CATERPILLAR®

SEBP5945
January 2012

RUTHZIL TRATOR COMERCIAL DE PEÇAS LTDA 11 97083-6812 ROLANDO

Parts Manual

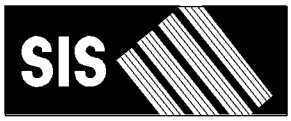

See "General Information" for New Parts Manual Features.

420F Backhoe Loader

LTG1-Up (Machine)
CRS1-Up (Engine)

Powered By C4.4 Engine

Product and Dealer Information

Note: For product identification plate locations, see the section “Product Identification Information” in the Operation and Maintenance Manual.

Delivery Date: _____

Product Information

Model: _____

Product Identification Number: _____

Engine Serial Number: _____

Transmission Serial Number: _____

Generator Serial Number: _____

Attachment Serial Numbers: _____

Attachment Information: _____

Customer Equipment Number: _____

Dealer Equipment Number: _____

Dealer Information

Name: _____ Branch: _____

Address: _____

_____

_____

	Dealer Contact	Phone Number	Hours
Sales:	_____	_____	_____
Parts:	_____	_____	_____
Service:	_____	_____	_____

MEMORANDA

TABLE OF CONTENTS

Name	Page
GENERAL INFORMATION	A4
REPAIR ALTERNATIVES	A7
SUPPLEMENTAL COOLANT ADDITIVES	A8
MAINTENANCE PARTS	A9
INDEX	A11
MACHINE ARRANGEMENT	1
BACKHOE AR-EXTENDABLE STICK	1
BACKHOE AR-STANDARD STICK	1
CHASSIS AR	2
COLD WEATHER AR	2
COMMON AR	2
DRIVE AR-BACKHOE LOADER	3
LOADER AR	3
ENGINE ARRANGEMENT	4
ENGINE AR	4
ENGINE AR-PRIMARY	5
BASIC ENGINE	6
CAMSHAFT GP	6
COVER GP-VALVE MECHANISM	7
CRANKSHAFT GP	9
CYLINDER BLOCK GP	11
CYLINDER HEAD GP	13
DRIVE GP-FAN	15
FLYWHEEL GP	16
HOUSING GP-FLYWHEEL	17
LIFTING GP-ENGINE	18
MOUNTING GP-ENGINE	19
MOUNTING GP-ENGINE & XMSN	21
PAN GP-OIL	22
PISTON & ROD GP	24
PLUG GP-ENGINE	26
ROCKER ARM GP	28
VALVE MECHANISM GP	29
LUBRICATION SYSTEM	30
GAUGE GP-OIL LEVEL & FILLER	30
GAUGE GP-OIL LEVEL (DIPSTICK)	31
PUMP GP-ENGINE OIL	32
COOLING SYSTEM	33
COOLER GP-ENGINE OIL	33
COOLER GP-FLTR BASE & ENG OIL	34
COOLING GP-SUPPLEMENTAL	35
FAN GP-SUCTION	38
LINES GP-POWER TRAIN COOLER	41
RADIATOR & HYD OIL COOLER GP	43
AIR INLET AND EXHAUST SYSTEM	44
AIR CLEANER GP	44
COVER GP-INLET MANIFOLD	47
EXTENSION GP-EXHAUST	48
MUFFLER GP	49
TURBOCHARGER GP	50
FUEL SYSTEM	52
CONTROL GP-GOVERNOR	52
FILTER GP-WATER SEP & FUEL	54
LINES GP-FUEL	55
LINES GP-FUEL FILTER	57
MOUNTING GP-GOVERNOR CONTROL	58
PUMP GP-FUEL INJECTION	59
PUMP GP-FUEL PRM & PRIM FILTER	63
TANK GP-FUEL	64
ELECTRICAL AND STARTING SYSTEM	67
BATTERY & WIRING GP	67
BATTERY GP	71
CONTROL GP-MACHINE	73
ELECTRONICS AR-MACHINE	73
ELECTRONICS GP-COMMUNICATION	73
ELECTRONICS GP-MACHINE	74
GLOW PLUG GP	75
HEATER GP-JACKET WATER	76
INSTALLATION GP-SECURITY	77
LAMP GP-FLOOD	79
LAMP GP-WARNING BEACON	82
LIGHTING GP-FLOOD & SIGNAL	84
LIGHTING GP-WARNING BEACON	87
RELAY GP	88
SENSOR GP-SPEED	93
STARTING MOTOR GP-ELECTRIC	94
SWITCH GP-ALL WHEEL DRIVE	97
SWITCH GP-DIFFERENTIAL LOCK	98
SWITCH GP-DISCONNECT	99
SWITCH GP-PRESSURE	100
WIRING GP-AIR CONDITIONER	101
WIRING GP-AUXILIARY	104
WIRING GP-COMMUNICATION	106
WIRING GP-CONSOLE	108
WIRING GP-ENGINE	110
WIRING GP-HEATER	113
WIRING GP-KICKOUT & POSITIONER	115
WIRING GP-PLATFORM	118
WIRING GP-REAR	125
WIRING GP-RIDE CONTROL	127
WIRING GP-TRANSMISSION CONTROL	129
POWER TRAIN	133
AXLE GP-DRIVE & STEERING	133

TABLE OF CONTENTS

Name	Page
AXLE GP-REAR	135
CASE AS-TRANSMISSION	138
CASE GP-TRANSMISSION	141
DIFFERENTIAL & BEVEL GEAR GP	144
DIFFERENTIAL GP	146
DRIVE GP-FLEXIBLE COUPLING	148
FILLER GP-POWER TRAIN OIL	149
FLANGE GP-WHEEL	153
HOUSING & FLANGE GP-AXLE	155
HOUSING GP-AXLE	157
LINES GP-POWER TRAIN OIL	161
LOCK GP-DIFFERENTIAL	162
MOUNTING GP-AXLE	164
MOUNTING GP-TRANSMISSION	165
PLANETARY GP-FINAL DRIVE	167
POWER TRAIN AR	169
SHAFT GP-COUNTER	170
SHAFT GP-DRIVE	172
SHAFT GP-IDLER	175
SHAFT GP-INPUT	177
SHAFT GP-OUTPUT	181
TORQUE CONVERTER AR	186
TRANSMISSION AR-DIRECT DRIVE	187
TRANSMISSION AR-POWER SHIFT	190
TRANSMISSION GP-DIRECT DRIVE	192
VALVE & MTG GP-SOLENOID	208
VALVE GP-RELIEF	209
VALVE GP-SOLENOID	210
VALVE GP-TIRE	215
WHEEL & TIRE AR	216
WHEEL & TIRE GP	218
BRAKING SYSTEM	227
CONTROL GP-PARKING BRAKE	227
CONTROL GP-SERVICE BRAKE	229
CYLINDER GP-BRAKE	232
LEVER GP-HAND CONTROL	236
STEERING SYSTEM	237
AXLE GP-FRONT	237
LINES GP-STEERING	239
PUMP GP-METERING	243
STEERING COLUMN GP	244
FRAME AND BODY	245
BOX GP-STORAGE	245
COUNTERWEIGHT GP	247
EXTENSION GP-FENDER	251
FENDER GP-FRONT	252
FENDER GP-REAR	253
FLOORPLATE GP	255
FRAME GP-LOADER	256
FRAME GP-SWING	258
GRILL GP-RADIATOR	260
GUARD GP-CYLINDER	262
GUARD GP-DEBRIS	263
GUARD GP-DRIVE SHAFT	265
GUARD GP-FUEL TANK	266
HOOD & GUARD GP	267
HOOD GP-ENGINE	269
LINER GP-SOUND SUPPRESSION	270
HYDRAULIC SYSTEM	271
ACCUMULATOR GP-HYDRAULIC	271
ACCUMULATOR GP-RIDE CONTROL	273
CONTROL AR-RIDE	275
CYLINDER GP-BACKHOE BUCKET	276
CYLINDER GP-BOOM	278
CYLINDER GP-HYDRAULIC	280
CYLINDER GP-LIFT	284
CYLINDER GP-MULTIPURPOSE BUKT	286
CYLINDER GP-STABILIZER	287
CYLINDER GP-STICK	289
CYLINDER GP-TILT	292
DRIVE & MTG GP-PUMP	293
FILTER & MTG GP-OIL	294
FILTER GP-OIL	295
FITTING GP-HYDRAULIC	296
HYDRAULIC AR	297
KICKOUT & POSITIONER GP	298
LINES GP-AUXILIARY HYDRAULIC	301
LINES GP-BACKHOE AUXILIARY	308
LINES GP-BOOM CYLINDER	309
LINES GP-BUCKET CYLINDER	311
LINES GP-EXTENDABLE STICK	315
LINES GP-LIFT & TILT CYLINDER	317
LINES GP-MULTIPURPOSE BUCKET	322
LINES GP-PILOT	326
LINES GP-PUMP	337
LINES GP-RETURN	339
LINES GP-RIDE CONTROL	341
LINES GP-STABILIZER	343
LINES GP-STICK	345
LINES GP-SWING CYLINDER	347
MANIFOLD GP-CONTROL	349
MANIFOLD GP-RIDE CONTROL	350
MOUNTING GP-LINES	351
PUMP & MTG GP-HYDRAULIC	352
SHAFT GP-PUMP DRIVE	353
TANK & MTG GP-HYDRAULIC	354
VALVE & MTG GP-AUXILIARY	355
VALVE & MTG GP-BANK	356
VALVE & MTG GP-SOLENOID	361
VALVE AR-BANK 2	362
VALVE AR-BANK 3	364
VALVE GP-BANK 2	365
VALVE GP-BANK 3	366
VALVE GP-BANK 7	367
VALVE GP-BANK 8	368

TABLE OF CONTENTS

Name	Page
VALVE GP-PILOT	369
VALVE GP-SOLENOID & PRESS REDC	371
IMPLEMENTS	373
ARM GP-LIFT	373
BOOM GP	377
BRACE GP-LIFT CYLINDER	379
GUARD GP-BOOM	380
LINKAGE GP-BACKHOE BUCKET	381
LOCK GP-TRANSPORT	383
MOUNTING GP-STICK	387
PAD & MTG GP-STABILIZER	388
PAD GP-STABILIZER	390
STABILIZER GP-BACKHOE	392
STICK AS	394
STICK GP-EXTENDABLE	395
STICK GP-HOE	399
WORK TOOLS	401
BUCKET AR-GENERAL PURPOSE	401
BUCKET AR-MULTIPURPOSE	404
BUCKET AS-GENERAL PURPOSE	409
BUCKET AS-HOE	413
BUCKET GP-GENERAL PURPOSE	418
BUCKET GP-HOE	422
BUCKET GP-MULTIPURPOSE	427
BULLDOZER AS	435
CLAM AS-MULTIPURPOSE BUCKET	439
COUPLER AR-QUICK	441
COUPLER GP-QUICK	442
EDGE GP-CUTTING	443
FORK GP	445
MOUNTING GP-BUCKET	446
PIN GP-COUPLER	447
TOOTH GP-UNI	449
OPERATOR STATION	450
AIR CONDITIONER & MOUNTING GP	450
CAB AR	453
CAB AR-ENCLOSED ROPS	453
CAB GP	454
CANOPY AR	457
CANOPY AR-OPEN ROPS	457
CANOPY GP-OPEN ROPS	459
COMPRESSOR GP-REFRIGERANT	461
CONDENSER & MTG GP-REFRIGERANT	463
CONSOLE GP-OPERATOR	464
CONTROL AR-STABILIZER	470
CONTROL GP-HANDLE	471
CONTROL GP-HYDRAULIC HAND	472
CONTROL GP-JOYSTICK	478
CONTROL GP-STEERING	481
CONTROL GP-TRANSMISSION	482
COVER GP-WIPER MOTOR	484
DOOR GP-CAB	485
DUCT GP-CAB AIR	489
FLOOR MAT GP	490
HEATER & AIR CONDITIONER AR	491
HEATER & AIR CONDITIONER GP	492
HEATER AR-CAB	494
HEATER GP-CAB	495
LATCH GP-CAB DOOR & WINDOW	499
LATCH GP-CONSOLE	501
LEVER GP-GOVERNOR	502
LINER GP-CAB	503
LINES GP-HEATER	505
LINES GP-HEATER & AIR COND	507
MIRROR GP-REAR VIEW	510
MOTOR GP-WINDOW WIPER	511
MOUNTING GP-BACKHOE CONTROL	513
MOUNTING GP-CAB	516
PEDAL GP-GOVERNOR	517
ROOF GP-CAB	518
SEAT BELT GP	519
SEAT GP	521
SEAT GP-SUSPENSION	524
SUSPENSION GP-SEAT	530
TRIM GP-CAB	534
VISOR GP-CAB	536
WINDOW GP-CAB	537
WINDOW GP-DOOR	543
WIPER GP-WINDOW	545
SERVICE EQUIPMENT AND SUPPLIES	550
FILM GP	550
FILM GP-INTERNATIONAL	551
FILM GP-U.S.	552
LINK GP-SHIPPING	553
LOCK GP-VANDALISM	554
PLATE & FILM GP	555
PLATE GP-IDENTIFICATION	556
PROTECTION GP-VANDALISM	557
PART NUMBER INDEX	B1

GENERAL INFORMATION

1. MACHINE IDENTIFICATION

Caterpillar machines are identified by Product Identification Numbers (PIN). Some components included in a machine may be identified by Serial Numbers (S/N). Typical components that will be serialized include engines, transmissions, bulldozers, and rippers. The machine and engine are further identified by arrangement numbers and in some cases modification numbers. These numbers are shown on the product identification plate(s) and on the master plate in the operator's compartment.

Caterpillar dealers need all of these numbers to determine accurate parts identification.

SIS *New Feature*

Effective First Quarter 2001 the Caterpillar Product Identification Number (PIN) changed from 8 to 17 characters. In an effort to provide uniform equipment identification, Caterpillar and other construction equipment manufacturers are moving to comply with the latest version of the product identification numbering standard. Non-road machine PINs are defined by ISO 10261. The new PIN format will apply to all Caterpillar machines and generator sets. The PIN plates and frame marking will display the 17 character PIN. The new format will look like the following:

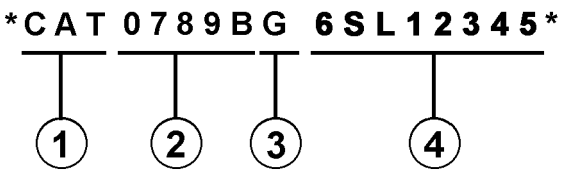

Where:

1. Caterpillar's World Manufacturing Code (characters 1-3)

2. Machine Descriptor (characters 4-8)

3. Check Character (character 9)

4. Machine Indicator Section (MIS) or Product Sequence Number (characters 10-17). These were previously referred to as the Serial Number.

Machines and generator sets produced before First Quarter 2001 will maintain their 8 character PIN format.

Components such as engines, transmissions, axles, etc. and work tools will continue to use an 8 character Serial Number (S/N).

2. ORDERING PARTS

⚠ WARNING

When replacement parts are required for this product Caterpillar recommends using Caterpillar replacement parts or parts with equivalent specifications including, but not limited to, physical dimensions, type, strength and material.

Failure to heed this warning can lead to premature failures, product damage, personal injury or death.

Quality Caterpillar replacement parts are available from Caterpillar dealers throughout the world. Their parts inventories are up to date and include all parts normally required to protect your investment in Caterpillar machines. Dealers may offer repair kits or remanufactured parts to allow selection of the most effective repair alternative for a particular situation. When ordering parts, your order should specify the quantity, part number, part name, and the serial number/product identification number of the machine for which the parts are needed.

3. PARTS MANUAL ORGANIZATION

Product information in this manual is presented as "information elements" that represent all of the components for the specific model. Engine Arrangement and Seat Group are examples of information elements. The information elements are organized alphabetically by part name and secondarily by part number within each major section of the manual.

4. TABLE OF CONTENTS

A table of contents (TOC) is found at the beginning of the manual. The TOC lists each section of the manual with a complete list of all information elements organized as they appear in the manual. Page numbers are provided for quick reference to detailed parts identification illustrations and serviceable consist lists.

5. MAINTENANCE PARTS INDEX

The Maintenance Parts Index, located near the beginning of the manual, references most frequently used maintenance part numbers, providing description, quantity, usage and page number. This information is organized alphabetically by part description.

6. INDEX

The index located near the front of the manual is an alphabetical listing of all information elements included in the manual. Page numbers are provided for quick reference to detailed parts identification illustrations and serviceable consist lists.

7. PART NUMBER INDEX

A numerical index listing all part numbers and the corresponding page number(s) appears at the back of the manual.

8. CAPTIONS

Captions located at the beginning of each information element identify the part number and part name along with additional descriptive information. PIN and S/N information found in each caption should be used to select correct information for a specific machine. Field replacement options, identification of optional attachment components, and where used ("part of") information is also provided.

The first line of a caption is shown in larger type font to indicate the beginning of an information element. Captions for additional pages that may be required to illustrate an information element will be shown in standard type font and will include the term *(contd.)* .

9. NON-SERVICED PARTS

In some instances it is necessary to display non-serviced parts that are a link to a lower level serviceable consist lists. These non-serviced part numbers are shown in *italic* type indicating that they are not available.

10. PARTS LIST REFERENCE NUMBERS

Numbers shown in the Ref No column correspond to numbers used in the associated graphic(s). An alphabetic suffix may be added to a reference number to identify lower level consist items. Numbers shown in the Graphic Ref column refer to the graphic number identifier displayed in the lower left corner of each illustration. The Graphic Ref number may be used in combination with the item Ref No to determine the correct part number. There may be intentional omission of a Ref No in a consist list as information is updated to reflect the latest serviceable part numbers.

11. INDENTED PART NAMES

When a part name is indented in a parts list, it is part of (included in) the group or assembly under which it is indented.

12. ILLUSTRATION REFERENCE LETTERS

When necessary, illustrations contain reference letters (A, B, C etc.) that are intended to track lines and harnesses from one point to another. They are also used to show where to reconnect illustrations that have been separated.

13. ABBREVIATIONS AND SYMBOLS

O.D. – Outside Diameter
I.D. – Inside Diameter
A – Not Part Of This Group
B – Use As Required
C – Change From Previous Type
D – Order By The Meter
E – Order By The Centimeter
F – Not Shown
G – Order By The Inch
I – Refer To Hydraulic Information System
M – Metric Part
R – Remfg Part May Be Available
Y – Separate Illustration
Z – Not Serviced Separately

SIS *New Feature*

14. DESCRIPTION OF TYPE CHANGES

Type - A type is defined as any configuration change that requires an additional Information Element for an Arrangement, Group, or Assembly. If serial number breaks for types are not available, a type # (Type 1, Type 2, etc.) will be displayed in the caption. These "type" changes are identified with a "C" note (change from previous type) in the Parts List. Only the "types" that apply to this Parts Manual will be included. Additional types may exist causing "C" notes to appear on an Information Element when no other types are shown.

15.<END>

This symbol indicates the end of an information element.

NOTE:

Continuing improvement and advancement of product design may cause changes to your machine which may not be included in this publication. Whenever a question arises regarding your Caterpillar product or this publication, please consult your Caterpillar dealer for the latest available information.

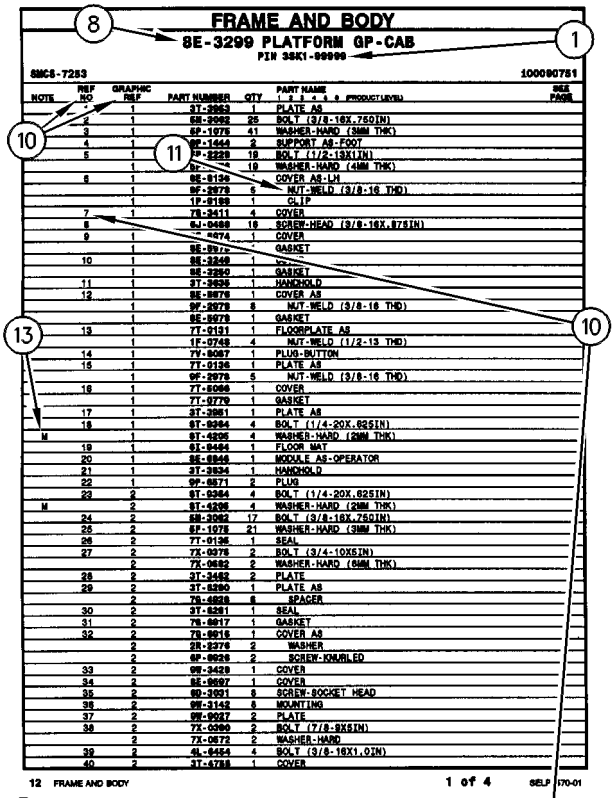

FRAME AND BODY

8E-3299 PLATFORM GP-CAB

PIN 3SK1-99999

SMCS-7283 100090751

NOTE	REF NO	GRAPHIC REF	PART NUMBER	QTY	PART NAME 1 2 3 4 5 6 (PRODUCT LEVEL)	SEE PAGE
	*	1	3T-3963	1	PLATE AS	
	2	1	6M-2062	25	BOLT (3/8-16X.750IN)	
	3	1	6P-1075	41	WASHER-HARD (3MM THK)	
	4	1	9F-1443	2	SUPPORT AS-FOOT	
	5	1	9P-2229	19	BOLT (1/2-13X1IN)	
		1	9P-[illegible]	19	WASHER-HARD (4MM THK)	
	6	1	8E-8136	*	COVER AS-LH	
		1	9F-2979	6	NUT-WELD (3/8-16 THD)	
		1	1P-8189	1	CLIP	
	7	1	7X-3411	4	COVER	
	8	1	6J-0468	18	SCREW-HEAD (3/8-16X.875IN)	
	9	1	[illegible]-4074	1	COVER	
		1	8E-8976	*	GASKET	
	10	1	8E-3248	1	[illegible]	
		1	8E-2260	1	GASKET	
	11	1	3T-3636	1	HANDHOLD	
	12	1	8E-8976	1	COVER AS	
		1	9F-2979	8	NUT-WELD (3/8-16 THD)	
		1	8E-8978	1	GASKET	
	13	1	7T-9131	1	FLOORPLATE AS	
		1	1F-0748	4	NUT-WELD (1/2-13 THD)	
	14	1	7Y-8067	1	PLUG-BUTTON	
	15	1	7T-0136	1	PLATE AS	
		1	9F-2978	5	NUT-WELD (3/8-16 THD)	
	16	1	7T-8066	1	COVER	
		1	7T-9779	1	GASKET	
	17	1	3T-3961	1	PLATE AS	
	18	1	9T-0264	4	BOLT (1/4-20X.625IN)	
M		1	9T-4295	4	WASHER-HARD (2MM THK)	
	19	1	6J-8464	1	FLOOR MAT	
	20	1	8E-8846	1	MODULE AS-OPERATOR	
	21	1	3T-3834	1	HANDHOLD	
	22	1	9F-8671	2	PLUG	
	23	2	9T-0264	4	BOLT (1/4-20X.625IN)	
M		2	9T-4295	4	WASHER-HARD (2MM THK)	
	24	2	6M-2062	17	BOLT (3/8-16X.750IN)	
	25	2	6P-1075	21	WASHER-HARD (3MM THK)	
	26	2	7T-0136	1	SEAL	
	27	2	7X-0078	2	BOLT (3/4-10X5IN)	
		2	7X-0682	2	WASHER-HARD (6MM THK)	
	28	2	3T-3482	2	PLATE	
	29	2	3T-8290	1	PLATE AS	
		2	7S-4828	6	SPACER	
	30	2	3T-8281	1	SEAL	
	31	2	7S-8817	1	GASKET	
	32	2	7S-8816	1	COVER AS	
		2	2R-2276	2	WASHER	
		2	9F-8626	2	SCREW-KNURLED	
	33	2	9M-3429	1	COVER	
	34	2	8E-8697	1	COVER	
	35	2	9D-3931	8	SCREW-SOCKET HEAD	
	36	2	9M-3142	8	MOUNTING	
	37	2	9M-9017	2	PLATE	
	38	2	7X-0360	2	BOLT (7/8-9X5IN)	
		2	7X-0672	2	WASHER-HARD	
	39	2	4L-8454	4	BOLT (3/8-16X1.0IN)	
	40	2	3T-4788	1	COVER	

12 FRAME AND BODY 1 of 4 SELP4570-01

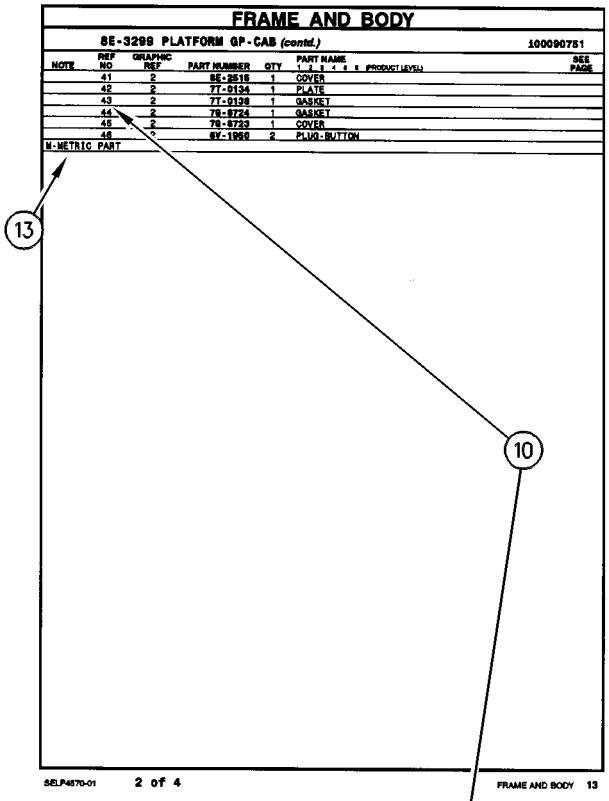

FRAME AND BODY

8E-3299 PLATFORM GP-CAB (contd.) 100090751

NOTE	REF NO	GRAPHIC REF	PART NUMBER	QTY	PART NAME 1 2 3 4 5 6 (PRODUCT LEVEL)	SEE PAGE
	41	2	8E-2516	1	COVER	
	42	2	7T-0134	1	PLATE	
	43	2	7T-0138	1	GASKET	
	44	2	7S-8724	1	GASKET	
	45	2	7S-8723	1	COVER	
	46	*	8Y-1950	2	PLUG-BUTTON	

M-METRIC PART

SELP4570-01 2 of 4 FRAME AND BODY 13

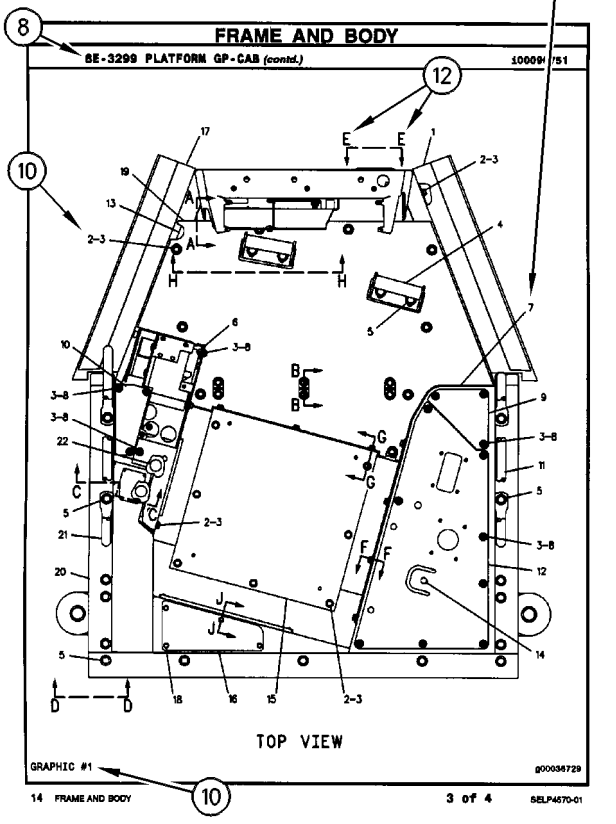

FRAME AND BODY

8E-3299 PLATFORM GP-CAB (contd.) 100090751

TOP VIEW

GRAPHIC #1 g00036729

14 FRAME AND BODY 3 of 4 SELP4570-01

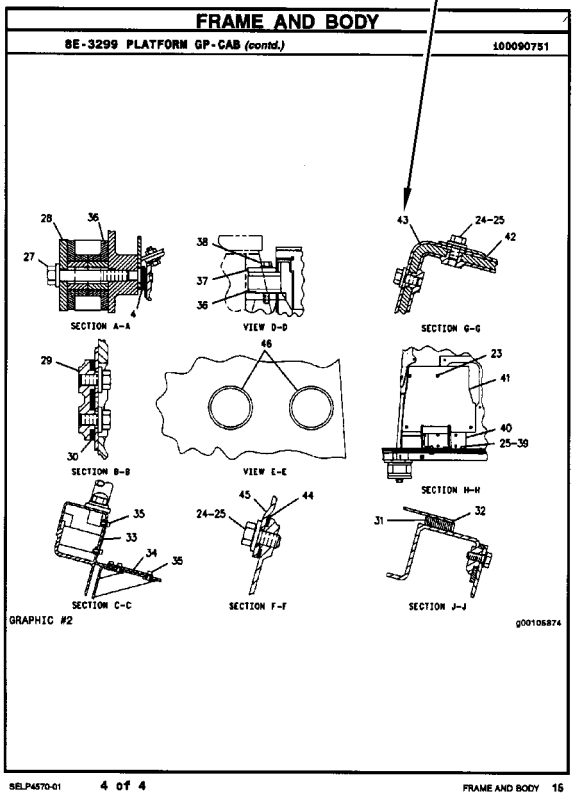

FRAME AND BODY

8E-3299 PLATFORM GP-CAB (contd.) 100090751

SECTION A-A

VIEW D-D

SECTION G-G

SECTION B-B

VIEW E-E

SECTION H-H

SECTION C-C

SECTION F-F

SECTION J-J

GRAPHIC #2 g00105874

SELP4570-01 4 of 4 FRAME AND BODY 15

REPAIR ALTERNATIVES

REMANUFACTURED COMPONENTS

As an option when making repairs consider Caterpillar Remanufactured Components. Components that are available through the Caterpillar Remanufactured Program are identified three ways in the parts book:

- with the letter R in the note field of the parts list
- with an R* at the beginning of the first line of the caption
- with an *R at the end of the first line of the caption

Typical components included in the Remanufacturing Program include:

ALTERNATORS
CONNECTING RODS
CRANKSHAFTS - UNDERSIZE
CRANKSHAFTS - UPGRADE TO NEW
CYLINDER HEADS
ELECTRONIC CONTROL MODULES (ECM)
ELECTRONIC SENSORS
FUEL INJECTORS
FUEL NOZZLES
FUEL PUMPS
GOVERNORS
OIL PUMPS
PISTONS
SHORT BLOCKS
STARTERS
TURBOCHARGERS - COMPLETE
TURBOCHARGER CARTRIDGES
WATER PUMPS

Caterpillar Remanufactured engines for many engine arrangements are also available.

SUPPLEMENTAL COOLANT ADDITIVES

CUSTOMER BENEFITS:

Protects against cavitation, foam, erosion, corrosion, and scale buildup in cooling systems.

- Provides measured coolant conditioner.

DESCRIPTION:

Additives deplete from the coolant with normal operation. For this reason, Supplemental Coolant Additives (SCA) must be added to all heavy duty coolants at regular intervals. In addition, when not using a fully formulated, pre-charged antifreeze, like Caterpillar's DEAC, an initial charge of SCA must be added to the cooling system. The amount of SCA added to the system is dependent on the capacity of the system.

The SCA for initial fill is provided as a liquid. SCA's for maintenance intervals are available in liquid form and as a spin-on element. (No Spin-on available for 3600 Family of Engines)

NOTE:

The amount of SCA added at initial fill is not the same as the amount added at maintenance intervals.

The coolant additive elements can be used with any ethylene or propylene glycol type antifreeze which meets ASTM D4985 or ASTM D5345 Specifications.

NOTE:

For use with standard heavy duty coolant only, not for use with Extended Life Coolant.

PARTS NEEDED:

Cooling System Capacity		Liquid SCA at Initial Fill	Liquid SCA at Maintenance*	Spin-on SCA Maintenance Element*
Liters	Gallons			
22-30	(6-8)	3P-2044 (1)	6V-3542 (1)	111-2370 (1)
30-38	(8-10)	3P-2044 (1) 6V-3542 (1)	111-2372 (1)	111-2369 (1)
38-49	(10-13)	3P-2044 (1) 8T-1589 (1)	111-2372 (1)	111-2369 (1)
49-64	(13-17)	3P-2044 (2)	8T-1589 (1)	9N-3368 (1)
64-83	(17-22)	3P-2044 (2) 8T-1589 (1)	111-2372 (1) 6V-3542 (1)	111-2371 (1)
83-114	(22-30)	3P-2044 (3) 8T-1589 (1)	3P-2044 (1)	9N-3718 (1)
114-163	(30-43)	3P-2044 (5)	3P-2044 (1) 6V-3542 (1)	111-2371 (2)
163-242	(43-64)	3P-2044 (8)	3P-2044 (2)	9N-3718 (2)

** Normal maintenance period is 250 hrs. See your Operation and Maintenance Manual for complete coolant maintenance instructions.*

( ) Indicates quantity required.

MAINTENANCE PARTS

DESCRIPTION	PART NUMBER	QTY	WHERE USED	PAGE
AIR INLET AND EXHAUST SYSTEM				
FILTER ELEMENT-AIR (PRIMARY)	346-6687	1	AIR CLEANER GP	44
FILTER ELEMENT-AIR (SECONDARY)	346-6688	1	AIR CLEANER GP	44
BASIC ENGINE				
GASKET (VALVE COVER)	225-6451	1	COVER GP-VALVE MECHANISM	7
PLUG-DRAIN (ENGINE OIL)	7C-0351	2	PAN GP-OIL	22
COOLING SYSTEM				
BELT-SERPENTINE	309-6655	1	FAN GP-SUCTION	38
BELT-SERPENTINE (FAN PULLEY)	298-5872	1	FAN GP-SUCTION	39
CAP AS-COOLANT TANK	251-3227	1	COOLING GP-SUPPLEMENTAL	35
HOSE-RADIATOR (LOWER)	352-4536	1	COOLING GP-SUPPLEMENTAL	35
HOSE-RADIATOR (UPPER)	352-4535	1	COOLING GP-SUPPLEMENTAL	35
ELECTRICAL AND STARTING SYSTEM				
BATTERY (12-VOLT, MAINTENANCE FREE)	230-6368	1	BATTERY & WIRING GP	67
		1	BATTERY GP	71
BELT-DRIVE (WARNING BEACON)	9X-8139	1	LAMP GP-WARNING BEACON	83
CAP AS-DUST	133-6517	1	HEATER GP-JACKET WATER	76
FLASHER AS (12-VOLT) (HAZARD)	7T-4848	1	WIRING GP-PLATFORM	118
FUSE (10-AMPERE)	113-8490	9	WIRING GP-PLATFORM	119
	3K-8782	1	LAMP GP-WARNING BEACON	82
FUSE (15-AMPERE)	113-8491	12	WIRING GP-PLATFORM	119
FUSE (30-AMPERE)	274-9872	1	RELAY GP	91
FUSE (30-AMPERE) (MAIN)	274-9872	1	WIRING GP-PLATFORM	118
FUSE (40-AMPERE)	278-6377	1	RELAY GP	88
		1	RELAY GP	91
FUSE (40-AMPERE) (POWER, 2)	278-6377	1	WIRING GP-PLATFORM	118
FUSE (60-AMPERE)	267-2701	2	RELAY GP	89
		1	RELAY GP	90
FUSE (60-AMPERE) (POWER, 1)	267-2701	1	WIRING GP-PLATFORM	118
GLOW PLUG (12-VOLT)	232-6662	4	GLOW PLUG GP	75
KEY (BATTERY DISCONNECT)	8H-5306	1	SWITCH GP-DISCONNECT	99
KEY AS-ELECTRONIC (SECURITY)	206-5162	2	INSTALLATION GP-SECURITY	77
LAMP (12-VOLT, 21-WATT)	3C-4883	1	LIGHTING GP-FLOOD & SIGNAL	84
	9W-3326	1	LIGHTING GP-FLOOD & SIGNAL	84
LAMP (12-VOLT, 5-WATT)	084-4348	1	LIGHTING GP-FLOOD & SIGNAL	84
LAMP (12-VOLT, 55-WATT)	9W-0607	1	LAMP GP-FLOOD	79
		1	LAMP GP-FLOOD	80
		1	LAMP GP-FLOOD	81
LAMP (12-VOLT, 55-WATT) (WARNING BEACON)	9X-8118	1	LAMP GP-WARNING BEACON	83
FUEL SYSTEM				
CAP-FUEL (LOCKABLE, VENTED)	284-9039	1	TANK GP-FUEL	64
ELEMENT-WATER SEPARATOR (FUEL FILTER)	361-9554	1	PUMP GP-FUEL PRM & PRIM FILTER	63
FILTER ELEMENT-FUEL (WATER SEPARATOR)	156-1200	1	FILTER GP-WATER SEP & FUEL	54
STRAINER (FUEL TANK)	340-4152	1	TANK GP-FUEL	64

MAINTENANCE PARTS

DESCRIPTION	PART NUMBER	QTY	WHERE USED	PAGE
HYDRAULIC SYSTEM				
BREATHER (HYDRAULIC TANK)	361-9918	1	TANK & MTG GP-HYDRAULIC	354
STRAINER (HYDRAULIC TANK)	254-1098	1	TANK & MTG GP-HYDRAULIC	354
LUBRICATION SYSTEM				
CAP AS-FILLER (ENGINE OIL)	236-6651	1	GAUGE GP-OIL LEVEL & FILLER	30
FILTER AS-ENGINE OIL	7W-2326	1	GAUGE GP-OIL LEVEL & FILLER	30
OPERATOR STATION				
BLADE AS-WIPER (500-MM) (REAR)	5C-8811	1	WIPER GP-WINDOW	545
BLADE AS-WIPER (600-MM) (FRONT)	101-0745	1	WIPER GP-WINDOW	545
		1	WIPER GP-WINDOW	548
DRYER AS-AIR	283-4236	1	LINES GP-HEATER & AIR COND	507
FILTER ELEMENT AS-AIR (CAB HEATER)	211-2661	1	AIR CONDITIONER & MOUNTING GP	450
		1	HEATER GP-CAB	495
FILTER ELEMENT-AIR (CAB HEATER)	211-2660	1	HEATER & AIR CONDITIONER GP	492
		1	HEATER GP-CAB	497
LAMP (12-VOLT)	210-8754	1	LINER GP-CAB	503
SEAT BELT (2-IN)	206-1749	1	SEAT BELT GP	519
SEAT BELT (3-IN)	206-1750	1	SEAT BELT GP	520
POWER TRAIN				
BREATHER (AXLE, FRONT)	253-5024	1	AXLE GP-DRIVE & STEERING	133
BREATHER (AXLE, REAR)	197-9155	1	AXLE GP-REAR	135
BREATHER (TRANSMISSION)	7T-3251	1	TRANSMISSION GP-DIRECT DRIVE	192
		1	TRANSMISSION GP-DIRECT DRIVE	198
		1	TRANSMISSION GP-DIRECT DRIVE	202
BREATHER AS (TRANSMISSION)	293-2147	1	TRANSMISSION GP-DIRECT DRIVE	193
		1	TRANSMISSION GP-DIRECT DRIVE	198
CAP-DUST	6V-0852	1	TRANSMISSION GP-DIRECT DRIVE	197
FILTER-OIL (STANDARD EFFICIENCY) (TRANSMISSION)	119-4740	1	TRANSMISSION AR-DIRECT DRIVE	188
		1	TRANSMISSION AR-DIRECT DRIVE	189
		1	TRANSMISSION AR-POWER SHIFT	191
PLUG AS-DRAIN (MAGNETIC) (AXLE, FRONT)	152-6144	4	AXLE GP-DRIVE & STEERING	133
		1	DIFFERENTIAL & BEVEL GEAR GP	144
PLUG AS-DRAIN (MAGNETIC) (AXLE, REAR)	152-6144	4	AXLE GP-REAR	135
PLUG AS-DRAIN (TRANSMISSION)	6Y-1896	1	TRANSMISSION GP-DIRECT DRIVE	192
		1	TRANSMISSION GP-DIRECT DRIVE	197
		1	TRANSMISSION GP-DIRECT DRIVE	202
STRAINER-SUCTION (TRANSMISSION)	7T-2651	1	CASE AS-TRANSMISSION	138
		1	CASE GP-TRANSMISSION	141
		1	TRANSMISSION GP-DIRECT DRIVE	202

INDEX

Name	Page
A	
ACCUMULATOR GP-HYDRAULIC	272
ACCUMULATOR GP-HYDRAULIC–CHARGED	271
ACCUMULATOR GP-RIDE CONTROL–CHARGED	274
ACCUMULATOR GP-RIDE CONTROL–UNCHARGED	273
ACCUMULATOR-REFRIGERANT	507
AIR CLEANER GP	44
	45
AIR COMPRESSOR GP (SUSPENSION SEAT)	530
AIR CONDITIONER & MOUNTING GP	450
ARM GP-LIFT	373
AXLE GP-DRIVE & STEERING–FRONT	133
AXLE GP-FRONT	237
AXLE GP-REAR	135
B	
BACKHOE AR-EXTENDABLE STICK	1
BACKHOE AR-STANDARD STICK–STANDARD STICK	1
BATTERY & WIRING GP	67
BATTERY (12-VOLT, MAINTENANCE FREE)	67
	71
BATTERY GP	71
BELT-DRIVE (WARNING BEACON)	83
BELT-SERPENTINE	38
BELT-SERPENTINE (FAN PULLEY)	39
BLADE AS-WIPER (500-MM) (REAR)	545
BLADE AS-WIPER (600-MM) (FRONT)	545
	548
BLOWER GP-CAB (HEATER)	492
	497
BOOM GP	377
BOX GP-STORAGE	245
	246
BRACE GP-LIFT CYLINDER–SINGLE TILT	379
BRAKE GP-MECH CALIPER PARKING	136
BREATHER (AXLE, FRONT)	133
BREATHER (AXLE, REAR)	135
BREATHER (HYDRAULIC TANK)	354
BREATHER (TRANSMISSION)	192
	198
	202
BREATHER AS (TRANSMISSION)	193
	198
BUCKET AR-GENERAL PURPOSE	401
	402
	403
BUCKET AR-MULTIPURPOSE	404
	405
	406
	407
	408
BUCKET AS-GENERAL PURPOSE	409
	410
	411
	412
BUCKET AS-HOE–HEAVY-DUTY	414
BUCKET AS-HOE–HEAVY-DUTY, PIN-LOCK	416
BUCKET AS-HOE–HIGH CAPACITY, PIN-LOCK	417
BUCKET AS-HOE–ROCK	415
BUCKET AS-HOE–STANDARD	413
BUCKET GP-GENERAL PURPOSE	418
	419
	420
	421
BUCKET GP-HOE	422
BUCKET GP-HOE–HEAVY-DUTY	423
BUCKET GP-HOE–HEAVY-DUTY, PIN-LOCK	425
BUCKET GP-HOE–HIGH CAPACITY, PIN-LOCK	426
BUCKET GP-HOE–ROCK	424
BUCKET GP-MULTIPURPOSE	427
	429
	430
	431
	432
	433
BULLDOZER AS	437
	438
BULLDOZER AS–MULTIPURPOSE	435
	436
C	
CAB AR	453
CAB AR-ENCLOSED ROPS	453
CAB GP–DELUXE	454
CAMSHAFT GP	6
CANOPY AR–TRIM	457
CANOPY AR-OPEN ROPS	458
CANOPY AR-OPEN ROPS–TRIM	457
CANOPY GP-OPEN ROPS	460
CANOPY GP-OPEN ROPS–EAME	459
CAP AS-COOLANT TANK	35
CAP AS-DUST	76
CAP AS-FILLER (ENGINE OIL)	30
CAP-DUST	197
CAP-FUEL (LOCKABLE, VENTED)	64
CASE AS-TRANSMISSION–ALL WHEEL DRIVE	139
CASE AS-TRANSMISSION–FRONT	138
CASE GP-TRANSMISSION–2-WHEEL DRIVE	142
CASE GP-TRANSMISSION–FRONT	141

INDEX

Name	Page
CHASSIS AR	2
CLAM AS-MULTIPURPOSE BUCKET	439, 440
COLD WEATHER AR	2
COMMON AR	2
COMPRESSOR GP-REFRIGERANT	461, 462
CONDENSER & MTG GP-REFRIGERANT	463
CONSOLE GP-OPERATOR–FRONT	466
CONSOLE GP-OPERATOR–LH	464
CONSOLE GP-OPERATOR–RH	468
CONTROL AR-RIDE	275
CONTROL AR-STABILIZER	470
CONTROL GP-GOVERNOR	52
CONTROL GP-HANDLE–LH	471
CONTROL GP-HYDRAULIC HAND–SINGLE TILT	472, 476
CONTROL GP-JOYSTICK–LH	480
CONTROL GP-JOYSTICK–RH	478, 479
CONTROL GP-MACHINE	73
CONTROL GP-PARKING BRAKE	227, 228
CONTROL GP-SERVICE BRAKE–STANDARD SHIFT	229
CONTROL GP-STEERING–TILT	481
CONTROL GP-TRANSMISSION	131, 482
CONTROL GP-TRANSMISSION (FORWARD, NEUTRAL, REVERSE)	482
CONTROL GP-UNPROGRAMMED (MACHINE ECM)	73
COOLER GP-ENGINE OIL	33
COOLER GP-FLTR BASE & ENG OIL	34
COOLER GP-HYD & XMSN OIL	43
COOLING GP-SUPPLEMENTAL	35
COUNTERWEIGHT GP	247, 248, 249, 250
COUPLER AR-QUICK–PIN-LOCK	441
COUPLER GP-QUICK–PIN-LOCK	442
COVER GP (OUTLET)	365, 366
COVER GP-INLET MANIFOLD	47
COVER GP-VALVE MECHANISM	7
COVER GP-WIPER MOTOR	484
CRANKSHAFT GP	9, 10
CUSHION GP-SEAT	527
CYLINDER BLOCK GP	11, 12
CYLINDER GP-BACKHOE BUCKET	276
CYLINDER GP-BOOM	278
CYLINDER GP-BRAKE	232, 234
CYLINDER GP-HYDRAULIC–LH	282
CYLINDER GP-HYDRAULIC–RH	280
CYLINDER GP-LIFT	284, 285
CYLINDER GP-MULTIPURPOSE BUKT	286
CYLINDER GP-STABILIZER–LH	287
CYLINDER GP-STABILIZER–RH	288
CYLINDER GP-STEERING	237
CYLINDER GP-STEERING (FRONT AXLE)	133
CYLINDER GP-STICK	289
CYLINDER GP-STICK–EXTENDABLE	291
CYLINDER GP-TILT	292
CYLINDER HEAD GP	13, 14

D

DIFFERENTIAL & BEVEL GEAR GP	146
DIFFERENTIAL & BEVEL GEAR GP–FRONT	144
DIFFERENTIAL GP–AXLE, FRONT	146
DIFFERENTIAL GP–AXLE, REAR	147
DOOR GP-CAB–LH	487
DOOR GP-CAB–RH	485
DRIVE & MTG GP-PUMP	293
DRIVE AR-BACKHOE LOADER–2-WHEEL DRIVE, 2-WHEEL STEER	3
DRIVE AR-BACKHOE LOADER–4-WHEEL DRIVE, 2-WHEEL STEER	3
DRIVE GP-FAN	15
DRIVE GP-FLEXIBLE COUPLING	148
DRYER AS-AIR	507
DUCT GP-CAB AIR	489

E

EDGE GP-CUTTING	443, 444
ELECTRONICS AR-MACHINE–PILOT	73
ELECTRONICS GP-COMMUNICATION–PRODUCT LINK 121SR	73
ELECTRONICS GP-MACHINE	74
ELEMENT-WATER SEPARATOR (FUEL FILTER)	63
ENGINE AR	4
ENGINE AR-PRIMARY	5
EXTENSION GP-EXHAUST	48
EXTENSION GP-FENDER	251

F

FAN GP-SUCTION	40
FAN GP-SUCTION–WITH AIR CONDITIONER	39

INDEX

Name	Page
FAN GP-SUCTION–WITHOUT AIR CONDITIONER	38
FENDER GP-FRONT	252
FENDER GP-REAR	253
FILLER GP-ENGINE OIL	7
FILLER GP-POWER TRAIN OIL–AUTOSHIFT	149
FILLER GP-POWER TRAIN OIL–STANDARD SHIFT	151
FILM GP	550
FILM GP-INTERNATIONAL	551
FILM GP-U.S.	552
FILM-CERTIFICATION (ROPS, FOPS, READ OMM)	454, 459, 460
FILM-IDENTIFICATION (12-VOLT)	104
FILM-IDENTIFICATION (BUCKET LEVEL)	298
FILM-IDENTIFICATION (CAT)	267
FILM-IDENTIFICATION (FUSE, RELAY PANEL)	120
FILM-IDENTIFICATION (GROUP NO., SEQUENCE NO.)	492, 497
FILM-IDENTIFICATION (HYDRAULIC OIL FILTER)	294
FILM-IDENTIFICATION (IGNITION SWITCH)	77
FILM-IDENTIFICATION (JUMP START)	104
FILM-IDENTIFICATION (LIFT EYE LOCATION)	164, 388, 389
FILM-IDENTIFICATION (STABILIZER CONTROL)	470
FILM-IDENTIFICATION (START SWITCH, READ OMM)	77
FILM-IDENTIFICATION (TEMPERATURE CONTROL)	450, 495
FILM-INFORMATION (BELT ROUTING)	38, 39
FILM-INFORMATION (HYDO ADVANCED 10)	354
FILM-INFORMATION (TIE-DOWN)	256
FILM-INSTRUCTION (BOOM LOCK)	52
FILM-INSTRUCTION (EXTENDABLE STICK PIN, READ OMM)	395
FILM-INSTRUCTION (FORWARD, NEUTRAL, REVERSE)	466
FILM-INSTRUCTION (LINK)	381
FILM-INSTRUCTION (MACHINE SECURITY, READ OMM)	77
FILM-INSTRUCTION (OPERATOR CONTROLS, READ OMM)	330
FILM-INSTRUCTION (STABILIZER, AUTO UP)	470
FILM-INSTRUCTION (START SWITCH)	468
FILM-INSTRUCTION (VARIABLE SPEED)	52
FILM-WARNING (HIGH PRESS CYLINDER, READ OMM)	341, 551
FILM-WARNING (HIGH PRESSURE, READ OMM)	273, 274
FILM-WARNING (HYD PRESS, READ OMM, INTL)	302, 305, 551
FILM-WARNING (HYD PRESS, READ OMM, U.S.)	302, 305, 552
FILM-WARNING (JUMP START, READ OMM, U.S.)	552
FILM-WARNING (NO ENTRANCE, EXIT, READ OMM)	551
FILM-WARNING (NO WELD, NO DRILL, READ OMM)	454, 459, 460
FILM-WARNING (PRODUCT LINK 300, INTL)	106, 551
FILM-WARNING (PRODUCT LINK 300, U.S.)	552
FILTER & MTG GP-OIL–HYDRAULIC	294
FILTER AS-ENGINE OIL	30
FILTER BASE & ENG OIL COOLER	34
FILTER ELEMENT AS-AIR (CAB HEATER)	450, 495
FILTER ELEMENT-AIR (CAB HEATER)	492, 497
FILTER ELEMENT-AIR (PRIMARY)	44
FILTER ELEMENT-AIR (SECONDARY)	44
FILTER ELEMENT-FUEL (WATER SEPARATOR)	54
FILTER GP-FUEL (WATER SEPARATOR)	54
FILTER GP-OIL	295
FILTER GP-WATER SEP & FUEL	54
FILTER-OIL (STANDARD EFFICIENCY) (TRANSMISSION)	188, 189, 191
FINAL DRIVE GP	168
FITTING GP-HYDRAULIC–QUICK DISCONNECT	296
FLANGE GP-WHEEL	153, 154
FLASHER AS (12-VOLT) (HAZARD)	118
FLOOR MAT	490
FLOOR MAT GP	490
FLOORPLATE GP	255
FLYWHEEL GP	16
FORK GP	445
FRAME GP-LOADER–SINGLE TILT	256

INDEX

Name	Page
FRAME GP-SWING	258
FUSE (10-AMPERE)	82
	119
FUSE (15-AMPERE)	119
FUSE (30-AMPERE)	91
FUSE (30-AMPERE) (MAIN)	118
FUSE (40-AMPERE)	88
	91
FUSE (40-AMPERE) (POWER, 2)	118
FUSE (60-AMPERE)	89
	90
FUSE (60-AMPERE) (POWER, 1)	118
G	
GASKET (VALVE COVER)	7
GAUGE (HYDRAULIC TANK)	354
GAUGE AS-OIL LEVEL (DIPSTICK) (ENGINE)	31
GAUGE GP-OIL LEVEL & FILLER	30
GAUGE GP-OIL LEVEL (DIPSTICK)	31
GAUGE-OIL LEVEL (DIPSTICK) (POWER TRAIN)	149
	151
GEAR GP-RING	155
	156
GEAR GP-RING (REAR AXLE)	135
GLOW PLUG (12-VOLT)	75
GLOW PLUG GP	75
GRILL GP-RADIATOR	260
GUARD GP-BOOM	380
GUARD GP-CYLINDER–STABILIZER	262
GUARD GP-DEBRIS–CANOPY	263
	264
GUARD GP-DRIVE SHAFT	265
GUARD GP-FUEL TANK	266
H	
HANDLE GP-MODULAR	478
HANDLE GP-MODULAR (LH)	471
	480
HANDLE GP-MODULAR (RH)	479
HARNESS AS-ALARM	110
HARNESS AS-CAB	545
	548
HARNESS AS-CONSOLE	108
HARNESS AS-CONTROL (SECURITY)	77
HARNESS AS-ENGINE	110
HARNESS AS-FUEL TANK (FUEL SHUTOFF)	4
HARNESS AS-HEATER & AIR COND	113
HARNESS AS-HEATER & AIR COND (CAB)	492
HARNESS AS-HEATER & AIR COND (COMPRESSOR)	101
HARNESS AS-HEATER & AIR COND (VENT)	101
HARNESS AS-HEATER (CAB)	497
HARNESS AS-LIGHTING (ROOF)	84
HARNESS AS-PLATFORM	119
HARNESS AS-RADIO (PRODUCT LINK)	106
HARNESS AS-REAR	125
HARNESS AS-RIDE CONTROL	127
	530
HARNESS AS-TRANSMISSION (AUTOSHIFT)	131
HARNESS AS-TRANSMISSION (STANDARD SHIFT)	129
HARNESS AS-WIRING (KICKOUT, POSITIONER)	115
HARNESS AS-WIRING (PRODUCT LINK)	106
HARNESS AS-WIRING (RETURN TO DIG)	116
HEATER & AIR CONDITIONER AR	491
HEATER & AIR CONDITIONER GP	492
HEATER AR-CAB	494
HEATER GP-CAB	495
	497
HEATER GP-JACKET WATER	76
HOOD & GUARD GP	267
HOOD GP-ENGINE	269
HOSE-RADIATOR (LOWER)	35
HOSE-RADIATOR (UPPER)	35
HOUSING & FLANGE GP-AXLE–LH	156
HOUSING & FLANGE GP-AXLE–RH	155
HOUSING GP-AXLE–LH	158
HOUSING GP-AXLE–REAR	159
HOUSING GP-AXLE–RH	157
HOUSING GP-FLYWHEEL	17
HYDRAULIC AR	297
I	
INDICATOR AS (LH TURN SIGNAL, PARKING BRAKE)	118
INDICATOR AS (RH TURN SIGNAL, HIGH BEAM)	118
INSTALLATION GP-SECURITY	77
K	
KEY (BATTERY DISCONNECT)	99
KEY AS-ELECTRONIC (SECURITY)	77
KICKOUT & POSITIONER GP	298
KIT-HUB	154
L	
LAMP (12-VOLT)	503
LAMP (12-VOLT, 21-WATT)	84
LAMP (12-VOLT, 5-WATT)	84
LAMP (12-VOLT, 55-WATT)	79
	80
	81

INDEX

Name	Page
LAMP (12-VOLT, 55-WATT) (WARNING BEACON)	83
LAMP GP-DOME (12-VOLT) (CAB)	503
LAMP GP-FLOOD	79, 80, 81
LAMP GP-HEAD & SIGNAL (FRONT, LH)	84
LAMP GP-HEAD & SIGNAL (FRONT, RH)	84
LAMP GP-SIGNAL (REAR, LH)	84
LAMP GP-SIGNAL (REAR, RH)	84
LAMP GP-WARNING BEACON– AMBER, MAGNETIC MOUNT, ROTATING	82
LAMP GP-WARNING BEACON– MAGNETIC MOUNT	83
LATCH GP-CAB DOOR & WINDOW	499, 500
LATCH GP-CONSOLE	501
LEVER GP-GOVERNOR–HANDHELD	502
LEVER GP-HAND CONTROL	236
LIFTING GP-ENGINE	18
LIGHTING GP-FLOOD & SIGNAL– NACD, OPTIONAL	84
LIGHTING GP-WARNING BEACON– AMBER, MAGNETIC MOUNT, ROTATING	87
LINER GP-CAB	503
LINER GP-SOUND SUPPRESSION	270
LINES GP-AUXILIARY HYDRAULIC	302
LINES GP-AUXILIARY HYDRAULIC– EXTENDABLE STICK	305
LINES GP-AUXILIARY HYDRAULIC– SINGLE TILT	301
LINES GP-BACKHOE AUXILIARY– EXTENDABLE STICK	308
LINES GP-BACKHOE AUXILIARY– STANDARD STICK	308
LINES GP-BOOM CYLINDER	309
LINES GP-BUCKET CYLINDER– EXTENDABLE STICK	313
LINES GP-BUCKET CYLINDER– STANDARD STICK	311
LINES GP-EXTENDABLE STICK	315
LINES GP-FUEL FILTER	57
LINES GP-FUEL–TURBO	55
LINES GP-HEATER	505
LINES GP-HEATER & AIR COND	507
LINES GP-LIFT & TILT CYLINDER	317, 319
LINES GP-MULTIPURPOSE BUCKET	322, 324
LINES GP-PILOT	326
LINES GP-PILOT–AUXILIARY	335, 336
LINES GP-PILOT–BACKHOE	330
LINES GP-PILOT–STABILIZER	333
LINES GP-PILOT–SUPPLY	328
LINES GP-POWER TRAIN COOLER	41
LINES GP-POWER TRAIN OIL	161
LINES GP-PUMP	337
LINES GP-RETURN	339
LINES GP-RIDE CONTROL	341
LINES GP-STABILIZER	343
LINES GP-STEERING	239, 241
LINES GP-STICK	345
LINES GP-SWING CYLINDER	347
LINK GP-SHIPPING	553
LINKAGE GP-BACKHOE BUCKET	381
LOADER AR–SINGLE TILT	3
LOCK GP-DIFFERENTIAL–AUTOSHIFT	162
LOCK GP-TRANSPORT–BACKHOE BUCKET	386
LOCK GP-TRANSPORT–BOOM	384
LOCK GP-TRANSPORT–STABILIZER	383
LOCK GP-VANDALISM	554

M

Name	Page
MANIFOLD GP-CONTROL (INLET)	365, 366
MANIFOLD GP-CONTROL (OUTLET)	367, 368
MANIFOLD GP-CONTROL– PATTERN CHANGE	349
MANIFOLD GP-RIDE CONTROL	350
MIRROR GP-REAR VIEW–INTERIOR	510
MODULE GP-DISPLAY	73
MODULE GP-INTERFACE	74
MOTOR GP-WINDOW WIPER	511, 512
MOUNTING GP-AXLE	164
MOUNTING GP-BACKHOE CONTROL– PILOT	513
MOUNTING GP-BUCKET– BACKHOE, QUICK COUPLER	446
MOUNTING GP-CAB	516
MOUNTING GP-ENGINE	19
MOUNTING GP-ENGINE & XMSN	21
MOUNTING GP-GOVERNOR CONTROL– ENGINE	58
MOUNTING GP-LINES	351
MOUNTING GP-STICK	387
MOUNTING GP-TRANSMISSION	165, 166
MOUNTING GP-WHEEL (FRONT)	2
MOUNTING GP-WHEEL (REAR)	2
MUFFLER GP–TURBOCHARGER	49

P

Name	Page
PAD & MTG GP-STABILIZER–STREET	388, 389

INDEX

Name	Page
PAD GP-STABILIZER–STREET	390, 391
PADLOCK GP	554
PAN GP-OIL	22
PEDAL GP-GOVERNOR	517
PIN GP-COUPLER–MACHINE	447
PIN GP-COUPLER–PIN-LOCK	448
PISTON & ROD GP	24
PLANETARY GP-FINAL DRIVE–AXLE	167, 168
PLATE & FILM GP	555
PLATE GP-IDENTIFICATION	556
PLATE-IDENTIFICATION (CAT)	413, 414, 415
PLATE-IDENTIFICATION (WORK TOOL)	422, 423, 424
PLUG AS-DRAIN (MAGNETIC) (AXLE, FRONT)	133, 144
PLUG AS-DRAIN (MAGNETIC) (AXLE, REAR)	135
PLUG AS-DRAIN (TRANSMISSION)	192, 197, 202
PLUG GP-CONTROL MANIFOLD	363
PLUG GP-ENGINE	26, 27
PLUG-DRAIN (ENGINE OIL)	22
POWER TRAIN AR–2-WHEEL DRIVE, 2-WHEEL STEER, STD SHIFT	169
POWER TRAIN AR–ALL WHEEL DRIVE, 2-WHEEL STEER, AUTOSHIFT	169
POWER TRAIN AR–ALL WHEEL DRIVE, 2-WHEEL STEER, STD SHIFT	169
PROTECTION GP-VANDALISM–ROTATING GUARD	557
PUMP & MTG GP-HYDRAULIC	352
PUMP GP-ENGINE OIL	32
PUMP GP-FUEL INJECTION	59, 60
PUMP GP-FUEL PRM & PRIM FILTER–WITH WATER SEPARATOR	63
PUMP GP-METERING	243
PUMP GP-PISTON (HYDRAULIC)	352
PUMP GP-TRANSMISSION (POWER TRAIN)	192, 197, 202

R

Name	Page
RADIATOR & HYD OIL COOLER GP	43
RADIATOR GP	43
RELAY AS (12-VOLT) (AIR CONDITIONER, HEATER)	101
RELAY AS (12-VOLT) (FUEL PUMP)	118
RELAY AS (12-VOLT) (FUSE BLOCK)	118
RELAY AS (12-VOLT) (HIGH SPEED)	101, 113
RELAY AS (12-VOLT) (NEUTRAL START)	118
RELAY AS (12-VOLT) (RIDE CONTROL)	127
RELAY AS (12-VOLT) (STABILIZER, AUTO UP)	92
RELAY AS (12-VOLT) (START)	118
RELAY GP–POWER DISTRIBUTION	88
RELAY GP–POWER, 1	89
RELAY GP–POWER, 2	90
RELAY GP–STABILIZER, AUTO UP	92
RELAY GP–STARTING MOTOR	91
ROCKER ARM GP	28
ROOF GP-CAB	518

S

Name	Page
SEAT BELT (2-IN)	519
SEAT BELT (3-IN)	520
SEAT BELT GP–RETRACTABLE, 2-IN	519
SEAT BELT GP–RETRACTABLE, 3-IN	520
SEAT GP–CLOTH	522
SEAT GP–VINYL	521
SEAT GP-SUSPENSION–CLOTH	525, 529
SEAT GP-SUSPENSION–DELUXE, CLOTH	526, 527, 529
SEAT GP-SUSPENSION–VINYL	524, 529
SENDER AS-FUEL LEVEL	64
SENDER AS-TEMPERATURE (12-VOLT) (TRANSMISSION OIL)	192, 197, 202
SENDER AS-TEMPERATURE (ENGINE COOLANT)	110
SENSOR AS-TEMPERATURE (HYDRAULIC OIL)	294
SENSOR GP-MOISTURE (WATER SEPARATOR)	63
SENSOR GP-PRESSURE (HYDRAULIC OIL)	352
SENSOR GP-PRESSURE (RIDE CONTROL)	127
SENSOR GP-SPEED (TACHOMETER)	198
SENSOR GP-SPEED (TRANSMISSION)	192, 203
SENSOR GP-SPEED–TRANSMISSION	93
SERVICE GP-MACHINE	73
SHAFT GP-AXLE	133
SHAFT GP-COUNTER	170
SHAFT GP-COUNTER (TRANSMISSION)	193, 198
SHAFT GP-DRIVE	172

INDEX

Name	Page
	173
	174
SHAFT GP-IDLER (TRANSMISSION)	193
	197
SHAFT GP-IDLER–POWERSHIFT	175
SHAFT GP-INPUT	177
SHAFT GP-INPUT–ALL WHEEL DRIVE	179
SHAFT GP-OUTPUT–FRONT	184
	185
SHAFT GP-OUTPUT–MAIN	181
SHAFT GP-OUTPUT–REAR	183
SHAFT GP-PUMP DRIVE	353
SOFTWARE GP-COMMUNICATION (PRODUCT LINK 121SR)	73
SOFTWARE GP-MACHINE	73
SPRING AS-GAS (GRILL, RH)	267
SPRING AS-GAS (HOOD, RH)	267
SPRING AS-GAS (LOCKABLE) (GRILL, LH)	267
SPRING AS-GAS (LOCKABLE) (HOOD, LH)	267
SPRING GP-GAS (CAB DOOR)	485
	487
SPRING GP-GAS (STEERING COLUMN)	244
STABILIZER GP-BACKHOE	392
STARTING MOTOR GP-ELECTRIC	94
STARTING MOTOR GP-ELECTRIC–12-VOLT	96
STEERING COLUMN GP–TILT	244
STICK AS	394
STICK GP-EXTENDABLE	395
STICK GP-HOE	399
STRAINER (FUEL TANK)	64
STRAINER (HYDRAULIC TANK)	354
STRAINER-SUCTION (TRANSMISSION)	138
	141
	202
SUN VISOR	536
SUSPENSION GP-SEAT	530
SWITCH AS (PARKING BRAKE)	227
SWITCH AS (STARTING MOTOR, 12-VOLT)	94
SWITCH AS-FOOT (DIFFERENTIAL LOCK ON, OFF)	98
SWITCH AS-LIMIT (SERVICE BRAKE)	229
SWITCH AS-MULTIFUNCTION (HD LIGHT, TURN SIG, WDO WIPER)	118
SWITCH AS-PRESSURE (ENGINE OIL)	100
SWITCH AS-PRESSURE (HYDRAULIC OIL)	295
SWITCH AS-PRESSURE (REFRIGERANT)	101
SWITCH AS-PUSH BUTTON (NEUTRALIZER)	472
SWITCH AS-PUSH BUTTON (PUSH BUTTON)	476
SWITCH AS-ROCKER (AIR CONDITIONER, HEATER SELECT)	101
SWITCH AS-ROCKER (ALL WHEEL DRIVE)	97
SWITCH AS-ROCKER (AUTOSHIFT, STANDARD SHIFT)	131
SWITCH AS-ROCKER (AUXILIARY HYDRAULIC FLOW)	363
	364
SWITCH AS-ROCKER (BLOWER FAN SPEED)	101
	113
SWITCH AS-ROCKER (FLOODLIGHT, FRONT)	84
SWITCH AS-ROCKER (FLOODLIGHT, REAR)	84
SWITCH AS-ROCKER (HAZARD WARNING LIGHTS)	118
SWITCH AS-ROCKER (HEATER)	113
SWITCH AS-ROCKER (HYDRAULIC LOCKOUT)	108
SWITCH AS-ROCKER (MODE SELECT)	118
SWITCH AS-ROCKER (RIDE CONTROL)	127
SWITCH AS-ROCKER (STARTING AID)	108
SWITCH AS-ROCKER (TRANSMISSION NEUTRAL LOCK)	118
SWITCH AS-ROCKER (WIPER, WASHER, REAR)	545
SWITCH AS-ROLLER (KICKOUT, POSITIONER)	116
SWITCH AS-START (KEY)	108
SWITCH GP-ALL WHEEL DRIVE	97
SWITCH GP-DIFFERENTIAL LOCK	98
SWITCH GP-DISCONNECT–BATTERY	99
SWITCH GP-PRESSURE	100
SWITCH GP-PUSH BUTTON (NEUTRALIZER)	482
SWITCH GP-PUSH BUTTON (NEUTRALIZER, DOWNSHIFT)	472
	476
SWITCH-PRESSURE (AIR CLEANER)	45
SWITCH-TEMPERATURE (HVAC) (AIR CONDITIONER)	492
SWITCH-TEMPERATURE (TIMING ADVANCE)	60
SYNCHRONIZER GP	183

T

TANK & MTG GP-HYDRAULIC	354
TANK GP-EXPANSION (COOLANT)	35
TANK GP-FUEL	64
	65
TIE ROD GP	133
	237
TIP GP-BUCKET (SOIL)	426
TIP GP-PENETRATION	422
	423
	424
	425
TOOTH GP-UNI	403
	406
	449
TORQUE CONVERTER AR	186
TRANSMISSION AR-DIRECT DRIVE	187

INDEX

Name	Page
	188
	189
TRANSMISSION AR-POWER SHIFT	191
TRANSMISSION AR-POWER SHIFT– 4-WHEEL DRIVE, AUTO SHIFT	190
TRANSMISSION AR-POWER SHIFT– ALL WHEEL DRIVE	190
TRANSMISSION GP-DIRECT DRIVE– 2-WHEEL DRIVE	192
TRANSMISSION GP-DIRECT DRIVE– ALL WHEEL DRIVE	197
	202
TRIM GP-CAB–OPEN ROPS	534
TURBOCHARGER GP	50

V

Name	Page
VALVE & MTG GP-AUXILIARY	355
VALVE & MTG GP-BANK	356
VALVE & MTG GP-BANK–MECHANICAL	359
	360
VALVE & MTG GP-BANK–PILOT, 7-BANK	357
VALVE & MTG GP-BANK–PILOT, 8-BANK	358
VALVE & MTG GP-SOLENOID	208
	361
VALVE AR-BANK 2	362
	363
VALVE AR-BANK 3	364
VALVE AS-PRESSURE RELIEF (REFRIGERANT COMPRESSOR)	461
VALVE GP-BANK 2	365
VALVE GP-BANK 3	366
VALVE GP-BANK 6	356
VALVE GP-BANK 7–PILOT CONTROL	367
VALVE GP-BANK 8–PILOT CONTROL	368
VALVE GP-CONTROL	366
VALVE GP-CONTROL (LIFT)	365
	366
VALVE GP-CONTROL (LIFT) (AUXILIARY)	368
VALVE GP-CONTROL (LIFT) (BOOM)	367
	368
VALVE GP-CONTROL (LIFT) (BUCKET)	367
	368
VALVE GP-CONTROL (LIFT) (EXTENDABLE STICK)	367
VALVE GP-CONTROL (LIFT) (STABILIZER)	367
	368
VALVE GP-CONTROL (LIFT) (STICK)	367
	368
VALVE GP-CONTROL (LIFT) (SWING)	367
	368
VALVE GP-CONTROL (TILT)	365
	366
VALVE GP-CUSHION CROSSOVER RLF (SWING CONTROL)	347
VALVE GP-MANUAL (HYDRAULIC OIL)	302
	305
VALVE GP-PILOT	330
	369
VALVE GP-PILOT–STABILIZER CONTROL	370
VALVE GP-PRESSURE REDUCING	371
VALVE GP-PRESSURE REDUCING (BRAKE)	372
VALVE GP-RADIATOR DRAIN	43
VALVE GP-RELIEF	209
VALVE GP-RELIEF (TORQUE CONVERTER INLET)	197
	202
VALVE GP-RELIEF (TORQUE CONVERTER)	192
VALVE GP-RELIEF (TRANSMISSION)	192
VALVE GP-SHUTOFF (HYDRAULIC OIL)	352
VALVE GP-SOLENOID	210
VALVE GP-SOLENOID & PRESS REDC	361
	371
	372
VALVE GP-SOLENOID (12 VDC) (AUXILIARY)	372
VALVE GP-SOLENOID (12-VOLT) (ACCUMULATOR)	350
VALVE GP-SOLENOID (12-VOLT) (ALL WHEEL DRIVE)	192
	198
VALVE GP-SOLENOID (12-VOLT) (CLUTCH)	203
VALVE GP-SOLENOID (12-VOLT) (DIFFERENTIAL LOCK)	203
	208
VALVE GP-SOLENOID (12-VOLT) (FLOW CONTROL)	349
VALVE GP-SOLENOID (12-VOLT) (FORWARD, REVERSE)	193
	198
VALVE GP-SOLENOID (12-VOLT) (PILOT SHUTOFF)	371
	372
VALVE GP-SOLENOID (12-VOLT) (REVERSE)	203
VALVE GP-SOLENOID (12-VOLT) (RIDE CONTROL, SWITCH)	350
VALVE GP-SOLENOID (12-VOLT) (TRANSMISSION)	203
VALVE GP-SOLENOID–CLUTCH	212
VALVE GP-SOLENOID–TRANSMISSION	213
VALVE GP-STABILIZER CONTROL	343
VALVE GP-TIRE	215
	216
VALVE MECHANISM GP	29
VISOR GP-CAB	536

W

Name	Page
WHEEL & TIRE AR–2-WHEEL DRIVE, BIAS	216
WHEEL & TIRE AR–4-WHEEL DRIVE	217
	218

INDEX

Name	Page	Name	Page
WHEEL & TIRE AR–4-WHEEL DRIVE, BIAS	216, 217		
WHEEL & TIRE GP	226		
WHEEL & TIRE GP–FRONT	218, 220, 224		
WHEEL & TIRE GP–FRONT, LH	218, 222, 225		
WHEEL & TIRE GP–FRONT, RH	219, 222, 225		
WHEEL & TIRE GP–LH	219, 220, 221, 223		
WHEEL & TIRE GP–REAR	219, 221, 223, 224		
WHEEL & TIRE GP–REAR, LH	224, 226		
WHEEL & TIRE GP–REAR, RH	225, 226		
WHEEL & TIRE GP–RH	220, 221, 222, 223		
WINDOW GP-CAB–LH	539		
WINDOW GP-CAB–REAR	537		
WINDOW GP-CAB–RH	541		
WINDOW GP-DOOR–LH	543		
WINDOW GP-DOOR–RH	544		
WIPER GP-WINDOW	545, 548		
WIRING GP-AIR CONDITIONER	101		
WIRING GP-AUXILIARY	104		
WIRING GP-COMMUNICATION	106		
WIRING GP-CONSOLE	108		
WIRING GP-ENGINE–PILOT & MECHANICAL	110		
WIRING GP-HEATER	113		
WIRING GP-KICKOUT & POSITIONER–SINGLE TILT	115, 116		
WIRING GP-PLATFORM–EAME, PILOT	118		
WIRING GP-REAR	125		
WIRING GP-RIDE CONTROL	127		
WIRING GP-TRANSMISSION CONTROL–AUTOSHIFT	131		
WIRING GP-TRANSMISSION CONTROL–STANDARD SHIFT	129		

MEMORANDA

MACHINE ARRANGEMENT

340-1729 BACKHOE AR-EXTENDABLE STICK

S/N: LTG1-UP
AN ATTACHMENT

SMCS-6504, 6533 **i04623810**

NOTE	PART NUMBER	QTY	PART NAME 1 2 3 4 5 6 (PRODUCT LEVEL)	SEE PAGE
Y	*209-9930*	1	BOOM GP	377
Y	**210-7088**	1	CYLINDER GP-BACKHOE BUCKET	276
Y	**210-7076**	1	CYLINDER GP-BOOM	278
Y	**210-7082**	1	CYLINDER GP-STICK	289
Y	*337-9830*	1	FRAME GP-SWING	258
Y	*367-9722*	1	LINES GP-BOOM CYLINDER	309
Y	*367-9729*	1	LINES GP-BUCKET CYLINDER (EXTENDABLE STICK)	313
Y	*367-9723*	1	LINES GP-STICK	345
Y	*213-6692*	1	LINKAGE GP-BACKHOE BUCKET (WITH LIFTING EYE)	381
Y	*211-5182*	1	LOCK GP-TRANSPORT (BOOM)	384
Y	*367-9721*	1	MOUNTING GP-LINES	351
Y	*213-6700*	1	MOUNTING GP-STICK	387
Y	*271-1405*	1	STICK GP-EXTENDABLE	395

Y-SEPARATE ILLUSTRATION

<END>

340-1728 BACKHOE AR-STANDARD STICK—STANDARD STICK

S/N: LTG1-UP
4.3-M (14-FT)
AN ATTACHMENT

SMCS-6502, 6504 **i04565313**

NOTE	PART NUMBER	QTY	PART NAME 1 2 3 4 5 6 (PRODUCT LEVEL)	SEE PAGE
Y	*209-9930*	1	BOOM GP	377
Y	**210-7088**	1	CYLINDER GP-BACKHOE BUCKET	276
Y	**210-7076**	1	CYLINDER GP-BOOM	278
Y	**210-7082**	1	CYLINDER GP-STICK	289
Y	*337-9830*	1	FRAME GP-SWING	258
Y	*367-9722*	1	LINES GP-BOOM CYLINDER	309
Y	*367-9725*	1	LINES GP-BUCKET CYLINDER	311
Y	*367-9723*	1	LINES GP-STICK	345
Y	*213-6692*	1	LINKAGE GP-BACKHOE BUCKET (WITH LIFTING EYE)	381
Y	*211-5182*	1	LOCK GP-TRANSPORT (BOOM)	384
Y	*367-9721*	1	MOUNTING GP-LINES	351
Y	*271-8667*	1	STICK GP-HOE	399

Y-SEPARATE ILLUSTRATION

<END>

MACHINE ARRANGEMENT

340-1690 CHASSIS AR

S/N: LTG1-UP

PART OF 368-8951 COMMON AR

SMCS-7000 **i04661909**

NOTE	PART NUMBER	QTY	PART NAME 1 2 3 4 5 6 (PRODUCT LEVEL)	SEE PAGE
Y	**381-8055**	1	CYLINDER GP-HYDRAULIC (LH)	282
Y	**381-8054**	1	CYLINDER GP-HYDRAULIC (RH)	280
Y	**291-2681**	1	CYLINDER GP-STABILIZER (LH)	287
Y	**291-2682**	1	CYLINDER GP-STABILIZER (RH)	288
Y	*337-9855*	1	FRAME GP-LOADER	256
Y	*337-9820*	1	LINES GP-STABILIZER	343
Y	*216-0910*	1	LOCK GP-VANDALISM	554
Y	*374-6876*	1	STABILIZER GP-BACKHOE	392
Y	*362-4625*	1	TANK GP-FUEL	65
Y	*383-9581*	1	WIRING GP-AUXILIARY (START)	104
	201-1915	1	MOUNTING GP-WHEEL (FRONT)	
	8T-5439	16	WASHER-HARD (21.5X45X6-MM THK)	
M	**201-1919**	16	NUT (M20X1.5-THD)	
	201-1916	1	MOUNTING GP-WHEEL (REAR)	
	8T-5439	20	WASHER-HARD (21.5X45X6-MM THK)	
M	**201-1919**	20	NUT (M20X1.5-THD)	
B	**193-5914**	10	PLUG	
B	**193-5915**	12	PLUG	

B-USE AS REQUIRED
M-METRIC PART
Y-SEPARATE ILLUSTRATION

<END>

377-0021 COLD WEATHER AR

S/N: LTG1-UP

CANNOT BE USED WITH 331-5461—PAGE 71

AN ATTACHMENT

SMCS-7000 **i04585934**

NOTE	PART NUMBER	QTY	PART NAME 1 2 3 4 5 6 (PRODUCT LEVEL)	SEE PAGE
Y	*331-5461*	1	BATTERY GP (HEAVY-DUTY)	71
Y	*367-6031*	1	HEATER GP-JACKET WATER (120-VOLT)	76

Y-SEPARATE ILLUSTRATION

<END>

368-8951 COMMON AR

S/N: LTG1-UP

SMCS-7000 **i04629204**

NOTE	PART NUMBER	QTY	PART NAME 1 2 3 4 5 6 (PRODUCT LEVEL)	SEE PAGE
Y	*340-1690*	1	CHASSIS AR	2
Y	*367-5829*	1	FILM GP	550
Y	*340-1715*	1	HYDRAULIC AR	297
Y	*340-1699*	1	LOADER AR (SINGLE TILT)	3
Y	*374-7438*	1	PLATE GP-IDENTIFICATION	556

Y-SEPARATE ILLUSTRATION

<END>

MACHINE ARRANGEMENT

353-1502 DRIVE AR-BACKHOE LOADER–
2-WHEEL DRIVE, 2-WHEEL STEER
S/N: LTG1-UP
PART OF 374-6818 POWER TRAIN AR
AN ATTACHMENT

SMCS-3268, 3278, 3282, 4304, 4313, 4334 **i04606531**

NOTE	PART NUMBER	QTY	PART NAME 1 2 3 4 5 6 (PRODUCT LEVEL)	SEE PAGE
Y	**230-5745**	1	AXLE GP-FRONT (2-WHEEL DRIVE)	237
Y	**230-5739**	1	AXLE GP-REAR (2-WHEEL DRIVE)	135
Y	*206-1642*	1	CONTROL GP-PARKING BRAKE	227
Y	*337-9824*	1	LINES GP-STEERING	239
Y	*337-9837*	1	MOUNTING GP-AXLE	164
Y	*308-9973*	1	SWITCH GP-DIFFERENTIAL LOCK (SIDESHIFT)	98
Y-SEPARATE ILLUSTRATION				

<END>

353-1503 DRIVE AR-BACKHOE LOADER–
4-WHEEL DRIVE, 2-WHEEL STEER
S/N: LTG1-UP
PART OF 374-6823, 374-6832 POWER TRAIN AR
AN ATTACHMENT

SMCS-3268, 3278, 3282, 4304, 4313, 4334 **i04603152**

NOTE	PART NUMBER	QTY	PART NAME 1 2 3 4 5 6 (PRODUCT LEVEL)	SEE PAGE
Y	**230-5743**	1	AXLE GP-DRIVE & STEERING (FRONT)	133
Y	**230-5739**	1	AXLE GP-REAR (2-WHEEL STEER)	135
Y	*206-1642*	1	CONTROL GP-PARKING BRAKE	227
Y	*337-9697*	1	GUARD GP-DRIVE SHAFT	265
Y	*337-9825*	1	LINES GP-STEERING	241
Y	*337-9837*	1	MOUNTING GP-AXLE	164
Y	*308-9973*	1	SWITCH GP-DIFFERENTIAL LOCK (SIDESHIFT)	98
Y-SEPARATE ILLUSTRATION				

<END>

340-1699 LOADER AR–SINGLE TILT
S/N: LTG1-UP
PART OF 368-8951 COMMON AR

SMCS-6100 **i04547513**

NOTE	PART NUMBER	QTY	PART NAME 1 2 3 4 5 6 (PRODUCT LEVEL)	SEE PAGE
Y	*337-9845*	1	ARM GP-LIFT	373
Y	*337-9840*	1	BRACE GP-LIFT CYLINDER	379
Y	**358-5034**	1	CYLINDER GP-LIFT (LH)	284
Y	**358-5035**	1	CYLINDER GP-LIFT (RH)	285
Y	**358-5044**	1	CYLINDER GP-TILT	292
Y	*337-9718*	1	KICKOUT & POSITIONER GP	298
Y	*357-3218*	1	WIRING GP-KICKOUT & POSITIONER	116
Y-SEPARATE ILLUSTRATION				

<END>

ENGINE ARRANGEMENT

340-1705 ENGINE AR

S/N: LTG1-UP

AN ATTACHMENT

SMCS-1000 **i04622249**

NOTE	PART NUMBER	QTY	PART NAME 1 2 3 4 5 6 (PRODUCT LEVEL)	SEE PAGE
Y	*353-1379*	1	AIR CLEANER GP	45
Y	*357-6501*	1	BATTERY & WIRING GP	67
Y	*353-1380*	1	BOX GP-STORAGE	245
Y	*352-1455*	1	COOLING GP-SUPPLEMENTAL	35
Y	**364-5753**	1	ENGINE AR-PRIMARY	5
Y	*350-3689*	1	EXTENSION GP-EXHAUST	48
Y	*352-3463*	1	GAUGE GP-OIL LEVEL & FILLER (ENGINE)	30
Y	*337-9702*	1	HOOD & GUARD GP	267
Y	*352-3462*	1	LINES GP-FUEL	55
Y	*353-1364*	1	MOUNTING GP-GOVERNOR CONTROL	58
Y	*352-1454*	1	MUFFLER GP	49
Y	*357-3199*	1	WIRING GP-ENGINE (PILOT & MECHANICAL)	110
	178-8465	1	HARNESS AS-FUEL TANK (FUEL SHUTOFF)	
	9X-3401	2	PIN-CONNECTOR (16-GA TO 18-GA)	
	176-1477	1	PLUG AS (2-PIN)	
	102-8802	1	KIT-RECEPTACLE (2-PIN)	
			(INCLUDES RECEPTACLE AS & WEDGE)	
	185-1861	2	SEAL-WIRE	
	8L-8413	2	STRAP-CABLE	
	176-1521	2	TERMINAL	

Y-SEPARATE ILLUSTRATION

ENGINE ARRANGEMENT

364-5753 ENGINE AR-PRIMARY

S/N: CRS1-UP
75 BRAKE KW (100 BHP) AT 2200 RPM
PART OF 340-1705 ENGINE AR
AN ATTACHMENT

SMCS-1000 **i04632551**

NOTE	PART NUMBER	QTY	PART NAME 1 2 3 4 5 6 (PRODUCT LEVEL)	SEE PAGE
Y	*334-4208*	1	CAMSHAFT GP	6
Y	*238-2799*	1	COOLER GP-FLTR BASE & ENG OIL	34
Y	*231-0149*	1	COVER GP-INLET MANIFOLD	47
Y	*335-9798*	1	COVER GP-VALVE MECHANISM	7
Y	*334-4203*	1	CRANKSHAFT GP	9
Y	*334-4202*	1	CYLINDER BLOCK GP	11
Y	*334-4205*	1	CYLINDER HEAD GP	14
Y	*386-2756*	1	DRIVE GP-FAN	15
Y	*230-7300*	1	FLYWHEEL GP	16
Y	*232-6661*	1	GLOW PLUG GP	75
Y	*236-8238*	1	HOUSING GP-FLYWHEEL	17
Y	*233-7432*	1	LIFTING GP-ENGINE	18
Y	*247-4885*	1	LINES GP-FUEL FILTER	57
Y	*386-2757*	1	MOUNTING GP-ENGINE	19
Y	*335-9799*	1	PAN GP-OIL	22
Y	*334-4204*	1	PISTON & ROD GP	24
Y	*225-4317*	1	PLUG GP-ENGINE	26
Y	*232-6204*	1	PLUG GP-ENGINE	27
Y	*230-7578*	1	PUMP GP-ENGINE OIL	32
Y	*236-8229*	1	PUMP GP-FUEL INJECTION	60
Y	*237-0024*	1	STARTING MOTOR GP-ELECTRIC	96
Y	*237-4896*	1	SWITCH GP-PRESSURE	100
Y	*237-3924*	1	TURBOCHARGER GP	50
Y	*334-4207*	1	VALVE MECHANISM GP	29
	359-0734	1	CYLINDER BLOCK GP-SHORT	
			AVAILABLE GASKET KIT(S):	
	277-5156	1	KIT-GASKET (TOP)	
	272-2232	1	KIT-GASKET (BOTTOM)	

Y-SEPARATE ILLUSTRATION

BASIC ENGINE

334-4208 CAMSHAFT GP

S/N: CRS1-UP
PART OF 364-5753 ENGINE AR-PRIMARY
AN ATTACHMENT

SMCS-1210, 1211, 1212 **i03653916**

NOTE	REF NO	GRAPHIC REF	PART NUMBER	QTY	PART NAME 1 2 3 4 5 6 (PRODUCT LEVEL)	SEE PAGE
	1	1	**067-6095**	8	ROD	
	2	1	**138-2053**	8	TAPPET	
	3	1	**350-2374**	1	CAMSHAFT AS	
	3A	1	**1B-8736**	1	KEY-WOODRUFF	

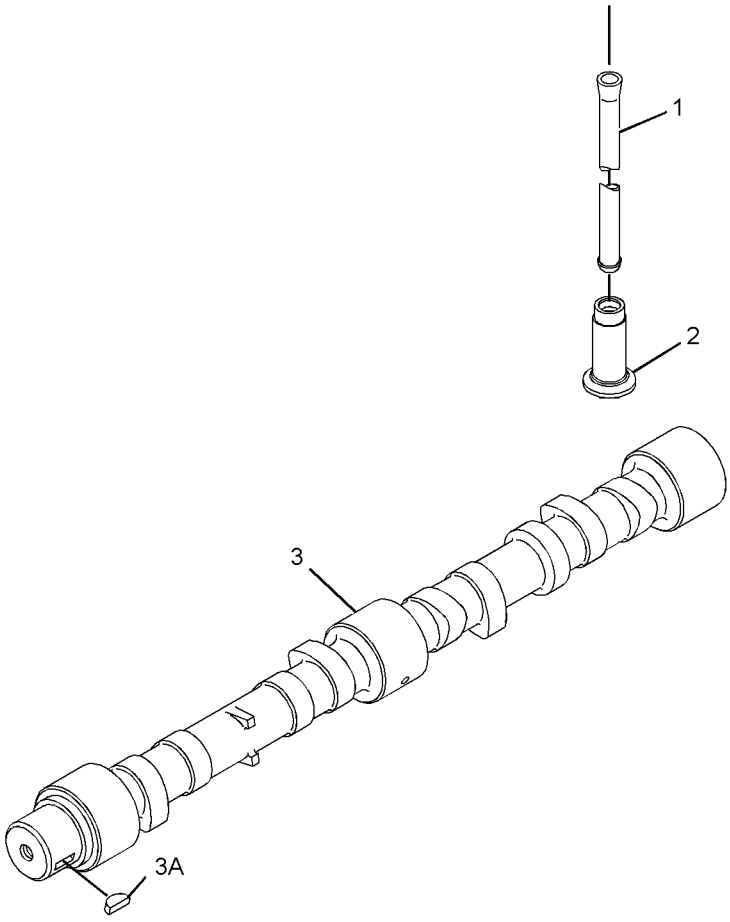

GRAPHIC #1 **<END>** g01964670

335-9798 COVER GP-VALVE MECHANISM

S/N: CRS1-UP

PART OF 364-5753 ENGINE AR-PRIMARY

AN ATTACHMENT

SMCS-1107, 1120 **i03907250**

NOTE	REF NO	GRAPHIC REF	PART NUMBER	QTY	PART NAME 1 2 3 4 5 6 (PRODUCT LEVEL)	SEE PAGE
M	1	1	**6I-0260**	2	BOLT (M8X1.25X25-MM)	
	2	1	**6I-0846**	3	BOLT (M6X1X14-MM)	
	3	1	**6I-0917**	1	BOLT (M6X1X25-MM)	
	4	1	**100-4838**	2	BOLT (M6X20-MM)	
M	5	1	**100-4841**	2	BOLT (M6X1X10-MM)	
	6	1	**225-6522**	1	PLUG-CUP	
	7	1	**230-9127**	1	COVER	
	8	1	**237-0769**	1	SHIELD-HEAT	
	9	1	**317-3769**	1	FILLER GP-ENGINE OIL	
	9A	1	**317-3778**	1	SEAL-O-RING	
	10	1	**287-8573**	1	PIPE-BREATHER	
	10A	1	**150-7732**	1	SEAL-O-RING	
	10B	1	**286-3030**	1	RING-SEAL	
	11	1	**308-1792**	1	COVER GP-VALVE MECHANISM	
	11A	1	**225-6451**	1	GASKET (VALVE COVER)	
	11B	1	**225-6456**	1	SPRING	
	11C	1	**225-6461**	1	CAP (VALVE COVER)	
	11D	1	**225-6464**	1	DIAPHRAGM (CRANKCASE PRESSURE CONTACTOR)	
	11E	1	**225-6477**	1	PLATE	
	11F	1	**225-6478**	4	SCREW-MACHINE	
	11G	1	**225-6479**	1	CAP (VALVE COVER)	
	11H	1	**349-2746**	10	BOLT	

M-METRIC PART

335-9798 **COVER GP-VALVE MECHANISM** *(contd.)* **i03907250**

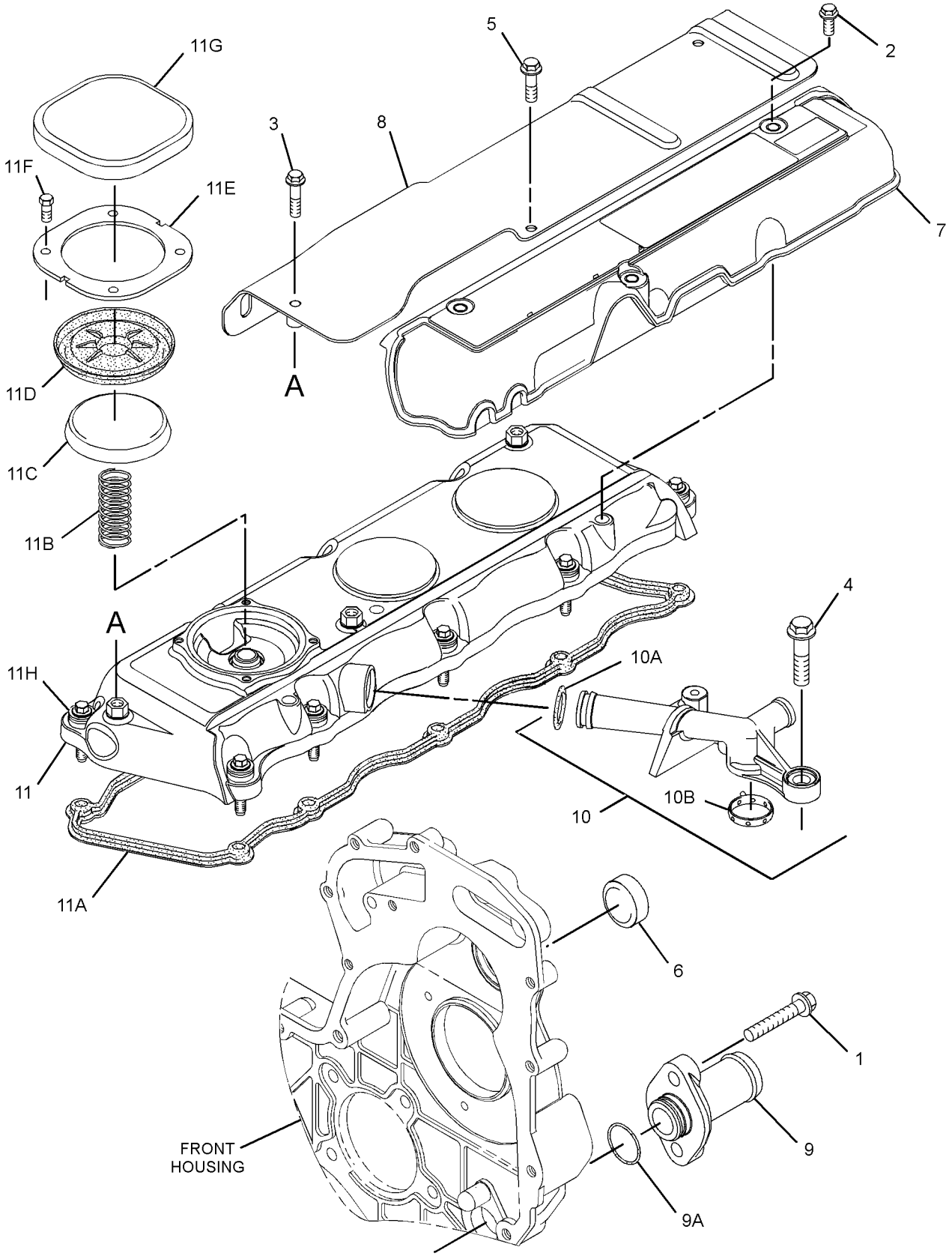

GRAPHIC #1 **<END>** g02150879

BASIC ENGINE

334-4203 CRANKSHAFT GP

S/N: CRS1-UP

PART OF 364-5753 ENGINE AR-PRIMARY

AN ATTACHMENT

SMCS-1202, 1203, 1204, 1230, 1231, 1232 **i04019313**

NOTE	REF NO	GRAPHIC REF	PART NUMBER	QTY	PART NAME 1 2 3 4 5 6 (PRODUCT LEVEL)	SEE PAGE
	1	1	**216-8314**	1	GEAR-CRANKSHAFT (34-TEETH)	
CY	2	1	**359-0715**	1	CRANKSHAFT GP	10
C	3	1	**1B-8736**	1	KEY-WOODRUFF	

C-CHANGE FROM PREVIOUS TYPE
Y-SEPARATE ILLUSTRATION

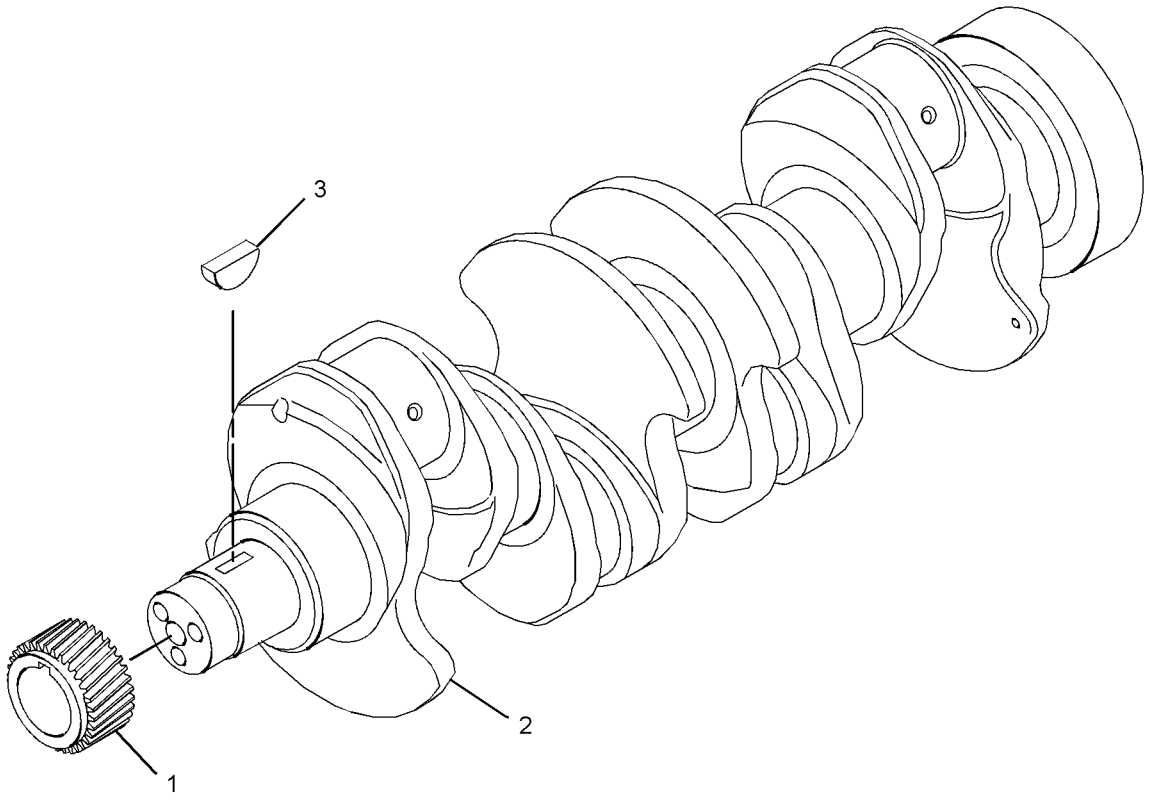

GRAPHIC #1 **<END>** g02163313

BASIC ENGINE

359-0715 CRANKSHAFT GP

S/N: CRS1-UP
PART OF 334-4203 CRANKSHAFT GP
AN ATTACHMENT

SMCS-1202, 1203, 1204, 1230, 1231, 1232 **i03959730**

NOTE	REF NO	GRAPHIC REF	PART NUMBER	QTY	PART NAME 1 2 3 4 5 6 (PRODUCT LEVEL)	SEE PAGE
	1	1	**032-9090**	2	WASHER-THRUST (STANDARD-UPPER)	
AB		1	**067-6873**		WASHER-THRUST (0.18-MM OS)	
	2	1	**032-9091**	2	WASHER-THRUST (STANDARD-LOWER)	
AB		1	**067-6874**		WASHER-THRUST (0.18-MM OS)	
	3	1	**353-7423**	1	KIT-BEARING (MAIN)	
AB		1	**233-3786**		KIT-CRANKSHAFT BEARING (0.030-IN US)	
AB		1	**353-7424**		KIT-BEARING (0.25-MM US)	
AB		1	**353-7425**		KIT-BEARING (0.50-MM US)	
	4	1	**353-9667**	1	KIT-ROD BEARING (STANDARD)	

A-NOT PART OF THIS GROUP
B-USE AS REQUIRED

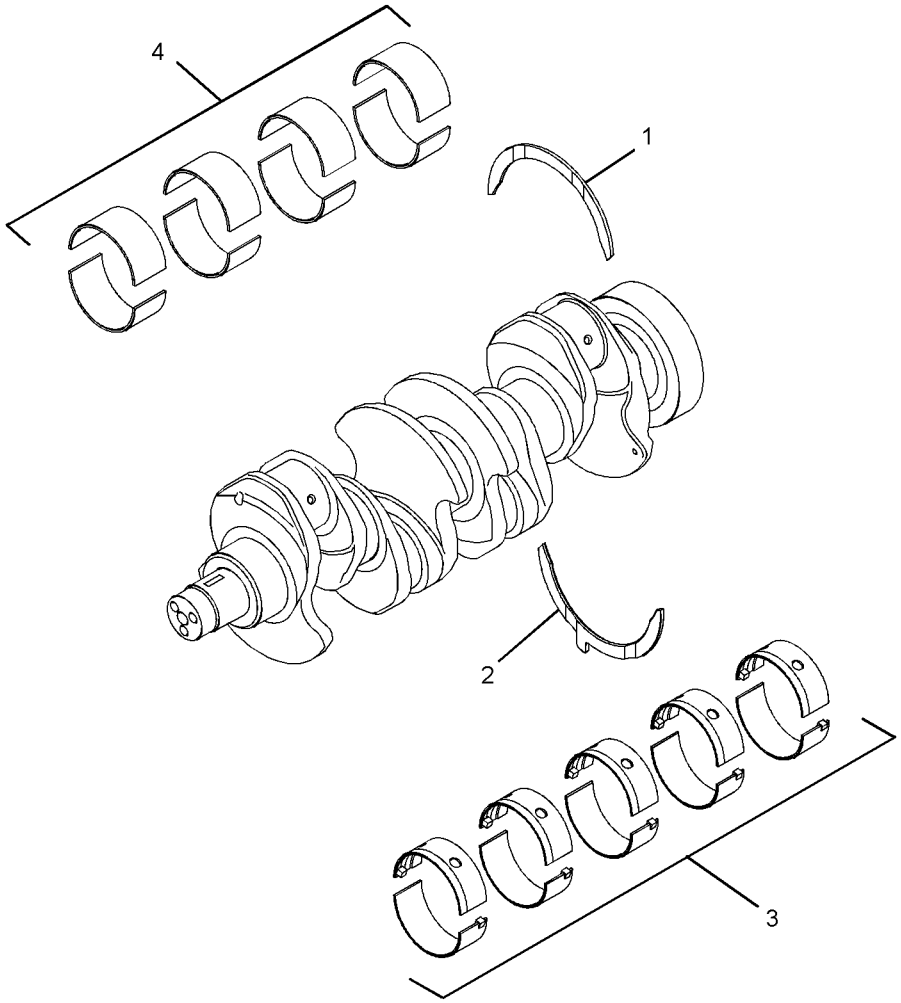

GRAPHIC #1 **<END>** g02174712

334-4202 CYLINDER BLOCK GP

S/N: CRS1-UP
PART OF 364-5753 ENGINE AR-PRIMARY
AN ATTACHMENT

SMCS-1201 **i04674370**

NOTE	REF NO	GRAPHIC REF	PART NUMBER	QTY	PART NAME 1 2 3 4 5 6 (PRODUCT LEVEL)	SEE PAGE
M	1	1	**209-9219**	10	BOLT (M8X1.25X16-MM)	
	2	1	**232-7449**	1	HOUSING AS	
Y	3	1	**362-2190**	1	CYLINDER BLOCK GP	12

M-METRIC PART
Y-SEPARATE ILLUSTRATION

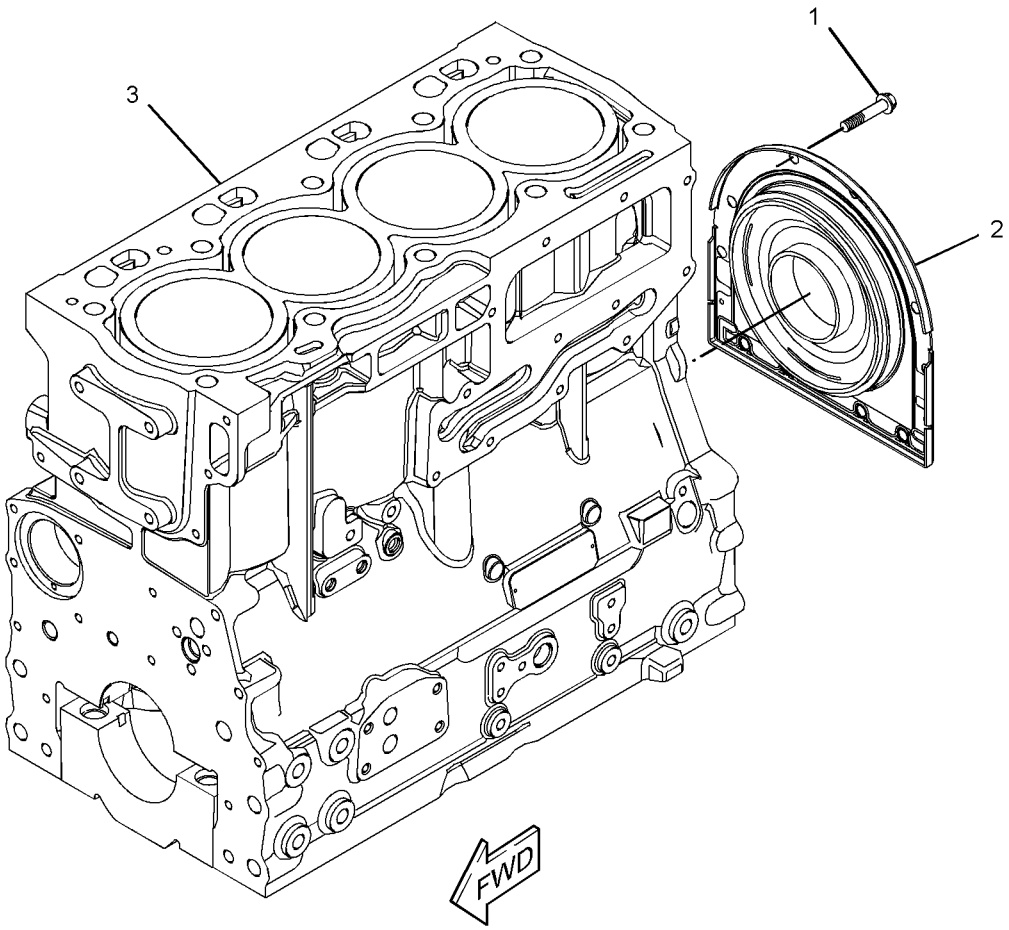

GRAPHIC #1 **<END>** g02500198

BASIC ENGINE

362-2190 CYLINDER BLOCK GP

S/N: CRS1-UP
PART OF 334-4202 CYLINDER BLOCK GP
AN ATTACHMENT

SMCS-1201 **i04340138**

NOTE	REF NO	GRAPHIC REF	PART NUMBER	QTY	PART NAME 1 2 3 4 5 6 (PRODUCT LEVEL)	SEE PAGE
	1	1	**6I-0572**	1	BOLT (M8X1.25X20-MM)	
	2	1	**6I-0646**	1	BOLT (M10X1.5X14-MM)	
	3	1	**035-8063**	1	PLUG	
M	4	1	**100-4841**	4	BOLT (M6X1X10-MM)	
	5	1	**214-3203**	1	WASHER (SEALING)	
	6	1	**225-7944**	1	GASKET	
	7	1	**232-3751**	1	PLATE	
	8	1	**232-7600**	1	PLUG-CUP	
	9	1	**232-7603**	1	PLUG	
	10	1	**276-5605**	4	JET AS-PISTON COOLING	

M-METRIC PART

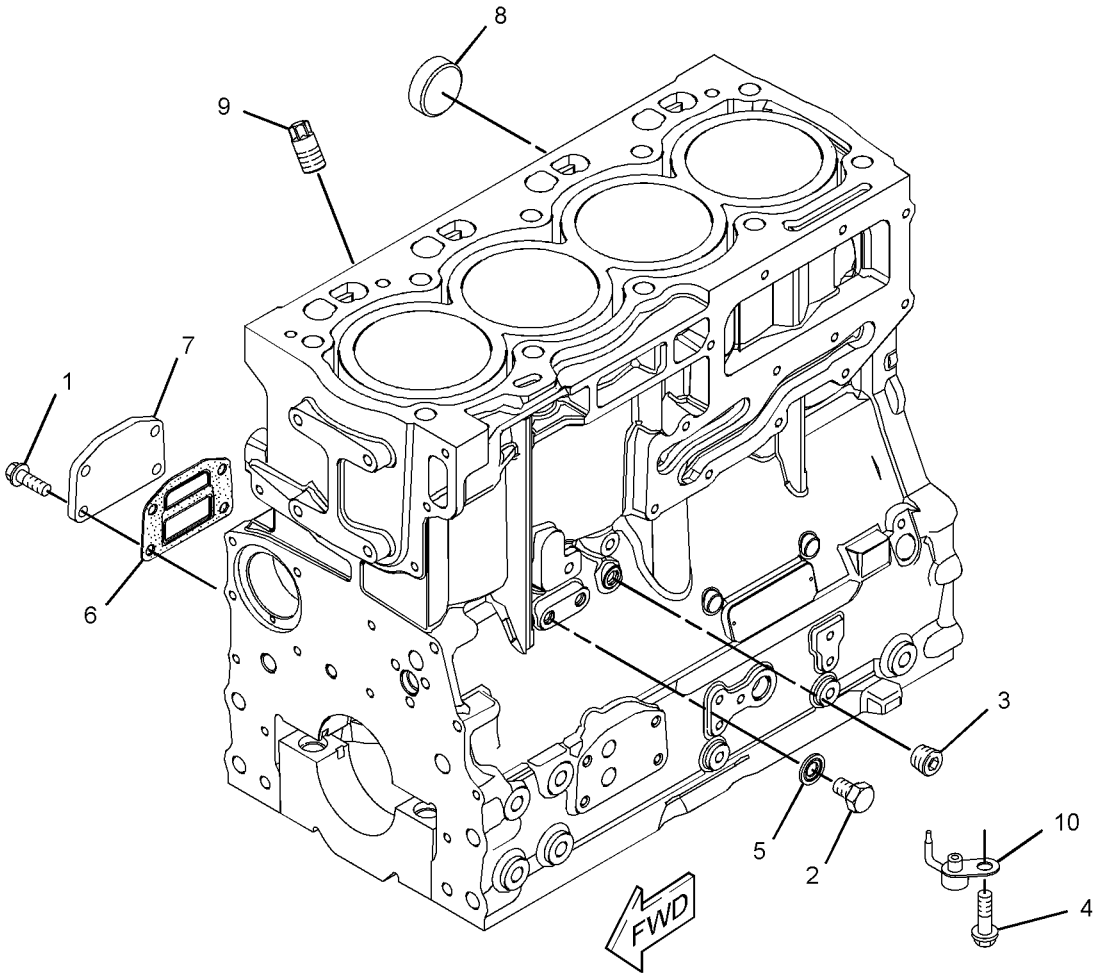

GRAPHIC #1 **<END>** g02500056

247-4868 CYLINDER HEAD GP

S/N: CRS1-UP
PART OF 334-4205 CYLINDER HEAD GP
AN ATTACHMENT

SMCS-1100, 1101, 1103, 1104, 1105, 1106, 1108, 1109, 1115, 1117, 1121, 1124, 1125

i03900425

NOTE	REF NO	GRAPHIC REF	PART NUMBER	QTY	PART NAME 1 2 3 4 5 6 (PRODUCT LEVEL)	SEE PAGE
	1	1	**2B-0858**	1	PLUG-PIPE	
	2	1	**9Y-5015**	2	PLUG-FREEZE	
	3	1	**067-6006**	4	PLUG	
	4	1	**147-1979**	16	RETAINER-VALVE SPRING	
	5	1	**185-0882**	8	GUIDE-VALVE	
	6	1	**199-9751**	1	SEAL-O-RING	
	7	1	**329-6655**	4	INSERT-VALVE SEAT	
	8	1	**322-9663**	4	INSERT-VALVE SEAT (EXHAUST)	
	9	1	**225-5495**	4	VALVE-INLET	
	10	1	**225-5496**	8	SPRING-VALVE	
	11	1	**225-5498**	8	CAP	
	12	1	**225-5499**	4	VALVE-EXHAUST	
	13	1	**232-1322**	1	PLUG	
	14	1	**252-6438**	4	SEAL-INLET VALVE	
	15	1	**254-3954**	4	SEAL-EXHAUST VALVE	

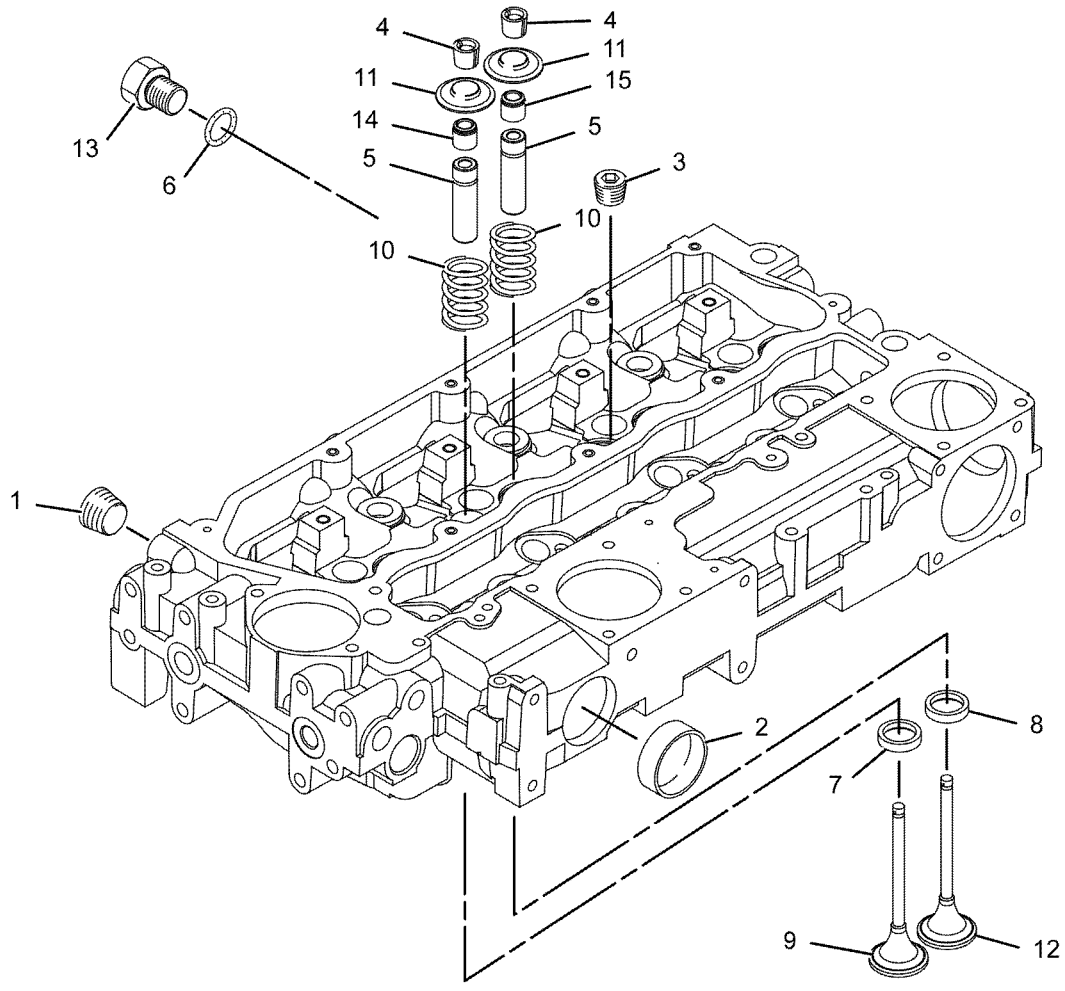

GRAPHIC #1

<END>

g01078948

334-4205 CYLINDER HEAD GP

S/N: CRS1-UP
PART OF 364-5753 ENGINE AR-PRIMARY
AN ATTACHMENT

SMCS-1100, 1101, 1103, 1104, 1105, 1106, 1108, 1109, 1115, 1117, 1121, 1124, 1125 **i03143144**

NOTE	REF NO	GRAPHIC REF	PART NUMBER	QTY	PART NAME 1 2 3 4 5 6 (PRODUCT LEVEL)	SEE PAGE
	1	1	**225-5501**	7	BOLT (M15X1.5X137-MM)	
	2	1	**225-5502**	3	BOLT (M15X1.5X162-MM)	
Y	3	1	**247-4868**	1	CYLINDER HEAD GP	13
	4	1	**258-4946**	1	GASKET-HEAD	

Y-SEPARATE ILLUSTRATION

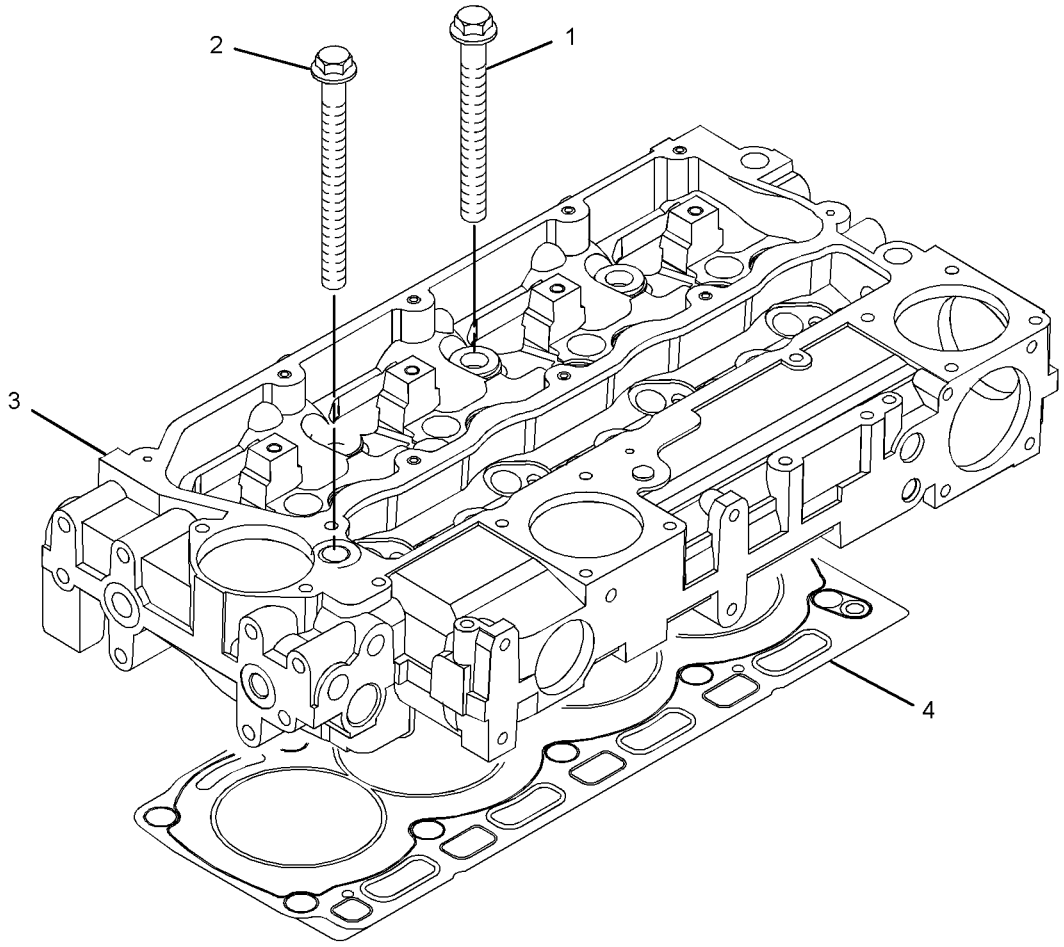

GRAPHIC #1 **<END>** g01619771

386-2756 DRIVE GP-FAN

S/N: CRS1-UP
PART OF 364-5753 ENGINE AR-PRIMARY
AN ATTACHMENT

SMCS-1357, 1358, 1359, 1390 **i04632590**

NOTE	REF NO	GRAPHIC REF	PART NUMBER	QTY	PART NAME 1 2 3 4 5 6 (PRODUCT LEVEL)	SEE PAGE
	1	1	**111-0859**	4	BOLT (M10X1.5X35-MM)	
	2	1	**289-8336**	1	HOUSING AS	

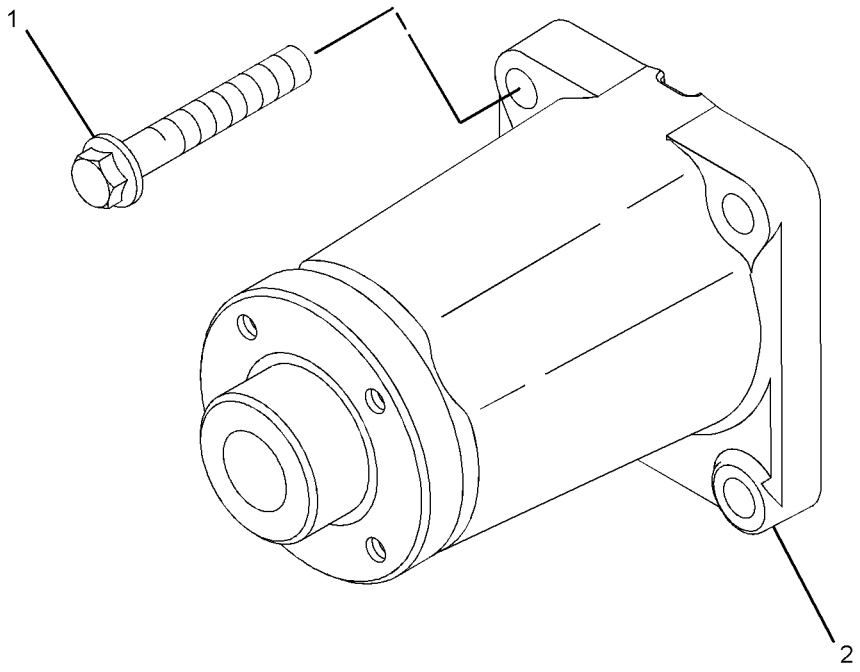

GRAPHIC #1 **<END>** g02780976

BASIC ENGINE

230-7300 FLYWHEEL GP

S/N: CRS1-UP
PART OF 364-5753 ENGINE AR-PRIMARY
AN ATTACHMENT

SMCS-1156, 1158 **i02004994**

NOTE	REF NO	GRAPHIC REF	PART NUMBER	QTY	PART NAME 1 2 3 4 5 6 (PRODUCT LEVEL)	SEE PAGE
	1	1	**0S-1603**	6	BOLT (1/2-20X1.5-IN)	
	2	1	**5P-8245**	6	WASHER-HARD (13.5X25.5X3-MM THK)	
	3	1	**245-9828**	1	FLYWHEEL AS	
	4	1	**033-7687**	1	RING-STARTING MOTOR (126-TEETH)	

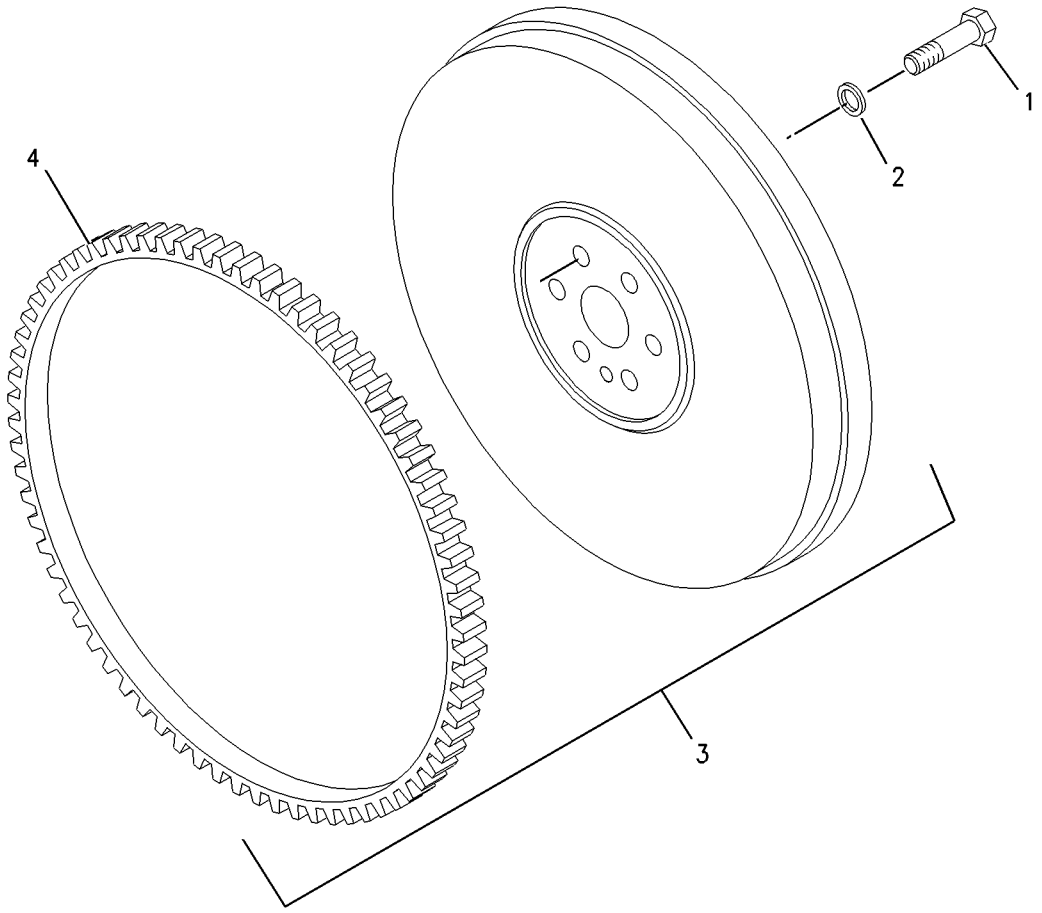

GRAPHIC #1 **<END>** g00955555

236-8238 HOUSING GP-FLYWHEEL

S/N: CRS1-UP
PART OF 364-5753 ENGINE AR-PRIMARY
AN ATTACHMENT

SMCS-1157 **i02527247**

NOTE	REF NO	GRAPHIC REF	PART NUMBER	QTY	PART NAME 1 2 3 4 5 6 (PRODUCT LEVEL)	SEE PAGE
M	1	1	**6I-0423**	2	BOLT (M12X1.75X30-MM)	
	2	1	**6I-0847**	2	PLUG	
	3	1	**7W-1176**	1	PLATE-COVER	
	4	1	**7W-4642**	1	SHIELD-DUST	
	5	1	**287-8597**	2	DOWEL	
	6	1	**114-4363**	2	BOLT (M8X1.25X12-MM)	
	7	1	**101-3617**	3	PLUG	
M	8	1	**121-0883**	6	BOLT (M10X1.5X30-MM)	
	9	1	**220-8631**	1	HOUSING-FLYWHEEL	

M-METRIC PART

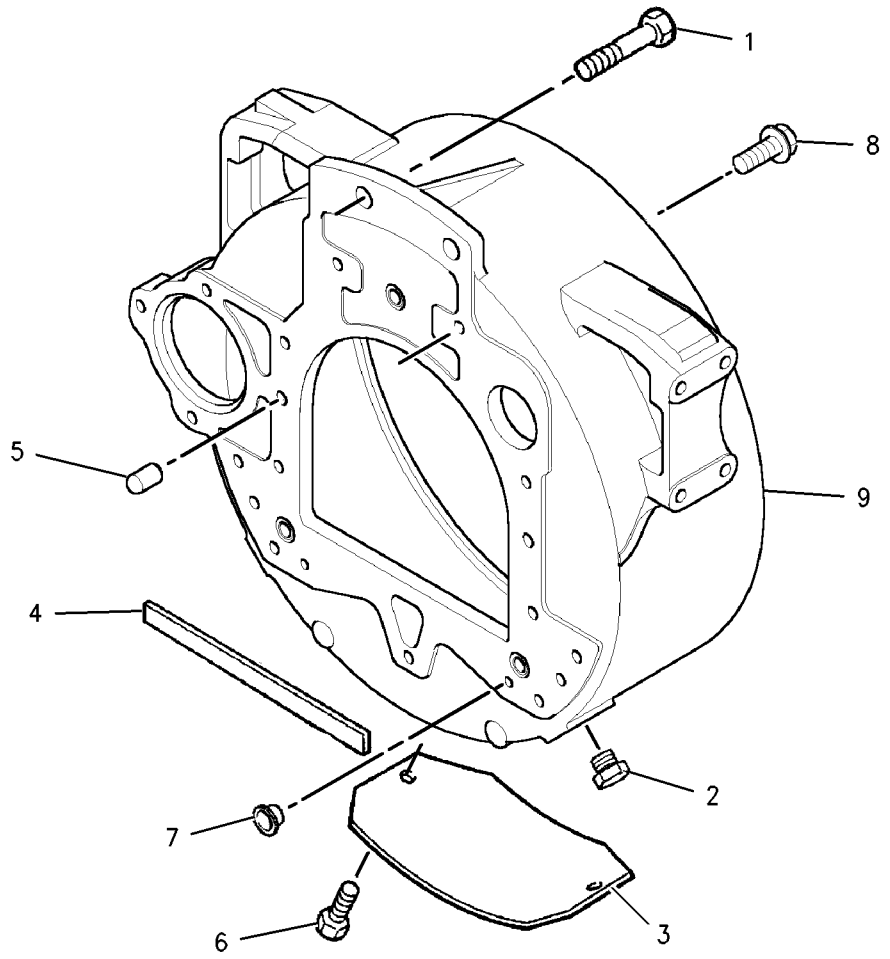

GRAPHIC #1 **<END>** g00902549

BASIC ENGINE

233-7432 LIFTING GP-ENGINE

S/N: CRS1-UP
PART OF 364-5753 ENGINE AR-PRIMARY
AN ATTACHMENT

SMCS-1122 **i01998680**

NOTE	REF NO	GRAPHIC REF	PART NUMBER	QTY	PART NAME 1 2 3 4 5 6 (PRODUCT LEVEL)	SEE PAGE
M	1	1	**100-4830**	4	BOLT (M10X1.5X20-MM)	
	2	1	**225-8848**	2	PLATE-LIFTING	

M-METRIC PART

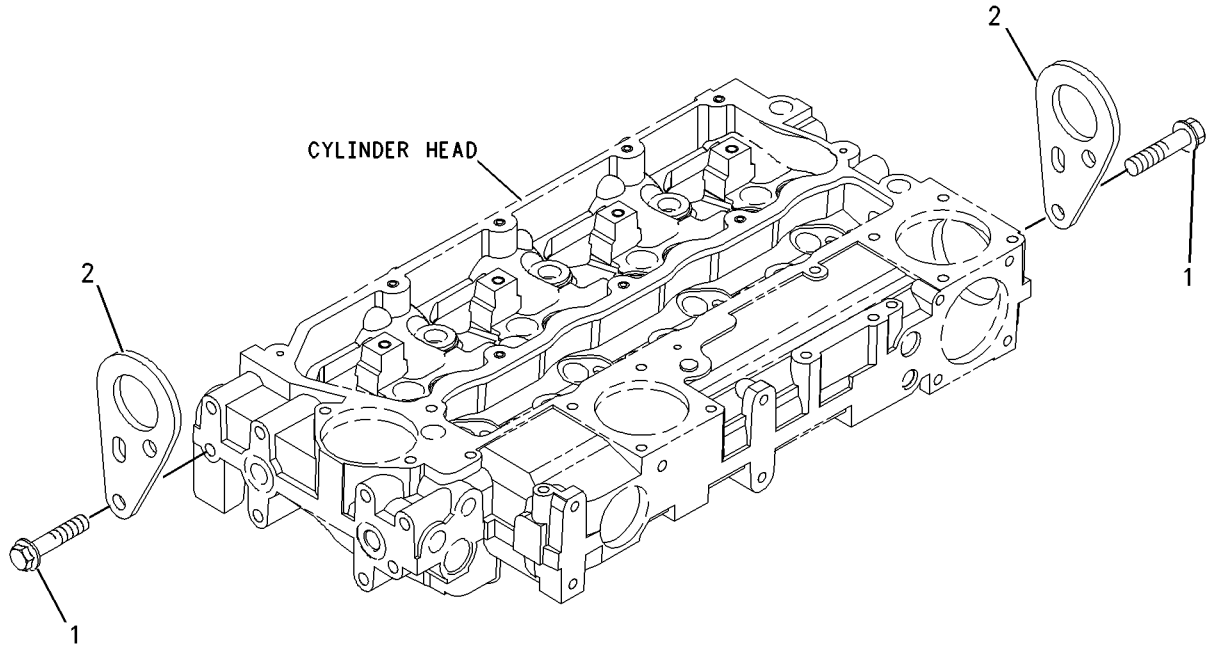

GRAPHIC #1 **<END>** g00955299

BASIC ENGINE

386-2757 MOUNTING GP-ENGINE

S/N: CRS1-UP

PART OF 364-5753 ENGINE AR-PRIMARY

AN ATTACHMENT

SMCS-1152, 1153, 1154 **i04632589**

NOTE	REF NO	GRAPHIC REF	PART NUMBER	QTY	PART NAME 1 2 3 4 5 6 (PRODUCT LEVEL)	SEE PAGE
	1	1	**195-2136**	7	STUD	
	2	1	**195-2221**	7	NUT (M12X1.75-THD)	
	3	1	**6H-3616**	8	PLUG-PROTECTION	
	4	1	**304-3711**	1	MOUNT-ENGINE	
	5	1	**347-7045**	1	BRACKET	

386-2757 **MOUNTING GP-ENGINE** *(contd.)* **i04632589**

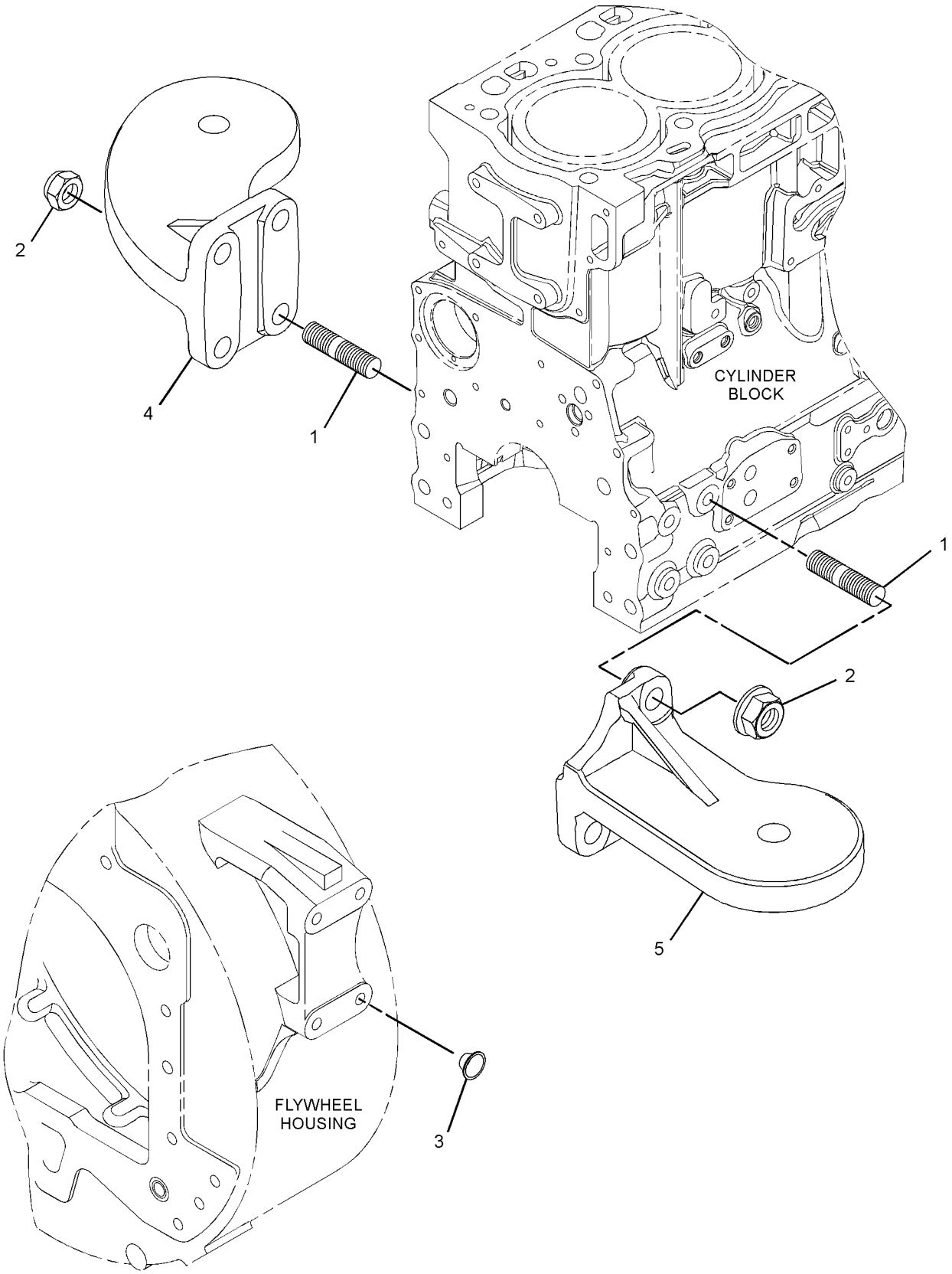

GRAPHIC #1 **<END>** g02783716

337-9727 MOUNTING GP-ENGINE & XMSN

S/N: LTG1-UP
PART OF 353-1512 TRANSMISSION AR-DIRECT DRIVE, 353-1510, 353-1513 TRANSMISSION AR-POWER SHIFT AN ATTACHMENT

SMCS-1152, 1153, 1154 **i04597510**

NOTE	REF NO	GRAPHIC REF	PART NUMBER	QTY	PART NAME 1 2 3 4 5 6 (PRODUCT LEVEL)	SEE PAGE
	1	1	**3E-4892**	2	WASHER (16.75X100X6-MM THK)	
	2	1	**9W-9915**	4	MOUNT AS	
	3	1	**9W-9952**	4	WASHER (16.75X86X8-MM THK)	
	4	1	**9W-9953**	4	SLEEVE	
	5	1	**335-1836**	4	BOLT-SPECIAL	
	6	1	**7X-0515**	4	WASHER-HARD (17X35X5-MM THK)	
	7	1	**8T-4121**	12	WASHER-HARD (11X21X2.5-MM THK)	
M	8	1	**8T-4132**	4	NUT (M16X2-THD)	
M	9	1	**8T-4196**	12	BOLT (M10X1.5X35-MM)	

M-METRIC PART

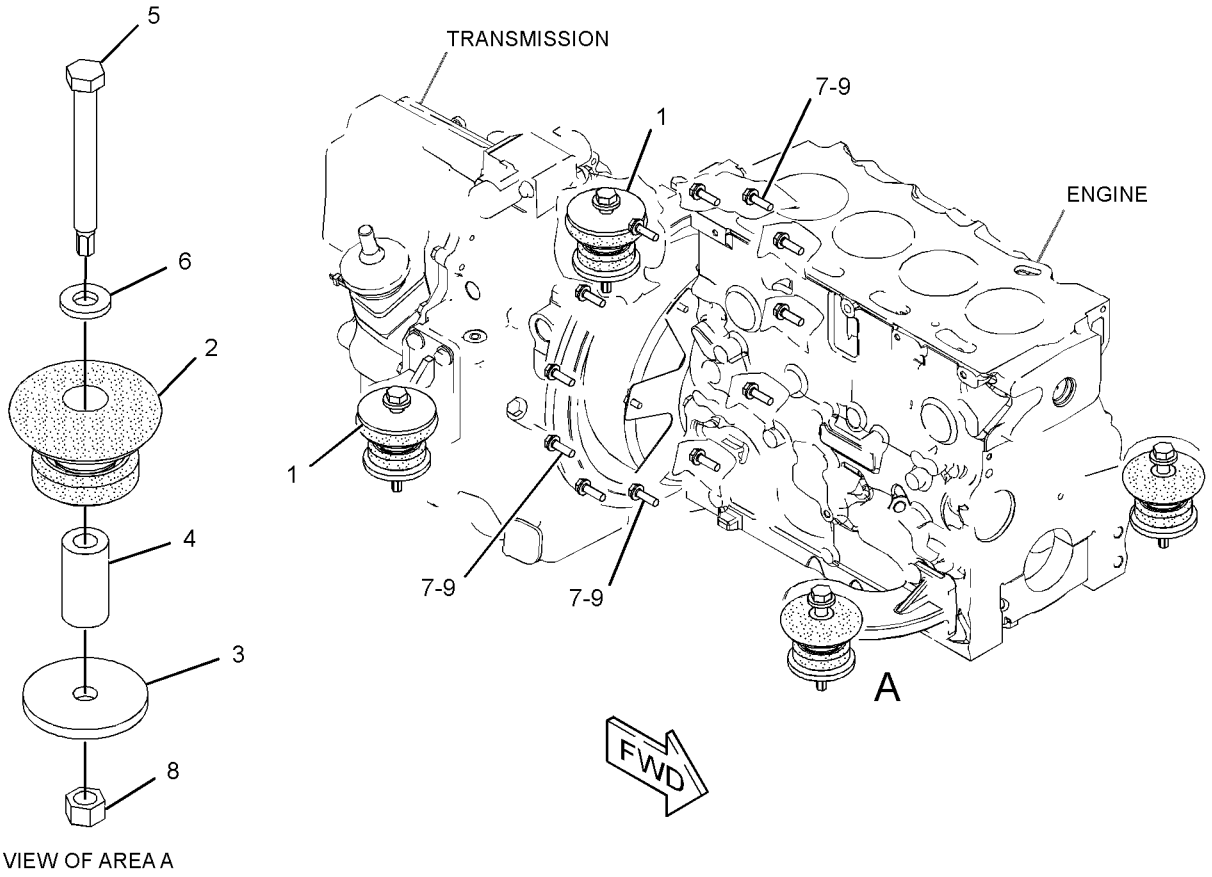

VIEW OF AREA A

GRAPHIC #1 **<END>** g02806179

BASIC ENGINE

335-9799 PAN GP-OIL

S/N: CRS1-UP
PART OF 364-5753 ENGINE AR-PRIMARY
AN ATTACHMENT

SMCS-1302 **i04674592**

NOTE	REF NO	GRAPHIC REF	PART NUMBER	QTY	PART NAME 1 2 3 4 5 6 (PRODUCT LEVEL)	SEE PAGE
M	1	1	**6I-0217**	14	BOLT (M8X1.25X20-MM)	
M	2	1	**6I-0260**	2	BOLT (M8X1.25X25-MM)	
	3	1	**6I-0289**	2	PLUG	
M	4	1	**6I-0363**	2	BOLT (M6X1X20-MM)	
	5	1	**6I-0572**	2	BOLT (M8X1.25X20-MM)	
	6	1	**7C-0351**	2	PLUG-DRAIN (ENGINE OIL)	
	7	1	**067-6213**	1	GASKET	
	8	1	**101-3771**	4	BOLT	
	9	1	**225-6005**	1	GASKET	
	10	1	**225-6041**	1	TUBE	
	11	1	**230-8094**	1	BRIDGE	
	12	1	**275-9883**	2	SEAL (DRAIN PLUG)	
C	13	1	**353-5219**	1	PAN-OIL	

C-CHANGE FROM PREVIOUS TYPE
M-METRIC PART

335-9799 **PAN GP-OIL** *(contd.)* **i04674592**

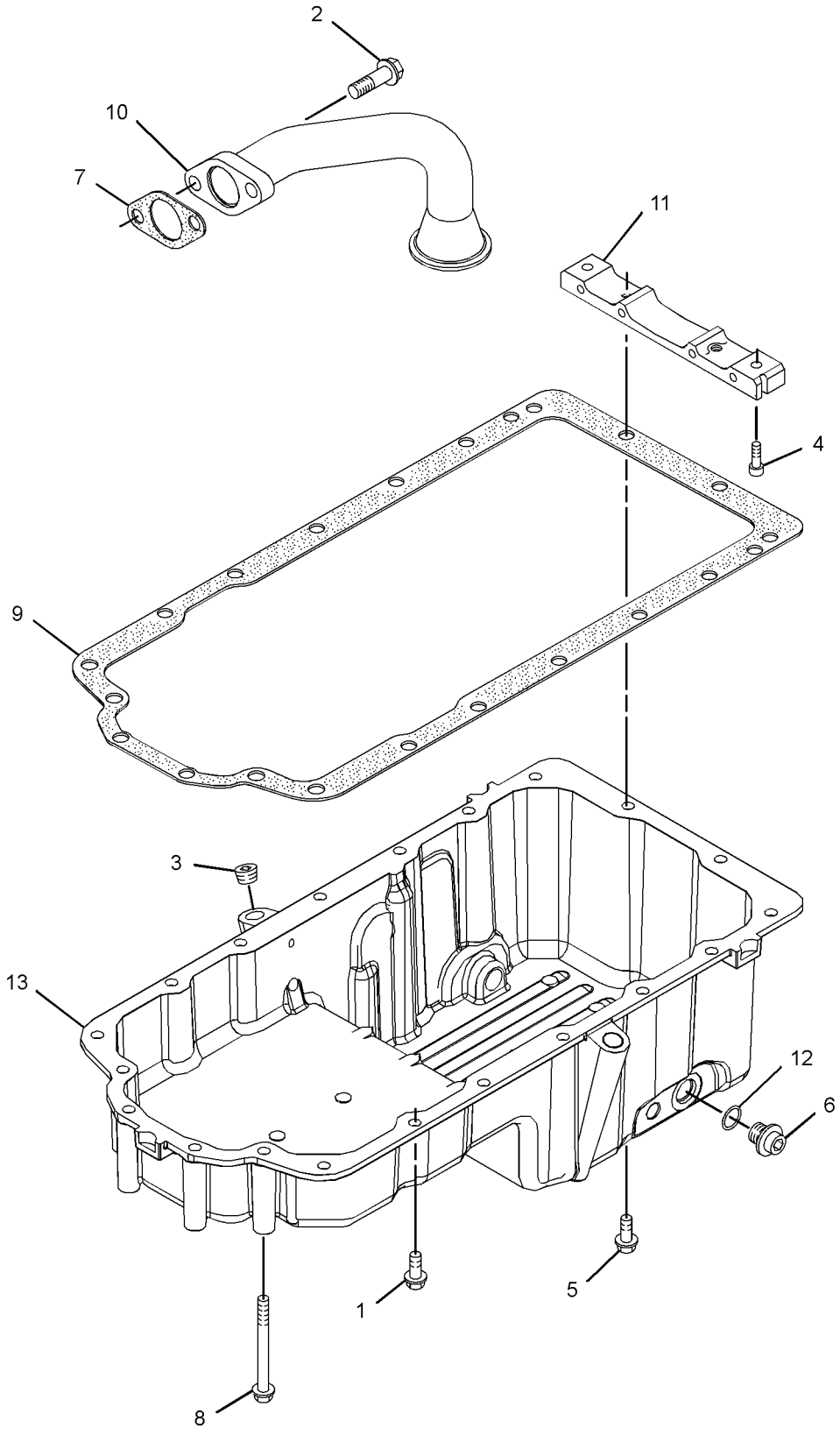

GRAPHIC #1 **<END>** g02795839

334-4204 PISTON & ROD GP

S/N: CRS1-UP
PART OF 364-5753 ENGINE AR-PRIMARY
AN ATTACHMENT

SMCS-1213, 1214, 1215, 1218, 1219, 1225, 1239 **i04017418**

NOTE	REF NO	GRAPHIC REF	PART NUMBER	QTY	PART NAME 1 2 3 4 5 6 (PRODUCT LEVEL)	SEE PAGE
	1	1	**225-5437**	4	PISTON AS	
					(EACH INCLUDES)	
	1A	1	**124-3536**	2	RING-RETAINING	
	1B	1	**225-5436**	1	KIT-PISTON RING	
AB		1	**334-2318**	1	KIT-PISTON RING (1.0-MM OS)	
AB		1	**334-2319**	1	KIT-PISTON RING (0.5-MM OS)	
AB		1	**288-1394**	1	PISTON AS (0.5-MM OS)	
AB		1	**288-1395**	1	PISTON AS (1-MM OS)	
BCJ	2	1	**359-0724**	4	ROD AS-CONNECTING (LENGTH B)	
					—OR—	
BCJ		1	**359-0723**	4	ROD AS-CONNECTING (LENGTH P)	
					—OR—	
BCJ		1	**359-0722**	4	ROD AS-CONNECTING (LENGTH G)	
					—OR—	
BCJ		1	**359-0721**	4	ROD AS-CONNECTING (LENGTH W)	
					—OR—	
BCJ		1	**359-0720**	4	ROD AS-CONNECTING (LENGTH O)	
					—OR—	
BCJ		1	**359-0719**	4	ROD AS-CONNECTING (LENGTH R)	
					(EACH ROD ASSEMBLY INCLUDES)	
	2A	1	**225-5438**	1	BUSHING	
	2B	1	**323-9312**	2	BOLT	

A-NOT PART OF THIS GROUP
B-USE AS REQUIRED
C-CHANGE FROM PREVIOUS TYPE
J-INSURE CORRECT ROD LENGTH IS FITTED

334-4204 **PISTON & ROD GP** *(contd.)* **i04017418**

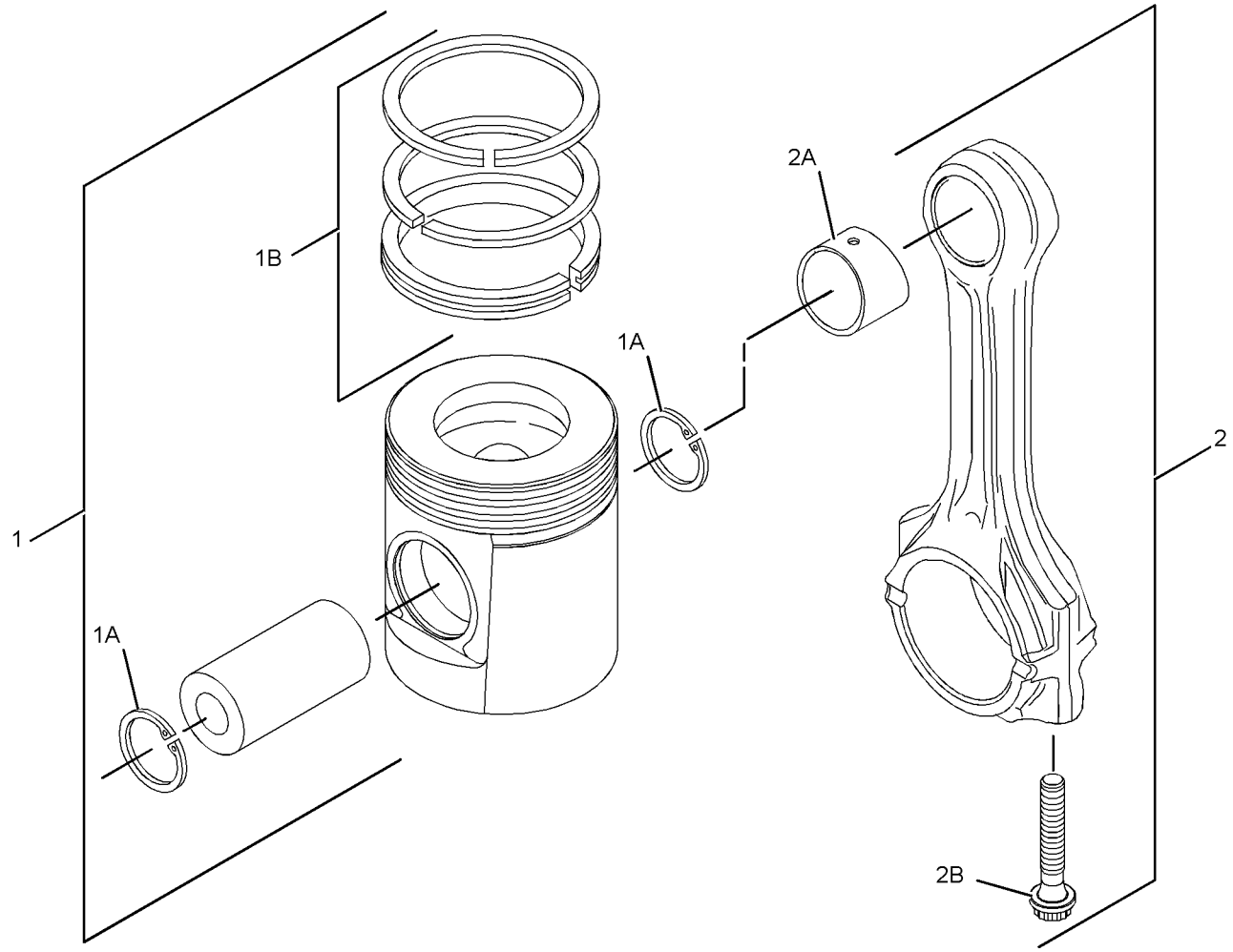

GRAPHIC #1 **<END>** g02201533

BASIC ENGINE

225-4317 PLUG GP-ENGINE

S/N: CRS1-UP
FRONT HOUSING, CYLINDER HEAD
PART OF 364-5753 ENGINE AR-PRIMARY
AN ATTACHMENT

SMCS-1000 **i01772005**

NOTE	REF NO	GRAPHIC REF	PART NUMBER	QTY	PART NAME 1 2 3 4 5 6 (PRODUCT LEVEL)	SEE PAGE
	1	1	**2B-0858**	3	PLUG-PIPE	

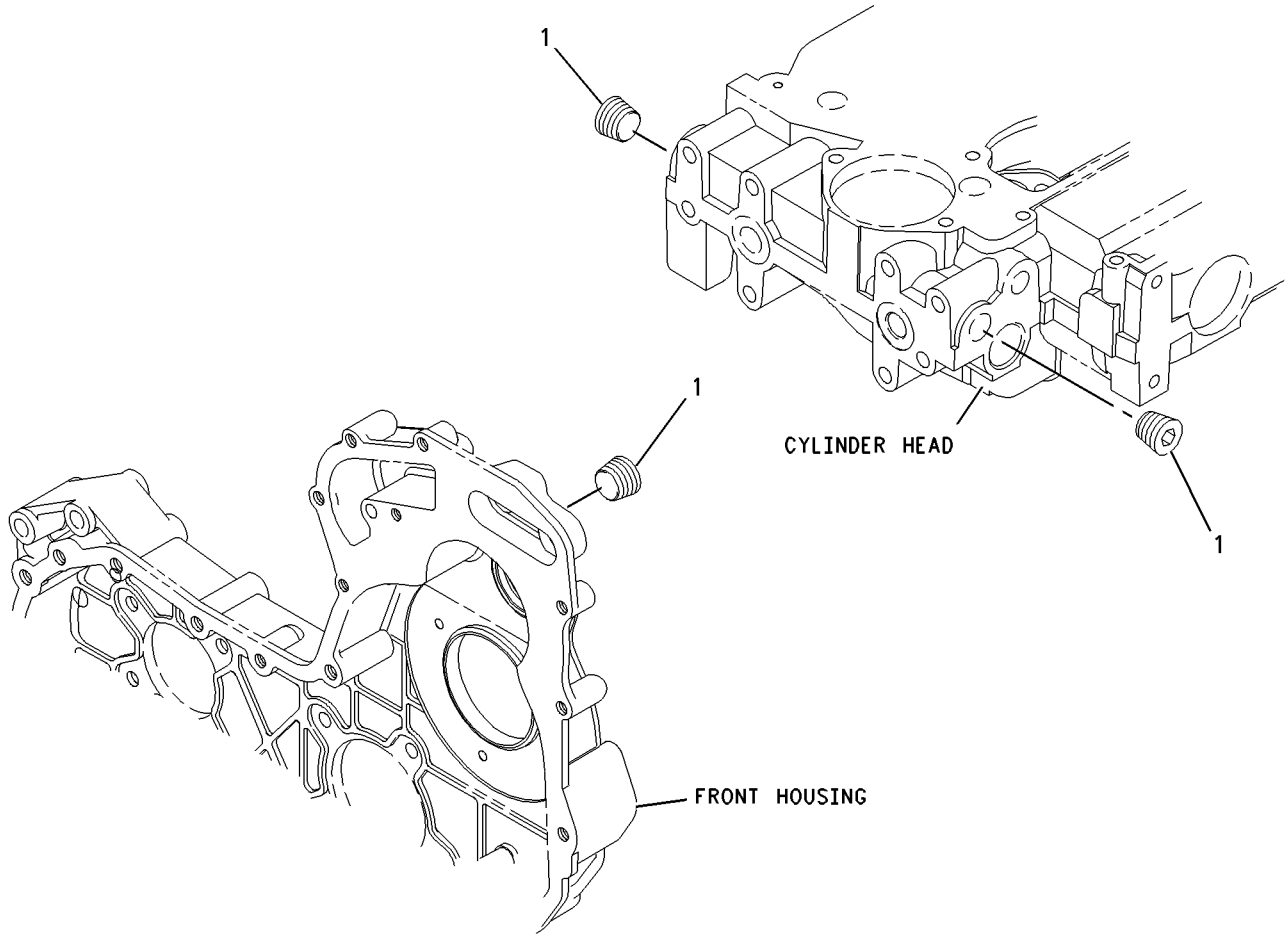

GRAPHIC #1 **<END>** g00911937

232-6204 PLUG GP-ENGINE

S/N: CRS1-UP
PART OF 364-5753 ENGINE AR-PRIMARY
AN ATTACHMENT

SMCS-1000 **i02160472**

NOTE	REF NO	GRAPHIC REF	PART NUMBER	QTY	PART NAME 1 2 3 4 5 6 (PRODUCT LEVEL)	SEE PAGE
	1	1	**199-9751**	1	SEAL-O-RING	
	2	1	**232-1322**	1	PLUG	

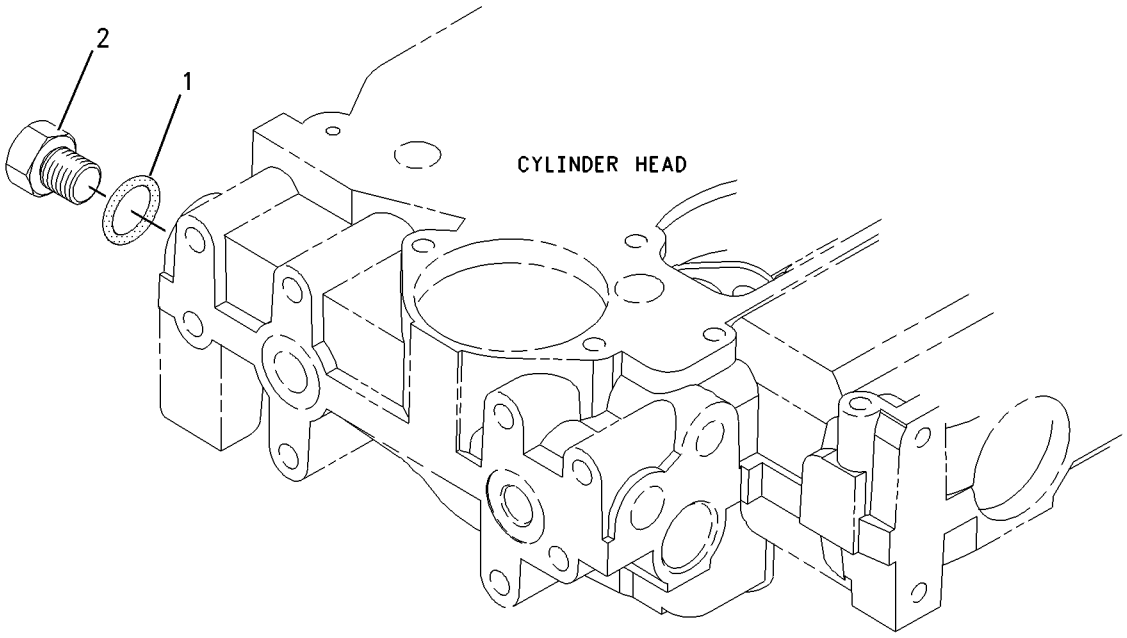

GRAPHIC #1 **<END>** g00950934

BASIC ENGINE

225-5963 ROCKER ARM GP

S/N: CRS1-UP
PART OF 334-4207 VALVE MECHANISM GP
AN ATTACHMENT

SMCS-1102, 1123 **i03304187**

NOTE	REF NO	GRAPHIC REF	PART NUMBER	QTY	PART NAME 1 2 3 4 5 6 (PRODUCT LEVEL)	SEE PAGE
	1	1	**225-5625**	4	LEVER AS	
					(EACH INCLUDES)	
	1A	1	**5B-9079**	1	NUT-JAM (3/8-24-THD)	
	1B	1	**185-1546**	1	SCREW	
	2	1	**225-5634**	1	SHAFT AS	
	2A	1	**225-5629**	2	PLUG	
	3	1	**225-5638**	3	SPRING	
	4	1	**225-5640**	4	LEVER AS	
					(EACH INCLUDES)	
	4A	1	**5B-9079**	1	NUT-JAM (3/8-24-THD)	
	4B	1	**185-1546**	1	SCREW	
	5	1	**225-5959**	2	CLIP	
	6	1	**225-5960**	1	BOLT (M8X1.25X60-MM)	
	7	1	**225-5961**	2	WASHER (26.7X34.32X0.38-MM THK)	
	8	1	**225-5962**	3	BOLT (M8X1.25X30-MM)	

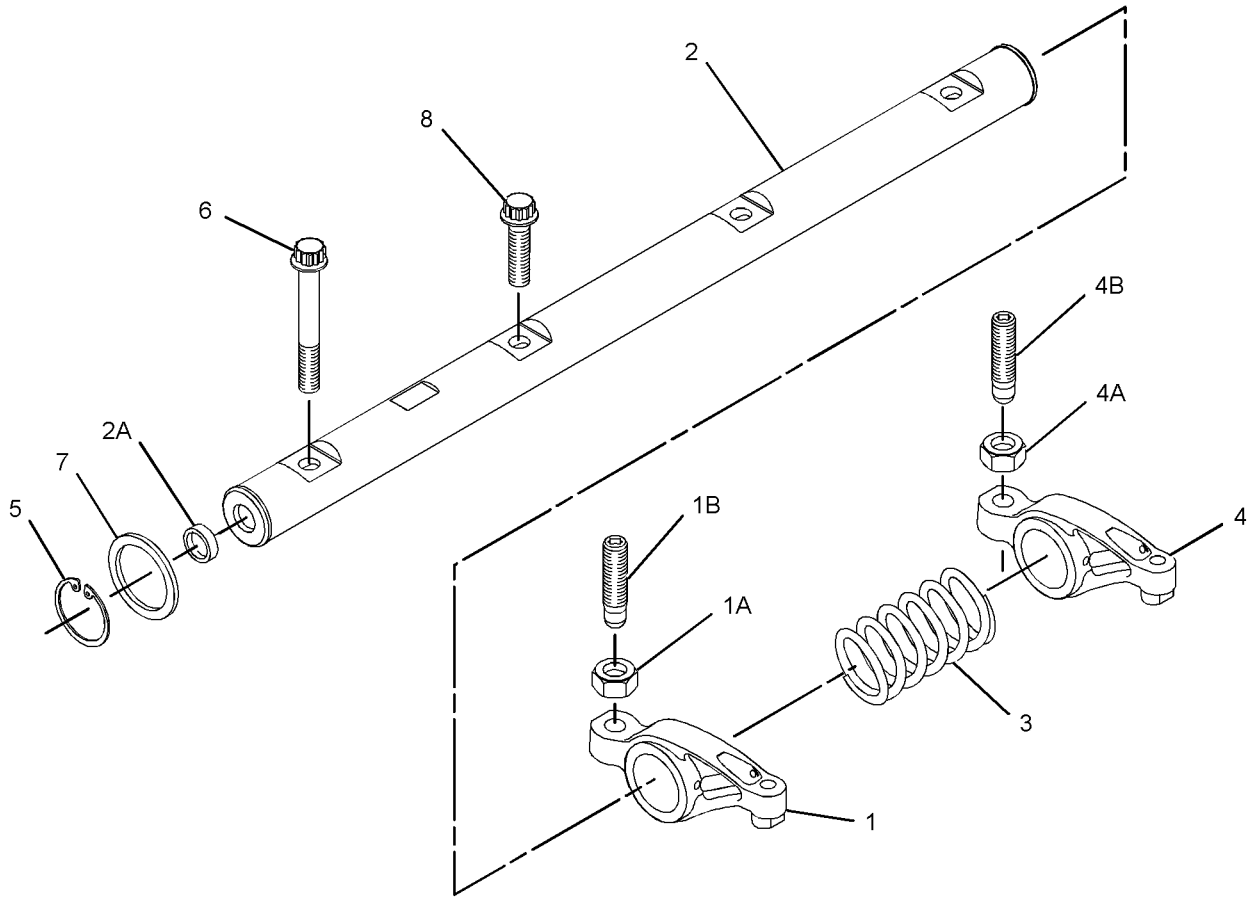

GRAPHIC #1 **<END>** g01368510

334-4207 VALVE MECHANISM GP

S/N: CRS1-UP

PART OF 364-5753 ENGINE AR-PRIMARY

AN ATTACHMENT

SMCS-1102, 1112, 1121, 1123, 1208, 1209 **i03143145**

NOTE	REF NO	GRAPHIC REF	PART NUMBER	QTY	PART NAME 1 2 3 4 5 6 (PRODUCT LEVEL)	SEE PAGE
Y	1	1	**225-5963**	1	ROCKER ARM GP	28

Y-SEPARATE ILLUSTRATION

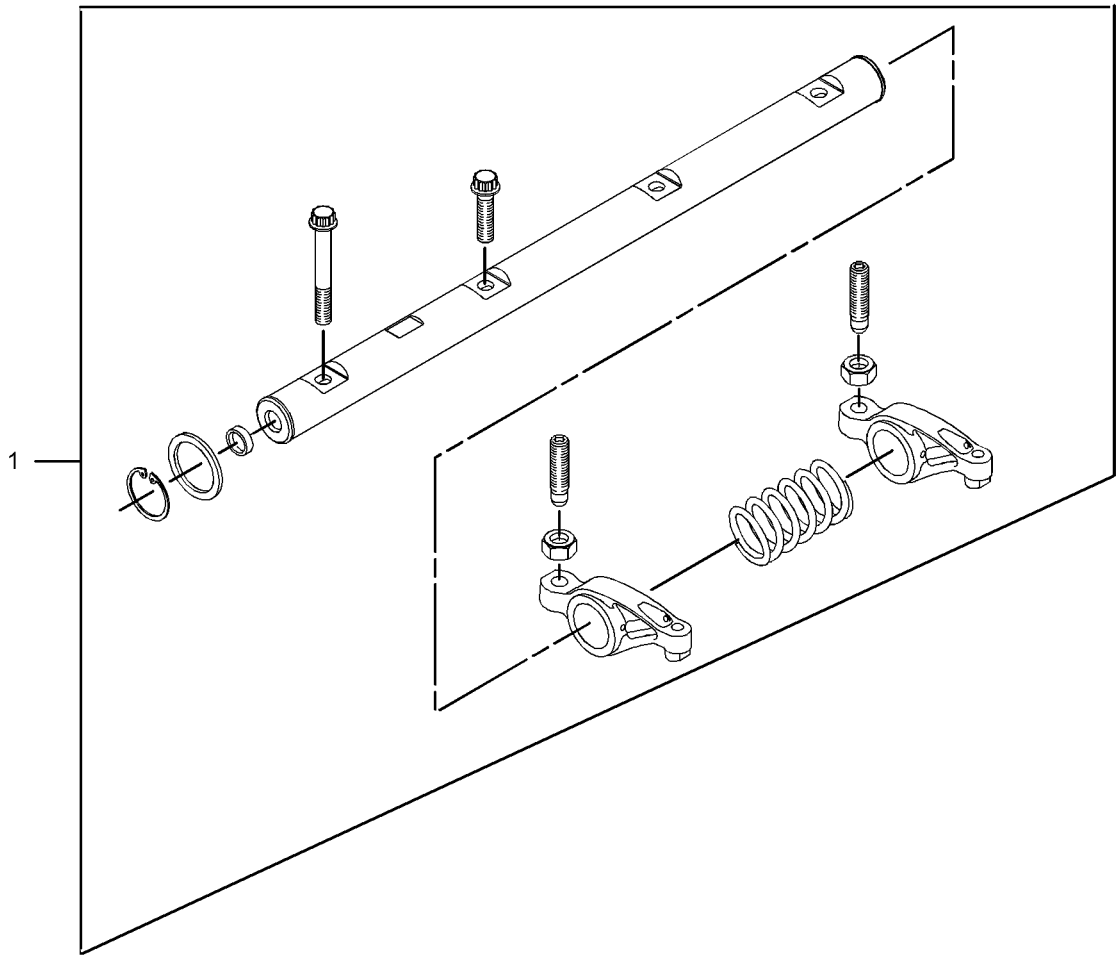

GRAPHIC #1 **<END>** g01619790

LUBRICATION SYSTEM

352-3463 GAUGE GP-OIL LEVEL & FILLER

S/N: LTG1-UP
PART OF 340-1705 ENGINE AR
AN ATTACHMENT

SMCS-1316, 1326 **i04628854**

NOTE	REF NO	GRAPHIC REF	PART NUMBER	QTY	PART NAME 1 2 3 4 5 6 (PRODUCT LEVEL)	SEE PAGE
	1	1	**6I-1497**	1	SEAL	
	2	1	**9M-7958**	1	CLAMP-HOSE	
	3	1	**236-6651**	1	CAP AS-FILLER (ENGINE OIL)	
	4	1	**323-3308**	2	CAP	
Y	5	1	**351-8191**	1	GAUGE GP-OIL LEVEL (DIPSTICK) (ENGINE)	31
	6	1	**352-7601**	1	HOSE	
	7	1	**352-7634**	1	BRACKET AS	
	8	1	**362-8059**	1	TUBE AS	
	9	1	**127-4471**	1	CLAMP-HOSE	
	10	1	**139-1398**	1	CLIP	
	11	1	**7W-2326**	1	FILTER AS-ENGINE OIL	
M	12	1	**8T-4189**	4	BOLT (M8X1.25X20-MM)	
	13	1	**8T-4224**	4	WASHER-HARD (8.8X16X2-MM THK)	

M-METRIC PART
Y-SEPARATE ILLUSTRATION

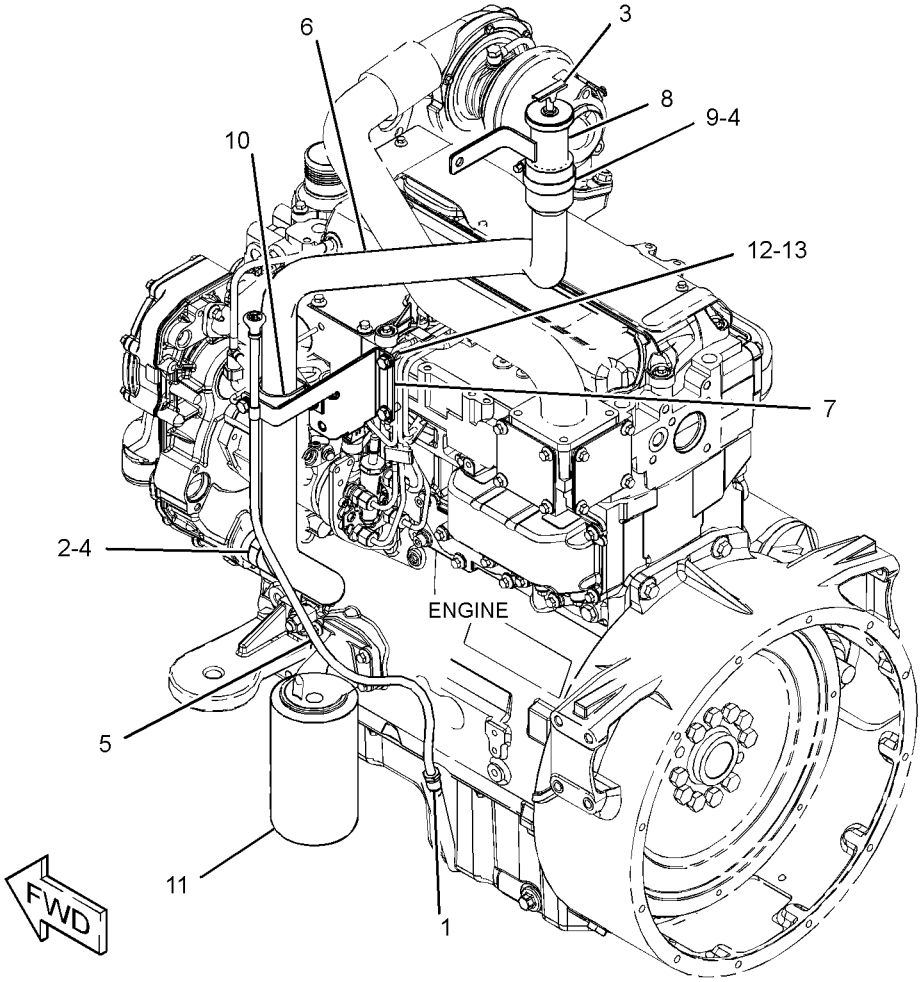

GRAPHIC #1 **<END>** g02823276

351-8191 GAUGE GP-OIL LEVEL (DIPSTICK)

S/N: LTG1-UP
PART OF 352-3463 GAUGE GP-OIL LEVEL & FILLER
AN ATTACHMENT

SMCS-1326 **i04611721**

NOTE	REF NO	GRAPHIC REF	PART NUMBER	QTY	PART NAME 1 2 3 4 5 6 (PRODUCT LEVEL)	SEE PAGE
	1	1	*351-8190*	1	GAUGE AS-OIL LEVEL (DIPSTICK) (ENGINE)	
		1	**275-9891**	2	SEAL-O-RING	

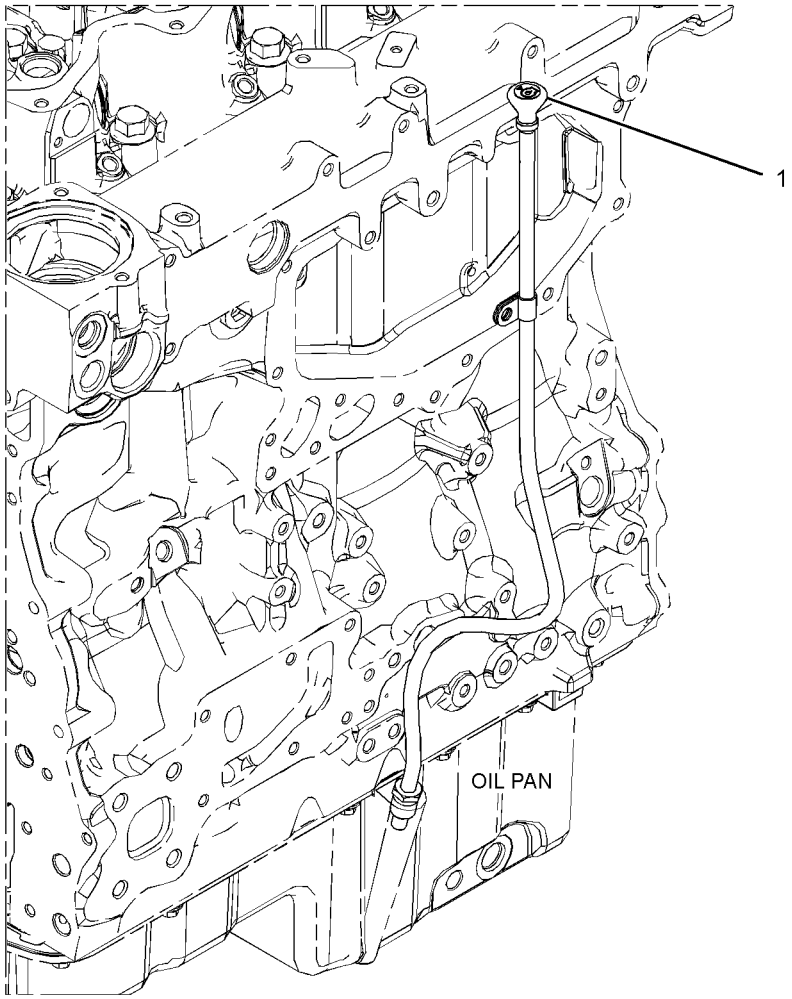

GRAPHIC #1 **<END>** g02828617

LUBRICATION SYSTEM

230-7578 PUMP GP-ENGINE OIL

S/N: CRS1-UP
PART OF 364-5753 ENGINE AR-PRIMARY
AN ATTACHMENT

SMCS-1304, 1315 **i01896485**

NOTE	REF NO	GRAPHIC REF	PART NUMBER	QTY	PART NAME 1 2 3 4 5 6 (PRODUCT LEVEL)	SEE PAGE
M	1	1	**100-4461**	5	BOLT (M10X1.50X50-MM)	
	2	1	**225-8329**	1	PUMP AS-ENGINE OIL	

M-METRIC PART

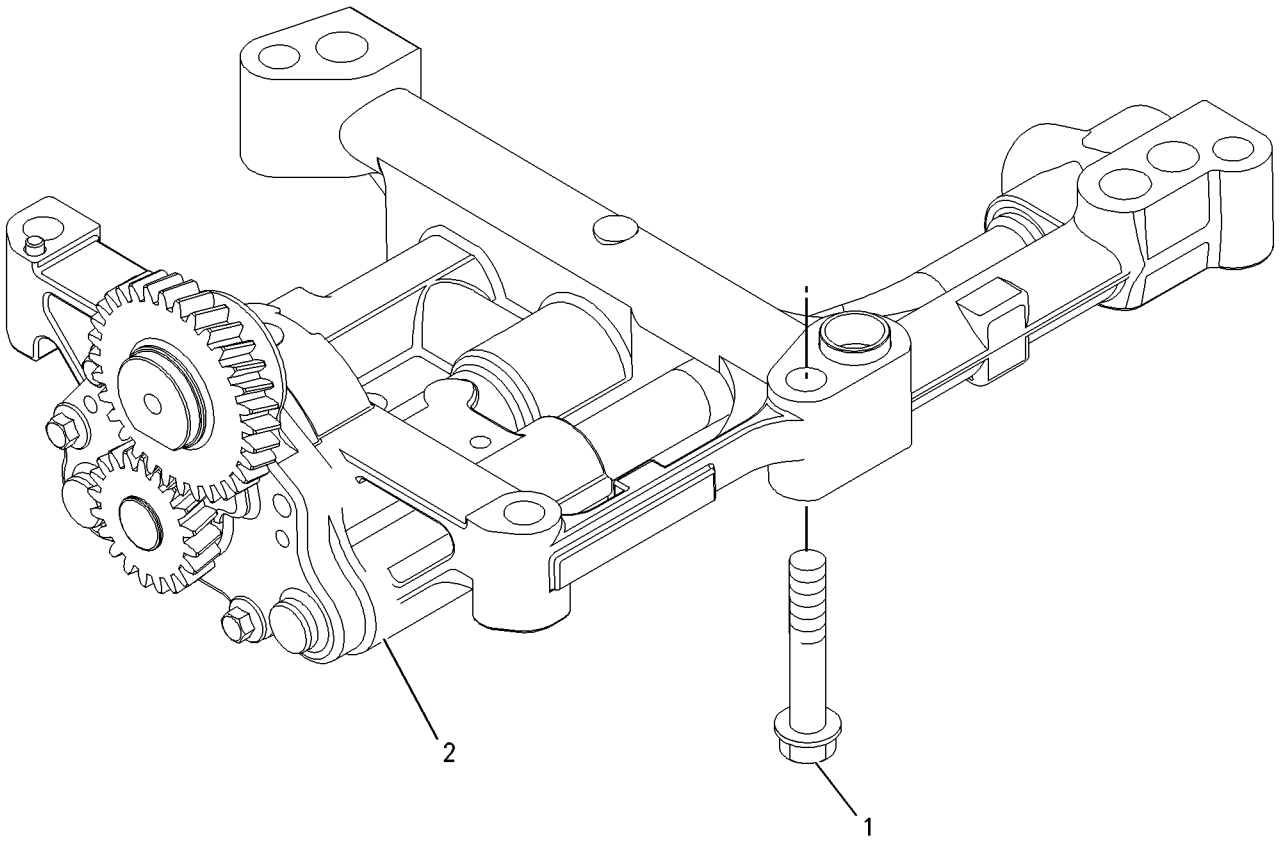

GRAPHIC #1 **<END>** g00911993

354-1274 COOLER GP-ENGINE OIL

S/N: CRS1-UP

PART OF 238-2799 COOLER GP-FLTR BASE & ENG OIL

AN ATTACHMENT

SMCS-1378 **i03900469**

NOTE	REF NO	GRAPHIC REF	PART NUMBER	QTY	PART NAME 1 2 3 4 5 6 (PRODUCT LEVEL)	SEE PAGE
M	1	1	**6I-0260**	10	BOLT (M8X1.25X25-MM)	
	2	1	**6I-4374**	3	BOLT (M8X1.25X60-MM)	
M	3	1	**101-3895**	4	BOLT (M8X1.25X35-MM)	
	4	1	**225-6817**	1	COOLER-OIL	
	5	1	**225-6818**	2	SEAL	
	6	1	**272-2265**	1	SEAL	

M-METRIC PART

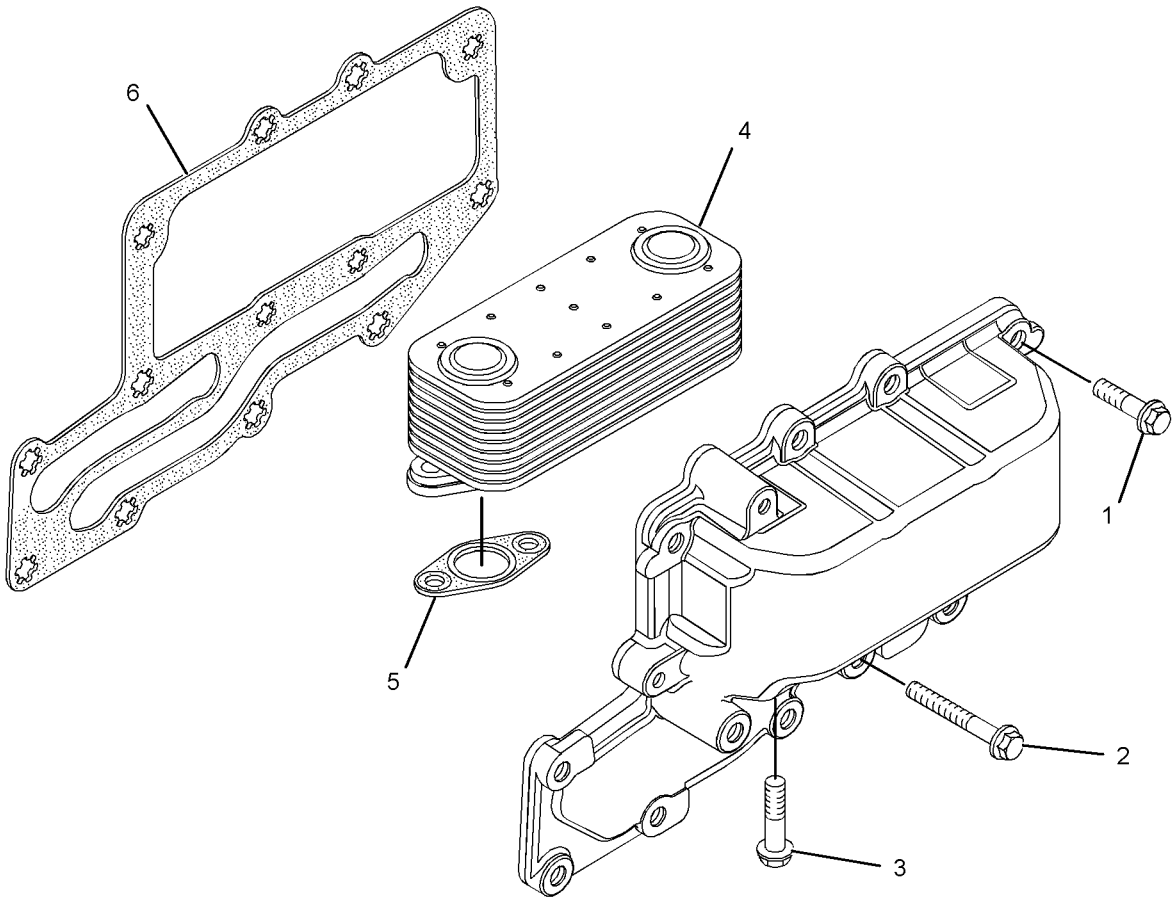

GRAPHIC #1 **<END>** g02140458

238-2799 COOLER GP-FLTR BASE & ENG OIL

S/N: CRS1-UP
PART OF 364-5753 ENGINE AR-PRIMARY
AN ATTACHMENT

SMCS-1306, 1378 **i03890788**

NOTE	REF NO	GRAPHIC REF	PART NUMBER	QTY	PART NAME 1 2 3 4 5 6 (PRODUCT LEVEL)	SEE PAGE
	1	1	**6I-0572**	4	BOLT (M8X1.25X20-MM)	
M	2	1	**6I-0645**	4	BOLT (M8X1.25X25-MM)	
	3	1	**8T-7876**	1	SEAL-O-RING	
	4	1	**225-7941**	1	PLUG	
	5	1	**225-7944**	2	GASKET	
	6	1	**249-0974**	1	HEAD AS-OIL FILTER	
Y	7	1	**354-1274**	1	COOLER GP-ENGINE OIL	33
	8	1	**232-3751**	1	PLATE	

M-METRIC PART
Y-SEPARATE ILLUSTRATION

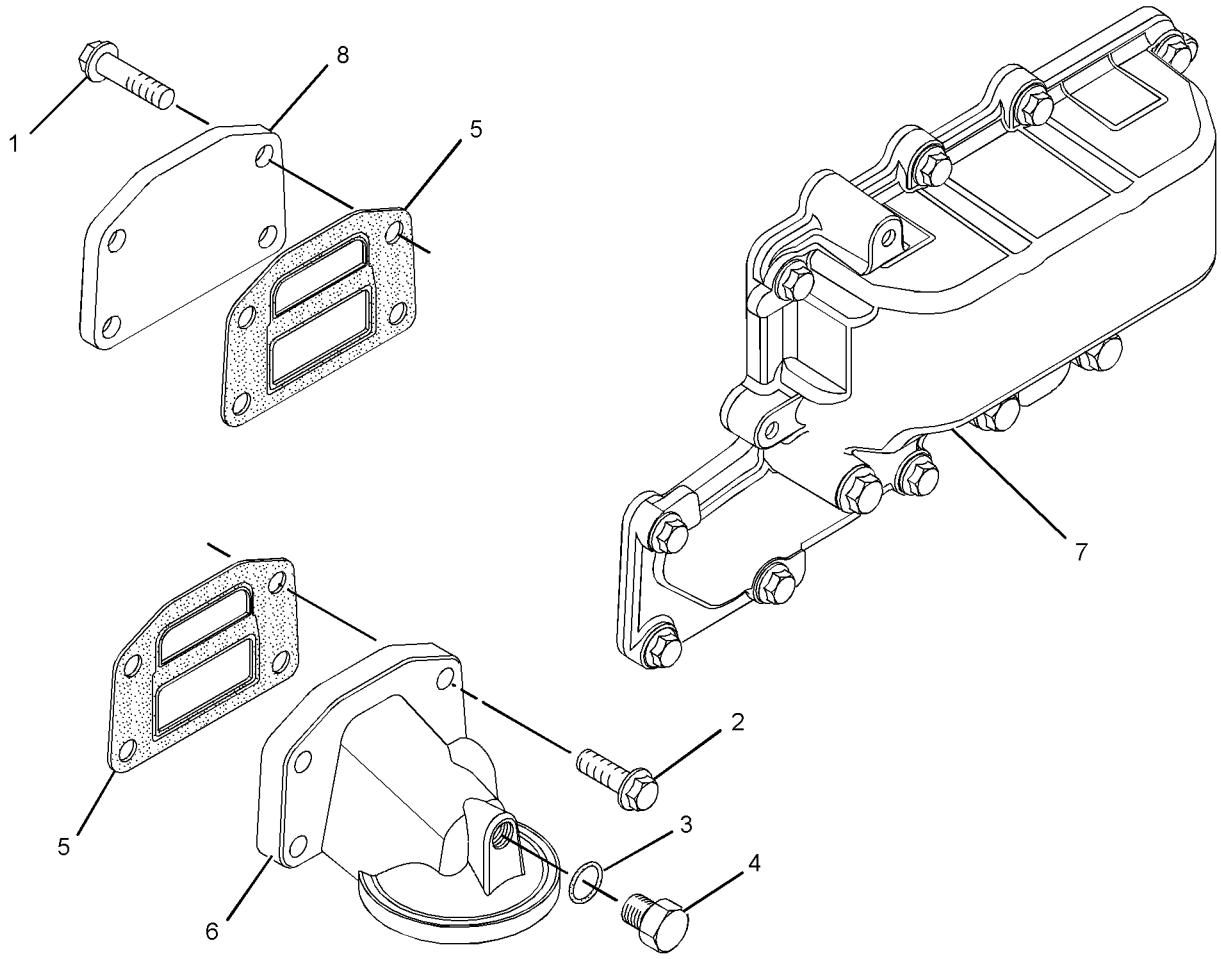

GRAPHIC #1 **<END>** g02140432

COOLING SYSTEM

352-1455 COOLING GP-SUPPLEMENTAL

S/N: LTG1-UP
PART OF 340-1705 ENGINE AR
AN ATTACHMENT

SMCS-1353, 1354, 1356, 1380, 1386 **i04628853**

NOTE	REF NO	GRAPHIC REF	PART NUMBER	QTY	PART NAME 1 2 3 4 5 6 (PRODUCT LEVEL)	SEE PAGE
	1	1	**6N-6984**	4	MOUNT-RUBBER	
	2	2	**9M-7958**	2	CLAMP-HOSE	
	3	1	**247-1385**	1	TANK GP-EXPANSION (COOLANT)	
		1	**247-1384**	1	TANK AS-COOLANT	
		1	**251-3227**	1	CAP AS-COOLANT TANK	
	4	1	**275-4918**	1	ELBOW	
	5	1,2	**323-3308**	8	CAP	
	6	2	**323-3309**	4	CAP	
	7	1	**329-5699**	1	HOSE	
	8	2	**343-5421**	2	SHROUD AS	
Y	9	1	**352-1456**	1	RADIATOR & HYD OIL COOLER GP	43
	10	2	**352-4535**	1	HOSE-RADIATOR (UPPER)	
	11	2	**352-4536**	1	HOSE-RADIATOR (LOWER)	
	12	1	**352-8799**	1	PLATE	
	13	2	**353-5987**	1	HOSE	
	14	1	**358-4420**	1	SEAL	
	15	1	**164-4227**	1	CLIP	
	16	1	**1B-3057**	1	CLIP	
	17	1	**2M-9780**	1	SEAL-O-RING	
	18	2	**3E-7445**	4	CLAMP-HOSE	
	19	2	**4D-7388**	2	CLIP	
M	20	2	**5C-7261**	8	NUT (M8X1.25-THD)	
	21	1	**5D-1026**	2	CLAMP-BAND	
	22	1,2	**5P-4116**	5	WASHER-HARD (8.8X20.5X2-MM THK)	
	23	2	**7X-0579**	10	WASHER-HARD (8.8X25.5X2-MM THK)	
M	24	1	**8T-4133**	4	NUT (M10X1.5-THD)	
M	25	1	**8T-4137**	1	BOLT (M10X1.5X20-MM)	
M	26	2	**8T-4200**	3	BOLT (M8X1.25X16-MM)	
	27	1	**8T-4222**	7	WASHER-PLATED (11X32X2.5-MM THK)	
M	28	1,2	**8T-4908**	4	BOLT (M8X1.25X25-MM)	
	29	2	**8T-4984**	4	CLAMP-HOSE	
E	30	1	**8C-3681**		HOSE (110-CM)	
E	30A	2	**8C-3681**		HOSE (50-CM)	
E	31	1	**262-8088**		HOSE (114-CM)	
E	31A	2	**262-8088**		HOSE (66-CM)	
G	32	2	**160-2244**		SLEEVE-ABRASION (10-IN EACH)	

E-ORDER BY THE CENTIMETER
G-ORDER BY THE INCH
M-METRIC PART
Y-SEPARATE ILLUSTRATION

352-1455 **COOLING GP-SUPPLEMENTAL** *(contd.)* **i04628853**

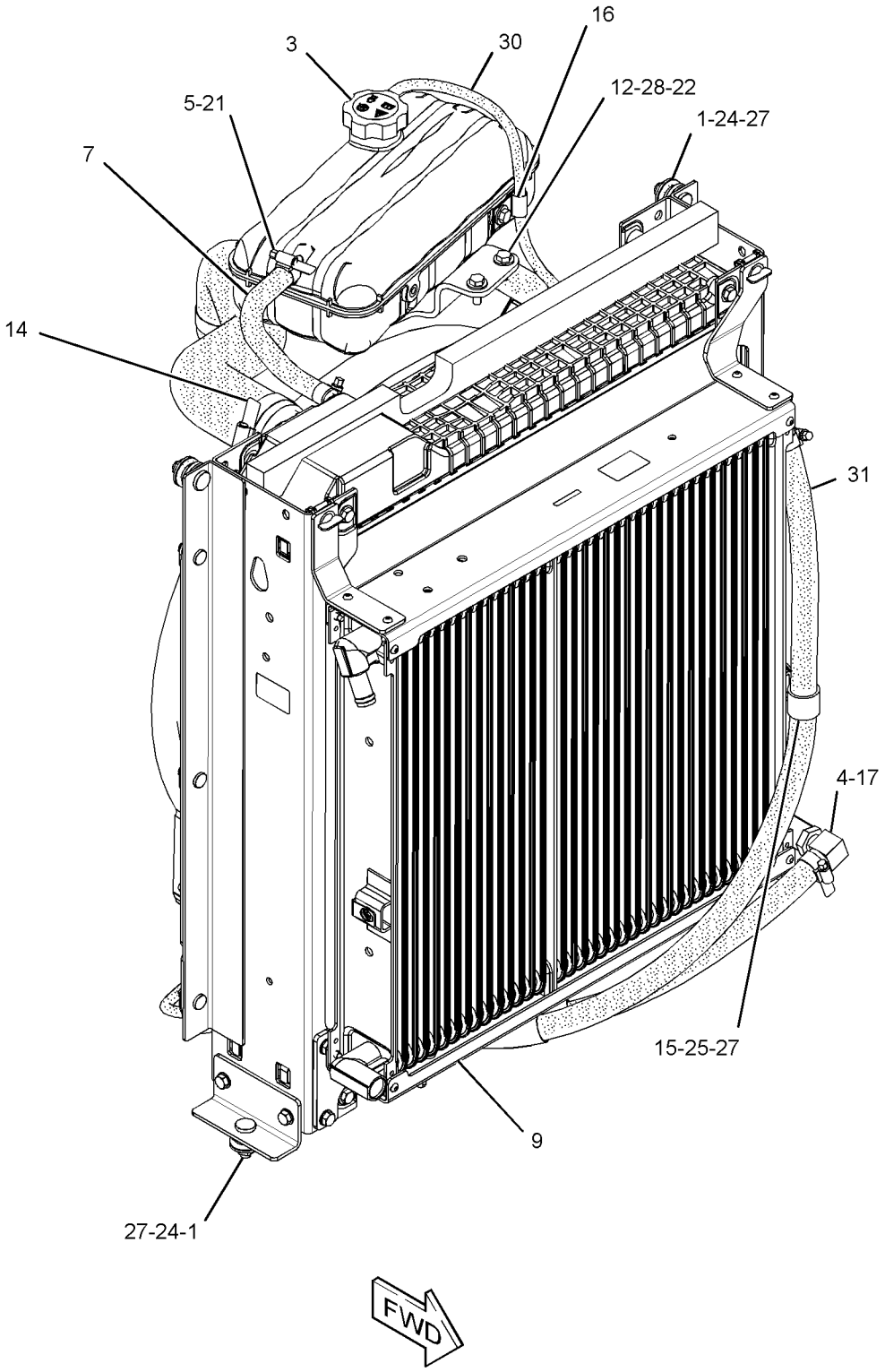

GRAPHIC #1 g02820396

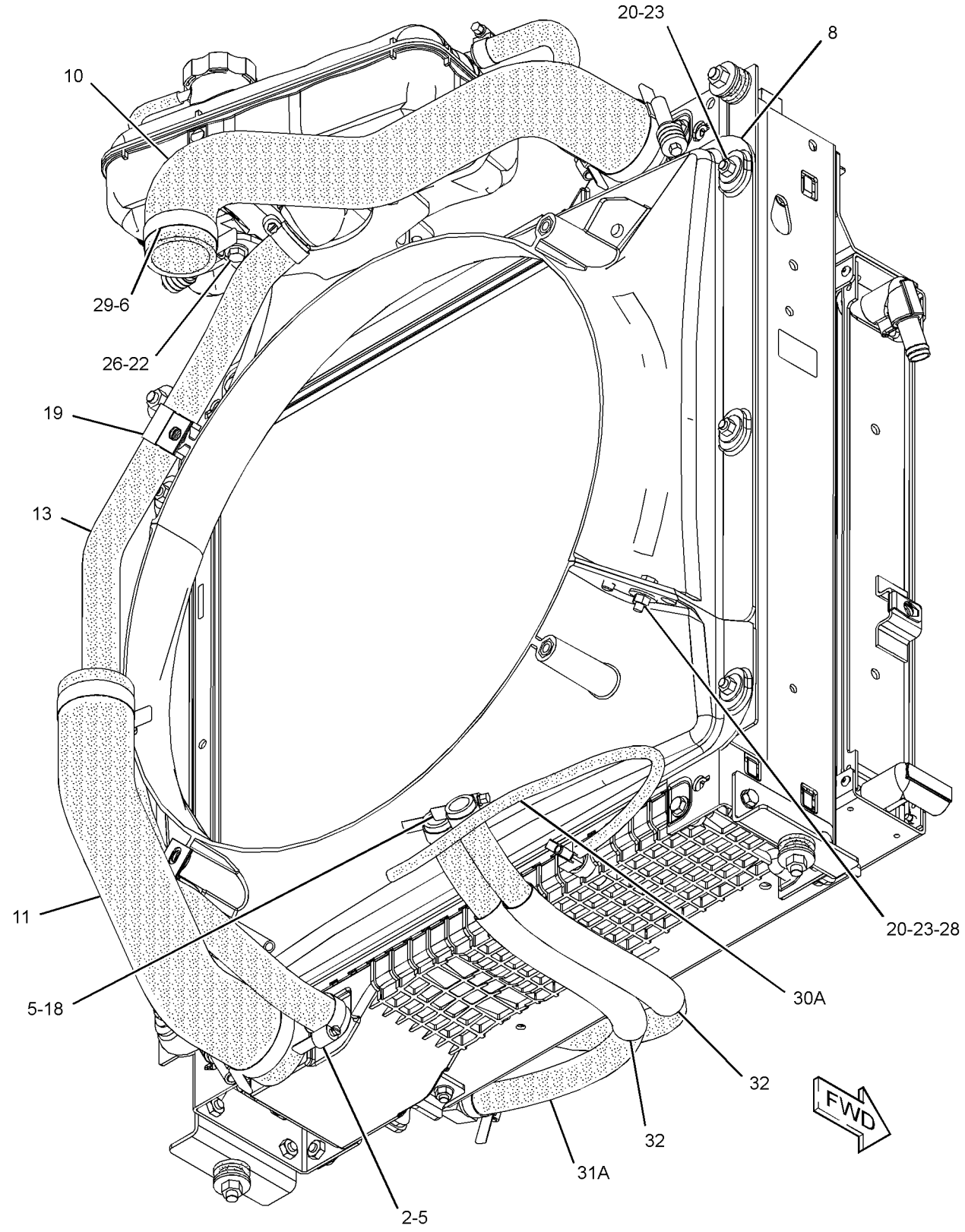

GRAPHIC #2 **<END>** g02820719

337-9761 FAN GP-SUCTION—WITHOUT AIR CONDITIONER

S/N: LTG1-UP
7-BLADE
PART OF 353-1466 FAN GP-SUCTION, 353-1467 HEATER AR-CAB
AN ATTACHMENT

SMCS-1356, 1360 **i04586213**

NOTE	REF NO	GRAPHIC REF	PART NUMBER	QTY	PART NAME 1 2 3 4 5 6 (PRODUCT LEVEL)	SEE PAGE
	1	1	**261-0406**	1	BELT TENSIONER	
	2	1	**284-1026**	1	PULLEY	
	3	1	**309-6655**	1	BELT-SERPENTINE	
	4	1	**349-3261**	1	PLATE-TENSIONER	
	5	1	**352-8358**	1	GUARD AS-FAN	
	6	1	**360-2827**	1	FAN (7-BLADE)	
	7	1	**371-2055**	1	FILM-INFORMATION (BELT ROUTING)	
	8	1	**379-2198**	1	SPACER-FAN (10-GA TO 12-GA, 1/4-IN SCREW)	
M	9	1	**178-3336**	4	NUT-HEX FLANGE (M8X1.25-THD)	
	10	1	**342-9920**	4	BOLT-FLANGE HEAD (M8X1.25X20-MM)	
	11	1	**5P-4116**	4	WASHER-HARD (8.8X20.5X2-MM THK)	
	12	1	**8T-4121**	3	WASHER-HARD (11X21X2.5-MM THK)	
M	13	1	**8T-4196**	3	BOLT (M10X1.5X35-MM)	
	14	1	**8T-4224**	4	WASHER-HARD (8.8X16X2-MM THK)	
M	15	1	**8T-7547**	4	BOLT (M8X1.25X30-MM)	
M	16	1	**9X-2099**	4	STUD (M8X1.25X52.75-MM)	

M-METRIC PART

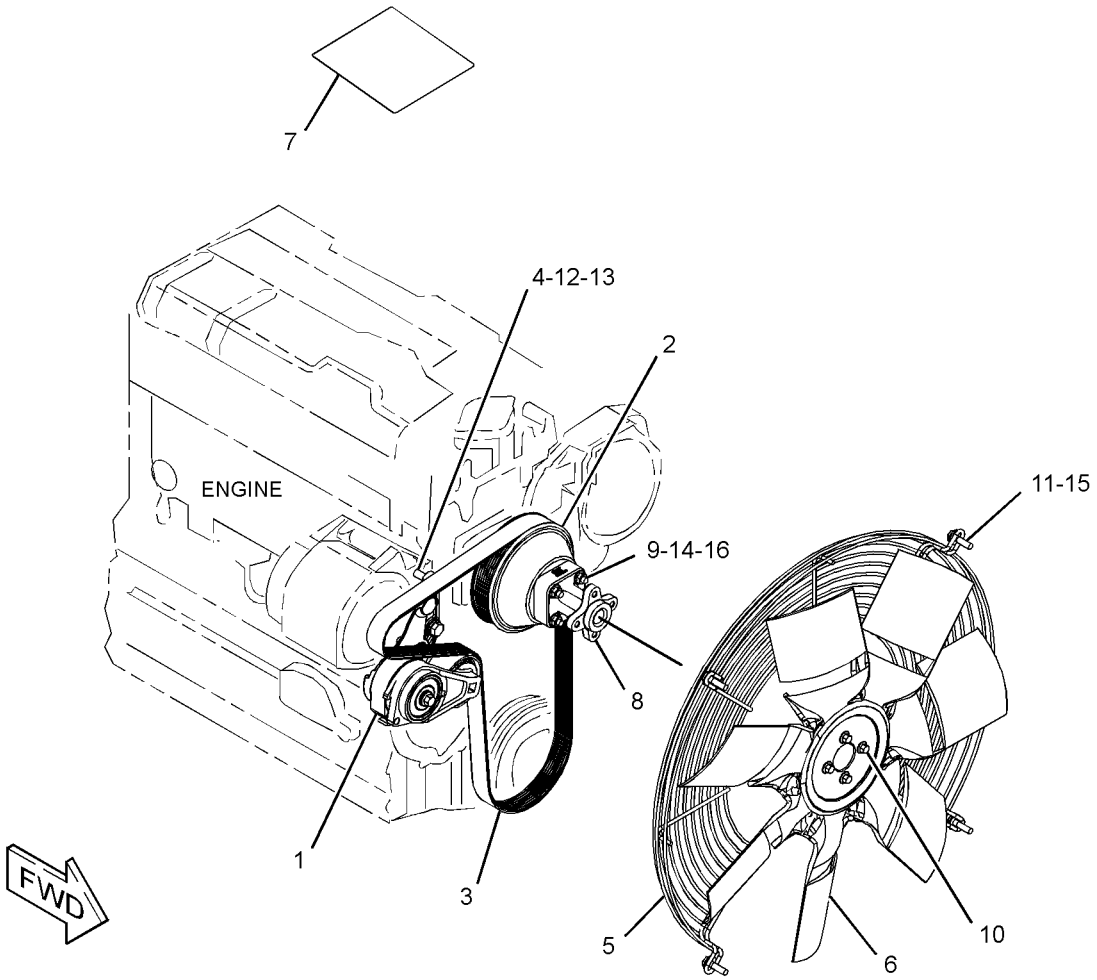

GRAPHIC #1 **<END>** g02796641

337-9762 FAN GP-SUCTION—WITH AIR CONDITIONER

S/N: LTG1-UP

PART OF 353-1468 HEATER & AIR CONDITIONER AR

AN ATTACHMENT

SMCS-1356, 1360 **i04586116**

NOTE	REF NO	GRAPHIC REF	PART NUMBER	QTY	PART NAME 1 2 3 4 5 6 (PRODUCT LEVEL)	SEE PAGE
	1	1	**261-0376**	1	BELT TENSIONER	
	2	1	**261-0428**	1	PULLEY AS-IDLER	
M		1	**307-2242**	1	BOLT (M10X1.5X45-MM)	
	3	1	**284-1026**	1	PULLEY	
	4	1	**298-5872**	1	BELT-SERPENTINE (FAN PULLEY)	
	5	1	**348-8149**	1	PLATE-MOUNTING	
	6	1	**352-8358**	1	GUARD AS-FAN	
	7	1	**360-2827**	1	FAN (7-BLADE)	
	8	1	**371-2054**	1	FILM-INFORMATION (BELT ROUTING)	
	9	1	**379-2198**	1	SPACER-FAN (10-GA TO 12-GA, 1/4-IN SCREW)	
M	10	1	**178-3336**	4	NUT-HEX FLANGE (M8X1.25-THD)	
	11	1	**342-9920**	4	BOLT-FLANGE HEAD (M8X1.25X20-MM)	
	12	1	**5P-4116**	4	WASHER-HARD (8.8X20.5X2-MM THK)	
	13	1	**8T-4121**	3	WASHER-HARD (11X21X2.5-MM THK)	
M	14	1	**8T-4196**	3	BOLT (M10X1.5X35-MM)	
	15	1	**8T-4224**	4	WASHER-HARD (8.8X16X2-MM THK)	
M	16	1	**8T-7547**	4	BOLT (M8X1.25X30-MM)	
M	17	1	**9X-2099**	4	STUD (M8X1.25X52.75-MM)	

M-METRIC PART

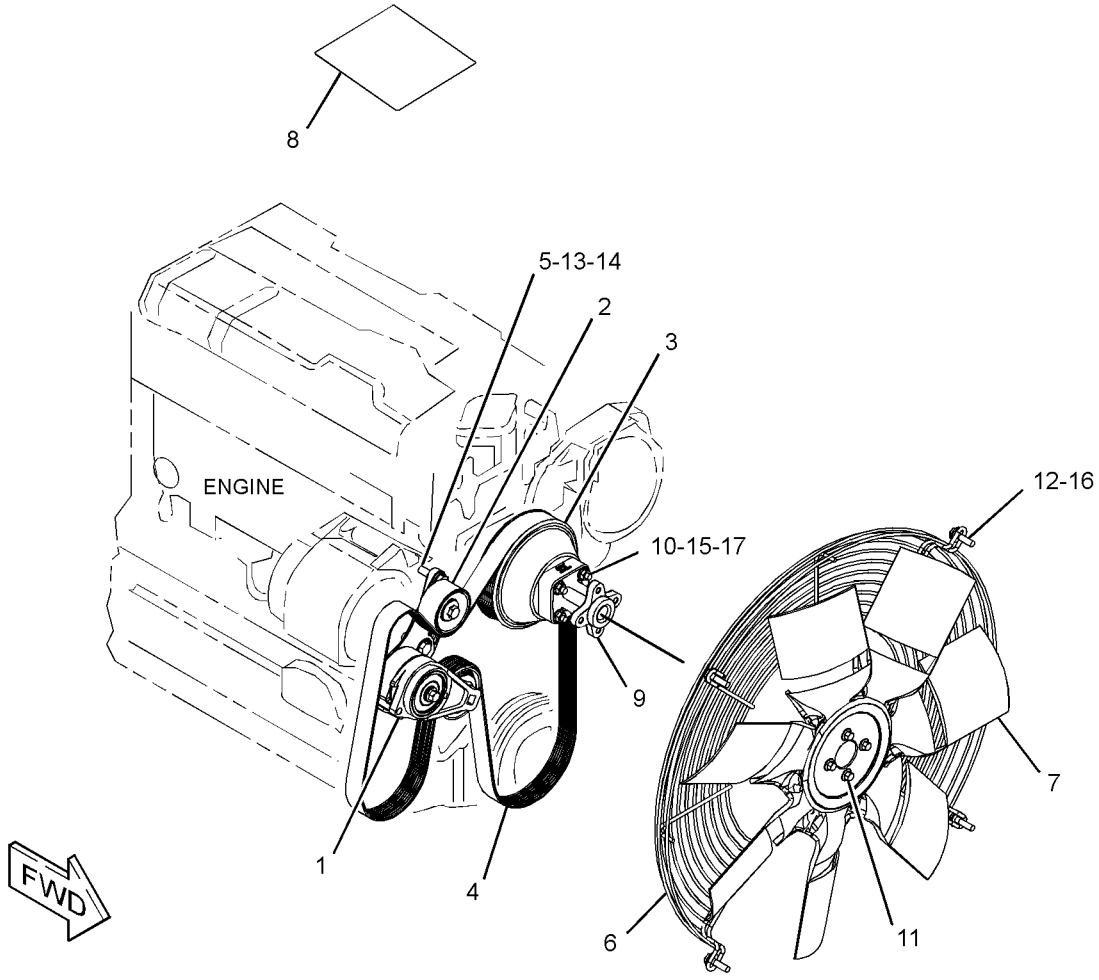

GRAPHIC #1 **<END>** g02797752

COOLING SYSTEM

353-1466 FAN GP-SUCTION

S/N: LTG1-UP
PART OF 373-4207, 373-4209 CANOPY AR-OPEN ROPS
AN ATTACHMENT

SMCS-1356, 1360 **i04602929**

NOTE	PART NUMBER	QTY	PART NAME 1 2 3 4 5 6 (PRODUCT LEVEL)	SEE PAGE
Y	*337-9761*	1	FAN GP-SUCTION (WITHOUT AIR CONDITIONER)	38

Y-SEPARATE ILLUSTRATION

<END>

337-9779 LINES GP-POWER TRAIN COOLER

S/N: LTG1-UP

PART OF 353-1512 TRANSMISSION AR-DIRECT DRIVE, 353-1510, 353-1513 TRANSMISSION AR-POWER SHIFT AN ATTACHMENT

SMCS-1375, 3016 **i04555033**

NOTE	REF NO	GRAPHIC REF	PART NUMBER	QTY	PART NAME 1 2 3 4 5 6 (PRODUCT LEVEL)	SEE PAGE
	1	1	**323-3308**	6	CAP	
I	2	1	**364-1940**	1	HOSE AS	
I	3	1	**364-1941**	1	HOSE AS	
G	4	1	**160-2244**		SLEEVE-ABRASION (9.9-IN EACH)	
	5	1	*386-6191*	1	ELBOW AS	
		1	**2M-9780**	1	SEAL-O-RING	
		1	**275-4918**	1	ELBOW	
	6	1	*148-8339*	2	CONNECTOR AS	
					(EACH INCLUDES)	
		1	**6V-8716**	1	CONNECTOR	
		1	**6V-9746**	1	SEAL-O-RING	
		1	**7M-8485**	1	SEAL-O-RING	
	7	1	**164-4227**	1	CLIP	
	8	1	**3E-7445**	6	CLAMP-HOSE	
	9	1	**6D-4246**	2	CLIP	
	10	1	**8T-4121**	1	WASHER-HARD (11X21X2.5-MM THK)	
M	11	1	**8T-4137**	2	BOLT (M10X1.5X20-MM)	
	12	1	**8T-4222**	1	WASHER-PLATED (11X32X2.5-MM THK)	
E	13	1	**262-8088**		HOSE (101.5-CM)	
E	13A	1	**262-8088**		HOSE (54.8-CM)	

E-ORDER BY THE CENTIMETER
G-ORDER BY THE INCH
I-REFER TO HYDRAULIC INFORMATION SYSTEM
M-METRIC PART

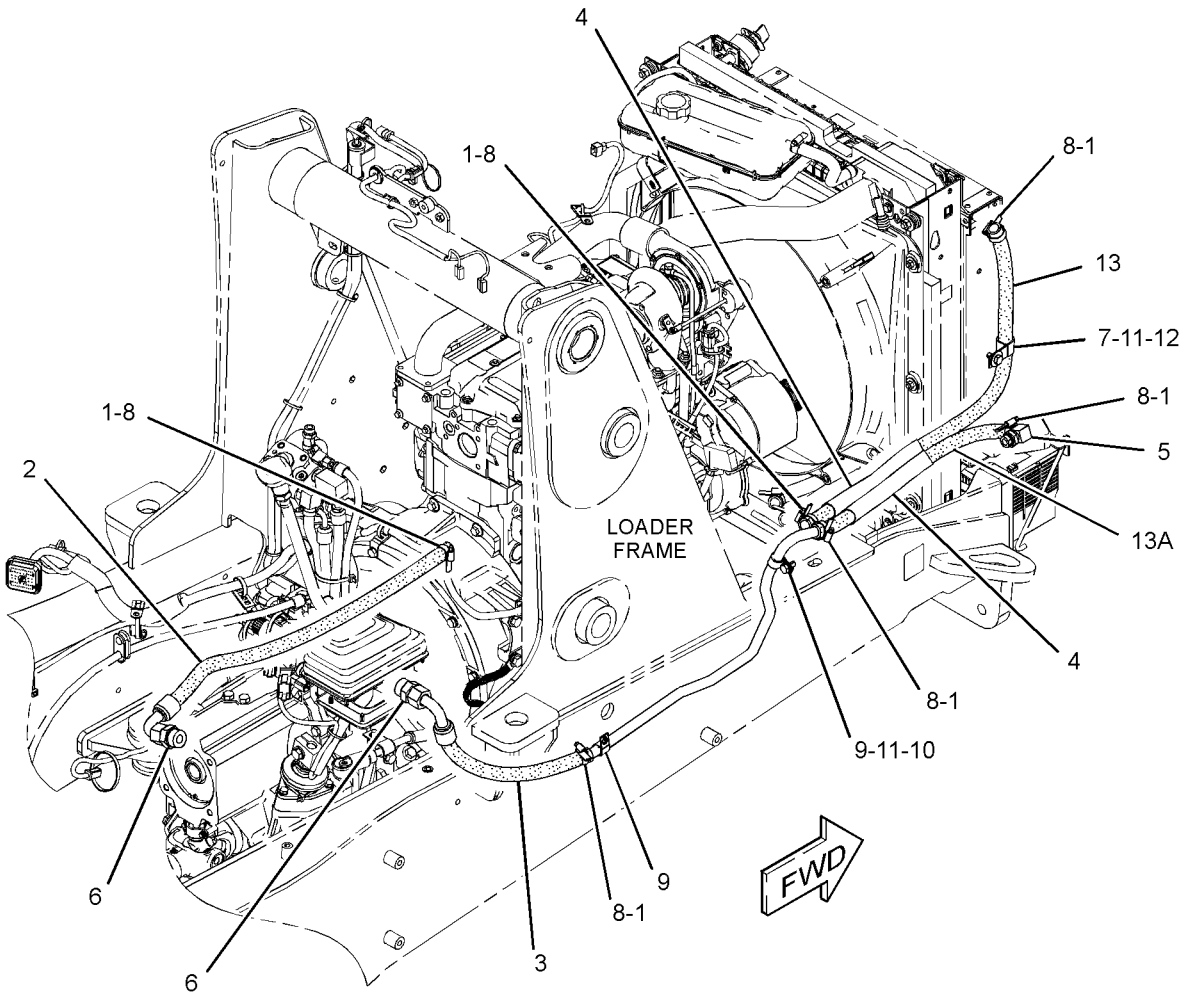

GRAPHIC #1 **<END>** g02807717

352-1456 RADIATOR & HYD OIL COOLER GP

S/N: LTG1-UP
PART OF 352-1455 COOLING GP-SUPPLEMENTAL
AN ATTACHMENT

SMCS-1353, 1374 **i04628855**

NOTE	REF NO	GRAPHIC REF	PART NUMBER	QTY	PART NAME 1 2 3 4 5 6 (PRODUCT LEVEL)	SEE PAGE
	1	1	**377-5267**	1	RADIATOR GP	
		1	**225-4287**	1	VALVE GP-RADIATOR DRAIN	
		1	**385-8594**	2	RECEPTACLE	
	2	1	**377-5268**	1	COOLER GP-HYD & XMSN OIL	
		1	**385-8591**	2	STUD	
		1	**385-8593**	2	RETAINER	

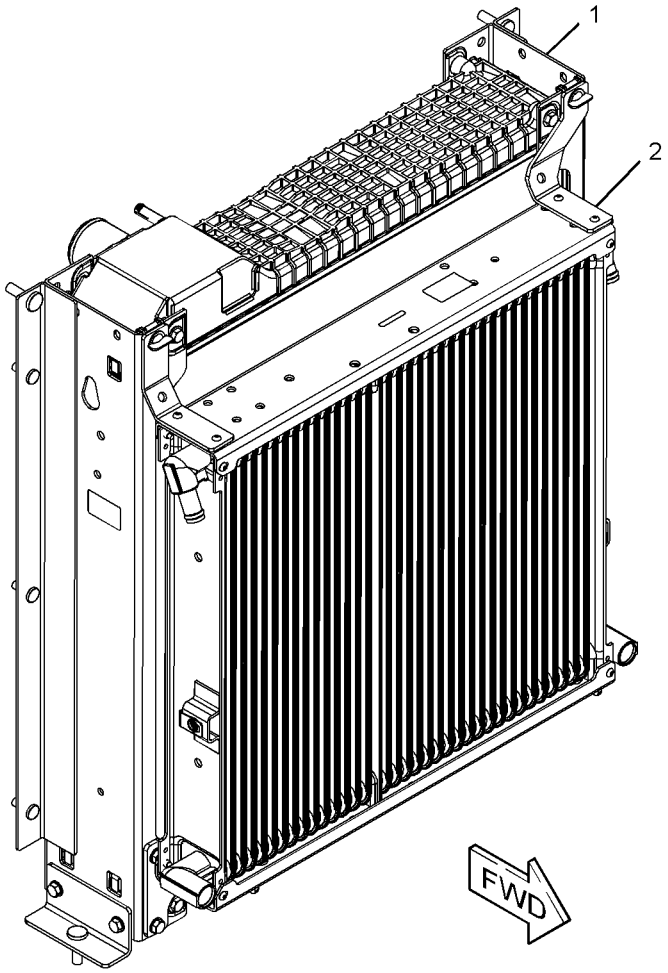

GRAPHIC #1 **<END>** g02824996

AIR INLET AND EXHAUST SYSTEM

343-5643 AIR CLEANER GP

S/N: LTG1-UP
PART OF 353-1379 AIR CLEANER GP
AN ATTACHMENT

SMCS-1051, 1054 **i04628898**

NOTE	REF NO	GRAPHIC REF	PART NUMBER	QTY	PART NAME 1 2 3 4 5 6 (PRODUCT LEVEL)	SEE PAGE
	1	1	**346-6687**	1	FILTER ELEMENT-AIR (PRIMARY)	
	2	1	**346-6688**	1	FILTER ELEMENT-AIR (SECONDARY)	
	3	1	**353-1641**	1	COVER	
	4	1	**353-4847**	1	VALVE-AIR CLEANER DUST	

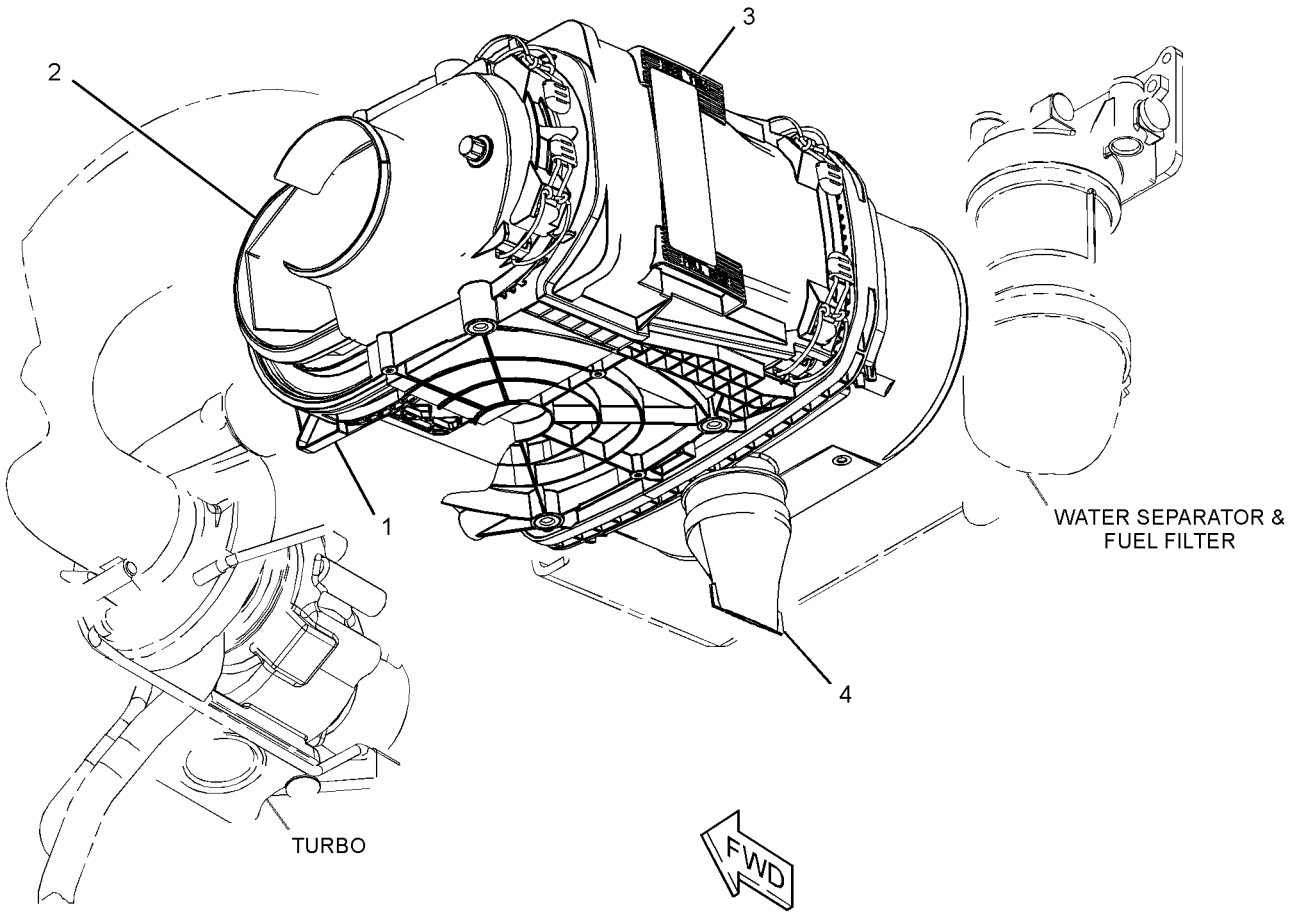

GRAPHIC #1 **<END>** g02823057

AIR INLET AND EXHAUST SYSTEM

353-1379 AIR CLEANER GP

S/N: LTG1-UP
PART OF 340-1705 ENGINE AR
AN ATTACHMENT

SMCS-1051, 1054 **i04582750**

NOTE	REF NO	GRAPHIC REF	PART NUMBER	QTY	PART NAME 1 2 3 4 5 6 (PRODUCT LEVEL)	SEE PAGE
	1	1	**276-4836**	1	SWITCH-PRESSURE (AIR CLEANER)	
	2	1	**323-3309**	2	CAP	
	3	1	**323-6645**	1	CAP	
	4	1	**339-3043**	1	DUCT-AIR	
	5	1	**341-8901**	1	SUPPORT AS	
Y	6	1	**343-5643**	1	AIR CLEANER GP	44
	7	1	**367-8073**	1	SEAL	
	8	1	**370-2158**	1	HOSE	
	9	1	**376-0645**	1	PLATE-INSTRUCTION (LUBRICATION POINTS)	
	10	1	**179-6401**	2	SCREW-PAN HEAD (6-32XO.5-IN)	
	11	1	**295-5550**	1	CLAMP-BAND (CONSTANT TENSION)	
	12	1	**4H-3001**	1	PLUG-BUTTON	
M	13	1	**5C-9553**	4	BOLT (M6X1X16-MM)	
	14	1	**5P-1717**	1	CLAMP-HOSE	
	15	1	**5P-4116**	4	WASHER-HARD (8.8X20.5X2-MM THK)	
	16	1	**7X-7729**	2	WASHER (11X25X3-MM THK)	
M	17	1	**8T-4133**	2	NUT (M10X1.5-THD)	
M	18	1	**8T-4908**	4	BOLT (M8X1.25X25-MM)	
	19	1	**8T-9402**	1	CLAMP-HOSE	
	20	1	**9X-6165**	4	WASHER (6.5X22X2.5-MM THK)	

M-METRIC PART
Y-SEPARATE ILLUSTRATION

353-1379 **AIR CLEANER GP** *(contd.)* **i04582750**

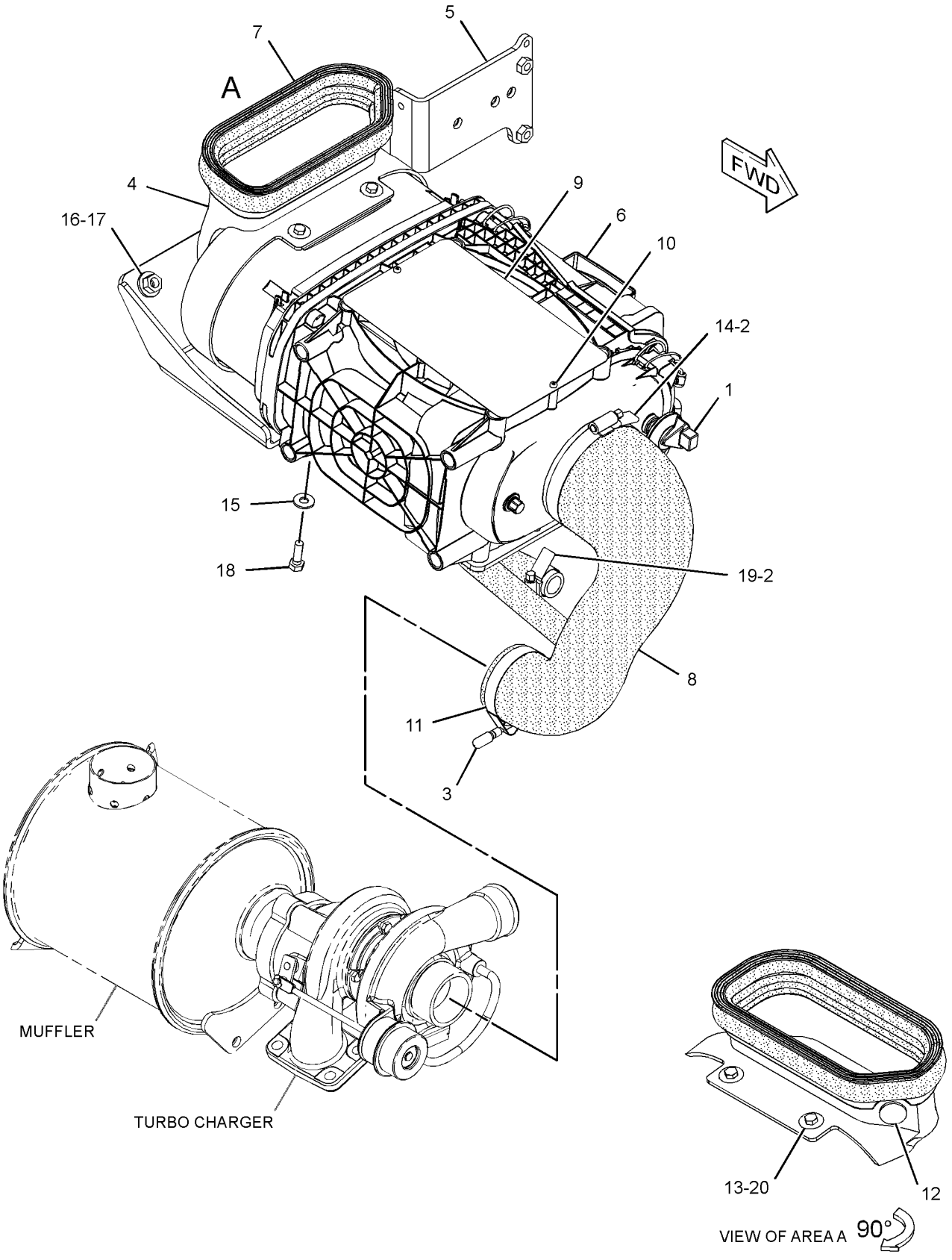

GRAPHIC #1 **<END>** g02790785

231-0149 COVER GP-INLET MANIFOLD

S/N: CRS1-UP
PART OF 364-5753 ENGINE AR-PRIMARY
AN ATTACHMENT

SMCS-1058 **i03821230**

NOTE	REF NO	GRAPHIC REF	PART NUMBER	QTY	PART NAME 1 2 3 4 5 6 (PRODUCT LEVEL)	SEE PAGE
	1	1	**111-8222**	12	BOLT (M8X16-MM)	
	2	1	**114-2579**	3	GASKET	
	3	1	**185-6627**	3	PLATE	

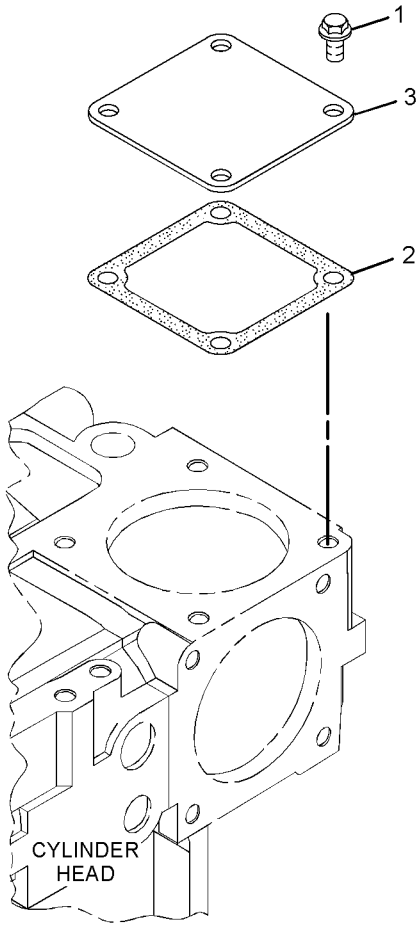

GRAPHIC #1 **<END>** g02090293

AIR INLET AND EXHAUST SYSTEM

350-3689 EXTENSION GP-EXHAUST

S/N: LTG1-UP
PART OF 340-1705 ENGINE AR
AN ATTACHMENT

SMCS-1061 **i04582812**

NOTE	REF NO	GRAPHIC REF	PART NUMBER	QTY	PART NAME 1 2 3 4 5 6 (PRODUCT LEVEL)	SEE PAGE
	1	1	**7E-3870**	1	CLAMP-MUFFLER	
	2	1	**239-2270**	1	PIPE-EXTENSION	
	3	1	**350-4310**	1	SUPPORT AS	
	4	1	**7X-7729**	2	WASHER (11X25X3-MM THK)	
M	5	1	**8T-4195**	2	BOLT (M10X1.5X30-MM)	

M-METRIC PART

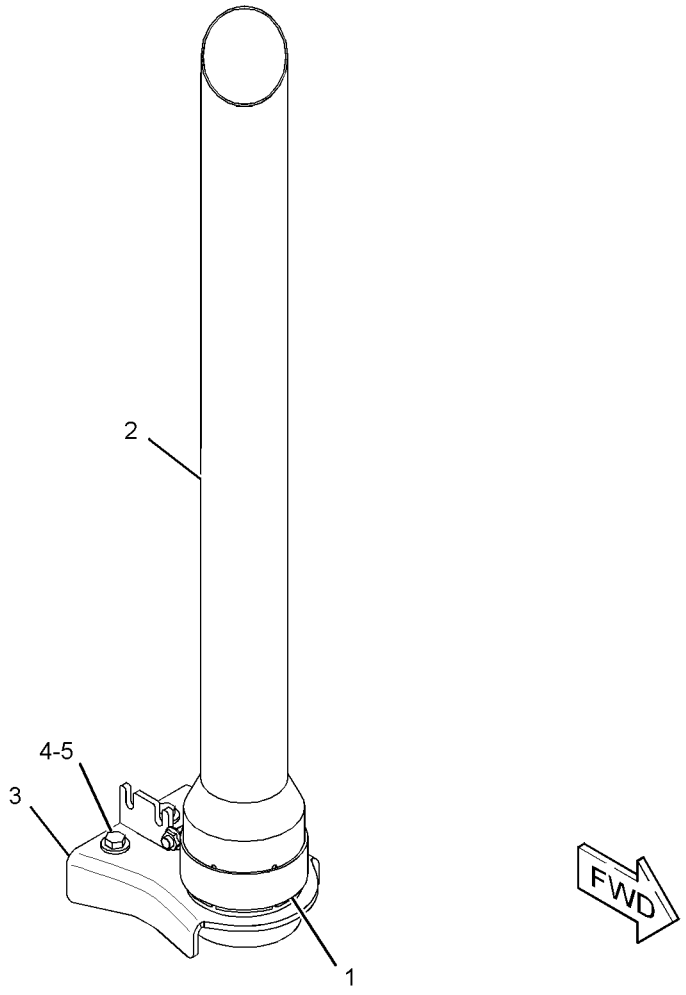

GRAPHIC #1 **<END>** g02806196

352-1454 MUFFLER GP–TURBOCHARGER

S/N: LTG1-UP
PART OF 340-1705 ENGINE AR
AN ATTACHMENT

SMCS-1062 **i04580330**

NOTE	REF NO	GRAPHIC REF	PART NUMBER	QTY	PART NAME 1 2 3 4 5 6 (PRODUCT LEVEL)	SEE PAGE
	1	1	**6I-0364**	3	STUD (M10X1.5X30-MM)	
	2	1	**6I-0563**	3	NUT (M10X1.5-THD)	
	3	1	**352-1930**	1	SUPPORT AS	
	4	1	**359-3495**	1	MUFFLER AS	
	5	1	**373-6522**	1	SUPPORT	
	6	1	**5P-4116**	4	WASHER-HARD (8.8X20.5X2-MM THK)	
	7	1	**7X-7729**	6	WASHER (11X25X3-MM THK)	
M	8	1	**8T-4136**	4	BOLT (M10X1.5X25-MM)	
M	9	1	**8T-4189**	2	BOLT (M8X1.25X20-MM)	
M	10	1	**8T-4195**	2	BOLT (M10X1.5X30-MM)	
M	11	1	**8T-4908**	2	BOLT (M8X1.25X25-MM)	

M-METRIC PART

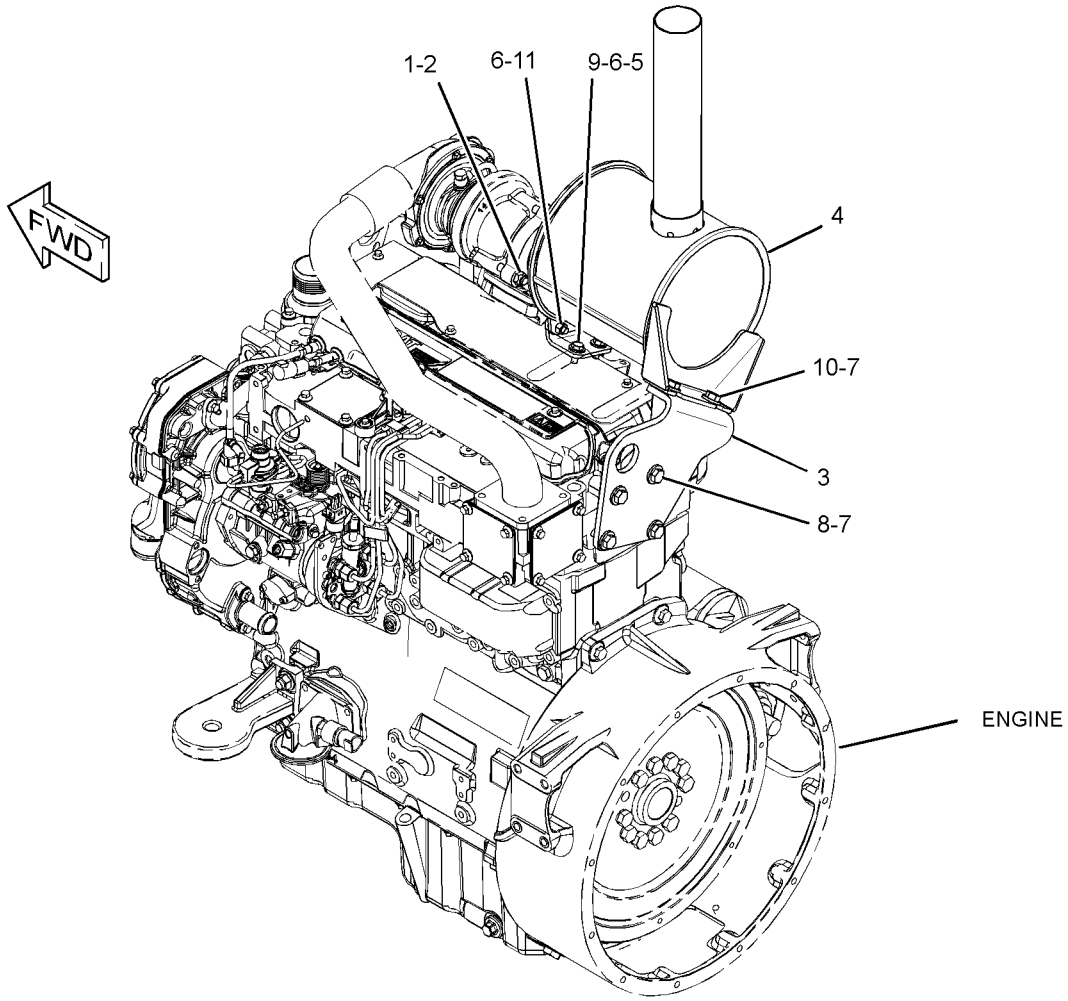

GRAPHIC #1 **<END>** g02809279

AIR INLET AND EXHAUST SYSTEM

237-3924 TURBOCHARGER GP

S/N: CRS1-UP
PART OF 364-5753 ENGINE AR-PRIMARY
AN ATTACHMENT

SMCS-1052, 1053 **i04329809**

NOTE	REF NO	GRAPHIC REF	PART NUMBER	QTY	PART NAME 1 2 3 4 5 6 (PRODUCT LEVEL)	SEE PAGE
M	1	1	**6I-0217**	2	BOLT (M8X1.25X20-MM)	
	2	1	**6I-0563**	4	NUT (M10X1.5-THD)	
	3	1	**6I-0572**	4	BOLT (M8X1.25X20-MM)	
	4	1	**106-8916**	2	BOLT (M6X16-MM)	
	5	1	**141-1667**	2	CLAMP-HOSE	
	6	1	**149-4236**	4	STUD	
	7	1	**174-9638**	8	BOLT	
	8	1	**194-5390**	1	GASKET-MANIFOLD	
	9	1	**371-5700**	1	MANIFOLD-EXHAUST	
	10	1	**225-8533**	1	GASKET (TURBOCHARGER)	
	11	1	**225-8534**	1	GASKET (TURBOCHARGER)	
	12	1	**225-8536**	1	GASKET (MANIFOLD)	
	13	1	**263-5376**	1	HOSE	
	14	1	**234-3030**	1	GASKET-INLET	
	15	1	**322-9616**	1	TUBE AS-TURBOCHARGER	
	15A	1	**225-8524**	2	BOLT-SPECIAL (BANJO)	
	15B	1	**225-8526**	4	WASHER (10.4X13.75X1.37-MM THK)	
	16	1	**237-3786**	1	TURBOCHARGER GP	
		1	**300-6520**	1	HOSE AS	
		1	**107-2348**	2	CLIP	
	17	1	**322-9615**	1	TUBE-TURBOCHARGER	
	18	1	**237-3794**	1	BOLT	
	19	1	**237-3921**	1	CLIP	
	20	1	**237-3922**	1	TUBE	

M-METRIC PART

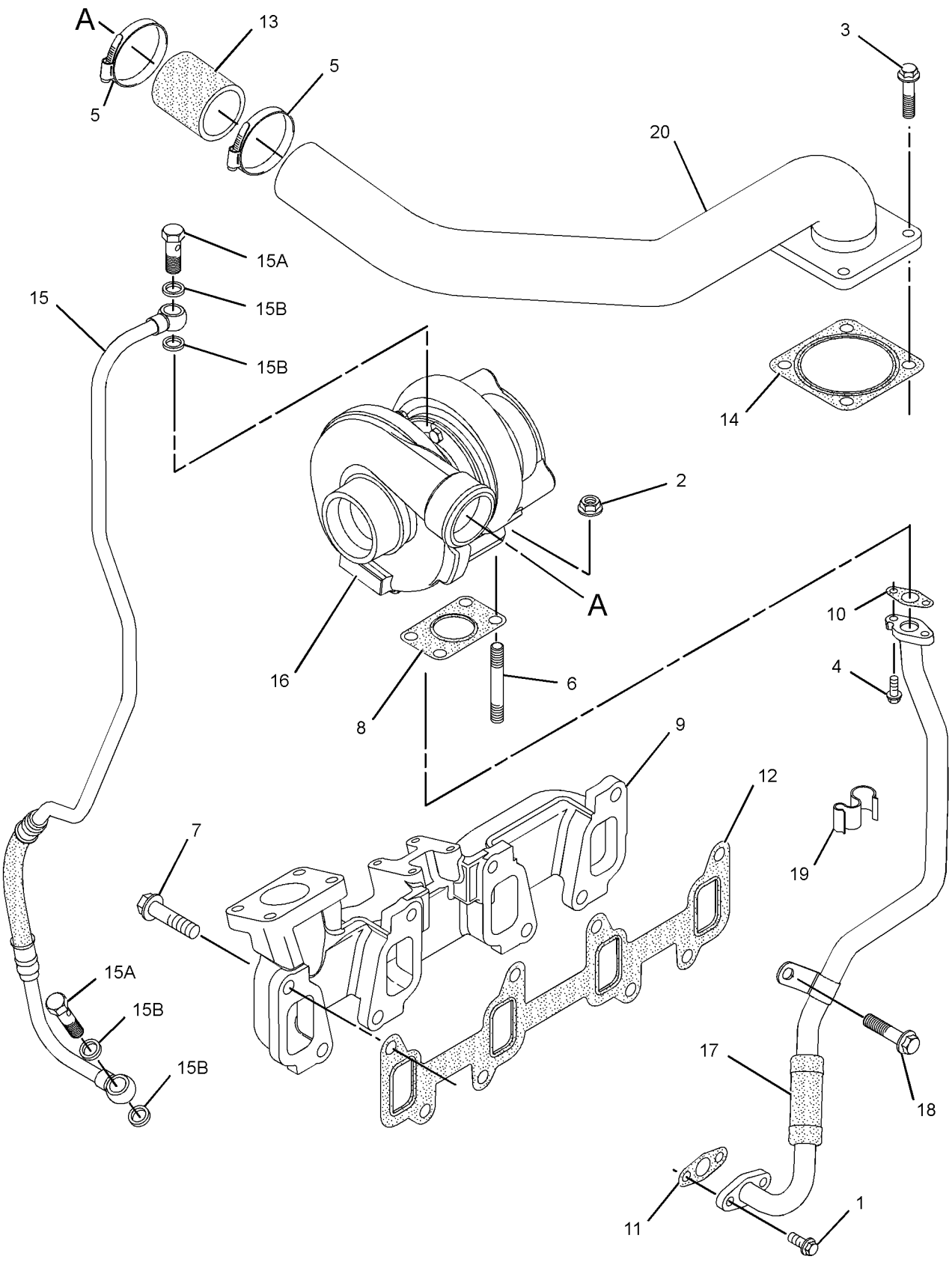

GRAPHIC #1 **<END>** g02494676

341-6719 CONTROL GP-GOVERNOR

S/N: LTG1-UP
PART OF 353-1452 ELECTRONICS AR-MACHINE
AN ATTACHMENT

SMCS-1265 **i04580997**

NOTE	REF NO	GRAPHIC REF	PART NUMBER	QTY	PART NAME 1 2 3 4 5 6 (PRODUCT LEVEL)	SEE PAGE
	1	1	**7K-1181**	2	STRAP-CABLE	
	2	1	**151-4841**	1	BLOCK	
	3	1	**164-1395**	1	KNOB (GOVERNOR CONTROL)	
	4	1	**206-1345**	1	STRAP-CABLE	
	5	1	**206-1692**	1	COVER AS (CONTROLS, REAR)	
		1	**206-1667**	3	CLIP	
Y	6	1	**209-3367**	1	LEVER GP-GOVERNOR (HANDHELD)	502
Y	7	1	**209-3378**	1	PEDAL GP-GOVERNOR (MECHANICAL)	517
	8	1	**235-0128**	1	CABLE AS	
M		1	**5C-2890**	2	NUT (M6X1-THD)	
		1	**8T-4742**	2	END-YOKE ROD	
		1	**8T-4744**	2	PIN AS-SPRING	
		1	**222-2690**	1	CLIP	
	9	1	**248-2707**	1	GROMMET	
	10	1	**250-7910**	1	FILM-INSTRUCTION (BOOM LOCK)	
	11	1	**250-7911**	1	FILM-INSTRUCTION (VARIABLE SPEED)	
	12	1	**300-1702**	1	BRACKET AS	
	13	1	**356-4070**	1	PLATE	
	14	1	**3S-2093**	2	STRAP-CABLE	
M	15	1	**5C-2890**	2	NUT (M6X1-THD)	
M	16	1	**7X-0818**	1	BOLT (M8X1.25X45-MM)	
M	17	1	**8C-6802**	3	SCREW-FLAT HEAD (6X1X26.3-MM)	
M	18	1	**8T-4138**	3	BOLT (M6X1X20-MM)	
	19	1	**8T-4205**	3	WASHER-HARD (7.2X14.5X2-MM THK)	
	20	1	**8T-4224**	2	WASHER-HARD (8.8X16X2-MM THK)	
M	21	1	**8T-4908**	1	BOLT (M8X1.25X25-MM)	
	22	1	**9X-2038**	4	WASHER (7X19X2-MM THK)	
M	23	1	**9X-2043**	2	SCREW-TRUSS HEAD (M6X1X14-MM)	

M-METRIC PART
Y-SEPARATE ILLUSTRATION

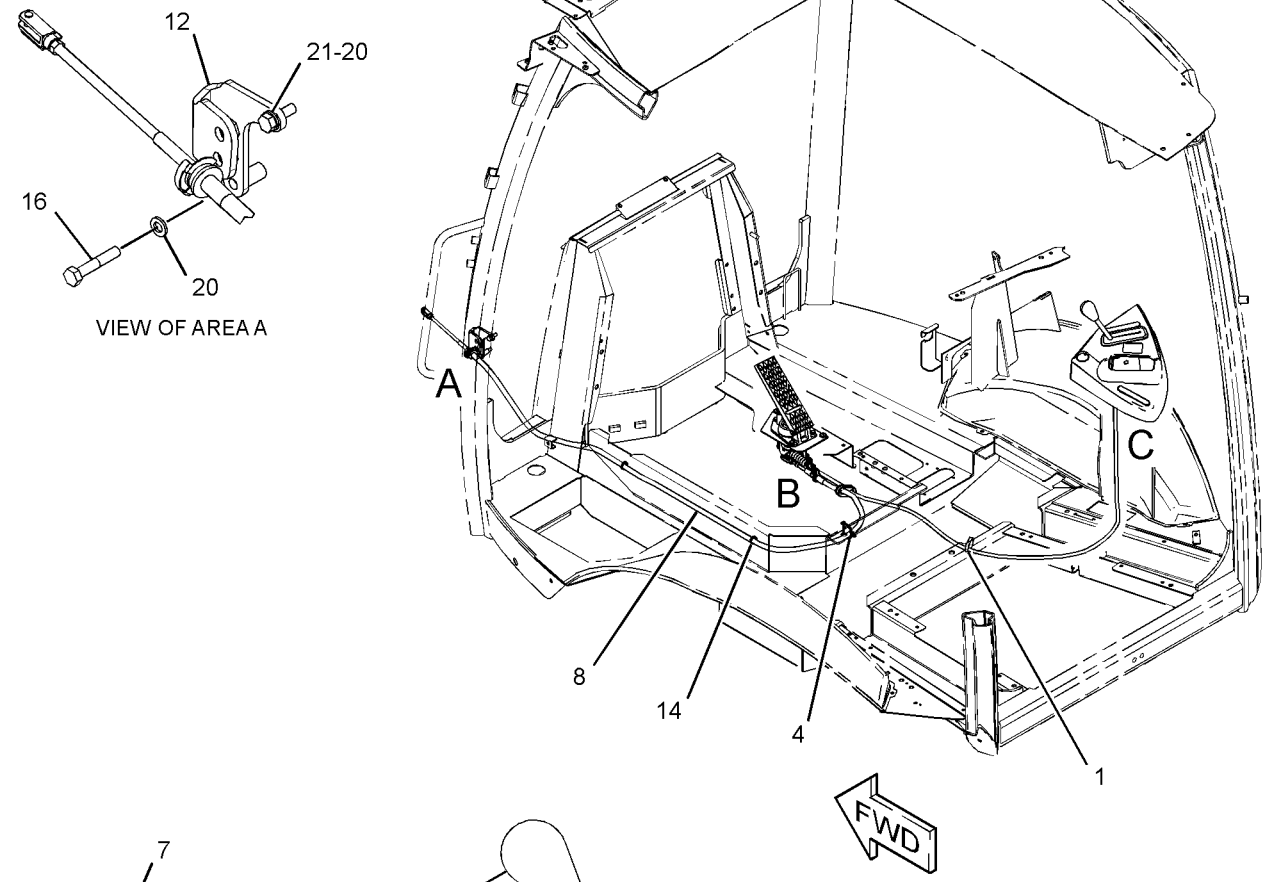

GRAPHIC #1 **<END>** g02798430

362-1266 FILTER GP-WATER SEP & FUEL

S/N: LTG1-UP
FIELD INSTALLATION

SMCS-1261, 1263 **i04629786**

NOTE	REF NO	GRAPHIC REF	PART NUMBER	QTY	PART NAME 1 2 3 4 5 6 (PRODUCT LEVEL)	SEE PAGE
	1	1	**246-2622**	2	ELBOW	
	2	1	**285-5098**	1	FILTER GP-FUEL (WATER SEPARATOR)	
		1	**118-8118**	1	RING-RETAINING	
		1	**118-8119**	1	NUT	
		1	**149-3516**	1	BASE AS	
		1	**156-1200**	1	FILTER ELEMENT-FUEL (WATER SEPARATOR)	
	3	1	**359-0264**	1	SUPPORT AS	
M		1	**159-9540**	2	NUT-WELD (M8X1.25-THD)	
	4	1	**362-2820**	2	CAP	
	5	1	*169-5861*	2	PLUG AS	
					(EACH INCLUDES)	
		1	**3K-8460**	1	PLUG	
		1	**5P-7814**	1	SEAL-O-RING	
	6	1	**359-7323**	2	CLAMP-HOSE	
	7	1	**5P-4116**	2	WASHER-HARD (8.8X20.5X2-MM THK)	
M	8	1	**8T-4189**	2	BOLT (M8X1.25X20-MM)	
	9	1	**8T-4224**	2	WASHER-HARD (8.8X16X2-MM THK)	
M	10	1	**8T-7547**	2	BOLT (M8X1.25X30-MM)	

M-METRIC PART

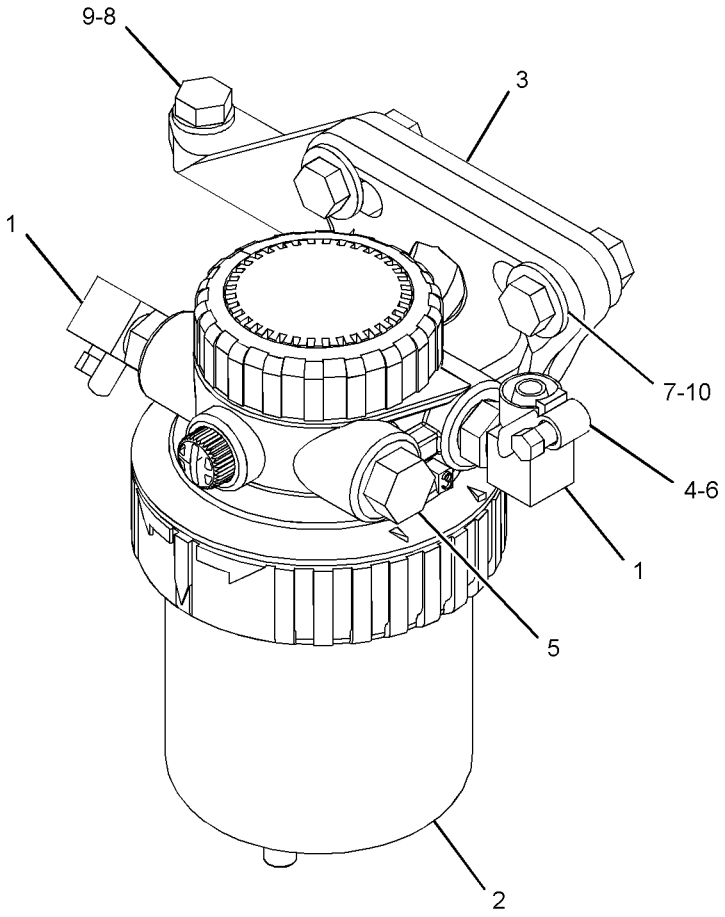

GRAPHIC #1 **<END>** g02809479

352-3462 LINES GP-FUEL–TURBO

S/N: LTG1-UP
PART OF 340-1705 ENGINE AR
AN ATTACHMENT

SMCS-1274 **i04552034**

NOTE	REF NO	GRAPHIC REF	PART NUMBER	QTY	PART NAME 1 2 3 4 5 6 (PRODUCT LEVEL)	SEE PAGE
	1	1	**069-4080**	1	FITTING	
	2	1	**215-9513**	1	CONNECTOR-HOSE	
	3	1	**224-5917**	1	CONNECTOR-SPECIAL	
	4	1	**241-4275**	1	TEE-SPECIAL	
	5	1	**246-2622**	1	ELBOW	
	6	1	*297-7958*	1	ADAPTER AS	
		1	**3J-1907**	1	SEAL-O-RING	
		1	**205-3079**	1	ADAPTER	
Y	7	1	**349-1063**	1	PUMP GP-FUEL PRM & PRIM FILTER (WITH WATER SEPARATOR)	63
	8	1	**362-2820**	10	CAP	
	9	1	**090-5725**	1	ELBOW	
	10	1	**100-4336**	4	CLIP	
	11	1	*148-8407*	2	PLUG AS	
					(EACH INCLUDES)	
		1	**3J-1907**	1	SEAL-O-RING	
		1	**9S-4191**	1	PLUG-O-RING	
	12	1	**359-7323**	8	CLAMP-HOSE	
	13	1	**359-7325**	2	CLAMP-HOSE	
	14	1	**3J-1907**	1	SEAL-O-RING	
	15	1	**5P-4116**	4	WASHER-HARD (8.8X20.5X2-MM THK)	
	16	1	**8T-4121**	4	WASHER-HARD (11X21X2.5-MM THK)	
M	17	1	**8T-4189**	2	BOLT (M8X1.25X20-MM)	
M	18	1	**8T-4196**	4	BOLT (M10X1.5X35-MM)	
M	19	1	**8T-7547**	2	BOLT (M8X1.25X30-MM)	
	20	1	**9M-8406**	3	CLIP	
E	21	1	**5P-1442**		HOSE (108-CM)	
E	22	1	**5P-1505**		HOSE (149-CM)	
E	23	1	**5P-1420**		HOSE (37.5-CM)	
E	23A	1	**5P-1420**		HOSE (50-CM)	
E	23B	1	**5P-1420**		HOSE (65-CM)	

E-ORDER BY THE CENTIMETER
M-METRIC PART
Y-SEPARATE ILLUSTRATION

352-3462 **LINES GP-FUEL** *(contd.)* **i04552034**

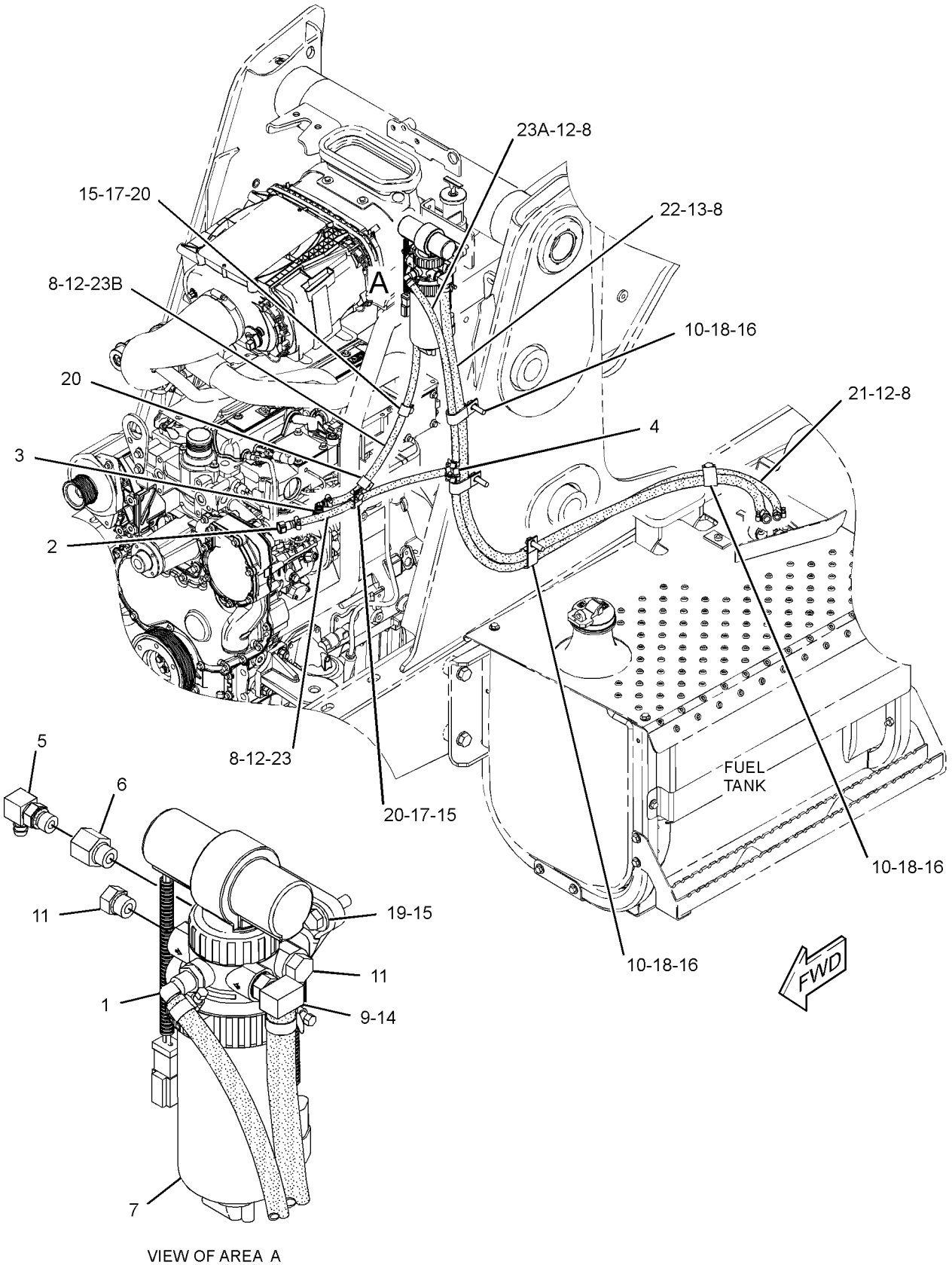

VIEW OF AREA A

GRAPHIC #1 **<END>** g02809460

247-4885 LINES GP-FUEL FILTER

S/N: CRS1-UP
PART OF 364-5753 ENGINE AR-PRIMARY
AN ATTACHMENT

SMCS-1261, 1274 **i02225714**

NOTE	REF NO	GRAPHIC REF	PART NUMBER	QTY	PART NAME 1 2 3 4 5 6 (PRODUCT LEVEL)	SEE PAGE
	1	1	**247-4884**	1	TUBE AS	
	2	1	**232-3126**	1	CLIP	

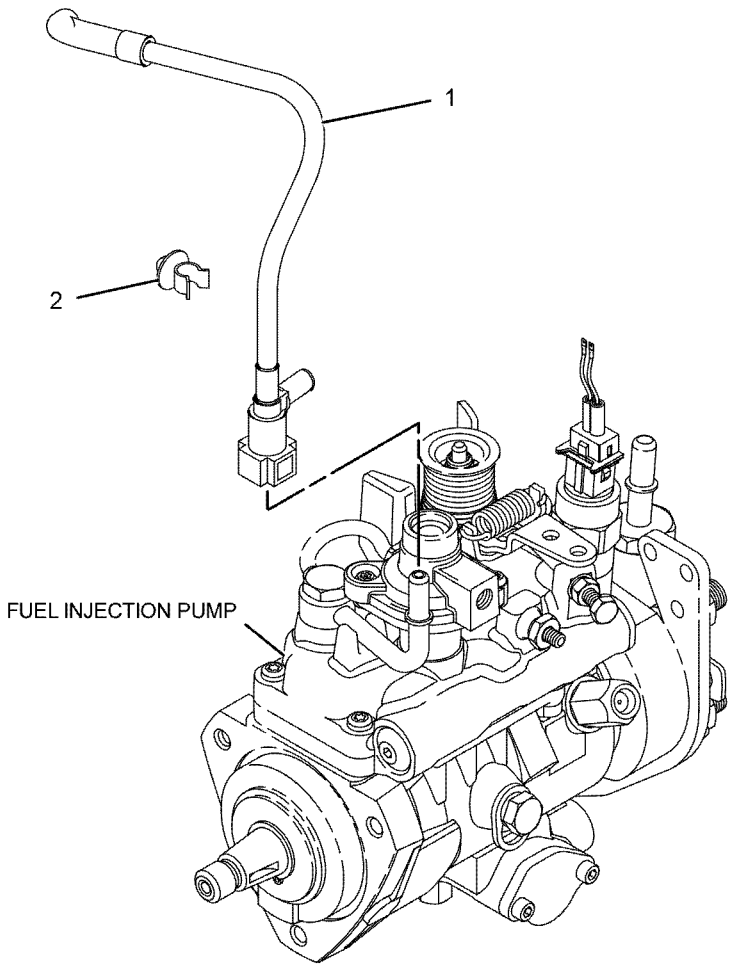

GRAPHIC #1

<END>

g01123693

353-1364 MOUNTING GP-GOVERNOR CONTROL–ENGINE

S/N: LTG1-UP
PART OF 340-1705 ENGINE AR
AN ATTACHMENT

SMCS-1264, 1265 **i04605592**

NOTE	REF NO	GRAPHIC REF	PART NUMBER	QTY	PART NAME 1 2 3 4 5 6 (PRODUCT LEVEL)	SEE PAGE
	1	1	**239-1434**	1	PLATE	
	2	1	**8T-4224**	2	WASHER-HARD (8.8X16X2-MM THK)	
M	3	1	**8T-4908**	2	BOLT (M8X1.25X25-MM)	

M-METRIC PART

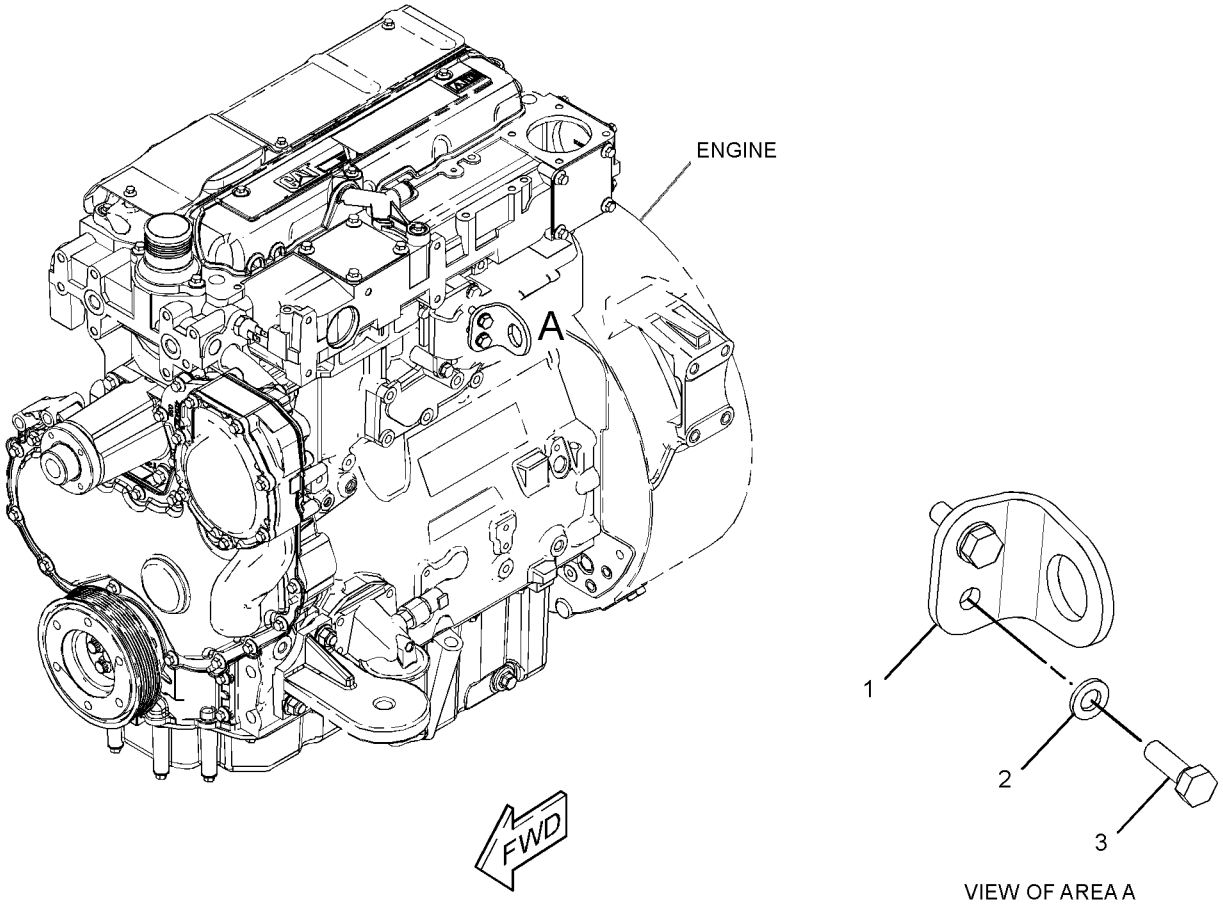

GRAPHIC #1 **<END>** g02788564

236-8228 PUMP GP-FUEL INJECTION

S/N: CRS1-UP
PART OF 236-8229 PUMP GP-FUEL INJECTION
AN ATTACHMENT

SMCS-1251, 1290 **i01999156**

NOTE	REF NO	GRAPHIC REF	PART NUMBER	QTY	PART NAME 1 2 3 4 5 6 (PRODUCT LEVEL)	SEE PAGE
	1	1	**152-3968**	1	SEAL-O-RING	
	2	1	**176-6219**	1	VALVE GP-SOLENOID (12-VOLT) (AIR FUEL RATIO CONTROL)	
	3	1	**193-0161**	1	CABLE AS-ADAPTER	

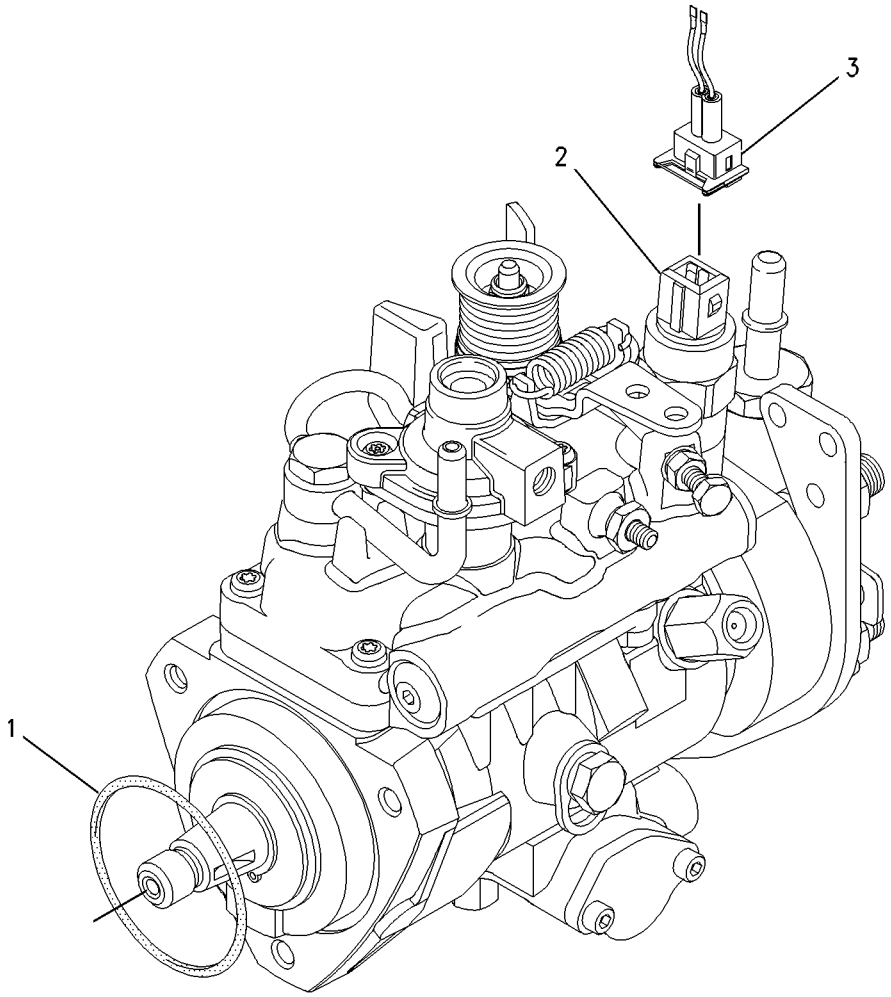

GRAPHIC #1 **<END>** g01006440

FUEL SYSTEM

236-8229 PUMP GP-FUEL INJECTION

S/N: CRS1-UP
PART OF 364-5753 ENGINE AR-PRIMARY
AN ATTACHMENT

SMCS-1251, 1290 **i04674300**

NOTE	REF NO	GRAPHIC REF	PART NUMBER	QTY	PART NAME 1 2 3 4 5 6 (PRODUCT LEVEL)	SEE PAGE
M	1	1	**6I-0217**	1	BOLT (M8X1.25X20-MM)	
M	2	1	**6I-0260**	3	BOLT (M8X1.25X25-MM)	
	3	1	**6I-0291**	1	NUT (M8X1.25-THD)	
	4	1	**035-8017**	1	UNION	
	5	1	**365-3308**	1	NUT-COMPRESSION	
	6	1	**067-6265**	1	FITTING-BRASS	
M	7	1	**100-4830**	1	BOLT (M10X1.5X20-MM)	
	8	1	**111-3422**	1	NUT	
	9	1	**111-3423**	1	WASHER	
	10	1	**140-8714**	1	CLIP	
	11	1	**230-7886**	1	TUBE AS	
	11A	1	**067-6999**	1	FERRULE	
	11B	1	**106-8835**	1	NUT	
	12	1	**230-8989**	1	GEAR-FUEL PUMP (68-TEETH)	
	13	1	**230-8995**	1	TUBE AS (CYL NO. 1)	
	14	1	**230-8996**	1	TUBE AS (CYL NO. 2)	
	15	1	**230-8997**	1	TUBE AS (CYL NO. 3)	
	16	1	**230-8998**	1	TUBE AS (CYL NO. 4)	
	17	2	**232-1323**	1	PLUG-CUP	
	18	1	**232-1328**	1	CAP (FUEL INJECTOR)	
	19	1	**232-1794**	3	HOSE	
	20	1	**232-2725**	2	CLIP	
	21	1	**232-2726**	1	CLIP	
	22	1	**232-3149**	1	WASHER (8.35X16.85X1.55-MM THK) (SEALING)	
	23	1	**232-3157**	1	BRACKET	
	24	1	**238-8671**	4	CLAMP-INJECTOR	
	25	1	**232-3274**	4	BOLT (M8X1.25X48.1-MM)	
	26	2	**235-1790**	1	SWITCH-TEMPERATURE (TIMING ADVANCE)	
	27	1	**236-1674**	4	INJECTOR AS-FUEL	
					(EACH INCLUDES)	
	27A	1	**236-1673**	1	NOZZLE	
	27B	1	**140-8718**	1	WASHER	
	27C	1	**275-1038**	1	SEAL-O-RING	
Y	28	1	**236-8228**	1	PUMP GP-FUEL INJECTION	59
	29	1	**318-2365**	1	CLIP	

M-METRIC PART
Y-SEPARATE ILLUSTRATION

236-8229 **PUMP GP-FUEL INJECTION** *(contd.)* **i04674300**

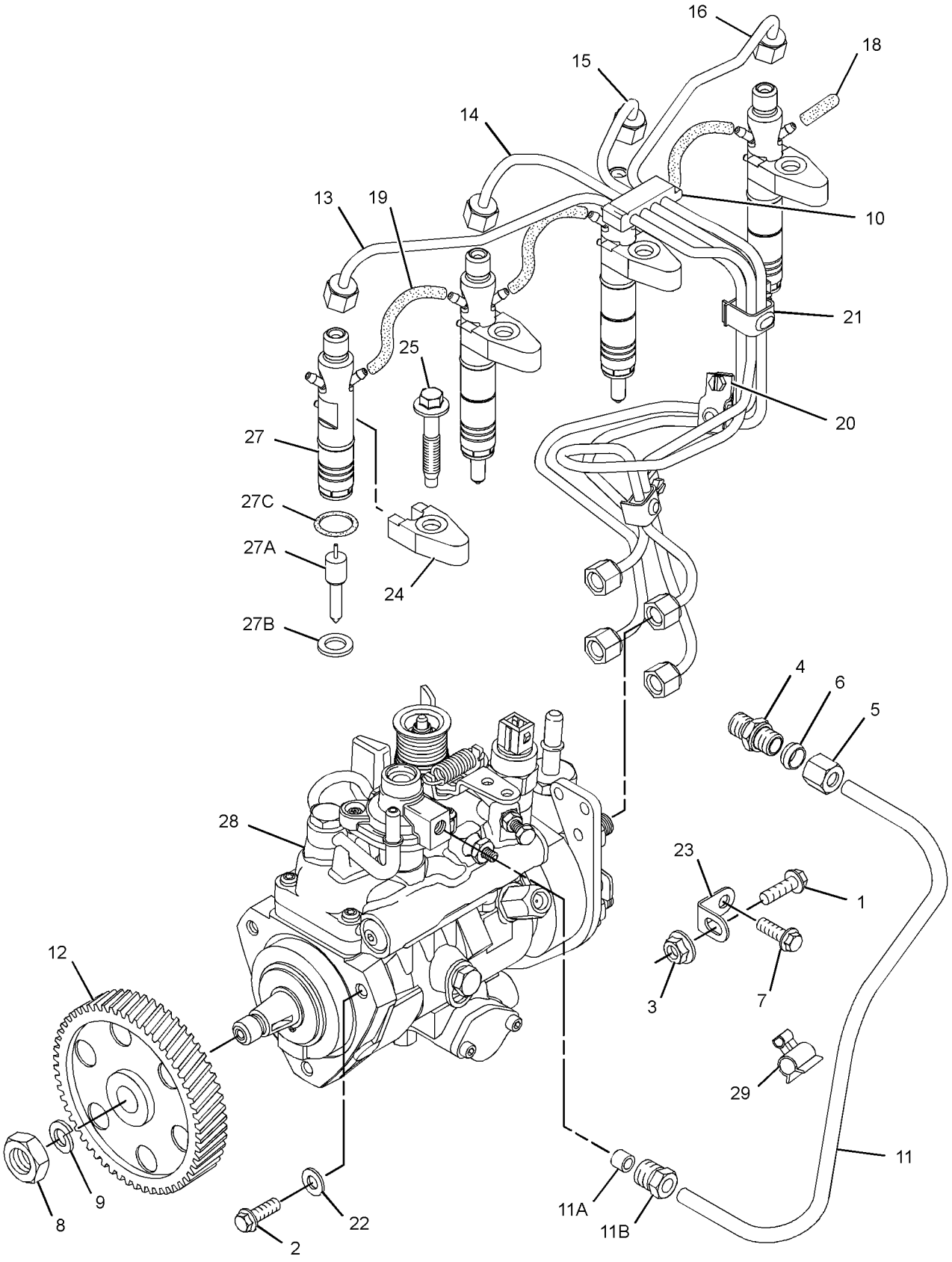

GRAPHIC #1 g01619129

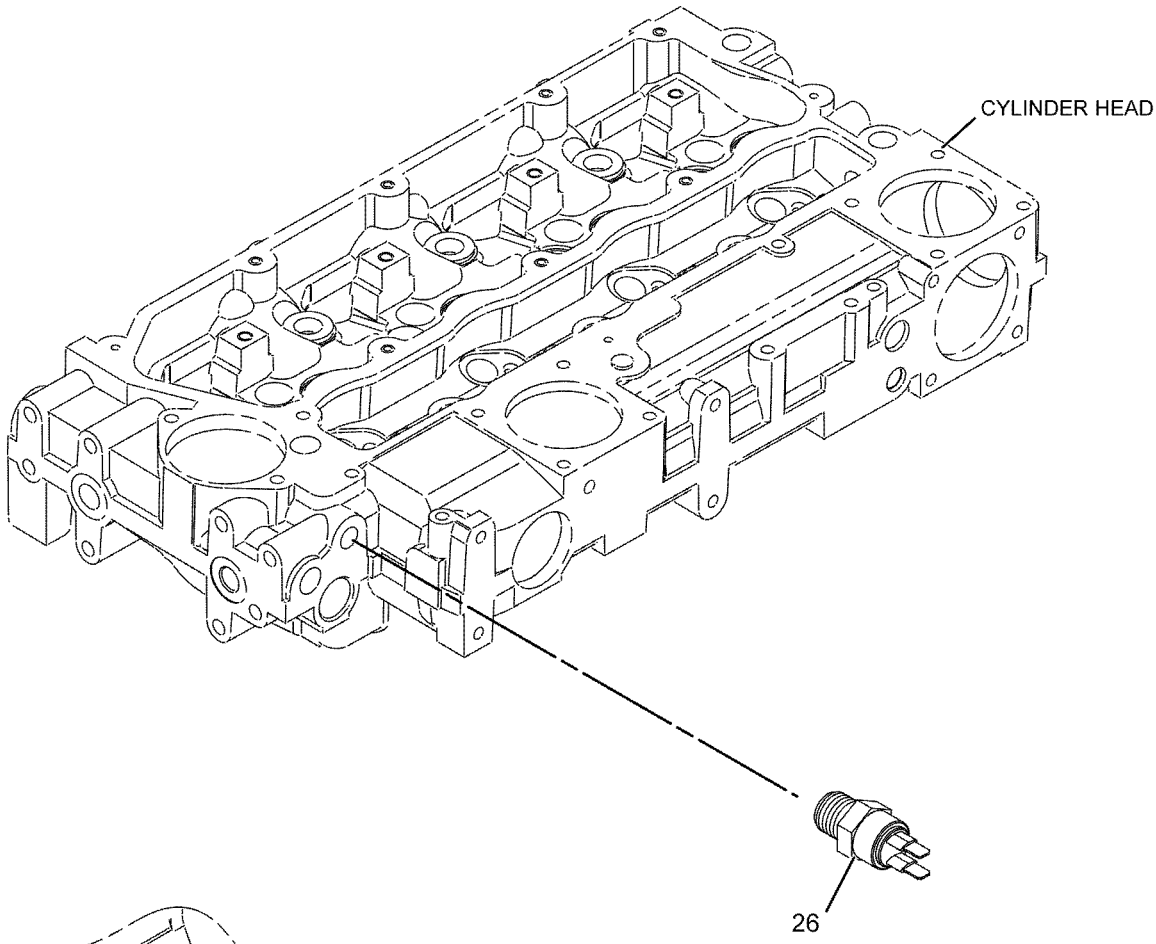

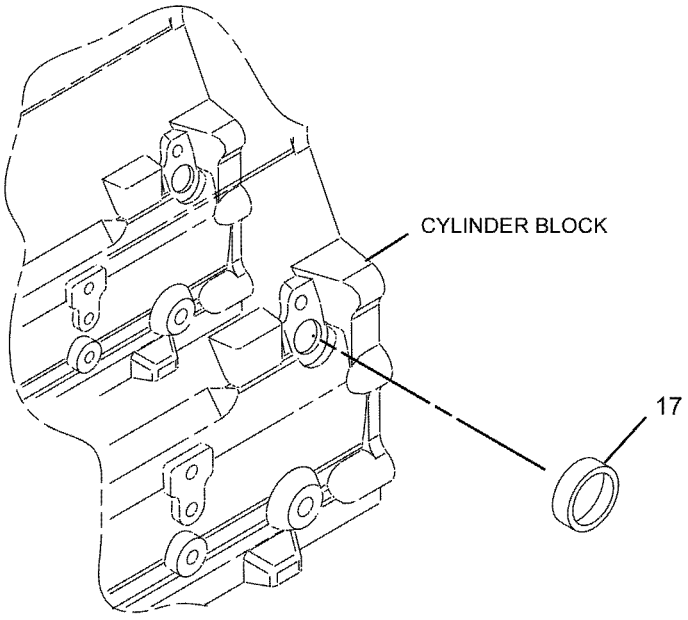

GRAPHIC #2 **<END>** g01022785

349-1063 PUMP GP-FUEL PRM & PRIM FILTER–
WITH WATER SEPARATOR
S/N: LTG1-UP
PART OF 352-3462 LINES GP-FUEL
AN ATTACHMENT

SMCS-1258, 1260, 1261 **i04583032**

NOTE	REF NO	GRAPHIC REF	PART NUMBER	QTY	PART NAME 1 2 3 4 5 6 (PRODUCT LEVEL)	SEE PAGE
	1	1	**118-8118**	1	RING-RETAINING	
	2	1	**149-9954**	1	DRAIN AS	
	3	1	**193-0618**	1	SENSOR GP-MOISTURE (WATER SEPARATOR)	
		1	**192-7876**	1	SCREW-MOUNTING	
	4	1	**361-9554**	1	ELEMENT-WATER SEPARATOR (FUEL FILTER)	
	5	1	**228-9132**	1	FITTING	

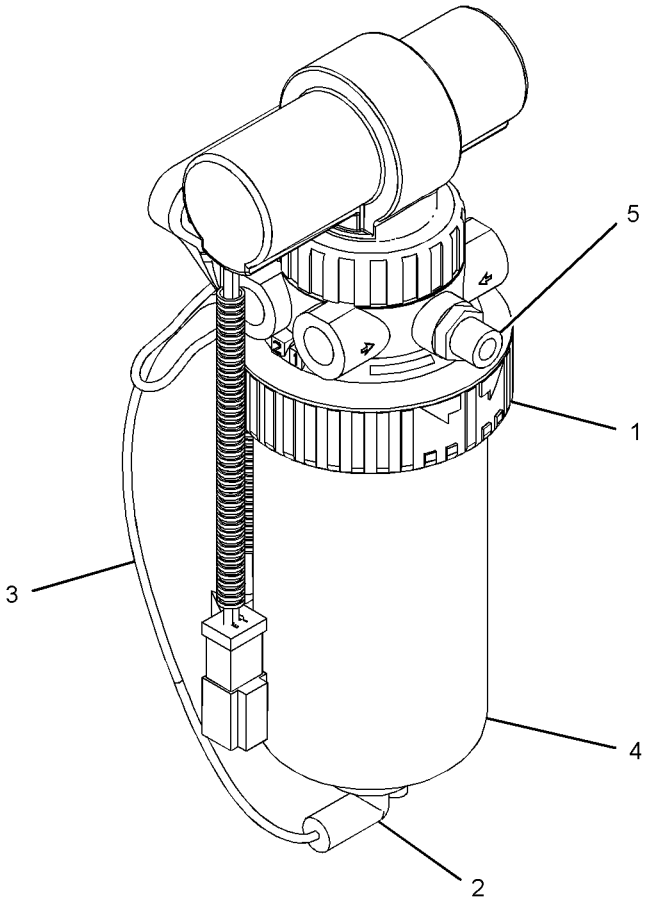

GRAPHIC #1 **<END>** g02736920

FUEL SYSTEM

362-4557 TANK GP-FUEL

S/N: LTG1-UP

PART OF 362-4625 TANK GP-FUEL

SMCS-1273 **i04547508**

NOTE	REF NO	GRAPHIC REF	PART NUMBER	QTY	PART NAME 1 2 3 4 5 6 (PRODUCT LEVEL)	SEE PAGE
	1	1	**284-9039**	1	CAP-FUEL (LOCKABLE, VENTED)	
	2	1	**314-7618**	1	PLUG AS	
		1	**190-7634**	1	SEAL-O-RING	
	3	1	**362-9029**	1	TANK AS-FUEL	
	4	1	**363-8475**	1	SENDER AS-FUEL LEVEL	
	4A	1	**310-4589**	1	GASKET	
	4B	1	**340-4152**	1	STRAINER (FUEL TANK)	
	4C	1	**102-8802**	1	KIT-RECEPTACLE (2-PIN)	
					(INCLUDES RECEPTACLE AS & WEDGE)	
	4D	1	**8T-8729**	1	PIN-CONNECTOR (16-GA TO 18-GA)	
	5	1	**198-9706**	6	SCREW-TRUSS HEAD (M5X0.8X16-MM)	

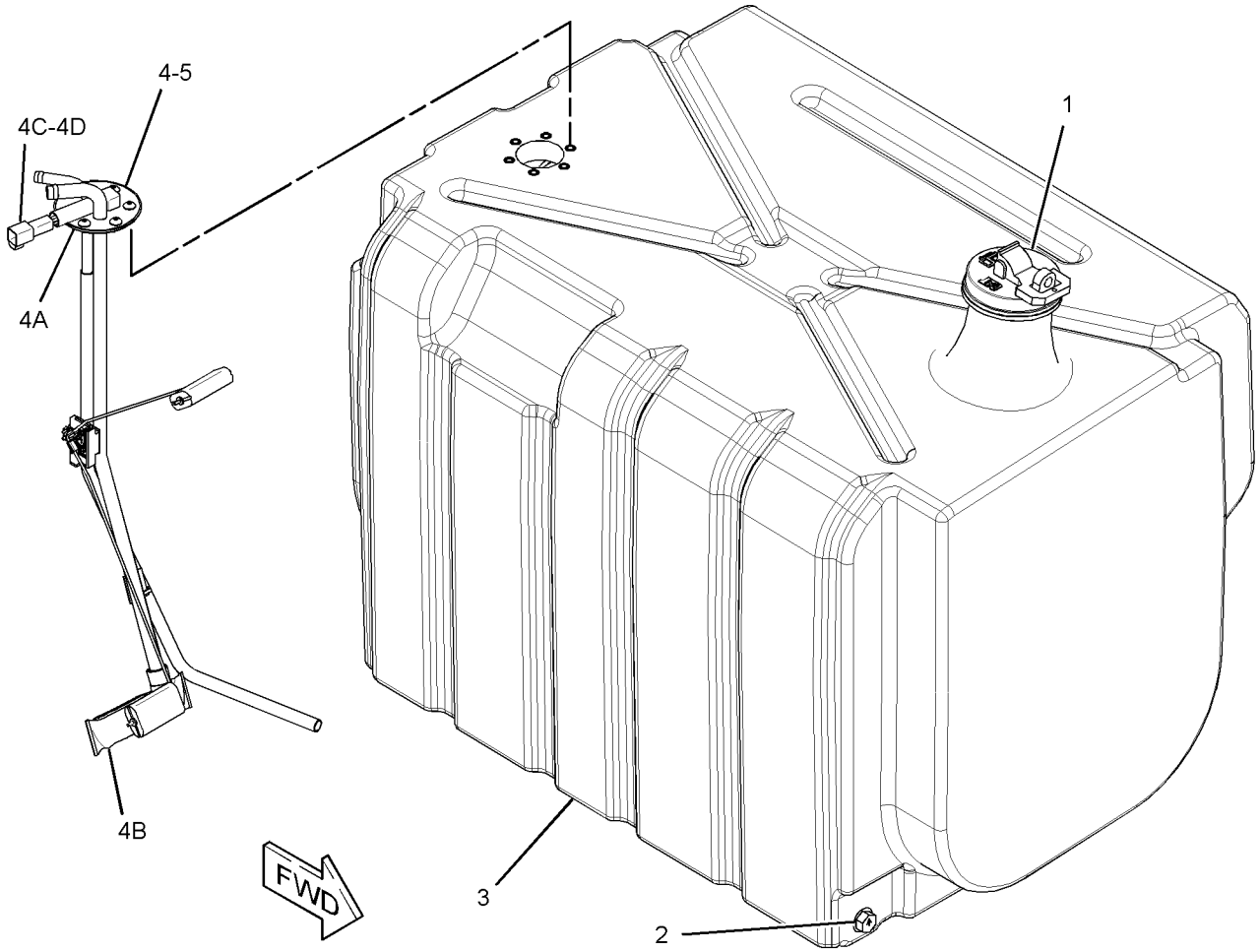

GRAPHIC #1 **<END>** g02777196

362-4625 TANK GP-FUEL

S/N: LTG1-UP
166-LITERS (43.9-US GAL)
PART OF 340-1690 CHASSIS AR

SMCS-1273 **i04649829**

NOTE	REF NO	GRAPHIC REF	PART NUMBER	QTY	PART NAME 1 2 3 4 5 6 (PRODUCT LEVEL)	SEE PAGE
Y	1	1	*362-4557*	1	TANK GP-FUEL	64
	2	1	**362-4560**	1	TUBE AS	
	3	1	**362-4563**	1	PLATE	
	4	1	**362-4624**	1	TUBE AS	
	5	1	**362-9460**	1	FENDER	
	6	1	**363-8010**	1	STEP AS	
	7	1	**363-8031**	1	TREAD AS	
	8	1	**363-8348**	2	MOUNT	
	9	1	**364-2475**	1	SEAL-STRIP	
	10	1	**371-6659**	1	SEAL-CENTER	
	11	1	**380-8815**	1	PLATE	
	12	1	**156-0283**	3	WASHER-HARD (8.4X35X2.5-MM THK)	
	13	1	**5P-4116**	14	WASHER-HARD (8.8X20.5X2-MM THK)	
M	14	1	**8T-4189**	2	BOLT (M8X1.25X20-MM)	
M	15	1	**8T-4193**	4	BOLT (M16X2X50-MM)	
M	16	1	**8T-4908**	3	BOLT (M8X1.25X25-MM)	
M	17	1	**8T-6869**	8	BOLT (M8X1.25X60-MM)	
	18	1	**9X-8257**	4	WASHER (17.5X30X3.5-MM THK)	
M	19	1	**8T-7547**	4	BOLT (M8X1.25X30-MM)	
	20	1	**193-5913**	2	PLUG	

M-METRIC PART
Y-SEPARATE ILLUSTRATION

362-4625 **TANK GP-FUEL** *(contd.)* **i04649829**

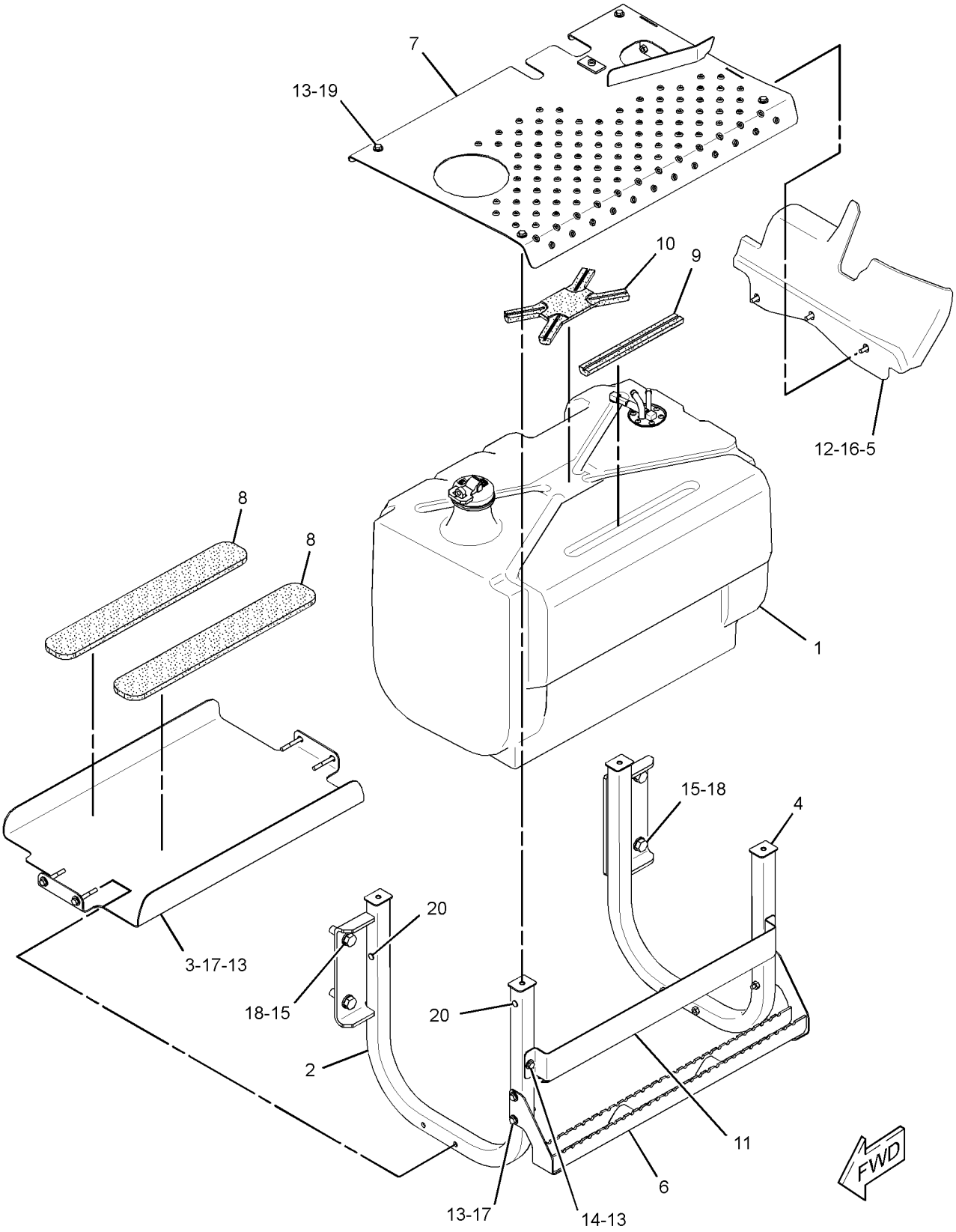

GRAPHIC #1 **<END>** g02829858

ELECTRICAL AND STARTING SYSTEM

357-6501 BATTERY & WIRING GP

S/N: LTG1-UP
PART OF 340-1705 ENGINE AR
AN ATTACHMENT

SMCS-1401, 1402, 1408, 1411 **i04577649**

NOTE	REF NO	GRAPHIC REF	PART NUMBER	QTY	PART NAME 1 2 3 4 5 6 (PRODUCT LEVEL)	SEE PAGE
	1	1	**3E-8320**	1	PLATE-INSTRUCTION (BATTERY)	
	2	1	**7K-1181**	3	STRAP-CABLE	
Y	3	1	**7N-0718**	1	SWITCH GP-DISCONNECT (BATTERY)	99
	4	1	**8W-8528**	3	SLEEVE	
	5	2	**8Y-1816**	1	SPACER (12.5X25X25-MM THK)	
	6	2	**8X-5489**	2	SLEEVE	
	7	1	**206-2423**	1	SADDLE	
M	8	1,2	**8T-7963**	2	LOCKNUT (M8X1.25-THD)	
	9	1	**230-6368**	1	BATTERY (12-VOLT, MAINTENANCE FREE)	
	10	2	**263-6556**	1	STUD	
	11	1	**290-6746**	1	CABLE AS	
		1	**312-6455**	1	TERMINAL AS	
E		1	**125-7876**		TUBE-HEAT SHRINK (17.78-MM DIA) (5-CM)	
		1	**311-6184**	1	TERMINAL-RING (2-GA, 3/8-IN SCREW)	
E		1	**125-7876**		TUBE-HEAT SHRINK (17.78-MM DIA) (7-CM)	
	12	1	**331-5550**	1	CABLE AS	
		1	**1S-7252**	1	TERMINAL-CABLE (00-GA, 3/8-IN SCREW)	
M		1	**8U-0767**	1	BOLT (M8X1.25X16-MM)	
		1	**8T-4224**	1	WASHER-HARD (8.8X16X2-MM THK)	
		1	**030-1705**	1	TERMINAL-CABLE (00-GA, 5/16-IN SCREW)	
E		1	**135-5009**		TUBE-HEAT SHRINK (32-MM DIA) (10-CM)	
E		1	**159-8049**		CABLE (00-GA, RED) (59-CM)	
	13	1	**331-5552**	1	CABLE AS	
E		1	**159-8049**		CABLE (00-GA, RED) (147-CM)	
		1	**1S-7252**	2	TERMINAL-CABLE (00-GA, 3/8-IN SCREW)	
E		1	**135-5009**		TUBE-HEAT SHRINK (32-MM DIA) (20-CM)	
	14	1	**331-5555**	1	CABLE AS-BATTERY	
E		1	**159-8050**		CABLE (00-GA, BLACK) (98-CM)	
		1	**9G-8909**	1	COVER-TERMINAL (BLACK)	
M		1	**8U-0767**	1	BOLT (M8X1.25X16-MM)	
		1	**1S-7252**	1	TERMINAL-CABLE (00-GA, 3/8-IN SCREW)	
		1	**030-1705**	1	TERMINAL-CABLE (00-GA, 5/16-IN SCREW)	
E		1	**135-5009**		TUBE-HEAT SHRINK (32-MM DIA) (10-CM)	
		1	**5P-4116**	1	WASHER-HARD (8.8X20.5X2-MM THK)	
	15	1	**331-5556**	1	CABLE AS	
E		1	**159-8050**		CABLE (00-GA, BLACK) (58-CM)	
		1	**9G-8909**	1	COVER-TERMINAL (BLACK)	
		1	**1S-7252**	1	TERMINAL-CABLE (00-GA, 3/8-IN SCREW)	
		1	**274-9183**	1	TERMINAL-RING	
E		1	**135-5009**		TUBE-HEAT SHRINK (32-MM DIA) (10-CM)	
	16	2	**331-5581**	1	BRACKET AS	
	17	1,2	**360-8983**	2	ROD	
	18	1	**360-8984**	1	ANGLE	
	19	1	**362-8030**	1	BRACKET AS	
	20	1	**368-4714**	1	CABLE AS (POSITIVE)	
E		1	**5P-0761**		CABLE (00-GA, RED) (96-CM)	
		1	**8N-0869**	1	COVER-TERMINAL (RED)	
		1	**1S-7252**	2	TERMINAL-CABLE (00-GA, 3/8-IN SCREW)	
E		1	**125-7876**		TUBE-HEAT SHRINK (17.78-MM DIA) (5-CM)	
	21	1	**374-7337**	1	BRACKET AS	
	22	1	**133-3260**	1	SPACER (11X19X10-MM THK)	
	23	1	**138-7500**	1	SPACER (11X25X50-MM THK)	
M	24	2	**148-1899**	1	BOLT-CARRIAGE (M10X1.5X60-MM)	
M	25	1	**198-3899**	2	SCREW-BUTTON HEAD (M8X1.25X20-MM)	
	26	1,2	**1S-0994**	4	CLIP	

357-6501 **BATTERY & WIRING GP** *(contd.)* **i04577649**

NOTE	REF NO	GRAPHIC REF	PART NUMBER	QTY	PART NAME 1 2 3 4 5 6 (PRODUCT LEVEL)	SEE PAGE
	27	1	**353-7957**	1	GROMMET	
	28	1	**362-2904**	1	PLATE AS	
	29	1	**3J-4818**	1	LOCKWASHER	
M	30	2	**5C-7261**	2	NUT (M8X1.25-THD)	
	31	1,2	**5G-3676**	2	GROMMET	
	32	1,2	**5P-4116**	2	WASHER-HARD (8.8X20.5X2-MM THK)	
	33	2	**5T-6374**	1	SPACER (10.5X20X40-MM THK)	
	34	1	**6V-8801**	1	NUT (3/8-16-THD)	
	35	1,2	**7C-4354**	2	CLIP	
	36	1	**7X-7729**	1	WASHER (11X25X3-MM THK)	
	37	2	**8F-3590**	1	LOCKWASHER	
	38	1,2	**8T-1887**	3	CLIP (SLOT)	
	39	1,2	**8T-1888**	3	CLIP (TAB)	
M	40	2	**8T-3998**	2	BOLT (M4X0.7X12-MM)	
	41	1,2	**8T-4121**	13	WASHER-HARD (11X21X2.5-MM THK)	
M	42	1,2	**8T-4133**	3	NUT (M10X1.5-THD)	
M	43	1	**8T-4136**	1	BOLT (M10X1.5X25-MM)	
M	44	1,2	**8T-4137**	4	BOLT (M10X1.5X20-MM)	
M	45	1	**8T-4139**	1	BOLT (M12X1.75X30-MM)	
M	46	1	**8T-4172**	1	BOLT (M10X1.5X80-MM)	
M	47	2	**8T-4189**	1	BOLT (M8X1.25X20-MM)	
M	48	1	**8T-4192**	2	BOLT (M12X1.75X25-MM)	
M	49	1,2	**8T-4196**	4	BOLT (M10X1.5X35-MM)	
	50	1	**8T-4223**	3	WASHER-HARD (13.5X25.5X3-MM THK)	
	51	1,2	**8T-4224**	6	WASHER-HARD (8.8X16X2-MM THK)	
	52	1	**8T-4896**	1	WASHER-HARD (10.2X18.5X2.5-MM THK)	
M	53	2	**8T-5005**	1	BOLT (M10X1.5X70-MM)	
M	54	2	**8T-7547**	2	BOLT (M8X1.25X30-MM)	

E-ORDER BY THE CENTIMETER
M-METRIC PART
Y-SEPARATE ILLUSTRATION

357-6501 **BATTERY & WIRING GP** *(contd.)* **i04577649**

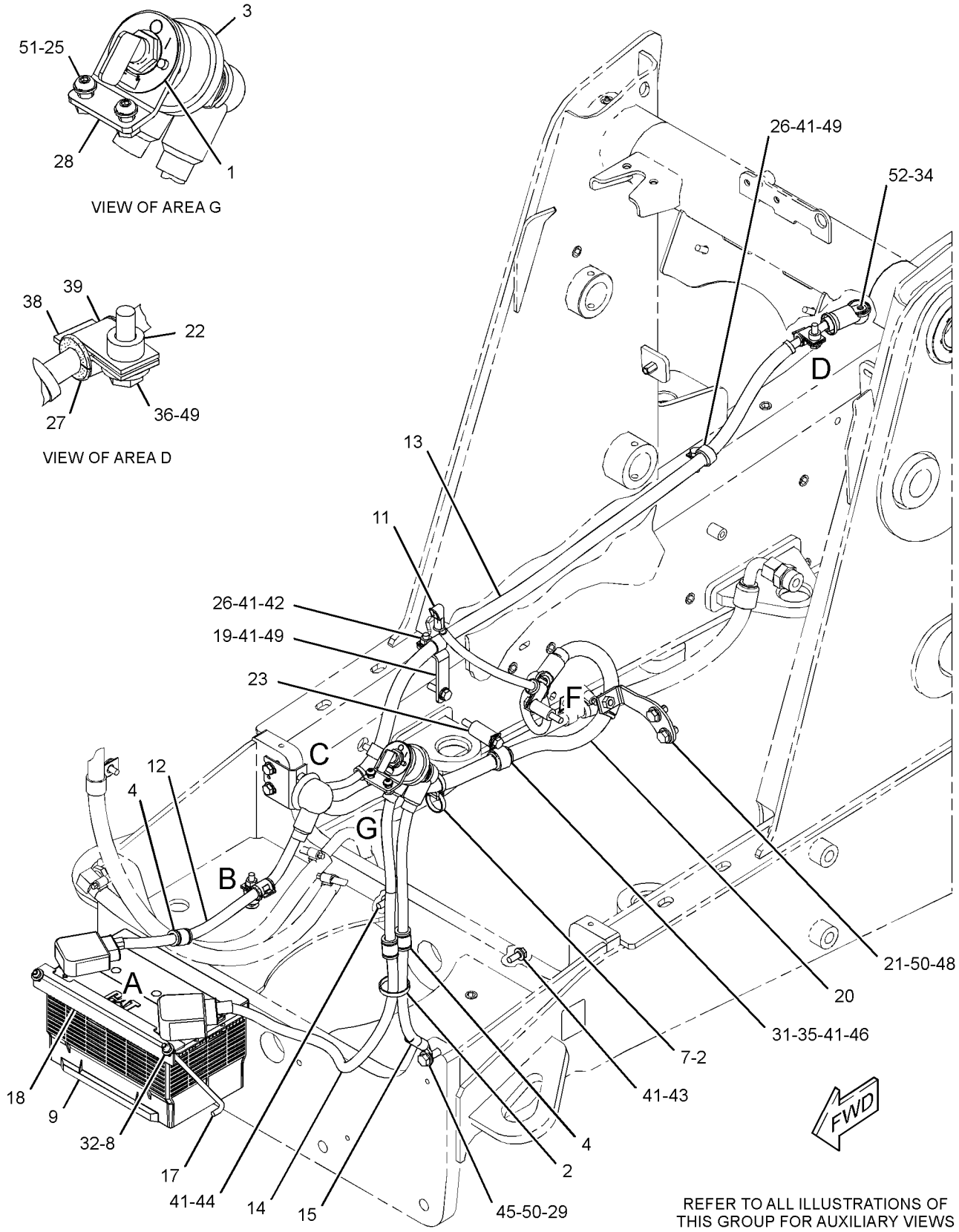

REFER TO ALL ILLUSTRATIONS OF THIS GROUP FOR AUXILIARY VIEWS

GRAPHIC #1

g02815177

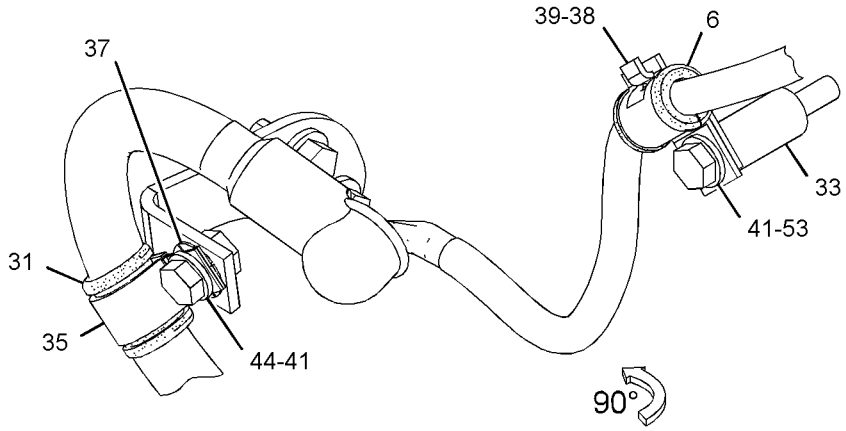

VIEW OF AREA F

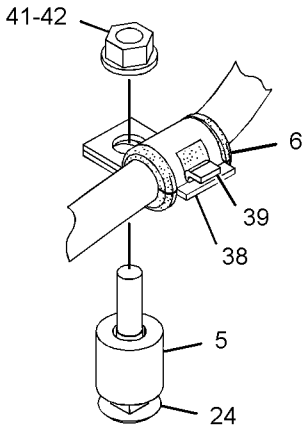

VIEW OF AREA B

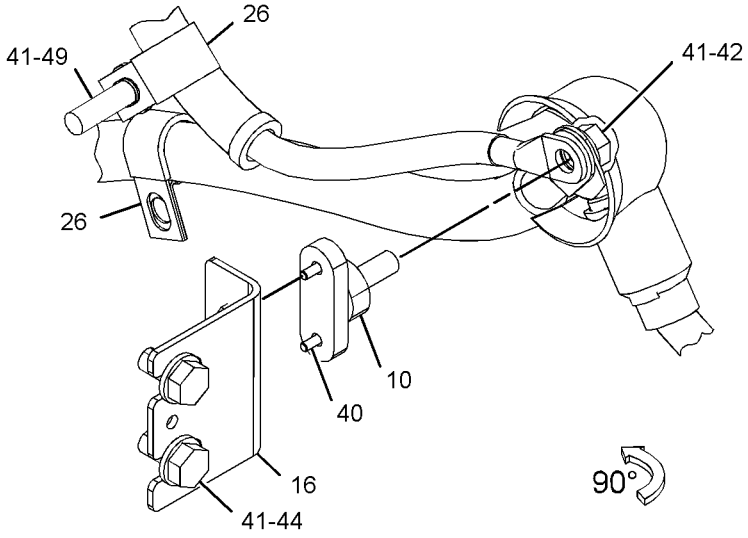

VIEW OF AREA C

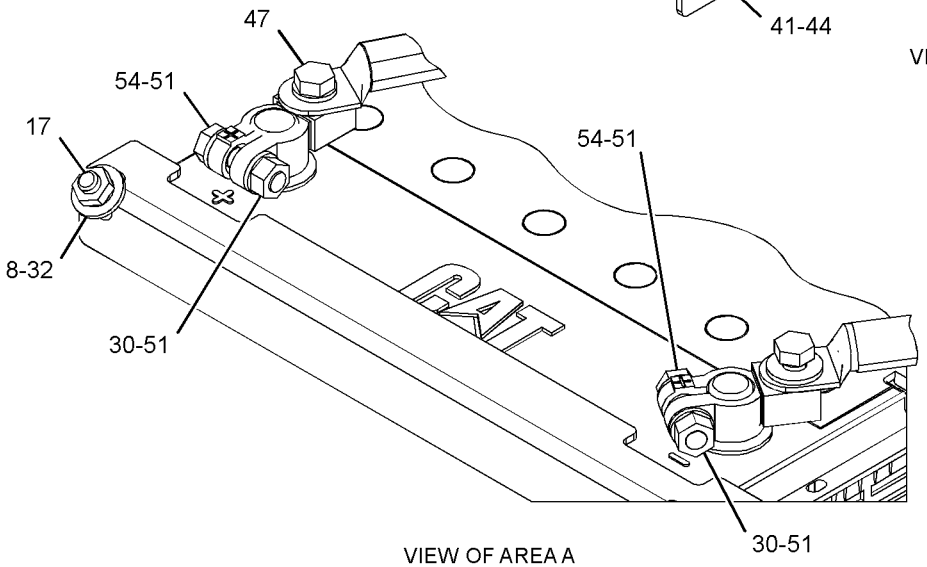

VIEW OF AREA A
(TERMINAL COVERS REMOVED)

GRAPHIC #2 **<END>** g02816577

331-5461 BATTERY GP

S/N: LTG1-UP
PART OF 377-0021 COLD WEATHER AR
AN ATTACHMENT

SMCS-1401 **i04565414**

NOTE	REF NO	GRAPHIC REF	PART NUMBER	QTY	PART NAME 1 2 3 4 5 6 (PRODUCT LEVEL)	SEE PAGE
	1	1	**230-6368**	1	BATTERY (12-VOLT, MAINTENANCE FREE)	
	2	1	**331-5554**	1	CABLE AS (POSITIVE)	
		1	**9G-0004**	1	COVER AS-TERMINAL (RED)	
		1	**8L-8413**	1	STRAP-CABLE (WHITE)	
E		1	**135-5009**		TUBE-HEAT SHRINK (32-MM DIA) (5-CM)	
E		1	**159-8049**		CABLE (00-GA, RED) (39-CM)	
		1	**1M-6119**	1	BOLT (5/16-18X1.375-IN)	
		1	**1M-6120**	1	NUT (5/16-18-THD)	
		1	**375-2144**	1	TERMINAL-RING	
	3	1	**331-5557**	1	CABLE AS (NEGATIVE)	
		1	**9G-0005**	1	COVER AS-TERMINAL (BLACK)	
		1	**8L-8413**	1	STRAP-CABLE (WHITE)	
E		1	**135-5009**		TUBE-HEAT SHRINK (32-MM DIA) (5-CM)	
E		1	**159-8050**		CABLE (00-GA, BLACK) (38-CM)	
		1	**1M-6119**	1	BOLT (5/16-18X1.375-IN)	
		1	**1M-6120**	1	NUT (5/16-18-THD)	
		1	**375-2144**	1	TERMINAL-RING	
	4	1	**360-8983**	2	ROD	
	5	1	**360-8984**	1	ANGLE	
	6	1	**5P-4116**	2	WASHER-HARD (8.8X20.5X2-MM THK)	
M	7	1	**8T-7963**	2	LOCKNUT (M8X1.25-THD)	

E-ORDER BY THE CENTIMETER
M-METRIC PART

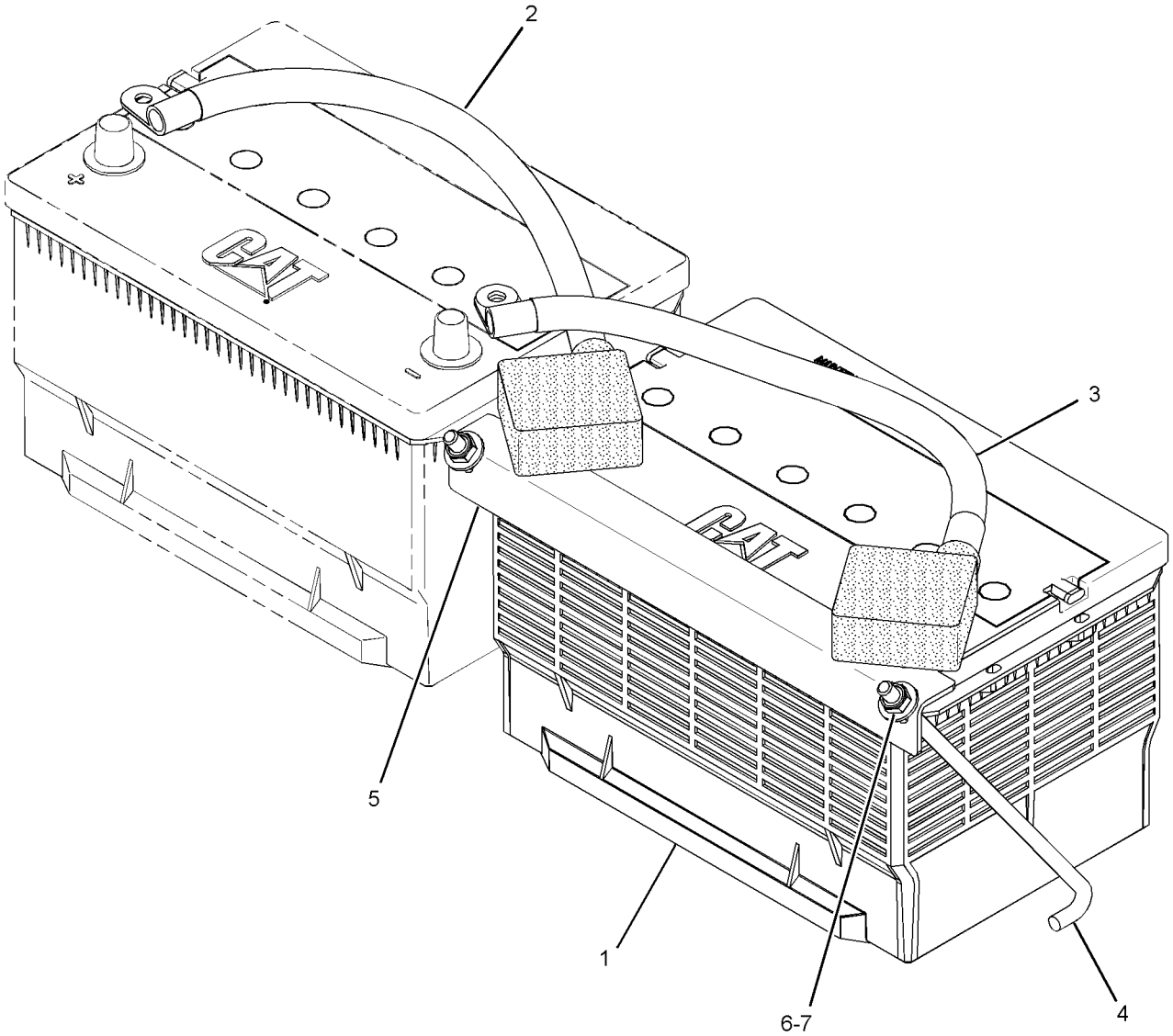

GRAPHIC #1 **<END>** g02804696

ELECTRICAL AND STARTING SYSTEM

380-8260 CONTROL GP-MACHINE

S/N: LTG1-UP
PART OF 353-1452 ELECTRONICS AR-MACHINE
AN ATTACHMENT

SMCS-7600, 7610 **i04612778**

NOTE	PART NUMBER	QTY	PART NAME 1 2 3 4 5 6 (PRODUCT LEVEL)	SEE PAGE
	382-3404	1	SOFTWARE GP-MACHINE	
			—OR—	
R	**304-5687**	1	CONTROL GP-UNPROGRAMMED (MACHINE ECM)	
			—OR—	
	382-3405	1	SERVICE GP-MACHINE	
			(OPTIONAL SERVICE REPLACEMENT) (INCLUDES CONTROL GP & SOFTWARE)	

R-REMFG PART MAY BE AVAILABLE

<END>

353-1452 ELECTRONICS AR-MACHINE—PILOT

S/N: LTG1-UP
PART OF 374-6818, 374-6823, 374-6832 POWER TRAIN AR
AN ATTACHMENT

SMCS-1408, 7000, 7610, 7620 **i04622230**

NOTE	PART NUMBER	QTY	PART NAME 1 2 3 4 5 6 (PRODUCT LEVEL)	SEE PAGE
Y	*341-6719*	1	CONTROL GP-GOVERNOR	52
Y	*380-8260*	1	CONTROL GP-MACHINE	73
Y	*331-5536*	1	WIRING GP-CONSOLE	108
Y	*357-3195*	1	WIRING GP-PLATFORM	118
	386-1736	1	MODULE GP-DISPLAY	
	8Y-7833	1	WIRE AS	

Y-SEPARATE ILLUSTRATION

<END>

336-3545 ELECTRONICS GP-COMMUNICATION—PRODUCT LINK 121SR

S/N: LTG1-UP
PART OF 357-3214 WIRING GP-COMMUNICATION
AN ATTACHMENT

SMCS-7606, 7610, 7620 **i04630041**

NOTE	PART NUMBER	QTY	PART NAME 1 2 3 4 5 6 (PRODUCT LEVEL)	SEE PAGE
	377-4844	1	SOFTWARE GP-COMMUNICATION (PRODUCT LINK 121SR)	

<END>

ELECTRICAL AND STARTING SYSTEM

310-5289 ELECTRONICS GP-MACHINE

S/N: LTG1-UP

PART OF 290-6740 INSTALLATION GP-SECURITY

AN ATTACHMENT

SMCS-7610, 7620 **i04602931**

NOTE	REF NO	GRAPHIC REF	PART NUMBER	QTY	PART NAME 1 2 3 4 5 6 (PRODUCT LEVEL)	SEE PAGE
	1	1	*310-4772*	1	MODULE GP-INTERFACE	
		1	**6V-6715**	1	SCREW-PAN HEAD (4-20X0.25-IN)	
		1	**8C-3095**	1	SEAL-O-RING	

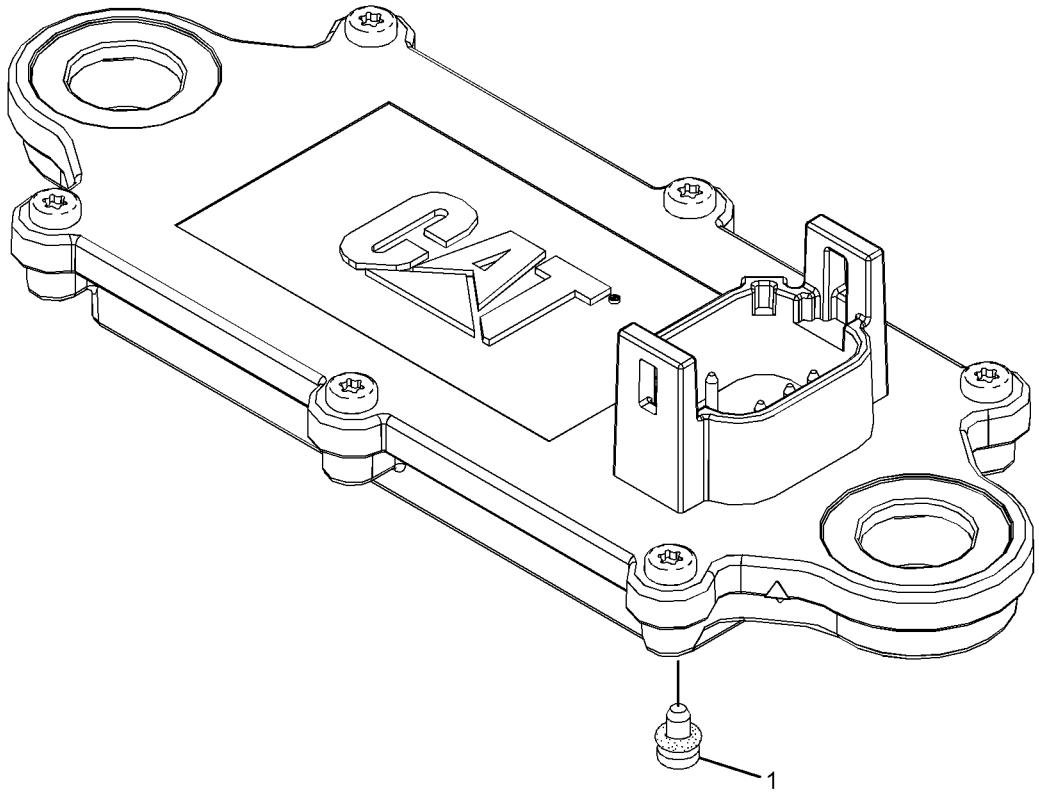

GRAPHIC #1 **<END>** g02402151

232-6661 GLOW PLUG GP

S/N: CRS1-UP
PART OF 364-5753 ENGINE AR-PRIMARY
AN ATTACHMENT

SMCS-1412 **i04660272**

NOTE	REF NO	GRAPHIC REF	PART NUMBER	QTY	PART NAME 1 2 3 4 5 6 (PRODUCT LEVEL)	SEE PAGE
	1	1	**368-3151**	1	BUS BAR GP	
		1	**370-2909**	1	WIRE AS (STARTING AID)	
		1	**276-1151**	1	PIN-CONNECTOR (6-GA)	
		1	**369-0473**	1	LOCKNUT	
		1	**369-2472**	1	SPACER	
	2	1	**232-6662**	4	GLOW PLUG (12-VOLT)	
	3	1	**232-3126**	1	CLIP	

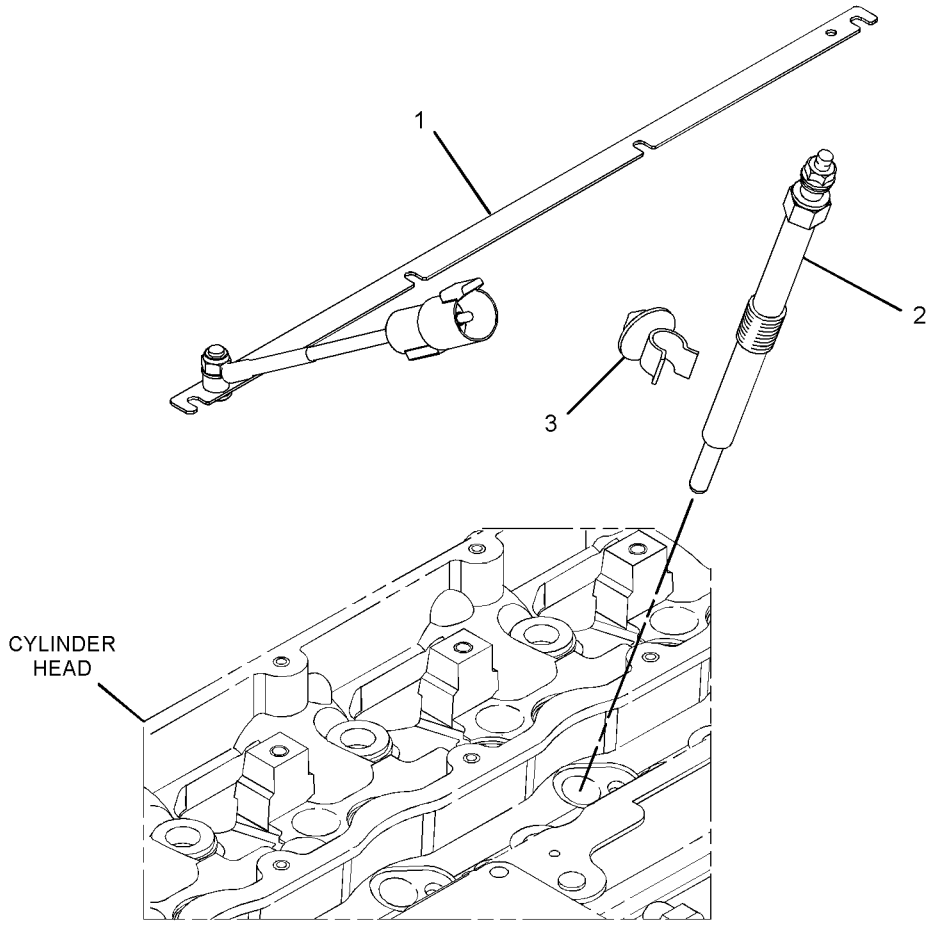

GRAPHIC #1 **<END>** g02792742

367-6031 HEATER GP-JACKET WATER

S/N: LTG1-UP
120-VOLT
PART OF 377-0021 COLD WEATHER AR
AN ATTACHMENT

SMCS-1383 **i04585932**

NOTE	REF NO	GRAPHIC REF	PART NUMBER	QTY	PART NAME 1 2 3 4 5 6 (PRODUCT LEVEL)	SEE PAGE
	1	1	**130-0165**	1	RECEPTACLE AS	
	2	1	**231-3054**	1	HEATER GP-JACKET WATER	
		1	**219-3273**	1	ELEMENT AS-JACKET WATER HEATER (120-VOLT, 1000-WATT)	
		1	**133-3413**	1	KIT-SEAL	
					(INCLUDES SEAL, SPACER & RINGS)	
		1	**133-6517**	1	CAP AS-DUST	
		1	**231-3052**	1	CORD AS	
	3	1	**377-9929**	1	BRACKET	
	4	1	**3S-2093**	2	STRAP-CABLE	
	5	1	**4P-7428**	1	CLIP	
	6	1	**4P-8134**	1	CLIP	
	7	1	**5P-4116**	2	WASHER-HARD (8.8X20.5X2-MM THK)	
	8	1	**8T-4121**	1	WASHER-HARD (11X21X2.5-MM THK)	
M	9	1	**8T-4189**	2	BOLT (M8X1.25X20-MM)	
M	10	1	**8T-4192**	1	BOLT (M12X1.75X25-MM)	
M	11	1	**8T-4196**	1	BOLT (M10X1.5X35-MM)	
	12	1	**8T-4223**	1	WASHER-HARD (13.5X25.5X3-MM THK)	

M-METRIC PART

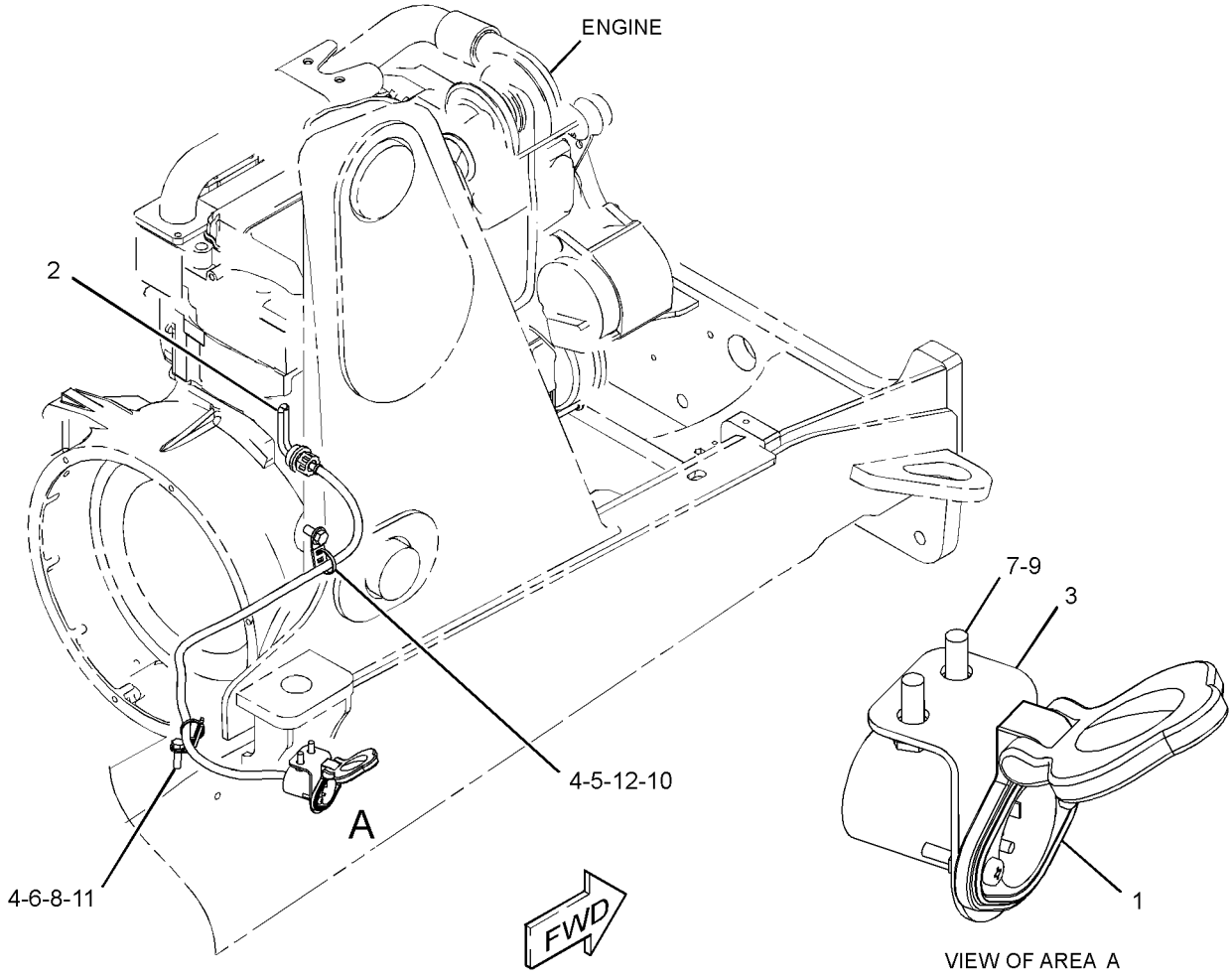

GRAPHIC #1 **<END>** g02809636

290-6740 INSTALLATION GP-SECURITY

S/N: LTG1-UP

AN ATTACHMENT

SMCS-7631 **i04586314**

NOTE	REF NO	GRAPHIC REF	PART NUMBER	QTY	PART NAME 1 2 3 4 5 6 (PRODUCT LEVEL)	SEE PAGE
	1	1	**8C-5607**	4	MOUNT-ISOLATION	
	2	1	**8C-5608**	2	SPACER (6.5X9.5X25.4-MM THK)	
	3	1	**206-5162**	2	KEY AS-ELECTRONIC (SECURITY)	
	4	1	*206-5203*	1	COIL AS (EXCITER)	
		1	**102-8802**	1	KIT-RECEPTACLE (2-PIN)	
					(INCLUDES RECEPTACLE AS & WEDGE)	
		1	**198-5389**	1	FILM-IDENTIFICATION (IGNITION SWITCH)	
		1	**205-8257**	1	COIL AS (EXCITER)	
D		1	**5P-5677**		WIRE (18-GA, BLACK) (0.4-M)	
		1	**8T-8729**	2	PIN-CONNECTOR (16-GA TO 18-GA)	
	5	1	**219-6314**	2	KEY RING (IDENTIFICATION)	
	6	1	**290-6741**	1	HARNESS AS-CONTROL (SECURITY)	
		1	**8T-8729**	4	PIN-CONNECTOR (16-GA TO 18-GA)	
		1	**155-2265**	1	KIT-CONNECTING PLUG (8-PIN)	
		1	**155-2270**	1	KIT-CONNECTING PLUG (2-PIN)	
					(EACH PLUG KIT INCLUDES PLUG AS, WEDGE & INTERFACE SEAL)	
		1	**8T-8737**	2	PLUG-SEAL	
		1	**102-8804**	1	KIT-RECEPTACLE (4-PIN)	
					(INCLUDES RECEPTACLE AS & WEDGE)	
		1	**8T-8730**	8	SOCKET-CONNECTOR (16-GA TO 18-GA)	
		1	**8L-8413**	10	STRAP-CABLE (WHITE)	
	7	1	**376-0642**	1	FILM-IDENTIFICATION (START SWITCH, READ OMM)	
Y	8	1	**310-5289**	1	ELECTRONICS GP-MACHINE (MACHINE SECURITY SYSTEM)	74
	9	1	**225-5927**	2	FILM-INSTRUCTION (MACHINE SECURITY, READ OMM)	
	10	1	**3S-2093**	3	STRAP-CABLE	
M	11	1	**5C-2890**	2	NUT (M6X1-THD)	
M	12	1	**8C-8451**	2	BOLT (M6X1X40-MM)	
	13	1	**9X-8256**	4	WASHER (6.6X12X2-MM THK)	

D-ORDER BY THE METER
M-METRIC PART
Y-SEPARATE ILLUSTRATION

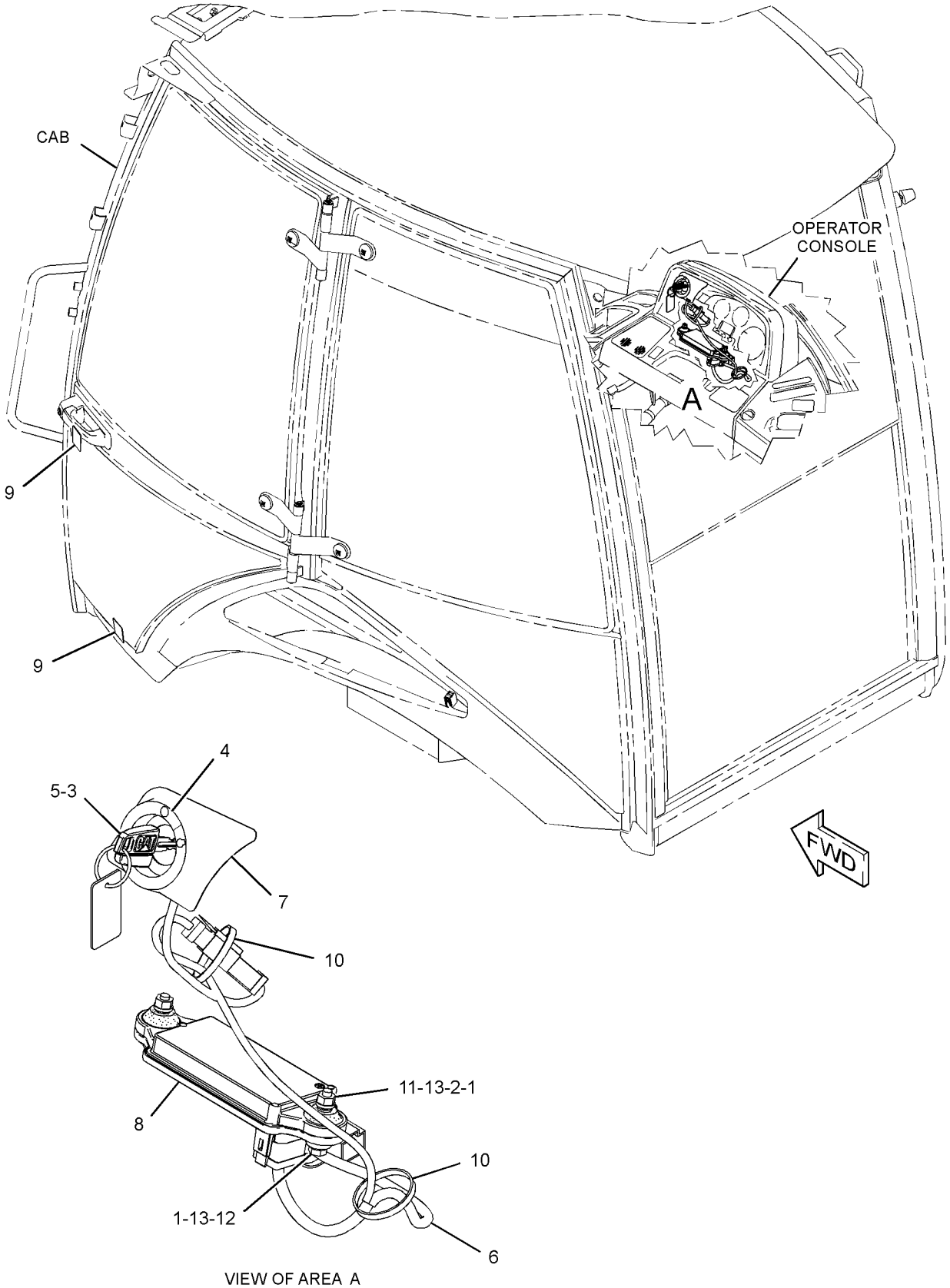

VIEW OF AREA A

GRAPHIC #1 **<END>** g01521963

234-4328 LAMP GP-FLOOD

S/N: LTG1-UP
12-VOLT
PART OF 331-5484 LIGHTING GP-FLOOD & SIGNAL
AN ATTACHMENT

SMCS-1429, 1434 **i03091796**

NOTE	REF NO	GRAPHIC REF	PART NUMBER	QTY	PART NAME 1 2 3 4 5 6 (PRODUCT LEVEL)	SEE PAGE
	1	1	**9W-0607**	1	LAMP (12-VOLT, 55-WATT)	
M	2	1	**8T-0389**	1	LOCKNUT (M10X1.5-THD)	
	3	1	**9X-4244**	2	SCREW-SPECIAL (M4X1.79X25-MM)	
	4	1	**202-6614**	1	LENS AS (FLOOD)	
	5	1	**234-7730**	1	BODY AS	
	6	1	**164-7556**	1	BRACKET (LAMP RETAINING)	
	7	1	**234-7731**	1	BRACKET AS	
	8	1	**8T-4121**	1	WASHER-HARD (11X21X2.5-MM THK)	

M-METRIC PART

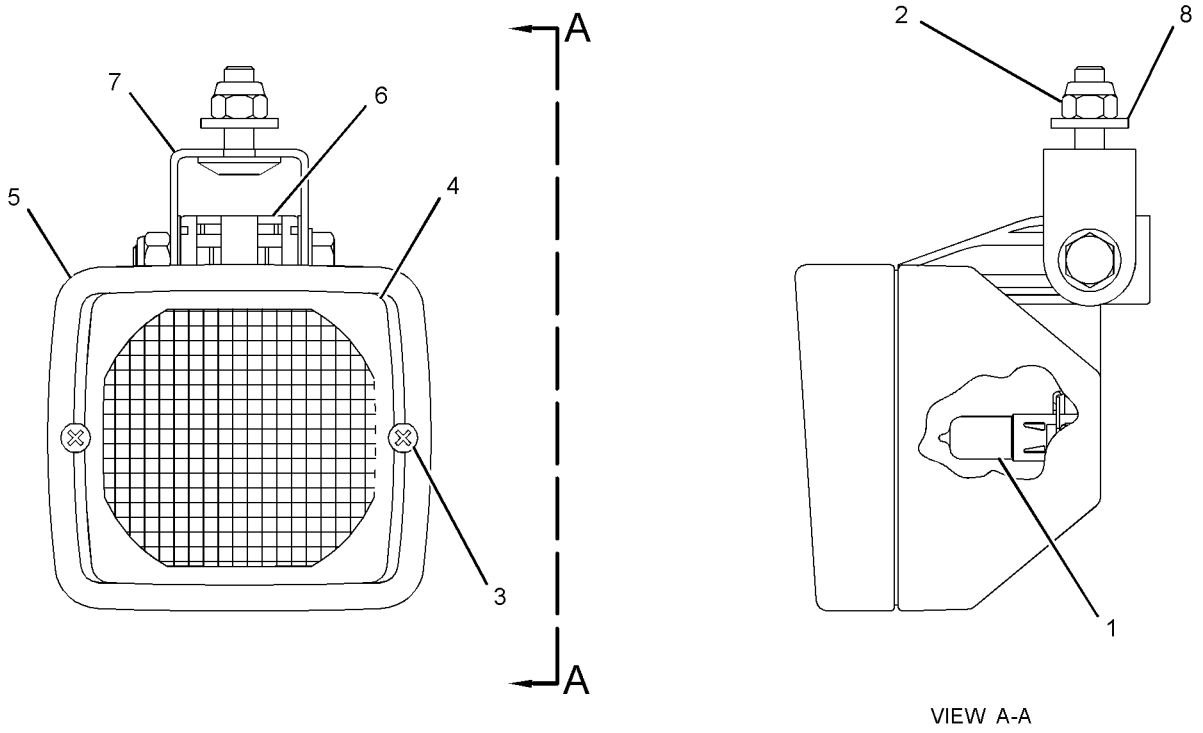

GRAPHIC #1 **<END>** g01283627

234-4329 LAMP GP-FLOOD

S/N: LTG1-UP
12-VOLT
PART OF 331-5484 LIGHTING GP-FLOOD & SIGNAL
AN ATTACHMENT

SMCS-1429, 1434 **i03325046**

NOTE	REF NO	GRAPHIC REF	PART NUMBER	QTY	PART NAME 1 2 3 4 5 6 (PRODUCT LEVEL)	SEE PAGE
	1	1	**9W-0607**	1	LAMP (12-VOLT, 55-WATT)	
M	2	1	**8T-0389**	1	LOCKNUT (M10X1.5-THD)	
	3	1	**9X-4244**	2	SCREW-SPECIAL (M4X1.79X25-MM)	
	4	1	**202-6611**	1	LENS AS (FLOODLIGHT)	
	5	1	**234-7730**	1	BODY AS	
	6	1	**164-7556**	1	BRACKET (LAMP RETAINING)	
	7	1	**234-7731**	1	BRACKET AS	
	8	1	**8T-4121**	1	WASHER-HARD (11X21X2.5-MM THK)	

M-METRIC PART

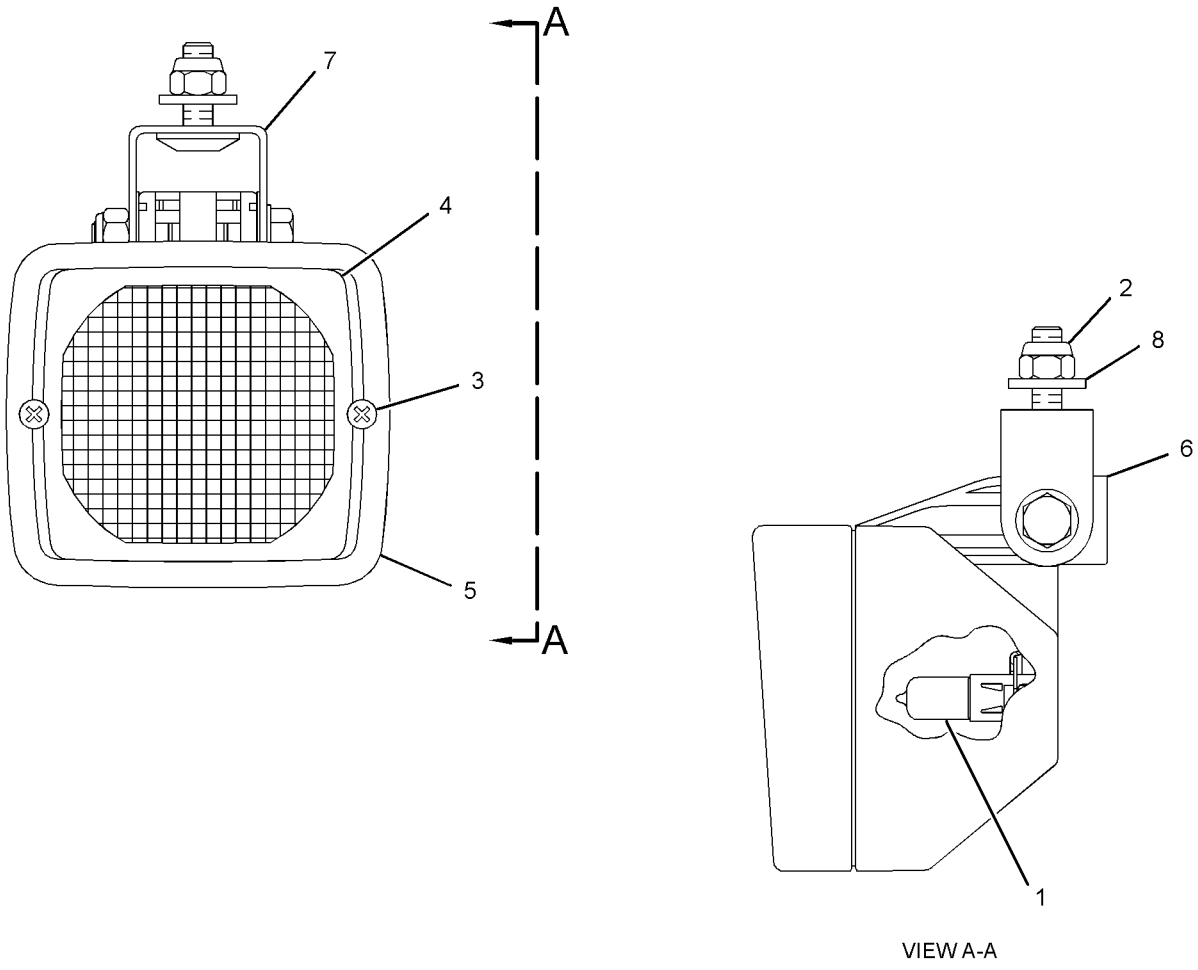

VIEW A-A

GRAPHIC #1 **<END>** g01431519

290-5760 LAMP GP-FLOOD

S/N: LTG1-UP
PART OF 331-5484 LIGHTING GP-FLOOD & SIGNAL
AN ATTACHMENT

SMCS-1429, 1434 **i04390405**

NOTE	REF NO	GRAPHIC REF	PART NUMBER	QTY	PART NAME 1 2 3 4 5 6 (PRODUCT LEVEL)	SEE PAGE
	1	1	**9W-0607**	1	LAMP (12-VOLT, 55-WATT)	
	2	1	**9X-4244**	2	SCREW-SPECIAL (M4X1.79X25-MM)	
	3	1	**202-6611**	1	LENS AS (FLOODLIGHT)	
	4	1	**234-7730**	1	BODY AS (FLOODLIGHT)	
	5	1	**164-7556**	1	BRACKET (LAMP RETAINING)	
M	6	1	**8T-0389**	1	LOCKNUT (M10X1.5-THD)	
	7	1	**234-7731**	1	BRACKET AS	
	8	1	**8T-4121**	1	WASHER-HARD (11X21X2.5-MM THK)	

M-METRIC PART

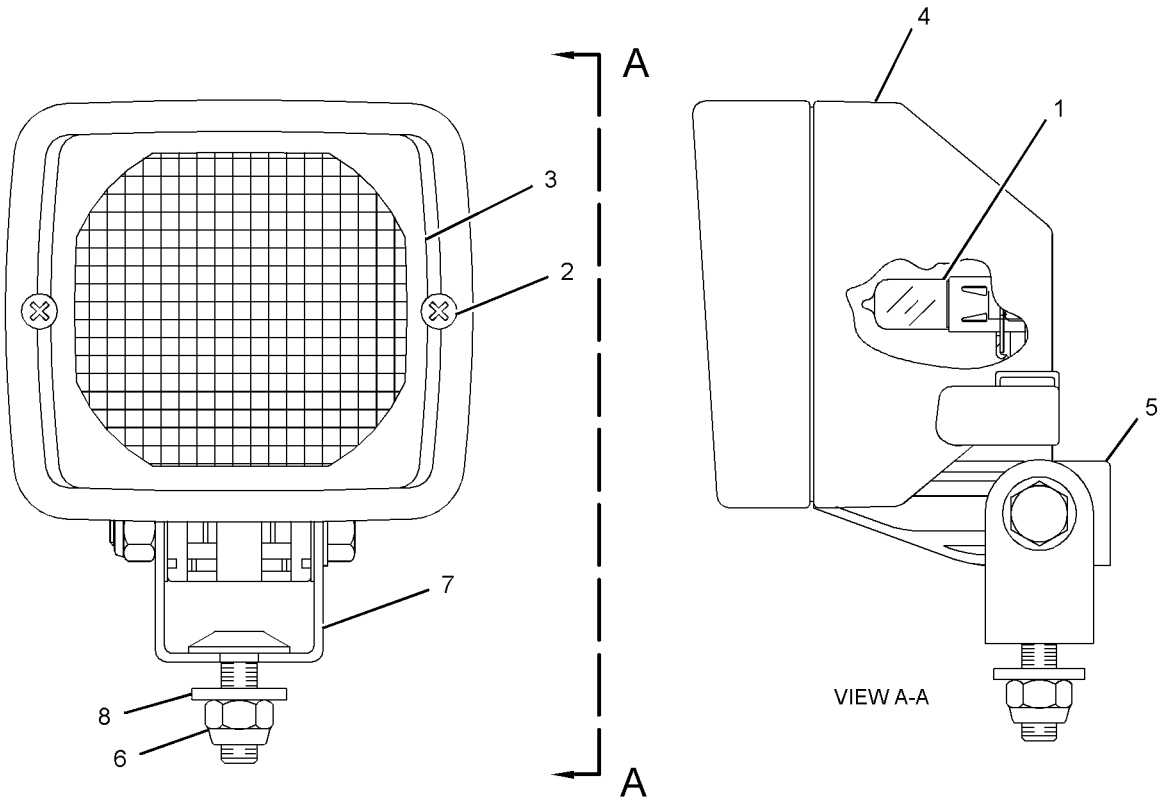

GRAPHIC #1 **<END>** g01349258

180-3664 LAMP GP-WARNING BEACON–

AMBER, MAGNETIC MOUNT, ROTATING
S/N: LTG1-UP
12-VOLT
PART OF 211-4292 LIGHTING GP-WARNING BEACON
AN ATTACHMENT

SMCS-1431 **i04403736**

NOTE	REF NO	GRAPHIC REF	PART NUMBER	QTY	PART NAME 1 2 3 4 5 6 (PRODUCT LEVEL)	SEE PAGE
Y	1	1	**185-7016**	1	LAMP GP-WARNING BEACON (MAGNETIC MOUNT)	83
	2	1	**179-5434**	1	PLUG AS	
		1	**3K-8782**	1	FUSE (10-AMPERE)	

Y-SEPARATE ILLUSTRATION

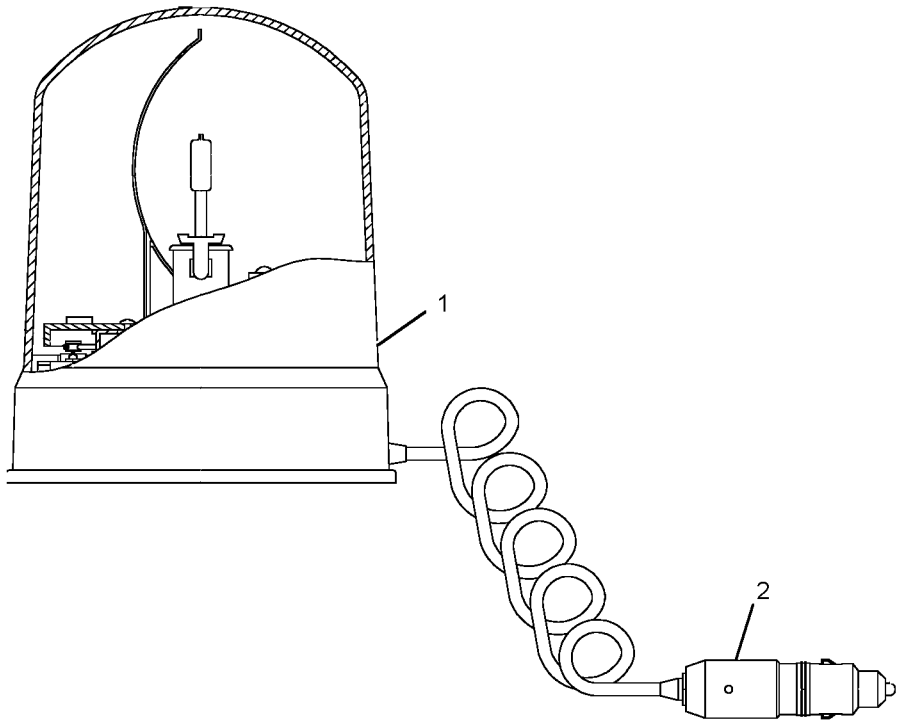

GRAPHIC #1 **<END>** g02594636

185-7016 LAMP GP-WARNING BEACON—MAGNETIC MOUNT

S/N: LTG1-UP
12-VOLTS
PART OF 180-3664 LAMP GP-WARNING BEACON
AN ATTACHMENT

SMCS-1431 **i04403874**

NOTE	REF NO	GRAPHIC REF	PART NUMBER	QTY	PART NAME 1 2 3 4 5 6 (PRODUCT LEVEL)	SEE PAGE
	1	1	**272-9800**	1	LENS (AMBER) (WARNING BEACON)	
	2	1	**9X-8118**	1	LAMP (12-VOLT, 55-WATT) (WARNING BEACON)	
	3	1	**9X-8139**	1	BELT-DRIVE (WARNING BEACON)	
	4	1	**102-8802**	1	KIT-RECEPTACLE (2-PIN)	
					(INCLUDES RECEPTACLE AS & WEDGE)	
	5	1	**186-3735**	2	PIN-CONNECTOR (16-GA TO 18-GA)	

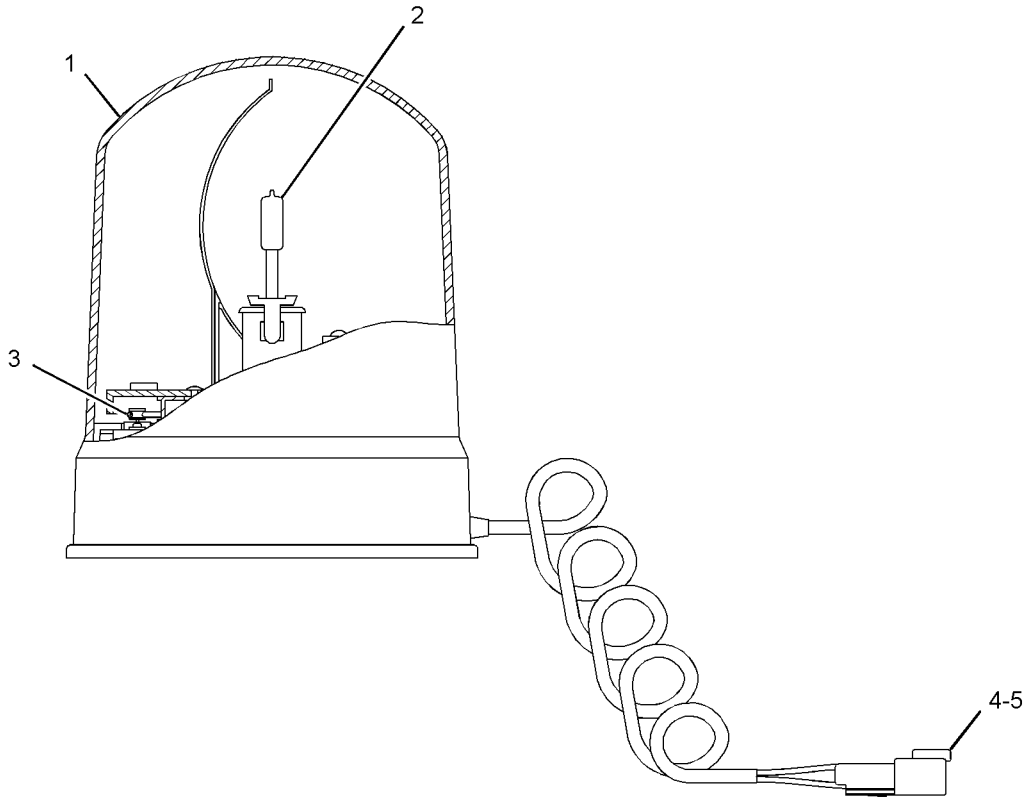

GRAPHIC #1 **<END>** g01365978

ELECTRICAL AND STARTING SYSTEM

331-5484 LIGHTING GP-FLOOD & SIGNAL—NACD, OPTIONAL

S/N: LTG1-UP

PART OF 353-1428 CAB AR, 353-1427 CANOPY AR, 353-1426 CANOPY AR-OPEN ROPS AN ATTACHMENT

SMCS-1429, 1430, 1432, 1434 **i04552026**

NOTE	REF NO	GRAPHIC REF	PART NUMBER	QTY	PART NAME 1 2 3 4 5 6 (PRODUCT LEVEL)	SEE PAGE
	1	1	**9R-1499**	2	REFLECTOR	
	2	1	**178-7539**	1	RECEPTACLE AS (POWER SUPPLY)	
	3	1	**290-6799**	1	HARNESS AS-LIGHTING (ROOF)	
		1	**274-3774**	4	CAP-CONNECTOR	
		1	**8T-8729**	10	PIN-CONNECTOR (16-GA TO 18-GA)	
		1	**155-2270**	10	KIT-CONNECTING PLUG (2-PIN)	
		1	**155-2271**	2	KIT-CONNECTING PLUG (4-PIN)	
					(EACH PLUG KIT INCLUDES PLUG AS, WEDGE & INTERFACE SEAL)	
		1	**8T-8737**	4	PLUG-SEAL	
		1	**102-8805**	1	KIT-RECEPTACLE (6-PIN)	
		1	**102-8806**	1	KIT-RECEPTACLE (8-PIN)	
					(EACH RECEPTACLE KIT INCLUDES RECEPTACLE AS & WEDGE)	
		1	**8T-8730**	28	SOCKET-CONNECTOR (16-GA TO 18-GA)	
		1	**8L-8413**	15	STRAP-CABLE (WHITE)	
B		1	**1P-0810**		TAPE-ELECTRICAL	
		1	**2L-8069**	2	TERMINAL-RING (2-GA TO 10-GA, 3/8-IN SCREW)	
		1	**5P-4571**	2	TERMINAL-BLADE (14-GA TO 16-GA)	
E		1	**119-3662**		TUBE-HEAT SHRINK (10.85-MM DIA) (13-CM)	
E		1	**125-7874**		TUBE-HEAT SHRINK (5.72-MM DIA) (35-CM)	
E		1	**125-7876**		TUBE-HEAT SHRINK (17.78-MM DIA) (20-CM)	
	4	1	**300-4995**	1	SWITCH AS-ROCKER (FLOODLIGHT, FRONT)	
	5	1	**300-4996**	1	SWITCH AS-ROCKER (FLOODLIGHT, REAR)	
					(EACH SWITCH AS-ROCKER INCLUDES)	
		1	**111-7899**	1	GASKET	
Y	6	1	**234-4328**	4	LAMP GP-FLOOD (12-VOLT)	79
Y	7	1	**234-4329**	2	LAMP GP-FLOOD (12-VOLT)	80
	8	1	**282-7833**	1	GROMMET	
	9	1	**282-7835**	1	PLATE	
	10	1	**172-6489**	1	LAMP GP-HEAD & SIGNAL (FRONT, LH)	
	10A	1	**172-6489**	1	LAMP GP-HEAD & SIGNAL (FRONT, RH)	
					(EACH LAMP GP INCLUDES)	
		1	**102-8802**	1	KIT-RECEPTACLE (2-PIN)	
					(INCLUDES RECEPTACLE AS & WEDGE)	
		1	**3C-4883**	1	LAMP (12-VOLT, 21-WATT)	
		1	**176-0348**	1	LENS	
	11	1	**172-6490**	1	LAMP GP-SIGNAL (REAR, RH)	
	11A	1	**172-6490**	1	LAMP GP-SIGNAL (REAR, LH)	
					(EACH LAMP GP INCLUDES)	
		1	**102-8804**	1	KIT-RECEPTACLE (4-PIN)	
					(INCLUDES RECEPTACLE AS & WEDGE)	
		1	**9W-3326**	1	LAMP (12-VOLT, 21-WATT)	
		1	**084-4348**	1	LAMP (12-VOLT, 5-WATT)	
		1	**363-8597**	1	LENS	
		1	**8T-8729**	4	PIN-CONNECTOR (16-GA TO 18-GA)	
	12	1	**3S-2093**	24	STRAP-CABLE	
	13	1	**8T-4121**	10	WASHER-HARD (11X21X2.5-MM THK)	
M	14	1	**8T-4133**	9	NUT (M10X1.5-THD)	
M	15	1	**8C-3798**	2	BOLT-LOCKING (M6X1X30-MM)	
	16	1	**9X-8256**	2	WASHER (6.6X12X2-MM THK)	
Y	17	1	**290-5760**	2	LAMP GP-FLOOD (12-VOLT)	81
	18	1	**8F-3590**	1	LOCKWASHER	
E	19	1	**3E-6600**		SEAL (5-CM)	

B-USE AS REQUIRED
E-ORDER BY THE CENTIMETER
M-METRIC PART
Y-SEPARATE ILLUSTRATION

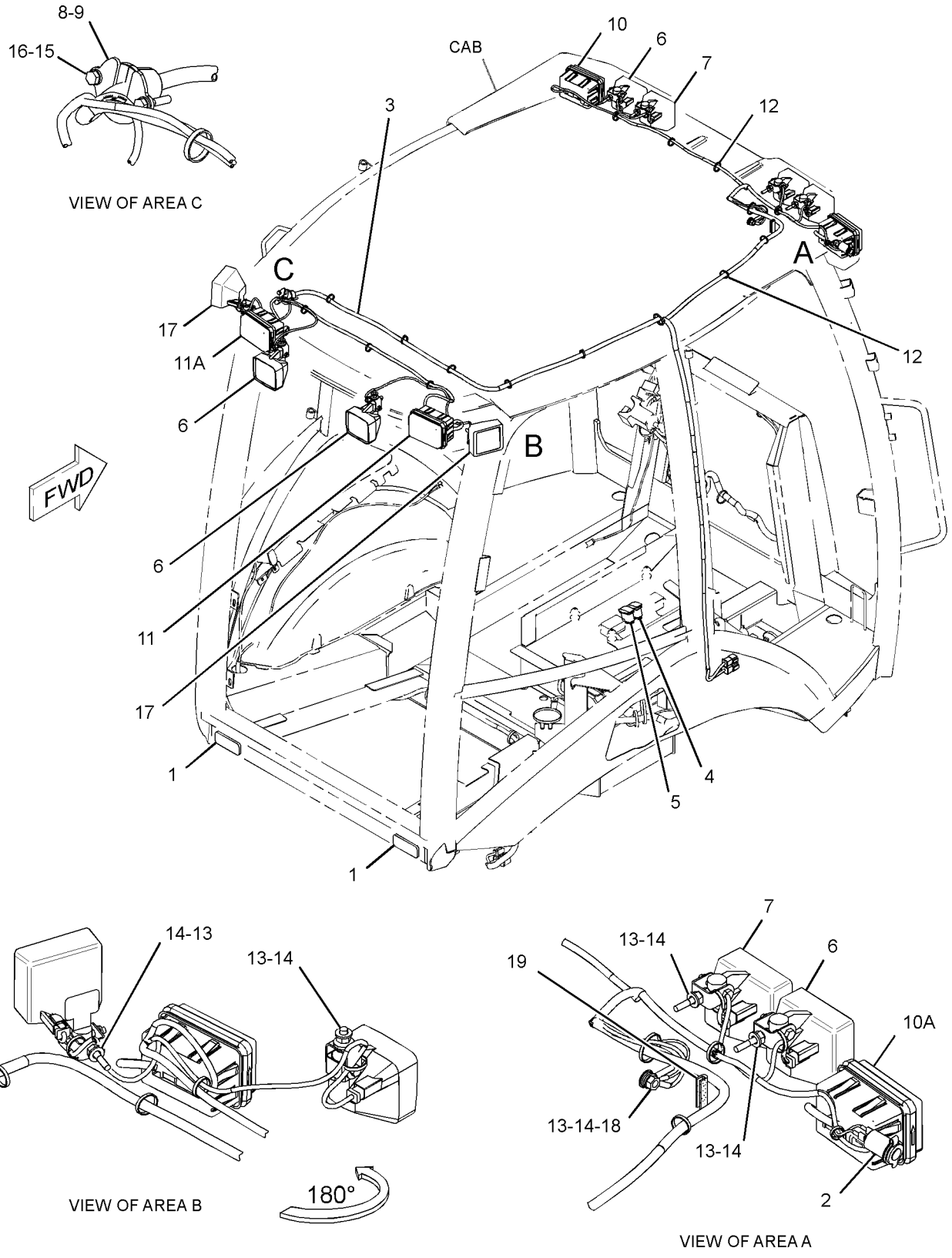

GRAPHIC #1 **<END>** g02724041

211-4292 LIGHTING GP-WARNING BEACON–
AMBER, MAGNETIC MOUNT, ROTATING
S/N: LTG1-UP
AN ATTACHMENT

SMCS-1431 **i03848712**

NOTE	REF NO	GRAPHIC REF	PART NUMBER	QTY	PART NAME 1 2 3 4 5 6 (PRODUCT LEVEL)	SEE PAGE
	1	1	**031-5644**	2	CLIP	
Y	2	1	**180-3664**	1	LAMP GP-WARNING BEACON (12-VOLT, AMBER)	82

Y-SEPARATE ILLUSTRATION

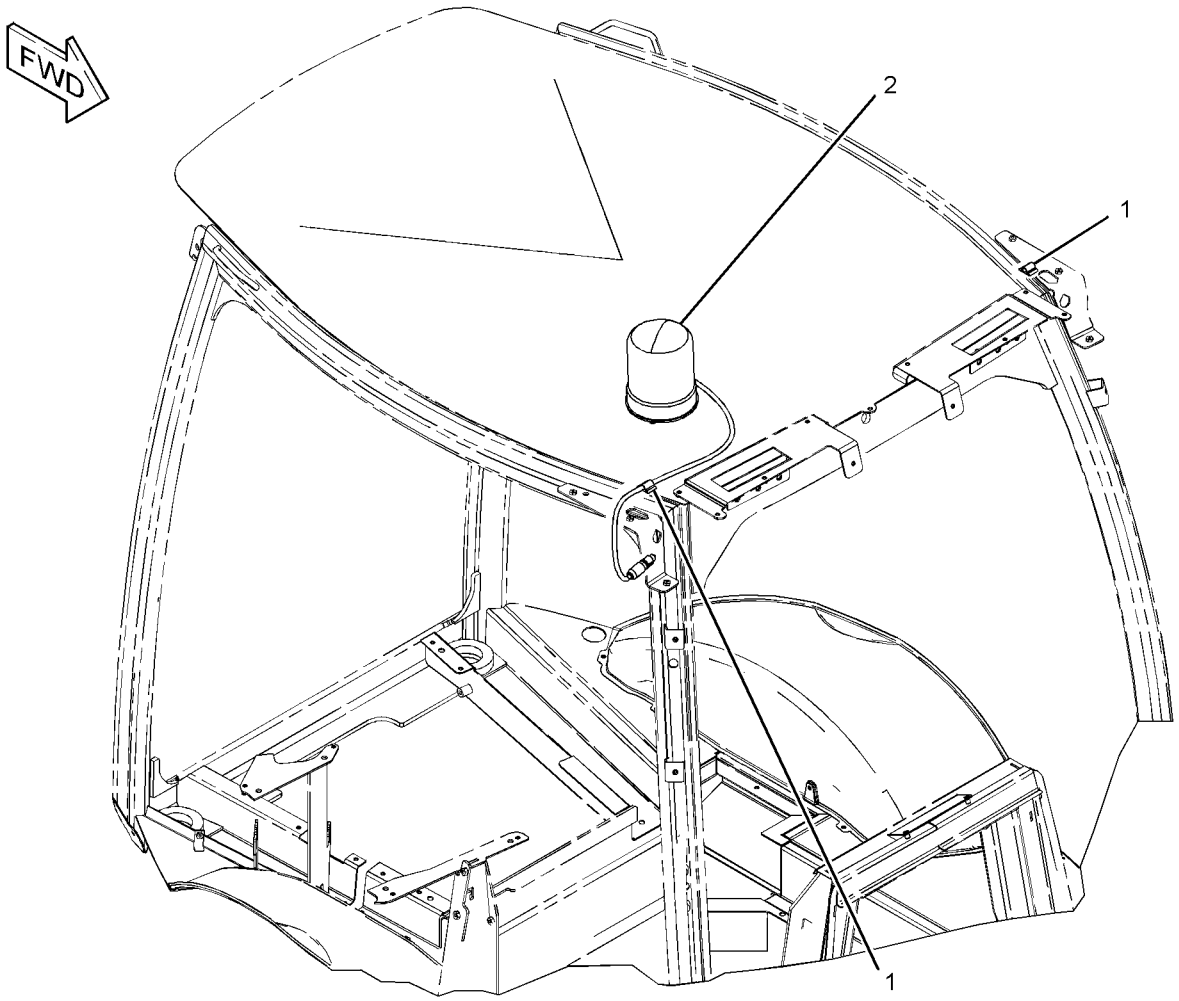

GRAPHIC #1 **<END>** g01233454

276-7287 RELAY GP—POWER DISTRIBUTION

S/N: LTG1-UP
12-VOLT
PART OF 357-3211 WIRING GP-AIR CONDITIONER, 359-0015 WIRING GP-HEATER
AN ATTACHMENT

SMCS-1422, 4493 **i03325084**

NOTE	REF NO	GRAPHIC REF	PART NUMBER	QTY	PART NAME 1 2 3 4 5 6 (PRODUCT LEVEL)	SEE PAGE
M	1	1	**5C-2890**	2	NUT (M6X1-THD)	
	2	1	**8T-4205**	2	WASHER-HARD (7.2X14.5X2-MM THK)	
	3	1	**1H-3244**	2	LOCKWASHER	
M	4	1	**5C-7261**	1	NUT (M8X1.25-THD)	
	5	1	**8T-4224**	1	WASHER-HARD (8.8X16X2-MM THK)	
	6	1	**267-5213**	1	COVER	
	7	1	**267-5211**	1	SEAL	
	8	1	**278-6377**	1	FUSE (40-AMPERE)	

M-METRIC PART

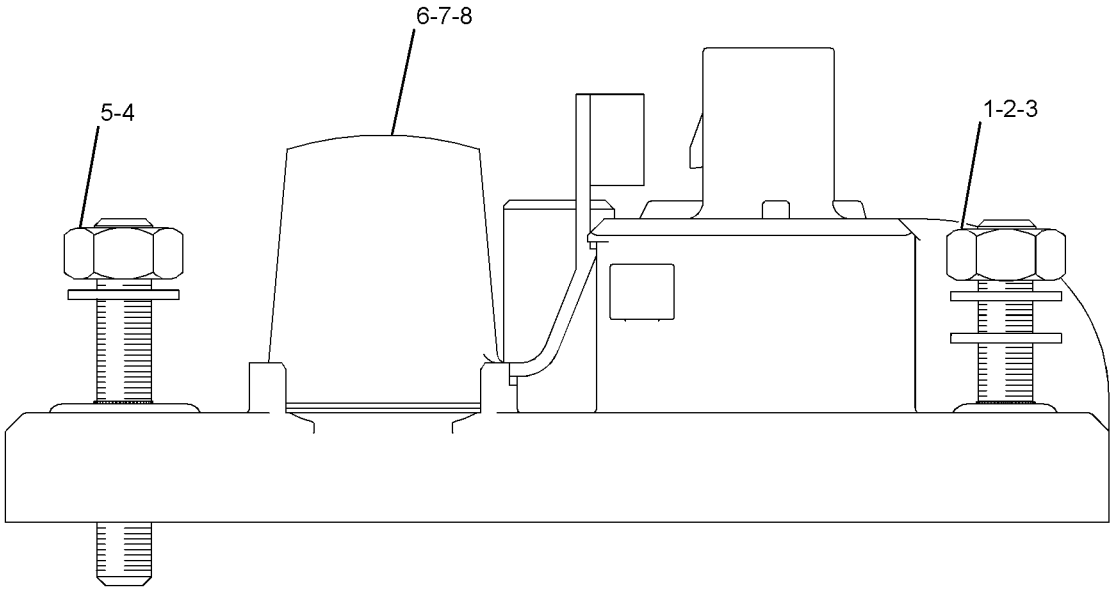

GRAPHIC #1 **<END>** g01290616

276-7290 RELAY GP–POWER, 1

S/N: LTG1-UP
12-VOLT
PART OF 357-3195 WIRING GP-PLATFORM
AN ATTACHMENT

SMCS-1422, 4493 **i04394021**

NOTE	REF NO	GRAPHIC REF	PART NUMBER	QTY	PART NAME 1 2 3 4 5 6 (PRODUCT LEVEL)	SEE PAGE
M	1	1	**5C-2890**	2	NUT (M6X1-THD)	
	2	1	**8T-4205**	2	WASHER-HARD (7.2X14.5X2-MM THK)	
	3	1	**1H-3244**	2	LOCKWASHER	
M	4	1	**5C-7261**	1	NUT (M8X1.25-THD)	
	5	1	**8T-4224**	1	WASHER-HARD (8.8X16X2-MM THK)	
	6	1	**267-5213**	1	COVER (FUSE)	
	7	1	**267-5211**	1	SEAL	
	8	1	**267-2701**	2	FUSE (60-AMPERE)	

M-METRIC PART

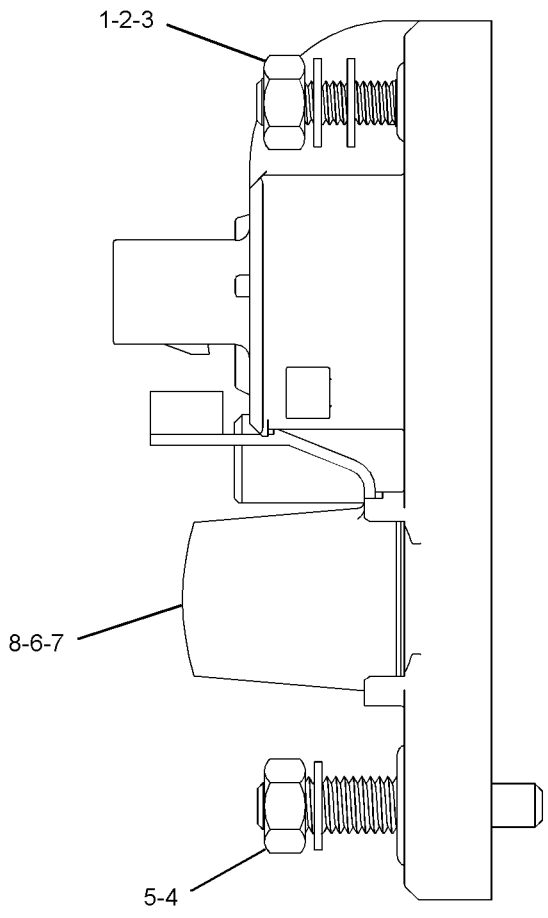

GRAPHIC #1 **<END>** g01278211

276-7291 RELAY GP–POWER, 2

S/N: LTG1-UP
12-VOLT
PART OF 357-3195 WIRING GP-PLATFORM
AN ATTACHMENT

SMCS-1422, 4493 **i03325141**

NOTE	REF NO	GRAPHIC REF	PART NUMBER	QTY	PART NAME 1 2 3 4 5 6 (PRODUCT LEVEL)	SEE PAGE
M	1	1	**5C-2890**	2	NUT (M6X1-THD)	
	2	1	**8T-4205**	2	WASHER-HARD (7.2X14.5X2-MM THK)	
	3	1	**1H-3244**	2	LOCKWASHER	
M	4	1	**5C-7261**	1	NUT (M8X1.25-THD)	
	5	1	**8T-4224**	1	WASHER-HARD (8.8X16X2-MM THK)	
	6	1	**267-5213**	1	COVER	
	7	1	**267-5211**	1	SEAL	
	8	1	**267-2701**	1	FUSE (60-AMPERE)	

M-METRIC PART

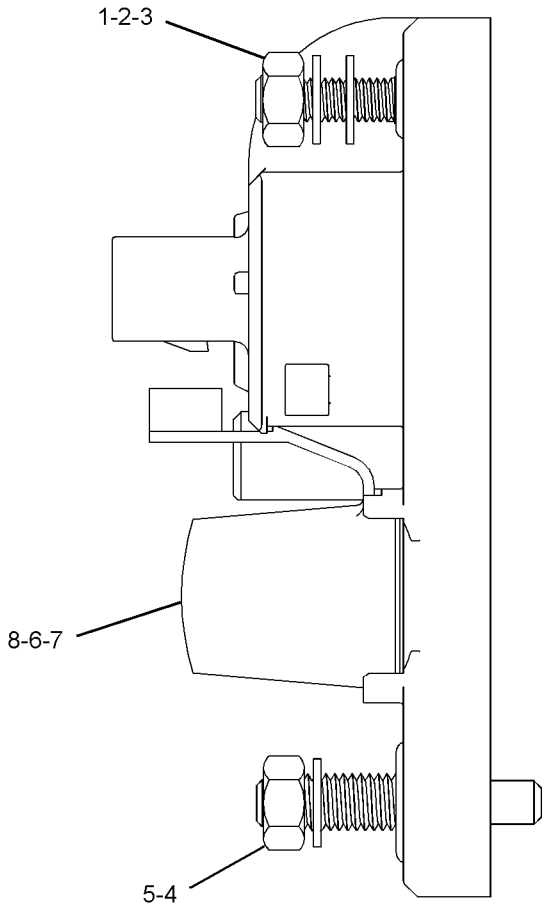

GRAPHIC #1 **<END>** g01278256

322-6827 RELAY GP–STARTING MOTOR

S/N: LTG1-UP
12-VOLT
PART OF 357-3195 WIRING GP-PLATFORM
AN ATTACHMENT

SMCS-1422, 4493 **i03498280**

NOTE	REF NO	GRAPHIC REF	PART NUMBER	QTY	PART NAME 1 2 3 4 5 6 (PRODUCT LEVEL)	SEE PAGE
	1	1	**274-9872**	1	FUSE (30-AMPERE)	
	2	1	**278-6377**	1	FUSE (40-AMPERE)	
	3	1	**267-5213**	1	COVER (FUSE)	
	4	1	**267-5211**	1	SEAL	
M	5	1	**5C-2890**	2	NUT (M6X1-THD)	
	6	1	**8T-4205**	2	WASHER-HARD (7.2X14.5X2-MM THK)	
	7	1	**1H-3244**	2	LOCKWASHER	
M	8	1	**5C-7261**	1	NUT (M8X1.25-THD)	
	9	1	**8T-4224**	1	WASHER-HARD (8.8X16X2-MM THK)	
	10	1	**9F-5644**	1	LOCKWASHER	

M-METRIC PART

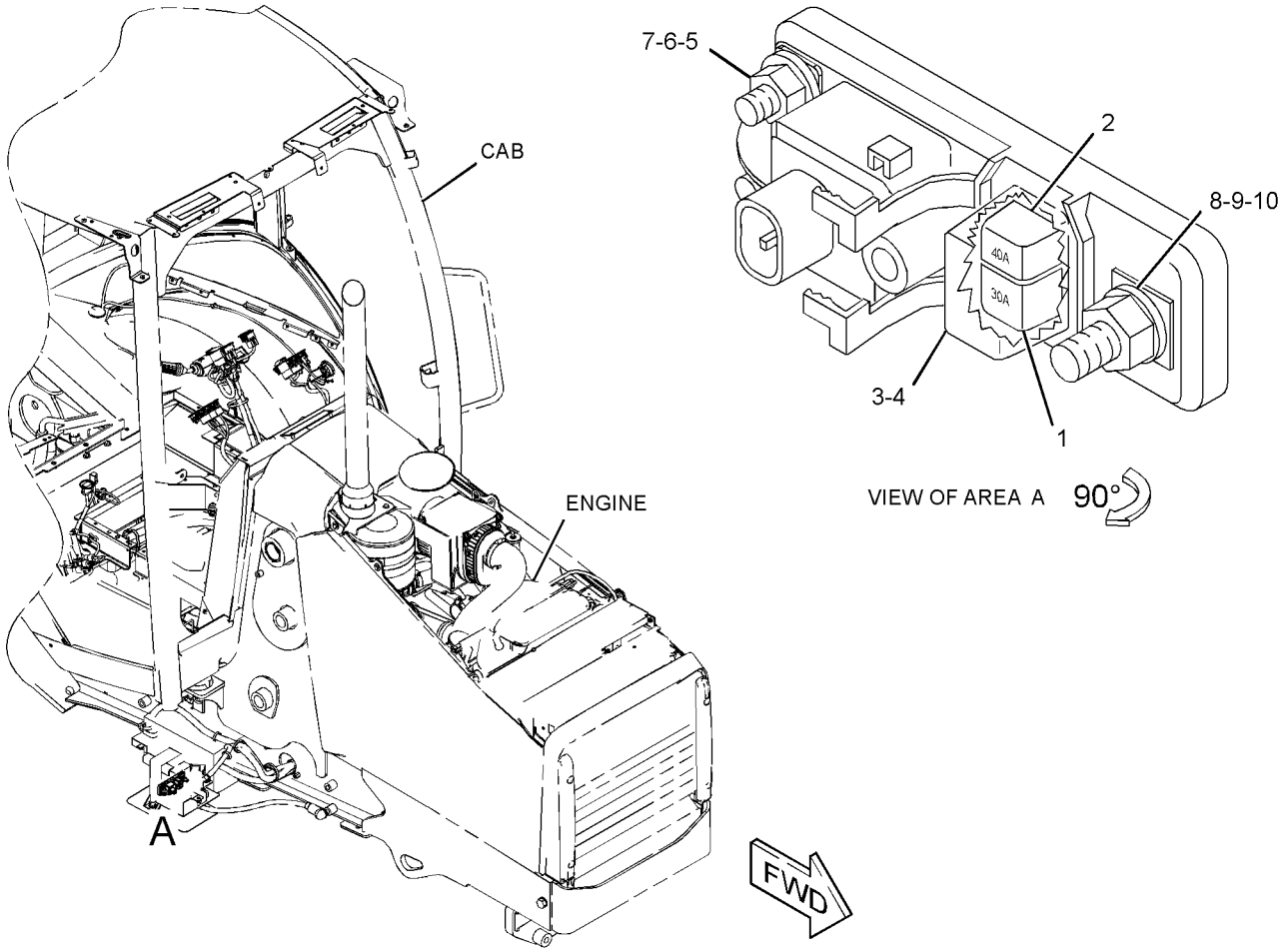

GRAPHIC #1 **<END>** g01571033

357-3230 RELAY GP–STABILIZER, AUTO UP

S/N: LTG1-UP
12-VOLT
PART OF 353-1450 CONTROL AR-STABILIZER
AN ATTACHMENT

SMCS-1422, 4493 **i04599650**

NOTE	REF NO	GRAPHIC REF	PART NUMBER	QTY	PART NAME 1 2 3 4 5 6 (PRODUCT LEVEL)	SEE PAGE
	1	1	**3E-9362**	1	RELAY AS (12-VOLT) (STABILIZER, AUTO UP)	

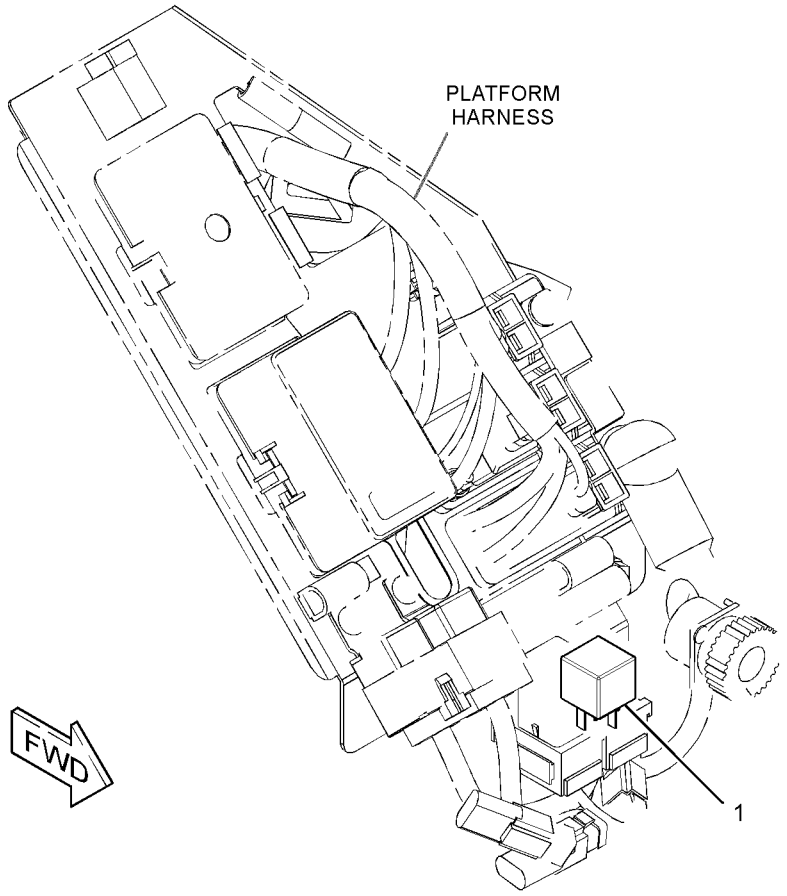

GRAPHIC #1 **<END>** g02805916

189-5746 SENSOR GP-SPEED–TRANSMISSION

S/N: LTG1-UP

PART OF 359-0392, 359-0394 TRANSMISSION GP-DIRECT DRIVE

AN ATTACHMENT

SMCS-3175 **i04518770**

NOTE	REF NO	GRAPHIC REF	PART NUMBER	QTY	PART NAME 1 2 3 4 5 6 (PRODUCT LEVEL)	SEE PAGE
	1	1	**171-5349**	1	STRAP-MARKER	
	2	1	**102-8802**	1	KIT-RECEPTACLE (2-PIN)	
					(INCLUDES RECEPTACLE AS & WEDGE)	
	3	1	**9X-3401**	2	PIN-CONNECTOR (16-GA TO 18-GA)	
E	4	1	**9X-1386**		SLEEVE (14-CM)	

E-ORDER BY THE CENTIMETER

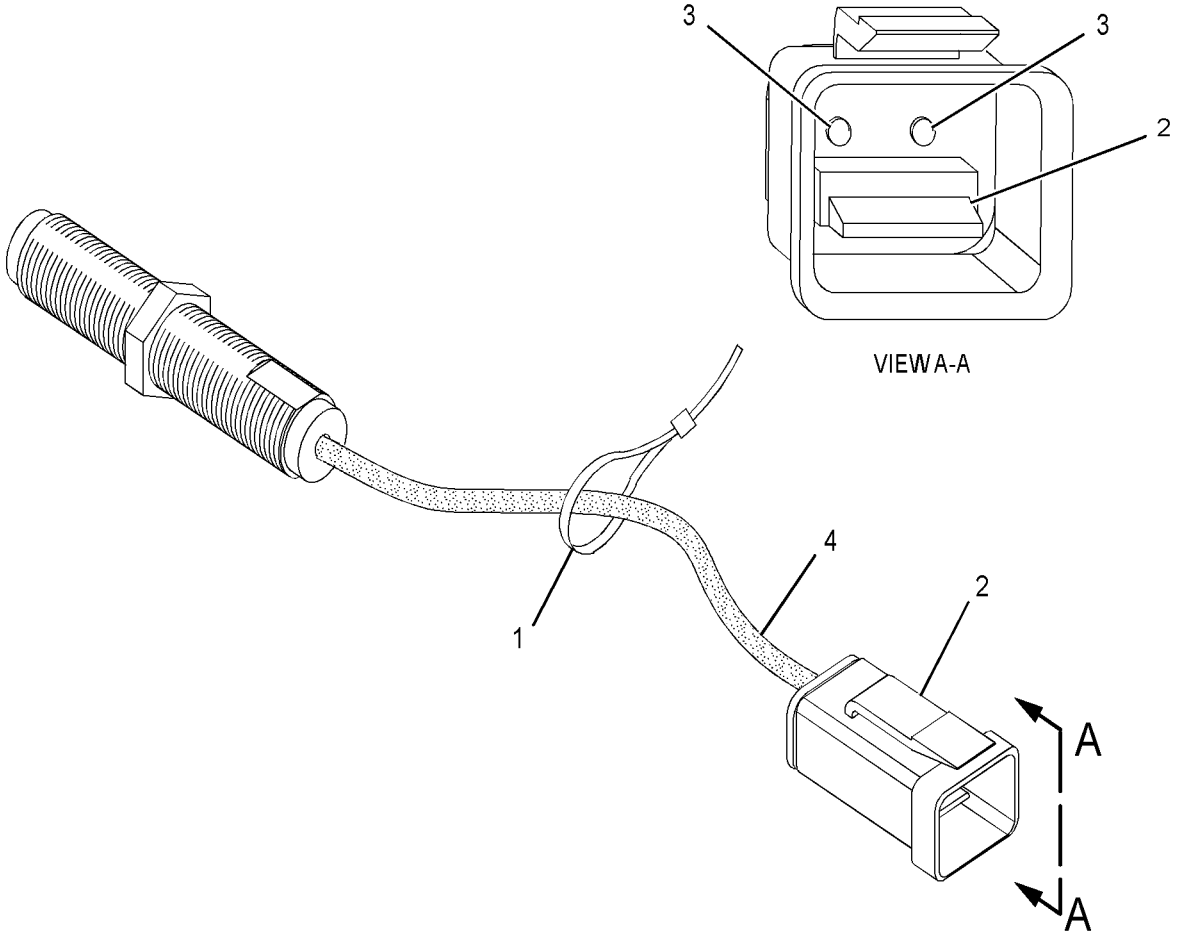

GRAPHIC #1 **<END>** g01353977

143-0539 STARTING MOTOR GP-ELECTRIC*R

S/N: CRS1-UP
12-VOLT
PART OF 237-0024 STARTING MOTOR GP-ELECTRIC
AN ATTACHMENT

SMCS-1453 **i02603749**

NOTE	REF NO	GRAPHIC REF	PART NUMBER	QTY	PART NAME 1 2 3 4 5 6 (PRODUCT LEVEL)	SEE PAGE
	1	1	**8C-9778**	1	PLUNGER AS	
	2	1	**8C-9783**	1	GASKET	
	3	1	**2P-8104**	1	BEARING	
	4	1	**7T-6092**	1	HOLDER AS-BRUSH	
M	5	1	**8T-4133**	2	NUT (M10X1.5-THD)	
	6	1	**7T-6088**	1	BEARING AS	
	7	1	**7T-6087**	1	WASHER (15.2X40X0.5-MM THK)	
	8	1	**7T-6093**	1	CLUTCH AS	
	9	1	**8J-4455**	1	BALL	
	10	1	**7T-6090**	1	SPRING	
	11	1	**8T-4121**	2	WASHER-HARD (11X21X2.5-MM THK)	
	12	1	**3E-5153**	1	COVER-STARTING MOTOR	
M	13	1	**9X-2036**	1	SCREW-PAN HEAD	
	14	1	**8F-1434**	1	LOCKWASHER	
	15	1	**100-4113**	1	SWITCH AS (STARTING MOTOR, 12-VOLT)	
	16	1	**100-4119**	1	ARMATURE AS	
	17	1	**100-4118**	1	CASE AS-STARTING MOTOR	
	18	1	**100-4115**	1	HOUSING-STARTING MOTOR	
	19	1	**143-1344**	1	FRAME-STARTER	
	20	1	**100-3685**	1	CAP	
	21	1	**3E-5154**	1	BUSHING-STARTING MOTOR	
					AVAILABLE REPAIR KIT(S):	
			7T-6099	1	KIT-GEAR (STARTING MOTOR)	
					(INCLUDES RETAINER, PINION & ROLLERS)	
			8C-5457	1	KIT-CONTACT (STARTING MOTOR)	
					(INCLUDES NUT, WASHER, PLATE, BUSHINGS, & BOLT)	
			146-6729	1	KIT-HARDWARE (STARTING MOTOR)	
					(INCLUDES BOLTS, SCREWS, SCREW ASSEMBLIES & PLATE)	
			100-4112	1	KIT-CONTACT (STARTING MOTOR)	
					(INCLUDES NUT, WASHERS, SEAL, BUSHINGS, PLATE & BOLT)	

M-METRIC PART

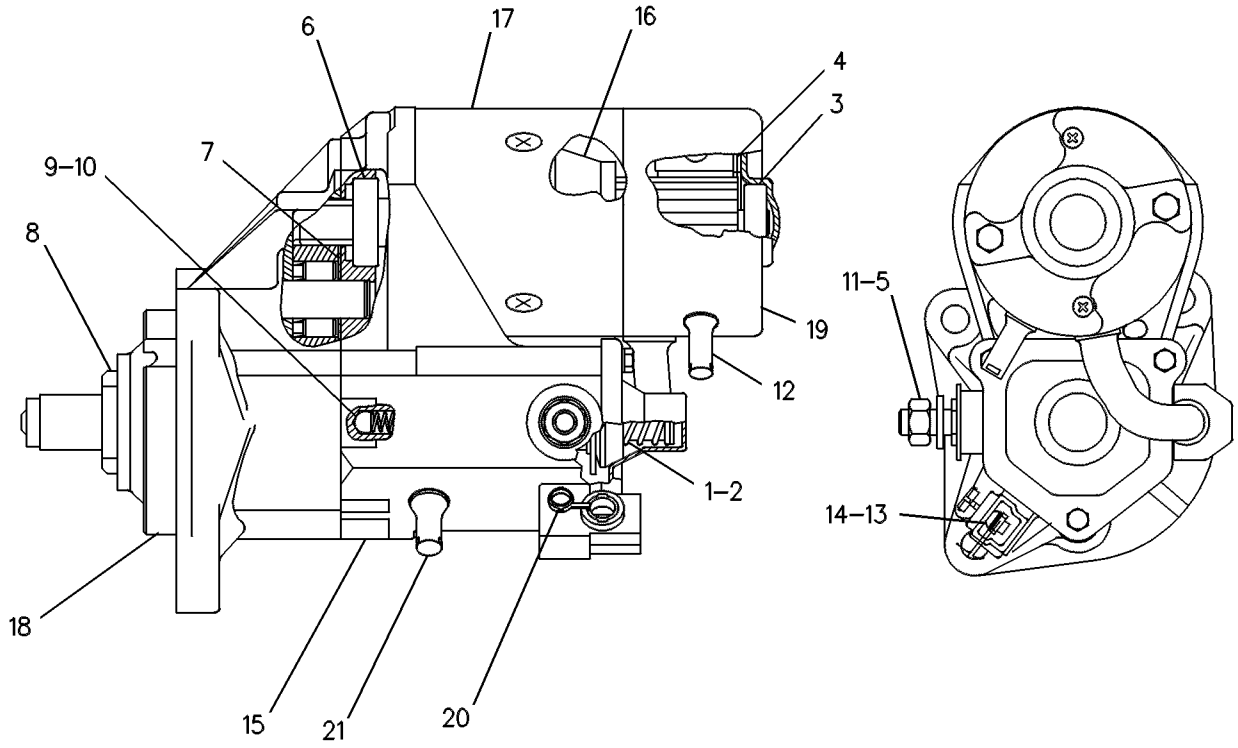

GRAPHIC #1 **<END>** g00131126

ELECTRICAL AND STARTING SYSTEM

237-0024 STARTING MOTOR GP-ELECTRIC–12-VOLT

S/N: CRS1-UP
PART OF 364-5753 ENGINE AR-PRIMARY
AN ATTACHMENT

SMCS-1453 **i03331920**

NOTE	REF NO	GRAPHIC REF	PART NUMBER	QTY	PART NAME 1 2 3 4 5 6 (PRODUCT LEVEL)	SEE PAGE
	1	1	**6I-0364**	3	STUD (M10X1.5X30-MM)	
	2	1	**6I-0594**	3	NUT (M10X1.5-THD)	
YR	3	1	**143-0539**	1	STARTING MOTOR GP-ELECTRIC (12-VOLT)	94

R-REMFG PART MAY BE AVAILABLE
Y-SEPARATE ILLUSTRATION

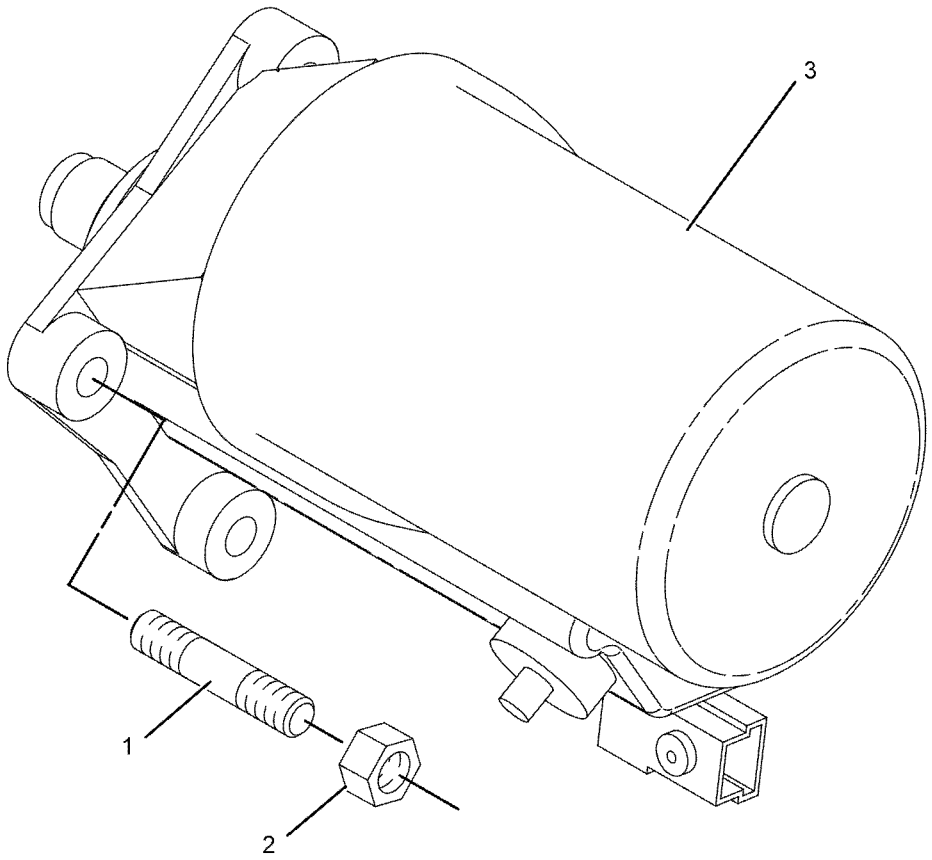

GRAPHIC #1 **<END>** g01039910

331-5456 SWITCH GP-ALL WHEEL DRIVE

S/N: LTG1-UP

PART OF 353-1510, 353-1513 TRANSMISSION AR-POWER SHIFT

AN ATTACHMENT

SMCS-1435, 4493 **i04597511**

NOTE	REF NO	GRAPHIC REF	PART NUMBER	QTY	PART NAME 1 2 3 4 5 6 (PRODUCT LEVEL)	SEE PAGE
	1	1	**362-3298**	1	SWITCH AS-ROCKER (ALL WHEEL DRIVE)	
		1	**111-7899**	1	GASKET	

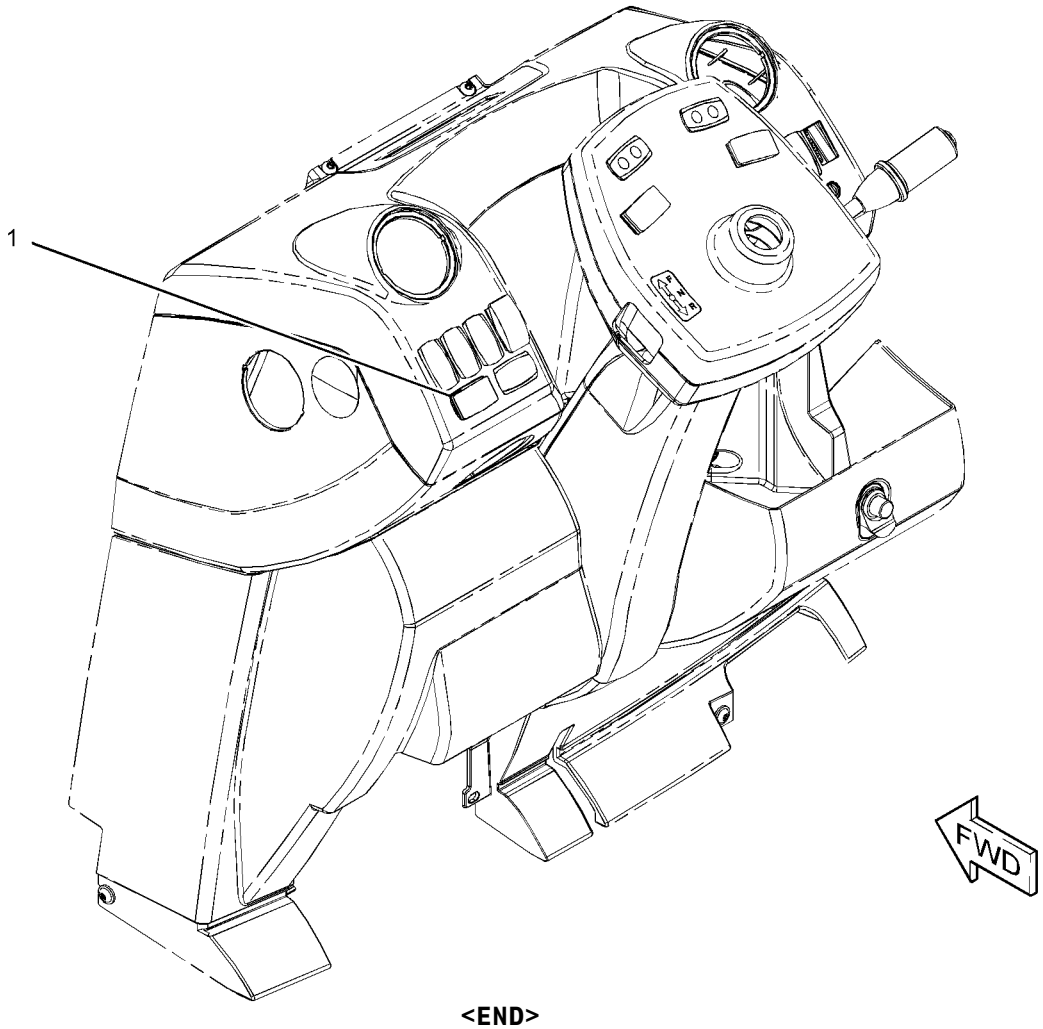

GRAPHIC #1 **<END>** g02806736

308-9973 SWITCH GP-DIFFERENTIAL LOCK

S/N: LTG1-UP
PART OF 353-1502, 353-1503 DRIVE AR-BACKHOE LOADER
AN ATTACHMENT

SMCS-1435, 3264 **i03906910**

NOTE	REF NO	GRAPHIC REF	PART NUMBER	QTY	PART NAME 1 2 3 4 5 6 (PRODUCT LEVEL)	SEE PAGE
	1	1	**201-9459**	1	BOOT	
	2	1	**204-0775**	1	SWITCH AS-FOOT (DIFFERENTIAL LOCK ON, OFF)	
	3	1	**205-6298**	1	ACTUATOR (DIFFERENTIAL LOCK CONTROL)	

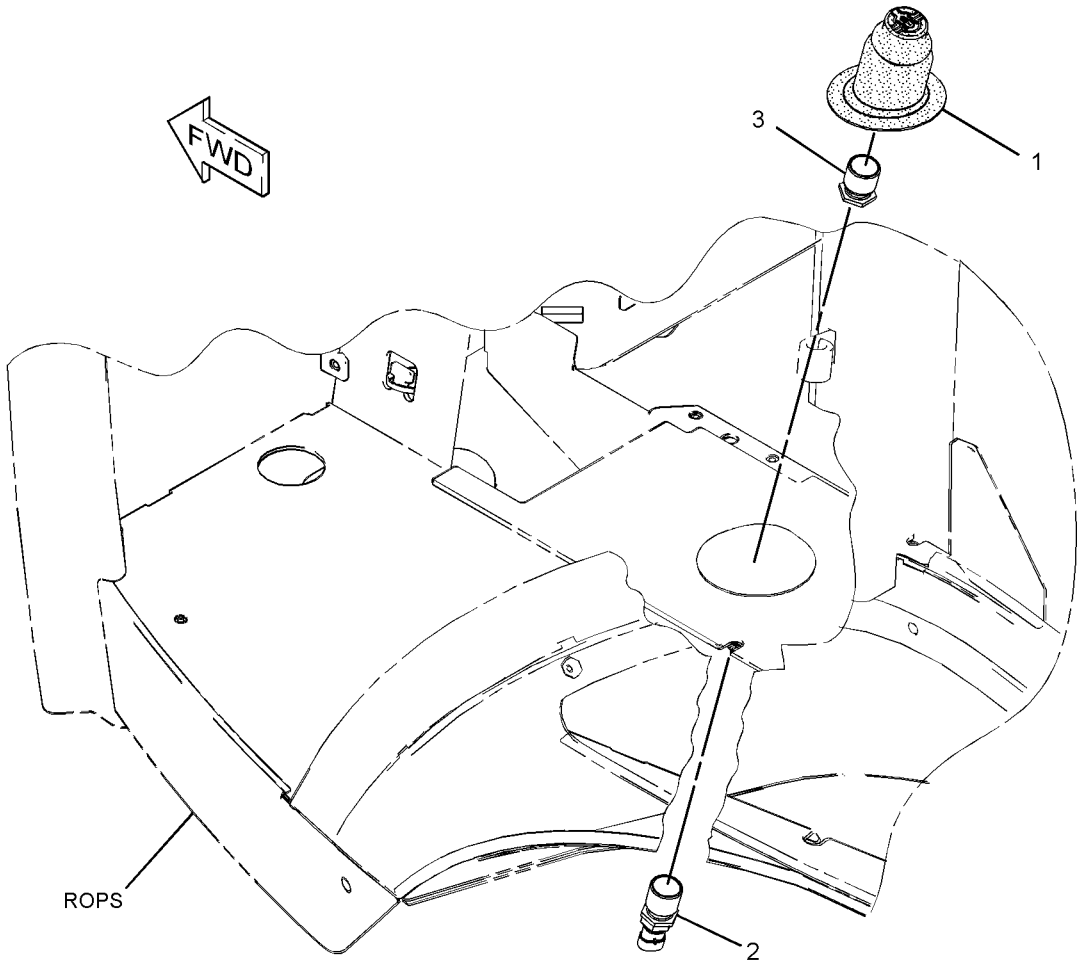

GRAPHIC #1 **<END>** g02148481

7N-0718 SWITCH GP-DISCONNECT–BATTERY

S/N: LTG1-UP
PART OF 357-6501 BATTERY & WIRING GP
AN ATTACHMENT

SMCS-1411 **i02544993**

NOTE	REF NO	GRAPHIC REF	PART NUMBER	QTY	PART NAME 1 2 3 4 5 6 (PRODUCT LEVEL)	SEE PAGE
	1	1	**8H-5306**	1	KEY (BATTERY DISCONNECT)	
	2	1	**8H-5303**	1	NUT (3/4-16-THD)	
	3	1	**2H-3922**	2	LOCKWASHER	
	4	1	**9F-5644**	2	LOCKWASHER	
	5	1	**6F-7045**	2	NUT-FULL (3/8-24-THD)	

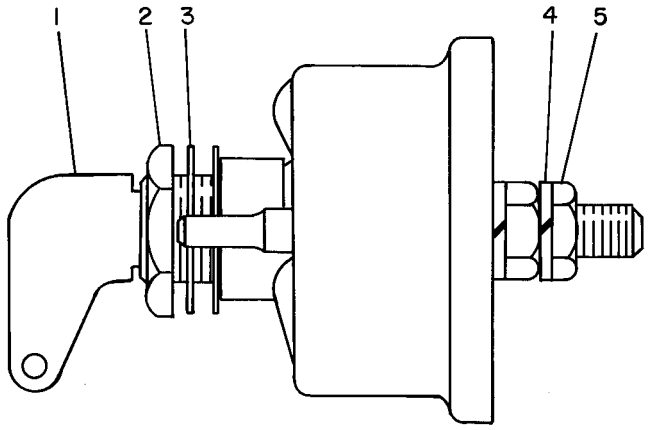

GRAPHIC #1 **<END>** g00084912

237-4896 SWITCH GP-PRESSURE

S/N: CRS1-UP
PART OF 364-5753 ENGINE AR-PRIMARY
AN ATTACHMENT

SMCS-1435 **i02270981**

NOTE	REF NO	GRAPHIC REF	PART NUMBER	QTY	PART NAME 1 2 3 4 5 6 (PRODUCT LEVEL)	SEE PAGE
	1	1	**237-4894**	1	SWITCH AS-PRESSURE (ENGINE OIL)	
	2	1	**199-9267**	1	SEAL-O-RING	

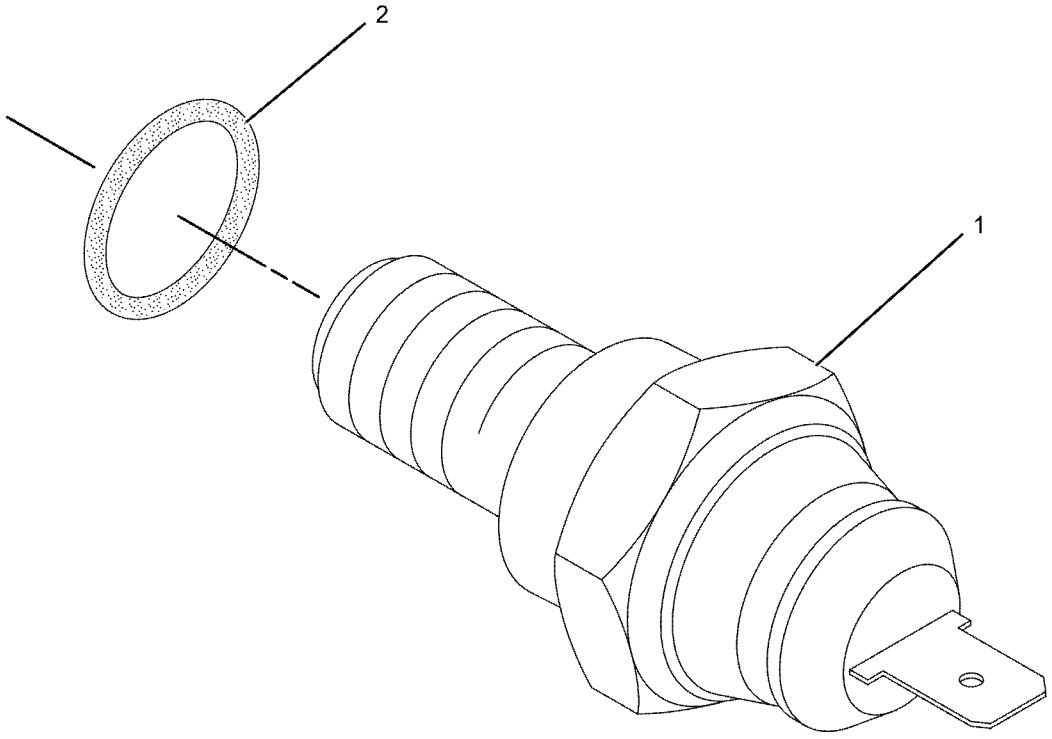

GRAPHIC #1 **<END>** g01138232

ELECTRICAL AND STARTING SYSTEM

357-3211 WIRING GP-AIR CONDITIONER

S/N: LTG1-UP

PART OF 353-1468 HEATER & AIR CONDITIONER AR

AN ATTACHMENT

SMCS-1408, 7320 **i04586154**

NOTE	REF NO	GRAPHIC REF	PART NUMBER	QTY	PART NAME 1 2 3 4 5 6 (PRODUCT LEVEL)	SEE PAGE
	1	1	**3E-9362**	1	RELAY AS (12-VOLT) (HIGH SPEED)	
	2	1	**6K-0806**	8	STRAP-CABLE	
	3	1	**8T-8799**	1	BOOT	
	4	1	**9X-7378**	1	SEAL-O-RING	
	5	1	**140-9378**	1	RELAY AS (12-VOLT) (AIR CONDITIONER, HEATER)	
	6	1	**189-3158**	1	SUPPRESSOR-ARC	
	7	1	**214-4695**	1	SWITCH AS-ROCKER (BLOWER FAN SPEED)	
	8	1	**214-4718**	1	SWITCH AS-ROCKER (AIR CONDITIONER, HEATER SELECT)	
					(EACH SWITCH AS INCLUDES)	
		1	**111-7899**	1	GASKET	
	9	1	**236-6923**	1	SWITCH AS-PRESSURE (REFRIGERANT)	
	10	1	**238-7492**	1	HARNESS AS-HEATER & AIR COND (COMPRESSOR)	
		1	**9X-3401**	2	PIN-CONNECTOR (16-GA TO 18-GA)	
		1	**155-2270**	2	KIT-CONNECTING PLUG (2-PIN)	
					(EACH INCLUDES PLUG AS, WEDGE & INTERFACE SEAL)	
		1	**102-8802**	1	KIT-RECEPTACLE (2-PIN)	
					(INCLUDES RECEPTACLE AS & WEDGE)	
		1	**100-6674**	2	SEAL-CONNECTOR	
		1	**180-9340**	4	SOCKET-CONNECTOR (14-GA TO 18-GA)	
		1	**124-5640**	2	TERMINAL-SOCKET	
		1	**3S-2093**	1	STRAP-CABLE	
E		1	**125-7874**		TUBE-HEAT SHRINK (5.72-MM DIA) (10-CM)	
	11	1	**275-0570**	1	BAR-BUS	
	12	1	**359-0016**	1	HARNESS AS-HEATER & AIR COND (VENT)	
		1	**228-5856**	2	CONNECTOR	
		1	**111-6795**	1	HOUSING-RELAY	
		1	**111-6816**	1	LOCK	
		1	**213-0139**	5	PIN	
		1	**8T-8729**	5	PIN-CONNECTOR (16-GA TO 18-GA)	
		1	**9X-3401**	2	PIN-CONNECTOR (16-GA TO 18-GA)	
		1	**177-9648**	1	KIT-CONNECTING PLUG (2-PIN)	
		1	**177-9656**	1	KIT-CONNECTING PLUG (4-PIN)	
					(EACH PLUG KIT INCLUDES PLUG AS, WEDGE & INTERFACE SEAL)	
		1	**8T-8737**	1	PLUG-SEAL	
		1	**102-8802**	2	KIT-RECEPTACLE (2-PIN)	
		1	**102-8803**	1	KIT-RECEPTACLE (3-PIN)	
					(EACH RECEPTACLE KIT INCLUDES RECEPTACLE AS & WEDGE)	
		1	**122-4401**	1	TERMINAL	
		1	**2L-8069**	1	TERMINAL-RING (2-GA TO 10-GA, 3/8-IN SCREW)	
		1	**2L-8067**	1	TERMINAL-RING (10-GA TO 12-GA, 1/4-IN SCREW)	
		1	**091-2436**	7	TERMINAL-BLADE (18-GA TO 22-GA)	
		1	**104-1995**	11	TERMINAL-BLADE (14-GA TO 18-GA)	
		1	**111-6792**	2	TERMINAL-RECEPTACLE (18-GA TO 20-GA)	
		1	**111-6794**	2	TERMINAL-RECEPTACLE	
E		1	**119-3662**		TUBE-HEAT SHRINK (10.85-MM DIA) (7-CM)	
E		1	**125-7874**		TUBE-HEAT SHRINK (5.72-MM DIA) (10-CM)	
E		1	**125-7875**		TUBE-HEAT SHRINK (7.44-MM DIA) (10-CM)	
	13	1	**096-6166**	2	WASHER-HARD (4.5X9X1-MM THK)	
Y	14	1	**276-7287**	1	RELAY GP (12-VOLT) (POWER DISTRIBUTION)	88
	15	1	**3S-2093**	6	STRAP-CABLE	
M	16	1	**5C-2890**	1	NUT (M6X1-THD)	

357-3211 **WIRING GP-AIR CONDITIONER** *(contd.)* **i04586154**

NOTE	REF NO	GRAPHIC REF	PART NUMBER	QTY	PART NAME 1 2 3 4 5 6 (PRODUCT LEVEL)	SEE PAGE
M	17	1	**5C-7261**	1	NUT (M8X1.25-THD)	
	18	1	**8C-3398**	1	LOCKWASHER	
M	19	1	**121-4405**	2	BOLT (M4X0.7X12-MM)	
	20	1	**8T-4205**	1	WASHER-HARD (7.2X14.5X2-MM THK)	
	21	1	**8T-4224**	1	WASHER-HARD (8.8X16X2-MM THK)	
M	22	1	**8T-9534**	1	BOLT (M6X1X50-MM)	

E-ORDER BY THE CENTIMETER
M-METRIC PART
Y-SEPARATE ILLUSTRATION

357-3211 **WIRING GP-AIR CONDITIONER** *(contd.)* **i04586154**

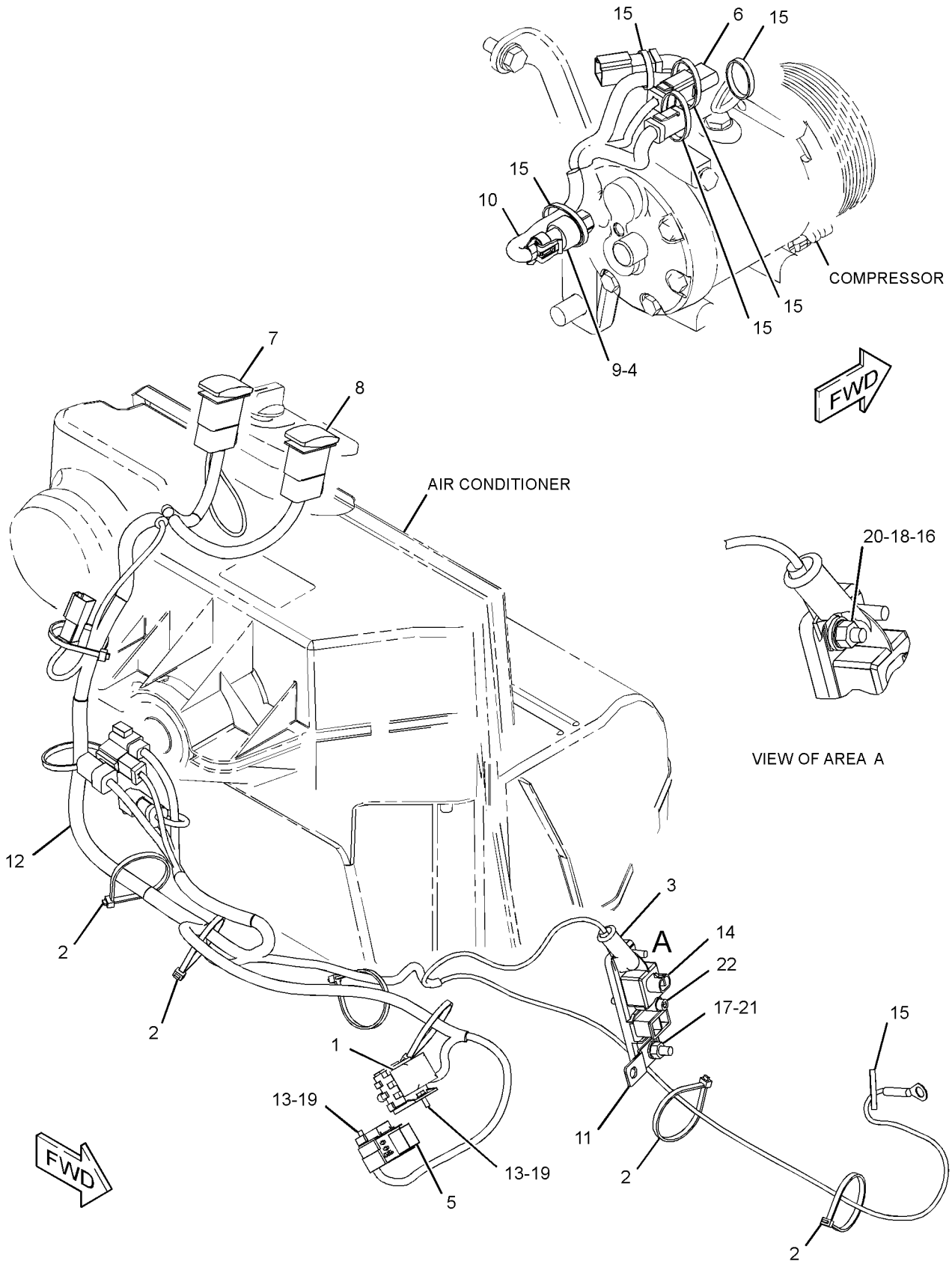

GRAPHIC #1 **<END>** g02814878

ELECTRICAL AND STARTING SYSTEM

383-9581 WIRING GP-AUXILIARY

S/N: LTG1-UP

PART OF 340-1690 CHASSIS AR

SMCS-1408, 7620 **i04629775**

NOTE	REF NO	GRAPHIC REF	PART NUMBER	QTY	PART NAME 1 2 3 4 5 6 (PRODUCT LEVEL)	SEE PAGE
	1	1	**106-0800**	1	TERMINAL AS-BATTERY (REMOTE JUMP START, POSITIVE)	
		1	**4D-5243**	1	LOCKWASHER	
		1	**9B-9146**	1	NUT-SPECIAL	
		1	**062-5388**	1	LOCKNUT (1-11-1/2-THD)	
		1	**277-5777**	1	COVER-TERMINAL	
	2	1	**122-4026**	1	SPACER (13X25X25-MM THK)	
	3	1	**159-8033**	1	FILM-IDENTIFICATION (12-VOLT)	
	4	1	**331-5518**	1	CABLE AS	
		1	**4D-1248**	1	TERMINAL (00-GA, 3/8-IN SCREW)	
E		1	**159-8049**		CABLE (00-GA, RED) (38-CM)	
		1	**276-1786**	1	COVER-TERMINAL (RED)	
		1	**315-0180**	1	TERMINAL-RING	
	5	1	**360-1845**	1	FILM-IDENTIFICATION (JUMP START)	
	6	1	**370-0042**	1	BRACKET	
	7	1	**383-2789**	1	COVER	
	8	1	**383-8936**	1	STUD	
	9	1	**383-8937**	1	RECEPTACLE	
	10	1	**388-4572**	1	COVER-TERMINAL (RED)	
	11	1	**388-5359**	1	RETAINER	
	12	1	**3S-2093**	2	STRAP-CABLE	
	13	1	**5P-4116**	2	WASHER-HARD (8.8X20.5X2-MM THK)	
M	14	1	**8T-4189**	2	BOLT (M8X1.25X20-MM)	

E-ORDER BY THE CENTIMETER
M-METRIC PART

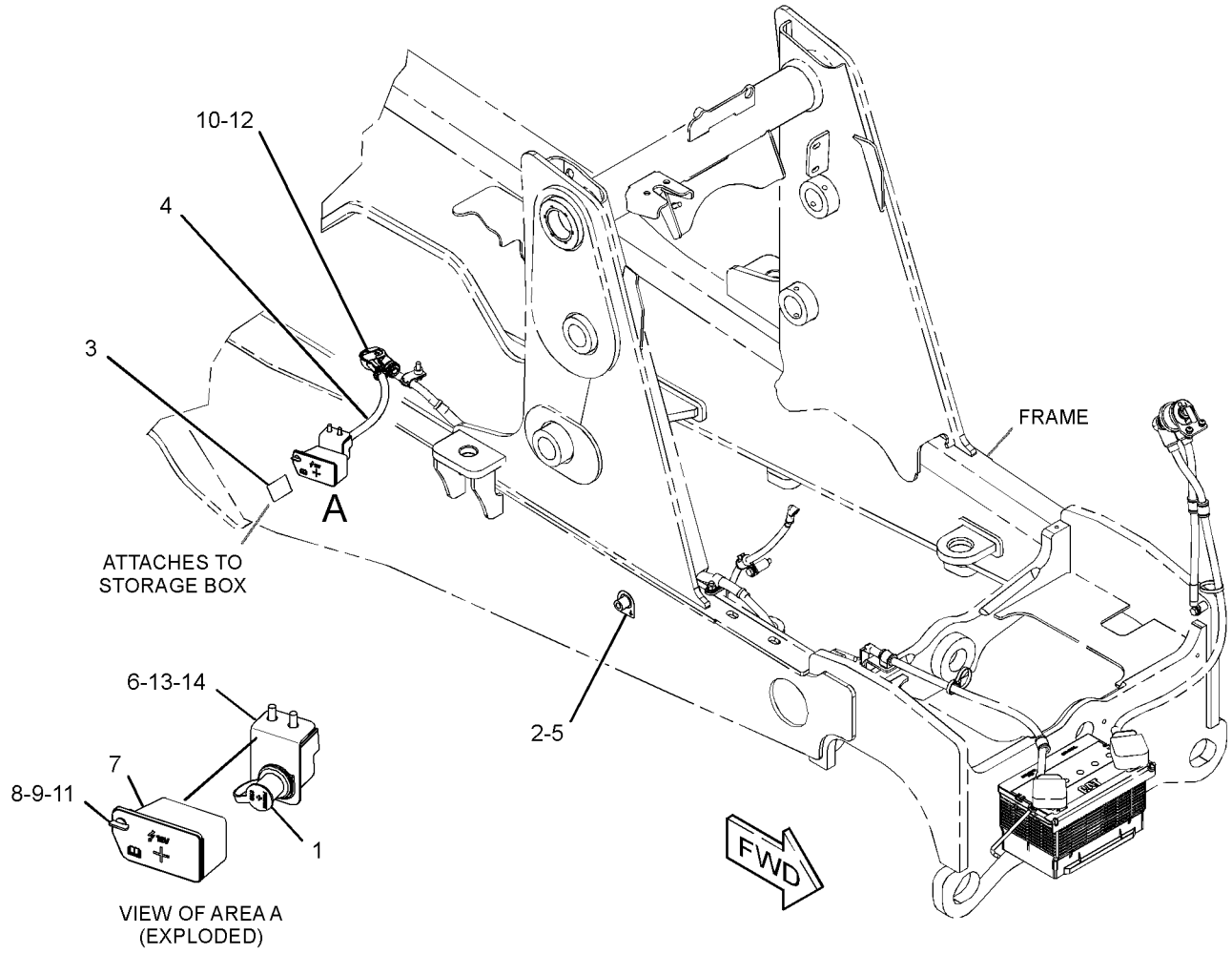

GRAPHIC #1 **<END>** g02828878

ELECTRICAL AND STARTING SYSTEM

357-3214 WIRING GP-COMMUNICATION

S/N: LTG1-UP

AN ATTACHMENT

SMCS-1408, 7606 **i04580753**

NOTE	REF NO	GRAPHIC REF	PART NUMBER	QTY	PART NAME 1 2 3 4 5 6 (PRODUCT LEVEL)	SEE PAGE
	1	1	**7K-1181**	16	STRAP-CABLE	
	2	1	**249-9076**	6	CLIP	
	3	1	**260-7653**	1	FILM-WARNING (PRODUCT LINK 300, INTL)	
	4	1	**284-8531**	1	ANTENNA AS (MAGNETIC MOUNT, PRODUCT LINK)	
		1	**301-0589**	1	ANTENNA (FLEXIBLE)	
	5	1	**331-5529**	1	HARNESS AS-RADIO (PRODUCT LINK)	
		1	**9X-3401**	9	PIN-CONNECTOR (16-GA TO 18-GA)	
		1	**155-2255**	1	KIT-CONNECTING PLUG (12-PIN)	
					(INCLUDES PLUG AS, WEDGE & INTERFACE SEAL)	
		1	**8T-8737**	8	PLUG-SEAL	
		1	**102-8802**	1	KIT-RECEPTACLE (2-PIN)	
		1	**102-8801**	1	KIT-RECEPTACLE (12-PIN)	
					(EACH RECEPTACLE KIT INCLUDES RECEPTACLE AS & WEDGE)	
		1	**180-9340**	9	SOCKET-CONNECTOR (14-GA TO 18-GA)	
B		1	**329-3734**		TAPE	
	6	1	**331-5635**	1	HARNESS AS-WIRING (PRODUCT LINK)	
		1	**9X-3401**	7	PIN-CONNECTOR (16-GA TO 18-GA)	
		1	**155-2255**	1	KIT-CONNECTING PLUG (12-PIN)	
					(INCLUDES PLUG AS, WEDGE & INTERFACE SEAL)	
		1	**8T-8737**	5	PLUG-SEAL	
		1	**102-8804**	1	KIT-RECEPTACLE (4-PIN)	
					(INCLUDES RECEPTACLE AS & WEDGE)	
		1	**9X-4813**	1	RECEPTACLE AS-CONNECTOR (3-PIN)	
		1	**180-9340**	7	SOCKET-CONNECTOR (14-GA TO 18-GA)	
Y	7	1	**336-3545**	1	ELECTRONICS GP-COMMUNICATION (PRODUCT LINK 121SR)	73
M	8	1	**129-3178**	4	LOCKNUT (M6X1-THD)	
	9	1	**6P-6591**	1	GROMMET	
	10	1	**9X-8256**	4	WASHER (6.6X12X2-MM THK)	

B-USE AS REQUIRED
M-METRIC PART
Y-SEPARATE ILLUSTRATION

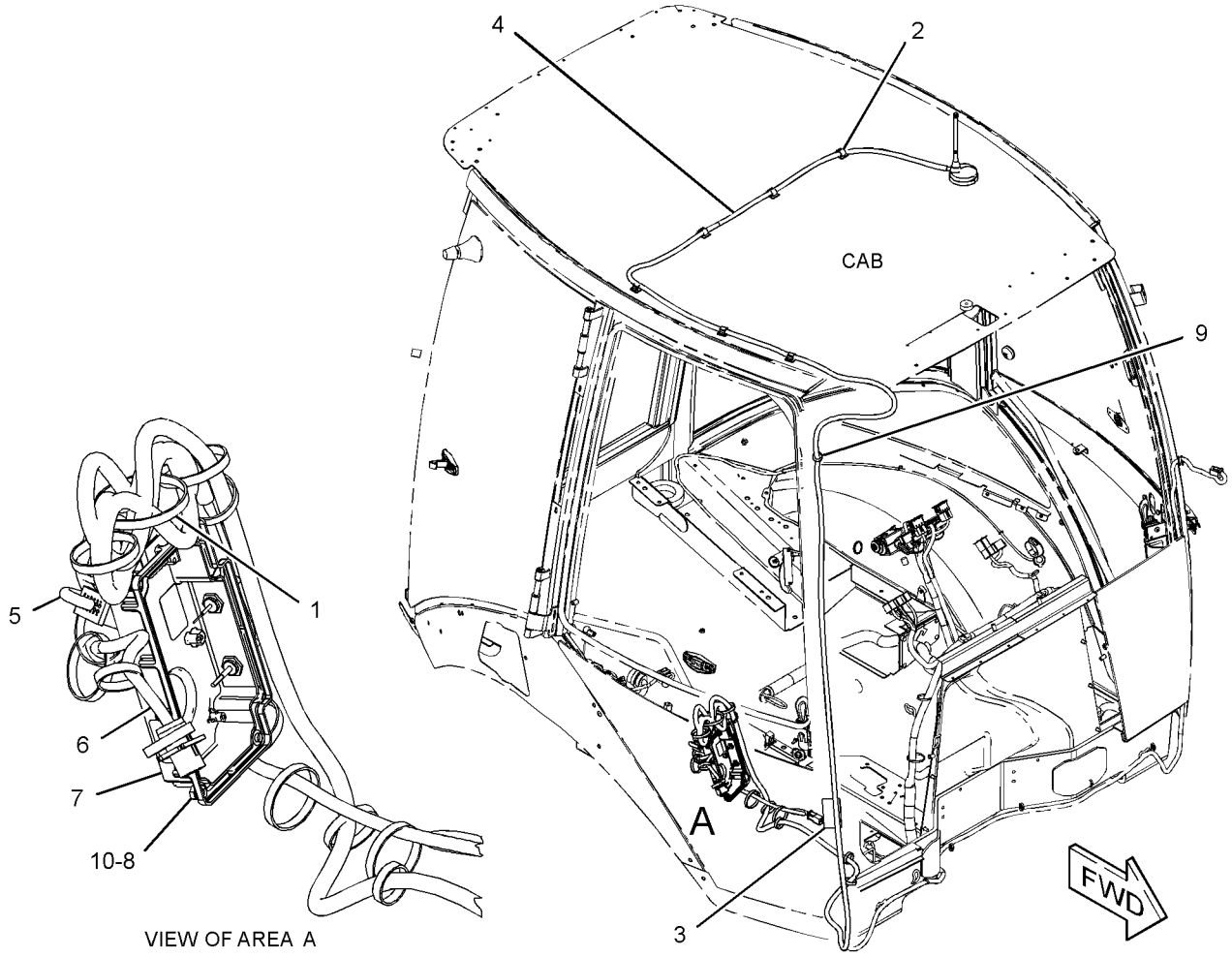

GRAPHIC #1 **<END>** g02808237

331-5536 WIRING GP-CONSOLE

S/N: LTG1-UP
PART OF 353-1452 ELECTRONICS AR-MACHINE
AN ATTACHMENT

SMCS-1408 **i04580721**

NOTE	REF NO	GRAPHIC REF	PART NUMBER	QTY	PART NAME 1 2 3 4 5 6 (PRODUCT LEVEL)	SEE PAGE
	1	1	**110-7887**	1	SWITCH AS-START (KEY)	
		1	**7T-6799**	1	NUT-MOUNTING (1-32-THD)	
		1	**8T-8729**	4	PIN-CONNECTOR (16-GA TO 18-GA)	
		1	**102-8804**	1	KIT-RECEPTACLE (4-PIN)	
					(INCLUDES RECEPTACLE AS & WEDGE)	
	2	1	**206-1345**	3	STRAP-CABLE	
	3	1	**214-4722**	1	SWITCH AS-ROCKER (STARTING AID)	
		1	**111-7899**	1	GASKET	
B	4	1	**227-1057**	5	PLUG-HOLE	
	5	1	**300-4994**	1	SWITCH AS-ROCKER (HYDRAULIC LOCKOUT)	
		1	**111-7899**	1	GASKET	
	6	1	**343-4355**	1	HORN	
	7	1	**357-3258**	1	HARNESS AS-CONSOLE	
		1	**228-5856**	6	CONNECTOR	
		1	**9X-3401**	2	PIN-CONNECTOR (16-GA TO 18-GA)	
					—OR—	
		1	**126-1767**	2	PIN-CONNECTOR (14-GA TO 16-GA)	
		1	**176-2947**	1	KIT-CONNECTING PLUG (4-PIN)	
					(INCLUDES PLUG AS, WEDGE & INTERFACE SEAL)	
		1	**272-2838**	1	PLUG AS	
		1	**245-8026**	1	CONNECTOR	
		1	**8T-8737**	11	PLUG-SEAL	
		1	**340-2566**	4	PLUG-SEAL	
		1	**151-9272**	1	KIT-RECEPTACLE (2-PIN)	
					(INCLUDES RECEPTACLE AS & WEDGE)	
		1	**180-9340**	44	SOCKET-CONNECTOR (14-GA TO 18-GA)	
B		1	**329-3734**		TAPE	
		1	**7N-7221**	2	TERMINAL-BLADE (18-GA TO 22-GA)	
E		1	**125-7874**		TUBE-HEAT SHRINK (5.72-MM DIA) (40-CM)	
E		1	**125-7875**		TUBE-HEAT SHRINK (7.44-MM DIA) (15-CM)	
	8	1	**3S-2093**	5	STRAP-CABLE	

B-USE AS REQUIRED
E-ORDER BY THE CENTIMETER

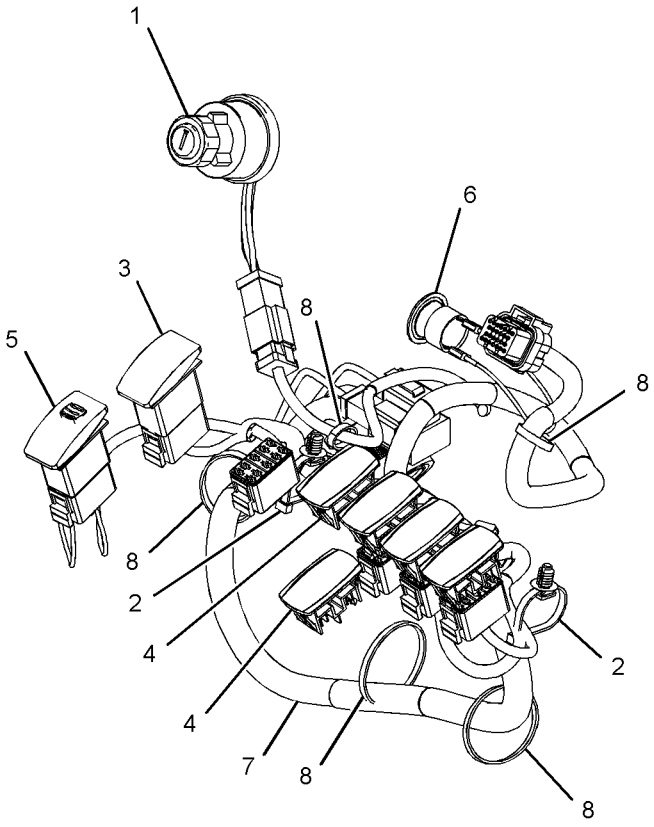

VIEW OF AREA A

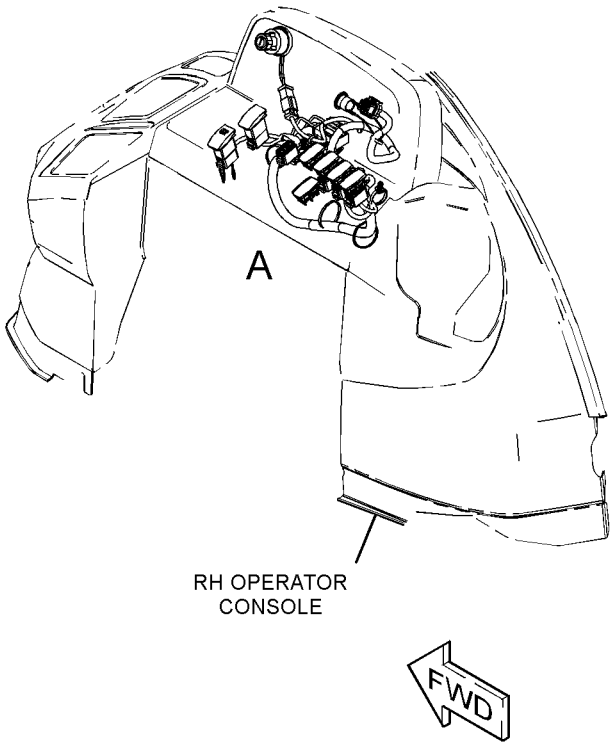

GRAPHIC #1 **<END>** g02806156

ELECTRICAL AND STARTING SYSTEM

357-3199 WIRING GP-ENGINE—PILOT & MECHANICAL

S/N: LTG1-UP
PART OF 340-1705 ENGINE AR
AN ATTACHMENT

SMCS-1408 **i04605589**

NOTE	REF NO	GRAPHIC REF	PART NUMBER	QTY	PART NAME 1 2 3 4 5 6 (PRODUCT LEVEL)	SEE PAGE
	1	2	**4E-0724**	1	SPACER (9X20X28-MM THK)	
	2	1,2	**7K-1181**	6	STRAP-CABLE	
	3	1	**134-3355**	1	STRAP AS	
	4	1	**164-9425**	1	HORN AS (12-VOLT, LOW TONE)	
	5	2	**205-9920**	2	STRAP-CABLE	
	6	1,2	**206-1345**	3	STRAP-CABLE	
	7	2	**244-3106**	1	SENDER AS-TEMPERATURE (ENGINE COOLANT)	
		2	**102-8802**	1	KIT-RECEPTACLE (2-PIN)	
					(INCLUDES RECEPTACLE AS & WEDGE)	
		2	**8T-8729**	2	PIN-CONNECTOR (16-GA TO 18-GA)	
	8	2	**274-3774**	1	CAP-CONNECTOR	
	9	1,2	**298-0663**	5	CLIP	
	10	1	**331-5496**	1	HARNESS AS-ALARM	
		1	**8T-8729**	2	PIN-CONNECTOR (16-GA TO 18-GA)	
		1	**155-2270**	1	KIT-CONNECTING PLUG (2-PIN)	
					(INCLUDES PLUG AS, WEDGE & INTERFACE SEAL)	
		1	**102-8802**	1	KIT-RECEPTACLE (2-PIN)	
					(INCLUDES RECEPTACLE AS & WEDGE)	
		1	**8T-8730**	2	SOCKET-CONNECTOR (16-GA TO 18-GA)	
	11	2	**352-3964**	1	CLIP	
	12	1	**357-3200**	1	HARNESS AS-ENGINE	
E		1	**226-5849**		CONDUIT (26-CM)	
		1	**123-7615**	2	CONNECTOR	
		1	**213-0139**	3	PIN	
		1	**176-1477**	1	PLUG AS (2-PIN)	
		1	**258-4172**	1	PLUG AS-CONNECTOR	
		1	**155-2260**	1	KIT-CONNECTING PLUG (3-PIN)	
		1	**155-2270**	8	KIT-CONNECTING PLUG (2-PIN)	
					(EACH PLUG KIT INCLUDES PLUG AS, WEDGE & INTERFACE SEAL)	
		1	**8T-8730**	10	SOCKET-CONNECTOR (16-GA TO 18-GA)	
		1	**169-0705**	18	SEAL	
		1	**185-1861**	2	SEAL-WIRE	
		1	**180-9340**	19	SOCKET-CONNECTOR (14-GA TO 18-GA)	
		1	**204-6195**	1	SOCKET-CONNECTOR (18-PIN)	
		1	**275-0601**	17	SOCKET-CONNECTOR (16-GA TO 20-GA)	
		1	**176-1521**	2	TERMINAL	
		1	**2L-8076**	1	TERMINAL-RING (14-GA TO 16-GA, NO. 10 SCREW)	
		1	**2L-8079**	1	TERMINAL-RING (14-GA TO 16-GA, 3/8-IN SCREW)	
		1	**7N-7221**	1	TERMINAL-BLADE (18-GA TO 22-GA)	
		1	**091-2436**	44	TERMINAL-BLADE (18-GA TO 22-GA)	
		1	**2L-8066**	1	TERMINAL-RING (10-GA TO 12-GA, NO. 10 SCREW)	
		1	**7N-9017**	2	TERMINAL-RING (18-GA TO 22-GA, NO. 10 SCREW)	
E		1	**119-3662**		TUBE-HEAT SHRINK (10.85-MM DIA) (7-CM)	
E		1	**125-7874**		TUBE-HEAT SHRINK (5.72-MM DIA) (11-CM)	
E		1	**125-7875**		TUBE-HEAT SHRINK (7.44-MM DIA) (10-CM)	
D		1	**5P-6006**		TUBE-HEAT SHRINK (9.52-MM DIA) (0.1-M)	
	13	2	**132-5789**	1	CLIP	
	14	2	**230-7732**	1	MOUNTING-CABLE TIE	
	15	1	**3J-4818**	1	LOCKWASHER	
	16	1,2	**3S-2093**	23	STRAP-CABLE	

357-3199 **WIRING GP-ENGINE** *(contd.)* **i04605589**

NOTE	REF NO	GRAPHIC REF	PART NUMBER	QTY	PART NAME 1 2 3 4 5 6 (PRODUCT LEVEL)	SEE PAGE
	17	2	**4P-7429**	1	CLIP	
	18	2	**4P-7581**	3	CLIP	
	19	2	**4P-8134**	4	CLIP	
M	20	2	**5C-2874**	2	NUT (M5X0.8-THD)	
	21	2	**7G-7053**	1	GROMMET	
M	22	2	**7X-0818**	1	BOLT (M8X1.25X45-MM)	
	23	2	**8F-1434**	2	LOCKWASHER	
	24	1	**8F-3590**	1	LOCKWASHER	
	25	2	**8T-0328**	2	WASHER-HARD (5.5X10X1-MM THK)	
	26	1,2	**8T-4121**	7	WASHER-HARD (11X21X2.5-MM THK)	
M	27	1	**8T-4136**	1	BOLT (M10X1.5X25-MM)	
M	28	1,2	**8T-4137**	5	BOLT (M10X1.5X20-MM)	
M	29	2	**8T-4189**	3	BOLT (M8X1.25X20-MM)	
M	30	1,2	**8T-4192**	3	BOLT (M12X1.75X25-MM)	
	31	1,2	**8T-4223**	4	WASHER-HARD (13.5X25.5X3-MM THK)	
	32	2	**8T-4224**	4	WASHER-HARD (8.8X16X2-MM THK)	

D-ORDER BY THE METER
E-ORDER BY THE CENTIMETER
M-METRIC PART

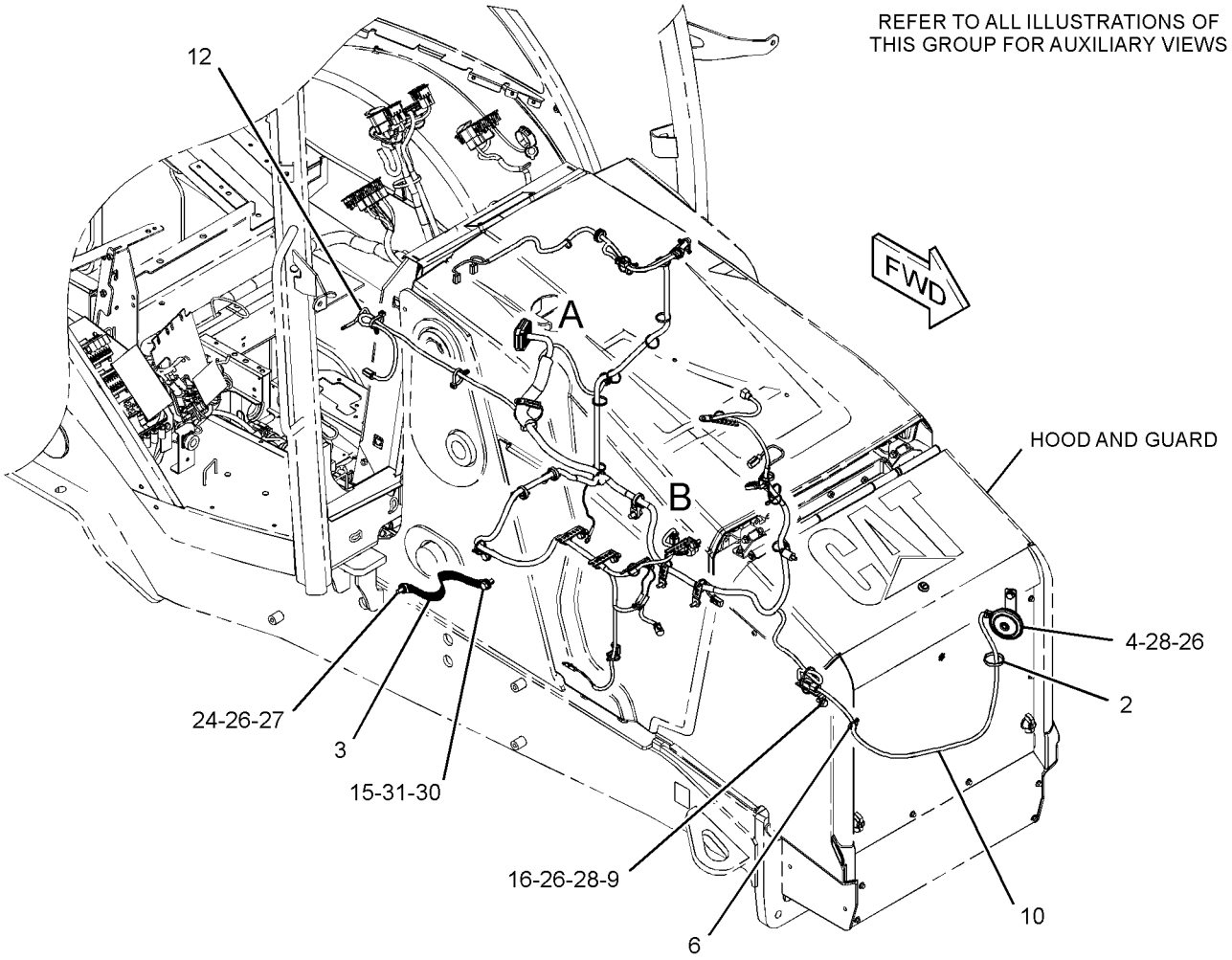

GRAPHIC #1 g02811356

357-3199 **WIRING GP-ENGINE** *(contd.)* **i04605589**

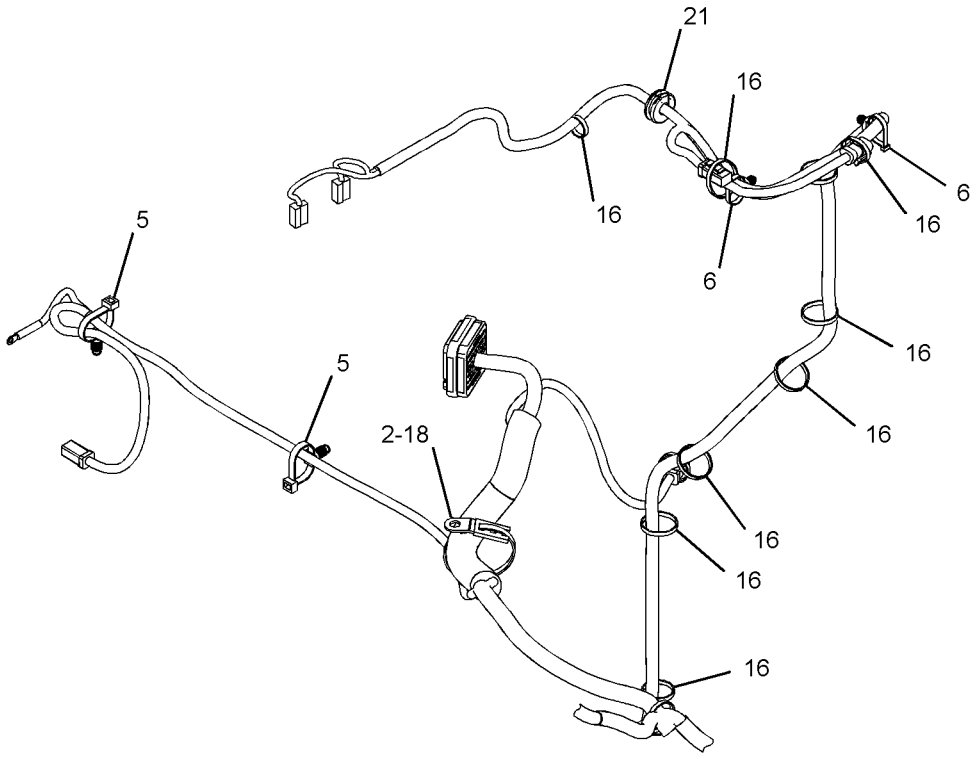

VIEW OF AREA A

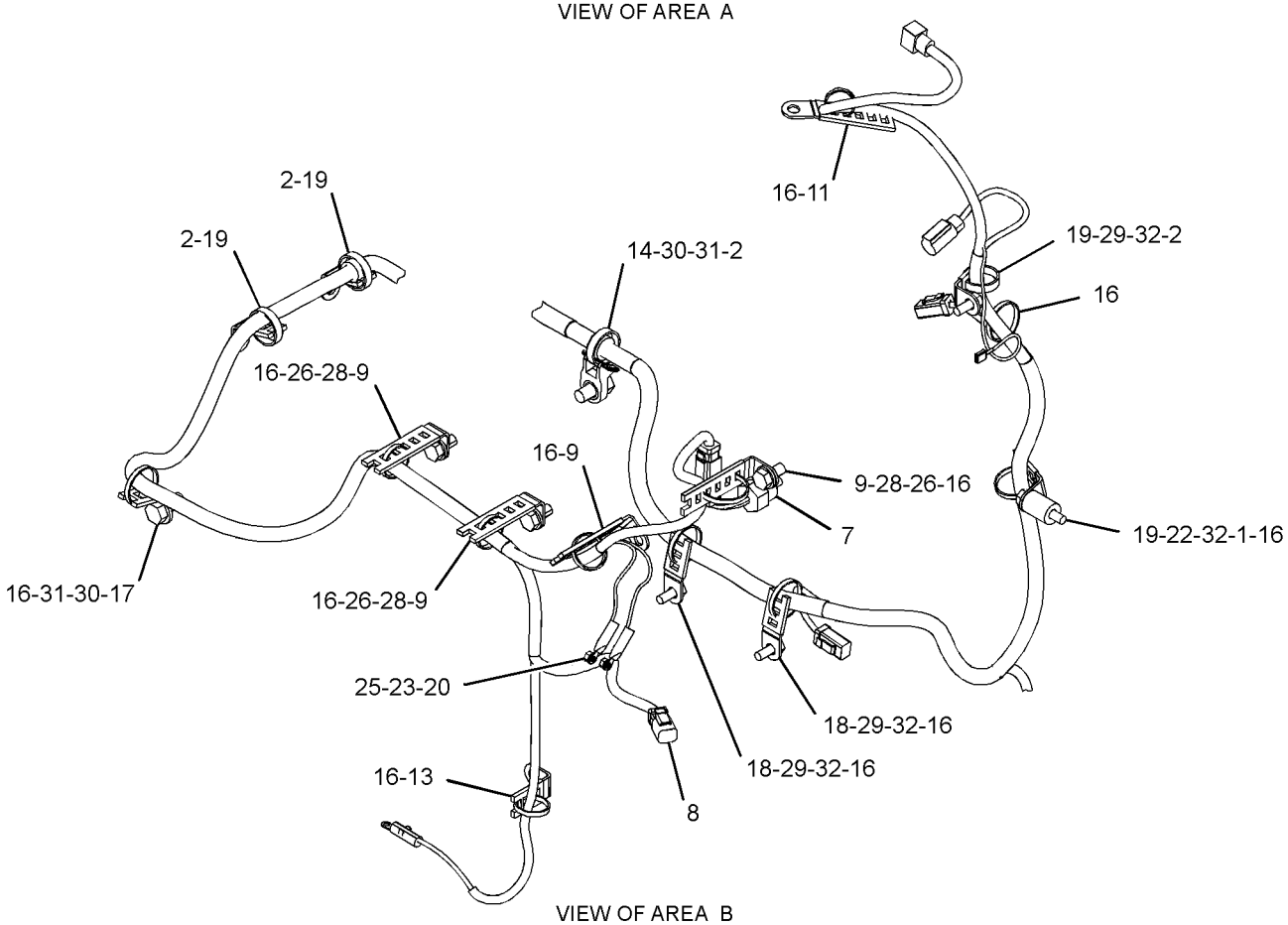

VIEW OF AREA B

GRAPHIC #2 **<END>** g02811357

359-0015 WIRING GP-HEATER

S/N: LTG1-UP
PART OF 353-1467 HEATER AR-CAB
AN ATTACHMENT

SMCS-1408, 7304 **i04586212**

NOTE	REF NO	GRAPHIC REF	PART NUMBER	QTY	PART NAME 1 2 3 4 5 6 (PRODUCT LEVEL)	SEE PAGE
	1	1	**3E-9362**	1	RELAY AS (12-VOLT) (HIGH SPEED)	
	2	1	**6K-0806**	8	STRAP-CABLE	
	3	1	**8T-8799**	1	BOOT	
	4	1	**214-4695**	1	SWITCH AS-ROCKER (BLOWER FAN SPEED)	
	5	1	**214-4703**	1	SWITCH AS-ROCKER (HEATER)	
					(EACH SWITCH AS INCLUDES)	
		1	**111-7899**	1	GASKET	
	6	1	**275-0570**	1	BAR-BUS	
	7	1	**359-0016**	1	HARNESS AS-HEATER & AIR COND	
		1	**228-5856**	2	CONNECTOR	
		1	**111-6795**	1	HOUSING-RELAY	
		1	**111-6816**	1	LOCK	
		1	**213-0139**	5	PIN	
		1	**8T-8729**	5	PIN-CONNECTOR (16-GA TO 18-GA)	
		1	**9X-3401**	2	PIN-CONNECTOR (16-GA TO 18-GA)	
		1	**177-9648**	1	KIT-CONNECTING PLUG (2-PIN)	
		1	**177-9656**	1	KIT-CONNECTING PLUG (4-PIN)	
					(EACH PLUG KIT INCLUDES PLUG AS, WEDGE & INTERFACE SEAL)	
		1	**8T-8737**	1	PLUG-SEAL	
		1	**102-8802**	2	KIT-RECEPTACLE (2-PIN)	
		1	**102-8803**	1	KIT-RECEPTACLE (3-PIN)	
					(EACH RECEPTACLE KIT INCLUDES RECEPTACLE AS & WEDGE)	
		1	**122-4401**	1	TERMINAL	
		1	**2L-8069**	1	TERMINAL-RING (2-GA TO 10-GA, 3/8-IN SCREW)	
		1	**2L-8067**	1	TERMINAL-RING (10-GA TO 12-GA, 1/4-IN SCREW)	
		1	**091-2436**	7	TERMINAL-BLADE (18-GA TO 22-GA)	
		1	**104-1995**	11	TERMINAL-BLADE (14-GA TO 18-GA)	
		1	**111-6792**	2	TERMINAL-RECEPTACLE (18-GA TO 20-GA)	
		1	**111-6794**	2	TERMINAL-RECEPTACLE	
E		1	**119-3662**		TUBE-HEAT SHRINK (10.85-MM DIA) (7-CM)	
E		1	**125-7874**		TUBE-HEAT SHRINK (5.72-MM DIA) (10-CM)	
E		1	**125-7875**		TUBE-HEAT SHRINK (7.44-MM DIA) (10-CM)	
	8	1	**096-6166**	2	WASHER-HARD (4.5X9X1-MM THK)	
Y	9	1	**276-7287**	1	RELAY GP (12-VOLT) (POWER DISTRIBUTION)	88
	10	1	**3S-2093**	1	STRAP-CABLE	
M	11	1	**5C-2890**	1	NUT (M6X1-THD)	
M	12	1	**5C-7261**	1	NUT (M8X1.25-THD)	
	13	1	**8C-3398**	1	LOCKWASHER	
M	14	1	**8T-0285**	2	SCREW-MACHINE (M4X0.7X12-MM)	
	15	1	**8T-4205**	1	WASHER-HARD (7.2X14.5X2-MM THK)	
	16	1	**8T-4224**	1	WASHER-HARD (8.8X16X2-MM THK)	
M	17	1	**8T-9534**	1	BOLT (M6X1X50-MM)	

E-ORDER BY THE CENTIMETER
M-METRIC PART
Y-SEPARATE ILLUSTRATION

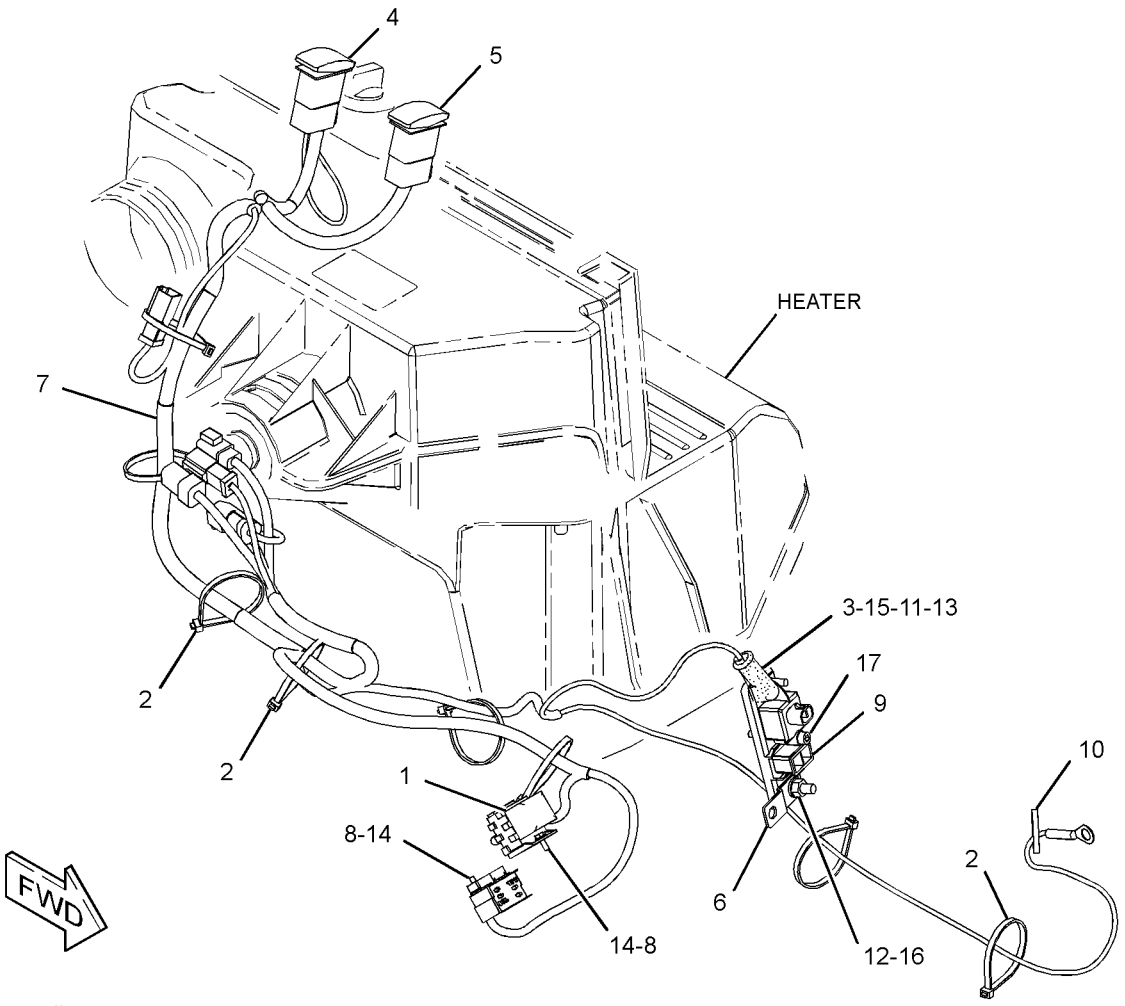

GRAPHIC #1 **<END>** g02806236

331-5472 WIRING GP-KICKOUT & POSITIONER–

SINGLE TILT

S/N: LTG1-UP

PART OF 373-4246, 373-4248 VALVE AR-BANK 2, 373-4256 VALVE AR-BANK 3

AN ATTACHMENT

SMCS-5109, 5112, 5734 **i04565311**

NOTE	REF NO	GRAPHIC REF	PART NUMBER	QTY	PART NAME 1 2 3 4 5 6 (PRODUCT LEVEL)	SEE PAGE
	1	1	**7K-1181**	4	STRAP-CABLE	
	2	1	**331-5473**	1	HARNESS AS-WIRING (KICKOUT, POSITIONER)	
		1	**8T-8729**	2	PIN-CONNECTOR (16-GA TO 18-GA)	
		1	**155-2260**	1	KIT-CONNECTING PLUG (3-PIN)	
		1	**155-2270**	2	KIT-CONNECTING PLUG (2-PIN)	
					(EACH PLUG KIT INCLUDES PLUG AS, WEDGE & INTERFACE SEAL)	
		1	**8T-8737**	1	PLUG-SEAL	
		1	**102-8802**	1	KIT-RECEPTACLE (2-PIN)	
					(INCLUDES RECEPTACLE AS & WEDGE)	
		1	**8T-8730**	6	SOCKET-CONNECTOR (16-GA TO 18-GA)	
		1	**189-3158**	1	SUPPRESSOR-ARC	
E		1	**125-7874**		TUBE-HEAT SHRINK (5.72-MM DIA) (10-CM)	
	3	1	**3S-2093**	1	STRAP-CABLE	
	4	1	**4P-8134**	1	CLIP	

E-ORDER BY THE CENTIMETER

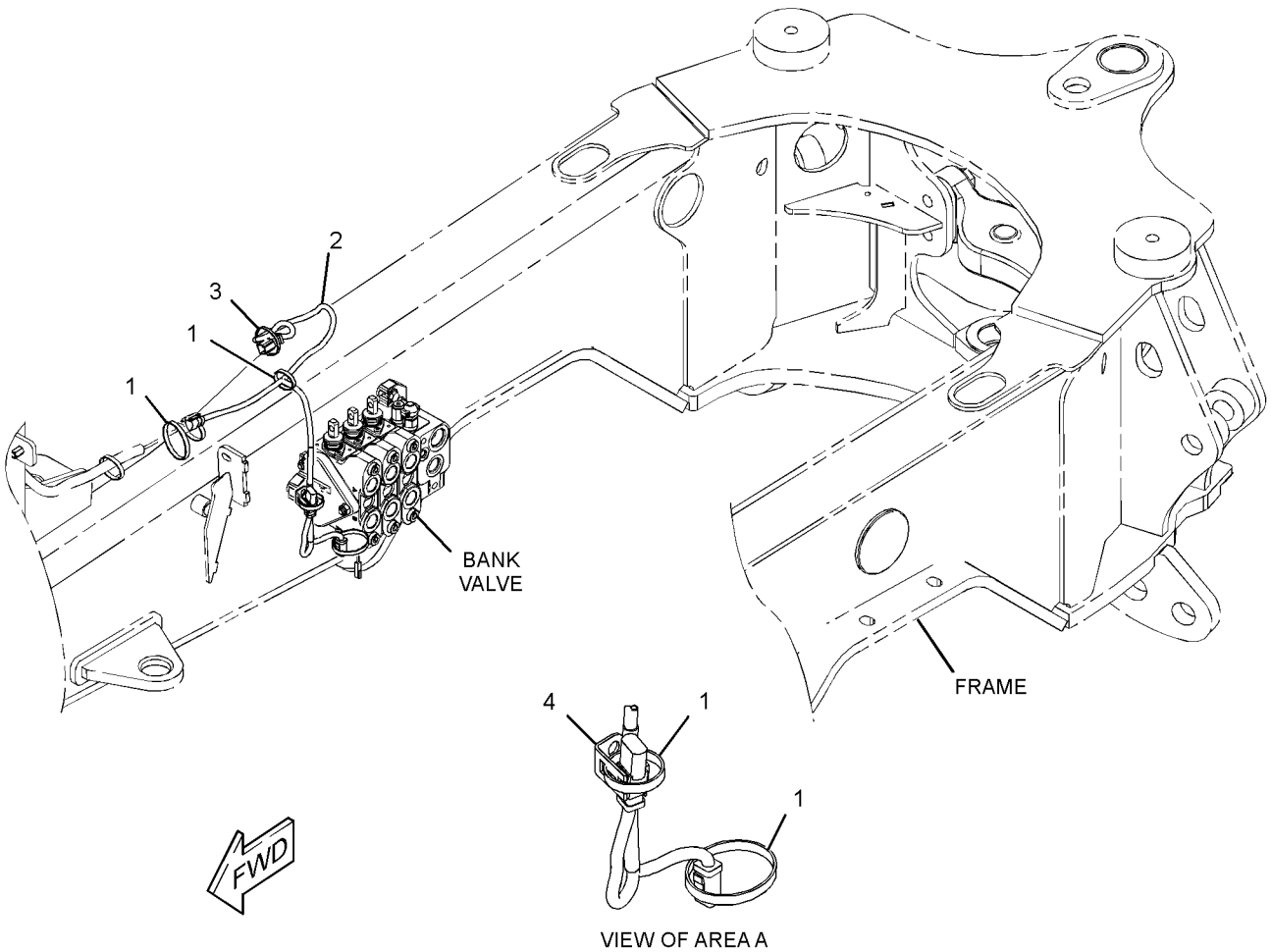

GRAPHIC #1 **<END>** g02789663

357-3218 WIRING GP-KICKOUT & POSITIONER–

SINGLE TILT

S/N: LTG1-UP

PART OF 340-1699 LOADER AR

SMCS-5109, 5112, 5734 **i04548142**

NOTE	REF NO	GRAPHIC REF	PART NUMBER	QTY	PART NAME 1 2 3 4 5 6 (PRODUCT LEVEL)	SEE PAGE
	1	1	**7K-1181**	22	STRAP-CABLE	
	2	1	**118-7790**	1	BRACKET AS	
	3	1	**206-1486**	1	SWITCH AS-ROLLER (KICKOUT, POSITIONER)	
		1	**2H-3922**	1	LOCKWASHER	
		1	**6V-8363**	2	SCREW (10-32X0.312-IN)	
		1	**6V-8370**	1	NUT-HEX (3/4-32-THD)	
		1	**8F-1434**	2	LOCKWASHER	
		1	**9X-0199**	1	BOOT-SWITCH	
	4	1	**357-3220**	1	HARNESS AS-WIRING (RETURN TO DIG)	
E		1	**6V-8523**		HOSE (450-CM)	
		1	**102-8803**	1	KIT-RECEPTACLE (3-PIN)	
					(INCLUDES RECEPTACLE AS & WEDGE)	
		1	**9X-3401**	2	PIN-CONNECTOR (16-GA TO 18-GA)	
		1	**8T-8737**	1	PLUG-SEAL	
		1	**5P-1476**	2	TERMINAL-FORK (14-GA TO 16-GA, NO. 10 SCREW)	
E		1	**8T-6885**		TUBE-HEAT SHRINK (19.05-MM DIA) (10-CM)	
	5	1	**3S-2093**	1	STRAP-CABLE	
	6	1	**4P-7581**	1	CLIP	
	7	1	**8M-2773**	1	CLIP	
	8	1	**8T-4121**	2	WASHER-HARD (11X21X2.5-MM THK)	
M	9	1	**8T-4133**	1	NUT (M10X1.5-THD)	
M	10	1	**8T-4138**	2	BOLT (M6X1X20-MM)	
M	11	1	**8T-4195**	1	BOLT (M10X1.5X30-MM)	
	12	1	**8T-4205**	2	WASHER-HARD (7.2X14.5X2-MM THK)	
	13	1	**9X-7344**	1	GROMMET	

E-ORDER BY THE CENTIMETER
M-METRIC PART

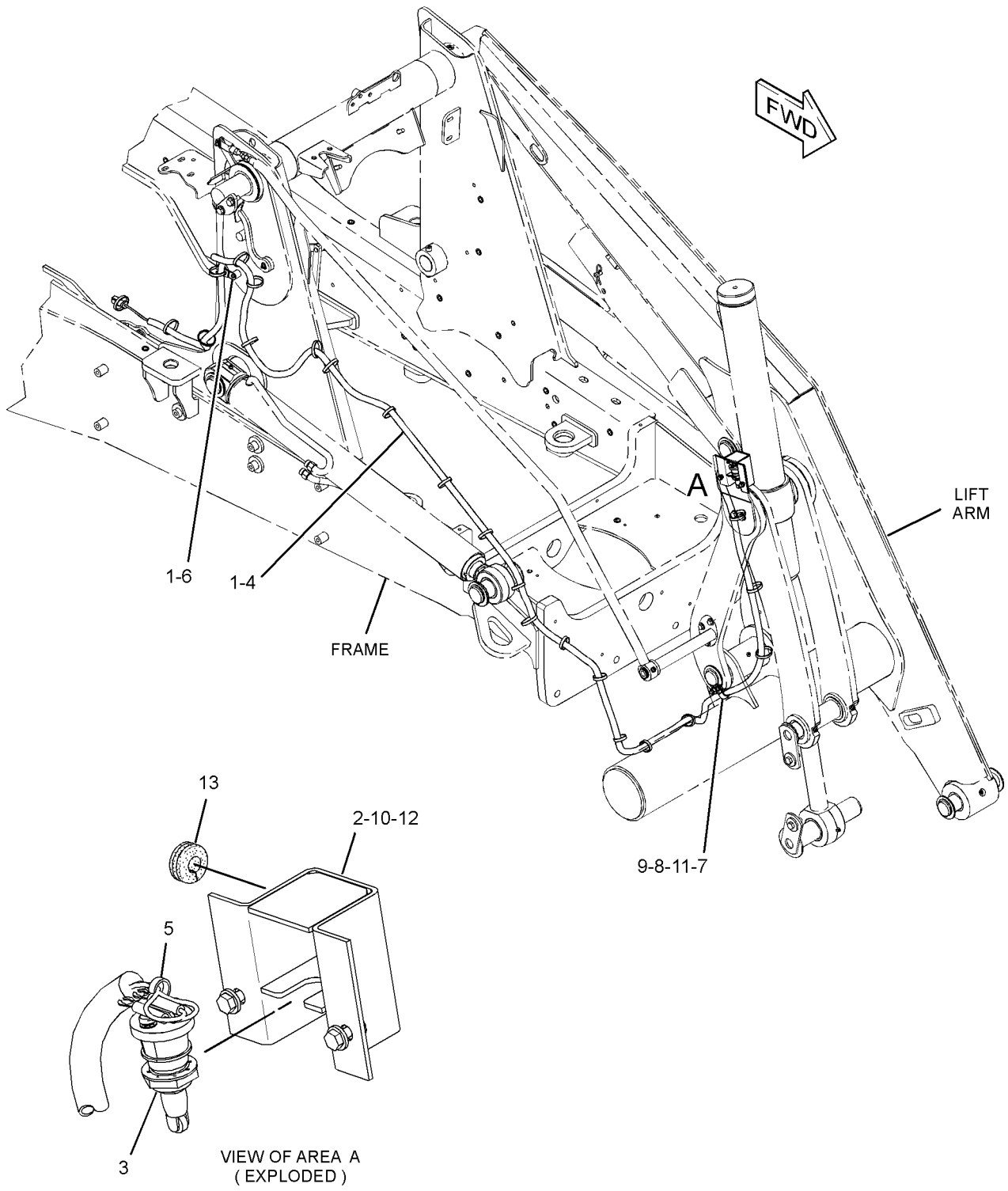

GRAPHIC #1 **<END>** g02785616

ELECTRICAL AND STARTING SYSTEM

357-3195 WIRING GP-PLATFORM–EAME, PILOT

S/N: LTG1-UP

PART OF 353-1452 ELECTRONICS AR-MACHINE

AN ATTACHMENT

SMCS-1408 **i04597232**

NOTE	REF NO	GRAPHIC REF	PART NUMBER	QTY	PART NAME 1 2 3 4 5 6 (PRODUCT LEVEL)	SEE PAGE
	1	1	**1S-9593**	3	STRAP-CABLE	
	2	2	**3E-9362**	1	RELAY AS (12-VOLT) (START)	
	3	2	**6I-1418**	4	SPACER (8.2X12.7X28.7-MM THK)	
	4	1	**6K-0806**	3	STRAP-CABLE	
	5	1,2,3	**7K-1181**	32	STRAP-CABLE	
	6	2	**7T-4848**	1	FLASHER AS (12-VOLT) (HAZARD)	
	7	2	**8C-6354**	1	CAP-RECEPTACLE (ET CONNECTOR)	
	8	2	**8T-8799**	5	BOOT	
	9	2	**8T-9655**	8	MOUNT-ISOLATION	
	10	1	**8X-9618**	1	STRAP AS-GROUND	
	11	3	**8Y-7833**	1	WIRE AS	
	12	2	**116-7471**	1	PULLER-MINIFUSE	
	13	2	**140-9378**	1	RELAY AS (12-VOLT) (NEUTRAL START)	
	13A	2	**140-9378**	1	RELAY AS (12-VOLT) (FUEL PUMP)	
	14	2	**146-1815**	1	STRAP AS	
	15	2	**146-9439**	3	RELAY AS (12-VOLT) (FUSE BLOCK)	
	16	1	**164-1368**	4	FASTENER-PANEL	
	17	1,3	**178-7539**	2	RECEPTACLE AS (POWER SUPPLY)	
	18	2	**179-6401**	4	SCREW-PAN HEAD (6-32X0.5-IN)	
	19	1	**196-2966**	1	PLUG	
	20	3	**201-1024**	2	BRACKET	
	21	1,2,3	**206-1345**	7	STRAP-CABLE	
	22	1	**212-0862**	3	CLAMP-CABLE	
	23	1	**214-4694**	1	SWITCH AS-ROCKER (MODE SELECT)	
	24	1	**214-4716**	1	SWITCH AS-ROCKER (TRANSMISSION NEUTRAL LOCK)	
					(EACH SWITCH AS INCLUDES)	
		1	**111-7899**	1	GASKET	
	25	1	**214-4717**	1	INDICATOR AS (LH TURN SIGNAL, PARKING BRAKE)	
	26	1	**214-4723**	1	INDICATOR AS (RH TURN SIGNAL, HIGH BEAM)	
					(EACH INDICATOR AS INCLUDES)	
		1	**111-7899**	1	GASKET	
B	27	1	**227-1057**	11	PLUG-HOLE	
	28	2	**258-4178**	1	FLANGE-MOUNTING	
	29	2	**267-2701**	1	FUSE (60-AMPERE) (POWER, 1)	
	30	1	**273-9190**	1	SWITCH AS-MULTIFUNCTION (HD LIGHT, TURN SIG, WDO WIPER)	
		1	**8T-8729**	13	PIN-CONNECTOR (16-GA TO 18-GA)	
		1	**8T-8737**	1	PLUG-SEAL	
		1	**151-9275**	1	KIT-RECEPTACLE (6-PIN)	
		1	**160-3518**	1	KIT-RECEPTACLE (8-PIN)	
					(EACH RECEPTACLE KIT INCLUDES RECEPTACLE AS & WEDGE)	
	31	2	**274-9872**	1	FUSE (30-AMPERE) (MAIN)	
	32	3	**275-0553**	1	BAR-BUS	
	33	3	**275-0570**	1	BAR-BUS	
Y	34	3	**276-7290**	1	RELAY GP (12-VOLT) (POWER, 1)	89
Y	35	3	**276-7291**	1	RELAY GP (12-VOLT) (POWER, 2)	90
	36	2	**278-6377**	1	FUSE (40-AMPERE) (POWER, 2)	
	37	1	**290-6733**	1	BRACKET AS	
	38	2	**298-0663**	1	CLIP	
	39	1	**306-7346**	1	SWITCH AS-ROCKER (HAZARD WARNING LIGHTS)	
		1	**111-7899**	1	GASKET	
	40	2	**312-3083**	1	BRACKET AS	
Y	41	3	**322-6827**	1	RELAY GP (12-VOLT) (STARTING MOTOR)	91
	42	2	**331-5578**	1	BRACKET	

357-3195 **WIRING GP-PLATFORM** ***(contd.)*** **i04597232**

NOTE	REF NO	GRAPHIC REF	PART NUMBER	QTY	PART NAME 1 2 3 4 5 6 (PRODUCT LEVEL)	SEE PAGE
	43	2	**331-5636**	1	BRACKET AS	
	44	2	**344-2824**	1	PLATE AS	
	45	1	**356-4114**	1	GROMMET	
	46	1	**357-3196**	1	HARNESS AS-PLATFORM	
		1	**275-7877**	1	BLOCK AS-FUSE	
		1	**306-0348**	1	COVER-FUSE	
		1	**8C-3398**	2	LOCKWASHER	
M		1	**5C-2890**	2	NUT (M6X1-THD)	
		1	**306-0351**	1	SEAL-COVER	
		1	**8T-4205**	2	WASHER-HARD (7.2X14.5X2-MM THK)	
		1	**292-9784**	1	BLOCK AS-FUSE	
		1	**8T-8799**	2	BOOT	
		1	**110-0203**	8	CONNECTOR AS	
		1	**228-5856**	8	CONNECTOR	
		1	**113-8490**	9	FUSE (10-AMPERE)	
		1	**113-8491**	12	FUSE (15-AMPERE)	
		1	**112-8492**	6	SCREW	
		1	**111-6795**	3	HOUSING-RELAY	
		1	**111-6816**	3	LOCK	
		1	**8C-3398**	2	LOCKWASHER	
M		1	**5C-2890**	2	NUT (M6X1-THD)	
		1	**211-0052**	2	NUT (1-11/16-18-THD)	
		1	**9X-3401**	56	PIN-CONNECTOR (16-GA TO 18-GA)	
		1	**262-9151**	3	PIN-CONNECTOR (12-GA TO 14-GA)	
		1	**275-0600**	17	PIN-CONNECTOR	
		1	**147-1446**	1	PLUG AS-CONNECTOR (70-PIN)	
		1	**147-1445**	1	PLUG AS-CONNECTOR (70-PIN)	
					(EACH PLUG AS INCLUDES)	
		1	**159-9322**	1	SEAL-O-RING	
		1	**155-2256**	1	KIT-CONNECTING PLUG (12-PIN)	
		1	**155-2255**	5	KIT-CONNECTING PLUG (12-PIN)	
		1	**155-2265**	4	KIT-CONNECTING PLUG (8-PIN)	
		1	**155-2260**	5	KIT-CONNECTING PLUG (3-PIN)	
		1	**155-2270**	12	KIT-CONNECTING PLUG (2-PIN)	
		1	**155-2271**	2	KIT-CONNECTING PLUG (4-PIN)	
		1	**155-2274**	5	KIT-CONNECTING PLUG (6-PIN)	
					(EACH PLUG KIT INCLUDES PLUG AS, WEDGE & INTERFACE SEAL)	
		1	**230-4011**	4	PLUG AS-CONNECTOR (2-PIN)	
					(EACH INCLUDES)	
		1	**264-7029**	1	SEAL-CONNECTOR	
		1	**205-9362**	1	PLUG AS	
		1	**7R-2751**	20	PLUG-CONNECTOR	
		1	**8T-8737**	108	PLUG-SEAL	
		1	**102-8802**	3	KIT-RECEPTACLE (2-PIN)	
		1	**102-8804**	1	KIT-RECEPTACLE (4-PIN)	
		1	**102-8805**	2	KIT-RECEPTACLE (6-PIN)	
		1	**102-8801**	1	KIT-RECEPTACLE (12-PIN)	
					(EACH RECEPTACLE KIT INCLUDES RECEPTACLE AS & WEDGE)	
		1	**134-2540**	2	RESISTOR AS-CONNECTION (3-PIN)	
		1	**167-3692**	11	RECEPTACLE AS-CONNECTOR (31-PIN)	
		1	**225-3861**	1	RECEPTACLE AS (31-PIN)	
		1	**258-4170**	1	RECEPTACLE AS	
		1	**9W-1951**	1	RECEPTACLE-CONNECTOR (9-PIN)	
		1	**169-0705**	19	SEAL	
		1	**100-6674**	2	SEAL-CONNECTOR	
		1	**9W-0844**	13	SOCKET-CONNECTOR (14-GA TO 16-GA)	
		1	**9X-3402**	96	SOCKET-CONNECTOR (16-GA TO 18-GA)	
		1	**180-9340**	168	SOCKET-CONNECTOR (14-GA TO 18-GA)	

357-3195 **WIRING GP-PLATFORM** *(contd.)* **i04597232**

NOTE	REF NO	GRAPHIC REF	PART NUMBER	QTY	PART NAME 1 2 3 4 5 6 (PRODUCT LEVEL)	SEE PAGE
		1	**202-0313**	23	TERMINAL AS	
					(EACH INCLUDES)	
		1	**128-5016**	1	SEAL-CABLE	
		1	**202-0314**	27	TERMINAL AS	
					(EACH INCLUDES)	
		1	**128-4123**	1	SEAL	
		1	**8L-8413**	2	STRAP-CABLE (WHITE)	
		1	**189-3158**	4	SUPPRESSOR-ARC	
B		1	**329-3734**		TAPE	
		1	**2L-8067**	1	TERMINAL-RING (10-GA TO 12-GA, 1/4-IN SCREW)	
		1	**2L-8069**	3	TERMINAL-RING (2-GA TO 10-GA, 3/8-IN SCREW)	
		1	**2L-8079**	1	TERMINAL-RING (14-GA TO 16-GA, 3/8-IN SCREW)	
		1	**2L-8050**	6	TERMINAL-RING (6-GA, 1/4-IN SCREW)	
		1	**5P-4571**	4	TERMINAL-BLADE (14-GA TO 16-GA)	
		1	**091-2436**	50	TERMINAL-BLADE (18-GA TO 22-GA)	
		1	**104-1995**	11	TERMINAL-BLADE (14-GA TO 18-GA)	
		1	**111-6792**	7	TERMINAL-RECEPTACLE (18-GA TO 20-GA)	
		1	**111-6793**	2	TERMINAL-RECEPTACLE	
		1	**111-6794**	2	TERMINAL-RECEPTACLE	
E		1	**119-3662**		TUBE-HEAT SHRINK (10.85-MM DIA) (46-CM)	
E		1	**125-7874**		TUBE-HEAT SHRINK (5.72-MM DIA) (275-CM)	
E		1	**125-7875**		TUBE-HEAT SHRINK (7.44-MM DIA) (50-CM)	
		1	**128-4249**	1	LOCKWASHER	
		1	**8T-4205**	2	WASHER-HARD (7.2X14.5X2-MM THK)	
		1	**310-0674**	1	LOCKWASHER	
	47	2	**358-7697**	1	BRACKET AS	
	48	2	**363-8477**	1	CABLE AS	
		2	**6T-5598**	1	TERMINAL-RING (1-GA TO 2-GA, 5/16-IN SCREW)	
E		2	**8C-3056**		CABLE (2-GA, RED) (27-CM)	
		2	**299-6082**	1	COVER-TERMINAL	
		2	**308-8161**	1	COVER-TERMINAL	
	49	1	**367-5026**	1	FILM-IDENTIFICATION (FUSE, RELAY PANEL)	
	50	1	**368-6231**	1	FILM-IDENTIFICATION (FUSE, RELAY PANEL)	
	51	2	**373-9138**	1	TERMINAL	
	52	2	**380-5914**	1	BRACKET	
	53	2	**096-6166**	12	WASHER-HARD (4.5X9X1-MM THK)	
	54	2	**110-2028**	4	SCREW-PAN HEAD (10-14X0.75-IN)	
	55	2	**132-5789**	1	CLIP	
	56	1	**156-6175**	2	CLIP	
	57	2	**274-7409**	4	SCREW-TRUSS HEAD (M8X1.25X45-MM)	
	58	1,2,3	**3S-2093**	16	STRAP-CABLE	
M	59	1,2,3	**5C-2890**	12	NUT (M6X1-THD)	
M	60	2,3	**5C-7261**	7	NUT (M8X1.25-THD)	
M	61	1,2	**5C-9553**	3	BOLT (M6X1X16-MM)	
	62	2	**6V-5764**	8	SCREW-MACHINE (10-32X0.625-IN)	
	63	2	**6V-8801**	1	NUT (3/8-16-THD)	
	64	2	**7X-0579**	7	WASHER-HARD (8.8X25.5X2-MM THK)	
	65	1	**7X-7729**	3	WASHER (11X25X3-MM THK)	
	66	1,2	**8C-3398**	7	LOCKWASHER	
	67	1,2	**8F-3590**	5	LOCKWASHER	
M	68	2	**8T-0285**	4	SCREW-MACHINE (M4X0.7X12-MM)	
	69	2	**8T-0328**	12	WASHER-HARD (5.5X10X1-MM THK)	
	70	1	**8T-4121**	4	WASHER-HARD (11X21X2.5-MM THK)	
M	71	1	**8T-4133**	2	NUT (M10X1.5-THD)	
M	72	1	**8T-4136**	1	BOLT (M10X1.5X25-MM)	
M	73	1	**8T-4137**	2	BOLT (M10X1.5X20-MM)	
M	74	1,2	**8T-4138**	3	BOLT (M6X1X20-MM)	
M	75	2,3	**8T-4200**	5	BOLT (M8X1.25X16-MM)	

357-3195 **WIRING GP-PLATFORM** ***(contd.)*** **i04597232**

NOTE	REF NO	GRAPHIC REF	PART NUMBER	QTY	PART NAME 1 2 3 4 5 6 (PRODUCT LEVEL)	SEE PAGE
	76	1,2,3	**8T-4205**	18	WASHER-HARD (7.2X14.5X2-MM THK)	
	77	2,3	**8T-4224**	8	WASHER-HARD (8.8X16X2-MM THK)	
	78	2	**8T-4896**	1	WASHER-HARD (10.2X18.5X2.5-MM THK)	
M	79	3	**8T-9534**	3	BOLT (M6X1X50-MM)	
	80	1	**9D-3769**	1	GROMMET	
M	81	2	**9X-2043**	2	SCREW-TRUSS HEAD (M6X1X14-MM)	
E	82	1	**3E-6600**		SEAL (5-CM EACH)	
E	83	2	**103-2543**		SEAL (3-CM EACH)	
E	84	1,3	**3E-8299**		SEAL (3-CM EACH)	
E	84A	2	**3E-8299**		SEAL (4-CM)	
E	84B	3	**3E-8299**		SEAL (6-CM EACH)	
E	84C	1	**3E-8299**		SEAL (7-CM)	
E	84D	2	**3E-8299**		SEAL (11-CM)	

B-USE AS REQUIRED
E-ORDER BY THE CENTIMETER
M-METRIC PART
Y-SEPARATE ILLUSTRATION

357-3195 **WIRING GP-PLATFORM** *(contd.)* **i04597232**

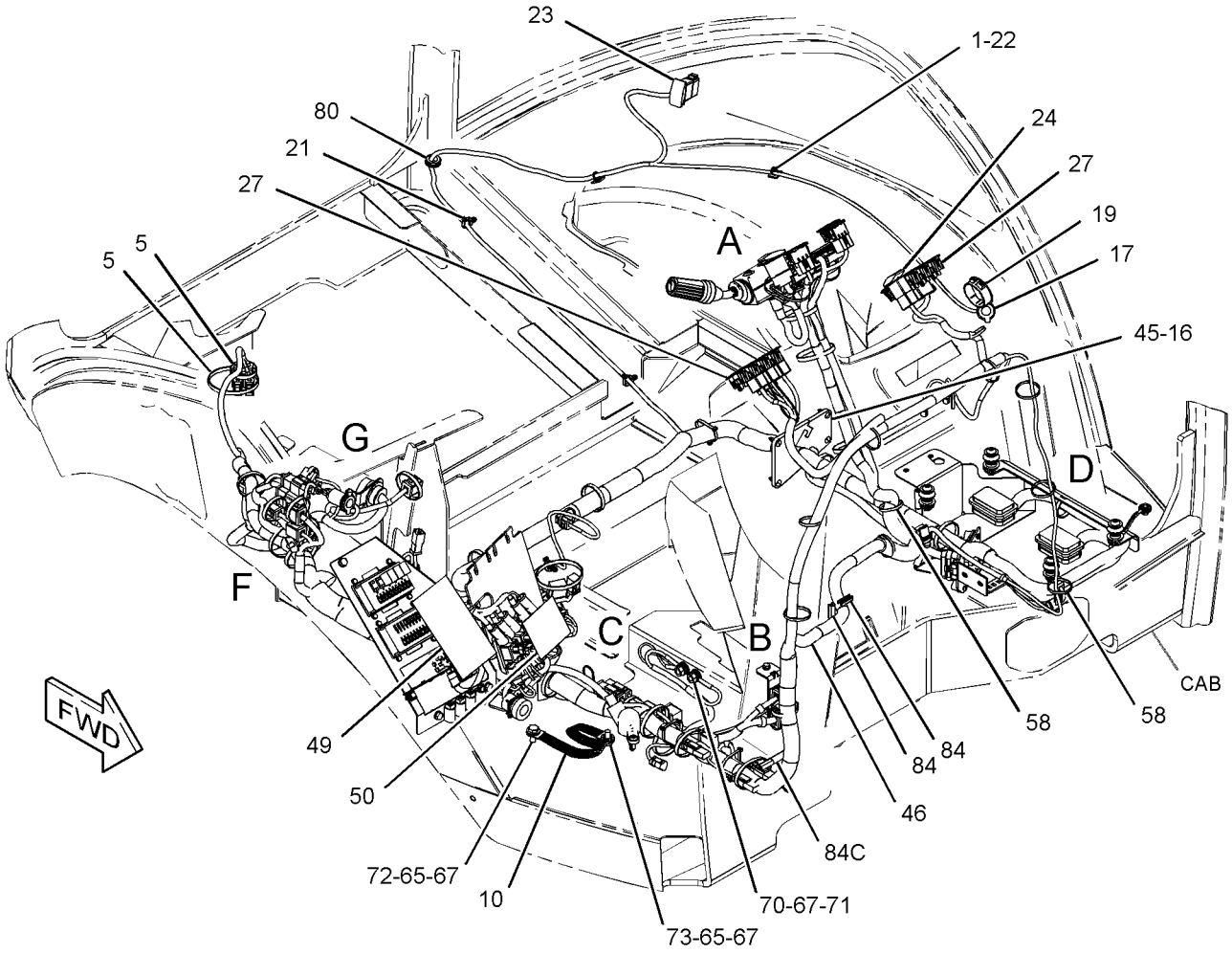

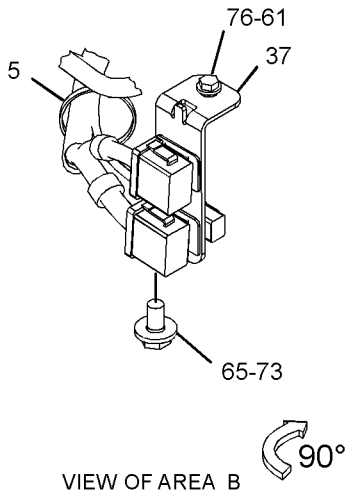

VIEW OF AREA B

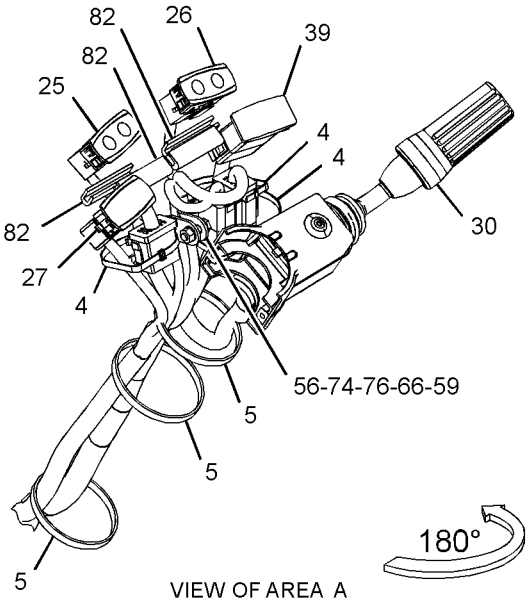

VIEW OF AREA A

REFER TO ALL ILLUSTRATIONS OF THIS GROUP FOR AUXILIARY VIEWS

GRAPHIC #1

g02817296

357-3195 **WIRING GP-PLATFORM** *(contd.)* **i04597232**

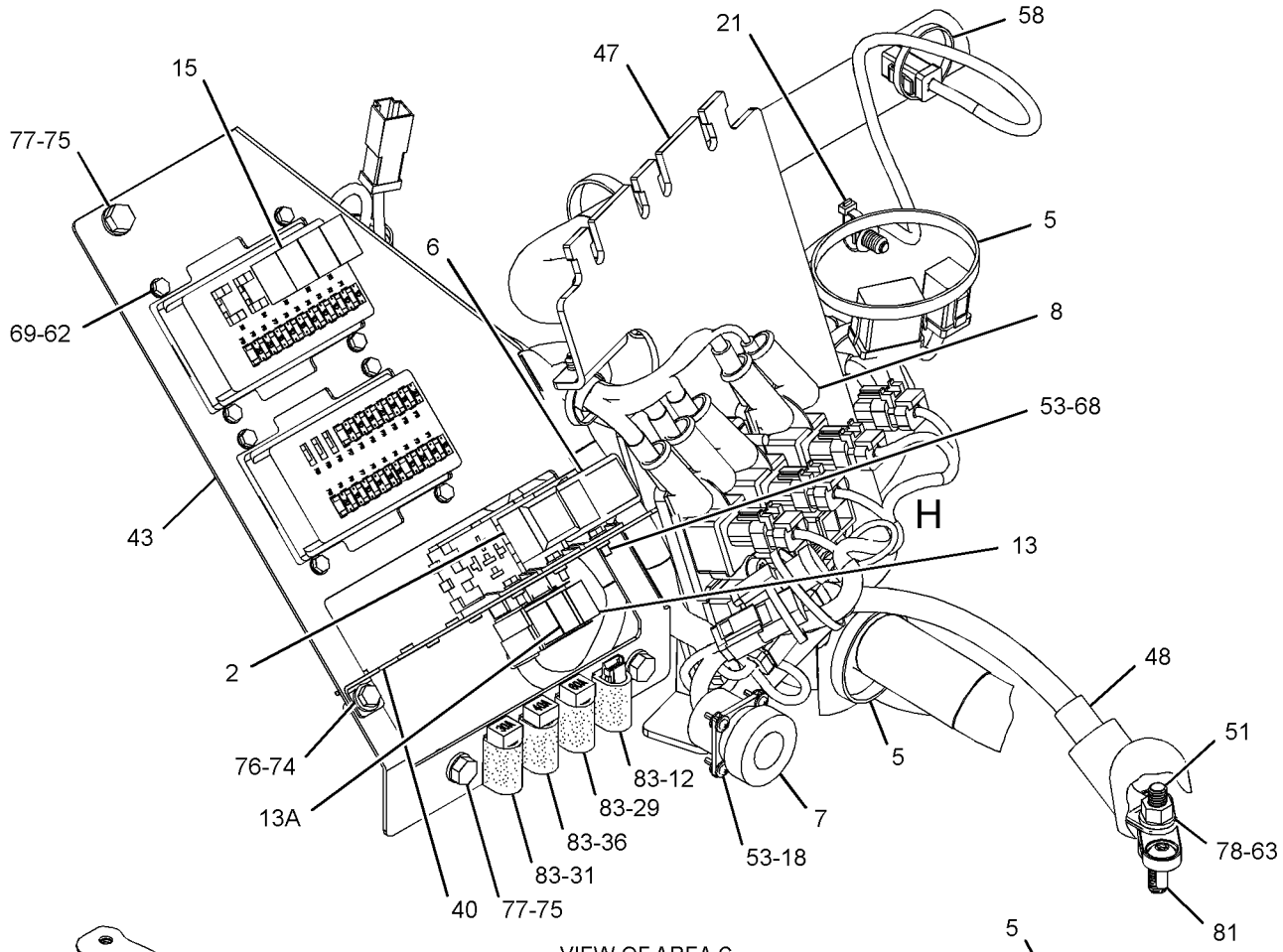

VIEW OF AREA C

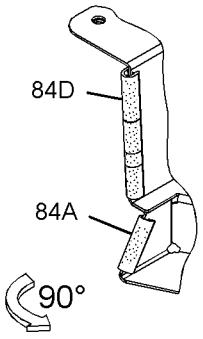

VIEW OF AREA J

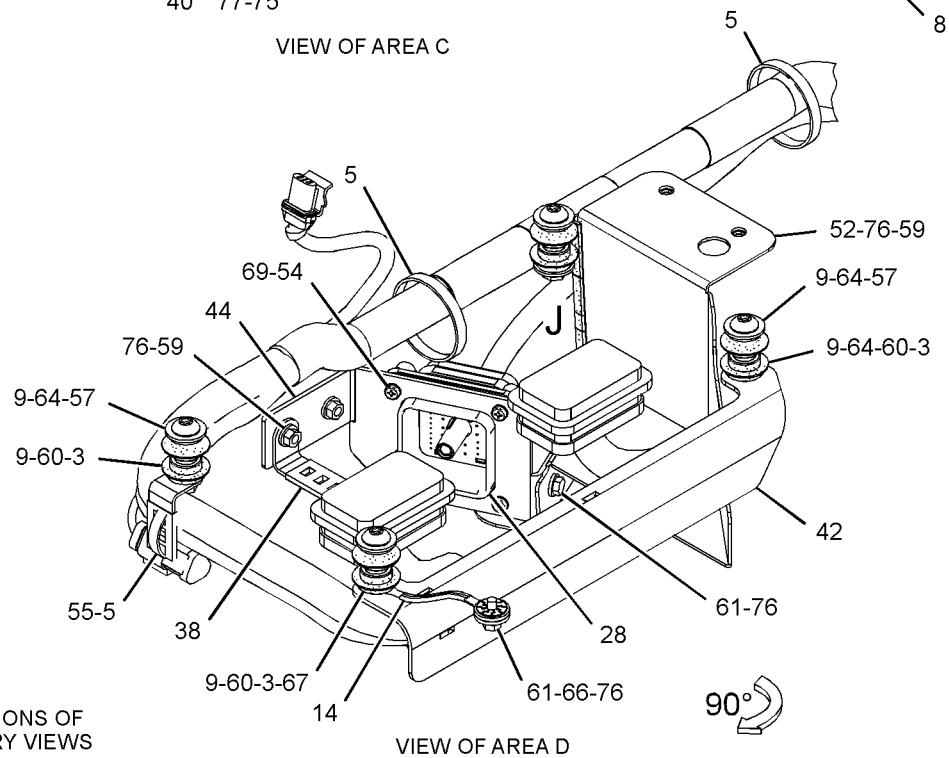

VIEW OF AREA D

REFER TO ALL ILLUSTRATIONS OF THIS GROUP FOR AUXILIARY VIEWS

GRAPHIC #2

g02844216

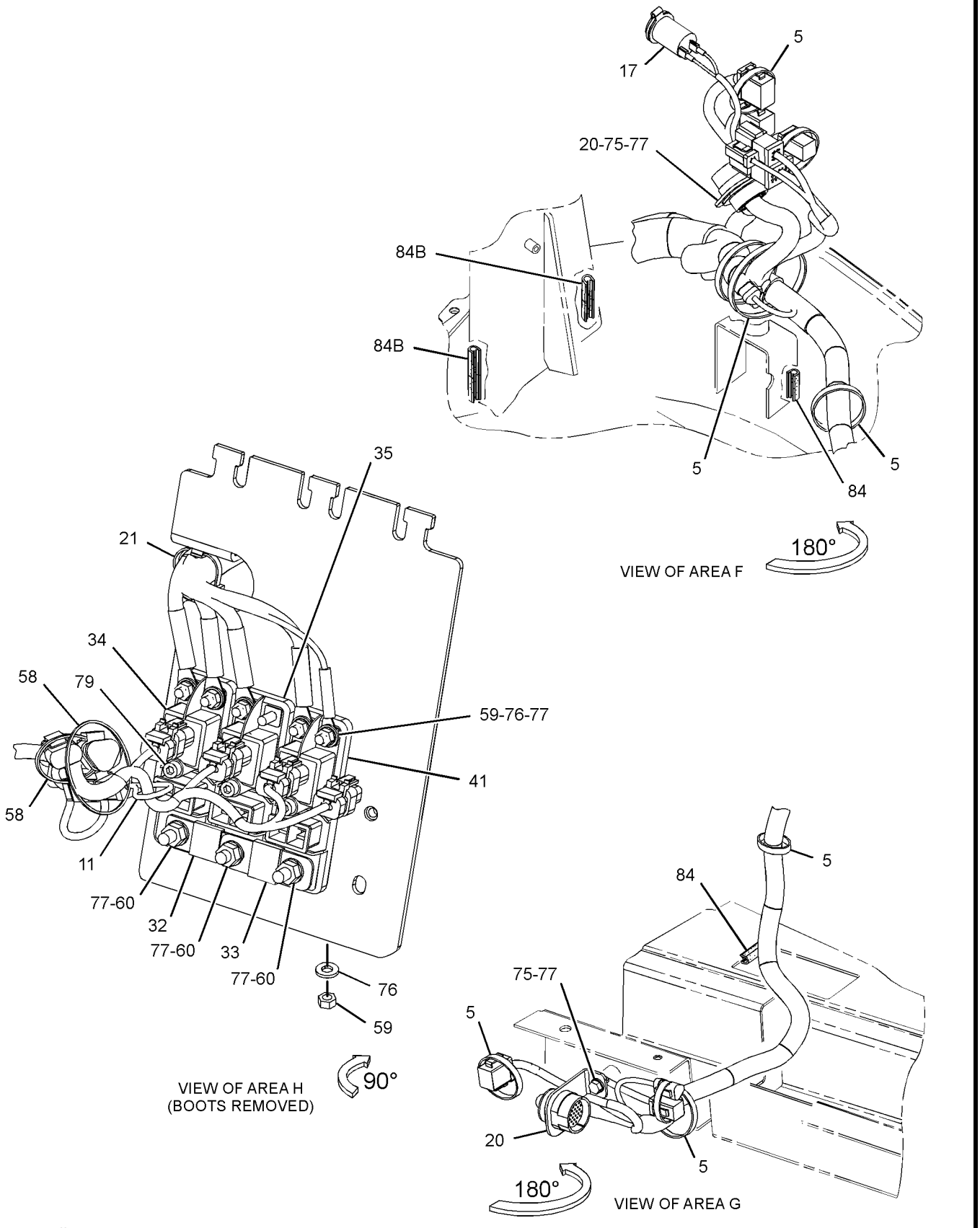

GRAPHIC #3 **<END>** g02818798

331-5448 WIRING GP-REAR

S/N: LTG1-UP

PART OF 373-4246, 373-4248 VALVE AR-BANK 2, 373-4256 VALVE AR-BANK 3

AN ATTACHMENT

SMCS-1408 **i04580720**

NOTE	REF NO	GRAPHIC REF	PART NUMBER	QTY	PART NAME 1 2 3 4 5 6 (PRODUCT LEVEL)	SEE PAGE
	1	1	**7K-1181**	8	STRAP-CABLE	
	2	1	**9U-2277**	1	CLIP AS	
	3	1	**154-5428**	1	ALARM AS (BACKUP)	
		1	**8T-8729**	2	PIN-CONNECTOR (16-GA TO 18-GA)	
		1	**102-8802**	1	KIT-RECEPTACLE (2-PIN)	
					(INCLUDES RECEPTACLE AS & WEDGE)	
	4	1	**205-9920**	8	STRAP-CABLE	
	5	1	**331-5449**	1	HARNESS AS-REAR	
		1	**274-3774**	6	CAP-CONNECTOR	
E		1	**9X-2133**		HOSE (107-CM)	
		1	**9X-3401**	22	PIN-CONNECTOR (16-GA TO 18-GA)	
		1	**155-2255**	2	KIT-CONNECTING PLUG (12-PIN)	
		1	**155-2270**	11	KIT-CONNECTING PLUG (2-PIN)	
					(EACH PLUG KIT INCLUDES PLUG AS, WEDGE & INTERFACE SEAL)	
		1	**8T-8737**	22	PLUG-SEAL	
		1	**180-9340**	33	SOCKET-CONNECTOR (14-GA TO 18-GA)	
		1	**189-3158**	1	SUPPRESSOR-ARC	
E		1	**125-7874**		TUBE-HEAT SHRINK (5.72-MM DIA) (30-CM)	
E		1	**125-7875**		TUBE-HEAT SHRINK (7.44-MM DIA) (5-CM)	
M	6	1	**111-4627**	2	SCREW-MACHINE (M6X1X30-MM)	
	7	1	**132-5789**	2	CLIP	
	8	1	**3S-2093**	7	STRAP-CABLE	
M	9	1	**5C-2890**	1	NUT (M6X1-THD)	
	10	1	**9X-6165**	1	WASHER (6.5X22X2.5-MM THK)	

E-ORDER BY THE CENTIMETER
M-METRIC PART

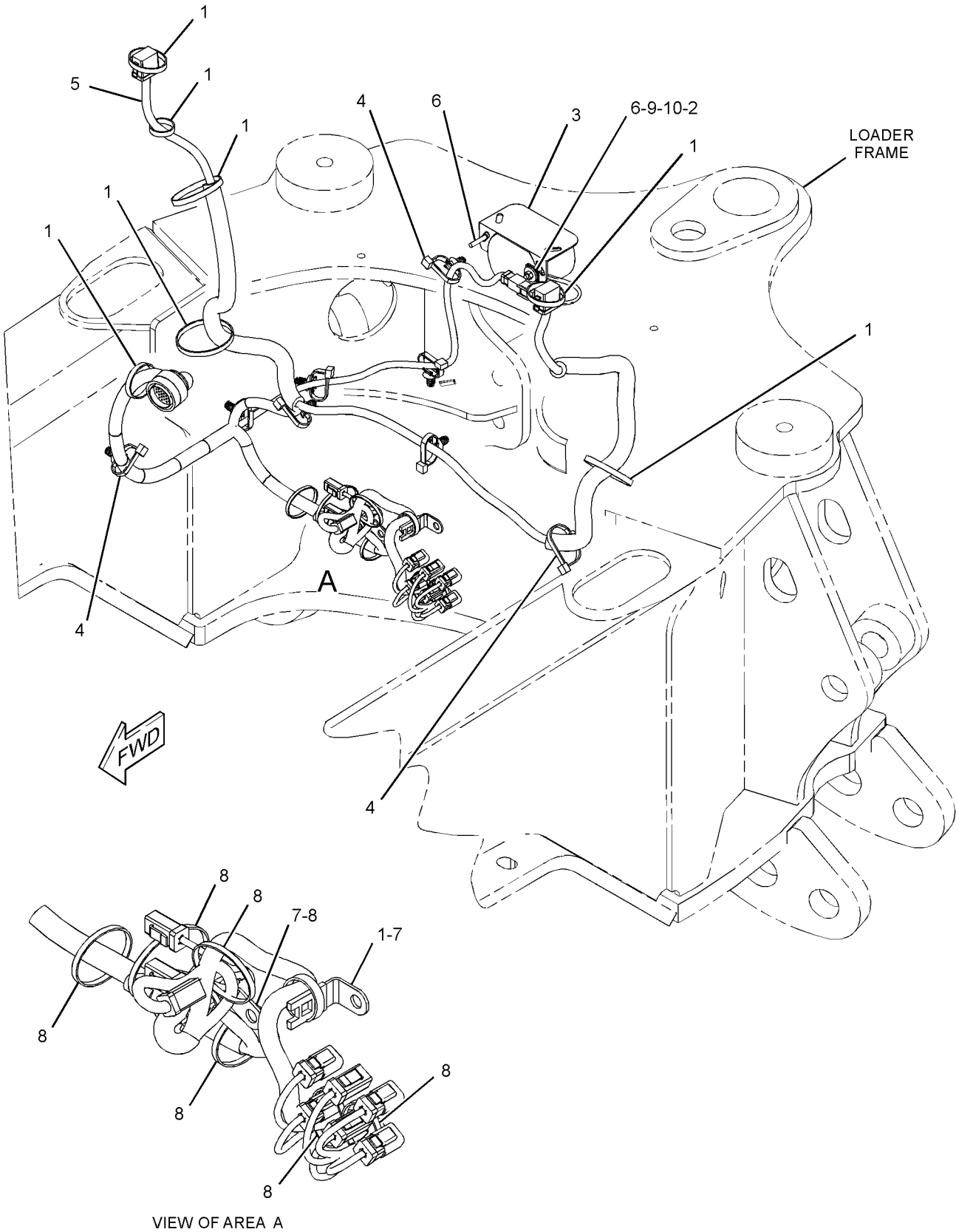

VIEW OF AREA A

GRAPHIC #1 **<END>** g02806139

331-5470 WIRING GP-RIDE CONTROL

S/N: LTG1-UP
PART OF 340-1747 CONTROL AR-RIDE
AN ATTACHMENT

SMCS-1408 **i04580718**

NOTE	REF NO	GRAPHIC REF	PART NUMBER	QTY	PART NAME 1 2 3 4 5 6 (PRODUCT LEVEL)	SEE PAGE
	1	1	**146-9439**	1	RELAY AS (12-VOLT) (RIDE CONTROL)	
	2	1	**205-9920**	3	STRAP-CABLE	
	3	1	**214-4710**	1	SWITCH AS-ROCKER (RIDE CONTROL)	
		1	**111-7899**	1	GASKET	
	4	1	**331-5471**	1	HARNESS AS-RIDE CONTROL	
		1	**8T-8729**	5	PIN-CONNECTOR (16-GA TO 18-GA)	
		1	**155-2270**	3	KIT-CONNECTING PLUG (2-PIN)	
					(EACH INCLUDES PLUG AS, WEDGE & INTERFACE SEAL)	
		1	**230-4013**	1	PLUG AS-CONNECTOR (3-PIN)	
		1	**264-7030**	1	SEAL-CONNECTOR	
		1	**8T-8737**	1	PLUG-SEAL	
		1	**102-8805**	1	KIT-RECEPTACLE (6-PIN)	
					(INCLUDES RECEPTACLE AS & WEDGE)	
		1	**8T-8730**	6	SOCKET-CONNECTOR (16-GA TO 18-GA)	
		1	**9X-3402**	3	SOCKET-CONNECTOR (16-GA TO 18-GA)	
		1	**189-3158**	1	SUPPRESSOR-ARC	
E		1	**125-7874**		TUBE-HEAT SHRINK (5.72-MM DIA) (10-CM)	
	5	1	**344-7391**	1	SENSOR GP-PRESSURE (RIDE CONTROL)	
	6	1	**3J-1907**	1	SEAL-O-RING	
	7	1	**3S-2093**	1	STRAP-CABLE	

E-ORDER BY THE CENTIMETER

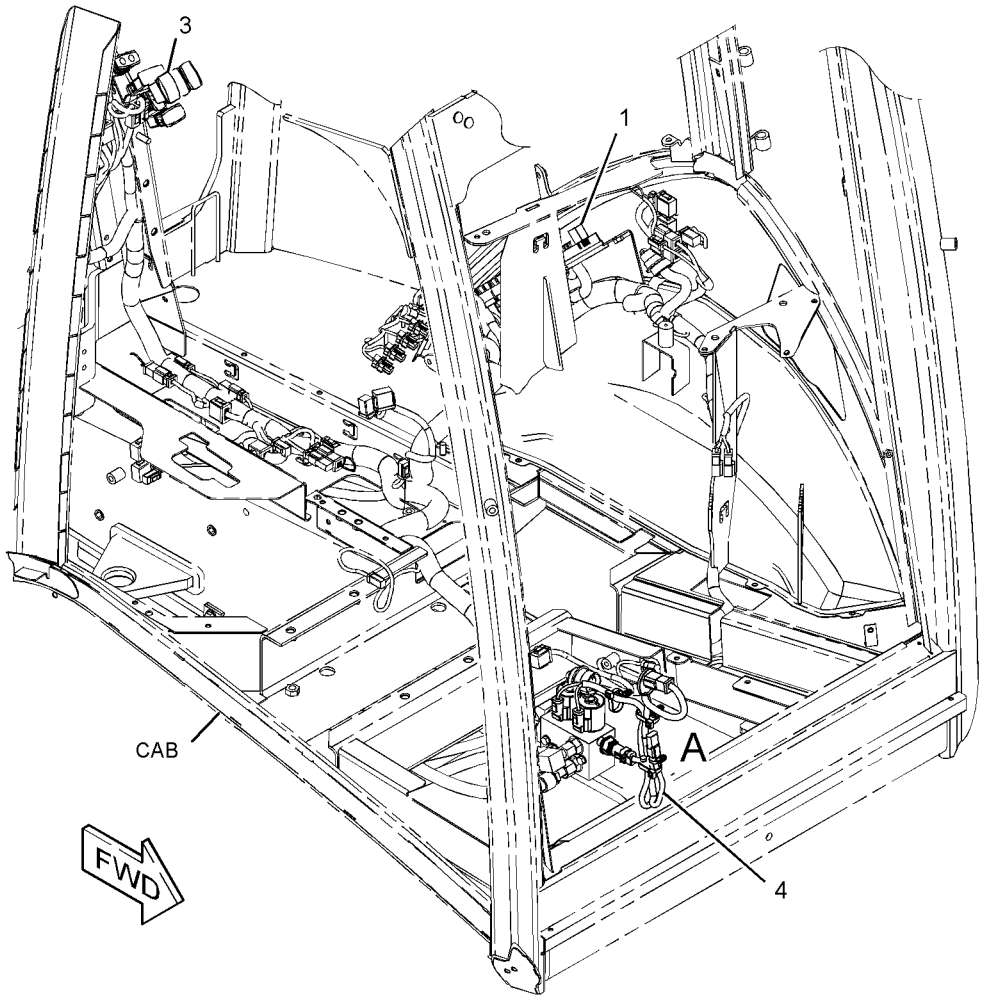

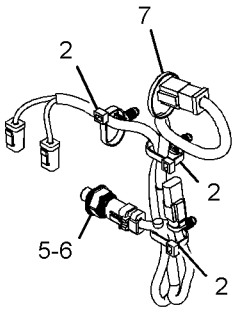

VIEW OF AREA A

GRAPHIC #1 **<END>** g02791924

331-5462 WIRING GP-TRANSMISSION CONTROL–

STANDARD SHIFT

S/N: LTG1-UP

PART OF 353-1512 TRANSMISSION AR-DIRECT DRIVE, 353-1513 TRANSMISSION AR-POWER SHIFT AN ATTACHMENT

SMCS-1408, 3168 **i04573599**

NOTE	REF NO	GRAPHIC REF	PART NUMBER	QTY	PART NAME 1 2 3 4 5 6 (PRODUCT LEVEL)	SEE PAGE
	1	1	**7K-1181**	6	STRAP-CABLE	
	2	1	**9B-0523**	1	SPACER (0.53X0.75X1-IN THK)	
	3	1	**331-5463**	1	HARNESS AS-TRANSMISSION (STANDARD SHIFT)	
		1	**274-3774**	1	CAP-CONNECTOR	
		1	**9X-3401**	15	PIN-CONNECTOR (16-GA TO 18-GA)	
		1	**155-2270**	7	KIT-CONNECTING PLUG (2-PIN)	
					(EACH INCLUDES PLUG AS, WEDGE & INTERFACE SEAL)	
		1	**230-4013**	1	PLUG AS-CONNECTOR (3-PIN)	
		1	**264-7030**	1	SEAL-CONNECTOR	
		1	**8T-8737**	9	PLUG-SEAL	
		1	**102-8801**	1	KIT-RECEPTACLE (12-PIN)	
		1	**190-7614**	1	KIT-RECEPTACLE (12-PIN)	
					(EACH RECEPTACLE KIT INCLUDES RECEPTACLE AS & WEDGE)	
		1	**274-3781**	1	CAP-SEAL	
		1	**9X-3402**	3	SOCKET-CONNECTOR (16-GA TO 18-GA)	
		1	**180-9340**	14	SOCKET-CONNECTOR (14-GA TO 18-GA)	
		1	**189-3158**	1	SUPPRESSOR-ARC	
		1	**7N-9017**	1	TERMINAL-RING (18-GA TO 22-GA, NO. 10 SCREW)	
E		1	**125-7874**		TUBE-HEAT SHRINK (5.72-MM DIA) (5-CM)	
	4	1	**352-3965**	1	CLIP	
B	5	1	**3S-2093**	6	STRAP-CABLE	
	6	1	**4P-7429**	1	CLIP	
M	7	1	**8T-4194**	1	BOLT (M12X1.75X50-MM)	
	8	1	**8T-4223**	3	WASHER-HARD (13.5X25.5X3-MM THK)	

B-USE AS REQUIRED
E-ORDER BY THE CENTIMETER
M-METRIC PART

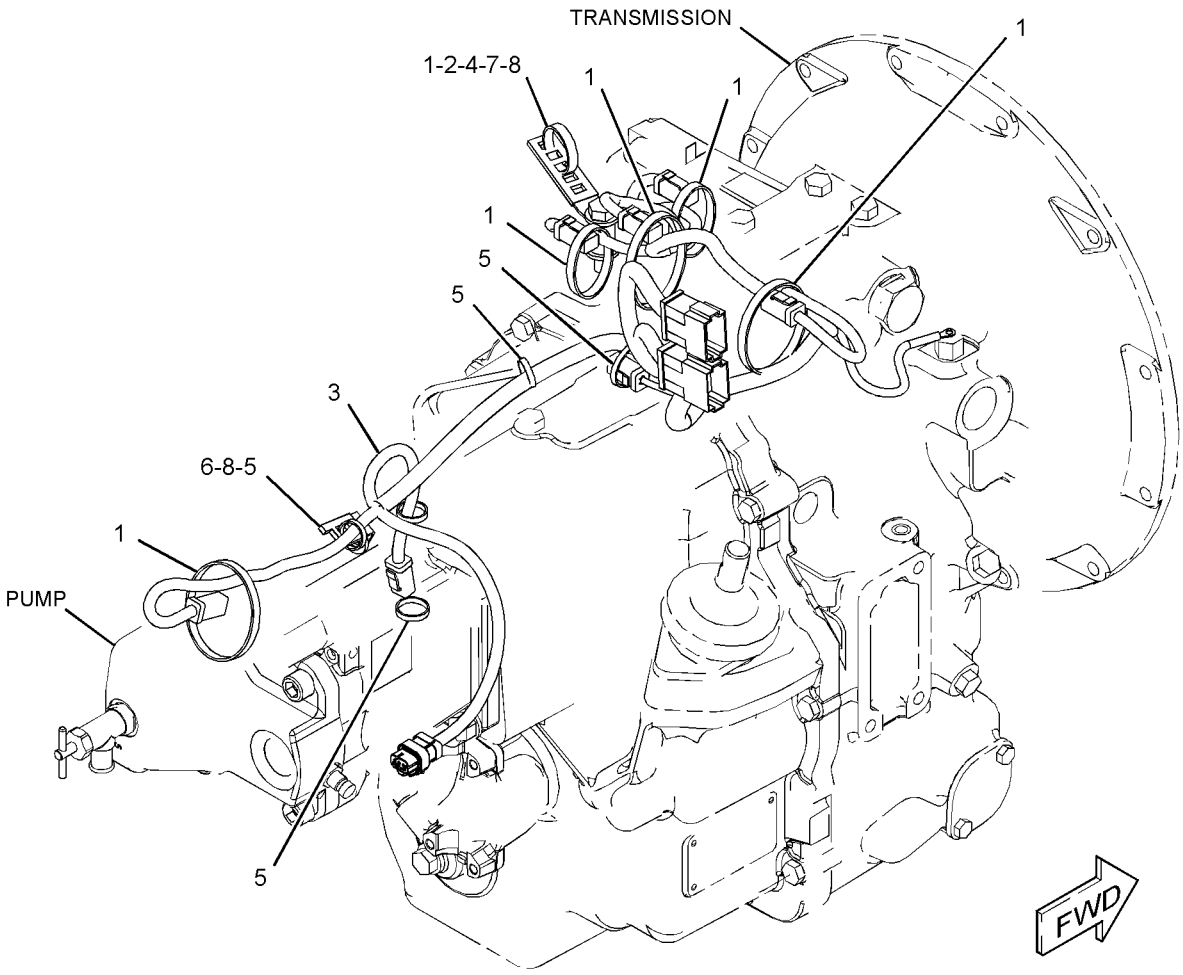

GRAPHIC #1 **<END>** g02838764

331-5464 WIRING GP-TRANSMISSION CONTROL–AUTOSHIFT

S/N: LTG1-UP

PART OF 353-1510 TRANSMISSION AR-POWER SHIFT AN ATTACHMENT

SMCS-1408, 3168 **i04603169**

NOTE	REF NO	GRAPHIC REF	PART NUMBER	QTY	PART NAME 1 2 3 4 5 6 (PRODUCT LEVEL)	SEE PAGE
	1	1	**7K-1181**	11	STRAP-CABLE	
	2	1	**164-1368**	8	FASTENER-PANEL	
	3	1	**214-4691**	1	SWITCH AS-ROCKER (AUTOSHIFT, STANDARD SHIFT)	
		1	**111-7899**	1	GASKET	
	4	1	**232-1545**	1	PLATE AS	
B	5	1	**274-3774**	1	CAP-CONNECTOR	
B	6	1	**274-3781**	1	CAP-SEAL	
	7	1	**274-9993**	1	PLATE	
	8	1	**310-9354**	1	CONTROL GP-TRANSMISSION	
		1	**8T-8737**	2	PLUG-SEAL	
		1	**174-3091**	1	KIT-RECEPTACLE (12-PIN)	
					(INCLUDES RECEPTACLE AS & WEDGE)	
	9	1	**331-5465**	1	HARNESS AS-TRANSMISSION (AUTOSHIFT)	
		1	**274-3774**	2	CAP-CONNECTOR	
		1	**9X-3401**	21	PIN-CONNECTOR (16-GA TO 18-GA)	
		1	**155-2270**	11	KIT-CONNECTING PLUG (2-PIN)	
					(EACH INCLUDES PLUG AS, WEDGE & INTERFACE SEAL)	
		1	**230-4013**	1	PLUG AS-CONNECTOR (3-PIN)	
		1	**264-7030**	1	SEAL-CONNECTOR	
		1	**8T-8737**	3	PLUG-SEAL	
		1	**102-8801**	1	KIT-RECEPTACLE (12-PIN)	
		1	**190-7614**	1	KIT-RECEPTACLE (12-PIN)	
					(EACH RECEPTACLE KIT INCLUDES RECEPTACLE AS & WEDGE)	
		1	**274-3781**	1	CAP-SEAL	
		1	**9X-3402**	3	SOCKET-CONNECTOR (16-GA TO 18-GA)	
		1	**180-9340**	22	SOCKET-CONNECTOR (14-GA TO 18-GA)	
		1	**7N-9017**	1	TERMINAL-RING (18-GA TO 22-GA, NO. 10 SCREW)	
E		1	**125-7874**		TUBE-HEAT SHRINK (5.72-MM DIA) (15-CM)	
M	10	1	**105-3480**	2	BOLT-SOCKET HEAD (M5X0.8X16-MM)	
	11	1	**3S-2093**	5	STRAP-CABLE	
	12	1	**4P-7429**	2	CLIP	
	13	1	**7X-0620**	1	WASHER-HARD (5.5X13X1.6-MM THK)	
M	14	1	**8T-4179**	1	BOLT (M12X1.75X20-MM)	
	15	1	**8T-4223**	3	WASHER-HARD (13.5X25.5X3-MM THK)	

B-USE AS REQUIRED
E-ORDER BY THE CENTIMETER
M-METRIC PART

331-5464 **WIRING GP-TRANSMISSION CONTROL** *(contd.)* **i04603169**

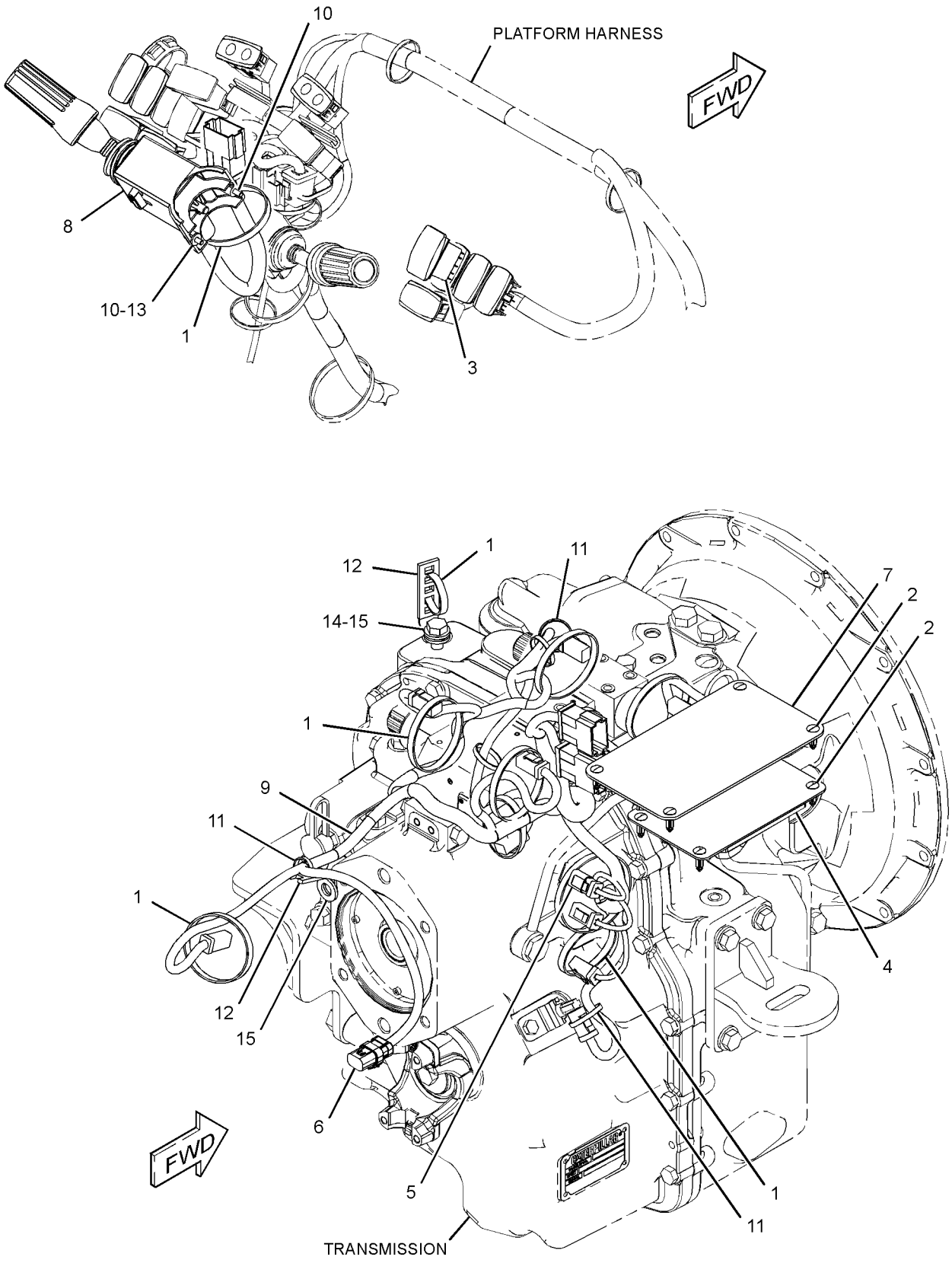

GRAPHIC #1 **<END>** g02828422

230-5743 AXLE GP-DRIVE & STEERING—FRONT

S/N: LTG1-UP
PART OF 353-1503 DRIVE AR-BACKHOE LOADER
AN ATTACHMENT

SMCS-3020, 3250, 3258, 3259, 3260, 3264, 3278, 4050, 4303, 4313

i04403806

NOTE	REF NO	GRAPHIC REF	PART NUMBER	QTY	PART NAME 1 2 3 4 5 6 (PRODUCT LEVEL)	SEE PAGE
M	1	1	**8C-7505**	4	SCREW-FLAT HEAD (M8X1.25X20-MM)	
M	2	1	**207-4254**	6	BOLT (M20X1.5X80-MM)	
	3	1	**207-4258**	2	NUT (M20X1.5-THD)	
	4	1	**219-8798**	2	SEAL-LIP TYPE	
	5	1	**219-8795**	1	CAP	
	6	1	**209-9875**	2	DOWEL	
	7	1	**209-7456**	2	BUSHING	
	8	1	**152-6144**	4	PLUG AS-DRAIN (MAGNETIC) (AXLE, FRONT)	
					(EACH INCLUDES)	
		1	**6V-6228**	1	SEAL-O-RING	
	9	1	**208-0321**	11	BOLT-FLANGE HEAD (M12X1.75X33-MM)	
	10	1	**209-7464**	2	SEAL	
M	11	1	**199-0683**	16	BOLT (M16X2X38-MM)	
	12	1	**210-5937**	2	WASHER (46X66X3-MM THK)	
Y	13	1	**209-9882**	1	DIFFERENTIAL & BEVEL GEAR GP (FRONT)	144
	14	1	**210-5942**	2	RING	
	15	1	**209-9883**	1	HOUSING	
	16	1	**210-5946**	2	SHAFT GP-AXLE	
					(EACH INCLUDES)	
		1	**174-4671**	1	YOKE	
		1	**174-4643**	2	KIT-SPIDER	
					(EACH INCLUDES SNAP RINGS)	
	17	1	**209-9886**	2	TIE ROD GP	
					(EACH INCLUDES)	
		1	**204-3080**	1	BALL JOINT	
		1	**217-2883**	1	TIE ROD	
		1	**243-5026**	1	NUT-SPECIAL	
	18	1	**209-9887**	1	BUSHING	
	19	1	**210-5947**	2	WASHER-THRUST (44.6X58X7-MM THK)	
	20	1	*216-7473*	4	PIN AS (UPPER)	
					(EACH INCLUDES)	
		1	**3N-4968**	1	CONE-BEARING	
		1	**6D-1734**	1	CUP-BEARING	
		1	**198-7825**	1	SEAL	
		1	**198-7838**	1	PIN	
Y	21	1	**210-5924**	2	PLANETARY GP-FINAL DRIVE (AXLE)	167
Y	22	1	**209-9884**	1	HOUSING & FLANGE GP-AXLE (RH)	155
Y	23	1	**209-9885**	1	HOUSING & FLANGE GP-AXLE (LH)	156
	24	1	**211-6735**	2	SEAL-O-RING	
L	25	1	**214-5097**	1	CYLINDER GP-STEERING (FRONT AXLE)	
		1	**238-5254**	1	ROD	
		1	**238-5255**	2	CYLINDER HEAD	
	26	1	**253-5024**	1	BREATHER (AXLE, FRONT)	
B	27	1	**1U-8846**		SEALANT-GASKET	
	28	1	**154-5404**	2	BEARING	
B	29	1	**198-7841**	8	SHIM (0.15-MM THK)	
B	30	1	**198-7842**	4	SHIM (0.2-MM THK)	
B	31	1	**198-7843**	4	SHIM (0.5-MM THK)	
					AVAILABLE REPAIR KIT(S):	
L			**215-2023**	1	KIT-SEAL	
					(INCLUDES GUIDE RINGS, DUAL RINGS, ROD SEALS, BACKUP WASHERS, ROD WIPERS & PISTON SEAL)	

230-5743 AXLE GP-DRIVE & STEERING *(contd.)* i04403806

B-USE AS REQUIRED
L-KIT MARKED L SERVICES PART MARKED L
M-METRIC PART
Y-SEPARATE ILLUSTRATION

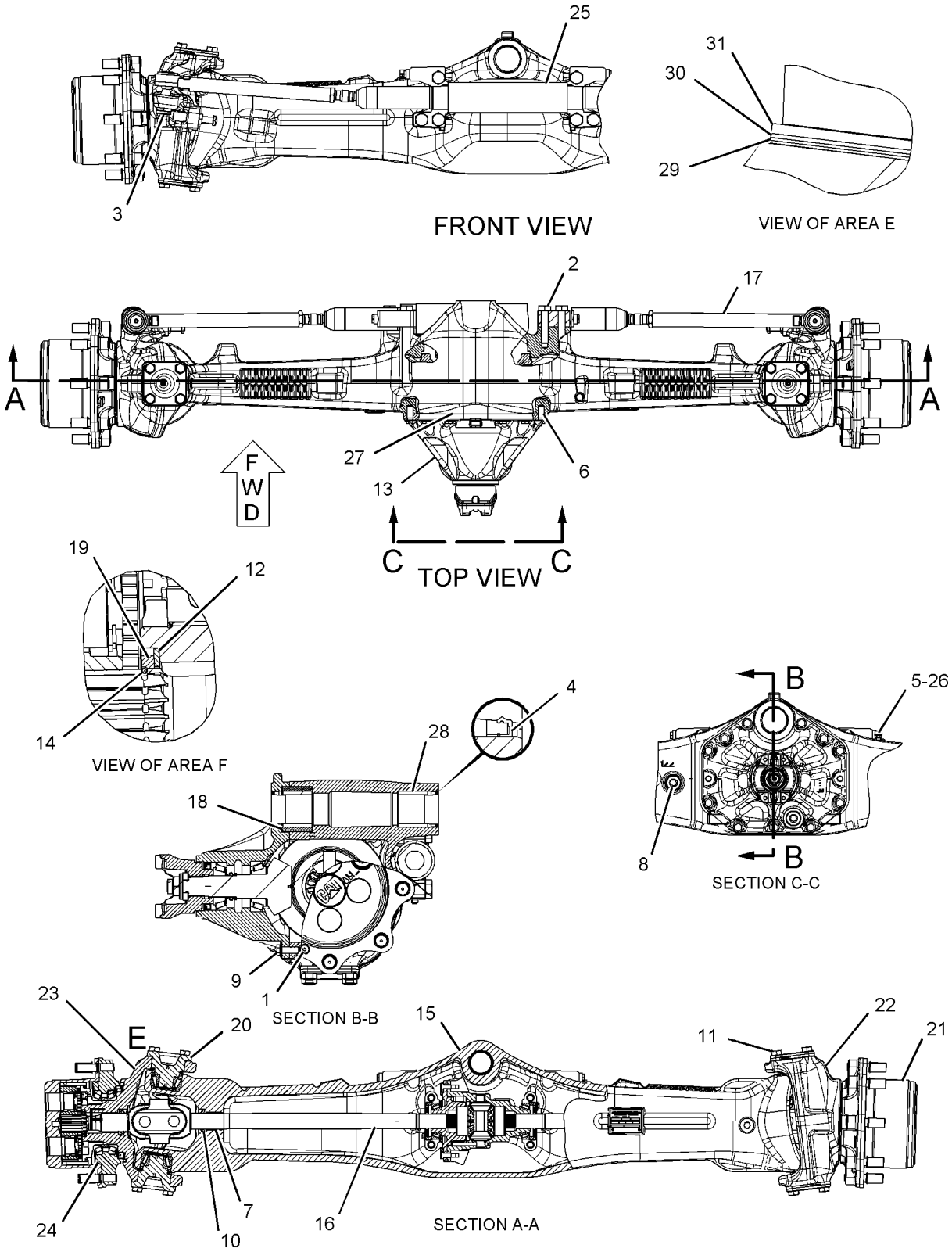

GRAPHIC #1 **<END>** g01094314

POWER TRAIN

230-5739 AXLE GP-REAR

S/N: LTG1-UP

PART OF 353-1502, 353-1503 DRIVE AR-BACKHOE LOADER

AN ATTACHMENT

SMCS-3278, 3282 **i04278969**

NOTE	REF NO	GRAPHIC REF	PART NUMBER	QTY	PART NAME 1 2 3 4 5 6 (PRODUCT LEVEL)	SEE PAGE
M	1	1	**8C-7505**	4	SCREW-FLAT HEAD (M8X1.25X20-MM)	
M	2	1	**6V-3940**	2	BOLT (M8X1.25X25-MM)	
CM	3	1	**8T-0292**	2	BOLT (M8X1.25X90-MM)	
	4	1	**199-0652**	2	CLIP-PIN	
	5	1	**9X-6378**	2	RING-RETAINING	
	6	1	**210-3098**	2	SEAL	
	7	1	**199-0668**	2	BUSHING	
	8	1	**197-9155**	1	BREATHER (AXLE, REAR)	
	9	1	**199-0670**	2	SCREW-PURGE	
	10	1	**198-7811**	2	DOWEL	
	11	1	**152-6144**	4	PLUG AS-DRAIN (MAGNETIC) (AXLE, REAR)	
					(EACH INCLUDES)	
		1	**6V-6228**	1	SEAL-O-RING	
	12	1	**199-0676**	2	SPRING	
M	13	1	**199-0679**	2	BOLT (M16X2X95-MM)	
	14	1	**210-3099**	2	SLEEVE	
	15	1	**210-3100**	2	BUSHING	
	16	1	**199-0706**	1	PISTON	
	17	1	**199-0786**	8	PLATE	
	18	1	**199-0787**	6	PIN	
	19	1	**210-7305**	2	SHAFT	
	20	1	**210-3106**	1	BRACKET	
	21	1	**212-5713**	2	PLUG AS	
					(EACH INCLUDES)	
		1	**033-6041**	1	SEAL-O-RING	
	22	1	*216-1608*	2	GEAR GP-RING (REAR AXLE)	
					(EACH INCLUDES)	
		1	**199-0778**	1	RING-SNAP	
		1	**210-7302**	1	GEAR-RING (81-TEETH)	
		1	**226-4364**	1	HUB	
Y	23	1	*216-1609*	2	FLANGE GP-WHEEL	153
Y	24	1	**216-1610**	2	PLANETARY GP-FINAL DRIVE (AXLE)	168
	25	1	**217-2914**	1	COVER (DIFFERENTIAL LOCK)	
	26	1	**231-0699**	1	COVER (DIFFERENTIAL LOCK)	
	27	1	**219-8839**	1	ROD	
	28	1	**174-4647**	1	BUSHING	
	29	1	**174-4650**	1	SPACER (20X32X8-MM THK)	
	30	1	**231-0698**	2	SHAFT-AXLE	
	31	1	**226-4366**	2	NUT-SPANNER	
	32	1	**226-4365**	2	WASHER-TAB	
	33	1	**226-4367**	2	SPACER (110X123X22.99-MM THK)	
	34	1	**226-4370**	6	BOLT-SELF-LOCKING	
	35	1	**238-5291**	6	DISC-BRAKE	
	36	1	**238-5292**	2	HUB-BRAKE	
	37	1	**238-5293**	1	HOUSING-AXLE (LH)	
	38	1	**238-5294**	1	HOUSING-AXLE (RH)	
Y	39	1	*238-5289*	1	HOUSING GP-AXLE (REAR)	159
	40	1	**4F-9029**	2	SEAL	
	41	1	**9X-7684**	2	SEAL-O-RING	
	42	1	**5H-4909**	2	SEAL-O-RING	
	43	1	**130-7282**	1	BRACKET	
M	44	1	**7X-2559**	26	BOLT (M16X2X160-MM)	
	45	1	**4L-6454**	2	BOLT (3/8-16X1-IN)	
	46	1	**3J-1907**	1	SEAL-O-RING	
	47	1	**9S-8004**	1	PLUG-O-RING	

230-5739 AXLE GP-REAR *(contd.)* i04278969

NOTE	REF NO	GRAPHIC REF	PART NUMBER	QTY	PART NAME 1 2 3 4 5 6 (PRODUCT LEVEL)	SEE PAGE
	48	1	**219-8795**	1	CAP	
B	49	1	**1U-8846**		SEALANT-GASKET	
CJ	50	1	**259-0127**	1	BRAKE GP-MECH CALIPER PARKING	
		1	**1B-4430**	1	NUT-JAM (1/2-20-THD)	
		1	**7X-3374**	1	NUT-FULL (1/2-20-THD)	
					AVAILABLE REPAIR KIT(S):	
J			**166-9413**	1	KIT-CAM (COUNTERCLOCKWISE)	
					(INCLUDES CAMS, BALL BEARINGS & BALL RETAINERS)	
J			**259-0128**	1	KIT-BRAKE LINING	
					(INCLUDES LINING AS, SPRING, INSRUCTION SHEET, GREASE, & CORRUGATED PAPER)	
J			**259-0129**	1	KIT-BRAKE CALIPER	
					(INCLUDES SLEEVES, WASHERS, LININGS, O-RINGS, NUT, BOLT, BEARING, BOOT, SEAL, SPRING, GREASE, SPACER, & CARRIER)	

B-USE AS REQUIRED
C-CHANGE FROM PREVIOUS TYPE
J-KITS MARKED J SERVICES PARTS MARKED J
M-METRIC PART
Y-SEPARATE ILLUSTRATION

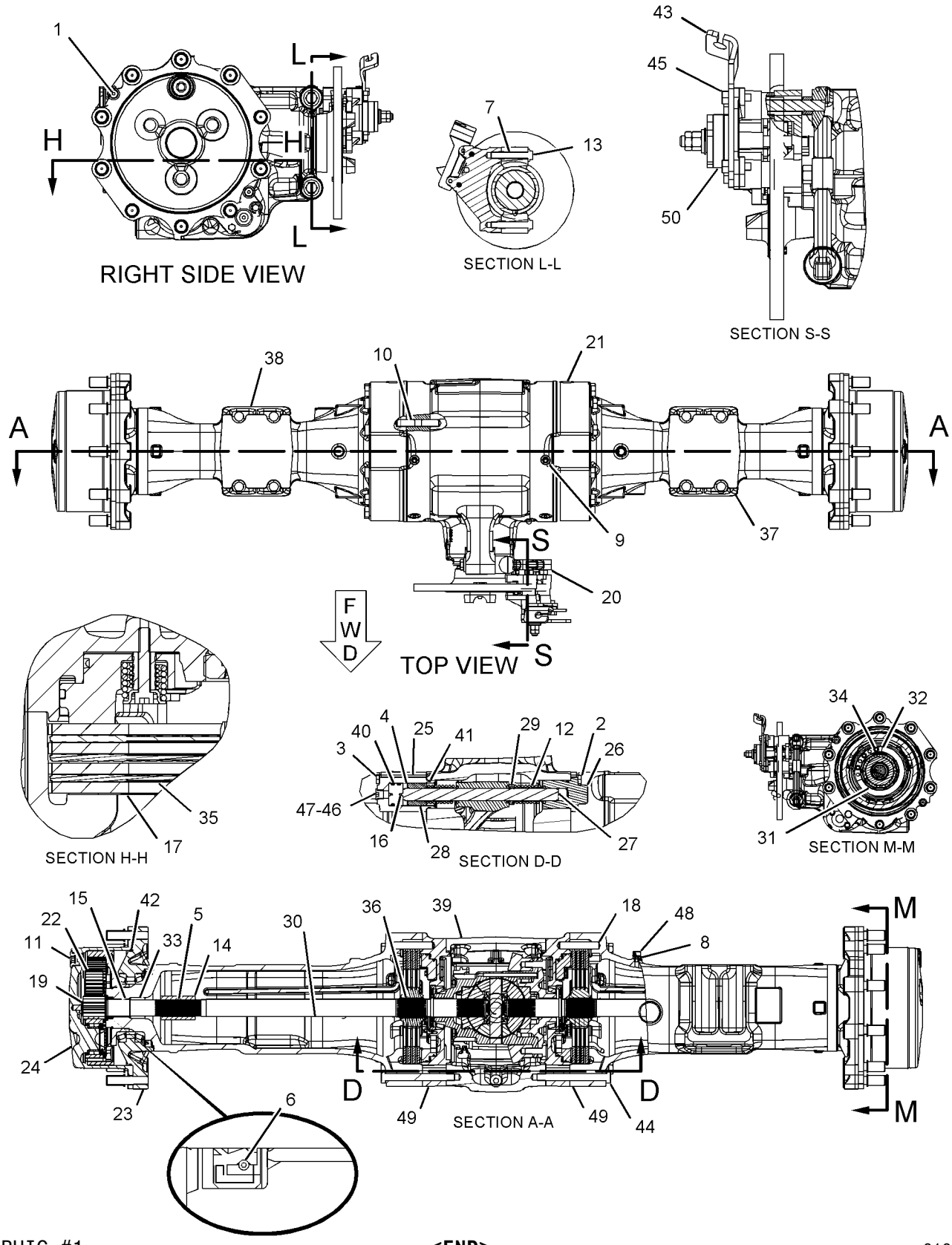

GRAPHIC #1 **<END>** g01093644

275-0468 CASE AS-TRANSMISSION–FRONT

S/N: LTG1-UP
PART OF 359-0394 TRANSMISSION GP-DIRECT DRIVE
AN ATTACHMENT

SMCS-3030, 3064 **i03978290**

NOTE	REF NO	GRAPHIC REF	PART NUMBER	QTY	PART NAME 1 2 3 4 5 6 (PRODUCT LEVEL)	SEE PAGE
	1	1	**120-9762**	4	SEAL-O-RING	
M	2	1	**6V-5215**	2	BOLT (M8X1.25X16-MM)	
	3	1	**7T-2651**	1	STRAINER-SUCTION (TRANSMISSION)	
	4	1	**106-9861**	1	PLATE-COVER	
	5	1	**7T-3051**	1	PLUG	
	6	1	**005-0469**	1	CUP-BEARING	
	7	1	**8T-1580**	1	CUP	
	8	1	**6Y-2737**	1	CUP-BEARING	
	9	1	**123-8906**	2	CUP-TAPERED ROLLER	
	10	1	**9W-5460**	1	RING	
	11	1	**4J-0522**	1	SEAL-O-RING	
	12	1	**275-0469**	1	CASE AS-FRONT	
		1	**122-3652**	2	PLUG	
		1	**123-2920**	3	PLUG	
		1	**237-5188**	1	PLUG-EXPANSION	
	13	1	**7T-3253**	2	DOWEL	

M-METRIC PART

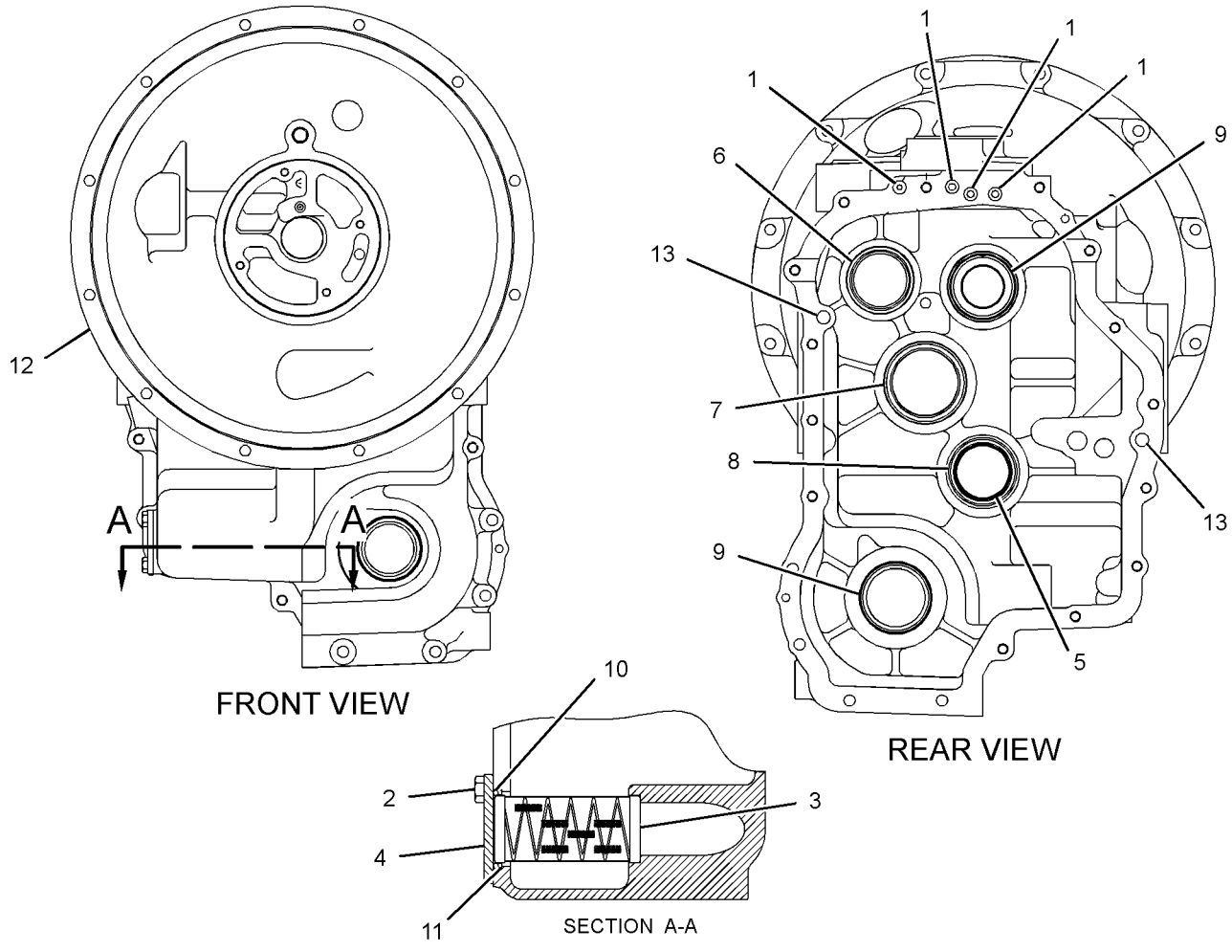

GRAPHIC #1 **<END>** g01220674

365-2814 CASE AS-TRANSMISSION—ALL WHEEL DRIVE

S/N: LTG1-UP

PART OF 359-0394 TRANSMISSION GP-DIRECT DRIVE

AN ATTACHMENT

SMCS-3030, 3064 **i04647430**

NOTE	REF NO	GRAPHIC REF	PART NUMBER	QTY	PART NAME 1 2 3 4 5 6 (PRODUCT LEVEL)	SEE PAGE
	1	1	**005-0469**	1	CUP-BEARING	
	2	1	**121-7398**	1	SPACER (70X79.5X2-MM THK)	
B	3	1	**121-7399**	1	SHIM (0.05-MM THK)	
B	4	1	**121-7400**	1	SHIM (0.08-MM THK)	
B	5	1	**121-7401**	1	SHIM (0.18-MM THK)	
B	6	1	**121-7402**	1	SHIM (0.6-MM THK)	
	7	1	**123-8908**	2	CUP-TAPERED ROLLER	
	8	1	**123-8910**	1	CUP-TAPERED ROLLER	
	9	1	**302-8432**	1	SEAL-LIP TYPE	
	10	1	**123-8906**	1	CUP-TAPERED ROLLER	
B	11	1	**6T-9142**	1	SHIM (0.508-MM THK)	
B	12	1	**6T-9143**	1	SHIM (0.381-MM THK)	
B	13	1	**6T-9144**	1	SHIM (0.051-MM THK)	
B	14	1	**6T-9145**	1	SHIM (0.178-MM THK)	
B	15	1	**6T-9146**	1	SHIM (0.127-MM THK)	
B	16	1	**6T-9147**	1	SHIM (0.076-MM THK)	
B	17	1	**6T-9163**	2	SHIM (0.599-MM THK)	
B	18	1	**6T-9164**	2	SHIM (0.178-MM THK)	
B	19	1	**6T-9165**	2	SHIM (0.076-MM THK)	
B	20	1	**6T-9166**	2	SHIM (0.051-MM THK)	
	21	1	**7T-2646**	2	SPACER (66X79.5X2.02-MM THK)	
	22	1	**7T-3034**	1	SPACER (56.9X64.5X1.98-MM)	
B	23	1	**104-3288**	1	SHIM (0.05-MM THK)	
B	24	1	**121-2059**	1	SHIM (0.08-MM THK)	
B	25	1	**121-2060**	1	SHIM (0.18-MM THK)	
B	26	1	**121-2061**	1	SHIM (0.6-MM THK)	
	27	1	**122-1879**	1	SPACER (58X67.5X2-MM THK)	
					PARTS SHOWN IN GRAPHIC(S) WITHOUT A REFERENCE NUMBER ARE NOT SERVICED SEPARATELY	

B-USE AS REQUIRED

365-2814 CASE AS-TRANSMISSION *(contd.)* **i04647430**

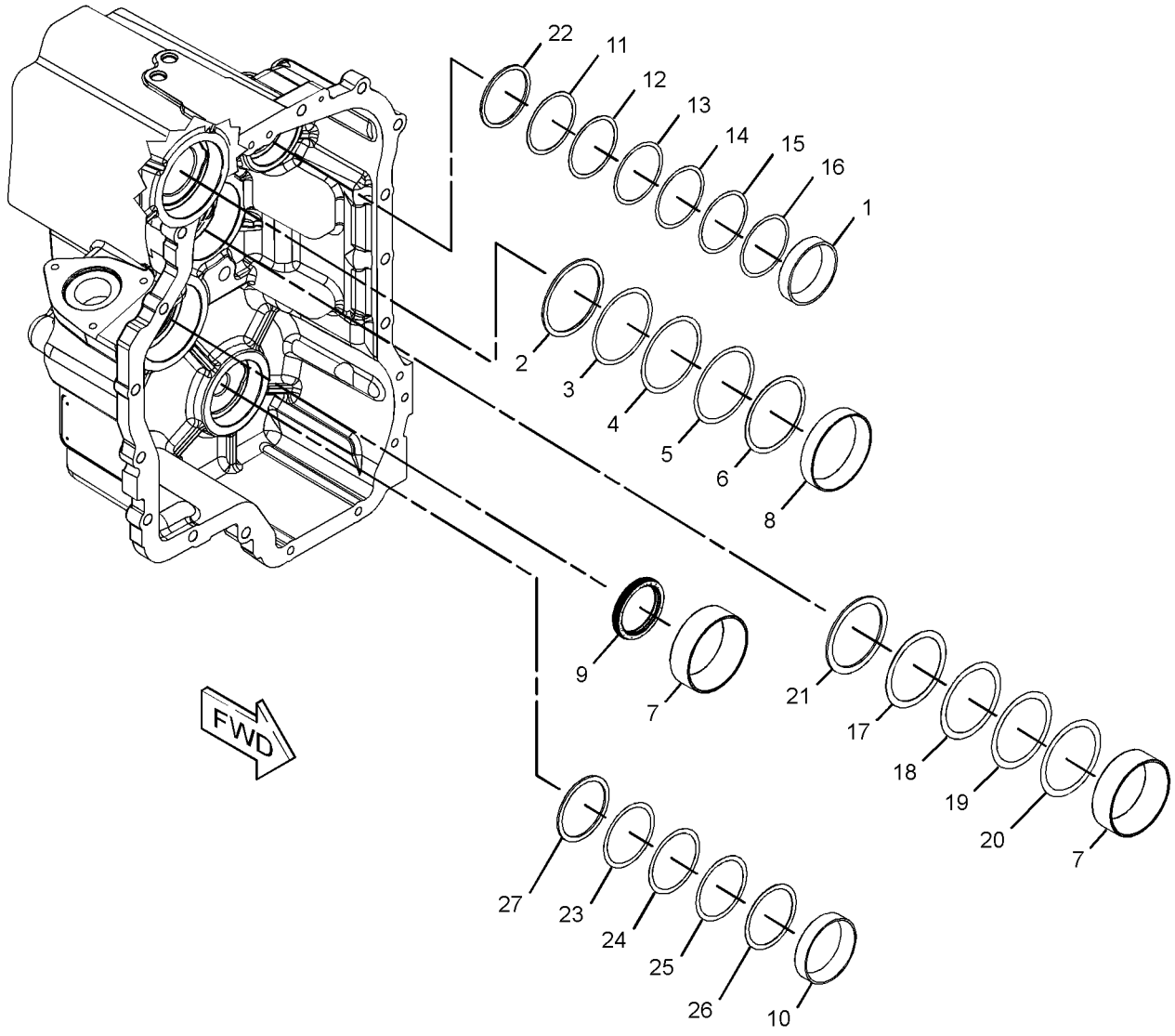

GRAPHIC #1 **<END>** g02823836

275-0472 CASE GP-TRANSMISSION–FRONT

S/N: LTG1-UP

PART OF 359-0392 TRANSMISSION GP-DIRECT DRIVE

AN ATTACHMENT

SMCS-3030, 3064 **i04346320**

NOTE	REF NO	GRAPHIC REF	PART NUMBER	QTY	PART NAME 1 2 3 4 5 6 (PRODUCT LEVEL)	SEE PAGE
M	1	1	**6V-5215**	2	BOLT (M8X1.25X16-MM)	
	2	1	**7T-2651**	1	STRAINER-SUCTION (TRANSMISSION)	
	3	1	**106-9861**	1	PLATE-COVER	
	4	1	**7T-3051**	1	PLUG	
	5	1	**005-0469**	1	CUP-BEARING	
	6	1	**8T-1580**	1	CUP	
	7	1	**6Y-2737**	1	CUP-BEARING	
	8	1	**123-8906**	1	CUP-TAPERED ROLLER	
	9	1	**9W-5460**	1	RING	
	10	1	**4J-0522**	1	SEAL-O-RING	
	11	1	**275-0471**	1	CASE AS-FRONT	
		1	**122-3652**	2	PLUG	
		1	**123-2920**	2	PLUG	
		1	**237-5188**	1	PLUG-EXPANSION	
	12	1	**7T-3253**	2	DOWEL	
	13	1	**120-9762**	3	SEAL-O-RING	

M-METRIC PART

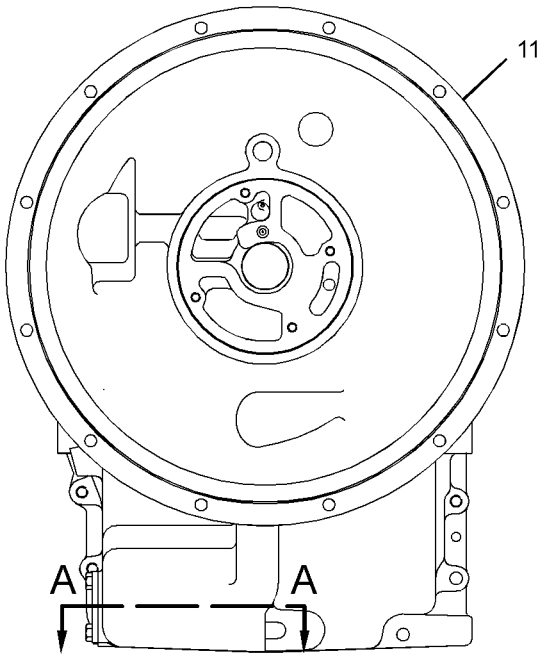

FRONT VIEW

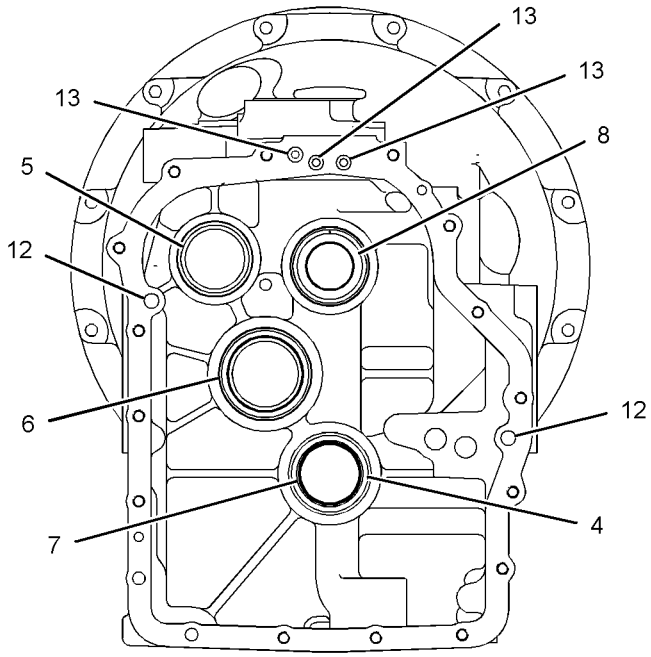

REAR VIEW

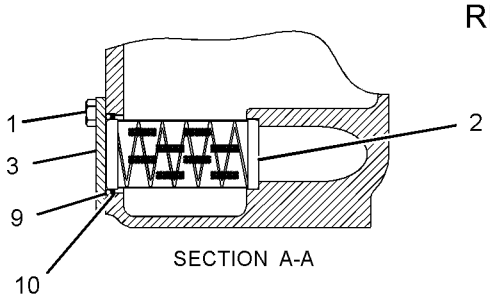

SECTION A-A

GRAPHIC #1 **<END>** g01220682

365-2812 CASE GP-TRANSMISSION–2-WHEEL DRIVE

S/N: LTG1-UP

PART OF 359-0392 TRANSMISSION GP-DIRECT DRIVE

AN ATTACHMENT

SMCS-3030, 3064 **i04623041**

NOTE	REF NO	GRAPHIC REF	PART NUMBER	QTY	PART NAME 1 2 3 4 5 6 (PRODUCT LEVEL)	SEE PAGE
	1	1	**005-0469**	1	CUP-BEARING	
	2	1	**121-7398**	1	SPACER (70X79.5X2-MM THK)	
B	3	1	**121-7399**	1	SHIM (0.05-MM THK)	
B		1	**121-7400**	1	SHIM (0.08-MM THK)	
B		1	**121-7401**	1	SHIM (0.18-MM THK)	
B		1	**121-7402**	1	SHIM (0.6-MM THK)	
	4	1	**7T-3034**	1	SPACER (56.9X64.5X1.98-MM)	
	5	1	**7T-2646**	2	SPACER (66X79.5X2.02-MM THK)	
B	6	1	**6T-9163**	2	SHIM (0.599-MM THK)	
B		1	**6T-9164**	2	SHIM (0.178-MM THK)	
B		1	**6T-9165**	2	SHIM (0.076-MM THK)	
B		1	**6T-9166**	2	SHIM (0.051-MM THK)	
	7	1	**123-8908**	2	CUP-TAPERED ROLLER	
	8	1	**123-8910**	1	CUP-TAPERED ROLLER	
	9	1	**302-8432**	1	SEAL-LIP TYPE	
	10	1	**365-2811**	1	CASE-REAR	
B	11	1	**6T-9142**	1	SHIM (0.508-MM THK)	
B		1	**6T-9143**	1	SHIM (0.381-MM THK)	
B		1	**6T-9144**	1	SHIM (0.051-MM THK)	
B		1	**6T-9145**	1	SHIM (0.178-MM THK)	
B		1	**6T-9146**	1	SHIM (0.127-MM THK)	
B		1	**6T-9147**	1	SHIM (0.076-MM THK)	

B-USE AS REQUIRED

365-2812 CASE GP-TRANSMISSION *(contd.)* **i04623041**

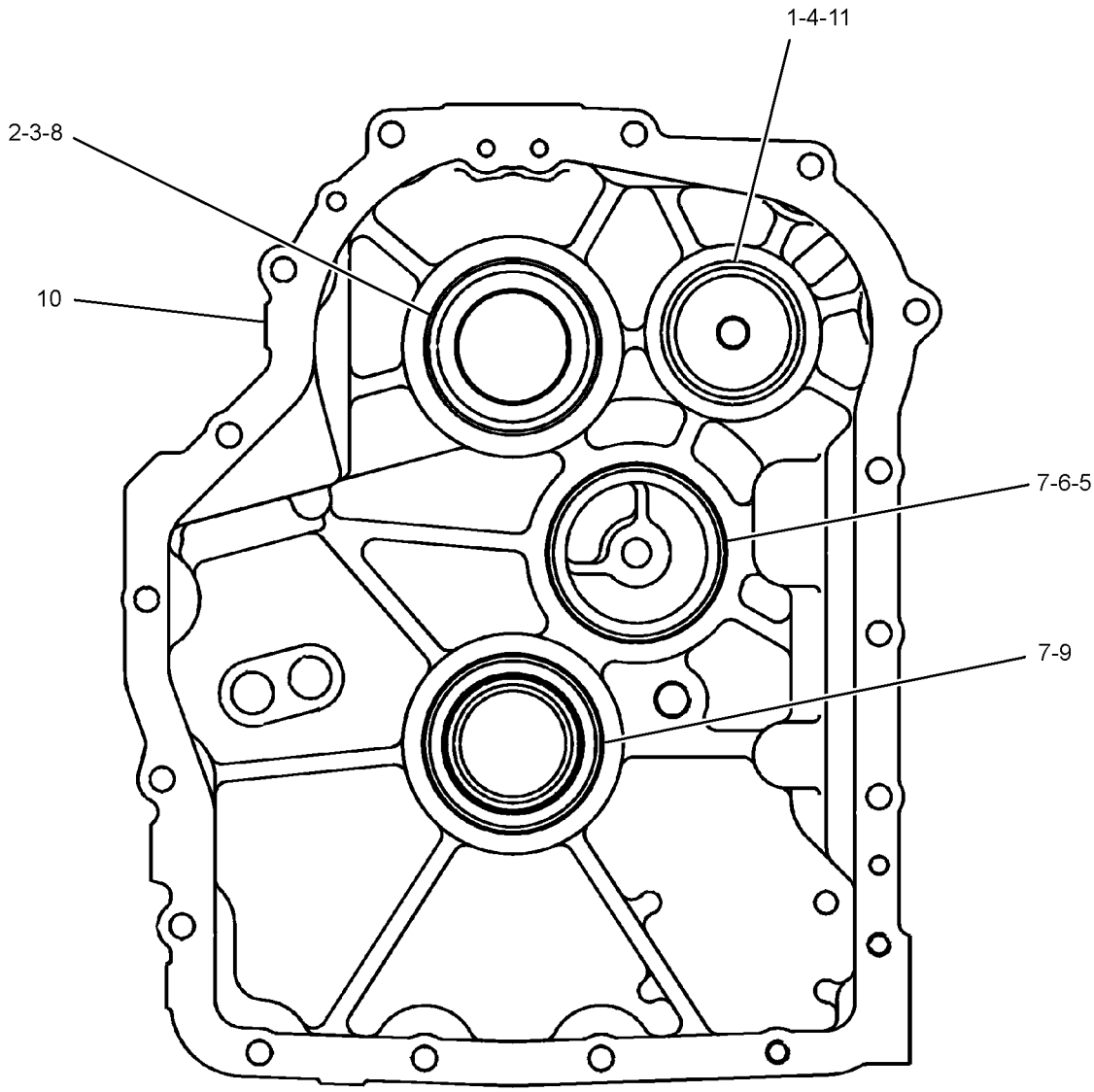

GRAPHIC #1 **<END>** g02789445

209-9882 DIFFERENTIAL & BEVEL GEAR GP–FRONT

S/N: LTG1-UP
PART OF 230-5743 AXLE GP-DRIVE & STEERING
AN ATTACHMENT

SMCS-3256, 3258, 3281, 3283, 3284 **i03973173**

NOTE	REF NO	GRAPHIC REF	PART NUMBER	QTY	PART NAME 1 2 3 4 5 6 (PRODUCT LEVEL)	SEE PAGE
	1	1	**4J-0520**	1	SEAL-O-RING	
	2	1	**216-4457**	1	SEAL	
	3	1	**216-4458**	2	BEARING	
	4	1	**136-7808**	1	BEARING AS-TAPERED ROLLER	
	5	1	**216-4461**	1	BEARING	
	6	1	**209-7454**	2	NUT (M94X2-THD)	
	7	1	**152-6144**	1	PLUG AS-DRAIN (MAGNETIC) (AXLE, FRONT)	
		1	**6V-6228**	1	SEAL-O-RING	
	8	1	**209-7462**	2	WASHER (40X50X2-MM THK)	
	9	1	**209-7463**	1	SLEEVE	
M	10	1	**199-0695**	2	BOLT (M6X1X14-MM)	
M	11	1	**209-7472**	1	NUT (M24X1.5-THD)	
B	12	1	**209-7473**	1	SHIM (2.5-MM THK)	
B		1	**219-8751**	1	SHIM (2.6-MM THK)	
B		1	**219-8752**	1	SHIM (2.7-MM THK)	
B		1	**219-8753**	1	SHIM (2.8-MM THK)	
B		1	**219-8754**	1	SHIM (2.9-MM THK)	
B		1	**219-8755**	1	SHIM (3-MM THK)	
B		1	**219-8756**	1	SHIM (3.1-MM THK)	
B		1	**219-8757**	1	SHIM (3.2-MM THK)	
B		1	**219-8758**	1	SHIM (3.3-MM THK)	
B		1	**219-8759**	1	SHIM (3.4-MM THK)	
	13	1	**216-4465**	1	WASHER (24.5X52X10-MM THK)	
	14	1	**216-4464**	1	YOKE	
	15	1	**199-0858**	2	RETAINER	
	16	1	**216-4466**	1	KIT-BEVEL GEAR & PINION	
					(INCLUDES SPACER, NUT, WASHERS, O-RING SEAL & BEVEL GEAR AS)	
Y	17	1	**216-9498**	1	DIFFERENTIAL GP (AXLE, FRONT)	146
	18	1	**208-0322**	4	BOLT-FLANGE HEAD (M14X2X75-MM)	

B-USE AS REQUIRED
M-METRIC PART
Y-SEPARATE ILLUSTRATION

209-9882 DIFFERENTIAL & BEVEL GEAR GP *(contd.)* i03973173

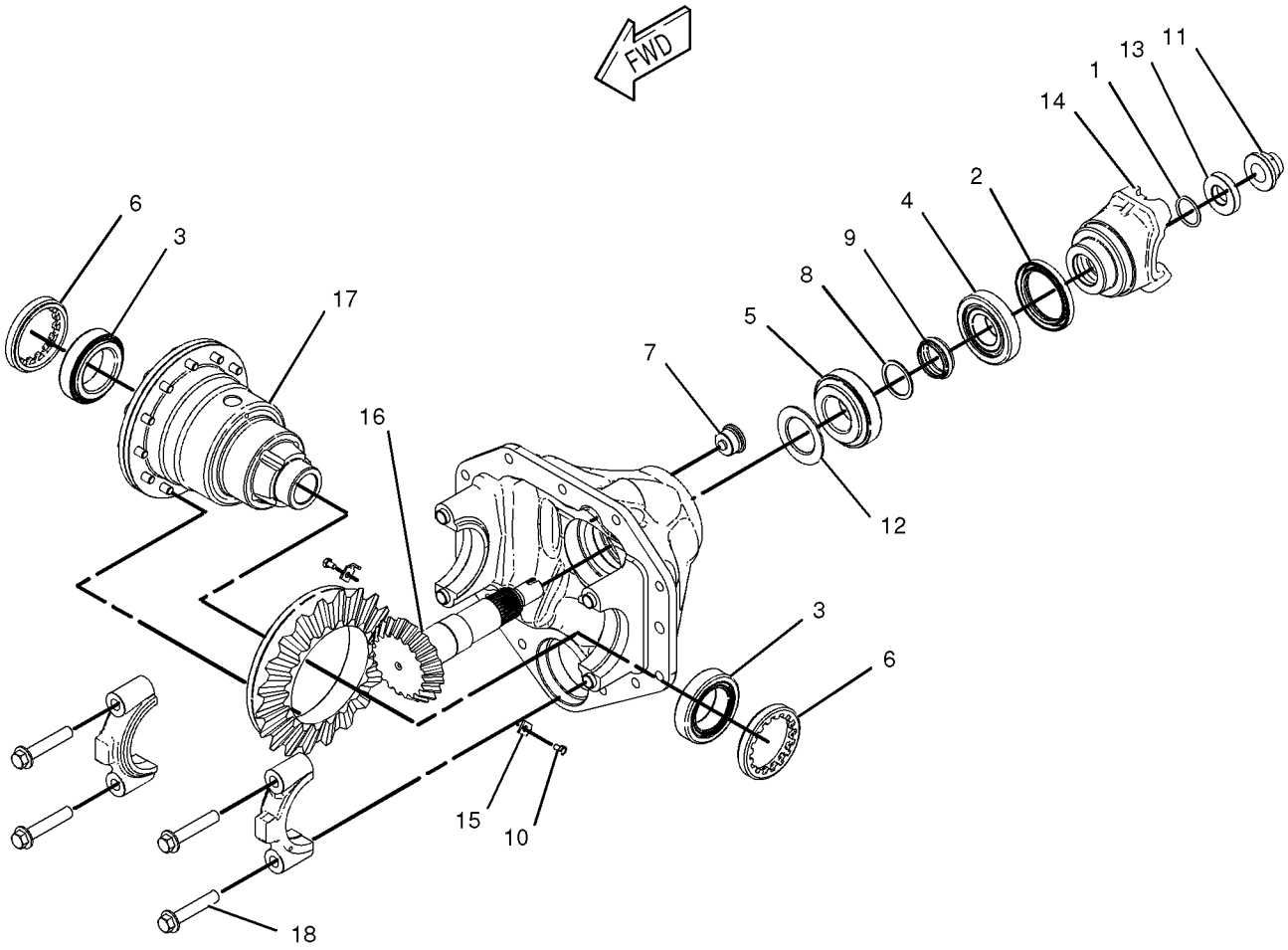

GRAPHIC #1 **<END>** g01028597

216-9498 DIFFERENTIAL GP–AXLE, FRONT

S/N: LTG1-UP

PART OF 209-9882 DIFFERENTIAL & BEVEL GEAR GP

AN ATTACHMENT

SMCS-3258 **i04403755**

NOTE	REF NO	GRAPHIC REF	PART NUMBER	QTY	PART NAME 1 2 3 4 5 6 (PRODUCT LEVEL)	SEE PAGE
	1	1	**211-0092**	2	WASHER-THRUST (22X42X2-MM THK)	
	2	1	**209-7455**	1	PIN	
	3	1	**216-8687**	1	COVER	
	4	1	**216-9497**	1	DIFFERENTIAL & BEVEL GEAR GP	
	5	1	**216-8689**	1	HOUSING-DIFFERENTIAL	
	6	1	**216-8691**	1	RETAINER	
	7	1	**229-5093**	2	WASHER-THRUST (49X72X1.5-MM THK)	
M	8	1	**144-6734**	12	BOLT (M10X1.5X30-MM)	

M-METRIC PART

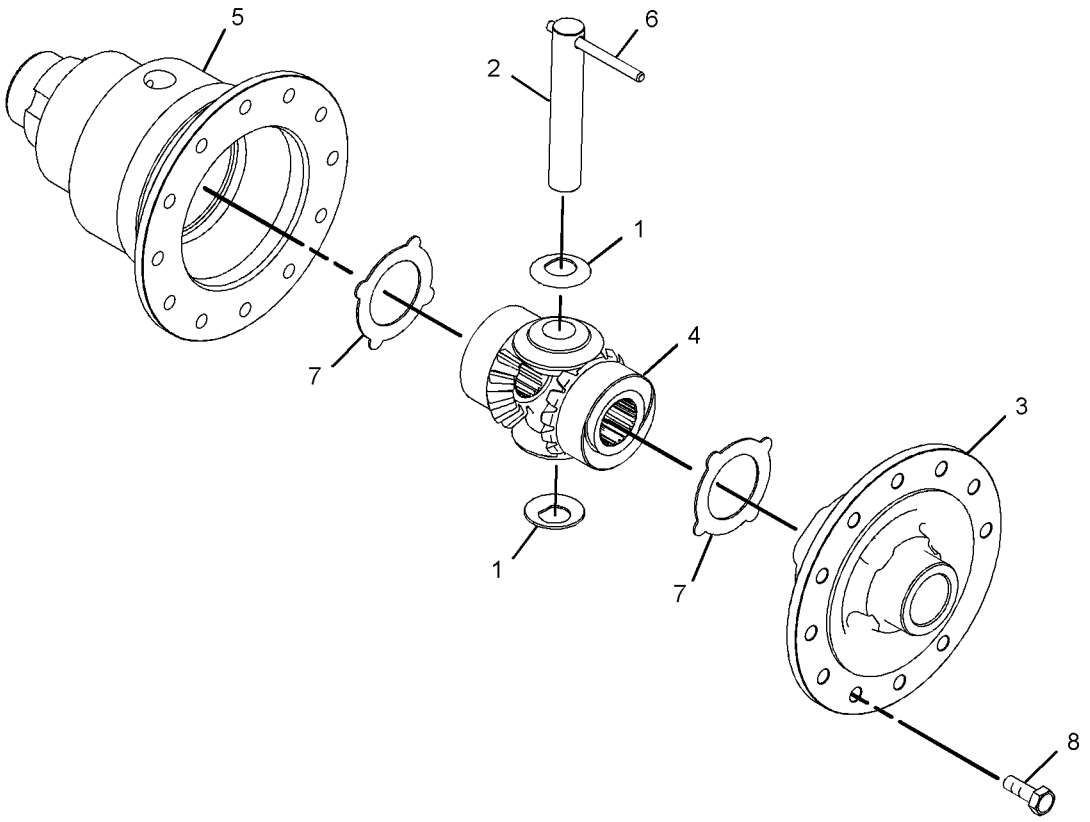

GRAPHIC #1 **<END>** g02596016

231-0692 DIFFERENTIAL GP–AXLE, REAR

S/N: LTG1-UP
PART OF 238-5289 HOUSING GP-AXLE
AN ATTACHMENT

SMCS-3258 **i02188622**

NOTE	REF NO	GRAPHIC REF	PART NUMBER	QTY	PART NAME 1 2 3 4 5 6 (PRODUCT LEVEL)	SEE PAGE
	1	1	**199-0673**	2	BUSHING	
	2	1	**199-0694**	12	BOLT (M14X2X40-MM)	
	3	1	**199-0756**	1	COLLAR	
	4	1	**199-0784**	1	COVER-DIFFERENTIAL	
	5	1	**199-0807**	4	PIN	
	6	1	**199-0808**	3	PIN	
	7	1	**231-0670**	1	SHAFT	
	8	1	**231-0671**	4	WASHER-THRUST	
	9	1	**231-0695**	2	WASHER-THRUST	
	10	1	**231-0693**	1	CASE-DIFFERENTIAL	
	11	1	**231-0696**	2	SHAFT	
	12	1	**231-0697**	1	RETAINER	
	13	1	**231-0694**	1	GEAR AS	
	14	1	**199-0659**	4	SEAL-PIN	

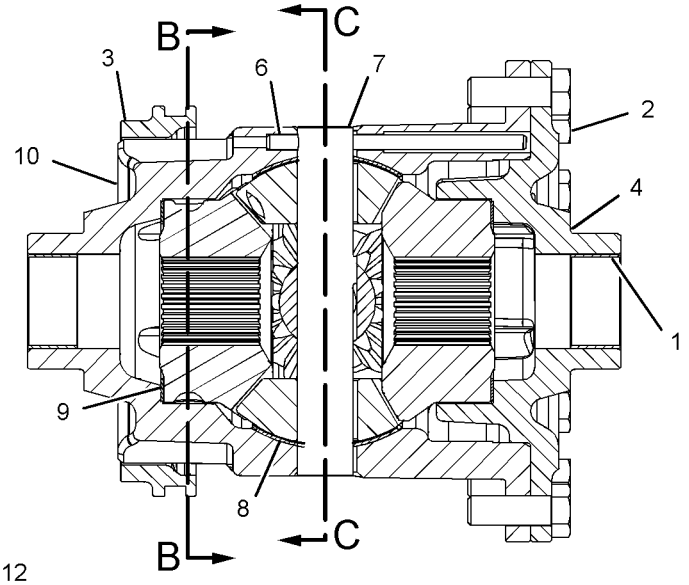

FRONT VIEW
(SECTIONED)

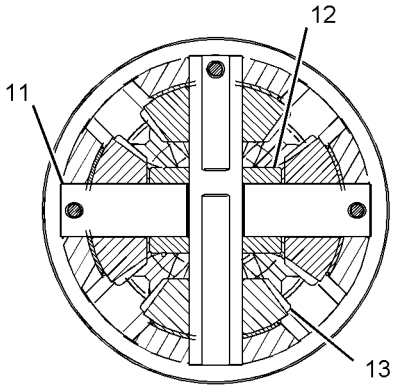

SECTION C-C

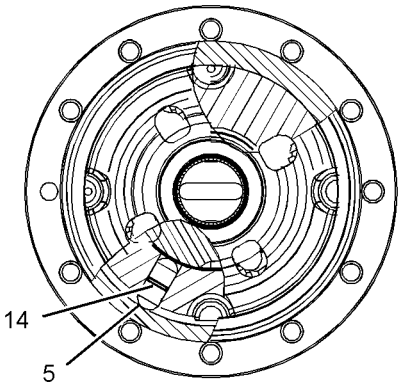

SECTION B-B

GRAPHIC #1 **<END>** g01107764

111-7907 DRIVE GP-FLEXIBLE COUPLING

S/N: LTG1-UP
PART OF 359-0401 TORQUE CONVERTER AR
AN ATTACHMENT

SMCS-3252 **i02594396**

NOTE	REF NO	GRAPHIC REF	PART NUMBER	QTY	PART NAME 1 2 3 4 5 6 (PRODUCT LEVEL)	SEE PAGE
M	1	1	**8T-4200**	8	BOLT (M8X1.25X16-MM)	
M	2	1	**6V-8455**	6	BOLT (M10X1.5X16-MM)	
	3	1	**117-9713**	1	PLATE-CONVERTER REINFORCEMENT	
	4	1	**8T-4224**	8	WASHER-HARD (8.8X16X2-MM THK)	
	5	1	**111-7906**	1	PLATE-CONVERTER DRIVE	

M-METRIC PART

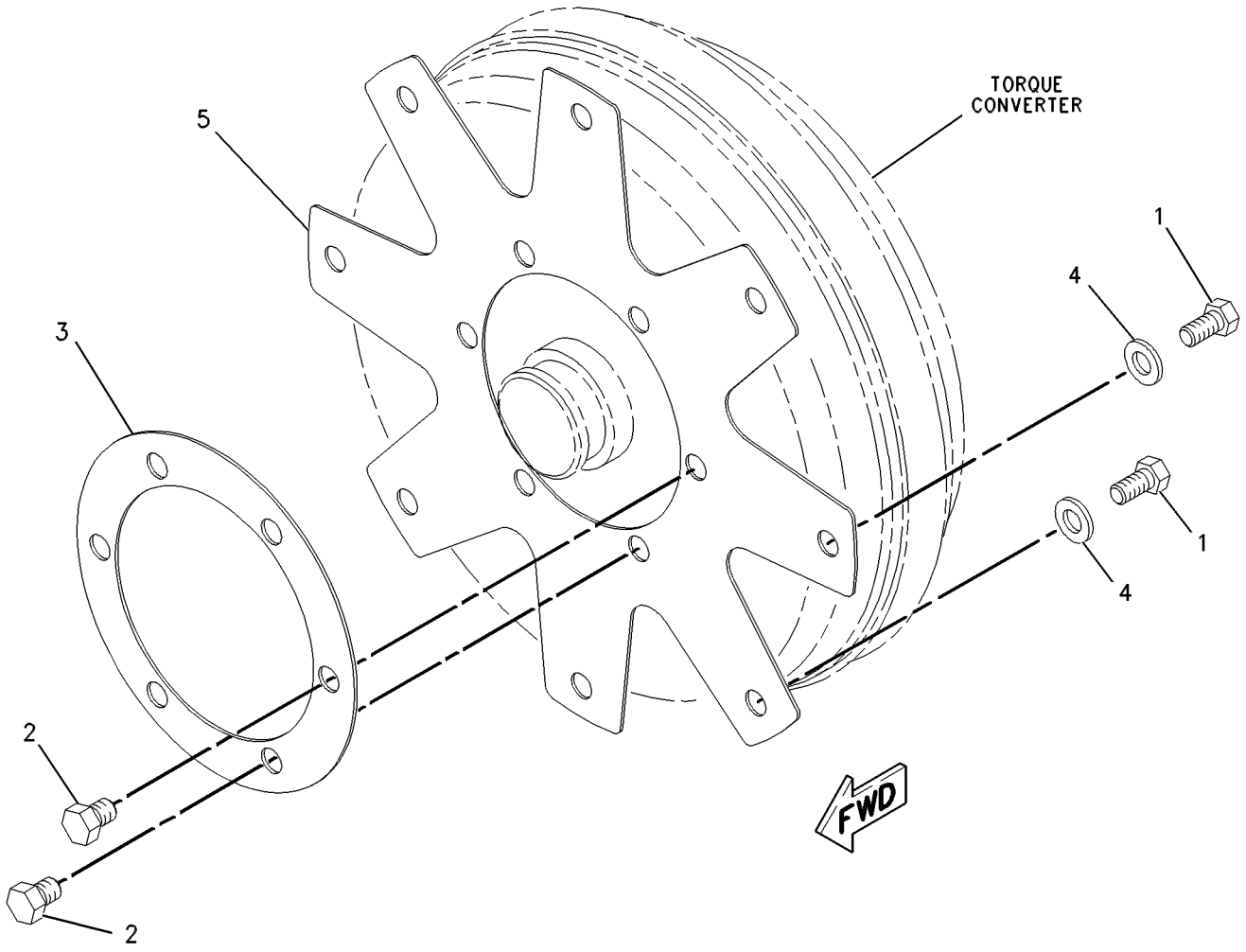

GRAPHIC #1 **<END>** g00547374

337-9701 FILLER GP-POWER TRAIN OIL–AUTOSHIFT

S/N: LTG1-UP

PART OF 353-1510 TRANSMISSION AR-POWER SHIFT

AN ATTACHMENT

SMCS-3005, 3081 **i04543241**

NOTE	REF NO	GRAPHIC REF	PART NUMBER	QTY	PART NAME 1 2 3 4 5 6 (PRODUCT LEVEL)	SEE PAGE
	1	1	**323-3308**	2	CAP	
	2	1	**361-1727**	1	FLANGE AS	
	3	1	**361-2693**	1	GAUGE-OIL LEVEL (DIPSTICK) (POWER TRAIN)	
	4	1	**361-7032**	1	TUBE AS	
	5	1	**363-9893**	1	BRACKET AS	
M		1	**159-9540**	1	NUT-WELD (M8X1.25-THD)	
	6	1	**3E-7445**	2	CLAMP-HOSE	
	7	1	**4J-0522**	1	SEAL-O-RING	
	8	1	**5P-4116**	2	WASHER-HARD (8.8X20.5X2-MM THK)	
	9	1	**8T-4121**	1	WASHER-HARD (11X21X2.5-MM THK)	
M	10	1	**8T-4189**	1	BOLT (M8X1.25X20-MM)	
M	11	1	**8T-4195**	1	BOLT (M10X1.5X30-MM)	
	12	1	**8T-4223**	2	WASHER-HARD (13.5X25.5X3-MM THK)	
M	13	1	**8T-4908**	1	BOLT (M8X1.25X25-MM)	
M	14	1	**8T-4956**	2	BOLT (M12X1.75X35-MM)	
	15	1	**262-8088**		HOSE (18.5-CM)	

M-METRIC PART

337-9701 **FILLER GP-POWER TRAIN OIL** *(contd.)* **i04543241**

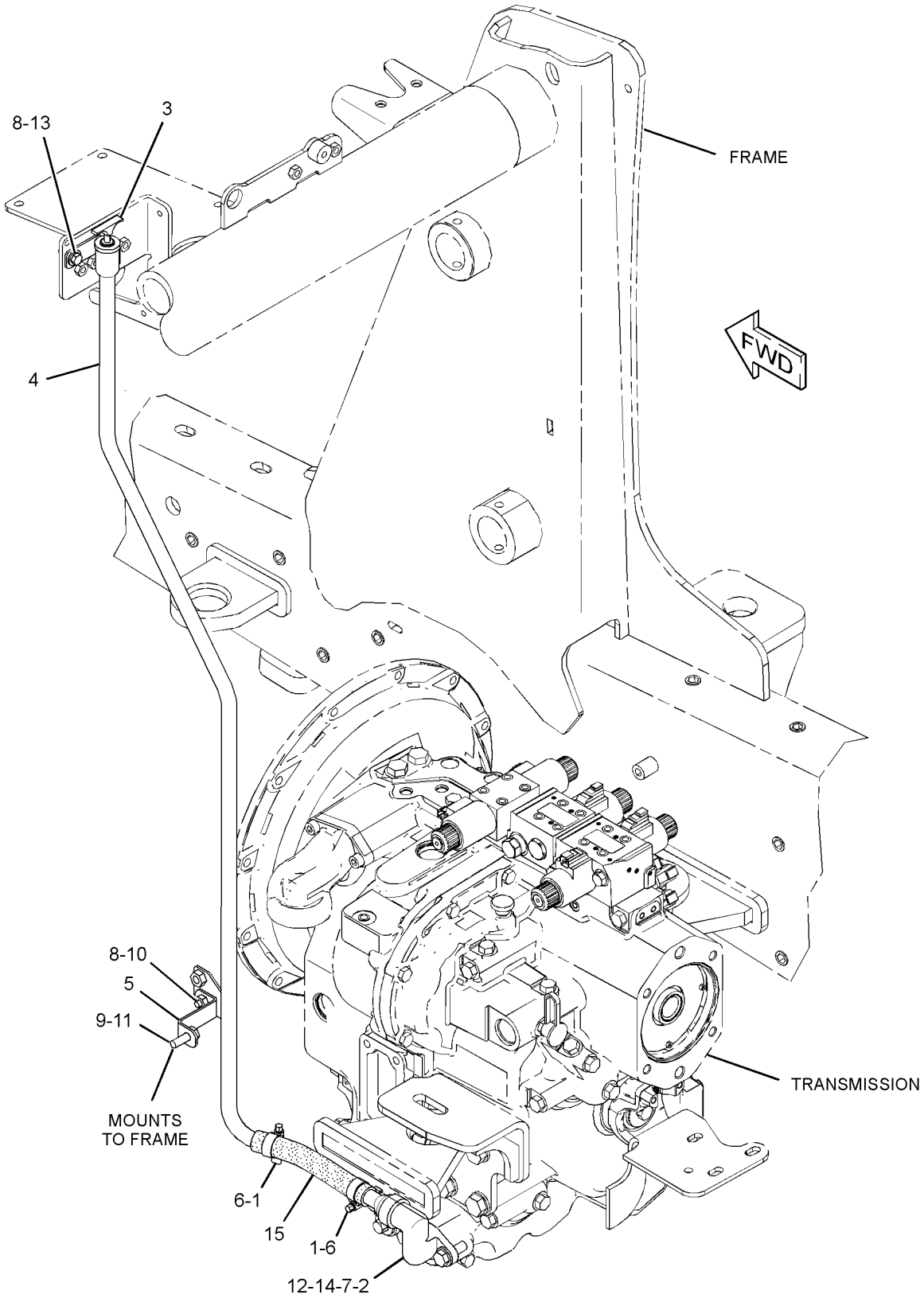

GRAPHIC #1

<END>

g02786397

337-9703 FILLER GP-POWER TRAIN OIL—STANDARD SHIFT

S/N: LTG1-UP
PART OF 353-1512 TRANSMISSION AR-DIRECT DRIVE, 353-1513 TRANSMISSION AR-POWER SHIFT AN ATTACHMENT

SMCS-3005, 3081 **i04543236**

NOTE	REF NO	GRAPHIC REF	PART NUMBER	QTY	PART NAME 1 2 3 4 5 6 (PRODUCT LEVEL)	SEE PAGE
	1	1	**323-3308**	2	CAP	
	2	1	**361-1725**	1	TUBE AS	
	3	1	**361-1727**	1	FLANGE AS	
	4	1	**361-1728**	1	GAUGE-OIL LEVEL (DIPSTICK) (POWER TRAIN)	
	5	1	**363-9893**	1	BRACKET AS	
M		1	**159-9540**	1	NUT-WELD (M8X1.25-THD)	
	6	1	**3E-7445**	2	CLAMP-HOSE	
	7	1	**4J-0522**	1	SEAL-O-RING	
	8	1	**5P-4116**	2	WASHER-HARD (8.8X20.5X2-MM THK)	
	9	1	**8T-4121**	1	WASHER-HARD (11X21X2.5-MM THK)	
M	10	1	**8T-4189**	1	BOLT (M8X1.25X20-MM)	
M	11	1	**8T-4195**	1	BOLT (M10X1.5X30-MM)	
	12	1	**8T-4223**	2	WASHER-HARD (13.5X25.5X3-MM THK)	
M	13	1	**8T-4908**	1	BOLT (M8X1.25X25-MM)	
M	14	1	**8T-4956**	2	BOLT (M12X1.75X35-MM)	
E	15	1	**262-8088**		HOSE (18.5-CM)	

E-ORDER BY THE CENTIMETER
M-METRIC PART

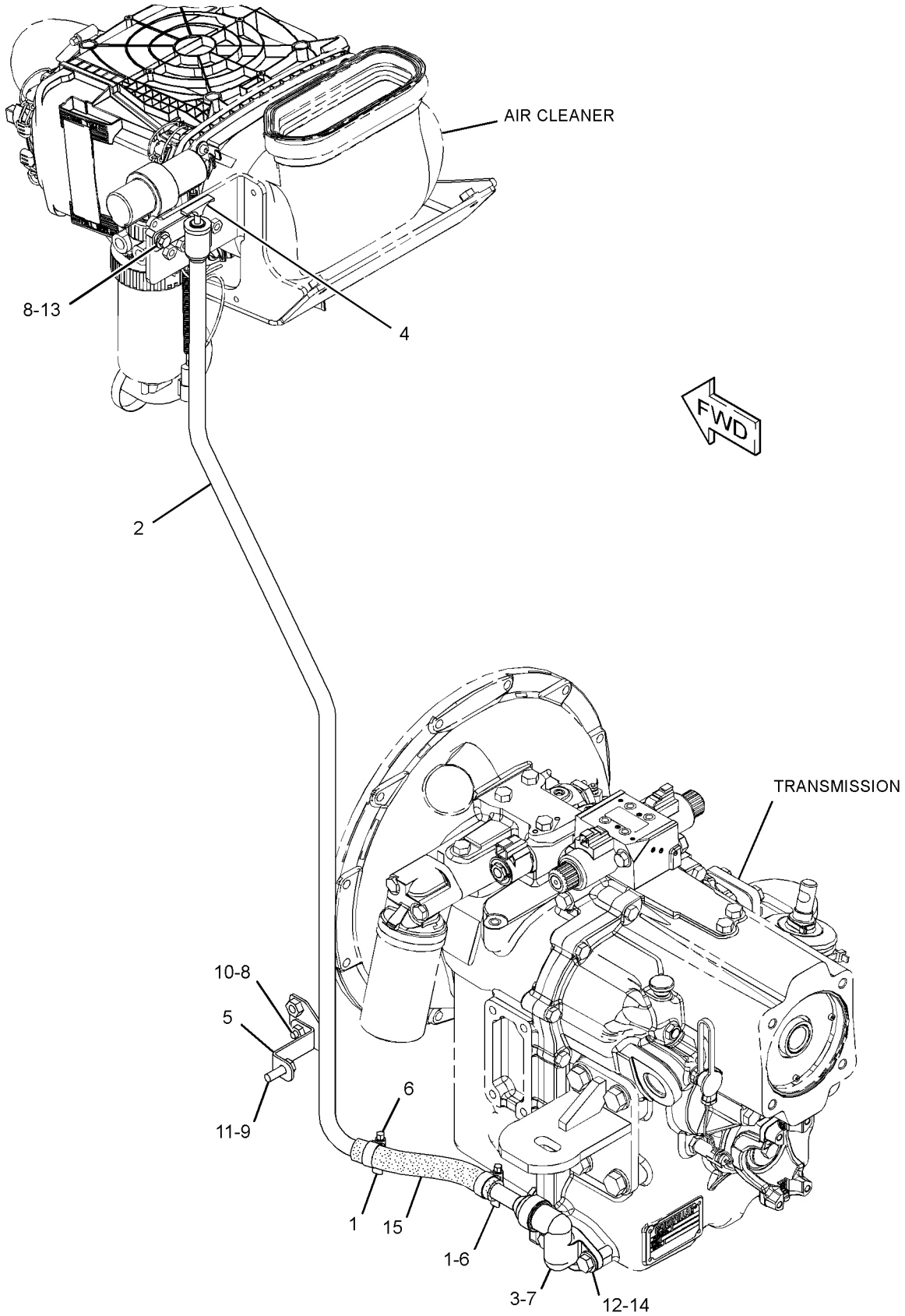

GRAPHIC #1 **<END>** g02785779

216-1609 FLANGE GP-WHEEL

S/N: LTG1-UP
PART OF 230-5739 AXLE GP-REAR
AN ATTACHMENT

SMCS-4057 **i04369628**

NOTE	REF NO	GRAPHIC REF	PART NUMBER	QTY	PART NAME 1 2 3 4 5 6 (PRODUCT LEVEL)	SEE PAGE
	1	1	**209-4232**	2	BEARING	
	2	1	**331-8538**	1	SEAL	
J	3	1	**226-4346**	10	STUD	
					AVAILABLE REPAIR KIT(S):	
			231-0719	1	KIT-WHEEL FLANGE	
					(ALSO INCLUDES FLANGE WHEEL)	
J-KIT MARKED J SERVICES PARTS MARKED J						

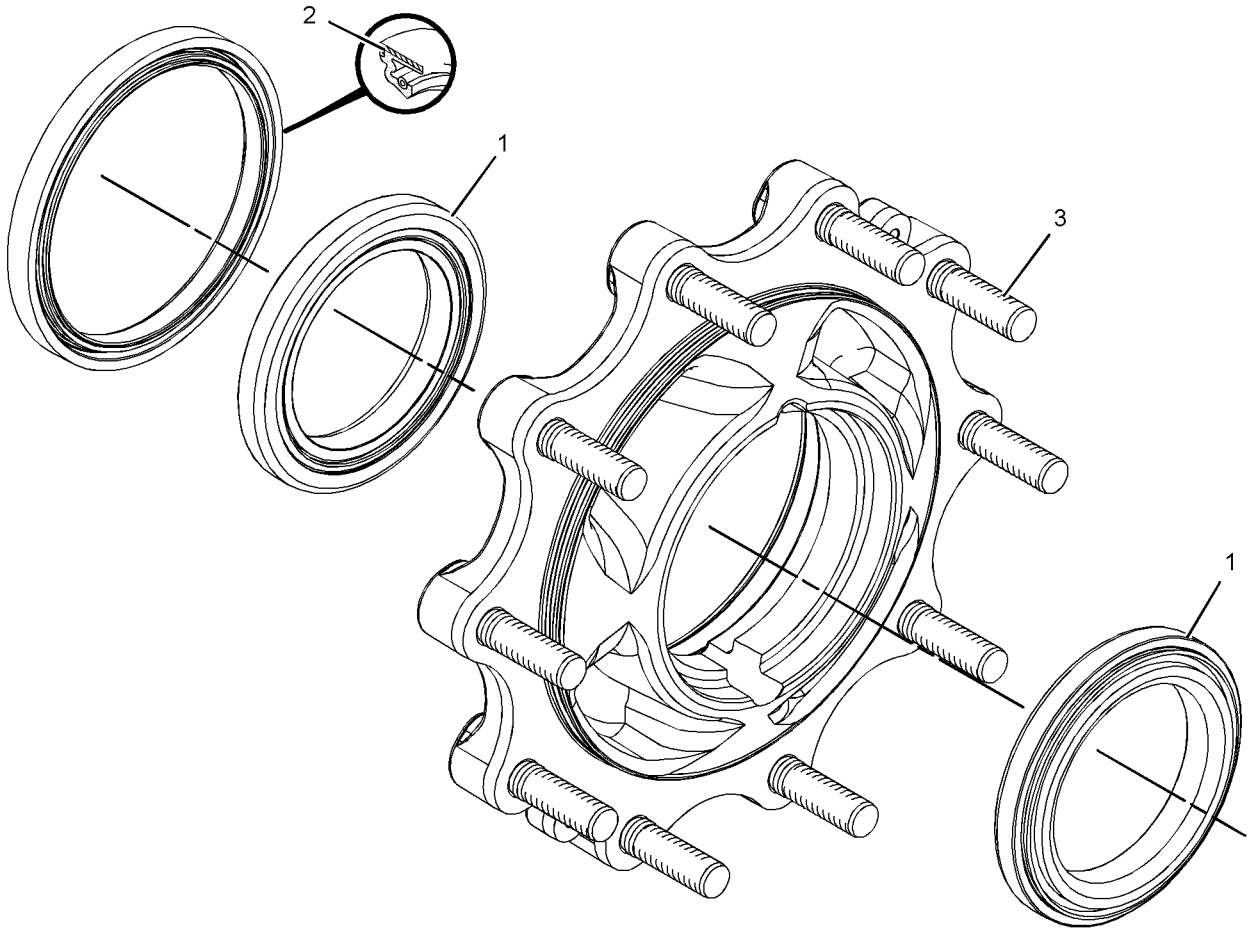

GRAPHIC #1 **<END>** g02531759

231-0683 FLANGE GP-WHEEL

S/N: LTG1-UP
FRONT AXLE
PART OF 230-5745 AXLE GP-FRONT
AN ATTACHMENT

SMCS-4057 **i02221574**

NOTE	REF NO	GRAPHIC REF	PART NUMBER	QTY	PART NAME 1 2 3 4 5 6 (PRODUCT LEVEL)	SEE PAGE
	1	1	**207-4263**	1	BEARING AS	
	2	1	**207-4267**	1	BEARING AS	
	3	1	**231-0687**	8	STUD	
	4	1	**231-0686**	1	HUB-WHEEL	
	5	1	**231-0688**	1	SEAL	
					AVAILABLE REPAIR KIT(S):	
			238-5228	1	KIT-HUB	
					(INCLUDES WHEEL HUB & WHEEL STUDS)	

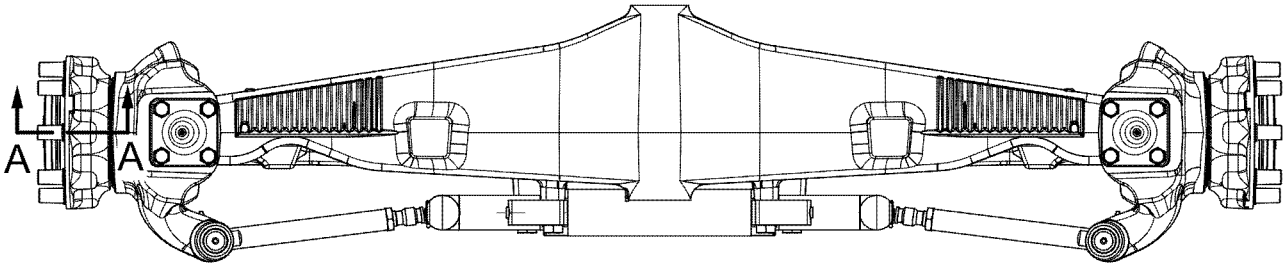

FRONT VIEW

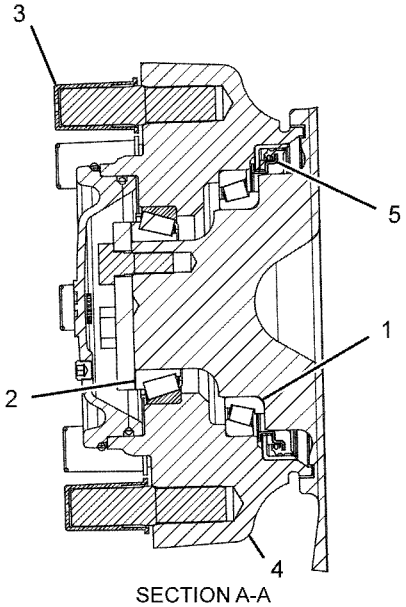

SECTION A-A

GRAPHIC #1

<END>

g01121040

209-9884 HOUSING & FLANGE GP-AXLE–RH

S/N: LTG1-UP
PART OF 230-5743 AXLE GP-DRIVE & STEERING
AN ATTACHMENT

SMCS-4057, 4234 **i03973170**

NOTE	REF NO	GRAPHIC REF	PART NUMBER	QTY	PART NAME 1 2 3 4 5 6 (PRODUCT LEVEL)	SEE PAGE
Y	1	1	**217-2877**	1	HOUSING GP-AXLE (RH)	157
J	2	1	*231-0703*	1	FLANGE AS (AXLE)	
	2A	1	**210-5932**	2	BEARING-WHEEL	
	2B	1	**226-4346**	8	STUD	
	2C	1	**331-8538**	1	SEAL	
	3	1	**226-4366**	1	NUT-SPANNER	
	4	1	**226-4370**	3	BOLT-SELF-LOCKING	
	5	1	**229-5085**	1	SPACER (110X123X18.36-MM THK)	
	6	1	**217-2879**	1	GEAR GP-RING	
	7	1	**226-4365**	1	WASHER-TAB	
					AVAILABLE REPAIR KIT(S):	
J			**238-5256**	1	KIT-FLANGE (AXLE HOUSING)	
					(INCLUDES STUDS & WHEEL FLANGE)	

J-KIT MARKED J SERVICES PART MARKED J
Y-SEPARATE ILLUSTRATION

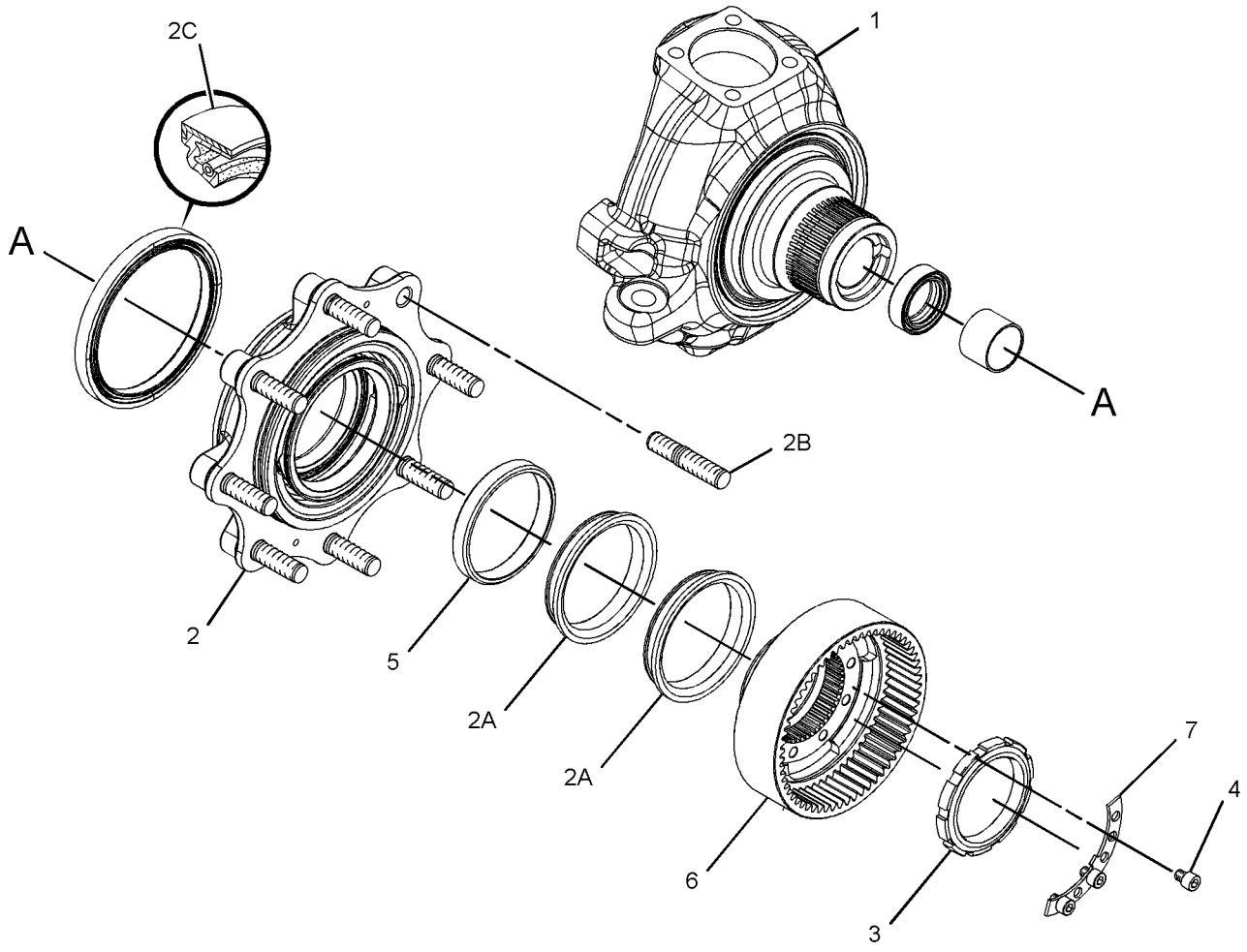

GRAPHIC #1 **<END>** g02164593

209-9885 HOUSING & FLANGE GP-AXLE–LH

S/N: LTG1-UP
PART OF 230-5743 AXLE GP-DRIVE & STEERING
AN ATTACHMENT

SMCS-4057, 4234 **i03920894**

NOTE	REF NO	GRAPHIC REF	PART NUMBER	QTY	PART NAME 1 2 3 4 5 6 (PRODUCT LEVEL)	SEE PAGE
Y	1	1	**217-2878**	1	HOUSING GP-AXLE (LH)	158
J	2	1	*231-0703*	1	FLANGE AS (AXLE)	
	2A	1	**210-5932**	2	BEARING-WHEEL	
	2B	1	**226-4346**	8	STUD	
	2C	1	**331-8538**	1	SEAL	
	3	1	**226-4366**	1	NUT-SPANNER	
	4	1	**226-4370**	4	BOLT-SELF-LOCKING	
	5	1	**229-5085**	1	SPACER (110X123X18.36-MM THK)	
	6	1	**217-2879**	1	GEAR GP-RING	
	7	1	**226-4365**	1	WASHER-TAB	
					AVAILABLE REPAIR KIT(S):	
J			**238-5256**	1	KIT-FLANGE (AXLE HOUSING)	
					(INCLUDES WHEEL FLANGE & STUDS)	

J-KIT MARKED J SERVICES PART(S) MARKED J
Y-SEPARATE ILLUSTRATION

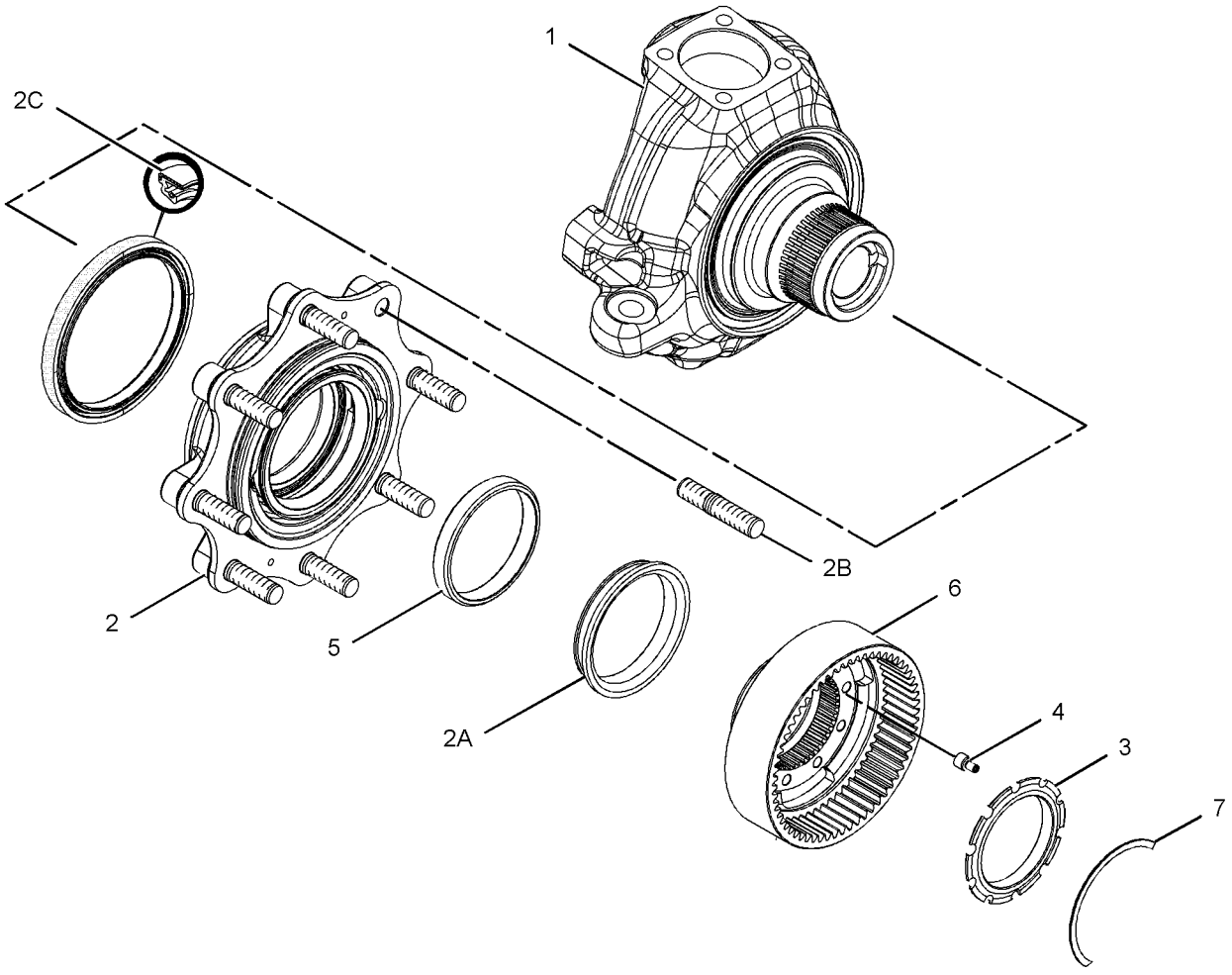

GRAPHIC #1 **<END>** g01180841

217-2877 HOUSING GP-AXLE–RH

S/N: LTG1-UP
PART OF 209-9884 HOUSING & FLANGE GP-AXLE
AN ATTACHMENT

SMCS-3256, 3258, 3260, 4251 **i02364961**

NOTE	REF NO	GRAPHIC REF	PART NUMBER	QTY	PART NAME 1 2 3 4 5 6 (PRODUCT LEVEL)	SEE PAGE
	1	1	**199-0648**	1	NUT-JAM (M16X2-THD)	
	2	1	**198-7814**	1	BOLT (M16X2X100-MM)	
	3	1	**209-7460**	1	BUSHING	
	4	1	**209-7465**	1	SEAL	
	5	1	**231-0700**	1	HOUSING	

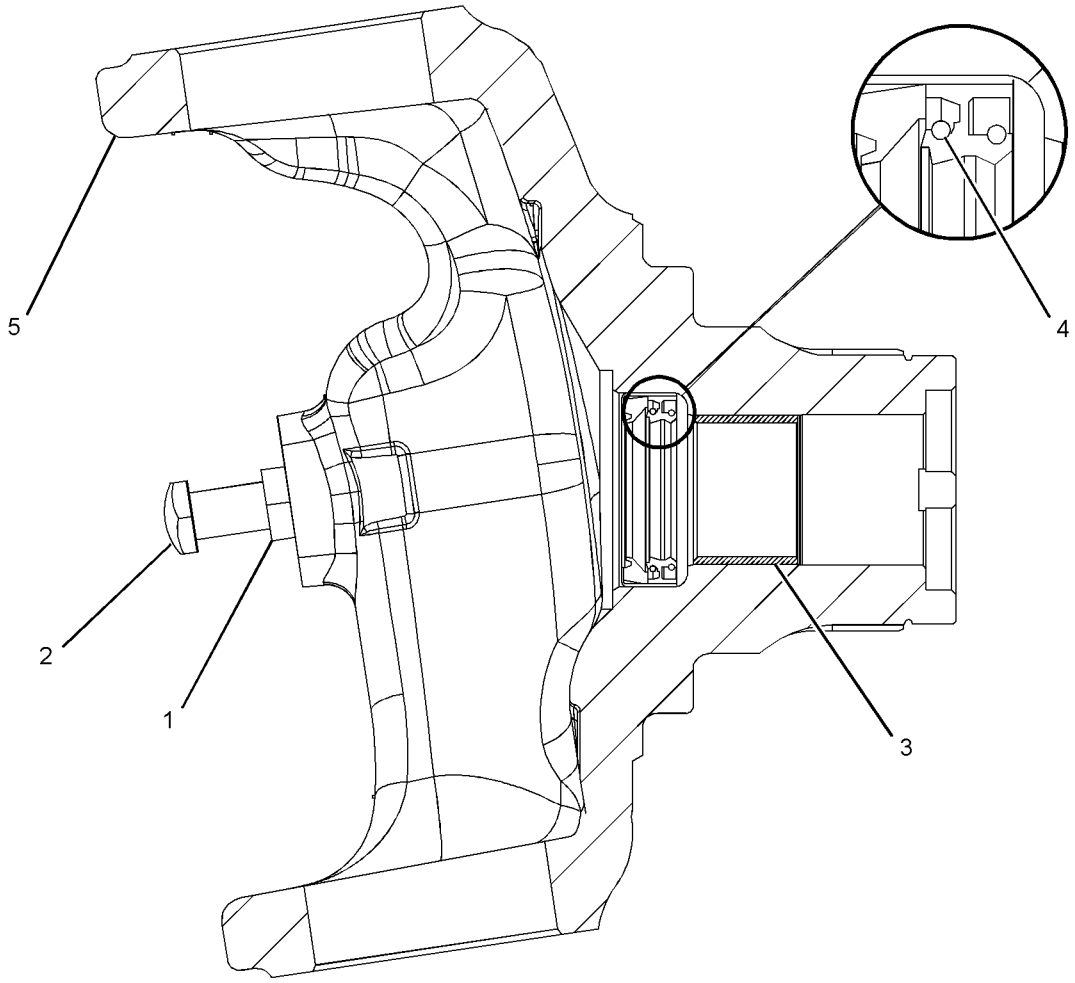

GRAPHIC #1 **<END>** g01181175

217-2878 HOUSING GP-AXLE–LH

S/N: LTG1-UP
PART OF 209-9885 HOUSING & FLANGE GP-AXLE
AN ATTACHMENT

SMCS-3256, 3258, 3260, 4251 **i02364974**

NOTE	REF NO	GRAPHIC REF	PART NUMBER	QTY	PART NAME 1 2 3 4 5 6 (PRODUCT LEVEL)	SEE PAGE
	1	1	**199-0648**	1	NUT-JAM (M16X2-THD)	
	2	1	**198-7814**	1	BOLT (M16X2X100-MM)	
	3	1	**209-7460**	1	BUSHING	
	4	1	**209-7465**	1	SEAL	
	5	1	**231-0701**	1	HOUSING	

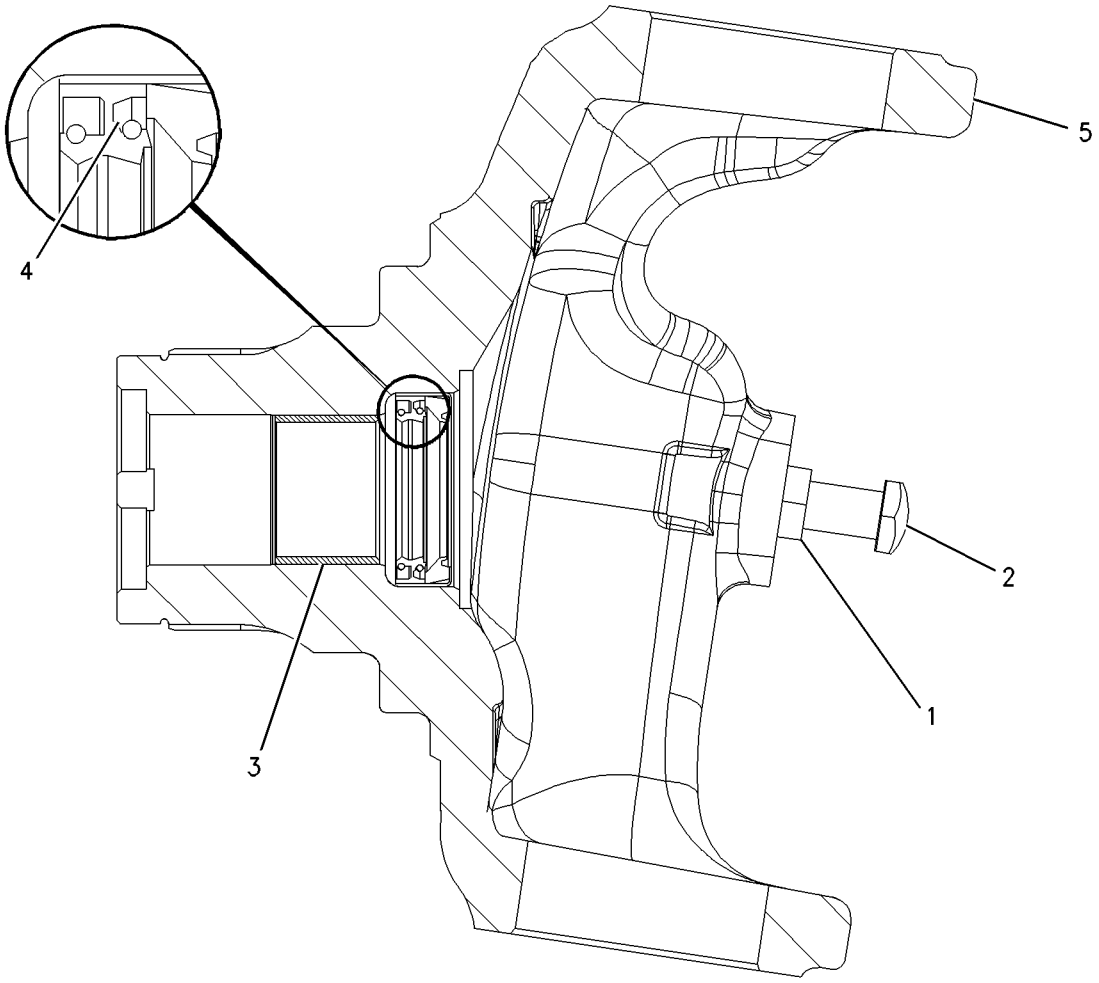

GRAPHIC #1 **<END>** g00926639

238-5289 HOUSING GP-AXLE—REAR

S/N: LTG1-UP
PART OF 230-5739 AXLE GP-REAR
AN ATTACHMENT

SMCS-3256, 3258, 3260, 4251 **i04459583**

NOTE	REF NO	GRAPHIC REF	PART NUMBER	QTY	PART NAME 1 2 3 4 5 6 (PRODUCT LEVEL)	SEE PAGE
M	1	1	**095-0674**	4	BOLT-SOCKET HEAD (M12X1.75X65-MM)	
	2	1	**199-0656**	2	CUP & CONE AS	
	3	1	**199-0663**	1	SEAL-O-RING	
	4	1	**198-7811**	2	DOWEL	
	5	1	**199-0675**	2	NUT (M104X2-THD)	
J	6	1	**199-0678**	2	WASHER (45.5X55X2-MM THK)	
J	7	1	**199-0680**	1	SPACER (47X50X19.2-MM THK)	
M	8	1	**199-0695**	2	BOLT (M6X1X14-MM)	
	9	1	**199-0697**	1	SEAL	
J	10	1	**199-0785**	1	WASHER (30.5X58X10-MM THK)	
	11	1	**199-0858**	2	RETAINER	
J	12	1	**217-2876**	1	KIT-BEVEL GEAR & PINION	
					(ALSO INCLUDES BEVEL GEAR, O-RING SEAL & PINION)	
J	13	1	**212-5702**	1	NUT (M30X2-THD)	
	14	1	**216-1600**	1	DISC-BRAKE	
	15	1	**095-1041**	1	BEARING AS	
	16	1	**093-8828**	1	BEARING AS	
Y	17	1	**216-1612**	1	CYLINDER GP-BRAKE (LH)	232
Y	18	1	**216-1613**	1	CYLINDER GP-BRAKE (RH)	234
	19	1	**219-8836**	1	FORK	
Y	20	1	**231-0692**	1	DIFFERENTIAL GP (AXLE)	147
	21	1	**238-5290**	1	HOUSING-CENTER	
B	22	1	**1U-8846**		SEALANT-GASKET	
B	23	1	**199-0684**	1	SHIM (2.5-MM THK)	
B		1	**199-0685**	1	SHIM (2.6-MM THK)	
B		1	**199-0686**	1	SHIM (2.7-MM THK)	
B		1	**199-0687**	1	SHIM (2.8-MM THK)	
B		1	**199-0688**	1	SHIM (2.9-MM THK)	
B		1	**199-0689**	1	SHIM (3-MM THK)	
B		1	**199-0690**	1	SHIM (3.1-MM THK)	
B		1	**199-0691**	1	SHIM (3.2-MM THK)	
B		1	**199-0692**	1	SHIM (3.3-MM THK)	
B		1	**199-0693**	1	SHIM (3.4-MM THK)	
FL			**199-0808**	1	PIN	
FL			**231-0670**	1	SHAFT	
FL			**231-0671**	2	WASHER-THRUST	
FL			**231-0695**	2	WASHER-THRUST	
					AVAILABLE REPAIR KIT(S):	
L			**217-2345**	1	KIT-DIFFERENTIAL	

B-USE AS REQUIRED
F-NOT SHOWN
J-KIT MARKED J SERVICES PARTS MARKED J
L-KIT MARKED L SERVICES PARTS MARKED L
M-METRIC PART
Y-SEPARATE ILLUSTRATION

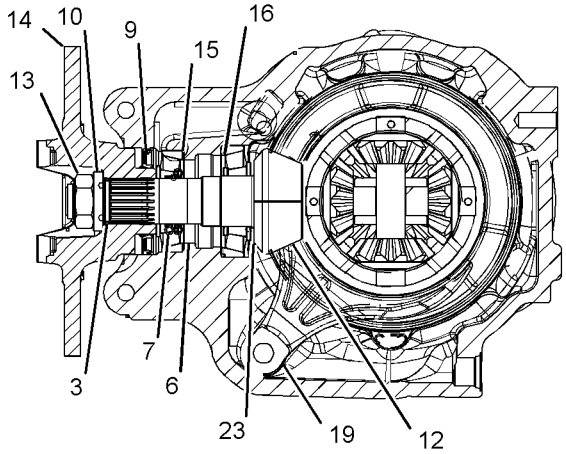

SECTION A-A

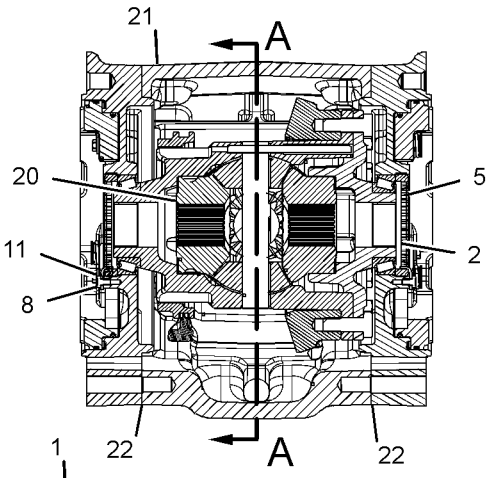

SECTION B-B

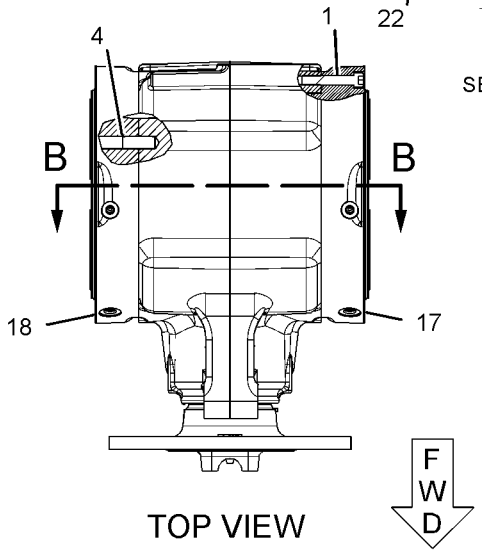

TOP VIEW

GRAPHIC #1 **<END>** g02120933

337-9717 LINES GP-POWER TRAIN OIL

S/N: LTG1-UP
PART OF 353-1512 TRANSMISSION AR-DIRECT DRIVE, 353-1513 TRANSMISSION AR-POWER SHIFT AN ATTACHMENT

SMCS-3016, 3154 **i04574730**

NOTE	REF NO	GRAPHIC REF	PART NUMBER	QTY	PART NAME 1 2 3 4 5 6 (PRODUCT LEVEL)	SEE PAGE
	1	1	**9X-6772**	2	STRAP-CABLE	
	2	1	**151-4841**	2	BLOCK	
	3	1	*165-6365*	1	FITTING AS	
		1	**3J-1907**		SEAL-O-RING	
		1	**7W-7381**	1	FITTING-OUTLET	
I	4	1	**362-4915**	1	HOSE AS	
	5	1	*148-8325*	1	CONNECTOR AS	
		1	**3J-1907**	1	SEAL-O-RING	
		1	**4J-5477**	1	SEAL-O-RING	
		1	**6V-8641**	1	CONNECTOR	
	6	1	*148-8368*	1	ELBOW AS	
		1	**3J-1907**	1	SEAL-O-RING	
		1	**4J-5477**	1	SEAL-O-RING	
		1	**6V-8627**	1	ELBOW	

I-REFER TO HYDRAULIC INFORMATION SYSTEM

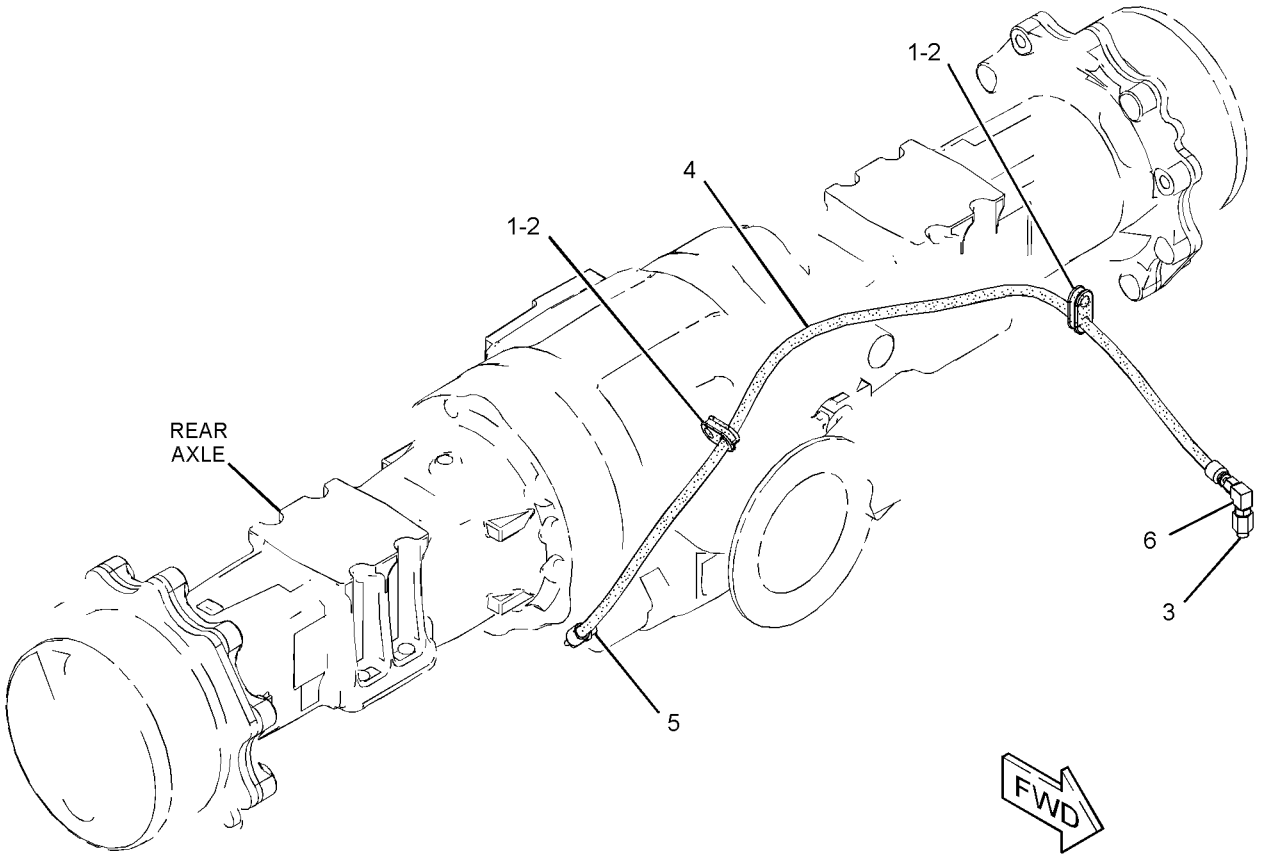

GRAPHIC #1 **<END>** g02806176

337-9719 LOCK GP-DIFFERENTIAL—AUTOSHIFT

S/N: LTG1-UP

PART OF 353-1510 TRANSMISSION AR-POWER SHIFT

AN ATTACHMENT

SMCS-3264, 3272 **i04602975**

NOTE	REF NO	GRAPHIC REF	PART NUMBER	QTY	PART NAME 1 2 3 4 5 6 (PRODUCT LEVEL)	SEE PAGE
	1	1	**9X-6772**	1	STRAP-CABLE	
	2	1	**151-4841**	1	BLOCK	
Y	3	1	**274-8048**	1	VALVE & MTG GP-SOLENOID (DIFFERENTIAL LOCK)	208
	4	1	**365-2181**	1	TUBE AS	
	5	1	**365-2182**	1	TUBE AS	
I	6	1	**365-2183**	1	HOSE AS	
	7	1	**365-2185**	1	PLATE AS	
	8	1	*148-8325*	3	CONNECTOR AS	
					(EACH INCLUDES)	
		1	**3J-1907**	1	SEAL-O-RING	
		1	**4J-5477**	1	SEAL-O-RING	
		1	**6V-8641**	1	CONNECTOR	
	9	1	*148-8368*	3	ELBOW AS	
					(EACH INCLUDES)	
		1	**3J-1907**	1	SEAL-O-RING	
		1	**4J-5477**	1	SEAL-O-RING	
		1	**6V-8627**	1	ELBOW	
	10	1	**6D-3479**	1	CLIP	
	11	1	**8T-4121**	3	WASHER-HARD (11X21X2.5-MM THK)	
M	12	1	**8T-4179**	2	BOLT (M12X1.75X20-MM)	
M	13	1	**8T-4195**	1	BOLT (M10X1.5X30-MM)	
	14	1	**8T-4223**	2	WASHER-HARD (13.5X25.5X3-MM THK)	
M	15	1	**8T-6466**	2	BOLT (M10X1.5X60-MM)	

I-REFER TO HYDRAULIC INFORMATION SYSTEM
M-METRIC PART
Y-SEPARATE ILLUSTRATION

337-9719 **LOCK GP-DIFFERENTIAL** *(contd.)* **i04602975**

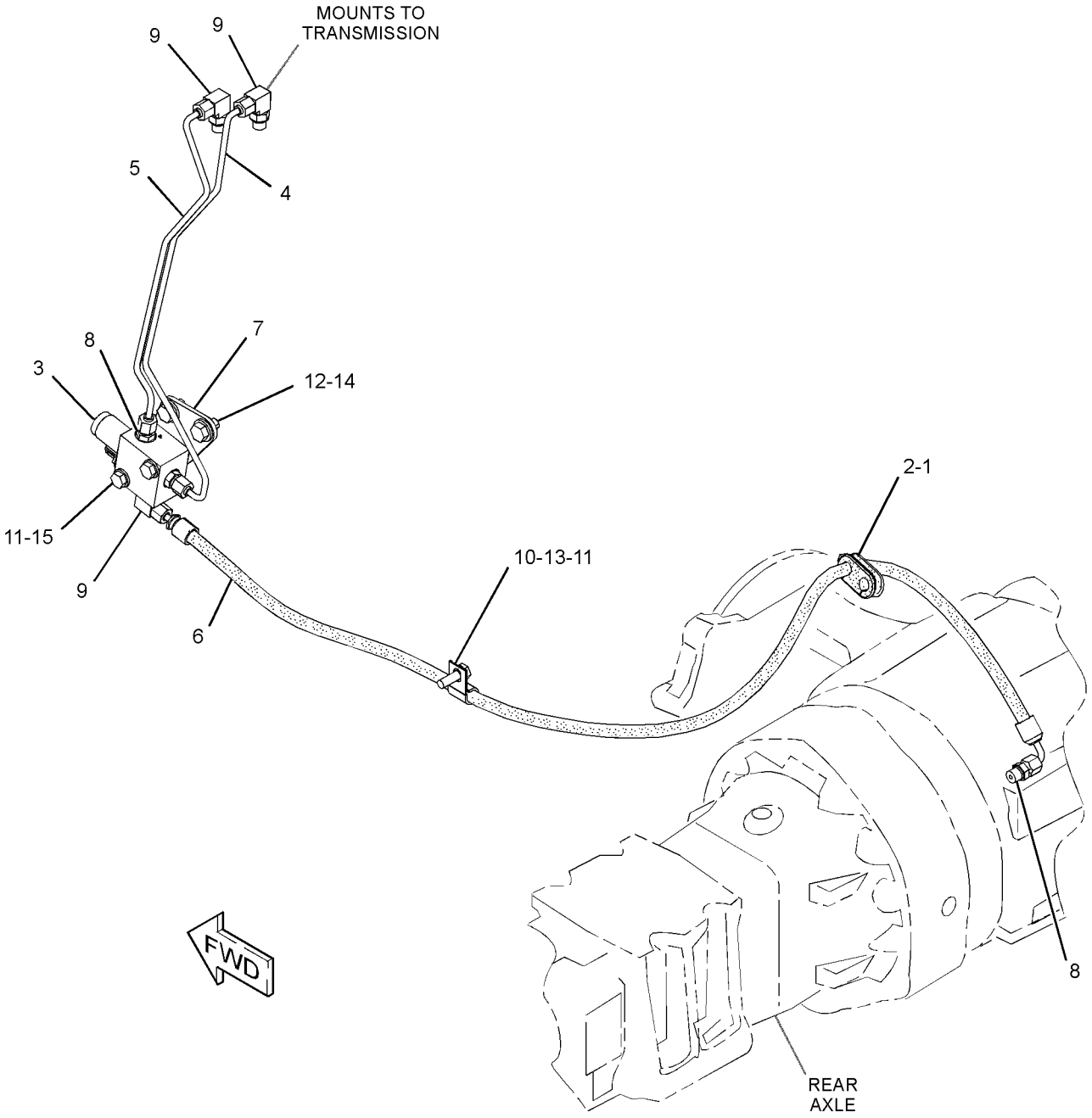

GRAPHIC #1 **<END>** g02806178

337-9837 MOUNTING GP-AXLE

S/N: LTG1-UP
PART OF 353-1502, 353-1503 DRIVE AR-BACKHOE LOADER
AN ATTACHMENT

SMCS-3268 **i04566200**

NOTE	REF NO	GRAPHIC REF	PART NUMBER	QTY	PART NAME 1 2 3 4 5 6 (PRODUCT LEVEL)	SEE PAGE
B	1	1	**1K-7082**	2	WASHER (2.266X4X0.031-IN THK)	
B	2	1	**9R-9702**	5	WASHER (56X100X1.6-MM THK)	
	3	1	**154-1580**	16	WASHER-HARD (22X38X6-MM THK)	
	4	1	**213-6754**	1	BOSS	
	5	1	**258-9999**	2	FILM-IDENTIFICATION (LIFT EYE LOCATION)	
	6	1	**361-5903**	1	PIN AS	
M	7	1	**089-7990**	8	BOLT (M20X2.5X250-MM)	
	8	1	**165-8996**	2	WASHER-THRUST (55.5X100.5X5-MM THK)	
	9	1	**7X-0590**	1	WASHER-HARD (13.5X44.5X6-MM THK)	
M	10	1	**8T-4131**	8	NUT (M20X2.5-THD)	
M	11	1	**8T-4183**	1	BOLT (M12X1.75X40-MM)	

B-USE AS REQUIRED
M-METRIC PART

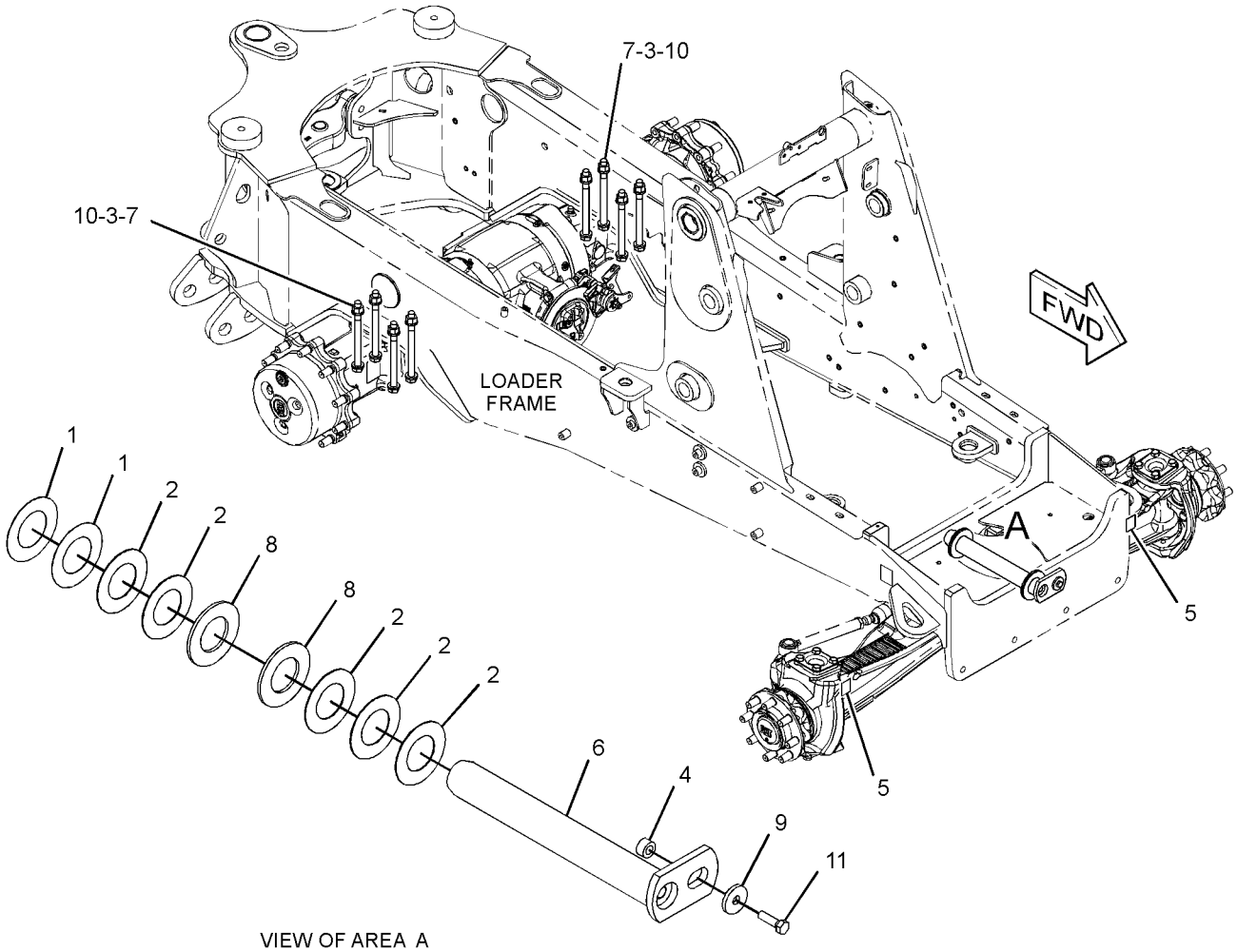

VIEW OF AREA A

GRAPHIC #1 **<END>** g02808238

355-3833 MOUNTING GP-TRANSMISSION

S/N: LTG1-UP
PART OF 359-0380 TRANSMISSION AR-POWER SHIFT
AN ATTACHMENT

SMCS-3082 **i04597389**

NOTE	REF NO	GRAPHIC REF	PART NUMBER	QTY	PART NAME 1 2 3 4 5 6 (PRODUCT LEVEL)	SEE PAGE
	1	1	**355-3837**	1	SUPPORT AS	
	2	1	**355-3838**	1	SUPPORT AS	
M	3	1	**7X-2553**	4	BOLT (M16X2X40-MM)	
	4	1	**8T-4223**	4	WASHER-HARD (13.5X25.5X3-MM THK)	
M	5	1	**8T-4956**	4	BOLT (M12X1.75X35-MM)	
	6	1	**9X-8257**	4	WASHER (17.5X30X3.5-MM THK)	

M-METRIC PART

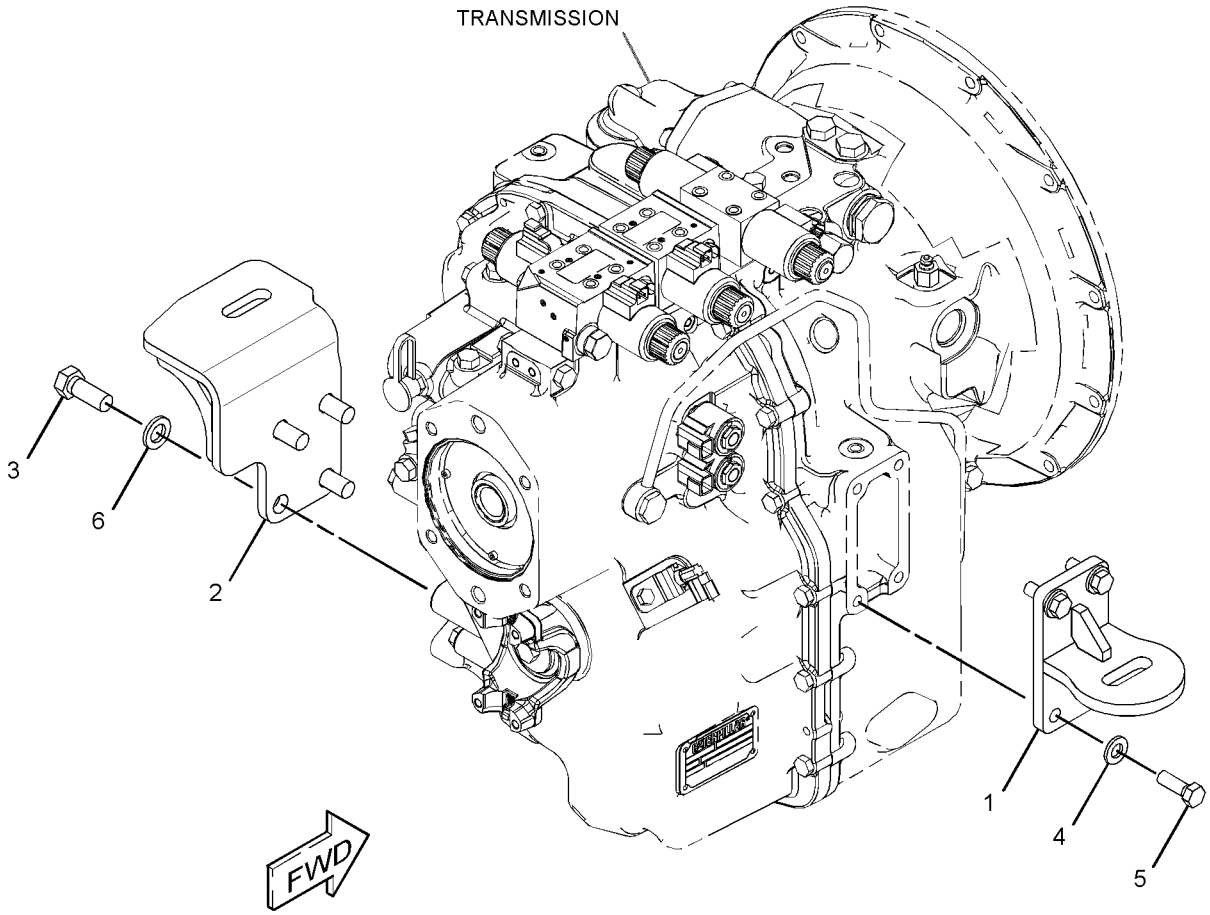

GRAPHIC #1 **<END>** g02788627

355-3841 MOUNTING GP-TRANSMISSION

S/N: LTG1-UP

PART OF 359-0376, 359-0378 TRANSMISSION AR-DIRECT DRIVE AN ATTACHMENT

SMCS-3082 **i04577808**

NOTE	REF NO	GRAPHIC REF	PART NUMBER	QTY	PART NAME 1 2 3 4 5 6 (PRODUCT LEVEL)	SEE PAGE
	1	1	**355-3837**	1	SUPPORT AS (LH)	
	2	1	**355-3839**	1	SUPPORT AS (RH)	
M	3	1	**7X-2553**	4	BOLT (M16X2X40-MM)	
	4	1	**8T-4223**	4	WASHER-HARD (13.5X25.5X3-MM THK)	
M	5	1	**8T-4956**	4	BOLT (M12X1.75X35-MM)	
	6	1	**9X-8257**	4	WASHER (17.5X30X3.5-MM THK)	

M-METRIC PART

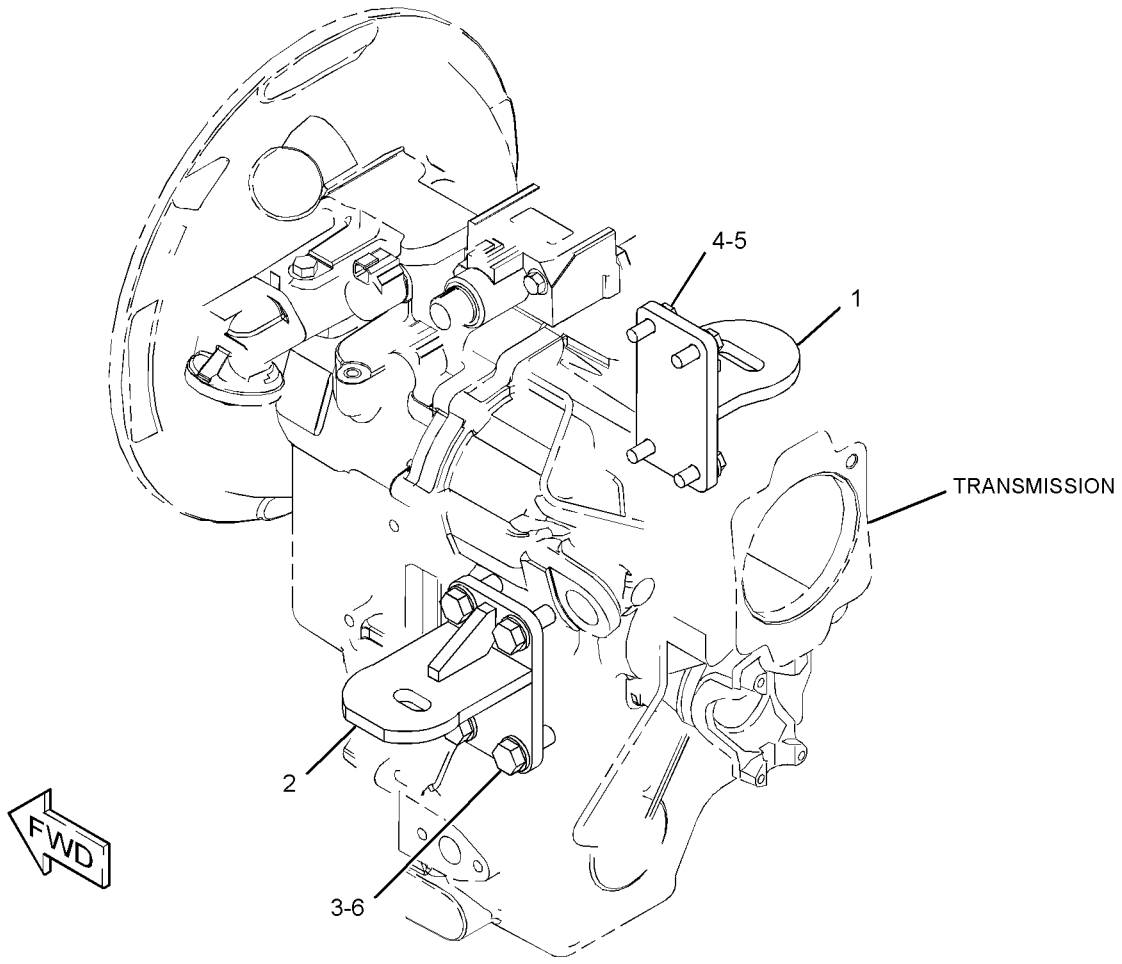

GRAPHIC #1 **<END>** g02806197

210-5924 PLANETARY GP-FINAL DRIVE–AXLE

S/N: LTG1-UP
PART OF 230-5743 AXLE GP-DRIVE & STEERING
AN ATTACHMENT

SMCS-4050 **i03156043**

NOTE	REF NO	GRAPHIC REF	PART NUMBER	QTY	PART NAME 1 2 3 4 5 6 (PRODUCT LEVEL)	SEE PAGE
	1	1	**210-5931**	4	RETAINER	
	2	1	**209-4157**	4	GEAR (23-TEETH)	
	3	1	**095-0924**	4	RING-RETAINING	
					AVAILABLE REPAIR KIT(S):	
			209-7466	1	KIT-PLANETARY CARRIER	
					(INCLUDES THRUST PLUG, SUN GEAR SHAFT & PLANET CARRIER)	
			219-8783	23	KIT-ROLLER BEARING	
					(EACH INCLUDES 10 NEEDLES)	
					(SERVICED IN QUANITY OF 10, EACH GEAR REQUIRES 56 ROLLERS OR 6 KITS, EACH WHEEL END AS. REQUIRES 224 ROLLERS OR 23 KITS)	

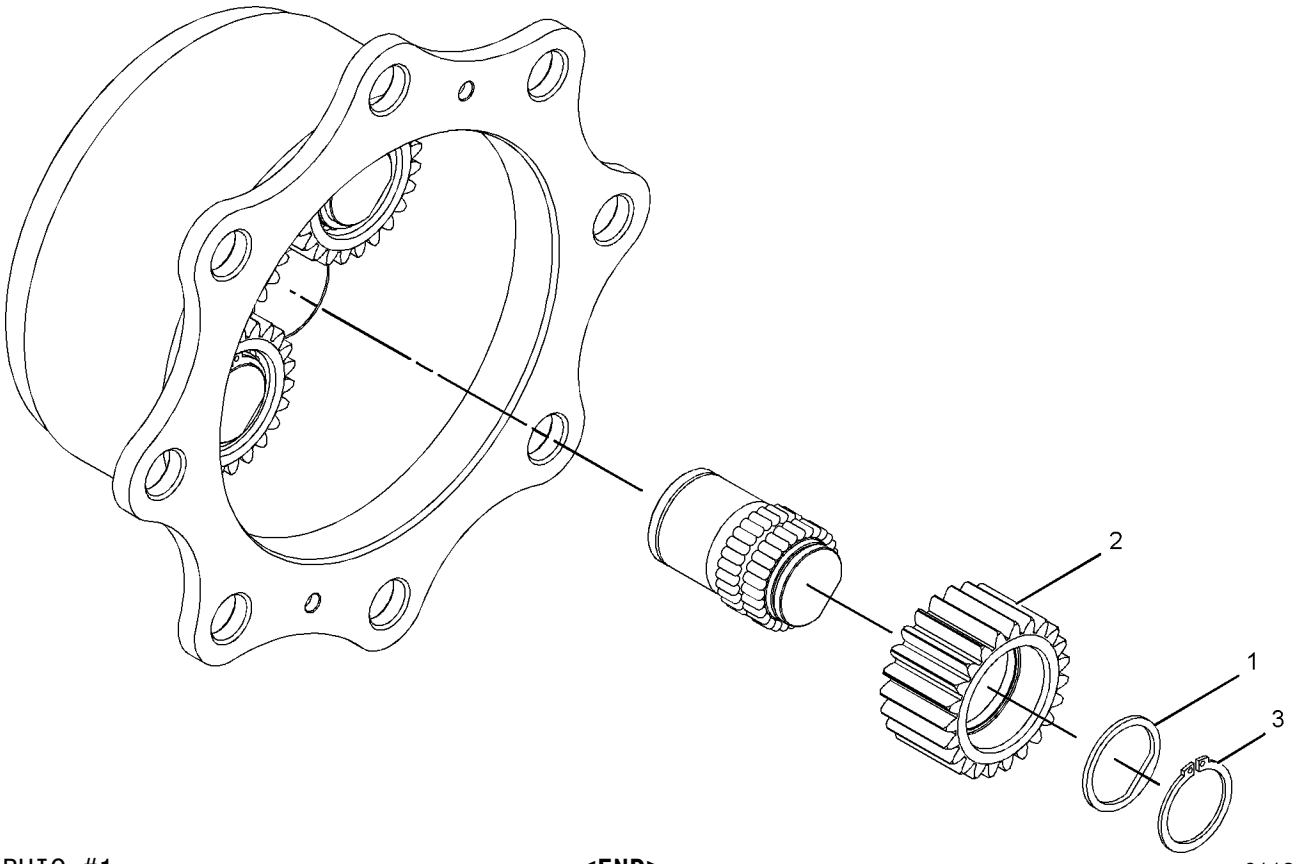

GRAPHIC #1 **<END>** g01132397

216-1610 PLANETARY GP-FINAL DRIVE–AXLE

S/N: LTG1-UP
PART OF 230-5739 AXLE GP-REAR
AN ATTACHMENT

SMCS-4050 **i03898318**

NOTE	REF NO	GRAPHIC REF	PART NUMBER	QTY	PART NAME 1 2 3 4 5 6 (PRODUCT LEVEL)	SEE PAGE
	1	1	**199-0653**	3	RING-RETAINING	
	2	1	**207-4257**	6	RING-RETAINER	
	3	1	**199-0760**	3	BEARING	
	4	1	**213-4222**	3	WASHER (50.1X61X2.5-MM THK)	
	5	1	**207-5962**	6	WASHER (65X72X2-MM THK)	
	6	1	**216-1606**	3	GEAR-PLANETARY (31-TEETH)	
	7	1	**216-1601**	1	CARRIER	
	8	1	**253-5022**	1	PLUG	

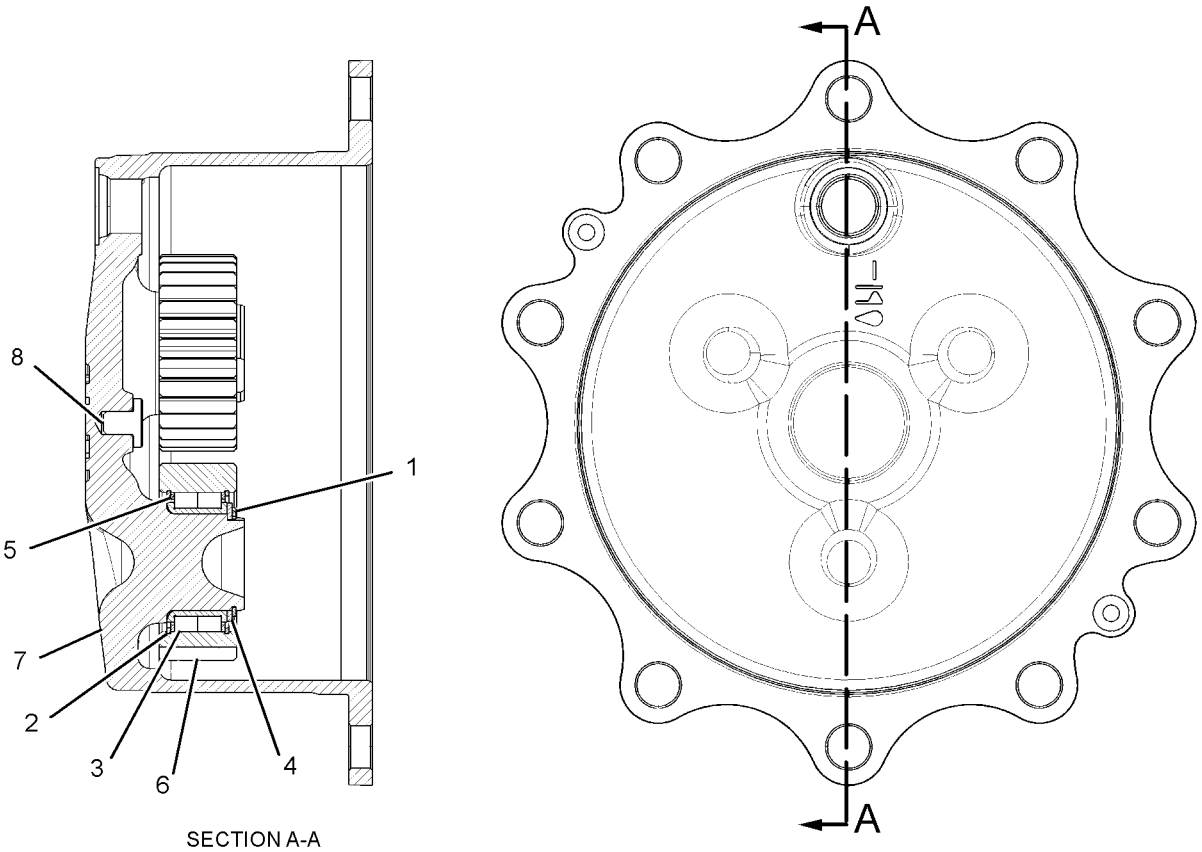

SECTION A-A

GRAPHIC #1 **<END>** g02141640

374-6818 POWER TRAIN AR–
2-WHEEL DRIVE, 2-WHEEL STEER, STD SHIFT
S/N: LTG1-UP
FOR USE WITH 282-3853–PAGE 216. CANNOT BE USED WITH 282-3854–PAGE 216, 282-3855–PAGE 216, 320-2384–PAGE 217, 320-2385–PAGE 217
AN ATTACHMENT

SMCS-3000, 4000 **i04629172**

NOTE	PART NUMBER	QTY	PART NAME 1 2 3 4 5 6 (PRODUCT LEVEL)	SEE PAGE
Y	*359-0401*	1	TORQUE CONVERTER AR	186
Y	*353-1502*	1	DRIVE AR-BACKHOE LOADER (2-WHEEL DRIVE, 2-WHEEL STEER)	3
Y	*353-1452*	1	ELECTRONICS AR-MACHINE (POWER TRAIN)	73
Y	*353-1512*	1	TRANSMISSION AR-DIRECT DRIVE (2-WHEEL DRIVE)	187
Y-SEPARATE ILLUSTRATION				

<END>

374-6823 POWER TRAIN AR–
ALL WHEEL DRIVE, 2-WHEEL STEER, STD SHIFT
S/N: LTG1-UP
FOR USE WITH 282-3854–PAGE 216, 320-2384–PAGE 217, 282-3855–PAGE 216, 320-2385–PAGE 217. CANNOT BE USED WITH 282-3853–PAGE 216
AN ATTACHMENT

SMCS-3000, 4000 **i04622231**

NOTE	PART NUMBER	QTY	PART NAME 1 2 3 4 5 6 (PRODUCT LEVEL)	SEE PAGE
Y	*359-0401*	1	TORQUE CONVERTER AR	186
Y	*353-1503*	1	DRIVE AR-BACKHOE LOADER (4-WHEEL DRIVE, 2-WHEEL STEER)	3
Y	*353-1452*	1	ELECTRONICS AR-MACHINE (POWER TRAIN)	73
Y	*353-1513*	1	TRANSMISSION AR-POWER SHIFT (ALL WHEEL DRIVE)	190
Y-SEPARATE ILLUSTRATION				

<END>

374-6832 POWER TRAIN AR–
ALL WHEEL DRIVE, 2-WHEEL STEER, AUTOSHIFT
S/N: LTG1-UP
FOR USE WITH 282-3854–PAGE 216, 320-2384–PAGE 217, 282-3855–PAGE 216, 320-2385–PAGE 217. CANNOT BE USED WITH 282-3853–PAGE 216
AN ATTACHMENT

SMCS-3000, 4000 **i04622229**

NOTE	PART NUMBER	QTY	PART NAME 1 2 3 4 5 6 (PRODUCT LEVEL)	SEE PAGE
Y	*359-0401*	1	TORQUE CONVERTER AR	186
Y	*353-1503*	1	DRIVE AR-BACKHOE LOADER (4-WHEEL DRIVE, 2-WHEEL STEER)	3
Y	*353-1452*	1	ELECTRONICS AR-MACHINE (POWER TRAIN)	73
Y	*353-1510*	1	TRANSMISSION AR-POWER SHIFT (4-WHEEL DRIVE)	190
Y-SEPARATE ILLUSTRATION				

<END>

274-4580 SHAFT GP-COUNTER

S/N: LTG1-UP
PART OF 359-0396 TRANSMISSION GP-DIRECT DRIVE
AN ATTACHMENT

SMCS-3053, 3063 **i04139511**

NOTE	REF NO	GRAPHIC REF	PART NUMBER	QTY	PART NAME 1 2 3 4 5 6 (PRODUCT LEVEL)	SEE PAGE
	1	1	**6T-9196**	1	SEAL	
	2	1	**6V-5100**	1	SEAL-O-RING	
	3	1	**6V-8757**	1	RING-RETAINING	
	4	1	**6Y-1192**	2	RING-SEAL	
	5	1	**6Y-7929**	8	DISC-FRICTION	
	6	1	**8E-5707**	1	PLATE-END	
	7	1	**122-1877**	1	WASHER-THRUST (40X65X4-MM THK)	
	8	1	**123-8907**	2	CONE-BEARING	
	9	1	**123-8908**	2	CUP-TAPERED ROLLER	
	10	1	**123-8912**	2	BEARING-ROLLER	
	11	1	**147-0203**	1	WASHER-THRUST (45.3X65X5-MM THK)	
	12	1	**147-0215**	1	GEAR (45/19-TEETH)	
	13	1	**147-0216**	1	GEAR (38-TEETH)	
	14	1	**147-0228**	1	PISTON-CLUTCH	
	15	1	**147-0238**	1	SPRING AS	
	16	1	**147-0258**	1	SPACER (46X50X16-MM THK)	
	17	1	**172-6050**	2	BEARING-SPECIAL	
	18	1	**173-0332**	1	SHAFT AS (COUNTERSHAFT)	
		1	**163-9091**	1	PLUG	
	19	1	**211-6752**	1	GEAR (46-TEETH)	
	20	1	**274-4553**	8	DISC-FRICTION	
	21	1	**274-8638**	1	RING-RETAINING	

274-4580 SHAFT GP-COUNTER *(contd.)* **i04139511**

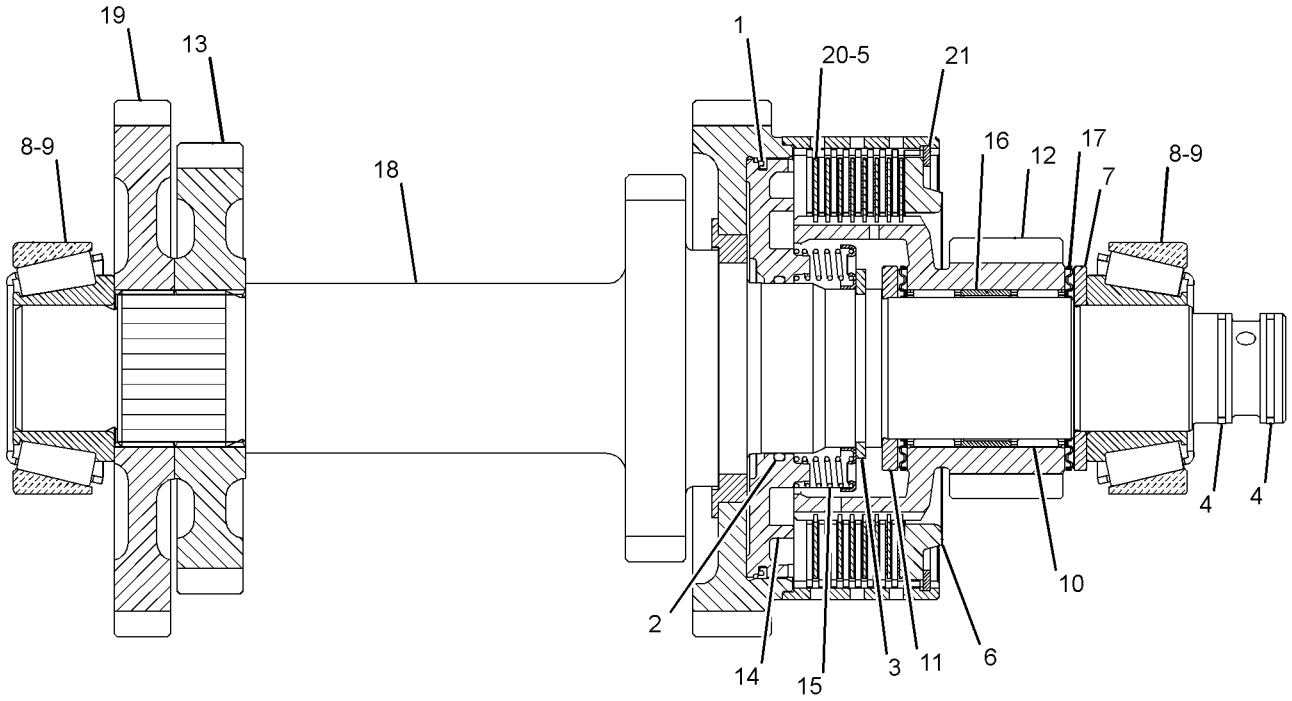

GRAPHIC #1 **<END>** g01216220

353-1335 SHAFT GP-DRIVE

S/N: LTG1-UP
PART OF 353-1512 TRANSMISSION AR-DIRECT DRIVE, 353-1510, 353-1513 TRANSMISSION AR-POWER SHIFT AN ATTACHMENT

SMCS-3253 **i04706671**

NOTE	REF NO	GRAPHIC REF	PART NUMBER	QTY	PART NAME 1 2 3 4 5 6 (PRODUCT LEVEL)	SEE PAGE
M	1	1	**107-6826**	8	BOLT (5/16-24X0.75-IN)	
	2	1	**316-1935**	4	STRAP	
	3	1	**348-7144**	1	SHAFT AS	
		1	**304-3265**	2	KIT-SPIDER & BEARING	

M-METRIC PART

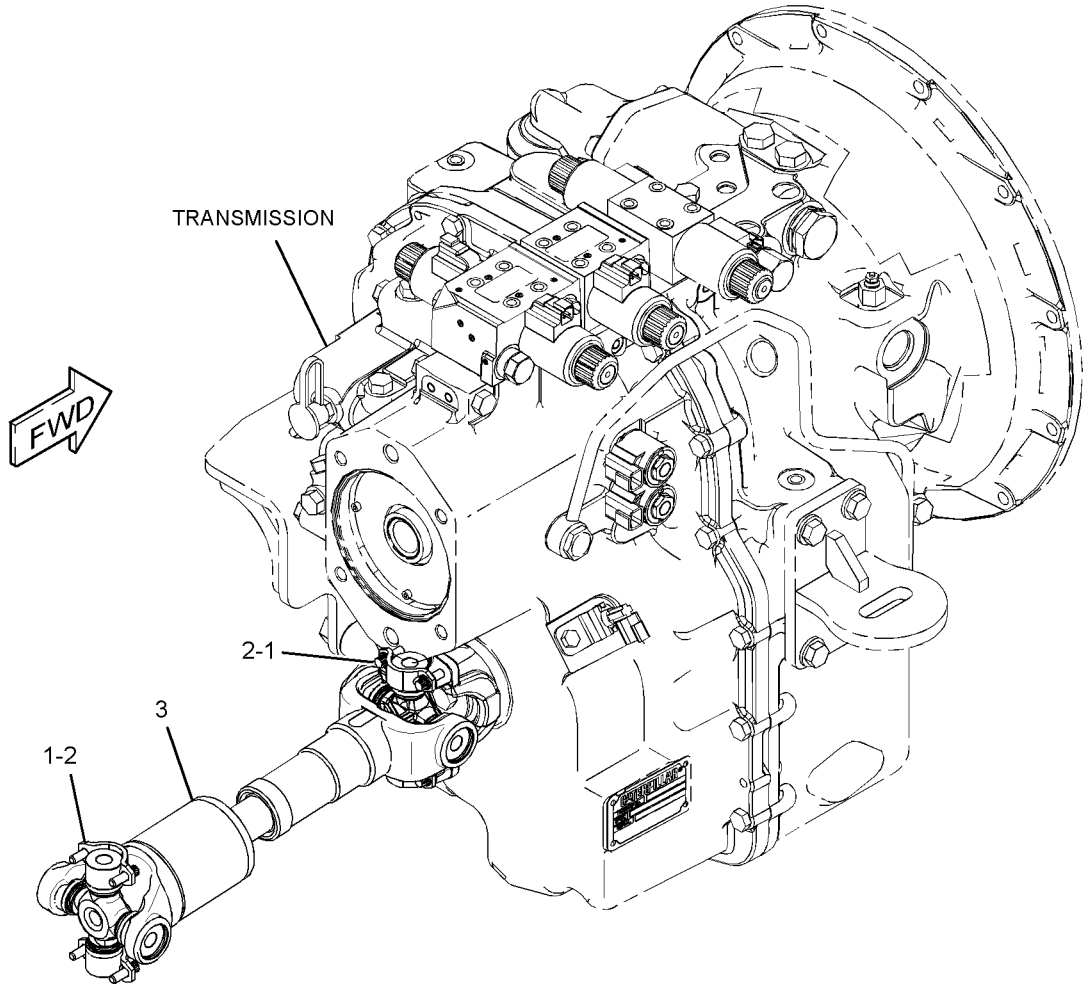

GRAPHIC #1 **<END>** g02809361

353-1336 SHAFT GP-DRIVE

S/N: LTG1-UP
PART OF 353-1513 TRANSMISSION AR-POWER SHIFT
AN ATTACHMENT

SMCS-3253 **i04577613**

NOTE	REF NO	GRAPHIC REF	PART NUMBER	QTY	PART NAME 1 2 3 4 5 6 (PRODUCT LEVEL)	SEE PAGE
M	1	1	**107-6826**	8	BOLT (5/16-24X0.75-IN)	
	2	1	**316-1935**	4	STRAP	
	3	1	**348-7143**	1	SHAFT AS	
		1	**304-3265**	2	KIT-SPIDER & BEARING	

M-METRIC PART

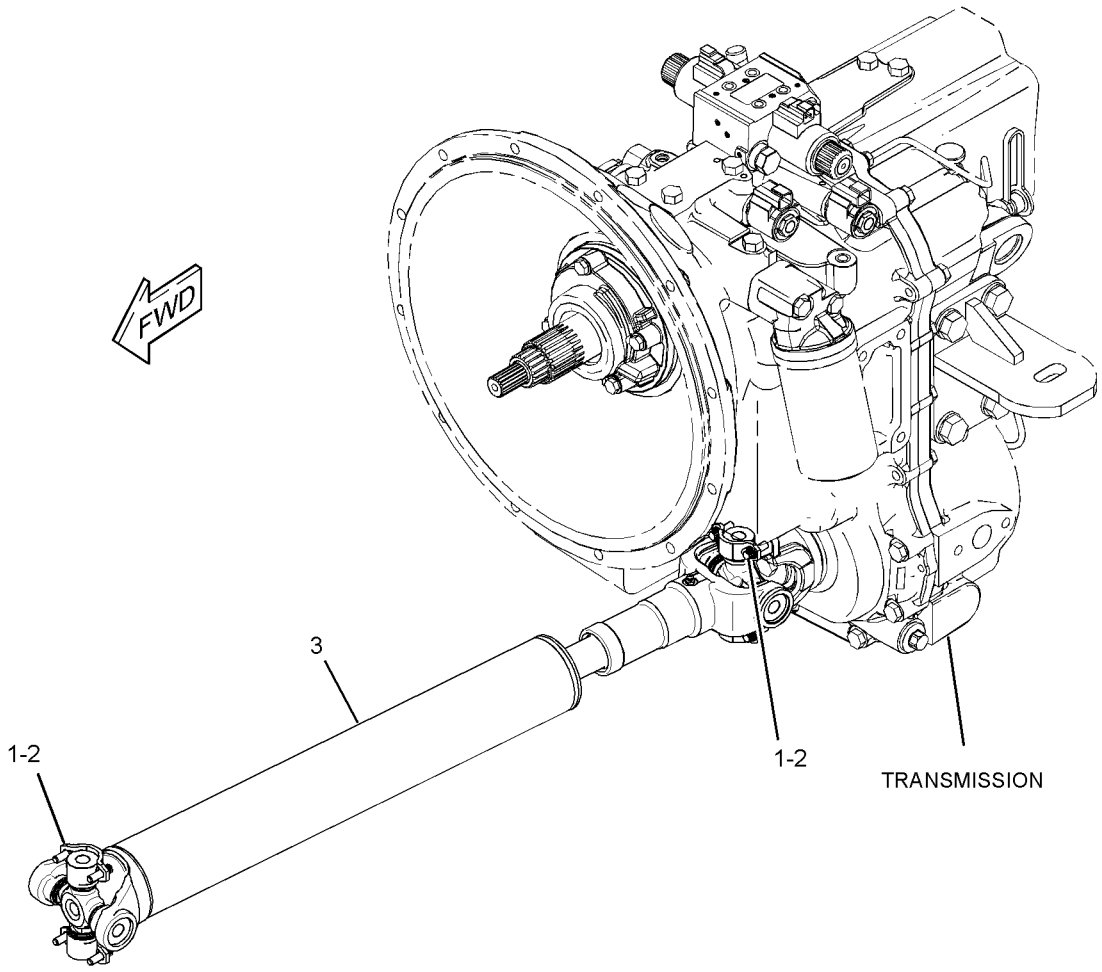

GRAPHIC #1 **<END>** g02809537

353-1337 SHAFT GP-DRIVE

S/N: LTG1-UP
PART OF 353-1510 TRANSMISSION AR-POWER SHIFT
AN ATTACHMENT

SMCS-3253 **i04605591**

NOTE	REF NO	GRAPHIC REF	PART NUMBER	QTY	PART NAME 1 2 3 4 5 6 (PRODUCT LEVEL)	SEE PAGE
M	1	1	**107-6826**	8	BOLT (5/16-24X0.75-IN)	
	2	1	**316-1935**	4	STRAP	
	3	1	**348-7146**	1	SHAFT AS	
		1	**304-3265**	2	KIT-SPIDER & BEARING (DRIVE SHAFT)	

M-METRIC PART

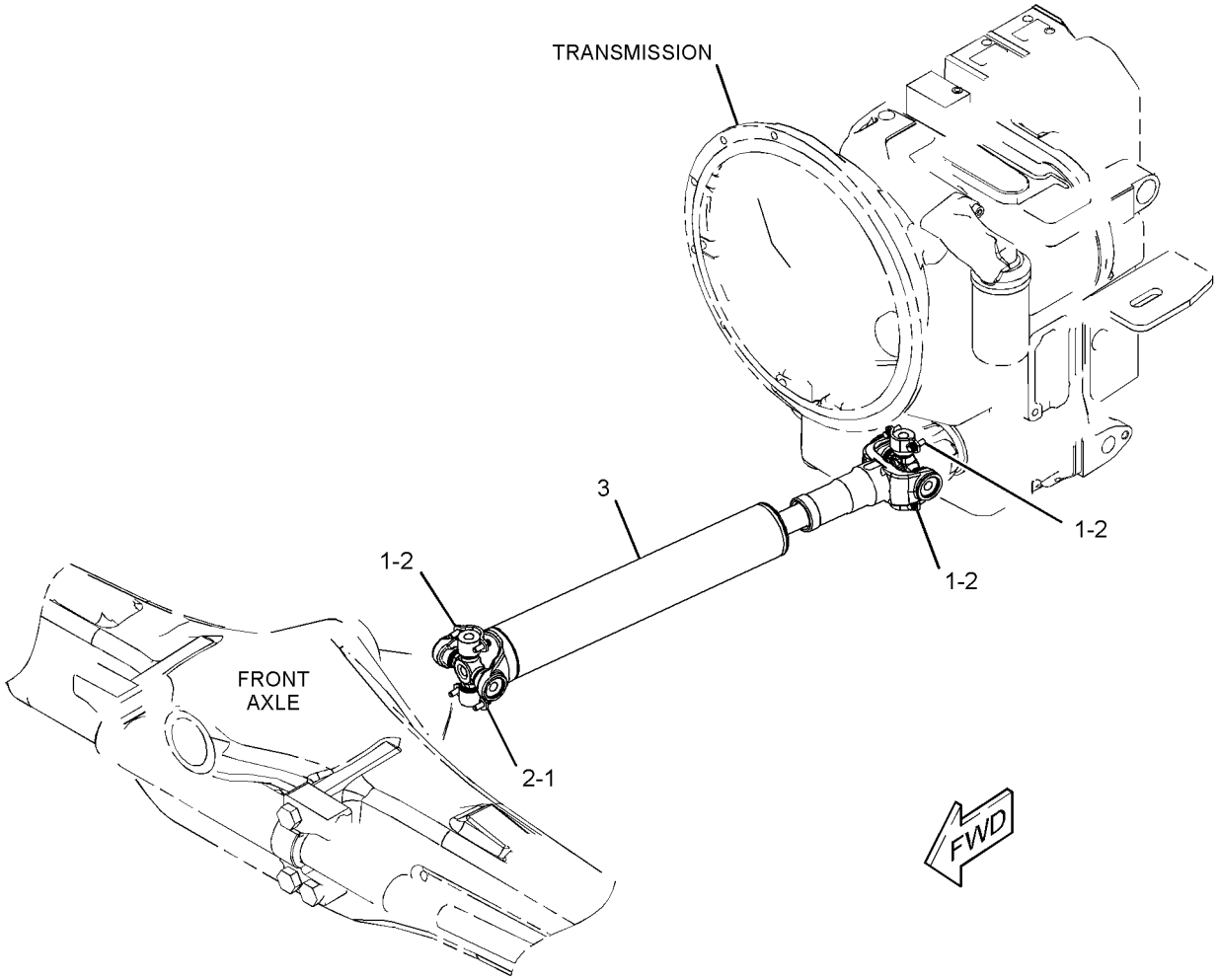

GRAPHIC #1 **<END>** g02811162

274-4561 SHAFT GP-IDLER—POWERSHIFT

S/N: LTG1-UP
PART OF 359-0396 TRANSMISSION GP-DIRECT DRIVE
AN ATTACHMENT

SMCS-3063 **i03889089**

NOTE	REF NO	GRAPHIC REF	PART NUMBER	QTY	PART NAME 1 2 3 4 5 6 (PRODUCT LEVEL)	SEE PAGE
	1	1	**147-0256**	1	SHAFT AS-REVERSE	
		1	**163-9091**	1	PLUG	
		1	**147-0270**	1	ORIFICE	
	2	1	**147-0202**	1	GEAR (45/24-TEETH)	
	3	1	**123-8905**	2	CONE-BEARING	
	4	1	**147-0228**	1	PISTON-CLUTCH	
	5	1	**6T-9196**	1	SEAL	
	6	1	**6V-5100**	1	SEAL-O-RING	
	7	1	**147-0238**	1	SPRING AS	
	8	1	**274-4553**	5	DISC-FRICTION	
	9	1	**6Y-7929**	5	DISC-FRICTION	
	10	1	**147-0259**	1	SPACER (51.1X54.9X18.7-MM THK)	
	11	1	**6V-8757**	1	RING-RETAINING (EXTERNAL)	
	12	1	**121-2500**	1	WASHER-THRUST (50X70X4-MM THK)	
	13	1	**172-5317**	2	BEARING-SPECIAL	
	14	1	**121-0694**	1	WASHER-THRUST (40X70X4-MM THK)	
	15	1	**6Y-1192**	2	RING-SEAL	
	16	1	**8E-5707**	1	PLATE-END	
	17	1	**9U-8875**	1	RING-RETAINING (INTERNAL)	
	18	1	**7T-6655**	2	BEARING	
	19	1	**123-8906**	2	CUP-TAPERED ROLLER	

274-4561 SHAFT GP-IDLER *(contd.)* **i03889089**

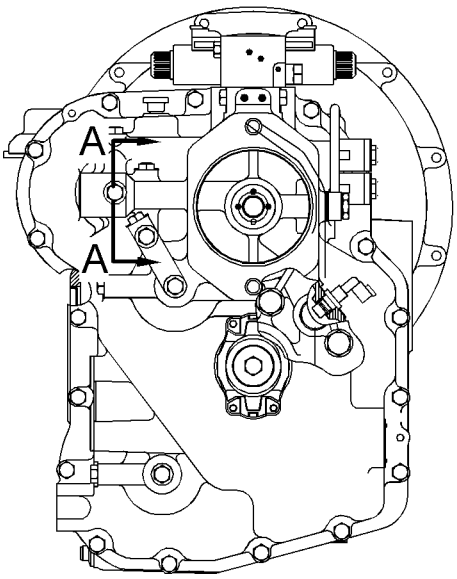

REAR VIEW

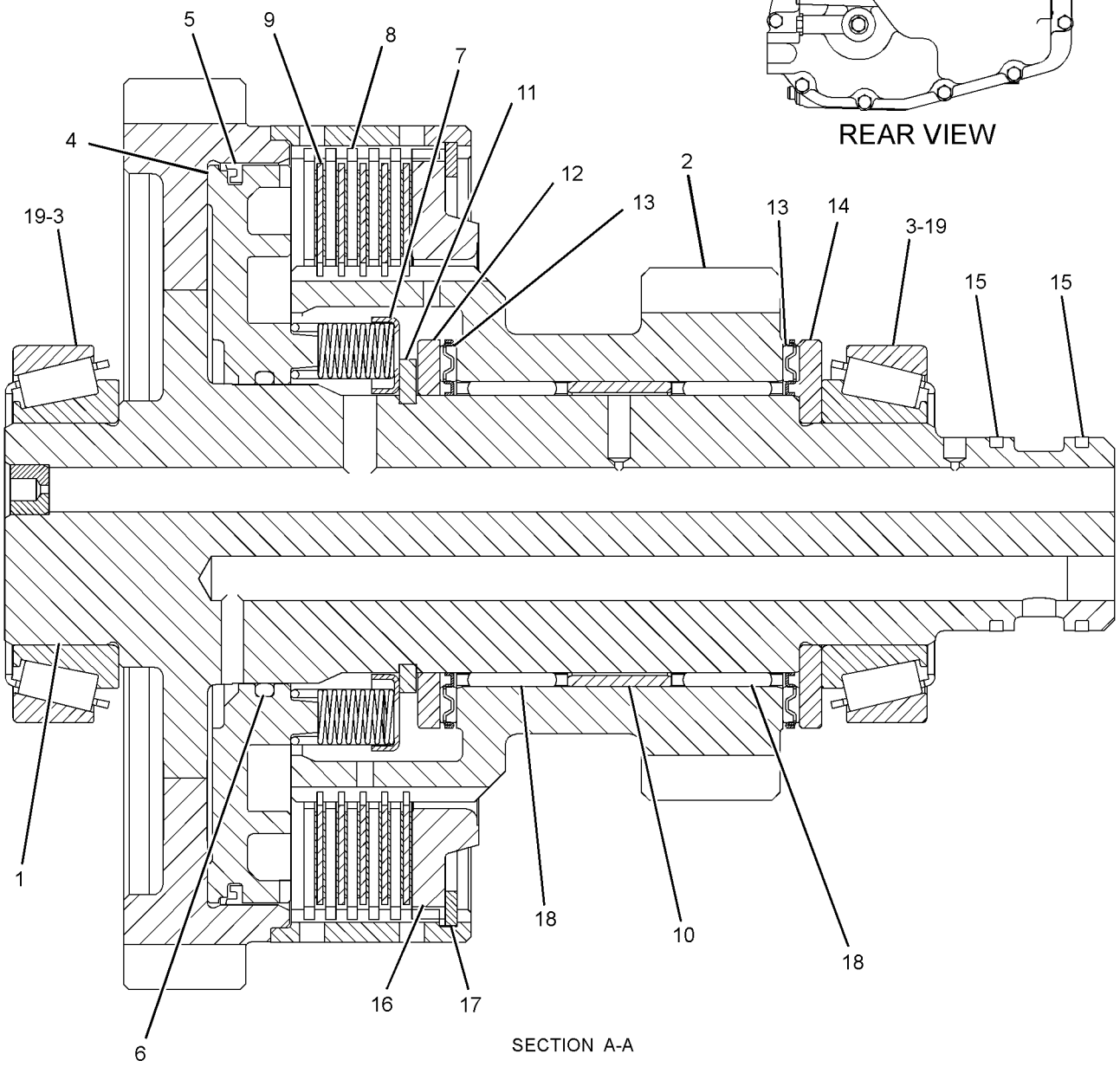

SECTION A-A

GRAPHIC #1 **<END>** g01216120

274-4578 SHAFT GP-INPUT

S/N: LTG1-UP
PART OF 359-0396 TRANSMISSION GP-DIRECT DRIVE
AN ATTACHMENT

SMCS-3053, 3063 **i03577181**

NOTE	REF NO	GRAPHIC REF	PART NUMBER	QTY	PART NAME 1 2 3 4 5 6 (PRODUCT LEVEL)	SEE PAGE
	1	1	**6T-9196**	2	SEAL	
	2	1	**6V-5100**	2	SEAL-O-RING	
	3	1	**6V-8757**	3	RING-RETAINING	
	4	1	**6Y-7929**	11	DISC-FRICTION	
	5	1	**7T-6655**	2	BEARING	
	6	1	**8E-5707**	2	PLATE-END	
	7	1	**9U-8886**	4	RING-SEAL	
	8	1	**121-0694**	1	WASHER-THRUST (40X70X4-MM THK)	
	9	1	**121-2500**	3	WASHER-THRUST (50X70X4-MM THK)	
	10	1	**122-1886**	1	RING-SEAL	
	11	1	**123-8905**	1	CONE-BEARING	
	12	1	**123-8906**	1	CUP-TAPERED ROLLER	
	13	1	**123-8909**	1	CONE-BEARING	
	14	1	**123-8910**	1	CUP-TAPERED ROLLER	
	15	1	**123-8913**	2	BEARING-ROLLER	
	16	1	**147-0202**	1	GEAR (45/24-TEETH)	
	17	1	**147-0224**	1	GEAR (45/32-TEETH)	
	18	1	**147-0228**	2	PISTON-CLUTCH	
	19	1	**147-0238**	2	SPRING AS	
	20	1	**147-0257**	1	SHAFT AS-INPUT	
		1	**123-0714**	1	BEARING	
		1	**123-2920**	3	PLUG	
	21	1	**147-0259**	1	SPACER (51.1X54.9X18.7-MM THK)	
	22	1	**172-5317**	4	BEARING-SPECIAL	
	23	1	**274-4553**	11	DISC-FRICTION	
	24	1	**274-8638**	2	RING-RETAINING	

274-4578 SHAFT GP-INPUT *(contd.)* i03577181

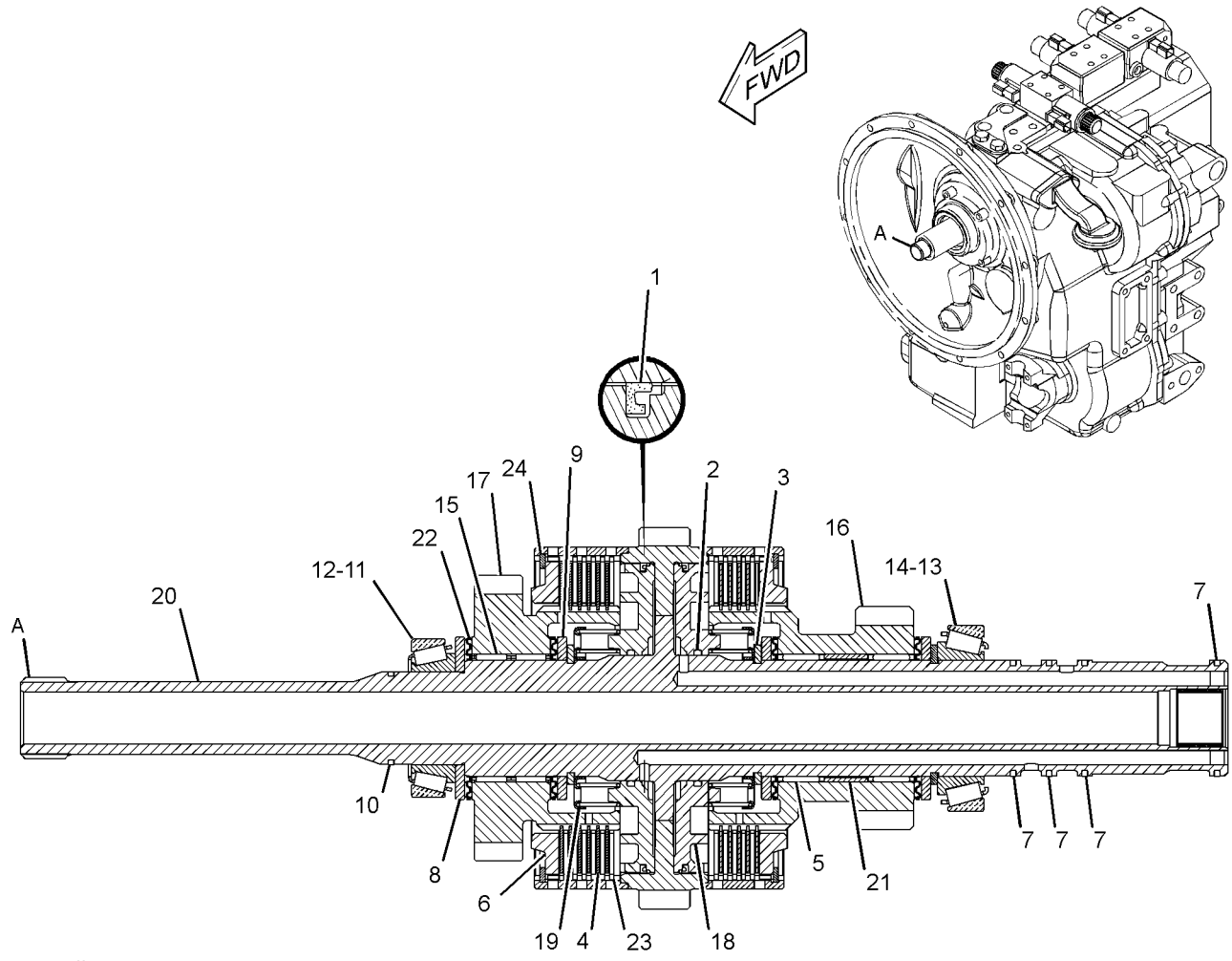

GRAPHIC #1 g01216057

<END>

305-3429 SHAFT GP-INPUT—ALL WHEEL DRIVE

S/N: LTG1-UP

PART OF 359-0392, 359-0394 TRANSMISSION GP-DIRECT DRIVE

AN ATTACHMENT

SMCS-3053, 3063 **i03043822**

NOTE	REF NO	GRAPHIC REF	PART NUMBER	QTY	PART NAME 1 2 3 4 5 6 (PRODUCT LEVEL)	SEE PAGE
	1	1	**9U-8875**	2	RING-RETAINING	
	2	1	**172-5317**	1	BEARING-SPECIAL	
	3	1	**172-6050**	1	BEARING-SPECIAL	
	4	1	**9U-8886**	4	RING-SEAL	
	5	1	**274-4553**	10	DISC-FRICTION	
	6	1	**122-1886**	1	RING-SEAL	
	7	1	**6V-8757**	3	RING-RETAINING	
	8	1	**121-2500**	2	WASHER-THRUST (50X70X4-MM THK)	
	9	1	**123-8905**	1	CONE-BEARING	
	10	1	**123-8909**	1	CONE-BEARING	
	11	1	**305-3431**	2	PISTON	
	12	1	**147-0238**	2	SPRING AS	
	13	1	**147-0203**	2	WASHER-THRUST (45.3X65X5-MM THK)	
	14	1	**6Y-7929**	10	DISC-FRICTION	
	15	1	**274-8616**	1	GEAR-FORWARD (24-TEETH)	
	16	1	**274-8617**	1	GEAR-REVERSE (27-TEETH)	
	17	1	**274-8628**	1	BEARING-NEEDLE	
	18	1	**274-8629**	1	BEARING-NEEDLE	
	19	1	**294-9821**	1	SPACER	
	20	1	**274-8636**	1	SHAFT AS	
		1	**123-0714**	2	BEARING	
		1	**123-2920**	3	PLUG	
	21	1	**8E-5707**	2	PLATE-END	
	22	1	**294-9812**	2	RETAINER-SPRING	

305-3429 **SHAFT GP-INPUT** *(contd.)* **i03043822**

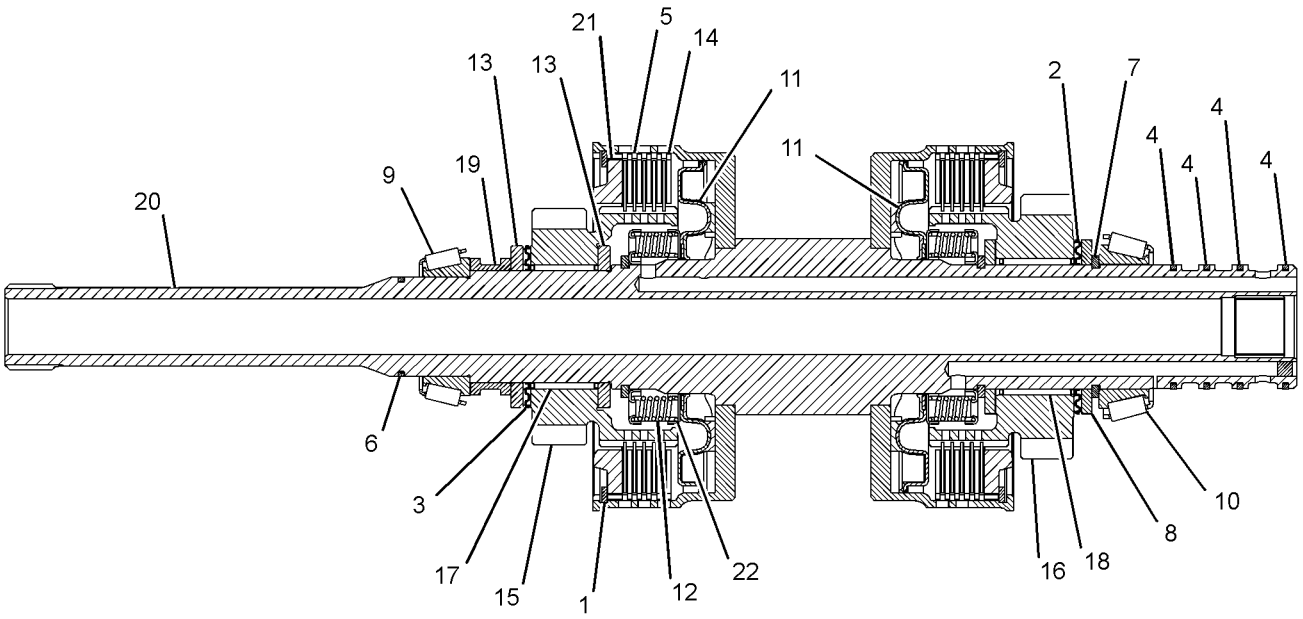

GRAPHIC #1 **<END>** g01383731

274-4582 SHAFT GP-OUTPUT–MAIN

S/N: LTG1-UP
PART OF 359-0396 TRANSMISSION GP-DIRECT DRIVE
AN ATTACHMENT

SMCS-3053, 3063 **i03577182**

NOTE	REF NO	GRAPHIC REF	PART NUMBER	QTY	PART NAME 1 2 3 4 5 6 (PRODUCT LEVEL)	SEE PAGE
	1	1	**6T-9196**	2	SEAL	
	2	1	**6Y-1192**	3	RING-SEAL	
	3	1	**6Y-7929**	13	DISC-FRICTION	
	4	1	**8E-5707**	2	PLATE-END	
	5	1	**8T-1580**	1	CUP	
	6	1	**8T-1581**	1	CONE	
	7	1	**009-2062**	2	SEAL-O-RING	
	8	1	**095-0927**	1	RING-RETAINING	
	9	1	**095-0928**	1	RING-RETAINING (EXTERNAL)	
	10	1	**121-0885**	1	RETAINER	
	11	1	**122-1877**	1	WASHER-THRUST (40X65X4-MM THK)	
	12	1	**123-8907**	1	CONE-BEARING	
	13	1	**123-8908**	1	CUP-TAPERED ROLLER	
	14	1	**123-8912**	2	BEARING-ROLLER	
	15	1	**147-0203**	1	WASHER-THRUST (45.3X65X5-MM THK)	
	16	1	**147-0205**	2	WASHER (55X78X5-MM THK)	
	17	1	**147-0242**	1	GEAR (48-TEETH)	
	18	1	**147-0248**	1	SPACER (56.2X60X15.8-MM THK)	
	19	1	**147-0260**	1	RETAINER-SPRING	
	20	1	**147-0261**	1	SHAFT AS-OUTPUT (REAR)	
		1	**163-9091**	2	PLUG	
	21	1	**150-3757**	2	BEARING	
	22	1	**157-2088**	2	PISTON AS	
	23	1	**157-2090**	1	GEAR (38-TEETH)	
	24	1	**172-6050**	2	BEARING-SPECIAL	
	25	1	**172-6743**	2	BEARING-SPECIAL	
	26	1	**178-9566**	2	SPRING-PISTON	
	27	1	**211-6753**	1	GEAR (24-TEETH)	
	28	1	**274-4553**	13	DISC-FRICTION	
	29	1	**274-8638**	2	RING-RETAINING	

274-4582 SHAFT GP-OUTPUT *(contd.)* **i03577182**

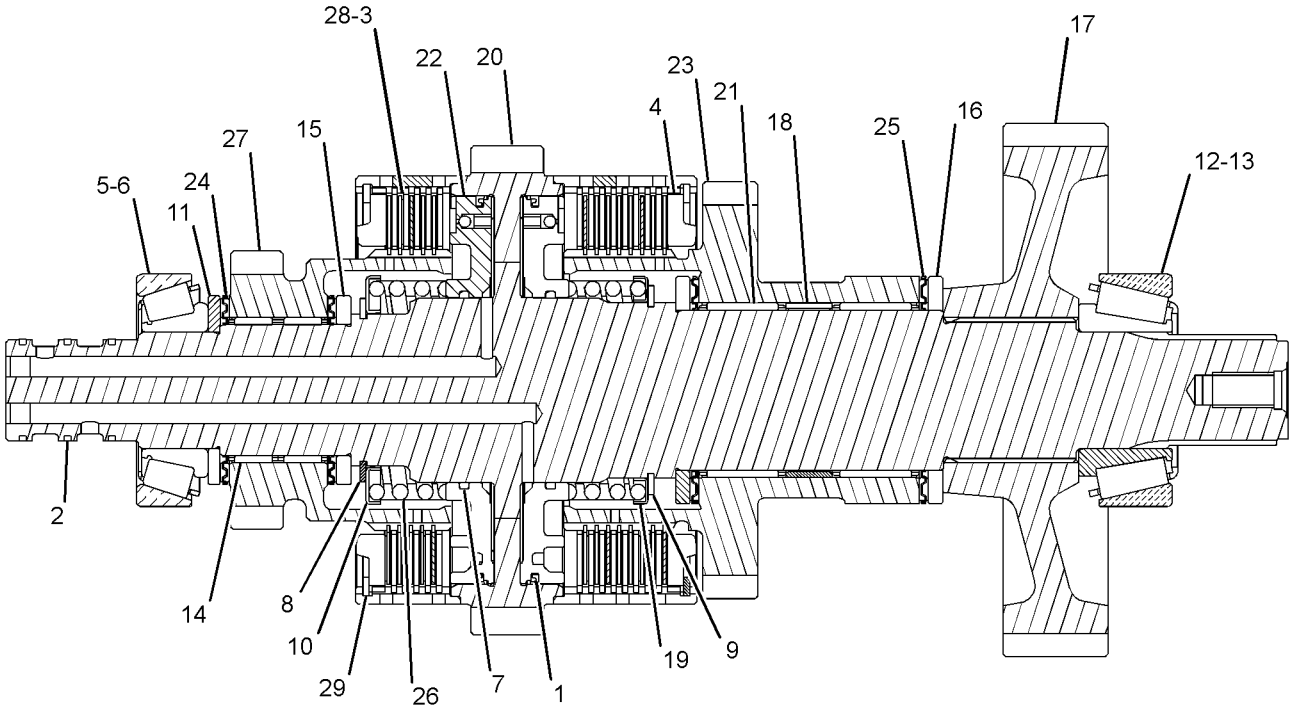

GRAPHIC #1 **<END>** g01216545

275-0478 SHAFT GP-OUTPUT–REAR

S/N: LTG1-UP
PART OF 359-0392, 359-0394 TRANSMISSION GP-DIRECT DRIVE
AN ATTACHMENT

SMCS-3053, 3063 **i02922492**

NOTE	REF NO	GRAPHIC REF	PART NUMBER	QTY	PART NAME 1 2 3 4 5 6 (PRODUCT LEVEL)	SEE PAGE
	1	1	**7T-3022**	2	SLEEVE	
	2	1	**6V-8500**	4	BEARING	
	3	1	**6T-9160**	1	GEAR (43-TEETH)	
	4	1	**7T-3017**	1	SPACER (52.5X59X9.6-MM THK)	
	5	1	**7T-3021**	2	SYNCHRONIZER GP	
	6	1	**096-5516**	1	RING-RETAINING	
	7	1	**259-1831**	1	GEAR (37-TEETH)	
	8	1	**6Y-2736**	1	CONE-BEARING	
	9	1	**123-8907**	1	CONE-BEARING	
	11	1	**274-8620**	1	GEAR-OUTPUT (37-TEETH)	
	12	1	**274-8621**	1	GEAR-OUTPUT (28-TEETH)	
	13	1	**274-8637**	1	SPACER-BEARING	
	14	1	**278-0215**	1	SHAFT-OUTPUT	
	15	1	**278-0216**	1	GEAR-OUTPUT (17-TEETH)	
	16	1	**278-0217**	1	BEARING-NEEDLE	
	17	1	**278-0218**	2	WASHER-THRUST	
	18	1	**178-8214**	1	CLIP	
	19	1	**7T-3018**	1	SLEEVE	
	20	1	**150-3757**	1	BEARING	
	21	1	**293-8761**	1	BEARING-NEEDLE	

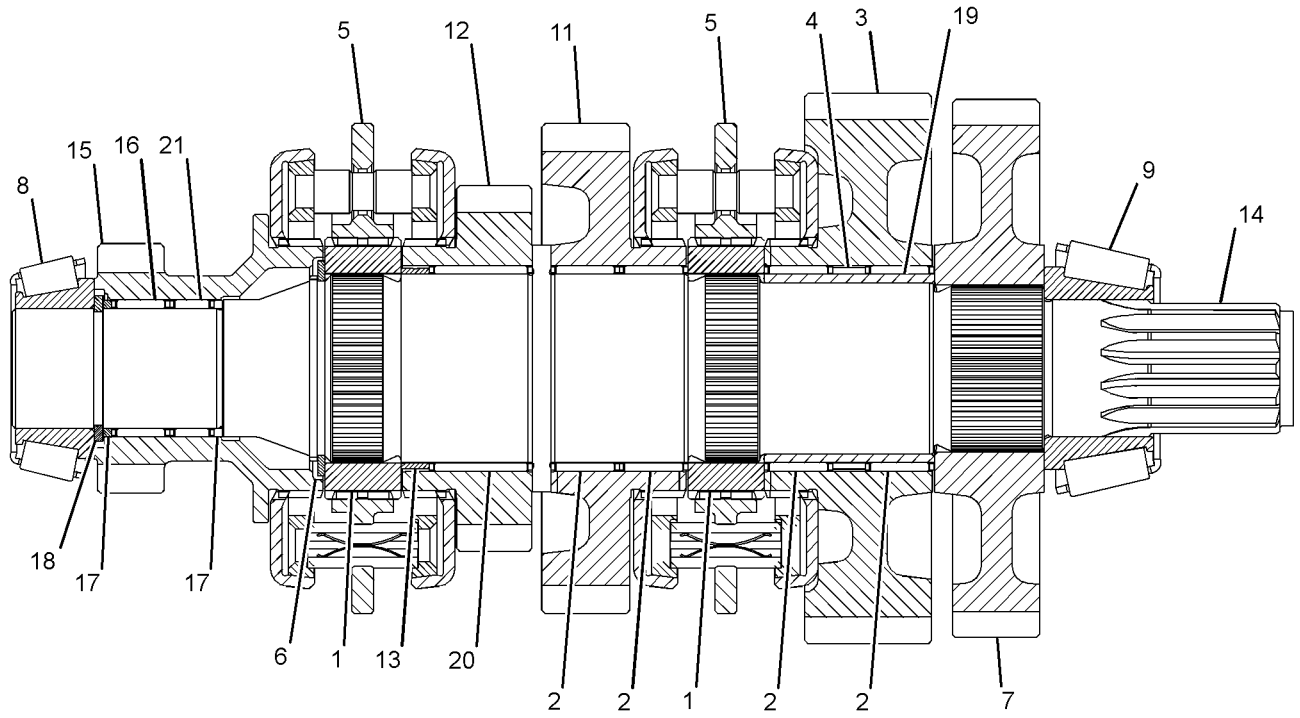

GRAPHIC #1 **<END>** g01508474

280-7007 SHAFT GP-OUTPUT–FRONT

S/N: LTG1-UP
PART OF 359-0396 TRANSMISSION GP-DIRECT DRIVE
AN ATTACHMENT

SMCS-3053, 3063 **i04631238**

NOTE	REF NO	GRAPHIC REF	PART NUMBER	QTY	PART NAME 1 2 3 4 5 6 (PRODUCT LEVEL)	SEE PAGE
	1	1	**294-9812**	1	RETAINER-SPRING	
	3	1	**6V-8757**	1	RING-RETAINING	
	4	1	**337-3530**	8	DISC-FRICTION	
	5	1	**8E-5707**	1	PLATE-END	
	6	1	**122-1877**	1	WASHER-THRUST (40X65X4-MM THK)	
	7	1	**122-1878**	1	RING-SEAL	
	8	1	**122-1884**	1	SPACER (45X49X8-MM THK)	
	9	1	**123-8905**	2	CONE-BEARING	
	10	1	**123-8906**	2	CUP-TAPERED ROLLER	
	11	1	**123-8912**	2	BEARING-ROLLER	
	12	1	**147-0203**	1	WASHER-THRUST (45.3X65X5-MM THK)	
	13	1	**147-0207**	1	SHAFT AS-OUTPUT (FRONT)	
	14	1	**147-0210**	1	GEAR (45/36-TEETH)	
	15	1	**305-3431**	1	PISTON	
	16	1	**147-0238**	1	SPRING AS	
	17	1	**161-3249**	1	RING-RETAINING	
	18	1	**172-6050**	2	BEARING-SPECIAL	
	19	1	**274-4553**	8	DISC-FRICTION	

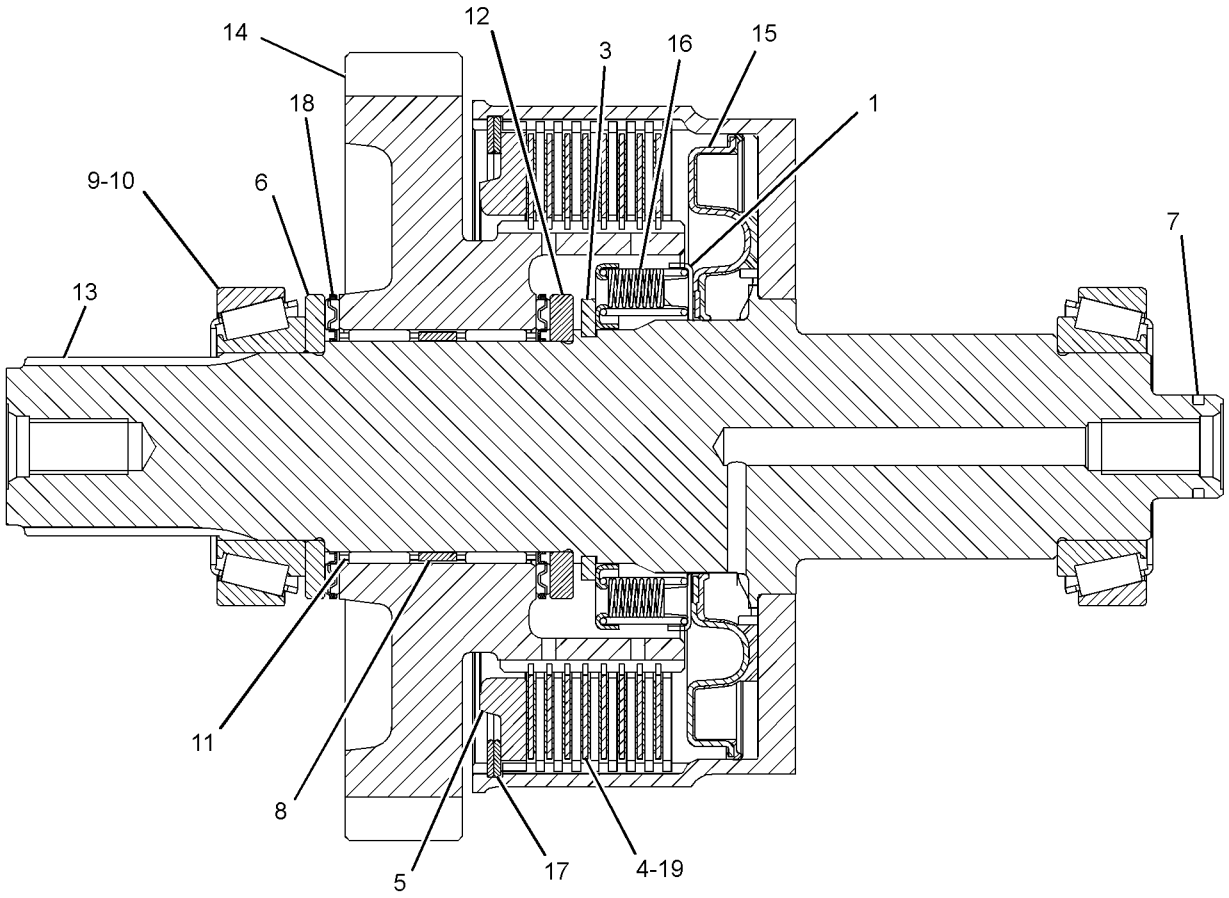

LEFT SIDE VIEW

GRAPHIC #1 **<END>** g01405501

305-3427 SHAFT GP-OUTPUT–FRONT

S/N: LTG1-UP
PART OF 359-0394 TRANSMISSION GP-DIRECT DRIVE
AN ATTACHMENT

SMCS-3053, 3063 **i02755327**

NOTE	REF NO	GRAPHIC REF	PART NUMBER	QTY	PART NAME 1 2 3 4 5 6 (PRODUCT LEVEL)	SEE PAGE
	1	1	**6V-8757**	1	RING-RETAINING	
	2	1	**274-4553**	8	DISC-FRICTION	
	3	1	**6Y-7957**	8	DISC-FRICTION	
	4	1	**305-3424**	1	WASHER-THRUST	
	5	1	**172-6050**	2	BEARING-SPECIAL	
	6	1	**122-1878**	1	RING-SEAL	
	7	1	**122-1877**	1	WASHER-THRUST (40X65X4-MM THK)	
	8	1	**122-1884**	1	SPACER (45X49X8-MM THK)	
	9	1	**305-3431**	1	PISTON (CLUTCH)	
	10	1	**123-8905**	2	CONE-BEARING	
	11	1	**178-9566**	1	SPRING-PISTON	
	12	1	**161-3249**	1	RING-RETAINING	
	13	1	**123-8912**	2	BEARING-ROLLER	
	14	1	**305-3425**	1	SHAFT AS-OUTPUT	
	15	1	**121-0904**	1	GEAR AS (36-TEETH)	
	16	1	**8E-5707**	1	PLATE-END	
	17	1	**294-9812**	1	RETAINER-SPRING	

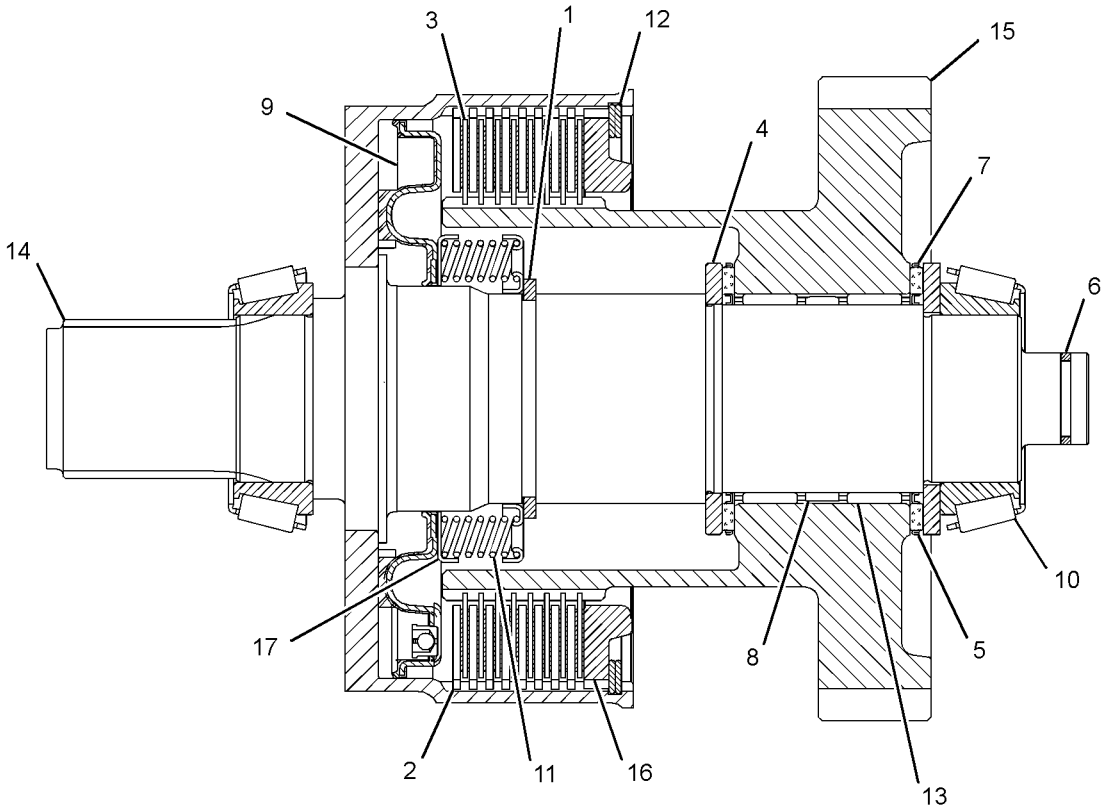

GRAPHIC #1 **<END>** g01382017

359-0401 TORQUE CONVERTER AR

S/N: LTG1-UP
PART OF 374-6818, 374-6823, 374-6832 POWER TRAIN AR
AN ATTACHMENT

SMCS-3101 **i04597369**

NOTE	REF NO	GRAPHIC REF	PART NUMBER	QTY	PART NAME 1 2 3 4 5 6 (PRODUCT LEVEL)	SEE PAGE
Y	1	1	*111-7907*	1	DRIVE GP-FLEXIBLE COUPLING	148
	2	1	**268-1710**	1	TORQUE CONVERTER AS	

Y-SEPARATE ILLUSTRATION

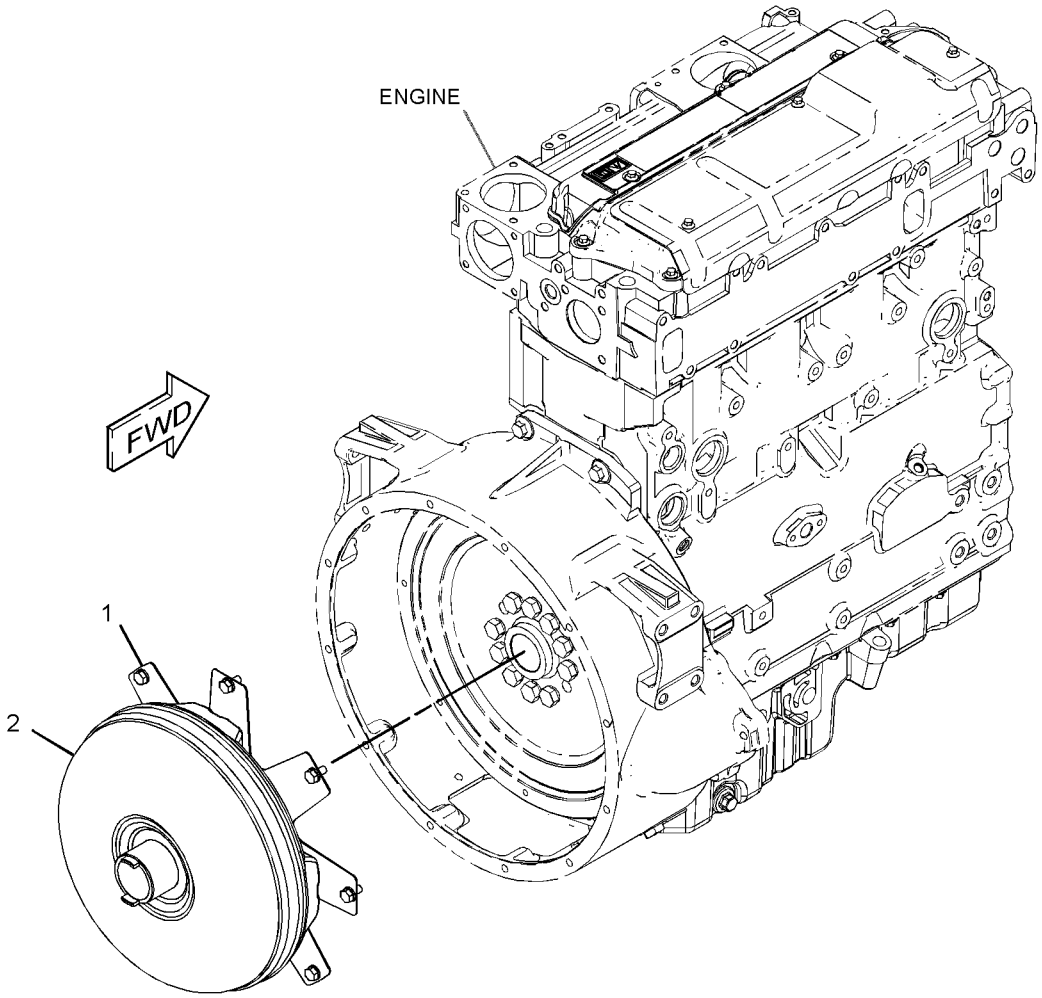

GRAPHIC #1 **<END>** g02788697

353-1512 TRANSMISSION AR-DIRECT DRIVE

S/N: LTG1-UP
PART OF 374-6818 POWER TRAIN AR
AN ATTACHMENT

SMCS-3030 **i04623569**

NOTE	PART NUMBER	QTY	PART NAME 1 2 3 4 5 6 (PRODUCT LEVEL)	SEE PAGE
Y	*356-4080*	1	CONTROL GP-TRANSMISSION	482
Y	*337-9703*	1	FILLER GP-POWER TRAIN OIL (STANDARD SHIFT)	151
Y	*337-9779*	1	LINES GP-POWER TRAIN COOLER	41
Y	*337-9717*	1	LINES GP-POWER TRAIN OIL	161
Y	*337-9727*	1	MOUNTING GP-ENGINE & XMSN	21
Y	*353-1335*	1	SHAFT GP-DRIVE	172
Y	*359-0376*	1	TRANSMISSION AR-DIRECT DRIVE	188
Y	*331-5462*	1	WIRING GP-TRANSMISSION CONTROL (STANDARD SHIFT)	129

Y-SEPARATE ILLUSTRATION

<END>

359-0376 TRANSMISSION AR-DIRECT DRIVE

S/N: LTG1-UP
PART OF 353-1512 TRANSMISSION AR-DIRECT DRIVE
AN ATTACHMENT

SMCS-3030 **i04623622**

NOTE	REF NO	GRAPHIC REF	PART NUMBER	QTY	PART NAME 1 2 3 4 5 6 (PRODUCT LEVEL)	SEE PAGE
	1	1	**119-4740**	1	FILTER-OIL (STANDARD EFFICIENCY) (TRANSMISSION)	
Y	2	1	*353-1338*	1	DRIVE & MTG GP-PUMP	293
Y	3	1	*355-3841*	1	MOUNTING GP-TRANSMISSION	166
Y	4	1	*359-0392*	1	TRANSMISSION GP-DIRECT DRIVE	192

Y-SEPARATE ILLUSTRATION

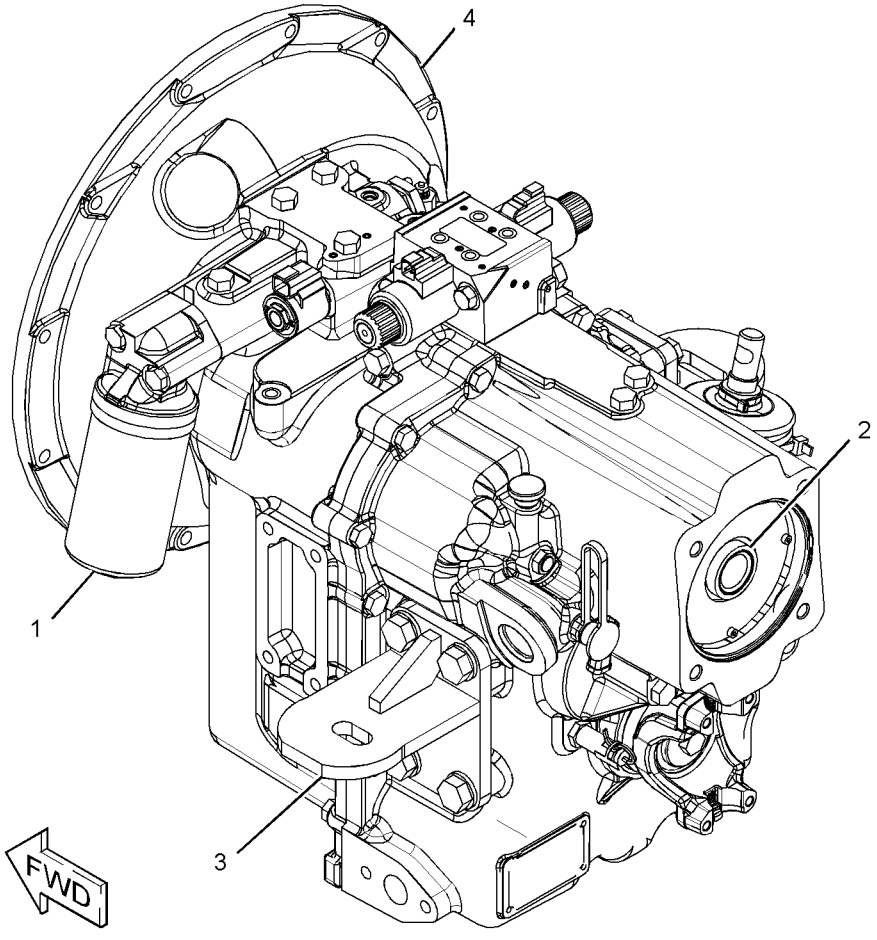

GRAPHIC #1 **<END>** g02820337

359-0378 TRANSMISSION AR-DIRECT DRIVE

S/N: LTG1-UP

PART OF 353-1513 TRANSMISSION AR-POWER SHIFT

AN ATTACHMENT

SMCS-3030 **i04597234**

NOTE	REF NO	GRAPHIC REF	PART NUMBER	QTY	PART NAME 1 2 3 4 5 6 (PRODUCT LEVEL)	SEE PAGE
Y	1	1	*353-1338*	1	DRIVE & MTG GP-PUMP	293
Y	2	1	*355-3841*	1	MOUNTING GP-TRANSMISSION	166
Y	3	1	*359-0394*	1	TRANSMISSION GP-DIRECT DRIVE (ALL WHEEL DRIVE)	197
	4	1	**119-4740**	1	FILTER-OIL (STANDARD EFFICIENCY) (TRANSMISSION)	

Y-SEPARATE ILLUSTRATION

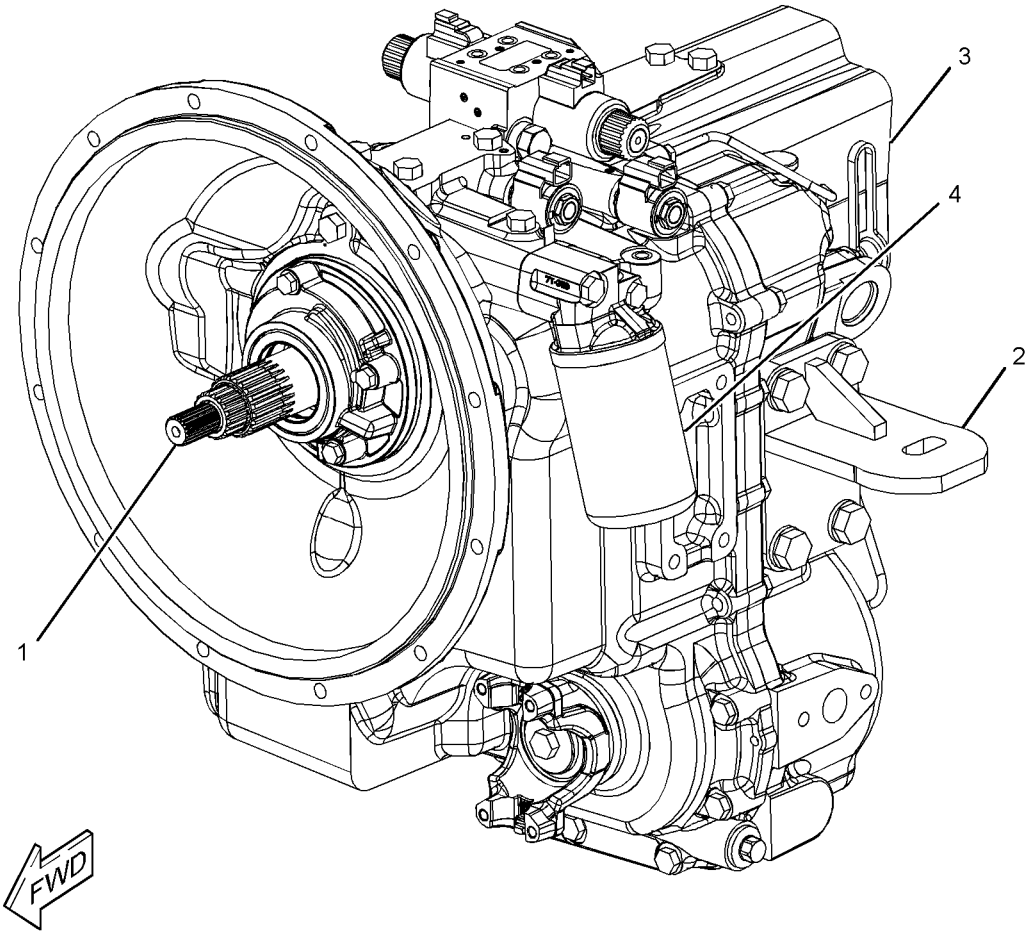

GRAPHIC #1 **<END>** g02831223

353-1510 TRANSMISSION AR-POWER SHIFT–
4-WHEEL DRIVE, AUTO SHIFT
S/N: LTG1-UP
PART OF 374-6832 POWER TRAIN AR
AN ATTACHMENT

SMCS-3030 **i04602972**

NOTE	PART NUMBER	QTY	PART NAME 1 2 3 4 5 6 (PRODUCT LEVEL)	SEE PAGE
Y	*337-9701*	1	FILLER GP-POWER TRAIN OIL	149
Y	*337-9779*	1	LINES GP-POWER TRAIN COOLER	41
Y	*337-9719*	1	LOCK GP-DIFFERENTIAL	162
Y	*337-9727*	1	MOUNTING GP-ENGINE & XMSN	21
Y	*353-1335*	1	SHAFT GP-DRIVE (REAR)	172
Y	*353-1337*	1	SHAFT GP-DRIVE (FRONT)	174
Y	*331-5456*	1	SWITCH GP-ALL WHEEL DRIVE	97
Y	*359-0380*	1	TRANSMISSION AR-POWER SHIFT	191
Y	*331-5464*	1	WIRING GP-TRANSMISSION CONTROL	131

Y-SEPARATE ILLUSTRATION

<END>

353-1513 TRANSMISSION AR-POWER SHIFT–
ALL WHEEL DRIVE
S/N: LTG1-UP
PART OF 374-6823 POWER TRAIN AR
AN ATTACHMENT

SMCS-3030 **i04597489**

NOTE	PART NUMBER	QTY	PART NAME 1 2 3 4 5 6 (PRODUCT LEVEL)	SEE PAGE
Y	*356-4080*	1	CONTROL GP-TRANSMISSION	482
Y	*337-9703*	1	FILLER GP-POWER TRAIN OIL (STANDARD SHIFT)	151
Y	*337-9779*	1	LINES GP-POWER TRAIN COOLER	41
Y	*337-9717*	1	LINES GP-POWER TRAIN OIL	161
Y	*337-9727*	1	MOUNTING GP-ENGINE & XMSN	21
Y	*353-1335*	1	SHAFT GP-DRIVE (REAR)	172
Y	*353-1336*	1	SHAFT GP-DRIVE (FRONT)	173
Y	*331-5456*	1	SWITCH GP-ALL WHEEL DRIVE	97
Y	*359-0378*	1	TRANSMISSION AR-DIRECT DRIVE	189
Y	*331-5462*	1	WIRING GP-TRANSMISSION CONTROL (STANDARD SHIFT)	129

Y-SEPARATE ILLUSTRATION

<END>

359-0380 TRANSMISSION AR-POWER SHIFT

S/N: LTG1-UP

PART OF 353-1510 TRANSMISSION AR-POWER SHIFT

AN ATTACHMENT

SMCS-3030 **i04597390**

NOTE	REF NO	GRAPHIC REF	PART NUMBER	QTY	PART NAME 1 2 3 4 5 6 (PRODUCT LEVEL)	SEE PAGE
Y	1	1	*353-1338*	1	DRIVE & MTG GP-PUMP	293
Y	2	1	*355-3833*	1	MOUNTING GP-TRANSMISSION	165
Y	3	1	*359-0396*	1	TRANSMISSION GP-DIRECT DRIVE (ALL WHEEL DRIVE)	202
	4	1	**119-4740**	1	FILTER-OIL (STANDARD EFFICIENCY) (TRANSMISSION)	

Y-SEPARATE ILLUSTRATION

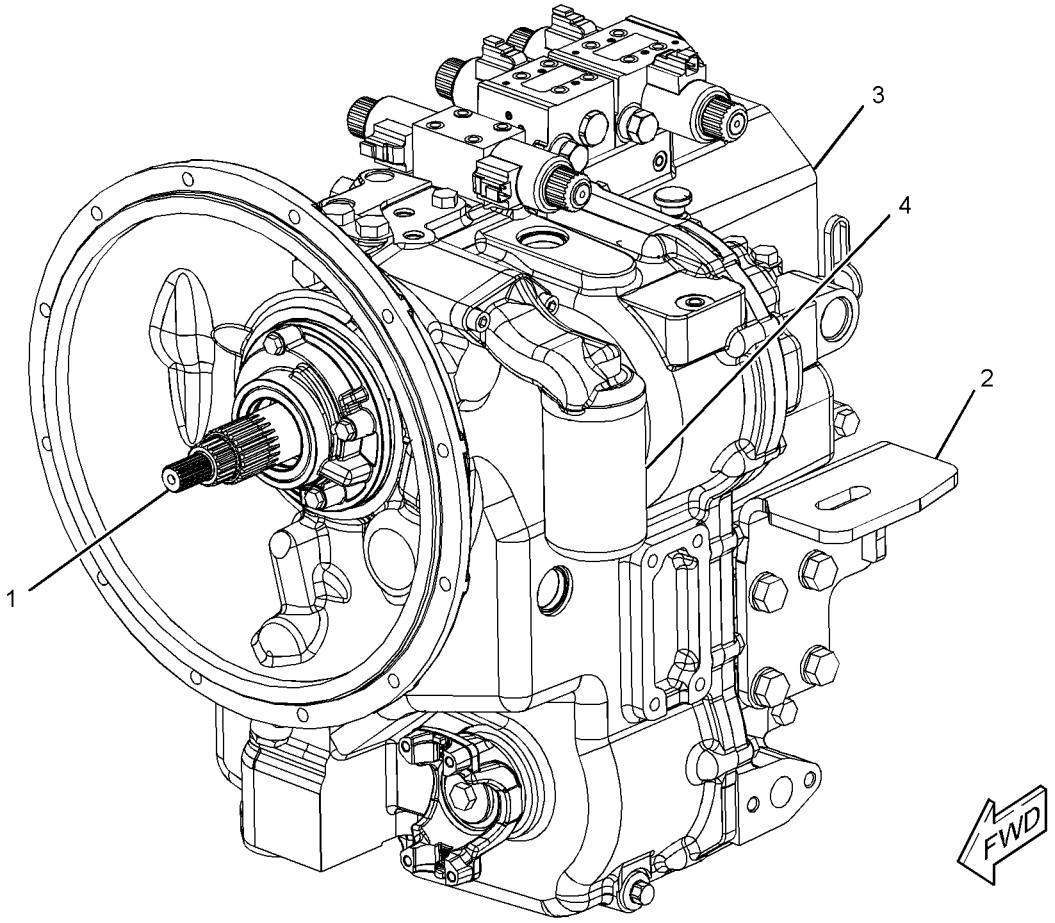

GRAPHIC #1 **<END>** g02831302

359-0392 TRANSMISSION GP-DIRECT DRIVE–2-WHEEL DRIVE

S/N: LTG1-UP

PART OF 359-0376 TRANSMISSION AR-DIRECT DRIVE AN ATTACHMENT

SMCS-3030 **i04623654**

NOTE	REF NO	GRAPHIC REF	PART NUMBER	QTY	PART NAME 1 2 3 4 5 6 (PRODUCT LEVEL)	SEE PAGE
	1	1,3	**3J-1907**	2	SEAL-O-RING	
	2	1	**3S-2093**	1	STRAP-CABLE	
	3	3	**4W-9972**	1	SENDER AS-TEMPERATURE (12-VOLT) (TRANSMISSION OIL)	
		3	**6V-8378**	1	NUT (10-32-THD)	
		3	**8F-1434**	1	LOCKWASHER	
		3	**8T-0328**	1	WASHER-HARD (5.5X10X1-MM THK)	
	4	2	**302-8432**	1	SEAL-LIP TYPE	
	5	2	**5P-8066**	1	SEAL-O-RING	
	6	3	**365-4592**	1	CLAMP	
	7	1	**6V-0852**	1	CAP-DUST	
	8	1	**6V-3965**	1	FITTING (QUICK DISCONNECT)	
M	9	3	**6V-7731**	2	BOLT (M10X1.5X70-MM)	
M	10	1	**6V-8097**	1	BOLT (M12X1.75X30-MM)	
M	11	1	**161-7632**	17	BOLT-SELF-LOCKING (M10X1.5X40-MM)	
	12	1	**6Y-1341**	2	SPRING	
	13	1	**6Y-1896**	1	PLUG AS-DRAIN (TRANSMISSION)	
		1	**5P-6718**	1	SEAL-O-RING	
	14	3	**6Y-2035**	1	GASKET	
	15	3	**7T-3109**	1	PIN	
	16	3	**7T-3111**	1	COVER	
	17	2	**7T-3195**	1	WASHER (12.3X47X6.35-MM THK)	
	18	1	**7T-3249**	2	SCREW (3/8-24X0.75-IN)	
	19	3	**7T-3251**	1	BREATHER (TRANSMISSION)	
	20	2	**7X-4741**	1	SEAL	
M	21	2,3	**8C-5748**	7	BOLT (M8X1.25X55-MM)	
	22	3	**9M-1974**	3	WASHER-HARD (8.8X16X2-MM THK)	
	23	2	**9P-9150**	4	WASHER (8.25X18X0.84-MM THK)	
	24	1,3	**334-5131**	12	PLUG AS	
					(EACH INCLUDES)	
		1,3	**3J-1907**	1	SEAL-O-RING	
		1,3	**9S-4191**	1	PLUG-O-RING	
	25	2	**208-8240**	1	SEAL-LIP TYPE	
M	26	3	**9X-6615**	4	BOLT (M5X0.8X30-MM)	
	27	1	**014-5645**	3	BALL	
	28	2	**121-7385**	1	PUMP GP-TRANSMISSION (POWER TRAIN)	
		2	**208-8240**	1	SEAL-LIP TYPE	
	29	1	**121-7389**	1	ROD AS-GEARSHIFT (FIRST, SECOND)	
	30	1	**121-7390**	1	ROD AS-GEARSHIFT (THIRD, FOURTH)	
	31	3	**121-7391**	1	LEVER	
	32	3	**121-7396**	1	VALVE GP-RELIEF (TORQUE CONVERTER)	
		3	**6V-4589**	1	SEAL-O-RING	
		3	**8L-2746**	1	SEAL-O-RING	
	33	1	**121-7403**	1	FORK-SHIFT	
	34	1	**121-7404**	1	FORK-SHIFT	
	35	1	**336-5469**	4	RIVET	
	36	2	**122-6787**	1	YOKE AS	
		2	**123-1377**	1	GUARD	
	37	3	**127-3017**	1	SEAT AS	
Y	38	3	**147-0209**	1	VALVE GP-RELIEF (TRANSMISSION)	209
	39	3	**174-9711**	1	GASKET	
	40	3	**175-0054**	1	SEAL-O-RING	
Y	41	1	**189-5746**	1	SENSOR GP-SPEED (TRANSMISSION)	93
	42	3	**305-3423**	1	VALVE GP-SOLENOID (12-VOLT) (ALL WHEEL DRIVE)	
		3	**274-8034**	1	COIL AS (12-VOLT)	

359-0392 **TRANSMISSION GP-DIRECT DRIVE** *(contd.)* **i04623654**

NOTE	REF NO	GRAPHIC REF	PART NUMBER	QTY	PART NAME 1 2 3 4 5 6 (PRODUCT LEVEL)	SEE PAGE
	43	1	**237-5186**	1	PLATE-XMSN IDENTIFICATION	
Y	44	2	**305-3429**	1	SHAFT GP-INPUT (ALL WHEEL DRIVE)	179
Y	45	2	**275-0472**	1	CASE GP-TRANSMISSION (FRONT)	141
Y	46	2	**365-2812**	1	CASE GP-TRANSMISSION (REAR)	142
	47	2	**275-0475**	1	SHAFT GP-IDLER (TRANSMISSION)	
		2	**005-0471**	2	CONE-BEARING	
		2	**274-8623**	1	SHAFT-REVERSE	
	48	2	**275-0477**	1	SHAFT GP-COUNTER (TRANSMISSION)	
		2	**8T-1581**	1	CONE	
		2	**123-8907**	1	CONE-BEARING	
		2	**274-8625**	1	GEAR-COUNTERSHAFT (38-TEETH)	
Y	49	2	**275-0478**	1	SHAFT GP-OUTPUT (REAR)	183
	50	1	**293-2147**	1	BREATHER AS (TRANSMISSION)	
		1	**3J-1907**	1	SEAL-O-RING	
		1	**122-6785**	1	PLUG AS	
	51	3	**7T-3119**	1	HOUSING	
	52	1	**324-2578**	1	VALVE GP-SOLENOID (12-VOLT) (FORWARD, REVERSE)	
		1	**8L-2779**	4	SEAL-O-RING	
		1	**280-7012**	2	TUBE AS	
					(EACH INCLUDES)	
		1	**6V-8399**	1	SEAL-O-RING	
		1	**274-4560**	1	NUT-SELF LOCKING	
		1	**324-2579**	2	COIL AS (12-VOLT)	
	53	3	**365-4591**	1	CLAMP	

M-METRIC PART
Y-SEPARATE ILLUSTRATION

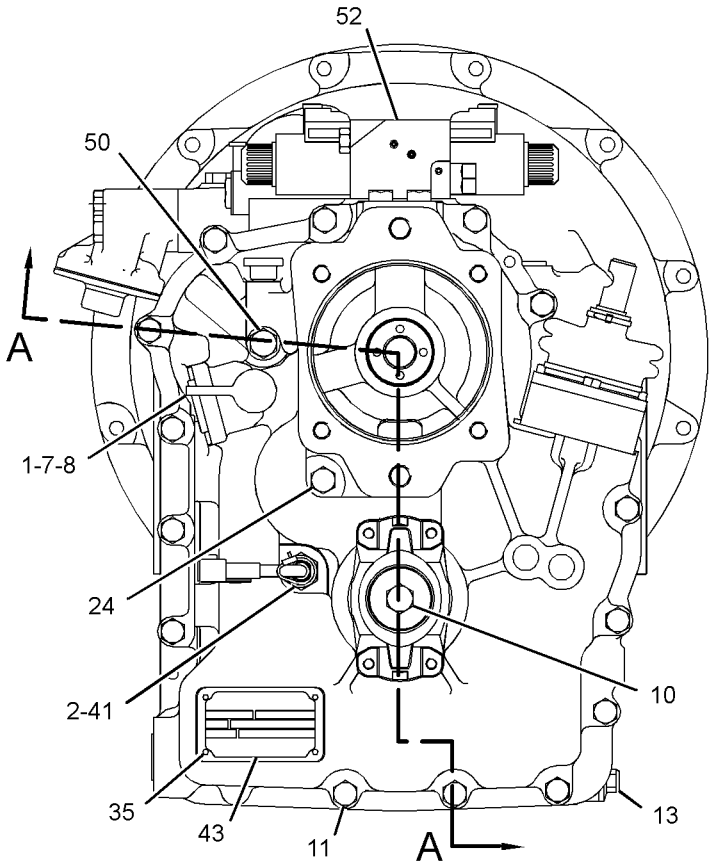

REAR VIEW

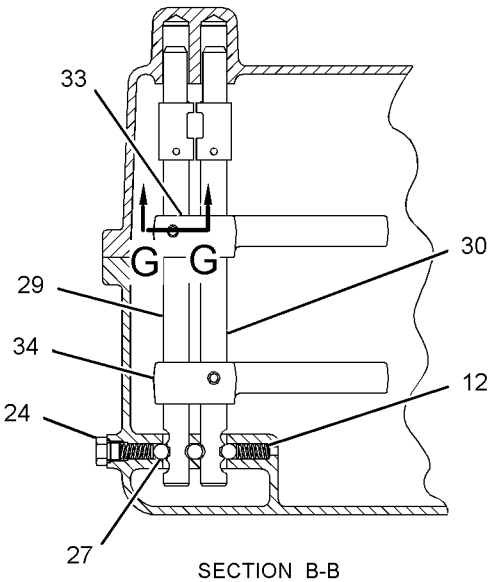

SECTION B-B

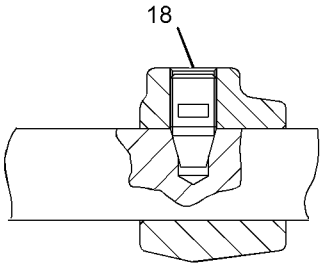

SECTION G-G

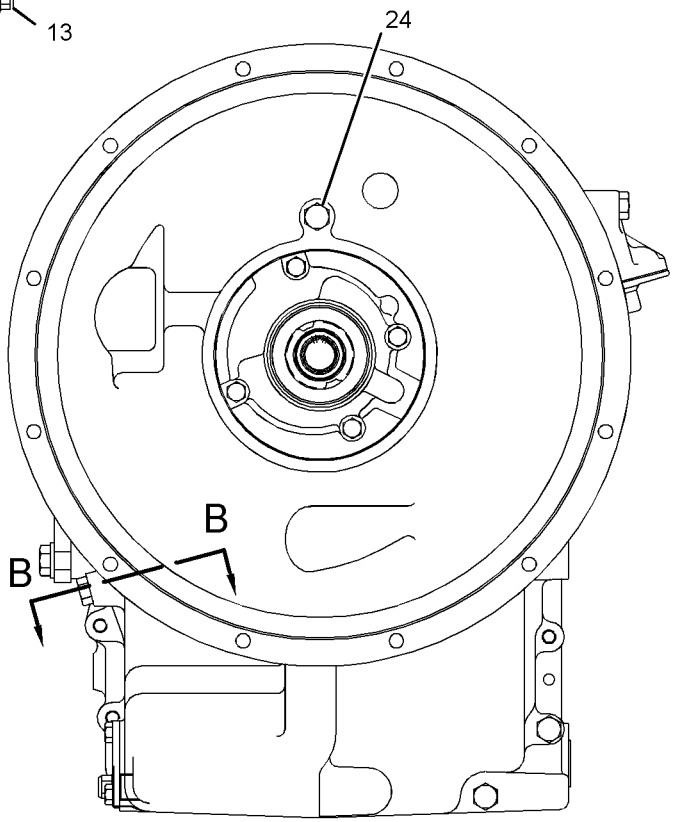

FRONT VIEW

REFER TO ALL ILLUSTRATIONS OF THIS GROUP FOR AUXILIARY VIEWS

GRAPHIC #1

g02822237

359-0392 **TRANSMISSION GP-DIRECT DRIVE** *(contd.)* **i04623654**

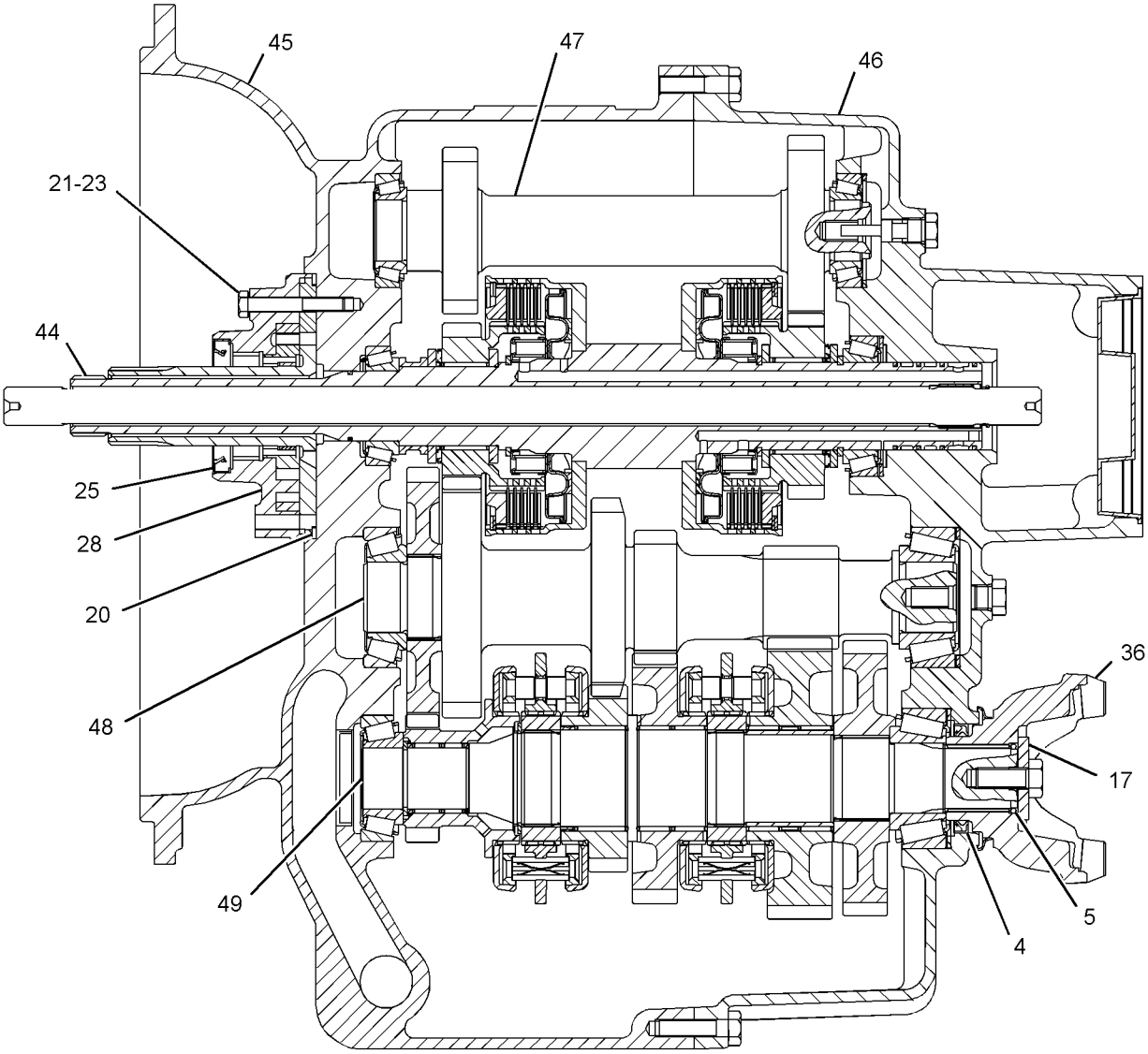

SECTION A-A

GRAPHIC #2

g02822238

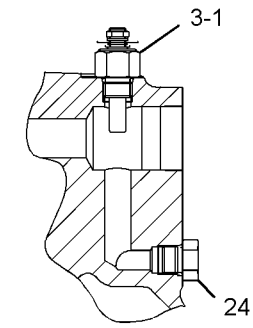

SECTION J

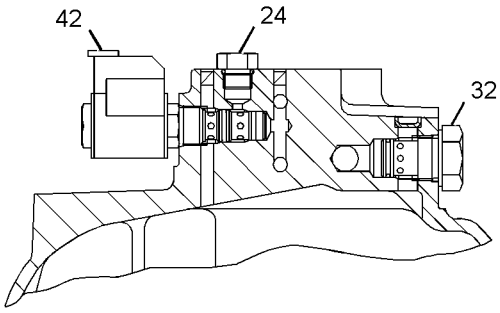

SECTION D-D

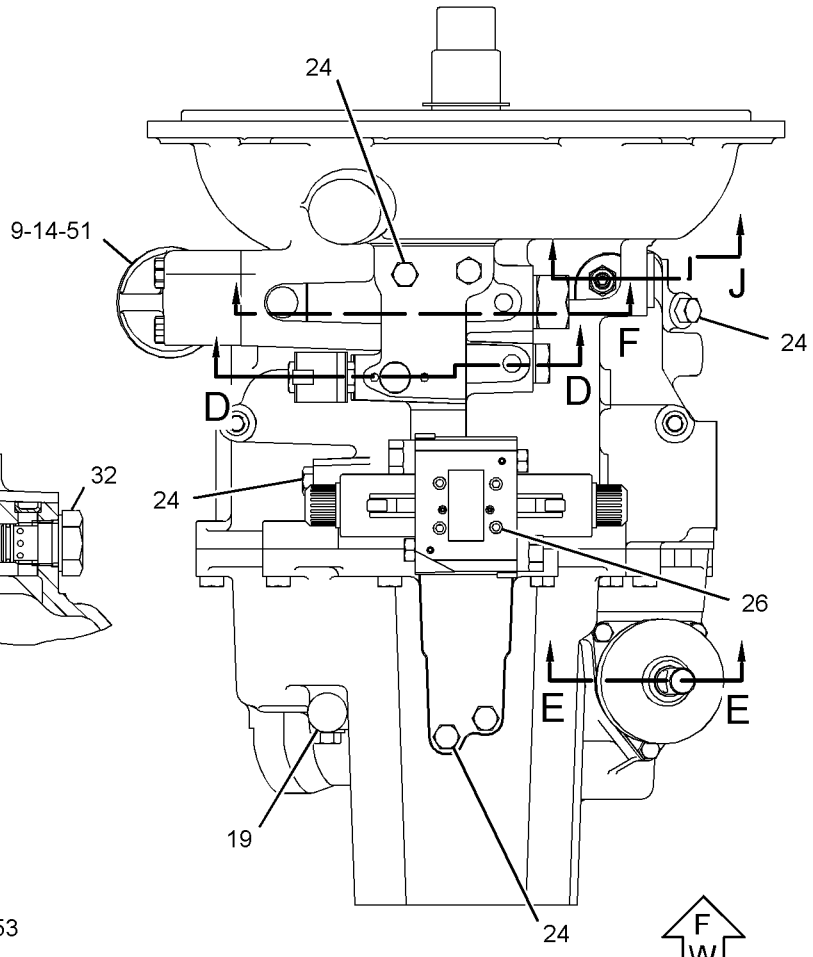

TOP VIEW

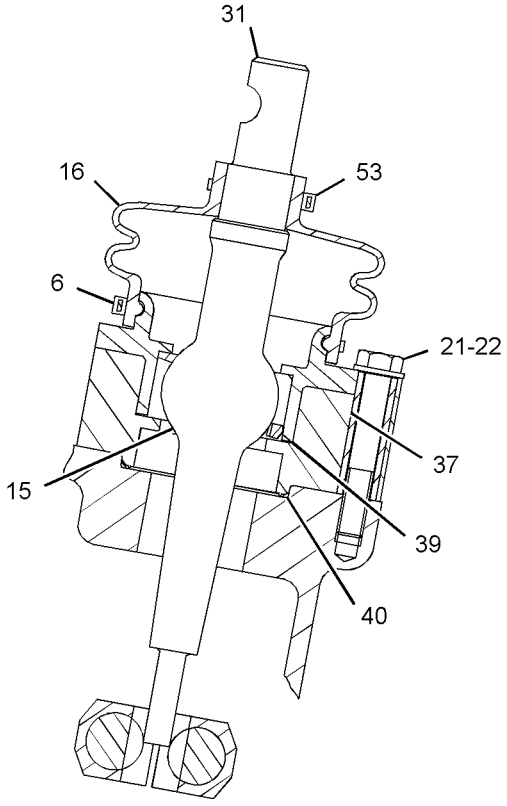

SECTION E-E

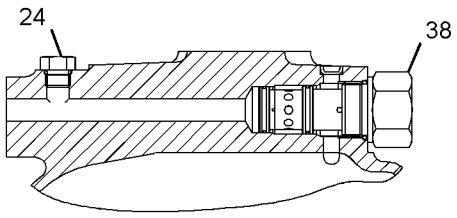

SECTION F

GRAPHIC #3 **<END>** g02822240

359-0394 TRANSMISSION GP-DIRECT DRIVE–

ALL WHEEL DRIVE

S/N: LTG1-UP

PART OF 359-0378 TRANSMISSION AR-DIRECT DRIVE

AN ATTACHMENT

SMCS-3030 **i04586229**

NOTE	REF NO	GRAPHIC REF	PART NUMBER	QTY	PART NAME 1 2 3 4 5 6 (PRODUCT LEVEL)	SEE PAGE
	1	1,3	**3J-1907**	2	SEAL-O-RING	
	2	3	**4W-9972**	1	SENDER AS-TEMPERATURE (12-VOLT) (TRANSMISSION OIL)	
		3	**6V-8378**	1	NUT (10-32-THD)	
		3	**8F-1434**	1	LOCKWASHER	
		3	**8T-0328**	1	WASHER-HARD (5.5X10X1-MM THK)	
	3	2	**5P-8066**	2	SEAL-O-RING	
	4	3	**365-4592**	1	CLAMP	
	5	1	**6V-0852**	1	CAP-DUST	
	6	1	**6V-3965**	1	FITTING (QUICK DISCONNECT)	
M	7	3	**6V-7731**	2	BOLT (M10X1.5X70-MM)	
M	8	1	**6V-8097**	2	BOLT (M12X1.75X30-MM)	
M	9	1	**161-7632**	14	BOLT-SELF-LOCKING (M10X1.5X40-MM)	
	10	1	**6Y-1341**	2	SPRING	
	11	1	**6Y-1896**	1	PLUG AS-DRAIN (TRANSMISSION)	
		1	**5P-6718**	1	SEAL-O-RING	
	12	3	**6Y-2035**	1	GASKET	
	13	3	**7T-3109**	1	PIN	
	14	3	**7T-3111**	1	COVER	
	15	2	**7T-3195**	2	WASHER (12.3X47X6.35-MM THK)	
	16	1	**7T-3249**	2	SCREW (3/8-24X0.75-IN)	
	17	2	**7X-4741**	1	SEAL	
M	18	2,3	**8C-5748**	7	BOLT (M8X1.25X55-MM)	
	19	3	**9M-1974**	3	WASHER-HARD (8.8X16X2-MM THK)	
	20	2	**9P-9150**	4	WASHER (8.25X18X0.84-MM THK)	
M	21	3	**9X-6615**	4	BOLT (M5X0.8X30-MM)	
	22	1	**014-5645**	3	BALL	
	23	2	**121-7385**	1	PUMP GP-TRANSMISSION (POWER TRAIN)	
		2	**208-8240**	1	SEAL-LIP TYPE	
	24	1	**121-7389**	1	ROD AS-GEARSHIFT (FIRST, SECOND)	
	25	1	**121-7390**	1	ROD AS-GEARSHIFT (THIRD, FOURTH)	
	26	3	**121-7391**	1	LEVER	
	27	3	*121-7396*	1	VALVE GP-RELIEF (TORQUE CONVERTER INLET)	
		3	**6V-4589**	1	SEAL-O-RING	
		3	**8L-2746**	1	SEAL-O-RING	
	28	1	**121-7403**	1	FORK-SHIFT (FIRST, SECOND)	
	29	1	**121-7404**	1	FORK-SHIFT (THIRD, FOURTH)	
	30	1	**121-7875**	4	ANGLE	
	31	2	**122-1883**	1	SPACER (38X45X5-MM THK)	
	32	2	**122-3650**	1	PLUG	
	33	2	**122-6787**	2	YOKE AS	
					(EACH INCLUDES)	
		2	**123-1377**	1	GUARD	
	34	1	**123-2918**	2	SLEEVE	
	35	1	**123-2919**	2	NUT (M11X1-THD)	
	36	3	**127-3017**	1	SEAT AS	
Y	37	3	**147-0209**	1	VALVE GP-RELIEF (TRANSMISSION)	209
	38	3	**174-9711**	1	GASKET	
	39	3	**175-0054**	1	SEAL-O-RING	
	40	1	**3S-2093**	1	STRAP-CABLE	
	41	2	**208-8240**	1	SEAL-LIP TYPE	
	42	1	**237-5186**	1	PLATE-XMSN IDENTIFICATION	
Y	43	2	**275-0468**	1	CASE AS-TRANSMISSION (FRONT)	138
	44	2	**275-0475**	1	SHAFT GP-IDLER (TRANSMISSION)	

359-0394 TRANSMISSION GP-DIRECT DRIVE *(contd.)* i04586229

NOTE	REF NO	GRAPHIC REF	PART NUMBER	QTY	PART NAME 1 2 3 4 5 6 (PRODUCT LEVEL)	SEE PAGE
		2	**005-0471**	2	CONE-BEARING	
		2	**274-8623**	1	SHAFT-REVERSE	
	45	2	**275-0477**	1	SHAFT GP-COUNTER (TRANSMISSION)	
		2	**8T-1581**	1	CONE	
		2	**123-8907**	1	CONE-BEARING	
		2	**274-8625**	1	GEAR-COUNTERSHAFT (38-TEETH)	
Y	46	2	**275-0478**	1	SHAFT GP-OUTPUT (REAR)	183
	47	1	**293-2147**	1	BREATHER AS (TRANSMISSION)	
		1	**3J-1907**	1	SEAL-O-RING	
		1	**122-6785**	1	PLUG AS	
	48	1	**294-9820**	1	TUBE	
	49	3	**365-4591**	1	CLAMP	
Y	50	2	**305-3427**	1	SHAFT GP-OUTPUT (FRONT)	185
Y	51	2	**305-3429**	1	SHAFT GP-INPUT (ALL WHEEL DRIVE)	179
	52	3	**324-2578**	1	VALVE GP-SOLENOID (12-VOLT) (FORWARD, REVERSE)	
		3	**8L-2779**	4	SEAL-O-RING	
		3	**280-7012**	2	TUBE AS	
					(EACH INCLUDES)	
		3	**6V-8399**	1	SEAL-O-RING	
		3	**274-4560**	1	NUT-SELF LOCKING	
		3	**324-2579**	2	COIL AS (12-VOLT)	
	53	1,3	**334-5131**	12	PLUG AS	
					(EACH INCLUDES)	
		1,3	**3J-1907**	1	SEAL-O-RING	
		1,3	**9S-4191**	1	PLUG-O-RING	
	54	1	**336-5469**	4	RIVET	
	55	3	**344-2608**	1	HOUSING AS-FILTER	
		3	**7T-3119**	1	HOUSING	
Y	56	1	**189-5746**	1	SENSOR GP-SPEED (TACHOMETER)	93
Y	57	2	**365-2814**	1	CASE AS-TRANSMISSION (ALL WHEEL DRIVE)	139
	58	3	**305-3423**	2	VALVE GP-SOLENOID (12-VOLT) (ALL WHEEL DRIVE)	
					(EACH INCLUDES)	
		3	**274-8034**	1	COIL AS (12-VOLT)	
	59	3	**7T-3251**	1	BREATHER (TRANSMISSION)	

M-METRIC PART
Y-SEPARATE ILLUSTRATION

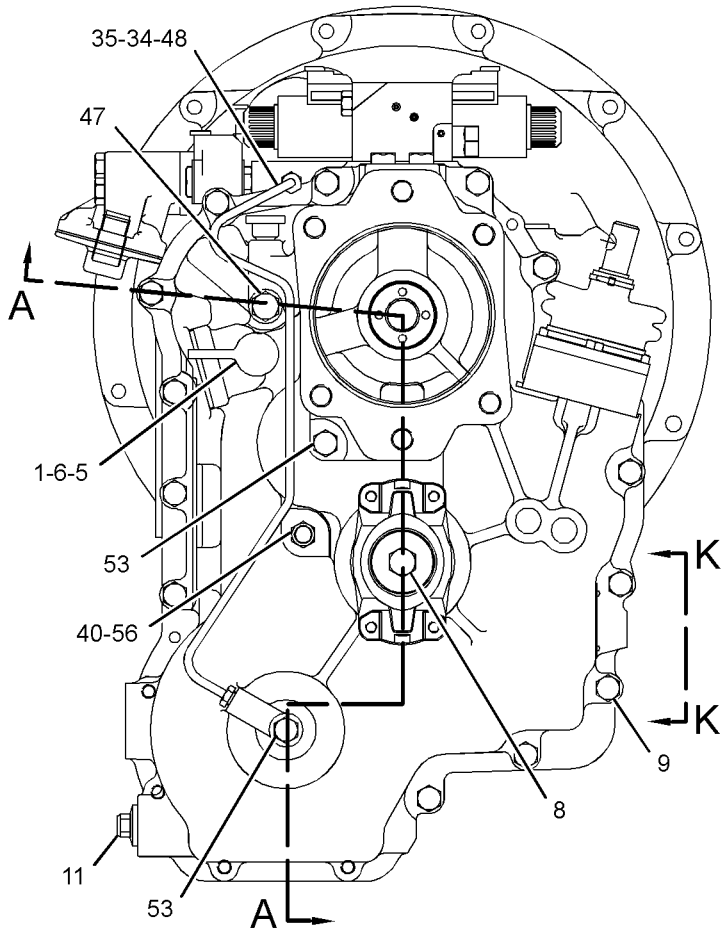

REAR VIEW

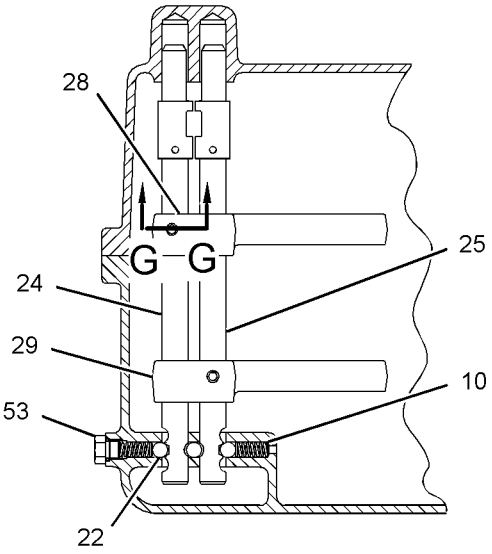

SECTION B-B

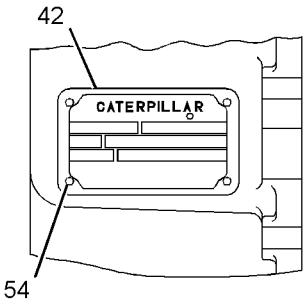

VIEW K-K

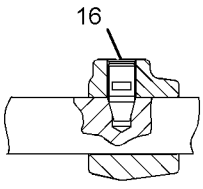

SECTION G-G

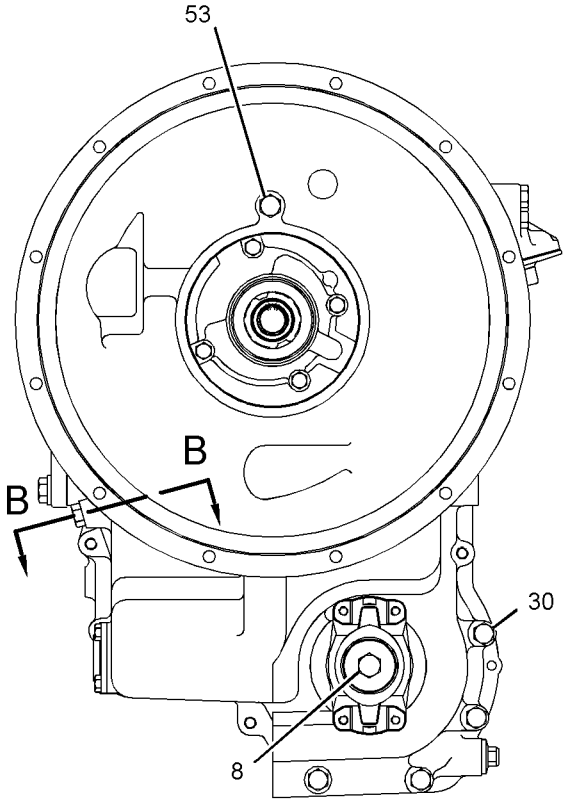

FRONT VIEW

REFER TO ALL ILLUSTRATIONS OF
THIS GROUP FOR AUXILIARY VIEWS

GRAPHIC #1

g02819401

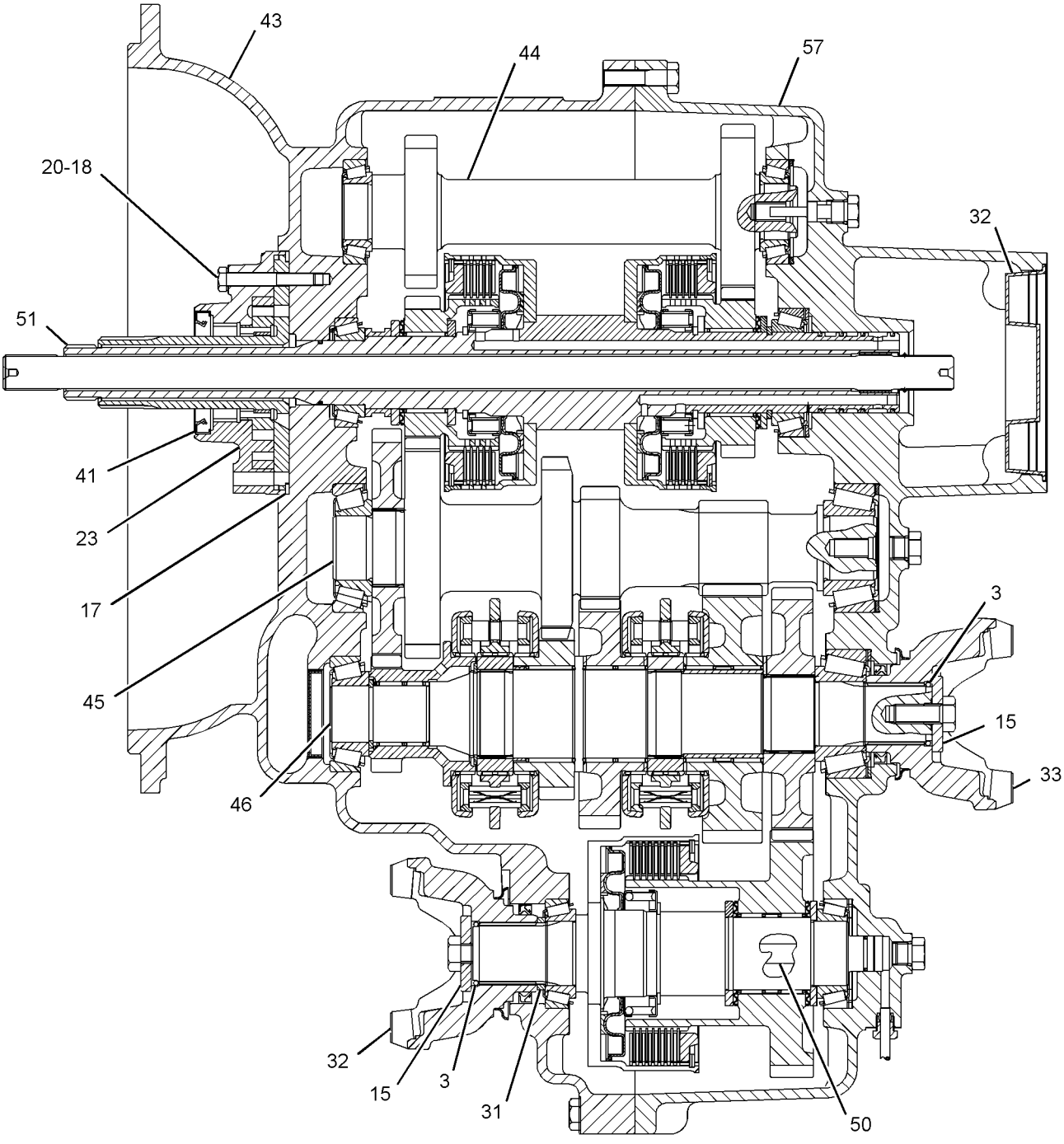

SECTION A-A

GRAPHIC #2

g02819416

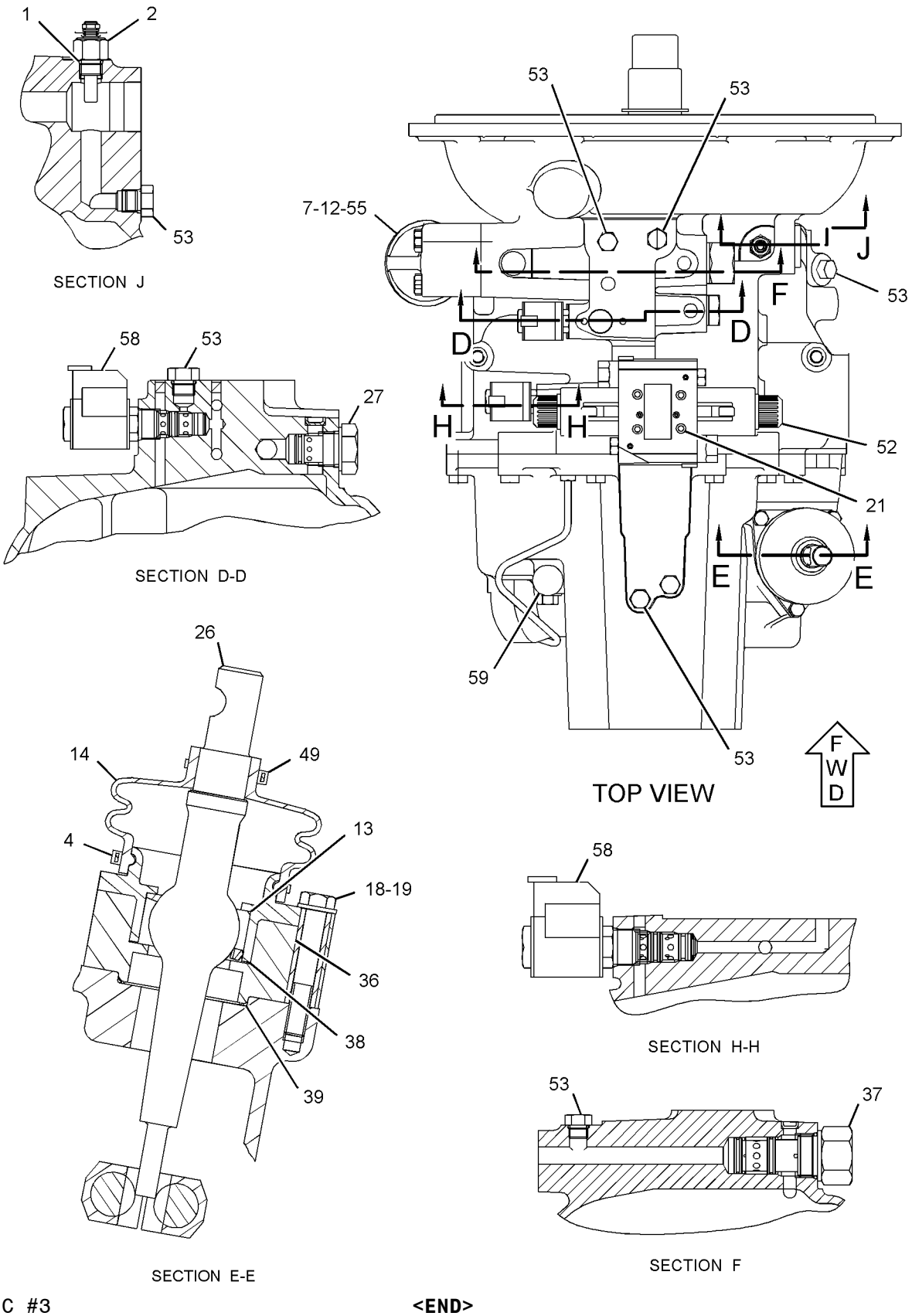

GRAPHIC #3 **<END>** g02822077

POWER TRAIN

359-0396 TRANSMISSION GP-DIRECT DRIVE–

ALL WHEEL DRIVE

S/N: LTG1-UP

PART OF 359-0380 TRANSMISSION AR-POWER SHIFT

AN ATTACHMENT

SMCS-3030 **i04597409**

NOTE	REF NO	GRAPHIC REF	PART NUMBER	QTY	PART NAME 1 2 3 4 5 6 (PRODUCT LEVEL)	SEE PAGE
	1	1,4	**3J-1907**	1	SEAL-O-RING	
	2	3	**4F-7952**	1	SEAL-O-RING	
	3	4	**4W-9972**	1	SENDER AS-TEMPERATURE (12-VOLT) (TRANSMISSION OIL)	
		4	**6V-8378**	1	NUT (10-32-THD)	
		4	**8F-1434**	1	LOCKWASHER	
		4	**8T-0328**	1	WASHER-HARD (5.5X10X1-MM THK)	
	4	2	**5P-8066**	2	SEAL-O-RING	
	5	2	**6T-9163**	2	SHIM (0.599-MM THK)	
	6	2	**6T-9164**	2	SHIM (0.178-MM THK)	
	7	2	**6T-9165**	2	SHIM (0.076-MM THK)	
	8	2	**6T-9166**	2	SHIM (0.051-MM THK)	
	9	3	**6T-9202**	2	PLUG	
M	10	3	**6V-5215**	3	BOLT (M8X1.25X16-MM)	
M	11	2	**6V-8097**	2	BOLT (M12X1.75X30-MM)	
M	12	1	**161-7632**	16	BOLT-SELF-LOCKING (M10X1.5X40-MM)	
	13	4	**6Y-1896**	1	PLUG AS-DRAIN (TRANSMISSION)	
		4	**5P-6718**	1	SEAL-O-RING	
	14	2	**7T-2646**	2	SPACER (66X79.5X2.02-MM THK)	
	15	3	**7T-2651**	1	STRAINER-SUCTION (TRANSMISSION)	
	16	2	**7T-3195**	2	WASHER (12.3X47X6.35-MM THK)	
	17	4	**7T-3251**	1	BREATHER (TRANSMISSION)	
	18	1	**7T-3253**	2	DOWEL	
	19	2	**7X-4741**	1	SEAL	
	20	1,2,3	**7W-3556**	12	WASHER (14.27X20.57X1.5-MM THK)	
M	21	4	**8C-5748**	4	BOLT (M8X1.25X55-MM)	
M	22	2	**8C-8545**	2	BOLT-SOCKET HEAD (M5X0.8X20-MM)	
M	23	4	**8T-0271**	2	BOLT-SOCKET HEAD (M10X1.5X35-MM)	
M	24	1	**8T-0643**	1	BOLT (M10X1.5X80-MM)	
	25	4	**9P-9150**	4	WASHER (8.25X18X0.84-MM THK)	
	26	3	**9W-5460**	1	RING	
M	27	4	**9X-6615**	12	BOLT (M5X0.8X30-MM)	
	28	1	**104-3288**	2	SHIM (0.05-MM THK)	
	29	3	**106-9861**	1	PLATE-COVER	
	30	1	**117-1385**	1	SEAL-O-RING	
	31	2,4	**120-9762**	3	SEAL-O-RING	
	32	1	**121-2059**	2	SHIM (0.08-MM THK)	
	33	1	**121-2060**	2	SHIM (0.18-MM THK)	
	34	1	**121-2061**	2	SHIM (0.6-MM THK)	
	35	2	**121-7385**	1	PUMP GP-TRANSMISSION (POWER TRAIN)	
		2	**208-8240**	1	SEAL-LIP TYPE	
	36	3	*121-7396*	1	VALVE GP-RELIEF (TORQUE CONVERTER INLET)	
		3	**6V-4589**	1	SEAL-O-RING	
		3	**8L-2746**	1	SEAL-O-RING	
	37	2	**121-7398**	1	SPACER (70X79.5X2-MM THK)	
	38	2	**121-7399**	1	SHIM (0.05-MM THK)	
	39	2	**121-7400**	1	SHIM (0.08-MM THK)	
	40	2	**121-7401**	1	SHIM (0.18-MM THK)	
	41	2	**121-7402**	1	SHIM (0.6-MM THK)	
	42	1	**122-1879**	2	SPACER (58X67.5X2-MM THK)	
	43	2	**122-1883**	1	SPACER (38X45X5-MM THK)	
	44	2	**122-6787**	2	YOKE AS	
					(EACH INCLUDES)	
		2	**123-1377**	1	GUARD	

359-0396 TRANSMISSION GP-DIRECT DRIVE *(contd.)* i04597409

NOTE	REF NO	GRAPHIC REF	PART NUMBER	QTY	PART NAME 1 2 3 4 5 6 (PRODUCT LEVEL)	SEE PAGE
	45	2	**147-0201**	1	TUBE AS	
Y	46	3	**147-0209**	1	VALVE GP-RELIEF (TRANSMISSION)	209
	47	4	**147-0211**	1	ELBOW AS	
		4	**3G-6927**	1	ADAPTER	
	48	2	**147-0218**	1	TUBE AS-TRANSFER	
	49	1	**147-0226**	1	TUBE AS	
	50	1,2,3	**147-0234**	6	BOLT (9/16-18X0.83-IN)	
	51	3	**147-0236**	1	TUBE AS-TRANSFER	
	52	3	**147-0262**	4	WASHER (19.1X24.1X1.5-MM THK)	
	53	3	**147-0266**	2	BOLT (3/4-16X1.417-IN)	
	54	3	**237-5186**	1	PLATE-XMSN IDENTIFICATION	
	55	4	**150-7732**	2	SEAL-O-RING	
	56	1	**191-8304**	1	SENSOR GP-SPEED (TRANSMISSION)	
		1	**137-6645**	1	PAD-CONNECTOR	
	57	1	**205-9244**	2	PLUG	
	58	2	**302-8432**	2	SEAL-LIP TYPE	
	59	3	**305-3423**	2	VALVE GP-SOLENOID (12-VOLT) (DIFFERENTIAL LOCK)	
					(EACH INCLUDES)	
		3	**274-8034**	1	COIL AS (12-VOLT)	
	60	2	**274-4554**	1	CASE AS-FRONT	
		2	**147-0268**	4	PLUG	
		2	**163-9091**	4	PLUG	
	61	4	*274-4556*	3	PLUG AS	
					(EACH INCLUDES)	
		4	**8L-2786**	1	SEAL-O-RING	
		4	**9S-4185**	1	PLUG-O-RING	
Y	62	1	**274-4561**	1	SHAFT GP-IDLER (POWERSHIFT)	175
	63	2	**363-4651**	1	CASE AS-REAR	
Y	64	2	**274-4578**	1	SHAFT GP-INPUT (POWERSHIFT)	177
Y	65	2	**274-4580**	1	SHAFT GP-COUNTER	170
Y	66	2	**274-4582**	1	SHAFT GP-OUTPUT (MAIN)	181
Y	67	4	**280-7010**	1	VALVE GP-SOLENOID (12-VOLT) (TRANSMISSION)	213
Y	68	4	**278-0209**	1	VALVE GP-SOLENOID (12-VOLT) (REVERSE)	210
Y	69	4	**278-0213**	1	VALVE GP-SOLENOID (12-VOLT) (CLUTCH)	212
Y	70	2	**280-7007**	1	SHAFT GP-OUTPUT (FRONT)	184
	71	1,3,4	**334-5131**	15	PLUG AS	
					(EACH INCLUDES)	
		1,3,4	**3J-1907**	1	SEAL-O-RING	
		1,3,4	**9S-4191**	1	PLUG-O-RING	
	72	3	**336-5469**	4	RIVET	
	73	1	**6V-0852**	1	CAP-DUST	
	74	1,4	**6V-3965**	1	FITTING (QUICK DISCONNECT)	
	75	4	**147-0232**	2	PLUG	

M-METRIC PART
Y-SEPARATE ILLUSTRATION

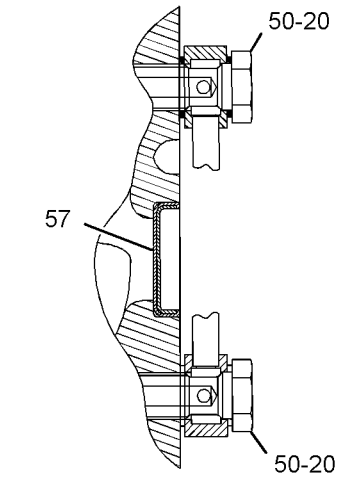

SECTION F-F

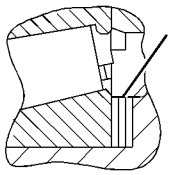

VIEW OF AREA M

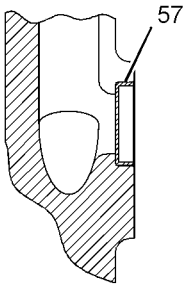

SECTION N-N

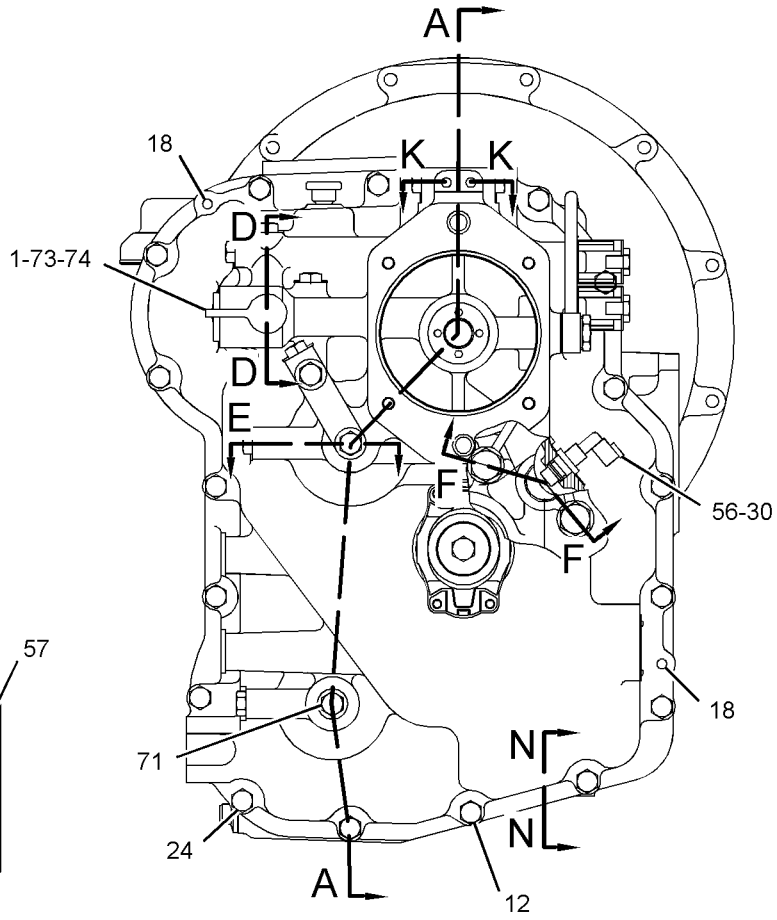

REAR VIEW

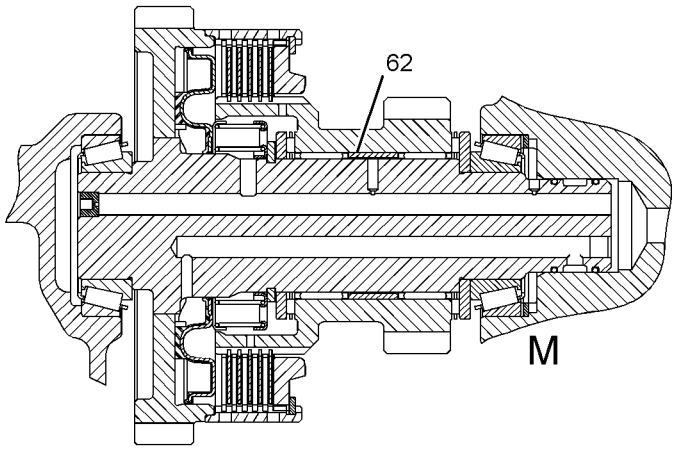

SECTION D-D

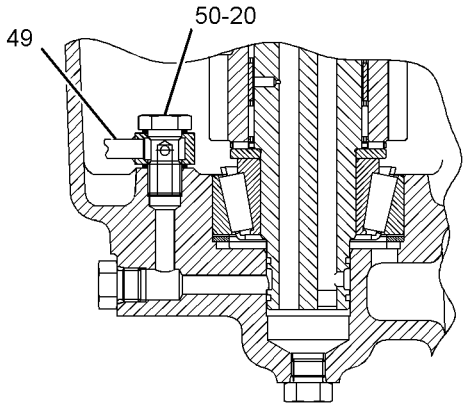

SECTION E

REFER TO ALL ILLUSTRATIONS OF
THIS GROUP FOR AUXILIARY VIEWS

GRAPHIC #1

g02827141

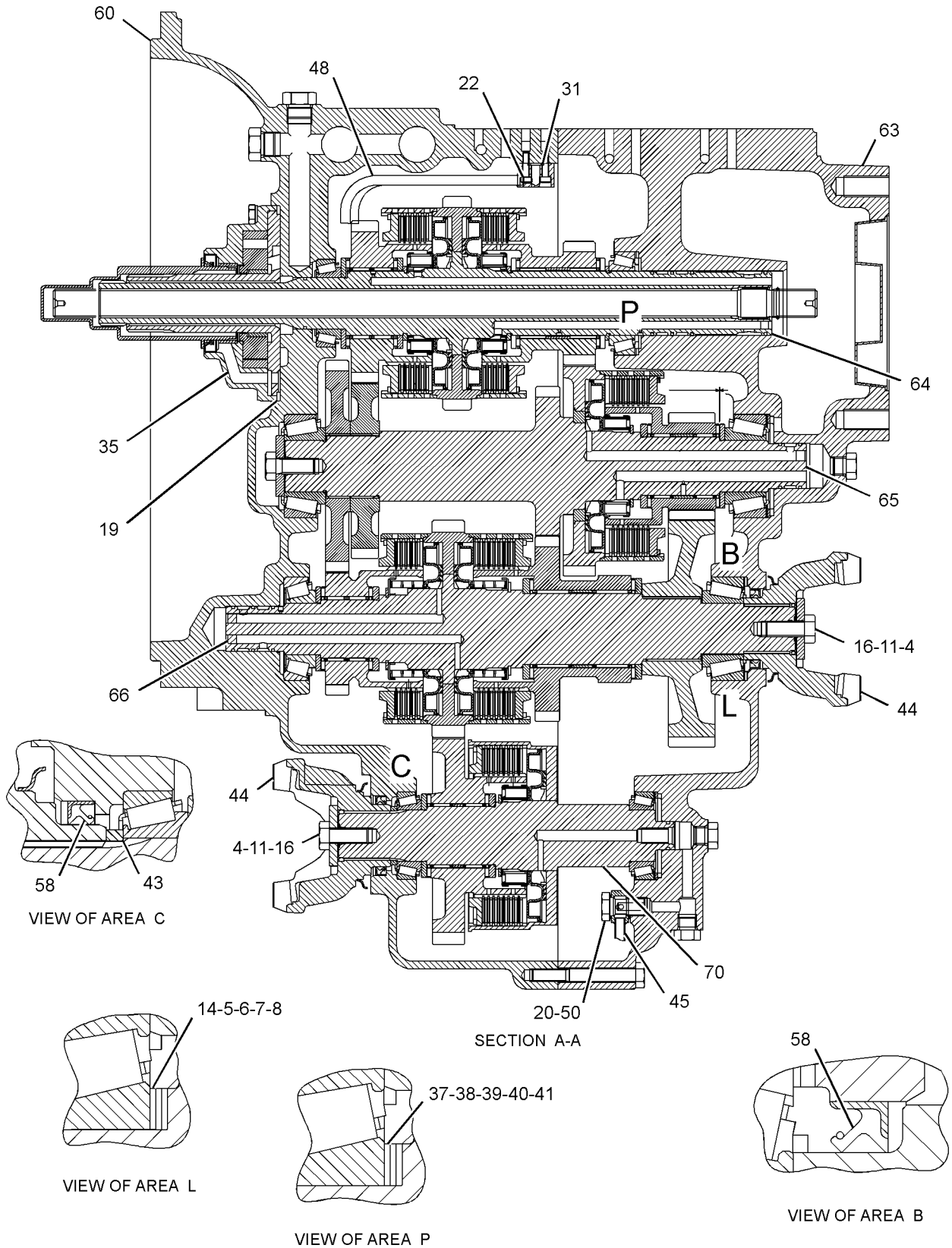

GRAPHIC #2

g02827244

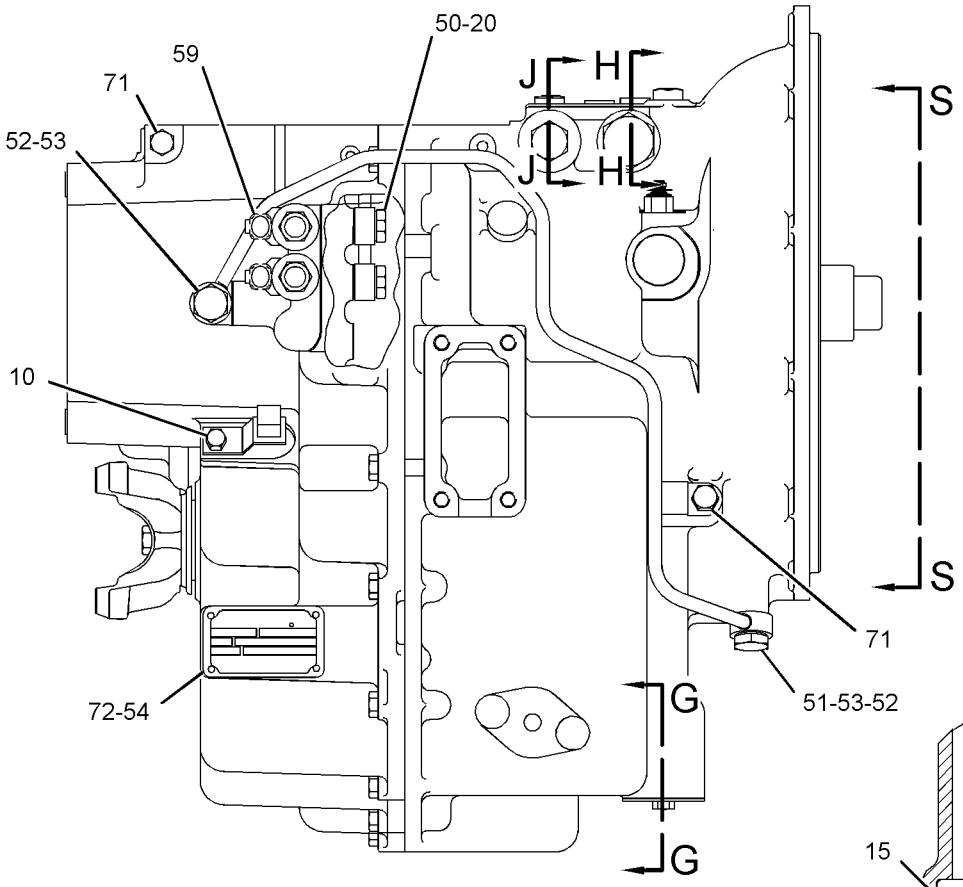

RIGHT SIDE VIEW

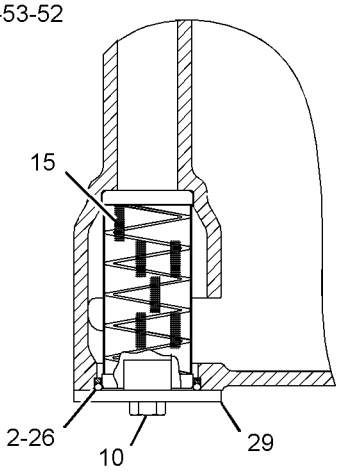

SECTION G-G

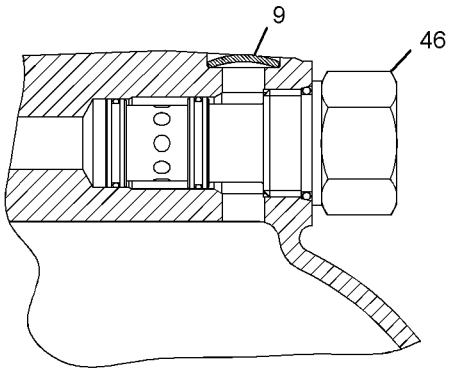

SECTION H-H

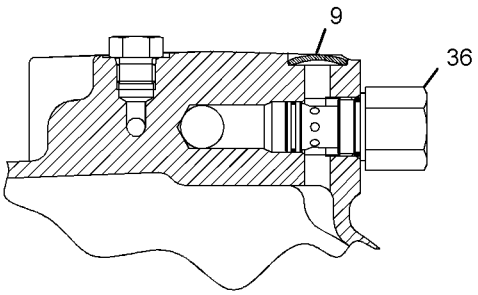

SECTION J-J

REFER TO ALL ILLUSTRATIONS OF
THIS GROUP FOR AUXILIARY VIEWS

GRAPHIC #3

g02827247

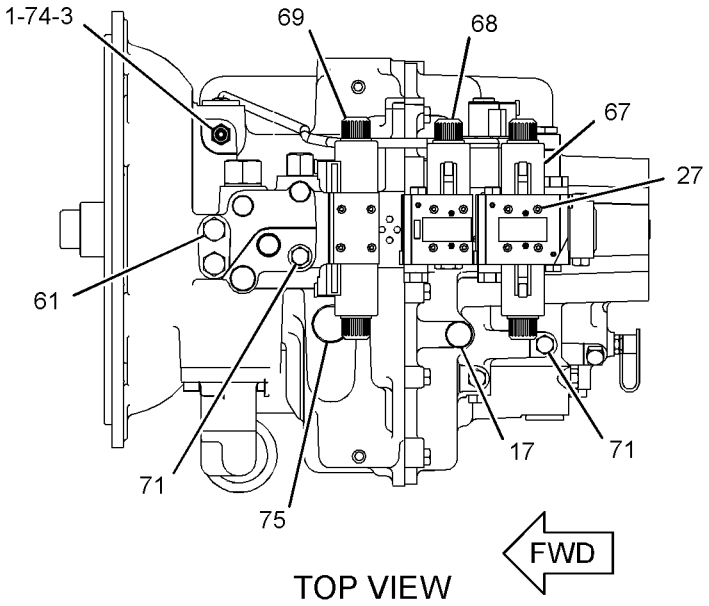

TOP VIEW

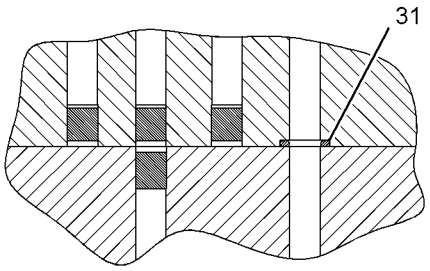

SECTION K-K

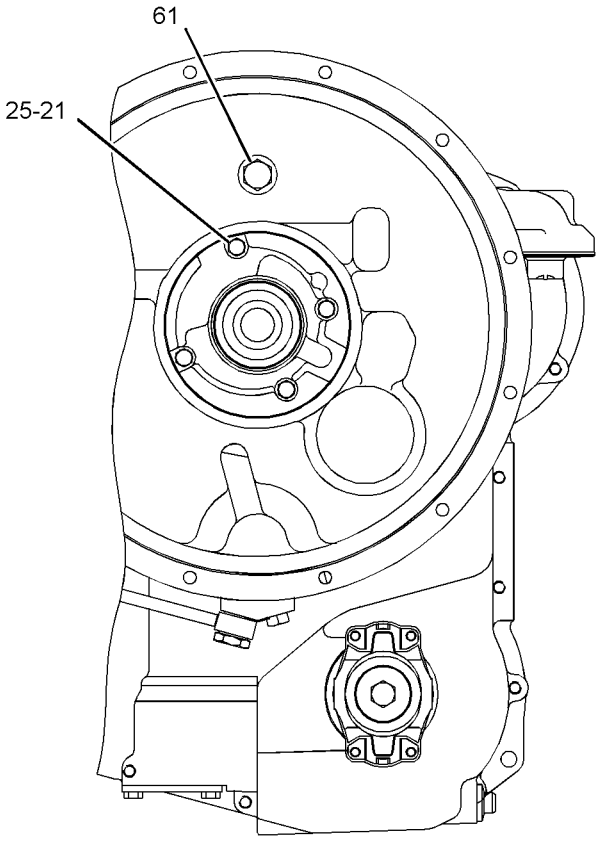

VIEW S-S

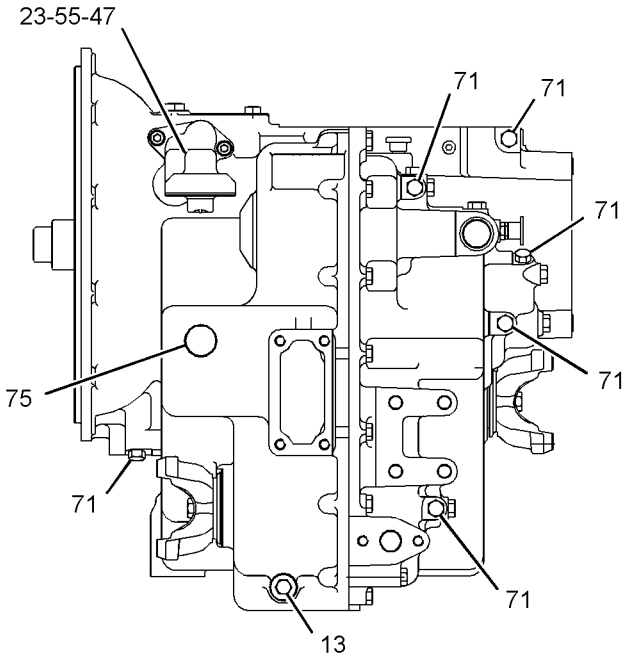

LEFT SIDE VIEW

GRAPHIC #4 **<END>** g02827252

274-8048 VALVE & MTG GP-SOLENOID

S/N: LTG1-UP
PART OF 337-9719 LOCK GP-DIFFERENTIAL
AN ATTACHMENT

SMCS-5479 **i04139542**

NOTE	REF NO	GRAPHIC REF	PART NUMBER	QTY	PART NAME 1 2 3 4 5 6 (PRODUCT LEVEL)	SEE PAGE
M	1	1	**096-5968**	2	BOLT-SOCKET HEAD (M5X0.8X8-MM)	
J	2	1	*274-8041*	1	VALVE GP-SOLENOID (12-VOLT) (DIFFERENTIAL LOCK)	
					AVAILABLE REPAIR KIT(S):	
J			**250-8330**	1	KIT-SEAL (VALVE)	
					(INCLUDES O-RINGS)	

J-KIT MARKED J SERVICES PART MARKED J
M-METRIC PART

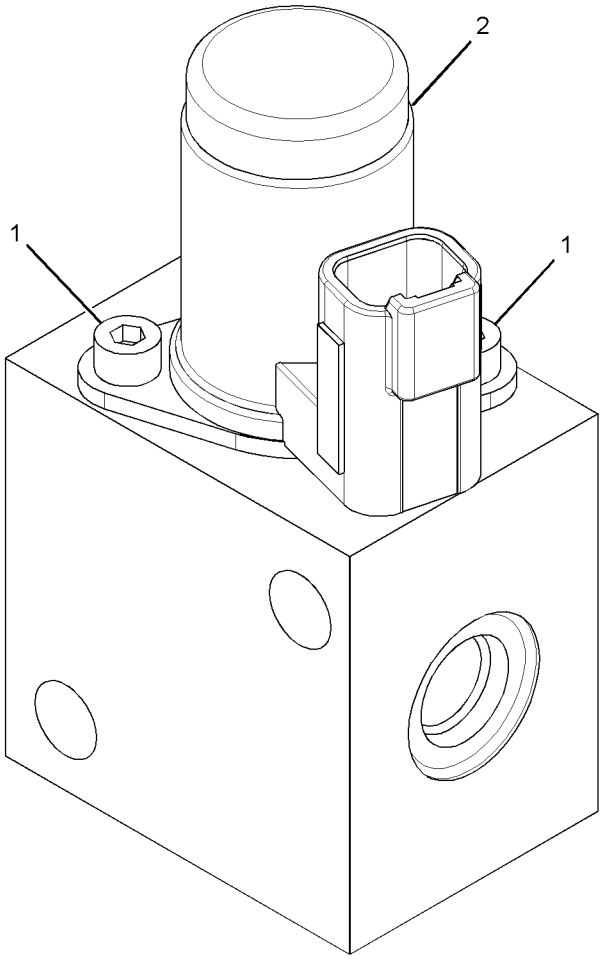

GRAPHIC #1 **<END>** g01346192

147-0209 VALVE GP-RELIEF

S/N: LTG1-UP

PART OF 359-0392, 359-0394, 359-0396 TRANSMISSION GP-DIRECT DRIVE

AN ATTACHMENT

SMCS-3133, 3182, 3210, 3213 **i00724885**

NOTE	REF NO	GRAPHIC REF	PART NUMBER	QTY	PART NAME 1 2 3 4 5 6 (PRODUCT LEVEL)	SEE PAGE
	1	1	**7X-4744**	1	SEAL-O-RING	
	2	1	**6V-9178**	1	SEAL-O-RING	
	3	1	**106-9586**	1	SEAL-O-RING	

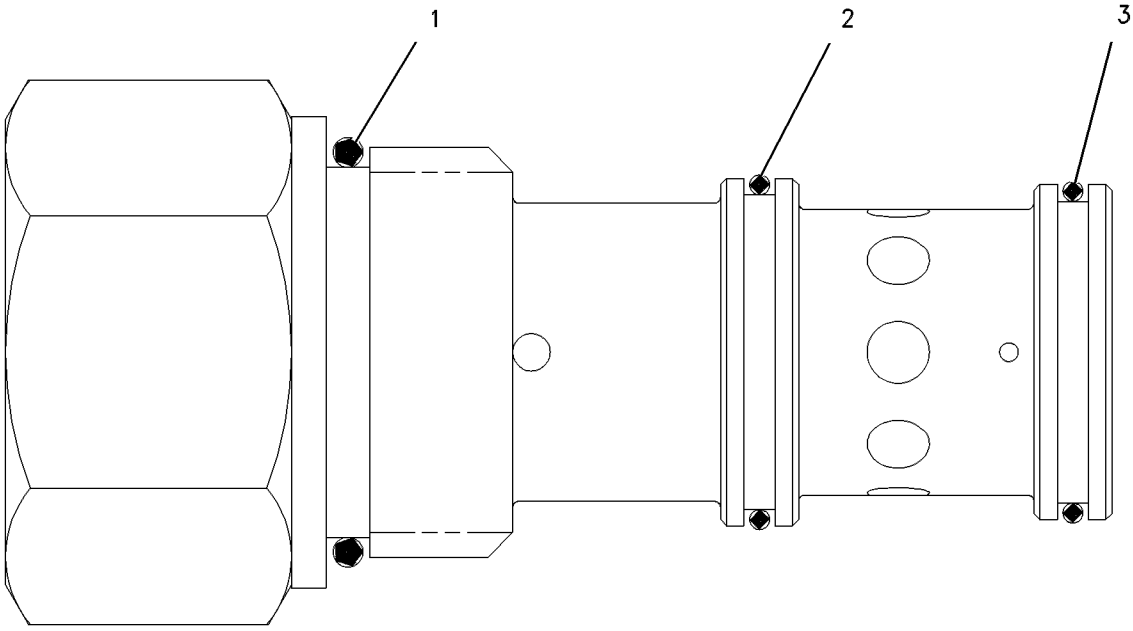

GRAPHIC #1 **<END>** g00304718

278-0209 VALVE GP-SOLENOID

S/N: LTG1-UP
24-VOLT
PART OF 359-0396 TRANSMISSION GP-DIRECT DRIVE
AN ATTACHMENT

SMCS-3174, 5479 **i04611676**

NOTE	REF NO	GRAPHIC REF	PART NUMBER	QTY	PART NAME 1 2 3 4 5 6 (PRODUCT LEVEL)	SEE PAGE
	1	1	**336-4713**	1	CARRIER	
	2	1	**336-4714**	2	SPRING-CENTERING	
	3	1	**336-4715**	1	HOUSING-VALVE BODY	
	4	1	**336-4722**	1	POPPET	
	5	1	**336-4729**	1	HEAD	
	6	1	**336-6804**	1	SPACER	
	7	1	**336-6817**	1	PISTON	
	8	1	**336-6822**	1	LABEL	
	9	1	**336-6824**	1	PLUG	
	10	1	**336-6831**	2	SPRING	
	11	1	**336-6839**	1	SPOOL	
	12	1	**336-6846**	1	PLUG	
	13	1	**336-6847**	1	PLUG	
	14	1	**336-6848**	1	PIN	
	15	1	**336-6908**	2	PLUG	
	16	1	**336-6913**	4	PLUG	
	17	1	**336-6914**	1	PLUG	
	18	1	**336-7113**	2	WASHER-SPECIAL	
	19	1	**336-7114**	1	SPRING	
	20	1	**336-7524**	1	SEAL-O-RING	
	21	1	**336-7526**	1	SEAL-O-RING	
	22	1	**336-7529**	1	SEAL-O-RING	
	23	1	**8L-2779**	4	SEAL-O-RING	
	24	1	**280-7009**	1	COIL AS (12-VOLT)	
	25	1	**280-7012**	1	TUBE AS	
		1	**6V-8399**	1	SEAL-O-RING	
		1	**274-4560**	1	NUT-SELF LOCKING	

278-0209 **VALVE GP-SOLENOID** *(contd.)* **i04611676**

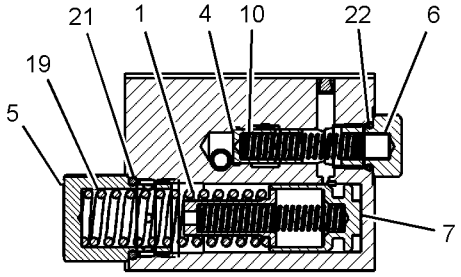

SECTION E-E

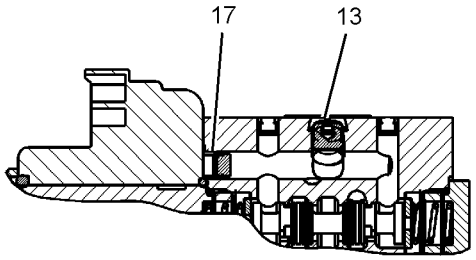

SECTION F-F

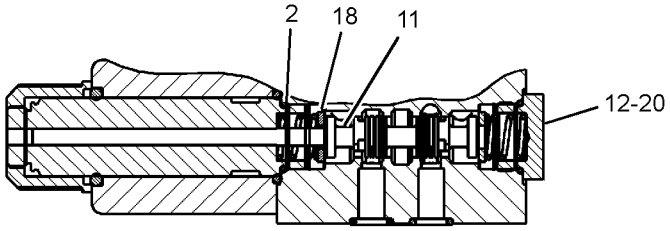

SECTION G-G

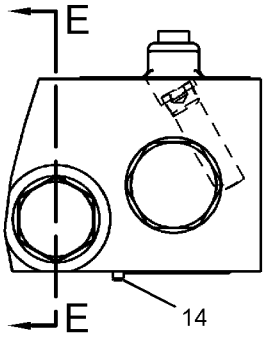

VIEW A-A

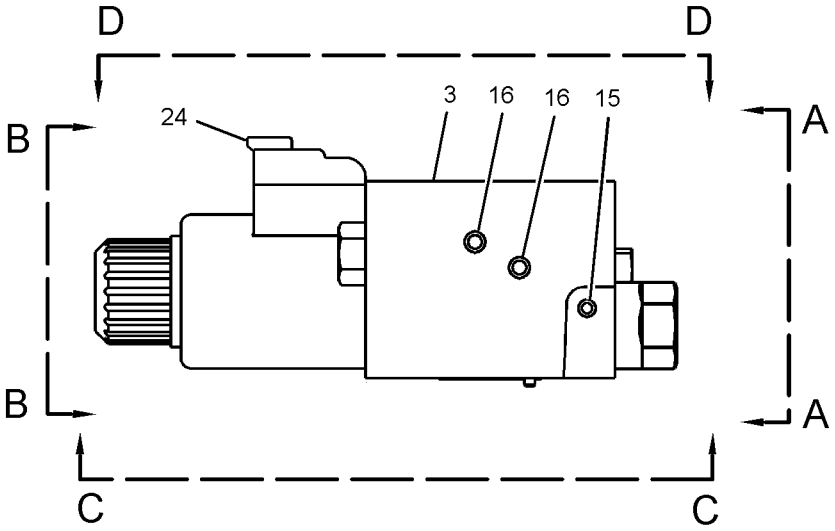

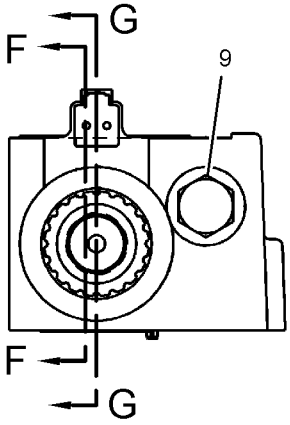

VIEW B-B

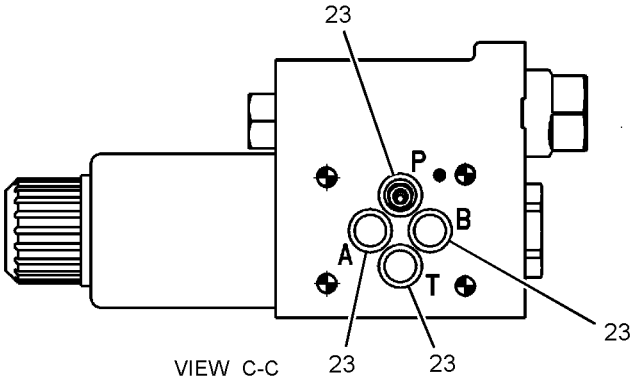

VIEW C-C

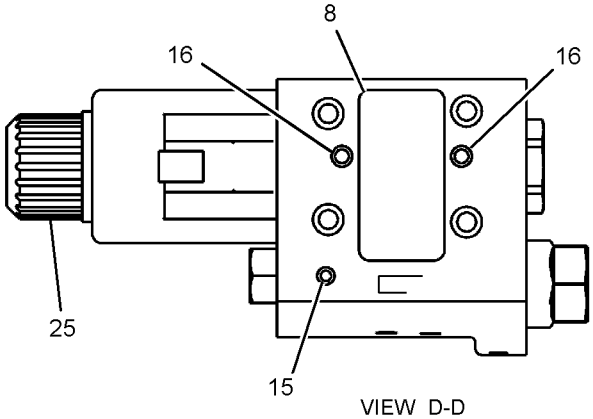

VIEW D-D

GRAPHIC #1 **<END>** g02791891

278-0213 VALVE GP-SOLENOID–CLUTCH

S/N: LTG1-UP
12-VOLT
PART OF 359-0396 TRANSMISSION GP-DIRECT DRIVE
AN ATTACHMENT

SMCS-3174, 5479 **i04611677**

NOTE	REF NO	GRAPHIC REF	PART NUMBER	QTY	PART NAME 1 2 3 4 5 6 (PRODUCT LEVEL)	SEE PAGE
	1	1	**8L-2779**	4	SEAL-O-RING	
	2	1	**218-3597**	1	PLUG-ORIFICE	
	3	1	**286-0867**	2	TUBE AS	
					(EACH INCLUDES)	
		1	**6V-8399**	1	SEAL-O-RING	
		1	**274-4560**	1	NUT-SELF LOCKING	
	4	1	**280-7009**	2	COIL AS (12-VOLT)	

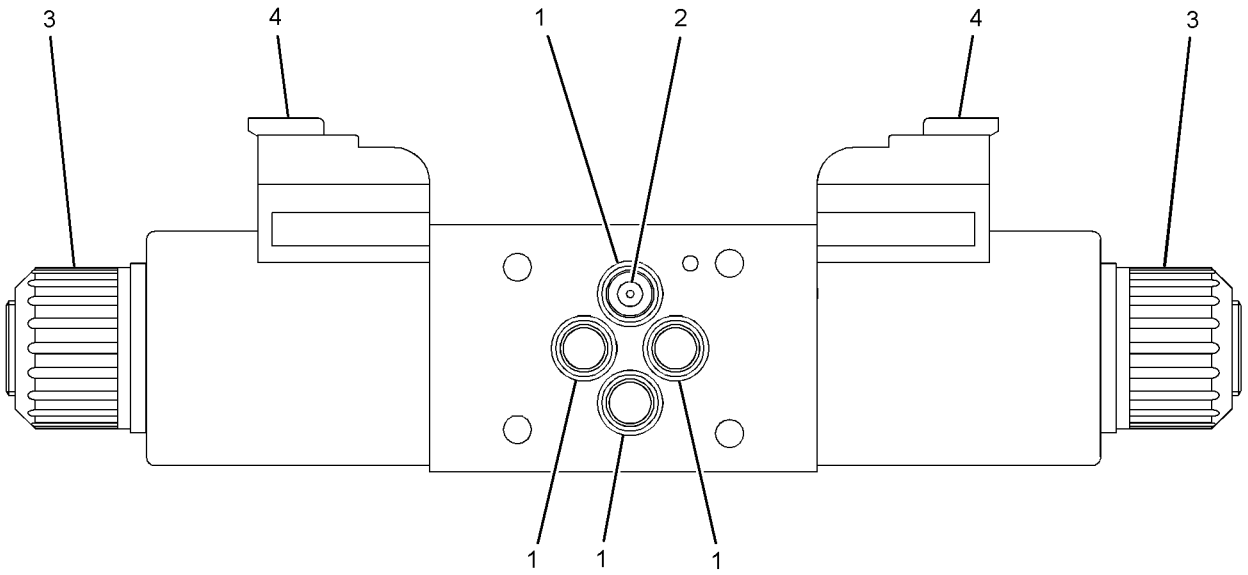

GRAPHIC #1 **<END>** g02791343

280-7010 VALVE GP-SOLENOID—TRANSMISSION

S/N: LTG1-UP
12-VOLT
PART OF 359-0396 TRANSMISSION GP-DIRECT DRIVE
AN ATTACHMENT

SMCS-3174, 5479 **i04611709**

NOTE	REF NO	GRAPHIC REF	PART NUMBER	QTY	PART NAME 1 2 3 4 5 6 (PRODUCT LEVEL)	SEE PAGE
	1	1	**336-4713**	2	CARRIER	
	2	1	**336-4714**	2	SPRING-CENTERING	
	3	1	**336-4722**	2	POPPET	
	4	1	**336-4728**	1	BODY-VALVE	
	5	1	**336-4729**	2	HEAD	
	6	1	**336-6804**	2	SPACER	
	7	1	**336-6817**	2	PISTON	
	8	1	**336-6822**	1	LABEL	
	9	1	**336-6824**	2	PLUG	
	10	1	**336-6831**	4	SPRING	
	11	1	**336-6839**	1	SPOOL	
	12	1	**336-6847**	1	PLUG	
	13	1	**336-6848**	1	PIN	
	14	1	**336-6908**	4	PLUG	
	15	1	**336-6913**	6	PLUG	
	16	1	**336-6914**	1	PLUG	
	17	1	**336-7113**	2	WASHER-SPECIAL	
	18	1	**336-7114**	2	SPRING	
	19	1	**336-7526**	2	SEAL-O-RING	
	20	1	**336-7529**	2	SEAL-O-RING	
	21	1	**8L-2779**	4	SEAL-O-RING	
	22	1	**280-7009**	2	COIL AS (12-VOLT)	
	23	1	**280-7012**	2	TUBE AS	
					(EACH INCLUDES)	
		1	**6V-8399**		SEAL-O-RING	
		1	**274-4560**	1	NUT-SELF LOCKING	

280-7010 **VALVE GP-SOLENOID** *(contd.)* **i04611709**

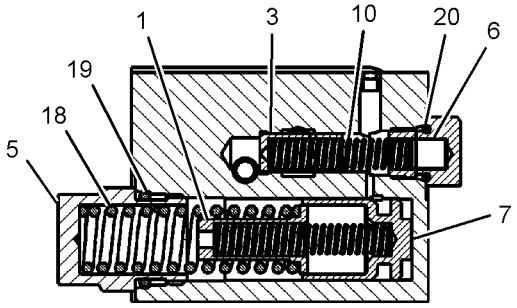

SECTION D-D

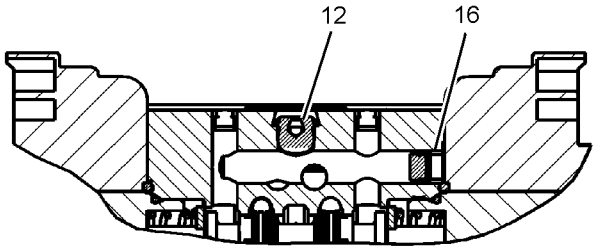

SECTION E-E

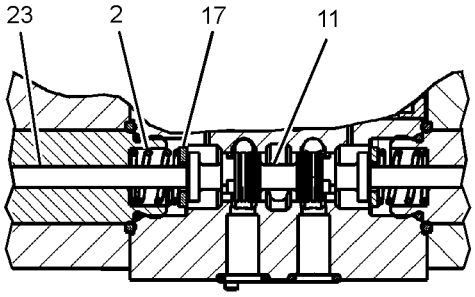

SECTION F-F

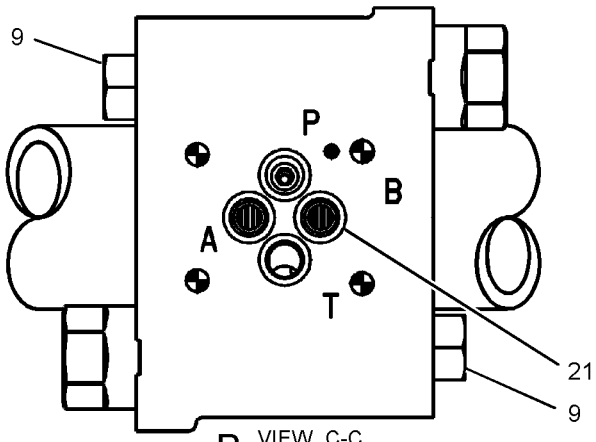

VIEW C-C

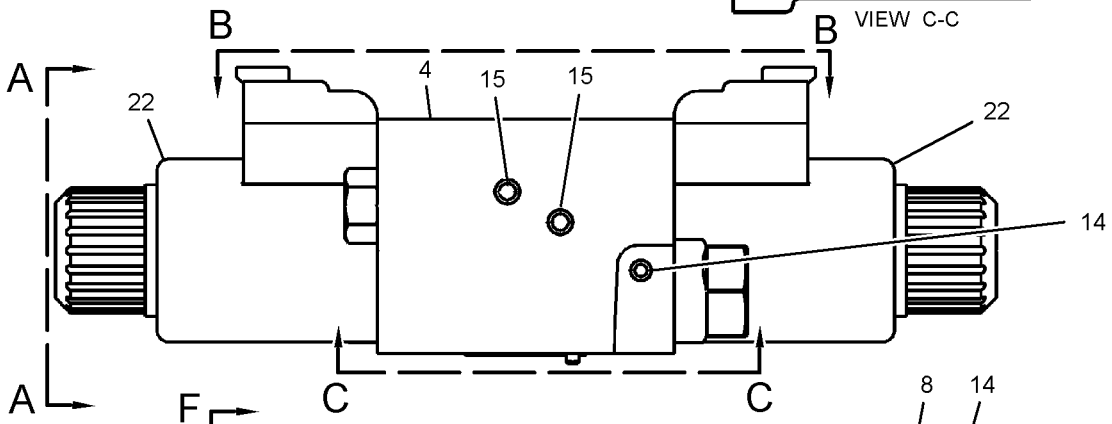

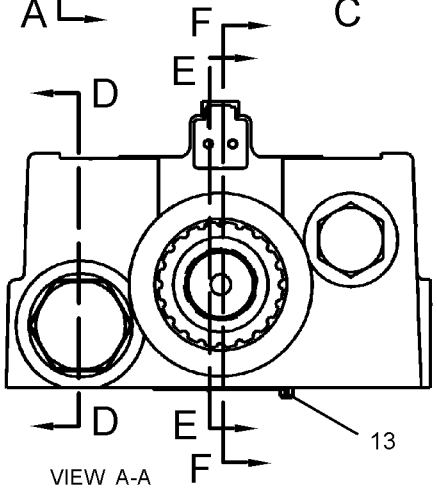

VIEW A-A

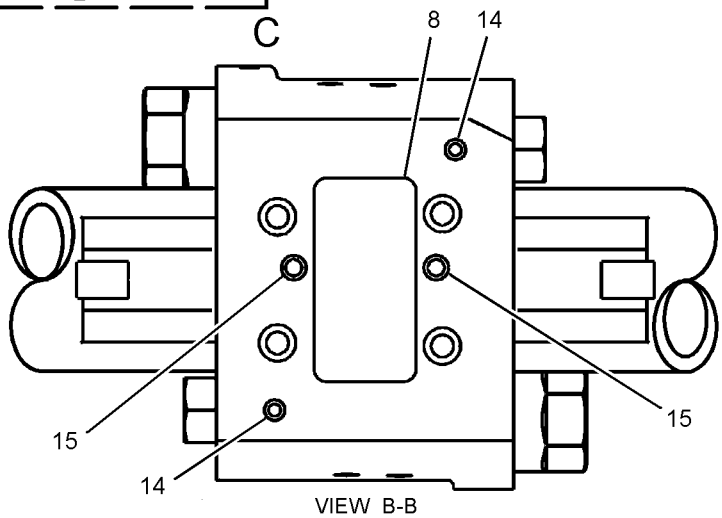

VIEW B-B

GRAPHIC #1 **<END>** g02791407

6D-0337 VALVE GP-TIRE

S/N: LTG1-UP
PART OF 201-1920 VALVE GP-TIRE
AN ATTACHMENT

SMCS-4203 **i03644348**

NOTE	REF NO	GRAPHIC REF	PART NUMBER	QTY	PART NAME 1 2 3 4 5 6 (PRODUCT LEVEL)	SEE PAGE
	1	1	**6D-0443**	1	HOUSING AS-CORE	
	1A	1	**2D-2628**	1	CORE-VALVE	
	1B	1	**2D-2633**	1	CAP (VALVE STEM)	
	2	1	**8D-2707**	1	SPUD AS	
	2A	1	**2D-2629**	1	GROMMET	
	2B	1	**2D-2630**	1	WASHER	
	2C	1	**2D-2631**	1	NUT (0.482-26-THD)	

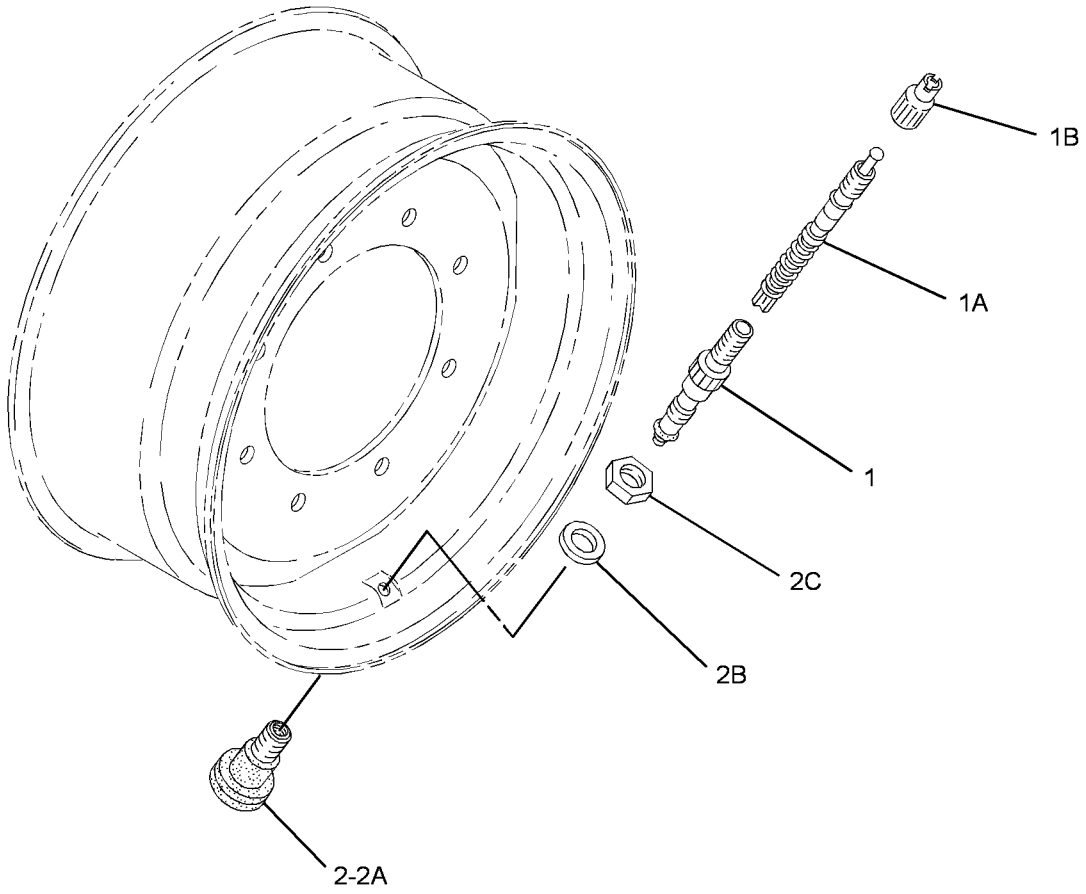

GRAPHIC #1 **<END>** g01955522

201-1920 VALVE GP-TIRE

S/N: LTG1-UP
PART OF 282-3863, 282-3864, 282-3866, 282-3867, 282-3869, 282-3870, 282-3872, 282-3873, 303-0428, 303-0429, 322-4572, 322-4573, 380-8965, 380-8966, 380-8967, 380-8968, 380-8973, 380-8974 WHEEL & TIRE GP
AN ATTACHMENT

SMCS-4203 **i03498408**

NOTE	PART NUMBER	QTY	PART NAME 1 2 3 4 5 6 (PRODUCT LEVEL)	SEE PAGE
Y	**6D-0337**	1	VALVE GP-TIRE	215
Y-SEPARATE ILLUSTRATION				

<END>

282-3853 WHEEL & TIRE AR—2-WHEEL DRIVE, BIAS

S/N: LTG1-UP
AN ATTACHMENT

SMCS-4201, 4202, 4203, 4208, 4209 **i04635389**

NOTE	PART NUMBER	QTY	PART NAME 1 2 3 4 5 6 (PRODUCT LEVEL)	SEE PAGE
Y	*282-3862*	1	WHEEL & TIRE GP (FRONT)	218
Y	*282-3865*	1	WHEEL & TIRE GP (REAR)	219
			—OR—	
Y	*380-8971*	1	WHEEL & TIRE GP (REAR)	226
Y-SEPARATE ILLUSTRATION				

<END>

282-3854 WHEEL & TIRE AR—4-WHEEL DRIVE, BIAS

S/N: LTG1-UP
AN ATTACHMENT

SMCS-4201, 4202, 4203, 4208, 4209 **i03845530**

NOTE	PART NUMBER	QTY	PART NAME 1 2 3 4 5 6 (PRODUCT LEVEL)	SEE PAGE
Y	*282-3865*	1	WHEEL & TIRE GP (REAR)	219
Y	*282-3868*	1	WHEEL & TIRE GP (FRONT)	220
Y-SEPARATE ILLUSTRATION				

<END>

282-3855 WHEEL & TIRE AR—4-WHEEL DRIVE, BIAS

S/N: LTG1-UP
AN ATTACHMENT

SMCS-4201, 4202, 4203, 4208, 4209 **i03856929**

NOTE	PART NUMBER	QTY	PART NAME 1 2 3 4 5 6 (PRODUCT LEVEL)	SEE PAGE
Y	*282-3868*	1	WHEEL & TIRE GP (FRONT)	220
Y	*282-3871*	1	WHEEL & TIRE GP (REAR)	221
Y-SEPARATE ILLUSTRATION				

<END>

320-2384 WHEEL & TIRE AR—4-WHEEL DRIVE

S/N: LTG1-UP
AN ATTACHMENT

SMCS-4201, 4202, 4203, 4208, 4209 **i04041077**

NOTE	PART NUMBER	QTY	PART NAME 1 2 3 4 5 6 (PRODUCT LEVEL)	SEE PAGE
Y	*359-2607*	1	WHEEL & TIRE GP (FRONT)	224
Y	*322-4571*	1	WHEEL & TIRE GP (REAR)	223

Y-SEPARATE ILLUSTRATION

<END>

320-2385 WHEEL & TIRE AR—4-WHEEL DRIVE, BIAS

S/N: LTG1-UP
AN ATTACHMENT

SMCS-4201, 4202, 4203, 4208, 4209 **i04635409**

NOTE	PART NUMBER	QTY	PART NAME 1 2 3 4 5 6 (PRODUCT LEVEL)	SEE PAGE
Y	*359-2607*	1	WHEEL & TIRE GP (FRONT)	224
Y	*282-3865*	1	WHEEL & TIRE GP (REAR)	219
			—OR—	
Y	*380-8971*	1	WHEEL & TIRE GP (REAR)	226

Y-SEPARATE ILLUSTRATION

<END>

380-8960 WHEEL & TIRE AR—4-WHEEL DRIVE

S/N: LTG1-UP
AN ATTACHMENT

SMCS-4201, 4202, 4203, 4208, 4209 **i04597512**

NOTE	PART NUMBER	QTY	PART NAME 1 2 3 4 5 6 (PRODUCT LEVEL)	SEE PAGE
Y	*380-8964*	1	WHEEL & TIRE GP (FRONT)	224
Y	*380-8963*	1	WHEEL & TIRE GP (REAR)	224

Y-SEPARATE ILLUSTRATION

<END>

380-8961 WHEEL & TIRE AR—4-WHEEL DRIVE

S/N: LTG1-UP
AN ATTACHMENT

SMCS-4201, 4202, 4203, 4208, 4209 **i04597549**

NOTE	PART NUMBER	QTY	PART NAME 1 2 3 4 5 6 (PRODUCT LEVEL)	SEE PAGE
Y	*282-3868*	1	WHEEL & TIRE GP (FRONT)	220
Y	*380-8971*	1	WHEEL & TIRE GP (REAR)	226

Y-SEPARATE ILLUSTRATION

<END>

380-8962 WHEEL & TIRE AR—4-WHEEL DRIVE

S/N: LTG1-UP
AN ATTACHMENT

SMCS-4201, 4202, 4203, 4208, 4209 **i04597550**

NOTE	PART NUMBER	QTY	PART NAME 1 2 3 4 5 6 (PRODUCT LEVEL)	SEE PAGE
Y	*380-8964*	1	WHEEL & TIRE GP (FRONT)	224
Y	*380-8971*	1	WHEEL & TIRE GP (REAR)	226

Y-SEPARATE ILLUSTRATION

<END>

282-3862 WHEEL & TIRE GP—FRONT

S/N: LTG1-UP
PART OF 282-3853 WHEEL & TIRE AR
AN ATTACHMENT

SMCS-4201, 4202, 4203, 4208, 4209 **i03982151**

NOTE	PART NUMBER	QTY	PART NAME 1 2 3 4 5 6 (PRODUCT LEVEL)	SEE PAGE
Y	*282-3863*	1	WHEEL & TIRE GP (FRONT, LH)	218
Y	*282-3864*	1	WHEEL & TIRE GP (FRONT, RH)	219

Y-SEPARATE ILLUSTRATION

<END>

282-3863 WHEEL & TIRE GP—FRONT, LH

S/N: LTG1-UP
(8X16)
PART OF 282-3862 WHEEL & TIRE GP
AN ATTACHMENT

SMCS-4201, 4202, 4203, 4208, 4209 **i03848000**

NOTE	PART NUMBER	QTY	PART NAME 1 2 3 4 5 6 (PRODUCT LEVEL)	SEE PAGE
Y	*201-1920*	1	VALVE GP-TIRE	216
	195-6341	1	WHEEL AS (FRONT)	
	276-8086	1	TIRE (11L-16)	

Y-SEPARATE ILLUSTRATION

<END>

282-3864 WHEEL & TIRE GP—FRONT, RH

S/N: LTG1-UP
(8X16)
PART OF 282-3862 WHEEL & TIRE GP
AN ATTACHMENT

SMCS-4201, 4202, 4203, 4208, 4209 **i03848002**

NOTE	PART NUMBER	QTY	PART NAME 1 2 3 4 5 6 (PRODUCT LEVEL)	SEE PAGE
Y	*201-1920*	1	VALVE GP-TIRE	216
	195-6341	1	WHEEL AS (FRONT)	
	276-8086	1	TIRE (11L-16)	
Y-SEPARATE ILLUSTRATION				

<END>

282-3865 WHEEL & TIRE GP—REAR

S/N: LTG1-UP
PART OF 282-3854 WHEEL & TIRE AR
AN ATTACHMENT

SMCS-4201, 4202, 4203, 4208, 4209 **i03967071**

NOTE	PART NUMBER	QTY	PART NAME 1 2 3 4 5 6 (PRODUCT LEVEL)	SEE PAGE
Y	*282-3866*	1	WHEEL & TIRE GP (LH)	219
Y	*282-3867*	1	WHEEL & TIRE GP (RH)	220
Y-SEPARATE ILLUSTRATION				

<END>

282-3866 WHEEL & TIRE GP—LH

S/N: LTG1-UP
(16X24)
PART OF 282-3865 WHEEL & TIRE GP
AN ATTACHMENT

SMCS-4201, 4202, 4203, 4208, 4209 **i03845551**

NOTE	PART NUMBER	QTY	PART NAME 1 2 3 4 5 6 (PRODUCT LEVEL)	SEE PAGE
Y	*201-1920*	1	VALVE GP-TIRE	216
	195-6344	1	WHEEL AS (REAR)	
	276-6820	1	TIRE (19.5L-24)	
Y-SEPARATE ILLUSTRATION				

<END>

282-3867 WHEEL & TIRE GP—RH

S/N: LTG1-UP
(16X24)
PART OF 282-3865 WHEEL & TIRE GP
AN ATTACHMENT

SMCS-4201, 4202, 4203, 4208, 4209 **i03845552**

NOTE	PART NUMBER	QTY	PART NAME 1 2 3 4 5 6 (PRODUCT LEVEL)	SEE PAGE
Y	*201-1920*	1	VALVE GP-TIRE	216
	195-6344	1	WHEEL AS (REAR)	
	276-6820	1	TIRE (19.5L-24)	

Y-SEPARATE ILLUSTRATION

<END>

282-3868 WHEEL & TIRE GP—FRONT

S/N: LTG1-UP
PART OF 282-3854, 282-3855, 380-8961 WHEEL & TIRE AR
AN ATTACHMENT

SMCS-4201, 4202, 4203, 4208, 4209 **i03971341**

NOTE	PART NUMBER	QTY	PART NAME 1 2 3 4 5 6 (PRODUCT LEVEL)	SEE PAGE
Y	*282-3869*	1	WHEEL & TIRE GP (LH)	220
Y	*282-3870*	1	WHEEL & TIRE GP (RH)	221

Y-SEPARATE ILLUSTRATION

<END>

282-3869 WHEEL & TIRE GP—LH

S/N: LTG1-UP
(10X18)
PART OF 282-3868 WHEEL & TIRE GP
AN ATTACHMENT

SMCS-4201, 4202, 4203, 4208, 4209 **i03845570**

NOTE	PART NUMBER	QTY	PART NAME 1 2 3 4 5 6 (PRODUCT LEVEL)	SEE PAGE
Y	*201-1920*	1	VALVE GP-TIRE	216
	202-6186	1	WHEEL AS (FRONT)	
	286-9087	1	TIRE (12.5/80-18)	

Y-SEPARATE ILLUSTRATION

<END>

282-3870 WHEEL & TIRE GP–RH

S/N: LTG1-UP
(10X18)
PART OF 282-3868 WHEEL & TIRE GP
AN ATTACHMENT

SMCS-4201, 4202, 4203, 4208, 4209 **i03845571**

NOTE	PART NUMBER	QTY	PART NAME 1 2 3 4 5 6 (PRODUCT LEVEL)	SEE PAGE
Y	*201-1920*	1	VALVE GP-TIRE	216
	202-6186	1	WHEEL AS (FRONT)	
	286-9087	1	TIRE (12.5/80-18)	

Y-SEPARATE ILLUSTRATION

<END>

282-3871 WHEEL & TIRE GP–REAR

S/N: LTG1-UP
PART OF 282-3855 WHEEL & TIRE AR
AN ATTACHMENT

SMCS-4201, 4202, 4203, 4208, 4209 **i04032138**

NOTE	PART NUMBER	QTY	PART NAME 1 2 3 4 5 6 (PRODUCT LEVEL)	SEE PAGE
Y	*282-3872*	1	WHEEL & TIRE GP (LH)	221
Y	*282-3873*	1	WHEEL & TIRE GP (RH)	222

Y-SEPARATE ILLUSTRATION

<END>

282-3872 WHEEL & TIRE GP–LH

S/N: LTG1-UP
(18X24)
PART OF 282-3871 WHEEL & TIRE GP
AN ATTACHMENT

SMCS-4201, 4202, 4203, 4208, 4209 **i03856992**

NOTE	PART NUMBER	QTY	PART NAME 1 2 3 4 5 6 (PRODUCT LEVEL)	SEE PAGE
Y	*201-1920*	1	VALVE GP-TIRE	216
	272-5111	1	WHEEL AS (REAR)	
	272-5116	1	TIRE (21L-24)	

Y-SEPARATE ILLUSTRATION

<END>

282-3873 WHEEL & TIRE GP–RH

S/N: LTG1-UP
(18X24)
PART OF 282-3871 WHEEL & TIRE GP
AN ATTACHMENT

SMCS-4201, 4202, 4203, 4208, 4209 **i03856993**

NOTE	PART NUMBER	QTY	PART NAME 1 2 3 4 5 6 (PRODUCT LEVEL)	SEE PAGE
Y	*201-1920*	1	VALVE GP-TIRE	216
	272-5111	1	WHEEL AS (REAR)	
	272-5116	1	TIRE (21L-24)	

Y-SEPARATE ILLUSTRATION

<END>

303-0428 WHEEL & TIRE GP–FRONT, LH

S/N: LTG1-UP
(10X18)
PART OF 359-2607 WHEEL & TIRE GP
AN ATTACHMENT

SMCS-4201, 4202, 4203, 4208, 4209 **i03592819**

NOTE	PART NUMBER	QTY	PART NAME 1 2 3 4 5 6 (PRODUCT LEVEL)	SEE PAGE
Y	*201-1920*	1	VALVE GP-TIRE	216
	202-6186	1	WHEEL AS (FRONT)	
	259-2940	1	TIRE (340/80-R18)	

Y-SEPARATE ILLUSTRATION

<END>

303-0429 WHEEL & TIRE GP–FRONT, RH

S/N: LTG1-UP
(10X18)
PART OF 359-2607 WHEEL & TIRE GP
AN ATTACHMENT

SMCS-4201, 4202, 4203, 4208, 4209 **i03592820**

NOTE	PART NUMBER	QTY	PART NAME 1 2 3 4 5 6 (PRODUCT LEVEL)	SEE PAGE
Y	*201-1920*	1	VALVE GP-TIRE	216
	202-6186	1	WHEEL AS (FRONT)	
	259-2940	1	TIRE (340/80-R18)	

Y-SEPARATE ILLUSTRATION

<END>

322-4571 WHEEL & TIRE GP—REAR

S/N: LTG1-UP
PART OF 320-2384 WHEEL & TIRE AR
AN ATTACHMENT

SMCS-4201, 4202, 4203, 4208, 4209 **i03982189**

NOTE	PART NUMBER	QTY	PART NAME 1 2 3 4 5 6 (PRODUCT LEVEL)	SEE PAGE
Y	*322-4572*	1	WHEEL & TIRE GP (LH, REAR)	223
Y	*322-4573*	1	WHEEL & TIRE GP (RH, REAR)	223
Y-SEPARATE ILLUSTRATION				

<END>

322-4572 WHEEL & TIRE GP—LH

S/N: LTG1-UP
(16X24)
PART OF 322-4571 WHEEL & TIRE GP
AN ATTACHMENT

SMCS-4201, 4202, 4203, 4208, 4209 **i03847994**

NOTE	PART NUMBER	QTY	PART NAME 1 2 3 4 5 6 (PRODUCT LEVEL)	SEE PAGE
Y	*201-1920*	1	VALVE GP-TIRE	216
	195-6344	1	WHEEL AS (REAR)	
	322-4574	1	TIRE (500/70-R24)	
Y-SEPARATE ILLUSTRATION				

<END>

322-4573 WHEEL & TIRE GP—RH

S/N: LTG1-UP
(16X24)
PART OF 322-4571 WHEEL & TIRE GP
AN ATTACHMENT

SMCS-4201, 4202, 4203, 4208, 4209 **i03847995**

NOTE	PART NUMBER	QTY	PART NAME 1 2 3 4 5 6 (PRODUCT LEVEL)	SEE PAGE
Y	*201-1920*	1	VALVE GP-TIRE	216
	195-6344	1	WHEEL AS (REAR)	
	322-4574	1	TIRE (500/70-R24)	
Y-SEPARATE ILLUSTRATION				

<END>

359-2607 WHEEL & TIRE GP—REAR

S/N: LTG1-UP
PART OF 320-2384, 320-2385 WHEEL & TIRE AR
AN ATTACHMENT

SMCS-4201, 4202, 4203, 4208, 4209 **i04354091**

NOTE	PART NUMBER	QTY	PART NAME 1 2 3 4 5 6 (PRODUCT LEVEL)	SEE PAGE
Y	*303-0428*	1	WHEEL & TIRE GP (FRONT, LH)	222
Y	*303-0429*	1	WHEEL & TIRE GP (FRONT, RH)	222

Y-SEPARATE ILLUSTRATION

<END>

380-8963 WHEEL & TIRE GP—REAR

S/N: LTG1-UP
PART OF 380-8960 WHEEL & TIRE AR
AN ATTACHMENT

SMCS-4201, 4202, 4203, 4208, 4209 **i04597551**

NOTE	PART NUMBER	QTY	PART NAME 1 2 3 4 5 6 (PRODUCT LEVEL)	SEE PAGE
Y	*380-8965*	1	WHEEL & TIRE GP (REAR, LH)	224
Y	*380-8966*	1	WHEEL & TIRE GP (REAR, RH)	225

Y-SEPARATE ILLUSTRATION

<END>

380-8964 WHEEL & TIRE GP—FRONT

S/N: LTG1-UP
PART OF 380-8960, 380-8962 WHEEL & TIRE AR
AN ATTACHMENT

SMCS-4201, 4202, 4203, 4208, 4209 **i04602910**

NOTE	PART NUMBER	QTY	PART NAME 1 2 3 4 5 6 (PRODUCT LEVEL)	SEE PAGE
Y	*380-8967*	1	WHEEL & TIRE GP (FRONT, LH)	225
Y	*380-8968*	1	WHEEL & TIRE GP (FRONT, RH)	225

Y-SEPARATE ILLUSTRATION

<END>

380-8965 WHEEL & TIRE GP—REAR, LH

S/N: LTG1-UP
PART OF 380-8963 WHEEL & TIRE GP
AN ATTACHMENT

SMCS-4201, 4202, 4203, 4208, 4209 **i04602912**

NOTE	PART NUMBER	QTY	PART NAME 1 2 3 4 5 6 (PRODUCT LEVEL)	SEE PAGE
Y	*201-1920*	1	VALVE GP-TIRE	216
	195-6344	1	WHEEL AS (REAR)	
	380-8969	1	TIRE (500/70-R24)	

Y-SEPARATE ILLUSTRATION

<END>

380-8966 WHEEL & TIRE GP—REAR, RH

S/N: LTG1-UP
PART OF 380-8963 WHEEL & TIRE GP
AN ATTACHMENT

SMCS-4201, 4202, 4203, 4208, 4209 **i04602898**

NOTE	PART NUMBER	QTY	PART NAME 1 2 3 4 5 6 (PRODUCT LEVEL)	SEE PAGE
Y	*201-1920*	1	VALVE GP-TIRE	216
	195-6344	1	WHEEL AS (REAR)	
	380-8969	1	TIRE (500/70-R24)	

Y-SEPARATE ILLUSTRATION

<END>

380-8967 WHEEL & TIRE GP—FRONT, LH

S/N: LTG1-UP
PART OF 380-8964 WHEEL & TIRE GP
AN ATTACHMENT

SMCS-4201, 4202, 4203, 4208, 4209 **i04602897**

NOTE	PART NUMBER	QTY	PART NAME 1 2 3 4 5 6 (PRODUCT LEVEL)	SEE PAGE
Y	*201-1920*	1	VALVE GP-TIRE	216
	202-6186	1	WHEEL AS (FRONT)	
	380-8970	1	TIRE (340/80-R18)	

Y-SEPARATE ILLUSTRATION

<END>

380-8968 WHEEL & TIRE GP—FRONT, RH

S/N: LTG1-UP
PART OF 380-8964 WHEEL & TIRE GP
AN ATTACHMENT

SMCS-4201, 4202, 4203, 4208, 4209 **i04602911**

NOTE	PART NUMBER	QTY	PART NAME 1 2 3 4 5 6 (PRODUCT LEVEL)	SEE PAGE
Y	*201-1920*	1	VALVE GP-TIRE	216
	202-6186	1	WHEEL AS (FRONT)	
	380-8970	1	TIRE (340/80-R18)	

Y-SEPARATE ILLUSTRATION

<END>

380-8971 WHEEL & TIRE GP

S/N: LTG1-UP
PART OF 282-3853, 320-2385, 380-8961, 380-8962 WHEEL & TIRE AR
AN ATTACHMENT

SMCS-4201, 4202, 4203, 4208, 4209 **i04602913**

NOTE	PART NUMBER	QTY	PART NAME 1 2 3 4 5 6 (PRODUCT LEVEL)	SEE PAGE
Y	*380-8973*	1	WHEEL & TIRE GP (REAR, LH)	226
Y	*380-8974*	1	WHEEL & TIRE GP (REAR, RH)	226

Y-SEPARATE ILLUSTRATION

<END>

380-8973 WHEEL & TIRE GP—REAR, LH

S/N: LTG1-UP
PART OF 380-8971 WHEEL & TIRE GP
AN ATTACHMENT

SMCS-4201, 4202, 4203, 4208, 4209 **i04602899**

NOTE	PART NUMBER	QTY	PART NAME 1 2 3 4 5 6 (PRODUCT LEVEL)	SEE PAGE
Y	*201-1920*	1	VALVE GP-TIRE	216
	195-6344	1	WHEEL AS (REAR)	
	380-8977	1	TIRE (19.5L-24)	

Y-SEPARATE ILLUSTRATION

<END>

380-8974 WHEEL & TIRE GP—REAR, RH

S/N: LTG1-UP
PART OF 380-8971 WHEEL & TIRE GP
AN ATTACHMENT

SMCS-4201, 4202, 4203, 4208, 4209 **i04602909**

NOTE	PART NUMBER	QTY	PART NAME 1 2 3 4 5 6 (PRODUCT LEVEL)	SEE PAGE
Y	*201-1920*	1	VALVE GP-TIRE	216
	195-6344	1	WHEEL AS (REAR)	
	380-8977	1	TIRE (19.5L-24)	

Y-SEPARATE ILLUSTRATION

<END>

206-1642 CONTROL GP-PARKING BRAKE

S/N: LTG1-UP

PART OF 353-1502, 353-1503 DRIVE AR-BACKHOE LOADER

AN ATTACHMENT

SMCS-4282, 4284 **i04643270**

NOTE	REF NO	GRAPHIC REF	PART NUMBER	QTY	PART NAME 1 2 3 4 5 6 (PRODUCT LEVEL)	SEE PAGE
	1	1	**7K-1181**	1	STRAP-CABLE	
	2	1	**154-5416**	1	SWITCH AS (PARKING BRAKE)	
		1	**155-2270**	1	KIT-CONNECTING PLUG (2-PIN)	
					(INCLUDES PLUG AS, WEDGE & INTERFACE SEAL)	
	3	1	**164-1368**	2	FASTENER-PANEL	
	4	1	**261-9635**	1	BOOT (PARKING BRAKE)	
CY	5	1	**389-7167**	1	CONTROL GP-PARKING BRAKE	228
	6	1	**8T-4224**	2	WASHER-HARD (8.8X16X2-MM THK)	
M	7	1	**8T-6912**	2	BOLT (M8X1.25X50-MM)	
	8	1	**9R-2806**	1	PIN	
	9	1	**9R-2807**	1	CLIP	

C-CHANGE FROM PREVIOUS TYPE
M-METRIC PART
Y-SEPARATE ILLUSTRATION

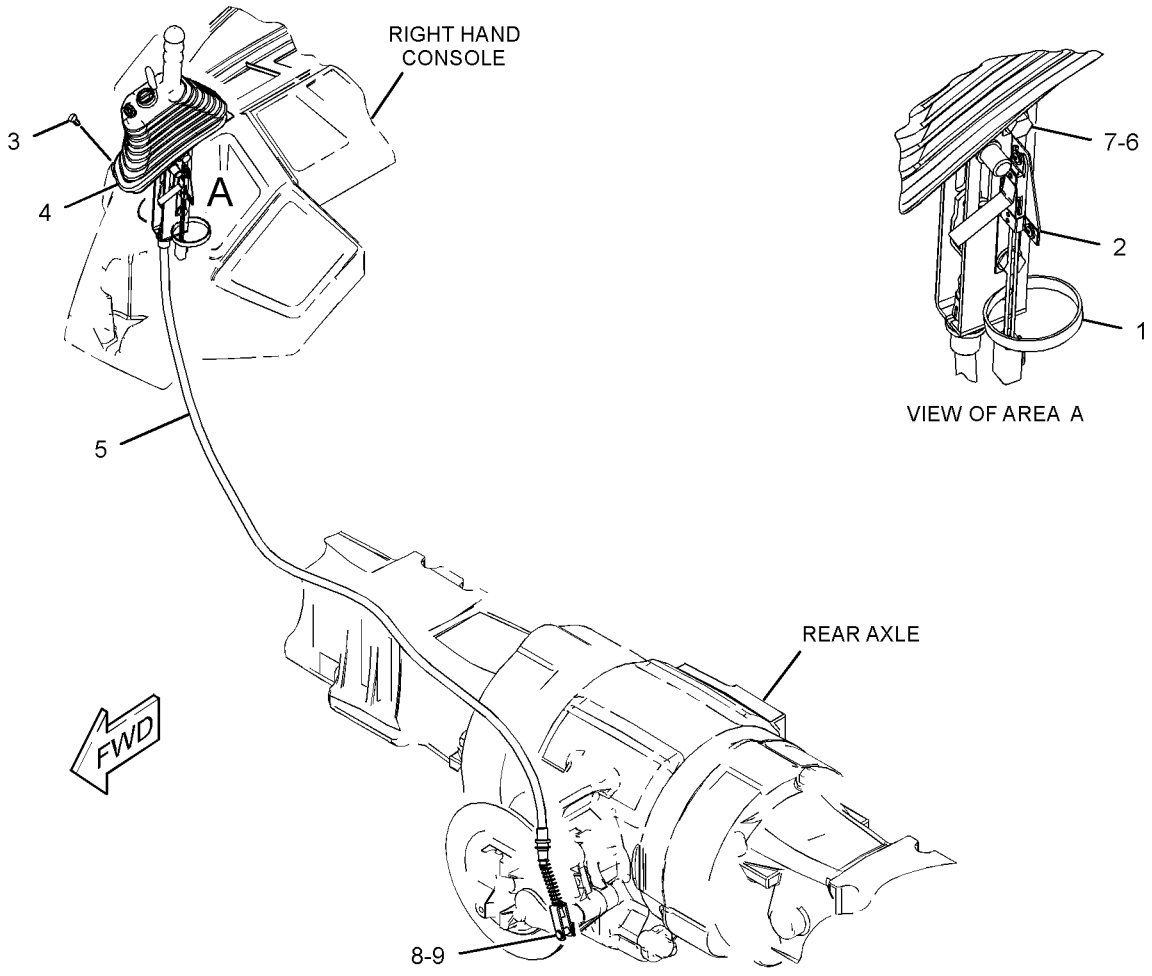

GRAPHIC #1 **<END>** g02821346

389-7167 CONTROL GP-PARKING BRAKE

S/N: LTG1-UP

PART OF 206-1642 CONTROL GP-PARKING BRAKE

AN ATTACHMENT

SMCS-4282, 4284 **i04643273**

NOTE	REF NO	GRAPHIC REF	PART NUMBER	QTY	PART NAME 1 2 3 4 5 6 (PRODUCT LEVEL)	SEE PAGE
Y	1	1	**163-0753**	1	LEVER GP-HAND CONTROL	236
	2	1	**389-7168**	1	CABLE AS	
		1	**6V-8759**	1	RING-RETAINING	

Y-SEPARATE ILLUSTRATION

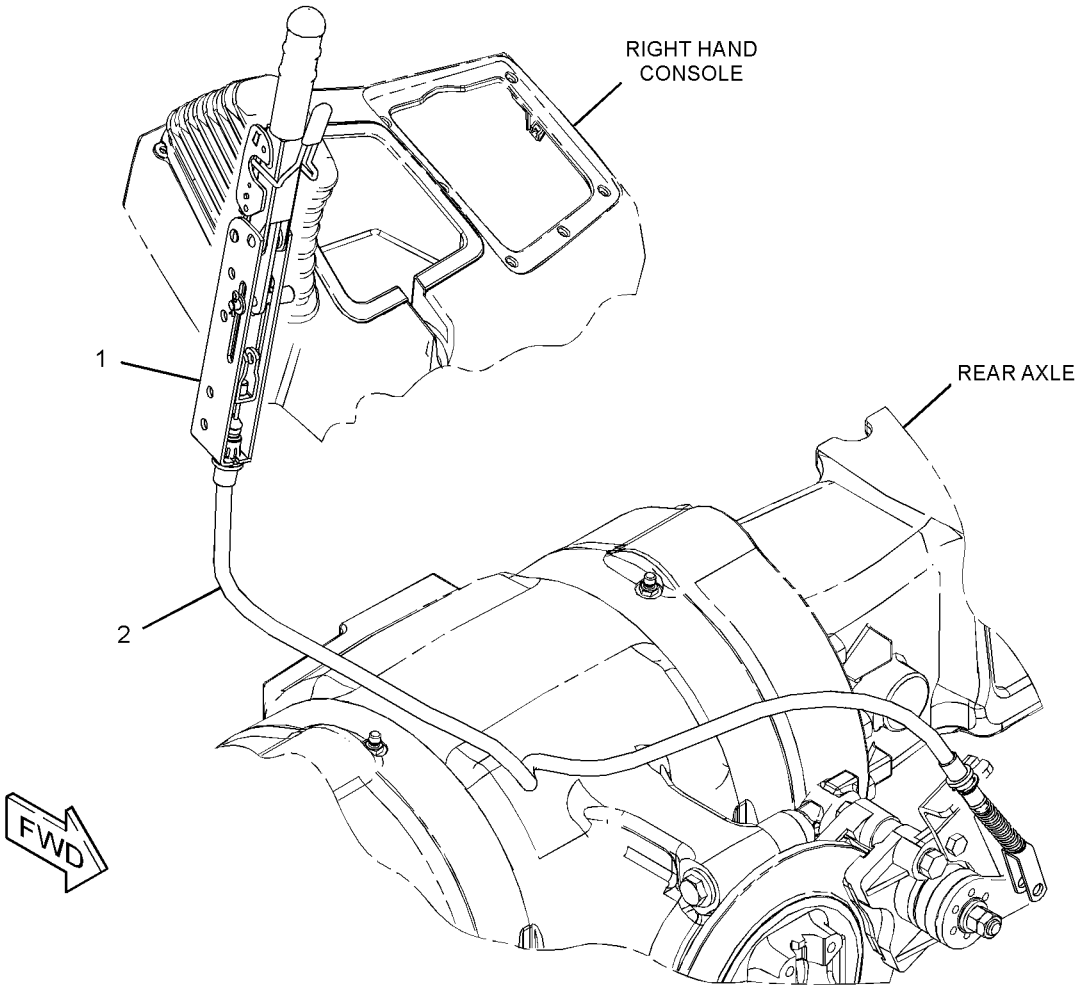

GRAPHIC #1 **<END>** g02822458

341-6684 CONTROL GP-SERVICE BRAKE—STANDARD SHIFT

S/N: LTG1-UP

PART OF 340-1715 HYDRAULIC AR

SMCS-4269 **i04689390**

NOTE	REF NO	GRAPHIC REF	PART NUMBER	QTY	PART NAME 1 2 3 4 5 6 (PRODUCT LEVEL)	SEE PAGE
E	1	1	**5P-0743**		HOSE (15-CM)	
	2	1	**7K-1181**	4	STRAP-CABLE	
	3	1	**9R-9901**	2	FASTENER	
	4	1	**105-8034**	2	SWITCH AS-LIMIT (SERVICE BRAKE)	
	5	1	**151-4841**	2	BLOCK	
	6	1	**153-2997**	1	FITTING AS (QUICK DISCONNECT, FEMALE)	
	7	1	**156-3631**	1	FITTING AS	
		1	**3K-0360**	1	SEAL-O-RING	
	8	1	**165-6595**	1	PIN AS	
	9	1	*170-0967*	1	ELBOW AS	
		1	**3K-0360**	1	SEAL-O-RING	
		1	**5P-4906**	1	ELBOW	
	10	1	*194-2903*	1	ELBOW AS	
		1	**3K-0360**	1	SEAL-O-RING	
		1	**8T-0119**	1	ELBOW	
	11	1	**202-5993**	1	PLATE	
	12	1	**206-1634**	1	PLATE AS	
M		1	**6V-4248**	2	BOLT (M10X1.5X25-MM)	
M		1	**6V-9632**	5	NUT-WELD (M6X1-THD)	
		1	**7T-1099**	4	LINK	
M		1	**8T-4908**	1	BOLT (M8X1.25X25-MM)	
	13	1	**206-1752**	1	PLATE AS	
	14	1	**206-1766**	2	PIN	
	15	1	**206-1767**	1	SPRING (LH)	
	16	1	**220-8226**	1	VALVE AS-BRAKE (BOOST)	
		1	**262-4084**	2	BOOT	
I	17	1	**253-1549**	1	HOSE AS	
	18	1	**262-4081**	2	END-YOKE ROD	
	19	1	**275-0652**	1	PEDAL AS (LH)	
	19A	1	**202-6029**	2	BUSHING	
	20	1	**275-0653**	1	PEDAL AS (RH)	
	20A	1	**202-6029**	2	BUSHING	
	21	1	**286-1930**	2	RING-RETAINING	
	22	1	**291-8379**	1	COVER-BRAKE	
	23	1	**298-3599**	1	PLATE AS	
	24	1	**356-4064**	1	GROMMET	
I	25	1	**362-5364**	1	HOSE AS	
I	26	1	**365-2868**	1	HOSE AS	
M	27	1	**142-0485**	2	NUT (M10X1.5-THD)	
	28	1	*148-8325*	4	CONNECTOR AS	
					(EACH INCLUDES)	
		1	**3J-1907**	1	SEAL-O-RING	
		1	**4J-5477**	1	SEAL-O-RING	
		1	**6V-8641**	1	CONNECTOR	
	29	1	*148-8374*	1	ELBOW AS	
		1	**3K-0360**	1	SEAL-O-RING	
		1	**6V-8397**	1	SEAL-O-RING	
		1	**6V-8723**	1	ELBOW	
	30	1	*148-8378*	1	ELBOW AS	
		1	**3J-1907**	1	SEAL-O-RING	
		1	**6V-8397**	1	SEAL-O-RING	
		1	**6V-8724**	1	ELBOW	
	31	1	**206-1768**	1	SPRING (RH)	
	32	1	**277-1873**	1	CLIP	
	33	1	**2K-5986**	1	PIN-SPRING	
	34	1	**359-7325**	2	CLAMP-HOSE	

341-6684 **CONTROL GP-SERVICE BRAKE** *(contd.)* **i04689390**

NOTE	REF NO	GRAPHIC REF	PART NUMBER	QTY	PART NAME 1 2 3 4 5 6 (PRODUCT LEVEL)	SEE PAGE
	35	1	**3K-0360**	1	SEAL-O-RING	
M	36	1	**5C-2890**	1	NUT (M6X1-THD)	
M	37	1	**5C-7261**	6	NUT (M8X1.25-THD)	
	38	1	**5P-4116**	4	WASHER-HARD (8.8X20.5X2-MM THK)	
M	39	1	**6V-7357**	1	BOLT (M6X1X25-MM)	
	40	1	**7X-7729**	6	WASHER (11X25X3-MM THK)	
	41	1	**8T-4121**	1	WASHER-HARD (11X21X2.5-MM THK)	
M	42	1	**8T-4133**	2	NUT (M10X1.5-THD)	
M	43	1	**8T-4136**	5	BOLT (M10X1.5X25-MM)	
M	44	1	**8T-4138**	1	BOLT (M6X1X20-MM)	
	45	1	**8T-4205**	1	WASHER-HARD (7.2X14.5X2-MM THK)	
	46	1	**8T-4224**	4	WASHER-HARD (8.8X16X2-MM THK)	
M	47	1	**8T-4908**	2	BOLT (M8X1.25X25-MM)	
	48	1	**9R-2807**	2	CLIP	
	49	1	**9R-5615**	2	PLUG	
M	50	1	**9X-2044**	2	SCREW-TRUSS HEAD (M6X1X16-MM)	
M	51	1	**9X-2045**	4	SCREW-TRUSS HEAD (M6X1X20-MM)	

E-ORDER BY THE CENTIMETER
I-REFER TO HYDRAULIC INFORMATION SYSTEM
M-METRIC PART

341-6684 **CONTROL GP-SERVICE BRAKE** *(contd.)* **i04689390**

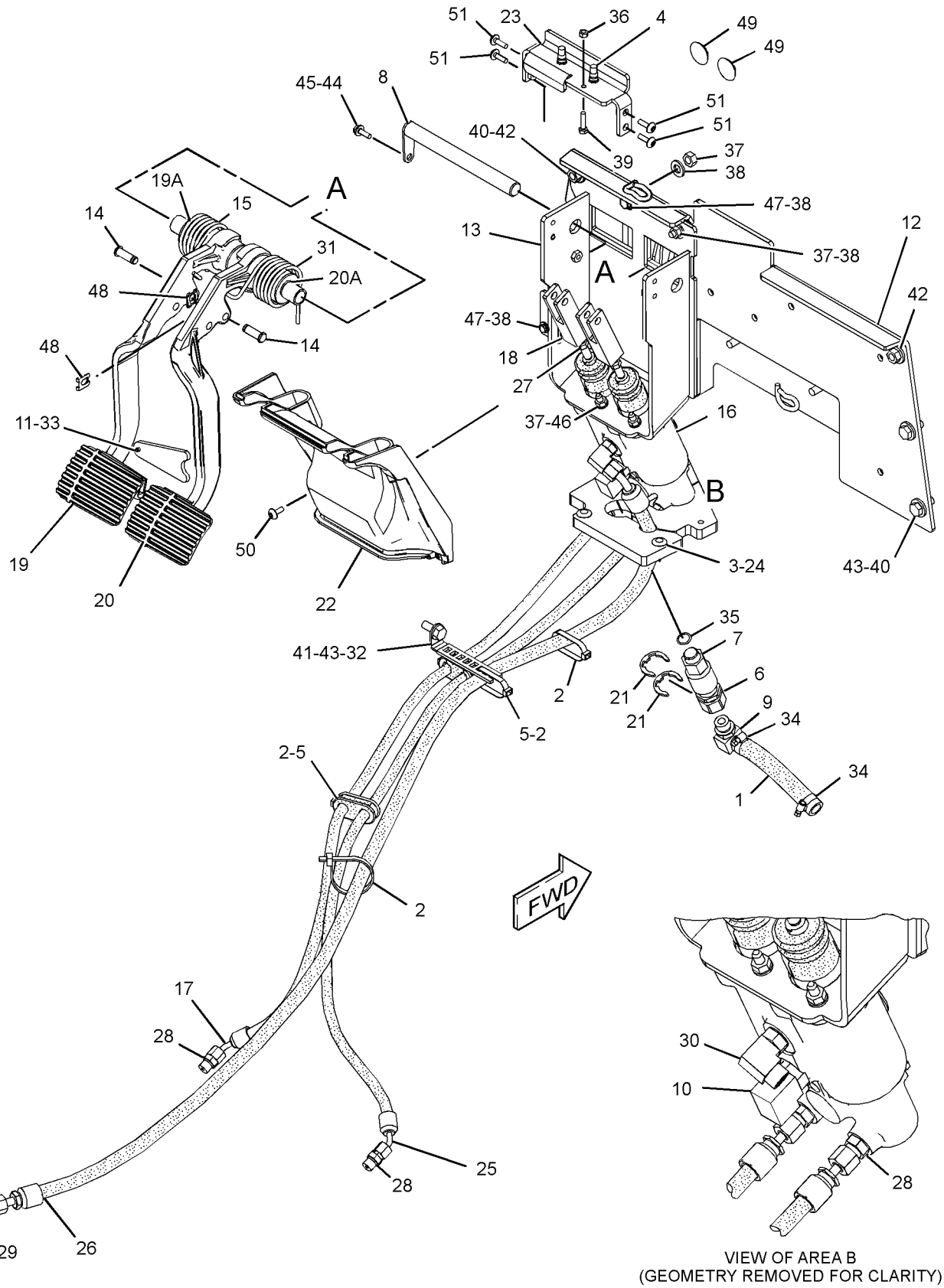

VIEW OF AREA B
(GEOMETRY REMOVED FOR CLARITY)

GRAPHIC #1 **<END>** g02761337

216-1612 CYLINDER GP-BRAKE

S/N: LTG1-UP
PART OF 238-5289 HOUSING GP-AXLE
AN ATTACHMENT

SMCS-4262 **i04403972**

NOTE	REF NO	GRAPHIC REF	PART NUMBER	QTY	PART NAME 1 2 3 4 5 6 (PRODUCT LEVEL)	SEE PAGE
JM	1	1	**6V-2315**	3	BOLT (M6X1X35-MM)	
LM	2	1	**1R-5396**	3	BOLT (M6X1X35-MM)	
J	3	1	**199-0672**	3	SPACER-SPECIAL	
J	4	1	**199-0681**	3	WASHER (6.2X16.5X2-MM THK)	
L	5	1	**199-0701**	3	BRAKE-COVER	
L	6	1	**199-0702**	3	SPRING (INNER)	
L	7	1	**199-0703**	3	SPRING (OUTER)	
	8	1	**199-0752**	1	PISTON-BRAKE	
	9	1	**199-0759**	1	O-RING-INNER	
JL	10	1	**212-5712**	6	BUSHING	
	11	1	**219-8834**	1	CYLINDER-BRAKE	
	12	1	**199-0700**	1	O-RING-OUTER	
					AVAILABLE REPAIR KIT(S):	
J			**217-2347**	3	KIT-BRAKE CYLINDER (ADJUSTER)	
					(INCLUDES SPECIAL SPACERS, BUSHINGS, WASHERS & BOLTS)	
L			**217-2349**	3	KIT-BRAKE CYLINDER (SPRING RETENTION)	
					(INCLUDES BOLTS, BRAKE COVERS, SPRINGS & BUSHINGS)	

J-KIT MARKED J SERVICES PARTS MARKED J
L-KIT MARKED L SERVICES PARTS MARKED L
M-METRIC PART

216-1612 CYLINDER GP-BRAKE *(contd.)* **i04403972**

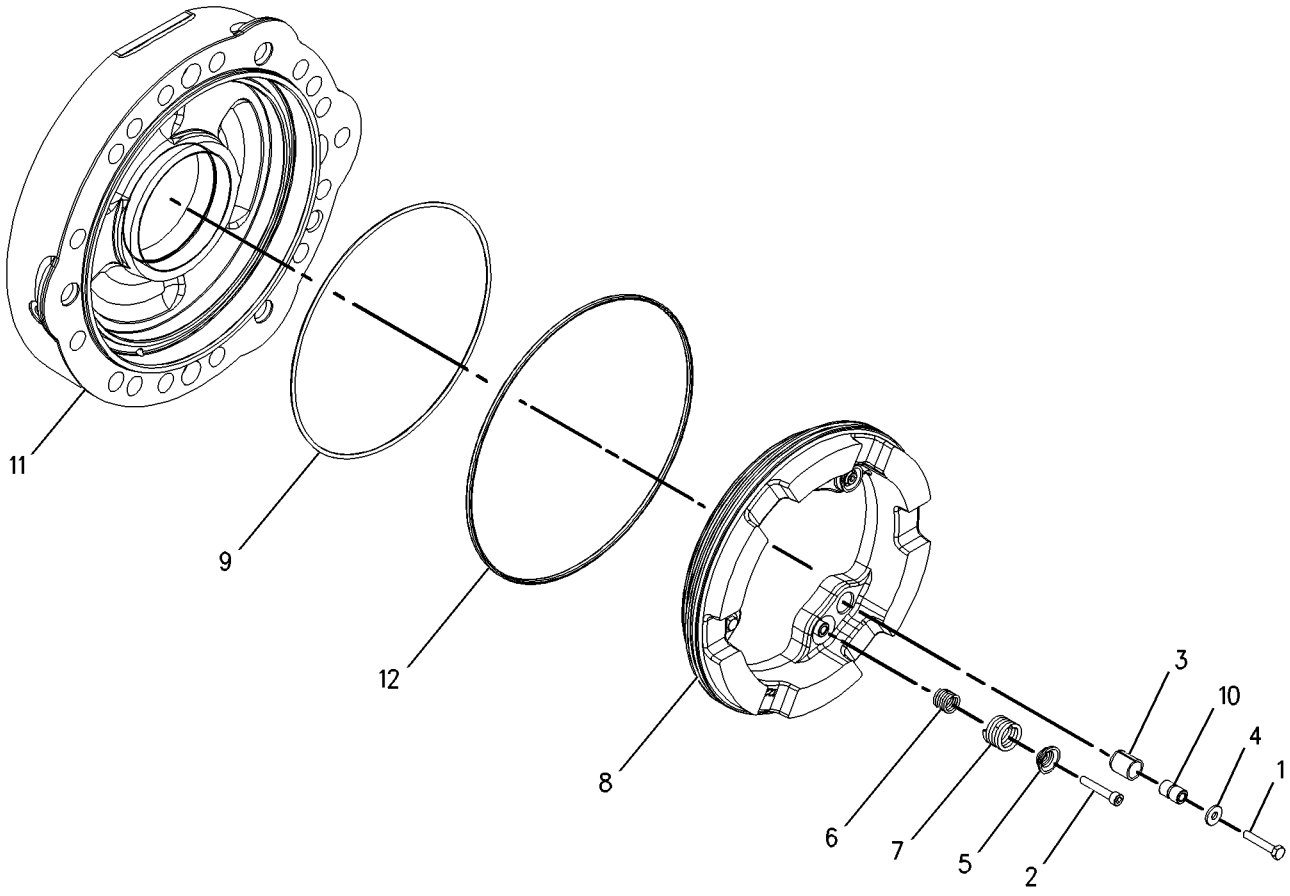

GRAPHIC #1 **<END>** g00953880

BRAKING SYSTEM

216-1613 CYLINDER GP-BRAKE

S/N: LTG1-UP
PART OF 238-5289 HOUSING GP-AXLE
AN ATTACHMENT

SMCS-4262 **i04404039**

NOTE	REF NO	GRAPHIC REF	PART NUMBER	QTY	PART NAME 1 2 3 4 5 6 (PRODUCT LEVEL)	SEE PAGE
JM	1	1	**6V-2315**	3	BOLT (M6X1X35-MM)	
LM	2	1	**1R-5396**	3	BOLT (M6X1X35-MM)	
J	3	1	**199-0672**	3	SPACER-SPECIAL	
J	4	1	**199-0681**	3	WASHER (6.2X16.5X2-MM THK)	
L	5	1	**199-0701**	3	BRAKE-COVER	
L	6	1	**199-0702**	3	SPRING (INNER)	
L	7	1	**199-0703**	3	SPRING (OUTER)	
	8	1	**199-0752**	1	PISTON-BRAKE	
	9	1	**199-0759**	1	O-RING-INNER	
JL	10	1	**212-5712**	6	BUSHING	
	11	1	**219-8835**	1	CYLINDER-BRAKE	
	12	1	**199-0700**	1	O-RING-OUTER	
					AVAILABLE REPAIR KIT(S):	
J			**217-2347**	3	KIT-BRAKE CYLINDER (ADJUSTER)	
					(INCLUDES SPECIAL SPACERS, BUSHINGS, WASHERS & BOLTS)	
L			**217-2349**	3	KIT-BRAKE CYLINDER (SPRING RETENTION)	
					(INCLUDES BOLTS, BRAKE COVERS, SPRINGS & BUSHINGS)	

J-KIT MARKED J SERVICES PARTS MARKED J
L-KIT MARKED L SERVICES PARTS MARKED L
M-METRIC PART

216-1613 CYLINDER GP-BRAKE *(contd.)* **i04404039**

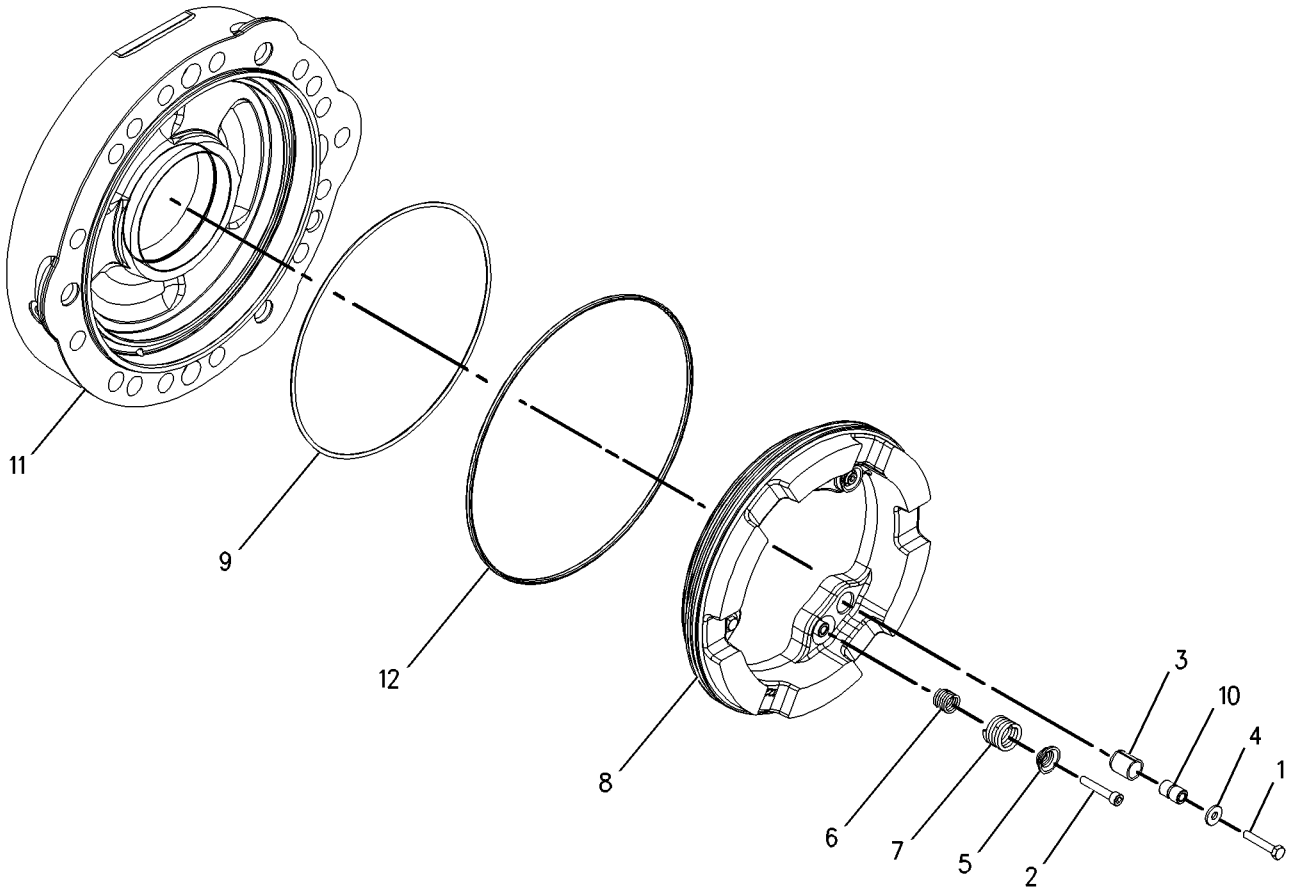

GRAPHIC #1 **<END>** g00995396

163-0753 LEVER GP-HAND CONTROL

S/N: LTG1-UP
PART OF 389-7167 CONTROL GP-PARKING BRAKE
AN ATTACHMENT

SMCS-4284 **i02156244**

NOTE	REF NO	GRAPHIC REF	PART NUMBER	QTY	PART NAME 1 2 3 4 5 6 (PRODUCT LEVEL)	SEE PAGE
	1	1	**7R-8239**	2	SPACER	
	2	1	**039-9133**	1	PIN	
	3	1	**164-9598**	1	GRIP	
	4	1	**164-9599**	1	COVER	
	5	1	**3B-4610**	1	PIN-COTTER	
	6	1	**8T-4224**	2	WASHER-HARD (8.8X16X2-MM THK)	

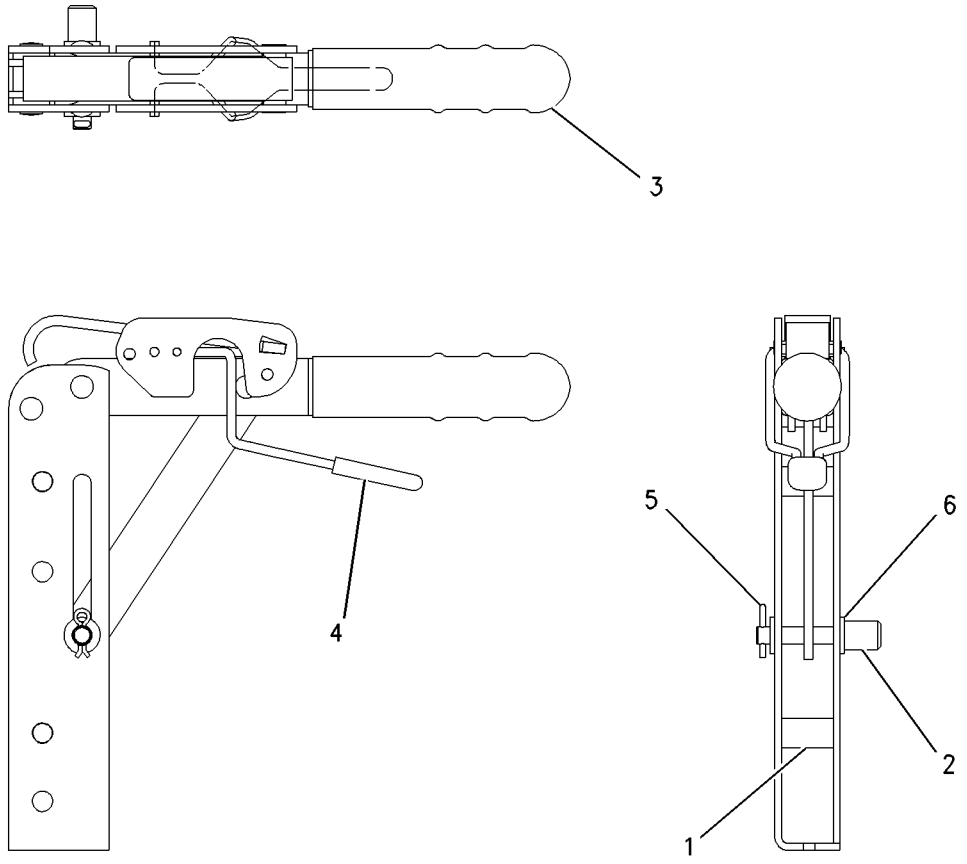

GRAPHIC #1 **<END>** g00729504

STEERING SYSTEM

230-5745 AXLE GP-FRONT

S/N: LTG1-UP
PART OF 353-1502 DRIVE AR-BACKHOE LOADER
AN ATTACHMENT

SMCS-3282, 4303 **i04390523**

NOTE	REF NO	GRAPHIC REF	PART NUMBER	QTY	PART NAME 1 2 3 4 5 6 (PRODUCT LEVEL)	SEE PAGE
M	1	1	**207-4254**	6	BOLT (M20X1.5X80-MM)	
	2	1	**207-4255**	2	PLUG	
	3	1	**199-0648**	2	NUT-JAM (M16X2-THD)	
	4	1	**207-4258**	2	NUT (M20X1.5-THD)	
	5	1	**207-4260**	2	SEAL-O-RING	
	6	1	**219-8798**	2	SEAL-LIP TYPE	
M	7	1	**199-0683**	16	BOLT (M16X2X38-MM)	
	8	1	**207-4262**	2	BOLT (STEERING STOP)	
	9	1	**198-7825**	4	SEAL	
	10	1	**207-4266**	2	RETAINER	
	11	1	**198-7838**	4	PIN	
	12	1	**207-4268**	1	BEAM	
	13	1	**207-4271**	2	COVER	
Y	14	1	**231-0683**	2	FLANGE GP-WHEEL	154
	15	1	**231-0684**	1	HOUSING (RH)	
	16	1	**231-0685**	1	HOUSING (LH)	
	17	1	**207-4272**	2	TIE ROD GP	
					(EACH INCLUDES)	
		1	**204-3080**	1	BALL JOINT	
		1	**216-4459**	1	TIE ROD	
		1	**217-2885**	1	NUT (M24X1.5-THD)	
	18	1	**154-5404**	2	BEARING	
M	19	1	**8T-4139**	6	BOLT (M12X1.75X30-MM)	
J	20	1	**214-5097**	1	CYLINDER GP-STEERING	
		1	**238-5254**	1	ROD	
		1	**238-5255**	2	CYLINDER HEAD	
	21	1	**198-7823**	4	BEARING AS	
B	22	1	**198-7841**	4	SHIM (0.15-MM THK)	
B	23	1	**198-7842**	4	SHIM (0.2-MM THK)	
B	24	1	**198-7843**	4	SHIM (0.5-MM THK)	
					AVAILABLE REPAIR KIT(S):	
J			**215-2023**	1	KIT-SEAL	
					(INCLUDES GUIDE RINGS, SEALS, WASHERS & WIPERS)	

B-USE AS REQUIRED
J-KIT MARKED J SERVICES PARTS MARKED J
M-METRIC PART
Y-SEPARATE ILLUSTRATION

230-5745 AXLE GP-FRONT *(contd.)* i04390523

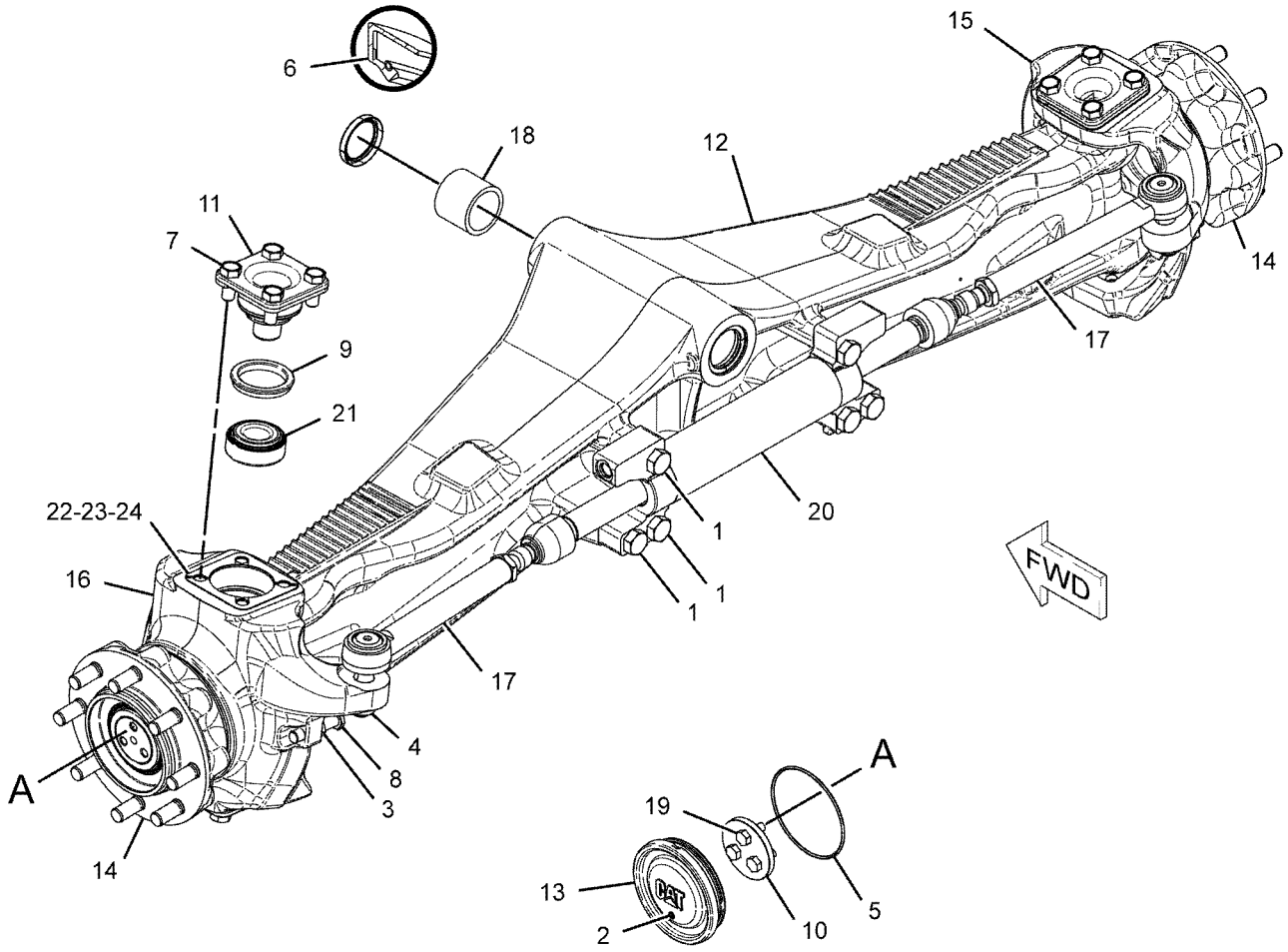

GRAPHIC #1 **<END>** g01118534

STEERING SYSTEM

337-9824 LINES GP-STEERING

S/N: LTG1-UP

PART OF 353-1502 DRIVE AR-BACKHOE LOADER

AN ATTACHMENT

SMCS-4304 **i04573702**

NOTE	REF NO	GRAPHIC REF	PART NUMBER	QTY	PART NAME 1 2 3 4 5 6 (PRODUCT LEVEL)	SEE PAGE
	1	1	**9X-6772**	7	STRAP-CABLE	
	2	1	*195-2037*	1	FITTING AS	
		1	**3K-0360**	1	SEAL-O-RING	
		1	**034-3679**	1	FITTING	
	3	1	*268-1559*	1	ADAPTER AS	
		1	**3J-1907**	1	SEAL-O-RING	
		1	**4J-5477**	1	SEAL-O-RING	
		1	**209-0939**	1	ADAPTER	
Y	4	1	**341-7654**	1	PUMP GP-METERING (HMU)	243
I	5	1	**361-4654**	1	HOSE AS	
I	6	1	**361-4655**	1	HOSE AS	
I	7	1	**361-8146**	1	HOSE AS	
I	8	1	**361-8147**	1	HOSE AS	
	9	1	**100-4336**	1	CLIP	
	10	1	*148-8318*	1	CONNECTOR AS	
		1	**3K-0360**	1	SEAL-O-RING	
		1	**6V-8397**	1	SEAL-O-RING	
		1	**6V-8634**	1	CONNECTOR	
	11	1	*148-8369*	1	ELBOW AS	
		1	**3J-7354**	1	SEAL-O-RING	
		1	**4J-5477**	1	SEAL-O-RING	
		1	**6V-8628**	1	ELBOW	
	12	1	*148-8374*	4	ELBOW AS	
					(EACH INCLUDES)	
		1	**3K-0360**	1	SEAL-O-RING	
		1	**6V-8397**	1	SEAL-O-RING	
		1	**6V-8723**	1	ELBOW	
	13	1	*148-8383*	1	ELBOW AS	
		1	**3K-0360**	1	SEAL-O-RING	
		1	**6V-8397**	1	SEAL-O-RING	
		1	**8T-1683**	1	ELBOW	
	14	1	*150-3026*	1	ELBOW AS	
		1	**3K-0360**	1	SEAL-O-RING	
		1	**6V-4292**	1	ELBOW	
	15	1	**359-7325**	2	CLAMP-HOSE	
	16	1	**4P-7429**	1	CLIP	
	17	1	**8T-4121**	3	WASHER-HARD (11X21X2.5-MM THK)	
	18	1	**2B-0941**	2	SPACER (10.5X19X19-MM THK)	
M	19	1	**8T-4196**	1	BOLT (M10X1.5X35-MM)	
M	20	1	**8T-6466**	2	BOLT (M10X1.5X60-MM)	
E	21	1	**5P-1505**		HOSE (78-CM)	

E-ORDER BY THE CENTIMETER
I-REFER TO HYDRAULIC INFORMATION SYSTEM
M-METRIC PART
Y-SEPARATE ILLUSTRATION

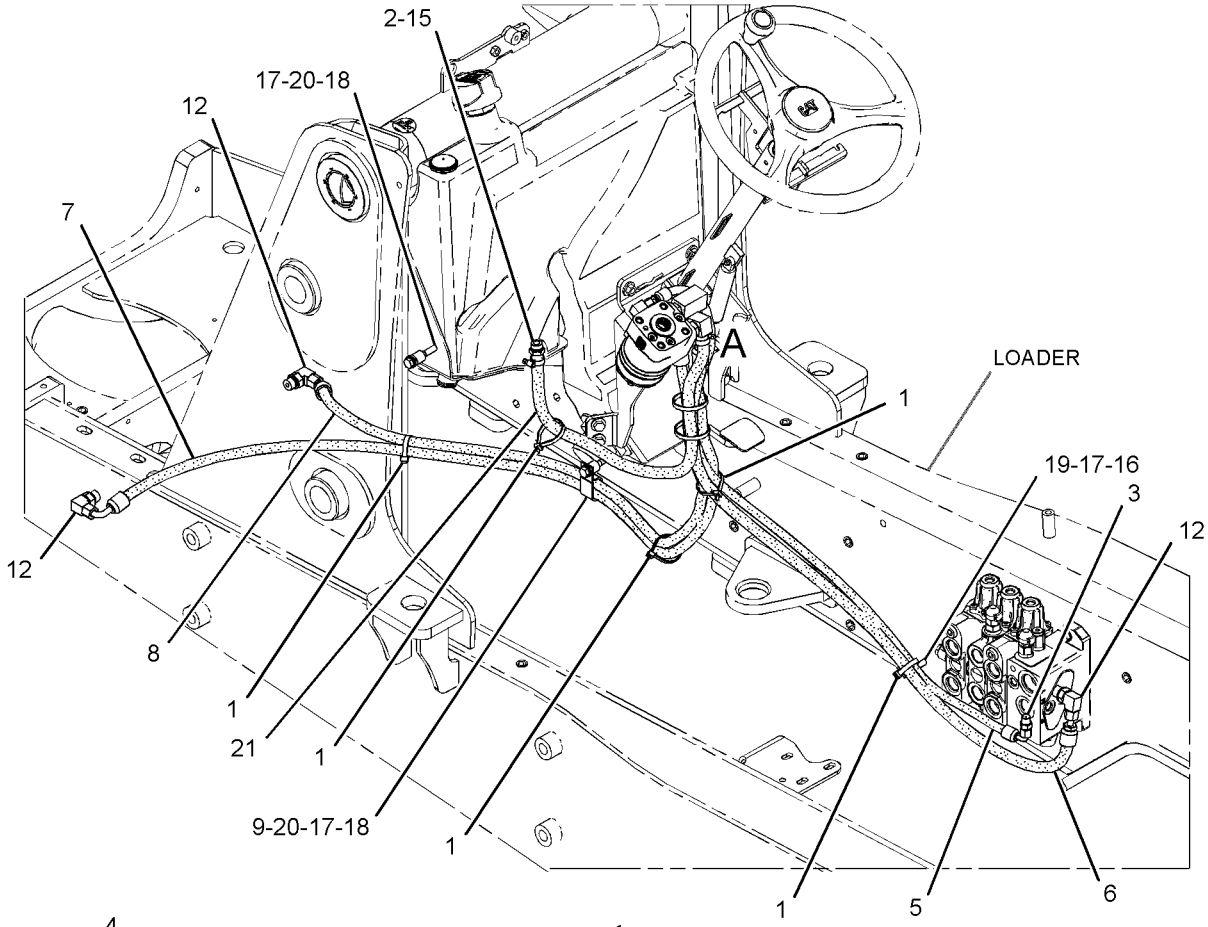

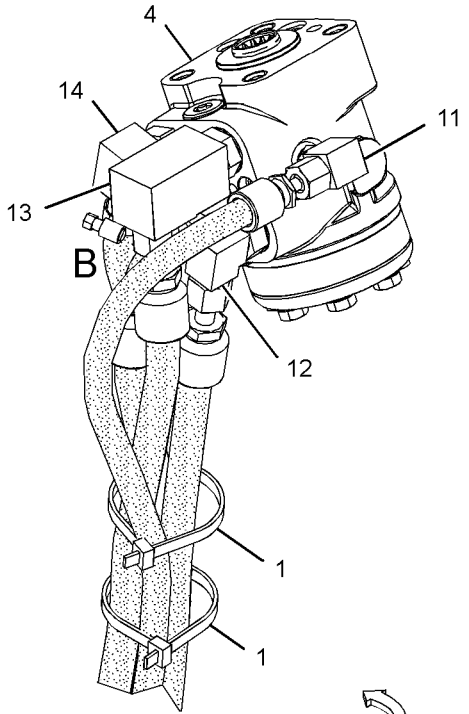

VIEW OF AREA A

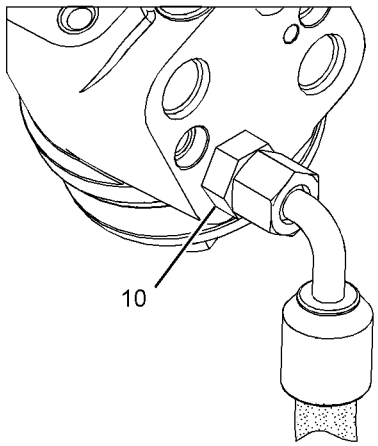

VIEW OF AREA B
(PARTS REMOVED FOR CLARITY)

GRAPHIC #1

<END>

g02818540

STEERING SYSTEM

337-9825 LINES GP-STEERING

S/N: LTG1-UP
PART OF 353-1503 DRIVE AR-BACKHOE LOADER
AN ATTACHMENT

SMCS-4304 **i04577537**

NOTE	REF NO	GRAPHIC REF	PART NUMBER	QTY	PART NAME 1 2 3 4 5 6 (PRODUCT LEVEL)	SEE PAGE
	1	1	**9X-6772**	6	STRAP-CABLE	
	2	1	*195-2037*	1	FITTING AS	
		1	**3K-0360**	1	SEAL-O-RING	
		1	**034-3679**	1	FITTING	
	3	1	*268-1559*	1	ADAPTER AS	
		1	**3J-1907**	1	SEAL-O-RING	
		1	**4J-5477**	1	SEAL-O-RING	
		1	**209-0939**	1	ADAPTER	
Y	4	1	**341-7654**	1	PUMP GP-METERING (HMU)	243
I	5	1	**361-4654**	1	HOSE AS	
I	6	1	**361-4655**	1	HOSE AS	
I	7	1	**362-9209**	1	HOSE AS	
I	8	1	**362-9239**	1	HOSE AS	
	9	1	**100-4336**	2	CLIP	
	10	1	*148-8318*	1	CONNECTOR AS	
		1	**3K-0360**	1	SEAL-O-RING	
		1	**6V-8397**	1	SEAL-O-RING	
		1	**6V-8634**	1	CONNECTOR	
	11	1	*148-8369*	1	ELBOW AS	
		1	**3J-7354**	1	SEAL-O-RING	
		1	**4J-5477**	1	SEAL-O-RING	
		1	**6V-8628**	1	ELBOW	
	12	1	*148-8374*	2	ELBOW AS	
					(EACH INCLUDES)	
		1	**3K-0360**	1	SEAL-O-RING	
		1	**6V-8397**	1	SEAL-O-RING	
		1	**6V-8723**	1	ELBOW	
	13	1	*148-8383*	3	ELBOW AS	
					(EACH INCLUDES)	
		1	**3K-0360**	1	SEAL-O-RING	
		1	**6V-8397**	1	SEAL-O-RING	
		1	**8T-1683**	1	ELBOW	
	14	1	*150-3026*	1	ELBOW AS	
		1	**3K-0360**	1	SEAL-O-RING	
		1	**6V-4292**	1	ELBOW	
	15	1	**359-7325**	2	CLAMP-HOSE	
	16	1	**4P-7429**	1	CLIP	
	17	1	**8S-0948**	1	CLIP	
	18	1	**8T-4121**	3	WASHER-HARD (11X21X2.5-MM THK)	
	19	1	**2B-0941**	2	SPACER (10.5X19X19-MM THK)	
M	20	1	**8T-4196**	1	BOLT (M10X1.5X35-MM)	
M	21	1	**8T-6466**	2	BOLT (M10X1.5X60-MM)	
E	22	1	**5P-1505**		HOSE (78-CM)	

E-ORDER BY THE CENTIMETER
I-REFER TO HYDRAULIC INFORMATION SYSTEM
M-METRIC PART
Y-SEPARATE ILLUSTRATION

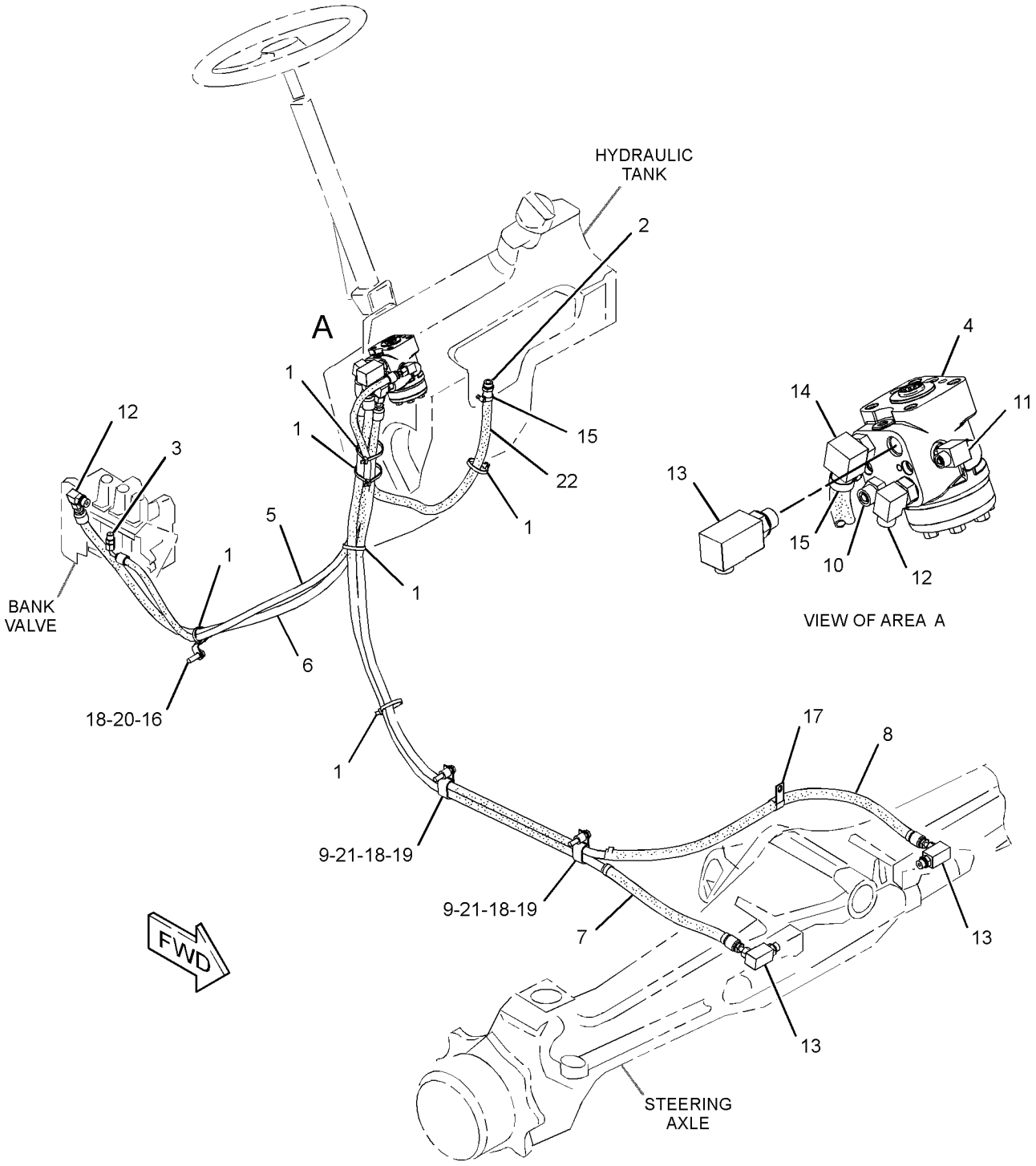

GRAPHIC #1 **<END>** g02796578

341-7654 PUMP GP-METERING

S/N: LTG1-UP

PART OF 337-9824, 337-9825 LINES GP-STEERING

AN ATTACHMENT

SMCS-4312 **i04574413**

NOTE	REF NO	GRAPHIC REF	PART NUMBER	QTY	PART NAME 1 2 3 4 5 6 (PRODUCT LEVEL)	SEE PAGE
J	1	1	**7X-9866**	1	SEAL	
	2	1	**054-6882**	1	BEARING AS	
	3	1	**054-6733**	1	RING	
J	4	1	**7X-9873**	7	WASHER (8.2X11.9X1-MM THK)	
					PARTS SHOWN IN GRAPHIC(S) WITHOUT A REFERENCE NUMBER ARE NOT SERVICED SEPARATELY	
					AVAILABLE REPAIR KIT(S):	
J			**214-7469**	1	KIT-SEAL (HMU)	
					(ALSO INCLUDES SEAL RING & O-RING SEALS)	

J-KIT MARKED J SERVICES PARTS MARKED J

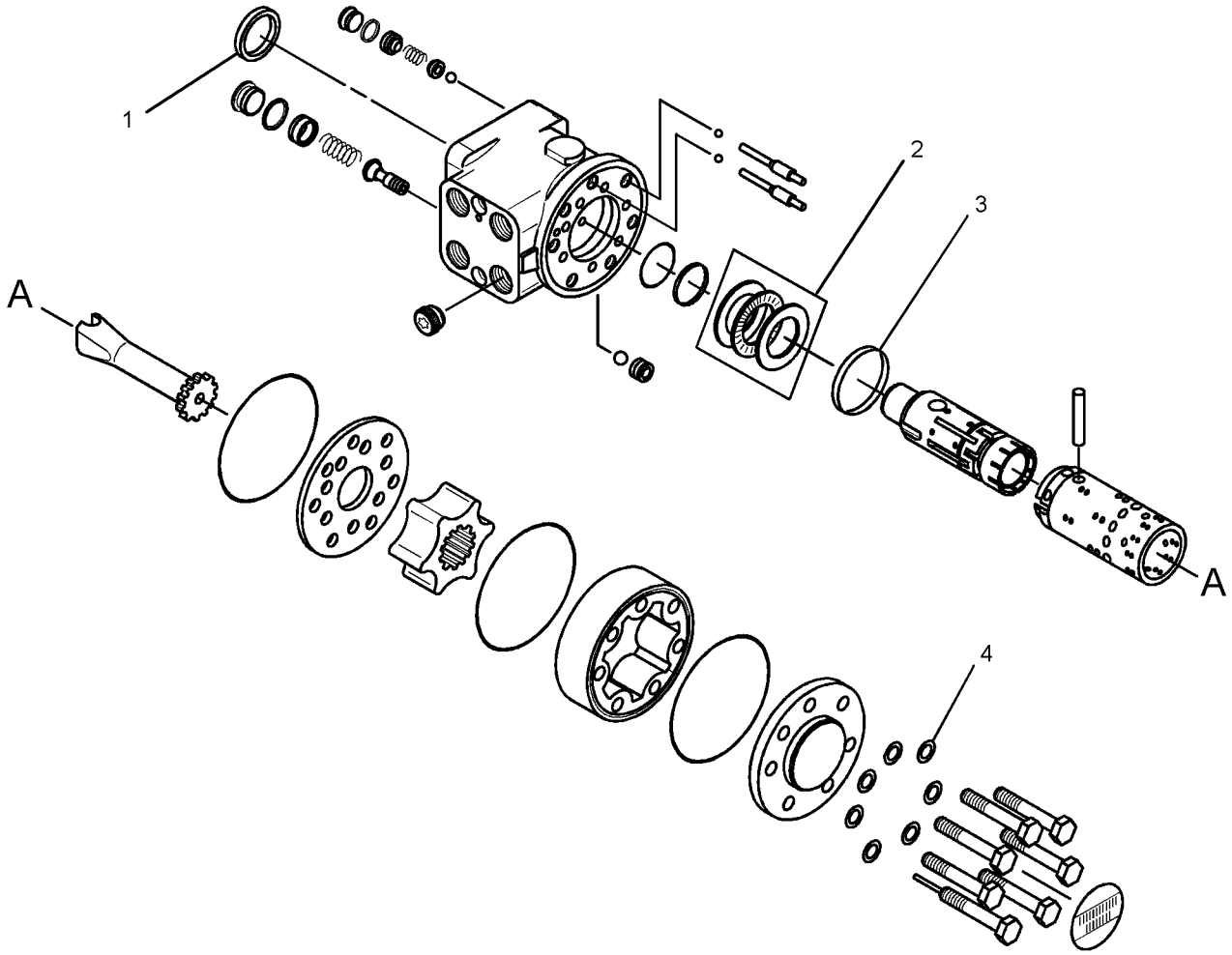

GRAPHIC #1 **<END>** g02812258

310-6216 STEERING COLUMN GP–TILT

S/N: LTG1-UP
PART OF 356-4120 CONTROL GP-STEERING
AN ATTACHMENT

SMCS-4310, 4338 **i03642520**

NOTE	REF NO	GRAPHIC REF	PART NUMBER	QTY	PART NAME 1 2 3 4 5 6 (PRODUCT LEVEL)	SEE PAGE
M	1	1	**169-3261**	1	NUT (M18X1.5-THD)	
	2	1	**338-1508**	1	SPRING GP-GAS (STEERING COLUMN)	
		1	**146-6347**	2	RING-RETAINING	
	3	1	**254-9926**	1	KIT-TILT PEDAL	
					(INCLUDES BOLT, RING, NUT, SPRING & TILT LEVER)	
M	4	1	**5C-8312**	1	NUT (M4X0.7-THD)	
	5	1	**317-5544**	1	CAM	
M	6	1	**123-0708**	1	SCREW-HEX SOCKET (M4X0.7X30-MM)	

M-METRIC PART

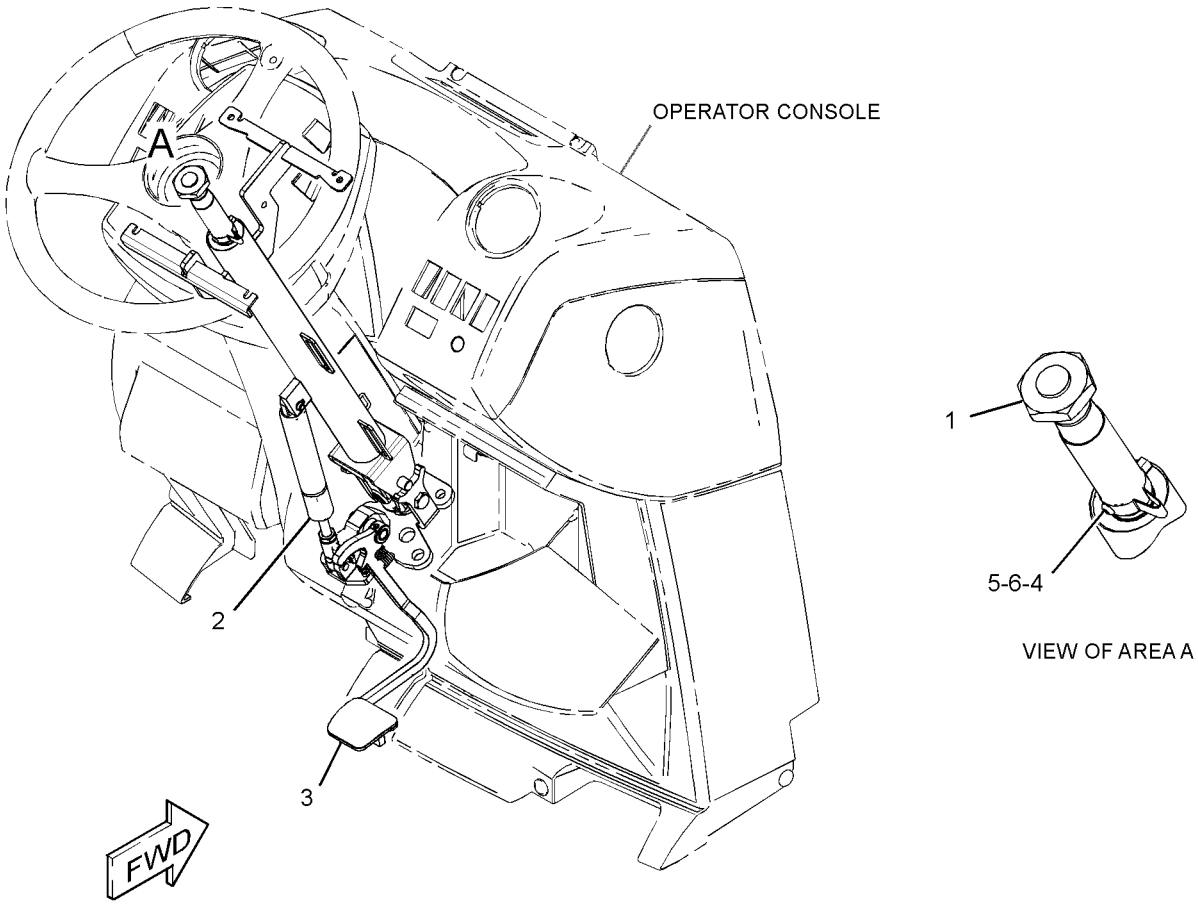

GRAPHIC #1 **<END>** g01960591

FRAME AND BODY

353-1380 BOX GP-STORAGE

S/N: LTG1-UP
PART OF 340-1705 ENGINE AR
AN ATTACHMENT

SMCS-7268 **i04577847**

NOTE	REF NO	GRAPHIC REF	PART NUMBER	QTY	PART NAME 1 2 3 4 5 6 (PRODUCT LEVEL)	SEE PAGE
	1	1	**347-5947**	1	FENDER	
	2	1	**362-3069**	1	TUBE AS	
	3	1	**362-3070**	1	TUBE AS	
	4	1	**362-3074**	1	TREAD AS	
Y	5	1	**362-3079**	1	BOX GP-STORAGE	246
	6	1	**362-4563**	1	PLATE	
	7	1	**363-8010**	1	STEP AS	
	8	1	**363-8348**	2	MOUNT	
	9	1	**364-2475**	5	SEAL-STRIP	
	10	1	**156-0283**	3	WASHER-HARD (8.4X35X2.5-MM THK)	
	11	1	**5P-1076**	4	WASHER-HARD (13.5X30X4-MM THK)	
	12	1	**5P-4116**	12	WASHER-HARD (8.8X20.5X2-MM THK)	
M	13	1	**8T-4183**	4	BOLT (M12X1.75X40-MM)	
M	14	1	**8T-4189**	3	BOLT (M8X1.25X20-MM)	
M	15	1	**8T-6869**	8	BOLT (M8X1.25X60-MM)	
M	16	1	**8T-7547**	4	BOLT (M8X1.25X30-MM)	

M-METRIC PART
Y-SEPARATE ILLUSTRATION

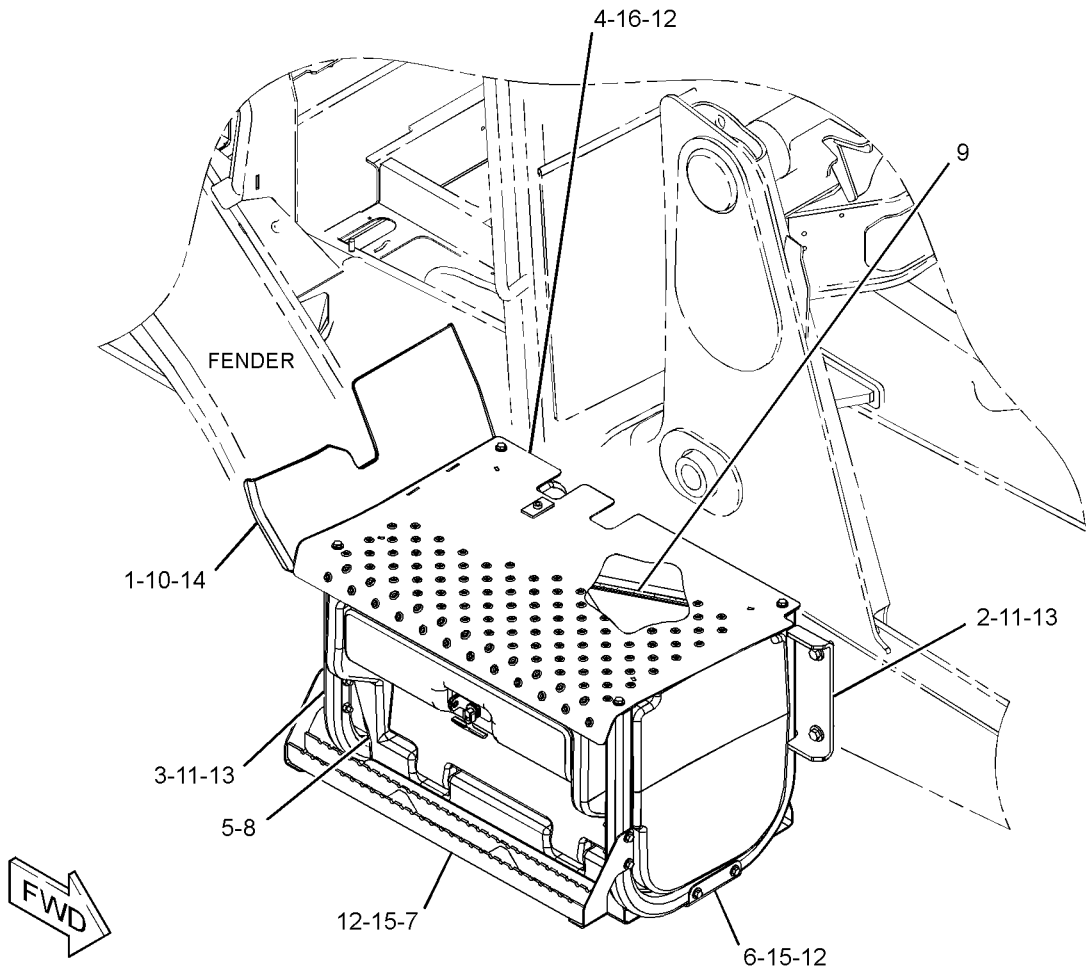

GRAPHIC #1 **<END>** g02811017

362-3079 BOX GP-STORAGE

S/N: LTG1-UP
PART OF 353-1380 BOX GP-STORAGE
AN ATTACHMENT

SMCS-7268 **i04577679**

NOTE	REF NO	GRAPHIC REF	PART NUMBER	QTY	PART NAME 1 2 3 4 5 6 (PRODUCT LEVEL)	SEE PAGE
M	1	1	**6V-9606**	2	BOLT (M6X1X140-MM)	
	2	1	**129-4741**	1	LATCH AS-T-BAR	
	3	1	**362-3080**	1	DOOR AS-ACCESS	
M	4	1	**129-3178**	2	LOCKNUT (M6X1-THD)	
M	5	1	**6V-7743**	2	LOCKNUT (M6X1-THD)	
M	6	1	**8T-4133**	2	NUT (M10X1.5-THD)	
	7	1	**9M-5732**	4	RIVET-POP	

M-METRIC PART

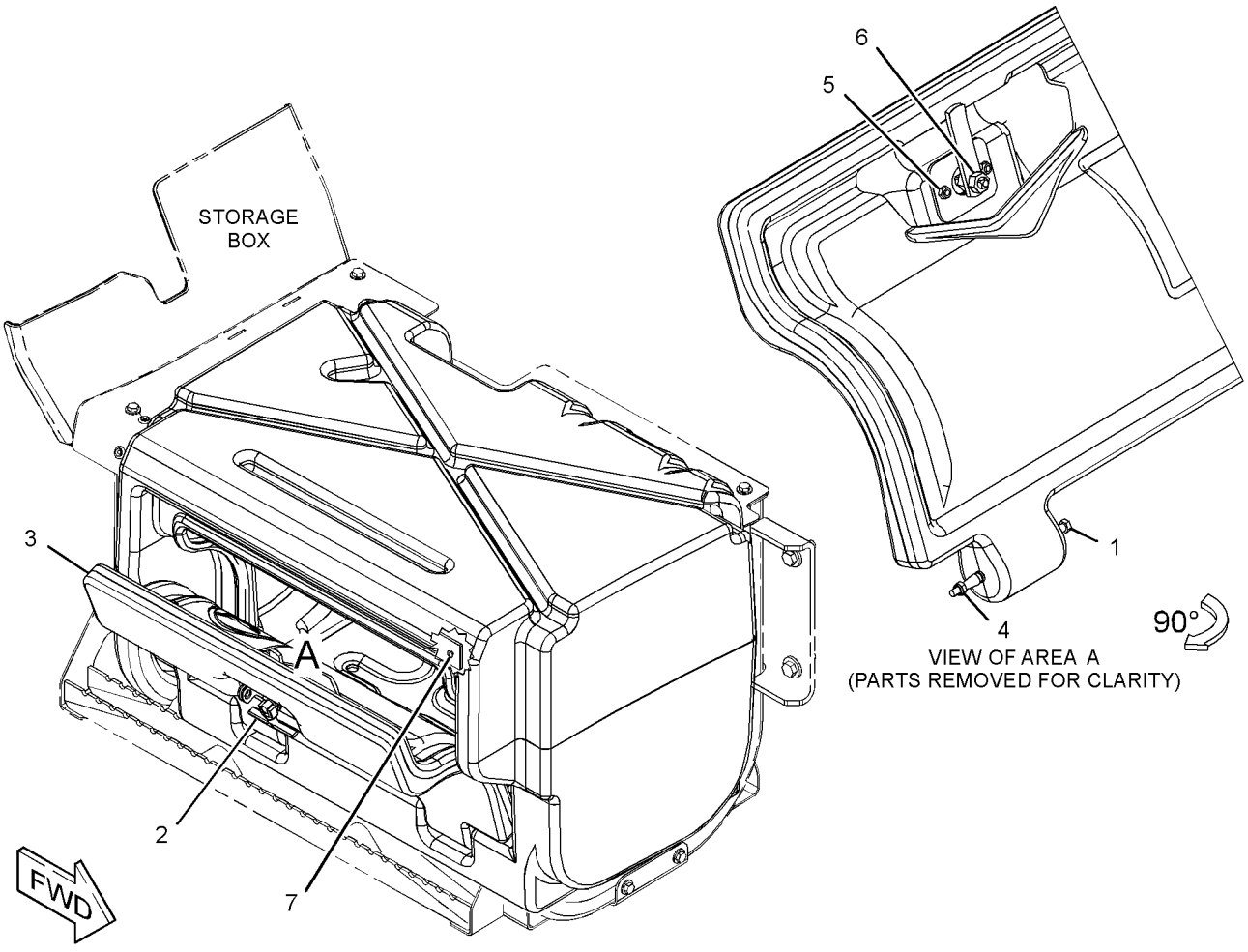

GRAPHIC #1 **<END>** g02818436

FRAME AND BODY

337-9693 COUNTERWEIGHT GP

S/N: LTG1-UP
AN ATTACHMENT

SMCS-7056 **i04549538**

NOTE	REF NO	GRAPHIC REF	PART NUMBER	QTY	PART NAME 1 2 3 4 5 6 (PRODUCT LEVEL)	SEE PAGE
	1	1	**366-1271**	4	CAP	

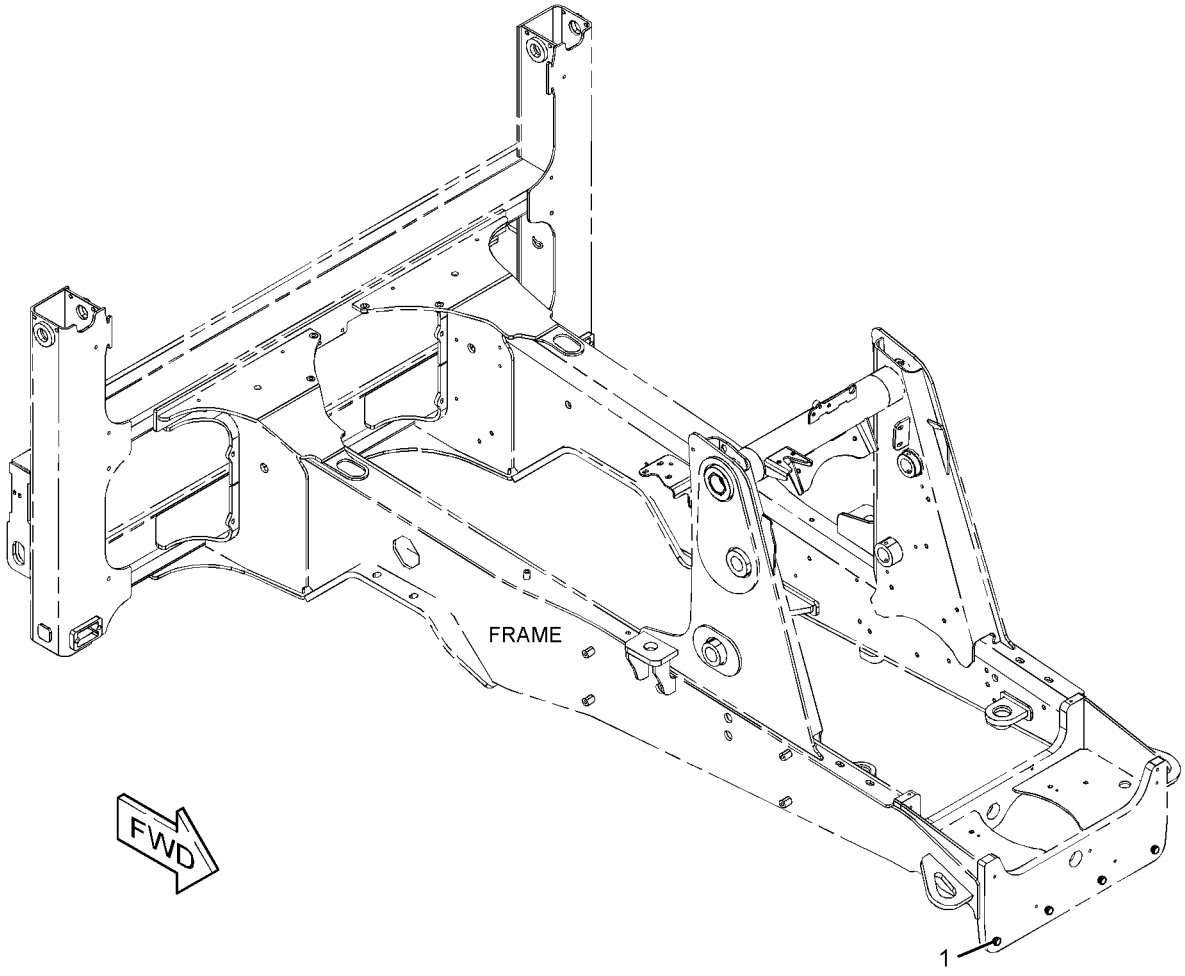

GRAPHIC #1 **<END>** g02773460

FRAME AND BODY

337-9694 COUNTERWEIGHT GP

S/N: LTG1-UP
116-KG (255-LB)
AN ATTACHMENT

SMCS-7056 **i04697090**

NOTE	REF NO	GRAPHIC REF	PART NUMBER	QTY	PART NAME 1 2 3 4 5 6 (PRODUCT LEVEL)	SEE PAGE
	1	1	**356-0041**	1	COUNTERWEIGHT	
M	2	1	**7X-2579**	2	BOLT (M24X3X240-MM)	
	3	1	**8T-4167**	2	WASHER-HARD (26X44X4-MM THK)	
	4	1	**366-1271**	2	CAP	

M-METRIC PART

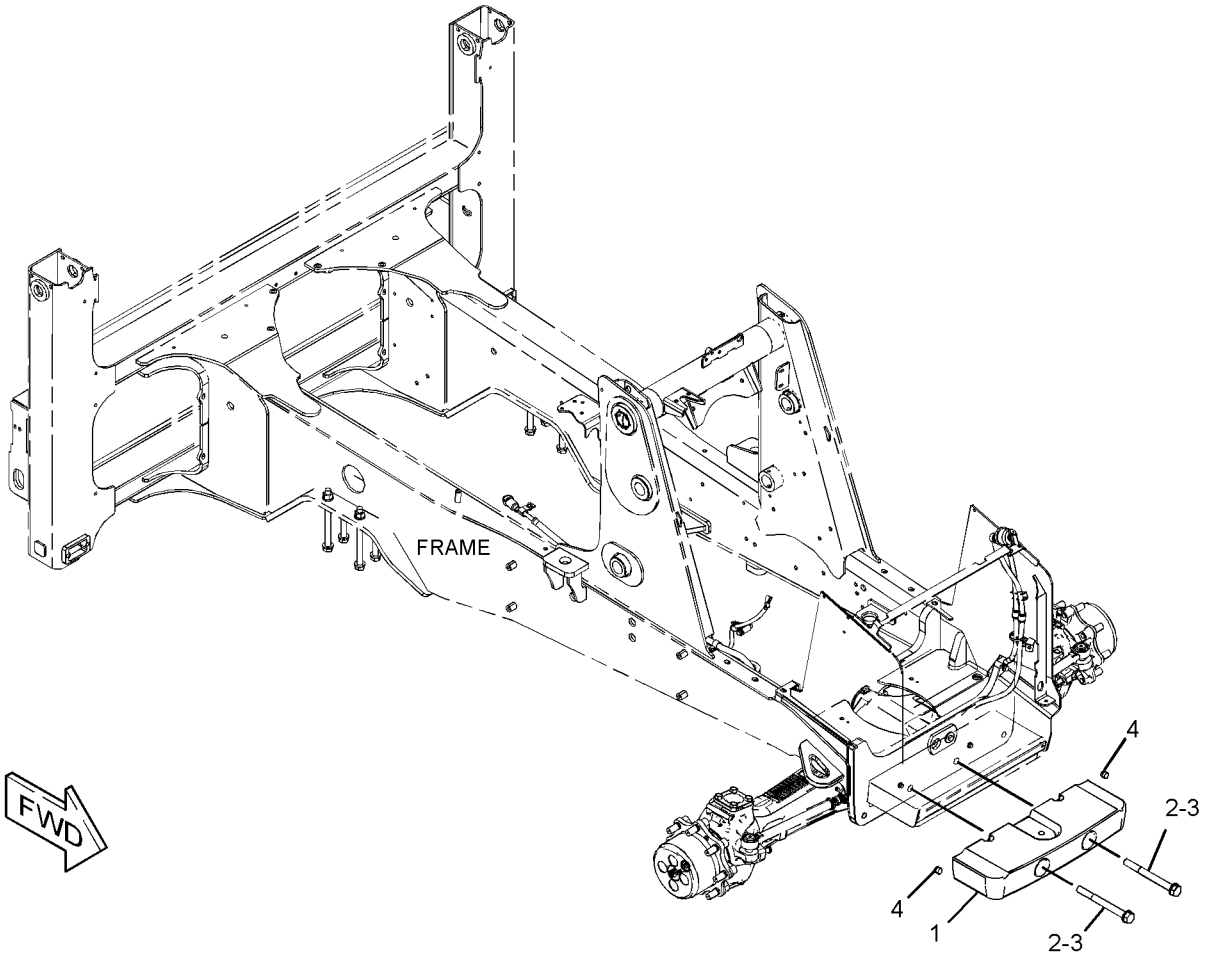

GRAPHIC #1 **<END>** g02806456

FRAME AND BODY

337-9695 COUNTERWEIGHT GP

S/N: LTG1-UP
240-KG (529-LB)
AN ATTACHMENT

SMCS-7056 **i04549542**

NOTE	REF NO	GRAPHIC REF	PART NUMBER	QTY	PART NAME 1 2 3 4 5 6 (PRODUCT LEVEL)	SEE PAGE
	1	1	**356-0042**	1	COUNTERWEIGHT	
M	2	1	**7X-2579**	4	BOLT (M24X3X240-MM)	
	3	1	**8T-4167**	4	WASHER-HARD (26X44X4-MM THK)	

M-METRIC PART

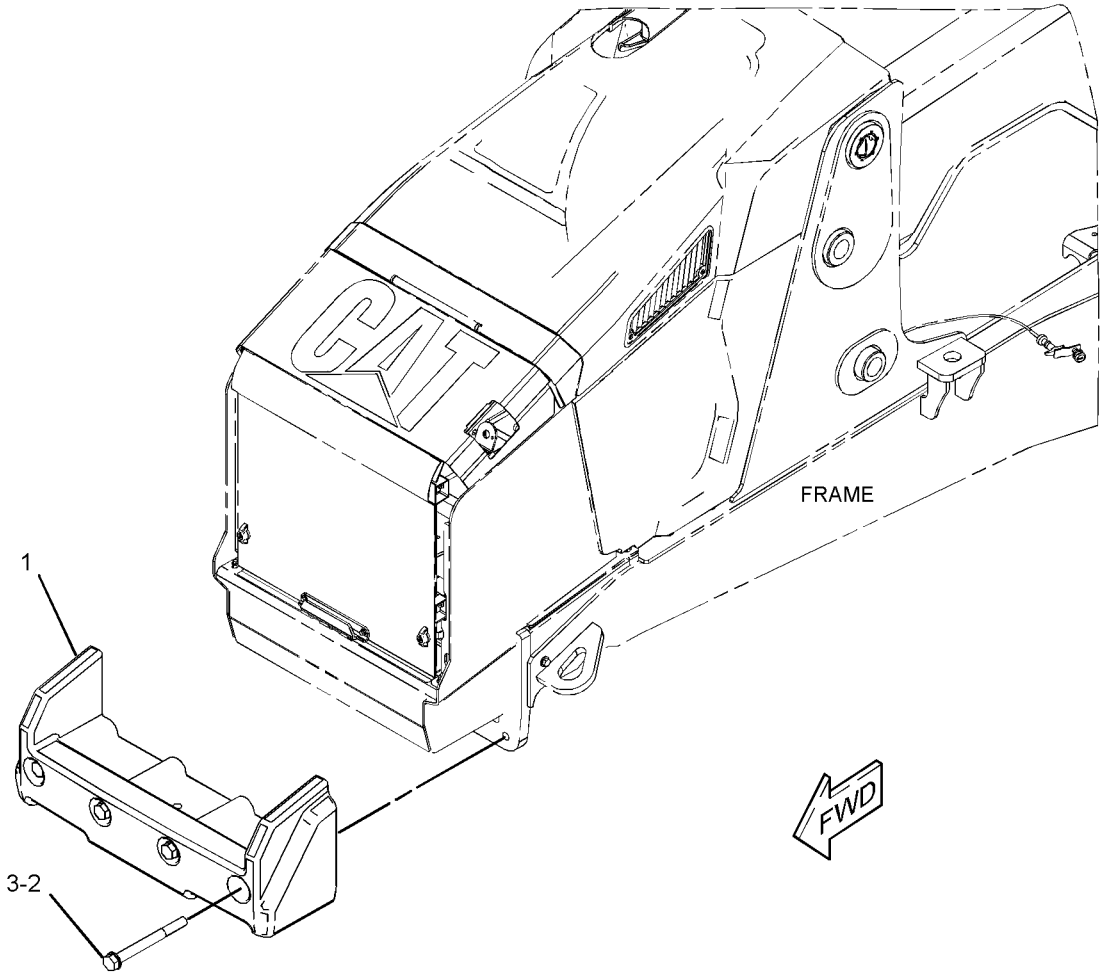

GRAPHIC #1 **<END>** g02812118

FRAME AND BODY

337-9696 COUNTERWEIGHT GP

S/N: LTG1-UP
460-KG (1015-LB)
AN ATTACHMENT

SMCS-7056 **i04549545**

NOTE	REF NO	GRAPHIC REF	PART NUMBER	QTY	PART NAME 1 2 3 4 5 6 (PRODUCT LEVEL)	SEE PAGE
	1	1	**341-2047**	1	COUNTERWEIGHT	
M	2	1	**7X-2579**	4	BOLT (M24X3X240-MM)	
	3	1	**8T-4167**	4	WASHER-HARD (26X44X4-MM THK)	

M-METRIC PART

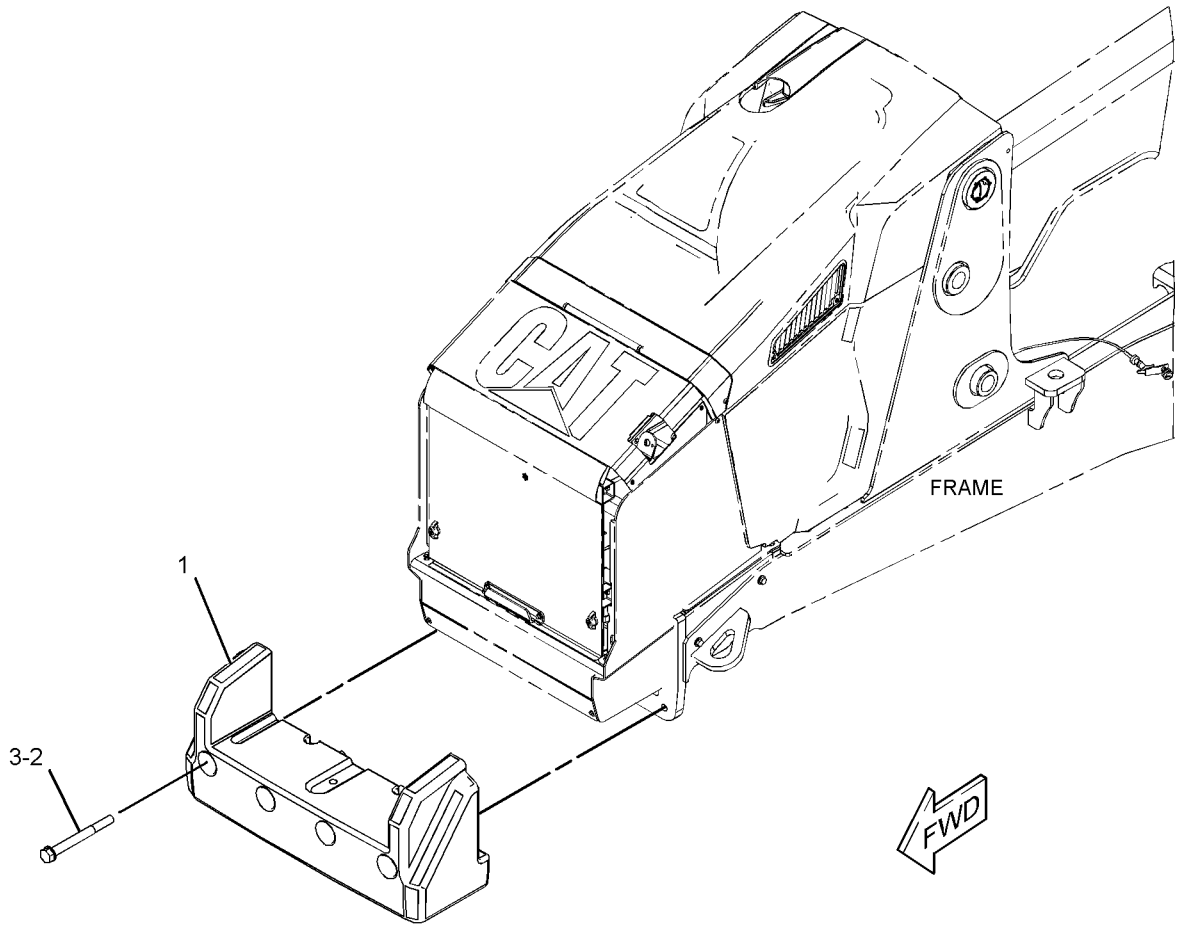

GRAPHIC #1 **<END>** g02812256

FRAME AND BODY

249-9328 EXTENSION GP-FENDER

S/N: LTG1-UP
AN ATTACHMENT

SMCS-7252 **i03849756**

NOTE	REF NO	GRAPHIC REF	PART NUMBER	QTY	PART NAME 1 2 3 4 5 6 (PRODUCT LEVEL)	SEE PAGE
	1	1	**249-9329**	1	EXTENSION-FENDER (LH)	
	2	1	**249-9330**	1	EXTENSION-FENDER (RH)	
	3	1	**251-4889**	8	WASHER-HARD (7.2X14.5X2-MM THK)	
	4	1	**251-4890**	4	SCREW-MACHINE (M6X1X25-MM)	
	5	1	**251-4891**	4	LOCKNUT (M6X1-THD)	

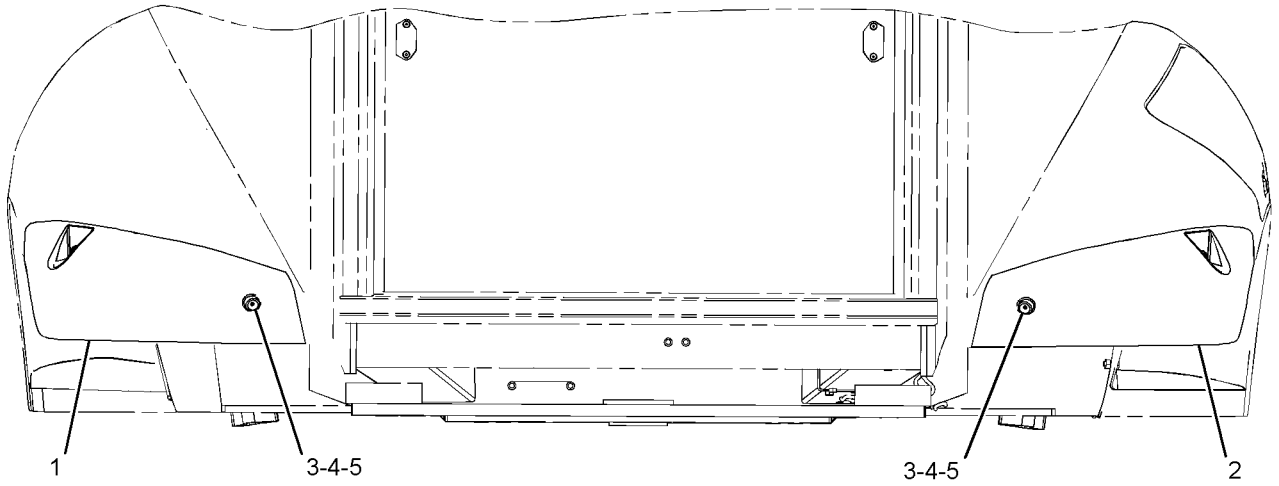

REAR VIEW

GRAPHIC #1 **<END>** g01231585

FRAME AND BODY

337-6851 FENDER GP-FRONT

S/N: LTG1-UP

AN ATTACHMENT

SMCS-7252 **i04549547**

NOTE	REF NO	GRAPHIC REF	PART NUMBER	QTY	PART NAME 1 2 3 4 5 6 (PRODUCT LEVEL)	SEE PAGE
M	1	1	**199-0783**	4	BOLT (M16X2X38-MM)	
	2	1	**375-1372**	1	BRACKET AS (LH)	
	3	1	**375-1373**	1	BRACKET AS (RH)	
	4	1	**377-5319**	2	PLATE	
	5	1	**377-5320**	2	FENDER	
M	6	1	**6V-7744**	4	LOCKNUT (M10X1.5-THD)	
	7	1	**8T-4121**	8	WASHER-HARD (11X21X2.5-MM THK)	
	8	1	**8T-4122**	12	WASHER-HARD (17X32X3.5-MM THK)	
M	9	1	**8T-4137**	4	BOLT (M10X1.5X20-MM)	
M	10	1	**8T-4195**	4	BOLT (M10X1.5X30-MM)	
	11	1	**8T-4222**	4	WASHER-PLATED (11X32X2.5-MM THK)	
M	12	1	**8T-4778**	4	LOCKNUT (M16X2-THD)	

M-METRIC PART

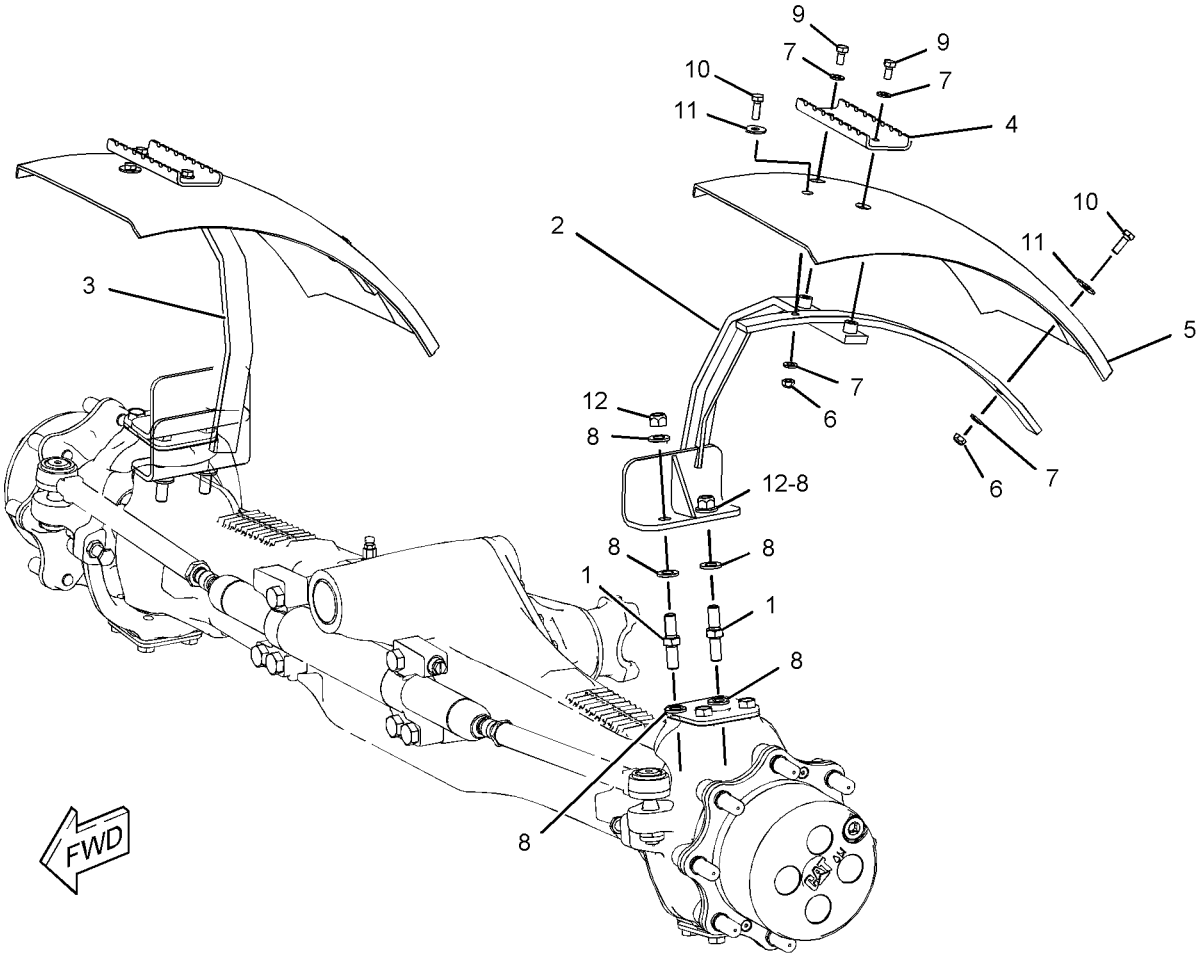

GRAPHIC #1 **<END>** g02760278

213-1891 FENDER GP-REAR

S/N: LTG1-UP

PART OF 353-1428 CAB AR, 353-1427 CANOPY AR, 353-1426 CANOPY AR-OPEN ROPS AN ATTACHMENT

SMCS-7252 **i04418651**

NOTE	REF NO	GRAPHIC REF	PART NUMBER	QTY	PART NAME 1 2 3 4 5 6 (PRODUCT LEVEL)	SEE PAGE
M	1	1	**8T-5093**	4	BOLT-LOCKING (M8X1.25X25-MM)	
E	2	1	**244-3113**		SEAL (219-CM EACH)	
	3	1	**116-5763**	1	CLIP-SPRING	
M	4	1	**193-9055**	2	SCREW-HEX FLANGE (M4X1.79X17-MM)	
	5	1	**211-3783**	1	FENDER-REAR (LH)	
	6	1	**213-1881**	1	FENDER-REAR (RH)	
	7	1	**213-1884**	1	CLIP	
	8	1	**213-1887**	1	COVER-FENDER	
	9	1	**213-1889**	1	PLATE	
	10	1	**225-0060**	1	GUARD	
J	11	1	**226-0291**	1	LOCK AS (PROTECTION)	
	12	1	**227-5556**	1	PLATE	
M	13	1	**7Y-9099**	1	SCREW-TRUSS HEAD (M8X1.25X25-MM)	
	14	1	**156-0283**	20	WASHER-HARD (8.4X35X2.5-MM THK)	
M	15	1	**5C-7261**	4	NUT (M8X1.25-THD)	
M	16	1	**8T-5091**	12	BOLT (M8X1.25X20-MM)	
D	17	1	**5P-5927**		SEAL (0.8-M)	
E	18	1	**220-0738**		SEAL (118-CM)	
	19	1	**376-2119**	2	SCREW-BUTTON HEAD	

D-ORDER BY THE METER
E-ORDER BY THE CENTIMETER
J-REQUIRES CORPORATE KEY
M-METRIC PART

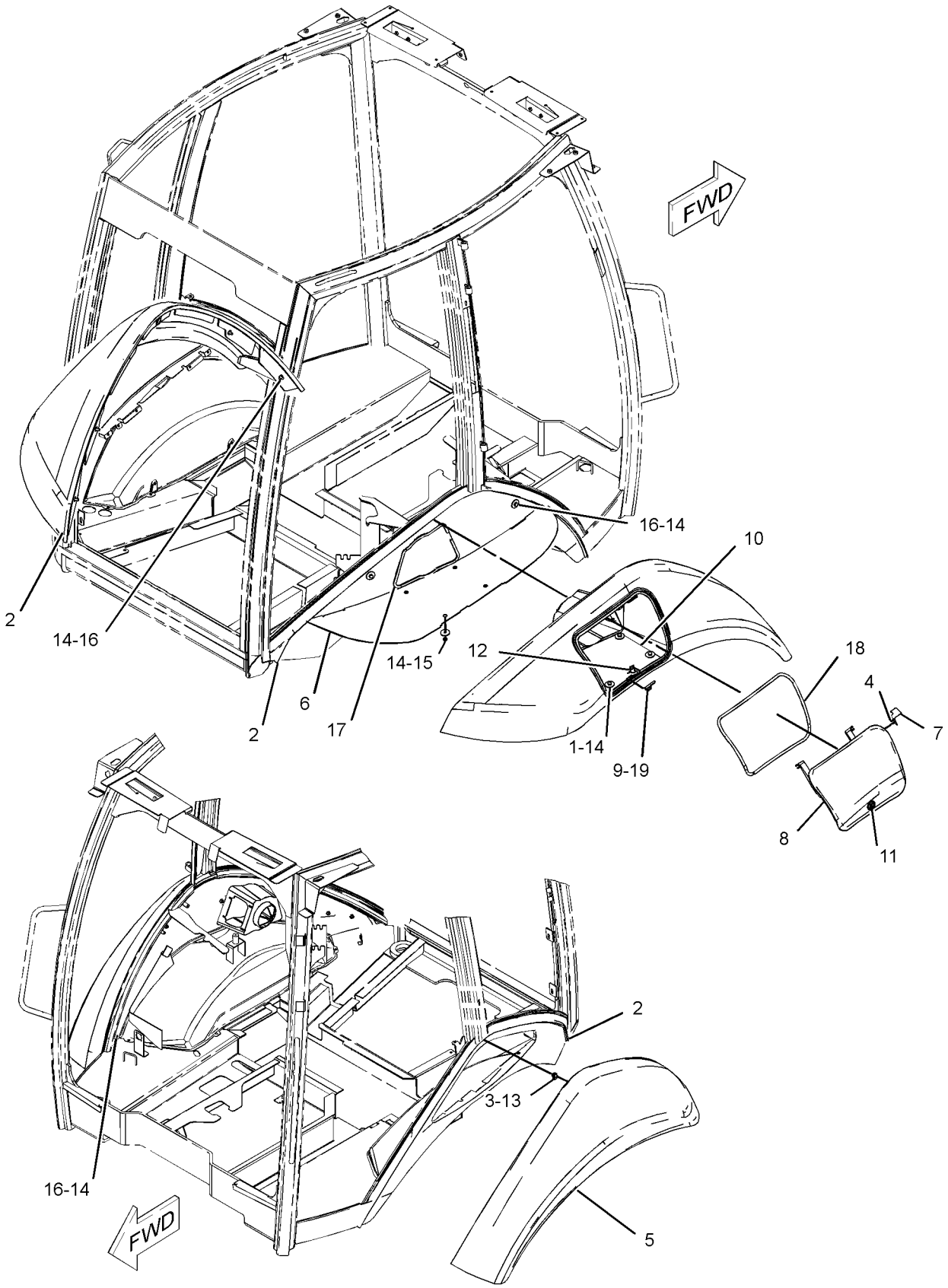

GRAPHIC #1 **<END>** g02671496

356-4100 FLOORPLATE GP

S/N: LTG1-UP

PART OF 373-4246, 373-4248 VALVE AR-BANK 2, 373-4256 VALVE AR-BANK 3

AN ATTACHMENT

SMCS-7265 **i04580772**

NOTE	REF NO	GRAPHIC REF	PART NUMBER	QTY	PART NAME 1 2 3 4 5 6 (PRODUCT LEVEL)	SEE PAGE
E	1	1	**7X-7898**		TRIM (15-CM)	
	2	1	**269-3269**	1	PLATE AS	
	3	1	**283-8563**	1	PLATE AS	
	4	1	**289-9871**	1	PLATE AS	
	5	1	**289-9873**	1	PLATE AS	
	6	1	**289-9874**	1	PLATE AS	
	7	1	**299-4777**	1	PLATE AS	
	8	1	**356-4066**	1	PLATE AS	
	9	1	**356-4108**	1	PLATE AS	
	10	1	**356-4110**	1	PLATE	
	11	1	**356-4112**	1	PLATE AS	
	12	1	**356-4116**	1	PLATE AS	
	13	1	**9X-2038**	38	WASHER (7X19X2-MM THK)	
M	14	1	**9X-2043**	44	SCREW-TRUSS HEAD (M6X1X14-MM)	

E-ORDER BY THE CENTIMETER
M-METRIC PART

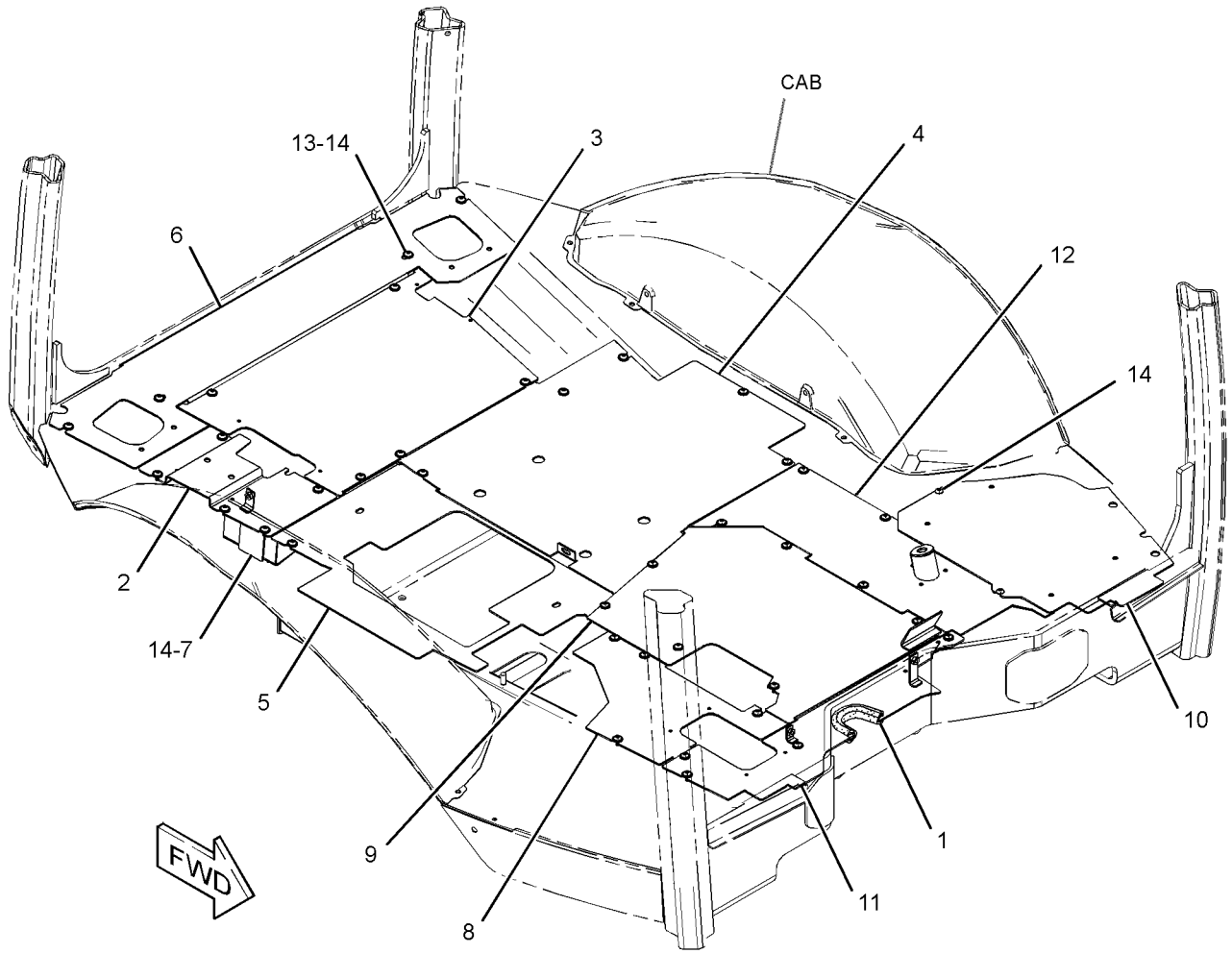

GRAPHIC #1 **<END>** g02791869

337-9855 FRAME GP-LOADER—SINGLE TILT

S/N: LTG1-UP

PART OF 340-1690 CHASSIS AR

SMCS-7054 **i04547494**

NOTE	REF NO	GRAPHIC REF	PART NUMBER	QTY	PART NAME 1 2 3 4 5 6 (PRODUCT LEVEL)	SEE PAGE
	1	1	**9R-0481**	2	WASHER (71X110X4-MM THK)	
M	2	1	**246-7853**	2	NUT-SPECIAL (M8X1.25-THD)	
M	3	1	**246-7854**	35	NUT-SPECIAL (M10X1.5-THD)	
	4	1	**252-2157**	4	FILM-INFORMATION (TIE-DOWN)	
	5	1	**362-2090**	1	CAP AS	
	5A	1	**363-0528**	2	BEARING	
	6	1	**364-5887**	2	CAP	
	7	1	**364-8075**	1	FRAME AS	
	7A	1	**220-1013**	2	BUSHING	
	7B	1	**363-0528**	2	BEARING	
	8	1	**370-0495**	8	NUT-SPECIAL (M8X1.25-THD)	
	9	1	**370-5555**	2	CAP	
	10	1	**3B-8489**	2	FITTING-GREASE	
	11	1	**8T-4167**	4	WASHER-HARD (26X44X4-MM THK)	
M	12	1	**8T-4196**	2	BOLT (M10X1.5X35-MM)	
M	13	1	**8T-5878**	4	BOLT (M24X3X80-MM)	

M-METRIC PART

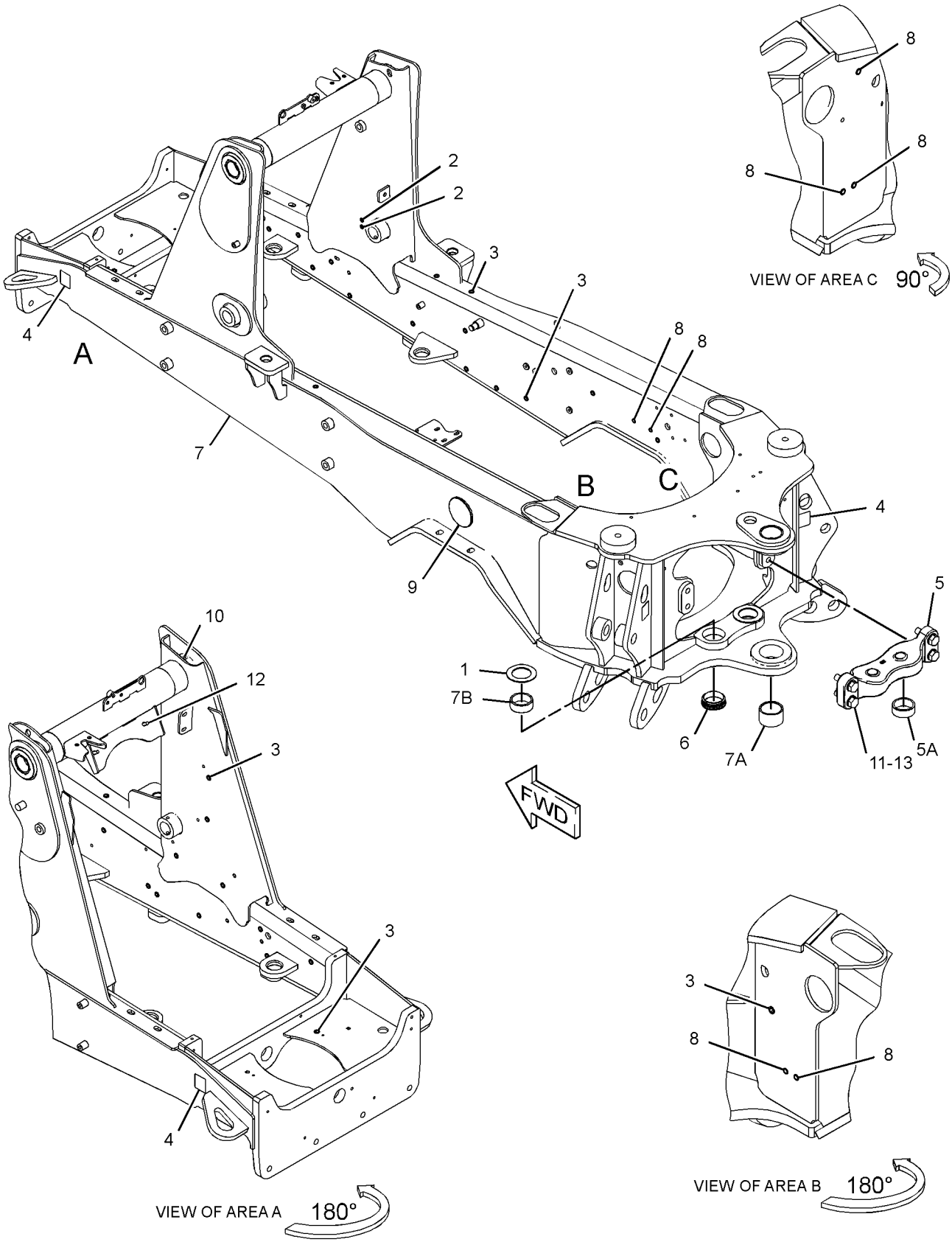

GRAPHIC #1 **<END>** g02790332

FRAME AND BODY

337-9830 FRAME GP-SWING

S/N: LTG1-UP
14-FOOT(4.5-METRE)
PART OF 340-1729 BACKHOE AR-EXTENDABLE STICK, 340-1728 BACKHOE AR-STANDARD STICK
AN ATTACHMENT

SMCS-6506 **i04565358**

NOTE	REF NO	GRAPHIC REF	PART NUMBER	QTY	PART NAME 1 2 3 4 5 6 (PRODUCT LEVEL)	SEE PAGE
	1	1	**136-1122**	1	BUSHING	
	2	1	**209-6850**	1	PIN AS	
	3	1	**237-5330**	2	PIN	
	4	1	**280-7732**	2	WASHER (76.5X130X8-MM THK)	
	5	1	**341-0597**	1	FRAME AS	
	5A	1	**213-6702**	4	BUSHING	
	5B	1	**237-0944**	2	BUSHING	
	5C	1	**278-5454**	2	BUSHING	
	6	1	**341-9483**	1	PIN	
	7	1	**341-9484**	1	PIN AS	
	8	1	**341-9488**	2	PIN	
	9	1	**3B-8489**	4	FITTING-GREASE	
	10	1	**6V-4364**	4	RING-RETAINING	
M	11	1	**6V-7687**	3	LOCKNUT (M12X1.75-THD)	
	12	1	**7X-0542**	2	WASHER-HARD (51X74X3-MM THK)	
M	13	1	**8T-4139**	2	BOLT (M12X1.75X30-MM)	
	14	1	**8T-4821**	2	WASHER (13.5X40X3-MM THK)	
M	15	1	**8T-7930**	3	BOLT (M12X1.75X160-MM)	
	16	1	**9R-7882**	1	SPACER (14X25X7-MM THK)	

M-METRIC PART

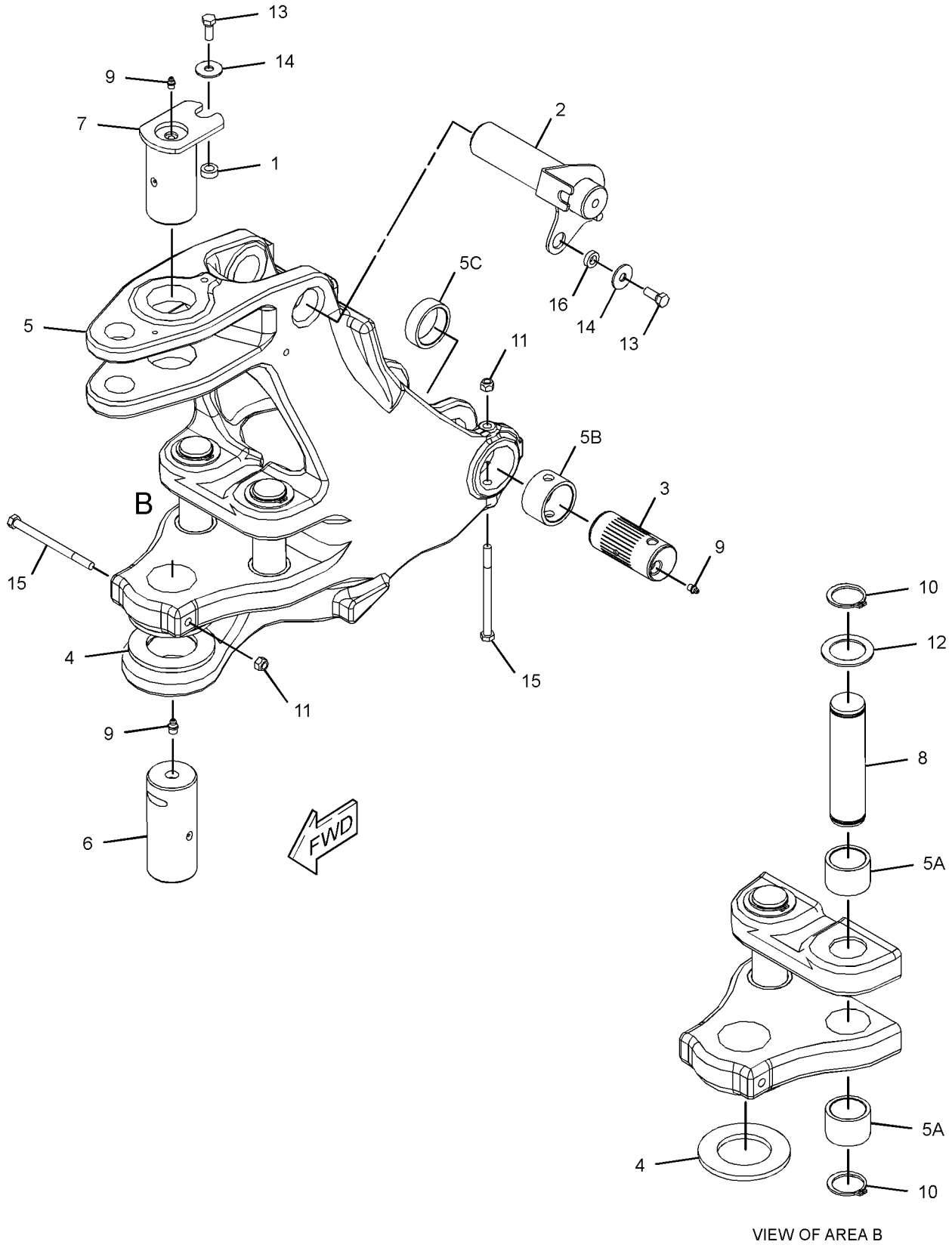

GRAPHIC #1 **<END>** g02797052

368-0291 GRILL GP-RADIATOR

S/N: LTG1-UP
PART OF 337-9702 HOOD & GUARD GP
AN ATTACHMENT

SMCS-7170 **i04577593**

NOTE	REF NO	GRAPHIC REF	PART NUMBER	QTY	PART NAME 1 2 3 4 5 6 (PRODUCT LEVEL)	SEE PAGE
	1	1	**129-5256**	8	BUSHING	
	2	1	**208-8469**	2	LOCKNUT (M6X1-THD)	
	3	1	**365-2511**	1	CAM-LATCH	
	4	1	**365-4093**	1	GRILL	
	5	1	**369-3473**	1	PIN	
	6	1	**369-3945**	1	BRACKET AS	
	7	1	**372-4600**	1	FRAME AS-GRILL	
	8	1	**372-4605**	1	GUARD AS	
	9	1	**372-4613**	2	PLATE	
	10	1	**382-6675**	2	LATCH-MAGNETIC	
	11	1	**130-1916**	2	STUD-BALL	
M	12	1	**178-3336**	2	NUT-HEX FLANGE (M8X1.25-THD)	
	13	1	**206-6969**	2	PAWL	
E	14	1	**220-0738**		SEAL (63-CM)	
	15	1	**233-5260**	1	LANYARD	
J	16	1	**260-3568**	2	LATCH AS	
	17	1	**277-0584**	1	LOCK AS	
	18	1	**342-9920**	12	BOLT-FLANGE HEAD (M8X1.25X20-MM)	
	19	1	**8S-7803**	2	RING-RETAINING	
	20	1	**8T-4123**	2	WASHER (22X35X3.5-MM THK)	

E-ORDER BY THE CENTIMETER
J-REQUIRES CORPORATE KEY
M-METRIC PART

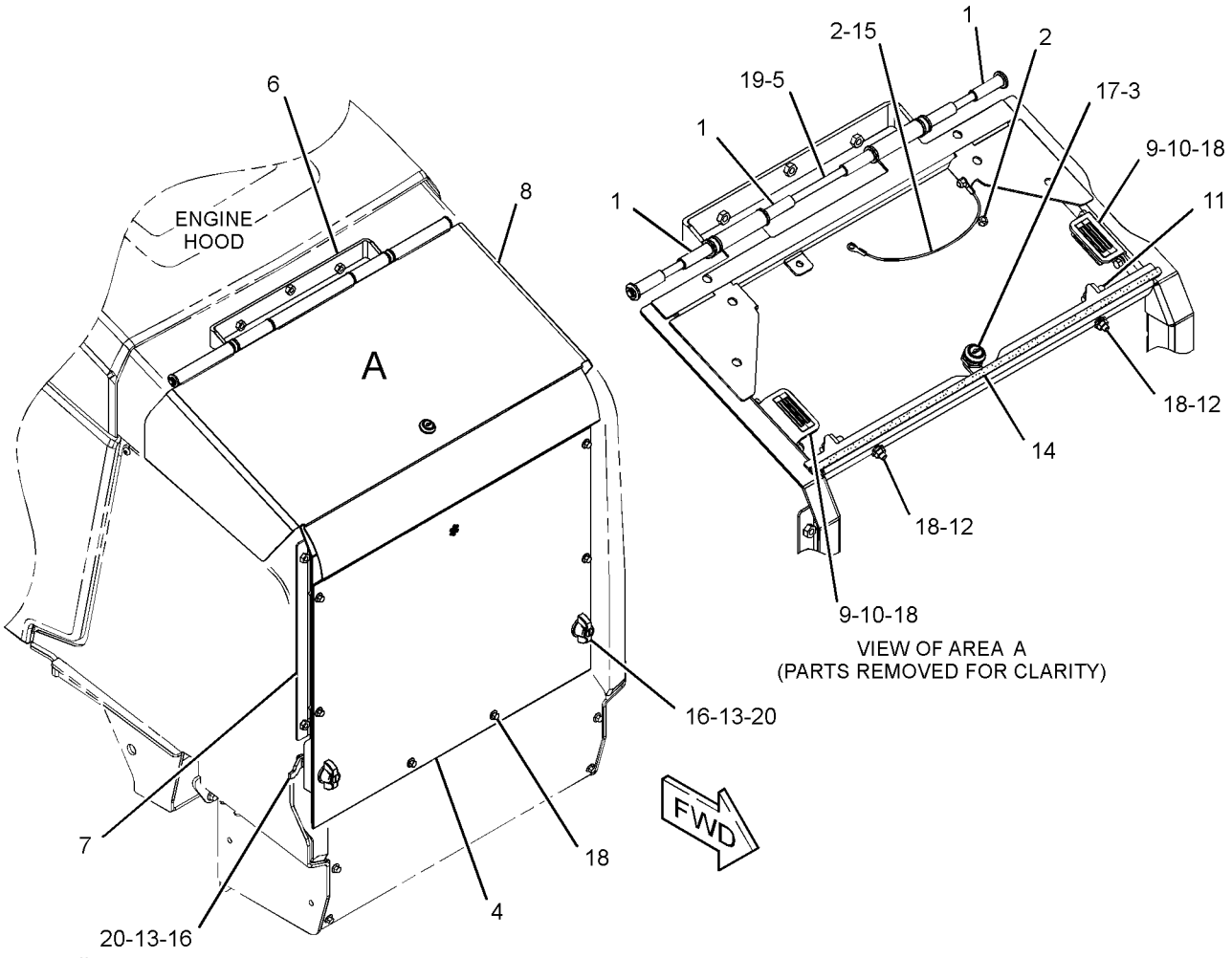

GRAPHIC #1 **<END>** g02818758

353-1389 GUARD GP-CYLINDER—STABILIZER

S/N: LTG1-UP
AN ATTACHMENT

SMCS-7164 **i04603070**

NOTE	REF NO	GRAPHIC REF	PART NUMBER	QTY	PART NAME 1 2 3 4 5 6 (PRODUCT LEVEL)	SEE PAGE
	1	1	**3S-8536**	2	SPACER (0.406X0.656X0.38-IN THK)	
	2	1	**8T-4986**	4	CLAMP-HOSE	
	3	1	**130-1638**	2	PIN	
	4	1	**188-3953**	2	PAD	
	5	1	**194-9487**	2	BUMPER AS	
	6	1	**241-0888**	2	PLATE	
	7	1	**318-8228**	2	PLATE AS	
	8	1	**372-3178**	2	GUARD AS	
	9	1	**5P-4116**	2	WASHER-HARD (8.8X20.5X2-MM THK)	
M	10	1	**7X-2537**	2	BOLT (M8X1.25X35-MM)	
	11	1	**7X-7729**	2	WASHER (11X25X3-MM THK)	
M	12	1	**8T-4195**	2	BOLT (M10X1.5X30-MM)	
	13	1	**9R-0109**	4	WASHER (41X64X3-MM THK)	

M-METRIC PART

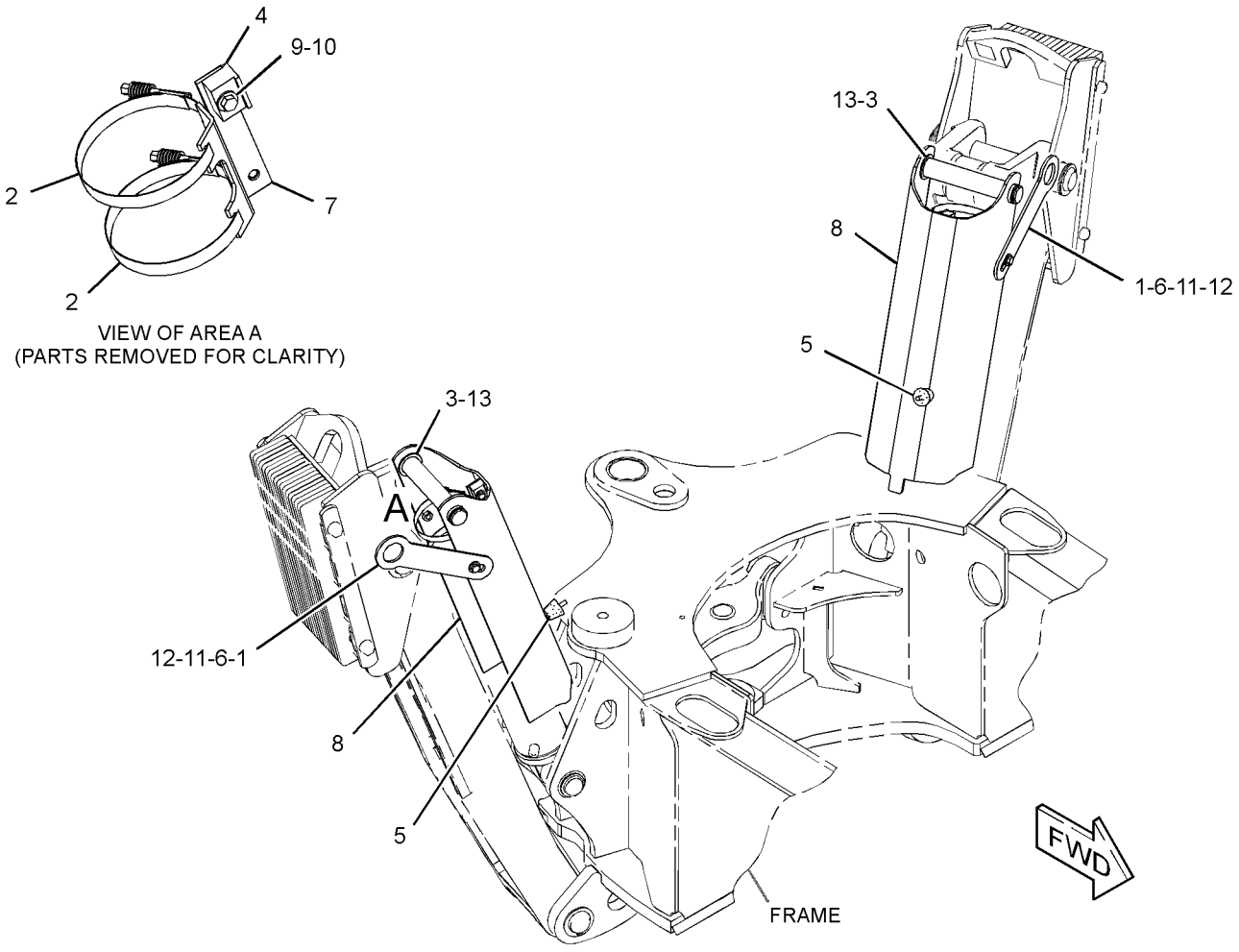

GRAPHIC #1 **<END>** g02810936

380-7775 GUARD GP-DEBRIS–CANOPY

S/N: LTG1-UP

PART OF 353-1428 CAB AR, 353-1427 CANOPY AR

AN ATTACHMENT

SMCS-7150, 7158 **i04565310**

NOTE	REF NO	GRAPHIC REF	PART NUMBER	QTY	PART NAME 1 2 3 4 5 6 (PRODUCT LEVEL)	SEE PAGE
	1	1	**164-1368**	6	FASTENER-PANEL	
	2	1	**378-3311**	1	MAT	
	3	1	**378-8059**	2	SEAL (6-GA, 1/4-IN SCREW)	

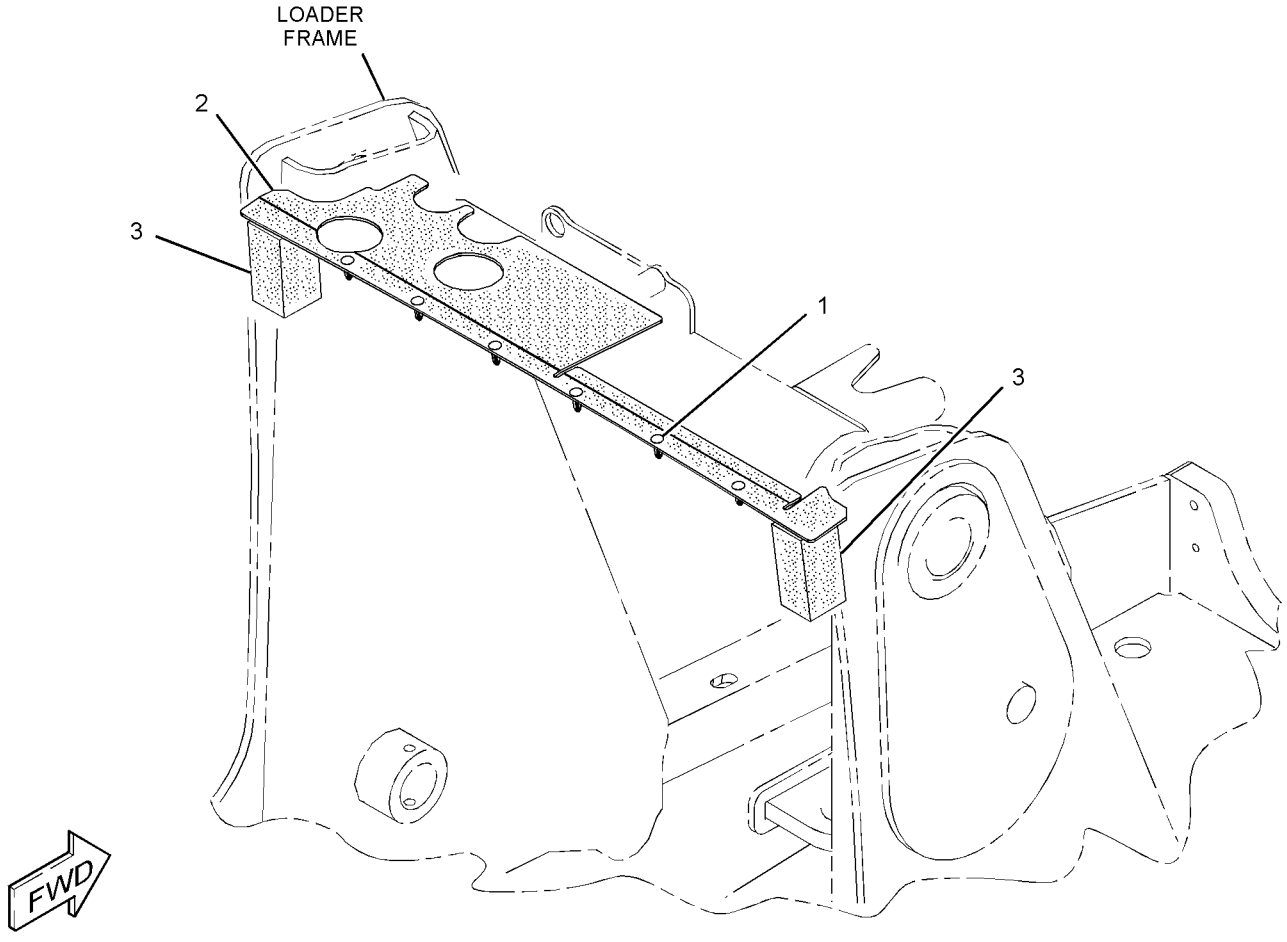

GRAPHIC #1 **<END>** g02809557

380-7776 GUARD GP-DEBRIS–CANOPY

S/N: LTG1-UP
PART OF 353-1426 CANOPY AR-OPEN ROPS
AN ATTACHMENT

SMCS-7150, 7158 **i04548467**

NOTE	REF NO	GRAPHIC REF	PART NUMBER	QTY	PART NAME 1 2 3 4 5 6 (PRODUCT LEVEL)	SEE PAGE
	1	1	**164-1368**	6	FASTENER-PANEL	
	2	1	**378-8059**	2	SEAL	
	3	1	**380-7777**	1	MAT	

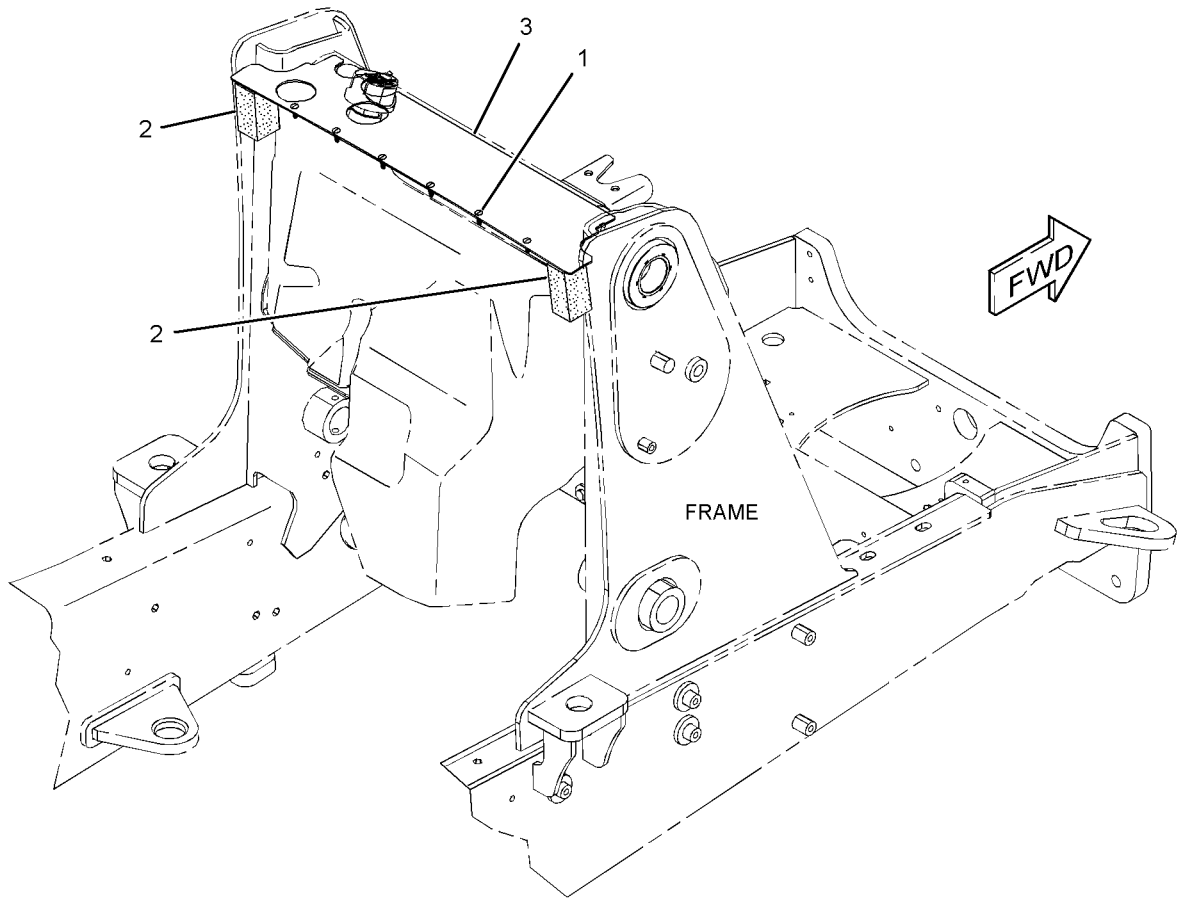

GRAPHIC #1 **<END>** g02778459

FRAME AND BODY

337-9697 GUARD GP-DRIVE SHAFT

S/N: LTG1-UP
PART OF 353-1503 DRIVE AR-BACKHOE LOADER
AN ATTACHMENT

SMCS-7153 **i04609209**

NOTE	REF NO	GRAPHIC REF	PART NUMBER	QTY	PART NAME 1 2 3 4 5 6 (PRODUCT LEVEL)	SEE PAGE
	1	1	**360-8966**	1	GUARD AS	
M	2	1	**7X-2552**	4	BOLT (M16X2X30-MM)	
	3	1	**8T-4122**	4	WASHER-HARD (17X32X3.5-MM THK)	

M-METRIC PART

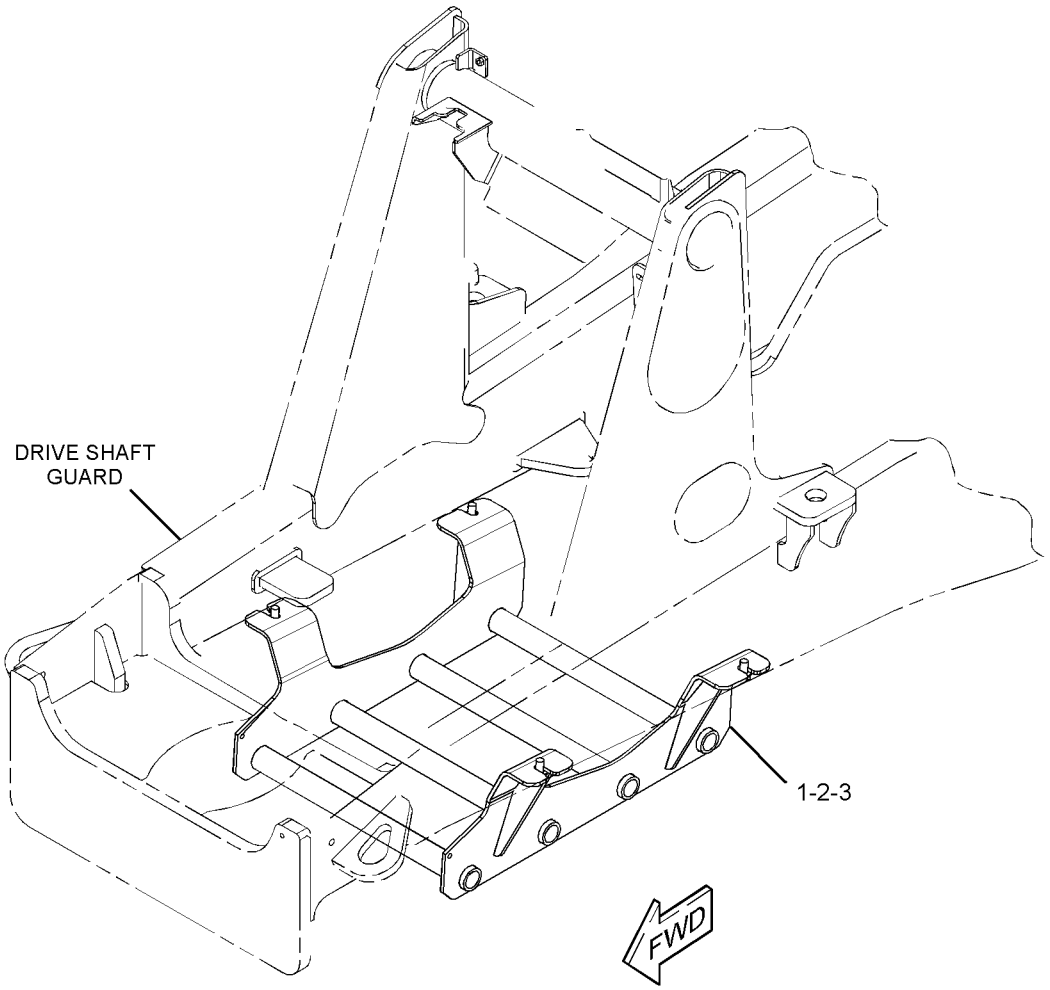

GRAPHIC #1 **<END>** g02798282

FRAME AND BODY

337-9722 GUARD GP-FUEL TANK

S/N: LTG1-UP

AN ATTACHMENT

SMCS-1273, 7150 **i04603069**

NOTE	REF NO	GRAPHIC REF	PART NUMBER	QTY	PART NAME 1 2 3 4 5 6 (PRODUCT LEVEL)	SEE PAGE
	1	1	**372-7230**	1	PLATE	
	2	1	**372-7231**	1	PLATE	
	3	1	**5P-4116**	2	WASHER-HARD (8.8X20.5X2-MM THK)	
M	4	1	**8T-4189**	2	BOLT (M8X1.25X20-MM)	

M-METRIC PART

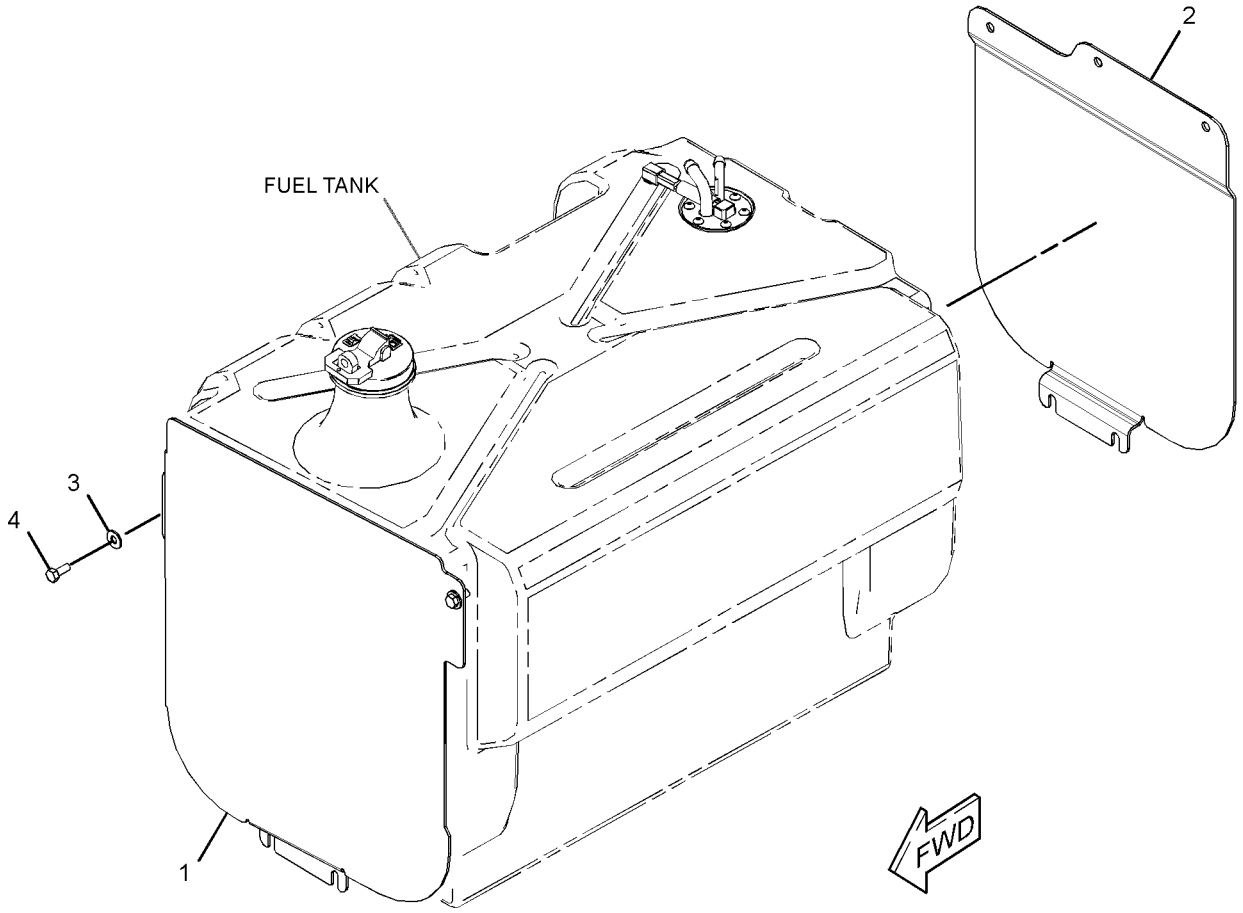

GRAPHIC #1 **<END>** g02788470

337-9702 HOOD & GUARD GP

S/N: LTG1-UP
PART OF 340-1705 ENGINE AR
AN ATTACHMENT

SMCS-7150, 7170, 7251, 7263 **i04577591**

NOTE	REF NO	GRAPHIC REF	PART NUMBER	QTY	PART NAME 1 2 3 4 5 6 (PRODUCT LEVEL)	SEE PAGE
	1	1	**130-1916**	2	STUD-BALL	
	2	1	**164-1368**	2	FASTENER-PANEL	
	3	1	**185-9777**	1	PLATE	
	4	1	**205-9920**	3	STRAP-CABLE	
J	5	1	**226-0294**	1	LOCK AS	
	6	1	**250-6858**	1	LATCH AS	
	7	1	**351-4746**	1	FILM-IDENTIFICATION (CAT)	
	8	1	**357-4273**	1	HOOD (RH)	
	9	1	**357-4274**	1	HOOD (LH)	
	10	1	**358-1415**	1	GUARD AS	
	11	1	**358-7863**	1	BRACKET AS	
	12	1	**358-7903**	1	CABLE AS	
	13	1	**362-8135**	1	BUMPER AS (RH)	
	14	1	**362-8136**	1	BUMPER AS (LH)	
	15	1	**363-2867**	1	SPRING AS-GAS (HOOD, RH)	
		1	**8T-2444**	2	STUD-BALL	
	16	1	**363-2868**	1	SPRING AS-GAS (GRILL, RH)	
	17	1	**366-9220**	1	MAT	
	18	1	**367-0055**	1	PLATE AS	
	19	1	**367-7625**	1	INSERT AS	
	20	1	**367-7764**	1	PLATE	
Y	21	1	*368-0291*	1	GRILL GP-RADIATOR	260
	22	1	**369-2053**	1	PLATE AS	
	23	1	**372-0739**	1	SPRING AS-GAS (LOCKABLE) (GRILL, LH)	
	24	1	**372-0740**	1	SPRING AS-GAS (LOCKABLE) (HOOD, LH)	
		1	**8T-2444**	2	STUD-BALL	
	25	1	**372-4616**	1	PLATE AS	
Y	26	1	*381-5559*	1	HOOD GP-ENGINE	269
M	27	1	**178-3336**	7	NUT-HEX FLANGE (M8X1.25-THD)	
M	28	1	**198-3899**	10	SCREW-BUTTON HEAD (M8X1.25X20-MM)	
	29	1	**342-9920**	9	BOLT-FLANGE HEAD (M8X1.25X20-MM)	
	30	1	**344-7932**	6	BOLT-FLANGE HEAD (M10X1.5X35-MM)	
M	31	1	**5C-7261**	6	NUT (M8X1.25-THD)	
	32	1	**5P-4116**	10	WASHER-HARD (8.8X20.5X2-MM THK)	
M	33	1	**6V-8949**	2	NUT (M10X1.5-THD)	
M	34	1	**7X-2537**	2	BOLT (M8X1.25X35-MM)	
E	35	1	**220-0738**		SEAL (52-CM EACH)	
E	35A	1	**220-0738**		SEAL (11-CM EACH)	
E	36	1	**9X-6383**		SEAL (27.5-CM EACH)	

E-ORDER BY THE CENTIMETER
J-REQUIRES CORPORATE KEY
M-METRIC PART
Y-SEPARATE ILLUSTRATION

337-9702 **HOOD & GUARD GP** *(contd.)* **i04577591**

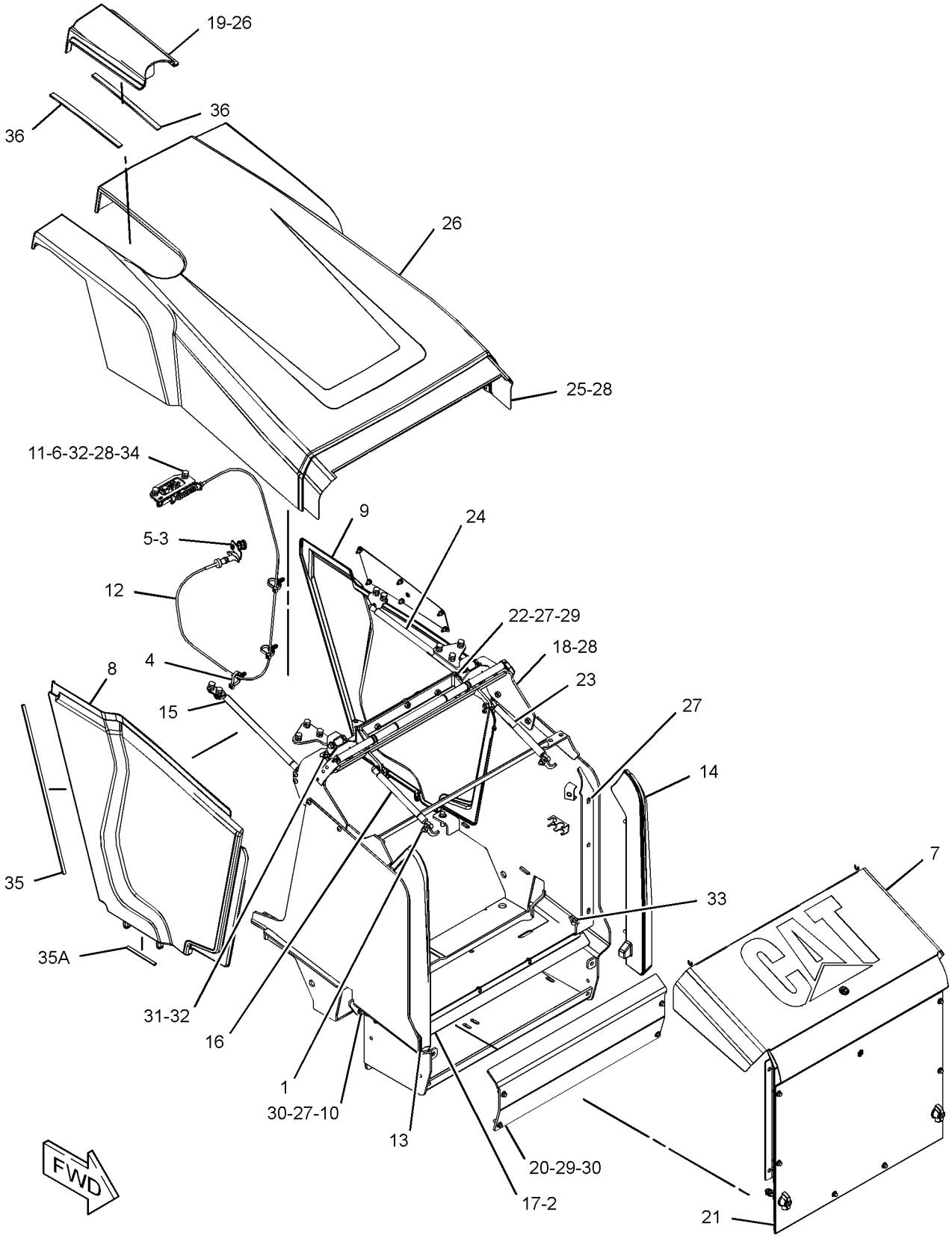

GRAPHIC #1 **<END>** g02817976

381-5559 HOOD GP-ENGINE

S/N: LTG1-UP
PART OF 337-9702 HOOD & GUARD GP
AN ATTACHMENT

SMCS-7251 **i04566215**

NOTE	REF NO	GRAPHIC REF	PART NUMBER	QTY	PART NAME 1 2 3 4 5 6 (PRODUCT LEVEL)	SEE PAGE
	1	1	**250-6850**	2	BRACKET AS	
	2	1	**358-7864**	1	BRACKET AS	
	3	1	**361-4643**	1	HOOD AS	
	4	1	**361-7891**	2	BRACKET AS	
	5	1	**371-7076**	1	HINGE AS (RH)	
	6	1	**371-7077**	1	HINGE AS (LH)	
	7	1	**372-4592**	1	GRILL	
M	8	1	**174-9194**	6	BOLT (M8X1.25X16-MM)	
	9	1	**208-9297**	2	BOLT-FLANGE HEAD (M10X1.5X50-MM)	
	10	1	**342-9920**	6	BOLT-FLANGE HEAD (M8X1.25X20-MM)	
M	11	1	**8T-4127**	6	SCREW-MACHINE (M5X0.8X20-MM)	
E	12	1	**220-0738**		SEAL (83-CM)	

E-ORDER BY THE CENTIMETER
M-METRIC PART

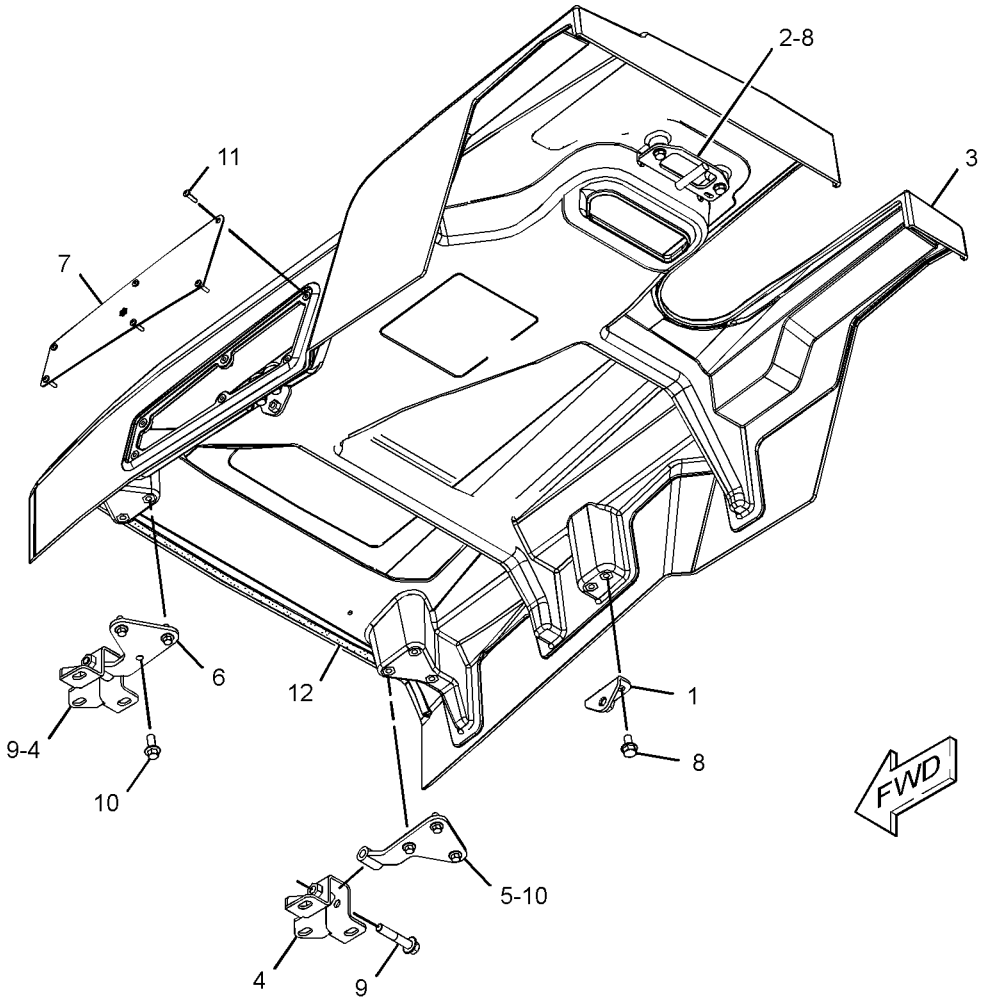

GRAPHIC #1 **<END>** g02790650

FRAME AND BODY

337-9735 LINER GP-SOUND SUPPRESSION

S/N: LTG1-UP

AN ATTACHMENT

SMCS-1801 **i04547481**

NOTE	REF NO	GRAPHIC REF	PART NUMBER	QTY	PART NAME 1 2 3 4 5 6 (PRODUCT LEVEL)	SEE PAGE
	1	1	**377-3802**	1	INSULATION (LH)	
	2	1	**377-3803**	1	INSULATION (RH)	

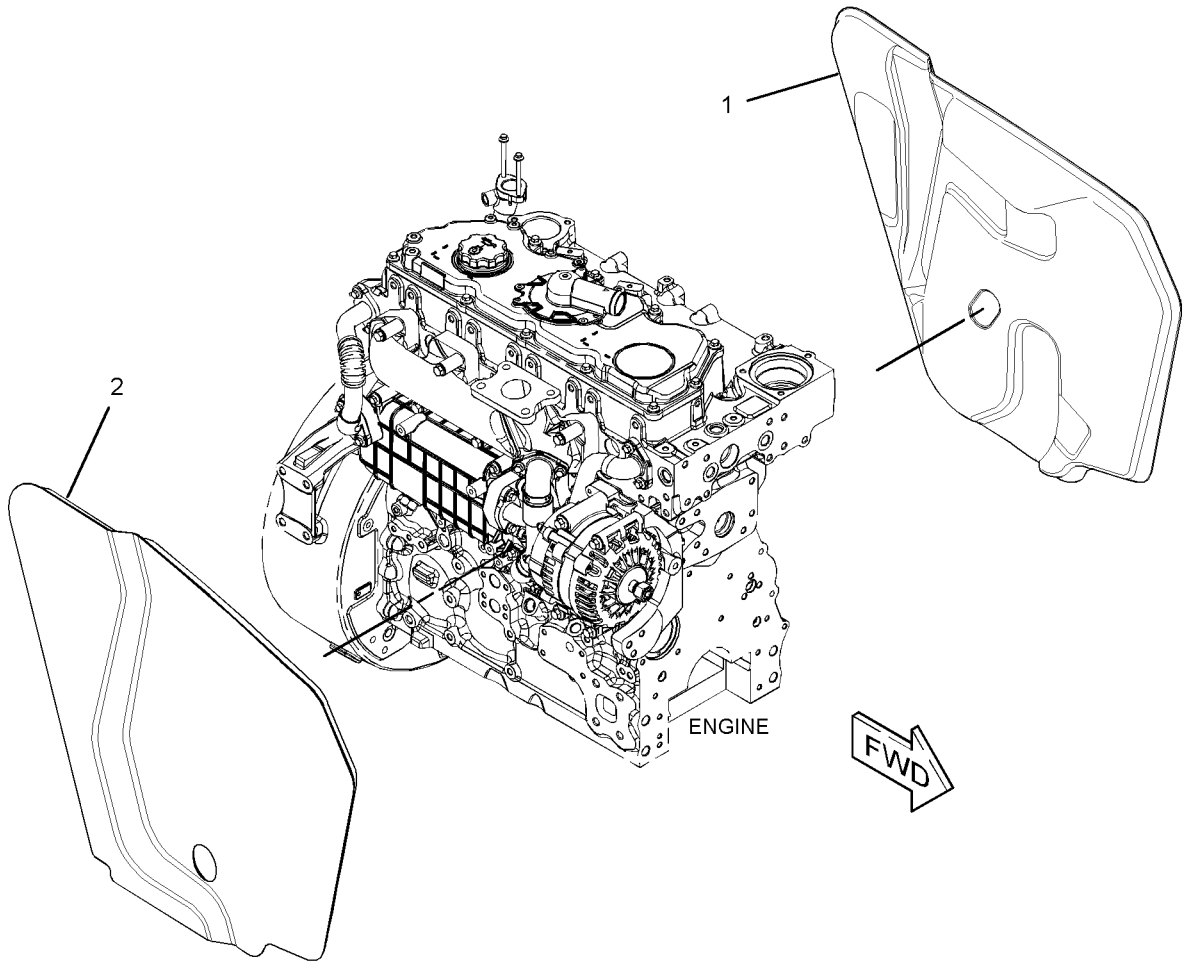

GRAPHIC #1 **<END>** g02772076

149-0686 ACCUMULATOR GP-HYDRAULIC–CHARGED

S/N: LTG1-UP

PART OF 353-1374 ACCUMULATOR GP-HYDRAULIC

AN ATTACHMENT

SMCS-5077 **i03909560**

NOTE	REF NO	GRAPHIC REF	PART NUMBER	QTY	PART NAME 1 2 3 4 5 6 (PRODUCT LEVEL)	SEE PAGE
					(NO SERVICED PARTS)	

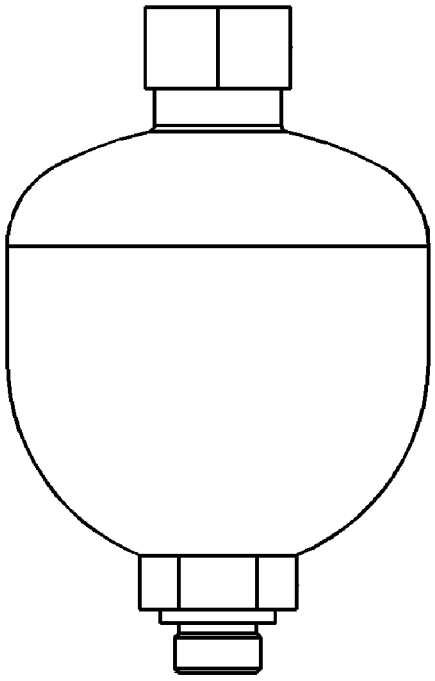

GRAPHIC #1 **<END>** g01423820

HYDRAULIC SYSTEM

353-1374 ACCUMULATOR GP-HYDRAULIC

S/N: LTG1-UP

PART OF 373-4246, 373-4248 VALVE AR-BANK 2, 373-4256 VALVE AR-BANK 3 AN ATTACHMENT

SMCS-5077 **i04611609**

NOTE	REF NO	GRAPHIC REF	PART NUMBER	QTY	PART NAME 1 2 3 4 5 6 (PRODUCT LEVEL)	SEE PAGE
Y	1	1	*149-0686*	1	ACCUMULATOR GP-HYDRAULIC (CHARGED)	271
	2	1	**3K-0360**	1	SEAL-O-RING	

Y-SEPARATE ILLUSTRATION

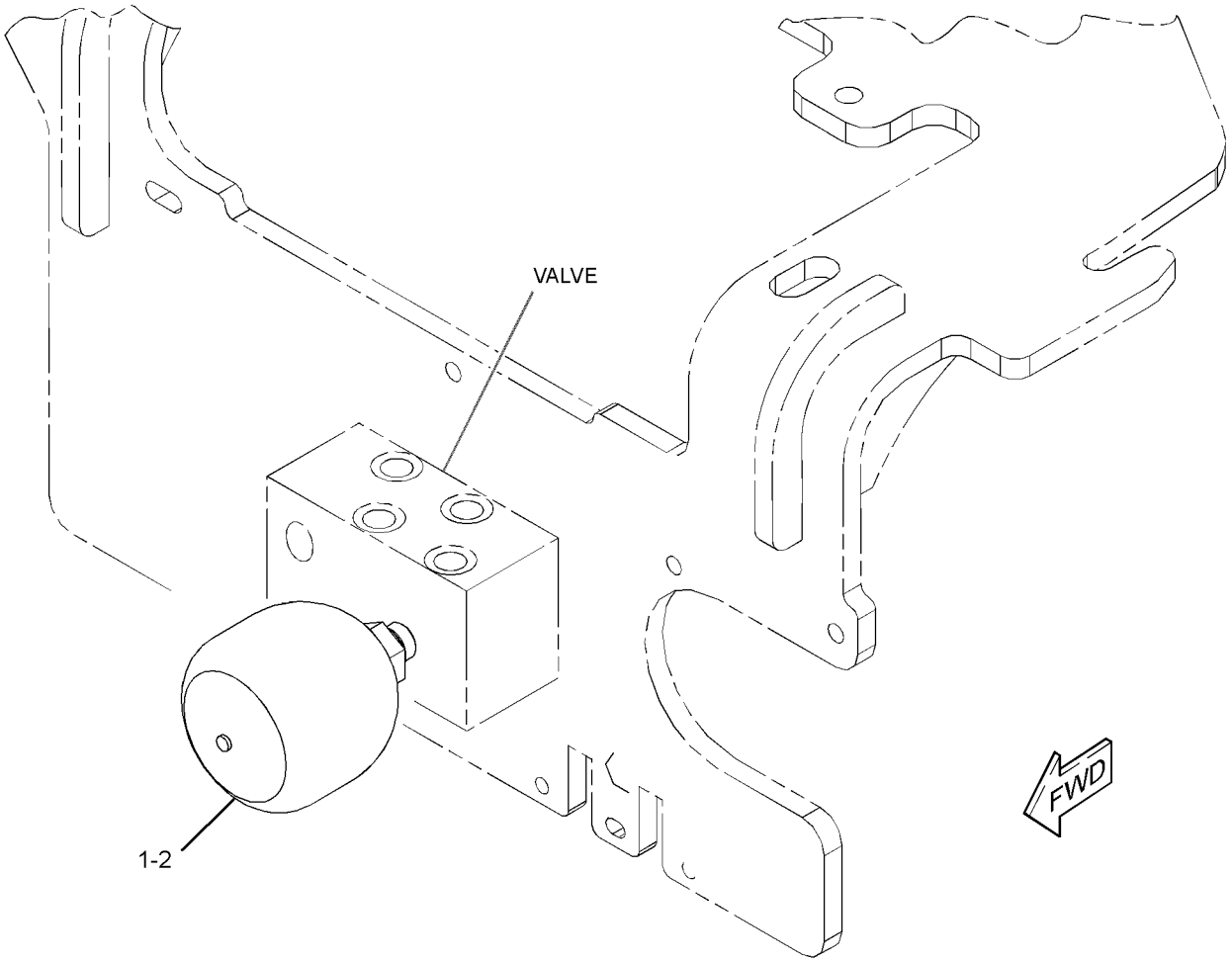

GRAPHIC #1 **<END>** g02813920

345-3674 ACCUMULATOR GP-RIDE CONTROL–UNCHARGED

S/N: LTG1-UP

SMCS-5077 **i04061330**

NOTE	REF NO	GRAPHIC REF	PART NUMBER	QTY	PART NAME 1 2 3 4 5 6 (PRODUCT LEVEL)	SEE PAGE
	1	1	**224-5132**	1	CAP (GAS VALVE)	
	2	1	**224-5152**	1	VALVE-GAS (HYDRAULIC ACCUMULATOR)	
	3	1	**3J-7354**	1	SEAL-O-RING	
	4	1	**1J-9671**	1	SEAL-O-RING	
	5	1	**241-0037**	1	FILM-WARNING (HIGH PRESSURE, READ OMM)	

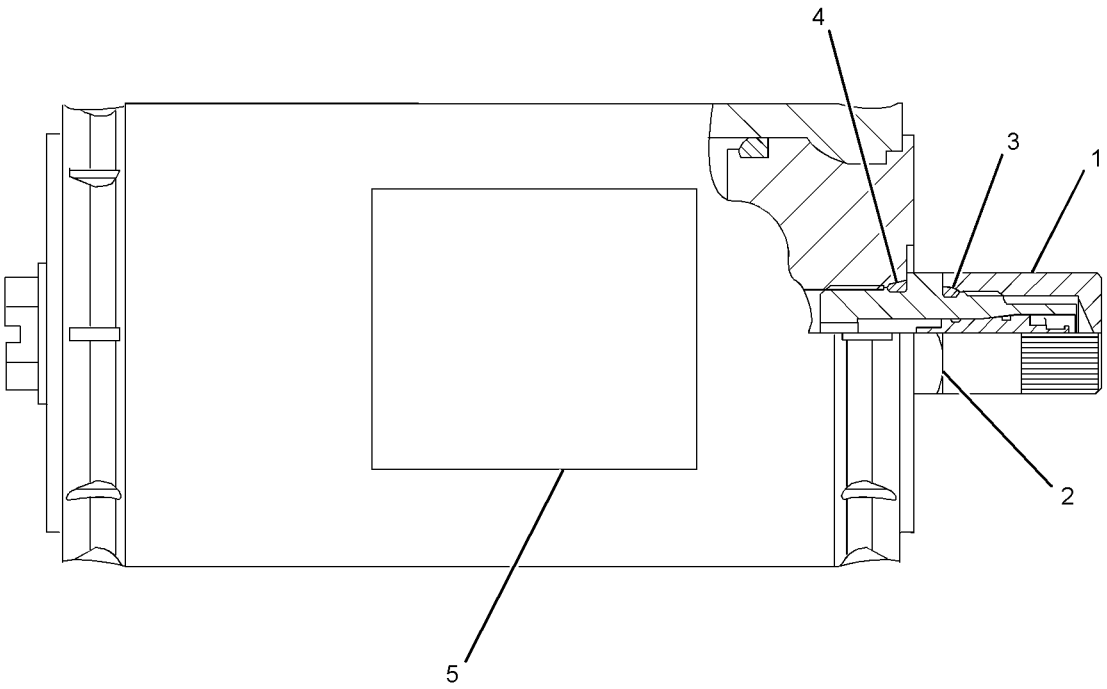

GRAPHIC #1 **<END>** g01966053

382-8033 ACCUMULATOR GP-RIDE CONTROL—CHARGED

S/N: LTG1-UP
PART OF 337-9793 LINES GP-RIDE CONTROL
FIELD REPLACEMENT ORDER 345-3674—PAGE 273
AN ATTACHMENT

SMCS-5077 **i04556055**

NOTE	REF NO	GRAPHIC REF	PART NUMBER	QTY	PART NAME 1 2 3 4 5 6 (PRODUCT LEVEL)	SEE PAGE
	1	1	**224-5132**	1	CAP (GAS VALVE)	
	2	1	**224-5152**	1	VALVE-GAS (HYDRAULIC ACCUMULATOR)	
	3	1	**3J-7354**	1	SEAL-O-RING	
	4	1	**1J-9671**	1	SEAL-O-RING	
	5	1	**241-0037**	1	FILM-WARNING (HIGH PRESSURE, READ OMM)	

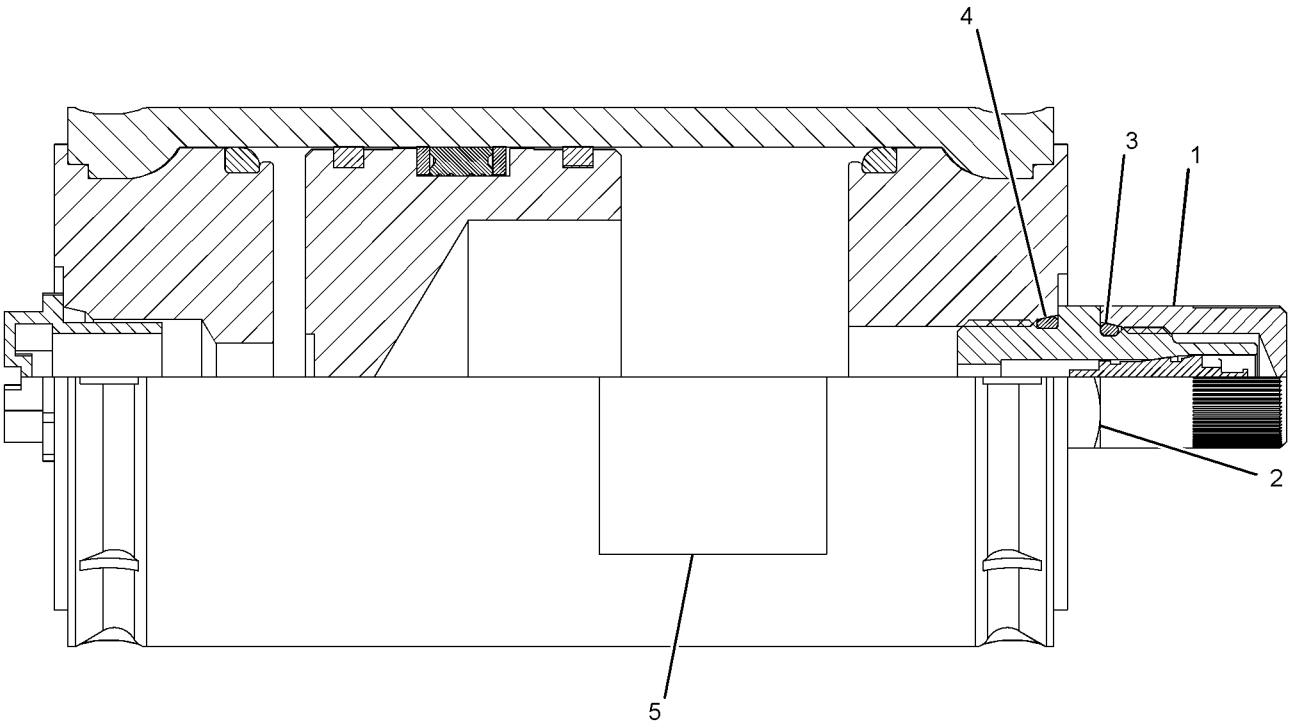

GRAPHIC #1 **<END>** g02780677

HYDRAULIC SYSTEM

340-1747 CONTROL AR-RIDE

S/N: LTG1-UP

AN ATTACHMENT

SMCS-5004 **i04603050**

NOTE	PART NUMBER	QTY	PART NAME 1 2 3 4 5 6 (PRODUCT LEVEL)	SEE PAGE
Y	*337-9793*	1	LINES GP-RIDE CONTROL	341
Y	*331-5470*	1	WIRING GP-RIDE CONTROL	127

Y-SEPARATE ILLUSTRATION

<END>

HYDRAULIC SYSTEM

210-7088 CYLINDER GP-BACKHOE BUCKET

S/N: LTG1-UP
89-MM (3.5-IN) BORE X 852-MM (33.5-IN) STROKE
PART OF 340-1729 BACKHOE AR-EXTENDABLE STICK, 340-1728 BACKHOE AR-STANDARD STICK
AN ATTACHMENT

SMCS-5457 **i04389817**

NOTE	REF NO	GRAPHIC REF	PART NUMBER	QTY	PART NAME 1 2 3 4 5 6 (PRODUCT LEVEL)	SEE PAGE
	1	1	**187-3510**	1	HEAD	
	2	1	**213-4616**	1	ROD AS	
	2A	1	**9R-0162**	2	BUSHING	
	3	1	**213-4620**	1	CYLINDER AS	
	3A	1	**9R-0139**	2	BUSHING	
	3B	1	**6V-8398**	1	SEAL-O-RING	
J	4	1	**223-3356**	1	RING-WEAR	
	5	1	**228-9572**	1	PISTON	
	6	1	**167-2201**	1	SEAL AS-BUFFER	
	7	1	**167-2312**	1	SEAL-U-CUP	
M	8	1	**173-9683**	1	BOLT (M30X3.5X90-MM)	
J	9	1	**6V-6707**	1	SEAL-O-RING	
J	10	1	**2H-4145**	1	SEAL-O-RING	
J	11	1	**4J-9224**	1	RING-BACKUP	
J	12	1	**5J-7011**	1	SEAL	
J	13	1	**5J-7012**	1	RING-EXPANDER	
	14	1	**5J-8156**	1	WIPER-ROD	
J	15	1	**8T-0785**	1	RING-WEAR	
	16	1	**9X-8399**	1	WASHER (33X56X6-MM THK)	
					AVAILABLE REPAIR KIT(S):	
J			**338-7038**	1	KIT-HYD CYLINDER SEAL	
					(INCLUDES RINGS & SEALS)	
					(FOR USE WITH REHS1392)	

J-KIT MARKED J SERVICES PARTS MARKED J
M-METRIC PART

210-7088 CYLINDER GP-BACKHOE BUCKET *(contd.)* i04389817

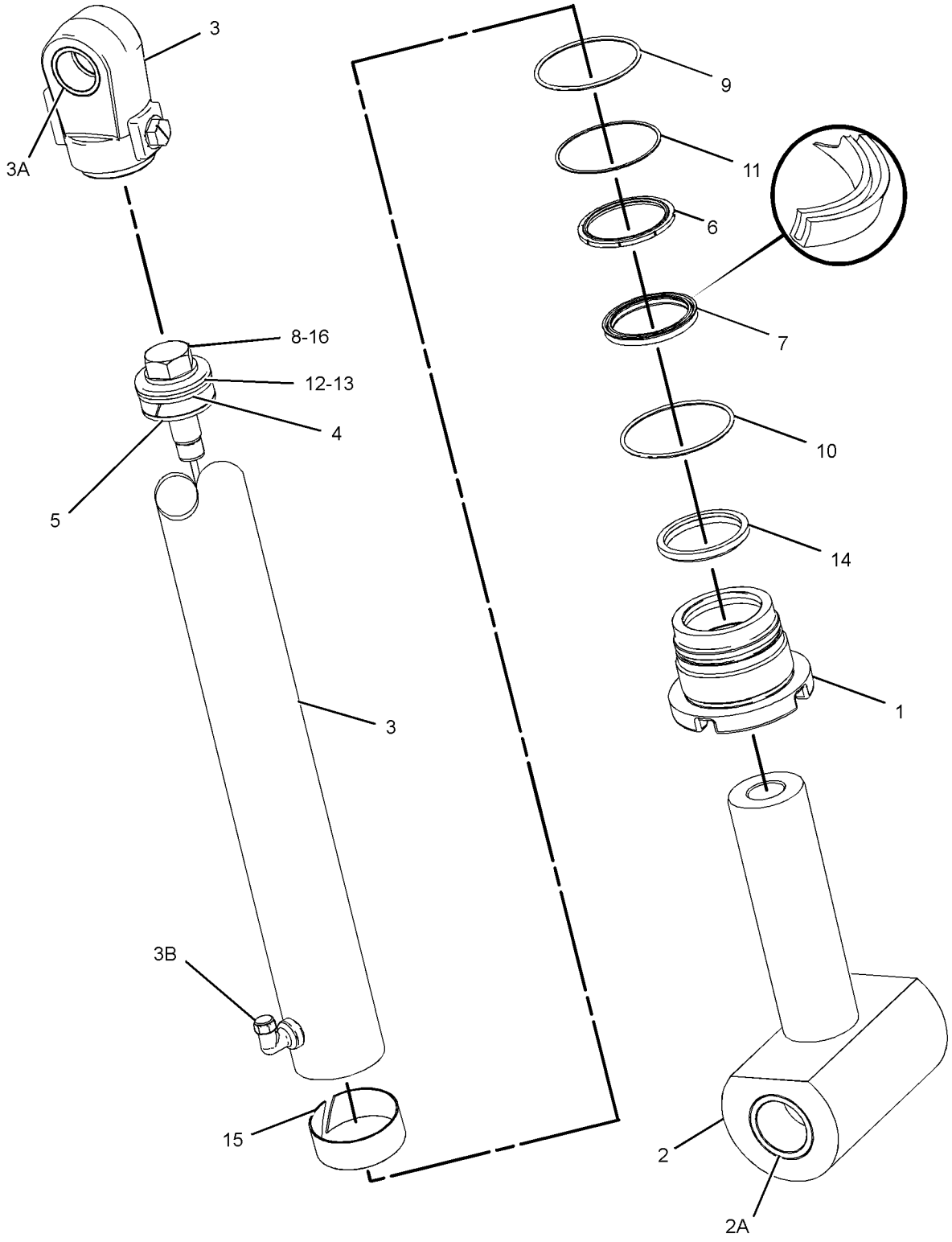

GRAPHIC #1 **<END>** g02093517

HYDRAULIC SYSTEM

210-7076 CYLINDER GP-BOOM

S/N: LTG1-UP
120.65-MM (4.8-IN) BORE X 943-MM (37.1-IN) STROKE
PART OF 340-1729 BACKHOE AR-EXTENDABLE STICK, 340-1728 BACKHOE AR-STANDARD STICK
AN ATTACHMENT

SMCS-5456 **i03799133**

NOTE	REF NO	GRAPHIC REF	PART NUMBER	QTY	PART NAME 1 2 3 4 5 6 (PRODUCT LEVEL)	SEE PAGE
	1	1	**273-9412**	1	HEAD	
	2	1	**276-7537**	1	CYLINDER AS	
	2A	1	**212-8960**	2	BEARING	
	3	1	**212-7291**	1	PISTON	
	4	1	**223-3360**	1	RING-WEAR	
	5	1	**167-2202**	1	SEAL AS-BUFFER	
	6	1	**167-2310**	1	SEAL-U-CUP	
	7	1	**175-7902**	1	SEAL-O-RING	
	8	1	**175-7903**	1	SEAL-O-RING	
	9	1	**212-6708**	1	ROD AS	
	9A	1	**326-3362**	1	BEARING-SLEEVE	
		1	**276-6142**	1	PLUNGER	
		1	**9T-2178**	1	SPRING	
		1	**2Y-5821**	1	RING	
	10	1	**231-3540**	1	SEAL-WIPER	
	11	1	**2J-3961**	1	RING-BACKUP	
	12	1	**4T-8588**	1	SEAL AS	
	13	1	**5J-5731**	1	LOCKNUT (1-3/4-12-THD)	
	14	1	**9X-7260**	1	RING-WEAR	

210-7076 CYLINDER GP-BOOM *(contd.)* **i03799133**

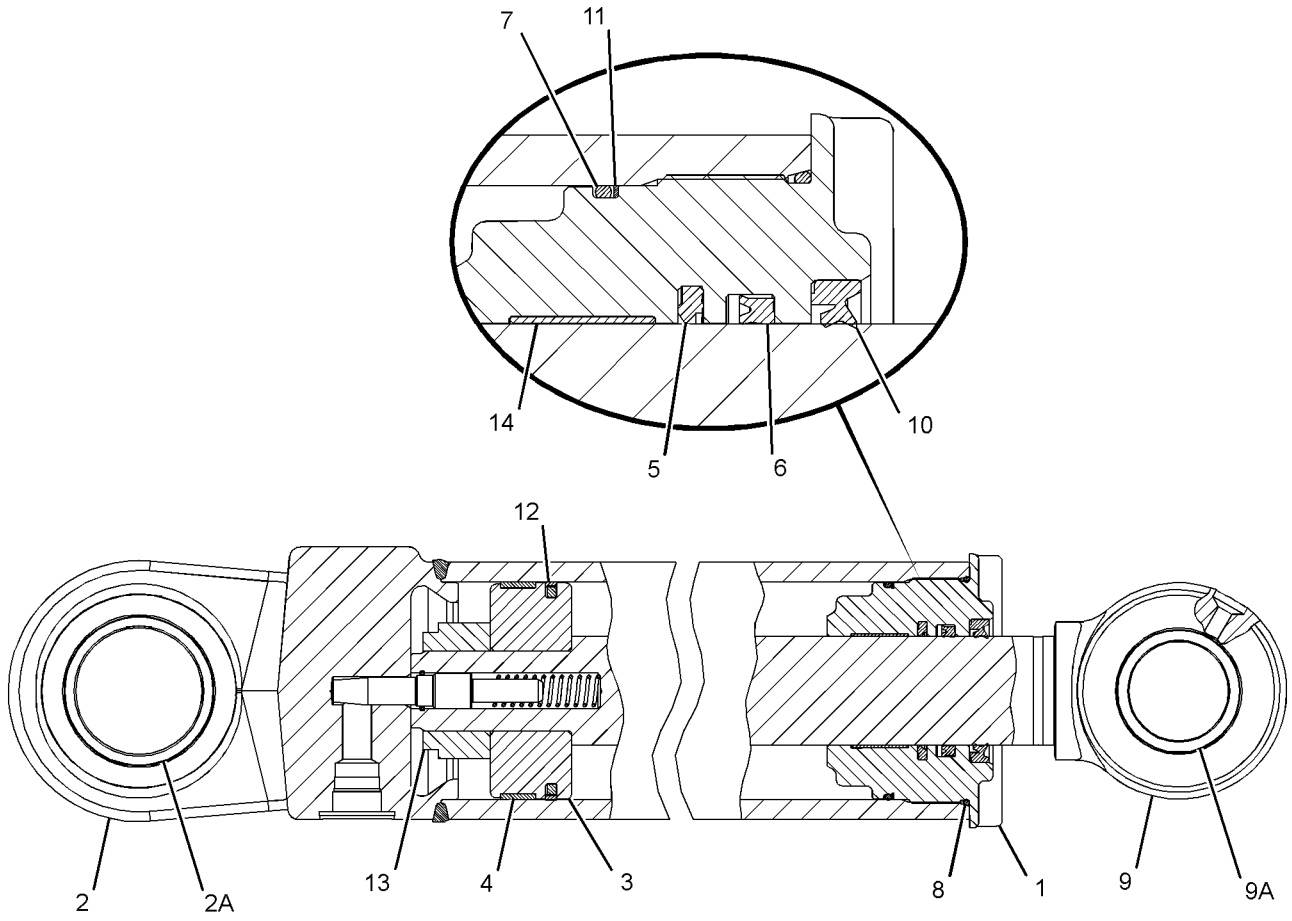

GRAPHIC #1 **<END>** g02056773

HYDRAULIC SYSTEM

381-8054 CYLINDER GP-HYDRAULIC—RH

S/N: LTG1-UP
100-MM (4-IN) BORE X 254-MM (10-IN) STROKE
PART OF 340-1690 CHASSIS AR

SMCS-7562 **i04562809**

NOTE	REF NO	GRAPHIC REF	PART NUMBER	QTY	PART NAME 1 2 3 4 5 6 (PRODUCT LEVEL)	SEE PAGE
	1	1	**3B-8489**	1	FITTING-GREASE	
	2	1	**3N-5739**	1	SPRING	
	3	1	**6E-1478**	1	PLUNGER	
	4	1	**102-3582**	1	WASHER (11X19.5X2.5-MM THK)	
J	5	1	**233-0619**	1	SEAL-WIPER	
J	6	1	**233-2589**	1	RING-WEAR	
	7	1	**233-2613**	1	BEARING	
	8	1	**381-8085**	1	CYLINDER AS-HYDRAULIC	
	8A	1	**9T-2883**	2	BEARING	
	9	1	**269-0386**	1	ROD AS	
	9A	1	**274-4274**	1	BUSHING	
	10	1	**269-0388**	1	HEAD	
	11	1	**269-0389**	1	PISTON	
J	12	1	**140-7649**	1	SEAL-PISTON	
J	13	1	**167-2183**	1	SEAL AS-BUFFER	
J	14	1	**167-2303**	1	SEAL-U-CUP	
J	15	1	**2K-6830**	1	RING-BACKUP	
J	16	1	**2Y-5821**	1	RING	
J	17	1	**3E-6735**	1	SEAL-O-RING	
J	18	1	**9X-4611**	1	SEAL-O-RING	
M	19	1	**9X-6611**	1	SETSCREW-SOCKET (M10X1.5X16-MM)	
					AVAILABLE REPAIR KIT(S):	
J			**377-9352**	1	KIT-HYDRAULIC CYLINDER SEAL (RH)	

J-KIT MARKED J SERVICES PARTS MARKED J
M-METRIC PART

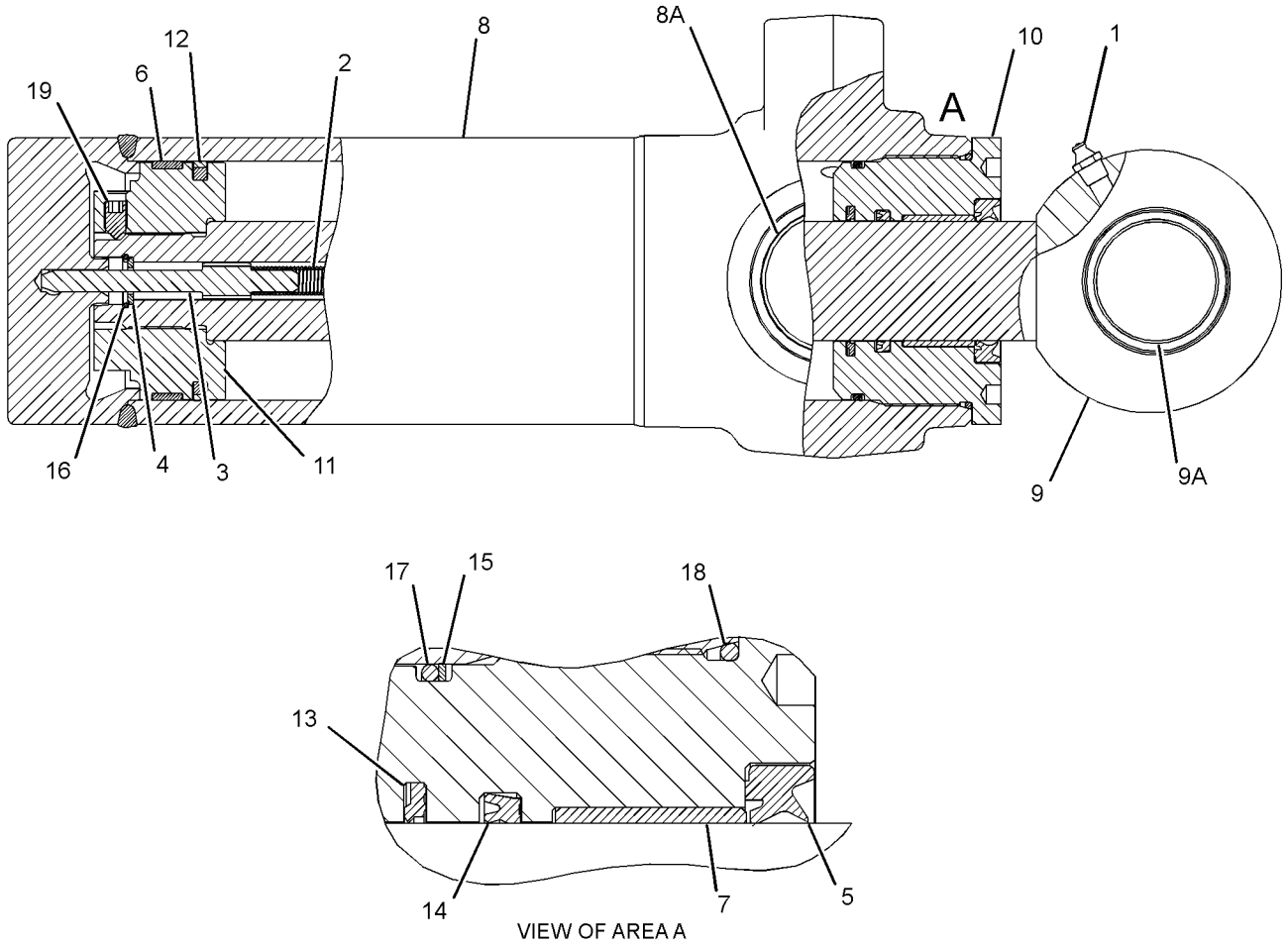

VIEW OF AREA A

GRAPHIC #1 **<END>** g02096053

HYDRAULIC SYSTEM

381-8055 CYLINDER GP-HYDRAULIC–LH

S/N: LTG1-UP

100-MM (3.9-IN) BORE X 254-MM (10-IN) STROKE. SWING

PART OF 340-1690 CHASSIS AR

SMCS-7562 **i04577409**

NOTE	REF NO	GRAPHIC REF	PART NUMBER	QTY	PART NAME 1 2 3 4 5 6 (PRODUCT LEVEL)	SEE PAGE
	1	1	**3B-8489**	1	FITTING-GREASE	
	2	1	**3N-5739**	1	SPRING	
	3	1	**6E-1478**	1	PLUNGER	
	4	1	**102-3582**	1	WASHER (11X19.5X2.5-MM THK)	
J	5	1	**140-7649**	1	SEAL-PISTON	
J	6	1	**233-0619**	1	SEAL-WIPER	
J	7	1	**233-2589**	1	RING-WEAR	
	8	1	**233-2613**	1	BEARING	
	9	1	**269-0386**	1	ROD AS	
	9A	1	**274-4274**	1	BUSHING	
	10	1	**269-0388**	1	HEAD	
	11	1	**269-0389**	1	PISTON	
	12	1	**381-8086**	1	CYLINDER AS-HYDRAULIC	
	12A	1	**9T-2883**	2	BEARING	
J	13	1	**167-2183**	1	SEAL AS-BUFFER	
J	14	1	**167-2303**	1	SEAL-U-CUP	
J	15	1	**2K-6830**	1	RING-BACKUP	
J	16	1	**2Y-5821**	1	RING	
J	17	1	**3E-6735**	1	SEAL-O-RING	
J	18	1	**9X-4611**	1	SEAL-O-RING	
M	19	1	**9X-6611**	1	SETSCREW-SOCKET (M10X1.5X16-MM)	
					AVAILABLE REPAIR KIT(S):	
J			**377-9352**	1	KIT-HYDRAULIC CYLINDER SEAL (SWING CYLINDER)	

J-KIT MARKED J SERVICES PARTS MARKED J
M-METRIC PART

381-8055 **CYLINDER GP-HYDRAULIC** *(contd.)* **i04577409**

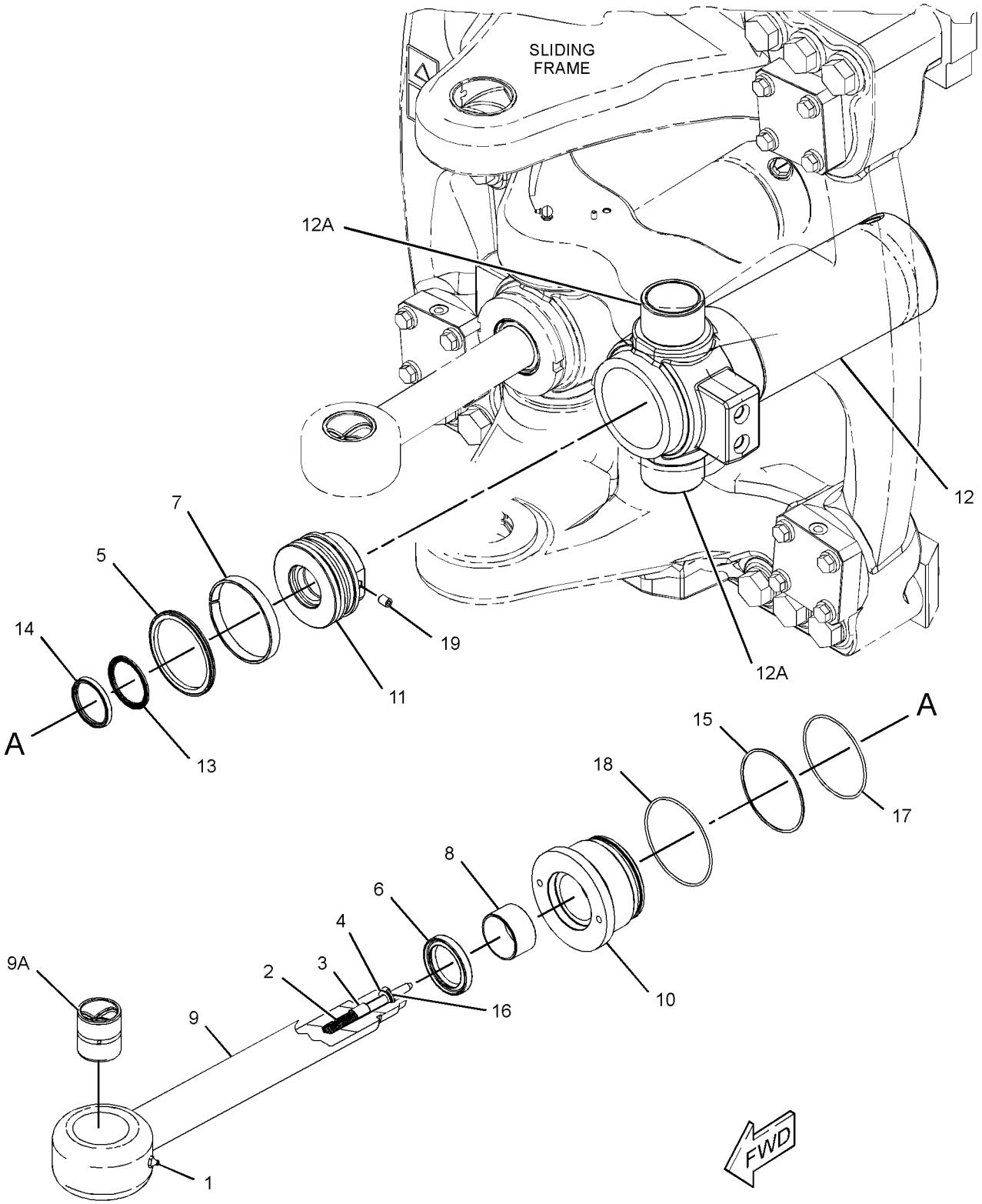

GRAPHIC #1 **<END>** g02832096

HYDRAULIC SYSTEM

358-5034 CYLINDER GP-LIFT

S/N: LTG1-UP
80-MM(3.2-IN)BORE X 783-MM(30.8-IN)STROKE
PART OF 340-1699 LOADER AR

SMCS-5102 **i04548143**

NOTE	REF NO	GRAPHIC REF	PART NUMBER	QTY	PART NAME 1 2 3 4 5 6 (PRODUCT LEVEL)	SEE PAGE
	1	1	*323-4219*	1	HEAD AS	
J	1A	1	**323-2467**	1	BUSHING	
		1	**323-4218**	1	HEAD	
J		1	**338-2414**	1	SEAL-WIPER	
J		1	**338-2444**	1	SEAL-U-CUP	
	2	1	**323-4221**	1	PISTON AS	
J		1	**161-7147**	1	SEAL-PISTON	
		1	**323-4220**	1	PISTON	
J		1	**340-9312**	1	SEAL-O-RING	
	3	1	**350-3842**	2	SET SCREW (M8X1.25X12-MM)	
	4	1	**360-7060**	1	ROD AS-HYDRAULIC CYLINDER	
	4A	1	**362-5024**	2	BUSHING	
	5	1	**363-0326**	1	CYLINDER AS-LIFT	
	5A	1	**362-5024**	2	BUSHING	
	6	1	**6V-8398**	2	SEAL-O-RING	
					AVAILABLE REPAIR KIT(S):	
J			**324-0356**		KIT-SEAL (LIFT CYLINDER)	
					(ALSO INCLUDES O-RING SEAL & WEAR RINGS)	

J-KIT MARKED J SERVICES PARTS MARKED J

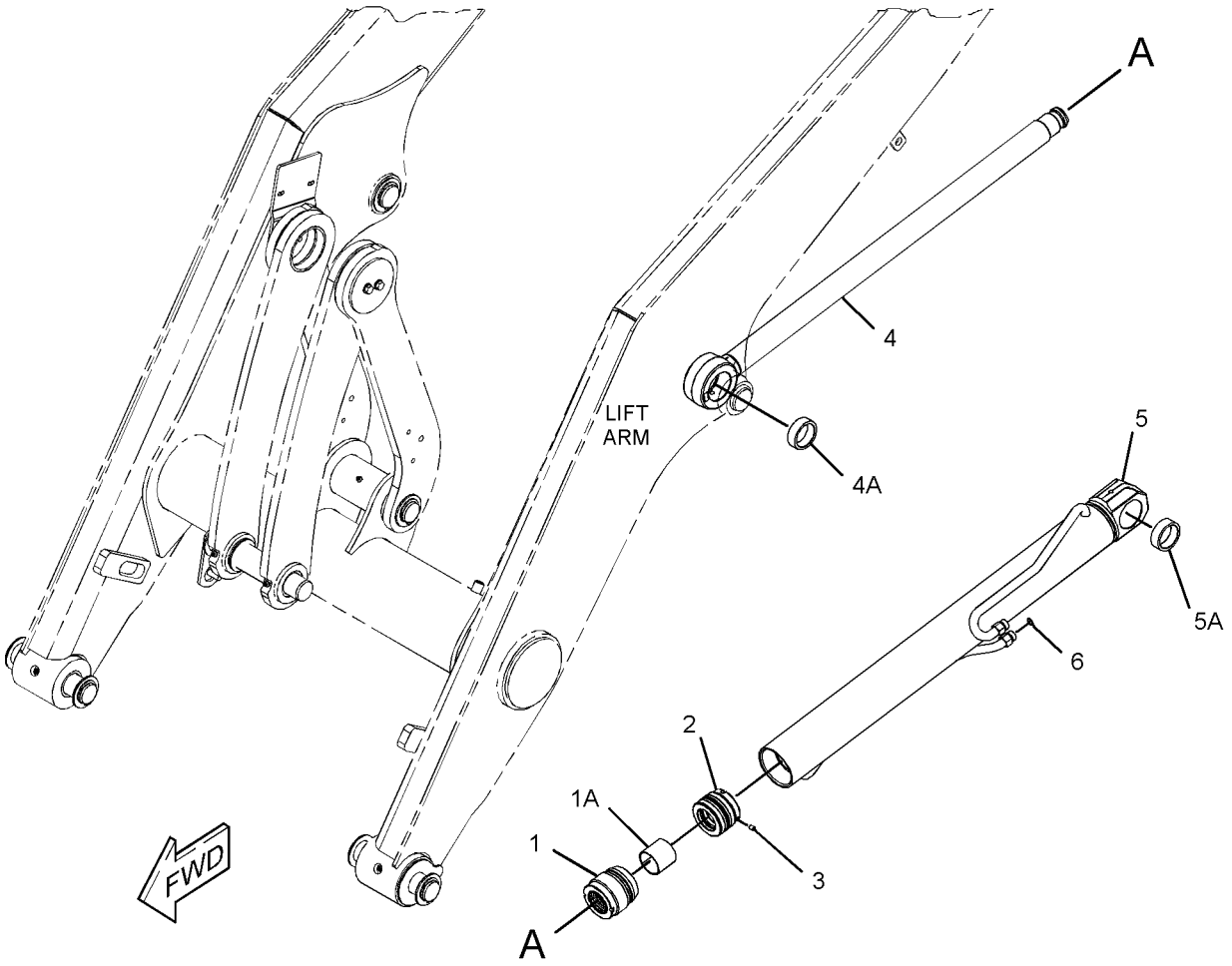

GRAPHIC #1 **<END>** g02831436

358-5035 CYLINDER GP-LIFT

S/N: LTG1-UP
80-MM(3.2-IN)BORE X 783-MM(30.8-IN)STROKE
PART OF 340-1699 LOADER AR

SMCS-5102 **i04548144**

NOTE	REF NO	GRAPHIC REF	PART NUMBER	QTY	PART NAME 1 2 3 4 5 6 (PRODUCT LEVEL)	SEE PAGE
	1	1	*323-4219*	1	HEAD AS	
J	1A	1	**323-2467**	1	BUSHING	
		1	**323-4218**	1	HEAD	
J		1	**338-2414**	1	SEAL-WIPER	
J		1	**338-2444**	1	SEAL-U-CUP	
	2	1	**323-4221**	1	PISTON AS	
J		1	**161-7147**	1	SEAL-PISTON	
		1	**323-4220**	1	PISTON	
J		1	**340-9312**	1	SEAL-O-RING	
	3	1	**350-3842**	2	SET SCREW (M8X1.25X12-MM)	
	4	1	**360-7056**	1	CYLINDER AS-LIFT	
	4A	1	**362-5024**	2	BUSHING	
	5	1	**360-7060**	1	ROD AS-HYDRAULIC CYLINDER	
	5A	1	**362-5024**	2	BUSHING	
	6	1	**6V-8398**	2	SEAL-O-RING	
					AVAILABLE REPAIR KIT(S):	
J			**324-0356**	1	KIT-SEAL (LIFT CYLINDER)	
					(ALSO INCLUDES O-RING SEAL & WEAR RINGS)	

J-KIT MARKED J SERVICES PARTS MARKED J

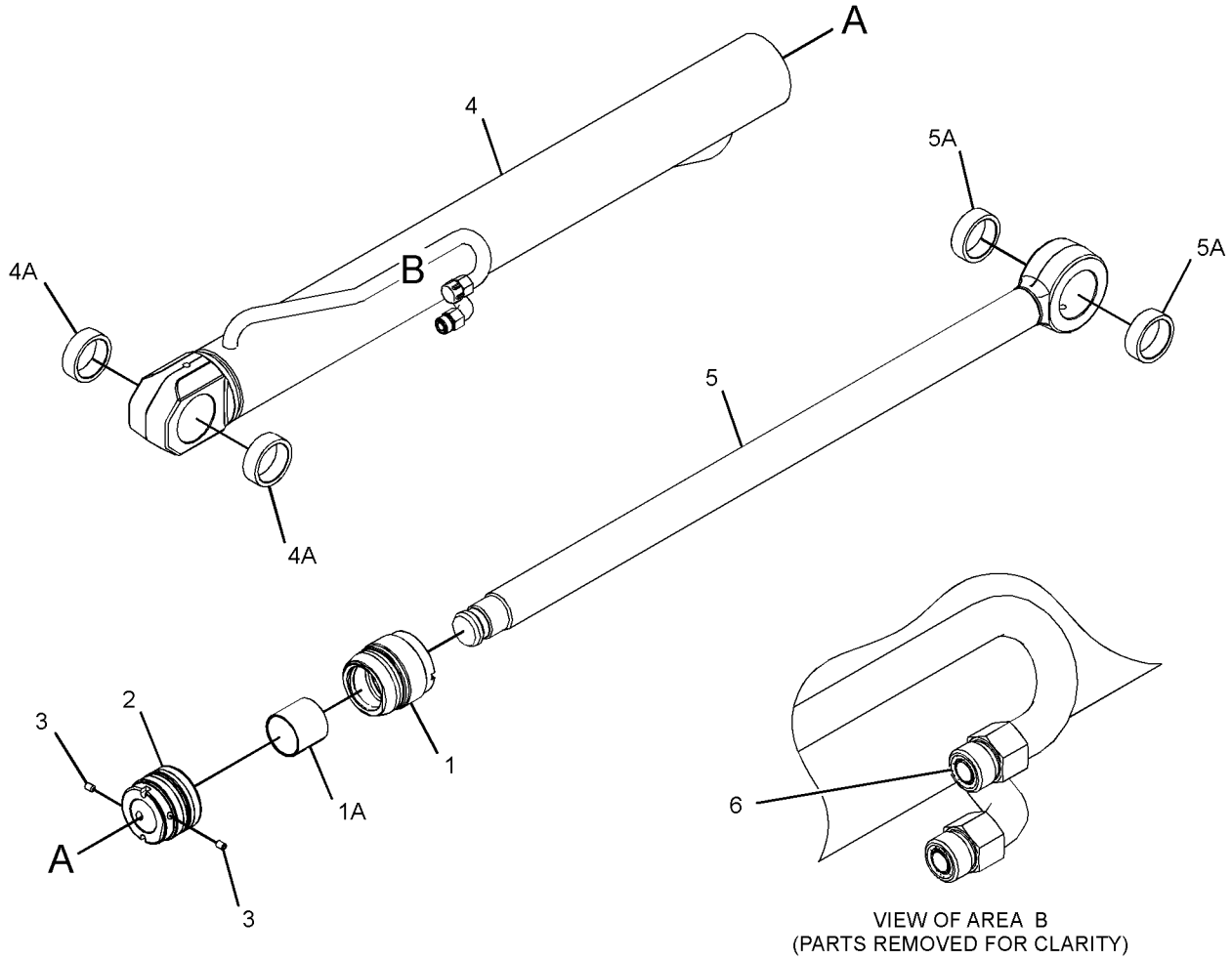

VIEW OF AREA B
(PARTS REMOVED FOR CLARITY)

GRAPHIC #1 **<END>** g02827757

HYDRAULIC SYSTEM

226-5540 CYLINDER GP-MULTIPURPOSE BUKT

S/N: LTG1-UP
76-MM (2.99-IN) BORE X 262-MM (10.31-IN) STROKE
PART OF 337-7436, 337-7442, 337-7458, 337-7459 BUCKET GP-MULTIPURPOSE AN ATTACHMENT

SMCS-5457 **i04404170**

NOTE	REF NO	GRAPHIC REF	PART NUMBER	QTY	PART NAME 1 2 3 4 5 6 (PRODUCT LEVEL)	SEE PAGE
	1	1	**3B-8489**	2	FITTING-GREASE	
	2	1	**9S-8004**	2	PLUG-O-RING	
	3	1	**3J-1907**	2	SEAL-O-RING	
	4	1	**9T-4007**	2	BEARING	
					AVAILABLE REPAIR KIT(S):	
			230-9357	1	KIT-SEAL (BUCKET CYLINDER)	
					(INCLUDES WIPER SEAL, O-RINGS, MOISTURE EXCLUDER, POLYPAK, WEAR RINGS, O-RING LOADER & PISTON RING))	

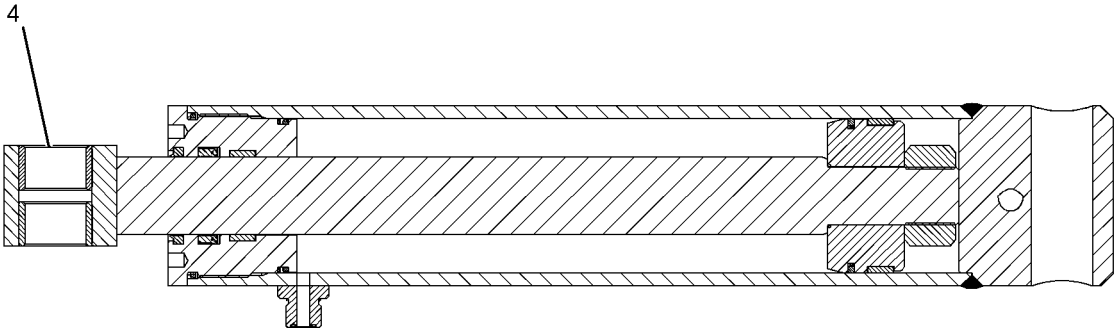

SECTION A-A



GRAPHIC #1 **<END>** g01086486

HYDRAULIC SYSTEM

291-2681 CYLINDER GP-STABILIZER–LH

S/N: LTG1-UP
100-MM (3.9-IN) BORE X 541-MM (21.3-IN) STROKE
PART OF 340-1690 CHASSIS AR

SMCS-5468 **i03879891**

NOTE	REF NO	GRAPHIC REF	PART NUMBER	QTY	PART NAME 1 2 3 4 5 6 (PRODUCT LEVEL)	SEE PAGE
	1	1	**3B-8489**	2	FITTING-GREASE	
	2	1	**140-7649**	1	SEAL-PISTON	
	3	1	**233-0625**	1	SEAL-WIPER	
	4	1	**233-2614**	1	RING-WEAR	
	5	1	**291-2684**	1	CYLINDER AS	
	5A	1	**9R-0321**	2	BEARING-SLEEVE	
	6	1	**291-2691**	1	ROD AS	
	6A	1	**9R-0321**	2	BEARING-SLEEVE	
	7	1	**291-2695**	1	PISTON	
	8	1	**291-2696**	1	HEAD	
	9	1	**140-7656**	1	RING-WEAR	
	10	1	**167-2306**	1	SEAL-U-CUP	
	11	1	**1H-8128**	1	SEAL-O-RING	
	12	1	**291-1559**	1	SEAL AS-BUFFER	
	13	1	**294-9507**	1	RING-BACKUP	
	14	1	**3E-6735**	1	SEAL-O-RING	
	15	1	**4J-0526**	1	SEAL-O-RING	
M	16	1	**9X-6611**	1	SETSCREW-SOCKET (M10X1.5X16-MM)	

M-METRIC PART

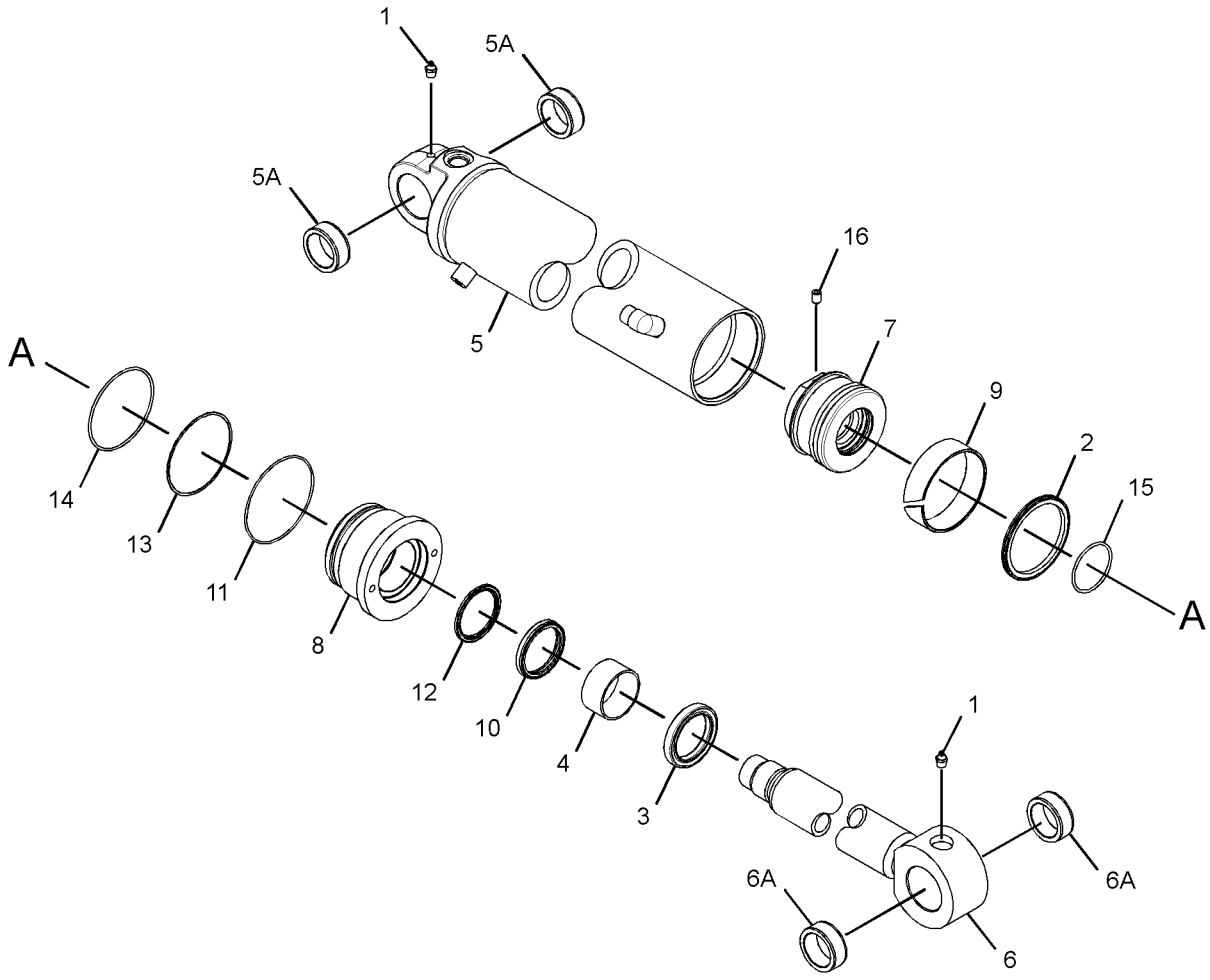

GRAPHIC #1 **<END>** g02097204

HYDRAULIC SYSTEM

291-2682 CYLINDER GP-STABILIZER–RH

S/N: LTG1-UP
100-MM (3.9-IN) BORE X 541-MM (21.3-IN) STROKE
PART OF 340-1690 CHASSIS AR

SMCS-5468 **i03879312**

NOTE	REF NO	GRAPHIC REF	PART NUMBER	QTY	PART NAME 1 2 3 4 5 6 (PRODUCT LEVEL)	SEE PAGE
	1	1	**3B-8489**	2	FITTING-GREASE	
	2	1	**140-7649**	1	SEAL-PISTON	
	3	1	**233-0625**	1	SEAL-WIPER	
	4	1	**233-2614**	1	RING-WEAR	
	5	1	**291-2683**	1	CYLINDER AS	
	5A	1	**9R-0321**	2	BEARING-SLEEVE	
	6	1	**291-2691**	1	ROD AS	
	6A	1	**9R-0321**	2	BEARING-SLEEVE	
	7	1	**291-2695**	1	PISTON	
	8	1	**291-2696**	1	HEAD	
	9	1	**140-7656**	1	RING-WEAR	
	10	1	**167-2306**	1	SEAL-U-CUP	
	11	1	**1H-8128**	1	SEAL-O-RING	
	12	1	**291-1559**	1	SEAL AS-BUFFER	
	13	1	**294-9507**	1	RING-BACKUP	
	14	1	**3E-6735**	1	SEAL-O-RING	
	15	1	**4J-0526**	1	SEAL-O-RING	
M	16	1	**9X-6611**	1	SETSCREW-SOCKET (M10X1.5X16-MM)	

M-METRIC PART

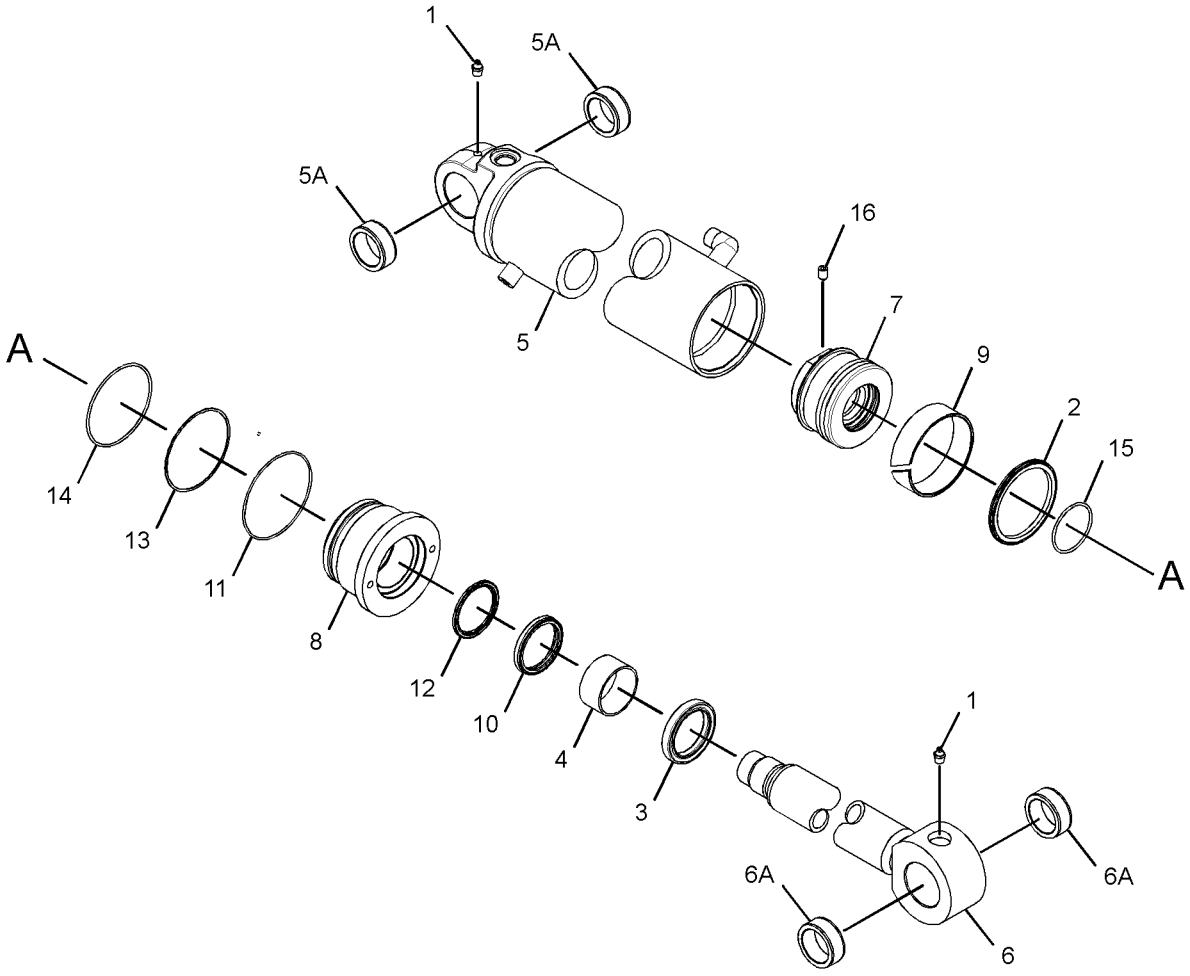

GRAPHIC #1 **<END>** g02097273

210-7082 CYLINDER GP-STICK

S/N: LTG1-UP
120.7-MM (4.8-IN) BORE X 679-MM (26.7-IN) STROKE
PART OF 340-1729 BACKHOE AR-EXTENDABLE STICK, 340-1728 BACKHOE AR-STANDARD STICK
AN ATTACHMENT

SMCS-5458 **i04705571**

NOTE	REF NO	GRAPHIC REF	PART NUMBER	QTY	PART NAME 1 2 3 4 5 6 (PRODUCT LEVEL)	SEE PAGE
	1	1	**212-0929**	1	CYLINDER AS	
	1A	1	**215-1906**	2	BUSHING	
		1	**6V-8398**	1	SEAL-O-RING	
		1	**203-7806**	1	ELBOW	
	2	1	**223-3360**	1	RING-WEAR	
	3	1	**228-8017**	1	ROD AS	
	3A	1	**213-6682**	2	BUSHING	
	4	1	**252-5832**	1	PISTON	
	5	1	**252-5833**	1	HEAD	
	6	1	**146-0742**	1	RING-WEAR	
	7	1	**167-2204**	1	SEAL AS-BUFFER	
	8	1	**167-2314**	1	SEAL-U-CUP	
	9	1	**175-7902**	1	SEAL-O-RING	
	10	1	**175-7903**	1	SEAL-O-RING	
	11	1	**227-1148**	1	SEAL-WIPER	
	12	1	**2J-0564**	1	LOCKNUT (2-12-THD)	
	13	1	**2J-3961**	1	RING-BACKUP	
	14	1	**5J-4966**	2	SEAL	

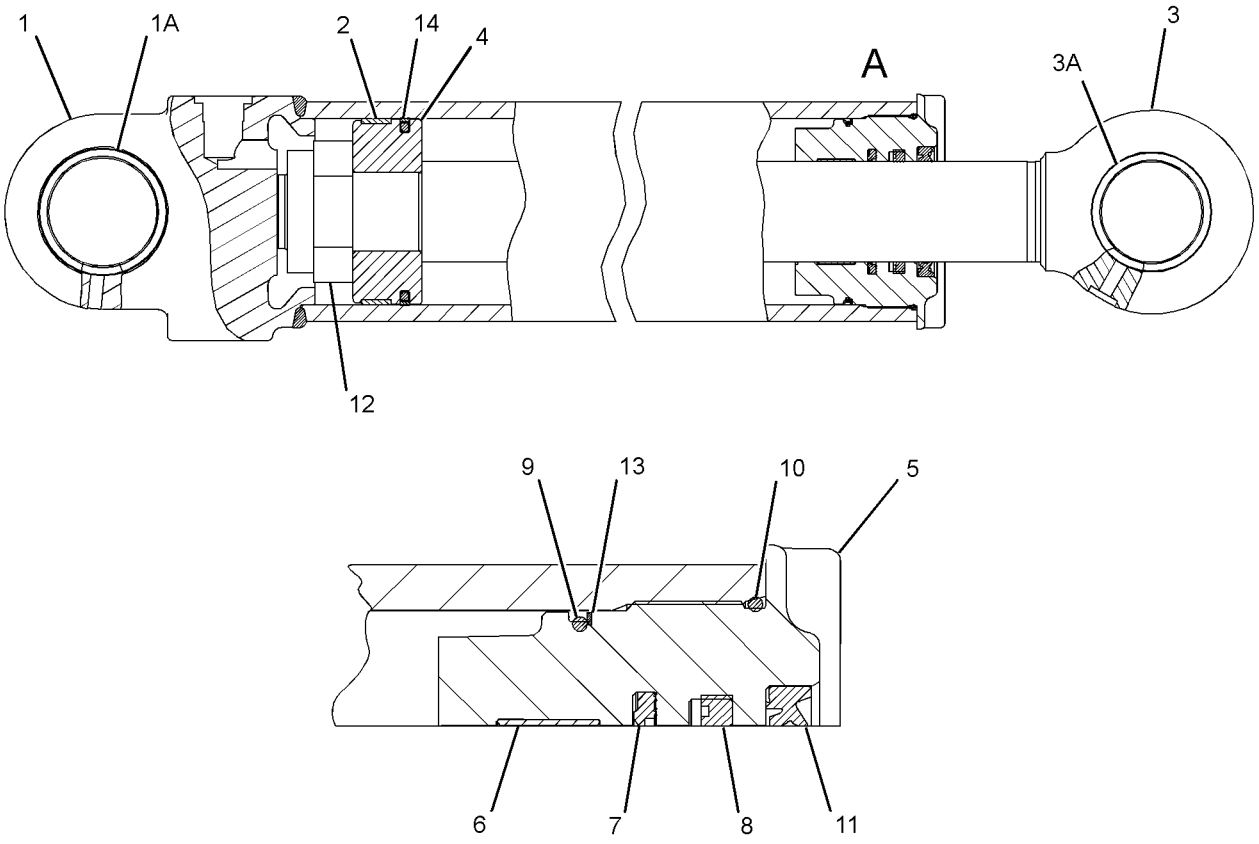

VIEW OF AREA A

GRAPHIC #1 **<END>** g02811597

210-7098 CYLINDER GP-STICK–EXTENDABLE

S/N: LTG1-UP
76.2-MM (3.0-IN) BORE X 1164-MM (45.8-IN) STROKE
PART OF 271-1405 STICK GP-EXTENDABLE
AN ATTACHMENT

SMCS-5458 **i04389856**

NOTE	REF NO	GRAPHIC REF	PART NUMBER	QTY	PART NAME 1 2 3 4 5 6 (PRODUCT LEVEL)	SEE PAGE
	1	1	**191-6159**	1	HEAD	
	2	1	**215-7457**	1	ROD AS	
	3	1	**215-7460**	1	CYLINDER AS	
		1	**6V-8398**	1	SEAL-O-RING	
	4	1	**229-8911**	1	PISTON	
J	5	1	**167-2186**	1	SEAL AS-BUFFER	
J	6	1	**167-2294**	1	SEAL-U-CUP	
M	7	1	**173-9779**	1	BOLT (M24X3X80-MM)	
J	8	1	**1H-7339**	1	SEAL-O-RING	
J	9	1	**223-3353**	1	RING-WEAR	
J	10	1	**226-8202**	1	SEAL-WIPER	
J	11	1	**4T-6780**	1	RING-WEAR	
J	12	1	**6J-2680**	1	SEAL-O-RING	
J	13	1	**6J-1972**	1	SEAL AS	
J	14	1	**6J-5731**	1	RING-BACKUP	
	15	1	**6V-8237**	1	WASHER (26X44X4-MM THK)	
					AVAILABLE REPAIR KIT(S):	
J			**338-7156**	1	KIT-HYD CYLINDER SEAL	
					(INCLUDES RINGS & SEALS)	
					(FOR USE WITH REHS1392	

J-KIT MARKED J SERVICES PARTS MARKED J
M-METRIC PART

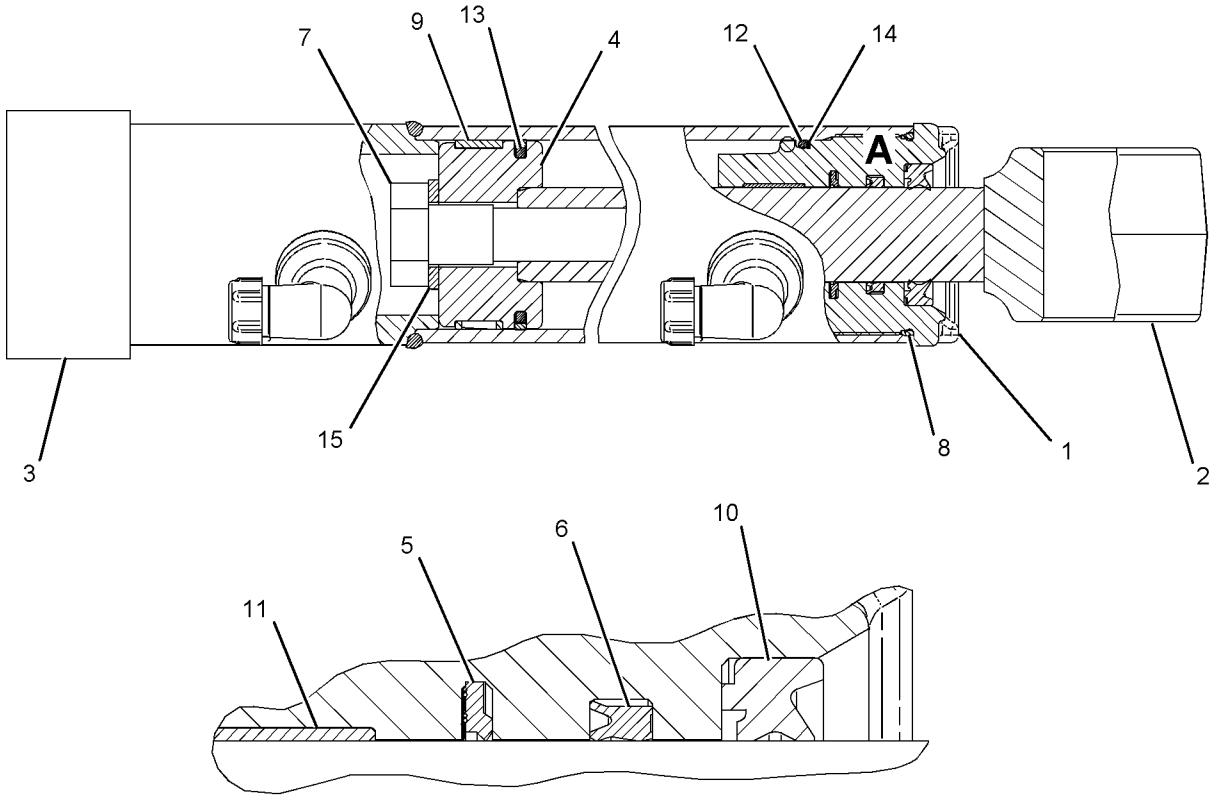

VIEW OF AREA A

GRAPHIC #1 **<END>** g01089695

HYDRAULIC SYSTEM

358-5044 CYLINDER GP-TILT

S/N: LTG1-UP
90-MM(3.6-IN)BORE X 720-MM(28.4-IN)STROKE
PART OF 340-1699 LOADER AR

SMCS-5104 **i04548146**

NOTE	REF NO	GRAPHIC REF	PART NUMBER	QTY	PART NAME 1 2 3 4 5 6 (PRODUCT LEVEL)	SEE PAGE
	1	1	**350-3842**	2	SET SCREW (M8X1.25X12-MM)	
	2	1	**353-1667**	1	PISTON AS	
		1	**144-5287**	1	SEAL-PISTON	
		1	**340-9312**	1	SEAL-O-RING	
		1	**343-8051**	2	RING-WEAR	
		1	**349-4367**	1	PISTON	
	3	1	**356-3070**	1	CYLINDER HEAD AS	
	3A	1	**323-2467**	1	BUSHING	
		1	**338-2414**	1	SEAL-WIPER	
		1	**338-2444**	1	SEAL-U-CUP	
		1	**340-9325**	1	SEAL-O-RING	
		1	**353-5389**	1	CYLINDER HEAD	
	4	1	**361-0414**	1	ROD AS	
	4A	1	**362-5027**	2	BUSHING	
	5	1	**361-0419**	1	CYLINDER AS-TILT	
	5A	1	**362-5025**	2	BUSHING	
	6	1	**7J-9108**	2	SEAL-O-RING	
					AVAILABLE REPAIR KIT(S):	
			355-6294	1	KIT-SEAL & RING	

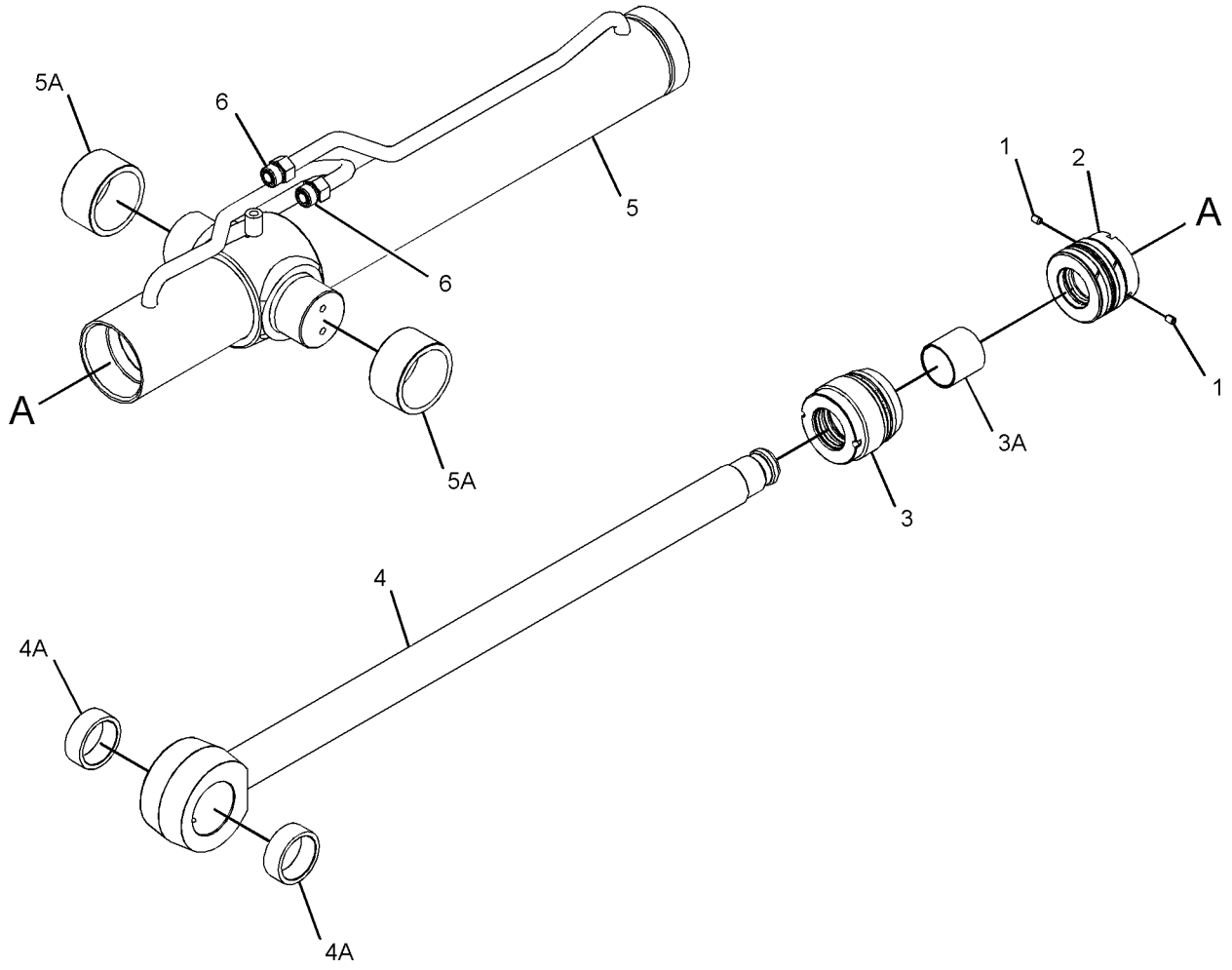

GRAPHIC #1 **<END>** g02828096

353-1338 DRIVE & MTG GP-PUMP

S/N: LTG1-UP
PART OF 359-0376, 359-0378 TRANSMISSION AR-DIRECT DRIVE, 359-0380 TRANSMISSION AR-POWER SHIFT AN ATTACHMENT

SMCS-3108, 5070 **i04574729**

NOTE	REF NO	GRAPHIC REF	PART NUMBER	QTY	PART NAME 1 2 3 4 5 6 (PRODUCT LEVEL)	SEE PAGE
	1	1	**9U-8886**	1	RING-SEAL	
	2	1	**115-1918**	1	PLATE	
	3	1	**117-3534**	1	ADAPTER	
Y	4	1	**128-5596**	1	SHAFT GP-PUMP DRIVE	353
	5	1	**274-4555**	1	HUB	
M	6	1	**8T-9405**	4	BOLT-SOCKET HEAD (M4X0.7X16-MM)	

M-METRIC PART
Y-SEPARATE ILLUSTRATION

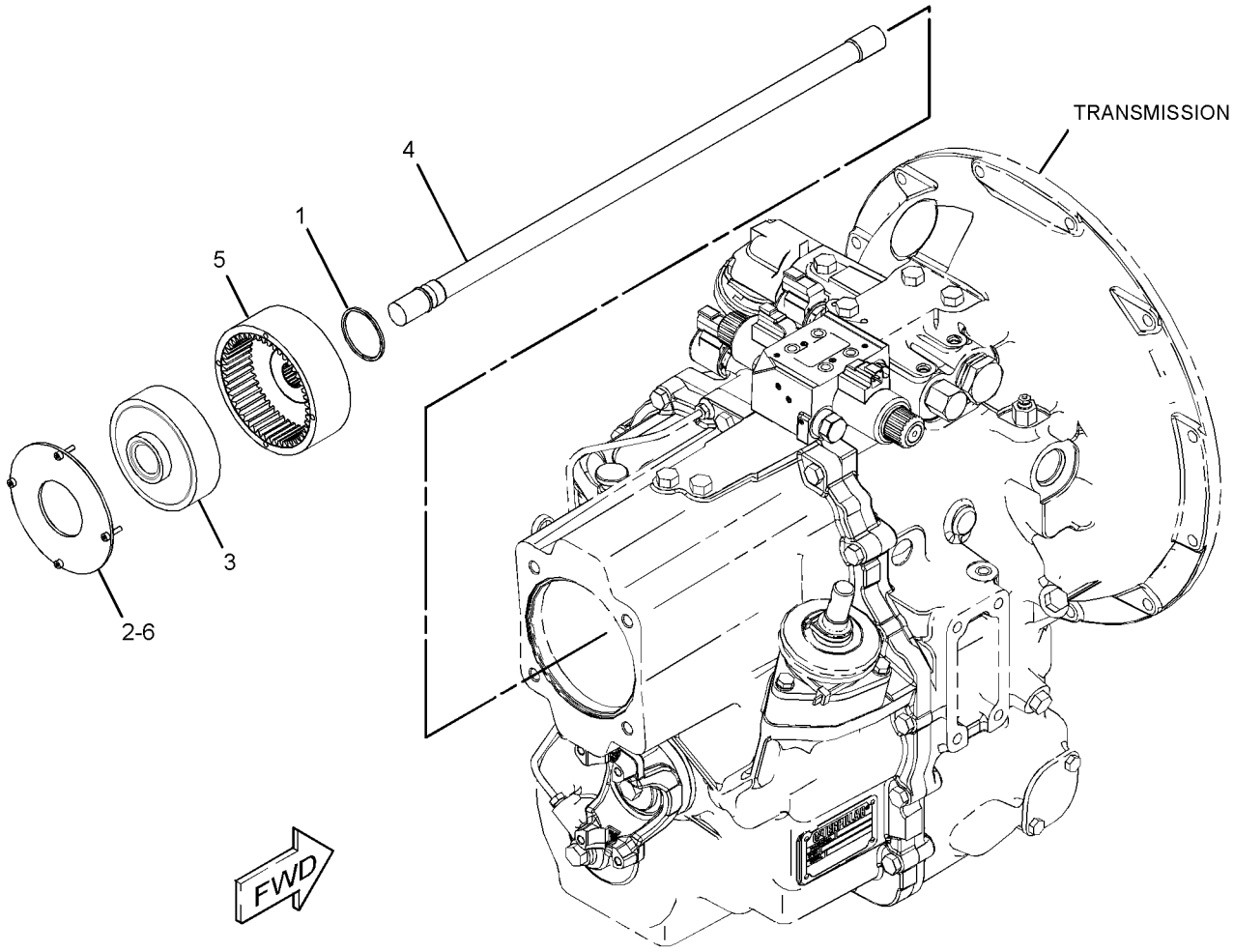

GRAPHIC #1 **<END>** g02809597

HYDRAULIC SYSTEM

337-9740 FILTER & MTG GP-OIL–HYDRAULIC

S/N: LTG1-UP

PART OF 340-1715 HYDRAULIC AR

SMCS-3004, 5068, 5091 **i04549414**

NOTE	REF NO	GRAPHIC REF	PART NUMBER	QTY	PART NAME 1 2 3 4 5 6 (PRODUCT LEVEL)	SEE PAGE
	1	1	**264-4297**	1	SENSOR AS-TEMPERATURE (HYDRAULIC OIL)	
Y	2	1	**359-7232**	1	FILTER GP-OIL (HYDRAULIC)	295
M	3	1	**8T-4137**	3	BOLT (M10X1.5X20-MM)	
	4	1	*148-8318*	1	CONNECTOR AS	
		1	**3K-0360**	1	SEAL-O-RING	
		1	**6V-8397**	1	SEAL-O-RING	
		1	**6V-8634**	1	CONNECTOR	
	5	1	*148-8347*	1	ELBOW AS	
		1	**3D-2824**	1	SEAL-O-RING	
		1	**6V-9007**	1	ELBOW	
		1	**6V-9746**	1	SEAL-O-RING	
	6	1	**3K-0360**	1	SEAL-O-RING	
B	7	1	**5K-9090**	1	SEAL-O-RING	
B	8	1	**6V-9829**	1	CAP AS	
B	9	1	**6V-9833**	1	CAP AS	
	10	1	**7X-7729**	3	WASHER (11X25X3-MM THK)	
	11	1	**377-3861**	1	FILM-IDENTIFICATION (HYDRAULIC OIL FILTER)	

B-USE AS REQUIRED
M-METRIC PART
Y-SEPARATE ILLUSTRATION

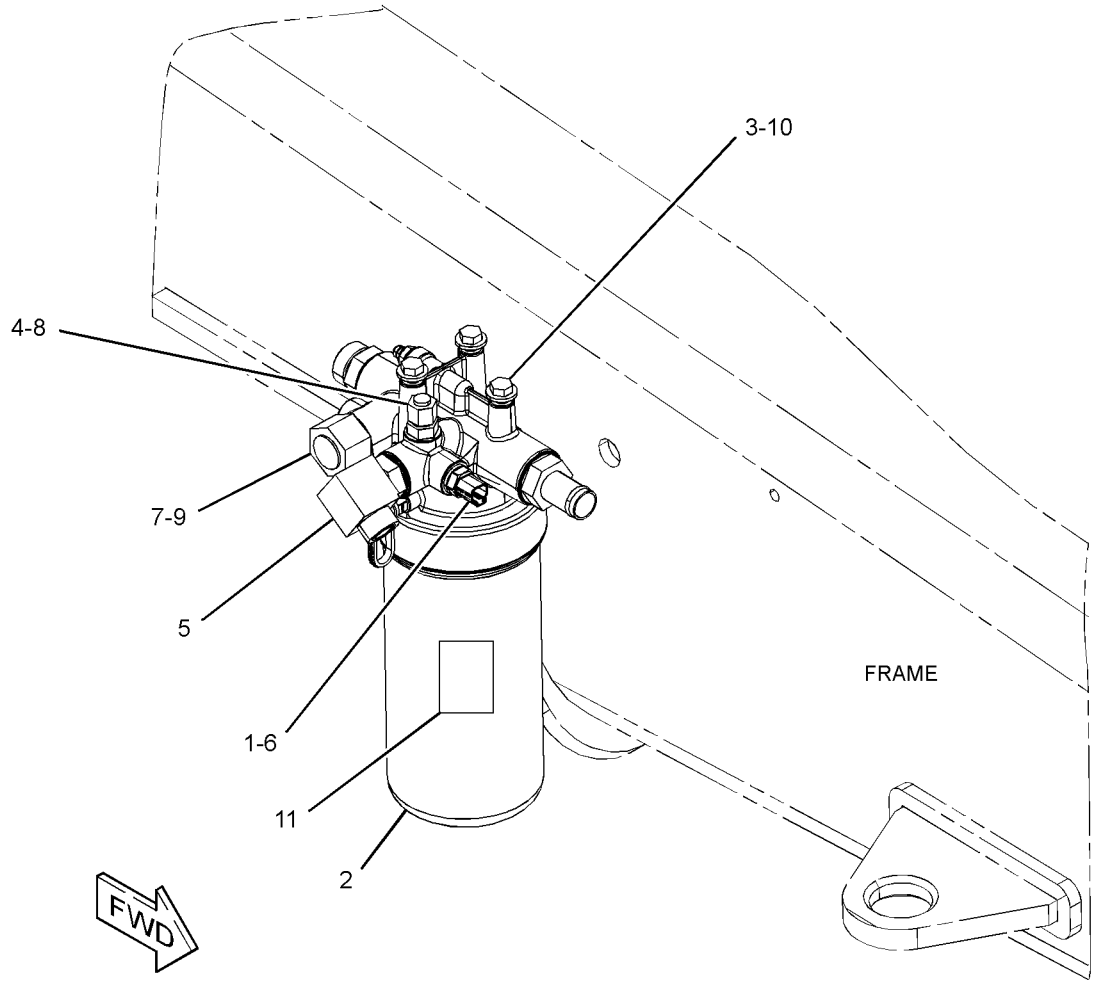

GRAPHIC #1 **<END>** g02838236

359-7232 FILTER GP-OIL

S/N: LTG1-UP

PART OF 337-9740 FILTER & MTG GP-OIL

SMCS-5068 **i04739122**

NOTE	REF NO	GRAPHIC REF	PART NUMBER	QTY	PART NAME 1 2 3 4 5 6 (PRODUCT LEVEL)	SEE PAGE
	1	1	**134-0404**	1	SWITCH AS-PRESSURE (HYDRAULIC OIL)	
	2	1	**362-1164**	1	HOUSING AS-FILTER	
	2A	1	**362-1163**	1	HOUSING-HYDRAULIC OIL FILTER	
		1	**2M-9780**	1	SEAL-O-RING	
		1	**6S-3002**	2	SEAL-O-RING	
		1	**9S-8006**	1	PLUG-O-RING	

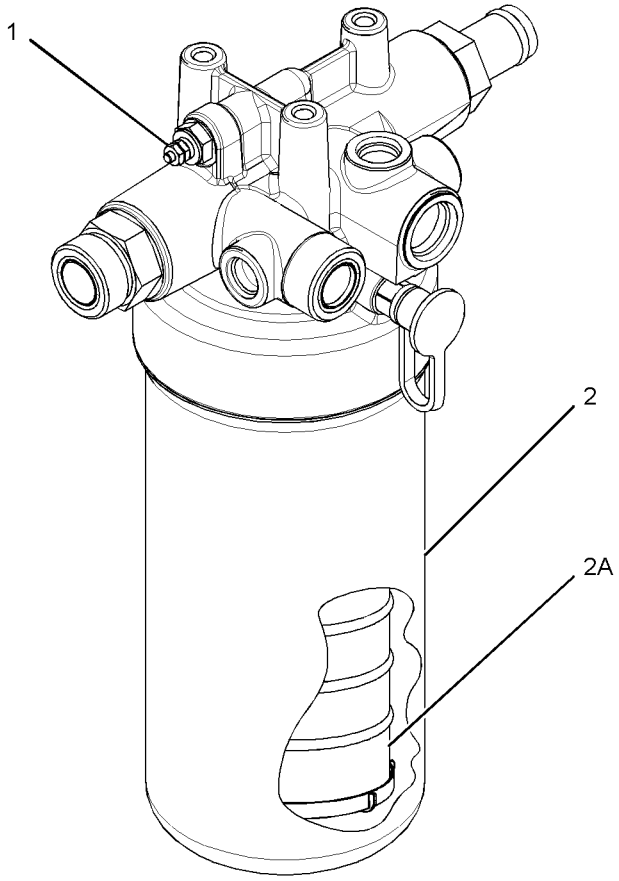

GRAPHIC #1 **<END>** g02838341

132-8769 FITTING GP-HYDRAULIC–QUICK DISCONNECT

S/N: LTG1-UP

AN ATTACHMENT

SMCS-5057 **i01499420**

NOTE	REF NO	GRAPHIC REF	PART NUMBER	QTY	PART NAME 1 2 3 4 5 6 (PRODUCT LEVEL)	SEE PAGE
	1	1	**106-0406**	1	FITTING (QUICK DISCONNECT, MALE)	
	2	1	**106-0401**	1	FITTING (QUICK DISCONNECT, FEMALE)	

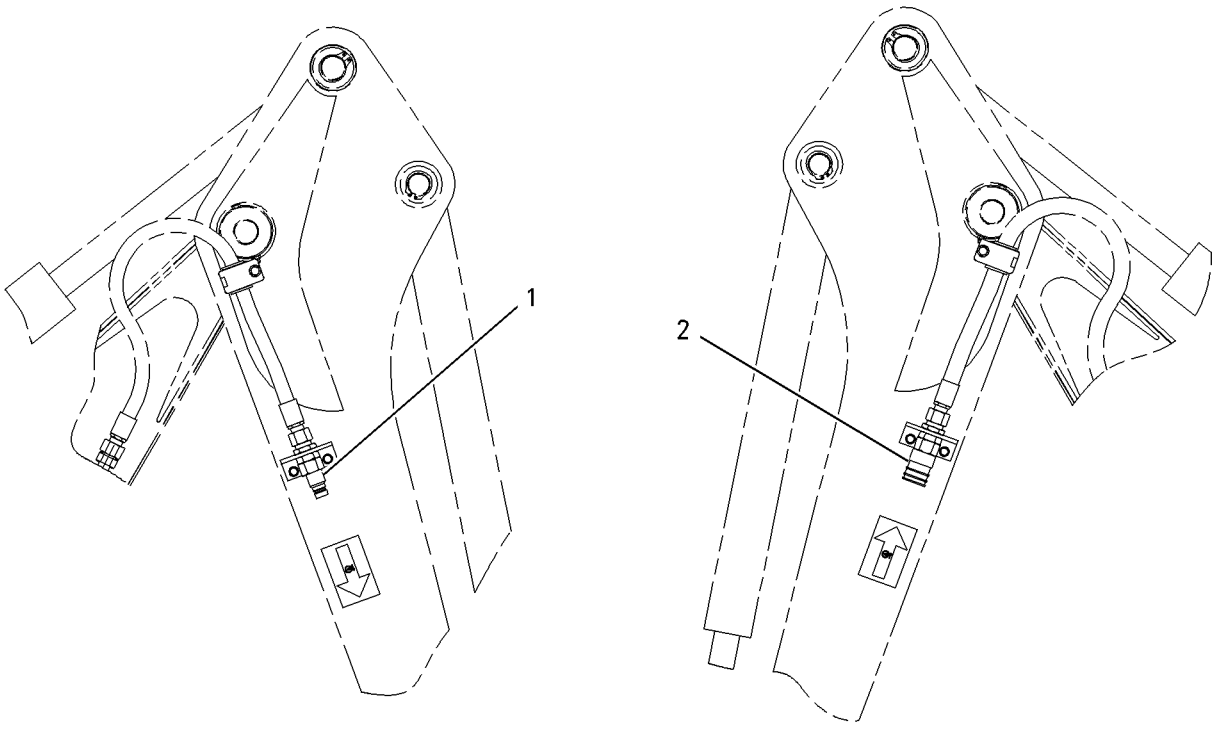

GRAPHIC #1 **<END>** g00778121

340-1715 HYDRAULIC AR

S/N: LTG1-UP

PART OF 368-8951 COMMON AR

SMCS-5050 **i04549537**

NOTE	PART NUMBER	QTY	PART NAME 1 2 3 4 5 6 (PRODUCT LEVEL)	SEE PAGE
Y	*341-6684*	1	CONTROL GP-SERVICE BRAKE	229
Y	*337-9740*	1	FILTER & MTG GP-OIL	294
Y	*337-9774*	1	LINES GP-PUMP	337
Y	*337-9777*	1	LINES GP-RETURN	339
Y	*337-9770*	1	LINES GP-PILOT (SIGNAL)	326
Y	*337-9795*	1	LINES GP-SWING CYLINDER	347
Y	*337-9699*	1	PUMP & MTG GP-HYDRAULIC	352
Y	*351-5888*	1	TANK & MTG GP-HYDRAULIC	354

Y-SEPARATE ILLUSTRATION

<END>

HYDRAULIC SYSTEM

337-9718 KICKOUT & POSITIONER GP

S/N: LTG1-UP

PART OF 340-1699 LOADER AR

SMCS-5109, 5112 **i04548130**

NOTE	REF NO	GRAPHIC REF	PART NUMBER	QTY	PART NAME 1 2 3 4 5 6 (PRODUCT LEVEL)	SEE PAGE
	1	1	**125-0965**	1	RING-RETAINING	
	2	2	**128-7902**	1	SPACER (60.25X75X6-MM THK)	
	3	1	**141-6343**	1	SPRING	
M	4	1	**246-7853**	2	NUT-SPECIAL (M8X1.25-THD)	
	5	1	**363-6736**	1	LINK AS	
	6	1	**363-6738**	1	TUBE AS	
	7	2	**363-6742**	1	LINK AS	
	8	2	**364-0575**	1	PLATE AS	
	9	1	**364-0609**	1	LEVER AS	
	10	2	**364-1270**	1	PIN AS	
	11	2	**364-2514**	1	ROD AS	
	12	2	**365-2437**	1	FILM-IDENTIFICATION (BUCKET LEVEL)	
	13	1	**369-8943**	1	PLATE AS	
	14	2	**378-8516**	1	LEVER	
M	15	2	**099-3649**	3	BOLT (M8X1.25X40-MM)	
	16	2	**3B-8489**	2	FITTING-GREASE	
M	17	2	**5C-7261**	3	NUT (M8X1.25-THD)	
	18	2	**5P-4116**	6	WASHER-HARD (8.8X20.5X2-MM THK)	
	19	2	**6V-7644**	1	RING-RETAINING	
	20	2	**8C-6955**	1	END-YOKE ROD	
	21	1,2	**8T-4121**	4	WASHER-HARD (11X21X2.5-MM THK)	
	22	1	**8T-4123**	4	WASHER (22X35X3.5-MM THK)	
M	23	2	**8T-4133**	2	NUT (M10X1.5-THD)	
M	24	2	**8T-4182**	1	BOLT (M10X1.5X45-MM)	
	25	1	**8T-4224**	2	WASHER-HARD (8.8X16X2-MM THK)	
M	26	1	**8T-7547**	2	BOLT (M8X1.25X30-MM)	
	27	2	**9R-2806**	1	PIN	
	28	1,2	**9R-2807**	3	CLIP	
M	29	2	**9X-2065**	1	NUT (M10X1.5-THD, LH)	

M-METRIC PART

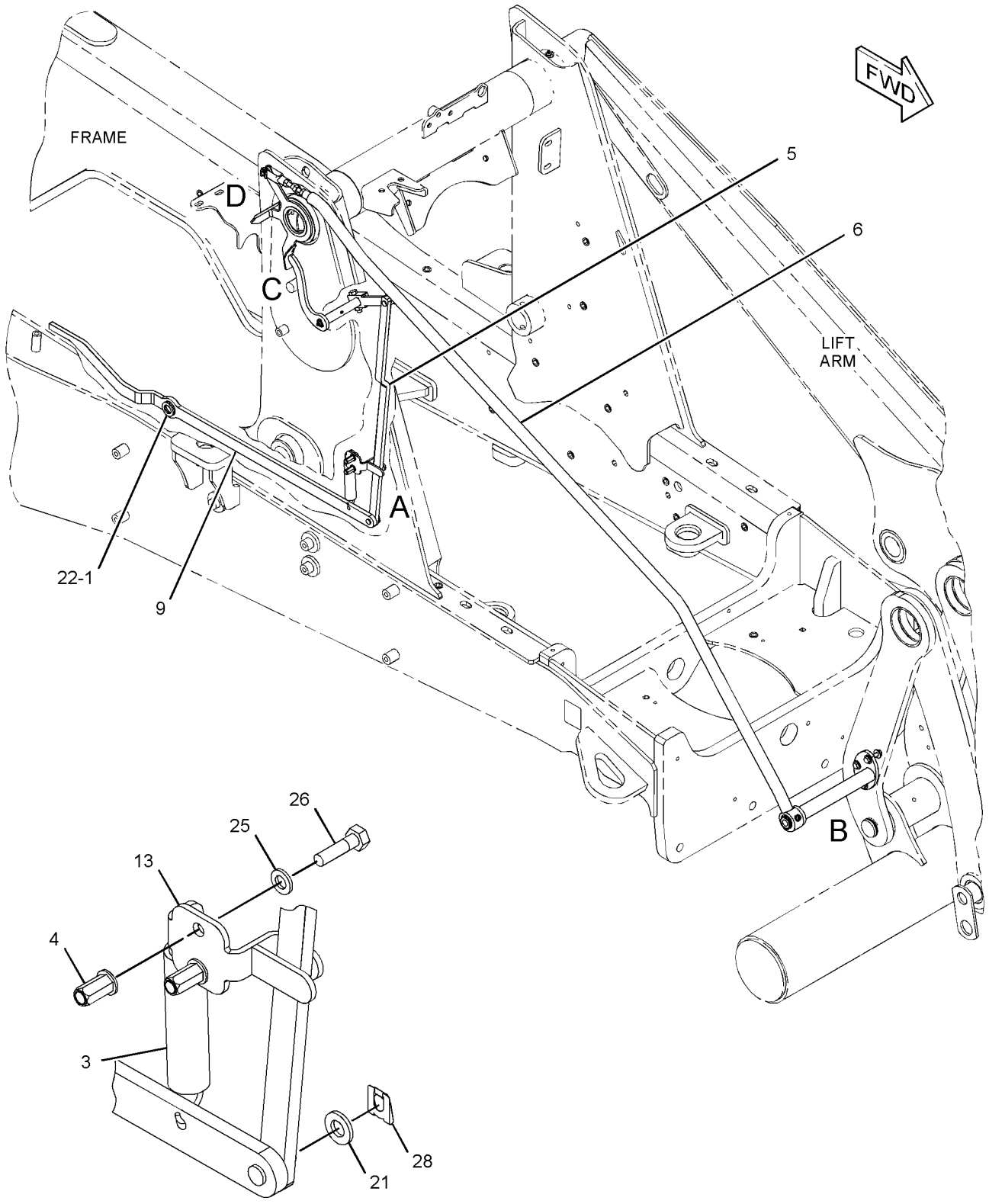

VIEW OF AREA A

REFER TO ALL ILLUSTRATIONS OF
THIS GROUP FOR AUXILIARY VIEWS

GRAPHIC #1

g02784681

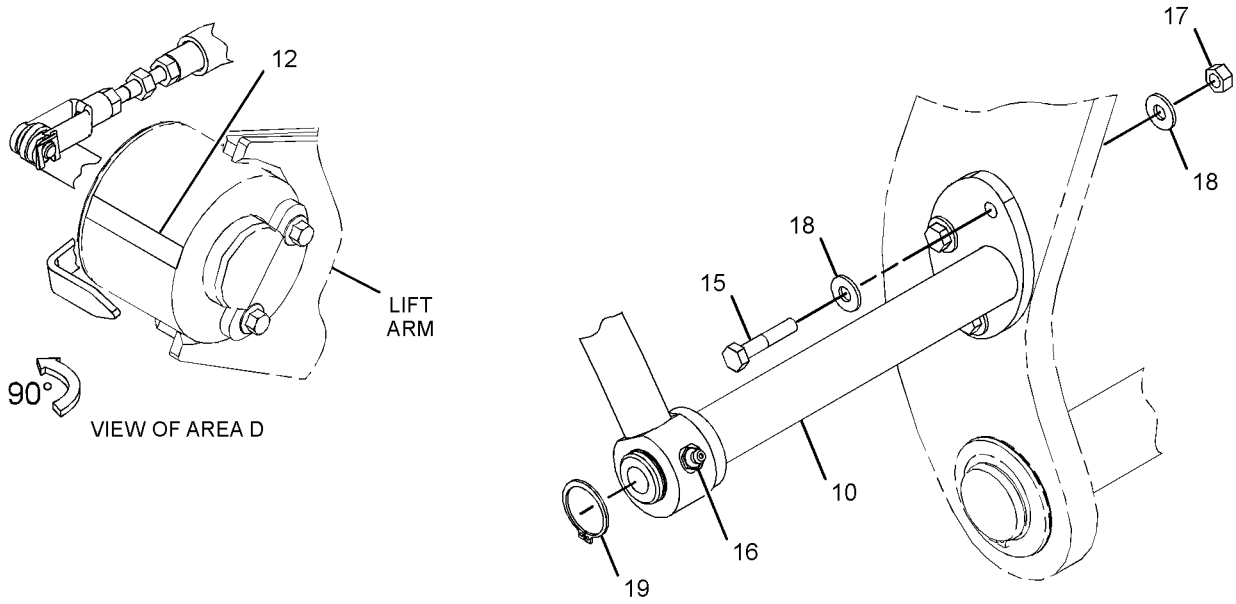

GRAPHIC #2 **<END>** g02785629

337-9809 LINES GP-AUXILIARY HYDRAULIC—SINGLE TILT

S/N: LTG1-UP
PART OF 373-4256 VALVE AR-BANK 3
AN ATTACHMENT

SMCS-5057 **i04574735**

NOTE	REF NO	GRAPHIC REF	PART NUMBER	QTY	PART NAME 1 2 3 4 5 6 (PRODUCT LEVEL)	SEE PAGE
	1	1	**7K-1181**	1	STRAP-CABLE	
I	2	1	**362-1584**	2	HOSE AS	
	3	1	**364-7152**	1	TUBE AS	
	4	1	**373-9533**	1	TUBE AS	
	5	1	*148-8341*	2	CONNECTOR AS	
					(EACH INCLUDES)	
		1	**3D-2824**	1	SEAL-O-RING	
		1	**6V-8713**	1	CONNECTOR	
		1	**7J-9108**	1	SEAL-O-RING	
	6	1	**6V-8398**	4	SEAL-O-RING	
	7	1	**6V-9830**	2	CAP AS	
	8	1	**7J-9108**	2	SEAL-O-RING	
	9	1	**8T-4121**	3	WASHER-HARD (11X21X2.5-MM THK)	
M	10	1	**8T-4136**	3	BOLT (M10X1.5X25-MM)	

I-REFER TO HYDRAULIC INFORMATION SYSTEM
M-METRIC PART

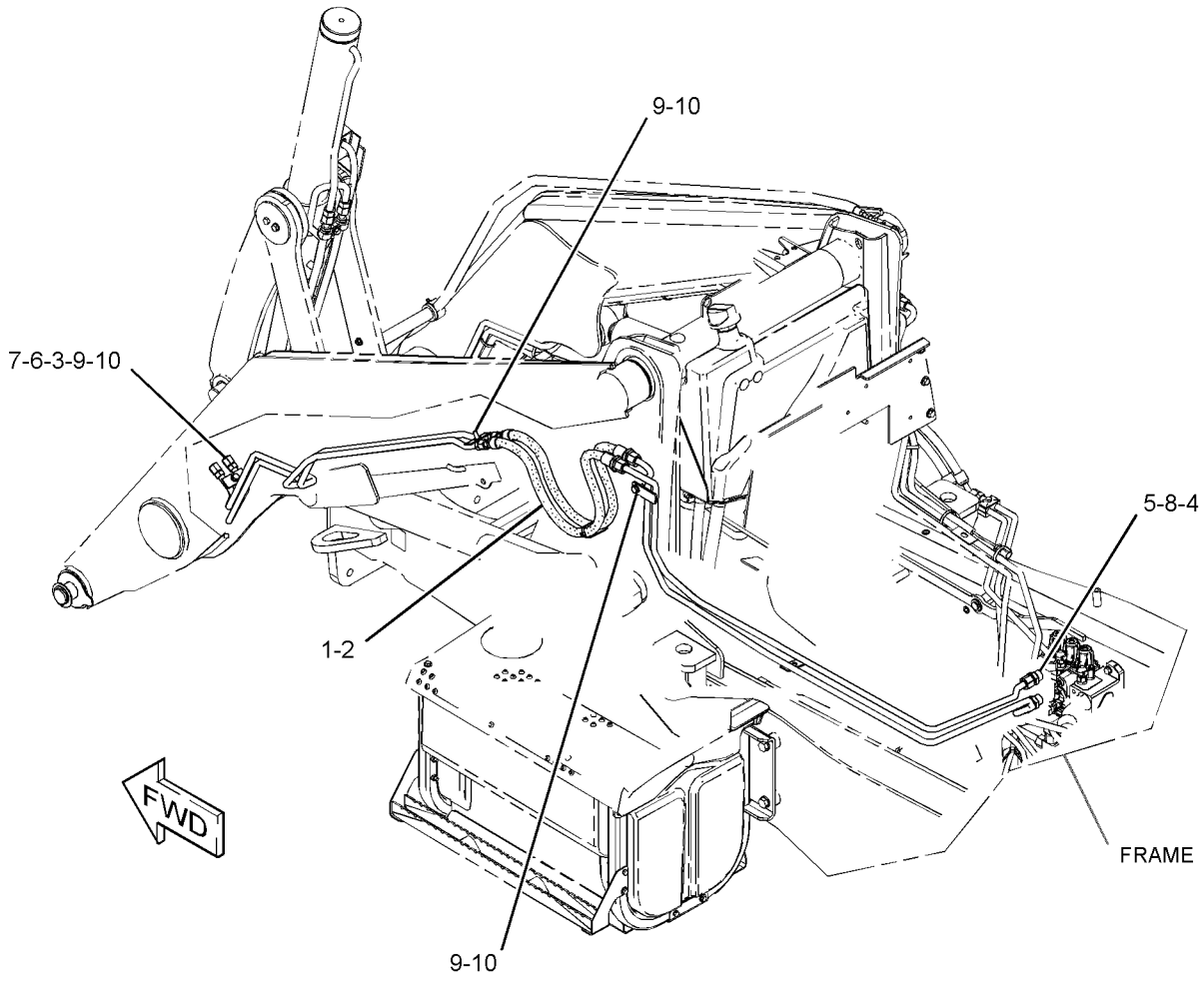

GRAPHIC #1 **<END>** g02816119

HYDRAULIC SYSTEM

367-9726 LINES GP-AUXILIARY HYDRAULIC

S/N: LTG1-UP

PART OF 364-3384 LINES GP-BACKHOE AUXILIARY

AN ATTACHMENT

SMCS-5057 **i04555811**

NOTE	REF NO	GRAPHIC REF	PART NUMBER	QTY	PART NAME 1 2 3 4 5 6 (PRODUCT LEVEL)	SEE PAGE
	1	1	**106-0401**	1	FITTING (QUICK DISCONNECT, FEMALE)	
	2	1	**106-0406**	1	FITTING (QUICK DISCONNECT, MALE)	
	3	1	**204-2281**	1	STRAP-CABLE	
B	4	1	**241-8448**	2	FILM-WARNING (HYD PRESS, READ OMM, U.S.)	
					—OR—	
B		1	**241-8450**	2	FILM-WARNING (HYD PRESS, READ OMM, INTL)	
	5	1	**251-9360**	1	TUBE AS	
I	6	1	**262-4203**	2	HOSE AS	
	7	1	**262-4217**	1	TUBE AS	
	8	1	**278-4497**	1	BRACKET	
	9	1	**278-4498**	1	BRACKET	
I	10	1	**290-6712**	1	HOSE AS	
I	11	1	**365-2867**	1	HOSE AS	
	12	1	**365-2875**	1	VALVE GP-MANUAL (HYDRAULIC OIL)	
I	13	1	**368-3051**	1	HOSE AS	
	14	1	**368-4842**	1	TUBE AS	
	15	1	**375-6022**	1	BRACKET AS	
	16	1	**377-5997**	1	TUBE AS	
	17	1	*148-8327*	2	CONNECTOR AS	
					(EACH INCLUDES)	
		1	**3D-2824**	1	SEAL-O-RING	
		1	**6V-8637**	1	CONNECTOR	
		1	**6V-9746**	1	SEAL-O-RING	
	18	1	*148-8357*	1	ELBOW AS	
		1	**5K-9090**	1	SEAL-O-RING	
		1	**6V-9008**	1	ELBOW	
		1	**7M-8485**	1	SEAL-O-RING	
	19	1	*148-8442*	1	TEE AS	
		1	**6V-9746**	2	SEAL-O-RING	
		1	**7M-8485**	1	SEAL-O-RING	
		1	**8T-1685**	1	TEE	
	20	1	*148-8449*	2	TEE AS-SWIVEL	
					(EACH INCLUDES)	
		1	**6V-9746**	2	SEAL-O-RING	
		1	**6V-9839**	1	TEE-SWIVEL	
	21	1	*150-3053*	2	CONNECTOR AS	
					(EACH INCLUDES)	
		1	**6V-9746**	1	SEAL-O-RING	
		1	**7M-8485**	1	SEAL-O-RING	
		1	**108-3872**	1	CONNECTOR	
	22	1	*155-2026*	2	UNION AS	
					(EACH INCLUDES)	
		1	**5K-9090**	2	SEAL-O-RING	
		1	**6V-8998**	1	UNION	
	23	1	**2P-1293**	2	LOCKNUT (1-3/16-12-THD)	
M	24	1	**5C-9553**	4	BOLT (M6X1X16-MM)	
	25	1	**5K-9090**	3	SEAL-O-RING	
	26	1	**5P-7466**	2	CLIP (SLOT)	
	27	1	**5P-7467**	2	CLIP (TAB)	
	28	1	**5P-8112**	2	GROMMET	
	29	1	**6V-9172**	2	NUT (1-7/16-12-THD)	
	30	1	**6V-9832**	2	CAP AS	
	31	1	**8S-0023**	2	CLIP (SLOT)	
	32	1	**8S-0024**	2	CLIP (TAB)	
	33	1	**8T-1889**	3	CLIP (SLOT)	

367-9726 LINES GP-AUXILIARY HYDRAULIC *(contd.)* i04555811

NOTE	REF NO	GRAPHIC REF	PART NUMBER	QTY	PART NAME 1 2 3 4 5 6 (PRODUCT LEVEL)	SEE PAGE
	34	1	**8T-1890**	3	CLIP (TAB)	
	35	1	**8T-4121**	7	WASHER-HARD (11X21X2.5-MM THK)	
M	36	1	**8T-4136**	4	BOLT (M10X1.5X25-MM)	
M	37	1	**8T-4195**	2	BOLT (M10X1.5X30-MM)	
M	38	1	**8T-4196**	1	BOLT (M10X1.5X35-MM)	
M	39	1	**8T-4910**	2	BOLT (M12X1.75X60-MM)	
	40	1	**9X-8256**	4	WASHER (6.6X12X2-MM THK)	

B-USE AS REQUIRED
I-REFER TO HYDRAULIC INFORMATION SYSTEM
M-METRIC PART

367-9726 **LINES GP-AUXILIARY HYDRAULIC** *(contd.)* **i04555811**

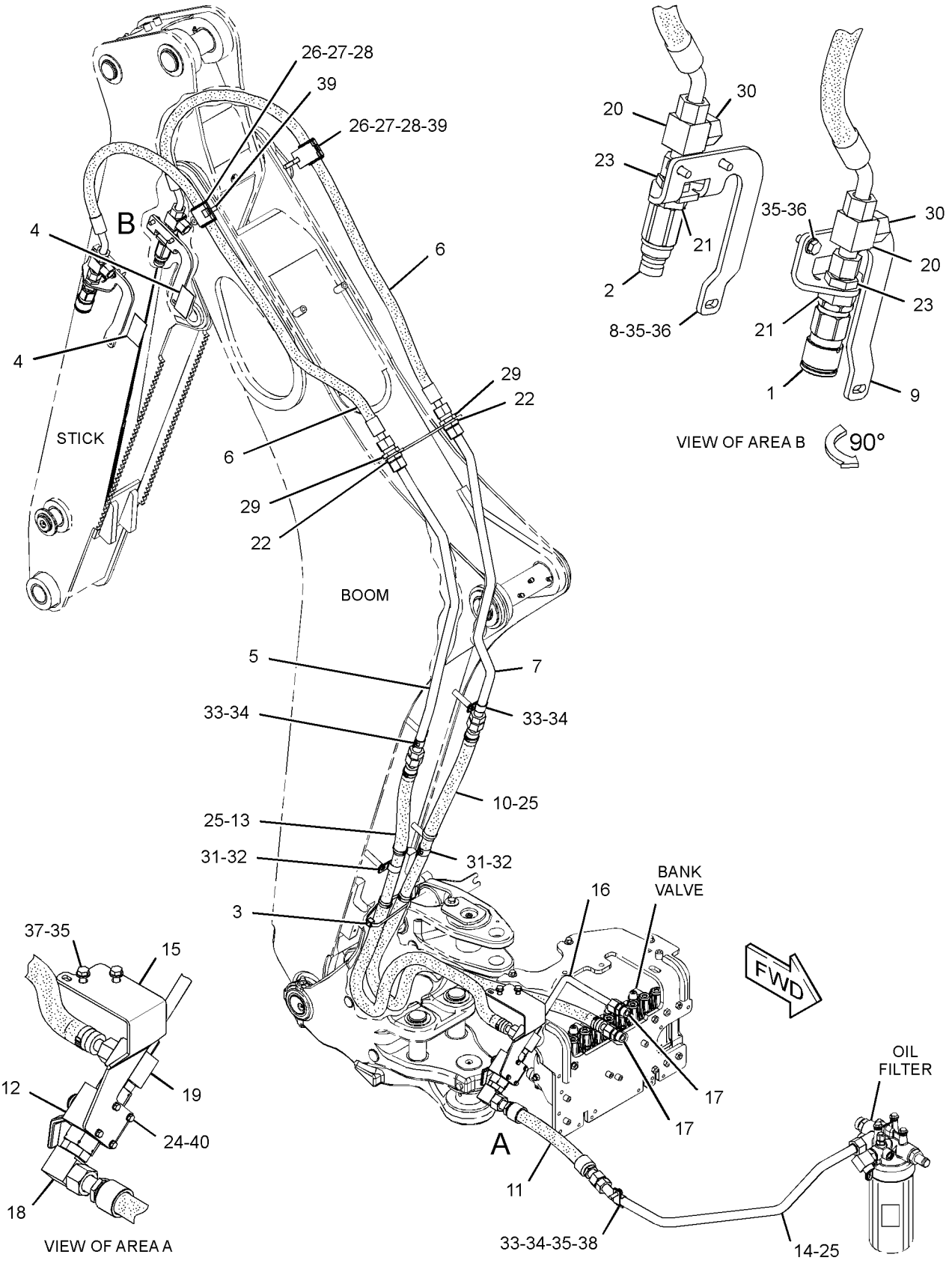

GRAPHIC #1 **<END>** g02787696

HYDRAULIC SYSTEM

367-9730 LINES GP-AUXILIARY HYDRAULIC–EXTENDABLE STICK

S/N: LTG1-UP

PART OF 364-3385 LINES GP-BACKHOE AUXILIARY AN ATTACHMENT

SMCS-5057 **i04617932**

NOTE	REF NO	GRAPHIC REF	PART NUMBER	QTY	PART NAME 1 2 3 4 5 6 (PRODUCT LEVEL)	SEE PAGE
	1	1	**106-0401**	1	FITTING (QUICK DISCONNECT, FEMALE)	
	2	1	**106-0406**	1	FITTING (QUICK DISCONNECT, MALE)	
	3	1	**204-2281**	2	STRAP-CABLE	
B	4	1	**241-8448**	2	FILM-WARNING (HYD PRESS, READ OMM, U.S.)	
					–OR–	
B		1	**241-8450**	2	FILM-WARNING (HYD PRESS, READ OMM, INTL)	
	5	1	**9X-8256**	4	WASHER (6.6X12X2-MM THK)	
	6	1	**251-9360**	1	TUBE AS	
	7	1	**262-4217**	1	TUBE AS	
	8	1	**278-4497**	1	BRACKET	
	9	1	**278-4498**	1	BRACKET	
I	10	1	**290-6712**	1	HOSE AS	
I	11	1	**312-2599**	2	HOSE AS	
I	12	1	**365-2867**	1	HOSE AS	
	13	1	**365-2870**	1	TUBE AS	
	14	1	**365-2875**	1	VALVE GP-MANUAL (HYDRAULIC OIL)	
I	15	1	**368-3051**	1	HOSE AS	
	16	1	**368-4842**	1	TUBE AS	
	17	1	**375-6022**	1	BRACKET AS	
	18	1	*148-8327*	2	CONNECTOR AS	
					(EACH INCLUDES)	
		1	**3D-2824**	1	SEAL-O-RING	
		1	**6V-8637**	1	CONNECTOR	
		1	**6V-9746**	1	SEAL-O-RING	
	19	1	*148-8357*	1	ELBOW AS	
		1	**5K-9090**	1	SEAL-O-RING	
		1	**6V-9008**	1	ELBOW	
		1	**7M-8485**	1	SEAL-O-RING	
	20	1	*148-8442*	1	TEE AS	
		1	**6V-9746**	2	SEAL-O-RING	
		1	**7M-8485**	1	SEAL-O-RING	
		1	**8T-1685**	1	TEE	
	21	1	*148-8449*	2	TEE AS-SWIVEL	
					(EACH INCLUDES)	
		1	**6V-9746**	2	SEAL-O-RING	
		1	**6V-9839**	1	TEE-SWIVEL	
	22	1	*150-3053*	2	CONNECTOR AS	
					(EACH INCLUDES)	
		1	**6V-9746**	1	SEAL-O-RING	
		1	**7M-8485**	1	SEAL-O-RING	
		1	**108-3872**	1	CONNECTOR	
	23	1	*153-6241*	2	ELBOW AS	
					(EACH INCLUDES)	
		1	**6V-8398**	1	SEAL-O-RING	
		1	**8C-8989**	1	ELBOW	
	24	1	*155-2026*	2	UNION AS	
					(EACH INCLUDES)	
		1	**5K-9090**	2	SEAL-O-RING	
		1	**6V-8998**	1	UNION	
	25	1	**2P-1293**	2	LOCKNUT (1-3/16-12-THD)	
M	26	1	**5C-9553**	4	BOLT (M6X1X16-MM)	
	27	1	**5K-9090**	3	SEAL-O-RING	
	28	1	**5P-7466**	2	CLIP (SLOT)	
	29	1	**5P-7467**	2	CLIP (TAB)	

367-9730 **LINES GP-AUXILIARY HYDRAULIC** *(contd.)* **i04617932**

NOTE	REF NO	GRAPHIC REF	PART NUMBER	QTY	PART NAME 1 2 3 4 5 6 (PRODUCT LEVEL)	SEE PAGE
	30	1	**5P-8112**	2	GROMMET	
	31	1	**6V-9172**	2	NUT (1-7/16-12-THD)	
	32	1	**6V-9832**	2	CAP AS	
	33	1	**8S-0023**	2	CLIP (SLOT)	
	34	1	**8S-0024**	2	CLIP (TAB)	
	35	1	**8T-1889**	3	CLIP (SLOT)	
	36	1	**8T-1890**	3	CLIP (TAB)	
	37	1	**8T-4121**	7	WASHER-HARD (11X21X2.5-MM THK)	
M	38	1	**8T-4136**	4	BOLT (M10X1.5X25-MM)	
M	39	1	**8T-4195**	2	BOLT (M10X1.5X30-MM)	
M	40	1	**8T-4196**	1	BOLT (M10X1.5X35-MM)	
M	41	1	**8T-4910**	2	BOLT (M12X1.75X60-MM)	

B-USE AS REQUIRED
I-REFER TO HYDRAULIC INFORMATION SYSTEM
M-METRIC PART

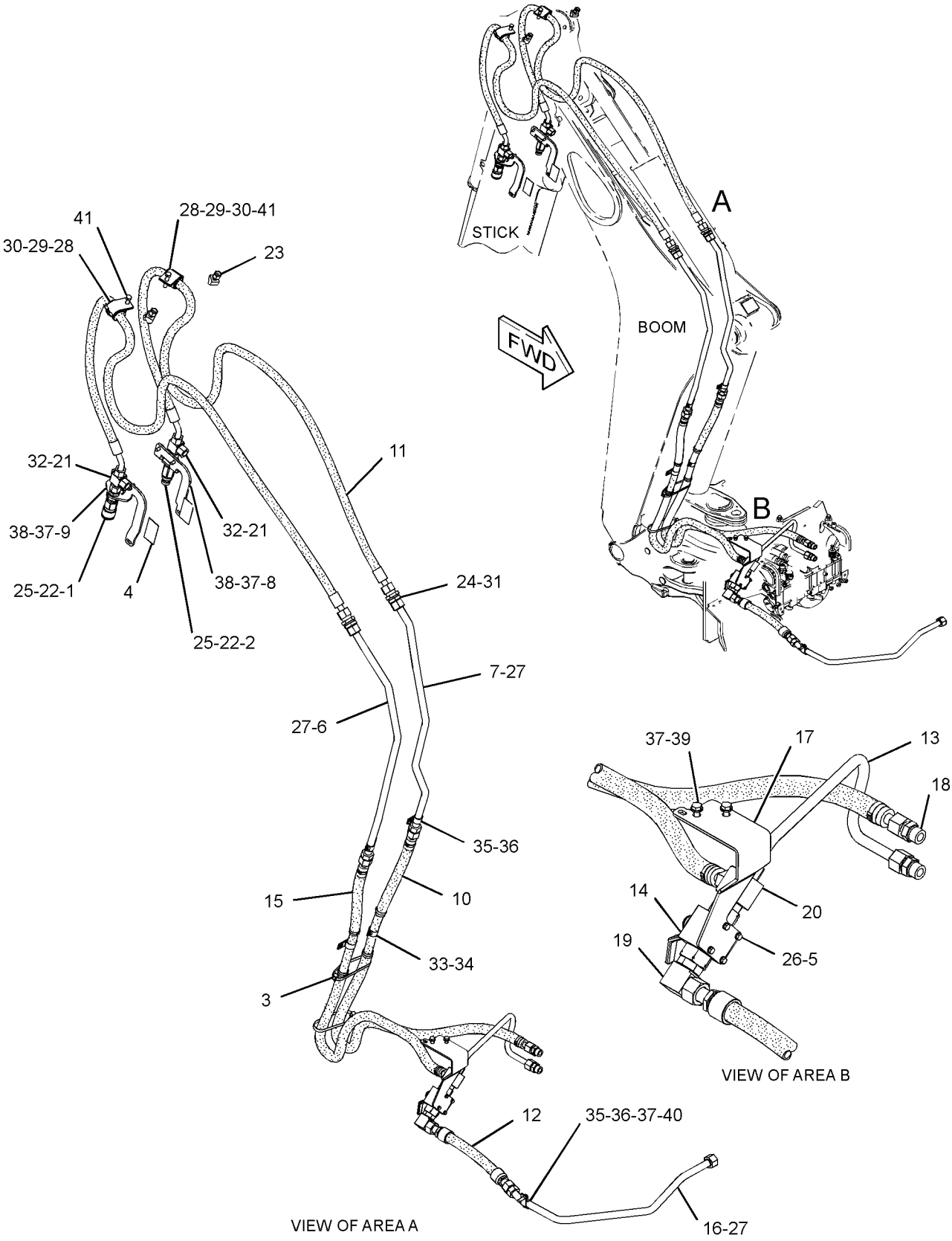

GRAPHIC #1

<END>

g02828420

364-3384 LINES GP-BACKHOE AUXILIARY—STANDARD STICK

S/N: LTG1-UP
FOR USE WITH 340-1728—PAGE 1
AN ATTACHMENT

SMCS-5057 **i04623693**

NOTE	PART NUMBER	QTY	PART NAME 1 2 3 4 5 6 (PRODUCT LEVEL)	SEE PAGE
Y	*367-9726*	1	LINES GP-AUXILIARY HYDRAULIC	302

Y-SEPARATE ILLUSTRATION

<END>

364-3385 LINES GP-BACKHOE AUXILIARY—EXTENDABLE STICK

S/N: LTG1-UP
FOR USE WITH 340-1729—PAGE 1
AN ATTACHMENT

SMCS-5057 **i04623694**

NOTE	PART NUMBER	QTY	PART NAME 1 2 3 4 5 6 (PRODUCT LEVEL)	SEE PAGE
Y	*367-9730*	1	LINES GP-AUXILIARY HYDRAULIC (EXTENDABLE STICK)	305

Y-SEPARATE ILLUSTRATION

<END>

HYDRAULIC SYSTEM

367-9722 LINES GP-BOOM CYLINDER

S/N: LTG1-UP

PART OF 340-1729 BACKHOE AR-EXTENDABLE STICK, 340-1728 BACKHOE AR-STANDARD STICK

AN ATTACHMENT

SMCS-5057, 5456 **i04555814**

NOTE	REF NO	GRAPHIC REF	PART NUMBER	QTY	PART NAME 1 2 3 4 5 6 (PRODUCT LEVEL)	SEE PAGE
	1	1	**5P-3860**	1	CLAMP-HOSE	
	2	1	**6U-0456**	4	STRAP	
	3	1	**7K-1181**	1	STRAP-CABLE	
	4	1	**9R-5948**	1	BLOCK	
I	5	1	**311-2501**	2	HOSE AS	
I	6	1	**363-0579**	1	HOSE AS	
I	7	1	**366-7473**	1	HOSE AS	
	8	1	*148-8341*	2	CONNECTOR AS	
					(EACH INCLUDES)	
		1	**3D-2824**	1	SEAL-O-RING	
		1	**6V-8713**	1	CONNECTOR	
		1	**7J-9108**	1	SEAL-O-RING	
	9	1	*148-8382*	1	ELBOW AS	
		1	**3D-2824**	1	SEAL-O-RING	
		1	**7J-9108**	1	SEAL-O-RING	
		1	**8T-0404**	1	ELBOW	
	10	1	*148-8414*	1	REDUCER AS	
		1	**6V-8943**	1	REDUCER	
		1	**7J-9108**	1	SEAL-O-RING	
	11	1	**7J-9108**	2	SEAL-O-RING	

I-REFER TO HYDRAULIC INFORMATION SYSTEM

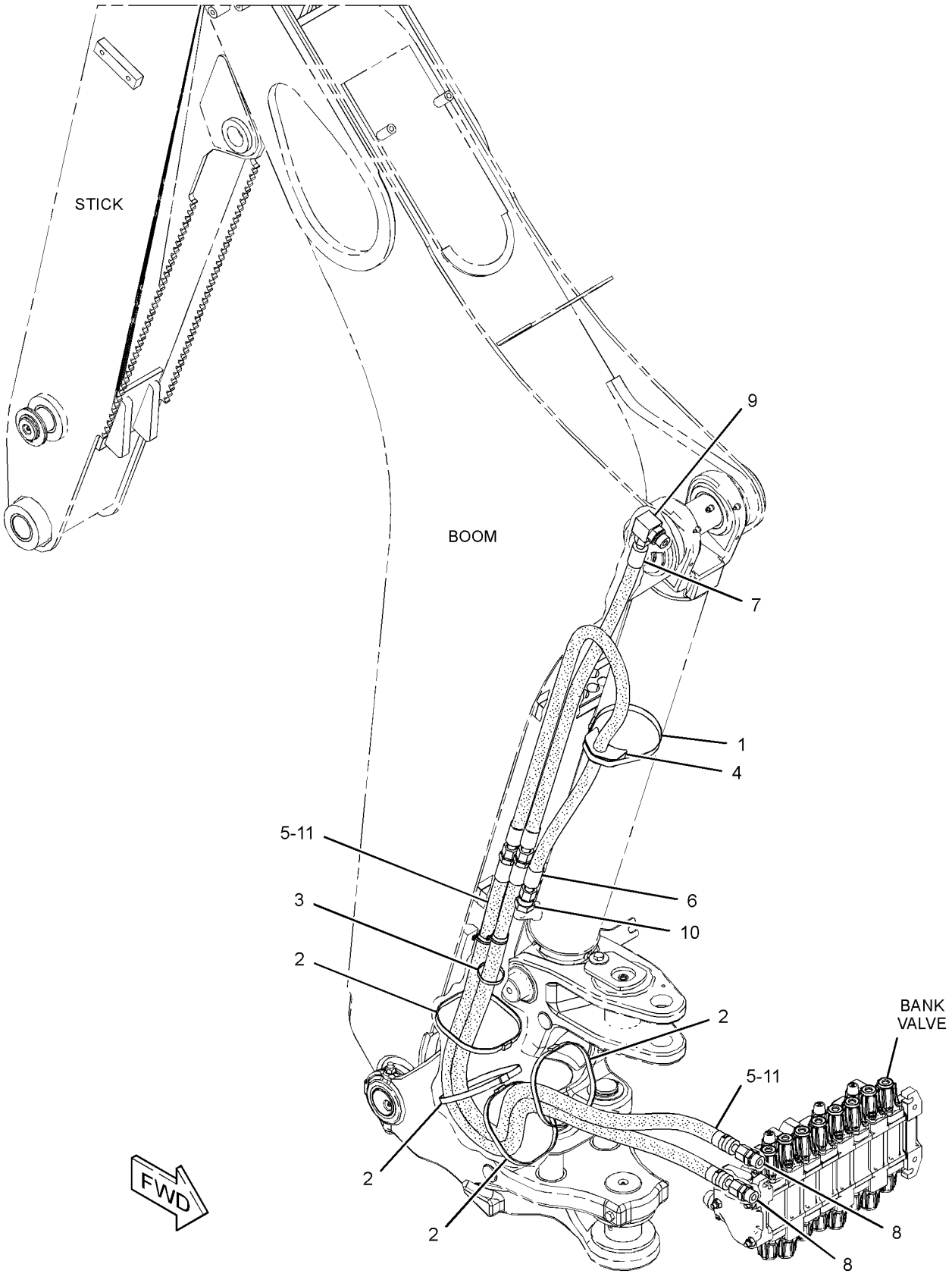

GRAPHIC #1 **<END>** g02778419

HYDRAULIC SYSTEM

367-9725 LINES GP-BUCKET CYLINDER—STANDARD STICK

S/N: LTG1-UP

PART OF 340-1728 BACKHOE AR-STANDARD STICK

AN ATTACHMENT

SMCS-5057, 5457 **i04555812**

NOTE	REF NO	GRAPHIC REF	PART NUMBER	QTY	PART NAME 1 2 3 4 5 6 (PRODUCT LEVEL)	SEE PAGE
	1	1	**5P-0599**	1	CLAMP-BAND	
	2	1	**7K-1181**	1	STRAP-CABLE	
	3	1	**9R-5948**	1	BLOCK	
I	4	1	**231-0215**	1	HOSE AS	
	5	1	**248-5547**	2	PLATE	
	6	1	**251-1541**	1	PLATE AS	
I	7	1	**252-0165**	1	HOSE AS	
I	8	1	**266-4326**	1	HOSE AS	
	9	1	*268-1548*	1	CONNECTOR AS	
		1	**6V-8398**	1	SEAL-O-RING	
		1	**7J-9108**	1	SEAL-O-RING	
		1	**268-1547**	1	CONNECTOR	
I	10	1	**311-2498**	1	HOSE AS	
I	11	1	**311-2501**	2	HOSE AS	
	12	1	*148-8341*	2	CONNECTOR AS	
					(EACH INCLUDES)	
		1	**3D-2824**	1	SEAL-O-RING	
		1	**6V-8713**	1	CONNECTOR	
		1	**7J-9108**	1	SEAL-O-RING	
	13	1	*148-8382*	1	ELBOW AS	
		1	**3D-2824**	1	SEAL-O-RING	
		1	**7J-9108**	1	SEAL-O-RING	
		1	**8T-0404**	1	ELBOW	
	14	1	*169-7409*	1	UNION AS	
		1	**6V-8996**	1	UNION	
		1	**7J-9108**	2	SEAL-O-RING	
	15	1	**5P-7464**	4	CLIP (SLOT)	
	16	1	**5P-7465**	4	CLIP (TAB)	
	17	1	**6V-1249**	2	GROMMET	
	18	1	**6V-1889**	1	CLIP	
	19	1	**6V-7359**	2	GROMMET	
	20	1	**6V-9170**	2	NUT-BULKHEAD (1-14-THD)	
	21	1	**7C-4354**	1	CLIP	
	22	1	**7J-9108**	2	SEAL-O-RING	
	23	1	**7X-7729**	4	WASHER (11X25X3-MM THK)	
	24	1	**8T-4121**	2	WASHER-HARD (11X21X2.5-MM THK)	
M	25	1	**8T-4136**	2	BOLT (M10X1.5X25-MM)	
M	26	1	**8T-4139**	4	BOLT (M12X1.75X30-MM)	
M	27	1	**8T-4183**	2	BOLT (M12X1.75X40-MM)	
M	28	1	**8T-4195**	4	BOLT (M10X1.5X30-MM)	
	29	1	**8T-4223**	8	WASHER-HARD (13.5X25.5X3-MM THK)	
M	30	1	**8T-4244**	2	NUT (M12X1.75-THD)	

I-REFER TO HYDRAULIC INFORMATION SYSTEM
M-METRIC PART

367-9725 **LINES GP-BUCKET CYLINDER** *(contd.)* **i04555812**

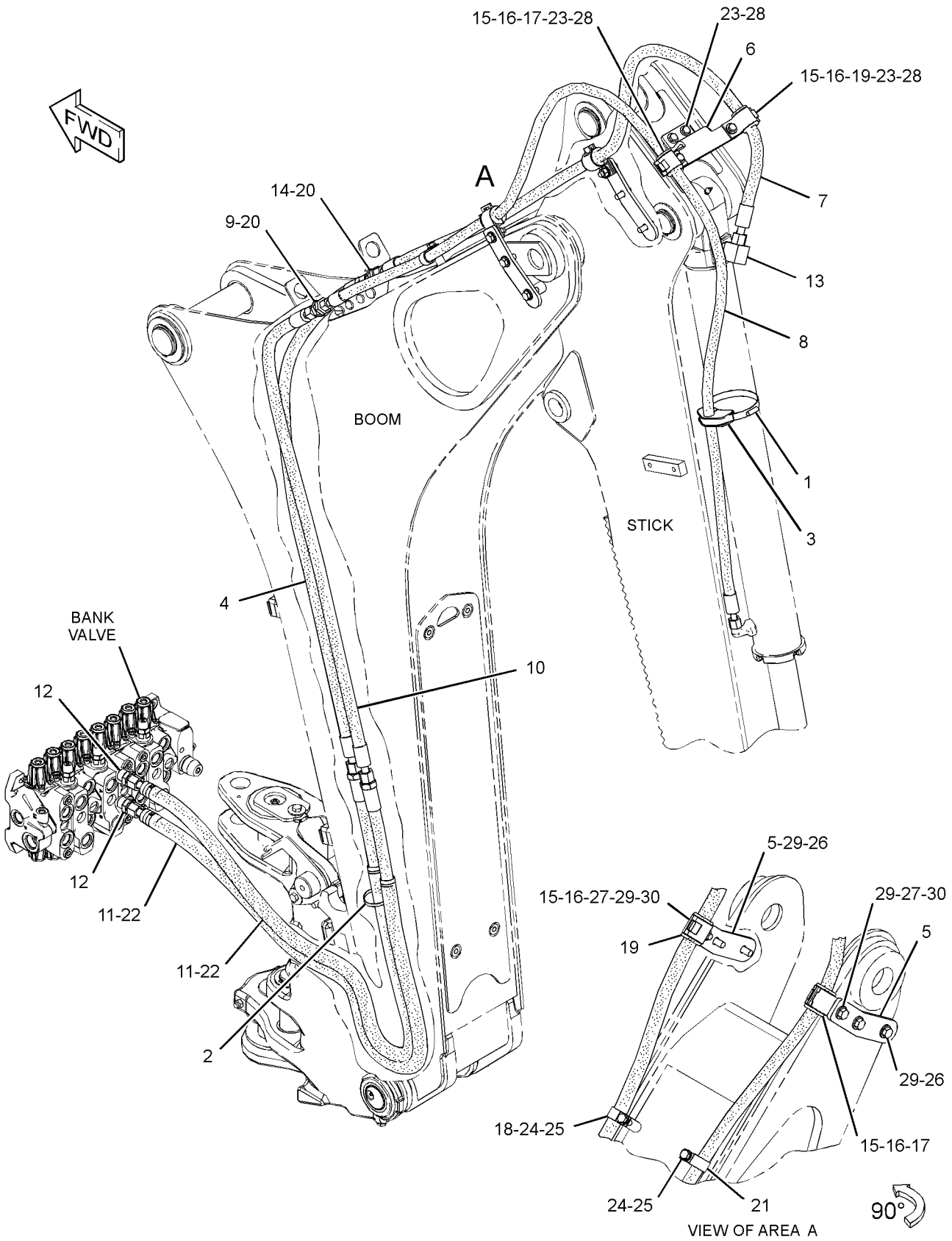

GRAPHIC #1 **<END>** g02784236

HYDRAULIC SYSTEM

367-9729 LINES GP-BUCKET CYLINDER—EXTENDABLE STICK

S/N: LTG1-UP

PART OF 340-1729 BACKHOE AR-EXTENDABLE STICK

AN ATTACHMENT

SMCS-5057, 5457 **i04555810**

NOTE	REF NO	GRAPHIC REF	PART NUMBER	QTY	PART NAME 1 2 3 4 5 6 (PRODUCT LEVEL)	SEE PAGE
	1	1	**5P-0599**	1	CLAMP-BAND	
	2	1	**7K-1181**	2	STRAP-CABLE	
	3	1	**9R-5948**	1	BLOCK	
I	4	1	**231-0215**	2	HOSE AS	
I	5	1	**266-4570**	2	HOSE AS	
	6	1	*268-1548*	3	CONNECTOR AS	
					(EACH INCLUDES)	
		1	**6V-8398**	1	SEAL-O-RING	
		1	**7J-9108**	1	SEAL-O-RING	
		1	**268-1547**	1	CONNECTOR	
I	7	1	**311-2498**	2	HOSE AS	
I	8	1	**311-2501**	4	HOSE AS	
	9	1	**312-2597**	1	PLATE	
I	10	1	**312-2600**	1	HOSE AS	
	11	1	**314-7750**	2	PLATE	
I	12	1	**360-4008**	1	HOSE AS	
	13	1	*148-8341*	4	CONNECTOR AS	
					(EACH INCLUDES)	
		1	**3D-2824**	1	SEAL-O-RING	
		1	**6V-8713**	1	CONNECTOR	
		1	**7J-9108**	1	SEAL-O-RING	
	14	1	*153-6232*	1	ELBOW AS	
		1	**3D-2824**	1	SEAL-O-RING	
		1	**7J-9108**	1	SEAL-O-RING	
		1	**8T-0120**	1	ELBOW	
	15	1	*169-7409*	1	UNION AS	
		1	**6V-8996**	1	UNION	
		1	**7J-9108**	2	SEAL-O-RING	
	16	1	**3G-8054**	1	CLIP (TAB)	
	17	1	**3G-8057**	1	CLIP (SLOT)	
	18	1	**5P-7464**	4	CLIP (SLOT)	
	19	1	**5P-7465**	4	CLIP (TAB)	
	20	1	**6V-1889**	1	CLIP	
	21	1	**6V-7359**	4	GROMMET	
	22	1	**6V-9170**	4	NUT-BULKHEAD (1-14-THD)	
	23	1	**6V-9990**	1	GROMMET	
	24	1	**7C-4354**	3	CLIP	
	25	1	**7G-3832**	1	GROMMET	
	26	1	**7G-3833**	1	CLIP (TAB)	
	27	1	**7G-3834**	1	CLIP (SLOT)	
	28	1	**7J-9108**	4	SEAL-O-RING	
	29	1	**8T-4121**	2	WASHER-HARD (11X21X2.5-MM THK)	
M	30	1	**8T-4136**	2	BOLT (M10X1.5X25-MM)	
M	31	1	**8T-4139**	6	BOLT (M12X1.75X30-MM)	
M	32	1	**8T-4194**	2	BOLT (M12X1.75X50-MM)	
	33	1	**8T-4223**	18	WASHER-HARD (13.5X25.5X3-MM THK)	
M	34	1	**8T-4244**	6	NUT (M12X1.75-THD)	
M	35	1	**8T-4910**	4	BOLT (M12X1.75X60-MM)	

I-REFER TO HYDRAULIC INFORMATION SYSTEM
M-METRIC PART

367-9729 **LINES GP-BUCKET CYLINDER** *(contd.)* **i04555810**

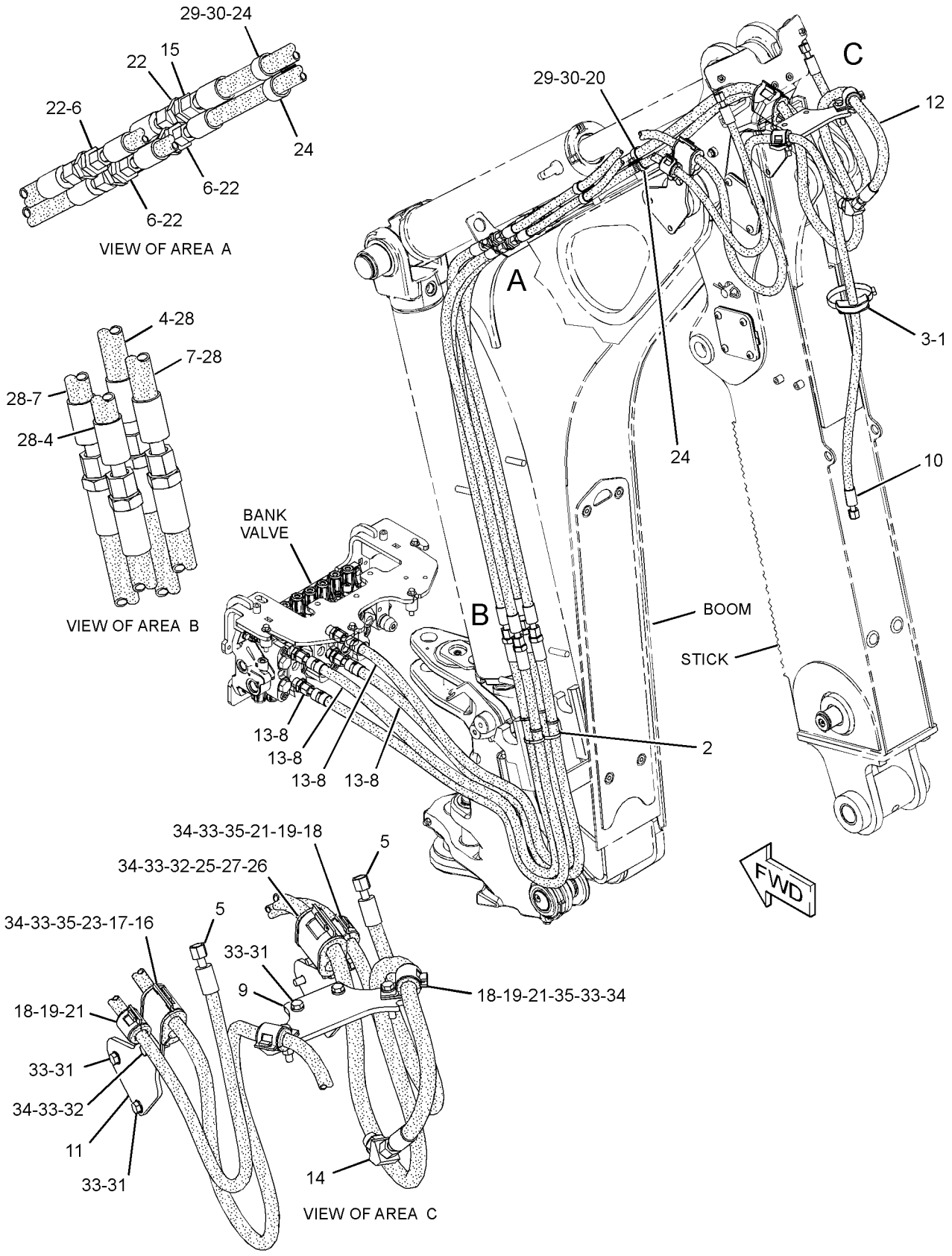

GRAPHIC #1 **<END>** g02790510

331-0096 LINES GP-EXTENDABLE STICK

S/N: LTG1-UP
PART OF 271-1405 STICK GP-EXTENDABLE
AN ATTACHMENT

SMCS-5057 **i03464300**

NOTE	REF NO	GRAPHIC REF	PART NUMBER	QTY	PART NAME 1 2 3 4 5 6 (PRODUCT LEVEL)	SEE PAGE
	1	1	**7K-1181**	4	STRAP-CABLE	
	2	1	**8T-6726**	3	CLAMP-HOSE	
	3	1	**206-2423**	2	SADDLE	
I	4	1	**221-3234**	1	HOSE AS	
I	5	1	**290-6023**	1	HOSE AS	
	6	1	**329-7970**	1	PLATE AS	
	7	1	**329-8017**	1	TUBE AS	
	8	1	**330-8297**	1	TUBE AS	
	9	1	*148-8364*	1	ELBOW AS	
		1	**3K-0360**	1	SEAL-O-RING	
		1	**6V-8398**	1	SEAL-O-RING	
		1	**6V-8625**	1	ELBOW	
	10	1	**6V-8398**	4	SEAL-O-RING	
	11	1	**8T-1885**	2	CLIP (SLOT)	
	12	1	**8T-1886**	2	CLIP (TAB)	
	13	1	**8T-1891**	2	CLIP (SLOT)	
	14	1	**8T-1892**	2	CLIP (TAB)	
	15	1	**8T-4121**	8	WASHER-HARD (11X21X2.5-MM THK)	
M	16	1	**8T-4133**	2	NUT (M10X1.5-THD)	
M	17	1	**8T-4136**	2	BOLT (M10X1.5X25-MM)	
M	18	1	**8T-4172**	2	BOLT (M10X1.5X80-MM)	
M	19	1	**8T-4195**	2	BOLT (M10X1.5X30-MM)	
	20	1	**9R-2053**	3	BLOCK	

I-REFER TO HYDRAULIC INFORMATION SYSTEM
M-METRIC PART

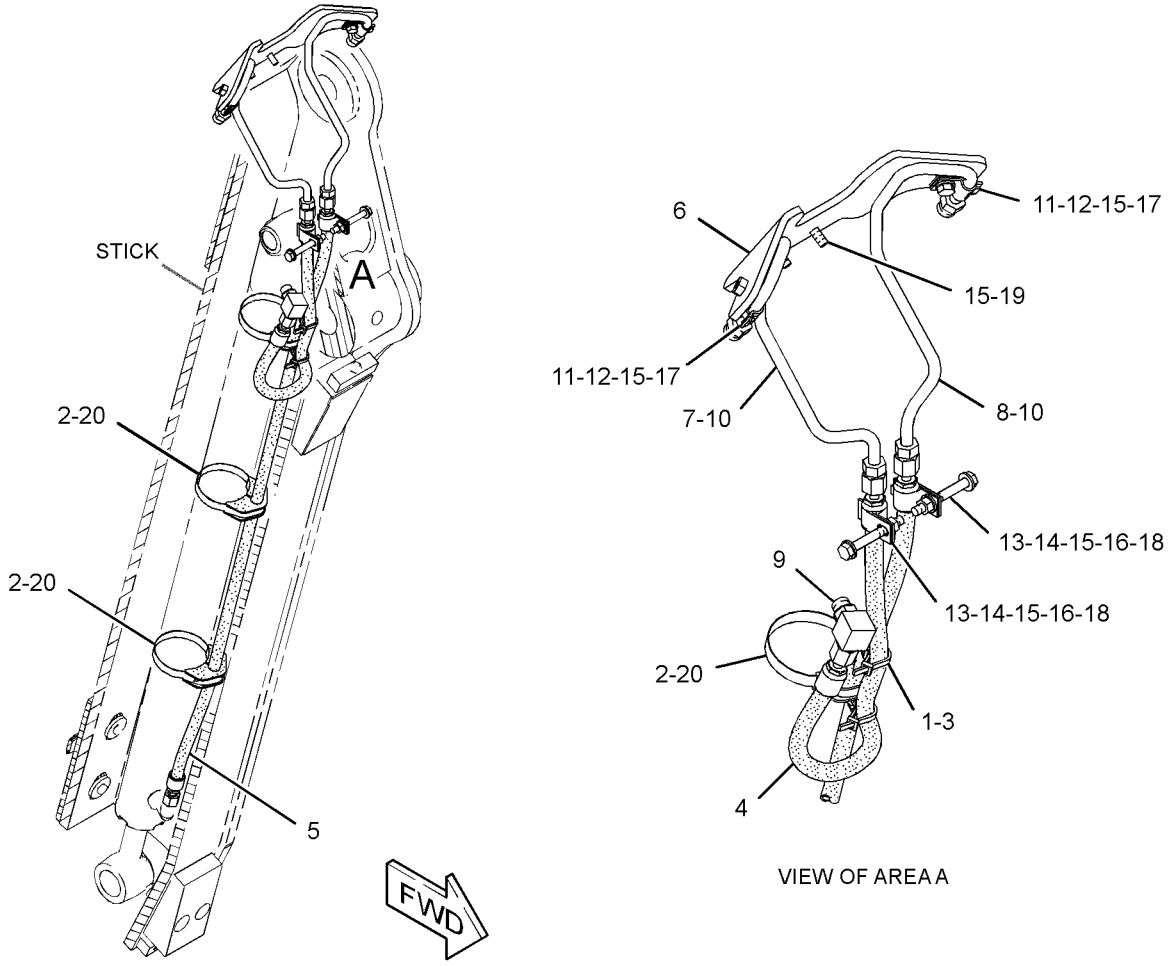

GRAPHIC #1 **<END>** g01809594

HYDRAULIC SYSTEM

337-9807 LINES GP-LIFT & TILT CYLINDER

S/N: LTG1-UP

PART OF 373-4246, 373-4248 VALVE AR-BANK 2, 373-4256 VALVE AR-BANK 3 AN ATTACHMENT

SMCS-5057 **i04565312**

NOTE	REF NO	GRAPHIC REF	PART NUMBER	QTY	PART NAME 1 2 3 4 5 6 (PRODUCT LEVEL)	SEE PAGE
I	1	1	**362-1583**	4	HOSE AS	
I	2	1	**362-1584**	2	HOSE AS	
I	3	1	**362-1585**	2	HOSE AS	
	4	1	**362-1597**	1	TUBE AS	
	5	1	**5K-2697**	4	CLIP	
	6	1	**7J-1908**	6	SEAL	
	7	1	**8T-4121**	4	WASHER-HARD (11X21X2.5-MM THK)	
M	8	1	**8T-4136**	4	BOLT (M10X1.5X25-MM)	

I-REFER TO HYDRAULIC INFORMATION SYSTEM
M-METRIC PART

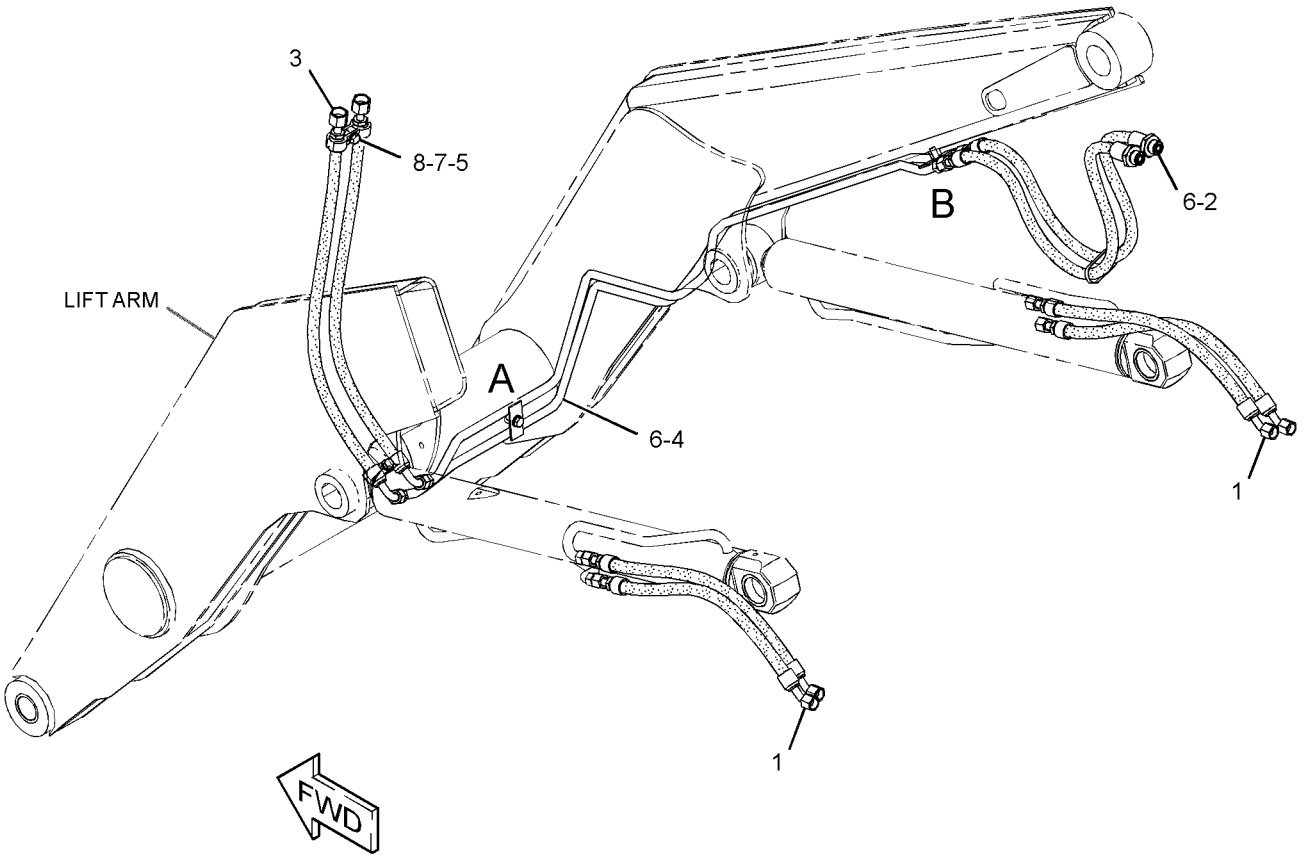

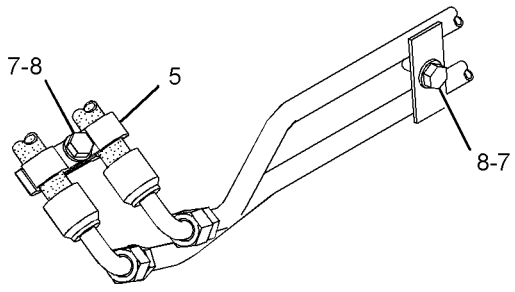

VIEW OF AREA A

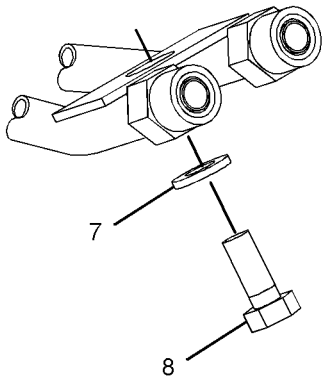

VIEW OF AREA B

GRAPHIC #1 **<END>** g02809278

HYDRAULIC SYSTEM

337-9808 LINES GP-LIFT & TILT CYLINDER

S/N: LTG1-UP

PART OF 373-4246, 373-4248 VALVE AR-BANK 2, 373-4256 VALVE AR-BANK 3

AN ATTACHMENT

SMCS-5057 **i04565317**

NOTE	REF NO	GRAPHIC REF	PART NUMBER	QTY	PART NAME 1 2 3 4 5 6 (PRODUCT LEVEL)	SEE PAGE
	1	2	**6W-2463**	4	CLAMP	
	2	2	**102-8703**	2	PLATE-COVER	
	3	2	*148-8341*	2	CONNECTOR AS	
					(EACH INCLUDES)	
		2	**3D-2824**	1	SEAL-O-RING	
		2	**6V-8713**	1	CONNECTOR	
		2	**7J-9108**	1	SEAL-O-RING	
	4	2	*260-9137*	2	UNION AS-CROSS	
					(EACH INCLUDES)	
		2	**7J-9108**	4	SEAL-O-RING	
		2	**260-9136**	1	CROSS-UNION	
	5	2	*330-9752*	2	ELBOW AS	
					(EACH INCLUDES)	
		2	**3D-2824**	1	SEAL-O-RING	
		2	**330-9591**	1	ELBOW	
	6	2	**362-2077**	1	TUBE AS	
	7	2	**362-2078**	1	TUBE AS	
	8	2	**362-2079**	1	TUBE AS	
	9	2	**362-2080**	1	TUBE AS	
	10	2	**373-9532**	1	TUBE AS	
	11	2	**6V-8398**	4	SEAL-O-RING	
	12	2	**6V-9831**	2	CAP AS	
M	13	2	**7X-2537**	2	BOLT (M8X1.25X35-MM)	
	14	2	**8T-4121**	1	WASHER-HARD (11X21X2.5-MM THK)	
M	15	2	**8T-4136**	1	BOLT (M10X1.5X25-MM)	

M-METRIC PART

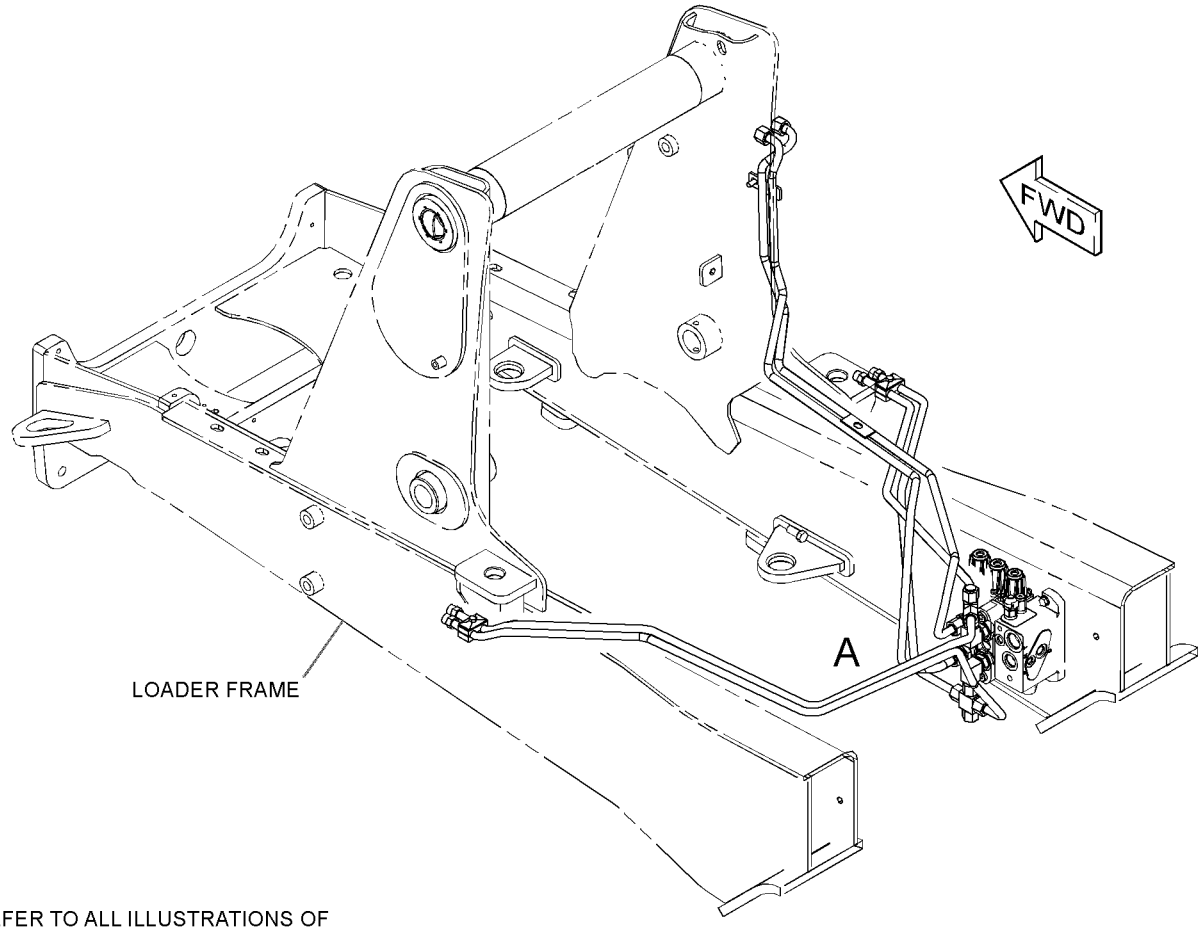

REFER TO ALL ILLUSTRATIONS OF
THIS GROUP FOR AUXILIARY VIEWS

GRAPHIC #1 g02809438

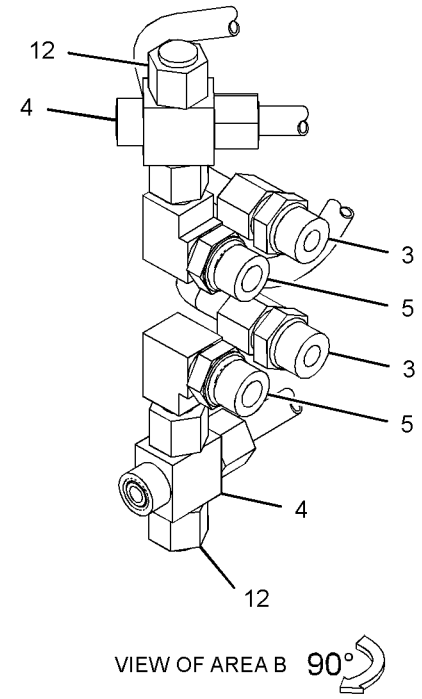

VIEW OF AREA B 90°

VIEW OF AREA A

GRAPHIC #2 **<END>** g02809440

HYDRAULIC SYSTEM

337-7460 LINES GP-MULTIPURPOSE BUCKET

S/N: LTG1-UP

PART OF 337-7442, 337-7459 BUCKET GP-MULTIPURPOSE

AN ATTACHMENT

SMCS-5057 **i04622209**

NOTE	REF NO	GRAPHIC REF	PART NUMBER	QTY	PART NAME 1 2 3 4 5 6 (PRODUCT LEVEL)	SEE PAGE
	1	1	**8T-6726**	2	CLAMP-HOSE	
I	2	1	**9R-0418**	2	HOSE AS	
	3	1	**9R-8870**	2	BLOCK	
I	4	1	**317-2242**	1	HOSE AS	
I	5	1	**320-9945**	1	HOSE AS	
I	6	1	**320-9946**	1	HOSE AS	
I	7	1	**339-3645**	1	HOSE AS	
	8	1	*148-8378*	2	ELBOW AS	
					(EACH INCLUDES)	
		1	**3J-1907**	1	SEAL-O-RING	
		1	**6V-8397**	1	SEAL-O-RING	
		1	**6V-8724**	1	ELBOW	
	9	1	*150-3060*	2	TEE AS	
					(EACH INCLUDES)	
		1	**6V-8397**	2	SEAL-O-RING	
		1	**6V-8398**	1	SEAL-O-RING	
		1	**8T-3444**	1	TEE-UNION	
	10	1	**6V-3341**	2	GROMMET	
	11	1	**6V-8397**	2	SEAL-O-RING	
	12	1	**8M-2773**	8	CLIP	
	13	1	**8T-1899**	2	CLIP (SLOT)	
	14	1	**8T-1900**	2	CLIP (TAB)	
	15	1	**8T-4121**	6	WASHER-HARD (11X21X2.5-MM THK)	
M	16	1	**8T-4136**	6	BOLT (M10X1.5X25-MM)	

I-REFER TO HYDRAULIC INFORMATION SYSTEM
M-METRIC PART

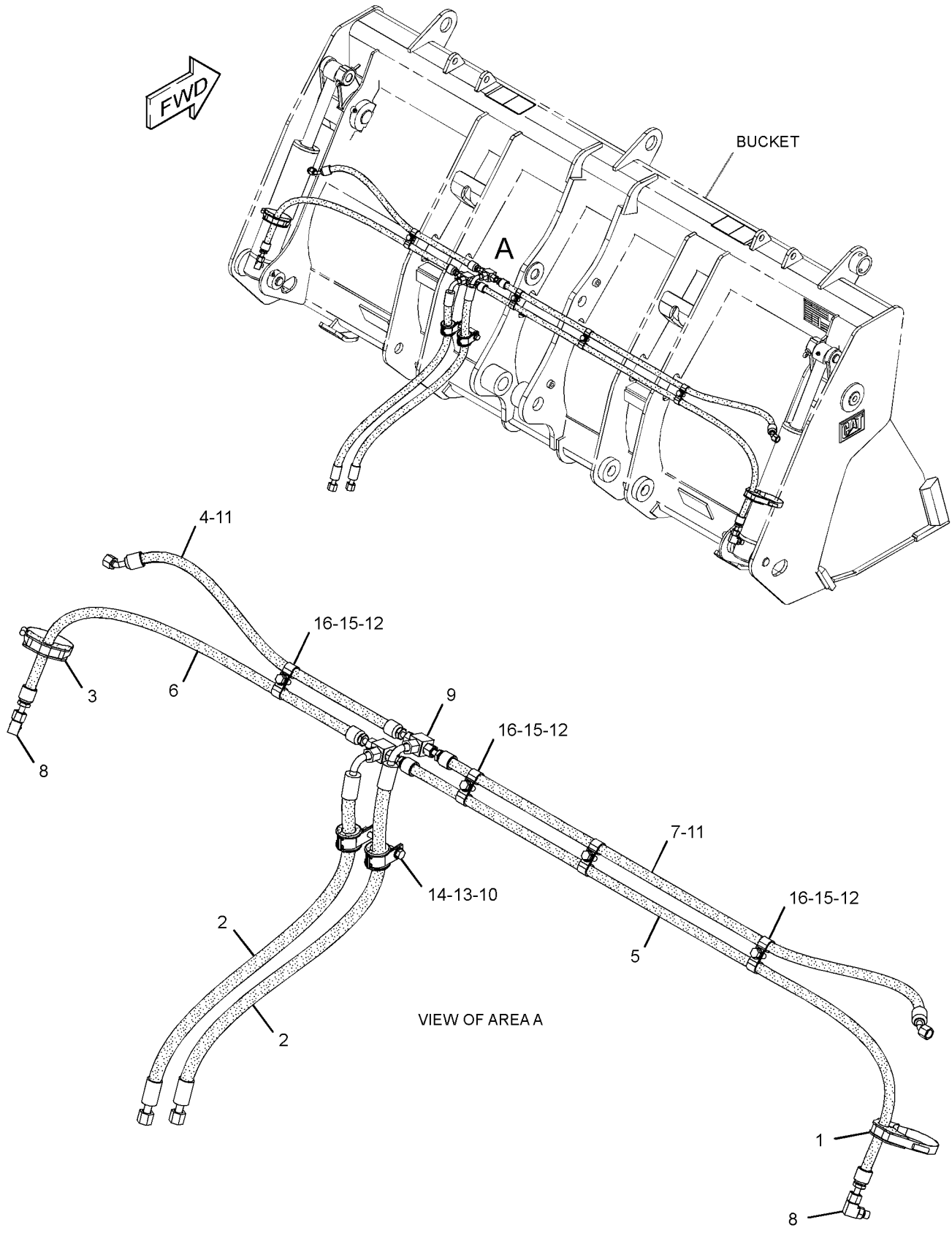

GRAPHIC #1 **<END>** g02808037

HYDRAULIC SYSTEM

337-7461 LINES GP-MULTIPURPOSE BUCKET

S/N: LTG1-UP

PART OF 337-7436, 337-7458 BUCKET GP-MULTIPURPOSE

AN ATTACHMENT

SMCS-5057 **i04606332**

NOTE	REF NO	GRAPHIC REF	PART NUMBER	QTY	PART NAME 1 2 3 4 5 6 (PRODUCT LEVEL)	SEE PAGE
	1	1	**8T-6726**	2	CLAMP-HOSE	
I	2	1	**9R-0418**	2	HOSE AS	
	3	1	**9R-8870**	2	BLOCK	
I	4	1	**291-3654**	1	HOSE AS	
I	5	1	**337-7471**	1	HOSE AS	
I	6	1	**351-8387**	1	HOSE AS	
I	7	1	**361-9721**	1	HOSE AS	
	8	1	*148-8378*	2	ELBOW AS	
					(EACH INCLUDES)	
		1	**3J-1907**	1	SEAL-O-RING	
		1	**6V-8397**	1	SEAL-O-RING	
		1	**6V-8724**	1	ELBOW	
	9	1	*150-3060*	2	TEE AS	
					(EACH INCLUDES)	
		1	**6V-8397**	2	SEAL-O-RING	
		1	**6V-8398**	1	SEAL-O-RING	
		1	**8T-3444**	1	TEE-UNION	
	10	1	**6V-3341**	2	GROMMET	
	11	1	**6V-8397**	2	SEAL-O-RING	
	12	1	**8M-2773**	8	CLIP	
	13	1	**8T-1899**	2	CLIP (SLOT)	
	14	1	**8T-1900**	2	CLIP (TAB)	
	15	1	**8T-4121**	6	WASHER-HARD (11X21X2.5-MM THK)	
M	16	1	**8T-4136**	6	BOLT (M10X1.5X25-MM)	

I-REFER TO HYDRAULIC INFORMATION SYSTEM
M-METRIC PART

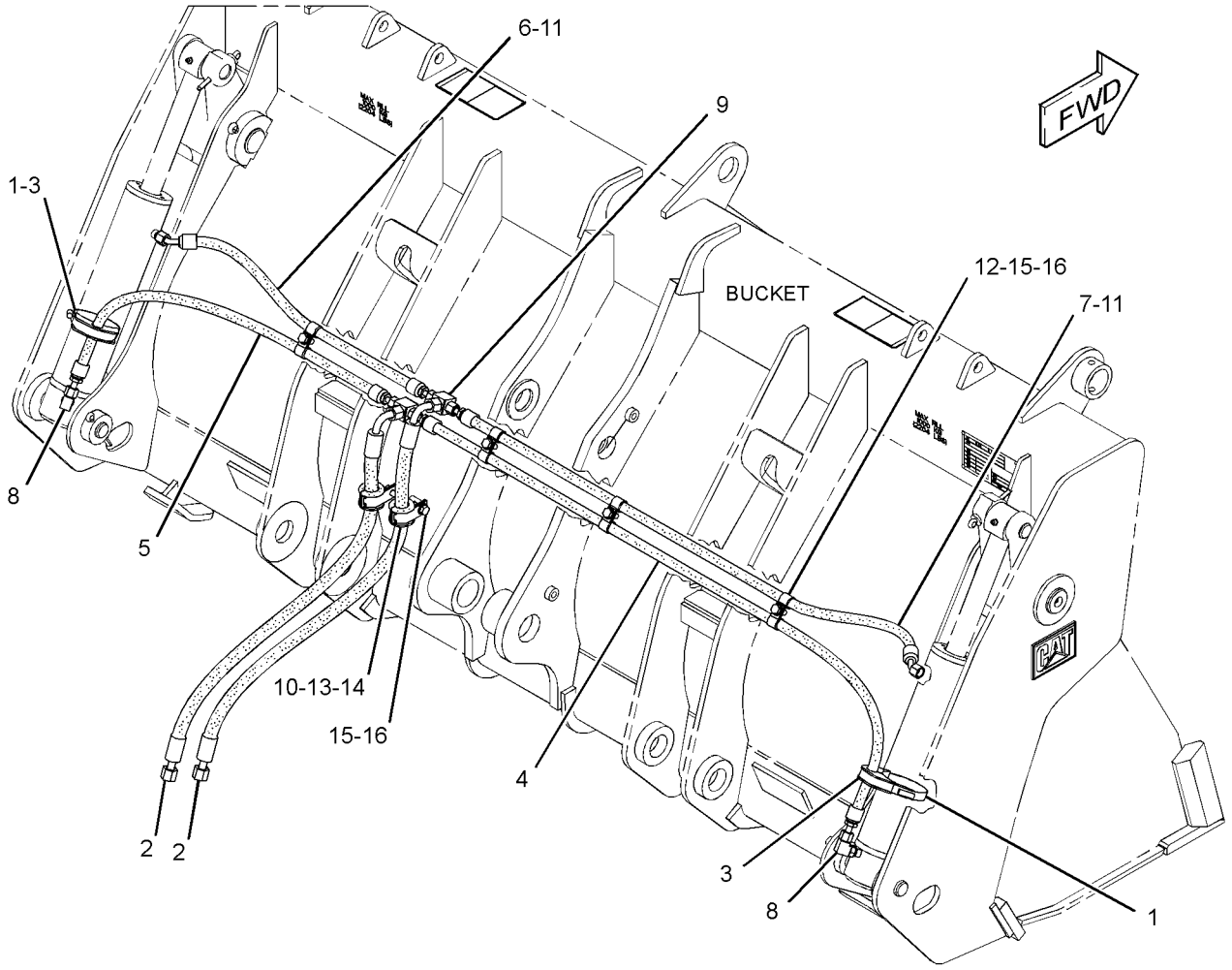

GRAPHIC #1 **<END>** g02790718

HYDRAULIC SYSTEM

337-9770 LINES GP-PILOT

S/N: LTG1-UP

PART OF 340-1715 HYDRAULIC AR

SMCS-5057, 5059 **i04548422**

NOTE	REF NO	GRAPHIC REF	PART NUMBER	QTY	PART NAME 1 2 3 4 5 6 (PRODUCT LEVEL)	SEE PAGE
	1	1	**6V-0852**	1	CAP-DUST	
	2	1	*164-5567*	1	COUPLER AS-QUICK DISCONNECT (MALE)	
		1	**6V-3965**	1	FITTING (QUICK DISCONNECT)	
		1	**214-7568**	1	SEAL-O-RING	
	3	1	**9X-6772**	3	STRAP-CABLE	
	4	1	*229-5336*	1	TEE AS	
		1	**3J-1907**	1	SEAL-O-RING	
		1	**4J-5477**	1	SEAL-O-RING	
		1	**081-5648**	1	TEE	
	5	1	*351-0290*	1	ADAPTER AS	
		1	**3J-7354**	1	SEAL-O-RING	
		1	**4J-5477**	1	SEAL-O-RING	
		1	**308-9568**	1	ADAPTER-TEE	
I	6	1	**361-9929**	1	HOSE AS	
I	7	1	**361-9930**	1	HOSE AS	
	8	1	*148-8325*	1	CONNECTOR AS	
		1	**3J-1907**	1	SEAL-O-RING	
		1	**4J-5477**	1	SEAL-O-RING	
		1	**6V-8641**	1	CONNECTOR	
	9	1	*150-3033*	1	ELBOW AS	
		1	**3J-1907**	1	SEAL-O-RING	
		1	**4J-5477**	1	SEAL-O-RING	
		1	**8T-0164**	1	ELBOW	

I-REFER TO HYDRAULIC INFORMATION SYSTEM

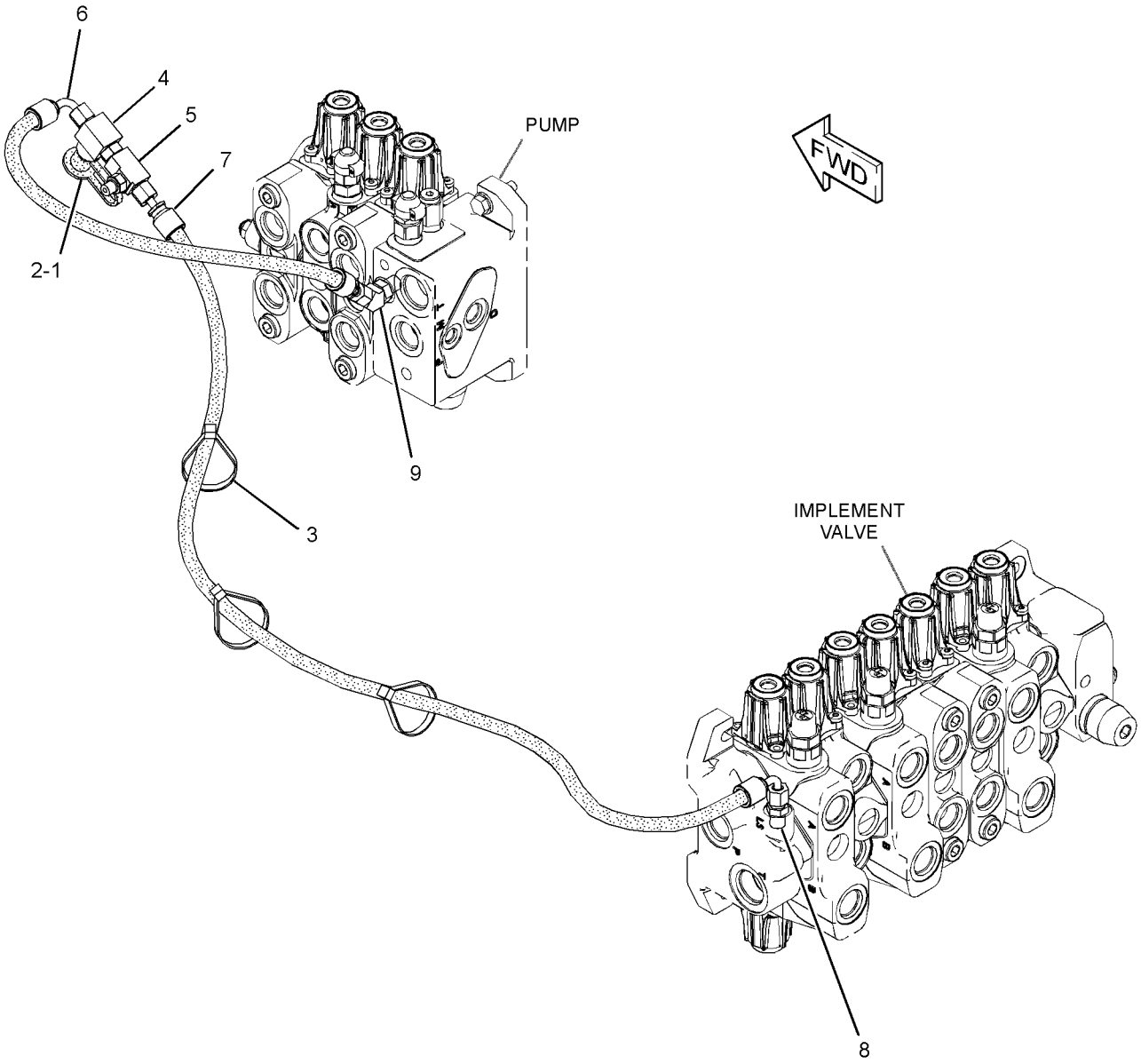

GRAPHIC #1 **<END>** g02783505

HYDRAULIC SYSTEM

337-9785 LINES GP-PILOT—SUPPLY

S/N: LTG1-UP

PART OF 373-4246, 373-4248 VALVE AR-BANK 2, 373-4256 VALVE AR-BANK 3 AN ATTACHMENT

SMCS-5057, 5059 **i04580730**

NOTE	REF NO	GRAPHIC REF	PART NUMBER	QTY	PART NAME 1 2 3 4 5 6 (PRODUCT LEVEL)	SEE PAGE
	1	1	**6V-0852**	1	CAP-DUST	
	2	1	**7C-0754**	1	TEE	
	3	1	**133-5813**	6	BAND-MARKER (GRAY, P)	
	4	1	**238-1842**	1	ELBOW AS	
		1	**9X-6581**	1	NUT-O-RING SEAL (1-14-THD)	
I	5	1	**358-7570**	2	HOSE AS	
I	6	1	**361-9947**	1	HOSE AS	
I	7	1	**363-5882**	1	HOSE AS	
I	8	1	**363-5887**	2	HOSE AS	
I	9	1	**365-2869**	1	HOSE AS	
	10	1	*385-5775*	1	CONNECTOR AS	
		1	**2M-9780**	1	SEAL-O-RING	
		1	**131-2171**	1	CONNECTOR	
	11	1	*148-8325*	9	CONNECTOR AS	
					(EACH INCLUDES)	
		1	**3J-1907**	1	SEAL-O-RING	
		1	**4J-5477**	1	SEAL-O-RING	
		1	**6V-8641**	1	CONNECTOR	
	12	1	*148-8338*	1	CONNECTOR AS	
		1	**3J-1907**	1	SEAL-O-RING	
		1	**6V-8397**	1	SEAL-O-RING	
		1	**8T-0075**	1	CONNECTOR	
	13	1	*148-8342*	1	CONNECTOR AS	
		1	**3K-0360**	1	SEAL-O-RING	
		1	**6V-8632**	1	CONNECTOR	
		1	**7J-9108**	1	SEAL-O-RING	
	14	1	*148-8353*	1	ELBOW AS	
		1	**3J-1907**	1	SEAL-O-RING	
		1	**6V-8397**	1	SEAL-O-RING	
		1	**6V-9001**	1	ELBOW	
	15	1	*148-8368*	1	ELBOW AS	
		1	**3J-1907**	1	SEAL-O-RING	
		1	**4J-5477**	1	SEAL-O-RING	
		1	**6V-8627**	1	ELBOW	
	16	1	*150-5968*	1	TEE AS	
		1	**4J-5477**	2	SEAL-O-RING	
		1	**6V-9835**	1	TEE-SWIVEL	
	17	1	*164-5567*	1	COUPLER AS-QUICK DISCONNECT (MALE)	
		1	**6V-3965**	1	FITTING (QUICK DISCONNECT)	
		1	**214-7568**	1	SEAL-O-RING	
	18	1	**359-7325**	4	CLAMP-HOSE	
	19	1	**3E-4321**	1	CLIP	
	20	1	**6V-9828**	1	CAP AS	
M	21	1	**8T-4200**	1	BOLT (M8X1.25X16-MM)	
	22	1	**8T-4224**	1	WASHER-HARD (8.8X16X2-MM THK)	
E	23	1	**5P-0743**		HOSE (47-CM)	
E	23A	1	**5P-0743**		HOSE (143-CM)	
	24	1	**205-7198**	1	TEE AS	
		1	**3J-1907**	1	SEAL-O-RING	
		1	**4J-5477**	2	SEAL-O-RING	

E-ORDER BY THE CENTIMETER
I-REFER TO HYDRAULIC INFORMATION SYSTEM
M-METRIC PART

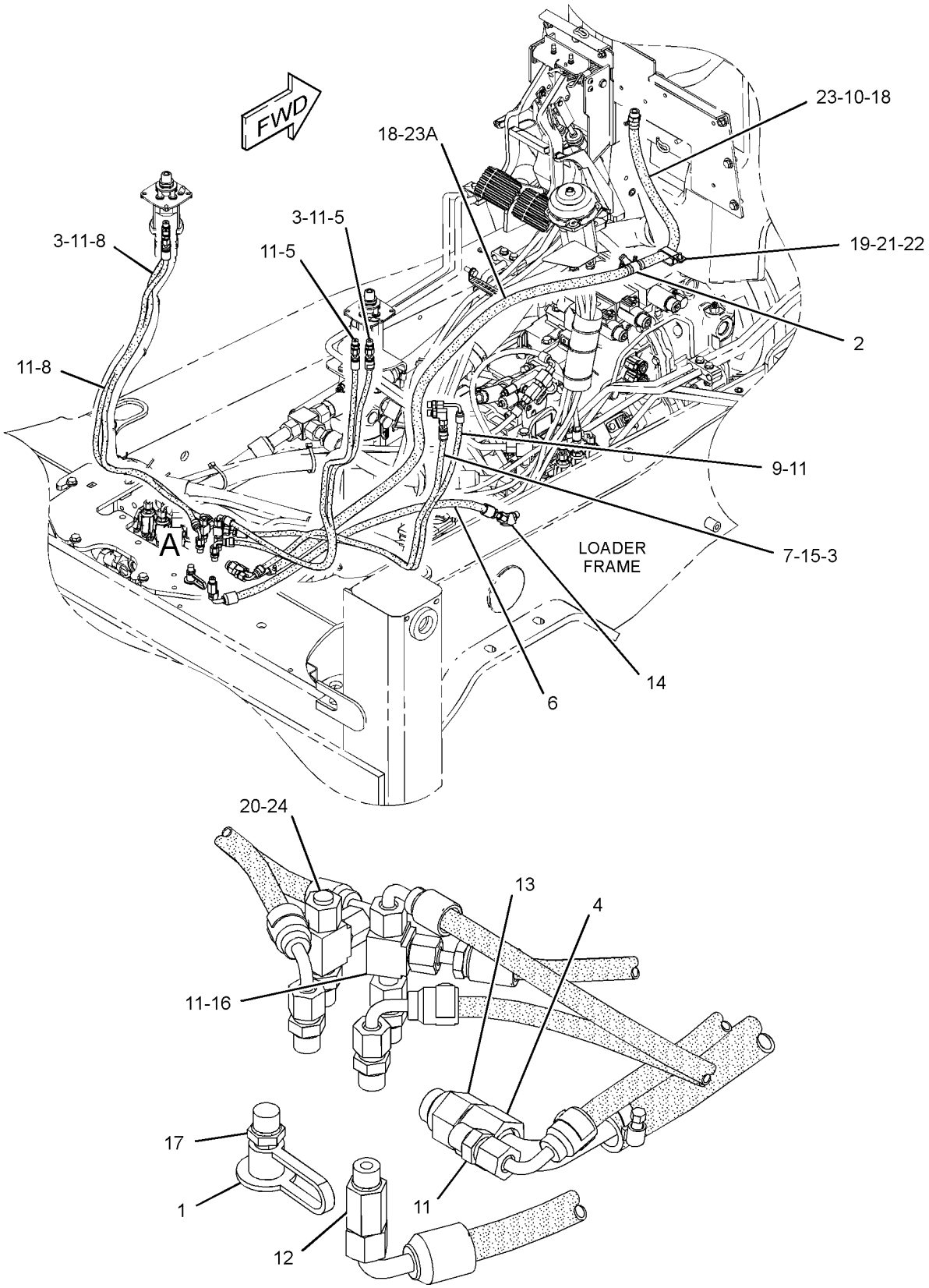

GRAPHIC #1

<END>

g02806940

HYDRAULIC SYSTEM

337-9786 LINES GP-PILOT—BACKHOE

S/N: LTG1-UP

PART OF 373-4246, 373-4248 VALVE AR-BANK 2, 373-4256 VALVE AR-BANK 3 AN ATTACHMENT

SMCS-5057, 5059 **i04580738**

NOTE	REF NO	GRAPHIC REF	PART NUMBER	QTY	PART NAME 1 2 3 4 5 6 (PRODUCT LEVEL)	SEE PAGE
	1	2	**4I-9521**	2	BAND-MARKER (RED, L1)	
	2	2	**4I-9522**	2	BAND-MARKER (YELLOW, L2)	
	3	2	**4I-9523**	2	BAND-MARKER (BLUE, L3)	
	4	2	**4I-9524**	2	BAND-MARKER (BROWN, L4)	
	5	2	**4I-9525**	2	BAND-MARKER (ORANGE, R1)	
	6	2	**4I-9526**	2	BAND-MARKER (WHITE, R2)	
	7	2	**4I-9527**	2	BAND-MARKER (GREEN, R3)	
	8	2	**4I-9528**	2	BAND-MARKER (PURPLE, R4)	
	9	2	**9X-6772**	10	STRAP-CABLE	
	10	2	*164-9640*	1	CONNECTOR AS	
		2	**3J-1907**	1	SEAL-O-RING	
		2	**4J-5477**	1	SEAL-O-RING	
		2	**145-2237**	1	CONNECTOR	
	11	2	*241-6215*	2	ELBOW AS	
					(EACH INCLUDES)	
		2	**3J-1907**	1	SEAL-O-RING	
		2	**6V-8076**	1	ELBOW	
Y	12	2	**300-4491**	1	MANIFOLD GP-CONTROL (PATTERN CHANGE)	349
	13	2	*268-1559*	6	ADAPTER AS	
					(EACH INCLUDES)	
		2	**3J-1907**	1	SEAL-O-RING	
		2	**4J-5477**	1	SEAL-O-RING	
		2	**209-0939**	1	ADAPTER	
	14	1	**311-1741**	1	FILM-INSTRUCTION (OPERATOR CONTROLS, READ OMM)	
I	15	2	**358-7573**	1	HOSE AS	
	16	2	**359-7227**	2	VALVE GP-PILOT	
I	17	2	**361-9942**	1	HOSE AS	
I	18	2	**361-9944**	2	HOSE AS	
I	19	2	**361-9946**	1	HOSE AS	
I	20	2	**363-5885**	1	HOSE AS	
I	21	2	**363-5886**	2	HOSE AS	
I	22	2	**363-5887**	1	HOSE AS	
I	23	2	**363-5888**	1	HOSE AS	
I	24	2	**363-5890**	1	HOSE AS	
I	25	2	**371-8501**	1	HOSE AS	
	26	2	*148-8325*	11	CONNECTOR AS	
					(EACH INCLUDES)	
		2	**3J-1907**	1	SEAL-O-RING	
		2	**4J-5477**	1	SEAL-O-RING	
		2	**6V-8641**	1	CONNECTOR	
	27	2	*148-8368*	5	ELBOW AS	
					(EACH INCLUDES)	
		2	**3J-1907**	1	SEAL-O-RING	
		2	**4J-5477**	1	SEAL-O-RING	
		2	**6V-8627**	1	ELBOW	
	28	2	*150-3033*	1	ELBOW AS	
		2	**3J-1907**	1	SEAL-O-RING	
		2	**4J-5477**	1	SEAL-O-RING	
		2	**8T-0164**	1	ELBOW	
	29	2	**156-6175**	1	CLIP	
	30	2	**8T-4224**	2	WASHER-HARD (8.8X16X2-MM THK)	
M	31	2	**8T-6869**	2	BOLT (M8X1.25X60-MM)	
	32	2	**9X-2038**	1	WASHER (7X19X2-MM THK)	
M	33	2	**9X-2043**	1	SCREW-TRUSS HEAD (M6X1X14-MM)	

337-9786 **LINES GP-PILOT** *(contd.)* **i04580738**

NOTE	REF NO	GRAPHIC REF	PART NUMBER	QTY	PART NAME 1 2 3 4 5 6 (PRODUCT LEVEL)	SEE PAGE
D	34	2	**160-2248**		SLEEVE-ABRASION (28.1-IN)	
D	34A	2	**160-2248**		SLEEVE-ABRASION (14.4-IN)	

D-ORDER BY THE METER
I-REFER TO HYDRAULIC INFORMATION SYSTEM
M-METRIC PART
Y-SEPARATE ILLUSTRATION

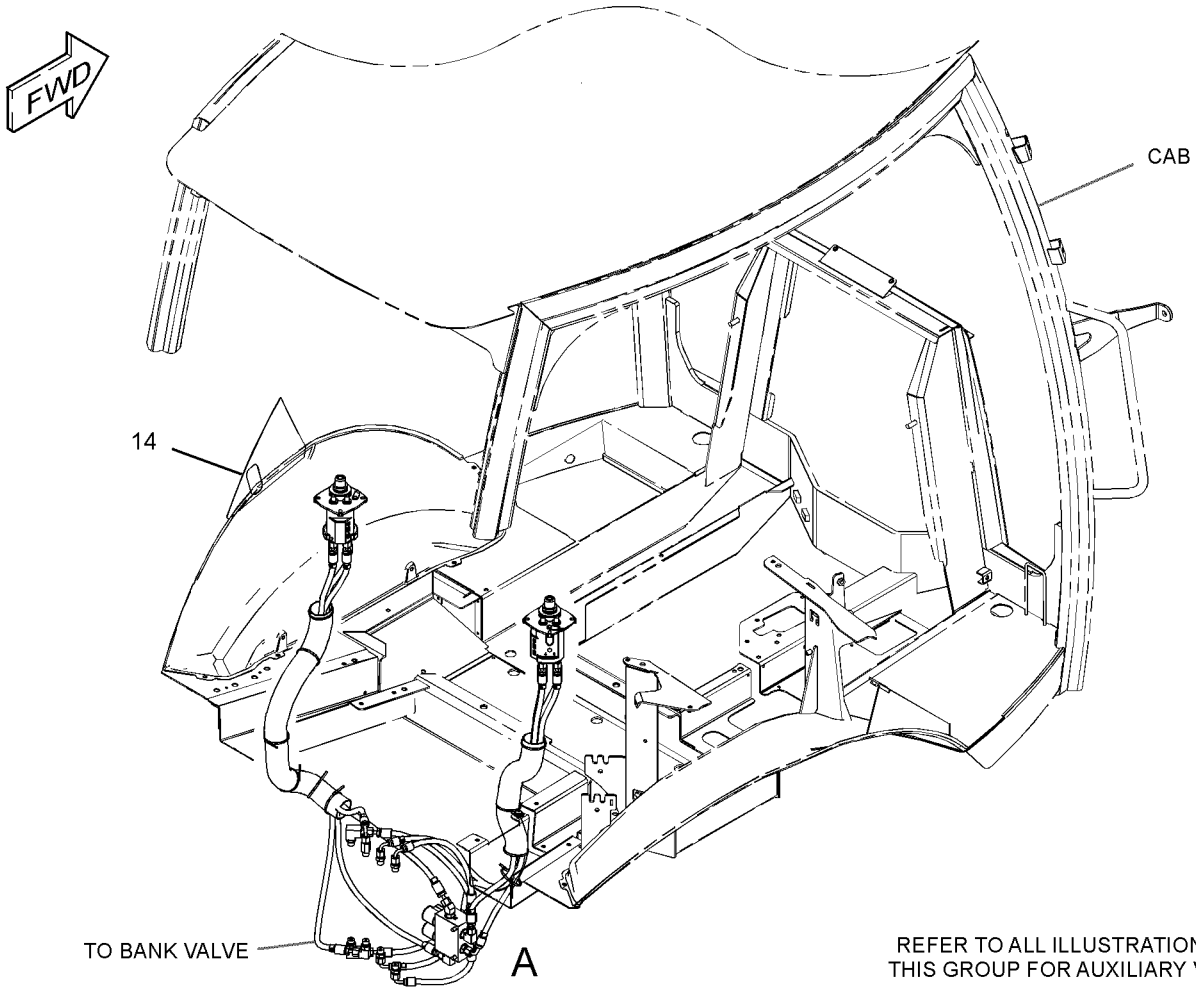

REFER TO ALL ILLUSTRATIONS OF THIS GROUP FOR AUXILIARY VIEWS

GRAPHIC #1

g02789606

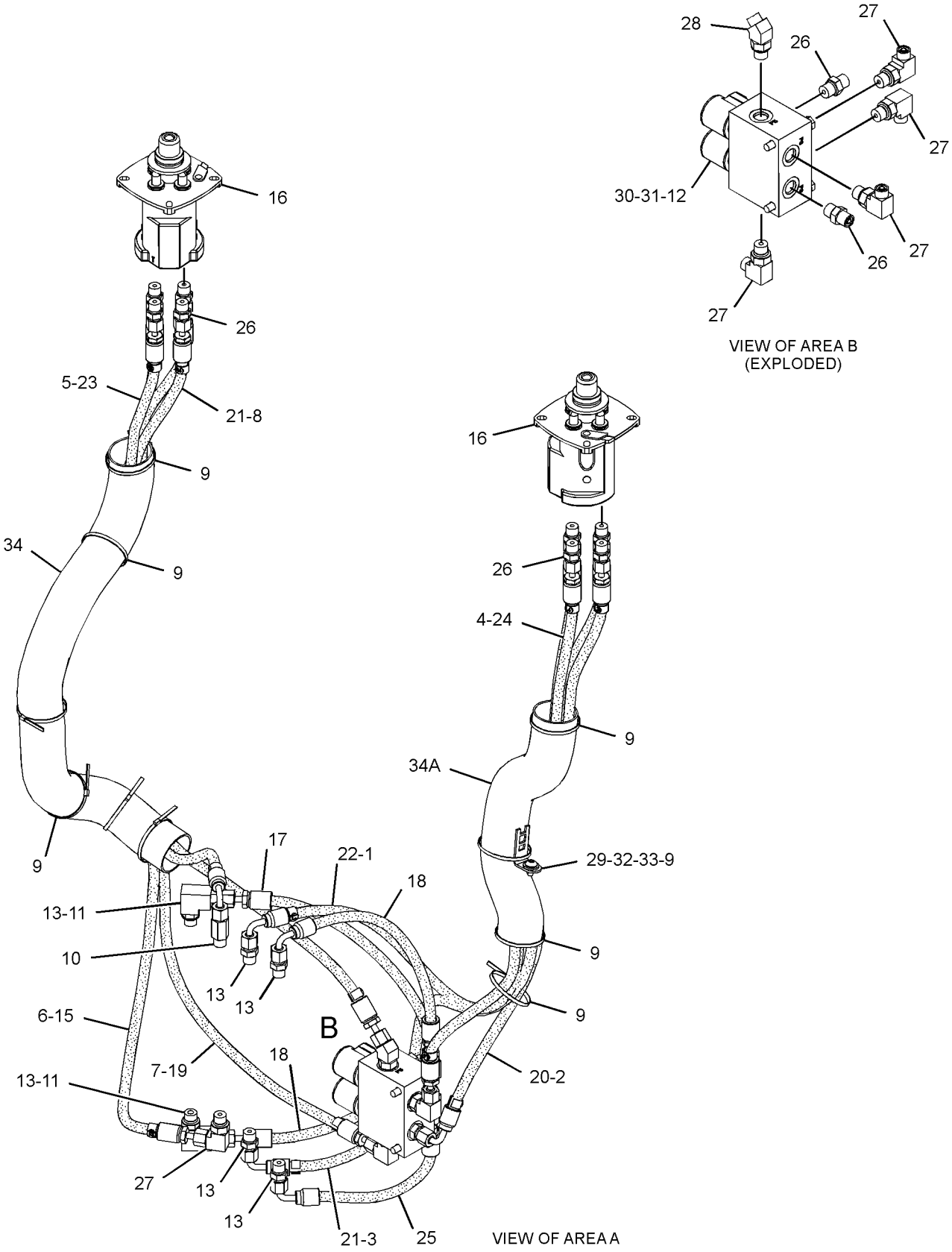

GRAPHIC #2 **<END>** g02789611

HYDRAULIC SYSTEM

337-9787 LINES GP-PILOT–STABILIZER

S/N: LTG1-UP

PART OF 373-4246, 373-4248 VALVE AR-BANK 2, 373-4256 VALVE AR-BANK 3

AN ATTACHMENT

SMCS-5057, 5059 **i04580739**

NOTE	REF NO	GRAPHIC REF	PART NUMBER	QTY	PART NAME 1 2 3 4 5 6 (PRODUCT LEVEL)	SEE PAGE
	1	1	**9X-6772**	3	STRAP-CABLE	
	2	1	**195-0260**	2	MARKER (BEIGE, L1)	
	3	1	**195-0261**	2	BAND-MARKER (BLACK, L2)	
	4	1	**195-0262**	2	BAND-MARKER (GREEN)	
	5	1	**195-0263**	2	BAND-MARKER (PINK, R2)	
	6	1	**206-1851**	1	SEAL	
I	7	1	**363-5883**	1	HOSE AS	
I	8	1	**363-5886**	1	HOSE AS	
I	9	1	**363-5888**	1	HOSE AS	
I	10	1	**363-5889**	1	HOSE AS	
	11	1	*148-8325*	6	CONNECTOR AS	
					(EACH INCLUDES)	
		1	**3J-1907**	1	SEAL-O-RING	
		1	**4J-5477**	1	SEAL-O-RING	
		1	**6V-8641**	1	CONNECTOR	
	12	1	*148-8368*	2	ELBOW AS	
					(EACH INCLUDES)	
		1	**3J-1907**	1	SEAL-O-RING	
		1	**4J-5477**	1	SEAL-O-RING	
		1	**6V-8627**	1	ELBOW	
G	13	1	**160-2248**		SLEEVE-ABRASION (13.8-IN)	

G-ORDER BY THE INCH
I-REFER TO HYDRAULIC INFORMATION SYSTEM

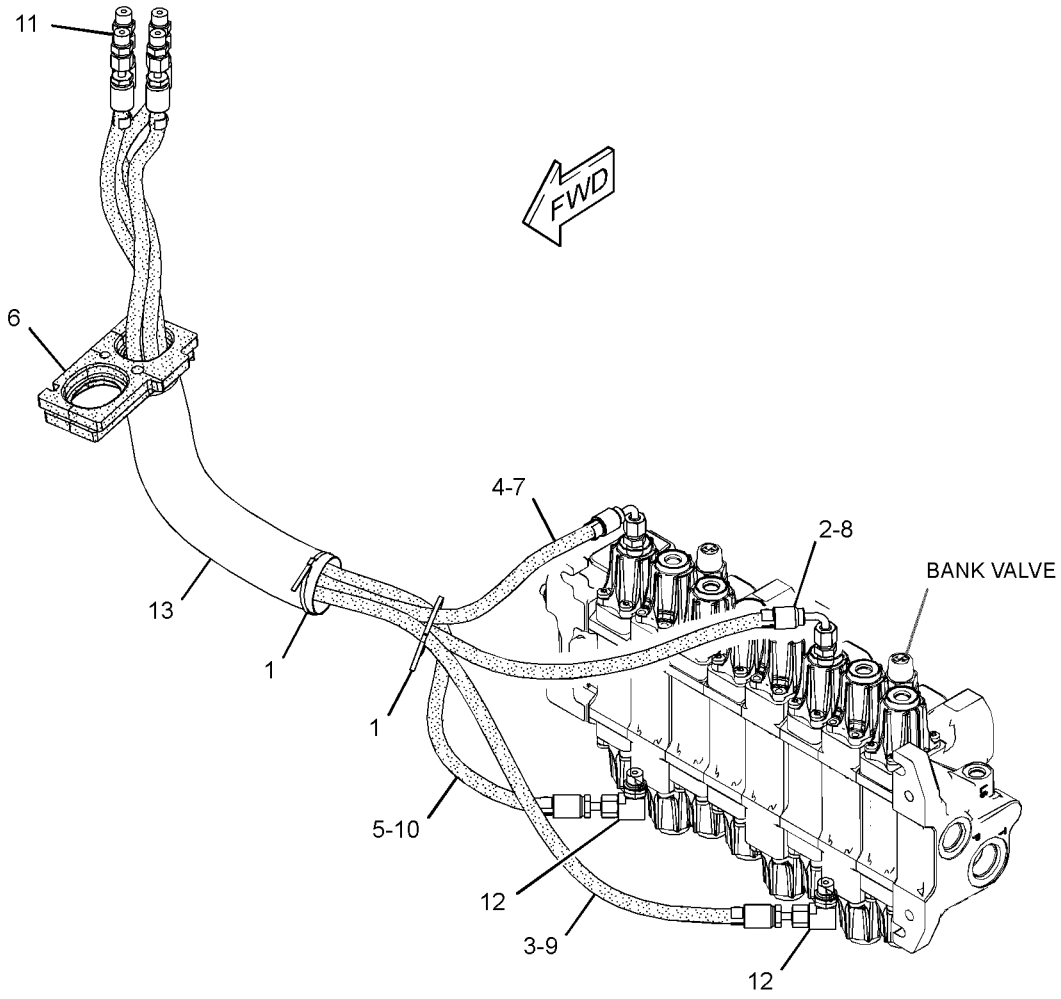

GRAPHIC #1 **<END>** g02789444

HYDRAULIC SYSTEM

337-9827 LINES GP-PILOT–AUXILIARY

S/N: LTG1-UP
PART OF 373-4256 VALVE AR-BANK 3
AN ATTACHMENT

SMCS-5057, 5059 **i04554998**

NOTE	REF NO	GRAPHIC REF	PART NUMBER	QTY	PART NAME 1 2 3 4 5 6 (PRODUCT LEVEL)	SEE PAGE
I	1	1	**361-9945**	4	HOSE AS	
	2	1	*148-8325*	8	CONNECTOR AS	
					(EACH INCLUDES)	
		1	**3J-1907**	1	SEAL-O-RING	
		1	**4J-5477**	1	SEAL-O-RING	
		1	**6V-8641**	1	CONNECTOR	

I-REFER TO HYDRAULIC INFORMATION SYSTEM

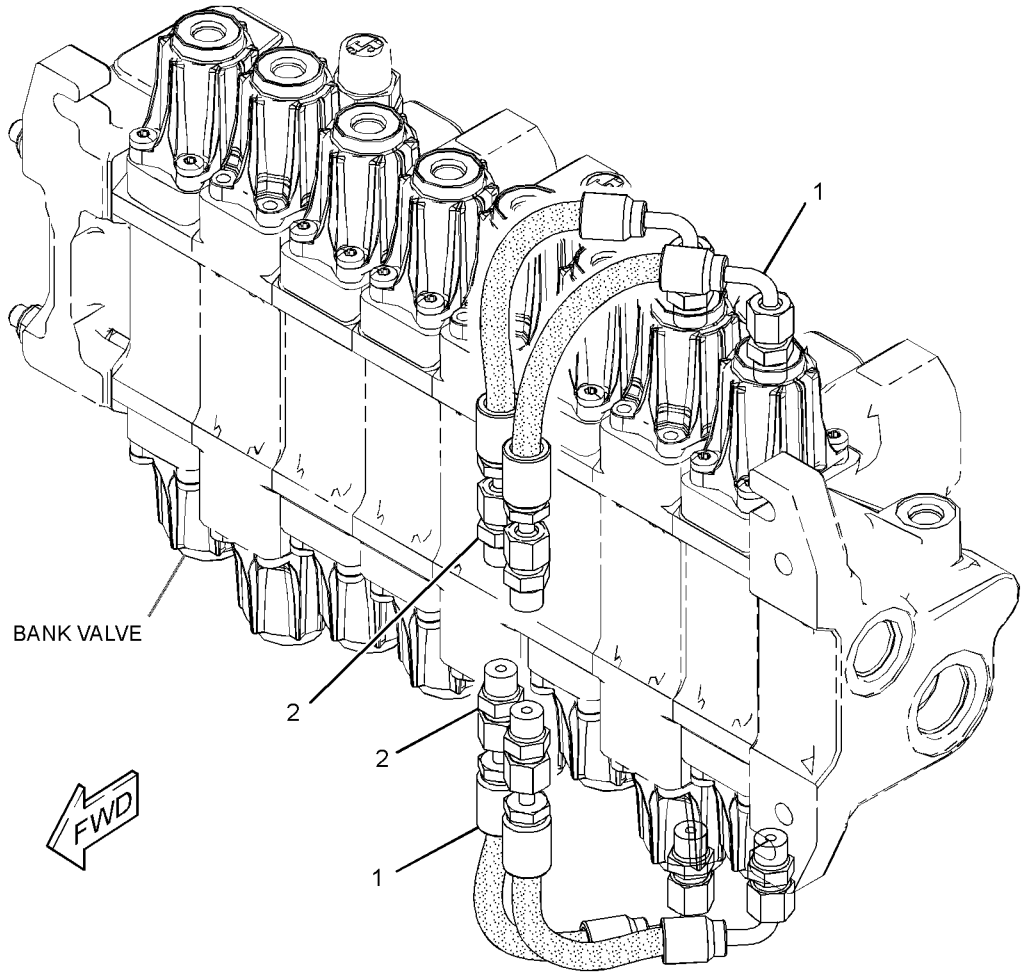

GRAPHIC #1 **<END>** g02791913

HYDRAULIC SYSTEM

337-9829 LINES GP-PILOT–AUXILIARY

S/N: LTG1-UP
PART OF 373-4248 VALVE AR-BANK 2
AN ATTACHMENT

SMCS-5057, 5059 **i04611674**

NOTE	REF NO	GRAPHIC REF	PART NUMBER	QTY	PART NAME 1 2 3 4 5 6 (PRODUCT LEVEL)	SEE PAGE
I	1	1	**361-9945**	2	HOSE AS	
	2	1	*148-8325*	4	CONNECTOR AS	
					(EACH INCLUDES)	
		1	**3J-1907**	1	SEAL-O-RING	
		1	**4J-5477**	1	SEAL-O-RING	
		1	**6V-8641**	1	CONNECTOR	

I-REFER TO HYDRAULIC INFORMATION SYSTEM

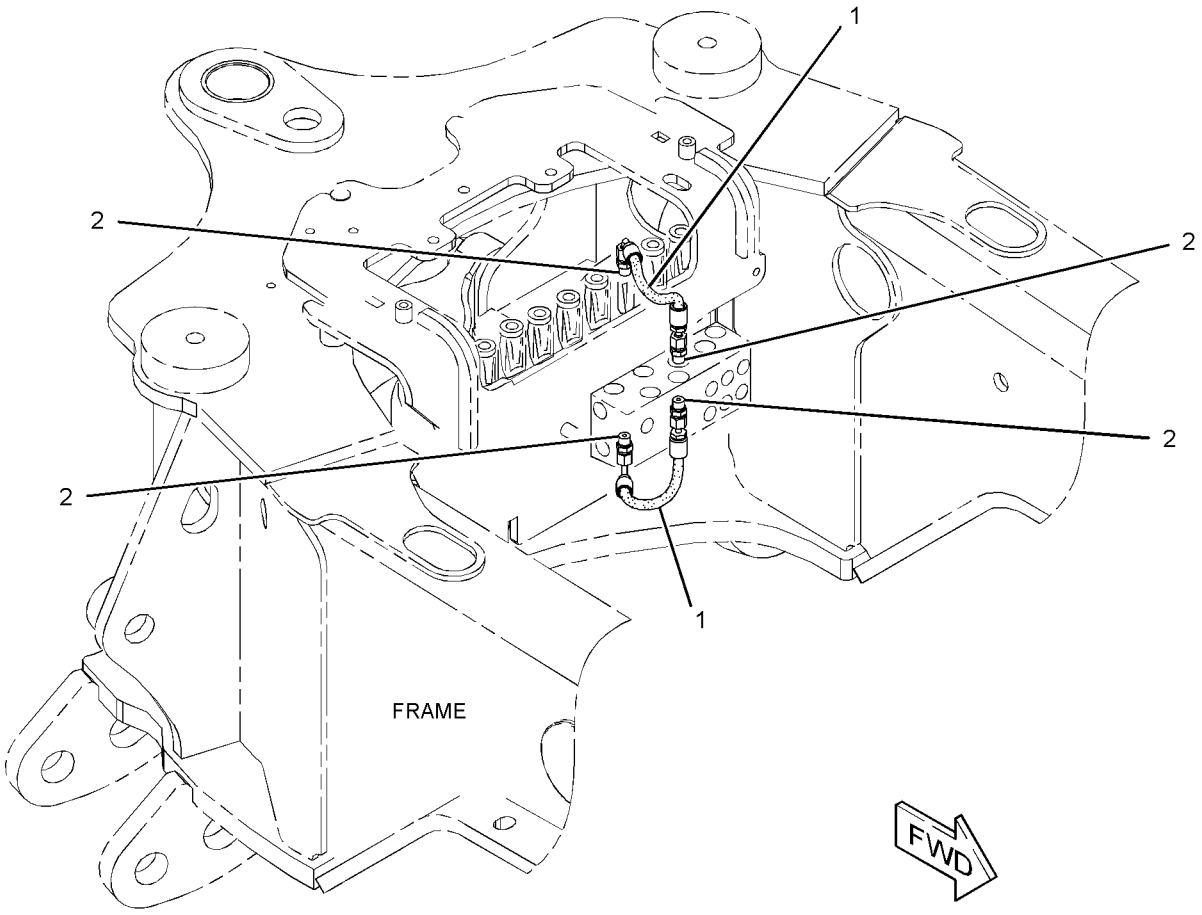

GRAPHIC #1 **<END>** g02819658

HYDRAULIC SYSTEM

337-9774 LINES GP-PUMP

S/N: LTG1-UP

PART OF 340-1715 HYDRAULIC AR

SMCS-5057 **i04548423**

NOTE	REF NO	GRAPHIC REF	PART NUMBER	QTY	PART NAME 1 2 3 4 5 6 (PRODUCT LEVEL)	SEE PAGE
	1	1	**335-9214**	1	CLAMP-BAND	
I	2	1	**363-0443**	1	HOSE AS	
I	3	1	**363-1316**	1	HOSE AS	
I	4	1	**363-2679**	1	HOSE AS	
	5	1	**370-3970**	1	TUBE AS	
	6	1	**370-4010**	1	HOSE	
	7	1	**375-2087**	1	HOSE AS	
	8	1	*148-8335*	3	CONNECTOR AS	
					(EACH INCLUDES)	
		1	**5K-9090**	1	SEAL-O-RING	
		1	**6V-8635**	1	CONNECTOR	
		1	**7M-8485**	1	SEAL-O-RING	
	9	1	*148-8362*	2	ELBOW AS	
					(EACH INCLUDES)	
		1	**3D-2824**	1	SEAL-O-RING	
		1	**5K-9090**	1	SEAL-O-RING	
		1	**8T-6684**	1	ELBOW	
	10	1	*148-8429*	2	TEE AS	
					(EACH INCLUDES)	
		1	**5K-9090**	2	SEAL-O-RING	
		1	**6V-9840**	1	TEE-SWIVEL	
	11	1	**1P-4584**	2	FLANGE-HALF	
	12	1	**5P-4868**	1	CLAMP-HOSE	
	13	1	**6J-2680**	1	SEAL-O-RING	
M	14	1	**8T-4183**	4	BOLT (M12X1.75X40-MM)	
	15	1	**8T-4223**	4	WASHER-HARD (13.5X25.5X3-MM THK)	

I-REFER TO HYDRAULIC INFORMATION SYSTEM
M-METRIC PART

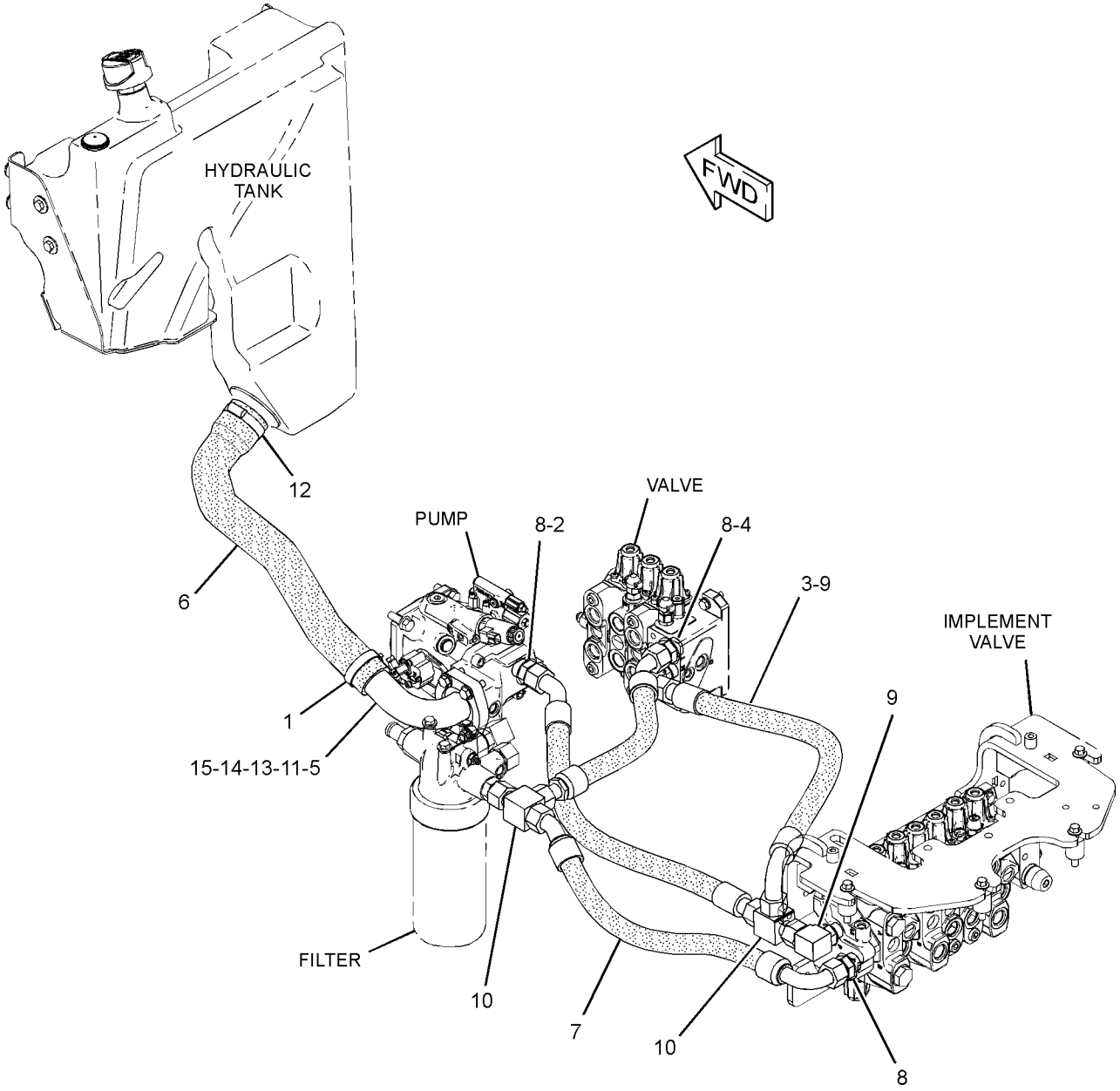

GRAPHIC #1 **<END>** g02783640

HYDRAULIC SYSTEM

337-9777 LINES GP-RETURN

S/N: LTG1-UP

PART OF 340-1715 HYDRAULIC AR

SMCS-5057 **i04548424**

NOTE	REF NO	GRAPHIC REF	PART NUMBER	QTY	PART NAME 1 2 3 4 5 6 (PRODUCT LEVEL)	SEE PAGE
	1	1	**130-9984**	1	CLIP	
	2	1	**323-3308**	5	CAP	
	3	1	*357-4621*	1	CONNECTOR AS	
		1	**033-6783**	1	FITTING	
		1	**238-5082**	1	SEAL-O-RING	
	4	1	**363-8466**	1	TUBE AS	
I	5	1	**371-1670**	1	HOSE AS	
	6	1	**380-5076**	1	DIFFUSER	
		1	**7M-8485**	1	SEAL-O-RING	
	7	1	**2B-0941**	1	SPACER (10.5X19X19-MM THK)	
	8	1	**2S-3440**	2	CLAMP-HOSE	
	9	1	**3E-7445**	3	CLAMP-HOSE	
	10	1	**5P-7854**	1	CLIP	
	11	1	**8T-4121**	4	WASHER-HARD (11X21X2.5-MM THK)	
M	12	1	**8T-4186**	1	BOLT (M10X1.5X40-MM)	
M	13	1	**8T-4196**	2	BOLT (M10X1.5X35-MM)	
M	14	1	**8T-6466**	1	BOLT (M10X1.5X60-MM)	
	15	1	**8T-7529**	1	CLIP	
	16	1	**205-9920**	1	STRAP-CABLE	
E	17	1	**136-1955**		HOSE (98-CM)	
E	18	1	**146-7453**		HOSE (108-CM)	

E-ORDER BY THE CENTIMETER
I-REFER TO HYDRAULIC INFORMATION SYSTEM
M-METRIC PART

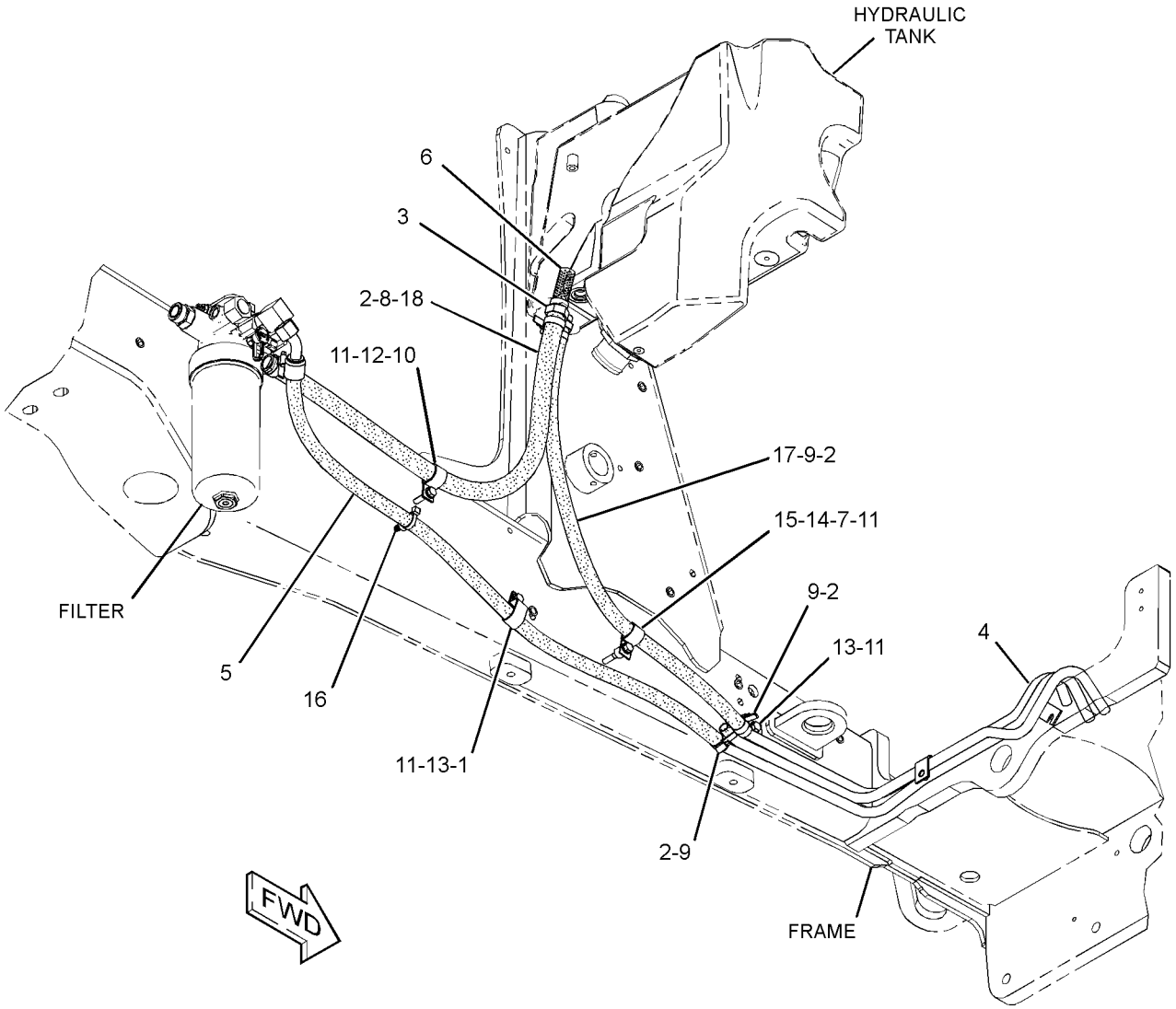

GRAPHIC #1 **<END>** g02784184

HYDRAULIC SYSTEM

337-9793 LINES GP-RIDE CONTROL

S/N: LTG1-UP

PART OF 340-1747 CONTROL AR-RIDE

AN ATTACHMENT

SMCS-5057, 5077, 5264 **i04555851**

NOTE	REF NO	GRAPHIC REF	PART NUMBER	QTY	PART NAME 1 2 3 4 5 6 (PRODUCT LEVEL)	SEE PAGE
Y	1	1	**245-8780**	1	MANIFOLD GP-RIDE CONTROL	350
	2	1	**276-2334**	1	FILM-WARNING (HIGH PRESS CYLINDER, READ OMM)	
I	3	1	**361-9950**	1	HOSE AS	
I	4	1	**361-9951**	1	HOSE AS	
I	5	1	**361-9952**	1	HOSE AS	
I	6	1	**363-5880**	1	HOSE AS	
Y	7	1	*382-8033*	1	ACCUMULATOR GP-RIDE CONTROL (CHARGED)	274
	8	1	**131-8201**	2	CLIP (SLOT)	
	9	1	**131-8202**	2	CLIP (TAB)	
	10	1	*148-8336*	1	CONNECTOR AS	
		1	**3J-1907**	1	SEAL-O-RING	
		1	**6V-8397**	1	SEAL-O-RING	
		1	**6V-8636**	1	CONNECTOR	
	11	1	*148-8340*	1	CONNECTOR AS	
		1	**3K-0360**	1	SEAL-O-RING	
		1	**6V-8398**	1	SEAL-O-RING	
		1	**6V-8639**	1	CONNECTOR	
	12	1	*148-8345*	1	CONNECTOR AS	
		1	**2M-9780**	1	SEAL-O-RING	
		1	**6V-8398**	1	SEAL-O-RING	
		1	**6V-8638**	1	CONNECTOR	
	13	1	*148-8363*	1	ELBOW AS	
		1	**3K-0360**	1	SEAL-O-RING	
		1	**6V-8397**	1	SEAL-O-RING	
		1	**6V-9876**	1	ELBOW	
	14	1	*148-8370*	1	ELBOW AS	
		1	**6V-8398**	1	SEAL-O-RING	
		1	**6V-9851**	1	ELBOW	
	15	1	*148-8372*	1	ELBOW AS	
		1	**2M-9780**	1	SEAL-O-RING	
		1	**6V-8398**	1	SEAL-O-RING	
		1	**6V-8721**	1	ELBOW	
	16	1	**8T-4121**	1	WASHER-HARD (11X21X2.5-MM THK)	
M	17	1	**8T-4177**	2	BOLT (M8X1.25X90-MM)	
M	18	1	**8T-4196**	1	BOLT (M10X1.5X35-MM)	
	19	1	**8T-4224**	2	WASHER-HARD (8.8X16X2-MM THK)	

I-REFER TO HYDRAULIC INFORMATION SYSTEM
M-METRIC PART
Y-SEPARATE ILLUSTRATION

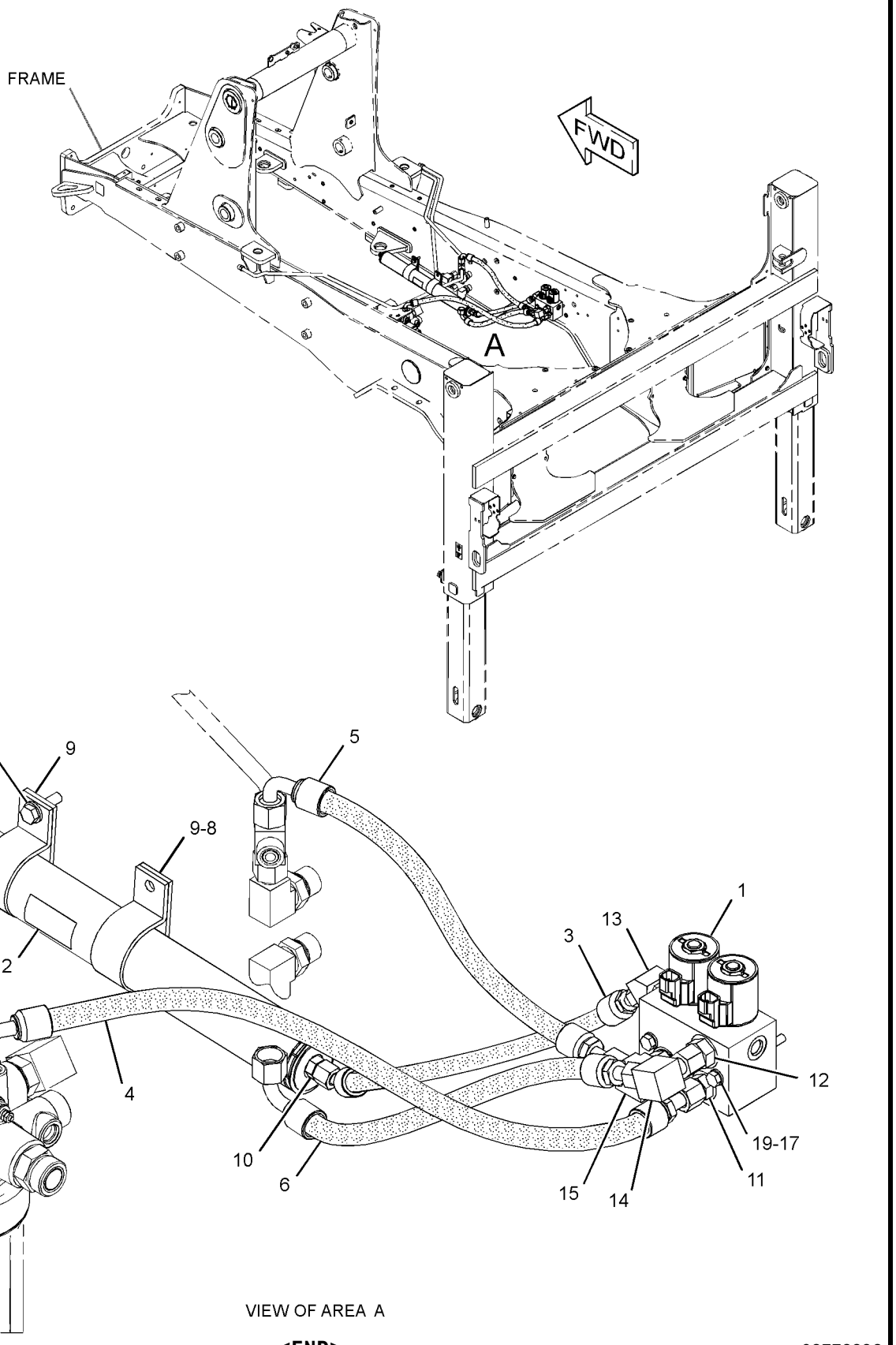

VIEW OF AREA A

GRAPHIC #1 **<END>** g02778896

HYDRAULIC SYSTEM

337-9820 LINES GP-STABILIZER

S/N: LTG1-UP

PART OF 340-1690 CHASSIS AR

SMCS-5057, 5468 **i04547493**

NOTE	REF NO	GRAPHIC REF	PART NUMBER	QTY	PART NAME 1 2 3 4 5 6 (PRODUCT LEVEL)	SEE PAGE
	1	1	**201-3621**	1	TUBE AS	
	2	1	**201-3622**	1	TUBE AS	
	3	1	**201-3623**	1	TUBE AS	
	4	1	**201-3624**	1	TUBE AS	
	5	1	*205-2357*	1	CONNECTOR AS	
		1	**3D-2824**	1	SEAL-O-RING	
		1	**6V-8398**	1	SEAL-O-RING	
		1	**8T-7968**	1	CONNECTOR	
	6	1	*309-5127*	1	ELBOW AS	
		1	**6V-8397**	1	SEAL-O-RING	
		1	**152-3411**	1	ELBOW	
	7	1	**359-7213**	2	VALVE GP-STABILIZER CONTROL	
I	8	1	**362-6099**	4	HOSE AS	
I	9	1	**362-6101**	4	HOSE AS	
	10	1	**365-2964**	1	TUBE AS	
	11	1	**365-2965**	1	TUBE AS	
	12	1	**365-2966**	1	TUBE AS	
	13	1	**365-2967**	1	TUBE AS	
	14	1	*371-7194*	3	CONNECTOR AS	
					(EACH INCLUDES)	
		1	**3D-2824**	1	SEAL-O-RING	
		1	**6V-8397**	1	SEAL-O-RING	
		1	**371-7193**	1	CONNECTOR	
	15	1	*148-8318*	4	CONNECTOR AS	
					(EACH INCLUDES)	
		1	**3K-0360**	1	SEAL-O-RING	
		1	**6V-8397**	1	SEAL-O-RING	
		1	**6V-8634**	1	CONNECTOR	
	16	1	*148-8367*	1	ELBOW AS	
		1	**6V-8397**	1	SEAL-O-RING	
		1	**6V-9850**	1	ELBOW	
	17	1	*148-8372*	2	ELBOW AS	
					(EACH INCLUDES)	
		1	**2M-9780**	1	SEAL-O-RING	
		1	**6V-8398**	1	SEAL-O-RING	
		1	**6V-8721**	1	ELBOW	
	18	1	*148-8374*	4	ELBOW AS	
					(EACH INCLUDES)	
		1	**3K-0360**	1	SEAL-O-RING	
		1	**6V-8397**	1	SEAL-O-RING	
		1	**6V-8723**	1	ELBOW	
	19	1	**6V-8397**	8	SEAL-O-RING	
	20	1	**6V-9168**	4	NUT (11/16-16-THD)	
	21	1	**8T-1885**	4	CLIP (SLOT)	
	22	1	**8T-1886**	4	CLIP (TAB)	
	23	1	**8T-4121**	4	WASHER-HARD (11X21X2.5-MM THK)	
M	24	1	**8T-4137**	4	BOLT (M10X1.5X20-MM)	
	25	1	**8T-4224**	4	WASHER-HARD (8.8X16X2-MM THK)	
M	26	1	**8T-6869**	4	BOLT (M8X1.25X60-MM)	

I-REFER TO HYDRAULIC INFORMATION SYSTEM
M-METRIC PART

337-9820 **LINES GP-STABILIZER** *(contd.)* **i04547493**

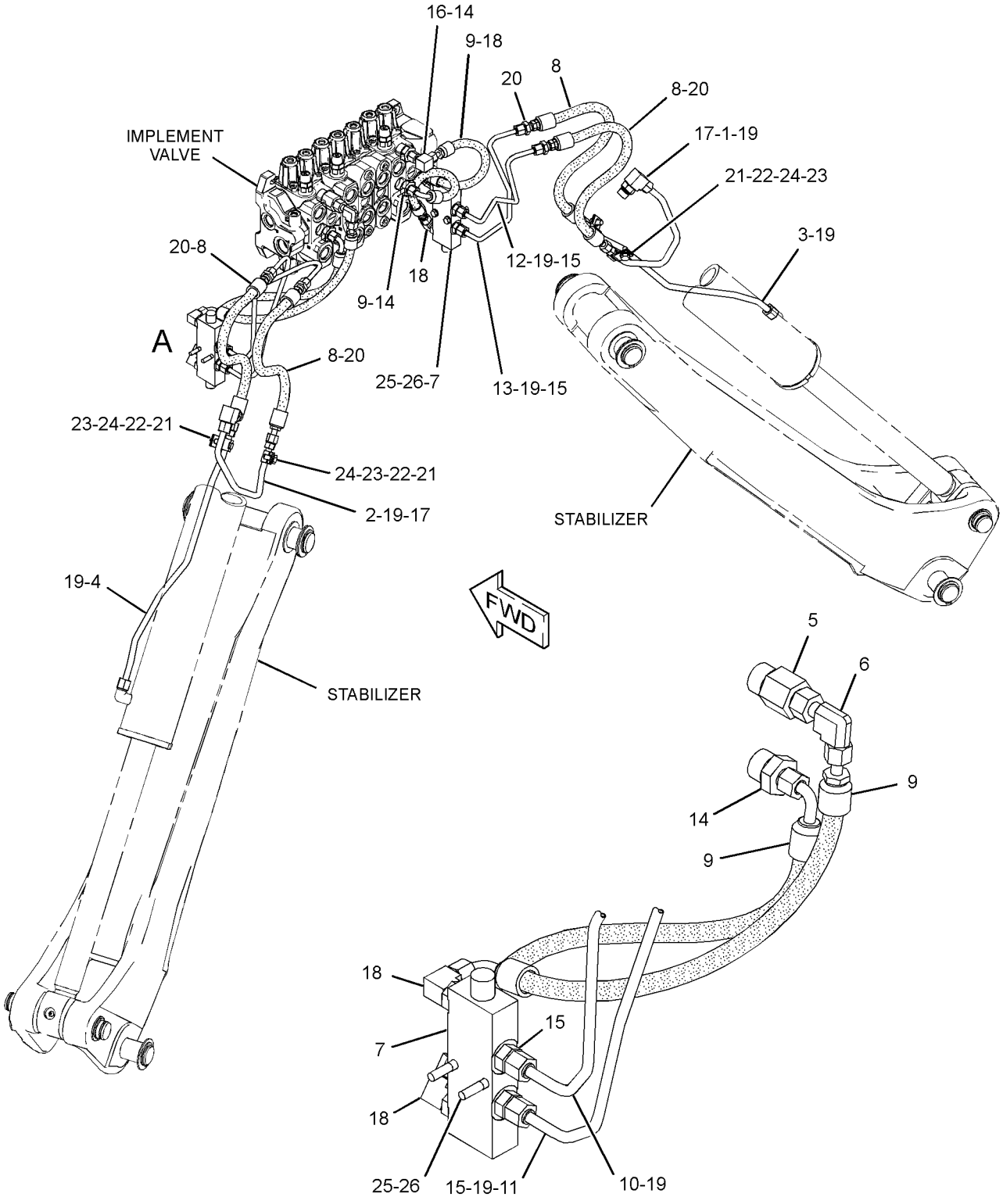

VIEW OF AREA A
(HOSES REMOVED FOR CLARITY)

GRAPHIC #1

<END>

g02784333

HYDRAULIC SYSTEM

367-9723 LINES GP-STICK

S/N: LTG1-UP

PART OF 340-1729 BACKHOE AR-EXTENDABLE STICK, 340-1728 BACKHOE AR-STANDARD STICK

AN ATTACHMENT

SMCS-5057 **i04555813**

NOTE	REF NO	GRAPHIC REF	PART NUMBER	QTY	PART NAME 1 2 3 4 5 6 (PRODUCT LEVEL)	SEE PAGE
	1	1	**5P-3860**	1	CLAMP-HOSE	
	2	1	**7K-1181**	1	STRAP-CABLE	
	3	1	**9R-5948**	1	BLOCK	
I	4	1	**229-5124**	1	HOSE AS	
I	5	1	**278-1170**	1	HOSE AS	
I	6	1	**278-7793**	1	HOSE AS	
I	7	1	**311-2501**	1	HOSE AS	
	8	1	*148-8328*	1	CONNECTOR AS	
		1	**3D-2824**	1	SEAL-O-RING	
		1	**6V-8398**	1	SEAL-O-RING	
		1	**6V-8633**	1	CONNECTOR	
	9	1	*148-8341*	1	CONNECTOR AS	
		1	**3D-2824**	1	SEAL-O-RING	
		1	**6V-8713**	1	CONNECTOR	
		1	**7J-9108**	1	SEAL-O-RING	
	10	1	*153-6232*	1	ELBOW AS	
		1	**3D-2824**	1	SEAL-O-RING	
		1	**7J-9108**	1	SEAL-O-RING	
		1	**8T-0120**	1	ELBOW	
	11	1	**6V-8398**	1	SEAL-O-RING	
	12	1	**7J-9108**	1	SEAL-O-RING	

I-REFER TO HYDRAULIC INFORMATION SYSTEM

367-9723 **LINES GP-STICK** *(contd.)* **i04555813**

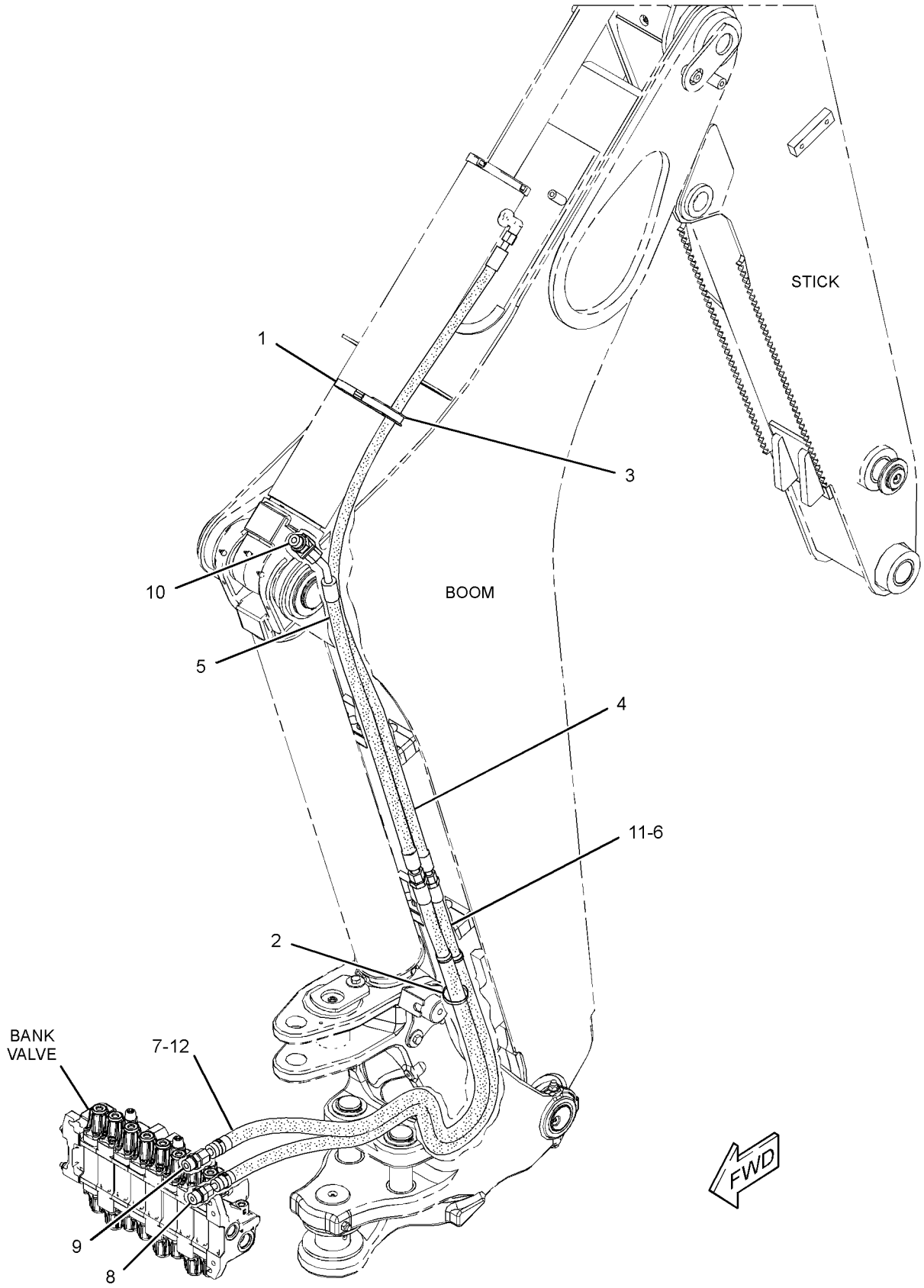

GRAPHIC #1 **<END>** g02778256

HYDRAULIC SYSTEM

337-9795 LINES GP-SWING CYLINDER

S/N: LTG1-UP

PART OF 340-1715 HYDRAULIC AR

SMCS-5057, 5105, 6544 **i04577533**

NOTE	REF NO	GRAPHIC REF	PART NUMBER	QTY	PART NAME 1 2 3 4 5 6 (PRODUCT LEVEL)	SEE PAGE
	1	1	**204-2281**	2	STRAP-CABLE	
	2	1	**206-3685**	1	VALVE GP-CUSHION CROSSOVER RLF (SWING CONTROL)	
		1	**7I-8084**	2	PLUG	
	3	1	**226-5634**	2	CONNECTOR AS	
					(EACH INCLUDES)	
		1	**3J-1907**	1	SEAL-O-RING	
		1	**4J-5477**	1	SEAL-O-RING	
		1	**153-7036**	1	SPOOL	
		1	**226-5633**	1	CONNECTOR	
I	4	1	**362-8279**	2	HOSE AS	
I	5	1	**362-8281**	1	HOSE AS	
I	6	1	**362-8282**	1	HOSE AS	
	7	1	**365-2873**	1	PLATE AS	
I	8	1	**368-9865**	1	HOSE AS	
I	9	1	**368-9866**	1	HOSE AS	
	10	1	*148-8340*	4	CONNECTOR AS	
					(EACH INCLUDES)	
		1	**3K-0360**	1	SEAL-O-RING	
		1	**6V-8398**	1	SEAL-O-RING	
		1	**6V-8639**	1	CONNECTOR	
	11	1	*148-8351*	2	ELBOW AS	
					(EACH INCLUDES)	
		1	**4J-5477**	1	SEAL-O-RING	
		1	**6V-9849**	1	ELBOW	
	12	1	*148-8364*	2	ELBOW AS	
					(EACH INCLUDES)	
		1	**3K-0360**	1	SEAL-O-RING	
		1	**6V-8398**	1	SEAL-O-RING	
		1	**6V-8625**	1	ELBOW	
	13	1	*148-8428*	2	TEE AS	
					(EACH INCLUDES)	
		1	**3K-0360**	1	SEAL-O-RING	
		1	**6V-8398**	2	SEAL-O-RING	
		1	**6V-8782**	1	TEE	
	14	1	*155-7321*	2	ADAPTER AS	
					(EACH INCLUDES)	
		1	**3D-2824**	1	SEAL-O-RING	
		1	**6V-1722**	1	ADAPTER-O-RING	
	15	1	**8M-2773**	1	CLIP	
	16	1	**8T-4121**	3	WASHER-HARD (11X21X2.5-MM THK)	
M	17	1	**8T-4195**	3	BOLT (M10X1.5X30-MM)	
	18	1	**8T-4224**	2	WASHER-HARD (8.8X16X2-MM THK)	
M	19	1	**8T-6869**	2	BOLT (M8X1.25X60-MM)	

I-REFER TO HYDRAULIC INFORMATION SYSTEM
M-METRIC PART

337-9795 **LINES GP-SWING CYLINDER** *(contd.)* **i04577533**

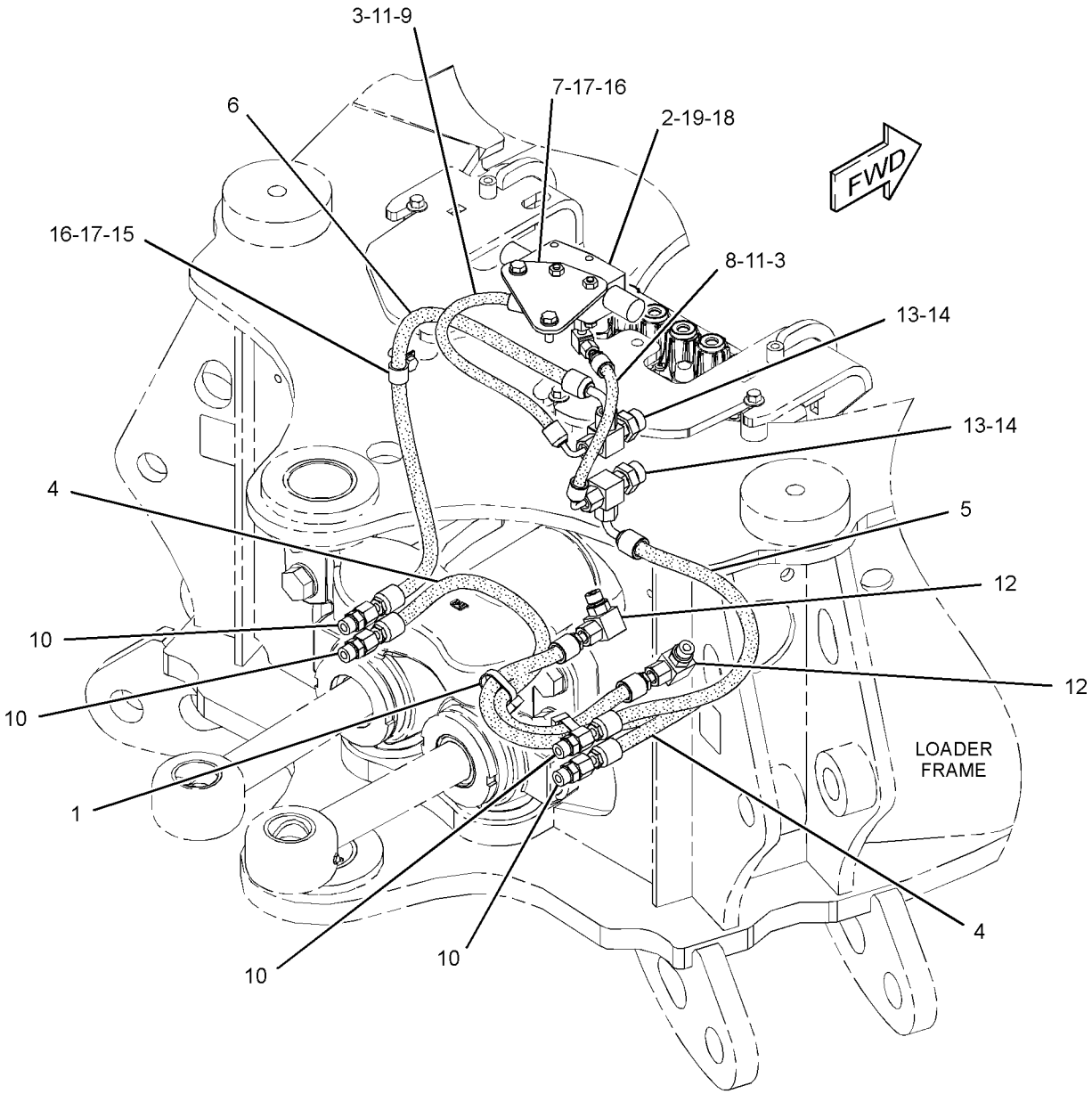

GRAPHIC #1 **<END>** g02807977

300-4491 MANIFOLD GP-CONTROL–PATTERN CHANGE

S/N: LTG1-UP
PART OF 337-9786 LINES GP-PILOT
AN ATTACHMENT

SMCS-5264 **i04139599**

NOTE	REF NO	GRAPHIC REF	PART NUMBER	QTY	PART NAME 1 2 3 4 5 6 (PRODUCT LEVEL)	SEE PAGE
J	1	1	**240-6866**	2	VALVE GP-SOLENOID (12-VOLT) (FLOW CONTROL)	
					(EACH INCLUDES)	
		1	**250-6148**	1	COIL AS (24-VOLT)	
					AVAILABLE REPAIR KIT(S):	
J			**106-3108**	1	KIT-SEAL	

J-KIT MARKED J SERVICES PART MARKED J

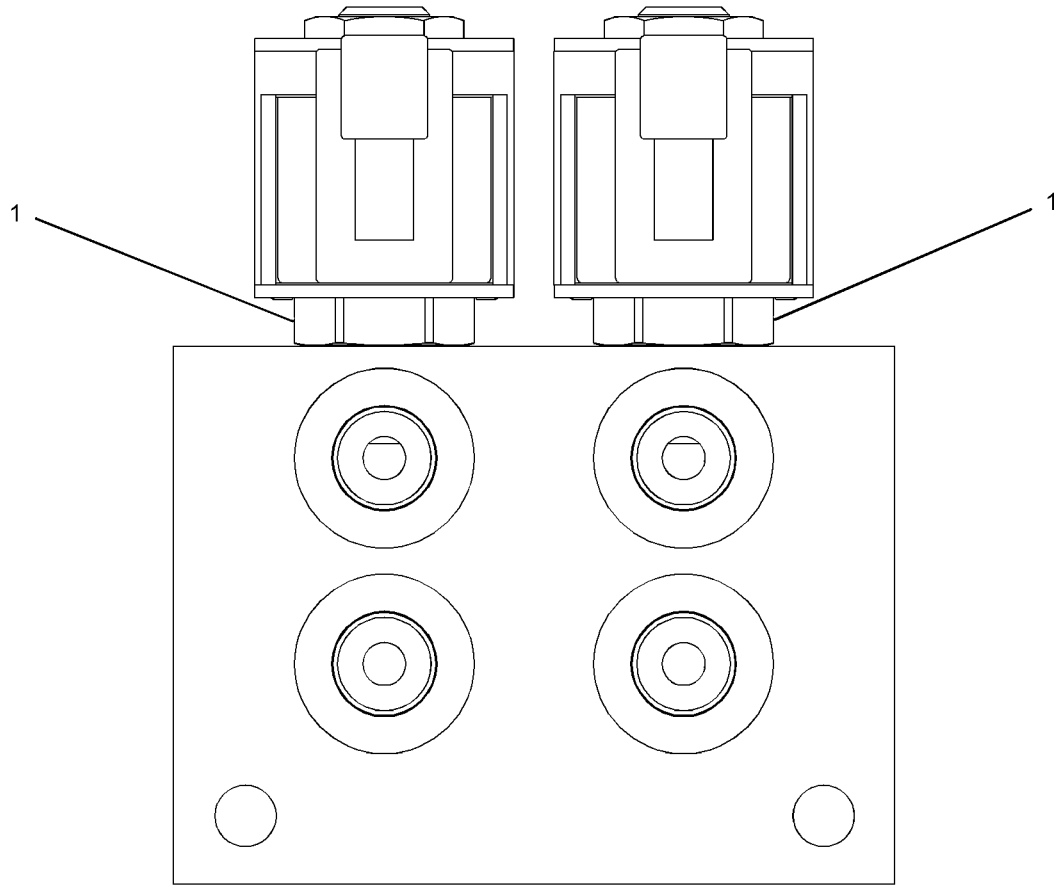

GRAPHIC #1 **<END>** g01388429

HYDRAULIC SYSTEM

245-8780 MANIFOLD GP-RIDE CONTROL

S/N: LTG1-UP
PART OF 337-9793 LINES GP-RIDE CONTROL
AN ATTACHMENT

SMCS-5264 **i04478830**

NOTE	REF NO	GRAPHIC REF	PART NUMBER	QTY	PART NAME 1 2 3 4 5 6 (PRODUCT LEVEL)	SEE PAGE
J	1	1	**249-3124**	1	VALVE GP-SOLENOID (12-VOLT) (RIDE CONTROL, SWITCH)	
L	2	1	**249-3125**	1	VALVE GP-SOLENOID (12-VOLT) (ACCUMULATOR)	
	3	1	**238-4628**	2	COIL AS (12-VOLT)	
					AVAILABLE REPAIR KIT(S):	
J			**141-0888**	1	KIT-SEAL (RIDE CONTROL, SWITCH)	
					(INCLUDES O-RING SEALS & BACK-UP RING)	
L			**227-5509**	1	KIT-SEAL (ACCUMULATOR)	

J-KIT MARKED J SERVICES PART MARKED J
L-KIT MARKED L SERVICES PART MARKED L

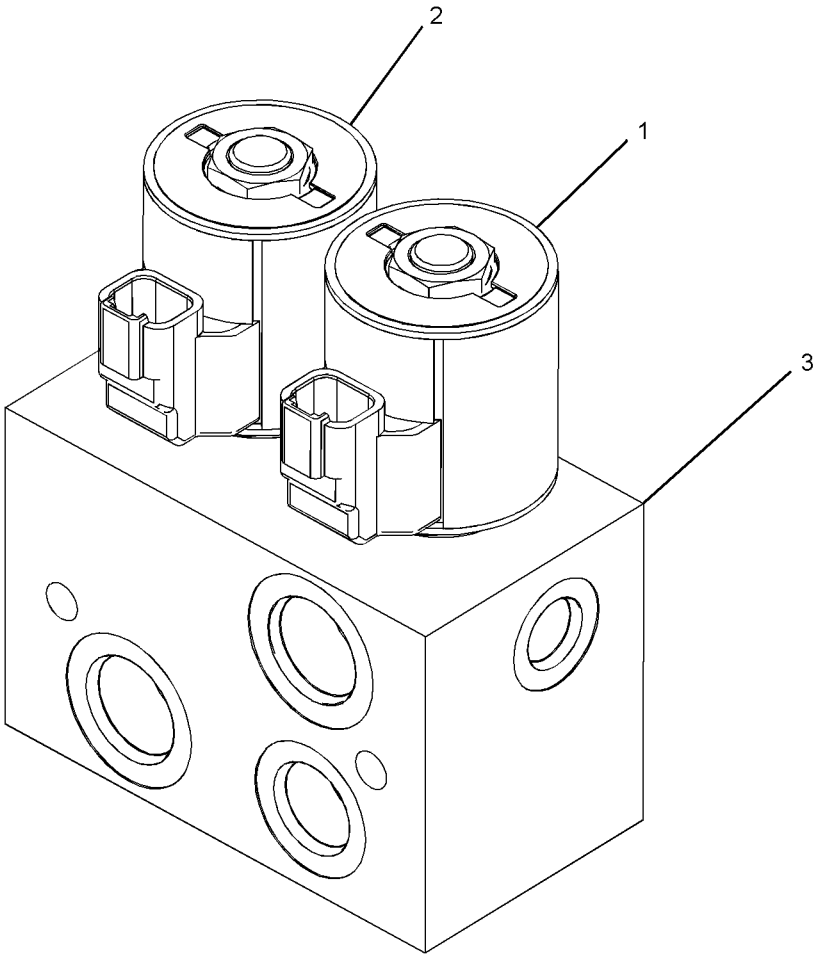

GRAPHIC #1 **<END>** g01646794

367-9721 MOUNTING GP-LINES

S/N: LTG1-UP

PART OF 340-1729 BACKHOE AR-EXTENDABLE STICK, 340-1728 BACKHOE AR-STANDARD STICK

AN ATTACHMENT

SMCS-5057 **i04565316**

NOTE	REF NO	GRAPHIC REF	PART NUMBER	QTY	PART NAME 1 2 3 4 5 6 (PRODUCT LEVEL)	SEE PAGE
	1	1	**248-4277**	2	PLATE	
	2	1	**311-2513**	2	BLOCK	
	3	1	**311-2514**	2	BLOCK	
	4	1	**311-2515**	2	BLOCK	
B	5	1	**8T-4121**	4	WASHER-HARD (11X21X2.5-MM THK)	
M	6	1	**8T-4196**	4	BOLT (M10X1.5X35-MM)	

B-USE AS REQUIRED
M-METRIC PART

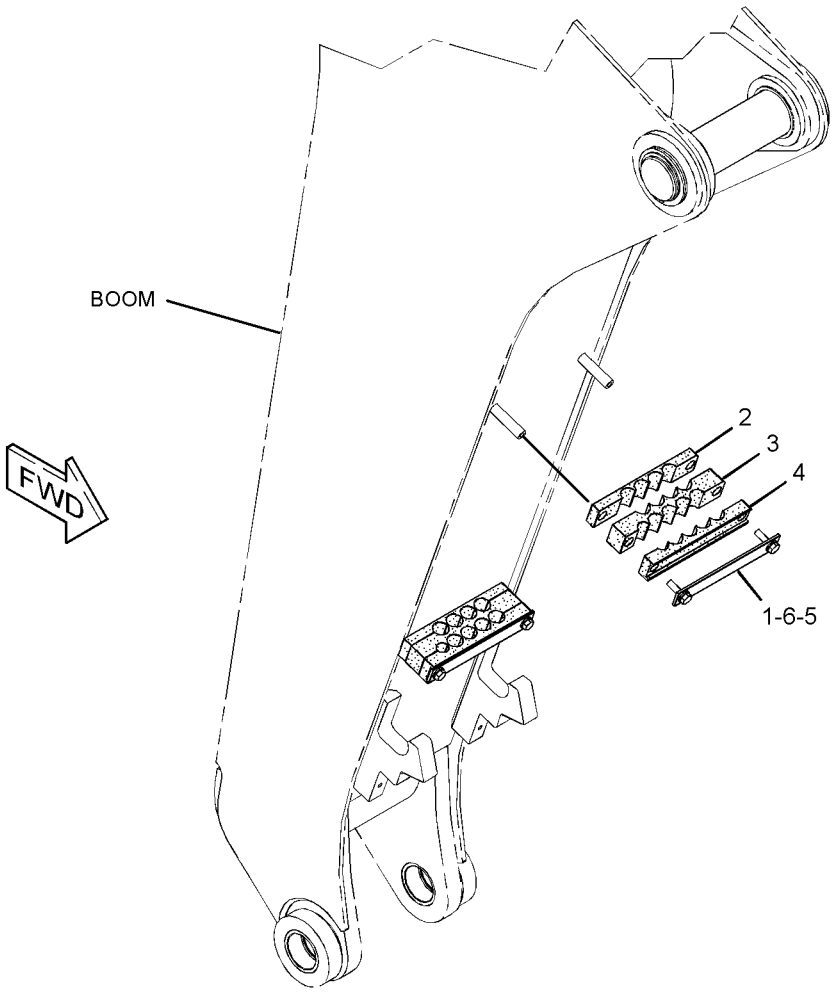

GRAPHIC #1 **<END>** g02804602

HYDRAULIC SYSTEM

337-9699 PUMP & MTG GP-HYDRAULIC

S/N: LTG1-UP

PART OF 340-1715 HYDRAULIC AR

SMCS-1387, 4324, 5055, 5070, 5073, 5084 **i04640930**

NOTE	REF NO	GRAPHIC REF	PART NUMBER	QTY	PART NAME 1 2 3 4 5 6 (PRODUCT LEVEL)	SEE PAGE
	1	1	*161-9916*	1	ADAPTER AS	
		1	**2M-9780**	1	SEAL-O-RING	
		1	**6V-7420**	1	ADAPTER	
	2	1	*164-5567*	1	COUPLER AS-QUICK DISCONNECT (MALE)	
		1	**6V-3965**	1	FITTING (QUICK DISCONNECT)	
		1	**214-7568**	1	SEAL-O-RING	
	3	1	*165-2273*	1	VALVE GP-SHUTOFF (HYDRAULIC OIL)	
		1	**3K-0360**	1	SEAL-O-RING	
		1	**6V-7238**	1	VALVE-SHUTOFF (HYDRAULIC OIL)	
	4	1	*216-1304*	1	TEE AS	
		1	**3J-7354**	1	SEAL-O-RING	
		1	**216-1302**	1	TEE	
	5	1	**307-3069**	1	PUMP GP-PISTON (HYDRAULIC)	
	6	1	**344-7391**	1	SENSOR GP-PRESSURE (HYDRAULIC OIL)	
	7	1	**175-7904**	1	SEAL-O-RING	
	8	1	**3J-1907**	1	SEAL-O-RING	
	9	1	**5P-2566**	4	BOLT (1/2-13X1.5-IN)	
	10	1	**8T-4223**	4	WASHER-HARD (13.5X25.5X3-MM THK)	
	11	1	**6V-0852**	1	CAP-DUST	

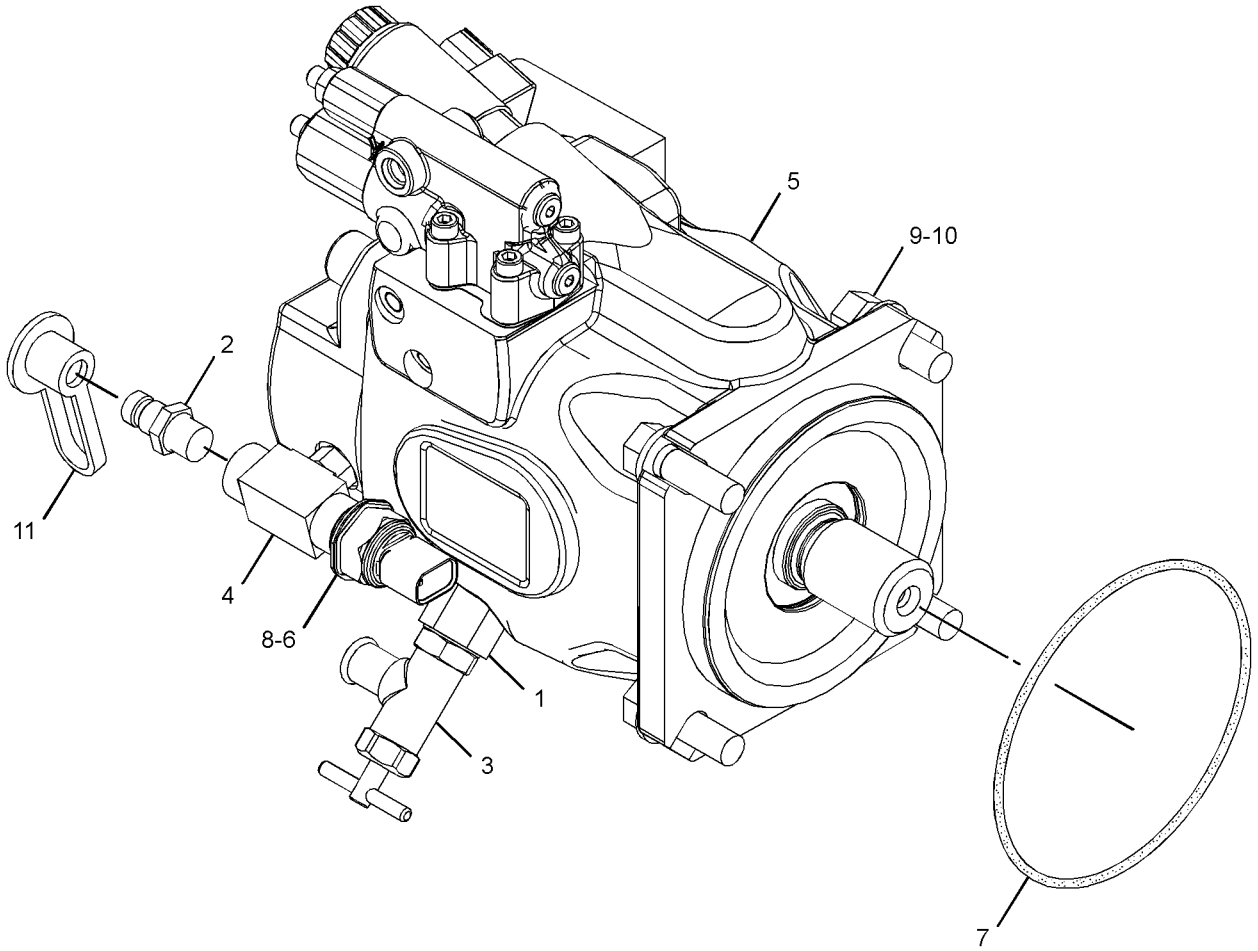

GRAPHIC #1 **<END>** g02823816

128-5596 SHAFT GP-PUMP DRIVE

S/N: LTG1-UP
PART OF 353-1338 DRIVE & MTG GP-PUMP
AN ATTACHMENT

SMCS-3108 **i00535584**

NOTE	REF NO	GRAPHIC REF	PART NUMBER	QTY	PART NAME 1 2 3 4 5 6 (PRODUCT LEVEL)	SEE PAGE
	1	1	**130-8150**	1	RING-RETAINING	

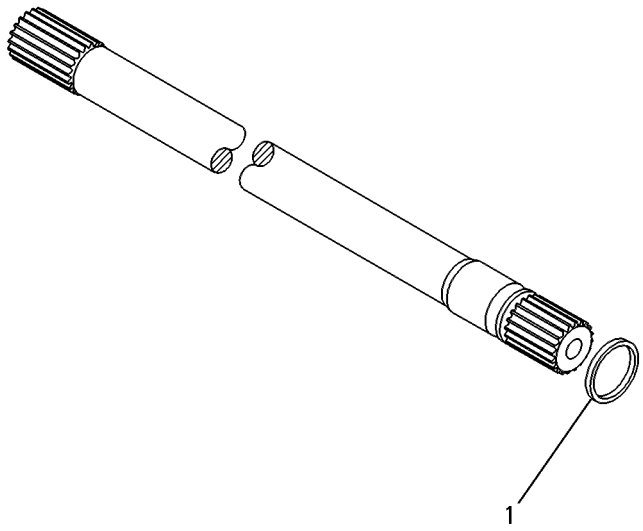

GRAPHIC #1 **<END>** g00131851

HYDRAULIC SYSTEM

351-5888 TANK & MTG GP-HYDRAULIC

S/N: LTG1-UP

PART OF 340-1715 HYDRAULIC AR

SMCS-5056 **i04548428**

NOTE	REF NO	GRAPHIC REF	PART NUMBER	QTY	PART NAME 1 2 3 4 5 6 (PRODUCT LEVEL)	SEE PAGE
	1	1	**254-1098**	1	STRAINER (HYDRAULIC TANK)	
	2	1	**334-4603**	1	FILM-INFORMATION (HYDO ADVANCED 10)	
	3	1	**358-9301**	1	TANK AS-HYDRAULIC	
	4	1	**361-9918**	1	BREATHER (HYDRAULIC TANK)	
	5	1	**363-9649**	1	GAUGE (HYDRAULIC TANK)	
	6	1	**371-1282**	1	BRACKET AS	
	7	1	**222-9151**	2	WASHER-HARD (11X32X5-MM THK)	
M	8	1	**8T-4186**	2	BOLT (M10X1.5X40-MM)	
M	9	1	**8T-4191**	5	BOLT (M10X1.5X16-MM)	
M	10	1	**8T-4195**	2	BOLT (M10X1.5X30-MM)	
	11	1	**8T-4222**	7	WASHER-PLATED (11X32X2.5-MM THK)	

M-METRIC PART

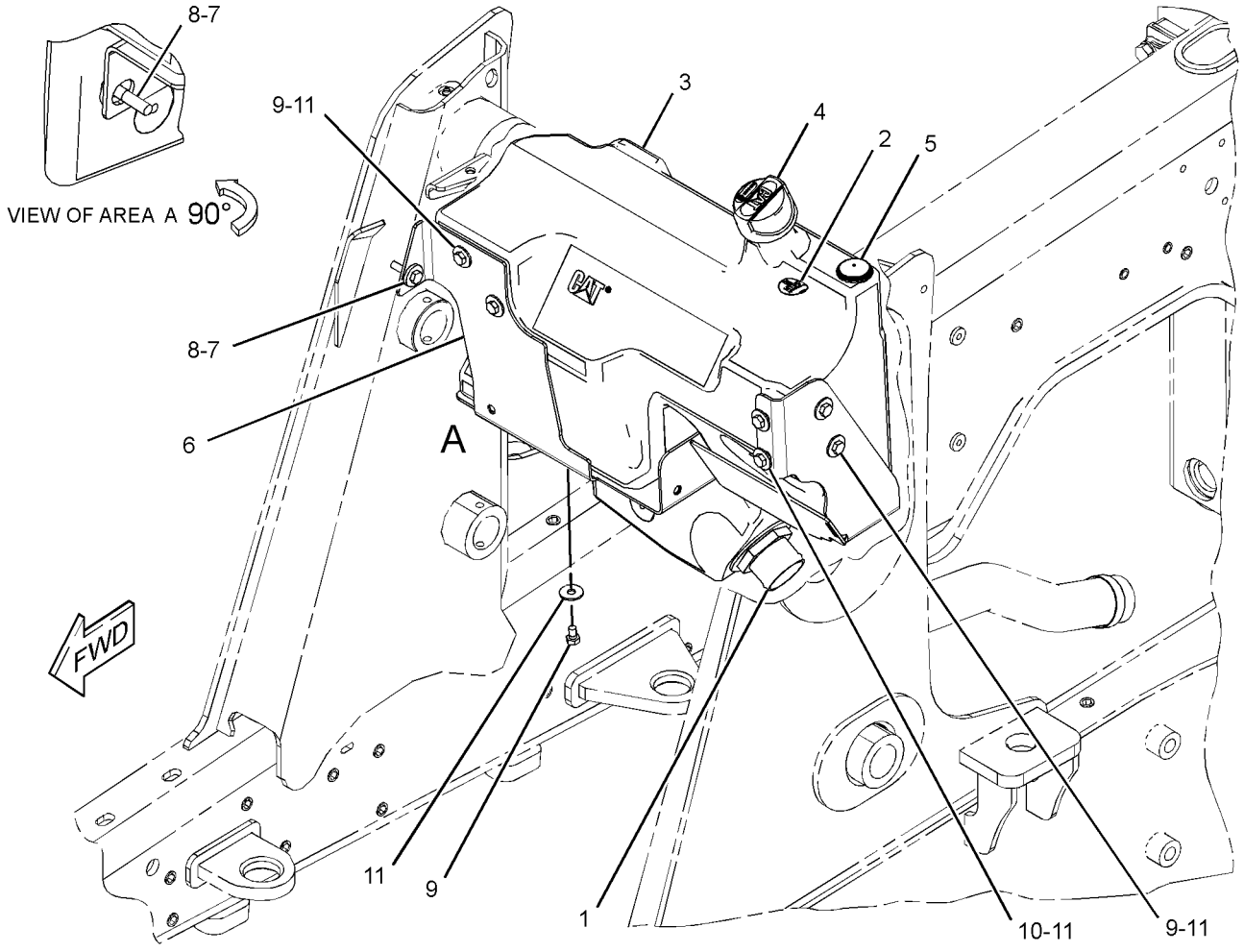

GRAPHIC #1 **<END>** g02789492

337-9815 VALVE & MTG GP-AUXILIARY

S/N: LTG1-UP

PART OF 373-4248 VALVE AR-BANK 2, 373-4256 VALVE AR-BANK 3

AN ATTACHMENT

SMCS-5051 **i04611574**

NOTE	REF NO	GRAPHIC REF	PART NUMBER	QTY	PART NAME 1 2 3 4 5 6 (PRODUCT LEVEL)	SEE PAGE
Y	1	1	**359-7224**	1	VALVE GP-SOLENOID & PRESS REDC	372
M	2	1	**096-5866**	2	BOLT (M8X1.25X75-MM)	
	3	1	**8T-4224**	2	WASHER-HARD (8.8X16X2-MM THK)	

M-METRIC PART
Y-SEPARATE ILLUSTRATION

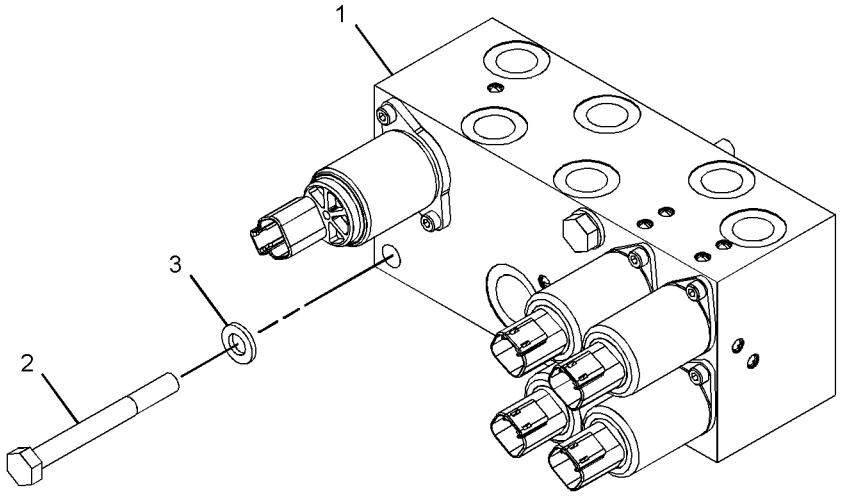

GRAPHIC #1 **<END>** g02813857

HYDRAULIC SYSTEM

337-9710 VALVE & MTG GP-BANK

S/N: LTG1-UP
PART OF 373-4246 VALVE AR-BANK 2
AN ATTACHMENT

SMCS-5051, 5057, 7265 **i04629223**

NOTE	REF NO	GRAPHIC REF	PART NUMBER	QTY	PART NAME 1 2 3 4 5 6 (PRODUCT LEVEL)	SEE PAGE
	1	1	**359-7208**	1	VALVE GP-BANK 6	
	2	1	**361-9737**	1	BRACKET AS	
	3	1	**372-6635**	4	BLOCK-MOUNTING	
	4	1	**208-9316**	4	BOLT-FLANGE HEAD (M12X1.75X70-MM)	
	5	1	**8T-4121**	4	WASHER-HARD (11X21X2.5-MM THK)	
M	6	1	**8T-4133**	1	NUT (M10X1.5-THD)	
M	7	1	**8T-4182**	3	BOLT (M10X1.5X45-MM)	

M-METRIC PART

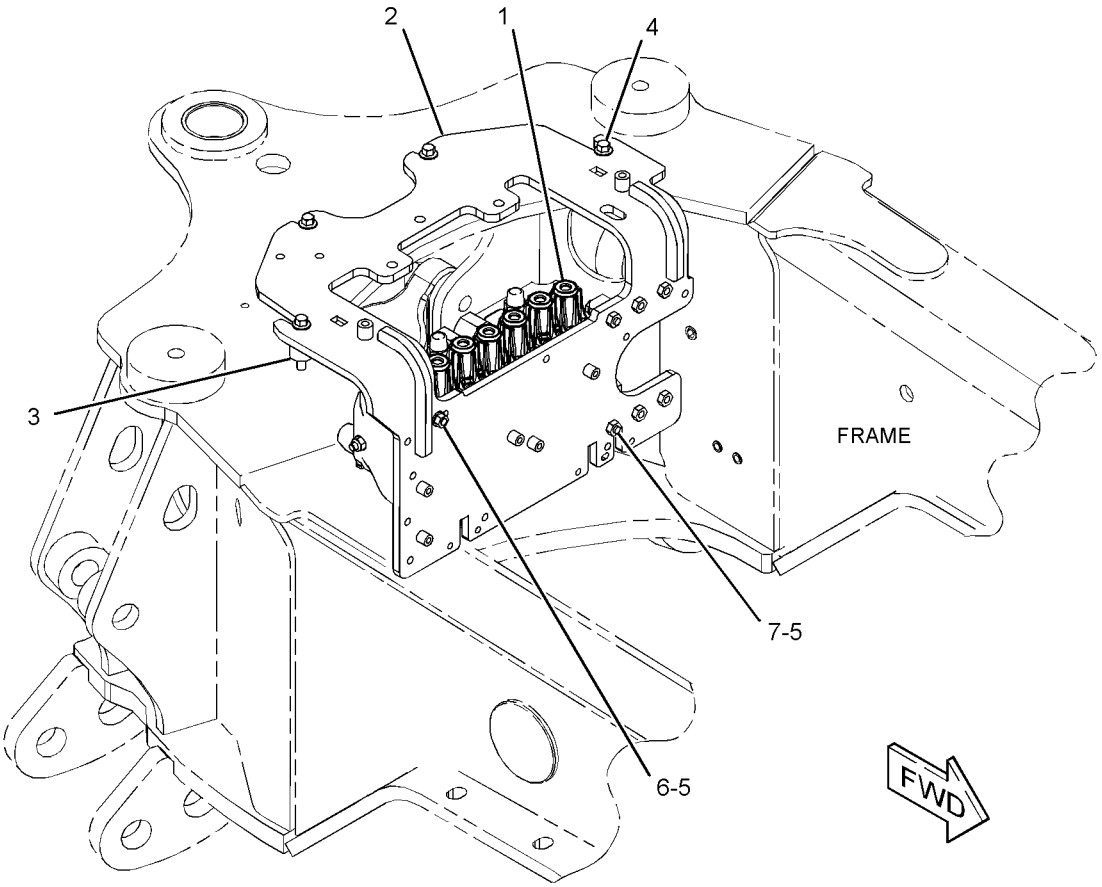

GRAPHIC #1 **<END>** g02805599

HYDRAULIC SYSTEM

337-9711 VALVE & MTG GP-BANK–PILOT, 7-BANK

S/N: LTG1-UP

PART OF 373-4248 VALVE AR-BANK 2

AN ATTACHMENT

SMCS-5051, 5057, 7265 **i04611673**

NOTE	REF NO	GRAPHIC REF	PART NUMBER	QTY	PART NAME 1 2 3 4 5 6 (PRODUCT LEVEL)	SEE PAGE
Y	1	1	**359-7210**	1	VALVE GP-BANK 7 (PILOT CONTROL)	367
	2	1	**361-9737**	1	BRACKET AS	
	3	1	**372-6635**	4	BLOCK-MOUNTING	
B	4	1	*148-8408*	2	PLUG AS	
					(EACH INCLUDES)	
		1	**3D-2824**	1	SEAL-O-RING	
		1	**9S-4183**	1	PLUG	
	5	1	**208-9316**	4	BOLT-FLANGE HEAD (M12X1.75X70-MM)	
	6	1	**8T-4121**	4	WASHER-HARD (11X21X2.5-MM THK)	
M	7	1	**8T-4133**	1	NUT (M10X1.5-THD)	
M	8	1	**8T-4182**	3	BOLT (M10X1.5X45-MM)	

B-USE AS REQUIRED
M-METRIC PART
Y-SEPARATE ILLUSTRATION

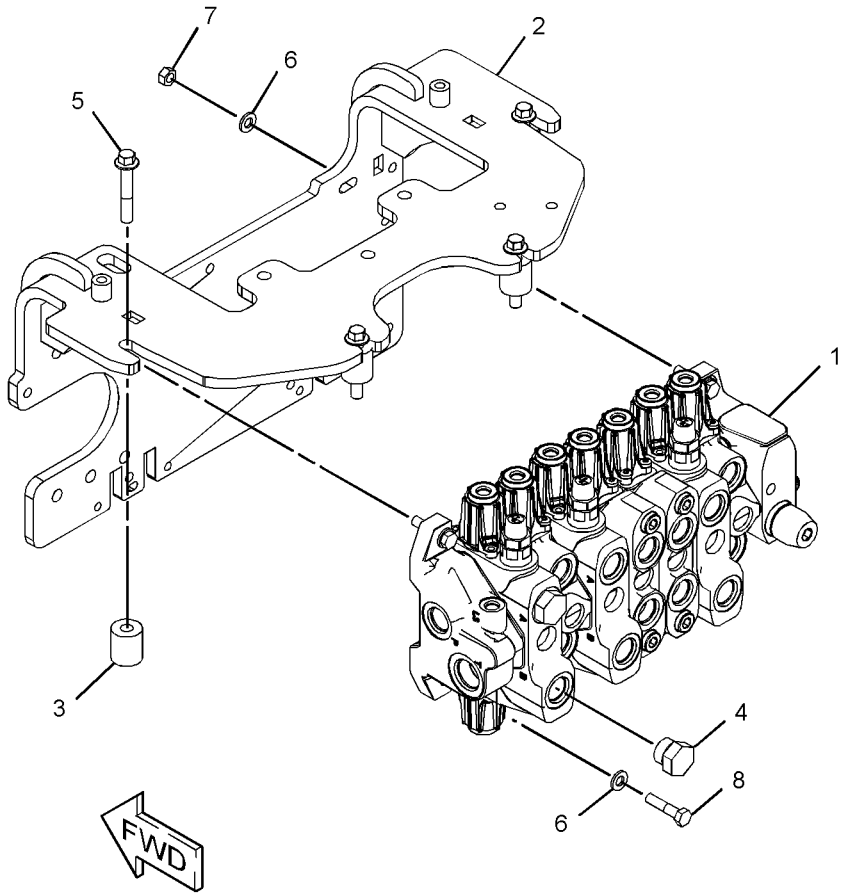

GRAPHIC #1 **<END>** g02812641

HYDRAULIC SYSTEM

337-9712 VALVE & MTG GP-BANK–PILOT, 8-BANK

S/N: LTG1-UP

PART OF 373-4256 VALVE AR-BANK 3

AN ATTACHMENT

SMCS-5051, 5057, 7265 **i04611529**

NOTE	REF NO	GRAPHIC REF	PART NUMBER	QTY	PART NAME 1 2 3 4 5 6 (PRODUCT LEVEL)	SEE PAGE
Y	1	1	**359-7212**	1	VALVE GP-BANK 8 (PILOT CONTROL)	368
	2	1	**361-9737**	1	BRACKET AS	
	3	1	**372-6635**	4	BLOCK-MOUNTING	
B	4	1	*148-8408*	4	PLUG AS	
					(EACH INCLUDES)	
		1	**3D-2824**	1	SEAL-O-RING	
		1	**9S-4183**	1	PLUG	
	5	1	**208-9316**	4	BOLT-FLANGE HEAD (M12X1.75X70-MM)	
	6	1	**8T-4121**	4	WASHER-HARD (11X21X2.5-MM THK)	
M	7	1	**8T-4133**	1	NUT (M10X1.5-THD)	
M	8	1	**8T-4182**	3	BOLT (M10X1.5X45-MM)	

B-USE AS REQUIRED
M-METRIC PART
Y-SEPARATE ILLUSTRATION

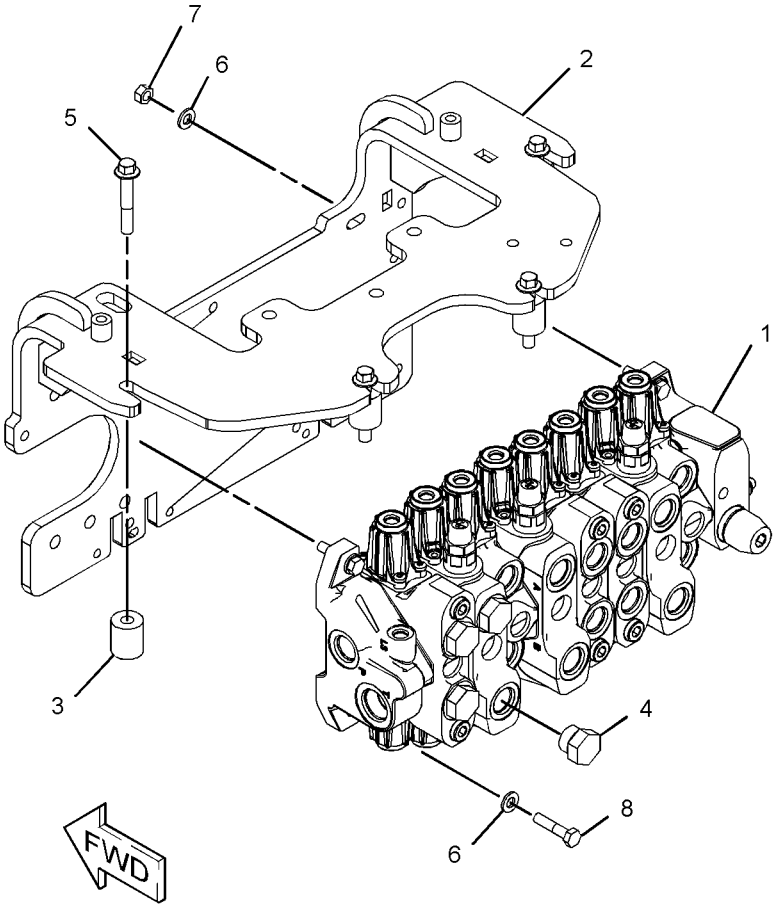

GRAPHIC #1 **<END>** g02813497

HYDRAULIC SYSTEM

337-9715 VALVE & MTG GP-BANK—MECHANICAL

S/N: LTG1-UP

PART OF 373-4246, 373-4248 VALVE AR-BANK 2

AN ATTACHMENT

SMCS-5051, 5057, 7265 **i04611713**

NOTE	REF NO	GRAPHIC REF	PART NUMBER	QTY	PART NAME 1 2 3 4 5 6 (PRODUCT LEVEL)	SEE PAGE
Y	1	1	*359-7205*	1	VALVE GP-BANK 2 (MECHANICAL)	365
	2	1	**344-7932**	3	BOLT-FLANGE HEAD (M10X1.5X35-MM)	

Y-SEPARATE ILLUSTRATION

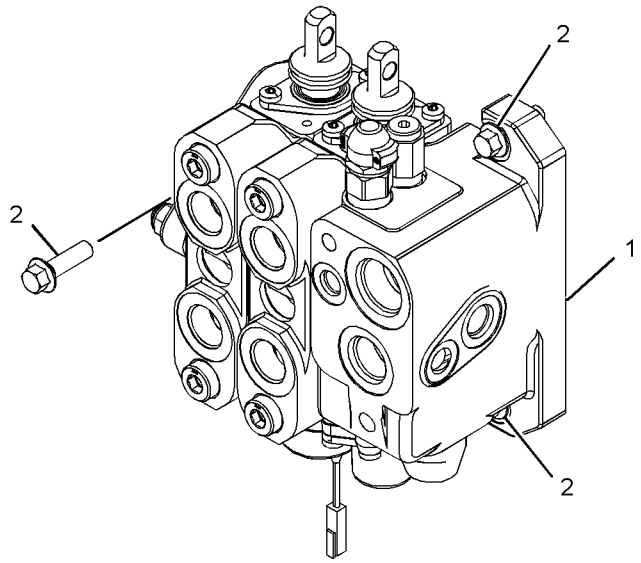

GRAPHIC #1 **<END>** g02812096

337-9716 VALVE & MTG GP-BANK–MECHANICAL

S/N: LTG1-UP

PART OF 373-4256 VALVE AR-BANK 3

AN ATTACHMENT

SMCS-5051, 5057, 7265 **i04611533**

NOTE	REF NO	GRAPHIC REF	PART NUMBER	QTY	PART NAME 1 2 3 4 5 6 (PRODUCT LEVEL)	SEE PAGE
Y	1	1	*359-7207*	1	VALVE GP-BANK 3 (MECHANICAL)	366
	2	1	**344-7932**	3	BOLT-FLANGE HEAD (M10X1.5X35-MM)	

Y-SEPARATE ILLUSTRATION

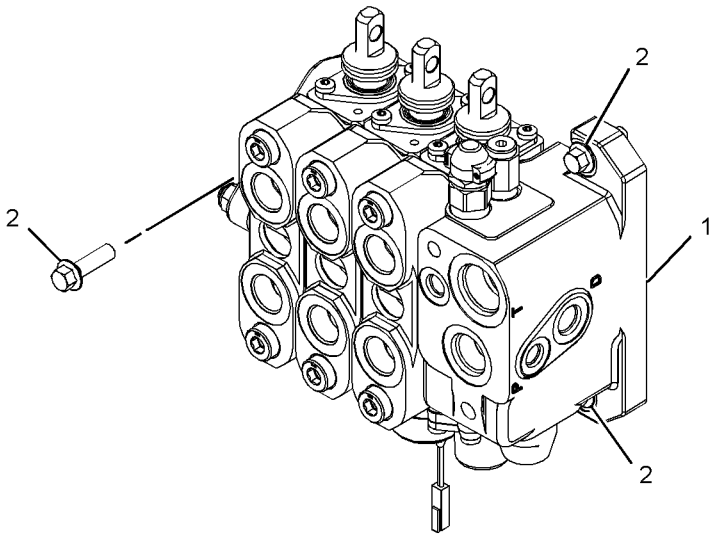

GRAPHIC #1 **<END>** g02812257

HYDRAULIC SYSTEM

337-9814 VALVE & MTG GP-SOLENOID

S/N: LTG1-UP
PART OF 373-4246 VALVE AR-BANK 2
AN ATTACHMENT

SMCS-4805, 5479 **i04629230**

NOTE	REF NO	GRAPHIC REF	PART NUMBER	QTY	PART NAME 1 2 3 4 5 6 (PRODUCT LEVEL)	SEE PAGE
Y	1	1	**359-7223**	1	VALVE GP-SOLENOID & PRESS REDC	371
M	2	1	**096-5866**	2	BOLT (M8X1.25X75-MM)	
	3	1	**8T-4224**	2	WASHER-HARD (8.8X16X2-MM THK)	

M-METRIC PART
Y-SEPARATE ILLUSTRATION

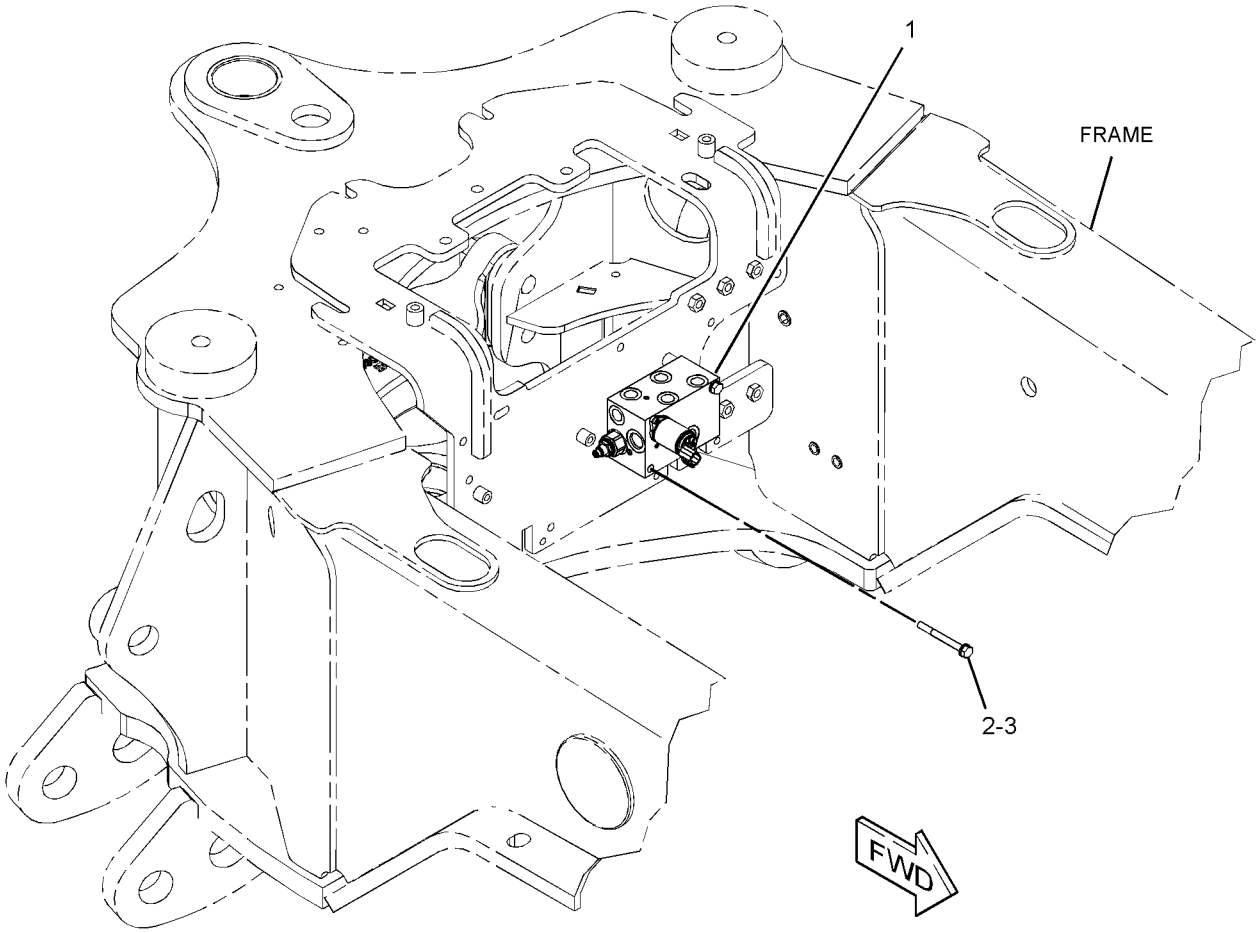

GRAPHIC #1 **<END>** g02804902

HYDRAULIC SYSTEM

373-4246 VALVE AR-BANK 2

S/N: LTG1-UP

AN ATTACHMENT

SMCS-5051 **i04629231**

NOTE	PART NUMBER	QTY	PART NAME 1 2 3 4 5 6 (PRODUCT LEVEL)	SEE PAGE
Y	*353-1374*	1	ACCUMULATOR GP-HYDRAULIC	272
Y	**271-3097**	1	CONTROL GP-HANDLE (LH)	471
Y	*334-3568*	1	CONTROL GP-HYDRAULIC HAND (SINGLE TILT)	476
Y	**271-3095**	1	CONTROL GP-JOYSTICK (RH)	478
Y	*356-4100*	1	FLOORPLATE GP	255
Y	*337-9807*	1	LINES GP-LIFT & TILT CYLINDER	317
Y	*337-9808*	1	LINES GP-LIFT & TILT CYLINDER	319
Y	*337-9785*	1	LINES GP-PILOT (SUPPLY)	328
Y	*337-9786*	1	LINES GP-PILOT (BACKHOE)	330
Y	*337-9787*	1	LINES GP-PILOT (STABILIZER)	333
Y	*269-3247*	1	MOUNTING GP-BACKHOE CONTROL (PILOT)	513
Y	*337-9710*	1	VALVE & MTG GP-BANK (6-BANK)	356
Y	*337-9715*	1	VALVE & MTG GP-BANK (2-BANK)	359
Y	*337-9814*	1	VALVE & MTG GP-SOLENOID	361
Y	*331-5472*	1	WIRING GP-KICKOUT & POSITIONER	115
Y	*331-5448*	1	WIRING GP-REAR	125

Y-SEPARATE ILLUSTRATION

<END>

HYDRAULIC SYSTEM

373-4248 VALVE AR-BANK 2

S/N: LTG1-UP

AN ATTACHMENT

SMCS-5051 **i04629795**

NOTE	PART NUMBER	QTY	PART NAME 1 2 3 4 5 6 (PRODUCT LEVEL)	SEE PAGE
Y	*353-1374*	1	ACCUMULATOR GP-HYDRAULIC	272
Y	**271-3097**	1	CONTROL GP-HANDLE (LH)	471
Y	*334-3568*	1	CONTROL GP-HYDRAULIC HAND (SINGLE TILT)	476
Y	**271-3096**	1	CONTROL GP-JOYSTICK (RH)	479
Y	*356-4100*	1	FLOORPLATE GP	255
Y	*337-9807*	1	LINES GP-LIFT & TILT CYLINDER	317
Y	*337-9808*	1	LINES GP-LIFT & TILT CYLINDER	319
Y	*337-9785*	1	LINES GP-PILOT (SUPPLY)	328
Y	*337-9786*	1	LINES GP-PILOT (BACKHOE)	330
Y	*337-9787*	1	LINES GP-PILOT (STABILIZER)	333
Y	*337-9829*	1	LINES GP-PILOT (7-BANK)	336
Y	*269-3247*	1	MOUNTING GP-BACKHOE CONTROL (PILOT)	513
Y	*337-9815*	1	VALVE & MTG GP-AUXILIARY	355
Y	*337-9711*	1	VALVE & MTG GP-BANK (7-BANK)	357
Y	*337-9715*	1	VALVE & MTG GP-BANK (2-BANK)	359
Y	*331-5472*	1	WIRING GP-KICKOUT & POSITIONER	115
Y	*331-5448*	1	WIRING GP-REAR	125
	389-7172	1	PLUG GP-CONTROL MANIFOLD	
	148-8407	2	PLUG AS	
			(EACH INCLUDES)	
	3J-1907	1	SEAL-O-RING	
	9S-4191	1	PLUG-O-RING	
	214-4706	1	SWITCH AS-ROCKER (AUXILIARY HYDRAULIC FLOW)	
	111-7899	1	GASKET	

Y-SEPARATE ILLUSTRATION

<END>

HYDRAULIC SYSTEM

373-4256 VALVE AR-BANK 3

S/N: LTG1-UP
FOR USE WITH 368-8951—PAGE 2
AN ATTACHMENT

SMCS-5051 **i04629256**

NOTE	PART NUMBER	QTY	PART NAME 1 2 3 4 5 6 (PRODUCT LEVEL)	SEE PAGE
Y	*353-1374*	1	ACCUMULATOR GP-HYDRAULIC	272
Y	*331-4358*	1	CONTROL GP-HYDRAULIC HAND (SINGLE TILT)	472
Y	**271-3096**	1	CONTROL GP-JOYSTICK (RH)	479
Y	**271-3099**	1	CONTROL GP-JOYSTICK (LH)	480
Y	*356-4100*	1	FLOORPLATE GP	255
Y	*337-9809*	1	LINES GP-AUXILIARY HYDRAULIC (SINGLE TILT)	301
Y	*337-9807*	1	LINES GP-LIFT & TILT CYLINDER	317
Y	*337-9808*	1	LINES GP-LIFT & TILT CYLINDER	319
Y	*337-9785*	1	LINES GP-PILOT (SUPPLY)	328
Y	*337-9786*	1	LINES GP-PILOT (BACKHOE)	330
Y	*337-9787*	1	LINES GP-PILOT (STABILIZER)	333
Y	*337-9827*	1	LINES GP-PILOT (AUXILIARY)	335
Y	*269-3247*	1	MOUNTING GP-BACKHOE CONTROL (PILOT)	513
Y	*337-9815*	1	VALVE & MTG GP-AUXILIARY	355
Y	*337-9712*	1	VALVE & MTG GP-BANK (8-BANK)	358
Y	*337-9716*	1	VALVE & MTG GP-BANK (3-BANK)	360
Y	*331-5472*	1	WIRING GP-KICKOUT & POSITIONER	115
Y	*331-5448*	1	WIRING GP-REAR	125
	214-4706	1	SWITCH AS-ROCKER (AUXILIARY HYDRAULIC FLOW)	
	111-7899	1	GASKET	

Y-SEPARATE ILLUSTRATION

<END>

HYDRAULIC SYSTEM

359-7205 VALVE GP-BANK 2

S/N: LTG1-UP
PART OF 337-9715 VALVE & MTG GP-BANK
AN ATTACHMENT

SMCS-5051 **i04611714**

NOTE	REF NO	GRAPHIC REF	PART NUMBER	QTY	PART NAME 1 2 3 4 5 6 (PRODUCT LEVEL)	SEE PAGE
	1	1	**363-9783**	1	MANIFOLD GP-CONTROL (INLET)	
	2	1	**363-9102**	1	VALVE GP-CONTROL (LIFT)	
	3	1	**363-9103**	1	VALVE GP-CONTROL (TILT)	
	4	1	**308-2160**	1	COVER GP (OUTLET)	
	5	1	**332-4169**	1	KIT-FASTENER	
					(INCLUDES LOCKNUTS)	
	6	1	**4J-9535**	3	SEAL-O-RING	
	7	1	**6V-8978**	9	SEAL-O-RING	

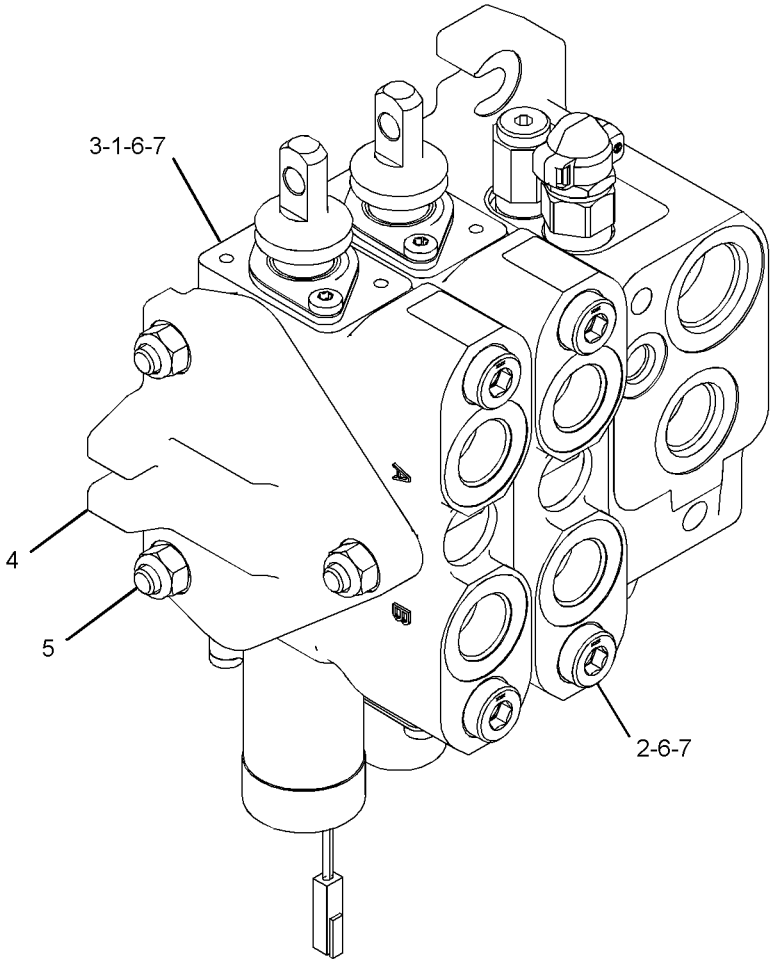

GRAPHIC #1 **<END>** g02818337

HYDRAULIC SYSTEM

359-7207 VALVE GP-BANK 3

S/N: LTG1-UP
PART OF 337-9716 VALVE & MTG GP-BANK
AN ATTACHMENT

SMCS-5051 **i04611532**

NOTE	REF NO	GRAPHIC REF	PART NUMBER	QTY	PART NAME 1 2 3 4 5 6 (PRODUCT LEVEL)	SEE PAGE
	1	1	**363-9783**	1	MANIFOLD GP-CONTROL (INLET)	
	2	1	**363-9102**	1	VALVE GP-CONTROL (LIFT)	
	3	1	**363-9103**	1	VALVE GP-CONTROL (TILT)	
	4	1	**363-9104**	1	VALVE GP-CONTROL	
	5	1	**308-2160**	1	COVER GP (OUTLET)	
	6	1	**308-2161**	1	KIT-FASTENER (BANK VALVE)	
					(INCLUDES LOCKNUTS)	
	7	1	**4J-9535**	4	SEAL-O-RING	
	8	1	**6V-8978**	12	SEAL-O-RING	

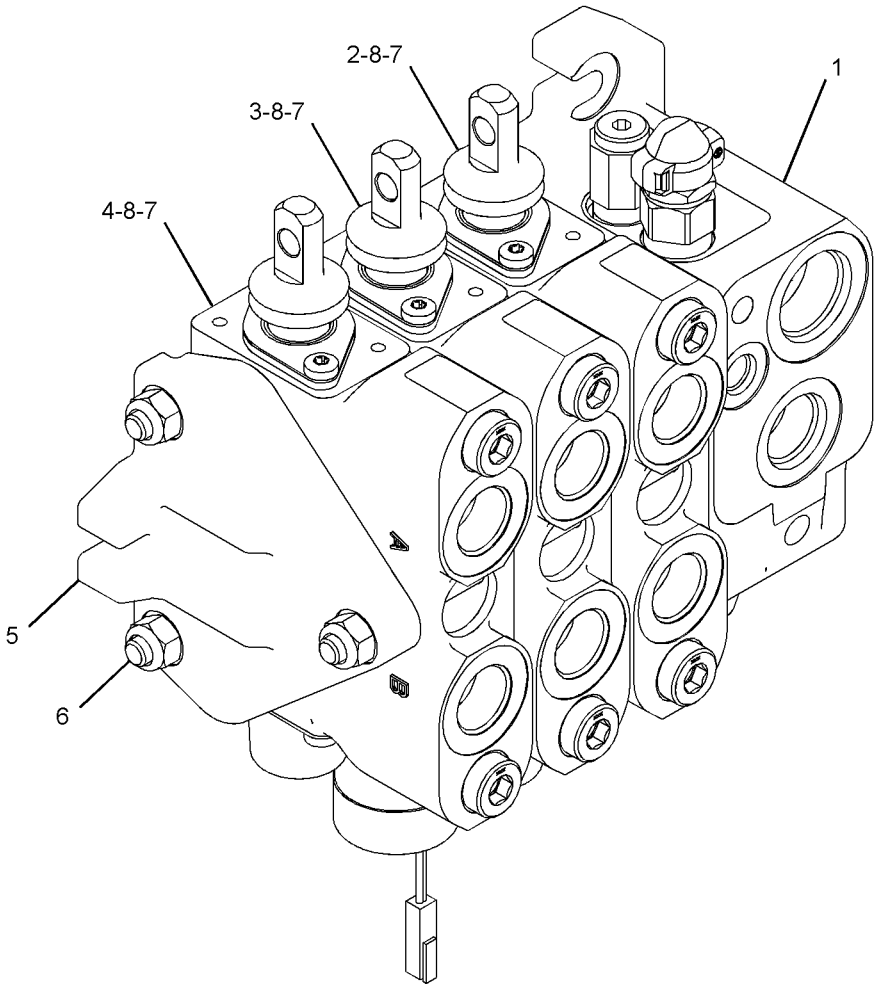

GRAPHIC #1 **<END>** g02818348

359-7210 VALVE GP-BANK 7—PILOT CONTROL

S/N: LTG1-UP
PART OF 337-9711 VALVE & MTG GP-BANK
AN ATTACHMENT

SMCS-5051 **i04732230**

NOTE	REF NO	GRAPHIC REF	PART NUMBER	QTY	PART NAME 1 2 3 4 5 6 (PRODUCT LEVEL)	SEE PAGE
	1	1	**335-6327**	1	COVER (INLET)	
	2	1	**389-3109**	2	VALVE GP-CONTROL (LIFT) (EXTENDABLE STICK)	
	3	1	**389-3110**	1	VALVE GP-CONTROL (LIFT) (STABILIZER)	
	4	1	**389-3111**	1	VALVE GP-CONTROL (LIFT) (STICK)	
	5	1	**389-3112**	1	VALVE GP-CONTROL (LIFT) (BUCKET)	
	6	1	**389-3113**	1	VALVE GP-CONTROL (LIFT) (SWING)	
	7	1	**389-3114**	1	VALVE GP-CONTROL (LIFT) (BOOM)	
	8	1	**389-3130**	1	MANIFOLD GP-CONTROL (OUTLET)	
	9	1	**308-2155**	1	KIT-FASTENER (7-BANK)	
					(INCLUDES TIE RODS & LOCKNUTS)	
	10	1	**4J-9535**	8	SEAL-O-RING	
	11	1	**6V-8978**	24	SEAL-O-RING	

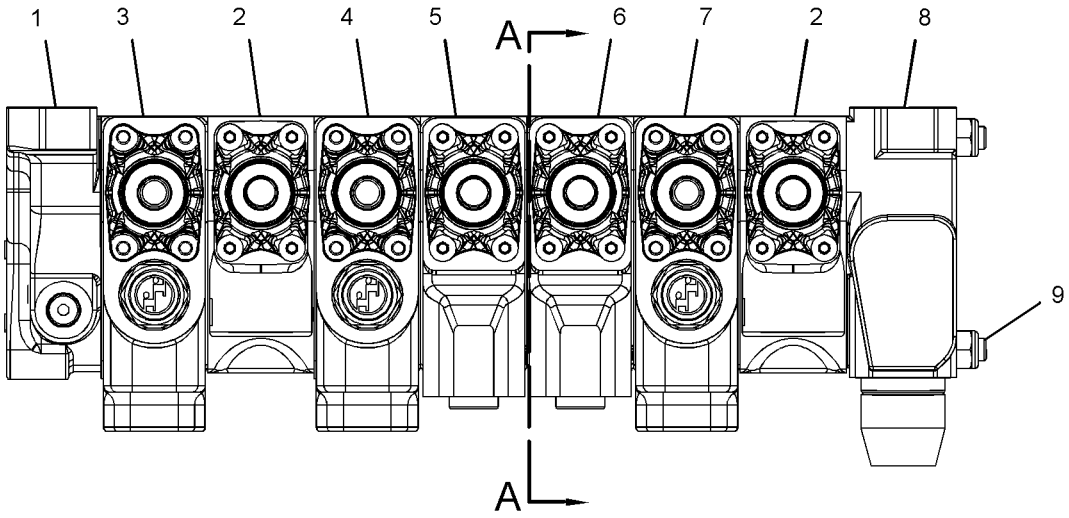

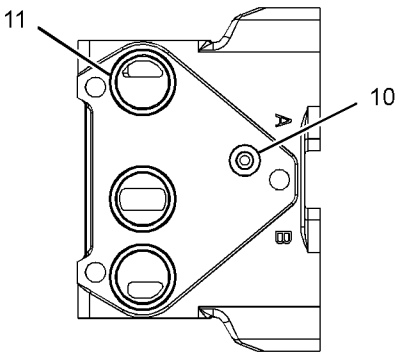

SECTION A-A

GRAPHIC #1 **<END>** g02832864

HYDRAULIC SYSTEM

359-7212 VALVE GP-BANK 8—PILOT CONTROL

S/N: LTG1-UP
PART OF 337-9712 VALVE & MTG GP-BANK
AN ATTACHMENT

SMCS-5051 **i04732231**

NOTE	REF NO	GRAPHIC REF	PART NUMBER	QTY	PART NAME 1 2 3 4 5 6 (PRODUCT LEVEL)	SEE PAGE
	1	1	**335-6327**	1	COVER (INLET)	
	2	1	**389-3115**	1	VALVE GP-CONTROL (LIFT) (AUXILIARY)	
	3	1	**389-3116**	1	VALVE GP-CONTROL (LIFT) (STICK)	
	4	1	**389-3117**	2	VALVE GP-CONTROL (LIFT) (STABILIZER)	
	5	1	**389-3118**	1	VALVE GP-CONTROL (LIFT) (STICK)	
	6	1	**389-3119**	1	VALVE GP-CONTROL (LIFT) (BUCKET)	
	7	1	**389-3120**	1	VALVE GP-CONTROL (LIFT) (SWING)	
	8	1	**389-3121**	1	VALVE GP-CONTROL (LIFT) (BOOM)	
	9	1	**389-3130**	1	MANIFOLD GP-CONTROL (OUTLET)	
	10	1	**389-3129**	1	KIT-FASTENER (8-BANK)	
					(INCLUDES TIE RODS & LOCKNUTS)	
	11	1	**4J-9535**	9	SEAL-O-RING	
	12	1	**6V-8978**	28	SEAL-O-RING	

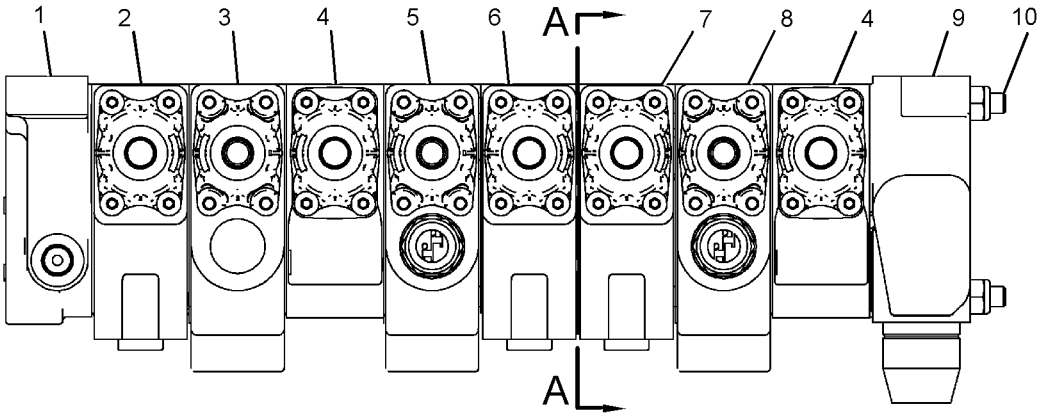

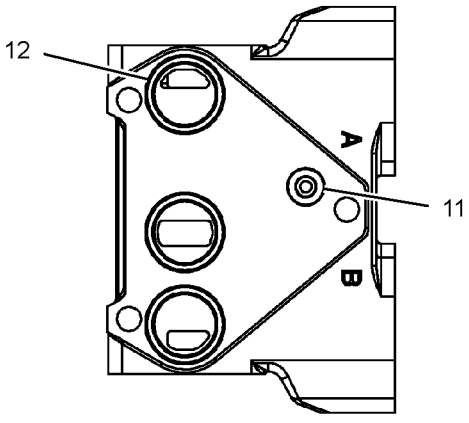

SECTION A-A

GRAPHIC #1 **<END>** g02833038

HYDRAULIC SYSTEM

359-7246 VALVE GP-PILOT

S/N: LTG1-UP

PART OF 353-1449 CONTROL AR-STABILIZER

AN ATTACHMENT

SMCS-5059 **i04555819**

NOTE	REF NO	GRAPHIC REF	PART NUMBER	QTY	PART NAME 1 2 3 4 5 6 (PRODUCT LEVEL)	SEE PAGE
					(NO BREAKDOWN OF SERVICEABLE PARTS AVAILABLE AT TIME OF PUBLICATION)	

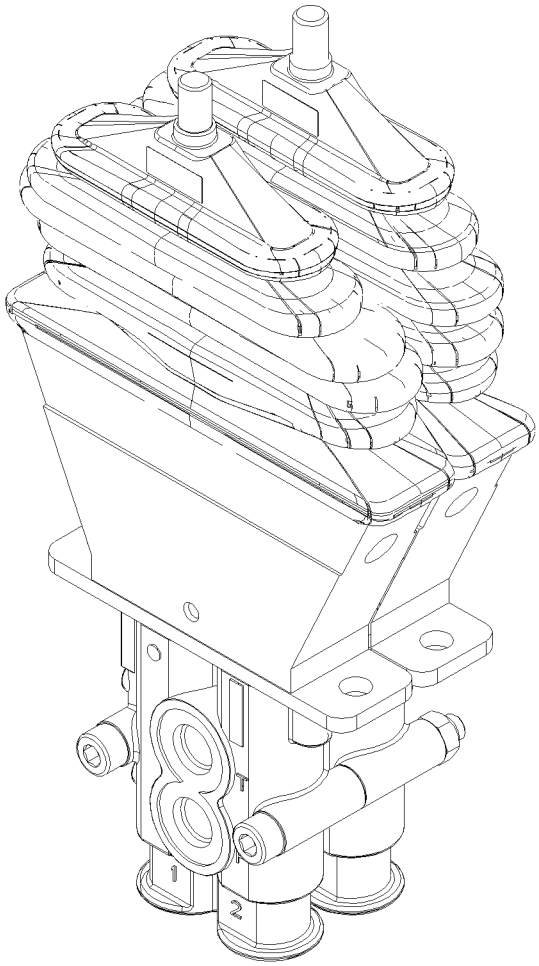

GRAPHIC #1

<END>

g02777210

HYDRAULIC SYSTEM

359-7248 VALVE GP-PILOT–STABILIZER CONTROL

S/N: LTG1-UP
PART OF 353-1450 CONTROL AR-STABILIZER
AN ATTACHMENT

SMCS-5059 **i04623191**

NOTE	REF NO	GRAPHIC REF	PART NUMBER	QTY	PART NAME 1 2 3 4 5 6 (PRODUCT LEVEL)	SEE PAGE
					(NO SERVICED PARTS)	

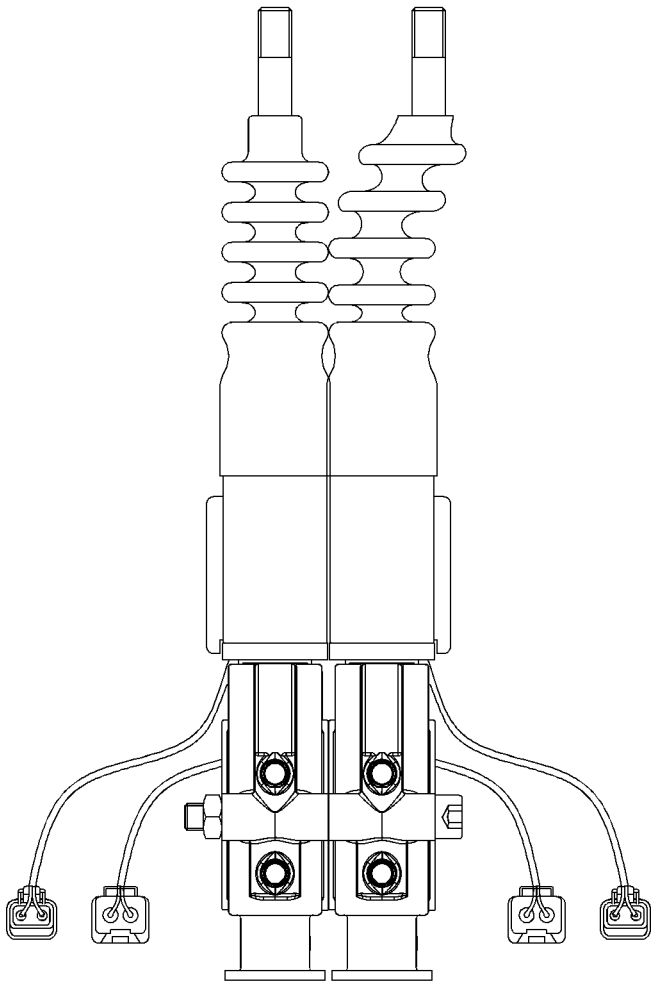

GRAPHIC #1 **<END>** g02825002

359-7223 VALVE GP-SOLENOID & PRESS REDC

S/N: LTG1-UP

PART OF 337-9814 VALVE & MTG GP-SOLENOID

AN ATTACHMENT

SMCS-5467, 5479 **i04597349**

NOTE	REF NO	GRAPHIC REF	PART NUMBER	QTY	PART NAME 1 2 3 4 5 6 (PRODUCT LEVEL)	SEE PAGE
	1	1	**359-7226**	1	VALVE GP-PRESSURE REDUCING	
M	2	1	**095-0641**	2	BOLT-SOCKET HEAD (M4X0.7X10-MM)	
	3	1	**373-6995**	1	VALVE GP-SOLENOID (12-VOLT) (PILOT SHUTOFF)	

M-METRIC PART

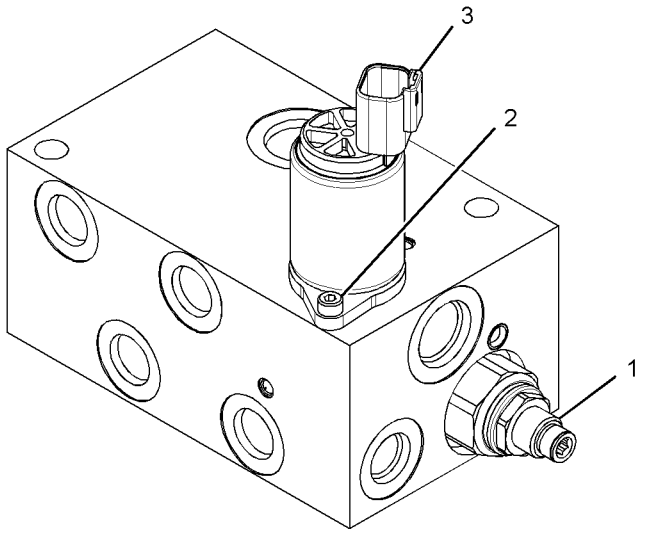

GRAPHIC #1 **<END>** g02809576

HYDRAULIC SYSTEM

359-7224 VALVE GP-SOLENOID & PRESS REDC

S/N: LTG1-UP

PART OF 337-9815 VALVE & MTG GP-AUXILIARY

AN ATTACHMENT

SMCS-5467, 5479 **i04611573**

NOTE	REF NO	GRAPHIC REF	PART NUMBER	QTY	PART NAME 1 2 3 4 5 6 (PRODUCT LEVEL)	SEE PAGE
	1	1	**359-7226**	1	VALVE GP-PRESSURE REDUCING (BRAKE)	
	2	1	**362-3212**	4	VALVE GP-SOLENOID (12 VDC) (AUXILIARY)	
M	3	1	**095-0641**	10	BOLT-SOCKET HEAD (M4X0.7X10-MM)	
	4	1	**373-6995**	1	VALVE GP-SOLENOID (12-VOLT) (PILOT SHUTOFF)	

M-METRIC PART

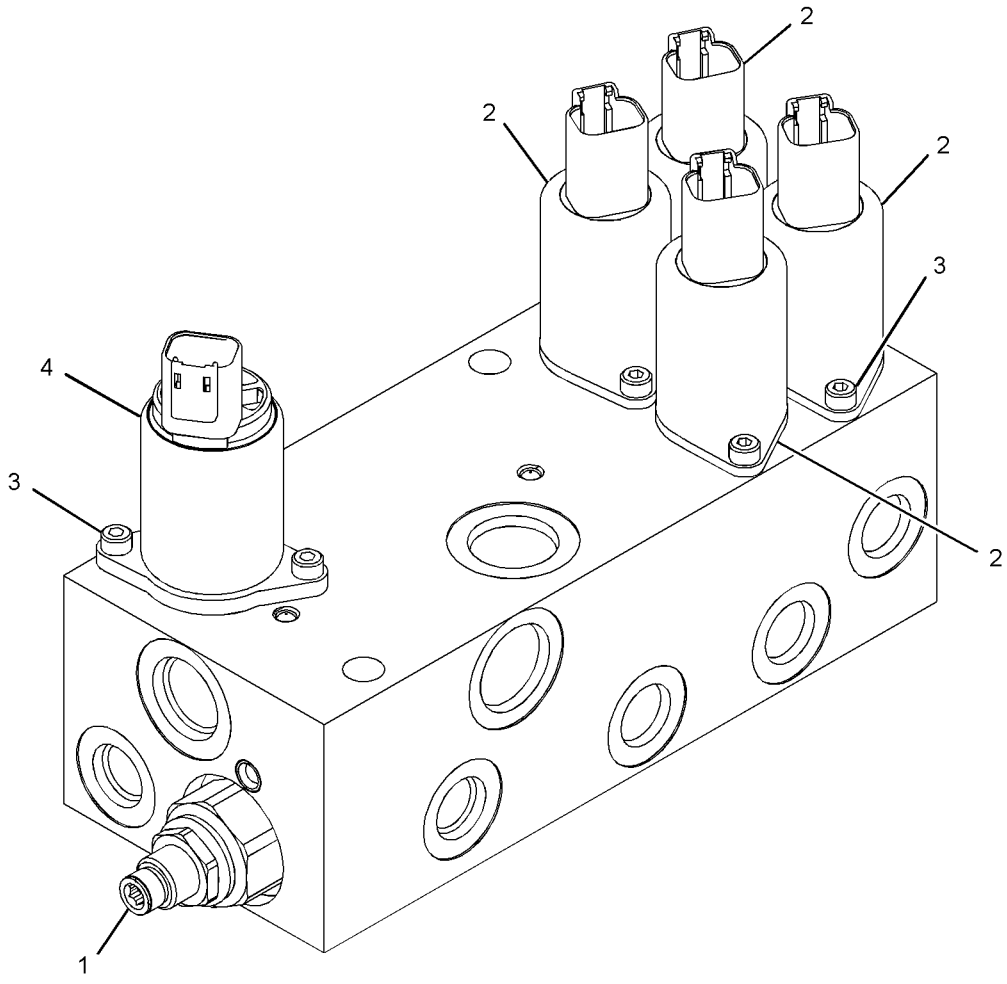

GRAPHIC #1 **<END>** g02821917

337-9845 ARM GP-LIFT

S/N: LTG1-UP

PART OF 340-1699 LOADER AR

SMCS-6118, 6119 **i04548141**

NOTE	REF NO	GRAPHIC REF	PART NUMBER	QTY	PART NAME 1 2 3 4 5 6 (PRODUCT LEVEL)	SEE PAGE
	1	1,2,3	**111-4337**	11	WASHER (46X70X1-MM THK)	
B	2	1,2	**128-7903**	2	SPACER (61X114.3X3-MM THK)	
B	3	1,2	**128-7905**	3	SPACER (61X114.3X1-MM THK)	
	4	3	**193-5914**	2	PLUG	
	5	1	**341-6152**	1	PIN	
	6	1	**358-1471**	2	LINK AS	
					(EACH INCLUDES)	
	6A	3	**361-4673**	1	BEARING	
	6B	1	**9R-5828**	1	BUSHING	
	7	3	**358-1472**	2	SPACER (92X145X5-MM THK)	
	8	1,3	**358-1531**	2	LINK AS	
					(EACH INCLUDES)	
	8A	3	**361-4673**	1	BEARING	
	9	1,3	**360-2816**	2	PIN	
	10	1,2	**360-2821**	2	PIN	
	11	3	**360-2822**	1	PIN	
	12	1	**360-2823**	1	PIN AS	
	13	1	**361-4613**	1	ARM AS-LIFT	
	13A	1,2	**9R-0411**	6	BUSHING	
	14	1	**361-7826**	1	TUBE	
	15	3	**362-1201**	1	PLATE	
	16	1	**362-3269**	1	PIN	
	17	2	**362-3270**	1	PIN	
B	18	1,2	**363-2855**	3	SHIM (1-MM THK)	
B	19	1,2	**363-2856**	2	SHIM (3-MM THK)	
	20	1	**364-3011**	1	PIN AS	
	21	1,2	**372-5024**	2	PLATE	
	22	1,2,3	**373-8390**	10	SHIM (1-MM THK)	
	23	3	**101-0117**	1	PLATE	
	24	1,2,3	**3B-8489**	10	FITTING-GREASE	
	25	1,2,3	**6V-3213**	6	RING-RETAINING	
	26	1,2,3	**6V-4364**	6	RING-RETAINING	
M	27	1,3	**6V-7744**	2	LOCKNUT (M10X1.5-THD)	
	28	1,2,3	**7X-0542**	13	WASHER-HARD (51X74X3-MM THK)	
	29	1	**7X-0618**	2	WASHER-HARD (13.5X40X5-MM THK)	
	30	3	**8T-4121**	4	WASHER-HARD (11X21X2.5-MM THK)	
M	31	3	**8T-4137**	4	BOLT (M10X1.5X20-MM)	
M	32	1,2	**8T-4139**	4	BOLT (M12X1.75X30-MM)	
	33	1,2	**8T-4223**	4	WASHER-HARD (13.5X25.5X3-MM THK)	
M	34	1	**8T-4956**	2	BOLT (M12X1.75X35-MM)	
	35	1,2,3	**9R-0158**	10	WASHER (46X69X3-MM THK)	
	36	1	**9R-1502**	1	WASHER (56X90X4-MM THK)	
M	37	1,3	**9X-2158**	2	BOLT-SOCKET HEAD (M10X1.5X90-MM)	

B-USE AS REQUIRED
M-METRIC PART

337-9845 **ARM GP-LIFT** ***(contd.)*** **i04548141**

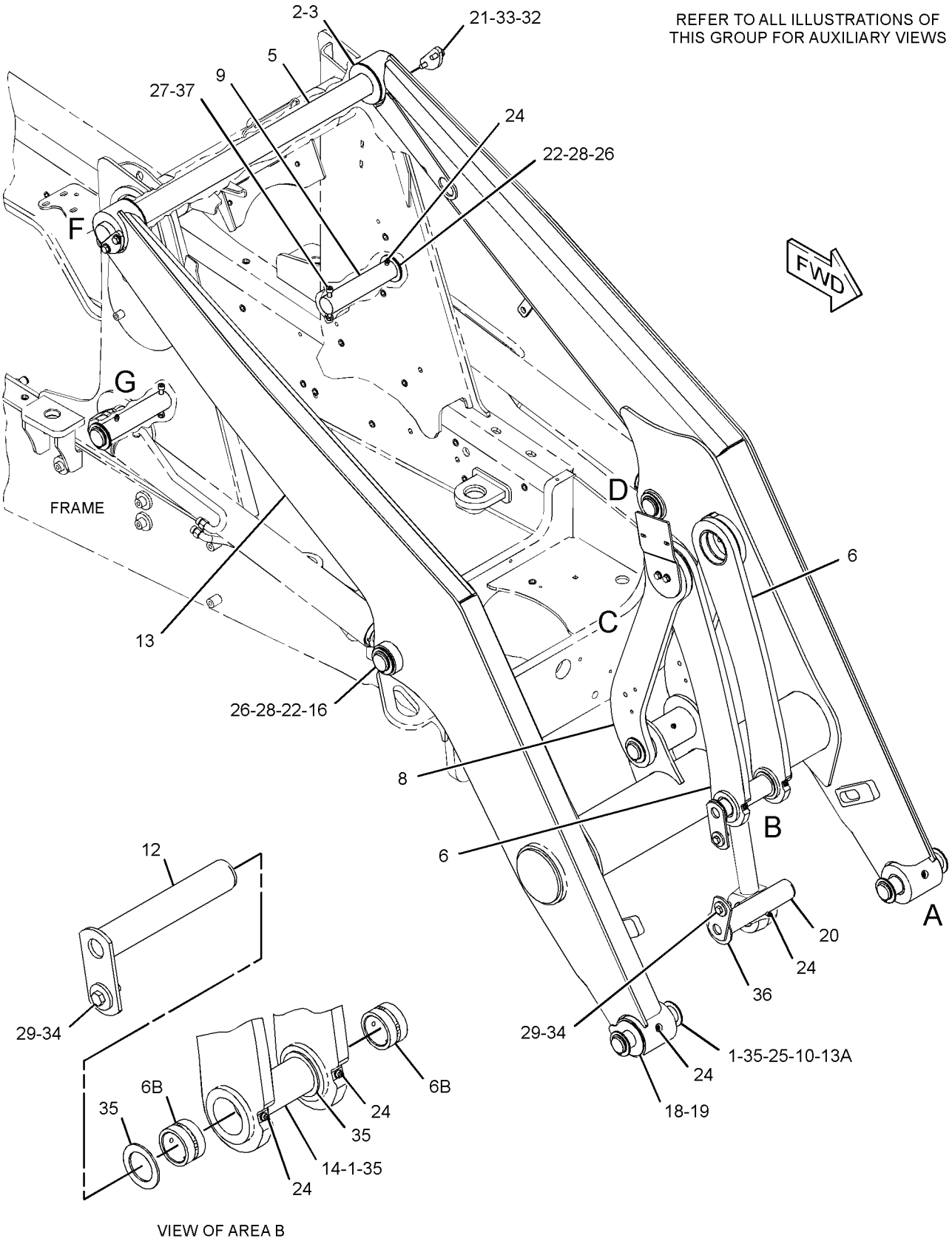

GRAPHIC #1 g02786358

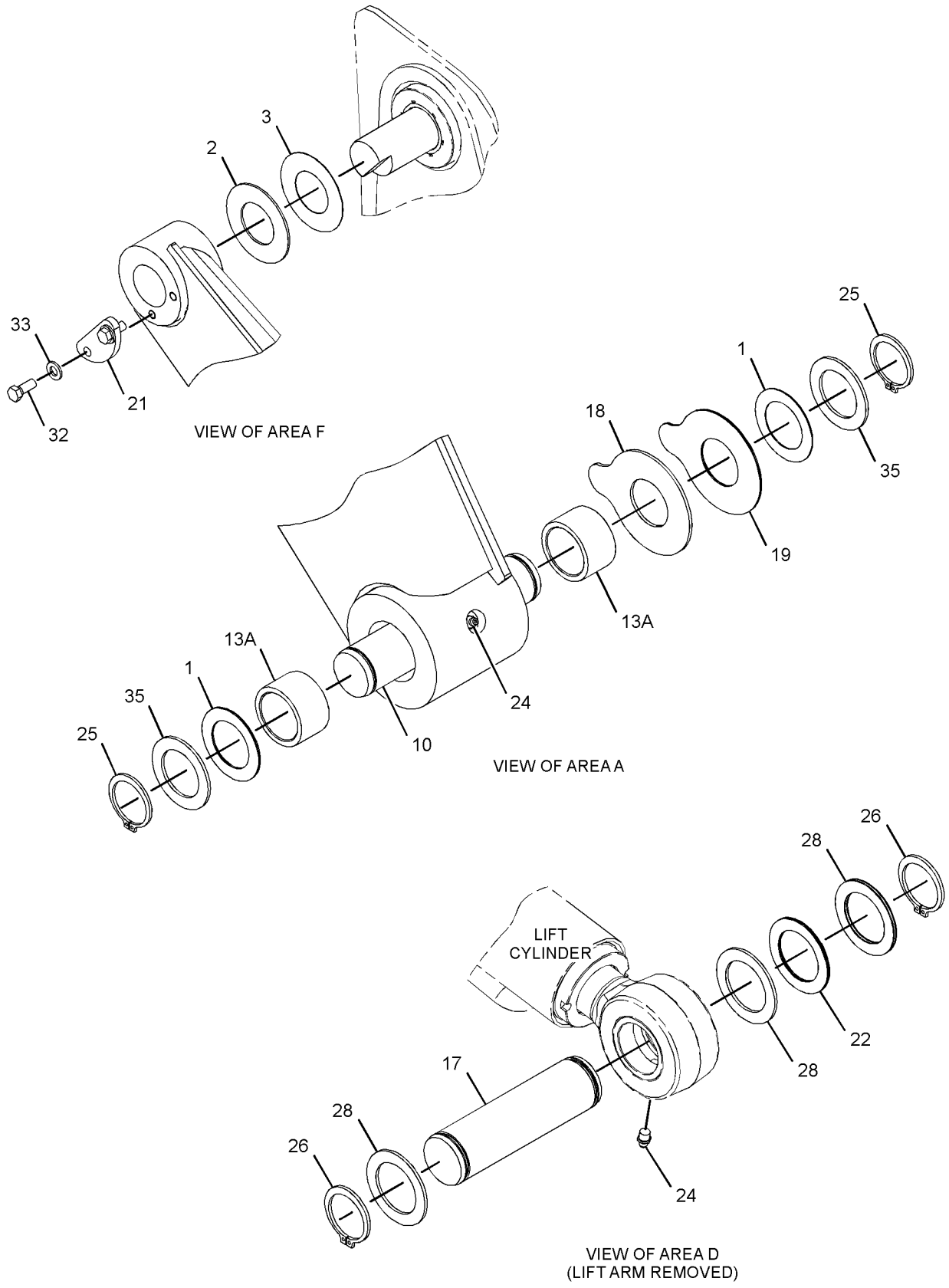

GRAPHIC #2

g02788469

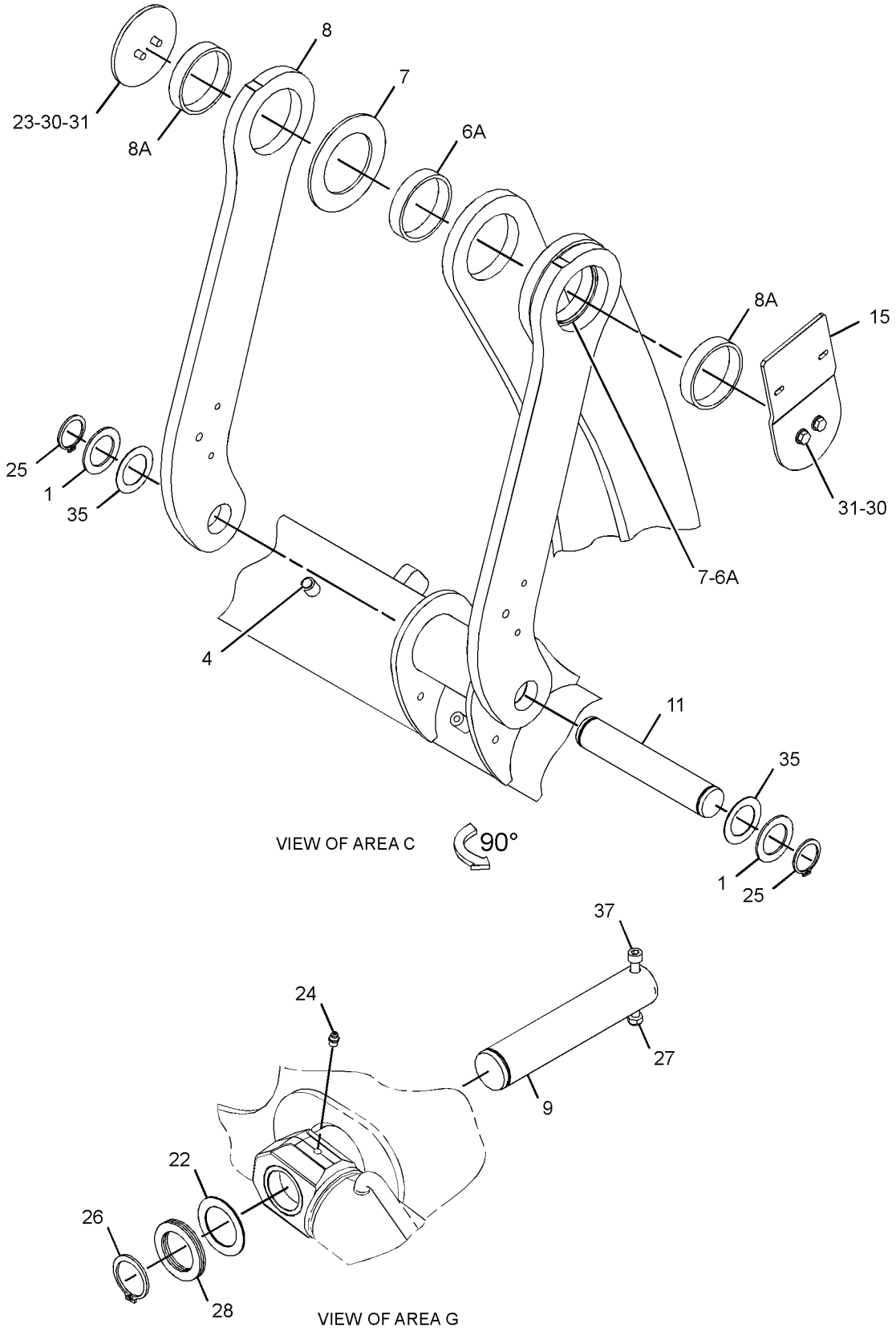

GRAPHIC #3 **<END>** g02788474

209-9930 BOOM GP

S/N: LTG1-UP

PART OF 340-1729 BACKHOE AR-EXTENDABLE STICK, 340-1728 BACKHOE AR-STANDARD STICK

AN ATTACHMENT

SMCS-6501 **i04635498**

NOTE	REF NO	GRAPHIC REF	PART NUMBER	QTY	PART NAME 1 2 3 4 5 6 (PRODUCT LEVEL)	SEE PAGE
B	1	1	**9R-0481**	4	WASHER (71X110X4-MM THK)	
	2	1	**316-0040**	1	BOOM AS	
	2A	1	**209-6181**	2	BUSHING	
	2B	1	**220-1012**	2	BUSHING	
M		1	**9R-9866**	2	BOSS-THREADED (M10X1.5-THD)	
	3	1	**213-6693**	1	PIN	
	4	1	**095-7950**	2	RING-RETAINING	
	5	1	**3B-8488**	3	FITTING-GREASE	
	6	1	**3B-8489**	1	FITTING-GREASE	
	7	1	**193-5915**	4	PLUG	

B-USE AS REQUIRED
M-METRIC PART

209-9930 **BOOM GP** ***(contd.)*** **i04635498**

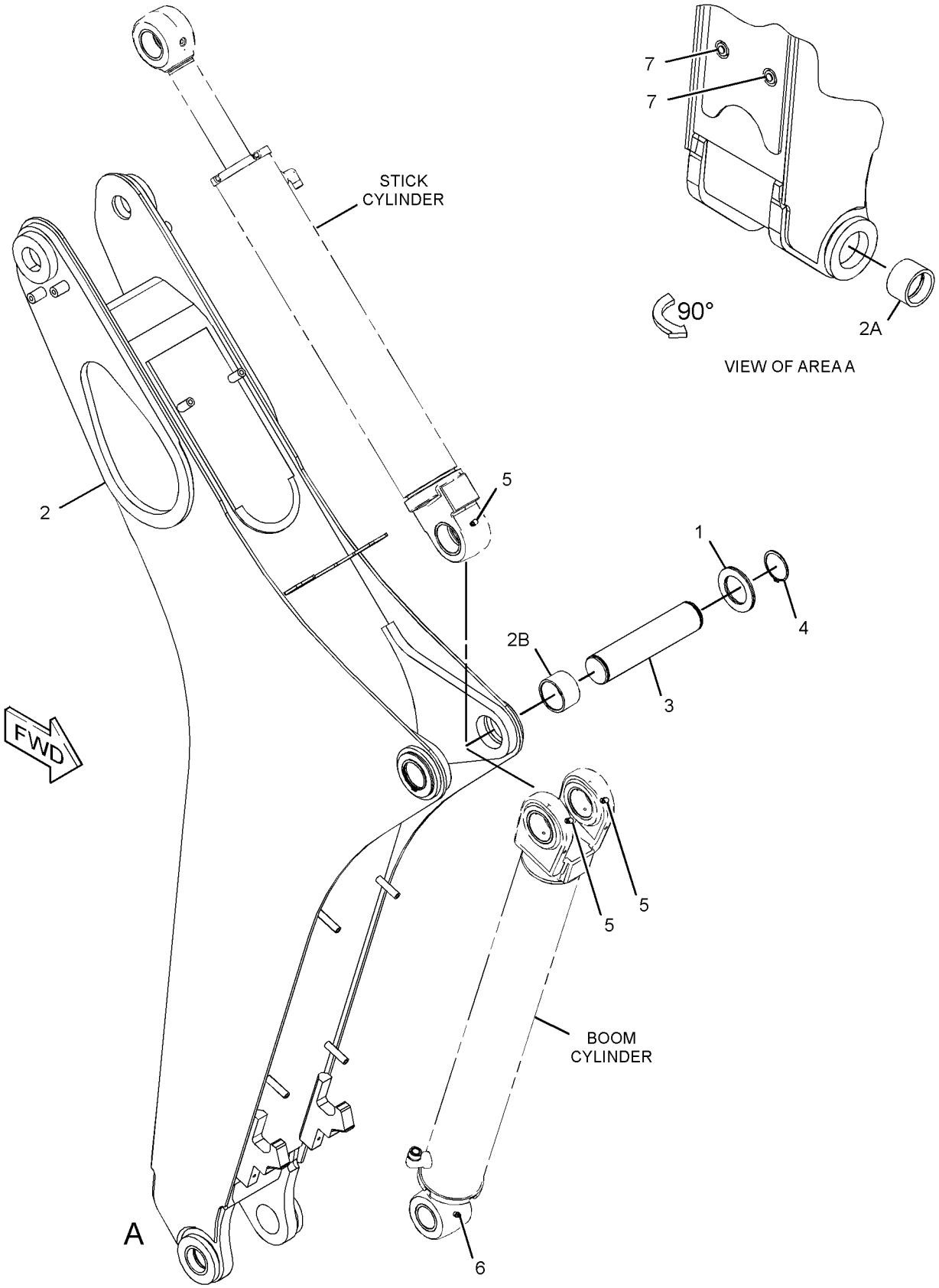

GRAPHIC #1 **<END>** g02821676

337-9840 BRACE GP-LIFT CYLINDER—SINGLE TILT

S/N: LTG1-UP

PART OF 340-1699 LOADER AR

SMCS-7507 **i04548131**

NOTE	REF NO	GRAPHIC REF	PART NUMBER	QTY	PART NAME 1 2 3 4 5 6 (PRODUCT LEVEL)	SEE PAGE
	1	1	**9R-0189**	1	PIN	
	2	1	**9R-5301**	1	PIN-COTTER	
	3	1	**359-1244**	1	PLATE AS	

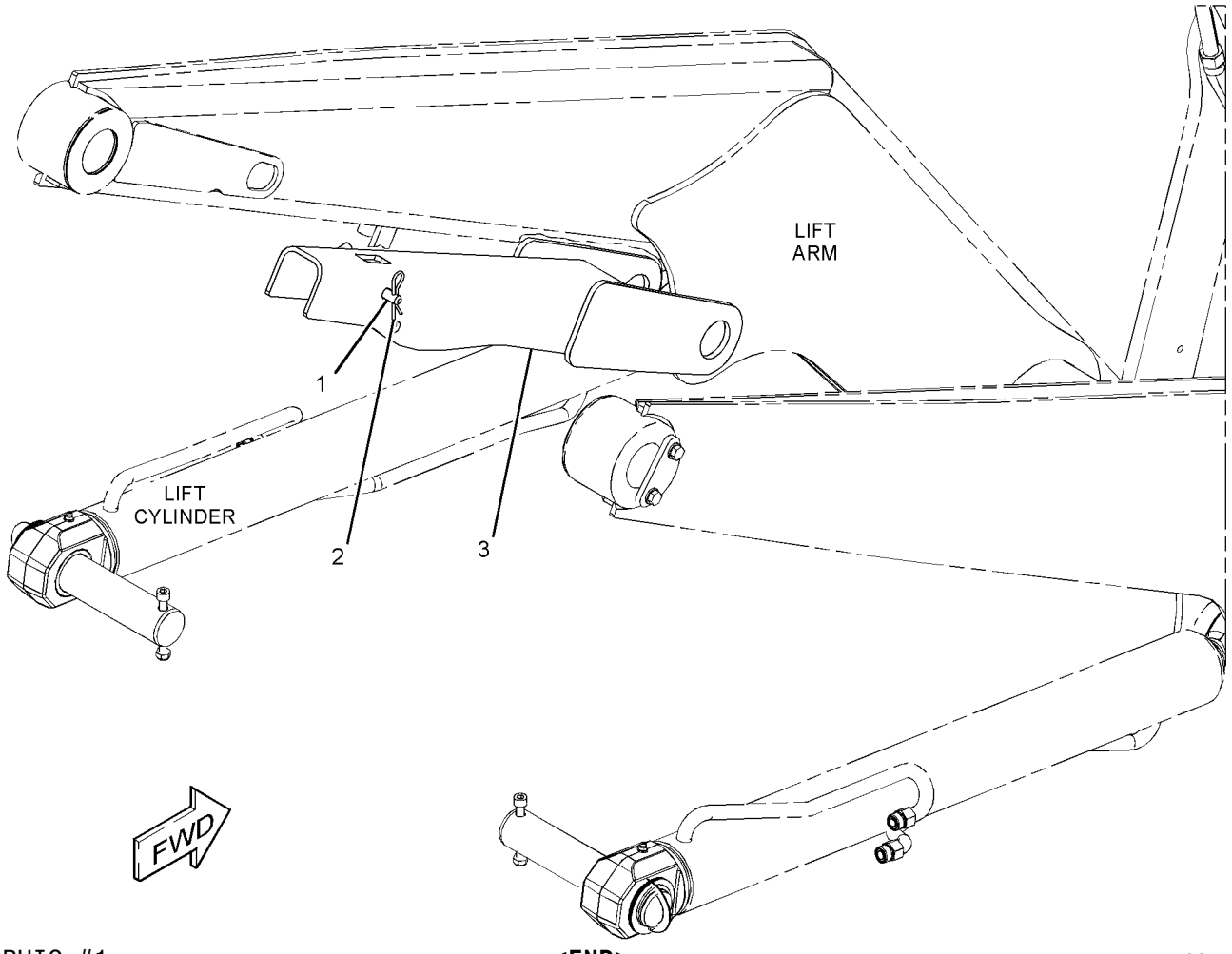

GRAPHIC #1 **<END>** g02777049

IMPLEMENTS

270-3204 GUARD GP-BOOM

S/N: LTG1-UP

AN ATTACHMENT

SMCS-7150 **i03848349**

NOTE	REF NO	GRAPHIC REF	PART NUMBER	QTY	PART NAME 1 2 3 4 5 6 (PRODUCT LEVEL)	SEE PAGE
	1	1	**294-5792**	1	PLATE AS	
M	2	1	**8T-4139**	4	BOLT (M12X1.75X30-MM)	
	3	1	**8T-4223**	4	WASHER-HARD (13.5X25.5X3-MM THK)	

M-METRIC PART

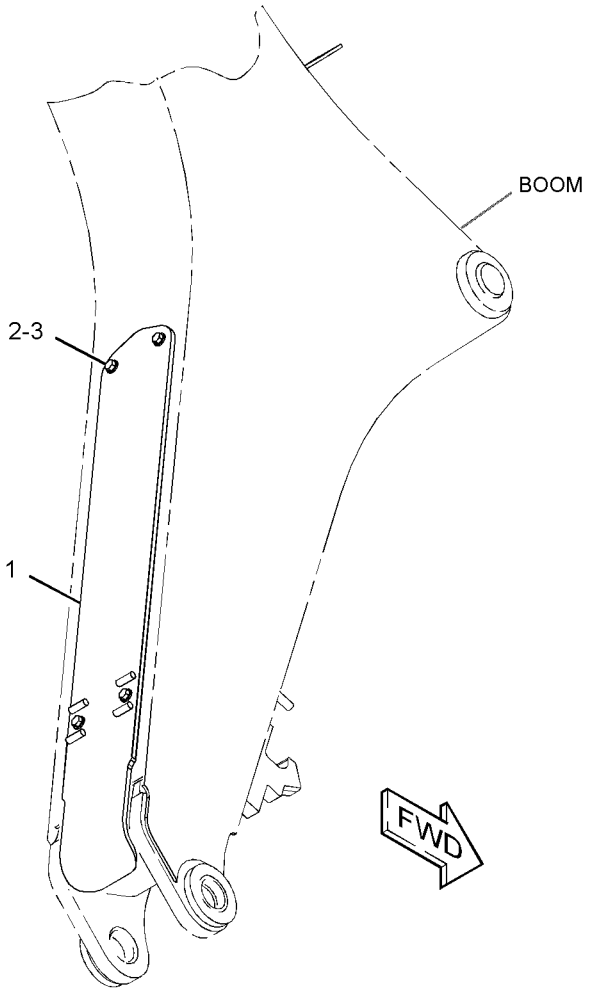

GRAPHIC #1 **<END>** g01514060

213-6692 LINKAGE GP-BACKHOE BUCKET

S/N: LTG1-UP

PART OF 340-1729 BACKHOE AR-EXTENDABLE STICK, 340-1728 BACKHOE AR-STANDARD STICK

AN ATTACHMENT

SMCS-6513 **i03865283**

NOTE	REF NO	GRAPHIC REF	PART NUMBER	QTY	PART NAME 1 2 3 4 5 6 (PRODUCT LEVEL)	SEE PAGE
	1	1	**239-9435**	1	FILM-INSTRUCTION (LINK)	
B	2	1	**9R-0158**	5	WASHER (46X69X3-MM THK)	
B	3	1	**9R-1502**	4	WASHER (56X90X4-MM THK)	
B	4	1	**9R-1510**	9	WASHER (51X82X4-MM THK)	
	5	1	**154-5278**	1	PIN	
	6	1	**154-5279**	1	PIN	
	7	1	**154-5280**	1	PIN	
	8	1	**6V-8344**	2	RING-RETAINING	
	9	1	**213-6690**	1	GUIDE AS (RH)	
	10	1	**213-6691**	1	GUIDE AS (LH)	
					(EACH GUIDE AS INCLUDES)	
		1	**9R-0162**	1	BUSHING	
		1	**9R-0170**	1	BUSHING	
		1	**213-6687**	1	BUSHING	
	11	1	**213-6698**	1	PIN	
	12	1	**213-6723**	1	LINK AS	
		1	**9R-0170**	2	BUSHING	
	13	1	**3B-5319**	4	PIN-COTTER	
	14	1	**3B-8489**	3	FITTING-GREASE	
	15	1	**6V-4364**	2	RING-RETAINING	

B-USE AS REQUIRED

213-6692 **LINKAGE GP-BACKHOE BUCKET** *(contd.)* **i03865283**

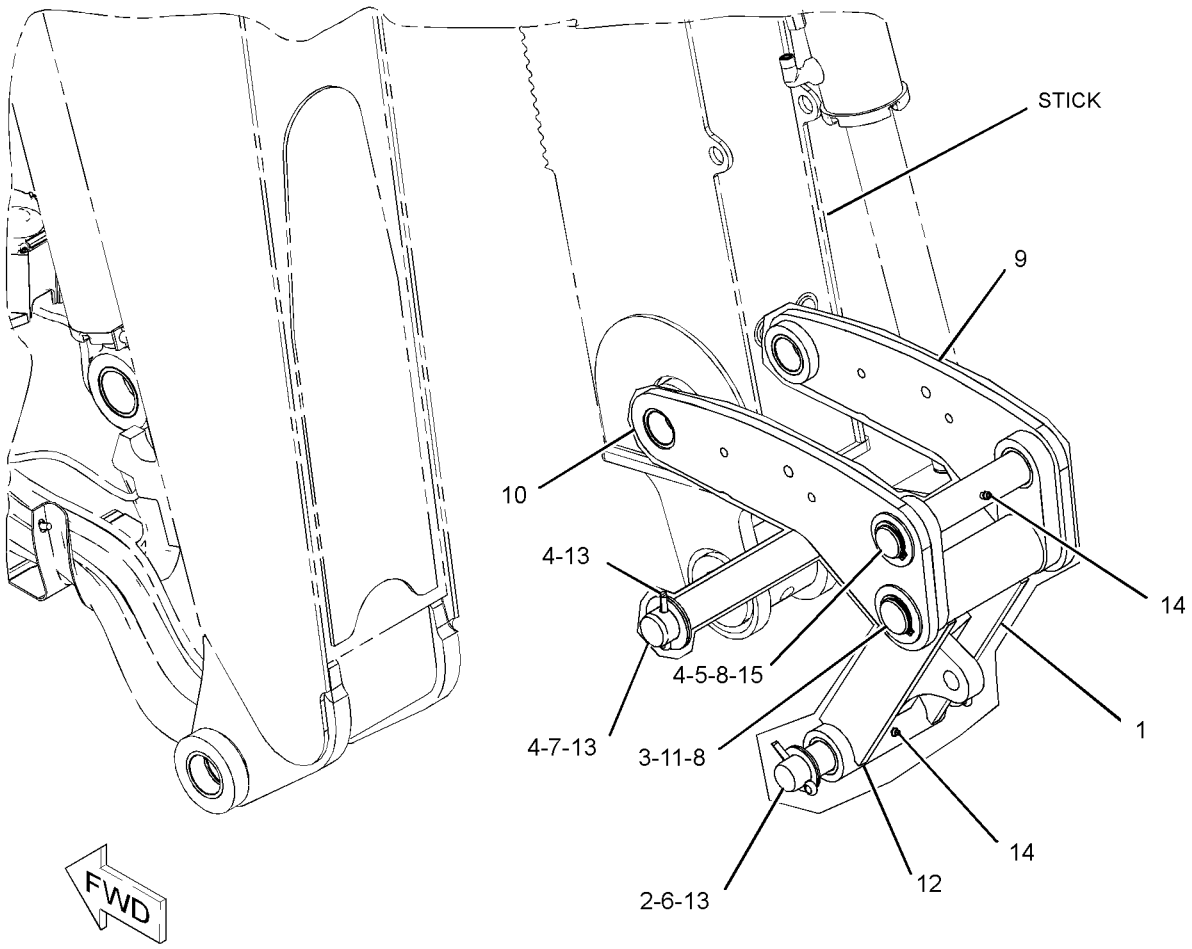

GRAPHIC #1 **<END>** g02110153

206-1641 LOCK GP-TRANSPORT–STABILIZER

S/N: LTG1-UP
PART OF 353-1449, 353-1450 CONTROL AR-STABILIZER
AN ATTACHMENT

SMCS-7505 **i03577612**

NOTE	REF NO	GRAPHIC REF	PART NUMBER	QTY	PART NAME 1 2 3 4 5 6 (PRODUCT LEVEL)	SEE PAGE
	1	1	**9R-8165**	1	BEARING	
	2	1	**164-1398**	2	KNOB	
	3	1	**183-6084**	1	BEARING	
	4	1	**206-1871**	1	BRACKET AS	
M		1	**6V-9632**	3	NUT-WELD (M6X1-THD)	
M		1	**8T-3612**	9	NUT-WELD (M8X1.25-THD)	
	5	1	**206-1874**	1	LEVER AS	
	6	1	**229-5745**	1	SPACER (8X15.875X11.6-MM THK)	
	7	1	**248-2710**	1	GROMMET	
	8	1	**164-1395**	1	KNOB	
	9	1	**5P-4116**	6	WASHER-HARD (8.8X20.5X2-MM THK)	
B	10	1	**6E-5431**	1	SHIM (0.5-MM THK)	
M	11	1	**8T-4138**	1	BOLT (M6X1X20-MM)	
M	12	1	**8T-4189**	8	BOLT (M8X1.25X20-MM)	
	13	1	**8T-4224**	4	WASHER-HARD (8.8X16X2-MM THK)	
	14	1	**8T-6902**	1	CLIP	
M	15	1	**8T-7547**	1	BOLT (M8X1.25X30-MM)	
	16	1	**9X-8256**	1	WASHER (6.6X12X2-MM THK)	

B-USE AS REQUIRED
M-METRIC PART

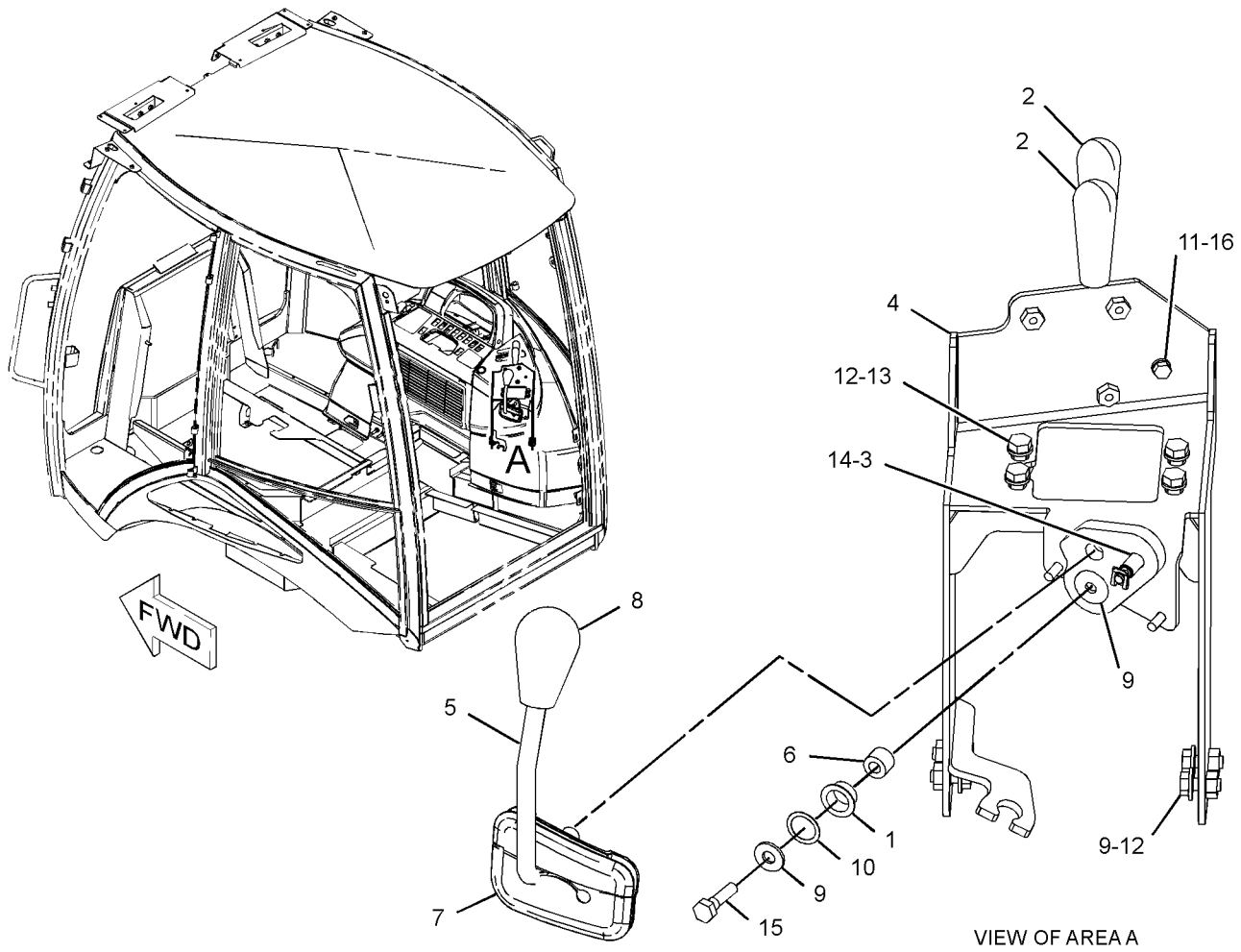

GRAPHIC #1 **<END>** g01207186

211-5182 LOCK GP-TRANSPORT–BOOM

S/N: LTG1-UP

PART OF 340-1729 BACKHOE AR-EXTENDABLE STICK, 340-1728 BACKHOE AR-STANDARD STICK

AN ATTACHMENT

SMCS-7505 **i04708410**

NOTE	REF NO	GRAPHIC REF	PART NUMBER	QTY	PART NAME 1 2 3 4 5 6 (PRODUCT LEVEL)	SEE PAGE
	1	1	**5P-7958**	1	SLEEVE-CABLE SPLICE	
C	2	1	**317-4928**	1	PIN AS	
	3	1	**131-8775**	1	BRACKET AS	
	4	1	**134-0143**	1	CABLE	
	5	1	**214-4285**	2	PAD AS	
	6	1	**214-6999**	1	HOOK	
	7	1	**214-7043**	1	SPACER (6.15X7.94X10-MM THK)	
	8	1	**225-8227**	1	HOOK	
	9	1	**276-2353**	1	CABLE AS	
		1	**2R-0364**	1	RING-RETAINING	
		1	**4D-9517**	1	CLIP	
		1	**6V-0826**	1	GROMMET	
		1	**279-9452**	1	CLIP	
	10	1	**3B-8489**	2	FITTING-GREASE	
M	11	1	**5A-3604**	2	BOLT-SOCKET HEAD (M8X1.25X25-MM)	
M	12	1	**8T-4138**	1	BOLT (M6X1X20-MM)	
	13	1	**6E-1135**	2	PIN	
	14	1	**8T-4121**	3	WASHER-HARD (11X21X2.5-MM THK)	
M	15	1	**8T-4137**	1	BOLT (M10X1.5X20-MM)	
M	16	1	**8T-4195**	2	BOLT (M10X1.5X30-MM)	
	17	1	**214-4281**	1	PIN	
	18	1	**8T-4224**	1	WASHER-HARD (8.8X16X2-MM THK)	
M	19	1	**8T-4908**	1	BOLT (M8X1.25X25-MM)	

C-CHANGE FROM PREVIOUS TYPE
M-METRIC PART

211-5182 **LOCK GP-TRANSPORT** *(contd.)* **i04708410**

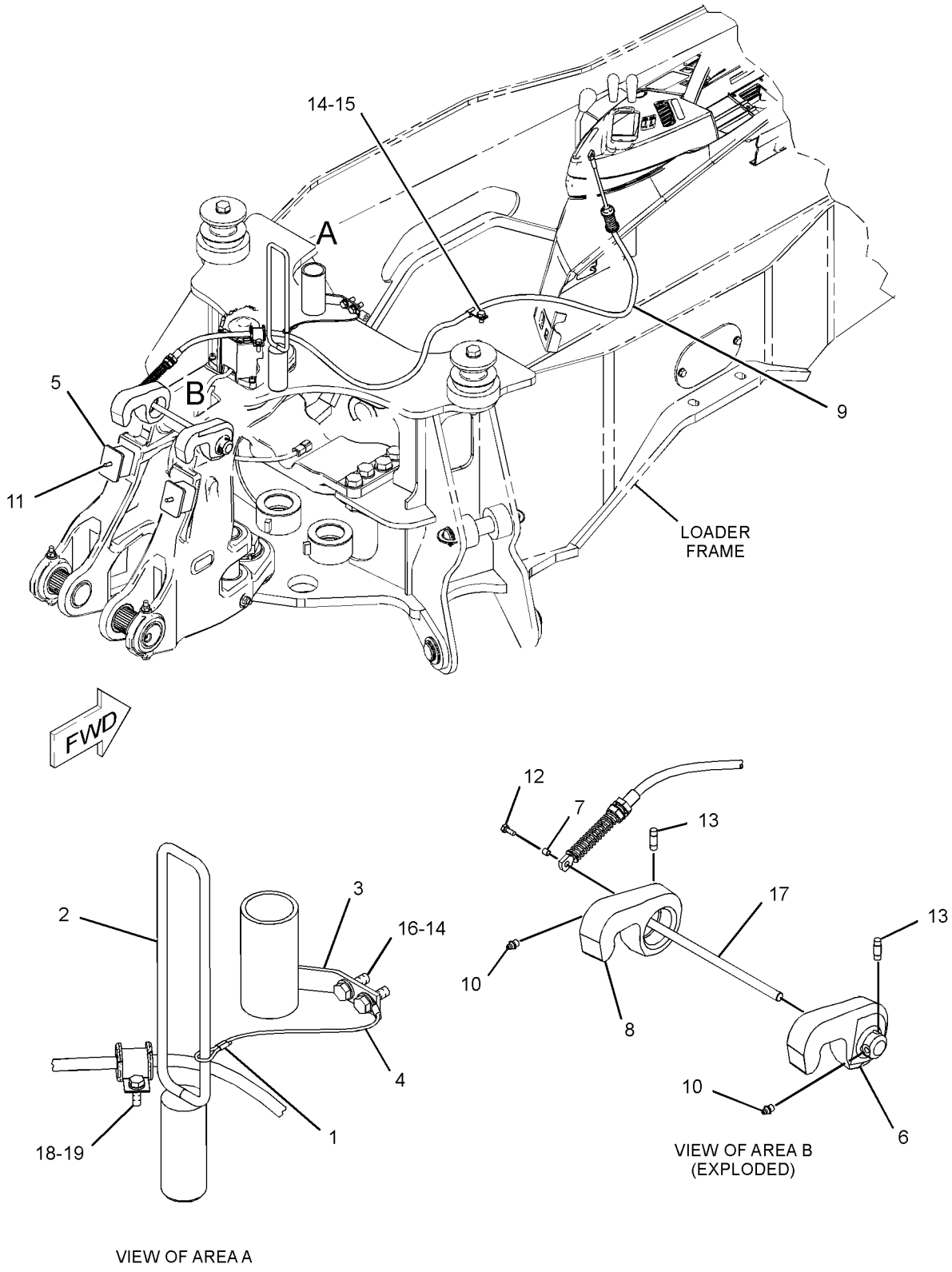

GRAPHIC #1 **<END>** g02826656

252-4660 LOCK GP-TRANSPORT—BACKHOE BUCKET

S/N: LTG1-UP

AN ATTACHMENT

SMCS-7505 **i02210128**

NOTE	REF NO	GRAPHIC REF	PART NUMBER	QTY	PART NAME 1 2 3 4 5 6 (PRODUCT LEVEL)	SEE PAGE
	1	1	**9R-9028**	1	PIN	
	2	1	**252-4659**	1	CABLE AS	
	3	1	**9R-5301**	2	PIN-COTTER	

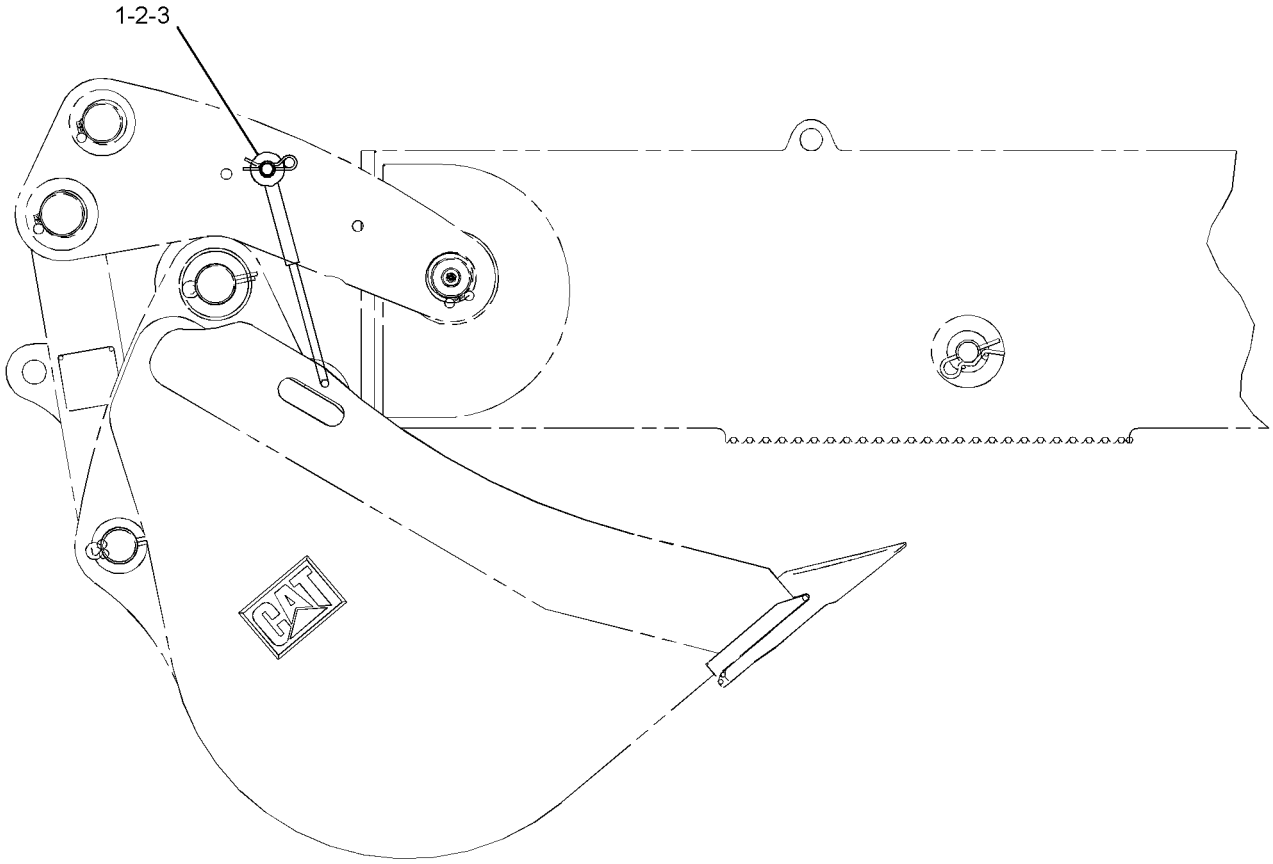

RIGHT SIDE VIEW

GRAPHIC #1 **<END>** g01116719

213-6700 MOUNTING GP-STICK

S/N: LTG1-UP
PART OF 340-1729 BACKHOE AR-EXTENDABLE STICK
AN ATTACHMENT

SMCS-6502 **i02416608**

NOTE	REF NO	GRAPHIC REF	PART NUMBER	QTY	PART NAME 1 2 3 4 5 6 (PRODUCT LEVEL)	SEE PAGE
B	1	1	**9R-5238**	6	SPACER (56X110X3-MM THK)	
B	2	1	**9R-1510**	3	WASHER (51X82X4-MM THK)	
B	3	1	**9R-8292**	3	SPACER (61X135X1-MM THK)	
	4	1	**213-6695**	1	PIN	
	5	1	**215-9448**	1	PIN AS	
B	6	1	**215-9690**	4	WASHER (66X100X4-MM THK)	
	7	1	**220-1019**	1	PIN	
	8	1	**095-0929**	2	RING-RETAINING	
	9	1	**3B-8488**	1	FITTING-GREASE	
	10	1	**3B-8489**	1	FITTING-GREASE	
	11	1	**6V-8344**	2	RING-RETAINING	

B-USE AS REQUIRED

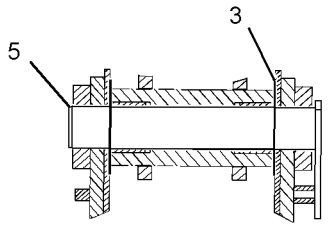

SECTION A-A

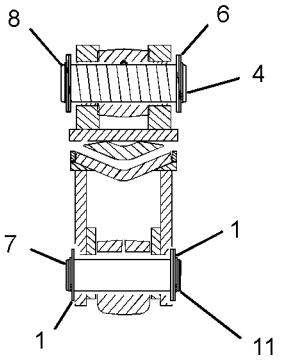

SECTION B-B

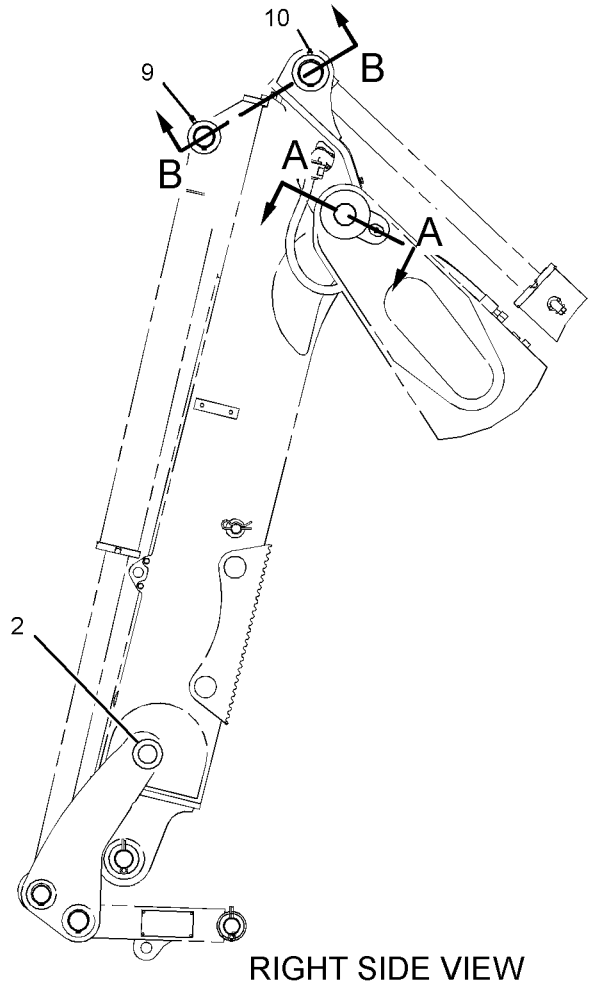

RIGHT SIDE VIEW

GRAPHIC #1 **<END>** g01208134

IMPLEMENTS

9R-1085 PAD & MTG GP-STABILIZER—STREET

S/N: LTG1-UP

AN ATTACHMENT

SMCS-7222 **i04633192**

NOTE	REF NO	GRAPHIC REF	PART NUMBER	QTY	PART NAME 1 2 3 4 5 6 (PRODUCT LEVEL)	SEE PAGE
BC	1	1	**9R-0158**	16	WASHER (46X69X3-MM THK)	
	2	1	**6V-3213**	4	RING-RETAINING	
CY	3	1	*247-7555*	2	PAD GP-STABILIZER (STREET)	391
	4	1	**258-9999**	2	FILM-IDENTIFICATION (LIFT EYE LOCATION)	

B-USE AS REQUIRED
C-CHANGE FROM PREVIOUS TYPE
Y-SEPARATE ILLUSTRATION

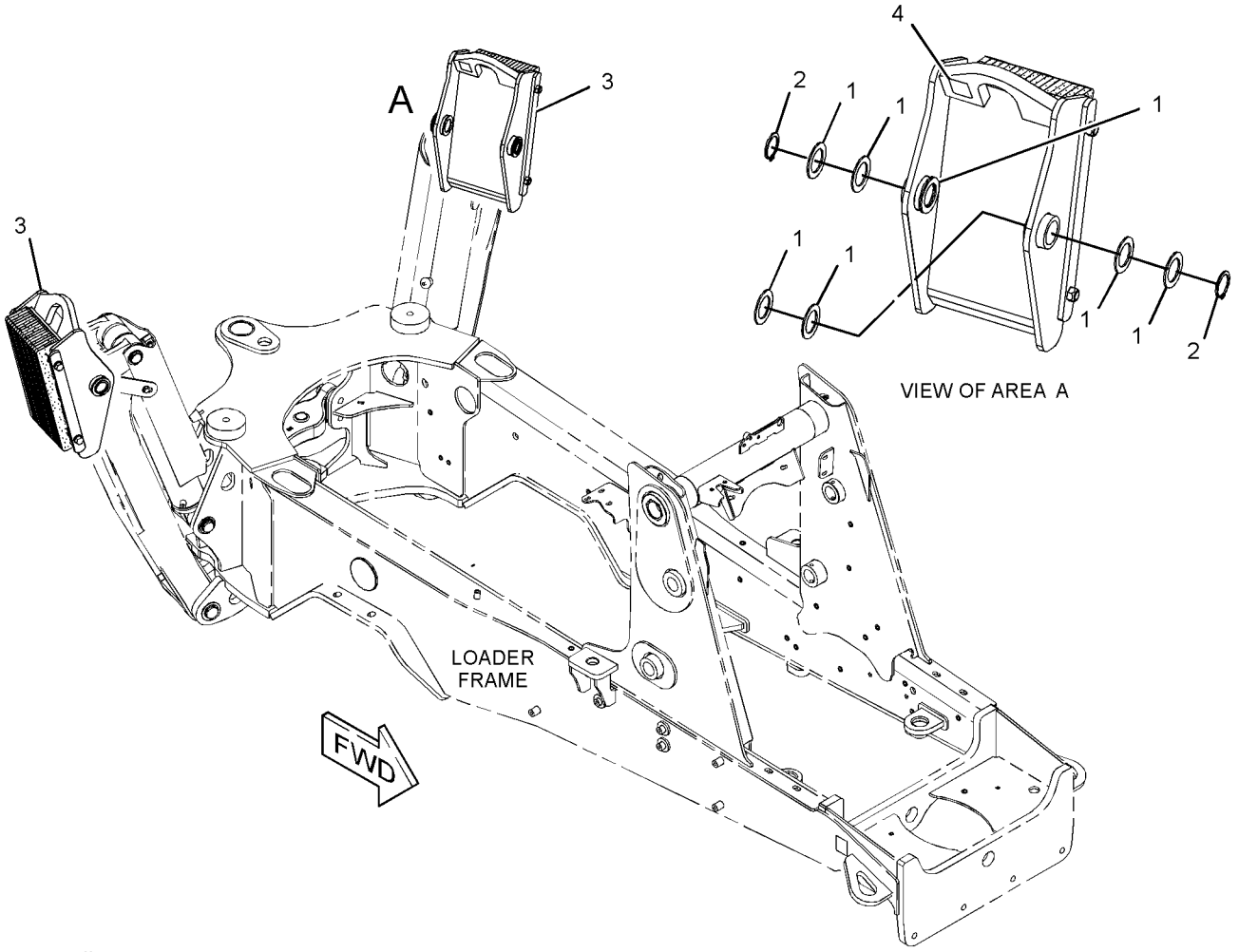

GRAPHIC #1 **<END>** g02806016

9R-6007 PAD & MTG GP-STABILIZER—STREET

S/N: LTG1-UP
AN ATTACHMENT

SMCS-7222 **i04633193**

NOTE	REF NO	GRAPHIC REF	PART NUMBER	QTY	PART NAME 1 2 3 4 5 6 (PRODUCT LEVEL)	SEE PAGE
B	1	1	**9R-0158**	16	WASHER (46X69X3-MM THK)	
	2	1	**6V-3213**	4	RING-RETAINING	
Y	3	1	*238-9547*	2	PAD GP-STABILIZER (STREET)	390
	4	1	**258-9999**	2	FILM-IDENTIFICATION (LIFT EYE LOCATION)	

B-USE AS REQUIRED
Y-SEPARATE ILLUSTRATION

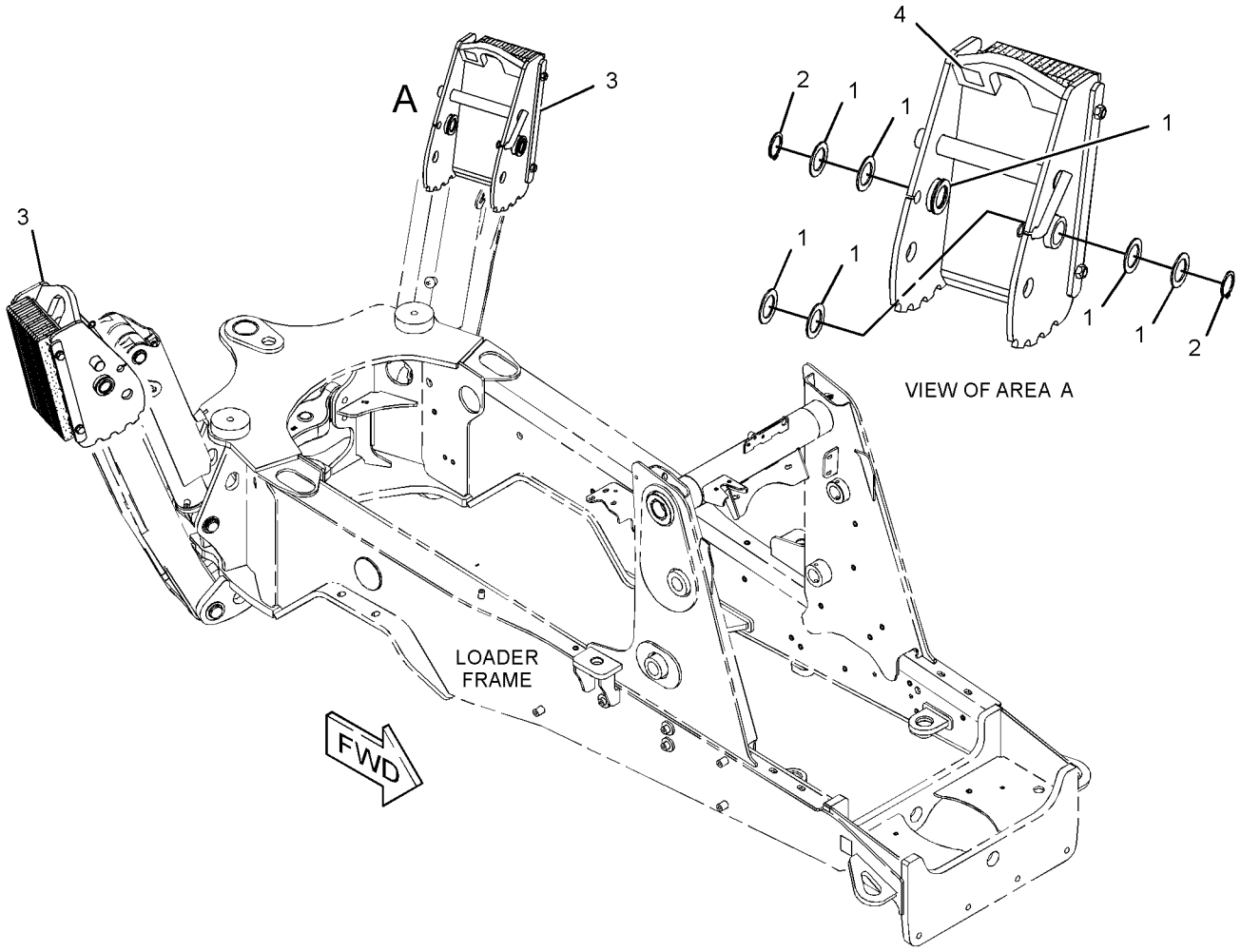

GRAPHIC #1 **<END>** g02805577

238-9547 PAD GP-STABILIZER–STREET

S/N: LTG1-UP
PART OF 9R-6007 PAD & MTG GP-STABILIZER
AN ATTACHMENT

SMCS-7222 **i03868309**

NOTE	REF NO	GRAPHIC REF	PART NUMBER	QTY	PART NAME 1 2 3 4 5 6 (PRODUCT LEVEL)	SEE PAGE
	1	1	**237-9349**	1	PAD AS	
	2	1	**237-9355**	1	PIN AS	
	3	1	**237-9356**	1	PAD AS	
	4	1	**241-0890**	2	SPACER (16.7X22.2X22.2-MM THK)	
	5	1	**241-0891**	2	PLATE	
	6	1	**241-0892**	1	PLATE	
	7	1	**5P-7971**	2	BOLT (5/8-11X12-IN)	
	8	1	**5P-0370**	1	LOCK PIN	
	9	1	**3K-2889**	2	LOCKNUT (5/8-11-THD)	
	10	1	**9X-8257**	2	WASHER (17.5X30X3.5-MM THK)	

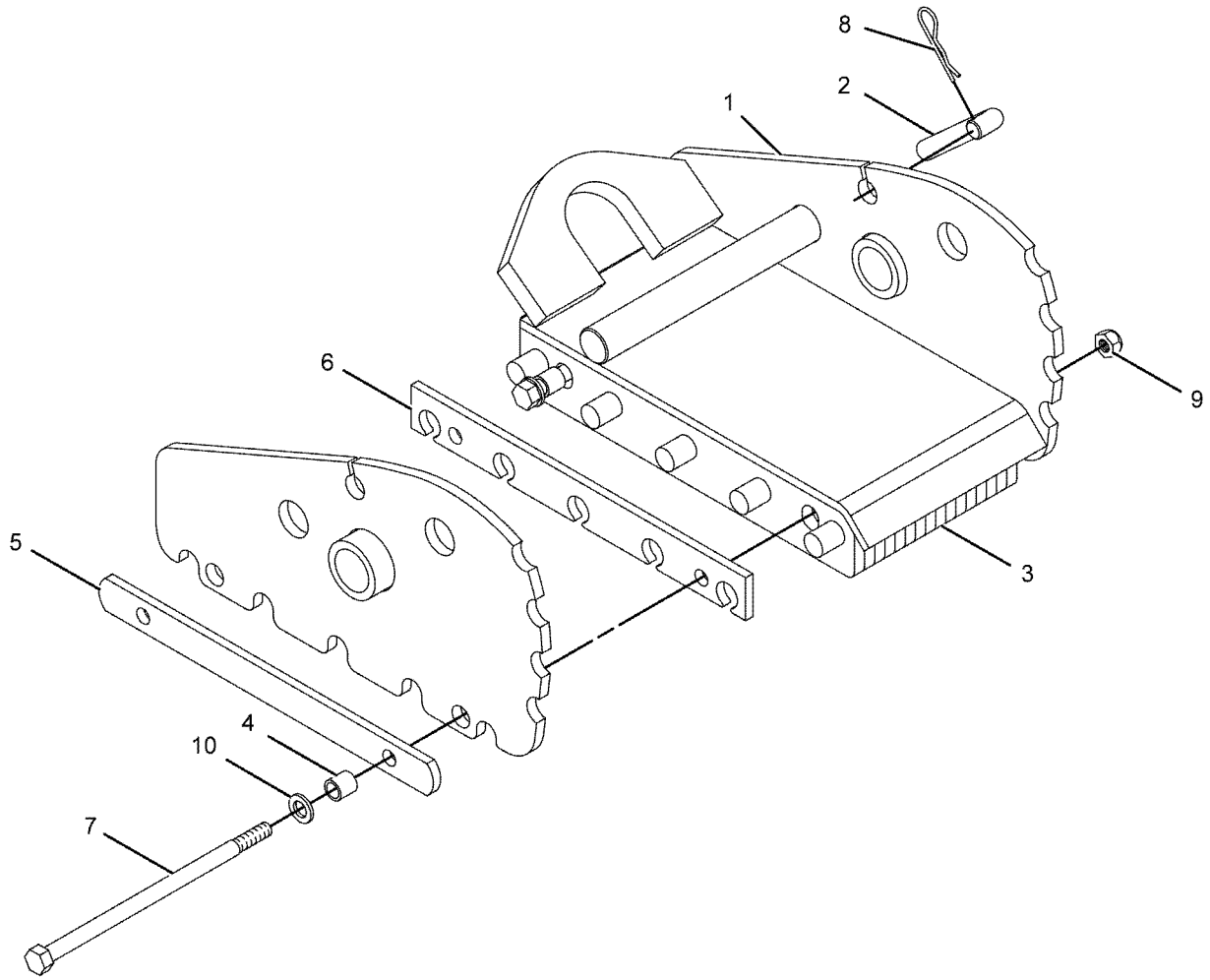

GRAPHIC #1 **<END>** g01084456

247-7555 PAD GP-STABILIZER—STREET

S/N: LTG1-UP
PART OF 9R-1085 PAD & MTG GP-STABILIZER
AN ATTACHMENT

SMCS-7222 **i03869689**

NOTE	REF NO	GRAPHIC REF	PART NUMBER	QTY	PART NAME 1 2 3 4 5 6 (PRODUCT LEVEL)	SEE PAGE
	1	1	**237-9356**	1	PAD AS	
	2	1	**239-1416**	1	PAD AS	
	3	1	**241-0890**	2	SPACER (16.7X22.2X22.2-MM THK)	
	4	1	**241-0891**	2	PLATE	
	5	1	**241-0892**	1	PLATE	
	6	1	**3K-2889**	2	LOCKNUT (5/8-11-THD)	
	7	1	**5P-7971**	2	BOLT (5/8-11X12-IN)	
	8	1	**9X-8257**	2	WASHER (17.5X30X3.5-MM THK)	

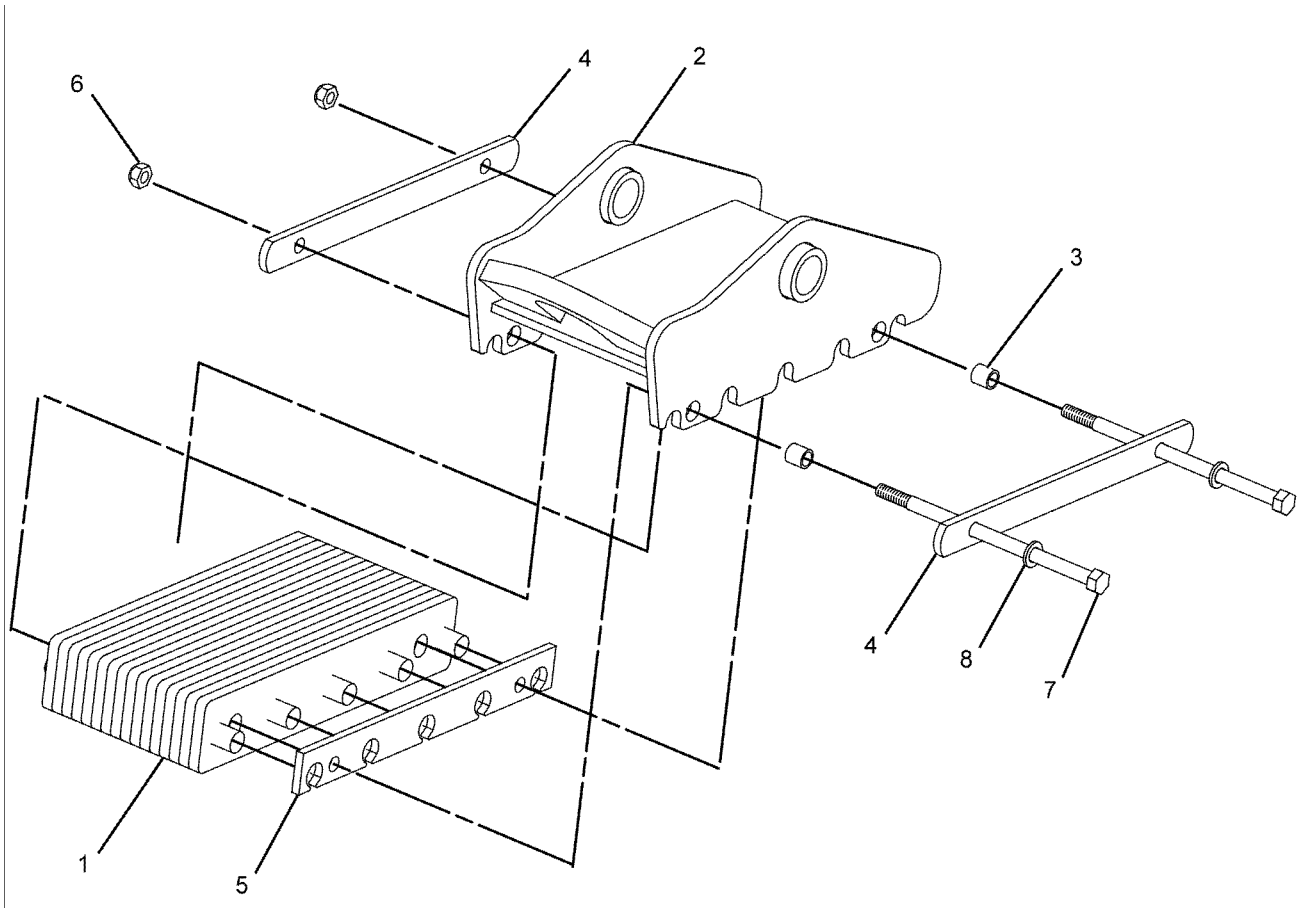

GRAPHIC #1 **<END>** g01113818

374-6876 STABILIZER GP-BACKHOE

S/N: LTG1-UP

PART OF 340-1690 CHASSIS AR

SMCS-7222 **i04547510**

NOTE	REF NO	GRAPHIC REF	PART NUMBER	QTY	PART NAME 1 2 3 4 5 6 (PRODUCT LEVEL)	SEE PAGE
B	1	1	**111-4337**	2	WASHER (46X70X1-MM THK)	
B	2	1	**119-4594**	2	WASHER (41X64X1-MM THK)	
	3	1	**130-0777**	2	STABILIZER AS	
					(EACH INCLUDES)	
	3A	1	**9R-0411**	2	BUSHING	
	4	1	**238-9546**	2	SHAFT	
	5	1	**374-7900**	2	PIN	
	6	1	**376-7520**	2	PIN	
	7	1	**380-9478**	2	PIN	
	8	1	**6V-3213**	4	RING-RETAINING	
	9	1	**6V-8144**	8	RING-RETAINING	
B	10	1	**9R-0109**	16	WASHER (41X64X3-MM THK)	
B	11	1	**9R-0158**	12	WASHER (46X69X3-MM THK)	

B-USE AS REQUIRED

374-6876 **STABILIZER GP-BACKHOE** *(contd.)* **i04547510**

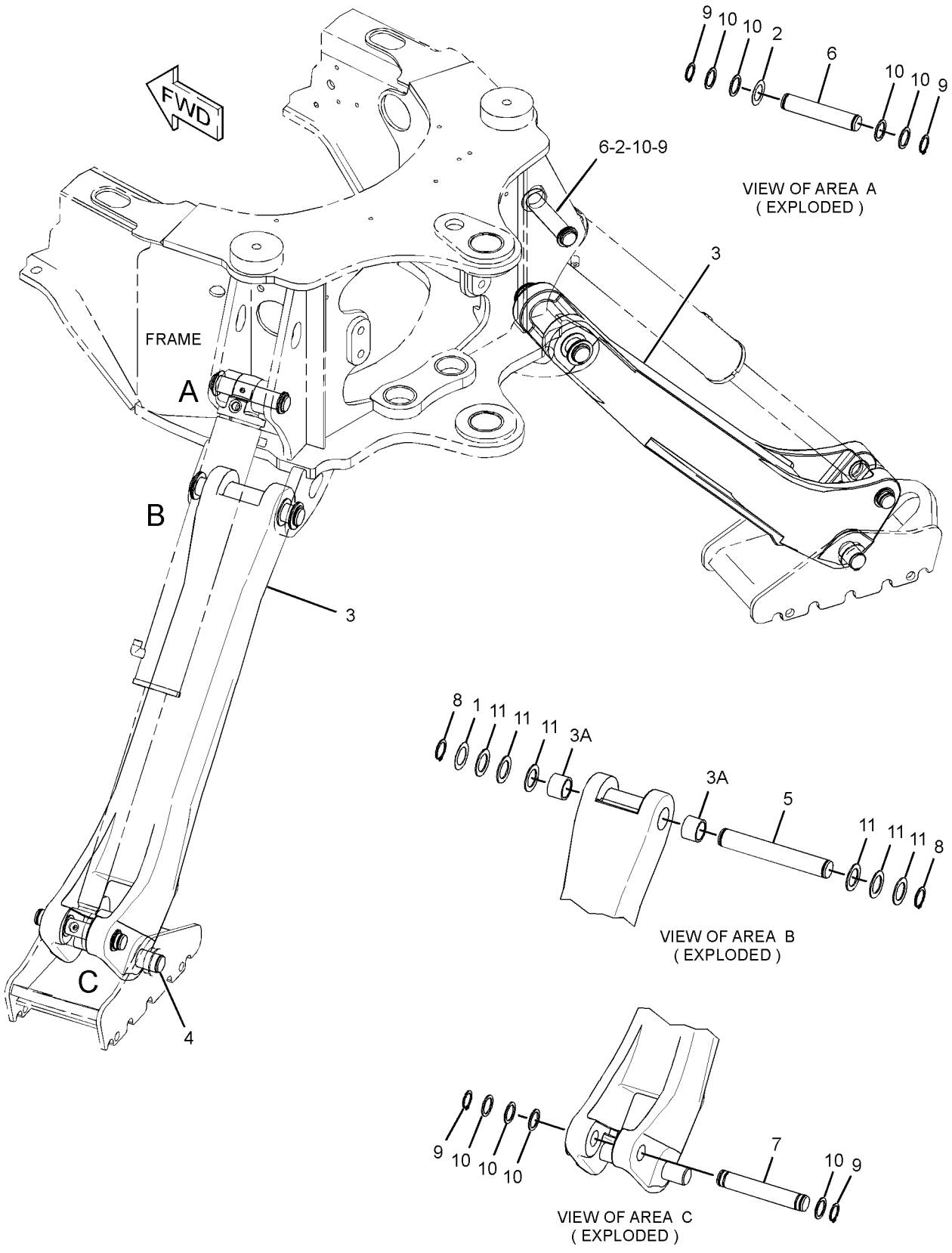

GRAPHIC #1 **<END>** g02779176

271-8670 STICK AS

S/N: LTG1-UP
PART OF 271-8667 STICK GP-HOE
AN ATTACHMENT

SMCS-6502 **i03908711**

NOTE	REF NO	GRAPHIC REF	PART NUMBER	QTY	PART NAME 1 2 3 4 5 6 (PRODUCT LEVEL)	SEE PAGE
	1	1	**9R-0162**	4	BUSHING	
	2	1	**213-6682**	2	BUSHING	
	3	1	**213-6683**	2	BUSHING	

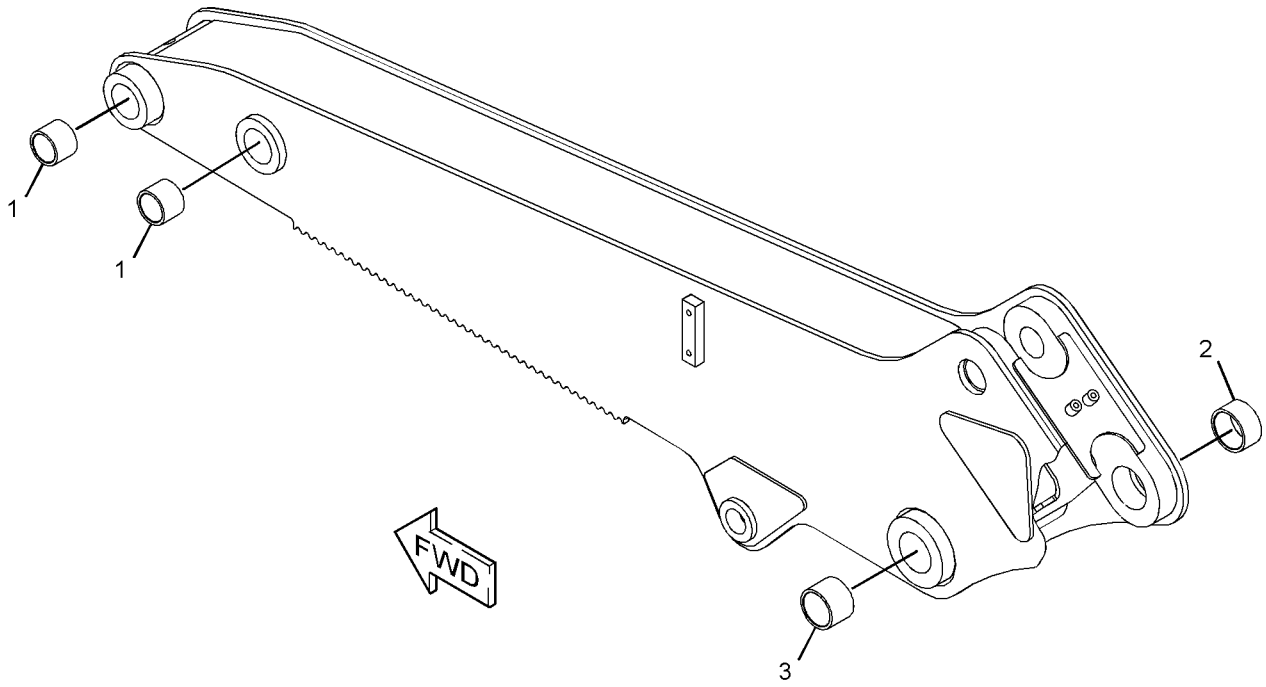

GRAPHIC #1 **<END>** g02149831

271-1405 STICK GP-EXTENDABLE

S/N: LTG1-UP
PART OF 340-1729 BACKHOE AR-EXTENDABLE STICK
AN ATTACHMENT

SMCS-6533 **i04637709**

NOTE	REF NO	GRAPHIC REF	PART NUMBER	QTY	PART NAME 1 2 3 4 5 6 (PRODUCT LEVEL)	SEE PAGE
	1	1,2	**3B-8489**	5	FITTING-GREASE	
	2	1	**9R-2959**	2	CLIP	
	3	1	**305-6167**	1	STICK AS (INNER)	
	3A	1	**213-6682**	2	BUSHING	
	3B	1	**213-6683**	2	BUSHING	
	4	1	**209-2435**	2	BLOCK	
Y	5	1	**210-7098**	1	CYLINDER GP-STICK (EXTENDABLE)	291
	6	2	**214-6143**	1	PIN	
	7	2	**216-6295**	1	PLATE	
	8	1	**217-0055**	1	PIN	
	9	1	**217-1577**	1	PAD AS	
	10	2	**220-1018**	1	PIN	
	11	1	**222-5171**	2	SCREW AS (ADJUSTER)	
	12	1	**223-3926**	1	PLATE	
	13	1	**226-9764**	2	PAD AS	
	14	1	**311-8075**	4	PLATE	
B	15	1	**233-5166**	8	SHIM (1-MM THK)	
B	16	1	**233-5167**	4	SHIM (2-MM THK)	
	17	2	**233-5169**	4	PAD	
Y	18	1	*331-0096*	1	LINES GP-EXTENDABLE STICK	315
	19	1	**271-1408**	1	STICK AS (OUTER)	
	19A	2	**286-7166**	2	BUSHING	
	19B	1	**9R-0162**	2	BUSHING	
	20	2	**1L-3768**	2	RING-RETAINING	
	21	1	**4F-8711**	2	PLUG-BUTTON	
	22	1,2	**5V-7190**	4	WASHER-HARD (10.5X45.2X6-MM THK)	
	23	2	**6V-4364**	2	RING-RETAINING	
B	24	1,2	**8T-4121**	12	WASHER-HARD (11X21X2.5-MM THK)	
M	25	2	**8T-4136**	2	BOLT (M10X1.5X25-MM)	
M	26	2	**8T-4139**	2	BOLT (M12X1.75X30-MM)	
M	27	1	**8T-4183**	2	BOLT (M12X1.75X40-MM)	
M	28	1	**8T-4194**	2	BOLT (M12X1.75X50-MM)	
M	29	1	**8T-4195**	2	BOLT (M10X1.5X30-MM)	
	30	1,2	**8T-4223**	26	WASHER-HARD (13.5X25.5X3-MM THK)	
M	31	1	**8T-4910**	4	BOLT (M12X1.75X60-MM)	
M	32	1	**297-5510**	16	SCREW-HEX SOCKET (M12X1.75X30-MM)	
B	33	1	**293-9882**	4	SHIM (1-MM THK)	
B	34	1	**293-9884**	4	SHIM (0.25-MM THK)	
	35	1	**287-5667**	4	SHIM (1-MM THK)	
	36	2	**111-9251**	2	WASHER-HARD (20X35X1.6-MM THK)	
	37	1	**289-9426**	1	PAD AS	
	38	1	**3B-8488**	1	FITTING-GREASE	
	39	2	**9R-1510**	3	WASHER (51X82X4-MM THK)	
	40	2	**9R-5238**	6	SPACER (56X110X3-MM THK)	
	41	2	**6V-8344**	2	RING-RETAINING	
	42	2	**9R-8292**	3	SPACER (61X135X1-MM THK)	
	43	1	**193-5914**	4	PLUG	
	44	1	**213-6695**	1	PIN	
	45	2	**215-9448**	1	PIN AS	
	46	1	**215-9690**	4	WASHER (66X100X4-MM THK)	
	47	2	**220-1019**	1	PIN	
	48	1	**259-1802**	2	FILM-INSTRUCTION (EXTENDABLE STICK PIN, READ OMM)	
	49	1	**375-1442**	2	RING-RETAINING	

B-USE AS REQUIRED
M-METRIC PART
Y-SEPARATE ILLUSTRATION

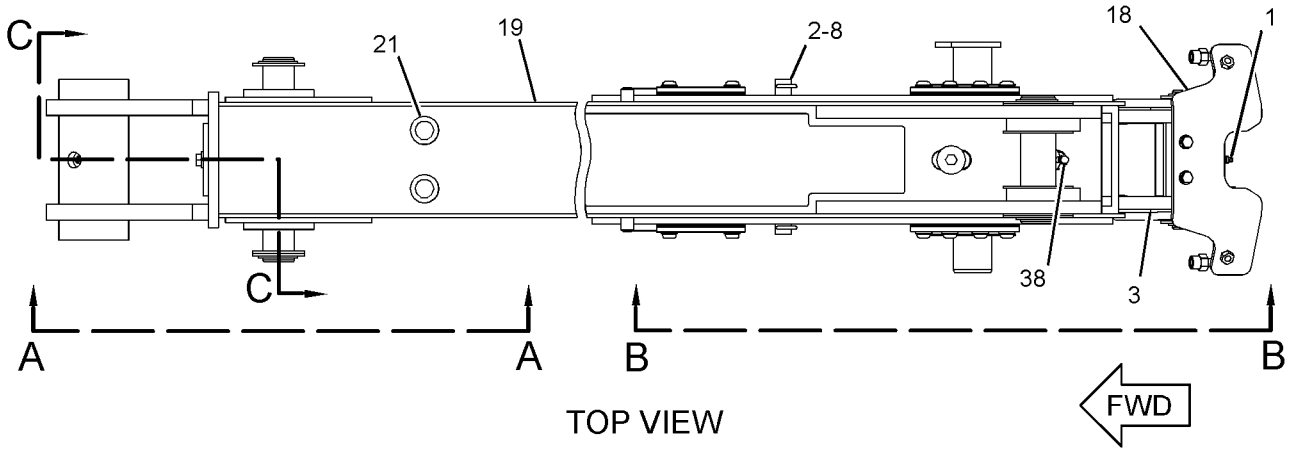

TOP VIEW

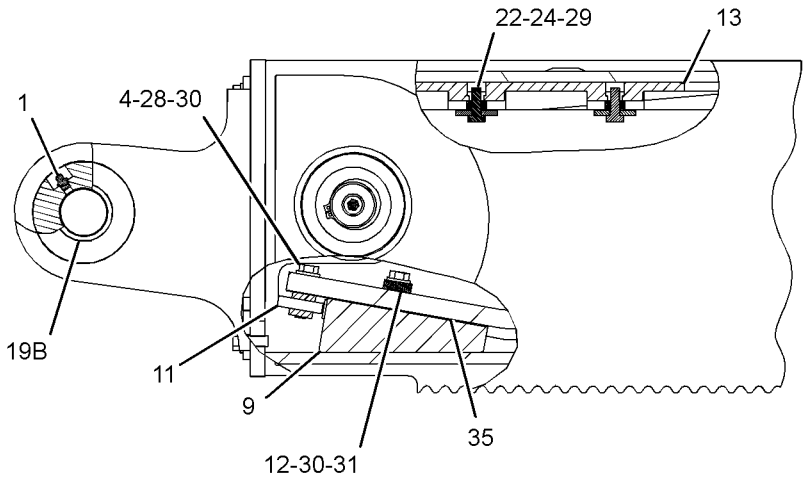

VIEW A-A

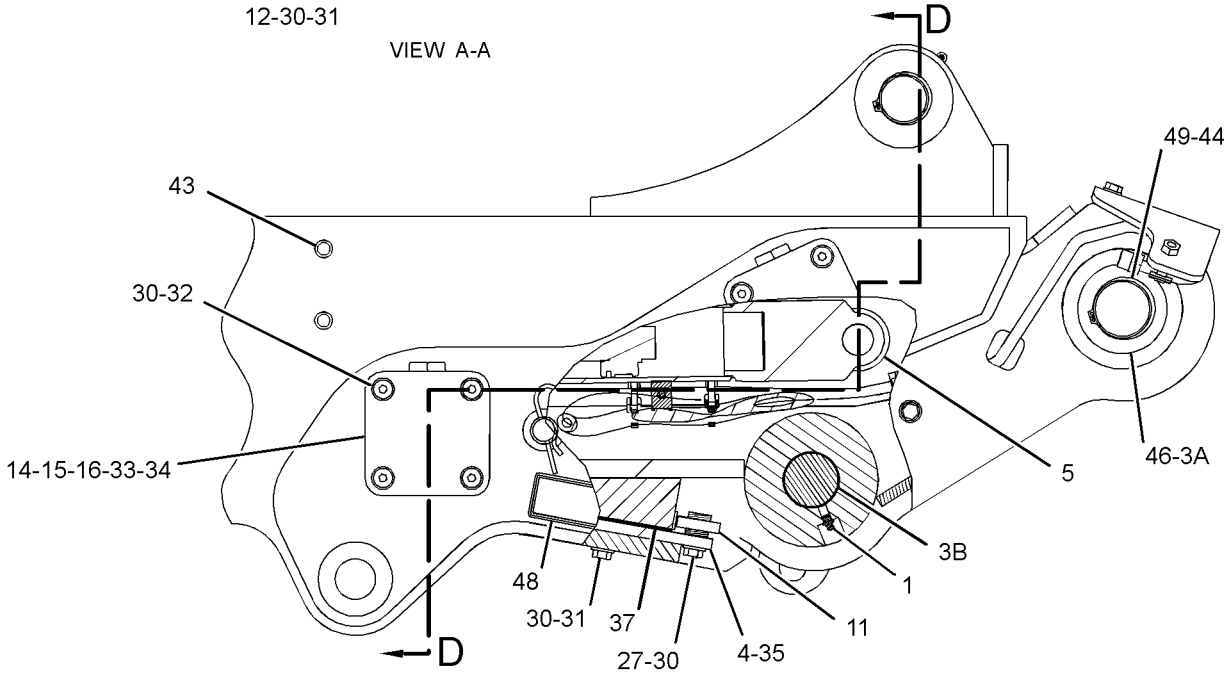

VIEW B-B

REFER TO ALL ILLUSTRATIONS OF THIS GROUP FOR AUXILIARY VIEWS

GRAPHIC #1

g02825116

271-1405 **STICK GP-EXTENDABLE** *(contd.)* **i04637709**

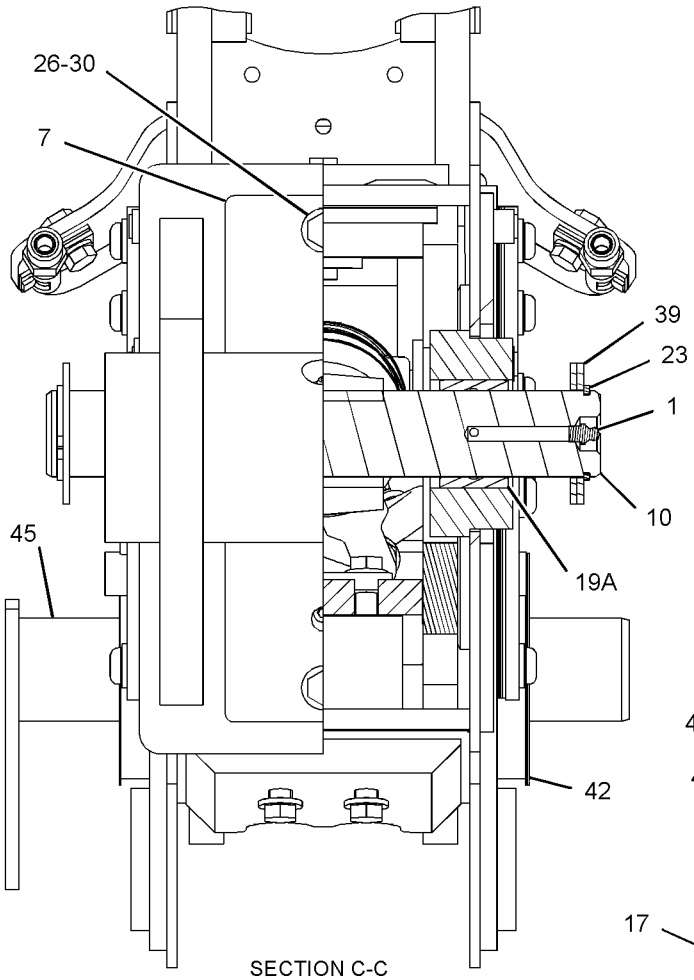

SECTION C-C

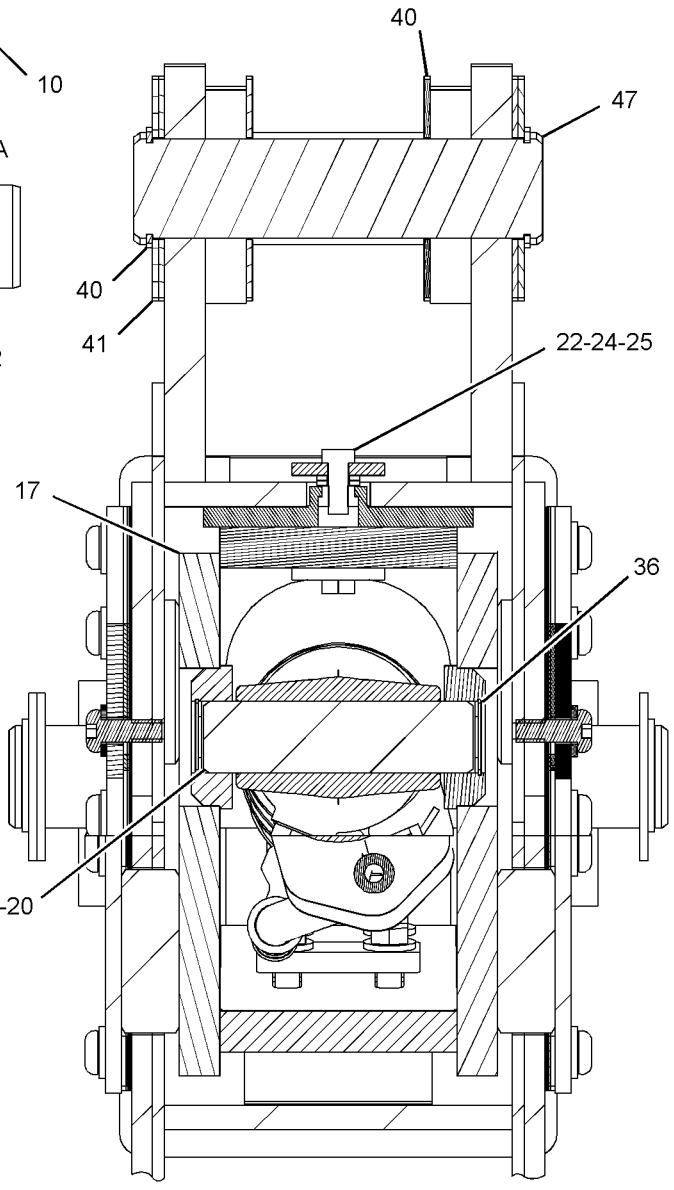

SECTION D-D

GRAPHIC #2 **<END>** g02825118

271-8667 STICK GP-HOE

S/N: LTG1-UP

PART OF 340-1728 BACKHOE AR-STANDARD STICK

AN ATTACHMENT

SMCS-6502 **i04637710**

NOTE	REF NO	GRAPHIC REF	PART NUMBER	QTY	PART NAME 1 2 3 4 5 6 (PRODUCT LEVEL)	SEE PAGE
B	1	1	**9R-1502**	4	WASHER (56X90X4-MM THK)	
B	2	1	**9R-1510**	4	WASHER (51X82X4-MM THK)	
B	3	1	**9R-8292**	3	SPACER (61X135X1-MM THK)	
	4	1	**213-6695**	1	PIN	
	5	1	**213-6696**	1	PIN	
	6	1	**213-6697**	1	PIN	
	7	1	**215-9448**	1	PIN AS	
B	8	1	**215-9690**	4	WASHER (66X100X4-MM THK)	
Y	9	1	**271-8670**	1	STICK AS	394
	10	1	**375-1442**	2	RING-RETAINING	
	11	1	**3B-8488**	1	FITTING-GREASE	
	12	1	**3B-8489**	5	FITTING-GREASE	
	13	1	**6V-4364**	2	RING-RETAINING	
	14	1	**6V-8344**	2	RING-RETAINING	

B-USE AS REQUIRED
Y-SEPARATE ILLUSTRATION

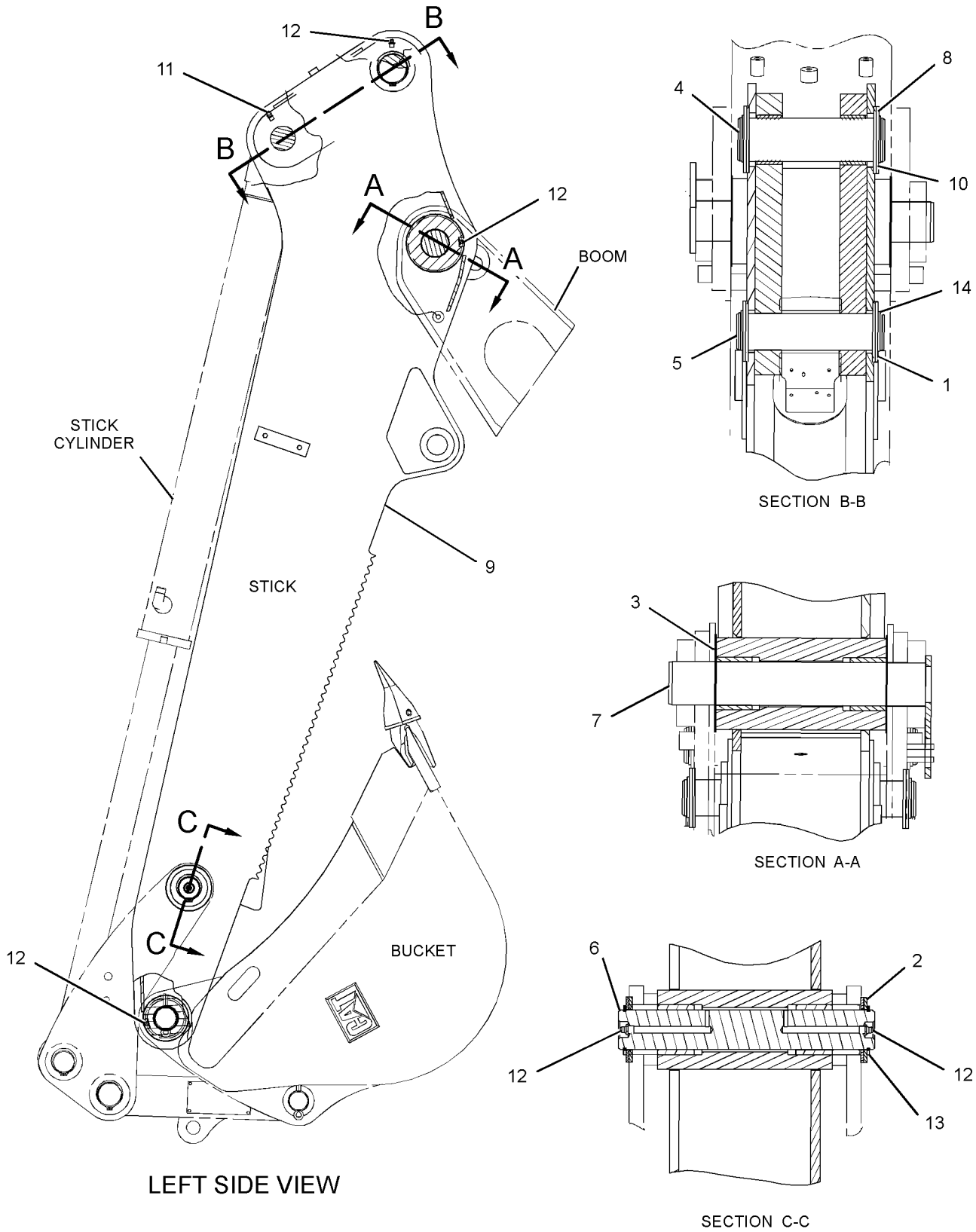

GRAPHIC #1 **<END>** g01232072

337-7386 BUCKET AR-GENERAL PURPOSE

S/N: LTG1-UP

AN ATTACHMENT

SMCS-6101 **i04605991**

NOTE	PART NUMBER	QTY	PART NAME 1 2 3 4 5 6 (PRODUCT LEVEL)	SEE PAGE
Y	**337-7385**	1	BUCKET GP-GENERAL PURPOSE	418
Y	*9R-5321*	1	EDGE GP-CUTTING	444
Y-SEPARATE ILLUSTRATION				

<END>

337-7387 BUCKET AR-GENERAL PURPOSE

S/N: LTG1-UP

AN ATTACHMENT

SMCS-6101 **i04606192**

NOTE	PART NUMBER	QTY	PART NAME 1 2 3 4 5 6 (PRODUCT LEVEL)	SEE PAGE
Y	**337-7385**	1	BUCKET GP-GENERAL PURPOSE	418
Y	*9R-5866*	1	TOOTH GP-UNI	449
Y-SEPARATE ILLUSTRATION				

<END>

337-7389 BUCKET AR-GENERAL PURPOSE

S/N: LTG1-UP

AN ATTACHMENT

SMCS-6101 **i04622226**

NOTE	PART NUMBER	QTY	PART NAME 1 2 3 4 5 6 (PRODUCT LEVEL)	SEE PAGE
Y	**337-7388**	1	BUCKET GP-GENERAL PURPOSE	419
Y	*9R-5321*	1	EDGE GP-CUTTING	444
Y-SEPARATE ILLUSTRATION				

<END>

337-7390 BUCKET AR-GENERAL PURPOSE

S/N: LTG1-UP

AN ATTACHMENT

SMCS-6101 **i04622225**

NOTE	PART NUMBER	QTY	PART NAME 1 2 3 4 5 6 (PRODUCT LEVEL)	SEE PAGE
Y	**337-7388**	1	BUCKET GP-GENERAL PURPOSE	419
Y	*9R-5866*	1	TOOTH GP-UNI	449
Y-SEPARATE ILLUSTRATION				

<END>

WORK TOOLS

337-7397 BUCKET AR-GENERAL PURPOSE

S/N: LTG1-UP

AN ATTACHMENT

SMCS-6101 **i04622224**

NOTE	PART NUMBER	QTY	PART NAME 1 2 3 4 5 6 (PRODUCT LEVEL)	SEE PAGE
Y	**337-7396**	1	BUCKET GP-GENERAL PURPOSE	420
Y	*9R-5320*	1	EDGE GP-CUTTING	443

Y-SEPARATE ILLUSTRATION

<END>

WORK TOOLS

361-2069 BUCKET AR-GENERAL PURPOSE

S/N: LTG1-UP

AN ATTACHMENT

SMCS-6101 **i04622217**

NOTE	REF NO	GRAPHIC REF	PART NUMBER	QTY	PART NAME 1 2 3 4 5 6 (PRODUCT LEVEL)	SEE PAGE
	1	1	*9R-5866*	1	TOOTH GP-UNI	
		1	**4F-3657**	16	BOLT-PLOW (5/8-11X2.75-IN)	
		1	**4K-0367**	16	NUT-FULL (5/8-11-THD)	
		1	**135-8203**	8	TOOTH-UNI	
Y	2	1	**337-7396**	1	BUCKET GP-GENERAL PURPOSE	420

Y-SEPARATE ILLUSTRATION

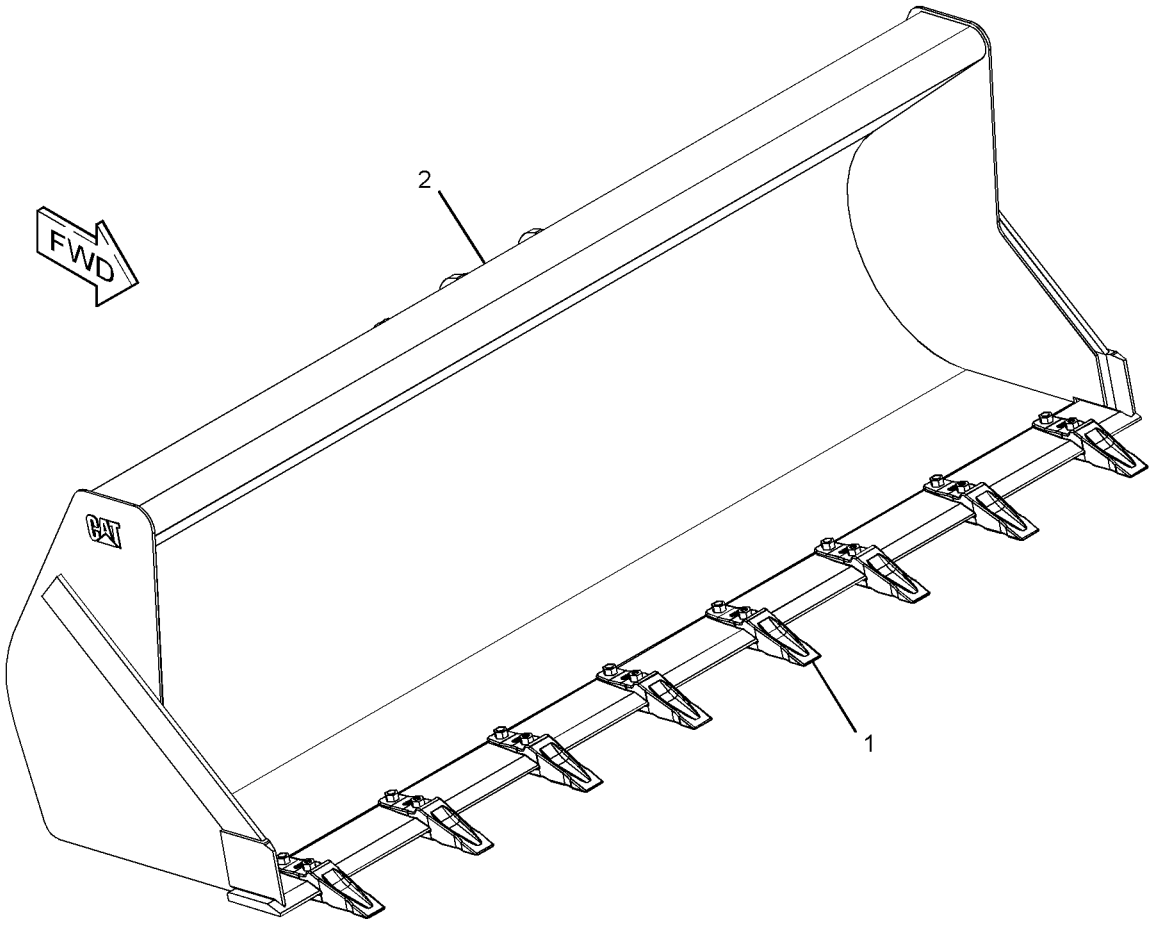

GRAPHIC #1 **<END>** g02791757

WORK TOOLS

337-7437 BUCKET AR-MULTIPURPOSE

S/N: LTG1-UP

AN ATTACHMENT

SMCS-6104 **i04606209**

NOTE	REF NO	GRAPHIC REF	PART NUMBER	QTY	PART NAME 1 2 3 4 5 6 (PRODUCT LEVEL)	SEE PAGE
	1	1	*9R-5866*	1	TOOTH GP-UNI	
		1	**4F-3657**	16	BOLT-PLOW (5/8-11X2.75-IN)	
		1	**4K-0367**	16	NUT-FULL (5/8-11-THD)	
		1	**135-8203**	8	TOOTH-UNI	
Y	2	1	**337-7436**	1	BUCKET GP-MULTIPURPOSE	427

Y-SEPARATE ILLUSTRATION

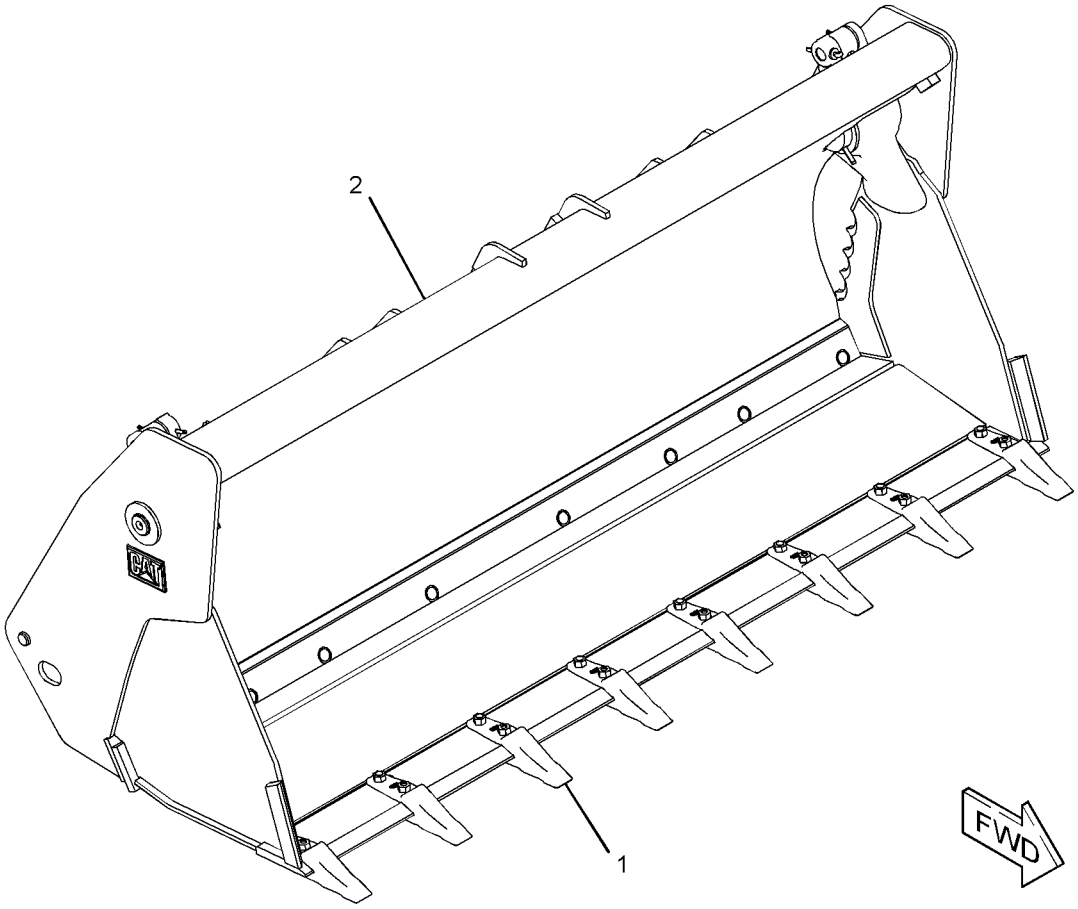

GRAPHIC #1 **<END>** g02788667

WORK TOOLS

337-7438 BUCKET AR-MULTIPURPOSE

S/N: LTG1-UP

AN ATTACHMENT

SMCS-6104 **i04618150**

NOTE	REF NO	GRAPHIC REF	PART NUMBER	QTY	PART NAME 1 2 3 4 5 6 (PRODUCT LEVEL)	SEE PAGE
Y	1	1	*9R-5321*	1	EDGE GP-CUTTING	444
Y	2	1	**337-7436**	1	BUCKET GP-MULTIPURPOSE	427

Y-SEPARATE ILLUSTRATION

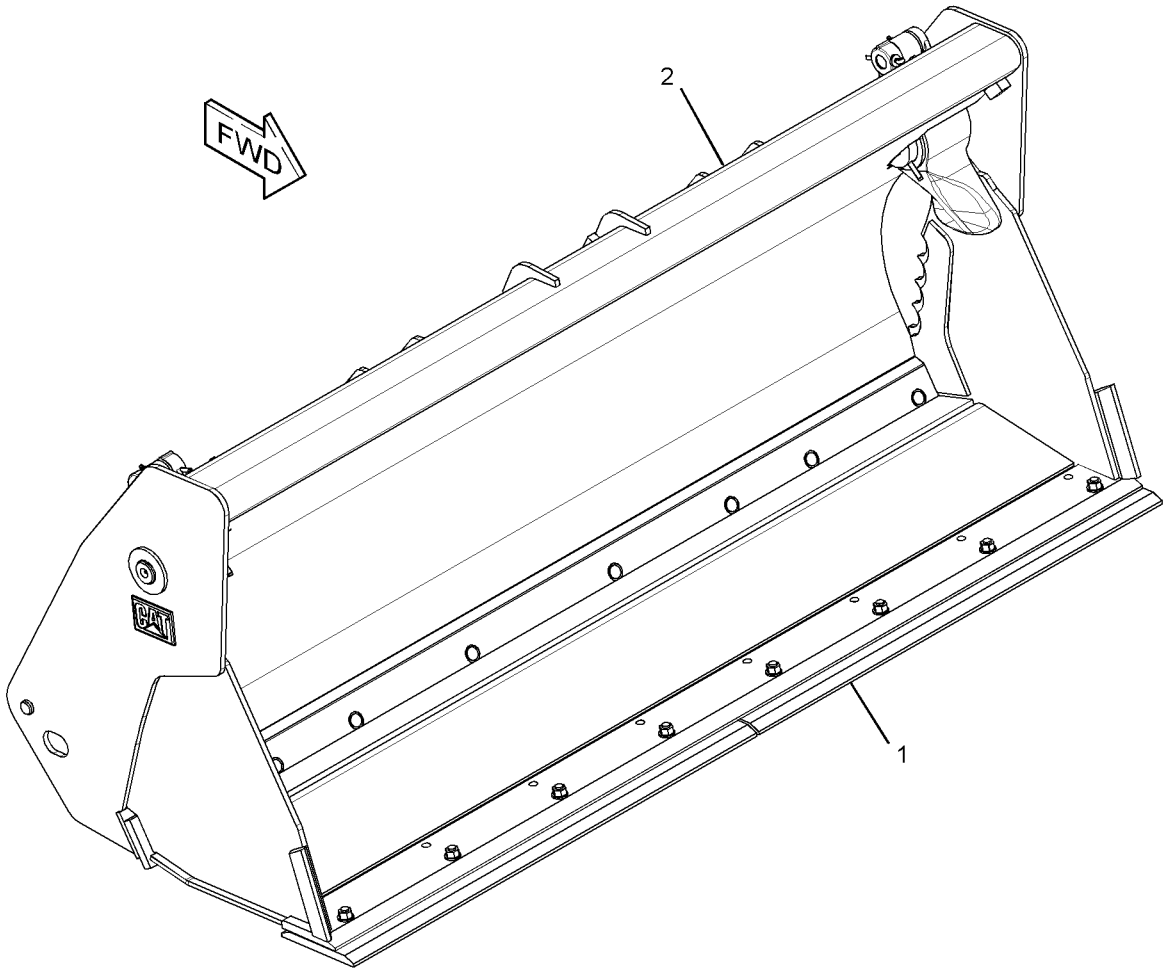

GRAPHIC #1 **<END>** g02790529

WORK TOOLS

337-7440 BUCKET AR-MULTIPURPOSE

S/N: LTG1-UP

AN ATTACHMENT

SMCS-6104 **i04608729**

NOTE	REF NO	GRAPHIC REF	PART NUMBER	QTY	PART NAME 1 2 3 4 5 6 (PRODUCT LEVEL)	SEE PAGE
	1	1	*9R-5866*	1	TOOTH GP-UNI	
		1	**4F-3657**	16	BOLT-PLOW (5/8-11X2.75-IN)	
		1	**4K-0367**	16	NUT-FULL (5/8-11-THD)	
		1	**135-8203**	8	TOOTH-UNI	
Y	2	1	*337-7439*	1	BUCKET GP-MULTIPURPOSE	429

Y-SEPARATE ILLUSTRATION

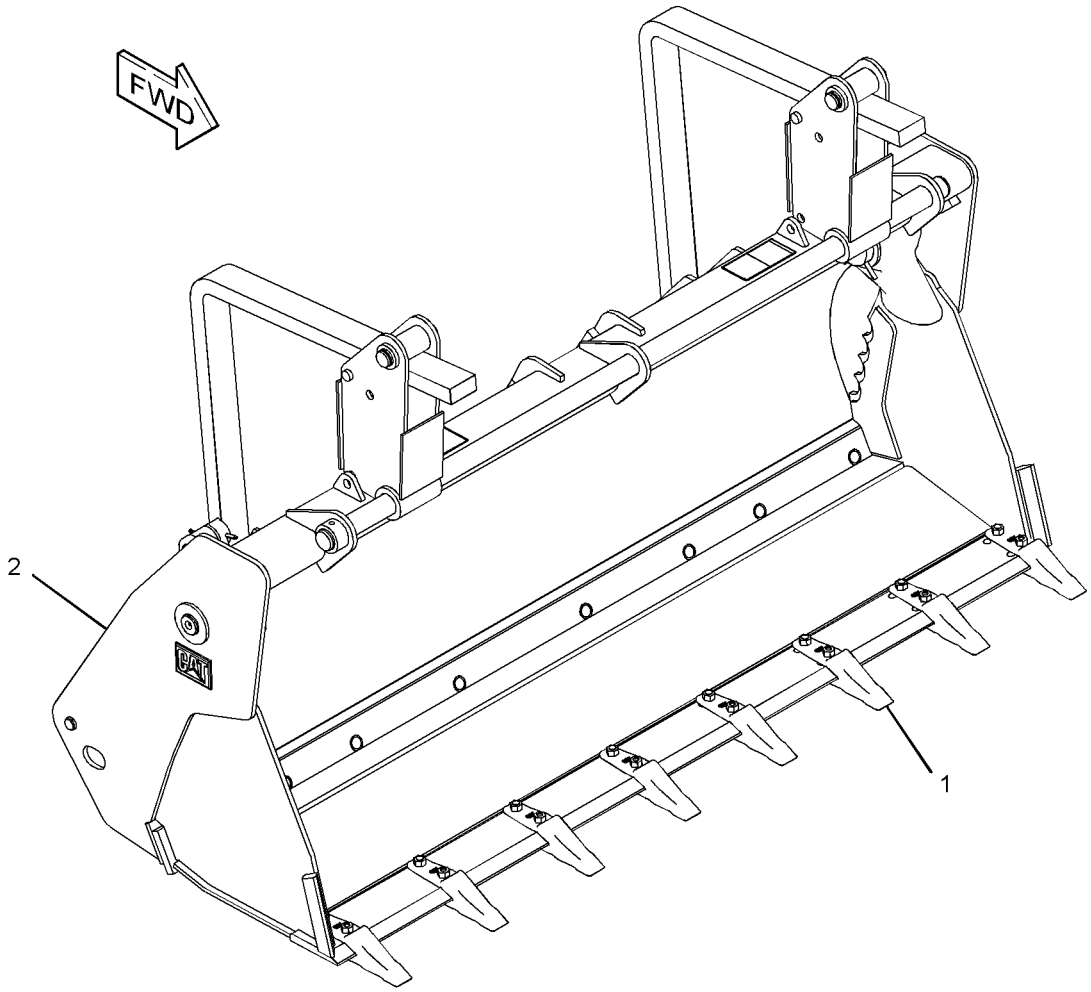

GRAPHIC #1 **<END>** g02790717

337-7441 BUCKET AR-MULTIPURPOSE

S/N: LTG1-UP
AN ATTACHMENT

SMCS-6104 **i04608730**

NOTE	PART NUMBER	QTY	PART NAME 1 2 3 4 5 6 (PRODUCT LEVEL)	SEE PAGE
Y	**337-7439**	1	BUCKET GP-MULTIPURPOSE	429
Y	*9R-5321*	1	EDGE GP-CUTTING	444
Y-SEPARATE ILLUSTRATION				

<END>

337-7443 BUCKET AR-MULTIPURPOSE

S/N: LTG1-UP
AN ATTACHMENT

SMCS-6104 **i04622221**

NOTE	PART NUMBER	QTY	PART NAME 1 2 3 4 5 6 (PRODUCT LEVEL)	SEE PAGE
Y	**337-7442**	1	BUCKET GP-MULTIPURPOSE	430
Y	*9R-5866*	1	TOOTH GP-UNI	449
Y-SEPARATE ILLUSTRATION				

<END>

337-7444 BUCKET AR-MULTIPURPOSE

S/N: LTG1-UP
AN ATTACHMENT

SMCS-6104 **i04622220**

NOTE	PART NUMBER	QTY	PART NAME 1 2 3 4 5 6 (PRODUCT LEVEL)	SEE PAGE
Y	**337-7442**	1	BUCKET GP-MULTIPURPOSE	430
Y	*9R-5320*	1	EDGE GP-CUTTING	443
Y-SEPARATE ILLUSTRATION				

<END>

337-7446 BUCKET AR-MULTIPURPOSE

S/N: LTG1-UP
AN ATTACHMENT

SMCS-6104 **i04622219**

NOTE	PART NUMBER	QTY	PART NAME 1 2 3 4 5 6 (PRODUCT LEVEL)	SEE PAGE
Y	*337-7445*	1	BUCKET GP-MULTIPURPOSE	431
Y	*9R-5866*	1	TOOTH GP-UNI	449
Y-SEPARATE ILLUSTRATION				

<END>

WORK TOOLS

337-7447 BUCKET AR-MULTIPURPOSE

S/N: LTG1-UP

AN ATTACHMENT

SMCS-6104 **i04622218**

NOTE	PART NUMBER	QTY	PART NAME 1 2 3 4 5 6 (PRODUCT LEVEL)	SEE PAGE
Y	**337-7445**	1	BUCKET GP-MULTIPURPOSE	431
Y	*9R-5320*	1	EDGE GP-CUTTING	443

Y-SEPARATE ILLUSTRATION

<END>

WORK TOOLS

337-7407 BUCKET AS-GENERAL PURPOSE

S/N: LTG1-UP
2262-MM (89.1-IN) WIDE X 1-CU M (1.3-CU YD) CAPACITY
PART OF 337-7385 BUCKET GP-GENERAL PURPOSE
AN ATTACHMENT

SMCS-6101 **i04606170**

NOTE	REF NO	GRAPHIC REF	PART NUMBER	QTY	PART NAME 1 2 3 4 5 6 (PRODUCT LEVEL)	SEE PAGE
	1	1	**9R-4672**	1	EDGE	
	2	1	**9R-5205**	1	EDGE (LH)	
	3	1	**9R-5206**	1	EDGE (RH)	
	4	1	**9R-5832**	2	EDGE	

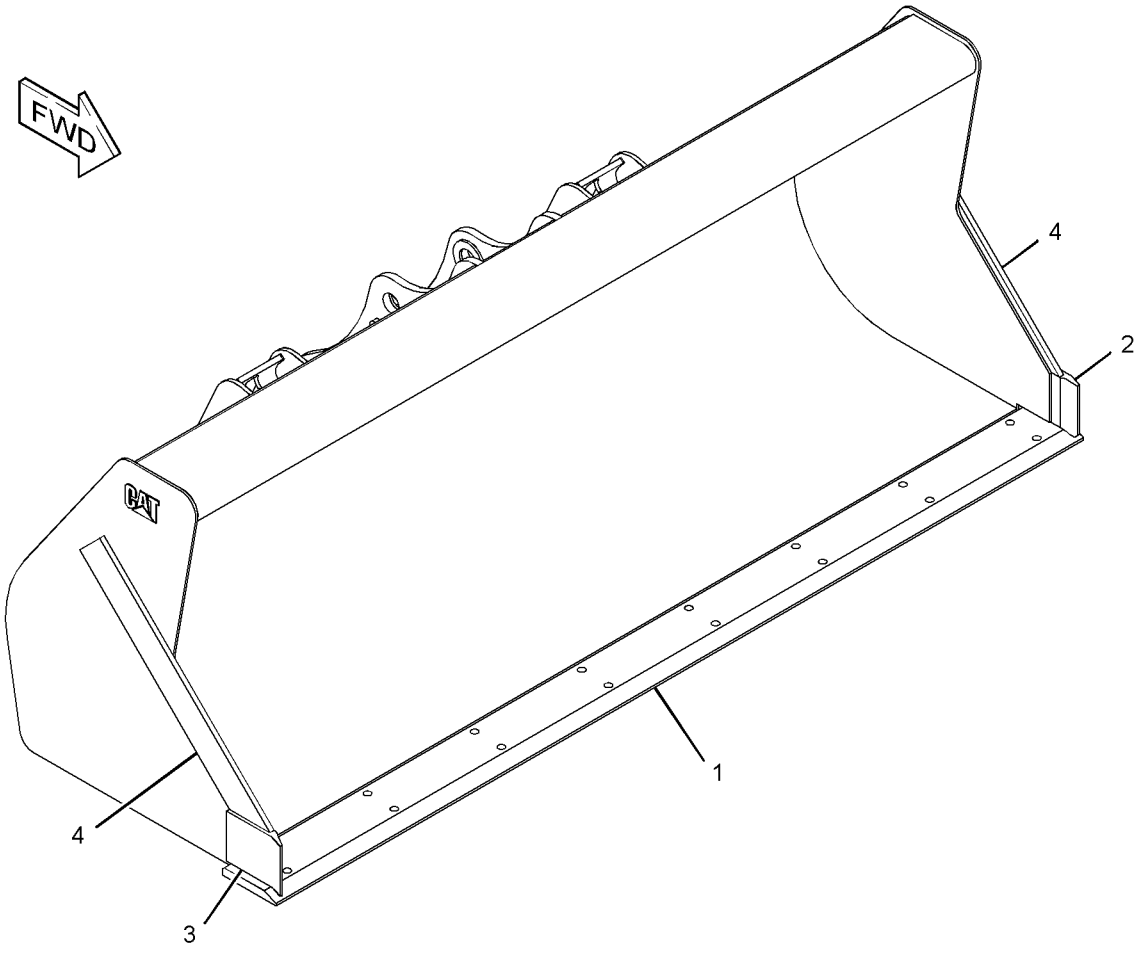

GRAPHIC #1 **<END>** g02789659

WORK TOOLS

337-7417 BUCKET AS-GENERAL PURPOSE

S/N: LTG1-UP
2262-MM (89-IN) WIDE X 1.1-CU M (1.4-CU YD) CAPACITY
PART OF 337-7388 BUCKET GP-GENERAL PURPOSE
AN ATTACHMENT

SMCS-6101 **i04629222**

NOTE	REF NO	GRAPHIC REF	PART NUMBER	QTY	PART NAME 1 2 3 4 5 6 (PRODUCT LEVEL)	SEE PAGE
	1	1	**9R-5206**	1	EDGE (RH)	
	2	1	**9R-5832**	2	EDGE	
	3	1	**9R-4672**	1	EDGE	
	4	1	**9R-5205**	1	EDGE (LH)	

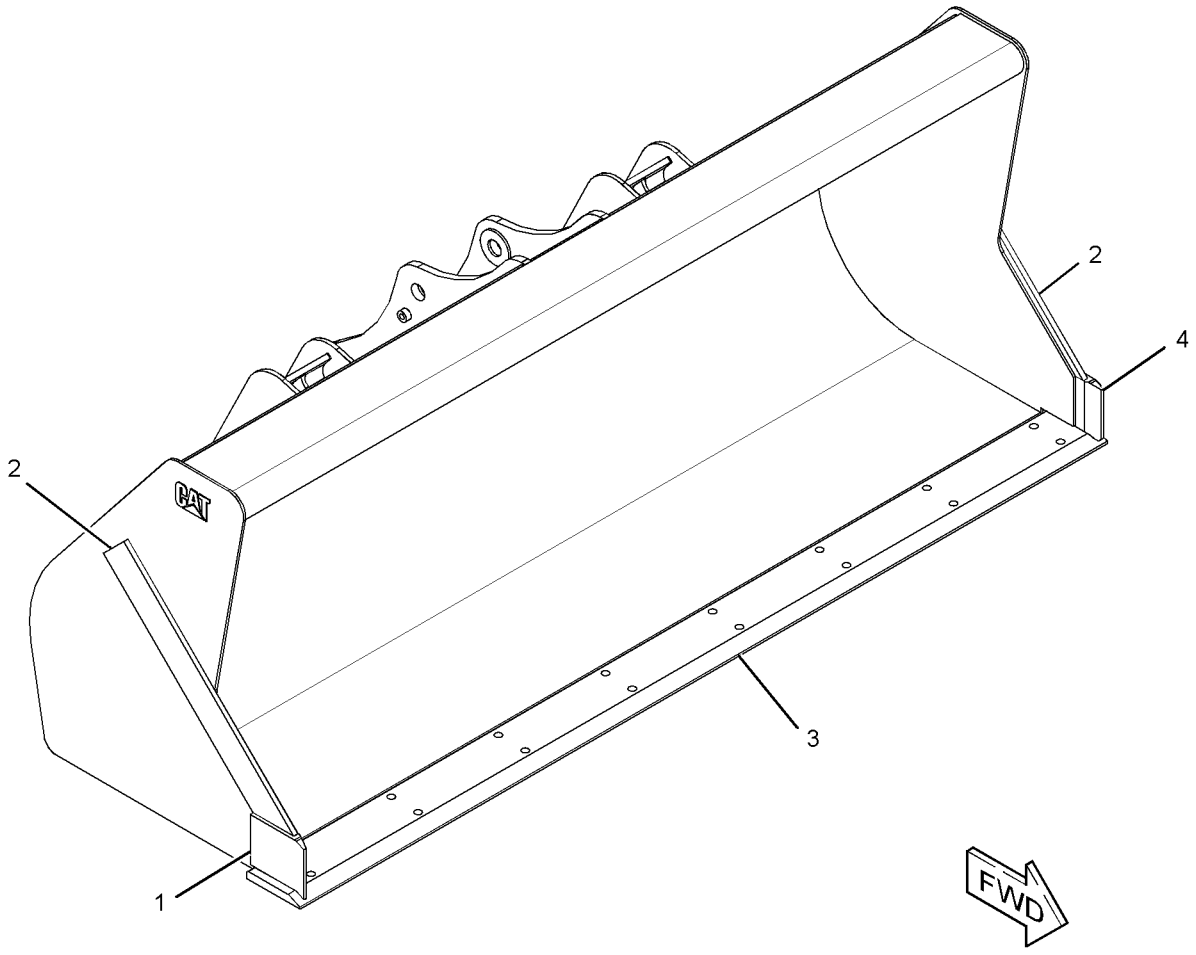

GRAPHIC #1 **<END>** g02789575

337-7433 BUCKET AS-GENERAL PURPOSE

S/N: LTG1-UP
2406-MM (94.7-IN) WIDE X 1.2-CU M (1.5-CU YD) CAPACITY
PART OF 337-7401 BUCKET GP-GENERAL PURPOSE
AN ATTACHMENT

SMCS-6101 **i04622214**

NOTE	REF NO	GRAPHIC REF	PART NUMBER	QTY	PART NAME 1 2 3 4 5 6 (PRODUCT LEVEL)	SEE PAGE
	1	1	**9R-5313**	1	EDGE	
	2	1	**9R-5205**	1	EDGE (LH)	
	3	1	**9R-5206**	1	EDGE (RH)	
	4	1	**9R-5832**	2	EDGE	

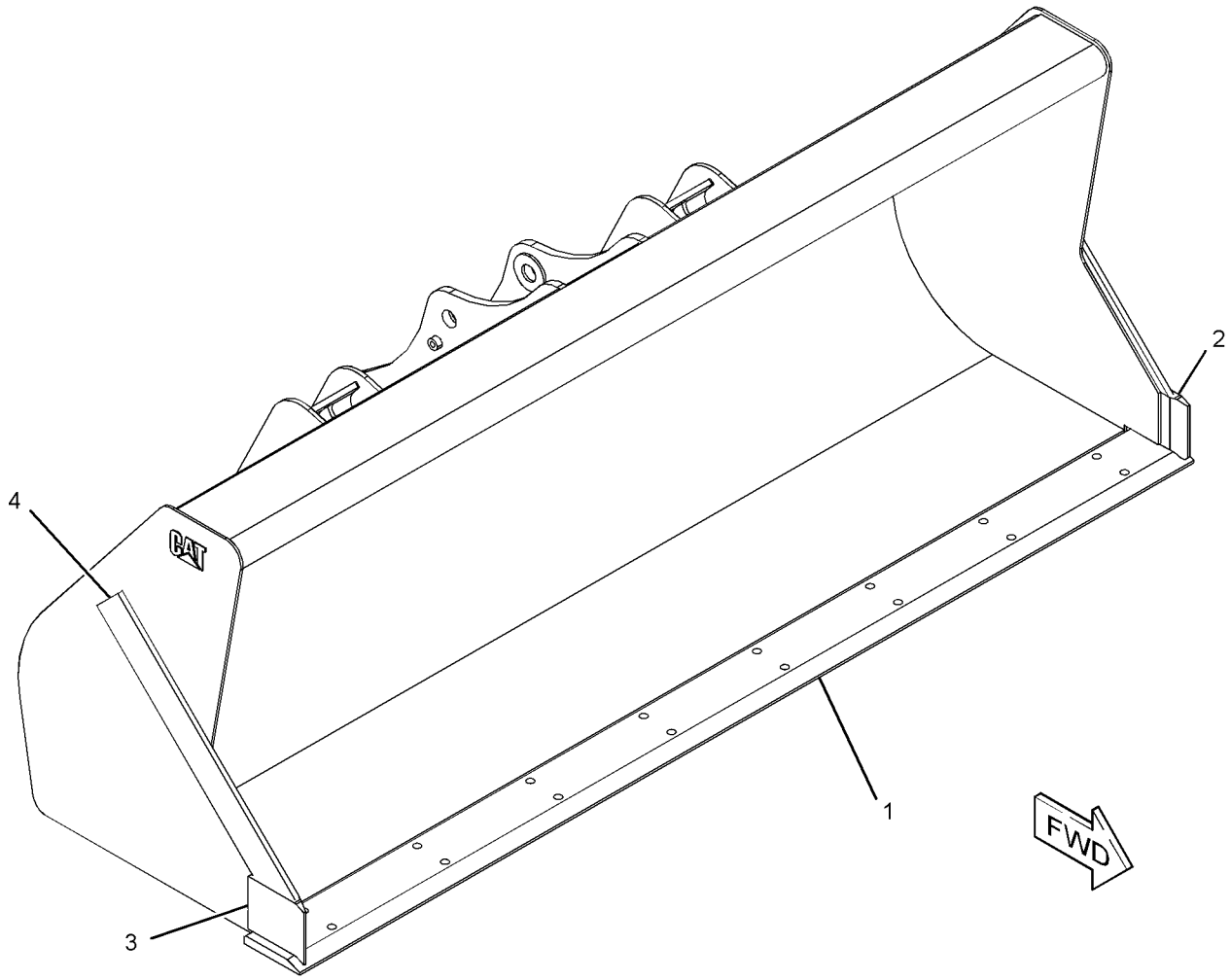

GRAPHIC #1 **<END>** g02807597

WORK TOOLS

337-7434 BUCKET AS-GENERAL PURPOSE

S/N: LTG1-UP
2406-MM (94.7-IN) WIDE X 1-CU M (1.3-CU YD) CAPACITY
PART OF 337-7396 BUCKET GP-GENERAL PURPOSE
AN ATTACHMENT

SMCS-6101 **i04622216**

NOTE	REF NO	GRAPHIC REF	PART NUMBER	QTY	PART NAME 1 2 3 4 5 6 (PRODUCT LEVEL)	SEE PAGE
	1	1	**9R-5205**	1	EDGE (LH)	
	2	1	**9R-5206**	1	EDGE (RH)	
	3	1	**9R-5313**	1	EDGE	
	4	1	**9R-5832**	2	EDGE	

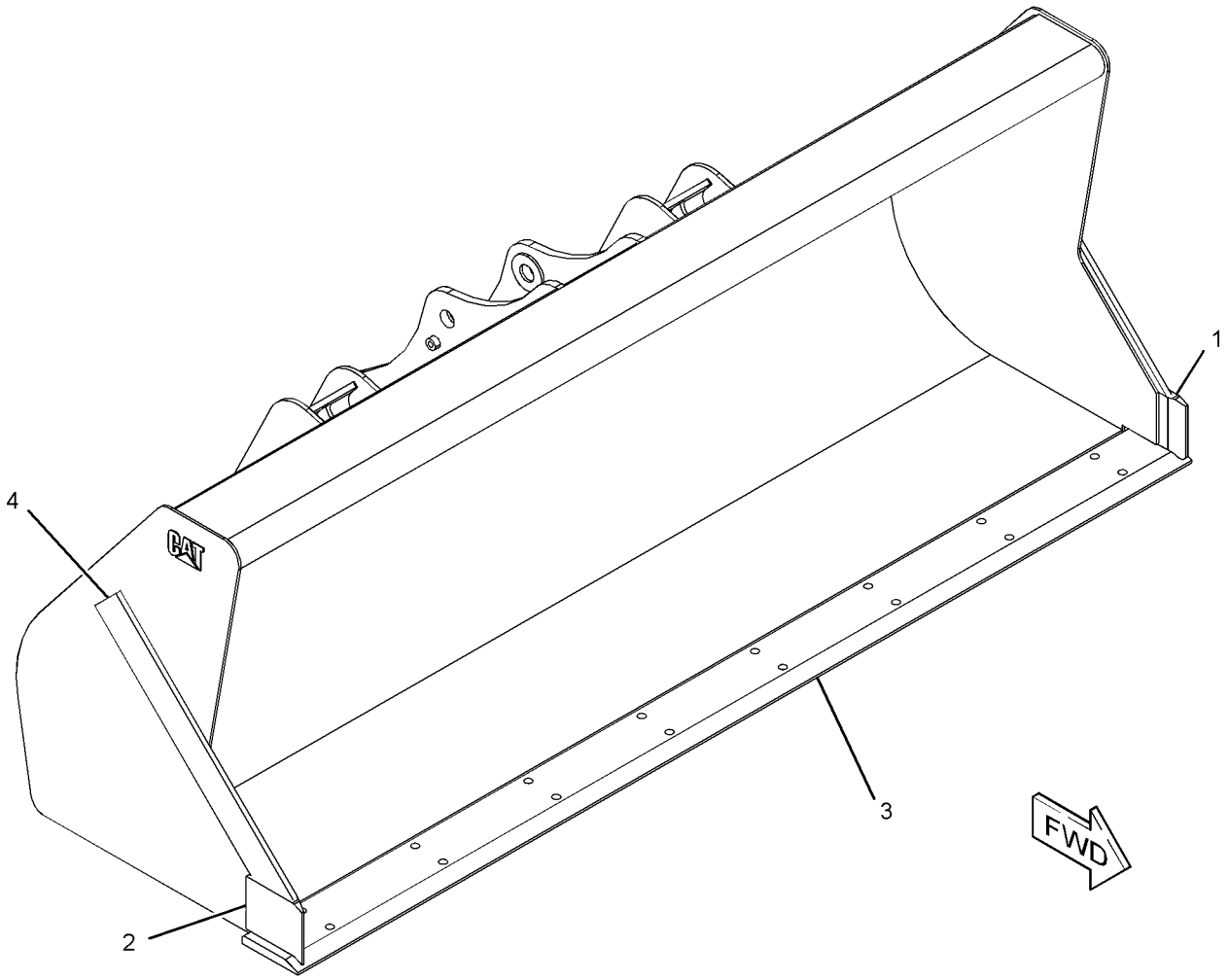

GRAPHIC #1 **<END>** g02807603

WORK TOOLS

219-3357 BUCKET AS-HOE–STANDARD

S/N: LTG1-UP
610-MM (24-IN)
PART OF 219-3381 BUCKET GP-HOE
AN ATTACHMENT

SMCS-6503 **i02659640**

NOTE	REF NO	GRAPHIC REF	PART NUMBER	QTY	PART NAME 1 2 3 4 5 6 (PRODUCT LEVEL)	SEE PAGE
	1	1	*151-7902*	1	BRACKET AS (LH)	
	1A	1	**9R-0162**	1	BEARING-SLEEVE	
	1B	1	**168-0480**	1	BEARING-SLEEVE	
	2	1	*151-7903*	1	BRACKET AS (RH)	
	2A	1	**9R-0162**	1	BEARING-SLEEVE	
	2B	1	**168-0480**	1	BEARING-SLEEVE	
	3	1	**161-4130**	2	PLATE-IDENTIFICATION (CAT)	
	4	1	**201-1235**	5	ADAPTER (2-STRAP)	
	5	1	**219-9488**	1	EDGE	

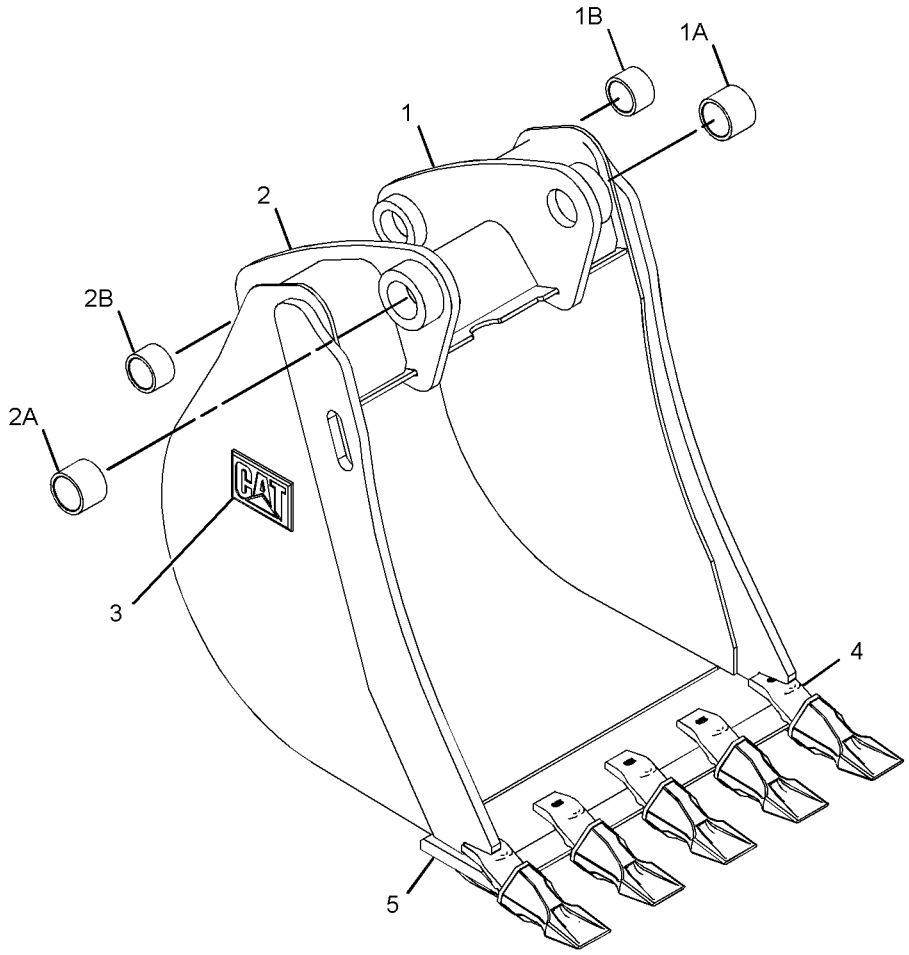

GRAPHIC #1 **<END>** g01336103

WORK TOOLS

219-3363 BUCKET AS-HOE—HEAVY-DUTY

S/N: LTG1-UP
610-MM (24-IN)
PART OF 219-3387 BUCKET GP-HOE
AN ATTACHMENT

SMCS-6503 **i02655227**

NOTE	REF NO	GRAPHIC REF	PART NUMBER	QTY	PART NAME 1 2 3 4 5 6 (PRODUCT LEVEL)	SEE PAGE
	1	1	**134-5884**	1	EDGE (LH)	
	2	1	**134-5885**	1	EDGE (RH)	
	3	1	*151-7902*	1	BRACKET AS (LH)	
	3A	1	**9R-0162**	1	BEARING-SLEEVE	
	3B	1	**168-0480**	1	BEARING-SLEEVE	
	4	1	*151-7903*	1	BRACKET AS (RH)	
	4A	1	**9R-0162**	1	BEARING-SLEEVE	
	4B	1	**168-0480**	1	BEARING-SLEEVE	
	5	1	**151-7927**	4	PLATE	
	6	1	**161-4130**	2	PLATE-IDENTIFICATION (CAT)	
	7	1	**201-1234**	5	ADAPTER (2-STRAP)	
	8	1	**219-9484**	1	EDGE	

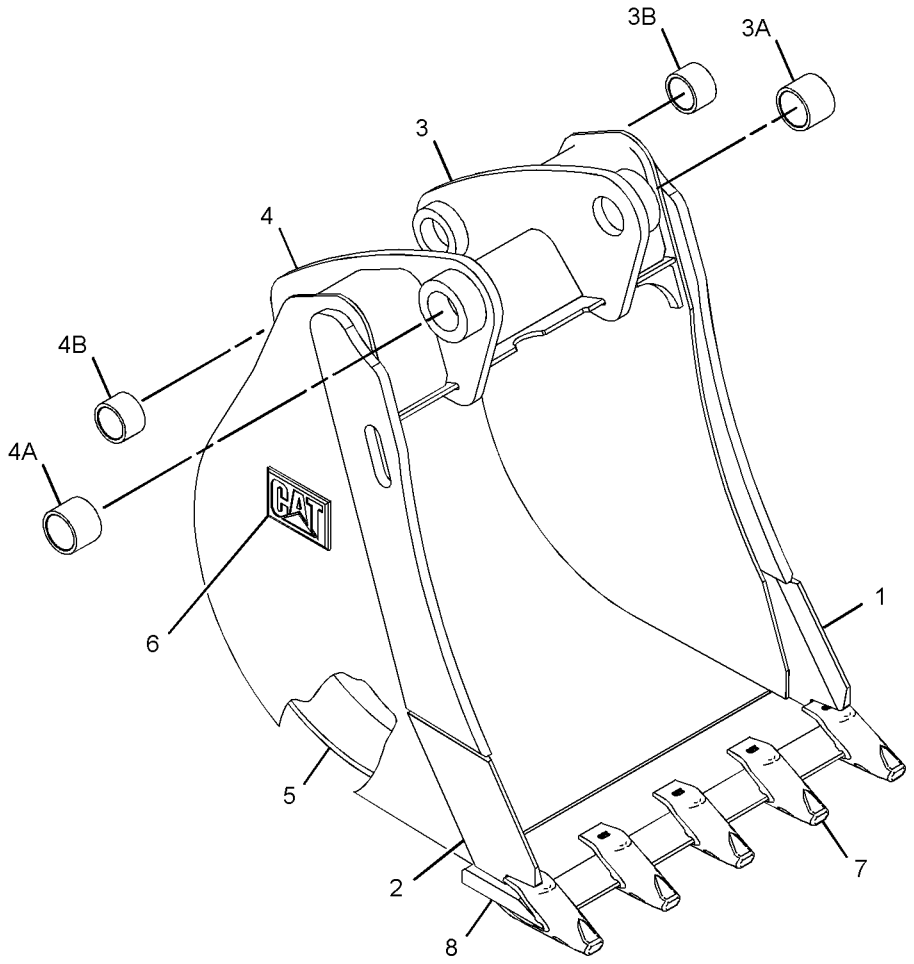

GRAPHIC #1 **<END>** g01335129

219-3372 BUCKET AS-HOE–ROCK

S/N: LTG1-UP
610-MM (24-IN)
PART OF 219-3396 BUCKET GP-HOE
AN ATTACHMENT

SMCS-6503 **i02652011**

NOTE	REF NO	GRAPHIC REF	PART NUMBER	QTY	PART NAME 1 2 3 4 5 6 (PRODUCT LEVEL)	SEE PAGE
	1	1	*151-7902*	1	BRACKET AS (LH)	
	1A	1	**168-0480**	1	BEARING-SLEEVE	
	1B	1	**9R-0162**	1	BEARING-SLEEVE	
	2	1	*151-7903*	1	BRACKET AS (RH)	
	2A	1	**168-0480**	1	BEARING-SLEEVE	
	2B	1	**9R-0162**	1	BEARING-SLEEVE	
	3	1	**161-4130**	2	PLATE-IDENTIFICATION (CAT)	
	4	1	**172-8277**	2	PLATE	
	5	1	**172-8280**	4	PLATE	
	6	1	**196-8921**	1	EDGE (RH)	
	7	1	**196-8922**	1	EDGE (LH)	
	8	1	**201-1234**	5	ADAPTER (2-STRAP)	
	9	1	**219-9484**	1	EDGE	

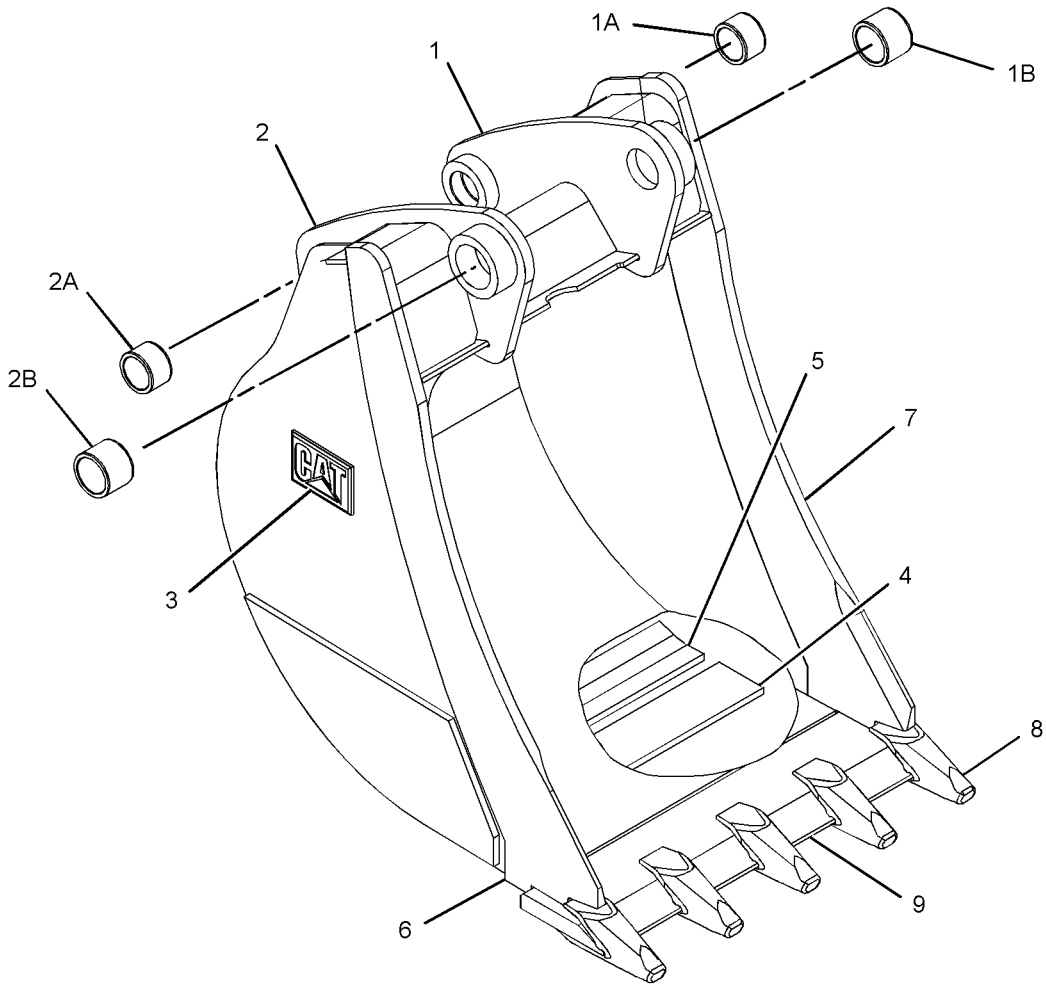

GRAPHIC #1 **<END>** g01341830

232-2755 BUCKET AS-HOE—HEAVY-DUTY, PIN-LOCK

S/N: LTG1-UP
610-MM (24-IN)
PART OF 247-1950 BUCKET GP-HOE
AN ATTACHMENT

SMCS-6503 **i03849801**

NOTE	REF NO	GRAPHIC REF	PART NUMBER	QTY	PART NAME 1 2 3 4 5 6 (PRODUCT LEVEL)	SEE PAGE
	1	1	**201-1234**	5	ADAPTER	
	2	1	**219-9484**	1	EDGE	
	3	1	**9R-0431**	2	BEARING-SLEEVE	

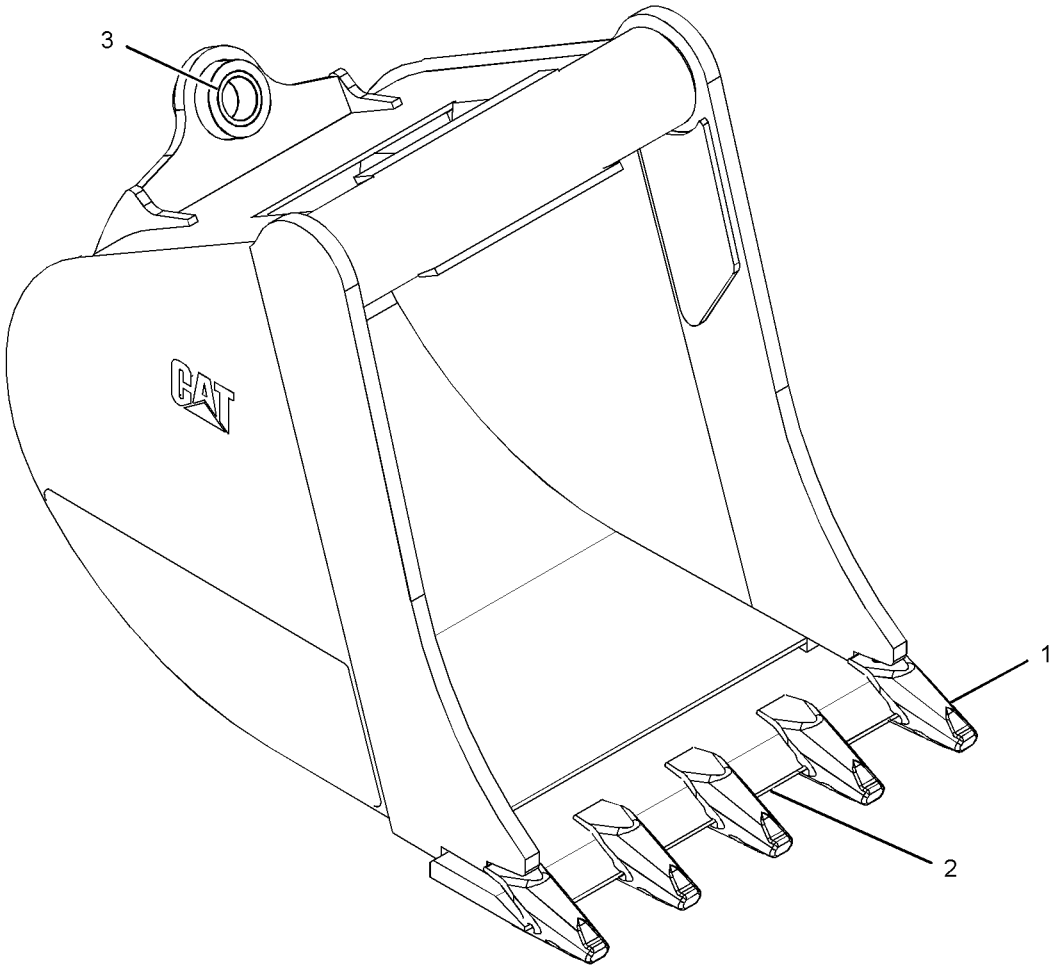

GRAPHIC #1 **<END>** g02095253

WORK TOOLS

254-8944 BUCKET AS-HOE—HIGH CAPACITY, PIN-LOCK

S/N: LTG1-UP
610-MM (24-IN)
PART OF 254-8941 BUCKET GP-HOE
AN ATTACHMENT

SMCS-6503 **i03849918**

NOTE	REF NO	GRAPHIC REF	PART NUMBER	QTY	PART NAME 1 2 3 4 5 6 (PRODUCT LEVEL)	SEE PAGE
	1	1	**172-8280**	5	PLATE	
	2	1	*286-9336*	1	BRACKET AS (RH)	
	2A	1	**9R-0162**	1	BEARING-SLEEVE	
	2B	1	**168-0480**	1	BEARING-SLEEVE	
	3	1	*286-9337*	1	BRACKET AS (LH)	
	3A	1	**9R-0162**	1	BEARING-SLEEVE	
	3B	1	**168-0480**	1	BEARING-SLEEVE	
	4	1	*299-3350*	1	EDGE AS	
			219-9484	1	EDGE	
			253-0234	5	ADAPTER	
	5	1	*300-7054*	1	PLATE AS	
			134-5885	1	EDGE (RH)	
	6	1	*300-7055*	1	PLATE AS	
			134-5884	1	EDGE (LH)	

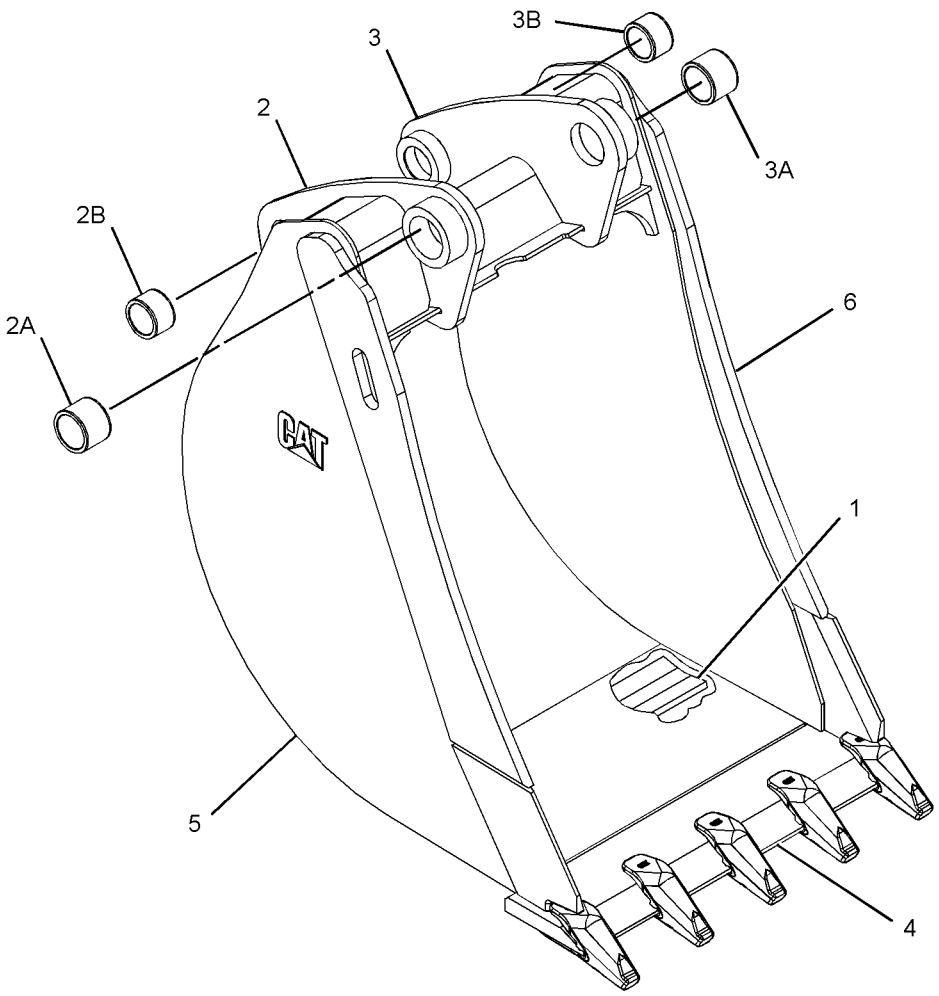

GRAPHIC #1 **<END>** g01382158

WORK TOOLS

337-7385 BUCKET GP-GENERAL PURPOSE

S/N: LTG1-UP

PART OF 337-7386, 337-7387 BUCKET AR-GENERAL PURPOSE

AN ATTACHMENT

SMCS-6101 **i04606090**

NOTE	REF NO	GRAPHIC REF	PART NUMBER	QTY	PART NAME 1 2 3 4 5 6 (PRODUCT LEVEL)	SEE PAGE
	1	1	**137-4234**	1	PLATE-IDENTIFICATION (WORK TOOL)	
	2	1	**168-8389**	4	TACK-FASTENER	
Y	3	1	**337-7407**	1	BUCKET AS-GENERAL PURPOSE	409

Y-SEPARATE ILLUSTRATION

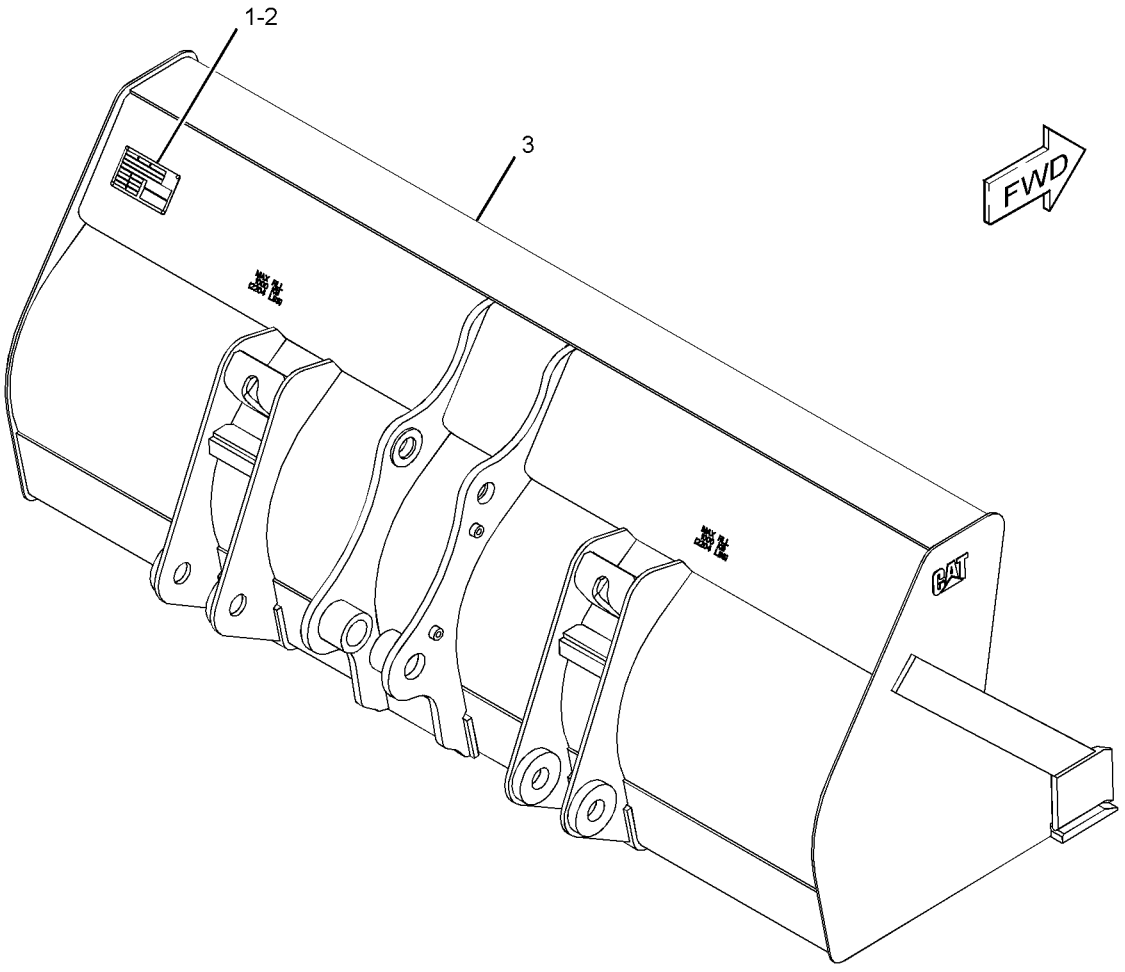

GRAPHIC #1 **<END>** g02790308

337-7388 BUCKET GP-GENERAL PURPOSE

S/N: LTG1-UP

PART OF 337-7389, 337-7390 BUCKET AR-GENERAL PURPOSE

AN ATTACHMENT

SMCS-6101 **i04622189**

NOTE	REF NO	GRAPHIC REF	PART NUMBER	QTY	PART NAME 1 2 3 4 5 6 (PRODUCT LEVEL)	SEE PAGE
	1	1	**137-4234**	1	PLATE-IDENTIFICATION (WORK TOOL)	
	2	1	**168-8389**	4	TACK-FASTENER	
Y	3	1	*337-7417*	1	BUCKET AS-GENERAL PURPOSE	410

Y-SEPARATE ILLUSTRATION

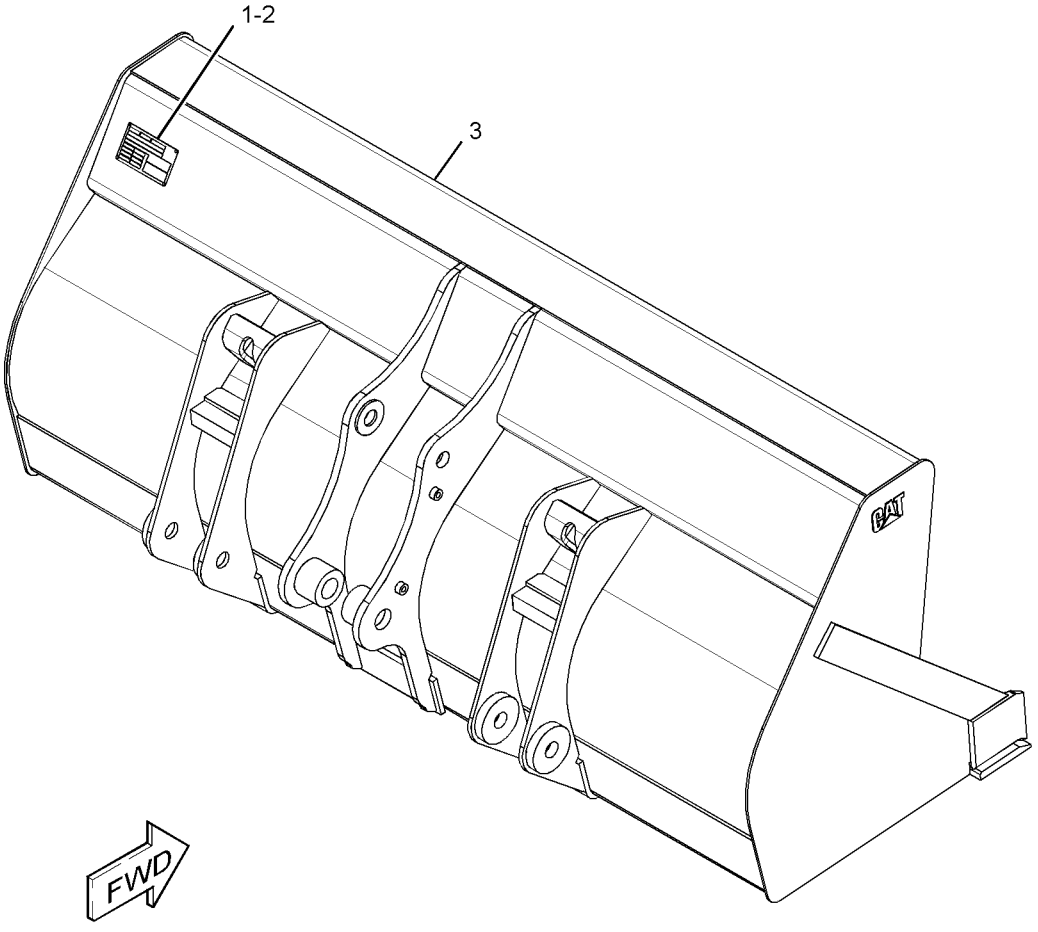

GRAPHIC #1 **<END>** g02789563

WORK TOOLS

337-7396 BUCKET GP-GENERAL PURPOSE

S/N: LTG1-UP

PART OF 337-7397, 361-2069 BUCKET AR-GENERAL PURPOSE

AN ATTACHMENT

SMCS-6101 **i04622215**

NOTE	REF NO	GRAPHIC REF	PART NUMBER	QTY	PART NAME 1 2 3 4 5 6 (PRODUCT LEVEL)	SEE PAGE
	1	1	**137-4234**	1	PLATE-IDENTIFICATION (WORK TOOL)	
	2	1	**168-8389**	4	TACK-FASTENER	
Y	3	1	*337-7434*	1	BUCKET AS-GENERAL PURPOSE	412

Y-SEPARATE ILLUSTRATION

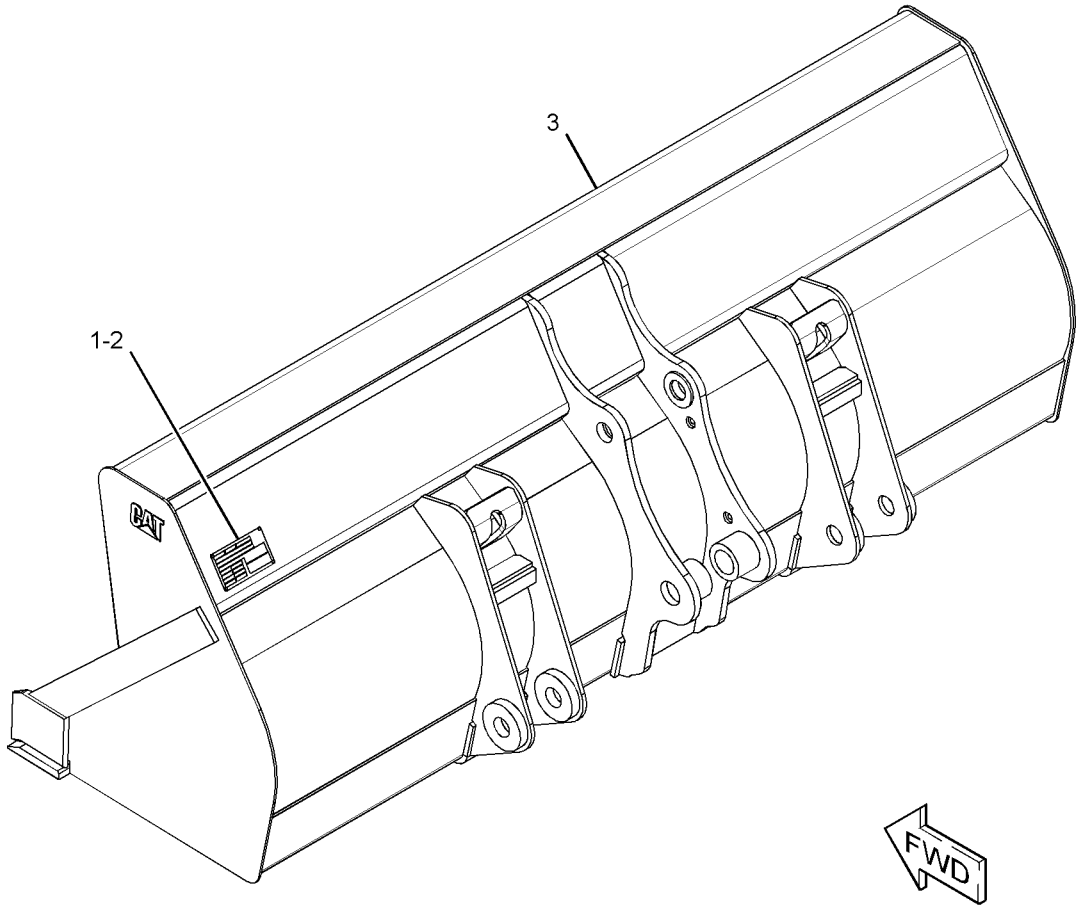

GRAPHIC #1 **<END>** g02790591

WORK TOOLS

337-7401 BUCKET GP-GENERAL PURPOSE

S/N: LTG1-UP

AN ATTACHMENT

SMCS-6101 **i04622213**

NOTE	REF NO	GRAPHIC REF	PART NUMBER	QTY	PART NAME 1 2 3 4 5 6 (PRODUCT LEVEL)	SEE PAGE
	1	1	**137-4234**	1	PLATE-IDENTIFICATION (WORK TOOL)	
	2	1	**168-8389**	4	TACK-FASTENER	
Y	3	1	*337-7433*	1	BUCKET AS-GENERAL PURPOSE	411

Y-SEPARATE ILLUSTRATION

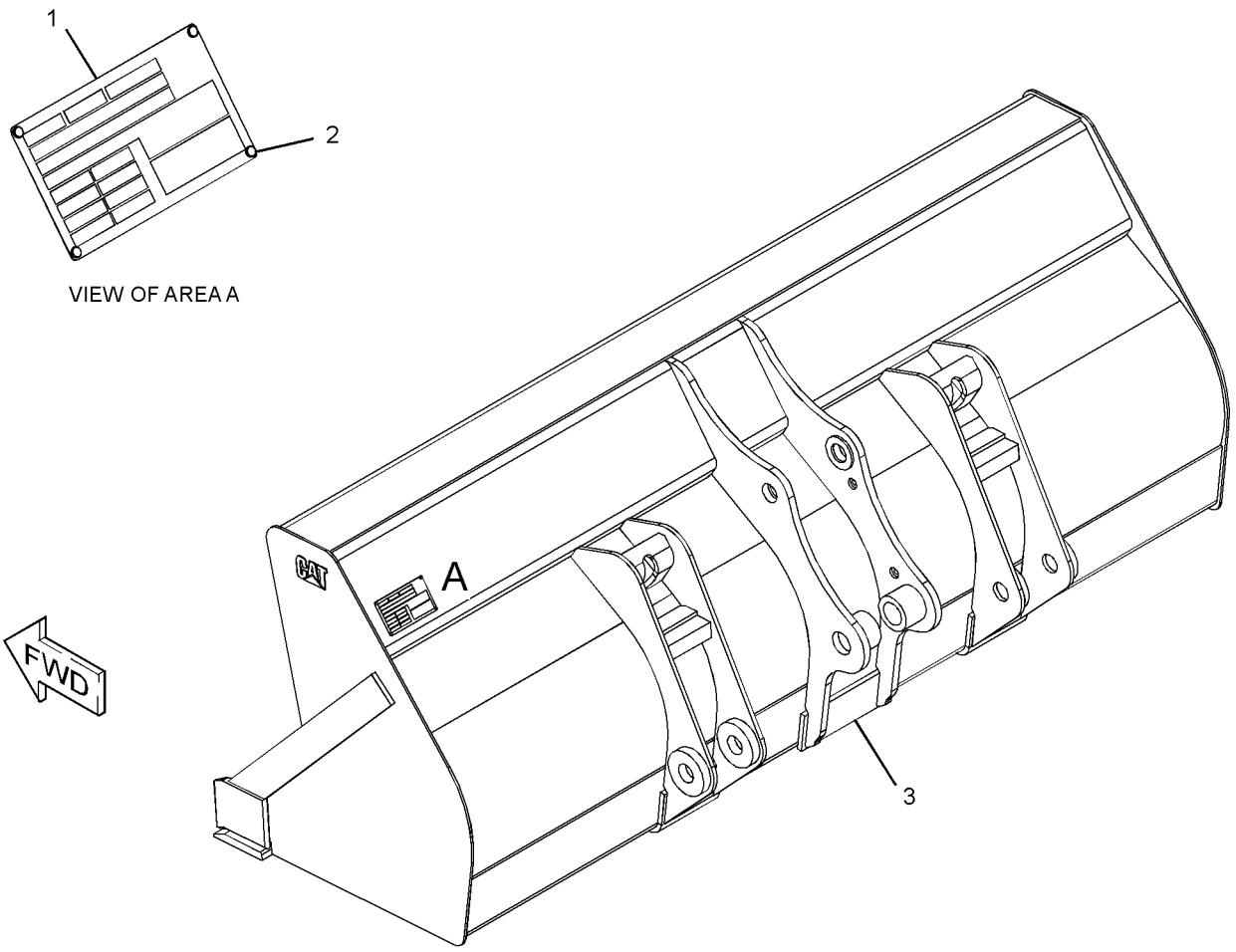

GRAPHIC #1 **<END>** g02788938

WORK TOOLS

219-3381 BUCKET GP-HOE

S/N: LTG1-UP

AN ATTACHMENT

SMCS-6503 **i02651118**

NOTE	REF NO	GRAPHIC REF	PART NUMBER	QTY	PART NAME 1 2 3 4 5 6 (PRODUCT LEVEL)	SEE PAGE
	1	1	**137-4234**	1	PLATE-IDENTIFICATION (WORK TOOL)	
	2	1	**168-8389**	4	TACK-FASTENER	
	3		*208-5245*	5	TIP GP-PENETRATION	
					(EACH INCLUDES)	
		1	**201-1238**	1	PIN	
		1	**201-1239**	1	RETAINER AS	
		1	**208-5235**	1	TIP-PENETRATION	
Y	4	1	*219-3357*	1	BUCKET AS-HOE	413

Y-SEPARATE ILLUSTRATION

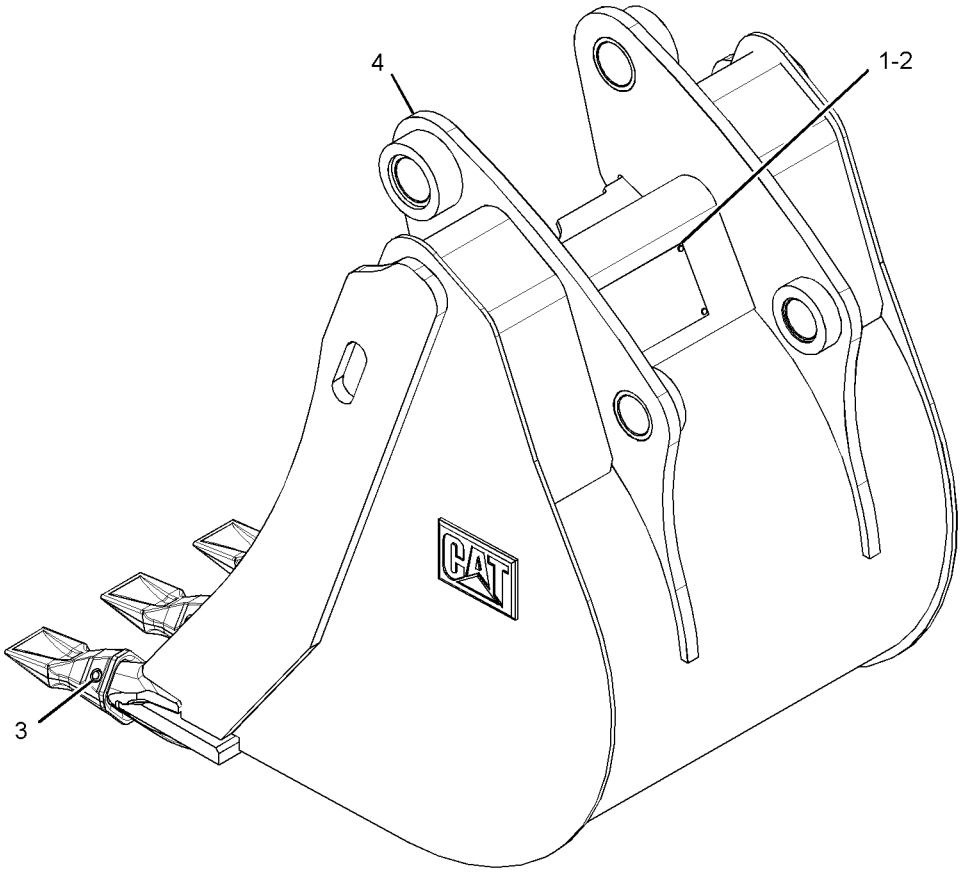

GRAPHIC #1 **<END>** g01340268

219-3387 BUCKET GP-HOE—HEAVY-DUTY

S/N: LTG1-UP

AN ATTACHMENT

SMCS-6503 **i02655211**

NOTE	REF NO	GRAPHIC REF	PART NUMBER	QTY	PART NAME 1 2 3 4 5 6 (PRODUCT LEVEL)	SEE PAGE
	1	1	**137-4234**	1	PLATE-IDENTIFICATION (WORK TOOL)	
	2	1	**168-8389**	4	TACK-FASTENER	
	3		*208-5245*	5	TIP GP-PENETRATION	
					(EACH INCLUDES)	
		1	**201-1238**	1	PIN	
		1	**201-1239**	1	RETAINER AS	
		1	**208-5235**	1	TIP-PENETRATION	
Y	4	1	*219-3363*	1	BUCKET AS-HOE	414

Y-SEPARATE ILLUSTRATION

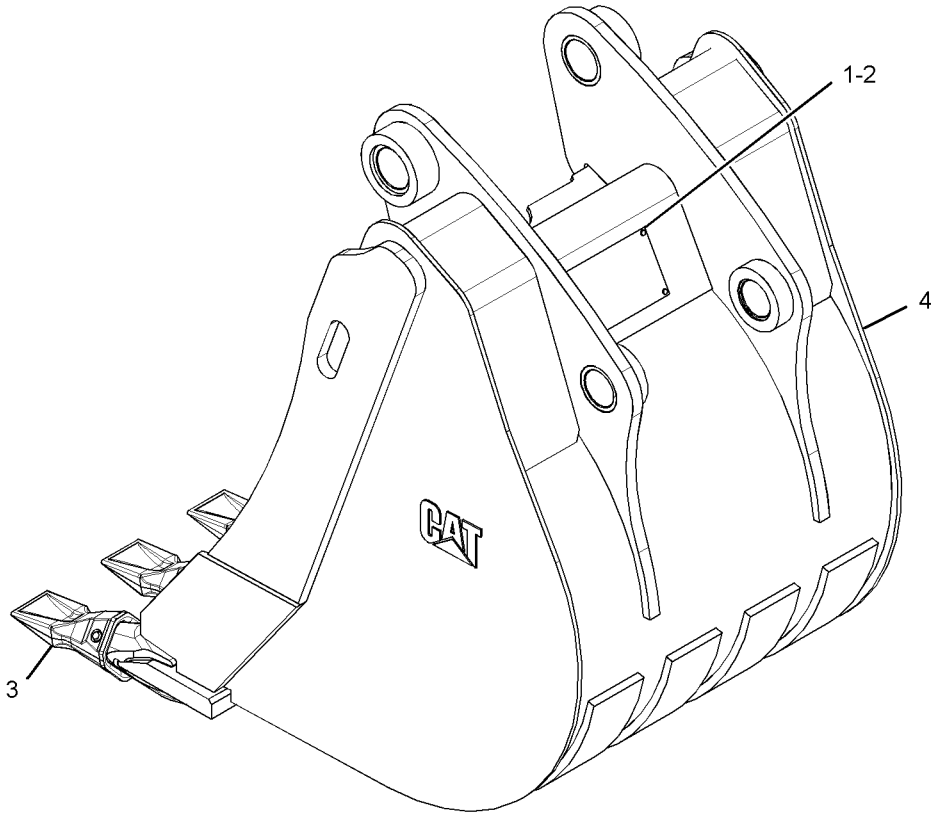

GRAPHIC #1 **<END>** g01336850

WORK TOOLS

219-3396 BUCKET GP-HOE—ROCK

S/N: LTG1-UP

AN ATTACHMENT

SMCS-6503 **i02651592**

NOTE	REF NO	GRAPHIC REF	PART NUMBER	QTY	PART NAME 1 2 3 4 5 6 (PRODUCT LEVEL)	SEE PAGE
	1	1	**137-4234**	1	PLATE-IDENTIFICATION (WORK TOOL)	
	2	1	**168-8389**	4	TACK-FASTENER	
	3	1	*208-5245*	5	TIP GP-PENETRATION	
					(EACH INCLUDES)	
		1	**201-1238**	1	PIN	
		1	**201-1239**	1	RETAINER AS	
		1	**208-5235**	1	TIP-PENETRATION	
Y	4	1	*219-3372*	1	BUCKET AS-HOE (ROCK)	415

Y-SEPARATE ILLUSTRATION

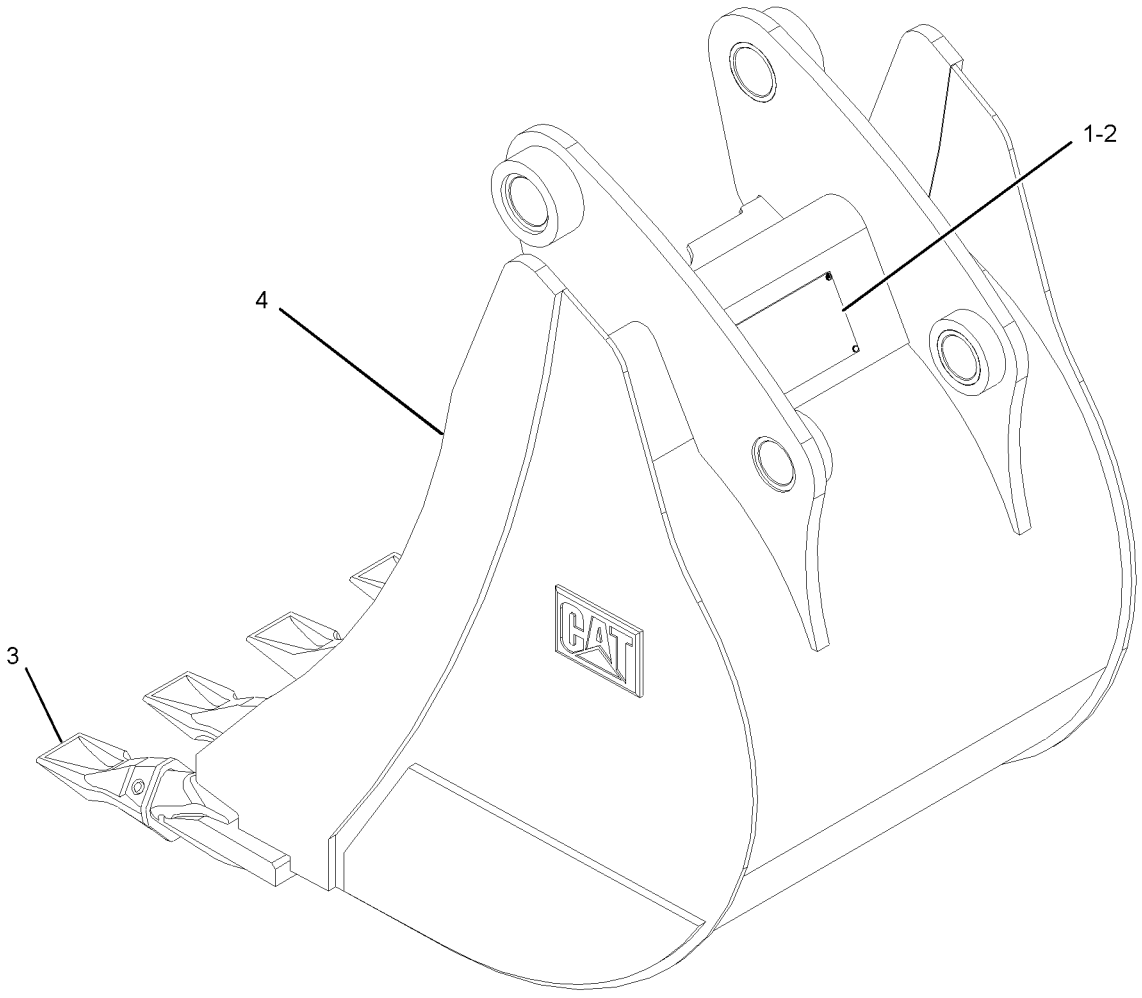

GRAPHIC #1 **<END>** g01341821

247-1950 BUCKET GP-HOE—HEAVY-DUTY, PIN-LOCK

S/N: LTG1-UP

AN ATTACHMENT

SMCS-6503 **i03849800**

NOTE	REF NO	GRAPHIC REF	PART NUMBER	QTY	PART NAME 1 2 3 4 5 6 (PRODUCT LEVEL)	SEE PAGE
	1	1	**137-4234**	1	PLATE-IDENTIFICATION (WORK TOOL)	
	2	1	**168-8389**	4	TACK-FASTENER	
	3	1	*208-5245*	5	TIP GP-PENETRATION	
					(EACH INCLUDES)	
		1	**201-1238**	1	PIN	
		1	**201-1239**	1	RETAINER AS	
		1	**208-5235**	1	TIP-PENETRATION	
Y	4	1	*232-2755*	1	BUCKET AS-HOE (HEAVY-DUTY, PIN-LOCK)	416

Y-SEPARATE ILLUSTRATION

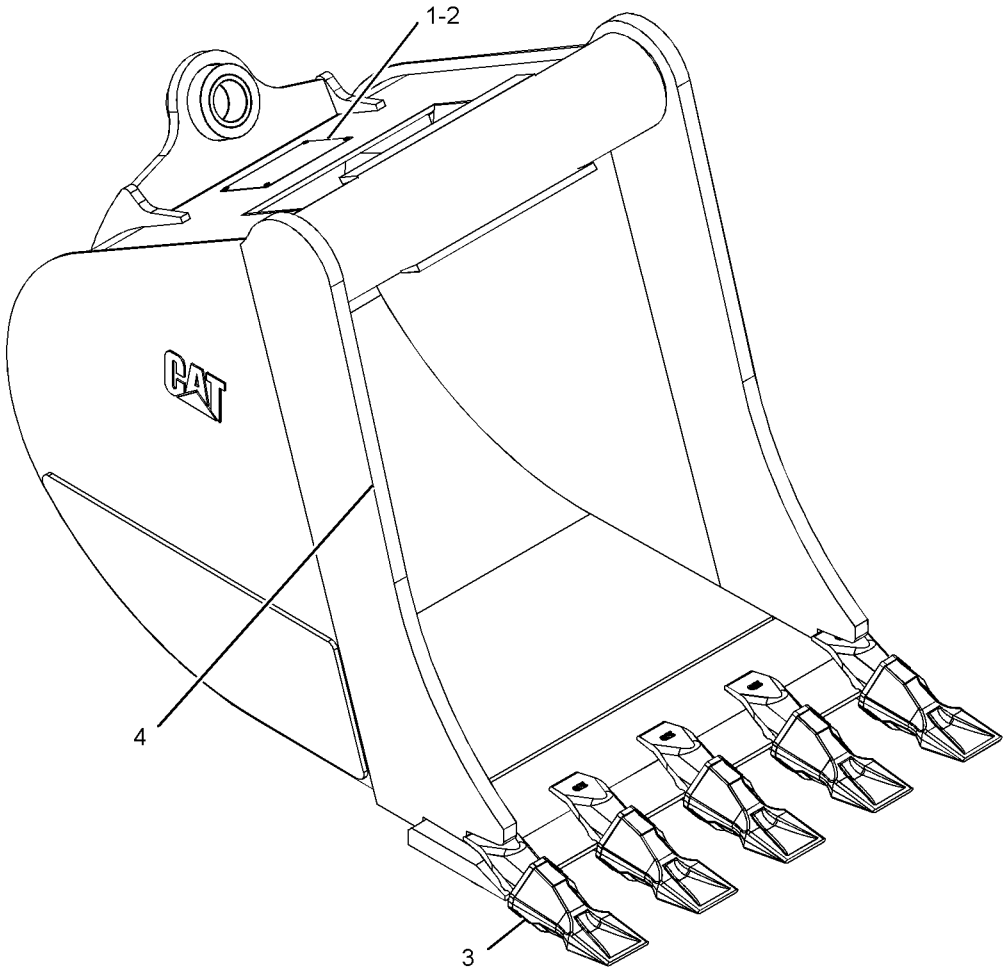

GRAPHIC #1 **<END>** g02111414

254-8941 BUCKET GP-HOE—HIGH CAPACITY, PIN-LOCK

S/N: LTG1-UP

AN ATTACHMENT

SMCS-6503 **i03849917**

NOTE	REF NO	GRAPHIC REF	PART NUMBER	QTY	PART NAME 1 2 3 4 5 6 (PRODUCT LEVEL)	SEE PAGE
	1	1	**137-4234**	1	PLATE-IDENTIFICATION (WORK TOOL)	
	2	1	**168-8389**	4	TACK-FASTENER	
	3	1	*208-5244*	5	TIP GP-BUCKET (SOIL)	
					(EACH INCLUDES)	
		1	**201-1238**	1	PIN	
		1	**201-1239**	1	RETAINER AS	
		1	**208-5234**	1	TIP-BUCKET (SOIL)	
Y	4	1	*254-8944*	1	BUCKET AS-HOE (HIGH CAPACITY, PIN-LOCK)	417

Y-SEPARATE ILLUSTRATION

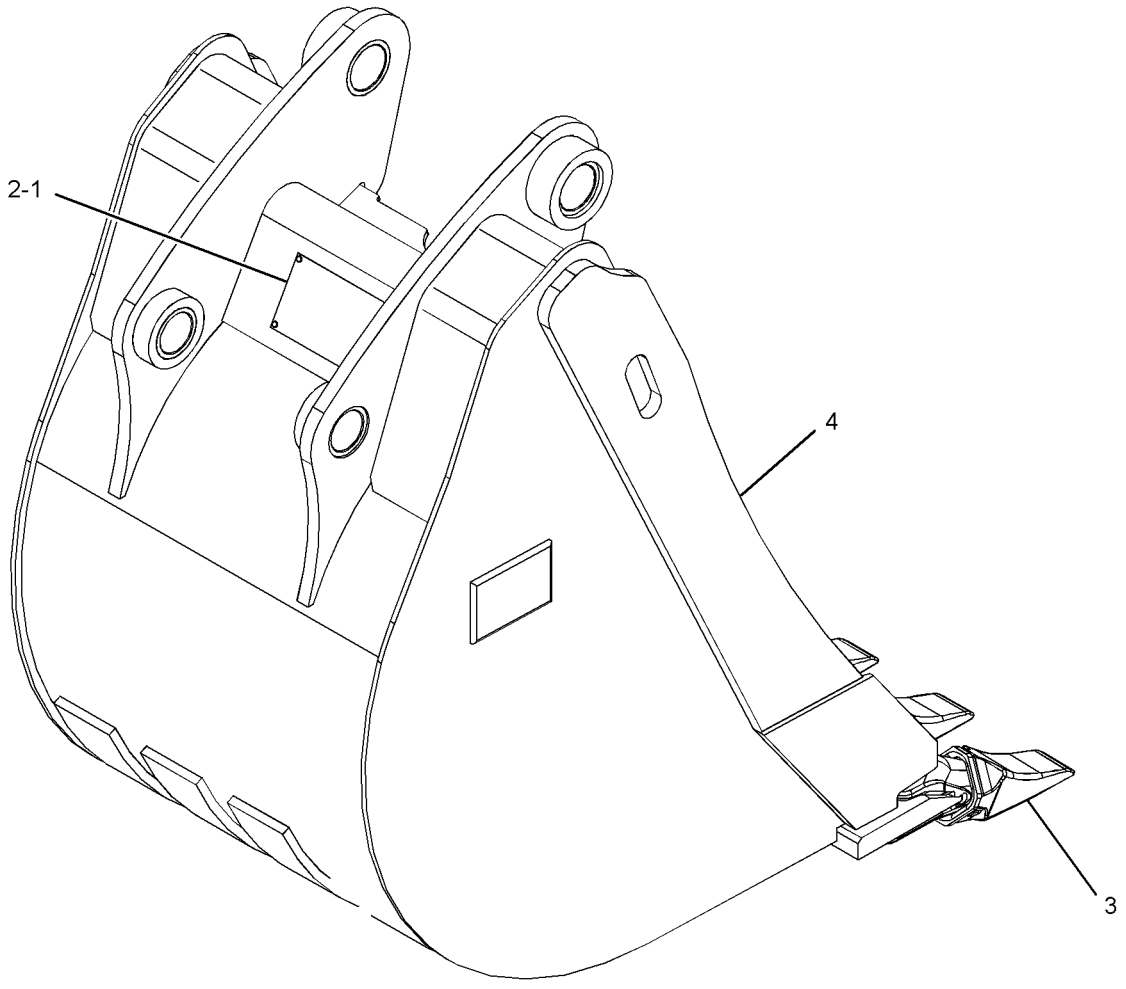

GRAPHIC #1 **<END>** g01150193

WORK TOOLS

337-7436 BUCKET GP-MULTIPURPOSE

S/N: LTG1-UP
1.1-CU M (1.4-CU YD)
PART OF 337-7437, 337-7438 BUCKET AR-MULTIPURPOSE
AN ATTACHMENT

SMCS-6104 **i04606254**

NOTE	REF NO	GRAPHIC REF	PART NUMBER	QTY	PART NAME 1 2 3 4 5 6 (PRODUCT LEVEL)	SEE PAGE
	1	1	**9R-4676**	2	PIN	
	2	1	**168-8389**	4	TACK-FASTENER	
Y	3	1	**216-8803**	1	CLAM AS-MULTIPURPOSE BUCKET	439
Y	4	1	**226-5540**	2	CYLINDER GP-MULTIPURPOSE BUKT	286
	5	1	**233-3757**	1	EDGE	
Y	6	1	**337-7448**	1	BULLDOZER AS (MULTIPURPOSE)	435
Y	7	1	*337-7461*	1	LINES GP-MULTIPURPOSE BUCKET	324
	8	1	**356-8635**	1	PLATE-IDENTIFICATION (WORK TOOL)	
	9	1	**095-0865**	4	PIN-COTTER	
	10	1	**096-1820**	2	PIN-COTTER	
	11	1	**3B-8489**	2	FITTING-GREASE	
	12	1	**3F-5108**	8	BOLT-PLOW (5/8-11X2.25-IN)	
	13	1	**4K-0367**	8	NUT-FULL (5/8-11-THD)	
	14	1	**8T-4122**	8	WASHER-HARD (17X32X3.5-MM THK)	
	15	1	**9R-4677**	2	PIN	
	16	1	**9R-4678**	2	PIN	

Y-SEPARATE ILLUSTRATION

337-7436 **BUCKET GP-MULTIPURPOSE** *(contd.)* **i04606254**

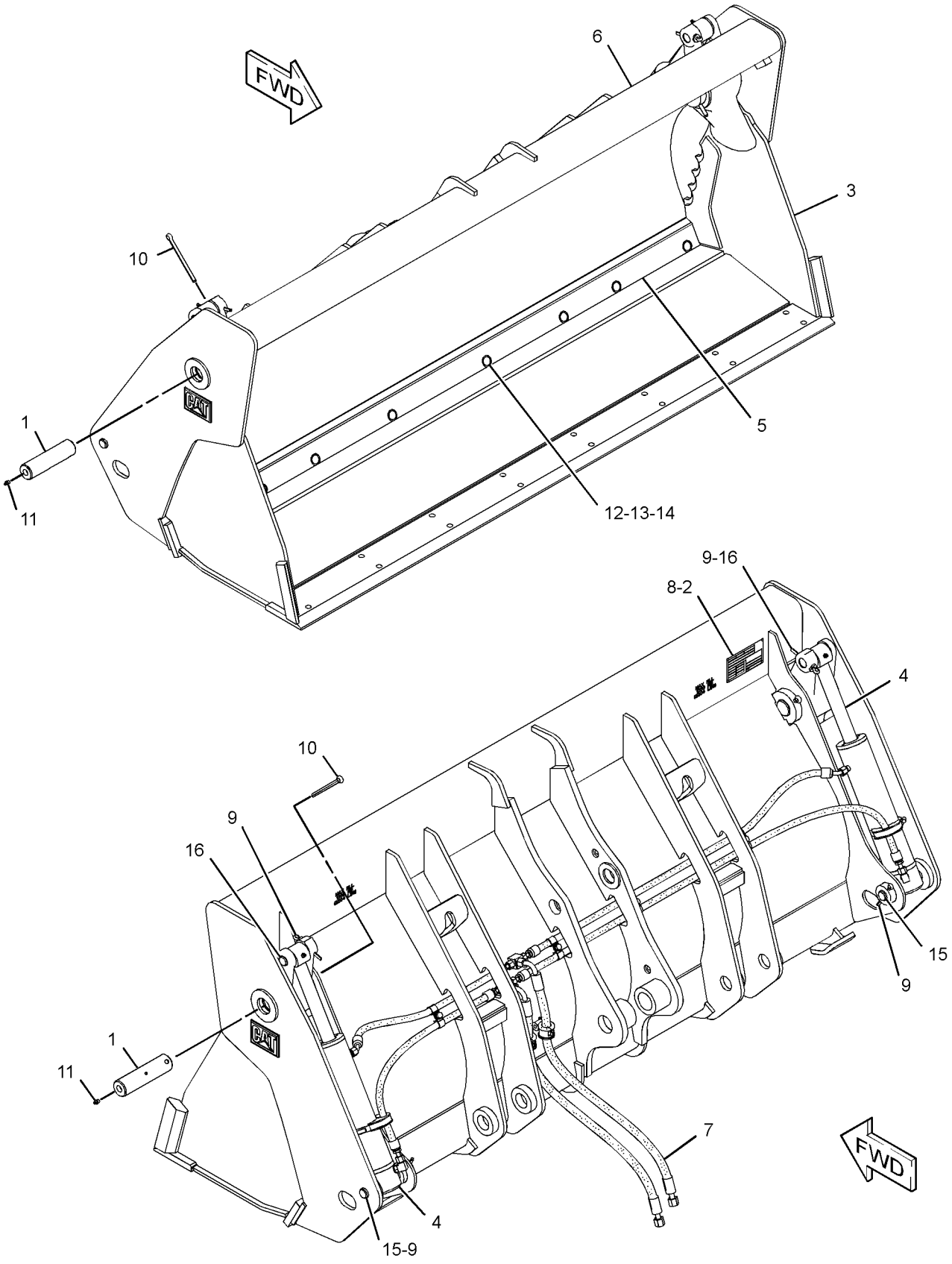

GRAPHIC #1 **<END>** g02790541

WORK TOOLS

337-7439 BUCKET GP-MULTIPURPOSE

S/N: LTG1-UP

PART OF 337-7440, 337-7441 BUCKET AR-MULTIPURPOSE

AN ATTACHMENT

SMCS-6104 **i04608693**

NOTE	REF NO	GRAPHIC REF	PART NUMBER	QTY	PART NAME 1 2 3 4 5 6 (PRODUCT LEVEL)	SEE PAGE
Y	1	1	**104-6310**	1	FORK GP	445
Y	2	1	**337-7458**	1	BUCKET GP-MULTIPURPOSE	432

Y-SEPARATE ILLUSTRATION

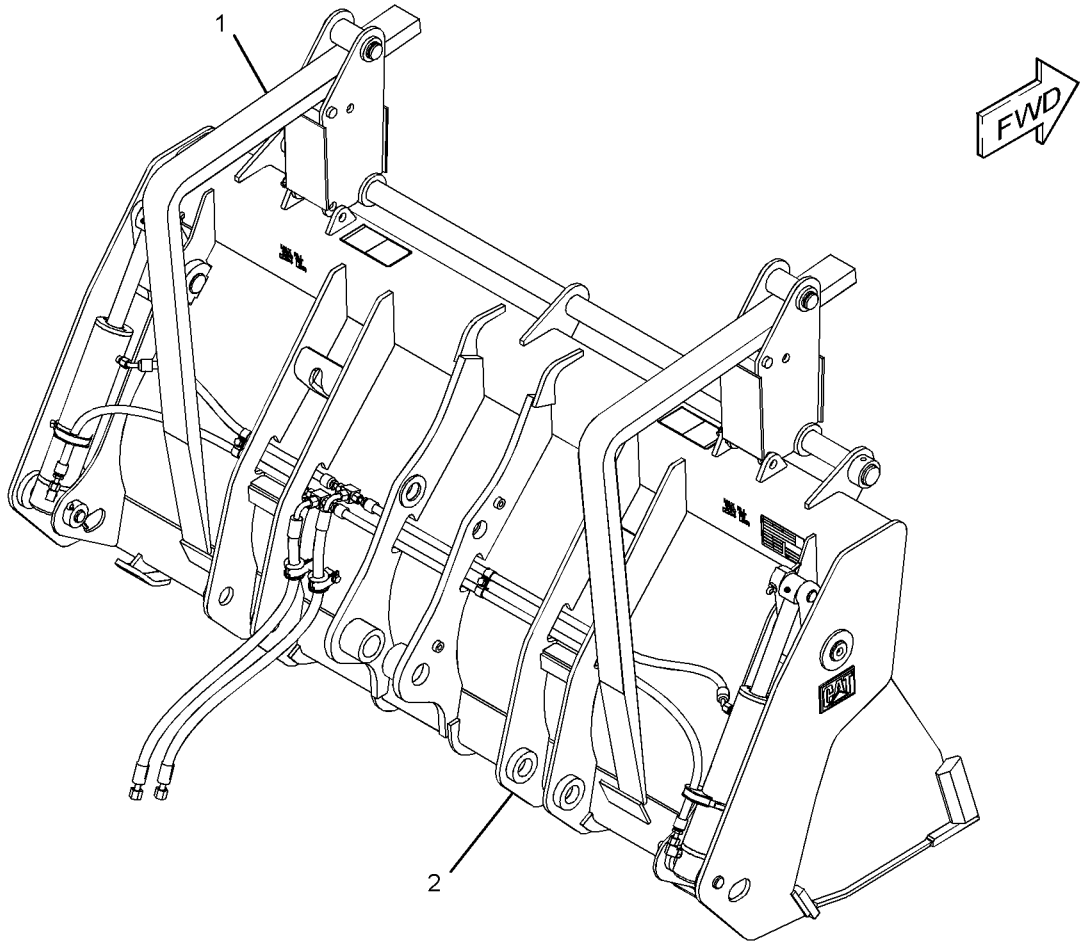

GRAPHIC #1 **<END>** g02790563

WORK TOOLS

337-7442 BUCKET GP-MULTIPURPOSE

S/N: LTG1-UP
1.1-CU M (1.4-CU YD) CAPACITY
PART OF 337-7443, 337-7444 BUCKET AR-MULTIPURPOSE
AN ATTACHMENT

SMCS-6104 **i04622190**

NOTE	REF NO	GRAPHIC REF	PART NUMBER	QTY	PART NAME 1 2 3 4 5 6 (PRODUCT LEVEL)	SEE PAGE
	1	1	**9R-4676**	2	PIN	
	2	1	**168-8389**	4	TACK-FASTENER	
Y	3	1	**216-8826**	1	CLAM AS-MULTIPURPOSE BUCKET	440
Y	4	1	**226-5540**	2	CYLINDER GP-MULTIPURPOSE BUKT	286
	5	1	**233-0859**	1	EDGE	
Y	6	1	**337-7450**	1	BULLDOZER AS	437
Y	7	1	*337-7460*	1	LINES GP-MULTIPURPOSE BUCKET	322
	8	1	**356-8635**	1	PLATE-IDENTIFICATION (WORK TOOL)	
	9	1	**095-0865**	4	PIN-COTTER	
	10	1	**096-1820**	2	PIN-COTTER	
	11	1	**3B-8489**	2	FITTING-GREASE	
	12	1	**3F-5108**	8	BOLT-PLOW (5/8-11X2.25-IN)	
	13	1	**4K-0367**	8	NUT-FULL (5/8-11-THD)	
	14	1	**8T-4122**	8	WASHER-HARD (17X32X3.5-MM THK)	
	15	1	**9R-4677**	2	PIN	
	16	1	**9R-4678**	2	PIN	

Y-SEPARATE ILLUSTRATION

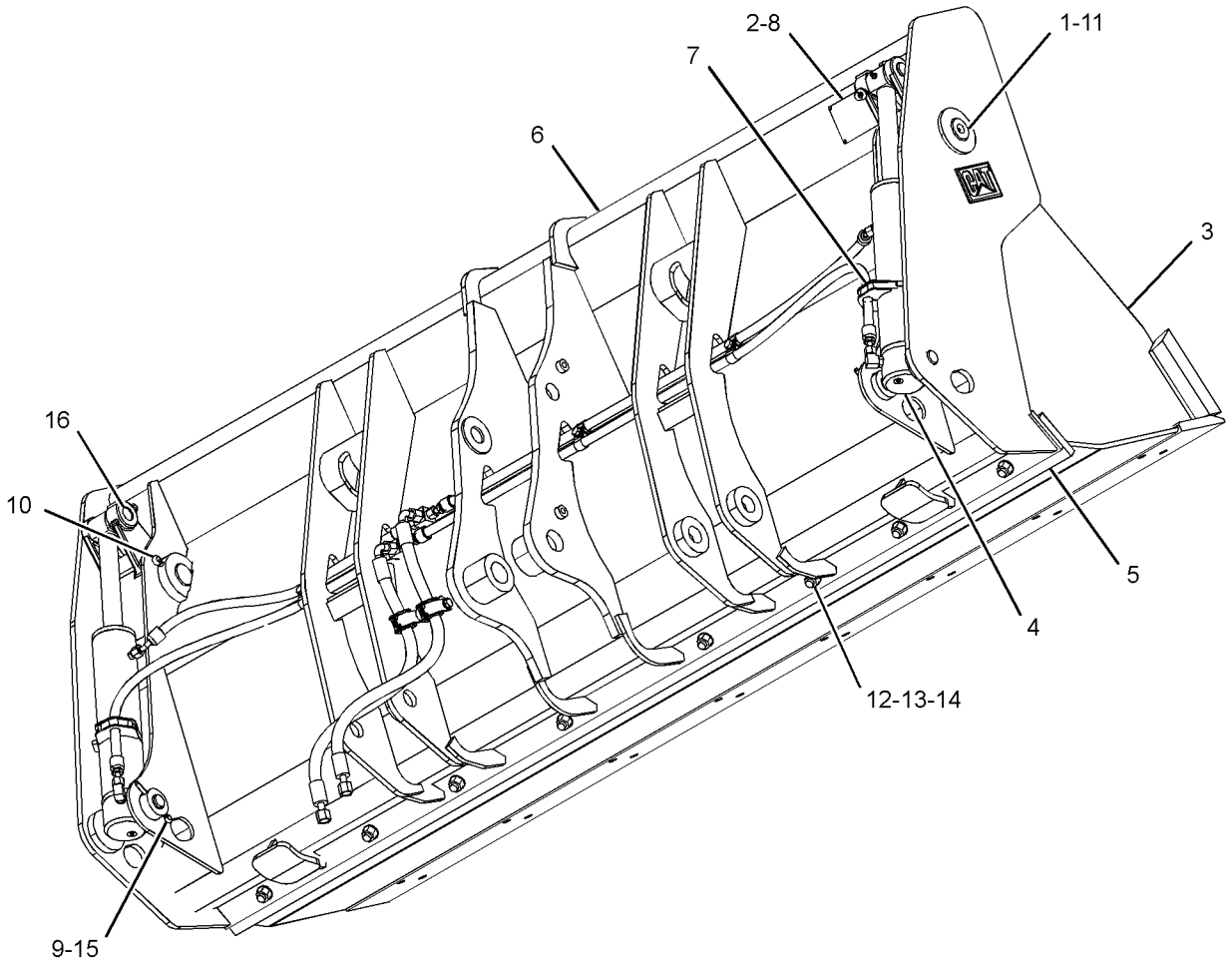

GRAPHIC #1 **<END>** g02815201

WORK TOOLS

337-7445 BUCKET GP-MULTIPURPOSE

S/N: LTG1-UP

PART OF 337-7446, 337-7447 BUCKET AR-MULTIPURPOSE

AN ATTACHMENT

SMCS-6104 **i04622210**

NOTE	REF NO	GRAPHIC REF	PART NUMBER	QTY	PART NAME 1 2 3 4 5 6 (PRODUCT LEVEL)	SEE PAGE
Y	1	1	**104-6310**	1	FORK GP	445
Y	2	1	*337-7459*	1	BUCKET GP-MULTIPURPOSE	433

Y-SEPARATE ILLUSTRATION

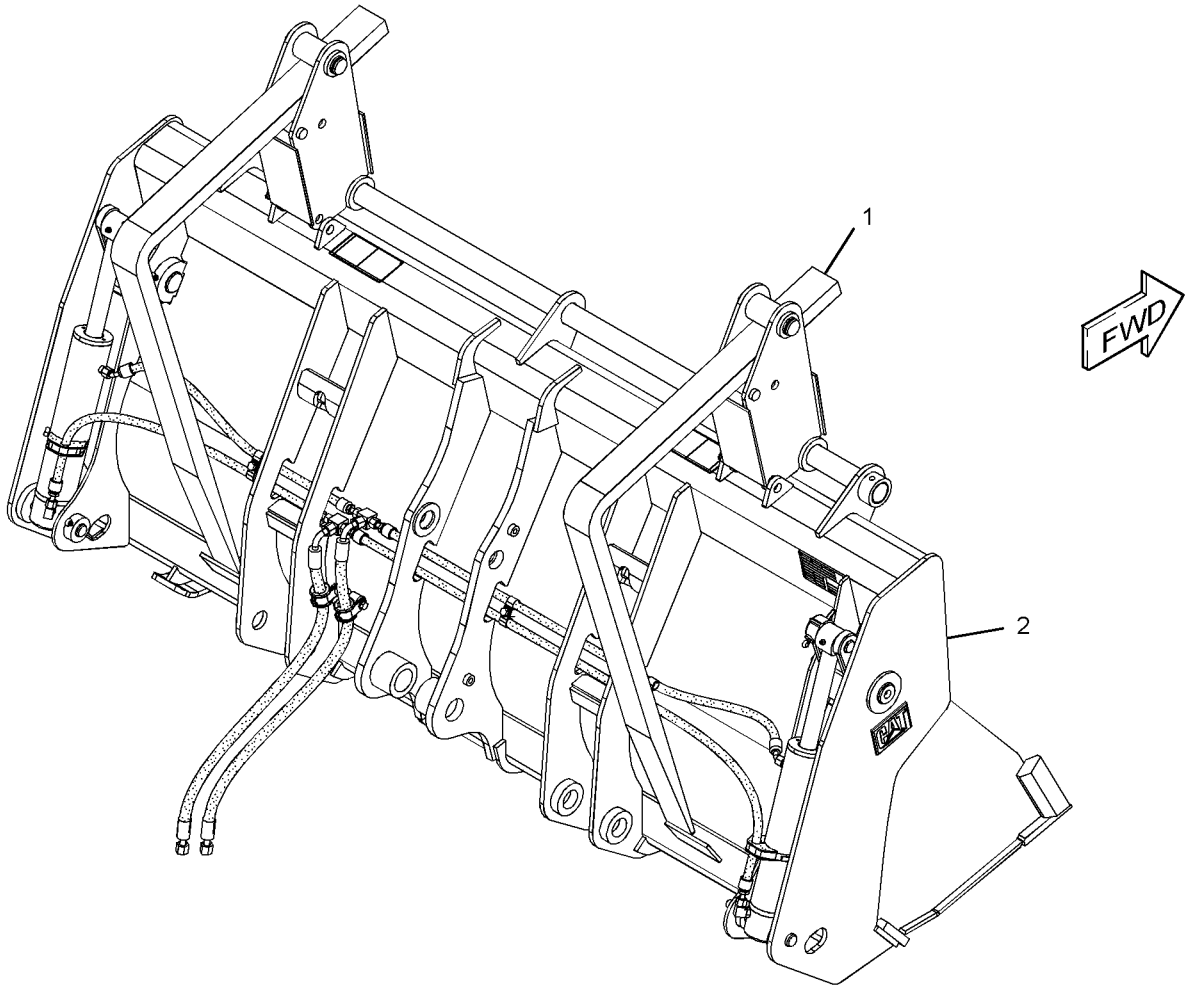

GRAPHIC #1 **<END>** g02790557

WORK TOOLS

337-7458 BUCKET GP-MULTIPURPOSE

S/N: LTG1-UP
1-CU M(1.3-CU YD)
PART OF 337-7439 BUCKET GP-MULTIPURPOSE
AN ATTACHMENT

SMCS-6104 **i04608695**

NOTE	REF NO	GRAPHIC REF	PART NUMBER	QTY	PART NAME 1 2 3 4 5 6 (PRODUCT LEVEL)	SEE PAGE
	1	1	**9R-4676**	2	PIN	
	2	1	**168-8389**	4	TACK-FASTENER	
Y	3	1	**216-8803**	1	CLAM AS-MULTIPURPOSE BUCKET	439
Y	4	1	**226-5540**	2	CYLINDER GP-MULTIPURPOSE BUKT	286
	5	1	**233-3757**	1	EDGE	
Y	6	1	*263-8591*	1	PLATE & FILM GP	555
Y	7	1	**337-7449**	1	BULLDOZER AS	436
Y	8	1	*337-7461*	1	LINES GP-MULTIPURPOSE BUCKET	324
	9	1	**356-8635**	1	PLATE-IDENTIFICATION (WORK TOOL)	
	10	1	**095-0865**	4	PIN-COTTER	
	11	1	**096-1820**	2	PIN-COTTER	
	12	1	**3B-8489**	2	FITTING-GREASE	
	13	1	**3F-5108**	8	BOLT-PLOW (5/8-11X2.25-IN)	
	14	1	**4K-0367**	8	NUT-FULL (5/8-11-THD)	
	15	1	**8T-4122**	8	WASHER-HARD (17X32X3.5-MM THK)	
	16	1	**9R-4677**	2	PIN	
	17	1	**9R-4678**	2	PIN	

Y-SEPARATE ILLUSTRATION

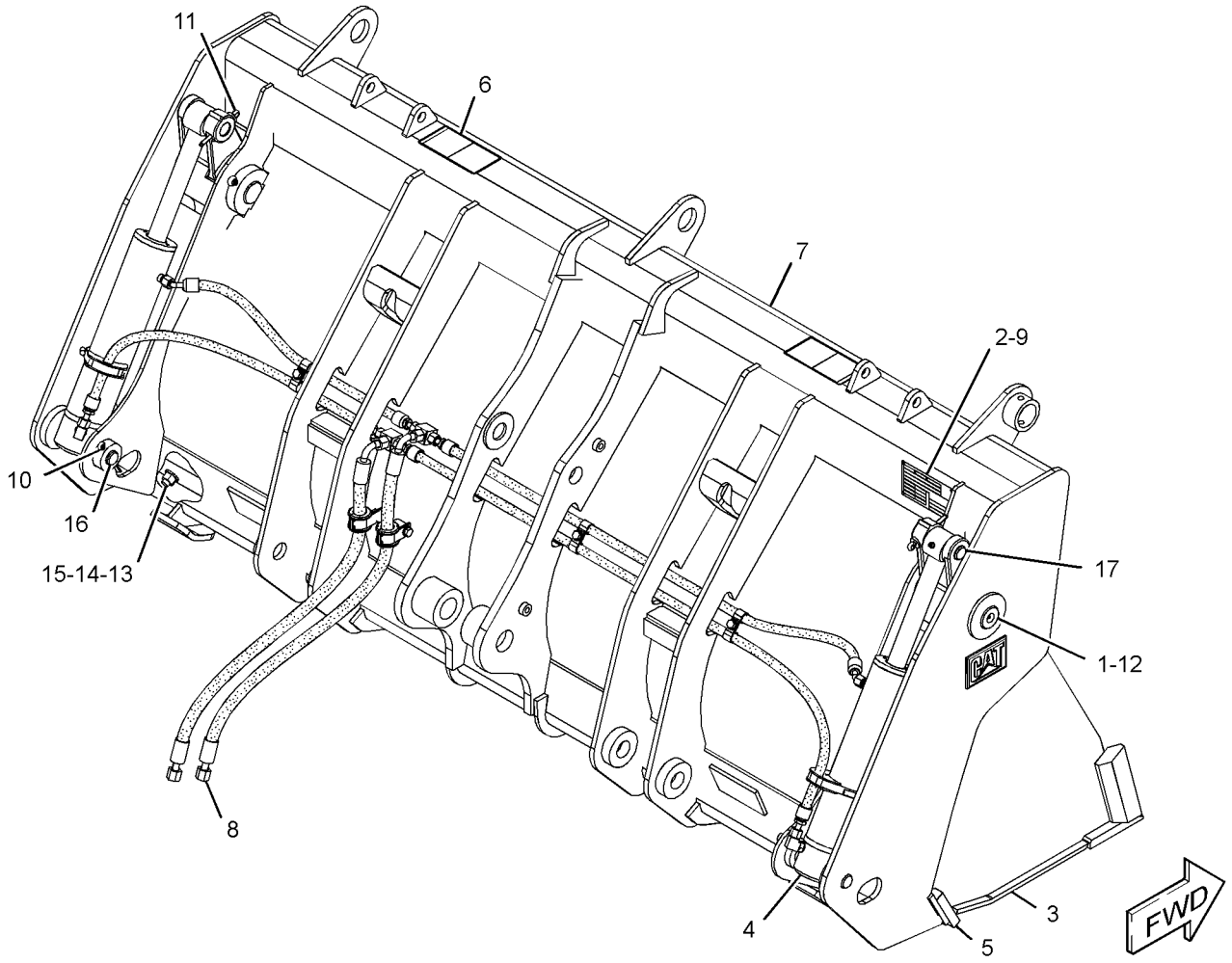

GRAPHIC #1 **<END>** g02827777

337-7459 BUCKET GP-MULTIPURPOSE

S/N: LTG1-UP
2425-MM (95.5-IN) WIDE X 1.1-CU M (1.4-CU YD) CAPACITY
PART OF 337-7445 BUCKET GP-MULTIPURPOSE
AN ATTACHMENT

SMCS-6104 **i04622211**

NOTE	REF NO	GRAPHIC REF	PART NUMBER	QTY	PART NAME 1 2 3 4 5 6 (PRODUCT LEVEL)	SEE PAGE
	1	1	**9R-4676**	2	PIN	
	2	1	**168-8389**	4	TACK-FASTENER	
Y	3	1	**216-8826**	1	CLAM AS-MULTIPURPOSE BUCKET	440
Y	4	1	**226-5540**	2	CYLINDER GP-MULTIPURPOSE BUKT	286
	5	1	**233-0859**	1	EDGE	
Y	6	1	*263-8591*	1	PLATE & FILM GP	555
Y	7	1	**337-7457**	1	BULLDOZER AS (FORKS)	438
Y	8	1	*337-7460*	1	LINES GP-MULTIPURPOSE BUCKET	322
	9	1	**356-8635**	1	PLATE-IDENTIFICATION (WORK TOOL)	
	10	1	**095-0865**	4	PIN-COTTER	
	11	1	**096-1820**	2	PIN-COTTER	
	12	1	**3B-8489**	2	FITTING-GREASE	
	13	1	**3F-5108**	8	BOLT-PLOW (5/8-11X2.25-IN)	
	14	1	**4K-0367**	8	NUT-FULL (5/8-11-THD)	
	15	1	**8T-4122**	9	WASHER-HARD (17X32X3.5-MM THK)	
	16	1	**9R-4677**	2	PIN	
	17	1	**9R-4678**	2	PIN	

Y-SEPARATE ILLUSTRATION

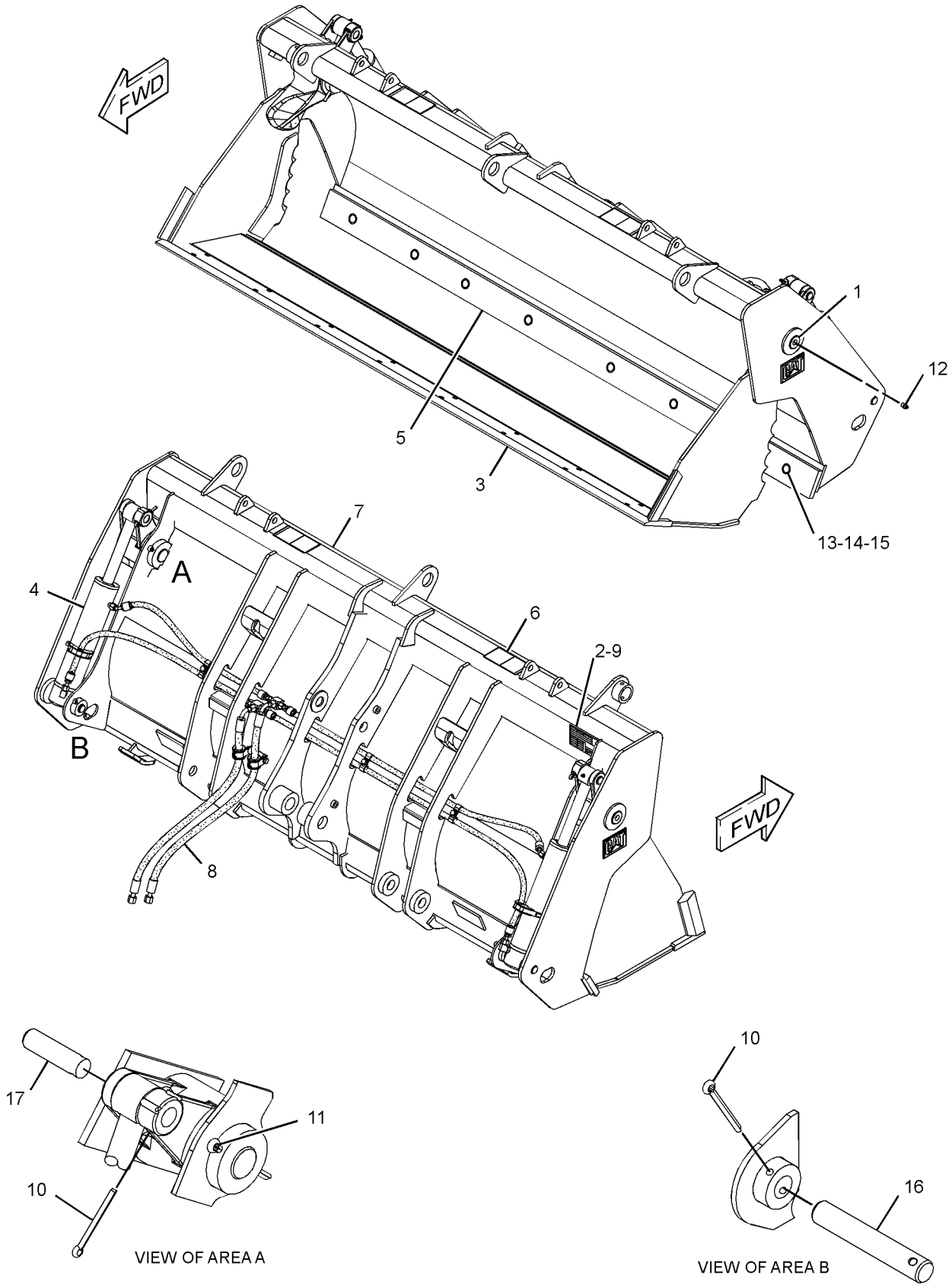

GRAPHIC #1 **<END>** g02807862

337-7448 BULLDOZER AS—MULTIPURPOSE

S/N: LTG1-UP
1.1-CU M(1.4-CU YD)
PART OF 337-7436 BUCKET GP-MULTIPURPOSE, 337-7449 BULLDOZER AS
AN ATTACHMENT

SMCS-6050 **i04608649**

NOTE	REF NO	GRAPHIC REF	PART NUMBER	QTY	PART NAME 1 2 3 4 5 6 (PRODUCT LEVEL)	SEE PAGE
M	1	1	**9R-2613**	4	BOSS-WELD (M10X1.5X25-MM)	
M	2	1	**9R-5271**	2	BOSS (M10X1.5X25-MM)	
	3	1	*216-8794*	1	BRACKET AS (LH)	
	3A	1	**161-4130**	1	PLATE-IDENTIFICATION (CAT)	
	4	1	*216-8796*	1	BRACKET AS (RH)	
	4A	1	**161-4130**	1	PLATE-IDENTIFICATION (CAT)	

M-METRIC PART

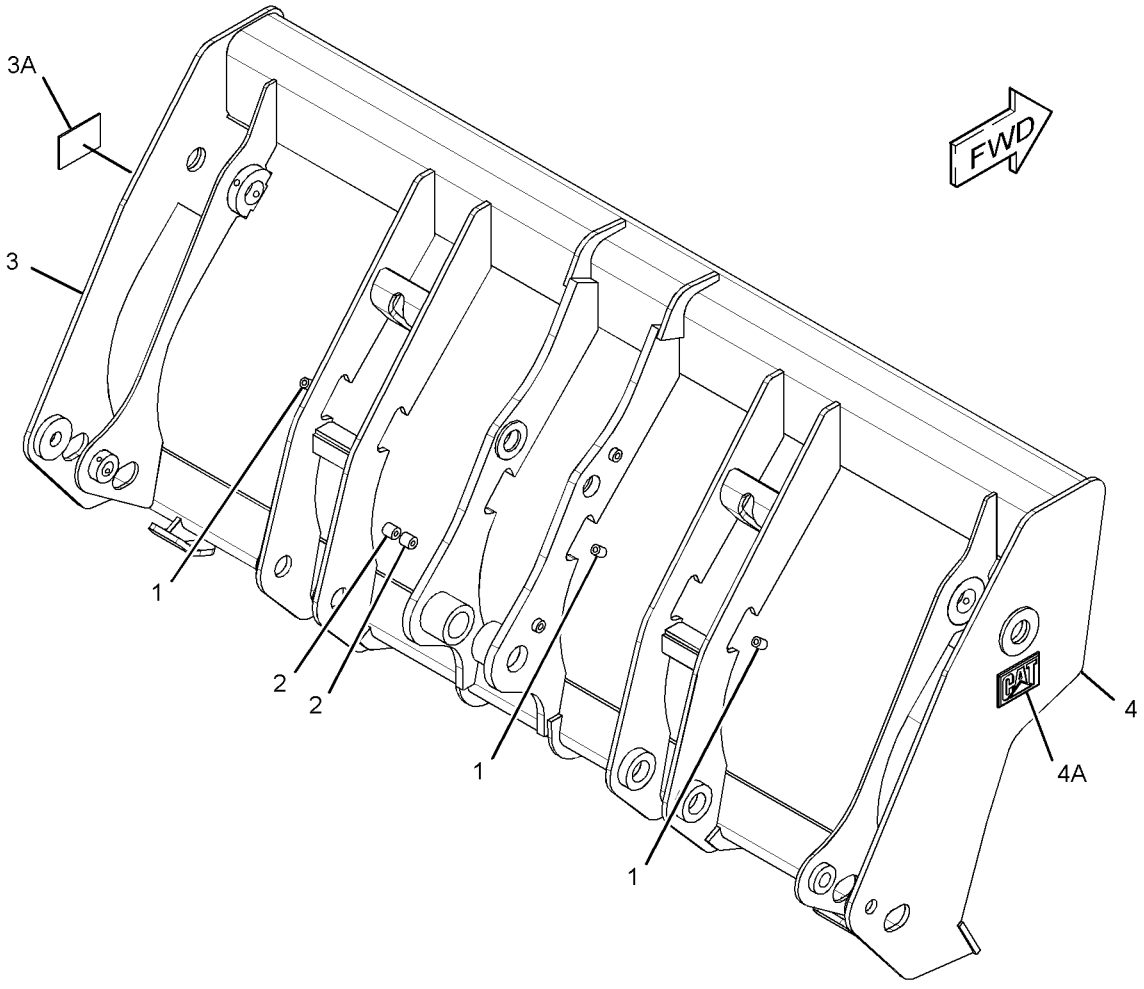

GRAPHIC #1 **<END>** g02829916

WORK TOOLS

337-7449 BULLDOZER AS—MULTIPURPOSE

S/N: LTG1-UP

PART OF 337-7458 BUCKET GP-MULTIPURPOSE

AN ATTACHMENT

SMCS-6050 **i04608690**

NOTE	REF NO	GRAPHIC REF	PART NUMBER	QTY	PART NAME 1 2 3 4 5 6 (PRODUCT LEVEL)	SEE PAGE
	1	1	**216-8778**	2	BRACKET	
	2	1	**216-8780**	1	BRACKET AS	
	3	1	**216-8781**	4	BRACKET	
	4	1	**224-6250**	2	PLATE	
Y	5	1	**337-7448**	1	BULLDOZER AS	435

Y-SEPARATE ILLUSTRATION

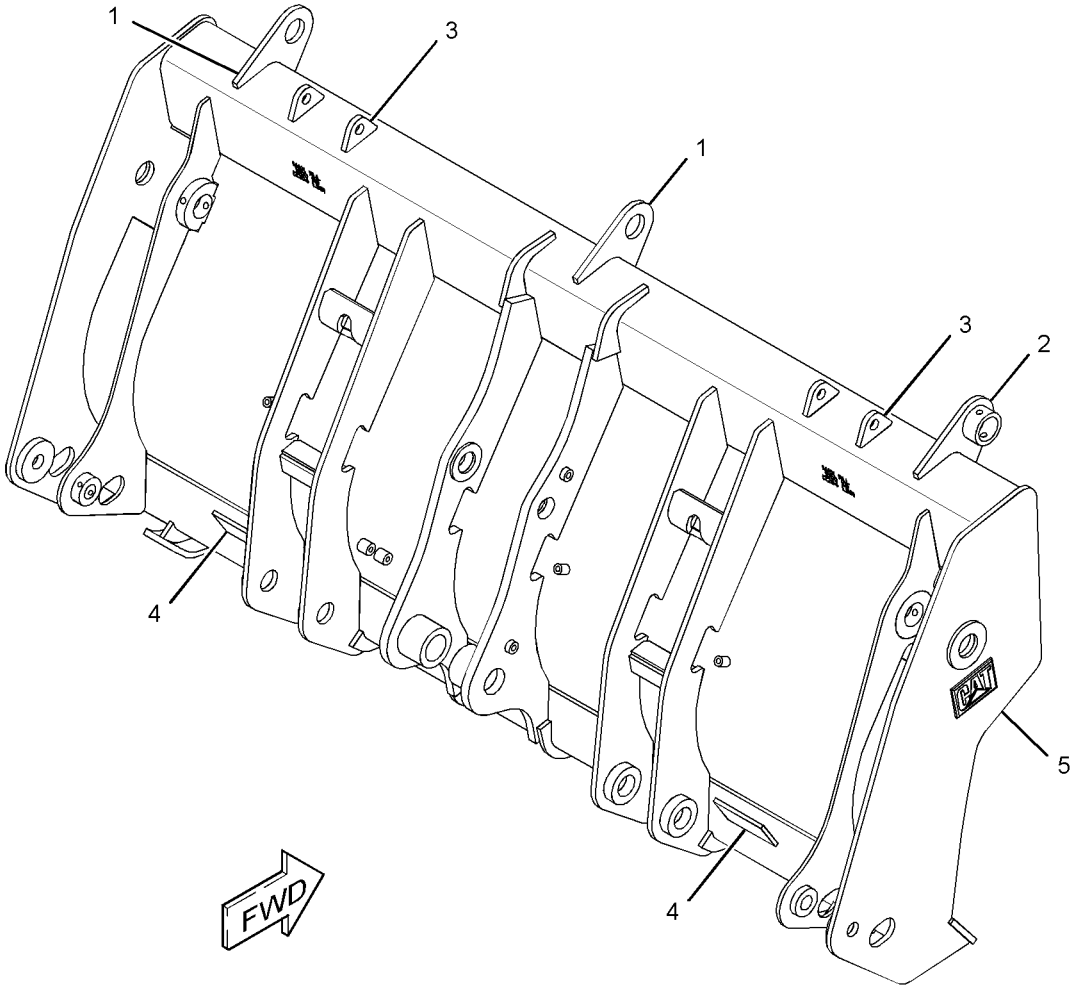

GRAPHIC #1 **<END>** g02790629

337-7450 BULLDOZER AS

S/N: LTG1-UP
1.1-CU M (1.4-CU YD) CAPACITY
PART OF 337-7442 BUCKET GP-MULTIPURPOSE, 337-7457 BULLDOZER AS
FIELD REPLACEMENT ORDER 337-7457—PAGE 438
AN ATTACHMENT

SMCS-6050 **i04622191**

NOTE	REF NO	GRAPHIC REF	PART NUMBER	QTY	PART NAME 1 2 3 4 5 6 (PRODUCT LEVEL)	SEE PAGE
M	1	1	**9R-2613**	4	BOSS-WELD (M10X1.5X25-MM)	
	2	1	*216-8794*	1	BRACKET AS (LH)	
	3	1	*216-8796*	1	BRACKET AS (RH)	
					(EACH BRACKET AS INCLUDES)	
		1	**161-4130**	1	PLATE-IDENTIFICATION (CAT)	
M	4	1	**9R-5271**	2	BOSS (M10X1.5X25-MM)	

M-METRIC PART

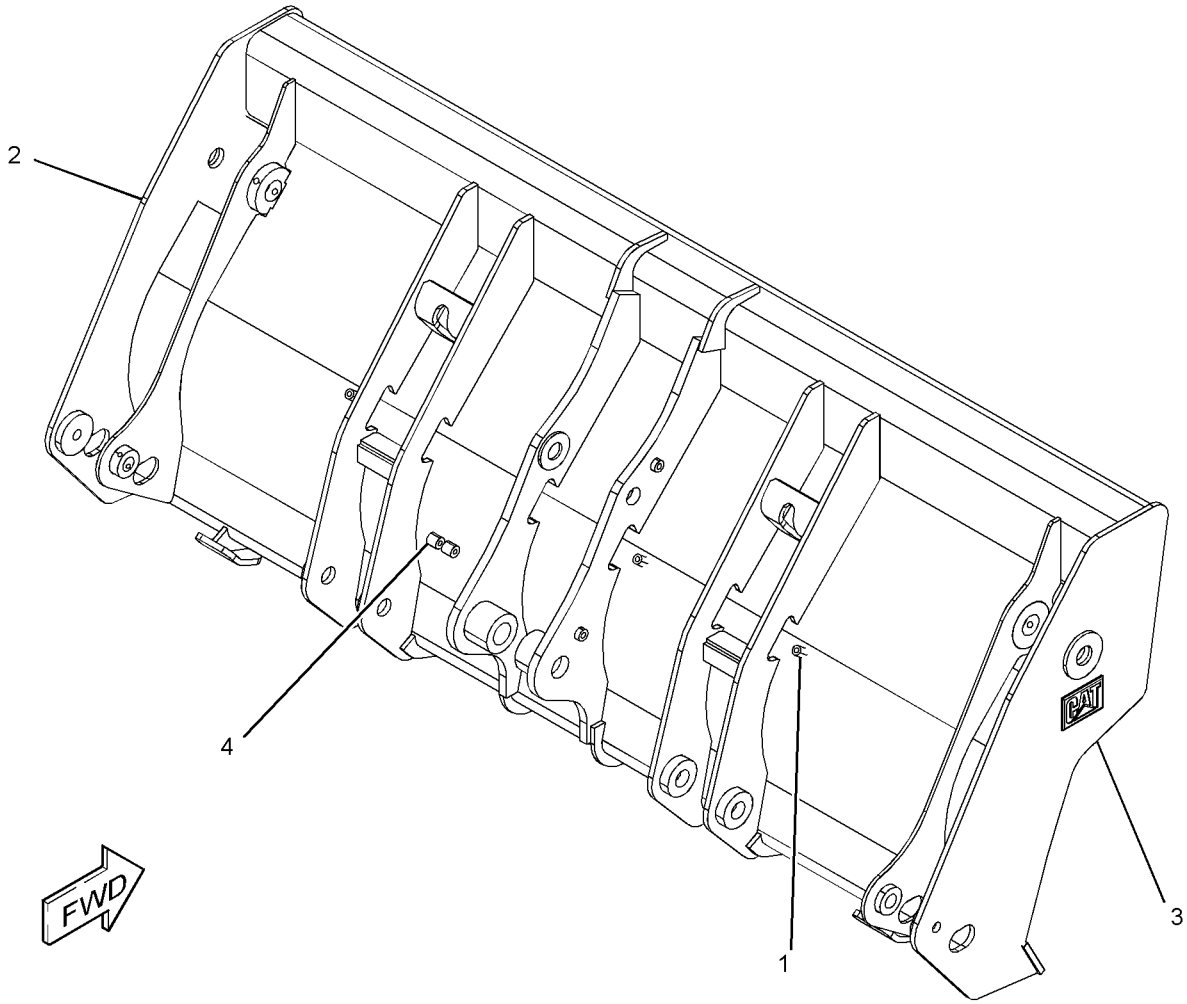

GRAPHIC #1 **<END>** g02807336

337-7457 BULLDOZER AS

S/N: LTG1-UP
PART OF 337-7459 BUCKET GP-MULTIPURPOSE
FIELD REPLACEMENT FOR 337-7450—PAGE 437
AN ATTACHMENT

SMCS-6050 **i04622212**

NOTE	REF NO	GRAPHIC REF	PART NUMBER	QTY	PART NAME 1 2 3 4 5 6 (PRODUCT LEVEL)	SEE PAGE
	1	1	**216-8778**	2	BRACKET	
	2	1	**216-8780**	1	BRACKET AS	
	3	1	**216-8781**	4	BRACKET	
	4	1	**224-6250**	2	PLATE	
Y	5	1	*337-7450*	1	BULLDOZER AS	437

Y-SEPARATE ILLUSTRATION

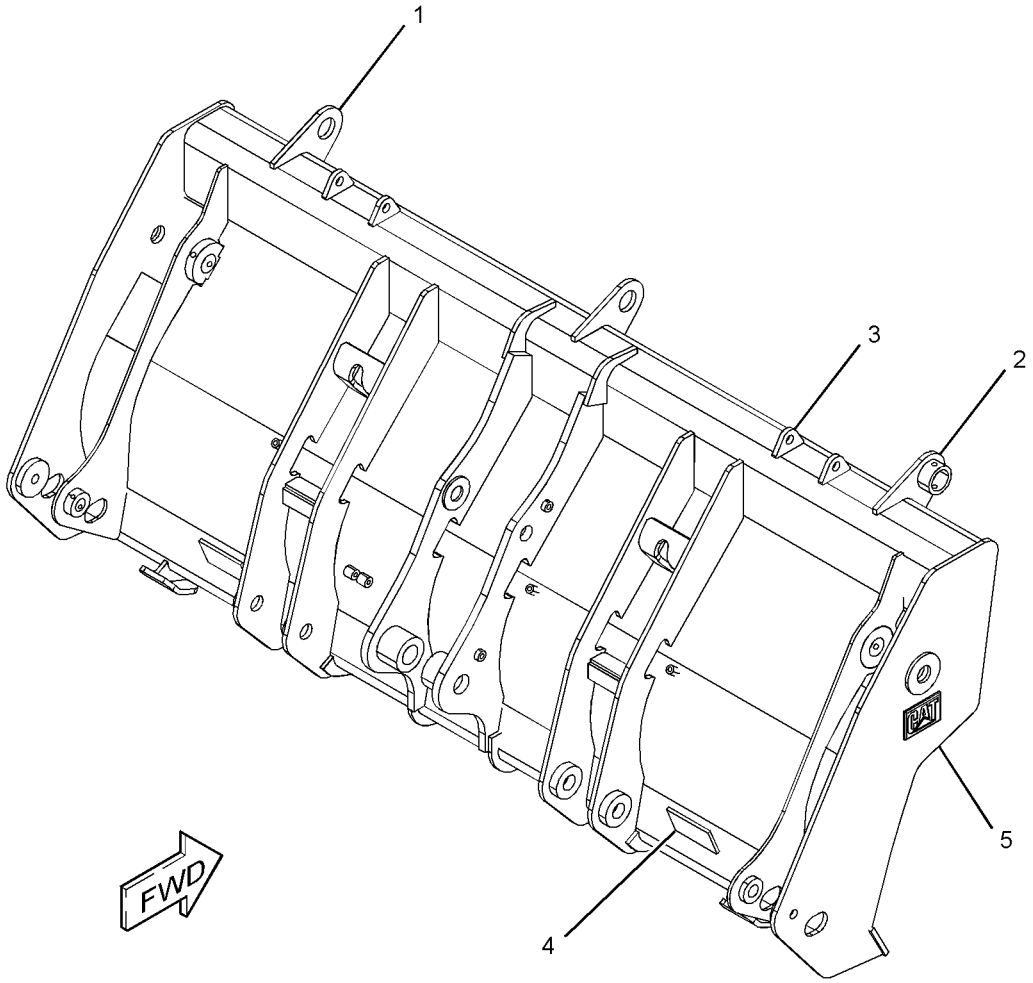

GRAPHIC #1 **<END>** g02807456

WORK TOOLS

216-8803 CLAM AS-MULTIPURPOSE BUCKET

S/N: LTG1-UP

PART OF 337-7436, 337-7458 BUCKET GP-MULTIPURPOSE

AN ATTACHMENT

SMCS-6104 **i03845656**

NOTE	REF NO	GRAPHIC REF	PART NUMBER	QTY	PART NAME 1 2 3 4 5 6 (PRODUCT LEVEL)	SEE PAGE
	1	1	**9R-4672**	1	EDGE	

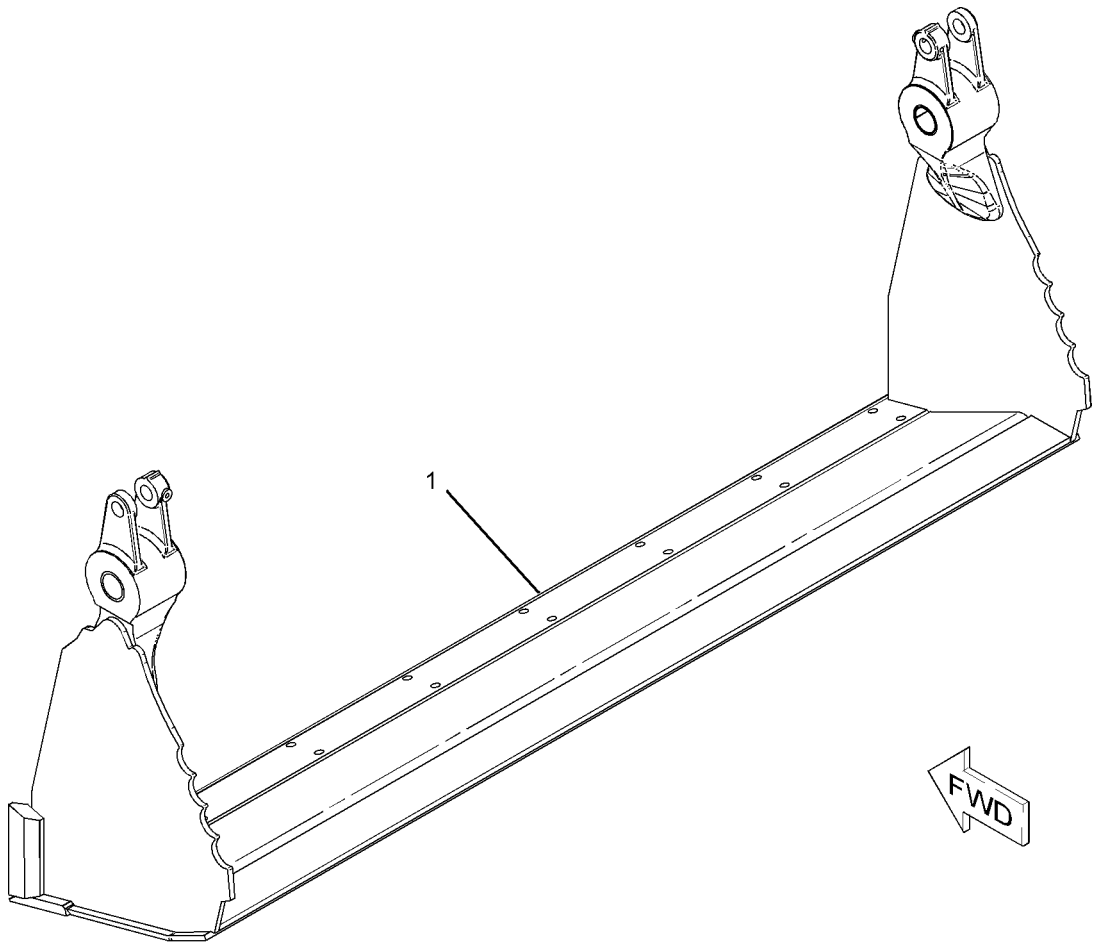

GRAPHIC #1 **<END>** g01134490

WORK TOOLS

216-8826 CLAM AS-MULTIPURPOSE BUCKET

S/N: LTG1-UP
PART OF 337-7442, 337-7459 BUCKET GP-MULTIPURPOSE
AN ATTACHMENT

SMCS-6104 **i03845734**

NOTE	REF NO	GRAPHIC REF	PART NUMBER	QTY	PART NAME 1 2 3 4 5 6 (PRODUCT LEVEL)	SEE PAGE
	1	1	*216-8804*	1	PLATE AS (LH)	
		1	**9R-4675**	1	BUSHING-TERMINAL	
		1	**9R-5294**	1	HINGE	
	2	1	*216-8805*	1	PLATE AS (RH)	
		1	**9R-4675**	1	BUSHING-TERMINAL	
		1	**9R-5294**	1	HINGE	
	3	1	*216-8829*	1	PLATE AS	
		1	**9R-5313**	1	EDGE	

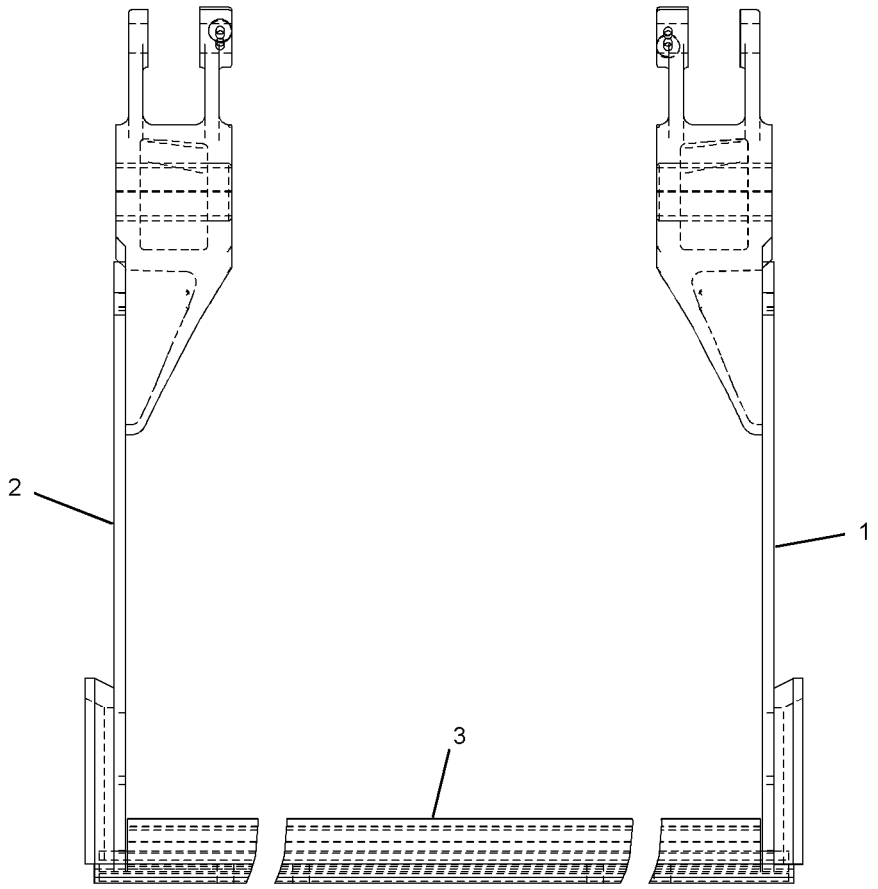

FRONT VIEW

GRAPHIC #1 **<END>** g01135645

WORK TOOLS

222-7379 COUPLER AR-QUICK—PIN-LOCK

S/N: LTG1-UP

AN ATTACHMENT

SMCS-6129 **i03849751**

NOTE	PART NUMBER	QTY	PART NAME 1 2 3 4 5 6 (PRODUCT LEVEL)	SEE PAGE
Y	*222-7464*	1	COUPLER GP-QUICK (PIN-LOCK)	442
Y	*215-9478*	1	PIN GP-COUPLER (MACHINE)	447
Y	*216-0928*	1	PIN GP-COUPLER (PIN-LOCK)	448

Y-SEPARATE ILLUSTRATION

<END>

222-7464 COUPLER GP-QUICK–PIN-LOCK

S/N: LTG1-UP
PART OF 222-7379 COUPLER AR-QUICK
AN ATTACHMENT

SMCS-6129 **i03849754**

NOTE	REF NO	GRAPHIC REF	PART NUMBER	QTY	PART NAME 1 2 3 4 5 6 (PRODUCT LEVEL)	SEE PAGE
	1	1	**154-2704**	1	PLATE-INSTRUCTION (BUCKET SPECIFICATIONS)	
	2	1	**168-8389**	4	TACK-FASTENER	
	3	1	**276-1368**	2	BUSHING	
	4	1	*232-2735*	1	COUPLER AS	
	4A	1	**161-4130**	2	PLATE-IDENTIFICATION (CAT)	
	5	1	**3B-8489**	1	FITTING-GREASE	
	6	1	**9R-0320**	2	BUSHING	
	7	1	**9R-3700**	2	BUSHING	

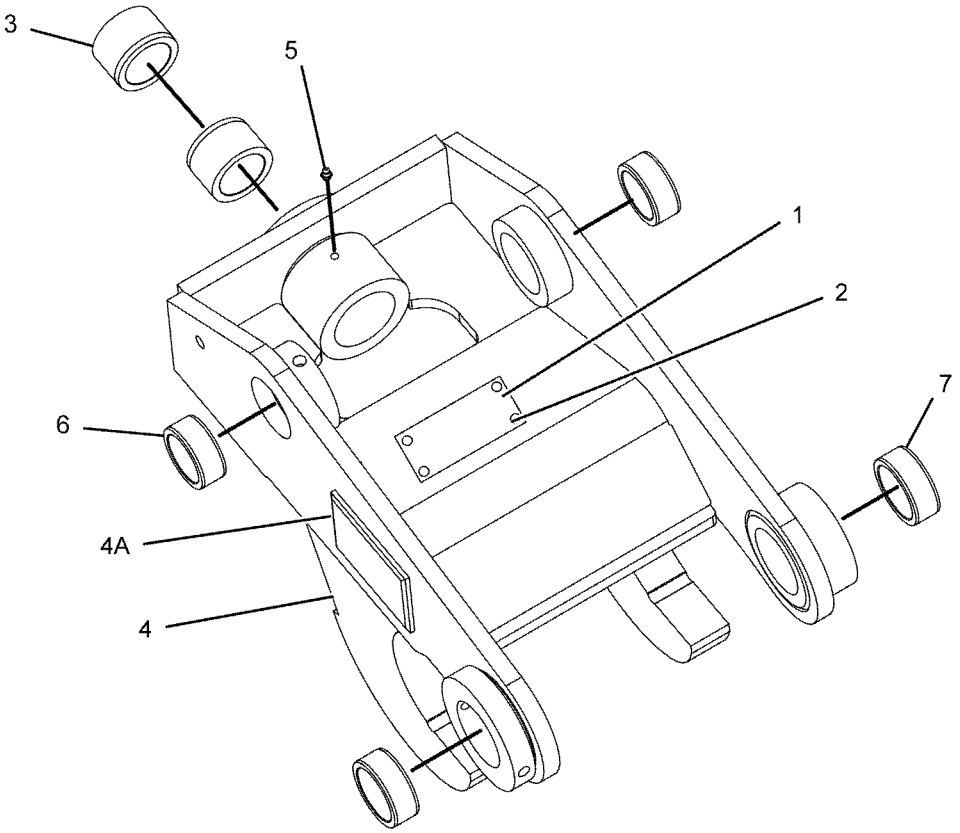

GRAPHIC #1 **<END>** g01072399

9R-5320 EDGE GP-CUTTING

S/N: LTG1-UP
PART OF 337-7397 BUCKET AR-GENERAL PURPOSE, 337-7444, 337-7447 BUCKET AR-MULTIPURPOSE
CANNOT BE USED WITH 9R-5866—PAGE 449
AN ATTACHMENT

SMCS-6801 **i00530080**

NOTE	REF NO	GRAPHIC REF	PART NUMBER	QTY	PART NAME 1 2 3 4 5 6 (PRODUCT LEVEL)	SEE PAGE
	1	1	**118-7110**	2	EDGE-CUTTING	
	2	1	**4F-3657**	8	BOLT-PLOW (5/8-11X2.75-IN)	
	3	1	**4K-0367**	8	NUT-FULL (5/8-11-THD)	
	4	1	**8T-4122**	8	WASHER-HARD (17X32X3.5-MM THK)	

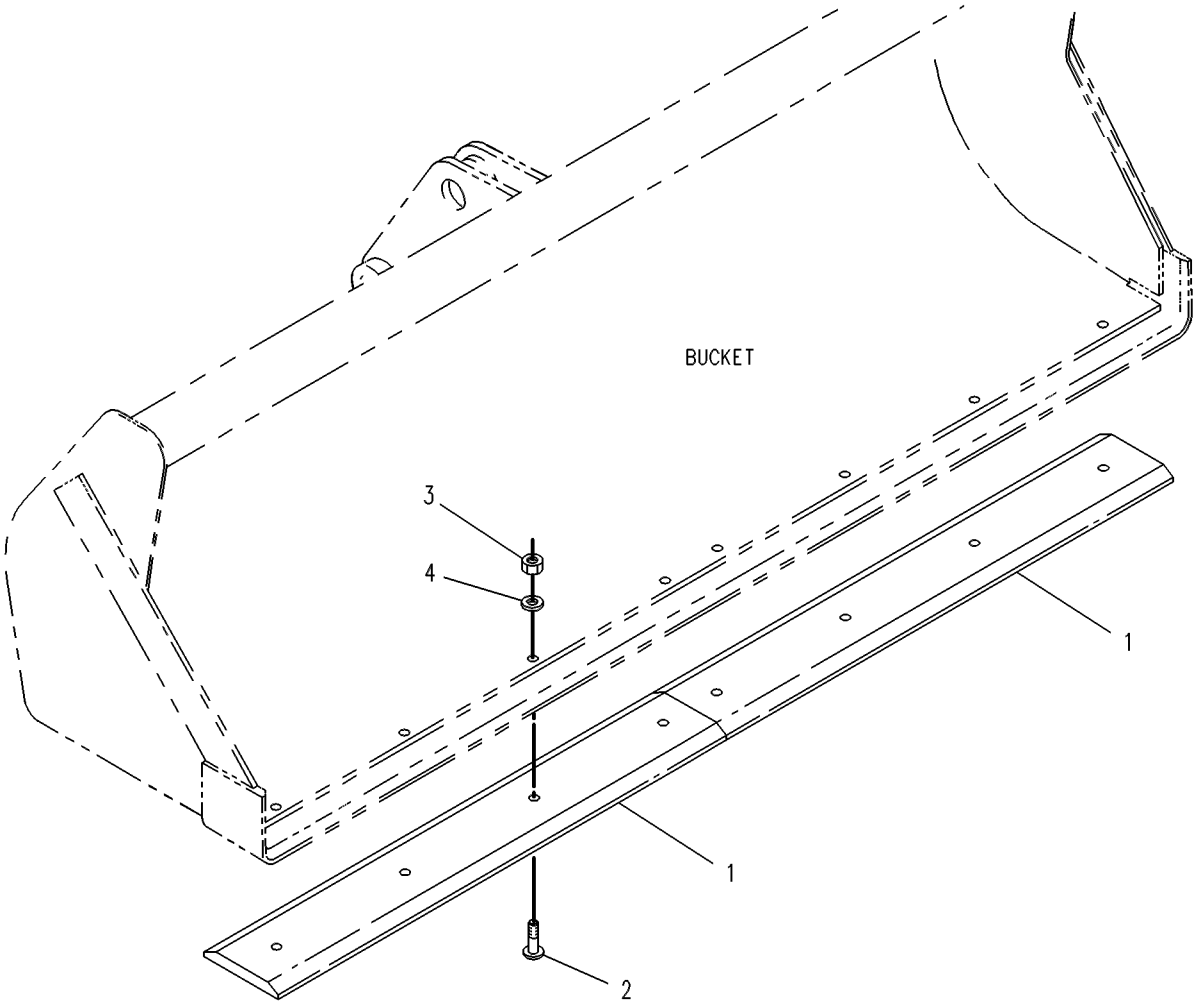

GRAPHIC #1 **<END>** g00131376

WORK TOOLS

9R-5321 EDGE GP-CUTTING

S/N: LTG1-UP
PART OF 337-7386, 337-7389 BUCKET AR-GENERAL PURPOSE, 337-7438, 337-7441 BUCKET AR-MULTIPURPOSE
CANNOT BE USED WITH 9R-5866—PAGE 449 AN ATTACHMENT

SMCS-6801 **i00530701**

NOTE	REF NO	GRAPHIC REF	PART NUMBER	QTY	PART NAME 1 2 3 4 5 6 (PRODUCT LEVEL)	SEE PAGE
	1	1	**9W-8215**	2	EDGE-CUTTING	
	2	1	**3F-5108**	8	BOLT-PLOW (5/8-11X2.25-IN)	
	3	1	**4K-0367**	8	NUT-FULL (5/8-11-THD)	
	4	1	**8T-4122**	8	WASHER-HARD (17X32X3.5-MM THK)	

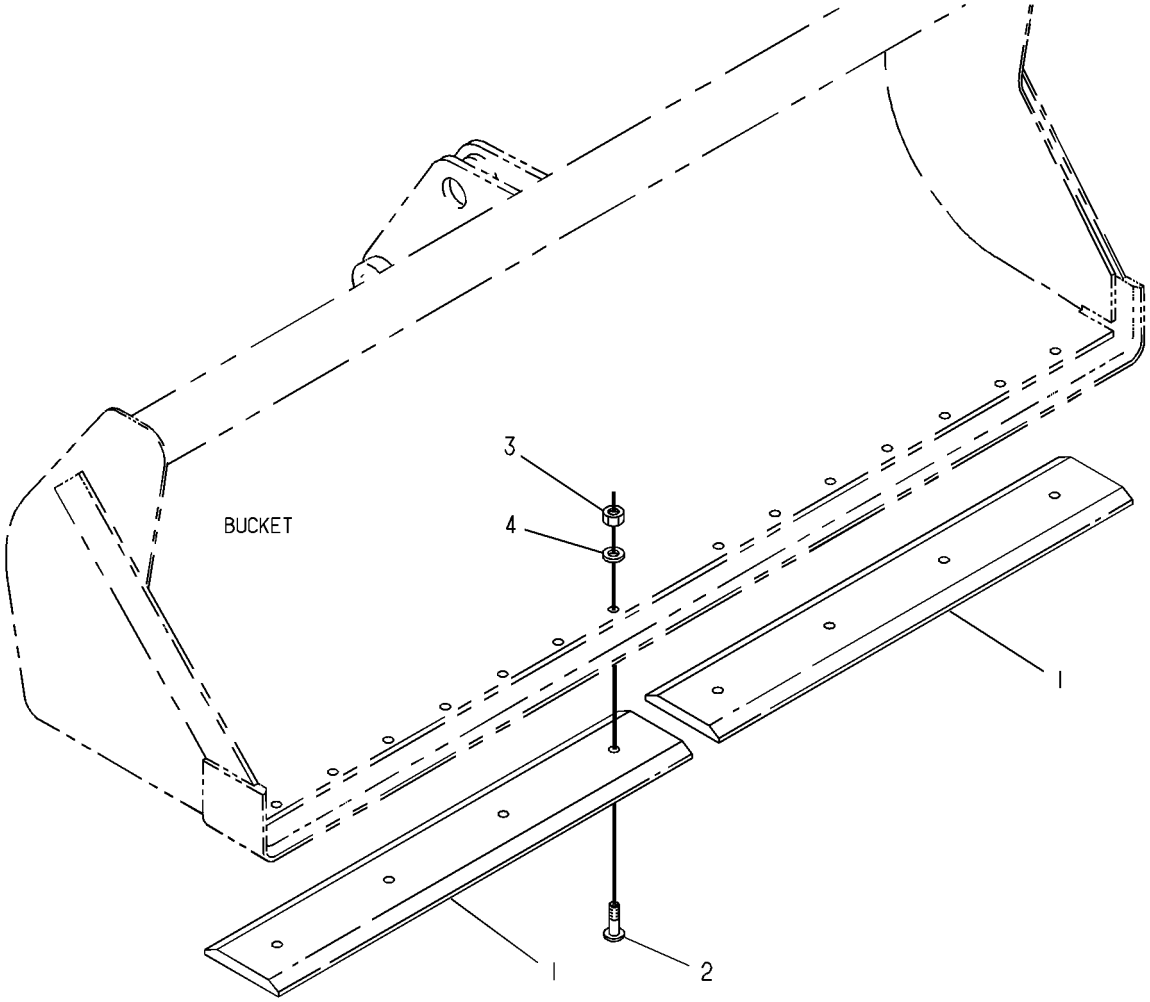

GRAPHIC #1 **<END>** g00130834

WORK TOOLS

104-6310 FORK GP

S/N: LTG1-UP
PART OF 337-7439, 337-7445 BUCKET GP-MULTIPURPOSE
AN ATTACHMENT

SMCS-6405 **i01114480**

NOTE	REF NO	GRAPHIC REF	PART NUMBER	QTY	PART NAME 1 2 3 4 5 6 (PRODUCT LEVEL)	SEE PAGE
	1	1	**104-6311**	2	BRACKET AS	
	2	1	**104-6312**	2	FORK AS	
	3	1	**104-6316**	1	PIN	
	4	1	**104-6317**	2	PIN	
	5	1	**4J-1888**	1	PIN-COTTER	
	6	1	**9R-0109**	4	WASHER (41X64X3-MM THK)	
	7	1	**112-1776**	2	PIN AS	
	8	1	**6V-8144**	4	RING-RETAINING	
	9	1	**5D-8159**	2	PIN AS	

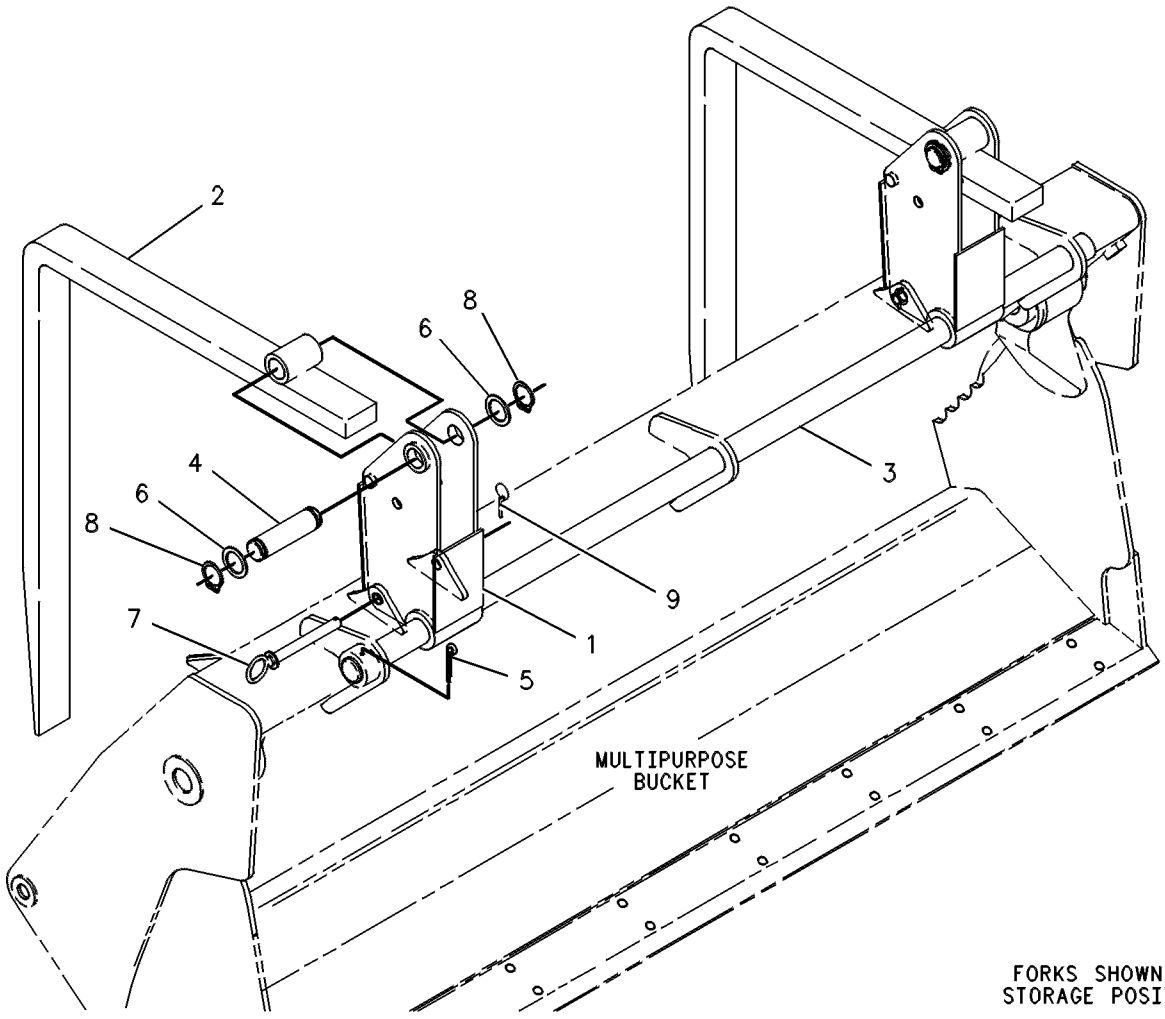

GRAPHIC #1 **<END>** g00131084

318-9902 MOUNTING GP-BUCKET—BACKHOE, QUICK COUPLER

S/N: LTG1-UP

AN ATTACHMENT

SMCS-6101 **i02990524**

NOTE	PART NUMBER	QTY	PART NAME 1 2 3 4 5 6 (PRODUCT LEVEL)	SEE PAGE
	154-5279	1	PIN	
	154-5280	1	PIN	
	3B-5319	4	PIN-COTTER	
B	**9R-0158**	5	WASHER (46X69X3-MM THK)	
B	**9R-1510**	5	WASHER (51X82X4-MM THK)	

B-USE AS REQUIRED

<END>

WORK TOOLS

215-9478 PIN GP-COUPLER—MACHINE

S/N: LTG1-UP

PART OF 222-7379 COUPLER AR-QUICK

AN ATTACHMENT

SMCS-6129 **i03849752**

NOTE	REF NO	GRAPHIC REF	PART NUMBER	QTY	PART NAME 1 2 3 4 5 6 (PRODUCT LEVEL)	SEE PAGE
	1	1	**215-3373**	1	PIN	
	2	1	**168-0425**	1	PIN	
M	3	1	**6V-7744**	2	LOCKNUT (M10X1.5-THD)	
M	4	1	**8T-4198**	2	BOLT (M10X1.5X100-MM)	

M-METRIC PART

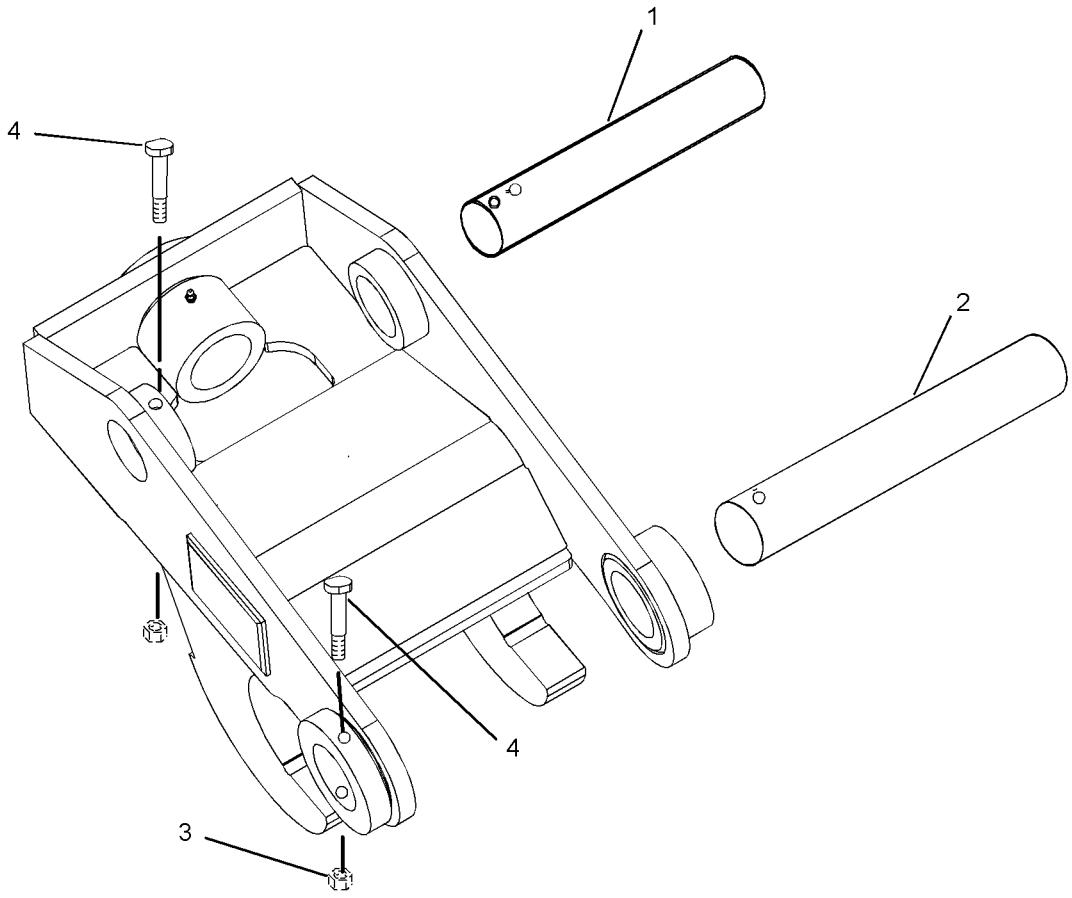

GRAPHIC #1 **<END>** g01224240

WORK TOOLS

216-0928 PIN GP-COUPLER—PIN-LOCK

S/N: LTG1-UP
PART OF 222-7379 COUPLER AR-QUICK
AN ATTACHMENT

SMCS-6129 **i03849753**

NOTE	REF NO	GRAPHIC REF	PART NUMBER	QTY	PART NAME 1 2 3 4 5 6 (PRODUCT LEVEL)	SEE PAGE
	1	1	**222-7411**	1	PIN AS	
	2	1	**216-3712**	1	PIN	

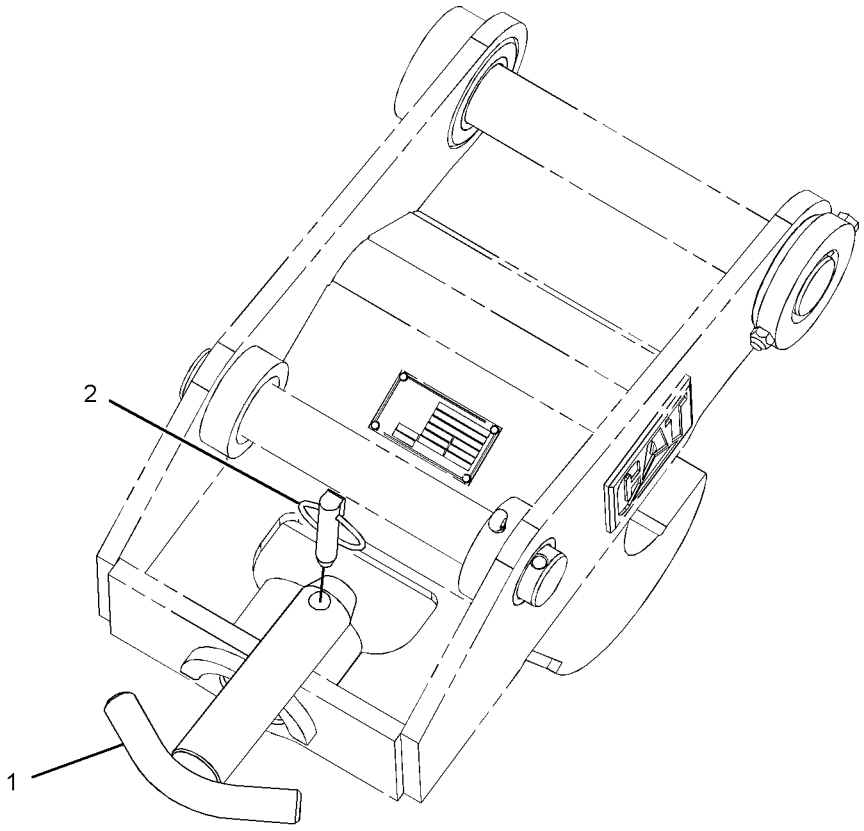

GRAPHIC #1 **<END>** g01239833

WORK TOOLS

9R-5866 TOOTH GP-UNI

S/N: LTG1-UP
PART OF 337-7387, 337-7390 BUCKET AR-GENERAL PURPOSE, 337-7443, 337-7446 BUCKET AR-MULTIPURPOSE
FOR USE WITH LOADER BUCKETS. CANNOT BE USED WITH 9R-5321—PAGE 444, 9R-5320—PAGE 443 AN ATTACHMENT

SMCS-6822 **i01789850**

NOTE	REF NO	GRAPHIC REF	PART NUMBER	QTY	PART NAME 1 2 3 4 5 6 (PRODUCT LEVEL)	SEE PAGE
	1	1	**135-8203**	8	TOOTH-UNI	
	2	1	**4F-3657**	16	BOLT-PLOW (5/8-11X2.75 IN)	
	3	1	**4K-0367**	16	NUT-FULL (5/8-11 THD)	

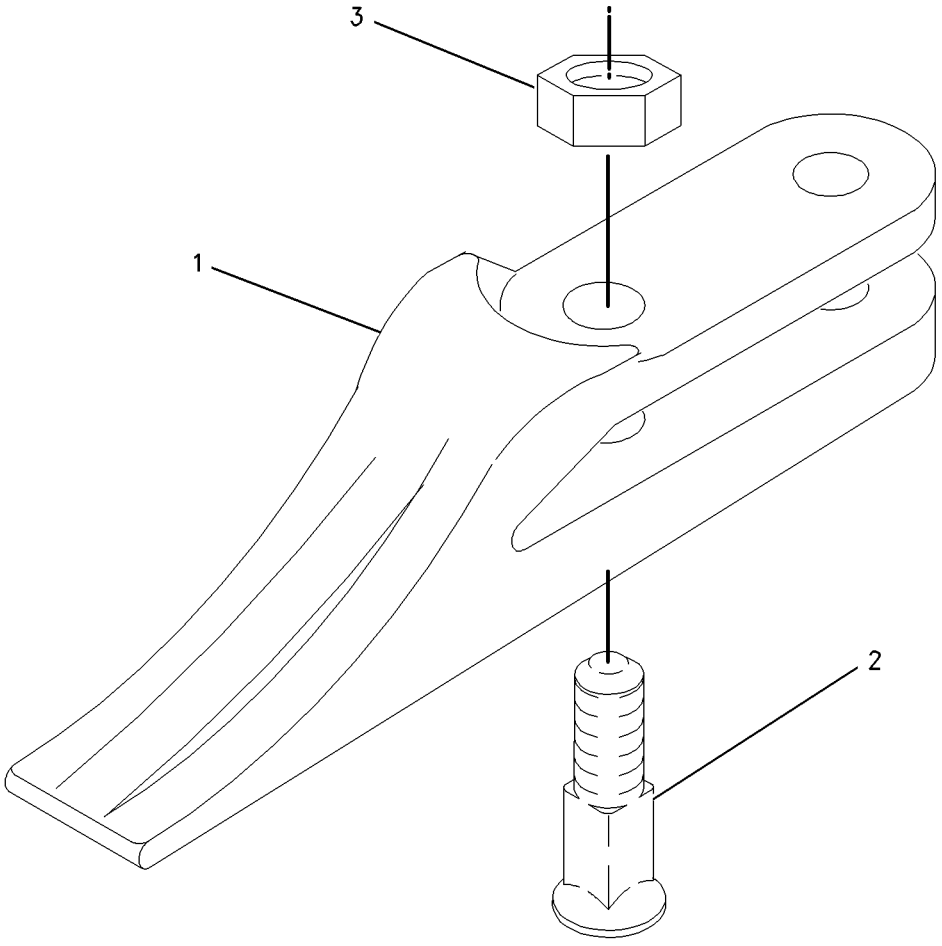

GRAPHIC #1 **<END>** g00915931

OPERATOR STATION

344-7511 AIR CONDITIONER & MOUNTING GP

S/N: LTG1-UP

PART OF 353-1468 HEATER & AIR CONDITIONER AR

AN ATTACHMENT

SMCS-7320 **i04586150**

NOTE	REF NO	GRAPHIC REF	PART NUMBER	QTY	PART NAME 1 2 3 4 5 6 (PRODUCT LEVEL)	SEE PAGE
	1	2	**6L-4725**	2	CLAMP-HOSE	
	2	2	**9N-2231**	1	GROMMET AS	
	3	2	**110-6109**	1	KNOB-CONTROL (AIR CONDITIONER)	
	4	2	**164-1368**	4	FASTENER-PANEL	
	5	2	**189-0881**	1	CONTROL AS	
		2	**129-1831**	1	CLAMP	
	6	2	**206-1648**	1	LOUVER	
	7	2	**206-1682**	1	PANEL-CONTROL	
	8	2	**206-1684**	1	COVER (CAB FILTER)	
	9	2	**206-1804**	1	GASKET	
	10	2	**206-1807**	1	GASKET	
	11	2	**206-1808**	1	PLATE	
	12	2	**206-1809**	1	ROD AS	
	13	2	**206-1818**	1	DUCT AS-AIR	
	14	2	**211-2661**	1	FILTER ELEMENT AS-AIR (CAB HEATER)	
	15	2	**255-0795**	1	FILM-IDENTIFICATION (TEMPERATURE CONTROL)	
	16	2	**319-8524**	1	HOSE-AIR	
	17	1	**356-4056**	1	INSULATION	
	18	1	**356-4057**	1	INSULATION	
Y	19	2	**358-7087**	1	HEATER & AIR CONDITIONER GP	492
M	20	2	**111-4627**	3	SCREW-MACHINE (M6X1X30-MM)	
	21	2	**4H-2558**	2	GROMMET	
	22	2	**5P-4116**	1	WASHER-HARD (8.8X20.5X2-MM THK)	
	23	2	**7X-0579**	1	WASHER-HARD (8.8X25.5X2-MM THK)	
M	24	2	**8T-4200**	1	BOLT (M8X1.25X16-MM)	
	25	2	**9X-2038**	2	WASHER (7X19X2-MM THK)	
M	26	2	**9X-2045**	2	SCREW-TRUSS HEAD (M6X1X20-MM)	
E	27	2	**220-0738**		SEAL (87-CM)	
D	28	2	**5P-6129**		TUBE (0.5-M EACH)	

D-ORDER BY THE METER
E-ORDER BY THE CENTIMETER
M-METRIC PART
Y-SEPARATE ILLUSTRATION

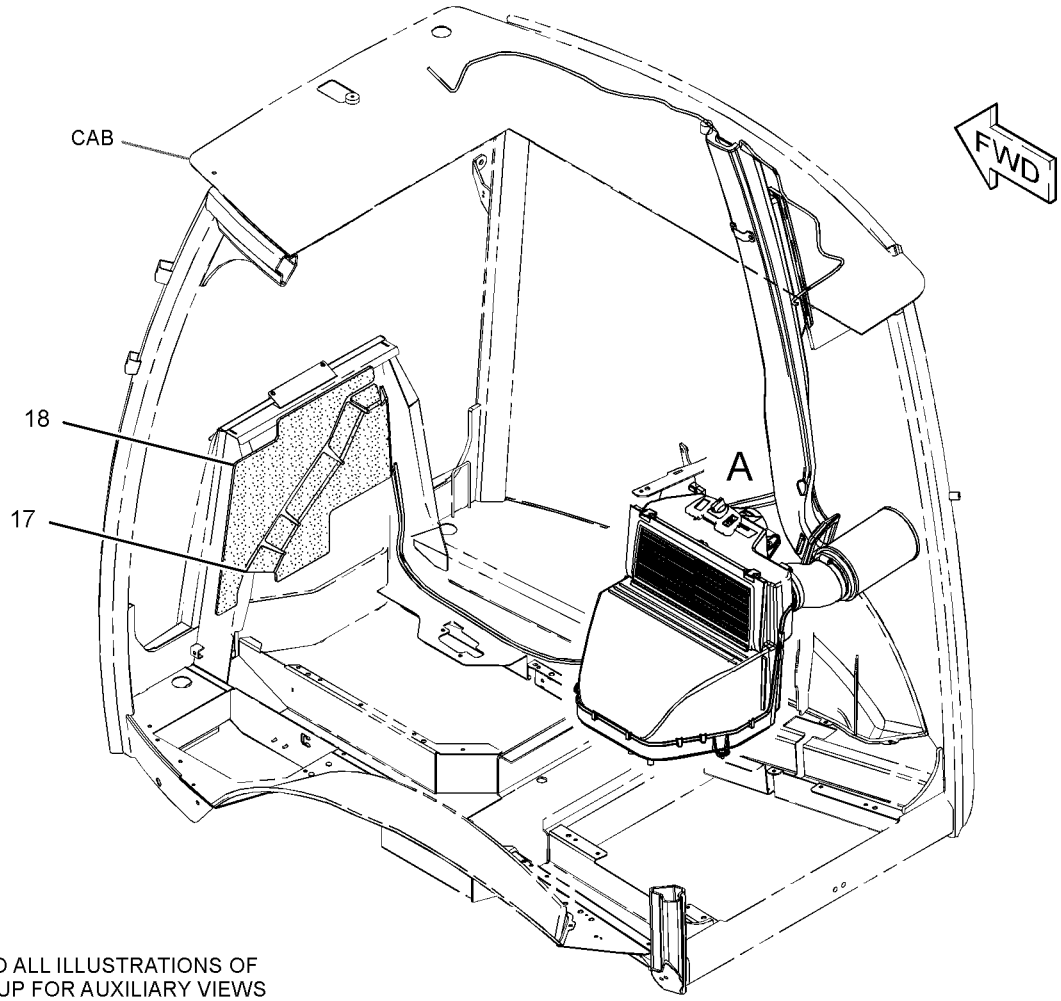

REFER TO ALL ILLUSTRATIONS OF
THIS GROUP FOR AUXILIARY VIEWS

GRAPHIC #1

g02790765

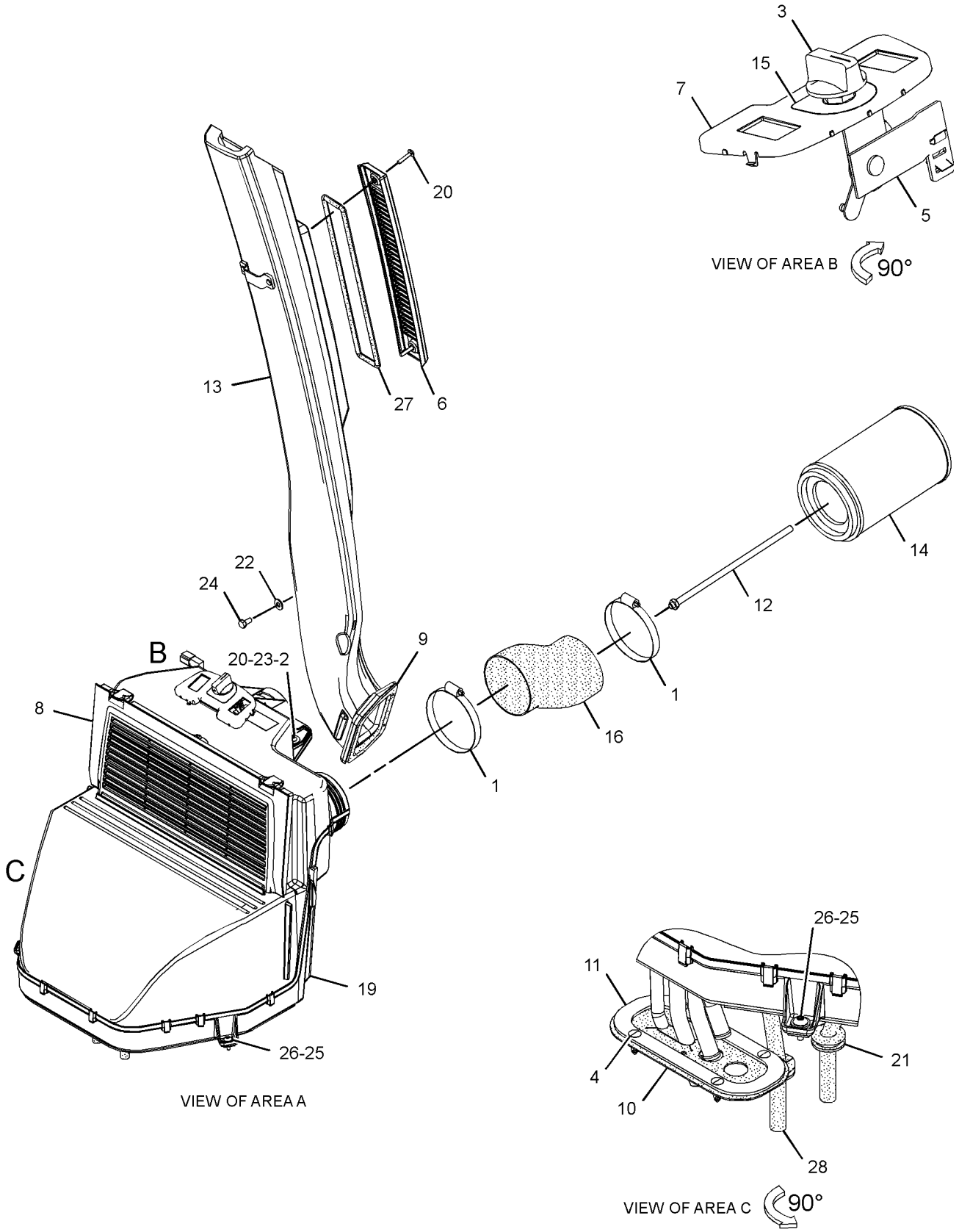

GRAPHIC #2 **<END>** g02790766

OPERATOR STATION

353-1428 CAB AR

S/N: LTG1-UP

PART OF 373-4210, 373-4213 CAB AR-ENCLOSED ROPS

AN ATTACHMENT

SMCS-7301, 7325 **i04586093**

NOTE	PART NUMBER	QTY	PART NAME 1 2 3 4 5 6 (PRODUCT LEVEL)	SEE PAGE
Y	*353-1398*	1	DUCT GP-CAB AIR	489
Y	**341-6716**	1	CAB GP	454
Y	*206-1702*	1	CONSOLE GP-OPERATOR (LH)	464
Y	*317-5539*	1	CONSOLE GP-OPERATOR (FRONT)	466
Y	*341-6677*	1	CONSOLE GP-OPERATOR (RH)	468
Y	*356-4120*	1	CONTROL GP-STEERING (TILT)	481
Y	*213-1891*	1	FENDER GP-REAR	253
Y	*206-1618*	1	FLOOR MAT GP	490
Y	*380-7775*	1	GUARD GP-DEBRIS	263
Y	*331-5484*	1	LIGHTING GP-FLOOD & SIGNAL (NACD, OPTIONAL)	84
Y	*317-5543*	1	LINER GP-CAB	503
Y	*259-6276*	1	MIRROR GP-REAR VIEW (INTERIOR)	510
Y	*205-9560*	1	MOUNTING GP-CAB	516
Y	*205-9569*	1	ROOF GP-CAB	518
Y	*206-1857*	1	VISOR GP-CAB	536
Y	*353-1365*	1	WIPER GP-WINDOW	545
	285-1207	1	MAT-PROTECTIVE	

Y-SEPARATE ILLUSTRATION

<END>

373-4210 CAB AR-ENCLOSED ROPS

S/N: LTG1-UP

AN ATTACHMENT

SMCS-7301, 7325 **i04586209**

NOTE	PART NUMBER	QTY	PART NAME 1 2 3 4 5 6 (PRODUCT LEVEL)	SEE PAGE
Y	*353-1428*	1	CAB AR	453
Y	*353-1449*	1	CONTROL AR-STABILIZER	470
Y	*353-1467*	1	HEATER AR-CAB	494
Y	*280-7365*	1	SEAT GP-SUSPENSION (CLOTH)	529

Y-SEPARATE ILLUSTRATION

<END>

373-4213 CAB AR-ENCLOSED ROPS

S/N: LTG1-UP

AN ATTACHMENT

SMCS-7301, 7325 **i04586090**

NOTE	PART NUMBER	QTY	PART NAME 1 2 3 4 5 6 (PRODUCT LEVEL)	SEE PAGE
Y	*353-1428*	1	CAB AR	453
Y	*353-1450*	1	CONTROL AR-STABILIZER	470
Y	*353-1468*	1	HEATER & AIR CONDITIONER AR	491
Y	*280-7366*	1	SEAT GP-SUSPENSION (DELUXE, CLOTH)	529

Y-SEPARATE ILLUSTRATION

<END>

OPERATOR STATION

341-6716 CAB GP–DELUXE

S/N: LTG1-UP
PART OF 353-1428 CAB AR
AN ATTACHMENT

SMCS-7301 **i04586111**

NOTE	REF NO	GRAPHIC REF	PART NUMBER	QTY	PART NAME 1 2 3 4 5 6 (PRODUCT LEVEL)	SEE PAGE
	1	1	**129-3738**	2	GUARD-STRIKER	
	2	1,2	**129-5256**	12	BUSHING	
	3	1,2	**129-5257**	8	BUSHING	
	4	1,2	**159-4945**	2	KEEPER	
B	5	1,2	**177-4877**	4	SHIM (1-MM THK)	
	6	2	**205-9622**	1	GLASS (LOWER, LH)	
	7	1	**205-9631**	1	GLASS (LOWER, RH)	
	8	1,2	**206-1590**	4	PIN	
	9	1	**210-6475**	2	PLATE	
	10	1	**215-2913**	1	GROMMET	
	11	1	**219-0302**	1	FILM-WARNING (NO WELD, NO DRILL, READ OMM)	
Y	12	2	**229-0300**	1	WINDOW GP-CAB (REAR)	537
Y	13	2	**327-7601**	1	WINDOW GP-CAB (LH)	539
Y	14	1	**327-7637**	1	WINDOW GP-CAB (RH)	541
Y	15	1	**329-1167**	1	DOOR GP-CAB (RH)	485
Y	16	2	**329-1168**	1	DOOR GP-CAB (LH)	487
	17	1	**338-3328**	2	BOLT-STRIKER	
	18	1	**355-5030**	1	CAB AS	
	19	1	**356-4054**	1	PLATE	
	20	1	**371-2051**	1	FILM-CERTIFICATION (ROPS, FOPS, READ OMM)	
	21	1	**380-7826**	1	GLASS (FRONT, LH)	
	22	1	**380-7827**	1	GLASS (FRONT, RH)	
	23	1	**380-7828**	1	GLASS	
	24	1,2	**159-4946**	2	KEEPER	
M	25	1,2	**174-8131**	8	SCREW-TRUSS HEAD (M4X0.7X12-MM)	
	26	1,2	**4B-4863**	8	WASHER (4.7X11X1.2-MM THK)	
M	27	1,2	**5C-8312**	8	NUT (M4X0.7-THD)	
	28	1	**5P-4116**	11	WASHER-HARD (8.8X20.5X2-MM THK)	
	29	1	**7X-0618**	2	WASHER-HARD (13.5X40X5-MM THK)	
	30	1,2	**8S-7803**	8	RING-RETAINING	
M	31	1	**8T-4200**	11	BOLT (M8X1.25X16-MM)	
	32	1	**9R-5616**	2	PLUG	
E	33	1,2	**322-8414**		SEAL-CAB (258-CM EACH)	
E	33A	1,2	**322-8414**		SEAL-CAB (339-CM EACH)	

B-USE AS REQUIRED
E-ORDER BY THE CENTIMETER
M-METRIC PART
Y-SEPARATE ILLUSTRATION

341-6716 CAB GP ***(contd.)*** **i04586111**

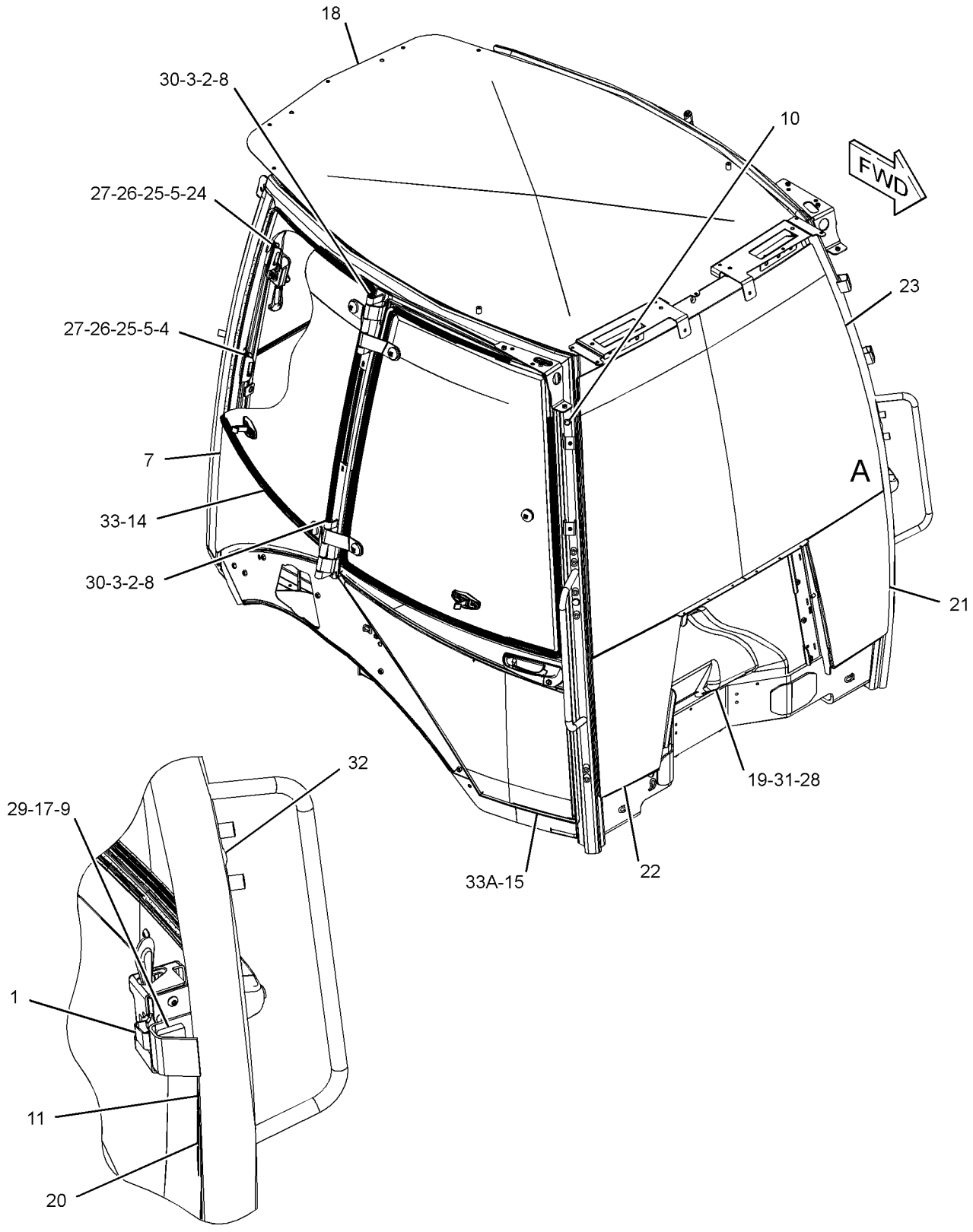

VIEW OF AREA A
(PARTS REMOVED FOR CLARITY)

GRAPHIC #1 g02816897

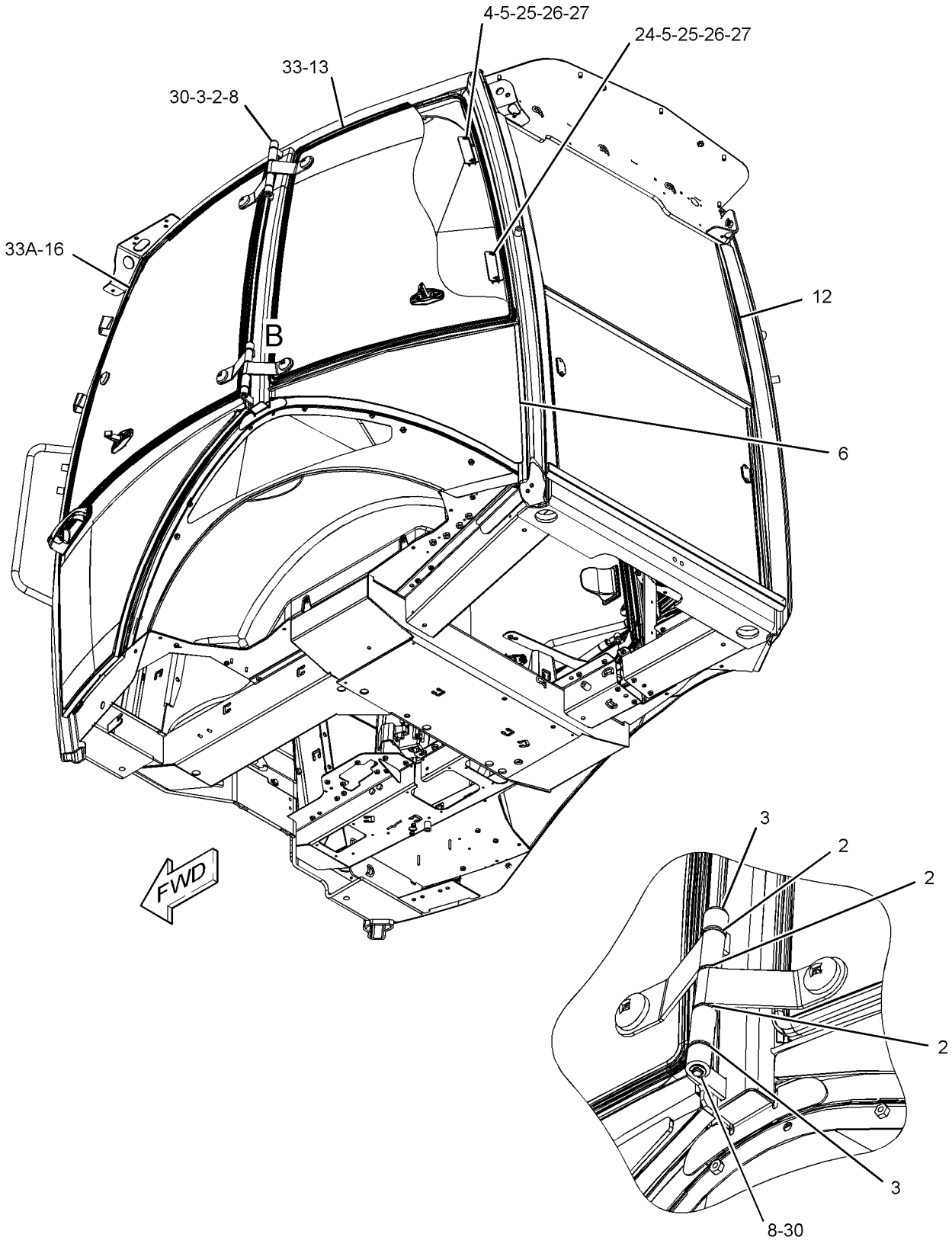

VIEW OF AREA B

GRAPHIC #2 **<END>** g02816898

OPERATOR STATION

353-1427 CANOPY AR–TRIM

S/N: LTG1-UP
PART OF 373-4209 CANOPY AR-OPEN ROPS
AN ATTACHMENT

SMCS-7302 **i04565309**

NOTE	PART NUMBER	QTY	PART NAME 1 2 3 4 5 6 (PRODUCT LEVEL)	SEE PAGE
Y	*341-6715*	1	CANOPY GP-OPEN ROPS	460
Y	*206-1702*	1	CONSOLE GP-OPERATOR (LH)	464
Y	*317-5539*	1	CONSOLE GP-OPERATOR (FRONT)	466
Y	*341-6677*	1	CONSOLE GP-OPERATOR (RH)	468
Y	*356-4120*	1	CONTROL GP-STEERING (TILT)	481
Y	*220-3785*	1	COVER GP-WIPER MOTOR	484
Y	*213-1891*	1	FENDER GP-REAR	253
Y	*206-1618*	1	FLOOR MAT GP	490
Y	*380-7775*	1	GUARD GP-DEBRIS	263
Y	*331-5484*	1	LIGHTING GP-FLOOD & SIGNAL (NACD, OPTIONAL)	84
Y	*259-6276*	1	MIRROR GP-REAR VIEW (INTERIOR)	510
Y	*205-9560*	1	MOUNTING GP-CAB	516
Y	*206-1701*	1	PROTECTION GP-VANDALISM (ROTATING GUARD)	557
Y	*205-9569*	1	ROOF GP-CAB	518
Y	*206-1704*	1	TRIM GP-CAB (OPEN ROPS)	534
Y	*353-1367*	1	WIPER GP-WINDOW	548
	285-1207	1	MAT-PROTECTIVE	
	273-1474	1	SEAL (CONSOLE, LH)	

Y-SEPARATE ILLUSTRATION

<END>

353-1426 CANOPY AR-OPEN ROPS–TRIM

S/N: LTG1-UP
PART OF 373-4207 CANOPY AR-OPEN ROPS
AN ATTACHMENT

SMCS-7302, 7323 **i04565290**

NOTE	PART NUMBER	QTY	PART NAME 1 2 3 4 5 6 (PRODUCT LEVEL)	SEE PAGE
Y	*341-6714*	1	CANOPY GP-OPEN ROPS (EAME)	459
Y	*206-1702*	1	CONSOLE GP-OPERATOR (LH)	464
Y	*317-5539*	1	CONSOLE GP-OPERATOR (FRONT)	466
Y	*341-6677*	1	CONSOLE GP-OPERATOR (RH)	468
Y	*356-4120*	1	CONTROL GP-STEERING (TILT)	481
Y	*213-1891*	1	FENDER GP-REAR	253
Y	*206-1618*	1	FLOOR MAT GP	490
Y	*380-7776*	1	GUARD GP-DEBRIS (CANOPY)	264
Y	*331-5484*	1	LIGHTING GP-FLOOD & SIGNAL (NACD, OPTIONAL)	84
Y	*259-6276*	1	MIRROR GP-REAR VIEW (INTERIOR)	510
Y	*205-9560*	1	MOUNTING GP-CAB	516
Y	*206-1701*	1	PROTECTION GP-VANDALISM (ROTATING GUARD)	557
Y	*205-9569*	1	ROOF GP-CAB	518
Y	*206-1704*	1	TRIM GP-CAB (OPEN ROPS)	534
	285-1207	1	MAT-PROTECTIVE	
	273-1474	1	SEAL (CONSOLE, LH)	

Y-SEPARATE ILLUSTRATION

<END>

OPERATOR STATION

373-4207 CANOPY AR-OPEN ROPS

S/N: LTG1-UP

AN ATTACHMENT

SMCS-7302, 7323 **i04602930**

NOTE	PART NUMBER	QTY	PART NAME 1 2 3 4 5 6 (PRODUCT LEVEL)	SEE PAGE
Y	*353-1426*	1	CANOPY AR-OPEN ROPS (TRIM)	457
Y	*353-1449*	1	CONTROL AR-STABILIZER	470
Y	*353-1466*	1	FAN GP-SUCTION	40
Y	*280-7364*	1	SEAT GP-SUSPENSION (VINYL)	529

Y-SEPARATE ILLUSTRATION

<END>

373-4209 CANOPY AR-OPEN ROPS

S/N: LTG1-UP

AN ATTACHMENT

SMCS-7302, 7323 **i04602952**

NOTE	PART NUMBER	QTY	PART NAME 1 2 3 4 5 6 (PRODUCT LEVEL)	SEE PAGE
Y	*353-1427*	1	CANOPY AR (TRIM)	457
Y	*353-1449*	1	CONTROL AR-STABILIZER	470
Y	*353-1466*	1	FAN GP-SUCTION	40
Y	*280-7364*	1	SEAT GP-SUSPENSION (VINYL)	529

Y-SEPARATE ILLUSTRATION

<END>

OPERATOR STATION

341-6714 CANOPY GP-OPEN ROPS–EAME

S/N: LTG1-UP

PART OF 353-1426 CANOPY AR-OPEN ROPS

AN ATTACHMENT

SMCS-7302, 7323 **i04548474**

NOTE	REF NO	GRAPHIC REF	PART NUMBER	QTY	PART NAME 1 2 3 4 5 6 (PRODUCT LEVEL)	SEE PAGE
	1	1	**215-2913**	1	GROMMET	
	2	1	**219-0302**	1	FILM-WARNING (NO WELD, NO DRILL, READ OMM)	
	3	1	**355-5027**	1	CANOPY AS-OPEN ROPS	
	4	1	**356-4054**	1	PLATE	
	5	1	**371-2051**	1	FILM-CERTIFICATION (ROPS, FOPS, READ OMM)	
	6	1	**380-7827**	1	GLASS (FRONT, RH)	
	7	1	**5P-4116**	11	WASHER-HARD (8.8X20.5X2-MM THK)	
M	8	1	**8T-4200**	11	BOLT (M8X1.25X16-MM)	
	9	1	**9R-5616**	2	PLUG	
	10	1	**380-7826**	1	GLASS (FRONT, LH)	
E	11	1	**9X-2092**		TRIM-EDGE (40-CM EACH)	

E-ORDER BY THE CENTIMETER
M-METRIC PART

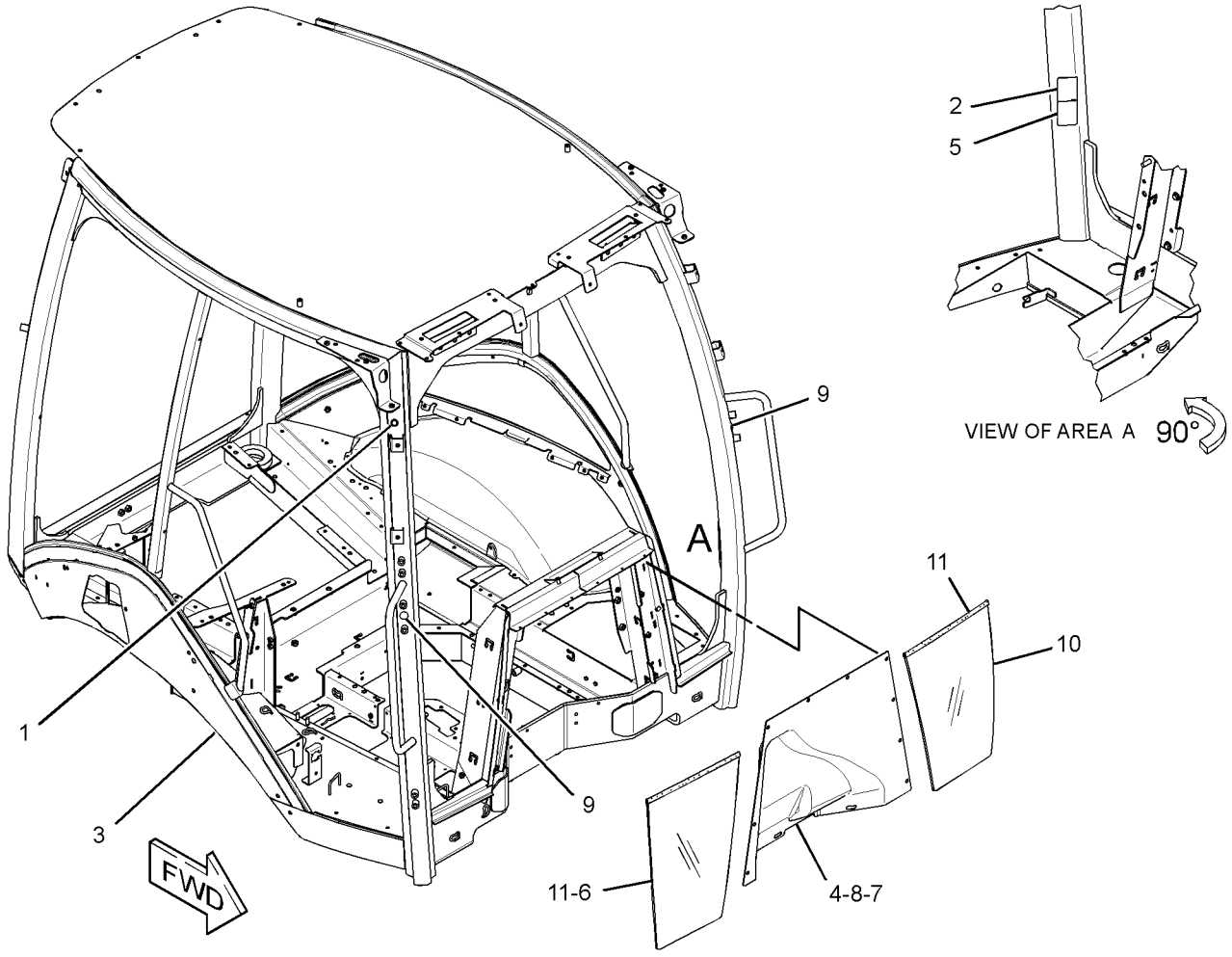

GRAPHIC #1 **<END>** g02776896

OPERATOR STATION

341-6715 CANOPY GP-OPEN ROPS

S/N: LTG1-UP
PART OF 353-1427 CANOPY AR
AN ATTACHMENT

SMCS-7302, 7323 **i04580670**

NOTE	REF NO	GRAPHIC REF	PART NUMBER	QTY	PART NAME 1 2 3 4 5 6 (PRODUCT LEVEL)	SEE PAGE
	1	1	**215-2913**	1	GROMMET	
	2	1	**219-0302**	1	FILM-WARNING (NO WELD, NO DRILL, READ OMM)	
	3	1	**355-5028**	1	CANOPY AS-OPEN ROPS	
	4	1	**356-4054**	1	PLATE	
	5	1	**371-2051**	1	FILM-CERTIFICATION (ROPS, FOPS, READ OMM)	
	6	1	**380-7826**	1	GLASS (FRONT, LH)	
	7	1	**380-7827**	1	GLASS (FRONT, RH)	
	8	1	**380-7828**	1	GLASS	
	9	1	**5P-4116**	11	WASHER-HARD (8.8X20.5X2-MM THK)	
M	10	1	**8T-4200**	11	BOLT (M8X1.25X16-MM)	
	11	1	**9R-5616**	2	PLUG	

M-METRIC PART

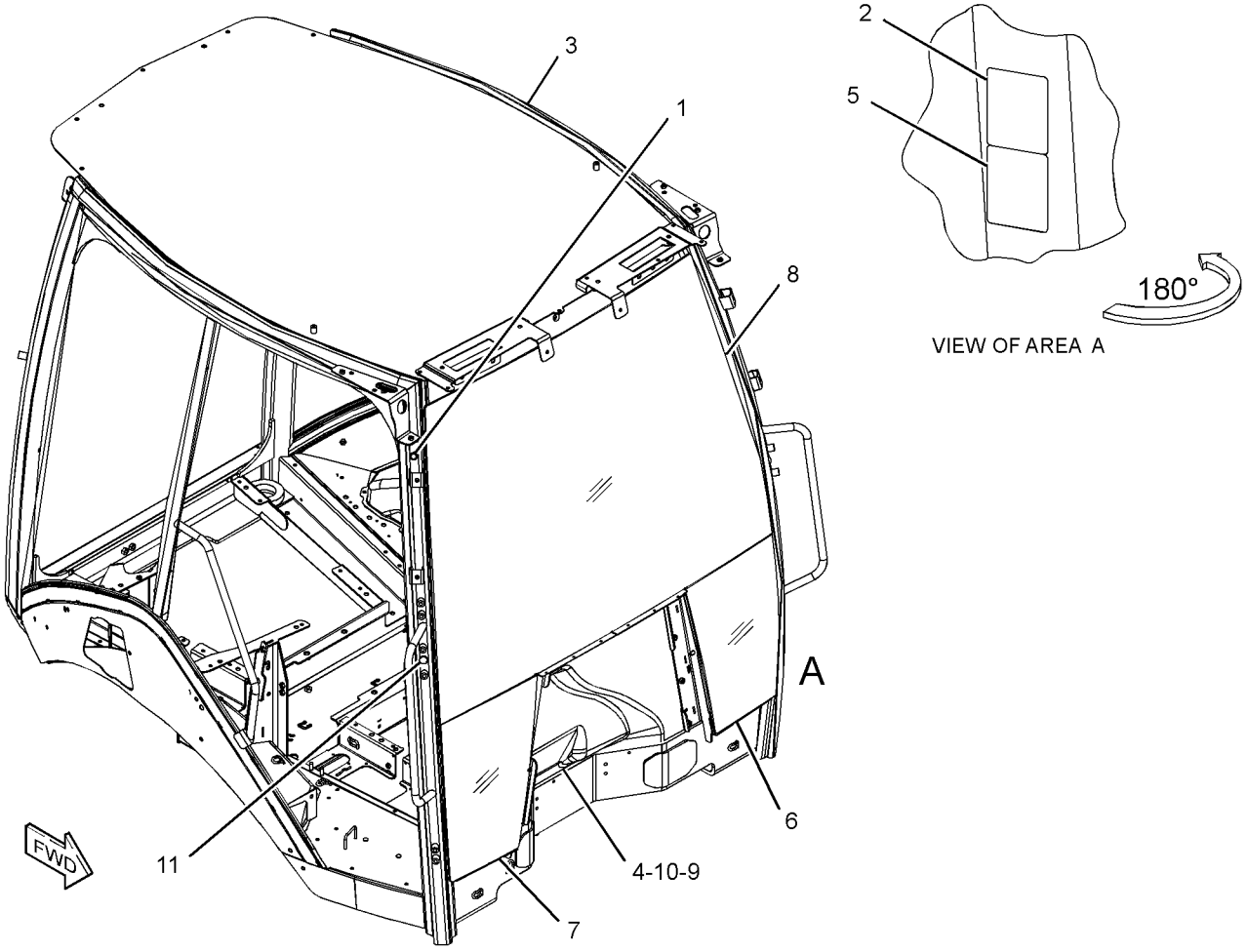

GRAPHIC #1 **<END>** g02809980

OPERATOR STATION

299-2212 COMPRESSOR GP-REFRIGERANT

S/N: LTG1-UP

PART OF 321-7038 COMPRESSOR GP-REFRIGERANT

AN ATTACHMENT

SMCS-1802 **i03729560**

NOTE	REF NO	GRAPHIC REF	PART NUMBER	QTY	PART NAME 1 2 3 4 5 6 (PRODUCT LEVEL)	SEE PAGE
	1	1	**126-1767**	2	PIN-CONNECTOR (14-GA TO 16-GA)	
	2	1	**102-8802**	1	KIT-RECEPTACLE (2-PIN)	
					(INCLUDES RECEPTACLE AS & WEDGE)	
	3	1	**314-4018**	1	VALVE AS-PRESSURE RELIEF (REFRIGERANT COMPRESSOR)	
	4	1	**7T-4532**	1	PLUG AS	
	5	1	**9X-7385**	2	SEAL-O-RING	

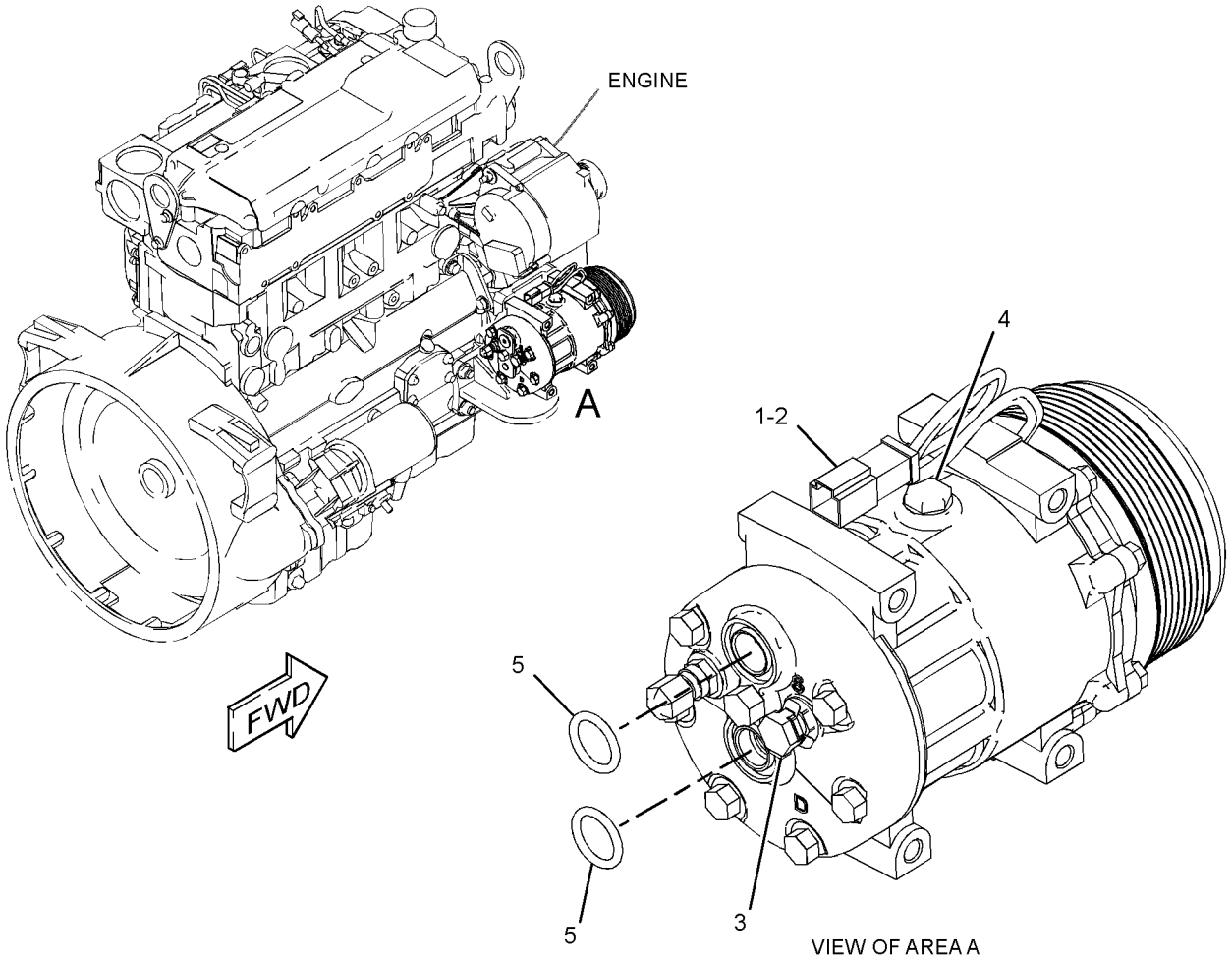

GRAPHIC #1

<END>

g01513535

OPERATOR STATION

321-7038 COMPRESSOR GP-REFRIGERANT

S/N: LTG1-UP

PART OF 353-1468 HEATER & AIR CONDITIONER AR

AN ATTACHMENT

SMCS-1802 **i03035509**

NOTE	REF NO	GRAPHIC REF	PART NUMBER	QTY	PART NAME 1 2 3 4 5 6 (PRODUCT LEVEL)	SEE PAGE
	1	1	**288-9734**	1	BRACKET	
	2	1	**290-7831**	1	BRACKET	
Y	3	1	**299-2212**	1	COMPRESSOR GP-REFRIGERANT	461
M	4	1	**7X-2538**	4	BOLT (M8X1.25X100-MM)	
M	5	1	**7X-2553**	2	BOLT (M16X2X40-MM)	
	6	1	**8T-4121**	2	WASHER-HARD (11X21X2.5-MM THK)	
M	7	1	**8T-4136**	2	BOLT (M10X1.5X25-MM)	
	8	1	**8T-4224**	4	WASHER-HARD (8.8X16X2-MM THK)	
	9	1	**9X-8257**	2	WASHER (17.5X30X3.5-MM THK)	

M-METRIC PART
Y-SEPARATE ILLUSTRATION

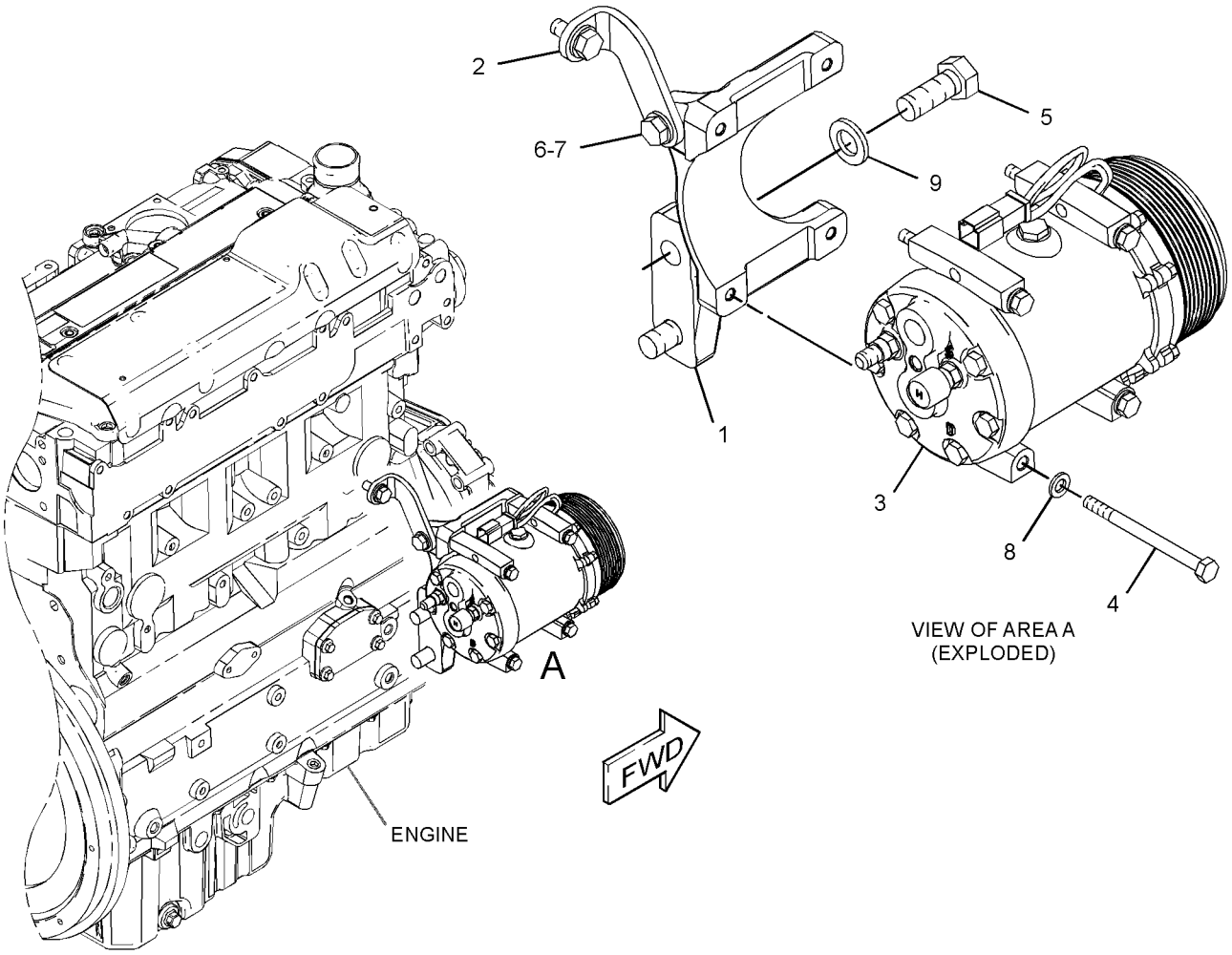

GRAPHIC #1 **<END>** g01570153

OPERATOR STATION

337-9765 CONDENSER & MTG GP-REFRIGERANT

S/N: LTG1-UP

PART OF 353-1468 HEATER & AIR CONDITIONER AR

AN ATTACHMENT

SMCS-1805 **i04586129**

NOTE	REF NO	GRAPHIC REF	PART NUMBER	QTY	PART NAME 1 2 3 4 5 6 (PRODUCT LEVEL)	SEE PAGE
	1	1	**359-9885**	1	CONDENSER AS	
		1	**317-8141**	4	MOUNT	
	2	1	**7X-0579**	4	WASHER-HARD (8.8X25.5X2-MM THK)	
M	3	1	**8T-7547**	4	BOLT (M8X1.25X30-MM)	

M-METRIC PART

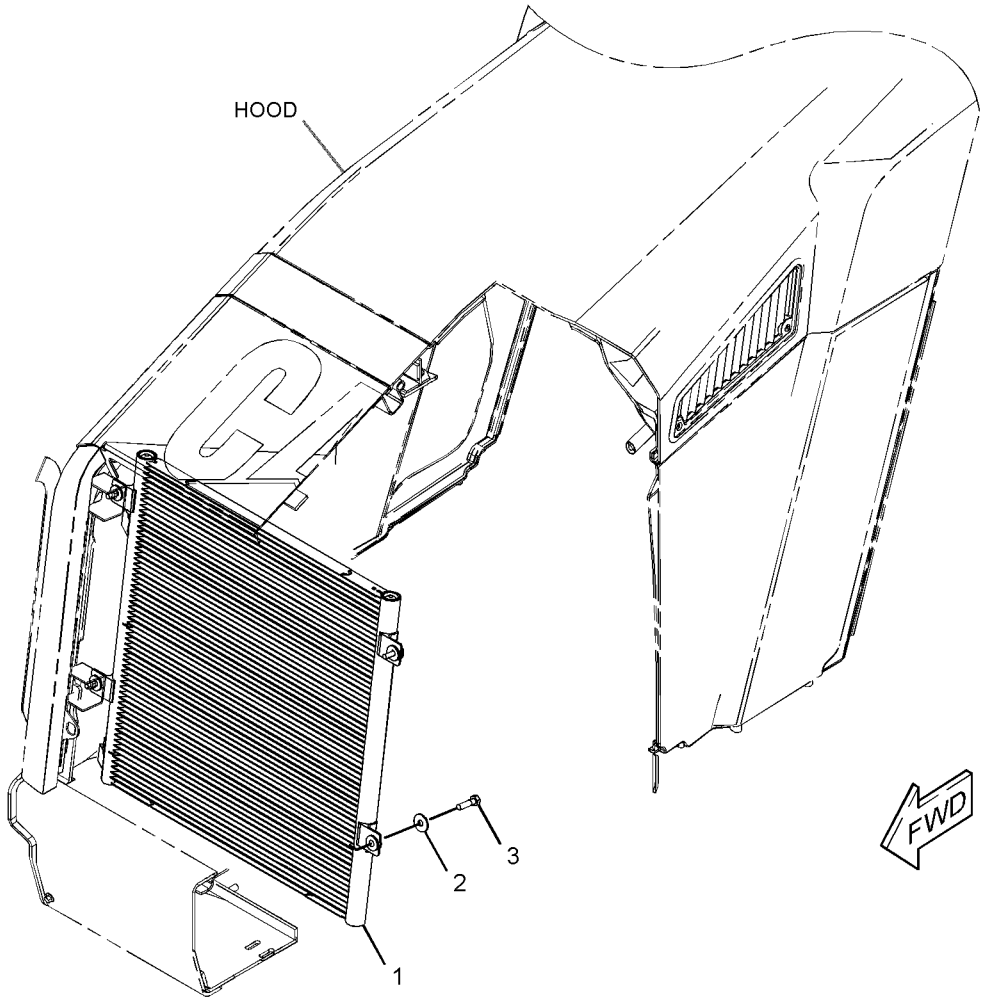

GRAPHIC #1 **<END>** g02788536

OPERATOR STATION

206-1702 CONSOLE GP-OPERATOR—LH

S/N: LTG1-UP

PART OF 353-1428 CAB AR, 353-1427 CANOPY AR, 353-1426 CANOPY AR-OPEN ROPS AN ATTACHMENT

SMCS-5258, 7451 **i03126124**

NOTE	REF NO	GRAPHIC REF	PART NUMBER	QTY	PART NAME 1 2 3 4 5 6 (PRODUCT LEVEL)	SEE PAGE
E	1	1	**3E-6600**		SEAL (34-CM)	
D	2	1	**5P-5927**		SEAL (1.7-M)	
	3	1	**206-1696**	1	CONSOLE AS (LH)	
	4	1	**206-1698**	1	DOOR-STORAGE	
	5	1	**206-1699**	1	CUP HOLDER	
	6	1	**206-1706**	1	BOX AS-STORAGE	
J	7	1	**206-1708**	1	LOCK AS	
	8	1	**206-1712**	1	HINGE-DOOR	
	9	1	**210-6491**	1	CUP HOLDER	
	10	1	**249-2482**	1	PLATE	
	11	1	**261-9636**	1	BRACKET-SUPPORT	
	12	1	**261-9637**	2	BRACKET AS	
	13	1	**261-9639**	3	SCREW-PAN HEAD (12X0.5-IN)	
E	14	1	**293-1980**		SEAL (71-CM)	
E	14A	1	**293-1980**		SEAL (77-CM)	
M	15	1	**5C-2890**	3	NUT (M6X1-THD)	
	16	1	**8T-4205**	3	WASHER-HARD (7.2X14.5X2-MM THK)	
	17	1	**9X-2038**	6	WASHER (7X19X2-MM THK)	
M	18	1	**9X-2044**	19	SCREW-TRUSS HEAD (M6X1X16-MM)	

D-ORDER BY THE METER
E-ORDER BY THE CENTIMETER
J-REQUIRES CORPORATE KEY
M-METRIC PART

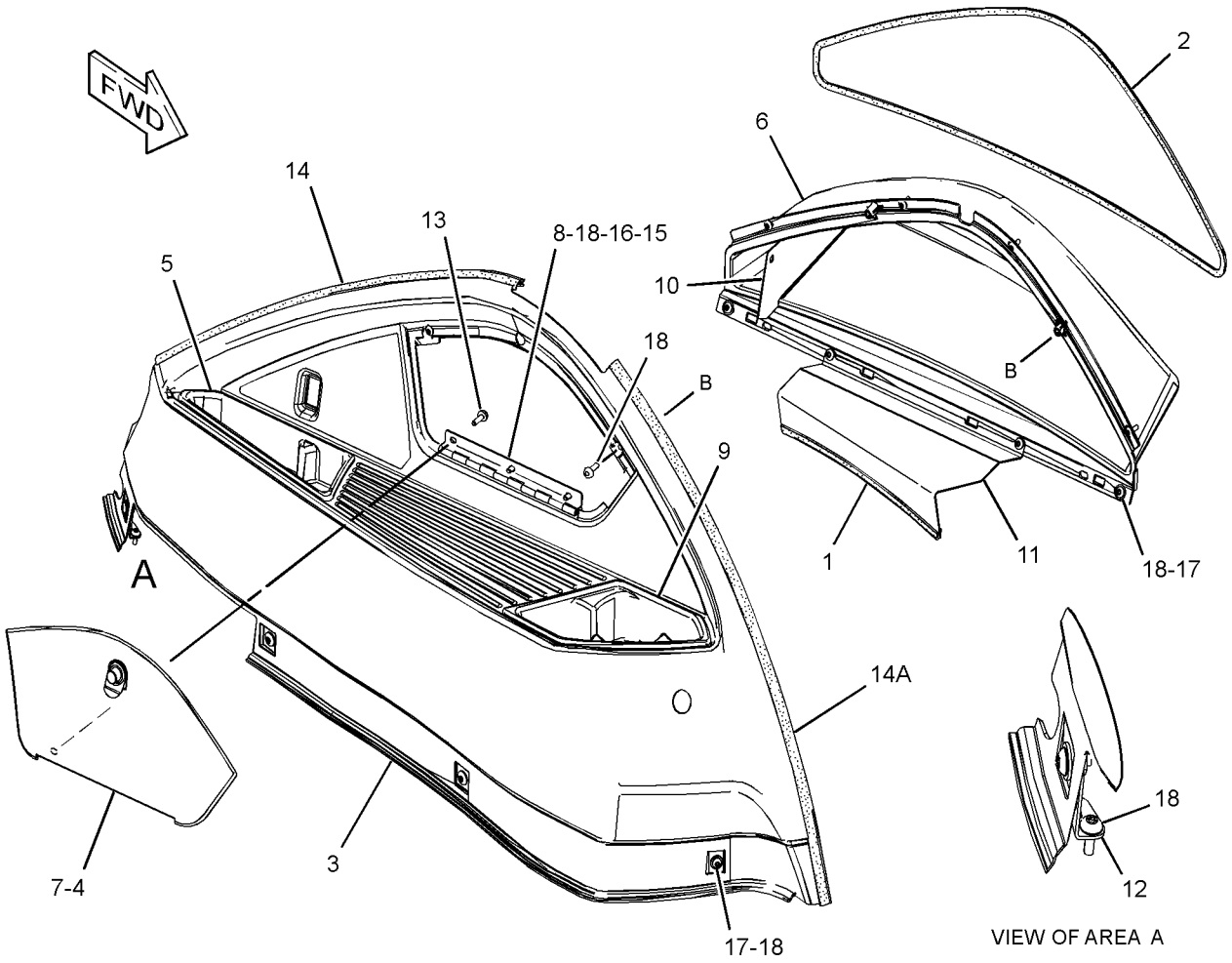

GRAPHIC #1 **<END>** g01520782

OPERATOR STATION

317-5539 CONSOLE GP-OPERATOR—FRONT

S/N: LTG1-UP

PART OF 353-1428 CAB AR, 353-1427 CANOPY AR, 353-1426 CANOPY AR-OPEN ROPS

AN ATTACHMENT

SMCS-5258, 7451 **i04556060**

NOTE	REF NO	GRAPHIC REF	PART NUMBER	QTY	PART NAME 1 2 3 4 5 6 (PRODUCT LEVEL)	SEE PAGE
	1	1	**4I-3038**	2	WASHER (3.3X8X0.5-MM THK)	
	2	1	**206-1659**	1	DOOR-STORAGE	
	3	1	**206-1662**	1	CONSOLE AS-FRONT (UPPER)	
		1	**206-1667**	8	CLIP	
	4	1	**206-1663**	1	CONSOLE-FRONT (MIDDLE)	
J	5	1	**206-1708**	1	LOCK AS	
	6	1	**224-2147**	1	CONSOLE AS-FRONT (LOWER, LH)	
	7	1	**224-2149**	1	CONSOLE AS-FRONT (LOWER, RH)	
BC	8	1	**227-1057**	1	PLUG-HOLE	
	9	1	**233-5260**	2	LANYARD	
	10	1	**258-2354**	1	BRACKET-LATCH	
	11	1	**261-9639**	10	SCREW-PAN HEAD (12.0X0.5-IN)	
	12	1	**313-6711**	1	COVER AS-STEERING COLUMN (UPPER)	
		1	**206-1667**	2	CLIP	
	13	1	**313-6712**	1	COVER AS-STEERING COLUMN (FRONT)	
	14	1	**313-6713**	1	COVER AS-STEERING COLUMN (REAR)	
					(EACH COVER AS INCLUDES)	
		1	**206-1667**	4	CLIP	
	15	1	**320-9835**	1	FILM-INSTRUCTION (FORWARD, NEUTRAL, REVERSE)	
M	16	1	**120-9027**	2	SCREW-PAN HEAD (M3X0.5X16-MM)	
	17	1	**206-1854**	1	HINGE	
M	18	1	**8T-2658**	2	LOCKNUT (M3X0.5-THD)	
	19	1	**9X-2038**	3	WASHER (7X19X2-MM THK)	
M	20	1	**9X-2044**	2	SCREW-TRUSS HEAD (M6X1X16-MM)	
M	21	1	**9X-2045**	16	SCREW-TRUSS HEAD (M6X1X20-MM)	
D	22	1	**5P-7070**		INSULATION-STRIP (0.1-M EACH)	
E	23	1	**220-0738**		SEAL (22-CM)	

B-USE AS REQUIRED
C-CHANGE FROM PREVIOUS TYPE
D-ORDER BY THE METER
E-ORDER BY THE CENTIMETER
J-REQUIRES CORPORATE KEY
M-METRIC PART

317-5539 **CONSOLE GP-OPERATOR** *(contd.)* **i04556060**

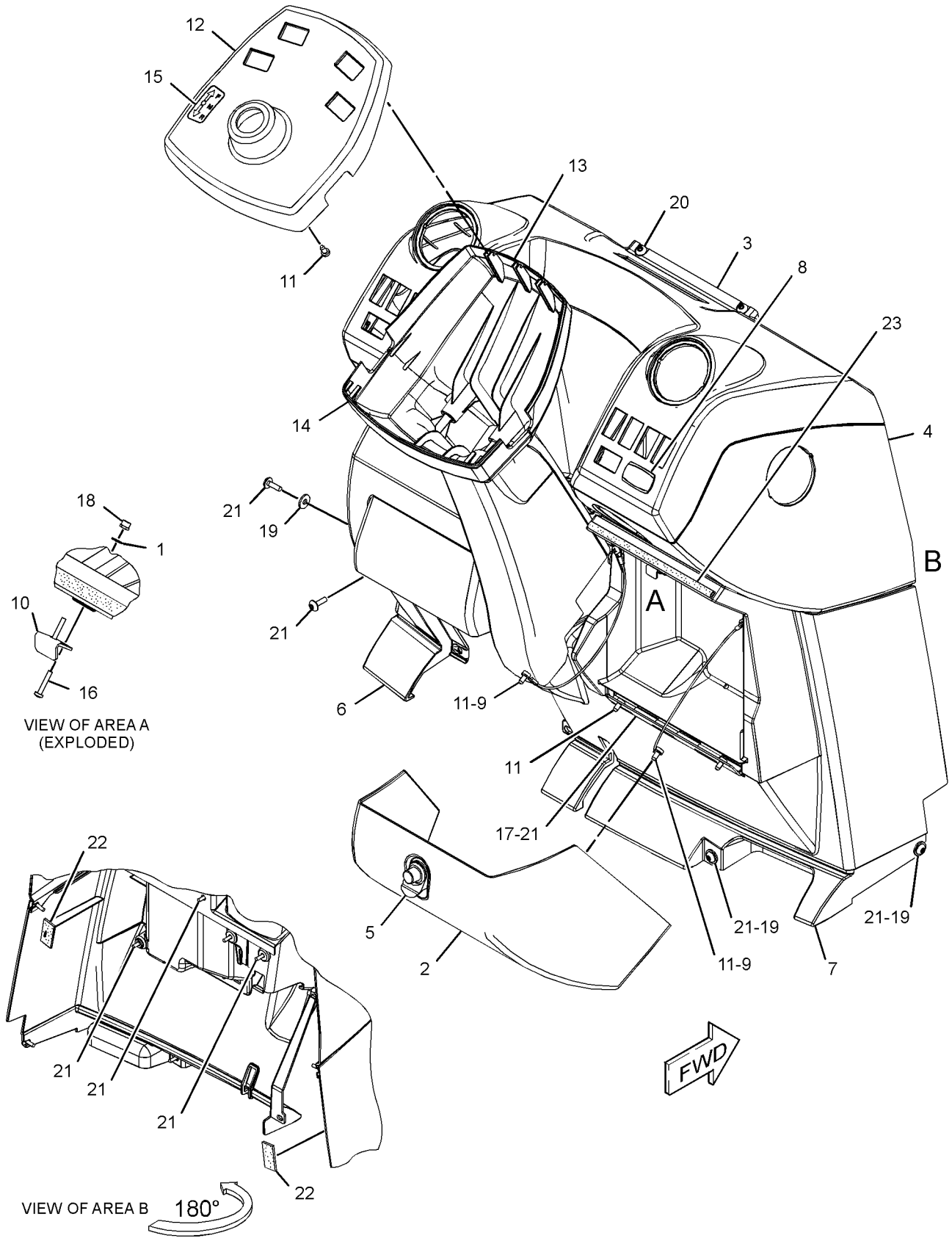

VIEW OF AREA A
(EXPLODED)

VIEW OF AREA B

GRAPHIC #1 **<END>** g02779417

OPERATOR STATION

341-6677 CONSOLE GP-OPERATOR—RH

S/N: LTG1-UP

PART OF 353-1428 CAB AR, 353-1427 CANOPY AR, 353-1426 CANOPY AR-OPEN ROPS

AN ATTACHMENT

SMCS-5258, 7451 **i04548496**

NOTE	REF NO	GRAPHIC REF	PART NUMBER	QTY	PART NAME 1 2 3 4 5 6 (PRODUCT LEVEL)	SEE PAGE
B	1	1	**2S-3163**	1	PLUG	
	2	1	**164-1178**	1	CLIP	
	3	1	**167-8251**	1	FASTENER	
	4	1	**206-1678**	1	HOUSING AS (UPPER)	
	5	1	**206-1681**	1	PANEL AS (LOWER)	
		1	**172-8591**	5	NUT-SPRING	
	6	1	**206-1687**	1	COVER-FUSE	
	7	1	**206-1690**	1	COVER (FENDER, REAR)	
B	8	1	**248-2709**	2	PLUG	
	9	1	**261-9644**	1	COVER AS (CONTROLS, FRONT, LOWER)	
		1	**206-1667**	1	CLIP	
	10	1	**261-9645**	1	COVER AS (CONTROLS, FRONT, UPPER)	
		1	**206-1667**	4	CLIP	
	11	1	**269-9115**	1	COVER AS (FENDER, FRONT)	
		1	**172-8591**	1	NUT-SPRING	
E	12	1	**293-1980**		SEAL (73-CM)	
E	12A	1	**293-1980**		SEAL (77.5-CM)	
	13	1	**336-7533**	1	PANEL AS-GAUGE	
		1	**206-1667**	2	CLIP	
	14	1	**337-5351**	1	FILM-INSTRUCTION (START SWITCH)	
	15	1	**9X-2038**	5	WASHER (7X19X2-MM THK)	
M	16	1	**9X-2045**	16	SCREW-TRUSS HEAD (M6X1X20-MM)	

B-USE AS REQUIRED
E-ORDER BY THE CENTIMETER
M-METRIC PART

341-6677 **CONSOLE GP-OPERATOR** *(contd.)* **i04548496**

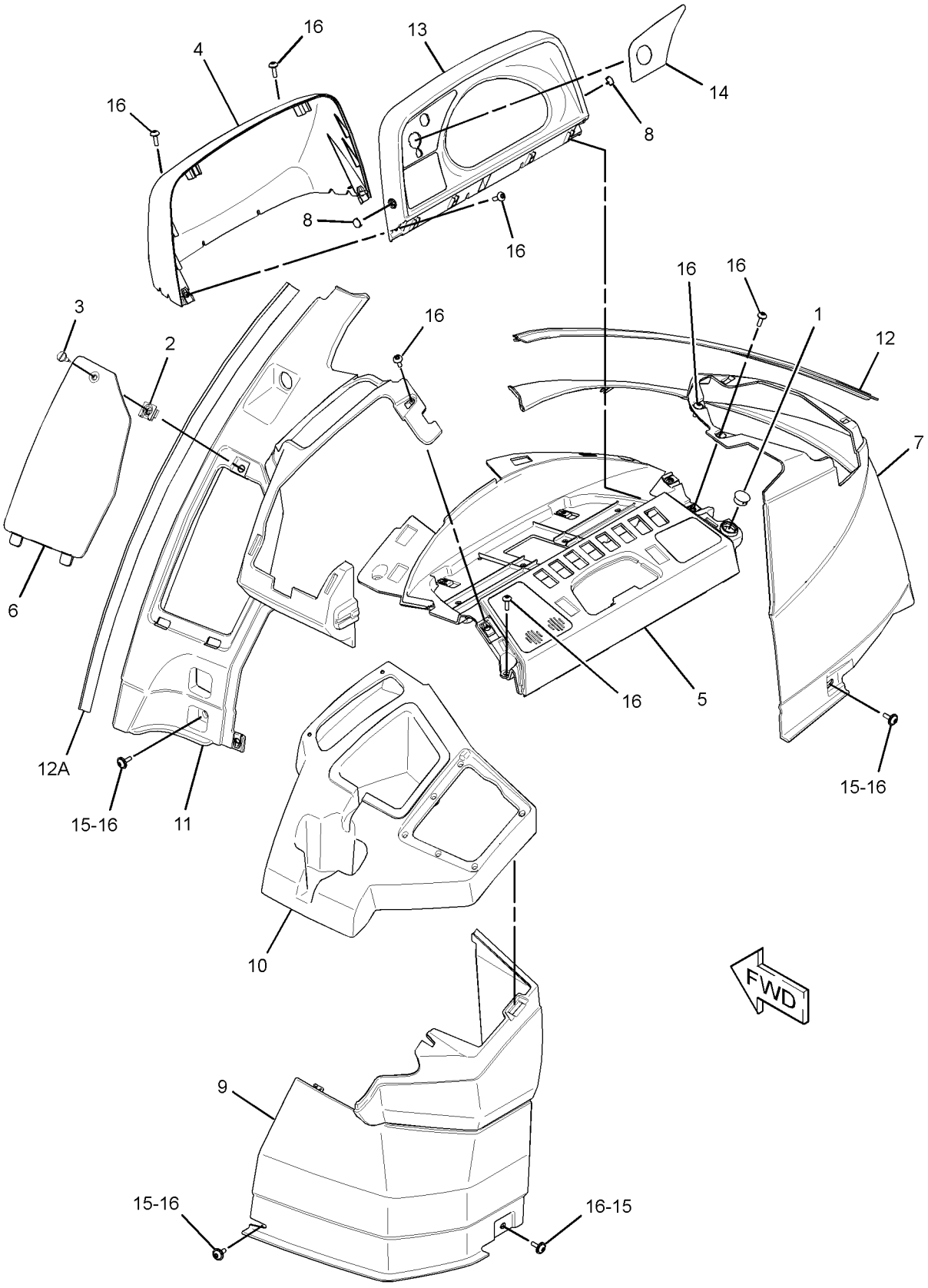

GRAPHIC #1 **<END>** g02788839

OPERATOR STATION

353-1449 CONTROL AR-STABILIZER

S/N: LTG1-UP
PART OF 373-4210 CAB AR-ENCLOSED ROPS, 373-4207, 373-4209 CANOPY AR-OPEN ROPS
AN ATTACHMENT

SMCS-1408, 7222 **i04586170**

NOTE	PART NUMBER	QTY	PART NAME 1 2 3 4 5 6 (PRODUCT LEVEL)	SEE PAGE
Y	*206-1641*	1	LOCK GP-TRANSPORT (STABILIZER)	383
Y	**359-7246**	1	VALVE GP-PILOT	369
	251-5628	1	FILM-IDENTIFICATION (STABILIZER CONTROL)	
			(ON RIGHT HAND CONSOLE NEXT TO STABILIZER CONTROLS)	

Y-SEPARATE ILLUSTRATION

<END>

353-1450 CONTROL AR-STABILIZER

S/N: LTG1-UP
PART OF 373-4213 CAB AR-ENCLOSED ROPS
AN ATTACHMENT

SMCS-1408, 7222 **i04586091**

NOTE	PART NUMBER	QTY	PART NAME 1 2 3 4 5 6 (PRODUCT LEVEL)	SEE PAGE
Y	*206-1641*	1	LOCK GP-TRANSPORT (STABILIZER)	383
Y	*357-3230*	1	RELAY GP (STABILIZER, AUTO UP)	92
Y	**359-7248**	1	VALVE GP-PILOT	370
	251-3306	1	FILM-INSTRUCTION (STABILIZER, AUTO UP)	
			(ON RH CONSOLE NEXT TO STABILIZER CONTROLS IN CAB)	

Y-SEPARATE ILLUSTRATION

<END>

OPERATOR STATION

271-3097 CONTROL GP-HANDLE–LH

S/N: LTG1-UP
PART OF 373-4246, 373-4248 VALVE AR-BANK 2
AN ATTACHMENT

SMCS-5063, 5705 **i03321224**

NOTE	REF NO	GRAPHIC REF	PART NUMBER	QTY	PART NAME 1 2 3 4 5 6 (PRODUCT LEVEL)	SEE PAGE
	1	1	**271-3103**	1	HANDLE GP-MODULAR (LH)	
		1	**8T-8737**	10	PLUG-SEAL	
		1	**174-3091**	1	KIT-RECEPTACLE (12-PIN)	
					(INCLUDES RECEPTACLE AS & WEDGE)	
		1	**186-3735**	2	PIN-CONNECTOR (16-GA TO 18-GA)	
	2	1	**278-7469**	1	ADAPTER (LH)	
	3	1	**254-3437**	1	BOOT	

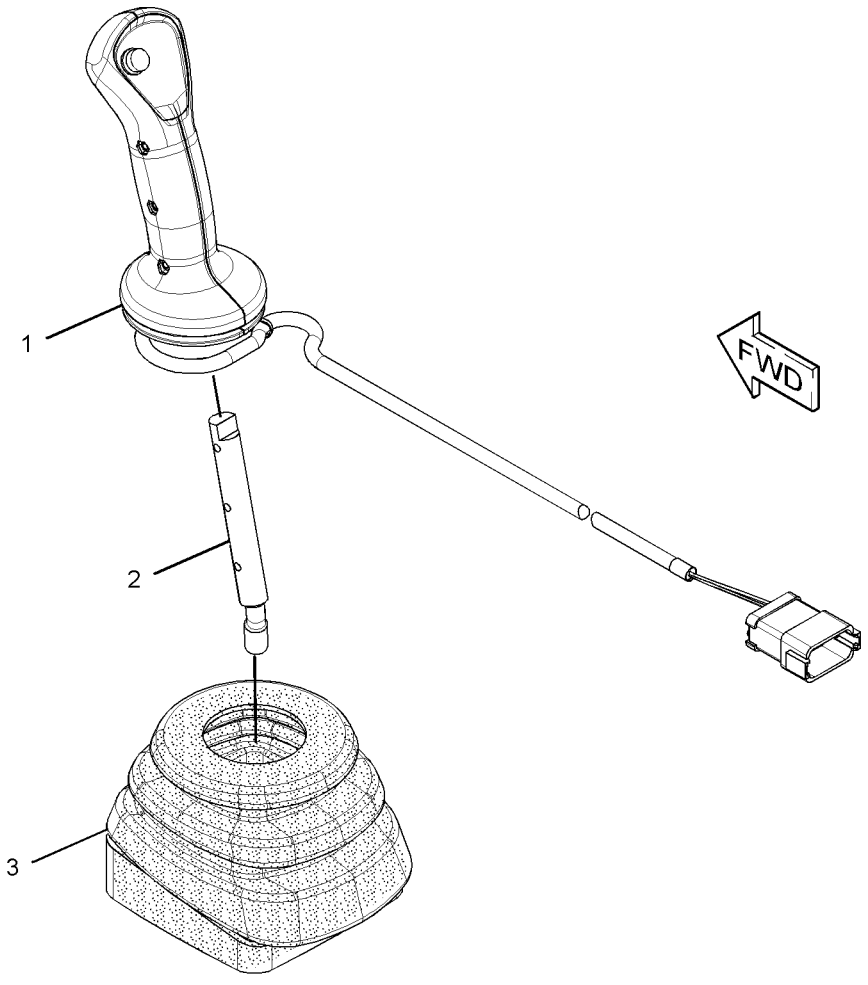

GRAPHIC #1 **<END>** g01473695

OPERATOR STATION

331-4358 CONTROL GP-HYDRAULIC HAND—SINGLE TILT

S/N: LTG1-UP
PART OF 373-4256 VALVE AR-BANK 3
AN ATTACHMENT

SMCS-5063 **i04654171**

NOTE	REF NO	GRAPHIC REF	PART NUMBER	QTY	PART NAME 1 2 3 4 5 6 (PRODUCT LEVEL)	SEE PAGE
E	1	2	**3E-6600**		SEAL (7-CM)	
	2	2	**2R-0364**	6	RING-RETAINING	
	3	2	**102-8802**	1	KIT-RECEPTACLE (2-PIN)	
					(INLCUDES RECPTACLE AS & WEDGE)	
	4	1,2	**3S-2093**	2	STRAP-CABLE	
	5	2	**8T-4743**	3	PIN	
	6	2	**8T-4773**	5	BALL JOINT	
	7	2	**9R-1765**	1	COVER-TOP	
	8	2	**9R-1766**	1	COVER-BOTTOM	
	9	2	**9R-1767**	1	BOOT	
	10	2	**9R-9868**	1	SWITCH GP-PUSH BUTTON (NEUTRALIZER, DOWNSHIFT)	
D		2	**5P-5677**		WIRE (18-GA, BLACK) (1-M EACH)	
D		2	**6V-2689**		TUBE-HEAT SHRINK (6.35-MM DIA) (1.1-M)	
		2	**9W-0625**	1	SWITCH AS-PUSH BUTTON (NEUTRALIZER)	
		2	**9X-3401**	2	PIN-CONNECTOR (16-GA TO 18-GA)	
					-OR-	
		2	**126-1767**	2	PIN-CONNECTOR (14-GA TO 16-GA)	
	11	2	**091-1745**	7	WASHER (16.6X24X1.2-MM THK)	
	12	2	**107-5591**	1	NUT-JAM (3/4-16-THD)	
	13	2	**119-4167**	1	ROD	
M	14	2	**134-0453**	1	TURNBUCKLE	
	15	1	**164-1368**	12	FASTENER-PANEL	
	16	1	**164-1395**	1	KNOB	
	17	1	**206-1668**	1	BOOT	
	18	2	**220-0269**	1	SHAFT	
	19	1	**270-2795**	1	PLATE	
	20	1	**291-5108**	1	GASKET	
C	21	1	**365-2913**	1	BRACKET AS	
	22	2	**330-6987**	1	LEVER AS-VALVE	
	22A	2	**183-3136**	1	BUSHING	
	23	2	**330-6988**	1	PIN	
	24	2	**352-8367**	1	PLATE	
C	25	2	**365-2915**	1	PIN AS	
		2	**330-6990**	2	LEVER	
	26	2	**330-6993**	1	ROD	
	27	2	**330-6994**	1	ROD	
	28	2	**330-6996**	1	ROD	
	29	2	**330-7001**	1	DAMPER AS	
	30	2	**330-7002**	1	LEVER AS-VALVE	
	30A	2	**183-3134**	2	BEARING	
	31	1	**352-8368**	1	PLATE AS	
	32	2	**333-7905**	1	PIN	
	33	2	**333-8324**	1	JOINT AS	
	33A	2	**183-3136**	1	BUSHING	
	34	2	**183-3134**	2	BEARING	
	36	2	**5H-3193**	1	PIN-SPRING	
M	37	1,2	**6V-7744**	7	LOCKNUT (M10X1.5-THD)	
	38	1	**7X-7729**	4	WASHER (11X25X3-MM THK)	
	39	1,2	**8T-4121**	6	WASHER-HARD (11X21X2.5-MM THK)	
M	40	1,2	**8T-4133**	9	NUT (M10X1.5-THD)	
M	41	1	**8T-4136**	1	BOLT (M10X1.5X25-MM)	
	42	1	**8T-4815**	3	ROD END	
	43	2	**8T-9501**	2	SCREW (10-16X0.75-IN)	
M	44	2	**8T-4189**	2	BOLT (M8X1.25X20-MM)	

331-4358 **CONTROL GP-HYDRAULIC HAND** *(contd.)* **i04654171**

NOTE	REF NO	GRAPHIC REF	PART NUMBER	QTY	PART NAME 1 2 3 4 5 6 (PRODUCT LEVEL)	SEE PAGE
	45	2	**5P-4116**	2	WASHER-HARD (8.8X20.5X2-MM THK)	
M	46	1	**9X-2040**	2	SCREW-TRUSS HEAD (M10X1.5X25-MM)	
M	47	2	**9X-2065**	1	NUT (M10X1.5-THD, LH)	

C-CHANGE FROM PREVIOUS TYPE
D-ORDER BY THE METER
E-ORDER BY THE CENTIMETER
M-METRIC PART

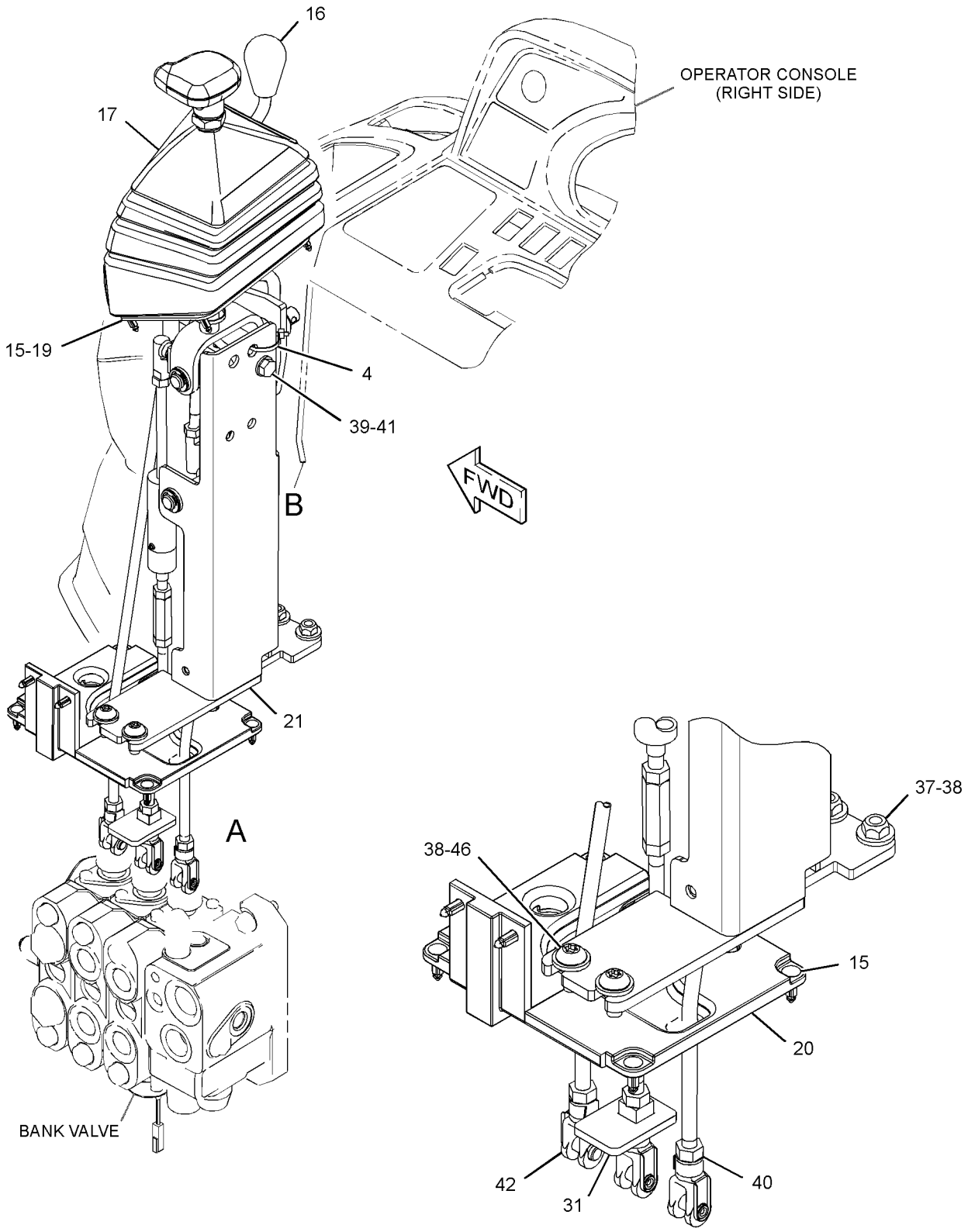

REFER TO ALL ILLUSTRATIONS OF
THIS GROUP FOR AUXILIARY VIEWS

VIEW OF AREA A

GRAPHIC #1

g02818777

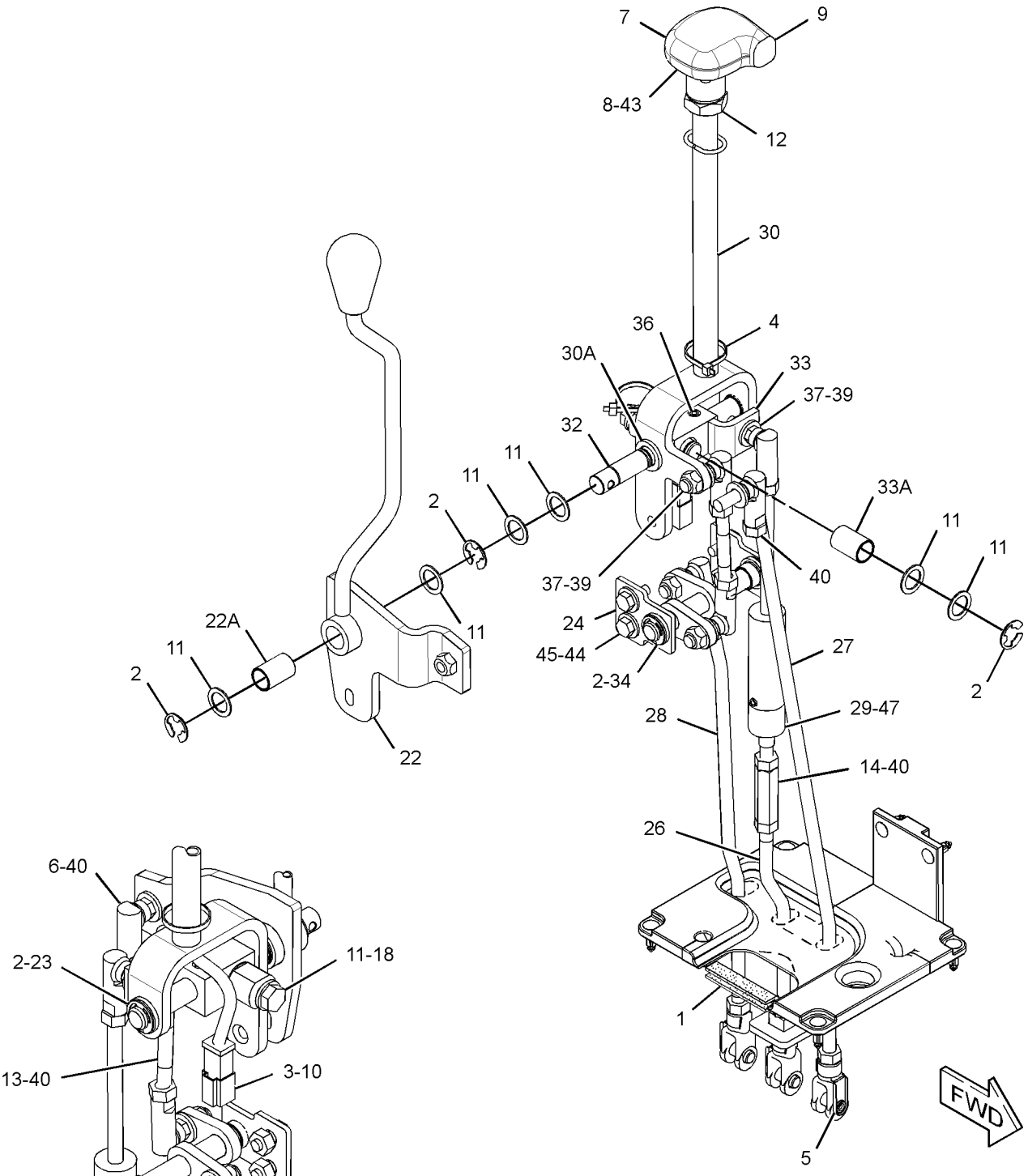

(PARTS REMOVED FOR CLARITY)

VIEW OF AREA B
(PARTS REMOVED FOR CLARITY)

GRAPHIC #2 **<END>** g02818778

OPERATOR STATION

334-3568 CONTROL GP-HYDRAULIC HAND—SINGLE TILT

S/N: LTG1-UP

PART OF 373-4246, 373-4248 VALVE AR-BANK 2

AN ATTACHMENT

SMCS-5063 **i04566201**

NOTE	REF NO	GRAPHIC REF	PART NUMBER	QTY	PART NAME 1 2 3 4 5 6 (PRODUCT LEVEL)	SEE PAGE
E	1	1	**3E-6600**		SEAL (7-CM)	
	2	1	**2R-0364**	5	RING-RETAINING	
	3	1	**102-8802**	1	KIT-RECEPTACLE (2-PIN)	
					(INCLUDES RECEPTACLE AS & WEDGE)	
	4	1	**3S-2093**	2	STRAP-CABLE	
	5	1	**8T-4743**	2	PIN	
	6	1	**8T-4773**	4	BALL JOINT	
	7	1	**9R-1765**	1	COVER-TOP	
	8	1	**9R-1766**	1	COVER-BOTTOM	
	9	1	**9R-1767**	1	BOOT	
	10	1	**9R-9868**	1	SWITCH GP-PUSH BUTTON (NEUTRALIZER, DOWNSHIFT)	
D		1	**5P-5677**		WIRE (18-GA, BLACK) (2-M)	
D		1	**6V-2689**		TUBE-HEAT SHRINK (6.35-MM DIA) (1.1-M)	
		1	**9W-0625**	1	SWITCH AS-PUSH BUTTON (PUSH BUTTON)	
		1	**9X-3401**	2	PIN-CONNECTOR (16-GA TO 18-GA)	
	11	1	**091-1745**	5	WASHER (16.6X24X1.2-MM THK)	
	12	1	**107-5591**	1	NUT-JAM (3/4-16-THD)	
	13	1	**119-4167**	1	ROD	
M	14	1	**134-0453**	1	TURNBUCKLE	
	15	1	**164-1368**	12	FASTENER-PANEL	
	16	1	**183-3134**	2	BEARING	
	17	1	**206-1695**	1	BOOT	
	18	1	**220-0269**	1	SHAFT	
	19	1	**270-2795**	1	PLATE	
	20	1	**291-5108**	1	GASKET	
	21	1	**365-2913**	1	BRACKET AS	
	22	1	**330-6988**	1	PIN	
	23	1	**330-6993**	1	ROD	
	24	1	**330-6996**	1	ROD	
	25	1	**330-7001**	1	DAMPER AS	
	26	1	**330-7002**	1	LEVER AS-VALVE	
	26A	1	**183-3134**	2	BEARING	
	27	1	**333-8324**	1	JOINT AS	
	27A	1	**183-3136**	1	BUSHING	
	28	1	**365-2915**	1	PIN AS	
	29	1	**352-8367**	1	PLATE	
	30	1	**352-8368**	1	PLATE AS	
	32	1	**5H-3193**	1	PIN-SPRING	
	33	1	**5P-4116**	2	WASHER-HARD (8.8X20.5X2-MM THK)	
M	34	1	**6V-7744**	6	LOCKNUT (M10X1.5-THD)	
	35	1	**7X-7729**	4	WASHER (11X25X3-MM THK)	
	36	1	**8T-4121**	5	WASHER-HARD (11X21X2.5-MM THK)	
M	37	1	**8T-4133**	7	NUT (M10X1.5-THD)	
M	38	1	**8T-4136**	1	BOLT (M10X1.5X25-MM)	
M	39	1	**8T-4189**	2	BOLT (M8X1.25X20-MM)	
	40	1	**8T-4815**	2	ROD END	
	41	1	**8T-9501**	2	SCREW (10-16X0.75-IN)	
M	42	1	**9X-2040**	2	SCREW-TRUSS HEAD (M10X1.5X25-MM)	
M	43	1	**9X-2065**	1	NUT (M10X1.5-THD, LH)	

D-ORDER BY THE METER
E-ORDER BY THE CENTIMETER
M-METRIC PART

334-3568 **CONTROL GP-HYDRAULIC HAND** *(contd.)* **i04566201**

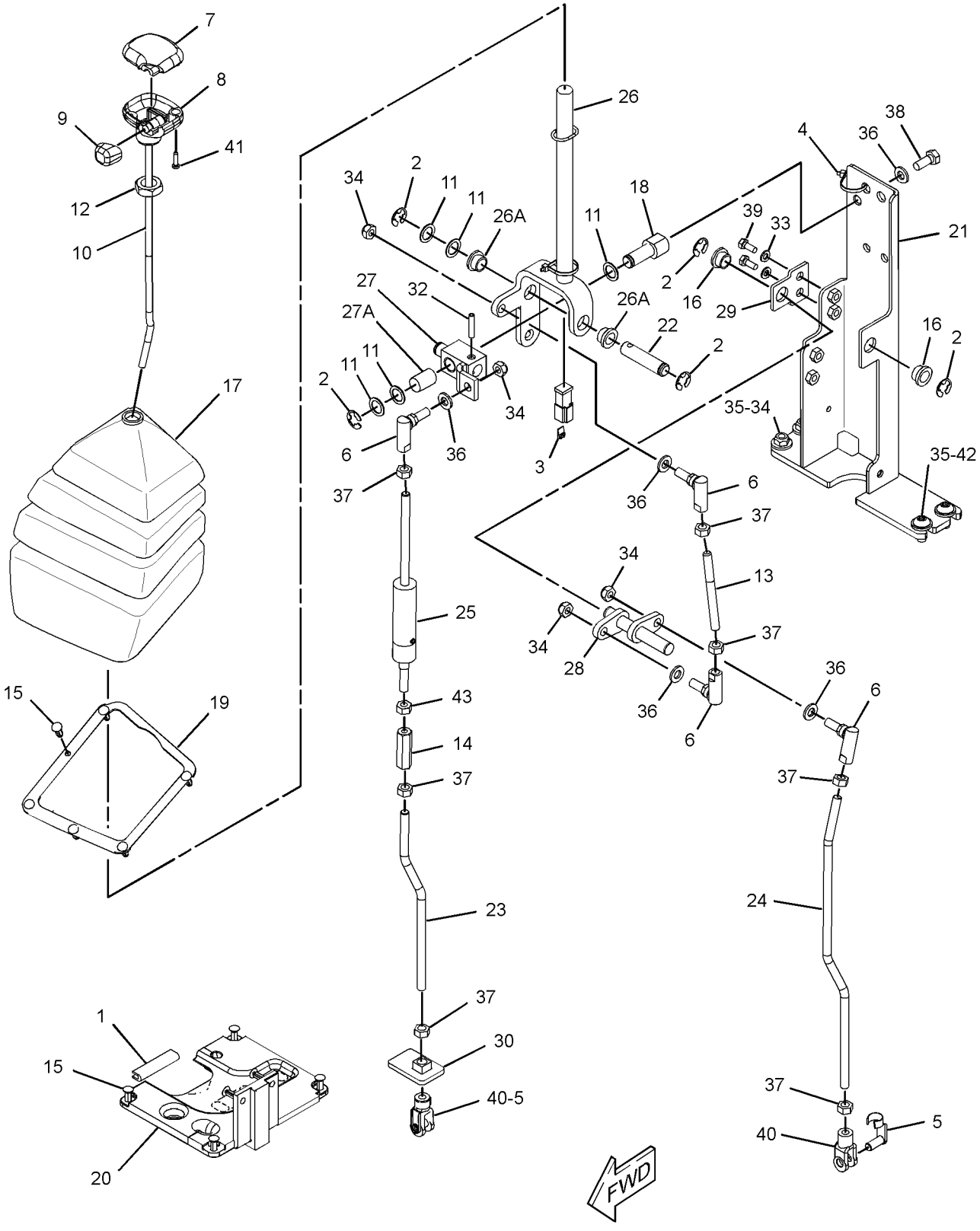

GRAPHIC #1 **<END>** g02787024

OPERATOR STATION

271-3095 CONTROL GP-JOYSTICK–RH

S/N: LTG1-UP
PART OF 373-4246 VALVE AR-BANK 2
AN ATTACHMENT

SMCS-5705 **i02447332**

NOTE	REF NO	GRAPHIC REF	PART NUMBER	QTY	PART NAME 1 2 3 4 5 6 (PRODUCT LEVEL)	SEE PAGE
	1	1	**271-3100**	1	HANDLE GP-MODULAR	
	2	1	**272-9701**	1	ADAPTER (RH)	
	3	1	**254-3437**	1	BOOT	

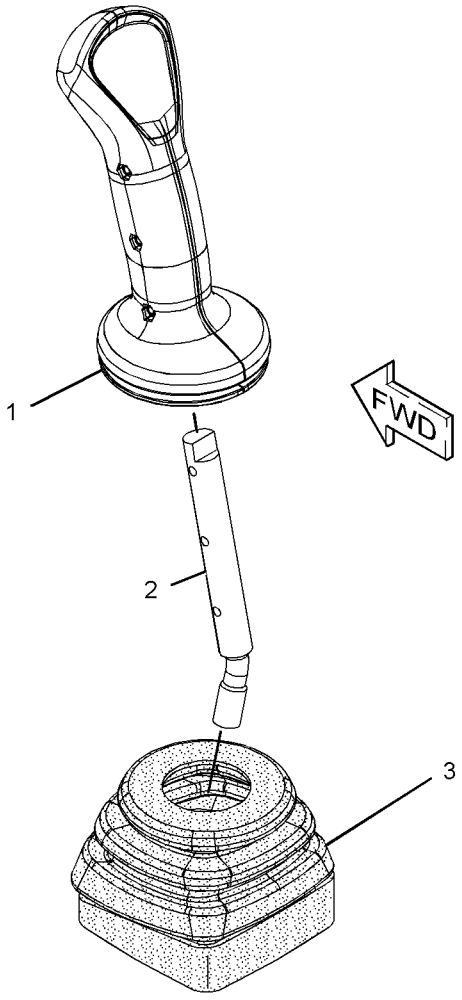

GRAPHIC #1 **<END>** g01214863

OPERATOR STATION

271-3096 CONTROL GP-JOYSTICK–RH

S/N: LTG1-UP

PART OF 373-4248 VALVE AR-BANK 2, 373-4256 VALVE AR-BANK 3

AN ATTACHMENT

SMCS-5705 **i03321223**

NOTE	REF NO	GRAPHIC REF	PART NUMBER	QTY	PART NAME 1 2 3 4 5 6 (PRODUCT LEVEL)	SEE PAGE
	1	1	**271-3101**	1	HANDLE GP-MODULAR (RH)	
		1	**8T-8737**	8	PLUG-SEAL	
		1	**174-3091**	1	KIT-RECEPTACLE (12-PIN)	
					(INCLUDES RECEPTACLE AS & WEDGE)	
		1	**186-3735**	4	PIN-CONNECTOR (16-GA TO 18-GA)	
	2	1	**272-9701**	1	ADAPTER (RH)	
	3	1	**254-3437**	1	BOOT	

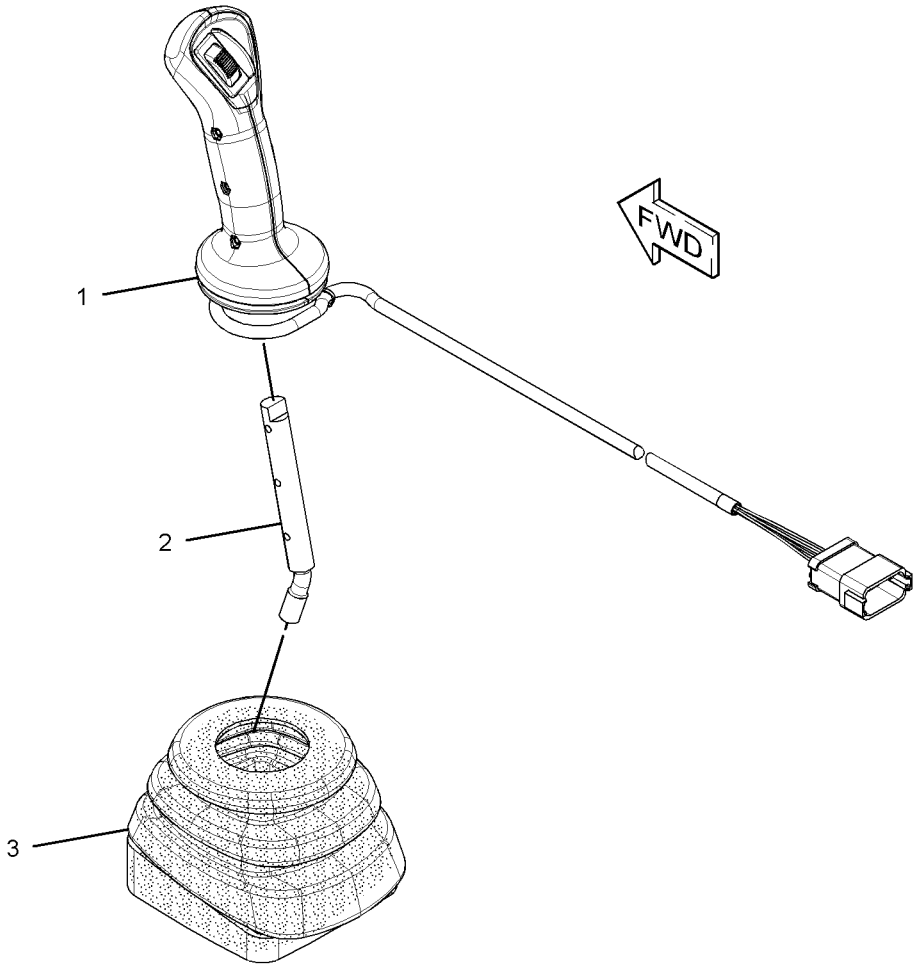

GRAPHIC #1 **<END>** g01478115

OPERATOR STATION

271-3099 CONTROL GP-JOYSTICK–LH

S/N: LTG1-UP
PART OF 373-4256 VALVE AR-BANK 3
AN ATTACHMENT

SMCS-5705 **i03799102**

NOTE	REF NO	GRAPHIC REF	PART NUMBER	QTY	PART NAME 1 2 3 4 5 6 (PRODUCT LEVEL)	SEE PAGE
	1	1	**271-3105**	1	HANDLE GP-MODULAR (LH)	
		1	**8T-8737**	6	PLUG-SEAL	
		1	**174-3091**	1	KIT-RECEPTACLE (12-PIN)	
					(INCLUDES RECEPTACLE AS & WEDGE)	
		1	**186-3735**	6	PIN-CONNECTOR (16-GA TO 18-GA)	
		1	**252-6934**	1	GROMMET	
	2	1	**278-7469**	1	ADAPTER (LH)	
	3	1	**254-3437**	1	BOOT	

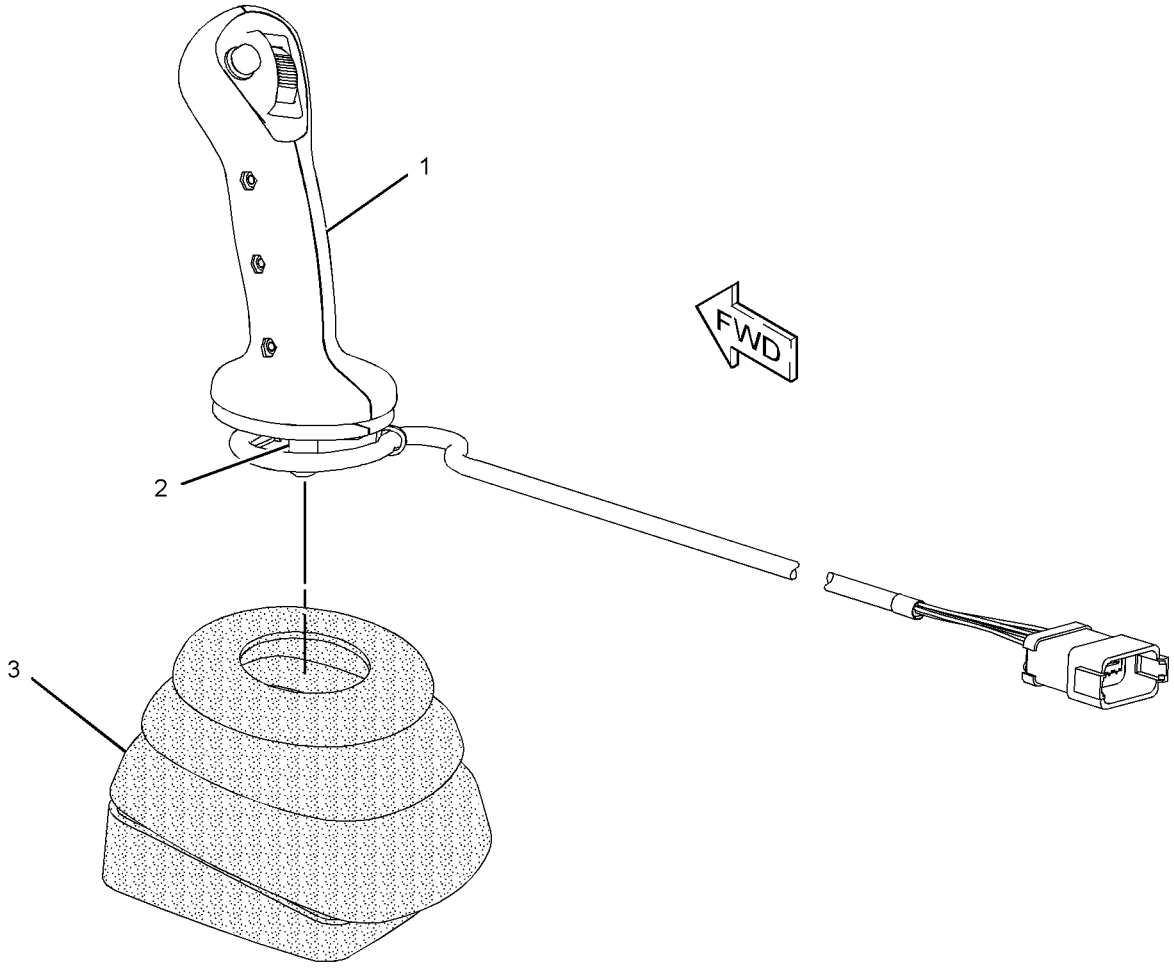

GRAPHIC #1 **<END>** g01433605

OPERATOR STATION

356-4120 CONTROL GP-STEERING–TILT

S/N: LTG1-UP

PART OF 353-1428 CAB AR, 353-1427 CANOPY AR, 353-1426 CANOPY AR-OPEN ROPS AN ATTACHMENT

SMCS-4309, 4310, 4338 **i04565291**

NOTE	REF NO	GRAPHIC REF	PART NUMBER	QTY	PART NAME 1 2 3 4 5 6 (PRODUCT LEVEL)	SEE PAGE
	1	1	**8R-2916**	1	COVER AS (CAT STEERING WHEEL)	
	2	1	**255-2749**	1	PLUG	
Y	3	1	**310-6216**	1	STEERING COLUMN GP	244
	4	1	**317-5541**	1	STEERING WHEEL	
	5	1	**325-9308**	1	KNOB AS	
	6	1	**356-4121**	1	PLATE AS	
	7	1	**7X-7729**	6	WASHER (11X25X3-MM THK)	
	8	1	**8T-4121**	4	WASHER-HARD (11X21X2.5-MM THK)	
M	9	1	**8T-4133**	2	NUT (M10X1.5-THD)	
M	10	1	**8T-4136**	4	BOLT (M10X1.5X25-MM)	
M	11	1	**8T-4195**	4	BOLT (M10X1.5X30-MM)	
M	12	1	**101-7401**	1	BOLT-SOCKET HEAD (M10X1.5X20-MM)	

M-METRIC PART
Y-SEPARATE ILLUSTRATION

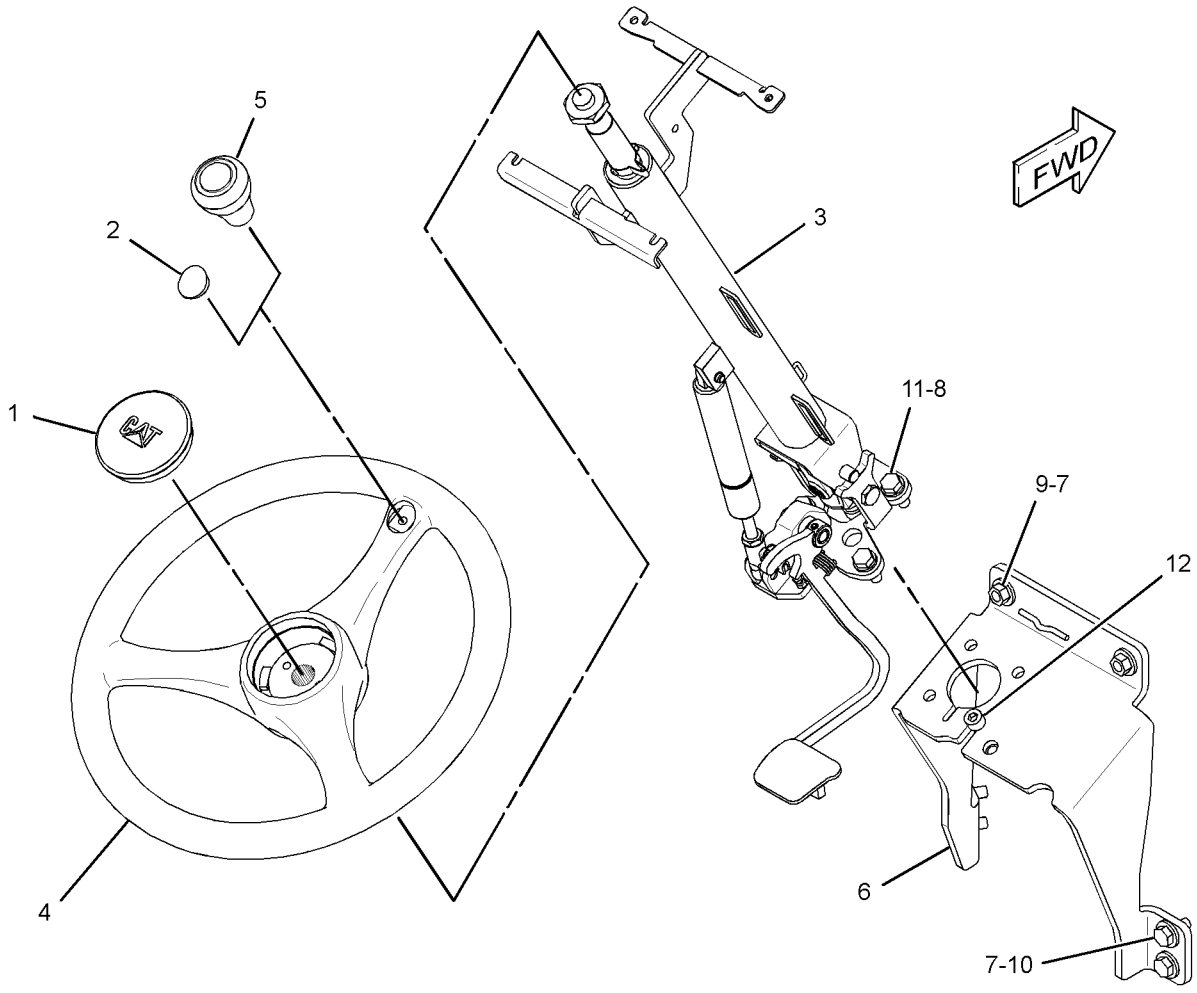

GRAPHIC #1 **<END>** g02809681

OPERATOR STATION

356-4080 CONTROL GP-TRANSMISSION

S/N: LTG1-UP
PART OF 353-1512 TRANSMISSION AR-DIRECT DRIVE, 353-1513 TRANSMISSION AR-POWER SHIFT
AN ATTACHMENT

SMCS-3065, 3168 **i04580749**

NOTE	REF NO	GRAPHIC REF	PART NUMBER	QTY	PART NAME 1 2 3 4 5 6 (PRODUCT LEVEL)	SEE PAGE
	1	1	**8T-9501**	2	SCREW (10-16X0.75-IN)	
	2	1	**3S-2093**	1	STRAP-CABLE	
	3	1	**9R-1766**	1	COVER-BOTTOM	
	4	1	**9R-1767**	1	BOOT	
	5	1	**107-5591**	1	NUT-JAM (3/4-16-THD)	
	6	1	**164-1153**	1	KNOB (UPPER)	
	7	1	**164-1368**	8	FASTENER-PANEL	
	8	1	**206-1669**	1	BOOT	
	9	1	**220-3470**	1	BOOT-SEAL	
	10	1	**230-2389**	1	PLATE	
	11	1	**230-2390**	1	PLATE	
	12	1	**263-7261**	1	SWITCH GP-PUSH BUTTON (NEUTRALIZER)	
	13	1	**310-9355**	1	CONTROL GP-TRANSMISSION (FORWARD, NEUTRAL, REVERSE)	
		1	**8T-8737**	6	PLUG-SEAL	
		1	**174-3091**	1	KIT-RECEPTACLE (12-PIN)	
					(INCLUDES RECEPTACLE AS & WEDGE)	
	14	1	**356-4074**	1	ROD AS	
M	15	1	**105-3480**	2	BOLT-SOCKET HEAD (M5X0.8X16-MM)	
	16	1	**102-8802**	1	KIT-RECEPTACLE (2-PIN)	
					(INCLUDES RECEPTACLE AS & WEDGE)	
	17	1	**7X-0620**	1	WASHER-HARD (5.5X13X1.6-MM THK)	
	18	1	**8T-4223**	1	WASHER-HARD (13.5X25.5X3-MM THK)	
M	19	1	**8T-4956**	1	BOLT (M12X1.75X35-MM)	

M-METRIC PART

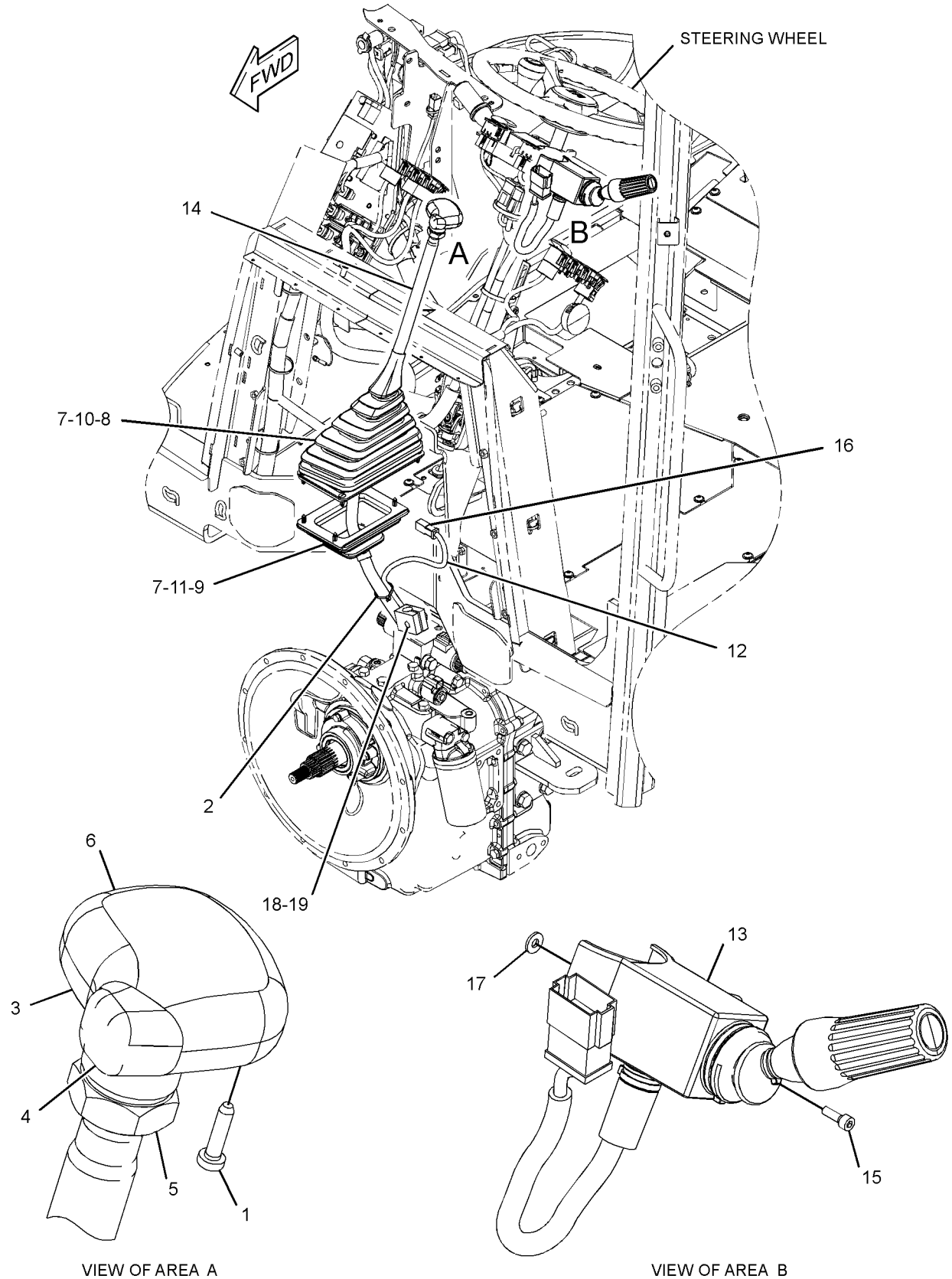

GRAPHIC #1 **<END>** g02809018

OPERATOR STATION

220-3785 COVER GP-WIPER MOTOR

S/N: LTG1-UP
PART OF 353-1427 CANOPY AR
AN ATTACHMENT

SMCS-7305 **i04315141**

NOTE	REF NO	GRAPHIC REF	PART NUMBER	QTY	PART NAME 1 2 3 4 5 6 (PRODUCT LEVEL)	SEE PAGE
	1	1	**226-5635**	1	COVER	
	2	1	**9X-2038**	3	WASHER (7X19X2-MM THK)	
M	3	1	**9X-2043**	3	SCREW-TRUSS HEAD (M6X1X14-MM)	

M-METRIC PART

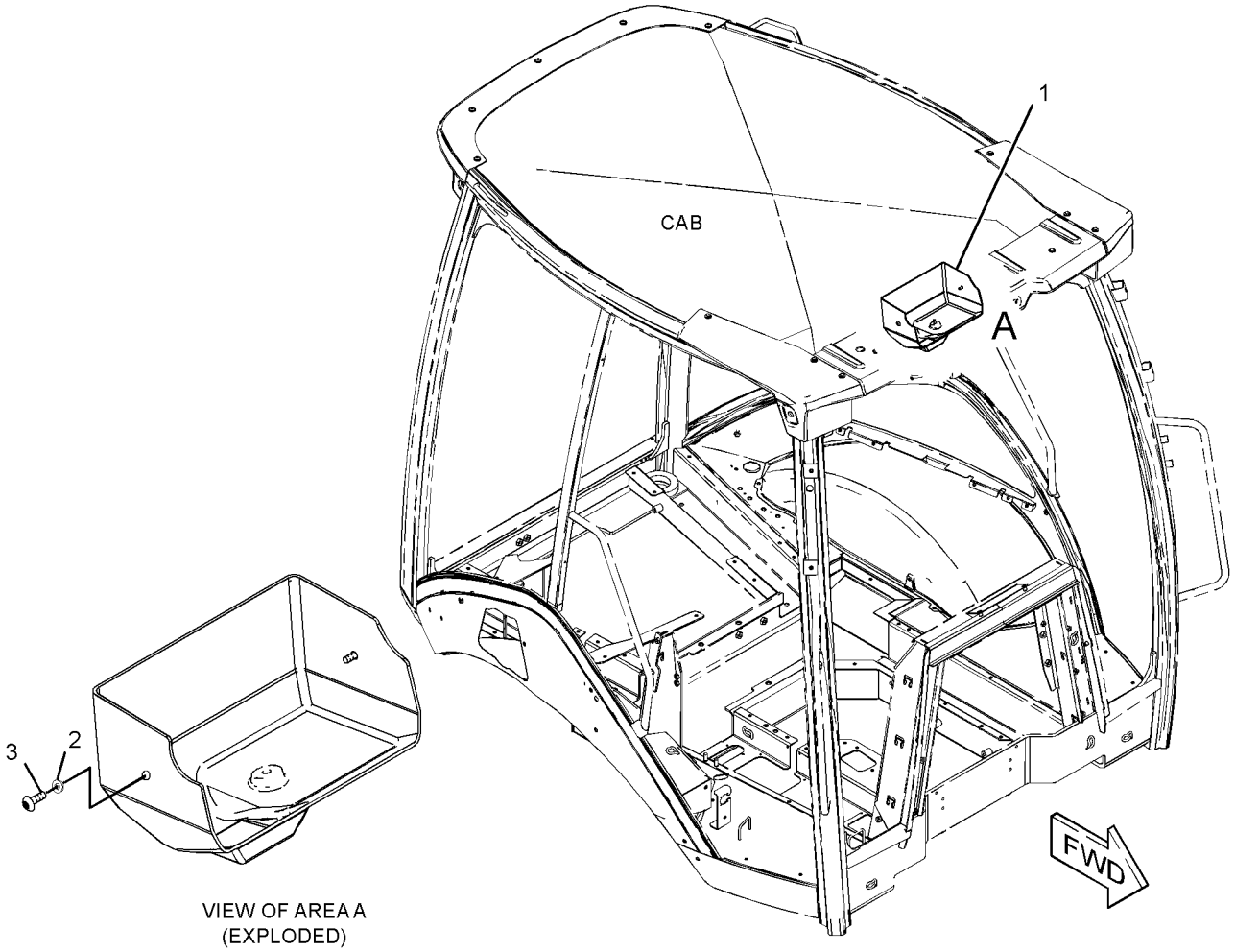

VIEW OF AREA A
(EXPLODED)

GRAPHIC #1 **<END>** g02478637

OPERATOR STATION

329-1167 DOOR GP-CAB–RH

S/N: LTG1-UP
PART OF 341-6716 CAB GP
AN ATTACHMENT

SMCS-7308 **i04633190**

NOTE	REF NO	GRAPHIC REF	PART NUMBER	QTY	PART NAME 1 2 3 4 5 6 (PRODUCT LEVEL)	SEE PAGE
	1	1	**132-2249**	2	SPACER (7.4X12.7X24-MM THK)	
J	2	1	**159-4269**	1	SPRING GP-GAS (CAB DOOR)	
	3	1	**159-4945**	1	KEEPER	
B	4	1	**177-4877**	1	SHIM (1-MM THK)	
	5	1	**205-9598**	1	GLASS (RH)	
	6	1	**248-2714**	2	NUT-ACORN (M6X1-THD)	
N	7	1	**252-1862**	1	HANDLE AS (PULL)	
	8	1	**252-1863**	1	GASKET	
	9	1	**252-1865**	1	LATCH AS (RH)	
	10	1	**253-1817**	1	SPACER (6.5X14.5X12-MM THK)	
	11	1	**253-1857**	1	PLATE	
	12	1	**253-1858**	1	COVER (LATCH)	
	13	1	**254-1126**	1	PLATE	
	14	1	**254-1127**	1	PLATE	
	15	1	**258-3697**	2	WASHER-NYLON (7X20X2-MM THK)	
	16	1	**329-1169**	1	DOOR AS (RH)	
Y	17	1	*333-9902*	1	WINDOW GP-DOOR (RH)	544
	18	1	**223-2029**	1	SEAL AS (RH)	
M	19	1	**174-8131**	2	SCREW-TRUSS HEAD (M4X0.7X12-MM)	
	20	1	**197-5107**	2	SCREW-TRUSS HEAD (M6X1X60-MM)	
	21	1	**205-7048**	2	INSERT-THREADED (M6X1-THD)	
M	22	1	**5C-9553**	3	BOLT (M6X1X16-MM)	
M	23	1	**8T-6974**	1	BOLT (M6X1X80-MM)	
	24	1	**9X-2038**	4	WASHER (7X19X2-MM THK)	
M	25	1	**9X-2045**	4	SCREW-TRUSS HEAD (M6X1X20-MM)	
E	26	1	**322-8414**		SEAL-CAB (347-CM)	
					PARTS SHOWN IN GRAPHIC(S) WITHOUT A REFERENCE NUMBER ARE NOT SERVICED SEPARATELY	
					AVAILABLE REPAIR KIT(S):	
J			**161-9044**	1	KIT-FITTING	
					(INCLUDES FITTING AS & NUT)	

B-USE AS REQUIRED
E-ORDER BY THE CENTIMETER
J-KIT MARKED J SERVICES PART MARKED J
M-METRIC PART
N-REQUIRES CORPORATE KEY
Y-SEPARATE ILLUSTRATION

329-1167 DOOR GP-CAB *(contd.)* i04633190

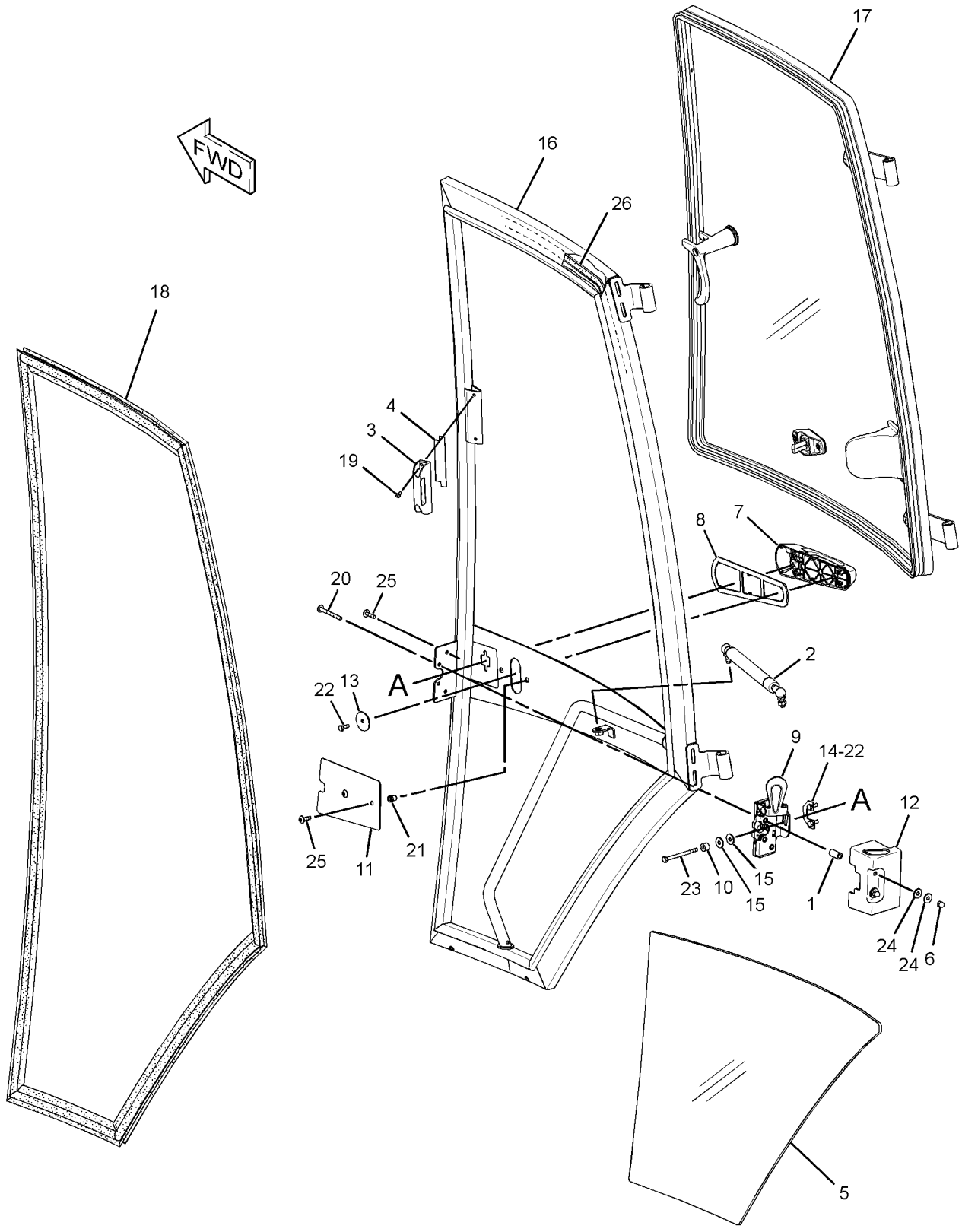

GRAPHIC #1 **<END>** g01819794

OPERATOR STATION

329-1168 DOOR GP-CAB–LH

S/N: LTG1-UP
PART OF 341-6716 CAB GP
AN ATTACHMENT

SMCS-7308 **i04631251**

NOTE	REF NO	GRAPHIC REF	PART NUMBER	QTY	PART NAME 1 2 3 4 5 6 (PRODUCT LEVEL)	SEE PAGE
	1	1	**132-2249**	2	SPACER (7.4X12.7X24-MM THK)	
J	2	1	**159-4269**	1	SPRING GP-GAS (CAB DOOR)	
B	3	1	**177-4877**	1	SHIM (1-MM THK)	
	4	1	**205-9588**	1	GLASS (LH)	
	5	1	**248-2714**	2	NUT-ACORN (M6X1-THD)	
N	6	1	**252-1862**	1	HANDLE AS (PULL)	
	7	1	**252-1863**	1	GASKET	
	8	1	**252-1864**	1	LATCH AS (LH)	
	9	1	**253-1817**	1	SPACER (6.5X14.5X12-MM THK)	
	10	1	**253-1857**	1	PLATE	
	11	1	**253-1858**	1	COVER (LATCH)	
	12	1	**254-1126**	1	PLATE	
	13	1	**254-1127**	1	PLATE	
	14	1	**258-3697**	2	WASHER-NYLON (7X20X2-MM THK)	
	15	1	**329-1170**	1	DOOR AS (LH)	
Y	16	1	**333-9901**	1	WINDOW GP-DOOR (LH)	543
	17	1	**223-2028**	1	SEAL AS (LH)	
M	18	1	**174-8131**	2	SCREW-TRUSS HEAD (M4X0.7X12-MM)	
	19	1	**159-4946**	1	KEEPER	
	20	1	**197-5107**	2	SCREW-TRUSS HEAD (M6X1X60-MM)	
	21	1	**205-7048**	2	INSERT-THREADED (M6X1-THD)	
M	22	1	**5C-9553**	3	BOLT (M6X1X16-MM)	
M	23	1	**8T-6974**	1	BOLT (M6X1X80-MM)	
	24	1	**9X-2038**	4	WASHER (7X19X2-MM THK)	
M	25	1	**9X-2045**	4	SCREW-TRUSS HEAD (M6X1X20-MM)	
E	26	1	**322-8414**		SEAL-CAB (347-CM)	
					PARTS SHOWN IN GRAPHIC(S) WITHOUT A REFERENCE NUMBER ARE NOT SERVICED SEPARATELY	
					AVAILABLE REPAIR KIT(S):	
J			**161-9044**	1	KIT-FITTING	
					(INCLUDES NUT & FITTING AS)	

B-USE AS REQUIRED
E-ORDER BY THE CENTIMETER
J-KIT MARKED J SERVICES PART MARKED J
M-METRIC PART
N-REQUIRES CORPORATE KEY
Y-SEPARATE ILLUSTRATION

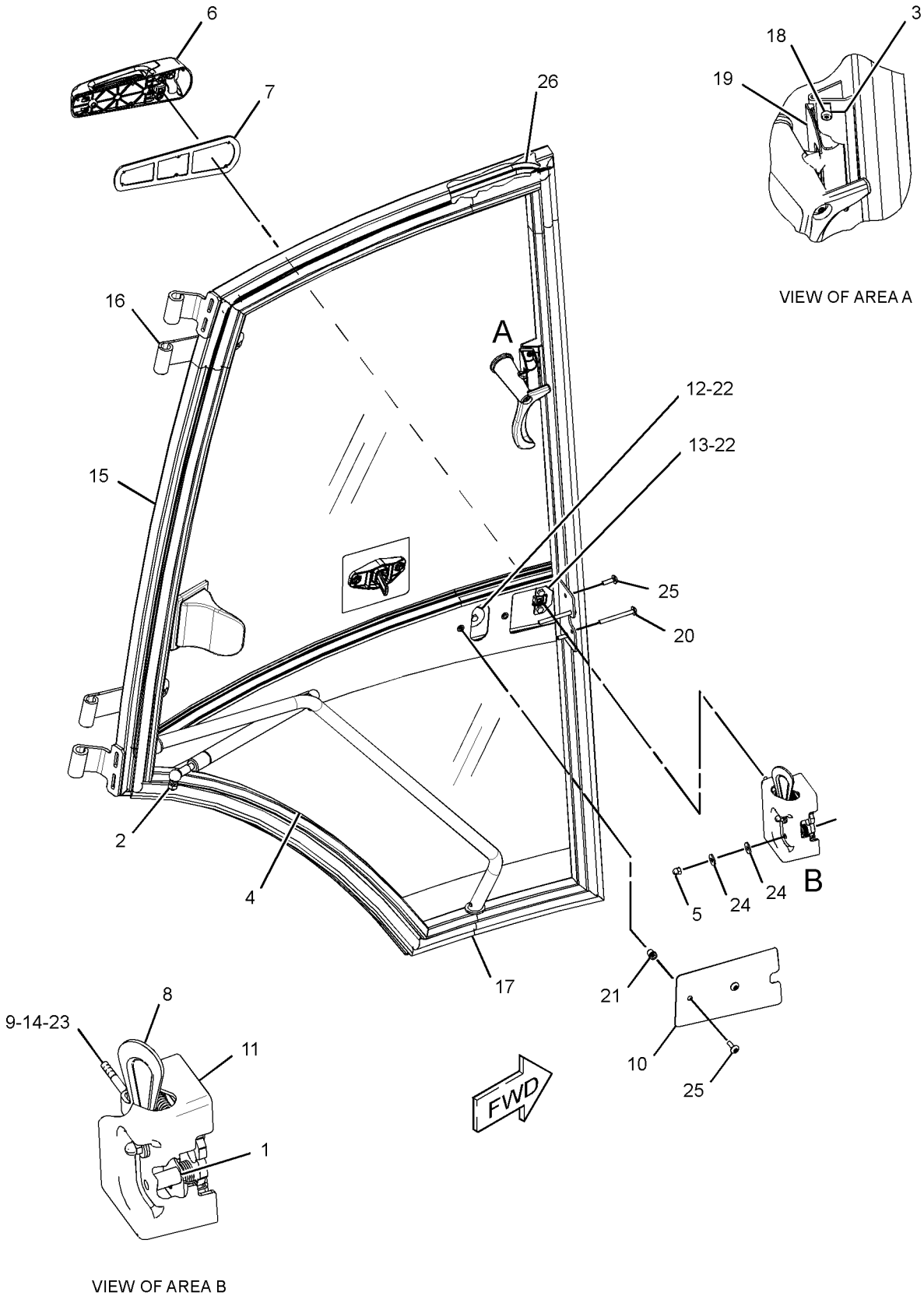

GRAPHIC #1 **<END>** g02797040

OPERATOR STATION

353-1398 DUCT GP-CAB AIR

S/N: LTG1-UP
PART OF 353-1428 CAB AR
AN ATTACHMENT

SMCS-734D **i04555034**

NOTE	REF NO	GRAPHIC REF	PART NUMBER	QTY	PART NAME 1 2 3 4 5 6 (PRODUCT LEVEL)	SEE PAGE
	1	1	**8Y-6352**	1	LOUVER AS	
	2	1	**8Y-6967**	6	LOUVER AS-VENT	
	3	1	**164-8474**	2	LOUVER AS-VENT	
	4	1	**206-1653**	4	GASKET	
	5	1	**206-1803**	2	GASKET	
	6	1	**206-1805**	1	GASKET	
	7	1	**206-1810**	1	DUCT-AIR	
	8	1	**206-1812**	1	DUCT-AIR	
	9	1	**206-1814**	1	DUCT-AIR	
	10	1	**206-1815**	1	DUCT-AIR	
	11	1	**206-1816**	1	DUCT-AIR	
	12	1	**206-1817**	2	DUCT-AIR	
	13	1	**218-0666**	6	LOUVER AS	
	14	1	**221-2420**	2	HOSE-AIR	
	15	1	**8T-4205**	4	WASHER-HARD (7.2X14.5X2-MM THK)	
	16	1	**9M-7959**	4	CLAMP-HOSE	
	17	1	**9X-2038**	2	WASHER (7X19X2-MM THK)	
M	18	1	**9X-2045**	6	SCREW-TRUSS HEAD (M6X1X20-MM)	

M-METRIC PART

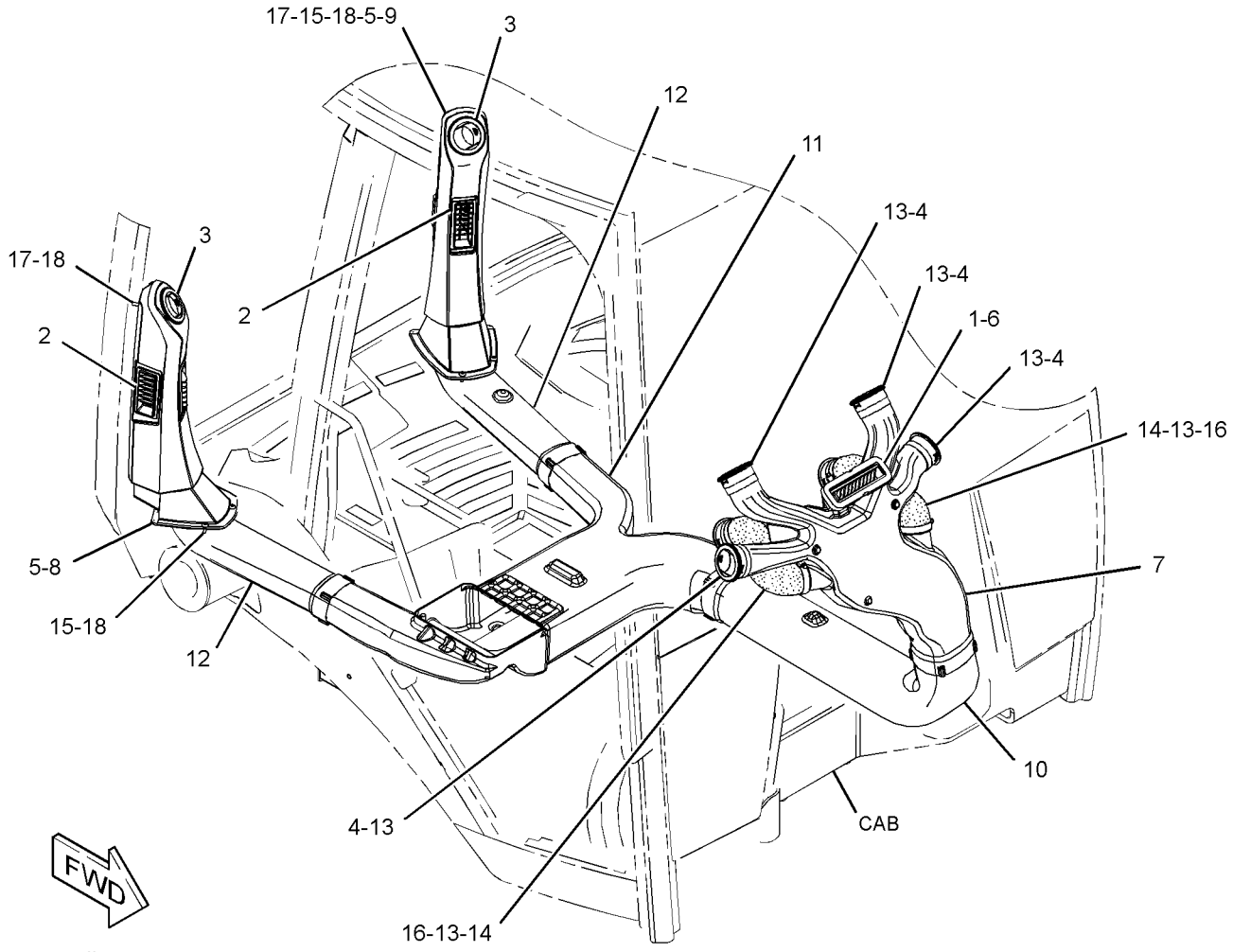

GRAPHIC #1 **<END>** g02810002

OPERATOR STATION

206-1618 FLOOR MAT GP

S/N: LTG1-UP

PART OF 353-1428 CAB AR, 353-1427 CANOPY AR, 353-1426 CANOPY AR-OPEN ROPS AN ATTACHMENT

SMCS-7265 **i04253750**

NOTE	REF NO	GRAPHIC REF	PART NUMBER	QTY	PART NAME 1 2 3 4 5 6 (PRODUCT LEVEL)	SEE PAGE
C	1	1	**285-5914**	2	PLATE	
	2	1	**284-1602**	1	FLOOR MAT	
	3	1	**1H-3244**	4	LOCKWASHER	
M	4	1	**9X-2045**	4	SCREW-TRUSS HEAD (M6X1X20-MM)	

C-CHANGE FROM PREVIOUS TYPE
M-METRIC PART

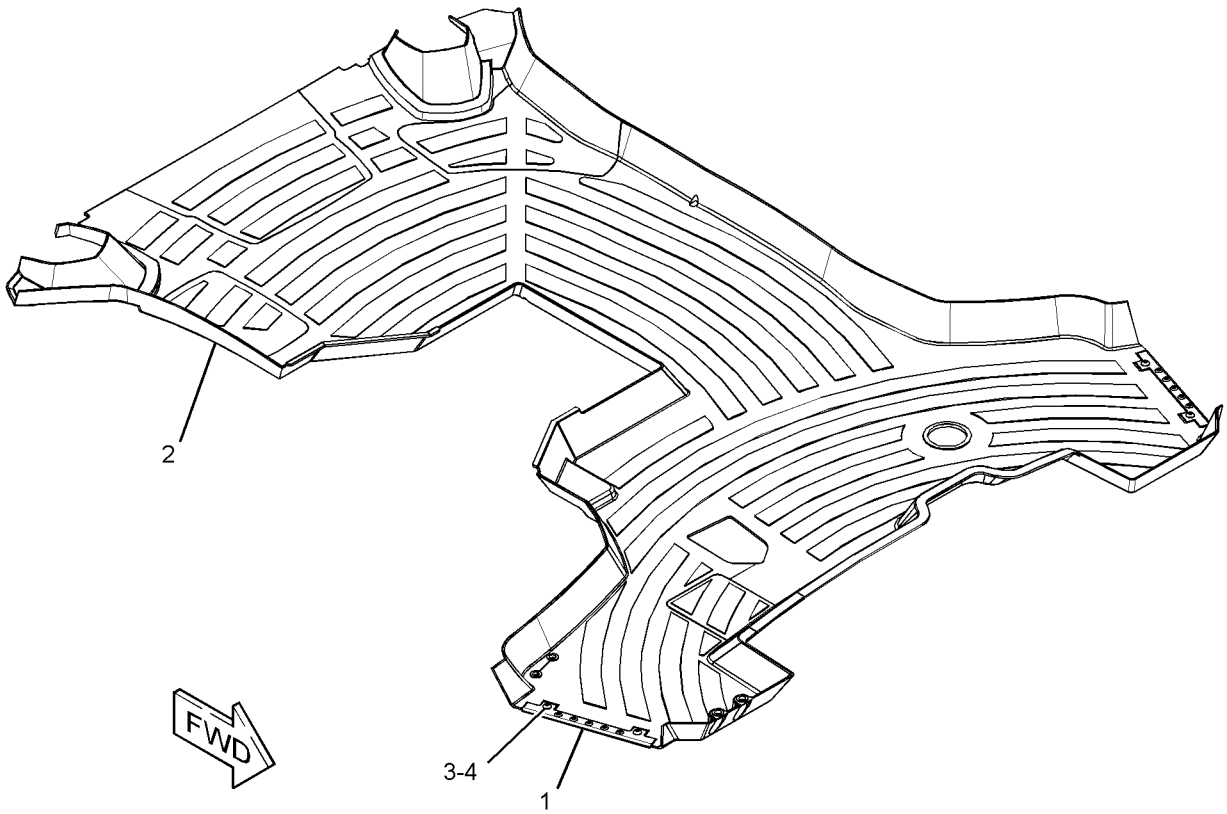

GRAPHIC #1 **<END>** g02437956

OPERATOR STATION

353-1468 HEATER & AIR CONDITIONER AR

S/N: LTG1-UP

PART OF 373-4213 CAB AR-ENCLOSED ROPS

AN ATTACHMENT

SMCS-7304, 7309, 7320, 7337 **i04586094**

NOTE	PART NUMBER	QTY	PART NAME 1 2 3 4 5 6 (PRODUCT LEVEL)	SEE PAGE
Y	*344-7511*	1	AIR CONDITIONER & MOUNTING GP	450
Y	*321-7038*	1	COMPRESSOR GP-REFRIGERANT	462
Y	*337-9765*	1	CONDENSER & MTG GP-REFRIGERANT	463
Y	*337-9762*	1	FAN GP-SUCTION (WITH AIR CONDITIONER)	39
Y	*337-9783*	1	LINES GP-HEATER & AIR COND	507
Y	*357-3211*	1	WIRING GP-AIR CONDITIONER	101

Y-SEPARATE ILLUSTRATION

<END>

OPERATOR STATION

358-7087 HEATER & AIR CONDITIONER GP

S/N: LTG1-UP
PART OF 344-7511 AIR CONDITIONER & MOUNTING GP
AN ATTACHMENT

SMCS-7304, 7309, 7320, 7337 **i04404158**

NOTE	REF NO	GRAPHIC REF	PART NUMBER	QTY	PART NAME 1 2 3 4 5 6 (PRODUCT LEVEL)	SEE PAGE
	1	1	**8C-3756**	1	FILM-IDENTIFICATION (GROUP NO., SEQUENCE NO.)	
	2	1	**119-9631**	1	SWITCH-TEMPERATURE (HVAC) (AIR CONDITIONER)	
	3	1	**185-4015**	11	CLIP	
M	4	1	**187-7719**	3	SCREW-HEX FLANGE (M5X2.24X14-MM)	
	5	1	**204-9921**	1	RESISTOR AS	
	6	1	**210-7665**	1	HOUSING-TOP	
	7	1	**210-7666**	1	BAFFLE	
	8	1	**210-8401**	1	COIL AS-EVAPORATOR	
D		1	**5P-5688**	1	SEAL (1-M)	
		1	**219-6283**	1	LATCH	
	9	1	**211-2660**	1	FILTER ELEMENT-AIR (CAB HEATER)	
	10	1	**219-6281**	1	COVER AS	
		1	**6C-3680**	1	RIVET-POP	
		1	**219-6283**	1	LATCH	
	15	1	**219-6292**	1	HOUSING AS	
		1	**7H-3937**	4	LOCKWASHER (EXTERNAL TOOTH)	
M		1	**129-3178**	4	LOCKNUT (M6X1-THD)	
	16	1	**220-3762**	1	HARNESS AS-HEATER & AIR COND (CAB)	
		1	**128-7716**	1	CONNECTOR	
		1	**7T-6739**	1	HOUSING-PLUG	
		1	**7T-0093**	3	PIN-CONNECTOR (12-GA TO 14-GA)	
		1	**155-2270**	1	KIT-CONNECTING PLUG (2-PIN)	
					(INCLUDES PLUG AS, WEDGE & INTERFACE SEAL)	
		1	**8T-8737**	1	PLUG-SEAL	
		1	**177-9653**	1	KIT-RECEPTACLE (4-PIN)	
					(INCLUDES RECEPTACLE AS & WEDGE)	
		1	**8T-8730**	2	SOCKET-CONNECTOR (16-GA TO 18-GA)	
		1	**192-2112**	5	SOCKET-TERMINAL	
	17	1	**253-9510**	1	GUARD	
	18	1	**304-8965**	1	BLOWER GP-CAB (HEATER)	
		1	**7T-0093**		PIN-CONNECTOR (12-GA TO 14-GA)	
		1	**177-9645**	1	KIT-RECEPTACLE (2-PIN)	
					(INCLUDES RECEPTACLE AS & WEDGE)	
	19	1	**2S-3745**	4	SCREW-TAPPING (10-16X0.5-IN)	
M	20	1	**6V-7357**	4	BOLT (M6X1X25-MM)	
	21	1	**8T-4205**	5	WASHER-HARD (7.2X14.5X2-MM THK)	
D	22	1	**5P-5655**		SEAL (0.5-M)	
DJ	23	1	**5P-5637**		SEAL (0.8-M)	
EJ	24	1	**8C-7524**		SEAL (35-CM)	
					AVAILABLE REPAIR KIT(S):	
J			**285-9109**	1	KIT-SEAL (HVAC)	
					(INCLUDES GASKETS & SEALS)	

D-ORDER BY THE METER
E-ORDER BY THE CENTIMETER
J-KIT MARKED J SERVICES PARTS MARKED J
M-METRIC PART

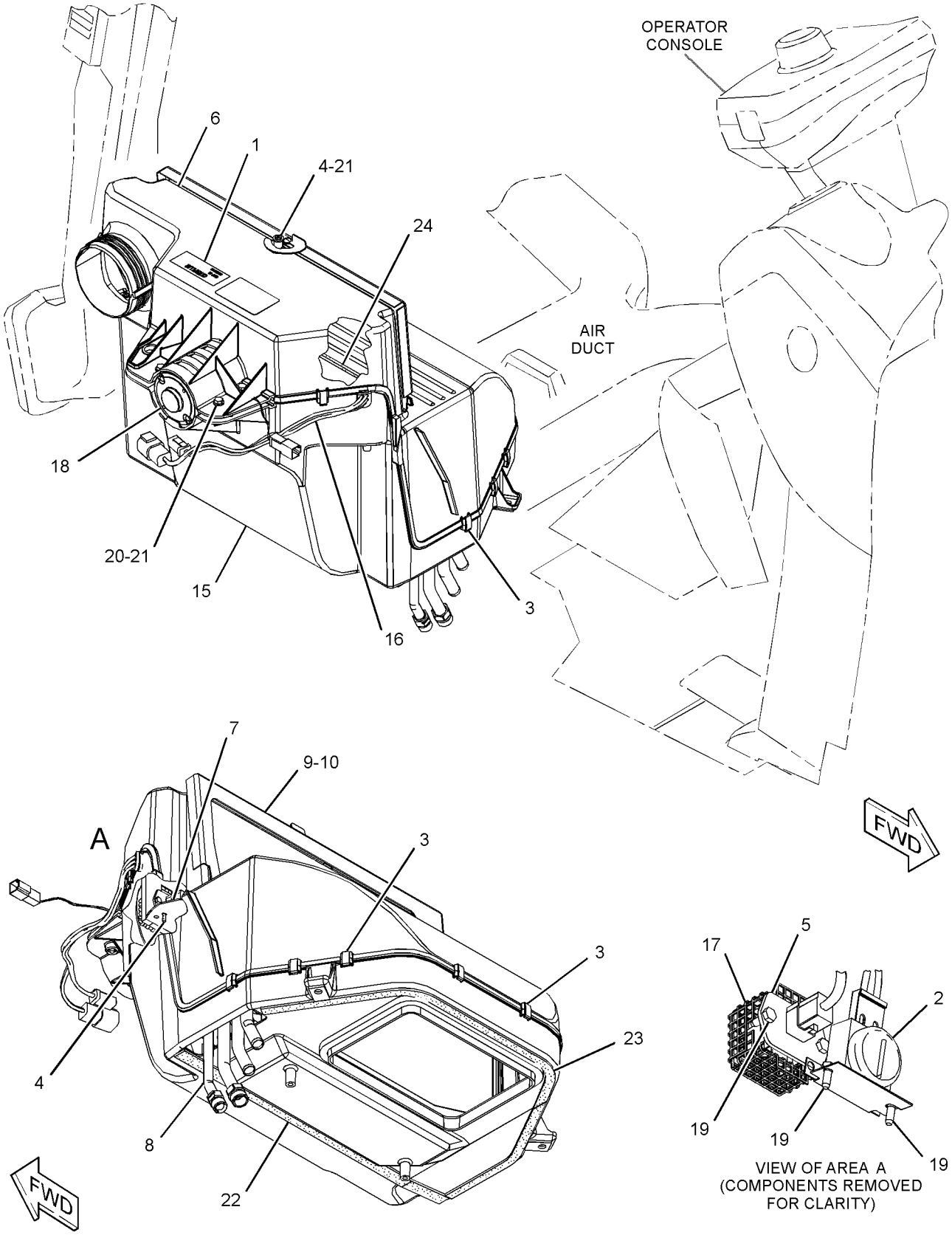

GRAPHIC #1 **<END>** g02178000

OPERATOR STATION

353-1467 HEATER AR-CAB

S/N: LTG1-UP

PART OF 373-4210 CAB AR-ENCLOSED ROPS

AN ATTACHMENT

SMCS-7304 **i04586191**

NOTE	PART NUMBER	QTY	PART NAME 1 2 3 4 5 6 (PRODUCT LEVEL)	SEE PAGE
Y	*337-9761*	1	FAN GP-SUCTION (WITHOUT AIR CONDITIONER)	38
Y	*341-6710*	1	HEATER GP-CAB	495
Y	*337-9781*	1	LINES GP-HEATER	505
Y	*359-0015*	1	WIRING GP-HEATER	113

Y-SEPARATE ILLUSTRATION

<END>

OPERATOR STATION

341-6710 HEATER GP-CAB

S/N: LTG1-UP

PART OF 353-1467 HEATER AR-CAB

AN ATTACHMENT

SMCS-7304 **i04586210**

NOTE	REF NO	GRAPHIC REF	PART NUMBER	QTY	PART NAME 1 2 3 4 5 6 (PRODUCT LEVEL)	SEE PAGE
	1	1	**6L-4725**	2	CLAMP-HOSE	
	2	1	**9N-2231**	1	GROMMET AS	
	3	1	**110-6109**	1	KNOB-CONTROL (TEMPERATURE)	
	4	1	**164-1368**	4	FASTENER-PANEL	
	5	1	**189-0881**	1	CONTROL AS	
		1	**129-1831**	1	CLAMP	
	6	1	**206-1648**	1	LOUVER	
	7	1	**206-1682**	1	PANEL-CONTROL	
	8	1	**206-1684**	1	COVER (CAB FILTER)	
	9	1	**206-1804**	1	GASKET	
	10	1	**206-1807**	1	GASKET	
	11	1	**206-1808**	1	PLATE	
	12	1	**206-1809**	1	ROD AS	
	13	1	**206-1818**	1	DUCT AS-AIR	
	14	1	**211-2661**	1	FILTER ELEMENT AS-AIR (CAB HEATER)	
	15	1	**255-0795**	1	FILM-IDENTIFICATION (TEMPERATURE CONTROL)	
	16	1	**319-8524**	1	HOSE-AIR	
Y	17	1	**358-7086**	1	HEATER GP-CAB	497
M	18	1	**111-4627**	3	SCREW-MACHINE (M6X1X30-MM)	
	19	1	**5P-4116**	1	WASHER-HARD (8.8X20.5X2-MM THK)	
	20	1	**7X-0579**	1	WASHER-HARD (8.8X25.5X2-MM THK)	
M	21	1	**8T-4200**	1	BOLT (M8X1.25X16-MM)	
	22	1	**9X-2038**	2	WASHER (7X19X2-MM THK)	
M	23	1	**9X-2045**	2	SCREW-TRUSS HEAD (M6X1X20-MM)	
E	24	1	**220-0738**		SEAL (87-CM)	

E-ORDER BY THE CENTIMETER
M-METRIC PART
Y-SEPARATE ILLUSTRATION

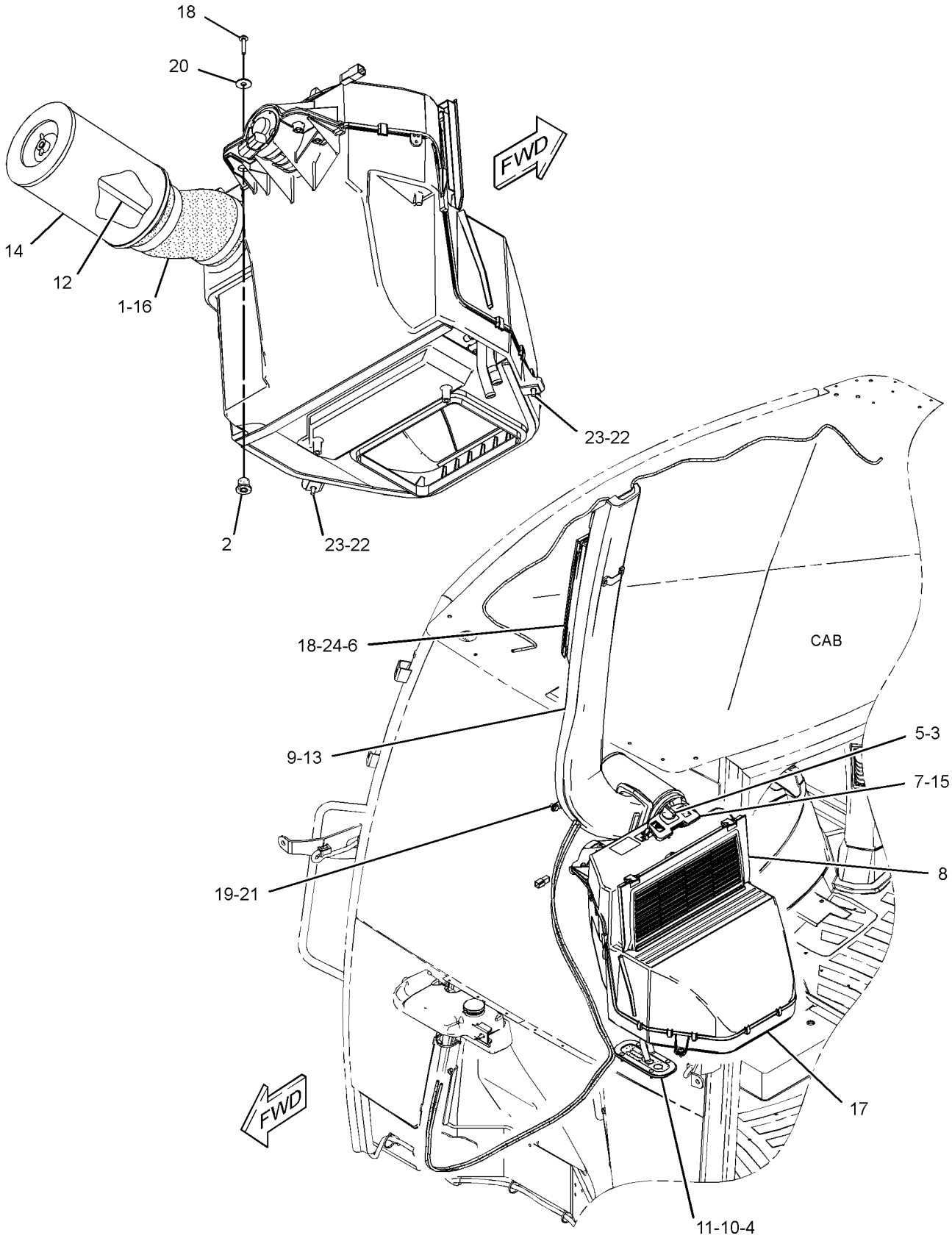

GRAPHIC #1 **<END>** g02815297

OPERATOR STATION

358-7086 HEATER GP-CAB

S/N: LTG1-UP
PART OF 341-6710 HEATER GP-CAB
AN ATTACHMENT

SMCS-7304 **i04404157**

NOTE	REF NO	GRAPHIC REF	PART NUMBER	QTY	PART NAME 1 2 3 4 5 6 (PRODUCT LEVEL)	SEE PAGE
	1	1	**8C-3756**	1	FILM-IDENTIFICATION (GROUP NO., SEQUENCE NO.)	
	2	1	**185-4015**	11	CLIP	
M	3	1	**187-7719**	3	SCREW-HEX FLANGE (M5X2.24X14-MM)	
	4	1	**204-9921**	1	RESISTOR AS	
	5	1	**210-7665**	1	HOUSING-TOP	
	6	1	**210-7666**	1	BAFFLE	
	7	1	**210-8402**	1	COIL AS-HEATER	
D		1	**5P-5688**	1	SEAL (1-M)	
		1	**219-6283**	1	LATCH	
	8	1	**211-2660**	1	FILTER ELEMENT-AIR (CAB HEATER)	
	9	1	**219-6281**	1	COVER AS	
		1	**6C-3680**	1	RIVET-POP	
		1	**219-6283**	1	LATCH	
	14	1	**219-6292**	1	HOUSING AS	
		1	**7H-3937**	4	LOCKWASHER (EXTERNAL TOOTH)	
M		1	**129-3178**	4	LOCKNUT (M6X1-THD)	
	15	1	**253-2470**	1	HARNESS AS-HEATER (CAB)	
		1	**128-7716**	1	CONNECTOR	
		1	**220-5725**	1	GROMMET	
		1	**7T-0093**	3	PIN-CONNECTOR (12-GA TO 14-GA)	
		1	**8T-8737**	1	PLUG-SEAL	
		1	**177-9653**	1	KIT-RECEPTACLE (4-PIN)	
					(INCLUDES RECEPTACLE AS & WEDGE)	
		1	**192-2112**	3	SOCKET-TERMINAL	
	16	1	**253-9510**	1	GUARD	
	17	1	**304-8965**	1	BLOWER GP-CAB (HEATER)	
		1	**7T-0093**		PIN-CONNECTOR (12-GA TO 14-GA)	
		1	**177-9645**	1	KIT-RECEPTACLE (2-PIN)	
					(INCLUDES RECEPTACLE AS & WEDGE)	
	18	1	**2S-3745**	2	SCREW-TAPPING (10-16X0.5-IN)	
M	19	1	**6V-7357**	4	BOLT (M6X1X25-MM)	
	20	1	**8T-4205**	5	WASHER-HARD (7.2X14.5X2-MM THK)	
D	21	1	**5P-5655**		SEAL (0.5-M)	
DJ	22	1	**5P-5637**		SEAL (0.8-M)	
EJ	23	1	**8C-7524**		SEAL (35-CM)	
					AVAILABLE REPAIR KIT(S):	
J			**285-9109**	1	KIT-SEAL (HVAC)	
					(INCLUDES GASKETS & SEALS)	

D-ORDER BY THE METER
E-ORDER BY THE CENTIMETER
J-KIT MARKED J SERVICES PARTS MARKED J
M-METRIC PART

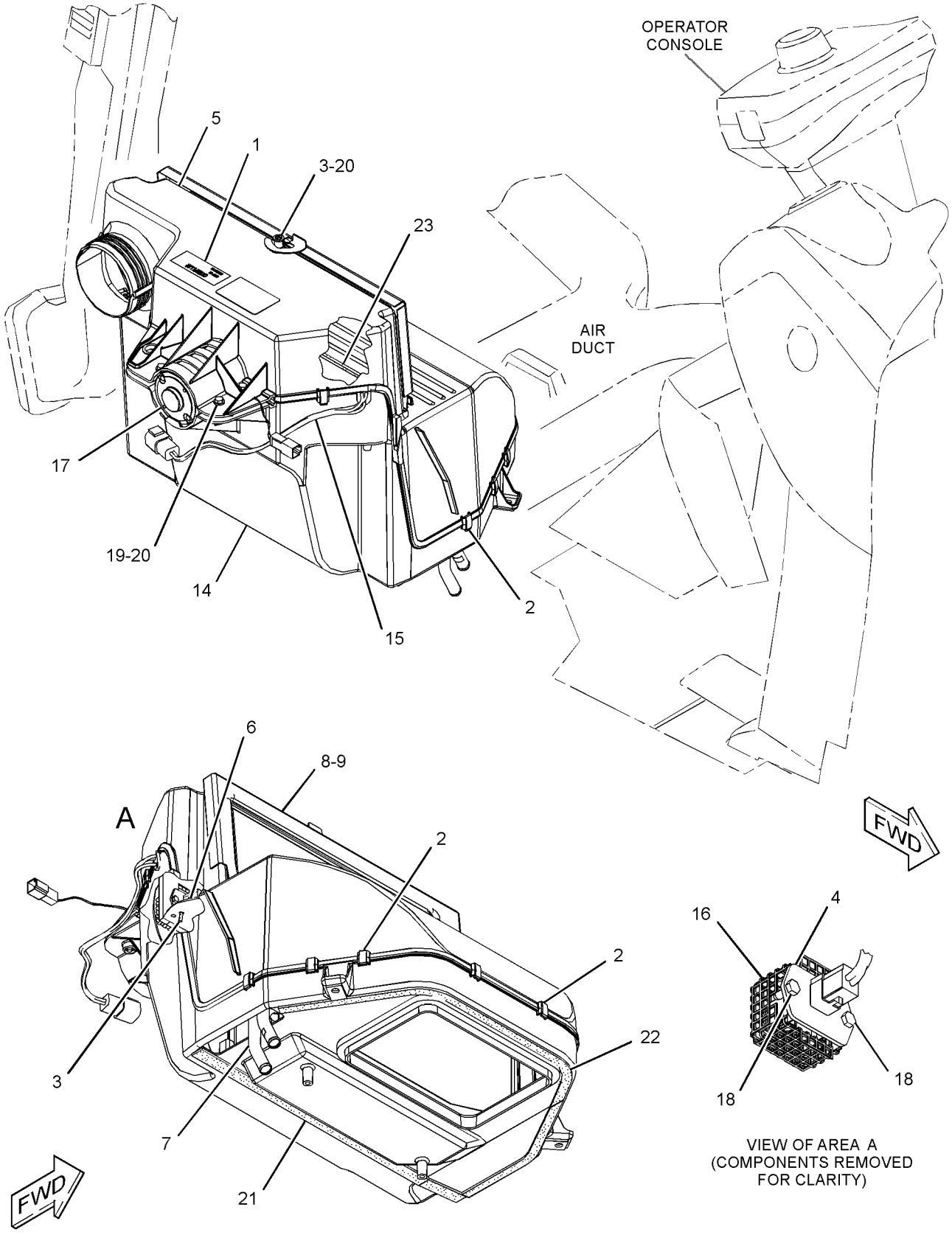

GRAPHIC #1 **<END>** g02177999

OPERATOR STATION

299-6985 LATCH GP-CAB DOOR & WINDOW

S/N: LTG1-UP

PART OF 327-7601, 327-7637 WINDOW GP-CAB, 333-9902 WINDOW GP-DOOR

AN ATTACHMENT

SMCS-7308, 7310 **i02693060**

NOTE	REF NO	GRAPHIC REF	PART NUMBER	QTY	PART NAME 1 2 3 4 5 6 (PRODUCT LEVEL)	SEE PAGE
M	1	1	**161-6984**	1	SCREW-TRUSS HEAD (M5X0.8X20-MM)	
	2	1	**161-6987**	1	WASHER-HARD (5.2X16X1.5-MM THK)	
	3	1	**161-9294**	1	SPRING-FLAT WIRE	
M	4	1	**162-6556**	1	LOCKNUT (M6X1-THD)	
M	5	1	**5C-2874**	1	NUT (M5X0.8-THD)	

M-METRIC PART

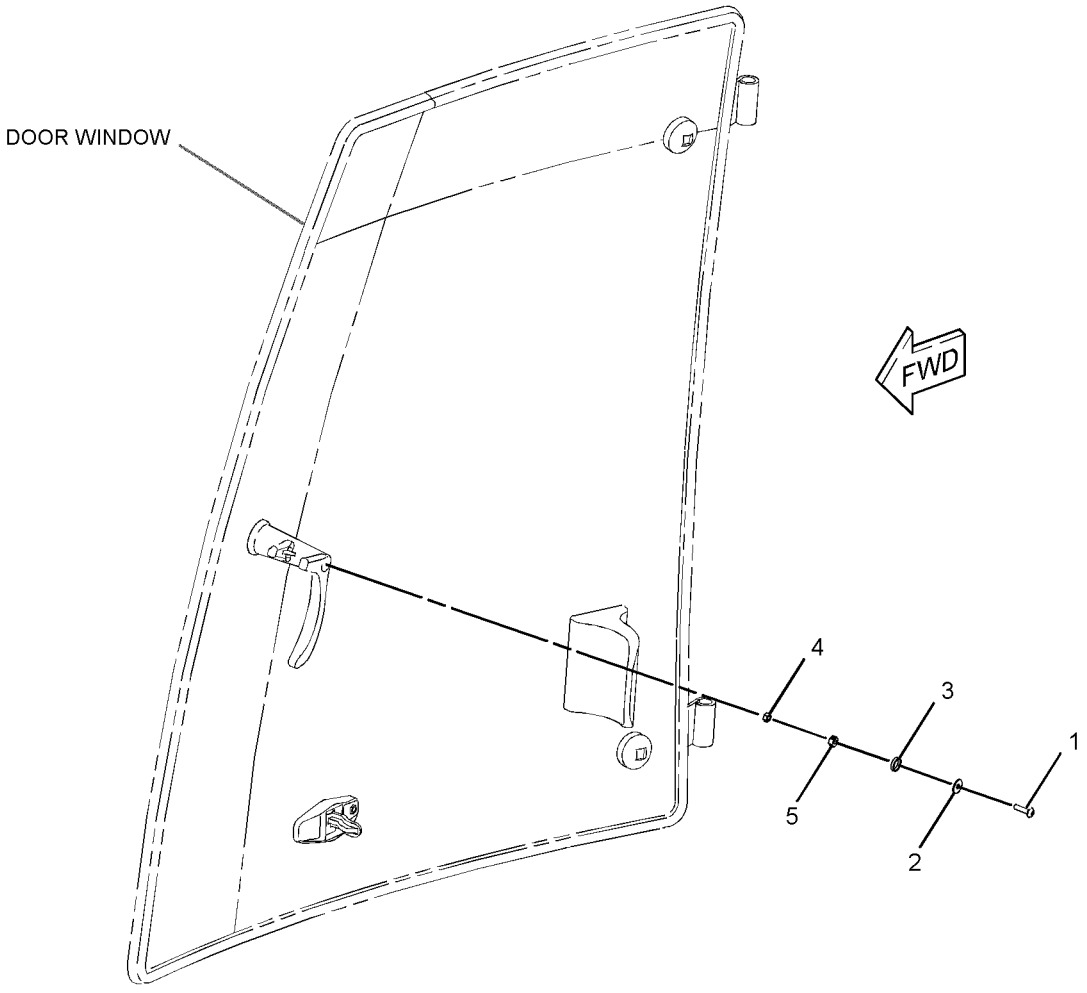

GRAPHIC #1 **<END>** g01353996

OPERATOR STATION

299-6986 LATCH GP-CAB DOOR & WINDOW

S/N: LTG1-UP

PART OF 327-7601, 327-7637 WINDOW GP-CAB, 333-9901 WINDOW GP-DOOR

AN ATTACHMENT

SMCS-7308, 7310 **i02693061**

NOTE	REF NO	GRAPHIC REF	PART NUMBER	QTY	PART NAME 1 2 3 4 5 6 (PRODUCT LEVEL)	SEE PAGE
M	1	1	**161-6984**	1	SCREW-TRUSS HEAD (M5X0.8X20-MM)	
	2	1	**161-6987**	1	WASHER-HARD (5.2X16X1.5-MM THK)	
	3	1	**161-9294**	1	SPRING-FLAT WIRE	
M	4	1	**162-6556**	1	LOCKNUT (M6X1-THD)	
M	5	1	**5C-2874**	1	NUT (M5X0.8-THD)	

M-METRIC PART

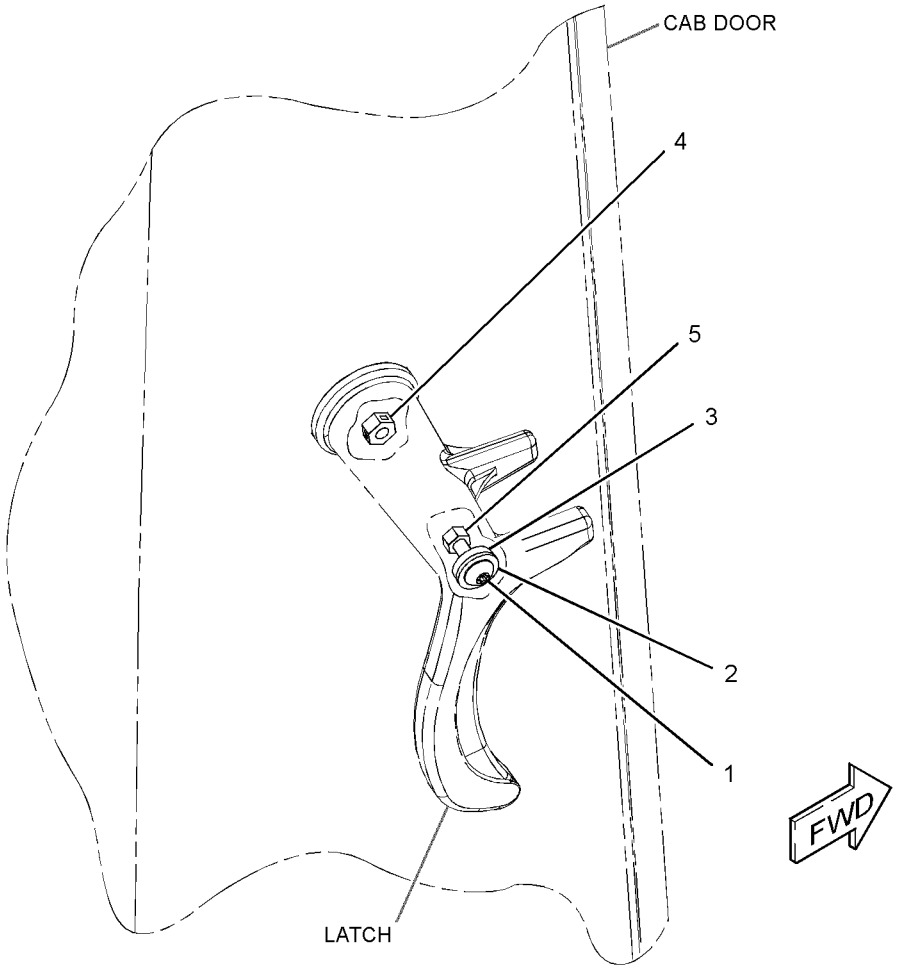

GRAPHIC #1 **<END>** g01354326

OPERATOR STATION

344-2432 LATCH GP-CONSOLE

S/N: LTG1-UP

PART OF 269-3247 MOUNTING GP-BACKHOE CONTROL

AN ATTACHMENT

SMCS-5258 **i04079173**

NOTE	REF NO	GRAPHIC REF	PART NUMBER	QTY	PART NAME 1 2 3 4 5 6 (PRODUCT LEVEL)	SEE PAGE
	1	1	**8T-4742**	2	END-YOKE ROD	
	2	1	**8T-4744**	2	PIN AS-SPRING	
	3	1	**110-5602**	1	KNOB	
	4	1	**183-6085**	2	BEARING	
	5	1	**316-3436**	1	LATCH AS	
	6	1	**316-3437**	1	LATCH AS	
	7	1	**319-9444**	2	PLATE	
	8	1	**344-2429**	2	ROD	
	9	1	**344-2430**	1	LEVER AS	
M	10	1	**099-3649**	1	BOLT (M8X1.25X40-MM)	
	11	1	**156-0283**	3	WASHER-HARD (8.4X35X2.5-MM THK)	
	12	1	**183-4912**	1	SLEEVE	
M	13	1	**5C-2890**	2	NUT (M6X1-THD)	

M-METRIC PART

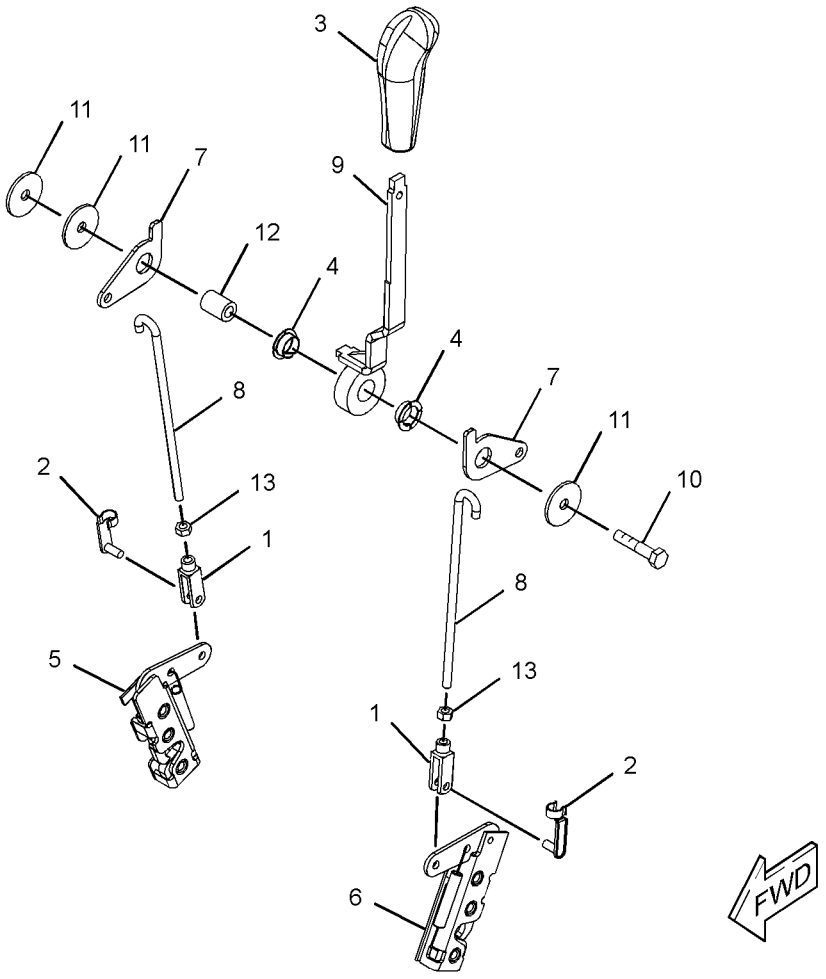

GRAPHIC #1 **<END>** g02309519

OPERATOR STATION

209-3367 LEVER GP-GOVERNOR–HANDHELD

S/N: LTG1-UP
PART OF 341-6719 CONTROL GP-GOVERNOR
AN ATTACHMENT

SMCS-1265 **i02159826**

NOTE	REF NO	GRAPHIC REF	PART NUMBER	QTY	PART NAME 1 2 3 4 5 6 (PRODUCT LEVEL)	SEE PAGE
	1	1	**209-3366**	1	CABLE AS	
	2	1	**219-0343**	1	LEVER AS	
	3	1	**8T-4742**	1	END-YOKE ROD	
	4	1	**8T-4744**	1	PIN AS-SPRING	
M	5	1	**8T-4971**	1	BOLT (M6X1X30-MM)	
M	6	1	**129-3178**	1	LOCKNUT (M6X1-THD)	

M-METRIC PART

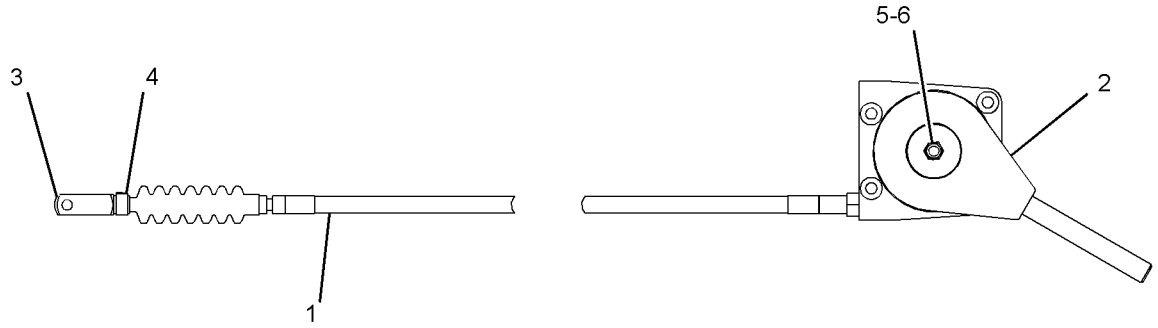

GRAPHIC #1 **<END>** g01096744

OPERATOR STATION

317-5543 LINER GP-CAB

S/N: LTG1-UP
PART OF 353-1428 CAB AR
AN ATTACHMENT

SMCS-7329 **i04552028**

NOTE	REF NO	GRAPHIC REF	PART NUMBER	QTY	PART NAME 1 2 3 4 5 6 (PRODUCT LEVEL)	SEE PAGE
	1	1	**325-9311**	3	FASTENER	
	2	1	**5G-2003**	2	SPACER (6.8X13X10-MM THK)	
	3	1	**8E-1118**	1	ANTENNA AS	
	4	1	**8R-6111**	1	CABLE AS-COAXIAL	
	5	1	**9U-8263**	1	COVER	
	6	1	**084-4277**	1	LAMP GP-DOME (12-VOLT) (CAB)	
		1	**210-8754**	1	LAMP (12-VOLT)	
	7	1	**132-2249**	1	SPACER (7.4X12.7X24-MM THK)	
	8	1	**145-0981**	2	SPACER (8.5X12.7X18-MM)	
	9	1	**169-7291**	2	COVER-SPEAKER	
	10	1	**209-4716**	2	PLATE	
	11	1	**262-9567**	2	SPEAKER	
M	12	1	**8C-4982**	8	BOLT-SOCKET HEAD (M4X0.7X20-MM)	
	13	1	**9X-2038**	3	WASHER (7X19X2-MM THK)	
	14	1	**292-5773**	1	COVER	
	15	1	**317-5542**	1	LINER AS-CAB	
		1	**263-5781**	2	PLATE AS	
					(EACH INCLUDES)	
		1	**205-7047**	8	INSERT-THREADED (M4X0.7-THD)	
M	16	1	**113-0920**	8	BOLT-SOCKET HEAD (M4X0.7X35-MM)	
M	17	1	**121-9870**	5	SCREW-MACHINE (M6X1X40-MM)	
	18	1	**282-7835**	1	PLATE	
	19	1	**282-7832**	1	GROMMET	
	20	1	**9X-8256**	2	WASHER (6.6X12X2-MM THK)	
M	21	1	**8C-3798**	2	BOLT-LOCKING (M6X1X30-MM)	

M-METRIC PART

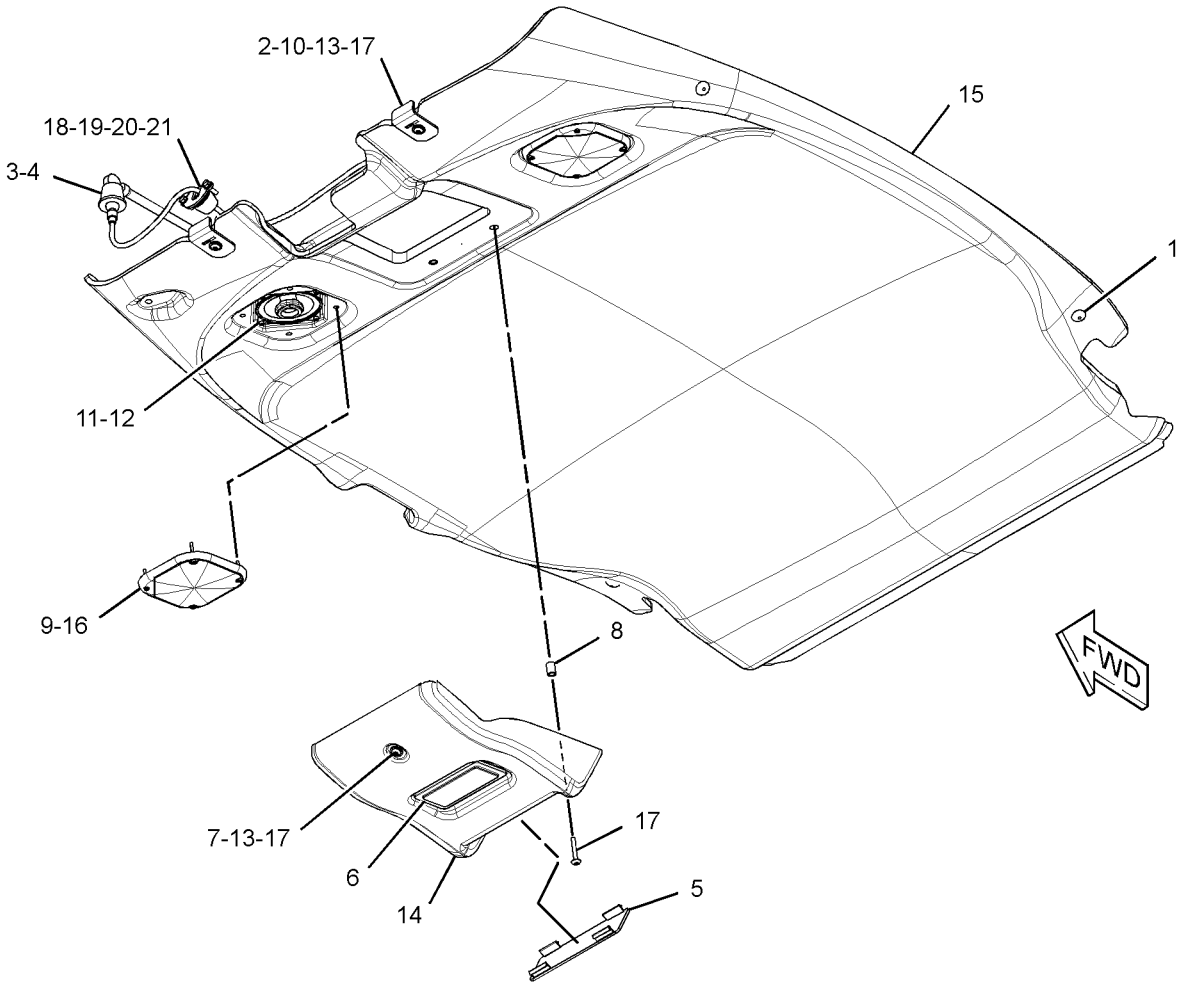

GRAPHIC #1 **<END>** g02468683

OPERATOR STATION

337-9781 LINES GP-HEATER

S/N: LTG1-UP

PART OF 353-1467 HEATER AR-CAB

AN ATTACHMENT

SMCS-1812 **i04585931**

NOTE	REF NO	GRAPHIC REF	PART NUMBER	QTY	PART NAME 1 2 3 4 5 6 (PRODUCT LEVEL)	SEE PAGE
	1	1	**5D-1026**	8	CLAMP-BAND	
	2	1	**6P-8855**	1	SPACER-SPECIAL	
	3	1	**7K-1181**	3	STRAP-CABLE	
	4	1	**8Y-5737**	1	CLAMP	
	5	1	**134-3856**	1	ELBOW	
	6	1	**194-5622**	1	VALVE AS-WATER (AIR CONDITIONER)	
		1	**6V-6717**	1	SCREW-WASHER HEAD (8-32X9.52-MM)	
		1	**124-0312**	2	SCREW-PAN HEAD (8-16X0.32-IN)	
	7	1	**323-3309**	8	CAP	
	8	1	**344-2846**	1	BRACKET	
	9	1	**361-4239**	1	CABLE AS	
	10	1	**124-0312**	2	SCREW-PAN HEAD (8-16X0.32-IN)	
	11	1	**2V-9121**	1	FITTING	
	12	1	**3E-4321**	4	CLIP	
	13	1	**8T-4121**	2	WASHER-HARD (11X21X2.5-MM THK)	
M	14	1	**8T-4138**	1	BOLT (M6X1X20-MM)	
M	15	1	**8T-4196**	2	BOLT (M10X1.5X35-MM)	
	16	1	**8T-4205**	1	WASHER-HARD (7.2X14.5X2-MM THK)	
E	17	1	**5P-0767**		HOSE (241.5-CM)	
E	17A	1	**5P-0767**		HOSE (228-CM)	
E	17B	1	**5P-0767**		HOSE (32-CM)	
E	17C	1	**5P-0767**		HOSE (30.5-CM)	

E-ORDER BY THE CENTIMETER
M-METRIC PART

337-9781 **LINES GP-HEATER** *(contd.)* **i04585931**

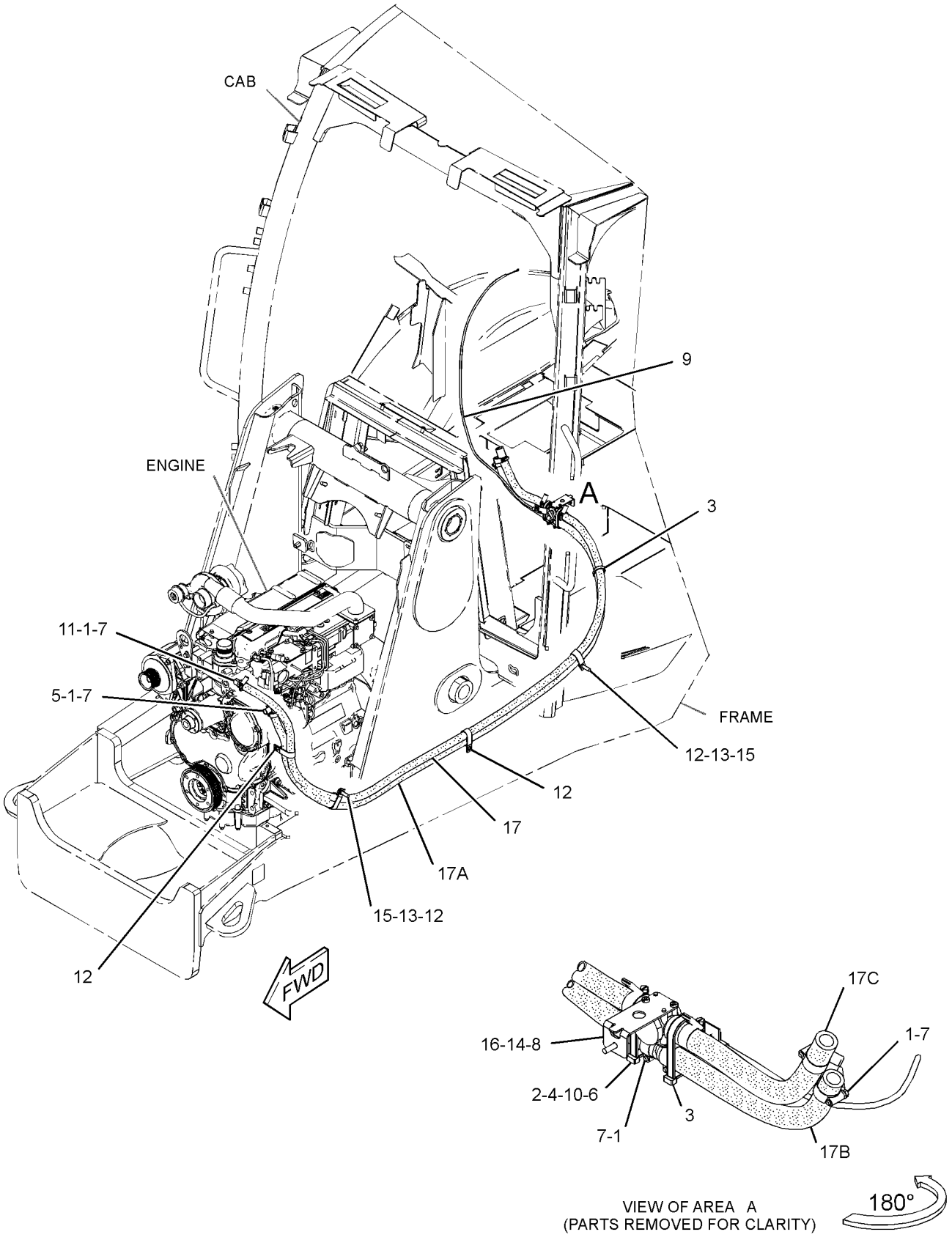

GRAPHIC #1 **<END>** g02816902

OPERATOR STATION

337-9783 LINES GP-HEATER & AIR COND

S/N: LTG1-UP

PART OF 353-1468 HEATER & AIR CONDITIONER AR

AN ATTACHMENT

SMCS-1380, 1808, 1812 **i04586149**

NOTE	REF NO	GRAPHIC REF	PART NUMBER	QTY	PART NAME 1 2 3 4 5 6 (PRODUCT LEVEL)	SEE PAGE
	1	1	**3S-2093**	1	STRAP-CABLE	
	2	1	**5D-1026**	8	CLAMP-BAND	
	3	1	**6P-8855**	1	SPACER-SPECIAL	
	4	1	**7K-1181**	9	STRAP-CABLE	
	5	1	**8Y-5737**	1	CLAMP	
	6	1	**130-9984**	3	CLIP	
	7	1	**9X-3959**	1	ELBOW	
	8	1	**151-4841**	2	BLOCK	
	9	1	**177-2215**	1	STRAP-DUAL CLAMP	
	10	1	**194-5622**	1	VALVE AS-WATER (AIR CONDITIONER)	
		1	**6V-6717**	1	SCREW-WASHER HEAD (8-32X9.52-MM)	
		1	**124-0312**	2	SCREW-PAN HEAD (8-16X0.32-IN)	
	11	1	**205-9920**	1	STRAP-CABLE	
	12	1	**255-0800**	1	PLATE	
	13	1	**274-5909**	1	ACCUMULATOR-REFRIGERANT	
	14	1	**283-4236**	1	DRYER AS-AIR	
		1	**3E-0068**	1	TUBE AS-REFRIGERANT ORIFICE	
	15	1	**315-7790**	1	PLATE	
	16	1	**317-4270**	1	BRACKET AS	
	17	1	**323-3309**	8	CAP	
	18	1	**344-2846**	1	BRACKET	
	19	1	**361-4239**	1	CABLE AS	
	20	1	**361-8151**	1	HOSE AS	
	21	1	**361-8157**	1	HOSE AS	
	22	1	**361-8158**	1	HOSE AS	
	23	1	**362-8670**	1	HOSE AS	
	24	1	**363-7486**	1	HOSE AS	
	25	1	**377-5823**	1	BRACKET AS	
	26	1	**109-1633**	1	CLIP (SLOT)	
	27	1	**109-1634**	1	CLIP (TAB)	
	28	1	**124-0312**	2	SCREW-PAN HEAD (8-16X0.32-IN)	
	29	1	**2P-4556**	2	CLIP	
	30	1	**2V-9121**	1	FITTING	
	31	1	**3E-4321**	4	CLIP	
	32	1	**4D-7388**	1	CLIP	
M	33	1	**5C-7261**	1	NUT (M8X1.25-THD)	
	34	1	**5K-5338**	1	CLIP	
	35	1	**5P-4116**	2	WASHER-HARD (8.8X20.5X2-MM THK)	
	36	1	**8T-4121**	8	WASHER-HARD (11X21X2.5-MM THK)	
M	37	1	**8T-4136**	3	BOLT (M10X1.5X25-MM)	
M	38	1	**8T-4138**	1	BOLT (M6X1X20-MM)	
M	39	1	**8T-4139**	1	BOLT (M12X1.75X30-MM)	
M	40	1	**8T-4189**	2	BOLT (M8X1.25X20-MM)	
M	41	1	**8T-4196**	5	BOLT (M10X1.5X35-MM)	
	42	1	**8T-4205**	1	WASHER-HARD (7.2X14.5X2-MM THK)	
	43	1	**8T-4223**	1	WASHER-HARD (13.5X25.5X3-MM THK)	
	44	1	**8T-4224**	1	WASHER-HARD (8.8X16X2-MM THK)	
	45	1	**9X-7380**	2	SEAL-O-RING	
	46	1	**9X-7381**	3	SEAL-O-RING	
	47	1	**9X-7382**	1	SEAL-O-RING	
	48	1	**9X-7383**	2	SEAL-O-RING	
E	49	1	**5P-0767**		HOSE (30.5-CM)	
E	49A	1	**5P-0767**		HOSE (32-CM)	
E	49B	1	**5P-0767**		HOSE (228-CM)	
E	49C	1	**5P-0767**		HOSE (241.5-CM)	

337-9783 LINES GP-HEATER & AIR COND *(contd.)* i04586149

NOTE	REF NO	GRAPHIC REF	PART NUMBER	QTY	PART NAME 1 2 3 4 5 6 (PRODUCT LEVEL)	SEE PAGE
D	50	1	**160-2246**		SLEEVE-ABRASION (47.6-IN)	

D-ORDER BY THE METER
E-ORDER BY THE CENTIMETER
M-METRIC PART

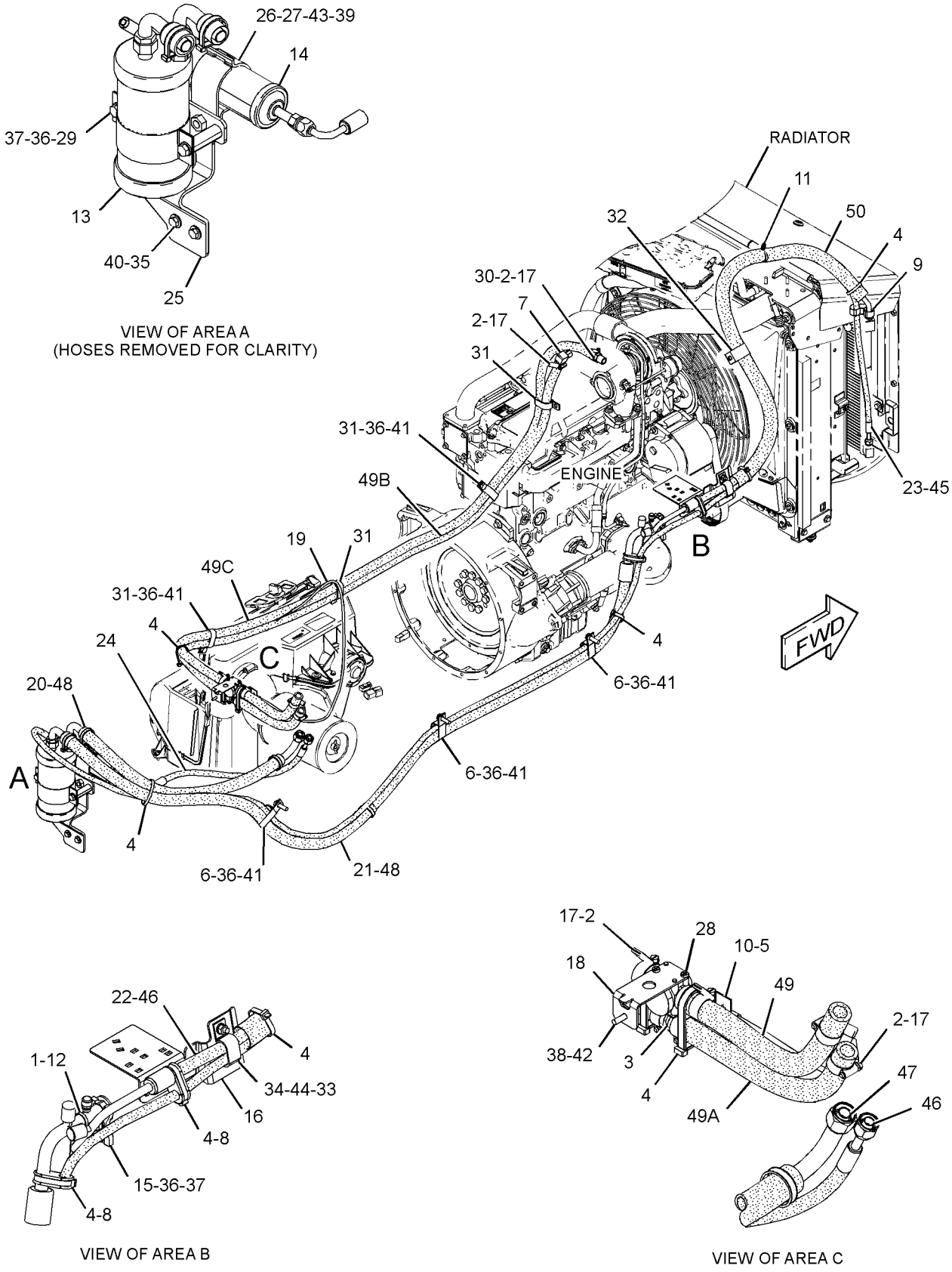

GRAPHIC #1 **<END>** g02789511

OPERATOR STATION

259-6276 MIRROR GP-REAR VIEW—INTERIOR

S/N: LTG1-UP

PART OF 353-1428 CAB AR, 353-1427 CANOPY AR, 353-1426 CANOPY AR-OPEN ROPS

AN ATTACHMENT

SMCS-7319 **i04403125**

NOTE	REF NO	GRAPHIC REF	PART NUMBER	QTY	PART NAME 1 2 3 4 5 6 (PRODUCT LEVEL)	SEE PAGE
M	1	1	**197-7499**	2	BOLT (M4X0.7X25-MM)	
	2	1	**199-0929**	1	MIRROR AS	
	3	1	**096-6166**	2	WASHER-HARD (4.5X9X1-MM THK)	

M-METRIC PART

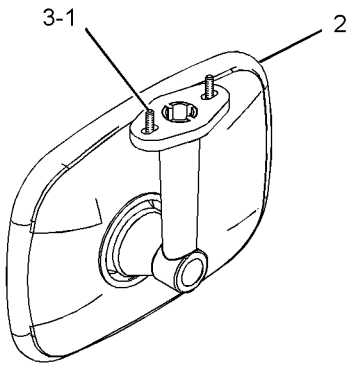

VIEW OF AREA A

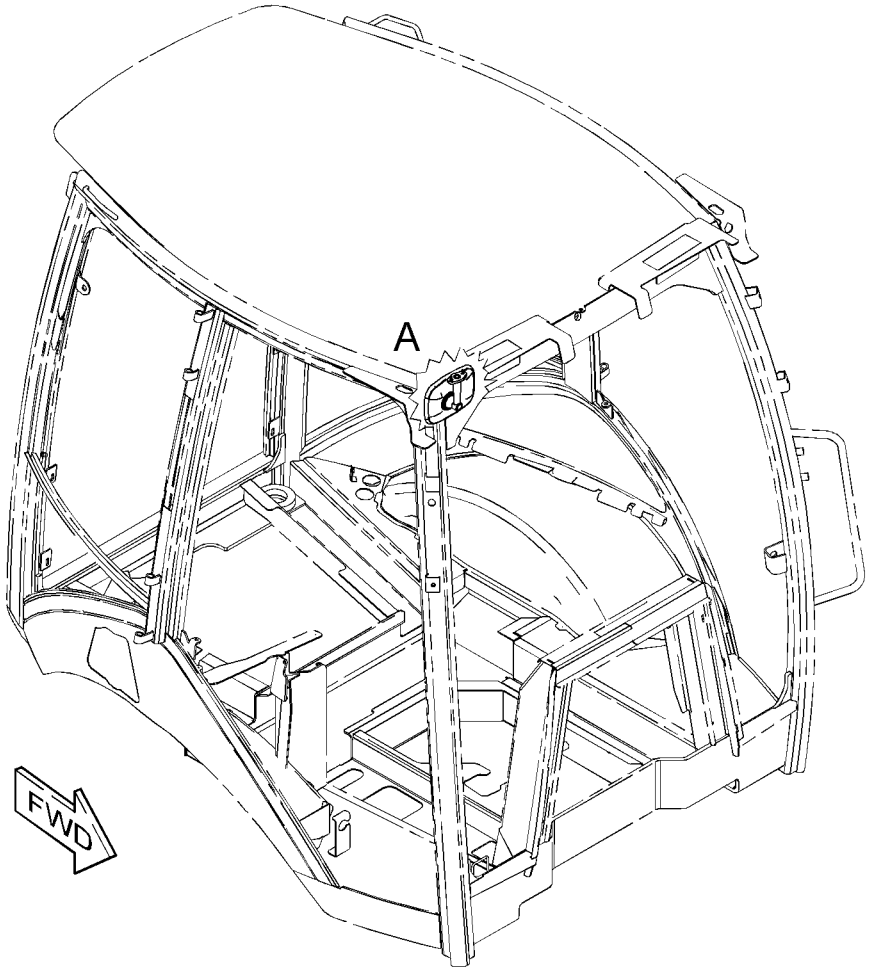

GRAPHIC #1 **<END>** g01214241

OPERATOR STATION

313-3752 MOTOR GP-WINDOW WIPER

S/N: LTG1-UP
12-VOLT
PART OF 353-1365, 353-1367 WIPER GP-WINDOW
AN ATTACHMENT

SMCS-7305 **i03500282**

NOTE	REF NO	GRAPHIC REF	PART NUMBER	QTY	PART NAME 1 2 3 4 5 6 (PRODUCT LEVEL)	SEE PAGE
	1	1	**102-8806**	1	KIT-RECEPTACLE (8-PIN)	
					(INCLUDES RECEPTACLE AS & WEDGE)	
	2	1	**8T-8737**	1	PLUG-SEAL	
	3	1	**186-3735**	7	PIN-CONNECTOR (16-GA TO 18-GA)	
	4	1	**206-5823**	1	CAP (MOTOR)	
	5	1	**3F-9556**	1	LOCKWASHER	
M	6	1	**5C-7261**	1	NUT (M8X1.25-THD)	

M-METRIC PART

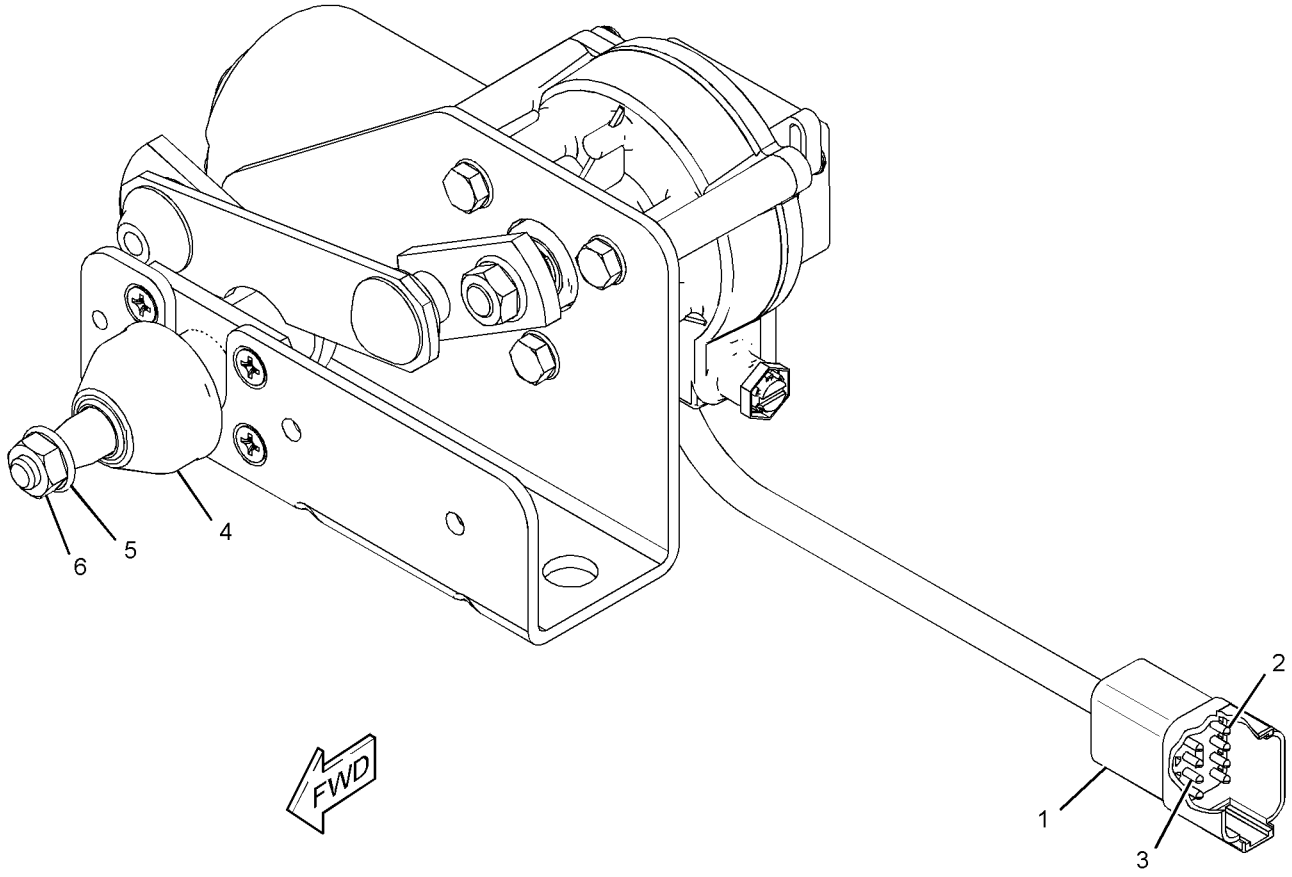

GRAPHIC #1 **<END>** g01570360

OPERATOR STATION

330-5010 MOTOR GP-WINDOW WIPER

S/N: LTG1-UP
PART OF 353-1365 WIPER GP-WINDOW
AN ATTACHMENT

SMCS-7305 **i03889151**

NOTE	REF NO	GRAPHIC REF	PART NUMBER	QTY	PART NAME 1 2 3 4 5 6 (PRODUCT LEVEL)	SEE PAGE
	1	1	**102-8804**	1	KIT-RECEPTACLE (4-PIN)	
					(INCLUDES RECEPTACLE AS & WEDGE)	
	2	1	**263-3823**	1	CAP-WIPER	
	3	1	**3F-9556**	1	LOCKWASHER	
M	4	1	**5C-7261**	1	NUT (M8X1.25-THD)	
	5	1	**186-3735**	4	PIN-CONNECTOR (16-GA TO 18-GA)	

M-METRIC PART

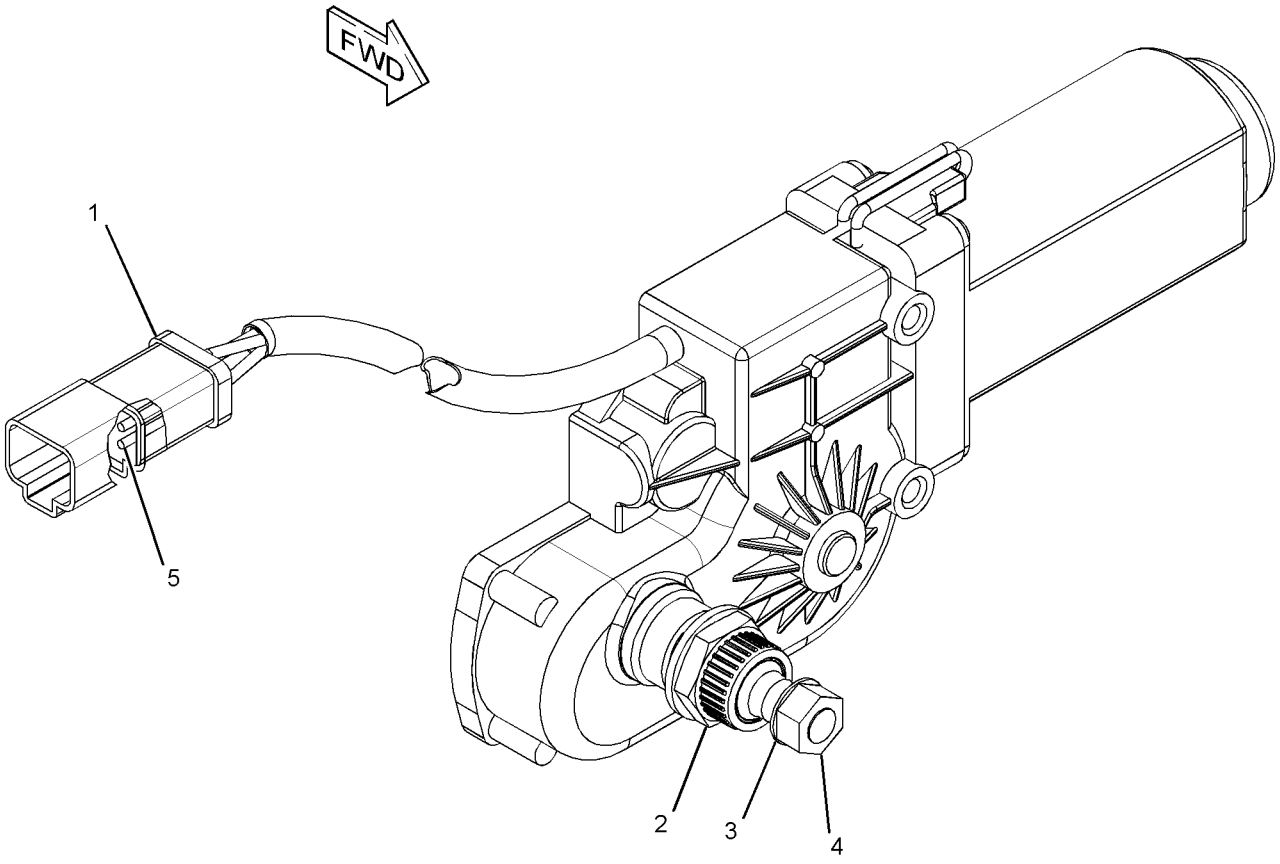

GRAPHIC #1 **<END>** g02133753

OPERATOR STATION

269-3247 MOUNTING GP-BACKHOE CONTROL—PILOT

S/N: LTG1-UP

PART OF 373-4246, 373-4248 VALVE AR-BANK 2, 373-4256 VALVE AR-BANK 3

AN ATTACHMENT

SMCS-5063, 5258, 5705 **i04251334**

NOTE	REF NO	GRAPHIC REF	PART NUMBER	QTY	PART NAME 1 2 3 4 5 6 (PRODUCT LEVEL)	SEE PAGE
	1	1,2	**7K-1181**	2	STRAP-CABLE	
	2	1,2	**164-1368**	15	FASTENER-PANEL	
	3	1,2	**183-4934**	2	BEARING-SELF-ALIGNING	
B	4	1,2	**195-7602**	3	SHIM (1.6-MM THK)	
E	5	1	**261-9634**		SEAL-BULK (8.5-CM EACH)	
	6	2	**261-9642**	1	COVER-CONSOLE (LH)	
	7	2	**267-5225**	1	BOOT	
CY	8	1	*344-2432*	1	LATCH GP-CONSOLE	501
	9	2	**269-3254**	1	SUPPORT AS (LH)	
B	10	2	**269-3262**	4	SHIM (1-MM THK)	
	11	1,2	**270-2794**	2	INSULATION	
	12	2	**270-5161**	1	GASKET	
	13	2	**272-7079**	1	PLATE	
	14	1	**273-1473**	1	GROMMET	
	15	1	**273-1475**	1	COVER-CONSOLE (RH)	
	16	1	**273-1476**	1	BOOT	
	17	1	**273-1477**	1	PLATE	
	18	1	**273-1478**	1	BUMPER AS	
	19	1	**283-3467**	1	PLATE AS	
M		1	**6V-9632**	7	NUT-WELD (M6X1-THD)	
M		1	**8T-3490**	3	NUT-WELD (M10X1.5-THD)	
M		1	**8T-3612**	1	NUT-WELD (M8X1.25-THD)	
	20	2	**283-3477**	1	TUBE AS	
	21	1	**283-7981**	1	PLATE AS	
	22	1	**283-8053**	2	STRIKER	
	23	1	**039-8557**	2	WASHER (13X26X6-MM THK)	
M	24	1,2	**3T-0849**	8	BOLT-SOCKET HEAD (M6X1X25-MM)	
M	25	1	**7X-2533**	6	BOLT (M6X1X35-MM)	
	26	1,2	**8T-4121**	9	WASHER-HARD (11X21X2.5-MM THK)	
M	27	1	**8T-4134**	6	NUT (M6X1-THD)	
M	28	1,2	**8T-4138**	2	BOLT (M6X1X20-MM)	
M	29	2	**8T-4186**	5	BOLT (M10X1.5X40-MM)	
M	30	1	**8T-4189**	2	BOLT (M8X1.25X20-MM)	
M	31	1	**8T-4195**	4	BOLT (M10X1.5X30-MM)	
	32	1,2	**8T-4224**	4	WASHER-HARD (8.8X16X2-MM THK)	
M	33	1,2	**8T-4244**	2	NUT (M12X1.75-THD)	
M	34	1	**8T-4956**	2	BOLT (M12X1.75X35-MM)	
M	35	1	**8T-4971**	2	BOLT (M6X1X30-MM)	
M	36	2	**8T-7547**	2	BOLT (M8X1.25X30-MM)	
	37	1,2	**9X-2038**	14	WASHER (7X19X2-MM THK)	
M	38	1,2	**9X-2045**	6	SCREW-TRUSS HEAD (M6X1X20-MM)	
	39	1,2	**9X-8256**	26	WASHER (6.6X12X2-MM THK)	
M	40	1	**9X-2043**	2	SCREW-TRUSS HEAD (M6X1X14-MM)	

B-USE AS REQUIRED
C-CHANGE FROM PREVIOUS TYPE
E-ORDER BY THE CENTIMETER
M-METRIC PART
Y-SEPARATE ILLUSTRATION

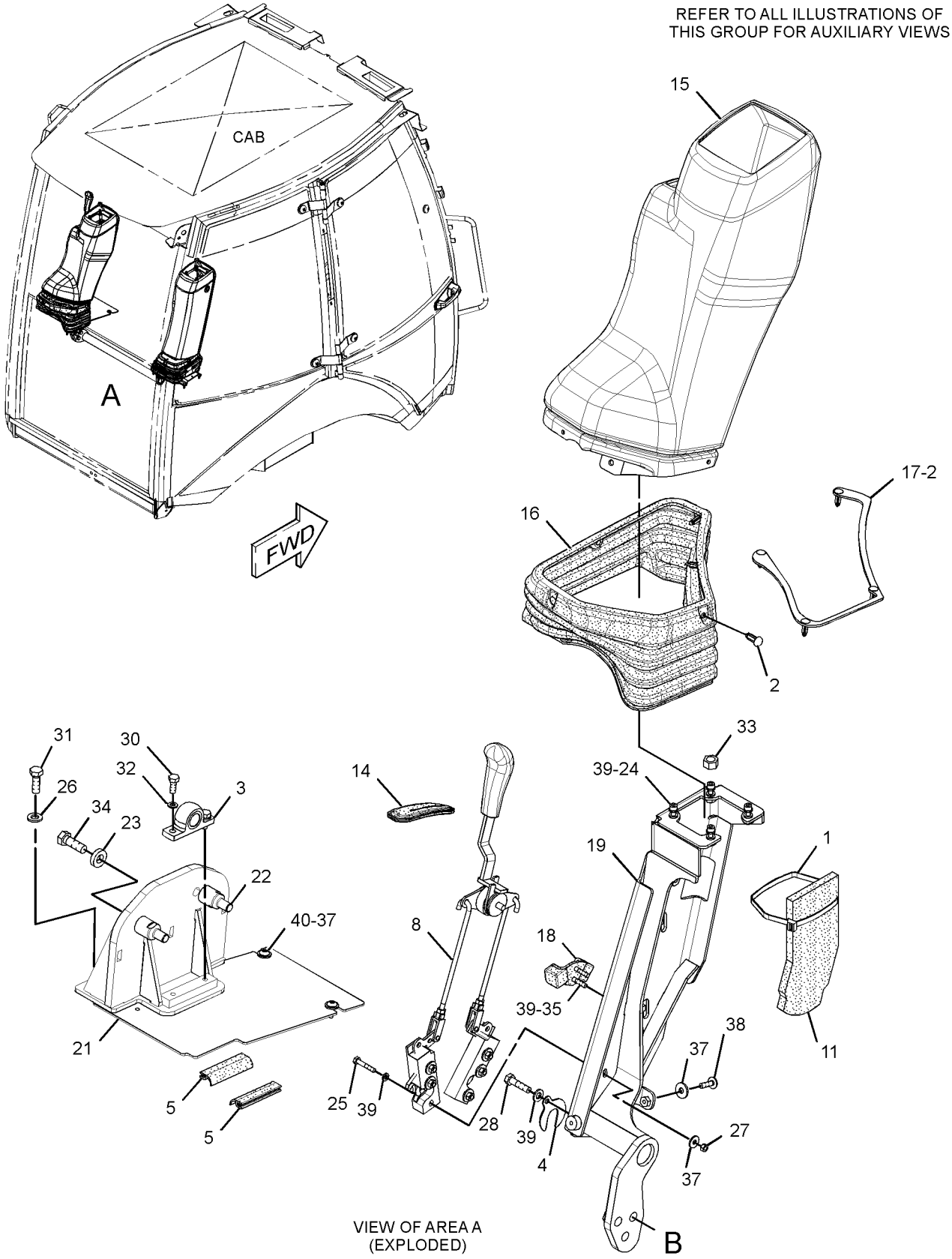

GRAPHIC #1

g02468598

REFER TO ALL ILLUSTRATIONS OF
THIS GROUP FOR AUXILIARY VIEWS

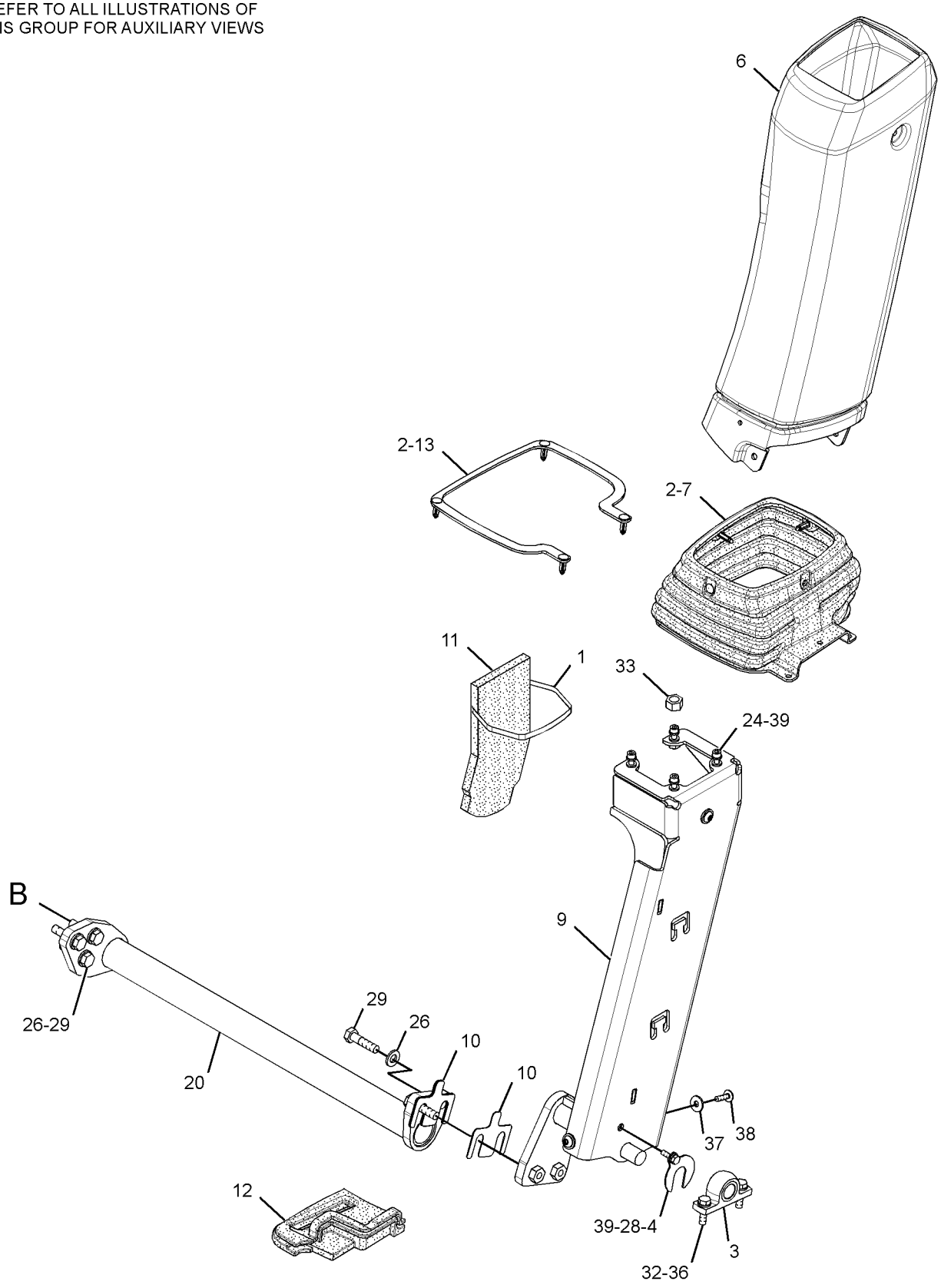

GRAPHIC #2 **<END>** g02475266

OPERATOR STATION

205-9560 MOUNTING GP-CAB

S/N: LTG1-UP

PART OF 353-1428 CAB AR, 353-1427 CANOPY AR, 353-1426 CANOPY AR-OPEN ROPS AN ATTACHMENT

SMCS-7301 **i04439892**

NOTE	REF NO	GRAPHIC REF	PART NUMBER	QTY	PART NAME 1 2 3 4 5 6 (PRODUCT LEVEL)	SEE PAGE
	1	1	**6Y-9930**	2	MOUNT AS	
	2	1	**118-2990**	2	MOUNT AS	
	3	1	**9W-6582**	2	SLEEVE	
M	4	1	**7X-2568**	2	BOLT (M20X2.5X180-MM)	
	5	1	**297-5849**	2	WASHER-HARD (17X75X10-MM THK)	
	6	1	**8T-4123**	4	WASHER (22X35X3.5-MM THK)	
M	7	1	**8T-4131**	2	NUT (M20X2.5-THD)	
M	8	1	**8T-4132**	2	NUT (M16X2-THD)	
	9	1	**335-1836**	2	BOLT-SPECIAL	
	10	1	**9W-6584**	2	WASHER (20.5X114X10-MM THK)	
	11	1	**9X-8257**	4	WASHER (17.5X30X3.5-MM THK)	
	12	1	**1L-6377**	2	BUTTON-PLUG	

M-METRIC PART

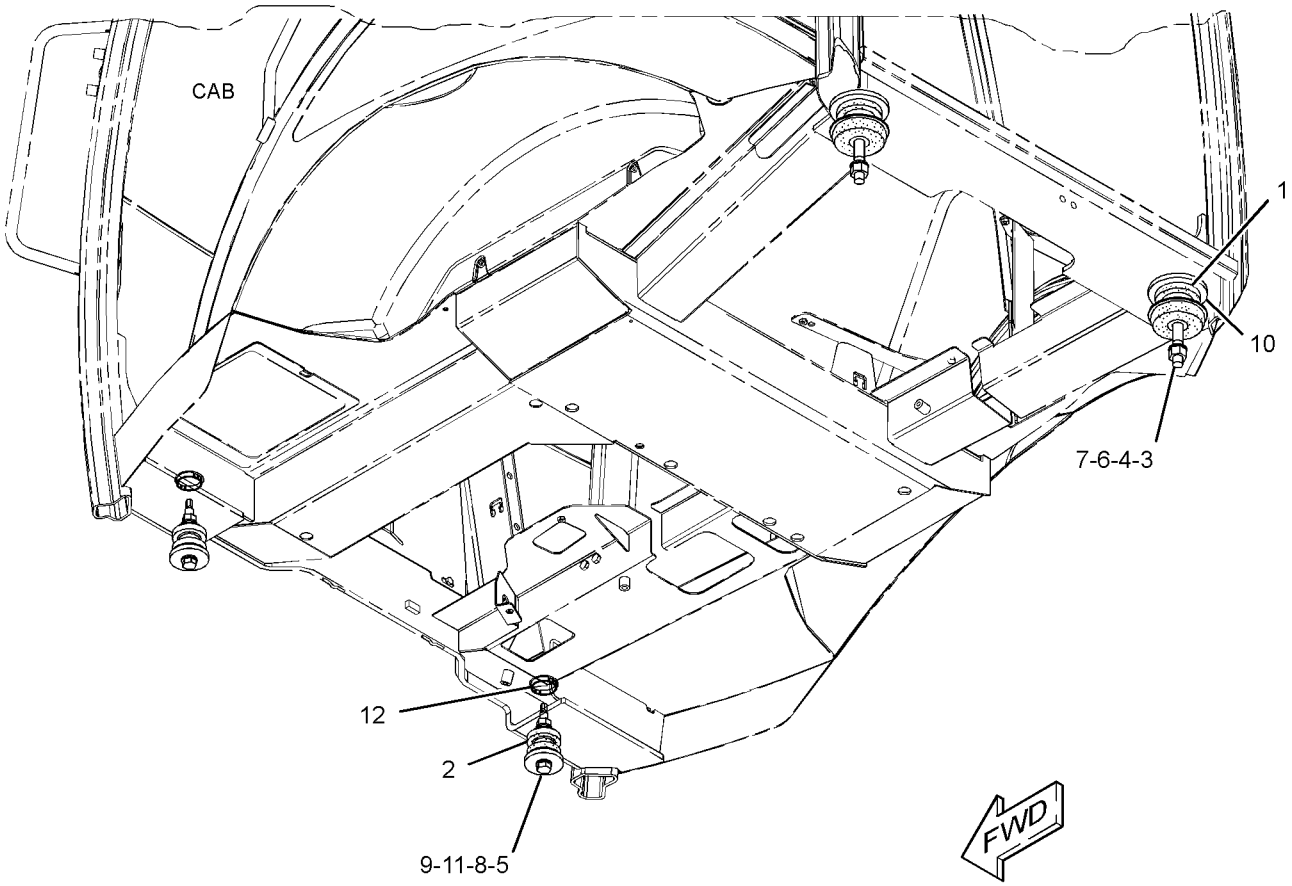

GRAPHIC #1 **<END>** g02713293

OPERATOR STATION

209-3378 PEDAL GP-GOVERNOR

S/N: LTG1-UP
PART OF 341-6719 CONTROL GP-GOVERNOR
AN ATTACHMENT

SMCS-1265 **i03592816**

NOTE	REF NO	GRAPHIC REF	PART NUMBER	QTY	PART NAME 1 2 3 4 5 6 (PRODUCT LEVEL)	SEE PAGE
M	1	1	**129-3178**	1	LOCKNUT (M6X1-THD)	
M	2	1	**5C-7261**	1	NUT (M8X1.25-THD)	
M	3	1	**5C-9553**	1	BOLT (M6X1X16-MM)	
	4	1	**8T-4205**	1	WASHER-HARD (7.2X14.5X2-MM THK)	
M	5	1	**095-0641**	4	BOLT-SOCKET HEAD (M4X0.7X10-MM)	
	6	1	**243-0063**	1	BOOT	
	7	1	**3F-9556**	2	LOCKWASHER	
	8	1	**6V-8186**	2	NUT-FULL (5/16-24-THD)	
	9	1	**8T-6902**	3	CLIP	
M	10	1	**9X-2842**	1	BOLT (M8X1.25X45-MM)	
					AVAILABLE REPAIR KIT(S):	
			164-1154	1	KIT-SERVICE	
					(INCLUDES CLAMP & SCREWS)	
			243-0062	1	KIT-REPAIR (GOVERNOR PEDAL)	
					(INCLUDES SHAFT, CLIPS & BEARINGS)	

M-METRIC PART

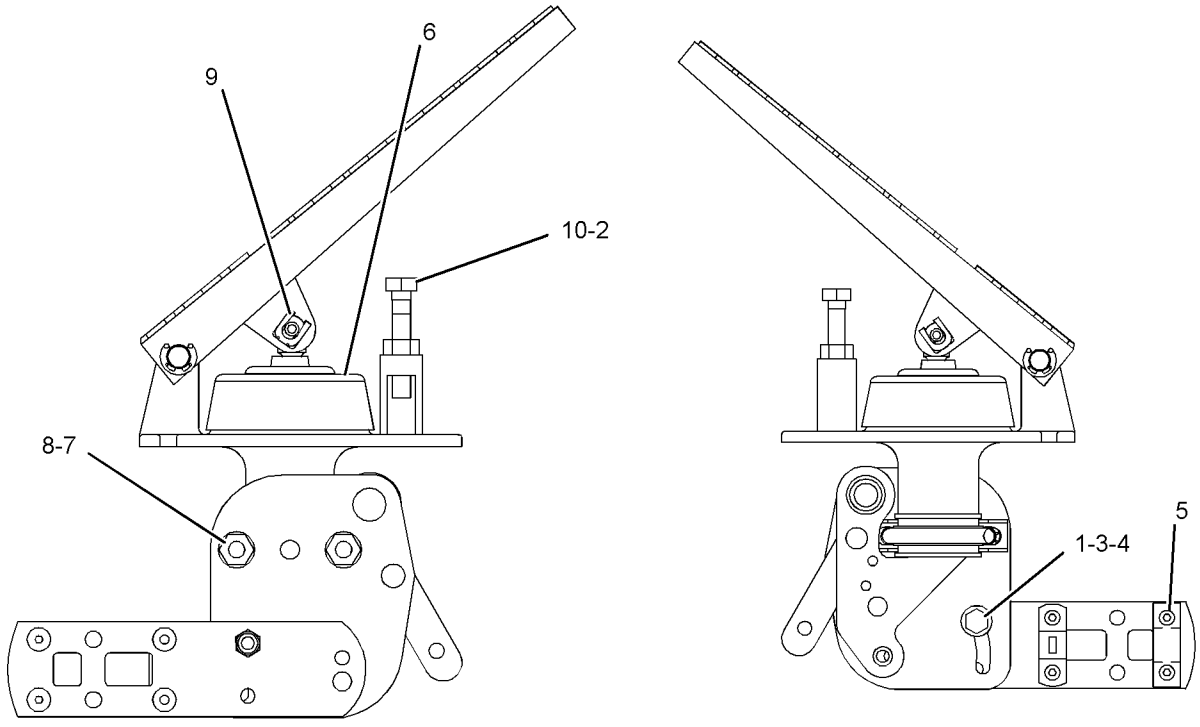

RIGHT SIDE VIEW **LEFT SIDE VIEW**

GRAPHIC #1 **<END>** g01081364

OPERATOR STATION

205-9569 ROOF GP-CAB

S/N: LTG1-UP
NACD
PART OF 353-1428 CAB AR, 353-1427 CANOPY AR, 353-1426 CANOPY AR-OPEN ROPS
AN ATTACHMENT

SMCS-7301 **i03852118**

NOTE	REF NO	GRAPHIC REF	PART NUMBER	QTY	PART NAME 1 2 3 4 5 6 (PRODUCT LEVEL)	SEE PAGE
	1	1	**205-9570**	1	COVER-ROOF (CENTER)	
	2	1	**205-9571**	1	COVER-ROOF (REAR)	
	3	1	**205-9576**	1	COVER-ROOF (LH)	
	4	1	**205-9577**	1	COVER-ROOF (RH)	
	5	1	**9X-6165**	16	WASHER (6.5X22X2.5-MM THK)	
M	6	1	**8T-4138**	16	BOLT (M6X1X20-MM)	
	7	1	**9X-2038**	7	WASHER (7X19X2-MM THK)	
M	8	1	**9X-2045**	9	SCREW-TRUSS HEAD (M6X1X20-MM)	

M-METRIC PART

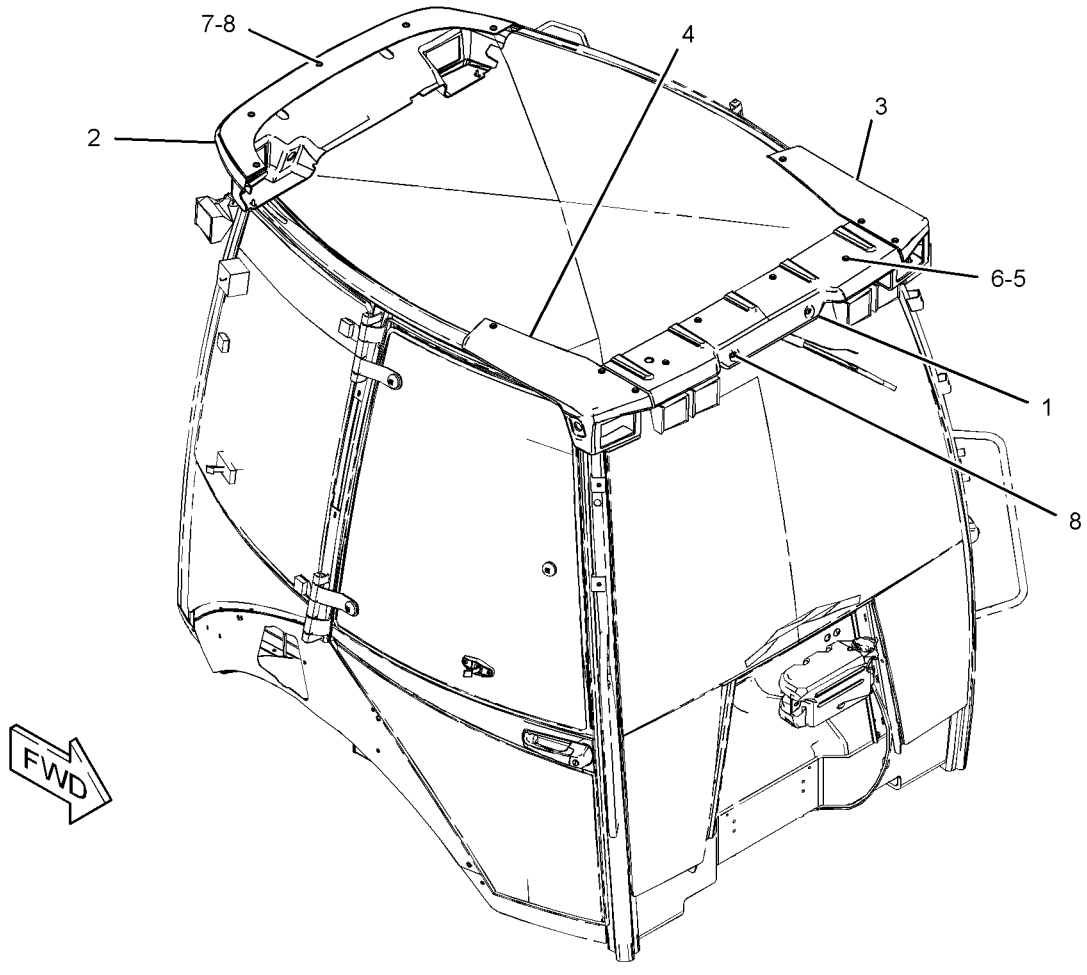

GRAPHIC #1 **<END>** g01233481

OPERATOR STATION

206-1747 SEAT BELT GP—RETRACTABLE, 2-IN

S/N: LTG1-UP

AN ATTACHMENT

SMCS-7327 **i02150894**

NOTE	REF NO	GRAPHIC REF	PART NUMBER	QTY	PART NAME 1 2 3 4 5 6 (PRODUCT LEVEL)	SEE PAGE
	1	1	**206-1749**	1	SEAT BELT (2-IN)	
	2	1	**8T-4223**	4	WASHER-HARD (13.5X25.5X3-MM THK)	
M	3	1	**8T-4956**	2	BOLT (M12X1.75X35-MM)	

M-METRIC PART

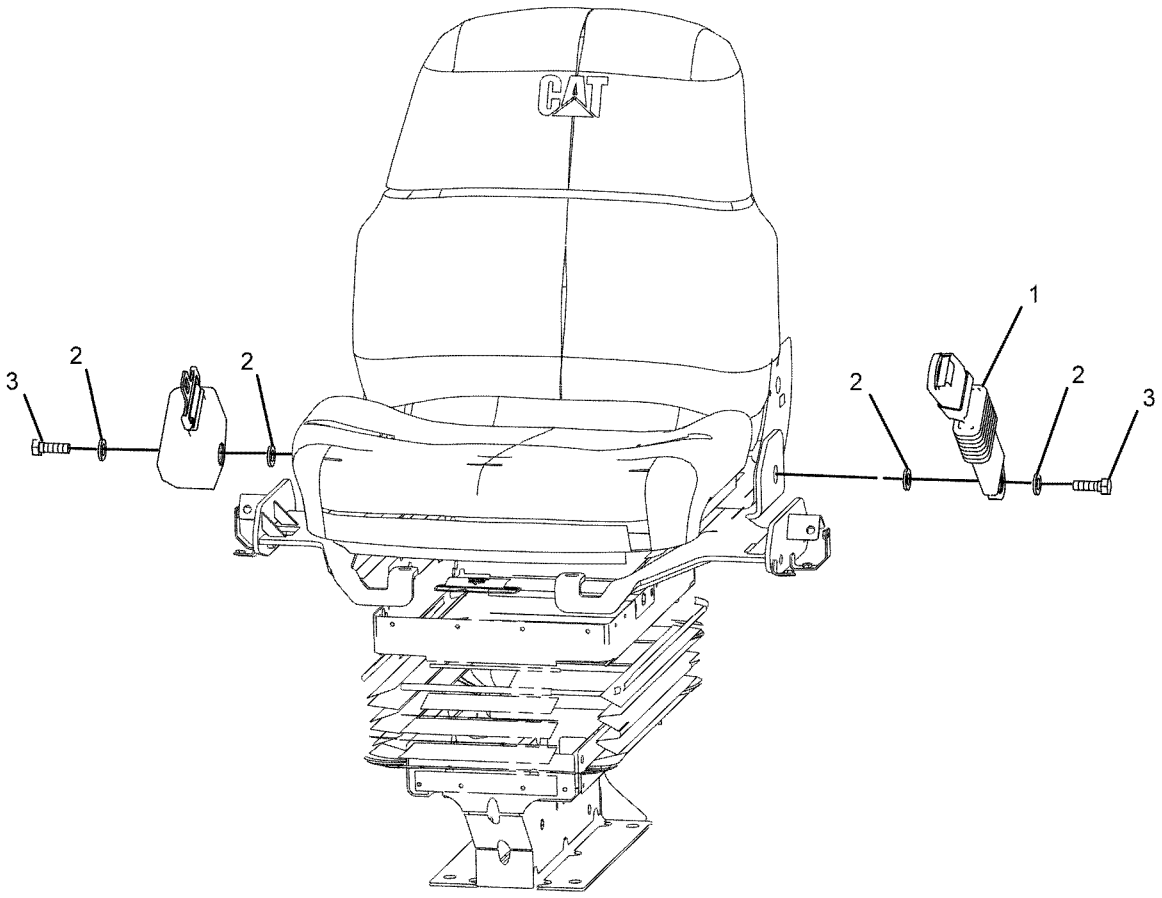

FRONT VIEW
(TOP LEFT)

GRAPHIC #1 **<END>** g01078751

OPERATOR STATION

206-1748 SEAT BELT GP–RETRACTABLE, 3-IN

S/N: LTG1-UP
FOR USE WITH IN CALIFORNIA, WASHINGTON, AND OREGON
AN ATTACHMENT

SMCS-7327 **i02209491**

NOTE	REF NO	GRAPHIC REF	PART NUMBER	QTY	PART NAME 1 2 3 4 5 6 (PRODUCT LEVEL)	SEE PAGE
	1	1	**206-1750**	1	SEAT BELT (3-IN)	
	2	1	**8T-4223**	4	WASHER-HARD (13.5X25.5X3-MM THK)	
M	3	1	**8T-4956**	2	BOLT (M12X1.75X35-MM)	

M-METRIC PART

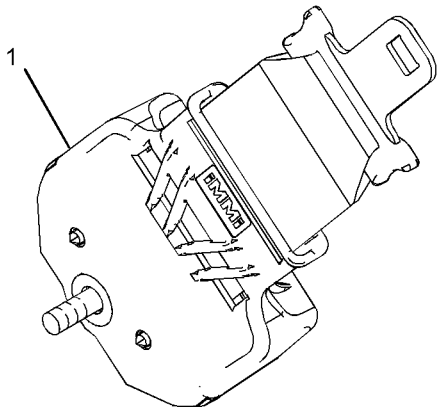

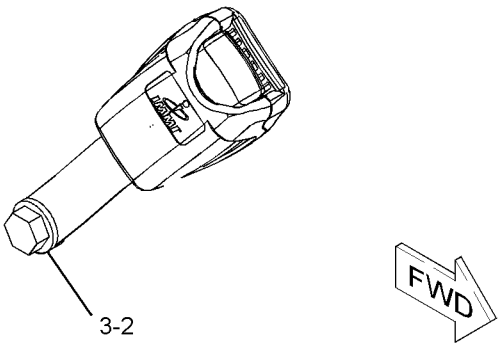

GRAPHIC #1 **<END>** g01117311

OPERATOR STATION

273-5905 SEAT GP–VINYL

S/N: LTG1-UP

PART OF 206-1791 SEAT GP-SUSPENSION

AN ATTACHMENT

SMCS-7312, 7321, 7324, 7336 **i03889150**

NOTE	PART NUMBER	QTY	PART NAME 1 2 3 4 5 6 (PRODUCT LEVEL)	SEE PAGE
	164-1258	1	BRACKET AS (RH)	
	164-1259	1	BRACKET AS (LH)	
	164-1266	1	CUSHION AS-BACK	
	260-0058	1	CUSHION AS-SEAT	
	164-1249	1	LEVER AS (RECLINER CONTROL)	
	164-1263	1	PAN AS	
	180-5797	1	PAN AS	
M	**8T-4189**	2	BOLT (M8X1.25X20-MM)	
	8T-8917	2	BOLT (1/2-13X1.25-IN)	
	164-1265	1	BOLT (3/8-16X1.1-IN)	
	260-0045	1	BOLT-SPECIAL	
M	**105-3481**	2	BOLT-SOCKET HEAD (M8X1.25X20-MM)	
	260-0027	1	KNOB-SLIDE	
	260-0028	1	LEVER-TILT (BOTTOM)	
M	**3T-0852**	8	LOCKNUT (M8X1.25-THD)	
M	**9X-6620**	1	LOCKNUT (M10X1.5-THD)	
M	**129-3180**	2	LOCKNUT (M12X1.75-THD)	
	260-0029	1	PAN	
	260-0040	1	PAN	
	180-5781	1	ROD	
	8T-9501	2	SCREW (10-16X0.75-IN)	
M	**8T-6412**	2	SCREW-MACHINE (M6X1X20-MM)	
	195-9223	2	SCREW-PAN HEAD	
	164-1256	2	SPACER (19X25.4X12.5-MM THK)	
	164-1251	1	SPRING	
	164-1252	1	SPRING	
	164-1273	1	SPRING-EXTENSION	
	161-9283	1	WASHER (19.8X31.8X1.6-MM THK)	
	5P-8245	2	WASHER-HARD (13.5X25.5X3-MM THK)	

M-METRIC PART

<END>

OPERATOR STATION

273-6036 SEAT GP—CLOTH

S/N: LTG1-UP

PART OF 206-1792 SEAT GP-SUSPENSION

AN ATTACHMENT

SMCS-7312, 7321, 7324, 7336 **i03889109**

NOTE	REF NO	GRAPHIC REF	PART NUMBER	QTY	PART NAME 1 2 3 4 5 6 (PRODUCT LEVEL)	SEE PAGE
M	1	1	**105-3481**	2	BOLT-SOCKET HEAD (M8X1.25X20-MM)	
	2	1	**161-9283**	3	WASHER (19.8X31.8X1.6-MM THK)	
	3	1	**164-1244**	1	CUSHION AS-BACK	
	4	1	**164-1249**	1	LEVER AS (RECLINER CONTROL)	
	5	1	**164-1250**	1	HANDLE	
	6	1	**164-1251**	1	SPRING	
	7	1	**164-1252**	1	SPRING	
	8	1	**164-1253**	1	PLATE	
	9	1	**164-1254**	1	SECTOR	
	10	1	**164-1255**	1	SECTOR	
	11	1	**164-1258**	1	BRACKET AS (RH)	
	12	1	**164-1259**	1	BRACKET AS (LH)	
	13	1	**180-5789**	1	NUT	
	14	1	**180-5796**	1	CUSHION AS-SEAT	
	15	1	**180-5797**	1	PAN AS	
	16	1	**195-9223**	2	SCREW-PAN HEAD	
	17	1	**260-0029**	1	PAN	
	18	1	**260-0045**	1	BOLT-SPECIAL	
M	19	1	**3T-0852**	8	LOCKNUT (M8X1.25-THD)	
M	20	1	**129-3180**	2	LOCKNUT (M12X1.75-THD)	
	21	1	**5P-8245**	2	WASHER-HARD (13.5X25.5X3-MM THK)	
M	22	1	**8T-4189**	2	BOLT (M8X1.25X20-MM)	
	23	1	**8T-9501**	2	SCREW (10-16X0.75-IN)	
M	24	1	**9X-6620**	1	LOCKNUT (M10X1.5-THD) (M10X1.5-THD)	

M-METRIC PART

273-6036 SEAT GP *(contd.)* **i03889109**

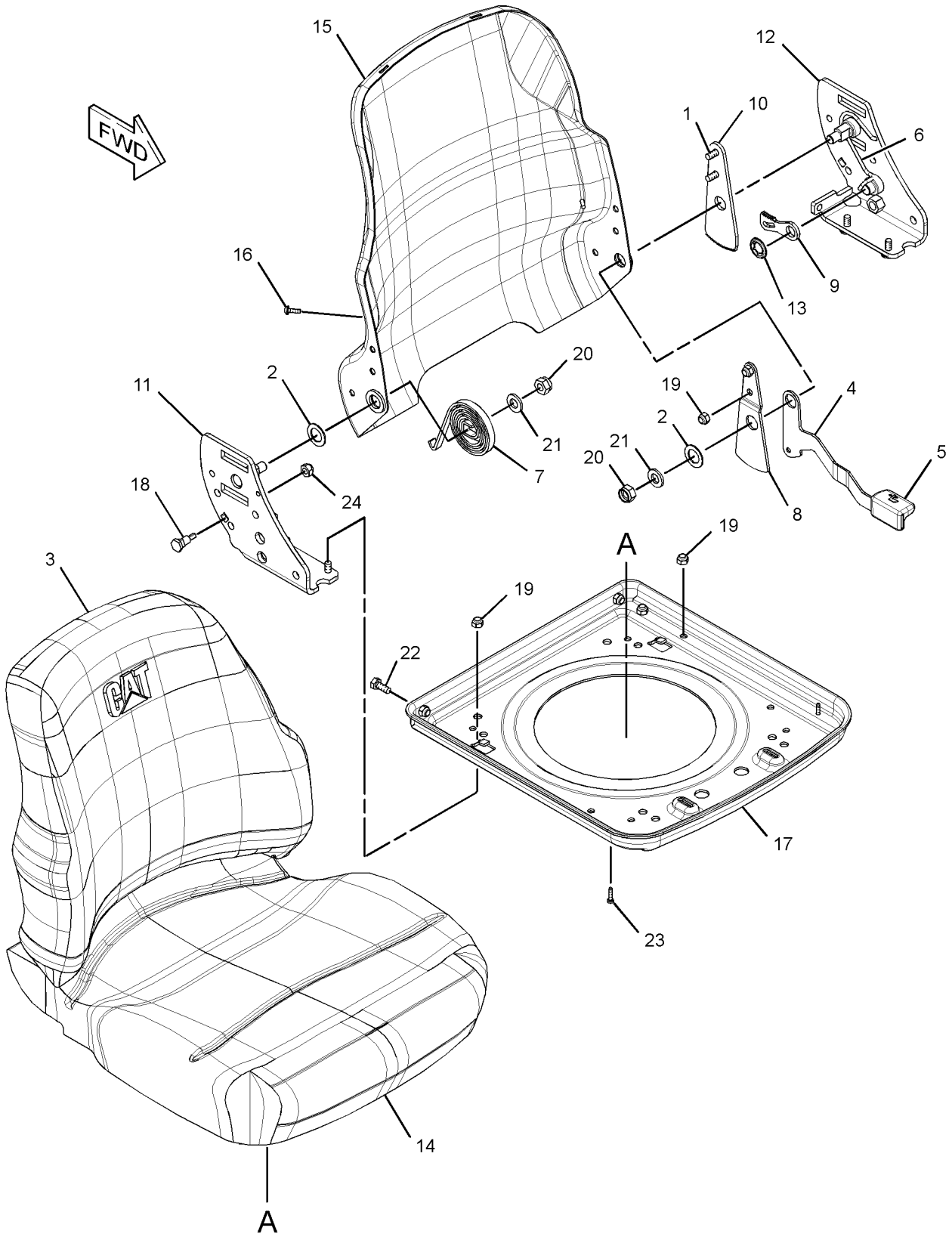

GRAPHIC #1 **<END>** g02133413

OPERATOR STATION

206-1791 SEAT GP-SUSPENSION—VINYL

S/N: LTG1-UP
PART OF 280-7364 SEAT GP-SUSPENSION
AN ATTACHMENT

SMCS-7324, 7336 **i03887952**

NOTE	REF NO	GRAPHIC REF	PART NUMBER	QTY	PART NAME 1 2 3 4 5 6 (PRODUCT LEVEL)	SEE PAGE
	1	1	**2K-4973**	4	LOCKNUT (3/8-16-THD)	
	2	1	**4L-6454**	4	BOLT (3/8-16X1-IN)	
	3	1	**195-7055**	4	WASHER-HARD (9.9X28.5X3.2-MM THK)	
Y	4	1	**273-5905**	1	SEAT GP (VINYL)	521
Y	5	1	**273-6372**	1	SUSPENSION GP-SEAT	530
	6	1	**164-1265**	4	BOLT (3/8-16X1.1-IN)	
	7	1	**4B-5271**	4	WASHER (25.5X11.2X2-MM THK)	
	8	1	**5T-7870**	4	KNOB (ARMREST ADJUSTMENT)	
	9	1	**164-1247**	1	BRACKET AS (RH)	
	10	1	**220-3790**	1	ARMREST AS (RH)	
M		1	**6A-9083**	1	SCREW-MACHINE (M6X1X15-MM)	
	11	1	**164-1261**	1	BRACKET AS (LH)	
	12	1	**220-3791**	1	ARMREST AS (LH)	
M		1	**6A-9083**	1	SCREW-MACHINE (M6X1X15-MM)	
	13	1	**1K-6872**	2	LOCKNUT (1/2-13-THD)	
	14	1	**0S-1595**	2	BOLT (1/2-13X1.25-IN)	
	15	1	**5P-8245**	2	WASHER-HARD (13.5X25.5X3-MM THK)	

M-METRIC PART
Y-SEPARATE ILLUSTRATION

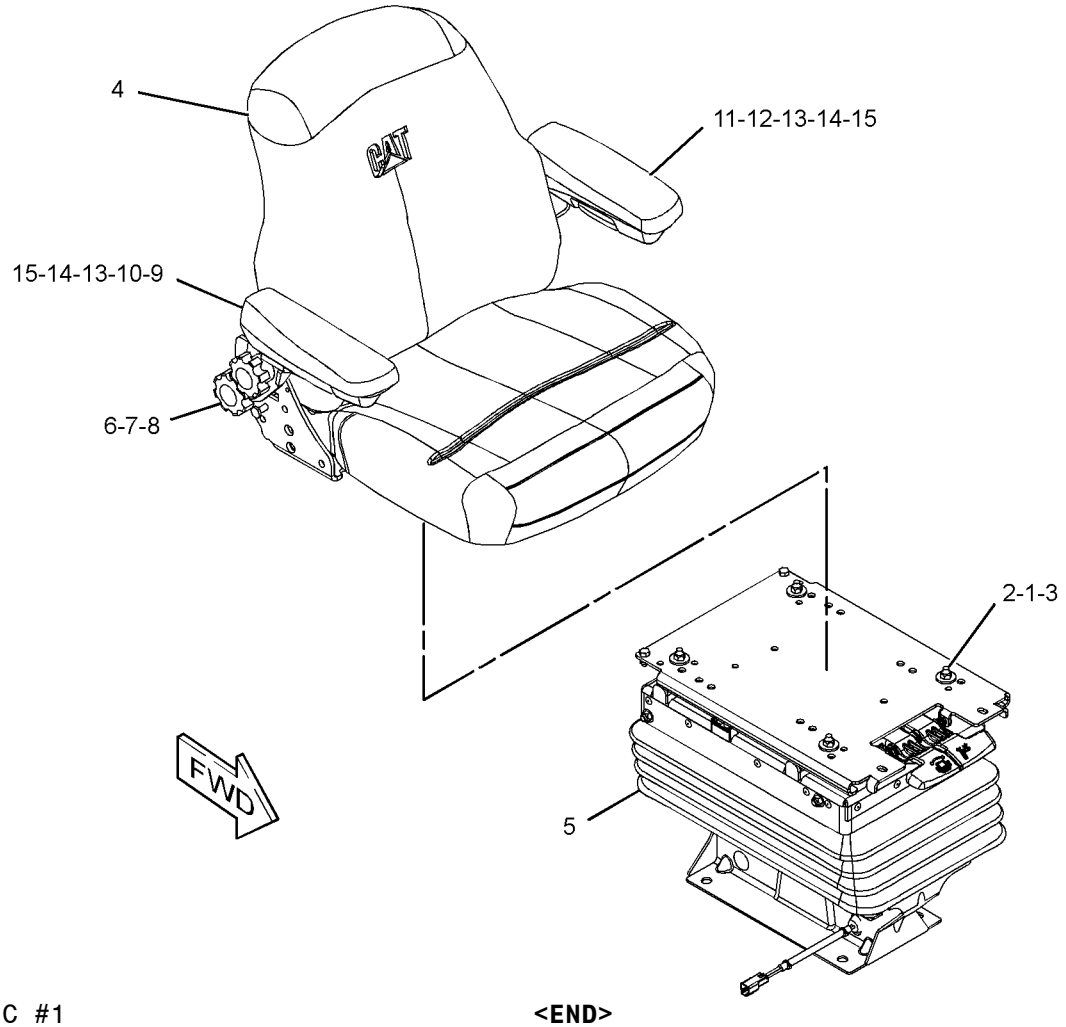

GRAPHIC #1 **<END>** g01298418

OPERATOR STATION

206-1792 SEAT GP-SUSPENSION—CLOTH

S/N: LTG1-UP
PART OF 280-7365 SEAT GP-SUSPENSION
AN ATTACHMENT

SMCS-7324, 7336 **i04402455**

NOTE	REF NO	GRAPHIC REF	PART NUMBER	QTY	PART NAME 1 2 3 4 5 6 (PRODUCT LEVEL)	SEE PAGE
	1	1	**2K-4973**	4	LOCKNUT (3/8-16-THD)	
	2	1	**4L-6454**	4	BOLT (3/8-16X1-IN)	
	3	1	**195-7055**	4	WASHER-HARD (9.9X28.5X3.2-MM THK)	
Y	4	1	**273-6036**	1	SEAT GP (CLOTH)	522
Y	5	1	**273-6372**	1	SUSPENSION GP-SEAT	530
	6	1	**164-1265**	4	BOLT (3/8-16X1.1-IN)	
	7	1	**4B-5271**	4	WASHER (25.5X11.2X2-MM THK)	
	8	1	**5T-7870**	4	KNOB (ARMREST ADJUSTMENT)	
	9	1	**164-1247**	1	BRACKET AS (RH)	
	10	1	**220-3790**	1	ARMREST AS (RH)	
M		1	**6A-9083**	1	SCREW-MACHINE (M6X1X15-MM)	
	11	1	**164-1261**	1	BRACKET AS (LH)	
	12	1	**220-3791**	1	ARMREST AS (LH)	
M		1	**6A-9083**	1	SCREW-MACHINE (M6X1X15-MM)	
	13	1	**1K-6872**	2	LOCKNUT (1/2-13-THD)	
	14	1	**0S-1595**	2	BOLT (1/2-13X1.25-IN)	
	15	1	**5P-8245**	2	WASHER-HARD (13.5X25.5X3-MM THK)	

M-METRIC PART
Y-SEPARATE ILLUSTRATION

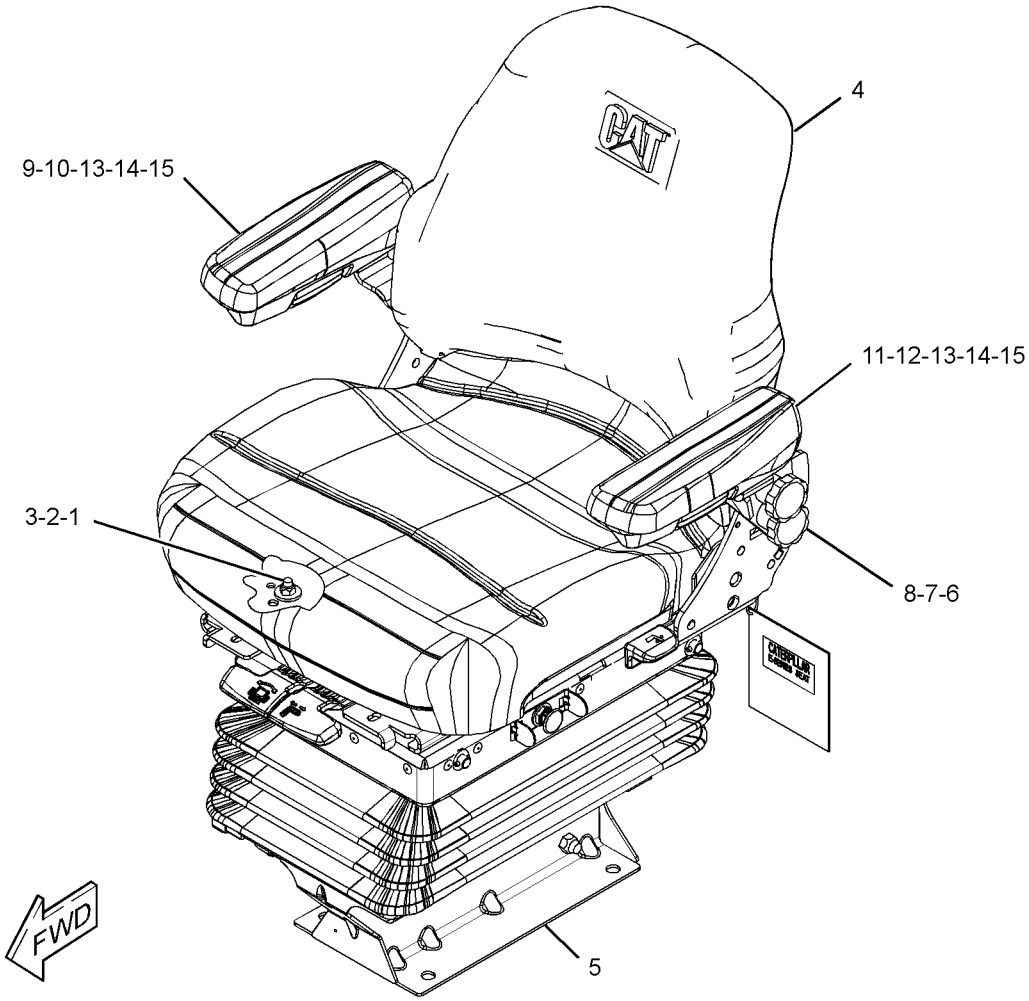

GRAPHIC #1 **<END>** g02588043

OPERATOR STATION

206-1796 SEAT GP-SUSPENSION—DELUXE, CLOTH

S/N: LTG1-UP
PART OF 280-7366 SEAT GP-SUSPENSION
AN ATTACHMENT

SMCS-7324, 7336 **i03889090**

NOTE	REF NO	GRAPHIC REF	PART NUMBER	QTY	PART NAME 1 2 3 4 5 6 (PRODUCT LEVEL)	SEE PAGE
	1	1	**2K-4973**	4	LOCKNUT (3/8-16-THD)	
	2	1	**4L-6454**	2	BOLT (3/8-16X1-IN)	
	3	1	**195-7055**	10	WASHER-HARD (9.9X28.5X3.2-MM THK)	
	4	1	**234-3017**	2	BOLT (3/8-16X0.875-IN)	
Y	5	1	**273-6037**	1	SEAT GP-SUSPENSION (DELUXE, CLOTH)	527
Y	6	1	**273-6372**	1	SUSPENSION GP-SEAT	530
	7	1	**164-1265**	4	BOLT (3/8-16X1.1-IN)	
	8	1	**4B-5271**	4	WASHER (25.5X11.2X2-MM THK)	
	9	1	**5T-7870**	4	KNOB (ARMREST ADJUSTMENT)	
	10	1	**164-1247**	1	BRACKET AS (RH)	
	11	1	**220-3790**	1	ARMREST AS (RH)	
M		1	**6A-9083**	1	SCREW-MACHINE (M6X1X15-MM)	
	12	1	**164-1261**	1	BRACKET AS (LH)	
	13	1	**220-3791**	1	ARMREST AS (LH)	
M		1	**6A-9083**	1	SCREW-MACHINE (M6X1X15-MM)	
	14	1	**1K-6872**	2	LOCKNUT (1/2-13-THD)	
	15	1	**0S-1595**	2	BOLT (1/2-13X1.25-IN)	
	16	1	**5P-8245**	2	WASHER-HARD (13.5X25.5X3-MM THK)	

M-METRIC PART
Y-SEPARATE ILLUSTRATION

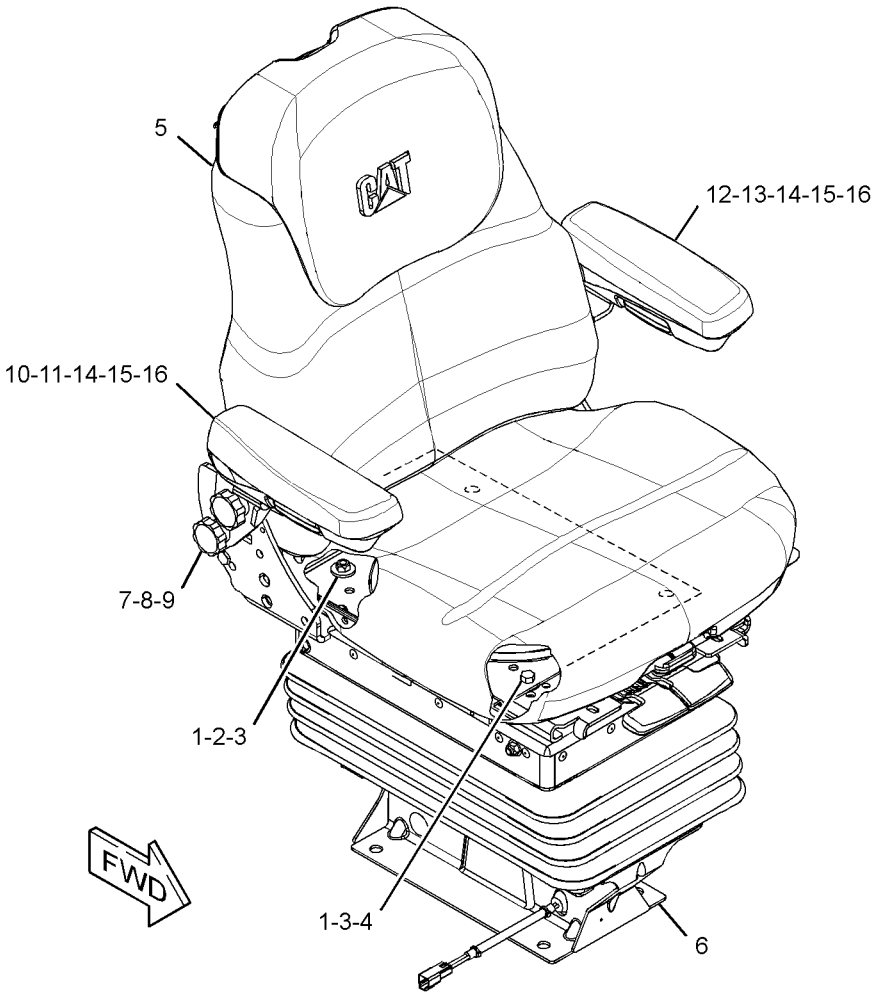

GRAPHIC #1 **<END>** g01309042

OPERATOR STATION

273-6037 SEAT GP-SUSPENSION—DELUXE, CLOTH

S/N: LTG1-UP

PART OF 206-1796 SEAT GP-SUSPENSION

AN ATTACHMENT

SMCS-7324, 7336 **i04631224**

NOTE	REF NO	GRAPHIC REF	PART NUMBER	QTY	PART NAME 1 2 3 4 5 6 (PRODUCT LEVEL)	SEE PAGE
C	1	1	**2M-7819**	1	RING-RETAINING	
C	2	1	**4B-4278**	4	WASHER (10.2X20.5X1.6-MM THK)	
M	3	1	**105-3481**	2	BOLT-SOCKET HEAD (M8X1.25X20-MM)	
C	4	1	**111-5042**	3	FASTENER	
C	5	1	**121-3040**	6	FASTENER-PANEL	
	6	1	**161-9283**	1	WASHER (19.8X31.8X1.6-MM THK)	
C	7	1	**164-1245**	1	CUSHION GP-SEAT	
		1	**101-0003**	3	FASTENER	
		1	**164-1269**	1	BOOT	
		1	**164-1272**	1	ROD AS	
		1	**164-1273**	2	SPRING-EXTENSION	
C	8	1	**164-1246**	1	CUSHION AS (BACK)	
	9	1	**164-1249**	1	LEVER AS	
	10	1	**164-1251**	1	SPRING	
	11	1	**164-1252**	1	SPRING	
C	12	1	**2P-7864**	2	SCREW-TAPPING	
C	13	1	**4H-1641**	2	PIN-SPRING	
	14	1	**5P-8245**	2	WASHER-HARD (13.5X25.5X3-MM THK)	
	15	1	**164-1258**	1	BRACKET AS (RH)	
	16	1	**164-1259**	1	BRACKET AS (LH)	
	17	1	**164-1263**	1	PAN AS	
C	18	1	**164-1269**	1	BOOT	
C	19	1	**164-1271**	2	SPRING	
C	20	1	**164-1272**	1	ROD AS	
C	21	1	**164-1273**	2	SPRING-EXTENSION	
C	22	1	**164-1274**	2	BLOCK	
	23	1	**164-1275**	1	BACKREST AS	
M		1	**2W-9499**	2	BOLT (M6X1X40-MM)	
		1	**8C-0572**	2	WASHER (8.8X25.5X2-MM THK)	
C	24	1	**164-1276**	2	TUBE	
C	25	1	**164-1277**	2	CLIP-SPRING	
	26	1	**180-5781**	1	ROD	
C	27	1	**180-5782**	1	SPRING	
C	28	1	**180-5783**	1	FOLLOWER	
C	29	1	**180-5784**	1	LATCH AS	
C	30	1	**180-5785**	1	SPRING	
M	31	1	**129-3180**	2	LOCKNUT (M12X1.75-THD)	
C	32	1	**180-5787**	1	KNOB	
C	33	1	**180-5788**	1	BLOCK	
M	34	1	**8T-4189**	2	BOLT (M8X1.25X20-MM)	
	35	1	**180-5791**	1	SUPPORT AS-SEAT (LUMBAR)	
C	36	1	**195-9223**	4	SCREW-PAN HEAD	
	37	1	**260-0027**	1	KNOB-SLIDE	
	38	1	**260-0028**	1	LEVER-TILT	
	39	1	**260-0045**	1	BOLT-SPECIAL	
C	40	1	**8T-7566**	1	PIN-SPRING	
M	41	1	**9X-6620**	1	LOCKNUT (M10X1.5-THD)	
M	42	1	**3T-0852**	8	LOCKNUT (M8X1.25-THD)	

PARTS SHOWN IN GRAPHIC WITHOUT REFERENCE NUMBER ARE NOT SERVICED SEPARATELY

C-CHANGE FROM PREVIOUS TYPE
M-METRIC PART

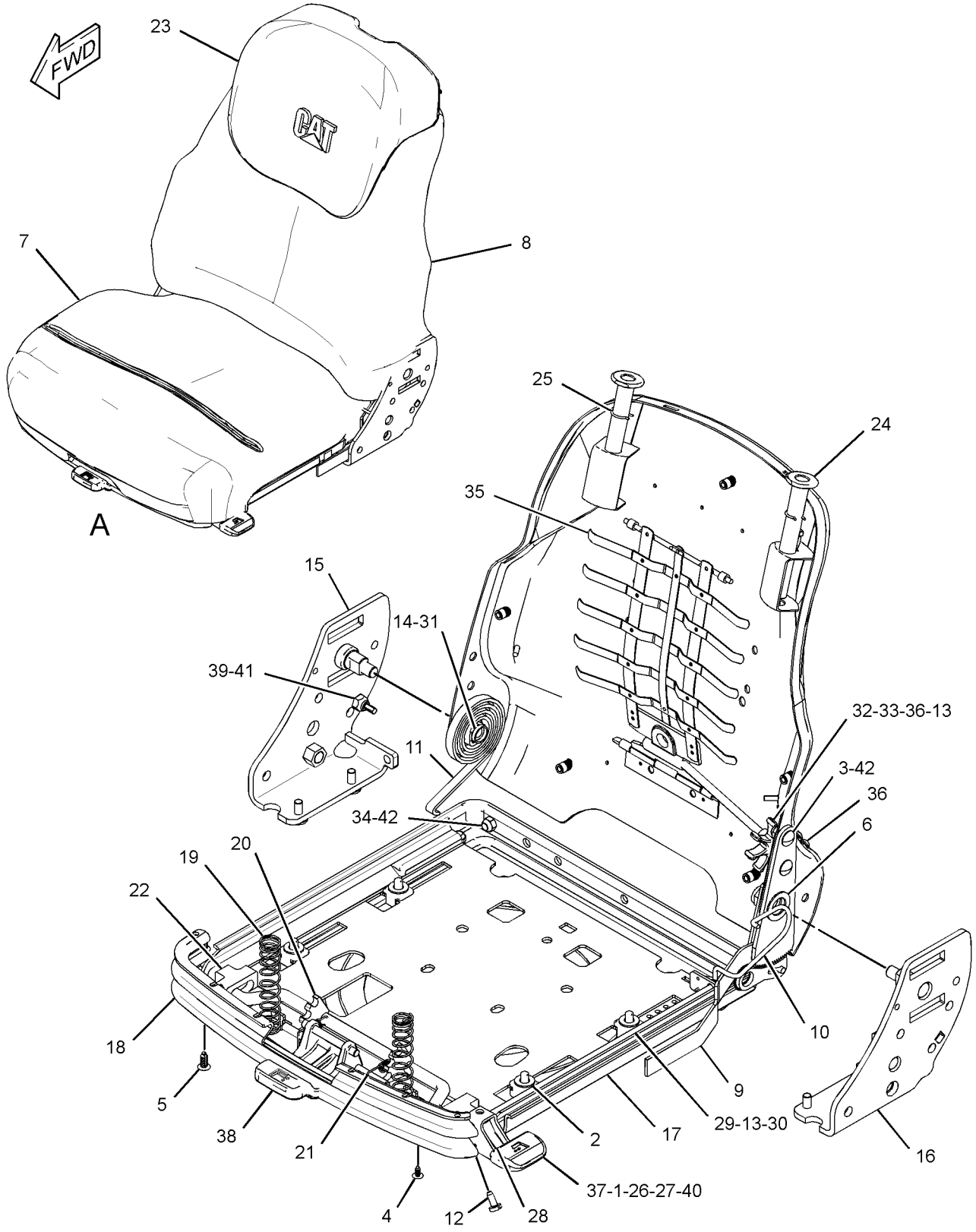

VIEW OF AREA A
(CUSHIONS REMOVED FOR CLARITY)

GRAPHIC #1

<END>

g01299261

OPERATOR STATION

280-7364 SEAT GP-SUSPENSION—VINYL

S/N: LTG1-UP
PART OF 373-4207, 373-4209 CANOPY AR-OPEN ROPS
AN ATTACHMENT

SMCS-7324, 7336 **i02415763**

NOTE	PART NUMBER	QTY	PART NAME 1 2 3 4 5 6 (PRODUCT LEVEL)	SEE PAGE
Y	**206-1791**	1	SEAT GP-SUSPENSION (VINYL)	524
	3S-2093	1	STRAP-CABLE	
M	**8T-4139**	4	BOLT (M12X1.75X30-MM)	
	8T-4223	4	WASHER-HARD (13.5X25.5X3-MM THK)	

M-METRIC PART
Y-SEPARATE ILLUSTRATION

<END>

280-7365 SEAT GP-SUSPENSION—CLOTH

S/N: LTG1-UP
PART OF 373-4210 CAB AR-ENCLOSED ROPS
AN ATTACHMENT

SMCS-7324, 7336 **i02424993**

NOTE	PART NUMBER	QTY	PART NAME 1 2 3 4 5 6 (PRODUCT LEVEL)	SEE PAGE
Y	**206-1792**	1	SEAT GP-SUSPENSION (CLOTH)	525
M	**8T-4139**	4	BOLT (M12X1.75X30-MM)	
	3S-2093	1	STRAP-CABLE	
	8T-4223	4	WASHER-HARD (13.5X25.5X3-MM THK)	

M-METRIC PART
Y-SEPARATE ILLUSTRATION

<END>

280-7366 SEAT GP-SUSPENSION—DELUXE, CLOTH

S/N: LTG1-UP
PART OF 373-4213 CAB AR-ENCLOSED ROPS
AN ATTACHMENT

SMCS-7324, 7336 **i02410234**

NOTE	PART NUMBER	QTY	PART NAME 1 2 3 4 5 6 (PRODUCT LEVEL)	SEE PAGE
Y	**206-1796**	1	SEAT GP-SUSPENSION (DELUXE, CLOTH)	526
M	**8T-4139**	4	BOLT (M12X1.75X30-MM)	
	3S-2093	1	STRAP-CABLE	
	8T-4223	4	WASHER-HARD (13.5X25.5X3-MM THK)	

M-METRIC PART
Y-SEPARATE ILLUSTRATION

<END>

OPERATOR STATION

273-6372 SUSPENSION GP-SEAT

S/N: LTG1-UP

PART OF 206-1791, 206-1792, 206-1796 SEAT GP-SUSPENSION

AN ATTACHMENT

SMCS-7312, 7324 **i04196810**

NOTE	REF NO	GRAPHIC REF	PART NUMBER	QTY	PART NAME 1 2 3 4 5 6 (PRODUCT LEVEL)	SEE PAGE
C	1	2	**3S-2093**	2	STRAP-CABLE	
	2	1,2	**111-5042**	34	FASTENER	
C	3	2	**243-3593**	1	SPRING AS-AIR	
		2	**130-8343**	1	SCREW-BUTTON HEAD (3/8-16X0.625-IN)	
		2	**163-1135**	1	SPRING	
		2	**164-1232**	1	PLATE	
D		2	**5P-6010**		TUBE (1-M)	
	4	1	**149-4745**	2	KIT-SLIDER BLOCK (SUSPENSION SEAT)	
					(EACH INCLUDES BOLT & SLIDER BLOCKS)	
C	5	1	**161-9283**	1	WASHER (19.8X31.8X1.6-MM THK)	
C	6	1	**161-9285**	1	NUT (3/4-10-THD)	
	7	1	**161-9288**	1	SHAFT-PIVOT	
	8	1	**161-9289**	2	BLOCK-SLIDER	
C	9	2	**180-5789**	2	NUT	
	10	2	**164-1215**	1	ABSORBER AS-SHOCK (SEAT)	
	11	2	**164-1218**	2	ARM AS-SUSPENSION (OUTER)	
	12	2	**164-1219**	1	BRACKET AS (FRONT)	
	13	2	**164-1220**	1	BRACKET AS (REAR)	
	14	2	**164-1226**	2	SHAFT	
C	15	2	**164-1228**	1	HARNESS AS-RIDE CONTROL	
	16	2	**164-1229**	4	BUMPER	
	17	2	**164-1230**	12	BEARING	
	19	2	**164-1233**	2	SPACER (13X25.4X20.5-MM THK)	
C	20	1	**164-1234**	1	PLATE	
C	21	1	**164-1235**	1	KNOB	
	22	2	**164-1237**	1	BUSHING	
	23	2	**164-1238**	1	SPACER (12.8X22.2X3.1-MM THK)	
	24	2	**164-1239**	2	SPACER (13.5X19X61.9-MM THK)	
	25	1	**164-1240**	1	BOOT	
	26	1	**173-5787**	2	SETSCREW (1/4-20-THD)	
C	28	2	**185-3890**	2	SCREW-PAN HEAD (8-32X33.3-MM)	
M	29	2	**197-6657**	1	BOLT-ROUND HEAD (M12X1.75X80-MM)	
C	30	1	**215-8196**	1	VALVE AS	
	31	2	**237-3943**	1	BRACKET	
	32	1	**260-0030**	1	SHAFT-PIVOT	
C	33	1	**321-6337**	1	LEVER	
	34	1	**260-0032**	1	LEVER	
	35	1	**260-0033**	1	SPRING-TORSION	
	36	1	**260-0034**	1	SPRING-RETURN (SWIVEL)	
	37	1	**260-0035**	1	SPRING-RETURN (SLIDE)	
	38	1	**260-0041**	1	BOLT (3/4-10X1.42-IN)	
	40	1	**260-0043**	1	BLOCK-STOP	
	41	1	**260-0044**	1	PLATE-LATCH	
C	42	1	**317-5309**	1	HOUSING AS	
		1	**260-0046**	1	HOUSING-UPPER	
M		1	**6V-9632**	2	NUT-WELD (M6X1-THD)	
	43	1	**260-0047**	2	SHAFT AS (UPPER)	
	44	2	**260-0049**	2	SHAFT-LOWER	
	45	1	**260-0051**	1	PLATE AS-UPPER	
	46	1	**260-0052**	1	PLATE AS-SLIDE	
	47	1	**260-0057**	1	LATCH AS-SLIDE	
	48	2	**260-0059**	1	AIR COMPRESSOR GP (SUSPENSION SEAT)	
	50	2	**260-0063**	1	BASE-SEAT	
	51	2	**260-0067**	2	BEARING	
C	52	1	**289-1204**	1	RING	

273-6372 **SUSPENSION GP-SEAT** *(contd.)* **i04196810**

NOTE	REF NO	GRAPHIC REF	PART NUMBER	QTY	PART NAME 1 2 3 4 5 6 (PRODUCT LEVEL)	SEE PAGE
M	53	1	**096-4882**	2	LOCKNUT (M8X1.25-THD)	
CM	54	2	**129-3180**	1	LOCKNUT (M12X1.75-THD)	
C	55	1,2	**153-0088**	4	WASHER-HARD (10.31X20X1.65-MM THK)	
	56	2	**0S-0509**	1	BOLT (3/8-16X0.75-IN)	
	57	2	**1H-3337**	4	BOLT (1/4-20X0.875-IN)	
	58	2	**1K-6872**	1	LOCKNUT (1/2-13-THD)	
	59	2	**2D-6235**	4	LOCKNUT (1/4-20-THD)	
	60	1,2	**2K-4973**	8	LOCKNUT (3/8-16-THD)	
	61	1	**2L-5893**	1	PIN-SPRING	
	62	1	**3B-4505**	2	LOCKWASHER	
C	63	1	**3B-4631**	1	PIN-COTTER	
	64	2	**3J-4818**	2	LOCKWASHER	
C	65	1	**4B-9784**	12	BALL	
	66	1,2	**9L-7469**	4	LOCK PIN	
	67	1	**4M-0061**	2	BOLT (5/16-18X0.75-IN)	
	68	1	**6L-7155**	2	SCREW-MACHINE (1/4-20X0.5-IN)	
	69	2	**6V-8185**	4	NUT (1/4-20-THD)	
	70	2	**7X-0481**	1	BOLT (1/2-13X8-IN)	
	71	2	**7X-0622**	6	WASHER (13X24X2.5-MM THK)	
	72	1	**8S-7803**	3	RING-RETAINING	
	73	2	**9X-1481**	2	WASHER (13X25.4X1.6-MM THK)	
C	74	1	**8Y-5946**	1	FASTENER	
	75	2	**260-0060**	1	ARM AS-SUSPENSION (INNER)	

C-CHANGE FROM PREVIOUS TYPE
D-ORDER BY THE METER
M-METRIC PART

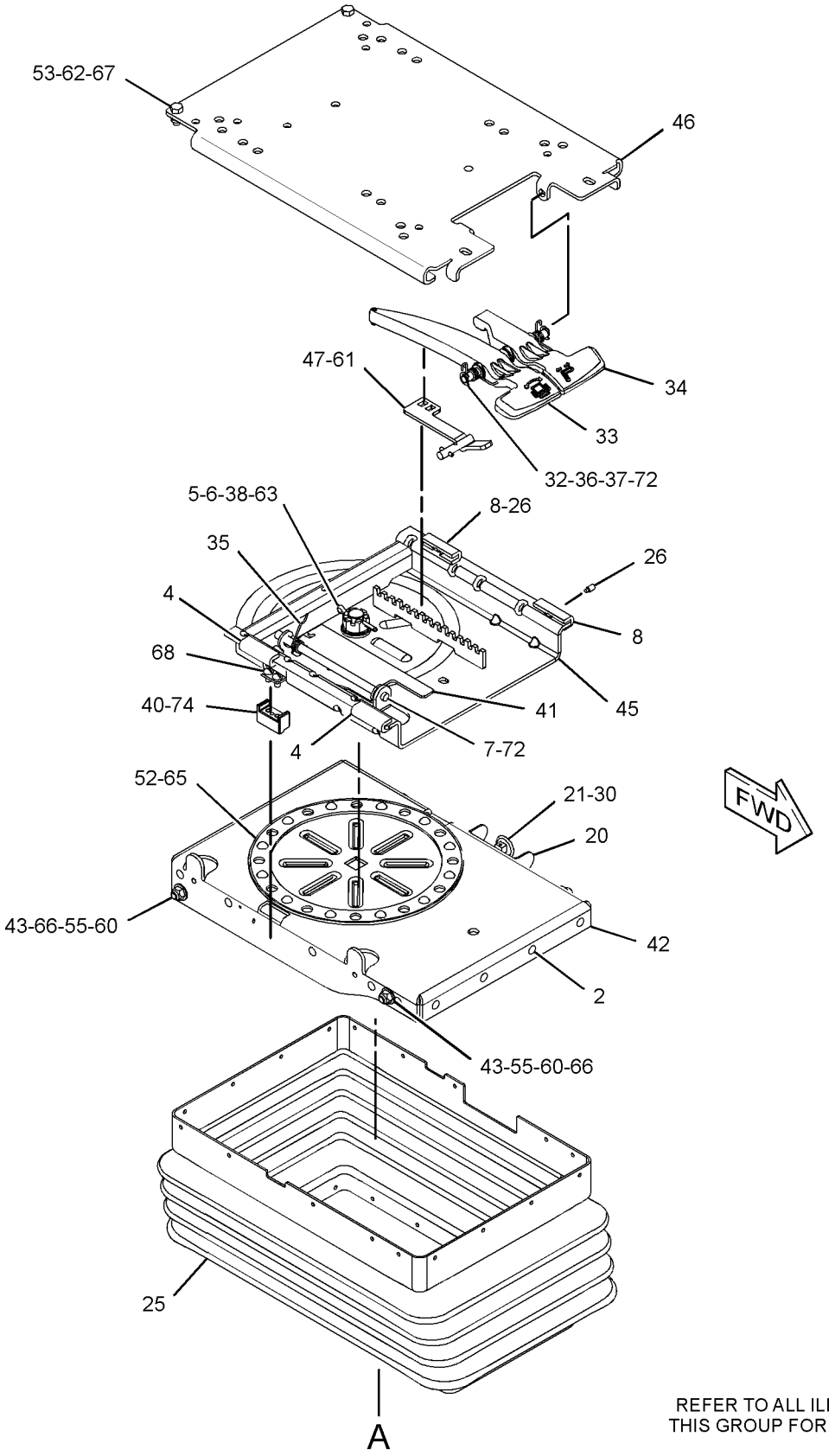

REFER TO ALL ILLUSTRATIONS OF THIS GROUP FOR AUXILIARY VIEWS

GRAPHIC #1

g01515019

REFER TO ALL ILLUSTRATIONS OF
THIS GROUP FOR AUXILIARY VIEWS

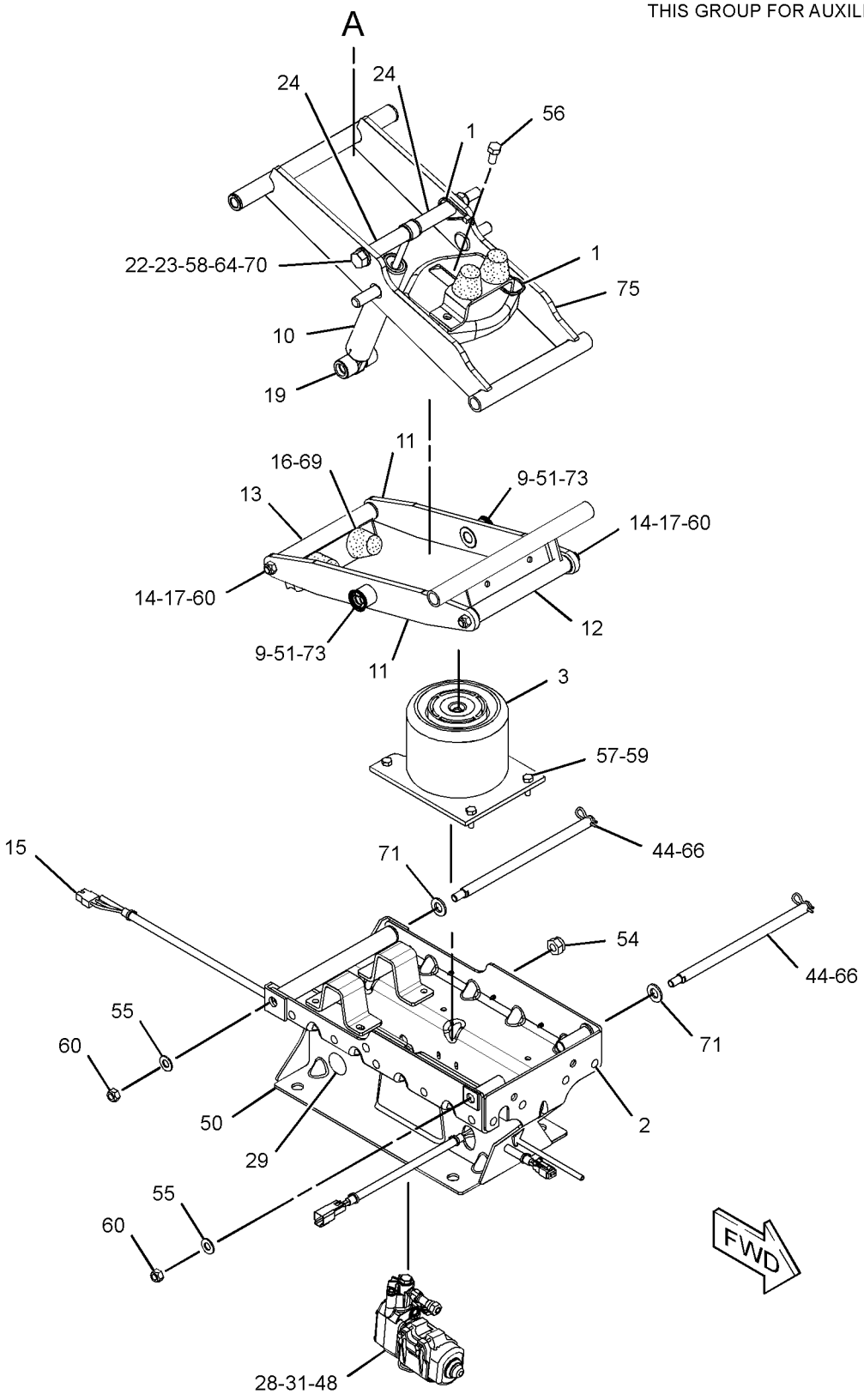

GRAPHIC #2 **<END>** g01951585

OPERATOR STATION

206-1704 TRIM GP-CAB—OPEN ROPS

S/N: LTG1-UP

PART OF 353-1427 CANOPY AR, 353-1426 CANOPY AR-OPEN ROPS

AN ATTACHMENT

SMCS-7329, 7451 **i04472910**

NOTE	REF NO	GRAPHIC REF	PART NUMBER	QTY	PART NAME 1 2 3 4 5 6 (PRODUCT LEVEL)	SEE PAGE
E	1	1	**8C-7524**		SEAL (40-CM EACH)	
	2	1	**9C-4457**	4	FASTENER	
	3	1	**141-1762**	1	SPACER (21.2X25.4X20-MM THK)	
	4	1	**206-1623**	1	INSERT (LH)	
	5	1	**206-1625**	1	INSERT (RH)	
	6	1	**206-1637**	1	CONSOLE-STORAGE	
	7	1	**206-1665**	2	PLUG	
	8	1	**206-1666**	1	PLUG	
	9	1	**206-1683**	1	INSERT	
	10	1	**206-1798**	1	COVER-POST	
	11	1	**206-1799**	4	PLUG	
	12	1	**213-1888**	1	COVER-FENDER	
	13	1	**261-9632**	1	COVER AS	
		1	**206-1684**	1	COVER (CAB FILTER)	
	14	1	**282-7833**	1	GROMMET	
	15	1	**282-7835**	1	PLATE	
M	16	1	**6V-7744**	1	LOCKNUT (M10X1.5-THD)	
	17	1	**8T-4222**	1	WASHER-PLATED (11X32X2.5-MM THK)	
M	18	1	**8T-4178**	1	BOLT (M10X1.5X90-MM)	
M	19	1	**8C-3798**	2	BOLT-LOCKING (M6X1X30-MM)	
	20	1	**9X-2038**	2	WASHER (7X19X2-MM THK)	
M	21	1	**9X-2044**	6	SCREW-TRUSS HEAD (M6X1X16-MM)	
	22	1	**9X-8256**	2	WASHER (6.6X12X2-MM THK)	
B	23	1	**6V-0292**	1	PLUG	

B-USE AS REQUIRED
E-ORDER BY THE CENTIMETER
M-METRIC PART

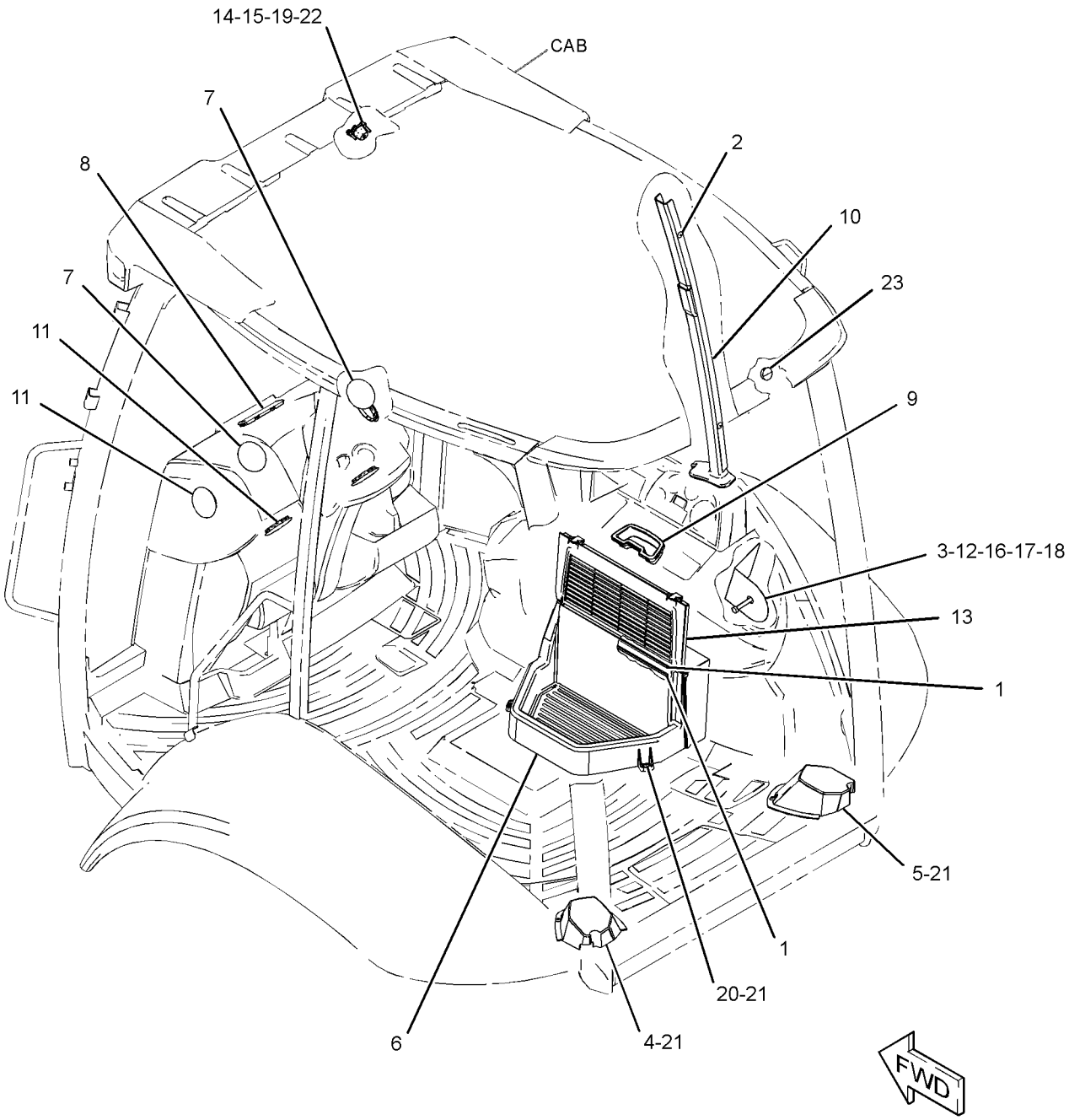

GRAPHIC #1 **<END>** g02780500

OPERATOR STATION

206-1857 VISOR GP-CAB

S/N: LTG1-UP
PART OF 353-1428 CAB AR
AN ATTACHMENT

SMCS-7301 **i02704721**

NOTE	REF NO	GRAPHIC REF	PART NUMBER	QTY	PART NAME 1 2 3 4 5 6 (PRODUCT LEVEL)	SEE PAGE
CE	1	1	**8C-3681**		HOSE (2.5-CM EACH)	
	2	1	**9R-3205**	1	VISOR AS	
C	3	1	**5P-9297**	2	CLIP	

C-CHANGE FROM PREVIOUS TYPE
E-ORDER BY THE CENTIMETER

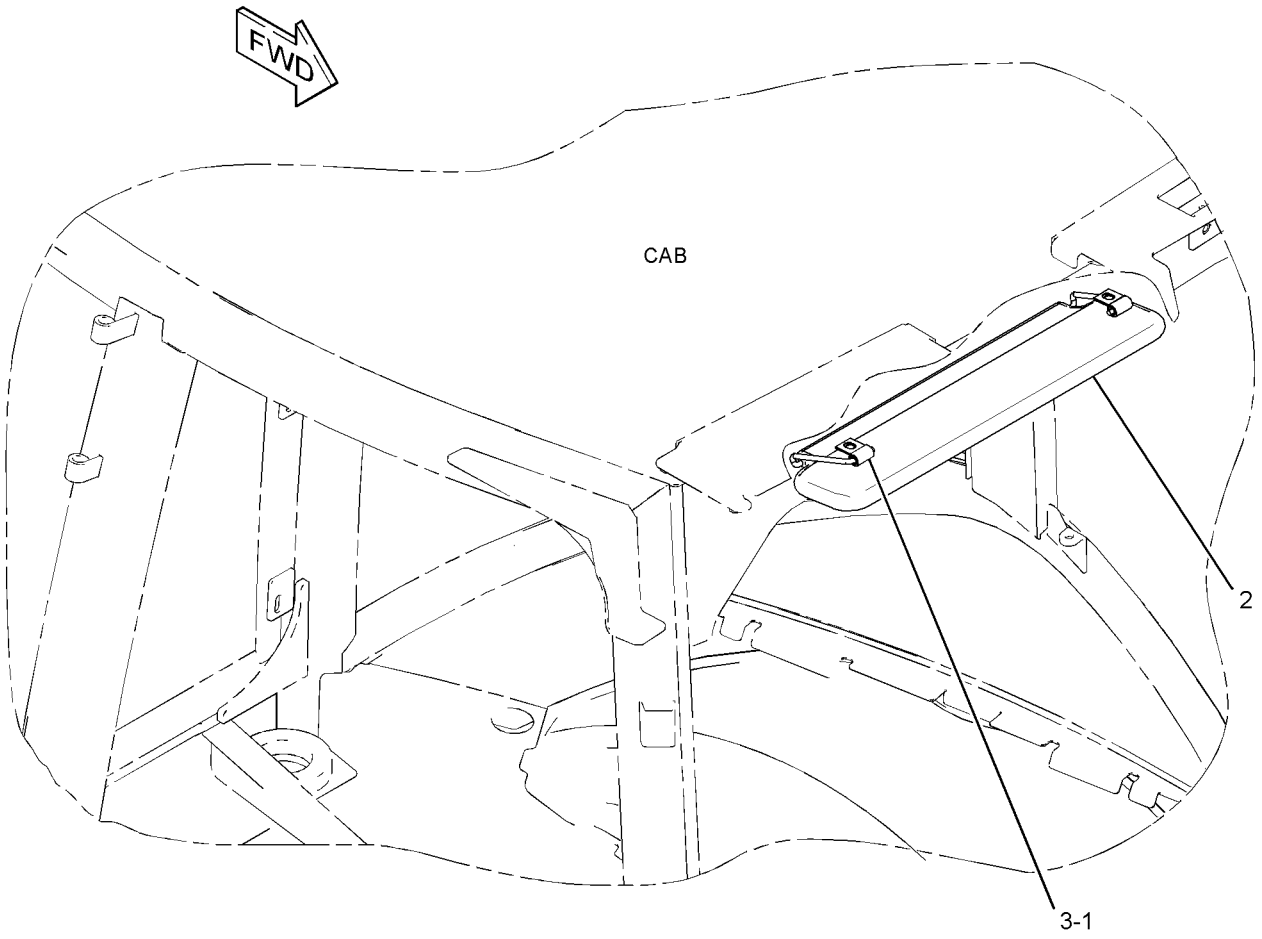

GRAPHIC #1 **<END>** g01384970

OPERATOR STATION

229-0300 WINDOW GP-CAB–REAR

S/N: LTG1-UP
PART OF 341-6716 CAB GP
AN ATTACHMENT

SMCS-7310 **i03891190**

NOTE	REF NO	GRAPHIC REF	PART NUMBER	QTY	PART NAME 1 2 3 4 5 6 (PRODUCT LEVEL)	SEE PAGE
	1	1	**5P-4115**	6	WASHER-HARD (7.2X19X2-MM THK)	
M	2	1	**9X-2044**	4	SCREW-TRUSS HEAD (M6X1X16-MM)	
	3	1	**9X-2132**	4	RETAINER	
	4	1	**110-5602**	2	KNOB	
	5	1	**119-8349**	2	CAP	
	6	1	**308-1273**	1	SEAL	
M	7	1	**129-3180**	4	LOCKNUT (M12X1.75-THD)	
M	8	1	**179-7262**	4	SCREW-FLAT HEAD (M8X1.25X40-MM)	
	9	1	**146-7744**	1	KIT-LATCH (RH)	
	10	1	**146-7745**	1	KIT-LATCH (LH)	
	11	1	**164-1308**	2	ROLLER	
	12	1	**164-1328**	2	SPRING AS-GAS	
	13	1	**164-1342**	4	BOLT-SPECIAL	
	14	1	**164-1343**	4	WASHER-THRUST (13.6X30X5.1-MM THK)	
	15	1	**164-1344**	4	WASHER-THRUST (13.6X30X2.1-MM THK)	
	16	1	**164-1345**	4	BEARING	
	17	1	**164-1346**	4	STRIKER	
	18	1	**164-1351**	2	PIN	
	19	1	**164-1352**	1	LATCH AS (LH)	
	20	1	**164-1353**	1	LATCH AS (RH)	
	21	1	**167-8182**	2	BUMPER	
	22	1	**171-2870**	2	SPACER (7X10X5.4-MM THK)	
B	23	1	**201-9465**	4	SHIM (1-MM THK)	
	24	1	**359-3107**	1	PLATE AS (RH)	
	25	1	**359-3106**	1	PLATE AS (LH)	
	26	1	**229-0298**	1	LINKAGE AS	
	27	1	**290-1273**	1	FRAME AS	
	28	1	**229-0308**	1	GLASS	
	29	1	**229-0310**	1	WINDOW AS	
		1	**229-0309**	1	GLASS	
M	30	1	**5C-2890**	2	NUT (M6X1-THD)	
	31	1	**5P-4116**	4	WASHER-HARD (8.8X20.5X2-MM THK)	
M	32	1	**8T-4200**	4	BOLT (M8X1.25X16-MM)	
	33	1	**8T-4223**	2	WASHER-HARD (13.5X25.5X3-MM THK)	
D	34	1	**5P-5637**		SEAL (1-M)	
E	35	1	**9X-6383**		SEAL (88-CM)	
E	36	1	**164-1314**		SEAL-BULK (153-CM EACH)	
E	37	1	**164-1354**		CHANNEL-WINDOW (90-CM)	
E	37A	1	**164-1354**		CHANNEL-WINDOW (75-CM EACH)	
E	37B	1	**164-1354**		CHANNEL-WINDOW (74-CM EACH)	
	38	1	**150-8015**	2	GASKET	
	39	1	**8T-2970**	4	WASHER (13X28X1.6-MM THK)	

B-USE AS REQUIRED
D-ORDER BY THE METER
E-ORDER BY THE CENTIMETER
M-METRIC PART

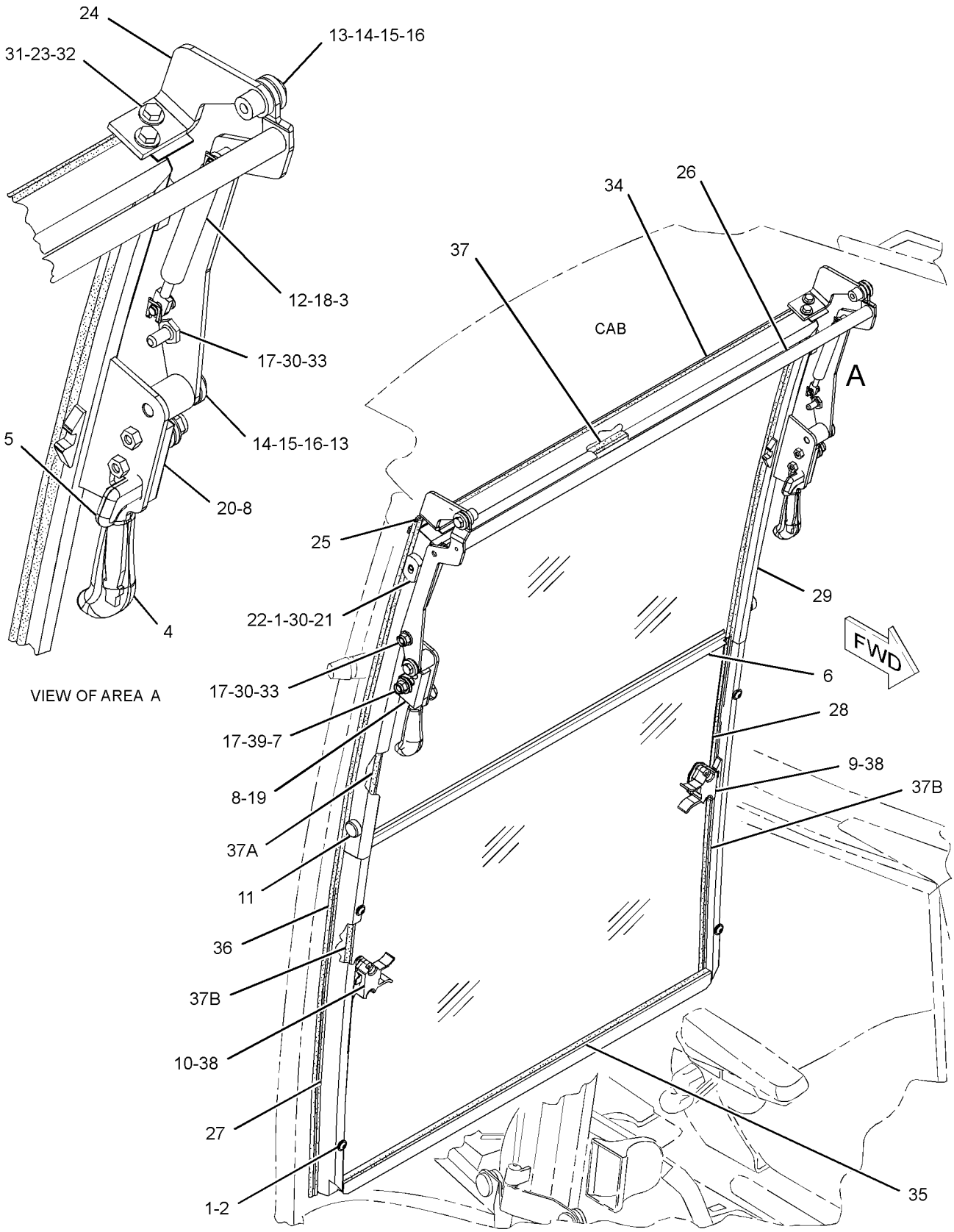

GRAPHIC #1

<END>

g02136116

OPERATOR STATION

327-7601 WINDOW GP-CAB—LH

S/N: LTG1-UP
PART OF 341-6716 CAB GP
AN ATTACHMENT

SMCS-7310 **i04354050**

NOTE	REF NO	GRAPHIC REF	PART NUMBER	QTY	PART NAME 1 2 3 4 5 6 (PRODUCT LEVEL)	SEE PAGE
	1	1	**8Y-7309**	1	RETAINER	
	2	1	**100-7608**	1	HANDLE (LH)	
	3	1	**129-8542**	6	RETAINER	
	4	1	**129-8545**	8	WASHER (13X40X3-MM THK)	
M	5	1	**136-4192**	4	BOLT (M6X1X35-MM)	
	6	1	**154-5423**	2	SPACER (6.6X12.7X17-MM THK)	
	7	1	**205-9623**	1	HINGE (LOWER, LH)	
	8	1	**205-9624**	1	HINGE (UPPER, LH)	
Y	9	1	**299-6985**	1	LATCH GP-CAB DOOR & WINDOW (LOWER)	499
Y	10	1	**299-6986**	1	LATCH GP-CAB DOOR & WINDOW (UPPER)	500
	11	1	**325-9300**	1	GLASS (REAR, LH)	
	12	1	*330-0427*	1	LATCH GP (LH)	
M		1	**6V-7743**	2	LOCKNUT (M6X1-THD)	
M		1	**9X-2045**	2	SCREW-TRUSS HEAD (M6X1X20-MM)	
		1	**143-2827**	1	SPRING	
		1	**330-0422**	2	GASKET	
M	13	1	**5C-7261**	1	NUT (M8X1.25-THD)	
M	14	1	**6V-7743**	2	LOCKNUT (M6X1-THD)	
	15	1	**7X-2393**	1	BUMPER-CONICAL	
E	16	1	**148-5353**		SEAL (342-CM)	

E-ORDER BY THE CENTIMETER
M-METRIC PART
Y-SEPARATE ILLUSTRATION

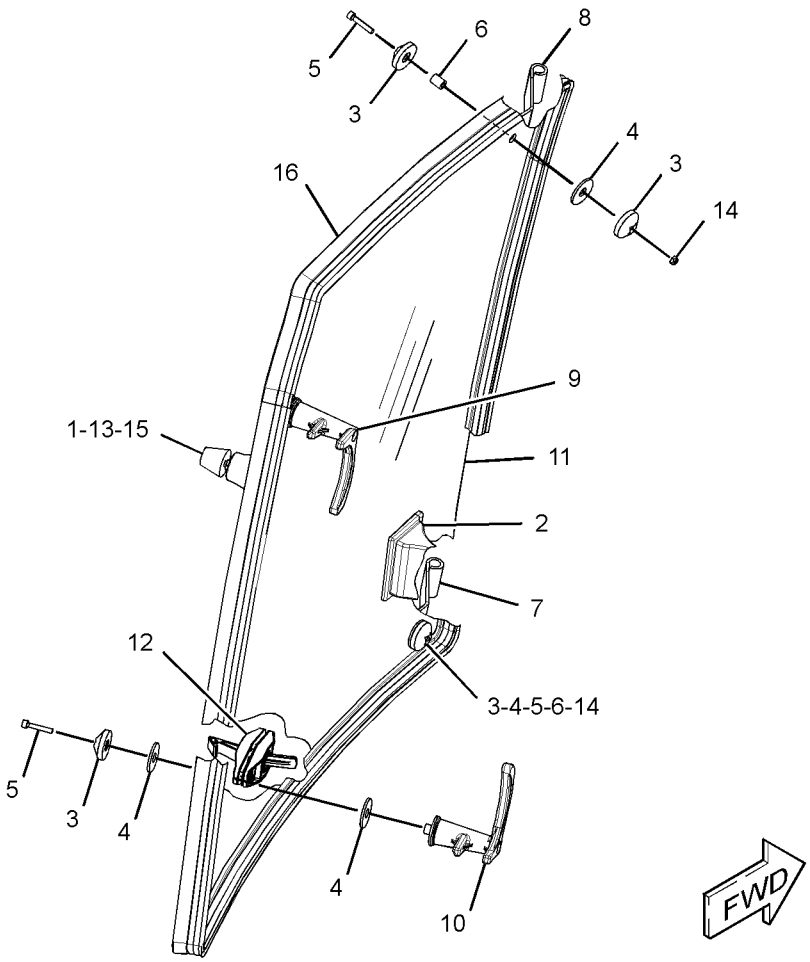

GRAPHIC #1 **<END>** g02512551

OPERATOR STATION

327-7637 WINDOW GP-CAB—RH

S/N: LTG1-UP
PART OF 341-6716 CAB GP
AN ATTACHMENT

SMCS-7310 **i04354051**

NOTE	REF NO	GRAPHIC REF	PART NUMBER	QTY	PART NAME 1 2 3 4 5 6 (PRODUCT LEVEL)	SEE PAGE
	1	1	**8Y-7309**	1	RETAINER	
	2	1	**100-7608**	1	HANDLE (RH)	
	3	1	**129-8542**	6	RETAINER	
	4	1	**129-8545**	8	WASHER (13X40X3-MM THK)	
M	5	1	**136-4192**	4	BOLT (M6X1X35-MM)	
	6	1	**154-5423**	2	SPACER (6.6X12.7X17-MM THK)	
	7	1	**205-9633**	1	HINGE (LOWER, RH)	
	8	1	**205-9634**	1	HINGE (UPPER, RH)	
Y	9	1	**299-6985**	1	LATCH GP-CAB DOOR & WINDOW (LOWER)	499
Y	10	1	**299-6986**	1	LATCH GP-CAB DOOR & WINDOW (UPPER)	500
	11	1	**325-9301**	1	GLASS (REAR, RH)	
	12	1	*330-0428*	1	LATCH GP (RH)	
M		1	**6V-7743**	2	LOCKNUT (M6X1-THD)	
M		1	**9X-2045**	2	SCREW-TRUSS HEAD (M6X1X20-MM)	
		1	**143-2827**	1	SPRING	
		1	**330-0422**	2	GASKET	
M	13	1	**5C-7261**	1	NUT (M8X1.25-THD)	
M	14	1	**6V-7743**	2	LOCKNUT (M6X1-THD)	
	15	1	**7X-2393**	1	BUMPER-CONICAL	
E	16	1	**148-5353**		SEAL (342-CM)	

E-ORDER BY THE CENTIMETER
M-METRIC PART
Y-SEPARATE ILLUSTRATION

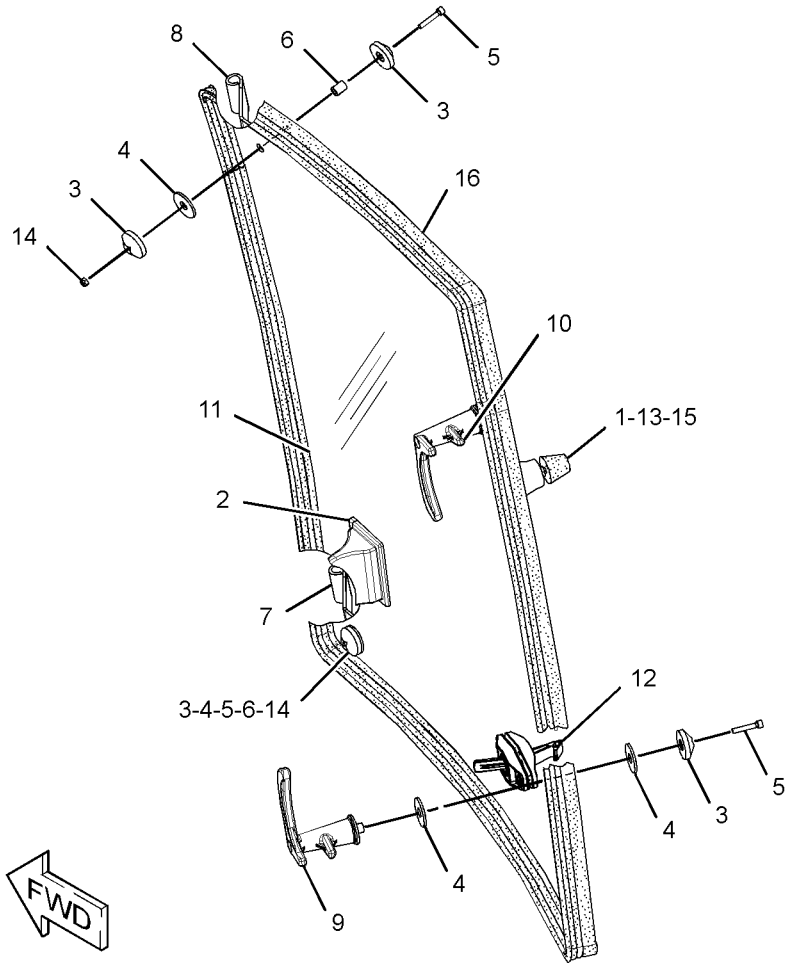

GRAPHIC #1 **<END>** g02512676

OPERATOR STATION

333-9901 WINDOW GP-DOOR–LH

S/N: LTG1-UP
PART OF 329-1168 DOOR GP-CAB
AN ATTACHMENT

SMCS-7308, 7310 **i04354069**

NOTE	REF NO	GRAPHIC REF	PART NUMBER	QTY	PART NAME 1 2 3 4 5 6 (PRODUCT LEVEL)	SEE PAGE
E	1	1	**148-5353**		SEAL (354-CM)	
	2	1	**100-7608**	1	HANDLE (LH)	
	3	1	**129-8542**	5	RETAINER	
	4	1	**129-8545**	6	WASHER (13X40X3-MM THK)	
M	5	1	**136-4192**	3	BOLT (M6X1X35-MM)	
	6	1	**154-5423**	2	SPACER (6.6X12.7X17-MM THK)	
	7	1	**205-9587**	1	GLASS (LH)	
	8	1	**205-9590**	1	HINGE (UPPER)	
	9	1	**205-9591**	1	HINGE (LOWER)	
Y	10	1	**299-6986**	1	LATCH GP-CAB DOOR & WINDOW (LH)	500
	11	1	*330-0427*	1	LATCH GP (LH)	
M		1	**6V-7743**	2	LOCKNUT (M6X1-THD)	
M		1	**9X-2045**	2	SCREW-TRUSS HEAD (M6X1X20-MM)	
		1	**143-2827**	1	SPRING	
		1	**330-0422**	2	GASKET	
M	12	1	**6V-7743**	2	LOCKNUT (M6X1-THD)	

E-ORDER BY THE CENTIMETER
M-METRIC PART
Y-SEPARATE ILLUSTRATION

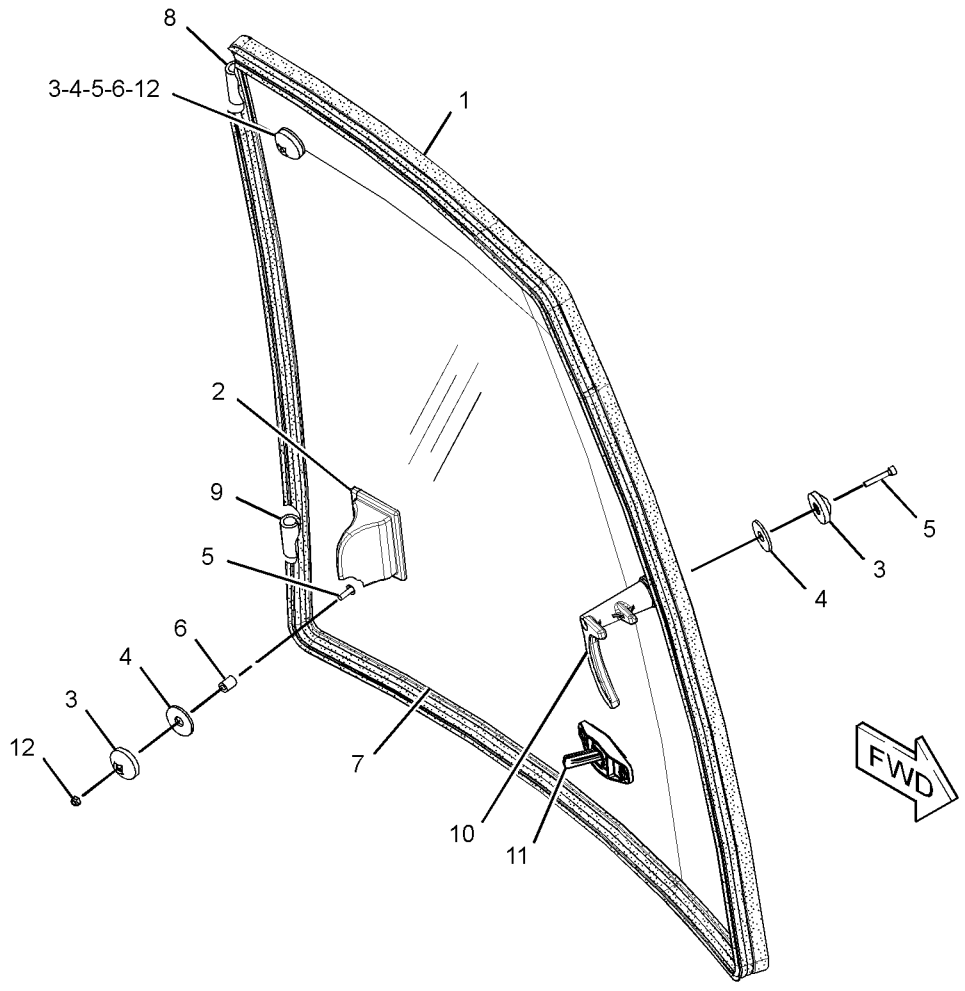

GRAPHIC #1 **<END>** g02512736

OPERATOR STATION

333-9902 WINDOW GP-DOOR–RH

S/N: LTG1-UP
PART OF 329-1167 DOOR GP-CAB
AN ATTACHMENT

SMCS-7308, 7310 **i04354070**

NOTE	REF NO	GRAPHIC REF	PART NUMBER	QTY	PART NAME 1 2 3 4 5 6 (PRODUCT LEVEL)	SEE PAGE
E	1	1	**148-5353**		SEAL (354-CM)	
	2	1	**100-7608**	1	HANDLE (RH)	
	3	1	**129-8542**	5	RETAINER	
	4	1	**129-8545**	6	WASHER (13X40X3-MM THK)	
M	5	1	**136-4192**	3	BOLT (M6X1X35-MM)	
	6	1	**154-5423**	2	SPACER (6.6X12.7X17-MM THK)	
	7	1	**205-9597**	1	GLASS (RH)	
	8	1	**205-9614**	1	HINGE (LOWER)	
	9	1	**205-9615**	1	HINGE (UPPER)	
Y	10	1	**299-6985**	1	LATCH GP-CAB DOOR & WINDOW (RH)	499
	11	1	*330-0428*	1	LATCH GP (RH)	
M		1	**6V-7743**	2	LOCKNUT (M6X1-THD)	
M		1	**9X-2045**	2	SCREW-TRUSS HEAD (M6X1X20-MM)	
		1	**143-2827**	1	SPRING	
		1	**330-0422**	2	GASKET	
M	12	1	**6V-7743**	2	LOCKNUT (M6X1-THD)	

E-ORDER BY THE CENTIMETER
M-METRIC PART
Y-SEPARATE ILLUSTRATION

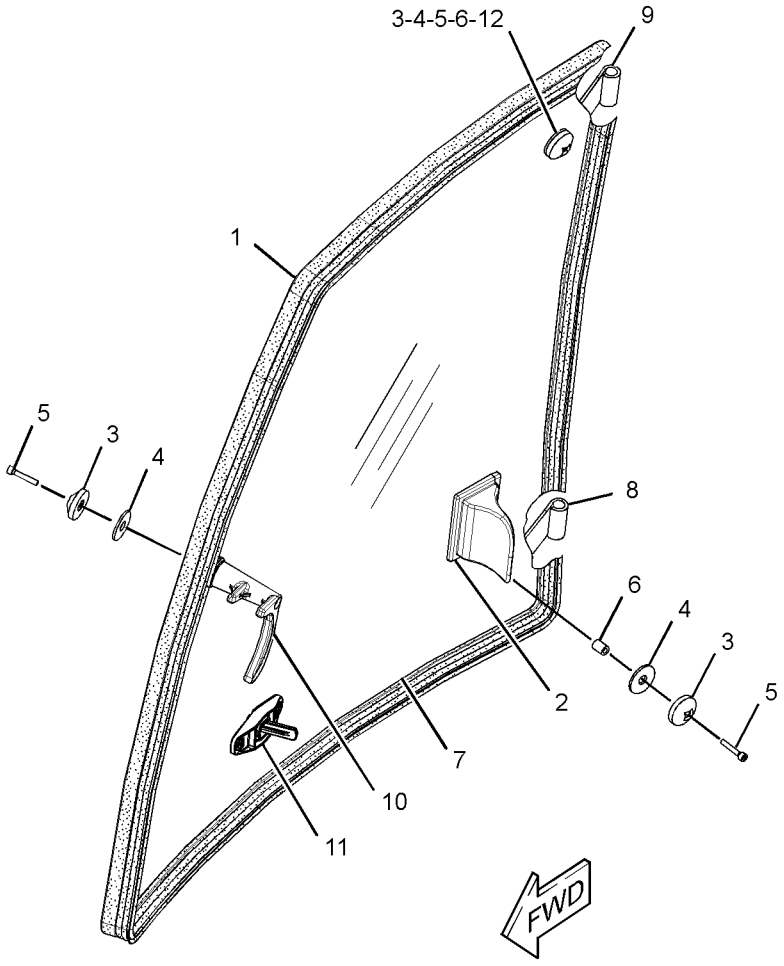

GRAPHIC #1 **<END>** g02512776

OPERATOR STATION

353-1365 WIPER GP-WINDOW

S/N: LTG1-UP
PART OF 353-1428 CAB AR
AN ATTACHMENT

SMCS-7305 **i04580649**

NOTE	REF NO	GRAPHIC REF	PART NUMBER	QTY	PART NAME 1 2 3 4 5 6 (PRODUCT LEVEL)	SEE PAGE
E	1	1	**144-0195**		HOSE (80.5-CM)	
E	1A	1	**144-0195**		HOSE (17-CM)	
E	1B	1	**144-0195**		HOSE (40-CM)	
E	1C	1	**144-0195**		HOSE (42.5-CM)	
	2	1	**3S-2093**	9	STRAP-CABLE	
	3	1	**5C-8811**	1	BLADE AS-WIPER (500-MM) (REAR)	
	4	1	**8T-1118**	1	NOZZLE AS-WASHER	
	5	1	**9R-3469**	2	DIAPHRAGM	
	6	1	**101-0745**	1	BLADE AS-WIPER (600-MM) (FRONT)	
	7	1	**121-6936**	1	CONNECTOR	
	8	1	**154-5410**	1	ARM-WINDOW WIPER	
	9	1	**160-2169**	2	SPACER (7X11X8.4-MM THK)	
	10	1	**214-4709**	1	SWITCH AS-ROCKER (WIPER, WASHER, REAR)	
		1	**111-7899**	1	GASKET	
	11	1	**220-2001**	1	ARM AS-WIPER	
	12	1	**223-8263**	1	PLATE	
	13	1	**229-0306**	1	PLATE	
	14	1	**276-8791**	1	CLIP	
	15	1	**282-7833**	1	GROMMET	
	16	1	**282-7835**	1	PLATE	
	17	1	**283-3451**	2	CONNECTOR AS	
Y	18	1	**313-3752**	1	MOTOR GP-WINDOW WIPER (12-VOLT) (FRONT)	511
Y	19	1	**330-5010**	1	MOTOR GP-WINDOW WIPER (12-VOLT) (REAR)	512
	20	1	**331-5531**	1	HARNESS AS-CAB	
		1	**9W-0852**	2	PIN-CONNECTOR (14-GA TO 16-GA)	
		1	**9X-3401**	9	PIN-CONNECTOR (16-GA TO 18-GA)	
					—OR—	
		1	**126-1767**	9	PIN-CONNECTOR (14-GA TO 16-GA)	
		1	**155-2265**	2	KIT-CONNECTING PLUG (8-PIN)	
		1	**155-2271**	1	KIT-CONNECTING PLUG (4-PIN)	
					(EACH PLUG KIT INCLUDES PLUG AS, WEDGE & INTERFACE SEAL)	
		1	**8T-8737**	3	PLUG-SEAL	
		1	**102-8801**	1	KIT-RECEPTACLE (12-PIN)	
					(INCLUDES RECEPTACLE AS & WEDGE)	
		1	**9W-0844**	4	SOCKET-CONNECTOR (14-GA TO 16-GA)	
		1	**180-9340**	14	SOCKET-CONNECTOR (14-GA TO 18-GA)	
		1	**3S-2093**	15	STRAP-CABLE	
		1	**097-7234**	2	TERMINAL-BLADE (18-GA TO 22-GA)	
		1	**2L-8069**	1	TERMINAL-RING (2-GA TO 10-GA, 3/8-IN SCREW)	
		1	**5P-4571**	2	TERMINAL-BLADE (14-GA TO 16-GA)	
E		1	**119-3662**		TUBE-HEAT SHRINK (10.85-MM DIA) (7-CM)	
E		1	**125-7874**		TUBE-HEAT SHRINK (5.72-MM DIA) (5-CM)	
D		1	**6V-2689**		TUBE-HEAT SHRINK (6.35-MM DIA) (0.1-M)	
	21	1	**346-5168**	1	TANK AS-WINDOW WASHER	
E		1	**9X-6383**		SEAL (57-CM)	
M	22	1	**5C-2890**	1	NUT (M6X1-THD)	
	23	1	**5P-4116**	1	WASHER-HARD (8.8X20.5X2-MM THK)	
M	24	1	**6V-7357**	1	BOLT (M6X1X25-MM)	
M	25	1	**8C-3798**	2	BOLT-LOCKING (M6X1X30-MM)	
M	26	1	**8T-4138**	2	BOLT (M6X1X20-MM)	
M	27	1	**8T-4171**	4	BOLT (M6X1X12-MM)	
M	28	1	**8T-4189**	1	BOLT (M8X1.25X20-MM)	
	29	1	**8T-4205**	9	WASHER-HARD (7.2X14.5X2-MM THK)	
M	30	1	**8T-4971**	1	BOLT (M6X1X30-MM)	

353-1365 **WIPER GP-WINDOW** *(contd.)* **i04580649**

NOTE	REF NO	GRAPHIC REF	PART NUMBER	QTY	PART NAME 1 2 3 4 5 6 (PRODUCT LEVEL)	SEE PAGE
	31	1	**9X-8256**	2	WASHER (6.6X12X2-MM THK)	

D-ORDER BY THE METER
E-ORDER BY THE CENTIMETER
M-METRIC PART
Y-SEPARATE ILLUSTRATION

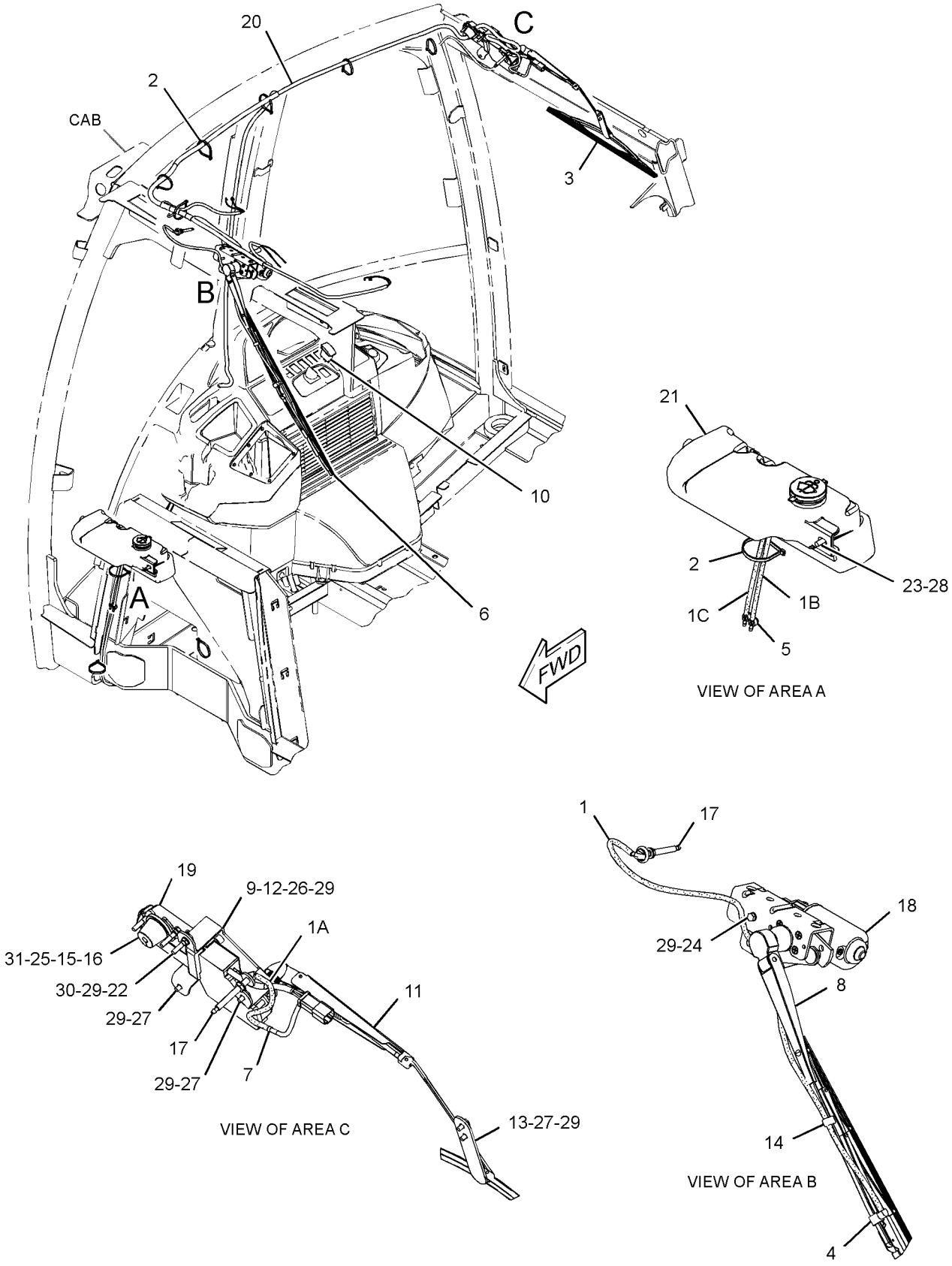

GRAPHIC #1 **<END>** g02810816

OPERATOR STATION

353-1367 WIPER GP-WINDOW

S/N: LTG1-UP
PART OF 353-1427 CANOPY AR
AN ATTACHMENT

SMCS-7305 **i04580629**

NOTE	REF NO	GRAPHIC REF	PART NUMBER	QTY	PART NAME 1 2 3 4 5 6 (PRODUCT LEVEL)	SEE PAGE
E	1	1	**144-0195**		HOSE (297.1-CM)	
E	1A	1	**144-0195**		HOSE (142.9-CM)	
	1B	1	**144-0195**		HOSE (78.8-CM)	
	2	1	**3S-2093**	8	STRAP-CABLE	
	3	1	**8T-1118**	1	NOZZLE AS-WASHER	
	4	1	**9R-3469**	1	DIAPHRAGM	
	5	1	**101-0745**	1	BLADE AS-WIPER (600-MM) (FRONT)	
	6	1	**154-5410**	1	ARM-WINDOW WIPER	
	7	1	**227-1057**	1	PLUG-HOLE	
	8	1	**276-8791**	1	CLIP	
	9	1	**283-3451**	1	CONNECTOR AS	
Y	10	1	**313-3752**	1	MOTOR GP-WINDOW WIPER (12-VOLT)	511
	11	1	**331-5531**	1	HARNESS AS-CAB	
		1	**9W-0852**	2	PIN-CONNECTOR (14-GA TO 16-GA)	
		1	**9X-3401**	9	PIN-CONNECTOR (16-GA TO 18-GA)	
					—OR—	
		1	**126-1767**	9	PIN-CONNECTOR (14-GA TO 16-GA)	
		1	**155-2265**	2	KIT-CONNECTING PLUG (8-PIN)	
		1	**155-2271**	1	KIT-CONNECTING PLUG (4-PIN)	
					(EACH PLUG KIT INCLUDES PLUG AS, WEDGE & INTERFACE SEAL)	
		1	**8T-8737**	3	PLUG-SEAL	
		1	**102-8801**	1	KIT-RECEPTACLE (12-PIN)	
					(INCLUDES RECEPTACLE AS & WEDGE)	
		1	**239-3104**	2	TERMINAL AS	
		1	**9W-0844**	4	SOCKET-CONNECTOR (14-GA TO 16-GA)	
		1	**180-9340**	14	SOCKET-CONNECTOR (14-GA TO 18-GA)	
		1	**3S-2093**	15	STRAP-CABLE	
		1	**097-7234**	2	TERMINAL-BLADE (18-GA TO 22-GA)	
		1	**2L-8069**	1	TERMINAL-RING (2-GA TO 10-GA, 3/8-IN SCREW)	
		1	**5P-4571**	2	TERMINAL-BLADE (14-GA TO 16-GA)	
E		1	**119-3662**		TUBE-HEAT SHRINK (10.85-MM DIA) (7-CM)	
E		1	**125-7874**		TUBE-HEAT SHRINK (5.72-MM DIA) (5-CM)	
D		1	**6V-2689**		TUBE-HEAT SHRINK (6.35-MM DIA) (0.1-M)	
	12	1	**377-6187**	1	TANK AS-WINDOW WASHER	
E		1	**9X-6383**		SEAL (57-CM)	
	13	1	**5P-4116**	1	WASHER-HARD (8.8X20.5X2-MM THK)	
M	14	1	**6V-7357**	1	BOLT (M6X1X25-MM)	
M	15	1	**8T-4189**	1	BOLT (M8X1.25X20-MM)	
	16	1	**8T-4205**	1	WASHER-HARD (7.2X14.5X2-MM THK)	

D-ORDER BY THE METER
E-ORDER BY THE CENTIMETER
M-METRIC PART
Y-SEPARATE ILLUSTRATION

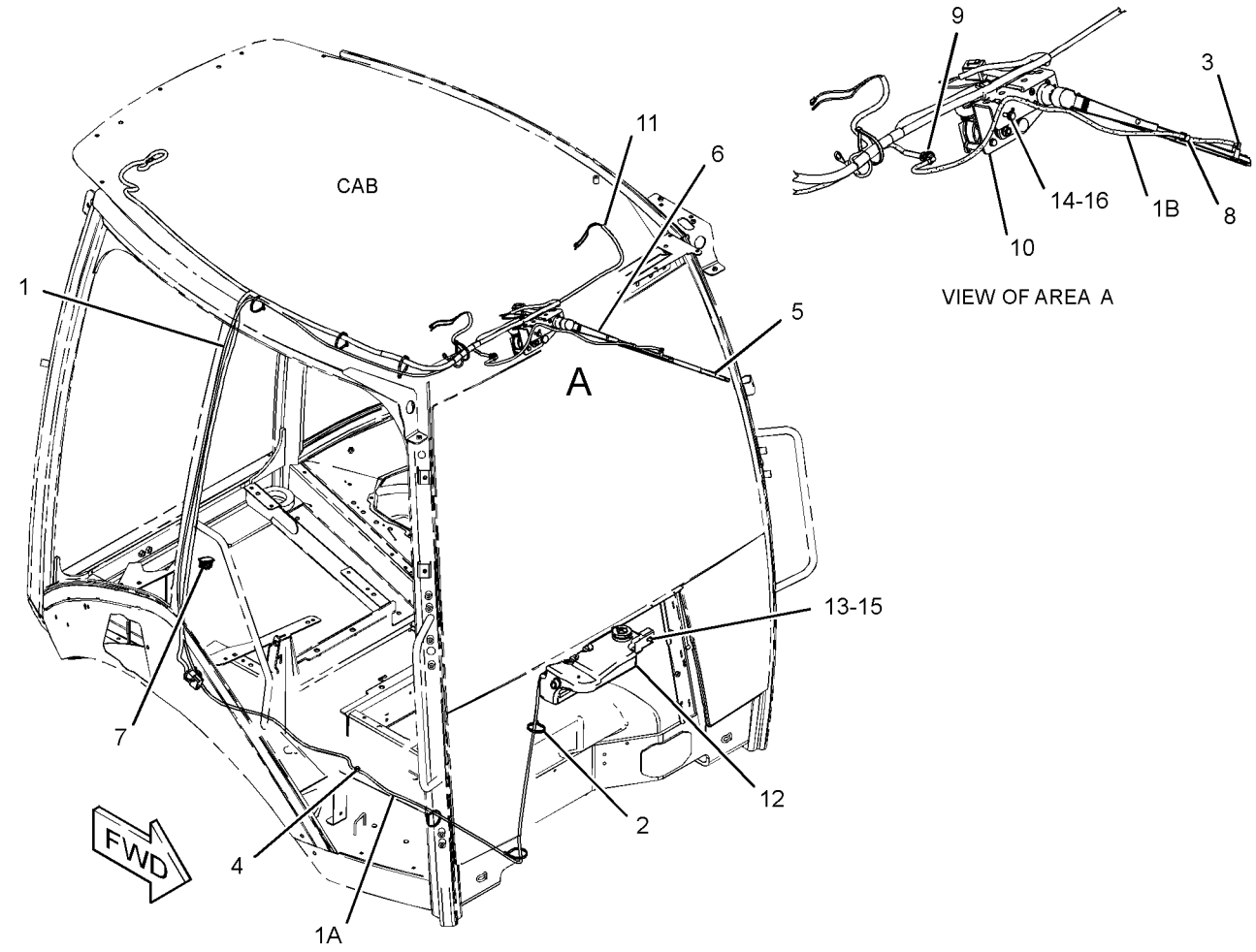

GRAPHIC #1 **<END>** g02808262

SERVICE EQUIPMENT AND SUPPLIES

367-5829 FILM GP

S/N: LTG1-UP

PART OF 368-8951 COMMON AR

SMCS-7405, 7557 **i04549340**

NOTE	REF NO	GRAPHIC REF	PART NUMBER	QTY	PART NAME 1 2 3 4 5 6 (PRODUCT LEVEL)	SEE PAGE
	1	1	**370-3949**	1	FILM-IDENTIFICATION (420F, RH)	
	2	1	**370-3957**	1	FILM-IDENTIFICATION (CAT, BOOM, RH)	
	3	1	**370-3948**	1	FILM-IDENTIFICATION (420F, LH)	
	4	1	**370-3956**	1	FILM-IDENTIFICATION (CAT, BOOM, LH)	

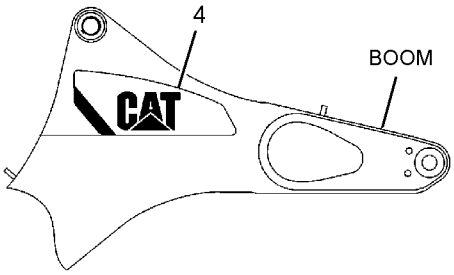

LEFT SIDE VIEW

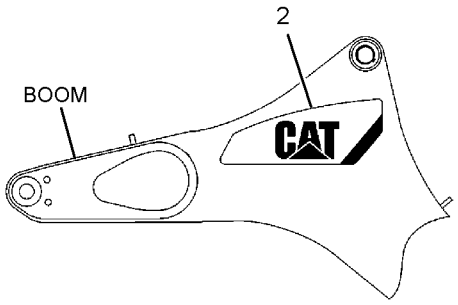

RIGHT SIDE VIEW

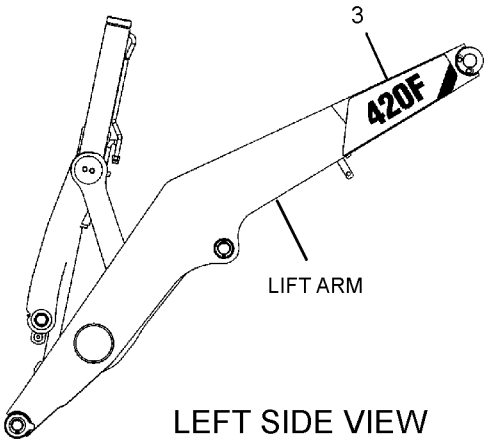

LEFT SIDE VIEW

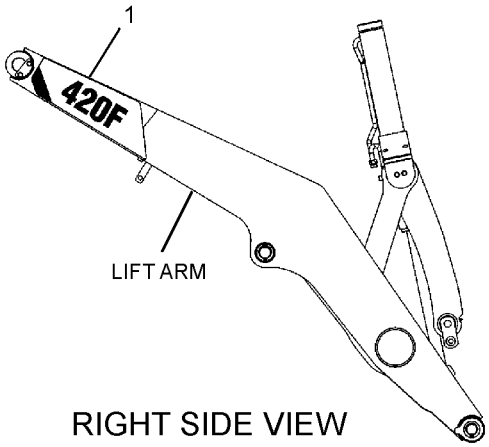

RIGHT SIDE VIEW

GRAPHIC #1 **<END>** g02771257

SERVICE EQUIPMENT AND SUPPLIES

353-1392 FILM GP-INTERNATIONAL

S/N: LTG1-UP

AN ATTACHMENT

SMCS-7405, 7557 **i04549343**

NOTE	REF NO	GRAPHIC REF	PART NUMBER	QTY	PART NAME 1 2 3 4 5 6 (PRODUCT LEVEL)	SEE PAGE
	1	1	**224-8946**	1	FILM-WARNING (NO ETHER SPRAY/AIR INTK, INTL)	
	2	1	**225-0312**	1	FILM-WARNING (JUMP START, READ OMM, INTL)	
	3	1	**226-1240**	2	FILM-WARNING (CRUSH HAZARD, STAY BACK, INTL)	
	4	1	**228-7316**	1	FILM-WARNING (HOT SURFACE, HANDS CLEAR, INTL)	
	5	1	**239-9430**	1	FILM-WARNING (ARM BRACE, READ OMM, INTL)	
	6	1	**240-7095**	2	FILM-WARNING (NO ENTRANCE, EXIT, READ OMM)	
	7	1	**241-8450**	2	FILM-WARNING (HYD PRESS, READ OMM, INTL)	
	8	1	**255-0793**	1	FILM-WARNING (READ OMM)	
	9	1	**255-0794**	1	FILM-WARNING (SEAT BELT)	
	10	1	**259-4402**	1	FILM-WARNING (HOT FLUID UNDER PRESSURE)	
	11	1	**260-7653**	1	FILM-WARNING (PRODUCT LINK 300, INTL)	
	12	1	**276-2334**	1	FILM-WARNING (HIGH PRESS CYLINDER, READ OMM)	
	13	1	**280-9658**	2	FILM-WARNING (NO ENTRANCE, EXIT, READ OMM)	
	14	1	**282-9043**	1	FILM-WARNING (QUICK COUPLER)	
	15	1	**373-2673**	1	FILM-WARNING (HOT SURFACE, HANDS CLEAR, OMM)	

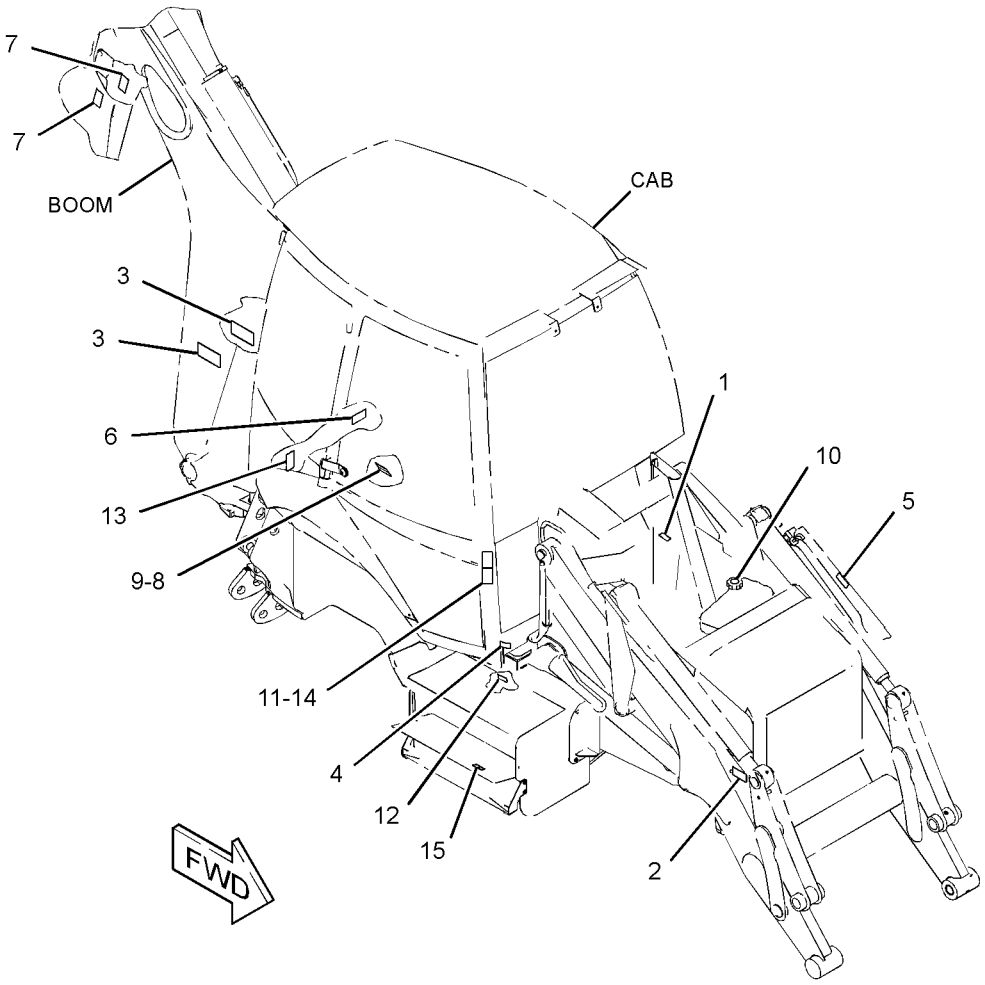

GRAPHIC #1 **<END>** g02773756

SERVICE EQUIPMENT AND SUPPLIES

353-1390 FILM GP-U.S.

S/N: LTG1-UP

AN ATTACHMENT

SMCS-7405, 7557 **i04552035**

NOTE	REF NO	GRAPHIC REF	PART NUMBER	QTY	PART NAME 1 2 3 4 5 6 (PRODUCT LEVEL)	SEE PAGE
	1	1	**224-8945**	1	FILM-WARNING (DO NOT USE ETHER, U.S.)	
	2	1	**225-0313**	1	FILM-WARNING (JUMP START, READ OMM, U.S.)	
	3	1	**226-1242**	2	FILM-WARNING (CRUSH HAZARD, STAY BACK, U.S.)	
	4	1	**228-7315**	1	FILM-WARNING (HOT SURFACE, HANDS CLEAR)	
	5	1	**239-9429**	1	FILM-WARNING (ARM BRACE, READ OMM, U.S.)	
	6	1	**240-7094**	2	FILM-WARNING (NO ENTRANCE, EXIT, READ OMM)	
	7	1	**241-8448**	2	FILM-WARNING (HYD PRESS, READ OMM, U.S.)	
	8	1	**255-0791**	1	FILM-WARNING (READ OMM)	
	9	1	**255-0792**	1	FILM-WARNING (SEAT BELT)	
	10	1	**259-4401**	1	FILM-WARNING (HOT FLUID UND PRESS, READ OMM)	
	11	1	**260-7652**	1	FILM-WARNING (PRODUCT LINK 300, U.S.)	
	12	1	**279-5016**	1	FILM-WARNING (HIGH PRESS CYLINDER, READ OMM)	
	13	1	**282-9042**	1	FILM-WARNING (QUICK COUPLER, READ OMM)	
	14	1	**373-2672**	1	FILM-WARNING (HOT SURFACE, HANDS CLEAR)	

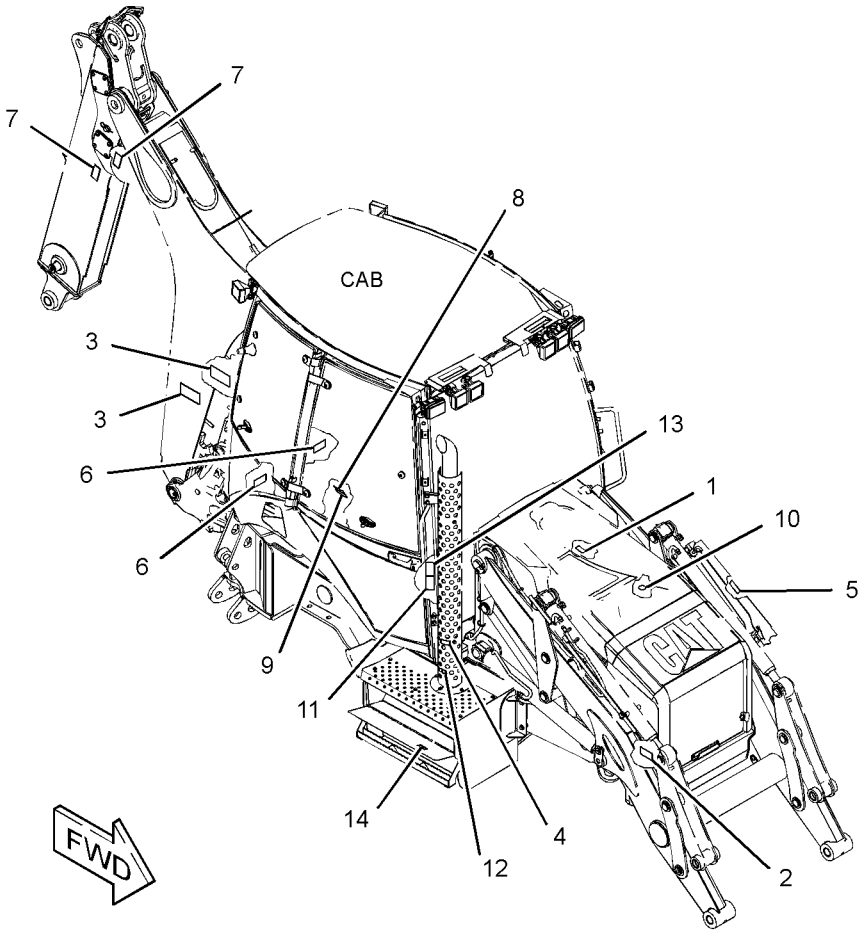

GRAPHIC #1 **<END>** g02830336

SERVICE EQUIPMENT AND SUPPLIES

175-7877 LINK GP-SHIPPING

S/N: LTG1-UP

AN ATTACHMENT

SMCS-6513 **i04555809**

NOTE	REF NO	GRAPHIC REF	PART NUMBER	QTY	PART NAME 1 2 3 4 5 6 (PRODUCT LEVEL)	SEE PAGE
	1	1	**120-9286**	1	PLATE	
					PARTS SHOWN IN GRAPHIC(S) WITHOUT A REFERENCE NUMBER ARE NOT SERVICED SEPARATELY	

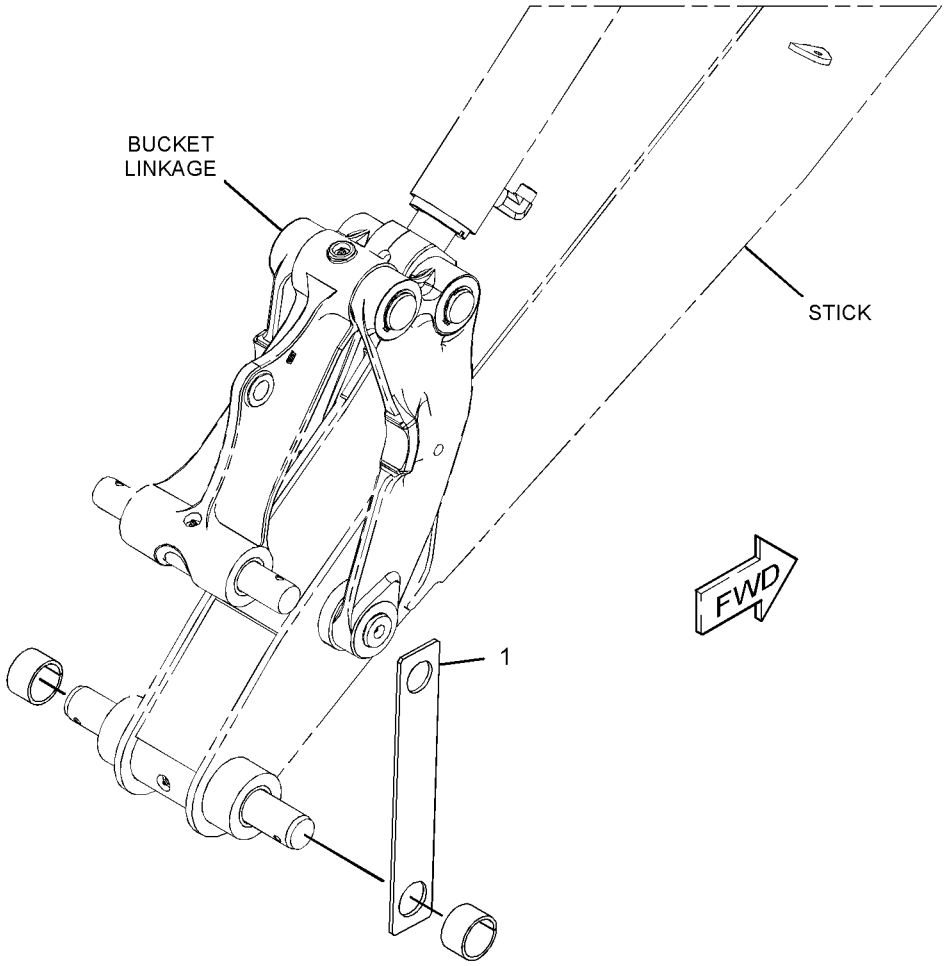

GRAPHIC #1 **<END>** g02778216

SERVICE EQUIPMENT AND SUPPLIES

216-0910 LOCK GP-VANDALISM

S/N: LTG1-UP

PART OF 340-1690 CHASSIS AR

SMCS-7315 **i03326060**

NOTE	REF NO	GRAPHIC REF	PART NUMBER	QTY	PART NAME 1 2 3 4 5 6 (PRODUCT LEVEL)	SEE PAGE
	1	1	**246-2641**	3	PADLOCK GP	
					(EACH INCLUDES)	
		1	**5P-8500**	1	KEY	

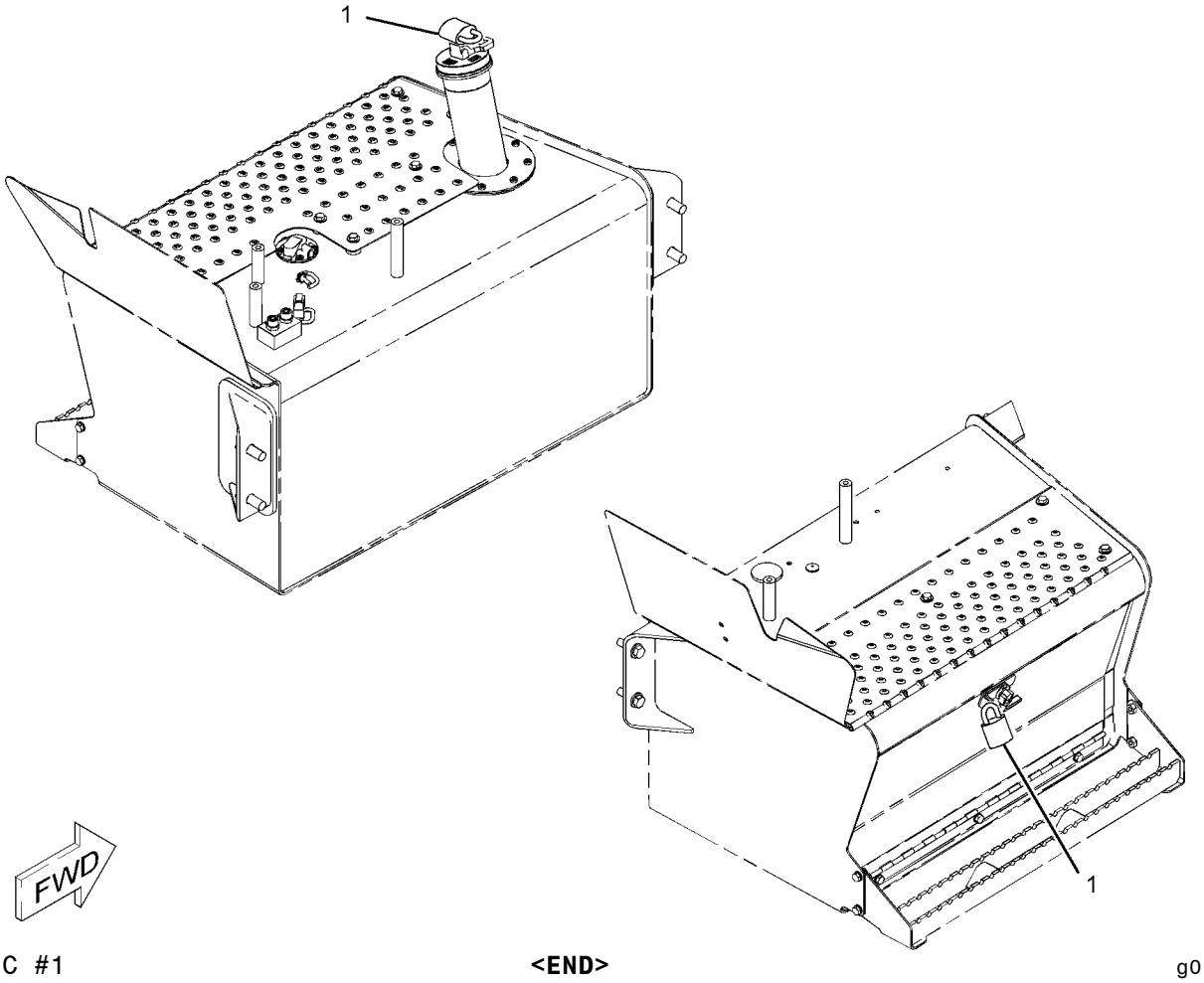

GRAPHIC #1 **<END>** g01096994

SERVICE EQUIPMENT AND SUPPLIES

263-8591 PLATE & FILM GP

S/N: LTG1-UP
PART OF 337-7458, 337-7459 BUCKET GP-MULTIPURPOSE
AN ATTACHMENT

SMCS-7405 **i03849809**

NOTE	REF NO	GRAPHIC REF	PART NUMBER	QTY	PART NAME 1 2 3 4 5 6 (PRODUCT LEVEL)	SEE PAGE
	1	1	**247-6118**	2	FILM-WARNING (CRUSH HAZARD, STAY BACK)	

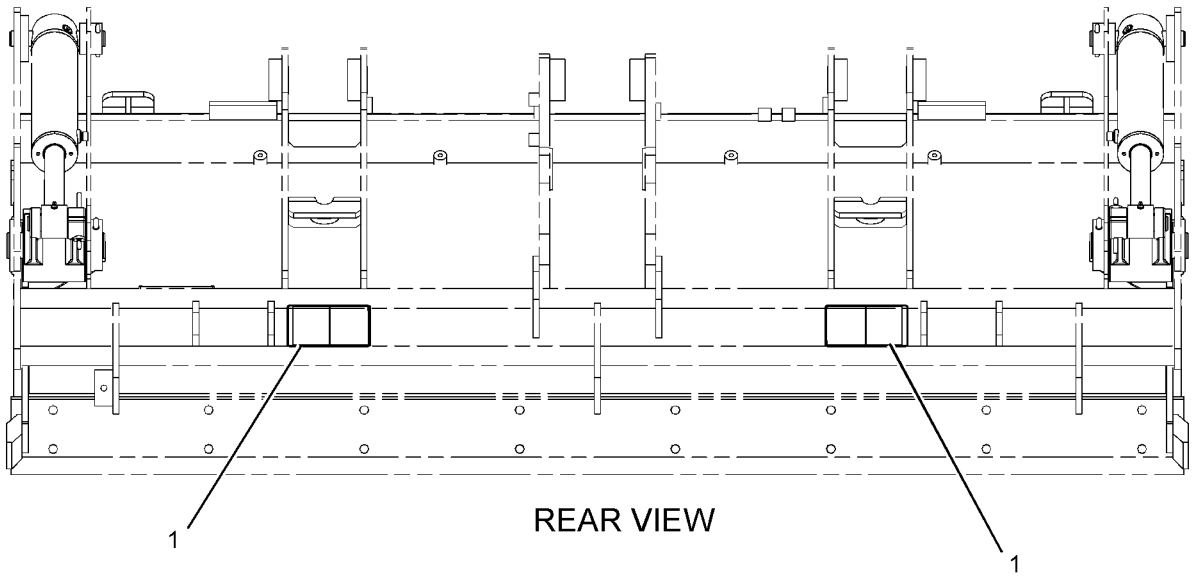

GRAPHIC #1 **<END>** g01231780

SERVICE EQUIPMENT AND SUPPLIES

374-7438 PLATE GP-IDENTIFICATION

S/N: LTG1-UP

PART OF 368-8951 COMMON AR

SMCS-7557 **i04548441**

NOTE	REF NO	GRAPHIC REF	PART NUMBER	QTY	PART NAME 1 2 3 4 5 6 (PRODUCT LEVEL)	SEE PAGE
	1	1	**225-4150**	1	PLATE-SERVICE INFORMATION (MACHINE)	
	2	1	**239-6989**	1	PLATE-SERIAL NUMBER (MACHINE)	

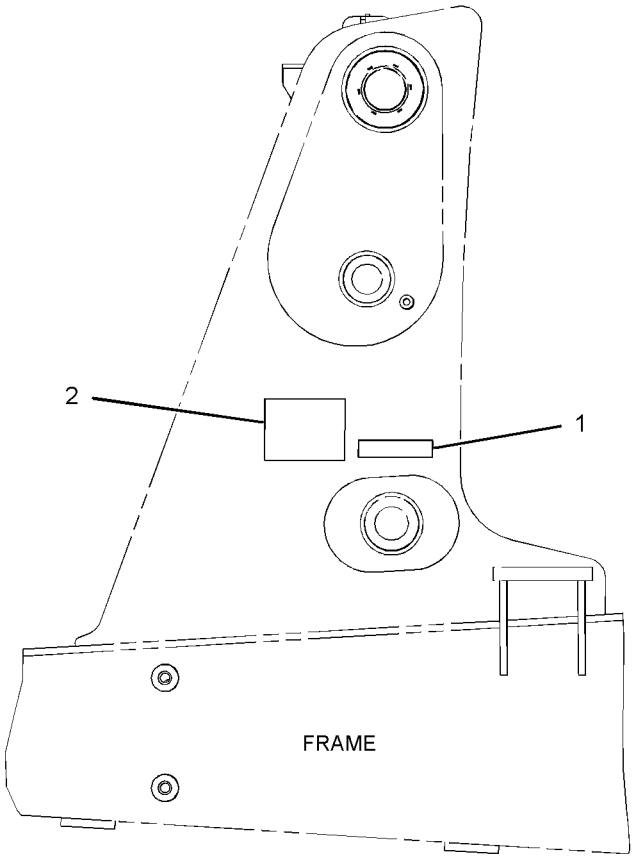

LEFT SIDE VIEW

GRAPHIC #1 **<END>** g02777322

SERVICE EQUIPMENT AND SUPPLIES

206-1701 PROTECTION GP-VANDALISM—ROTATING GUARD

S/N: LTG1-UP

PART OF 353-1427 CANOPY AR, 353-1426 CANOPY AR-OPEN ROPS

AN ATTACHMENT

SMCS-7315 **i03500322**

NOTE	REF NO	GRAPHIC REF	PART NUMBER	QTY	PART NAME 1 2 3 4 5 6 (PRODUCT LEVEL)	SEE PAGE
	1	1	**206-1852**	1	COVER-VANDALISM	
	2	1	**206-1853**	2	BUSHING	
	3	1	**206-1855**	1	PLATE	
	4	1	**206-1856**	1	BRACKET	
J	5	1	**226-0291**	1	LOCK AS	
M	6	1	**129-3178**	2	LOCKNUT (M6X1-THD)	
M	7	1	**174-8131**	1	SCREW-TRUSS HEAD (M4X0.7X12-MM)	
	8	1	**232-4636**	2	BOLT-CARRIAGE (M6X1-THD)	
	9	1	**8C-9660**	1	WASHER (4.6X7.9X0.8-MM THK)	
M	10	1	**8T-2659**	1	LOCKNUT (M4X0.7-THD)	
	11	1	**9X-2038**	2	WASHER (7X19X2-MM THK)	

J-REQUIRES 5P-8500 KEY
M-METRIC PART

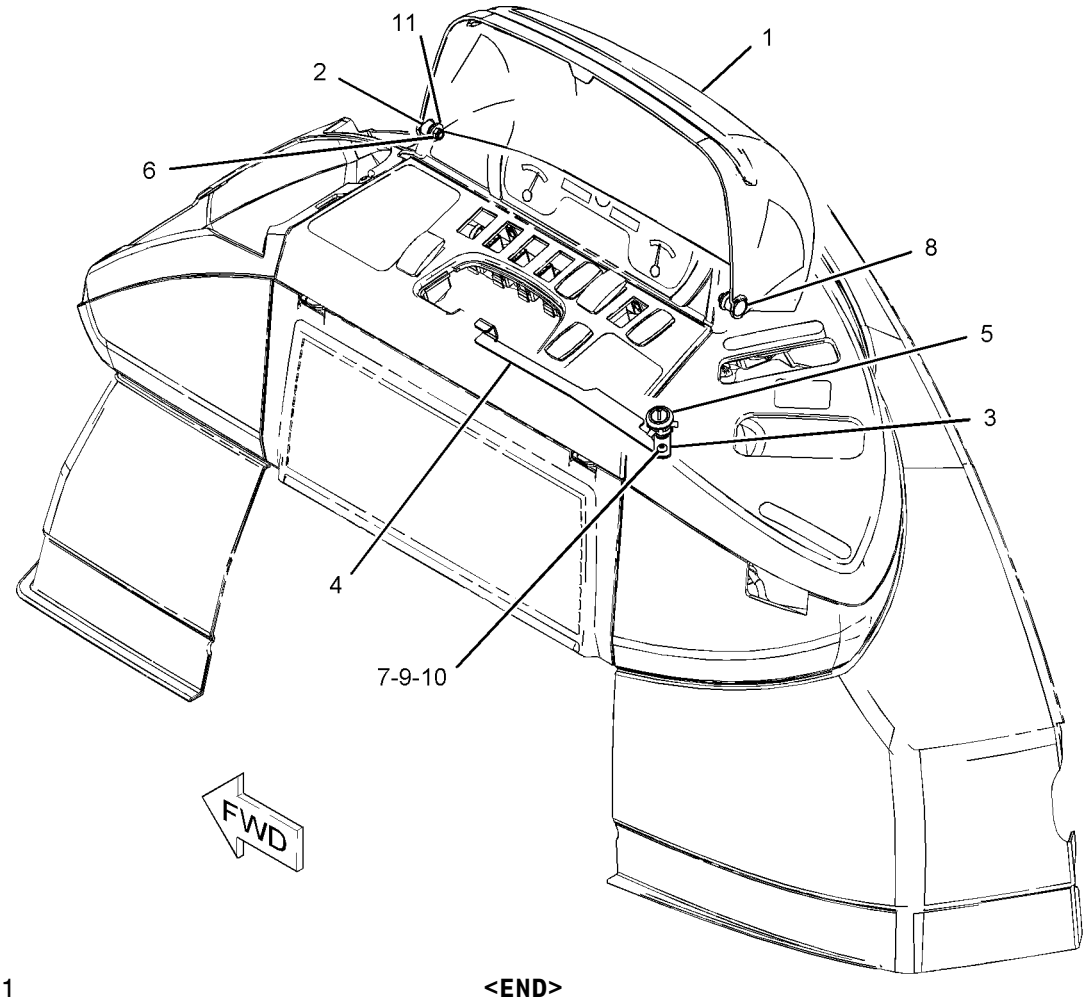

GRAPHIC #1 **<END>** g01083362

MEMORANDA

PART NUMBER INDEX

Part	Page
0	
0S-0509	531
0S-1595	524
	525
	526
0S-1603	16
1	
1B-3057	35
1B-4430	136
1B-8736	6
	9
1H-3244	88
	89
	90
	91
	490
1H-3337	531
1H-7339	291
1H-8128	287
	288
1J-9671	273
	274
1K-6872	524
	525
	526
	531
1K-7082	164
1L-3768	395
1L-6377	516
1M-6119	71
1M-6120	71
1P-0810	84
1P-4584	337
1R-5396	232
	234
1S-0994	67
1S-7252	67
1S-9593	118
1U-8846	133
	136
	159
2	
2B-0858	13
	26
2B-0941	239
	241
	339
2D-2628	215
2D-2629	215
2D-2630	215
2D-2631	215
2D-2633	215
2D-6235	531
2H-3922	99
	116
2H-4145	276
2J-0564	289
2J-3961	278
	289
2K-4973	524
	525
	526
	531
2K-5986	229
2K-6830	280
	282
2L-5893	531
2L-8050	120
2L-8066	110
2L-8067	101
	113
	120
2L-8069	84
	101
	113
	120
	545
	548
2L-8076	110
2L-8079	110
	120
2M-7819	527
2M-9780	35
	41
	295
	328
	341
	343
	352
2P-1293	302
	305
2P-4556	507
2P-7864	527
2P-8104	94
2R-0364	384
	472
	476
2S-3163	468
2S-3440	339
2S-3745	492
	497
2V-9121	505
	507
2W-9499	527
2Y-5821	278
	280
	282
3	
3B-4505	531
3B-4610	236
3B-4631	531
3B-5319	381
	446
3B-8488	377
	387
	395
	399
3B-8489	256
	258
	280
	282
	286
	287
	288
	298
	373
	377
	381
	384
	387
	395
	399
	427
	430
	432
	433
	442
3C-4883	84
3D-2824	294
	301
	302
	305
	309
	311
	313
	319
	337
	343
	345
	347
	357
	358
3E-0068	507
3E-4321	328
	505
	507
3E-4892	21
3E-5153	94
3E-5154	94
3E-6600	84
	121
	464
	472
	476
3E-6735	280
	282
	287
	288
3E-7445	35
	41
	149
	151
	339
3E-8299	121
3E-8320	67
3E-9362	92
	101
	113
	118
3F-5108	427
	430
	432
	433
	444
3F-9556	511
	512
	517
3G-6927	203
3G-8054	313
3G-8057	313
3J-1907	55
	127
	135
	161
	162
	192
	193
	197
	198
	202
	203
	229
	239
	241
	286
	322
	324
	326
	328
	330
	333
	335
	336
	341
	347
	352
	363
3J-4818	68
	110
	531
3J-7354	239
	241
	273
	274
	326
	352
3K-0360	229
	230
	239
	241
	272
	294
	315
	328
	341
	343
	347
	352
3K-2889	390
	391
3K-8460	54
3K-8782	82
3N-4968	133
3N-5739	280
	282
3S-2093	52
	76
	77
	84
	101
	104

► **PRIMARY REFERENCE**

PART NUMBER INDEX

Part	Page
	108
	110
	113
	115
	116
	120
	125
	127
	129
	131
	192
	197
	472
	476
	482
	507
	529
	530
	545
	548
3S-8536	262
3T-0849	513
3T-0852	521
	522
	527
4	
4B-4278	527
4B-4863	454
4B-5271	524
	525
	526
4B-9784	531
4D-1248	104
4D-5243	104
4D-7388	35
	507
4D-9517	384
4E-0724	110
4F-3657	403
	404
	406
	443
	449
4F-7952	202
4F-8711	395
4F-9029	135
4H-1641	527
4H-2558	450
4H-3001	45
4I-3038	466
4I-9521	330
4I-9522	330
4I-9523	330
4I-9524	330
4I-9525	330
4I-9526	330
4I-9527	330
4I-9528	330
4J-0520	144
4J-0522	138
	141
	149
	151
4J-0526	287
	288
4J-1888	445
4J-5477	161
	162
	229
	239
	241
	326
	328
	330
	333
	335
	336
	347
4J-9224	276
4J-9535	365
	366
	367
	368
4K-0367	403
	404
	406
	427
	430
	432
	433
	443
	444
	449
4L-6454	135
	524
	525
	526
4M-0061	531
4P-7428	76
4P-7429	111
	129
	131
	239
	241
4P-7581	111
	116
4P-8134	76
	111
	115
4T-6780	291
4T-8588	278
4W-9972	192
	197
	202
5	
5A-3604	384
5B-9079	28
5C-2874	111
	499
	500
5C-2890	52
	77
	88
	89
5C-7261	35
	68
	88
	89
	90
	91
	101
	113
	119
	120
	125
	230
	464
	501
	537
	545
5C-8312	244
	454
5C-8811	545
5C-9553	45
	120
	302
	305
	485
	487
	517
5D-1026	35
	505
	507
5D-8159	445
5G-2003	503
5G-3676	68
5H-3193	472
	476
5H-4909	135
5J-4966	289
5J-5731	278
5J-7011	276
5J-7012	276
5J-8156	276
5K-2697	317
5K-5338	507
5K-9090	294
	302
	305
	337
5P-0370	390
5P-0599	311
	313
5P-0743	229
	328
5P-0761	67
5P-0767	505
	507
5P-1076	245
5P-1420	55
5P-1442	55
5P-1476	116
5P-1505	55
	239
	241
5P-1717	45
5P-2566	352
5P-3860	309
	345
5P-4115	537
5P-4116	35
	38
	39
	45
	49
	54
	55
	65
	67
	68
	71
	76
	104
	149
	151
	230
	245
	262
	266
	267
	298
	383
	450
	454
	459
	460
	473
	476
	495
	507
	537
	545
	548
5P-4571	84
	120
	545
	548
5P-4868	337
5P-4906	229
5P-5637	492
	497
	537
5P-5655	492
	497
5P-5677	77
	472
	476
5P-5688	492
	497

PART NUMBER INDEX

Part	Page
5P-5927	253
	464
5P-6006	110
5P-6010	530
5P-6129	450
5P-6718	192
	197
	202
5P-7070	466
5P-7464	311
	313
5P-7465	311
	313
5P-7466	302
	305
5P-7467	302
	305
5P-7814	54
5P-7854	339
5P-7958	384
5P-7971	390
	391
5P-8066	192
	197
	202
5P-8112	302
	306
5P-8245	16
	521
	522
	524
	525
	526
	527
5P-8500	554
5P-9297	536
5T-6374	68
5T-7870	524
	525
	526
5V-7190	395
6	
6A-9083	524
	525
	526
6C-3680	492
	497
6D-0337	▶215
	216
6D-0443	215
6D-1734	133
6D-3479	162
6D-4246	41
6E-1135	384
6E-1478	280
	282
6E-5431	383
6F-7045	99
6H-3616	19
6I-0217	22
	50
	60
6I-0260	7
	22
	33
	60
6I-0289	22
6I-0291	60
6I-0363	22
6I-0364	49
	96
6I-0423	17
6I-0563	49
	50
6I-0572	12
	22
	34
	50
6I-0594	96
6I-0645	34
6I-0646	12
6I-0846	7
6I-0847	17
6I-0917	7
6I-1418	118
6I-1497	30
6I-4374	33
6J-1972	291
6J-2680	291
	337
6J-5731	291
6K-0806	101
	113
	118
6L-4725	450
	495
6L-7155	531
6N-6984	35
6P-6591	106
6P-8855	505
	507
6S-3002	295
6T-5598	120
6T-9142	139
	142
6T-9143	139
	142
6T-9144	139
	142
6T-9145	139
	142
6T-9146	139
	142
6T-9147	139
	142
6T-9160	183
6T-9163	139
	142
	202
6T-9164	139
	142
	202
6T-9165	139
	142
	202
6T-9166	139
	142
	202
6T-9196	170
	175
	177
	181
6T-9202	202
6U-0456	309
6V-0292	534
6V-0826	384
6V-0852	192
	197
	203
	326
	328
	352
6V-1249	311
6V-1722	347
6V-1889	311
	313
6V-2315	232
	234
6V-2689	472
	476
	545
	548
6V-3213	373
	388
	389
	392
6V-3341	322
	324
6V-3940	135
6V-3965	192
	197
	203
	326
	328
	352
6V-4248	229
6V-4292	239
	241
6V-4364	258
	373
	381
	395
	399
6V-4589	192
	197
	202
6V-5100	170
	175
	177
6V-5215	138
	141
	202
6V-5764	120
6V-6228	133
	135
	144
6V-6707	276
6V-6715	74
6V-6717	505
	507
6V-7238	352
6V-7357	230
	492
	497
	545
	548
6V-7359	311
	313
6V-7420	352
6V-7644	298
6V-7687	258
6V-7731	192
	197
6V-7743	246
	539
	541
	543
	544
6V-7744	252
	373
	447
	472
	476
	534
6V-8076	330
6V-8097	192
	197
	202
6V-8144	392
	445
6V-8185	531
6V-8186	517
6V-8237	291
6V-8344	381
	387
	395
	399
6V-8363	116
6V-8370	116
6V-8378	192
	197
	202
6V-8397	229
	239
	241
	294
	322
	324
	328
	341
	343
6V-8398	276
	284
	285
	289
	291
	301
	305
	311
	313
	315
	319
	322
	324
	341
	343
	345

▶ **PRIMARY REFERENCE**

PART NUMBER INDEX

Part	Page
	347
6V-8399	193
	198
	210
	212
	213
6V-8455	148
6V-8500	183
6V-8523	116
6V-8625	315
	347
6V-8627	161
	162
	328
	330
	333
6V-8628	239
	241
6V-8632	328
6V-8633	345
6V-8634	239
	241
	294
	343
6V-8635	337
6V-8636	341
6V-8637	302
	305
6V-8638	341
6V-8639	341
	347
6V-8641	161
	162
	229
	326
	328
	330
	333
	335
	336
6V-8713	301
	309
	311
	313
	319
	345
6V-8716	41
6V-8721	341
	343
6V-8723	229
	239
	241
	343
6V-8724	229
	322
	324
6V-8757	170
	175
	177
	179
	184
	185
6V-8759	228
6V-8782	347
6V-8801	68
	120
6V-8943	309
6V-8949	267
6V-8978	365
	366
	367
	368
6V-8996	311
	313
6V-8998	302
	305
6V-9001	328
6V-9007	294
6V-9008	302
	305
6V-9168	343
6V-9170	311
	313
6V-9172	302
	306
6V-9178	209
6V-9606	246
6V-9632	229
	383
	513
	530
6V-9746	41
	294
	302
	305
6V-9828	328
6V-9829	294
6V-9830	301
6V-9831	319
6V-9832	302
	306
6V-9833	294
6V-9835	328
6V-9839	302
	305
6V-9840	337
6V-9849	347
6V-9850	343
6V-9851	341
6V-9876	341
6V-9990	313
6W-2463	319
6Y-1192	170
	175
	181
6Y-1341	192
	197
6Y-1896	192
	197
	202
6Y-2035	192
	197
6Y-2736	183
6Y-2737	138
	141
6Y-7929	170
	175
	177
	179
	181
6Y-7957	185
6Y-9930	516
	7
7C-0351	22
7C-0754	328
7C-4354	68
	311
	313
7E-3870	48
7G-3832	313
7G-3833	313
7G-3834	313
7G-7053	111
7H-3937	492
	497
7I-8084	347
7J-1908	317
7J-9108	292
	301
	309
	311
	313
	319
	328
	345
7K-1181	52
	67
	106
	110
	115
	116
	118
	125
	129
	131
	227
	229
	301
	309
	311
	313
	315
	345
	505
	507
	513
7M-8485	41
	302
	305
	337
	339
7N-0718	67
	▶99
7N-7221	108
	110
7N-9017	110
	129
	131
7R-2751	119
7R-8239	236
7T-0093	492
	497
7T-1099	229
7T-2646	139
	142
	202
7T-2651	138
	141
	202
7T-3017	183
7T-3018	183
7T-3021	183
7T-3022	183
7T-3034	139
	142
7T-3051	138
	141
7T-3109	192
	197
	192
	197
7T-3119	193
	198
	192
	197
	202
7T-3249	192
	197
7T-3251	192
	198
	202
7T-3253	138
	141
	202
7T-4532	461
7T-4848	118
7T-6087	94
7T-6088	94
7T-6090	94
7T-6092	94
7T-6093	94
7T-6099	94
7T-6655	175
	177
7T-6739	492
7T-6799	108
7W-1176	17
7W-2326	30
7W-3556	202
7W-4642	17
7W-7381	161
7X-0481	531
7X-0515	21
7X-0542	258
	373
7X-0579	35
	120
	450
	463
	495
7X-0590	164
7X-0618	373
	454
7X-0620	131
	482
7X-0622	531
7X-0818	52

▶ **PRIMARY REFERENCE**

PART NUMBER INDEX

Part	Page
	111
7X-2393	539
	541
7X-2533	513
7X-2537	262
	267
	319
7X-2538	462
7X-2552	265
7X-2553	165
	166
	462
7X-2559	135
7X-2568	516
7X-2579	248
	249
	250
7X-3374	136
7X-4741	192
	197
	202
7X-4744	209
7X-7729	45
	48
	49
	68
	120
	230
	262
	294
	311
	472
	476
	481
7X-7898	255
7X-9866	243
7X-9873	243
7Y-9099	253

8

Part	Page
8C-0572	527
8C-3056	120
8C-3095	74
8C-3398	102
	113
	119
	120
8C-3681	35
	536
8C-3756	492
	497
8C-3798	84
	503
	534
	545
8C-4982	503
8C-5457	94
8C-5607	77
8C-5608	77
8C-5748	192
	197
	202
8C-6354	118
8C-6802	52
8C-6955	298
8C-7505	133
	135
8C-7524	492
	497
	534
8C-8451	77
8C-8545	202
8C-8989	305
8C-9660	557
8C-9778	94
8C-9783	94
8D-2707	215
8E-1118	503
8E-5707	170
	175
	177
	179
	181
	184
	185
8F-1434	94
	111
	116
	192
	197
	202
8F-3590	68
	84
	111
	120
8H-5303	99
8H-5306	99
8J-4455	94
8L-2746	192
	197
	202
8L-2779	193
	198
	210
	212
	213
8L-2786	203
8L-8413	4
	71
	77
	84
	120
8M-2773	116
	322
	324
	347
8N-0869	67
8R-2916	481
8R-6111	503
8S-0023	302
	306
8S-0024	302
	306
8S-0948	241
8S-7803	260
	454
	531
8T-0075	328
8T-0119	229
8T-0120	313
	345
8T-0164	326
	330
8T-0271	202
8T-0285	113
	120
8T-0292	135
8T-0328	111
	120
	192
	197
	202
8T-0389	79
	80
	81
8T-0404	309
	311
8T-0643	202
8T-0785	276
8T-1118	545
	548
8T-1580	138
	141
	181
8T-1581	181
	193
	198
8T-1683	239
	241
8T-1685	302
	305
8T-1885	315
	343
8T-1886	315
	343
8T-1887	68
8T-1888	68
8T-1889	302
	306
8T-1890	303
	306
8T-1891	315
8T-1892	315
8T-1899	322
	324
8T-1900	322
	324
8T-2444	267
8T-2658	466
8T-2659	557
8T-2970	537
8T-3444	322
	324
8T-3490	513
8T-3612	383
	513
8T-3998	68
8T-4121	21
	38
	39
	41
	55
	68
	76
	79
	80
	81
	84
	94
	111
	116
	120
	149
	151
	162
	230
	239
	241
	252
	298
	301
	303
	306
	311
	313
	315
	317
	319
	322
	324
	339
	341
	343
	347
	351
	356
	357
	358
	373
	384
	395
	462
	472
	476
	481
	505
	507
	513
8T-4122	252
	265
	427
	430
	432
	433
	443
	444
8T-4123	260
	298
	516
8T-4127	269
8T-4131	164
	516
8T-4132	21
	516
8T-4133	35
	45
	68
	84

► **PRIMARY REFERENCE**

PART NUMBER INDEX

Part	Page
	94
	116
	120
	230
	246
	298
	315
	356
	357
	358
	472
	476
	481
8T-4134	513
8T-4136	49
	68
	111
	120
	230
	301
	303
	306
	311
	313
	315
	317
	319
	322
	324
	395
	462
	472
	476
	481
	507
8T-4137	35
	41
	68
	111
	120
	252
	294
	343
	373
	384
8T-4138	52
	116
	120
	230
	383
	384
	505
	507
	513
	518
	545
8T-4139	68
	237
	258
	311
	313
	373
	380
	395
	507
	529
8T-4167	248
	249
	250
	256
8T-4171	545
8T-4172	68
	315
8T-4177	341
8T-4178	534
8T-4179	131
	162
8T-4182	298
	356
	357
	358
8T-4183	164
	245
	311
	337
	395
8T-4186	339
	354
	513
8T-4189	30
	49
	54
	55
	65
	68
	76
	104
	111
	149
	151
	245
	266
	383
	472
	476
	507
	513
	521
	522
	527
	545
	548
8T-4191	354
8T-4192	68
	76
	111
8T-4193	65
8T-4194	129
	313
	395
8T-4195	48
	49
	116
	149
	151
	162
	252
	262
	303
	306
	311
	315
	347
	354
	384
	395
	481
	513
8T-4196	21
	38
	39
	55
	68
	76
	239
	241
	256
	303
	306
	339
	341
	351
	505
	507
8T-4198	447
8T-4200	35
	120
	148
	328
	450
	454
	459
	460
	495
	537
8T-4205	52
	88
	89
	90
	91
	102
	113
	116
	119
	120
	121
	230
	464
	489
	492
	497
	505
	507
	517
	545
	548
8T-4222	35
	41
	252
	354
	534
8T-4223	68
	76
	111
	129
	131
	149
	151
	162
	165
	166
	311
	313
	337
	352
	373
	380
	395
	482
	507
	519
	520
	529
	537
8T-4224	30
	38
	39
	52
	54
	58
	67
	68
	88
	89
	90
	91
	102
	111
	113
	121
	148
	227
	230
	236
	298
	328
	330
	341
	343
	347
	355
	361
	383
	384
	462
	507
	513
8T-4244	311
	313
	513
8T-4742	52
	501
	502
8T-4743	472
	476
8T-4744	52
	501
	502
8T-4773	472
	476

PART NUMBER INDEX

Part	Page
8T-4778	252
8T-4815	472
	476
8T-4821	258
8T-4896	68
	121
8T-4908	35
	45
	49
	52
	58
	65
	149
	151
	229
	230
	384
8T-4910	303
	306
	313
	395
8T-4956	149
	151
	165
	166
	373
	482
	513
	519
	520
8T-4971	502
	513
	545
8T-4984	35
8T-4986	262
8T-5005	68
8T-5091	253
8T-5093	253
8T-5439	2
8T-5878	256
8T-6412	521
8T-6466	162
	239
	241
	339
8T-6684	337
8T-6726	315
	322
	324
8T-6869	65
	245
	330
	343
	347
8T-6885	116
8T-6902	383
	517
8T-6912	227
8T-6974	485
	487
8T-7529	339
8T-7547	38
	39
	54
	55
	65
	68
	245
	298
	383
	463
	513
8T-7566	527
8T-7876	34
8T-7930	258
8T-7963	67
	71
8T-7968	343
8T-8729	64
	77
	84
	101
	108
	110
	113
	115
	118
	125
	127
8T-8730	77
	84
	110
	115
	127
	492
8T-8737	77
	84
	101
	106
	108
	113
	115
	116
	118
	119
	125
	127
	129
	131
	471
	479
	480
	482
	492
	497
	511
	545
	548
8T-8799	101
	113
	118
	119
8T-8917	521
8T-9402	45
8T-9405	293
8T-9501	472
	476
	482
	521
	522
8T-9534	102
	113
	121
8T-9655	118
8U-0767	67
8W-8528	67
8X-5489	67
8X-9618	118
8Y-1816	67
8Y-5737	505
	507
8Y-5946	531
8Y-6352	489
8Y-6967	489
8Y-7309	539
	541
8Y-7833	73
	118
9B-0523	129
9B-9146	104
9C-4457	534
9D-3769	121
9F-5644	91
	99
9G-0004	71
9G-0005	71
9G-8909	67
9L-7469	531
9M-1974	192
	197
9M-5732	246
9M-7958	30
	35
9M-7959	489
9M-8406	55
9N-2231	450
	495
9P-9150	192
	197
	202
9R-0109	262
	392
	445
9R-0139	276
9R-0158	373
	381
	388
	389
	392
	446
9R-0162	276
	381
	394
	395
	413
	414
	415
	417
9R-0170	381
9R-0189	379
9R-0320	442
9R-0321	287
	288
9R-0411	373
	392
9R-0418	322
	324
9R-0431	416
9R-0481	256
	377
9R-1085	▶388
9R-1499	84
9R-1502	373
	381
	399
9R-1510	381
	387
	395
	399
	446
9R-1765	472
	476
9R-1766	472
	476
	482
9R-1767	472
	476
	482
9R-2053	315
9R-2613	435
	437
9R-2806	227
	298
9R-2807	227
	230
	298
9R-2959	395
9R-3205	536
9R-3469	545
	548
9R-3700	442
9R-4672	409
	410
	439
9R-4675	440
9R-4676	427
	430
	432
	433
9R-4677	427
	430
	432
	433
9R-4678	427
	430
	432
	433
9R-5205	409
	410
	411
	412
9R-5206	409
	410
	411
	412
9R-5238	387

9

▶ **PRIMARY REFERENCE**

PART NUMBER INDEX

Part	Page
	395
9R-5271	435
	437
9R-5294	440
9R-5301	379
	386
9R-5313	411
	412
	440
9R-5320	402
	407
	408
	▶443
9R-5321	401
	405
	407
	▶444
9R-5615	230
9R-5616	454
	459
	460
9R-5828	373
9R-5832	409
	410
	411
	412
9R-5866	401
	403
	404
	406
	407
	▶449
9R-5948	309
	311
	313
	345
9R-6007	▶389
9R-7882	258
9R-8165	383
9R-8292	387
	395
	399
9R-8870	322
	324
9R-9028	386
9R-9702	164
9R-9866	377
9R-9868	472
	476
9R-9901	229
9S-4183	357
	358
9S-4185	203
9S-4191	55
	192
	198
	203
	363
9S-8004	135
	286
9S-8006	295
9T-2178	278
9T-2883	280
	282
9T-4007	286
9U-2277	125
9U-8263	503
9U-8875	175
	179
9U-8886	177
	179
	293
9W-0607	79
	80
	81
9W-0625	472
	476
9W-0844	119
	545
	548
9W-0852	545
	548
9W-1951	119
9W-3326	84
9W-5460	138
	141
	202
9W-6582	516
9W-6584	516
9W-8215	444
9W-9915	21
9W-9952	21
9W-9953	21
9X-0199	116
9X-1386	93
9X-1481	531
9X-2036	94
9X-2038	52
	255
	330
	450
	464
	466
	468
	484
	485
	487
	489
	495
	503
	513
	518
	534
	557
9X-2040	473
	476
9X-2043	52
	121
	255
	330
	484
	513
9X-2044	230
	464
	466
	534
	537
9X-2045	230
	450
	466
	468
	485
	487
	489
	490
	495
	513
	518
	539
	541
	543
	544
9X-2065	298
	473
	476
9X-2092	459
9X-2099	38
	39
9X-2132	537
9X-2133	125
9X-2158	373
9X-2842	517
9X-3401	4
	93
	101
	106
	108
	113
	116
	119
	125
	129
	131
	472
	476
	545
	548
9X-3402	119
	127
	129
	131
9X-3959	507
9X-4244	79
	80
	81
9X-4611	280
	282
9X-4813	106
9X-6165	45
	125
	518
9X-6378	135
9X-6383	267
	537
	545
	548
9X-6581	328
9X-6611	280
	282
	287
	288
9X-6615	192
	197
	202
9X-6620	521
	522
	527
9X-6772	161
	162
	239
	241
	326
	330
	333
9X-7260	278
9X-7344	116
9X-7378	101
9X-7380	507
9X-7381	507
9X-7382	507
9X-7383	507
9X-7385	461
9X-7684	135
9X-8118	83
9X-8139	83
9X-8256	77
	84
	106
	303
	305
	383
	503
	513
	534
	546
9X-8257	65
	165
	166
	390
	391
	462
	516
9X-8399	276
9Y-5015	13
0	
005-0469	138
	139
	141
	142
005-0471	193
	198
009-2062	181
014-5645	192
	197
030-1705	67
031-5644	87
032-9090	10
032-9091	10
033-6041	135
033-6783	339
033-7687	16
034-3679	239
	241
035-8017	60
035-8063	12
039-8557	513
039-9133	236

▶ **PRIMARY REFERENCE**

PART NUMBER INDEX

Part	Page
054-6733	243
054-6882	243
062-5388	104
067-6006	13
067-6095	6
067-6213	22
067-6265	60
067-6873	10
067-6874	10
067-6999	60
069-4080	55
081-5648	326
084-4277	503
084-4348	84
089-7990	164
090-5725	55
091-1745	472
	476
091-2436	101
	110
	113
	120
093-8828	159
095-0641	371
	372
	517
095-0674	159
095-0865	427
	430
	432
	433
095-0924	167
095-0927	181
095-0928	181
095-0929	387
095-1041	159
095-7950	377
096-1820	427
	430
	432
	433
096-4882	531
096-5516	183
096-5866	355
	361
096-5968	208
096-6166	101
	113
	120
	510
097-7234	545
	548
099-3649	298
	501
1	
100-3685	94
100-4112	94
100-4113	94
100-4115	94
100-4118	94
100-4119	94
100-4336	55
	239
	241
100-4461	32
100-4830	18
	60
100-4838	7
100-4841	7
	12
100-6674	101
	119
100-7608	539
	541
	543
	544
101-0003	527
101-0117	373
101-0745	545
	548
101-3617	17
101-3771	22
101-3895	33
101-7401	481
102-3582	280
	282
102-8703	319
102-8801	106
	119
	129
	131
	545
	548
102-8802	4
	64
	77
	83
	84
	93
	101
	106
	110
	113
	115
	119
	125
	461
	472
	476
	482
102-8803	101
	113
	116
102-8804	77
	84
	106
	108
	119
	512
102-8805	84
	119
	127
102-8806	84
	511
103-2543	121
104-1995	101
	113
	120
104-3288	139
	202
104-6310	429
	431
	▶445
104-6311	445
104-6312	445
104-6316	445
104-6317	445
105-3480	131
	482
105-3481	521
	522
	527
105-8034	229
106-0401	296
	302
	305
106-0406	296
	302
	305
106-0800	104
106-3108	349
106-8835	60
106-8916	50
106-9586	209
106-9861	138
	141
	202
107-2348	50
107-5591	472
	476
	482
107-6826	172
	173
	174
108-3872	302
	305
109-1633	507
109-1634	507
110-0203	119
110-2028	120
110-5602	501
	537
110-6109	450
	495
110-7887	108
111-0859	15
111-3422	60
111-3423	60
111-4337	373
	392
111-4627	125
	450
	495
111-5042	527
	530
111-6792	101
	113
	120
111-6793	120
111-6794	101
	113
	120
111-6795	101
	113
	119
111-6816	101
	113
	119
111-7899	84
	97
	101
	108
	113
	118
	127
	131
	363
	364
	545
111-7906	148
111-7907	▶148
	186
111-8222	47
111-9251	395
112-1776	445
112-8492	119
113-0920	503
113-8490	119
113-8491	119
114-2579	47
114-4363	17
115-1918	293
116-5763	253
116-7471	118
117-1385	202
117-3534	293
117-9713	148
118-2990	516
118-7110	443
118-7790	116
118-8118	54
	63
118-8119	54
119-3662	84
	101
	110
	113
	120
	545
	548
119-4167	472
	476
119-4594	392
119-4740	188
	189
	191
119-8349	537
119-9631	492
120-9027	466
120-9286	553
120-9762	138
	141
	202
121-0694	175
	177
121-0883	17
121-0885	181

▶ **PRIMARY REFERENCE**

PART NUMBER INDEX

Part	Page
121-0904	185
121-2059	139
	202
121-2060	139
	202
121-2061	139
	202
121-2500	175
	177
	179
121-3040	527
121-4405	102
121-6936	545
121-7385	192
	197
	202
121-7389	192
	197
121-7390	192
	197
121-7391	192
	197
121-7396	192
	197
	202
121-7398	139
	142
	202
121-7399	139
	142
	202
121-7400	139
	142
	202
121-7401	139
	142
	202
121-7402	139
	142
	202
121-7403	192
	197
121-7404	192
	197
121-7875	197
121-9870	503
122-1877	170
	181
	184
	185
122-1878	184
	185
122-1879	139
	202
122-1883	197
	202
122-1884	184
	185
122-1886	177
	179
122-3650	197
122-3652	138
	141
122-4026	104
122-4401	101
	113
122-6785	193
	198
122-6787	192
	197
	202
123-0708	244
123-0714	177
	179
123-1377	192
	197
	202
123-2918	197
123-2919	197
123-2920	138
	141
	177
	179
123-7615	110
123-8905	175
	177
	179
	184
	185
123-8906	138
	139
	141
	175
	177
	184
123-8907	170
	181
	183
	193
	198
123-8908	139
	142
	170
	181
123-8909	177
	179
123-8910	139
	142
	177
123-8912	170
	181
	184
	185
123-8913	177
124-0312	505
	507
124-3536	24
124-5640	101
125-0965	298
125-7874	84
	101
	108
	110
	113
	115
	120
	125
	127
	129
	131
	545
	548
125-7875	101
	108
	110
	113
	120
	125
125-7876	67
	84
126-1767	108
	461
	472
	545
	548
127-3017	192
	197
127-4471	30
128-4123	120
128-4249	120
128-5016	120
128-5596	293
	▶353
128-7716	492
	497
128-7902	298
128-7903	373
128-7905	373
129-1831	450
	495
129-3178	106
	246
	492
	497
	502
	517
	557
129-3180	521
	522
	527
	531
	537
129-3738	454
129-4741	246
129-5256	260
	454
129-5257	454
129-8542	539
	541
	543
	544
129-8545	539
	541
	543
	544
130-0165	76
130-0777	392
130-1638	262
130-1916	260
	267
130-7282	135
130-8150	353
130-8343	530
130-9984	339
	507
131-2171	328
131-8201	341
131-8202	341
131-8775	384
132-2249	485
	487
	503
132-5789	110
	120
	125
132-8769	▶296
133-3260	67
133-3413	76
133-5813	328
133-6517	76
134-0143	384
134-0404	295
134-0453	472
	476
134-2540	119
134-3355	110
134-3856	505
134-5884	414
	417
134-5885	414
	417
135-5009	67
	71
135-8203	403
	404
	406
	449
136-1122	258
136-1955	339
136-4192	539
	541
	543
	544
136-7808	144
137-4234	418
	419
	420
	421
	422
	423
	424
	425
	426
137-6645	203
138-2053	6
138-7500	67
139-1398	30
140-7649	280
	282
	287
	288
140-7656	287
	288
140-8714	60
140-8718	60
140-9378	101
	118
141-0888	350
141-1667	50
141-1762	534

▶ **PRIMARY REFERENCE**

PART NUMBER INDEX

Part	Page
141-6343	298
142-0485	229
143-0539	▶94
	96
143-1344	94
143-2827	539
	541
	543
	544
144-0195	545
	548
144-5287	292
144-6734	146
145-0981	503
145-2237	330
146-0742	289
146-1815	118
146-6347	244
146-6729	94
146-7453	339
146-7744	537
146-7745	537
146-9439	118
	127
147-0201	203
147-0202	175
	177
147-0203	170
	179
	181
	184
147-0205	181
147-0207	184
147-0209	192
	197
	203
	▶209
147-0210	184
147-0211	203
147-0215	170
147-0216	170
147-0218	203
147-0224	177
147-0226	203
147-0228	170
	175
	177
147-0232	203
147-0234	203
147-0236	203
147-0238	170
	175
	177
	179
	184
147-0242	181
147-0248	181
147-0256	175
147-0257	177
147-0258	170
147-0259	175
	177
147-0260	181
147-0261	181
147-0262	203
147-0266	203
147-0268	203
147-0270	175
147-1445	119
147-1446	119
147-1979	13
148-1899	67
148-5353	539
	541
148-8318	239
	241
	294
	343
148-8325	161
	162
	229
	326
	328
	330
	333
	335
	336
148-8327	302
	305
148-8328	345
148-8335	337
148-8336	341
148-8338	328
148-8339	41
148-8340	341
	347
148-8341	301
	309
	311
	313
	319
	345
148-8342	328
148-8345	341
148-8347	294
148-8351	347
148-8353	328
148-8357	302
	305
148-8362	337
148-8363	341
148-8364	315
	347
148-8367	343
148-8368	161
	162
	328
	330
	333
148-8369	239
	241
148-8370	341
148-8372	341
	343
148-8374	229
	239
	241
	343
148-8378	229
	322
	324
148-8382	309
	311
148-8383	239
	241
148-8407	55
	363
148-8408	357
	358
148-8414	309
148-8428	347
148-8429	337
148-8442	302
	305
148-8449	302
	305
149-0686	▶271
	272
149-3516	54
149-4236	50
149-4745	530
149-9954	63
150-3026	239
	241
150-3033	326
	330
150-3053	302
	305
150-3060	322
	324
150-3757	181
	183
150-5968	328
150-7732	7
	203
150-8015	537
151-4841	52
	161
	162
	229
	507
151-7902	413
	414
	415
151-7903	413
	414
	415
151-7927	414
151-9272	108
151-9275	118
152-3411	343
152-3968	59
152-6144	133
	135
	144
153-0088	531
153-2997	229
153-6232	313
	345
153-6241	305
153-7036	347
154-1580	164
154-2704	442
154-5278	381
154-5279	381
	446
154-5280	381
	446
154-5404	133
	237
154-5410	545
	548
154-5416	227
154-5423	539
	541
	543
	544
154-5428	125
155-2026	302
	305
155-2255	106
	119
	125
155-2256	119
155-2260	110
	115
	119
155-2265	77
	119
	545
	548
155-2270	77
	84
	101
	110
	115
	119
	125
	127
	129
	131
	227
	492
155-2271	84
	119
	545
	548
155-2274	119
155-7321	347
156-0283	65
	245
	253
	501
156-1200	54
156-3631	229
156-6175	120
	330
157-2088	181
157-2090	181
159-4269	485
	487
159-4945	454
	485
159-4946	454
	487
159-8033	104
159-8049	67
	71

▶ **PRIMARY REFERENCE**

PART NUMBER INDEX

Part	Page	Part	Page	Part	Page	Part	Page
	104	164-1234	530		227		432
159-8050	67	164-1235	530		263		433
	71	164-1237	530		264		442
159-9322	119	164-1238	530		267	169-0705	110
159-9540	54	164-1239	530		450		119
	149	164-1240	530		472	169-3261	244
	151	164-1244	522		476	169-5861	54
160-2169	545	164-1245	527		482	169-7291	503
160-2244	35	164-1246	527		495	169-7409	311
	41	164-1247	524		513		313
160-2246	508		525	164-1395	52	170-0967	229
160-2248	331		526		383	171-2870	537
	333	164-1249	521		472	171-5349	93
160-3518	118		522	164-1398	383	172-5317	175
161-3249	184		527	164-4227	35		177
	185	164-1250	522		41		179
161-4130	413	164-1251	521	164-5567	326	172-6050	170
	414		522		328		179
	415		527		352		181
	435	164-1252	521	164-7556	79		184
	437		522		80		185
	442		527		81	172-6489	84
161-6984	499	164-1253	522	164-8474	489	172-6490	84
	500	164-1254	522	164-9425	110	172-6743	181
161-6987	499	164-1255	522	164-9598	236	172-8277	415
	500	164-1256	521	164-9599	236	172-8280	415
161-7147	284	164-1258	521	164-9640	330		417
	285		522	165-2273	352	172-8591	468
161-7632	192		527	165-6365	161	173-0332	170
	197	164-1259	521	165-6595	229	173-5787	530
	202		522	165-8996	164	173-9683	276
161-9044	485		527	166-9413	136	173-9779	291
	487	164-1261	524	167-2183	280	174-3091	131
161-9283	521		525		282		471
	522		526	167-2186	291		479
	527	164-1263	521	167-2201	276		480
	530		527	167-2202	278		482
161-9285	530	164-1265	521	167-2204	289	174-4643	133
161-9288	530		524	167-2294	291	174-4647	135
161-9289	530		525	167-2303	280	174-4650	135
161-9294	499		526		282	174-4671	133
	500	164-1266	521	167-2306	287	174-8131	454
161-9916	352	164-1269	527		288		485
162-6556	499	164-1271	527	167-2310	278		487
	500	164-1272	527	167-2312	276		557
163-0753	228	164-1273	521	167-2314	289	174-9194	269
	▶236		527	167-3692	119	174-9638	50
163-1135	530	164-1274	527	167-8182	537	174-9711	192
163-9091	170	164-1275	527	167-8251	468		197
	175	164-1276	527	168-0425	447	175-0054	192
	181	164-1277	527	168-0480	413		197
	203	164-1308	537		414	175-7877	▶553
164-1153	482	164-1314	537		415	175-7902	278
164-1154	517	164-1328	537		417		289
164-1178	468	164-1342	537	168-8389	418	175-7903	278
164-1215	530	164-1343	537		419		289
164-1218	530	164-1344	537		420	175-7904	352
164-1219	530	164-1345	537		421	176-0348	84
164-1220	530	164-1346	537		422	176-1477	4
164-1226	530	164-1351	537		423		110
164-1228	530	164-1352	537		424	176-1521	4
164-1229	530	164-1353	537		425		110
164-1230	530	164-1354	537		426	176-2947	108
164-1232	530	164-1368	118		427	176-6219	59
164-1233	530		131		430	177-2215	507

PART NUMBER INDEX

Part	Page
177-4877	454
	485
	487
177-9645	492
	497
177-9648	101
	113
177-9653	492
	497
177-9656	101
	113
178-3336	38
	39
	260
	267
178-7539	84
	118
178-8214	183
178-8465	4
178-9566	181
	185
179-5434	82
179-6401	45
	118
179-7262	537
180-3664	▶82
	87
180-5781	521
	527
180-5782	527
180-5783	527
180-5784	527
180-5785	527
180-5787	527
180-5788	527
180-5789	522
	530
180-5791	527
180-5796	522
180-5797	521
	522
180-9340	101
	106
	108
	110
	119
	125
	129
	131
	545
	548
183-3134	472
	476
183-3136	472
	476
183-4912	501
183-4934	513
183-6084	383
183-6085	501
185-0882	13
185-1546	28
185-1861	4
	110
185-3890	530
185-4015	492
	497
185-6627	47
185-7016	82
	▶83
185-9777	267
186-3735	83
	471
	479
	480
	511
	512
187-3510	276
187-7719	492
	497
188-3953	262
189-0881	450
	495
189-3158	101
	115
	120
	125
	127
	129
189-5746	▶93
	192
	198
190-7614	129
	131
190-7634	64
191-6159	291
191-8304	203
192-2112	492
	497
192-7876	63
193-0161	59
193-0618	63
193-5913	65
193-5914	2
	373
	395
193-5915	2
	377
193-9055	253
194-2903	229
194-5390	50
194-5622	505
	507
194-9487	262
195-0260	333
195-0261	333
195-0262	333
195-0263	333
195-2037	239
	241
195-2136	19
195-2221	19
195-6341	218
	219
195-6344	219
	220
	223
	224
	225
	226
195-7055	524
	525
	526
195-7602	513
195-9223	521
	522
	527
196-2966	118
196-8921	415
196-8922	415
197-5107	485
	487
197-6657	530
197-7499	510
197-9155	135
198-3899	67
	267
198-5389	77
198-7811	135
	159
198-7814	157
	158
198-7823	237
198-7825	133
	237
198-7838	133
	237
198-7841	133
	237
198-7842	133
	237
198-7843	133
	237
198-9706	64
199-0648	157
	158
	237
199-0652	135
199-0653	168
199-0656	159
199-0659	147
199-0663	159
199-0668	135
199-0670	135
199-0672	232
	234
199-0673	147
199-0675	159
199-0676	135
199-0678	159
199-0679	135
199-0680	159
199-0681	232
	234
199-0683	133
	237
199-0684	159
199-0685	159
199-0686	159
199-0687	159
199-0688	159
199-0689	159
199-0690	159
199-0691	159
199-0692	159
199-0693	159
199-0694	147
199-0695	144
	159
199-0697	159
199-0700	232
	234
199-0701	232
	234
199-0702	232
	234
199-0703	232
	234
199-0706	135
199-0752	232
	234
199-0756	147
199-0759	232
	234
199-0760	168
199-0778	135
199-0783	252
199-0784	147
199-0785	159
199-0786	135
199-0787	135
199-0807	147
199-0808	147
	159
199-0858	144
	159
199-0929	510
199-9267	100
199-9751	13
	27
	2
201-1024	118
201-1234	414
	415
	416
201-1235	413
201-1238	422
	423
	424
	425
	426
201-1239	422
	423
	424
	425
	426
201-1915	2
201-1916	2
201-1919	2
201-1920	▶216
	218
	219
	220
	221
	222
	223
	224
	225

▶ **PRIMARY REFERENCE**

PART NUMBER INDEX

Part	Page
	226
201-3621	343
201-3622	343
201-3623	343
201-3624	343
201-9459	98
201-9465	537
202-0313	120
202-0314	120
202-5993	229
202-6029	229
202-6186	220
	221
	222
	225
202-6611	80
	81
202-6614	79
203-7806	289
204-0775	98
204-2281	302
	305
	347
204-3080	133
	237
204-6195	110
204-9921	492
	497
205-2357	343
205-3079	55
205-6298	98
205-7047	503
205-7048	485
	487
205-7198	328
205-8257	77
205-9244	203
205-9362	119
205-9560	453
	457
	▶516
205-9569	453
	457
	▶518
205-9570	518
205-9571	518
205-9576	518
205-9577	518
205-9587	543
205-9588	487
205-9590	543
205-9591	543
205-9597	544
205-9598	485
205-9614	544
205-9615	544
205-9622	454
205-9623	539
205-9624	539
205-9631	454
205-9633	541
205-9634	541
205-9920	110
	125
	127
	267
	339
	507
206-1345	52
	108
	110
	118
206-1486	116
206-1590	454
206-1618	453
	457
	▶490
206-1623	534
206-1625	534
206-1634	229
206-1637	534
206-1641	▶383
	470
206-1642	3
	▶227
206-1648	450
	495
206-1653	489
206-1659	466
206-1662	466
206-1663	466
206-1665	534
206-1666	534
206-1667	52
	466
	468
206-1668	472
206-1669	482
206-1678	468
206-1681	468
206-1682	450
	495
206-1683	534
206-1684	450
	495
	534
206-1687	468
206-1690	468
206-1692	52
206-1695	476
206-1696	464
206-1698	464
206-1699	464
206-1701	457
	▶557
206-1702	453
	457
	▶464
206-1704	457
	▶534
206-1706	464
206-1708	464
	466
206-1712	464
206-1747	▶519
206-1748	▶520
206-1749	519
206-1750	520
206-1752	229
206-1766	229
206-1767	229
206-1768	229
206-1791	▶524
	529
206-1792	▶525
	529
206-1796	▶526
	529
206-1798	534
206-1799	534
206-1803	489
206-1804	450
	495
206-1805	489
206-1807	450
	495
206-1808	450
	495
206-1809	450
	495
206-1810	489
206-1812	489
206-1814	489
206-1815	489
206-1816	489
206-1817	489
206-1818	450
	495
206-1851	333
206-1852	557
206-1853	557
206-1854	466
206-1855	557
206-1856	557
206-1857	453
	▶536
206-1871	383
206-1874	383
206-2423	67
	315
206-3685	347
206-5162	77
206-5203	77
206-5823	511
206-6969	260
207-4254	133
	237
207-4255	237
207-4257	168
207-4258	133
	237
207-4260	237
207-4262	237
207-4263	154
207-4266	237
207-4267	154
207-4268	237
207-4271	237
207-4272	237
207-5962	168
208-0321	133
208-0322	144
208-5234	426
208-5235	422
	423
	424
	425
208-5244	426
208-5245	422
	423
	424
	425
208-8240	192
	197
	202
208-8469	260
208-9297	269
208-9316	356
	357
	358
209-0939	239
	241
	330
209-2435	395
209-3366	502
209-3367	52
	▶502
209-3378	52
	▶517
209-4157	167
209-4232	153
209-4716	503
209-6181	377
209-6850	258
209-7454	144
209-7455	146
209-7456	133
209-7460	157
	158
209-7462	144
209-7463	144
209-7464	133
209-7465	157
	158
209-7466	167
209-7472	144
209-7473	144
209-9219	11
209-9875	133
209-9882	133
	▶144
209-9883	133
209-9884	133
	▶155
209-9885	133
	▶156
209-9886	133
209-9887	133
209-9930	1
	▶377
210-3098	135
210-3099	135
210-3100	135
210-3106	135
210-5924	133
	▶167
210-5931	167
210-5932	155
	156
210-5937	133

▶ **PRIMARY REFERENCE**

PART NUMBER INDEX

Part	Page	Part	Page	Part	Page	Part	Page
210-5942	133	213-6691	381	216-1304	352	217-2914	135
210-5946	133	213-6692	1	216-1600	159	218-0666	489
210-5947	133		▶381	216-1601	168	218-3597	212
210-6475	454	213-6693	377	216-1606	168	219-0302	454
210-6491	464	213-6695	387	216-1608	135		459
210-7076	1		395	216-1609	135		460
	▶278		399		▶153	219-0343	502
210-7082	1	213-6696	399	216-1610	135	219-3273	76
	▶289	213-6697	399		▶168	219-3357	▶413
210-7088	1	213-6698	381	216-1612	159		422
	▶276	213-6700	1		▶232	219-3363	▶414
210-7098	▶291		▶387	216-1613	159		423
	395	213-6702	258		▶234	219-3372	▶415
210-7302	135	213-6723	381	216-3712	448		424
210-7305	135	213-6754	164	216-4457	144	219-3381	▶422
210-7665	492	214-3203	12	216-4458	144	219-3387	▶423
	497	214-4281	384	216-4459	237	219-3396	▶424
210-7666	492	214-4285	384	216-4461	144	219-6281	492
	497	214-4691	131	216-4464	144		497
210-8401	492	214-4694	118	216-4465	144	219-6283	492
210-8402	497	214-4695	101	216-4466	144		497
210-8754	503		113	216-6295	395	219-6292	492
211-0052	119	214-4703	113	216-7473	133		497
211-0092	146	214-4706	363	216-8314	9	219-6314	77
211-2660	492		364	216-8687	146	219-8751	144
	497	214-4709	545	216-8689	146	219-8752	144
211-2661	450	214-4710	127	216-8691	146	219-8753	144
	495	214-4716	118	216-8778	436	219-8754	144
211-3783	253	214-4717	118		438	219-8755	144
211-4292	▶87	214-4718	101	216-8780	436	219-8756	144
211-5182	1	214-4722	108		438	219-8757	144
	▶384	214-4723	118	216-8781	436	219-8758	144
211-6735	133	214-5097	133		438	219-8759	144
211-6752	170		237	216-8794	435	219-8783	167
211-6753	181	214-6143	395		437	219-8795	133
212-0862	118	214-6999	384	216-8796	435		136
212-0929	289	214-7043	384		437	219-8798	133
212-5702	159	214-7469	243	216-8803	427		237
212-5712	232	214-7568	326		432	219-8834	232
	234		328		▶439	219-8835	234
212-5713	135		352	216-8804	440	219-8836	159
212-6708	278	215-1906	289	216-8805	440	219-8839	135
212-7291	278	215-2023	133	216-8826	430	219-9484	414
212-8960	278		237		433		415
213-0139	101	215-2913	454		▶440		416
	110		459	216-8829	440		417
	113		460	216-9497	146	219-9488	413
213-1881	253	215-3373	447	216-9498	144	220-0269	472
213-1884	253	215-7457	291		▶146		476
213-1887	253	215-7460	291	217-0055	395	220-0738	253
213-1888	534	215-8196	530	217-1577	395		260
213-1889	253	215-9448	387	217-2345	159		267
213-1891	▶253		395	217-2347	232		269
	453		399		234		450
	457	215-9478	441	217-2349	232		466
213-4222	168		▶447		234		495
213-4616	276	215-9513	55	217-2876	159	220-1012	377
213-4620	276	215-9690	387	217-2877	155	220-1013	256
213-6682	289		395		▶157	220-1018	395
	394		399	217-2878	156	220-1019	387
	395	216-0910	2		▶158		395
213-6683	394		▶554	217-2879	155	220-2001	545
	395	216-0928	441		156	220-3470	482
213-6687	381		▶448	217-2883	133	220-3762	492
213-6690	381	216-1302	352	217-2885	237	220-3785	457

▶ **PRIMARY REFERENCE**

PART NUMBER INDEX

Part	Page
	▶484
220-3790	524
	525
	526
220-3791	524
	525
	526
220-5725	497
220-8226	229
220-8631	17
221-2420	489
221-3234	315
222-2690	52
222-5171	395
222-7379	▶441
222-7411	448
222-7464	441
	▶442
222-9151	354
223-2028	487
223-2029	485
223-3353	291
223-3356	276
223-3360	278
	289
223-3926	395
223-8263	545
224-2147	466
224-2149	466
224-5132	273
	274
224-5152	273
	274
224-5917	55
224-6250	436
	438
224-8945	552
224-8946	551
225-0060	253
225-0312	551
225-0313	552
225-3861	119
225-4150	556
225-4287	43
225-4317	5
	▶26
225-5436	24
225-5437	24
225-5438	24
225-5495	13
225-5496	13
225-5498	13
225-5499	13
225-5501	14
225-5502	14
225-5625	28
225-5629	28
225-5634	28
225-5638	28
225-5640	28
225-5927	77
225-5959	28
225-5960	28
225-5961	28
225-5962	28
225-5963	▶28
	29
225-6005	22
225-6041	22
225-6451	7
225-6456	7
225-6461	7
225-6464	7
225-6477	7
225-6478	7
225-6479	7
225-6522	7
225-6817	33
225-6818	33
225-7941	34
225-7944	12
	34
225-8227	384
225-8329	32
225-8524	50
225-8526	50
225-8533	50
225-8534	50
225-8536	50
225-8848	18
226-0291	253
	557
226-0294	267
226-1240	551
226-1242	552
226-4346	153
	155
	156
226-4364	135
226-4365	135
	155
	156
226-4366	135
	155
	156
226-4367	135
226-4370	135
	155
	156
226-5540	▶286
	427
	430
	432
	433
226-5633	347
226-5634	347
226-5635	484
226-5849	110
226-8202	291
226-9764	395
227-1057	108
	118
	466
	548
227-1148	289
227-5509	350
227-5556	253
228-5856	101
	108
	113
	119
228-7315	552
228-7316	551
228-8017	289
228-9132	63
228-9572	276
229-0298	537
229-0300	454
	▶537
229-0306	545
229-0308	537
229-0309	537
229-0310	537
229-5085	155
	156
229-5093	146
229-5124	345
229-5336	326
229-5745	383
229-8911	291
230-2389	482
230-2390	482
230-4011	119
230-4013	127
	129
	131
230-5739	3
	▶135
230-5743	3
	▶133
230-5745	3
	▶237
230-6368	67
	71
230-7300	5
	▶16
230-7578	5
	▶32
230-7732	110
230-7886	60
230-8094	22
230-8989	60
230-8995	60
230-8996	60
230-8997	60
230-8998	60
230-9127	7
230-9357	286
231-0149	5
	▶47
231-0215	311
	313
231-0670	147
	159
231-0671	147
	159
231-0683	▶154
	237
231-0684	237
231-0685	237
231-0686	154
231-0687	154
231-0688	154
231-0692	▶147
	159
231-0693	147
231-0694	147
231-0695	147
	159
231-0696	147
231-0697	147
231-0698	135
231-0699	135
231-0700	157
231-0701	158
231-0703	155
	156
231-0719	153
231-3052	76
231-3054	76
231-3540	278
232-1322	13
	27
232-1323	60
232-1328	60
232-1545	131
232-1794	60
232-2725	60
232-2726	60
232-2735	442
232-2755	▶416
	425
232-3126	57
	75
232-3149	60
232-3157	60
232-3274	60
232-3751	12
	34
232-4636	557
232-6204	5
	▶27
232-6661	5
	▶75
232-6662	75
232-7449	11
232-7600	12
232-7603	12
233-0619	280
	282
233-0625	287
	288
233-0859	430
	433
233-2589	280
	282
233-2613	280
	282
233-2614	287
	288
233-3757	427
	432
233-3786	10
233-5166	395
233-5167	395
233-5169	395
233-5260	260
	466
233-7432	5
	▶18

▶ **PRIMARY REFERENCE**

PART NUMBER INDEX

Part	Page	Part	Page	Part	Page	Part	Page
234-3017	526	238-5293	135	248-2714	485	254-8944	▶417
234-3030	50	238-5294	135		487		426
234-4328	▶79	238-7492	101	248-4277	351	254-9926	244
	84	238-8671	60	248-5547	311	255-0791	552
234-4329	▶80	238-9546	392	249-0974	34	255-0792	552
	84	238-9547	389	249-2482	464	255-0793	551
234-7730	79		▶390	249-3124	350	255-0794	551
	80	239-1416	391	249-3125	350	255-0795	450
	81	239-1434	58	249-9076	106		495
234-7731	79	239-2270	48	249-9328	▶251	255-0800	507
	80	239-3104	548	249-9329	251	255-2749	481
	81	239-6989	556	249-9330	251	258-2354	466
235-0128	52	239-9429	552	250-6148	349	258-3697	485
235-1790	60	239-9430	551	250-6850	269		487
236-1673	60	239-9435	381	250-6858	267	258-4170	119
236-1674	60	240-6866	349	250-7910	52	258-4172	110
236-6651	30	240-7094	552	250-7911	52	258-4178	118
236-6923	101	240-7095	551	250-8330	208	258-4946	14
236-8228	▶59	241-0037	273	251-1541	311	258-9999	164
	60		274	251-3227	35		388
236-8229	5	241-0888	262	251-3306	470		389
	▶60	241-0890	390	251-4889	251	259-0127	136
236-8238	5		391	251-4890	251	259-0128	136
	▶17	241-0891	390	251-4891	251	259-0129	136
237-0024	5		391	251-5628	470	259-1802	395
	▶96	241-0892	390	251-9360	302	259-1831	183
237-0769	7		391		305	259-2940	222
237-0944	258	241-4275	55	252-0165	311	259-4401	552
237-3786	50	241-6215	330	252-1862	485	259-4402	551
237-3794	50	241-8448	302		487	259-6276	453
237-3921	50		305	252-1863	485		457
237-3922	50		552		487		▶510
237-3924	5	241-8450	302	252-1864	487	260-0027	521
	▶50		305	252-1865	485		527
237-3943	530		551	252-2157	256	260-0028	521
237-4894	100	243-0062	517	252-4659	386		527
237-4896	5	243-0063	517	252-4660	▶386	260-0029	521
	▶100	243-3593	530	252-5832	289		522
237-5186	193	243-5026	133	252-5833	289	260-0030	530
	197	244-3106	110	252-6438	13	260-0032	530
	203	244-3113	253	252-6934	480	260-0033	530
237-5188	138	245-8026	108	253-0234	417	260-0034	530
	141	245-8780	341	253-1549	229	260-0035	530
237-5330	258		▶350	253-1817	485	260-0040	521
237-9349	390	245-9828	16		487	260-0041	530
237-9355	390	246-2622	54	253-1857	485	260-0043	530
237-9356	390		55		487	260-0044	530
	391	246-2641	554	253-1858	485	260-0045	521
238-1842	328	246-7853	256		487		522
238-2799	5		298	253-2470	497		527
	▶34	246-7854	256	253-5022	168	260-0046	530
238-4628	350	247-1384	35	253-5024	133	260-0047	530
238-5082	339	247-1385	35	253-9510	492	260-0049	530
238-5228	154	247-1950	▶425		497	260-0051	530
238-5254	133	247-4868	▶13	254-1098	354	260-0052	530
	237		14	254-1126	485	260-0057	530
238-5255	133	247-4884	57		487	260-0058	521
	237	247-4885	5	254-1127	485	260-0059	530
238-5256	155		▶57		487	260-0060	531
	156	247-6118	555	254-3437	471	260-0063	530
238-5289	135	247-7555	388		478	260-0067	530
	▶159		▶391		479	260-3568	260
238-5290	159	248-2707	52		480	260-7652	552
238-5291	135	248-2709	468	254-3954	13	260-7653	106
238-5292	135	248-2710	383	254-8941	▶426		551

▶ **PRIMARY REFERENCE**

PART NUMBER INDEX

Part	Page	Part	Page	Part	Page	Part	Page
260-9136	319	269-0389	280	274-3774	84	275-0475	193
260-9137	319		282		110		197
261-0376	39	269-3247	362		125	275-0477	193
261-0406	38		363		129		198
261-0428	39		364		131	275-0478	▶183
261-9632	534		▶513	274-3781	129		193
261-9634	513	269-3254	513		131		198
261-9635	227	269-3262	513	274-4274	280	275-0553	118
261-9636	464	269-3269	255		282	275-0570	101
261-9637	464	269-9115	468	274-4553	170		113
261-9639	464	270-2794	513		175		118
	466	270-2795	472		177	275-0600	119
261-9642	513		476		179	275-0601	110
261-9644	468	270-3204	▶380		181	275-0652	229
261-9645	468	270-5161	513		184	275-0653	229
262-4081	229	271-1405	1		185	275-1038	60
262-4084	229		▶395	274-4554	203	275-4918	35
262-4203	302	271-1408	395	274-4555	293		41
262-4217	302	271-3095	362	274-4556	203	275-7877	119
	305		▶478	274-4560	193	275-9883	22
262-8088	35	271-3096	363		198	275-9891	31
	41		364		210	276-1151	75
	149		▶479		212	276-1368	442
	151	271-3097	362		213	276-1786	104
262-9151	119		363	274-4561	▶175	276-2334	341
262-9567	503		▶471		203		551
263-3823	512	271-3099	364	274-4578	▶177	276-2353	384
263-5376	50		▶480		203	276-4836	45
263-5781	503	271-3100	478	274-4580	▶170	276-5605	12
263-6556	67	271-3101	479		203	276-6142	278
263-7261	482	271-3103	471	274-4582	▶181	276-6820	219
263-8591	432	271-3105	480		203		220
	433	271-8667	1	274-5909	507	276-7287	▶88
	▶555		▶399	274-7409	120		101
264-4297	294	271-8670	▶394	274-8034	192		113
264-7029	119		399		198	276-7290	▶89
264-7030	127	272-2232	5		203		118
	129	272-2265	33	274-8041	208	276-7291	▶90
	131	272-2838	108	274-8048	162		118
266-4326	311	272-5111	221		▶208	276-7537	278
266-4570	313		222	274-8616	179	276-8086	218
267-2701	89	272-5116	221	274-8617	179		219
	90		222	274-8620	183	276-8791	545
	118	272-7079	513	274-8621	183		548
267-5211	88	272-9701	478	274-8623	193	277-0584	260
	89		479		198	277-1873	229
	90	272-9800	83	274-8625	193	277-5156	5
	91	273-1473	513		198	277-5777	104
267-5213	88	273-1474	457	274-8628	179	278-0209	203
	89	273-1475	513	274-8629	179		▶210
	90	273-1476	513	274-8636	179	278-0213	203
	91	273-1477	513	274-8637	183		▶212
267-5225	513	273-1478	513	274-8638	170	278-0215	183
268-1547	311	273-5905	▶521		177	278-0216	183
	313		524		181	278-0217	183
268-1548	311	273-6036	▶522	274-9183	67	278-0218	183
	313		525	274-9872	91	278-1170	345
268-1559	239	273-6037	526		118	278-4497	302
	241		▶527	274-9993	131		305
	330	273-6372	524	275-0468	▶138	278-4498	302
268-1710	186		525		197		305
269-0386	280		526	275-0469	138	278-5454	258
	282		▶530	275-0471	141	278-6377	88
269-0388	280	273-9190	118	275-0472	▶141		91
	282	273-9412	278		193		118

▶ **PRIMARY REFERENCE**

PART NUMBER INDEX

Part	Page
278-7469	471
	480
278-7793	345
279-5016	552
279-9452	384
280-7007	▶184
	203
280-7009	210
	212
	213
280-7010	203
	▶213
280-7012	193
	198
	210
	213
280-7364	458
	▶529
280-7365	453
	▶529
280-7366	453
	▶529
280-7732	258
280-9658	551
282-3853	▶216
282-3854	▶216
282-3855	▶216
282-3862	216
	▶218
282-3863	▶218
282-3864	218
	▶219
282-3865	216
	217
	▶219
282-3866	219
282-3867	219
	▶220
282-3868	216
	217
	▶220
282-3869	220
282-3870	220
	▶221
282-3871	216
	▶221
282-3872	221
282-3873	221
	▶222
282-7832	503
282-7833	84
	534
	545
282-7835	84
	503
	534
	545
282-9042	552
282-9043	551
283-3451	545
	548
283-3467	513
283-3477	513
283-4236	507
283-7981	513
283-8053	513
283-8563	255
284-1026	38
	39
284-1602	490
284-8531	106
284-9039	64
285-1207	453
	457
285-5098	54
285-5914	490
285-9109	492
	497
286-0867	212
286-1930	229
286-3030	7
286-7166	395
286-9087	220
	221
286-9336	417
286-9337	417
287-5667	395
287-8573	7
287-8597	17
288-1394	24
288-1395	24
288-9734	462
289-1204	530
289-8336	15
289-9426	395
289-9871	255
289-9873	255
289-9874	255
290-1273	537
290-5760	▶81
	84
290-6023	315
290-6712	302
	305
290-6733	118
290-6740	▶77
290-6741	77
290-6746	67
290-6799	84
290-7831	462
291-1559	287
	288
291-2681	2
	▶287
291-2682	2
	▶288
291-2683	288
291-2684	287
291-2691	287
	288
291-2695	287
	288
291-2696	287
	288
291-3654	324
291-5108	472
	476
291-8379	229
292-5773	503
292-9784	119
293-1980	464
	468
293-2147	193
	198
293-8761	183
293-9882	395
293-9884	395
294-5792	380
294-9507	287
	288
294-9812	179
	184
	185
294-9820	198
294-9821	179
295-5550	45
297-5510	395
297-5849	516
297-7958	55
298-0663	110
	118
298-3599	229
298-5872	39
299-2212	▶461
	462
299-3350	417
299-4777	255
299-6082	120
299-6985	▶499
	539
	541
	544
299-6986	▶500
	539
	541
	543
3	
300-1702	52
300-4491	330
	▶349
300-4994	108
300-4995	84
300-4996	84
300-6520	50
300-7054	417
300-7055	417
301-0589	106
302-8432	139
	142
	192
	203
303-0428	▶222
	224
303-0429	▶222
	224
304-3265	172
	173
	174
304-3711	19
304-5687	73
304-8965	492
	497
305-3423	192
	198
	203
305-3424	185
305-3425	185
305-3427	▶185
	198
305-3429	▶179
	193
	198
305-3431	179
	184
	185
305-6167	395
306-0348	119
306-0351	119
306-7346	118
307-2242	39
307-3069	352
308-1273	537
308-1792	7
308-2155	367
308-2160	365
	366
308-2161	366
308-8161	120
308-9568	326
308-9973	3
	▶98
309-5127	343
309-6655	38
310-0674	120
310-4589	64
310-4772	74
310-5289	▶74
	77
310-6216	▶244
	481
310-9354	131
310-9355	482
311-1741	330
311-2498	311
	313
311-2501	309
	311
	313
	345
311-2513	351
311-2514	351
311-2515	351
311-6184	67
311-8075	395
312-2597	313
312-2599	305
312-2600	313
312-3083	118
312-6455	67
313-3752	▶511
	545
	548
313-6711	466
313-6712	466
313-6713	466
314-4018	461
314-7618	64

▶ **PRIMARY REFERENCE**

PART NUMBER INDEX

Part	Page
314-7750	313
315-0180	104
315-7790	507
316-0040	377
316-1935	172
	173
	174
316-3436	501
316-3437	501
317-2242	322
317-3769	7
317-3778	7
317-4270	507
317-4928	384
317-5309	530
317-5539	453
	457
	▶466
317-5541	481
317-5542	503
317-5543	453
	▶503
317-5544	244
317-8141	463
318-2365	60
318-8228	262
318-9902	▶446
319-8524	450
	495
319-9444	501
320-2384	▶217
320-2385	▶217
320-9835	466
320-9945	322
320-9946	322
321-6337	530
321-7038	▶462
	491
322-4571	217
	▶223
322-4572	223
322-4573	▶223
322-4574	223
322-6827	▶91
	118
322-8414	454
	485
	487
322-9615	50
322-9616	50
322-9663	13
323-2467	284
	285
	292
323-3308	30
	35
	41
	149
	151
	339
323-3309	35
	45
	505
	507
323-4218	284
323-4219	284
	285
323-4220	284
	285
323-4221	284
	285
323-6645	45
323-9312	24
324-0356	284
	285
324-2578	193
	198
324-2579	193
	198
325-9300	539
325-9301	541
325-9308	481
325-9311	503
326-3362	278
327-7601	454
	▶539
327-7637	454
	▶541
329-1167	454
	▶485
329-1168	454
	▶487
329-1169	485
329-1170	487
329-3734	106
	108
	120
329-5699	35
329-6655	13
329-7970	315
329-8017	315
330-0422	539
	541
	543
	544
330-0427	539
	543
330-0428	541
	544
330-5010	▶512
	545
330-6987	472
330-6988	472
	476
330-6990	472
330-6993	472
	476
330-6994	472
330-6996	472
	476
330-7001	472
	476
330-7002	472
	476
330-8297	315
330-9591	319
330-9752	319
331-0096	▶315
	395
331-4358	364
	▶472
331-5448	▶125
	362
	363
	364
331-5449	125
331-5456	▶97
	190
331-5461	2
	▶71
331-5462	▶129
	187
	190
331-5463	129
331-5464	▶131
	190
331-5465	131
331-5470	▶127
	275
331-5471	127
331-5472	▶115
	362
	363
	364
331-5473	115
331-5484	▶84
	453
	457
331-5496	110
331-5518	104
331-5529	106
331-5531	545
	548
331-5536	73
	▶108
331-5550	67
331-5552	67
331-5554	71
331-5555	67
331-5556	67
331-5557	71
331-5578	118
331-5581	67
331-5635	106
331-5636	119
331-8538	153
	155
	156
332-4169	365
333-7905	472
333-8324	472
	476
333-9901	487
	▶543
333-9902	485
	▶544
334-2318	24
334-2319	24
334-3568	362
	363
	▶476
334-4202	5
	▶11
334-4203	5
	▶9
334-4204	5
	▶24
334-4205	5
	▶14
334-4207	5
	▶29
334-4208	5
	▶6
334-4603	354
334-5131	192
	198
	203
335-1836	21
	516
335-6327	367
	368
335-9214	337
335-9798	5
	▶7
335-9799	5
	▶22
336-3545	▶73
	106
336-4713	210
	213
336-4714	210
	213
336-4715	210
336-4722	210
	213
336-4728	213
336-4729	210
	213
336-5469	192
	198
	203
336-6804	210
	213
336-6817	210
	213
336-6822	210
	213
336-6824	210
	213
336-6831	210
	213
336-6839	210
	213
336-6846	210
336-6847	210
	213
336-6848	210
	213
336-6908	210
	213
336-6913	210
	213
336-6914	210
	213
336-7113	210
	213
336-7114	210
	213
336-7524	210

▶ **PRIMARY REFERENCE**

PART NUMBER INDEX

Part	Page
336-7526	210
	213
336-7529	210
	213
336-7533	468
337-3530	184
337-5351	468
337-6851	▶252
337-7385	401
	▶418
337-7386	▶401
337-7387	▶401
337-7388	401
	▶419
337-7389	▶401
337-7390	▶401
337-7396	402
	403
	▶420
337-7397	▶402
337-7401	▶421
337-7407	▶409
	418
337-7417	▶410
	419
337-7433	▶411
	421
337-7434	▶412
	420
337-7436	404
	405
	▶427
337-7437	▶404
337-7438	▶405
337-7439	406
	407
	▶429
337-7440	▶406
337-7441	▶407
337-7442	407
	▶430
337-7443	▶407
337-7444	▶407
337-7445	407
	408
	▶431
337-7446	▶407
337-7447	▶408
337-7448	427
	▶435
	436
337-7449	432
	▶436
337-7450	430
	▶437
	438
337-7457	433
	▶438
337-7458	429
	▶432
337-7459	431
	▶433
337-7460	▶322
	430
	433
337-7461	▶324
	427
	432
337-7471	324
337-9693	▶247
337-9694	▶248
337-9695	▶249
337-9696	▶250
337-9697	3
	▶265
337-9699	297
	▶352
337-9701	▶149
	190
337-9702	4
	▶267
337-9703	▶151
	187
	190
337-9710	▶356
	362
337-9711	▶357
	363
337-9712	▶358
	364
337-9715	▶359
	362
	363
337-9716	▶360
	364
337-9717	▶161
	187
	190
337-9718	3
	▶298
337-9719	▶162
	190
337-9722	▶266
337-9727	▶21
	187
	190
337-9735	▶270
337-9740	▶294
	297
337-9761	▶38
	40
	494
337-9762	▶39
	491
337-9765	▶463
	491
337-9770	297
	▶326
337-9774	297
	▶337
337-9777	297
	▶339
337-9779	▶41
	187
	190
337-9781	494
	▶505
337-9783	491
	▶507
337-9785	▶328
	362
	363
	364
337-9786	▶330
	362
	363
	364
337-9787	▶333
	362
	363
	364
337-9793	275
	▶341
337-9795	297
	▶347
337-9807	▶317
	362
	363
	364
337-9808	▶319
	362
	363
	364
337-9809	▶301
	364
337-9814	▶361
	362
337-9815	▶355
	363
	364
337-9820	2
	▶343
337-9824	3
	▶239
337-9825	3
	▶241
337-9827	▶335
	364
337-9829	▶336
	363
337-9830	1
	▶258
337-9837	3
	▶164
337-9840	3
	▶379
337-9845	3
	▶373
337-9855	2
	▶256
338-1508	244
338-2414	284
	285
	292
338-2444	284
	285
	292
338-3328	454
338-7038	276
338-7156	291
339-3043	45
339-3645	322
340-1690	▶2
340-1699	2
	▶3
340-1705	▶4
340-1715	2
	▶297
340-1728	▶1
340-1729	▶1
340-1747	▶275
340-2566	108
340-4152	64
340-9312	284
	285
	292
340-9325	292
341-0597	258
341-2047	250
341-6152	373
341-6677	453
	457
	▶468
341-6684	▶229
	297
341-6710	494
	▶495
341-6714	457
	▶459
341-6715	457
	▶460
341-6716	453
	▶454
341-6719	▶52
	73
341-7654	239
	241
	▶243
341-8901	45
341-9483	258
341-9484	258
341-9488	258
342-9920	38
	39
	260
	267
	269
343-4355	108
343-5421	35
343-5643	▶44
	45
343-8051	292
344-2429	501
344-2430	501
344-2432	▶501
	513
344-2608	198
344-2824	119
344-2846	505
	507
344-7391	127
	352
344-7511	▶450
	491
344-7932	267
	359
	360
345-3674	▶273
346-5168	545
346-6687	44

▶ **PRIMARY REFERENCE**

PART NUMBER INDEX

Part	Page	Part	Page	Part	Page	Part	Page
346-6688	44		▶545		189		▶285
347-5947	245	353-1367	457	355-5027	459	358-5044	3
347-7045	19		▶548	355-5028	460		▶292
348-7143	173	353-1374	▶272	355-5030	454	358-7086	495
348-7144	172		362	355-6294	292		▶497
348-7146	174		363	356-0041	248	358-7087	450
348-8149	39		364	356-0042	249		▶492
349-1063	55	353-1379	4	356-3070	292	358-7570	328
	▶63		▶45	356-4054	454	358-7573	330
349-2746	7	353-1380	4		459	358-7697	120
349-3261	38		▶245		460	358-7863	267
349-4367	292	353-1389	▶262	356-4056	450	358-7864	269
350-2374	6	353-1390	▶552	356-4057	450	358-7903	267
350-3689	4	353-1392	▶551	356-4064	229	358-9301	354
	▶48	353-1398	453	356-4066	255	359-0015	▶113
350-3842	284		▶489	356-4070	52		494
	285	353-1426	▶457	356-4074	482	359-0016	101
	292		458	356-4080	187		113
350-4310	48	353-1427	▶457		190	359-0264	54
351-0290	326		458		▶482	359-0376	187
351-4746	267	353-1428	453	356-4100	▶255		▶188
351-5888	297	353-1449	453		362	359-0378	▶189
	▶354		458		363		190
351-8190	31		▶470		364	359-0380	190
351-8191	30	353-1450	453	356-4108	255		▶191
	▶31		▶470	356-4110	255	359-0392	188
351-8387	324	353-1452	▶73	356-4112	255		▶192
352-1454	4		169	356-4114	119	359-0394	189
	▶49	353-1466	▶40	356-4116	255		▶197
352-1455	4		458	356-4120	453	359-0396	191
	▶35	353-1467	453		457		▶202
352-1456	35		▶494		▶481	359-0401	169
	▶43	353-1468	453	356-4121	481		▶186
352-1930	49		▶491	356-8635	427	359-0715	9
352-3462	4	353-1502	▶3		430		▶10
	▶55		169		432	359-0719	24
352-3463	4	353-1503	▶3		433	359-0720	24
	▶30		169	357-3195	73	359-0721	24
352-3964	110	353-1510	169		▶118	359-0722	24
352-3965	129		▶190	357-3196	119	359-0723	24
352-4535	35	353-1512	169	357-3199	4	359-0724	24
352-4536	35		▶187		▶110	359-0734	5
352-7601	30	353-1513	169	357-3200	110	359-1244	379
352-7634	30		▶190	357-3211	▶101	359-2607	217
352-8358	38	353-1641	44		491		▶224
	39	353-1667	292	357-3214	▶106	359-3106	537
352-8367	472	353-4847	44	357-3218	3	359-3107	537
	476	353-5219	22		▶116	359-3495	49
352-8368	472	353-5389	292	357-3220	116	359-7205	359
	476	353-5987	35	357-3230	▶92		▶365
352-8799	35	353-7423	10		470	359-7207	360
353-1335	▶172	353-7424	10	357-3258	108		▶366
	187	353-7425	10	357-4273	267	359-7208	356
	190	353-7957	68	357-4274	267	359-7210	357
353-1336	▶173	353-9667	10	357-4621	339		▶367
	190	354-1274	▶33	357-6501	4	359-7212	358
353-1337	▶174		34		▶67		▶368
	190	355-3833	▶165	358-1415	267	359-7213	343
353-1338	188		191	358-1471	373	359-7223	361
	189	355-3837	165	358-1472	373		▶371
	191		166	358-1531	373	359-7224	355
	▶293	355-3838	165	358-4420	35		▶372
353-1364	4	355-3839	166	358-5034	3	359-7226	371
	▶58	355-3841	▶166		▶284		372
353-1365	453		188	358-5035	3	359-7227	330

▶ **PRIMARY REFERENCE**

PART NUMBER INDEX

Part	Page
359-7232	294
	▶295
359-7246	▶369
	470
359-7248	▶370
	470
359-7323	54
	55
359-7325	55
	229
	239
	241
	328
359-9885	463
360-1845	104
360-2816	373
360-2821	373
360-2822	373
360-2823	373
360-2827	38
	39
360-4008	313
360-7056	285
360-7060	284
	285
360-8966	265
360-8983	67
	71
360-8984	67
	71
361-0414	292
361-0419	292
361-1725	151
361-1727	149
	151
361-1728	151
361-2069	▶403
361-2693	149
361-4239	505
	507
361-4613	373
361-4643	269
361-4654	239
	241
361-4655	239
	241
361-4673	373
361-5903	164
361-7032	149
361-7826	373
361-7891	269
361-8146	239
361-8147	239
361-8151	507
361-8157	507
361-8158	507
361-9554	63
361-9721	324
361-9737	356
	357
	358
361-9918	354
361-9929	326
361-9930	326
361-9942	330
361-9944	330
361-9945	335
	336
361-9946	330
361-9947	328
361-9950	341
361-9951	341
361-9952	341
362-1163	295
362-1164	295
362-1201	373
362-1266	▶54
362-1583	317
362-1584	301
	317
362-1585	317
362-1597	317
362-2077	319
362-2078	319
362-2079	319
362-2080	319
362-2090	256
362-2190	11
	▶12
362-2820	54
	55
362-2904	68
362-3069	245
362-3070	245
362-3074	245
362-3079	245
	▶246
362-3080	246
362-3212	372
362-3269	373
362-3270	373
362-3298	97
362-4557	▶64
	65
362-4560	65
362-4563	65
	245
362-4624	65
362-4625	2
	▶65
362-4915	161
362-5024	284
	285
362-5025	292
362-5027	292
362-5364	229
362-6099	343
362-6101	343
362-8030	67
362-8059	30
362-8135	267
362-8136	267
362-8279	347
362-8281	347
362-8282	347
362-8670	507
362-9029	64
362-9209	241
362-9239	241
362-9460	65
363-0326	284
363-0443	337
363-0528	256
363-0579	309
363-1316	337
363-2679	337
363-2855	373
363-2856	373
363-2867	267
363-2868	267
363-4651	203
363-5880	341
363-5882	328
363-5883	333
363-5885	330
363-5886	330
	333
363-5887	328
	330
363-5888	330
	333
363-5889	333
363-5890	330
363-6736	298
363-6738	298
363-6742	298
363-7486	507
363-8010	65
	245
363-8031	65
363-8348	65
	245
363-8466	339
363-8475	64
363-8477	120
363-8597	84
363-9102	365
	366
363-9103	365
	366
363-9104	366
363-9649	354
363-9783	365
	366
363-9893	149
	151
364-0575	298
364-0609	298
364-1270	298
364-1940	41
364-1941	41
364-2475	65
	245
364-2514	298
364-3011	373
364-3384	▶308
364-3385	▶308
364-5753	4
	▶5
364-5887	256
364-7152	301
364-8075	256
365-2181	162
365-2182	162
365-2183	162
365-2185	162
365-2437	298
365-2511	260
365-2811	142
365-2812	▶142
	193
365-2814	▶139
	198
365-2867	302
	305
365-2868	229
365-2869	328
365-2870	305
365-2873	347
365-2875	302
	305
365-2913	472
	476
365-2915	472
	476
365-2964	343
365-2965	343
365-2966	343
365-2967	343
365-3308	60
365-4093	260
365-4591	193
	198
365-4592	192
	197
366-1271	247
	248
366-7473	309
366-9220	267
367-0055	267
367-5026	120
367-5829	2
	▶550
367-6031	2
	▶76
367-7625	267
367-7764	267
367-8073	45
367-9721	1
	▶351
367-9722	1
	▶309
367-9723	1
	▶345
367-9725	1
	▶311
367-9726	▶302
	308
367-9729	1
	▶313
367-9730	▶305
	308
368-0291	▶260
	267
368-3051	302
	305
368-3151	75
368-4714	67
368-4842	302
	305

▶ **PRIMARY REFERENCE**

PART NUMBER INDEX

Part	Page
368-6231	120
368-8951	▶2
368-9865	347
368-9866	347
369-0473	75
369-2053	267
369-2472	75
369-3473	260
369-3945	260
369-8943	298
370-0042	104
370-0495	256
370-2158	45
370-2909	75
370-3948	550
370-3949	550
370-3956	550
370-3957	550
370-3970	337
370-4010	337
370-5555	256
371-1282	354
371-1670	339
371-2051	454
	459
	460
371-2054	39
371-2055	38
371-5700	50
371-6659	65
371-7076	269
371-7077	269
371-7193	343
371-7194	343
371-8501	330
372-0739	267
372-0740	267
372-3178	262
372-4592	269
372-4600	260
372-4605	260
372-4613	260
372-4616	267
372-5024	373
372-6635	356
	357
	358
372-7230	266
372-7231	266
373-2672	552
373-2673	551
373-4207	▶458
373-4209	▶458
373-4210	▶453
373-4213	▶453
373-4246	▶362
373-4248	▶363
373-4256	▶364
373-6522	49
373-6995	371
	372
373-8390	373
373-9138	120
373-9532	319
373-9533	301
374-6818	▶169
374-6823	▶169
374-6832	▶169
374-6876	2
	▶392
374-7337	67
374-7438	2
	▶556
374-7900	392
375-1372	252
375-1373	252
375-1442	395
	399
375-2087	337
375-2144	71
375-6022	302
	305
376-0642	77
376-0645	45
376-2119	253
376-7520	392
377-0021	▶2
377-3802	270
377-3803	270
377-3861	294
377-4844	73
377-5267	43
377-5268	43
377-5319	252
377-5320	252
377-5823	507
377-5997	302
377-6187	548
377-9352	280
	282
377-9929	76
378-3311	263
378-8059	263
	264
378-8516	298
379-2198	38
	39
380-5076	339
380-5914	120
380-7775	▶263
	453
	457
380-7776	▶264
	457
380-7777	264
380-7826	454
	459
	460
380-7827	454
	459
	460
380-7828	454
	460
380-8260	73
380-8815	65
380-8960	▶217
380-8961	▶217
380-8962	▶218
380-8963	217
	▶224
380-8964	217
	218
	▶224
380-8965	▶224
380-8966	224
	▶225
380-8967	224
	▶225
380-8968	224
	▶225
380-8969	224
	225
380-8970	225
380-8971	216
	217
	218
	▶226
380-8973	▶226
380-8974	▶226
380-8977	226
380-9478	392
381-5559	267
	▶269
381-8054	2
	▶280
381-8055	2
	▶282
381-8085	280
381-8086	282
382-3404	73
382-3405	73
382-6675	260
382-8033	▶274
	341
383-2789	104
383-8936	104
383-8937	104
383-9581	2
	▶104
385-5775	328
385-8591	43
385-8593	43
385-8594	43
386-1736	73
386-2756	5
	▶15
386-2757	5
	▶19
386-6191	41
388-4572	104
388-5359	104
389-3109	367
389-3110	367
389-3111	367
389-3112	367
389-3113	367
389-3114	367
389-3115	368
389-3116	368
389-3117	368
389-3118	368
389-3119	368
389-3120	368
389-3121	368
389-3129	368
389-3130	367
	368
389-7167	227
	▶228
389-7168	228
389-7172	363

▶ **PRIMARY REFERENCE**



© 2012 CATERPILLAR
ALL RIGHTS
RESERVED

CAT, CATERPILLAR, THEIR RESPECTIVE LOGOS, “CATERPILLAR YELLOW” AND THE POWER EDGE TRADE DRESS, AS WELL AS CORPORATE AND PRODUCT IDENTITY USED HEREIN, ARE TRADEMARKS OF CATERPILLAR AND MAY NOT BE USED WITHOUT PERMISSION.