CATERPILLAR®

81807754-01
April 2005

RUTHZIL TRATOR COMERCIAL DE PEÇAS LTDA 11 97083-6812 ROLANDO

Parts Manual

424 SERIES I Backhoe Loader

JRB00255 - 999 (Machine)

Powered By S440(NA) Engine

Product and Dealer Information

Note: For product identification plate locations, see the section “Product Identification Information” in the Operation and Maintenance Manual.

Delivery Date: _____

Product Information

Model: _____

Product Identification Number: _____

Engine Serial Number: _____

Transmission Serial Number: _____

Generator Serial Number: _____

Attachment Serial Numbers: _____

Attachment Information: _____

Customer Equipment Number: _____

Dealer Equipment Number: _____

Dealer Information

Name: _____ Branch: _____

Address: _____

_____

_____

	Dealer Contact	Phone Number	Hours
Sales:	_____	_____	_____
Parts:	_____	_____	_____
Service:	_____	_____	_____

TABLE OF CONTENTS

TABLE OF CONTENTS A1

GENERAL INFORMATION A4

REPAIR ALTERNATIVES A7

INDEX A8

MACHINE ARRANGEMENT 1
- BACKHOE AR 1
- CHASSIS AR 2
- COMMON AR 3
- SUPPRESSION AR-SOUND 4

ENGINE ARRANGEMENT 5
- ENGINE AR 5
- ENGINE AS 5
- INSTALLATION AR-ENGINE 6

BASIC ENGINE 9
- ENGINE ASSY 9
- CAMSHAFT GP 12
- COOLER GP-FILTER 14
- COVER GP-VALVE MECHANISM 16
- CRANKSHAFT GP 18
- CYLINDER BLOCK GP 10
- CYLINDER HEAD GP 24
- DRIVE GP-FAN 20
- ELBOW GP- AIR 22
- FLYWHEEL GP 26
- HOUSING GP-FLYWHEEL 26
- KIT - GASKET 28
- LIFTING GP-ENGINE 32
- MOUNTING GP-ALTERNATOR 34
- MOUNTING GP-ENGINE 7
- MOUNTING GP-ENGINE & TMSN 8
- MOUNTING GP-STARTING MOTOR 33
- PAN GP-OIL 36
- PISTON & ROD GP 18
- PULLY GP-CRANKSHAFT 18
- PUMP GP - ENGINE OIL 38
- PUMP GP - FUEL INJECTION 40
- PUMP GP -WATER 43
- VALVE MECHANISM GP 45

LUBRICATION SYSTEM 47
- GAUGE GP-OIL LEVEL & FILLER 47
- PUMP GP-ENGINE OIL 38

COOLING SYSTEM 98
- COOLER GP-FLTR BASE &ENG OIL 14
- COOLING AR 48
- FAN GP-SUCTION 49
- LINES GP-POWER TRAIN COOLER 50
- PUMP GP-WATER 43
- RADIATOR & HYD OIL COOLER GP 52

AIR INLET AND EXHAUST SYSTEM 53
- AIR CLEANER GP 53
- ELBOW GP-AIR INLET 57
- INDICATOR GP-AIR FILTER CHANGE 56
- LINES GP-AIR 57
- MANIFOLD GP-EXHAUST 57
- MANIFOLD GP-INLET 57
- MUFFLER GP 58

FUEL SYSTEM 59
- CONTROL GP-GOV.&ACCELERATOR 60
- FILTER & LINES GP-FUEL 64
- FILTER GP-FUEL 22
- FILTER GP-FUEL LINES 64
- LEVER GP-GOVERNOR CONTROL 59
- PUMP GP-FUEL INJECTION 22
- SENDER AS-FUEL LEVEL 62
- SEPARATOR GP-WATER 22
- TANK GP-FUEL 65

ELECTRICAL AND STARTING SYSTEM 67
- ALTERNATOR GP-CHARGING 38
- BATTERY GP 67
- CIRCUIT BREAKER 70,72
- HORN AS 88
- LAMP GP-HEAD & SIGNAL 68
- LAMP GP-REGISTERATION PLATE 330
- LAMP GP STOP & TAIL 69
- LIGHTING GP-FLOOD 70
- LIGHTING GP-ROADING 72
- MODULE GP-WARNING INDICATOR 75, 76
- SPEED SENSOR GP 101
- SENDOR AS COOLANT TEMP 88
- STARTING MOTOR GP-ELECTRIC 25
- SWITCH AS-KEY START 313
- SWITCH PRESSURE –ENGINE OIL 77
- WARNING GP-BACKUP 78
- WIRING GP-CAB 80
- WIRING GP-CONSOLE 83,86
- WIRING GP-ENGINE 88
- WIRING GP-PLATFORM 93
- WIRING GP-REAR 98
- WIRING GP-SENSOR 79

POWER TRAIN 104
- AXLE&MTG. GP-REAR&FRONT 113
- AXLE GP-REAR 104
- CONTROL GP-TRANSMISSION 114
- DRIVE AR 116
- DRIVE GP-FLEXIBLE COUPLING 117
- FILLER GP-POWER TRAIN OIL 118
- POWER TRAIN AR, ... 120
- SHAFT GP-DRIVE 122
- TRANSMISSION & MTG.GP 123

TABLE OF CONTENTS

TRANSMISSION AR-DIRECT DRIVE 124
VALVE GP-SOLENOID 130
WHEEL & TIRE GP 110,111

BRAKING SYSTEM 133
BRAKE GP-PARKING 104
CONTROL GP-PARKING BRAKE 133
CONTROL GP-SERVICE BRAKE 134
LEVER GP-HAND CONTROL 136
RESERVOIR GP-BRAKE 134

STEERING SYSTEM 138
AXLE GP-FRONT 140
CONTROL GP-STEERING 138
CYLINDER GP-STEERING 146
LINES GP-STEERING 142
PUMP GP-METERING 144
STEERING COLUMN GP 139
VALVE GP-PRIORITY 147

FRAME AND BODY 149
BATTERY BOX GP 149
COUNTERWEIGHT GP 150
FENDER GP-REAR 151
FLOORPLATE GP 152,162
FRAME GP-LOADER 154
FRAME GP-SLIDING 156
FRAME GP-SWING 160
GUARD GP-HOSE 163
HOOD & GUARD GP 164
HOOD GP-ENGINE 166

HYDRAULIC SYSTEM 169
CONTROL GP-HYD. HAND-LOADER 169,172
CONTROL GP-HYD.HAND-HOE 170
CYLINDER GP-BACKHOE BUCKET 174
CYLINDER GP-BOOM 175
CYLINDER GP-LIFT 176
CYLINDER GP-MULTIPURPOSE BUCKET 177
CYLINDER GP-STABILIZER 178
CYLINDER GP-STICK 179
CYLINDER GP-SWING 180,181
CYLINDER GP-TILT 182
FILTER GP-OIL 183
HYDRAULIC AR 184-187
KICKOUT & POSITIONER GP 188
LINES GP-BACKHOE 190
LINES GP-BOOM 194
LINES GP-BUCKET CYLINDER 192
LINES GP-LIFT CYLINDER 195,196
LINES GP-LOADER AUXILIARY 198
LINES GP-MULTIPURPOSE BUCKET 200
LINES GP-PUMP 204
LINES GP-RETURN 211
LINES GP-SIDESHIFT LOCK 212
LINES GP-STABILIZER 202,214
LINES GP-STICK 220
LINES GP-SWING 216
LINES GP-TILT CYLINDER 218
MOUNTING GP-BANK VALVE-LOADER 221
MOUNTING GP-BANK VALVE-HOE 222
MOUNTING GP-CYLINDER 223
MOUNTING GP-HYDRAULIC CONTROL-STABILIZER 224
MOUNTING GP-HYD.PUMP 225
MOUNTING GP-LINES 227,231
PUMP GP-PISTON 228
ROTATING GP-PUMP 230
SHAFT GP-POWER TAKE-OFF 232
STABILIZER AR 233
TANK & MTG GP-HYDRAULIC 234
VALVE & MTG.GP-BANK-2 STABILIZER 236
VALVE AR-BANK 4 237
VALVE AR-BANK 2 238
VALVE GP-BANK 3 239
VALVE GP-BANK 4 240
VALVE GP-CHECK 241
VALVE GP-CONTROL 242
VALVE GP-PRESS & FLOW CMPNSTR 258
VALVE GP-SOLENOID 261

IMPLEMENTS 263
ARM-LIFT 264
BOOM AR 263
BOOM GP 266
BRACE GP-LIFT CYLINDER 267
LINK GP-SHIPPING 272
LINKAGE GP-BACKHOE BUCKET 268
LINKAGE GP-LOADER BUCKET 270
LOADER AR 273
LOCK GP-TRANSPORT 275
STABILIZER GP-BACKHOE 278
STICK GP-HOE 276

WORK TOOLS 279
BUCKET AR-MULTIPURPOSE 281
BUCKET AS-LOADER 283
BUCKET GP-HOE 291
BUCKET GP-MULTIPURPOSE 284,285
FORK GP 292
TOOTH GP-UNI-LOADER BUCKETS 293
TOOTH GP-UNI-HOE BUCKETS 294

TABLE OF CONTENTS

OPERATOR STATION 295
CAB AR 295
CAB GP 296
CONSOLE GP-FRONT 298
CONSOLE GP-OPERATOR 299
CONSOLE GP-SIDE 300
COVER GP-CONSOLE 301
COVER GP-PARKING BRAKE 304
COVER GP-POST 305
DOOR GP-LH 306
FLOOR MAT GP 308
HORN GP - ELECTRIC 329
MIRROR GP-REAR VIEW 309
MOTOR GP-WINDOW WIPER 328
MOUNTING GP-INSTRUMENT PANEL 311
PANEL GP-INSTRUMENT-SIDE 313
PEDAL GP-GOVERNOR 314
SEAT BELT 315
SEAT GP 315
WASHER GP-WINDOW 316
WINDOW GP-CAB 318,320
WINDOW GP-DOOR 324
WIPER GP-WINDOW 328

SERVICE EQUIPMENT AND SUPPLIES 330
ACCESSORIES GP 332
FILM GP 331
LAMP GP-NUMBER PLATE 333
LOCK GP-VANDALISM 330
REFLECTOR GP 334

PART NUMBER INDEX PNI1

GENERAL INFORMATION

1. MACHINE IDENTIFICATION

Caterpillar machines are identified by Product Identification Numbers (PIN). Some components included in a machine may be identified by Serial Numbers (S/N). Typical components that will be serialized include engines, transmissions, bulldozers, and rippers. The machine and engine are further identified by arrangement numbers and in some cases modification numbers. These numbers are shown on the product identification plate(s) and on the master plate in the operator's compartment.

Caterpillar dealers need all of these numbers to determine accurate parts identification.

SIS ***New Feature***

Effective First Quarter 2001 the Caterpillar Product Identification Number (PIN) will change from 8 to 17 characters. In an effort to provide uniform equipment identification, Caterpillar and other construction equipment manufacturers are moving to comply with the latest version of the product identification numbering standard. Non-road machine PINs are defined by ISO 10261. The new PIN format will apply to all Caterpillar machines and generator sets. The PIN plates and frame marking will display the 17 character PIN. The new format will look like the following:

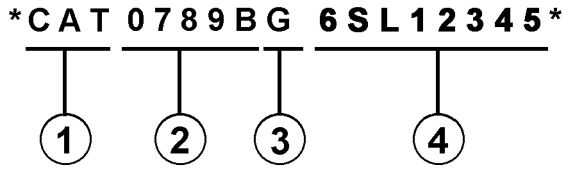

Where:

1. Caterpillar's World Manufacturing Code (characters 1-3)

2. Machine Descriptor (characters 4-8)

3. Check Character (character 9)

4. Machine Indicator Section (MIS) or Product Sequence Number (characters 10-17). These were previously referred to as the Serial Number.

Machines and generator sets produced before First Quarter 2001 will maintain their 8 character PIN format.

Components such as engines, transmissions, axles, etc. and work tools will continue to use an 8 character Serial Number (S/N).

2. ORDERING PARTS

⚠ WARNING

When replacement parts are required for this product Caterpillar recommends using Caterpillar replacement parts or parts with equivalent specifications including, but not limited to, physical dimensions, type, strength and material.

Failure to heed this warning can lead to premature failures, product damage, personal injury or death.

Quality Caterpillar replacement parts are available from Caterpillar dealers throughout the world. Their parts inventories are up to date and include all parts normally required to protect your investment in Caterpillar machines. Dealers may offer repair kits or remanufactured parts to allow selection of the most effective repair alternative for a particular situation. When ordering parts, your order should specify the quantity, part number, part name, and the serial number/product identification number of the machine for which the parts are needed.

3. PARTS MANUAL ORGANIZATION

Product information in this manual is presented as "information elements" that represent all of the components for the specific model. Engine Arrangement and Seat Group are examples of information elements. The information elements are organized alphabetically by part name and secondarily by part number within each major section of the manual.

4. TABLE OF CONTENTS

SIS ***New Feature***

A table of contents (TOC) is found at the beginning of the manual. The TOC lists each section of the manual with a complete list of all information elements organized as they appear in the manual. Page numbers are provided for quick reference to detailed parts identification illustrations and serviceable consist lists.

5. MAINTENANCE PARTS INDEX

The Maintenance Parts Index, located near the beginning of the manual, references most frequently used maintenance part numbers, providing description, quantity, usage and page number. This information is organized alphabetically by part description.

6. INDEX

The index located near the front of the manual is an alphabetical listing of all information elements included in the manual. Page numbers are provided for quick reference to detailed parts identification illustrations and serviceable consist lists.

7. PART NUMBER INDEX

A numerical index listing all part numbers and the corresponding page number(s) appears at the back of the manual.

8. CAPTIONS

Captions located at the top of each page of an information element identify the part number and part name along with additional descriptive information. PIN and S/N information found in each caption should be used to select correct information for a specific machine. Field replacement options, identification of optional attachment components, and where used ("part of") information is also provided.

SIS ***New Feature***

The first line of a caption is shown in larger type font to indicate the beginning of an information element. Captions for additional pages that may be required to illustrate an information element will be shown in standard type font and will include the term *(contd.)* .

9. NON-SERVICED PARTS

SIS ***New Feature***

In some instances it is necessary to display non-serviced parts that are a link to a lower level serviceable consist lists. These non-serviced part numbers are shown in *italic* type indicating that they are not available.

10. PARTS LIST REFERENCE NUMBERS

SIS ***New Feature***

Numbers shown in the Ref No column correspond to numbers used in the associated graphic(s). An alphabetic suffix may be added to a reference number to identify lower level consist items. Numbers shown in the Graphic Ref column refer to the graphic number identifier displayed in the lower left corner of each illustration. The Graphic Ref number may be used in combination with the item Ref No to determine the correct part number. There may be intentional omission of a Ref No in a consist list as information is updated to reflect the latest serviceable part numbers.

11. INDENTED PART NAMES

When a part name is indented in a parts list, it is part of (included in) the group or assembly under which it is indented.

12. ILLUSTRATION REFERENCE LETTERS

When necessary, illustrations contain reference letters (A, B, C etc.) that are intended to track lines and harnesses from one point to another. They are also used to show where to reconnect illustrations that have been separated.

13. ABBREVIATIONS AND SYMBOLS

O.D. – Outside Diameter
I.D. – Inside Diameter
A – Not Part Of This Group
B – Use As Required
C – Change From Previous Type
D – Order By The Meter
E – Order By The Centimeter
F – Not Shown
G – Order By The Inch
I – See Hose Fabrication Guide
M – Metric Part
R – Remfg Part May Be Available
Y – Separate Illustration
Z – Not Serviced Separately

NOTE:

Continuing improvement and advancement of product design may cause changes to your machine which may not be included in this publication. Whenever a question arises regarding your Caterpillar product or this publication, please consult your Caterpillar dealer for the latest available information.

FRAME AND BODY

8E-3299 PLATFORM GP-CAB

PIN 38K1-09999

SMCS-7253 100090751

NOTE	REF NO	GRAPHIC REF	PART NUMBER	QTY	PART NAME (1 2 3 4 5 6 PRODUCT LEVEL)	SEE PAGE
	1	1	3T-3953	1	PLATE AS	
	2	1	5B-2992	25	BOLT (3/8-16X.750IN)	
	3	1	6P-1075	41	WASHER-HARD (3MM THK)	
	4	1	6P-1444	2	SUPPORT AS-FOOT	
	5	1	6P-2228	19	BOLT (1/2-13X1IN)	
		1	6P-[illegible]4	19	WASHER-HARD (4MM THK)	
	6	1	8E-8136	1	COVER AS-LH	
		1	8F-2978	6	NUT-WELD (3/8-16 THD)	
		1	1P-8188	1	CLIP	
	7	1	7S-3411	4	COVER	
	8	1	6J-0488	18	SCREW-HEAD (3/8-16X.875IN)	
	9	1	[illegible]-4474	1	COVER	
		1	8E-8[illegible]7	1	GASKET	
	10	1	8E-3248	1	[illegible]	
		1	8E-3250	1	GASKET	
	11	1	3T-3835	1	HANDHOLD	
	12	1	8E-8878	1	COVER AS	
		1	8F-2978	8	NUT-WELD (3/8-16 THD)	
		1	8E-8078	1	GASKET	
	13	1	7T-0131	1	FLOORPLATE AS	
		1	1F-0748	4	NUT-WELD (1/2-13 THD)	
	14	1	7Y-8087	1	PLUG-BUTTON	
	15	1	7T-0136	1	PLATE AS	
		1	8F-2978	6	NUT-WELD (3/8-16 THD)	
	16	1	7T-8086	1	COVER	
		1	7T-8779	1	GASKET	
	17	1	3T-3981	1	PLATE AS	
	18	1	6T-9364	4	BOLT (1/4-20X.625IN)	
M		1	6T-4205	4	WASHER-HARD (2MM THK)	
	19	1	6L-8484	1	FLOOR MAT	
	20	1	9E-8946	1	MODULE AS-OPERATOR	
	21	1	3T-3834	1	HANDHOLD	
	22	1	9P-8571	2	PLUG	
	23	2	6T-9364	4	BOLT (1/4-20X.625IN)	
M		2	6T-4205	4	WASHER-HARD (2MM THK)	
	24	2	5B-3062	17	BOLT (3/8-16X.750IN)	
	26	2	6P-1075	21	WASHER-HARD (3MM THK)	
	26	2	7T-0135	1	SEAL	
	27	2	7X-0378	2	BOLT (3/4-10X5IN)	
		2	7X-0682	2	WASHER-HARD (6MM THK)	
	28	2	3T-3482	2	PLATE	
	29	2	3T-8280	1	PLATE AS	
		2	7S-8028	8	SPACER	
	30	2	3T-8281	1	SEAL	
	31	2	7S-8017	1	GASKET	
	32	2	7S-8018	1	COVER AS	
		2	2R-2276	2	WASHER	
		2	6P-8028	2	SCREW-KNURLED	
	33	2	9W-3429	1	COVER	
	34	2	8E-8697	1	COVER	
	35	2	9D-3031	8	SCREW-SOCKET HEAD	
	36	2	9W-3142	8	MOUNTING	
	37	2	9W-9027	2	PLATE	
	38	2	7X-0390	2	BOLT (7/8-9X5IN)	
		2	7X-0672	2	WASHER-HARD	
	39	2	4L-8454	4	BOLT (3/8-16X1.0IN)	
	40	2	3T-4788	1	COVER	

12 FRAME AND BODY 1 of 4 SELP4570-01

FRAME AND BODY

8E-3299 PLATFORM GP-CAB (contd.)

100090751

NOTE	REF NO	GRAPHIC REF	PART NUMBER	QTY	PART NAME (1 2 3 4 5 6 PRODUCT LEVEL)	SEE PAGE
	41	2	8E-3515	1	COVER	
	42	2	7T-0134	1	PLATE	
	43	2	7T-0139	1	GASKET	
	44	2	7S-8724	1	GASKET	
	45	2	7S-8723	1	COVER	
	46	2	6V-1969	2	PLUG-BUTTON	

M-METRIC PART

SELP4570-01 2 of 4 FRAME AND BODY 13

FRAME AND BODY

8E-3299 PLATFORM GP-CAB (contd.)

100090751

TOP VIEW

GRAPHIC #1 g00036729

14 FRAME AND BODY 3 of 4 SELP4570-01

FRAME AND BODY

8E-3299 PLATFORM GP-CAB (contd.)

100090751

SECTION A-A VIEW D-D SECTION G-G

SECTION B-B VIEW E-E SECTION H-H

SECTION C-C SECTION F-F SECTION J-J

GRAPHIC #2 g00105874

SELP4570-01 4 of 4 FRAME AND BODY 15

REPAIR ALTERNATIVES

REMANUFACTURED COMPONENTS

As an option when making repairs consider Caterpillar Remanufactured Components. Components that are available through the Caterpillar Remanufactured Program are identified three ways in the parts book:

- with the letter R in the note field of the parts list
- with an R* at the beginning of the first line of the caption
- with an *R at the end of the first line of the caption

Typical components included in the Remanufacturing Program include:

ALTERNATORS
CONNECTING RODS
CRANKSHAFTS - UNDERSIZE
CRANKSHAFTS - UPGRADE TO NEW
CYLINDER HEADS
ELECTRONIC CONTROL MODULES (ECM)
ELECTRONIC SENSORS
FUEL INJECTORS
FUEL NOZZLES
FUEL PUMPS
GOVERNORS
OIL PUMPS
PISTONS
SHORT BLOCKS
STARTERS
TURBOCHARGERS - COMPLETE
TURBOCHARGER CARTRIDGES
WATER PUMPS

Caterpillar Remanufactured engines for many engine arrangements are also available.

INDEX

A

ACCESSORIES GP 332
AIR CLEANER GP 53
ALARM-BACK UP 78
ALTERNATOR GP-CHARGING 34
ARM GP-LIFT 264
AXLE & MTG GP-FRONT & REAR 113
AXLE GP-FRONT 140
AXLE GP-REAR 104

B

BACKHOE AR 1
BATTERY BOX GP 149
BATTERY GP 67
BELT-DRIVE 34
BLADE AS –WIPER 328
BLOCK GP - CYLINDER 10
BOOM AR 263
BOOM GP 266
BOOT 114
BRACE GP-LIFT CYLINDER 267
BRACKET GP STABILIZER 274
BRAKE GP-PARKING 104
BREATHER 104,126
BUCKET AR-MULTIPURPOSE 281
BUCKET AS-LOADER 283
BUCKET GP-HOE 291
BUCKET GP-MULTIPURPOSE 284,285

C

CAB AR 295
CAB GP 296
CAMSHAFT GP 12
CAP AS 198
CAP AS-FILLER-ENGINE OIL 47
CAP-DUST 118
202
204
206
CAP-FILLER 234
CHASSIS AR 2
CIRCUIT BREAKER AS 72
COMMON AR 3
CONSOLE GP-FRONT 298
CONSOLE GP-OPERATOR 299
CONSOLE GP-SIDE 300
CONTROL GP-
GOV & ACCELERATOR 60
CONTROL GP-HYDRAULIC HAND 170
CONTROL GP-HYDRAULIC
HAND–LOADER 172
CONTROL GP-PARKING BRAKE 133
CONTROL GP-SERVICE BRAKE 134
CONTROL GP-STEERING 138
CONTROL GP-STABILIZER 224
CONTROL GP-TRANSMISSION 114
COOLER GP-FLTR
BASE & ENG OIL 14
COOLING AR 48
COUNTERWEIGHT GP 150
COVER GP-CONSOLE 301
COVER GP-FRONT HOUSING 18
COVER GP-PARKING BRAKE 304
COVER GP-POST 305
COVER GP-VALVE MECHANISM 16
CRANKSHAFT GP 18
CYLINDER AS-BRAKE 134
CYLINDER BLOCK GP 10
CYLINDER GP-BACKHOE BUCKET .. 174
CYLINDER GP-BOOM 175
CYLINDER GP-LIFT 176
CYLINDER GP-MULTIPURPOSE
BUKT 177
CYLINDER GP-STABILIZER 178
CYLINDER GP-STEERING 146
CYLINDER GP-STICK 179
CYLINDER GP-SWING 180
181
CYLINDER GP-TILT 182
CYLINDER HEAD GP 24

D

DOOR GP-LH 306
DRAIN GP-HYDRAULIC 206
DRIVE AR 116
DRIVE GP-FAN 20
DRIVE GP-FLEXIBLE COUPLING 117

E

EDGE –CUTTING 283
ELBOW GP - AIR 22
ELEMENT-MAIN (PRIMARY) 53
ELEMENT (SECONDARY) 53
ENGINE AR 5
ENGINE AS 9

INDEX

F

FAN GP-SUCTION 49
FENDER GP-REAR 151
FILLER GP-POWER TRAIN OIL 118
FILM GP 331
FILM (BUCKET CONTROL) 185
FILM (BUCKET MECHANICAL CONTROL) 186
FILM –CAT 166
FILM-IDENTIFICATION (FUSE) 116
FILM-INDICATOR (BUCKET) 281 282
FILM-INSTRUCTION 166
FILM (INSTRUCTION-BUCKET CONTROL) 186
FILM-STRIPE (139CM) 166
FILM-STRIPE (400CM) 295
FILTER 234 242 244 246 248 250 252 254
FILTER & LINES GP-FUEL 62
FILTER AS-ENGINE OIL 14
FILTER AS-OIL-HYD 183
FILTER BASE & ENG OIL COOLER 14
FILTER ELEMENT-FUEL 40
FILTER GP-FUEL 40
FILTER-OIL-TRANS. 132
FITTING GP-FUEL LINES 40
FITTING-GREASE 156 264 266 268 270 276
FLASHER AS-SIGNAL 93
FLOOR MAT GP 308
FLOORPLATE GP 152
FLYWHEEL GP 26
FORK GP 292
FRAME GP-LOADER 154
FRAME GP-SLIDING 156
FRAME GP-SWING 158
FUSE (10 AMP) 93 94
FUSE (15 AMP) 70 80 93
FUSE (20 AMP) 93
FUSE (5 AMP) 94

G

GASKETS-ENGINE 28,30
GAUGE GP-OIL LEVEL & FILLER 47
GUARD GP-HOSE 163

H

HOOD & GUARD GP 164
HOOD GP-ENGINE 166
HORN GP-ELECTRIC 88
HOUR METER 86
HOSE-RADIATOR 52
HOUSING GP-FLYWHEEL 26
HYDRAULIC AR 184 185 186 187

I

INDICATOR-ENG.COOLANT 83
INDICATOR-FUEL LEVEL 83
INDICATOR-TRANS.OIL TEMP 83
INDICATOR GP-AIR FILTER CHANGE 56
INDICATOR-SERVICE 56
INSTALLATION AR-ENGINE 6

K

KEY 329
KICKOUT & POSITIONER GP 188
KIT-CONNECTING PLUG (12 PIN) 83 86 93
KIT-CONNECTING PLUG (2 PIN) 70 83 86 88 93 98 80 88 93
KIT-CONNECTING PLUG (4 PIN) 70 70 80

INDEX

83
93
98
70
72
80
83
93
98
KIT-CONNECTING PLUG (8 PIN) 93

KIT-CRANKSHAFT
BEARING (.25MM US) 18
KIT-CRANKSHAFT
BEARING (.50MM US) 18
KIT-CRANKSHAFT
BEARING (.75MM US) 18
KIT-HARDWARE 261
KIT-RECEPTACLE (12 PIN) 75
KIT-RECEPTACLE (2 PIN) 88
93
94
98
KIT-RECEPTACLE (3 PIN) 79
83
93
94
98
KIT-RECEPTACLE (4 PIN) 93
94
KIT-RECEPTACLE (6 PIN) 70
86
93
KIT-RECEPTACLE (8 PIN) 76
80
93
98
KIT-ROD BEARING (.25MM US) 18
KIT-ROD BEARING (.50MM US) 18
KIT-ROD BEARING (.75MM US) 18
KIT-SEAL 144
174
146
175
176
177
178
179
180
181
182
KIT-SPIDER & BEARING 122
KIT-SPRING 144

L

LAMP(BULB) 68
69
70
LAMP AS-NUMBER PLATE 333
LAMP GP-HEAD & SIGNAL 68
LAMP GP-STOP & TAIL 69
LAMP GP-FLOOD 70
LEVER AS-STABILIZER CONROL 226
LEVER GP-GOVERNOR CONTROL 59
LEVER GP-HAND CONTROL 136
LIFTING GP-ENGINE 32
LIGHTING GP-FLOOD 70
LIGHTING GP-ROADING 72
LINES GP-AIR 57
LINES GP-BACKHOE 190
LINES GP-BOOM 194
LINES GP-BUCKET
CYLINDER 192
LINES GP-LIFT CYLINDER 195
196
LINES GP-LOADER AUXILIARY 198
LINES GP-MULTIPURPOSE
BUCKET 200
LINES GP-POWER TRAIN
COOLER 50
LINES GP-PUMP 204
206
210
LINES GP-RETURN 211
LINES GP-SIDESHIFT LOCK 212
LINES GP-STABILIZER 202
214
LINES GP-STEERING 142
LINES GP-STICK 220
LINES GP-SWING 216
LINES GP-TILT CYLINDER 218
LINK GP-SHIPPING 272
LINKAGE GP-BACKHOE BUCKET 268
LINKAGE GP-LOADER BUCKET 270
LOADER AR 273
LOCK GP-TRANSPORT 275
LOCK GP-VANDALISM 329

M

MANIFOLD GP-EXHAUST 22
MANIFOLD GP-INLET 22
MIRROR GP-REAR VIEW 309
310
MODULE GP-WARNING
INDICATOR 75
76

INDEX

MOTOR GP-WINDOW WIPER 328
MOUNTING GP-ALTERNATOR 34
MOUNTING GP-BANK VALVE 221
MOUNTING GP-BANK VALVE–BACKHOE 222
MOUNTING GP-CYLINDER–MULTIPURPOSE 223
MOUNTING GP-ENGINE 7
MOUNTING GP-ENGINE & TMSN 8
MOUNTING GP-HYDRAULIC PUMP 225
MOUNTING GP-INSTRUMENT PANEL 311 312
MOUNTING GP-LINES 227 231
MOUNTING GP-REGISTRATION 330
MOUNTING GP-STARTING MOTOR 33
MUFFLER GP 58

P

PAD –STABILIZER 278
PADLOCK GP 329
PAN GP-OIL 36
PANEL GP-INSTRUMENT–SIDE 313
PEDAL-BRAKE 134
PEDAL GP-GOVERNOR 341
PISTON & ROD GP 18
PLUG 69
PLUG GP-CYLINDER BLOCK 10
PLUG GP-CYLINDER HEAD 24
PLUG-MAGNETIC 104
PLUG-SUMP DRAIN 36
POWER TRAIN AR 120 121
PULLEY GP-CRANKSHAFT 18
PUMP GP-ENGINE OIL 38
PUMP GP-FUEL INJECTION 40
PUMP GP-METERING 144
PUMP GP-PISTON 228
PUMP GP-TRANSMISSION 125
PUMP GP-WATER 43

R

RADIATOR & HYD OIL COOLER GP 52
REFLECTOR GP 334
REFLECTOR GP-CERTIFICATION–SIDE SHIFT 334
REGULATOR-WATER TEMPERATURE 43
RELAY AS (12 VOLT) 70 80 94
RESERVOIR GP-BRAKE 137
ROTATING GP-PUMP 230

S

SEAT GP 315
SENDER-TEMP.(COOLANT) 88
SENDER-TEMPERATURE ((TORQUE CONVERTER OIL)) 88
SEPARATOR GP-WATER 40
SERVICE METER 86
SHAFT GP-DRIVE–REAR 122
SHAFT GP-POWER TAKE-OFF 232
SPEEDOMETER 332
SPEED SENSOR 101
STABILIZER AR 233
STABILIZER GP-BACKHOE 278
STARTING MOTOR GP-ELECTRIC 33
STEERING COLUMN GP 138
STEERING WHEEL 138
STICK GP-HOE 276
STRAINER 126
SUPPRESSION AR-SOUND 4
SWITCH AS 70,72,77,79
SWITCH AS-KEY START 313
SWITCH AS-LIMIT 134
SWITCH AS-PUSH BUTTON 114 172
SWITCH-PRESSURE (ENGINE OIL) 77
SYNCHRONIZER GP 124

T

TANK & MTG GP-HYDRAULIC 234
TANK GP-FUEL 62 65
TOOTH GP-UNI 293 294
TRANSMISSION & MOUNTING GP 123
TRANSMISSION AR-DIRECT DRIVE 132
TRANSMISSION GP-DIRECT DRIVE 124

V

V-BELT 20
VALVE & MTG GP-BANK–STABILIZER 236
VALVE AR-BANK 4 237
VALVE GP-BANK 2 ..... 236 238
VALVE GP-BANK 3 239
VALVE GP-BANK 4 240
VALVE GP-CHECK–RETURN OIL 241
VALVE GP-CONTROL 248 250 252 254 256
VALVE GP-CONTROL–AUXILIARY 242
VALVE GP-CONTROL–BUCKET 256
VALVE GP-CONTROL–LIFT 244
VALVE GP-CONTROL–SWING 246
VALVE GP–STABILIZER 236
VALVE GP-POWER COMPENSATOR 260
VALVE GP-PRESS & FLOW COMPENSATOR 258
VALVE GP-PRIORITY–STEERING 147
VALVE GP-RELIEF 124 147 242 246 248 250
VALVE GP-SHUTOFF 206
VALVE GP-SOLENOID 130 261
VALVE MECHANISM GP 45
VALVE-SHUTOFF 206

W

WARNING GP-BACKUP 78
WASHER GP-WINDOW 316
WHEEL & TIRE GP 110 111
WINDOW GP-CAB 318 320 322
WINDOW GP-DOOR 324
WIPER GP-WINDOW 328
WIRING GP-CAB 80
WIRING GP-CONSOLE 83 86
WIRING GP-ENGINE 88
WIRING GP-PLATFORM 93
WIRING GP-REAR 98
WIRING GP-SENSOR 79

MACHINE ARRANGEMENT

233-6435 BACKHOE AR

S/N:JRB00255-UP
STANDARD STICK
PART OF 228-2802 COMMON AR

SMCS-6500, 6504 **i01569560**

NOTE	PART NUMBER	QTY	PART NAME 1 2 3 4 5 6 (PRODUCT LEVEL)	SEE PAGE
Y	**228-2783**	1	CYLINDER GP-BACKHOE BUCKET	174
Y	**236-6509**	1	FRAME GP-SWING	160
Y	**183-8506**	1	LINES GP-BACKHOE	190
Y	**183-8543**	1	LINES GP-BOOM	194
Y	**193-0703**	1	LINES GP-BUCKET CYLINDER	192
Y	**176-9298**	1	LINES GP-RETURN	211
Y	**183-8530**	1	LINES GP-SIDESHIFT LOCK	212
Y	**183-8544**	1	LINES GP-STICK	220
Y	**151-7928**	1	LINKAGE GP-BACKHOE BUCKET	268
Y	**186-2950**	1	MOUNTING GP-LINES	231
Y	**175-7620**	1	MOUNTING GP-LINES	227
Y	**184-6178**	1	STICK GP-HOE	276

Y-SEPARATE ILLUSTRATION

MACHINE ARRANGEMENT

228-2807 CHASSIS AR

S/N:JRB00485-UP

PART OF 228-2802 COMMON AR

SMCS-7000 **i01643525**

NOTE	PART NUMBER	QTY	PART NAME 1 2 3 4 5 6 (PRODUCT LEVEL)	SEE PAGE
Y	**183-3120**	1	CONTROL GP-HYDRAULIC HAND	172
Y	**202-5726**	1	FLOORPLATE GP	152
Y	**197-8134**	1	FRAME GP-LOADER	154
Y	**185-8857**	1	FRAME GP-SLIDING	156
Y	**9R-9999**	1	GUARD GP-HOSE	163
Y	**185-8842**	1	HOOD & GUARD GP	164
Y	**236-9154**	1	BRACKET GP-STAB	274
Y	**126-5707**	1	STABILIZER GP-BACKHOE	278
Y	**236-8605**	1	TANK GP-FUEL	62
Y	**250-2646**	1	WIRING GP-CONSOLE - FRONT	86
Y	**250-2648**	1	WIRING GP-PLATFORM	93

Y-SEPARATE ILLUSTRATION

MACHINE ARRANGEMENT

228-2802 COMMON AR

S/N : JRB00324-UP

NOTE	REF NO	GRAPHIC REF	PART NUMBER	QTY	PART NAME 1 2 3 4 5 6 (PRODUCT LEVEL)	SEE PAGE
Y			122-2054	1	MIRROR GP-BASIC	309
Y			134-8204	1	LOCK GP-VANDALISM	329
Y			144-6253	1	LINES GP-LIFT CYLINDER	195
Y			164-1400	1	CONTROL GP - VALVE	170
Y			183-4898	1	CONTROL GP - VALVE	138
Y			185-1129	1	SOUND AR	4
Y			185-1932	1	BOOM AR	263
Y			186-4967	1	VALVE AR-4 BANK	237
Y			202-5738	1	POWER TRAIN AR	120
Y			202-5883	1	CONTROL AR	
Y			202-6122	1	HYDRAULIC AR	187
Y			210-8919	1	STABILIZER AR	233
Y			228-2784	1	ENGINE AR-GEN	5
Y			228-2785	1	INSTALLATION AR	6
Y			228-2787	1	CAB AR	295
Y			228-2788	1	COOLER AR-AIR	48
Y			228-2803	1	LOADER AR	273
Y			228-2806	1	HYDRAULIC AR	184
Y			228-2807	1	CHASSIS AR	2
Y			228-2810	1	POWERTRAIN AR	121
Y			233-6435	1	BACKHOE AR-STD	1
Y			235-6520	1	WHEEL GP - REAR	110
Y			235-9051	1	COUNTER WT GP	250
Y			236-4725	1	WHEEL GP-FRONT	111
Y			236-9141	1	DRIVER AR	116
Y			237-7909	1	BATTERY GP	67
Y			238-4521	1	ACCESSORIES GP	331
Y			250-2640	1	MOUNTING GP-INSTRUMENTAL	313
Y			250-2643	1	LIGHTING GP	70
Y			250-2659	1	LIGHTING GP-ROAD	72
Y			258-5106	1	WARNING GP - BACKUP	78

Y-SEPARATE ILLUSTRATION

MACHINE ARRANGEMENT

185-1129 SUPPRESSION AR-SOUND

S/N:JRB00255-UP

SMCS-1801, 7076 **i01521128**

NOTE	PART NUMBER	QTY	PART NAME 1 2 3 4 5 6 (PRODUCT LEVEL)	SEE PAGE
Y	**197-3263**	1	AIR CLEANER GP	55
Y	**174-7153**	1	LINES GP-PUMP	206

Y-SEPARATE ILLUSTRATION

ENGINE ARRANGEMENT

228-2784 ENGINE AR-GENERAL

S/N:JRB00693-UP
PART OF 228-2802 COMMON AR

SMCS-1000 **i01619958**

NOTE	PART NUMBER	QTY	PART NAME 1 2 3 4 5 6 (PRODUCT LEVEL)	SEE PAGE
Y	**275-3916**	1	ENGINE AS	9-46
Y	**233-6423**	1	LINES GP-AIR	57
Y	**233-6424**	1	MUFFLER GP	58
Y	**250-2649**	1	WIRING GP-ENGINE	88
Y	**233-6426**	1	MOUNTING GP-ENGINE	7
Y	**233-6425**	1	GAGE GP-WARNING	77

Y-SEPARATE ILLUSTRATION

ENGINE ARRANGEMENT

228-2785 INSTALLATION AR-ENGINE

S/N:JRB00255-UP

PART OF 228-2802 COMMON AR

SMCS-1000 **i01354233**

NOTE	PART NUMBER	QTY	PART NAME 1 2 3 4 5 6 (PRODUCT LEVEL)	SEE PAGE
Y	**228-2786**	1	GAUGE GP-OIL LEVEL & FILLER	47

Y-SEPARATE ILLUSTRATION

BASIC ENGINE

233-6426 MOUNTING GP-ENGINE

S/N:JRB00255-UP

PART OF 228-2784 ENGINE AR

SMCS-1152, 1153, 1154 **i01366951**

NOTE	REF NO	GRAPHIC REF	PART NUMBER	QTY	PART NAME 1 2 3 4 5 6 (PRODUCT LEVEL)	SEE PAGE
	1	1	**101-2987**	6	PLUG	
	2	1	**133-8470**	4	PLUG	
	3	1	**129-6387**	1	SUPPORT-FRONT	
	4	1	**129-6389**	1	SUPPORT-FRONT	
	5	1	**240-9350**	8	STUD (ENGINE SUPPLY)	
	6	1	**240-9321**	8	NUT(ENGINE SUPPLY)	
	7	1	**240-9217**	8	WASHER (ENGINE SUPPLY)	

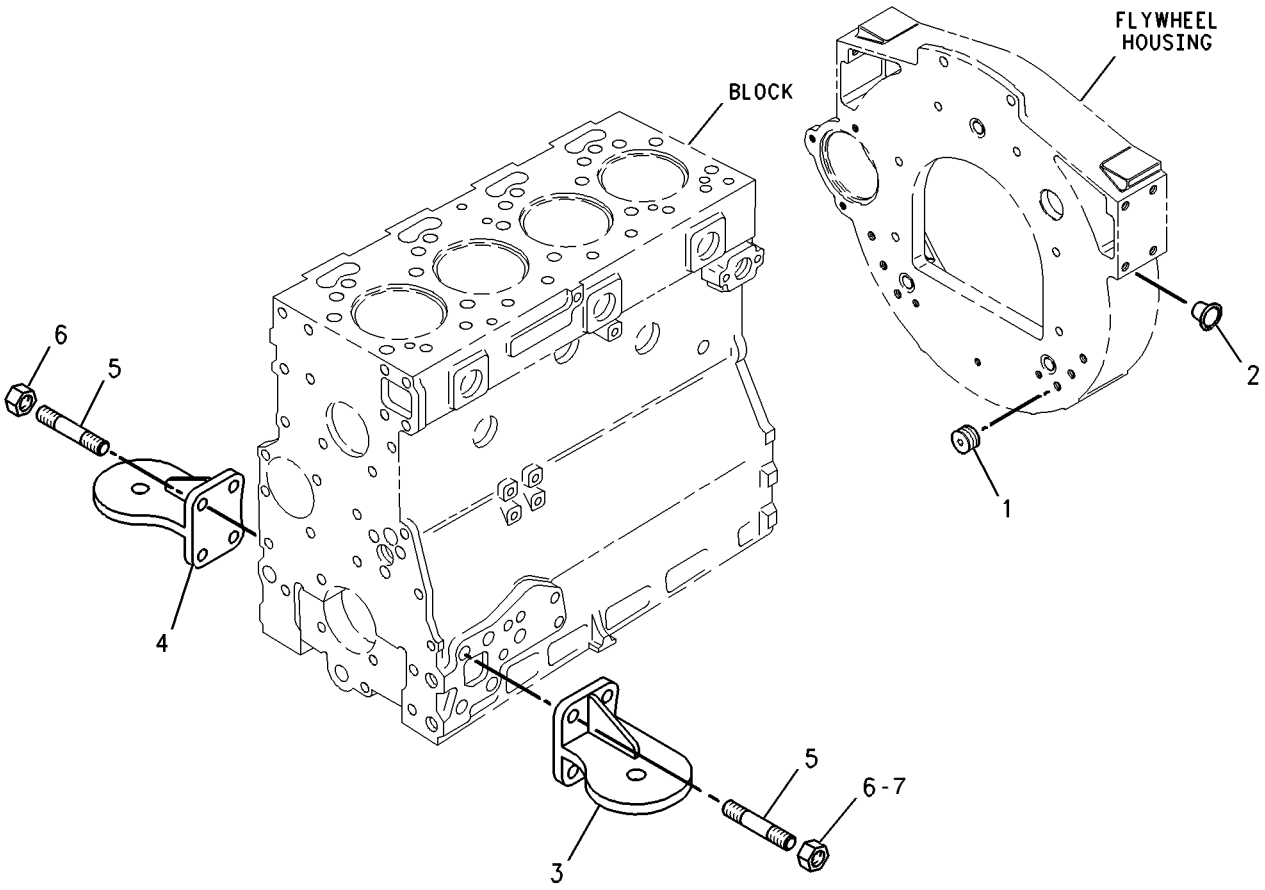

GRAPHIC #1 g00738284

BASIC ENGINE

143-0788 MOUNTING GP-ENGINE & TMSN

S/N:JRB00255-UP

PART OF 228-2810 POWER TRAIN AR

SMCS-1152, 1153, 1154 **i01670193**

NOTE	REF NO	GRAPHIC REF	PART NUMBER	QTY	PART NAME 1 2 3 4 5 6 (PRODUCT LEVEL)	SEE PAGE
	1	1	**3E-4892**	4	WASHER	
	2	1	**3E-4924**	2	MOUNTING AS	
	3	1	**6Y-9915**	2	MOUNT AS	
	4	1	**9W-9953**	2	SLEEVE	
	5	1	**8T-4121**	12	WASHER-HARD (11X21X2.5MM THK)	
M	6	1	**8T-4132**	4	NUT (M16X2 THD)	
M	7	1	**8T-4174**	4	BOLT (M16X2.0X120MM)	
M	8	1	**8T-4196**	12	BOLT (M10X1.5X35MM)	
	9	1	**9X-8257**	8	WASHER (17.5X30X3.5MM THK)	

M-METRIC PART

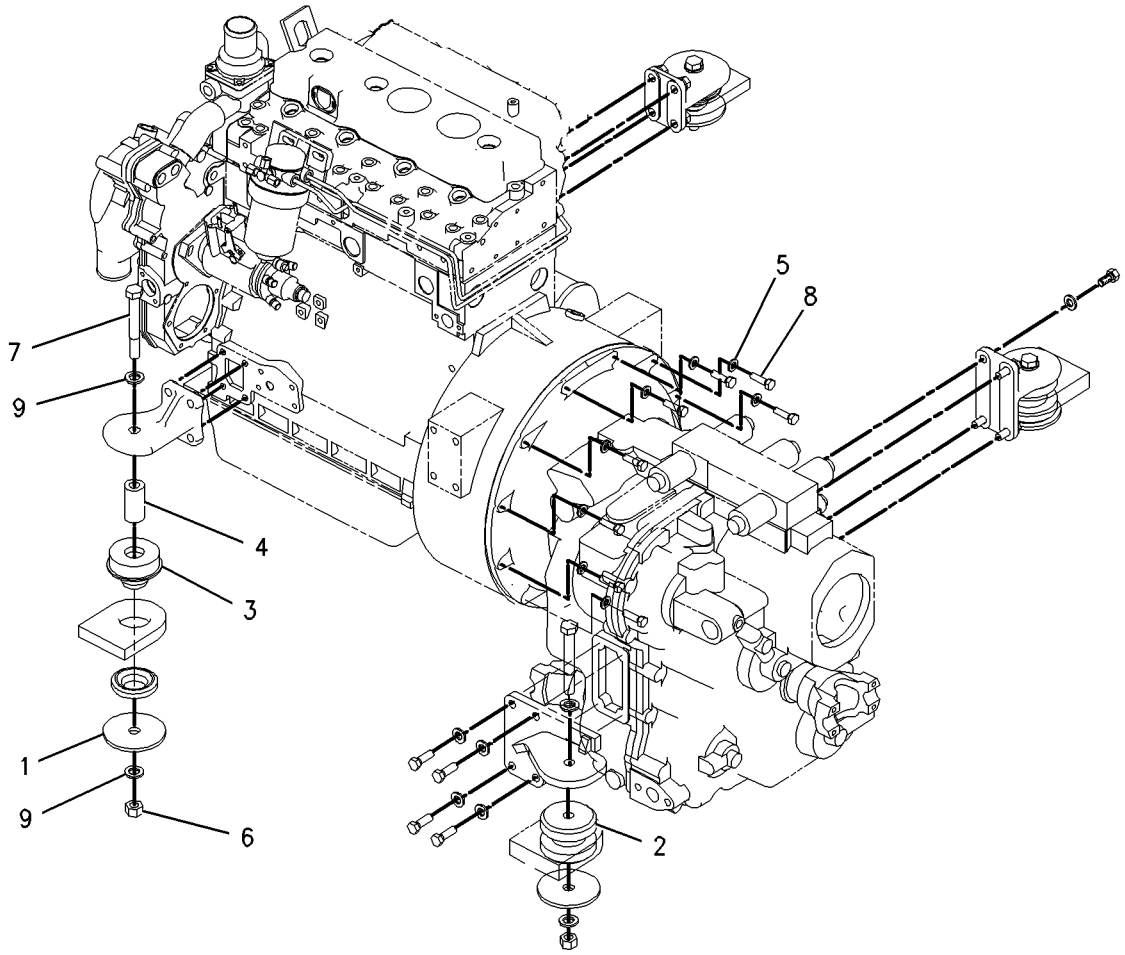

GRAPHIC #1 g00863051

BASIC ENGINE

275-3916 ENGINE ASSY

S / N : JRB00693 - UP

PART OF 228-2784 ENGINE AR-GENERAL

SMCS -1000

NOTE	REF NO	GRAPHIC REF	PART NUMBER	QTY	PART NAME 1 2 3 4 5 6 (PRODUCT LEVEL)	SEE PAGE
Y	1		*241-0308*	1	BLOCK GP-CYLINDER	10
Y	2		*241-0309*	1	CAMSHAFT GP	12
Y	3		*241-0310*	1	COOLER GP-FILTER	14
Y	4		*241-0311*	1	COVER GP-CYLINDER HEAD	16
Y	5		*241-0312*	1	CRANKSHAFT GP	18
Y	6		*241-0313*	1	DRIVE GP-FAN	20
Y	7		*241-0314*	1	ELBOW GP-AIR	22
Y	8		*241-0315*	1	HEAD GP-CYLINDER	24
Y	9		*241-0316*	1	HOUSING GP-FLYWHEEL	26
Y	10		241-0317	1	KIT-GASKET	28
Y	11		*241-0318*	1	LIFTING GP-ENGINE	32
Y	12		*241-0319*	1	STARTER MOTOR GP	33
Y	13		*241-0320*	1	ALTERNATOR MTG. GP	34
Y	14		*241-0321*	1	PAN GP-OIL	36
Y	15		*241-0322*	1	PUMP GP-ENGINE	38
Y	16		*241-0323*	1	PUMP GP-FUEL INJECTION	40
Y	17		*241-0324*	1	PUMP GP-WATER	43
Y	18		*241-0325*	1	VALVE MECHANISM GP	45

Y - SEPARATE ILLUSTRATION

BASIC ENGINE

241-0308 BLOCK GP-CYLINDER

S / N : JRB00693 - UP

PART OF 275-3916 ENGINE ASSY

SMCS -1201

NOTE	REF NO	GRAPHIC REF	PART NUMBER	QTY	PART NAME 1 2 3 4 5 6 (PRODUCT LEVEL)	SEE PAGE
	1	1	240-9377	1	CYLINDER BLOCK ASSY MINOR	
	2	1	240-9288	1	CYLINDER BLOCK	
	3	1	240-9274	4	LINER-PRESS FIT	
	4	1	240-9204	1	PLUG	
F	5	1	067-6002	10	DOWEL	
	6	1	035-8068	10	BOLT	
	7	1	036-5802	1	BEARING	
	8	1	241-3964	1	BEARING CAP	
Z		1	240-9246	1	CAP MAIN BEARING FRONT	
Z		1	240-9247	2	CAP INTER	
Z		1	240-9248	1	CAP MIDDLE	
Z		1	240-9249	1	CAP REAR	
	9	1	240-9204	5	PLUG	
	10	1	240-9205	1	PLUG	
	11	1	240-9202	1	PLUG	
	12	1	127-9768	1	PLUG	
	13	1	1N-3762	2	PLUG	
	14	1	067-6808	1	PLUG	
	15	1	7W-2501	1	PLUG	
	16	1	067-6808	1	PLUG	
	17	1	1N-3762	3	PLUG	
	18	1	1N-3762	4	PLUG	
	19	1	9Y-5015	1	PLUG	
	20	1	240-9268	1	PLUG	
	21	1	240-9278	1	WASHER	
F	22	1	240-9203	1	PLUG	
F	23	1	6I-0646	1	PLUG	
F	24	1	240-9329	2	PLUG	
F	25	1	241-3965	2	PLUG	
	26	1	6I-0219	1	BLANKING PLATE	
	27	1	6I-0220	1	JOINT	
	28	1	240-9344	1	SCREW	
	29	1	069-1124	2	PLUG	
	30	1	240-9370	1	HOUSING ASSY-OIL SEAL	
	31	1	240-9294	1	HOUSING	
	32	1	240-9333	1	SEAL	
	33	1	112-5541	1	GASKET	
	34	1	6I-0217	12	BOLT	
	35	1	126-2231	2	BOLT	
	36	1	240-9195	2	DOWEL	
F	37	1	240-9283	1	JOINT BLOCK TO LIFT PUMP	
F	38	1	240-9359	1	PLATE FEED PUMP BLANKING	
F	39	1	240-9350	8	STUD ENGINE FRONT MTG.	
F	40	1	240-9321	8	NUT	
F	41	1	240-9217	8	WASHER	
	42	1	6I-0164	4	LINER-SLIP FIT(SERVICE LINER)	

Z-NOT SERVICED SEPARATELY

F-NOT SHOWN

241-0308 BLOCK GP-CYLINDER (Contd.)

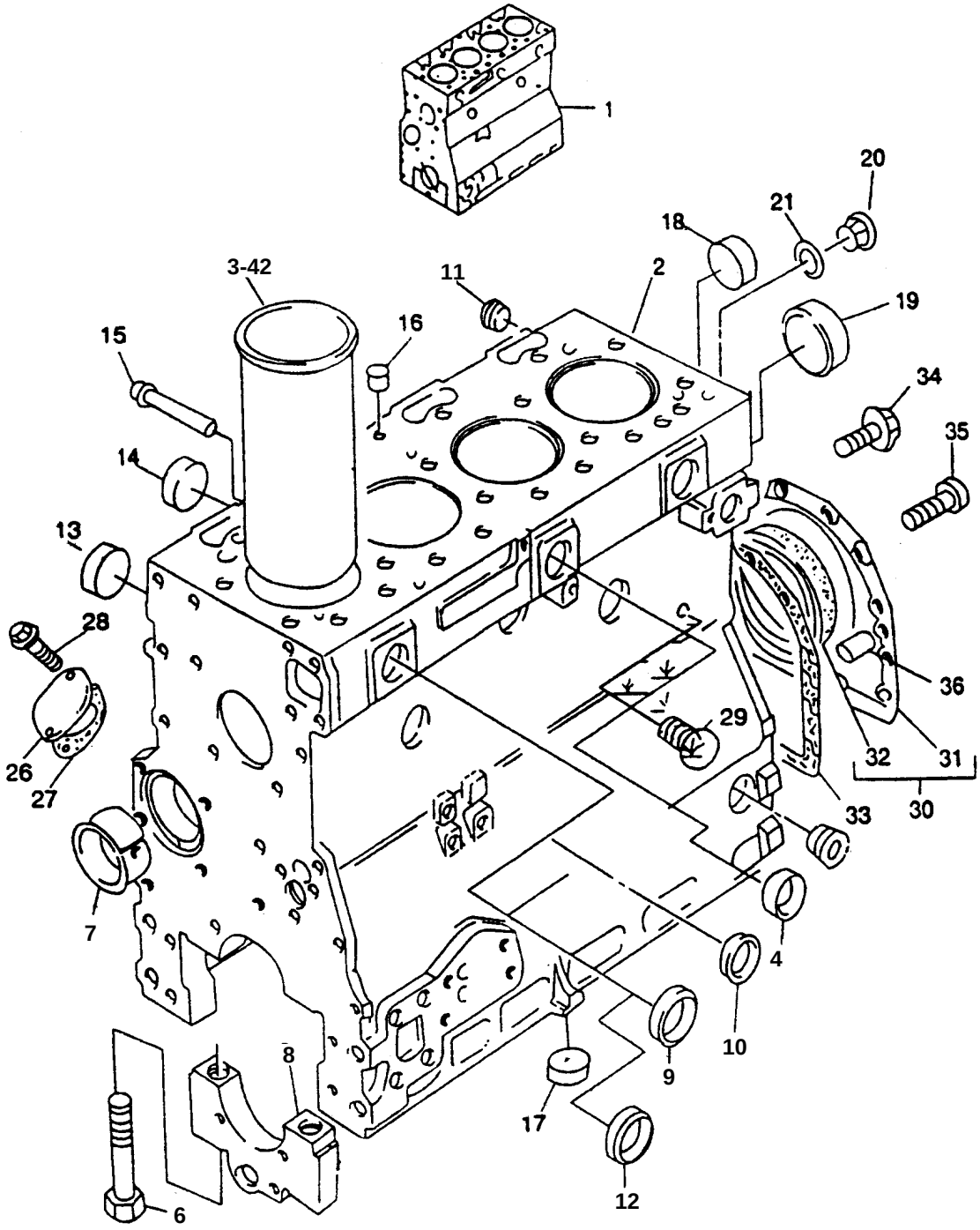

GRAPHIC #1

BASIC ENGINE

241-0309 CAMSHAFT GP

S / N : JRB00693 - UP

PART OF 275-3916 ENGINE ASSY

SMCS -1210

NOTE	REF NO	GRAPHIC REF	PART NUMBER	QTY	PART NAME 1 2 3 4 5 6 (PRODUCT LEVEL)	SEE PAGE
	1	1	240-9312	1	TIMING CASE	
	2	1	6I-0836	1	GASKET	
	3	1	6I-0217	8	BOLT	
	4	1	240-9339	4	SCREW	
	5	1	132-3930	1	CAMSHAFT	
	6	1	7W-4842	1	PLATE-THRUST	
	7	1	240-9221	1	PIN	
	8	1	240-9307	1	GEAR CAMSHAFT	
	9	1	240-9197	1	KEY-WOODRUFF	
	10	1	7C-4616	1	BOLT	
	11	1	133-1011	1	WASHER	
	12	1	067-6897	1	HUB-IDLER GEAR	
	13	1	240-9362	1	GEAR IDLER	
	14	1	240-9306	1	GEAR	
	15	1	240-9186	1	BUSH	
	16	1	240-9275	1	PLATE	
	17	1	6I-0789	3	BOLT	
		1	240-9369	1	TIMINGCASE COVER ASSY	
	18	1	240-9259	1	COVER	
	19	1	240-9334	1	SEAL	
	20	1	240-9285	1	JOINT	
	21	1	6I-0839	6	BOLT	
	22	1	6I-0254	6	BOLT	
	23	1	6I-0260	7	BOLT	
	24	1	240-9349	2	STUD	
	25	1	6I-0291	2	NUT	
	26	1	241-3642	1	COVER	
	27	1	6I-0842	1	GASKET	
	28	1	240-9338	4	SCREW	
	29	1	035-7293	1	COVER	
	30	1	169-6714	1	GASKET	
	31	1	240-9340	2	SCREW	
F	32	1	240-9201	1	PLUG	
F	33	1	6I-4037	1	PLATE OIL FILLER BLANKING	
F	34	1	6I-0512	1	GASKET	
F	35	1	124-3815	2	BOLT	
F	36	1	240-9406	3	STUD FIP RETAINING	
F	37	1	240-9402	2	NUT	
F	38	1	240-9403	1	NUT	
F	39	1	240-9348	3	WASHER	

F-NOT SHOWN

241-0309 CAMSHAFT GP (Contd.)

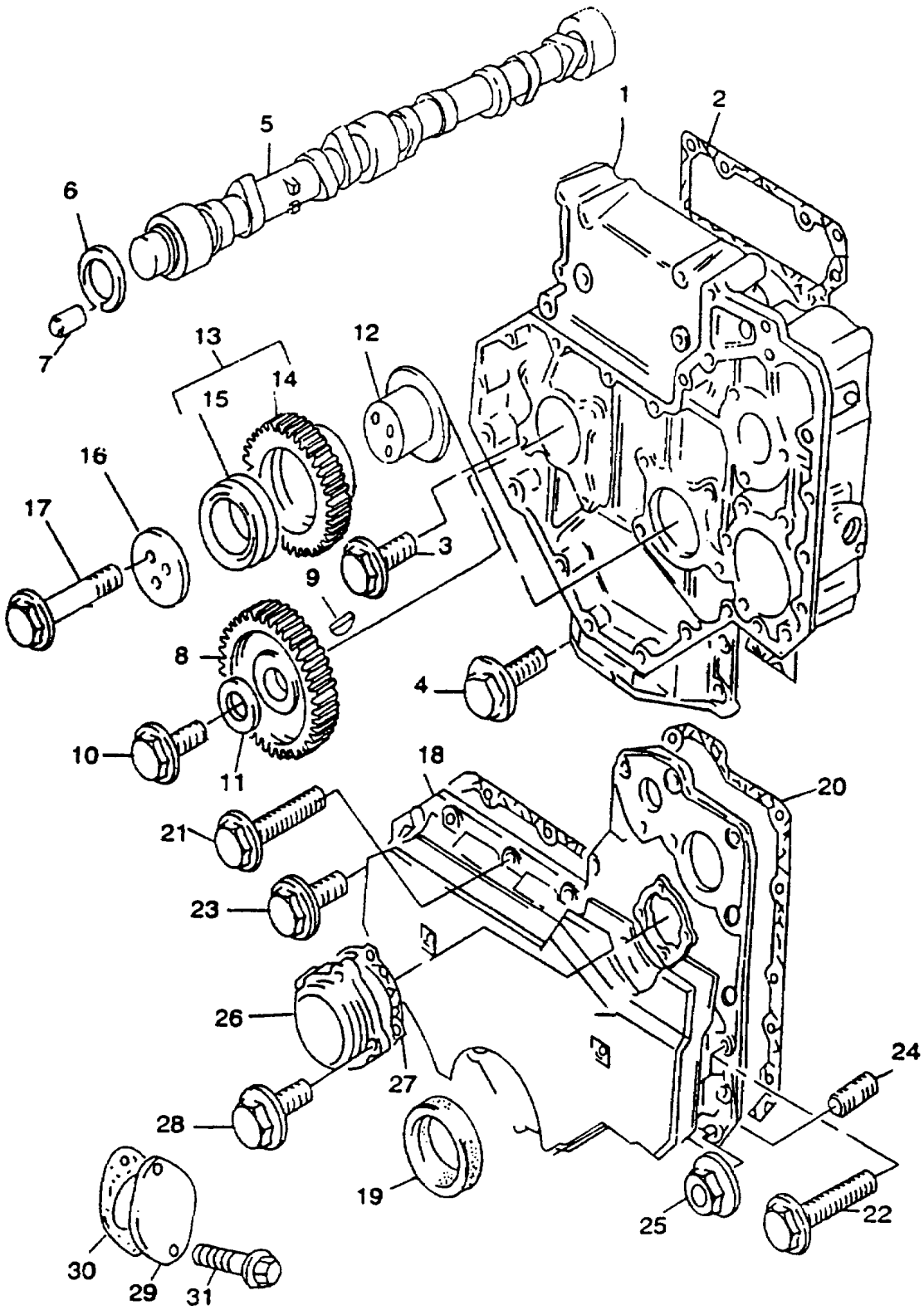

GRAPHIC #1

BASIC ENGINE

241-0310 COOLER GP-FILTER

S / N : JRB00693 - UP

PART OF 275-3916 ENGINE ASSY

SMCS -1308,1378

NOTE	REF NO	GRAPHIC REF	PART NUMBER	QTY	PART NAME 1 2 3 4 5 6 (PRODUCT LEVEL)	SEE PAGE
	1	1	118-9144	1	HEAD ASSY-OIL FILTER	
Z	2	1		1	FILTER HEAD	
	3	1	118-9145	1	CONNECTOR	
	4	1	6I-0298	2	GASKET	
	5	1	240-9203	1	PLUG	
	6	1	240-9393	1	FILTER-OIL	
	7	1	101-3913	1	ADAPTOR	
	8	1	6I-1110	2	BOLT	
	9	1	105-4173	2	BOLT	
	10	1	240-9392	1	OIL COOLER ASSY	
		1	240-9335	1	SEAL-OIL COOLER	
	11	1	229-8670	1	HOSE - COOLER	
	12	1	240-9323	1	PIPE - COOLER	
	13	1	240-9279	1	ADAPTER	
	14	1	240-9229	1	ELBOW CONNECTION	
	15	1	240-9346	1	BOLT -OIL COOLER	
	16	1	240-9332	1	SEAL-O-RING	
	17	1	240-9230	6	CLIP	
	18	1	7W-4666	1	HOSE	
	19	1	240-9282	1	HOSE	
	20	1	240-9252	1	CLAMP	
	21	1	240-9236	1	PLUG-FUEL FILTER	
	22	1	142-8069	1	ADAPTOR	
	23	1	6I-0302	3	BOLT	
	24	1	6I-0301	1	BOLT	
	25	1	142-8068	1	GASKET	
F	26	1	6I-0646	1	BOLT	
F	27	1	240-9357	1	WASHER	

F-NOT SHOWN
Z-NOT SERVICED SEPARATELY

241-0310 COOLER GP-FILTER (Contd.)

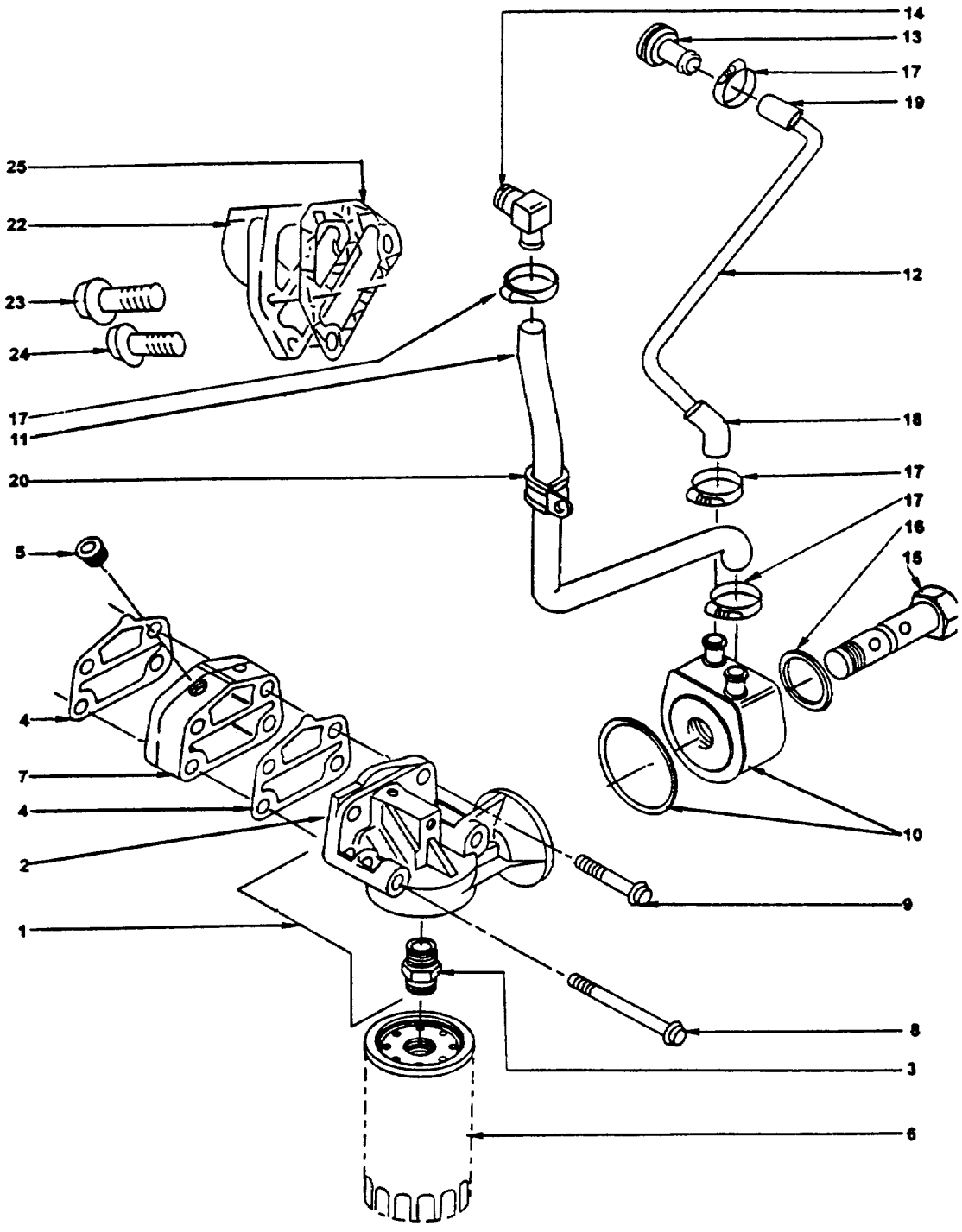

GRAPHIC #1

BASIC ENGINE

241-0311 COVER GP-CYLINDER HEAD

S / N : JRB00693 - UP

PART OF 275-3916 ENGINE ASSY

SMCS -1107,1120

NOTE	REF NO	GRAPHIC REF	PART NUMBER	QTY	PART NAME 1 2 3 4 5 6 (PRODUCT LEVEL)	SEE PAGE
	1	1	240-9380	1	COVER ASSY-CYLINDER HEAD	
Z	2	1		1	COVER	
	3	1	6I-4728	1	CONNECTOR	
	4	1	6I-0506	1	GASKET	
	5	1	101-3675	3	SEAL	
	6	1	240-9215	3	WASHER	
	7	1	6I-0516	1	HOSE	
	8	1	6I-0517	1	SPRING	
	9	1	240-9230	1	CLIP	
	10	1	7C-1281	1	BRACKET	
	11	1	136-3608	1	CAP ASSY-FILLER	
	12	1	240-9293	1	CAP	
	13	1	240-9226	1	SEAL-O-RING	
	14	1	240-9383	1	BODY-FILLER	
	15	1	6I-0507	3	NUT	

Z-NOT SERVICED SEPARATELY

241-0311 COVER GP-CYLINDER HEAD (Contd.)

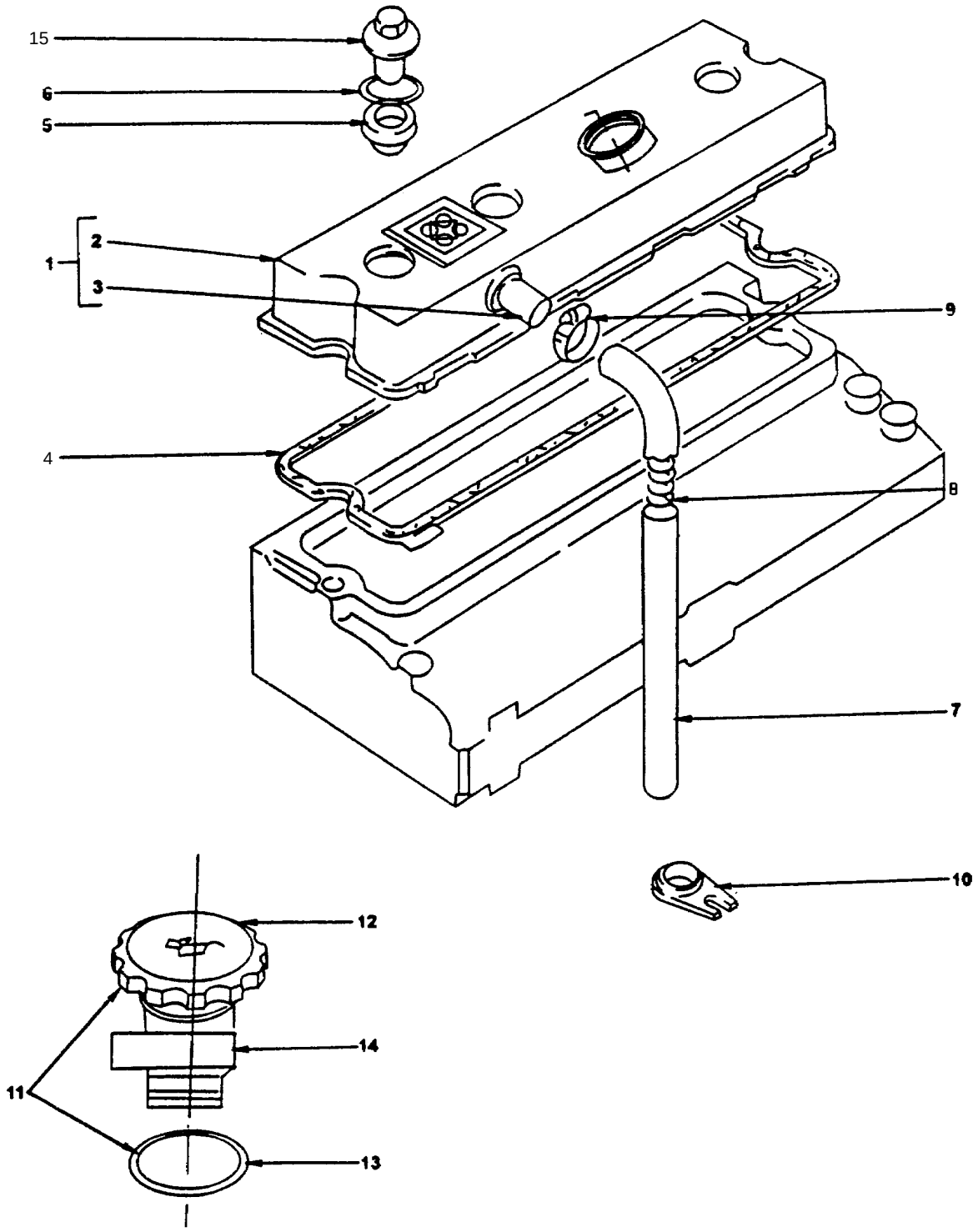

GRAPHIC #1

BASIC ENGINE

241-0312 CRANKSHAFT GP

S / N : JRB00693 - UP

PART OF 275-3916 ENGINE ASSY

SMCS -1202

NOTE	REF NO	GRAPHIC REF	PART NUMBER	QTY	PART NAME 1 2 3 4 5 6 (PRODUCT LEVEL)	SEE PAGE
	1		240-9387	1	CRANKSHAFT ASSY	
	2		240-9271	1	CRANKSHAFT	
	3		240-9187	1	KIT BEARING	
			240-9207	1	KIT-BEARING	
			240-9208	1	KIT-BEARING	
			240-9209	1	KIT-BEARING	
Z			240-9263	1	BEARING	
Z			240-9264	1	BEARING	
Z			240-9265	4	BEARING	
Z			240-9266	3	BEARING	
	4		240-9188	1	KIT-BEARING	
			240-9210	1	KIT-BEARING	
			240-9211	1	KIT-BEARING	
			240-9212	1	KIT-BEARING	
			240-9363	1	WASHER-THRUST	
	5		032-9090	2	WASHER THRUST	
			067-6873	2	WASHER THRUST	
	6		032-9091	2	WASHER THRUST	
			067-6874	2	WASHER THRUST	
	7		240-9276	1	BLOCK THRUST	
	8		240-9269	3	SCREW	
	9		240-9304	4	ROD ASSY-CONNECTOR	
Z	10		240-9272	1	ROD CONNECTING	
Z	11		240-9273	1	CAP	
Z	12		067-6158	1	BUSHING-END	
Z	13		067-6883	2	BOLT-ROD CAP	
	14		7W-2505	2	NUT-CONN.ROD	
			240-9386	1	PISTON RING KIT	
	15		240-9368	4	PISTON KIT	
Z	16		240-9324	1	PISTON (HIGH GRADE)	
Z			240-9325	1	PISTON (LOW GRADE)	
Z	17		240-9322	1	PIN	
	18		240-9191	1	CIRCLIP	
	19		240-9191	1	CIRCLIP	
	20		240-9367	4	PISTON RING KIT	
Z			240-9326	1	RING COMPRESSION	
Z			240-9327	1	RING COMPRESSION	
Z			240-9328	1	RING COMPRESSION	
	21		240-9308	1	GEAR- CRANKSHAFT	
	22		240-9197	1	KEY WOODRUFF	
	23		6I-3981	1	PULLEY	

Z-NOT SERVICED SEPARATELY

241-0312 CRANKSHAFT GP (Contd.)

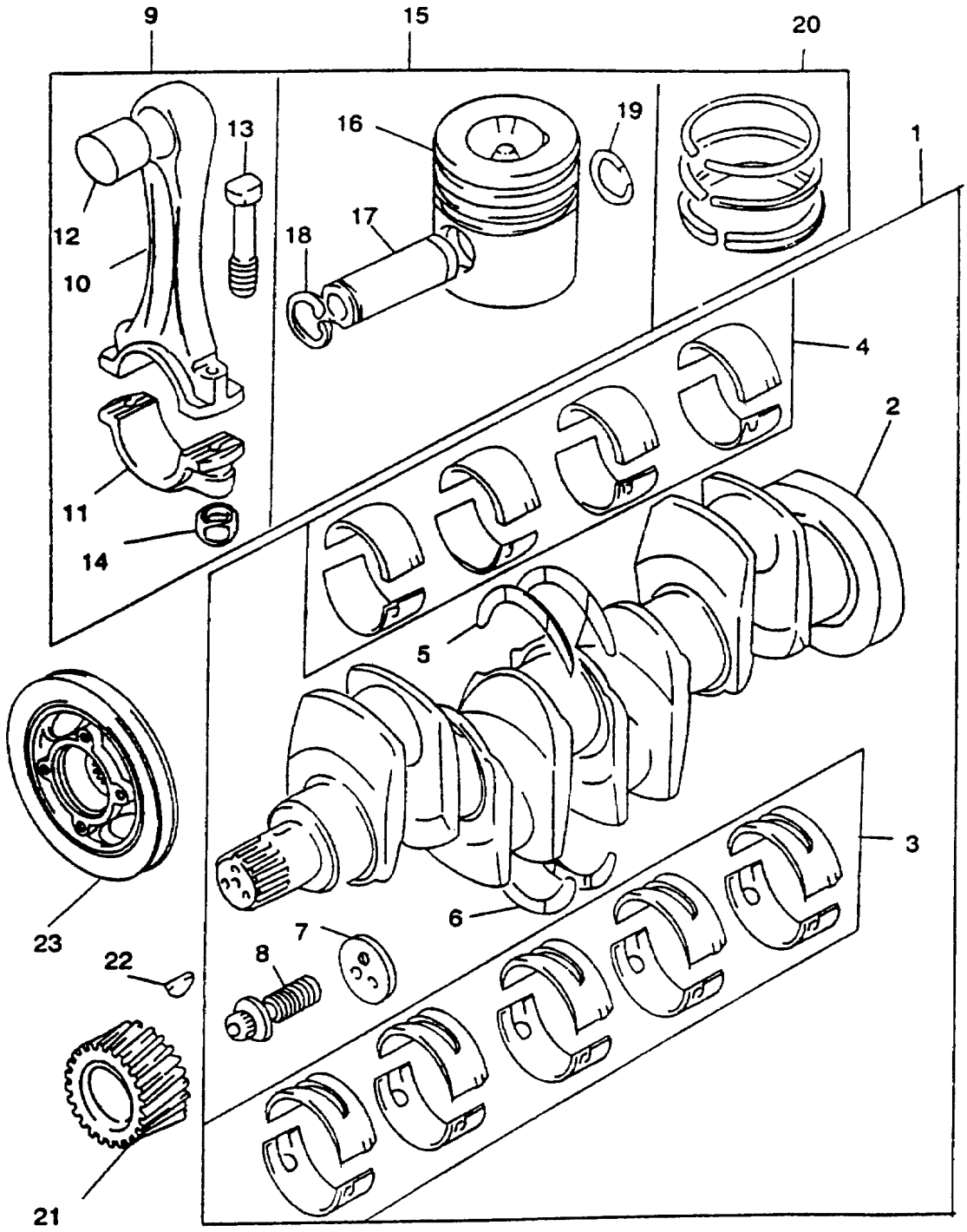

GRAPHIC #1

BASIC ENGINE

241-0313 DRIVE GP-FAN

S / N : JRB00693 - UP

PART OF 275-3916 ENGINE ASSY

SMCS -1359

NOTE	REF NO	GRAPHIC REF	PART NUMBER	QTY	PART NAME 1 2 3 4 5 6 (PRODUCT LEVEL)	SEE PAGE
	1	1	103-5686	1	HOUSING ASSY	
	2	1	240-9296	1	HOUSING	
	3	1	240-9260	1	BEARING	
	4	1	240-9280	1	HUB	
	5	1	100-4463	4	BOLT	
	6	1	240-9237	1	BELT-COGGED	
	7	1	240-9331	1	PULLEY	
	8	1	240-9287	1	FAN-EXTENSION	
	9	1	240-9337	4	SCREW-FAN EXTENSION	
	10	1	240-9216	4	WASHER-SPRING	

241-0313 DRIVE GP-FAN (Contd.)

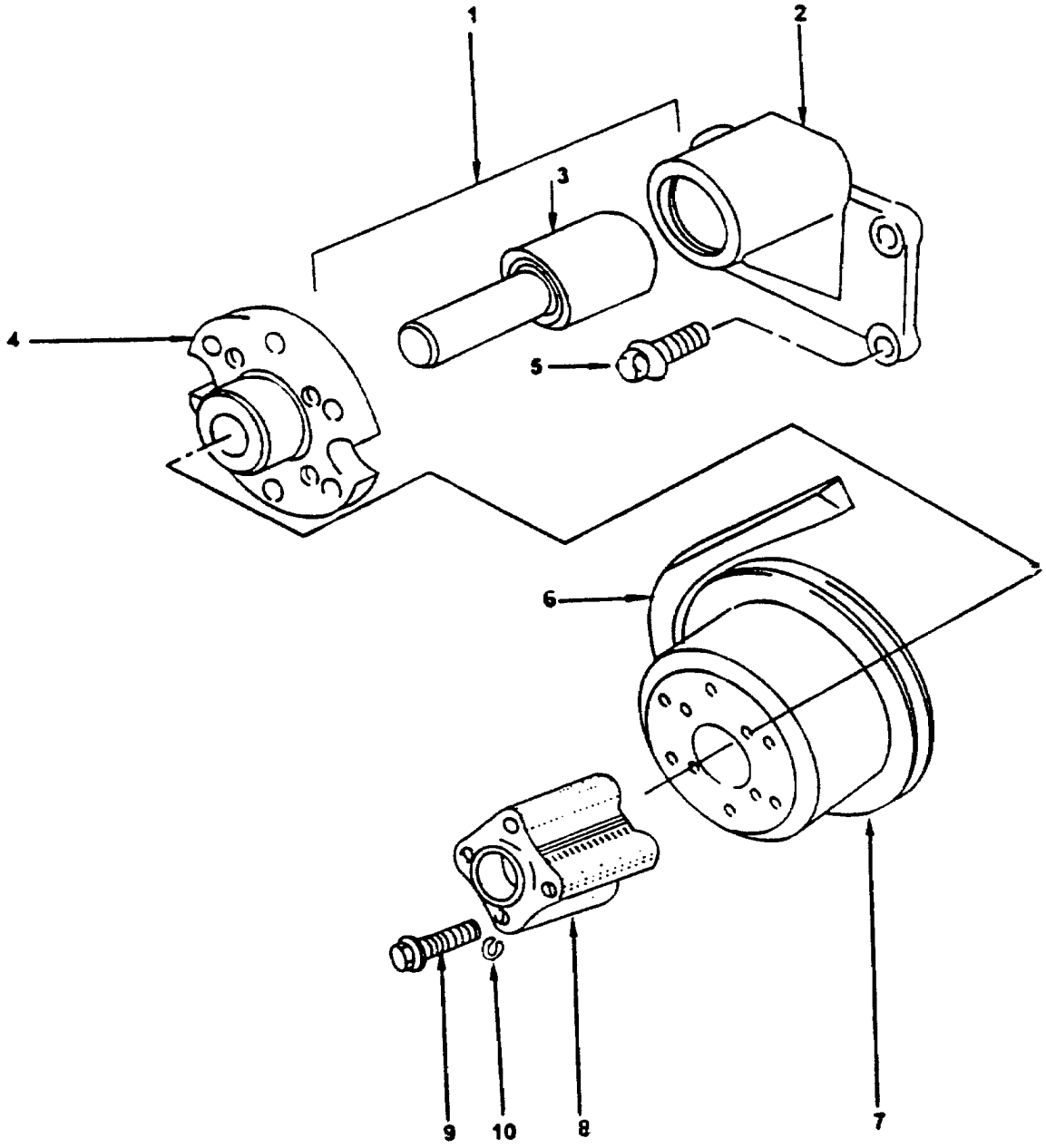

GRAPHIC #1

BASIC ENGINE

241-0314 ELBOW GP-AIR

S / N : JRB00693 - UP

PART OF 275-3916 ENGINE ASSY

SMCS - 1058,1059

NOTE	REF NO	GRAPHIC REF	PART NUMBER	QTY	PART NAME 1 2 3 4 5 6 (PRODUCT LEVEL)	SEE PAGE
	1	1	240-9318	1	MANIFOLD	
	2	1	241-3640	1	GASKET	
	3	1	240-9341	4	SCREW	
	4	1	240-9342	1	SCREW	
	5	1	240-9343	1	SCREW	
	6	1	6I-4005	1	GASKET	
	7	1	6I-0260	2	BOLT	
	8	1	101-3805	2	BOLT	
	9	1	240-9227	1	PLUG	
	10	1	113-7582	1	ELBOW	
	11	1	240-9361	1	PLATE	
	12	1	124-3815	4	BOLT	
	13	2	6I-4007	1	MANIFOLD-EXH	
	14	2	240-9286	1	GASKET	
	15	2	6I-0364	4	STUD	
	16	2	6I-0563	4	NUT	
F	17	1	6I-4039	1	GASKET	

F-NOT SHOWN

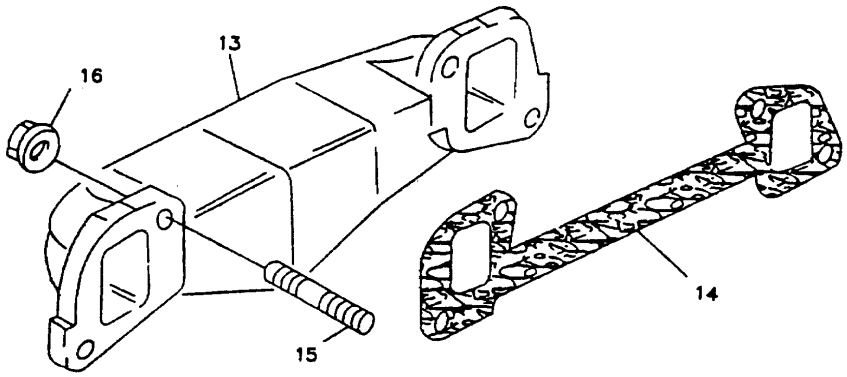

GRAPHIC # 2

241-0314 ELBOW GP-AIR (Contd.)

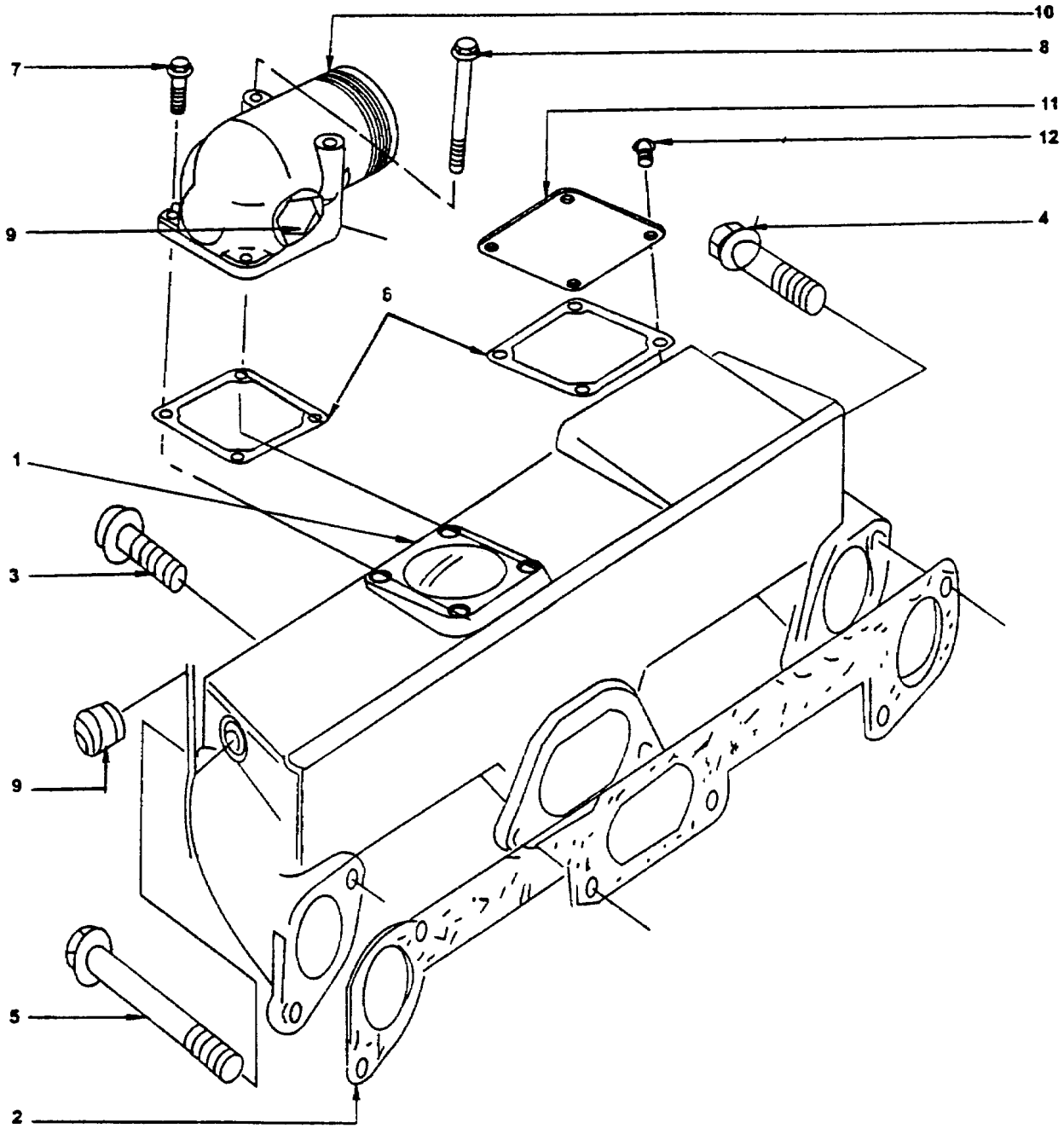

GRAPHIC #1

BASIC ENGINE

241-0315 HEAD GP-CYLINDER

S / N : JRB00693 - UP

PART OF 275-3916 ENGINE ASSY

SMCS - 1100

NOTE	REF NO	GRAPHIC REF	PART NUMBER	QTY	PART NAME 1 2 3 4 5 6 (PRODUCT LEVEL)	SEE PAGE
	1	1	240-9365	1	CYLINDER HEAD-KIT (MAJOR)	
K	2	1	240-9289	1	HEAD-CYLINDER	
	3	1	240-9204	1	PLUG	
	4	1	6I-0285	4	PLUG	
	5	1	240-9199	1	PLUG	
	6	1	240-9224	1	WASHER	
	7	1	240-9352	4	VALVE-INLET	
K	8	1	160-5436	4	GUIDE-IN. VALVE	
	9	1	067-6054	4	WASHER	
	10	1	6I-0283	4	SPRING	
	11	1	6I-0284	4	SPRING	
	12	1	1W-5849	4	SEAL-VALVE	
	13	1	6I-0281	4	CAP-VALVE SPRING	
	14	1	067-6834	8	COTTER-CAP	
	15	1	240-9353	4	VALVE- EXHAUST	
K	16	1	241-3645	4	GUIDE-EX .VALVE	
	17	1	067-6054	4	WASHER	
	18	1	6I-0283	4	SPRING	
	19	1	6I-0284	4	SPRING	
	20	1	1W-5849	4	SEAL-VALVE	
	21	1	6I-0281	4	CAP-VALVE SPRING	
	22	1	067-6834	8	COTTER-CAP	
	23	1	7C-3192	1	COVER	
	24	1	241-3644	1	GASKET	
	25	1	124-3815	3	BOLT	
F		1	6I-0217	1	BOLT	
	26	1	100-4830	2	BOLT	
	27	1	240-9213	2	PLUG	
	28	1	240-9201	2	PLUG	
	29	1	7W-2520	2	BOLT	
	30	1	7W-2518	8	BOLT	
	31	1	7W-2519	12	BOLT	
	32	1	160-0161	1	GASKET-HEAD	
	33	1	161-9820	2	PIN	
F		1	240-9366	1	CYLINDER HEAD-KIT (MINOR)	

K-PARTS MARKED 'K' ARE INCLUDED IN 240-9366 CYLINDER HEAD-KIT(MINOR)
F-NOT SHOWN

241-0315 HEAD GP-CYLINDER (Contd.)

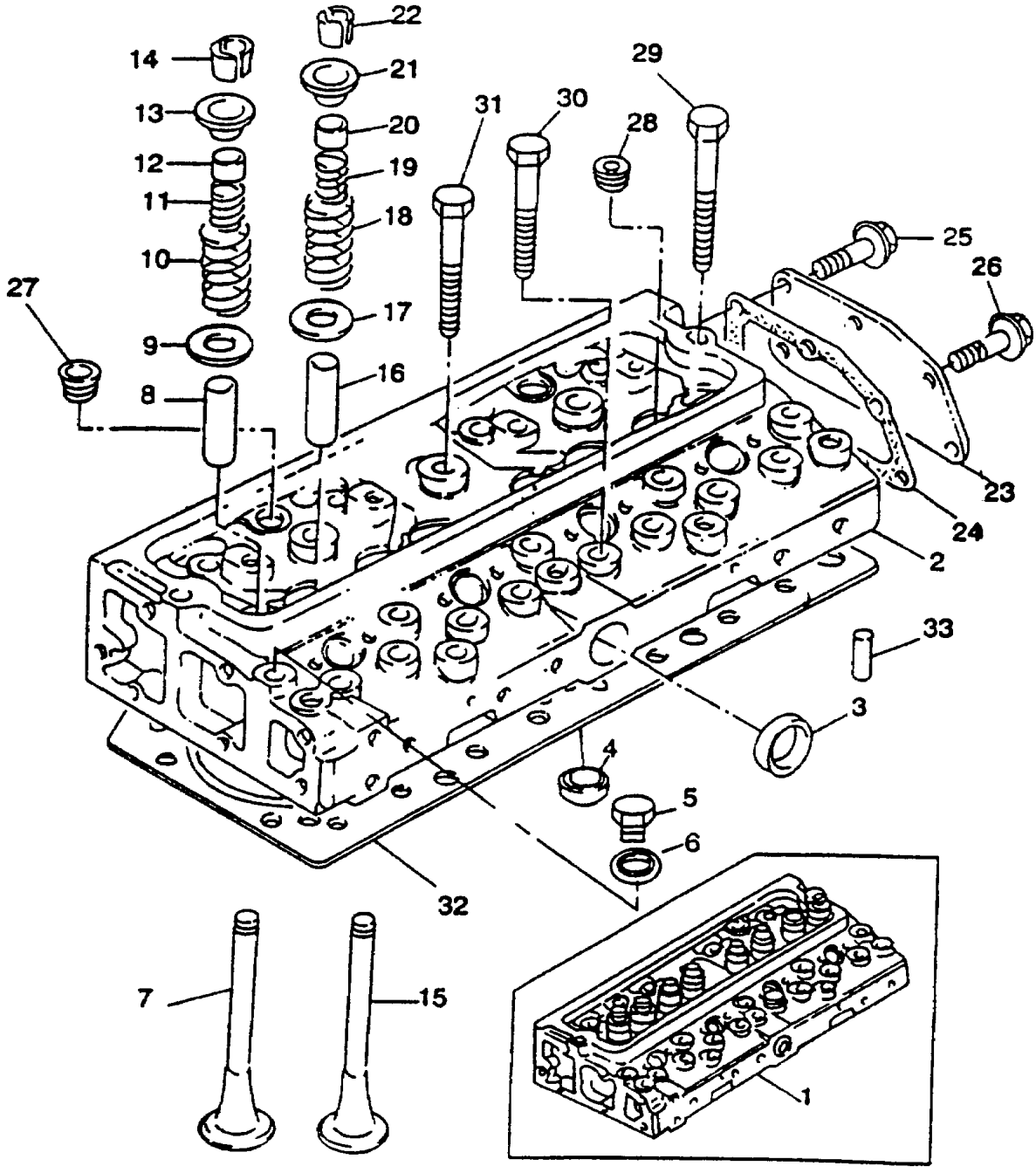

GRAPHIC #1

BASIC ENGINE

241-0316 HOUSING GP-FLYWHEEL

S / N : JRB00693 - UP

PART OF 275-3916 ENGINE ASSY

SMCS - 1157

NOTE	REF NO	GRAPHIC REF	PART NUMBER	QTY	PART NAME 1 2 3 4 5 6 (PRODUCT LEVEL)	SEE PAGE
	1	1	240-9270	1	FLYWHEEL	
	2	1	240-9305	1	STARTER RING	
	3	1	240-9190	6	SCREW	
	4	1	145-4911	6	WASHER	
	5	1	241-3641	1	HOUSING FLYWHEEL	
	6	1	240-9196	2	DOWEL	
	7	1	6I-0593	6	SCREW	
	8	1	6I-0423	2	SCREW	
	9	1	240-9360	1	PLATE FLYWHEEL HOUSING	
	10	1	6I-4200	2	SCREW	
	11	1	240-9313	1	JOINT F/W HOUSING	
F	12	1	240-9317	1	STUD F/W HOUSING TO BLOCK	
F	13	1	240-9405	4	SET SCREW	
F	14	1	240-9214	4	WASHER	
F	15	1	240-9314	1	JOINT FLYWHEEL HOUSING	

F-NOT SHOWN

241-0316 HOUSING GP-FLYWHEEL (Contd.)

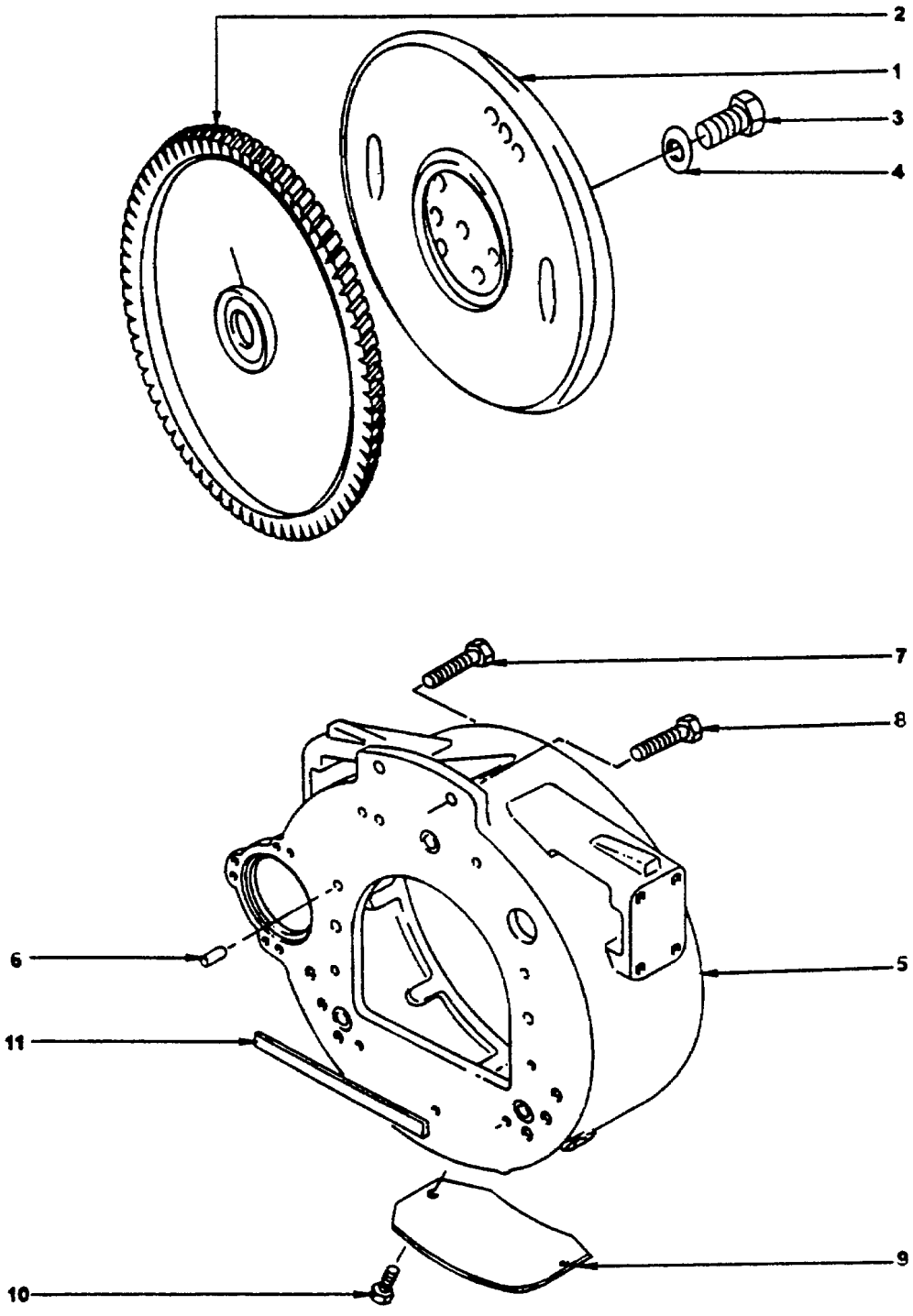

GRAPHIC #1

BASIC ENGINE

241-0317 KIT-GASKET (MAJOR)

S / N : JRB00693 - UP

PART OF 275-3916 ENGINE ASSY

SMCS - 7555

NOTE	REF NO	GRAPHIC REF	PART NUMBER	QTY	PART NAME 1 2 3 4 5 6 (PRODUCT LEVEL)	SEE PAGE
			240-9388	1	KIT-GASKET (MAJOR)	
			240-9390	1	KIT-GASKET (BOTTOM SERVICE KIT)	30
	1		240-9389	1	KIT-GASKET (TOP SERVICE KIT)	
	2		160-0161	1	GASKET-HEAD	
	3		6I-0506	1	GASKET CYL.HEAD COVER	
	4		241-3644	1	GASKET CYL.HEAD REAR AND COVER	
	5		6I-0453	1	GASKET THERMOSTAT HOU.TO CYL.HEAD	
	6		241-3640	1	GASKET IND.MANIFOLD TO CYL. HEAD	
	7		240-9286	1	GASKET CYL.HEAD TO EXH./M	
F	8		6I-0485	1	GASKET THERMO. HOUS.TO OUTLET CON.	
	9		6I-4005	1	GASKET IND./M TO ELBOW	
	10		6I-4039	1	GASKET EXH./M OUTLET	
	11		240-9219	4	WASHER ATOMISER SEALING	
	12		1W-5849	8	SEAL- VALVE	
	13		241-3643	10	OLIVE ROCKER SHAFT OIL FEED CONN.	
	14		7W-0187	4	SEAL ATOMISER DUST	
	15		6I-0220	1	GASKET TURBOCHARGER WATER DRAIN	

F-NOT SHOWN

241-0317 KIT-GASKET (MAJOR) (Contd.)

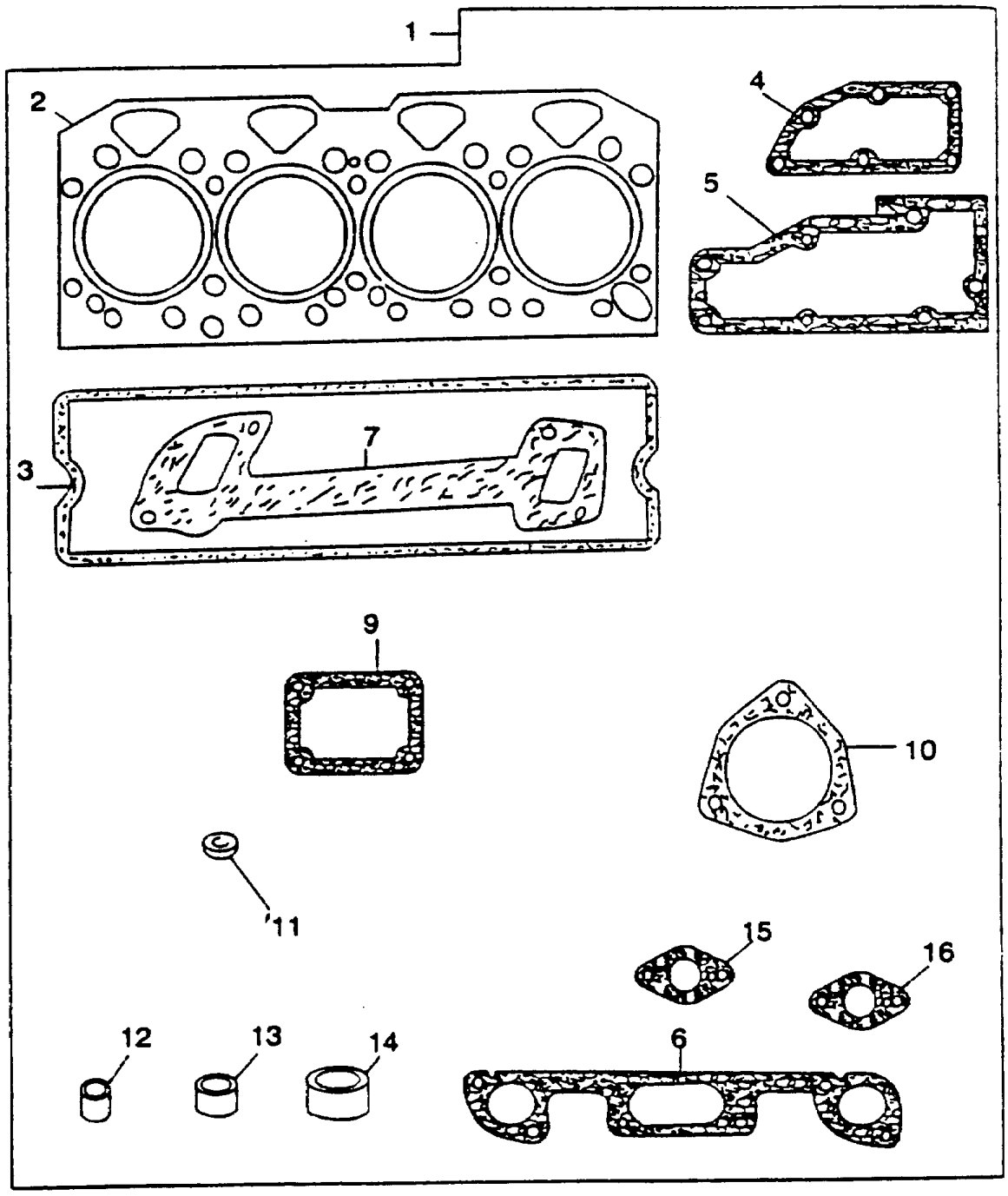

GRAPHIC #1

BASIC ENGINE

240-9390 KIT-GASKET (BOTTOM SERVICE KIT)

S / N : JRB00693 - UP

PART OF 275-3916 ENGINE ASSY

SMCS -7555

NOTE	REF NO	GRAPHIC REF	PART NUMBER	QTY	PART NAME 1 2 3 4 5 6 (PRODUCT LEVEL)	SEE PAGE
	1	1	240-9390	1	KIT-GASKET (BOTTOM SERVICE KIT)	
	2	1	240-9284	1	JOINT SUMP TO BLOCK	
F	3	1	240-9335	1	SEAL- OIL COOLER	
	4	1	6I-0836	1	GASKET CYL.BLOCK T CARE	
	5	1	240-9285	1	JOINT FRONT COVER TO T CARE	
	6	1	112-5541	1	GASKET CYL.BLOCK TO REAR OIL SEAL HOUSING	
F	7	1	169-6714	1	GASKET T CARE BLANKING REAR PLATE	
	8	1	6I-0298	2	GASKET FILTER HEAD TO ADAPTOR	
	9	1	9Y-9380	1	GASKET BLANKING PLATE TO T CARE	
	10	1	121-3221	1	GASKET FEED PUMP BLANKING PUMP	
F	11	1	142-8068	1	GASKET ADAPTOR LUB OIL PIPE	
	12	1	240-9316	1	JOINT FIP MOUNTING	
	13	1	6I-1092	1	GASKET FILTER HEAD TO LUB OIL PUMP	
	14	1	067-6213	1	GASKET LUB OIL SUCTION PIPE FLANGE TO PUMP	
	15	1	6I-0459	1	GASKET ELBOW WATER CONNECTION	
	16	1	240-9245	1	SEAL-O-RING WATER PUMP	
	17	1	6I-0450	1	SEAL-O-RING WATER PUMP	
F	18	1	6I-1497	1	SEAL- DIPSTICK	

F-NOT SHOWN

240-9390 KIT-GASKET (BOTTOM SERVIC KIT) (Contd.)

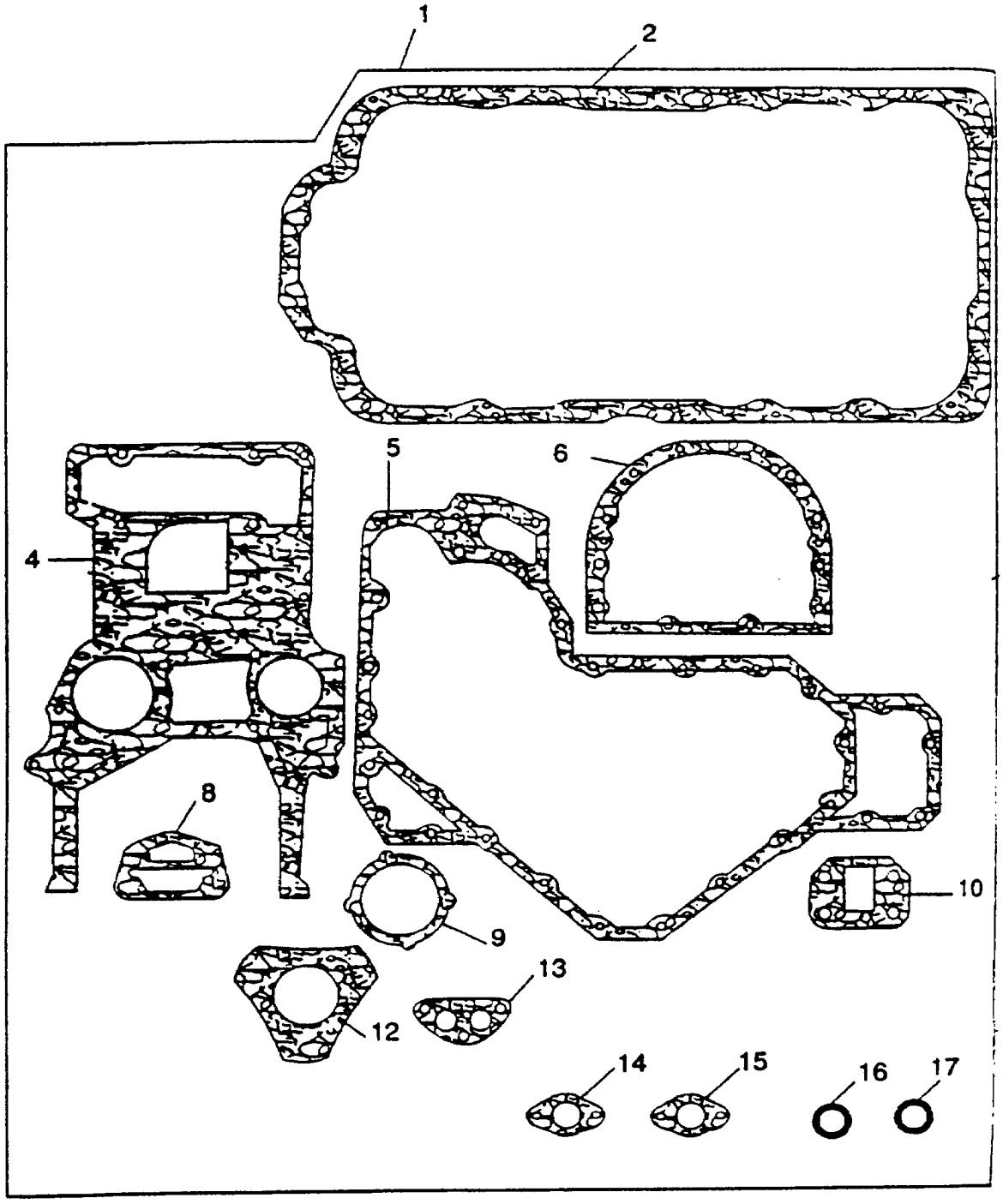

GRAPHIC #1

BASIC ENGINE

241-0318 LIFTING GP-ENGINE

S / N : JRB00693 - UP

PART OF 275-3916 ENGINE ASSY

SMCS - 1122

NOTE	REF NO	GRAPHIC REF	PART NUMBER	QTY	PART NAME 1 2 3 4 5 6 (PRODUCT LEVEL)	SEE PAGE
	1	1	6I-0653	1	PLATE- FRONT	
	2	1	6I-0654	2	BOLT	
	3	1	240-9240	1	PLATE- REAR	
	4	1	6I-0593	2	BOLT	
F	5	1	240-9218	2	SPACER- REAR BRACKET	

F-NOT SHOWN

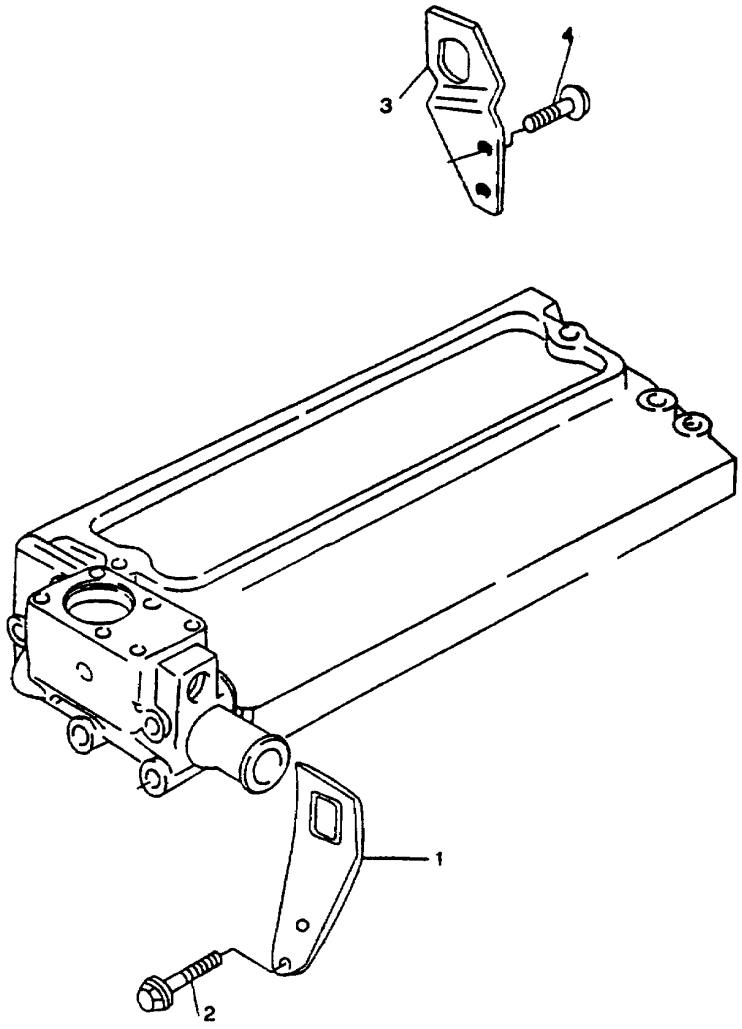

GRAPHIC #1

BASIC ENGINE

241-0319 STARTER MOTOR GP

S / N : JRB00693 - UP

PART OF 275-3916 ENGINE ASSY

SMCS -1453

NOTE	REF NO	GRAPHIC REF	PART NUMBER	QTY	PART NAME 1 2 3 4 5 6 (PRODUCT LEVEL)	SEE PAGE
	1	1	240-9397	1	STARTER MOTOR	
	2	1	6I-4012	3	STUD	
	3	1	240-9319	3	NUT	

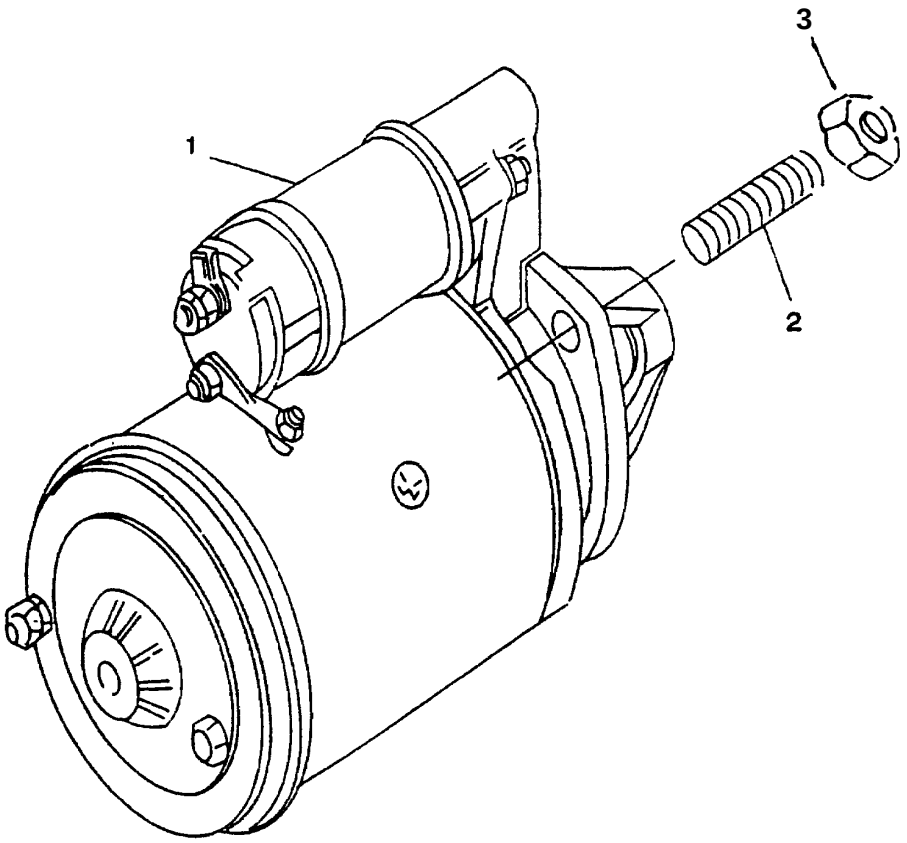

GRAPHIC #1

BASIC ENGINE

241-0320 ALTERNATOR AND MOUNTING GP

S / N : JRB00693 - UP

PART OF 275-3916 ENGINE ASSY

SMCS - 1405

NOTE	REF NO	GRAPHIC REF	PART NUMBER	QTY	PART NAME 1 2 3 4 5 6 (PRODUCT LEVEL)	SEE PAGE
	1	1	240-9391	1	ALTERNATOR	
	2	1	240-9330	1	PULLEY	
	3	1	240-9241	1	BRACKET	
	4	1	103-5687	1	BOLT	
	5	1	240-9319	1	NUT	
	6	1	240-9345	2	SCREW	
	7	1	100-4830	1	BOLT	
	8	1	240-9237	1	BELT COGGED	
	9	1	101-3804	1	BRACKET LINK(FOR LEVER)	
	10	1	6I-0456	2	BOLT	
	11	1	101-3805	1	BOLT	
	12	1	240-9315	1	LEVER	
	13	1	6I-0654	1	BOLT	
	14	1	240-9319	1	NUT	
	15	1	123-2899	1	BOLT	
	16	1	240-9319	1	NUT	
	17	1	240-9356	2	WASHER	
F	18	1	240-9281	3	DISTANCE PIECE	

F-NOT SHOWN

241-0320 ALTERNATOR AND MOUNTING GP (Contd.)

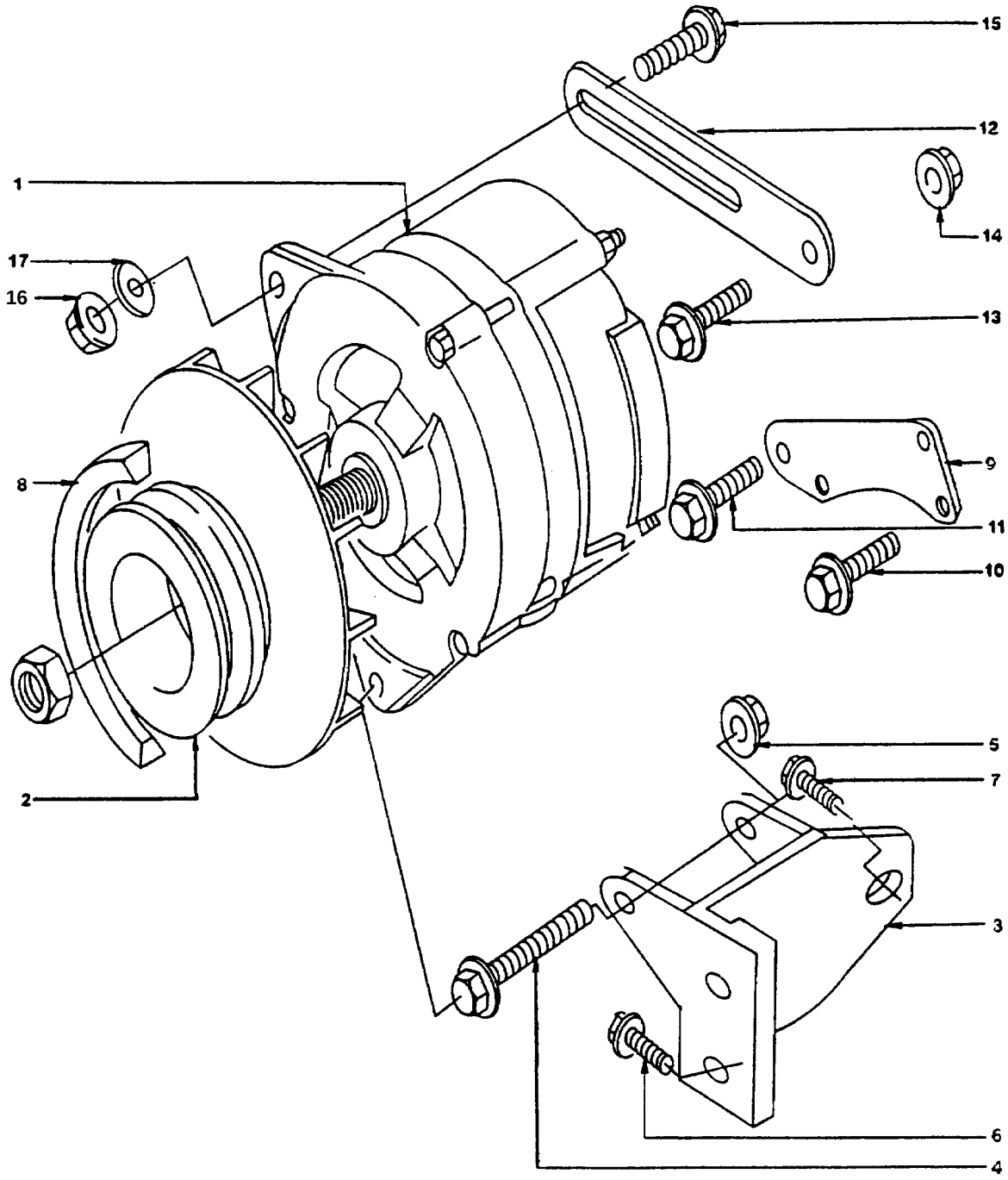

GRAPHIC #1

BASIC ENGINE

241-0321 PAN GP-OIL

S / N : JRB00693 - UP

PART OF 275-3916 ENGINE ASSY

SMCS - 1302

NOTE	REF NO	GRAPHIC REF	PART NUMBER	QTY	PART NAME 1 2 3 4 5 6 (PRODUCT LEVEL)	SEE PAGE
		1	240-9351	1	PAN ASSY	
	1	1	240-9290	1	PAN	
	2	1	7C-0351	1	PLUG-SUMP DRAIN	
	3	1	240-9225	1	SEAL-O-RING	
	4	1	240-9284	1	GASKET	
	5	1	113-0309	1	BRIDGE PIECE	
	6	1	6I-0363	2	BOLT	
	7	1	6I-0289	2	PLUG	
	8	1	240-9381	1	PIPE AS-SUCTION	
	9	1	6I-1090	2	BOLT	
	10	1	067-6213	1	GASKET	
	11	1	6I-0217	13	BOLT	
	12	1	240-9194	1	SPACER SUMP	
	13	1	6I-0260	1	BOLT	
	14	1	9Y-5132	1	BRACKET	
	15	1	6I-0260	1	BOLT	
	16	1	240-9194	1	SPACER-SUMP	
	17	1	9Y-5124	1	CLAMP	
	18	1	6I-4068	2	BOLT	
	19	1	6I-4069	2	NUT	
	20	1	240-9382	1	TUBE AS- DIPSTICK	
	21	1	6I-4079	1	NUT	
	22	1	6I-1497	1	SEAL	
	23	1	240-9277	1	DIPSTICK	
	24	1	240-9257	6	SCREW-PAN	

241-0321 PAN GP-OIL (Contd.)

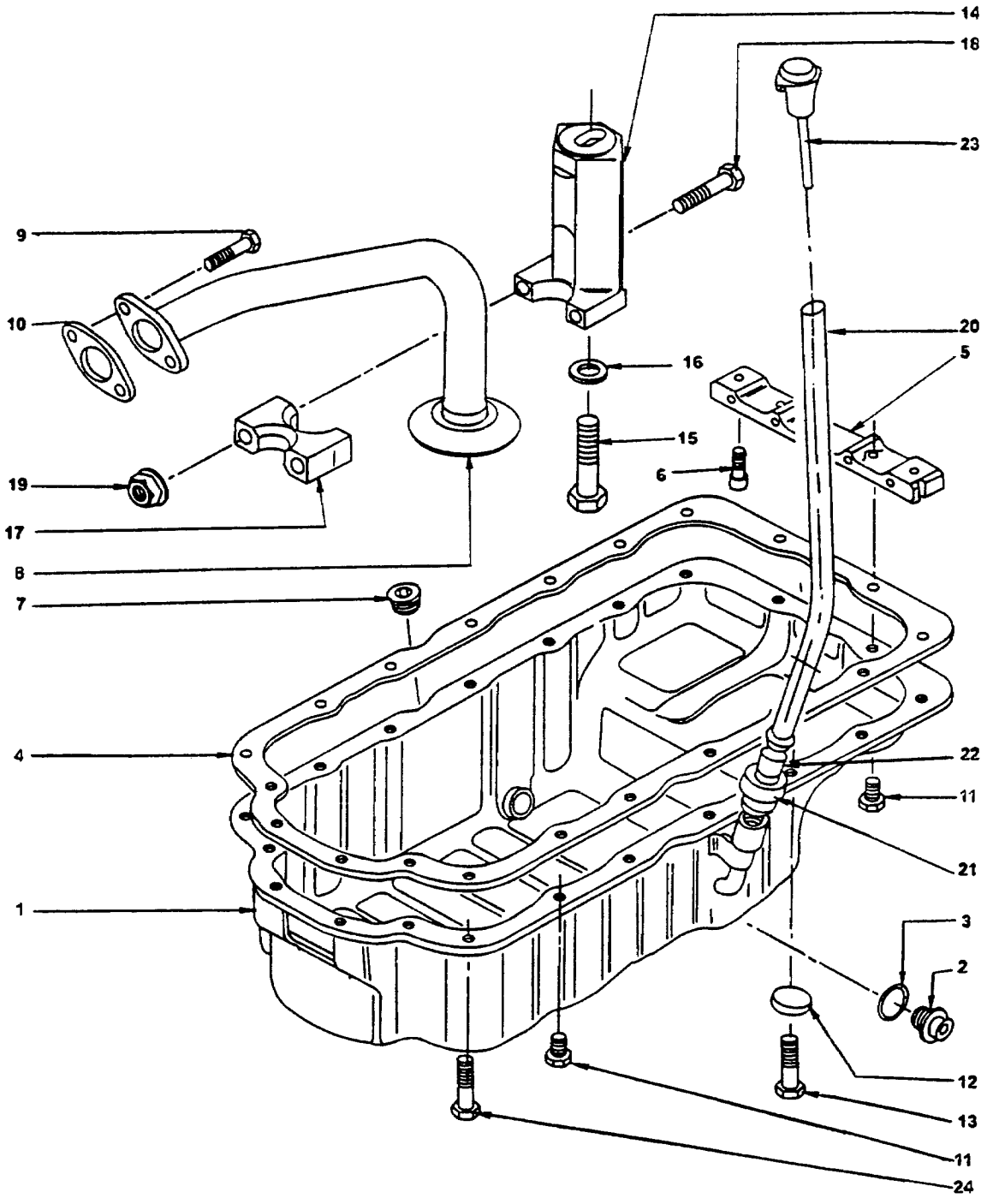

GRAPHIC #1

BASIC ENGINE

241-0322 PUMP GP-ENGINE OIL

S / N : JRB00693 - UP

PART OF 275-3916 ENGINE ASSY

SMCS - 1304,1315

NOTE	REF NO	GRAPHIC REF	PART NUMBER	QTY	PART NAME 1 2 3 4 5 6 (PRODUCT LEVEL)	SEE PAGE
Z	1	1	6I-0912	1	PUMP AS-ENGINE OIL	
F		1	240-9300	1	BODY	
F		1	240-9295	1	COVER	
F		1	240-9255	3	SCREW	
F		1	240-9309	1	GEAR	
F		1	240-9234	2	BUSHING	
F		1	240-9258	1	ROTOR	
	2	1	241-3646	1	SHAFT	
	3	1	6I-0255	1	GEAR IDLER	
	4	1	240-9310	1	GEAR	
	5	1	240-9233	1	BUSHING	
	6	1	6I-0256	1	WASHER	
	7	1	067-6928	1	CIRCLIP	
	8	1	6I-0254	3	SCREW	
	9	1	241-3648	1	RELIEF VALVE ASSY	
	10	1	240-9299	1	BODY	
	11	1	7W-4782	1	PLUNGER	
	12	1	241-3647	1	SPRING	
	13	1	7W-4648	1	SEAT-SPRING	
	14	1	240-9235	1	RING RETAINER	
	15	1	6I-0650	1	BOLT	
	16	1	8N-7998	1	DOWEL	
	17	1	6I-0257	1	PIPE OIL	
	18	1	6I-0258	2	SEAL	
	19	1	240-9303	1	FLANGE	
	20	1	6I-0260	2	BOLT	

Z-NOT SERVICED SEPARATELY
F-NOT SHOWN

241-0322 PUMP GP-ENGINE OIL (Contd.)

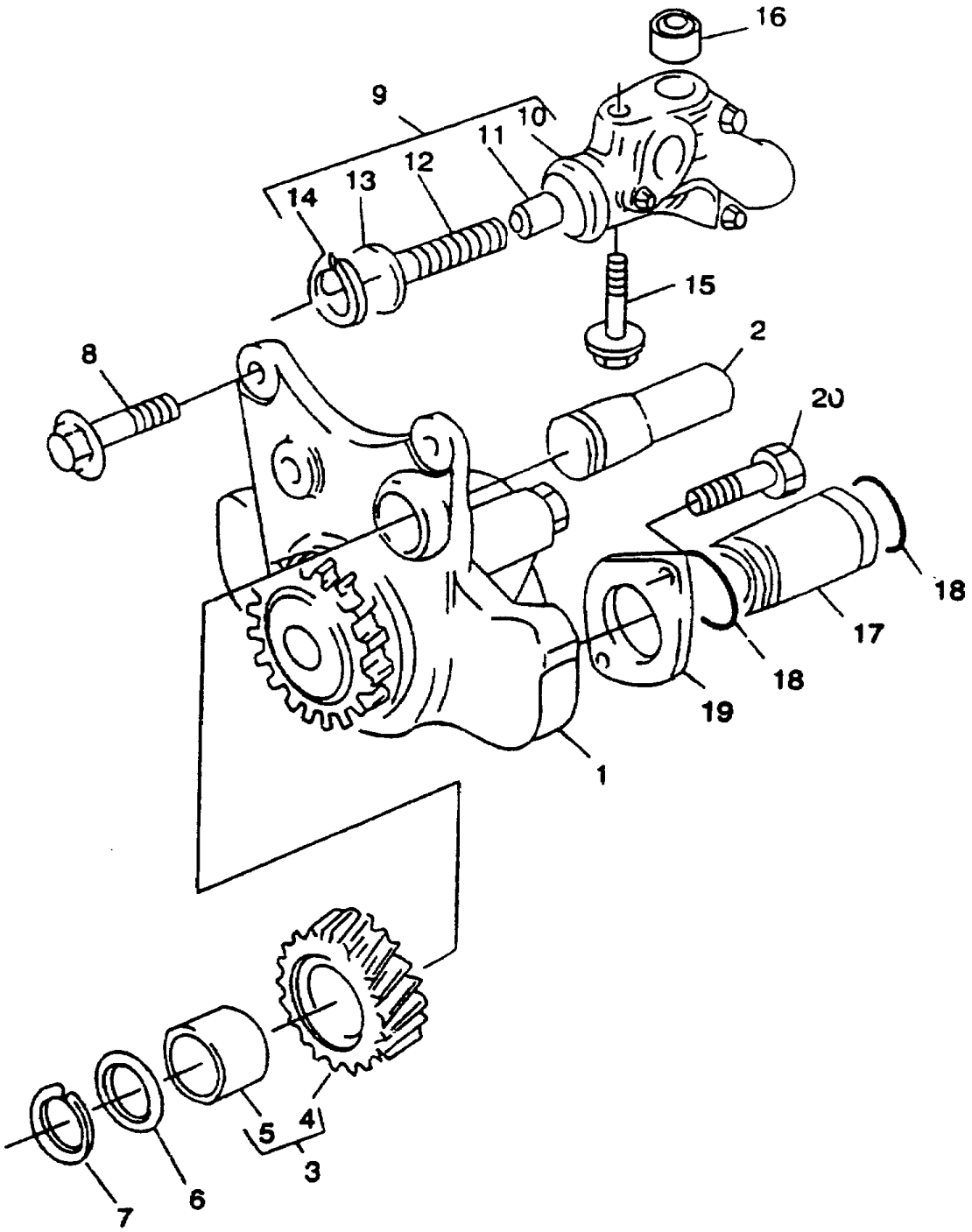

GRAPHIC #1

BASIC ENGINE

241-0323 PUMP GP-FUEL INJECTION

S / N : JRB00693 - UP

PART OF 275-3916 ENGINE ASSY

SMCS -

NOTE	REF NO	GRAPHIC REF	PART NUMBER	QTY	PART NAME 1 2 3 4 5 6 (PRODUCT LEVEL)	SEE PAGE
	1	1,2	240-9395	1	FUEL INJECTION PUMP	
	2	1	240-9400	1	ADAPTOR FUEL PUMP GEAR	
Z	3	1		1	CONNECTING NUT	
Z	4	1		1	WASHER	
	5	1	240-9222	1	DOWEL	
	6	1	240-9401	1	JOINT- FIP	
	7	1	240-9311	1	GEAR- FIP	
	8	1	240-9404	3	SCREW	
	9	1	240-9216	3	WASHER SPRING	
	10	2	240-9378	1	PIPE ASSY	
	11	1	240-9336	1	NO.1 PIPE FUEL INJECTION	
	12	1	240-9372	1	NO.2 PIPE FUEL INJECTION	
	13	1	240-9373	1	NO.3 PIPE FUEL INJECTION	
	14	1	240-9374	1	NO.4 PIPE FUEL INJECTION	
	15	1	240-9250	1	CLIP ASSY	
	16	1	240-9251	2	CLIP ASSY	
	17	1,2	240-9394	4	ATOMISER ASSY	
Z	18	1		1	HOLDER	
Z	19	1		1	NOZZLE	
	20	1	7W-0186	1	SPACER	
	21	1	7W-0187	1	SEAL	
	22	1	240-9219	1	WASHER	
	23	1	240-9189	3	BOLT-BANJO	
	24	1	240-9253	1	UNION	
	25	1	240-9220	8	WASHER	
	26	1,2	240-9379	1	PIPE ATOMISER LEAK ASSY	
F	27		240-9238	1	BOLT- BANJO I.P.INLET	
F	28		240-9355	2	WASHER	
	29	1	240-9399	4	CLAMP	
	30	1	101-3895	9	SCREW	
	31	1	240-9238	2	BOLT- BANJO	
	32	1	240-9355	4	WASHER	
	33	1	240-9243	1	BRACKET FIP SUPPORT	
	34	1	240-9244	1	BRACKET FIP SUPPORT BRACKET	
	35	1	100-4830	2	SCREW FIP	
	36	1	6I-0593	1	SETSCREW-BLOCK	
	37	1	123-2899	1	SETSCREW BRACKET	
	38	1	240-9320	1	NUT	
	39	1	240-9254	1	BLOCK	
F	40		240-9239	1	BOLT- BANJO	
F	41		240-9354	2	WASHER	
	42	1,2	240-9384	1	PIPE AS-LUB OIL	
F	43		240-9236	1	PLUG FUEL FILTER	
	44	2	240-9398	1	FUEL FILTER(.5 LIT.DUAL)	
F		2	240-9358	2	ELEMENT(PRI & SEC)	
F		2	240-9262	2	WASHER-COPPER	
	45	2	240-9396	1	WATER SEPARATOR	
F	46		240-9238	2	BOLT -BANJO	
F	47		240-9355	2	WASHER	
	48	2	240-9385	1	PIPE ATOMISER AND FIP OVERFLOW	

F - NOT SHOWN

Z-NOT SERVICED SEPARATELY

241-0323 PUMP GP-FUEL INJECTION (Contd.)

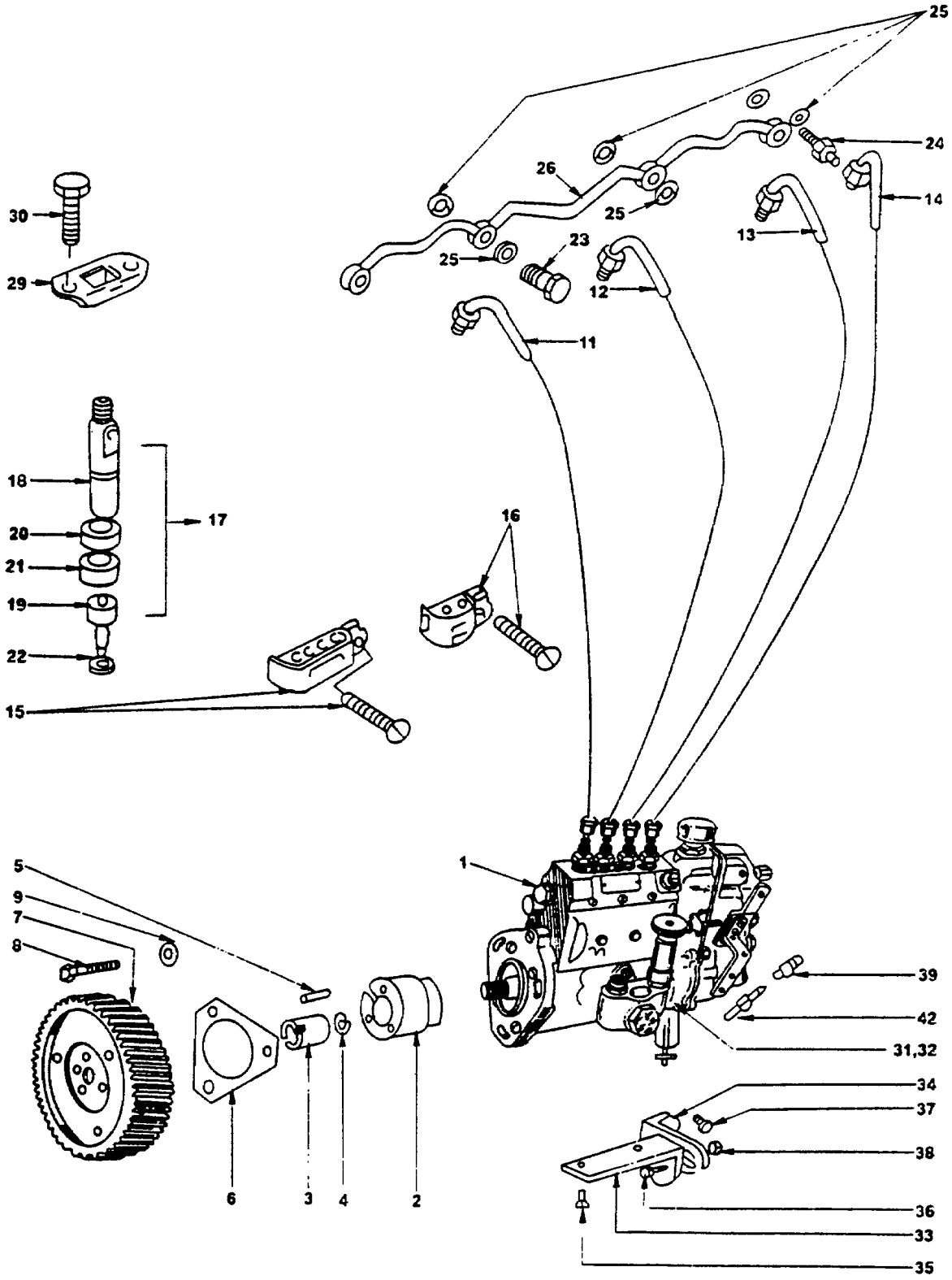

GRAPHIC #1

241-0323 PUMP GP-FUEL INJECTION (Contd.)

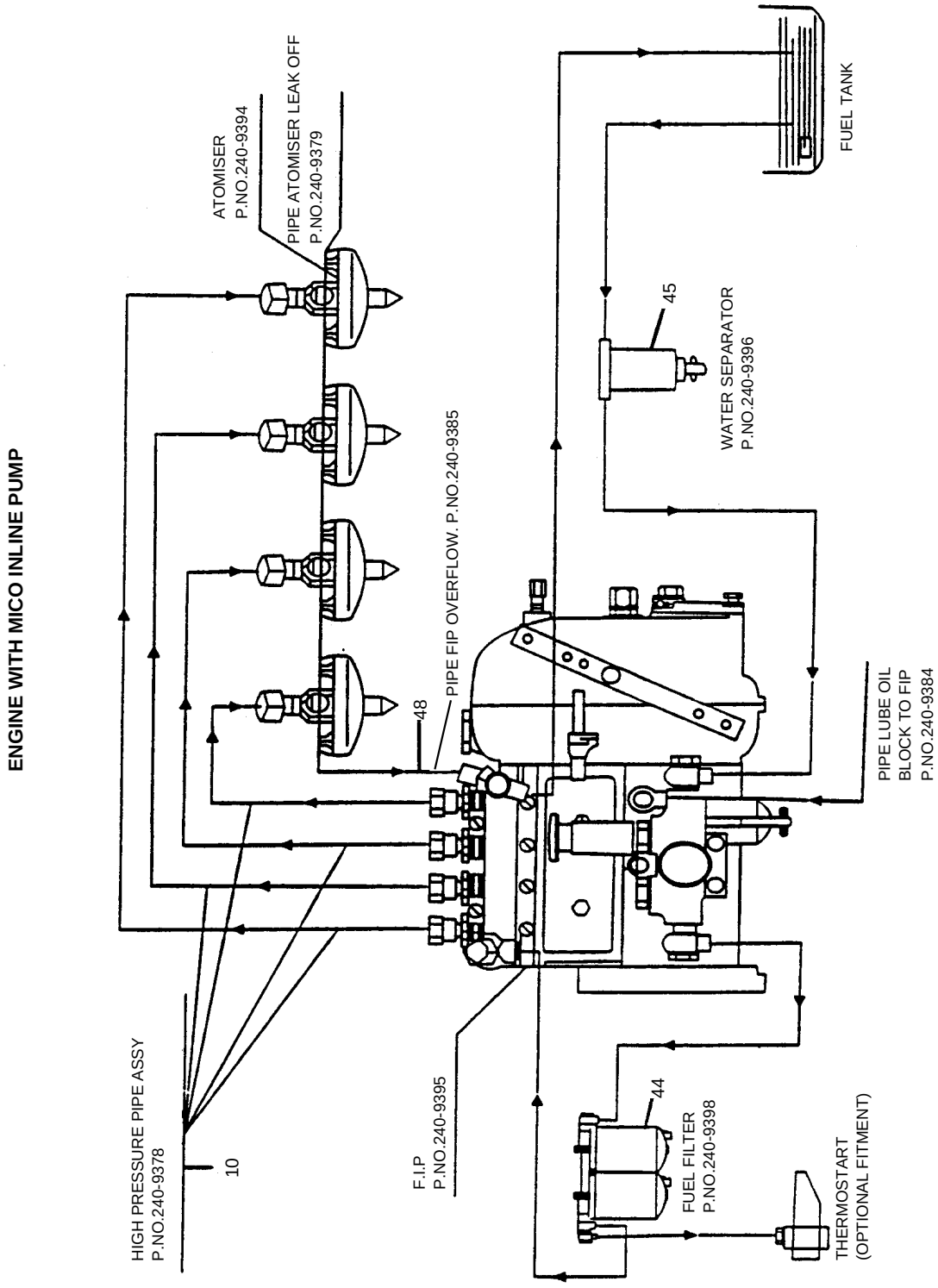

GRAPHIC # 2

BASIC ENGINE

241-0324 PUMP GP-WATER

S / N : JRB00693 - UP

PART OF 275-3916 ENGINE ASSY

SMCS - 1361

NOTE	REF NO	GRAPHIC REF	PART NUMBER	QTY	PART NAME 1 2 3 4 5 6 (PRODUCT LEVEL)	SEE PAGE
	1		241-3650	1	WATER PUMP ASSY	
	2		240-9297	1	BODY	
	3		240-9261	1	SHAFT	
	4		186-3384	1	IMPELLER-PUMP	
	5		6I-0443	1	GEAR	
	6		6I-0444	1	SEAL	
	7		6I-0300	1	SEAL	
	8		151-4838	1	SEAL	
	9		6I-0445	1	COVER	
	10		6I-0446	1	GASKET	
	11		240-9256	6	SCREW	
	12		6I-0450	1	SEAL-O-RING	
	13		101-3895	2	BOLT	
	14		6I-0293	1	BOLT	
	15		240-9298	1	CONNECTOR	
	16		6I-0485	1	GASKET	
	17		6I-0455	6	BOLT	
	18		6I-4041	1	HOUSING	
	19		6I-0453	1	GASKET	
	20		240-9228	1	PLUG	
	21		6I-4045	2	BOLT	
	22		6I-0293	1	BOLT	
	23		6I-0456	2	BOLT	
	24		240-9231	1	THERMOSTAT	
	25		241-3960	1	CONNECTOR ASSY	
			240-9302	1	CONNECTOR	
			240-9228	1	PLUG	
			141-0837	1	O-RING	
	26		6I-0459	1	GASKET	
	27		6I-0260	2	BOLT	
	28		241-3649	1	HOSE KIT	
	29		240-9193	2	CLIP	
	30		240-9345	3	SCREW	

241-0324 PUMP GP-WATER (Contd.)

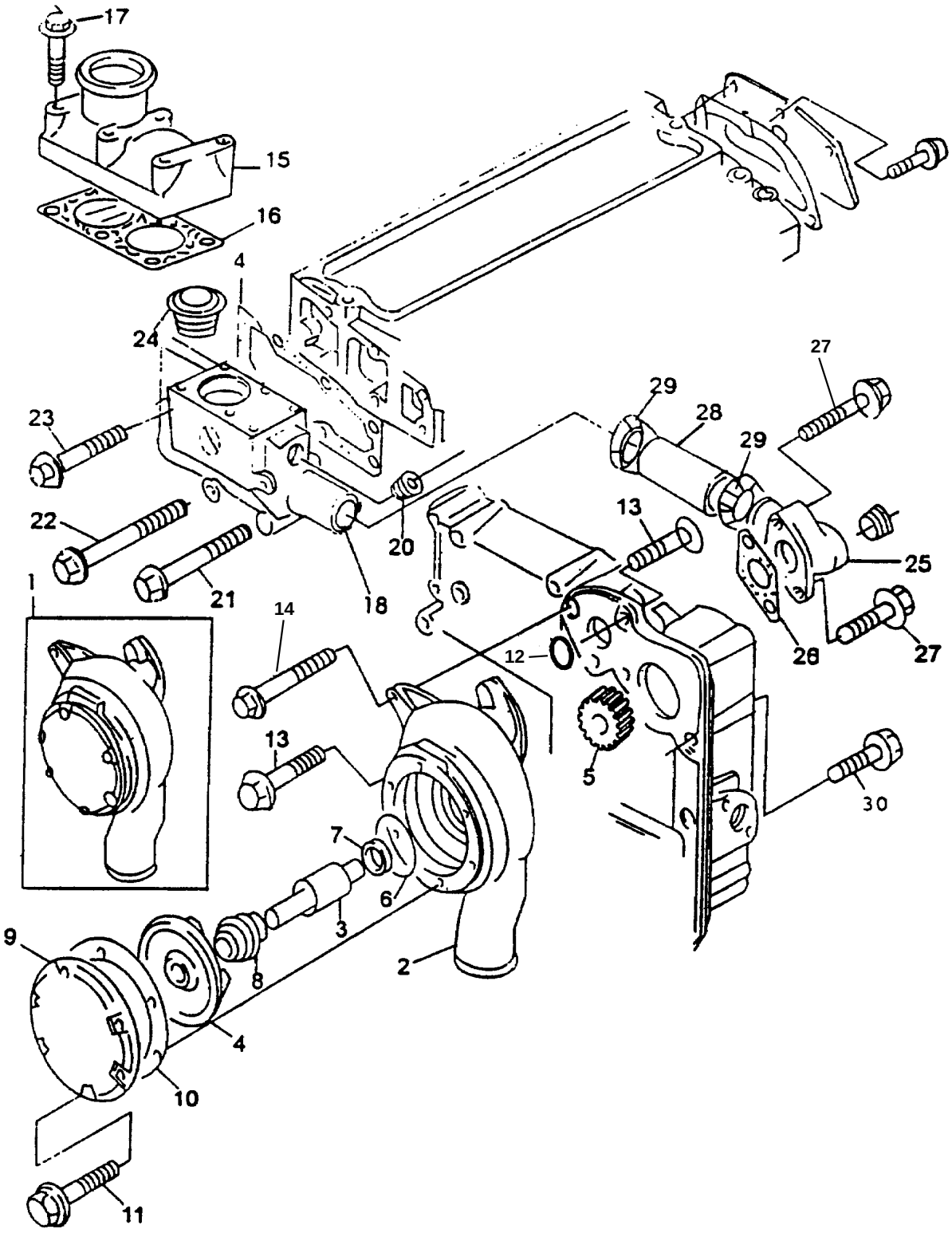

GRAPHIC #1

BASIC ENGINE

241-0325 VALVE MECHANISM GP

S / N : JRB00693 - UP

PART OF 275-3916 ENGINE ASSY

SMCS -1102,1121,1123,1208,1209

NOTE	REF NO	GRAPHIC REF	PART NUMBER	QTY	PART NAME 1 2 3 4 5 6 (PRODUCT LEVEL)	SEE PAGE
	1	1	240-9364	1	SHAFT ASSY-ROCKER	
	2	1	240-9267	1	SHAFT-ROCKER	
	3	1	240-9200	2	PLUG	
	4	1	240-9242	4	BRACKET	
	5	1	241-3963	4	ROCKER LEVER ASSY-LH	
	6	1	240-9292	1	LEVER	
	7	1	240-9232	1	BUSHING	
	8	1	241-3961	1	ROCKER LEVER ASSY- RH	
	9	1	240-9291	1	LEVER	
	10	1	240-9232	1	BUSHING	
	11	1	067-6087	2	SPRING-SHAFT	
	12	1	067-6088	2	SPRING-SHAFT	
	13	1	6I-3718	1	CONNECTION	
	14	1	240-9223	1	SCREW	
	15	1	241-3962	2	SHIM	
	16	1	067-6085	2	WASHER-SHAFT END	
	17	1	240-9192	2	RING RETAINER	
	18	1	241-3643	1	OLIVE	
	19	1	240-9206	8	SCREW	
	20	1	240-9198	8	NUT	
	21	1	6I-0234	3	STUD	
	22	1	240-9347	3	NUT	
	23	1	6I-0235	1	BOLT	
	24	1	067-6095	8	ROD	
	25	1	138-2053	8	TAPPET	

241-0325 VALVE MECHANISM GP (Contd.)

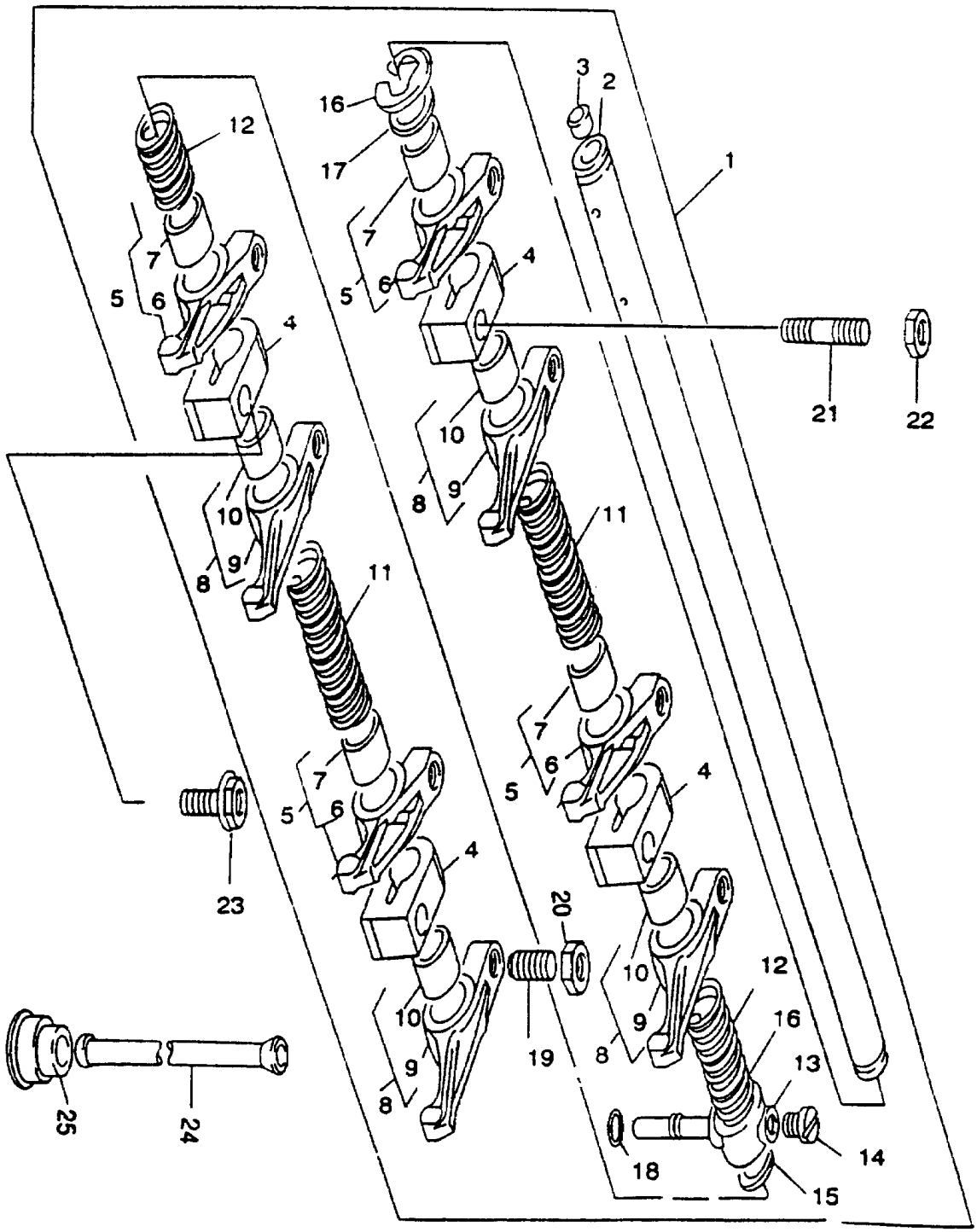

GRAPHIC #1

LUBRICATION SYSTEM

228-2786 GAUGE GP-OIL LEVEL & FILLER

S/N:JRB00255-UP

PART OF 228-2785 INSTALLATION AR-ENGINE

SMCS-1316, 1326 **i01564764**

NOTE	REF NO	GRAPHIC REF	PART NUMBER	QTY	PART NAME 1 2 3 4 5 6 (PRODUCT LEVEL)	SEE PAGE
*	1	1	**240-9382**	1	TUBE AS	
	2	1	**121-1288**	1	GAUGE-OIL LEVEL	
	3	1	**134-3987**	2	CLIP (SLOT)	
M	4	1	**8T-4189**	1	BOLT (M8X1.25X20MM)	
	5	1	**8T-4224**	2	WASHER-HARD (8.8X16X2MM THK)	
	7	1	**9M-0164**	2	CLAMP-HOSE	
	8	1	**120-8717**	1	HOSE	
*	9	1	**136-3608**	1	CAP AS-FILLER	
		1	**240-9226**	1	SEAL	
	10	1	**120-8718**	1	BRACKET	
*	11	1	**240-9383**	1	BODY AS	
	12	1	**8T-4205**	4	WASHER-HARD (7.2X14.5X2MM THK)	
*	13	1	**6I-1497**	1	SEAL	
M	14	1	**8T-4908**	1	BOLT (M8X1.25X25MM)	
M	15	1	**8T-4138**	4	BOLT (M6X1X20MM)	

M-METRIC PART

*-THESE PARTS ARE PART OF 275-3916 ENGINE ASSY

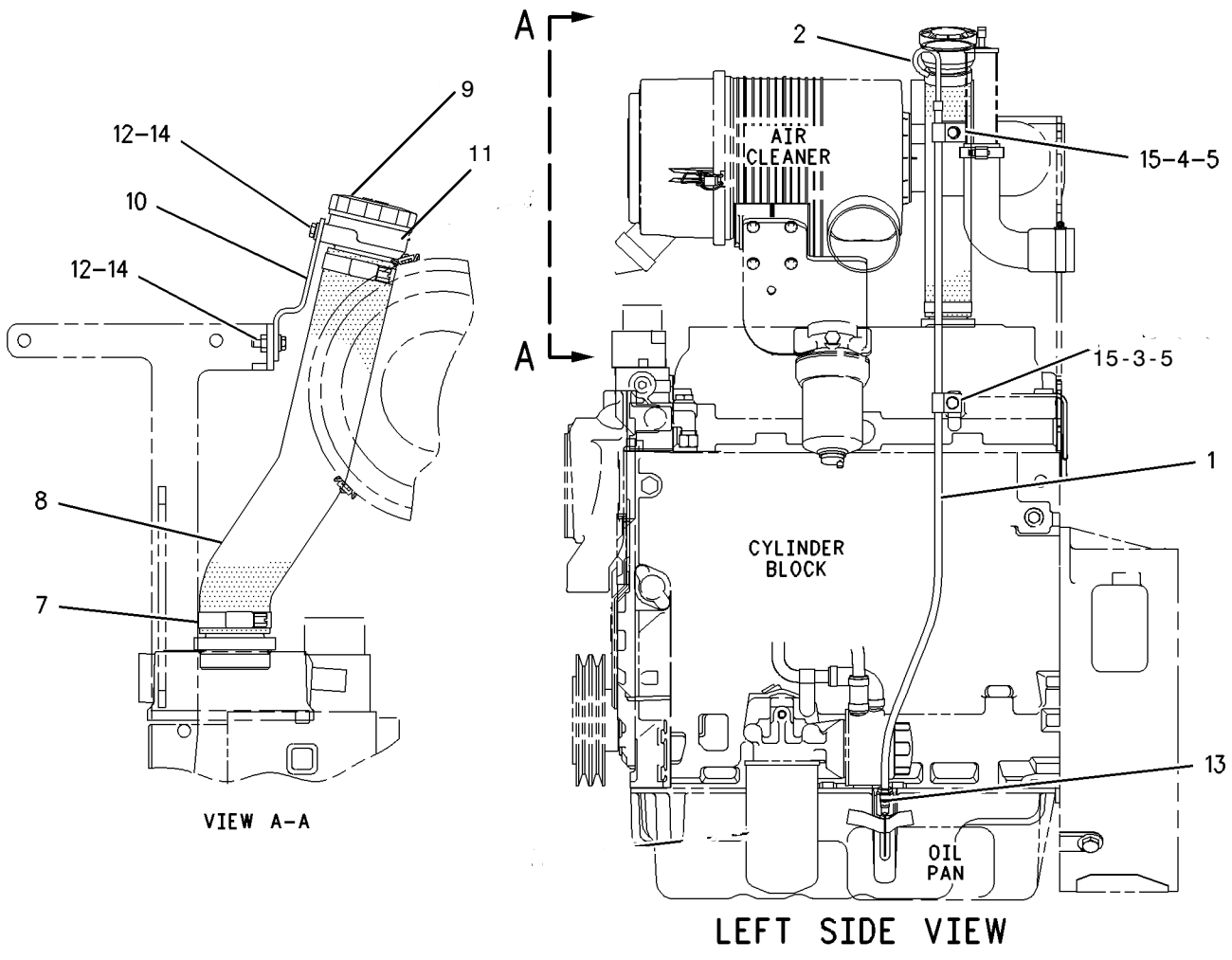

GRAPHIC #1 g00813054

COOLING SYSTEM

228-2788 COOLING AR

S/N:JRB00255-UP

SMCS-1350 **i01624602**

NOTE	PART NUMBER	QTY	PART NAME 1 2 3 4 5 6 (PRODUCT LEVEL)	SEE PAGE
Y	**234-4399**	1	FAN GP-SUCTION	49
Y	**238-8899**	1	RADIATOR & HYD OIL COOLER GP	52
	131-1424	1	SEAL	
	228-2816	1	TACHOMETER AS	

Y-SEPARATE ILLUSTRATION

COOLING SYSTEM

234-4399 FAN GP-SUCTION

S/N:JRB00255-UP

PART OF 228-2788 COOLING AR

SMCS-1356, 1360 **i01644518**

NOTE	REF NO	GRAPHIC REF	PART NUMBER	QTY	PART NAME 1 2 3 4 5 6 (PRODUCT LEVEL)	SEE PAGE
	1	1	**5P-4116**	4	WASHER-HARD (8.8X20.5X2MM THK)	
M	2	1	**8T-4908**	6	BOLT (M8X1.25X25MM)	
A	3	1	**238-8904**	2	GUARD AS-FAN	
	7	1	**142-3391**	1	SPIDER AS	
	9	1	8T-4224	6	WASHER-HARD	

M-METRIC PART

A-PART OF RADIATOR KIT ASSY P.NO.238-8903

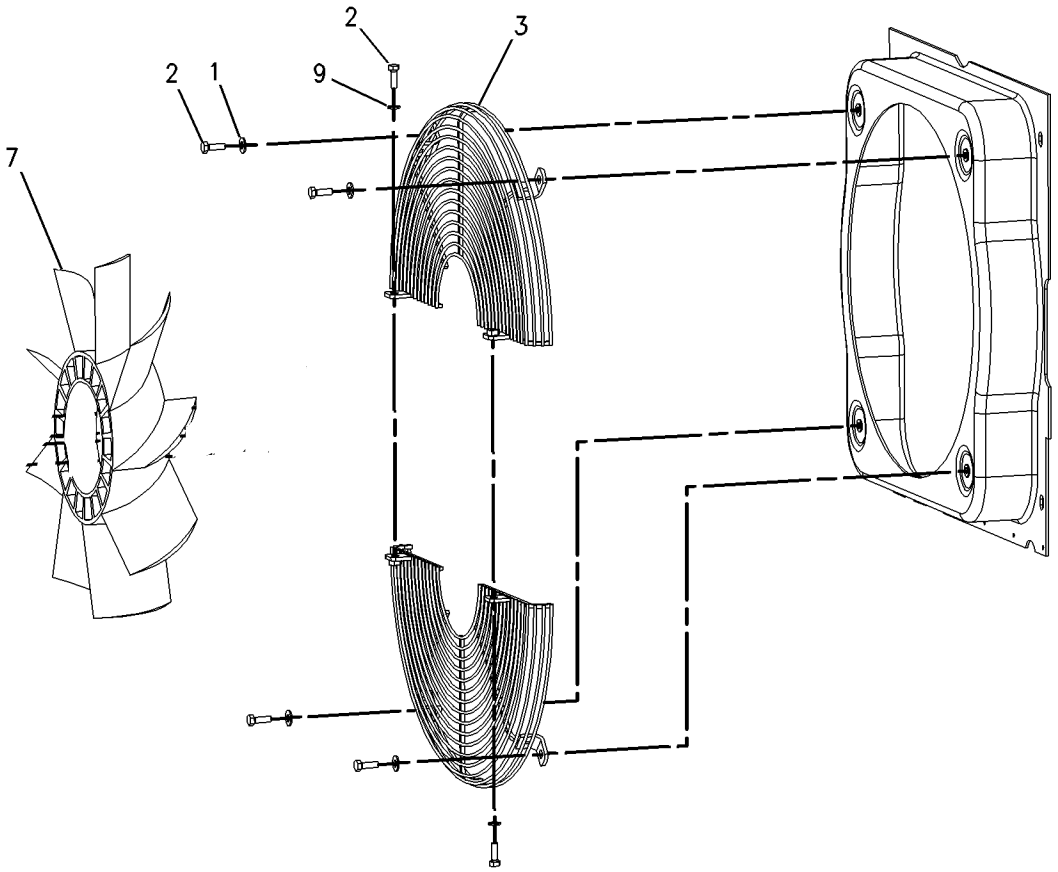

GRAPHIC #1 g00850012

COOLING SYSTEM

143-0786 LINES GP-POWER TRAIN COOLER

S/N:JRB00255-UP
STANDARD DUTY
PART OF 228-2810 POWER TRAIN AR

SMCS-1375, 1380, 3016 **i01498723**

NOTE	REF NO	GRAPHIC REF	PART NUMBER	QTY	PART NAME 1 2 3 4 5 6 (PRODUCT LEVEL)	SEE PAGE
B	1	1	**7K-1181**	2	STRAP-CABLE	
	2	1	**118-7286**	1	BRACKET AS	
	3	1	**130-9984**	2	CLIP (SLOT)	
	4	1	**138-6904**	1	HOSE AS	
	5	1	**138-6913**	1	HOSE AS	
	6	1	**159-0186**	2	CLAMP	
	7	1	*148-8339*	1	CONNECTOR GP	
		1	**6V-8716**	1	CONNECTOR	
		1	**6V-9746**	1	SEAL-O-RING	
		1	**7M-8485**	1	SEAL-O-RING	
	8	1	*148-8360*	1	ELBOW GP	
		1	**6V-9182**	1	ELBOW	
		1	**6V-9746**	1	SEAL-O-RING	
		1	**7M-8485**	1	SEAL-O-RING	
	9	1	**5P-4116**	2	WASHER-HARD (8.8X20.5X2MM THK)	
	10	1	**8T-4121**	2	WASHER-HARD (11X21X2.5MM THK)	
M	11	1	**8T-4136**	1	BOLT (M10X1.5X25MM)	
M	12	1	**8T-4137**	1	BOLT (M10X1.5X20MM)	
M	13	1	**8T-4189**	2	BOLT (M8X1.25X20MM)	
M	14	1	**8T-4192**	2	BOLT (M12X1.75X25MM)	
	15	1	**8T-4223**	2	WASHER-HARD (13.5X25.5X3MM THK)	
	16	1	**8T-7529**	3	CLIP (SLOT)	

B-USE AS REQUIRED
M-METRIC PART

143-0786 **LINES GP-POWER TRAIN COOLER** *(contd.)* **i01498723**

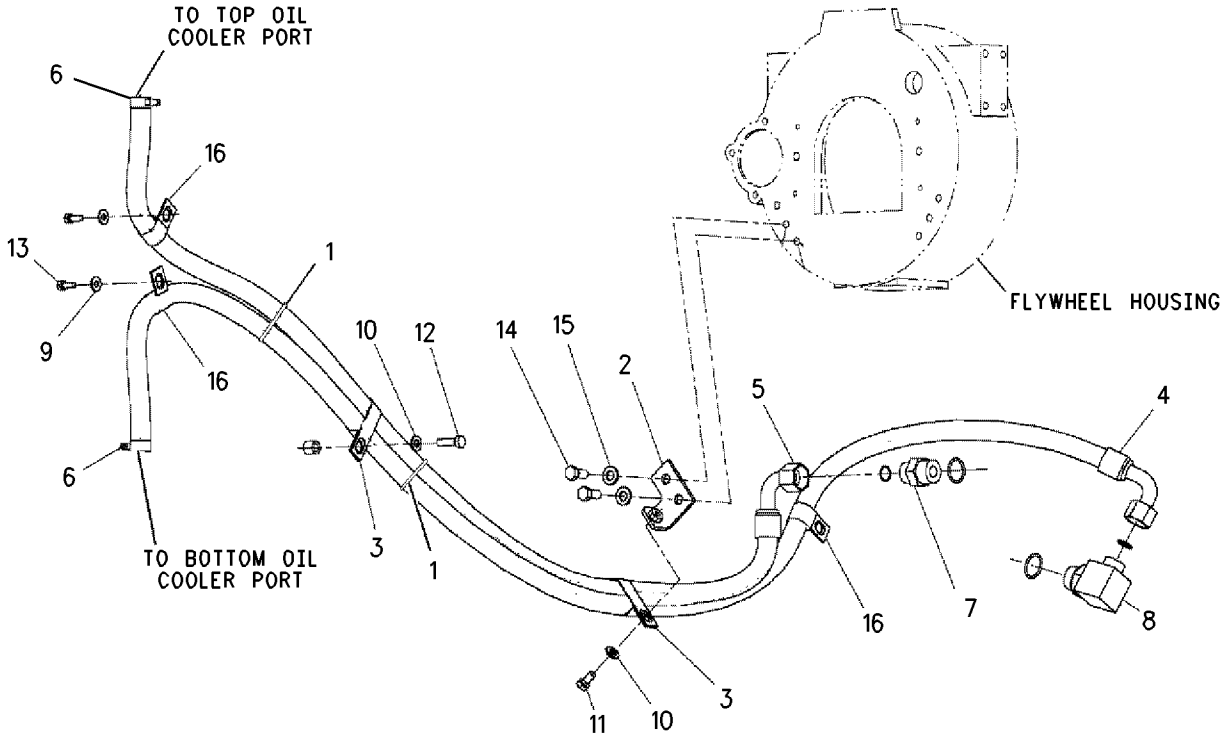

GRAPHIC #1 g00777719

COOLING SYSTEM

238-8899 RADIATOR & HYD OIL COOLER GP

S/N : JRB00324-UP
PART OF 228-2788 COOLING AR

NOTE	REF NO	GRAPHIC REF	PART NUMBER	QTY	PART NAME 1 2 3 4 5 6 (PRODUCT LEVEL)	SEE PAGE
	1	1	142-0724	1	OIL COOLER AS	
			123-4065	16	RIVET-POP	
			140-3635	1	CORE AS	
			140-3639	1	CORE AS	
	2	1	2W-9710	2	MOUNT AS	
	3	1	6N-6984	2	MOUNT AS	
	4	1	238-8901	1	HOSE-RADIATOR	
	5	1	238-8902	1	HOSE-RADIATOR	
	6	1	140-3640	2	PLATE	
A	7	1	238-8905	1	RADIATOR AS	
	8	1	214-7457	2	CLAMP-T BOLT	
	9	1	214-7458	2	CLAMP-T BOLT	
	10	1	7X-0603	2	WASHER HARD	
	11	1	8T-4133	2	NUT	
	12	1	8T-4186	2	BOLT	
	13	1	8T-4222	4	WASHER	
	14	1	8T-4908	2	BOLT	
A	15	1	238-8906	1	FAN SHROUD	
	16	1	141-7512	1	BAFFLE	
	17	1	151-8752	2	BUSHING	
	18	1	8C-0572	2	WASHER	
	19	1	8T-4224	2	WASHER HARD	
	20	1	8T-4200	4	BOLT	
	21	1	123-4065	6	RIVET	
F			238-8900	1	DRAIN COCK	

A - PART OF KIT-RADIATOR ASSY P.NO.238-8903
F - NOT SHOWN

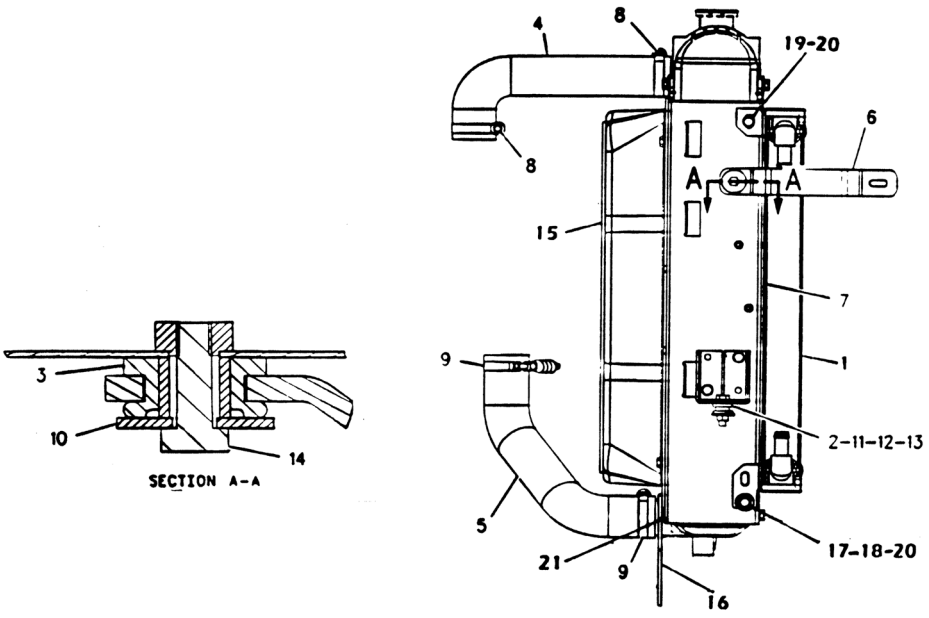

GRAPHIC #1

AIR INLET AND EXHAUST SYSTEM

112-9689 AIR CLEANER GP

S/N:JRB00255-UP

PART OF 130-1470 AIR CLEANER DUCT GP

SMCS-1051, 1054 **i00534865**

NOTE	REF NO	GRAPHIC REF	PART NUMBER	QTY	PART NAME 1 2 3 4 5 6 (PRODUCT LEVEL)	SEE PAGE
	1	1	**110-6326**	1	ELEMENT-MAIN (PRIMARY)	
	2	1	**110-6331**	1	ELEMENT (SECONDARY)	
	3	1	**112-9717**	1	VALVE-VACUATOR	

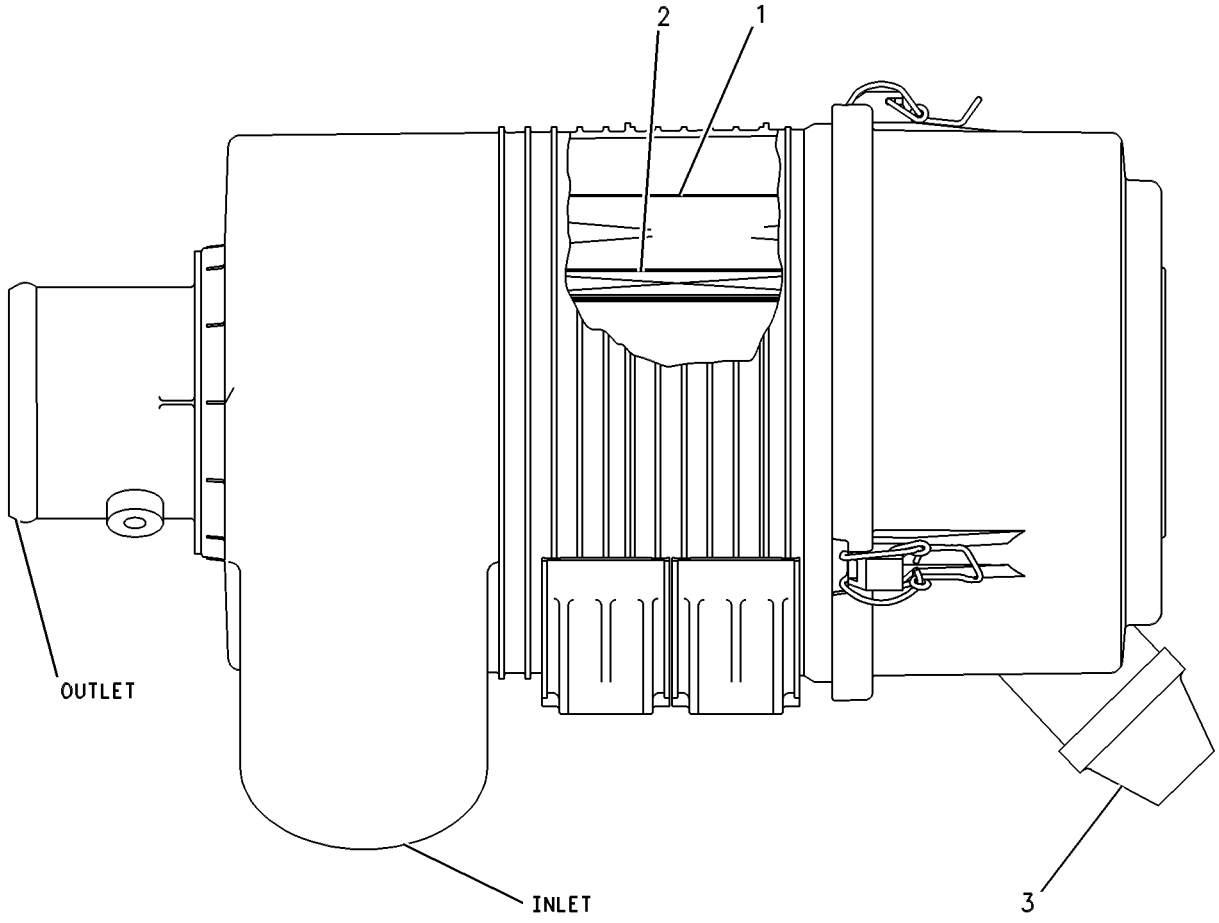

GRAPHIC #1 g00131631

AIR INLET AND EXHAUST SYSTEM

130-1470 DUCT GP-AIR CLEANER

S/N:JRB00255-UP

PART OF 197-3263 AIR CLEANER GP

SMCS-1051, 1054 **i01037970**

NOTE	REF NO	GRAPHIC REF	PART NUMBER	QTY	PART NAME 1 2 3 4 5 6 (PRODUCT LEVEL)	SEE PAGE
Y	1	1	**112-9689**	1	AIR CLEANER GP	53
	2	1	**7M-1530**	3	RIVET-POP	
	3	1	**128-1038**	1	DUCT	

Y-SEPARATE ILLUSTRATION

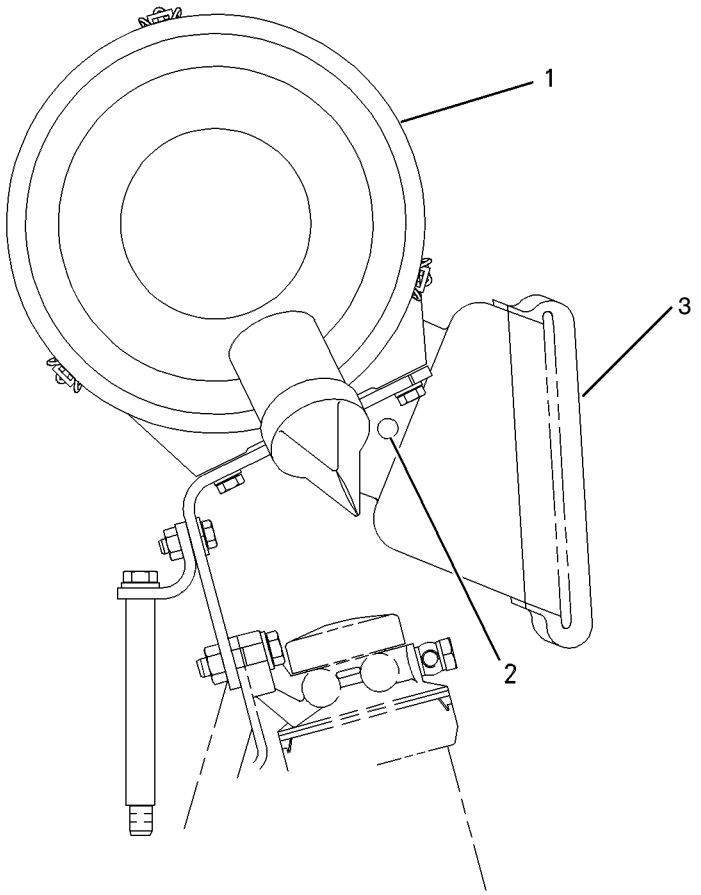

GRAPHIC #1 g00535184

AIR INLET AND EXHAUST SYSTEM

197-3263 AIR CLEANER GP

S/N: JRB00255-UP

PART OF 185-1129 SUPPRESSION AR-SOUND

SMCS-1051, 1054 **i01471415**

NOTE	REF NO	GRAPHIC REF	PART NUMBER	QTY	PART NAME 1 2 3 4 5 6 (PRODUCT LEVEL)	SEE PAGE
Y	1	1	**130-1470**	1	AIR CLEANER DUCT GP	54
M	2	1	**8T-4189**	4	BOLT (M8X1.25X20MM)	
	3	1	**8T-4224**	4	WASHER-HARD (8.8X16X2MM THK)	

M-METRIC PART
Y-SEPARATE ILLUSTRATION

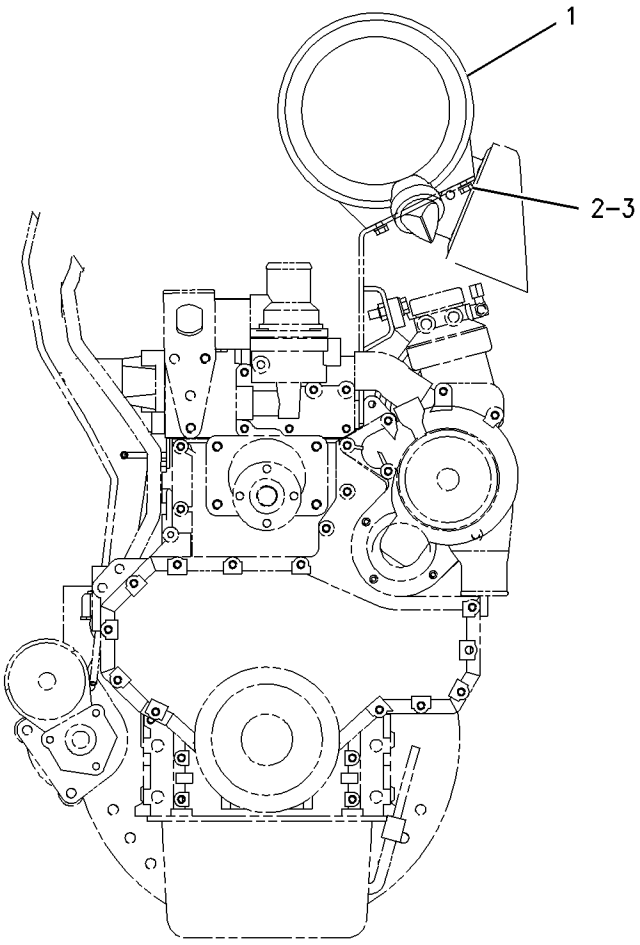

GRAPHIC #1 g00767794

AIR INLET AND EXHAUST SYSTEM

184 - 7900 INDICATOR GP-AIR FILTER CHANGE

S/N:JRB00548-UP
PART OF 228-2787 CAB AR

SMCS - 7452

NOTE	REF NO	GRAPHIC REF	PART NUMBER	QTY	PART NAME 1 2 3 4 5 6 (PRODUCT LEVEL)	SEE PAGE
	1	1	1S-9593	2	STRAP	
	2	1	123-0275	1	FITTING-FILTER	
	3	1	228-4525	1	INDICATOR GP-E	
			5W-9411	1	SEAL-O-RING	
			7W-7417	1	INDICATOR	
			119-6723	1	FITTING	
			123-0275	1	FITTING-FILTER	
	4	1	8T-4138	2	BOLT M6X1	
M	5	1	8T-4205	2	WASHER-HARD (7.2X14.5X2MM THK)	
D	6	1	6V-1362		HOSE (0.5M)	

M-METRIC PART
D-ORDER BY THE METER

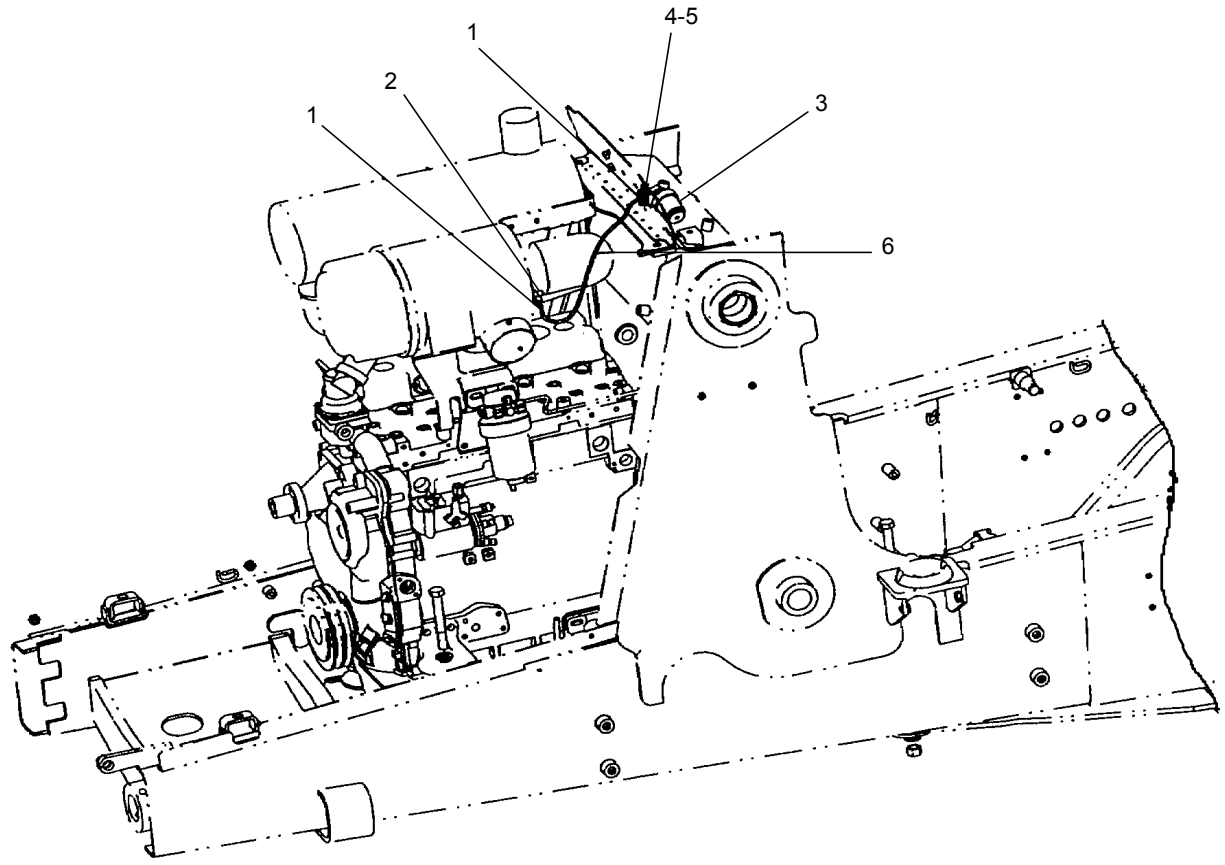

GRAPHIC #1

AIR INLET AND EXHAUST SYSTEM

233-6423 LINES GP - AIR

S/N : JRB00324-UP
PART OF 228-2784 ENGINE AR

NOTE	REF NO	GRAPHIC REF	PART NUMBER	QTY	PART NAME 1 2 3 4 5 6 (PRODUCT LEVEL)	SEE PAGE
	1	1		1	GASKET (PART OF ENGINE KIT)	
	2	1	8T-6726	2	CLAMP	
	3	1	233-6428	1	ELBOW-EXHAUST	
	4	1	189-5641	1	HOSE-MANIFOLD	
	5	1	8T-4121	3	WASHER HARD	
	6	1	8T-4198	3	BOLT	
	7	1	233-6429	1	BRACKET-AIR CLEANER	
	8	1	8T-4136	4	BOLT	
	9	1	5P-1075	4	WASHER HDN.	

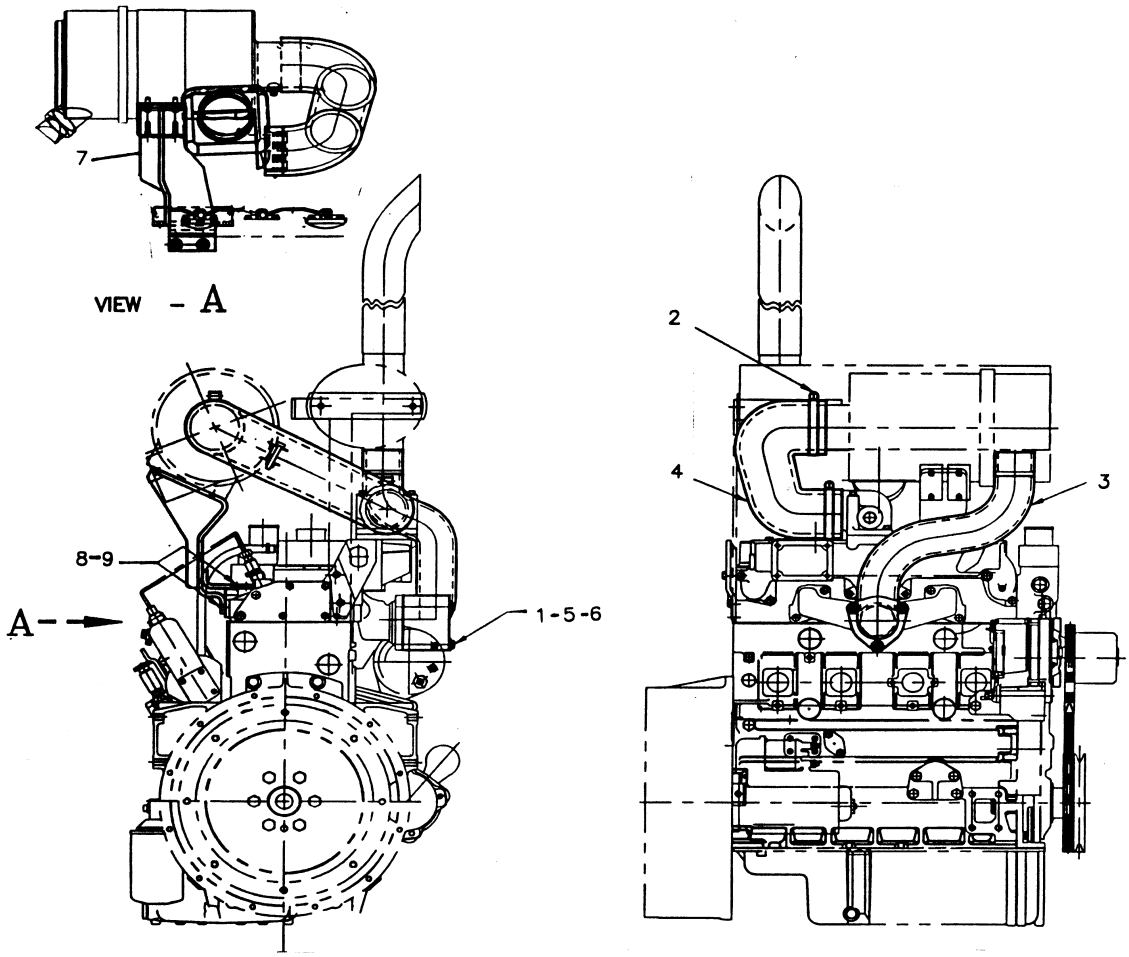

GRAPHIC #1

AIR INLET AND EXHAUST SYSTEM

233-6424 MUFFLER GP

S/N:JRB00255-UP
PART OF 228-2784 ENGINE AR

SMCS-1062 **i00935718**

NOTE	REF NO	GRAPHIC REF	PART NUMBER	QTY	PART NAME 1 2 3 4 5 6 (PRODUCT LEVEL)	SEE PAGE
	1	1	**233-6434**	1	MUFFLER AS	
	2	1	**233-6433**	1	PIPE-EXTENSION	
	3	1	**135-8168**	1	CLAMP	
M	4	1	**8T-4136**	**2**	BOLT (M10X1.50X25MM)	
	5	1	**8T-4121**	**2**	WASHER (2.5MM THK)	
	6	1	**112-9514**	1	BRACKET AS	
M		1	**6V-9632**	2	NUT-WELD(M6x1THD)	
	7	1	**137-4499**	1	CLAMP-TUBING	
M	8	1	**8T-4185**	1	BOLT (M10X1.5 THD)	
	9	1	**6V-5839**	1	WASHER (2.5MM THK)	
	10	1	**133-3260**	1	SPACER	

M-METRIC PART

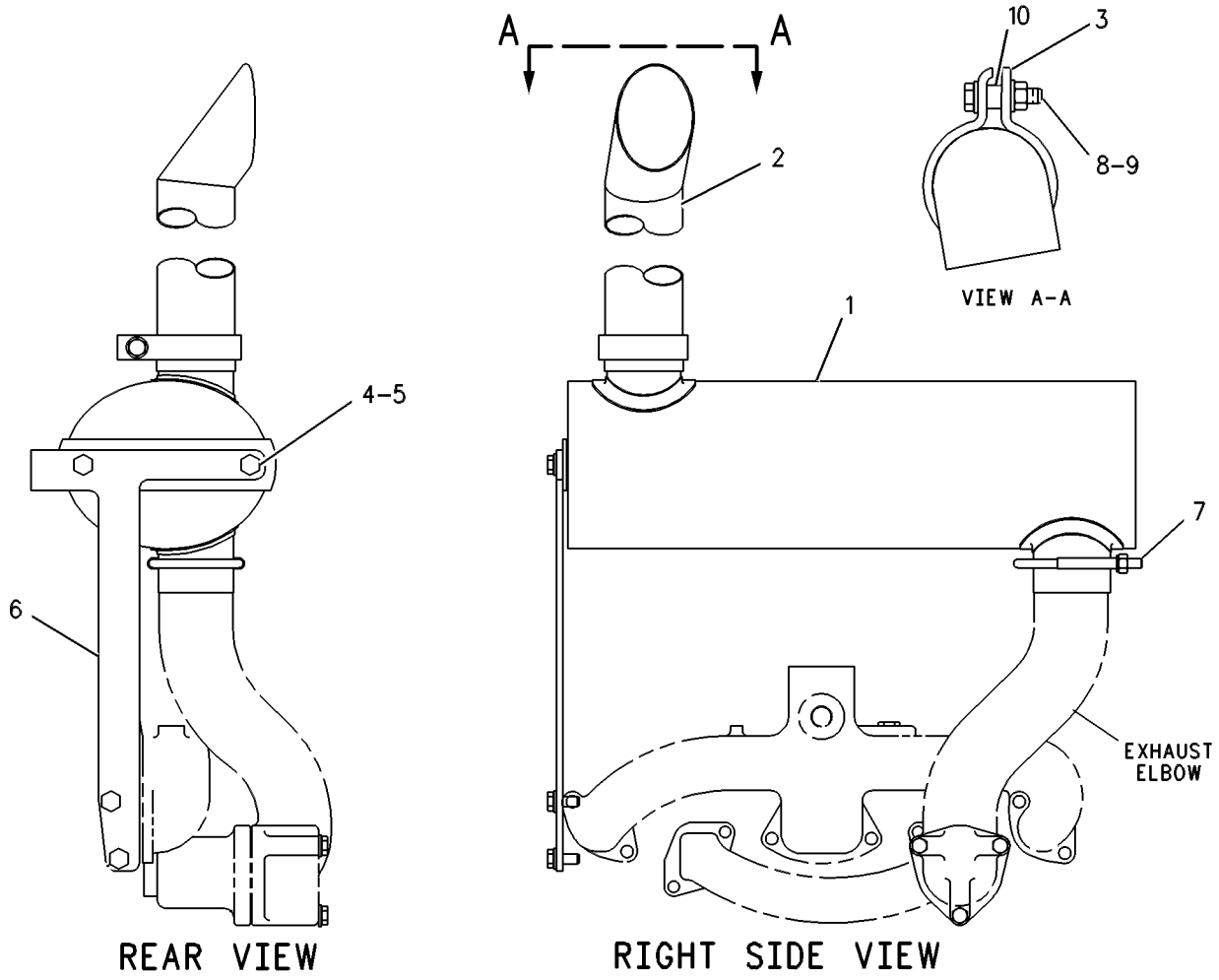

GRAPHIC #1 g00132212

183-3887 LEVER GP-GOVERNOR CONTROL

S/N:JRB00255-UP

PART OF 233-6427 CONTROL GP-GOV & ACCELERATOR

SMCS-1265 **i01483331**

NOTE	REF NO	GRAPHIC REF	PART NUMBER	QTY	PART NAME 1 2 3 4 5 6 (PRODUCT LEVEL)	SEE PAGE
	1	1	**8T-4742**	1	END-YOKE ROD	
	2	1	**8T-4744**	1	PIN AS-SPRING	
	3	1	**164-1079**	1	CABLE AS	
	4	1	**164-1083**	1	LEVER AS	
M	5	1	**8T-4971**	1	BOLT (M6X1X30MM)	
M	6	1	**129-3178**	1	LOCKNUT (M6X1 THD)	

M-METRIC PART

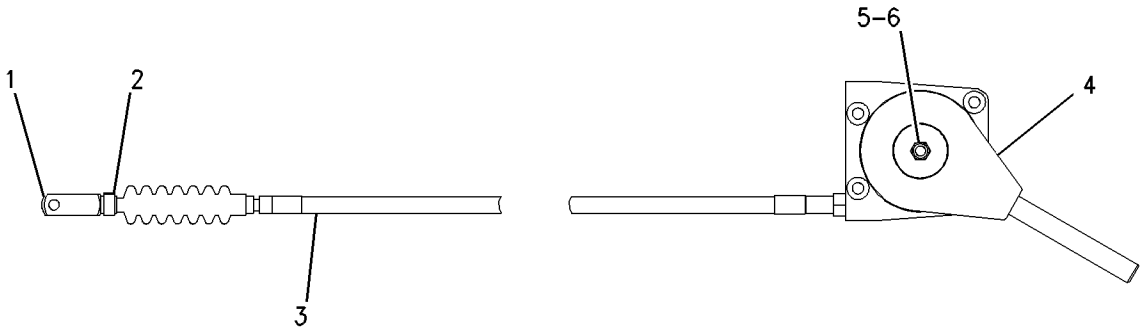

GRAPHIC #1 g00743371

FUEL SYSTEM

233-6427 CONTROL GP-GOV.& ACCELERATOR

S/N : JRB00324-UP

PART OF 228-2806 HYDRAULIC AR

NOTE	REF NO	GRAPHIC REF	PART NUMBER	QTY	PART NAME 1 2 3 4 5 6 (PRODUCT LEVEL)	SEE PAGE
	1	1	7K-1181	3	STRAP	
	2	1	164-1077	1	PANEL AS	
Y	3	1	164-1078	1	PEDAL AS	314
	4	1	233-6443	1	BRACKET	
Y	5	1	183-3887	1	LEVER AS-CONT.	59
	6	1	190-5139	1	FILM	
	7	1	202-6113	1	BRACKET AS	
	8	1	203-7100	1	CABLE AS	
	9	1	119-5025	4	SCREW-FLAT HEAD	
	10	1	151-4841	3	BLOCK	
	11	1	164-1395	1	KNOB	
	12	1	3S-2093	1	STRAP	
	13	1	8T-4138	3	BOLT	
	14	1	8T-4189	2	BOLT	
	15	1	8T-4205	3	WASHER HARD	
	16	1	8T-4224	2	WASHER HARD	
	17	1	8T-4742	1	ROD END-YOKE	
	18	1	8T-4744	1	PIN AS-SPRING	
	19	1	9X-2044	7	SCREW	
	20	1	233-6442	1	CABLE SHUTOFF	
	21	1	239-6440	1	CLAMP	
	22	1	239-6439	1	BUSHING	
	23	1	095-1310	1	CLEVIS PIN	
	24	1	3B-4609	2	COTTER PIN	
	25	1	0S-1614	1	BOLT	
	26	1	233-6447	1	PLATE BENT	
	27	1	8L-8413	2	STRAP	
	28	1	096-6726	1	CLEVIS PIN	
	29	1	239-4982	1	ROD END YOKE	
	30	1	81407545	1	PLATE	
	31	1	81407560	1	PLATE	
	32	1	9X-2045	2	SCREW	
	33	1	6V-9197	1	PIN-LOCK	

Y-SEPARATE ILLUSTRATION

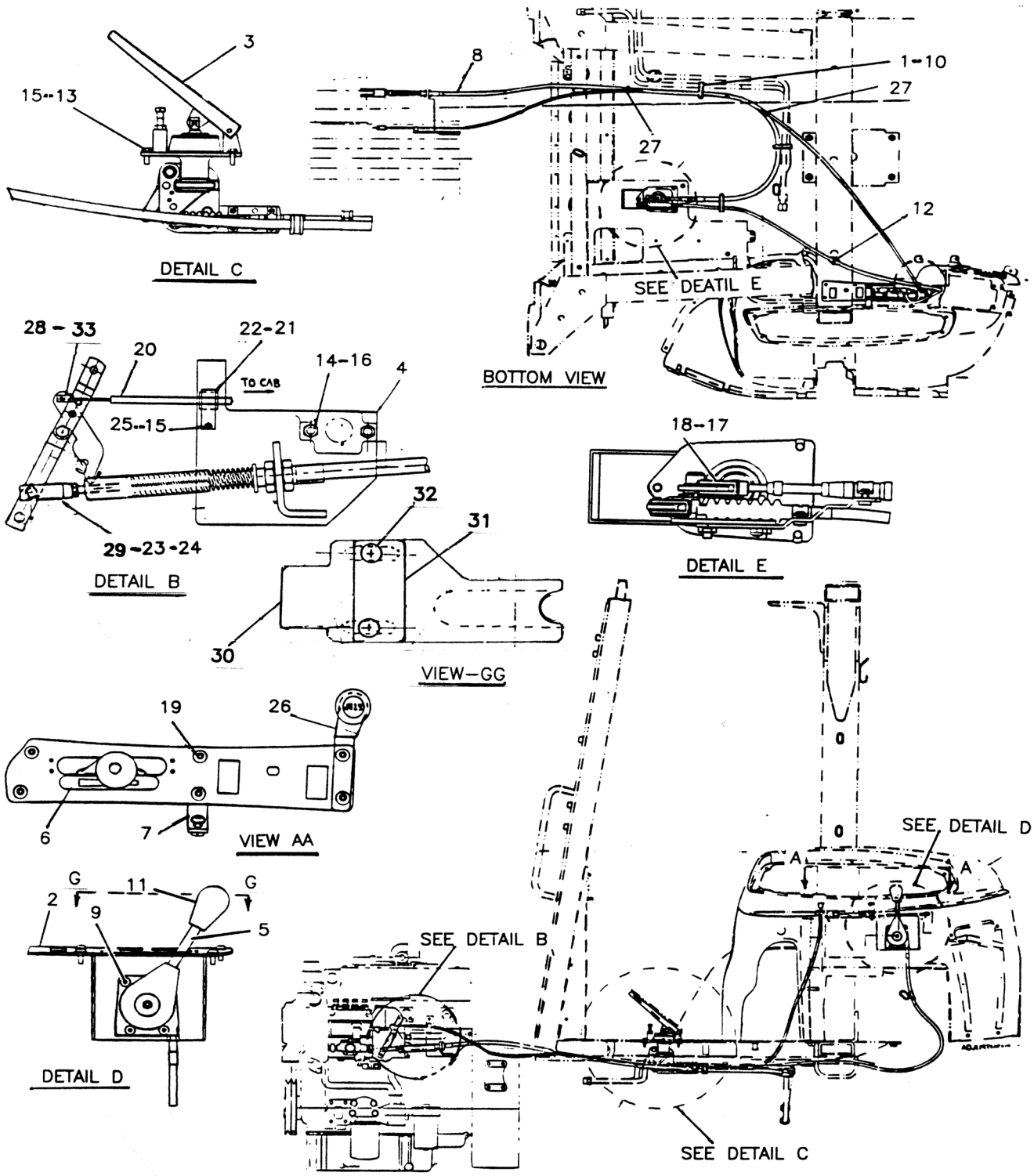
3
15--13
DETAIL C
8
1-10
27
27
12
SEE DEATIL E
BOTTOM VIEW
28 - 33
20
22-21
TO CAB
14-16
4
25--15
29-23-24
DETAIL B
18-17
DETAIL E
32
31
30
VIEW-GG
19
26
6
7
VIEW AA
G
11
G
2
9
5
DETAIL D
SEE DETAIL B
SEE DETAIL D
A
A
SEE DETAIL C

GRAPHIC #1

FUEL SYSTEM

236-8605 TANK GP - FUEL

S/N : JRB00324-UP
PART OF 228-2807 CHASSIS AR

NOTE	REF NO	GRAPHIC REF	PART NUMBER	QTY	PART NAME 1 2 3 4 5 6 (PRODUCT LEVEL)	SEE PAGE
E	1	1,2	5P-1442		HOSE (105CM)	
E	2	1,2	5P-6442		HOSE (92CM)	
	3	1,2	1P-4278	4	CLAMP-HOUSE	
	4	1,2	6S-8620	2	CLAMP-HOUSE	
	5	1	8L-8413	1	STRAP-CABLE	
	6	1	9R-7240	1	GASKET	
	7	1	131-0232	1	COVER	
	8	1,2	149-7678	1	TUBE AS	
	9	1	164-3876	1	STEP AS	
	10	1	187-8936	1	SENDOR AS - FUEL LEVEL	
		1	3E-3365	1	WEDGE-RECEPTACLE LOCK (2 PIN)	
		1	102-8802	1	KIT-RECEPTACLE (2 PIN)	
		1			(KIT INCLUDES RECEPTACLE AS AND WEDGE)	
		1	186-3735	2	PIN-CONNECTOR	
	11	1,2	8T-4195	2	BOLT	
	12	1	190-5123	1	PLATE AS	
	13	1,2	190-9838	1	TUBE AS	
	14	1	236-8606		GRIT	
Y	15	1	236-8613	1	TANK GP - FUEL	65
M	16	1	123-4950	5	SCREW-PAN HEAD (M6X1X16MM)	
	17	1	2B-2404	1	CLIP	
	18	1	5P-4116	3	WASHER-HARD (8.8X20.5X2MM THK)	
	19	1	6D-7573	1	CLIP	
	20	1	8B-6127	1	CLIP	
	21	1	8T-4121	1	WASHER-HARD (11X21X2.5MM THK)	
M	22	1	8T-4179	1	BOLT (M12X1.75X20MM)	
M	23	1	8T-4183	4	BOLT (M12X1.75X40MM)	
M	24	1	8T-4189	3	BOLT (M8X1.25X20MM)	
M	25	1	8T-4200	4	BOLT (M8X1.25X16MM)	
	26	1	8T-4223	5	WASHER-HARD(13.5X25.5X3MM THK)	
	27	1	8T-4224	4	WASHER-HARD(8.8X16X2MM THK)	
M	28	1	8T-1159	1	BOLT-SOCKET HEAD (M10X1.5X20MM)	
	29	2	236-9140	1	CONNECTOR	
	30	1,2	3Y-8139	4	HARD WASHER	
	31	2	236-8608	1	BRACKET	
	32	2	8T-4136	2	BOLT-BKT MTG TO ENGINEHARD	
	33	2	236-9139	2	CONNECTOR	
	34	2	5P-8244	2	HARD WASHER	
	35	2	236-8611	1	HOSE AS	
	36	2	236-8612	1	HOSE AS	
	37	2	8T-4186	2	BOLT-FILTER MTG TO BKT	

E - ORDER BY THE CENTIMETER
M - METRIC PART
Y - SEPARATE ILLUSTRATION

236-8605 TANK GP-FUEL *(contd.)* **i01627747**

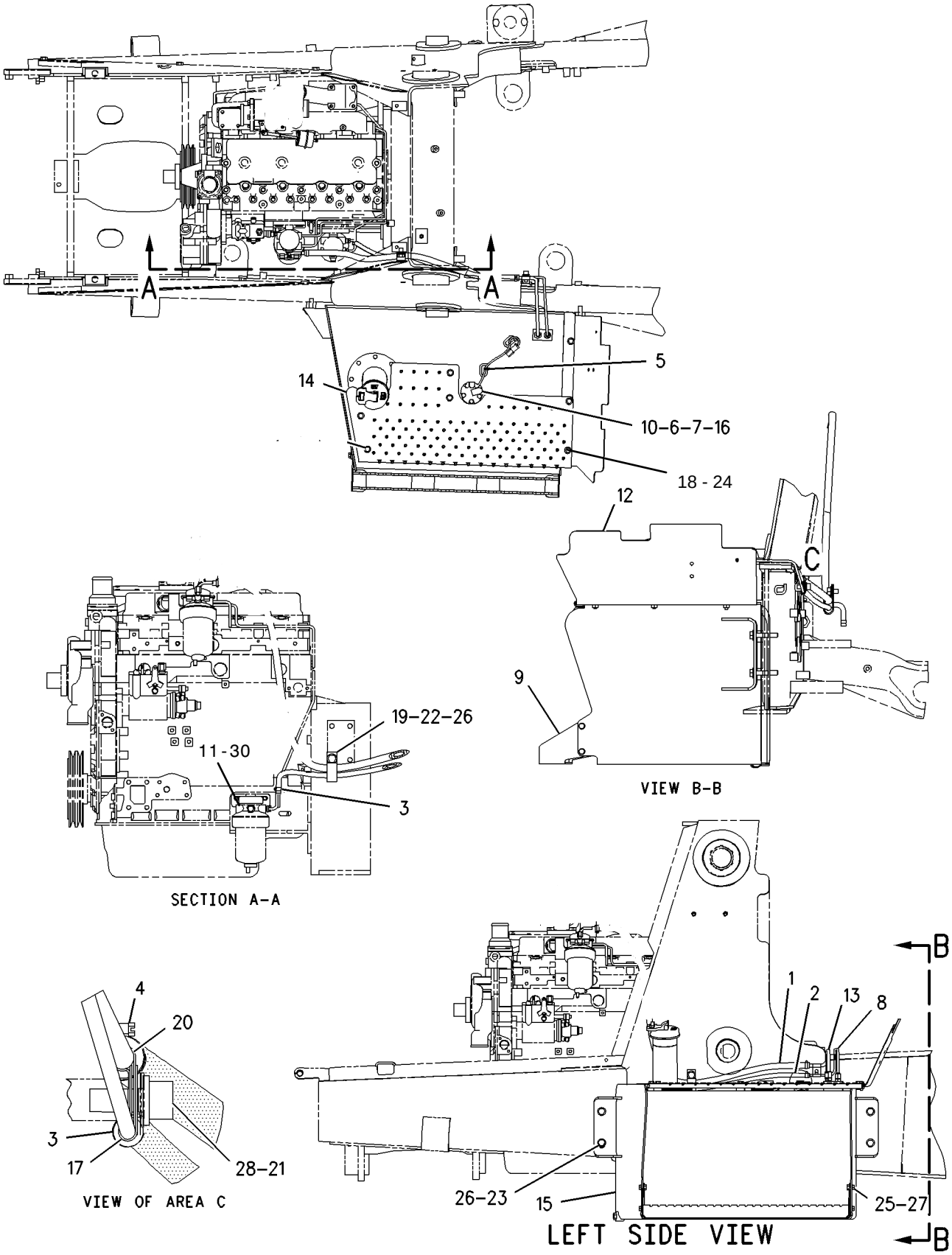

GRAPHIC #1 g00843351

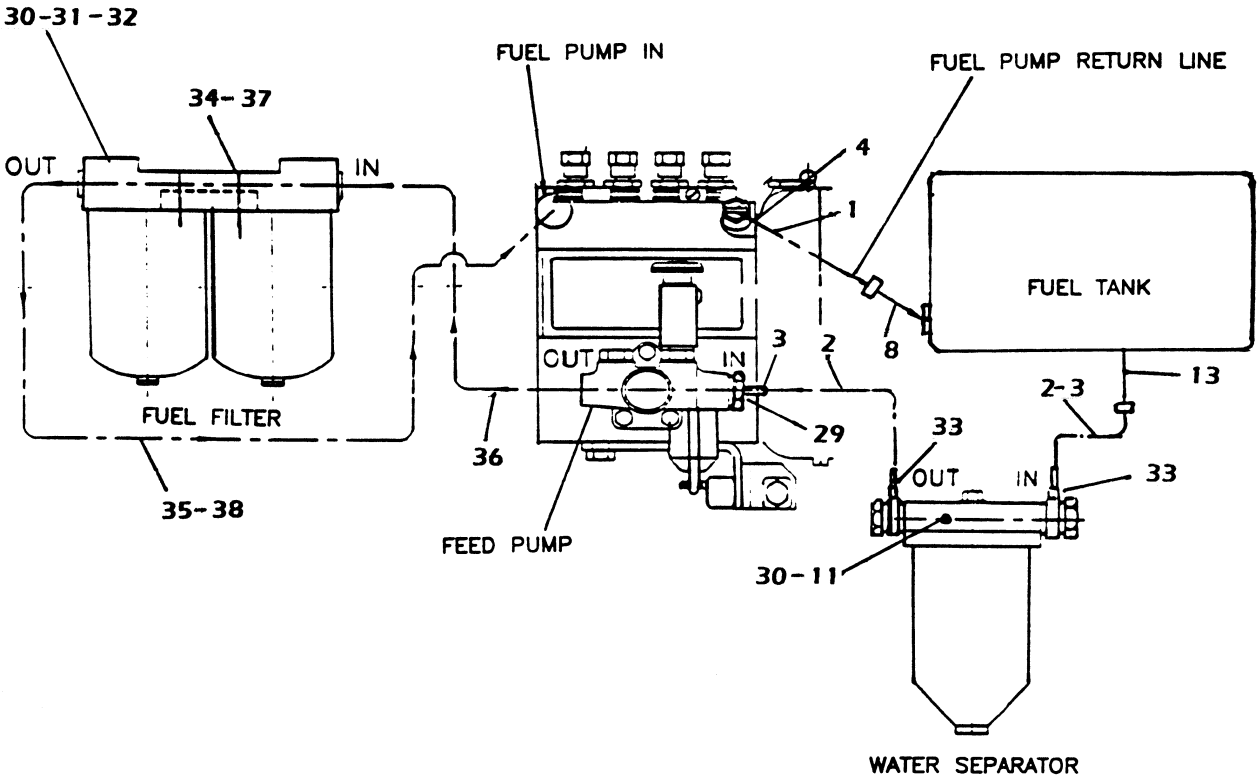

FUEL LINES–SCHEMATIC

GRAPHIC #2

FUEL SYSTEM

236-8613 TANK GP-FUEL

S/N:JRB00255-UP

PART OF 236-8605 TANK GP-FUEL

SMCS-1273 **i01628141**

NOTE	REF NO	GRAPHIC REF	PART NUMBER	QTY	PART NAME 1 2 3 4 5 6 (PRODUCT LEVEL)	SEE PAGE
	1	1	**201-0330**	1	CAP-FUEL	
J	2	1	**201-1835**	1	TUBE AS	
	3	1	**236-8614**	1	TANK AS-FUEL	
	4	1	**106-8020**	1	GASKET	
M	5	1	**123-4950**	8	SCREW-PAN HEAD (M6X1X16MM)	
	6	1	**148-8316**	1	CONNECTOR GP	
		1	**3J-7354**	1	SEAL-O-RING	
		1	**4J-5477**	1	SEAL-O-RING	
		1	**6V-8647**	1	CONNECTOR	
	7	1	**148-8326**	1	CONNECTOR GP	
		1	**3J-7354**	1	SEAL-O-RING	
		1	**6V-8397**	1	SEAL-O-RING	
		1	**6V-9872**	1	CONNECTOR	
	8	1	**148-8407**	1	PLUG GP	
		1	**3J-1907**	1	SEAL-O-RING	
		1	**9S-4191**	1	PLUG-STRAIGHT THREAD	

J-NOTE: 180-3730 (FILTER SCREEN) OPTIONAL SERVICE PART
M-METRIC PART

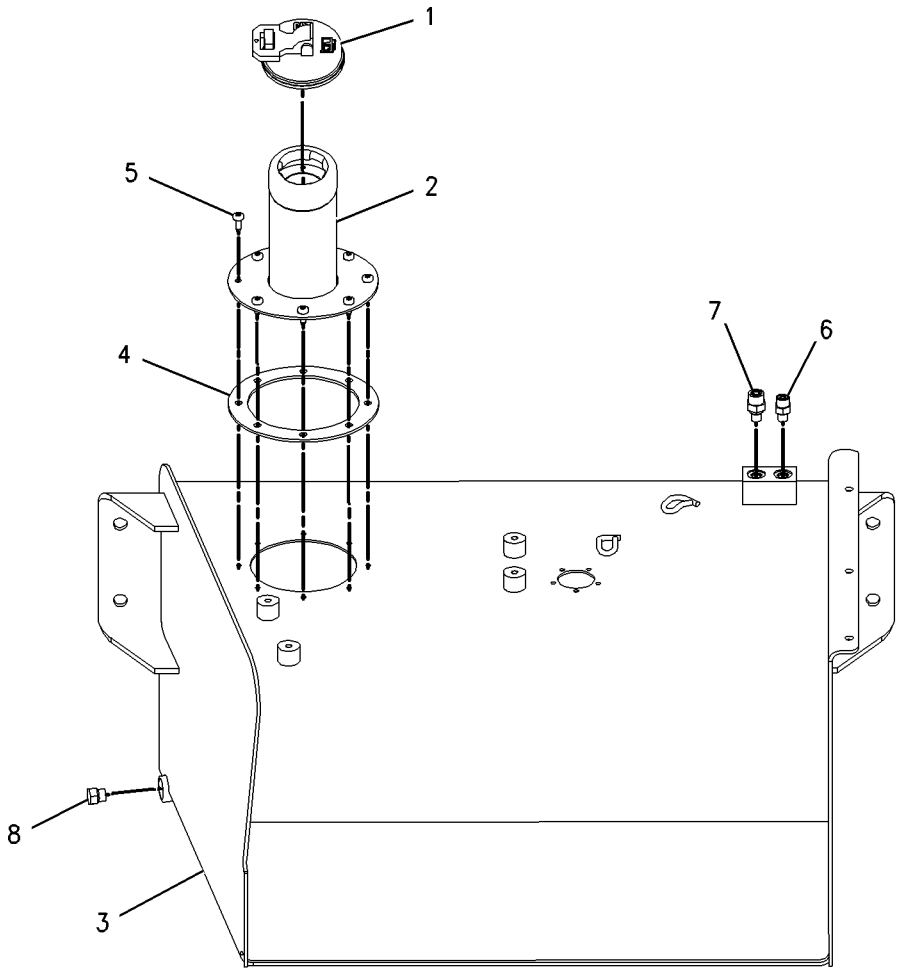

GRAPHIC #1 g00844037

250-5458 LAMP GP-REAR (WORKING)

S/N:JRB00255-UP
AN ATTACHMENT

SMCS-7308, 7310 **i01500339**

NOTE	REF NO	GRAPHIC REF	PART NUMBER	QTY	PART NAME 1 2 3 4 5 6 (PRODUCT LEVEL)	SEE PAGE
	1	1	**250-5459**	**2**	LAMP AS	
	2	1	**169-0591**	**1**	SWITCH AS	

250-5464 LAMP GP-CAB

S/N:JRB353-358,363,364&367-UP

SMCS-7308, 7310 **i01500339**

NOTE	REF NO	GRAPHIC REF	PART NUMBER	QTY	PART NAME 1 2 3 4 5 6 (PRODUCT LEVEL)	SEE PAGE
	1	1	**1H-2204**	**2**	SCREW AS	
	2	1	**250-5463**	**1**	LAMP AS	

ELECTRICAL AND STARTING SYSTEM

237-7909 BATTERY GP

S/N : JRB00324-UP

NOTE	REF NO	GRAPHIC REF	PART NUMBER	QTY	PART NAME 1 2 3 4 5 6 (PRODUCT LEVEL)	SEE PAGE
	1	1	237-7910	1	BATTERY	
	2	1	7K-1181	1	STRAP-CABLE	
	3	1	237-7911	2	MAT-BATTERY	
	4	1	237-7912	1	BRACKET AS	
	5	1	237-7915	1	CABLE AS	
E			5P-0747		CABLE(00GA)(BLACK) (15CM)	
	5A	1	1S-7251	1	TERMINAL-RING(FOR 1/2 IN BOLT)	
	5B	1	7N-5274	1	COVER-TERMINAL (BLACK) (BATTERY)	
	5C	1	9W-3459	1	TERMINAL AS- BATTERY (NEGATIVE)	
			1M-6119	1	BOLT-BATTERY TERMINAL(5/16-18X1.375)	
			1M-6120	1	NUT-BATTERY TERMINAL (5/16-18 THD)	
	6	1	237-7914	1	CABLE AS	
			1S-7252	1	TERMINAL-RING(FOR 3/8 IN BOLT)	
E			5P-0761		CABLE(00GA)(RED) (89CM)	
			6V-2721		TUBE-HEAT SHRINK	
			8N-0869	1	COVER-TERMINAL (RED)	
			8Y-8081		TUBE	
			141-6647	1	TERMINAL AS-BATTERY(POSITIVE)	
			1M-6120	2	NUT-BATTERY TERMINAL(5/16-18 THD)	
			3T-3349	1	BOLT-BATTERY TERMINAL	
	7	1	9P-0719	1	GROMMET	
	8	1	5P-0537	4	WASHER	
	9	1	6K-4355	4	ROD	
	10	1	3B-4607	4	COTTER PIN	
	11	1	1B-4330	4	NUT	

E - ORDER BY THE CENTIMETER

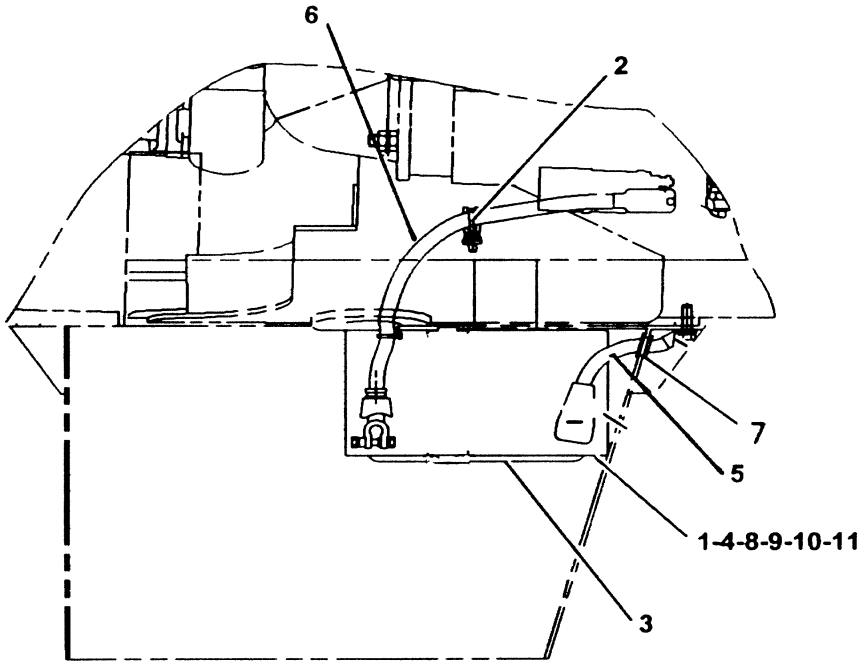

ELECTRICAL AND STARTING SYSTEM

250-2657 LAMP GP - HEAD & SIGNAL

S/N:JRB00255
12 VOLT
PART OF 250-2659 LIGHTING GP - ROADING

SMCS - 1429

NOTE	REF NO	GRAPHIC REF	PART NUMBER	QTY	PART NAME 1 2 3 4 5 6 (PRODUCT LEVEL)	SEE PAGE
	1	1	258-5110	1	BULB - HEAD LAMP	
	2	1	258-5111	1	BULB - PARKING	
	3	1	258-5112	1	LENS	

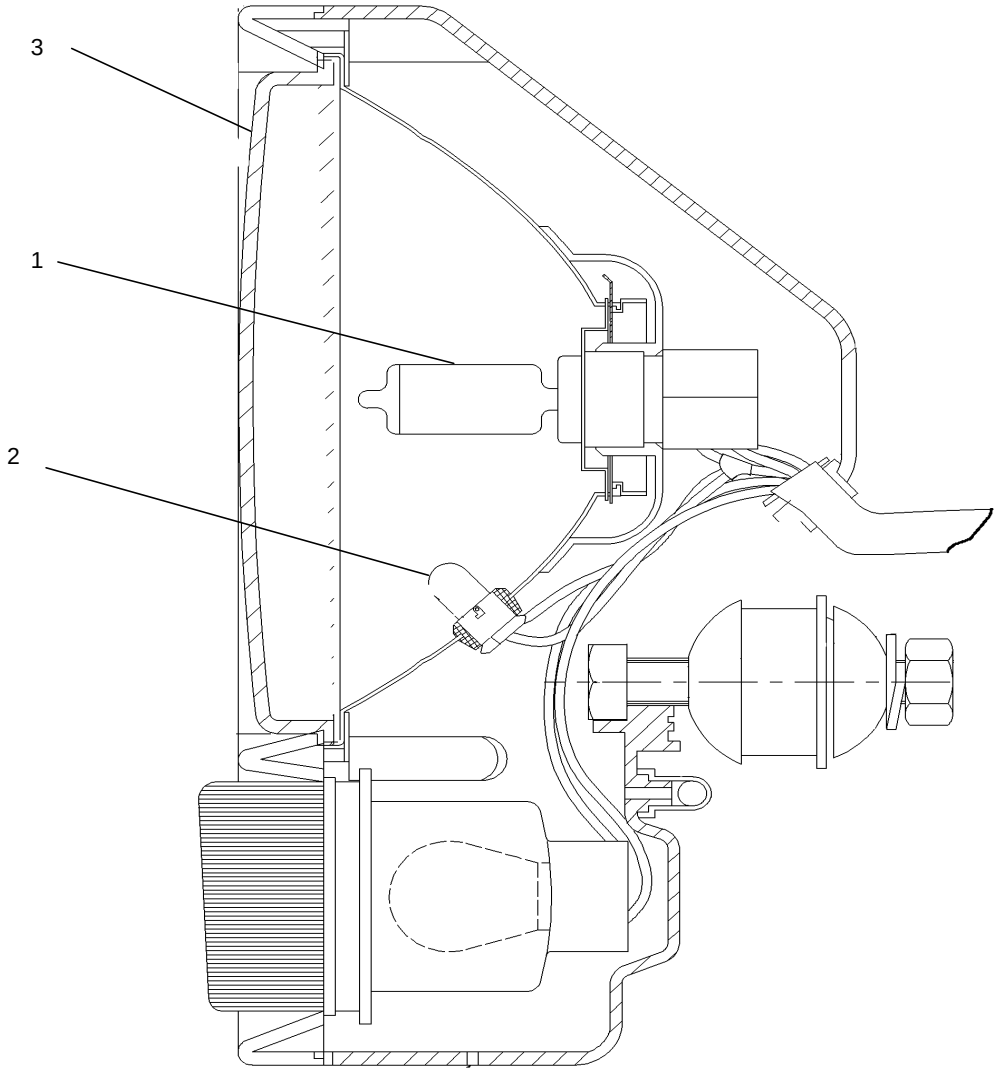

GRAPHIC #1

250-2658 LAMP GP - STOP & TAIL

S/N:JRB00255
12 VOLT
PART OF 250-2659 LIGHTING GP - ROADING

SMCS - 1432

NOTE	REF NO	GRAPHIC REF	PART NUMBER	QTY	PART NAME 1 2 3 4 5 6 (PRODUCT LEVEL)	SEE PAGE
	1	1	258-5115	1	LENS	
	2	1	258-5116	1	BULB	
	3	1	258-5117	1	BULB	
	4	1	258-5118	1	BULB	

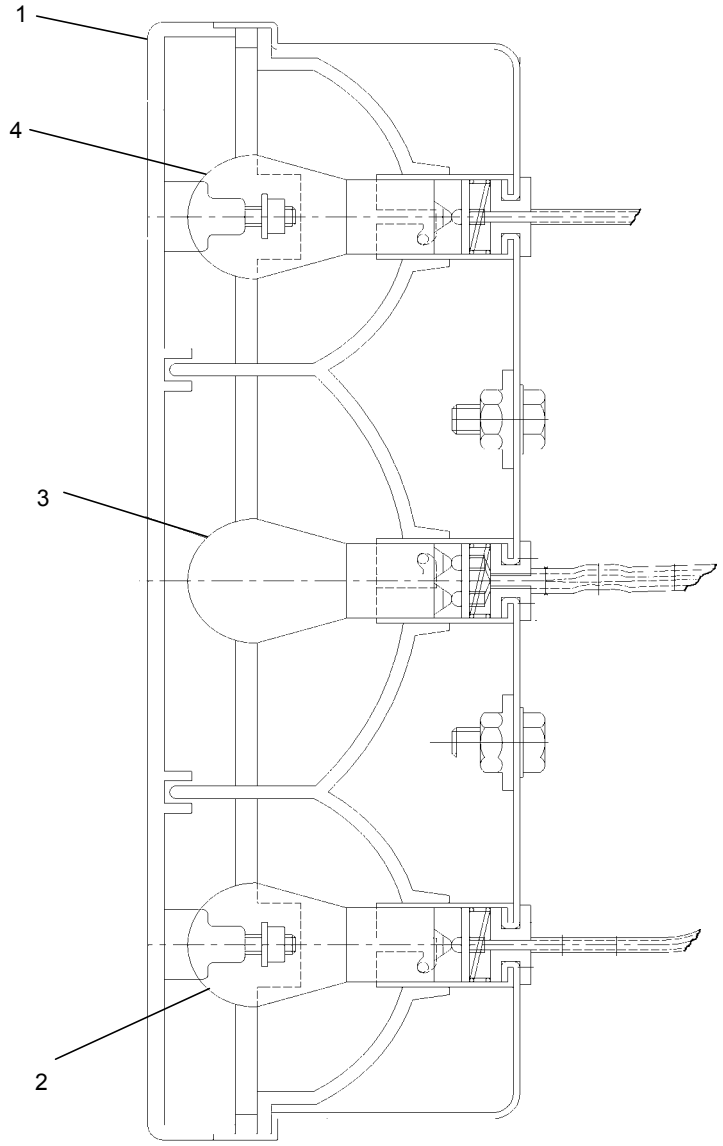

GRAPHIC #1

ELECTRICAL AND STARTING SYSTEM

250-2643 LIGHTING GP-FLOOD

S/N:JRB485-UP

PART OF 228-2802 COMMON AR

SMCS-1434 **i01670923**

NOTE	REF NO	GRAPHIC REF	PART NUMBER	QTY	PART NAME 1 2 3 4 5 6 (PRODUCT LEVEL)	SEE PAGE
D	1	1	**137-9626**		SEAL (5.8M)	
	2	1	**3E-9362**	2	RELAY AS (12 VOLT DC)	
	3	1	**3S-3093**	12	STRAP-CABLE	
	4	1	**250-2644**	2	LAMP GP-FLOOD	
					(EACH INCLUDES)	
		1	**258-5113**	1	BULB (12 VOLT)(55 WATT)	
		1	**258-5114**	**1**	LENS	
	5	1	**113-8491**	2	FUSE (15 AMP)	
	6	1	**146-9439**	2	RELAY AS (12 VOLT)	
	7	1	**155-6457**	2	MOUNT	
	8	1	**156-0283**	7	WASHER-HARD (8.4X35X2.5MM THK)	
	9	1	**169-0590**	1	SWITCH AS-CAB REAR LIGHT	
		1	**111-7899**	1	GASKET	
	10	1	**169-0592**	1	SWITCH AS-CAB FRONT LIGHT	
		1	**111-7899**	1	GASKET	
	11	1	**169-0595**	1	SWITCH AS-FAN	
		1	**111-7899**	1	GASKET	
	12	1	**173-3175**	1	CIRCUIT BREAKER AS	
	13	1	**250-2645**	2	LAMP GP-FLOOD	
					(EACH INCLUDES)	
		1	**81807775**	1	BULB (12 VOLT)(55 WATT)	
		1	**81807776**	1	LENS	
	14	1	**178-7539**	2	RECEPTACLE AS (POWER PORT)	
	15	1	**179-5435**	2	FLANGE	
	16	1	**252-6727**	1	ROOF	
	17	1	**81407103**	1	HARNESS AS	
		1	**102-8805**	1	KIT-RECEPTACLE (6 PIN)	
					(KIT SERVICES RECEPTACLE AS AND WEDGE)	
		1	**155-2270**	1	KIT-CONNECTING PLUG (2 PIN)	
					(KIT SERVICES PLUG AS AND WEDGE)	
		1	**155-2274**	1	KIT-CONNECTING PLUG (6 PIN)	
					(KIT SERVICES PLUG AS AND WEDGE)	
	18	1	**202-5705**	1	HARNESS AS	
		1	**102-8805**	1	KIT-RECEPTACLE (6 PIN)	
					(KIT SERVICES RECEPTACLE AS AND WEDGE)	
		1	**155-2271**	1	KIT-CONNECTING PLUG (4 PIN)	
					(KIT SERVICES PLUG AS AND WEDGE)	
M	19	1	**138-8454**	2	SCREW-TRUSS HEAD	
	20	1	**3E-6922**	4	SCREW-RECESS FLAT HEAD (NO. 6-19X12.7MM)	
	21	1		2	WASHER (4.7X11X1.2MM THK)(4B-4863)	
M	22	1	**8T-4133**	2	NUT (M10X1.5 THD)	
M	23	1	**8T-5093**	7	BOLT-LOCKING (M8X1.25X25MM)	
D	24	1	**137-9626**	2	SEAL (0.035M)	
D	25	1	**137-9626**	3	SEAL (0.025M)	
	26	1	8K-1433	**2**	GROMMET	

D-ORDER BY THE METER
M-METRIC PART

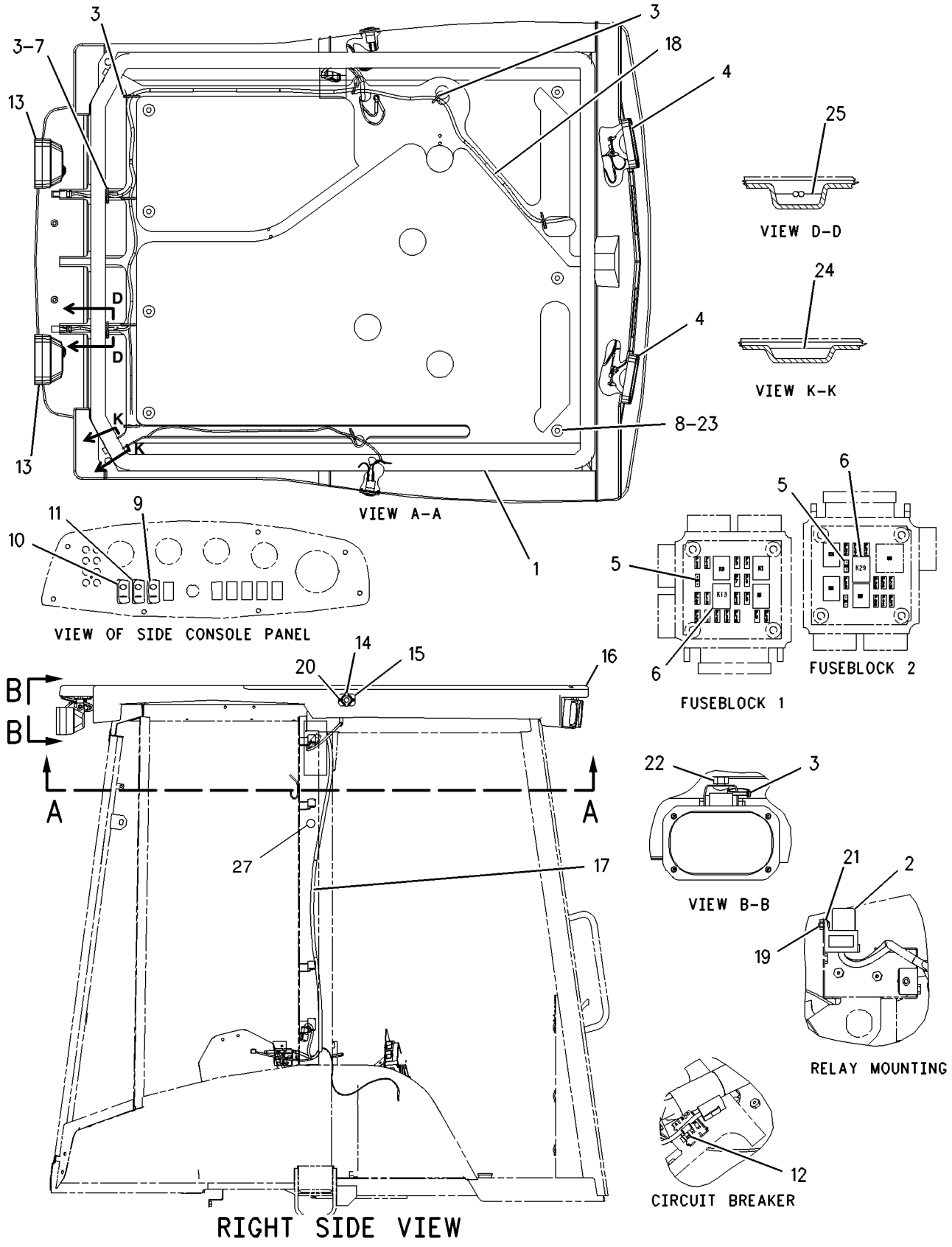

GRAPHIC #1 g00861763

ELECTRICAL AND STARTING SYSTEM

250-2659 LIGHTING GP-ROADING

S/N:JRB00255-UP

SMCS-1429 **i01543175**

NOTE	REF NO	GRAPHIC REF	PART NUMBER	QTY	PART NAME 1 2 3 4 5 6 (PRODUCT LEVEL)	SEE PAGE
Y	1	1	**250-2657**	2	LAMP GP- HEAD & SIGNAL	68
	2	1	**3S-2093**	8	STRAP-CABLE	
	3	1	**8T-8737**	2	PLUG-SEAL	
	4	2	**9R-1499**	2	REFLECTOR	
Y	5	2	**250-2658**	2	LAMP GP-STOP & TAIL	69
	6	1	**9R-6247**	2	STRAP-CABLE	
	7	1	**155-2263**	2	WEDGE-PLUG LOCK (6 PIN)	
	8	1	**164-1096**	1	BRACKET-LH	
	9	1	**164-1097**	1	BRACKET-RH	
	10	1	**169-0594**	1	SWITCH AS (ROADING)	
		1	**111-7899**	1	GASKET	
	11	1	**173-3175**	1	CIRCUIT BREAKER AS	
	12	1	**155-2274**	2	KIT-CONNECTING PLUG (6 PIN)	
					(KIT SERVICES PLUG AS AND WEDGE)	
	13	1	**8T-4121**	4	WASHER-HARD (11X21X2.5MM THK)	
M	14	1	**8T-4137**	4	BOLT (M10X1.5X20MM)	

M-METRIC PART
Y-SEPARATE ILLUSTRATION

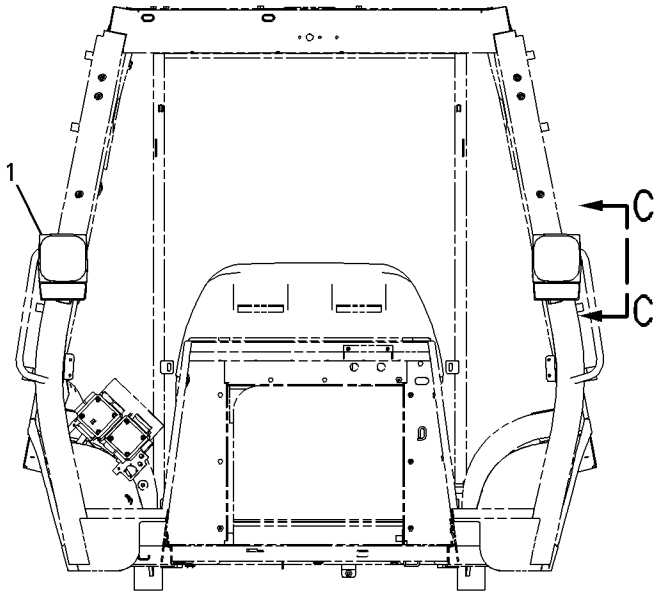

FRONT VIEW

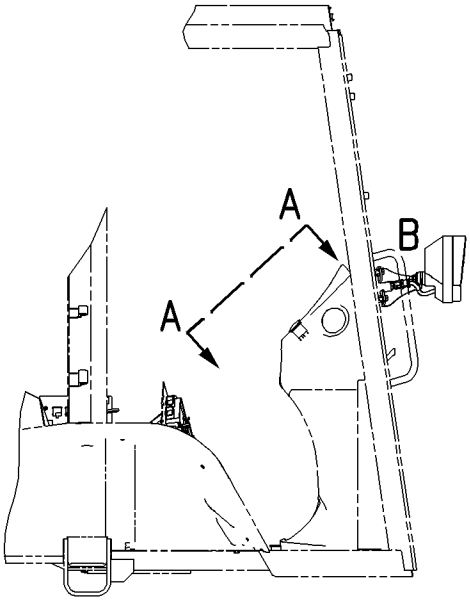

RIGHT SIDE VIEW

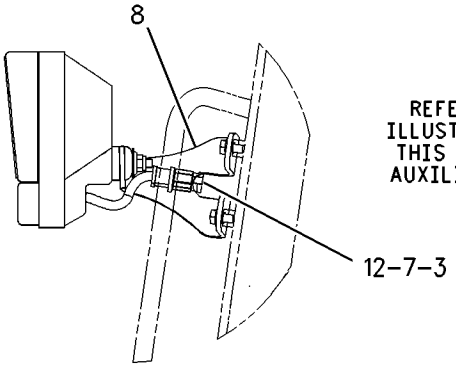

SECTION C-C

REFER TO ALL ILLUSTRATIONS IN THIS GROUP FOR AUXILIARY VIEWS

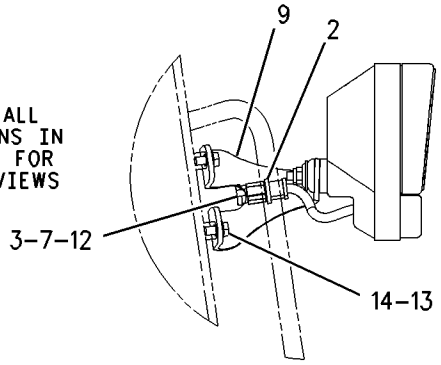

VIEW OF AREA B

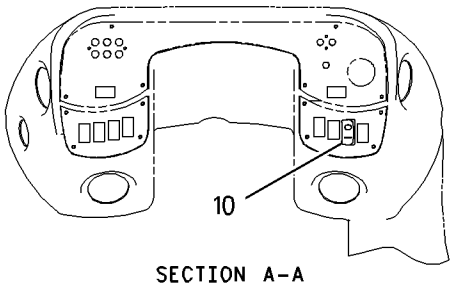

SECTION A-A

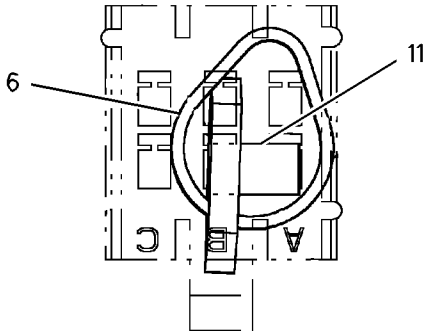

BREAKER POSITION VIEW

GRAPHIC #1

g00801721

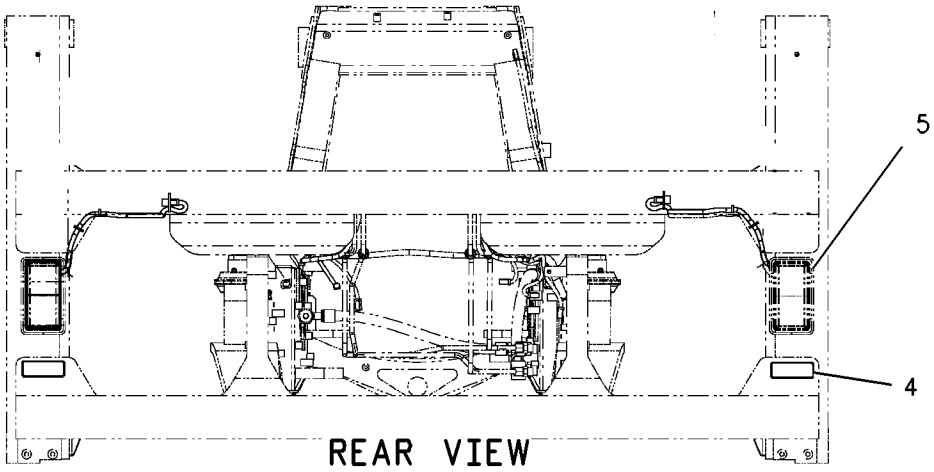

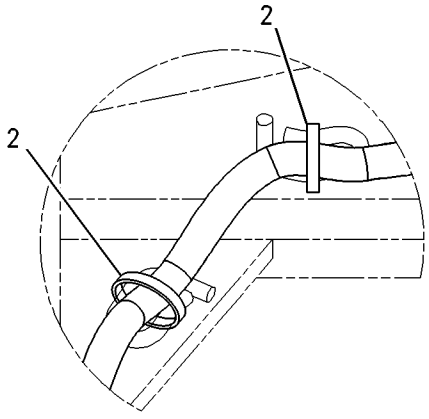

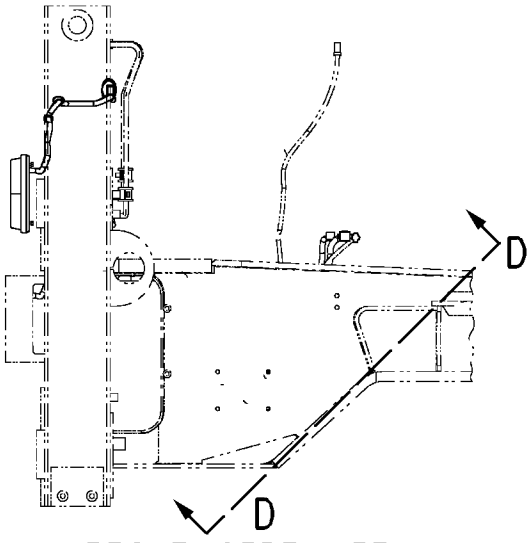

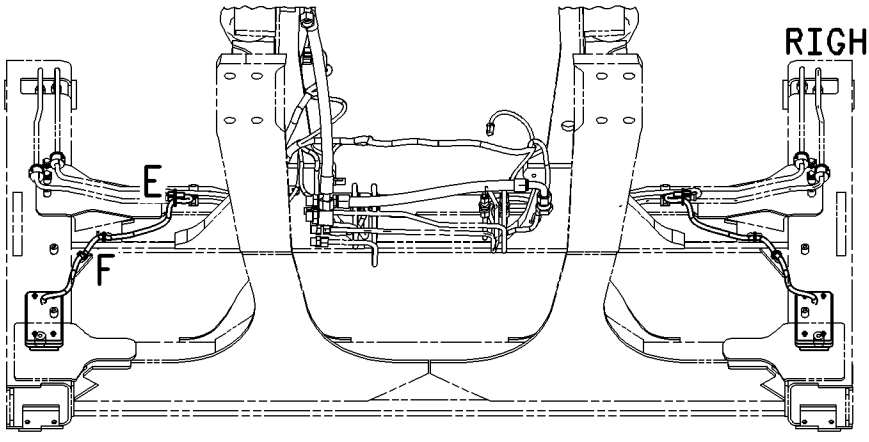

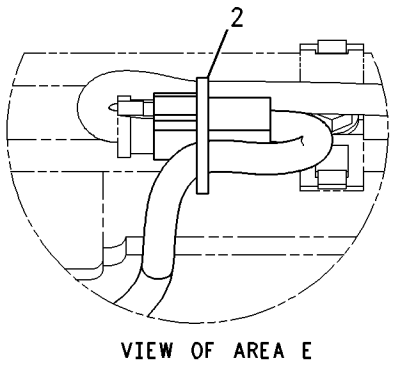

GRAPHIC #2 g00804661

144-9930 MODULE GP-WARNING INDICATOR

S/N:JRB00255-UP
PART OF 250-2651 WIRING GP-CONSOLE SIDE

SMCS-7407, 7431 **i01655621**

NOTE	REF NO	GRAPHIC REF	PART NUMBER	QTY	PART NAME 1 2 3 4 5 6 (PRODUCT LEVEL)	SEE PAGE
	1	1	**144-9934**	1	GASKET	
	2	1	**102-8801**	1	KIT-RECEPTACLE (12 PIN)	
					(KIT SERVICES RECEPTACLE AS. AND WEDGE)	

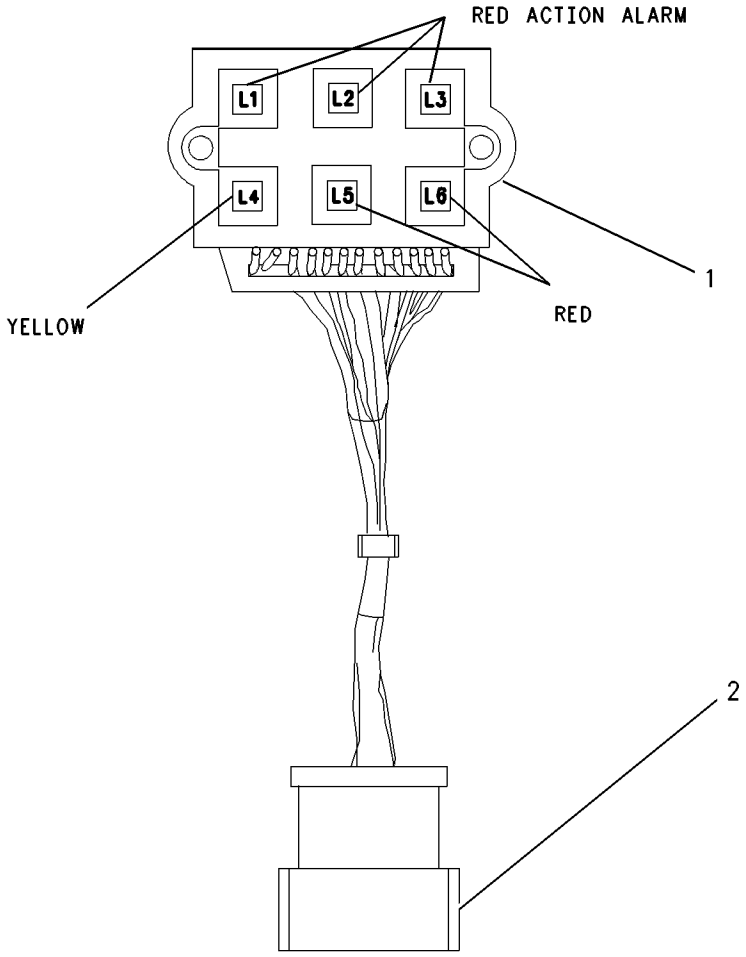

GRAPHIC #1 g00464021

144-9931 MODULE GP-WARNING INDICATOR

S/N:JRB00255-UP

PART OF 250-2646 WIRING GP-CONSOLE FRONT

SMCS-7407, 7431 **i01655622**

NOTE	REF NO	GRAPHIC REF	PART NUMBER	QTY	PART NAME 1 2 3 4 5 6 (PRODUCT LEVEL)	SEE PAGE
	1	1	**144-9934**	1	GASKET	
	2	1	**102-8806**	1	KIT-RECEPTACLE (8 PIN)	
					(KIT SERVICES RECEPTACLE AS. AND WEDGE)	
F			**189-3610**	1	LAMP	

F-NOT SHOWN

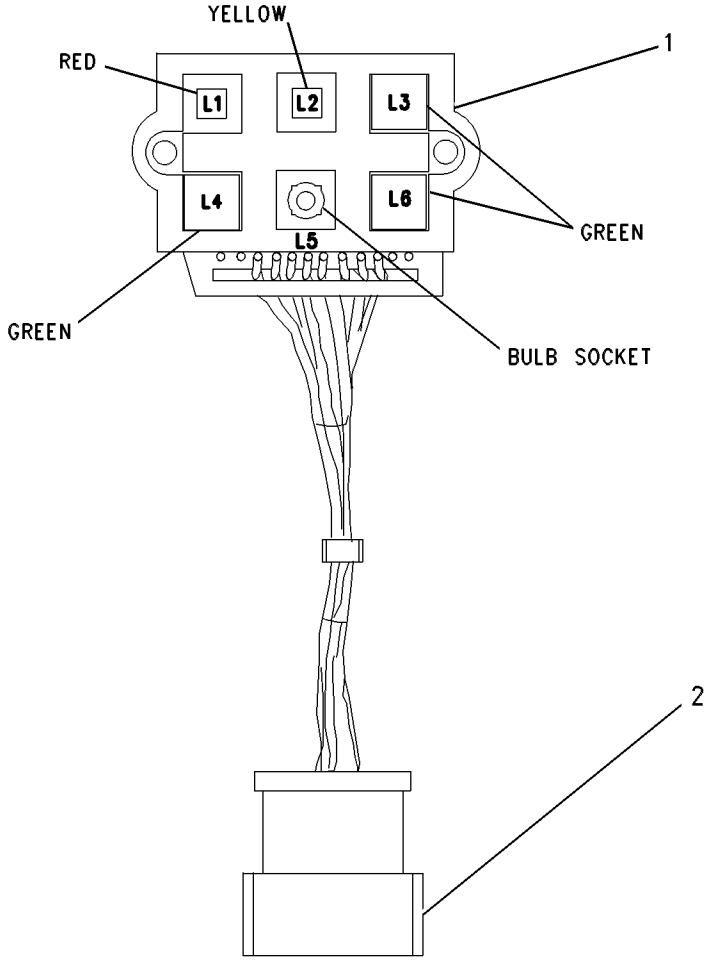

GRAPHIC #1 g00464170

ELECTRICAL AND STARTING SYSTEM

223-6425 GAUGE GP-WARNING

S/N:JRB00255-UP

PART OF 228-2784 ENGINE AR

SMCS-1435 **i01405597**

NOTE	REF NO	GRAPHIC REF	PART NUMBER	QTY	PART NAME 1 2 3 4 5 6 (PRODUCT LEVEL)	SEE PAGE
	1	1	**7W-1238**	1	SWITCH-PRESSURE (ENGINE OIL)	

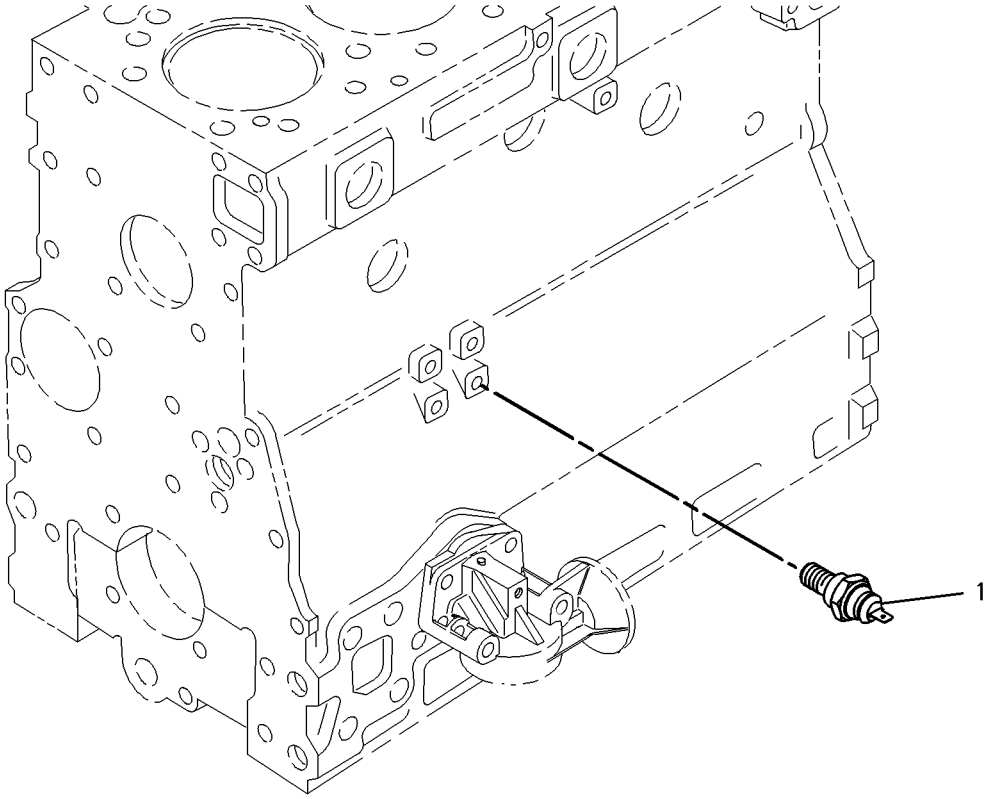

GRAPHIC #1 g00744374

ELECTRICAL AND STARTING SYSTEM

258-5106 WARNING GP - BACKUP

S/N : JRB00324-UP

NOTE	REF NO	GRAPHIC REF	PART NUMBER	QTY	PART NAME 1 2 3 4 5 6 (PRODUCT LEVEL)	SEE PAGE
	1	1	258-5107	1	REVERSE ALARM	
	2	1	0S-1615	4	BOLT-HEX	
	3	1	8T-4205	4	WASHER	
	4	1	258-5108	1	PLATE ASSY	
	5	1	9X-2044	2	SCREW	
	6	1	9X-6165	2	WASHER	

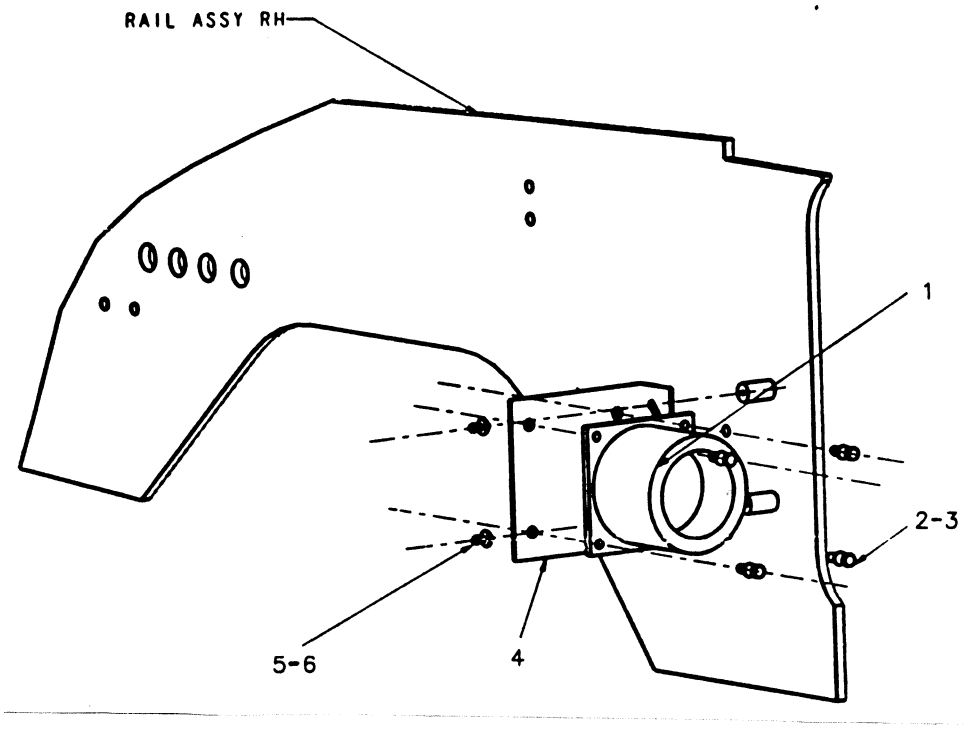

250-2647 WIRING GP-SENSOR

S/N:JRB314-UP

PART OF 228-2803 LOADER AR

SMCS-1408 **i01637615**

NOTE	REF NO	GRAPHIC REF	PART NUMBER	QTY	PART NAME 1 2 3 4 5 6 (PRODUCT LEVEL)	SEE PAGE
	1	1	**3S-2093**	38	STRAP-CABLE	
	2	1	**118-7790**	1	BRACKET AS	
M	3	1	**8T-4138**	2	BOLT (M6X1X20MM)	
	4	1	**8T-4205**	2	WASHER-HARD (7.2X14.5X2MM THK)	
	5	1	**249-7416**	1	HARNESS AS	
		1	**102-8803**	1	KIT-RECEPTACLE (3 PIN)	
					(KIT SERVICES RECEPTACLE AND WEDGE)	
	6	1	**206-1486**	1	SWITCH AS-ROLLER	
		1	**2H-3922**	1	LOCKWASHER	
		1	**6V-8363**	2	SCREW (10-32X0.312 IN)	
		1	**6V-8370**	1	NUT-HEX (3/4-32 THD)	
		1	**8F-1434**	2	LOCKWASHER	
		1	**9X-0199**	1	BOOT-SWITCH	

M-METRIC PART

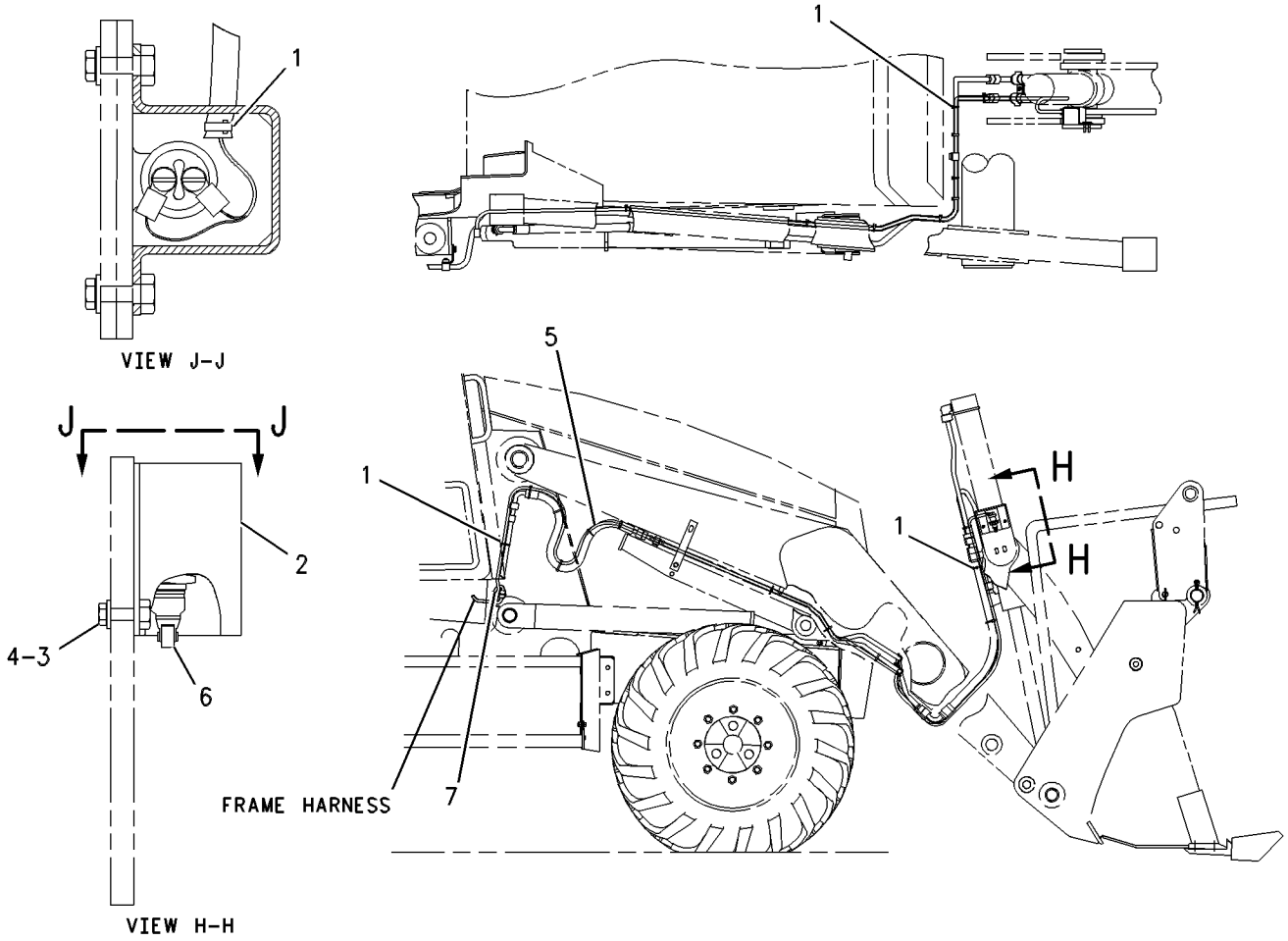

GRAPHIC #1 g00594275

250-2639 WIRING GP-CAB

S/N:JRB00485-UP
PART OF 228-2787 CAB AR

SMCS-1408, 7301 **i01669328**

NOTE	REF NO	GRAPHIC REF	PART NUMBER	QTY	PART NAME 1 2 3 4 5 6 (PRODUCT LEVEL)	SEE PAGE
	1	2	**3S-2093**	13	STRAP CABLE	
	2	2	**113-8491**	2	FUSE (15 AMP)	
	3	2	**146-9439**	1	RELAY AS (12 VOLT)	
	4	2	**246-2671**	1	CONTROL GP-STEERING COLUMN SWITCH AS	
	5	1	**249-7469**	1	HARNESS AS	
		1	**102-8806**	1	KIT-RECEPTACLE (8 PIN)	
					(KIT SERVICES RECEPTACLE AS AND WEDGE)	
		1	**155-2260**	1	KIT-CONNECTING PLUG (3 PIN)	
					(KIT SERVICES PLUG AS AND WEDGE)	
		1	**155-2271**	1	KIT-CONNECTING PLUG (4 PIN)	
					(KIT SERVICES PLUG AS AND WEDGE)	
		1	**155-2274**	1	KIT-CONNECTING PLUG (6 PIN)	
					(KIT SERVICES PLUG AS AND WEDGE)	
	6	1	**169-0596**	1	SWITCH AS - REAR WIPER(OPTION)	
		1	**111-7899**	1	GASKET	
M	7	2	**8T-0352**	2	BOLT (M5X0.8X45MM)	
	8	2	**8T-4121**	2	WASHER-HARD (11X21X2.5MM THK)	
M	9	2	**8T-4133**	1	NUT (M10X1.5 THD)	

M-METRIC PART

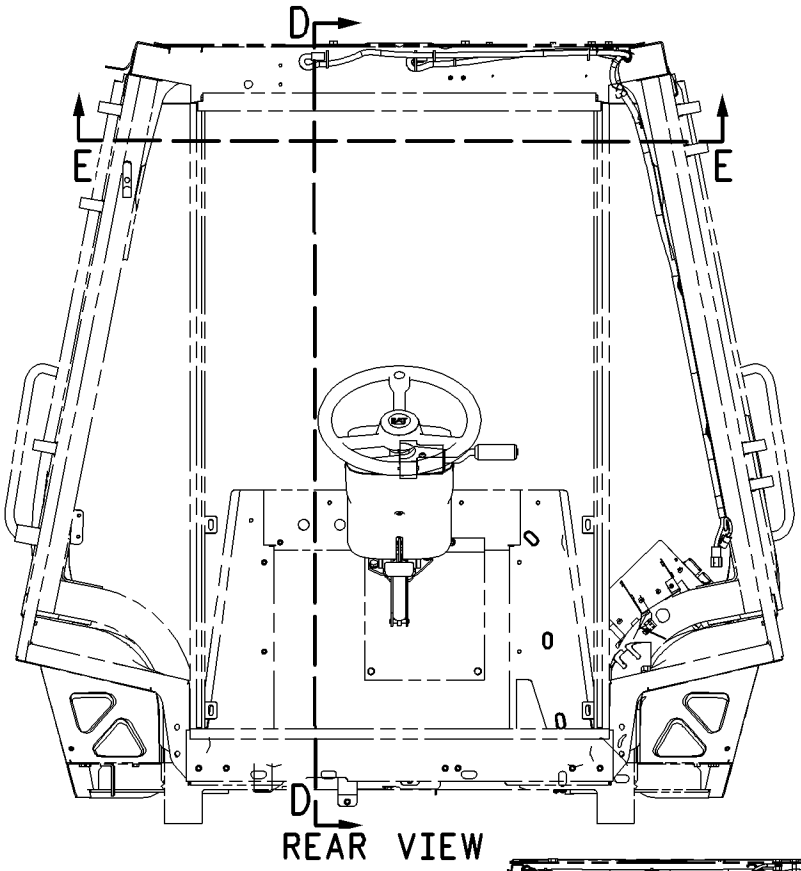

REFER TO ALL ILLUSTRATIONS IN THIS GROUP FOR AUXILIARY VIEWS

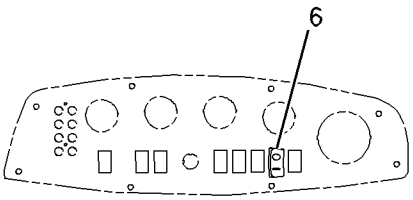

VIEW OF RH SIDE CONSOLE PANEL

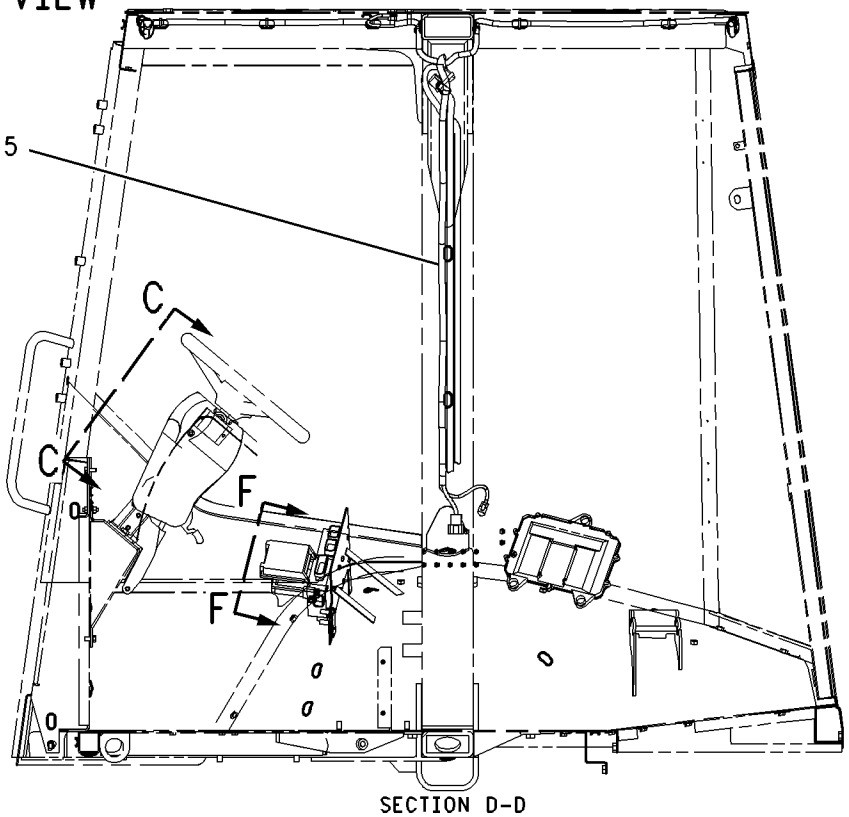

SECTION D-D

GRAPHIC #1

g00863895

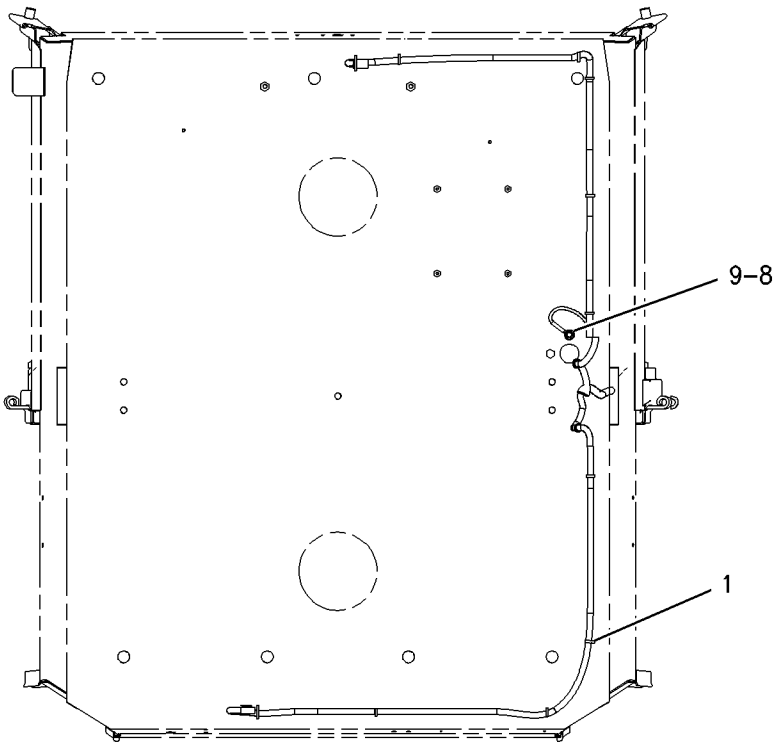

SECTION E-E

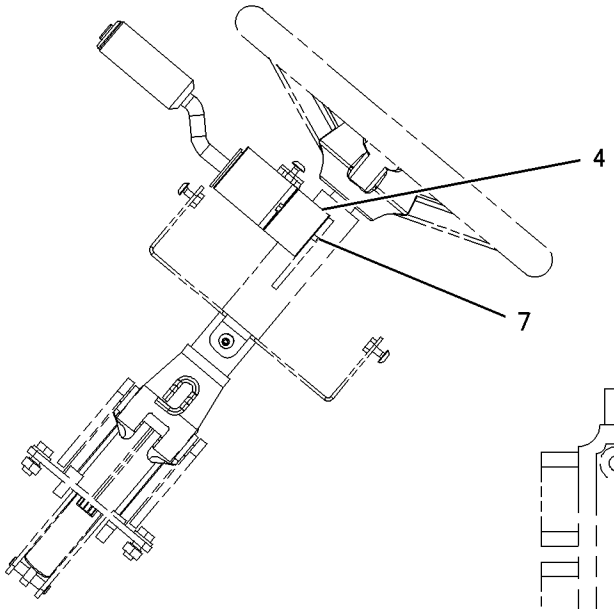

SECTION C-C

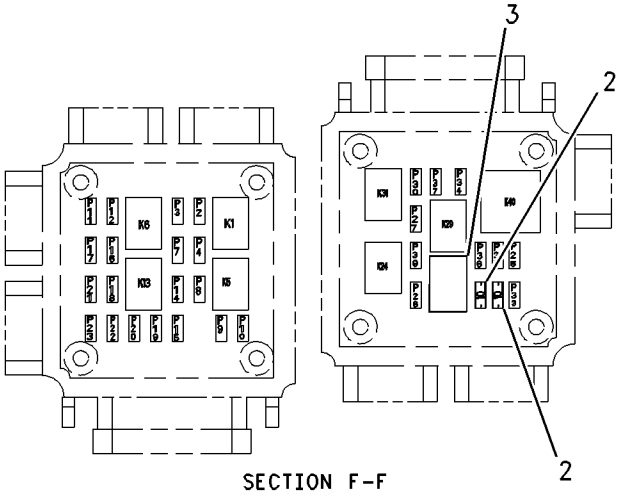

SECTION F-F

GRAPHIC #2

g00863927

250-2651 WIRING GP-CONSOLE

S/N:JRB00255-UP
SIDE
PART OF 228-2787 CAB AR

SMCS-1408 **i01673595**

NOTE	REF NO	GRAPHIC REF	PART NUMBER	QTY	PART NAME 1 2 3 4 5 6 (PRODUCT LEVEL)	SEE PAGE
B	1	1	**3S-2093**	12	STRAP-CABLE	
B	2	1	**6K-0806**	2	STRAP-CABLE	
	3	1	**7K-1181**	3	STRAP-CABLE	
Y	4	2	**144-9930**	1	MODULE GP-WARNING INDICATOR	75
	5	2	**157-1997**	2	SPACER	
	6		NOT USED			
	7	1	**172-9200**	1	SUPPRESSOR-ARC	
B	8	1	**184-5293**	1	PLUG	
B	9	1	**187-1644**	6	PLUG	
	10	1	**249-7475**	1	HARNESS AS	
		1	**102-8803**	1	KIT-RECEPTACLE (3 PIN)	
					(KIT SERVICES RECEPTACLE AS AND WEDGE)	
		1	**155-2255**	1	KIT-CONNECTING PLUG (12 PIN)	
					(KIT SERVICES PLUG AS AND WEDGE)	
		1	**155-2270**	1	KIT-CONNECTING PLUG (2 PIN)	
					(KIT SERVICES PLUG AS AND WEDGE)	
		1	**155-2271**	1	KIT-CONNECTING PLUG (4 PIN)	
					(KIT SERVICES PLUG AS AND WEDGE)	
		1	**155-2274**	1	KIT-CONNECTING PLUG (6 PIN)	
					(KIT SERVICES PLUG AS AND WEDGE)	
M	11	2	**095-0741**	1	SCREW-MACHINE (M6X1THD)	
	12	2	**116-7491**	1	ANCHOR	
	13	1	**134-2305**	3	SEAL	
	14	1	**170-6305**	1	INDICATOR AS-FUEL LEVEL	
		1	**4B-2043**	3	NUT (8-32 THD)	
		1	**7X-9065**	1	LAMP	
		1	**9B-7233**	3	LOCKWASHER	
	15	1	**226-7164**	1	INDICATOR AS - ENG. COOLANT TEMP	
		1	**4B-2043**	3	NUT (8-32 THD)	
		1	**7X-9065**	1	LAMP	
		1	**9B-7233**	3	LOCKWASHER	
	16	1	**170-6542**	1	INDICATOR AS - TRANS. OIL TEMP	
		1	**4B-2043**	3	NUT (8-32 THD)	
		1	**7X-9065**	1	LAMP	
		1	**9B-7233**	3	LOCKWASHER	
	17	1	**196-2966**	1	PLUG	
	18	1	**198-0099**	1	FILM	
B	19	2	**4P-8134**	3	CLIP	
M	20	2	**8T-2659**	2	LOCKNUT (M4X0.7 THD)	
BM	21	2	**8T-4133**	3	NUT (M10X1.5 THD)	
BM	22	2	**8T-4191**	3	BOLT (M10X1.5X16MM)	

B-USE AS REQUIRED
M-METRIC PART
Y-SEPARATE ILLUSTRATION

250-2651 WIRING GP-CONSOLE *(contd.)* i01673595

REFER TO ALL ILLUSTRATIONS
IN THIS GROUP FOR
AUXILIARY VIEWS

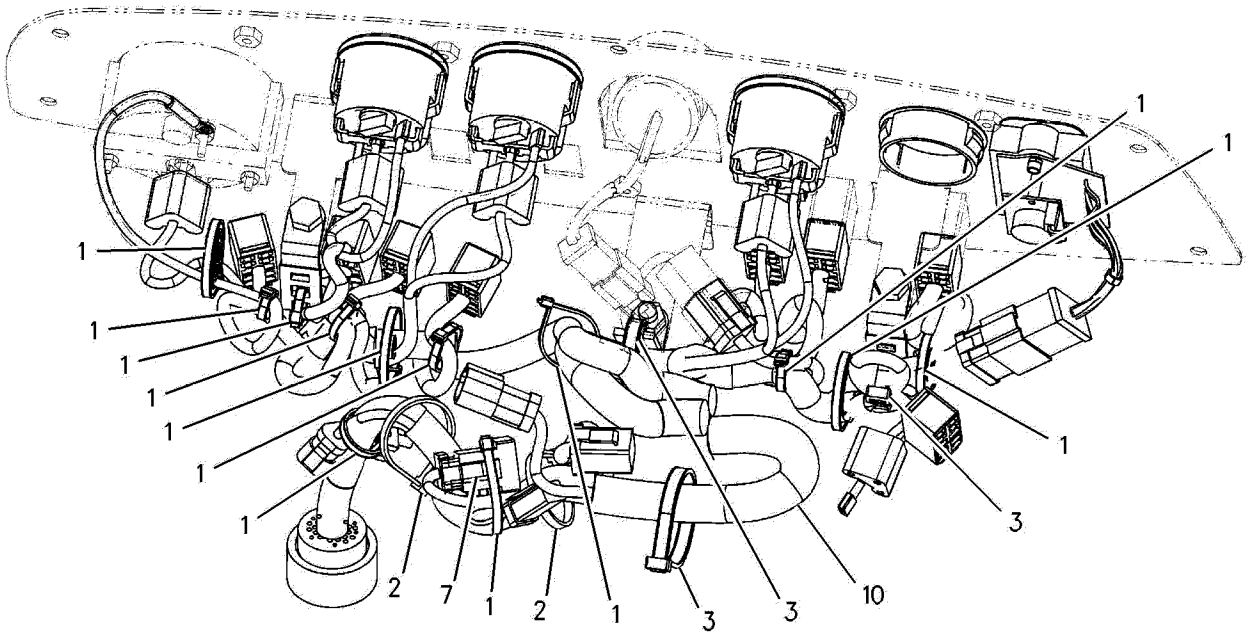

BACK OF SIDE CONSOLE

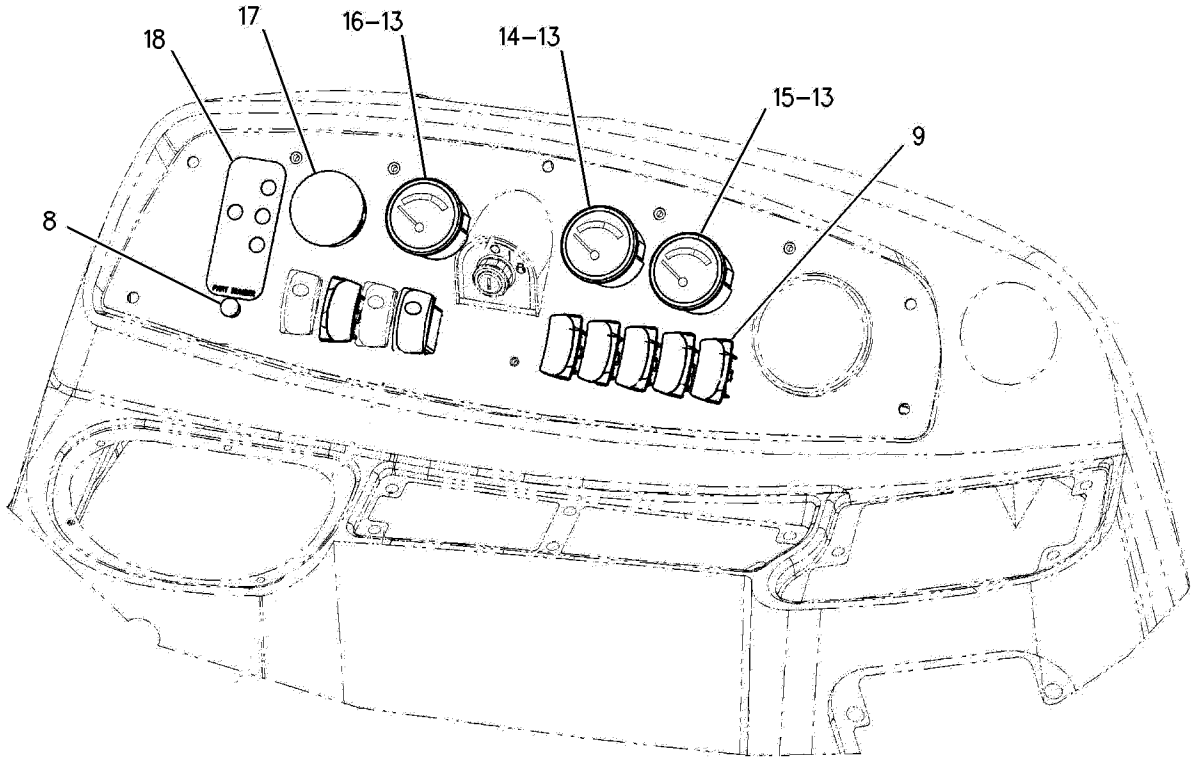

SIDE CONSOLE

GRAPHIC #1 g00853874

250-2651 **WIRING GP-CONSOLE** ***(contd.)*** **i01673595**

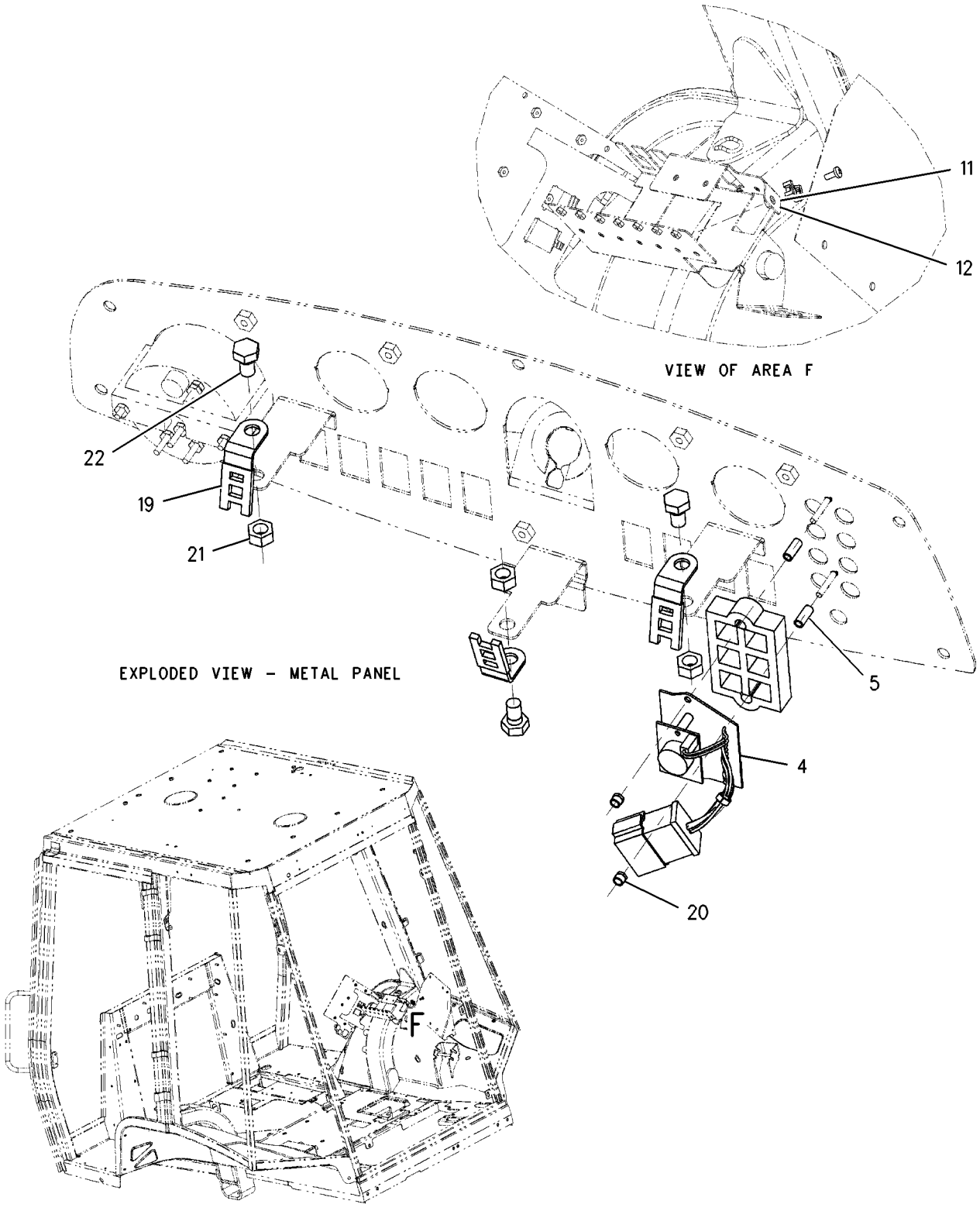

GRAPHIC #2 g00853876

ELECTRICAL AND STARTING SYSTEM

250-2646 WIRING GP-CONSOLE

S/N:JRB00485-UP
FRONT
PART OF 228-2807 CHASSIS AR

SMCS-1408 **i01483325**

NOTE	REF NO	GRAPHIC REF	PART NUMBER	QTY	PART NAME 1 2 3 4 5 6 (PRODUCT LEVEL)	SEE PAGE
	1	1	**3S-2093**	6	STRAP-CABLE	
Y	2	1	**144-9931**	1	MODULE GP-WARNING INDICATOR	76
	3	1	**157-1997**	2	SPACER (6.34MM THK) (NYLON)	
	4	1	**249-7432**	1	HARNESS AS-CONSOLE	
		1	**102-8805**	1	KIT-RECEPTACLE (6 PIN)	
					(KIT SERVICES RECEPTACLE AS. AND WEDGE)	
		1	**8L-8413**	32	STRAP-CABLE	
		1	**8T-8737**	1	PLUG-SEAL	
		1	**155-2270**	1	KIT-CONNECTING PLUG (2 PIN)	
					(KIT SERVICES PLUG AS. AND WEDGE)	
		1	**155-2265**	1	KIT-CONNECTING PLUG (8 PIN)	
					(KIT SERVICES PLUG AS. AND WEDGE)	
		1	**155-2255**	1	KIT-CONNECTING PLUG (12 PIN)	
					(KIT SERVICES PLUG AS. AND WEDGE)	
	5	1	**169-0587**	1	SWITCH AS (HORN)	
		1	**111-7899**	1	GASKET	
	6	1	**169-0588**	1	SWITCH AS (NEUTRAL LOCK)	
		1	**111-7899**	1	GASKET	
	7	1	**169-0589**	1	SWITCH AS (HAZZARD)	
		1	**111-7899**	1	GASKET	
	8	1	**187-1644**	**6**	PLUG	
M	9	1	**095-0741**	2	SCREW-MACHINE (M6X1THD)	
M	10	1	**099-0492**	2	LOCKNUT (M6X1 THD)	
	11	1	**116-7491**	2	ANCHOR	
	12	1	**197-8832**	1	SERVICE METER	
			200-5727	1	CLIP	
			205-7700	1	KIT-SERVICE METER	
	13	1	**188-0863**	1	FILM-INDICATOR	
M	14	1	**8T-2659**	2	LOCKNUT (M4X0.7 THD)	

M-METRIC PART
Y-SEPARATE ILLUSTRATION

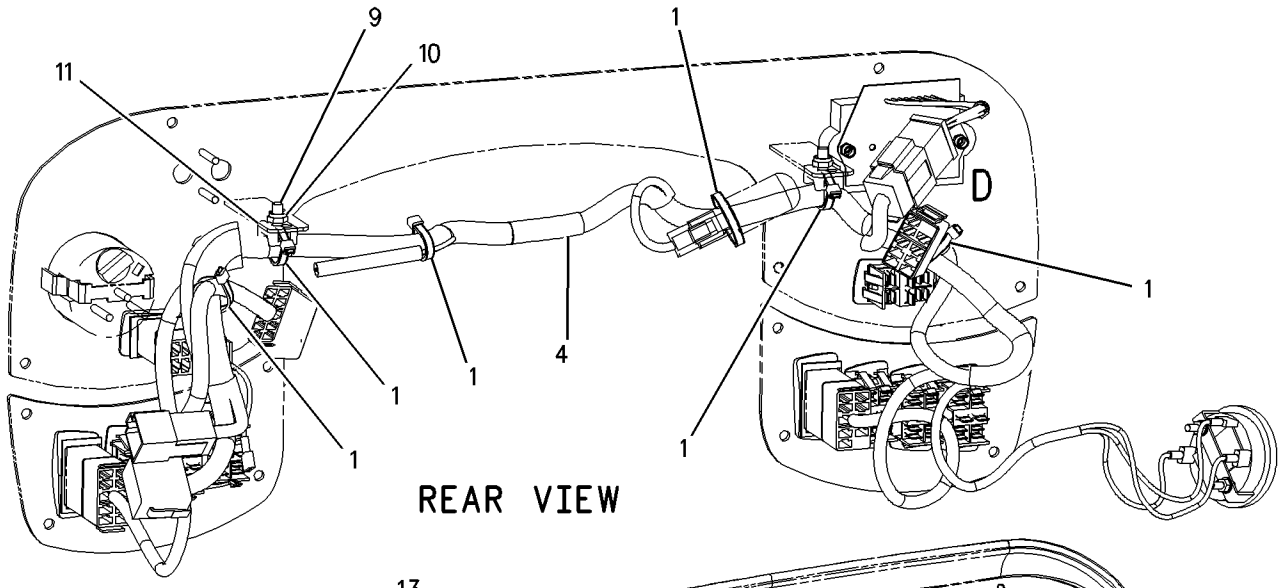

REAR VIEW

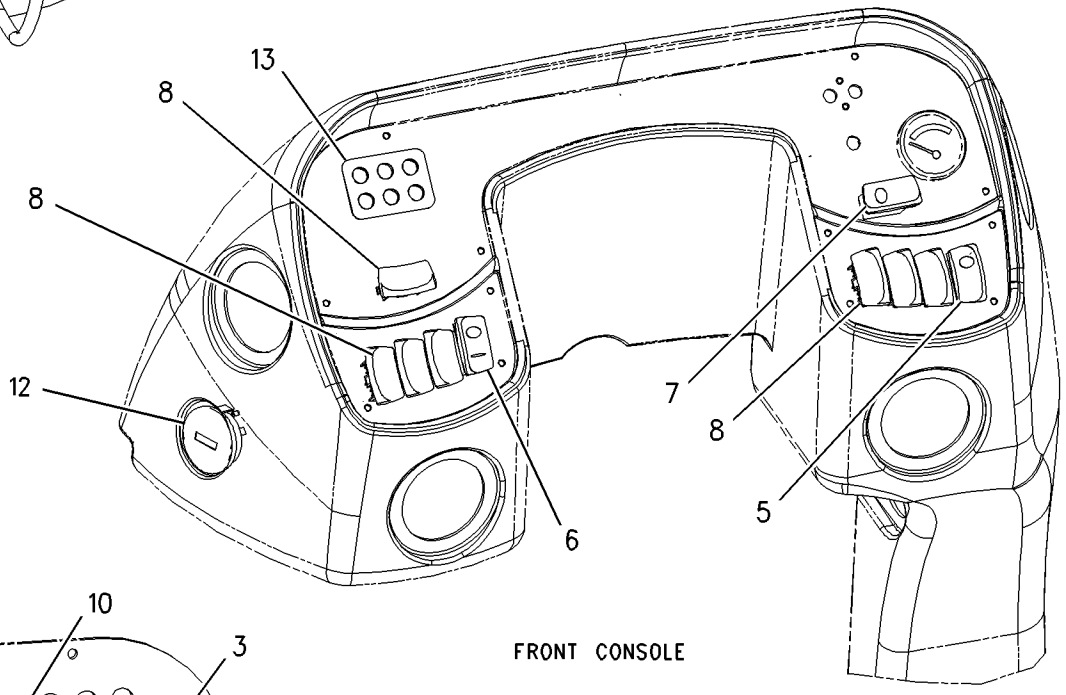

FRONT CONSOLE

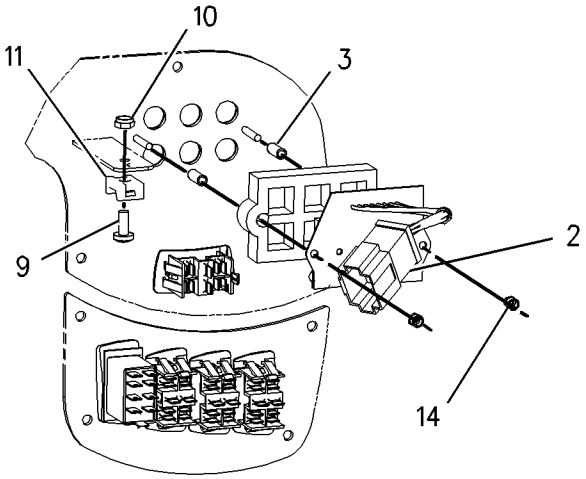

VIEW OF AREA D

GRAPHIC #1

g00744994

ELECTRICAL AND STARTING SYSTEM

250-2649 WIRING GP-ENGINE

S/N:JRB00485-UP

PART OF 228-2784 ENGINE AR

SMCS-1408 **i01617860**

NOTE	REF NO	GRAPHIC REF	PART NUMBER	QTY	PART NAME 1 2 3 4 5 6 (PRODUCT LEVEL)	SEE PAGE
	1	1,2,3,4	**3S-2093**	1	STRAP-CABLE	
	2	1	**4W-9972**	1	SENDER-TEMPERATURE ((TORQUE CONVERTER OIL))	
		1	**4B-2049**	1	NUT (10-32 THD)	
		1	**8F-1434**	1	LOCKWASHER	
		1	**8T-0328**	1	WASHER-HARD (5.5X10X1MM THK)	
	3	2	**203-3219**	1	SWITCH AS-TEMPERATURE (COOLANT)	
		2	**6V-8376**	2	SCREW-MACHINE (8-32X0.25 IN)	
		2	**9B-7233**	2	LOCKWASHER	
	4	1,4	**7K-1181**	3	STRAP-CABLE	
	5	3	**8T-8799**	1	BOOT	
	6	4	**250-2652**	1	HORN AS	
	7	2	**244-3106**	1	SENDER AS-TEMPERATURE ((COOLANT))	
		2	**3E-3365**	1	WEDGE-RECEPTACLE LOCK (2 PIN)	
		2	**186-3735**	2	PIN-CONNECTOR	
		2	**102-8802**	1	KIT-RECEPTACLE (2 PIN)	
					(INCLUDES RECEPTACLE AS & WEDGE)	
	8	4	**249-7459**	1	WIRE AS	
		4	**102-8802**	1	KIT-RECEPTACLE (2 PIN)	
					(INCLUDES RECEPTACLE AS & WEDGE)	
		4	**3E-3365**	1	WEDGE-RECEPTACLE LOCK (2 PIN)	
		4	**144-1636**	2	PIN-CONNECTOR	
	9	4	**249-7461**	1	HARNESS AS-ENGINE	
		4	**155-2270**	7	KIT-CONNECTING PLUG (2 PIN)	
					(EACH INCLUDES PLUG AS & WEDGE)	
		4	**177-9645**	1	KIT-RECEPTACLE (2 PIN)	
					(INCLUDES RECEPTACLE AS & WEDGE)	
		4	**102-8802**	1	KIT-RECEPTACLE (2 PIN)	
					(INCLUDES RECEPTACLE AS & WEDGE)	
		4	**155-2260**	3	KIT-CONNECTING PLUG (3 PIN)	
					(EACH INCLUDES PLUG AS & WEDGE)	
	10	1	**3J-1907**	1	SEAL-O-RING	
	11	2,3,4	**4P-7581**	6	CLIP	
	12	1,2	**4P-8134**	4	CLIP	
	13	4	**5P-4116**	1	WASHER-HARD (8.8X20.5X2MM THK)	
	14	2,3,4	**8T-4121**	8	WASHER-HARD (11X21X2.5MM THK)	
M	15	4	**8T-4136**	1	BOLT (M10X1.5X25MM)	
M	16	3,4	**8T-4137**	5	BOLT (M10X1.5X20MM)	
M	17	4	**8T-4200**	1	BOLT (M8X1.25X16MM)	

M-METRIC PART

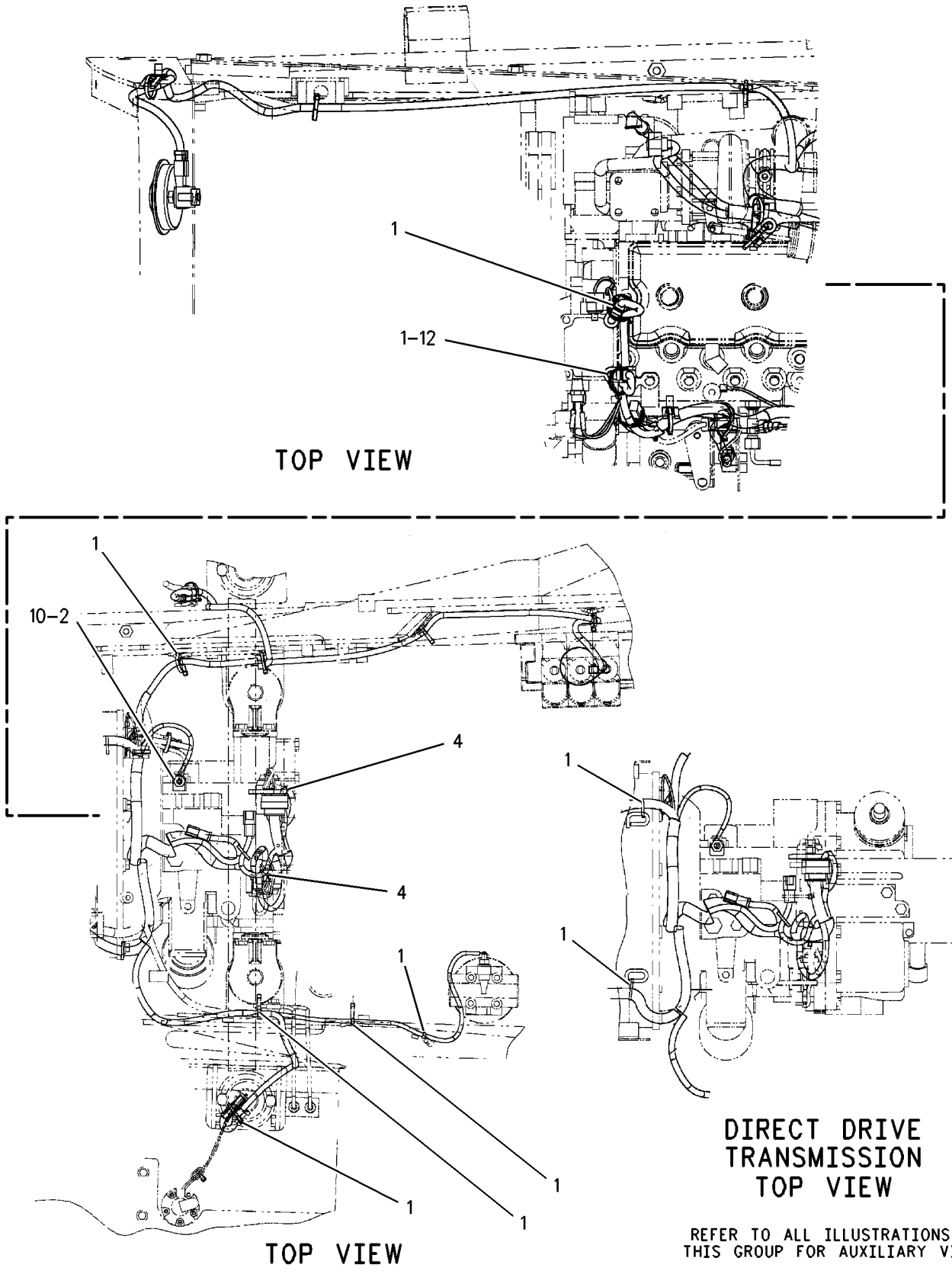

GRAPHIC #1

g00854838

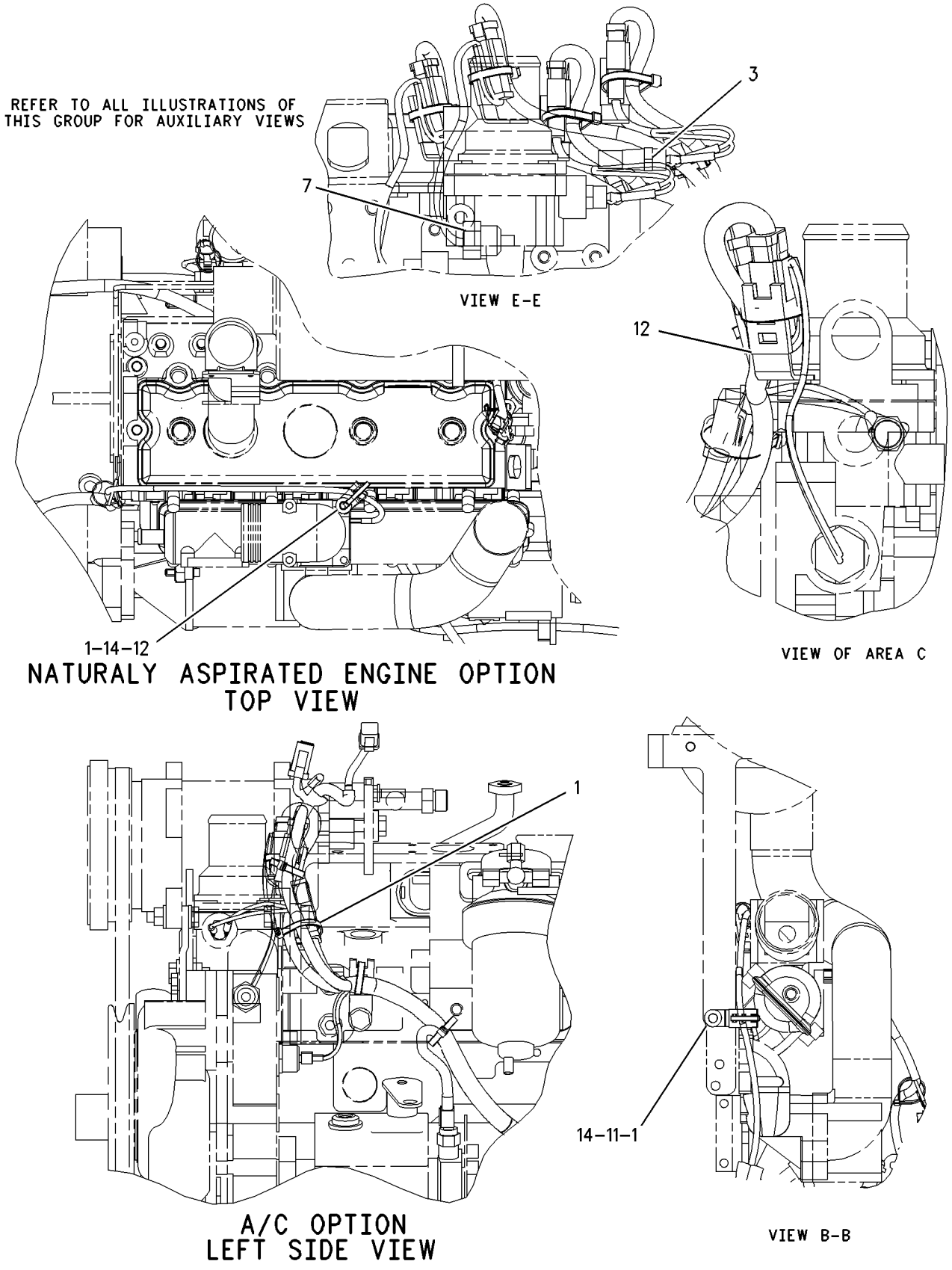

GRAPHIC #2

g00854843

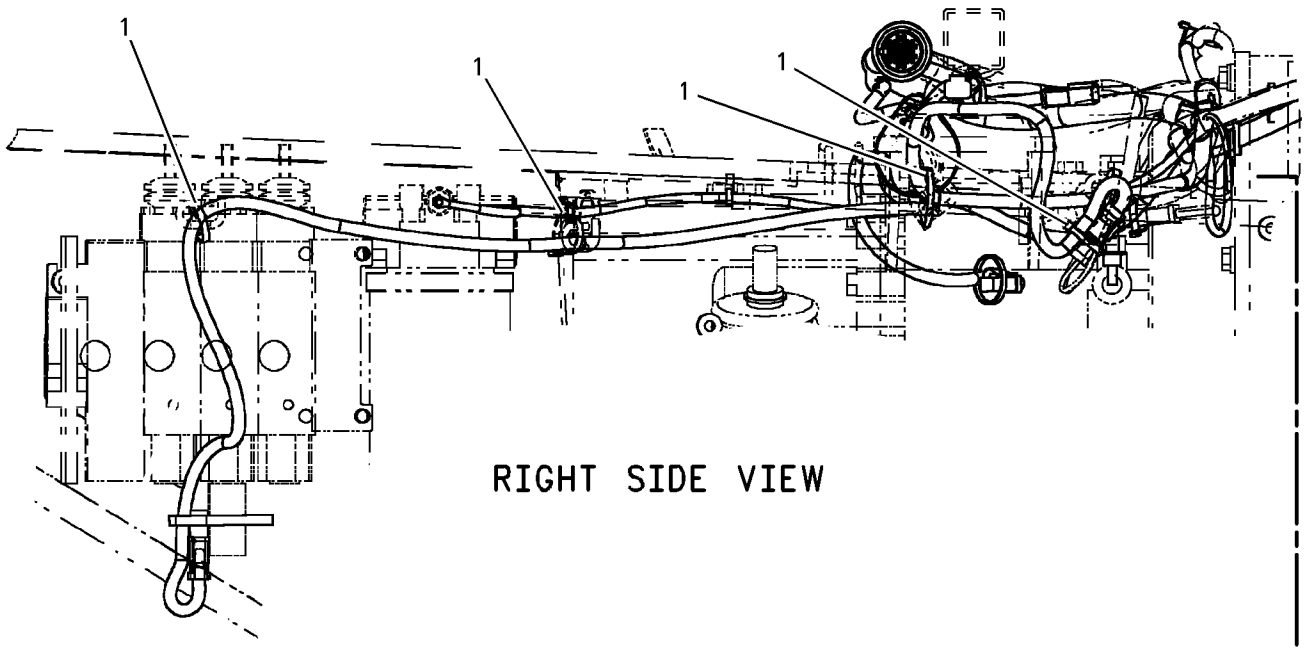

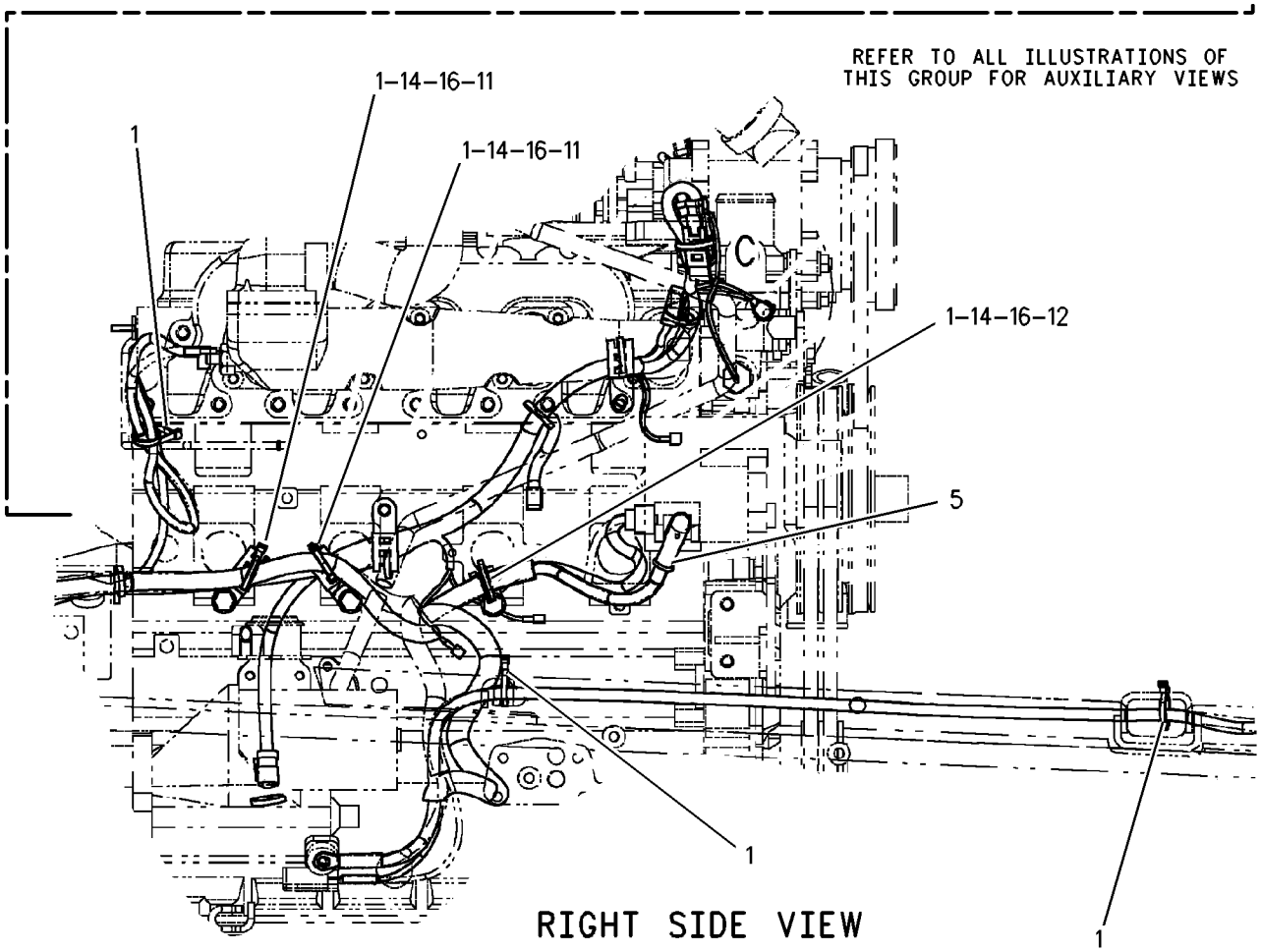

GRAPHIC #3

g00854848

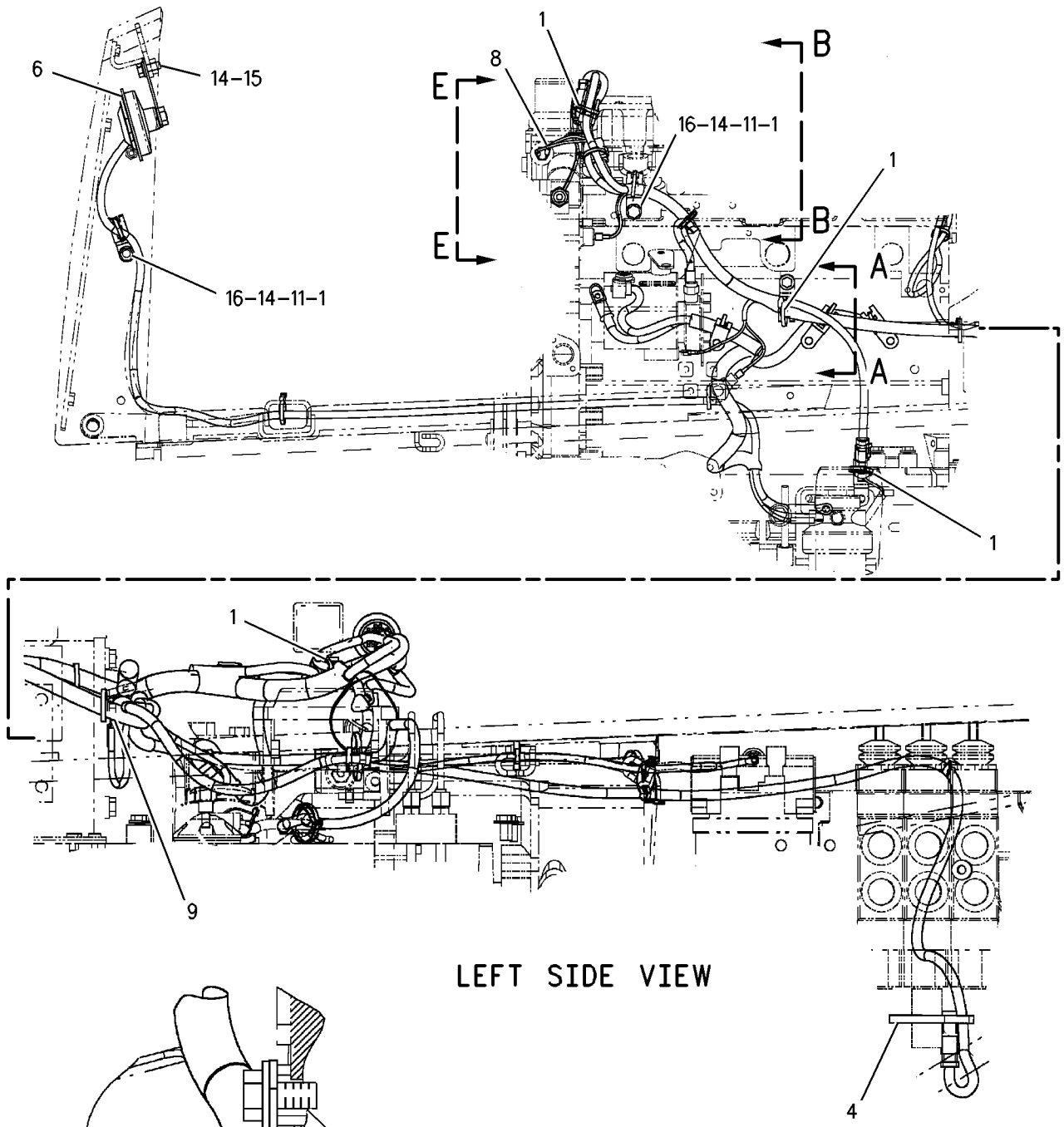

GRAPHIC #4 g00854556

ELECTRICAL AND STARTING SYSTEM

250-2648 WIRING GP-PLATFORM

S/N:JRB00485-UP

PART OF 228-2807 CHASSIS AR

SMCS-1408 **i01669863**

NOTE	REF NO	GRAPHIC REF	PART NUMBER	QTY	PART NAME 1 2 3 4 5 6 (PRODUCT LEVEL)	SEE PAGE
D	1	3	**5P-5816**		SEAL (0.035M)	
D	2	2	**5P-7657**	3	SEAL (0.032M)	
	3	1,2,3	**3S-2093**	36	STRAP-CABLE	
	4	3	**6K-0806**	8	STRAP-CABLE	
	5	2	**7G-1060**	1	STRAP AS-GROUND	
	6	3	**7T-4848**	1	FLASHER AS-SIGNAL	
	7	2	**249-7441**	1	CABLE AS	
		2	**1S-7251**	2	TERMINAL-RING (FOR 1/2 IN BOLT)	
		2	**5P-0747**	1	CABLE (00GA)(BLACK) (40CM)	
B	8	3	**8T-8737**	8	PLUG-SEAL	
	9	1	**128-4249**	2	LOCKWASHER	
	10	2	**164-1056**	1	CHANNEL	
	11	1	**249-7445**	1	HARNESS AS-PLATFORM	
		1	**102-8802**	1	KIT-RECEPTACLE (2 PIN)	
					(KIT SERVICES RECEPTACLE AS AND WEDGE)	
		1	**102-8803**	1	KIT-RECEPTACLE (3 PIN)	
					(KIT SERVICES RECEPTACLE AS AND WEDGE)	
		1	**102-8804**	1	KIT-RECEPTACLE (4 PIN)	
					(KIT SERVICES RECEPTACLE AS AND WEDGE)	
		1	**102-8805**	2	KIT-RECEPTACLE (6 PIN)	
					(KIT SERVICES RECEPTACLE AS AND WEDGE)	
		1	**102-8806**	1	KIT-RECEPTACLE (8 PIN)	
					(KIT SERVICES RECEPTACLE AS AND WEDGE)	
		1	**102-8801**	1	KIT-RECEPTACLE (12 PIN)	
					(KIT SERVICES RECEPTACLE AS AND WEDGE)	
		1	**7R-2750**	40	SEAL-CONNECTOR	
		1	**155-2265**	1	KIT-CONNECTING PLUG (8 PIN)	
					(KIT SERVICES PLUG AS AND WEDGE)	
		1	**155-2260**	4	KIT-CONNECTING PLUG (3 PIN)	
					(KIT SERVICES PLUG AS AND WEDGE)	
		1	**155-2270**	6	KIT-CONNECTING PLUG (2 PIN)	
					(KIT SERVICES PLUG AS AND WEDGE)	
		1	**155-2271**	3	KIT-CONNECTING PLUG (4 PIN)	
					(KIT SERVICES PLUG AS AND WEDGE)	
		1	**155-2274**	1	KIT-CONNECTING PLUG (6 PIN)	
					(KIT SERVICES PLUG AS AND WEDGE)	
		1	**155-2265**	1	KIT-CONNECTING PLUG (8 PIN)	
					(KIT SERVICES PLUG AS AND WEDGE)	
		1	**155-2255**	2	KIT-CONNECTING PLUG (12 PIN)	
					(KIT SERVICES PLUG AS AND WEDGE)	
		1	**196-2383**	2	KIT-PLUG	
					(KIT SERVICES PLUG AS AND WEDGE)	
		1	**196-2384**	2	KIT-PLUG	
					(KIT SERVICES PLUG AS AND WEDGE)	
		1	**177-9648**	2	KIT-CONNECTING PLUG (2 PIN)	
					(KIT SERVICES PLUG AS AND WEDGE)	
		1	**196-2385**	1	KIT-PLUG	
					(KIT SERVICES PLUG AS AND WEDGE)	
		1	**196-2386**	1	KIT-PLUG	
					(KIT SERVICES PLUG AS AND WEDGE)	
	12	1	**249-7456**	1	HARNESS AS (BATTERY POWER)	
	13	1	**184-6430**	1	COVER	
	14	1	**210-6059**	1	BLOCK AS-FUSE	
		1	**113-8490**	5	FUSE (10 AMP)	
		1	**113-8491**	3	FUSE (15 AMP)	
		1	**113-8492**	2	FUSE (20 AMP)	

250-2648 WIRING GP-PLATFORM *(contd.)*

i01669863

NOTE	REF NO	GRAPHIC REF	PART NUMBER	QTY	PART NAME 1 2 3 4 5 6 (PRODUCT LEVEL)	SEE PAGE
		1	**141-2759**	3	FUSE (5 AMP)	
		1	**146-9439**	3	RELAY AS (12 VOLT)	
	15	1	**210-6060**	1	BLOCK AS-FUSE	
		1	**113-8490**	1	FUSE (10 AMP)	
		1	**113-8491**	1	FUSE (15 AMP)	
		1	**141-2759**	2	FUSE (5 AMP)	
		1	**146-9439**	2	RELAY AS (12 VOLT)	
	16	1	**211-0052**	2	NUT	
M	17	3	**138-8454**	3	SCREW-TRUSS HEAD	
B	18	3	**102-8802**	4	KIT-RECEPTACLE (2 PIN)	
					(KIT SERVICES RECEPTACLE AS AND WEDGE)	
B	19	3	**102-8803**	1	KIT-RECEPTACLE (3 PIN)	
					(KIT SERVICES RECEPTACLE AS AND WEDGE)	
B	20	3	**102-8804**	1	KIT-RECEPTACLE (4 PIN)	
					(KIT SERVICES RECEPTACLE AS AND WEDGE)	
	21	1,3	**4B-4863**	11	WASHER (4.7X11X1.2MM THK)(4B-4863)	
	22	2,3	**8T-4121**	7	WASHER-HARD (11X21X2.5MM THK)	
M	23	3	**8T-4133**	2	NUT (M10X1.5 THD)	
M	24	2	**8T-4136**	2	BOLT (M10X1.5X25MM)	
M	25	2	**8T-4137**	1	BOLT (M10X1.5X20MM)	
M	26	2	**8T-4171**	2	BOLT (M6X1X12MM)	
M	27	2	**8T-4179**	1	BOLT (M12X1.75X20MM)	
	28	2	**8T-4205**	2	WASHER-HARD (7.2X14.5X2MM THK)	
	29	2	**8T-4223**	1	WASHER-HARD (13.5X25.5X3MM THK)	
M	30	1	095-0733	8	SCREW-MACHINE	
	31	1	**8Y-7833**	**1**	WIRE AS	

B-USE AS REQUIRED
D-ORDER BY THE METER
M-METRIC PART

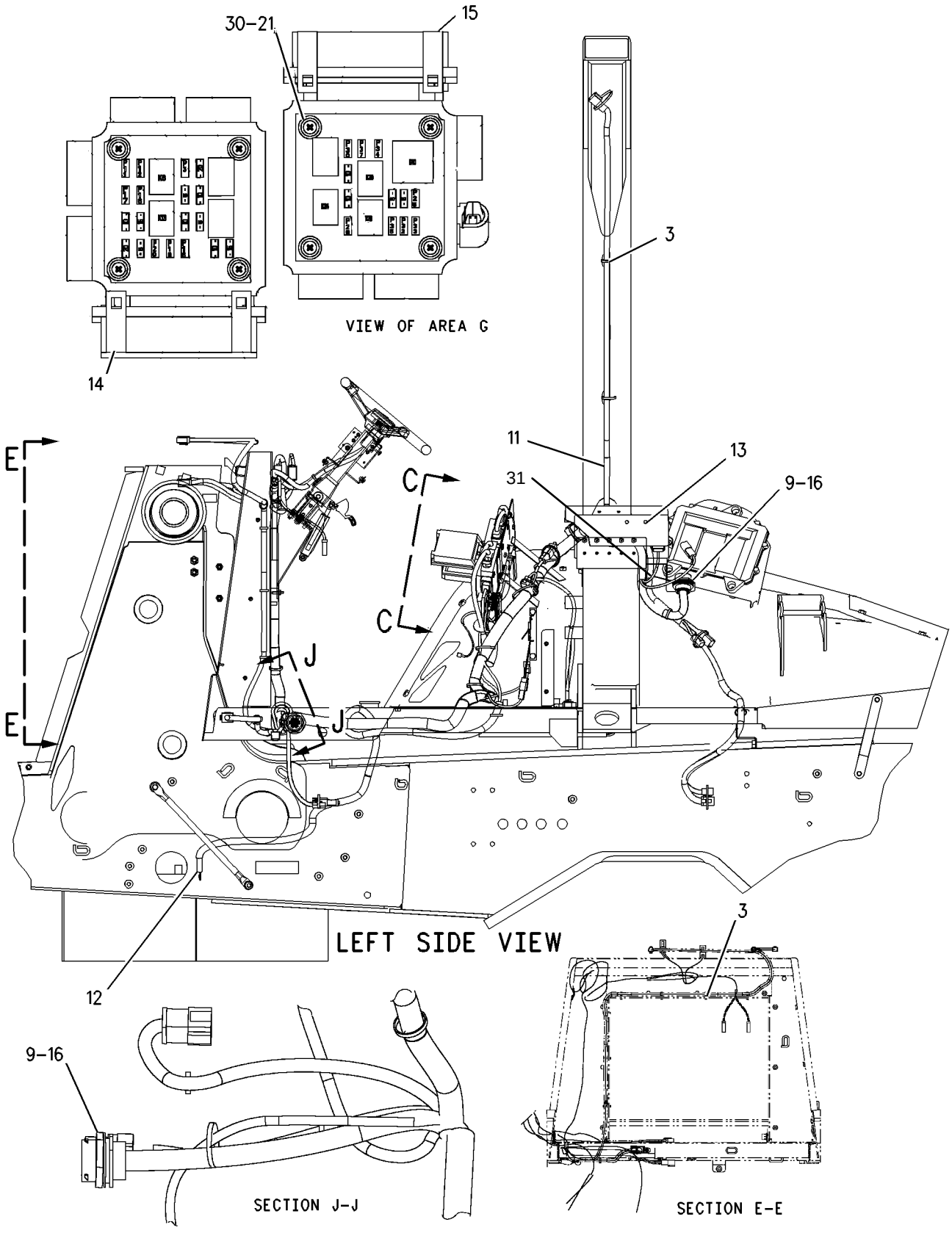

GRAPHIC #1 g00830817

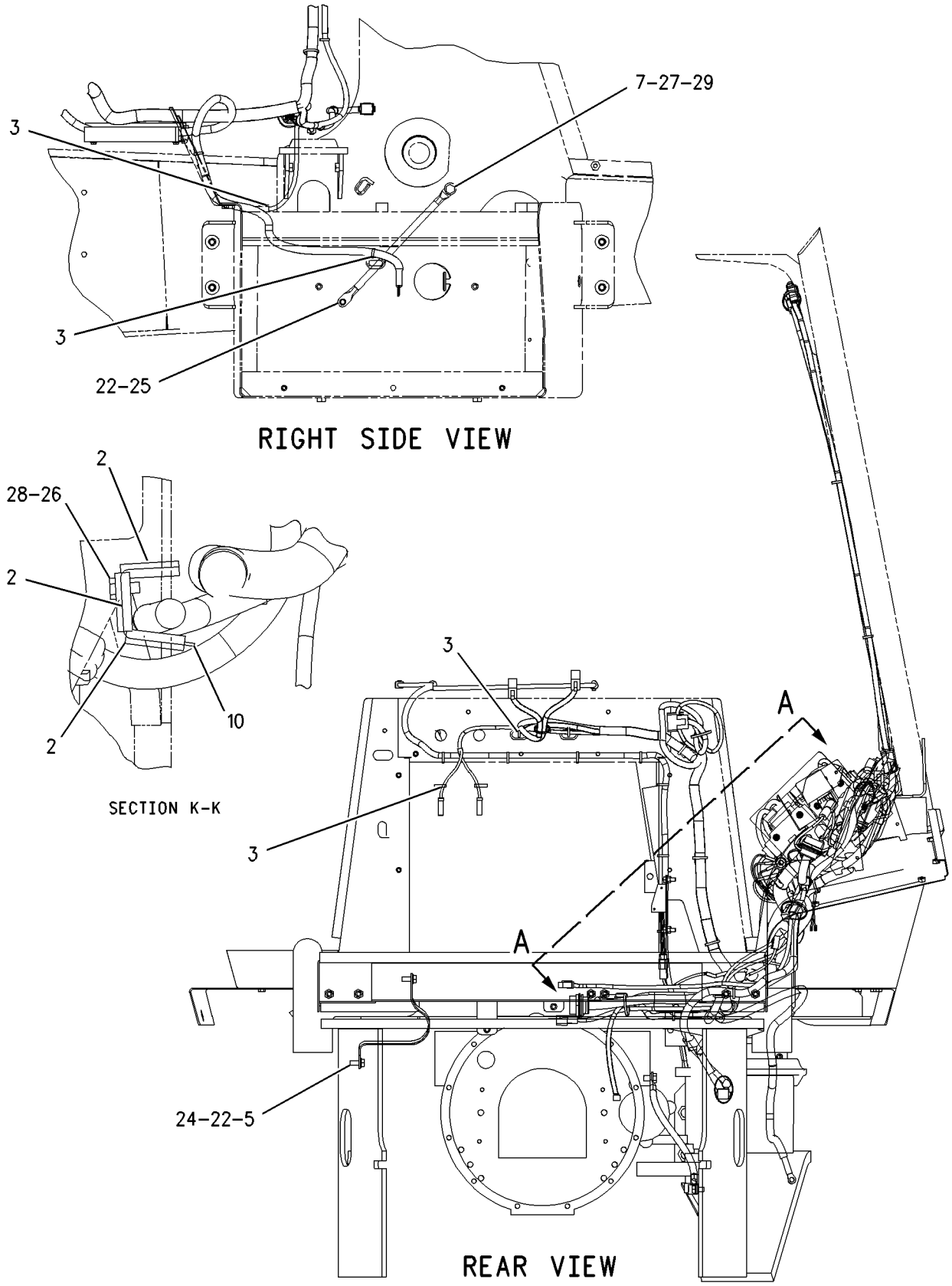

GRAPHIC #2 g00830912

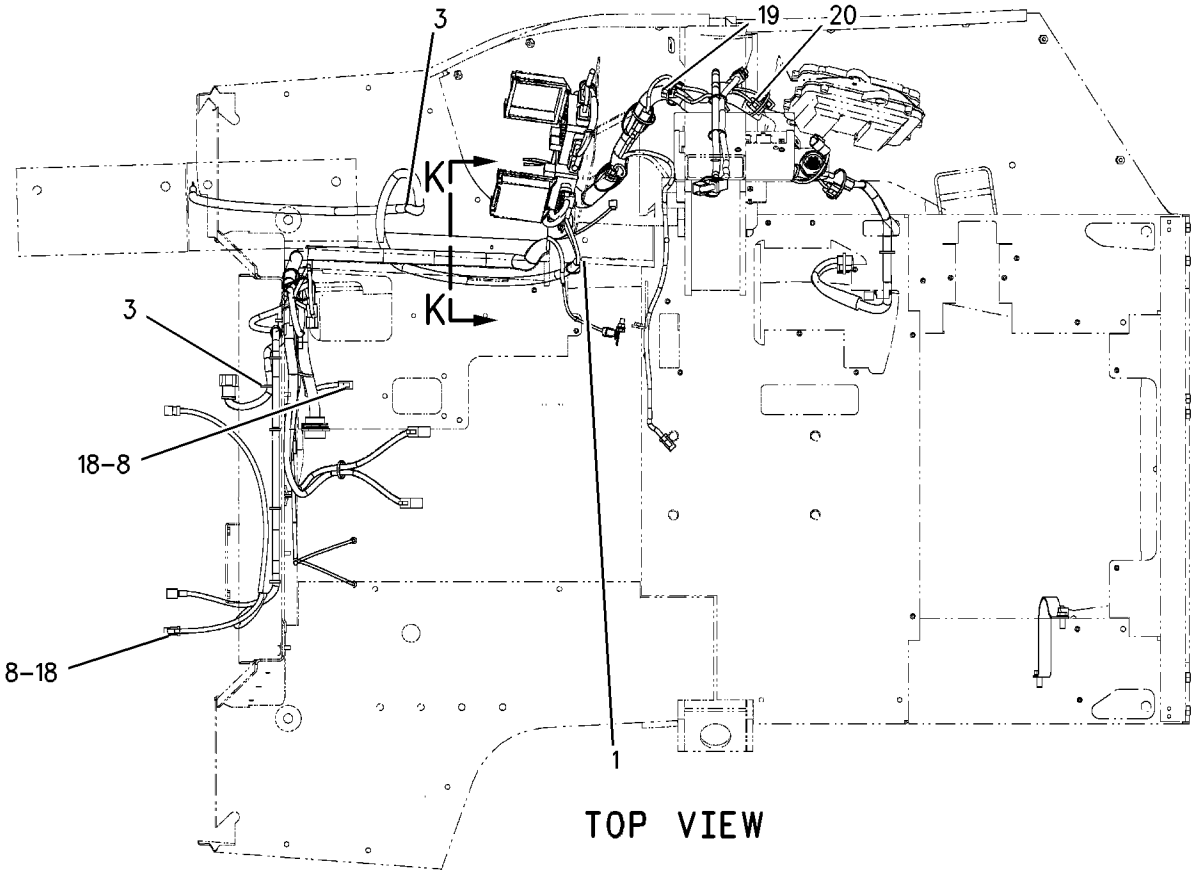

TOP VIEW

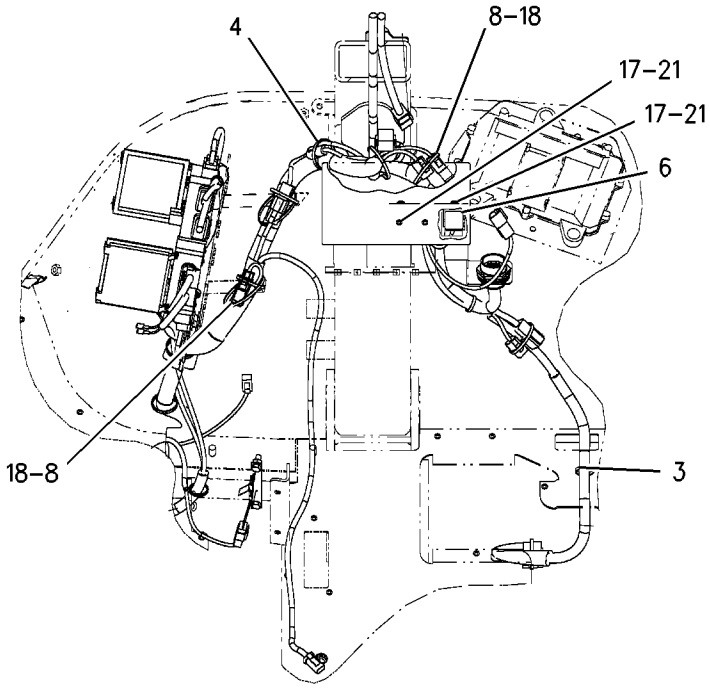

SECTION A-A

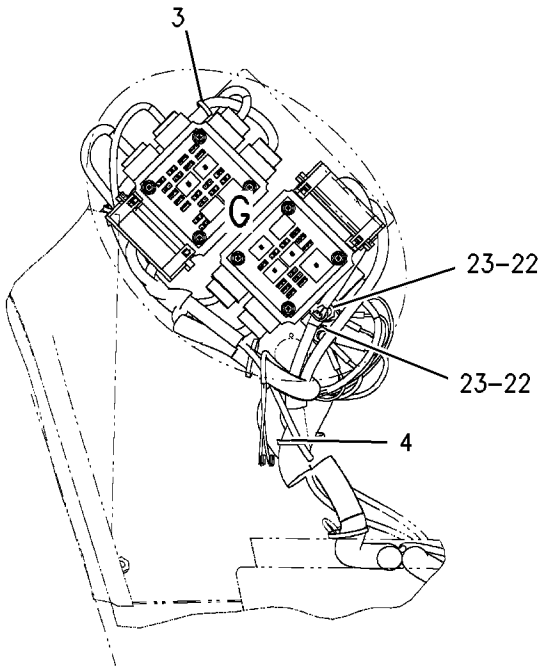

SECTION C-C

GRAPHIC #3 g00830896

250-2650 WIRING GP-REAR

S/N:JRB00255-UP

PART OF 236-9141 DRIVE AR

SMCS-1408 **i01670257**

NOTE	REF NO	GRAPHIC REF	PART NUMBER	QTY	PART NAME 1 2 3 4 5 6 (PRODUCT LEVEL)	SEE PAGE
B	1	1,2	**3S-2093**	8	STRAP-CABLE	
	2	1,2	**7K-1181**	6	STRAP-CABLE	
B	3	2	**8T-8737**	8	PLUG-SEAL	
	4	2	**9U-2277**	1	CLIP AS	
B	5	2	**155-8522**	1	MOUNT	
	6	1	**249-7470**	1	HARNESS AS (REAR END)	
		1	**102-8803**	1	KIT-RECEPTACLE (3 PIN)	
					(KIT SERVICES RECEPTACLE AS AND WEDGE)	
		1	**102-8806**	1	KIT-RECEPTACLE (8 PIN)	
					(KIT SERVICES RECEPTACLE AS AND WEDGE)	
		1	**155-2270**	1	KIT-CONNECTING PLUG (2 PIN)	
					(KIT SERVICES PLUG AS AND WEDGE)	
		1	**155-2271**	1	KIT-CONNECTING PLUG (4 PIN)	
					(KIT SERVICES PLUG AS AND WEDGE)	
		1	**155-2274**	1	KIT-CONNECTING PLUG (6 PIN)	
					(KIT SERVICES PLUG AS AND WEDGE)	
	7	2	**169-0597**	1	SWITCH AS (SIDE SHIFT LOCK)	
		2	**111-7899**	1	GASKET	
	8	2	**096-4415**	1	LOCKWASHER	
BM	9	2	**150-4086**	1	SCREW (M4X.7X16MM)	
B	10	2	**102-8802**	4	KIT-RECEPTACLE (2 PIN)	
					(KIT SERVICES RECEPTACLE AS AND WEDGE)	
	11	2	**4P-7428**	1	CLIP	
	12	2	**4P-7581**	2	CLIP	
BM	13	2	**8T-2659**	1	LOCKNUT (M4X0.7 THD)	
	14	2	**8T-4121**	2	WASHER-HARD (11X21X2.5MM THK)	
M	15	2	**8T-4133**	2	NUT (M10X1.5 THD)	
M	16	2	**8T-4137**	1	BOLT (M10X1.5X20MM)	
M	17	2	**8T-4195**	1	BOLT (M10X1.5X30MM)	

B-USE AS REQUIRED
M-METRIC PART

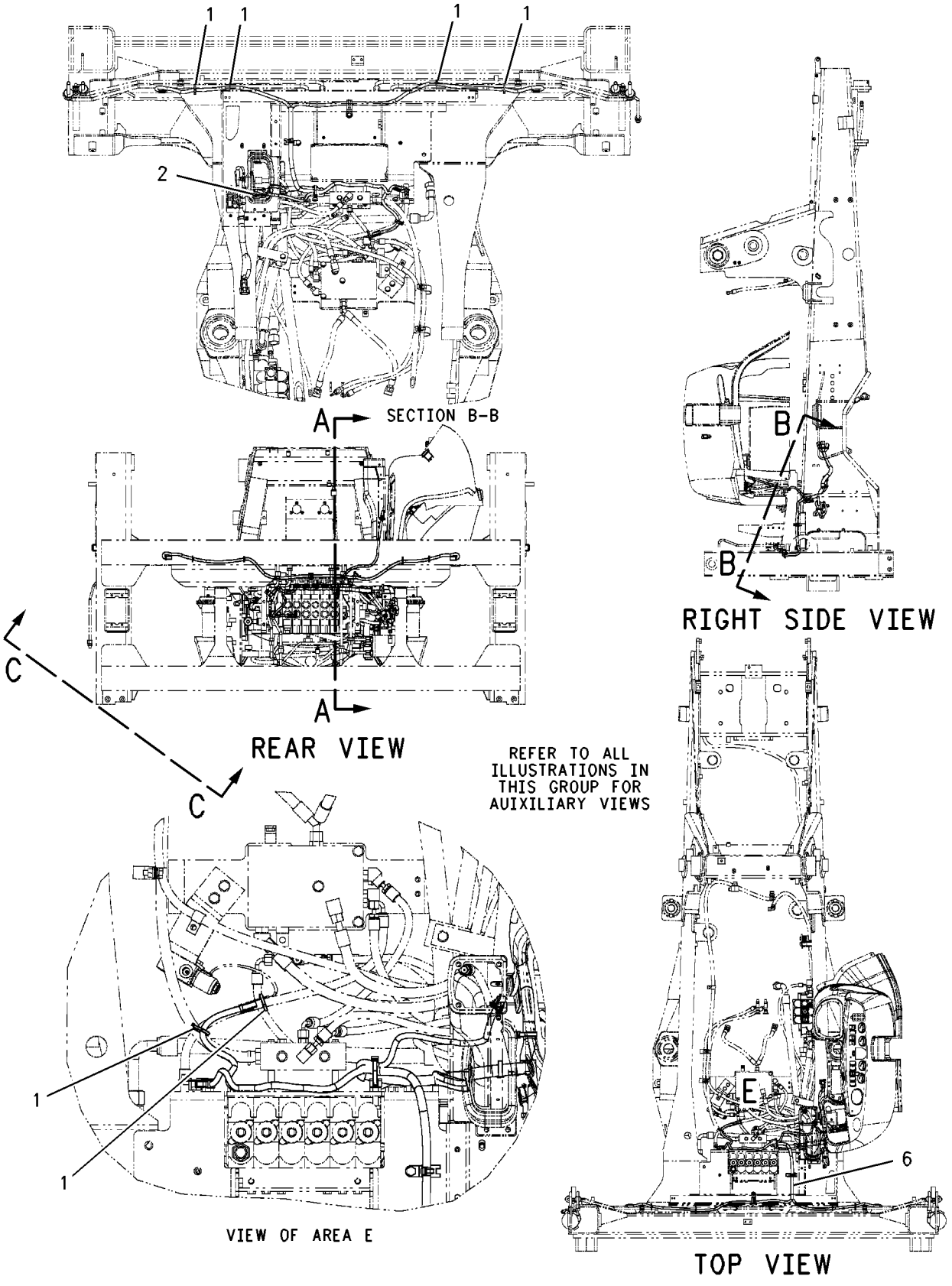

GRAPHIC #1 g00863376

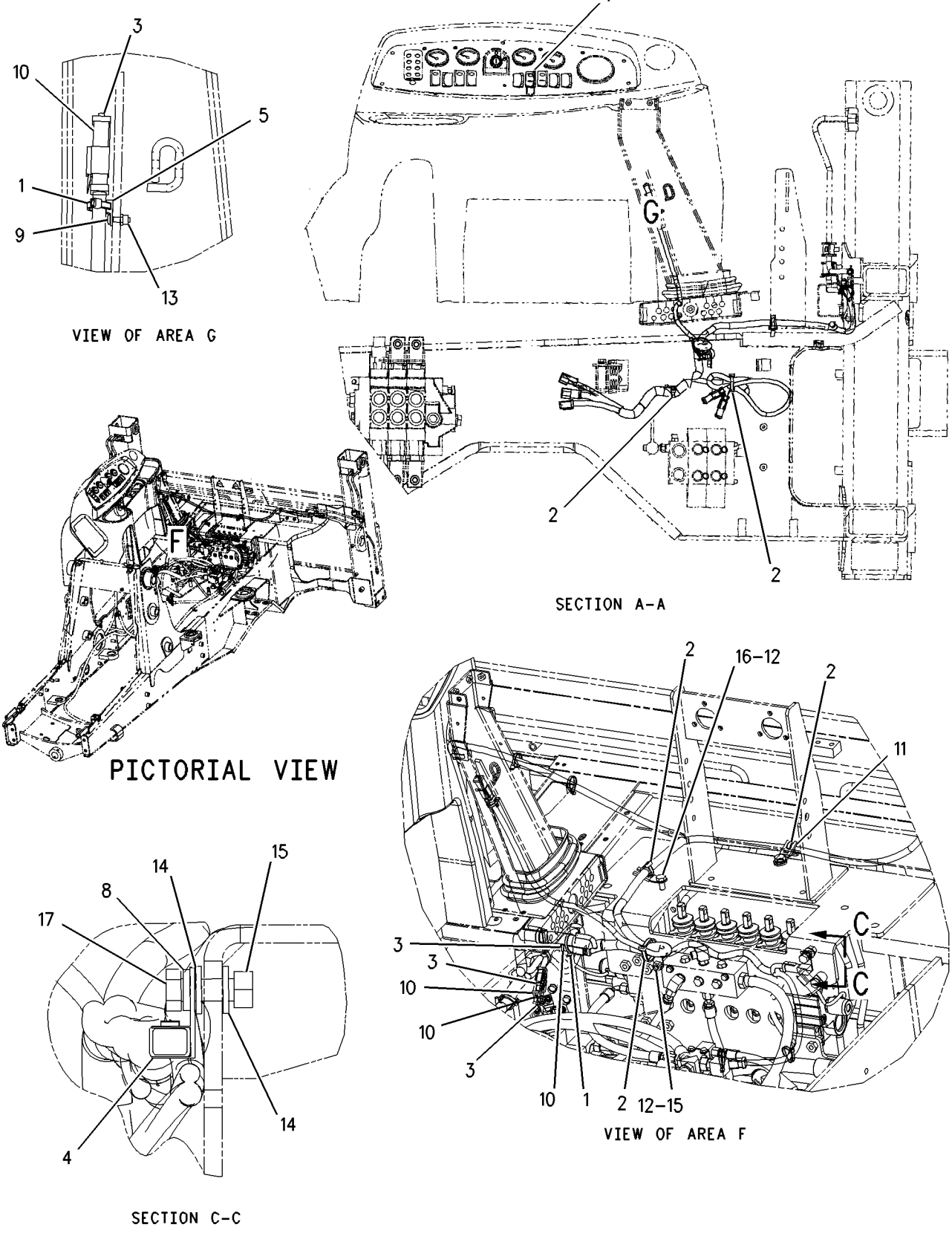

GRAPHIC #2 g00863287

ELECTRICAL AND STARTING SYSTEM

239-0842 SPEED SENSOR GROUP

S/N:JRB00255-UP

NOTE	REF.NO.	GRAPHIC REF	PART NUMBER	QTY	PART NAME 1 2 3 4 5 6 (PRODUCT LEVEL)	SEE PAGE
	1	1	239-0843	1	BRACKET ASSY	
	2	1	239-0844	1	SENSOR	
	3	1	8T-4198	2	BOLT	
	4	1	8T-4121	2	WASHER-HARD	

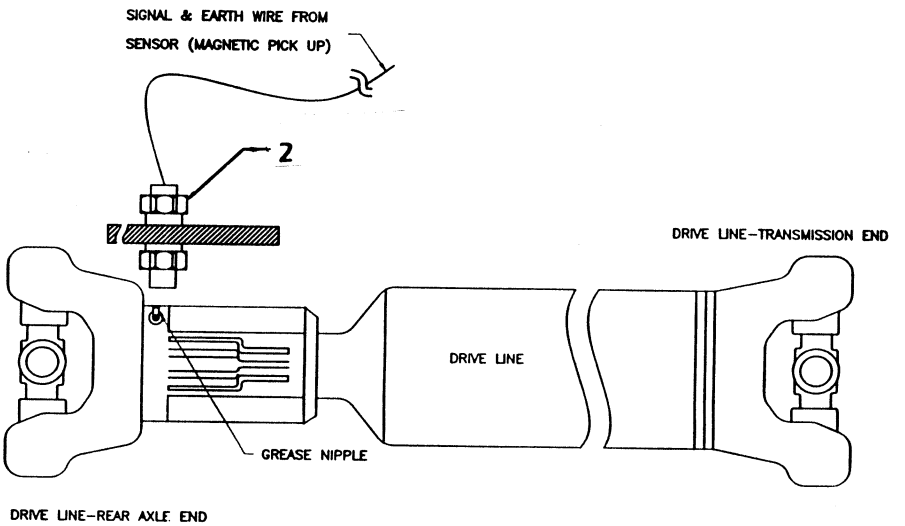

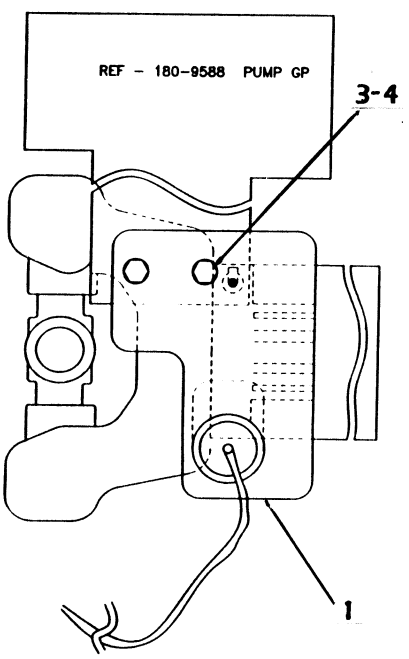

GRAPHIC # 1

D:\424\28042

MEMORANDA

MEMORANDA

POWER TRAIN

168-7447 AXLE GP-REAR

S/N : JRB00324-UP

PART OF 236-9141 DRIVE AR

NOTE	REF NO	GRAPHIC REF	PART NUMBER	QTY	PART NAME 1 2 3 4 5 6 (PRODUCT LEVEL)	SEE PAGE
			168-7447	1	AXLE AS-REAR	
	1	1	7X-2559	26	BOLT	
	2	1	230-6115	1	BRAKE AS	
	3	2	152-6144	1	PLUG-MAGNETIC	
	4	1	197-9155	1	BREATHER	
	5	1	198-7811	2	DOWEL	
	6	1	219-8799	2	SEAL-O-RING	
	7	2	199-0639	4	SCREW	
	8	1	199-0641	2	BOLT	
	9	1	199-0652	2	CIRCLIP-PIN	
	10	2	199-0654	2	CIRCLIP-HUB	
	11	1	199-0658	2	O-RING	
	12	2	199-0662	2	O-RING	
	13	1	199-0668	2	BUSH	
	14	1	199-0670	2	BLEED SCREW	
	16	1	199-0676	2	SPRING	
	17	1	199-0679	2	BOLT	
	18	1	199-0706	1	PISTON	
	19	2	199-0750	6	BRAKE DISC	
	20	2	199-0757	2	HUB-BRAKE	
	21	1	9S-8004	1	PLUG	
	22	1	3J-1907	1	O-RING(274246)	
	23	1	174-4647	2	BUSHING-SLEEVE	
	24	2	199-0786	8	BRAKE COUNTER DISC	
	25	1	199-0787	6	PIN	
	26	2	226-4367	2	SPACER	
	27	2	226-4366	2	NUT-RING	
	28	2	226-4370	6	BOLT LOCKING	
	29	2	210-3097	2	CIRCLIP	
	30	1	210-3098	2	SEAL-WHEEL	
	31	2	210-3099	2	SLEEVE-SPLIT	
	32	1	210-3100	2	BUSHING-WHEEL	
	33	1	226-4375	1	HOUSING-LH	
	34	1	226-4376	1	HOUSING-RH	
	35	1	210-3106	1	BRACKET-SUPPORT	
	36	2	231-0698	2	SHAFT-AXLE	
	37	2	210-7305	2	SHAFT	
	38	1	212-5713	2	PLUG	
	38A	1	174-4650	1	WASHER	
	38B	1	217-2914	1	COVER	
	38C	1	219-8802	2	BOLT	
	38D	1	219-8839	1	ROD	
	38E	2	226-4365	2	RETAINING TAB	
	38F	1	231-0699	1	COVER DIFF.LOCK	
			216-1608	2	RING GEAR AS	
	39	2	199-0768	2	HUB	
	39A	2	210-7302	2	RING GEAR	
	40	2	199-0778	2	SNAP RING	
			216-1609	2	WHEEL FLANGE AS	
	41	2	216-1602	2	WHEEL FLANGE	
	42	2	216-3939	20	STUD	
	43	2	210-5932	4	BEARING	
	44	2	157-0739	2	SEAL-LIP TYPE	
			216-1610	2	PLANET GEAR AS	
	45	2	199-0669	2	THRUST PLUG	
	46	2	199-0760	6	BEARING-PLANET	
	47	2	207-4257	12	SNAP RING	

POWER TRAIN

168-7447 AXLE GP - REAR

S/N : JRB00324-UP
PART OF 236-9141 DRIVER AR

NOTE	REF NO	GRAPHIC REF	PART NUMBER	QTY	PART NAME 1 2 3 4 5 6 (PRODUCT LEVEL)	SEE PAGE
	48	2	207-5962	12	THRUST WASHER	
	49	2	213-4222	6	THRUST WASHER	
	50	2	216-1601	2	CARRIER	
	51	2	216-1606	6	GEAR PLANET	
	52	2	199-0653	6	PLANET PIN	
C			216-1611	1	CENTER SECTION AS	
	53	1	198-7811	2	DOWEL	
	54	1	199-0646	4	BOLT	
	55	3	199-0656	2	BEARING	
B	56	3	199-0663	1	O-RING	
	57	3	199-0675	2	BEARING NUT	
B	58	3	199-0678	2	WASHER-SPACER	
B	59	3	199-0680	1	SPACER	
	60	3	199-0684	1	SHIM-2.5mm	
			199-0685	1	SHIM-2.6mm	
			199-0686	1	SHIM-2.7mm	
			199-0687	1	SHIM-2.8mm	
			199-0688	1	SHIM-2.9mm	
			199-0689	1	SHIM-3.0mm	
			199-0690	1	SHIM-3.1mm	
			199-0691	1	SHIM-3.2mm	
			199-0692	1	SHIM-3.3mm	
			199-0693	1	SHIM-3.4mm	
	61	3	199-0695	2	SCREW	
	62	3	199-0697	1	PINION SEAL	
	63	1	199-0774	1	FORK	
B	64	3	199-0785	1	WASHER	
	65	3	199-0858	2	LOCKING PLATE	
	66	1	210-3103	1	HOUSING-CENTER	
B	67	3	210-3108	1	BEVEL GEAR SET	
			210-6027	1	PINION	
			210-6032	1	BEVEL GEAR	
B	68	3	212-5702	1	NUT	
	69	3	212-5704	1	BEARING	
	70	3	212-5708	1	BEARING	
A	71	3	216-1600	1	DISC-BRAKE	
			216-1607	1	DIFFERENTIAL	
	72	3	199-0659	4	O-RING	
	73	3	199-0673	2	BUSHING	
	74	3	199-0694	12	BOLT	
A	75	3	199-0709	2	THRUST WASHER	
A	76	3	199-0714	1	PIN	
	77	3	199-0754	1	DIFF.HOUSING	
	78	3	199-0755	2	WASHER	
	79	3	199-0756	1	COLLAR	
	80	3	199-0784	1	DIFF.CASE	
			199-0790	1	DIFF.GP	
A	81	3	199-0708	2	SPIDER GEAR	
A	82	3	199-0715	1	SIDE GEAR	
A	83	3	199-0789	1	SIDE GEAR	

168-7447 AXLE GP - REAR

S/N : JRB00324-UP
PART OF 236-9141 DRIVER AR

NOTE	REF NO	GRAPHIC REF	PART NUMBER	QTY	PART NAME 1 2 3 4 5 6 (PRODUCT LEVEL)	SEE PAGE
	84	3	199-0807		PIN	
A	85	3	199-0808		PIN	
	86	3	216-1605		PIN-RETAINER	
	87	1	216-1612		BRAKE CYL.AS-RH	
			199-0753		BRAKE CYLINDER-RH	
	88	1	216-1613		BRAKE CYL.AS-LH	
		1	199-0805		BRAKE CYLINDER-LH	
			THE FOLLOWING PARTS ARE COMMON FOR BOTH RH & LH BRAKE CYLINDERS			
	89	2	199-0640		BOLT	
	90	2	199-0645		BOLT-BRAKE	
	91	2	199-0672		SPACER-BRAKE	
	92	2	199-0681		WASHER	
	93	2	199-0700		O-RING-OUTER	
	94	2	199-0701		BRAKE-COVER	
	95	2	199-0702		SPRING-INNER	
	96	2	199-0703		SPRING-OUTER	
	97	2	199-0752		PISTON-BRAKR	
	98	2	199-0759		O-RING-INNER	
	99	2	212-5712		BUSHING-BRAKE	

NOTE A: ITEMS MARKED WITH 'A' ARE INCLUDED IN DIFFERENTIAL KIT P.NO.217-2345
NOTE B: ITEMS MARKED WITH 'B' ARE INCLUDED IN BEVEL GEAR KIT P.NO.217-2346
NOTE C: USE SEALANT GASKET P.NO.694707 TO INTERFACE OF CENTRE SECTION ASSY AND AXLE HOUSIN

168-7447 AXLE GP-REAR (Contd.)

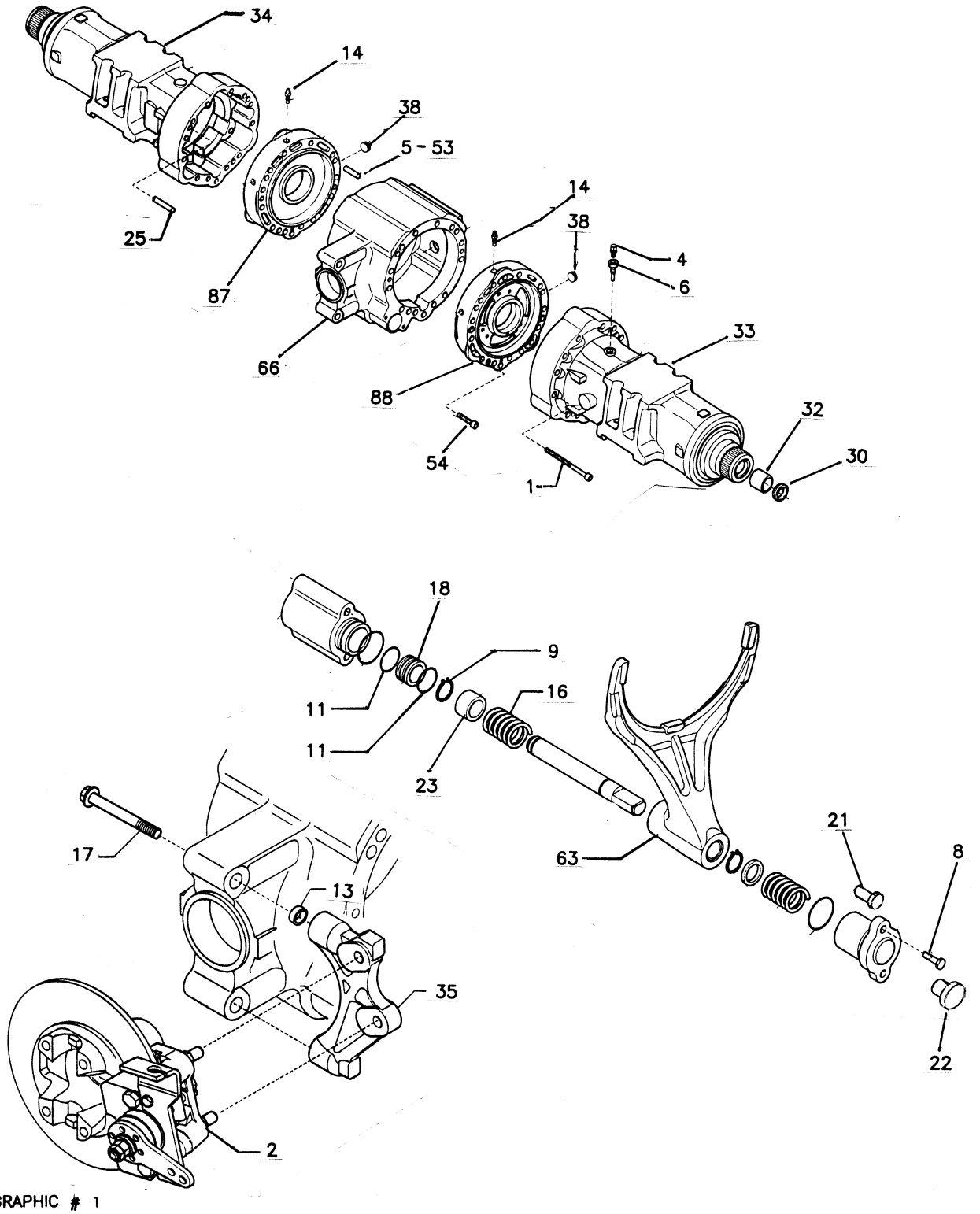

GRAPHIC # 1

D:\424\28997

168-7447 AXLE GP-REAR (Contd.)

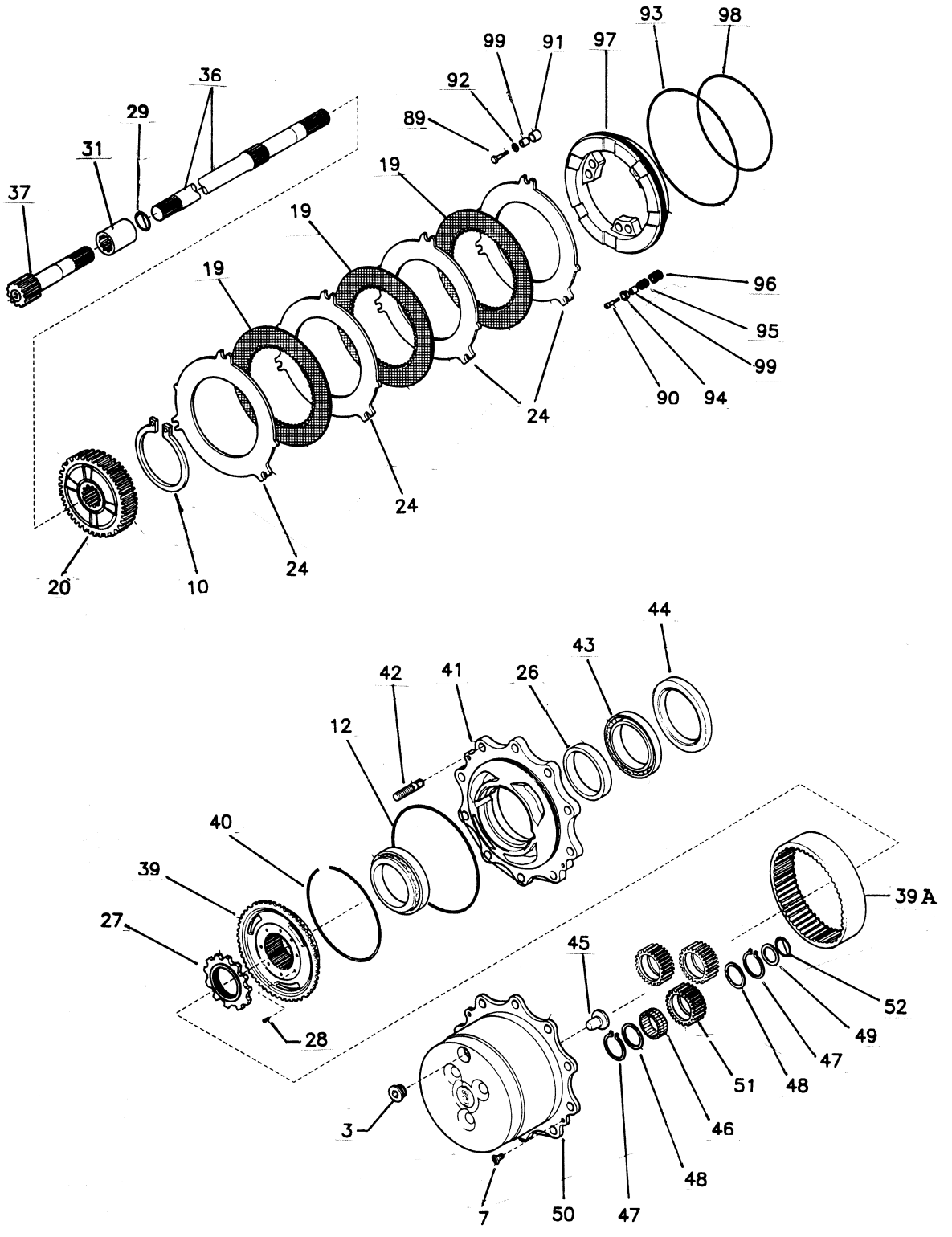

GRAPHIC # 2

D:\424\28997

168-7447 AXLE GP-REAR (Contd.)

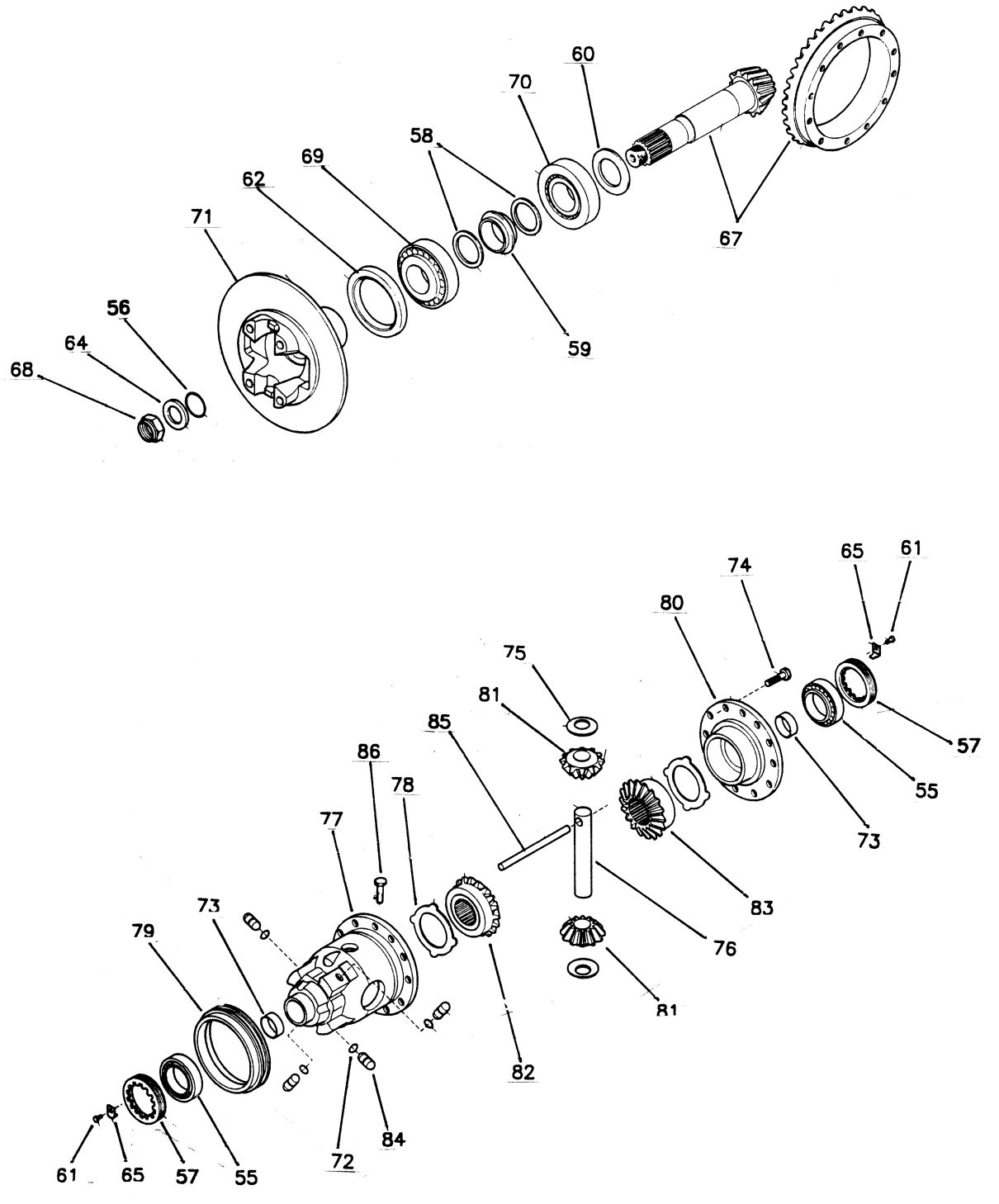

GRAPHIC # 3

D:\424\28997

POWER TRAIN

235-6520 WHEEL & TIRE–REAR

S/N:JRB00255-UP

SMCS-4200, 4201, 4203 **i01498022**

NOTE	REF NO	GRAPHIC REF	PART NUMBER	QTY	PART NAME 1 2 3 4 5 6 (PRODUCT LEVEL)	SEE PAGE
			195-6348	**2**	WHEEL AS	
A			**235-5998**	**2**	TIRE	
			235-5999	**2**	TUBE	
			201-1916	1	MTG. GP WHEEL	
			201-1919	**20**	NUT	
			8T-5439	**20**	HARD WASHER	

NOTE A : USE PART NUMBER 249-7471 FOR MACHINES FITTED WITH MRF INDUSTRIAL TIRES AS OPTIONAL ATTACHMENT.

228-2813 WHEEL & TIRE - REAR(HEAVY DUTY)

S/N:JRB00255-UP
AN ATTACHMENT

NOTE	REF NO	GRAPHIC REF	PART NUMBER	QTY	PART NAME 1 2 3 4 5 6 (PRODUCT LEVEL)	SEE PAGE
			228-2815	2	TIRE (14X25)	
			250-4146	2	TUBE	
			251-6076	2	FLAP	
			201-1916	**1**	MTG. GP-WHEEL	
			201-1919	20	NUT	
			8T-5439	20	HARD WASHER	
			252-9760	2	RIM GP-REAR	
A			**228-2814**	2	RIM GP (10X25)	
			250-4147	2	RIM AS	
			250-4148	2	DRIVER	
			250-4149	2	FLANGE	
			250-4150	2	LOCK RING	
				(OR)		
A			**252-9761**	2	RIM GP	
			252-8871	2	RIM AS	
			250-4148	2	DRIVER AS	
			228-4149	2	FLANGE	
			228-4150	2	LOCK RING	

NOTE A -TWO TYPES OF RIM GROUP 228-2814 AND 252-9761 ARE USED IN REAR WHEEL GROUP. BEFORE ORDERING PARTS CHECK THE COMPONENTS.

POWER TRAIN

236-4725 WHEEL & TIRE—FRONT

S/N:JRB296-UP

SMCS-4200, 4201, 4203 **i01498022**

NOTE	REF NO	GRAPHIC REF	PART NUMBER	QTY	PART NAME 1 2 3 4 5 6 (PRODUCT LEVEL)	SEE PAGE
			236-4726	**2**	WHEEL & TIRE GP	
			195-6341	**2**	WHEEL AS	
			228-2790	**2**	TIRE-11L-16PR	
			236-4728	**2**	TUBE	
			201-1915	1	MTG.GP WHEEL	
			201-1919	16	NUT	
			8T-5439	16	HARD WASHER	

g00777374

MEMORANDA

POWER TRAIN

201-7648 MOUNTING GP - AXLES

S/N : JRB00255-UP
PART OF 236-9141 DRIVE AR

NOTE	REF NO	GRAPHIC REF	PART NUMBER	QTY	PART NAME 1 2 3 4 5 6 (PRODUCT LEVEL)	SEE PAGE
	1	1	1K-7082	1	WASHER	
	2	1	8T-8549	1	NUT	
	3	1	9R-9702	2	WASHER	
	4	1	112-9629	1	PIN	
	5	1	165-8996	2	WASHER-THRUST	
	6	1	089-7990	8	BOLT	
	7	1	8T-4131	8	NUT	
	8	1	8T-5041	1	BOLT	
	9	1	8T-5439	16	WASHER-HARD	

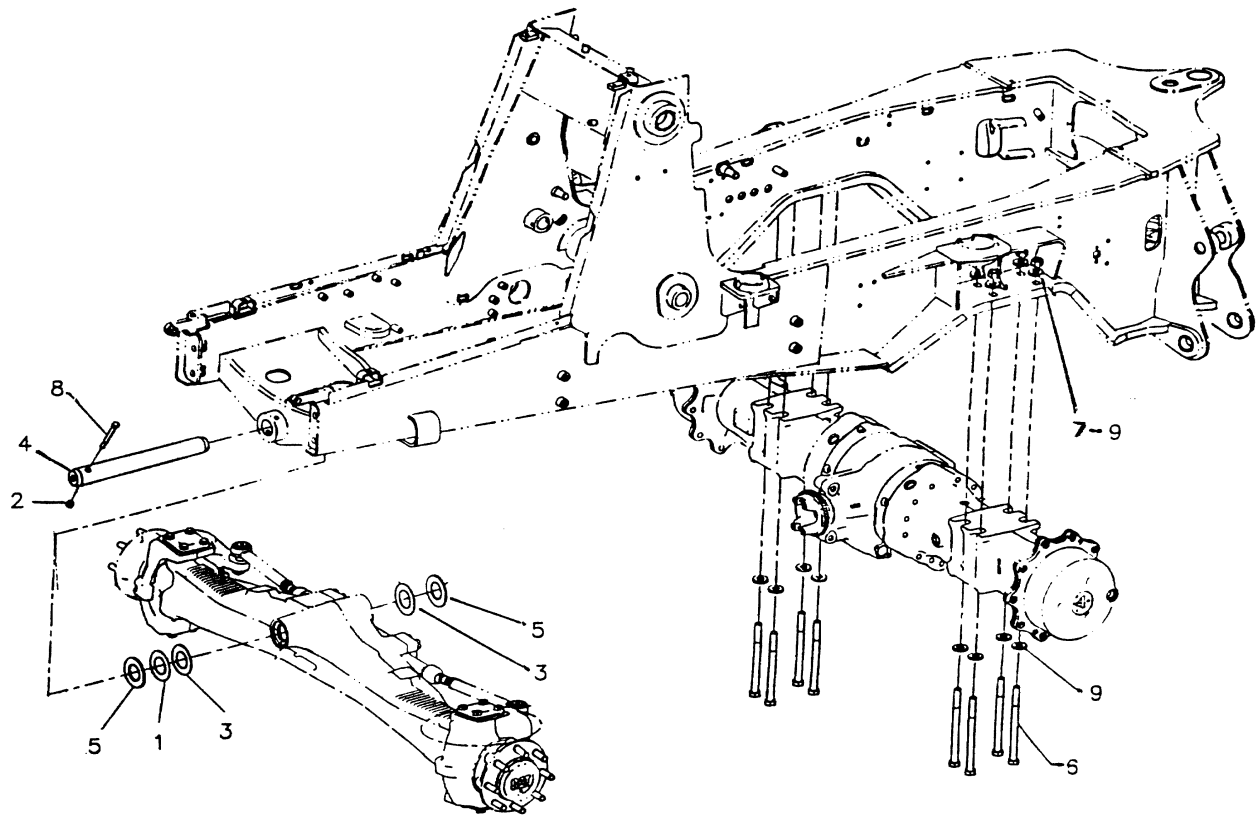

GRAPHIC #1

POWER TRAIN

164-1130 CONTROL GP-TRANSMISSION

S/N:JRB00255-UP

PART OF 228-2810 POWER TRAIN AR

SMCS-3065, 3156, 3167, 3168, 3209 **i01508748**

NOTE	REF NO	GRAPHIC REF	PART NUMBER	QTY	PART NAME 1 2 3 4 5 6 (PRODUCT LEVEL)	SEE PAGE
	1	1	**3E-3363**	1	KIT-RECEPTACLE (2 PIN)	
					(KIT SERVICES RECEPTACLE AS. AND WEDGE)	
	2	1	**3E-3365**	1	WEDGE-RECEPTACLE LOCK (2 PIN)	
	3	1	**9R-1766**	1	KNOB	
	4	1	**9R-1767**	1	BOOT	
	5	1	**9R-9868**	1	SWITCH AS-PUSH BUTTON	
		1	**186-3735**	2	PIN-CONNECTOR	
	6	1	**107-5591**	1	NUT-JAM (3/4-16 THD)	
	7	1	**164-1113**	1	PLATE	
	8	1	**164-1153**	1	KNOB	
	9	1	**164-1197**	1	ROD AS	
	10	1	**164-1365**	1	BOOT	
	11	1	**164-1368**	4	CLIP	
	12	1	**174-6640**	1	CONTROL GP-TRANSMISSION	
M	13	1	**095-0756**	4	SCREW-MACHINE	
	14	1	**8T-4223**	1	WASHER-HARD (13.5X25.5X3MM THK)	
M	15	1	**8T-4956**	1	BOLT (M12X1.75X35MM)	
	16	1	**8T-9501**	2	SCREW (10-16X.75 IN)	

M-METRIC PART

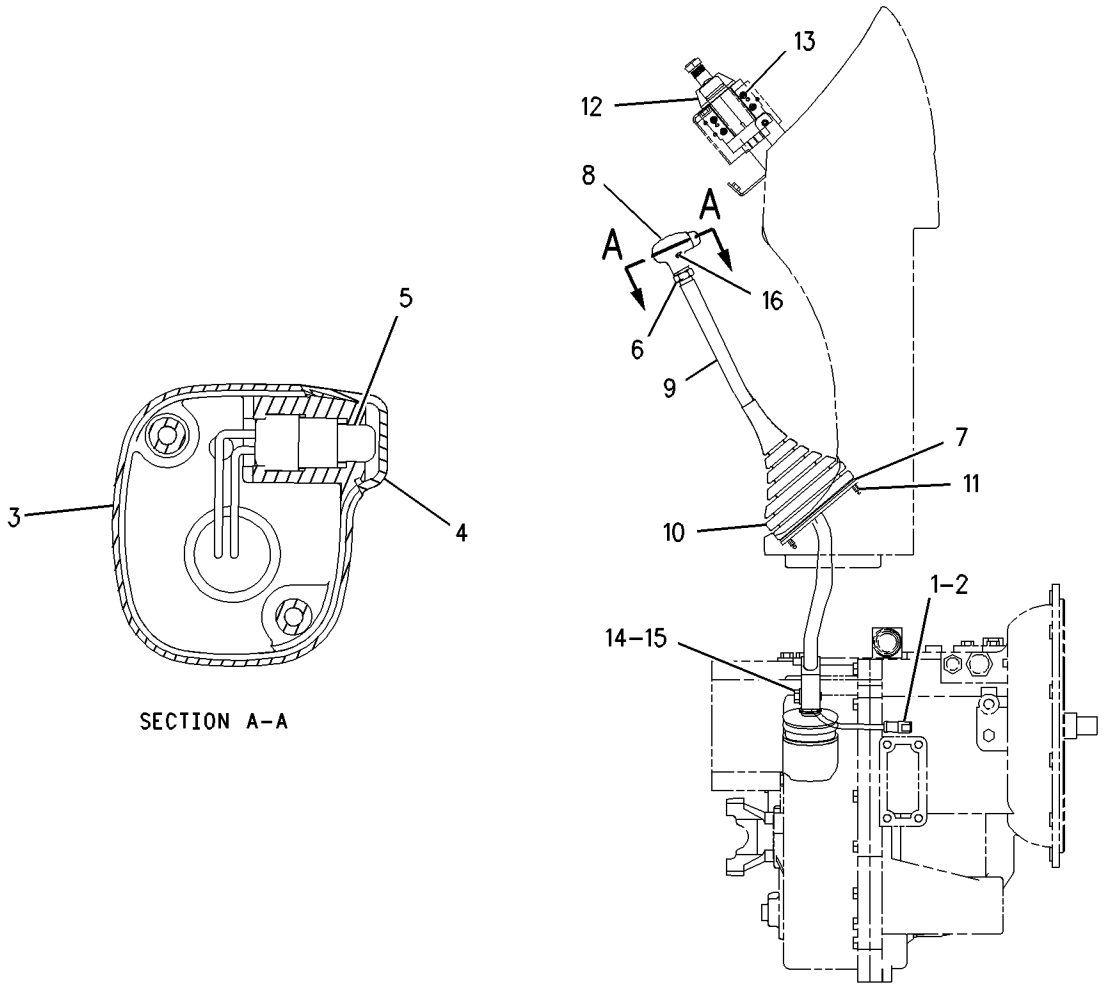

GRAPHIC #1 g00739090

POWER TRAIN

236-9141 DRIVE AR

S/N:JRB00255-UP

TWO WHEEL DRIVE, TWO WHEEL STEER, SIDESHIFT

SMCS-3278 **i01657282**

NOTE	PART NUMBER	QTY	PART NAME 1 2 3 4 5 6 (PRODUCT LEVEL)	SEE PAGE
Y	**250-2650**	1	WIRING GP-REAR	98
Y	**168-7447**	1	AXLE GP-REAR	104
Y	**201-7648**	1	MOUNTING GP-AXLE FRONT & REAR	113
Y	**189-1834**	1	AXLE GP-FRONT	140
Y	**202-5712**	1	LINES GP-STEERING	142
Y	**163-0059**	1	PUMP GP-METERING	144
	202-5710	1	FILM-IDENTIFICATION (FUSE)	
	202-5718	1	FILM-IDENTIFICATION (FUSE)	
Y	**185-9784**	1	MOUNTING GP-STABILIZER VALVE	236
Y	**202-6020**	1	CONTROL GP-BRAKE	134

Y-SEPARATE ILLUSTRATION

111-7907 DRIVE GP-FLEXIBLE COUPLING

S/N:JRB00301-UP

PART OF 185-7585 TRANSMISSION AR-DIRECT DRIVE

SMCS-3252 **i01053593**

NOTE	REF NO	GRAPHIC REF	PART NUMBER	QTY	PART NAME 1 2 3 4 5 6 (PRODUCT LEVEL)	SEE PAGE
M	1	1	**8T-4200**	8	BOLT (M8X1.25X16MM)	
M	2	1	**6V-8455**	6	BOLT (M10X1.5X16MM)	
	3	1	**117-9713**	1	PLATE-CONVERTER REINFORCEMENT	
	4	1	**8T-4224**	8	WASHER-HARD (2MM THK)	
	5	1	**111-7906**	1	PLATE-CONVERTER DRIVE	

M-METRIC PART

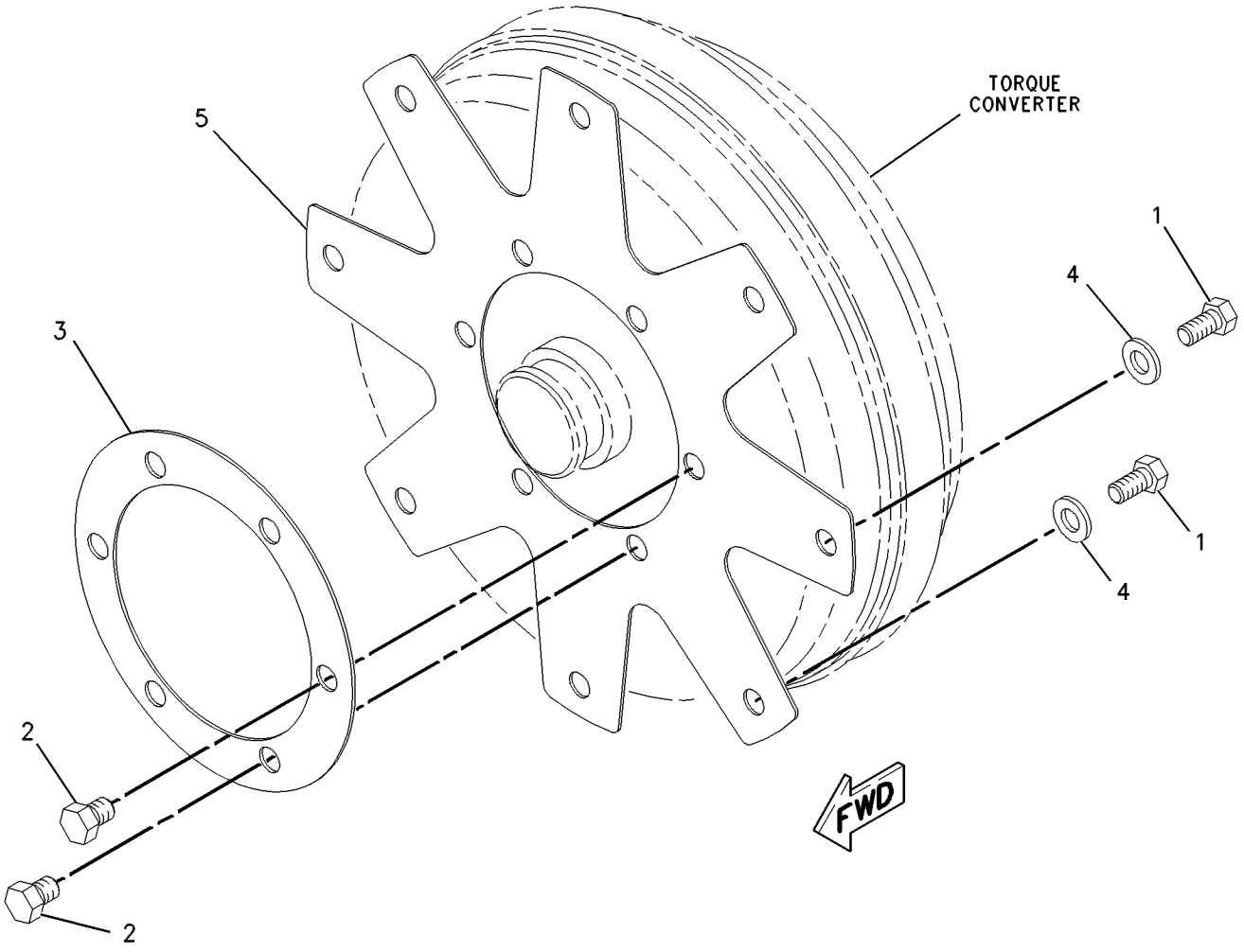

GRAPHIC #1 g00547374

239-0007 FILLER GP-POWER TRAIN OIL

S/N:JRB00485-UP

PART OF 228-2810 POWER TRAIN AR

SMCS-3005, 3081 **i01489436**

NOTE	REF NO	GRAPHIC REF	PART NUMBER	QTY	PART NAME 1 2 3 4 5 6 (PRODUCT LEVEL)	SEE PAGE
	1	1	**4J-0522**	2	SEAL-O-RING	
	2	1	**5P-7854**	2	CLIP	
	3	1	**7C-8246**	1	SPACER (10.5X20X24MM THK)	
	4	1	**104-8566**	1	GAUGE AS	
	5	1	**112-6219**	1	BRACKET AS	
	6	1	**239-0008**	1	BRACKET AS	
	7	1	**125-0851**	1	TUBE AS	
	8	1	**136-3112**	1	SPACER	
	9	1	**8T-4121**	4	WASHER-HARD (11X21X2.5MM THK)	
M	10	1	**8T-4133**	1	NUT (M10X1.5 THD)	
M	11	1	**8T-4137**	3	BOLT (M10X1.5X20MM)	
M	12	1	**8T-4192**	2	BOLT (M12X1.75X25MM)	
	13	1	**8T-4223**	5	WASHER-HARD (13.5X25.5X3MM THK)	
M	14	1	**8T-4194**	2	BOLT (M12X1.75X50MM)	
M	15	1	**148-1899**	1	BOLT (M10X1.50X60MM)	
	16	1	**3J-1907**	2	SEAL-O-RING	
	17	1	**6V-0852**	2	CAP-DUST	
	18	1	**6V-3965**	2	FITTING AS (QUICK DISCONNECT)	
	19	1	**150-3065**	1	ADAPTER GP	
		1	**3J-1907**	1	SEAL-O-RING	
		1	**6V-0484**	1	ADAPTER-O-RING	
	20	1	**165-7014**	2	TEE AS	
		1	**3J-1907**	**2**	SEAL-O-RING	

M-METRIC PART

239-0007 FILLER GP-POWER TRAIN OIL *(contd.)* i01489436

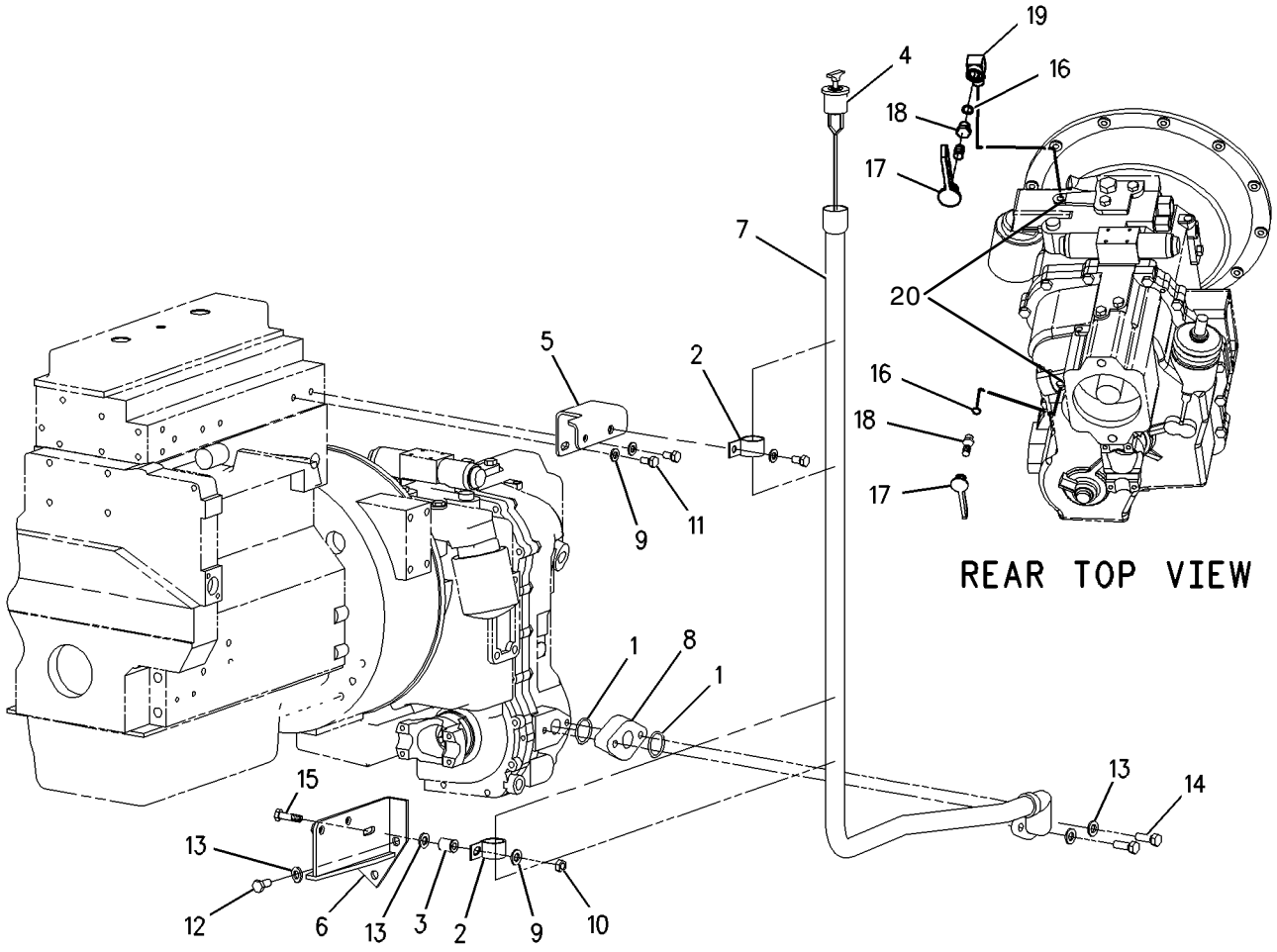

GRAPHIC #1 g00774260

POWER TRAIN

202-5738 POWER TRAIN AR

S/N:JRB00255-UP

PART OF 228-2802 COMMON AR

SMCS-3000 **i01439916**

NOTE	PART NUMBER	QTY	PART NAME 1 2 3 4 5 6 (PRODUCT LEVEL)	SEE PAGE
Y	**202-5734**	1	SHAFT GP-DRIVE	122
Y	**202-5737**	1	CONTROL GP-PARKING BRAKE	133
Y	**202-5714**	1	LINES GP-PUMP	204
Y	**184-7898**	1	MOUNTING GP-INSTRUMENT PANEL	311

Y-SEPARATE ILLUSTRATION

POWER TRAIN

228-2810 POWER TRAIN AR

S/N:JRB00255-UP

STANDARD SHIFT, TWO WHEEL DRIVE

SMCS-3000 **i01670016**

NOTE	PART NUMBER	QTY	PART NAME 1 2 3 4 5 6 (PRODUCT LEVEL)	SEE PAGE
Y	**143-0788**	1	MOUNTING GP-ENGINE & TMSN	8
Y	**143-0786**	1	LINES GP-POWER TRAIN COOLER	50
Y	**164-1130**	1	CONTROL GP-TRANSMISSION	114
Y	**239-0007**	1	FILLER GP-POWER TRAIN OIL	118
Y	**185-7585**	1	TRANSMISSION AR-DIRECT DRIVE	132
Y	**237-5499**	1	BATTERY BOX GP	149
Y	**253-5658**	1	CONSOLE GP-FRONT	298
Y	**185-3525**	1	MOUNTING GP-INSTRUMENT PANEL	312

Y-SEPARATE ILLUSTRATION

POWER TRAIN

202-5734 SHAFT GP - DRIVE(REAR)

S/N : JRB00255-UP

PART OF 205-5738 POWER TRAIN AR

NOTE	REF NO	GRAPHIC REF	PART NUMBER	QTY	PART NAME 1 2 3 4 5 6 (PRODUCT LEVEL)	SEE PAGE
	1	1	5V-2545	4	STRAP	
	2	1	107-6826	8	BOLT	
	3	1	198-6026	1	SHAFT AS-MAIN	
			117-9887	2	KIT-SPIDER & BEARING	

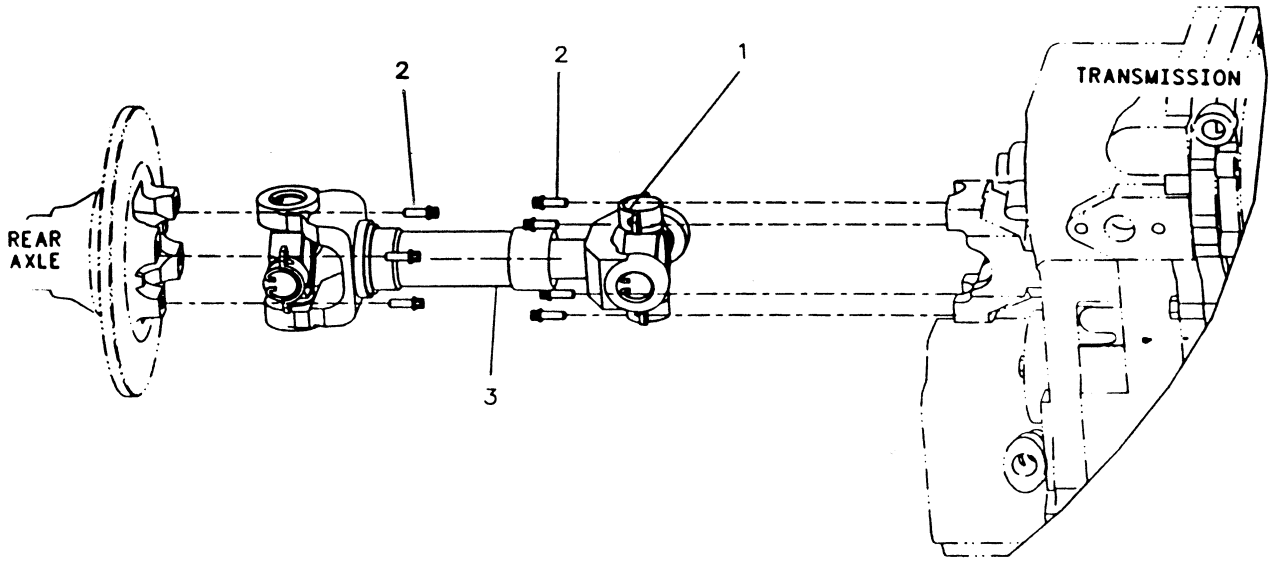

GRAPHIC #1

202-6007 TRANSMISSION & MOUNTING GP

S/N:JRB00301-UP

PART OF 185-7585 TRANSMISSION AR-DIRECT DRIVE

SMCS-3030 **i01574550**

NOTE	REF NO	GRAPHIC REF	PART NUMBER	QTY	PART NAME 1 2 3 4 5 6 (PRODUCT LEVEL)	SEE PAGE
	1	1	**113-9221**	1	SUPPORT-REAR	
	2	1	**138-7137**	1	SUPPORT AS	
Y	3	1	**201-8561**	1	TRANSMISSION GP-DIRECT DRIVE	124
M	4	1	**7X-2553**	4	BOLT (M16X2X40MM)	
	5	1	**8T-4223**	4	WASHER-HARD (13.5X25.5X3MM THK)	
M	6	1	**8T-4956**	4	BOLT (M12X1.75X35MM)	
	7	1	**9X-8257**	4	WASHER (17.5X30X3.5MM THK)	

M-METRIC PART
Y-SEPARATE ILLUSTRATION

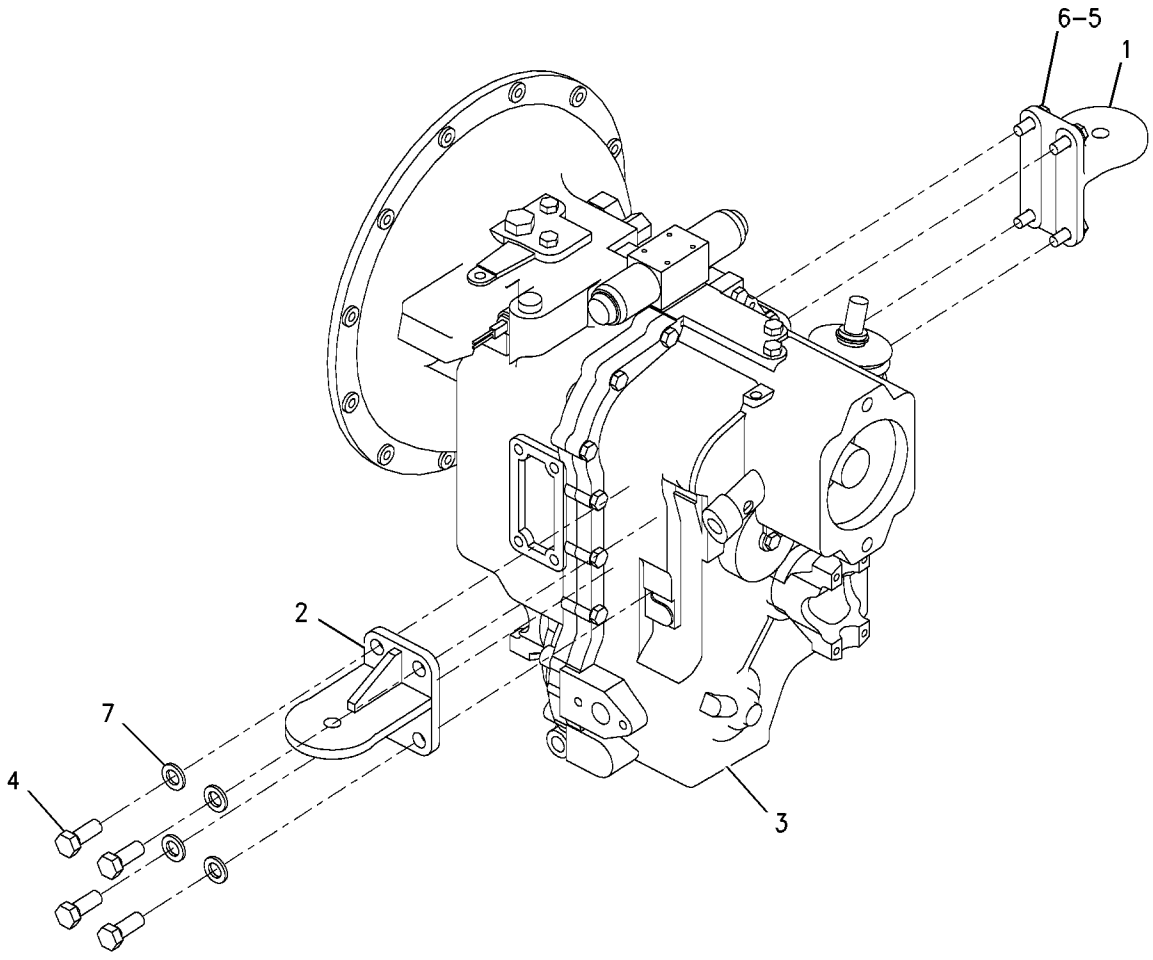

GRAPHIC #1 g00791202

POWER TRAIN

201-8561 TRANSMISSION GP-DIRECT DRIVE

S/N:JRB00301-UP

TWO WHEEL

PART OF 202-6007 TRANSMISSION & MOUNTING GP

SMCS-3030, 3060, 3400 **i01584967**

NOTE	REF NO	GRAPHIC REF	PART NUMBER	QTY	PART NAME 1 2 3 4 5 6 (PRODUCT LEVEL)	SEE PAGE
	1	1	**174-9711**	1	GASKET	
	2	1	**175-0054**	1	SEAL-O-RING	
	3	1	**9M-1974**	3	WASHER-HARD (8.8X16X2MM THK)	
	4	1	**122-3649**	2	RING-RETAINING	
	5	1,2	**122-3652**	2	PLUG	
	6	2	**121-7405**	1	VALVE GP-RELIEF	
		2	**6V-9178**	1	SEAL-O-RING	
		2	**7X-4744**	1	SEAL-O-RING	
		2	**106-9586**	1	SEAL-O-RING	
	7	1	**121-7396**	1	VALVE GP-RELIEF	
		1	**6V-4589**	1	SEAL-O-RING	
		1	**8L-2746**	1	SEAL-O-RING	
M	8	1,3	**8C-5748**	7	BOLT (M8X1.25X55MM)	
	9	1	**192-0843**	1	CASE AS	
	10	1	**156-9276**	1	CASE-TRANSMISSION	
	11	1,2,3	**9S-4191**	10	PLUG-STRAIGHT THREAD	
	12	1,2,3	**3J-1907**	11	SEAL-O-RING	
M	13	2	**6V-8335**	17	BOLT-SELF LOCKING (M10X1.5X40MM)	
	14	1	**7T-3022**	2	SLEEVE	
	15	1	**123-8906**	1	CUP-TAPERED ROLLER	
	16	1	**123-8905**	1	CONE-TAPERED	
	17	1	**9U-8886**	4	RING-SEAL (44.95MM ID)	
	18	1	**7T-3021**	2	SYNCHRONIZER GP	
	19	1	**121-1223**	1	GEAR (35 TEETH)	
	20	1	**121-1251**	1	GEAR (28 TEETH)	
	21	1	**117-4650**	1	GEAR (37 TEETH)	
	22	1	**6T-9160**	1	GEAR (43 TEETH)	
	23	1	**6V-8500**	2	BEARING	
	24	1	**7T-3017**	1	SPACER (9.6MM THK)	
	25	1	**7T-3018**	1	SLEEVE	
	26	1	**6Y-2326**	1	RING	
	27	1	**121-2062**	1	WASHER-THRUST	
	28	1	**7T-3034**	1	SHIM (2.02MM THK)	
B		1	**6T-9144**	1	SHIM (0.002MM THK)	
B		1	**6T-9147**	1	SHIM (0.003MM THK)	
B		1	**6T-9146**	1	SHIM (0.005MM THK)	
B		1	**6T-9145**	1	SHIM (0.007MM THK)	
B		1	**6T-9143**	1	SHIM (0.015MM THK)	
B		1	**6T-9142**	1	SHIM (0.020MM THK)	
	29	3	**9P-9150**	4	WASHER (8.25X18X.84MM THK)	
M	30	3	**6V-7731**	2	BOLT (M10X1.5X70MM)	
	31	3	**6Y-2035**	1	GASKET	
	32	3	**7T-3119**	1	HOUSING	
	33	1	**6Y-2936**	1	SPACER	
	34	2	**122-6785**	1	PLUG AS-BLEEDER	
	35	1	**005-0469**	2	CUP-BEARING	
	36	1	**005-0471**	2	CONE-BEARING	
	37	1	**211-6759**	1	SHAFT-OUTPUT (REAR)	
	38	1	**123-8910**	1	CUP-TAPERED ROLLER	
	39	1	**123-8909**	1	CONE-TAPERED ROLLER	
	40	1	**7T-2646**	2	SPACER (2.02MM THK)	
B		1	**6T-9166**	2	SHIM (0.051MM THK)	
B		1	**6T-9165**	2	SHIM (0.076MM THK)	
B		1	**6T-9164**	2	SHIM (0.178MM THK)	

201-8561 TRANSMISSION GP-DIRECT DRIVE *(contd.)* i01584967

NOTE	REF NO	GRAPHIC REF	PART NUMBER	QTY	PART NAME 1 2 3 4 5 6 (PRODUCT LEVEL)	SEE PAGE
B		1	**6T-9163**	2	SHIM (0.599MM THK)	
	41	2	**1H-9721**	1	PLUG-EXPANSION	
	42	1	**6K-0806**	1	STRAP-CABLE	
	43	1	**7T-3111**	1	COVER	
	44	2	**120-9762**	3	SEAL-O-RING	
	45	1	**7T-3051**	1	PLUG	
	46	1	**8T-1580**	1	CUP	
	47	1	**8T-1581**	1	CONE	
	48	1	**6Y-2737**	1	CUP-BEARING	
	49	1	**6Y-2736**	1	CONE-BEARING	
	50	1	**121-2500**	3	WASHER-THRUST (4MM THK)	
	51	1	**121-2511**	1	SHAFT	
	52	1	**121-2537**	1	SHAFT-REVERSE	
	53	1	**121-2545**	1	SHAFT AS-INPUT	
		1	**123-0714**	1	BEARING	
		1	**123-2920**	3	PLUG	
	54	1	**121-2603**	1	GEAR (40 TEETH)	
	55	1	**121-2604**	1	GEAR (27 TEETH)	
	56	1	**121-0694**	1	WASHER-THRUST (4MM THK)	
	57	1	**122-1882**	2	PLATE-END	
	58	1	**122-1881**	12	PLATE-CLUTCH	
	59	1	**122-1880**	12	DISC	
	60	1	**6V-8757**	3	RING	
	61	1	**178-8200**	2	RETAINER	
	62	1	**178-8134**	2	SPRING	
	63	1	**178-8132**	2	PISTON	
	64	1	**178-8133**	2	SPRING GUIDE	
	65	1			NOT USED	
	66	1			NOT USED	
	67	1			NOT USED	
	68	1	**122-6787**	1	YOKE AS	
		1	**123-1377**	1	GUARD	
	69	1	**122-1885**	2	SPACER	
	70	1	**123-8913**	4	BEARING-ROLLER	
	71	1	**172-5317**	2	BEARING-SPECIAL	
	72	1	**7T-3195**	1	WASHER (6.35MM THK)	
M	73	1	**6V-8097**	1	BOLT (M12X1.75X30MM)	
	74	1	**5P-8066**	1	SEAL-O-RING	
	75	1	**121-7385**	1	PUMP GP-TRANSMISSION	
		1	**124-6612**	1	SEAL-LIP TYPE (57.15MM ID)	
	76	1	**7X-4741**	1	SEAL (140MM ID)	
	77	1	**122-1886**	1	RING-SEAL	
	78	3	**014-5645**	3	BALL	
	79	3	**6Y-1341**	2	SPRING	
	80	3	**121-7403**	1	FORK-SHIFT	
	81	3	**121-7389**	1	ROD AS-GEARSHIFT	
	82	3	**121-7390**	1	ROD AS-GEARSHIFT	
	83	2	**7T-3249**	2	SCREW	
	84	1	**123-8907**	2	CONE-TAPERED ROLLER	
	85	1	**123-8908**	2	CUP-TAPERED ROLLER	
	86	1	**127-3017**	1	SEAT AS	
	87	1	**7T-3109**	1	PIN	
	88	3	**121-7404**	1	FORK-SHIFT	
	89	1	**3S-2093**	1	STRAP-CABLE	
	90	1	**121-7391**	1	LEVER	
	91	2	**6Y-1896**	1	PLUG AS-DRAIN	
		2	**5P-6718**	1	SEAL-O-RING	
	92	1	**121-7398**	1	SPACER (2MM THK)	
B		1	**121-7399**	1	SHIM (0.05MM THK)	

201-8561 TRANSMISSION GP-DIRECT DRIVE *(contd.)* i01584967

NOTE	REF NO	GRAPHIC REF	PART NUMBER	QTY	PART NAME 1 2 3 4 5 6 (PRODUCT LEVEL)	SEE PAGE
B		1	**121-7400**	1	SHIM (0.08MM THK)	
B		1	**121-7401**	1	SHIM (0.18MM THK)	
B		1	**121-7402**	1	SHIM (0.6MM THK)	
	93	3	**7T-3251**	1	BREATHER	
M	94	3	**6V-8210**	2	BOLT (M8X1.25X16 MM)	
	95	3	**106-9861**	1	PLATE-COVER	
	96	3	**9W-5460**	1	RING	
	97	3	**4F-7952**	1	SEAL-O-RING	
M	98	2	**9X-6615**	4	BOLT (M5X.8X30MM)	
Y	99	3	**142-1468**	1	VALVE GP-SOLENOID	130
	100	3	**7T-2651**	1	STRAINER	
	101	2	**3G-6927**	1	ADAPTER	
	102	3	**7T-3253**	2	DOWEL	
	103	1	**216-2267**	1	SEAL	
					1U8846 SEALANT IS REQUIRED	

B-USE AS REQUIRED
M-METRIC PART
Y-SEPARATE ILLUSTRATION

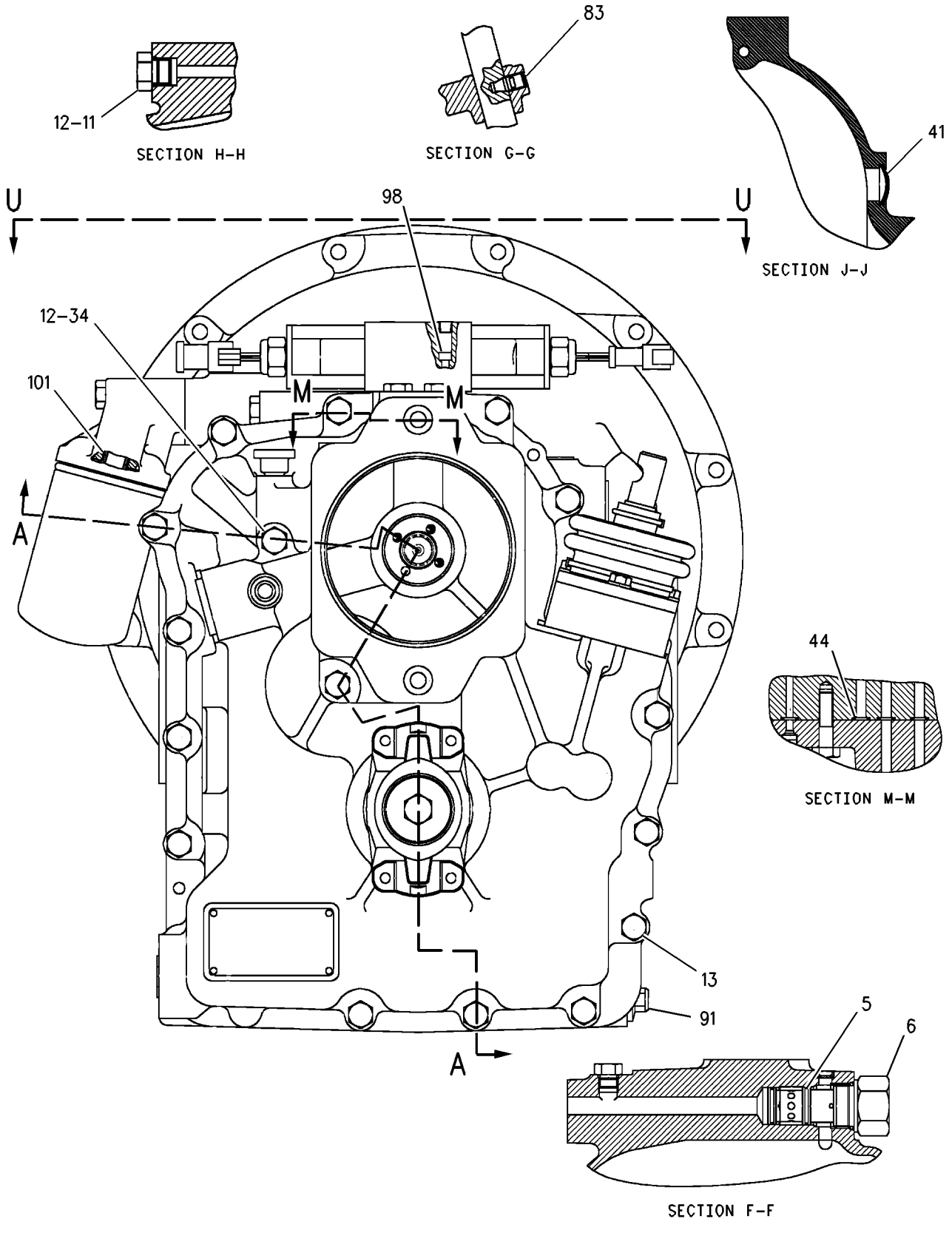

GRAPHIC #2 g00822394

201-8561 TRANSMISSION GP-DIRECT DRIVE *(contd.)* i01584967

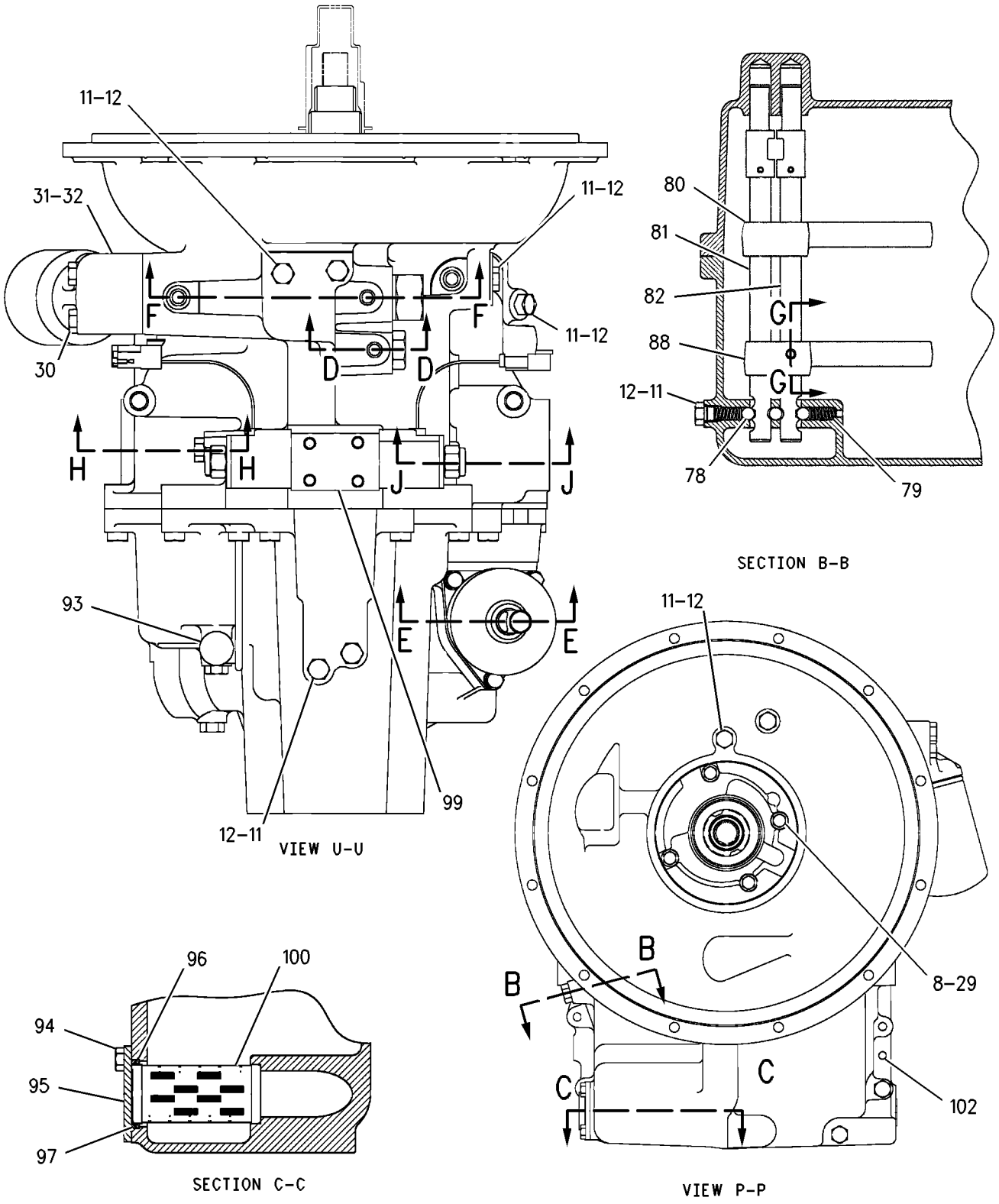

GRAPHIC #3 g00822409

142-1468 VALVE GP-SOLENOID

S/N:JRB00255-UP
12 VOLT DIRECT CURRENT
PART OF 192-0842 TRANSMISSION GP-DIRECT DRIVE

SMCS-3174 **i01670020**

NOTE	REF NO	GRAPHIC REF	PART NUMBER	QTY	PART NAME 1 2 3 4 5 6 (PRODUCT LEVEL)	SEE PAGE
	1	1	**117-2911**	1	COIL AS	
		1	**1S-9593**	2	STRAP-CABLE	
		1	**102-8802**	1	KIT-RECEPTACLE (2 PIN)	
					(KIT INCLUDES RECEPTACLE AS AND WEDGE)	
		1	**3E-3365**	1	WEDGE-RECEPTACLE LOCK (2 PIN)	
		1	**8T-8729**	2	PIN-CONNECTOR	
	2	1	**130-0912**	1	COIL AS	
		1	**1S-9593**	2	STRAP-CABLE	
		1	**102-8803**	1	KIT-RECEPTACLE (3 PIN)	
					(KIT INCLUDES RECEPTACLE AS AND WEDGE)	
		1	**3E-3371**	1	WEDGE-RECEPTACLE LOCK (3 PIN)	
		1	**8T-8729**	2	PIN-CONNECTOR	
		1	**8T-8737**	1	PLUG-SEAL	
	3	1	**061-8639**	2	SEAL-O-RING (15.54MM ID)	
	4	1	**8L-2779**	4	SEAL-O-RING	
	5	1	**202-0040**	2	NUT-LOCKING	
	6	1	**143-6227**	1	PLUG-ORIFICE	
	7	1	**143-4655**	2	WASHER (M18.4X24.8X0.8MM THK)	

142-1468 **VALVE GP-SOLENOID** ***(contd.)*** **i01670020**

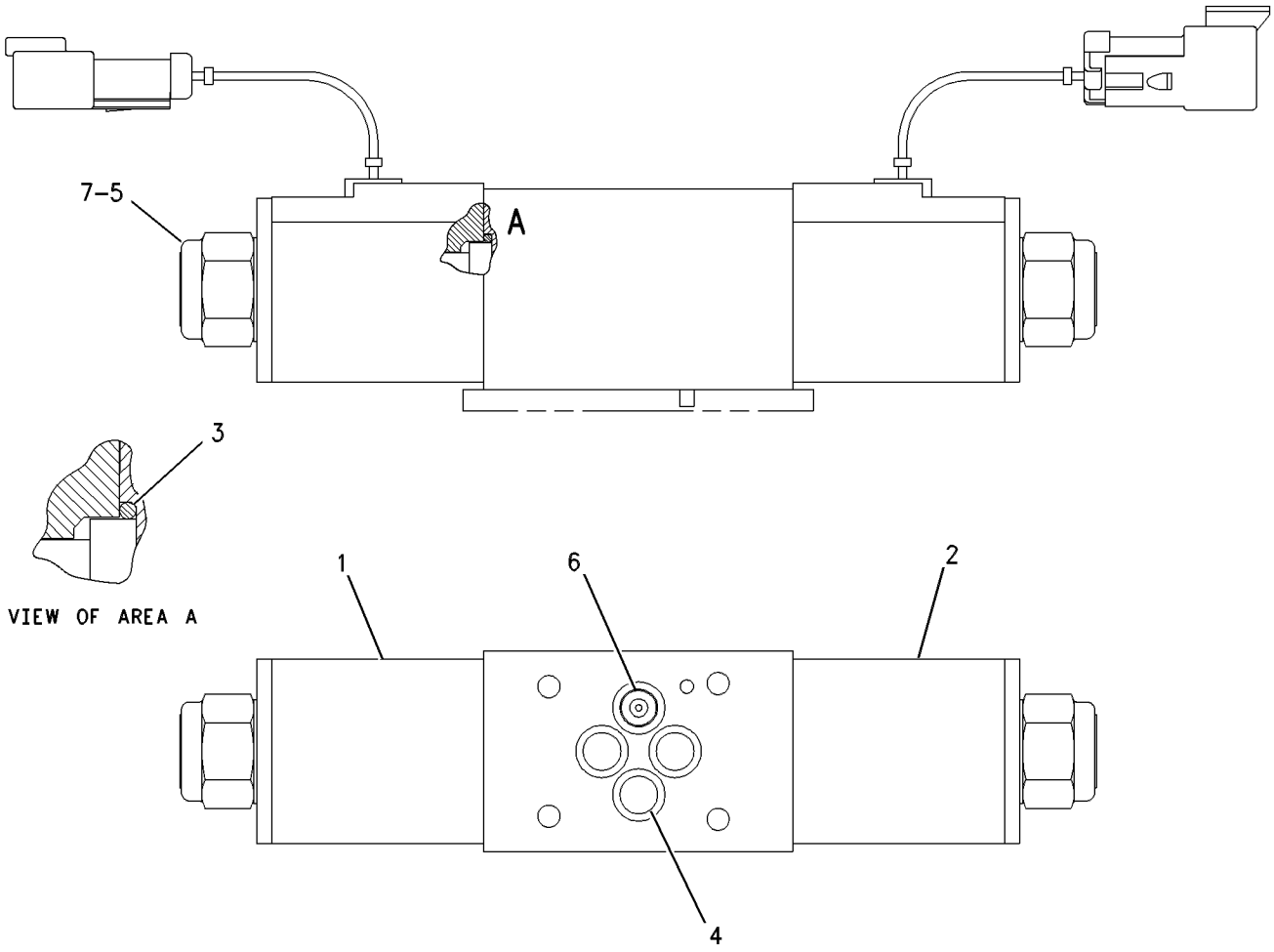

GRAPHIC #1 g00286138

POWER TRAIN

185-7585 TRANSMISSION AR-DIRECT DRIVE

S/N:JRB00351-UP

PART OF 228-2810 POWER TRAIN AR

SMCS-3030, 3060, 3400 **i01533872**

NOTE	PART NUMBER	QTY	PART NAME 1 2 3 4 5 6 (PRODUCT LEVEL)	SEE PAGE
Y	**111-7907**	1	DRIVE GP-FLEXIBLE COUPLING	117
Y	**202-6007**	2	TRANSMISSION & MOUNTING GP	123
	119-4740	1	FILTER-OIL	
	212-6215	1	TORQUE CONVERTER AS	

Y-SEPARATE ILLUSTRATION

BRAKING SYSTEM

202-5737 CONTROL GP-PARKING BRAKE

S/N:JRB00255-UP

PART OF 202-5738 POWER TRAIN AR

SMCS-4282, 4284 **i01499369**

NOTE	REF NO	GRAPHIC REF	PART NUMBER	QTY	PART NAME 1 2 3 4 5 6 (PRODUCT LEVEL)	SEE PAGE
M	1	1	**9X-2043**	4	SCREW-TRUSS HEAD (M6X1X14MM)	
	2	1	**154-5416**	1	SWITCH AS (PARKING BRAKE ALARM)	
		1	**155-2270**	1	KIT-CONNECTING PLUG (2 PIN)	
					(KIT SERVICES PLUG AS. AND WEDGE)	
Y	3	1	**163-0754**	1	CONTROL GP-PARKING BRAKE	148
	4	1	**180-7245**	1	BRACKET AS	
M	5	1	**6V-9189**	2	LOCKNUT (M8X1.25 THD)	
	6	1	**9R-2806**	1	PIN	
	7	1	**9R-2807**	1	CLIP	
M	8	1	**8T-0276**	2	BOLT (M8X1.25X45MM)	
	9	1	**8T-4224**	2	WASHER-HARD (8.8X16X2MM THK)	

M-METRIC PART
Y-SEPARATE ILLUSTRATION

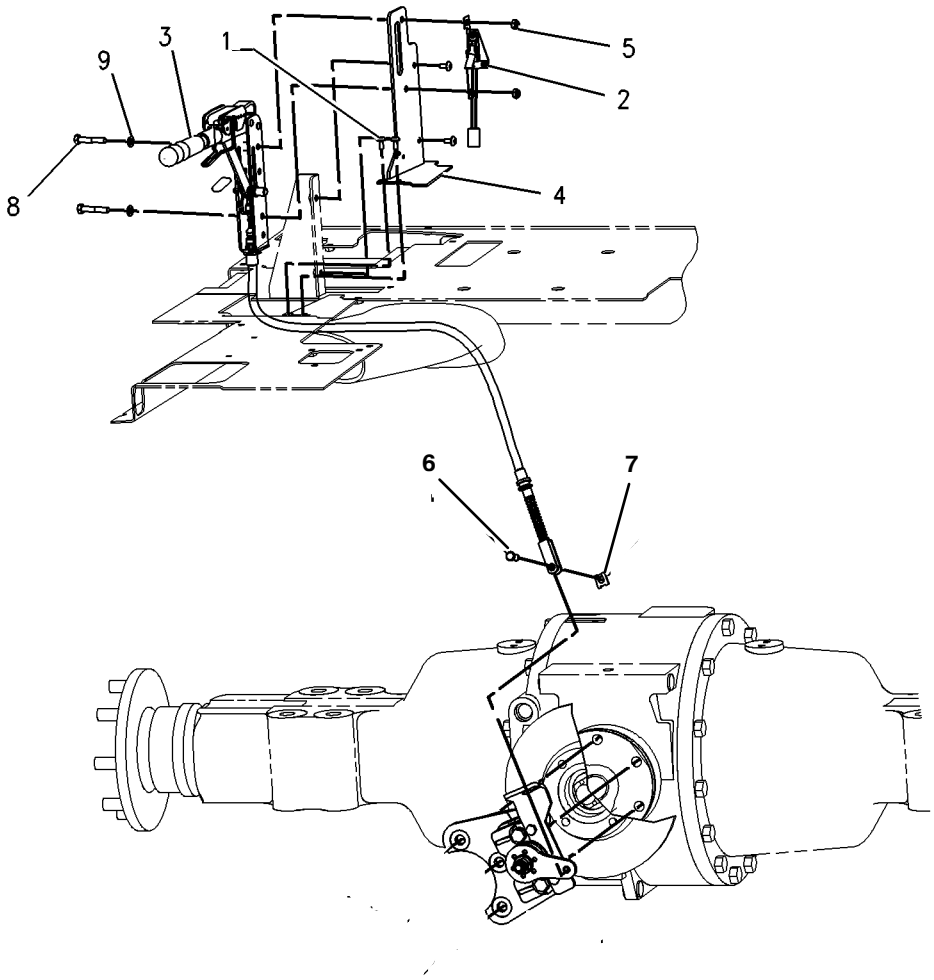

GRAPHIC #1 g00725939

BRAKING SYSTEM

202-6020 CONTROL GP - SERVICE BRAKE

S/N : JRB00324-UP
PART OF 236-9141 DRIVE AR

NOTE	REF NO	GRAPHIC REF	PART NUMBER	QTY	PART NAME 1 2 3 4 5 6 (PRODUCT LEVEL)	SEE PAGE
B	1	1	5P-1442	2	HOSE	
Y	2	1	4E-8619	1	RESERVOIR	137
	3	1	5G-8108	1	CLAMP	
	4	1	6S-8620	4	CLAMP	
	5	1	9R-8189	2	PUSHROD	
	6	1	9R-9334	1	BRACKET AS	
	7	1	105-8034	2	SWITCH AS-LIMIT	
	8	1	164-1137	1	COVER-FIREWALL	
	9	1	165-6595	1	PIN AS	
	10	1	165-6599	2	ROD END	
	11	1	165-6601	2	SPACER	
	12	1	165-6602	2	SPACER	
	13	1	165-6603	1	PLATE	
	14	1	167-8164	2	HOSE AS	
	15	1	171-8623	1	GROMMET-TWO HOLE	
	16	1	174-7820	2	TUBE AS	
	17	1	184-6581	2	CONNECTOR AS	
	18	1	201-3364	2	HOSE AS	
	19	1	205-3760	1	PEDAL AS-LH	
			165-6585	1	BEARING SLEEVE	
	20	1	205-3761	1	PEDAL AS-RH	
			165-6585	1	BEARING SLEEVE	
	21	1	202-3518	1	PLATE AS	
	22	1	222-7875	1	CYLINDER AS	
	23	1	223-8465	1	BRACKET AS	
	24	1	223-9078	1	PLATE AS	
	25	1	148-8325	2	CONNECTOR AS	
			3J-1907	2	SEAL O RING	
			4J-5477	2	SEAL O RING	
			6V-8641	2	CONNECTOR	
	26	1	148-8368	2	ELBOW AS	
			3J-1907	2	SEAL O RING	
			4J-5477	2	SEAL O RING	
			6V-8627	2	ELBOW	
	27	1	1A-0621	2	GROMMET	
	28	1	1A-5350	2	CLIP	
	29	1	1H-1200	1	PIN-SPRING	
	30	1	2P-1279	2	LOCKNUT	
	31	1	3S-2093	1	STRAP	
	32	1	4J-5477	4	SEAL O RING	
	33	1	5C-7261	9	NUT	
	34	1	8T-4133	2	NUT	
	35	1	8T-4138	6	BOLT	
	36	1	8T-4189	4	BOLT	
	37	1	8T-4200	1	BOLT	
	38	1	8T-4205	6	WASHER-HARD	
	39	1	8T-4224	14	WASHER-HARD	
	40	1	9R-2807	2	CLIP	
	41	1	9R-7138	2	PIN	
	42	1	9X-2038	12	WASHER	
	43	1	9X-2042	6	SCREW-TRUSS HEAD	
	44	1	9X-2045	12	SCREW-TRUSS HEAD	

B - USE AS REQUIRED
Y - SEPARATE ILLUSTRATION

BRAKING SYSTEM

202-6020 CONTROL GP-SERVICE BRAKE (Contd.)

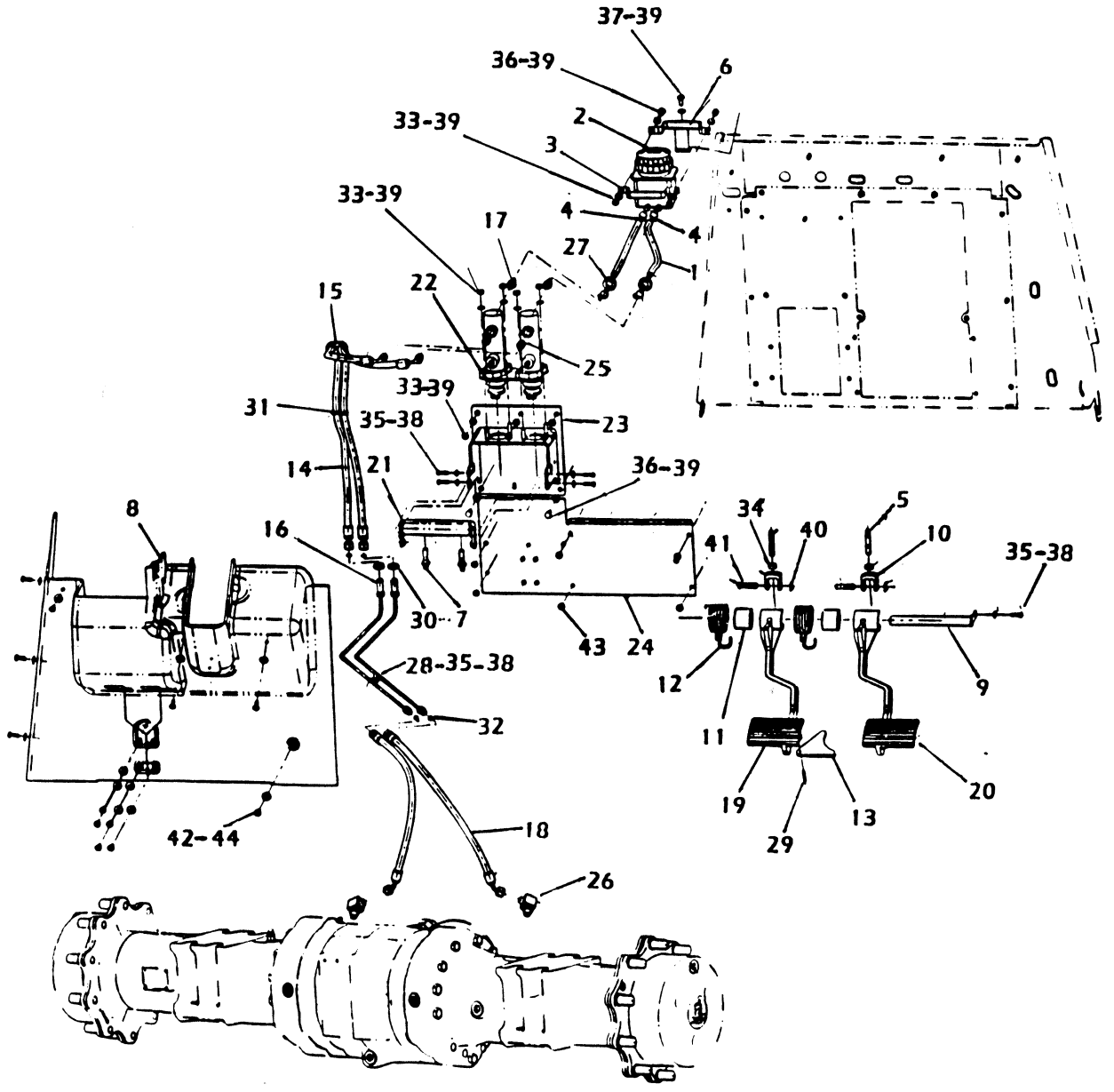

GRAPHIC # 1

D:\424\28997

BRAKING SYSTEM

163-0753 LEVER GP-HAND CONTROL

S/N:JRB00255-UP

PART OF 163-0754 CONTROL GP-PARKING BRAKE

SMCS-4284 **i01388136**

NOTE	REF NO	GRAPHIC REF	PART NUMBER	QTY	PART NAME 1 2 3 4 5 6 (PRODUCT LEVEL)	SEE PAGE
	1	1	**7R-8239**	2	SPACER	
	2	1	**039-9133**	1	PIN (38.86 MM LG)	
	3	1	**164-9598**	1	GRIP	
	4	1	**164-9599**	1	COVER	
	5	1	**3B-4610**	1	COTTER	
	6	1	**8T-4224**	2	WASHER-HARD (8.8X16X2MM THK)	

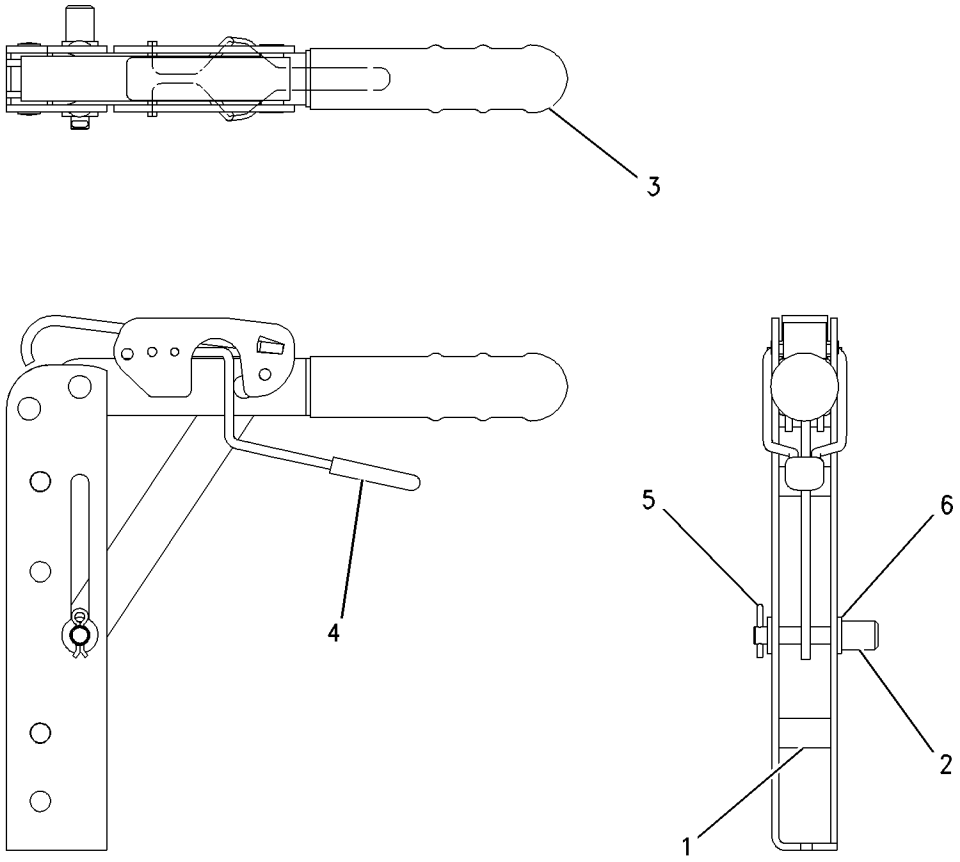

GRAPHIC #1 g00729504

BRAKING SYSTEM

4E-8619 RESERVOIR GP-BRAKE

S/N:JRB00255-UP

PART OF 202-6020 CONTROL GP-SERVICE BRAKE

SMCS-4291 **i01670353**

NOTE	REF NO	GRAPHIC REF	PART NUMBER	QTY	PART NAME 1 2 3 4 5 6 (PRODUCT LEVEL)	SEE PAGE
	1	1	**7N-7779**	1	SOCKET-CONNECTOR	
	2	1	**7N-9737**	1	HOUSING-PLUG	
	3	1	**7N-7780**	1	PIN-CONNECTOR	
F		1	**8R-6263**		INDICATOR AS	
					AVAILABLE REPAIR KIT(S):	
			159-7907	1	KIT-BRAKE RESERVOIR	

F-NOT SHOWN

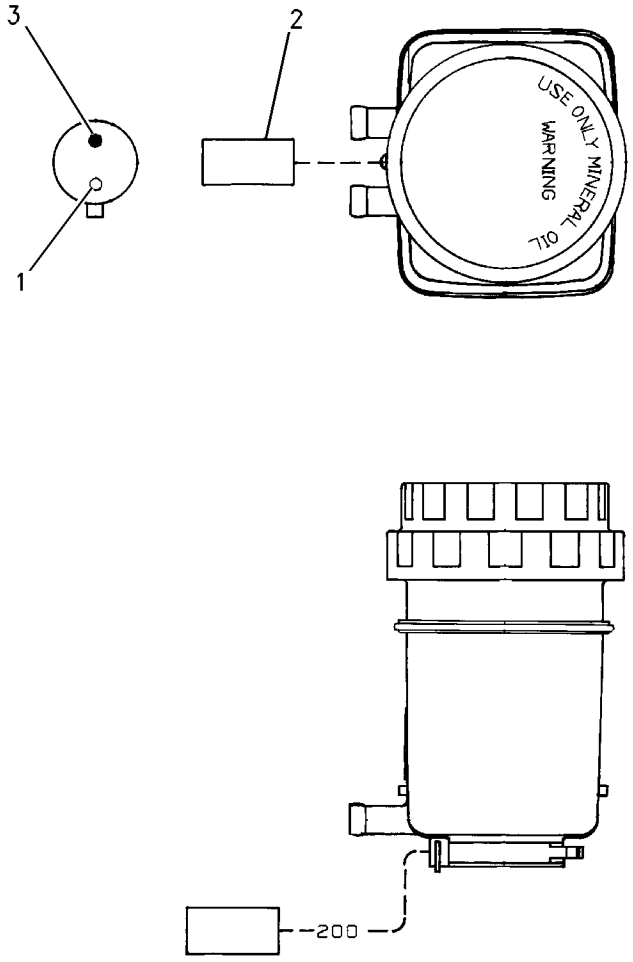

GRAPHIC #1 g00862942

STEERING SYSTEM

183-4898 CONTROL GP-STEERING (STATIONARY)

S/N: JRB00305-UP

SMCS-4309, 4310, 4322, 4338, 4343 **i01673625**

NOTE	REF NO	GRAPHIC REF	PART NUMBER	QTY	PART NAME 1 2 3 4 5 6 (PRODUCT LEVEL)	SEE PAGE
	1	1	**9X-2044**	5	SCREW	
	2	1	**163-7940**	1	PANEL AS	
	3	1	**180-8170**	1	COLUMN AS-STEER	
M		1	**6V-8227**	1	NUT (M18X1.5-6 THD)	
M		1	**6V-9632**	5	NUT-WELD (M6X1 THD)	
		1	**7T-1099**	1	LINK	
	4	1	**185-3529**	1	CONSOLE AS	
	5	1	**153-9580**	1	STEERING WHEEL	
M	6	1	**5C-7261**	2	NUT (M8X1.25 THD)	
	7	1	**8T-4121**	2	WASHER-HARD (11X21X2.5MM THK)	
M	8	1	**8T-4136**	2	BOLT (M10X1.5X25MM)	
M	9	1	**8T-4189**	2	BOLT (M8X1.25X20MM)	
	10	1	**8T-4224**	4	WASHER-HARD (8.8X16X2MM THK)	
M	11	1	**8T-8894**	4	BOLT-SOCKET HEAD (M10X1.5X20MM)	
	12	1	**9X-2045**	**1**	SCREW	

M-METRIC PART

GRAPHIC #1

g00856951

STEERING SYSTEM

206-6974 STEERING COLUMN GP

S/N:JRB00255-UP

PART OF 183-4897 CONTROL GP-STEERING

SMCS-4310, 4338 **i01391731**

NOTE	REF NO	GRAPHIC REF	PART NUMBER	QTY	PART NAME 1 2 3 4 5 6 (PRODUCT LEVEL)	SEE PAGE
M	1	1	**6V-9632**	5	NUT-WELD (M6X1 THD)	
	2	1	**7T-1099**	1	LINK	
	3	1	**149-0777**	1	KIT-KNOB	
	4	1	**149-0780**	1	KIT-GAS SPRING	
	5	1	**149-0782**	1	KIT-TILT LEVER	
	6	1	**149-0783**	1	KIT-SHAFT	
	7	1	**149-0784**	1	KIT-HOUSING	

M-METRIC PART

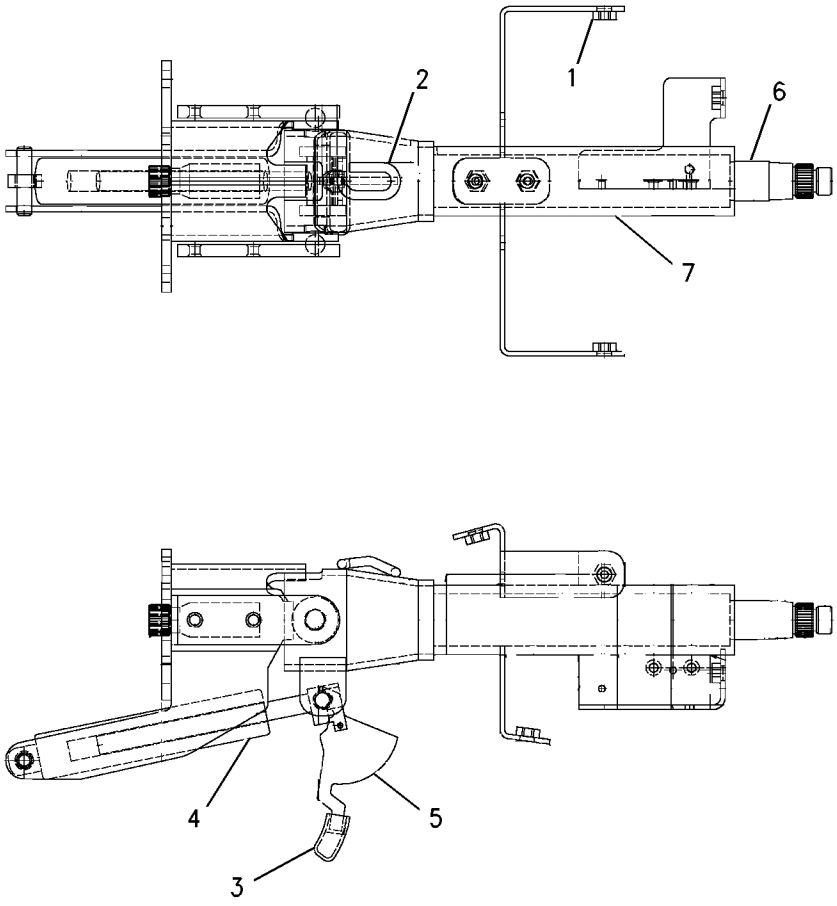

GRAPHIC #1 g00722268

STEERING SYSTEM

189-1834 AXLE GP - FRONT

S/N : JRB00324-UP
PART OF 236-9141 DRIVE AR

NOTE	REF NO	GRAPHIC REF	PART NUMBER	QTY	PART NAME 1 2 3 4 5 6 (PRODUCT LEVEL)	SEE PAGE
	1	1	207-4268	1	AXLE BEAM	
	2	1	219-8798	2	SEAL-LIP TYPE	
	3	1	154-5404	2	BUSHING	
	4	1	198-7825	4	SEAL-KING PIN	
	5	1	198-7823	4	BEARING	
	6	1	231-0684	1	SWIVEL HOUSING-RH	
	7	1	207-4266	2	BEARING RETAINER	
	8	1	8T-4139	6	BOLT	
	9	1	207-4271	2	HUB COVER	
	10	1	207-4255	2	PLUG	
	11	1	231-0685	1	SWIVEL HOUSING-LH	
	12	1	207-4265	2	PROTECTIVE COVER	
	13	1	207-4272	2	TIE ROD AS	
	13A	1	216-4459	2	TIE ROD	
	13B	1	204-3080	2	BALL JOINT	
	13C	1	217-2885	2	NUT	
	14	1	207-4260	2	O-RING	
Y	15	1	214-5097	1	STEERING CYLINDER	146
	16	1	198-7838	4	KING PIN	
	17	1	198-7841	4	SHIM 0.15mm	
			198-7842	4	SHIM 0.20mm	
			198-7843	4	SHIM 0.25mm	
	18	1	199-0648	2	NUT	
	19	1	199-0683	16	BOLT	
	20	1	207-4254	6	BOLT	
	21	1	207-4258	2	NUT	
	22	1	207-4262	2	BOLT-STRG.STOP	
			198-7820	1	PLATE IDENT	
			231-0683	2	WHEEL FLANGE AS	
	23	1	207-4263	2	WHEEL BEARING	
	24	1	207-4267	2	WHELL BEARING	
	25	1	231-0686	2	WHEEL HUB	
	26	1	231-0687	16	WHEEL STUD	
	27	1	231-0688	2	SEAL	
			238-5228	2	KIT WHEEL HUB	

Y - SEPARATE ILLUSTRATION

STEERING SYSTEM

189-1834 AXLE GP - FRONT

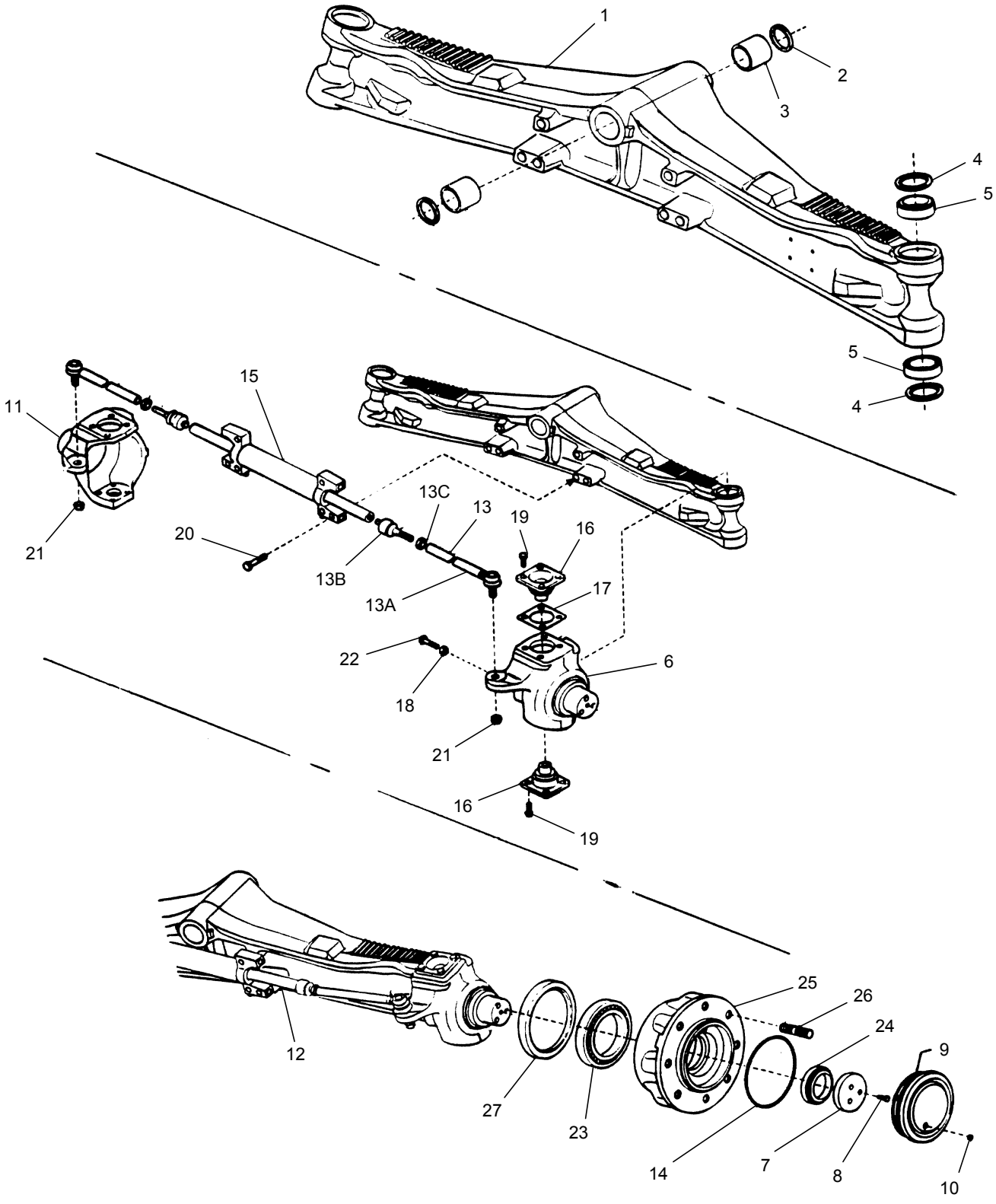

GRAPHIC #1

STEERING SYSTEM

202-5712 LINES GP - STEERING

S/N : JRB00324-UP
TWO WHEEL DRIVE
PART OF 236-9141 DRIVE AR

NOTE	REF NO	GRAPHIC REF	PART NUMBER	QTY	PART NAME 1 2 3 4 5 6 (PRODUCT LEVEL)	SEE PAGE
E	1	1	160-2248		SLEEVE-ABRASION (20CM)	
	2	1	5D-1026	2	CLAMP-HOSE	
	3	1	7K-1181	4	STRAP-CABLE	
I	4	1	117-3242	1	HOSE AS	
I	5	1	214-3159	1	HOSE AS	
I	6	1	201-3398	1	HOSE AS	
I	7	1	145-1847	1	HOSE AS	
	8	1	195-2037	1	FITTING AS	
			3K-0360	1	SEAL-O-RING	
			034-3679	1	FITTING	
	9	1	148-8316	1	CONNECTOR GP	
			3J-7354	1	SEAL-O-RING	
			4J-5477	1	SEAL-O-RING	
			6V-8647	1	CONNECTOR	
	10	1	148-8346	2	ELBOW GP	
			3K-0360	2	SEAL-O-RING	
			6V-8398	2	SEAL-O-RING	
		1	8T-1686	2	ELBOW	
	11	1	148-8369	2	ELBOW GP	
		1	3J-7354	1	SEAL-O-RING	
			4J-5477	1	SEAL-O-RING	
			6V-8628	1	ELBOW	
	12	1	148-8374	2	ELBOW GP	
		1	3K-0360	2	SEAL-O-RING	
		1	6V-8397	2	SEAL-O-RING	
		1	6V-8723	2	ELBOW	
	13	1	148-8367	2	ELBOW AS	
			6V-9850	2	SEAL-O-RING	
			6V-8397	2	SEAL-O-RING	
			148-8369	2	CONNECTOR	
	14	1	5K-5338	1	CLIP	
	15	1	5P-7462	2	CLIP (SLOT)	
	16	1	5P-7463	2	CLIP (TAB)	
	17	1	6D-4246	1	CLIP	
	18	1	6V-0683	2	GROMMET	
	19	1	8T-4121	3	WASHER-HARD (11X21X2.5MM THK)	
M	20	1	8T-4136	2	BOLT (M10X1.5X25MM)	
M	21	1	8T-4186	1	BOLT (M10X1.5X40MM)	
	22	1	9M-8406	1	CLIP	
E	23	1	5P-1505		HOSE (53CM)	
	24	1	148-8318	1	CONNECTOR GP	
			3K-0360	1	SEAL-O-RING	
			6V-8397	1	SEAL-O-RING	
	25	1	204-0317	1	CONNECTOR AS	
			3K-0360	1	SEAL O-RING	
			6V-8397	1	SEAL O-RING	

E - ORDER BY THE CENTIMETER
I - SEE HOSE FABRICATION GUIDE
M - METRIC PART

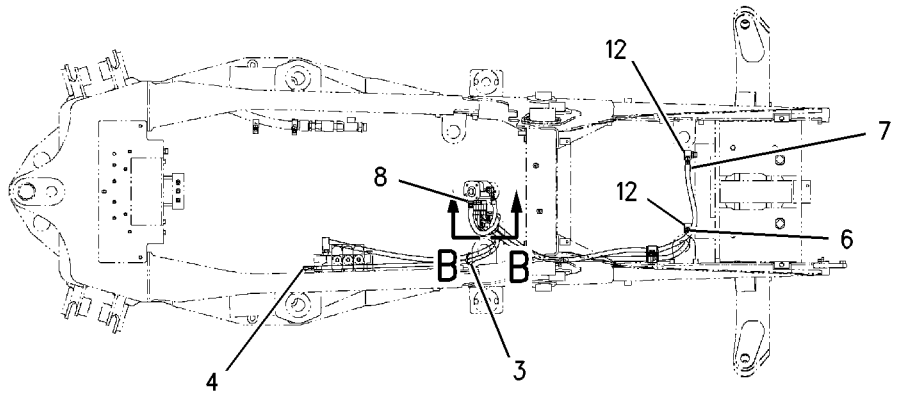

TOP VIEW

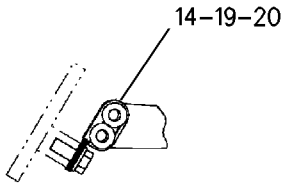

SECTION D-D

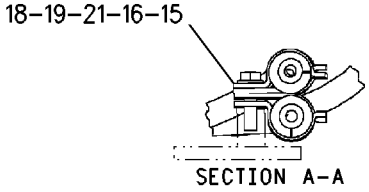

SECTION A-A

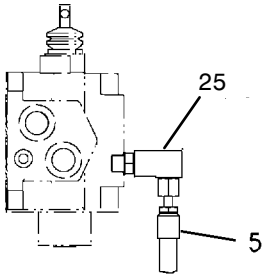

SECTION G-G

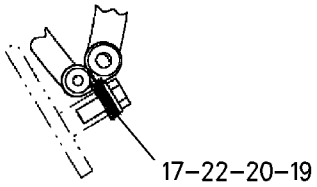

SECTION E-E

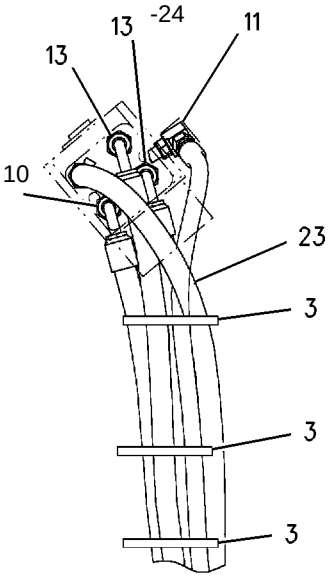

SECTION B-B

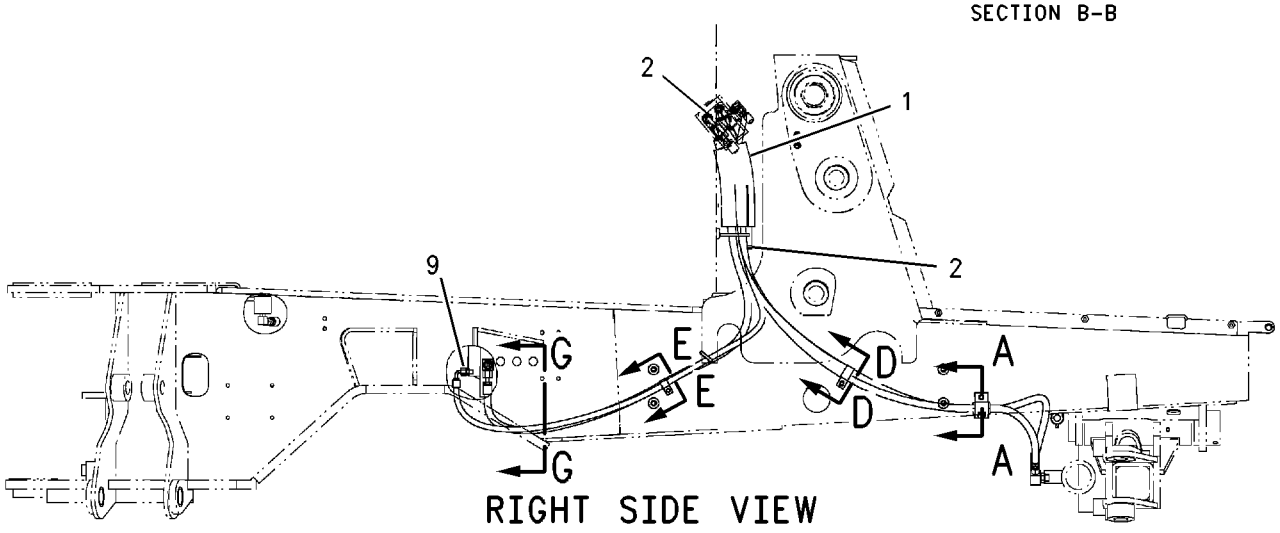

RIGHT SIDE VIEW

GRAPHIC #1 g00864651

STEERING SYSTEM

163-0059 PUMP GP-METERING

S/N:JRB00255-UP

PART OF 236-9141 DRIVE AR

SMCS-4312 **i01670085**

NOTE	REF NO	GRAPHIC REF	PART NUMBER	QTY	PART NAME 1 2 3 4 5 6 (PRODUCT LEVEL)	SEE PAGE
	1	1	**3G-6906**	1	SCREW (9/16-18X0.559IN)	
	2	1	**1H-1023**	3	SEAL-O-RING	
	3	1	**3G-6907**	1	SEAT	
	4	1	**5F-9144**	1	SEAL-O-RING	
	5	1	**6S-7827**	1	BALL	
	6	1	**6S-7826**	1	RETAINER-BALL	
	7	1	**114-5325**	2	SPRING	
	8	1	**114-5326**	2	PLUG	
	9	1	**114-5332**	2	BALL	
	10	1	**8F-5340**	1	SEAL-LIP (25.4MM ID)	
	11	1	**9J-8076**	1	BUSHING-TERMINAL	
	12	1	**9J-5442**	1	RING-RETAINING (INTERNAL)(2.279IN OD)	
	13	1	**7F-8267**	1	SEAL-O-RING	
	14	1	**5L-1100**	1	BEARING-THRUST	
	15	1	**7J-8009**	1	PIN (0.25 ODX1.62IN OAL)	
	16	1	**114-5190**	1	SPACER	
	17	1	**9J-5686**	3	SEAL-O-RING	
	18	1	**114-5180**	1	CAP	
	19	1	**119-8086**	7	BOLT	
	20	1	**3G-4461**	1	SPACER (0.24IN THK)	
	21	1	**7J-6839**	1	DRIVE-CONTROL END	
	22	1	**9T-8560**	1	KIT-SPRING	
	23	1	**3G-6891**	2	RACE	
	24	1	**7J-6833**	1	SEAL (1.034IN ID)	
	25	1	**114-5337**	2	SEAT-VALVE	
	26	1	**114-5342**	2	RETAINER-BALL	
	27	1	**114-5075**	2	SPRING	
	28	1	**114-5347**	2	PLUG	
	29	1	**9T-1083**	1	GEROTOR AS	
	30	1	**114-5339**	2	BALL	
	31	1	**114-5132**	1	VALVE AS-CHECK	
					AVAILABLE REPAIR KIT(S):	
			118-4341	1	KIT-SEAL	

163-0059 PUMP GP-METERING *(contd.)* i01670085

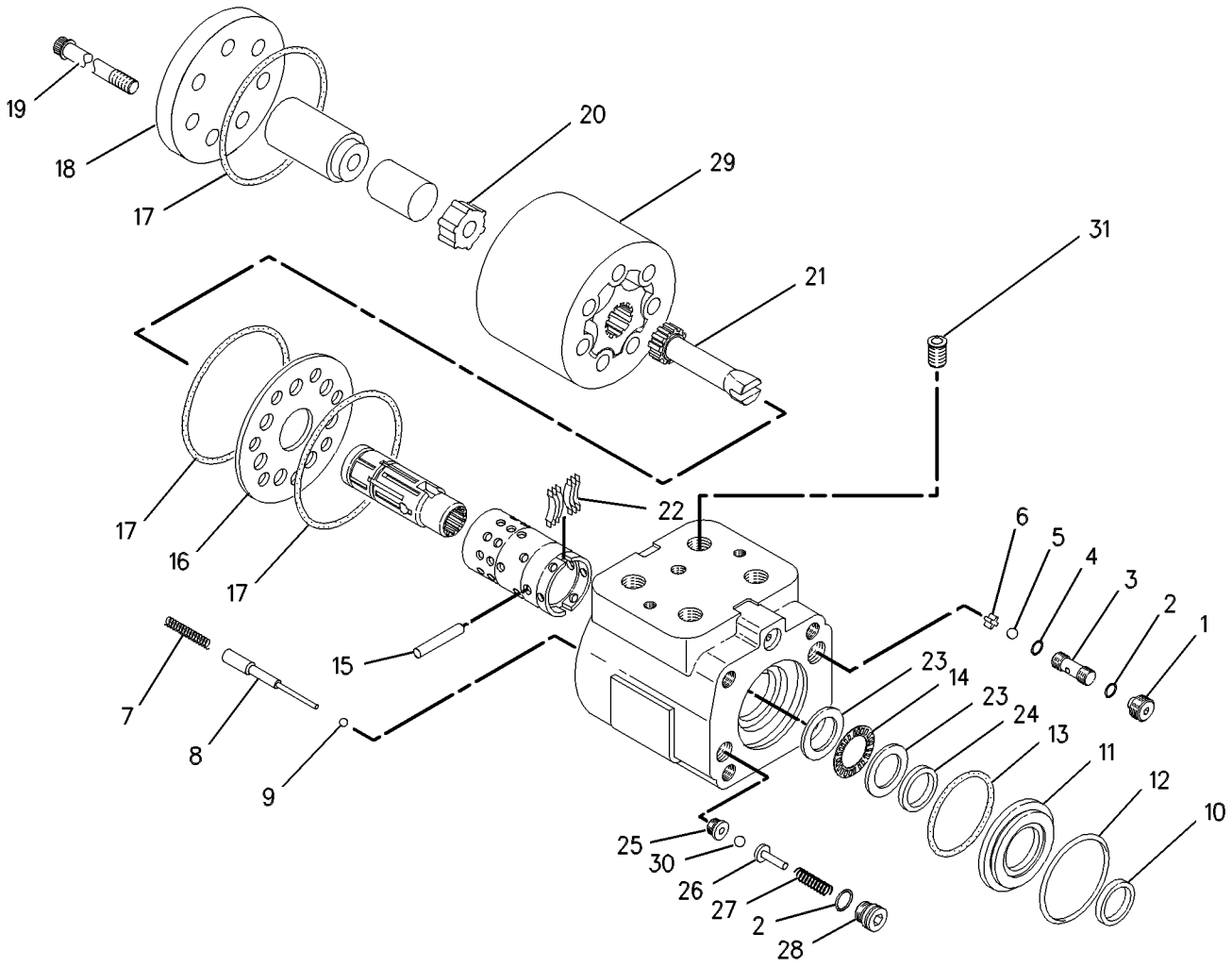

GRAPHIC #1 g00509375

STEERING SYSTEM

214-5097 CYLINDER GP - STEERING

S/N : JRB00255-UP

PART OF 189-1834 AXLE GP - FRONT

NOTE	REF NO	GRAPHIC REF	PART NUMBER	QTY	PART NAME 1 2 3 4 5 6 (PRODUCT LEVEL)	SEE PAGE
	1	1	238-5254	1	ROD	
	2	1	238-5255	2	CYLINDER HEAD	
			215-2023	1	SEAL-KIT	

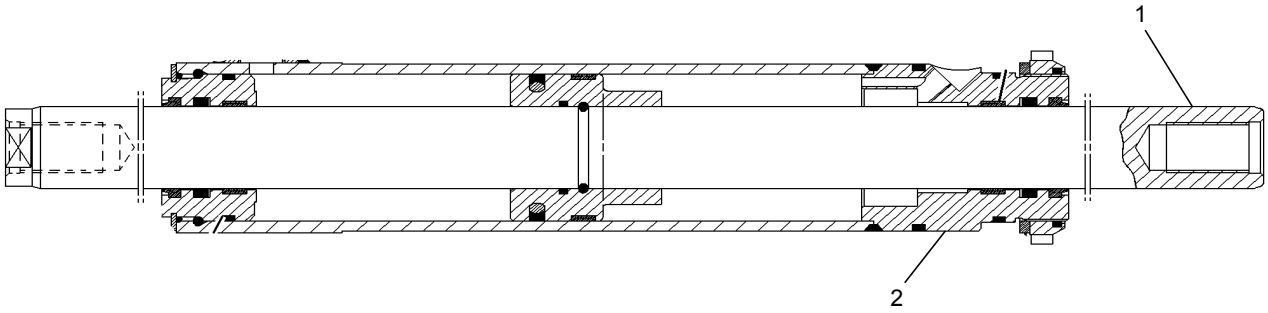

GRAPHIC #1

STEERING SYSTEM

188-7471 VALVE GP-PRIORITY–STEERING

S/N:JRB00255-UP

PART OF 185-5906 VALVE GP-BANK 2, 185-5907 VALVE GP-BANK 3

SMCS-4320, 5137 **i01650185**

NOTE	REF NO	GRAPHIC REF	PART NUMBER	QTY	PART NAME 1 2 3 4 5 6 (PRODUCT LEVEL)	SEE PAGE
Y	1	1	**191-4484**	1	VALVE GP-CONTROL	256
	2	1	**9S-8006**	1	PLUG	
	3	1	**103-4754**	1	SPRING	
	4	1	**9T-0655**	1	VALVE GP-RELIEF	
	4A	1	**1S-8947**	1	SEAL-O-RING	
	4B	1	**3D-2824**	1	SEAL-O-RING	
	4C	1	**9T-0656**	1	RING	
	5	1	**5B-9318**	1	BALL	
	6	1	**180-9157**	1	SEAT AS	
	6A	1	**4T-7807**	1	RING-BACKUP	
	6B	1	**7J-0204**	1	SEAL-O-RING	
	6C	1	**8T-2360**	1	SEAL-O-RING	
	7	1	**9S-9334**	1	PLUG	
	8	1	**7M-8485**	1	SEAL-O-RING	

Y-SEPARATE ILLUSTRATION

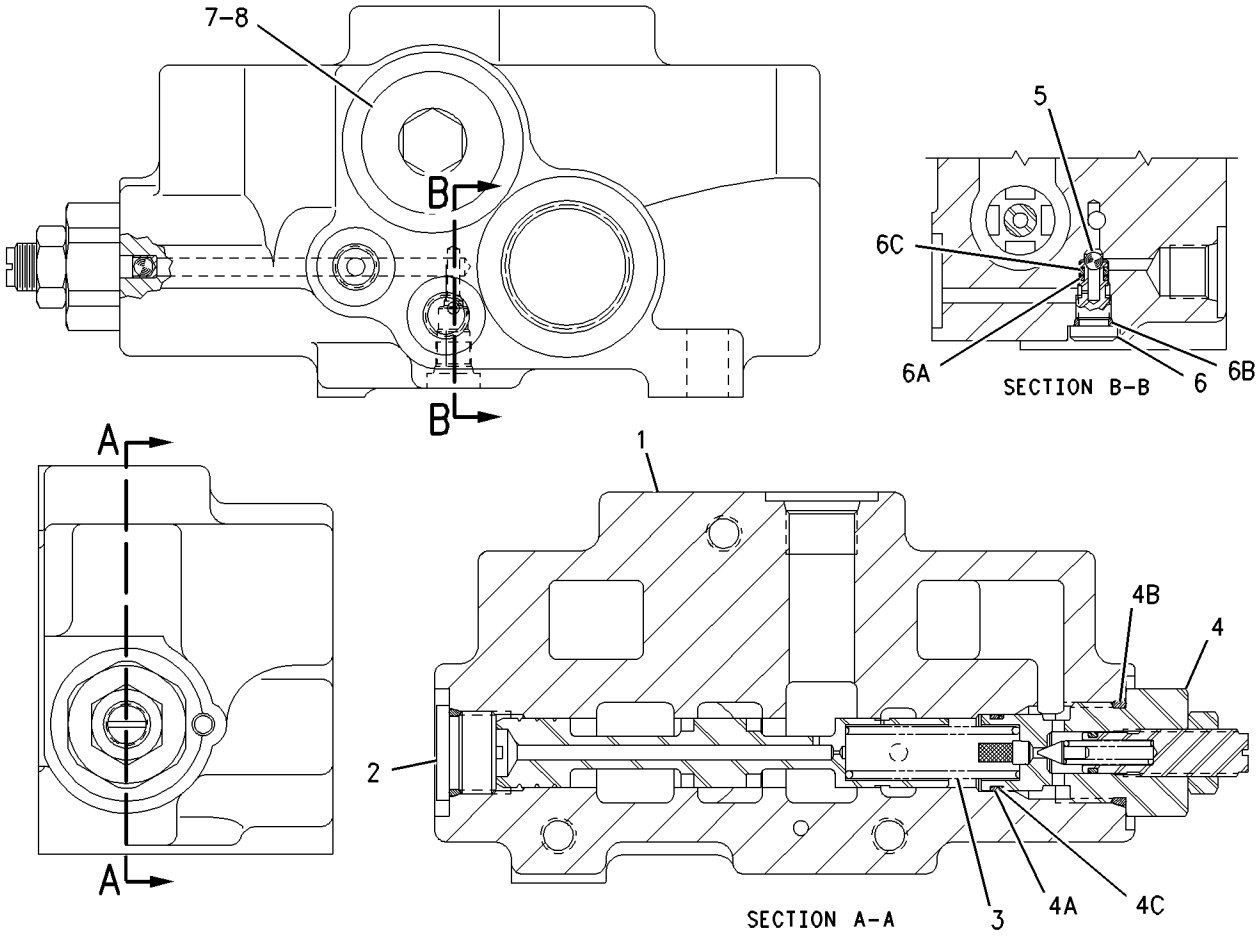

GRAPHIC #1 g00852617

BRAKING SYSTEM

163-0754 CONTROL GP-PARKING BRAKE

S/N:JRB00255-UP

PART OF 202-5737 CONTROL GP-PARKING BRAKE

SMCS-4282, 4284 **i01388150**

NOTE	REF NO	GRAPHIC REF	PART NUMBER	QTY	PART NAME 1 2 3 4 5 6 (PRODUCT LEVEL)	SEE PAGE
Y	1	1	**163-0753**	1	LEVER GP-HAND CONTROL	136
	2	1	**163-0755**	1	CABLE GP	
		1	**6V-8759**	1	RING-RETAINING	

Y-SEPARATE ILLUSTRATION

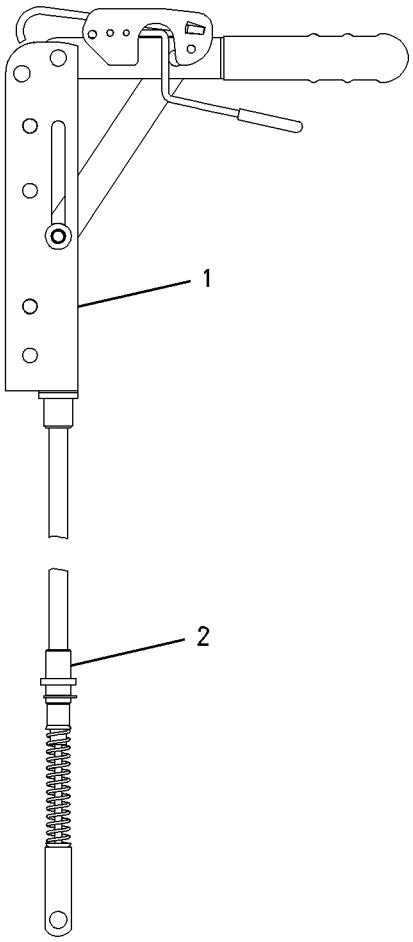

GRAPHIC #1 g00729449

FRAME AND BODY

237-5499 BATTERY BOX GP

S/N : JRB00255-UP

NOTE	REF NO	GRAPHIC REF	PART NUMBER	QTY	PART NAME 1 2 3 4 5 6 (PRODUCT LEVEL)	SEE PAGE
	1	1	7T-8895	1	GROMMET	
	2	1	148-7868	1	STEP AS	
	3	1	237-5500	1	BOX AS	
	4	1	237-5501	1	PLATE	
	5	1	7X-0578	3	WASHER-HARD	
	6	1	8T-4121	3	WASHER-HARD	
	7	1	8T-4136	6	BOLT	
	8	1	8T-4183	4	BOLT	
	9	1	8T-4223	4	WASHER-HARD	
			228-2794		TREAD GP-SAFETY	
B	10	1	236-8606		GRIT	

B - USE AS REQUIRED

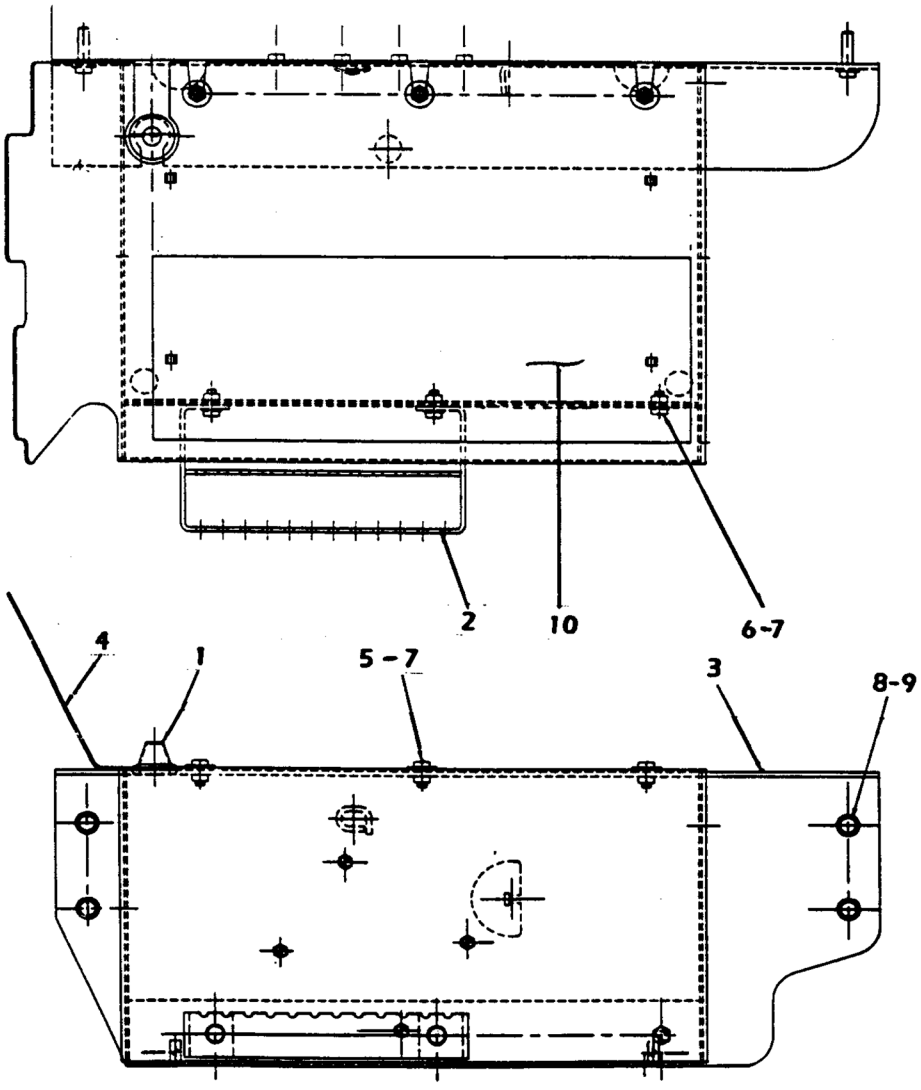

GRAPHIC #1

235-9051 COUNTERWEIGHT GP

S/N:JRB00255-269

SMCS-7056

NOTE	REF NO	GRAPHIC REF	PART NUMBER	QTY	PART NAME 1 2 3 4 5 6 (PRODUCT LEVEL)	SEE PAGE
	1	1	**235-9052**	1	COUNTER WEIGHT	
M	2	1	**8T-4123**	4	WASHER	
	3	1	**8T-4170**	4	BOLT	

M-METRIC PART

GRAPHIC #1

g00257331

FRAME AND BODY

250-2655 FENDER GP-REAR

S/N:JRB00485-UP

PART OF 228-2787 CAB AR

SMCS-7252 **i01354034**

NOTE	REF NO	GRAPHIC REF	PART NUMBER	QTY	PART NAME 1 2 3 4 5 6 (PRODUCT LEVEL)	SEE PAGE
	1	1	**156-0283**	14	WASHER-HARD (2.5MM THK)	
	2	1	**228-2792**	1	FENDER-RH	
	3	1	**228-2793**	1	FENDER-LH	
M	4	1	**8T-4189**	14	BOLT (M8X1.25X20MM)	

M-METRIC PART

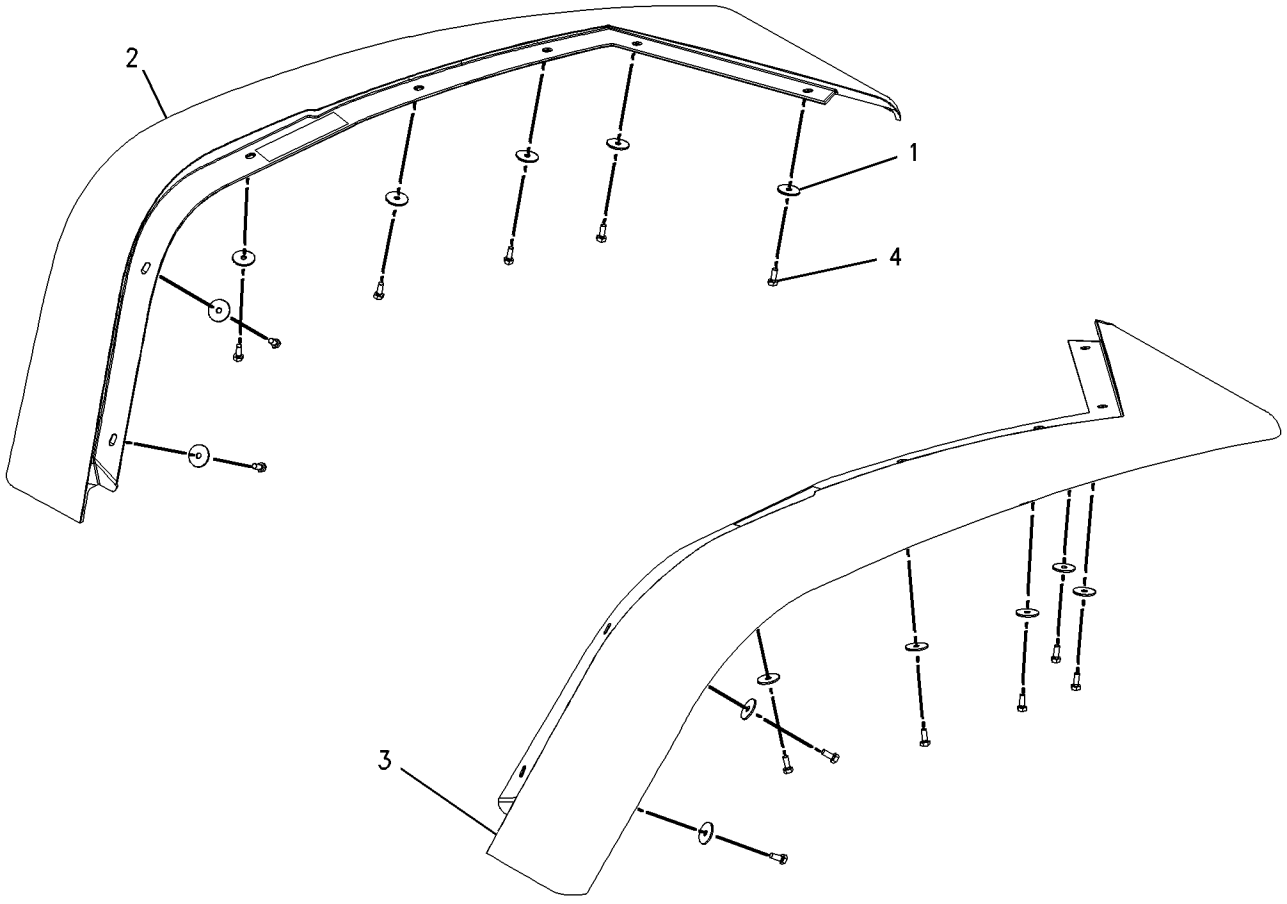

GRAPHIC #1 g00714945

FRAME AND BODY

202-5726 FLOORPLATE GP

S/N:JRB00255-UP

PART OF 228-2807 CHASSIS AR

SMCS-7265 **i01673627**

NOTE	REF NO	GRAPHIC REF	PART NUMBER	QTY	PART NAME 1 2 3 4 5 6 (PRODUCT LEVEL)	SEE PAGE
	1	1	**9R-0393**	6	SHIM (1.6 MM THK)	
	2	1	**9R-0394**	2	MOUNT AS	
	3	1	**118-2990**	2	MOUNT AS	
	4	1	**164-1102**	1	PLATE AS	
	5	1	**202-5888**	1	PLATE	
	6	1	**184-6436**	1	PLATE	
	7	1	**201-4822**	1	PLATE AS	
		1	**164-1114**	1	PLATE	
	8	1	**1L-6377**	2	BUTTON-PLUG	
	9	1	**8C-3291**	4	WASHER (M17X90X10MM THK)	
M	10	1	**8T-4001**	2	NUT (M24X3 THD)	
	11	1	**8T-4122**	2	WASHER-HARD (17X32X3.5MM THK)	
M	12	1	**8T-4132**	2	NUT (M16X2 THD)	
	13	1	**8T-4167**	4	WASHER-HARD (26X44X4MM THK)	
M	14	1	**8T-4174**	2	BOLT (M16X2.0X120MM)	
M	15	1	**8T-4649**	2	BOLT (M24X3X140MM)	
	16	1	**9R-9869**	4	WASHER-HARD (M26X120X10MM THK)	
M	17	1	**9X-2042**	12	SCREW-TRUSS HEAD (M6X1X12MM)	
M	18	1	**8T-4137**	1	BOLT (M10X1.5X20MM)	
	19	1	**8T-4121**	1	WASHER-HARD (11X21X2.5MM THK)	
	20	1	**8M-2770**	1	CLIP	
	21	1	**202-5889**	1	PLATE	

M-METRIC PART

202-5726 FLOORPLATE GP *(contd.)* i01673627

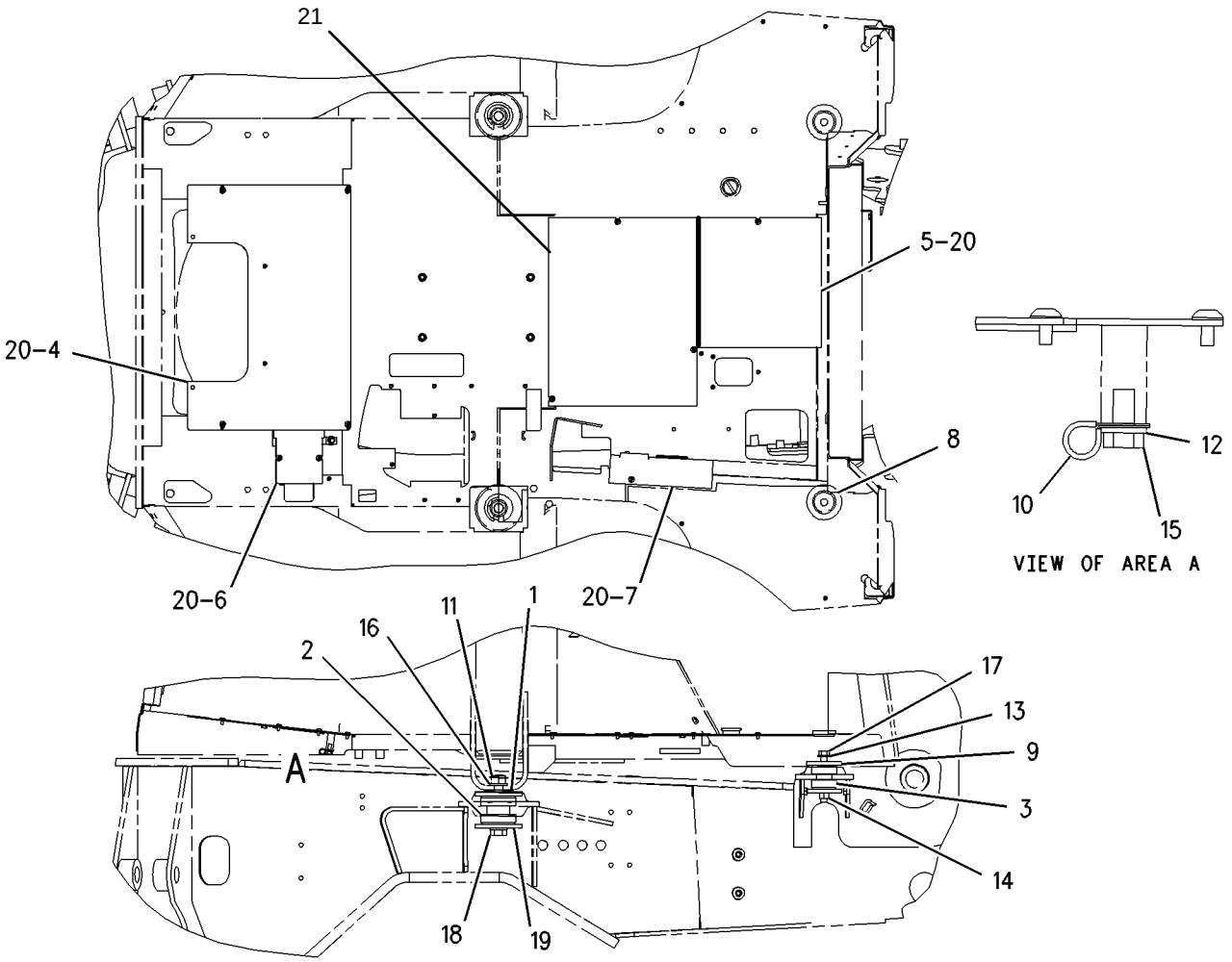

GRAPHIC #1 g00809282

FRAME AND BODY

197-8134 FRAME GP-LOADER

S/N:JRB00255-UP
SINGLE TILT
PART OF 228-2807 CHASSIS AR

SMCS-7054 **i01424349**

NOTE	REF NO	GRAPHIC REF	PART NUMBER	QTY	PART NAME 1 2 3 4 5 6 (PRODUCT LEVEL)	SEE PAGE
	1	1	**126-5693**	2	TUBE AS	
	2	1	**126-5701**	4	PLATE-RETAINER	
	3	1	**196-9310**	1	FRAME AS	
	3A	1	**9R-6690**	4	BEARING-SLEEVE	
	4	1	**193-1681**	2	PAD	
	5	1	**193-1682**	2	PAD	
	6	1	**193-1683**	2	PAD	
	7	1	**193-1684**	2	PAD	
	8	1	**193-1685**	2	PAD	
	9	1	**193-1686**	2	PAD	
	10	1	**193-1687**	2	PAD	
	11	1	**193-1688**	2	PAD	
	12	1	**193-1689**	2	PAD	
M	13	1	**8T-4191**	8	BOLT (M10X1.5X16MM)	

M-METRIC PART

197-8134 FRAME GP-LOADER *(contd.)* i01424349

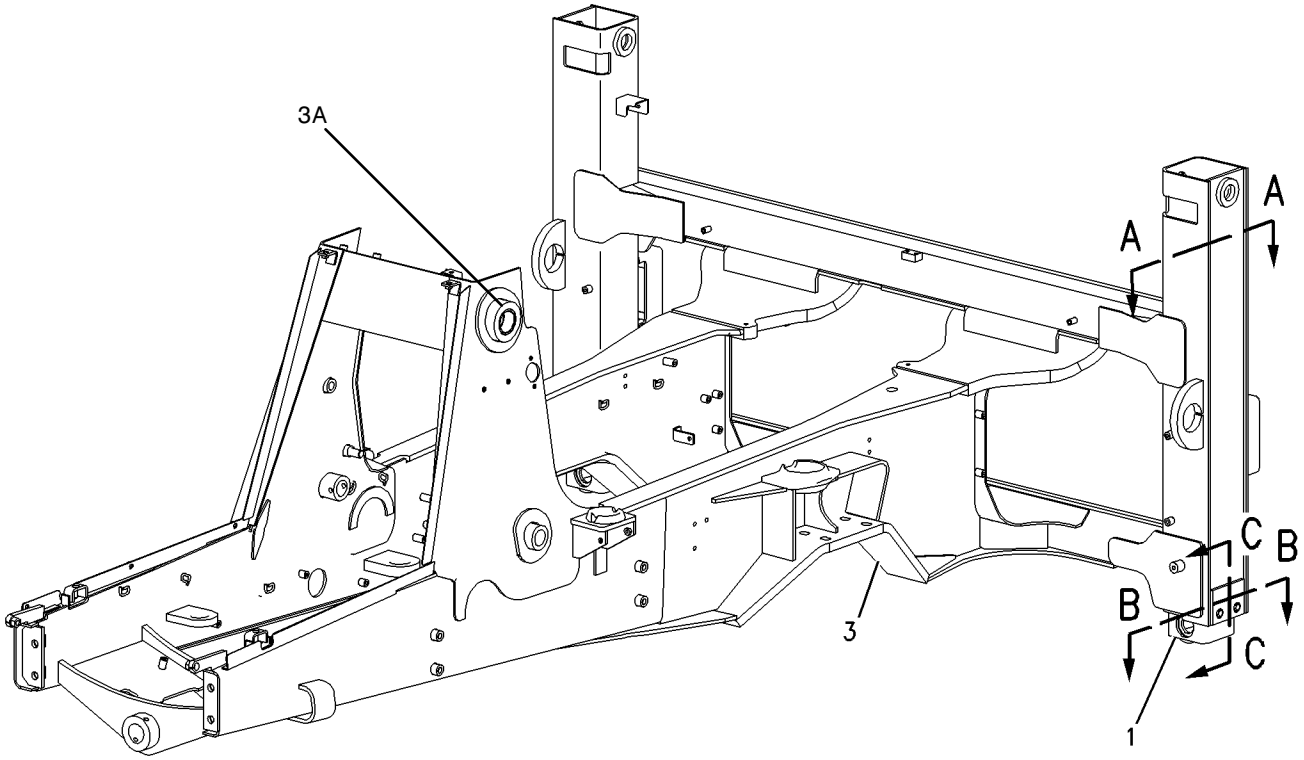

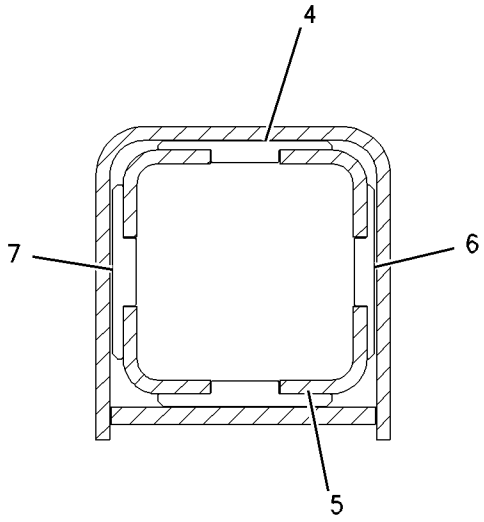

SECTION A-A

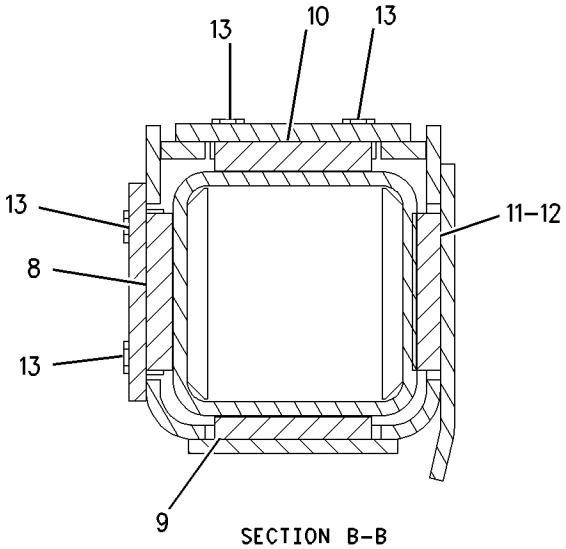

SECTION B-B

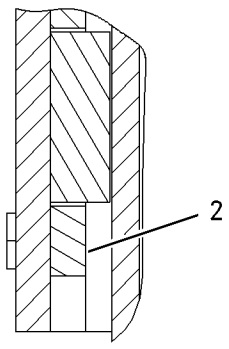

SECTION C-C

GRAPHIC #1 g00723496

185-8857 FRAME GP-SLIDING

S/N :JRB00315-UP

PART OF 228-2807 CHASSIS AR

SMCS-6508 **i01549358**

NOTE	REF NO	GRAPHIC REF	PART NUMBER	QTY	PART NAME 1 2 3 4 5 6 (PRODUCT LEVEL)	SEE PAGE
C	1	1	**201-0582**	1	FRAME AS	
C	1A	1	**9C-8895**	3	BOSS	
C	1B	1	**9R-0413**	1	BEARING	
C	1C	1	**9R-4110**	2	BEARING-SLEEVE	
C	1D	1	**102-4560**	1	BEARING-SLEEVE	
C	1E	1	**9R-0366**	1	WASHER (5MM THK)	
	2	1	**9R-7092**	2	BAR	
	3	1	**9R-7701**	1	CAP AS	
	3A	1	**9R-4110**	2	BEARING-SLEEVE	
CM	4	1	**7X-2465**	6	BOLT (M24X3.0X180MM)	
	5	1	**8T-4167**	12	WASHER-HARD (26X44X4MM THK)	
M	6	1	**114-6099**	6	BOLT-HEX HEAD	
M	7	1	**8T-4001**	6	NUT (M24X3 THD)	
	8	1	**9R-0481**	2	WASHER (4MM THK)	
	9	1	**3B-8488**	2	FITTING-GREASE	
	10	1	**3B-8489**	2	FITTING-GREASE	
	11	1	**9R-5387**	4	PISTON	
	12	1	**209-6188**	4	PLATE	
	13	1	**030-3239**	4	RING-BACKUP	
	14	1	**8F-6711**	4	SEAL-O-RING	
	15	1	**7K-9205**	4	SEAL-LIP	
	16	1	**9R-5386**	4	CYLINDER	

C-CHANGE FROM PREVIOUS TYPE
M-METRIC PART

185-8857 FRAME GP-SLIDING *(contd.)* i01549358

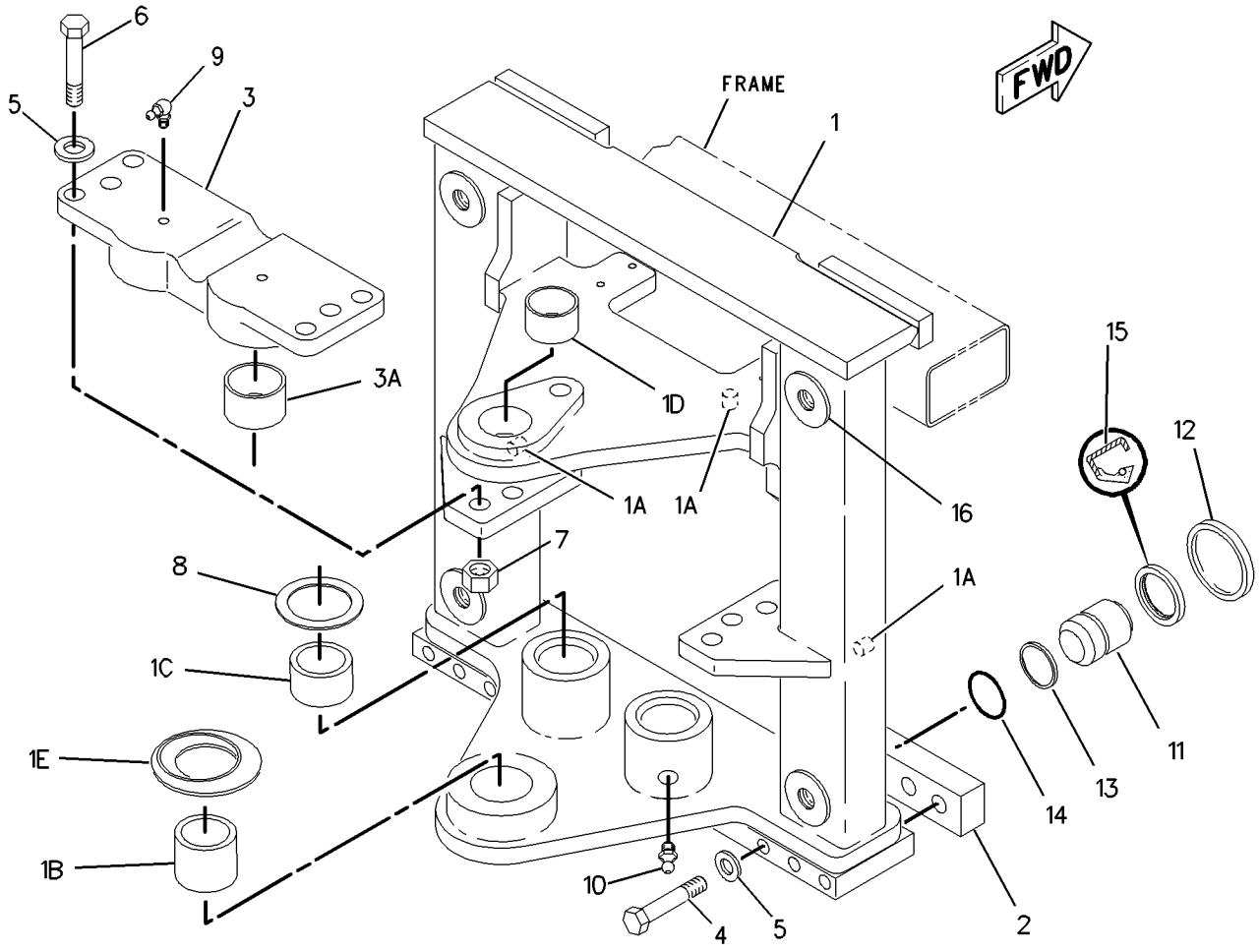

GRAPHIC #1 g00805431

FRAME AND BODY

183-6058 FRAME GP-SWING

S/N:JRB00255-UP
PART OF 233-6435 BACKHOE AR,
AN ATTACHMENT

SMCS-6506

NOTE	REF NO	GRAPHIC REF	PART NUMBER	QTY	PART NAME 1 2 3 4 5 6 (PRODUCT LEVEL)	SEE PAGE
	1	1	**9R-7710**	1	FRAME AS	
		1	**9R-0366**	1	WASHER (5MM THK)	
	2	1	**130-0484**	1	PIN	
	3	1	**9R-8579**	2	PIN	
	4	1	**130-0485**	2	PIN	
	5	1	*142-6132*	1	ROD AS	
M		1	**6V-7687**	1	LOCKNUT (M12X1.75 THD)	
		1	**123-7034**	1	ROD	
M	6	1	**6V-7687**	3	LOCKNUT (M12X1.75 THD)	
M	7	1	**8T-3652**	1	NUT (M42 THD)	
	8	1	**8T-4837**	1	WASHER (48X85X6MM THK)	
M	9	1	**8T-5412**	2	BOLT (M12X1.75X140MM)	
M	10	1	**8T-4139**	2	BOLT (M12X1.75X30MM)	
	11	1	**8T-4821**	2	WASHER-PLATED (3MM THK)	
	12	1	**9R-7882**	2	SPACER (7MM THK)	
B	13	1	**9R-5437**	4	WASHER (56X90X.5MM THK)	
	14	1	**3B-8489**	6	FITTING-GREASE (1/8-27 THD)	
B	15	1	**9R-8291**	2	SPACER (1MM THK)	
	16	1	**101-4020**	1	PIN AS	
	17	1	**159-0960**	1	PIN AS	
	18	1	**102-1940**	1	STOP	
M	19	1	**8T-4136**	5	BOLT (M10X1.5X25MM)	
	20	1	**8T-4121**	7	WASHER-HARD (11X21X2.5MM THK)	
	21	1	**134-0143**	1	CABLE	
	22	1	**8Y-7203**	1	WEDGE	
	23	1	**8Y-7204**	1	WEDGE	
	24	1	**194-2754**	1	SPRING	
	25	1	**101-4015**	1	BRACKET	
	26	1	**164-1182**	1	CABLE AS	
	27	1	**9R-8594**	1	PIN AS	
	28	1	**131-8775**	1	BRACKET AS	
	29	1	**9R-8599**	1	PLATE	
B	30	1	**9R-5429**	2	SPACER (3MM THK)	
	31	1	**9R-8760**	2	PLATE	
M	32	1	**8T-4908**	4	BOLT (M8X1.25X25MM)	
	33	1	**8T-4224**	4	WASHER-HARD (8.8X16X2MM THK)	
M	34	1	**8T-8894**	1	BOLT-SOCKET HEAD (M10X1.5X20MM)	
M	35	1	**8T-4195**	2	BOLT (M10X1.5X30MM)	
	36	1	**5P-7958**	1	SLEEVE-CABLE SPLICE	
	37	1	**101-4016**	1	PLATE AS	
	38	1	**6K-0806**	1	STRAP-CABLE	
	39	1	**4D-7794**	3	CLIP	
M	40	1	**8T-4133**	2	NUT (M10X1.5 THD)	
	41	1	**7X-7729**	2	WASHER (11X25X3MM THK)	
B	42	1	**210-1706**	1	SHIM	
B	43	1	210-**1707**	1	SHIM	

B-USE AS REQUIRED
M-METRIC PART

183-6058 FRAME GP-SWING *(contd.)* i01657307

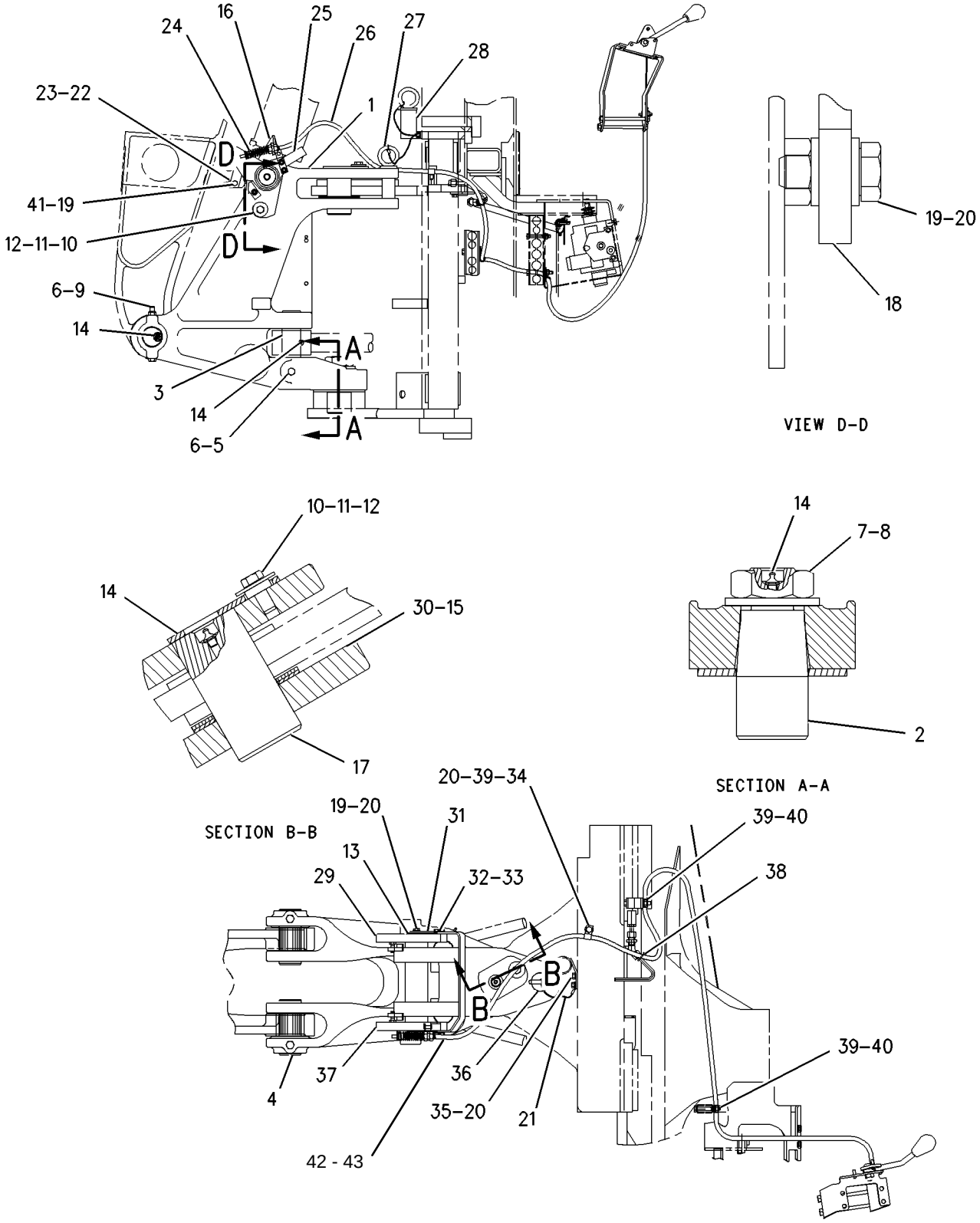

GRAPHIC #1 g00795729

FRAME AND BODY

236-6509 FRAME GP - SWING

S/N : JRB00649-UP
PART OF 233-6435 BACKHOE AR
STANDARD

SMCS - 6506

NOTE	REF NO	GRAPHIC REF	PART NUMBER	QTY	PART NAME 1 2 3 4 5 6 (PRODUCT LEVEL)	SEE PAGE
	1	1	271-0175	2	PIN	
	2	1	5P-7958	1	SLEEVE	
	3	1	8T-4837	1	WASHER (48X85X6MM THK)	
	4	1	8Y-7203	1	WEDGE	
	5	1	8Y-7204	1	WEDGE	
B	6	1	9R-5429	2	SPACER (3MM THK)	
	7	1	9R-5437	4	WASHER (56X90X0.5 THK)	
	8	1	9R-7882	2	SPACER (7MM THK)	
B	9	1	9R-8291	2	SPACER (1MM THK)	
	10	1	9R-8594	1	PIN AS	
	11	1	9R-8599	1	PLATE	
	12	1	9R-8760	2	PLATE	
	13	1	101-4015	1	BRAKCET	
	14	1	101-4016	1	PLATE AS	
	15	1	101-4022	1	PIN AS	
	16	1	102-1940	1	STOP	
	17	1	130-0484	1	PIN	
	18	1	131-8775	1	BRACKET AS	
	19	1	134-0143	1	CABLE AS	
	20	1	152-7146	1	BOLT M12X1.75	
B	21	1	210-1706	1	SHIM	
B	22	1	210-1707	1	SHIM	
	23	1	236-6512	1	PIN AS	
	24	1	236-6954	1	FRAME AS	
	24A	1	9R-0366	1	WASHER (5MM THK)	
	24B	1	236-8183	4	BEARING-SLEEVE	
	24C	1	237-0944	2	BEARING-SLEEVE	
	24D	1	237-0945	2	BEARING-SLEEVE	
	25	1	237-0803	1	SPRING	
	26	1	237-5330	2	PIN	
	27	1	3B-8489	6	FITTING-GREASE (1/8-27 THD)	
	28	1	5P-1076	1	WASHER-HARD	
M	29	1	6V-7687	3	LOCKNUT (M12X1.75 THD)	
	30	1	6V-8757	2	RING-RETAINING	
	31	1	7X-7729	2	WASHER (11X25X3MM THK)	
	32	1	8T-3652	1	NUT (M42 THD)	
	33	1	8T-4121	6	WASHER-HARD (11X21X205MM THK)	
M	34	1	8T-4136	5	BOLT (M10X1.5X25MM)	
M	35	1	8T-4139	2	BOLT (M12X1.75X30MM)	
M	36	1	8T-4195	2	BOLT (M10X1.5X30MM)	
	37	1	8T-4224	4	WASHER-HARD	
	38	1	8T-4821	2	WASHER-PLATED (3MM THK)	
M	39	1	8T-4908	4	BOLT (M8X1.25X25MM)	
M	40	1	8T-5092	2	BOLT (M12X1.75)	
	41	1	9R-2807	1	CLIP	
	42	1	9R-3135	1	PIN	

B - USE AS REQUIRED
M - METRIC PART

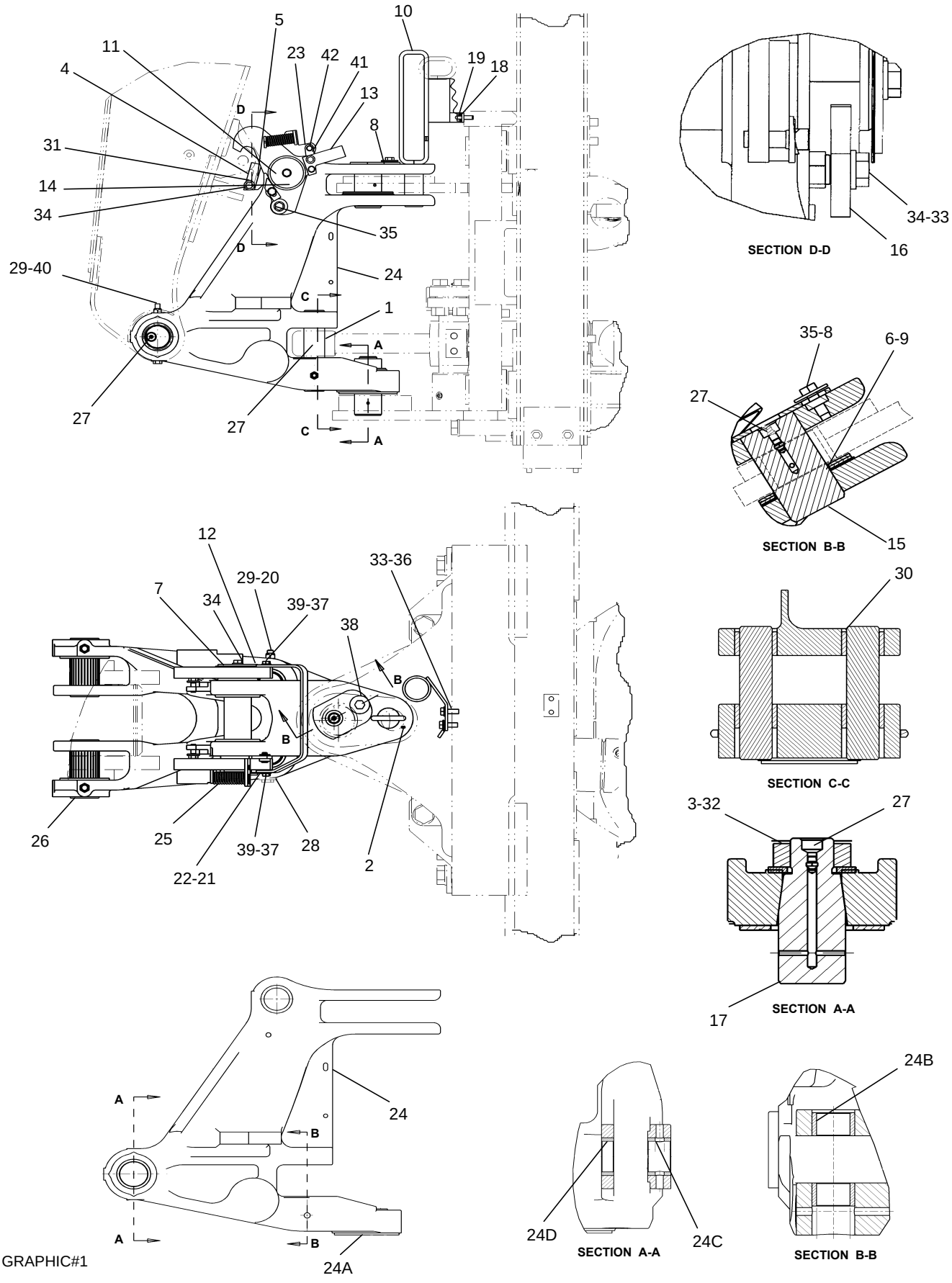
5
10
11
23
42
41
19
18
4
13
D
8
31
14
34
35
D
29-40
24
C
1
A
27
27
C
A
34-33
SECTION D-D
16
35-8
6-9
27
SECTION B-B
15
12
33-36
29-20
7
34
39-37
38
30
B
B
SECTION C-C
26
25
39-37
28
22-21
2
3-32
27
SECTION A-A
17
A
24
B
A
B
24A
24D
SECTION A-A
24C
24B
SECTION B-B

GRAPHIC#1

FRAME AND BODY

201-9732 FLOORPLATE GP

S/N:JRB00255-UP

PART OF 228-2787 CAB AR

SMCS-7265 **i01516360**

NOTE	REF NO	GRAPHIC REF	PART NUMBER	QTY	PART NAME 1 2 3 4 5 6 (PRODUCT LEVEL)	SEE PAGE
	1	1	**201-9733**	1	COVER	
M	2	1	**9X-2042**	1	SCREW-TRUSS HEAD (M6X1X12MM)	

M-METRIC PART

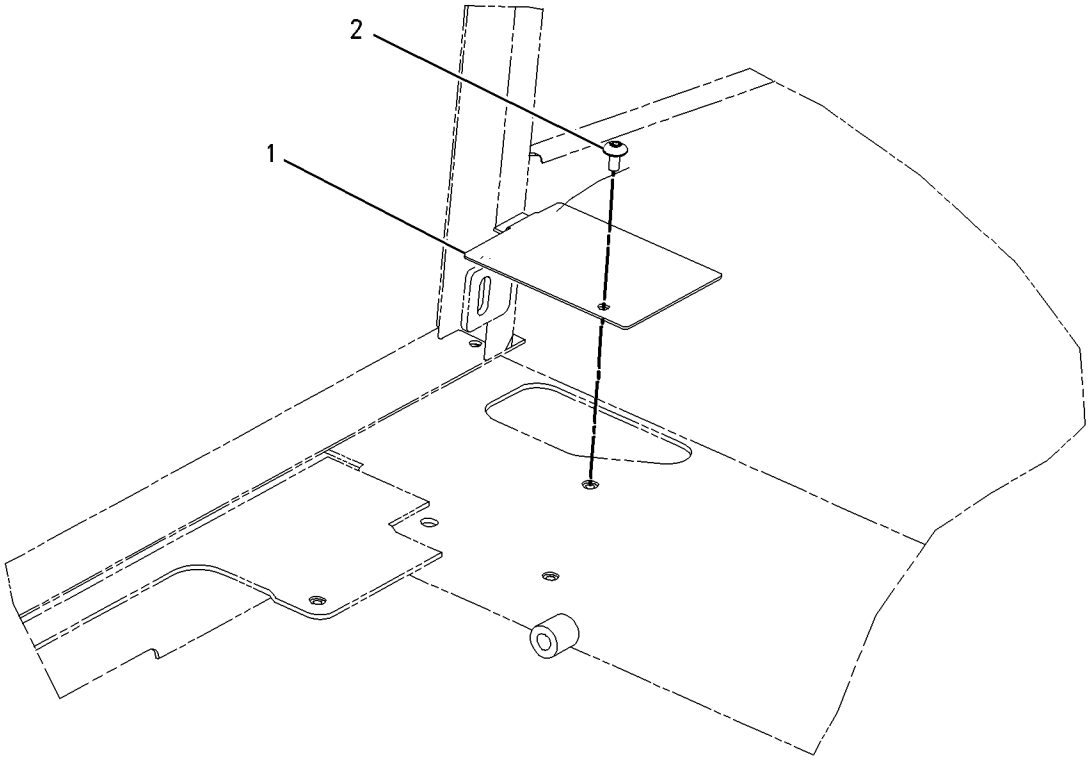

GRAPHIC #1 g00790974

FRAME AND BODY

9R-9999 GUARD GP-HOSE

S/N:JRB00255-UP

PART OF 228-2807 CHASSIS AR

SMCS-7167 **i00529890**

NOTE	REF NO	GRAPHIC REF	PART NUMBER	QTY	PART NAME 1 2 3 4 5 6 (PRODUCT LEVEL)	SEE PAGE
	1	1	**9R-9997**	1	GUARD-RH	
	2	1	**9R-9998**	1	GUARD-LH	
	3	1	**8T-4121**	8	WASHER (2.5MM THK)	
M	4	1	**8T-4137**	8	BOLT (M10X1.50X20MM)	

M-METRIC PART

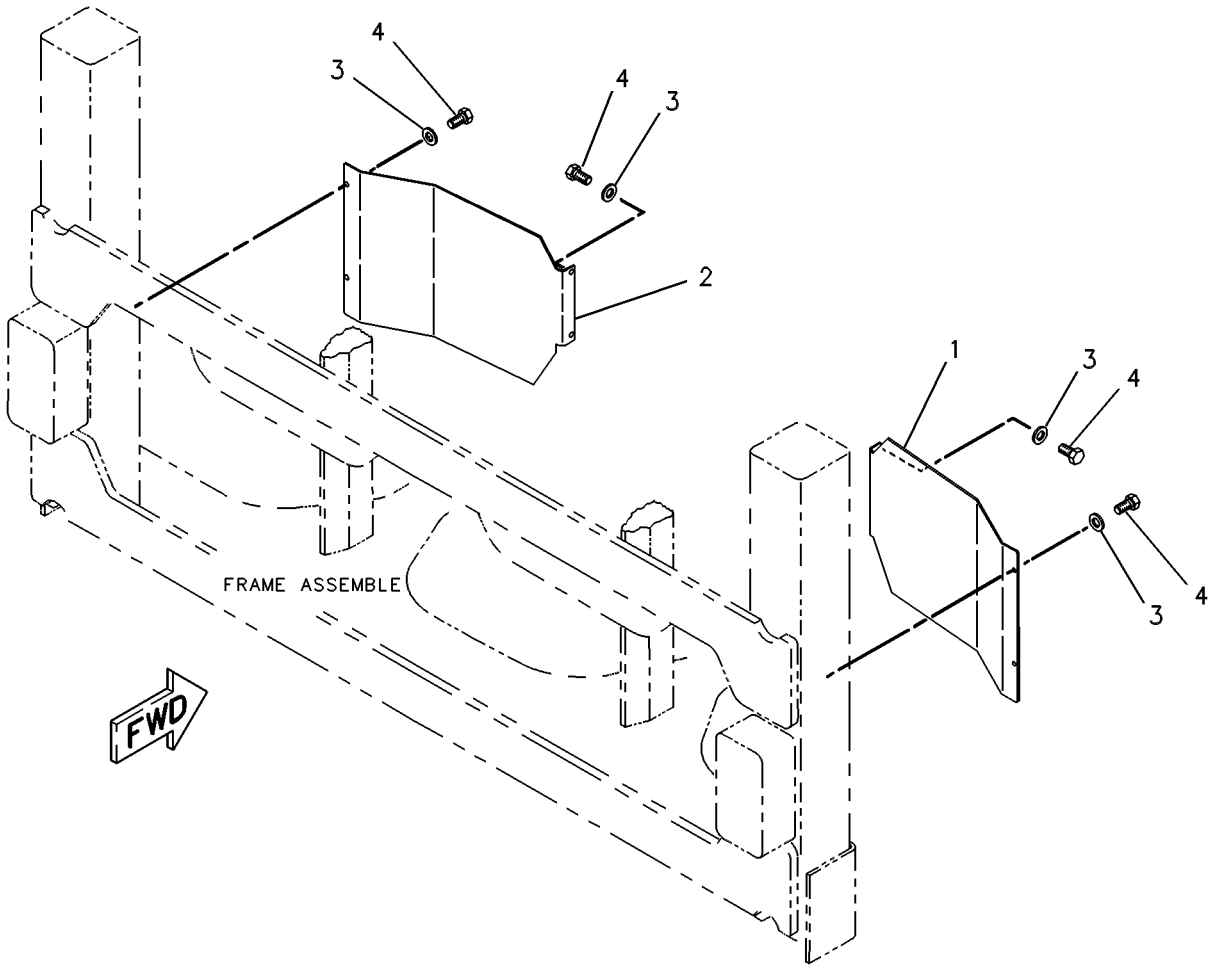

GRAPHIC #1 g00257652

FRAME AND BODY

185-8842 HOOD & GUARD GP

S/N:JRB00255-UP

PART OF 228-2807 CHASSIS AR

SMCS-7150, 7251 **i01435741**

NOTE	REF NO	GRAPHIC REF	PART NUMBER	QTY	PART NAME 1 2 3 4 5 6 (PRODUCT LEVEL)	SEE PAGE
BE	1	1	**3E-6600**		SEAL (83 CM)	
BE	2	1	**123-3827**		SEAL (60 CM)	
BE	3	1	**179-5571**		SEAL (61 CM)	
	4	1	**9R-2620**	1	PLUG	
	5	1	**112-4415**	2	BUMPER AS	
	6	1	**112-4416**	1	GUARD AS	
	7	1	**198-8341**	1	CABLE AS	
	8	1	**123-0428**	2	BAR	
	9	1	**123-4065**	6	RIVET-POP	
	10	1	**135-9886**	1	SPRING	
	11	1	**141-7514**	2	BAFFLE	
	12	1	**145-4476**	1	ENCLOSURE GP	
BE		1	**3E-6600**		SEAL (117 CM)	
	13	1	**145-4477**	1	ENCLOSURE GP	
BE		1	**177-4122**		SEAL (95 CM)	
	14	1	**188-0862**	1	GRILL AS	
	15	1	**188-0865**	1	BAFFLE	
Y	16	1	*190-5124*	1	HOOD GP-ENGINE	166
	17	1	**3S-2093**	4	STRAP-CABLE	
	18	1	**5P-4115**	1	WASHER-HARD (7.2X19X2MM THK)	
	19	1	**6P-6590**	1	GROMMET	
M	20	1	**7X-2554**	2	BOLT (M16X2X70MM)	
	21	1	**7X-7729**	3	WASHER (11X25X3MM THK)	
	22	1	**8T-4121**	8	WASHER-HARD (11X21X2.5MM THK)	
M	23	1	**8T-4136**	4	BOLT (M10X1.5X25MM)	
M	24	1	**8T-4137**	6	BOLT (M10X1.5X20MM)	
M	25	1	**8T-4138**	1	BOLT (M6X1X20MM)	
M	26	1	**8T-4182**	2	BOLT (M10X1.5X45MM)	
M	27	1	**8T-4191**	3	BOLT (M10X1.5X16MM)	
	28	1	**8T-4222**	4	WASHER-PLATED (11X32X2.5MM THK)	
	29	1	**8T-4224**	6	WASHER-HARD (8.8X16X2MM THK)	
M	30	1	**8T-7547**	6	BOLT (M8X1.25X30MM)	
	31	1	**9X-8257**	2	WASHER (17.5X30X3.5MM THK)	

B-USE AS REQUIRED
E-ORDER BY THE CENTIMETER
M-METRIC PART
Y-SEPARATE ILLUSTRATION

185-8842 HOOD & GUARD GP *(contd.)* i01435741

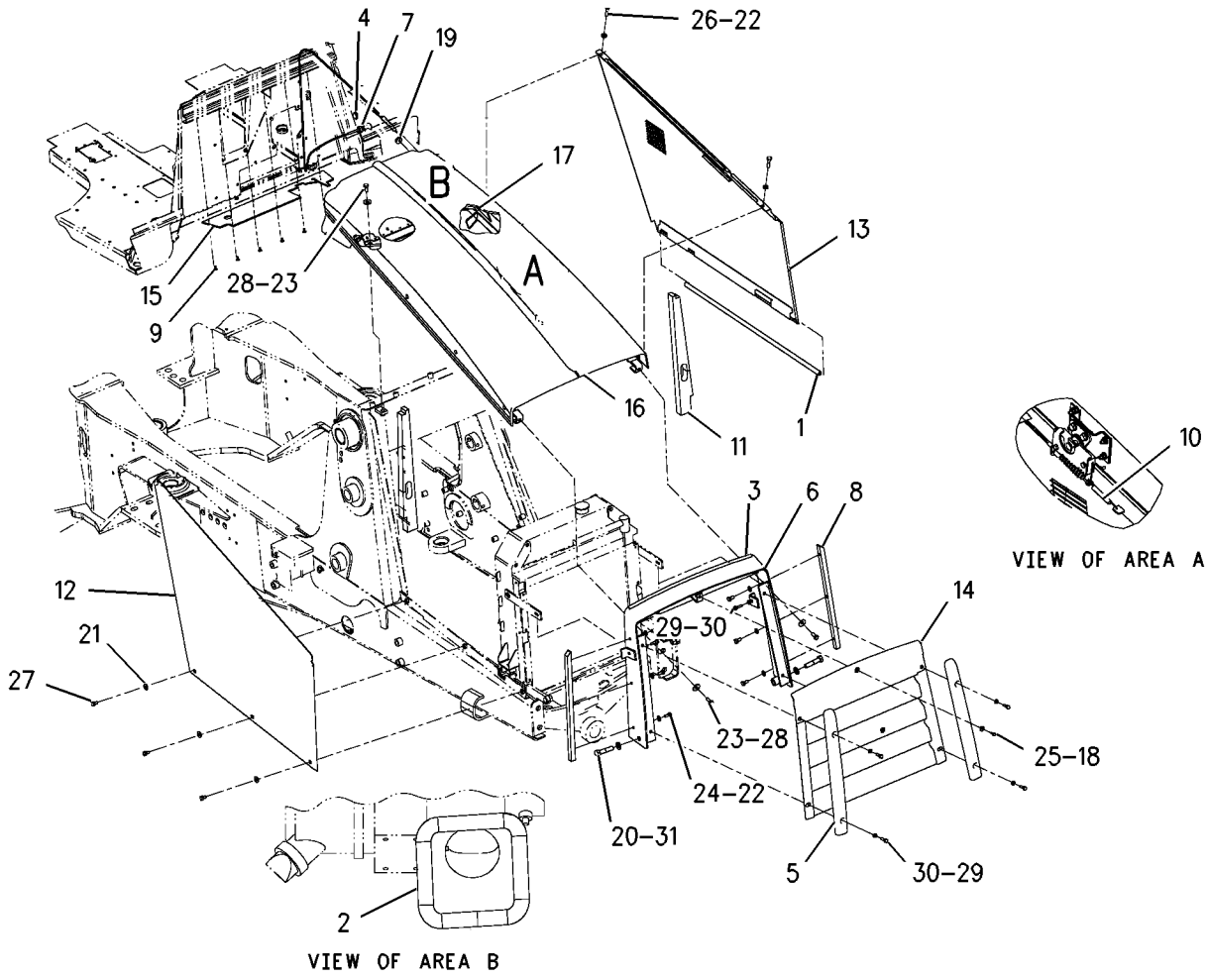

GRAPHIC #1 g00722653

FRAME AND BODY

190-5124 HOOD GP-ENGINE

S/N:JRB00255-UP

PART OF 185-8842 HOOD & GUARD GP

SMCS-7251 **i01645310**

NOTE	REF NO	GRAPHIC REF	PART NUMBER	QTY	PART NAME 1 2 3 4 5 6 (PRODUCT LEVEL)	SEE PAGE
E	1	1	**126-8472**		SEAL (35.8CM)	
	2	1	**4V-5091**	2	GROMMET	
	3	2	**5D-4822**	4	RING-RETAINING	
	4	1	**5V-8309**	1	STRIKER AS	
B	5	2	**8T-0318**	3	SHIM	
	6	1	**8T-2444**	4	STUD-BALL	
	7	1	**8Y-6998**	1	LATCH AS-ROTARY	
	8	2	**9R-4784**	1	PLATE AS	
	9	2	**114-8861**	2	SPRING AS-GAS	
	10	2	**114-8972**	2	HINGE AS	
	11	1	**114-8973**	2	HINGE AS	
	12	1	**115-5219**	1	PLATE AS	
	13	1	**115-5220**	1	PLATE	
	14	1	**122-5923**	1	BAFFLE	
	15	1	**123-4065**	11	RIVET-POP	
	16	1	**131-0827**	1	PLATE-LH	
	17	1	**131-0828**	1	PLATE-RH	
	18	1	**141-7515**	1	BAFFLE	
	19	1	**190-5125**	1	SUPPORT AS	
B		1	**7T-0525**	2	SHIM (3MM THK)	
	20	2	**191-9109**	1	HOOD AS-LH	
		1	**8T-9501**	6	SCREW (10-16X.75 IN)	
	21	2	**191-9110**	1	HOOD AS-RH	
M	22	1	**129-3178**	4	LOCKNUT (M6X1 THD)	
	23	1	**139-3785**	9	RIVET-POP	
	24	2	**4B-4274**	9	WASHER (5.5X13X1.2MM THK)	
M	25	1	**5C-7261**	6	NUT (M8X1.25 THD)	
	26	1	**7X-0579**	4	WASHER-HARD (8.8X25.5X2MM THK)	
M	27	1	**8T-4181**	2	BOLT (M6X1X20MM)	
M	28	2	**8T-4189**	12	BOLT (M8X1.25X20MM)	
M	29	1	**8T-4197**	3	BOLT (M8X1.25X40MM)	
	30	1	**8T-4205**	4	WASHER-HARD (7.2X14.5X2MM THK)	
	31	2	**8T-4224**	19	WASHER-HARD (8.8X16X2MM THK)	
M	32	2	**8T-5091**	2	BOLT (M8X1.25X20MM)	
M	33	1	**9X-2045**	4	SCREW-TRUSS HEAD (M6X1X20MM)	
	34	2	**191-9111**	1	FILM-CAT	
	35	2	**132-3895**	1	FILM-INSTRUCTION	
E	36	1	**3E-8211**	2	FILM-STRIPE (139CM)	

B-USE AS REQUIRED
E-ORDER BY THE CENTIMETER
M-METRIC PART

190-5124 HOOD GP-ENGINE *(contd.)* i01645310

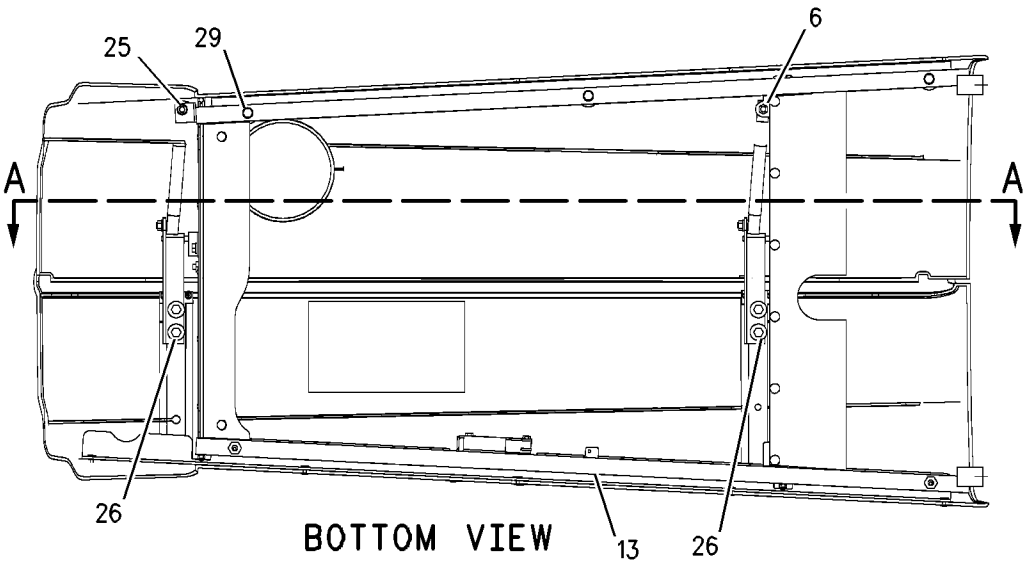

BOTTOM VIEW

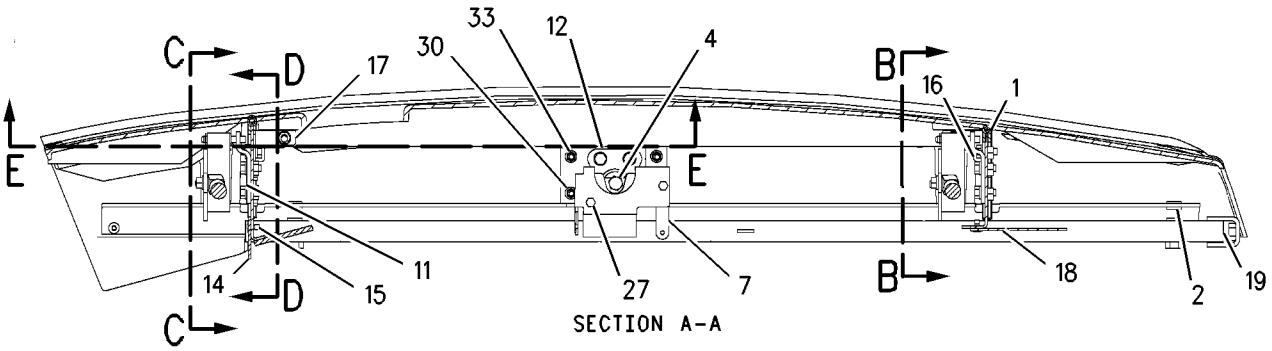

SECTION A-A

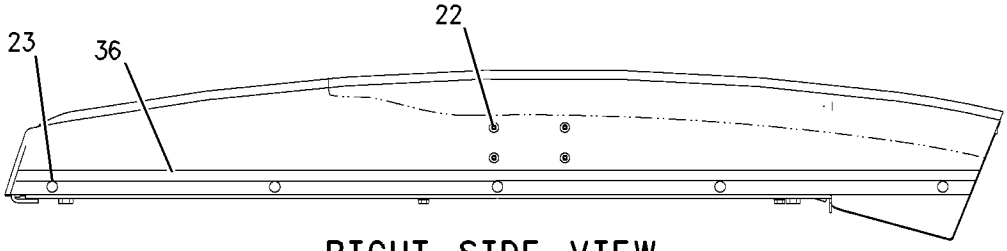

RIGHT SIDE VIEW

REFER TO ALL ILLUSTRATIONS
IN THIS GROUP FOR
AUXILIARY VIEWS

GRAPHIC #1 g00743336

190-5124 HOOD GP-ENGINE *(contd.)* i01645310

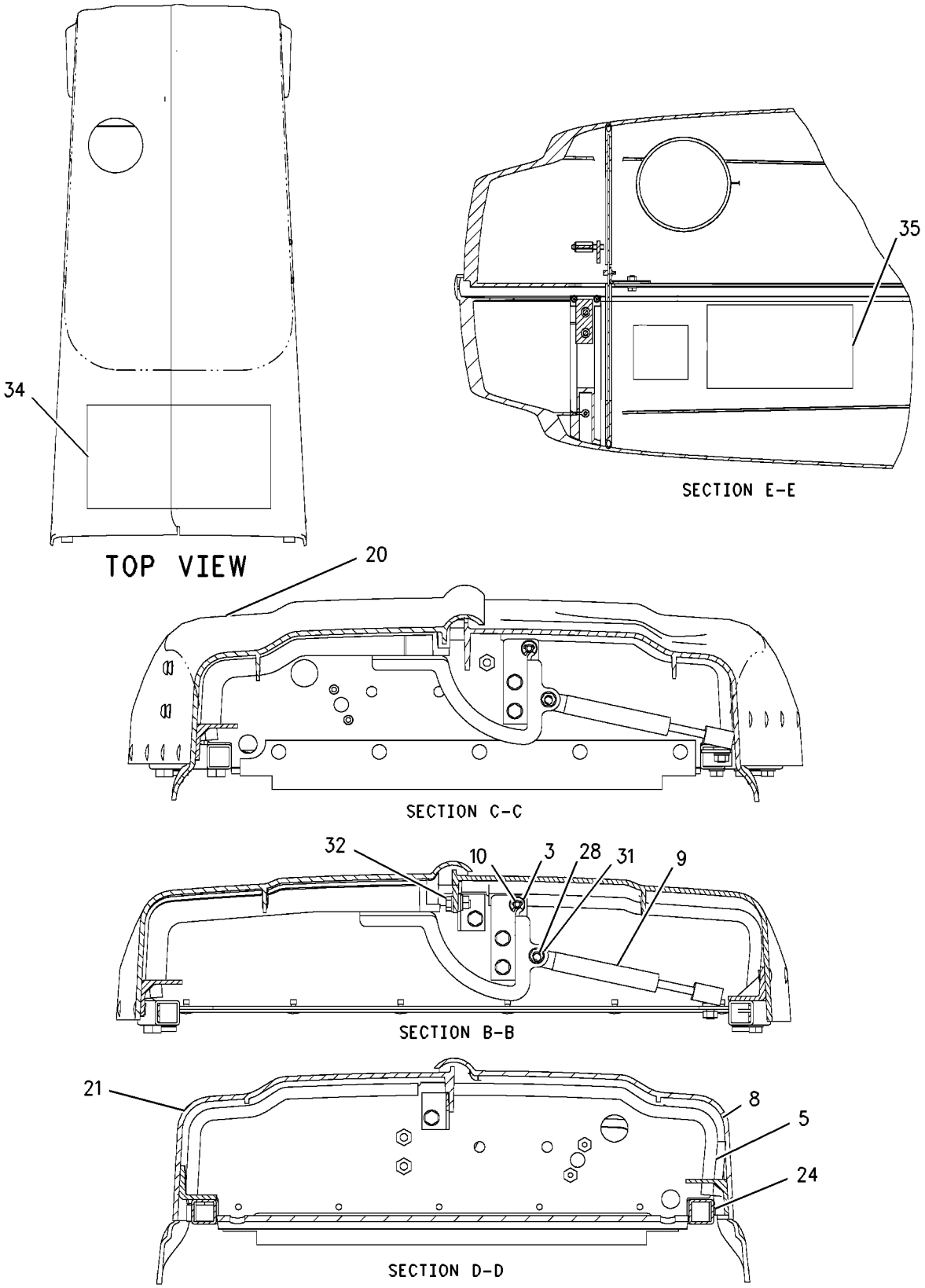

GRAPHIC #2 g00723871

HYDRAULIC SYSTEM

183-3150 CONTROL GP-HYDRAULIC HAND–LOADER

S/N:JRB00255-UP
MP BUCKET, SINGLE TILT
PART OF 186-5333 HYDRAULIC AR
AN ATTACHMENT

SMCS-5063 **i01657347**

NOTE	REF NO	GRAPHIC REF	PART NUMBER	QTY	PART NAME 1 2 3 4 5 6 (PRODUCT LEVEL)	SEE PAGE
	1	1	**1K-0502**	3	WASHER (25.4X16.3X1.2MM THK)	
	2	1	**2R-0364**	1	RING-RETAINING	
	3	1	**8T-4773**	1	BALL JOINT	
	4	1	**8T-4815**	1	ROD END	
M	5	1	**134-0453**	1	TURN BUCKLE	
	6	1	**164-1395**	1	KNOB	
	7	1	**179-8235**	1	LOCK PIN	
	8	1	**183-3151**	1	LEVER AS	
		1	**183-3136**	1	BEARING	
	9	1	**183-3153**	1	ROD	
	10	1	**183-3156**	1	ROD	
	11	1	**8C-4987**	1	PIN-CLEVIS	
	12	1	**8T-4121**	1	WASHER-HARD (11X21X2.5MM THK)	
M	13	1	**8T-4133**	3	NUT (M10X1.5 THD)	
M	14	1	**9X-2065**	1	NUT	

M-METRIC PART

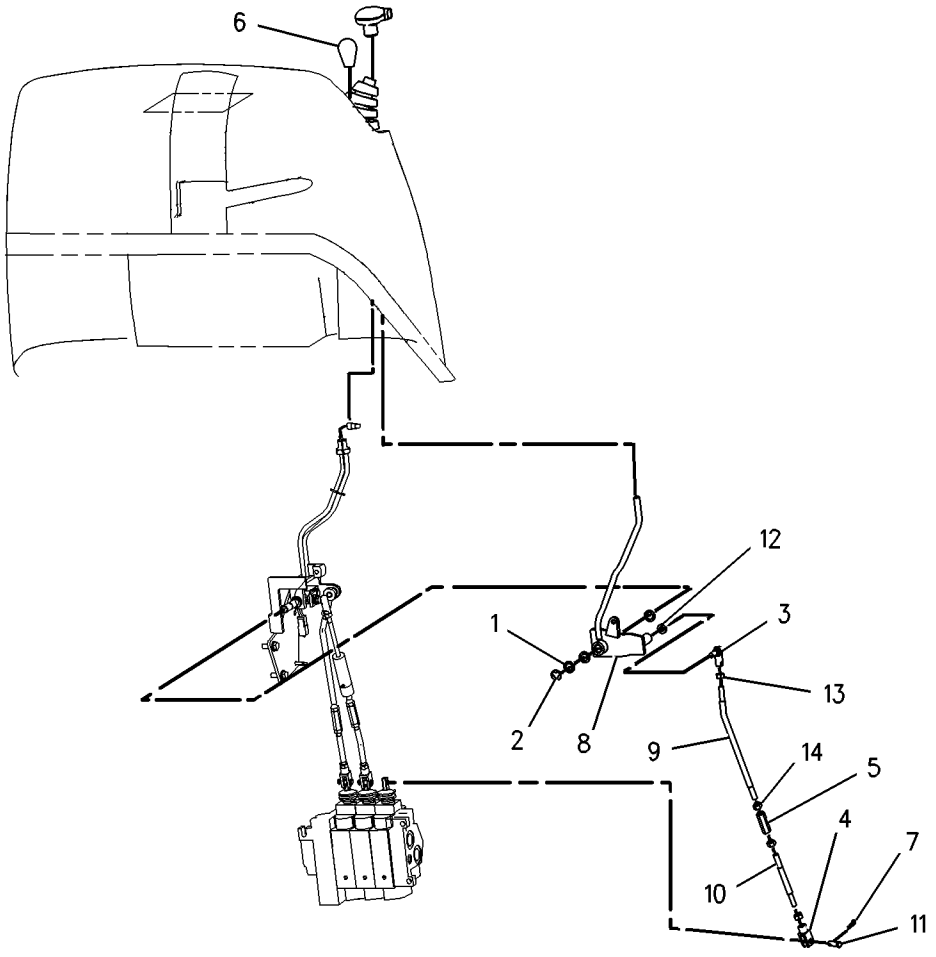

GRAPHIC #1 g00738135

HYDRAULIC SYSTEM

269-3116 CONTROL GP-HYDRAULIC HAND-B/H

S/N:JRB00543,548,549 & 558-UP
PART OF 228-2802 COMMON AR

SMCS-5063 **i01434312**

NOTE	REF NO	GRAPHIC REF	PART NUMBER	QTY	PART NAME 1 2 3 4 5 6 (PRODUCT LEVEL)	SEE PAGE
	1	1	**8T-4773**	4	BALL JOINT	
	2	1	**8T-4815**	4	ROD END	
	3	1	**205-9980**	7	SCREW-TRUSS HEAD M6X1.0	
	4	1	**164-1361**	2	BOOT	
	5	1	**269-3115**	1	PLATE	
	6	1	**164-1399**	2	KNOB	
	7	1	**164-1402**	2	SLEEVE	
	8	1	**164-1404**	2	SPACER (23MM THK)	
	9	1	**164-1406**	4	ROD	
	10	1	**164-1409**	1	LEVER AS	
	11	1	**164-1411**	1	LEVER AS	
	12	1	**164-1435**	2	PLATE	
	13	1	**164-1560**	1	TOWER AS	
	14	1	**269-3114**	1	CONSOLE-REAR	
	15	1	**170-6312**	4	BEARING	
	16	1	**179-8235**	4	LOCKPIN	
	17	1	**190-5130**	1	FILM	
M	18	1	**6V-7744**	8	LOCKNUT (M10X1.50 THD)	
	19	1	**7X-7729**	8	WASHER (11X25X3MM THK)	
	20	1	**8C-4987**	4	PIN-CLEVIS	
	21	1	**8T-4121**	8	WASHER-HARD (11X21X2.5MM THK)	
M	22	1	**8T-4133**	8	NUT (M10X1.5 THD)	
M	23	1	**8T-4138**	6	BOLT (M6X1X20MM)	
M	24	1	**8T-4172**	2	BOLT (M10X1.50X80MM)	
M	25	1	**8T-4195**	2	BOLT (M10X1.5X30MM)	
M	26	1	**8T-6466**	2	BOLT (M10X1.50X60MM)	
	27	1	**9X-2038**	4	WASHER (7X19X2MM THK)	
M	28	1	**9X-2045**	4	SCREW-TRUSS HEAD (M6X1X20MM)	
	29	1	**9X-8256**	6	WASHER (6.6X12X2MM THK)	
	30	1	**8T-4205**	7	WASHER	

M-METRIC PART

269-3116 CONTROL GP-HYDRAULIC HAND *(contd.)* i01434312

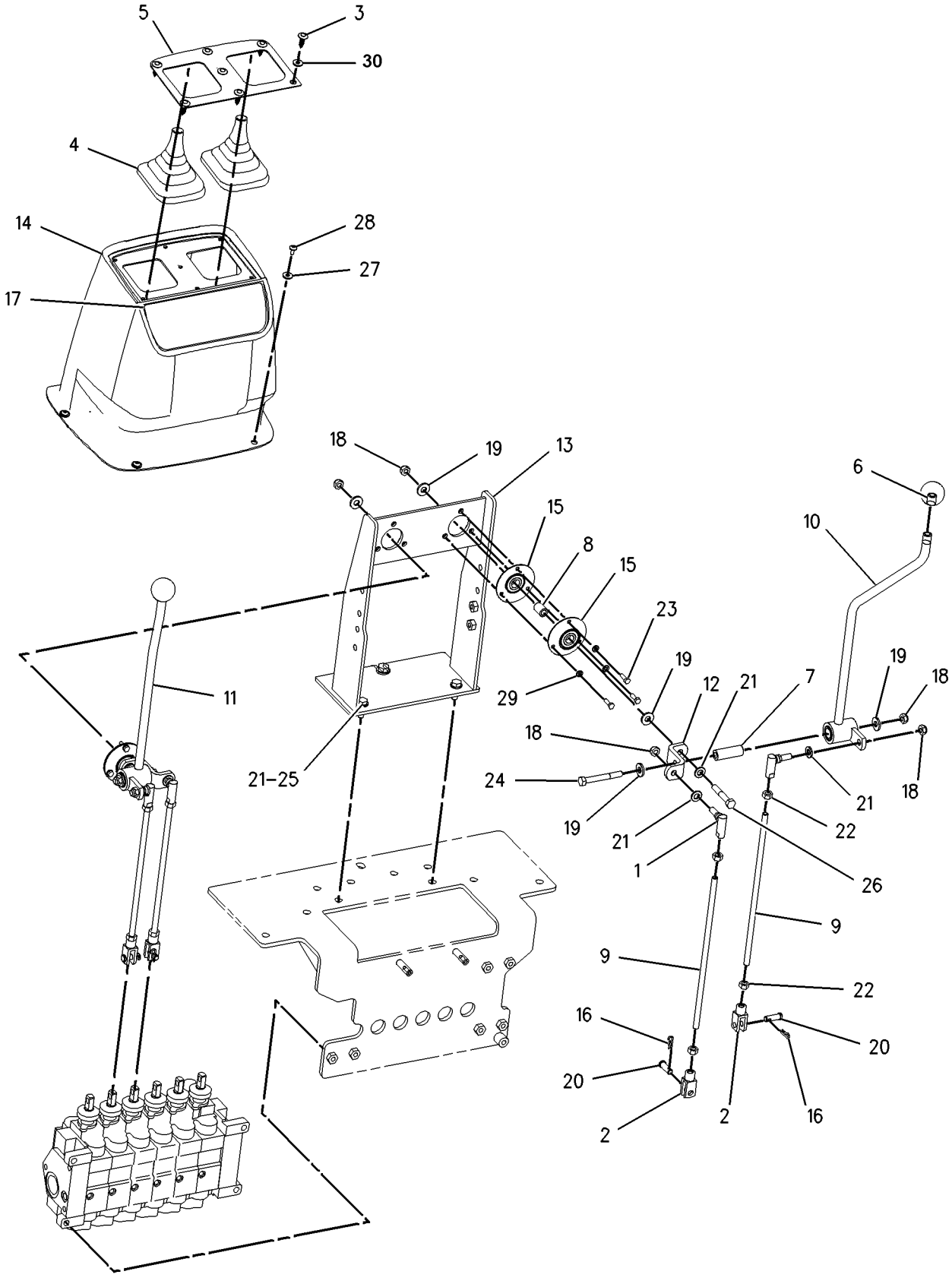

GRAPHIC #1 g00739022

HYDRAULIC SYSTEM

183-3120 CONTROL GP-HYDRAULIC HAND–LOADER

S/N:JRB00255-UP
SINGLE TILT
PART OF 228-2807 CHASSIS AR

SMCS-5063 **i01668712**

NOTE	REF NO	GRAPHIC REF	PART NUMBER	QTY	PART NAME 1 2 3 4 5 6 (PRODUCT LEVEL)	SEE PAGE
B	1	1	**1K-0502**	7	WASHER (25.4X16.3X1.2MM THK)	
	2	1	**2R-0364**	3	RING-RETAINING	
	3	1	**3E-3365**	1	WEDGE-RECEPTACLE LOCK (2 PIN)	
	4	1	**5H-3193**	1	PIN-SPRING	
	5	1	**8T-4766**	1	ROD END	
	6	1	**8T-4773**	1	BALL JOINT	
	7	1	**8T-4815**	2	ROD END	
	8	1	**9R-1765**	1	KNOB	
	9	1	**9R-1766**	1	KNOB	
	10	1	**9R-1767**	1	BOOT	
	11	1	**9R-9868**	1	SWITCH AS-PUSH BUTTON	
		1	**186-3735**	2	PIN-CONNECTOR	
	12	1	**107-5591**	1	NUT-JAM (3/4-16 THD)	
M	13	1	**134-0453**	2	TURN BUCKLE	
	14	1	**140-6021**	1	PLATE	
	15	1	**164-1368**	8	CLIP	
	16	1	**164-1369**	1	PLATE	
	17	1	**179-8235**	1	LOCK PIN	
	18	1	**183-3121**	1	BRACKET AS	
	19	1	**183-3122**	1	LEVER AS	
	20	1	**183-3131**	1	DAMPER AS	
		1	**095-9230**	1	PIN-SPRING	
		1	**183-3132**	1	CYLINDER	
	21	1	**183-3135**	1	JOINT AS	
		1	**183-3136**	1	BEARING	
	22	1	**183-3137**	1	PIN	
	23	1	**183-3153**	1	ROD	
	24	1	**183-3155**	1	ROD	
	25	1	**183-3156**	1	ROD	
	26	1	**201-8069**	1	SEAL	
	27	1	**102-8802**	1	KIT-RECEPTACLE (2 PIN)	
					(KIT SERVICES RECEPTACLE AS. AND WEDGE)	
	28	1	**3S-2093**	1	STRAP-CABLE	
M	29	1	**6V-7744**	2	LOCKNUT (M10X1.5 THD)	
	30	1	**8C-4987**	1	PIN-CLEVIS	
	31	1	**8T-4121**	4	WASHER-HARD (11X21X2.5MM THK)	
M	32	1	**8T-4133**	8	NUT (M10X1.5 THD)	
M	33	1	**8T-4136**	2	BOLT (M10X1.5X25MM)	
M	34	1	**8T-4195**	2	BOLT (M10X1.5X30MM)	
	35	1	**8T-4223**	4	WASHER-HARD (13.5X25.5X3MM THK)	
	36	1	**8T-9501**	2	SCREW (10-16X.75 IN)	
	37	1	**9R-2807**	1	CLIP	
	38	1	**9R-3067**	1	PIN	
M	39	1	**9X-2065**	2	NUT	

B-USE AS REQUIRED
M-METRIC PART

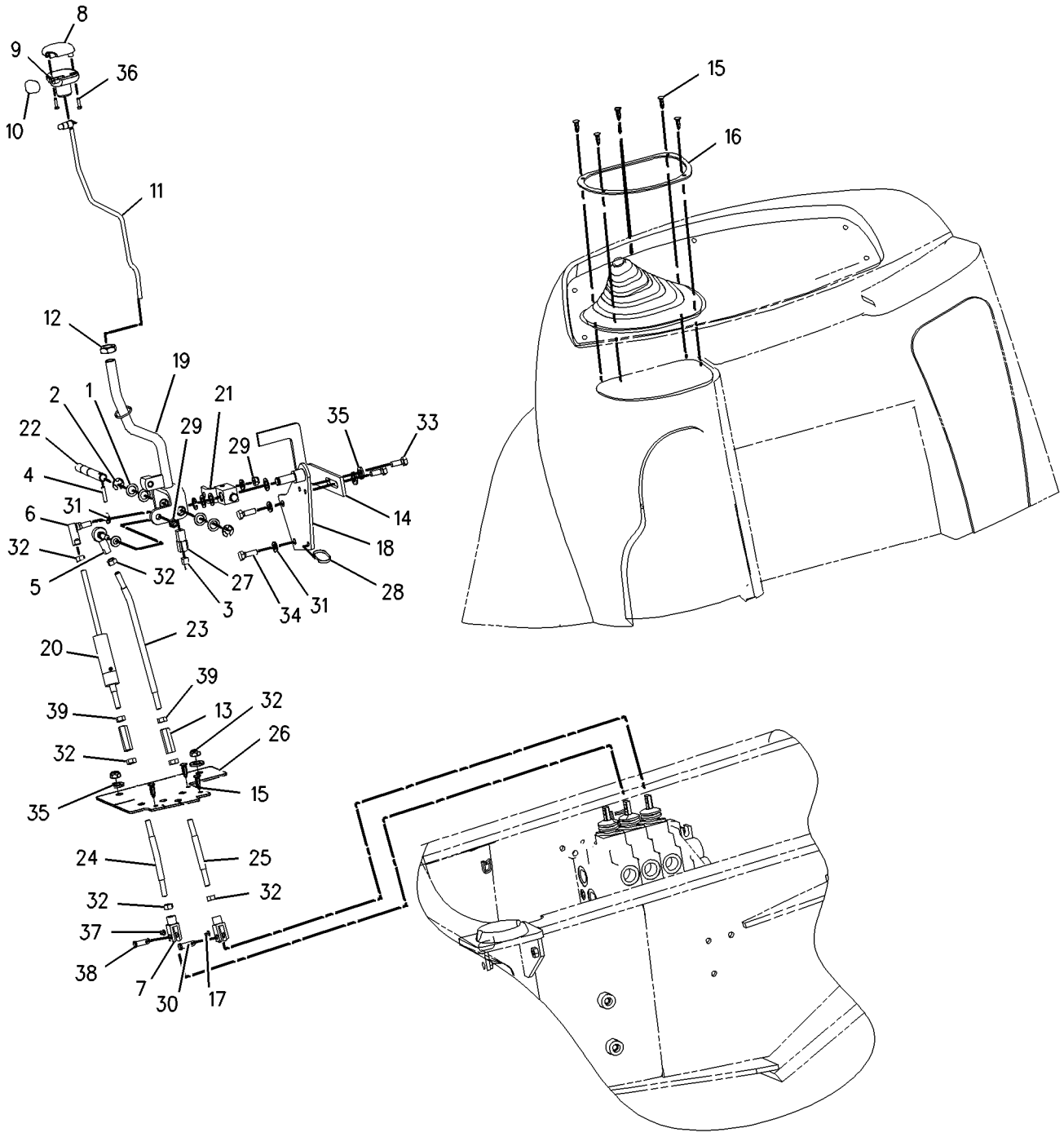

GRAPHIC #1 g00861982

HYDRAULIC SYSTEM

228-2783 CYLINDER GP - BACKHOE BUCKET

ALTERNATE TO 206-0514 S/N:JRB
PART OF 233-6435 BACKHOE AR

NOTE	REF NO	GRAPHIC REF	PART NUMBER	QTY	PART NAME 1 2 3 4 5 6 (PRODUCT LEVEL)	SEE PAGE
	1	1	240-6431	1	TUBE ASSY	
	2	1	240-6428	1	PISTON ROD AS	
	3	1	240-6391	1	PISTON	
	4	1	240-6397	1	H.E COVER	
	5	1	240-6418	1	RETAINER	
	6	1	240-6407	2	BUSH(CEC)	
	7	1	240-6408	2	BUSH (ROD EYE)	
	8	1	240-6419	1	SET SCREW	
	9	1	240-6386	1	SNAP RING	
	10	1	240-6379	1	SET SCREW	
	11	1	240-6369	1	PISTON SEAL	
	12	1	240-6343	1	O-RING (P.SEAL)	
	13	1	240-6374	2	PISTON BEARING	
	14	1	240-6332	1	O-RING	
	15	1	240-6359	1	BACK-UP RING (PISTON)	
	16	1	240-6334	1	O-RING (HEC)	
	17	1	240-6360	1	BACK-UP RING (HEC)	
	18	1	240-6385	1	PRESS PIECE	
	19	1	240-6356	1	ROD SEAL (SECOND)	
	20	1	240-6357	1	ROD SEAL (PRIMARY)	
	21	1	240-6354	1	WIPER SEAL	

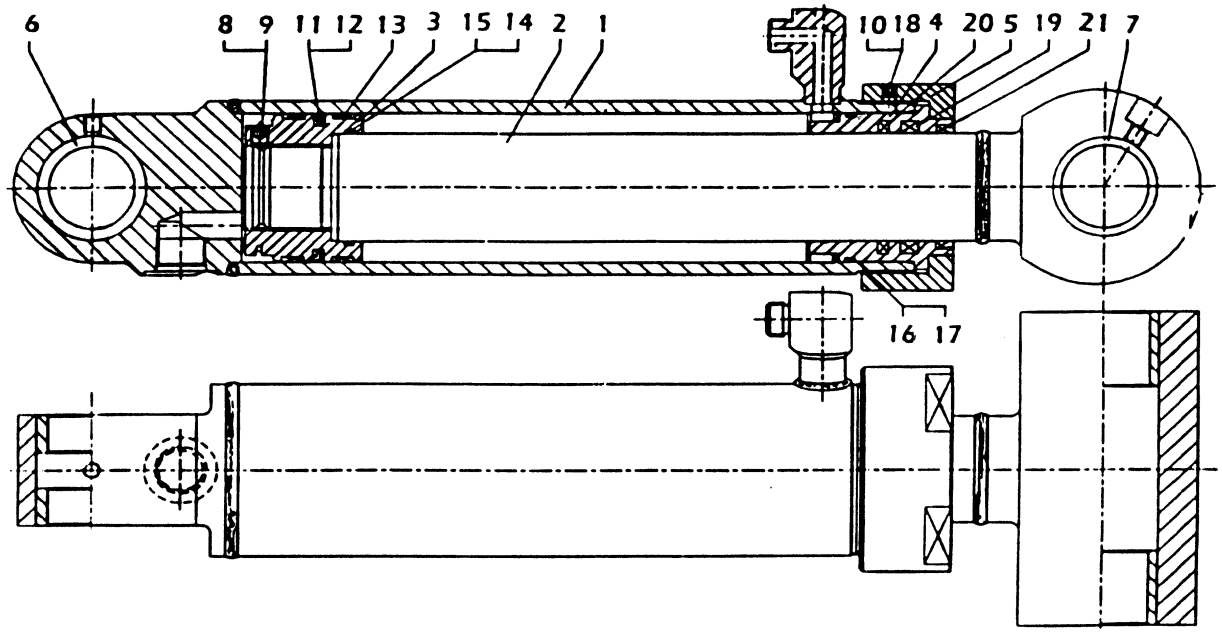

GRAPHIC #1

HYDRAULIC SYSTEM

236-4724 CYLINDER GP - BOOM

ALTERNATE TO 206-3628 S/N:JRB
PART OF 228-2806 HYDRAULIC AR

NOTE	REF NO	GRAPHIC REF	PART NUMBER	QTY	PART NAME 1 2 3 4 5 6 (PRODUCT LEVEL)	SEE PAGE
	1	1	240-6438	1	TUBE ASSY	
	2	1	240-6431	1	PISTON ROD	
	3	1	240-6394	1	PISTON	
	4	1	240-6400	1	H.E COVER	
	5	1	240-6424	1	PLUNGER	
	6	1	240-6413	1	SPRING	
	7	1	240-6428	1	COLLAR	
	8	1	240-6355	1	WIPER	
	9	1	240-6423	1	SET SCREW	
	10	1	240-6422	1	SNAP RING	
	11	1	240-6411	1	BUSH	
	12	1	240-6383	1	BIMETAL BUSH	
	13	1	240-6371	1	PISTON SEAL	
	14	1	240-6339	1	O-RING(P.SEAL)	
	15	1	240-6378	2	BEARING	
	16	1	240-6331	1	O-RING(PISTON)	
	17	1	240-6363	1	BACK-UP RING	
	18	1	240-6336	1	O-RING(HEC)	
	19	1	240-6364	1	BACK-UP RING(HEC)	
	20	1	240-6351	1	ROD SEAL (PRIMARY)	
	21	1	240-6348	1	ROD SEAL (SECOND)	

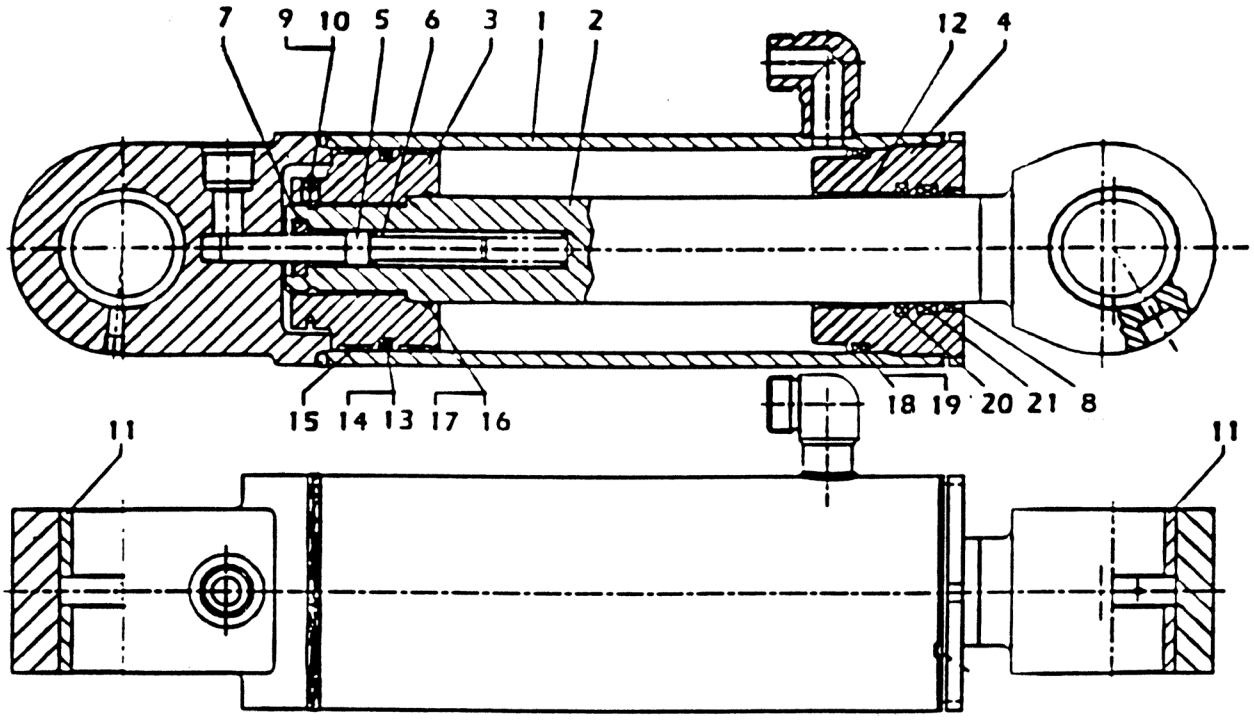

GRAPHIC #1

HYDRAULIC SYSTEM

236-4722 CYLINDER GP - LIFT-LOADER

ALTERNATE TO 206-3549 S/N:JRB
PART OF 228-2806 HYDRAULIC AR

NOTE	REF NO	GRAPHIC REF	PART NUMBER	QTY	PART NAME 1 2 3 4 5 6 (PRODUCT LEVEL)	SEE PAGE
	1	1	240-6433	1	TUBE ASSY	
	2	1	240-6426	1	PISTON ROD ASSY	
	3	1	240-6390	1	PISTON	
	4	1	240-6396	1	H.E.COVER	
	5	1	240-6417	1	RETAINER	
	6	1	240-6415	1	NYLOC NUT	
	7	1	240-6403	1	BUSH(CEC)	
	8	1	240-6404	1	BUSH(RE)	
	9	1	240-6379	1	SET SCREW	
	10	1	240-6376	1	PISTON BEARING	
	11	1	240-6370	1	PISTON SEAL	
	12	1	240-6338	1	O-RING(P.SEAL)	
	13	1	240-6330	1	O-RING(PISTON)	
	14	1	240-6361	1	BACK-UP RING	
	15	1	240-6333	1	O-RING(HEC)	
	16	1	240-6366	1	BACK-UP RING(HEC)	
	17	1	240-6349	1	ROD SEAL(PRIMARY)	
	18	1	240-6346	1	ROD SEAL(SECOND)	
	19	1	240-6353	1	WIPER	
	20	1	240-6385	1	PRESS PIECE	

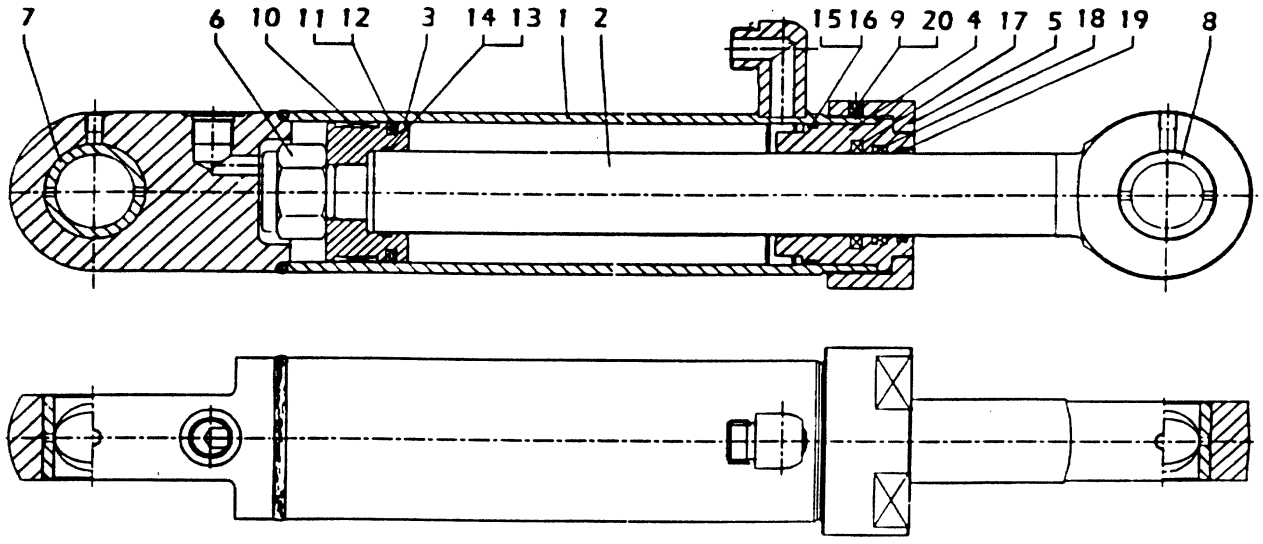

GRAPHIC #1

185-1839 CYLINDER GP-MULTIPURPOSE BUKT

S/N:JRB00255-UP
76.2MM BORE X 260MM STROKE
PART OF 111-8634, 111-8635 BUCKET AR-MULTIPURPOSE
AN ATTACHMENT

SMCS-5457 **i01594497**

NOTE	REF NO	GRAPHIC REF	PART NUMBER	QTY	PART NAME 1 2 3 4 5 6 (PRODUCT LEVEL)	SEE PAGE
	1	1	**6E-0122**	1	HEAD	
	2	1	**9T-2212**	1	PISTON	
R	3	1	**9T-4008**	1	ROD AS	
	3A	1	**9T-4007**	2	BEARING	
R	4	1	**9T-4009**	1	CYLINDER AS	
	5	1	**167-2186**	1	SEAL AS-BUFFER	
	6	1	**167-2294**	1	SEAL-U-CUP	
	7	1	**167-2450**	1	SEAL-WIPER	
	8	1	**1H-7339**	1	SEAL-O-RING	
	9	1	**4T-6780**	1	RING-WEAR	
	10	1	**5P-8250**	1	WASHER (28X49X5MM THK)	
	11	1	**6F-7037**	1	BOLT (1-14X3.25IN)	
	12	1	**6J-1972**	1	SEAL AS	
	13	1	**6J-5733**	1	RING-WEAR	
	14	1	**8J-2574**	1	RING-BACKUP	

R-REMFG PART MAY BE AVAILABLE

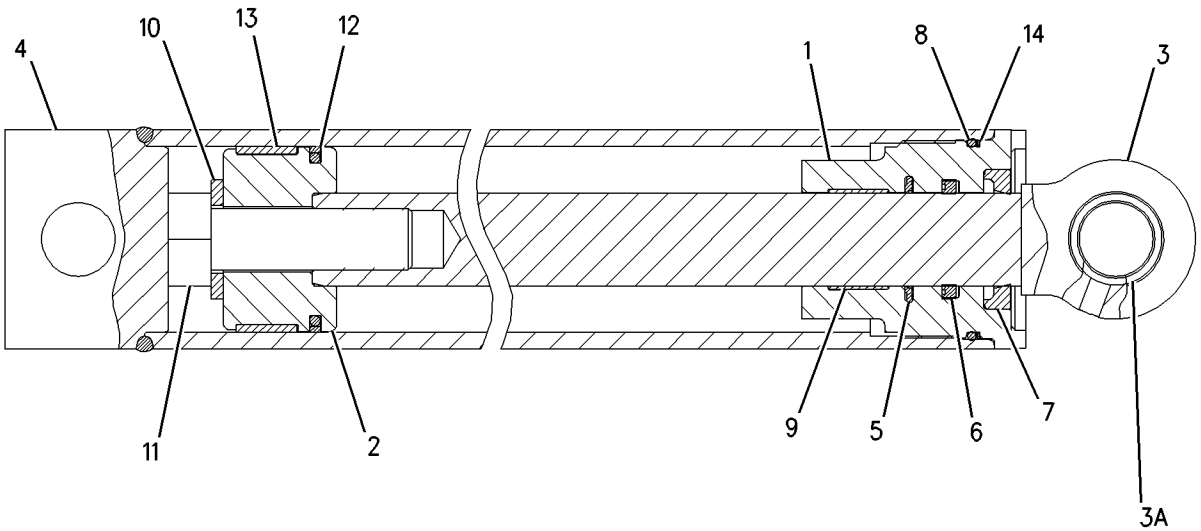

GRAPHIC #1 g00826884

HYDRAULIC SYSTEM

236-4718 CYLINDER GP - STABILIZER

ALTERNATE TO 173-4565 S/N:JRB
PART OF 228-2806 HYDRAULIC AR

NOTE	REF NO	GRAPHIC REF	PART NUMBER	QTY	PART NAME 1 2 3 4 5 6 (PRODUCT LEVEL)	SEE PAGE
	1	1	240-6432	1	TUBE ASSY	
	2	1	240-6389	1	PISTON ROD AS	
	3	1	240-6388	1	PISTON	
	4	1	240-6395	1	H.E.COVER	
	5	1	240-6416	1	RETAINER	
	6	1	240-6402	1	BUSH	
	7	1	240-6412	1	NYLOCK NUT	
	8	1	240-6379	1	SET SCREW	
	9	1	240-6401	1	SPACER	
	10	1	240-6340	1	O-RING(PISTON)	
	11	1	240-6385	1	PRESS PIECE	
	12	1	240-6367	1	PISTON SEAL	
	13	1	240-6342	1	O-RING	
	14	1	240-6352	1	WIPER	
	15	1	240-6373	1	ROD SEAL(PRIMARY)	
	16	1	240-6345	1	ROD SEAL(SECOND)	
	17	1	240-6375	1	PISTON BEARING	
	18	1	240-6341	1	O-RING(R.SEAL)	
	19	1	240-6372	1	O-RING(HEC)	
	20	1	240-6359	1	BACK-UP RING(HEC)	

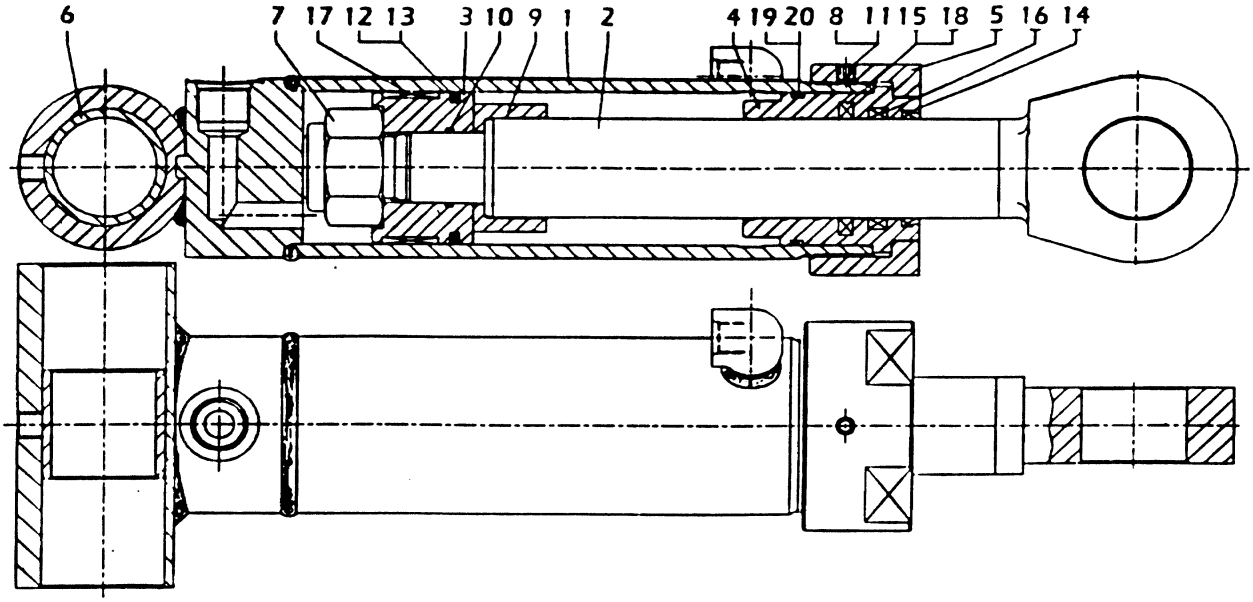

GRAPHIC #1

HYDRAULIC SYSTEM

236-4721 CYLINDER GP - STICK

ALTERNATE TO 206-0509 S/N:JRB
PART OF 228-2806 HYDRAULIC AR

NOTE	REF NO	GRAPHIC REF	PART NUMBER	QTY	PART NAME 1 2 3 4 5 6 (PRODUCT LEVEL)	SEE PAGE
	1	1	240-6439	1	TUBE ASSY	
	2	1	240-6430	1	PISTON ROD AS	
	3	1	240-6393	1	PISTON	
	4	1	240-6399	1	H.E COVER	
	5	1	240-6423	1	SET SCREW	
	6	1	240-6422	1	SNAP RING	
	7	1	240-6411	4	BUSH	
	8	1	240-6384	1	BIMETAL BUSH	
	9	1	240-6378	2	PISTON BEARING	
	10	1	240-6371	1	PISTON SEAL	
	11	1	240-6339	1	O-RING(P.SEAL)	
	12	1	240-6331	1	O-RING	
	13	1	240-6363	1	BACK-UP RING	
	14	1	240-6336	1	O-RING(HEC)	
	15	1	240-6364	1	BACK-UP RING	
	16	1	240-6356	1	ROD SEAL(SECOND)	
	17	1	240-6354	1	WIPER	
	18	1	240-6357	1	ROD SEAL(PRIMARY)	

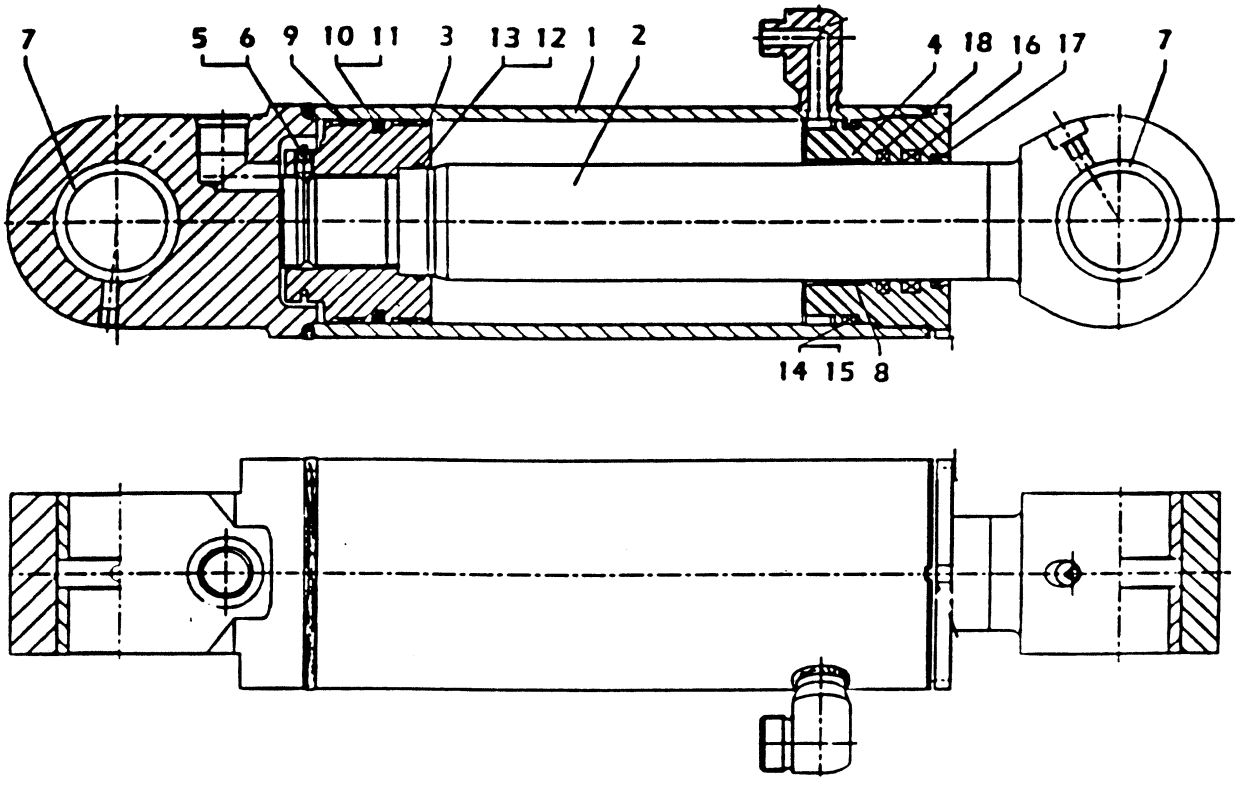

GRAPHIC #1

HYDRAULIC SYSTEM

236-4719 CYLINDER GP - SWING - RH

ALTERNATE TO 191-7735, S/N:JRB
PART OF 228-2806 HYDRAULIC AR

NOTE	REF NO	GRAPHIC REF	PART NUMBER	QTY	PART NAME 1 2 3 4 5 6 (PRODUCT LEVEL)	SEE PAGE
	1	1	240-6436	1	TUBE ASSY	
	2	1	240-6429	1	PISTON ROD ASSY	
	3	1	240-6392	1	PISTON	
	4	1	240-6398	1	H.E.COVER	
	5	1	240-6420	1	PLUNGER	
	6	1	240-6412	1	SPRING	
	7	1	240-6409	2	BUSH(RE)	
	8	1	240-6410	2	BUSH(TRUNNION)	
	9	1	240-6380	1	SET SCREW	
	10	1	240-6382	1	BIMETAL BUSH	
	11	1	240-6387	1	SNAP RING	
	12	1	240-6368	1	PISTON SEAL	
	13	1	240-6344	1	O-RING(P.SEAL)	
	14	1	240-6337	1	O-RING(PISTON)	
	15	1	240-6365	1	BACK-UP RING(PISTON)	
	16	1	240-6335	1	O-RING(HEC)	
	17	1	240-6362	1	BACK-UP RING(HEC)	
	18	1	240-6350	1	ROD SEAL(PRIMARY)	
	19	1	240-6347	1	ROD SEAL(SECONDARY)	
	20	1	240-6358	1	WIPER	
	21	1	240-6377	2	PISTON BEARING	

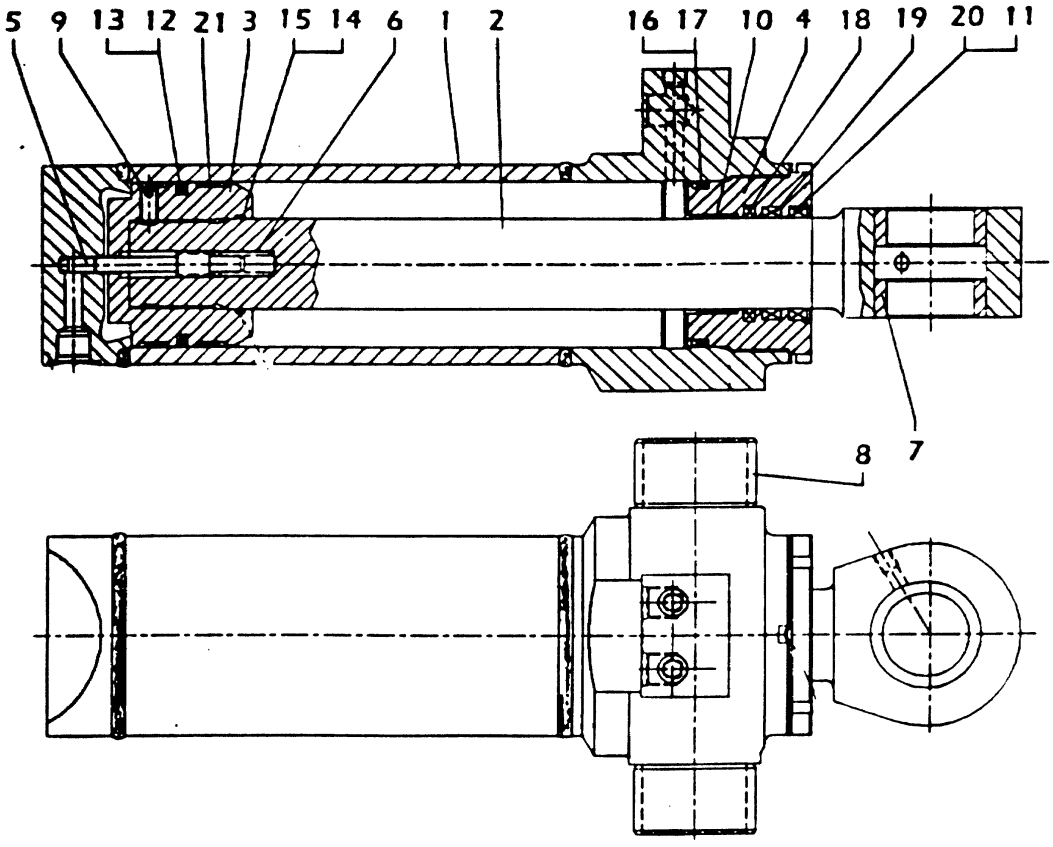

GRAPHIC #1

HYDRAULIC SYSTEM

236-4720 CYLINDER GP - SWING - LH

ALTERNATE TO 191-8161, S/N:JRB
PART OF 228-2806 HYDRAULIC AR

NOTE	REF NO	GRAPHIC REF	PART NUMBER	QTY	PART NAME 1 2 3 4 5 6 (PRODUCT LEVEL)	SEE PAGE
	1	1	240-6437	1	TUBE ASSY	
	2	1	240-6429	1	PISTON ROD ASSY	
	3	1	240-6392	1	PISTON	
	4	1	240-6398	1	H.E.COVER	
	5	1	240-6420	1	PLUNGER	
	6	1	240-6412	1	SPRING	
	7	1	240-6409	2	BUSH(RE)	
	8	1	240-6410	2	BUSH	
	9	1	240-6380	1	SET SCREW	
	10	1	240-6382	1	BIMETAL BUSH	
	11	1	240-6387	1	SNAP RING	
	12	1	240-6368	1	PISTON SEAL	
	13	1	240-6344	1	O-RING(P.SEAL)	
	14	1	240-6337	1	O-RING(PISTON)	
	15	1	240-6365	1	BACK-UP RING	
	16	1	240-6335	1	O-RING(HEC)	
	17	1	240-6362	1	BACK-UP RING(HEC)	
	18	1	240-6350	1	ROD SEAL(PRIMARY)	
	19	1	240-6347	1	ROD SEAL(SECONDARY)	
	20	1	240-6358	1	WIPER	
	21	1	240-6377	2	PISTON BEARING	

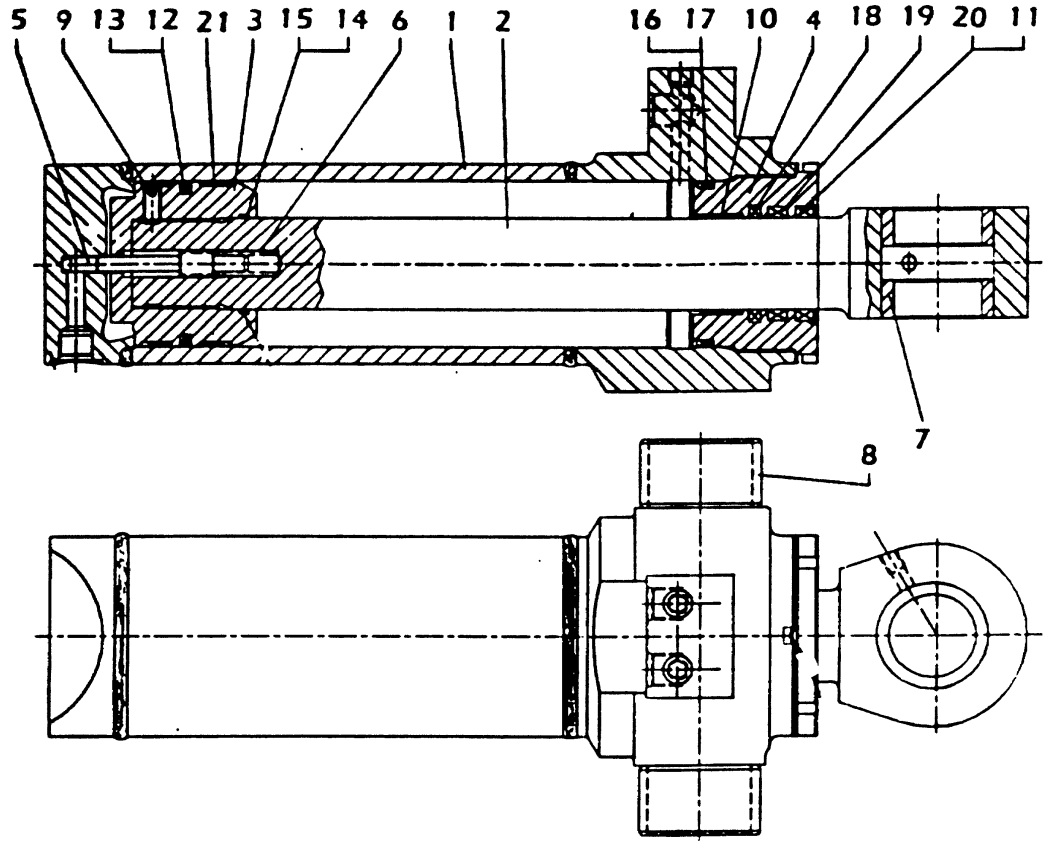

GRAPHIC #1

HYDRAULIC SYSTEM

236-4723 CYLINDER GP - TILT - LOADER

ALTERNATE TO 206-3553, S/N:JRB
PART OF 228-2806 HYDRAULIC AR

NOTE	REF NO	GRAPHIC REF	PART NUMBER	QTY	PART NAME 1 2 3 4 5 6 (PRODUCT LEVEL)	SEE PAGE
	1	1	240-6434	1	TUBE ASSY	
	2	1	240-6427	1	PISTON ROD ASSY	
	3	1	240-6390	1	PISTON	
	4	1	240-6396	1	H.E.COVER	
	5	1	240-6417	1	RETAINER	
	6	1	240-6415	1	NYLOC NUT	
	7	1	240-6405	2	BUSH	
	8	1	240-6406	2	BUSH(RE)	
	9	1	240-6379	2	SET SCREW	
	10	1	240-6376	1	PISTON BEARING	
	11	1	240-6370	1	PISTON SEAL	
	12	1	240-6338	1	O-RING(P.SEAL)	
	13	1	240-6330	1	O-RING(PISTON)	
	14	1	240-6361	1	BACK-UP RING(PISTON)	
	15	1	240-6333	1	O-RING(HEC)	
	16	1	240-6366	1	BACK-UP RING(HEC)	
	17	1	240-6349	1	ROD SEAL(PRIMARY)	
	18	1	240-6346	1	ROD SEAL(SECONDARY)	
	19	1	240-6353	1	WIPER	
	20	1	240-6385	1	PRESS PIECE	

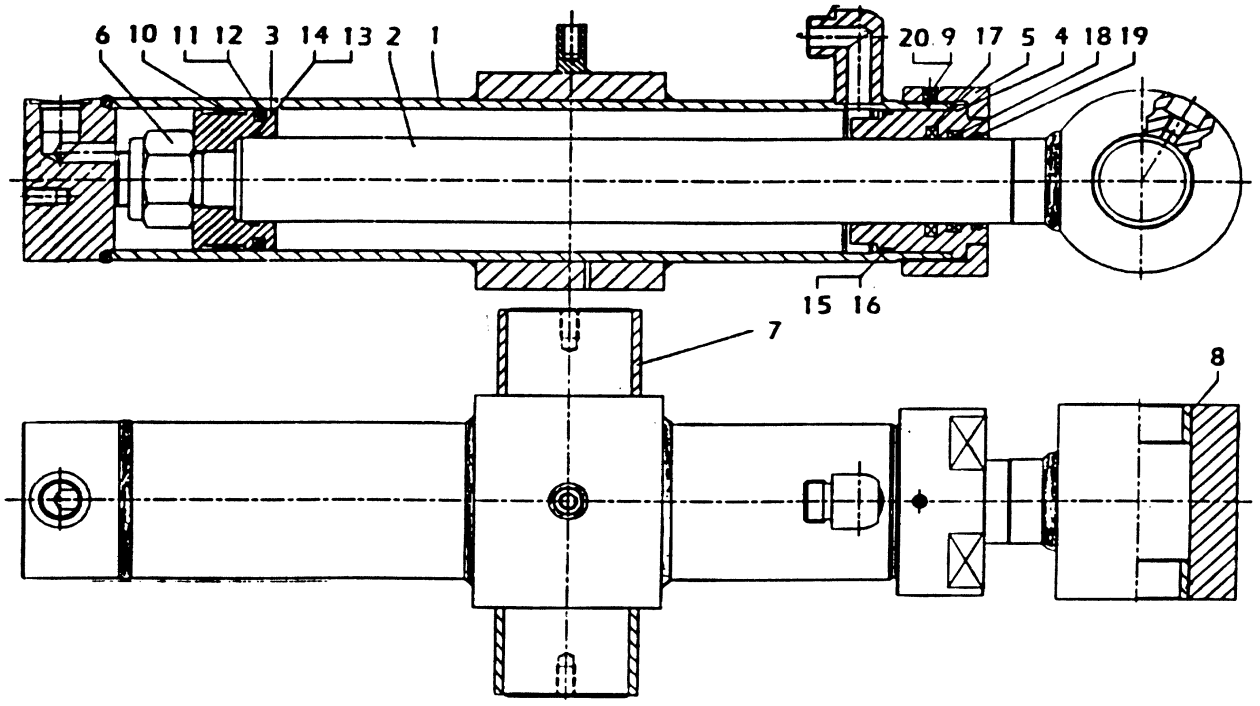

GRAPHIC #1

HYDRAULIC SYSTEM

178-0094 FILTER GP-OIL

S/N:JRB00255-UP

PART OF 228-2806 HYDRAULIC AR

SMCS-5068 **i01657477**

NOTE	REF NO	GRAPHIC REF	PART NUMBER	QTY	PART NAME 1 2 3 4 5 6 (PRODUCT LEVEL)	SEE PAGE
	1	1	**126-1817**	1	FILTER AS-OIL	
	2	1	**164-6709**	1	PLUG AS	
		1	**3J-1907**	1	SEAL-O-RING	
		1	**5F-9144**	1	SEAL-O-RING	
	3	1	**173-7194**	1	BASE AS	

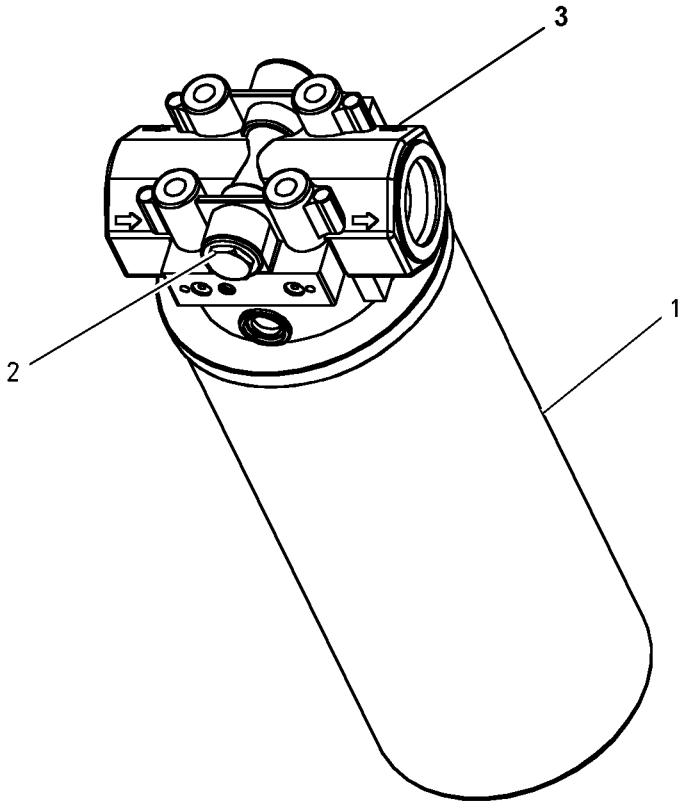

GRAPHIC #1 g00722105

HYDRAULIC SYSTEM

228-2806 HYDRAULIC AR

S/N:JRB00255-UP

PART OF 228-2802 COMMON AR

SMCS-5050 **i01660071**

NOTE	PART NUMBER	QTY	PART NAME 1 2 3 4 5 6 (PRODUCT LEVEL)	SEE PAGE
Y	**236-4724**	1	CYLINDER GP-BOOM	175
Y	**236-4722**	2	CYLINDER GP-LIFT	176
Y	**236-4718**	2	CYLINDER GP-STABILIZER	178
Y	**236-4721**	1	CYLINDER GP-STICK	179
Y	**236-4719**	1	CYLINDER GP-SWING-RH	180
Y	**236-4720**	1	CYLINDER GP-SWING-LH	181
Y	**236-4723**	1	CYLINDER GP-TILT	182
Y	**178-0094**	1	FILTER GP-OIL	183
Y	**185-3414**	1	LINES GP-STABILIZER	214
Y	**112-1826**	1	MOUNTING GP-HYDRAULIC PUMP	225
Y	**185-3167**	1	MOUNTING GP-BANK VALVE	222
YR	**180-9588**	1	PUMP GP-PISTON	228
Y	**163-7934**	1	TANK & MTG GP-HYDRAULIC	234
Y	**233-6427**	1	CONTROL GP-GOV.	60
Y	**202-6139**	1	CONNECTOR GP	204

R-REMFG PART MAY BE AVAILABLE
Y-SEPARATE ILLUSTRATION

HYDRAULIC SYSTEM

186-5331 HYDRAULIC AR - LOADER

S/N:JRB00255-UP
TWO BANK, SINGLE TILT, GP BUCKET
STANDARD

SMCS-5050 **i01507870**

NOTE	PART NUMBER	QTY	PART NAME 1 2 3 4 5 6 (PRODUCT LEVEL)	SEE PAGE
	164-1363	1	BOOT	
	186-5298	1	FILM (BUCKET CONTROL)	
Y	*163-9371*	1	LINES GP-LIFT CYLINDER	196
Y	*189-0555*	1	LINES GP-TILT CYLINDER	218
Y	*185-1598*	1	MOUNTING GP-BANK VALVE	221
Y	**185-5906**	1	VALVE GP-BANK 2	238

Y-SEPARATE ILLUSTRATION

HYDRAULIC SYSTEM

186-5333 HYDRAULIC AR - LOADER

S/N:JRB00255-UP
THREE BANK, SINGLE TILT, MULTI PURPOSE BUCKET
AN ATTACHMENT

SMCS-5050 **i01440580**

NOTE	PART NUMBER	QTY	PART NAME 1 2 3 4 5 6 (PRODUCT LEVEL)	SEE PAGE
	164-1364	1	BOOT	
Y	**183-3150**	1	CONTROL GP-HYDRAULIC HAND	169
	186-5298	1	FILM (INSTRUCTION-BUCKET CONTROL)	
	198-0102	1	FILM (BUCKET MECHANICAL CONTROL)	
Y	**163-9371**	1	LINES GP-LIFT CYLINDER	198
Y	**106-5876**	1	LINES GP-LOADER AUXILIARY	196
Y	**189-0555**	1	LINES GP-TILT CYLINDER	218
Y	**185-1598**	1	MOUNTING GP-BANK VALVE	221
Y	**185-5907**	1	VALVE GP-BANK 3	239

Y-SEPARATE ILLUSTRATION

HYDRAULIC SYSTEM

202-6122 HYDRAULIC AR - HOE

S/N:JRB00255-UP

STANDARD SWING, STANDARD FRAME

SMCS-5050 **i01668181**

NOTE	PART NUMBER	QTY	PART NAME 1 2 3 4 5 6 (PRODUCT LEVEL)	SEE PAGE
Y	*183-8505*	1	LINES GP-SWING	216

Y-SEPARATE ILLUSTRATION

HYDRAULIC SYSTEM

106-9046 KICKOUT & POSITIONER GP

S/N:JRB00255-UP

PART OF 228-2803 LOADER AR

SMCS-5109, 5112 **i01434317**

NOTE	REF NO	GRAPHIC REF	PART NUMBER	QTY	PART NAME 1 2 3 4 5 6 (PRODUCT LEVEL)	SEE PAGE
	1	1	**9R-7797**	1	PLATE	
	2	1	**9R-3255**	1	LEVER	
	3	1	**128-7902**	1	SPACER (6MM THK)	
	4	1	**9R-5301**	2	PIN-COTTER	
	5	1	**135-9420**	1	PIVOT	
	6	1	**140-6009**	1	LEVER AS	
	7	1	**9R-9146**	1	PIPE AS	
	8	1	**128-7905**	3	SPACER (1MM THK)	
	9	1	**128-7903**	3	SPACER (3MM THK)	
	10	1	**1B-0676**	1	PIN	
	11	1	**5P-0372**	1	LOCKPIN	
	12	1	**3B-8489**	2	FITTING-GREASE	
	13	1	**8T-0706**	1	RING-RETAINING (18 X 1.2)	
C	14	1	**141-6343**	1	SPRING	
	15	1	**9R-2806**	2	PIN	
	16	1	**9R-2807**	4	CLIP	
	17	1	**8T-5063**	1	ROD END	
M	18	1	**8T-4133**	2	NUT (M10X1.5 THD)	
	19	1	**8C-6955**	1	END-YOKE ROD	
M	20	1	**8T-4182**	1	BOLT (M10X1.5X45MM)	
	21	1	**130-5774**	1	LINK AS	
	22	1	**130-7952**	1	PLATE	
	23	1	**8T-4123**	4	WASHER-PLATED (22X35X3.5MM THK)	
	24	1	**1B-8736**	1	KEY-WOODRUFF	
	25	1	**112-5494**	1	LEVER AS	
		1	**7Y-0336**	1	SPACER (24MM THK)	
	26	1	**9R-2614**	1	BEARING	
	27	1	**106-7301**	1	ROD AS	
M	28	1	**2Y-5829**	1	NUT (M10X1.5 THD)	
	29	1	**130-5891**	1	LEVER AS	
		1	**7Y-0336**	1	SPACER (24MM THK)	
	30	1	**9R-3135**	1	PIN	
	31	1	**9R-2614**	1	BEARING	
	32	1	**9X-2334**	1	FILM (BUCKET INDICATOR)	

C-CHANGE FROM PREVIOUS TYPE
M-METRIC PART

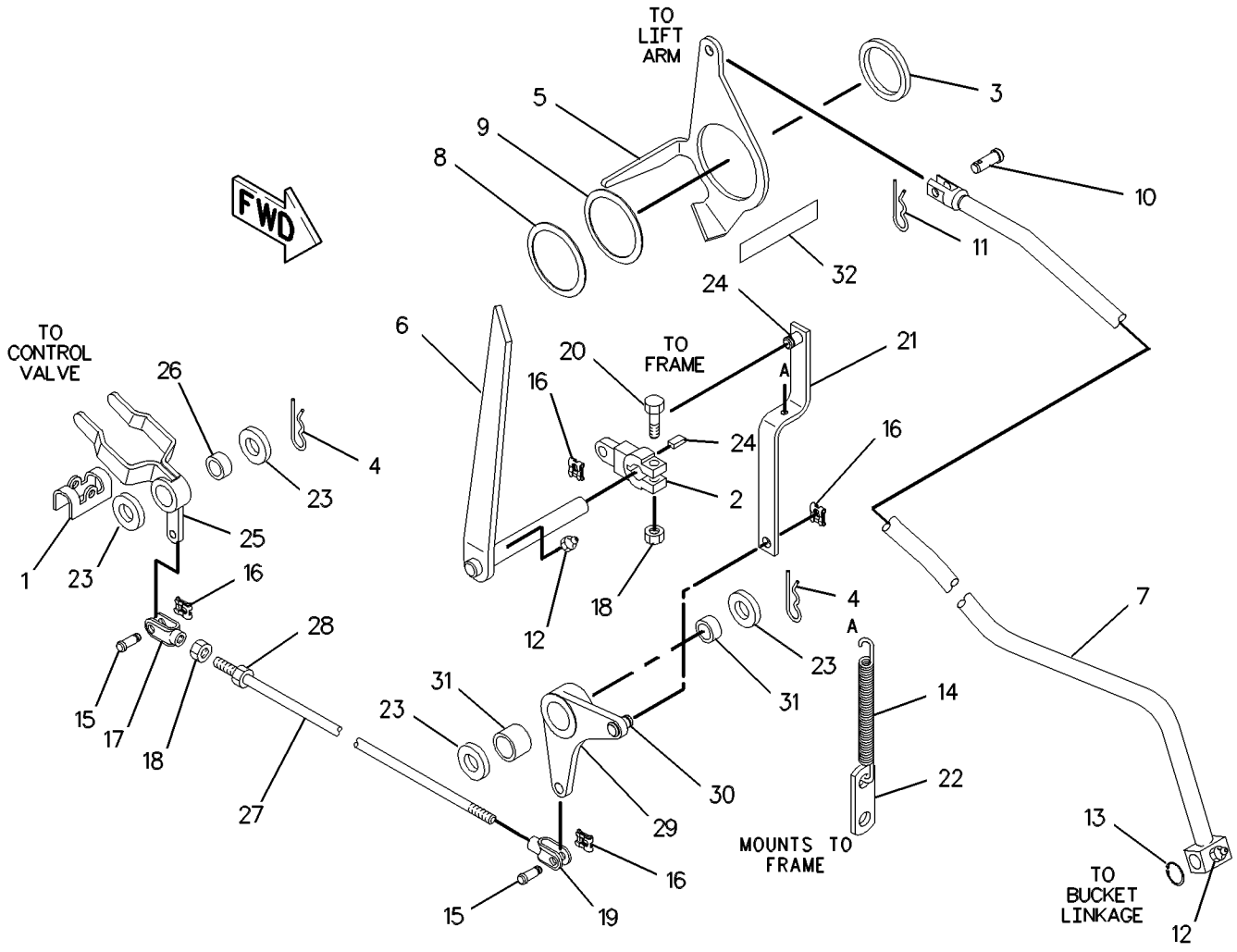

GRAPHIC #1

g00277804

HYDRAULIC SYSTEM

183-8506 LINES GP-BACKHOE

S/N:JRB00255-UP
STANDARD FRAME
PART OF 233-6435 BACKHOE AR

SMCS-5057 **i01496787**

NOTE	REF NO	GRAPHIC REF	PART NUMBER	QTY	PART NAME 1 2 3 4 5 6 (PRODUCT LEVEL)	SEE PAGE
	1	1	**106-5813**	4	BLOCK	
	2	1	**106-5814**	4	PLATE	
	3	1	**228-2796**	2	CLAMP-RH	
	4	1	**176-9154**	1	BRACKET-RH	
	5	1	**183-8488**	1	HOSE AS	
	6	1	**183-8490**	1	HOSE AS	
	7	1	**183-8492**	1	HOSE AS	
	8	1	**183-8494**	1	HOSE AS	
	9	1	**183-8500**	1	HOSE AS	
	10	1	**183-8502**	1	HOSE AS	
	11	1	**148-8341**	6	CONNECTOR GP	
					(EACH INCLUDES)	
		1	**3D-2824**	1	SEAL-O-RING	
		1	**6V-8713**	1	CONNECTOR (1-14 THD X 1 1/16-12 THD)	
		1	**7J-9108**	1	SEAL-O-RING	
	12	1	**2P-1293**	2	LOCKNUT-BULKHEAD (1 3/16-12 THD)	
M	13	1	**6V-7744**	10	LOCKNUT (M10X1.5 THD)	
	14	1	**6V-8398**	2	SEAL-O-RING	
	15	1	**6V-9169**	2	NUT-BULKHEAD (13/16-16 THD)	
	16	1	**6V-9170**	2	NUT-BULKHEAD (1-14 THD)	
	17	1	**6V-9746**	2	SEAL-O-RING	
	18	1	**7J-9108**	2	SEAL-O-RING	
	19	1	**8T-4121**	2	WASHER-HARD (11X21X2.5MM THK)	
M	20	1	**8T-4136**	2	BOLT (M10X1.5X25MM)	
M	21	1	**8T-5005**	10	BOLT (M10X1.50X70MM)	

M-METRIC PART

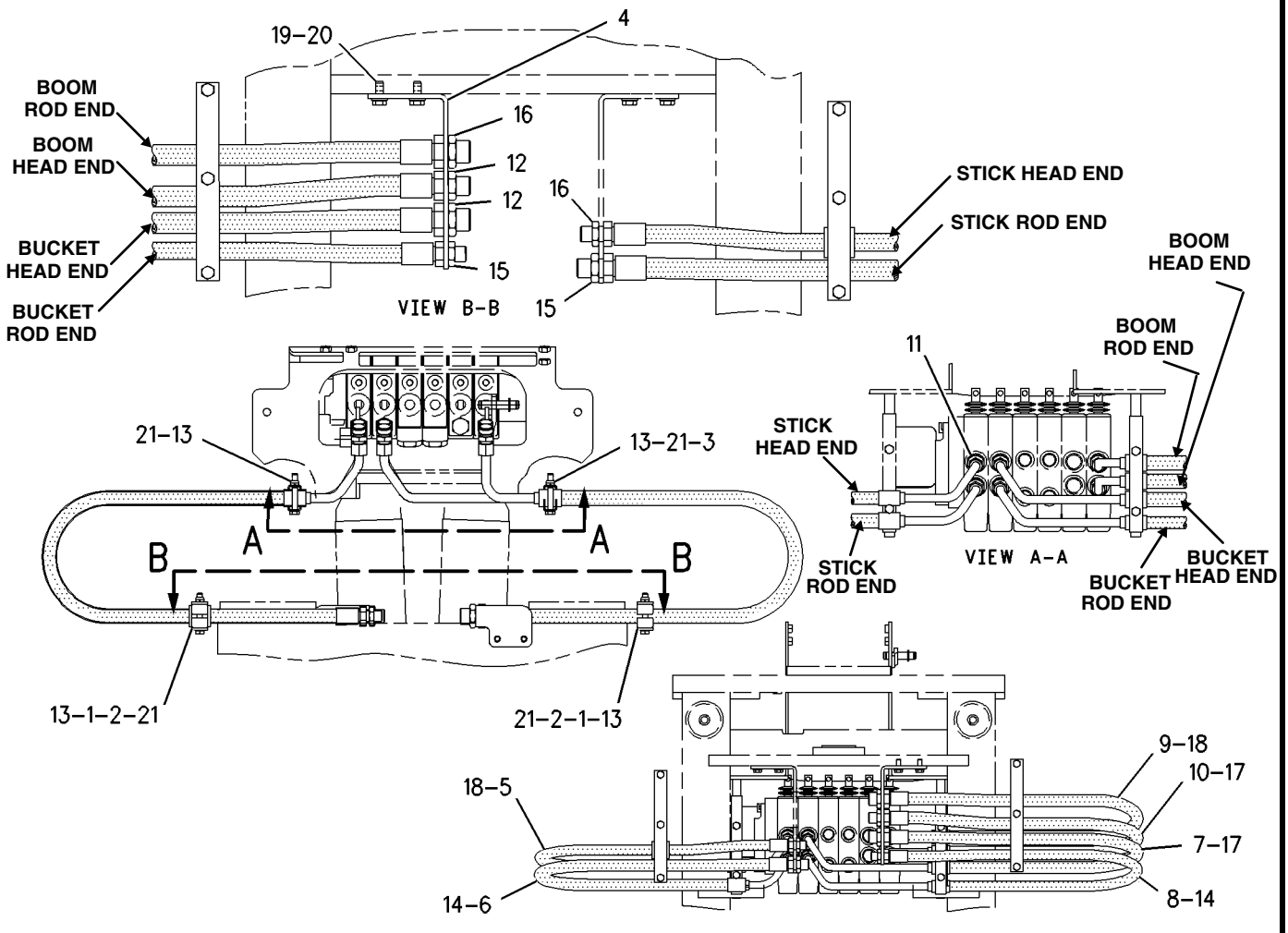

GRAPHIC #1

g00726759

HYDRAULIC SYSTEM

193-0703 LINES GP-BUCKET CYLINDER

S/N:JRB00255-UP

PART OF 233-6435 BACKHOE AR

SMCS-5057, 5457 **i01650104**

NOTE	REF NO	GRAPHIC REF	PART NUMBER	QTY	PART NAME 1 2 3 4 5 6 (PRODUCT LEVEL)	SEE PAGE
	1	1	**5P-0599**	2	CLAMP	
	2	1	**9R-5948**	1	BLOCK	
I	3	1	**9R-9218**	1	HOSE AS	
I	4	1	**9R-9221**	1	HOSE AS	
	5	1	**187-4343**	1	TUBE AS	
	6	1	**195-0268**	1	BRACKET AS	
I	7	1	**197-0573**	1	HOSE AS	
	8	1	**212-9338**	1	HOSE AS	
	9	1	**148-8362**	1	ELBOW GP	
		1	**3D-2824**	1	SEAL-O-RING	
		1	**5K-9090**	1	SEAL-O-RING	
		1	**8T-6684**	1	ELBOW	
	10	1	**148-8455**	1	UNION GP	
		1	**6V-8997**	1	UNION	
		1	**6V-9746**	2	SEAL-O-RING	
	11	1	**148-8457**	1	UNION GP	
		1	**6V-8398**	2	SEAL-O-RING	
		1	**6V-8995**	1	UNION-BULKHEAD	
	12	1	**2P-1293**	1	LOCKNUT-BULKHEAD (1 3/16-12 THD)	
	13	1	**5P-7464**	1	CLIP (SLOT)	
	14	1	**5P-7465**	1	CLIP (TAB)	
	15	1	**5P-7466**	1	CLIP (SLOT)	
	16	1	**5P-7467**	1	CLIP (TAB)	
	17	1	**5P-8112**	1	GROMMET	
	18	1	**6V-1249**	1	GROMMET	
	19	1	**6V-9169**	1	NUT-BULKHEAD (13/16-16 THD)	
	20	1	**6V-9746**	1	SEAL-O-RING	
	21	1	**8T-1889**	1	CLIP (SLOT)	
	22	1	**8T-1890**	1	CLIP (TAB)	
	23	1	**8T-4121**	1	WASHER-HARD (11X21X2.5MM THK)	
	24	1	**8T-4136**	1	BOLT	
M	25	1	**8T-4139**	2	BOLT (M12X1.75X30MM)	
	26	1	**8T-4223**	2	WASHER-HARD (13.5X25.5X3MM THK)(8T-4223)	

I-SEE HOSE FABRICATION GUIDE
M-METRIC PART

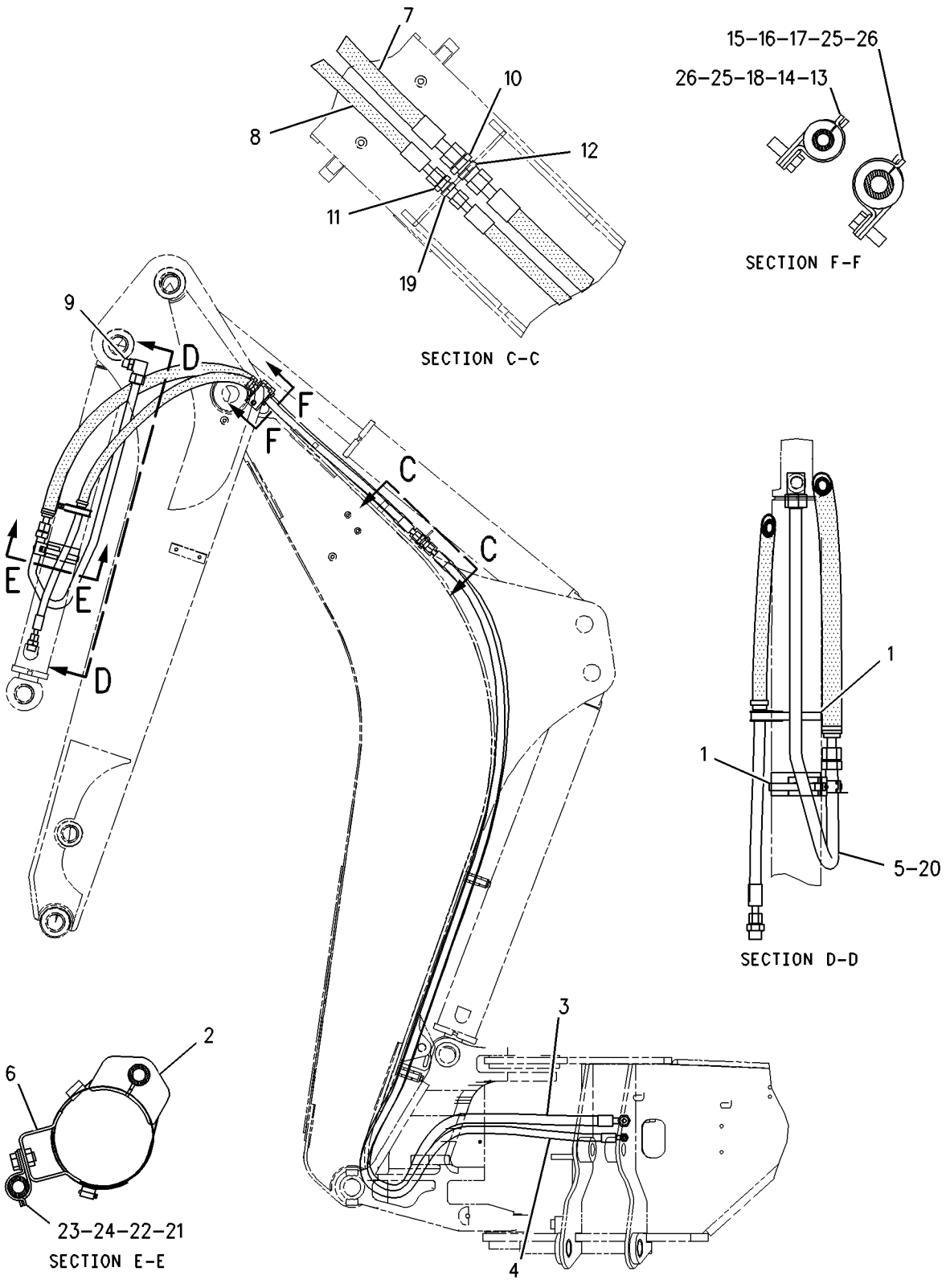

GRAPHIC #1 g00852576

HYDRAULIC SYSTEM

183-8543 LINES GP-BOOM

S/N:JRB00255-UP

PART OF 233-6435 BACKHOE AR

SMCS-5057, 5456 **i01626765**

NOTE	REF NO	GRAPHIC REF	PART NUMBER	QTY	PART NAME 1 2 3 4 5 6 (PRODUCT LEVEL)	SEE PAGE
	1	1	**5P-0599**	1	CLAMP	
	2	1	**9R-4619**	1	SUPPORT AS	
I	3	1	**183-4843**	1	HOSE AS	
I	4	1	**199-8927**	1	HOSE AS	
	5	1	**207-5477**	1	TUBE AS	
	6	1	**148-8327**	1	CONNECTOR GP	
		1	**3D-2824**	1	SEAL-O-RING	
		1	**6V-8637**	1	CONNECTOR-SEAL	
		1	**6V-9746**	1	SEAL-O-RING	
	7	1	**7J-9108**	1	SEAL-O-RING	
	8	1	**8T-1887**	1	CLIP (SLOT)	
	9	1	**8T-1888**	1	CLIP (TAB)	
	10	1	**8T-4121**	1	WASHER-HARD (11X21X2.5MM THK)	
M	11	1	**8T-4137**	1	BOLT (M10X1.5X20MM)	

I-SEE HOSE FABRICATION GUIDE
M-METRIC PART

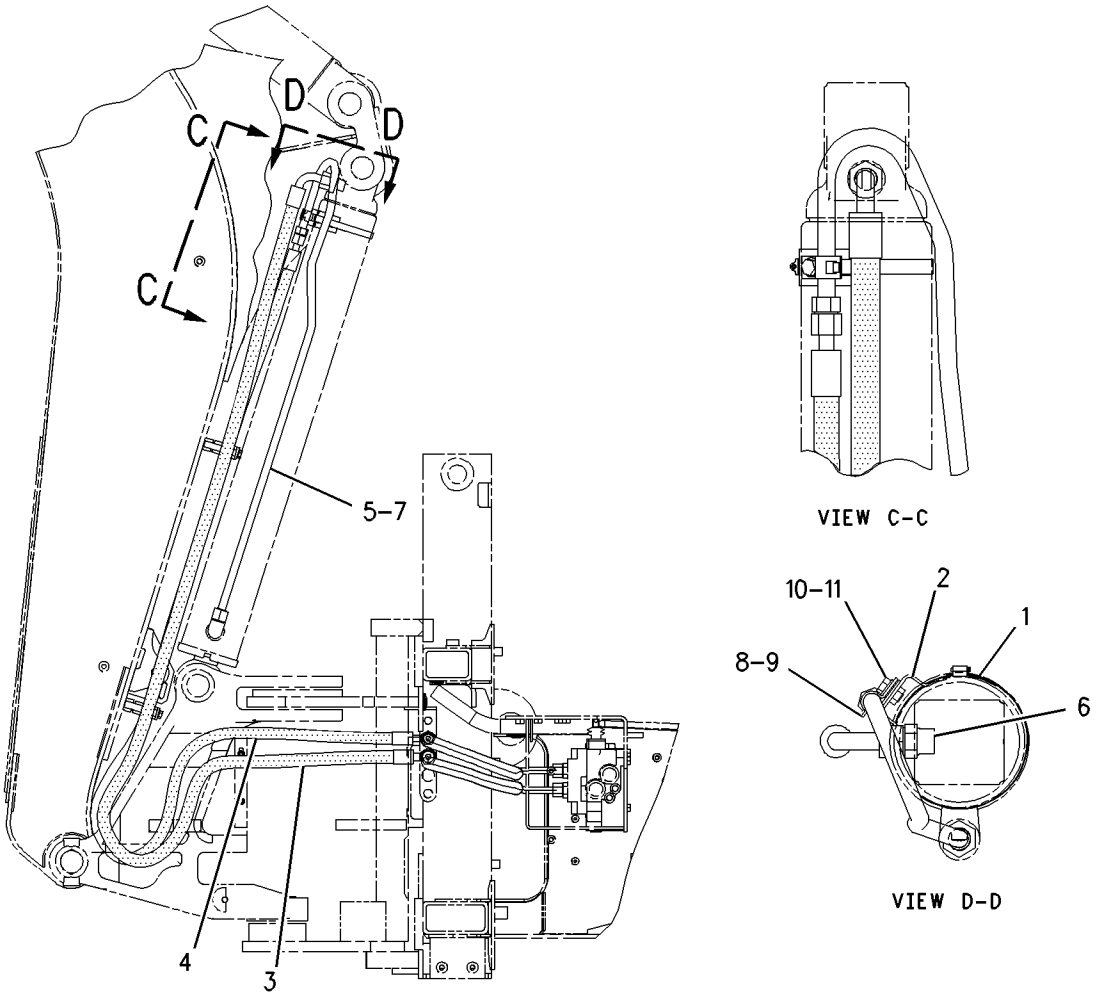

GRAPHIC #1 g00842621

HYDRAULIC SYSTEM

144-6253 LINES GP-LIFT CYLINDER

S/N:JRB00255-UP

PART OF 228-2802 COMMON AR

SMCS-5057, 5102 **i01645845**

NOTE	REF NO	GRAPHIC REF	PART NUMBER	QTY	PART NAME 1 2 3 4 5 6 (PRODUCT LEVEL)	SEE PAGE
	1	1	**8T-6726**	4	CLAMP-HOSE	
	2	1	**9R-7070**	1	PLATE AS	
	3	1	**9R-7071**	1	PLATE AS	
	4	1	**144-6256**	1	TUBE AS	
	5	1	**144-6258**	1	TUBE AS	
	6	1	**158-3412**	4	CLIP (SLOT)	
	7	1	**207-5479**	1	TUBE AS	
	8	1	**207-5480**	1	TUBE AS	
	9	1	*148-8390*	2	ELBOW GP	
					(EACH INCLUDES)	
		1	**2M-9780**	1	SEAL-O-RING	
		1	**6V-8626**	1	ELBOW	
		1	**7J-9108**	1	SEAL-O-RING	
	10	1	**6V-8398**	4	SEAL-O-RING	
	11	1	**8T-4121**	2	WASHER-HARD (11X21X2.5MM THK)	
M	12	1	**8T-4136**	2	BOLT (M10X1.5X25MM)	
	13	1	**9R-7803**	2	CLIP	

M-METRIC PART

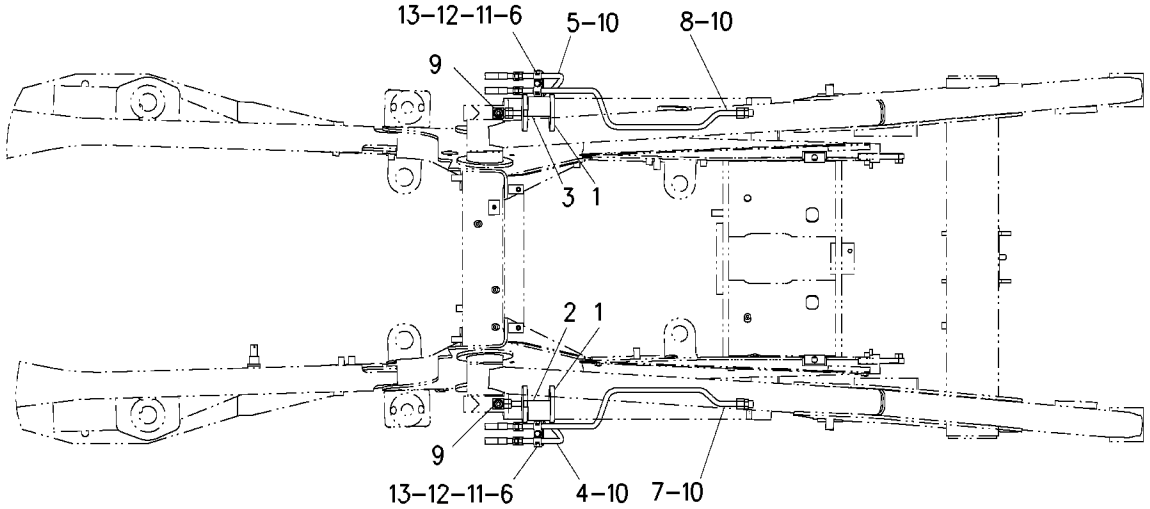

GRAPHIC #1 g00850638

HYDRAULIC SYSTEM

163-9371 LINES GP-LIFT CYLINDER

S/N:JRB00255-UP

PART OF 186-5331, 186-5333 HYDRAULIC AR

SMCS-5057, 5102 **i01590621**

NOTE	REF NO	GRAPHIC REF	PART NUMBER	QTY	PART NAME 1 2 3 4 5 6 (PRODUCT LEVEL)	SEE PAGE
	1	1	**7K-1181**	2	STRAP-CABLE	
	2	1	**112-5825**	1	TUBE AS	
	3	1	**112-5828**	1	TUBE AS	
I	4	1	**120-1324**	4	HOSE AS	
	5	1	**122-4872**	1	BRACKET AS	
	6	1	**122-4873**	1	BRACKET AS	
	7	1	**151-4841**	2	BLOCK	
	8	1	**158-3412**	4	CLIP (SLOT)	
	9	1	**163-5676**	1	TUBE AS	
	10	1	**163-5677**	1	TUBE AS	
	11	1	**148-8341**	1	CONNECTOR GP	
		1	**3D-2824**	1	SEAL-O-RING	
		1	**6V-8713**	1	CONNECTOR	
		1	**7J-9108**	1	SEAL-O-RING	
	12	1	**148-8446**	3	TEE AS-SWIVEL	
					(EACH INCLUDES)	
		1	**6V-9838**	1	TEE-SWIVEL	
		1	**7J-9108**	2	SEAL-O-RING	
	13	1	**150-3063**	1	TEE AS	
		1	**3D-2824**	1	SEAL-O-RING	
		1	**7J-9108**	2	SEAL-O-RING	
		1	**120-9809**	1	TEE	
	14	1	**6V-8398**	4	SEAL-O-RING	
	15	1	**6V-9831**	2	CAP AS	
	16	1	**8T-4121**	4	WASHER-HARD (11X21X2.5MM THK)	
M	17	1	**8T-4136**	4	BOLT (M10X1.5X25MM)	
	18	1	**9R-7803**	2	CLIP	

I-SEE HOSE FABRICATION GUIDE
M-METRIC PART

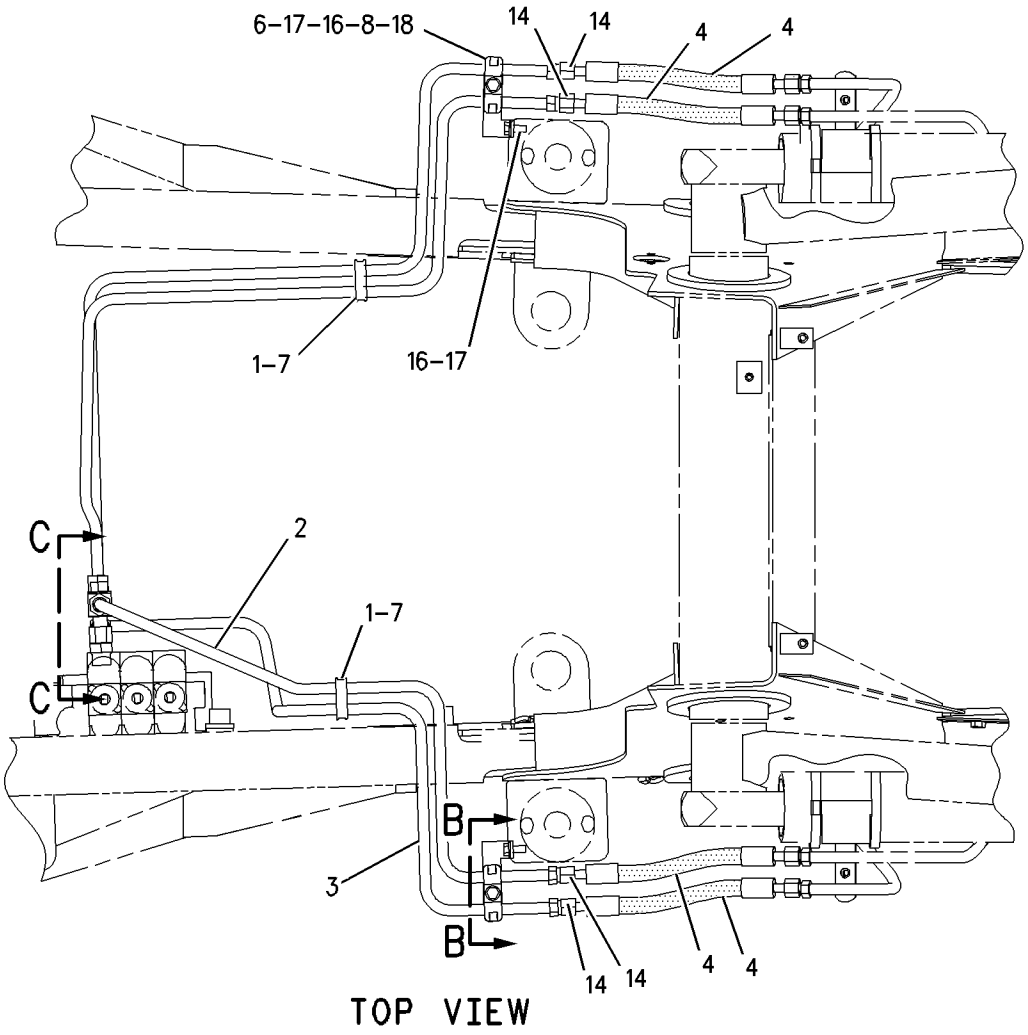

TOP VIEW

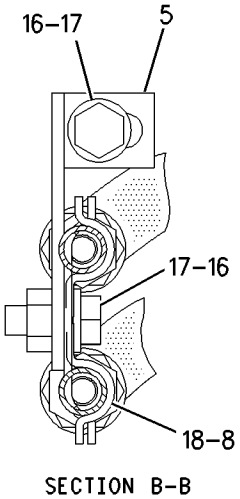

SECTION B-B

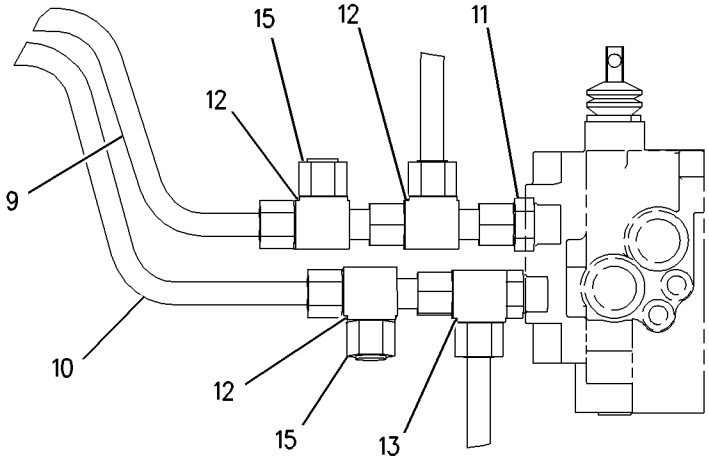

SECTION C-C

GRAPHIC #1

g00824794

HYDRAULIC SYSTEM

106-5876 LINES GP-LOADER AUXILIARY

S/N:JRB00255-UP
PART OF 186-5333 HYDRAULIC AR
AN ATTACHMENT

SMCS-5057 **i01645640**

NOTE	REF NO	GRAPHIC REF	PART NUMBER	QTY	PART NAME 1 2 3 4 5 6 (PRODUCT LEVEL)	SEE PAGE
	1	1	**6V-9830**	2	CAP AS	
I	2	1	**9R-9198**	2	HOSE AS	
	3	1	**9R-9319**	1	BRACKET AS	
	4	1	**116-4616**	1	TUBE AS	
	5	1	**116-4617**	1	TUBE AS	
	6	1	**122-5823**	1	BRACKET AS	
	7	1	**151-4841**	1	BLOCK	
	8	1	**133-7332**	1	TUBE AS	
	9	1	**133-7333**	1	TUBE AS	
	11	1	**6V-8398**	6	SEAL-O-RING	
	12	1	**148-8341**	2	CONNECTOR GP	
		1	**3D-2824**	2	SEAL-O-RING	
		1	**6V-8713**	2	CONNECTOR	
		1	**7J-9108**	2	SEAL-O-RING	
M	13	1	**8T-4137**	1	BOLT (M10X1.5X20MM)	
	14	1	**8T-4121**	7	WASHER-HARD (11X21X2.5MM THK)	
	15	1	**7K-1181**	1	STRAP-CABLE	
M	16	1	**8T-4136**	3	BOLT (M10X1.5X25MM)	
M	17	1	**8T-4195**	3	BOLT (M10X1.5X30MM)	
	18	1	**158-3412**	8	CLIP (SLOT)	
	19	1	**9R-7803**	4	CLIP	

I-SEE HOSE FABRICATION GUIDE
M-METRIC PART

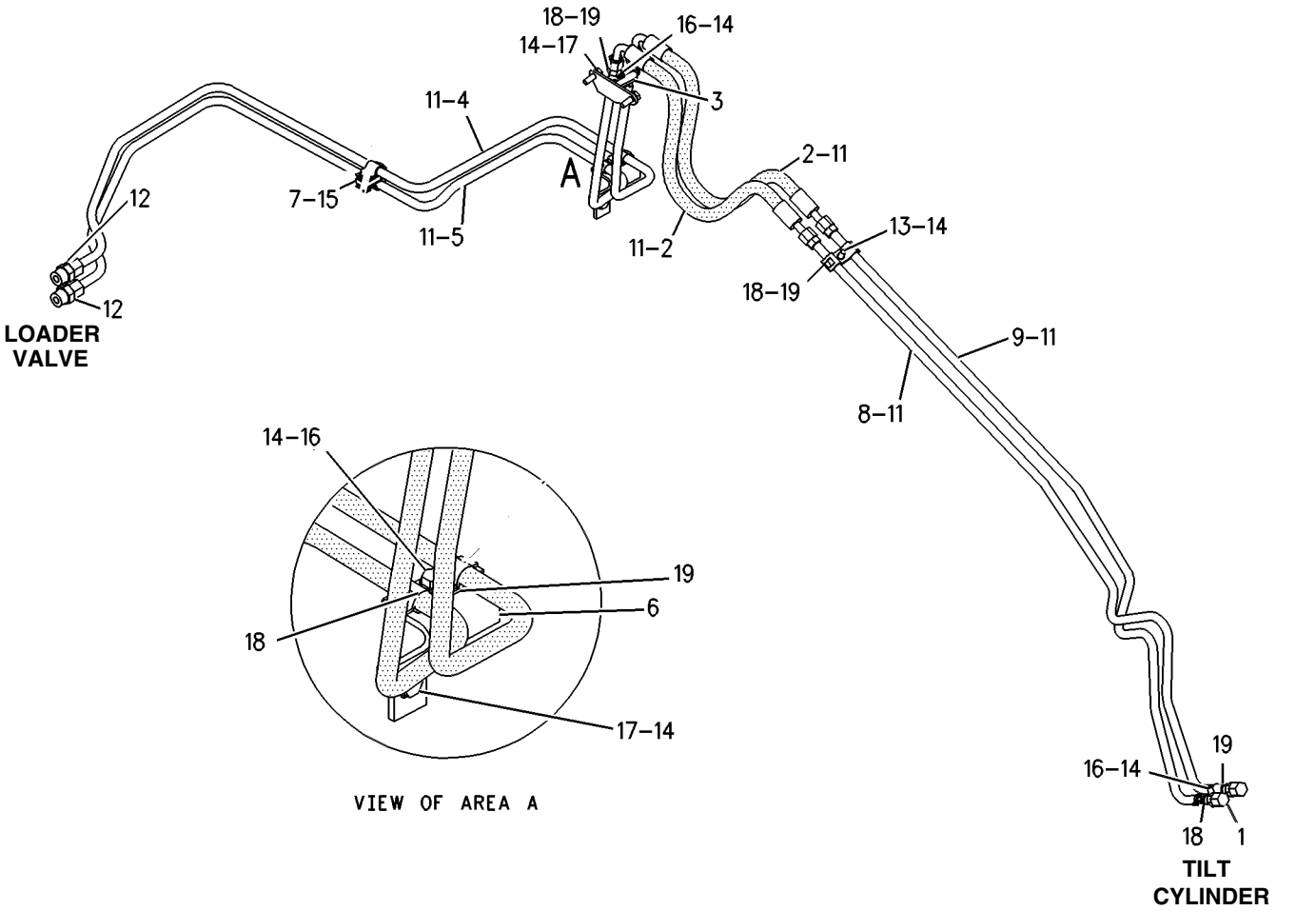

GRAPHIC #1

g00850538

HYDRAULIC SYSTEM

9R-5788 LINES GP-MULTIPURPOSE BUCKET

S/N:JRB00255-UP

PART OF 111-8634, 111-8635 BUCKET AR-MULTIPURPOSE

AN ATTACHMENT

SMCS-5057 **i00724954**

NOTE	REF NO	GRAPHIC REF	PART NUMBER	QTY	PART NAME 1 2 3 4 5 6 (PRODUCT LEVEL)	SEE PAGE
	1	1	**3J-1907**	4	SEAL-O-RING (11.89MM ID)	
	2	1	**6V-1249**	2	GROMMET	
I	3	1	**7I-5486**	1	HOSE AS	
I	4	1	**9R-0418**	2	HOSE AS	
I	5	1	**100-7443**	1	HOSE AS	
I	6	1	**100-7444**	1	HOSE AS	
I	7	1	**131-2127**	1	HOSE AS	
	8	1	**5P-7464**	2	CLIP (SLOT)	
	9	1	**5P-7465**	2	CLIP (TAB)	
	10	1	**6V-8397**	8	SEAL-O-RING (9.27MM ID)	
	11	1	**6V-8398**	4	SEAL-O-RING (12.47MM ID)	
	12	1	**6V-8636**	4	CONNECTOR	
C	13	1	**8T-1891**	4	CLIP (SLOT)	
C	14	1	**8T-1892**	4	CLIP (TAB)	
C	15	1	**8T-3444**	2	TEE-UNION ORIFICE	
C	16	1	**8T-4121**	2	WASHER (2.5MM THK)	
CM	17	1	**8T-4136**	2	BOLT (M10X1.50X25MM)	
M	18	1	**8T-4192**	2	BOLT (M12X1.75X25MM)	
	19	1	**8T-4223**	2	WASHER-HARD (3MM THK)	

C-CHANGE FROM PREVIOUS TYPE
I-SEE HOSE FABRICATION GUIDE
M-METRIC PART

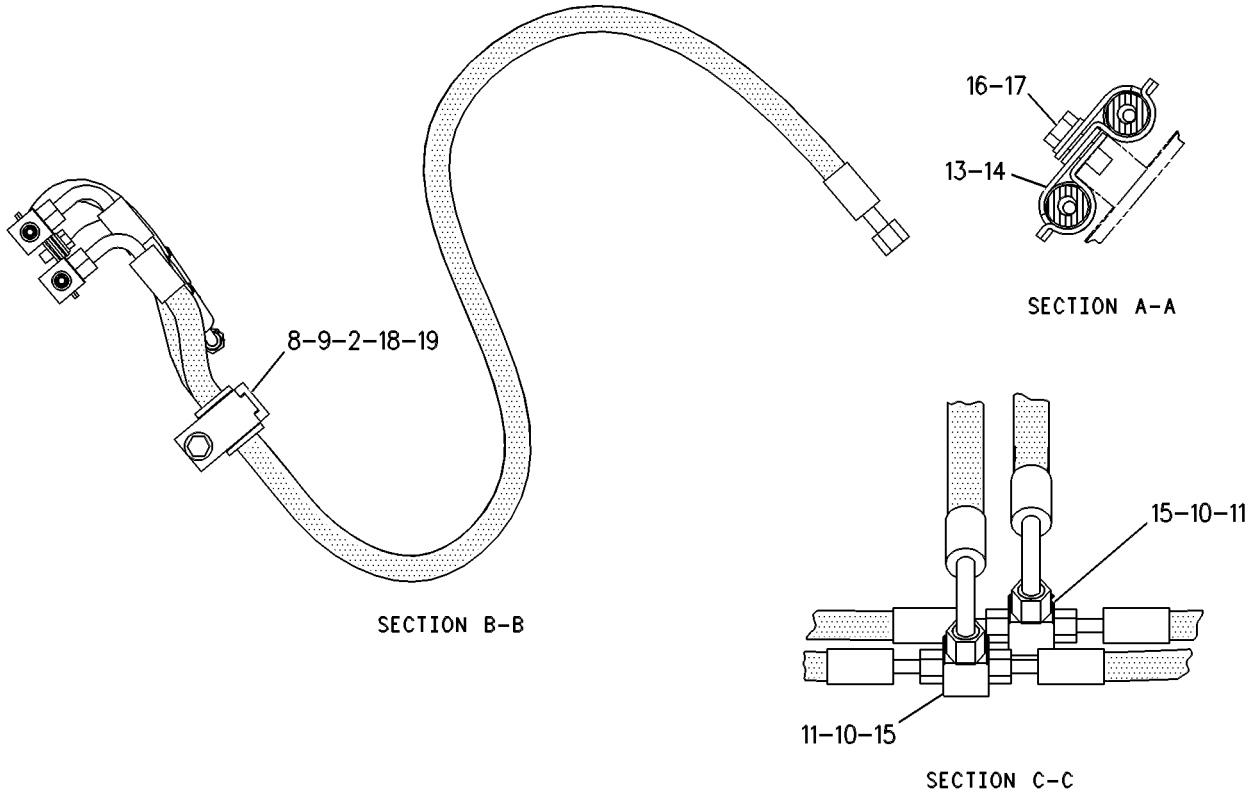

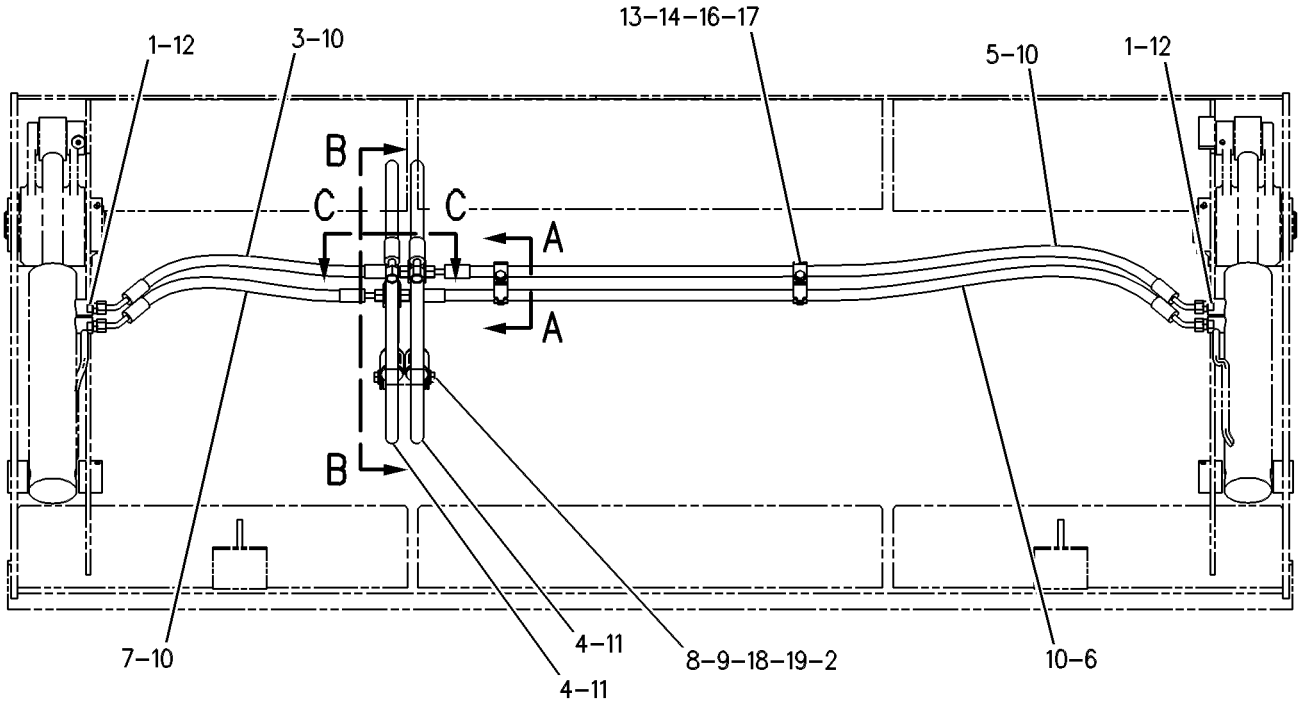

GRAPHIC #1 g00308322

HYDRAULIC SYSTEM

202-5815 LINES GP - PILOT

S/N:JRB

NOTE	REF NO	GRAPHIC REF	PART NUMBER	QTY	PART NAME 1 2 3 4 5 6 (PRODUCT LEVEL)	SEE PAGE
	1	1	5D-1026	2	CLAMP-RETAINER	
	2	1	6V-0852	1	CAP-DUST	
	3	1	90-5725	1	ELBOW	
	4	1	111-1374	1	BRACKET	
	5	1	164-5567	1	NIPPLE AS	
			3J-1907	1	O-RING	
			4J-5477	1	SEAL FACE	
	6	1	166-2033	1	TEE AS-SWIVEL	
			4J-5477	1	SEAL O-RING	
	7	1	174-6740	1	TEE AS	
			2M-9780	1	O-RING	
	8	1	201-1850	1	BRACKET AS	
	9	1	204-9734	1	SPACER	
	10	1	210-8916	1	BLOCK	
	11	1	148-8325	1	CNNECTOR AS	
			3J-1907	1	O-RING	
			4J-5477	1	SEAL FACE	
	12	1	148-8407	1	PLUG AS	
			3J-1907	1	O-RING	
			4J-5477	1	SEAL FACE	
	13	1	3J-1907	1	SEAL O RING	
	14	1	5C-7261	1	NUT	
	15	1	5C-9553	1	BOLT	
	16	1	5P-4115	2	WASHER	
	17	1	6D-4246	5	CLIP	
	18	1	6V-9828	1	CAP AS	
	19	1	7D-7233	3	CLIP	
	20	1	7S-4244	1	CLIP	
	21	1	8T-4121	6	WASHER HARD	
	22	1	8T-4133	3	NUT	
	23	1	8T-4136	3	BOLT	
	24	1	8T-4189	1	BOLT	
	25	1	8T-4200	2	BOLT	
	26	1	8T-4224	4	WASHER HARD	
	27	1	9M-8406	1	CLIP	
	28	1	5P-1505	1	HOSE (220CM)	

GRAPHIC #1

HYDRAULIC SYSTM

202-5815 LINES GP-PILOT (contd.)

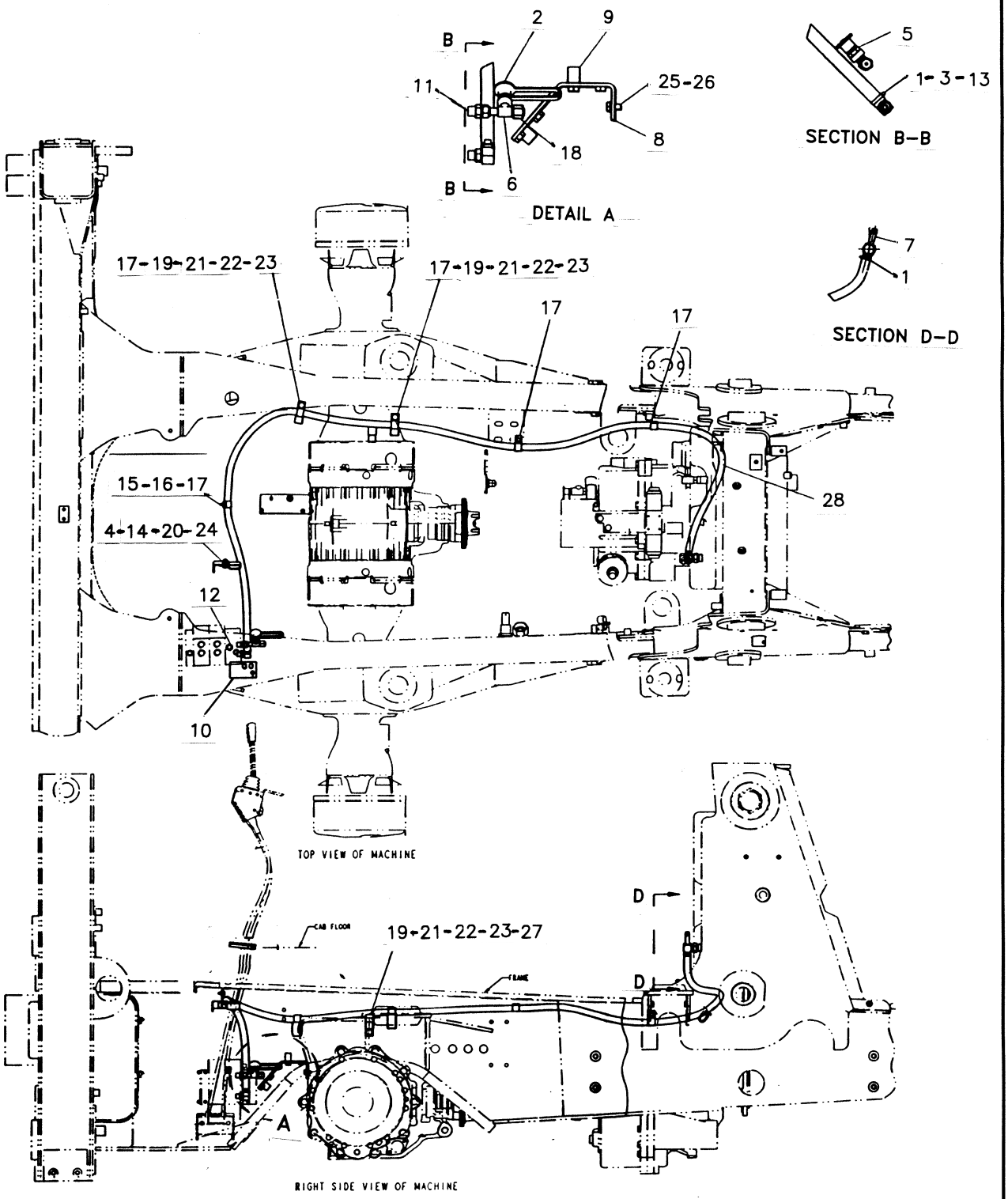

GRAPHIC # 1

D:\424\28986

HYDRAULIC SYSTEM

202-5714 LINES GP-PUMP

S/N:JRB00255-UP

PART OF 202-5738 DRIVE AR

SMCS-5057 **i01640863**

NOTE	REF NO	GRAPHIC REF	PART NUMBER	QTY	PART NAME 1 2 3 4 5 6 (PRODUCT LEVEL)	SEE PAGE
K	1	1	**6V-0852**	1	CAP-DUST	
I	2	1	**120-4604**	1	HOSE AS	
K	3	1	**164-5567**	1	FITTING GP	
			3J-1907	1	SEAL-O-RING	
		1	**6V-3965**	1	FITTING AS	
	4	1	**185-0804**	1	PLATE AS	
I	5	1	**190-8956**	1	HOSE AS	
I K	6	1	**190-8957**	1	HOSE AS	
	7	1	*148-8316*	2	CONNECTOR GP	
					(EACH INCLUDES)	
		1	**3J-7354**	1	SEAL-O-RING	
		1	**4J-5477**	1	SEAL-O-RING	
		1	**6V-8647**	1	CONNECTOR	
	8	1	*148-8351*	1	ELBOW GP	
		1	**4J-5477**	1	SEAL-O-RING	
		1	**6V-9849**	1	ELBOW-SWIVEL	
	9	1	*148-8369*	1	ELBOW GP	
		1	**3J-7354**	1	SEAL-O-RING	
		1	**4J-5477**	1	SEAL-O-RING	
		1	**6V-8628**	1	ELBOW	
K	10	1	*150-3062*	1	TEE AS	
		1	**3J-7354**	1	SEAL-O-RING	
		1	**4J-5477**	1	SEAL-O-RING	
		1	**101-1787**	1	TEE AS	
	11	1	**5K-0906**	2	BOLT (5/16-18X0.63 IN)	
	12	1	**6K-8178**	1	CLIP	
	13	1	**8T-4224**	1	WASHER-HARD	
M	14	1	7X**-0818**	1	BOLT	
	15	1	**8T-4224**	2	WASHER-HARD (8.8X16X2MM THK)	
	16	1	**9M-8406**	1	CLIP	
K	17	1	200*-3947*	1	ADAPTOR AS	
		1	**3J-1907**	1	SEAL-O-RING	
		1	**4J-5477**	1	SEAL-FACE	
K	18	1	148*-8316*	1	CONNECTOR AS	
			3J-7354	1	SEAL-O-RING	
			4J-5477	1	SEAL-FACE	

I-SEE HOSE FABRICATION GUIDE
M-METRIC PART
K- K MARKED ITEMS ARE PART OF 202-6139 CONNECTOR GP

202-5714* LINES GP-PUMP *(contd.) **i01640863**

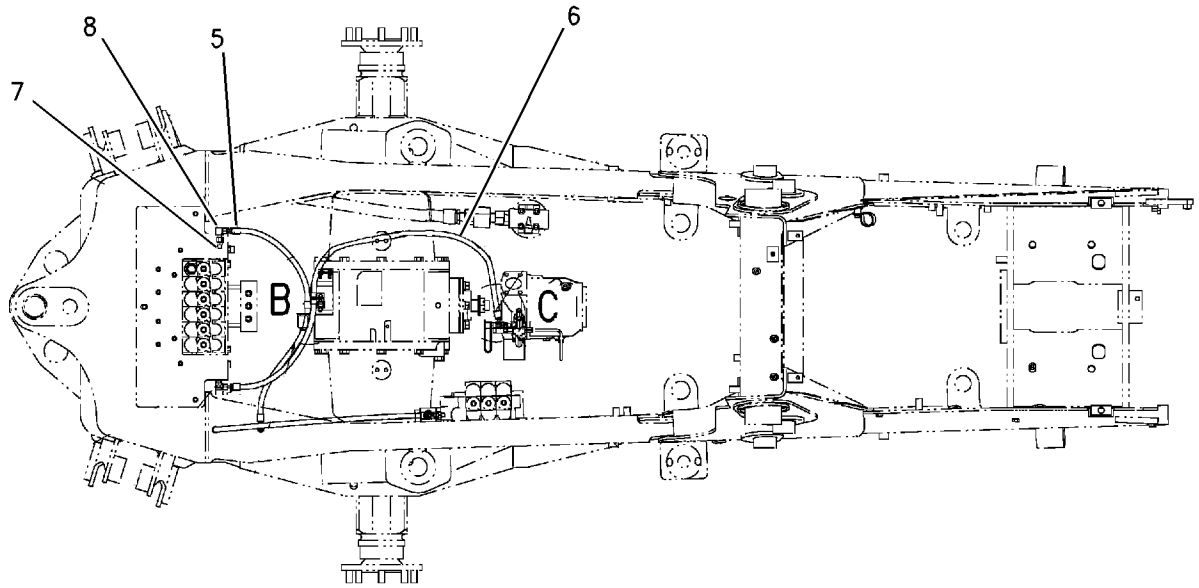

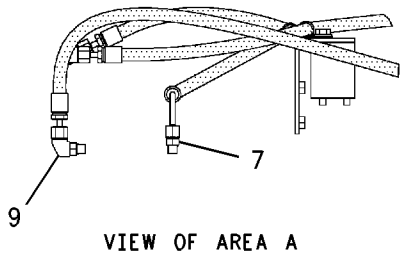

VIEW OF AREA A

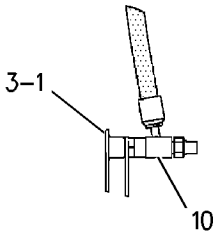

VIEW OF AREA C

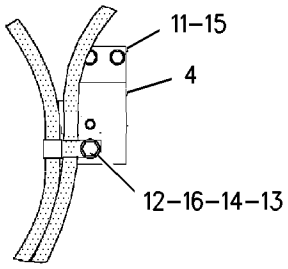

VIEW OF AREA B

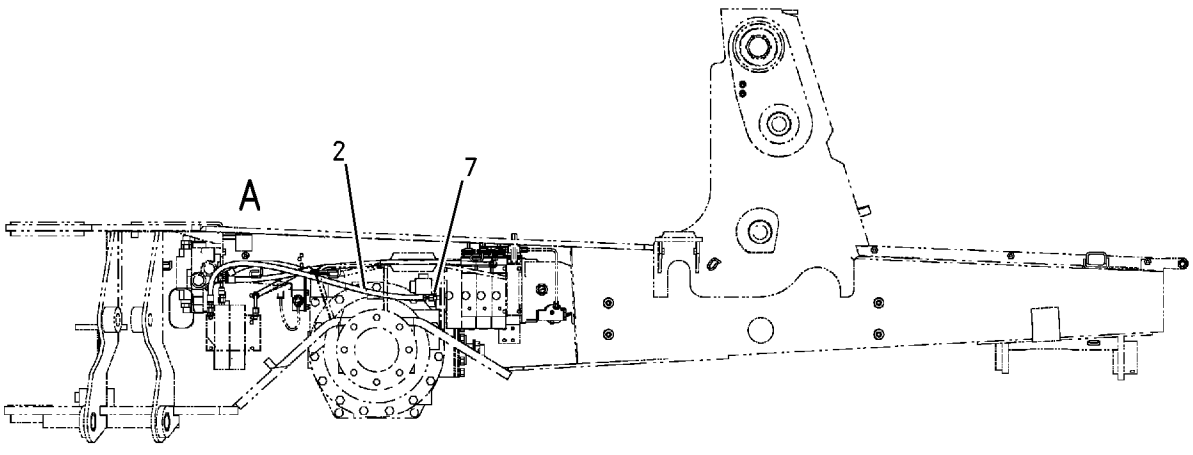

GRAPHIC #1 g00848602

HYDRAULIC SYSTEM

174-7153 LINES GP - PUMP

S/N:JRB

PART OF 185-1129 SUPPRESSION AR - SOUND

NOTE	REF NO	GRAPHIC REF	PART NUMBER	QTY	PART NAME 1 2 3 4 5 6 (PRODUCT LEVEL)	SEE PAGE
	1	1	1P-3709	1	SEAL-RECTANGULAR	
	2	1	5D-1026	2	CLAMP-HOSE	
	3	1	5P-4868	2	CLAMP(HOSE)	
	4	1	6V-0852	1	CAP-DUST	
	5	1	7K-1181	4	STRAP - CABLE	
	6	1	8T-0154	1	CLAMP-HOSE	
	7	1	8T-6675	1	CLAMP-HOSE	
	8	1	110-2445	3	CLAMP-HOSE	
	9	1	114-4777	1	BRACKET AS	
	10	1	130-9984	1	CLIP	
	11	1	146-7276	1	HOSE AS	
	12	1	146-8958	1	FITTING	
	13	1	159-0186	4	CLAMP	
	14	1	164-5567	1	FITTING GP	
			3J-1907	1	SEAL-O-RING	
			6V-3965	1	FITTING AS (QUICK DISCONNECT)	
	15	1	165-2273	1	VALVE GP-SHUTOFF	
			3K-0360	1	SEAL-O-RING	
			6V-7238	1	VALVE - SHUTOFF	
	16	1	174-7147	1	HOSE	
	17	1	190-2932	1	FLANGE	
	18	1	190-3032	1	ELBOW AS	
			5K-9090	1	SEAL-O-RING	
			7M-8485	1	SEAL-O-RING	
			194-1958	1	ELBOW	
I	19	1	190-4163	1	HOSE AS	
I	20	1	207-7589	1	HOSE AS	
	21	1	195-8665	1	ELBOW	
	22	1	148-8352	1	ELBOW GP	
		1	5K-9090	1	SEAL-0-RING	
		1	6V-9854	1	ELBOW-SWIVEL	
	23	1	148-8362	1	ELBOW GP	
		1	3D-2824	1	SEAL-O-RING	
		1	5K-9090	1	SEAL-O-RING	
		1	8T-6684	1	ELBOW	
	24	1	148-8422	2	TEE AS-ORFS	
					(EACH INCLUDES)	
			5K-9090	1	SEAL-0-RING	
			6V-9746	1	SEAL-0-RING	
			7M-8485	1	SEAL-0-RING	
			8T-6356	1	TEE-O-RING PORT	
	25	1	150-3027	1	ELBOW AS	
			2M-9780	1	SEAL-O-RING	
			6V-5653	1	ELBOW-O-RING (7/8-14 THD)	
	26	1	150-3065	1	ADAPTER GP	
			3J-1907	1	SEAL-O-RING	
			6V-0484	1	ADAPTER-0-RING	
	27	1	1P-3703	1	SEAL-RECTANGULAR	
	28	1	5P-4116	2	WASHER-HARD (8.8X20.5X2MM THK)	
	29	1	6V-9832	1	CAP AS	
	30	1	7D-7233	4	CLIP	

174-7153 LINES GP - PUMP (contd.)

NOTE	REF NO	GRAPHIC REF	PART NUMBER	QTY	PART NAME 1 2 3 4 5 6 (PRODUCT LEVEL)	SEE PAGE
M	31	1	7X-2550	2	BOLT (M12X1.75X110MM)	
	32	1	8T-4121	16	WASHER-HARD (11X21X2.5MM THK)	
M	33	1	8T-4136	8	BOLT(M10X1.5X25MM)	
M	34	1	8T-4137	1	BOLT(M10X1.5X20MM)	
M	35	1	8T-4189	2	BOLT(M8X1.25X20MM)	
M	36	1	8T-4195	3	BOLT(M10X1.5X30MM)	
M	37	1	8T-4198	4	BOLT(M10X1.5X100MM)	
	38	1	8T-4223	6	WASHER-HARD(13.5X25.5X3MM THK)	
M	39	1	8T-4910	2	BOLT (M12X1.75X60MM)	
	40	1	8T-7529	2	CLIP	
E	41	1	5P-1505		HOSE (72CM)	
E	42	1	146-7453		HOSE (55CM)	
E	43	1	136-1955	2	HOSE (96CM)	
E	44	1	5P-0743		HOSE (40CM)	

E - ORDER BY THE CENTIMETER
I - SEE HOSE FABRICATION GUIDE
M - METRIC PART

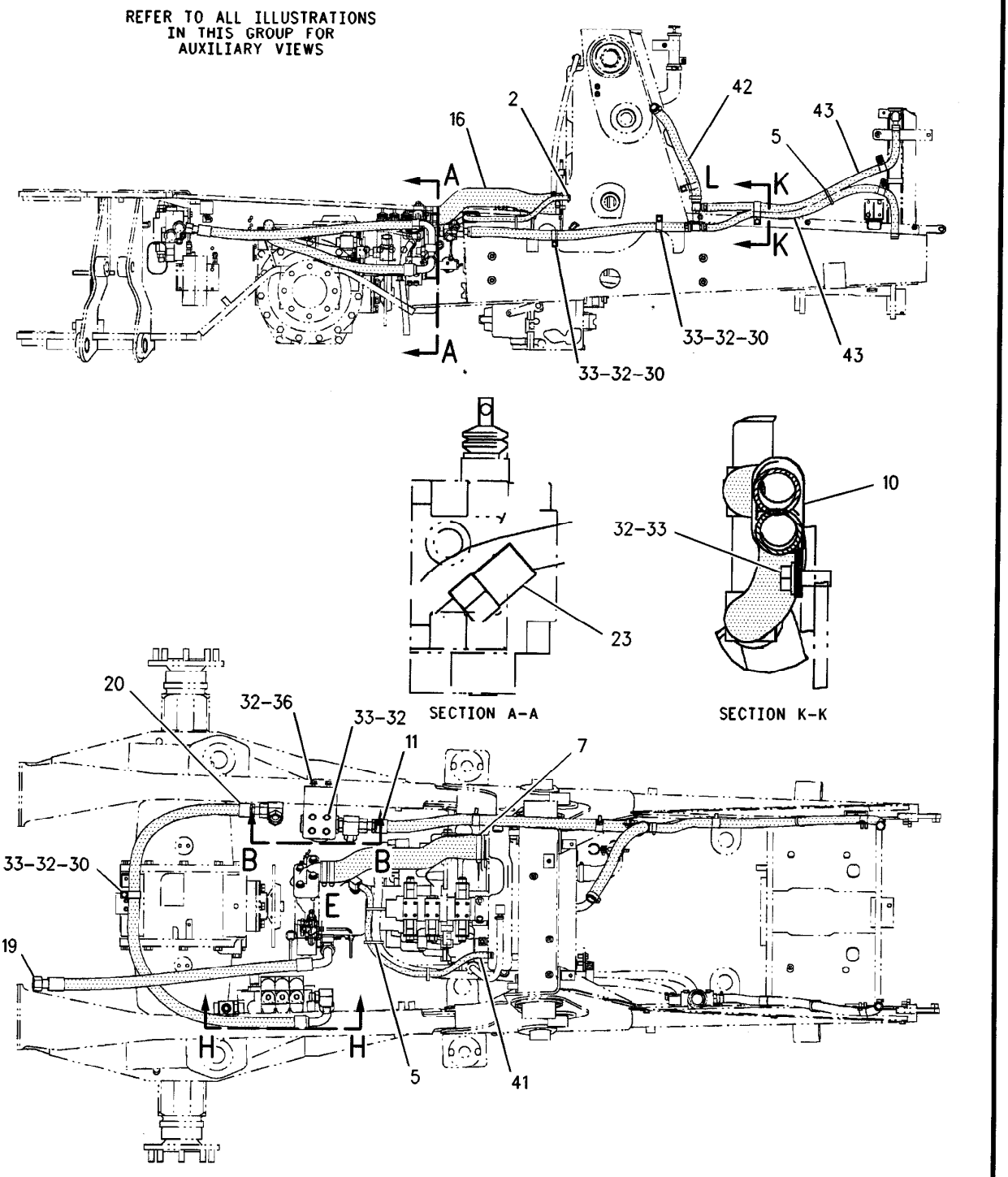

GRAPHIC #1

g00732509

174-7153 **LINES GP-PUMP** *(contd.)* **i01507961**

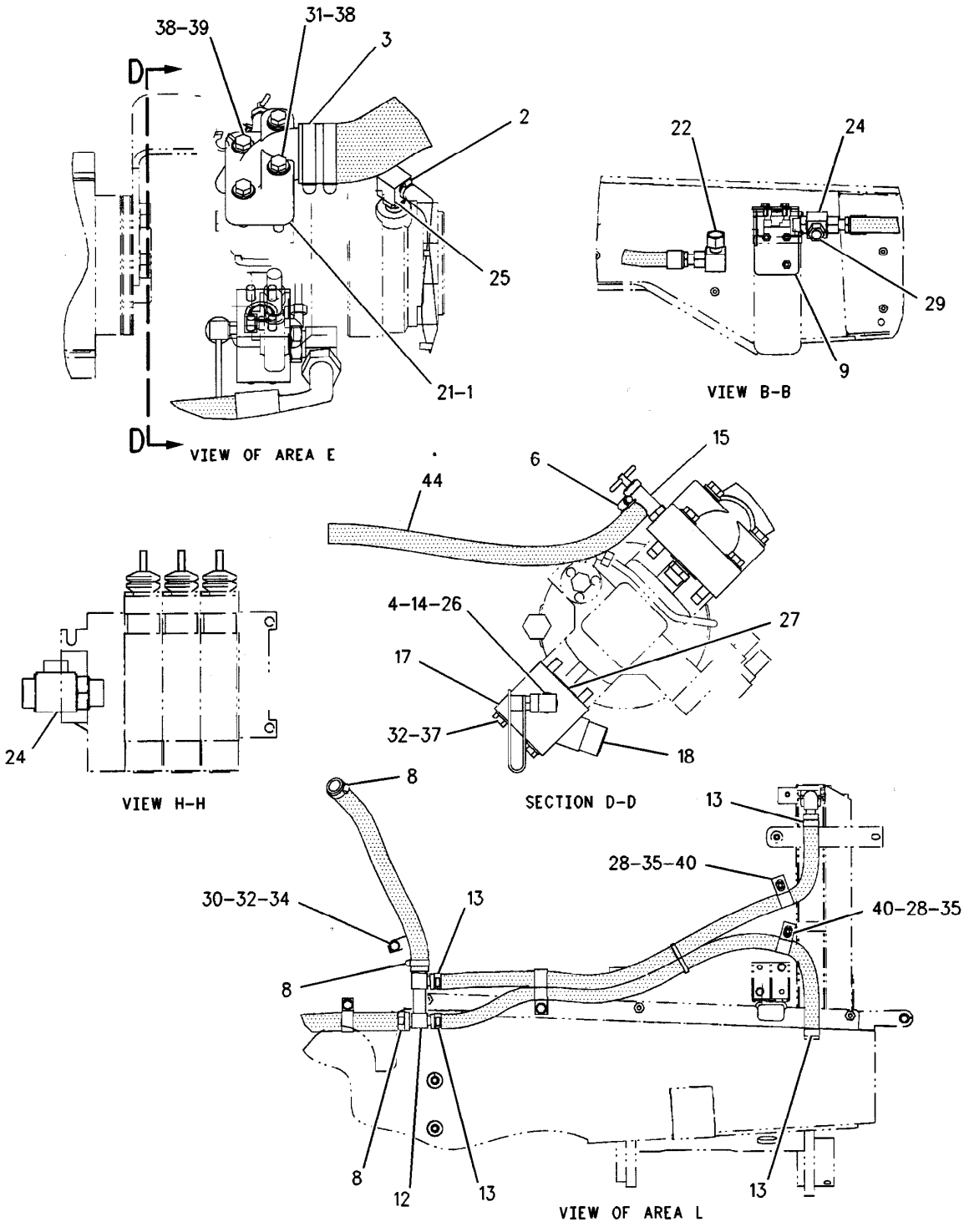

GRAPHIC #2 g00733533

HYDRAULIC SYSTEM

196-9913 LINES GP-PUMP

S/N:JRB00255-UP

PART OF 186-4967 VALVE AR-BANK 4

SMCS-5057 **i01433027**

NOTE	REF NO	GRAPHIC REF	PART NUMBER	QTY	PART NAME 1 2 3 4 5 6 (PRODUCT LEVEL)	SEE PAGE
I	1	1	**190-4164**	1	HOSE AS	
	2	1	**197-0398**	1	CONNECTOR GP	
		1	**5K-9090**	1	SEAL-O-RING (23.52MM ID)	
			7M-8485	1	SEAL-O-RING (29.74MM ID)	
		1	**8C-3443**	1	CONNECTOR	
	3	1	**148-8429**	1	FITTING GP	
		1	**5K-9090**	2	SEAL-O-RING (23.52MM ID)	
		1	**6V-9840**	1	TEE-SWIVEL	

I-SEE HOSE FABRICATION GUIDE

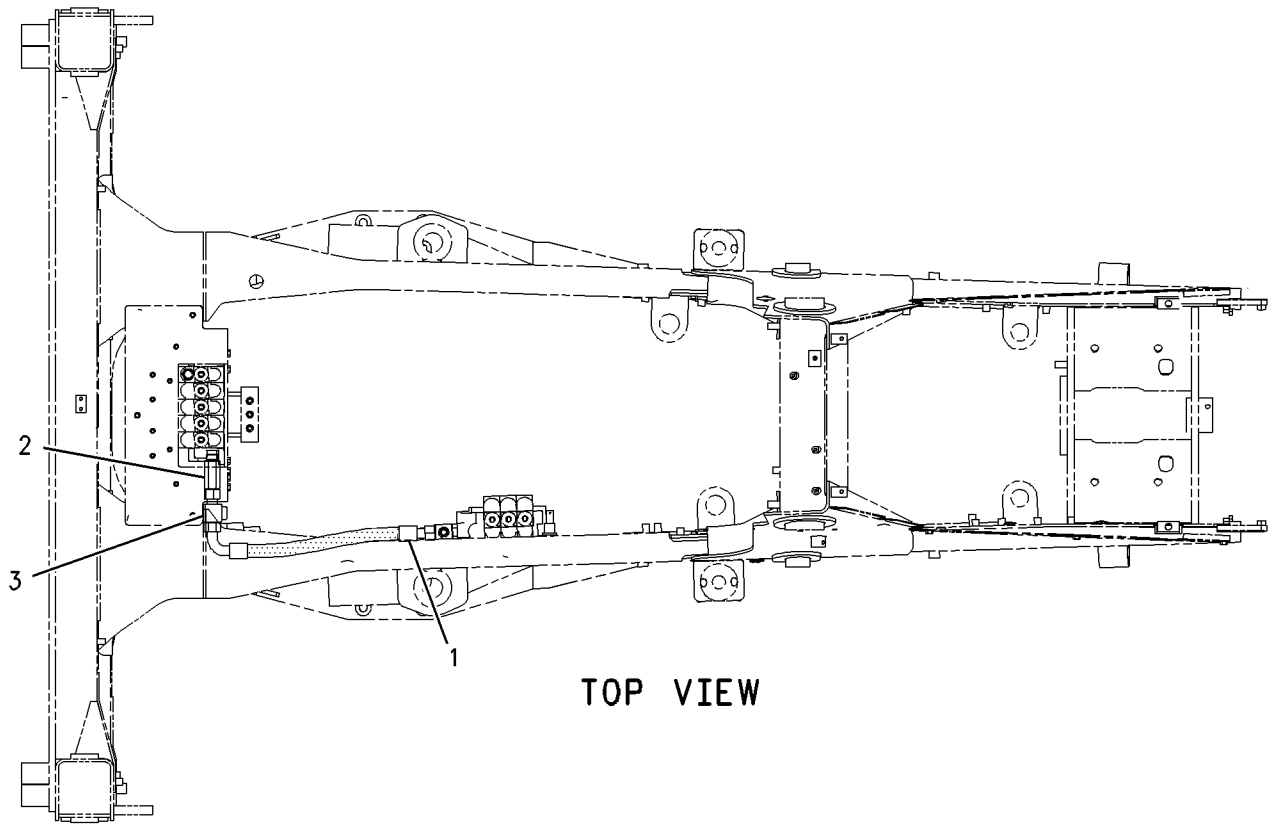

TOP VIEW

GRAPHIC #1 g00751321

HYDRAULIC SYSTEM

176-9298 LINES GP-RETURN

S/N:JRB00255-UP

PART OF 233-6435 BACKHOE AR

SMCS-5057 **i01657557**

NOTE	REF NO	GRAPHIC REF	PART NUMBER	QTY	PART NAME 1 2 3 4 5 6 (PRODUCT LEVEL)	SEE PAGE
Y	1	1	**178-7480**	1	VALVE GP-CHECK	241
I	2	1	**185-6602**	1	HOSE AS	
	3	1	**148-8335**	1	CONNECTOR GP	
		1	**5K-9090**	1	SEAL-O-RING	
		1	**6V-8635**	1	CONNECTOR	
			7M-8485	1	SEAL-O-RING	
	4	1	**148-8429**	2	FITTING GP	
					(EACH INCLUDES)	
		1	**5K-9090**	2	SEAL-O-RING	
		1	**6V-9840**	1	TEE-SWIVEL	

I-SEE HOSE FABRICATION GUIDE
Y-SEPARATE ILLUSTRATION

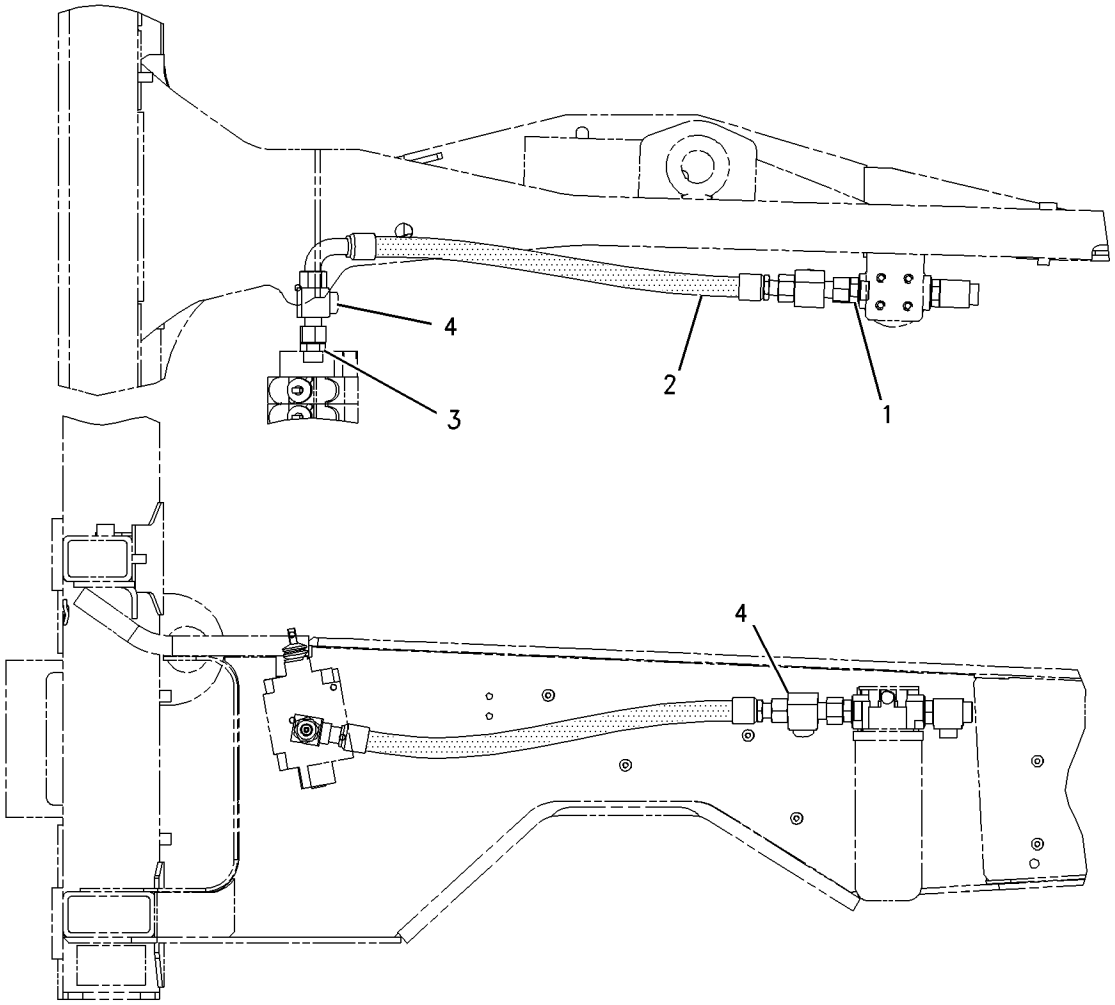

GRAPHIC #1 g00776783

HYDRAULIC SYSTEM

183-8530 LINES GP-SIDESHIFT LOCK

S/N:JRB00255-UP

PART OF 233-6435 BACKHOE AR

SMCS-5057, 5484 **i01376362**

NOTE	REF NO	GRAPHIC REF	PART NUMBER	QTY	PART NAME 1 2 3 4 5 6 (PRODUCT LEVEL)	SEE PAGE
Y	1	1	**3E-8622**	1	VALVE GP-SOLENOID	261
	2	1	**9R-1975**	1	TUBE AS	
	3	1	**9R-1976**	1	TUBE AS	
	4	1	**9R-9208**	1	TUBE AS	
	5	1	**9R-9209**	1	TUBE AS	
	6	1	**107-6715**	1	TUBE AS	
	7	1	**183-8529**	1	HOSE AS	
	8	1	**148-8366**	1	ELBOW AS	
		1	**6V-8397**	2	SEAL-O-RING (9.27MM ID)	
		1	**6V-8987**	1	ELBOW-45 DEGREE	
	9	1	**148-8378**	2	ELBOW GP	
					(EACH INCLUDES)	
			3J-1907	1	SEAL-O-RING	
		1	**6V-8397**	1	SEAL-O-RING (9.27MM ID)	
		1	**6V-8724**	1	ELBOW	
	10	1	**148-8439**	2	TEE AS-ORFS	
					(EACH INCLUDES)	
			3J-1907	1	SEAL-O-RING	
		1	**6V-8397**	2	SEAL-O-RING (9.27MM ID)	
		1	**6V-8774**	1	TEE	
	11	1	**150-3056**	1	TEE AS	
		1	**6V-8397**	3	SEAL-O-RING (9.27MM ID)	
		1	**6V-8788**	1	TEE	
	12	1	**150-4044**	1	CONNECTOR AS	
			3J-1907	1	SEAL-O-RING	
		1	**6V-8397**	1	SEAL-O-RING (9.27MM ID)	
		1	**8T-1779**	1	CONNECTOR	
	13	1	**6V-9168**	1	NUT (11/16-16 THD)	

Y-SEPARATE ILLUSTRATION

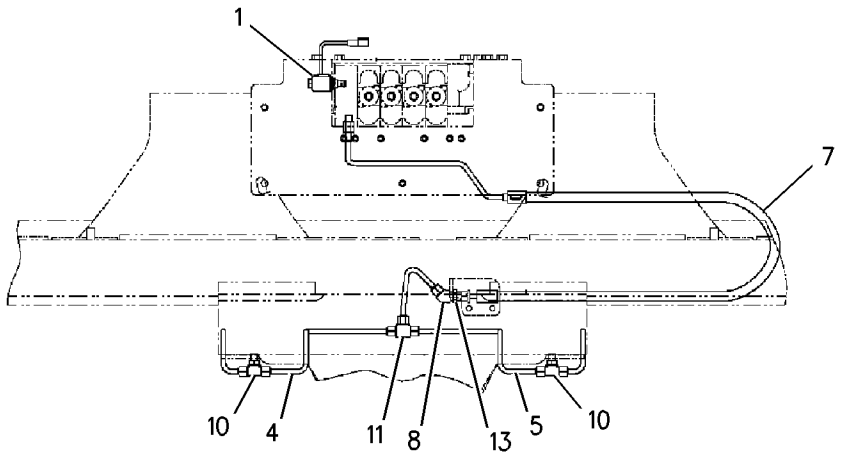

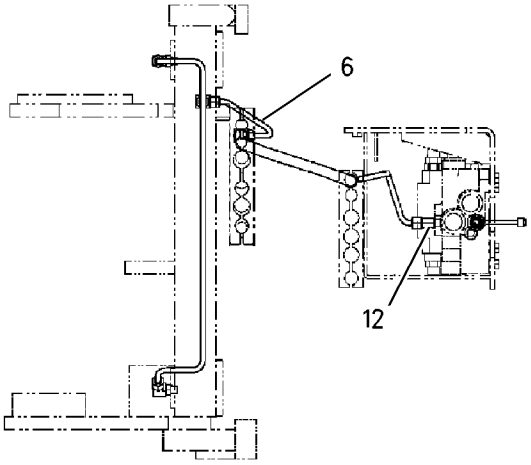

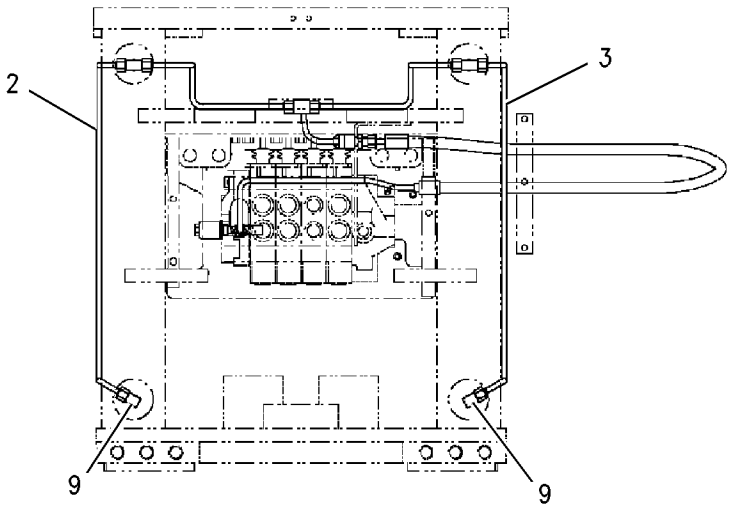

GRAPHIC #1 g00727802

HYDRAULIC SYSTEM

185-3414 LINES GP-STABILIZER

S/N:JRB00255-UP

PART OF 228-2806 HYDRAULIC AR

SMCS-5057, 5468 **i01621286**

NOTE	REF NO	GRAPHIC REF	PART NUMBER	QTY	PART NAME 1 2 3 4 5 6 (PRODUCT LEVEL)	SEE PAGE
	1	1	**8Y-8674**	1	TUBE AS	
	2	1	**8Y-8675**	1	TUBE AS	
	3	1	**9M-6738**	2	CLAMP-HOSE	
	4	1	**9R-2004**	2	BLOCK	
	5	1	**174-4028**	1	TUBE AS	
	6	1	**174-4029**	1	TUBE AS	
	7	1	**174-4030**	1	TUBE AS	
	8	1	**174-4031**	1	TUBE AS	
	9	1	**174-4032**	1	TUBE AS	
	10	1	**174-4033**	1	TUBE AS	
	11	1	**174-4034**	1	TUBE AS	
	12	1	**174-4035**	1	TUBE AS	
I	13	1	**177-7094**	1	HOSE AS	
	14	1	**195-0355**	1	TUBE AS	
	15	1	**195-0356**	1	TUBE AS	
	16	1	**195-0357**	1	TUBE AS	
	17	1	**195-0358**	1	TUBE AS	
I	18	1	**197-8444**	1	HOSE AS	
	19	1	**148-8327**	1	CONNECTOR GP	
		1	**3D-2824**	1	SEAL-O-RING	
		1	**6V-8637**	1	CONNECTOR-SEAL	
		1	**6V-9746**	1	SEAL-O-RING	
	20	1	**148-8336**	2	CONNECTOR GP	
					(EACH INCLUDES)	
			3J-1907	1	SEAL-O-RING	
		1	**6V-8397**	1	SEAL-O-RING	
		1	**6V-8636**	1	CONNECTOR	
	21	1	**148-8345**	6	CONNECTOR GP	
					(EACH INCLUDES)	
			2M-9780	1	SEAL-O-RING	
		1	**6V-8398**	1	SEAL-O-RING	
		1	**6V-8638**	1	CONNECTOR-SEAL	
	22	1	**148-8347**	1	ELBOW GP	
			3D-2824	1	SEAL-O-RING	
		1	**6V-9007**	1	ELBOW	
		1	**6V-9746**	1	SEAL-O-RING	
	23	1	**6V-0826**	4	GROMMET	
	24	1	**6V-8398**	10	SEAL-O-RING	
	25	1	**6V-8946**	1	REDUCER AS	
	26	1	**6V-9746**	1	SEAL-O-RING	
	27	1	**8T-1889**	4	CLIP (SLOT)	
	28	1	**8T-1890**	4	CLIP (TAB)	
	29	1	**8T-4121**	8	WASHER-HARD (11X21X2.5MM THK)	
M	30	1	**8T-4137**	8	BOLT (M10X1.5X20MM)	
	31	1	**9R-9289**	8	CLIP (SLOT)	
	32	1	**9R-9290**	4	CLIP (TAB)	

I-SEE HOSE FABRICATION GUIDE
M-METRIC PART

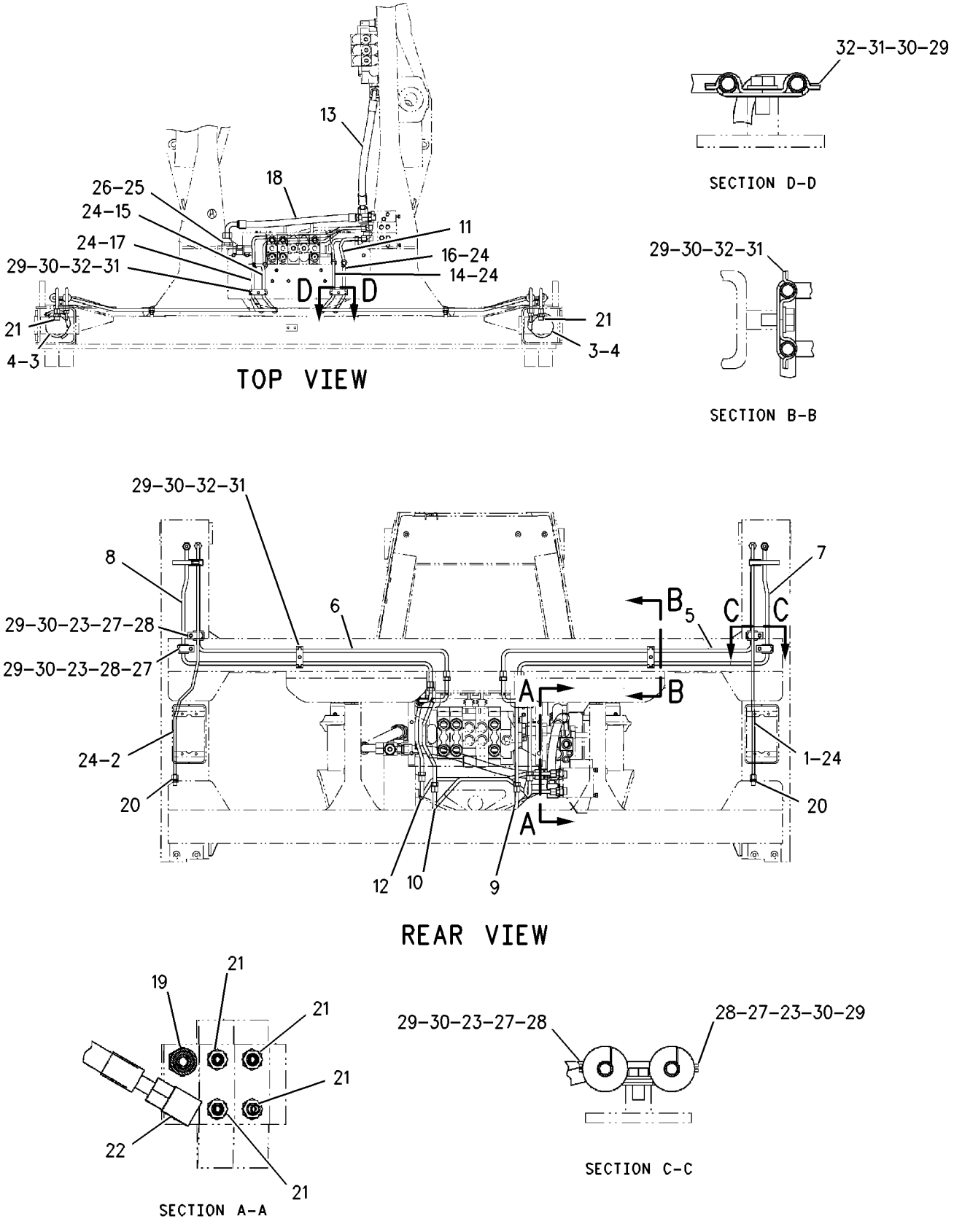

GRAPHIC #1 g00839019

HYDRAULIC SYSTEM

183-8505 LINES GP-SWING

S/N:JRB00255-UP
STANDARD FRAME
PART OF 202-6122 HYDRAULIC AR

SMCS-5057, 5105 **i01657696**

NOTE	REF NO	GRAPHIC REF	PART NUMBER	QTY	PART NAME 1 2 3 4 5 6 (PRODUCT LEVEL)	SEE PAGE
	1	1	**5P-0599**	2	CLAMP	
	2	1	**9R-2053**	2	BLOCK	
I	3	1	**107-6699**	2	HOSE AS	
	4	1	**259-0955**	1	TUBE AS	
	5	1	**259-0956**	1	TUBE AS	
	6	1	**183-8496**	1	HOSE AS	
	7	1	**183-8498**	1	HOSE AS	
I	8	1	**196-8438**	1	HOSE AS	
I	9	1	**196-8439**	1	HOSE AS	
	10	1	**148-8342**	2	CONNECTOR GP	
					(EACH INCLUDES)	
		1	**3K-0360**	1	SEAL-O-RING	
		1	**6V-8632**	1	CONNECTOR	
		1	**7J-9108**	1	SEAL-O-RING	
	11	1	**148-8354**	2	ELBOW GP	
					(EACH INCLUDES)	
		1	**3K-0360**	1	SEAL-O-RING	
		1	**6V-8398**	1	SEAL-O-RING	
		1	**6V-9002**	1	ELBOW	
	12	1	**148-8364**	2	ELBOW GP	
					(EACH INCLUDES)	
		1	**3K-0360**	1	SEAL-O-RING	
		1	**6V-8398**	1	SEAL-O-RING	
		1	**6V-8625**	1	ELBOW	
	13	1	*148-8411*	2	PLUG GP	
					(EACH INCLUDES)	
		1	**3K-0360**	1	SEAL-O-RING	
		1	**9S-4185**	1	PLUG	
	14	1	**148-8454**	2	TEE GP	
					(EACH INCLUDES)	
		1	**6V-8398**	3	SEAL-O-RING	
		1	**6V-8789**	1	TEE	
	15	1	**6V-8398**	2	SEAL-O-RING	
	16	1	**8T-1885**	4	CLIP (SLOT)	
	17	1	**8T-1886**	4	CLIP (TAB)	
	18	1	**8T-4121**	4	WASHER-HARD (11X21X2.5MM THK)	
M	19	1	**8T-4136**	2	BOLT (M10X1.5X25MM)	
M	20	1	**9X-2040**	2	SCREW-TRUSS HEAD (M10X1.5X25MM)	

I-SEE HOSE FABRICATION GUIDE
M-METRIC PART

183-8505 LINES GP-SWING *(contd.)* i01657696

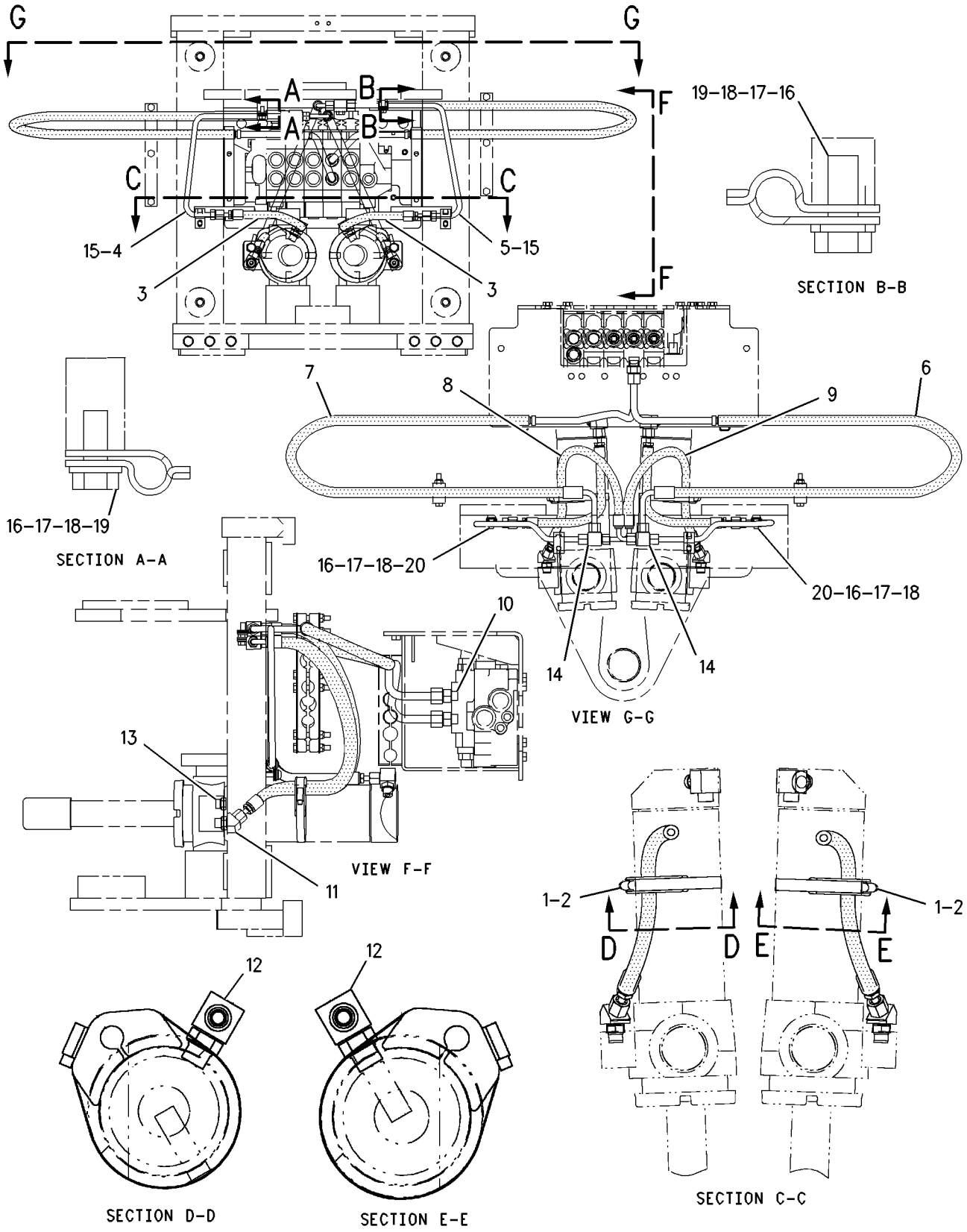

GRAPHIC #1 g00731138

HYDRAULIC SYSTEM

189-0555 LINES GP-TILT CYLINDER

S/N:JRB00255-UP

PART OF 186-5331, 186-5333 HYDRAULIC AR

SMCS-5057, 5104 **i01666490**

NOTE	REF NO	GRAPHIC REF	PART NUMBER	QTY	PART NAME 1 2 3 4 5 6 (PRODUCT LEVEL)	SEE PAGE
	1	1	**7K-1181**	1	STRAP-CABLE	
I	2	1	**9R-1034**	2	HOSE AS	
I	3	1	**9R-9198**	2	HOSE AS	
	4	1	**9R-9316**	1	BRACKET AS	
	5	1	**122-5822**	1	BRACKET AS	
	6	1	**151-4841**	1	BLOCK	
	7	1	**156-3837**	4	CLIP (SLOT)	
	8	1	**156-3838**	2	CLIP (TAB)	
	9	1	**158-3412**	8	CLIP (SLOT)	
	10	1	**187-3162**	1	TUBE AS	
	11	1	**187-3163**	1	TUBE AS	
	12	1	**187-3164**	1	TUBE AS	
	13	1	**187-3166**	1	TUBE AS	
	14	1	**207-7581**	1	TUBE AS	
	15	1	**187-4329**	1	TUBE AS	
	16	1	*148-8315*	1	CONNECTOR GP	
		1	**2M-9780**	1	SEAL-O-RING	
		1	**6V-8642**	1	CONNECTOR	
		1	**7J-9108**	1	SEAL-O-RING	
	17	1	*148-8341*	2	CONNECTOR GP	
					(EACH INCLUDES)	
		1	**3D-2824**	1	SEAL-O-RING	
		1	**6V-8713**	1	CONNECTOR	
		1	**7J-9108**	1	SEAL-O-RING	
	18	1	*148-8390*	1	ELBOW GP	
		1	**2M-9780**	1	SEAL-O-RING	
		1	**6V-8626**	1	ELBOW	
		1	**7J-9108**	1	SEAL-O-RING	
	19	1	*148-8393*	2	ELBOW GP	
					(EACH INCLUDES)	
		1	**6V-9852**	1	ELBOW-SWIVEL	
		1	**7J-9108**	1	SEAL-O-RING	
	20	1	**6V-8398**	8	SEAL-O-RING	
	21	1	**8T-4121**	10	WASHER-HARD (11X21X2.5MM THK)	
M	22	1	**8T-4136**	5	BOLT (M10X1.5X25MM)	
M	23	1	**8T-4137**	2	BOLT (M10X1.5X20MM)	
M	24	1	**8T-4195**	2	BOLT (M10X1.5X30MM)	
	25	1	**9R-7803**	4	CLIP	

I-SEE HOSE FABRICATION GUIDE
M-METRIC PART

189-0555 LINES GP-TILT CYLINDER *(contd.)* i01666490

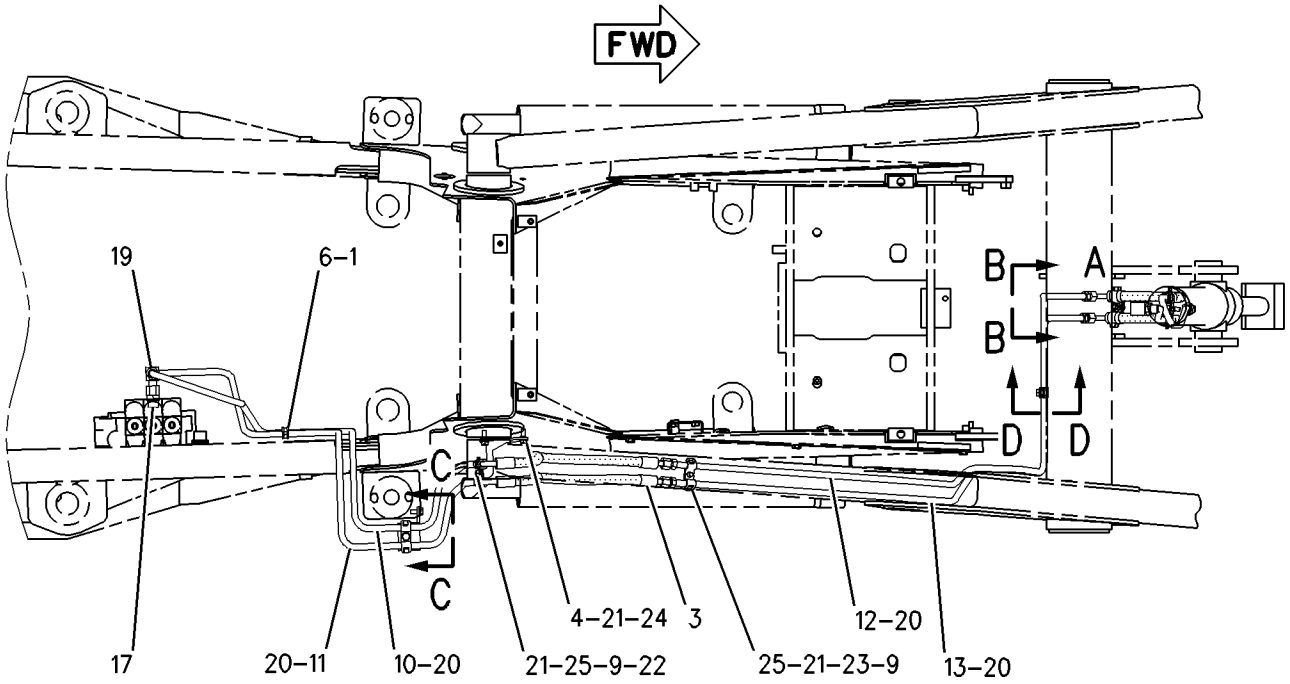

TOP VIEW

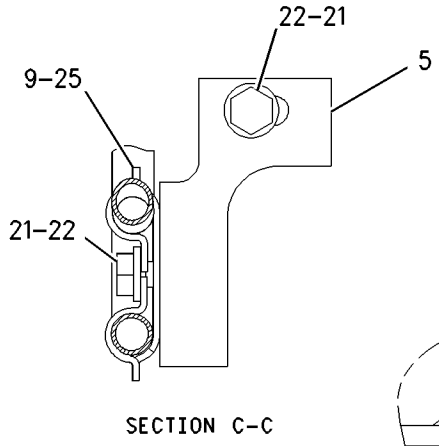

SECTION C-C

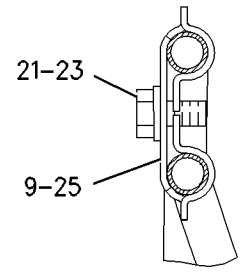

SECTION D-D

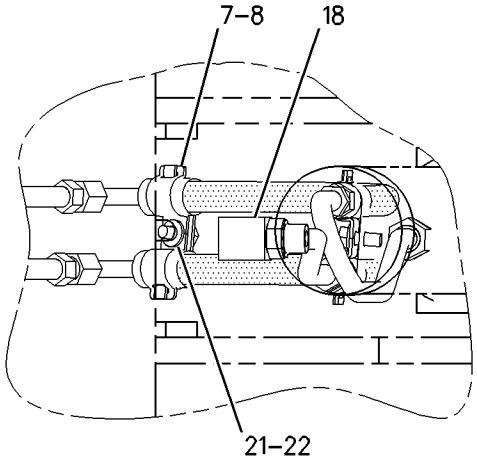

VIEW OF AREA A

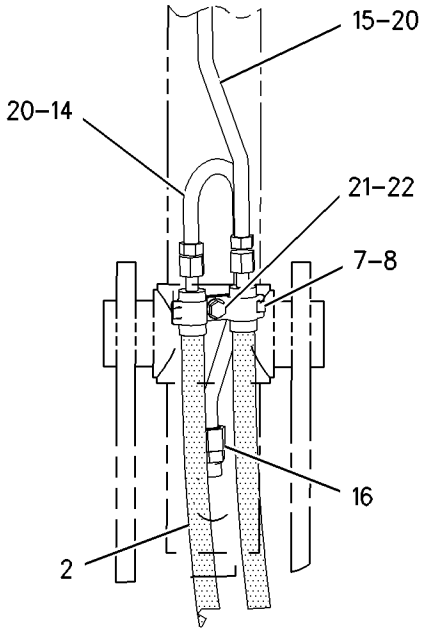

VIEW B-B

GRAPHIC #1

g00737848

HYDRAULIC SYSTEM

183-8544 LINES GP-STICK

S/N:JRB00255-UP

PART OF 233-6435 BACKHOE AR,

SMCS-5057, 5458 **i01626814**

NOTE	REF NO	GRAPHIC REF	PART NUMBER	QTY	PART NAME 1 2 3 4 5 6 (PRODUCT LEVEL)	SEE PAGE
	1	1	**5P-0599**	1	CLAMP	
I	2	1	**9R-9210**	1	HOSE AS	
I	3	1	**9R-9211**	1	HOSE AS	
	4	1	**173-3995**	1	BLOCK	
	5	1	**148-8341**	1	CONNECTOR GP	
			3D-2824	1	SEAL-O-RING	
		1	**6V-8713**	1	CONNECTOR	
		1	**7J-9108**	1	SEAL-O-RING	

I-SEE HOSE FABRICATION GUIDE

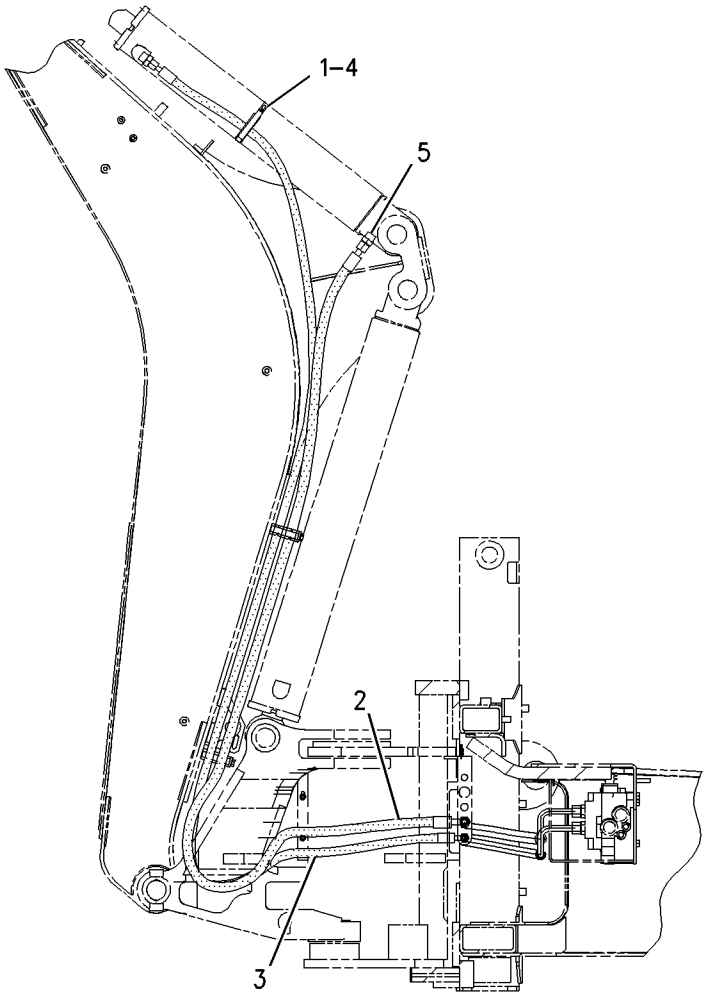

GRAPHIC #1 g00842643

HYDRAULIC SYSTEM

185-1598 MOUNTING GP-BANK VALVE-LOADER

S/N: JRB00255-UP

MECHANICAL

PART OF 186-5331, 186-5333, HYDRAULIC AR

SMCS-5051 **i01523519**

NOTE	REF NO	GRAPHIC REF	PART NUMBER	QTY	PART NAME 1 2 3 4 5 6 (PRODUCT LEVEL)	SEE PAGE
	1	1	**199-7854**	2	SPACER (11.8X20X45MM THK)	
M	2	1	**8T-0389**	2	LOCKNUT (M10X1.5 THD)	
	3	1	**8T-4121**	5	WASHER-HARD (11X21X2.5MM THK)	
M	4	1	**8T-4186**	1	BOLT (M10X1.5X40MM)	
M	5	1	**8T-4198**	2	BOLT (M10X1.5X100MM)	

M-METRIC PART

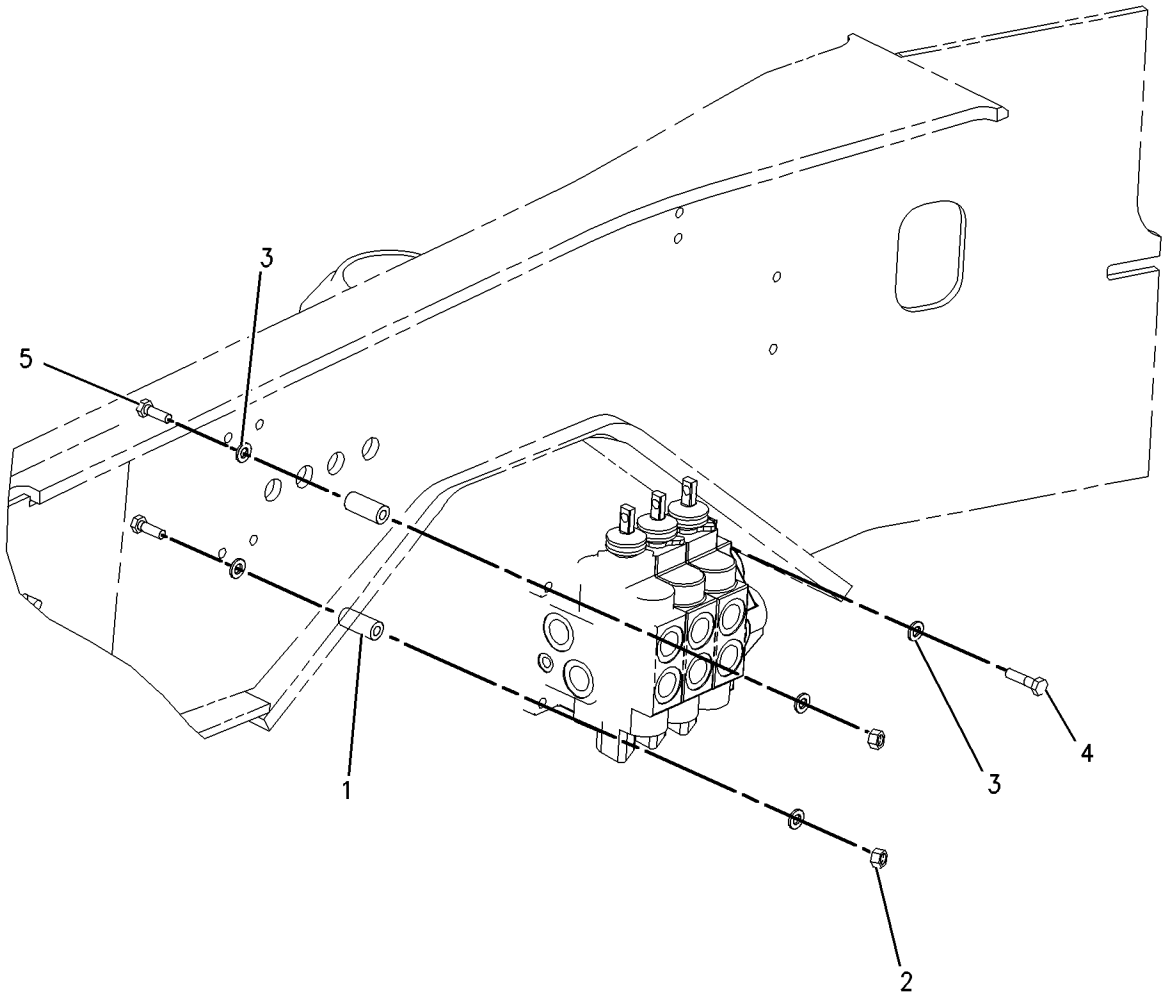

GRAPHIC #1 g00791506

HYDRAULIC SYSTEM

185-3167 MOUNTING GP-BANK VALVE–BACKHOE

S/N:JRB00255-UP

PART OF 228-2806 HYDRAULIC AR

SMCS-5051 **i01668180**

NOTE	REF NO	GRAPHIC REF	PART NUMBER	QTY	PART NAME 1 2 3 4 5 6 (PRODUCT LEVEL)	SEE PAGE
	1	1	**203-5491**	1	BRACKET AS	
	2	1	**8T-4121**	5	WASHER-HARD (11X21X2.5MM THK)	
M	3	1	**8T-4183**	3	BOLT (M12X1.75X40MM)	
M	4	1	**8T-4185**	1	BOLT (M10X1.5X50MM)	
M	5	1	**8T-4186**	2	BOLT (M10X1.5X40MM)	
	6	1	**8T-4223**	3	WASHER-HARD (13.5X25.5X3MM THK)	

M-METRIC PART

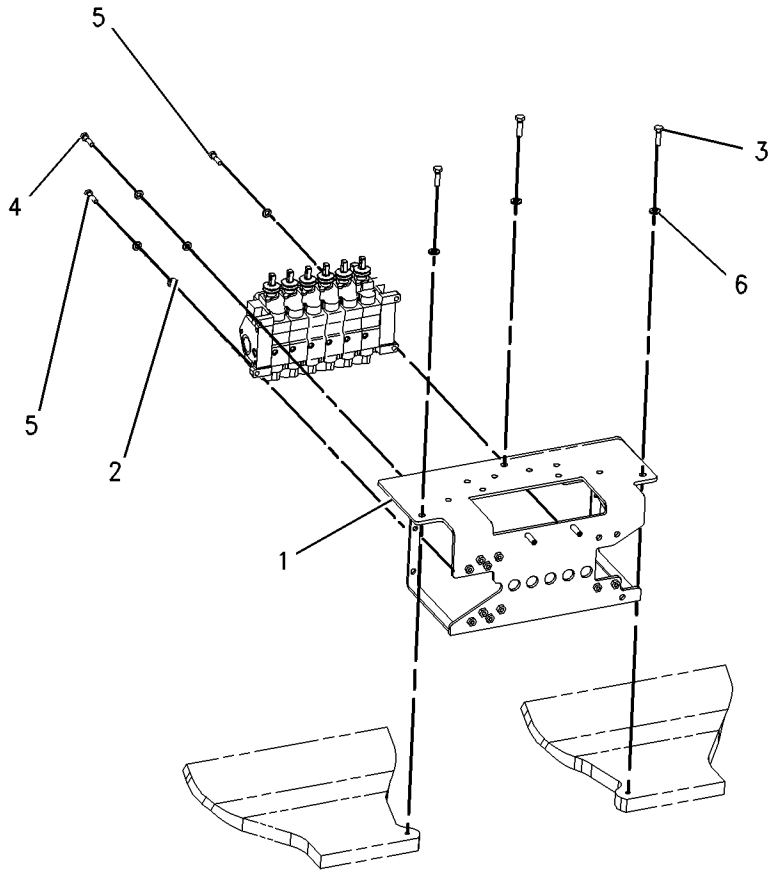

GRAPHIC #1 g00861606

HYDRAULIC SYSTEM

9R-4668 MOUNTING GP-CYLINDER—MULTIPURPOSE

S/N:JRB00255-UP

PART OF 111-8634, 111-8635,BUCKET AR-MULTIPURPOSE

AN ATTACHMENT

SMCS-5102, 6068, 7562 **i00528574**

NOTE	REF NO	GRAPHIC REF	PART NUMBER	QTY	PART NAME 1 2 3 4 5 6 (PRODUCT LEVEL)	SEE PAGE
	1	1	**9R-4677**	2	PIN	
	2	1	**3B-5317**	4	COTTER	
	3	1	**9R-4678**	2	PIN	
	4	1	**3B-8489**	4	FITTING-GREASE (1/8-27 THD)	

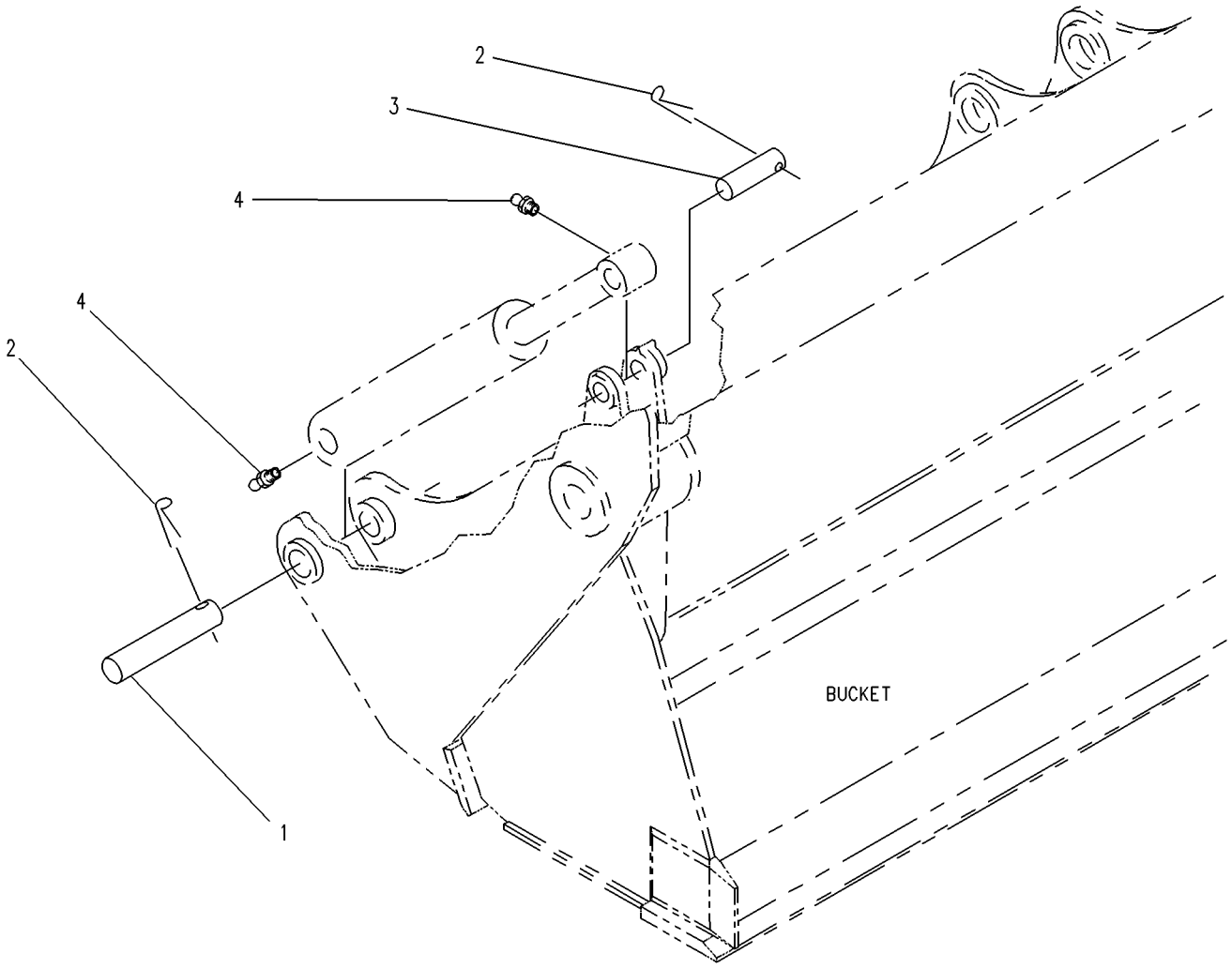

GRAPHIC #1 g00219196

HYDRAULIC SYSTEM

228-5731 CABLE GP - HYDRAULIC CONTROL

S/N:JRB00255-UP

PART OF 210-8919 STABILIZER AR

NOTE	REF NO	GRAPHIC REF	PART NUMBER	QTY	PART NAME 1 2 3 4 5 6 (PRODUCT LEVEL)	SEE PAGE
	1	1	240-9301	1	PLATE	
	2	1	210-8917	2	LEVER AS	
			8T-0328	2	WASHER	
			134-1374	2	BOLT	
			136-0155	2	SCREW	
	3	1	217-3383	1	BRACKET AS	
Y	4	1	222-9436	2	LEVER AS-CABLE	226
	5	1	229-1203	1	COVER	
	6	1	5C-2890	4	NUT	
	7	1	5C-9553	4	BOLT	
	8	1	5P-4115	3	WASHER	
	9	1	7X-0465	3	BOLT	
	10	1	8T-4205	11	WASHER	
	11	1	9X-2043	3	SCREW	
	12	1	129-3178	3	LOCKNUT	

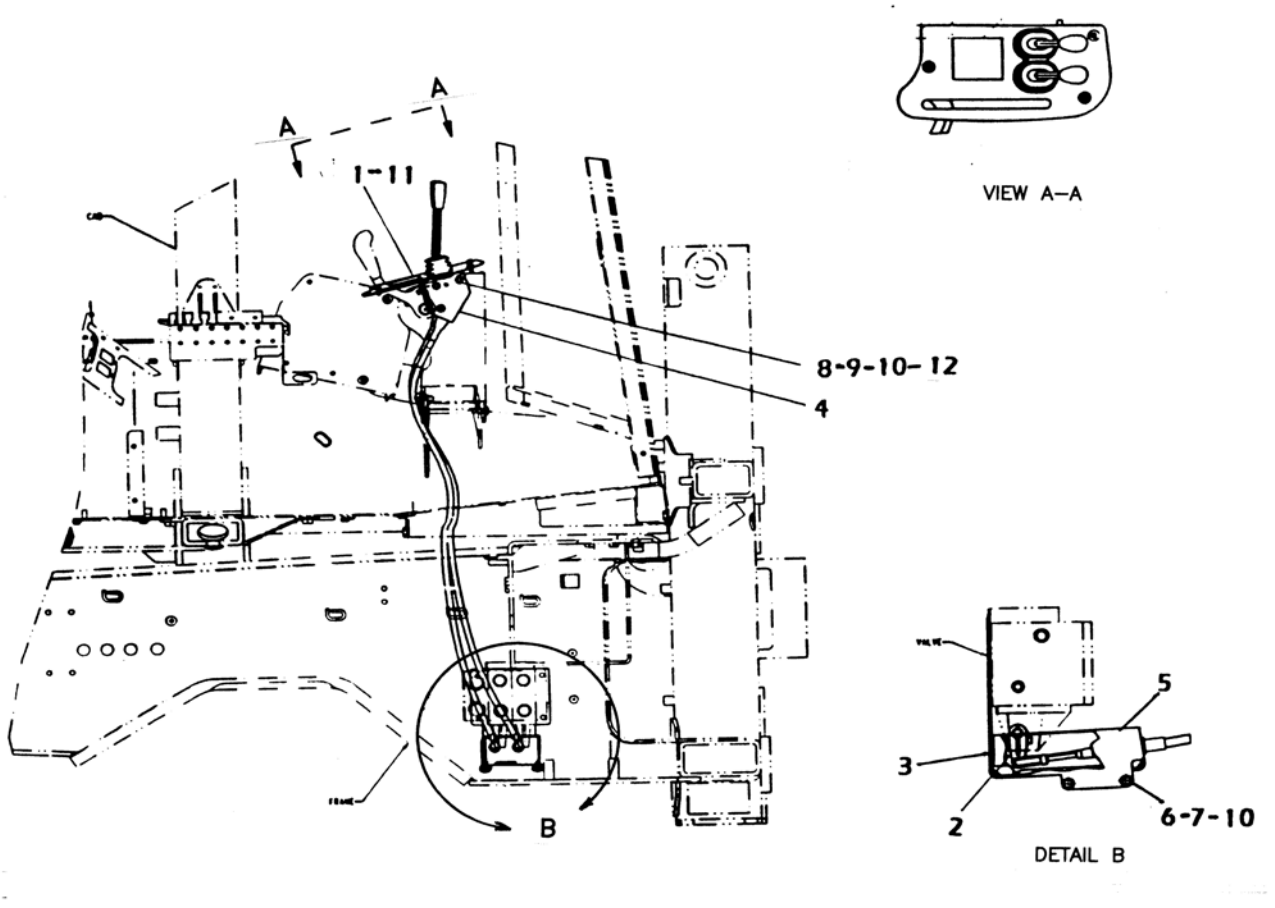

GRAPHIC #1

HYDRAULIC SYSTEM

112-1826 MOUNTING GP-HYDRAULIC PUMP

S/N:JRB00255-UP

PART OF 228-2806 HYDRAULIC AR

SMCS-5070 **i00534530**

NOTE	REF NO	GRAPHIC REF	PART NUMBER	QTY	PART NAME 1 2 3 4 5 6 (PRODUCT LEVEL)	SEE PAGE
M	1	1	**8T-9405**	4	BOLT-SOCKET HEAD (M4X0.7X16MM)	
	2	1	**9U-8886**	1	RING-SEAL (44.95MM ID)	
	3	1	**115-1918**	1	PLATE	
	4	1	**117-3534**	1	ADAPTER	
	5	1	**117-3535**	1	HUB	
Y	6	1	**128-5596**	1	SHAFT GP-POWER TAKE-OFF	232
	7	1	**5F-3106**	1	SEAL-O-RING (126.59MM ID)	
	8	1	**8T-4122**	2	WASHER (3.5MM THK)	
M	9	1	**8T-7338**	2	BOLT (M16X2.0X45MM)	

M-METRIC PART
Y-SEPARATE ILLUSTRATION

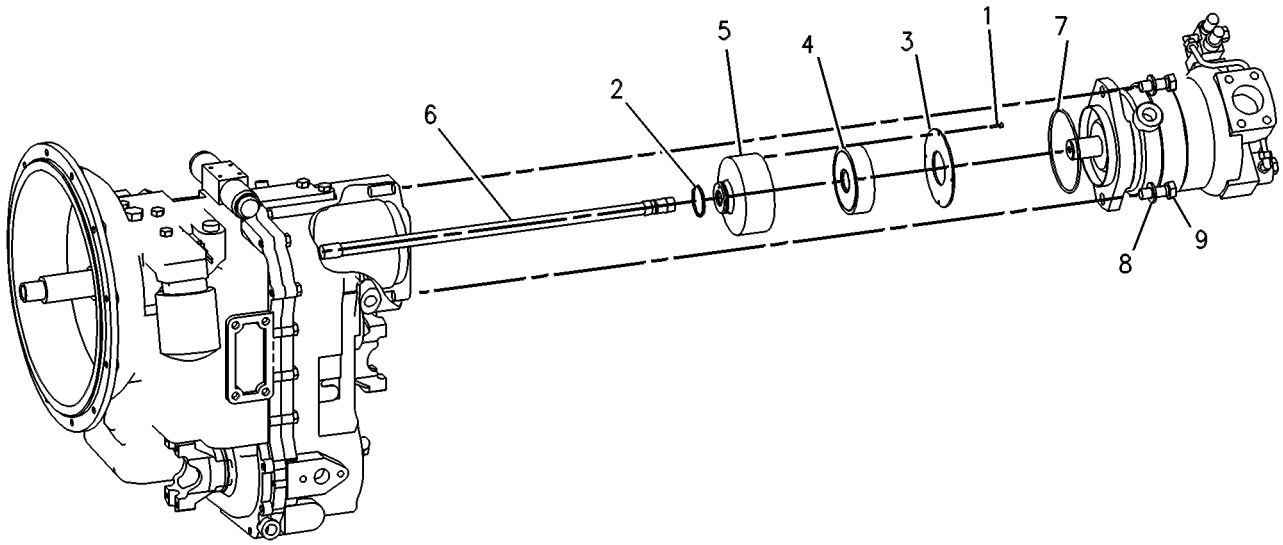

GRAPHIC #1 g00131524

HYDRAULIC SYSTEM

222-9436 LEVER AS - CONTROL

S/N:JRB00255-UP
PART OF 228-5731 CABLE GP

NOTE	REF NO	GRAPHIC REF	PART NUMBER	QTY	PART NAME 1 2 3 4 5 6 (PRODUCT LEVEL)	SEE PAGE
	1	1	228-4593	1	GAITER	
	2	1	228-4594	1	CABLE AS.	
	3	1	228-4596	1	ROD	
	4	1	228-4597	1	CLIP	
	5	1	228-4592	1	KNOB	
	6	1	5C-2890	1	NUT	
	7	1	8T-4742	1	ROD END-YOKE	
	8	1	8T-4744	1	PIN AS.-SPRING	

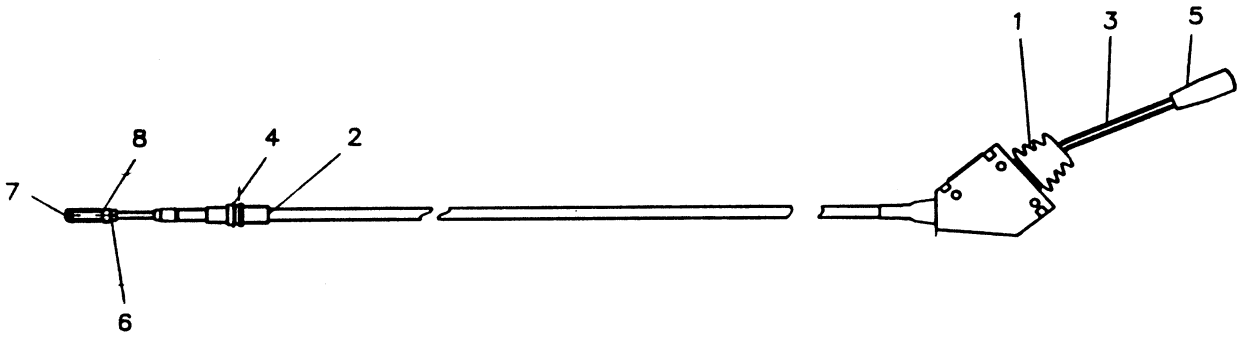

GRAPHIC #1

HYDRAULIC SYSTEM

175-7620 MOUNTING GP-LINES

S/N:JRB00255-UP
FOUR BANK VALVE
PART OF 233-6435 BACKHOE AR

SMCS-5057, 5456 **i01496305**

NOTE	REF NO	GRAPHIC REF	PART NUMBER	QTY	PART NAME 1 2 3 4 5 6 (PRODUCT LEVEL)	SEE PAGE
	1	1	**176-9152**	1	BRACKET-LH	
	2	1	**228-2795**	2	CLAMP	
	3	1	**8T-4121**	2	WASHER-HARD (11X21X2.5MM THK)	
M	4	1	**8T-4136**	2	BOLT (M10X1.5X25MM)	

M-METRIC PART

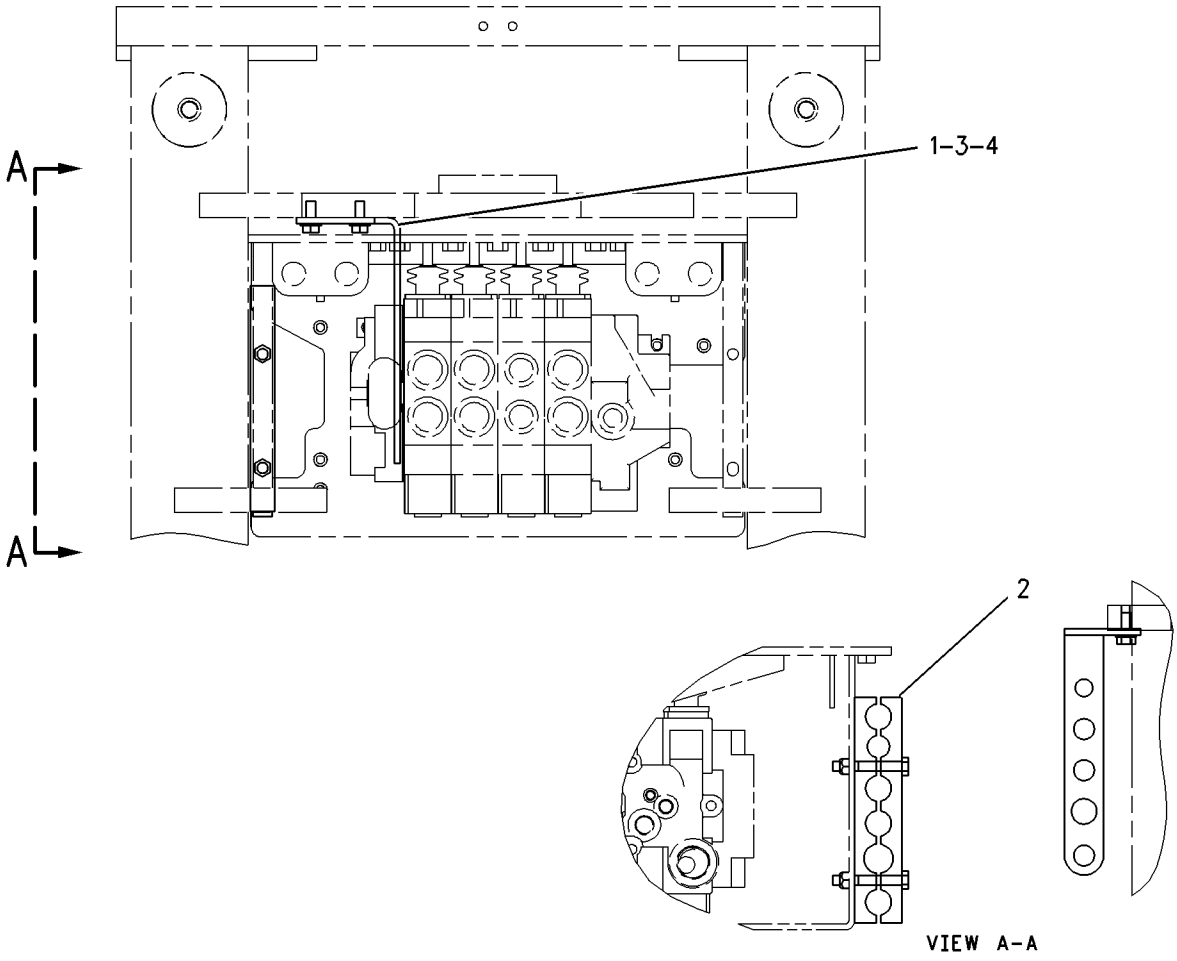

GRAPHIC #1 g00727863

HYDRAULIC SYSTEM

180-9588 PUMP GP-PISTON*R

S/N:JRB00255-UP

PART OF 228-2806 HYDRAULIC AR

SMCS-5070, 5084 **i01657717**

NOTE	REF NO	GRAPHIC REF	PART NUMBER	QTY	PART NAME 1 2 3 4 5 6 (PRODUCT LEVEL)	SEE PAGE
	1	1	**180-6213**	1	RING-RETAINING	
	2	1	**6E-4003**	2	BEARING	
	3	1	**173-0637**	1	HOUSING-PUMP	
Y	4	1	**120-5726**	1	ROTATING GP-PUMP	230
	5	1	**3E-6769**	4	SEAL-O-RING	
M	6	1	**095-9805**	4	BOLT-SOCKET HEAD	
	7	1	**1P-6872**	1	CUP-BEARING	
	8	1	**8C-7110**	1	CONE-BEARING	
	9	1	**103-5520**	1	CARRIER-PIN	
	10	1	**6E-4000**	1	SPACER (3MM THK)	
	11	1	**3E-6770**	1	SEAL-O-RING	
	12	1	**6E-6175**	1	CYLINDER	
	13	1	**6E-6176**	1	SPRING	
	14	1	**6E-6174**	1	PLUNGER	
	15	1	**9S-8006**	1	PLUG	
	16	1	**2M-9780**	1	SEAL-O-RING	
	17	1	**162-1604**	1	SHAFT-PUMP	
	18	1	**6V-2323**	1	CONE-BEARING	
	19	1	**3B-5790**	1	CUP-BEARING	
	20	1	**6E-4004**	2	SEAL-SHAFT	
	21	1	**173-0639**	1	SWASHPLATE AS	
	22	1	**120-5727**	1	PISTON-CONTROL	
	23	1	**120-5729**	1	GUIDE-PISTON	
	24	1	**136-8423**	1	PLUG-BREAK OFF	
	25	1	**083-4419**	1	PIN	
	26	1	**173-0641**	1	PLUG-FILTER	
	27	1	**173-0638**	1	HEAD-PUMP	
	28	1	**215-9219**	1	ADAPTER AS	
		1	**3J-7354**	1	SEAL-O-RING	
	29	1	**3J-7352**	2	CONNECTOR	
	30	1	**3J-7354**	3	SEAL-O-RING	
	31	1	**193-8648**	1	TUBE AS	
Y	32	1	**215-9232**	1	VALVE GP-POWER COMPENSATOR	260
M	33	1	**6V-5683**	1	BOLT (M6X1X16MM)	
	34	1	**3C-8388**	1	PIN-ROLL	
Y	35	1	**173-0640**	1	VALVE GP-PRESS & FLOW CMPNSTR	258
	36	1	**194-6196**	1	SPACER	
	37	1	**9X-7680**	3	SEAL-O-RING	

M-METRIC PART
Y-SEPARATE ILLUSTRATION

180-9588 PUMP GP-PISTON *(contd.)* i01657717

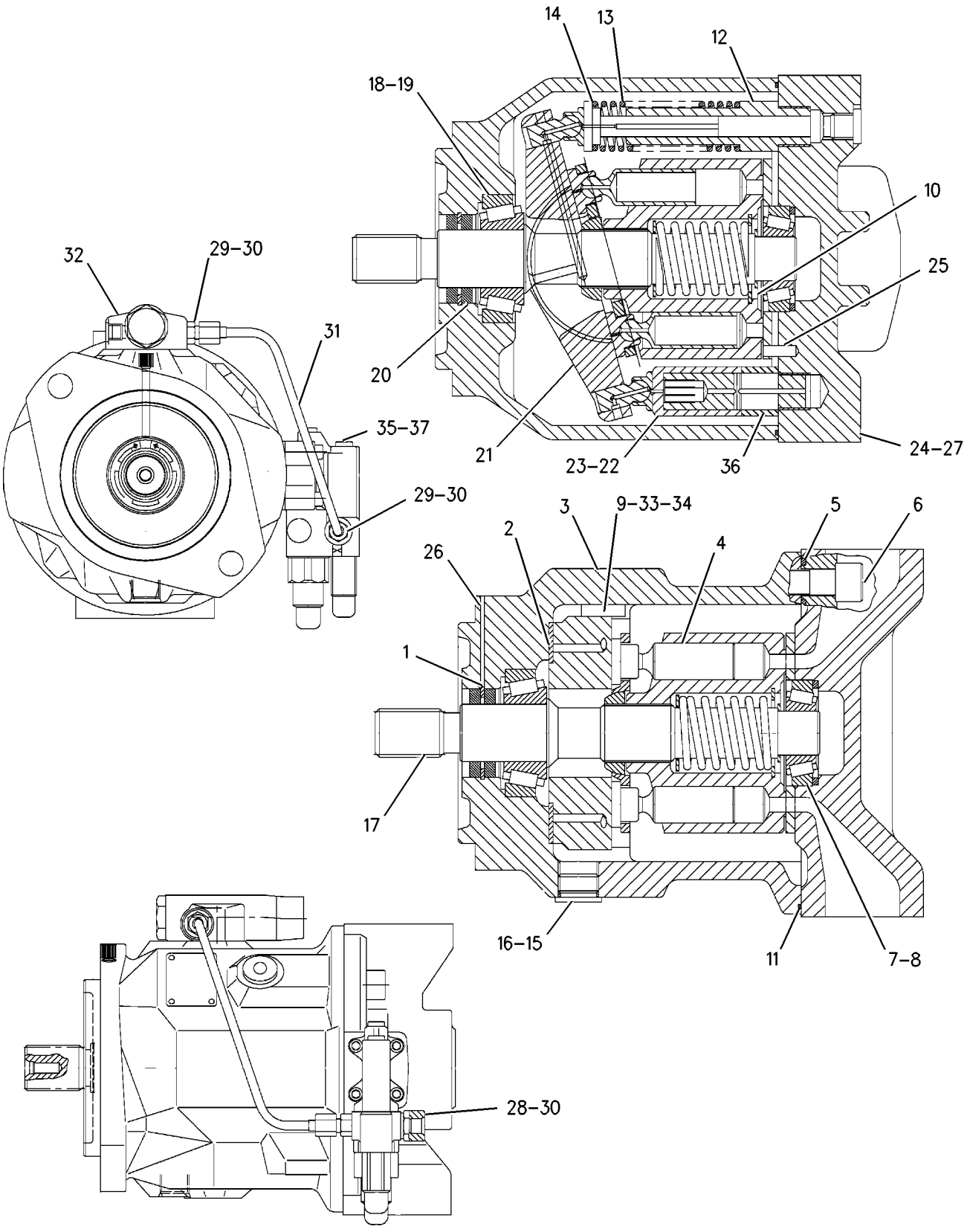

GRAPHIC #1 g00847539

HYDRAULIC SYSTEM

120-5726 ROTATING GP-PUMP

S/N:JRB00255-UP

PART OF 180-9588 PUMP GP-PISTON

SMCS-5070 **i00534731**

NOTE	REF NO	GRAPHIC REF	PART NUMBER	QTY	PART NAME 1 2 3 4 5 6 (PRODUCT LEVEL)	SEE PAGE
	1	1	**6E-6151**	9	PISTON AS	
	2	1	**6E-6154**	1	PLATE-RETRACTION	
	3	1	**6E-6155**	1	BEARING	
	4	1	**6E-4007**	1	BARREL	
	5	1	**6E-3341**	1	SEAT-SPRING	
	6	1	**6E-4009**	1	SPRING	
	7	1	**6E-6158**	1	RING	
	8	1	**120-5724**	1	PLATE-VALVE	
	9	1	**6E-6157**	3	PIN	

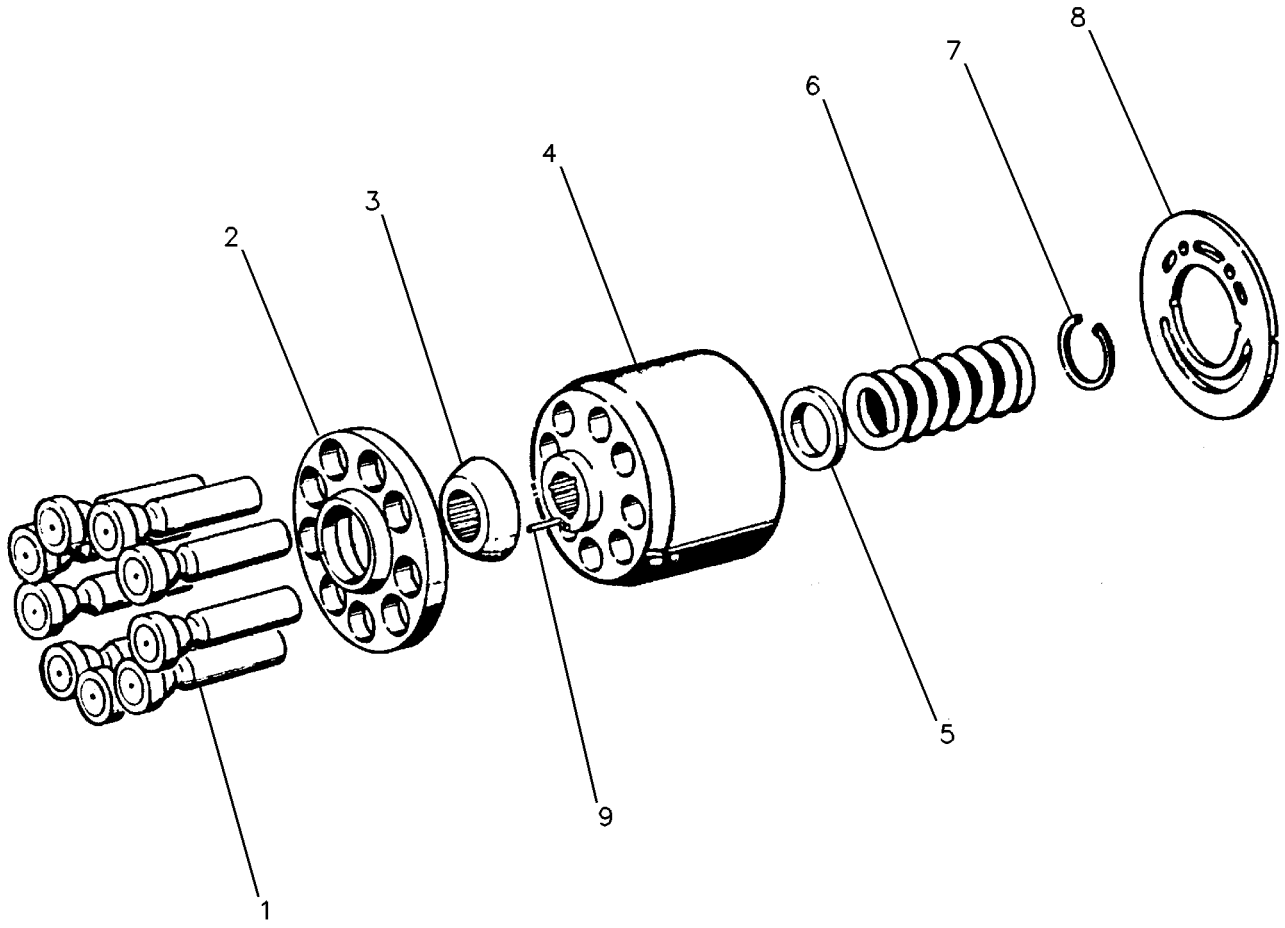

GRAPHIC #1 g00119332

HYDRAULIC SYSTEM

186-2950 MOUNTING GP-LINES

S/N:JRB00255-UP
PART OF 233-6435 BACKHOE AR

SMCS-5057, 5456 **i01497842**

NOTE	REF NO	GRAPHIC REF	PART NUMBER	QTY	PART NAME 1 2 3 4 5 6 (PRODUCT LEVEL)	SEE PAGE
	1	1	**9R-8875**	2	BLOCK	
	2	1	**109-1258**	2	BLOCK	
	3	1	**109-1259**	2	BLOCK	
	4	1	**119-9398**	1	BLOCK	
	5	1	**119-9399**	1	BLOCK	
	6	1	**120-4397**	1	PLATE	
M	7	1	**6V-9189**	2	LOCKNUT (M8X1.25 THD)	
	8	1	**8T-4121**	4	WASHER-HARD (11X21X2.5MM THK)	
M	9	1	**8T-4136**	4	BOLT (M10X1.5X25MM)	
	10	1	**8T-4224**	4	WASHER-HARD (8.8X16X2MM THK)	
M	11	1	**8T-6870**	2	BOLT (M8X1.25X70MM)	
	12	1	**9R-8874**	2	PLATE	

M-METRIC PART

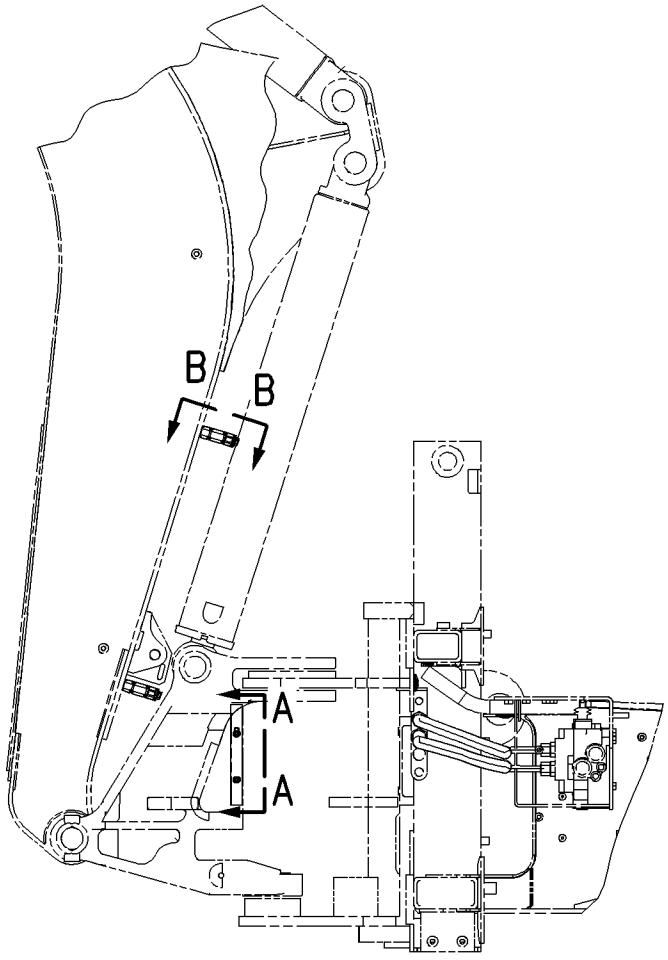

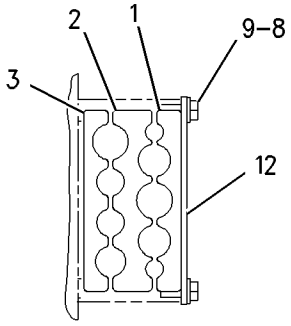

SECTION B-B

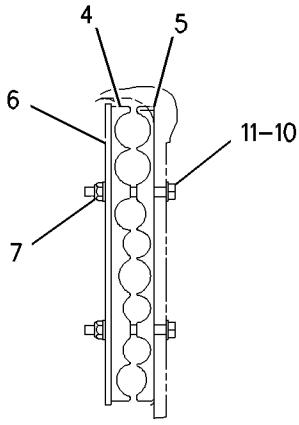

SECTION A-A

GRAPHIC #1 g00778264

HYDRAULIC SYSTEM

128-5596 SHAFT GP-POWER TAKE-OFF

S/N:JRB00255-UP

PART OF 112-1826 MOUNTING GP-HYDRAULIC PUMP

SMCS-3107 **i00535584**

NOTE	REF NO	GRAPHIC REF	PART NUMBER	QTY	PART NAME 1 2 3 4 5 6 (PRODUCT LEVEL)	SEE PAGE
	1	1	**130-8150**	1	RING-RETAINING	

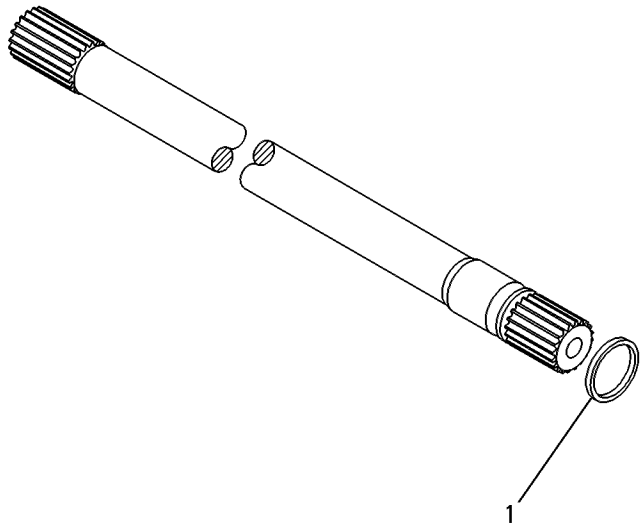

GRAPHIC #1 g00131851

HYDRAULIC SYSTEM

210-8919 STABILIZER AR

S/N:JRB00255-UP

SMCS-1408, 5059, 7222 **i01432980**

NOTE	PART NUMBER	QTY	PART NAME 1 2 3 4 5 6 (PRODUCT LEVEL)	SEE PAGE
Y	**228-5731**	1	CABLE GP	224
	238-6847	1	FILM	

Y-SEPARATE ILLUSTRATION

HYDRAULIC SYSTEM

163-7934 TANK & MTG GP-HYDRAULIC

S/N:JRB00255-UP

PART OF 228-2806 HYDRAULIC AR

SMCS-5056 **i01516173**

NOTE	REF NO	GRAPHIC REF	PART NUMBER	QTY	PART NAME 1 2 3 4 5 6 (PRODUCT LEVEL)	SEE PAGE
	1	1	**1P-4278**	1	CLAMP-HOSE	
	2	1	**5D-1026**	2	CLAMP-HOSE	
	3	1	**9M-0164**	2	CLAMP-HOSE	
	4	1	**9R-9925**	1	FILTER	
	5	1	**119-7749**	1	HOSE	
	6	1	**120-9926**	2	CLAMP	
	7	1	**123-0867**	1	CAP-FILLER	
	8	1	**132-3056**	1	SEAL-O-RING	
	9	1	**163-7936**	1	TANK GP-HYDRAULIC	
		1	**202-6143**	1	TANK	
		1	**170-1644**	1	GAUGE-SIGHT	
	10	1	**168-9902**	1	BRACKET AS	
	11	1	**170-1645**	1	DIFFUSER AS	
	12	1	**174-7479**	1	TUBE AS	
	13	1	**150-3027**	2	ELBOW AS	
					(EACH INCLUDES)	
		1	**2M-9780**	1	SEAL-O-RING	
		1	**6V-5653**	1	ELBOW-O-RING (7/8-14 THD)	
M	14	1	**5C-7261**	1	NUT (M8X1.25 THD)	
	15	1	**6D-3479**	1	CLIP	
M	16	1	**8C-6364**	6	BOLT-SOCKET HEAD (M5X.8X14MM)	
	17	1	**8T-4121**	5	WASHER-HARD (11X21X2.5MM THK)	
M	18	1	**8T-4137**	1	BOLT (M10X1.5X20MM)	
M	19	1	**8T-4139**	1	BOLT (M12X1.75X30MM)	
M	20	1	**8T-4179**	3	BOLT (M12X1.75X20MM)	
M	21	1	**8T-4191**	4	BOLT (M10X1.5X16MM)	
	22	1	**8T-4223**	4	WASHER-HARD (13.5X25.5X3MM THK)	
	23	1	**8T-4224**	2	WASHER-HARD (8.8X16X2MM THK)	
M	24	1	**8T-4908**	1	BOLT (M8X1.25X25MM)	
E	25	1	**5P-1505**		HOSE (8CM)	
E	26	1	**5P-1442**		HOSE (124CM)	

E-ORDER BY THE CENTIMETER
M-METRIC PART

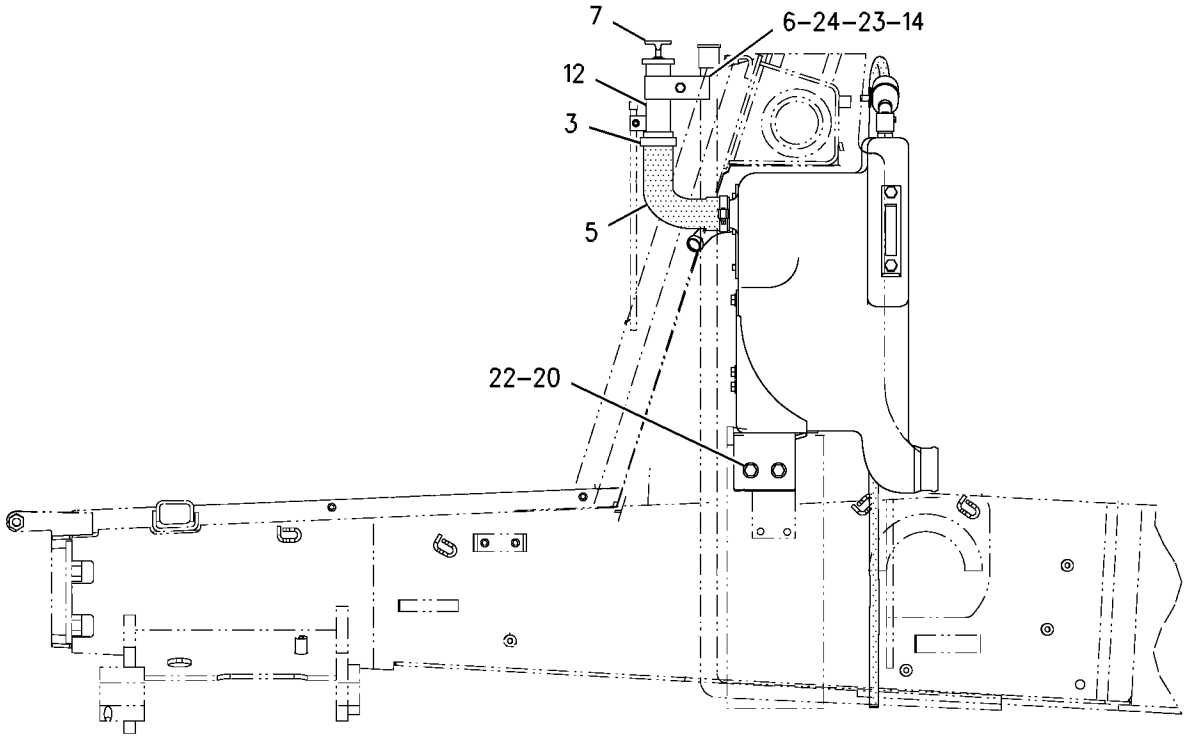

LEFT SIDE VIEW

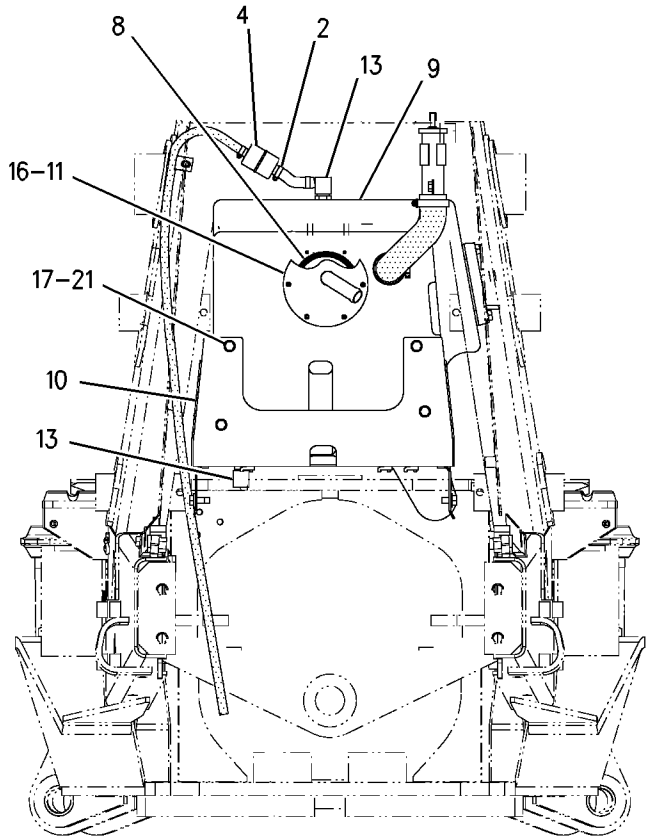

FRONT VIEW

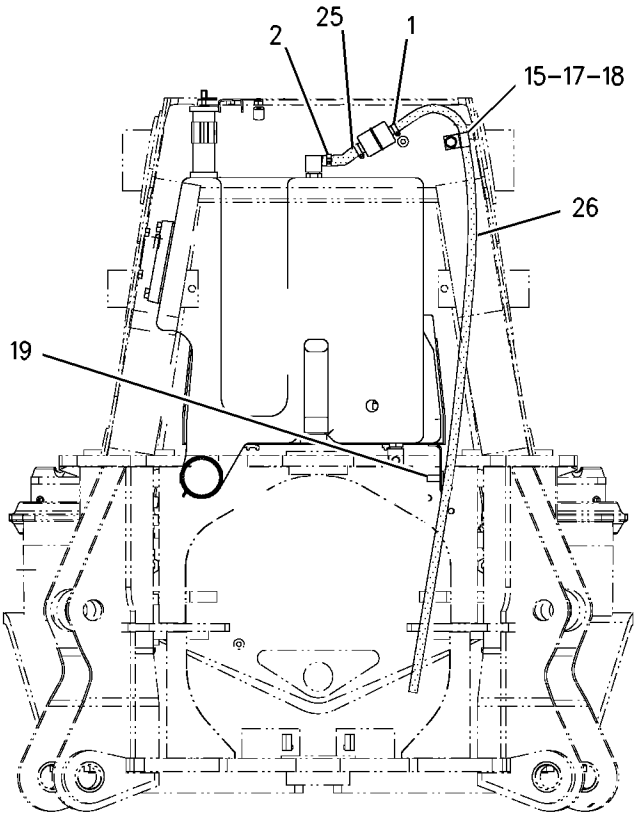

REAR VIEW

GRAPHIC #1

g00786747

HYDRAULIC SYSTEM

185-9784 VALVE & MTG GP-BANK–STABILIZER

S/N:JRB00255-UP

PART OF 236-9141 DRIVE AR

SMCS-5051, 5057, 7265 **i01497939**

NOTE	REF NO	GRAPHIC REF	PART NUMBER	QTY	PART NAME 1 2 3 4 5 6 (PRODUCT LEVEL)	SEE PAGE
	1	1	**222-0364**	1	VALVE GP-BANK 2	238A
M	2	1	**232-5849**	4	STUD-TAPERLOCK	
M	3	1	**5C-7261**	4	NUT (M8X1.25 THD)	
	4	1	**8T-4224**	4	WASHER-HARD (8.8X16X2MM THK)	

M-METRIC PART

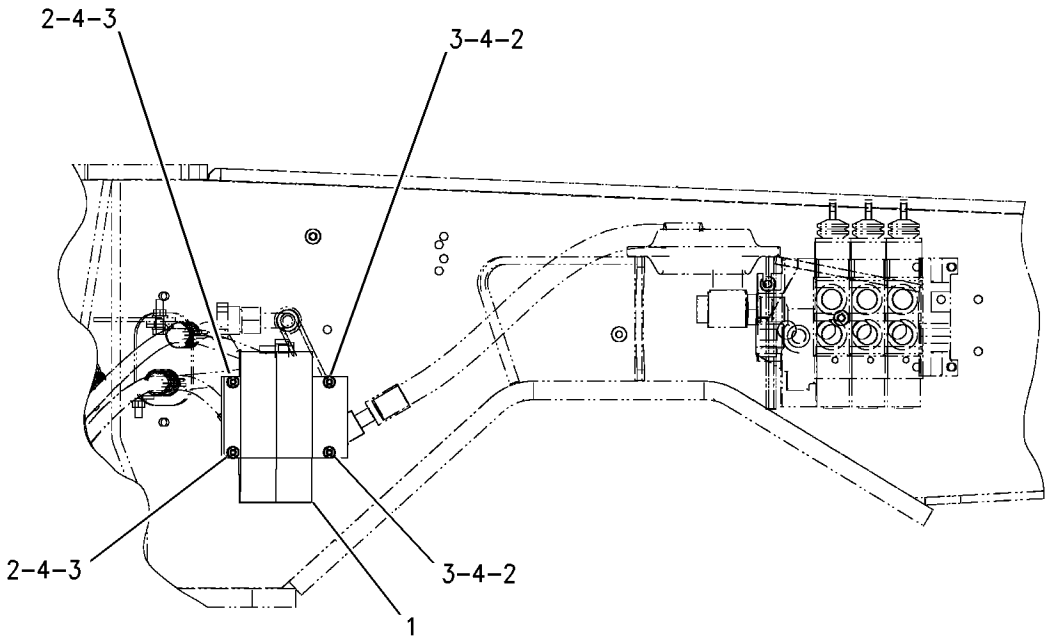

GRAPHIC #1 g00723526

HYDRAULIC SYSTEM

186-4967 VALVE AR-BANK 4

S/N:JRB00255-UP

SMCS-5051 **i01480257**

NOTE	PART NUMBER	QTY	PART NAME 1 2 3 4 5 6 (PRODUCT LEVEL)	SEE PAGE
Y	**185-5903**	1	VALVE GP-BANK 4	240
Y	**196-9913**	1	LINES GP-PUMP	210

Y-SEPARATE ILLUSTRATION

HYDRAULIC SYSTEM

185-5906 VALVE GP-BANK 2

S/N:JRB00255-UP
LOADER
PART OF 186-5331 HYDRAULIC AR

SMCS-5051 **i01659377**

NOTE	REF NO	GRAPHIC REF	PART NUMBER	QTY	PART NAME 1 2 3 4 5 6 (PRODUCT LEVEL)	SEE PAGE
Y	1	1	**188-7471**	1	VALVE GP-PRIORITY	147
	2	1	**191-4010**	1	COVER GP	
Y	3	1	**130-6520**	1	VALVE GP-CONTROL (LIFT)	244
Y	4	1	**168-0361**	1	VALVE GP-CONTROL	248
	5	1	**5M-2894**	3	WASHER-HARD (10.2X18.5X2.5MM THK)	
	6	1	**9S-8752**	3	NUT-FULL (3/8-16 THD)	
	7	1	**4T-4538**	3	STUD	
	8	1	**4D-9986**	6	SEAL-O-RING	
	9	1	**4J-5140**	3	SEAL-O-RING	
	10	1	**4J-5267**	3	SEAL-O-RING	
	11	1	**4T-2723**	9	SHIM (0.076MM THK)	

Y-SEPARATE ILLUSTRATION

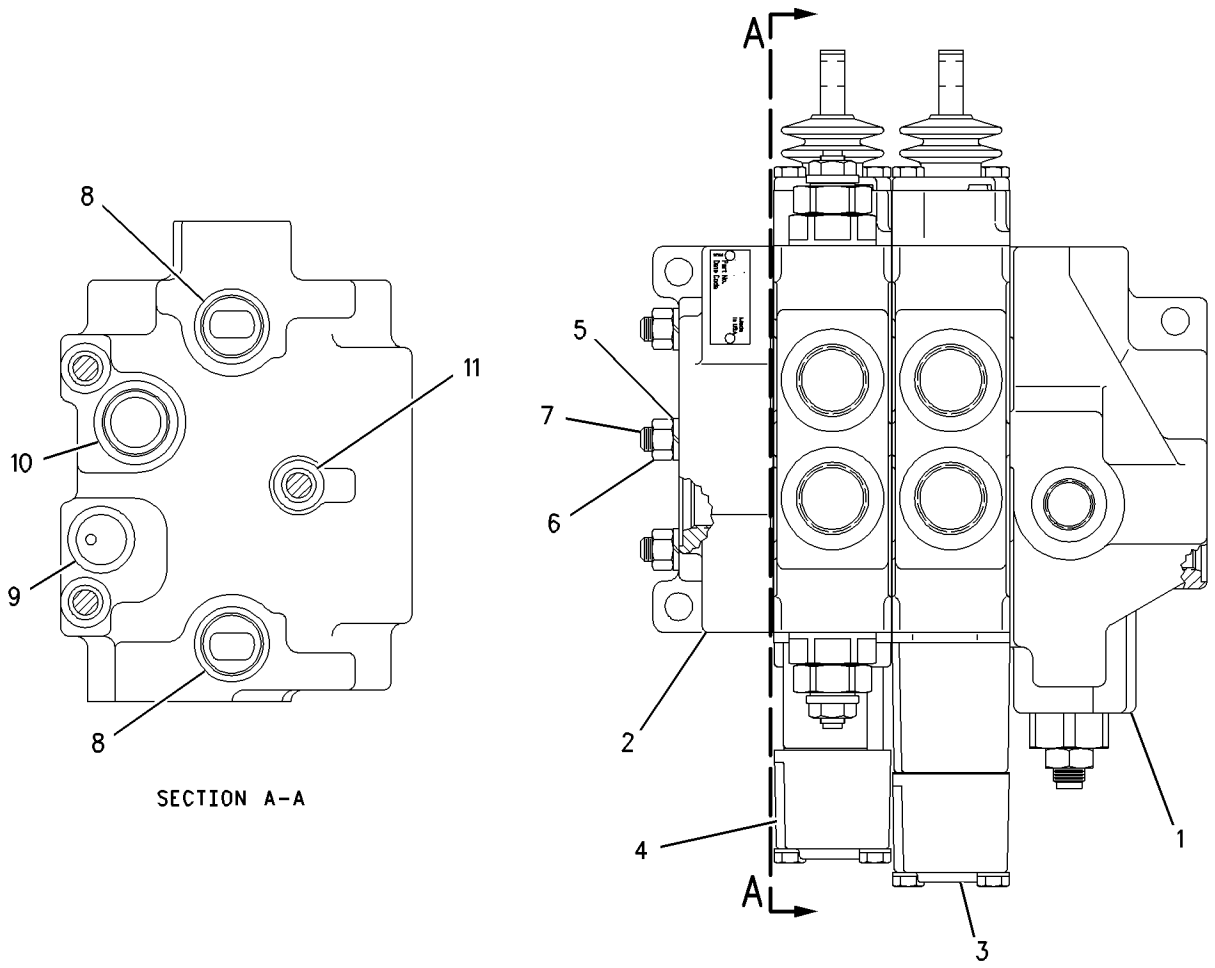

GRAPHIC #1 g00746353

HYDRAULIC SYSTEM

222-0364 VALVE GP - BANK 2

S/N : JRB00255-UP

PART OF 185-9784 VALVE & MTG GP -BANK

NOTE	REF NO	GRAPHIC REF	PART NUMBER	QTY	PART NAME 1 2 3 4 5 6 (PRODUCT LEVEL)	SEE PAGE
	1	1	192-4489	3	STUD	
	2	1	5C-7261	6	NUT (M8X1.25 THD)	
	3	1	8T-4205	6	WASHER HARD (7.2X14.5X2MM THK)	
	4	1	192-7506	18	SEAL-O-RING	
	5	1	192-7511	1	SEAL	
	6	1	192-7508	10	SEAL -O-RING	
	7	1	192-7509	1	SEAL-O-RING	
	8	1	239-2226	1	COVER GP-CONTROL VALVE	238C
	9	1	192-0826	1	COVER-END	
	10	1	250-7835	2	VALVE GP-CONTROL	238D
	11	1	250-7836	2	COVER AS	
	12	1	192-7516	2	SEAL	
	13	1	252-4837	2	SEAL	
	14	1	149-4311	16	BOLT-SOCKET HEAD (M6X1X16MM)	
	15	1	192-7507	4	SEAL-O-RING	
	16	1	192-7864	2	PLUG	
	17	1	192-4491	2	DISC	
	18	1	192-4492	12	BALL	
	19	1	192-0828	2	VALVE GP-COMPENSATING	
					(EACH INCLUDES)	
			192-4488	1	RING	
			192-7512	1	SEAL-O-RING	
			192-7515	1	SEAL-O-RING	
	20	1	250-7837	2	COVER AS	
	21	1	252-4444	2	VALVE GP	
			192-7507	2	SEAL-O-RING	
	22	1	192-7510	2	SEAL-O-RING	
	23	1	192-2081	2	SPRING	

GRAPHIC #1

HYDRAULIC SYSTEM

222-0364 VALVE GP - BANK 2

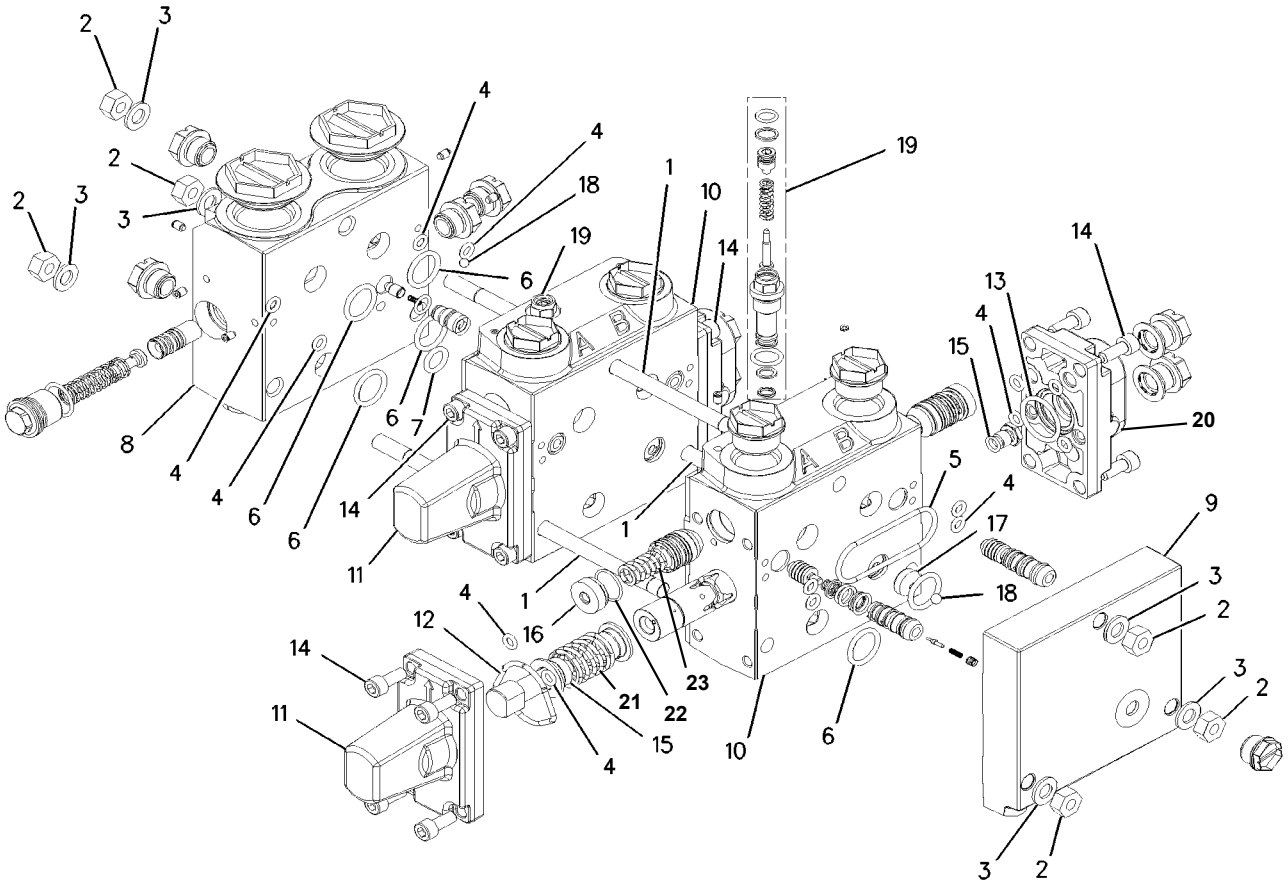

GRAPHIC #1

HYDRAULIC SYSTEM

239-2226 COVER GP-CONTROL VALVE

S/N: JRB255-UP

PART OF 222-0364 VALVE GP-BANK 2

SMCS-5051 **i01654756**

NOTE	REF NO	GRAPHIC REF	PART NUMBER	QTY	PART NAME 1 2 3 4 5 6 (PRODUCT LEVEL)	SEE PAGE
	1	1	**192-2080**	1	SPRING	
	2	1	**7J-9108**	1	SEAL-O-RING	
	3	1	**192-7863**	1	PLUG	
	4	1	**192-2075**	1	VALVE GP-CHECK	
	5	1	**192-7512**	1	SEAL-O-RING	

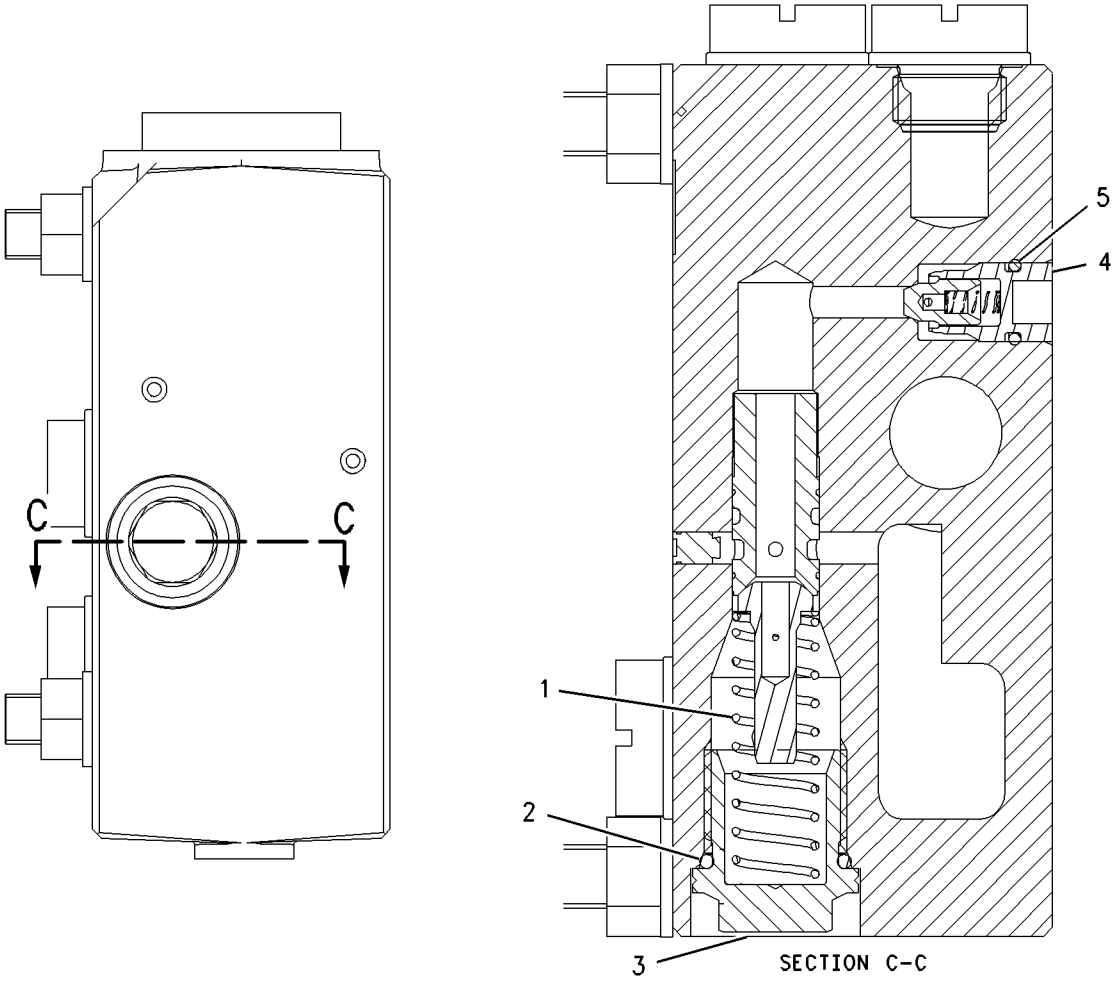

GRAPHIC #1 g00855000

HYDRAULIC SYSTEM

250-7835 VALVE GP-CONTROL

S/N: JRB255-UP

PART OF 222-0364 VALVE GP-BANK 2

SMCS-5051 **i01665713**

NOTE	REF NO	GRAPHIC REF	PART NUMBER	QTY	PART NAME 1 2 3 4 5 6 (PRODUCT LEVEL)	SEE PAGE
	1	1	**192-7512**	4	SEAL-O-RING	
	2	1	**192-2060**	1	COVER AS	
		1	**192-7506**	2	SEAL-O-RING	
		1	**192-7516**	1	SEAL	
	3	1	**192-7864**	2	PLUG	
	4	1	**192-7510**	2	SEAL-O-RING	
	5	1	**192-2081**	2	SPRING	
	6	1	**192-4490**	2	VALVE GP-CHECK	
	7	1	**192-2082**	2	SPRING	
	8	1	**192-7513**	2	SEAL-O-RING	
	9	1	**192-4488**	2	RING	
	10	1	**192-4487**	2	RING	
	11	1	**192-7514**	2	SEAL-O-RING	
	12	1	**192-4491**	1	DISC	
	13	1	**192-4492**	1	BALL	
	14	1	**192-0828**	1	VALVE GP-COMPENSATING	
		1	**192-4488**	1	RING	
		1	**192-7512**	1	SEAL-O-RING	
		1	**192-7515**	1	SEAL-O-RING	
	15	1	**214-6350**	**2**	PISTON	

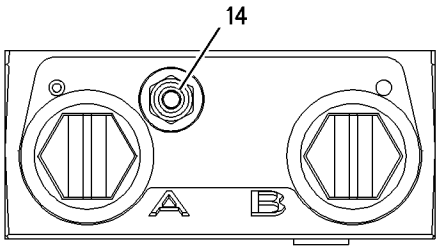

TOP VIEW

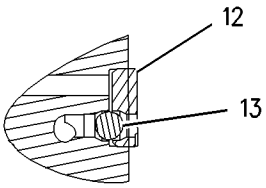

SECTION E-E

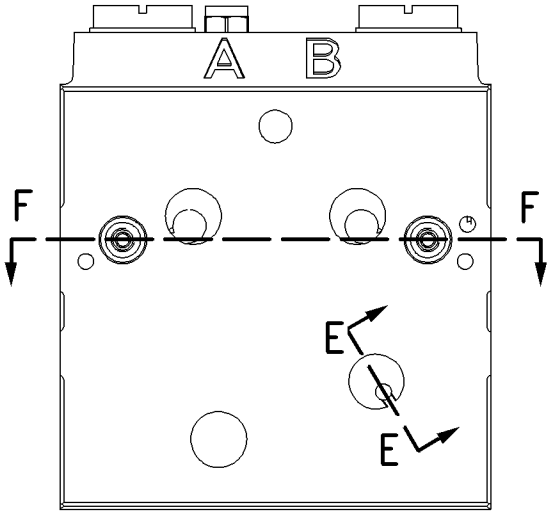

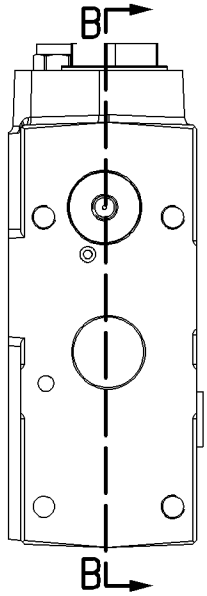

RIGHT SIDE VIEW

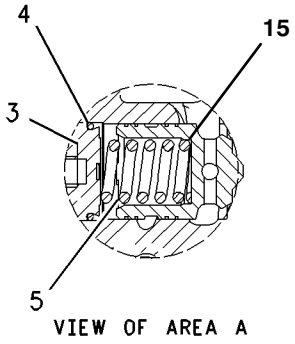

VIEW OF AREA A

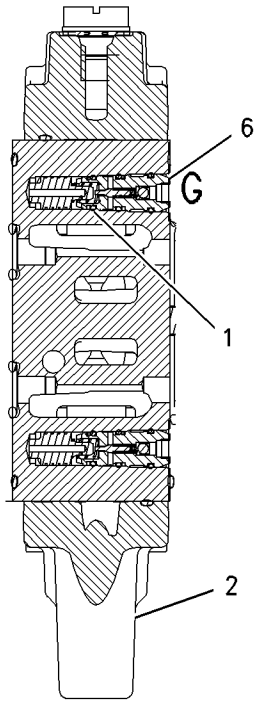

SECTION F-F

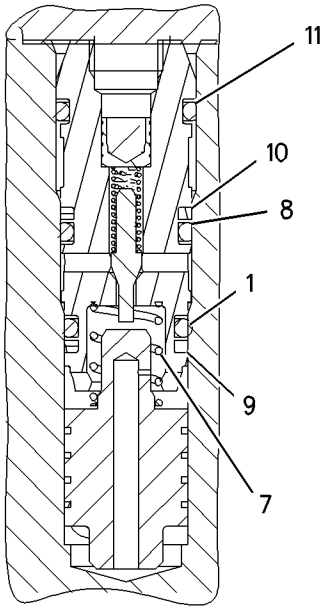

VIEW OF AREA G

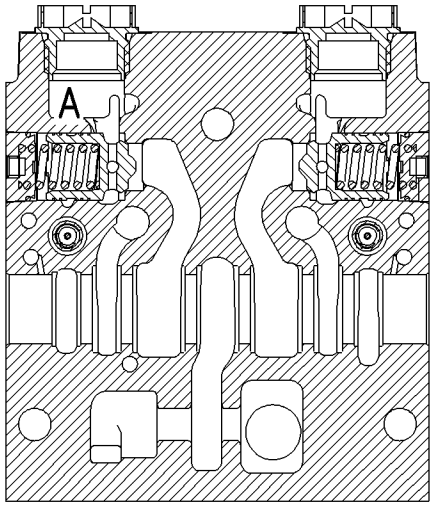

SECTION B-B

GRAPHIC #1

g00799626

MEMORANDA

185-5907 VALVE GP-BANK 3

S/N:JRB00255-UP
PART OF 186-5333 HYDRAULIC AR
AN ATTACHMENT - LOADER

SMCS-5051 **i01659453**

NOTE	REF NO	GRAPHIC REF	PART NUMBER	QTY	PART NAME 1 2 3 4 5 6 (PRODUCT LEVEL)	SEE PAGE
Y	1	1	**188-7471**	1	VALVE GP-PRIORITY	147
	2	1	**191-4010**	1	COVER GP	
Y	3	1	**130-6520**	1	VALVE GP-CONTROL (LIFT)	244
Y	4	1	**168-0361**	1	VALVE GP-CONTROL	248
Y	5	1	**124-8818**	1	VALVE GP-CONTROL (AUXILIARY)	242
	6	1	**5M-2894**	3	WASHER-HARD (10.2X18.5X2.5MM THK)	
	7	1	**9S-8752**	3	NUT-FULL (3/8-16 THD)	
	8	1	**4T-4518**	3	STUD	
	9	1	**4D-9986**	8	SEAL-O-RING	
	10	1	**4J-5140**	4	SEAL-O-RING	
	11	1	**4J-5267**	4	SEAL-O-RING	
B	12	1	**4T-2723**	12	SHIM (0.076MM THK)	

B-USE AS REQUIRED
Y-SEPARATE ILLUSTRATION

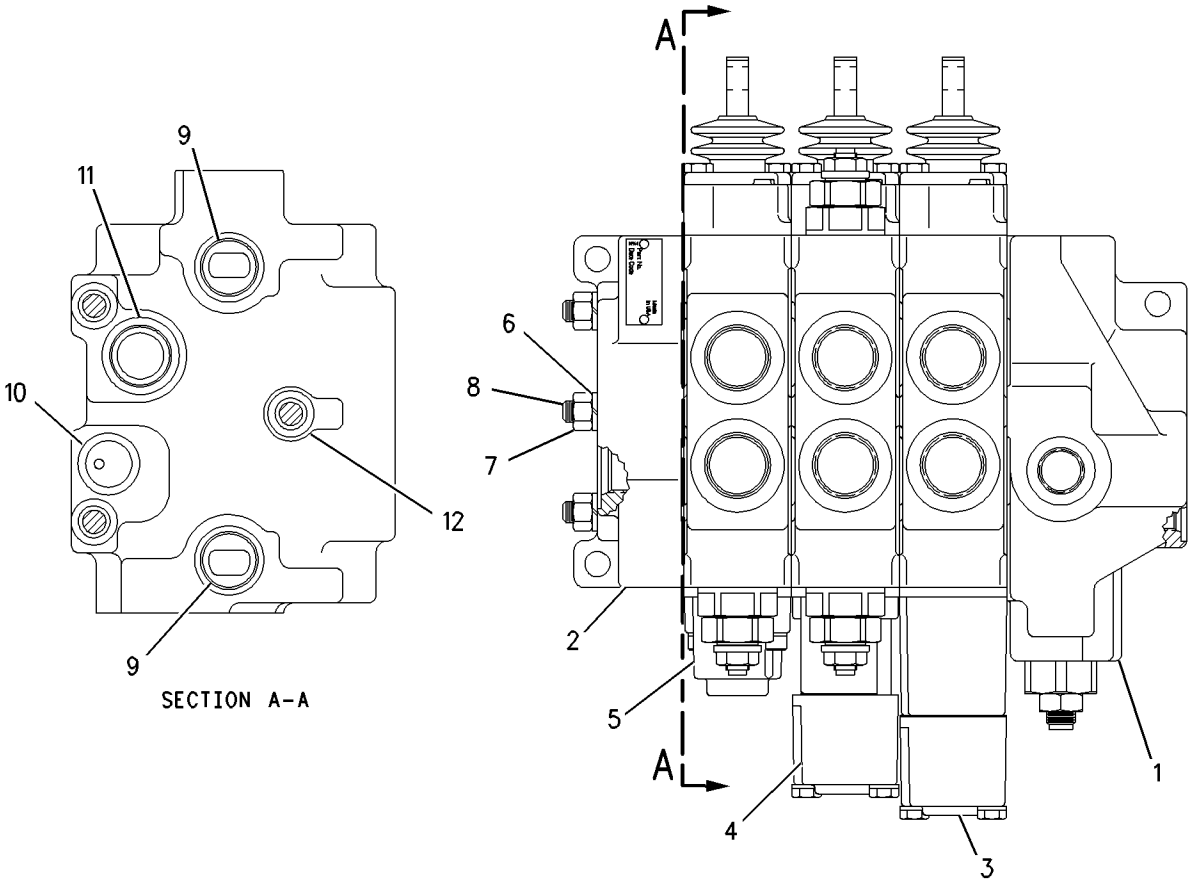

GRAPHIC #1 g00746383

HYDRAULIC SYSTEM

185-5903 VALVE GP-BANK 4 - BACKHOE

S/N:JRB00255-UP

PART OF 186-4967 VALVE AR-BANK 4

SMCS-5051 **i01650121**

NOTE	REF NO	GRAPHIC REF	PART NUMBER	QTY	PART NAME 1 2 3 4 5 6 (PRODUCT LEVEL)	SEE PAGE
	1	1	**200-0161**	1	COVER	
	2	1	**193-9189**	1	COVER AS	
		1	**5B-9318**	1	BALL	
		1	**197-2969**	1	SEAT AS	
Y	3	1	**190-3431**	1	VALVE GP-CONTROL	254
Y	4	1	**166-7950**	1	VALVE GP-CONTROL	246
Y	5	1	**190-3428**	1	VALVE GP-CONTROL	250
Y	6	1	**190-3430**	1	VALVE GP-CONTROL	252
	7	1	**5M-2894**	6	WASHER-HARD (10.2X18.5X2.5MM THK)	
	8	1	**9S-8752**	6	NUT-FULL (3/8-16 THD)	
	9	1	**4T-4218**	3	STUD	
	10	1	**4D-9986**	10	SEAL-O-RING	
	11	1	**4J-5140**	5	SEAL-O-RING	
	12	1	**4J-5267**	5	SEAL-O-RING	
	13	1	**4T-2723**	15	SHIM (0.076MM THK)	

Y-SEPARATE ILLUSTRATION

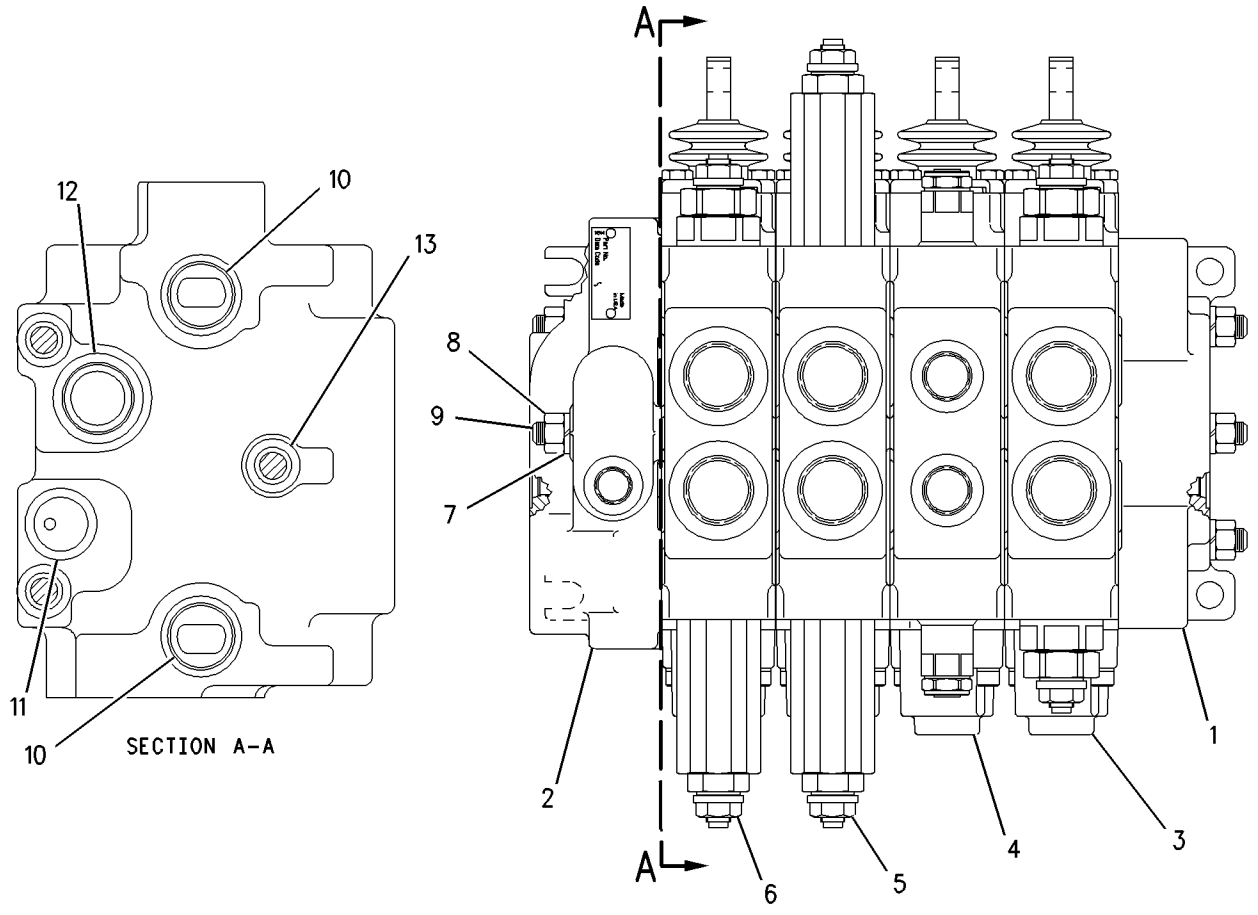

GRAPHIC #1 g00754187

178-7480 VALVE GP-CHECK–RETURN OIL

S/N:JRB00255-UP
PRE-INSTALLED O-RINGS
PART OF 176-9298 LINES GP-RETURN

SMCS-5067 **i01483246**

NOTE	REF NO	GRAPHIC REF	PART NUMBER	QTY	PART NAME 1 2 3 4 5 6 (PRODUCT LEVEL)	SEE PAGE
	1	1	**5K-9090**	1	SEAL-O-RING	
	2	1	**7M-8485**	1	SEAL-O-RING	

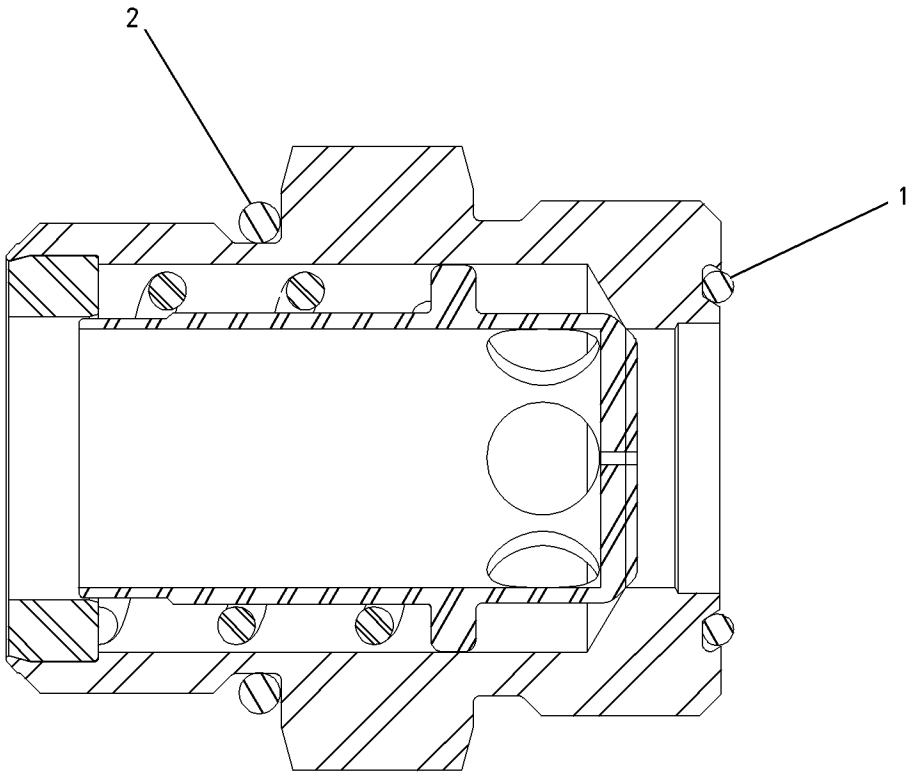

GRAPHIC #1 g00756300

HYDRAULIC SYSTEM

124-8818 VALVE GP-CONTROL–AUXILIARY

S/N:JRB00255-UP

LOADER

PART OF 185-5907 VALVE GP-BANK 3

AN ATTACHMENT

SMCS-5051 **i01528677**

NOTE	REF NO	GRAPHIC REF	PART NUMBER	QTY	PART NAME 1 2 3 4 5 6 (PRODUCT LEVEL)	SEE PAGE
	1	1	**4T-4524**	1	GUARD-DUST	
	2	1	**031-0214**	2	BOLT-LOCKING (1/4-20X0.5 IN)	
	3	1	**9T-0704**	1	VALVE GP-RELIEF	
	3A	1	**4K-1388**	1	SEAL-O-RING	
	3B	1	**6E-0358**	1	RING-BACKUP	
	3C	1	**5K-9090**	1	SEAL-O-RING	
	4	1	**4T-4516**	1	SPRING	
	5	1	**031-5085**	1	BOLT-LOCKING (1/4-20X1.00 IN)	
	6	1	**167-6768**	1	HOUSING	
	7	1	**4T-4521**	2	RETAINER	
	8	1	**4T-4533**	1	SPACER	
	9	1	**195-2139**	2	SEAL-O-RING	
	10	1	**6E-4317**	1	SPRING	
	11	1	**2M-9780**	1	SEAL-O-RING	
	12	1	**9S-8006**	1	PLUG	
	13	1	**4T-4520**	1	FILTER	
	14	1	**4T-4528**	1	RETAINER	
	15	1	**126-5476**	1	SEAT AS-SHUTTLE	
	15A	1	**4T-7807**	1	RING-BACKUP	
	15B	1	**7J-0204**	1	SEAL-O-RING	
	15C	1	**8T-2360**	1	SEAL-O-RING	
	16	1	**5B-9318**	1	BALL	
	17	1	**155-9836**	1	HOUSING AS	
	17A	1	**1P-7363**	1	SEAL-O-RING	
	17B	1	**3J-7354**	1	SEAL-O-RING	
	17C	1	**8T-2361**	1	SEAL-O-RING	
	17D	1	**126-5984**	1	RING-BACKUP	
	17E	1	**126-5985**	1	RING-BACKUP	
	18	1	**8H-0707**	2	BOLT (1/4-20X1 IN)	

124-8818 VALVE GP-CONTROL *(contd.)* i01528677

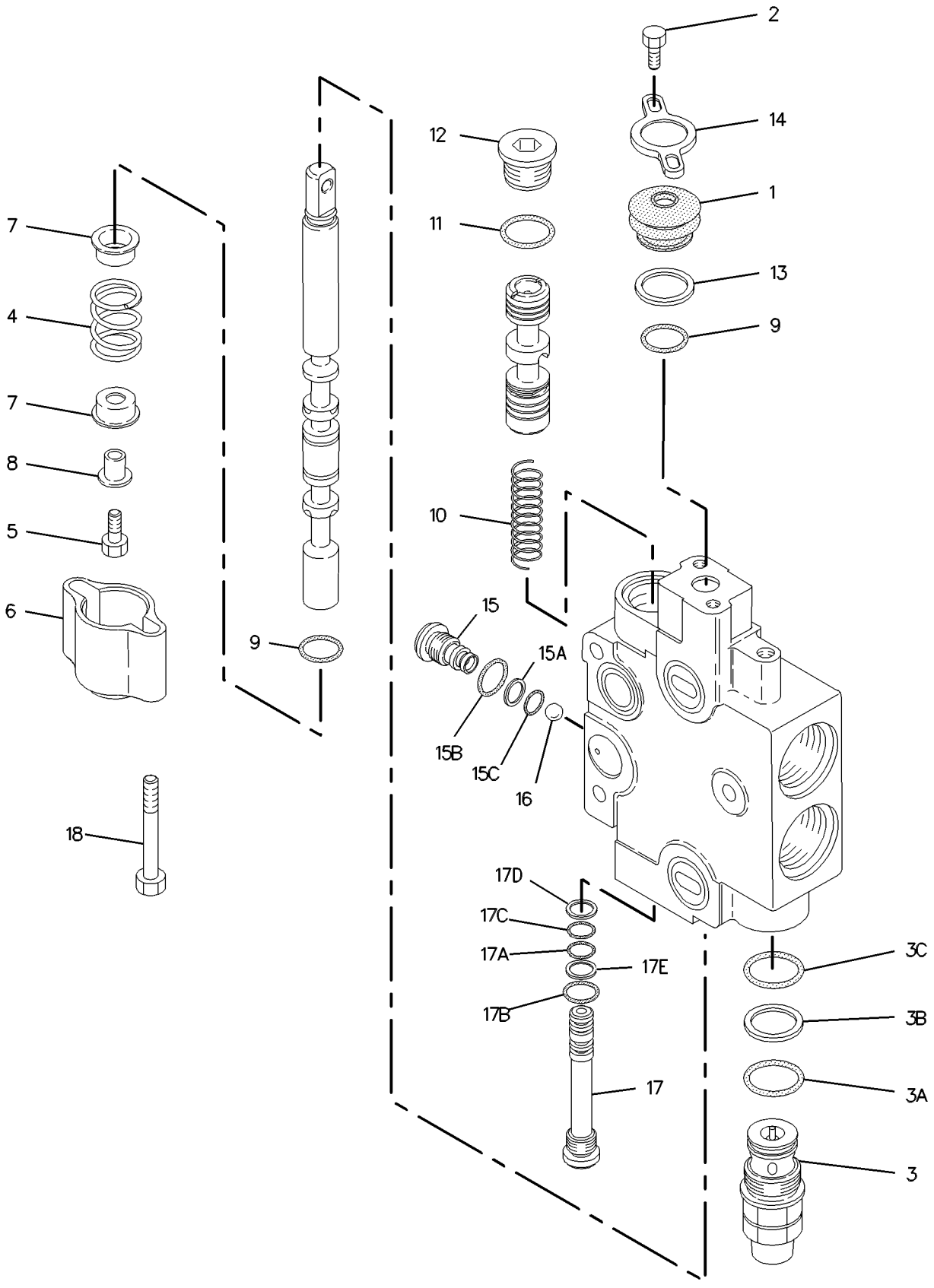

GRAPHIC #1 g00538490

HYDRAULIC SYSTEM

130-6520 VALVE GP-CONTROL–LIFT

S/N:JRB00255-UP

PART OF 185-5906 VALVE GP-BANK 2, 185-5907 VALVE GP-BANK 3

SMCS-5051 **i01672788**

NOTE	REF NO	GRAPHIC REF	PART NUMBER	QTY	PART NAME 1 2 3 4 5 6 (PRODUCT LEVEL)	SEE PAGE
	1	1	**4T-4524**	1	GUARD-DUST	
	2	1	**031-0214**	2	BOLT-LOCKING (1/4-20X0.5 IN)	
	3	1	**4T-4531**	1	PLUG	
	4	1	**4T-4513**	1	SPRING	
	5	1	**100-3567**	1	HOUSING-DETENT	
	6	1	**100-3566**	1	PISTON-DETENT	
	7	1	**4B-9782**	1	BALL	
	8	1	**4T-4532**	1	HOUSING	
	9	1	**144-4277**	1	SHAFT AS-DETENT	
	10	1	**8S-4710**	2	BOLT (1/4-20X4 IN)	
	11	1	**5P-0537**	2	WASHER-HARD (7.2X14.5X2MM THK)	
	12	1	**100-3564**	1	SPRING	
	13	1	**4T-4521**	2	RETAINER	
	14	1	**100-3563**	1	SPACER-DETENT	
	15	1	**8F-0212**	1	SEAL-O-RING	
	16	1	**6E-4317**	1	SPRING	
	17	1	**2M-9780**	1	SEAL-O-RING	
	18	1	**9S-8006**	1	PLUG	
	19	1	**4T-4520**	1	FILTER	
	20	1	**4T-4528**	1	RETAINER	
	21	1	**126-5476**	1	SEAT AS-SHUTTLE	
	21A	1	**4T-7807**	1	RING-BACKUP	
	21B	1	**7J-0204**	1	SEAL-O-RING	
	21C	1	**8T-2360**	1	SEAL-O-RING	
	22	1	**5B-9318**	7	BALL	
	23	1	**155-9836**	1	VALVE GP-RELIEF	
	23A	1	**1P-7363**	1	SEAL-O-RING	
	23B	1	**3J-7354**	1	SEAL-O-RING	
	23C	1	**8T-2361**	1	SEAL-O-RING	
	23D	1	**126-5984**	1	RING-BACKUP	
	23E	1	**126-5985**	1	RING-BACKUP	
	24	1	**4K-1388**	1	SEAL-O-RING	
	25	1	**6E-0358**	1	RING-BACKUP	
	26	1	**5K-9090**	1	SEAL-O-RING	
	27	1	**128-2776**	1	GASKET	
	28	1	**195-2139**	1	SEAL-O-RING	

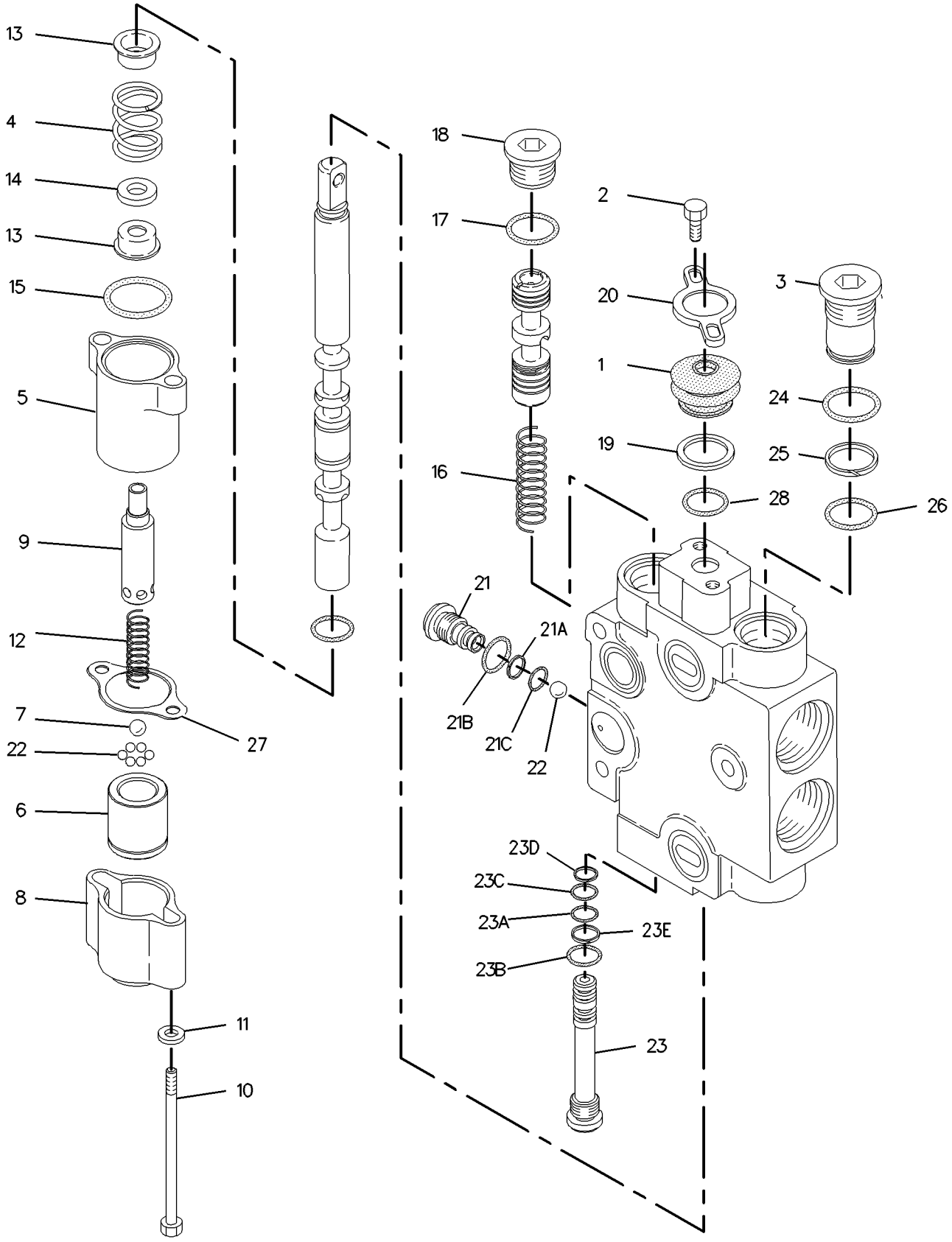

GRAPHIC #1

g00864249

HYDRAULIC SYSTEM

166-7950 VALVE GP-CONTROL—SWING

S/N:JRB00255-UP

PART OF 185-5903,VALVE GP-BANK 4

SMCS-5051 **i01601679**

NOTE	REF NO	GRAPHIC REF	PART NUMBER	QTY	PART NAME 1 2 3 4 5 6 (PRODUCT LEVEL)	SEE PAGE
	1	1	**4T-4524**	1	GUARD-DUST	
	2	1	**031-0214**	2	BOLT-LOCKING (1/4-20X0.5 IN)	
	3	1	**137-9466**	2	VALVE GP-RELIEF	
		1	**147-1659**	1	KIT-SEAL	
	4	1	**195-2406**	1	SPRING	
	5	1	**0S-1614**	1	BOLT (1/4-20X0.5 IN)	
	6	1	**167-6768**	1	HOUSING	
	7	1	**4T-4521**	2	RETAINER	
	8	1	**9X-2027**	1	WASHER (11X18X2MM THK)	
	9	1	**195-2139**	2	SEAL-O-RING	
	10	1	**6E-4317**	1	SPRING	
	11	1	**126-5796**	1	HOUSING GP	
		1	**1P-7363**	1	SEAL-O-RING	
		1	**3J-7354**	1	SEAL-O-RING	
		1	**8T-2361**	1	SEAL-O-RING	
		1	**126-5984**	1	RING-BACKUP	
		1	**126-5985**	1	RING-BACKUP	
	12	1	**2M-9780**	1	SEAL-O-RING	
	13	1	**9S-8006**	1	PLUG	
	14	1	**4T-4520**	1	FILTER	
	15	1	**4T-4528**	1	RETAINER	
	16	1	**126-5476**	1	SEAT AS-SHUTTLE	
		1	**4T-7807**	1	RING-BACKUP	
		1	**7J-0204**	1	SEAL-O-RING	
		1	**8T-2360**	1	SEAL-O-RING	
	17	1	**5B-9318**	1	BALL	
	18	1	**8H-0707**	2	BOLT (1/4-20X1 IN)	
	19	1	**5P-0537**	1	WASHER-HARD (7.2X14.5X2MM THK)	

166-7950 VALVE GP-CONTROL *(contd.)* i01601679

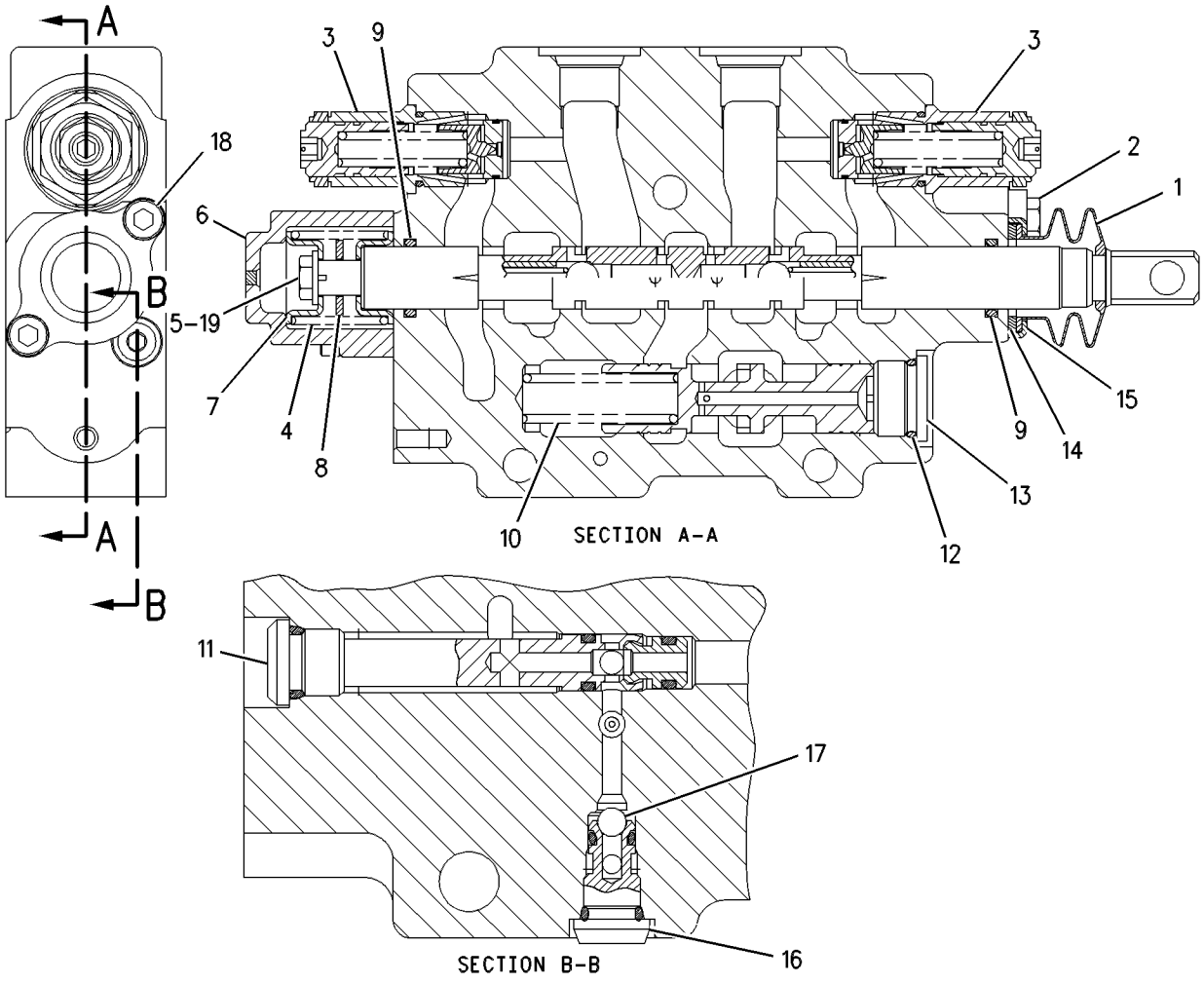

GRAPHIC #1 g00535913

HYDRAULIC SYSTEM

168-0361 VALVE GP-CONTROL - LOADER

S/N:JRB00255-UP

PART OF 185-5906 VALVE GP-BANK 2, 185-5907 VALVE GP-BANK 3

SMCS-5051 **i01569459**

NOTE	REF NO	GRAPHIC REF	PART NUMBER	QTY	PART NAME 1 2 3 4 5 6 (PRODUCT LEVEL)	SEE PAGE
	1	1	**4T-4524**	1	GUARD-DUST	
	2	1	**031-0214**	2	BOLT-LOCKING (1/4-20X0.5 IN)	
	3	1	**9T-0704**	2	VALVE GP-RELIEF	
					(EACH INCLUDES)	
		1	**4K-1388**	1	SEAL-O-RING	
		1	**6E-0358**	1	RING-BACKUP	
		1	**5K-9090**	1	SEAL-O-RING	
	4	1	**4J-7533**	1	SEAL-O-RING	
	5	1	**4T-4521**	2	RETAINER	
	6	1	**128-2776**	1	GASKET	
	7	1	**9T-0642**	1	COUPLING	
	8	1	**5L-9023**	1	RING-RETAINING	
	9	1	**4T-4532**	1	HOUSING	
	10	1	**9T-0644**	1	SPRING	
	11	1	**9T-7309**	1	PLATE	
	12	1	**3E-8620**	1	COIL AS-SOLENOID	
		1	**1S-9593**	2	STRAP-CABLE	
		1	**102-8802**	1	KIT-RECEPTACLE (2 PIN)	
					(KIT SERVICES RECEPTACLE AS AND WEDGE)	
		1	**8T-8729**	2	PIN-CONNECTOR	
	13	1	**4T-4516**	1	SPRING	
	14	1	**8F-0212**	1	SEAL-O-RING	
	15	1	**195-2139**	2	SEAL-O-RING	
	16	1	**6E-4317**	1	SPRING	
	17	1	**2M-9780**	1	SEAL-O-RING	
	18	1	**9S-8006**	1	PLUG	
	19	1	**4T-4520**	1	FILTER	
	20	1	**4T-4528**	1	RETAINER	
	21	1	**126-5476**	1	SEAT AS-SHUTTLE	
		1	**4T-7807**	1	RING-BACKUP	
		1	**7J-0204**	1	SEAL-O-RING	
		1	**8T-2360**	1	SEAL-O-RING	
	22	1	**5B-9318**	1	BALL	
	23	1	**155-9836**	1	HOUSING AS	
		1	**1P-7363**	1	SEAL-O-RING	
		1	**3J-7354**	1	SEAL-O-RING	
		1	**8T-2361**	1	SEAL-O-RING	
		1	**126-5984**	1	RING-BACKUP	
		1	**126-5985**	1	RING-BACKUP	
	24	1	**8F-6302**	2	BOLT (1/4-20X3.75IN)	
	25	1	**5P-0537**	2	WASHER-HARD (7.2X14.5X2MM THK)	
	26	1	**197-3698**	1	SEAL-O-RING	
	27	1	**197-3121**	1	RING-GUIDE	

168-0361 VALVE GP-CONTROL *(contd.)* i01569459

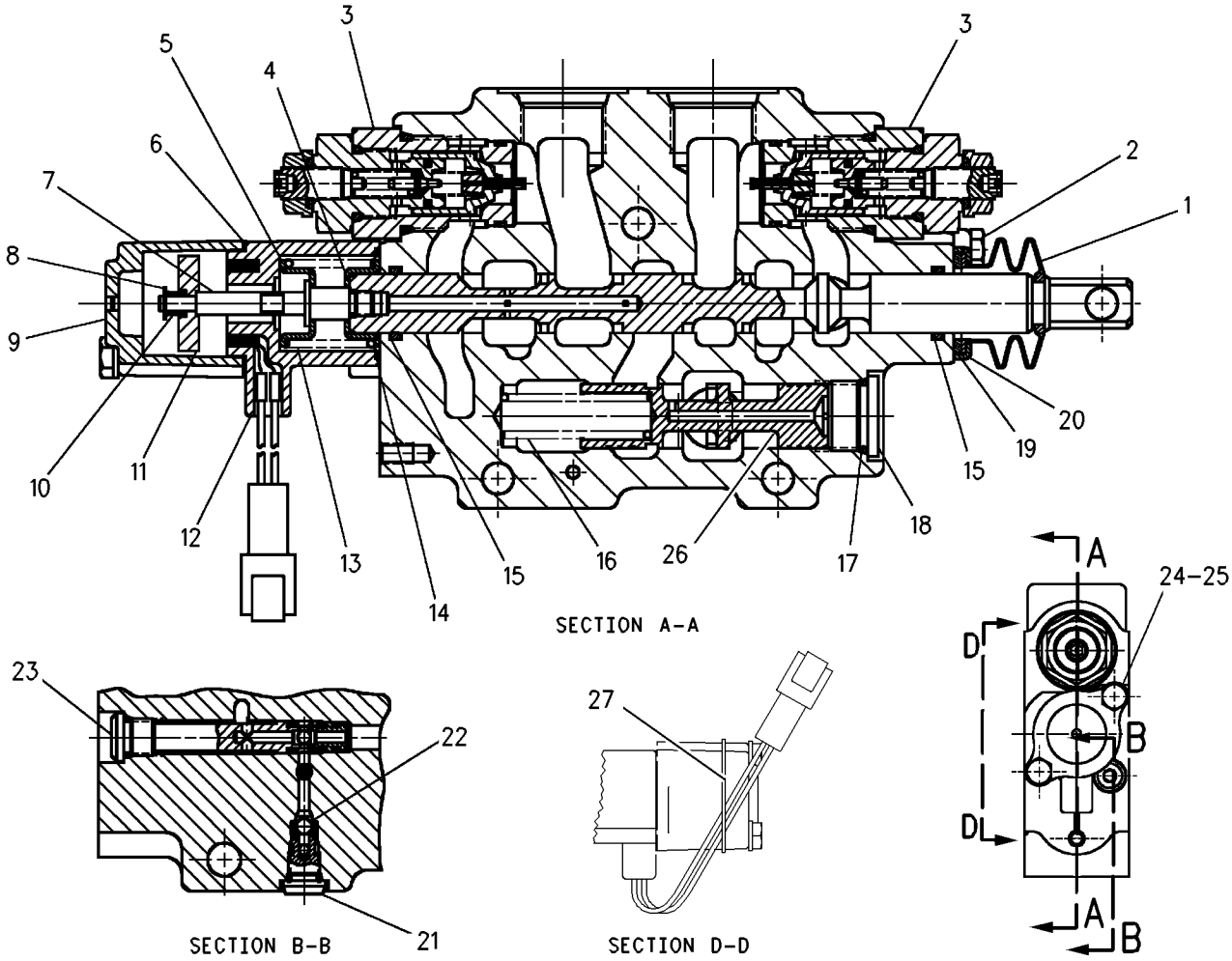

GRAPHIC #1 g00814984

HYDRAULIC SYSTEM

190-3428 VALVE GP-CONTROL - BUCKET HOE

S/N:JRB00255-UP

PART OF 185-5903 VALVE GP-BANK 4

SMCS-5051 **i01423080**

NOTE	REF NO	GRAPHIC REF	PART NUMBER	QTY	PART NAME 1 2 3 4 5 6 (PRODUCT LEVEL)	SEE PAGE
	1	1	**195-2139**	2	SEAL-O-RING	
	2	1	**9S-8006**	1	PLUG	
	3	1	**197-2709**	1	SPRING	
	4	1	**126-5796**	1	HOUSING AS	
		1	**1P-7363**	1	SEAL-O-RING (6.07MM ID)	
		1	**3J-7354**	1	SEAL-O-RING (8.92MM ID)	
		1	**8T-2361**	1	SEAL-O-RING (5.28MM ID)	
		1	**126-5984**	1	RING-BACKUP (5.94MM ID)	
		1	**126-5985**	1	RING-BACKUP (6.73MM ID)	
	5	1	**5B-9318**	1	BALL (4.76MM DIA)	
	6	1	**126-5476**	1	SEAT AS-SHUTTLE	
		1	**4T-7807**	1	RING-BACKUP (5.13MM ID)	
		1	**7J-0204**	1	SEAL-O-RING (7.65MM ID)	
		1	**8T-2360**	1	SEAL-O-RING (4.5MM ID)	
	7	1	**195-2406**	1	SPRING	
	8	1	**8H-0707**	2	BOLT (1/4-20X1 IN)	
	9	1	**4T-4533**	1	SPACER	
	10	1	**4T-4521**	2	RETAINER	
	11	1	**167-6768**	1	HOUSING	
	12	1	**031-5085**	1	BOLT-LOCKING (1/4-20X1.00 IN)	
	13	1	**187-0527**	1	VALVE GP-RELIEF	
		1	**3K-0360**	1	SEAL-O-RING (16.36MM ID)	
		1	**4K-1388**	1	SEAL-O-RING (26.59MM ID)	
		1	**5K-9090**	1	SEAL-O-RING (23.52MM ID)	
		1	**6E-0358**	1	RING-BACKUP	
	14	1	**187-0524**	1	VALVE GP-RELIEF	
		1	**3K-0360**	1	SEAL-O-RING (16.36MM ID)	
		1	**4K-1388**	1	SEAL-O-RING (26.59MM ID)	
		1	**5K-9090**	1	SEAL-O-RING (23.52MM ID)	
		1	**6E-0358**	1	RING-BACKUP	
	15	1	**031-0214**	2	BOLT-LOCKING (1/4-20X0.5 IN)	
	16	1	**4T-4524**	1	GUARD-DUST	
	17	1	**4T-4528**	1	RETAINER	
	18	1	**4T-4520**	1	FILTER	
	19	1	**2M-9780**	1	SEAL-O-RING (19.18MM ID)	

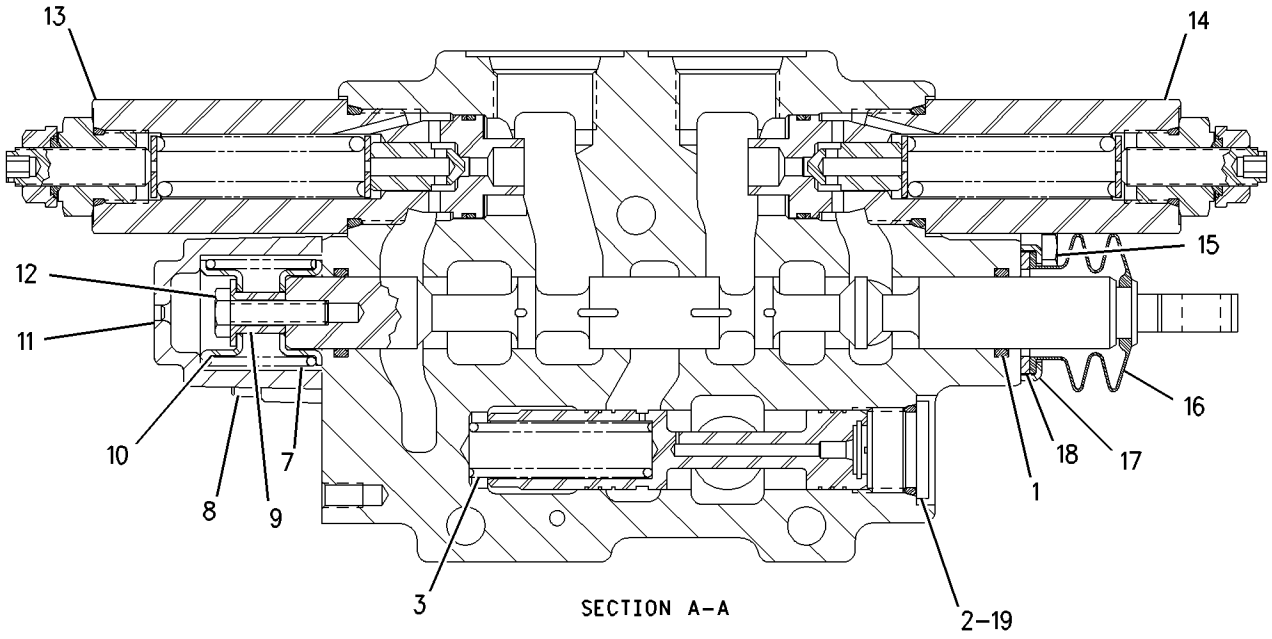

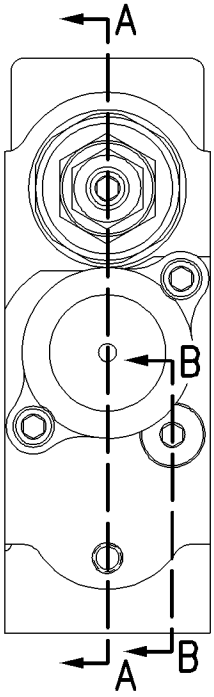

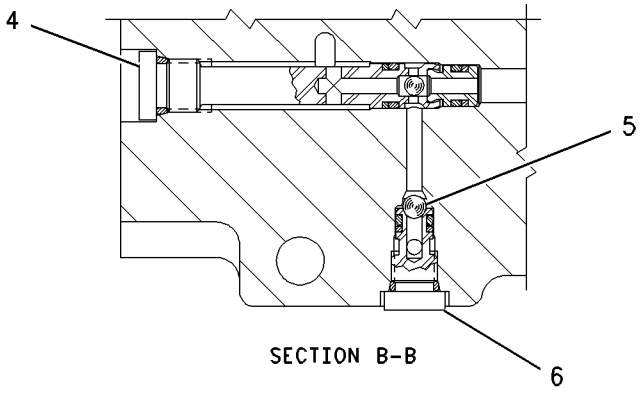

GRAPHIC #1 g00748295

HYDRAULIC SYSTEM

190-3430 VALVE GP-CONTROL - STICK

S/N:JRB00255-UP

PART OF 185-5903 VALVE GP-BANK 4

SMCS-5051 **i01420523**

NOTE	REF NO	GRAPHIC REF	PART NUMBER	QTY	PART NAME 1 2 3 4 5 6 (PRODUCT LEVEL)	SEE PAGE
	1	1	**195-2139**	2	SEAL-O-RING	
	2	1	**9S-8006**	1	PLUG	
	3	1	**197-2709**	1	SPRING	
	4	1	**126-5796**	1	HOUSING AS	
		1	**1P-7363**	1	SEAL-O-RING (6.07MM ID)	
		1	**3J-7354**	1	SEAL-O-RING (8.92MM ID)	
		1	**8T-2361**	1	SEAL-O-RING (5.28MM ID)	
		1	**126-5984**	1	RING-BACKUP (5.94MM ID)	
		1	**126-5985**	1	RING-BACKUP (6.73MM ID)	
	5	1	**5B-9318**	1	BALL (4.76MM DIA)	
	6	1	**126-5476**	1	SEAT AS-SHUTTLE	
		1	**4T-7807**	1	RING-BACKUP (5.13MM ID)	
		1	**7J-0204**	1	SEAL-O-RING (7.65MM ID)	
		1	**8T-2360**	1	SEAL-O-RING (4.5MM ID)	
	7	1	**109-9685**	1	SEAL-O-RING (6.07MM ID)	
	8	1	**8H-0707**	2	BOLT (1/4-20X1 IN)	
	9	1	**195-2406**	1	SPRING	
	10	1	**4T-4521**	2	RETAINER	
	11	1	**167-6768**	1	HOUSING	
	12	1	**9T-0650**	1	SPACER	
	13	1	**6E-6281**	1	VALVE GP-RELIEF	
		1	**3K-0360**	1	SEAL-O-RING (16.36MM ID)	
		1	**4K-1388**	1	SEAL-O-RING (26.59MM ID)	
		1	**5K-9090**	1	SEAL-O-RING (23.52MM ID)	
		1	**6E-0358**	1	RING-BACKUP	
	14	1	**6E-6286**	1	VALVE GP-RELIEF	
		1	**4K-1388**	1	SEAL-O-RING (26.59MM ID)	
		1	**5K-9090**	1	SEAL-O-RING (23.52MM ID)	
		1	**6E-0358**	1	RING-BACKUP	
	15	1	**031-0214**	2	BOLT-LOCKING (1/4-20X0.5 IN)	
	16	1	**4T-4524**	1	GUARD-DUST	
	17	1	**4T-4528**	1	RETAINER	
	18	1	**4T-4520**	1	FILTER	
	19	1	**2M-9780**	1	SEAL-O-RING (19.18MM ID)	

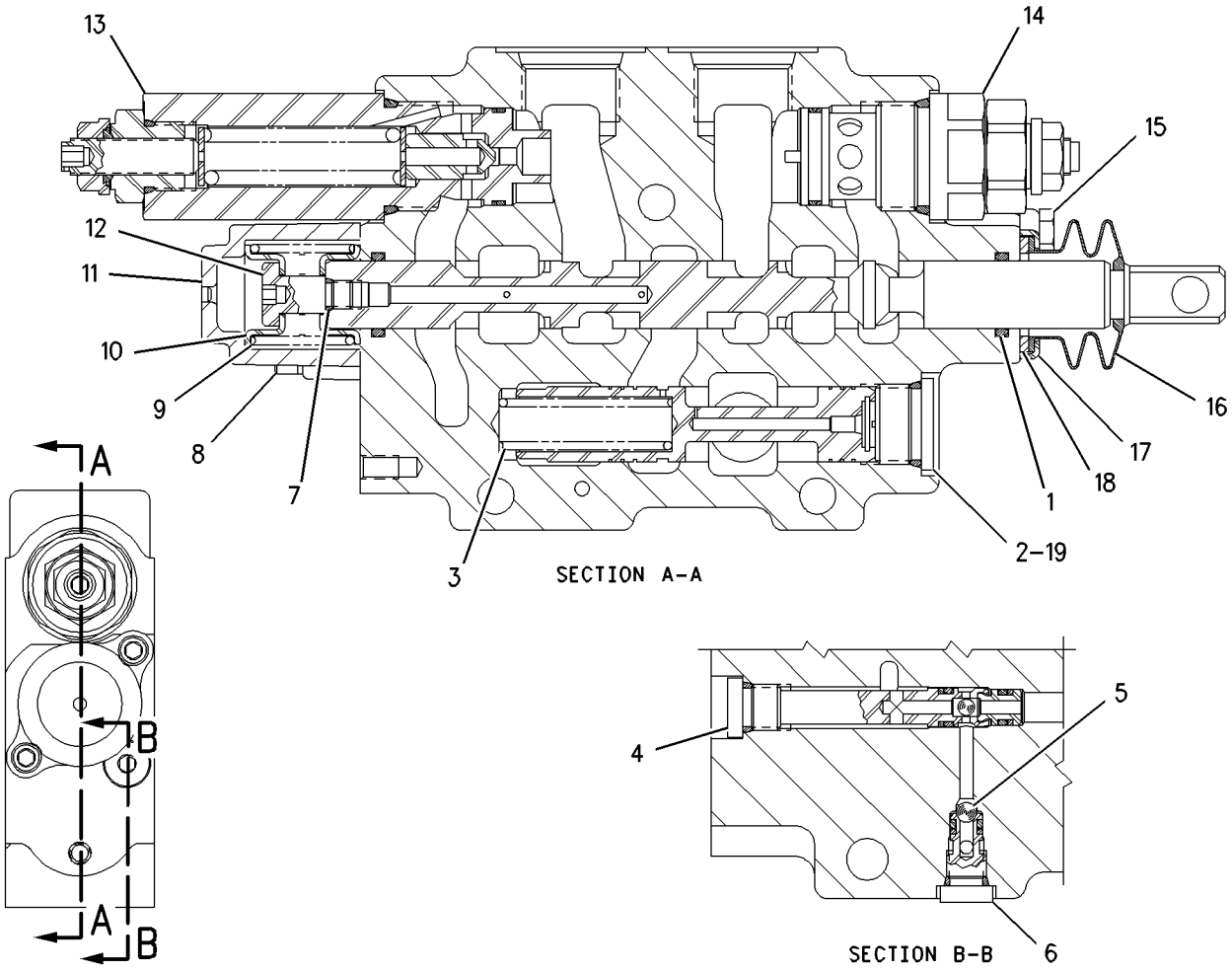

GRAPHIC #1

g00745149

HYDRAULIC SYSTEM

190-3431 VALVE GP-CONTROL - BOOM

S/N:JRB00255-UP

PART OF 185-5903 VALVE GP-BANK 4

SMCS-5051 **i01420463**

NOTE	REF NO	GRAPHIC REF	PART NUMBER	QTY	PART NAME 1 2 3 4 5 6 (PRODUCT LEVEL)	SEE PAGE
	1	1	**195-2139**	2	SEAL-O-RING	
	2	1	**9S-8006**	1	PLUG	
	3	1	**197-2709**	1	SPRING	
	4	1	**126-5796**	1	HOUSING AS	
		1	**1P-7363**	1	SEAL-O-RING (6.07MM ID)	
		1	**3J-7354**	1	SEAL-O-RING (8.92MM ID)	
		1	**8T-2361**	1	SEAL-O-RING (5.28MM ID)	
		1	**126-5984**	1	RING-BACKUP (5.94MM ID)	
		1	**126-5985**	1	RING-BACKUP (6.73MM ID)	
	5	1	**5B-9318**	1	BALL (4.76MM DIA)	
	6	1	**126-5476**	1	SEAT AS-SHUTTLE	
		1	**4T-7807**	1	RING-BACKUP (5.13MM ID)	
		1	**7J-0204**	1	SEAL-O-RING (7.65MM ID)	
		1	**8T-2360**	1	SEAL-O-RING (4.5MM ID)	
	7	1	**109-9685**	1	SEAL-O-RING (6.07MM ID)	
	8	1	**8H-0707**	2	BOLT (1/4-20X1 IN)	
	9	1	**195-2406**	1	SPRING	
	10	1	**167-6768**	1	HOUSING	
	11	1	**9T-0650**	1	SPACER	
	12	1	**4T-4521**	2	RETAINER	
	13	1	**6E-6284**	1	VALVE GP-MAKEUP & RELIEF	
		1	**4K-1388**	1	SEAL-O-RING (26.59MM ID)	
		1	**5K-9090**	1	SEAL-O-RING (23.52MM ID)	
		1	**6E-0358**	1	RING-BACKUP	
	14	1	**6E-6285**	1	VALVE GP-RELIEF	
		1	**4K-1388**	1	SEAL-O-RING (26.59MM ID)	
		1	**5K-9090**	1	SEAL-O-RING (23.52MM ID)	
		1	**6E-0358**	1	RING-BACKUP	
	15	1	**031-0214**	2	BOLT-LOCKING (1/4-20X0.5 IN)	
	16	1	**4T-4524**	1	GUARD-DUST	
	17	1	**4T-4528**	1	RETAINER	
	18	1	**4T-4520**	1	FILTER	
	19	1	**2M-9780**	1	SEAL-O-RING (19.18MM ID)	

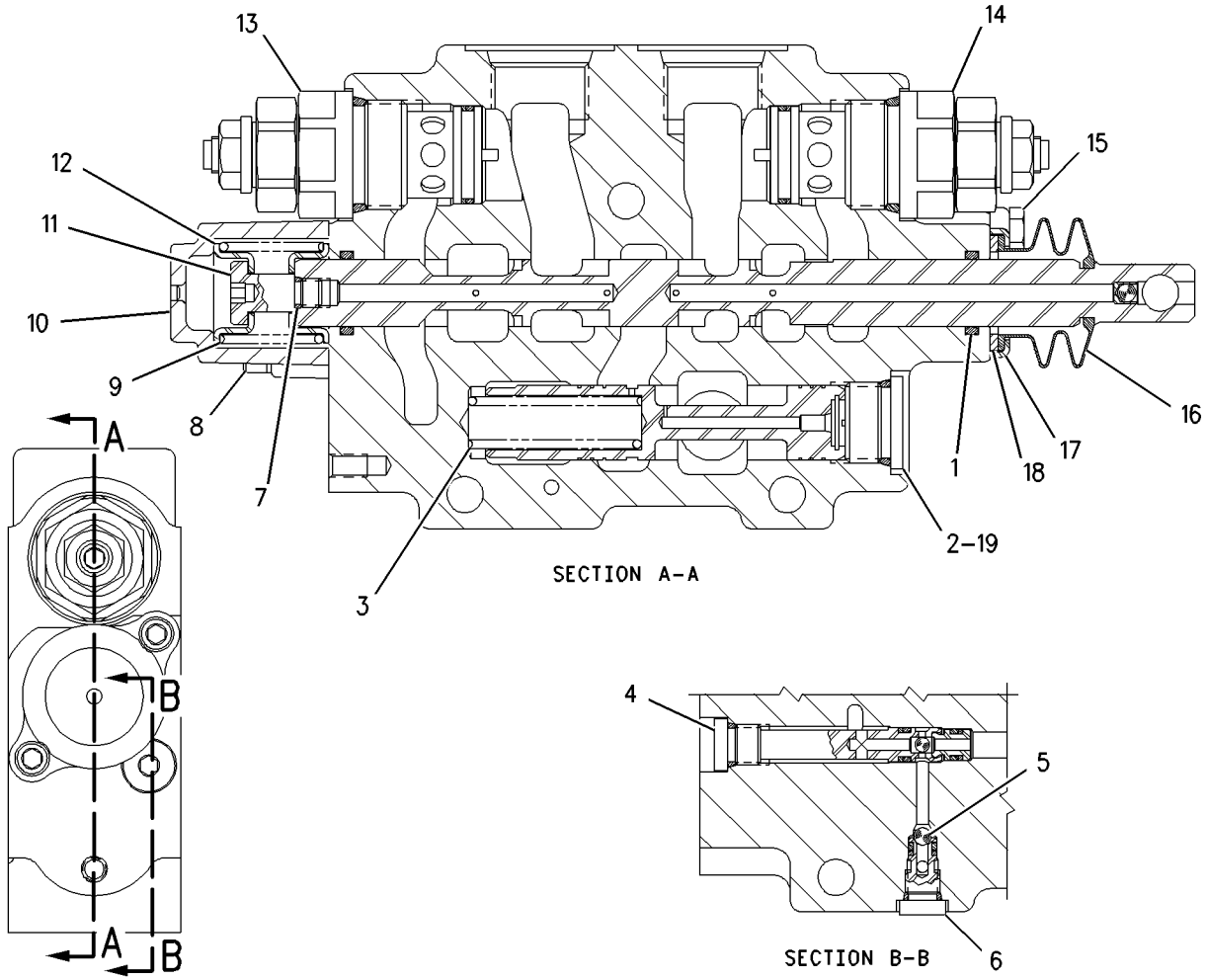

GRAPHIC #1 g00745414

HYDRAULIC SYSTEM

191-4484 VALVE GP-CONTROL—BUCKET-LOADER

S/N:JRB00255-UP

PART OF 188-7471 VALVE GP-PRIORITY

SMCS-5051 **i01493419**

NOTE	REF NO	GRAPHIC REF	PART NUMBER	QTY	PART NAME 1 2 3 4 5 6 (PRODUCT LEVEL)	SEE PAGE
	1	1	**4D-9986**	2	SEAL-O-RING	
	2	1	**9S-8009**	1	PLUG-O-RING	
	3	1	**197-2709**	1	SPRING	
	4	1	**126-5796**	1	HOUSING GP	
	4A	1	**1P-7363**	1	SEAL-O-RING	
	4B	1	**3J-7354**	1	SEAL-O-RING	
	4C	1	**8T-2361**	1	SEAL-O-RING	
	4D	1	**126-5984**	1	RING-BACKUP	
	4E	1	**126-5985**	1	RING-BACKUP	
	5	1	**5B-9318**	1	BALL	
	6	1	**126-5476**	1	SEAT AS-SHUTTLE	
	6A	1	**4T-7807**	1	RING-BACKUP	
	6B	1	**7J-0204**	1	SEAL-O-RING	
	6C	1	**8T-2360**	1	SEAL-O-RING	
	7	1	**114-1973**	1	COUPLING	
	8	1	**197-3222**	2	HOUSING	
	9	1	**156-1267**	2	RETAINER	
	10	1	**114-3906**	2	RETAINER	
	11	1	**200-6382**	2	SPRING	
	12	1	**114-1972**	1	COUPLING	
	13	1	**5S-0003**	2	NUT (5/16-18 THD)	
	14	1	**156-4321**	4	WASHER	
	15	1	**187-0527**	1	VALVE GP-RELIEF	
		1	**3K-0360**	1	SEAL-O-RING	
		1	**4K-1388**	1	SEAL-O-RING	
		1	**5K-9090**	1	SEAL-O-RING	
		1	**6E-0358**	1	RING-BACKUP	
	16	1	**187-0530**	1	VALVE GP-RELIEF	
	17	1	**2M-9780**	1	SEAL-O-RING	
	18	1	**8H-0707**	4	BOLT (1/4-20X1 IN)	

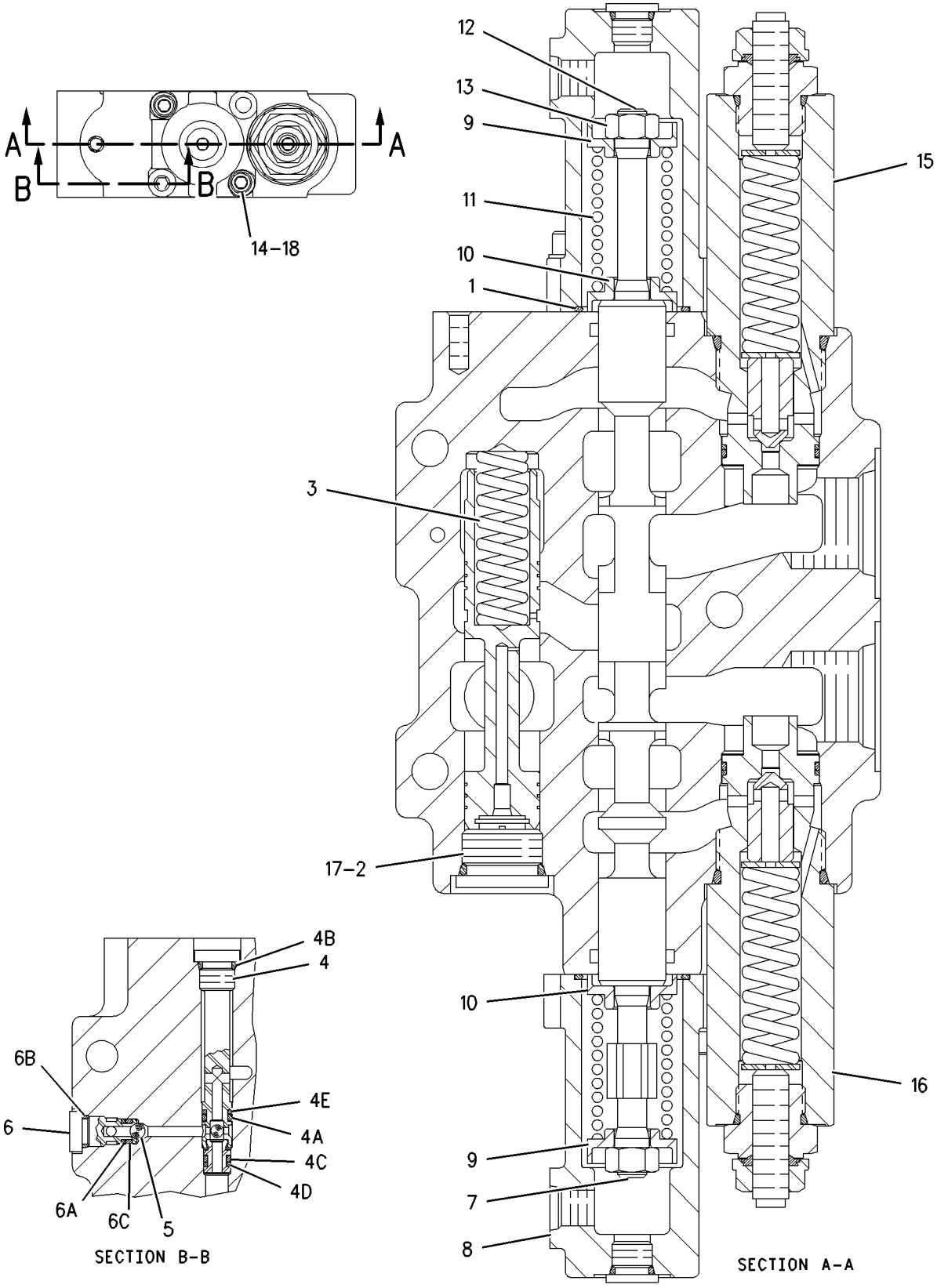

GRAPHIC #1 g00769989

HYDRAULIC SYSTEM

173-0640 VALVE GP-PRESS & FLOW CMPNSTR

S/N:JRB00255-UP

PART OF 180-9588 PUMP GP-PISTON

SMCS-5086 **i01537303**

NOTE	REF NO	GRAPHIC REF	PART NUMBER	QTY	PART NAME 1 2 3 4 5 6 (PRODUCT LEVEL)	SEE PAGE
	1	1	**6E-3268**	1	RETAINER-SPRING	
	2	1	**6E-3269**	1	RETAINER-SPRING	
	3	1	**200-5359**	1	HOUSING	
	4	1	**200-5360**	1	HOUSING	
	5	1	**6E-3272**	1	SEAT	
	6	1	**6E-3273**	1	SEAT	
	7	1	**6E-3274**	1	SPRING	
	8	1	**6E-3275**	1	SPRING	
	9	1	**6E-3276**	1	SPRING	
	10	1	**105-2145**	1	VALVE-ORIFICE	
	11	1	**202-7503**	2	RETAINER	
	12	1	**6E-6527**	2	PLUG	
	13	1	**193-1036**	1	SPRING	
	14	1	**033-6043**	1	SEAL-O-RING	
	15	1	**6V-8352**	1	SEAL-O-RING	
	16	1	**6E-6528**	2	SEAL (9.3MM ID)	
	17	1	**5P-9262**	1	SEAL-O-RING	
	18	1	**200-5361**	2	NUT	
	19	1	**200-5362**	2	SEAL-O-RING	
	20	1	**200-5363**	2	RING-THRUST	
	21	1	**200-5364**	2	CAP	

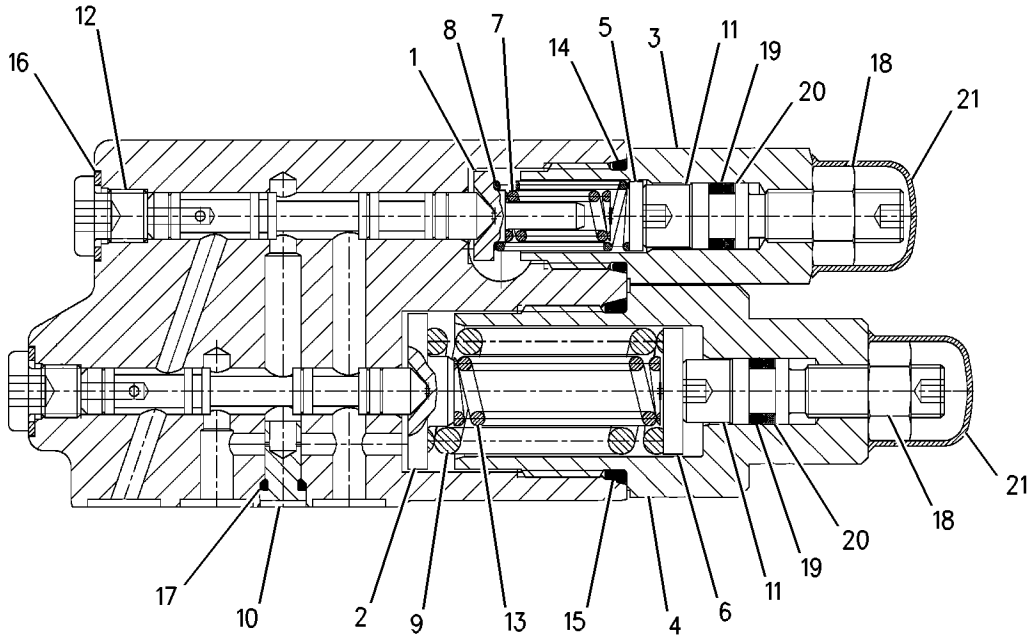

GRAPHIC #1 g00791680

HYDRAULIC SYSTEM

103-5519 VALVE GP-POWER COMPENSATOR

S/N:JRB00255-UP

PART OF 180-9588 PUMP GP-PISTON

SMCS-4306, 5051 **i01640977**

NOTE	REF NO	GRAPHIC REF	PART NUMBER	QTY	PART NAME 1 2 3 4 5 6 (PRODUCT LEVEL)	SEE PAGE
	1	1	**105-1434**	1	PLUG	
	2	1	**5P-5599**	1	SEAL-O-RING	
	3	1	**105-1435**	1	SPRING	
	4	1	**105-1436**	1	RETAINER-SPRING	
	5	1	**6E-6528**	1	SEAL	
	6	1	**6V-8236**	1	PIN-SPRING	
	7	1	**214-0592**	1	GASKET	
M	8	1	**3T-0849**	2	BOLT-SOCKET HEAD (M6X1X25MM)	
	9	1	**105-1437**	1	RETAINER-SPRING	
	10	1	**105-1438**	1	SPRING	
	11	1	**033-6044**	1	SEAL-O-RING	
	12	1	**105-1439**	1	ADJUSTER	
	13	1	**105-1440**	1	CAP	
	14	1	**105-1441**	1	PLUG	

M-METRIC PART

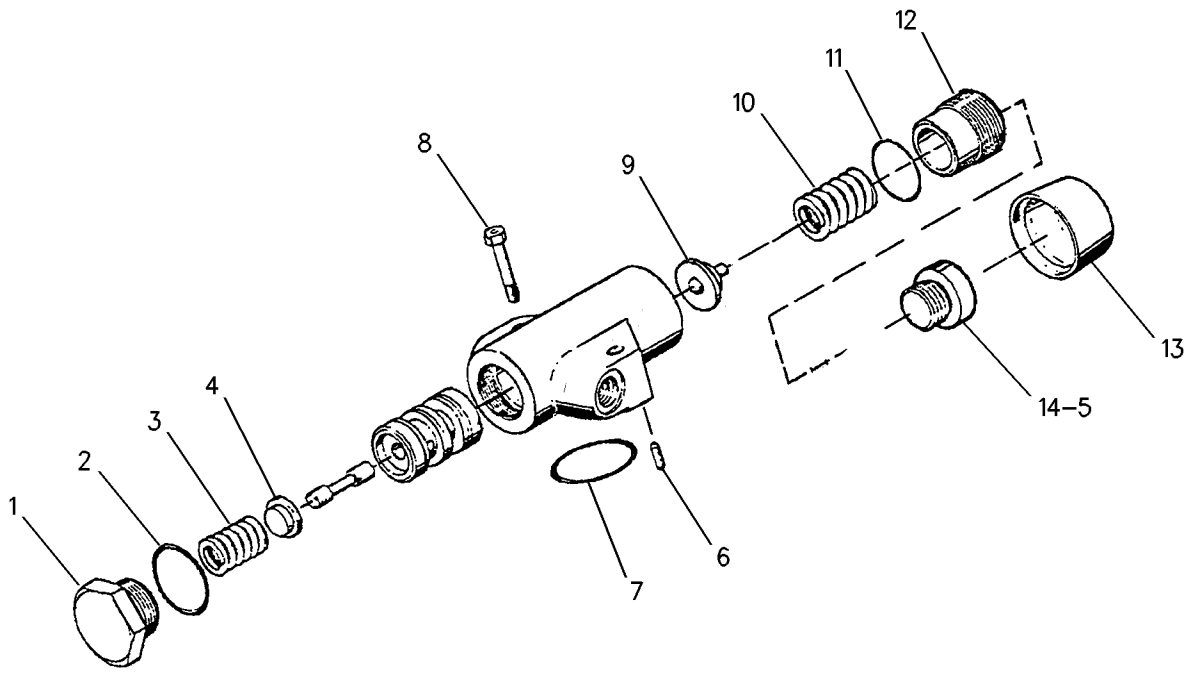

GRAPHIC #1 g00844592

HYDRAULIC SYSTEM

3E-8622 VALVE GP-SOLENOID

S/N:JRB00255-UP

PART OF 183-8530 LINES GP-SIDESHIFT LOCK

SMCS-5132, 5479 **i01500381**

NOTE	REF NO	GRAPHIC REF	PART NUMBER	QTY	PART NAME 1 2 3 4 5 6 (PRODUCT LEVEL)	SEE PAGE
	1	1	**3J-9196**	1	NUT-JAM (1/2-20 THD)	
	2	1	**107-2066**	1	CARTRIDGE AS	
		1	**7T-1342**	1	KIT-HARDWARE	
					(INCLUDES SEALS, WASHER, NUT & RING)	
	3	1	**3E-8621**	1	COIL AS	
		1	**3E-3365**	1	WEDGE-RECEPTACLE LOCK (2 PIN)	
		1	**102-8802**	1	KIT-RECEPTACLE (2 PIN)	
					(KIT SERVICES RECEPTACLE AS. AND WEDGE)	
		1	**186-3735**	2	PIN-CONNECTOR	
	4	1	**1S-9593**	2	STRAP-CABLE	

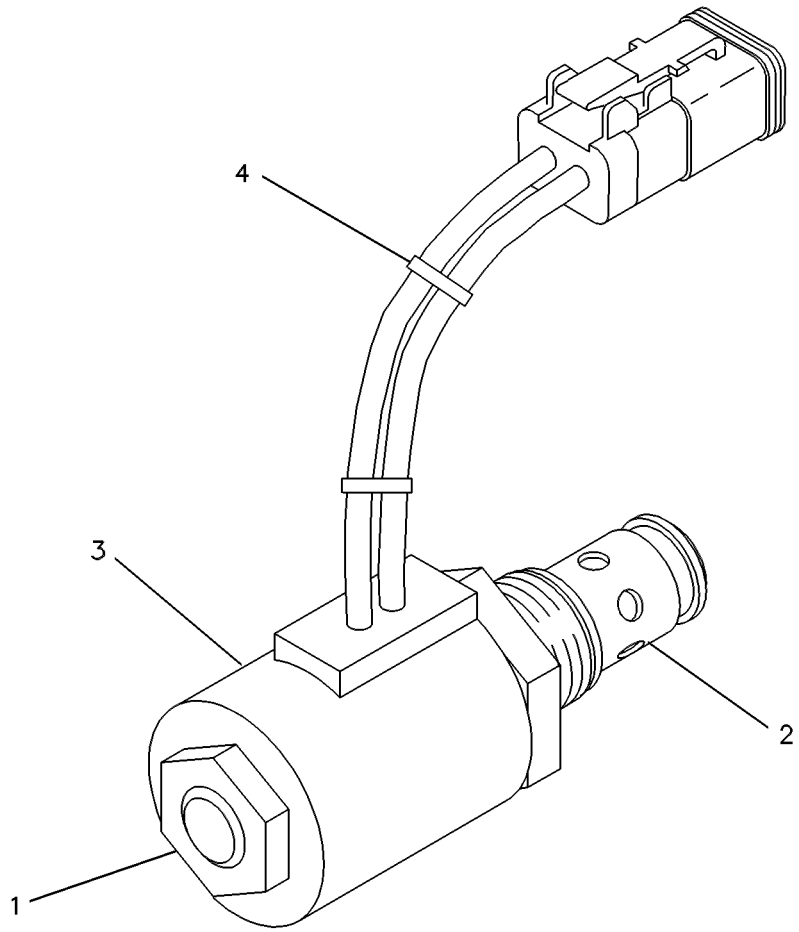

GRAPHIC #1 g00131580

MEMORANDA

IMPLEMENTS

185-1932 BOOM AR

S/N:JRB00255-UP

PART OF 228-2802 COMMON AR

SMCS-6501 **i00967085**

NOTE	PART NUMBER	QTY	PART NAME 1 2 3 4 5 6 (PRODUCT LEVEL)	SEE PAGE
Y	**185-1927**	1	BOOM GP	266

Y-SEPARATE ILLUSTRATION

231-3643 ARM GP-LIFT

S/N:JRB00281-UP

PART OF 81406691 LOADER AR

SMCS-6118, 6119 **i01549155**

NOTE	REF NO	GRAPHIC REF	PART NUMBER	QTY	PART NAME 1 2 3 4 5 6 (PRODUCT LEVEL)	SEE PAGE
M	1	1	**8T-4176**	2	BOLT (M12X1.75X90MM)	
M	2	1	**6V-7687**	2	LOCKNUT (M12X1.75 THD)	
	3	1	**9R-0158**	2	WASHER (46X69X3MM THK)	
	4	1	**6V-3213**	2	RING-RETAINING	
	5	1	**130-5451**	2	PIN	
	6	1	**6V-8144**	6	RING	
	7	1	**9R-0109**	4	WASHER (3MM THK)	
	8	1	**9R-3182**	2	PIN	
B	9	1	**9R-0109**	4	WASHER (3MM THK)	
	10	1	**3B-8488**	4	FITTING-GREASE	
	11	1	**9R-9373**	1	PIN AS	
	12	1	**127-8987**	2	RING-RETAINING	
B	13	1	**9R-8390**	2	SPACER (1.0MM THK)	
	14	1	**128-5010**	1	PIN	
	15	1	**3B-8489**	5	FITTING-GREASE	
	16	1	**132-6496**	1	PIN AS	
B	17	1	**9R-4066**	2	WASHER (4MM THK)	
	18	1	231-3646	1	ARM AS-LIFT	
	20	1	**9R-0111**	4	BEARING-SLEEVE	
	21	1	**9R-0119**	2	BOSS	
	22	1	**9R-6690**	4	BEARING-SLEEVE	
	23	1	**112-4498**	1	BOSS	
	24	1	**231-3648**	1	BOSS-WELD	
	25	1	**9R-0320**	2	BEARING	
	26	1	**9R-2821**	1	BOSS	

B-USE AS REQUIRED
M-METRIC PART

231-3643 ARM GP-LIFT *(contd.)* i01549155

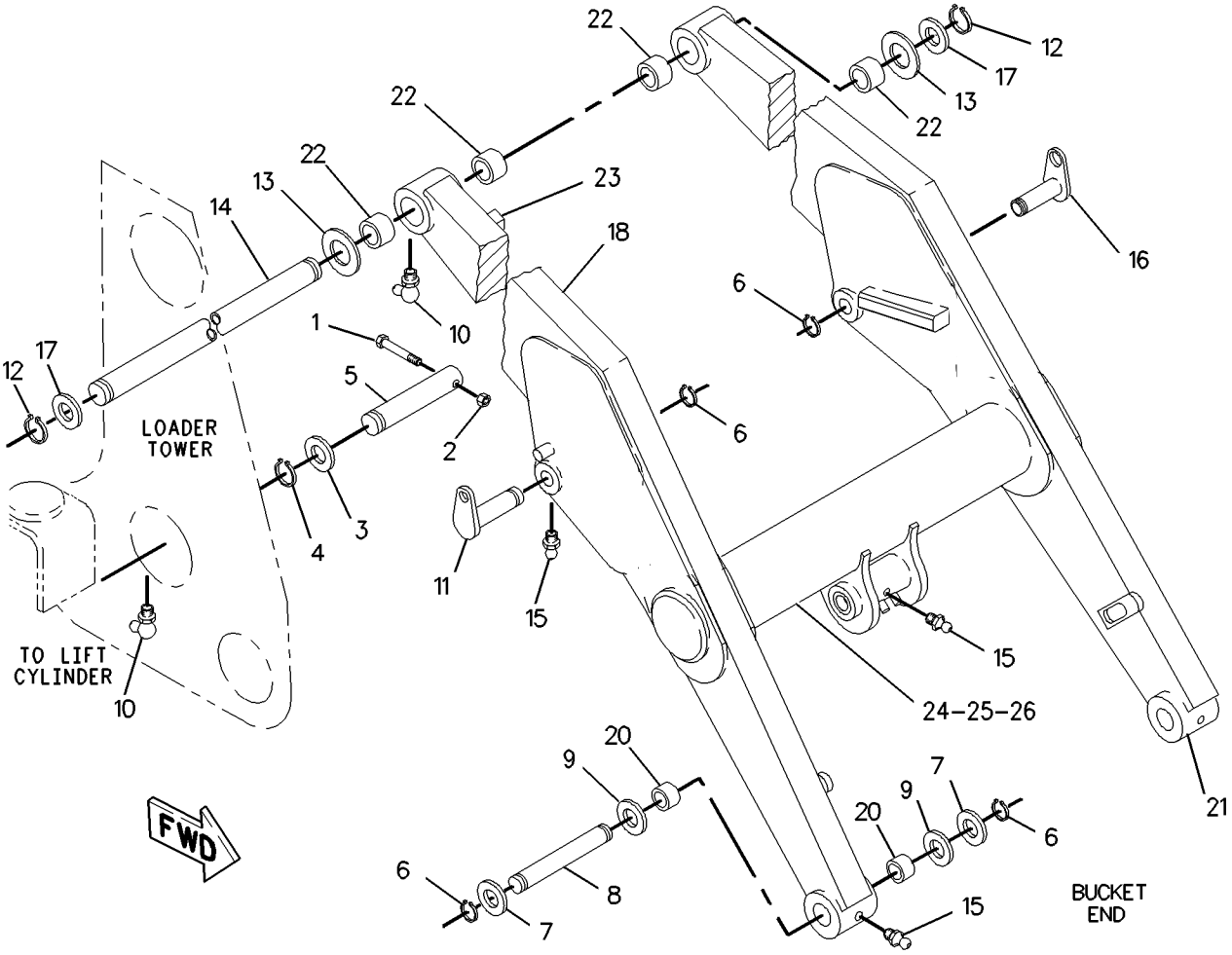

GRAPHIC #1

185-1927 BOOM GP

S/N:JRB00596-UP

PART OF 185-1932 BOOM AR

SMCS-6501 **i01208801**

NOTE	REF NO	GRAPHIC REF	PART NUMBER	QTY	PART NAME 1 2 3 4 5 6 (PRODUCT LEVEL)	SEE PAGE
	1	1	**244-1989**	1	BOOM AS	
	1A	1	**111-0483**	2	BOSS	
	1B	1	**8Y-4489**	4	BOSS	
	1C	1	**9R-8523**	2	PIN	
	1D	1	**237-2252**	2	BEARING-SLEEVE	
	1E	1	**9R-0170**	3	BEARING SLEEVE	
	2	1	**3B-8488**	3	FITTING-HYDRAULIC (1/8-27 NPTF)	
	3	1	**9R-9812**	2	PIN	
M	4	1	**8T-5001**	2	BOLT (M12X1.75X130MM)	
M	5	1	**6V-7687**	2	LOCKNUT (M12X1.75 THD)	
	6	1	**3B-8489**	1	FITTING-GREASE (1/8-27 THD)	
	7	1	**179-9961**	1	PLUG-PROTECTIVE	

M-METRIC PART

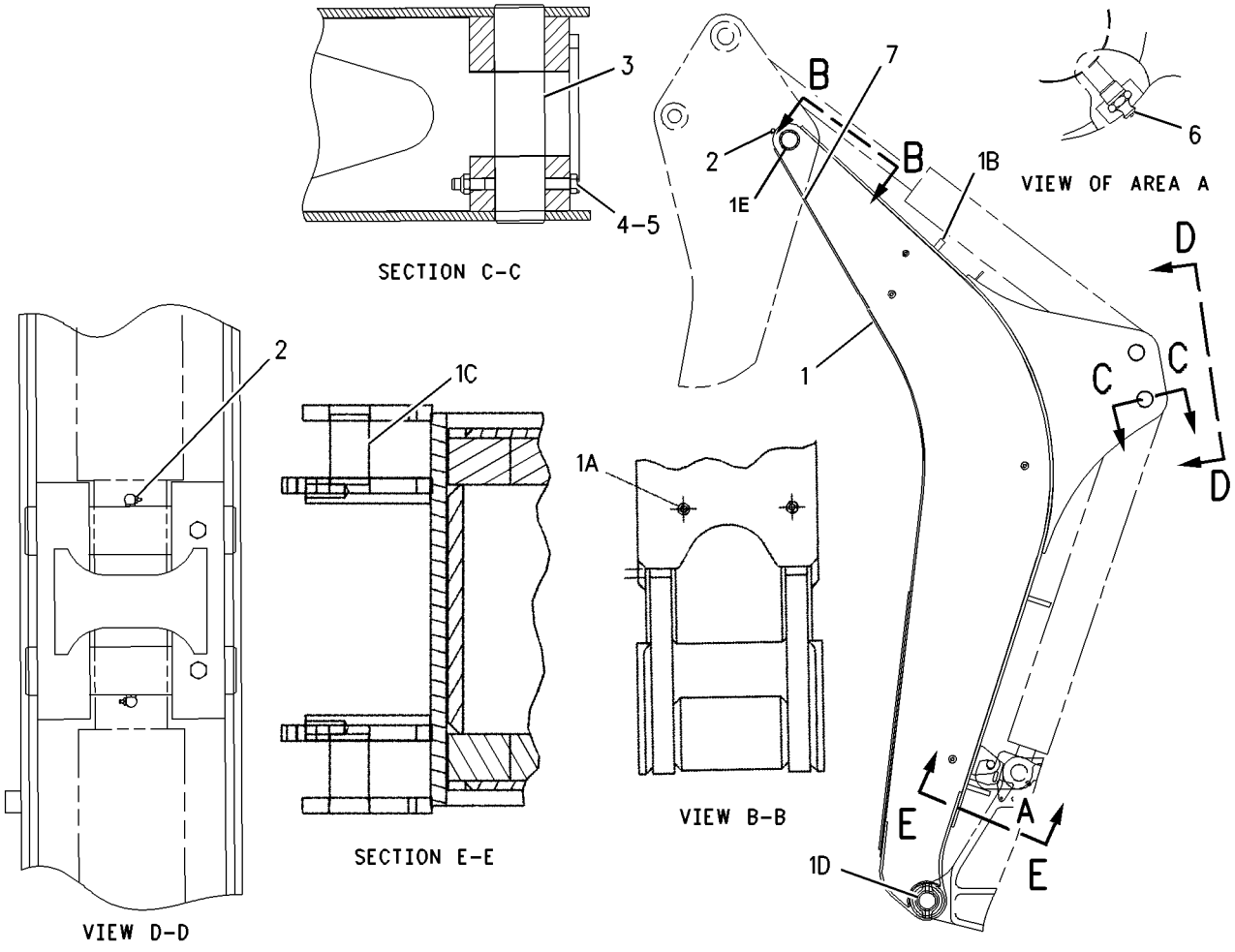

GRAPHIC #1 g00646984

IMPLEMENTS

9R-0036 BRACE GP-LIFT CYLINDER

S/N:JRB00255-UP

PART OF 228-2803 LOADER AR

SMCS-7507 **i00528373**

NOTE	REF NO	GRAPHIC REF	PART NUMBER	QTY	PART NAME 1 2 3 4 5 6 (PRODUCT LEVEL)	SEE PAGE
	1	1	**9R-0189**	1	PIN	
	2	1	**132-6497**	1	BRACE AS	
C	3	1	**9R-5301**	1	PIN-COTTER	
C	4	1	**8C-4447**	1	FILM-INDICATOR	

C-CHANGE FROM PREVIOUS TYPE

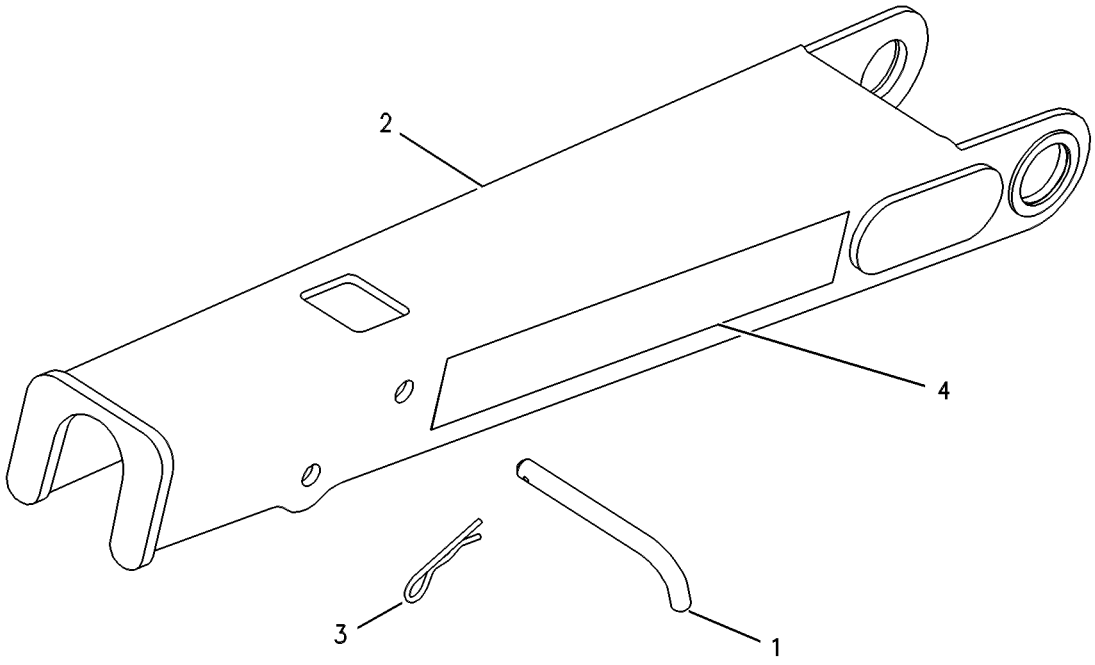

GRAPHIC #1 g00131910

151-7928 LINKAGE GP-BACKHOE BUCKET

S/N:JRB00255-UP

PART OF 233-6435 BACKHOE AR

SMCS-6513 **i01309120**

NOTE	REF NO	GRAPHIC REF	PART NUMBER	QTY	PART NAME 1 2 3 4 5 6 (PRODUCT LEVEL)	SEE PAGE
	1	1	**9R-0158**	10	WASHER (3MM THK)	
	2	1	**9R-1510**	13	WASHER (4MM THK)	
	3	1	**8T-9530**	4	TACK-FASTENER	
	4	1	**145-8337**	1	GUIDE AS-RH	
		1	**9R-0162**	1	BEARING	
		1	**9R-0411**	1	BEARING-SLEEVE	
	5	1	**145-8344**	1	GUIDE AS-LH	
		1	**9R-0162**	2	BEARING	
		1	**9R-0411**	1	BEARING-SLEEVE	
	6	1	**154-5265**	1	LINK AS	
		1	**9R-3092**	2	BEARING-SLEEVE	
		1	**9R-0147**	2	BEARING	
	7	1	**154-5277**	1	PIN	
	8	1	**154-5278**	2	PIN	
	9	1	**154-5279**	1	PIN	
	10	1	**154-5280**	1	PIN	
	11	1	**177-4102**	1	PLATE-INSTRUCTION	
	12	1	**3B-5319**	4	COTTER	
	13	1	**3B-8489**	5	FITTING-GREASE (1/8-27 THD)	
	14	1	**6V-3213**	2	RING-RETAINING	
	15	1	**6V-4364**	4	RING-RETAINING	

151-7928 LINKAGE GP-BACKHOE BUCKET *(contd.)* i01309120

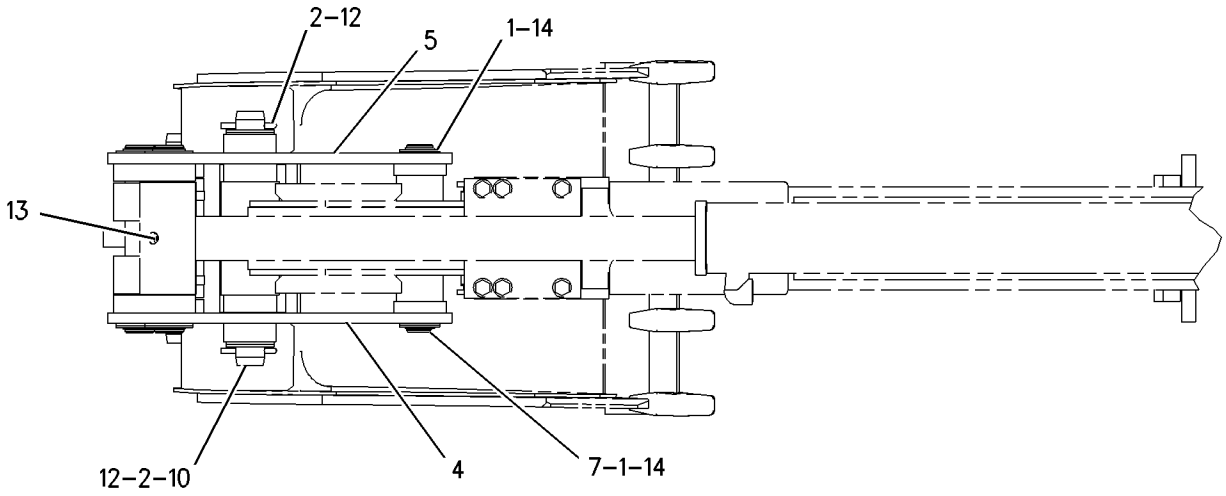

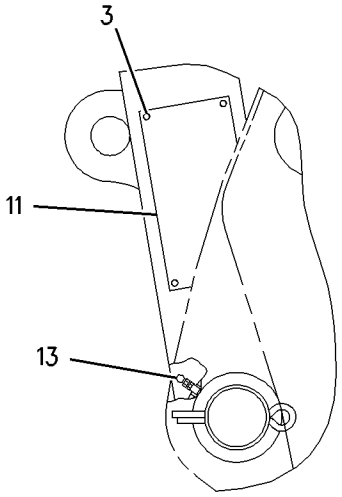

VIEW OF AREA A

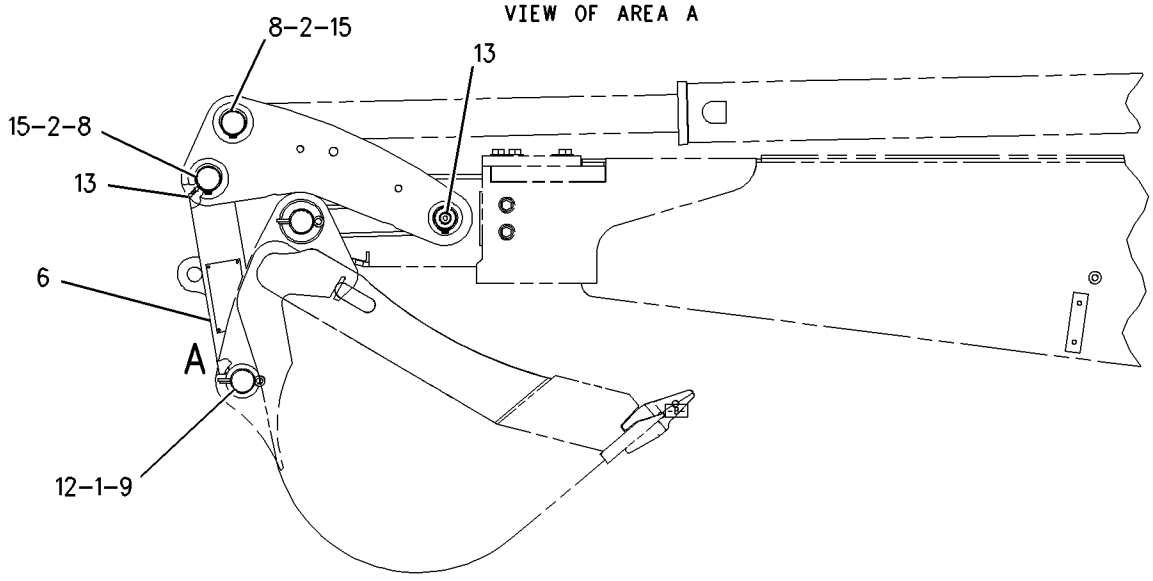

GRAPHIC #1 g00646347

IMPLEMENTS

9R-9140 LINKAGE GP-LOADER BUCKET

S/N:JRB00255-UP

PART OF 228-2803 LOADER AR

SMCS-6513 **i00529373**

NOTE	REF NO	GRAPHIC REF	PART NUMBER	QTY	PART NAME 1 2 3 4 5 6 (PRODUCT LEVEL)	SEE PAGE
M	1	1	**8T-4137**	4	BOLT (M10X1.50X20MM)	
	2	1	**8T-4121**	4	WASHER (2.5MM THK)	
	3	1	**101-0117**	1	PLATE	
	4	1	**9R-5834**	1	LINK AS-RH	
	5	1	**9R-1107**	1	BEARING	
	6	1	**9R-5828**	1	BEARING-SLEEVE	
	7	1	**9R-5835**	1	LINK AS-LH	
	8	1	**9R-1107**	1	BEARING	
	9	1	**9R-5828**	1	BEARING-SLEEVE	
	10	1	**3B-8489**	7	FITTING-GREASE (1/8-27 THD)	
	11	1	**118-7789**	1	PLATE	
	12	1	**9R-4494**	3	PIN AS	
B	13	1	**9R-0158**	8	WASHER (3MM THK)	
	14	1	**6V-3213**	3	RING-RETAINING	
	15	1	**9R-4482**	1	SPACER	
	16	1	**9R-5063**	1	GUIDE AS	
	17	1	**9R-1104**	1	BEARING	
	18	1	**102-1647**	1	GUIDE AS-RH	
	19	1	**9R-1104**	1	BEARING	
	20	1	**9R-3933**	1	PIN	
B	21	1	**111-4337**	10	WASHER (1MM THK)	

B-USE AS REQUIRED
M-METRIC PART

9R-9140 LINKAGE GP-LOADER BUCKET *(contd.)* i00529373

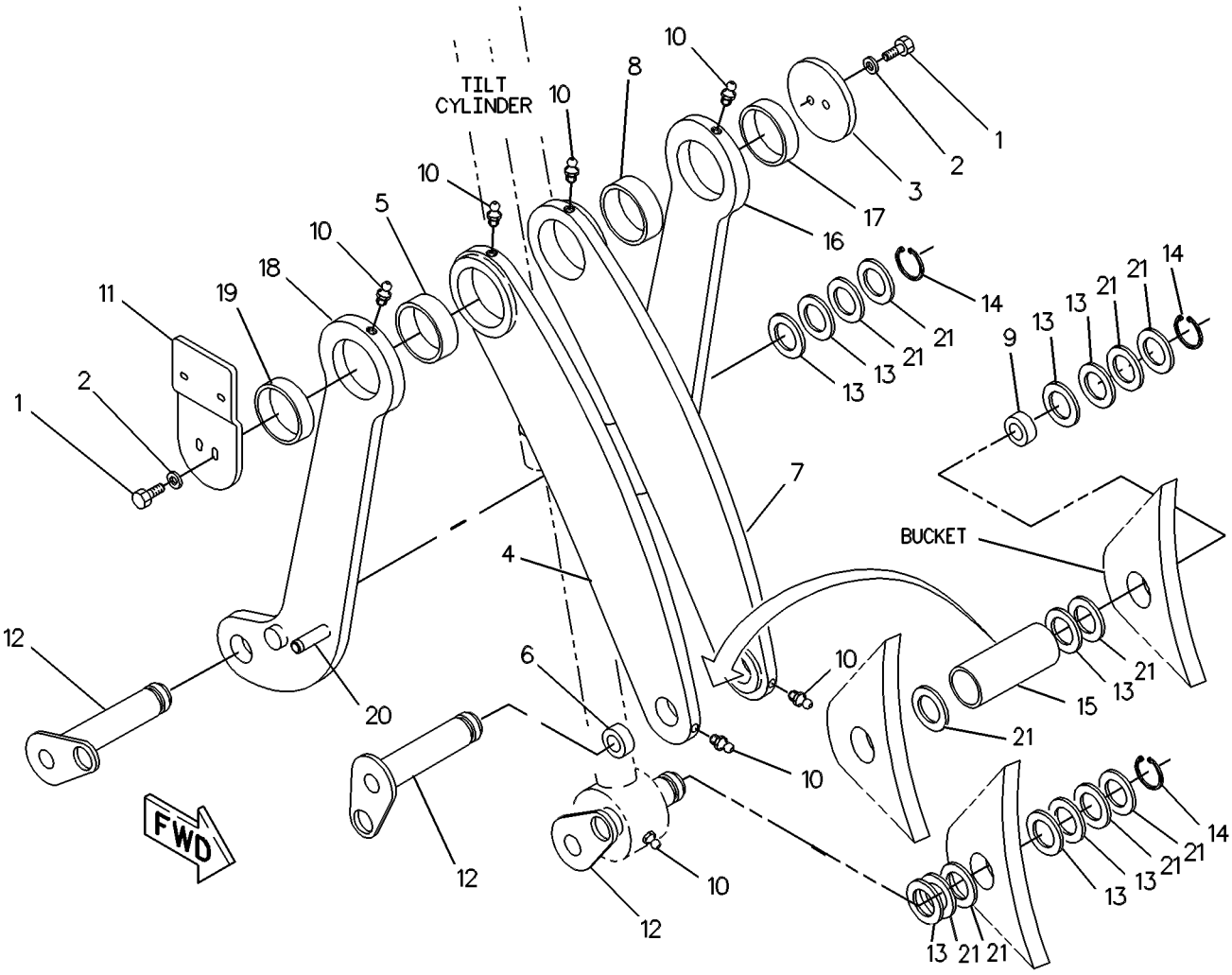

GRAPHIC #1 g00132176

MEMORANDA

IMPLEMENTS

228-2803 LOADER AR

S/N:JRB00281-UP

PART OF 228-2802 COMMON AR

SMCS-6100 **i00774319**

NOTE	PART NUMBER	QTY	PART NAME 1 2 3 4 5 6 (PRODUCT LEVEL)	SEE PAGE
Y	**231-3643**	1	ARM GP-LIFT	264
Y	**9R-0036**	1	BRACE GP-LIFT CYLINDER	267
Y	**106-9046**	1	KICKOUT & POSITIONER GP	188
Y	**9R-9140**	1	LINKAGE GP-LOADER BUCKET	270
Y	**250-2647**	1	WIRING GP-SENSOR	79

Y-SEPARATE ILLUSTRATION

236-9154 BRACKET GP - STABILIZER (MECH)

S/N:JRB00255-UP
PART OF 228-2807 CHASSIS AR

NOTE	REF NO	GRAPHIC REF	PART NUMBER	QTY	PART NAME 1 2 3 4 5 6 (PRODUCT LEVEL)	SEE PAGE
	1	1	210-8911	1	BRACKET AS	
			8T-3490	1	NUT	
			8T-3612	2	NUT	
	2	1	5P-4116	2	WASHER HARD	
	3	1	108-2989	2	BOLT	

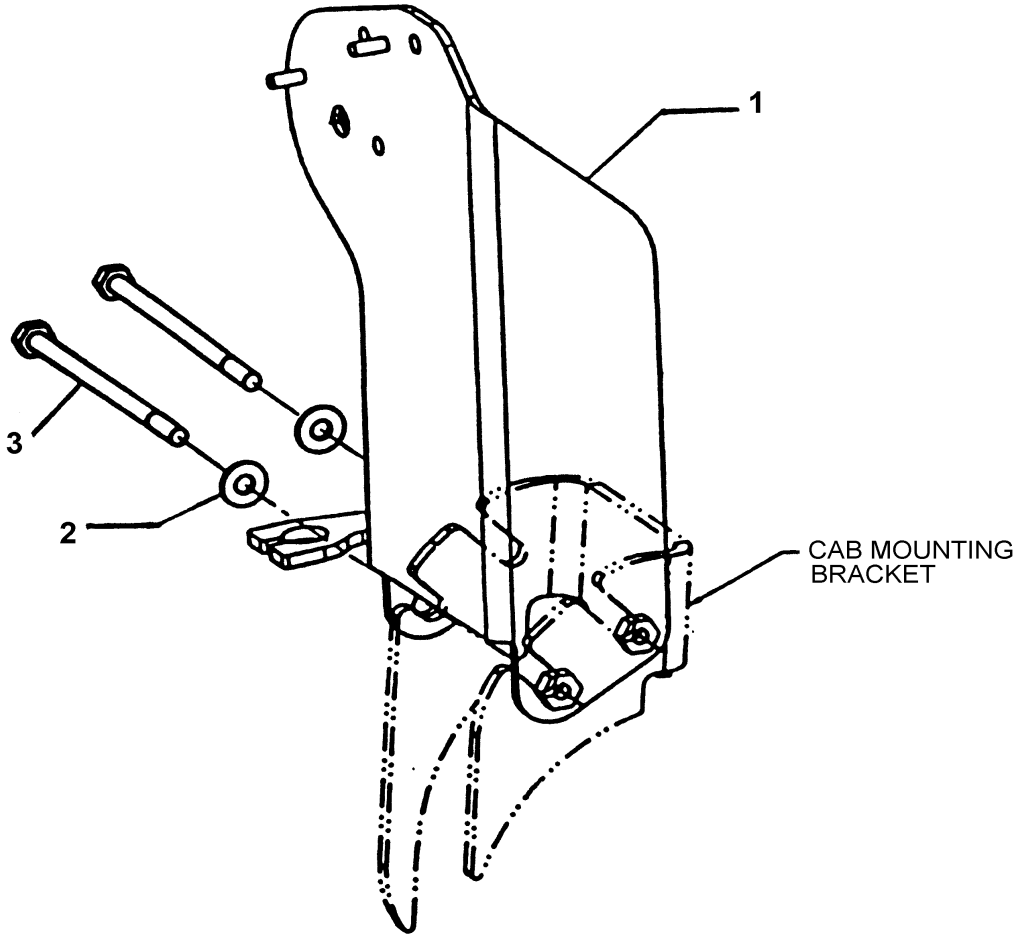

GRAPHIC #1

IMPLEMENTS

183-6076 LOCK GP - TRANSPORT

S/N:JRB00255-UP
AN ATTACHMENT

NOTE	REF NO	GRAPHIC REF	PART NUMBER	QTY	PART NAME 1 2 3 4 5 6 (PRODUCT LEVEL)	SEE PAGE
	1	1	8D-5294	1	RING RETAINING	
	2	1	108-2989	2	BOLT	
	3	1	110-5602	1	KNOB	
	4	1	183-6081	1	BOLT	
	5	1	183-6084	1	BEARING	
	6	1	183-6085	2	BEARING	
	7	1	210-8911	1	BRACKET AS	
	8	1	210-8913	1	LEVER AS	
	9	1	5P-4116	2	WASHER-HARD	
			190-5137	1	FILM-STB.CONT	

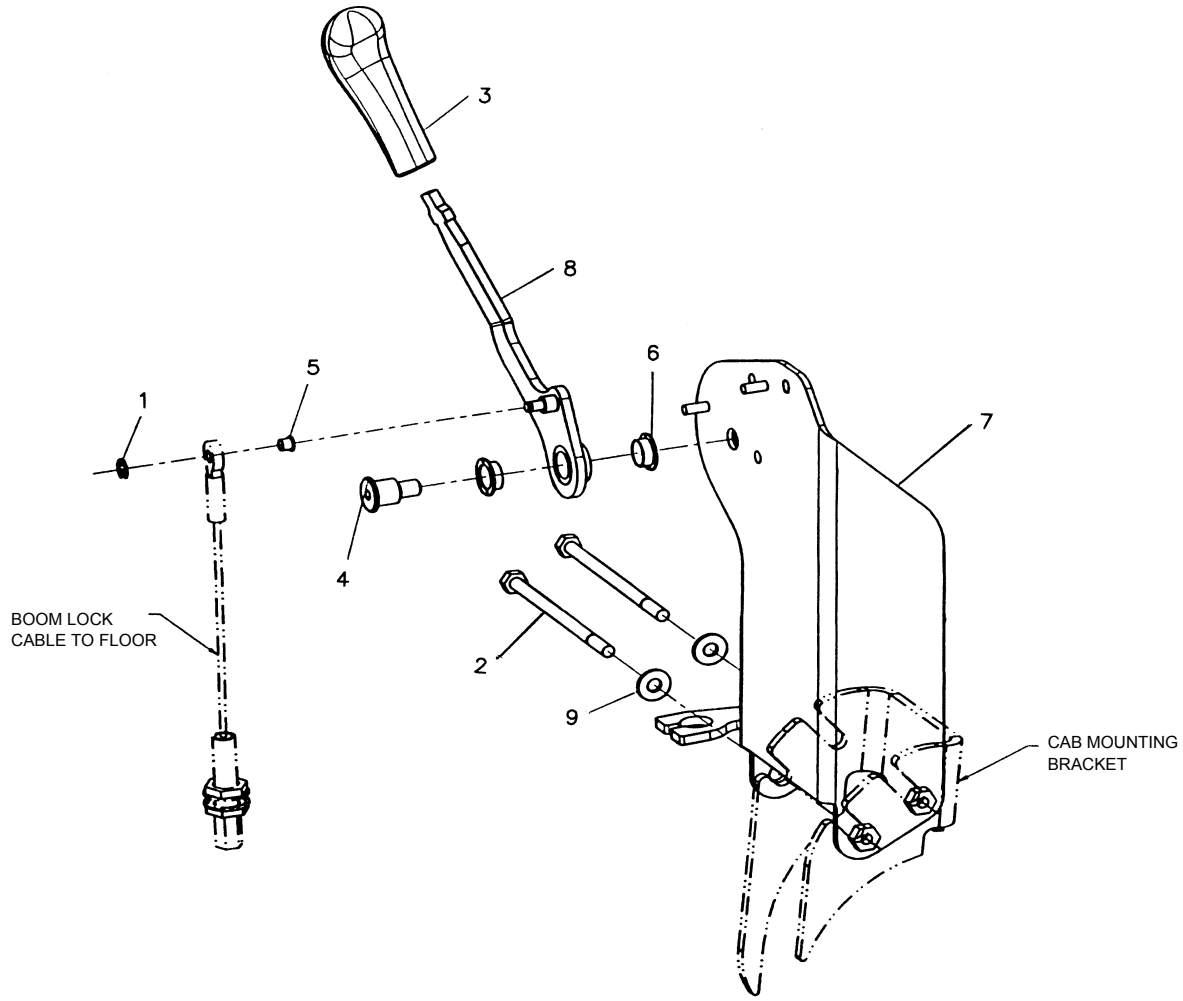

GRAPHIC #1

IMPLEMENTS

184-6178 STICK GP-HOE

S/N:JRB00255-UP

PART OF 233-6435 BACKHOE AR

SMCS-6502 **i01468897**

NOTE	REF NO	GRAPHIC REF	PART NUMBER	QTY	PART NAME 1 2 3 4 5 6 (PRODUCT LEVEL)	SEE PAGE
	1	1	**3B-8488**	1	FITTING-HYDRAULIC	
	2	1	**9R-1502**	4	WASHER (4MM THK)	
	3	1	**9R-1510**	4	WASHER (4MM THK)	
	4	1	**9R-8663**	1	PIN	
	5	1	**184-1307**	1	STICK AS	
	5A	1	**9R-0139**	2	BEARING-SLEEVE	
	5B	1	**9R-0411**	2	BEARING-SLEEVE	
	5C	1	**9R-0162**	4	BEARING	
	5D	1	**172-9992**	2	BOSS	
	5E	1	**107-6711**	2	BLOCK	
	6	1	**179-9961**	1	PLUG-PROTECTIVE	
	7	1	**174-5696**	1	PIN	
	8	1	**3B-8489**	2	FITTING-GREASE	
	9	1	**6V-4364**	2	RING-RETAINING	
M	10	1	**6V-7687**	1	LOCKNUT (M12X1.75 THD)	
	11	1	**6V-8344**	2	RING	
M	12	1	**8T-5001**	1	BOLT (M12X1.75X130MM)	
	13	1	9R-8664	1	PIN	
B	14	1	**124-0360**	1	WASHER-THRUST	

B-USE AS REQUIRED
M-METRIC PART

184-6178 STICK GP-HOE *(contd.)* i01468897

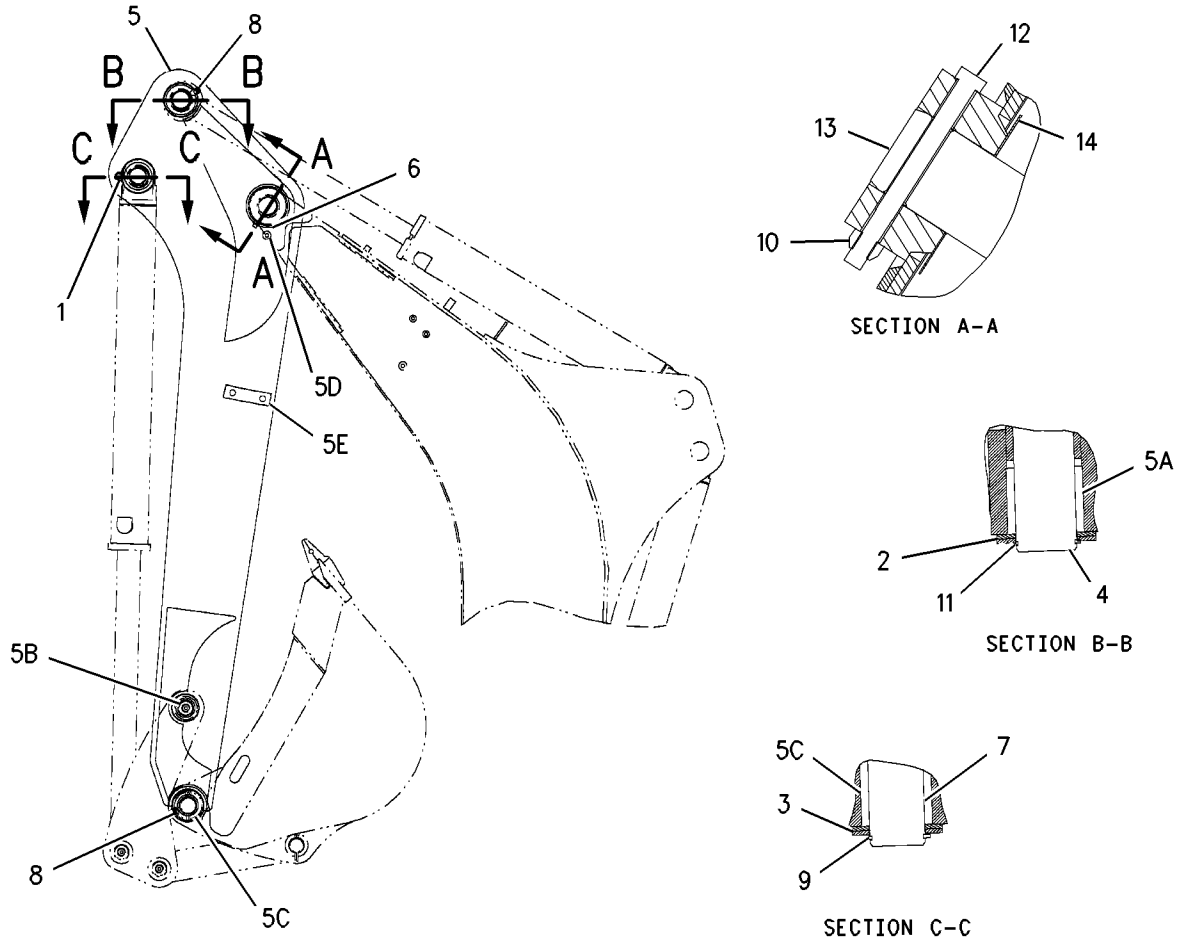

GRAPHIC #1 g00766374

IMPLEMENTS

126-5707 STABILIZER GP-BACKHOE

S/N:JRB00255-UP

PART OF 228-2807 CHASSIS AR

SMCS-7222 **i01590104**

NOTE	REF NO	GRAPHIC REF	PART NUMBER	QTY	PART NAME 1 2 3 4 5 6 (PRODUCT LEVEL)	SEE PAGE
	1	1	**9R-6785**	2	PIN	
	2	1	**136-0437**	2	PAD-STABILIZER	
	3	1	**184-1413**	2	PIN AS	
B	4	1	**185-5734**	2	SHIM	
B	5	1	**185-5735**	2	SHIM	
	6	1	**6V-3213**	6	RING-RETAINING	

B-USE AS REQUIRED

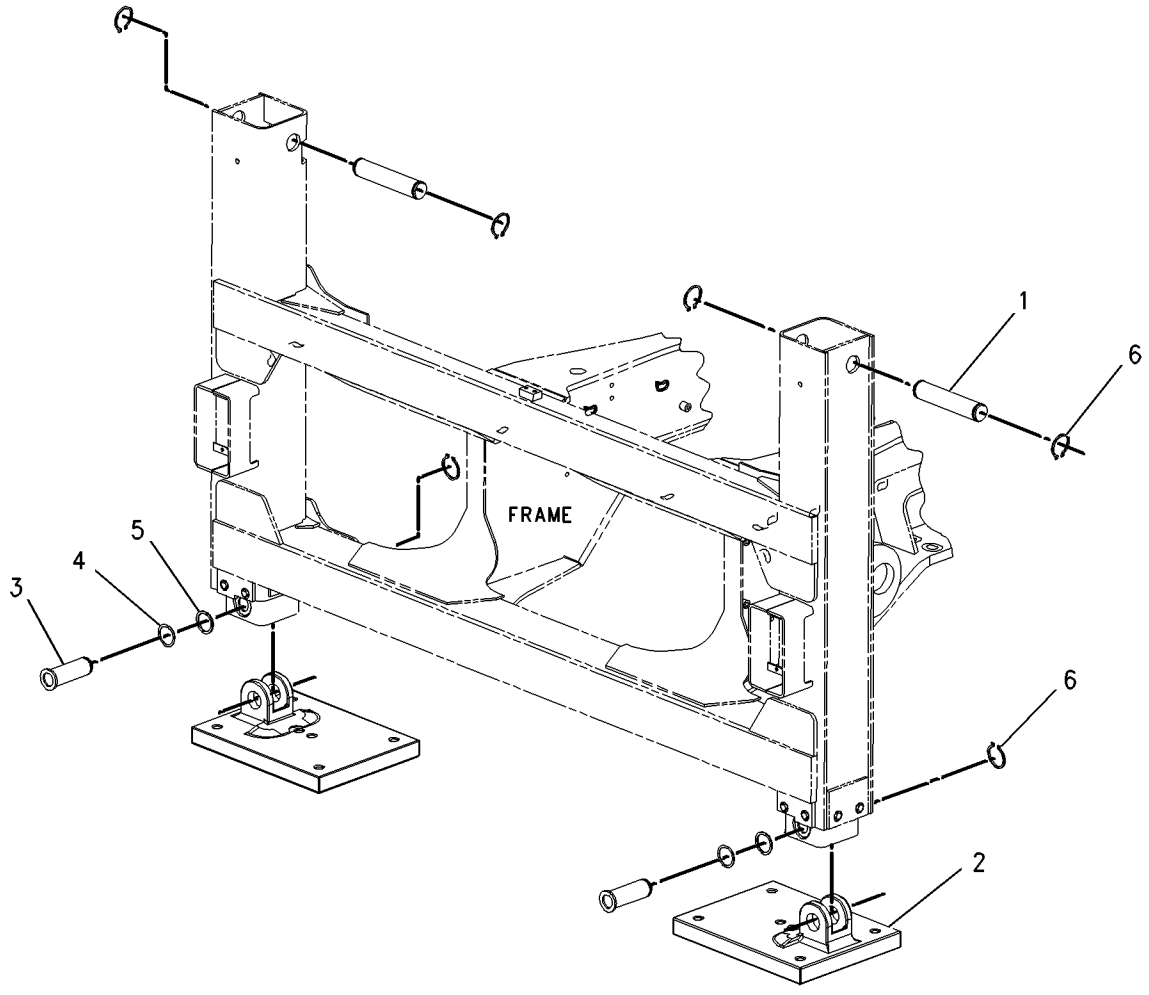

GRAPHIC #1 g00824441

WORK TOOLS

111-8634 BUCKET AR-MULTIPURPOSE

S/N:JRB00255-UP
1.03 CU M (1.35 CU YD)
PART OF 111-8636 BUCKET AR-MULTIPURPOSE
AN ATTACHMENT

SMCS-6104 **i01422432**

NOTE	PART NUMBER	QTY	PART NAME 1 2 3 4 5 6 (PRODUCT LEVEL)	SEE PAGE
Y	**104-3965**	1	BUCKET GP-MULTIPURPOSE	285
Y	**185-1839**	2	CYLINDER GP-MULTIPURPOSE BUKT	177
Y	*9R-5788*	1	LINES GP-MULTIPURPOSE BUCKET	200
Y	*9R-4668*	1	MOUNTING GP-CYLINDER	223

Y-SEPARATE ILLUSTRATION

WORK TOOLS

111-8635 BUCKET AR-MULTIPURPOSE

S/N:JRB00255-UP
1.03 CU M (1.35 CU YD). WITH FORKS
PART OF 111-8637 BUCKET AR-MULTIPURPOSE
AN ATTACHMENT

SMCS-6104 **i01422960**

NOTE	PART NUMBER	QTY	PART NAME 1 2 3 4 5 6 (PRODUCT LEVEL)	SEE PAGE
Y	**104-3964**	1	BUCKET GP-MULTIPURPOSE	284
Y	**185-1839**	2	CYLINDER GP-MULTIPURPOSE BUKT	177
Y	*104-6310*	1	FORK GP	292
Y	*9R-5788*	1	LINES GP-MULTIPURPOSE BUCKET	200
Y	*9R-4668*	1	MOUNTING GP-CYLINDER	223

Y-SEPARATE ILLUSTRATION

WORK TOOLS

111-8636 BUCKET AR-MULTIPURPOSE

S/N:JRB00255-UP
1.03 CU M (1.35 CU YD)
AN ATTACHMENT

SMCS-6104 **i01658031**

NOTE	PART NUMBER	QTY	PART NAME 1 2 3 4 5 6 (PRODUCT LEVEL)	SEE PAGE
Y	**111-8634**	1	BUCKET AR-MULTIPURPOSE	279
	106-9387	1	FILM-INDICATOR (BUCKET)	

Y-SEPARATE ILLUSTRATION

WORK TOOLS

111-8637 BUCKET AR-MULTIPURPOSE

S/N:JRB00255-UP
1.03 CU M (1.35 CU YD). WITH FORKS
AN ATTACHMENT

SMCS-6104 **i01658032**

NOTE	PART NUMBER	QTY	PART NAME 1 2 3 4 5 6 (PRODUCT LEVEL)	SEE PAGE
Y	**111-8635**	1	BUCKET AR-MULTIPURPOSE	280
	106-9387	1	FILM-INDICATOR (BUCKET)	

Y-SEPARATE ILLUSTRATION

WORK TOOLS

9R-5202 BUCKET AS

S/N:JRB00255-UP

0.95 CU M (1.25 CU YD)

SMCS-6101 **i01135033**

NOTE	REF NO	GRAPHIC REF	PART NUMBER	QTY	PART NAME 1 2 3 4 5 6 (PRODUCT LEVEL)	SEE PAGE
	1	1	**9R-5205**	1	EDGE-LH	
	2	1	**9R-5832**	2	EDGE	
	3	1	**9R-5313**	1	EDGE	
	4	1	**9R-0111**	4	BEARING-SLEEVE	
	5	1	**9R-4485**	2	BOSS	
	6	1	**9R-4486**	2	BOSS	
	7	1	**9R-5206**	1	EDGE-RH	

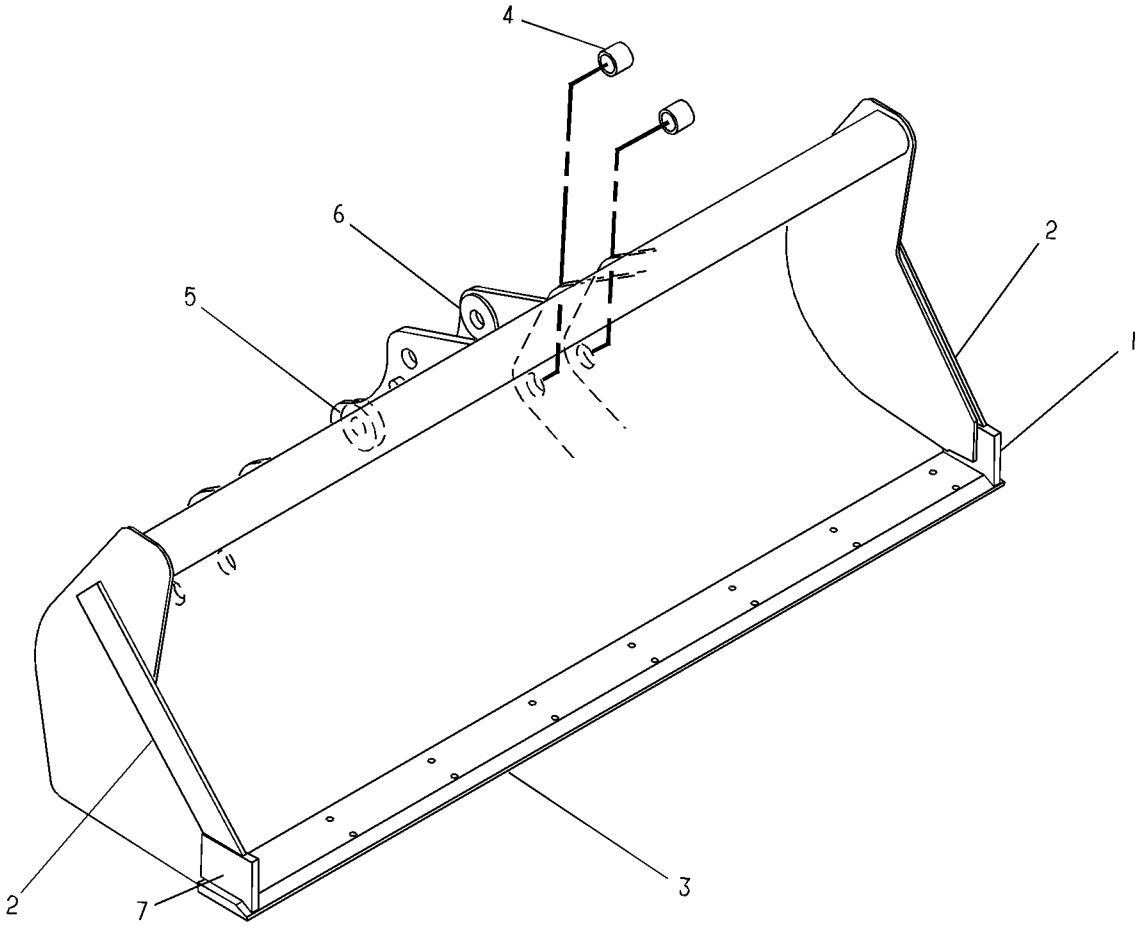

GRAPHIC #1 g00130843

WORK TOOLS

104-3964 BUCKET GP-MULTIPURPOSE

S/N:JRB00255-UP
1.03 CU M (1.35 CU YD)WITH FORKS
PART OF 111-8635 BUCKET AR-MULTIPURPOSE
AN ATTACHMENT

SMCS-6104 **i01125031**

NOTE	REF NO	GRAPHIC REF	PART NUMBER	QTY	PART NAME 1 2 3 4 5 6 (PRODUCT LEVEL)	SEE PAGE
	1	1	**104-3966**	1	BULLDOZER AS	
	2	1	**104-6314**	2	BRACKET	
	3	1	**104-6313**	1	BRACKET AS	
	4	1	**106-9388**	1	BRACKET	
	5	1	**104-3967**	1	BULLDOZER AS	
	6	1	**9R-5786**	1	EDGE	
	7	1	**9R-0111**	2	BEARING-SLEEVE	
	8	1	**110-2861**	4	BRACKET	
	9	1	**126-4225**	1	CLAM AS	
	10	1	**9R-4675**	2	BUSHING-TERMINAL	
	11	1	**9R-5313**	1	EDGE	
	12	1	**9R-5294**	2	HINGE	
	13	1	**4J-1888**	2	COTTER	
	14	1	**3B-8489**	2	FITTING-GREASE (1/8-27 THD)	
	15	1	**9R-4676**	2	PIN	

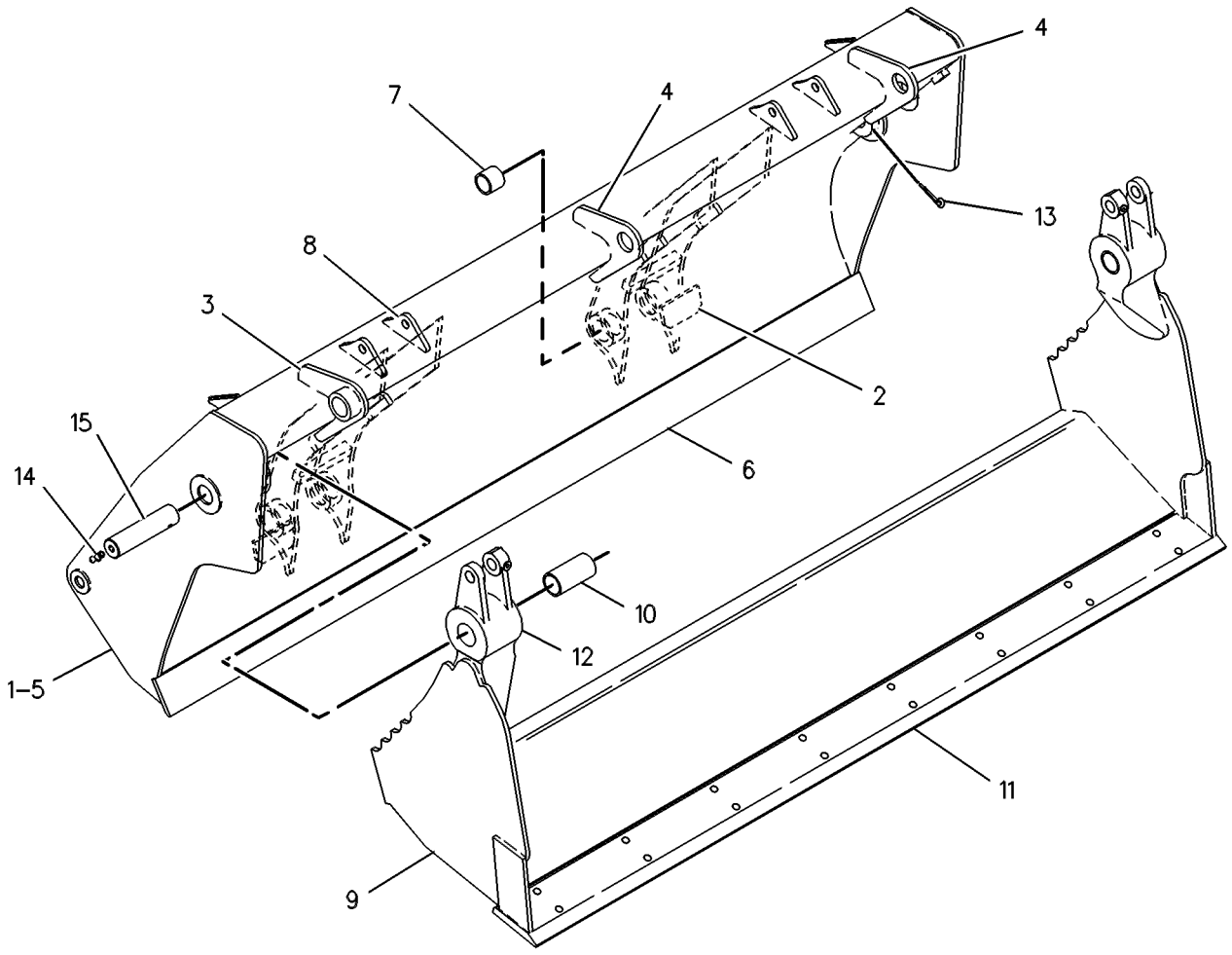

GRAPHIC #1 g00131436

WORK TOOLS

104-3965 BUCKET GP-MULTIPURPOSE

S/N:JRB00255-UP
1.03 CU M (1.35 CU YD)
PART OF 111-8634 BUCKET AR-MULTIPURPOSE
AN ATTACHMENT

SMCS-6104 **i01125138**

NOTE	REF NO	GRAPHIC REF	PART NUMBER	QTY	PART NAME 1 2 3 4 5 6 (PRODUCT LEVEL)	SEE PAGE
	1	1	**104-3967**	1	BULLDOZER AS	
	2	1	**9R-5786**	1	EDGE	
	3	1	**9R-0111**	2	BEARING-SLEEVE	
	4	1	**126-4225**	1	CLAM AS	
	5	1	**9R-4675**	2	BUSHING-TERMINAL	
	6	1	**9R-5313**	1	EDGE	
	7	1	**9R-5294**	2	HINGE	
	8	1	**4J-1888**	2	COTTER	
	9	1	**3B-8489**	2	FITTING-GREASE (1/8-27 THD)	
	10	1	**9R-4676**	2	PIN	

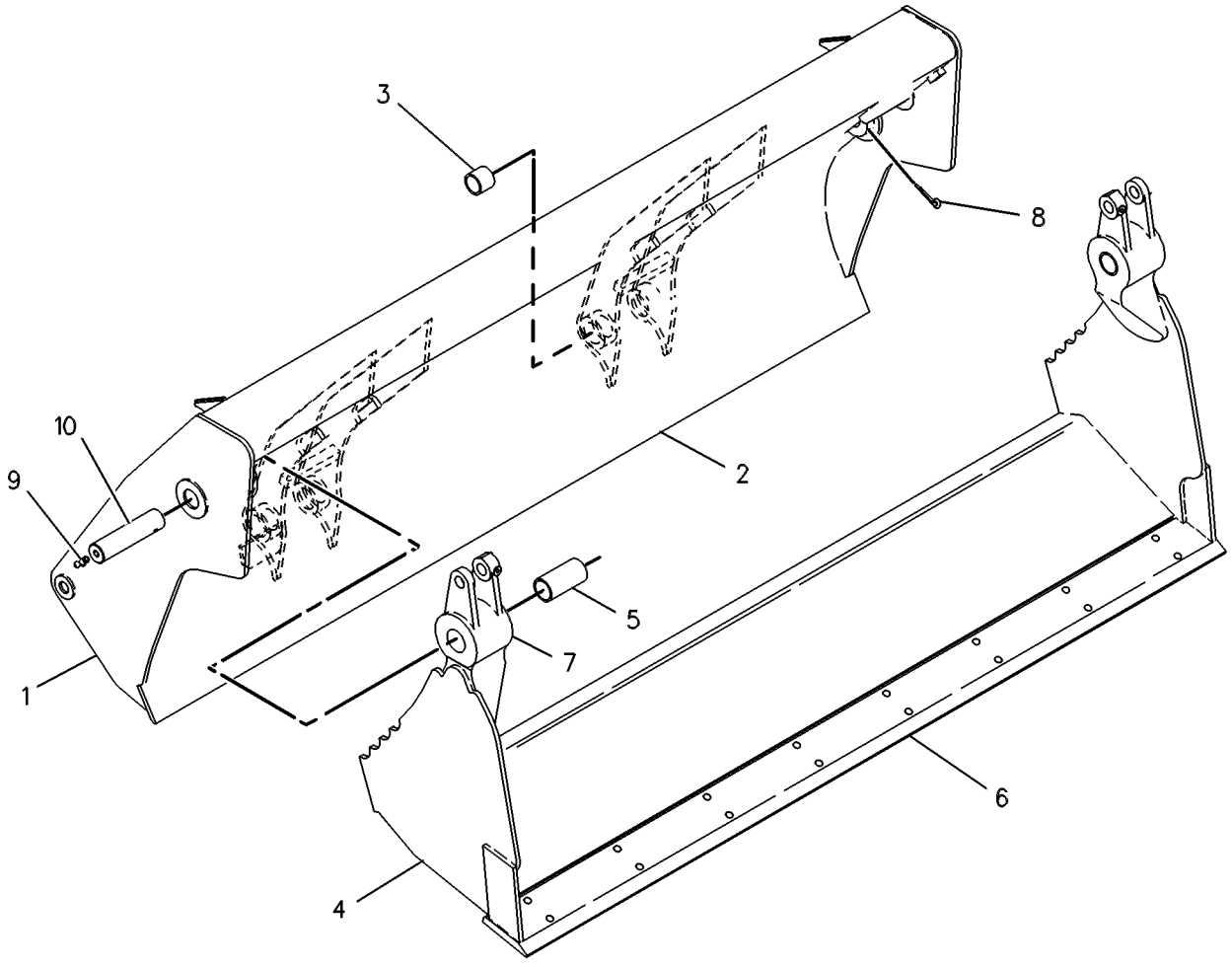

GRAPHIC #1 g00131434

WORK TOOLS

151-7877 BUCKET GP-HOE

S/N:JRB00255-UP
305MM/12INCH.HEAVY DUTY
AN ATTACHMENT

SMCS-3030, 3060, 3400 **i01584967**

NOTE	REF NO	GRAPHIC REF	PART NUMBER	QTY	PART NAME 1 2 3 4 5 6 (PRODUCT LEVEL)	SEE PAGE
	1	1	**135-8206**	**3**	TOOTH GP-UNI	
	1A	1	**4F-3656**	6	BOLT-PLOW(5/8-11X2.5IN)	
	1B	2	**4K-0367**	6	NUT-FULL(5/8-11THD)	
	1C	1	**135-8203**	**3**	TOOTH UNI	
			151-7819	**1**	BUCKET AS	
	2	1	**9R-8988**	1	EDGE	
	3	1	**9R-8987**	1	EDGE	
FJ		1	**151-7927**	**2**	PLATE	
	5	1	**154-5255**	1	EDGE	
	6	1	**9R-0320**	1	BEARING	
	7	1	**154-5257**	1	BEARING	
	8	1	**9R-0320**	1	BEARING	
	9	1	**154-5257**	1	BEARING	

F-NOT SHOWN
J-LOCATED ON BACK OF BUCKET

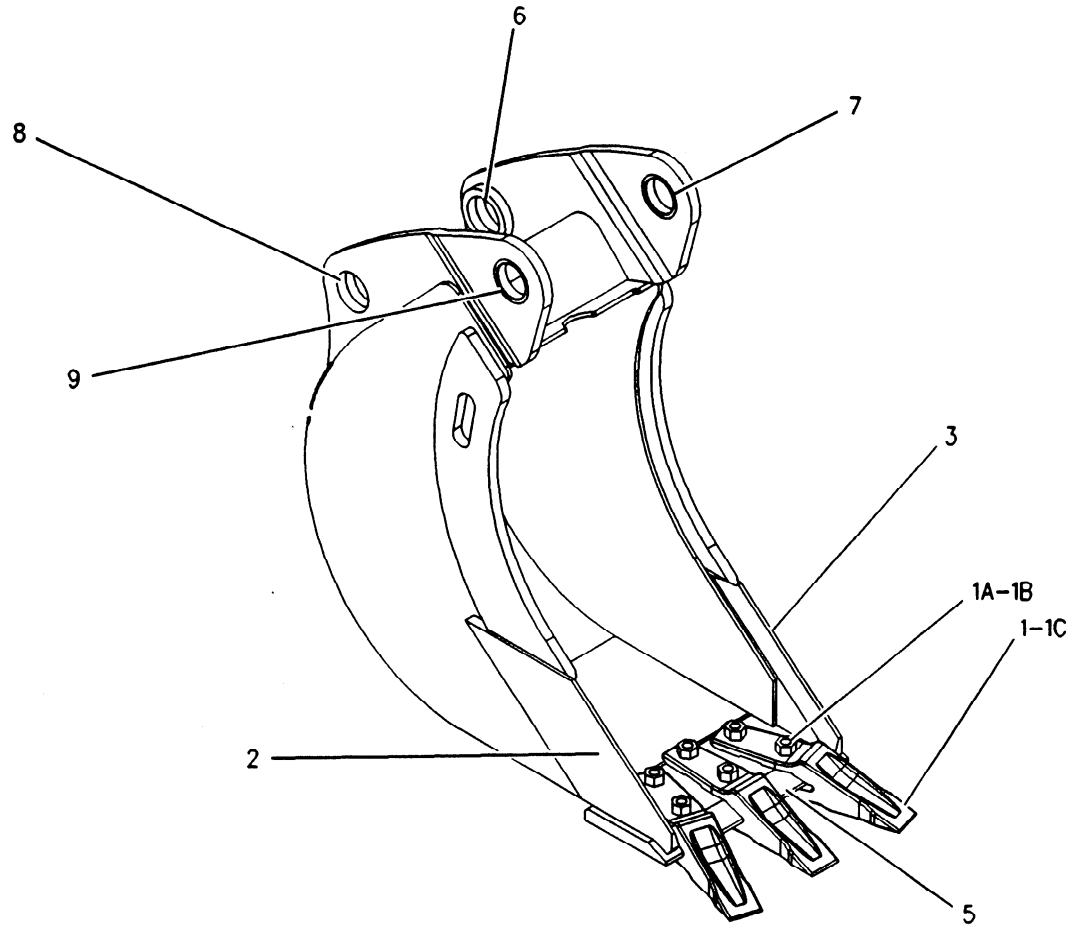

WORK TOOLS

269-9514 BUCKET GP - HOE

458MM/18 INCH-HEAVY WITH SIDE CUTTER-(0.12 CU.M)
AN ATTACHMENT

SMCS - 6503

NOTE	REF NO	GRAPHIC REF	PART NUMBER	QTY	PART NAME 1 2 3 4 5 6 (PRODUCT LEVEL)	SEE PAGE
	1	1	135-8206	3	TOOTH GP-UNI	
					(EACH INCLUDES)	
	2	1	4F-3657	2	BOLT-PLOW	
	3	1	4K-0367	2	NUT-FULL	
	4	1	135-8203	1	TOOTH-UNI	
			135-8204		TOOTH-FORGED	
					(OR)	
			135-8205		TOOTH-CASTING	
	5		137-4234	1	PLATE IDENT	
	6	1	168-8389	4	TACK-FASTENER	
	7	1	255-9034	1	SIDE CUTTER-RH	
	8	1	255-9035	1	SIDE CUTTER-LH	
	9	1	269-9515	1	BUCKET ASSY	
	10	1	9R-0162	2	BEARING-SLEEVE	
	11	1	168-0480	2	BEARING-SLEEVE	
	12	1	269-9516	1	EDGE	
	13	1	228-2799	3	PLATE	
	14	1	2J-3506	6	NUT-FULL 3/4-10	
	15	1	4F-7827	6	BOLT-PLOW 3/4-10	

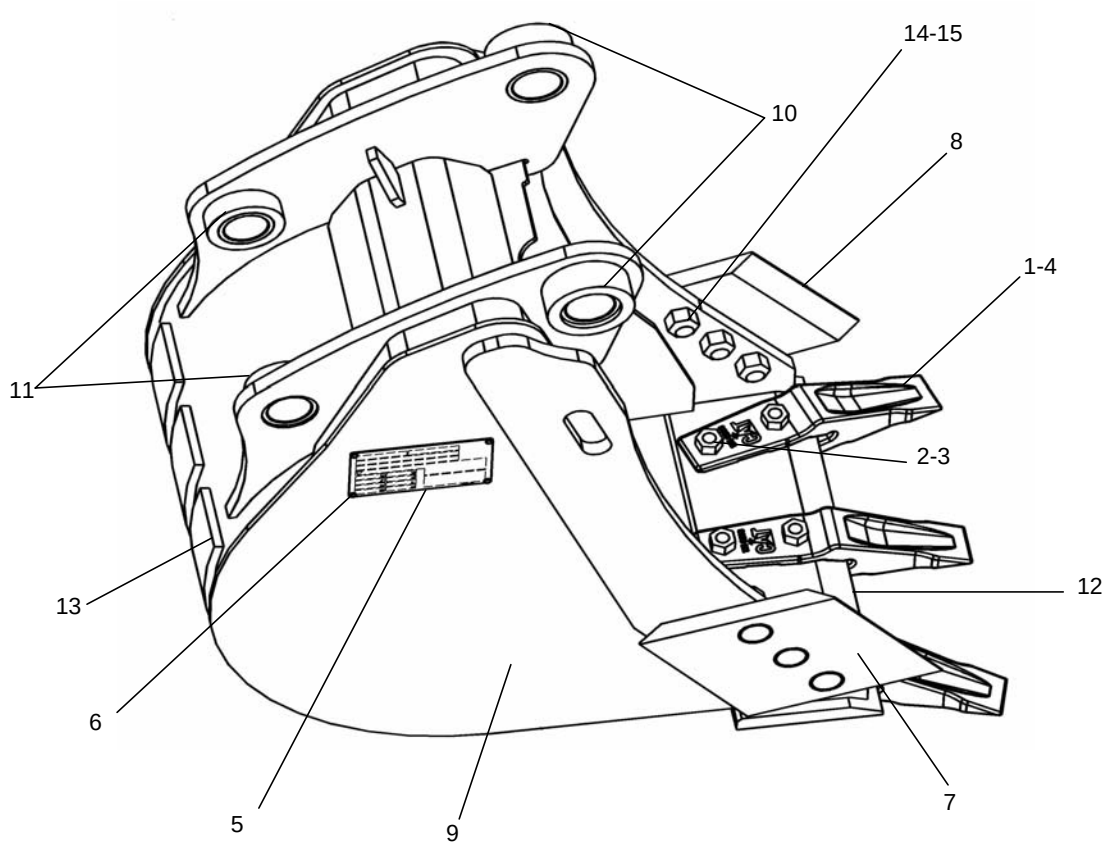

GRAPHIC #1

WORK TOOLS

272-7867 BUCKET GP - HOE

S/N : JRB00255-UP
610MM/ 24 INCH (0.18 CU.M) HEAVY DUTY
AN ATTACHMENT

NOTE	REF NO	GRAPHIC REF	PART NUMBER	QTY	PART NAME 1 2 3 4 5 6 (PRODUCT LEVEL)	SEE PAGE
	1	1	135-8206	4	TOOTH GP - UNI	
					(EACH INCLUDES)	
	2	1	4F-3656	8	BOLT-PLOW (5/8-11X2.5 IN)	
	3	1	4K-0367	8	NUT-FULL (5/8-11 THD) (4K-0367)	
	4	1	135-8203	1	TOOTH-UNI	
			135-8204	1	TOOTH-FORGED	
					(OR)	
			135-8205	1	TOOTH-CASTING	
	5	1	255-9034	1	SIDE CUTTER-RH	
	6	1	255-9035	1	SIDE CUTTER-LH	
	7	1	2J-3506	6	NUT-FULL 3/4-10	
	8	1	4F-7827	6	BOLT PLOW 3/4-10	
	9	1	272-7868	1	BUCKET AS-HOE	
	10	1	272-7869	1	EDGE	
	11	1	9R-0162	2	BEARING-SLEEVE	
	12	1	168-0480	2	BEARING-SLEEVE	
	13	1	137-4234	1	PLATE - IDENT	
	14	1	168-8389	4	TRACK-FASTENER	

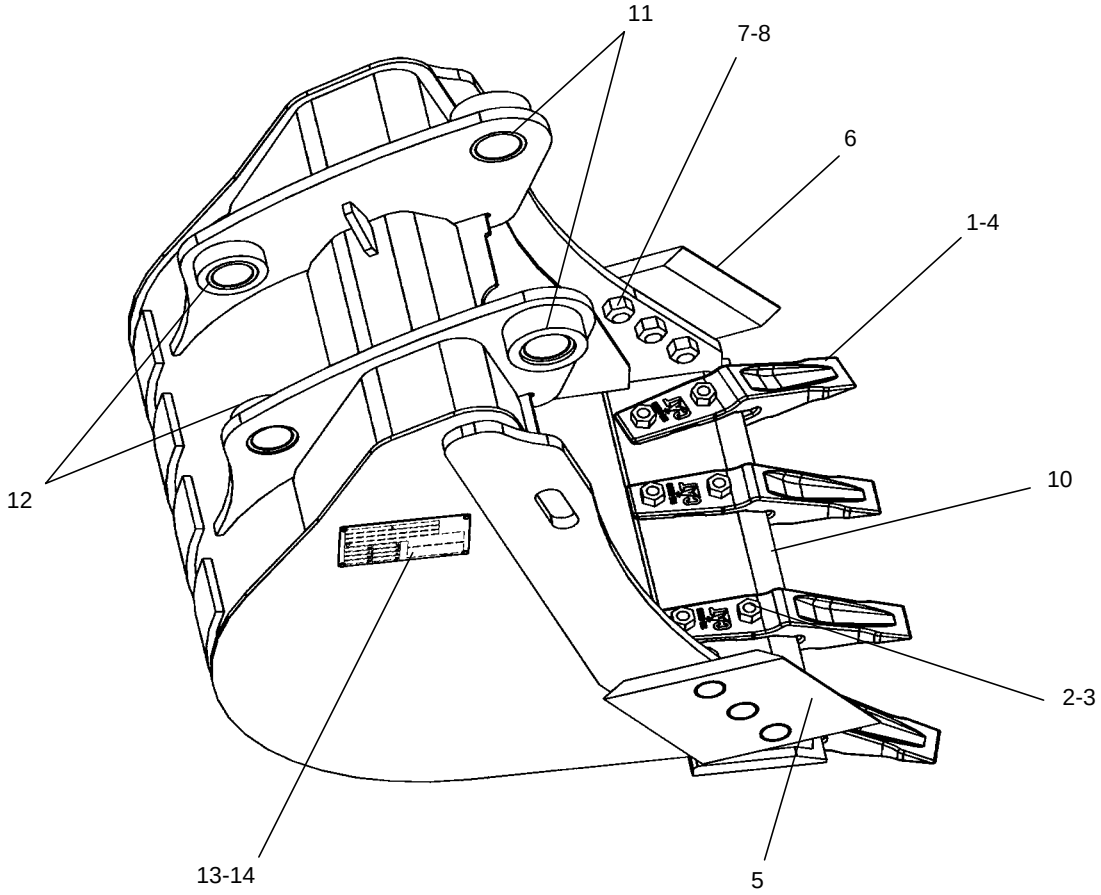

GRAPHIC#1

WORK TOOLS

151-7882 BUCKET GP - HOE

914MM/36 INCH-HEAVY DUTY-(0.30 CU.M)
S/N:JRB00255, AN ATTACHMENT

NOTE	REF NO	GRAPHIC REF	PART NUMBER	QTY	PART NAME 1 2 3 4 5 6 (PRODUCT LEVEL)	SEE PAGE
	1	1	135-8206	6	TOOTH GP-UNI	
					EACH INCLUDES	
	2	1	4F-3656	2	BOLT-PLOW	
	3	1	4K-0367	2	NUT-FULL	
	4	1	135-8203	1	TOOTH-UNI	
			151-7824	1	BUCKET AS	
	5	1	9R-8988	1	EDGE-RH	
	6	1	9R-8987	1	EDGE-LH	
FJ			151-7927	5	PLATE	
	7	1	130-2057	1	EDGE	
	8	1	168-0480	2	BEARING	
	9	1	9R-0162	2	BEARING	

F - NOT SHOWN
J - LOCATED ON BACK OF BUCKET

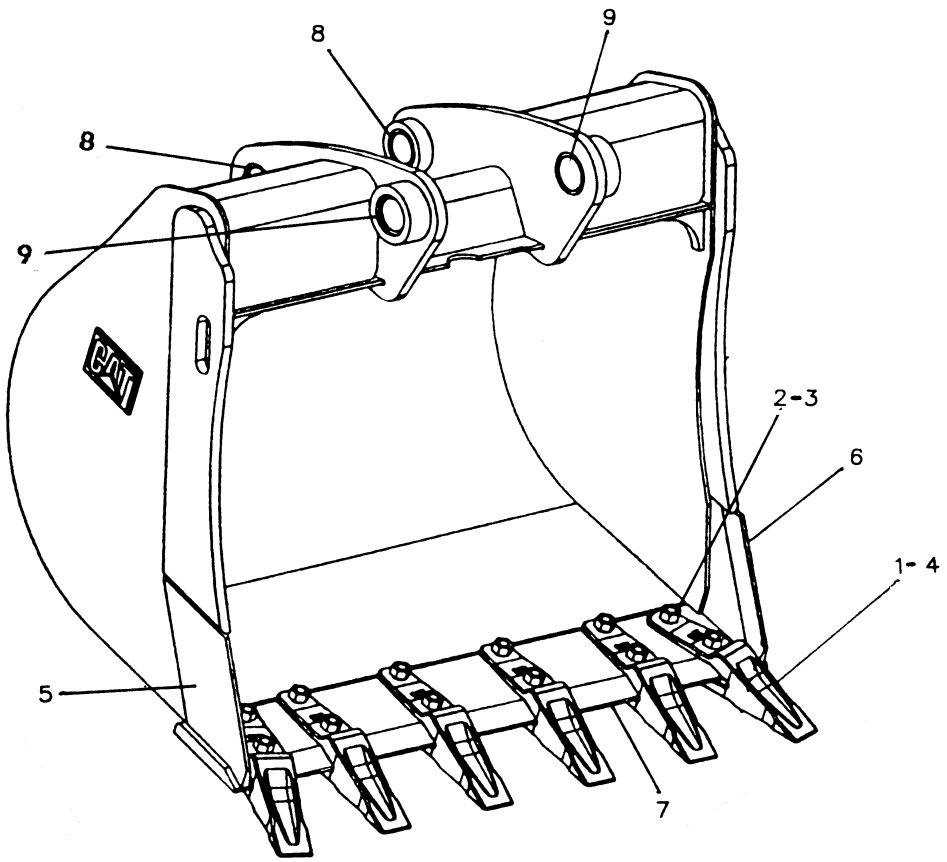

GRAPHIC #1

WORK TOOLS

219-3397 BUCKET GP - HOE (762MM/30 INCH-ROCK)

S/N : JRB00255-UP
AN ATTACHMENT

NOTE	REF NO	GRAPHIC REF	PART NUMBER	QTY	PART NAME 1 2 3 4 5 6 (PRODUCT LEVEL)	SEE PAGE
	1	1	208-5245	5	TIP GP	
			201-1238	5	PIN	
			208-5235	5	TIP	
			201-1239	5	RETAINER AS	
	2	1	219-3373	1	BUCKET AS	
	3	1	9R-0162	2	BEARING	
	4	1	168-0480	2	BEARING	
	5	1	219-9485	1	EDGE	
	6	1	196-8922	1	EDGE-LH	
	7	1	196-8921	1	EDGE-RH	
	8	1	201-1234	5	ADAPTER	

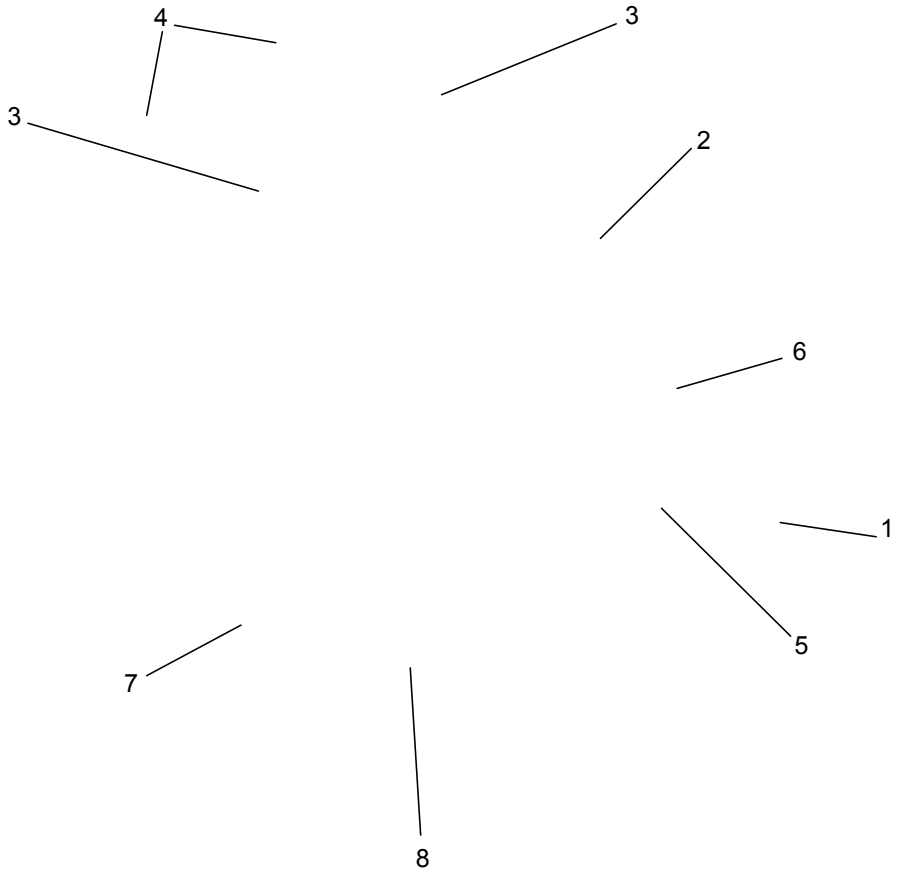

GRAPHIC #1

WORK TOOLS

228-2797 BUCKET GP - HOE

S/N : JRB00255-UP
30 INCH/762MM(0.23 CU.M) STANDARD DUTY

SMCS - 6813

NOTE	REF NO	GRAPHIC REF	PART NUMBER	QTY	PART NAME 1 2 3 4 5 6 (PRODUCT LEVEL)	SEE PAGE
	1	1	135-8206	5	TOOTH GP - UNI	
					(EACH INCLUDES)	
	2	1	4F-3656	2	BOLT-PLOW (5/8-11X2.5 IN)	
	3	1	4K-0367	2	NUT-FULL (5/8-11 THD)	
	4	1	135-8203	1	TOOTH-UNI	
			135-8204	1	TOOTH-FORGED	
					(OR)	
			135-8205	1	TOOTH-CASTING	
	5	1	275-4279	1	SIDE CUTTER-RH	
	6	1	275-4280	1	SIDE CUTTER-LH	
	7	1	2J-3506	6	NUT-FULL 3/4-10	
	8	1	5J-4771	6	BOLT PLOW 3/4-10	
	9	1	137-4234	1	PLATE-IDENT	
	10	1	168-8389	4	TACK-FASTENER	
	11	1	228-2798	1	BUCKET AS-HOE	
	12	1	131-2117	1	EDGE	
	13	1	9R-0162	2	BEARING-SLEEVE	
	14	1	168-0480	2	BEARING-SLEEVE	

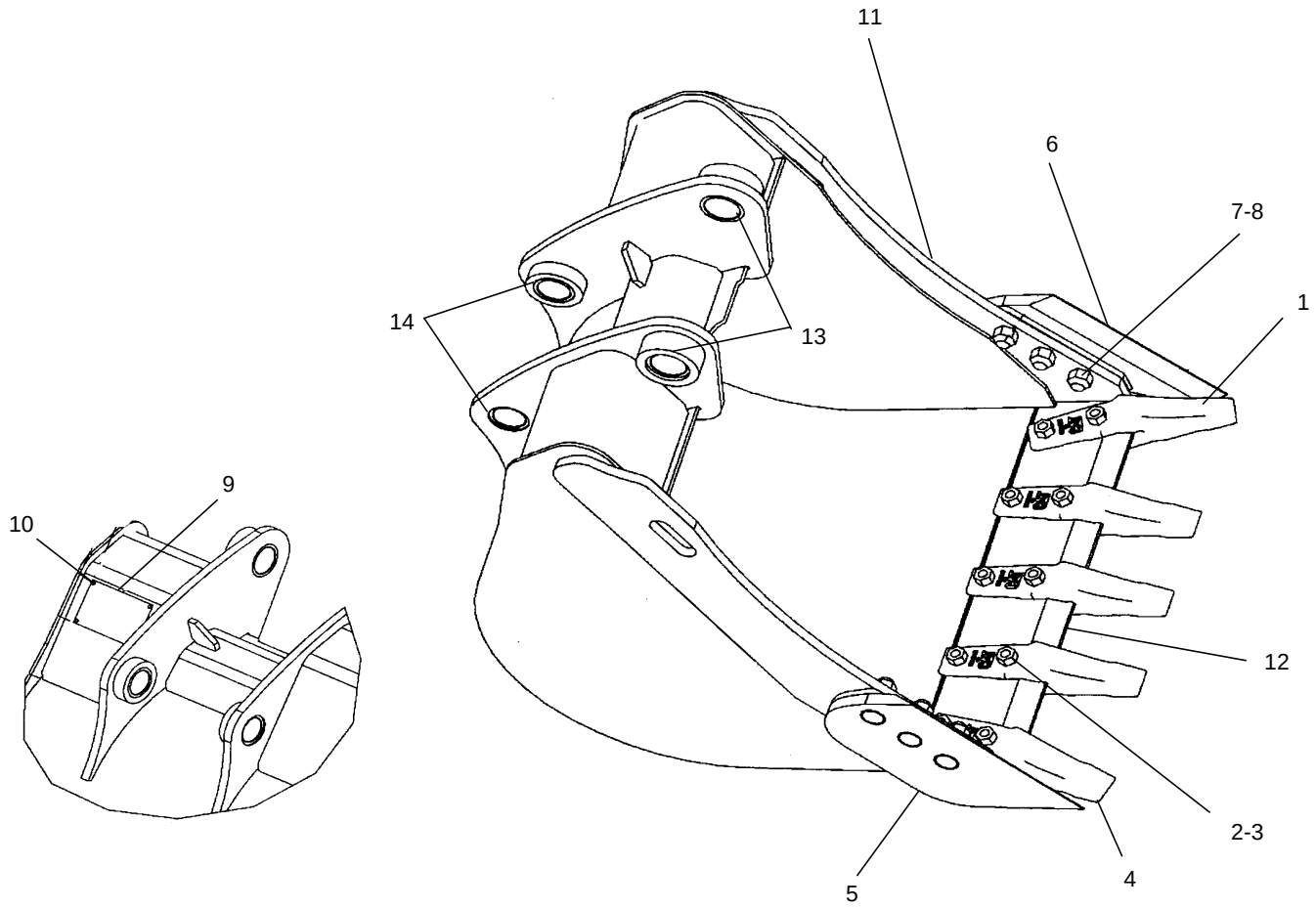

GRAPHIC#1

WORK TOOLS

268-5326 BUCKET GP - HOE

S/N : JRB00255-UP
36 INCH/ 914MM(0.30 CU.M) HEAVY DUTY
AN ATTACHMENT

NOTE	REF NO	GRAPHIC REF	PART NUMBER	QTY	PART NAME 1 2 3 4 5 6 (PRODUCT LEVEL)	SEE PAGE
	1	1	135-8206	6	TOOTH GP - UNI	
					(EACH INCLUDES)	
	2	1	4F-3656	2	BOLT-PLOW (5/8-11X2.5 IN)	
	3	1	4K-0367	2	NUT-FULL (5/8-11 THD) (4K-0367)	
	4	1	135-8203	1	TOOTH-UNI	
			135-8204	1	TOOTH-FORGED	
					(OR)	
			135-8205		TOOTH-CASTING	
	5	1	255-9034	1	SIDE CUTTER-RH	
	6	1	255-9035	1	SIDE CUTTER-LH	
	7	1	2J-3506	6	NUT-FULL 3/4-10	
	8	1	4F-7827	6	BOLT PLOW 3/4-10	
	9	1	268-5327	1	BUCKET AS-HOE	
	10	1	268-5330	1	EDGE	
	11	1	9R-0162	2	BEARING-SLEEVE	
	12	1	168-0480	2	BEARING-SLEEVE	
	13	1	137-4234	1	PLATE - IDENT	
	14	1	168-8389	4	TACK-FASTENER	

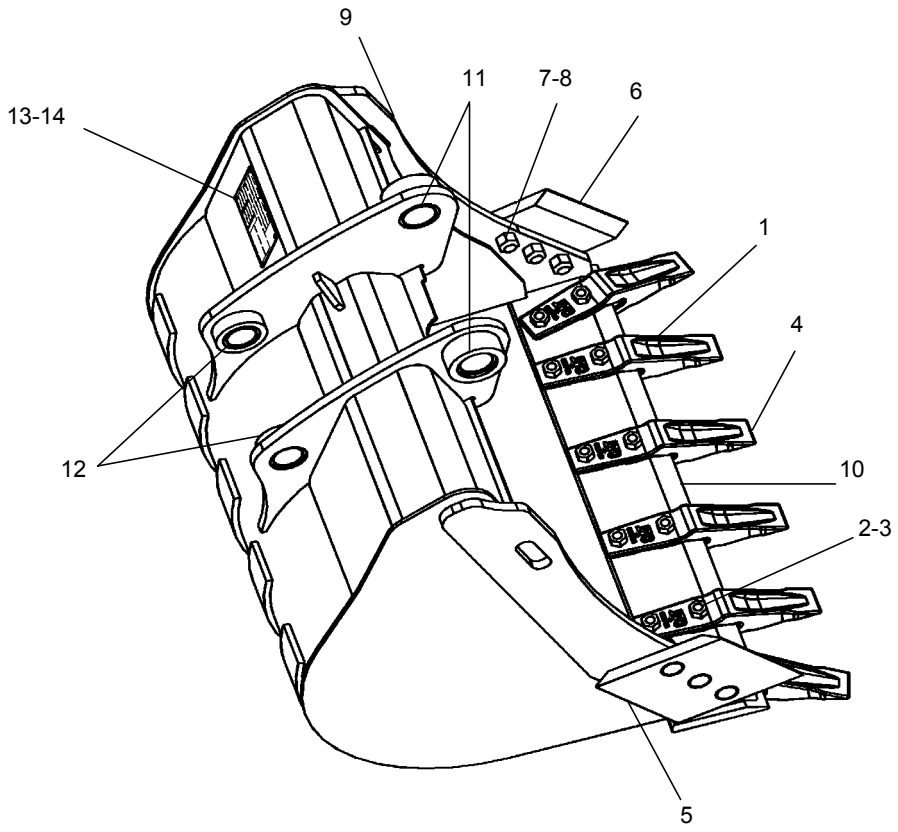

GRAPHIC#1

MEMORANDA

WORK TOOLS

104-6310 FORK GP

S/N:JRB00255-UP
PART OF 111-8635 BUCKET AR-MULTIPURPOSE
AN ATTACHMENT

SMCS-6405 **i01114480**

NOTE	REF NO	GRAPHIC REF	PART NUMBER	QTY	PART NAME 1 2 3 4 5 6 (PRODUCT LEVEL)	SEE PAGE
	1	1	**104-6311**	2	BRACKET AS	
	2	1	**104-6312**	2	FORK AS	
	3	1	**104-6316**	1	PIN	
	4	1	**104-6317**	2	PIN	
	5	1	**4J-1888**	1	COTTER	
	6	1	**9R-0109**	4	WASHER (3MM THK)	
	7	1	**112-1776**	2	PIN AS	
	8	1	**6V-8144**	4	RING	
	9	1	**5D-8159**	2	PIN AS	

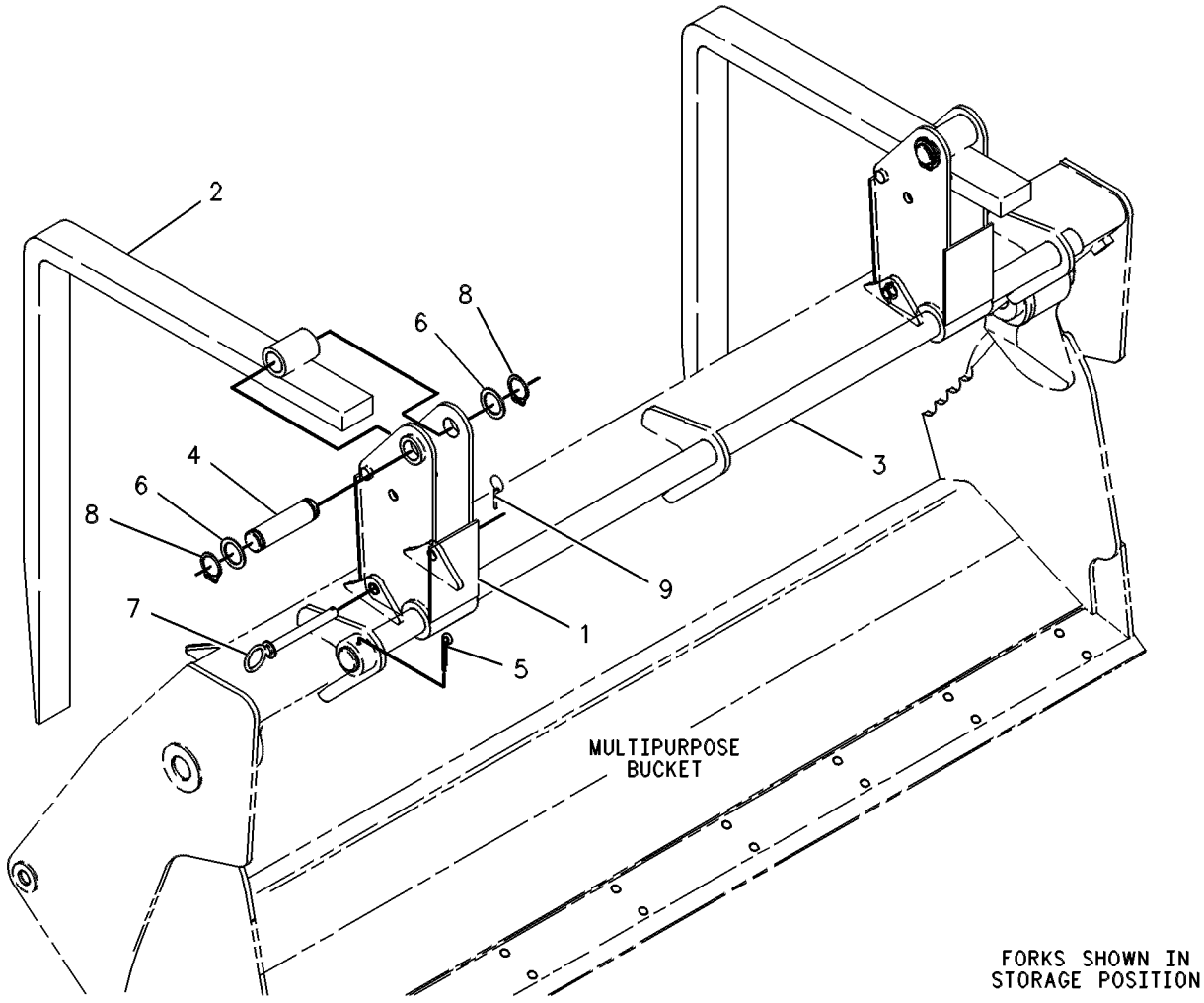

GRAPHIC #1 g00131084

WORK TOOLS

9R-5866 TOOTH GP-UNI

S/N:JRB00255-UP
FOR USE WITH LOADER BUCKETS

SMCS-6822 **i01673046**

NOTE	REF NO	GRAPHIC REF	PART NUMBER	QTY	PART NAME 1 2 3 4 5 6 (PRODUCT LEVEL)	SEE PAGE
	1	1	**135-8204**	8	TOOTH-UNI(FORGING)-OR	
		1	**135-8205**	8	TOOTH-UNI(CASTING)	
	2	1	**4F-3656**	16	BOLT-PLOW (5/8-11X2.5IN)	
	3	1	4K-0367	16	NUT-FULL (5/8-11 THD)	

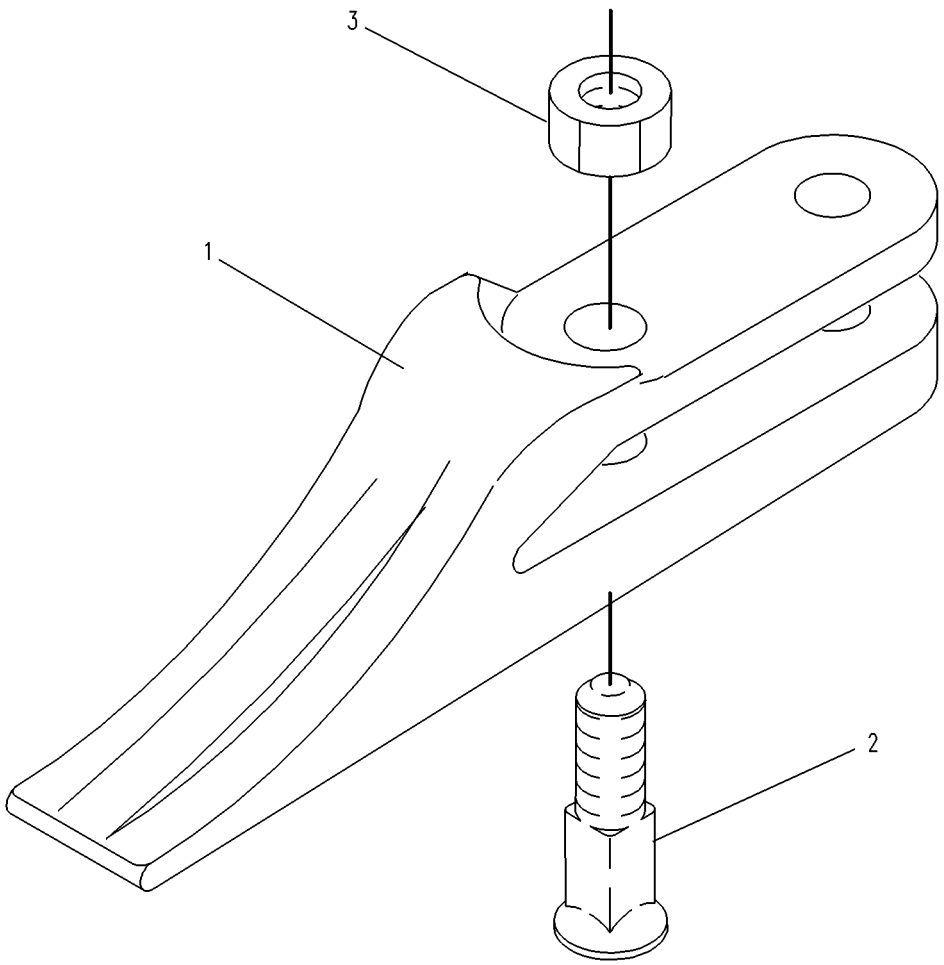

GRAPHIC #1 g00130909

WORK TOOLS

135-8206 TOOTH GP-UNI

S/N:JRB00255-UP
FOR USE WITH HOE BUCKETS

SMCS-6822 **i01187033**

NOTE	REF NO	GRAPHIC REF	PART NUMBER	QTY	PART NAME 1 2 3 4 5 6 (PRODUCT LEVEL)	SEE PAGE
	1	1	**4F-3656**	2	BOLT-PLOW (5/8-11X2.5IN)	
	2	1	4K-0367	2	NUT-FULL (5/8-11 THD)	
	3	1	**135-8204**	1	TOOTH-UNI(FORGING)-OR	
		1	**135-8205**	1	TOOTH-UNI(CASTING)	

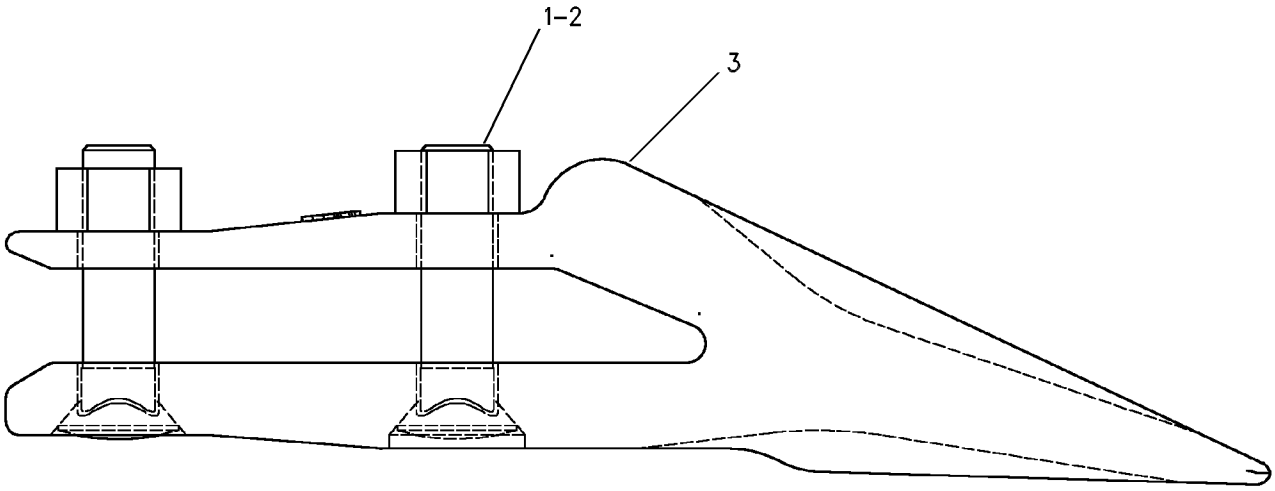

GRAPHIC #1 g00616675

OPERATOR STATION

228-2787 CAB AR

S/N:JRB00255

NOTE	REF NO	GRAPHIC REF	PART NUMBER	QTY	PART NAME 1 2 3 4 5 6 (PRODUCT LEVEL)	SEE PAGE
Y	1	1	245-8539	1	CAB GP	296
Y			185-3524	1	CONSOLE GP - OPERATOR	299
Y			201-9732	1	FLOORPLATE GP	162
Y			185-3527	1	COVER GP - PARKING BRAKE	304
Y	2	1	198-1289	1	COVER GP - POST (RH)	305
Y	3	1	164-1149	1	FENDER GP - REAR	151
Y	4	1	180-5764	1	FLOOR MAT GP	308
Y	5	1	184-7900	1	INDICATOR GP - AIR FILTER CHANGE	56
Y	6	1	237-2637	1	WIPER GP - WINDOW-FRONT	328
Y	7	1	250-2639	1	WIRING GP - CAB	80
Y	8	1	250-2651	1	WIRING GP - CONSOLE	83
			110-0037	1	FILM - WINDSHIELD	
			3E-8211	1	FILM - STRIPE (400CM)	
			203-2485	1	MAT-PROTECTIVE	
			194-4183	1	COMPARTMENT GP	
			193-2342	1	HORN GP-ELECTRIC	
Y			250-5464	1	LAMP GP-CAB	66
Y			250-2656	1	COVER GP	

OPERATOR STATION

245-8539 CAB GP

S/N:JRB00356-UP
SIDESHIFT
PART OF 228-2787 CAB AR

SMCS-7301, 7325, 7335 **i01597326**

NOTE	REF NO	GRAPHIC REF	PART NUMBER	QTY	PART NAME 1 2 3 4 5 6 (PRODUCT LEVEL)	SEE PAGE
	1	1	**8S-7803**	8	RING-RETAINING	
	2	1	**8Y-7444**	1	PIN	
	3	1	**117-7414**	1	PIN	
	4	1	245**-8586**	8	BUSHING	
	5	1	245**-8535**	8	BUSHING	
	6	1	**134-3059**	1	GUARD-STRIKER	
	7	1	**134-3060**	1	PLATE	
	8	1	245**-8540**	1	STRIKER	
	9	1	**143-2830**	1	LATCH AS	
M		1	**6V-7743**	2	LOCKNUT (M6X1 THD)	
M		1	**9X-2045**	2	SCREW-TRUSS HEAD (M6X1X20MM)	
		1	**143-2827**	1	SPRING	
	10	1	**159-4945**	2	KEEPER-REAR (LH)	
	11	1	**159-4946**	2	KEEPER-REAR (RH)	
	12	1	**201-3328**	1	PLATE AS	
Y	13	1	*164-1059*	1	WINDOW GP-CAB (RH)	318
Y	14	1	*164-1060*	1	WINDOW GP-CAB (LH)	320
Y	15	1	*164-1062*	1	DOOR GP-LH	306
	16	1	**164-1068**	1	GLASS-RH	
	17	1	**164-1069**	1	GLASS-LH	
	18	1	**164-1070**	1	GLASS (FRONT)	
	19	1	**164-1071**	1	GLASS-RH	
	20	1	**164-1072**	1	GLASS-LH	
	21	1	**245-8538**	1	CAB AS	
Y	22	1	*164-1355*	1	WINDOW GP-CAB	322
	23	1	**164-1358**	1	GLASS	
	24	1	**249-7418**	1	HARNESS AS	
		1	**155-2265**	1	KIT-CONNECTING PLUG (8 PIN)	
B	25	1	**177-4877**	2	SHIM	
	26	1	**180-7218**	1	GLASS-UPPER	
	27	1	**180-7219**	1	GLASS-LOWER	
	28	1	**180-7232**	1	PIN	
	29	1	**180-7233**	1	PIN	
	30	1	**108-4311**	1	SCREW-MACHINE	
M	31	1	**131-3987**	8	SCREW (M4X0.7X12MM)	
M	32	1	**5C-7261**	2	NUT (M8X1.25 THD)	
	33	1	**5P-4116**	9	WASHER-HARD (8.8X20.5X2MM THK)	
M	34	1	**8T-4189**	5	BOLT (M8X1.25X20MM)	
M	35	1	**8T-4200**	2	BOLT (M8X1.25X16MM)	
	36	1	**9R-5616**	2	PLUG	
	37	1	**3S-2093**	2	STRAP-CABLE	

E-ORDER BY THE CENTIMETER
M-METRIC PART
Y-SEPARATE ILLUSTRATION

GRAPHIC #1 g00826119

OPERATOR STATION

253-5658 CONSOLE GP-FRONT

S/N:JRB00485-UP

PART OF 228-2810 POWER TRAIN AR

SMCS-5258 **i01410614**

NOTE	REF NO	GRAPHIC REF	PART NUMBER	QTY	PART NAME 1 2 3 4 5 6 (PRODUCT LEVEL)	SEE PAGE
	1	1	**8Y-6388**	1	LOUVER AS	
	2	1	**151-5715**	2	LOUVER AS	
	3	1	**164-8473**	5	LOUVER AS	
	4	1	**252-6729**	1	CONSOLE AS-FRONT	
	5	1	**104-2091**	22	SCREW-FLAT HEAD (NO.6-20X0.5 IN)	
	6	1	**148-3626**	4	SCREW-FLAT HEAD	

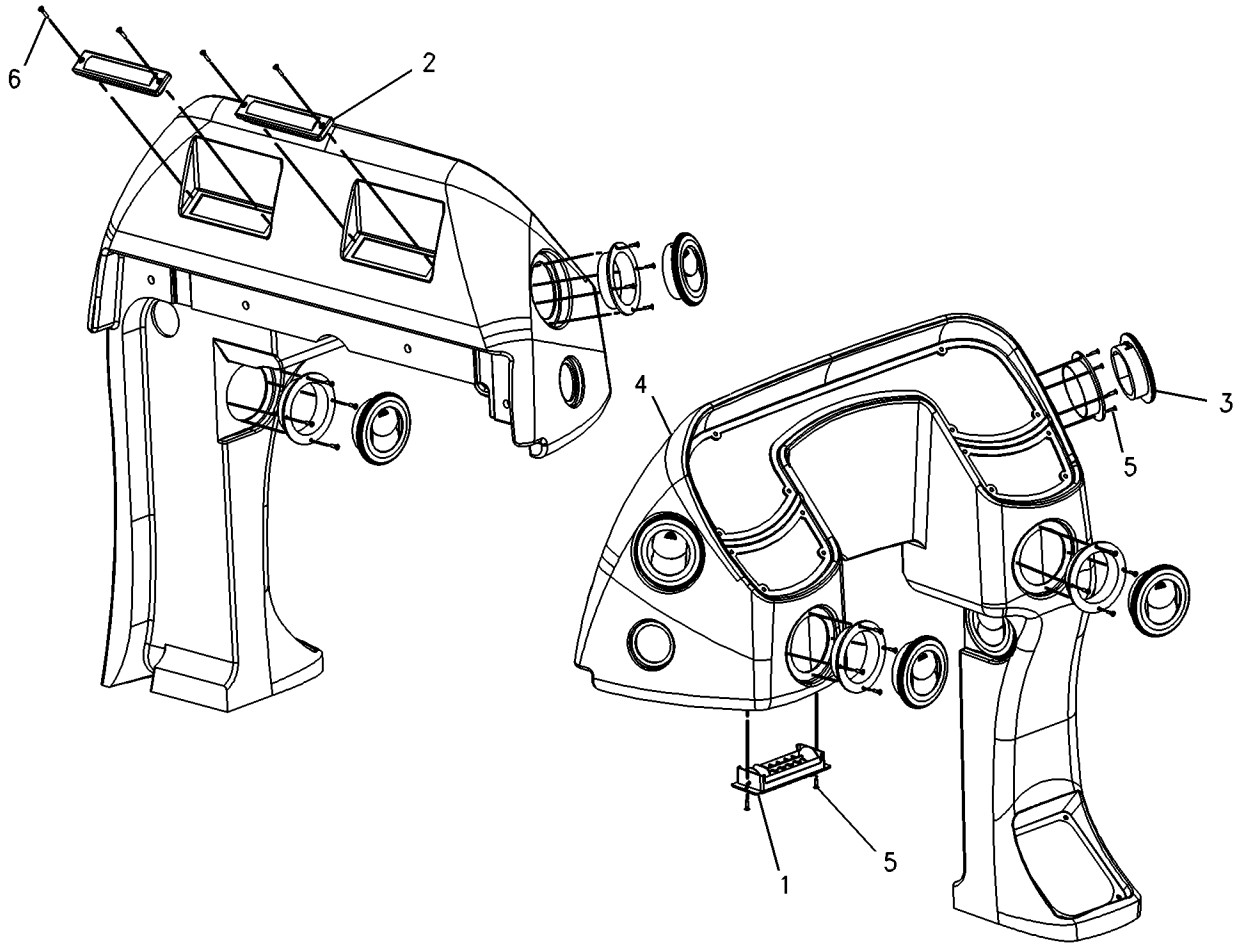

GRAPHIC #1 g00743525

OPERATOR STATION

253-7656 CONSOLE GP-OPERATOR

S/N:JRB00485-UP
RIGHT HAND
PART OF 228-2787 CAB AR

SMCS-5258, 7451 **i01555553**

NOTE	REF NO	GRAPHIC REF	PART NUMBER	QTY	PART NAME 1 2 3 4 5 6 (PRODUCT LEVEL)	SEE PAGE
BC	1	1	**9P-6571**	1	PLUG	
M	2	1	**178-9983**	4	LOCKNUT	
Y	3	1	*252-6728*	1	CONSOLE GP-SIDE (RH)	300
	4	1	**205-9980**	4	SCREW-TRUSS HEAD	
CM	5	1	**8T-3998**	4	BOLT (M4X0.7X12MM)	
M	6	1	**9X-2044**	5	SCREW-TRUSS HEAD (M6X1X16MM)	

B-USE AS REQUIRED
C-CHANGE FROM PREVIOUS TYPE
M-METRIC PART
Y-SEPARATE ILLUSTRATION

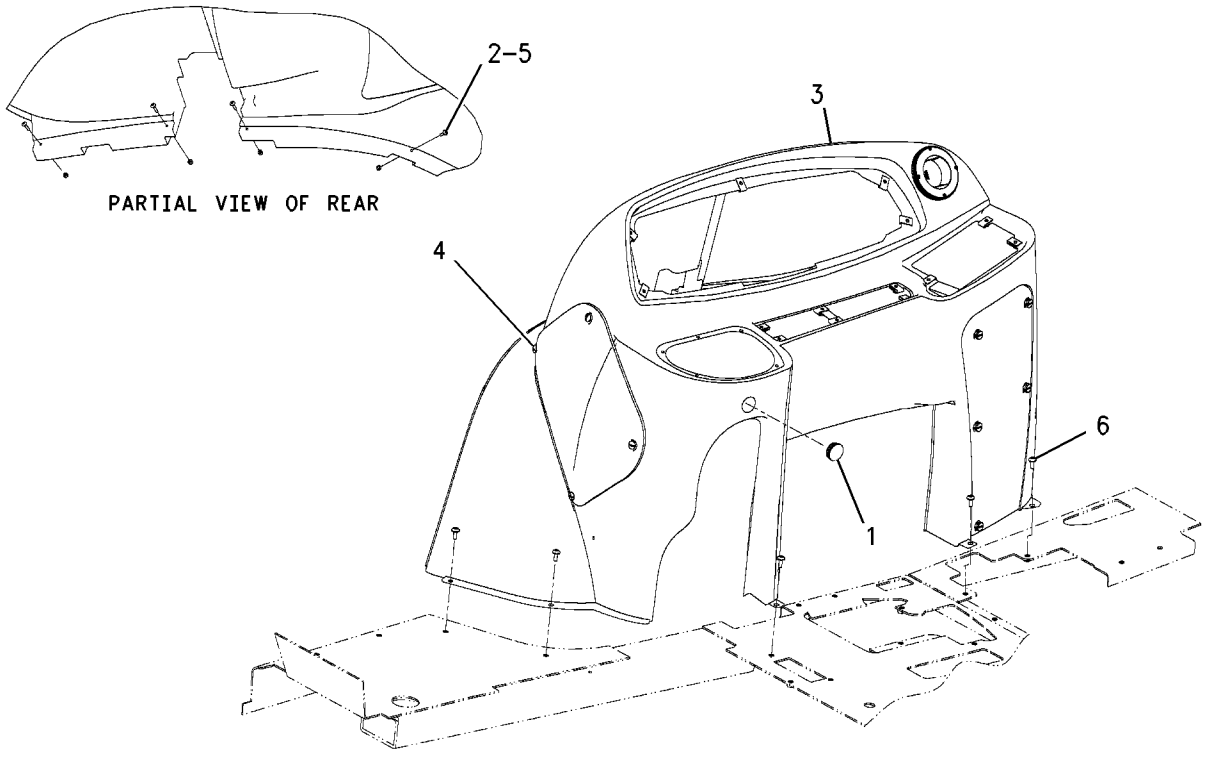

GRAPHIC #1 g00808569

OPERATOR STATION

252-6728 CONSOLE GP-SIDE

S/N:JRB00485-UP

PART OF 253-7656 CONSOLE GP-OPERATOR

SMCS-7451 **i01663889**

NOTE	REF NO	GRAPHIC REF	PART NUMBER	QTY	PART NAME 1 2 3 4 5 6 (PRODUCT LEVEL)	SEE PAGE
C	2	1	**164-1178**	5	CLIP	
C	3	1	**172-8591**	16	NUT-SPRING	
Y	4	1	*183-4991*	1	COVER GP-CONSOLE	301
C	5	1	**202-6142**	1	CONSOLE-SIDE	
	6	1	**204-7341**	1	COVER-FUSE	

C-CHANGE FROM PREVIOUS TYPE
Y-SEPARATE ILLUSTRATION

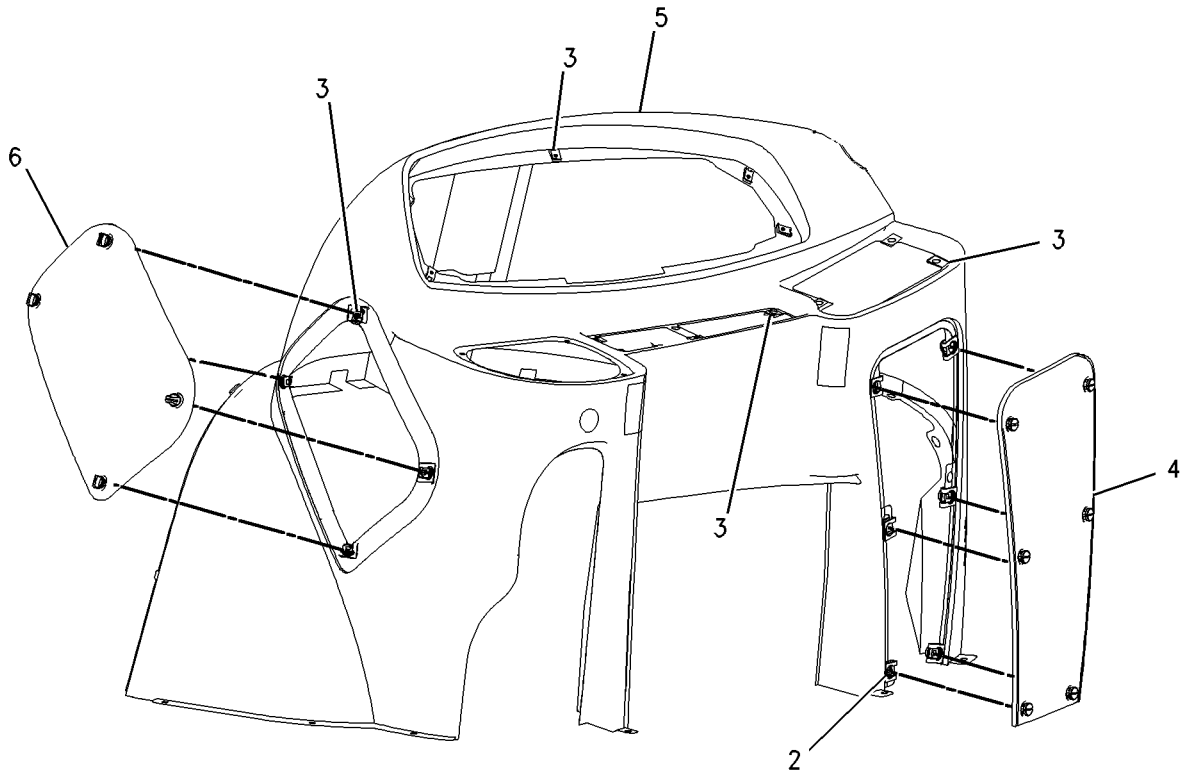

GRAPHIC #1 g00859080

OPERATOR STATION

183-4991 COVER GP-CONSOLE

S/N:JRB00255-UP
BOOM LOCK
PART OF 183-4998 CONSOLE GP-SIDE

SMCS-5258 **i01482398**

NOTE	REF NO	GRAPHIC REF	PART NUMBER	QTY	PART NAME 1 2 3 4 5 6 (PRODUCT LEVEL)	SEE PAGE
	1	1	**117-3789**	5	RETAINER-STUD	
	2	1	**164-1108**	1	COVER	
	3	1	**167-8251**	5	STUD	

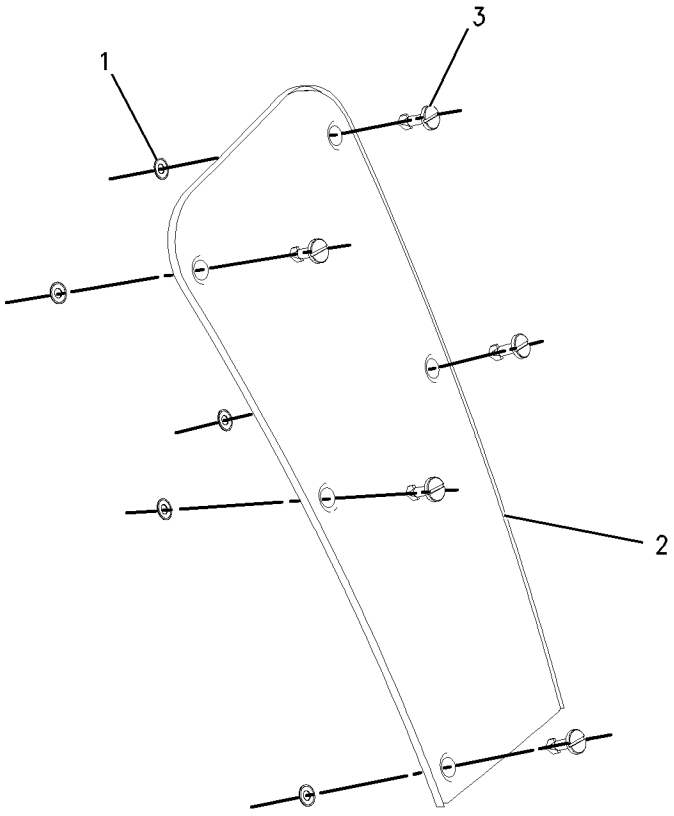

GRAPHIC #1 g00744971

OPERATOR STATION

202-5731 MOUNTING GP-NO DIFF LOCK

S/N:JRB00255,
PART OF 202-5883 CONTROL AS

NOTE	REF NO	GRAPHIC REF	PART NUMBER	QTY	PART NAME 1 2 3 4 5 6 (PRODUCT LEVEL)	SEE PAGE
	1	1	237-5491	1	PLATE AS	
	2	1	9X-2042	3	SCREW	

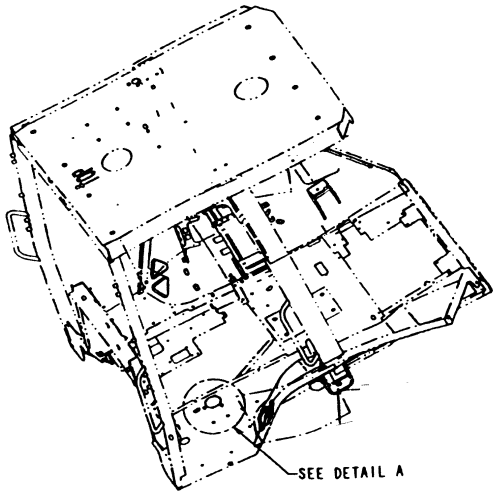

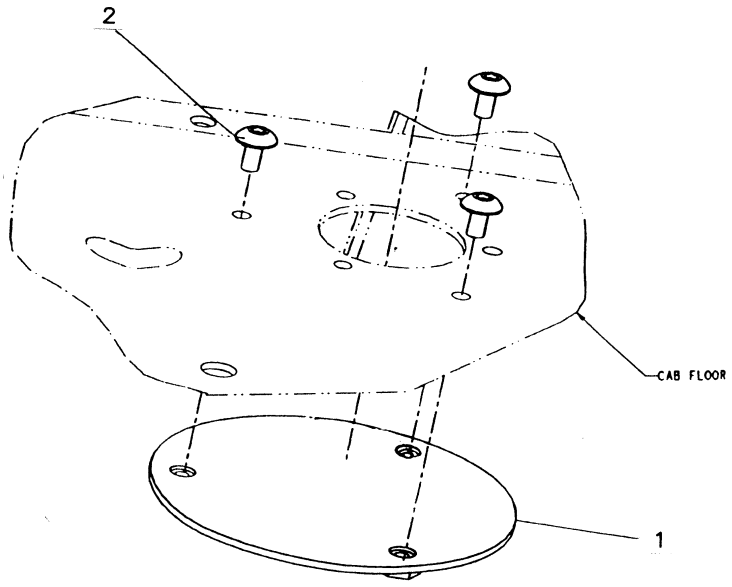

GRAPHIC #1

OPERATOR STATION

191-1784 COVER GP - CONSOLE

S/N: JRB
AN ATTACHMENT

NOTE	REF NO	GRAPHIC REF	PART NUMBER	QTY	PART NAME 1 2 3 4 5 6 (PRODUCT LEVEL)	SEE PAGE
J	1	1	125-2086	1	LOCK AS - CYLINDER	
	2	1	9C-9785	1	BUMPER	
	3	1	124-8105	1	PLATE	
	4	1	130-7912	1	SPRING	
	5	1	130-7913	2	WASHER	
	6	1	130-7914	1	BUSHING (40MM THK)	
	7	1	194-9497	1	SUPPORT AS	
	8	1	194-9645	1	COVER AS	
	9	1	195-6523	1	PLATE	
	10	1	113-8277	1	SCREW-PAN HEAD (8-32X12.7MM)	
M	11	1	5C-2890	1	NUT (M6X1 THD)	
M	12	1	6V-7743	1	LOCKNUT	
M	13	1	8T-3844	1	BOLT (M6X1X70MM)	

J- REQUIRES A 5P8500 KEY
M-METRIC PART

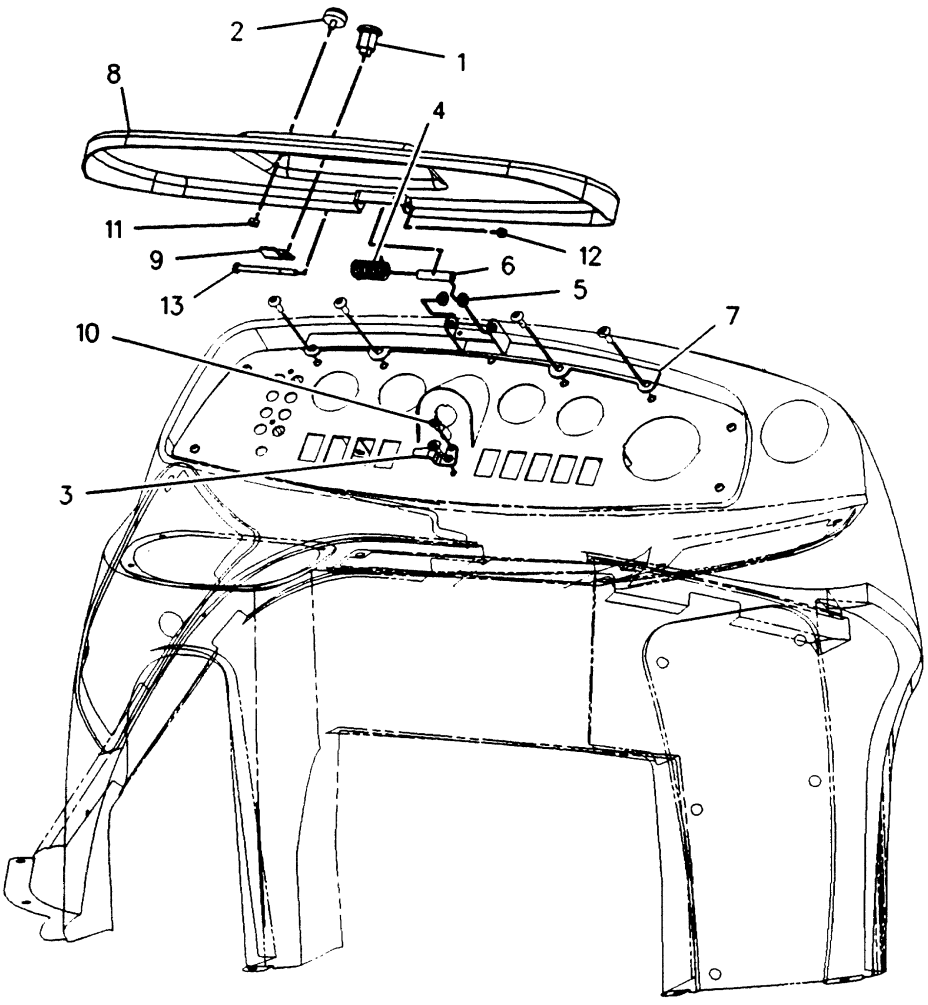

GRAPHIC #1

OPERATOR STATION

185-3527 COVER GP-PARKING BRAKE

S/N:JRB00255-UP
PARK BRAKE COVER
PART OF 228-2787 CAB AR

SMCS-4284 **i01463137**

NOTE	REF NO	GRAPHIC REF	PART NUMBER	QTY	PART NAME 1 2 3 4 5 6 (PRODUCT LEVEL)	SEE PAGE
	1	1	**164-1110**	1	COVER	
M	2	1	**9X-2044**	2	SCREW-TRUSS HEAD (M6X1X16MM)(9X-2044)	

M-METRIC PART

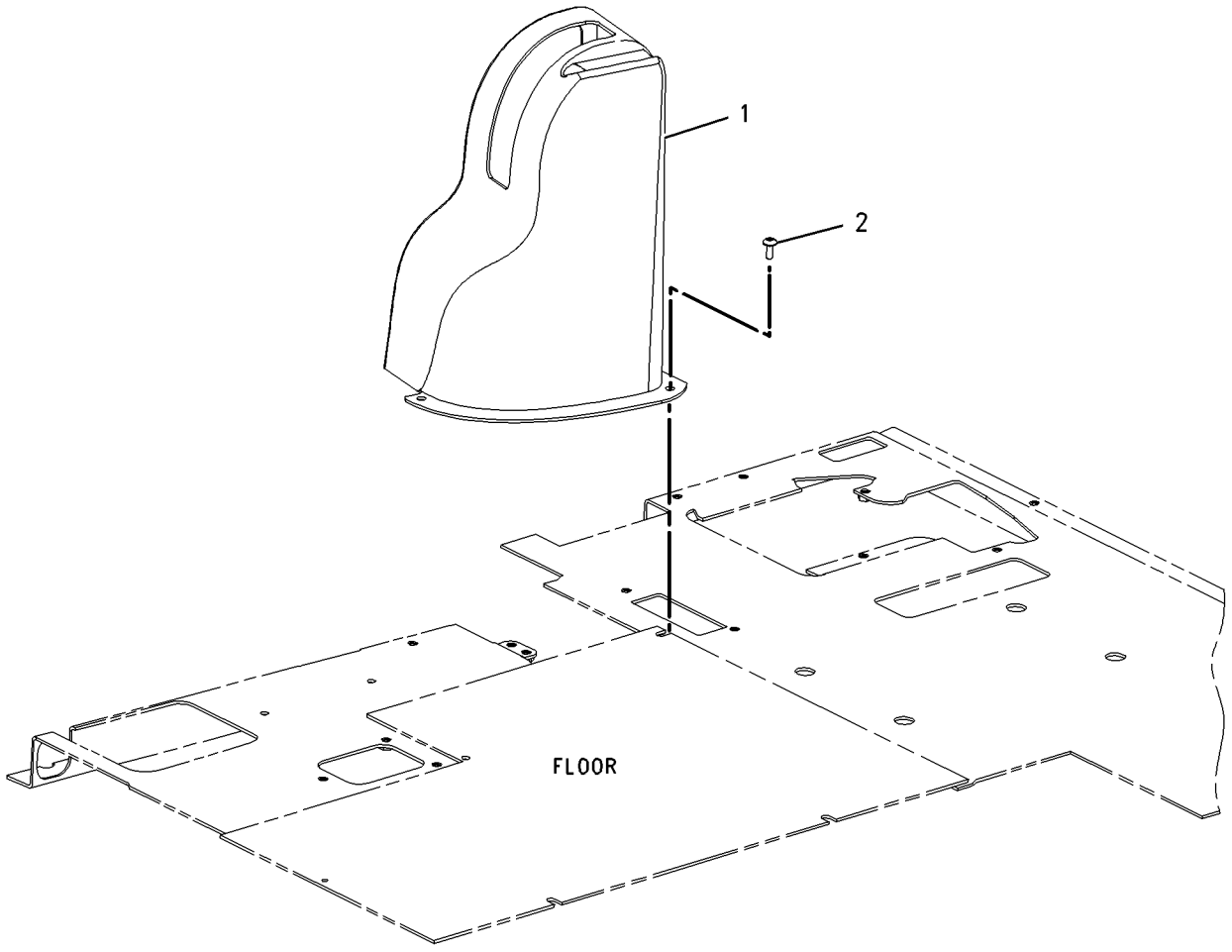

GRAPHIC #1 g00753168

OPERATOR STATION

237-5489 COVER GP-POST

S/N:JRB00485-UP
PART OF 228-2787 CAB AR

SMCS-7329 **i01622432**

NOTE	REF NO	GRAPHIC REF	PART NUMBER	QTY	PART NAME 1 2 3 4 5 6 (PRODUCT LEVEL)	SEE PAGE
	1	1	**253-4818**	1	COVER	
	2	1	**237-5490**	1	COVER	
M	3	1	**9X-2041**	**3**	SCREW-TRUSS HEAD (M10X1.5X20MM)	
E	4	1	**129-1854**		FASTENER-LOOP (108CM)	
E	5	1	**129-1855**		FASTENER-HOOK (108CM)	

E-ORDER BY THE CENTIMETER
M-METRIC PART

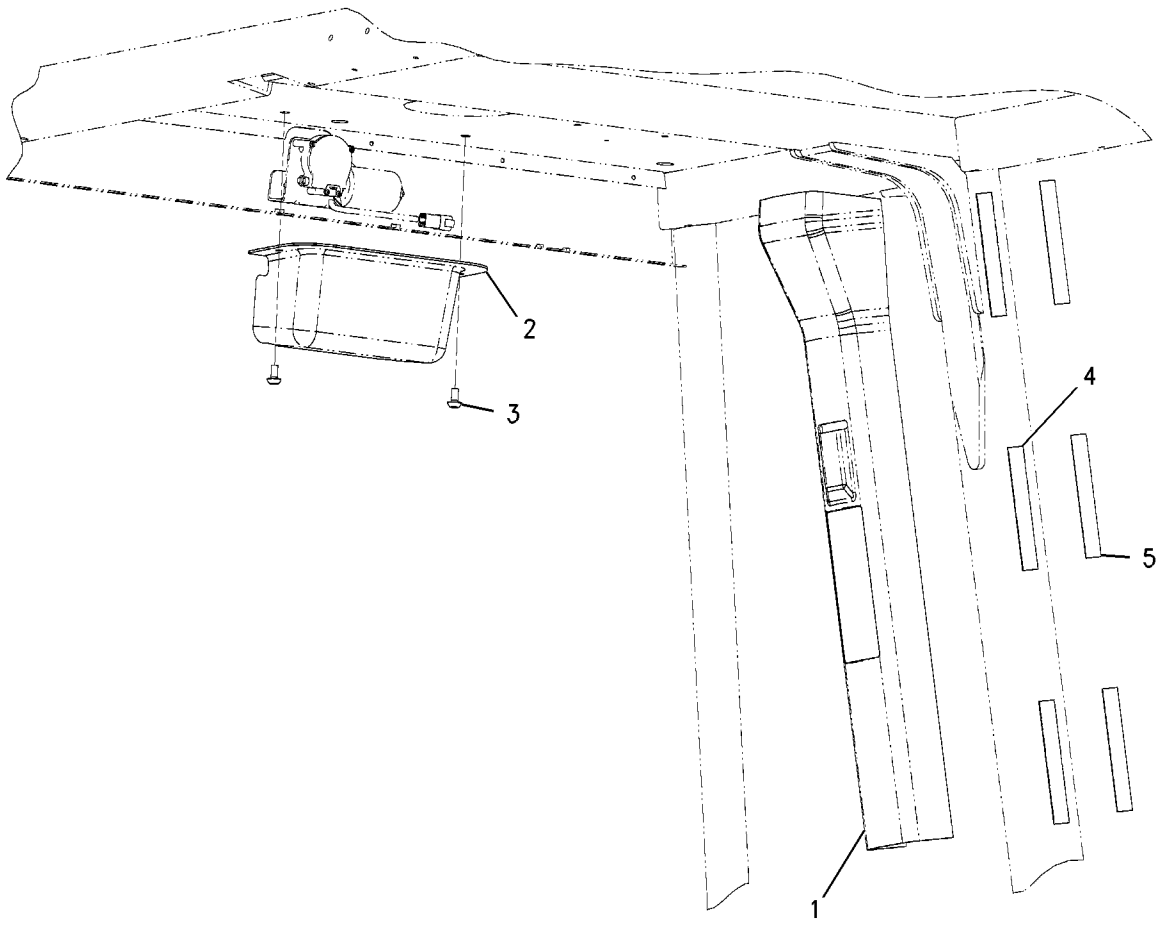

GRAPHIC #1 g00840758

OPERATOR STATION

164-1062 DOOR GP-LH

S/N:JRB00645-UP
PART OF 201-9455 CAB GP

SMCS-7308 **i01374549**

NOTE	REF NO	GRAPHIC REF	PART NUMBER	QTY	PART NAME 1 2 3 4 5 6 (PRODUCT LEVEL)	SEE PAGE
	1	1	**245-8583**	1	SPRING AS-GAS	
		1	**161-9044**	1	KIT-FITTING	
E	2	1	**148-5355**		SEAL (478CM)	
	3	1	**5P-4116**	2	WASHER (8.8X20.5X2MM THK)	
M	4	1	**8T-4171**	1	BOLT (M6X1.0X12MM)	
	5	1	**7X-2497**	1	HANDLE-DOOR	
	6	1	**159-4953**	1	DOOR AS-LH	
M		1	**8T-3612**	1	NUT-WELD (M8X1.25 THD)	
		1	**8Y-7310**	2	HINGE AS-LH	
Y	7	1	**164-1074**	1	WINDOW GP-DOOR	324
	8	1	**8Y-7264**	1	GLASS	
M	9	1	**8T-4180**	4	SCREW-MACHINE (M5X0.8X20MM)	
	10	1	**8Y-6386**	1	SEAL-HANDLE	
	11	1	**148-7319**	1	HANDLE AS-PADDLE	
	12	1	**147-3019**	2	BRACKET	
	13	1	**8Y-7306**	1	COVER	
M	14	1	**131-3987**	6	SCREW (M4X0.7X12MM)	
	15	1	**148-7311**	1	LATCH AS-ROTARY	
M	16	1	**8T-4181**	4	BOLT (M6X1X20MM)	
	17	1	**159-4946**	1	KEEPER-REAR	

E-ORDER BY THE CENTIMETER
M-METRIC PART
Y-SEPARATE ILLUSTRATION

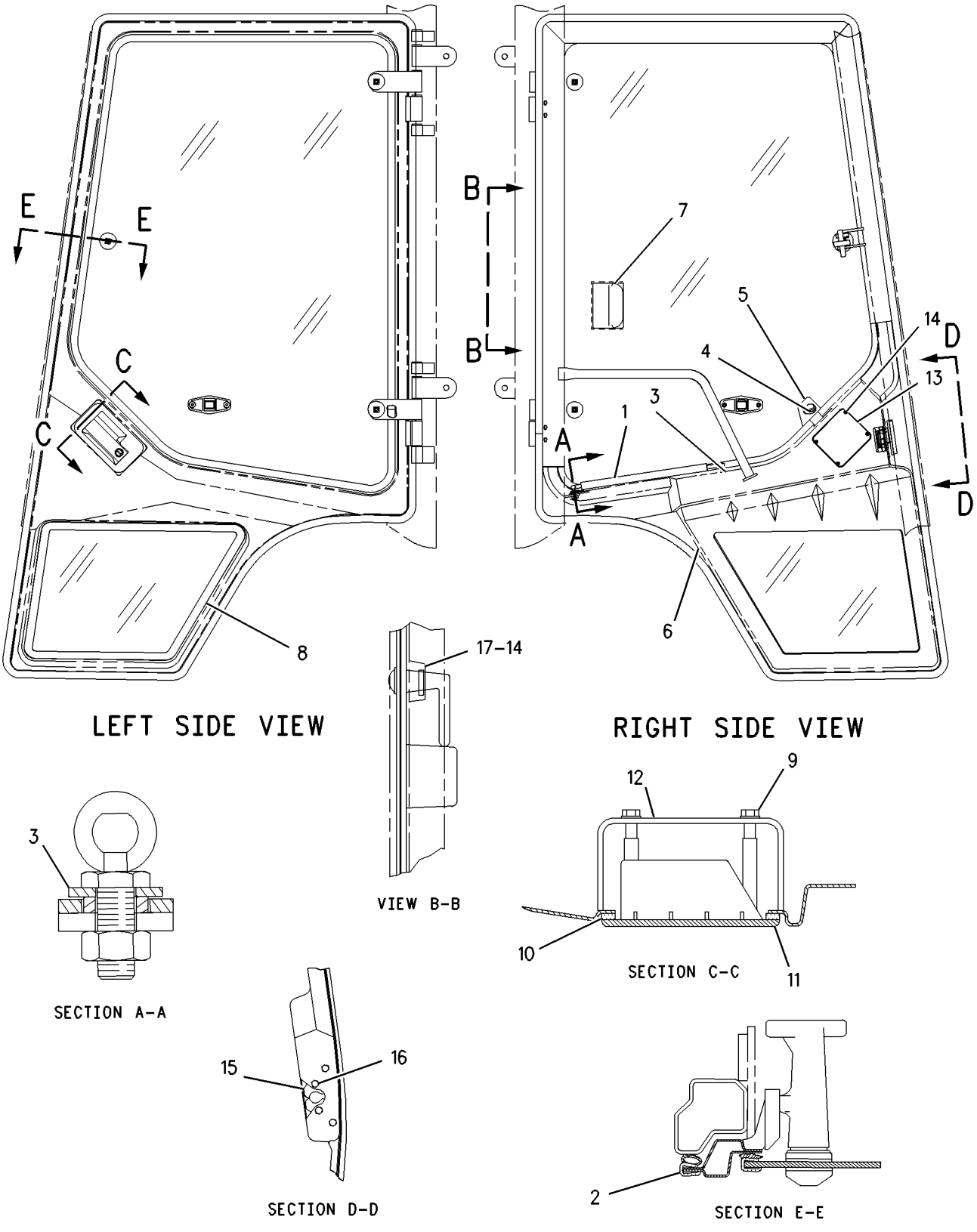

GRAPHIC #1 g00725879

OPERATOR STATION

253-7657 FLOOR MAT GP

S/N:JRB00485-UP

PART OF 228-2787 CAB AR

SMCS-7265 **i01377963**

NOTE	REF NO	GRAPHIC REF	PART NUMBER	QTY	PART NAME 1 2 3 4 5 6 (PRODUCT LEVEL)	SEE PAGE
	1	1	**180-5754**	2	PLATE	
	2	1	**228-2809**	1	FLOOR MAT	
	3	1	**1H-3244**	4	LOCKWASHER(1H-3244)	
M	4	1	**9X-2045**	4	SCREW-TRUSS HEAD (M6X1X20MM)	

M-METRIC PART

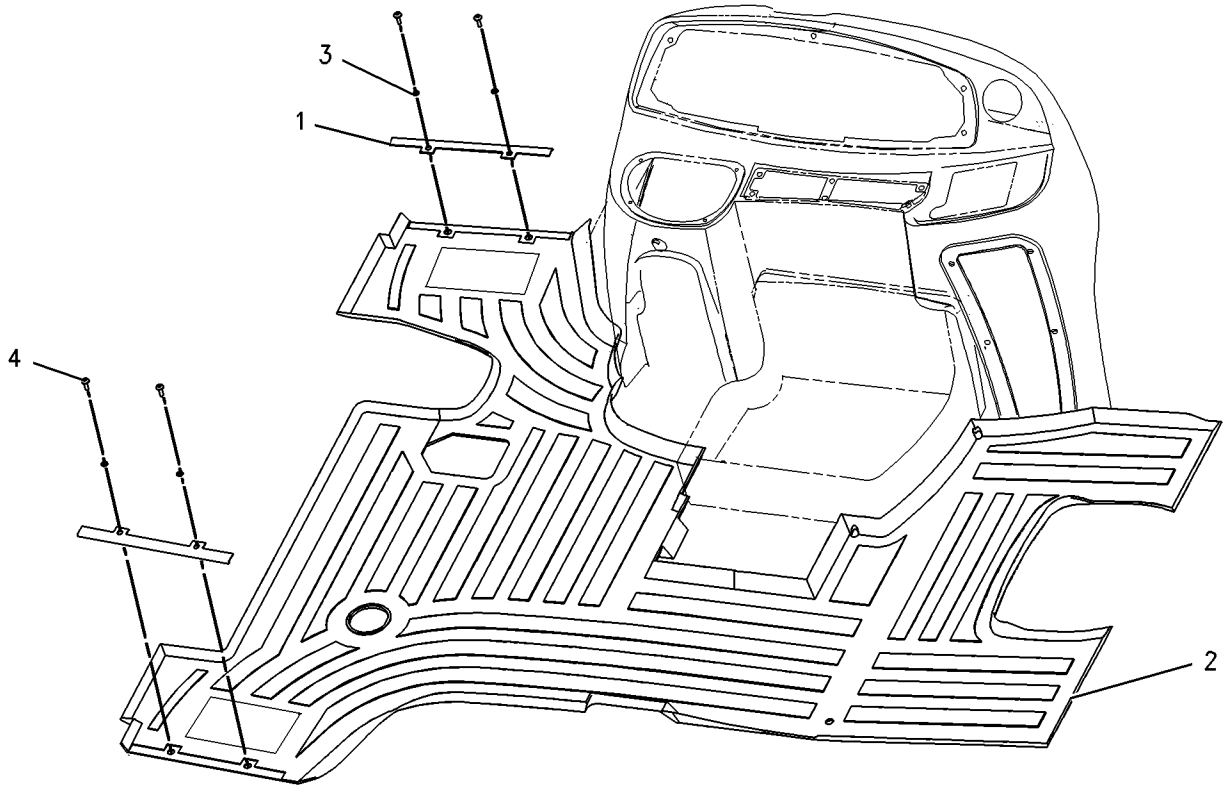

GRAPHIC #1 g00728663

OPERATOR STATION

122-2054 MIRROR GP-REAR VIEW

S/N:JRB00304-UP

SMCS-7319 **i01345327**

NOTE	REF NO	GRAPHIC REF	PART NUMBER	QTY	PART NAME 1 2 3 4 5 6 (PRODUCT LEVEL)	SEE PAGE
	1	1	**228-2811**	2	MIRROR AS (LH & RH)	
M	2	1	**8T-4137**	4	BOLT (M10X1.50X20MM)	
	3	1	**8T-4121**	4	WASHER-HARD (2.5MM THK)	

M-METRIC PART

GRAPHIC #1

OPERATOR STATION

164-1055 MIRROR GP-REAR VIEW

S/N:JRB00255-UP
AN ATTACHMENT

SMCS-7319 **i01666073**

NOTE	REF NO	GRAPHIC REF	PART NUMBER	QTY	PART NAME 1 2 3 4 5 6 (PRODUCT LEVEL)	SEE PAGE
	1	1	**123-6620**	2	MIRROR AS	
	2	1	**159-7104**	2	BRACKET AS	
	3	1	**159-7105**	1	BRACKET & MOUNTING AS	
	4	1	**159-7106**	1	BRACKET & MOUNTING AS	
	5	1	**8T-4121**	4	WASHER-HARD (11X21X2.5MM THK)	
M	6	1	**8T-4137**	4	BOLT (M10X1.5X20MM)	
M	7	1	**8T-4189**	4	BOLT (M8X1.25X20MM)	
	8	1	**8T-4224**	4	WASHER-HARD (8.8X16X2MM THK)	

M-METRIC PART

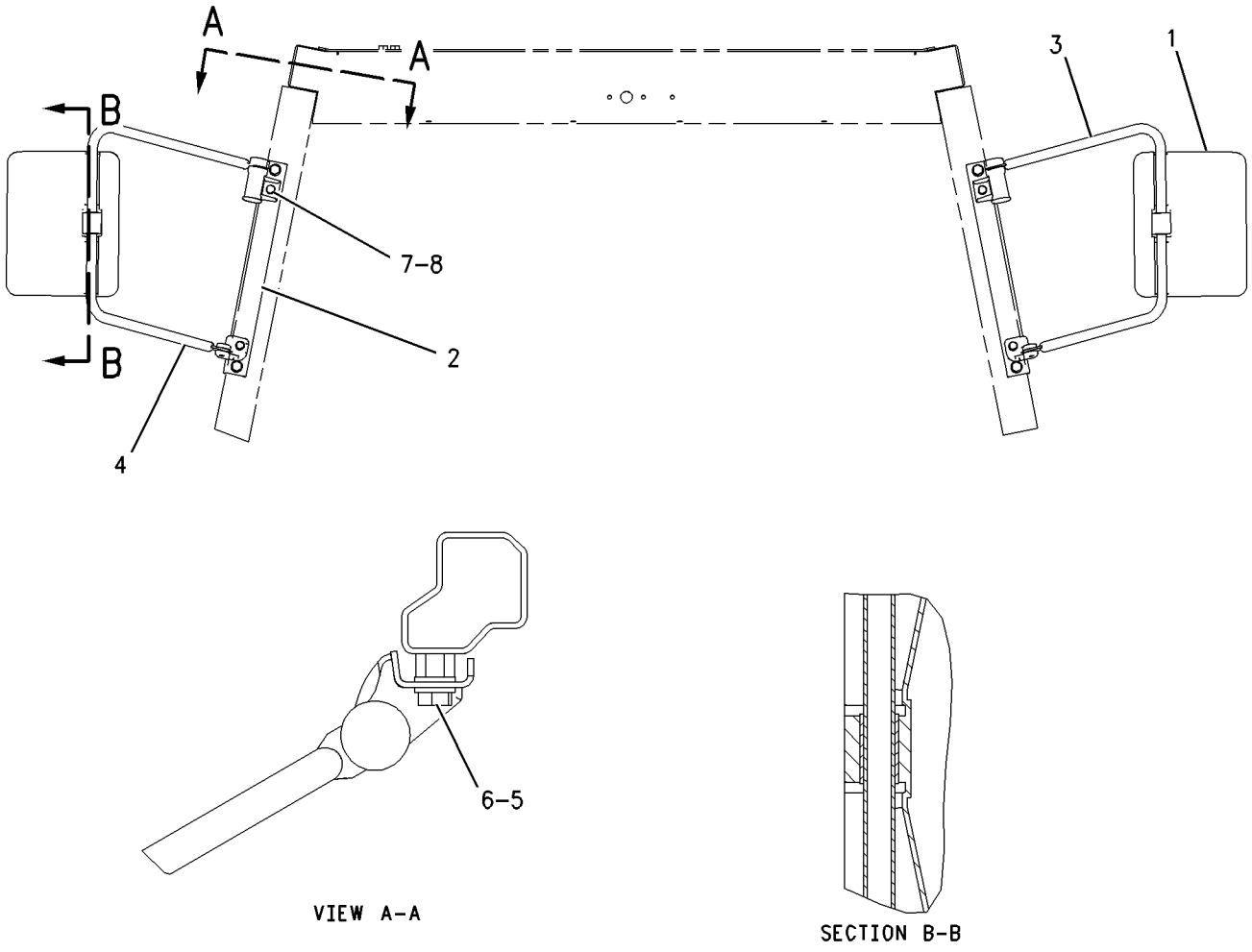

GRAPHIC #1 g00860365

OPERATOR STATION

184-7898 MOUNTING GP-INSTRUMENT PANEL

S/N:JRB00269-UP
TWO WHEEL STEER, FRONT CONSOLE
PART OF 202-5738 POWER TRAIN AR

SMCS-7451 **i01439939**

NOTE	REF NO	GRAPHIC REF	PART NUMBER	QTY	PART NAME 1 2 3 4 5 6 (PRODUCT LEVEL)	SEE PAGE
	1	1	**167-8278**	2	PLATE	
	2	1	**167-8279**	1	PANEL AS	
M	3	1	**9X-1046**	8	SCREW (M4X0.7X18MM)	
	4	**1**	**172-8591**	**6**	**NUT-SPRING**	
	5	1	**9X-2044**	**6**	SCREW	

M-METRIC PART

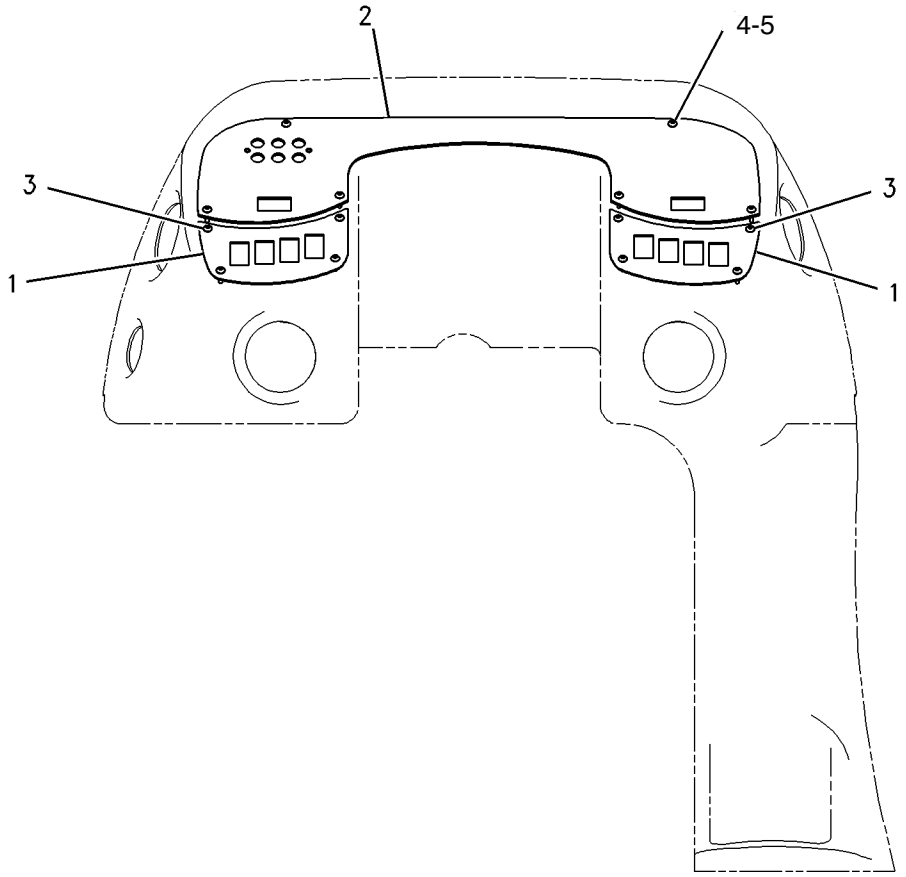

GRAPHIC #1 g00754349

OPERATOR STATION

185-3525 MOUNTING GP-INSTRUMENT PANEL

S/N:JRB00255-UP
CONSOLE
PART OF 228-2810 POWER TRAIN AR

SMCS-7451 **i01444394**

NOTE	REF NO	GRAPHIC REF	PART NUMBER	QTY	PART NAME 1 2 3 4 5 6 (PRODUCT LEVEL)	SEE PAGE
	1	1	**5P-4116**	4	WASHER-HARD (8.8X20.5X2MM THK)	
M	2	1	**6V-9189**	4	LOCKNUT	

M-METRIC PART

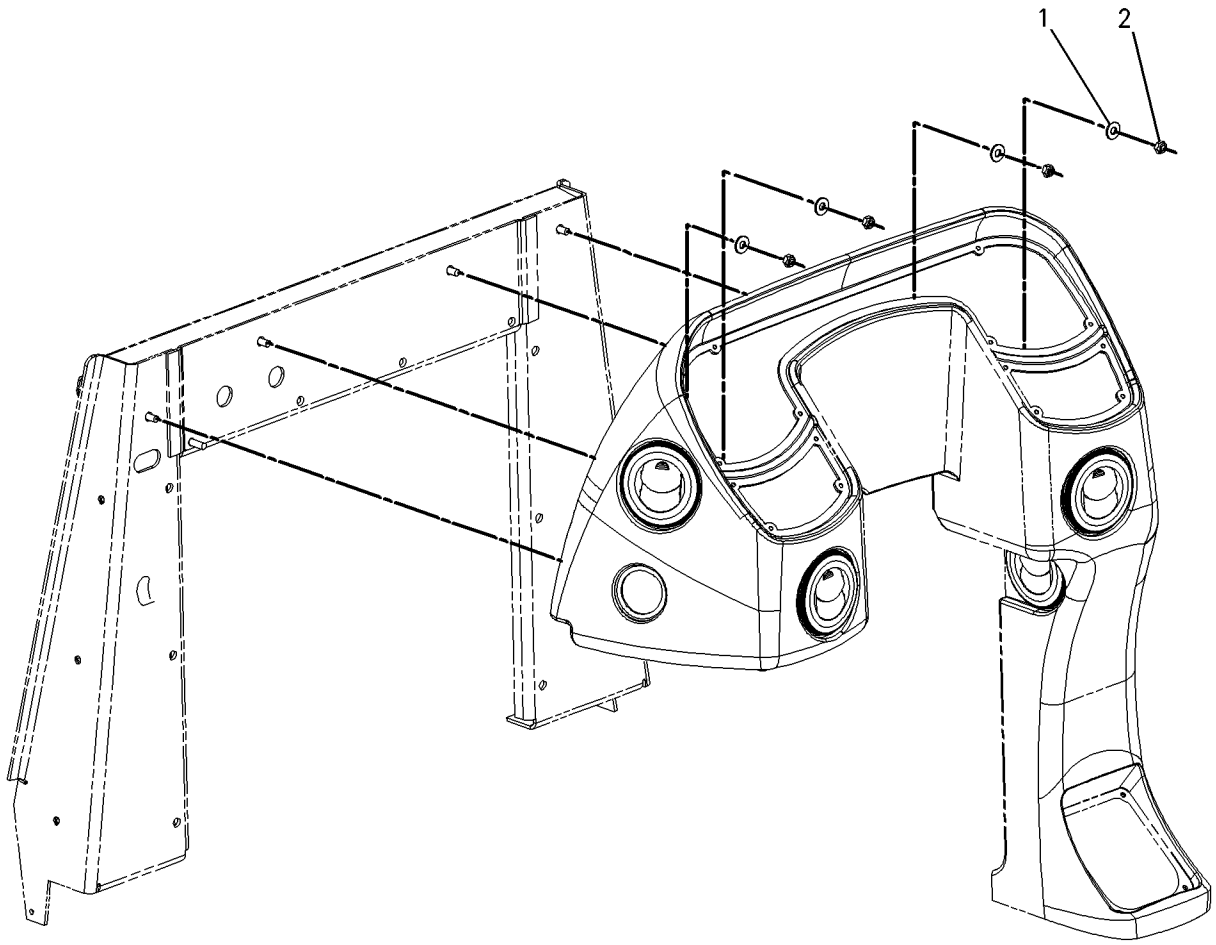

GRAPHIC #1 g00756122

OPERATOR STATION

250-2640 MOUNTING GP-INSTRUMENT-SIDE

S/N:JRB00485-UP

SMCS-1435, 7450, 7451, 7453, 7462, 7463, 7477, 7481 **i01626248**

NOTE	REF NO	GRAPHIC REF	PART NUMBER	QTY	PART NAME 1 2 3 4 5 6 (PRODUCT LEVEL)	SEE PAGE
J	1	1	**142-8858**	1	SWITCH AS-KEY START	
	2	1	**167-8283**	1	PANEL AS-INSTRUMENT	
	3	1	**249-7479**	1	WIRE AS	
	4	1	**191-9104**	1	FILM	
M	5	1	**9X-2045**	10	SCREW-TRUSS HEAD (M6X1X20MM)	

J-REQUIRES 5P8500 KEY
M-METRIC PART

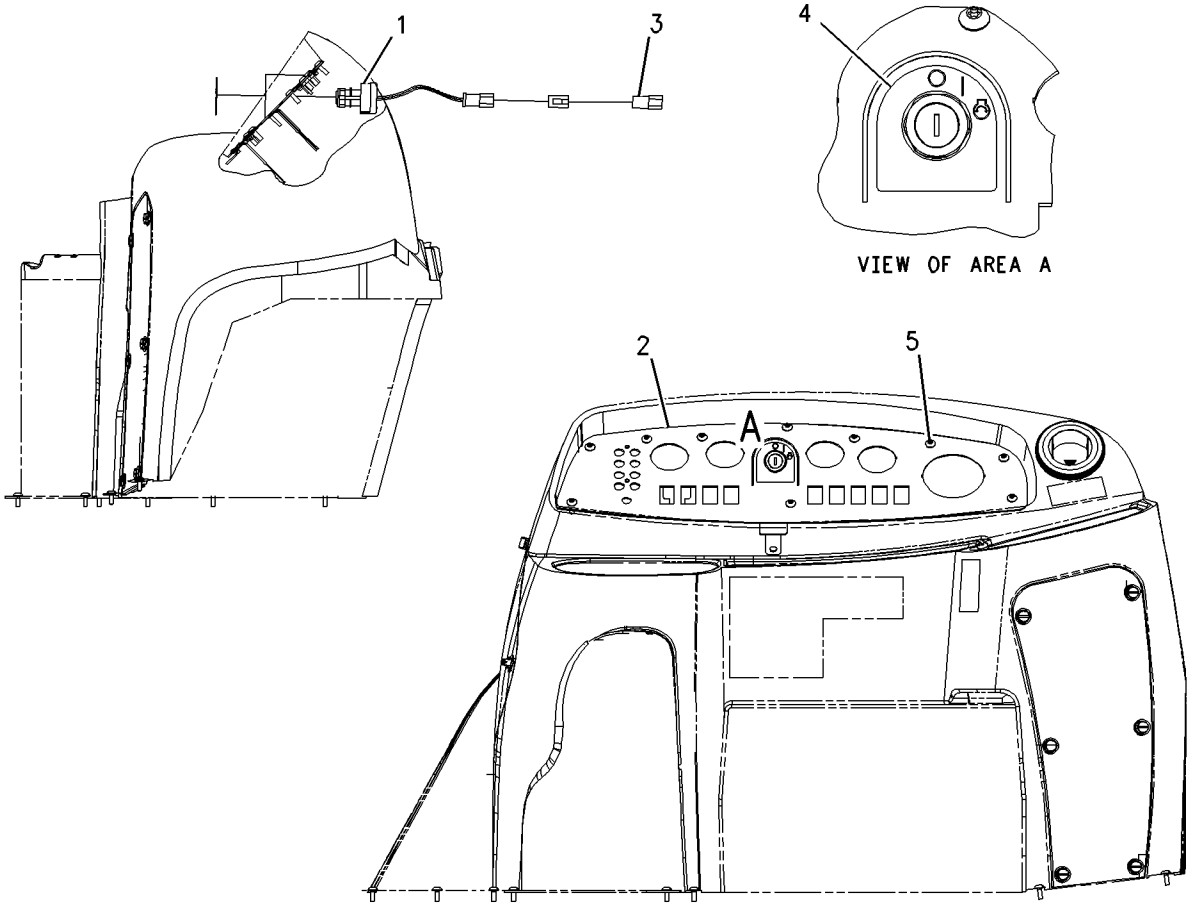

GRAPHIC #1 g00844991

OPERATOR STATION

164-1078 PEDAL GP-GOVERNOR

S/N:JRB00255-UP

PART OF 233-6427 CONTROL GP-GOV & ACCELERATOR

SMCS-1265 **i01606663**

NOTE	REF NO	GRAPHIC REF	PART NUMBER	QTY	PART NAME 1 2 3 4 5 6 (PRODUCT LEVEL)	SEE PAGE
M	1	1	**129-3178**	1	LOCKNUT (M6X1 THD)	
M	2	1	**5C-7261**	1	NUT (M8X1.25 THD)	
M	3	1	**5C-9553**	1	BOLT (M6X1X16MM)	
	4	1	**8T-4205**	1	WASHER-HARD (7.2X14.5X2MM THK)	
	5	1	**8T-6902**	3	CLIP (SLOT)	
	6	1	**3F-9556**	2	LOCKWASHER	
M	7	1	**6V-5698**	4	SCREW-BUTTON HEAD (M4X0.7X10MM)	
	8	1	**6V-8186**	2	NUT-FULL (5/16-24 THD)	
M	9	1	**8T-4197**	1	BOLT (M8X1.25X40MM)	
					AVAILABLE REPAIR KIT(S):	
			164-1154	1	KIT-SERVICE	

M-METRIC PART

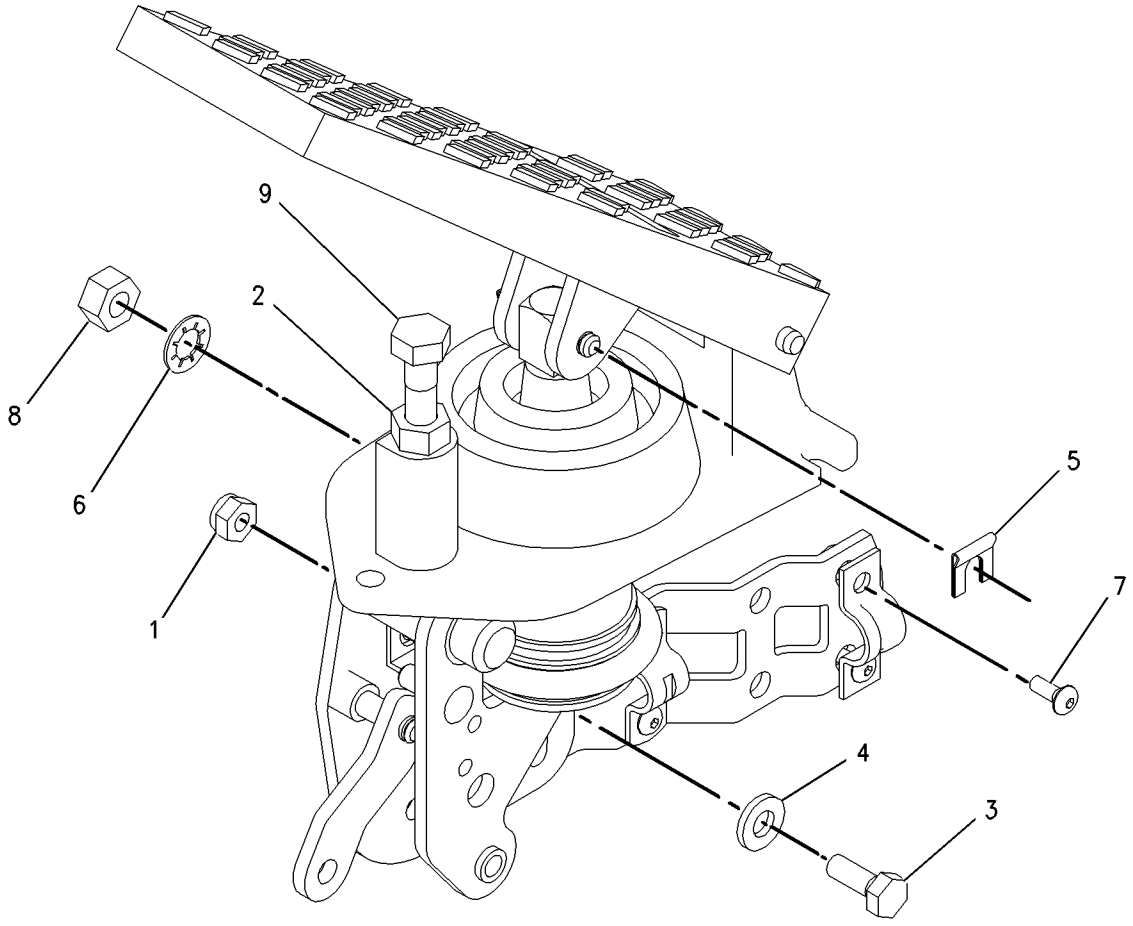

GRAPHIC #1 g00832396

OPERATOR STATION

236-9667 SEAT GP-SUSPENSION

S/N:JRB00255-UP

SMCS-7324, 7336 **i01658547**

NOTE	PART NUMBER	QTY	PART NAME 1 2 3 4 5 6 (PRODUCT LEVEL)	SEE PAGE
M	**8T-4139**	4	BOLT (M12X1.75X30MM)	
	236-9668	1	SEAT GP-SUSPENSION	
	3S-2093	1	STRAP-CABLE	
	8T-4223	4	WASHER-HARD (13.5X25.5X3MM THK)(8T-4223)	

M-METRIC PART

OPERATOR STATION

250-2634 WASHER GP-WINDOW

S/N:JRB00255
WINDSHIELD
AN ATTACHMENT

NOTE	REF NO	GRAPHIC REF	PART NUMBER	QTY	PART NAME 1 2 3 4 5 6 (PRODUCT LEVEL)	SEE PAGE
	1	1	3S-2093	2	STRAP-CABLE	
	2	1	112-9450	1	PLATE	
	3	1	9R-3469	2	DIAPHRAGM	
	4	1	121-6936	2	CONNECTOR	
	5	1	123-8670	1	TANK AS	
			117-2823	1	CAP	
			117-2826	1	PUMP	
	6	1	250-2635	1	HARNESS AS	
			102-8803	1	KIT-RECEPTACLE (3 PIN)	
					(KIT SERVICES RECEPTACLE AS AND WEDGE)	
	7	1	168-9906	1	BRACKET	
	8	1	186-0817	1	WASHER-HARD (7X19X2MM THK)(7X19X2MM THK)	
M	9	1	129-3178	1	LOCKNUT (M6X1 THD)	
B	10	1	8T-4121	2	WASHER-HARD (11X21X2.5MM THK)	
	11	1	7X-7729	1	WASHER (11X25X3MM THK)	
M	12	1	8T-4201	2	BOLT-LOCKING (M10X1.5X20MM)	
	13	1	8T-4205	1	WASHER-HARD (7.2X14.5X2MM THK)	
M	14	1	8T-4971	1	BOLT (M6X1X30MM)	
	15	1	6V-5571		FLUID (1LIT)	
E	16	1	183-4678		HOSE (280CM)	
	18	1	8T-0789	1	CLIP-HOSE	
	19	1	8T-1118	1	NOZZLE AS	

B - USE AS REQUIRED
E - ORDER BY THE CENTIMETER
M-METRIC PART

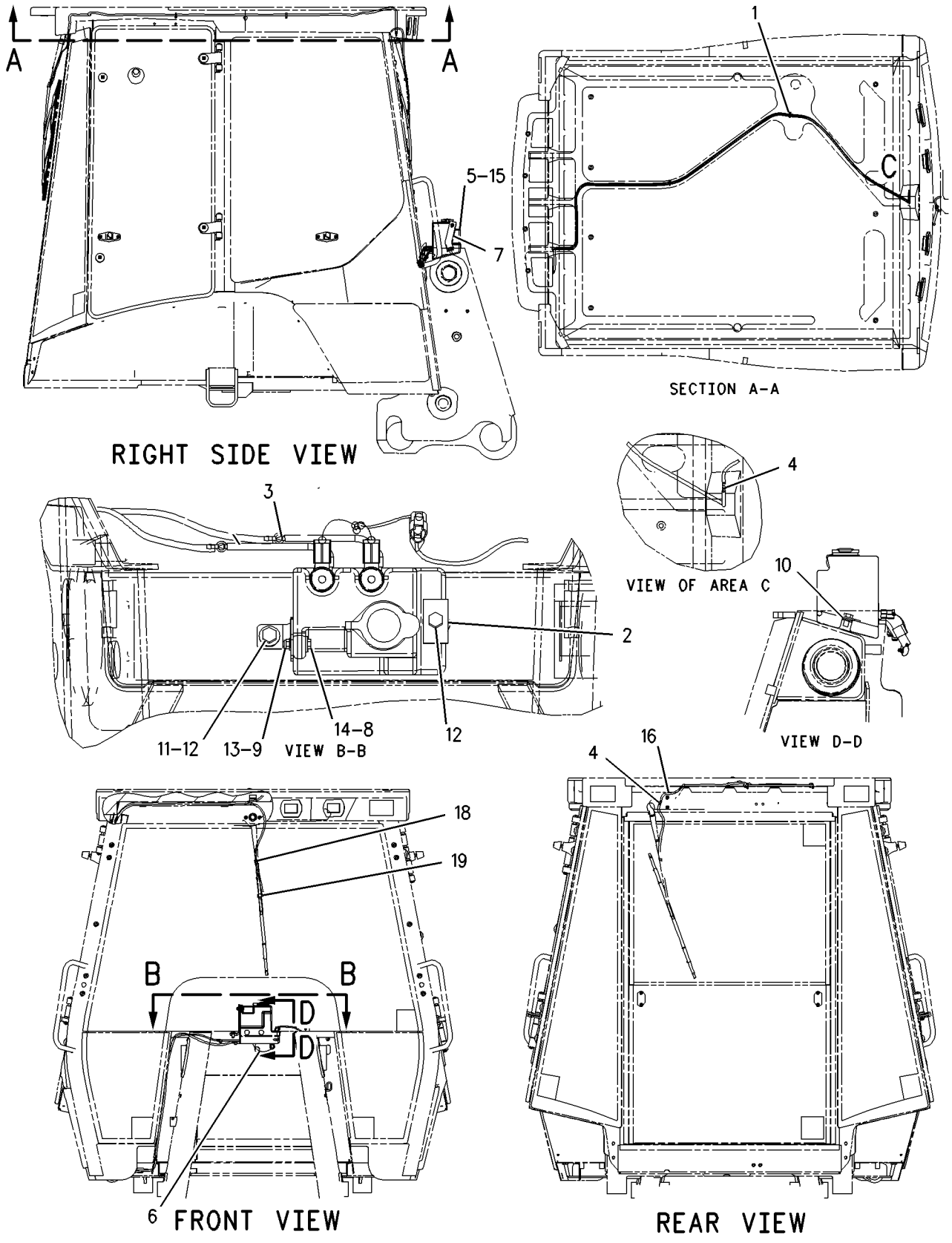

GRAPHIC #1

g00776687

OPERATOR STATION

164-1059 WINDOW GP-CAB

S/N:JRB00484-UP
RIGHT HAND
PART OF 245-8539 CAB GP

SMCS-7310 **i01374504**

NOTE	REF NO	GRAPHIC REF	PART NUMBER	QTY	PART NAME 1 2 3 4 5 6 (PRODUCT LEVEL)	SEE PAGE
	1	1	**7X-2393**	2	BUMPER-CONICAL	
	2	1	**8Y-7309**	2	RETAINER	
	3	1	**100-7608**	1	HANDLE	
	4	1	**129-8542**	6	RETAINER	
	5	1	**129-8545**	8	WASHER (3MM THK)	
M	6	1	**136-4192**	4	BOLT (M6X1.0X35MM)	
	7	1	**143-2830**	1	LATCH AS	
M		1	**6V-7743**	2	LOCKNUT (M6X1 THD)	
M		1	**9X-2045**	2	SCREW-TRUSS HEAD (M6X1X20MM)	
		1	**143-2827**	1	SPRING	
	8	1	**154-5423**	2	SPACER	
	9	1	**154-5424**	2	HINGE	
	10	1	**159-4951**	2	LATCH AS	
M		1	**5C-2874**	2	NUT (M5X.8 THD)	
M		1	**161-6984**	2	SCREW-TRUSS HEAD (M5X0.8X20MM)	
		1	**161-6987**	2	WASHER-HARD (1.5MM THK)	
		1	**161-9294**	2	SPRING-FLAT WIRE	
M		1	**162-6556**	2	LOCKNUT (M6X1.0 THD)	
	11	1	**164-1064**	1	GLASS-RH	
M	12	1	**5C-7261**	2	NUT (M8X1.25 THD)	
M	13	1	**6V-7743**	2	LOCKNUT (M6X1 THD)	
E	14	1	**148-5353**		SEAL (378CM)	

E-ORDER BY THE CENTIMETER
M-METRIC PART

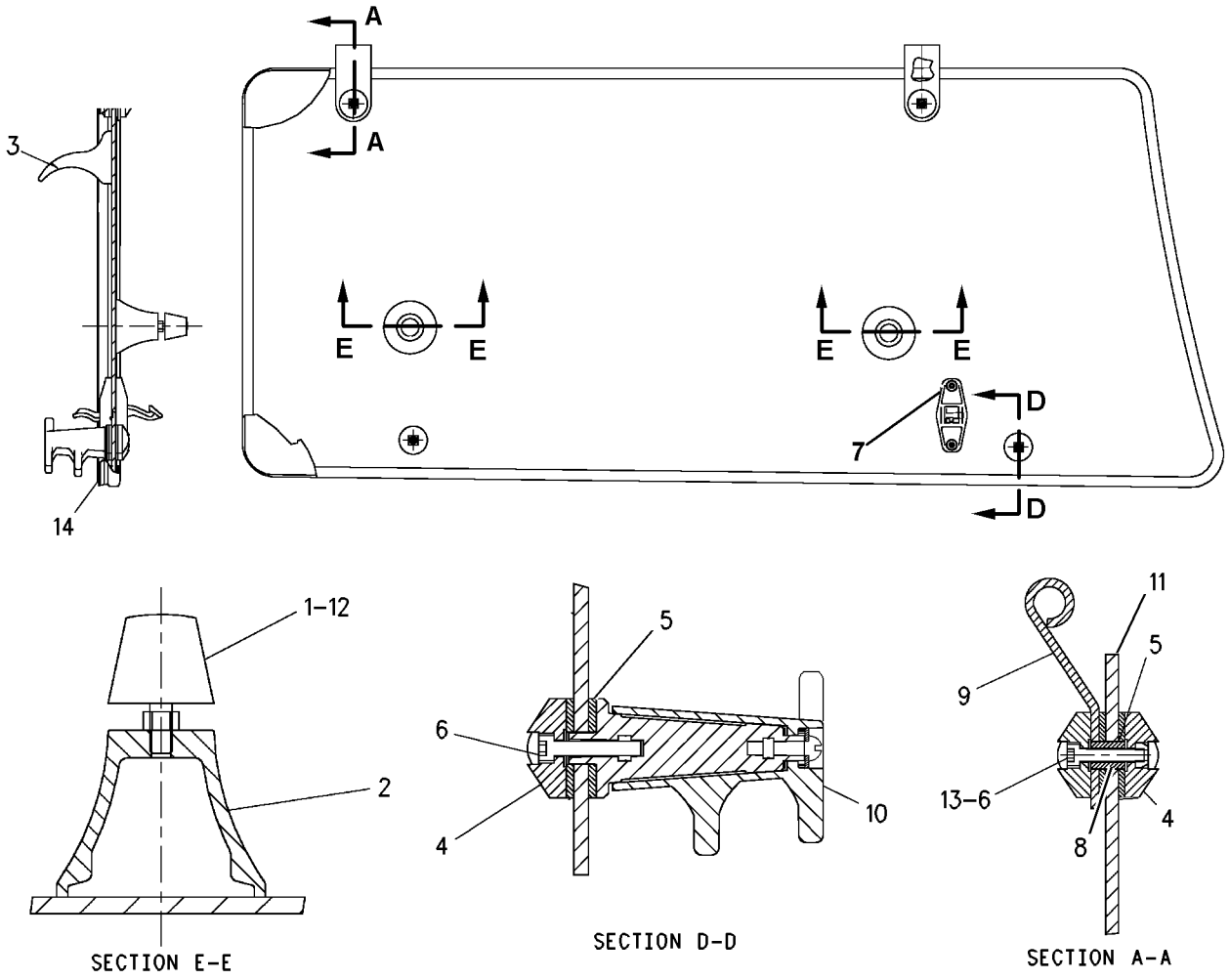

GRAPHIC #1 g00725900

OPERATOR STATION

164-1060 WINDOW GP-CAB

S/N:JRB00484-UP
LEFT HAND
PART OF 245-8539 CAB GP

SMCS-7310 **i01374537**

NOTE	REF NO	GRAPHIC REF	PART NUMBER	QTY	PART NAME 1 2 3 4 5 6 (PRODUCT LEVEL)	SEE PAGE
	1	1	**7X-2393**	2	BUMPER-CONICAL	
	2	1	**8Y-7309**	2	RETAINER	
	3	1	**100-7608**	1	HANDLE	
	4	1	**129-8542**	6	RETAINER	
	5	1	**129-8545**	8	WASHER (3MM THK)	
M	6	1	**136-4192**	4	BOLT (M6X1.0X35MM)	
	7	1	**143-2830**	1	LATCH AS	
M		1	**6V-7743**	2	LOCKNUT (M6X1 THD)	
M		1	**9X-2045**	2	SCREW-TRUSS HEAD (M6X1X20MM)	
		1	**143-2827**	1	SPRING	
	8	1	**154-5423**	2	SPACER	
	9	1	**154-5424**	2	HINGE	
	10	1	**159-4950**	2	LATCH AS	
M		1	**5C-2874**	2	NUT (M5X.8 THD)	
M		1	**161-6984**	2	SCREW-TRUSS HEAD (M5X0.8X20MM)	
		1	**161-6987**	2	WASHER-HARD (1.5MM THK)	
		1	**161-9294**	2	SPRING-FLAT WIRE	
M		1	**162-6556**	2	LOCKNUT (M6X1.0 THD)	
	11	1	**164-1065**	1	GLASS-LH	
M	12	1	**5C-7261**	2	NUT (M8X1.25 THD)	
M	13	1	**6V-7743**	2	LOCKNUT (M6X1 THD)	
E	14	1	**148-5353**		SEAL (378CM)	

E-ORDER BY THE CENTIMETER
M-METRIC PART

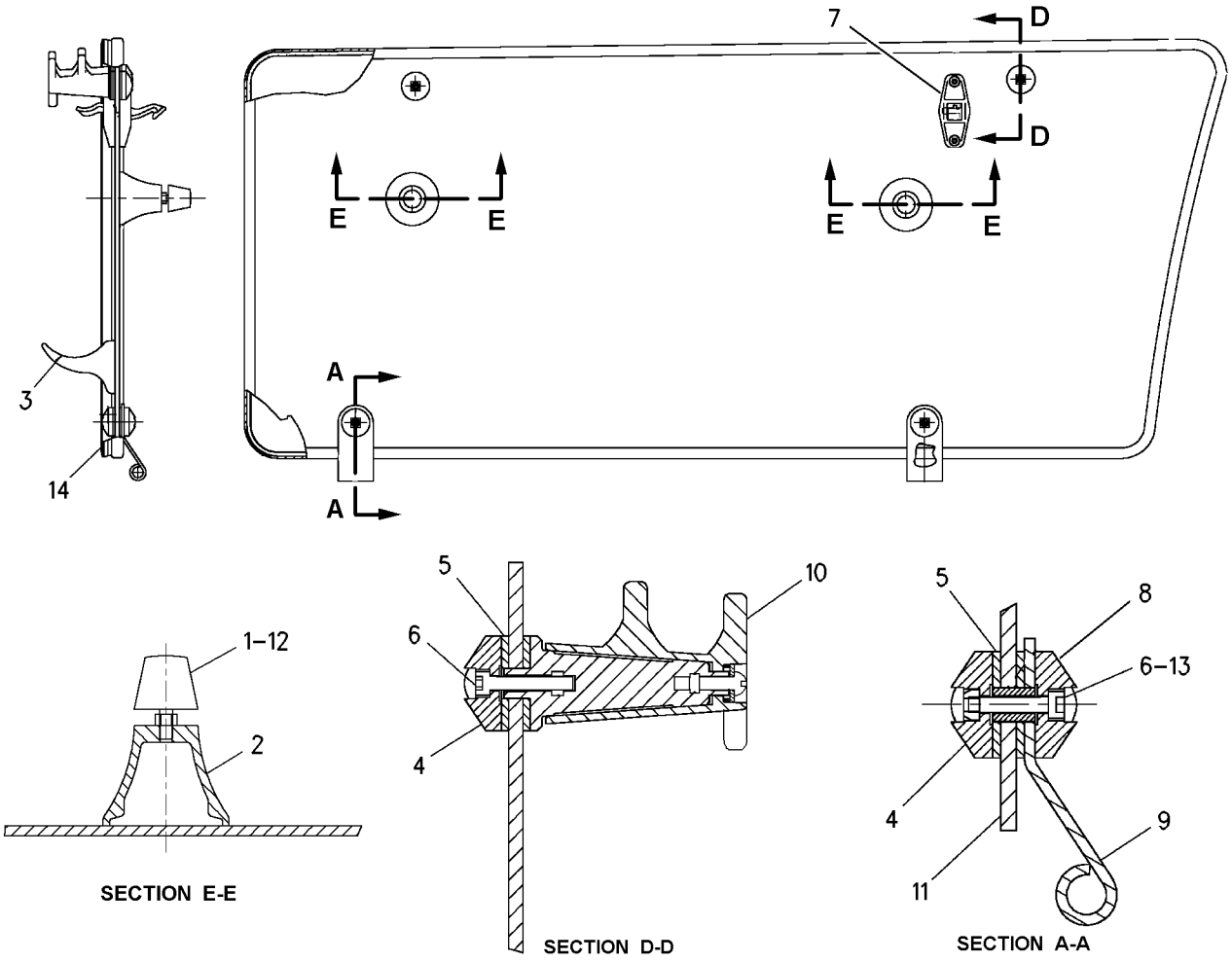

GRAPHIC #1 g00725887

OPERATOR STATION

164-1355 WINDOW GP-CAB

S/N:JRB00410-UP

UPPER

PART OF 245-8539 CAB GP

SMCS-7310 **i01665710**

NOTE	REF NO	GRAPHIC REF	PART NUMBER	QTY	PART NAME 1 2 3 4 5 6 (PRODUCT LEVEL)	SEE PAGE
	1	1	**110-5602**	2	KNOB	
M	2	1	**131-8203**	4	SCREW-FLAT HEAD	
	3	1	**140-9921**	2	INSERT-THREADED	
	4	1	**164-1308**	2	ROLLER	
	5	1	**164-1311**	1	LINKAGE AS	
	6	1	**245-8584**	2	SPRING AS-GAS	
	7	1	**164-1342**	4	BOLT	
	8	1	**164-1343**	4	WASHER-THRUST	
	9	1	**164-1344**	4	WASHER-THRUST	
	10	1	**164-1345**	4	BEARING	
	11	1	**164-1346**	4	STRIKER	
	12	1	**164-1351**	2	PIN	
	13	1	**164-1352**	1	LATCH AS	
	14	1	**164-1353**	1	LATCH AS	
	15	1	**164-1359**	1	WINDOW AS	
		1	**164-1303**	1	GLASS	
	16	1	**167-8182**	2	BUMPER	
	17	1	**171-2870**	2	SPACER	
B	18	1	**201-9465**	4	SHIM	
	19	1	**205-7536**	1	BRACKET AS-LH	
	20	1	**205-7538**	1	BRACKET AS-RH	
	21	1	**119-8349**	2	CAP	
	22	1	**121-9743**	1	SEAL	
M	23	1	**129-3180**	4	LOCKNUT (M12X1.75 THD)	
	24	1	**5P-4115**	2	WASHER-HARD (7.2X19X2MM THK)	
	25	1	**5P-4116**	4	WASHER-HARD (8.8X20.5X2MM THK)	
M	26	1	**8T-4138**	2	BOLT (M6X1X20MM)	
M	27	1	**8T-4200**	4	BOLT (M8X1.25X16MM)	
	28	1	**8T-4223**	4	WASHER-HARD (13.5X25.5X3MM THK)	
	29	1	**9X-2132**	4	RETAINER	
D	30	1	**5P-0798**		SEAL (0.85M)	
E	31	1	**164-1314**	2	SEAL-LAMP (148.5CM)	

B-USE AS REQUIRED
D-ORDER BY THE METER
E-ORDER BY THE CENTIMETER
M-METRIC PART

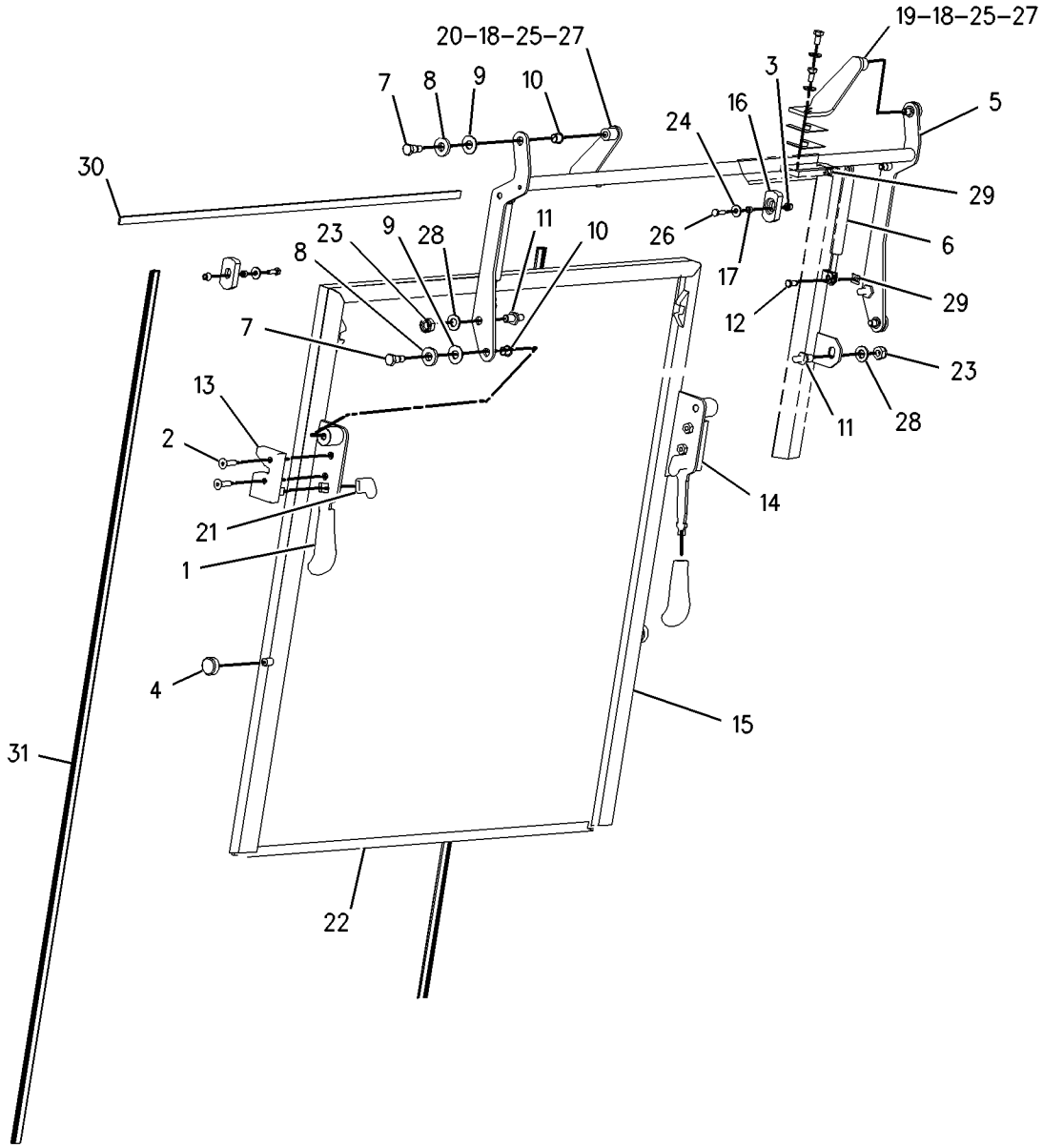

GRAPHIC #1 g00860117

OPERATOR STATION

164-1074 WINDOW GP-DOOR

S/N:JRB00255-UP
LEFT HAND
PART OF 164-1062 DOOR GP-LH

SMCS-7308, 7310 **i01500339**

NOTE	REF NO	GRAPHIC REF	PART NUMBER	QTY	PART NAME 1 2 3 4 5 6 (PRODUCT LEVEL)	SEE PAGE
	1	1	**8Y-7287**	2	HINGE	
	2	1	**100-7608**	1	HANDLE	
	3	1	**129-8542**	5	RETAINER	
	4	1	**129-8543**	2	SPACER (16MM THK)	
	5	1	**129-8545**	6	WASHER (3MM THK)	
M	6	1	**136-1613**	2	BOLT-SOCKET HEAD	
M	7	1	**136-4192**	1	BOLT (M6X1.0X35MM)	
	8	1	**143-2830**	1	LATCH AS	
M		1	**6V-7743**	2	LOCKNUT (M6X1 THD)	
M		1	**9X-2045**	2	SCREW-TRUSS HEAD (M6X1X20MM)	
		1	**143-2827**	1	SPRING	
	9	1	**159-4951**	1	LATCH AS	
M		1	**5C-2874**	1	NUT (M5X.8 THD)	
M		1	**161-6984**	1	SCREW-TRUSS HEAD (M5X0.8X20MM)	
		1	**161-6987**	1	WASHER-HARD (1.5MM THK)	
		1	**161-9294**	1	SPRING-FLAT WIRE	
M		1	**162-6556**	1	LOCKNUT	
	10	1	**164-1067**	1	GLASS	
M	11	1	**6V-7743**	2	LOCKNUT (M6X1 THD)	
B	12	1	**148-5353**		SEAL	

B-USE AS REQUIRED
M-METRIC PART

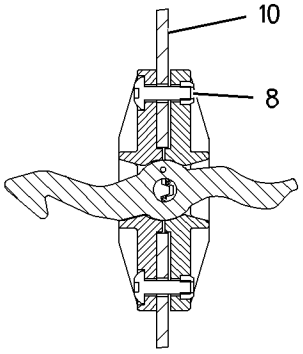

SECTION C-C

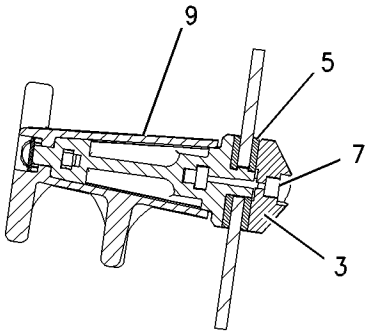

SECTION D-D

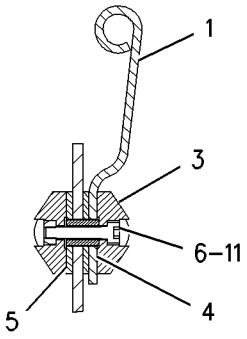

SECTION A-A

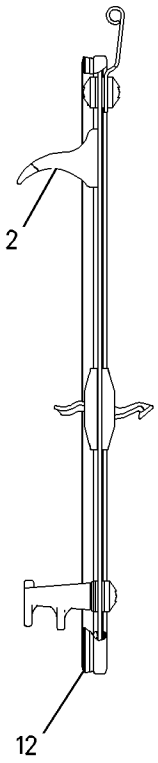

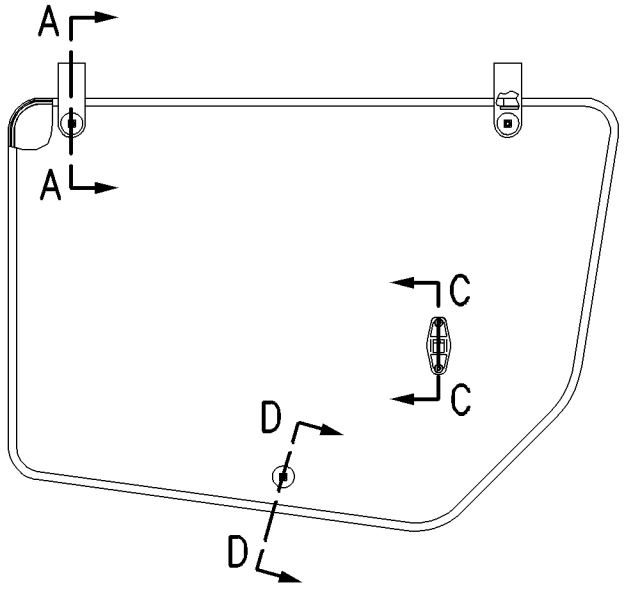

GRAPHIC #1

g00778434

OPERATOR STATION

247-4367 WIPER GP-WINDOW-REAR

S/N:JRB00255-UP
AN ATTACHMENT

SMCS-7305 **i01498230**

NOTE	REF NO	GRAPHIC REF	PART NUMBER	QTY	PART NAME 1 2 3 4 5 6 (PRODUCT LEVEL)	SEE PAGE
M	1	1	**8C-8451**	2	BOLT (M6X1X40MM)	
M	2	1	**8T-4970**	**2**	BOLT (M6X1X14MM)	
	3	1	**101-0745**	**1**	BLADE AS	
	4	1	**132-2249**	2	SPACER (24.0MM THK)	
	5	1	**8T-4205**	**4**	WASHER-HARD (7.2X14.5X2MM THK)	
	6	1	**174-5456**	1	PLATE	
	7	1	**174-2025**	1	MOTOR GP-WINDOW WIPER-REAR	
		1	**102-8805**	1	KIT-RECEPTACLE (6 PIN)	
					(KIT SERVICES RECEPTACLE AS. AND WEDGE)	
		1	**186-3735**	4	PIN-CONNECTOR	
	8	1	**174-2026**	1	ARM AS-REAR WIPER	
		1	**163-4759**	1	KIT-REPAIR	
E		1	**194-5171**		HOSE (33CM)	

E-ORDER BY THE CENTIMETER
M-METRIC PART
Y-SEPARATE ILLUSTRATION

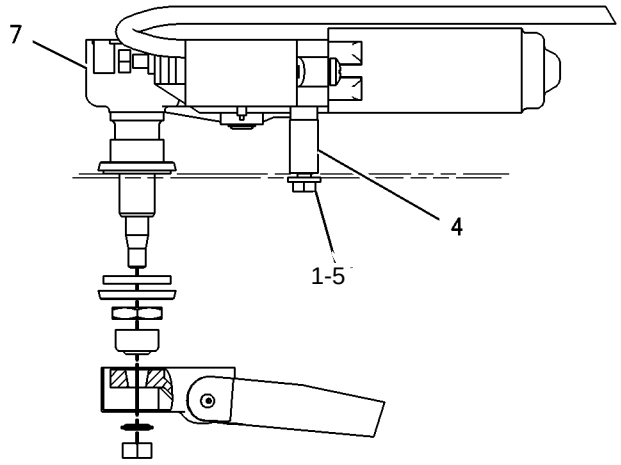

VIEW A-A

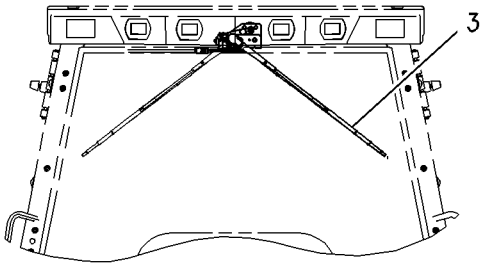

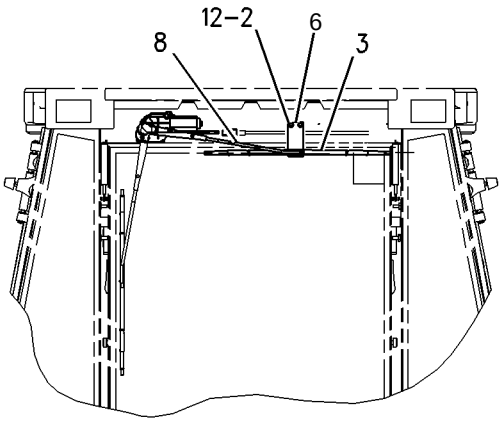

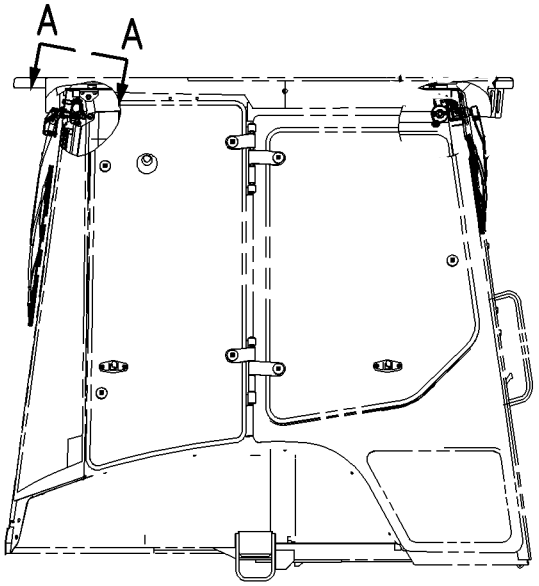

GRAPHIC #1 g00726930

OPERATOR STATION

237-2637 WIPER GP-WINDOW-FRONT

S/N: JRB

PART OF 228-2787 CAB AR

NOTE	REF NO	GRAPHIC REF	PART NUMBER	QTY	PART NAME 1 2 3 4 5 6 (PRODUCT LEVEL)	SEE PAGE
	1	1	237-2641	1	SPACER	
	2	1	237-2650	1	WIPER MOTOR	
	3	1	237-2645	1	BRACKET ASSY	
	4	1	8T-4138	5	BOLT	
	5	1	8T-4205	7	WASHER HARD	
	6	1	237-2643	1	WIPER MOTOR-ACCESS KIT	
	7	1	237-2638	1	LINK ASSY	
	8	1	237-2642	1	WIPER BLADE	
	9	1	237-2644	1	WIPER ARM	

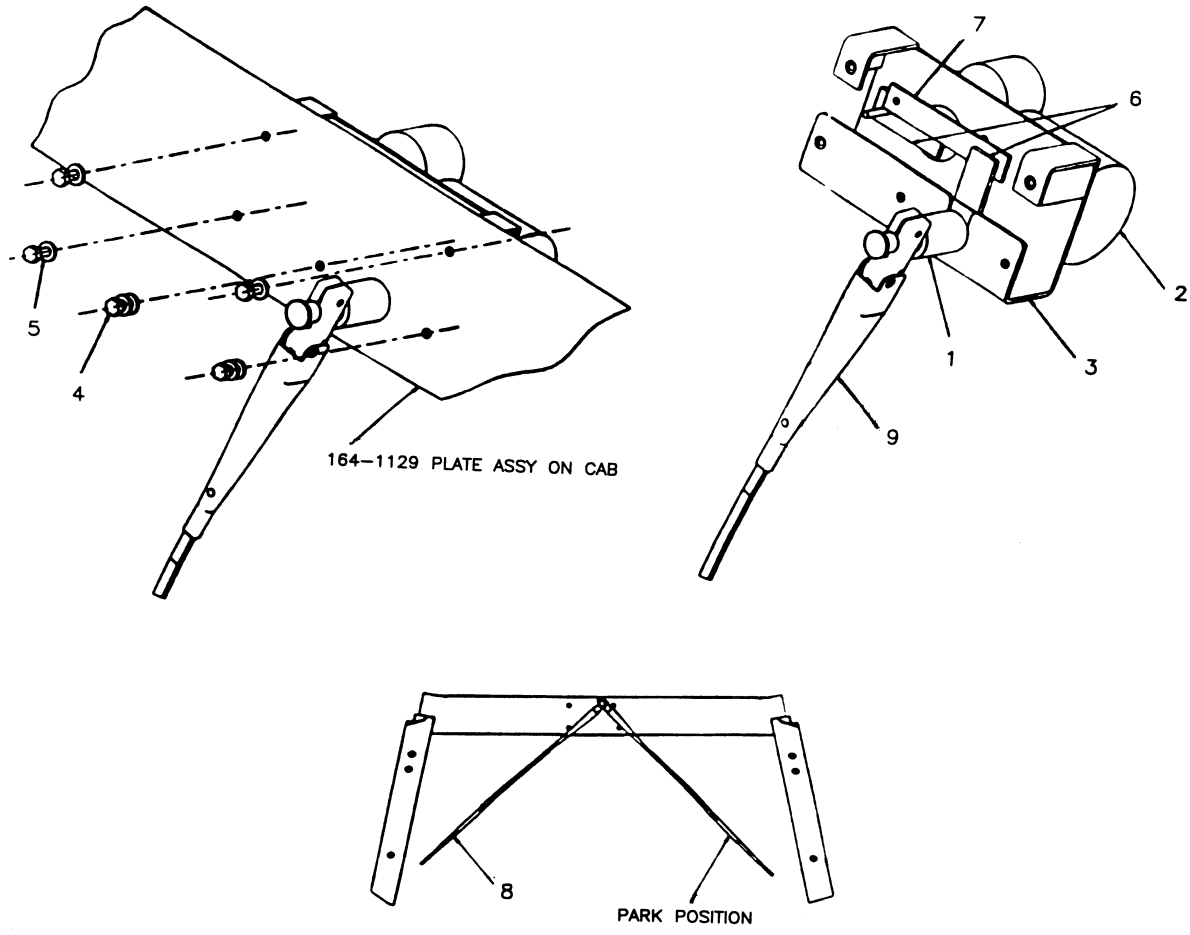

GRAPHIC #1

OPERATOR STATION

193-2342 HORN GP-ELECTRIC

S/N: JRB353-358,363,364 & 367-UP

REAR

SMCS-7402 **i01585055**

NOTE	REF NO	GRAPHIC REF	PART NUMBER	QTY	PART NAME 1 2 3 4 5 6 (PRODUCT LEVEL)	SEE PAGE
B	1	1	**3S-2093**	1	STRAP-CABLE	
	2	1	**164-9425**	1	HORN AS	
	3	1	**169-0587**	1	SWITCH AS	
		1	**111-7899**	1	GASKET	
	4	1	**096-4415**	1	LOCKWASHER	
B	5	1	**4P-8134**	1	CLIP	
M	6	1	**8T-4133**	1	NUT (M10X1.5 THD)	
M	7	1	**8T-4195**	1	BOLT (M10X1.5X30MM)	

B-USE AS REQUIRED
M-METRIC PART

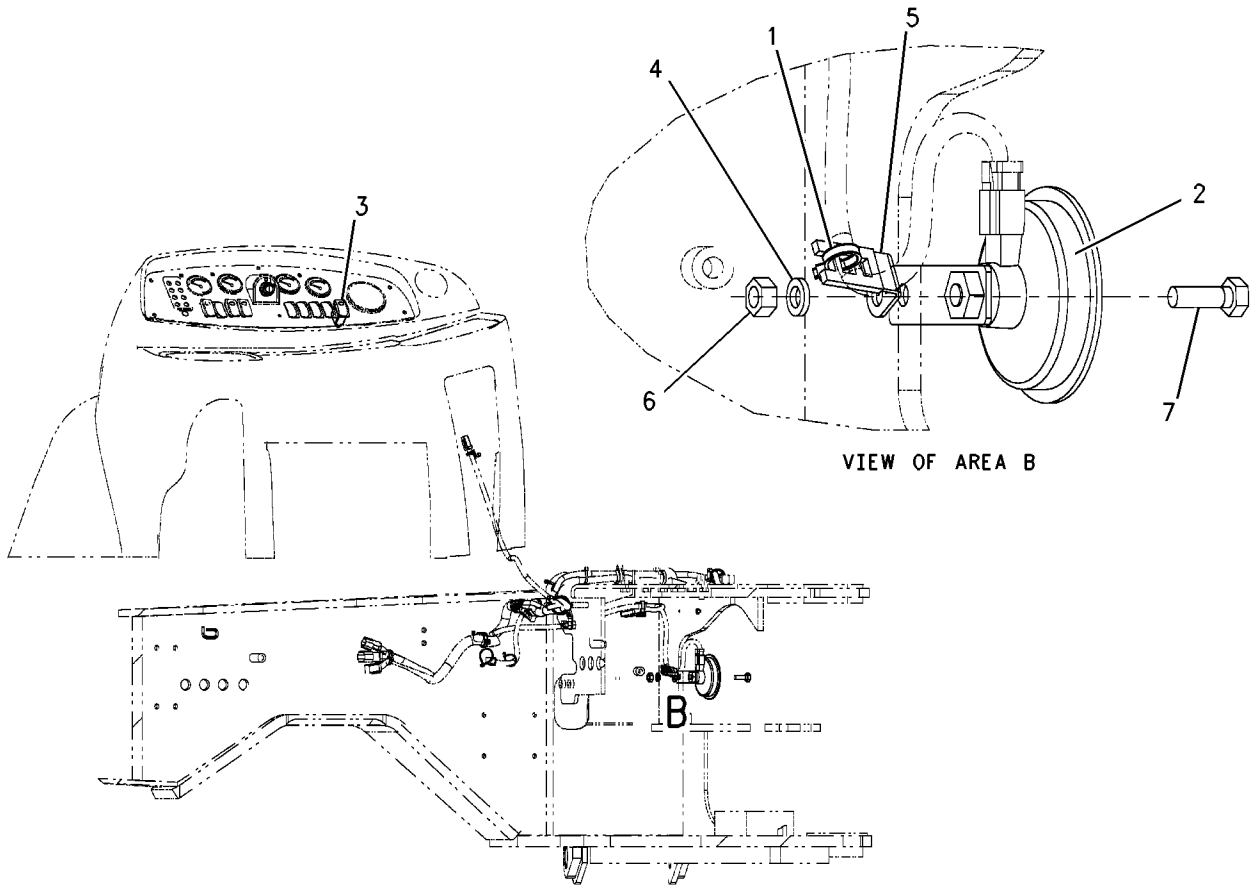

GRAPHIC #1 g00823261

SERVICE EQUIPMENT AND SUPPLIES

134-8204 LOCK GP-VANDALISM

S/N:JRB00255-UP
SINGLE TILT

SMCS-7315 **i00559218**

NOTE	REF NO	GRAPHIC REF	PART NUMBER	QTY	PART NAME 1 2 3 4 5 6 (PRODUCT LEVEL)	SEE PAGE
	1	1	**5P-8501**	2	PADLOCK GP	
					(EACH INCLUDES)	
		1	**5P-8500**	1	KEY	
		1	**8Y-6364**	1	SLEEVE	
	2	1	**125-2086**	1	LOCK AS-CYLINDER	
		1	**7F-9223**	1	LOCKWASHER (0.91MM THK)	
		1	**8T-5004**	1	SCREW-MACHINE (1/4-28X0.375IN)	

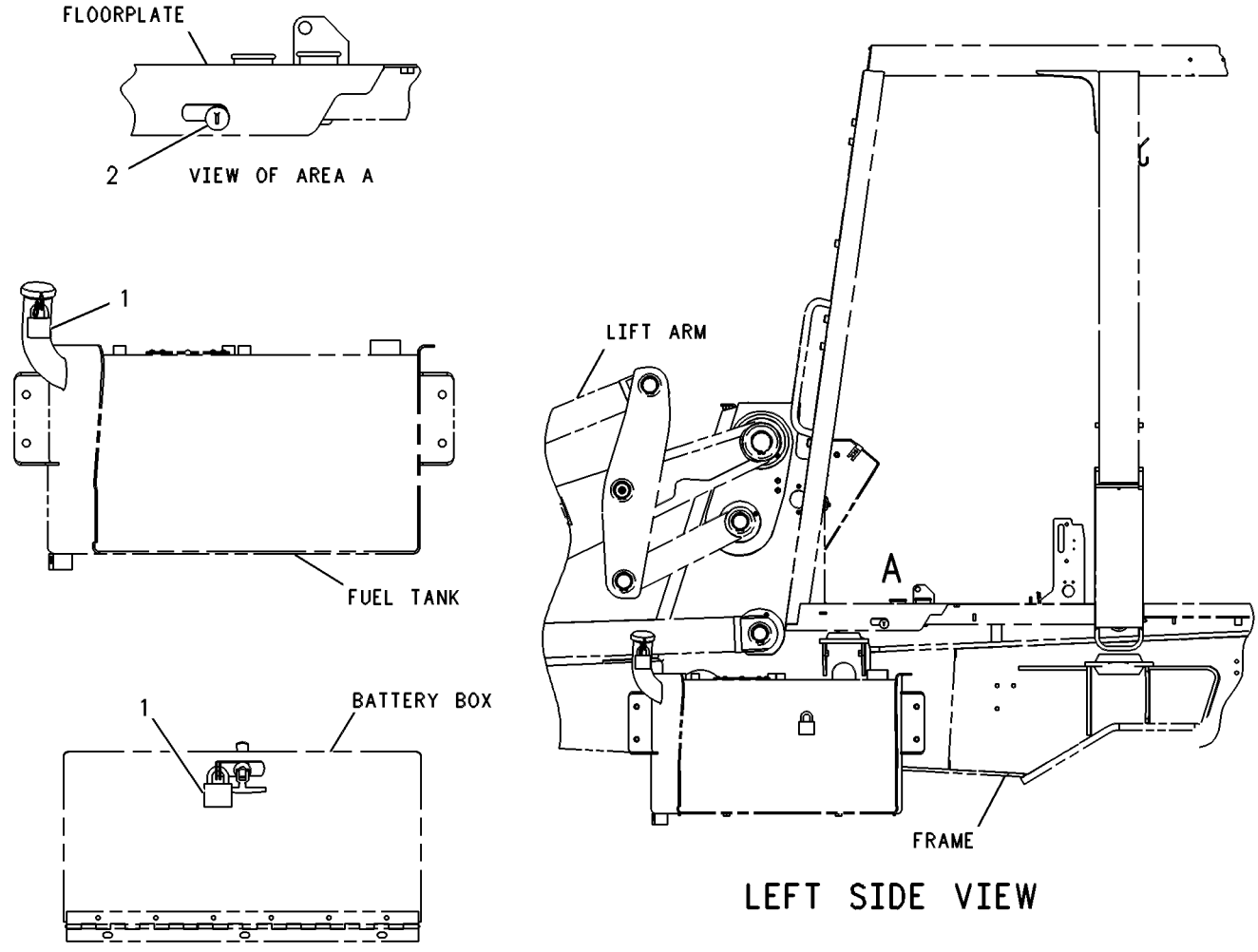

GRAPHIC #1 g00131833

SERVICE EQUIPMENT SUPPLIES

236-9146 FILM GP

S/N : JRB00255-UP

SMCS-7405,7557

NOTE	REF NO	GRAPHIC REF	PART NUMBER	QTY	PART NAME 1 2 3 4 5 6 (PRODUCT LEVEL)	SEE PAGE
	1	1	232-1672	1	FILM(424) (RH)	
	2	1	101-0003	8	FASTENER	
	3	1	3E-8123	1	FILM STRIPE-RH	
	4	1	3E-8124	1	FILM STRIPE-LH	
	5	1	232-1671	1	FILM(424)(LH)	
D	6	1	3E-8211		FILM	
	7	1	110-0037	1	FILM-WINDSHIELD	
	8	1	191-9111	1	FILM-CAT	

D - ORDER BY THE CENTIMETER

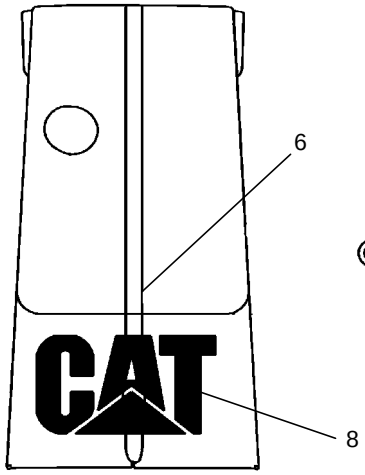

HOOD (TOP)

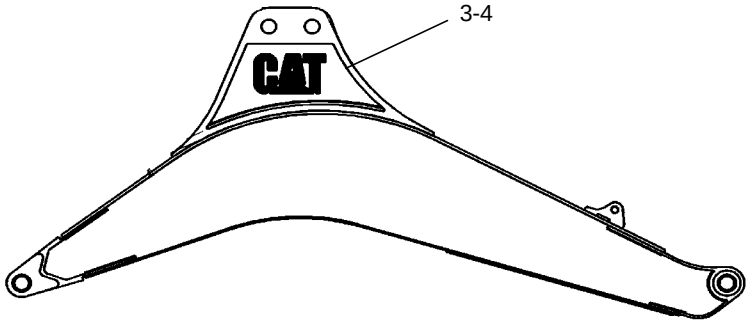

BOOM

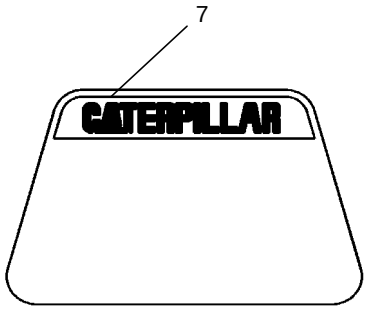

WINDSHIELD (FRONT)

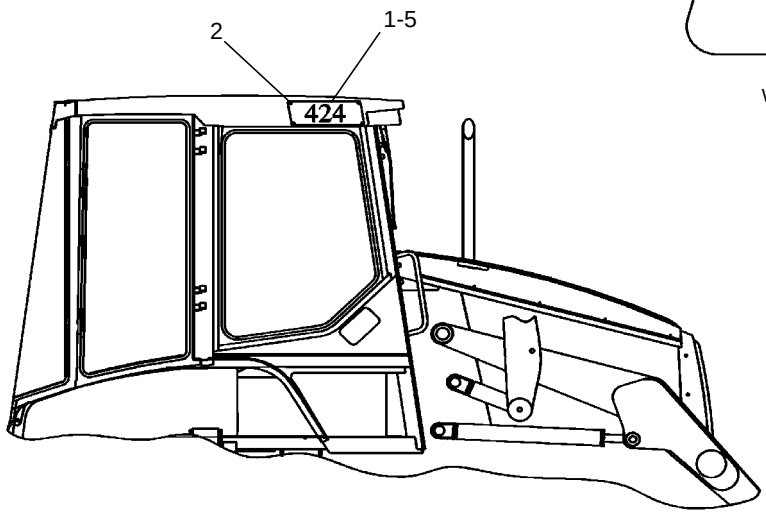

RIGHT SIDE

GRAPHIC#1

SERVICE EQUIPMENT AND SUPPLIES

238-4521 ACCESSORIES GP

S / N : JRB00255 - UP

NOTE	REF NO	GRAPHIC REF	PART NUMBER	QTY	PART NAME 1 2 3 4 5 6 (PRODUCT LEVEL)	SEE PAGE
Y	1		*238-4522*	1	REFLECTOR GP	334
Y	2		*238-4529*	1	LAMP GP	333
Y	3		*239-0842*	1	MOUNTING GP-SPEED SENSOR	101
A	4		239-0847	1	SPEEDOMETER	

Y - SEPARATE ILLUSTRATION

A - MOUNT SPEEDOMETER ON FRONT CONSOLE PANEL ASSY

SERVICE EQUIPMENT AND SUPPLIES

238-4529 LAMP GP-NUMBER PLATE

S / N : JRB00255 - UP

PART OF 238-4521 ACCESSORIES GP

SMCS -1429

NOTE	REF NO	GRAPHIC REF	PART NUMBER	QTY	PART NAME 1 2 3 4 5 6 (PRODUCT LEVEL)	SEE PAGE
	1	1	111-0394	1	PLATE ASSY	
	2	1	238-4530	1	LAMP ASSY	
	3	1	8T-4121	1	WASHER-HARD	
	4	1	8T-4136	1	BOLT	

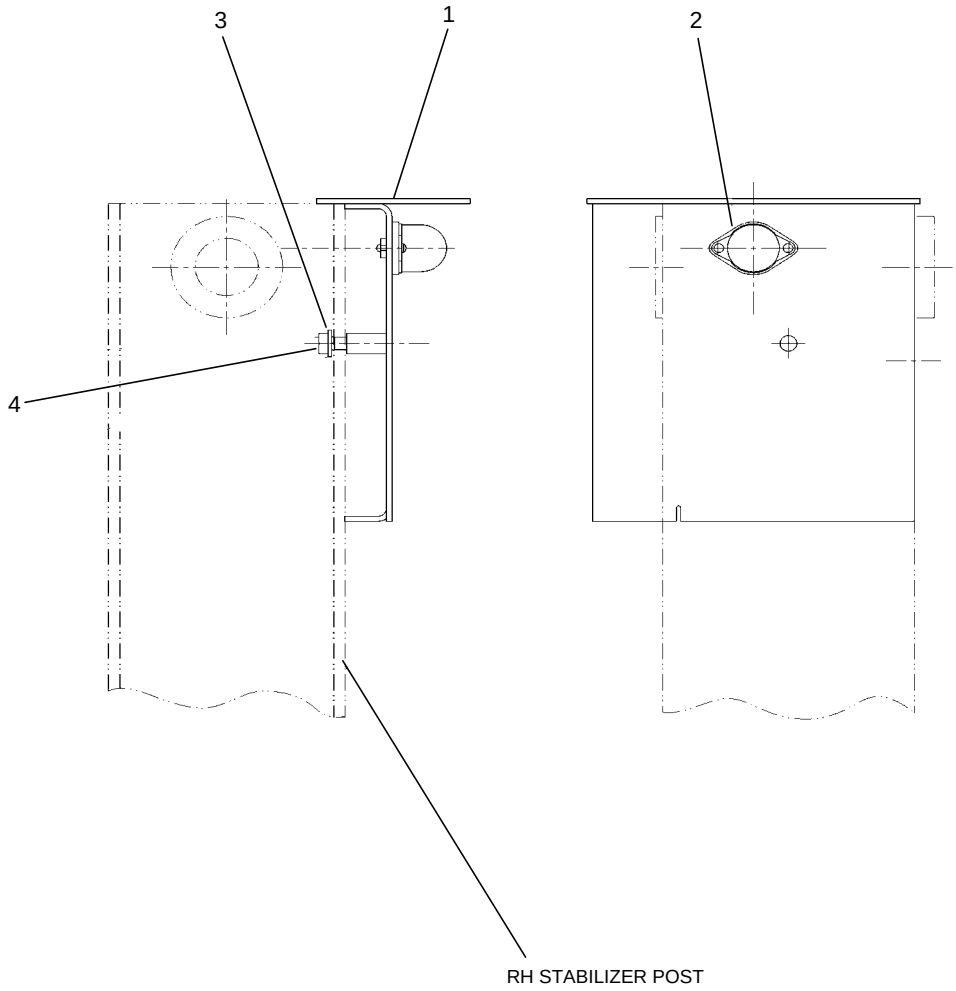

GRAPHIC#1

SERVICE EQUIPMENT AND SUPPLIES

238-4522 REFLECTOR GP

S / N : JRB00255 - UP

PART OF 238-4521 ACCESSORIES GP

SMCS - 7405

NOTE	REF NO	GRAPHIC REF	PART NUMBER	QTY	PART NAME 1 2 3 4 5 6 (PRODUCT LEVEL)	SEE PAGE
	1	1	238-4523	2	REFLECTOR-RED	
	2	1	238-4524	8	REFLECTOR-AMBER	
	3	1	238-4525	2	REFLECTOR-WHITE	
	4	1	238-4527		REFLECTOR-RED (STRIPE) 500 CM	
	5		238-4528		REFLECTOR-WHITE(STRIP) 240 CM	

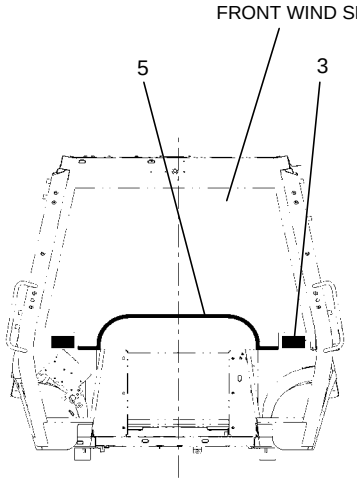

FRONT VIEW OF CAB

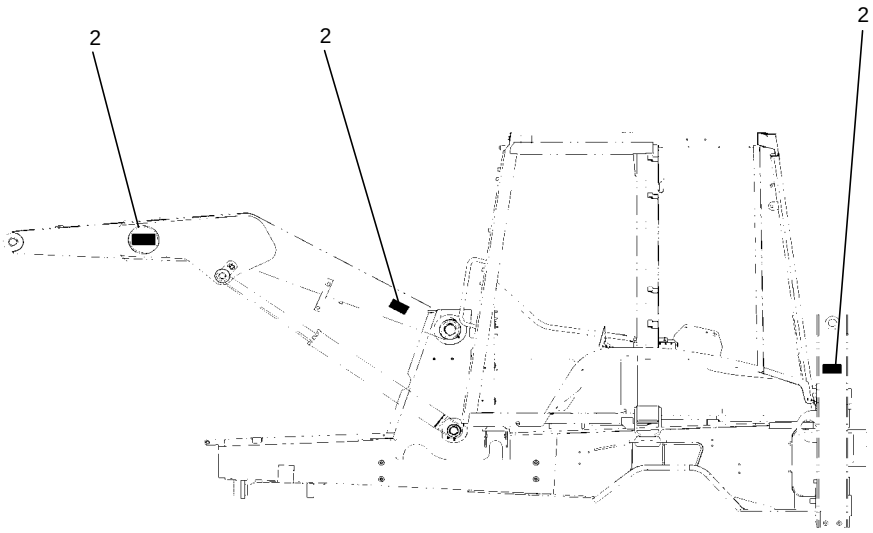

LH SIDE VIEW OF MACHINE

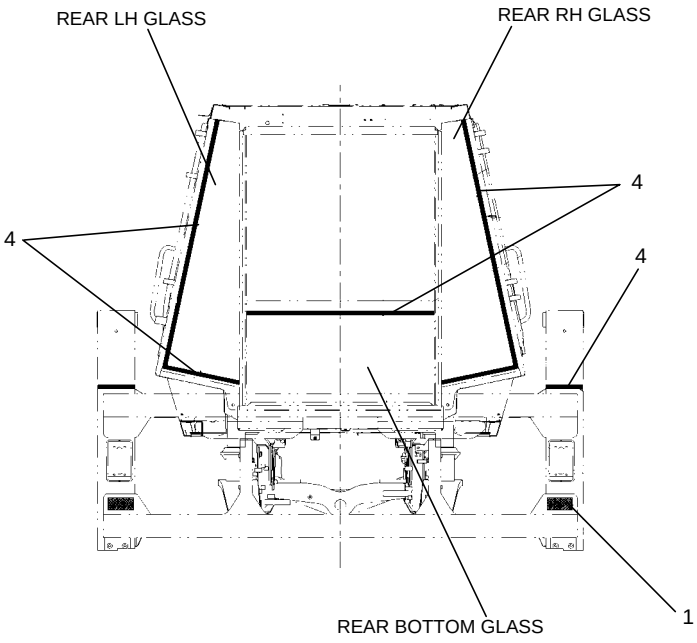

REAR VIEW OF MACHINE

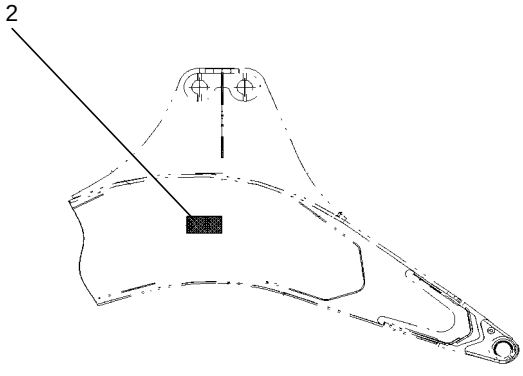

RH SIDE VIEW OF BOOM

GRAPHIC#1

PARTS NUMERICAL INDEX

PARTNO	PAGE	PARTNO	PAGE	PARTNO	PAGE	PARTNO	PAGE	PARTNO	PAGE	PARTNO	PAGE
0S-1614	246	1S-7252	67	31-0214	242	3E-3365	130	3J-1907	200	3K-0360	142
0S-1614	60	1S-8947	147	31-5085	242	3E-3365	172	3J-1907	202	3K-0360	206
0S-1615	78	1S-9593	130	3B-4607	67	3E-3365	261	3J-1907	202	3K-0360	216
1A-0621	134	1S-9593	130	3B-4609	60	3E-3365	62	3J-1907	202	3K-0360	216
1A-5350	134	1S-9593	248	3B-4610	136	3E-3365	88	3J-1907	202	3K-0360	216
1B-0676	188	1S-9593	261	3B-5317	223	3E-3365	88	3J-1907	204	3K-0360	216
1B-4330	67	1S-9593	56	3B-5319	268	3E-3371	130	3J-1907	204	3K-0360	250
1B-8736	188	1W-5849	24	3B-5790	228	3E-4892	8	3J-1907	206	3K-0360	250
1H-1023	144	1W-5849	24	3B-8488	156	3E-4924	8	3J-1907	206	3K-0360	252
1H-1200	134	1W-5849	28	3B-8488	264	3E-6600	164	3J-1907	212	3K-0360	256
1H-2204	66	2B-2404	62	3B-8488	266	3E-6600	164	3J-1907	212	3S-2093	125
1H-3244	308	2H-3922	79	3B-8488	276	3E-6769	228	3J-1907	212	3S-2093	134
1H-7339	177	2J-3506	287	3B-8489	156	3E-6770	228	3J-1907	214	3S-2093	164
1H-9721	125	2J-3506	288	3B-8489	158	3E-6922	70	3J-1907	65	3S-2093	172
1K-0502	169	2J-3506	291	3B-8489	160	3E-8123	331	3J-1907	88	3S-2093	296
1K-0502	172	2J-3506	291A	3B-8489	188	3E-8124	331	3J-7352	228	3S-2093	315
1K-7082	113	2M-9780	195	3B-8489	223	3E-8211	166	3J-7354	142	3S-2093	316
1L-6377	152	2M-9780	202	3B-8489	264	3E-8211	295	3J-7354	142	3S-2093	329
1M-6119	67	2M-9780	206	3B-8489	266	3E-8211	331	3J-7354	204	3S-2093	60
1M-6120	67	2M-9780	214	3B-8489	268	3E-8620	248	3J-7354	204	3S-2093	70
1M-6120	67	2M-9780	218	3B-8489	270	3E-8621	261	3J-7354	204	3S-2093	72
1N-3762	10	2M-9780	218	3B-8489	276	3E-8622	212	3J-7354	204	3S-2093	79
1N-3762	10	2M-9780	228	3B-8489	284	3E-8622	261	3J-7354	228	3S-2093	80
1N-3762	10	2M-9780	234	3B-8489	285	3E-9362	70	3J-7354	228	3S-2093	83
1P-3703	206	2M-9780	242	3C-8388	228	3F-9556	314	3J-7354	242	3S-2093	86
1P-3709	206	2M-9780	244	3D-2824	147	3G-4461	144	3J-7354	244	3S-2093	88
1P-4278	234	2M-9780	246	3D-2824	190	3G-6891	144	3J-7354	246	3S-2093	93
1P-4278	62	2M-9780	248	3D-2824	192	3G-6906	144	3J-7354	248	3S-2093	98
1P-6872	228	2M-9780	250	3D-2824	194	3G-6907	144	3J-7354	250	3T-0849	260
1P-7363	242	2M-9780	252	3D-2824	196	3G-6927	126	3J-7354	252	3T-3349	67
1P-7363	244	2M-9780	254	3D-2824	196	3J-1907	104	3J-7354	254	3Y-8139	62
1P-7363	246	2M-9780	256	3D-2824	198	3J-1907	118	3J-7354	256	4B-2043	83
1P-7363	248	2P-1279	134	3D-2824	206	3J-1907	118	3J-7354	65	4B-2043	83
1P-7363	250	2P-1293	190	3D-2824	214	3J-1907	118	3J-7354	65	4B-2043	83
1P-7363	252	2P-1293	192	3D-2824	214	3J-1907	124	3J-9196	261	4B-2049	88
1P-7363	254	2R-0364	169	3D-2824	218	3J-1907	134	3K-0360	142	4B-4274	166
1P-7363	256	2R-0364	172	3D-2824	220	3J-1907	134	3K-0360	142	4B-4863	70
1S-7251	67	2W-9710	52	3E-3363	114	3J-1907	134	3K-0360	142	4B-4863	94
1S-7251	93	2Y-5829	188	3E-3365	114	3J-1907	183	3K-0360	142	4B-9782	244

PARTS NUMERICAL INDEX

PARTNO	PAGE	PARTNO	PAGE	PARTNO	PAGE	PARTNO	PAGE	PARTNO	PAGE	PARTNO	PAGE
4D-7794	158	4J-5477	204	4T-4520	250	4W-9972	88	5H-3193	172	5P-0761	67
4D-9986	238	4J-5477	204	4T-4520	252	5B-9318	147	5J-4771	291	5P-0798	322
4D-9986	239	4J-5477	204	4T-4520	254	5B-9318	240	5K-0906	204	5P-1075	57
4D-9986	240	4J-5477	65	4T-4521	242	5B-9318	242	5K-5338	142	5P-1076	160
4D-9986	256	4J-7533	248	4T-4521	244	5B-9318	244	5K-9090	192	5P-1442	134
4E-8619	134	4K-0367	286	4T-4521	246	5B-9318	246	5K-9090	206	5P-1442	234
4E-8619	137	4K-0367	287	4T-4521	248	5B-9318	248	5K-9090	206	5P-1442	62
4F-3656	286	4K-0367	288	4T-4521	250	5B-9318	250	5K-9090	206	5P-1505	142
4F-3656	288	4K-0367	289	4T-4521	252	5B-9318	252	5K-9090	206	5P-1505	202
4F-3656	289	4K-0367	291	4T-4521	254	5B-9318	254	5K-9090	210	5P-1505	207
4F-3656	291	4K-0367	291A	4T-4524	242	5B-9318	256	5K-9090	210	5P-1505	234
4F-3656	291A	4K-0367	293	4T-4524	244	5C-2874	318	5K-9090	211	5P-4115	164
4F-3656	293	4K-0367	294	4T-4524	246	5C-2874	320	5K-9090	211	5P-4115	202
4F-3656	294	4K-1388	242	4T-4524	248	5C-2874	324	5K-9090	241	5P-4115	224
4F-3657	287	4K-1388	244	4T-4524	250	5C-2890	224	5K-9090	242	5P-4115	322
4F-7827	287	4K-1388	248	4T-4524	252	5C-2890	226	5K-9090	244	5P-4116	206
4F-7827	288	4K-1388	250	4T-4524	254	5C-2890	303	5K-9090	248	5P-4116	274
4F-7827	291A	4K-1388	250	4T-4528	242	5C-7261	134	5K-9090	250	5P-4116	275
4F-7952	126	4K-1388	252	4T-4528	244	5C-7261	138	5K-9090	250	5P-4116	296
4J-0522	118	4K-1388	252	4T-4528	246	5C-7261	166	5K-9090	252	5P-4116	306
4J-1888	284	4K-1388	254	4T-4528	248	5C-7261	202	5K-9090	252	5P-4116	312
4J-1888	285	4K-1388	254	4T-4528	250	5C-7261	234	5K-9090	254	5P-4116	322
4J-1888	292	4K-1388	256	4T-4528	252	5C-7261	236	5K-9090	254	5P-4116	49
4J-5140	238	4P-7428	98	4T-4528	254	5C-7261	238A	5K-9090	256	5P-4116	50
4J-5140	239	4P-7581	88	4T-4531	244	5C-7261	296	5L-1100	144	5P-4116	62
4J-5140	240	4P-7581	98	4T-4532	244	5C-7261	314	5L-9023	248	5P-4116	88
4J-5267	238	4P-8134	329	4T-4532	248	5C-7261	318	5M-2894	238	5P-4868	206
4J-5267	239	4P-8134	83	4T-4533	242	5C-7261	320	5M-2894	239	5P-5599	260
4J-5267	240	4P-8134	88	4T-4533	250	5C-9553	202	5M-2894	240	5P-5816	93
4J-5477	134	4T-2723	238	4T-4538	238	5C-9553	224	5P-0372	188	5P-6442	62
4J-5477	134	4T-2723	239	4T-6780	177	5C-9553	314	5P-0537	244	5P-6718	125
4J-5477	134	4T-2723	240	4T-7807	147	5D-1026	142	5P-0537	246	5P-7462	142
4J-5477	142	4T-4218	240	4T-7807	242	5D-1026	202	5P-0537	248	5P-7463	142
4J-5477	142	4T-4513	244	4T-7807	244	5D-1026	206	5P-0537	67	5P-7464	192
4J-5477	202	4T-4516	242	4T-7807	246	5D-1026	234	5P-0599	192	5P-7464	200
4J-5477	202	4T-4516	248	4T-7807	248	5D-4822	166	5P-0599	194	5P-7465	192
4J-5477	202	4T-4518	239	4T-7807	250	5D-8159	292	5P-0599	216	5P-7465	200
4J-5477	202	4T-4520	242	4T-7807	252	5F-3106	225	5P-0599	220	5P-7466	192
4J-5477	204	4T-4520	244	4T-7807	254	5F-9144	144	5P-0743	207	5P-7467	192
4J-5477	204	4T-4520	246	4T-7807	256	5F-9144	183	5P-0747	67	5P-7657	93
4J-5477	204	4T-4520	248	4V-5091	166	5G-8108	134	5P-0747	93	5P-7854	118

PARTS NUMERICAL INDEX

PARTNO	PAGE	PARTNO	PAGE	PARTNO	PAGE	PARTNO	PAGE	PARTNO	PAGE	PARTNO	PAGE
5P-7958	158	6E-4317	242	6I-0260	43	6I-0563	22	6K-0806	158	6V-3965	206
5P-7958	160	6E-4317	244	6I-0281	24	6I-0593	26	6K-0806	83	6V-4364	268
5P-8066	125	6E-4317	246	6I-0281	24	6I-0593	32	6K-0806	93	6V-4364	276
5P-8112	192	6E-4317	248	6I-0283	24	6I-0593	40	6K-4355	67	6V-4589	124
5P-8244	62	6E-6151	230	6I-0283	24	6I-0646	10	6K-8178	204	6V-5571	316
5P-8250	177	6E-6154	230	6I-0284	24	6I-0646	14	6N-6984	52	6V-5653	206
5P-8500	330	6E-6155	230	6I-0284	24	6I-0650	38	6P-6590	164	6V-5653	234
5P-8501	330	6E-6157	230	6I-0285	24	6I-0653	32	6S-7826	144	6V-5683	228
5P-9262	258	6E-6158	230	6I-0289	36	6I-0654	32	6S-7827	144	6V-5698	314
5S-0003	256	6E-6174	228	6I-0291	12	6I-0654	34	6S-8620	134	6V-5839	58
5V-2545	122	6E-6175	228	6I-0293	43	6I-0789	12	6S-8620	62	6V-7238	206
5V-8309	166	6E-6176	228	6I-0293	43	6I-0836	12	6T-9142	124	6V-7687	158
5W-9411	56	6E-6281	252	6I-0298	14	6I-0836	30	6T-9143	124	6V-7687	158
6D-3479	234	6E-6284	254	6I-0298	30	6I-0839	12	6T-9144	124	6V-7687	160
6D-4246	142	6E-6285	254	6I-0300	43	6I-0842	12	6T-9145	124	6V-7687	264
6D-4246	202	6E-6286	252	6I-0301	14	6I-0912	38	6T-9146	124	6V-7687	266
6D-7573	62	6E-6527	258	6I-0302	14	6I-1090	36	6T-9147	124	6V-7687	276
6E-0122	177	6E-6528	258	6I-0363	36	6I-1092	30	6T-9160	124	6V-7731	124
6E-0358	242	6E-6528	260	6I-0364	22	6I-1110	14	6T-9163	125	6V-7743	296
6E-0358	244	6F-7037	177	6I-0423	26	6I-1497	30	6T-9164	124	6V-7743	303
6E-0358	248	6I-0164	10	6I-0443	43	6I-1497	36	6T-9165	124	6V-7743	318
6E-0358	250	6I-0217	10	6I-0444	43	6I-1497	47	6T-9166	124	6V-7743	318
6E-0358	250	6I-0217	12	6I-0445	43	6I-3718	45	6V-0484	118	6V-7743	320
6E-0358	252	6I-0217	24	6I-0446	43	6I-3981	18	6V-0484	206	6V-7743	320
6E-0358	252	6I-0217	36	6I-0450	30	6I-4005	22	6V-0683	142	6V-7743	324
6E-0358	254	6I-0219	10	6I-0450	43	6I-4005	28	6V-0826	214	6V-7743	324
6E-0358	254	6I-0220	10	6I-0453	28	6I-4007	22	6V-0852	118	6V-7744	170
6E-0358	256	6I-0220	28	6I-0453	43	6I-4012	33	6V-0852	202	6V-7744	172
6E-3268	258	6I-0234	45	6I-0455	43	6I-4037	12	6V-0852	204	6V-7744	190
6E-3269	258	6I-0235	45	6I-0456	34	6I-4039	22	6V-0852	206	6V-8097	125
6E-3272	258	6I-0254	12	6I-0456	43	6I-4039	28	6V-1249	192	6V-8144	264
6E-3273	258	6I-0254	38	6I-0459	30	6I-4041	43	6V-1249	200	6V-8144	292
6E-3274	258	6I-0255	38	6I-0459	43	6I-4045	43	6V-1362	56	6V-8186	314
6E-3275	258	6I-0256	38	6I-0485	28	6I-4068	36	6V-2323	228	6V-8210	126
6E-3276	258	6I-0257	38	6I-0485	43	6I-4069	36	6V-2721	67	6V-8227	138
6E-3341	230	6I-0258	38	6I-0506	16	6I-4079	36	6V-3213	264	6V-8236	260
6E-4000	228	6I-0260	12	6I-0506	28	6I-4200	26	6V-3213	268	6V-8335	124
6E-4003	228	6I-0260	22	6I-0507	16	6I-4728	16	6V-3213	270	6V-8344	276
6E-4004	228	6I-0260	36	6I-0512	12	6J-1972	177	6V-3213	278	6V-8352	258
6E-4007	230	6I-0260	36	6I-0516	16	6J-5733	177	6V-3965	118	6V-8363	79
6E-4009	230	6I-0260	38	6I-0517	16	6K-0806	125	6V-3965	204	6V-8370	79

PARTS NUMERICAL INDEX

PARTNO	PAGE	PARTNO	PAGE	PARTNO	PAGE	PARTNO	PAGE	PARTNO	PAGE	PARTNO	PAGE
6V-8376	88	6V-8638	214	6V-9746	192	7J-0204	244	7M-8485	210	7W-2520	24
6V-8397	142	6V-8641	134	6V-9746	194	7J-0204	246	7M-8485	211	7W-4648	38
6V-8397	142	6V-8642	218	6V-9746	206	7J-0204	248	7M-8485	241	7W-4666	14
6V-8397	142	6V-8647	142	6V-9746	214	7J-0204	250	7M-8485	50	7W-4782	38
6V-8397	142	6V-8647	204	6V-9746	214	7J-0204	252	7M-8485	50	7W-4842	12
6V-8397	200	6V-8647	65	6V-9746	214	7J-0204	254	7N-5274	67	7W-7417	56
6V-8397	212	6V-8713	190	6V-9746	50	7J-0204	256	7N-7779	137	7X-0465	224
6V-8397	212	6V-8713	196	6V-9746	50	7J-6833	144	7N-7780	137	7X-0578	149
6V-8397	212	6V-8713	198	6V-9828	202	7J-6839	144	7N-9737	137	7X-0579	166
6V-8397	212	6V-8713	218	6V-9830	198	7J-8009	144	7R-2750	93	7X-0603	52
6V-8397	212	6V-8713	220	6V-9831	196	7J-9108	190	7R-8239	136	7X-2393	318
6V-8397	214	6V-8716	50	6V-9832	206	7J-9108	190	7S-4244	202	7X-2393	320
6V-8397	65	6V-8723	142	6V-9838	196	7J-9108	194	7T-0525	166	7X-2465	156
6V-8398	142	6V-8724	212	6V-9840	210	7J-9108	195	7T-1099	138	7X-2497	306
6V-8398	190	6V-8757	125	6V-9840	211	7J-9108	196	7T-1099	139	7X-2550	206
6V-8398	192	6V-8757	160	6V-9849	204	7J-9108	196	7T-1342	261	7X-2553	123
6V-8398	195	6V-8759	148	6V-9850	142	7J-9108	196	7T-2646	124	7X-2554	164
6V-8398	196	6V-8774	212	6V-9852	218	7J-9108	198	7T-2651	126	7X-2559	104
6V-8398	198	6V-8788	212	6V-9854	206	7J-9108	216	7T-3017	124	7X-4741	125
6V-8398	200	6V-8789	216	6V-9872	65	7J-9108	218	7T-3018	124	7X-4744	124
6V-8398	214	6V-8946	214	6Y-1341	125	7J-9108	218	7T-3021	124	7X-7729	158
6V-8398	214	6V-8987	212	6Y-1896	125	7J-9108	218	7T-3022	124	7X-7729	160
6V-8398	216	6V-8995	192	6Y-2035	124	7J-9108	218	7T-3034	124	7X-7729	164
6V-8398	216	6V-8997	192	6Y-2326	124	7J-9108	220	7T-3051	125	7X-7729	170
6V-8398	216	6V-9002	216	6Y-2736	125	7J-9108	238C	7T-3109	125	7X-7729	316
6V-8398	216	6V-9007	214	6Y-2737	125	7K-1181	142	7T-3111	125	7X-9065	83
6V-8398	218	6V-9168	212	6Y-2936	124	7K-1181	196	7T-3119	124	7X-9065	83
6V-8455	117	6V-9169	190	6Y-9915	8	7K-1181	198	7T-3195	125	7X-9065	83
6V-8500	124	6V-9169	192	7C-0351	36	7K-1181	206	7T-3249	125	7Y-0336	188
6V-8625	216	6V-9170	190	7C-1281	16	7K-1181	218	7T-3251	126	7Y-0336	188
6V-8626	195	6V-9178	124	7C-3192	24	7K-1181	50	7T-3253	126	8B-6127	62
6V-8626	218	6V-9182	50	7C-4616	12	7K-1181	60	7T-4848	93	8C-0572	52
6V-8627	134	6V-9189	133	7C-8246	118	7K-1181	67	7T-8895	149	8C-3291	152
6V-8628	142	6V-9189	231	7D-7233	202	7K-1181	83	7W-0186	40	8C-3443	210
6V-8628	204	6V-9189	312	7D-7233	206	7K-1181	88	7W-0187	28	8C-4121	169
6V-8632	216	6V-9197	60	7F-8267	144	7K-1181	98	7W-0187	40	8C-4182	188
6V-8635	211	6V-9632	138	7F-9223	330	7K-9205	156	7W-1238	77	8C-4447	267
6V-8636	200	6V-9632	139	7G-1060	93	7M-1530	54	7W-2501	10	8C-4987	169
6V-8636	214	6V-9632	58	7I-5486	200	7M-8485	147	7W-2505	18	8C-4987	170
6V-8637	194	6V-9746	190	7J-0204	147	7M-8485	206	7W-2518	24	8C-4987	172
6V-8637	214	6V-9746	192	7J-0204	242	7M-8485	206	7W-2519	24	8C-5748	124

PARTS NUMERICAL INDEX

PARTNO	PAGE	PARTNO	PAGE	PARTNO	PAGE	PARTNO	PAGE	PARTNO	PAGE	PARTNO	PAGE
8C-6364	234	8T-1580	125	8T-3844	303	8T-4121	58	8T-4136	196	8T-4138	56
8C-6955	188	8T-1581	125	8T-3998	299	8T-4121	62	8T-4136	198	8T-4138	60
8C-7110	228	8T-1686	142	8T-4001	152	8T-4121	72	8T-4136	200	8T-4138	79
8C-8451	326	8T-1779	212	8T-4001	156	8T-4121	8	8T-4136	202	8T-4139	140
8D-5294	275	8T-1885	216	8T-4121	101	8T-4121	80	8T-4136	206	8T-4139	158
8F-0212	244	8T-1886	216	8T-4121	118	8T-4121	88	8T-4136	216	8T-4139	160
8F-0212	248	8T-1887	194	8T-4121	138	8T-4121	94	8T-4136	218	8T-4139	192
8F-1434	79	8T-1888	194	8T-4121	142	8T-4121	98	8T-4136	227	8T-4139	234
8F-1434	88	8T-1889	192	8T-4121	149	8T-4122	152	8T-4136	231	8T-4139	315
8F-5340	144	8T-1889	214	8T-4121	152	8T-4122	225	8T-4136	333	8T-4167	152
8F-6302	248	8T-1890	192	8T-4121	158	8T-4123	150	8T-4136	50	8T-4167	156
8F-6711	156	8T-1890	214	8T-4121	160	8T-4123	188	8T-4136	57	8T-4170	150
8H-0707	242	8T-1891	200	8T-4121	163	8T-4129	138	8T-4136	58	8T-4171	306
8H-0707	246	8T-1892	200	8T-4121	164	8T-4131	113	8T-4136	62	8T-4171	94
8H-0707	250	8T-2360	147	8T-4121	170	8T-4132	152	8T-4136	88	8T-4172	170
8H-0707	252	8T-2360	242	8T-4121	172	8T-4132	8	8T-4136	94	8T-4174	152
8H-0707	254	8T-2360	244	8T-4121	190	8T-4133	118	8T-4137	118	8T-4174	8
8H-0707	256	8T-2360	246	8T-4121	192	8T-4133	134	8T-4137	152	8T-4176	264
8J-2574	177	8T-2360	248	8T-4121	194	8T-4133	158	8T-4137	163	8T-4179	234
8L-2746	124	8T-2360	250	8T-4121	195	8T-4133	169	8T-4137	164	8T-4179	62
8L-2779	130	8T-2360	252	8T-4121	196	8T-4133	170	8T-4137	194	8T-4179	94
8L-8413	60	8T-2360	254	8T-4121	198	8T-4133	172	8T-4137	198	8T-4180	306
8L-8413	62	8T-2360	256	8T-4121	200	8T-4133	188	8T-4137	204	8T-4181	166
8L-8413	86	8T-2361	242	8T-4121	202	8T-4133	202	8T-4137	206	8T-4181	306
8M-2770	152	8T-2361	244	8T-4121	204	8T-4133	329	8T-4137	214	8T-4182	164
8N-0869	67	8T-2361	246	8T-4121	206	8T-4133	52	8T-4137	218	8T-4183	149
8N-7998	38	8T-2361	248	8T-4121	214	8T-4133	70	8T-4137	234	8T-4183	222
8R-6263	137	8T-2361	250	8T-4121	216	8T-4133	80	8T-4137	270	8T-4183	62
8S-4710	244	8T-2361	252	8T-4121	218	8T-4133	83	8T-4137	309	8T-4185	222
8S-7803	296	8T-2361	254	8T-4121	221	8T-4133	94	8T-4137	310	8T-4185	58
8T-0154	206	8T-2361	256	8T-4121	222	8T-4133	98	8T-4137	50	8T-4186	142
8T-0276	133	8T-2444	166	8T-4121	227	8T-4136	138	8T-4137	72	8T-4186	221
8T-0318	166	8T-2659	83	8T-4121	231	8T-4136	142	8T-4137	88	8T-4186	222
8T-0328	224	8T-2659	86	8T-4121	234	8T-4136	149	8T-4137	94	8T-4186	52
8T-0328	88	8T-2659	98	8T-4121	270	8T-4136	158	8T-4137	98	8T-4186	62
8T-0352	80	8T-3444	200	8T-4121	309	8T-4136	160	8T-4138	134	8T-4189	134
8T-0389	221	8T-3490	274	8T-4121	310	8T-4136	164	8T-4138	164	8T-4189	151
8T-0706	188	8T-3612	274	8T-4121	316	8T-4136	172	8T-4138	170	8T-4189	166
8T-0789	316	8T-3612	306	8T-4121	333	8T-4136	190	8T-4138	322	8T-4189	202
8T-1118	316	8T-3652	158	8T-4121	50	8T-4136	192	8T-4138	328	8T-4189	207
8T-1159	62	8T-3652	160	8T-4121	57	8T-4136	195	8T-4138	47	8T-4189	296

PARTS NUMERICAL INDEX

PARTNO	PAGE	PARTNO	PAGE	PARTNO	PAGE	PARTNO	PAGE	PARTNO	PAGE	PARTNO	PAGE
8T-4189	310	8T-4205	166	8T-4224	231	8T-5001	276	8T-9501	172	9P-9150	124
8T-4189	47	8T-4205	224	8T-4224	234	8T-5004	330	8T-9530	268	9R-0036	267
8T-4189	50	8T-4205	238A	8T-4224	236	8T-5005	190	8Y-4489	266	9R-0036	273
8T-4189	55	8T-4205	314	8T-4224	310	8T-5041	113	8Y-6364	330	9R-0109	264
8T-4189	60	8T-4205	316	8T-4224	47	8T-5063	188	8Y-6386	306	9R-0109	264
8T-4189	62	8T-4205	326	8T-4224	49	8T-5091	166	8Y-6388	298	9R-0109	292
8T-4191	154	8T-4205	328	8T-4224	52	8T-5092	160	8Y-6998	166	9R-0111	264
8T-4191	164	8T-4205	47	8T-4224	55	8T-5093	70	8Y-7203	158	9R-0111	283
8T-4191	234	8T-4205	56	8T-4224	60	8T-5412	158	8Y-7203	160	9R-0111	284
8T-4191	83	8T-4205	60	8T-4224	62	8T-5439	110	8Y-7204	158	9R-0111	285
8T-4192	118	8T-4205	78	8T-4649	152	8T-5439	110	8Y-7204	160	9R-0119	264
8T-4192	200	8T-4205	79	8T-4742	226	8T-5439	111	8Y-7264	306	9R-0139	276
8T-4192	50	8T-4205	94	8T-4742	59	8T-5439	113	8Y-7287	324	9R-0147	268
8T-4194	118	8T-4222	164	8T-4742	60	8T-6356	206	8Y-7306	306	9R-0158	264
8T-4195	158	8T-4222	52	8T-4744	226	8T-6466	170	8Y-7309	318	9R-0158	268
8T-4195	160	8T-4223	114	8T-4744	59	8T-6675	206	8Y-7309	320	9R-0158	270
8T-4195	170	8T-4223	118	8T-4744	60	8T-6684	192	8Y-7310	306	9R-0162	268
8T-4195	172	8T-4223	123	8T-4766	172	8T-6684	206	8Y-7444	296	9R-0162	268
8T-4195	198	8T-4223	149	8T-4773	169	8T-6726	195	8Y-7833	94	9R-0162	276
8T-4195	207	8T-4223	172	8T-4773	170	8T-6726	57	8Y-8081	67	9R-0162	287
8T-4195	218	8T-4223	192	8T-4773	172	8T-6870	231	8Y-8674	214	9R-0162	288
8T-4195	329	8T-4223	200	8T-4815	169	8T-6902	314	8Y-8675	214	9R-0162	289
8T-4195	62	8T-4223	207	8T-4815	170	8T-7338	225	90-5725	202	9R-0162	290
8T-4195	98	8T-4223	222	8T-4815	172	8T-7529	207	9B-7233	83	9R-0162	291
8T-4196	8	8T-4223	234	8T-4821	158	8T-7529	50	9B-7233	83	9R-0162	291A
8T-4197	166	8T-4223	315	8T-4821	160	8T-7557	164	9B-7233	83	9R-0170	266
8T-4197	314	8T-4223	322	8T-4837	158	8T-8549	113	9B-7233	88	9R-0189	267
8T-4198	101	8T-4223	50	8T-4837	160	8T-8729	130	9C-8895	156	9R-0234	158
8T-4198	207	8T-4223	62	8T-4908	158	8T-8729	130	9C-9785	303	9R-0320	264
8T-4198	221	8T-4223	94	8T-4908	160	8T-8729	248	9J-5442	144	9R-0320	286
8T-4198	57	8T-4224	117	8T-4908	234	8T-8737	130	9J-5686	144	9R-0320	286
8T-4200	117	8T-4224	133	8T-4908	47	8T-8737	72	9J-8076	144	9R-0366	156
8T-4200	134	8T-4224	134	8T-4908	49	8T-8737	86	9M-0164	234	9R-0366	158
8T-4200	202	8T-4224	136	8T-4908	52	8T-8737	93	9M-0164	47	9R-0366	160
8T-4200	296	8T-4224	138	8T-4910	207	8T-8737	98	9M-1974	124	9R-0393	152
8T-4200	322	8T-4224	158	8T-4956	114	8T-8799	88	9M-6738	214	9R-0394	152
8T-4200	52	8T-4224	160	8T-4956	123	8T-8894	138	9M-8406	142	9R-0411	268
8T-4200	62	8T-4224	164	8T-4970	326	8T-8894	158	9M-8406	202	9R-0411	268
8T-4200	88	8T-4224	166	8T-4971	316	8T-9405	225	9M-8406	204	9R-0411	276
8T-4201	316	8T-4224	202	8T-4971	59	8T-9501	114	9P-0719	67	9R-0413	156
8T-4205	134	8T-4224	204	8T-5001	266	8T-9501	166	9P-6571	299	9R-0418	200

PARTS NUMERICAL INDEX

PARTNO	PAGE	PARTNO	PAGE	PARTNO	PAGE	PARTNO	PAGE	PARTNO	PAGE	PARTNO	PAGE
9R-0481	156	9R-4482	270	9R-5834	270	9R-8988	289	9S-8006	254	9X-2044	299
9R-1034	218	9R-4485	283	9R-5835	270	9R-9140	270	9S-8009	256	9X-2044	304
9R-1104	270	9R-4486	283	9R-5866	293	9R-9140	273	9S-8752	238	9X-2044	311
9R-1104	270	9R-4494	270	9R-5948	192	9R-9146	188	9S-8752	239	9X-2044	60
9R-1107	270	9R-4619	194	9R-6247	72	9R-9198	198	9S-8752	240	9X-2044	78
9R-1107	270	9R-4668	223	9R-6690	154	9R-9198	218	9S-9334	147	9X-2045	134
9R-1499	72	9R-4668	279	9R-6690	264	9R-9208	212	9T-0642	248	9X-2045	138
9R-1502	276	9R-4668	280	9R-6785	278	9R-9209	212	9T-0644	248	9x-2045	166
9R-1510	268	9R-4675	284	9R-7070	195	9R-9210	220	9T-0650	252	9X-2045	170
9R-1510	276	9R-4675	285	9R-7071	195	9R-9211	220	9T-0650	254	9X-2045	296
9R-1765	172	9R-4676	284	9R-7092	156	9R-9218	192	9T-0655	147	9X-2045	308
9R-1766	114	9R-4676	285	9R-7138	134	9R-9221	192	9T-0656	147	9X-2045	313
9R-1766	172	9R-4677	223	9R-7240	62	9R-9289	214	9T-0704	242	9X-2045	318
9R-1767	114	9R-4678	223	9R-7701	156	9R-9290	214	9T-0704	248	9X-2045	320
9R-1767	172	9R-4784	166	9R-7710	158	9R-9316	218	9T-1083	144	9X-2045	324
9R-1975	212	9R-5063	270	9R-7797	188	9R-9319	198	9T-2212	177	9X-2045	60
9R-1976	212	9R-5202	283	9R-7803	195	9R-9334	134	9T-4007	177	9X-2065	169
9R-2004	214	9R-5205	283	9R-7803	196	9R-9373	264	9T-4008	177	9X-2065	172
9R-2053	216	9R-5206	283	9R-7803	198	9R-9702	113	9T-4009	177	9X-2132	322
9R-2614	188	9R-5294	284	9R-7803	218	9R-9812	266	9T-7309	248	9X-2334	188
9R-2614	188	9R-5294	285	9R-7882	158	9R-9868	114	9T-8560	144	9X-6165	78
9R-2620	164	9R-5301	188	9R-7882	160	9R-9868	172	9U-2277	98	9X-6615	126
9R-2806	133	9R-5301	267	9R-8189	134	9R-9869	152	9U-8886	124	9X-7680	228
9R-2806	188	9R-5313	283	9R-8291	158	9R-9901	170	9U-8886	225	9X-8256	170
9R-2807	133	9R-5313	284	9R-8291	160	9R-9925	234	9W-3459	67	9X-8257	123
9R-2807	134	9R-5313	285	9R-8390	264	9R-9997	163	9W-5460	126	9X-8257	164
9R-2807	160	9R-5386	156	9R-8523	266	9R-9998	163	9W-9953	8	9X-8257	8
9R-2807	172	9R-5387	156	9R-8579	158	9R-9999	163	9X-0199	79	9Y-5015	10
9R-2807	188	9R-5429	158	9R-8594	158	9R-9999	2	9X-1046	311	9Y-5124	36
9R-2821	264	9R-5429	160	9R-8594	160	9S-4185	216	9X-2027	246	9Y-5132	36
9R-3067	172	9R-5437	158	9R-8599	158	9S-4191	124	9X-2038	134	9Y-9380	30
9R-3092	268	9R-5437	160	9R-8599	160	9S-4191	65	9X-2038	170	005-0469	124
9R-3135	160	9R-5616	296	9R-8663	276	9S-8004	104	9X-2040	216	005-0471	124
9R-3135	188	9R-5786	284	9R-8664	276	9S-8006	147	9X-2041	305	014-5645	125
9R-3182	264	9R-5786	285	9R-8760	158	9S-8006	228	9X-2042	134	030-3239	156
9R-3255	188	9R-5788	200	9R-8760	160	9S-8006	242	9X-2042	152	031-0214	244
9R-3469	316	9R-5788	279	9R-8874	231	9S-8006	244	9X-2042	162	031-0214	246
9R-3933	270	9R-5788	280	9R-8875	231	9S-8006	246	9X-2042	302	031-0214	248
9R-4066	264	9R-5828	270	9R-8987	286	9S-8006	248	9X-2043	133	031-0214	250
9R-4110	156	9R-5828	270	9R-8987	289	9S-8006	250	9X-2043	224	031-0214	252
9R-4110	156	9R-5832	283	9R-8988	286	9S-8006	252	9X-2044	138	031-0214	254

PARTS NUMERICAL INDEX

PARTNO	PAGE	PARTNO	PAGE	PARTNO	PAGE	PARTNO	PAGE	PARTNO	PAGE	PARTNO	PAGE
031-5085	250	096-4415	98	102-8802	172	104-3967	284	107-6826	122	111-8636	281
032-9090	18	096-6726	60	102-8802	248	104-3967	285	108-2989	274	111-8637	282
032-9091	18	099-0492	86	102-8802	261	104-6310	280	108-2989	275	112-1776	292
033-6043	258	100-3563	244	102-8802	62	104-6310	292	108-4311	296	112-1826	184
033-6044	260	100-3564	244	102-8802	88	104-6311	292	109-1258	231	112-1826	225
034-3679	142	100-3566	244	102-8802	88	104-6312	292	109-1259	231	112-4415	164
035-7293	12	100-3567	244	102-8802	88	104-6313	284	109-1583	216	112-4416	164
035-8068	10	100-4463	20	102-8802	93	104-6314	284	109-9685	252	112-4498	264
036-5802	10	100-4830	24	102-8802	94	104-6316	292	109-9685	254	112-5494	188
039-9133	136	100-4830	34	102-8802	98	104-6317	292	110-0037	295	112-5541	10
061-8639	130	100-4830	40	102-8803	130	104-8566	118	110-0037	331	112-5541	30
067-6002	10	100-7443	200	102-8803	316	105-1434	260	110-2445	206	112-5825	196
067-6054	24	100-7444	200	102-8803	79	105-1435	260	110-2861	284	112-5828	196
067-6054	24	100-7608	318	102-8803	83	105-1436	260	110-5602	275	112-6219	118
067-6085	45	100-7608	320	102-8803	93	105-1437	260	110-5602	322	112-9450	316
067-6087	45	100-7608	324	102-8803	94	105-1438	260	110-6326	53	112-9514	58
067-6088	45	101-0003	331	102-8803	98	105-1439	260	110-6331	53	112-9629	113
067-6095	45	101-0117	270	102-8804	93	105-1440	260	111-0394	333	112-9689	53
067-6158	18	101-0745	326	102-8804	94	105-1441	260	111-0483	266	112-9689	54
067-6213	30	101-1787	204	102-8805	326	105-2145	258	111-1374	202	112-9717	53
067-6213	36	101-2987	7	102-8805	70	105-4173	14	111-4337	270	113-0309	36
067-6808	10	101-3675	16	102-8805	70	105-8034	134	111-7899	329	113-7582	22
067-6808	10	101-3804	34	102-8805	86	106-5813	190	111-7899	70	113-8277	303
067-6834	24	101-3805	22	102-8805	93	106-5814	190	111-7899	70	113-8490	93
067-6834	24	101-3805	34	102-8806	76	106-5876	186	111-7899	70	113-8490	94
067-6873	18	101-3895	40	102-8806	80	106-5876	198	111-7899	72	113-8491	70
067-6874	18	101-3895	43	102-8806	93	106-7301	188	111-7899	80	113-8491	80
067-6883	18	101-3913	14	102-8806	98	106-8020	65	111-7899	83	113-8491	93
067-6897	12	101-4015	158	103-4754	147	106-9046	188	111-7899	86	113-8491	94
067-6928	38	101-4015	160	103-5519	228	106-9046	273	111-7899	86	113-8492	93
069-1124	10	101-4016	158	103-5519	260	106-9387	281	111-7899	86	113-9221	123
083-4419	228	101-4016	160	103-5520	228	106-9387	282	111-7899	98	114-1972	256
089-7990	113	101-4020	158	103-5522	228	106-9388	284	111-7906	117	114-1973	256
095-0733	94	101-4022	160	103-5686	20	106-9586	124	111-7907	117	114-3906	256
095-0741	83	102-1647	270	103-5687	34	106-9861	126	111-7907	132	114-4777	206
095-0741	86	102-1940	158	104-2091	298	107-2066	261	111-7907	132	114-5075	144
095-0756	114	102-1940	160	104-3964	280	107-5591	114	111-7907	132	114-5132	144
095-1310	60	102-4560	156	104-3964	284	107-5591	172	111-8634	279	114-5180	144
095-9230	172	102-8801	75	104-3965	279	107-6699	216	111-8634	281	114-5190	144
095-9805	228	102-8801	93	104-3965	285	107-6711	276	111-8635	280	114-5325	144
096-4415	329	102-8802	130	104-3966	284	107-6715	212	111-8635	282	114-5326	144

PARTS NUMERICAL INDEX

PARTNO	PAGE	PARTNO	PAGE	PARTNO	PAGE	PARTNO	PAGE	PARTNO	PAGE	PARTNO	PAGE
114-5332	144	119-8349	322	121-9743	322	123-8910	124	126-5984	254	130-0484	160
114-5337	144	119-9398	231	122-1880	125	123-8913	125	126-5984	256	130-0485	158
114-5339	144	119-9399	231	122-1881	125	124-0360	276	126-5985	242	130-0912	130
114-5342	144	120-1324	196	122-1882	125	124-3815	12	126-5985	244	130-1470	54
114-5347	144	120-4397	231	122-1885	125	124-3815	22	126-5985	246	130-1470	55
114-6099	156	120-4604	204	122-1886	125	124-3815	24	126-5985	248	130-2057	289
114-8861	166	120-5724	230	122-2054	3	124-6612	125	126-5985	250	130-5451	264
114-8972	166	120-5726	228	122-2054	309	124-8105	303	126-5985	252	130-5774	188
114-8973	166	120-5726	230	122-3649	124	124-8718	47	126-5985	254	130-5891	188
115-1918	225	120-5727	228	122-3652	124	124-8818	239	126-5985	256	130-6520	238
115-5219	166	120-5729	228	122-4872	196	124-8818	242	126-8472	166	130-6520	239
115-5220	166	120-8717	47	122-4873	196	125-0851	118	127-3017	125	130-6520	244
116-4616	198	120-9762	125	122-5822	218	125-2086	303	127-8987	264	130-7912	303
116-4617	198	120-9809	196	122-5823	198	125-2086	330	127-9768	10	130-7913	303
116-7491	83	120-9926	234	122-5923	166	126-1817	183	128-1038	54	130-7914	303
116-7491	86	121-0694	125	122-6785	124	126-2231	10	128-2776	244	130-7952	188
117-2823	316	121-1223	124	122-6787	125	126-4225	284	128-2776	248	130-8150	232
117-2826	316	121-1251	124	123-0275	56	126-4225	285	128-4249	93	130-9984	206
117-2911	130	121-1288	47	123-0275	56	126-5476	242	128-5010	264	130-9984	50
117-3242	142	121-2062	124	123-0428	164	126-5476	244	128-5596	225	131-0232	62
117-3534	225	121-2500	125	123-0714	125	126-5476	246	128-5596	232	131-0827	166
117-3535	225	121-2511	125	123-0867	234	126-5476	248	128-7902	188	131-0828	166
117-3789	301	121-2537	125	123-1377	125	126-5476	250	128-7903	188	131-1424	48
117-4650	124	121-2545	125	123-2899	34	126-5476	252	128-7905	188	131-2117	291
117-7414	296	121-2603	125	123-2899	40	126-5476	254	129-1854	305	131-2127	200
117-9713	117	121-2604	125	123-2920	125	126-5476	256	129-1855	305	131-3987	296
117-9887	122	121-3221	30	123-3827	164	126-5693	154	129-3178	166	131-3987	306
118-2990	152	121-6936	316	123-4065	164	126-5701	154	129-3178	224	131-8203	322
118-4341	144	121-7385	125	123-4065	166	126-5707	2	129-3178	314	131-8775	158
118-7286	50	121-7389	125	123-4065	52	126-5707	278	129-3178	316	131-8775	160
118-7789	270	121-7390	125	123-4065	52	126-5796	246	129-3178	59	132-2249	326
118-7790	79	121-7391	125	123-4950	62	126-5796	250	129-3180	322	132-3056	234
118-9144	14	121-7396	124	123-4950	65	126-5796	252	129-6387	7	132-3895	166
118-9145	14	121-7398	125	123-6620	310	126-5796	254	129-6389	7	132-3930	12
119-4740	132	121-7399	125	123-7034	158	126-5796	256	129-8542	318	132-6496	264
119-4740	132	121-7400	126	123-8670	316	126-5984	242	129-8542	320	132-6497	267
119-4740	132	121-7401	126	123-8905	124	126-5984	244	129-8542	324	133-1011	12
119-5025	60	121-7402	126	123-8906	124	126-5984	246	129-8543	324	133-3260	58
119-6723	56	121-7403	125	123-8907	125	126-5984	248	129-8545	318	133-7332	198
119-7749	234	121-7404	125	123-8908	125	126-5984	250	129-8545	320	133-7333	198
119-8086	144	121-7405	124	123-8909	124	126-5984	252	129-8545	324	133-8470	7

PARTS NUMERICAL INDEX

PARTNO	PAGE	PARTNO	PAGE	PARTNO	PAGE	PARTNO	PAGE	PARTNO	PAGE	PARTNO	PAGE
134-0143	158	136-1613	324	142-0724	52	146-7276	206	148-8351	204	150-3065	118
134-0143	160	136-1955	207	142-1468	126	146-7453	207	148-8352	206	150-3065	206
134-0453	169	136-3112	118	142-1468	130	146-8958	206	148-8354	216	150-4044	212
134-0453	172	136-3608	16	142-3391	49	146-9439	70	148-8360	50	150-4086	98
134-1374	224	136-3608	47	142-6132	158	146-9439	80	148-8362	192	151-4838	43
134-2305	83	136-4192	318	142-8068	14	146-9439	94	148-8362	206	151-4841	196
134-3059	296	136-4192	320	142-8068	30	146-9439	94	148-8364	216	151-4841	198
134-3060	296	136-4192	324	142-8069	14	147-1659	246	148-8366	212	151-4841	218
134-3987	47	136-8423	228	142-8858	313	147-3019	306	148-8367	142	151-4841	60
134-8204	3	137-4234	287	143-0786	121	148-1899	118	148-8368	134	151-5715	298
134-8204	330	137-4234	288	143-0786	50	148-3626	298	148-8369	142	151-7819	286
135-8168	58	137-4234	291	143-0788	121	148-5353	318	148-8369	142	151-7824	289
135-8203	286	137-4234	291A	143-0788	8	148-5353	320	148-8369	204	151-7877	286
135-8203	287	137-4499	58	143-2827	296	148-5353	324	148-8374	142	151-7882	289
135-8203	288	137-9466	246	143-2827	318	148-5355	306	148-8378	212	151-7927	286
135-8203	289	137-9626	70	143-2827	320	148-7311	306	148-8390	195	151-7927	289
135-8203	291	137-9626	70	143-2827	324	148-7319	306	148-8390	218	151-7928	1
135-8203	291A	137-9626	70	143-2830	296	148-7868	149	148-8393	218	151-7928	268
135-8204	287	138-2053	45	143-2830	318	148-8315	218	148-8407	202	151-8752	52
135-8204	288	138-6904	50	143-2830	320	148-8316	142	148-8407	65	152-6144	104
135-8204	291	138-6913	50	143-2830	324	148-8316	204	148-8411	216	152-7146	160
135-8204	291A	138-7137	123	143-4655	130	148-8316	204	148-8422	206	153-9580	138
135-8204	293	138-8454	70	143-6227	130	148-8316	65	148-8429	210	154-5255	286
135-8204	294	138-8454	94	144-1636	88	148-8318	142	148-8429	211	154-5257	286
135-8205	287	139-3785	166	144-4277	244	148-8325	134	148-8439	212	154-5257	286
135-8205	288	140-3635	52	144-6253	195	148-8325	202	148-8446	196	154-5265	268
135-8205	291	140-3639	52	144-6253	3	148-8326	65	148-8454	216	154-5277	268
135-8205	291A	140-3640	52	144-6256	195	148-8327	194	148-8455	192	154-5278	268
135-8205	293	140-6009	188	144-6258	195	148-8327	214	148-8457	192	154-5279	268
135-8205	294	140-6021	172	144-9930	75	148-8335	211	149-0777	139	154-5280	268
135-8206	286	140-7393	132	144-9930	83	148-8336	214	149-0780	139	154-5404	140
135-8206	287	140-7393	132	144-9931	76	148-8339	50	149-0782	139	154-5416	133
135-8206	288	140-9921	322	144-9931	86	148-8341	190	149-0783	139	154-5423	318
135-8206	289	141-0837	43	144-9934	75	148-8341	196	149-0784	139	154-5423	320
135-8206	291	141-2759	94	144-9934	76	148-8341	198	149-4311	238A	154-5424	318
135-8206	291A	141-2759	94	145-1847	142	148-8341	218	149-7678	62	154-5424	320
135-8206	294	141-6343	188	145-4476	164	148-8341	220	150-3027	206	155-2255	83
135-9420	188	141-6647	67	145-4477	164	148-8342	216	150-3027	234	155-2255	86
135-9886	164	141-7512	52	145-4911	26	148-8345	214	150-3056	212	155-2255	93
136-0155	224	141-7514	164	145-8337	268	148-8346	142	150-3062	204	155-2260	80
136-0437	278	141-7515	166	145-8344	268	148-8347	214	150-3063	196	155-2260	88

PARTS NUMERICAL INDEX

PARTNO	PAGE	PARTNO	PAGE	PARTNO	PAGE	PARTNO	PAGE	PARTNO	PAGE	PARTNO	PAGE
155-2260	93	158-3412	198	163-0755	148	164-1114	152	164-1406	170	167-8283	313
155-2263	72	158-3412	218	163-4759	326	164-1130	114	164-1409	170	168-0361	238
155-2265	296	159-0186	206	163-5676	196	164-1130	121	164-1411	170	168-0361	239
155-2265	86	159-0186	50	163-5677	196	164-1137	134	164-1435	170	168-0361	248
155-2265	93	159-0960	158	163-7934	184	164-1149	295	164-1560	170	168-0480	287
155-2265	93	159-4945	296	163-7934	234	164-1153	114	164-3876	62	168-0480	288
155-2270	133	159-4946	296	163-7936	234	164-1154	314	164-5567	202	168-0480	289
155-2270	70	159-4946	306	163-7937	234	164-1178	300	164-5567	204	168-0480	290
155-2270	83	159-4950	320	163-7940	138	164-1182	158	164-5567	206	168-0480	291
155-2270	86	159-4951	318	163-9371	185	164-1197	114	164-6709	183	168-0480	291A
155-2270	88	159-4951	324	163-9371	186	164-1303	322	164-8473	298	168-7447	104
155-2270	93	159-4953	306	163-9371	196	164-1308	322	164-9425	329	168-7447	105
155-2270	98	159-7104	310	164-1055	310	164-1311	322	164-9598	136	168-7447	106
155-2271	70	159-7105	310	164-1056	93	164-1314	322	164-9599	136	168-7447	116
155-2271	80	159-7106	310	164-1059	296	164-1342	322	165-2273	206	168-8389	287
155-2271	83	159-7907	137	164-1059	318	164-1343	322	165-6585	134	168-8389	288
155-2271	93	160-0161	24	164-1060	296	164-1344	322	165-6585	134	168-8389	291
155-2271	98	160-0161	28	164-1060	320	164-1345	322	165-6595	134	168-8389	291A
155-2274	70	160-2248	142	164-1062	296	164-1346	322	165-6599	134	168-9902	234
155-2274	72	160-5436	24	164-1062	306	164-1351	322	165-6601	134	168-9906	316
155-2274	80	161-6984	318	164-1064	318	164-1352	322	165-6602	134	169-0587	329
155-2274	83	161-6984	320	164-1065	320	164-1353	322	165-6603	134	169-0587	86
155-2274	93	161-6984	324	164-1067	324	164-1355	296	165-7014	118	169-0588	86
155-2274	98	161-6987	318	164-1068	296	164-1355	322	165-8996	113	169-0589	86
155-6457	70	161-6987	320	164-1069	296	164-1358	296	166-2033	202	169-0590	70
155-8522	98	161-6987	324	164-1070	296	164-1359	322	166-7950	240	169-0591	66
155-9836	242	161-9044	306	164-1071	296	164-1361	170	166-7950	246	169-0592	70
155-9836	244	161-9294	318	164-1072	296	164-1363	185	167-2186	177	169-0594	72
155-9836	248	161-9294	320	164-1074	306	164-1364	186	167-2294	177	169-0595	70
156-0283	151	161-9294	324	164-1074	324	164-1365	114	167-2450	177	169-0596	80
156-0283	70	161-9820	24	164-1077	60	164-1368	114	167-6768	242	169-0597	98
156-1267	256	162-1604	228	164-1078	314	164-1368	172	167-6768	246	169-6714	12
156-3837	218	162-6556	318	164-1078	60	164-1369	172	167-6768	250	169-6714	30
156-3838	218	162-6556	320	164-1079	59	164-1371	170	167-6768	252	170-1644	234
156-4321	256	162-6556	324	164-1083	59	164-1395	169	167-6768	254	170-1645	234
156-9276	124	163-0059	116	164-1096	72	164-1395	60	167-8164	134	170-6305	83
157-0739	104	163-0059	144	164-1097	72	164-1399	170	167-8182	322	170-6312	170
157-1997	83	163-0753	136	164-1102	152	164-1400	170	167-8248	170	170-6542	83
157-1997	86	163-0753	148	164-1108	301	164-1400	3	167-8251	301	171-2870	322
158-3412	195	163-0754	133	164-1110	304	164-1402	170	167-8278	311	171-8623	134
158-3412	196	163-0754	148	164-1113	114	164-1404	170	167-8279	311	172-5317	125

PARTS NUMERICAL INDEX

PARTNO	PAGE	PARTNO	PAGE	PARTNO	PAGE	PARTNO	PAGE	PARTNO	PAGE	PARTNO	PAGE
172-8591	300	176-9152	227	183-3121	172	183-8506	190	185-3527	295	187-0530	256
172-8591	311	176-9154	190	183-3122	172	183-8529	212	185-3527	304	187-1644	83
172-9200	83	176-9298	1	183-3131	172	183-8530	1	185-3529	138	187-1644	86
172-9992	276	176-9298	211	183-3132	172	183-8530	212	185-5734	278	187-3162	218
173-0637	228	177-4102	268	183-3135	172	183-8543	1	185-5735	278	187-3163	218
173-0638	228	177-4122	164	183-3136	169	183-8543	194	185-5903	237	187-3164	218
173-0639	228	177-4877	296	183-3136	172	183-8544	1	185-5903	240	187-3166	218
173-0640	228	177-7094	214	183-3137	172	183-8544	220	185-5906	185	187-4329	218
173-0640	258	177-9645	88	183-3150	169	184-1307	276	185-5906	238	187-4343	192
173-0641	228	177-9648	93	183-3150	186	184-1413	278	185-5907	186	187-8093	70
173-3175	70	178-0094	183	183-3151	169	184-5293	83	185-5907	239	187-8936	62
173-3175	72	178-0094	184	183-3153	169	184-6178	1	185-6602	211	188-0862	164
173-3995	220	178-7480	211	183-3153	172	184-6178	276	185-7585	121	188-0863	86
173-7194	183	178-7480	241	183-3155	172	184-6430	93	185-7585	132	188-0865	164
174-2025	326	178-7539	70	183-3156	169	184-6436	152	185-7585	132	188-7471	147
174-2026	326	178-8132	125	183-3156	172	184-6581	134	185-7585	132	188-7471	238
174-4028	214	178-8133	125	183-3887	59	184-7399	154	185-8842	164	188-7471	239
174-4029	214	178-8134	125	183-3887	60	184-7898	120	185-8842	2	189-0555	185
174-4030	214	178-8200	125	183-4678	316	184-7898	311	185-8857	156	189-0555	186
174-4031	214	178-9983	299	183-4843	194	184-7900	295	185-8857	2	189-0555	218
174-4032	214	179-5435	70	183-4898	138	184-7900	56	185-9784	116	189-1834	116
174-4033	214	179-5571	164	183-4898	3	185-0804	204	185-9784	236	189-1834	140
174-4034	214	179-8235	169	183-4991	300	185-1129	3	186-0817	316	189-3610	76
174-4035	214	179-8235	170	183-4991	301	185-1129	4	186-2950	1	189-5641	57
174-4647	104	179-8235	172	183-4995	121	185-1598	185	186-2950	231	190-2932	206
174-4650	104	179-9961	266	183-6058	158	185-1598	186	186-3384	43	190-3032	206
174-5456	326	179-9961	276	183-6076	275	185-1598	221	186-3735	114	190-3428	240
174-5696	276	180-5754	308	183-6081	275	185-1839	177	186-3735	172	190-3428	250
174-6640	114	180-5764	295	183-6084	275	185-1839	279	186-3735	261	190-3430	240
174-6740	202	180-6213	228	183-6085	275	185-1839	280	186-3735	326	190-3430	252
174-7147	206	180-7218	296	183-8488	190	185-1927	263	186-3735	62	190-3431	240
174-7153	206	180-7219	296	183-8490	190	185-1927	266	186-3735	88	190-3431	254
174-7153	207	180-7232	296	183-8492	190	185-1932	263	186-4967	237	190-4163	206
174-7153	4	180-7233	296	183-8494	190	185-1932	3	186-4967	3	190-4164	210
174-7479	234	180-7245	133	183-8496	216	185-3167	184	186-5298	185	190-5123	62
174-7820	134	180-8170	138	183-8498	216	185-3167	222	186-5298	186	190-5124	164
174-9711	124	180-9157	147	183-8500	190	185-3414	184	186-5331	185	190-5124	166
175-0054	124	180-9588	184	183-8502	190	185-3414	214	186-5333	186	190-5125	166
175-7620	1	180-9588	228	183-8505	187	185-3524	295	187-0524	250	190-5130	170
175-7620	227	183-3120	172	183-8505	216	185-3525	121	187-0527	250	190-5139	60
176-0585	216	183-3120	2	183-8506	1	185-3525	312	187-0527	256	190-8956	204

PARTS NUMERICAL INDEX

PARTNO	PAGE	PARTNO	PAGE	PARTNO	PAGE	PARTNO	PAGE	PARTNO	PAGE	PARTNO	PAGE
190-8957	204	192-7512	238A	195-2037	142	197-8444	214	199-0681	106	199-0790	105
190-9838	62	192-7512	238C	195-2139	242	197-8832	86	199-0683	140	199-0805	106
191-1784	303	192-7512	238D	195-2139	244	197-9155	104	199-0684	105	199-0807	106
191-4010	238	192-7512	238D	195-2139	246	198-0099	83	199-0685	105	199-0808	106
191-4010	239	192-7513	238D	195-2139	248	198-0102	186	199-0686	105	199-0858	105
191-4484	147	192-7514	238D	195-2139	250	198-1289	295	199-0687	105	199-7854	221
191-4484	256	192-7515	238A	195-2139	252	198-6026	122	199-0688	105	199-8927	194
191-9104	313	192-7515	238D	195-2139	254	198-7811	104	199-0689	105	200-0161	240
191-9109	166	192-7516	238A	195-2406	246	198-7811	105	199-0690	105	200-3947	204
191-9110	166	192-7516	238D	195-2406	250	198-7820	140	199-0691	105	200-5359	258
191-9111	166	192-7863	238C	195-2406	252	198-7823	140	199-0692	105	200-5360	258
191-9111	331	192-7864	238A	195-2406	254	198-7825	140	199-0693	105	200-5361	258
192-0826	238A	192-7864	238D	195-6341	111	198-7838	140	199-0694	105	200-5362	258
192-0828	238A	193-0703	1	195-6348	110	198-7841	140	199-0695	105	200-5363	258
192-0828	238D	193-0703	192	195-6523	303	198-7842	140	199-0697	105	200-5364	258
192-0843	124	193-1036	258	195-8665	206	198-7843	140	199-0700	106	200-5727	86
192-2060	238D	193-1681	154	196-2383	93	198-8341	164	199-0701	106	200-6382	256
192-2075	238C	193-1682	154	196-2384	93	199-0639	104	199-0702	106	201-0330	65
192-2080	238C	193-1683	154	196-2385	93	199-0640	106	199-0703	106	201-0582	156
192-2081	238A	193-1684	154	196-2386	93	199-0641	104	199-0706	104	201-1234	290
192-2081	238D	193-1685	154	196-2966	83	199-0645	106	199-0708	105	201-1238	290
192-2082	238D	193-1686	154	196-8438	216	199-0646	105	199-0709	105	201-1239	290
192-4487	238D	193-1687	154	196-8439	216	199-0648	140	199-0714	105	201-1835	65
192-4488	238A	193-1688	154	196-8921	290	199-0652	104	199-0715	105	201-1850	202
192-4488	238D	193-1689	154	196-8922	290	199-0653	105	199-0750	104	201-1915	111
192-4488	238D	193-2342	295	196-9913	210	199-0654	104	199-0752	106	201-1916	110
192-4489	238A	193-2342	329	196-9913	237	199-0656	105	199-0753	106	201-1916	110
192-4490	238D	193-8648	228	197-0398	210	199-0658	104	199-0754	105	201-1919	110
192-4491	238A	193-9189	240	197-0573	192	199-0659	105	199-0755	105	201-1919	110
192-4491	238D	194-1958	206	197-2709	250	199-0662	104	199-0756	105	201-1919	111
192-4492	238A	194-2754	158	197-2709	252	199-0663	105	199-0757	104	201-3328	296
192-4492	238D	194-4183	295	197-2709	254	199-0668	104	199-0759	106	201-3364	134
192-7506	238A	194-5171	326	197-2709	256	199-0669	104	199-0760	104	201-3398	142
192-7506	238D	194-6196	228	197-2969	240	199-0670	104	199-0768	104	201-4822	152
192-7507	238A	194-9497	303	197-3121	248	199-0672	106	199-0774	105	201-7648	113
192-7507	238A	194-9645	303	197-3222	256	199-0673	105	199-0778	104	201-7648	116
192-7508	238A	195-0268	192	197-3263	4	199-0675	105	199-0784	105	201-8069	172
192-7509	238A	195-0355	214	197-3263	55	199-0676	104	199-0785	105	201-8561	123
192-7510	238A	195-0356	214	197-3698	248	199-0678	105	199-0786	104	201-8561	124
192-7510	238D	195-0357	214	197-8134	154	199-0679	104	199-0787	104	201-8561	125
192-7511	238A	195-0358	214	197-8134	2	199-0680	105	199-0789	105	201-8561	126

PARTS NUMERICAL INDEX

PARTNO	PAGE	PARTNO	PAGE	PARTNO	PAGE	PARTNO	PAGE	PARTNO	PAGE	PARTNO	PAGE
201-9465	322	203-7100	60	210-3099	104	216-1605	106	228-2784	3	228-4597	226
201-9732	162	204-0317	142	210-3100	104	216-1606	105	228-2784	5	228-5731	224
201-9732	295	204-3080	140	210-3103	105	216-1607	105	228-2785	3	228-5731	233
201-9733	162	204-7341	300	210-3106	104	216-1608	104	228-2785	6	229-1203	224
202-0040	130	204-9734	202	210-3108	105	216-1609	104	228-2786	47	229-8670	14
202-3518	134	205-3760	134	210-5932	104	216-1610	104	228-2786	6	230-6115	104
202-5710	116	205-3761	134	210-6027	105	216-1611	105	228-2787	295	231-0683	140
202-5712	116	205-7536	322	210-6032	105	216-1612	106	228-2787	3	231-0684	140
202-5712	142	205-7538	322	210-6059	93	216-1613	106	228-2788	3	231-0685	140
202-5714	120	205-7700	86	210-6060	94	216-2267	126	228-2788	48	231-0686	140
202-5714	204	205-9980	299	210-7302	104	216-3939	104	228-2790	111	231-0687	140
202-5718	116	206-1486	79	210-7305	104	216-4459	140	228-2792	151	231-0688	140
202-5726	152	206-6974	139	210-8911	274	217-2345	106	228-2793	151	231-0698	104
202-5726	2	207-4254	140	210-8911	275	217-2346	106	228-2794	149	231-0699	104
202-5731	302	207-4255	140	210-8913	275	217-2885	140	228-2795	227	231-3643	264
202-5734	120	207-4257	104	210-8916	202	217-2914	104	228-2796	190	231-3643	273
202-5734	122	207-4258	140	210-8917	224	217-3383	224	228-2798	291	231-3646	264
202-5737	120	207-4260	140	210-8919	233	219-3373	290	228-2799	287	231-3648	264
202-5737	133	207-4262	140	210-8919	3	219-3397	290	228-2802	3	232-1671	331
202-5738	120	207-4263	140	211-0052	94	219-8798	140	228-2803	273	232-1672	331
202-5738	3	207-4265	140	211-6759	124	219-8799	104	228-2803	3	232-5849	236
202-5815	202	207-4266	140	212-5702	105	219-8802	104	228-2806	184	233-6423	5
202-5883	3	207-4267	140	212-5704	105	219-8839	104	228-2806	3	233-6423	57
202-5888	152	207-4268	140	212-5708	105	219-9485	290	228-2807	2	233-6424	5
202-5889	152	207-4271	140	212-5712	106	222-0364	236	228-2807	3	233-6424	58
202-6007	123	207-4272	140	212-5713	104	222-0364	238A	228-2809	308	233-6425	5
202-6007	132	207-5477	194	212-6215	132	222-7875	134	228-2810	121	233-6426	5
202-6007	132	207-5479	195	212-9338	192	222-9436	224	228-2810	3	233-6426	7
202-6020	116	207-5480	195	213-4222	105	222-9436	226	228-2811	309	233-6427	184
202-6020	134	207-5962	105	213-8479	80	223-6425	77	228-2813	110	233-6427	60
202-6113	60	207-7581	218	214-0592	260	223-8465	134	228-2814	110	233-6428	57
202-6122	187	207-7589	206	214-3159	142	223-9078	134	228-2815	110	233-6429	57
202-6122	3	208-5235	290	214-5097	140	226-4365	104	228-2816	48	233-6433	58
202-6139	184	208-5245	290	214-5097	146	226-4366	104	228-4147	110	233-6434	58
202-6139	204	209-6188	156	214-6350	238D	226-4367	104	228-4149	110	233-6435	1
202-6142	300	210-1706	158	214-7457	52	226-4370	104	228-4150	110	233-6435	3
202-7430	132	210-1706	160	214-7458	52	226-4375	104	228-4525	56	233-6442	60
202-7503	258	210-1707	158	215-2023	146	226-4376	104	228-4592	226	233-6443	60
203-2485	295	210-1707	160	216-1600	105	226-7164	83	228-4593	226	233-6447	60
203-3219	88	210-3097	104	216-1601	105	228-2783	1	228-4594	226	234-4399	48
203-5491	222	210-3098	104	216-1602	104	228-2783	174	228-4596	226	234-4399	49

PARTS NUMERICAL INDEX

PARTNO	PAGE	PARTNO	PAGE	PARTNO	PAGE	PARTNO	PAGE	PARTNO	PAGE	PARTNO	PAGE
235-5998	110	236-9141	116	238-4523	334	240-6333	182	240-6359	174	240-6383	175
235-5999	110	236-9141	3	238-4524	334	240-6334	174	240-6359	178	240-6384	179
235-6520	110	236-9146	331	238-4525	334	240-6335	180	240-6360	174	240-6385	174
235-6520	3	236-9154	2	238-4527	334	240-6335	181	240-6361	176	240-6385	176
235-9051	150	236-9154	274	238-4528	334	240-6336	175	240-6361	182	240-6385	178
235-9051	3	236-9667	315	238-4529	332	240-6336	179	240-6362	180	240-6385	182
235-9052	150	236-9668	315	238-4529	333	240-6337	180	240-6362	181	240-6386	174
236-4718	178	237-0803	160	238-4530	333	240-6337	181	240-6363	175	240-6387	180
236-4718	184	237-0944	160	238-5228	140	240-6338	176	240-6363	179	240-6387	181
236-4719	180	237-0945	160	238-5254	146	240-6338	182	240-6364	175	240-6388	178
236-4719	184	237-2252	266	238-5255	146	240-6339	175	240-6364	179	240-6389	178
236-4720	181	237-2637	295	238-6847	233	240-6339	179	240-6365	180	240-6390	176
236-4720	184	237-2637	328	238-8899	48	240-6340	178	240-6365	181	240-6390	182
236-4721	179	237-2638	328	238-8899	52	240-6341	178	240-6366	176	240-6391	174
236-4721	184	237-2639	60	238-8900	52	240-6342	178	240-6366	182	240-6392	180
236-4722	176	237-2640	60	238-8901	52	240-6343	174	240-6367	178	240-6392	181
236-4722	184	237-2641	328	238-8902	52	240-6344	180	240-6368	180	240-6393	179
236-4723	182	237-2642	328	238-8903	52	240-6344	181	240-6368	181	240-6394	175
236-4723	184	237-2643	328	238-8904	49	240-6345	178	240-6369	174	240-6395	178
236-4724	175	237-2644	328	238-8905	52	240-6346	176	240-6370	176	240-6396	176
236-4724	184	237-2645	328	238-8906	52	240-6346	182	240-6370	182	240-6396	182
236-4725	111	237-2650	328	239-0007	118	240-6347	180	240-6371	175	240-6397	174
236-4725	3	237-5330	160	239-0007	121	240-6347	181	240-6371	179	240-6398	180
236-4726	111	237-5489	305	239-0008	118	240-6348	175	240-6372	178	240-6398	181
236-4728	111	237-5490	305	239-0842	101	240-6349	176	240-6373	178	240-6399	179
236-6509	1	237-5491	302	239-0842	332	240-6349	182	240-6374	174	240-6400	175
236-6512	160	237-5499	121	239-0843	101	240-6350	180	240-6375	178	240-6401	178
236-6954	160	237-5499	149	239-0844	101	240-6350	181	240-6376	176	240-6402	178
236-8183	160	237-5500	149	239-0847	332	240-6351	175	240-6376	182	240-6403	176
236-8605	2	237-5501	149	239-2226	238A	240-6352	178	240-6377	180	240-6404	176
236-8605	62	237-7909	3	239-2226	238C	240-6353	176	240-6377	181	240-6405	182
236-8606	149	237-7909	67	239-4982	60	240-6353	182	240-6378	175	240-6406	182
236-8606	62	237-7910	67	239-6439	60	240-6354	174	240-6378	179	240-6407	174
236-8608	62	237-7911	67	239-6440	60	240-6354	179	240-6379	174	240-6408	174
236-8611	62	237-7912	67	240-0506	47	240-6355	175	240-6379	176	240-6409	180
236-8612	62	237-7914	67	240-6330	176	240-6356	174	240-6379	178	240-6409	181
236-8613	62	237-7915	67	240-6330	182	240-6356	179	240-6379	182	240-6410	180
236-8613	65	238-4521	3	240-6331	175	240-6357	174	240-6380	180	240-6410	181
236-8614	65	238-4521	332	240-6331	179	240-6357	179	240-6380	181	240-6411	175
236-9139	62	238-4522	332	240-6332	174	240-6358	180	240-6382	180	240-6411	179
236-9140	62	238-4522	334	240-6333	176	240-6358	181	240-6382	181	240-6412	178

PARTS NUMERICAL INDEX

PARTNO	PAGE	PARTNO	PAGE	PARTNO	PAGE	PARTNO	PAGE	PARTNO	PAGE	PARTNO	PAGE
240-6412	180	240-9193	43	240-9225	36	240-9258	38	240-9297	43	240-9334	12
240-6412	181	240-9194	36	240-9226	16	240-9259	12	240-9298	43	240-9335	14
240-6413	175	240-9194	36	240-9227	22	240-9260	20	240-9299	38	240-9335	30
240-6415	176	240-9195	10	240-9228	43	240-9261	43	240-9300	38	240-9336	40
240-6415	182	240-9196	26	240-9228	43	240-9262	40	240-9301	224	240-9337	20
240-6416	178	240-9197	12	240-9229	14	240-9263	18	240-9302	43	240-9338	12
240-6417	176	240-9197	18	240-9230	14	240-9264	18	240-9303	38	240-9339	12
240-6417	182	240-9198	45	240-9230	16	240-9265	18	240-9304	18	240-9340	12
240-6418	174	240-9199	24	240-9231	43	240-9266	18	240-9305	26	240-9341	22
240-6419	174	240-9200	45	240-9232	45	240-9267	45	240-9306	12	240-9342	22
240-6420	180	240-9201	12	240-9232	45	240-9268	10	240-9307	12	240-9343	22
240-6420	181	240-9201	24	240-9233	38	240-9269	18	240-9308	18	240-9344	10
240-6422	175	240-9202	10	240-9234	38	240-9270	26	240-9309	38	240-9345	34
240-6422	179	240-9203	10	240-9235	38	240-9271	18	240-9310	38	240-9345	43
240-6423	175	240-9203	14	240-9236	14	240-9272	18	240-9311	40	240-9346	14
240-6423	179	240-9204	10	240-9236	40	240-9273	18	240-9312	12	240-9347	45
240-6424	175	240-9204	10	240-9237	20	240-9274	10	240-9313	26	240-9348	12
240-6426	176	240-9204	24	240-9237	34	240-9275	12	240-9314	26	240-9349	12
240-6427	182	240-9205	10	240-9238	40	240-9276	18	240-9315	34	240-9350	10
240-6428	174	240-9206	45	240-9238	40	240-9277	36	240-9316	30	240-9350	7
240-6428	175	240-9207	18	240-9238	40	240-9278	10	240-9317	26	240-9351	36
240-6429	180	240-9208	18	240-9239	40	240-9279	14	240-9318	22	240-9352	24
240-6429	181	240-9209	18	240-9240	32	240-9280	20	240-9319	33	240-9353	24
240-6430	179	240-9210	18	240-9241	34	240-9281	34	240-9319	34	240-9354	40
240-6431	174	240-9211	18	240-9242	45	240-9282	14	240-9319	34	240-9355	40
240-6431	175	240-9212	18	240-9243	40	240-9283	10	240-9319	34	240-9355	40
240-6432	178	240-9213	24	240-9244	40	240-9284	30	240-9320	40	240-9355	40
240-6433	176	240-9214	26	240-9245	30	240-9284	36	240-9321	10	240-9356	34
240-6434	182	240-9215	16	240-9246	10	240-9285	30	240-9321	7	240-9357	14
240-6436	180	240-9216	20	240-9247	10	240-9286	22	240-9322	18	240-9358	40
240-6437	181	240-9216	40	240-9248	10	240-9286	28	240-9323	14	240-9359	10
240-6438	175	240-9217	10	240-9249	10	240-9287	20	240-9324	18	240-9360	26
240-6439	179	240-9217	7	240-9250	40	240-9288	10	240-9325	18	240-9361	22
240-9186	12	240-9218	32	240-9251	40	240-9289	24	240-9326	18	240-9362	12
240-9187	18	240-9219	28	240-9252	14	240-9290	36	240-9327	18	240-9363	18
240-9188	18	240-9219	40	240-9253	40	240-9291	45	240-9328	18	240-9364	45
240-9189	40	240-9220	40	240-9254	40	240-9292	45	240-9329	10	240-9365	24
240-9190	26	240-9221	12	240-9255	38	240-9293	16	240-9330	34	240-9366	24
240-9191	18	240-9222	40	240-9256	43	240-9294	10	240-9331	20	240-9367	18
240-9191	18	240-9223	45	240-9257	36	240-9295	38	240-9332	14	240-9368	18
240-9192	45	240-9224	24	240-9258	12	240-9296	20	240-9333	10	240-9369	12

PARTS NUMERICAL INDEX

PARTNO	PAGE	PARTNO	PAGE	PARTNO	PAGE	PARTNO	PAGE	PARTNO	PAGE	PARTNO	PAGE
240-9370	10	241-0309	9	241-3645	24	250-2639	295	250-7835	238D	269-9515	287
240-9372	40	241-0310	14	241-3646	38	250-2639	80	250-7836	238A	269-9516	287
240-9373	40	241-0310	9	241-3647	38	250-2640	3	250-7837	238A	271-0175	160
240-9374	40	241-0311	16	241-3648	38	250-2640	313	251-6076	110	272-7867	288
240-9377	10	241-0311	9	241-3649	43	250-2643	3	252-4444	238A	272-7868	288
240-9378	40	241-0312	18	241-3650	43	250-2643	70	252-4837	238A	272-7869	288
240-9379	40	241-0312	9	241-3960	43	250-2644	70	252-6728	299	275-3916	5
240-9380	16	241-0313	20	241-3961	45	250-2645	70	252-6728	300	275-3916	9
240-9381	36	241-0313	9	241-3962	45	250-2646	2	252-6729	298	275-4279	291
240-9382	36	241-0314	22	241-3963	45	250-2646	86	252-8871	110	275-4280	291
240-9382	47	241-0314	9	241-3964	10	250-2647	273	252-9760	110		
240-9383	16	241-0315	24	241-3965	10	250-2647	79	252-9761	110		
240-9383	47	241-0315	9	244-1989	266	250-2648	2	253-4818	305		
240-9384	40	241-0316	26	244-3106	88	250-2648	93	253-5658	298		
240-9385	40	241-0316	9	245-8535	296	250-2648	94	253-7656	299		
240-9386	18	241-0317	28	245-8538	296	250-2649	5	253-7657	308		
240-9387	18	241-0317	9	245-8539	295	250-2649	88	255-9034	287		
240-9388	28	241-0318	32	245-8539	296	250-2650	116	255-9034	288		
240-9389	28	241-0318	9	245-8540	296	250-2650	98	255-9034	291A		
240-9390	28	241-0319	33	245-8583	306	250-2651	295	255-9035	287		
240-9390	30	241-0319	9	245-8584	322	250-2651	83	255-9035	288		
240-9390	30	241-0320	34	245-8586	296	250-2652	88	255-9035	291A		
240-9391	34	241-0320	9	246-2671	80	250-2655	151	258-5106	3		
240-9392	14	241-0321	36	247-4367	326	250-2656	295	258-5106	78		
240-9393	14	241-0321	9	249-7416	79	250-2657	68	258-5107	78		
240-9394	40	241-0322	38	249-7418	296	250-2657	72	258-5108	78		
240-9395	40	241-0322	9	249-7432	86	250-2658	69	258-5110	68		
240-9396	40	241-0323	40	249-7441	93	250-2658	72	258-5111	68		
240-9397	33	241-0323	9	249-7445	93	250-2659	3	258-5112	68		
240-9398	40	241-0324	43	249-7456	93	250-2659	72	258-5113	70		
240-9399	40	241-0324	9	249-7459	88	250-4146	110	258-5113	70		
240-9400	40	241-0325	45	249-7461	88	250-4148	110	258-5114	70		
240-9401	40	241-0325	9	249-7469	80	250-4148	110	258-5114	70		
240-9402	12	241-3640	22	249-7470	98	250-4149	110	258-5115	69		
240-9403	12	241-3640	28	249-7471	110	250-4150	110	258-5116	69		
240-9404	40	241-3641	26	249-7472	70	250-5458	66	258-5117	69		
240-9405	26	241-3642	12	249-7473	70	250-5459	66	258-5118	69		
240-9406	12	241-3643	28	249-7475	83	250-5463	66	268-5326	291A		
241-0308	10	241-3643	45	249-7479	313	250-5464	295	268-5327	291A		
241-0308	9	241-3644	24	250-2634	316	250-5464	66	268-5330	291A		
241-0309	12	241-3644	28	250-2635	316	250-7835	238A	269-9514	287		