9802/2740 - WHEELED LOADING SHOVEL - .426 - Index

JCB

RUTHZIL TRATOR COMERCIAL DE PEÇAS LTDA 11 97083-6812 ROLANDO CITRANGULO

Top of
catalogue

A	ATTACHMENTS
A01	SHOVELS
A03	ATTACHMENTS
B	BODYWORK, CAB, LOADER END
B01	BODYWORK/FRAME
B02	CAB
B03	LOADER, FRONT END
B05	REFURBISHMENTS
B06	HOMOLAGATION PARTS
C	ELECTRICS-MACHINE, CAB & ENGINE
C01	ELECTRICS, MAIN MACHINE
C02	ELECTRICS, ENGINE
C03	ELECTRICS, CAB
D	CONTROLS-MACHINE, ENGINE & STEERING
D01	CONTROLS, MACHINE
D02	CONTROLS, ENGINE
D03	COLUMN, STEERING
E	HYDRAULICS & AIR INCLUDING, STEERING
E01	HOSE & PIPEWORK
E02	PUMP/MOTOR & PUMP DRIVE
E03	VALVES & HYDRAULIC FILTERS
E04	RAMS
F	AXLES, WHEELS & TRANSMISSION
F01	AXLES, FRONT
F02	AXLES, REAR
F03	WHEELS, TYRES & PROPSHAFTS
F04	PROPSHAFTS, TRANSMISSION
F05	TRANSMISSIONS
F06	COOLER, OIL, TRANSMISSION
G	BRAKES
G01	BRAKES
U	ENGINE BTAA5.9 - C SERIES TIER, 2 EMISSIONS
U01	ENGINE BLOCK & SUB-ASSEMBLIES
U02	CYLINDER HEAD & SUB-ASSEMBLIES
U03	INDUCTION & EXHAUST SYSTEMS
U04	SYSTEM, COOLING
U05	SYSTEM, LUBRICATION
U06	SYSTEM, FUEL
U07	EQUIPMENT, AUXILIARY

9802/2740 A1-1-1 SHOVEL 1.8 CU.M., QUICKHITCH ZBAR & HT

Item	Part no.	Change No.	Description	Remarks	Usage code	Qty
1	335/02717		Shovel, 1.8Cu.M./2.3Cu.M			1
2	510/99402		:Toeplate			1

Machine groups

Details

Machine group	From serial no.	To serial no.
.426		
426		

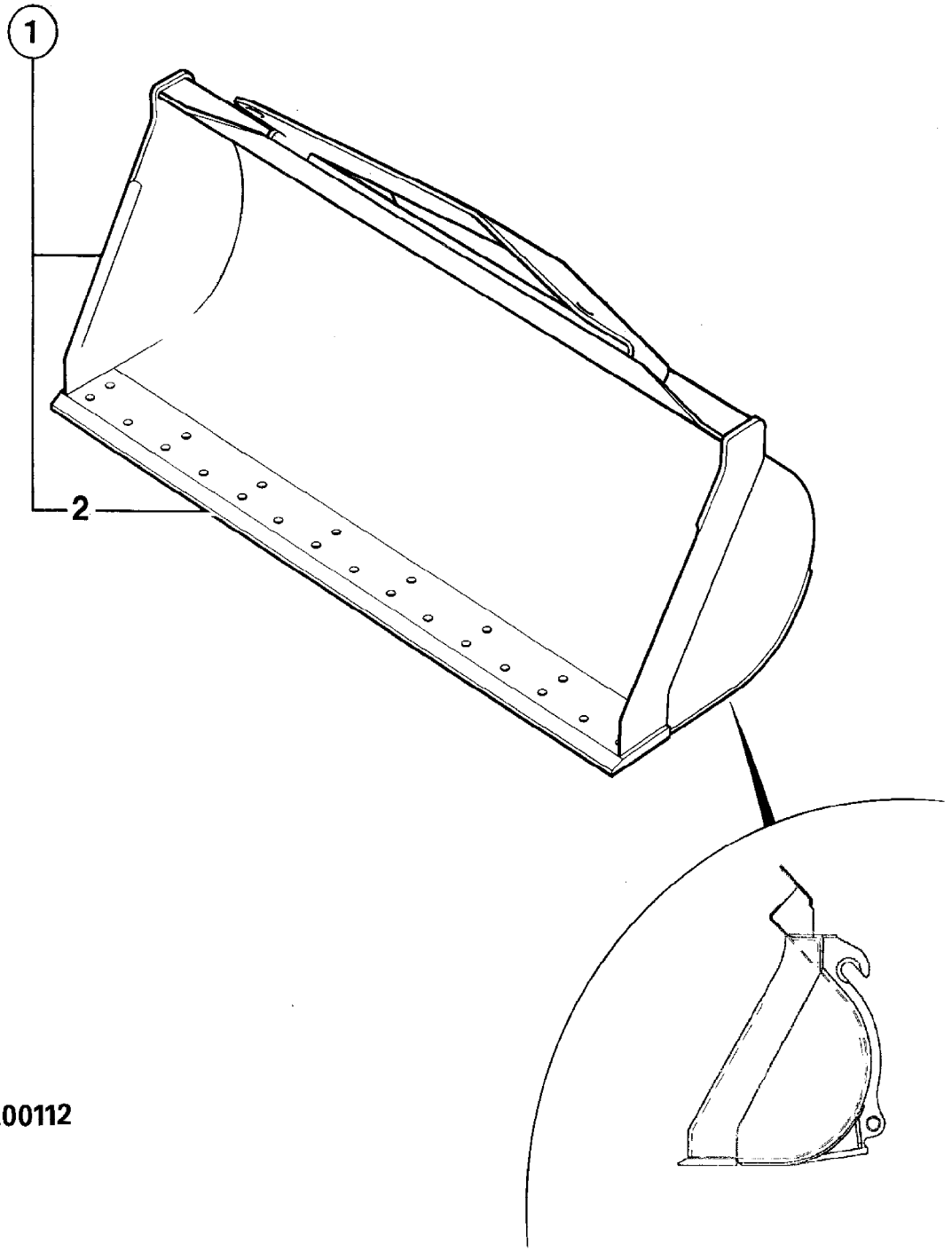

200112

9802/2740 A1-2-1 SHOVEL 1.8 CU.M., QUICKHITCH ZBAR

Item	Part no.	Change No.	Description	Remarks	Usage code	Qty
1	510/88400		Shovel, 1.8cu.m./2.3cu.yd.			1
2	510/99402		:Toeplate			1

Machine groups

Details

Machine group	From serial no.	To serial no.
.426		
426		

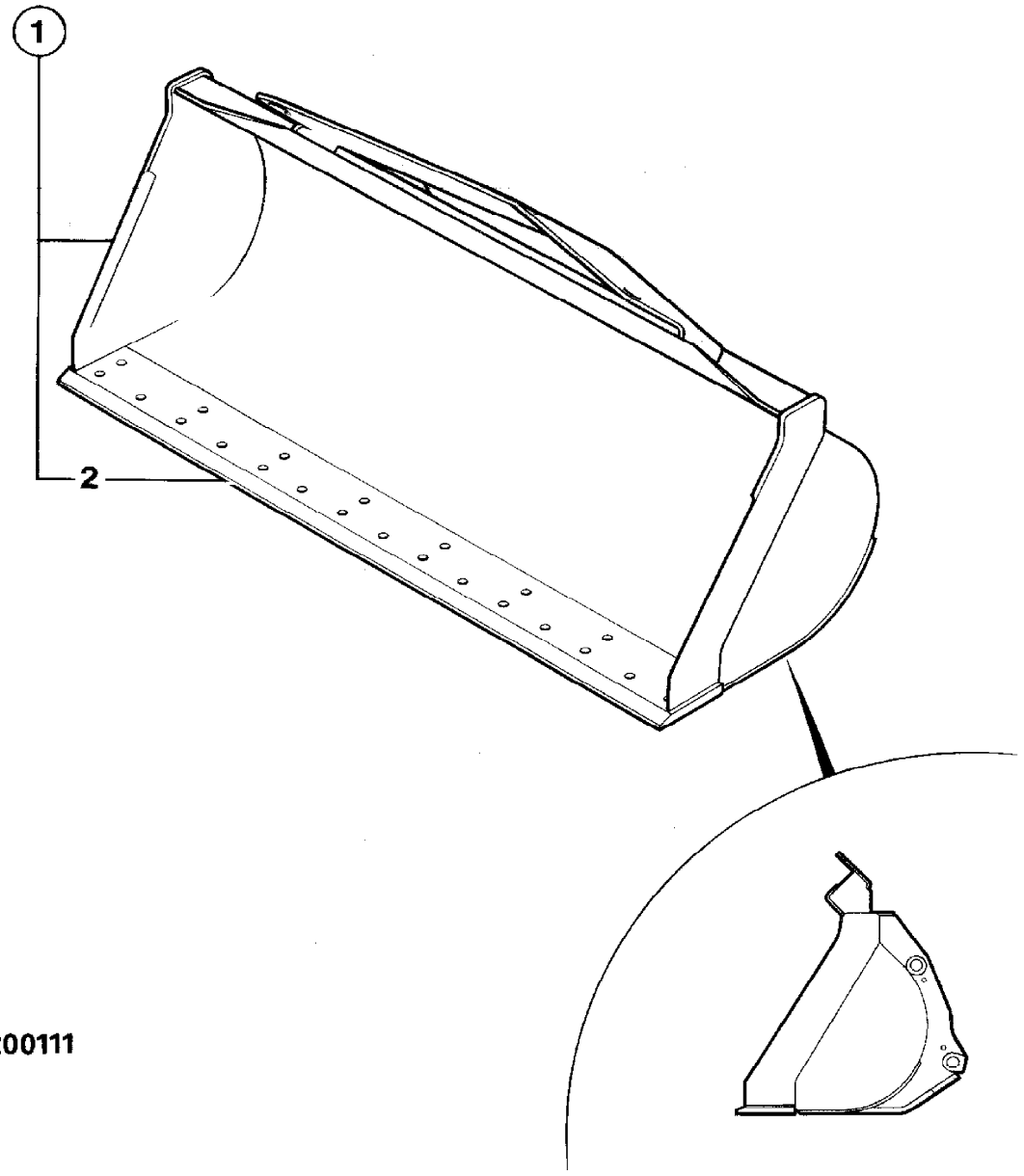

200111

9802/2740 A1-3-1 SHOVEL 1.8 CU.M., HT

Item	Part no.	Change No.	Description	Remarks	Usage code	Qty
1	510/88300		Shovel, 1.8cu.m./2.3cu.yd.			1
2	510/99402		:Toeplate			1

Machine groups

Details

Machine group	From serial no.	To serial no.
.426		
426		

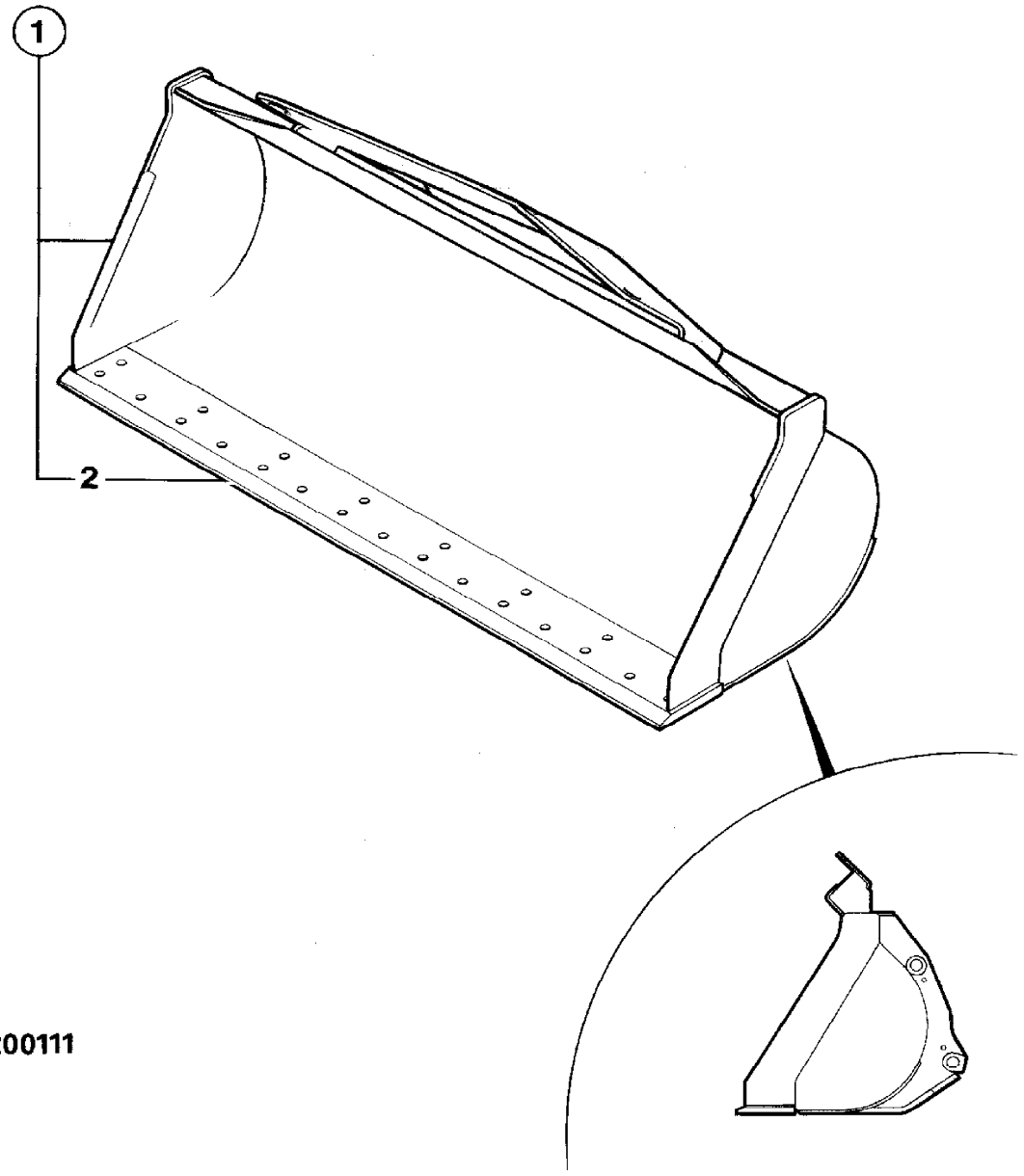

200111

9802/2740 A1-4-1 SHOVEL 2.0 CU.M., HT

Item	Part no.	Change No.	Description	Remarks	Usage code	Qty
1	510/88500		Shovel, 2.0cu.m./2.6cu.yd.			1
2	510/99402		:Toeplate			1

Machine groups

Details

Machine group	From serial no.	To serial no.
.426		
426		

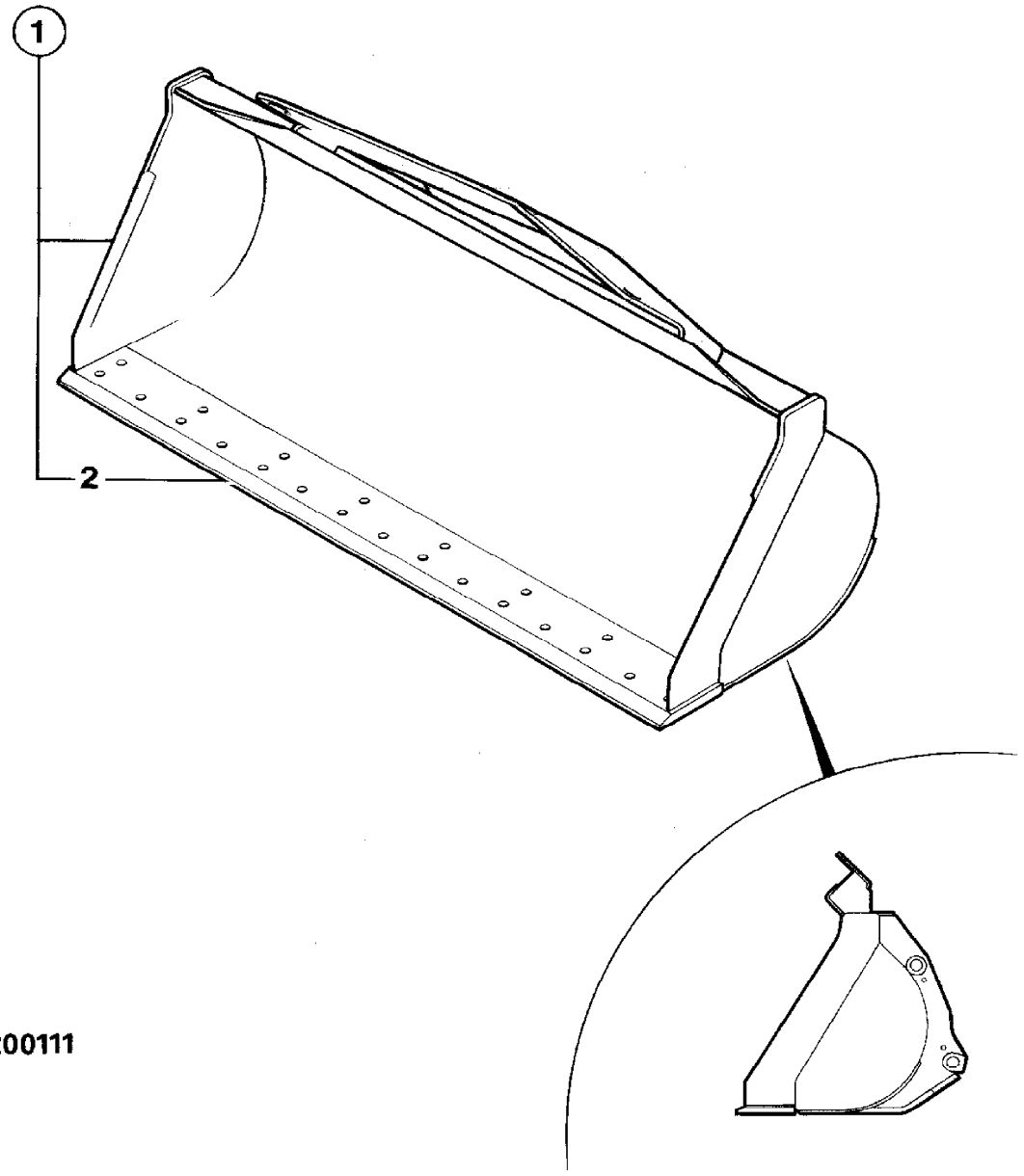

200111

9802/2740 A1-5-1 SHOVEL 2.0 CU.M., QUICKHITCH ZBAR & HT

Item	Part no.	Change No.	Description	Remarks	Usage code	Qty
1	335/02718		Shovel, 2.0Cu.M._2.6Cu.M			1
2	510/99402		:Toeplate			1

Machine groups

Details

Machine group	From serial no.	To serial no.
.426		
426		

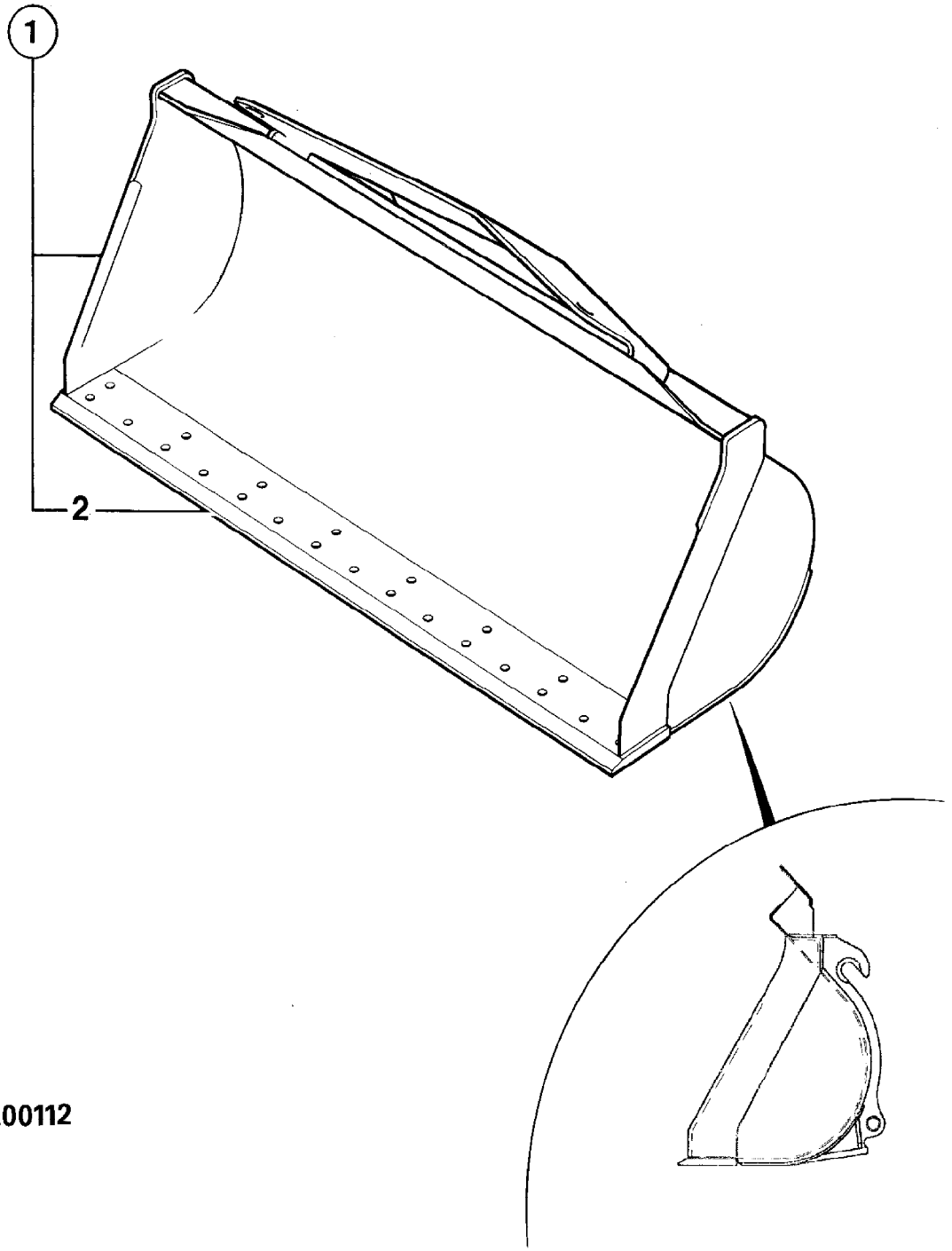

200112

9802/2740 A1-6-1 SHOVEL 2.0 CU.M., ZBAR

Item	Part no.	Change No.	Description	Remarks	Usage code	Qty
1	510/88600		Shovel, 2.0cu.m./2.6cu.yd.			1
2	510/99402		:Toeplate			1

Machine groups

Details

Machine group	From serial no.	To serial no.
.426		
426		

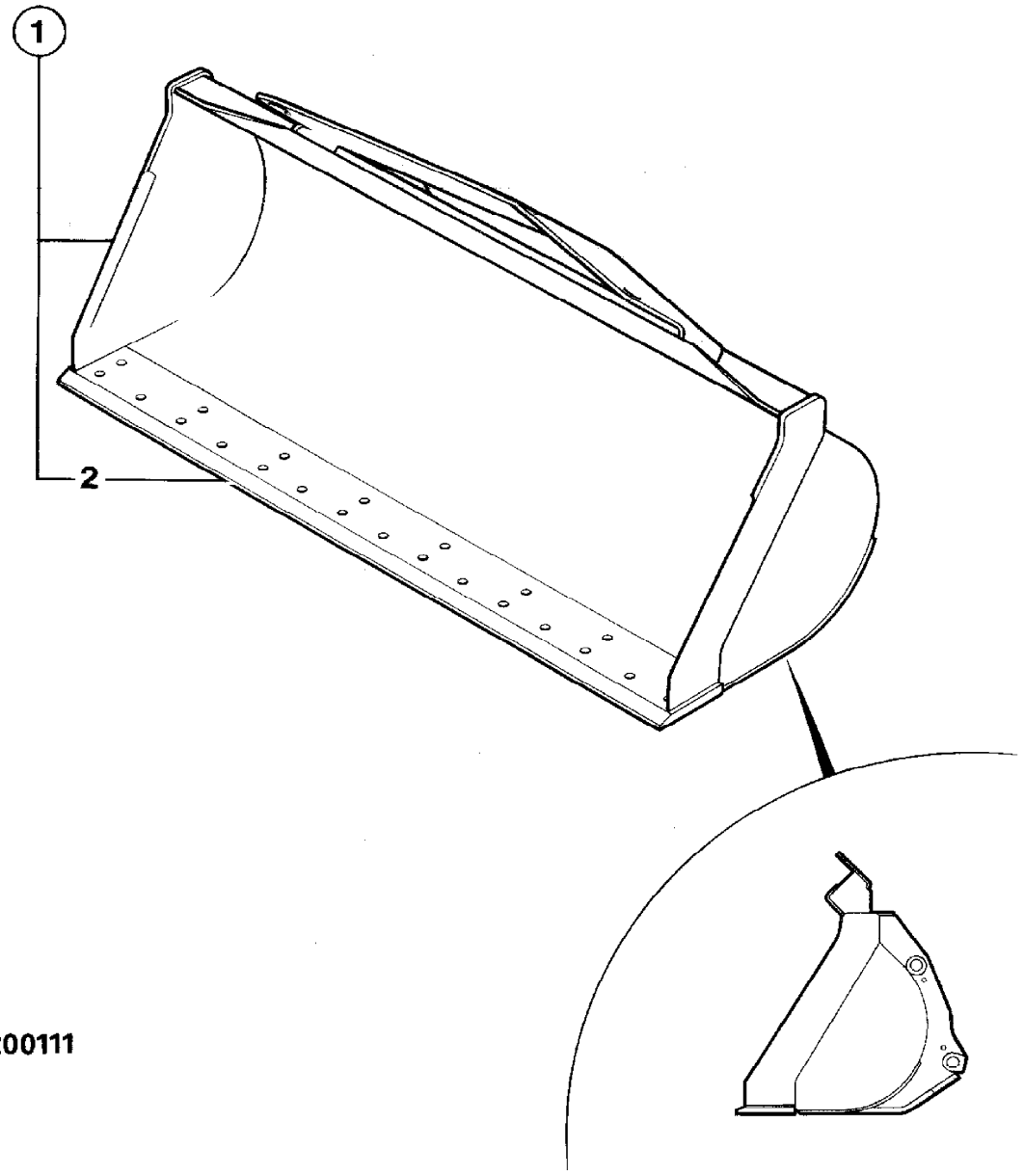

200111

9802/2740 A1-7-1 SHOVEL 2.0 CU.M, PENETRATION, Z BAR

Item	Part no.	Change No.	Description	Remarks	Usage code	Qty
1	510/92500		Shovel, penetration, 2.0 cu.m			1
2	510/92306		:Toeplate, 2498 mm long			1

Machine groups

Details

Machine group	From serial no.	To serial no.
.426		
426		

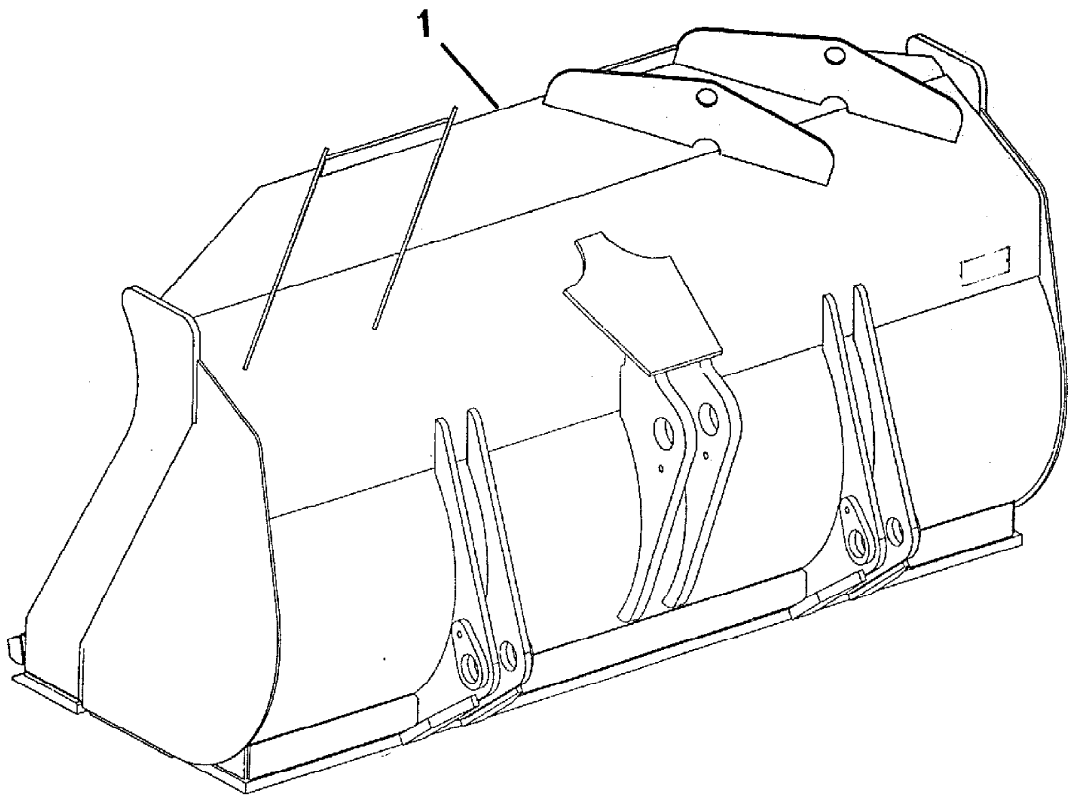

256200

9802/2740 A1-8-1 TOEPLATE, BOLT-ON, 2548mm WIDE

Item	Part no.	Change No.	Description	Remarks	Usage code	Qty
1	516/00005		Toeplate, inner			1
2	826/01022		Ploughbolt			15
3	823/00353		Washer, hardened			15
4	1370/0701Z		Nut			15
5	510/81902		Toeplate, outer, 444mm wide 3 holes			2

Machine groups

Details

Machine group	From serial no.	To serial no.
.426		
426		

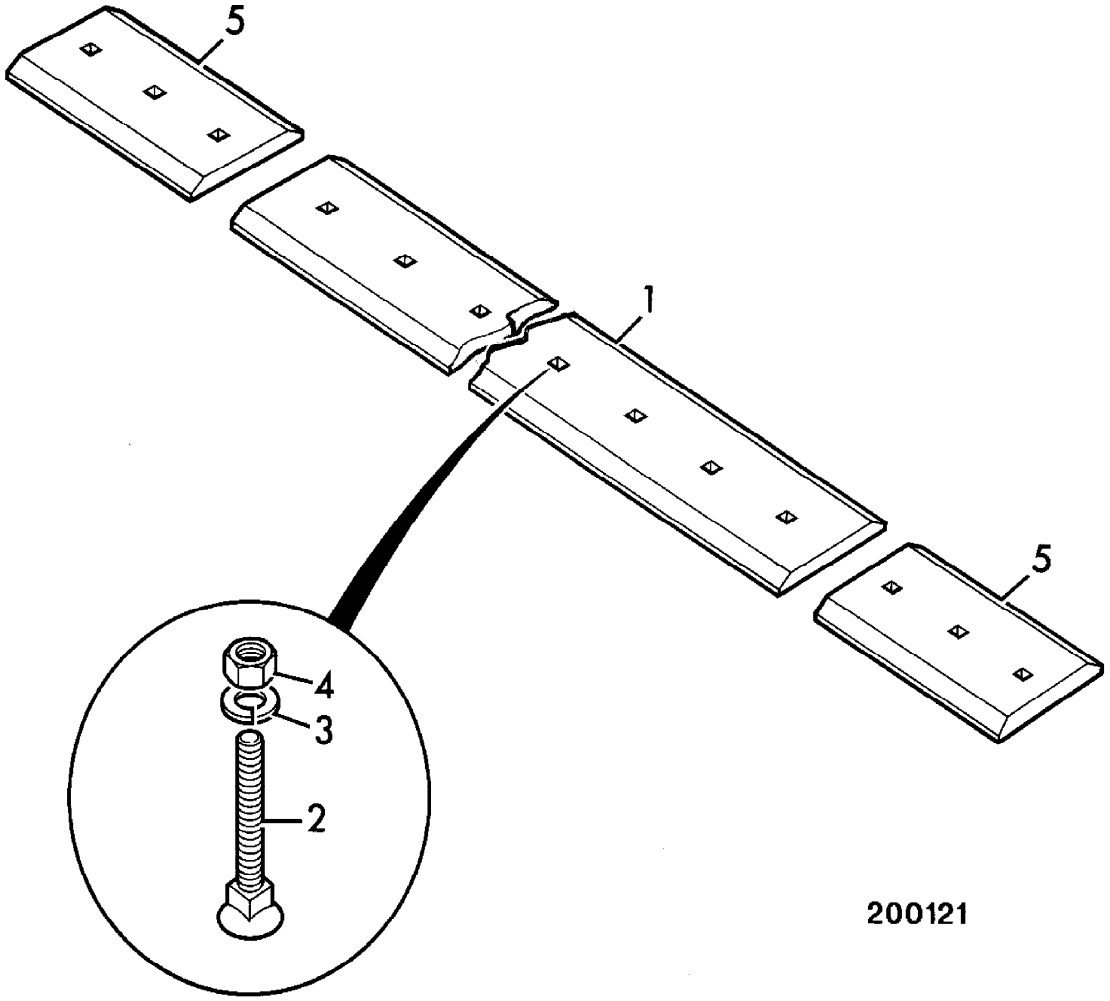

200121

9802/2740 A1-9-1 TOOTH GUARD

Item	Part no.	Change No.	Description	Remarks	Usage code	Qty
1	265/01542		Guard, pressing			2
2	268/40075		Bracket			2
3	1315/3716Z		Bolt, M16 x 70mm			2
4	1315/0408Z		Bolt, M10x30			4
5	1370/0303Z		Nut, lock, M10			8
6	1420/0008Z		Washer, Plain M10			16
7	1315/0405Z		Screw, M10 x 20mm long			4

Machine groups

Details

Machine group	From serial no.	To serial no.
.426		
426		

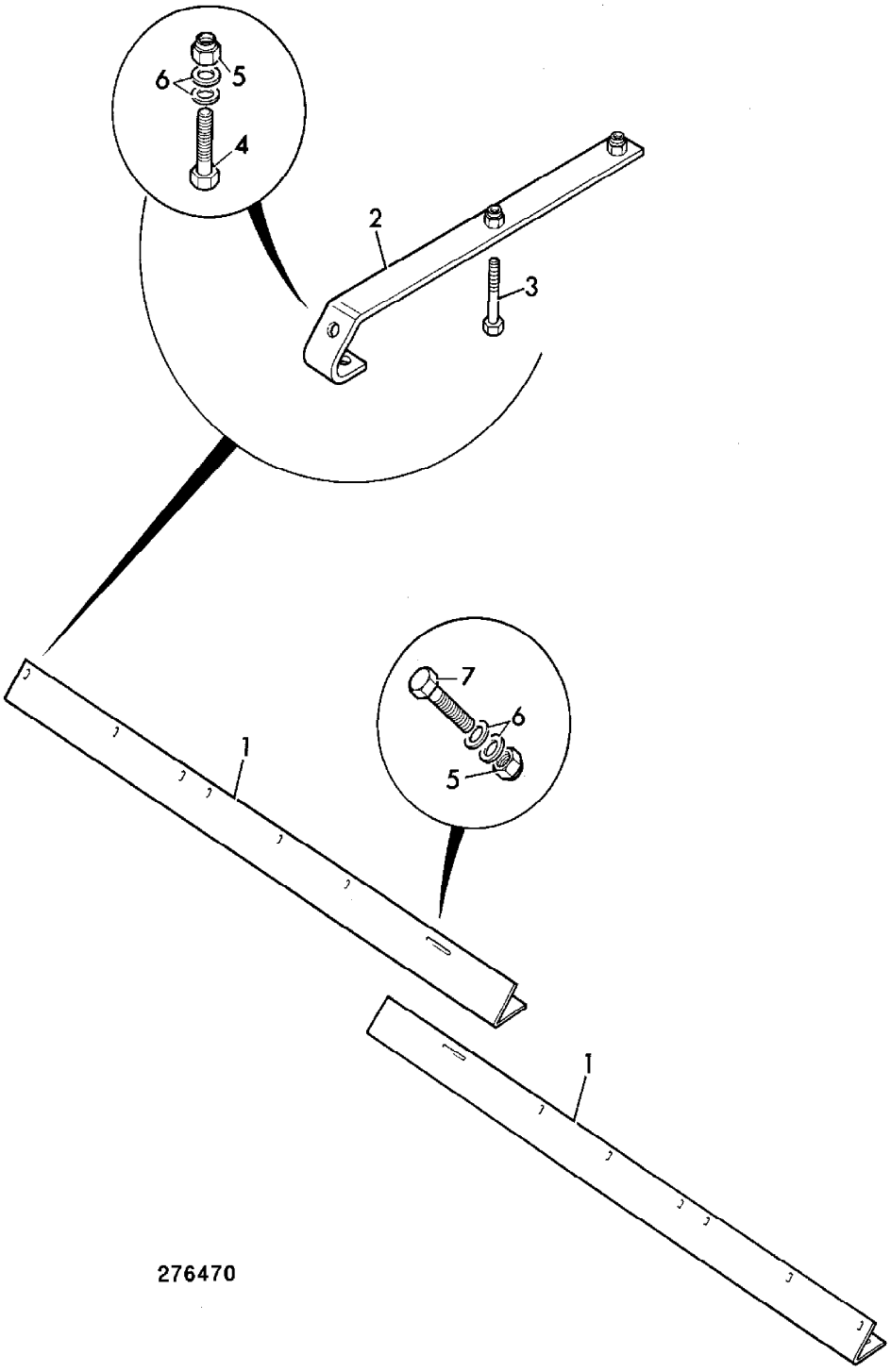

276470

9802/2740 A3-1-1 FORK FRAME AND TINES, STANDARD LIFT

Item	Part no.	Change No.	Description	Remarks	Usage code	Qty
1	511/55600		Frame, fork, assembly	N.S.P		1
2	511/61200		:Frame, fork assy. class 3, std.lift 1500mm wide			1
3	511/60800		:Fork			2
4	511/55504		:Spring, compression			2
5	1412/0004Z		:Washer			2
6	2103/0710		:Pin, split			2
7	511/55503		:Pin, spring			2

Machine groups

Details

Machine group	From serial no.	To serial no.
.426		
426		

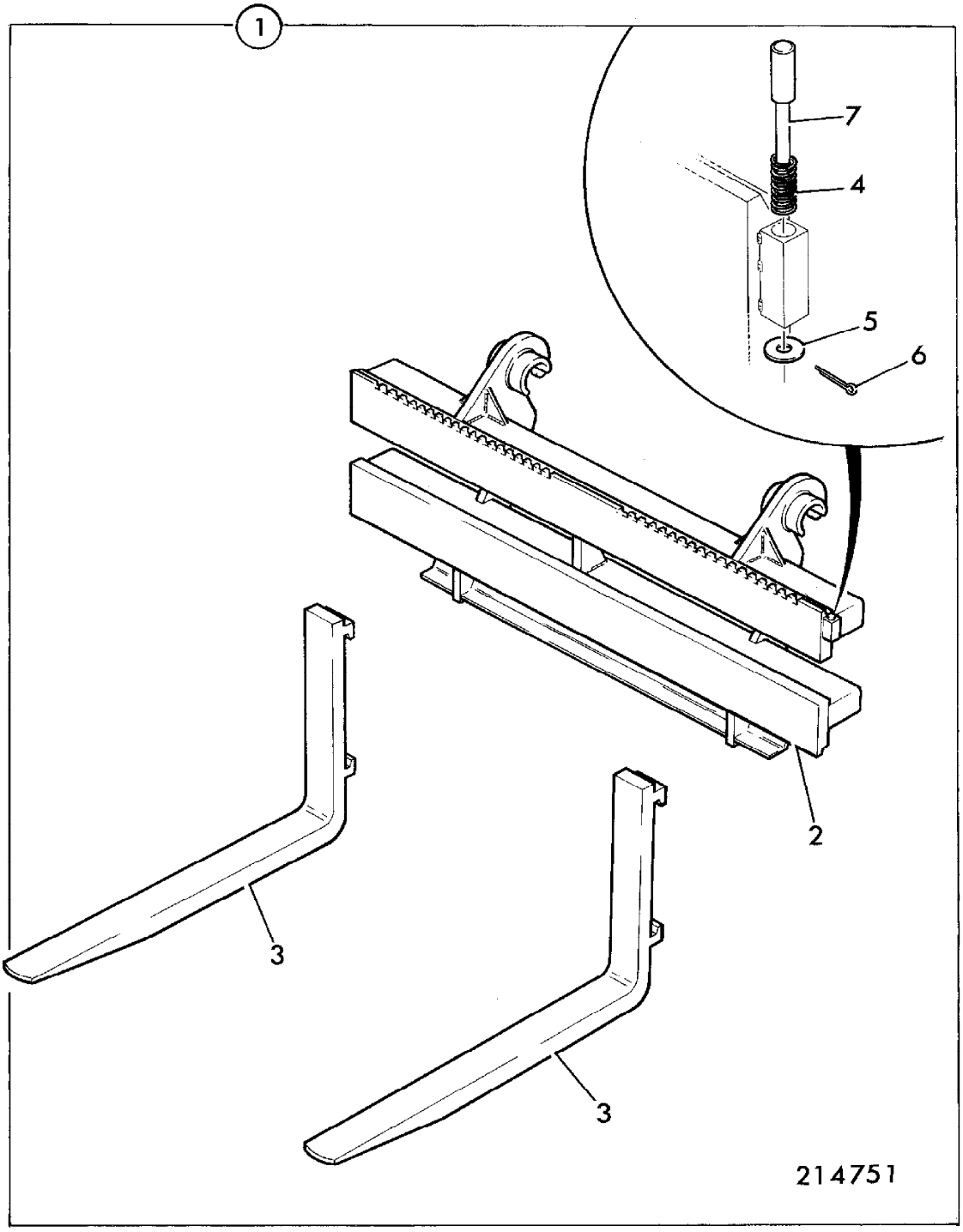
1
7
4
5
6
2
3
3
214751

9802/2740 A3-2-1 FORK FRAME AND TINES, PARALLEL LIFT

Item	Part no.	Change No.	Description	Remarks	Usage code	Qty
1	NSP		None serviced part			1
2	511/60700		:Frame, fork			1
3	511/60800		:Fork			2
4	511/55504		:Spring, compression			2
5	1412/0004Z		:Washer			2
6	2103/0710		:Pin, split			2
7	511/55503		:Pin, spring			2

Machine groups

Details

Machine group	From serial no.	To serial no.
.426		
426		

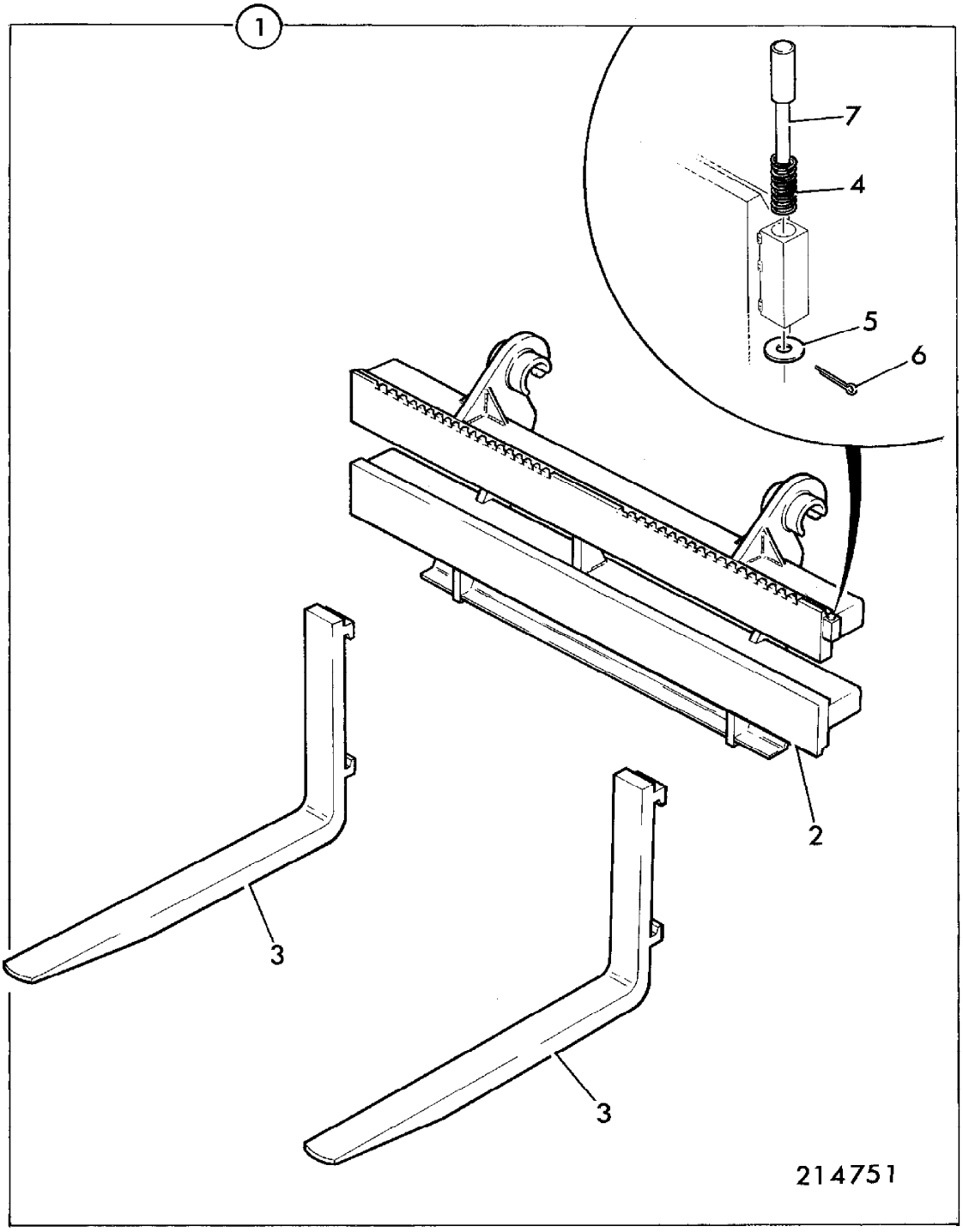
1
7
4
5
6
2
3
3
214751

9802/2740 A3-3-1 QUICKHITCH

Item	Part no.	Change No.	Description	Remarks	Usage code	Qty
1	511/59300		Attachment, quickhitch, industrial			1
2	331/16727		:Attachment, quickhitch			1
3	811/50343		:Pin, locking			2
4	551/60007		:Ram, assembly, quickhitch	Components E4-6-1		1
5	611/20800		:Hose, 1/4BSPx400			1
6	611/21000		:Hose, 1/4"BSP,470mm long			2
7	1604/0002		:Adapter, 1/4" BSP M/M			2
8	25/961900		:Valve, ball			1
	25/961901		::Handle			1
9	1315/0408Z		:Bolt, M10x30			8
10	1420/0008Z		:Washer, Plain M10			8
11	511/55401		:Indicator, Peg			2
12	511/54702		:Pin, indicator			2
13	511/58200		:Cover, access, L.H.			1
13A	816/50088		::Adapter, tee			2
14	511/54703		:Washer, limit, red, 2" dia x 10mm sq.			1
15	826/00115		:Screw			8
16	NSP		:None serviced part	Rating plate		1
17	817/03502		:Plate, instruction			1
18	1450/0001		:Nipple, grease, straight, 1/8 BSP			2
19	1406/0011		:Seal, bonded			2
20	613/51004		:Hose			2
	613/80067		Hose, wire guarded	Sales Special		2
21	926/04700		:Seal			1
22	816/00190		:Cap, blanking 1/2" BSP, female			2
23	511/58300		:Cover, access, R.H.			1
24	1315/0710Z		:Bolt, M16 x 40mm			4
25	830/00599		:Spacer			4
26	819/00094		:Shim, 65 i/d, 1mm thick			44

Machine groups

Details

Machine group	From serial no.	To serial no.
.426		

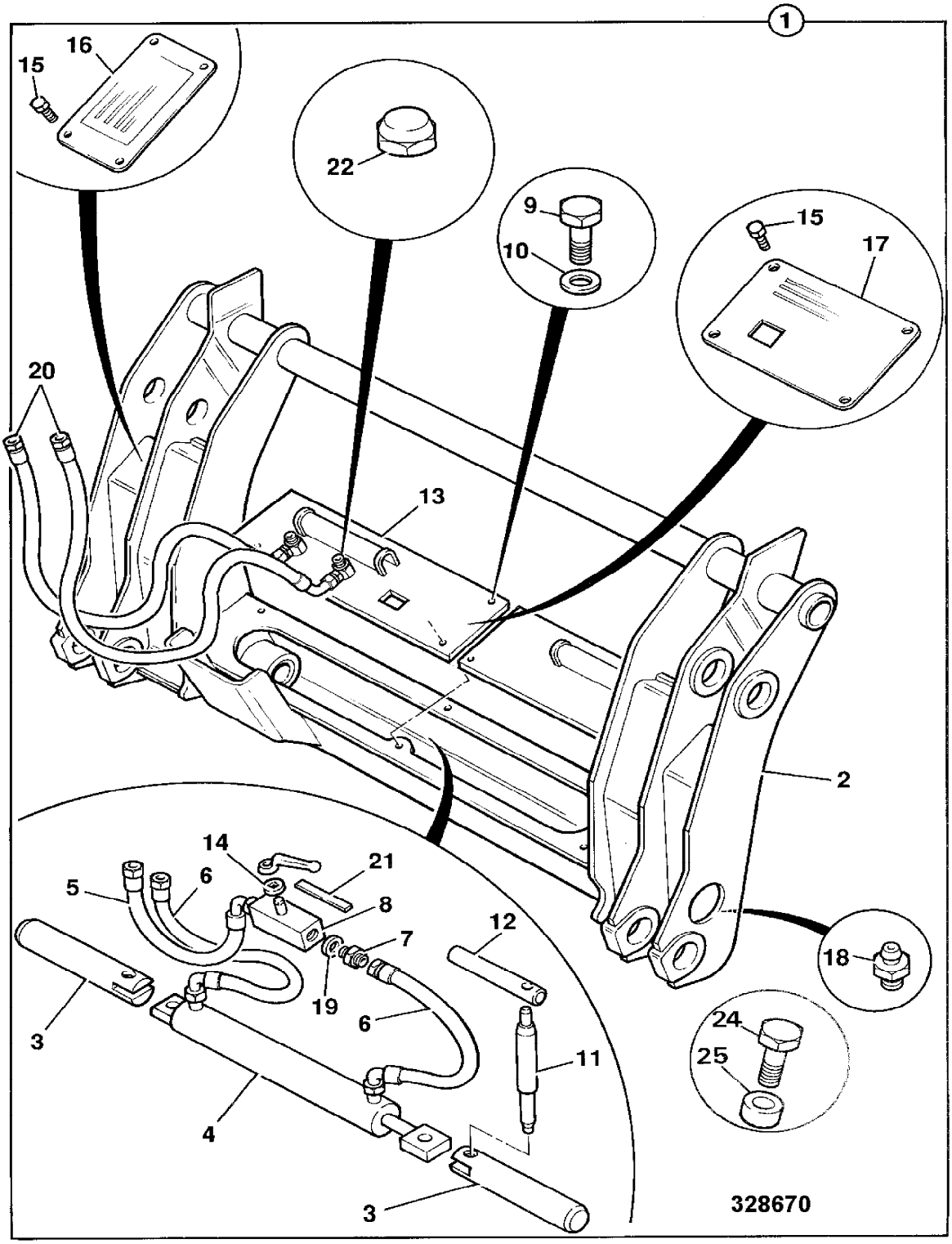
1
16
15
22
9
10
15
17
20
13
2
14
21
5
6
8
7
12
18
19
6
24
25
3
11
4
3
328670

9802/2740 A3-4-1 QUICKHITCH

Item	Part no.	Change No.	Description	Remarks	Usage code	Qty
0A	331/21035		Quickhitch, assembly			1
2	811/50343		:Pin, locking			2
3	551/60007		:Ram, assembly, quickhitch			1
4	611/20800		:Hose, 1/4BSPx400			1
5	611/21000		:Hose, 1/4"BSP,470mm long			2
6	1604/0002		:Adapter, 1/4" BSP M/M			2
7	25/961900		:Valve, ball			1
8	1315/0408Z		:Bolt, M10x30			2
9	1420/0008Z		:Washer, Plain M10			2
10	511/55401		:Indicator, Peg			2
11	511/54702		:Pin, indicator			2
12	331/15859		:Cover, access, left side			1
13	511/54703		:Washer, limit, red, 2" dia x 10mm sq.			1
14	826/00115		:Screw			4
16	817/03502		:Plate, instruction			1
17	1450/0001		:Nipple, grease, straight, 1/8 BSP			2
18	1406/0011		:Seal, bonded			2
19	613/51004		:Hose			2
20	926/04700		:Seal	2 required from roll 150mm long		A/R
21	816/00196		Cap, blanking 3/4"BSP, steel			2
22	511/58300		:Cover, access, R.H.			1
23	816/10159		:Adapter, bulkhead, 3/4"BSP x 3/4"BSP			2
25	819/00094		:Shim, 65 i/d, 1mm thick			4
26	819/00102		:Spacer, 5mm			2

Machine groups

Details

Machine group	From serial no.	To serial no.
.426		
426		

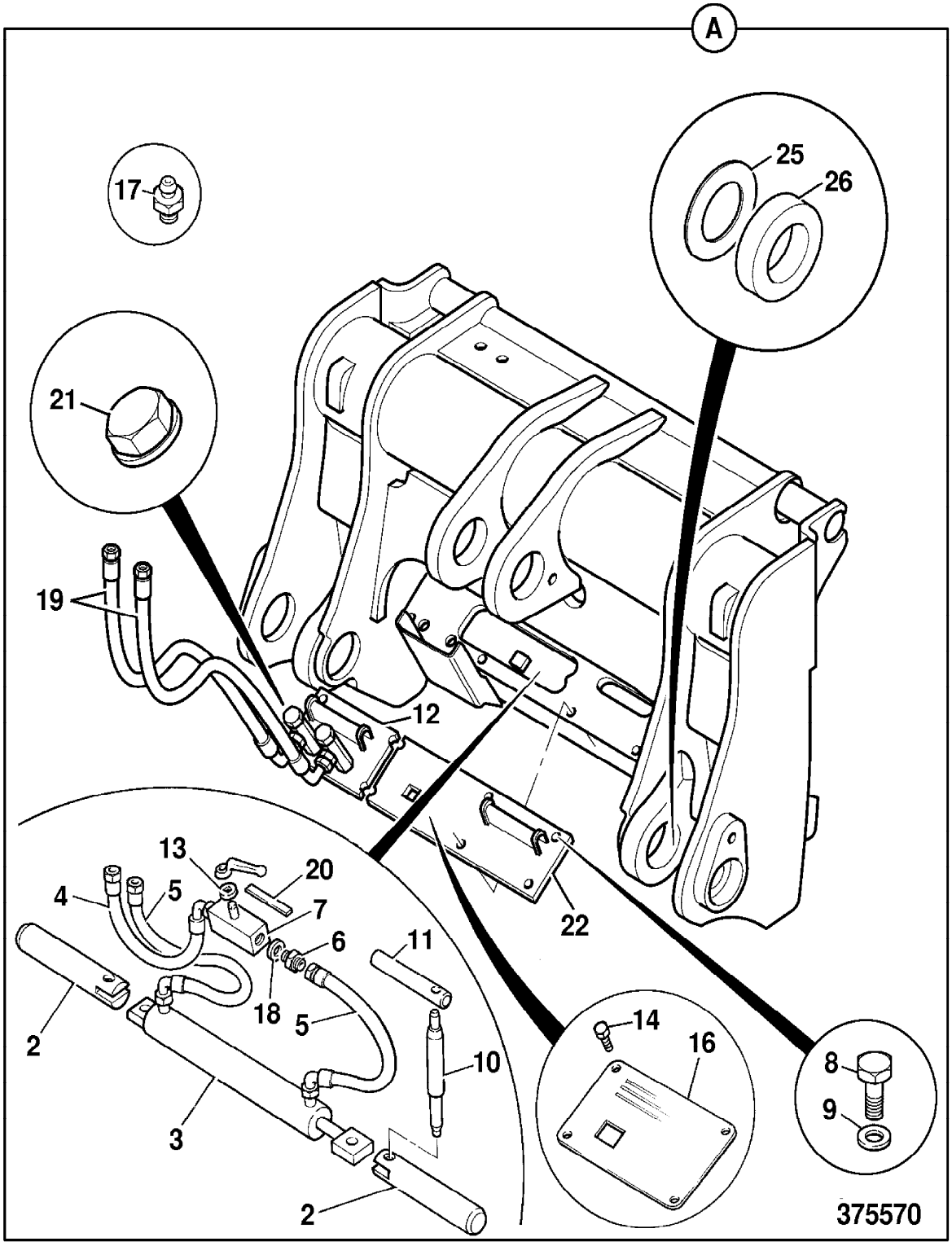
A
17
25
26
21
19
12
22
13
20
4
5
7
6
11
18
5
2
10
3
2
14
16
8
9
375570

9802/2740 A3-5-1 FORK AND FRAME, CLASS 3, STANDARD LIFT

Item	Part no.	Change No.	Description	Remarks	Usage code	Qty
2	511/61000		Frame, class 3			1
3	511/61100		Fork, class 3 1500 long			2
4	511/55504		Spring, compression			2
5	1412/0004Z		Washer			2
6	2103/0710		Pin, split			2
7	511/55503		Pin, spring			2

Machine groups

Details

Machine group	From serial no.	To serial no.
.426		
426		

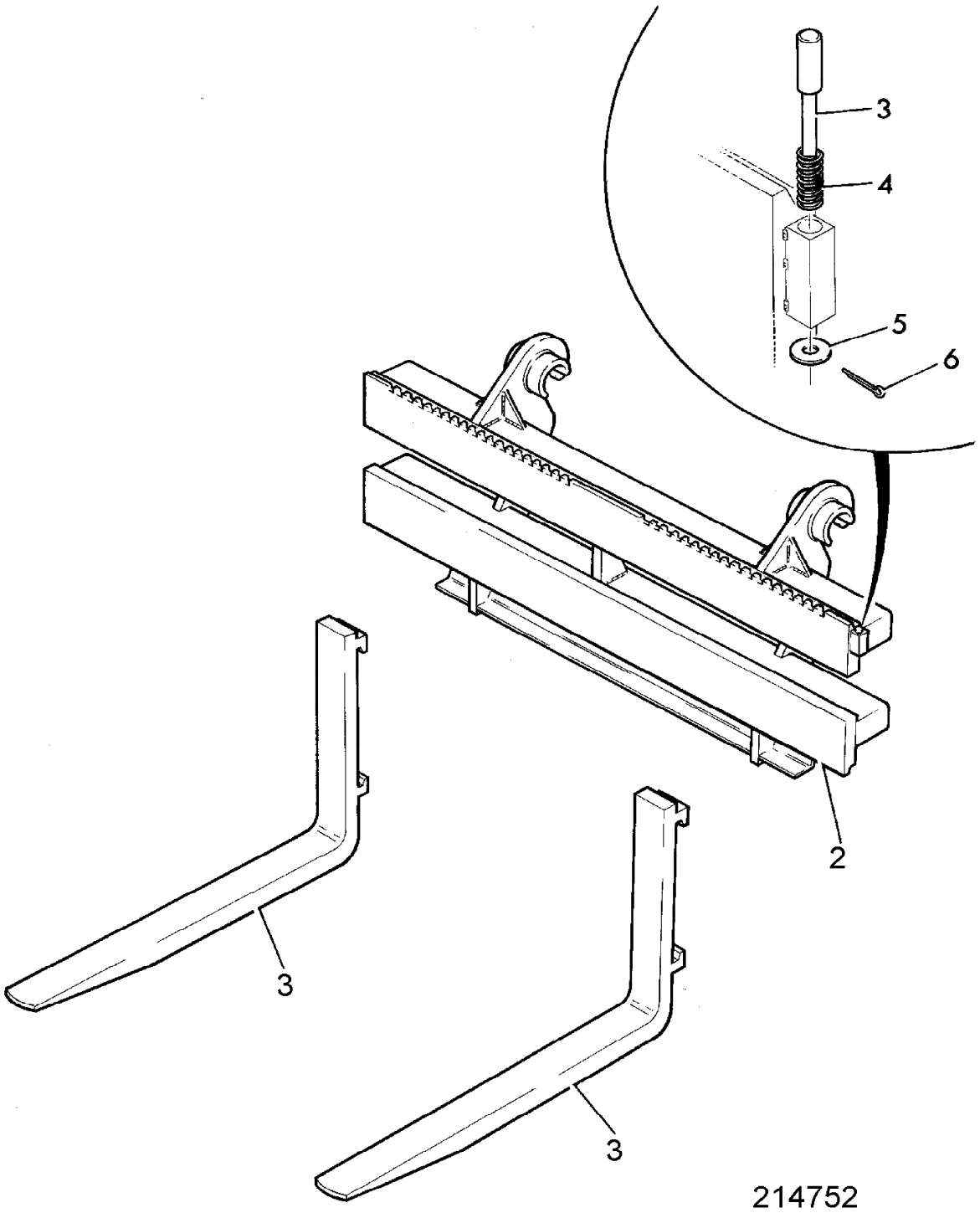
3
4
5
6
2
3
3
214752

9802/2740 A3-6-1 COUPLINGS, QUICK RELEASE

Item	Part no.	Change No.	Description	Remarks	Usage code	Qty
1	45/910400		Coupling, 1/2" BSP female, quick release			1
2	45/910500		Coupling, 1/2" BSP male, quick release			1
3	1406/0018		Seal, bonded, 1/2" BSP			2

Machine groups

Details

Machine group	From serial no.	To serial no.
.426		
426		

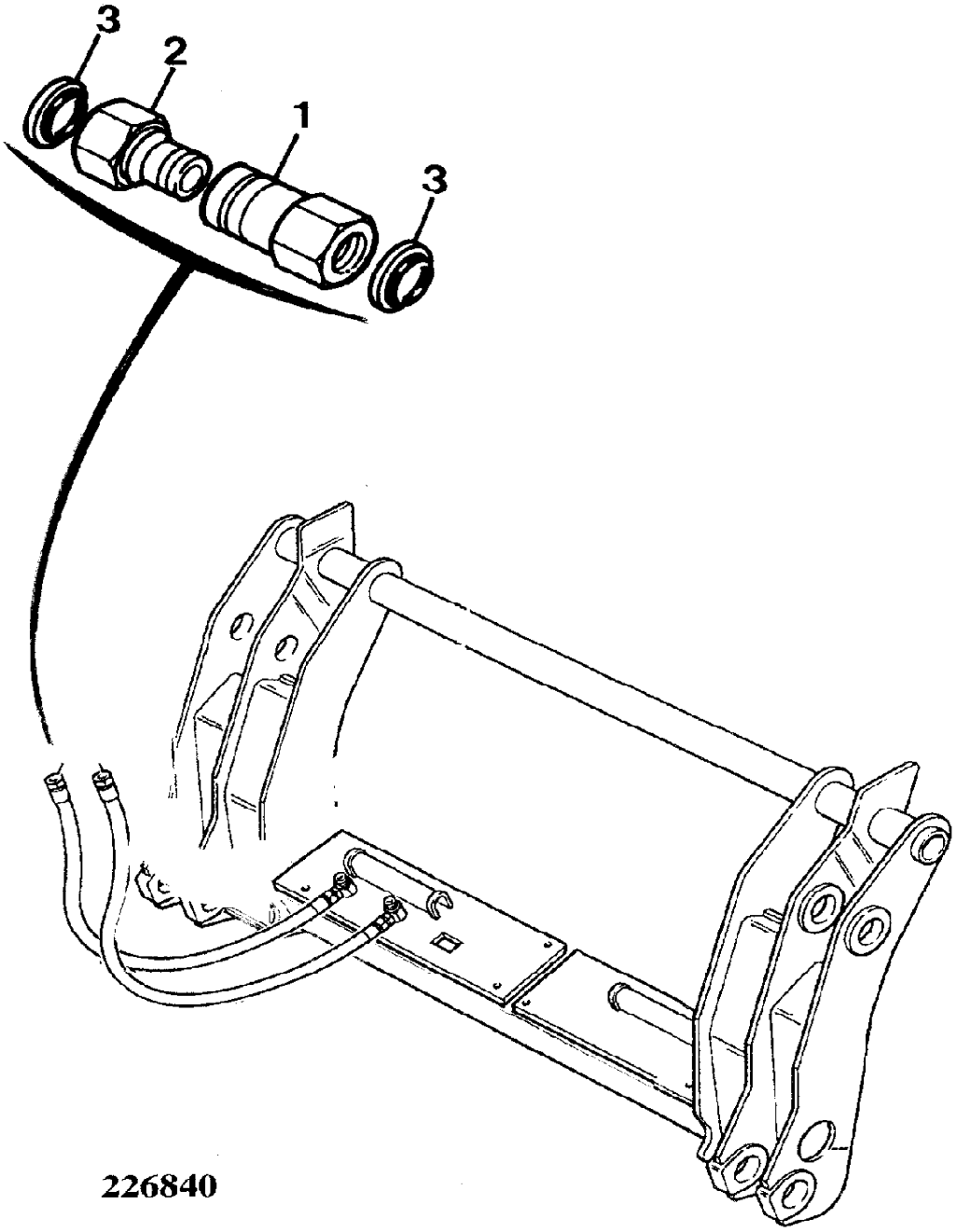

226840

9802/2740 B1-1-1 CHASSIS FRONT

Item	Part no.	Change No.	Description	Remarks	Usage code	Qty
1	335/09350	Superseded	Chassis, front, HT			1
	335/90313		Chassis, front, HT			1
	335/09348		Chassis, front, HT	Sales special 7672		1
	335/09351	Superseded	Chassis, front, ZX			1
	335/90314		Chassis, front, ZX			1
	335/09348		Chassis, front, HT	Sales special 7672 (436 front chassis)		1
5	.		'See Remark'	See E4 for steer rams		2
6	911/29700		Pin, pivot			2
	811/90366		Pin, pivot, expander	Expander pin service replacement for o/s bore		1
7	911/27000		Pin, pivot, steer ram rear			2
	811/90367		Pin, pivot, expander	Expander pin service replacement for o/s bore		1
8	823/10714		Shim			4
10	1315/3712D		Bolt, M16x50			2
10A	1420/0007D		Washer, M8 plain			2
11	1370/0603D		Nut, M16			2
12	1315/0708D		Setscrew			2
13	1412/0007D		Washer, large			4
14	830/00599		Spacer			4
15	335/11091		Bracket, hose support			1
16	1315/0407D		Setscrew, M10 x 25mm long			2
17	1370/0303D		Nut, M10			2
18	331/17126		Plate, clamp			1
19	821/10260		Clamp			2
20	1315/3421D		Bolt, M10x110			2
21	1420/0008D		Washer, M10			6
22	1370/0203D		Nut, lock			2
23	331/21956		Stop, articulation			2

24	826/01829		Capscrew, M10 x 75			4
25	1370/0303D		Nut, M10			4
26	1420/0008D		Washer, M10			4
31	335/02905	Superseded	Plate, cover, front chassis			1
	331/62315		Plate, cover, front chassis			1
32	1420/0006D		Washer, M6 plain			8
33	826/11079		Setscrew, flange head, dacromet M10 x 20mm			4
34	918/10008		Chain, retention			2
	918/10036		Chain, retention	Replaces 918/10008		2
35	1315/0210D		Setscrew			4
36	826/01249		Nut, M10 rivet			4
39	331/21954		Plate, striker			2
40	821/00350		Clamp			4
41	1370/0103D		Nut, M6 lock			4
42	265/01946		Mat, apron	Option in place of item 31		1
43	1315/0409Z		Screw, hex. head			2
44	826/01526		Screw, thumb			2
45	1412/0004Z		Washer			4
46	823/00480		Retainer			2
47	826/01249		Nut, M10 rivet			4

Machine groups

Details

Machine group	From serial no.	To serial no.
.426		
426		

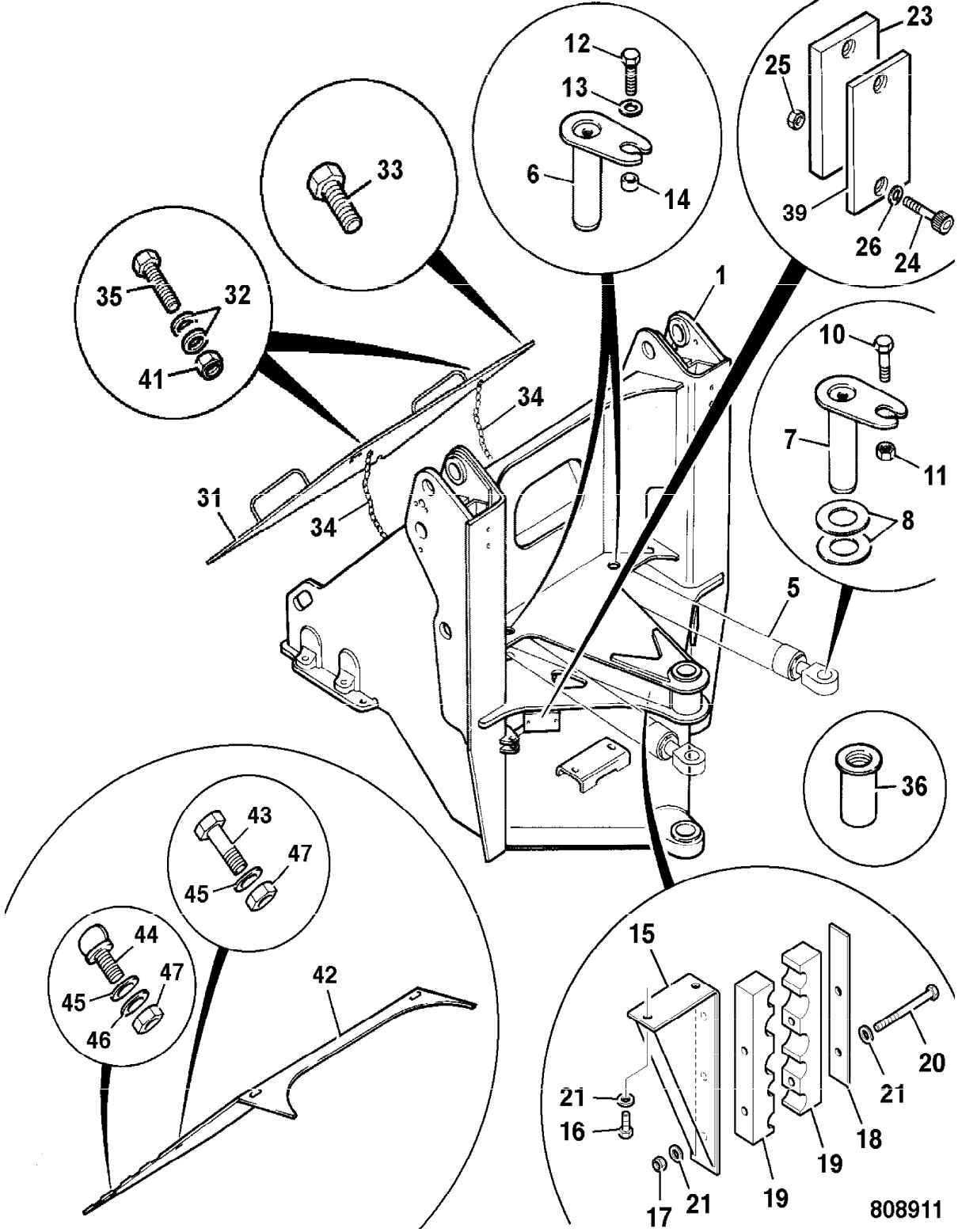
12
13
6
14
23
25
39
26
24
33
35
32
41
1
10
7
11
8
34
31
34
5
36
43
47
45
44
47
45
46
42
15
21
16
17
21
19
19
18
21
20
808911

9802/2740 B1-10-1 FENDERS, FRONT

Item	Part no.	Change No.	Description	Remarks	Usage code	Qty
1	335/09994		Fender, front, left side			1
2	335/09995		Fender, front, right side			1
7	335/11116		Plate, mounting, left side			1
8	335/11117		Plate, mounting, right side			1
9	346/00228		Trim, fender, LH			1
10	346/00229		Trim, fender, RH			1
15	1315/0710D		Setscrew			6
16	1420/0011D		Washer, M16			6
20	1315/0407D		Setscrew, M10 x 25mm long			8
21	1420/0008D		Washer, M10			12
22	1370/0303D		Nut, M10			8
27	331/54464		Mudflap, front			2
29	331/54656		Strip, mudflap front, upper			2
30	331/54824		Strip, mudflap front, lower			4
34	826/11357		Screw, button head, M8 x 30			6
36	1420/0007D		Washer, M8 plain			9
37	1370/0203D		Nut, lock			9
38	826/11330		Rivet, plastic			9

Machine groups

Details

Machine group	From serial no.	To serial no.
.426		1231602
426		1231602

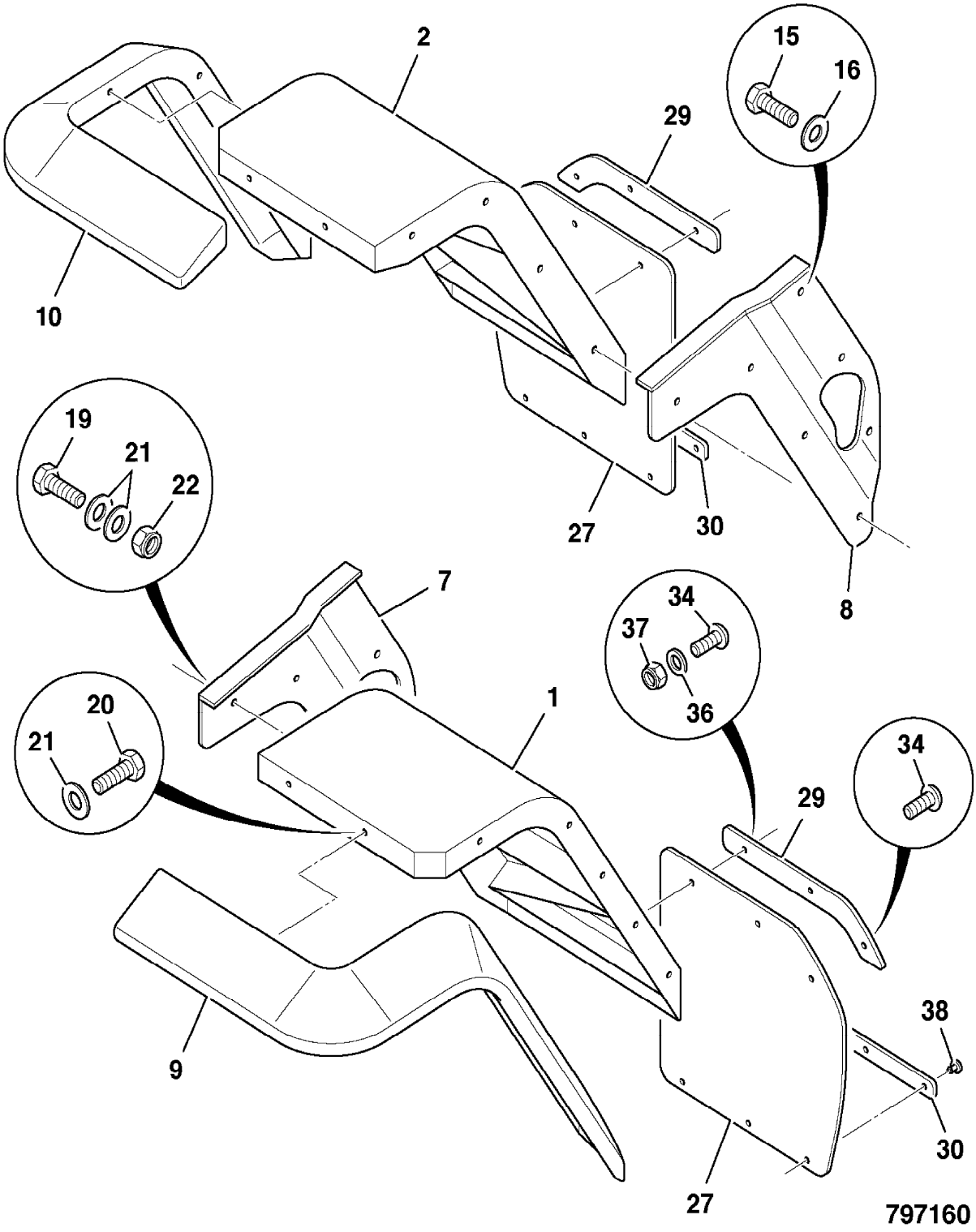
2
15
16
29
10
19
21
22
27
30
8
7
34
37
36
1
20
21
34
29
38
9
30
27
797160

9802/2740 B1-10-2 FENDERS, FRONT

Item	Part no.	Change No.	Description	Remarks	Usage code	Qty
1	335/11728		Fender, front, left side			1
2	335/11729		Fender, front, right side			1
7	335/11730		Plate, mounting, left side			1
8	335/11731		Plate, mounting, right side			1
9	346/00228		Trim, fender, LH			1
10	346/00229		Trim, fender, RH			1
15	1315/0710D		Setscrew			6
16	1420/0011D		Washer, M16			6
20	1315/0407D		Setscrew, M10 x 25mm long			8
21	1420/0008D		Washer, M10			12
22	1370/0303D		Nut, M10			8
27	331/54464		Mudflap, front			2
29	331/54656		Strip, mudflap front, upper			2
30	331/54824		Strip, mudflap front, lower			4
34	826/11357		Screw, button head, M8 x 30			6
36	1420/0007D		Washer, M8 plain			9
37	1370/0203D		Nut, lock			9
38	826/11330		Rivet, plastic			9

Machine groups

Details

Machine group	From serial no.	To serial no.
.426	1231603	
426	1231603	

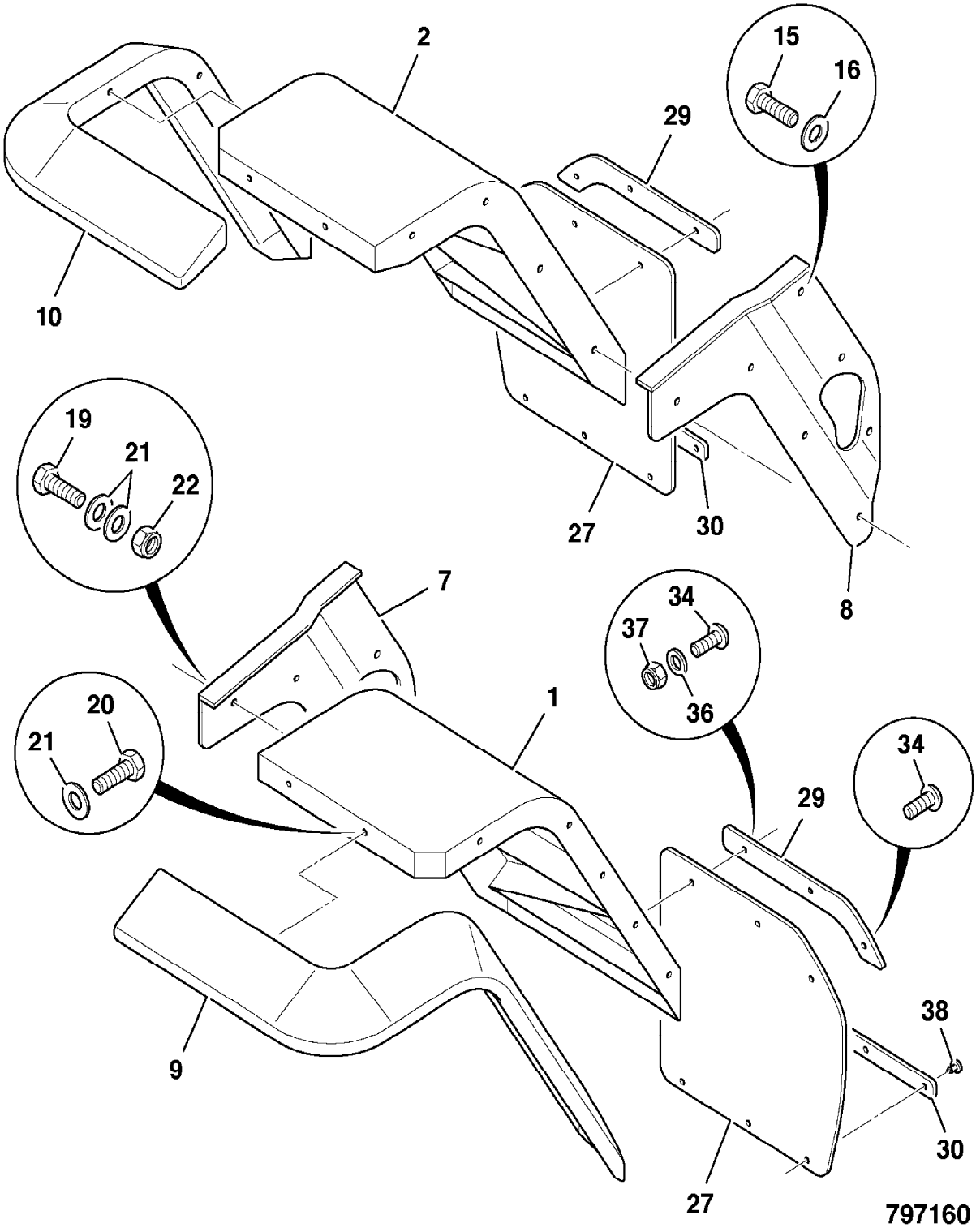
2
15
16
29
10
19
21
22
27
30
8
7
34
37
36
1
20
21
34
29
38
9
30
27
797160

9802/2740 B1-10-3 FENDERS, FRONT, 750 TYRES, SALES SPECIAL

Item	Part no.	Change No.	Description	Remarks	Usage code	Qty
1	335/11725		Fender, front, left side	Sales special 7767		1
2	335/11726		Fender, front, right side			1
7	335/11730		Plate, mounting, left side			1
8	335/11731		Plate, mounting, right side			1
9	346/00177		Trim, fender, LH			1
10	346/00178		Trim, fender, RH			1
15	1315/0710D		Setscrew			6
16	1420/0011D		Washer, M16			6
20	1315/0407D		Setscrew, M10 x 25mm long			8
21	1420/0008D		Washer, M10			12
22	1370/0303D		Nut, M10			8
27	331/47606		Mudflap, front			2
29	331/47589		Strip, mudflap, front			2
30	265/02961		Plate, stiffening			4
34	826/11357		Screw, button head, M8 x 30			6
36	1420/0007D		Washer, M8 plain			9
37	1370/0203D		Nut, lock			9
38	826/11330		Rivet, plastic			9

Machine groups

Details

Machine group	From serial no.	To serial no.
.426		
426		

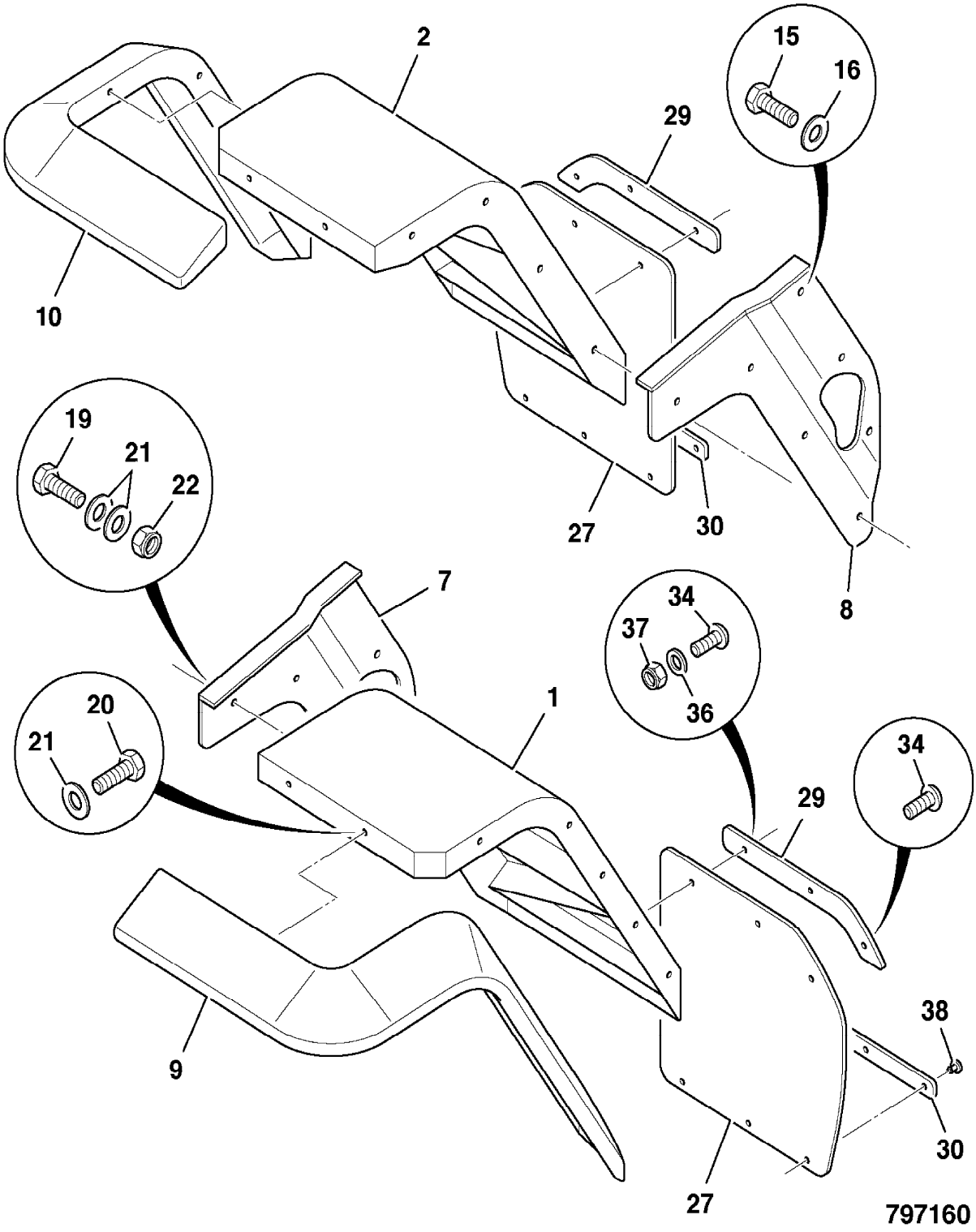
2
15
16
29
10
19
21
22
27
30
8
7
34
37
36
1
20
21
34
29
38
9
30
27
797160

9802/2740 B1-12-1 FENDERS, REAR

Item	Part no.	Change No.	Description	Remarks	Usage code	Qty
3	335/10017		Fender, rear lower, left side			1
4	335/10018		Fender, rear lower, right side			1
5	335/09376		Fender, rear upper, left side			1
6	335/09377		Fender, rear upper, right side			1
11	346/00230		Trim, rear lower fender, left side			1
12	346/00231		Trim, rear lower fender, right side			1
13	346/00232		Trim, upper rear fender, left side			1
14	346/00233		Trim, upper rear fender, right side			1
17	1315/0408D		Setscrew, M10 x 30			16
18	1315/0410D		Setscrew			2
19	1315/0409D		Setscrew, M10 x 35mm long			8
20	1315/0407D		Setscrew, M10 x 25mm long			34
21	1420/0008D		Washer, M10			78
22	1370/0303D		Nut, M10			26
23	829/30918		Spacer, steel, 16mm long			2
24	331/51604		Plate, tread			2
26	331/53156		Plate, tread, upper			2
28	331/54465		Mudflap, rear			2
30	331/54824		Strip, mudflap front, lower			4
31	331/54501		Strip, clamp			2
32	331/47590		Strip, mudflap, reaer			2
33	826/01486		Screw, M8 x 20, socket type			22
34	826/11357		Screw, button head, M8 x 30			6
35	123/04791		Washer, nylon			16
36	1420/0007D		Washer, M8 plain			14
37	1370/0203D		Nut, lock			16
38	826/11330		Rivet, plastic			12
39	1412/0003D		Washer, large			8

Machine groups

Details

Machine group	From serial no.	To serial no.
.426		
426		

.

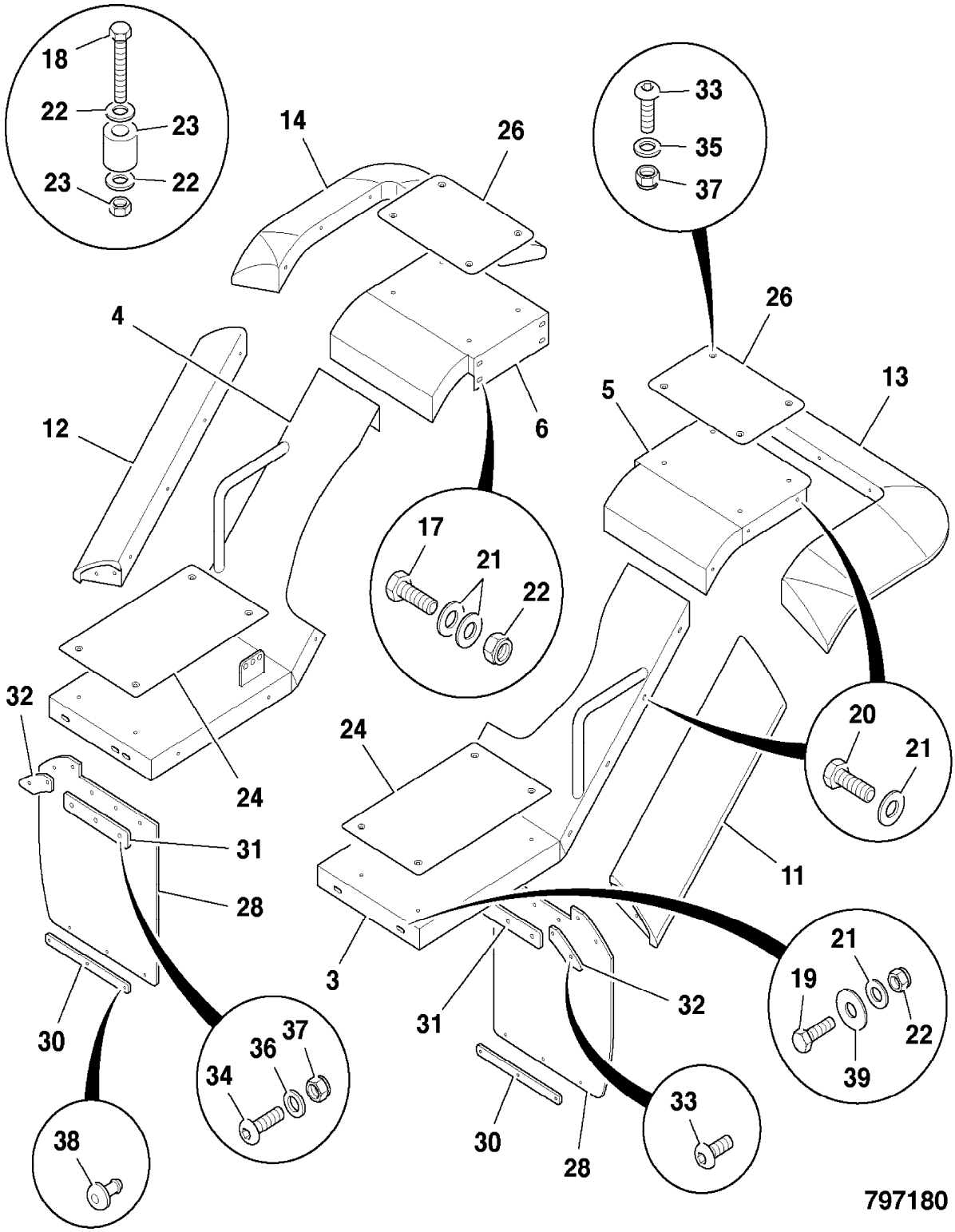

9802/2740 B1-12-3 FENDERS, REAR, 750 TYRES, SALES SPECIAL

Item	Part no.	Change No.	Description	Remarks	Usage code	Qty
3	335/11673		Fender, rear lower, left side	Sales special 7767		1
4	335/11674		Fender, rear lower, right side			1
5	335/11652		Fender, rear upper, left side			1
6	335/11653		Fender, rear upper, right side			1
11	346/00230		Trim, rear lower fender, left side			1
12	346/00231		Trim, rear lower fender, right side			1
13	TBA		Part number, Not Yet Known			1
14	TBA		Part number, Not Yet Known			1
17	1315/0408D		Setscrew, M10 x 30			16
18	1315/0410D		Setscrew			2
19	1315/0409D		Setscrew, M10 x 35mm long			8
20	1315/0407D		Setscrew, M10 x 25mm long			34
21	1420/0008D		Washer, M10			78
22	1370/0303D		Nut, M10			26
23	829/30918		Spacer, steel, 16mm long			2
24	331/51604		Plate, tread			2
26	331/59471		Plate, tread, upper fender			2
28	331/59462		Mudflap, rear			2
30	265/02961		Plate, stiffening			4
31	331/54501		Strip, clamp			2
32	331/47590		Strip, mudflap, reaer			2
33	826/01486		Screw, M8 x 20, socket type			22
34	826/11357		Screw, button head, M8 x 30			6
35	123/04791		Washer, nylon			16
36	1420/0007D		Washer, M8 plain			14
37	1370/0203D		Nut, lock			16
38	826/11330		Rivet, plastic			12
39	1412/0003D		Washer, large			8

Machine groups

Details

Machine group	From serial no.	To serial no.
.426		
426		

.

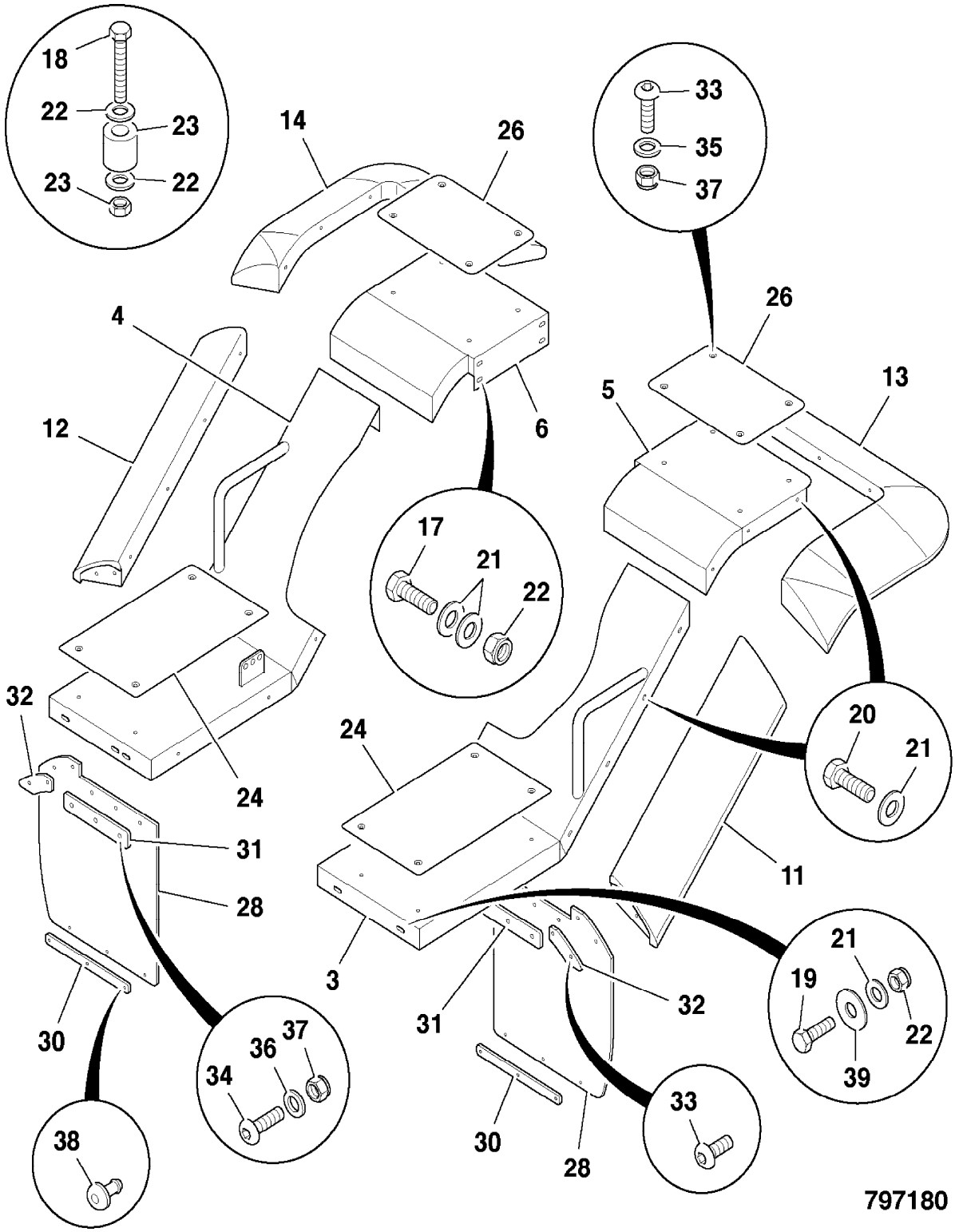

9802/2740 B1-12-5 FENDERS, REAR, 620 TYRES

Item	Part no.	Change No.	Description	Remarks	Usage code	Qty
3	335/09655		Fender, rear lower, left side			1
4	335/09656		Fender, rear lower, right side			1
5	335/09617		Fender, rear upper, left side			1
6	335/09618		Fender, rear upper, right side			1
11	346/00230		Trim, rear lower fender, left side			1
12	346/00231		Trim, rear lower fender, right side			1
13	346/00173		Trim, rear upper fender, LH			1
14	346/00174		Trim, rear upper fender			1
17	1315/0408D		Setscrew, M10 x 30			16
18	1315/0410D		Setscrew			2
19	1315/0409D		Setscrew, M10 x 35mm long			8
20	1315/0407D		Setscrew, M10 x 25mm long			34
21	1420/0008D		Washer, M10			78
22	1370/0303D		Nut, M10			26
23	829/30918		Spacer, steel, 16mm long			2
24	331/51604		Plate, tread			2
26	331/45222		Plate, tread			2
28	331/58383		Mudflap, rear			2
30	331/54824		Strip, mudflap front, lower			2
31	331/54501		Strip, clamp			2
32	331/47590		Strip, mudflap, reaer			2
33	826/01486		Screw, M8 x 20, socket type			22
34	826/11357		Screw, button head, M8 x 30			6
35	123/04791		Washer, nylon			16
36	1420/0007D		Washer, M8 plain			14
37	1370/0203D		Nut, lock			16
38	826/11330		Rivet, plastic			12
39	1412/0003D		Washer, large			8

Machine groups

Details

Machine group	From serial no.	To serial no.
.426		
426		

.

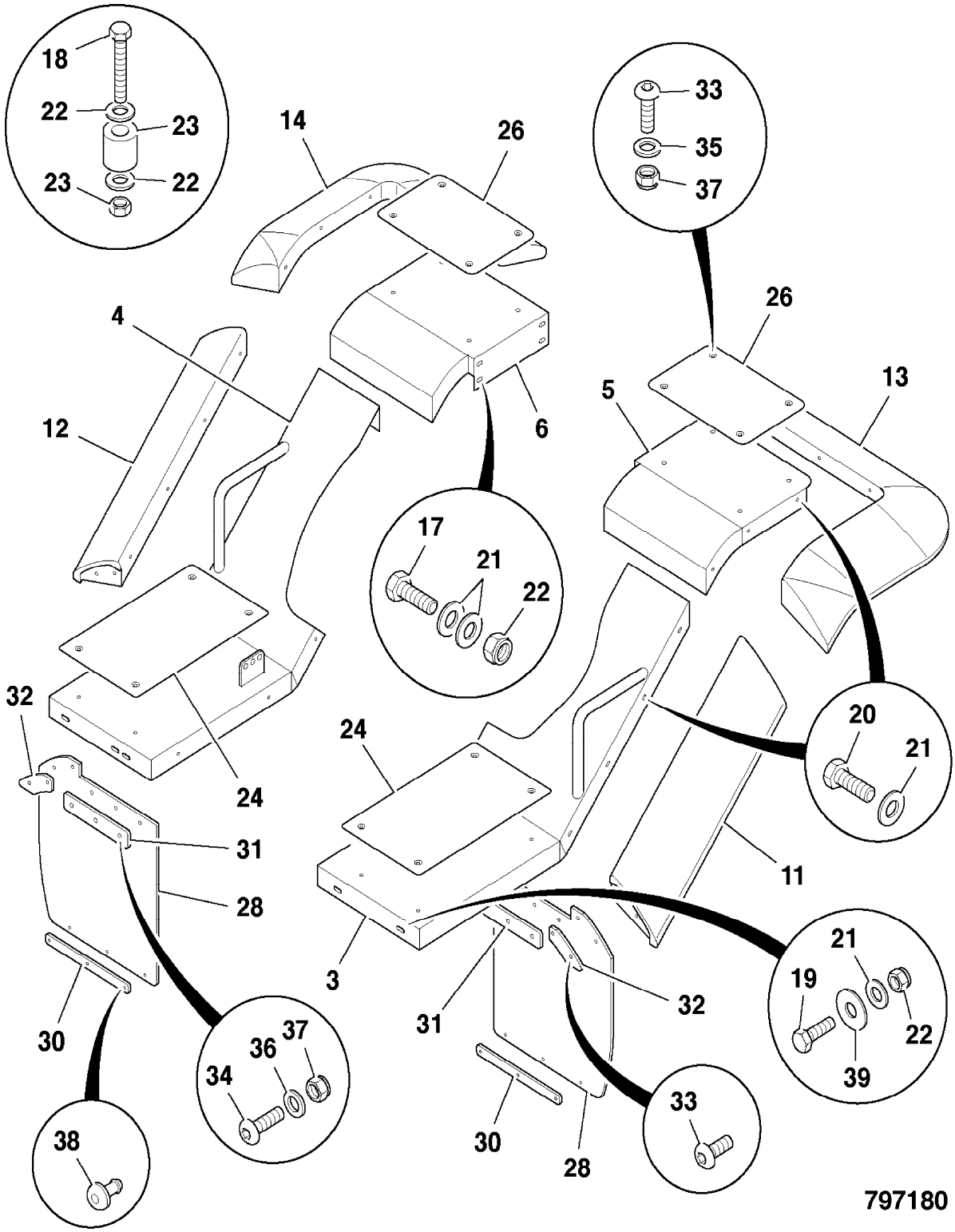

9802/2740 B1-13-1 GUARDS, REAR LIGHTS

Item	Part no.	Change No.	Description	Remarks	Usage code	Qty
1	335/09583		Guard, rear light, LH			1
	335/09719		Guard, rear light, RH			1
2	335/09591		Bracket, rear light, LH			1
	335/09728		Bracket, rear light, RH			1
3	1315/0207D		Screw, M6 x 25mm			8
4	1370/0103D		Nut, M6 lock			8
5	1420/0006D		Washer, M6 plain			16

Machine groups

Details

Machine group	From serial no.	To serial no.
.426		
426		

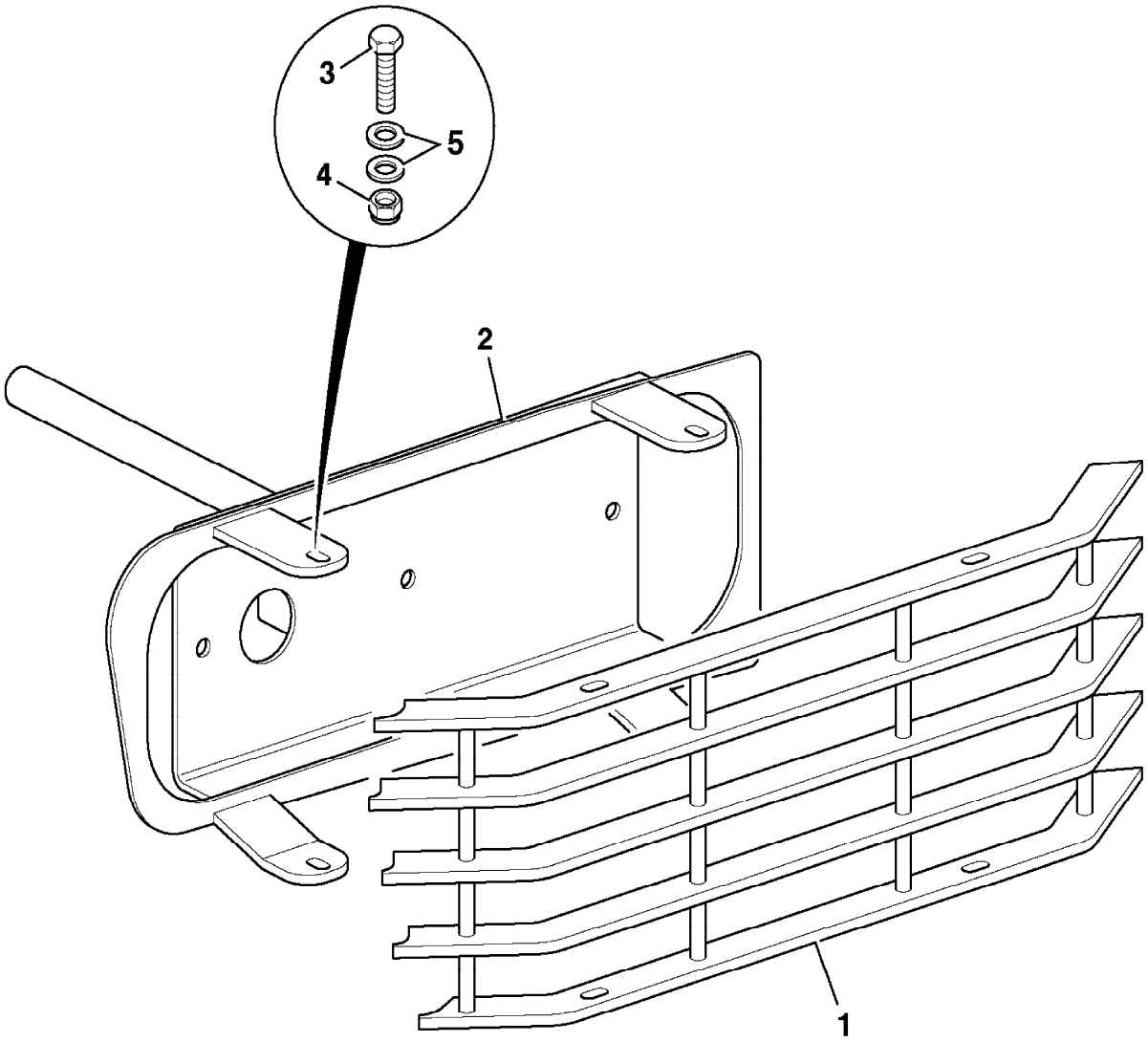

796770

9802/2740 B1-14-1 MOUNTINGS, REAR LIGHTS

Item	Part no.	Change No.	Description	Remarks	Usage code	Qty
1	335/08734		Bracket, rear light, LH			1
	335/08735		Bracket, rear light, RH			1
	335/09816		Bracket, rear light blanking, LH	Sales special 8219		1
	335/09819		Bracket, rear light blanking, RH	Sales special 8219		1
2	1412/0003D		Washer, large			2
3	1315/3314D		Bolt			2
4	1420/0007D		Washer, M8 plain			2

Machine groups

Details

Machine group	From serial no.	To serial no.
.426		
426		

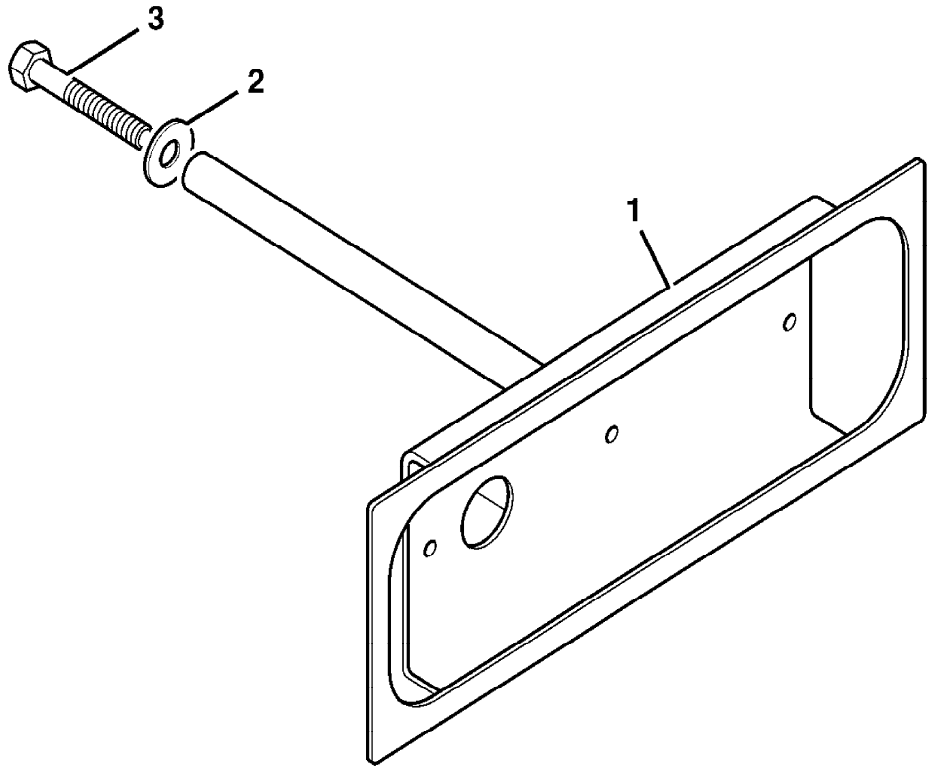

377320

9802/2740 B1-15-1 COUNTERWEIGHT

Item	Part no.	Change No.	Description	Remarks	Usage code	Qty
1	331/53535		Counterweight			1
2	1315/4036D		Bolt			2
3	1315/4024D		Bolt, M24x140mm lg			2
4	823/10643		Washer, 8mm thick			4
5	1420/0014D		Washer			8
6	1370/0903D		Nut, lock M24			4
11	268/00172		Pin, towing			1
12	265/00739		Wire, retaining			1
14	826/00512		Pin, lynch			1
15	331/50791		Bracket			1
16	1315/4024D		Bolt, M24x140mm lg			2
17	1370/0901D		Nut			2
18	1422/0014D		Washer			2
19	835/00170		Plug, yellow, M30			2

Machine groups

Details

Machine group	From serial no.	To serial no.
.426		
426		

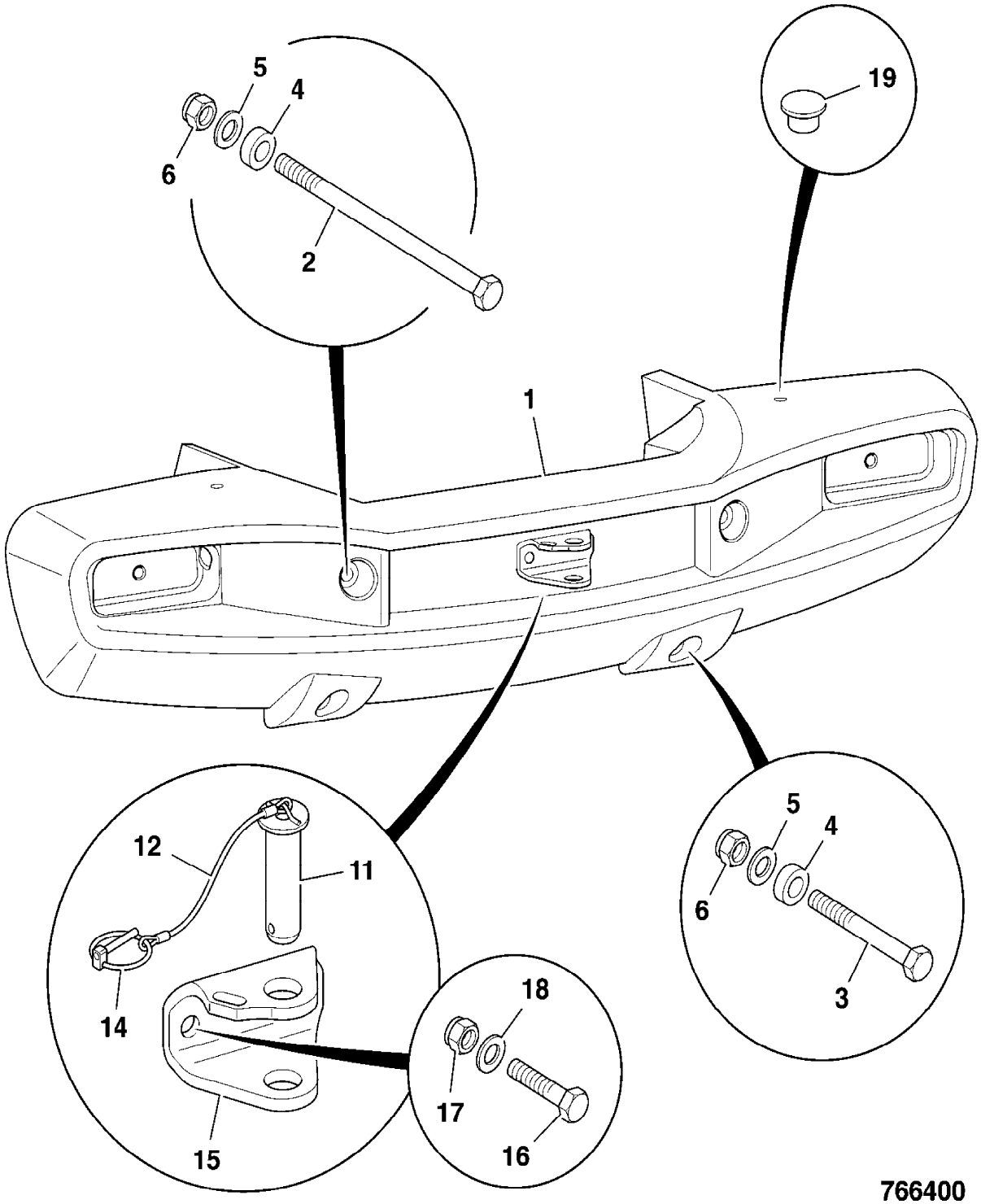
5
4
6
2
19
1
12
11
14
15
18
17
16
5
4
6
3
766400

9802/2740 B1-16-1 COUNTERWEIGHT, EXTRA

Item	Part no.	Change No.	Description	Remarks	Usage code	Qty
1	331/54079		Counterweight, extra, 190KG LH			1
2	331/54080		Counterweight, extra, 190KG RH			1
3	1315/3730D		Bolt, BOLT M16x200			4
4	1315/3822D		Bolt, M20 x 120mm long			2
5	1420/0012D		Washer, plain			4
6	1370/0703D		Nut, M20			2
7	828/10286		Plug, blanking			4

Machine groups

Details

Machine group	From serial no.	To serial no.
.426		
426		

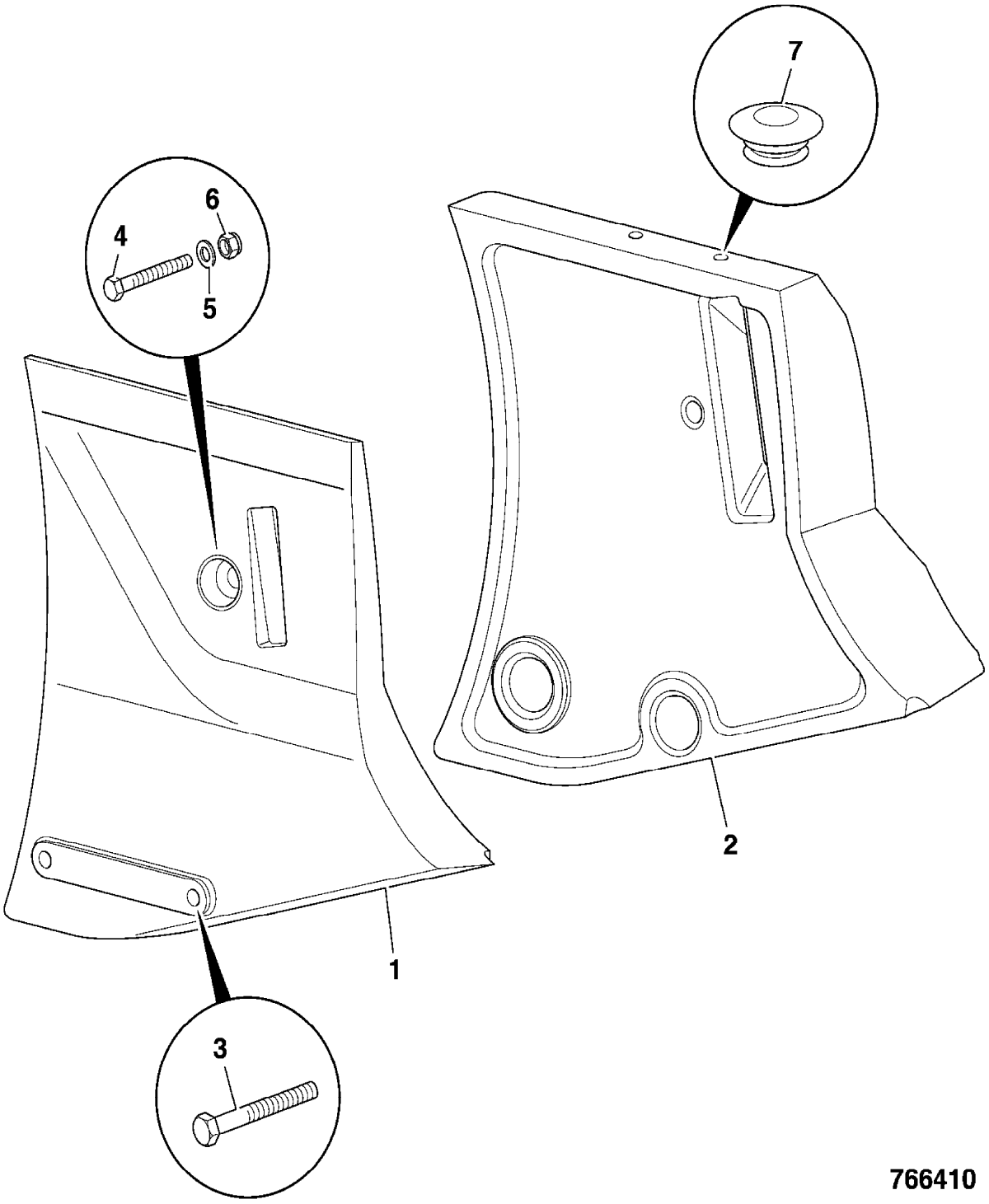

766410

9802/2740 B1-17-1 CORNER CASTINGS, REAR CHASSIS

Item	Part no.	Change No.	Description	Remarks	Usage code	Qty
1	331/49704		Casting, rear corner, LH			1
2	331/49705		Casting, rear corner, RH			1
3	1315/3412D		Bolt, M10 x 50			6
4	1370/0303D		Nut, M10			6
5	1420/0008D		Washer, M10			12

Machine groups

Details

Machine group	From serial no.	To serial no.
.426		
426		

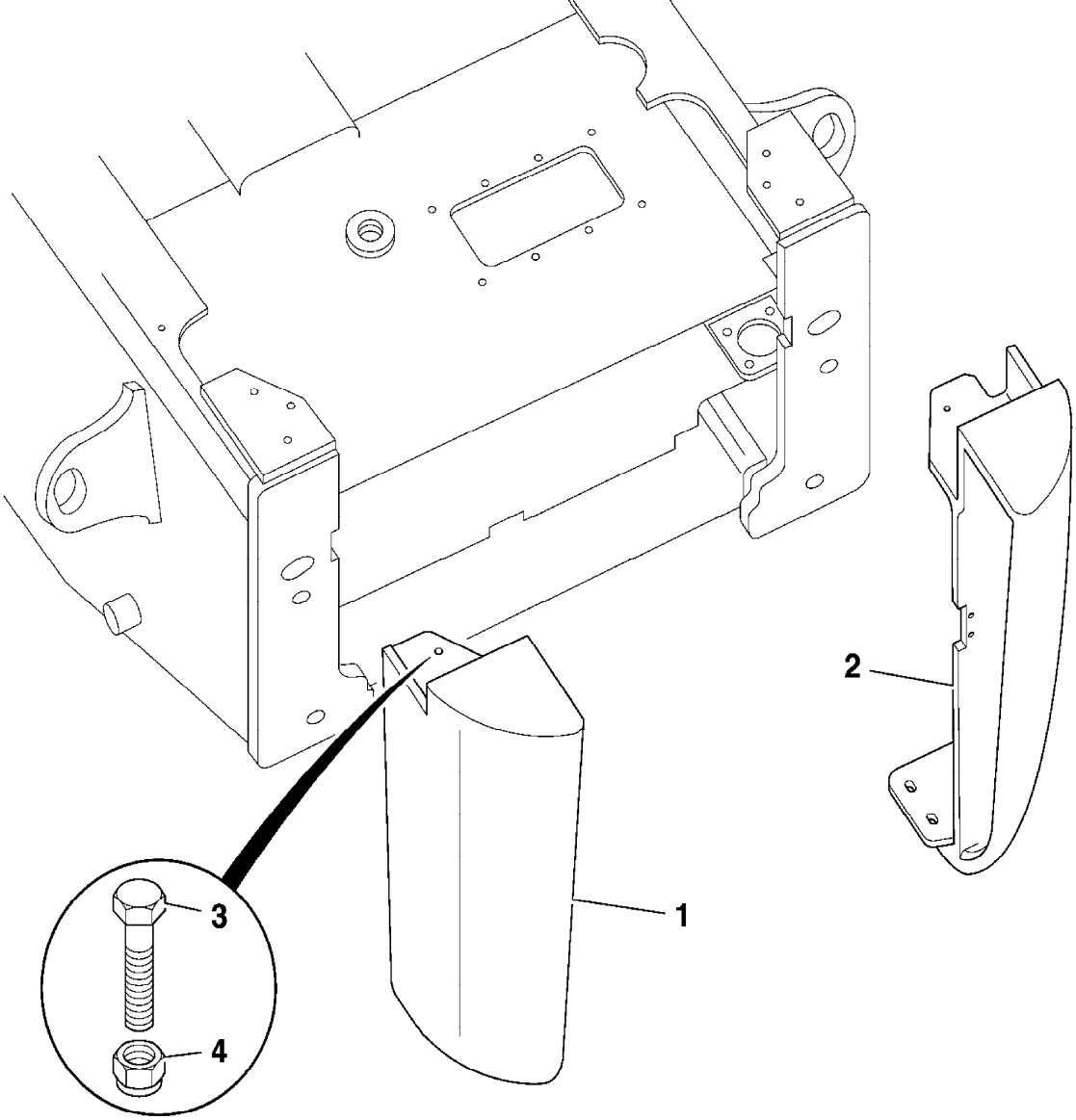

790680

9802/2740 B1-18-1 BELLY GUARDS

Item	Part no.	Change No.	Description	Remarks	Usage code	Qty
1	335/09683	toS/N1231574	Guard, belly, front			1
	335/11851		Guard, belly, front			1
2	335/09684	toS/N1231574	Guard, belly, centre			1
	335/11852		Guard, belly, centre			1
3	335/09690		Guard, belly, rear			1
4	1315/0408D		Setscrew, M10 x 30			12
5	1412/0004D		Washer, 7/16" large			12
7	1315/3518D		Bolt, M12x80			2
8	1315/3516D		Bolt, M12x70			2
9	1420/0009D		Washer, M12			4
10	1370/0403D		Nut, M12			2

Machine groups

Details

Machine group	From serial no.	To serial no.
.426		
426		

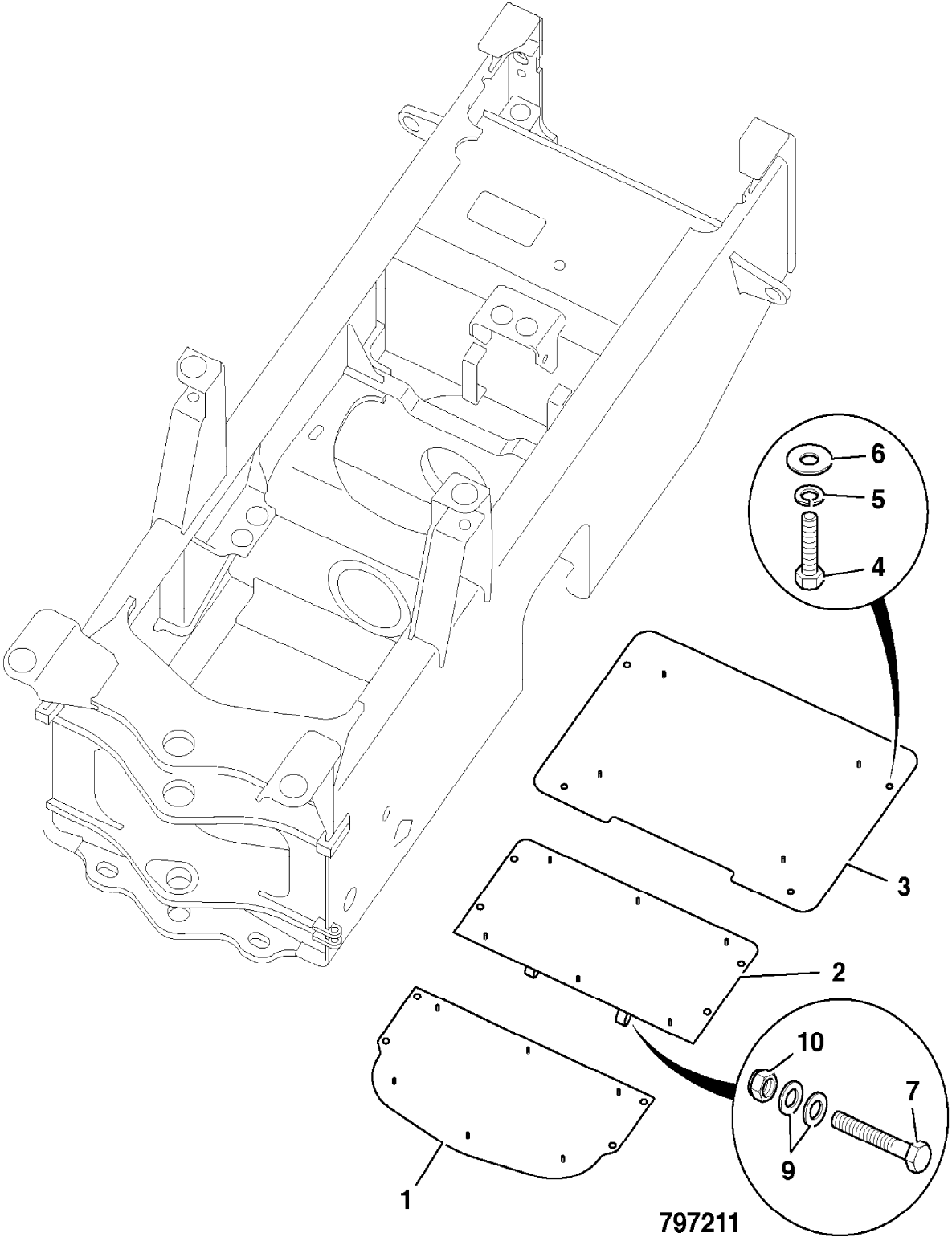
6
5
4
3
2
10
7
9
1
797211

9802/2740 B1-19-1 GUARD, REAR AXLE

Item	Part no.	Change No.	Description	Remarks	Usage code	Qty
1	331/53069		Guard, rear axle			1
2	1315/0403D		Setscrew			3
3	1420/0008D		Washer, M10			3

Machine groups

Details

Machine group	From serial no.	To serial no.
.426		
426		

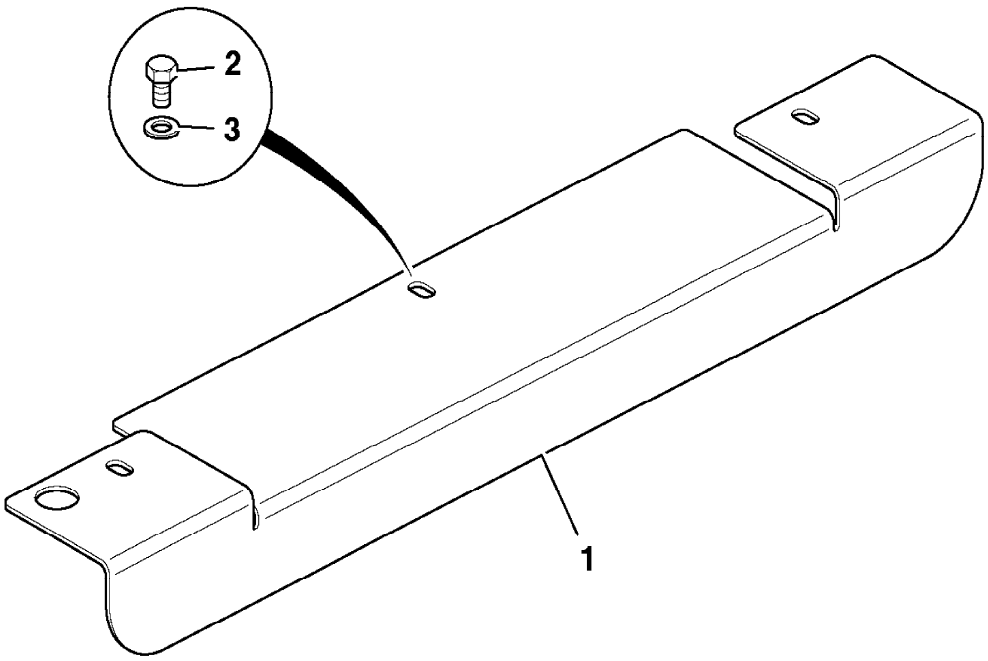

797090

9802/2740 B1-2-1 CHASSIS REAR

Item	Part no.	Change No.	Description	Remarks	Usage code	Qty
1	335/09310		Chassis, rear			1
2	269/10052		Cover, access			2
	826/00972		:Rivet, nut, blind			20
3	813/00434		Gasket, access cover			2
5	1315/0208Z		Screw, M6 x 30mm long			10
6	1420/0006Z		Washer, M6			10
7	821/00186		Clamp, top			1
8	123/08053		Gauge, sight			1
9	638/80000		Hose, assembly			1
10	668/40001		Pipe, assembly			1
11	274/01052		Cap, hydraulic			1
11A	32/925592		Breather			1
12	1315/0407D		Setscrew, M10 x 25mm long			4
13	1420/0008D		Washer, M10			4
14	.		'See Remark'	Not fitted. See page E1-19-1		1
15	821/00187		Clamp, base			1
16	1604/0008		Adapter			1
17	1406/0026		Washer, seal			1
18	32/901100		Strainer			2
19	1315/3520Z		Bolt, M12 x 100mm			2
20	1420/0009Z		Washer, Plain M12			2
21	32/925390		Plug, drain			2
25	581/18071		Filter, assembly, hydraulic			1
26	331/54110		Stay, articulation			1
	269/30247		Stay, articulation			1
28	265/00455		Cap, filler, diesel			1
	123/05892		Cap, filler, lockable, supplied without key			1
	123/06343		Seal	For both caps		1
	701/45501		Key, Door/Ignition, Ref 14657			1
29	911/19400		:Pin, pivot			2
30	716/30128		Sender, temperature			1
36	1315/3818Z		Bolt, M20 x 80mm			1
37	1370/0703Z		Nut, M20			1
38	1406/0024		Washer, bonded			1
39	2301/0015		O Ring			1
40	331/57047		Plate, closing			1
41	1315/0403D		Setscrew			5

42	1412/0008D		Washer, WASHER 3/4in LARGE			5
51	926/50402		Strip, edging, 550mm			1
52	926/50402		Strip, edging, 550mm	Cut to 320mm		2
54	1315/0411D		Screw, set M10X45			2
55	1425/0008D		Washer, spring, M10			2
56	835/10127		Plug, blanking, 28mm dia.			2
57	926/08300		Strip, edging	Fitted to side plate 1200mm long		A/R
58	926/00600		Grommet, Flexiform	Axle bay		1

Machine groups

Details

Machine group	From serial no.	To serial no.
.426		
426		

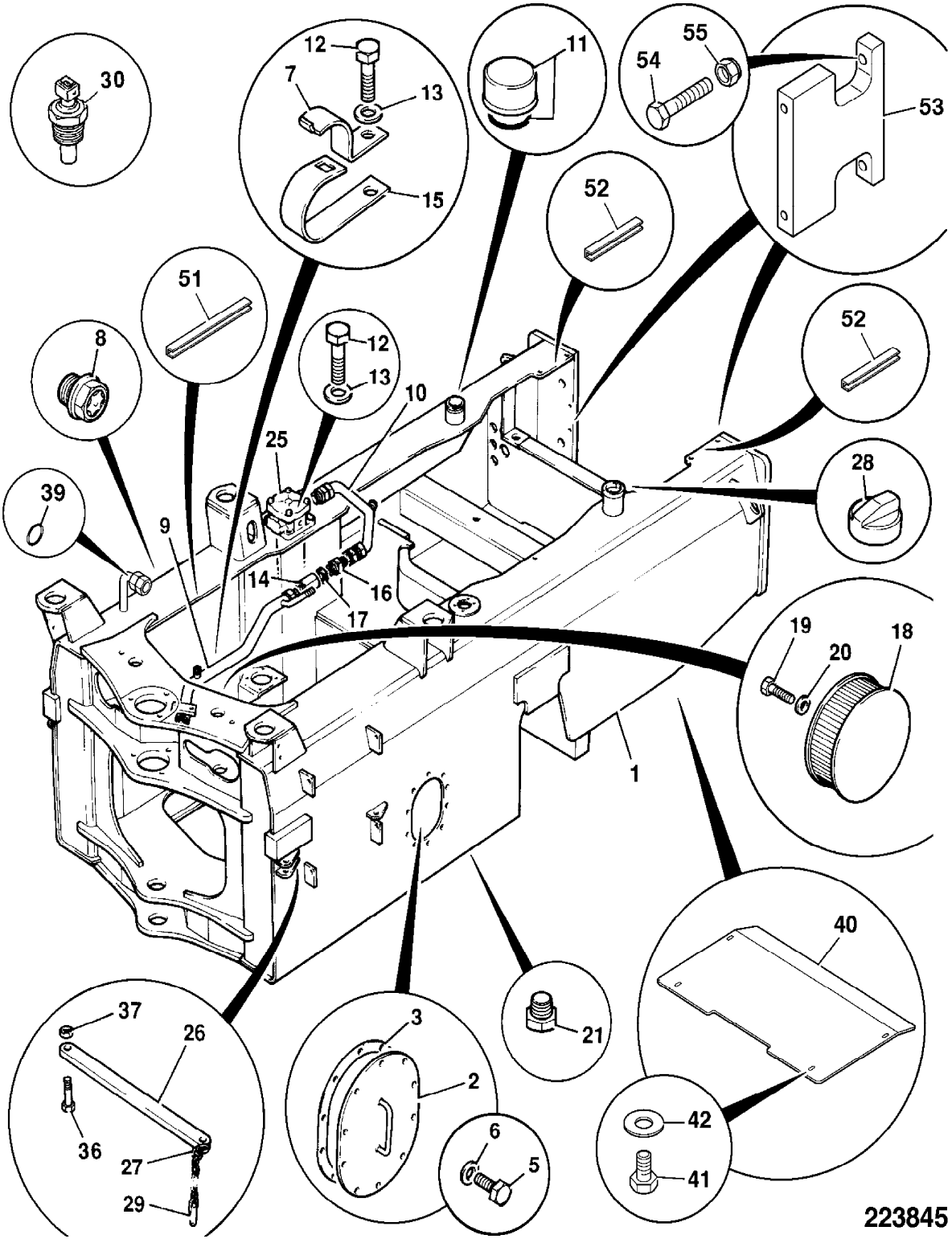
30
12
7
13
15
11
55
54
53
52
51
8
12
13
10
25
52
39
9
14
16
17
28
19
20
18
1
40
37
26
36
27
29
3
2
6
5
21
42
41
223845

9802/2740 B1-2-5 CHASSIS REAR, CLOSING PANELS

Item	Part no.	Change No.	Description	Remarks	Usage code	Qty
1	331/56578		Panel, closing, left side			1
2	331/56579		Panel, closing, right side			1
3	331/56592		Bracket			2
4	1315/0305D		Screw, set M8x20			6
5	1370/0203D		Nut, lock			2
6	1420/0007D		Washer, M8 plain			8
7	1315/0407D		Setscrew, M10 x 25mm long			2
8	1370/0303D		Nut, M10			2
9	1420/0008D		Washer, M10			4

Machine groups

Details

Machine group	From serial no.	To serial no.
.426		
426		

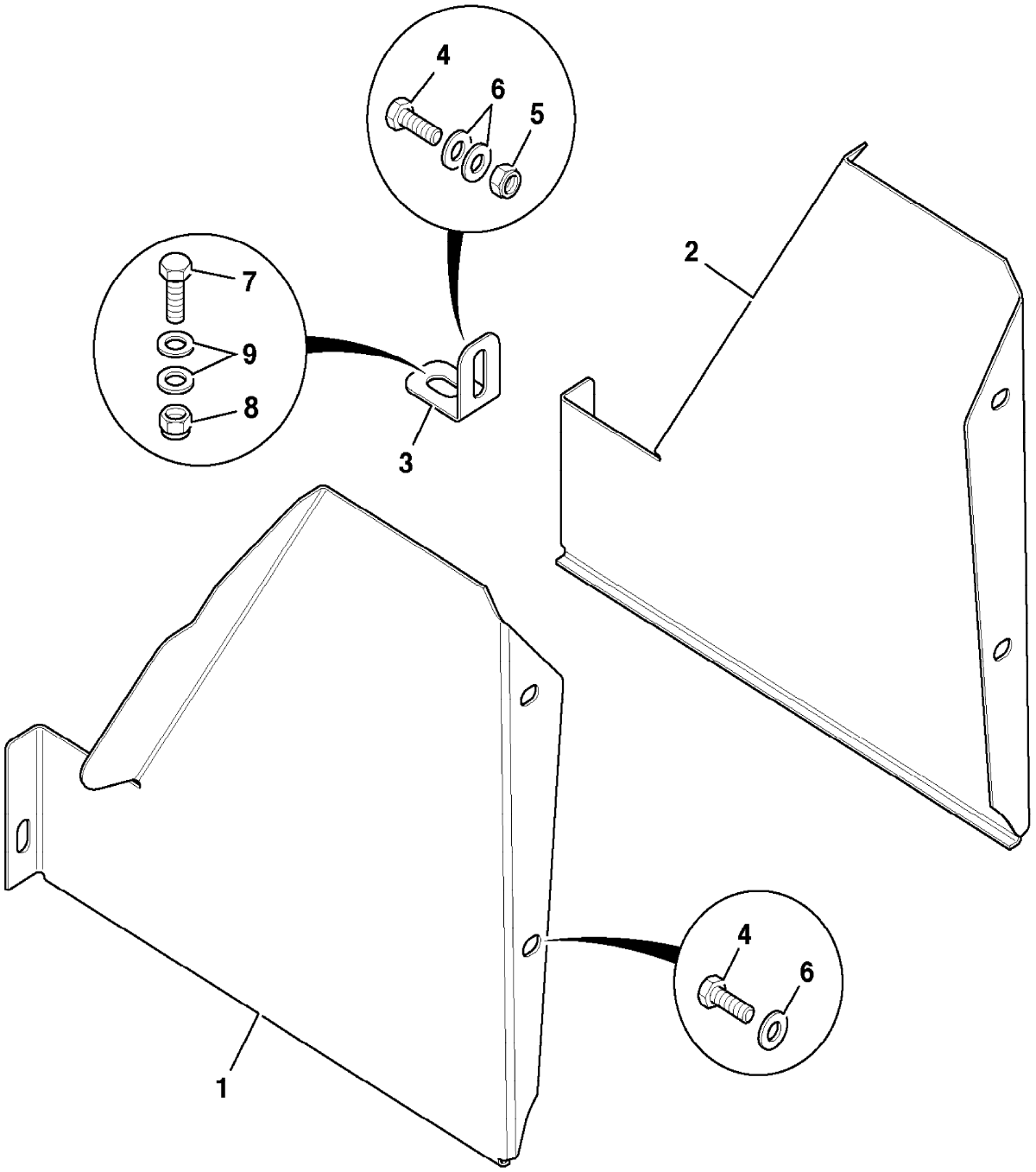

808900

9802/2740 B1-20-1 SOUNDPROOFING, ENGINE COVER

Item	Part no.	Change No.	Description	Remarks	Usage code	Qty
1	331/51586		Panel, soundproofing, LH upper door			1
2	331/51587		Panel, soundproofing, RH upper door			1
4	331/57075		Panel, soundproofing			2
5	331/51590		Panel, soundproofing, LH lower door			1
6	331/51591		Panel, soundproofing, RH lower door			1
7	331/51640		Panel, soundproofing, fixed panel			2
8	331/51675		Panel, soundproofing, front bulkhead			1
11	826/01308		Retainer, insulation			A/R

Machine groups

Details

Machine group	From serial no.	To serial no.
.426		
426		

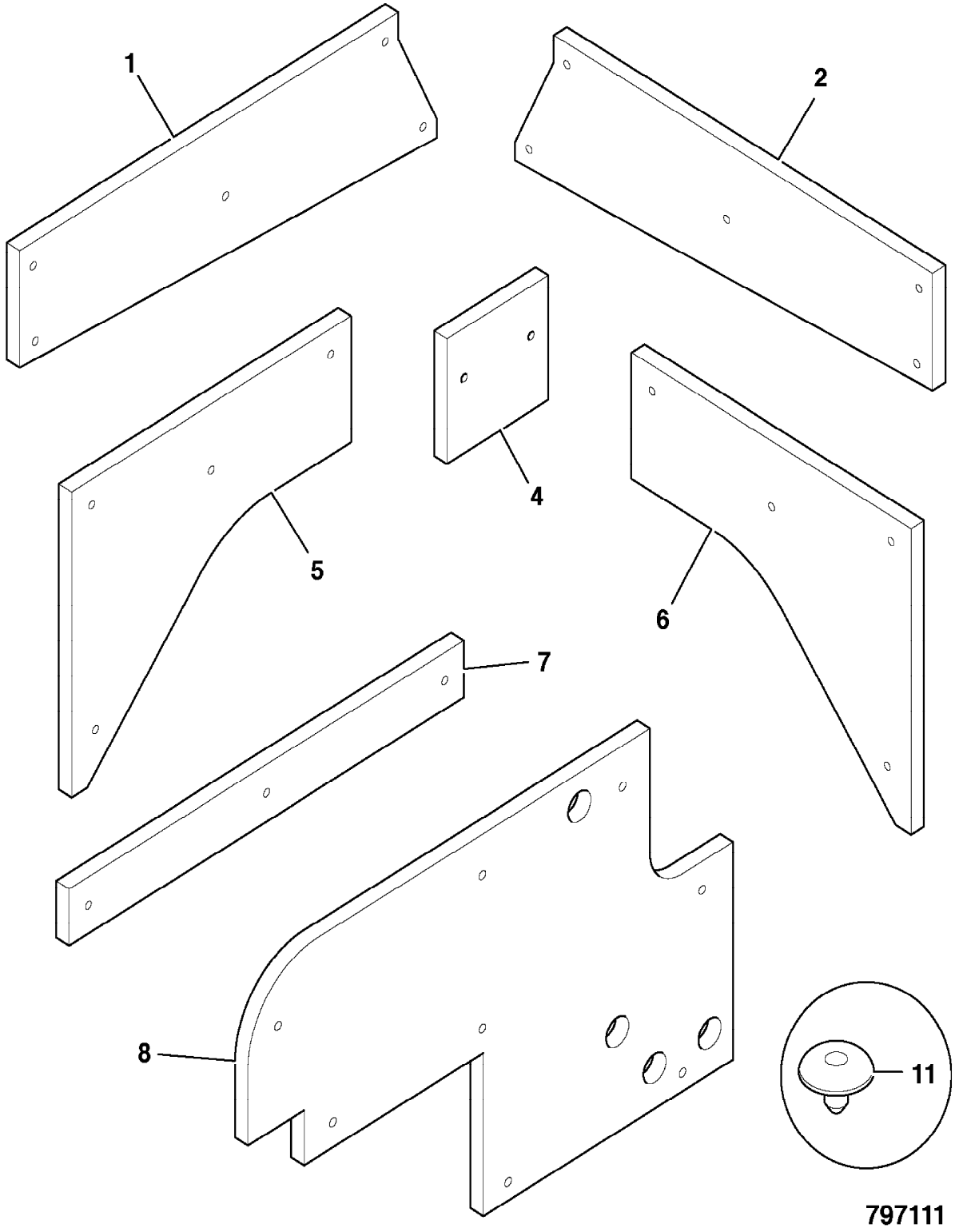
1
2
4
5
6
7
8
11
797111

9802/2740 B1-21-1 FUEL SENDER

Item	Part no.	Change No.	Description	Remarks	Usage code	Qty
1	704/50092		Sender, fuel			1
1A	813/10225		:Gasket			1
2	1315/0103D		Screw			4
3	1420/0005D		Washer			4

Machine groups

Details

Machine group	From serial no.	To serial no.
.426		
426		

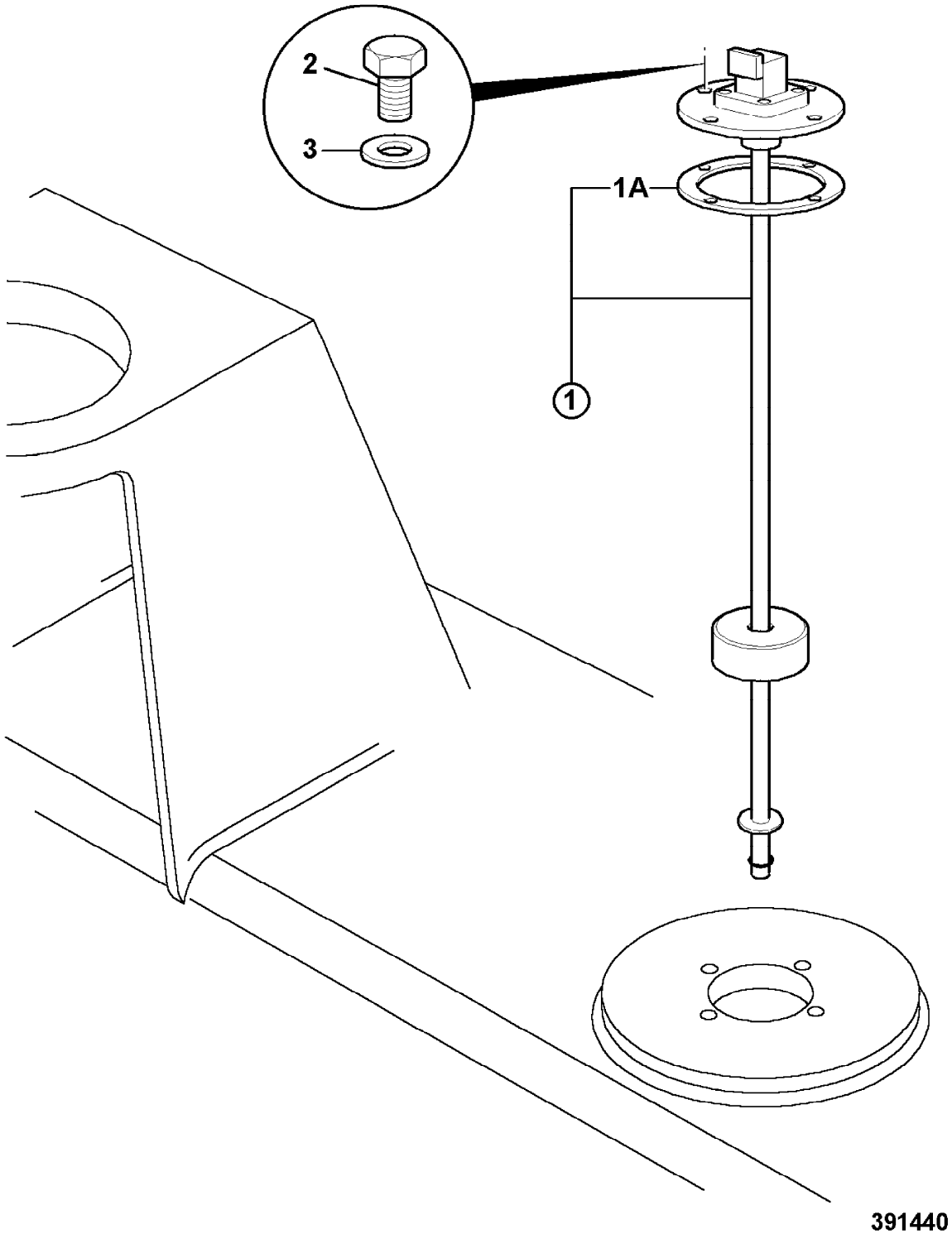
2
3
1A
1
391440

9802/2740 B1-22-1 GUARDS, REAR LIGHTS

Item	Part no.	Change No.	Description	Remarks	Usage code	Qty
1	331/29424		Guard, rear light			2

Machine groups

Details

Machine group	From serial no.	To serial no.
.426		
426		

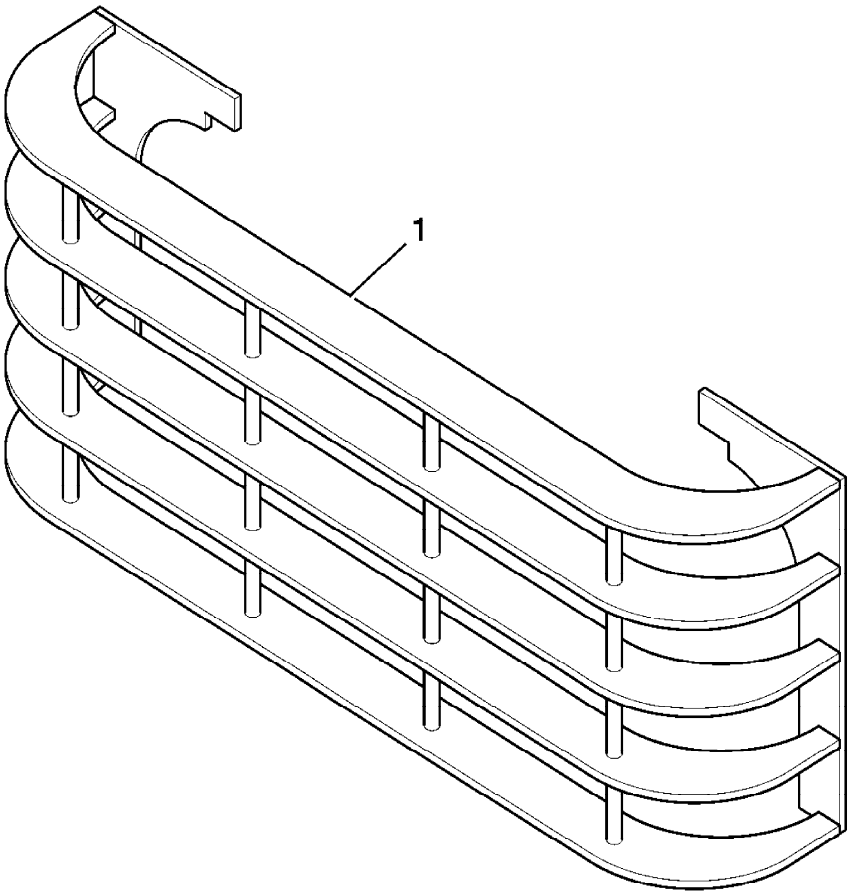

431610

9802/2740 B1-23-1 GUARD, REAR PROTECTION, SALES SPECIAL

Item	Part no.	Change No.	Description	Remarks	Usage code	Qty
	335/09755		Bracket, guard support, LH	Sales special 8222		1
2	335/09759		Bracket, guard support, RH			1
3	335/09756		Guard, rear			1
4	331/52195		Pin, locking			2
5	826/00479		Clip, 'R'			2
6	826/10865		Bolt, M24 x 425mm			2
7	1315/1112D		Screw, M30 X 50			2
8	1420/0015D		Washer, plain, M30			2

Machine groups

Details

Machine group	From serial no.	To serial no.
.426		
426		

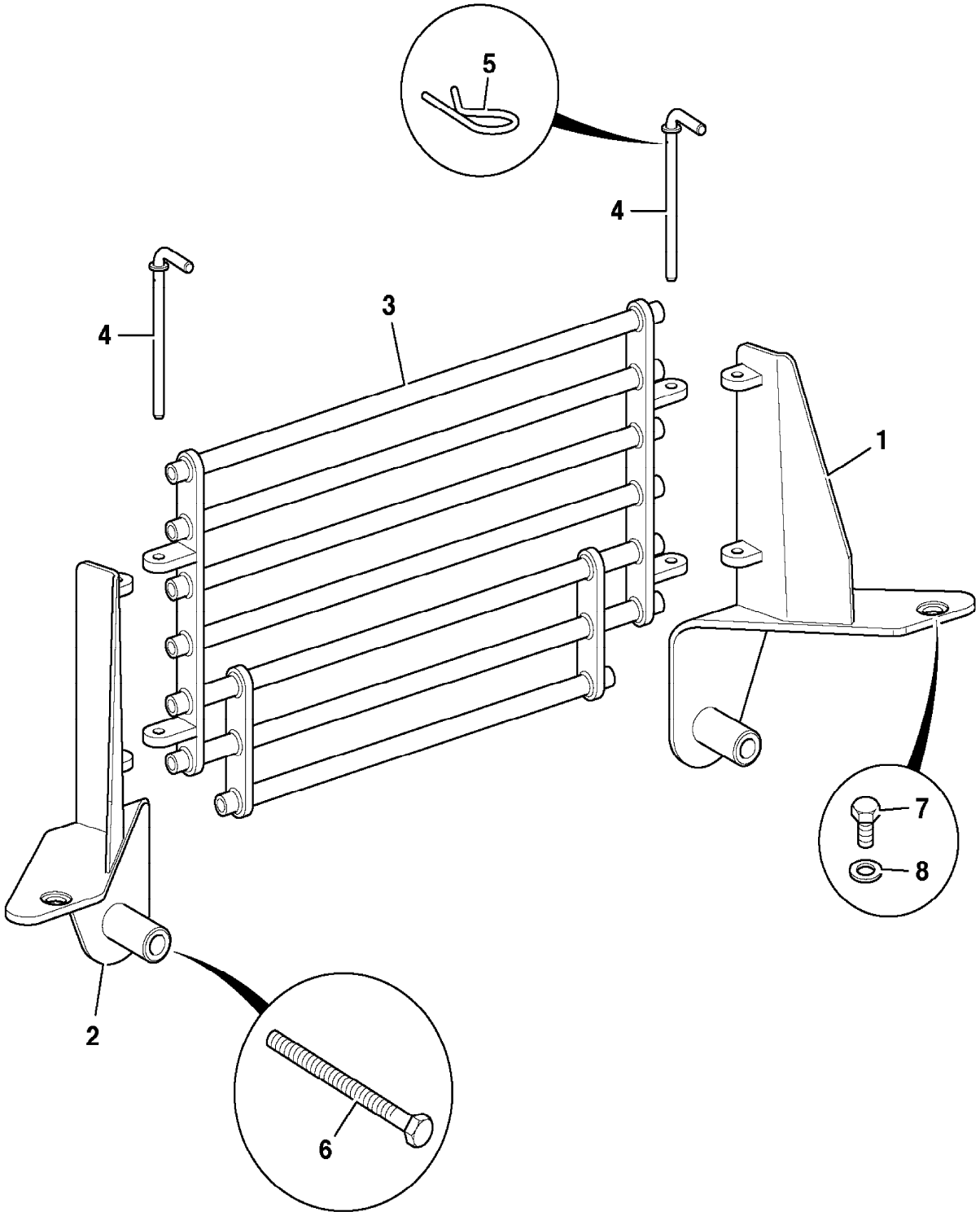

796900

9802/2740 B1-25-1 AIR CONDITIONING, CONDENSER

Illustration Machines Top of catalogue

Item	Part no.	Change No.	Description	Remarks	Usage code	Qty
0A	649/51960		Hose, condenser to drier	See page C3-22-1		1
0B	649/51962		Hose, comp. to condenser	See page C3-22-1		1
1	335/09952		Frame, condenser			1
2	30/926343		Condenser			1
	30/926448		Condenser, epoxy coated	Optional		1
3	831/00098		Bearing			2
4	826/10532		Fastener, 1/4 turn			1
5	478/00288		Retainer			1
6	1315/0209D		Setscrew			2
7	1315/0205D		Setscrew, M6 x 20mm long			2
8	1420/0006D		Washer, M6 plain			8
9	1370/0103D		Nut, M6 lock			4
10	1315/0409D		Setscrew, M10 x 35mm long			4
11	1420/0008D		Washer, M10			8
12	1370/0303D		Nut, M10			4
15	TBA		Part number, Not Yet Known	Clamp		1
16	TBA		Part number, Not Yet Known	Clamp cover		1
17	TBA		Part number, Not Yet Known	Clamp bolt		1
18	331/52821		Plate, latch			1
19	335/09159		Hinge			1
20	821/00492		Circlip, E series			2
21	835/10077		Plug, plastic			2
22	TBA		Part number, Not Yet Known	Washer clamp		1
23	TBA		Part number, Not Yet Known	Clamp nut		1

Machine groups

Details

Machine group	From serial no.	To serial no.
.426		
426		

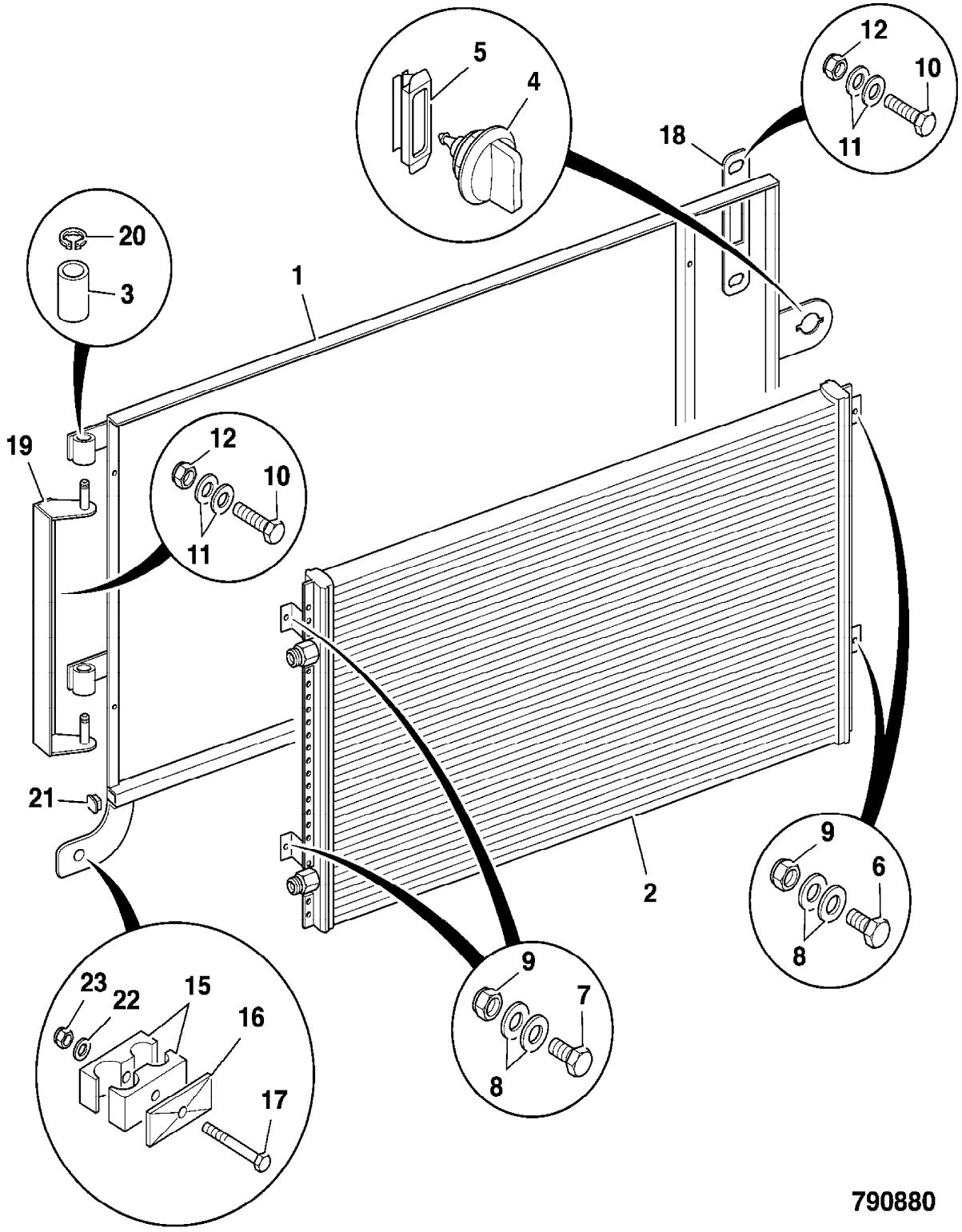
1
2
3
4
5
6
7
8
9
10
11
12
15
16
17
18
19
20
21
22
23
790880

9802/2740 B1-26-1 GUARDS, FRONT LIGHT, OPTIONAL

Item	Part no.	Change No.	Description	Remarks	Usage code	Qty
1	331/41222		Guard, front light, yellow			2
	335/12509		Guard, front light, black			2

Machine groups

Details

Machine group	From serial no.	To serial no.
.426		
426		

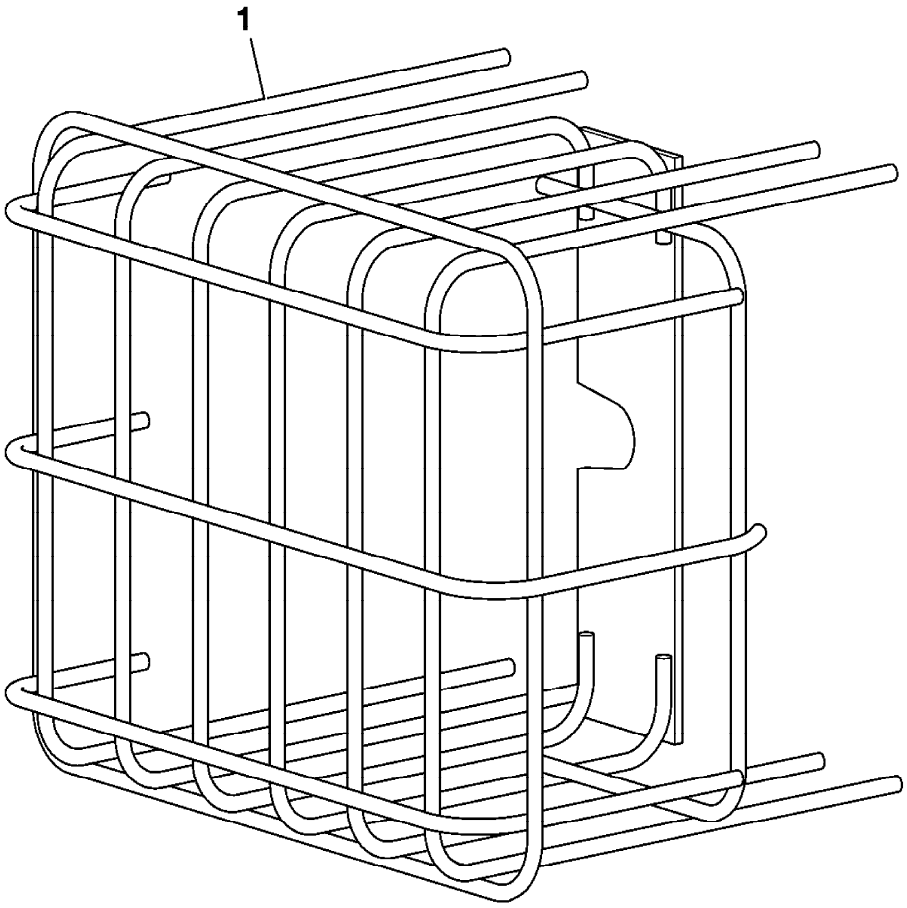

730140

9802/2740 B1-27-1 TOOL KIT

Item	Part no.	Change No.	Description	Remarks	Usage code	Qty
2	915/03600		Gauge, tyre pressure			1
3	915/07300		Gun, grease			1
4	915/07301		:Connector, flexible			1
	4003/2017		:Grease, HP, 400g x 24			1
5	825/99930		Socket, wheel nut			1
6	825/99902		Bar, tommy			1

Machine groups

Details

Machine group	From serial no.	To serial no.
.426		
426		

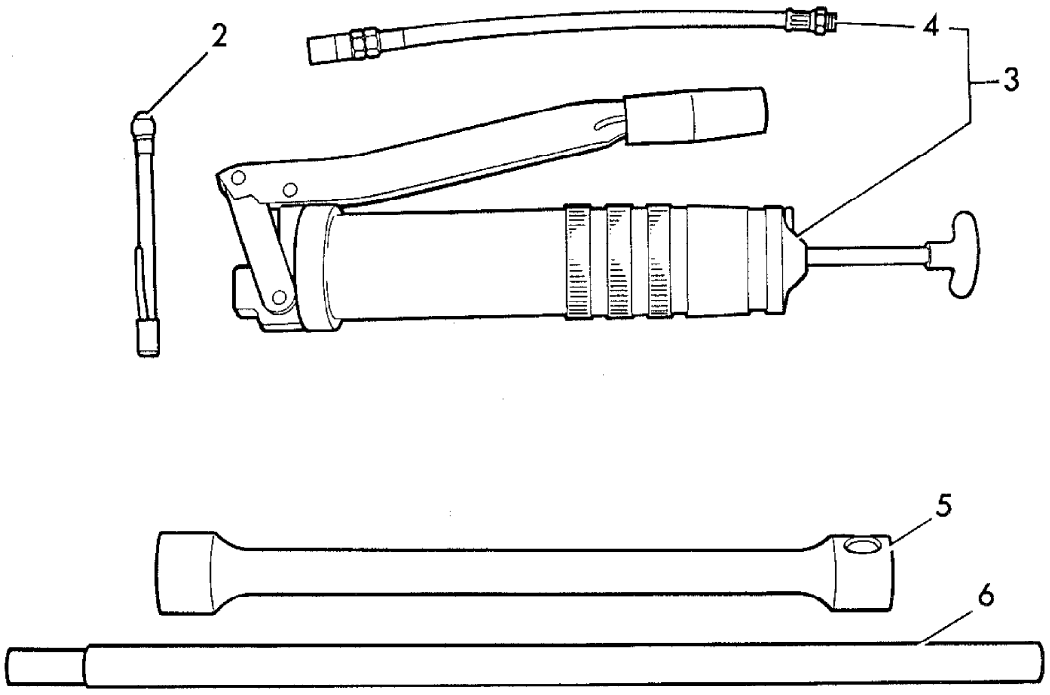

197811

9802/2740 B1-3-1 STEPS AND LIGHT ARMS

Item	Part no.	Change No.	Description	Remarks	Usage code	Qty
1	335/10945		Frame, step, left side			2
	335/10946		Frame, step, right side			1
2	331/22800		Step, Bare Metal,Tread			4
3	830/12940		Handle, grab			1
4	331/26445		Mounting, step, flexible, right side			4
5	265/01846		Handle, grab			1
6	1315/0409D		Setscrew, M10 x 35mm long			4
7	1412/0003D		Washer, large			16
8	1420/0009D		Washer, M12			16
9	1315/0411D		Screw, set M10X45			8
10	1420/0008D		Washer, M10			16
11	1370/0303D		Nut, M10			16
12	1315/0510D		Setscrew			8
13	1315/0414D		Screw, M10x60			8
14	335/10023		Step, rear			2
15	1315/0710D		Setscrew			4
16	1420/0011D		Washer, M16			4
17	1370/0403D		Nut, M12			8
18	1370/0603D		Nut, M16	No longer fitted		4
21	335/09579		Box, light			2
22	335/09196		Arm, light, LH			2
	335/09197		Arm, light, RH			1
23	1425/0008D		Washer, spring, M10			4
24	1315/0403D		Setscrew			4
25	1315/0407D		Setscrew, M10 x 25mm long			4
26	1420/0008D		Washer, M10			8
27	2410/0114		Grommet			2
28	2410/1114		Grommet, blind,hole dia 38mm, panel thkness 2-3mm			5

Machine groups

Details

Machine group	From serial no.	To serial no.
.426		
426		

.

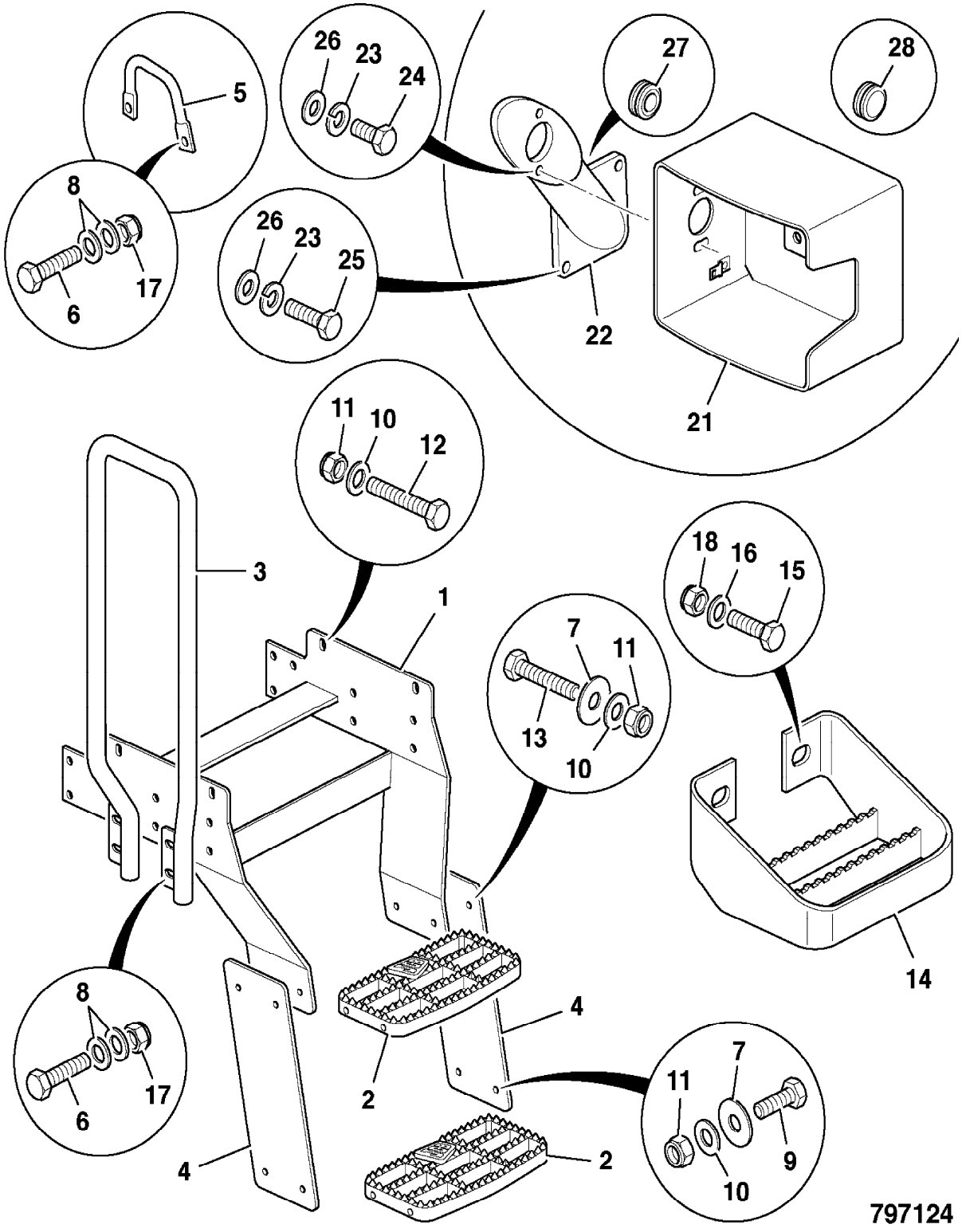

9802/2740 B1-3-5 STEPS, FOLDING, SALES SPECIAL

Item	Part no.	Change No.	Description	Remarks	Usage code	Qty
1	335/12833		Step, folding	Sales special 8218		2
2	331/63214		Bracket, step support			2
3	1315/0309D		Setscrew, M8x35			4
4	1411/0003D		Washer			8
5	1370/0202D		Nut, thin			8

Machine groups

Details

Machine group	From serial no.	To serial no.
.426		
426		

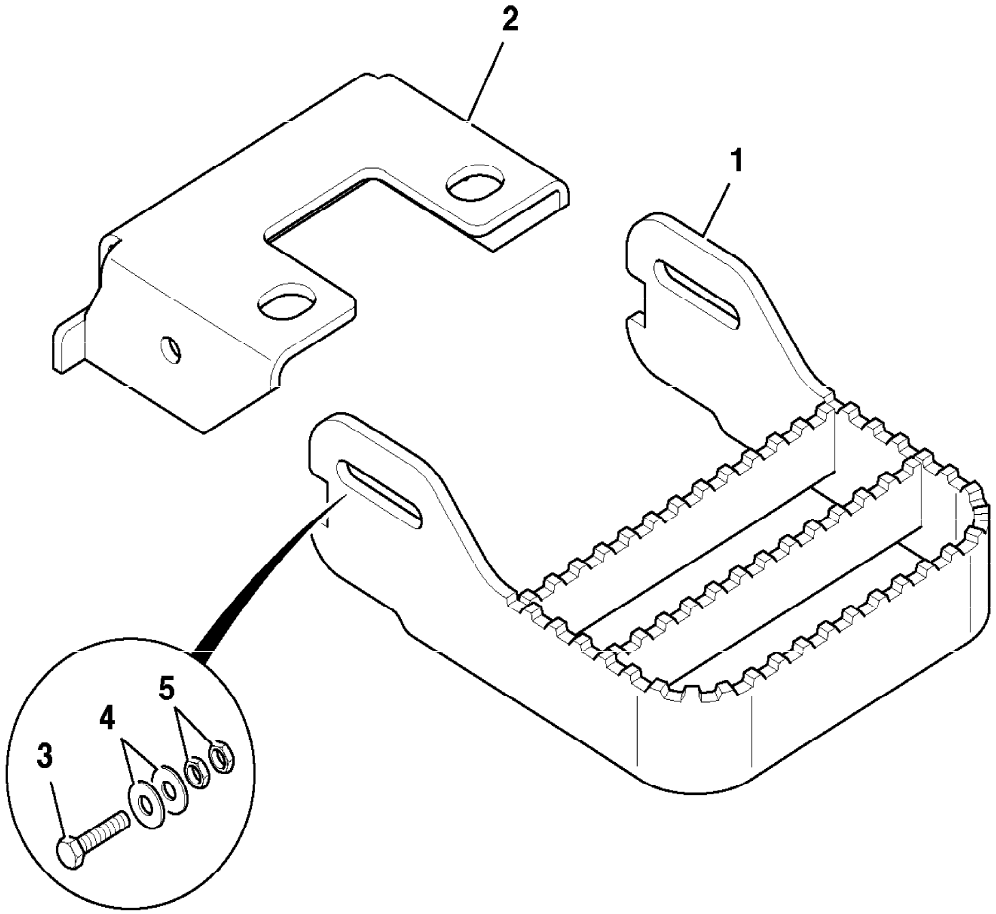

809800

9802/2740 B1-4-1 HOSE CLAMP, CENTRE PIVOT

Item	Part no.	Change No.	Description	Remarks	Usage code	Qty
1	335/11091		Bracket, hose support			1
2	821/10260		Clamp			2
3	331/17126		Plate, clamp			1
4	1315/3421D		Bolt, M10x110			2
6	1420/0008D		Washer, M10			6
7	1315/0407D		Setscrew, M10 x 25mm long			2
8	1370/0303D		Nut, M10			2

Machine groups

Details

Machine group	From serial no.	To serial no.
.426		
426		

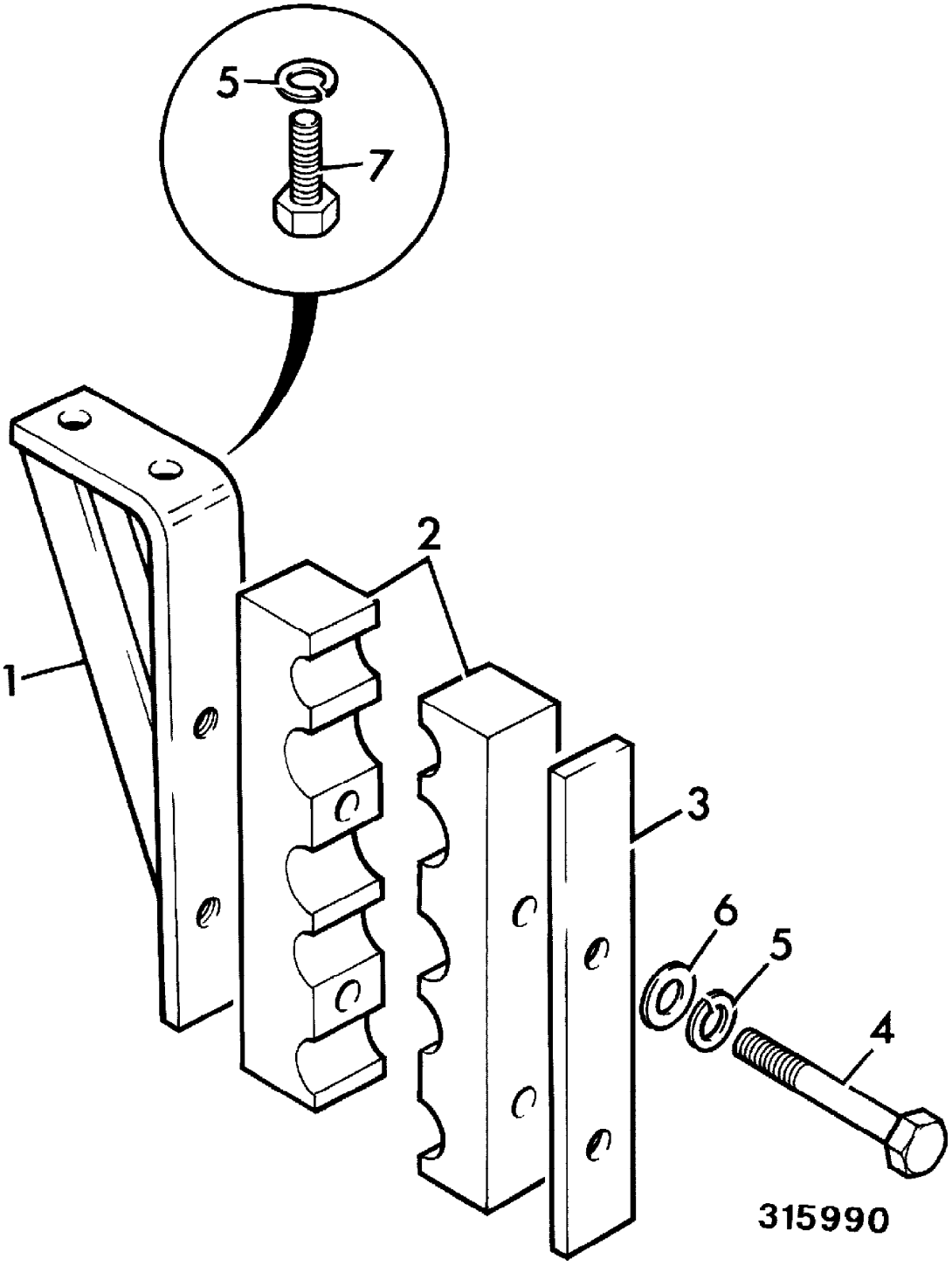
5
7
1
2
3
6
5
4
315990

9802/2740 B1-5-1 COVER & GRILLE, COOLING BAY

Item	Part no.	Change No.	Description	Remarks	Usage code	Qty
1	335/08078		Box, fan			1
2	.		'See Remark'	Fan motor see section E2		1
3	331/45105		Panel, grille			1
4	346/00078		Panel, grille, upper			1
5	331/45556		Guard, fan			1
6	331/48126		Plate, blanking			1
7	162/00643		Handle			1
8	331/48328		Handle			1
9	335/08140	Superseded	Hinge			2
	335/13383		Hinge			2
10	335/08141		Hinge, angled			1
11	265/01843		Bearing, oilite			8
12	265/01819		Pin, hinge			2
13	821/00492		Circlip, E series			4
15	331/51330		Bracket, gas strut mounting			2
16	826/01486		Screw, M8 x 20, socket type			10
17	826/11127		Bolt, M5 button head			4
19	1315/0205D		Setscrew, M6 x 20mm long			4
20	1315/0305D		Screw, set M8x20			6
21	1315/0405D		Setscrew			4
22	1315/0410D		Setscrew			4
23	1370/0003D		Nut, lock M5			8
24	1370/0103D		Nut, M6 lock			4
25	1370/0203D		Nut, lock			2
26	1370/0303D		Nut, M10			4
27	1420/0005D		Washer			8
28	1420/0006D		Washer, M6 plain			6
29	1420/0007D		Washer, M8 plain			12
30	1420/0008D		Washer, M10			24
31	335/08763		Plate			1
35	826/01609		Screw, M5			4

36	331/48759		Strut, 900N	When 20/925694 fan motor fitted		1
	331/59652		Strut, 1000N	When 20/925723 fan motor fitted		1
	331/59653		Strut, 1150N	When 20/925707 fan motor fitted		1
37	835/10130		Buffer, M8 x 80			2
38	814/10203		Spring, compression			2
39	829/31270		Bush			2
40	826/01627		Nut, rivet			2
41	1420/0009D		Washer, M12			4
42	1370/0202D		Nut, thin			2
43	1412/0002D		Washer, large			2

Machine groups

Details

Machine group	From serial no.	To serial no.
.426		
426		

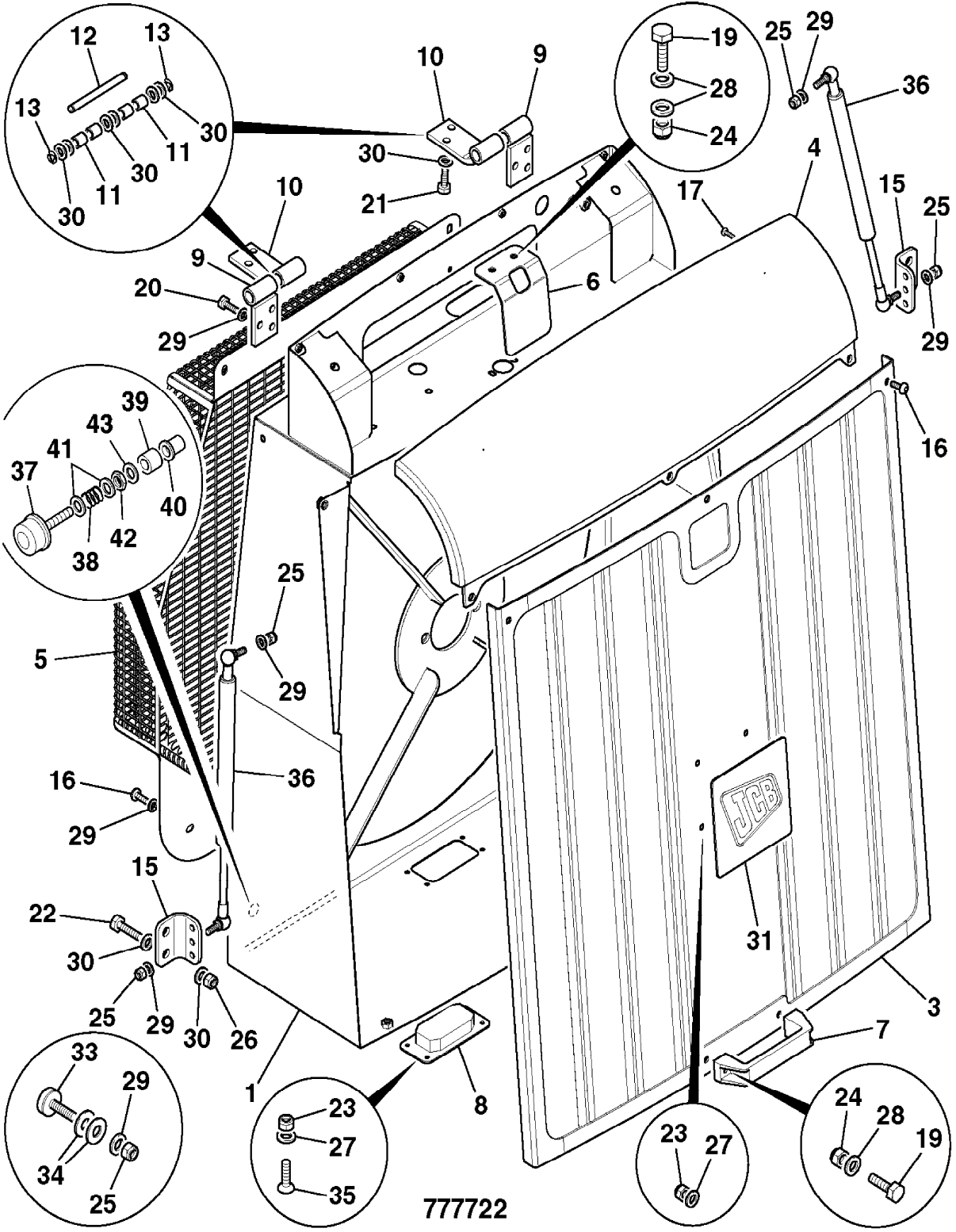
12
13
13
30
11
30
30
11
30
10
9
30
21
10
9
20
29
19
28
24
25
29
36
4
17
15
25
29
6
16
39
43
41
37
40
42
38
25
29
5
36
16
29
15
22
30
25
29
30
26
1
23
27
35
8
31
3
7
33
29
34
25
23
27
24
28
19
777722

9802/2740 B1-6-1 CENTRE PIVOT

Illustration Machines Top of catalogue

Item	Part no.	Change No.	Description	Remarks	Usage code	Qty
1	265/00523		Pin, pivot, upper			1
2	911/27800		Pin, pivot, lower			1
3	826/10859		Setscrew			1
4	1412/0007Z		Washer			1
5	265/00565		Cap, end			2
6	813/00415		Seal, pivot pin			2
7	813/00443		Seal, V			2
9	819/00106		Shim, 1.0 mm thick			1
10	819/00107		Shim, 0.25 mm thick			1
11	819/00108		Shim, 0.15 mm thick			1
12	819/00109		Shim, 0.6 mm thick			1
13	819/00110		Shim, 0.9 mm thick			1
14	819/00111		Shim, 0.7 mm thick			1
17	826/01507		Bolt, M20x335mm long			1
18	907/11600		Bearing, taper roller			2
19	1450/1001		Nipple, grease, 90deg. angle			3
20	809/00118		Bearing			1
21	826/01443		Nut, slotted			1
22	2103/1111		Pin, Split			1
23	1315/3713Z		Bolt			6
24	1420/0011Z		Washer, M16 plain			6
26	259/01306		Washer			2
28	1420/0012Z		Washer			2
30	819/00103		Shim, 1mm thick, 75mm I.D			8
31	830/00599		Spacer			1

Machine groups

Details

Machine group	From serial no.	To serial no.
.426		
426		

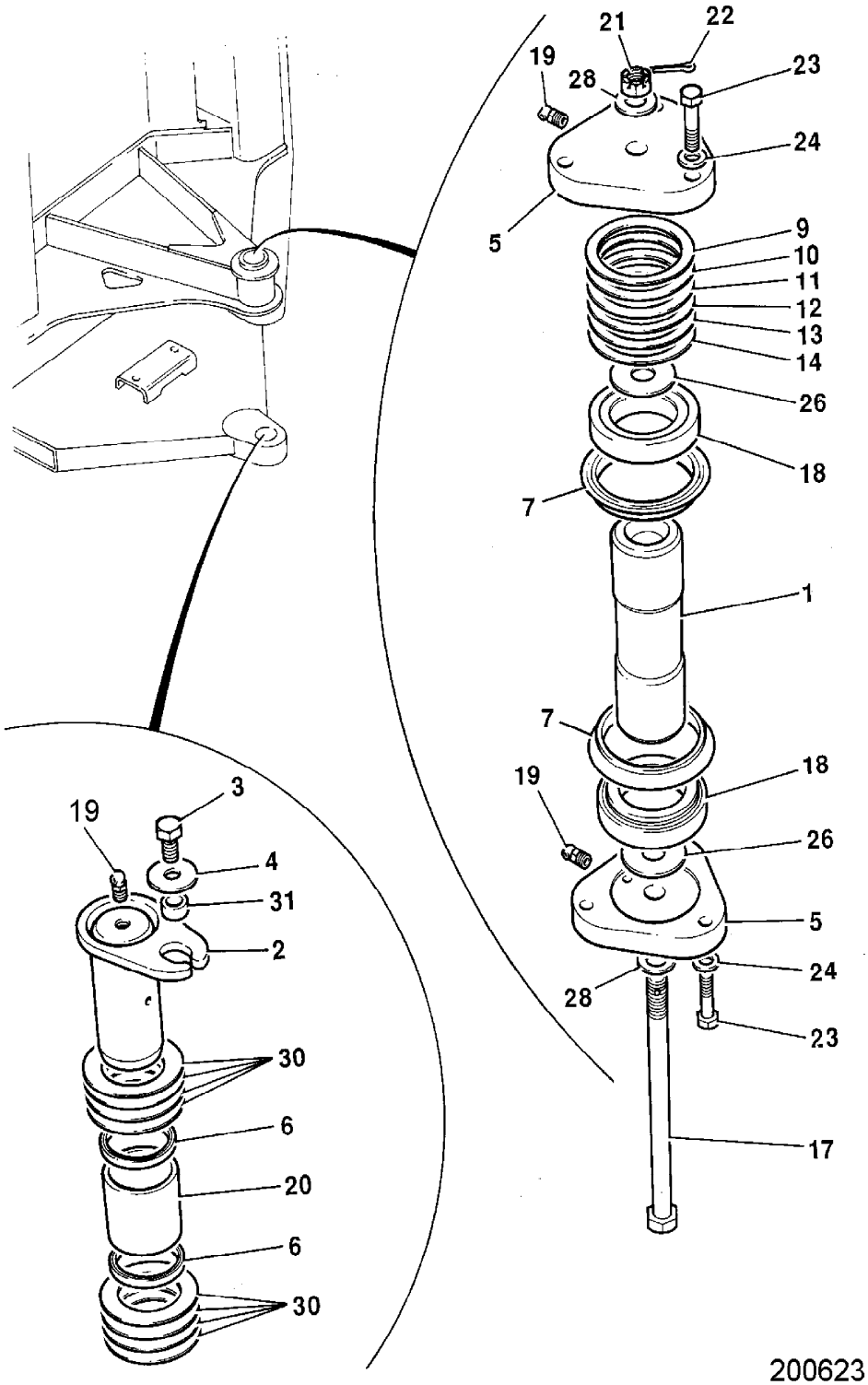
21
22
19
28
23
24
5
9
10
11
12
13
14
26
18
7
1
7
18
19
26
5
24
28
23
17
3
19
4
31
2
30
6
20
6
30

200623

9802/2740 B1-7-1 ENGINE COVER, TOOLBOX

Item	Part no.	Change No.	Description	Remarks	Usage code	Qty
1	331/48069		Cover, tool box			1
2	162/02540		Hinge			2
3	162/00643		Handle			2
4	2410/0209		Grommet			1
5	259/80601		Latch			1
6	1420/0006D		Washer, M6 plain			4
7	1315/0405D		Setscrew			4
8	1370/0103D		Nut, M6 lock			4
9	1420/0008D		Washer, M10			4
11	1370/0303D		Nut, M10			4
12	926/04800		Strip, edging	697 mm approx		A/R
16	1420/0007D		Washer, M8 plain			16
17	1315/0305D		Screw, set M8x20			8
18	1370/0201D		Nut, M8			8

Machine groups

Details

Machine group	From serial no.	To serial no.
.426		
426		

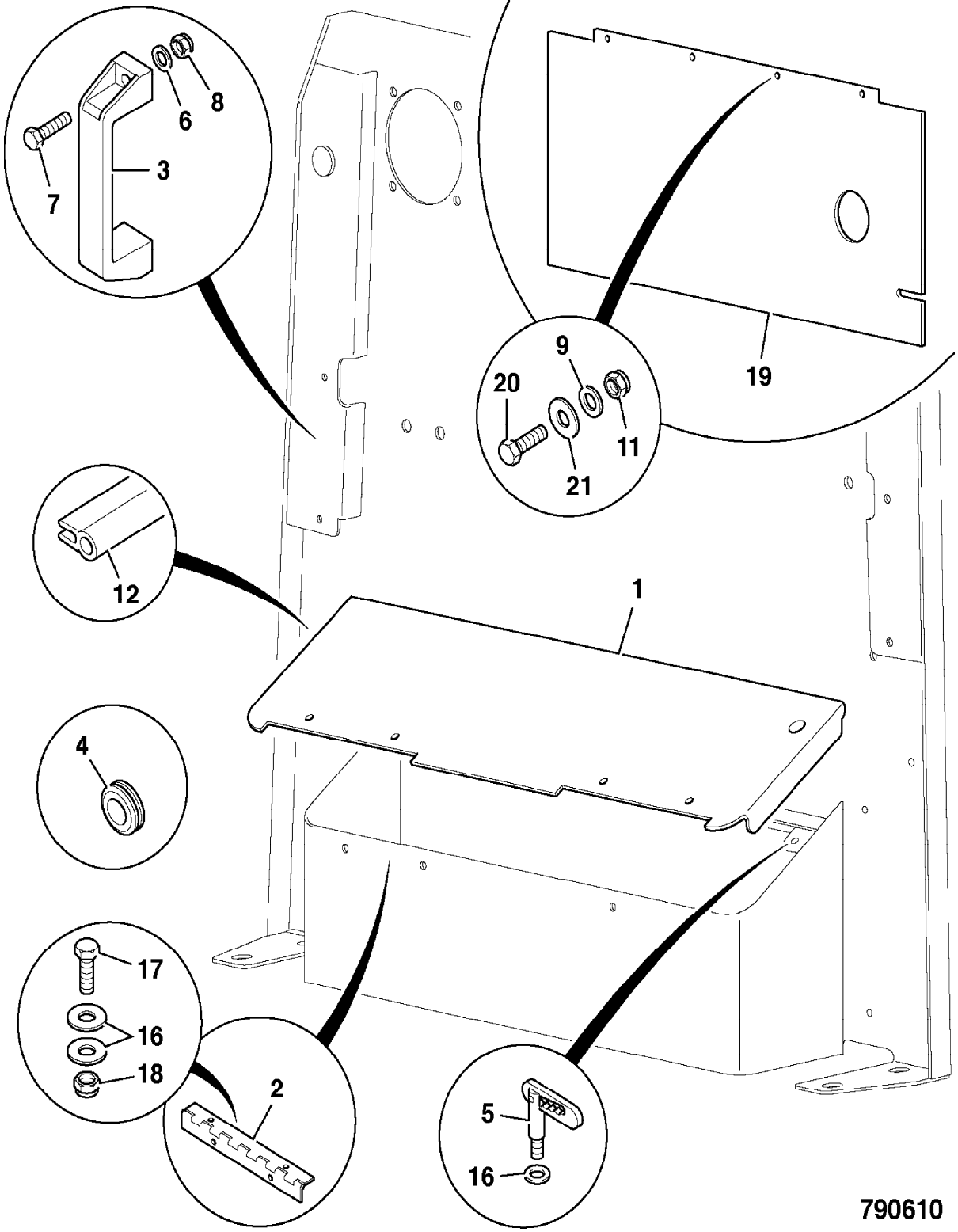
6
8
3
7
19
9
20
11
21
12
1
4
17
16
18
2
5
16
790610

9802/2740 B1-8-1 ENGINE COVER

Item	Part no.	Change No.	Description	Remarks	Usage code	Qty
0A	.		'See Remark'	See B1 section for cooling bay cover		1
1	335/08140	Superseded	Hinge			4
	335/13383		Hinge			4
2	335/11113		Frame, front			1
3	335/09408		Panel, top			1
4	335/09553		Panel, fixed,lower, left side			1
5	335/09554		Panel, fixed,lower, right side			1
6	335/11054		Door, engine cover, left side			1
7	335/11055		Door, engine cover, right side			1
8	335/09471		Frame, rear			1
9	331/51128		Plate, mounting			1
10	821/00492		Circlip, E series			8
11	346/00241		Grille, air intake, left side			1
	331/54688		Grille, left side, chaff			1
12	346/00242		Grille, air intake, right side			1
	331/54689		Grille, right side, chaff			1
14	2410/1014		Grommet, 38.1mm.	Fitted to top panel		6
15	265/01819		Pin, hinge			4
16	265/01843		Bearing, oilite			16
17	331/52904		Strut, gas, 1700N	Standard Fenders		2
	331/54665		Strut, gas, 2100N	With Fender extenders.Replaced with 331/59253		2
	331/59253		Strut, gas, 2300N	Replaces 331/54665		1
18	1420/0008D		Washer, M10			7
19	1370/0303D		Nut, M10			4
20	926/12700		Seal, rubber			A/R
21	926/19800		Seal			A/R
22	926/19900		Seal, bubble end, 2320mm			A/R
23	826/11079		Setscrew, flange head, dacromet M10 x 20mm			16
24	1315/0407D		Setscrew, M10 x 25mm long			11
25	1370/0403D		Nut, M12			8
26	1412/0005D		Washer, large			16

27	1420/0009D		Washer, M12			8
28	1315/0508D		Setscrew	Bodywork to chassis		8
29	1412/0004D		Washer, 7/16" large			15
30	268/10151		Plate, latch			2
31	831/00064		Bush, self lubricating			2
32	829/00583		Spindle			2
33	331/34627		Bar, spring			2
34	1420/0007D		Washer, M8 plain			2
35	1370/0201D		Nut, M8			2
36	1315/3414D		Bolt, M10 x 60			2
37	1370/0303D		Nut, M10			2
38	814/00431		Spring, latch return			2
39	265/02675		Grip, handle			2
40	265/01882		Latch, toolbox			1
41	331/49547		Striker, bar			1
42	TBA		Part number, Not Yet Known			1
43	TBA		Part number, Not Yet Known			1
44	331/51801		Striker, bar			1
45	910/60231		Cable, release			1
46	1420/0008D		Washer, M10			12
47	1370/0302D		Nut, thin			6
48	1315/3210D		Bolt, M6x40			2
49	1420/0006D		Washer, M6 plain			4
50	1370/0103D		Nut, M6 lock			2
51	4102/0901		Sealant, clear DP2205, 310ml			A/R
52	257/44700		Trunnion, with screw			1
53	335/09096		Plate, striker mounting			2
54	1315/0407D		Setscrew, M10 x 25mm long			4
55	1411/0004D		Washer, plain, 7/16"medium			1
56	1412/0004D		Washer, 7/16" large			1
60	478/02306		Buffer, stop			4
61	1412/0002D		Washer, large			12
65	162/00643		Handle			2
66	1315/0207D		Screw, M6 x 25mm			4

67	1420/0006D		Washer, M6 plain			4
68	1370/0103D		Nut, M6 lock			4
69	331/57033		Shim	Top panel front		2
70	829/30608		Spacer			5
71	1315/0205D		Setscrew, M6 x 20mm long	Front bulkhead electrics		11
72	1420/0006D		Washer, M6 plain	Front bulkhead electrics		7
73	826/11170		Nut, M8 caged	For lower fixed panels		4
74	331/52903		Shim, 2mm			4
75	926/06600		Strip, edging	940mm per door		A/R

Machine groups

Details

Machine group	From serial no.	To serial no.
.426		
426		

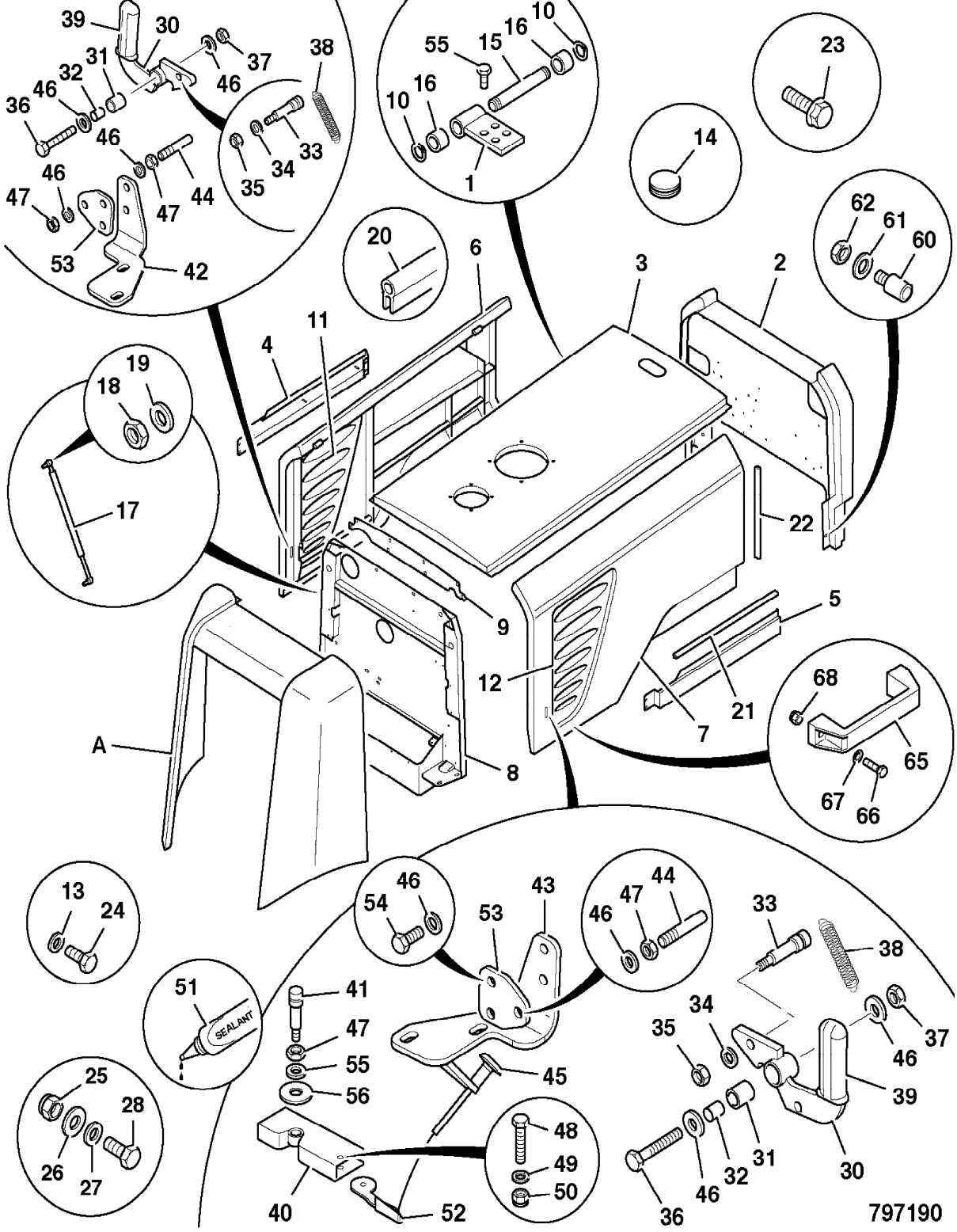
39
30
31
32
46
36
46
37
38
46
33
34
35
46
44
47
47
53
42
55
15
16
10
10
16
1
14
23
62
61
60
20
6
3
2
11
4
19
18
17
22
9
5
12
21
7
68
65
67
66
A
8
13
24
46
54
53
43
46
47
44
33
38
51
SEALANT
41
47
55
56
45
34
35
37
46
39
25
28
26
27
48
49
50
40
52
46
32
31
30
36
797190

9802/2740 B1-9-1 FENDERS, REAR, EXTENSION, 20.5R25 TYRES

Item	Part no.	Change No.	Description	Remarks	Usage code	Qty
1	335/10529		Fender, extension, left side			1
2	335/10530		Fender, extension, right side			1
3	346/00226		Trim, rear upper fender, LH,rear extension			1
4	346/00227		Trim, rear upper fender, RH,rear extension			1
5	1420/0008D		Washer, M10			38
6	1315/0407D		Setscrew, M10 x 25mm long			12
7	1315/0408D		Setscrew, M10 x 30			12
8	1370/0303D		Nut, M10			12
9	817/18566		Decal, Warning, No Step			2

Machine groups

Details

Machine group	From serial no.	To serial no.
.426		
426		

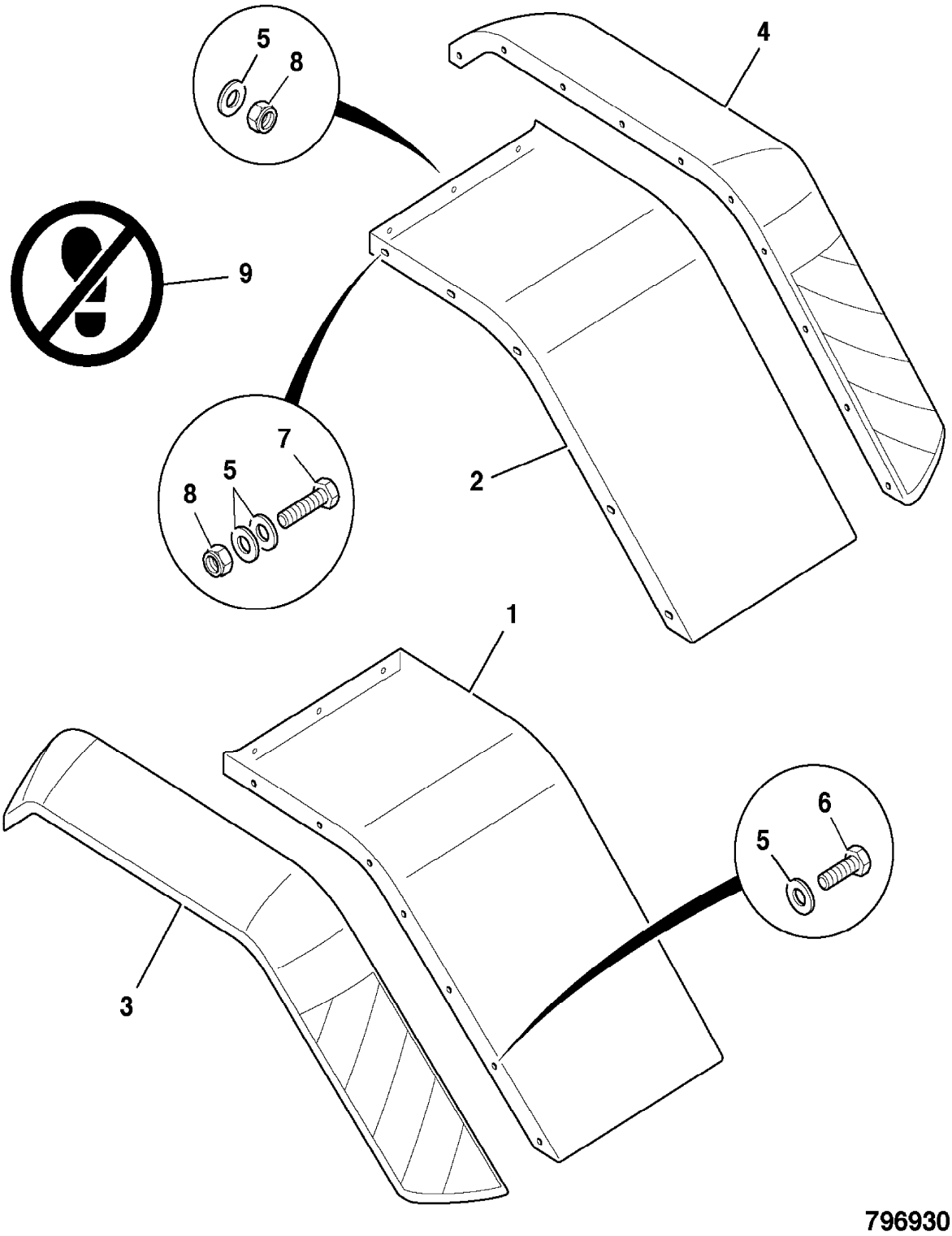
5
8
4
9
7
5
8
2
1
6
5
3
796930

9802/2740 B1-9-2 FENDERS, REAR, EXTENSION,750 TYRES, SALES SPECIAL

Item	Part no.	Change No.	Description	Remarks	Usage code	Qty
1	335/11757		Fender, extension, left side	Sales special 7767		1
2	335/11758		Fender, extension, right side			1
3	346/00226		Trim, rear upper fender, LH,rear extension			1
4	346/00227		Trim, rear upper fender, RH,rear extension			1
5	1420/0008D		Washer, M10			38
6	1315/0407D		Setscrew, M10 x 25mm long			12
7	1315/0408D		Setscrew, M10 x 30			12
8	1370/0303D		Nut, M10			12
9	817/18566		Decal, Warning, No Step			2

Machine groups

Details

Machine group	From serial no.	To serial no.
.426		
426		

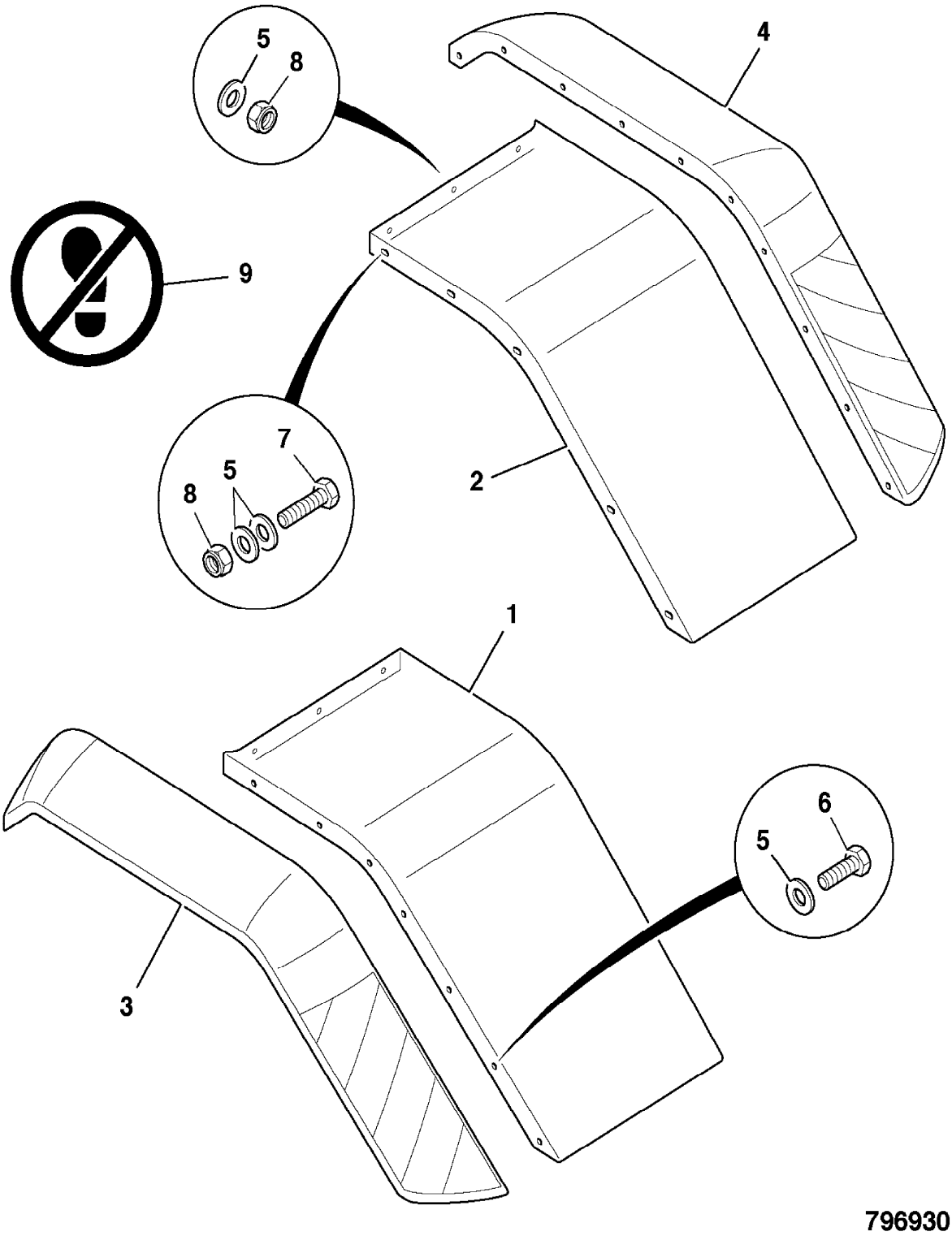
5
8
4
9
7
5
8
2
1
6
5
3
796930

9802/2740 B2-1-1 CAB

Item	Part no.	Change No.	Description	Remarks	Usage code	Qty
0A	269/40696		Cab, assembly	Includes glazing for cab frame only		1
0B	827/80317		:Windscreen, front, tinted	See page B2-5-1		1
0C	827/80343		:Glass, lower, right side, front	See page B2-5-1		1
0D	827/80344		:Glass, lower, left side, front	See page B2-5-1		1
0E	827/80345		:Glass, lower, left side	See page B2-5-1		1
0F	827/80322		:Glass, upper, left side	See page B2-5-1		1
0G	827/80323		:Glass, upper, right side	See page B2-5-1		1
0H	827/80346		:Glass, lower, right side			1
0J	827/80316		:Glass, rear	See page B2-5-1		1
1	269/40758		:Cab, WA			1
2	.		:'See Remark'	See B2-2-1 for cab door		1
3	.		:'See Remark'	See B2-3-1 for RH side window		1
4	331/50738		:Seal, front			1
5	331/50740		:Seal, LH front			1
6	331/50741		:Seal, RH front			1
7	123/05740		:Plug, blanking, 30mm			6
8	828/10341		:Grommet, Semi Blind			1
9	2410/0215		Grommet			2
10	2410/1009		Grommet			2
16	826/10879		:Nut, M6			29
17	826/10977		:Nut, rivet,M8 Hex, low profile			21
18	826/10973		:Nut, Bollhof M5			24
19	826/01181		:Nut, rivet			8
20	826/10346		:Nut, rivet			4

Machine groups

Details

Machine group From serial no. To serial no.

.426

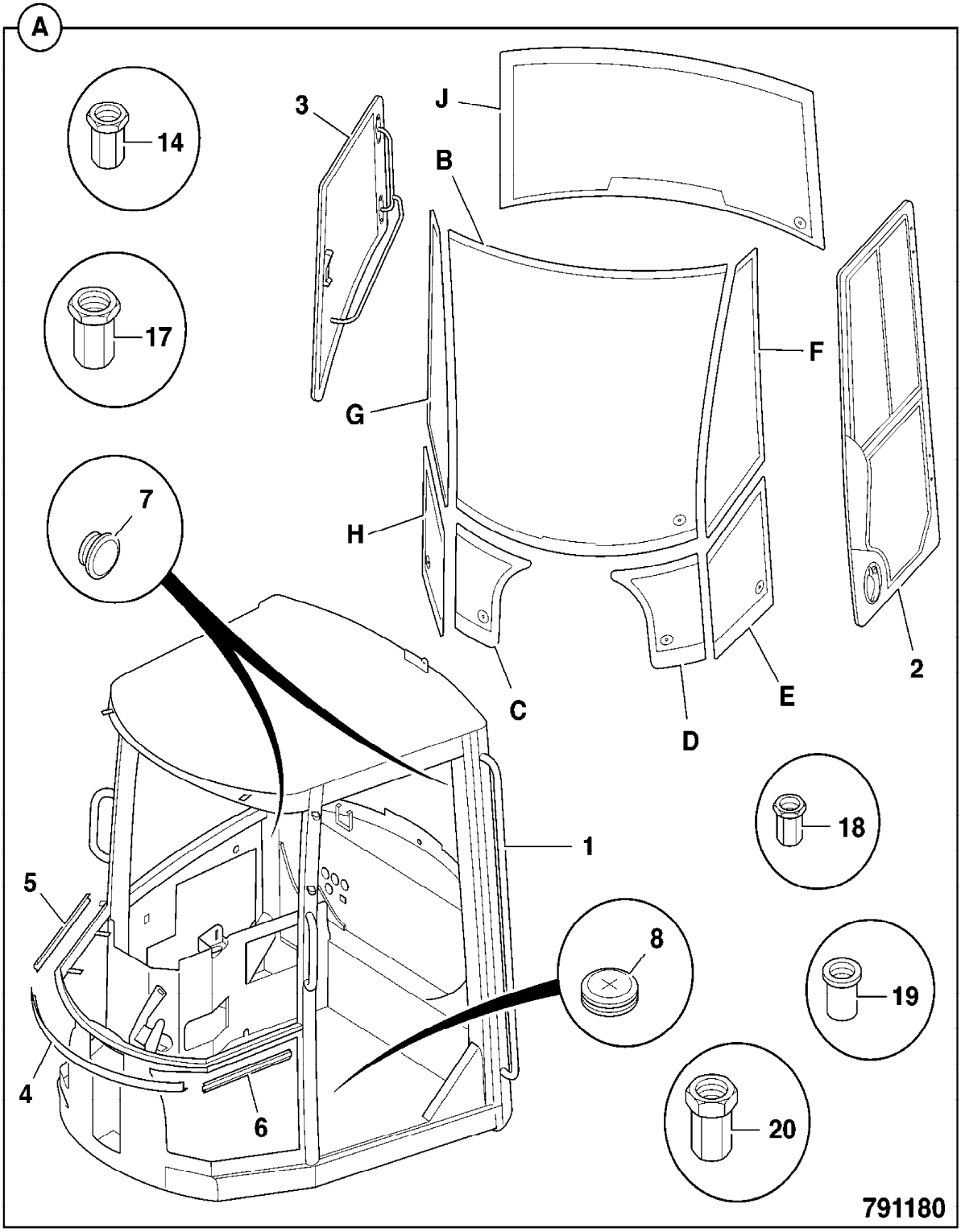
A
14
17
7
3
J
B
F
G
H
C
D
E
2
1
18
5
8
19
4
6
20
791180

9802/2740 B2-2-1 CAB DOOR

Item	Part no.	Change No.	Description	Remarks	Usage code	Qty
0A	269/40561		Door, assembly			1
1	269/40688		:Window, sliding, assembly			1
1A	827/80368		::Glass, door			1
1B	927/20057		::Window, assembly, sliding			1
1C	827/80335		::Glass, sliding			1
2	335/09860		:Frame, door			1
3	331/43116		:Handle, door, right side			1
4	826/11026		:Handle			1
	826/11629		Handle	Replaces 826/11026		1
5	835/10107		:Plug, Blanking			1
6	331/28105		:Gasket, door handle			1
7	826/01814		:Screw, M8x35 countersunk			2
8	826/01559		:Screw, M6 x 16mm long, button head socket			5
9	331/31247		:Hinge, Block Assembly			2
10	335/09474		:Hinge			2
11	813/10281		:Gasket			2
12	331/45843	Superseded	:Rod, connecting			1
	331/63226		:Rod, connecting			1
12A	826/00711		:Washer, 'starloc'			1
13	331/44771		:Moulding, latch cover			1
	331/64765		Moulding, latch cover	Replaces 331/44771		1
14	331/30951		:Bolt, door striker			1
15	826/10947		:Nut, plain			1
16	331/26791		:Guard, striker			1
17	331/46388		:Strut			1
18	926/90004		:Seal			1
19	826/10879		:Nut, M6			1
20	1315/0308D		:Setscrew, M8 x 30mm long			4
21	1370/0203D		:Nut, lock			8
21A	122/23509		:Cap			4
22	1420/0007D		:Washer, M8 plain			10
23	2410/0106		:Grommet, 16mm diameter	No longer fitted		2
24	1370/9403Z		:Nut			2
28	1370/0201D		:Nut, M8			2

29	331/51986		Strap, check	90 degree door opening		1
30	1315/3316D		Bolt, M8x70			2
31	1370/0203D		Nut, lock			2
32	1420/0007D		Washer, M8 plain			4
33	122/23509		Cap			4

Machine groups

Details

Machine group	From serial no.	To serial no.
.426		
426		

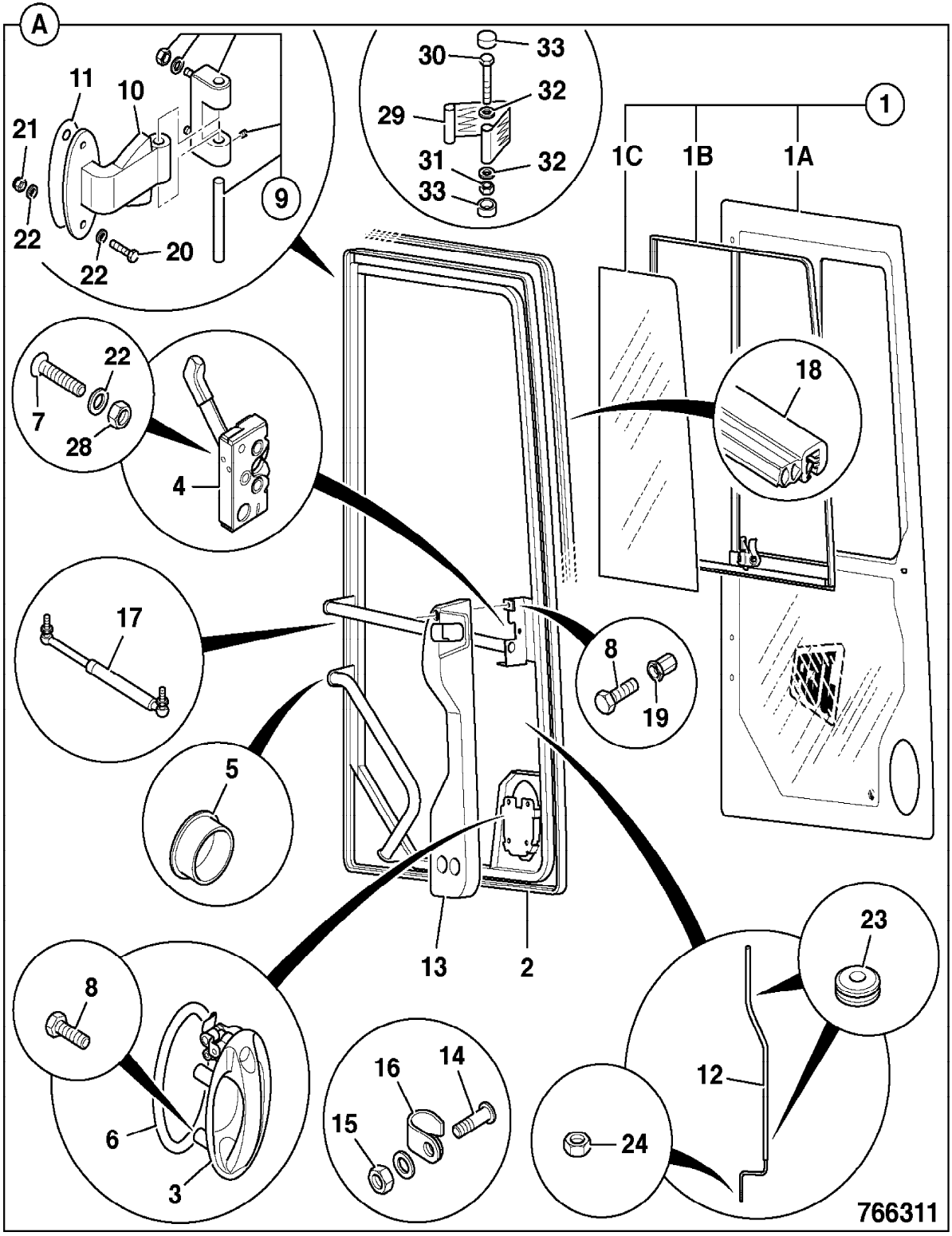
A
11
10
21
22
22
20
9
30
33
32
29
31
32
33
1
1C
1B
1A
22
7
28
4
18
17
8
19
5
13
2
8
6
3
16
14
15
24
12
23
766311

9802/2740 B2-21-1 ARMREST

Item	Part no.	Change No.	Description	Remarks	Usage code	Qty
1	331/34723		Pad, Armrest			1
2	191/00770	Superseded	Handle			1
	162/02997		Clamp, Lever M10			1
3	331/45155		Shaft, armrest			1
4	.		'See Remark'	Not fitted		1
5	335/07930		Bracket, armrest clamp			1
6	1420/0008D		Washer, M10			2
7	821/10266		Clamp			2
8	1315/0417D		Bolt			1
9	826/10977		Nut, rivet,M8 Hex, low profile			1

Machine groups

Details

Machine group	From serial no.	To serial no.
.426		
426		

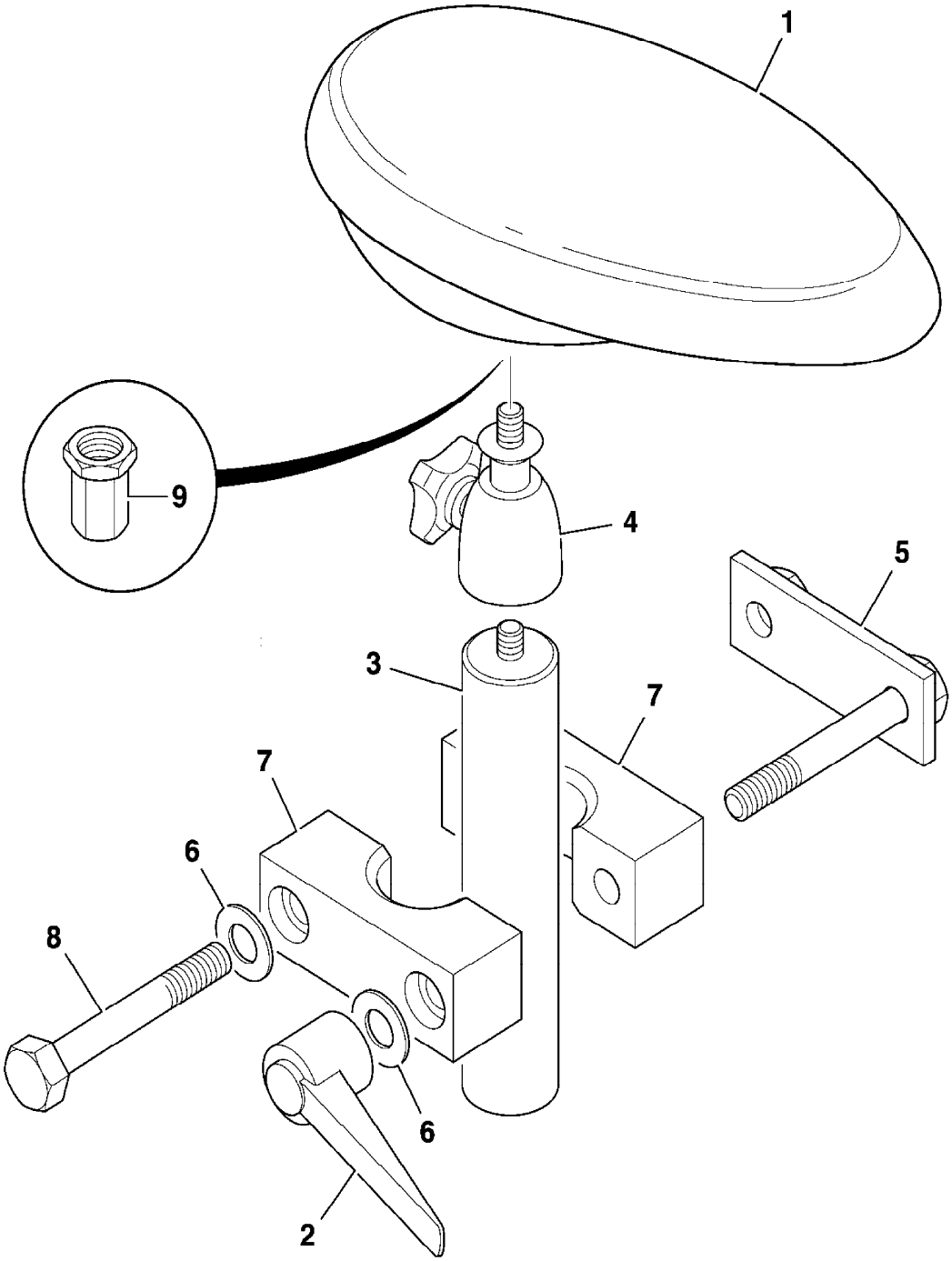

790640

9802/2740 B2-22-1 SEAT, AIR SUSPENSION

Item	Part no.	Change No.	Description	Remarks	Usage code	Qty
1	40/911029		Seat, assy,c/w seat belt, fabric	See B2-23-1 for components		1
2	331/42449		Base, seat			1
3	1315/0303D		Setscrew			4
4	1420/0007D		Washer, M8 plain			4
5	1315/0407D		Setscrew, M10 x 25mm long			4
6	1420/0008D		Washer, M10			4

Machine groups

Details

Machine group	From serial no.	To serial no.
.426		
426		

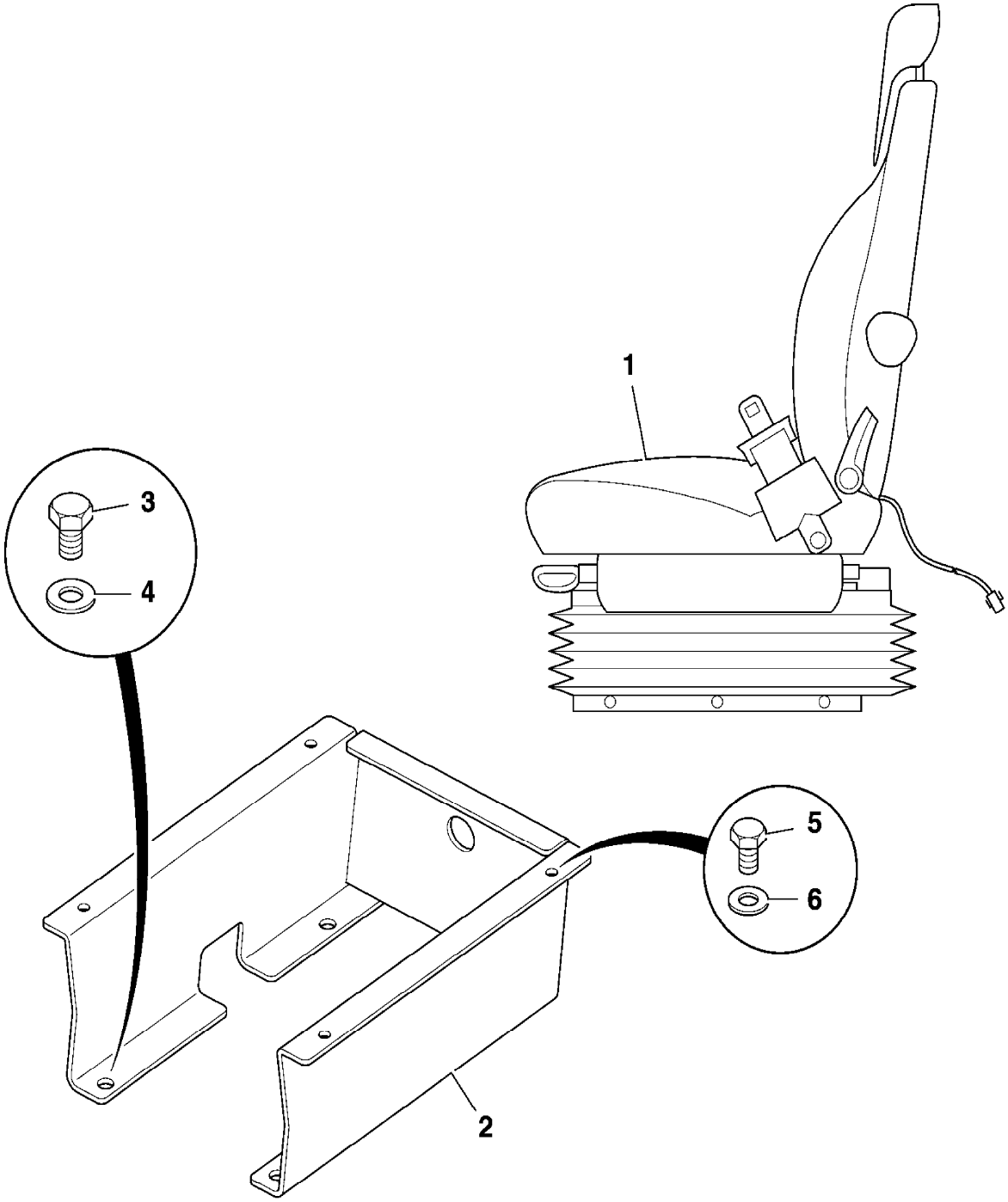

790750

9802/2740 B2-23-1 SEAT, AIR SUSPENSION, COMPONENTS

Item	Part no.	Change No.	Description	Remarks	Usage code	Qty
0A	40/911029		Seat, assy,c/w seat belt, fabric			1
1	40/910637		:Kit, Head Rest			1
2	40/910670		:Kit, LH, Upper Assembly			1
3	40/910635		::Kit-back cover			1
5	40/910489		::Kit, back foam			1
6	40/910685		::Kit, kit, seat frame			1
7	40/910667		::Kit, seat cover			1
8	40/212705		::Kit, Seat Foam			1
9	40/910669		::Kit, Lumbar			1
10	40/910668		::Kit, knob			1
11	40/910672		:Kit, Swivel			1
12	40/910673		:Kit, Air Spring and Tubes			1
13	40/910674		:Kit, Isolator			1
14	TBA		Part number, Not Yet Known	24V compressor kit		1
15	40/910676		:Kit, Bump Stop			1
16	40/910677		:Kit, Damper			1
17	40/910678		:Kit, Suspension Cover			1
18	TBA		:Part number, Not Yet Known	24V suspension assembly kit		1
20	40/910680		:Kit, Isolator Damper			1
22	40/910681		:Kit, Valve Air, and Lever			1
24	40/910682		Kit, Indicator			1
25	TBA		Part number, Not Yet Known	24V one touch riser sensor kit		1
25A	TBA		Part number, Not Yet Known	24V magnet kit		1
26	40/910664		:Kit, Seat-belt, 2 inch			1
	40/910760		Kit, seatbelt, 3"(76mm), retractable			1
30	1315/0303D		Setscrew			4
31	1420/0007D		Washer, M8 plain			4
32	1425/0007D		Washer, M8 spring			4

Machine groups

Details

Machine group	From serial no.	To serial no.
.426		

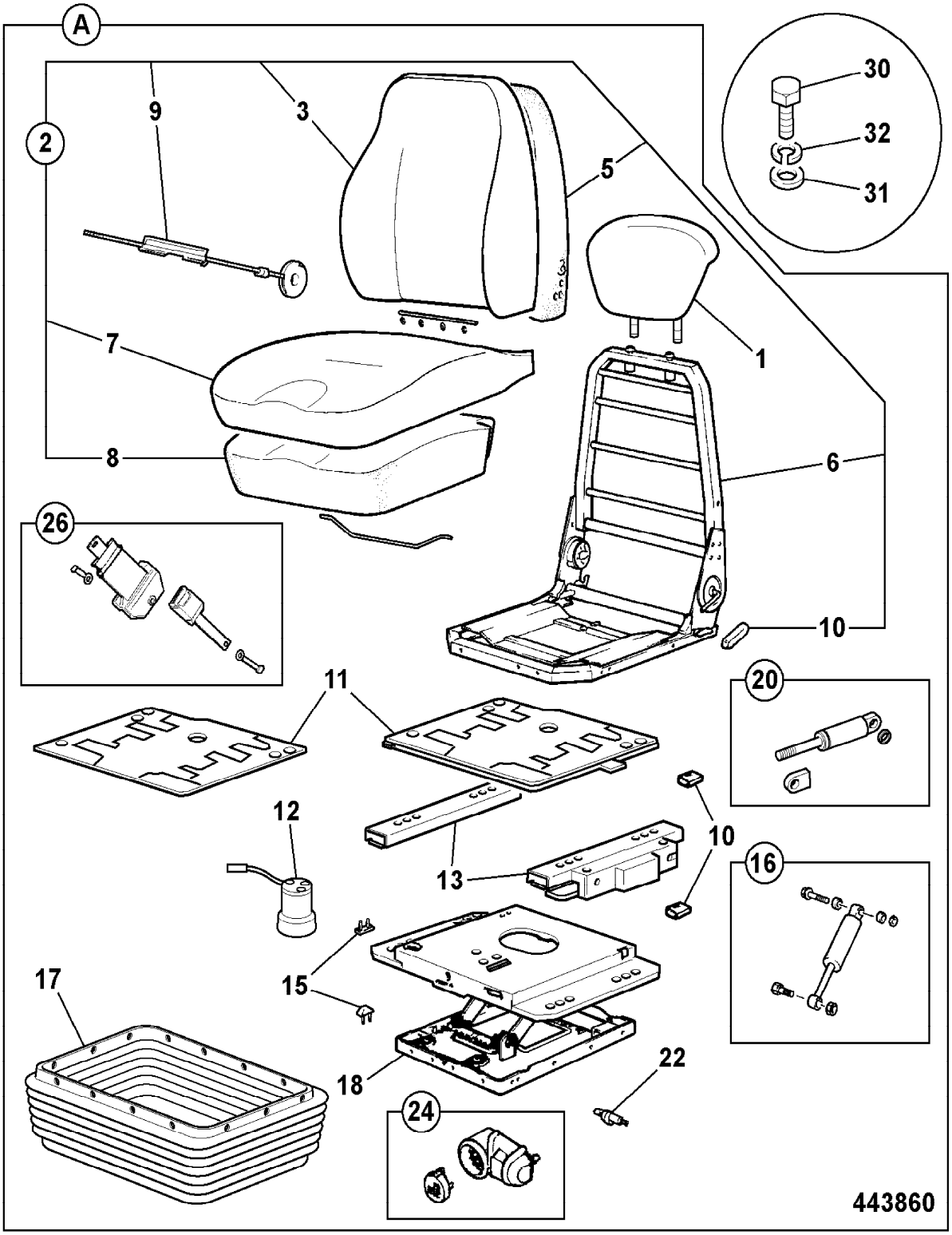
A
2
9
3
5
30
32
31
7
1
8
6
26
10
11
20
12
10
13
16
15
17
18
22
24
443860

9802/2740 B2-24-1 SEAT, AIR SUSPENSION, HEATED

Item	Part no.	Change No.	Description	Remarks	Usage code	Qty
1	40/911030		Seat, assy,c/w seat belt, fabric,heated	See B2-25-1 for components		1
2	331/42449		Base, seat			1
3	1315/0303D		Setscrew			4
4	1420/0007D		Washer, M8 plain			4
5	1315/0407D		Setscrew, M10 x 25mm long			4
6	1420/0008D		Washer, M10			4
7	40/910760		Kit, seatbelt, 3"(76mm), retractable			1

Machine groups

Details

Machine group	From serial no.	To serial no.
.426		
426		

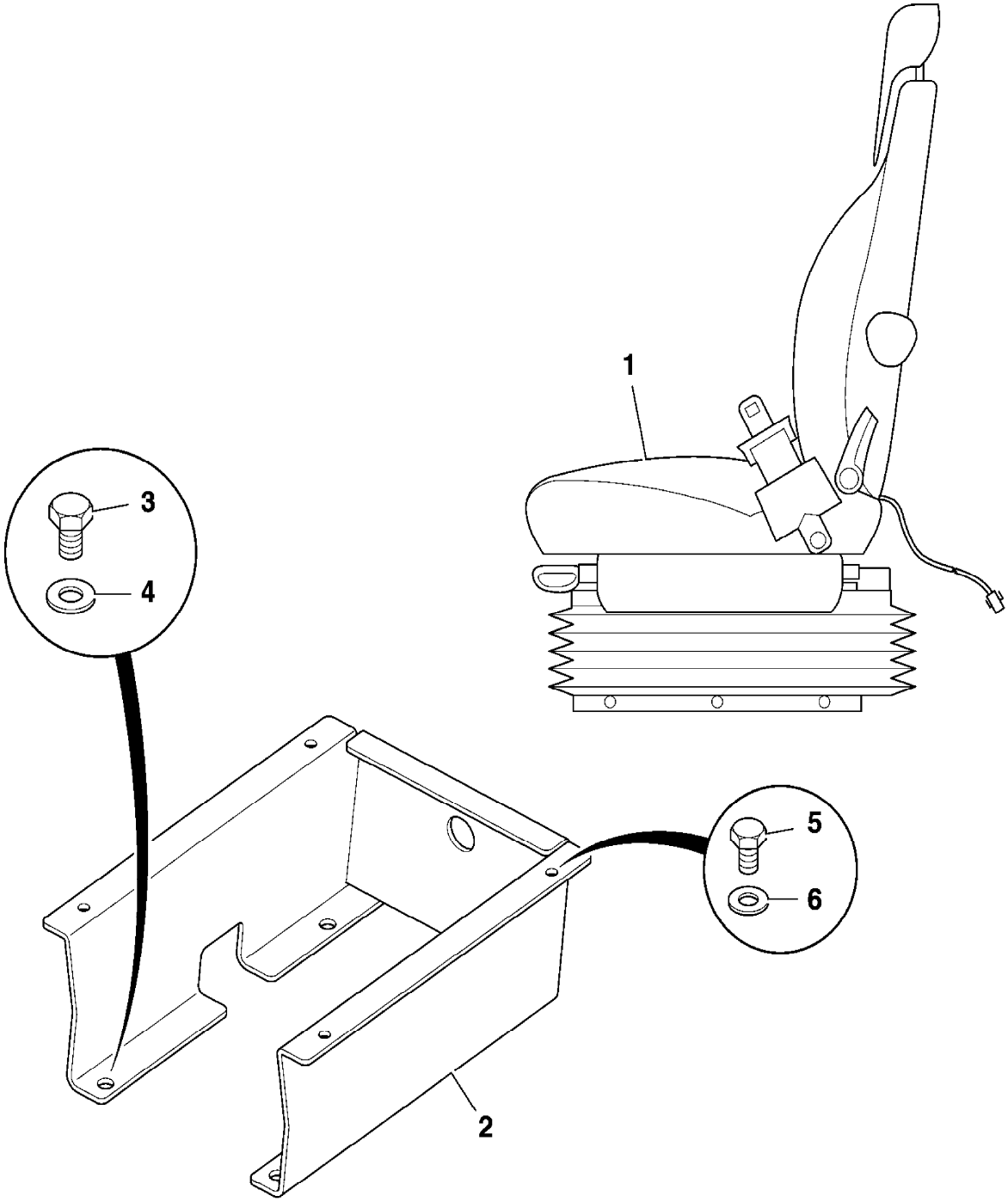

790750

9802/2740 B2-25-1 SEAT, AIR SUSPENSION, HEATED, COMPONENTS

Item	Part no.	Change No.	Description	Remarks	Usage code	Qty
0A	40/911030		Seat, assy,c/w seat belt, fabric,heated			1
1	40/910637		:Kit, Head Rest			1
2	40/910670		:Kit, LH, Upper Assembly			1
3	40/910635		::Kit-back cover			1
5	40/910489		::Kit, back foam			1
6	40/910685		::Kit, kit, seat frame			1
7	40/910667		::Kit, seat cover			1
8	40/212705		::Kit, Seat Foam			1
9	40/910669		::Kit, Lumbar			1
10	40/910668		::Kit, knob			1
11	40/910672		:Kit, Swivel			1
12	40/910673		:Kit, Air Spring and Tubes			1
13	40/910674		:Kit, Isolator			1
14	TBA		:Part number, Not Yet Known	24V compressor kit		1
15	40/910676		:Kit, Bump Stop			1
16	40/910677		:Kit, Damper			1
17	40/910678		:Kit, Suspension Cover			1
18	TBA		:Part number, Not Yet Known	24V suspension assembly kit		1
20	40/910680		:Kit, Isolator Damper			1
22	40/910681		:Kit, Valve Air, and Lever			1
24	40/910682		Kit, Indicator			1
25	TBA		:Part number, Not Yet Known	24V one touch riser sensor kit		1
25A	TBA		:Part number, Not Yet Known	24V one touch riser magnet kit		1
26	40/910664		:Kit, Seat-belt, 2 inch			1
	40/910760		Kit, seatbelt, 3"(76mm), retractable			1
27	40/910968		Element, seat, 24V			1
28	40/910969		Element, seat back, 24V			1
30	1315/0303D		Setscrew			4
31	1420/0007D		Washer, M8 plain			4
32	1425/0007D		Washer, M8 spring			4

Machine groups

Details

Machine group	From serial no.	To serial no.
.426		
426		

.

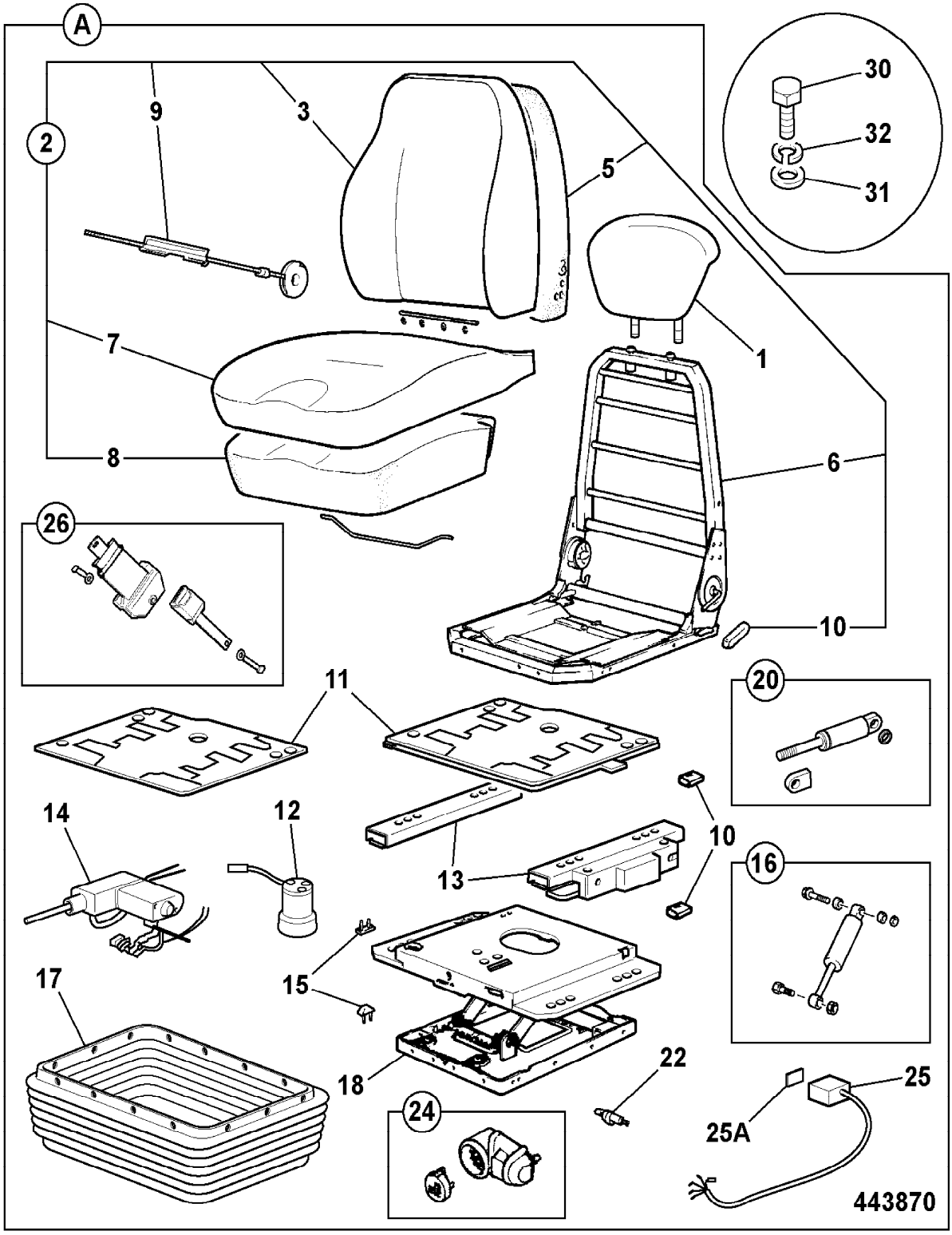

9802/2740 B2-26-1 FIRE EXTINGUISHER

Illustration Machines Top of catalogue

Item	Part no.	Change No.	Description	Remarks	Usage code	Qty
1	265/02895		Extinguisher, fire c/w cradle			1
1A	265/02967		:Extinguisher, fire			1
2	826/01723		Capscrew			2
3	.		'See Remark'	Not fitted		2
4	.		'See Remark'	Not fitted		2

Machine groups

Details

Machine group	From serial no.	To serial no.
.426		
426		

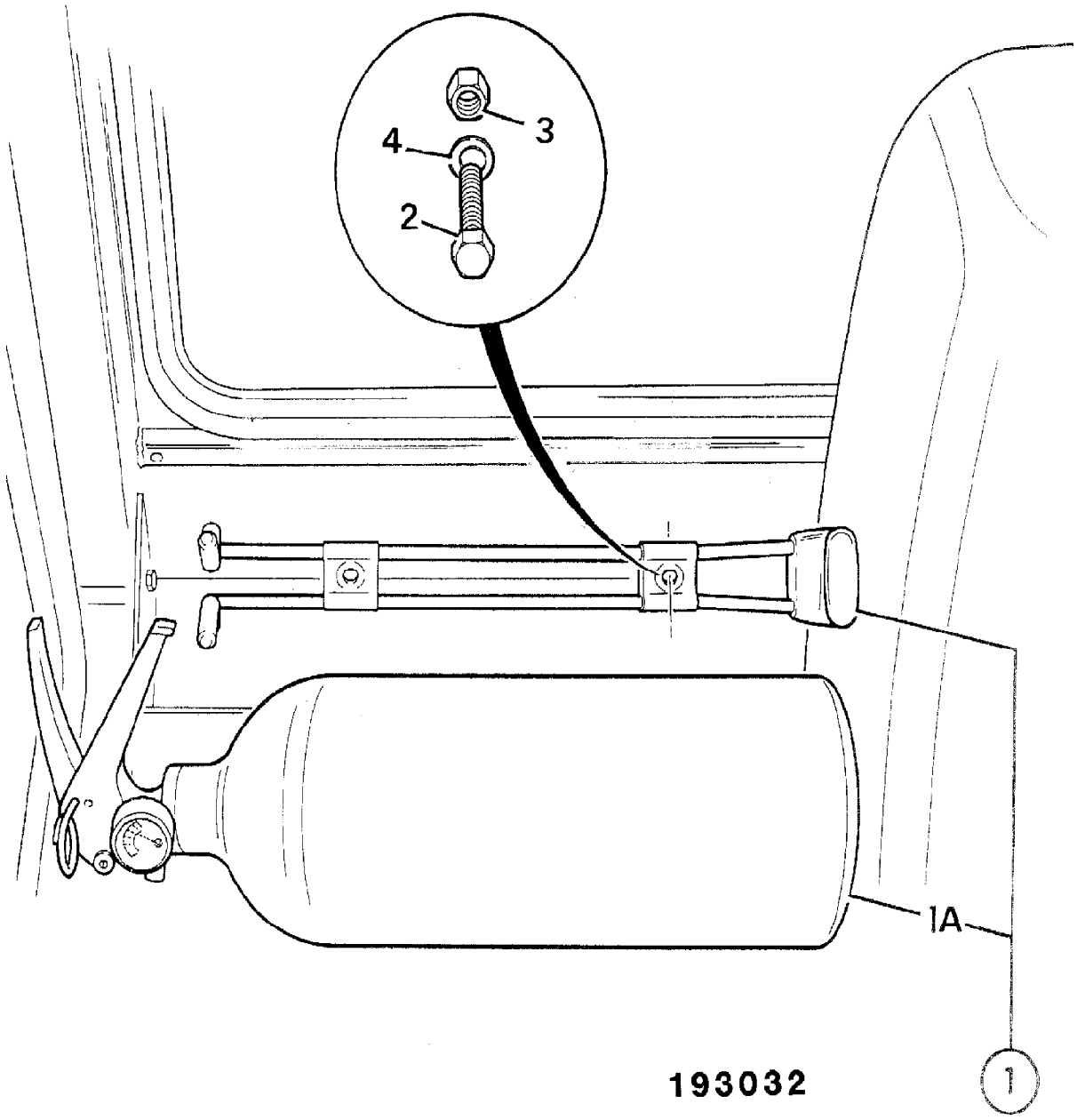
4
3
2
1A
1
193032

9802/2740 B2-27-1 CUP HOLDER

Item	Part no.	Change No.	Description	Remarks	Usage code	Qty
1	331/16237		Holder, cup			1
2	1315/0103Z		Screw			2
3	1370/0003Z		Nut			2
4	1414/0011Z		Washer, 2 BA			2

Machine groups

Details

Machine group	From serial no.	To serial no.
.426		
426		

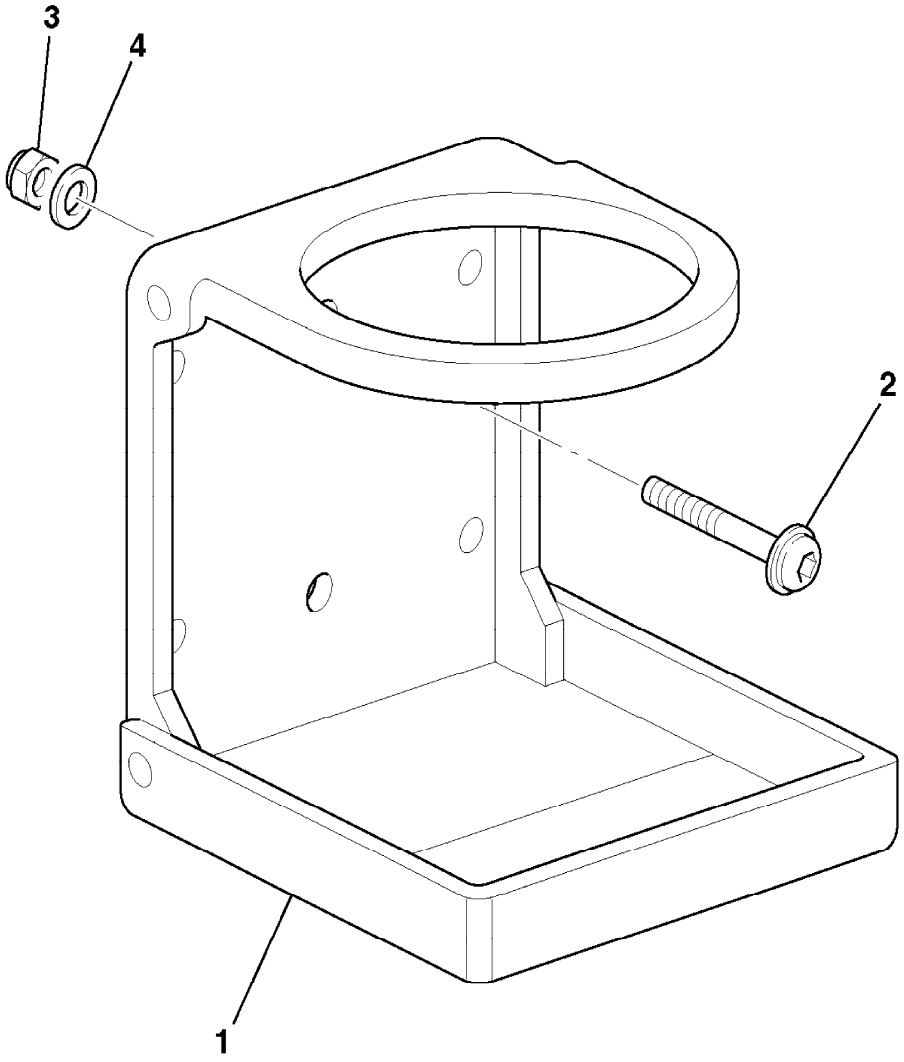

774790

9802/2740 B2-28-1 COVER, HEATER

Illustration Machines Top of catalogue

Item	Part no.	Change No.	Description	Remarks	Usage code	Qty
1	331/44767		Door, heater			1
2	335/08838		Frame, door			1
3	826/11339		Lock, assembly			1
3A	826/10101		Lock, barrel assembly			1
3B	331/48679		Housing, lock			1
3C	826/11340		Screw, Pan head, M6 x 8			1
4	290/00812		Lock, left side,			1
5	826/10481		Screw			2
6	1370/0203D		Nut, lock			2
7	290/00807		Latch, bolt			1
8	1420/0008D		Washer, M10			1
9	1370/0303D		Nut, M10			1
10	335/09315		Plate, door retainer			1
11	1420/0008D		Washer, M10			2
12	826/01486		Screw, M8 x 20, socket type			6
13	331/50187		Bracket, striker			1
14	1370/0201D		Nut, M8			4
15	823/00529		Washer, M8 black			6

Machine groups

Details

Machine group	From serial no.	To serial no.
.426		
426		

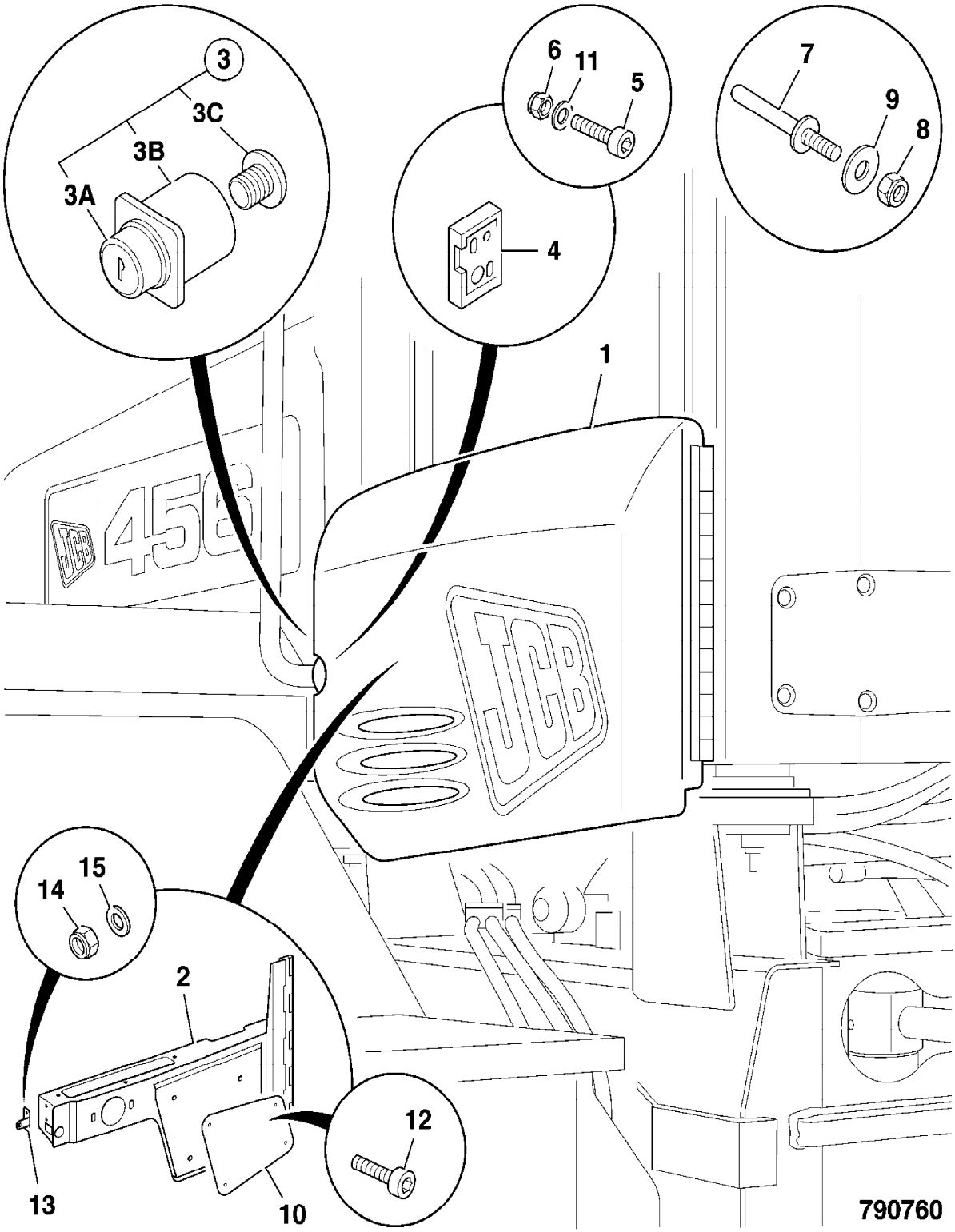
3
3C
3B
3A
6
11
5
4
7
9
8
1
456
JCB
15
14
2
12
13
10
790760

9802/2740 B2-29-1 GUARD WINDSCREEN

Item	Part no.	Change No.	Description	Remarks	Usage code	Qty
1	335/09503		Guard, front screen			1
2	335/09502		Guard, RH side			1
3	335/09501		Guard, LH side			1
4	331/51012		Bracket, screen guard, RH			1
5	331/50995		Bracket, screen guard, LH			1
6	1315/3410D		Bolt			4
7	1420/0008D		Washer, M10			20
8	1370/0303D		Nut, M10			10
9	1315/3409D		Bolt, M10 x 35mm long			6
10	1315/0307D		Setscrew, M8x25			2
11	1420/0007D		Washer, M8 plain			4
12	1370/0203D		Nut, lock			2

Machine groups

Details

Machine group	From serial no.	To serial no.
.426		
426		

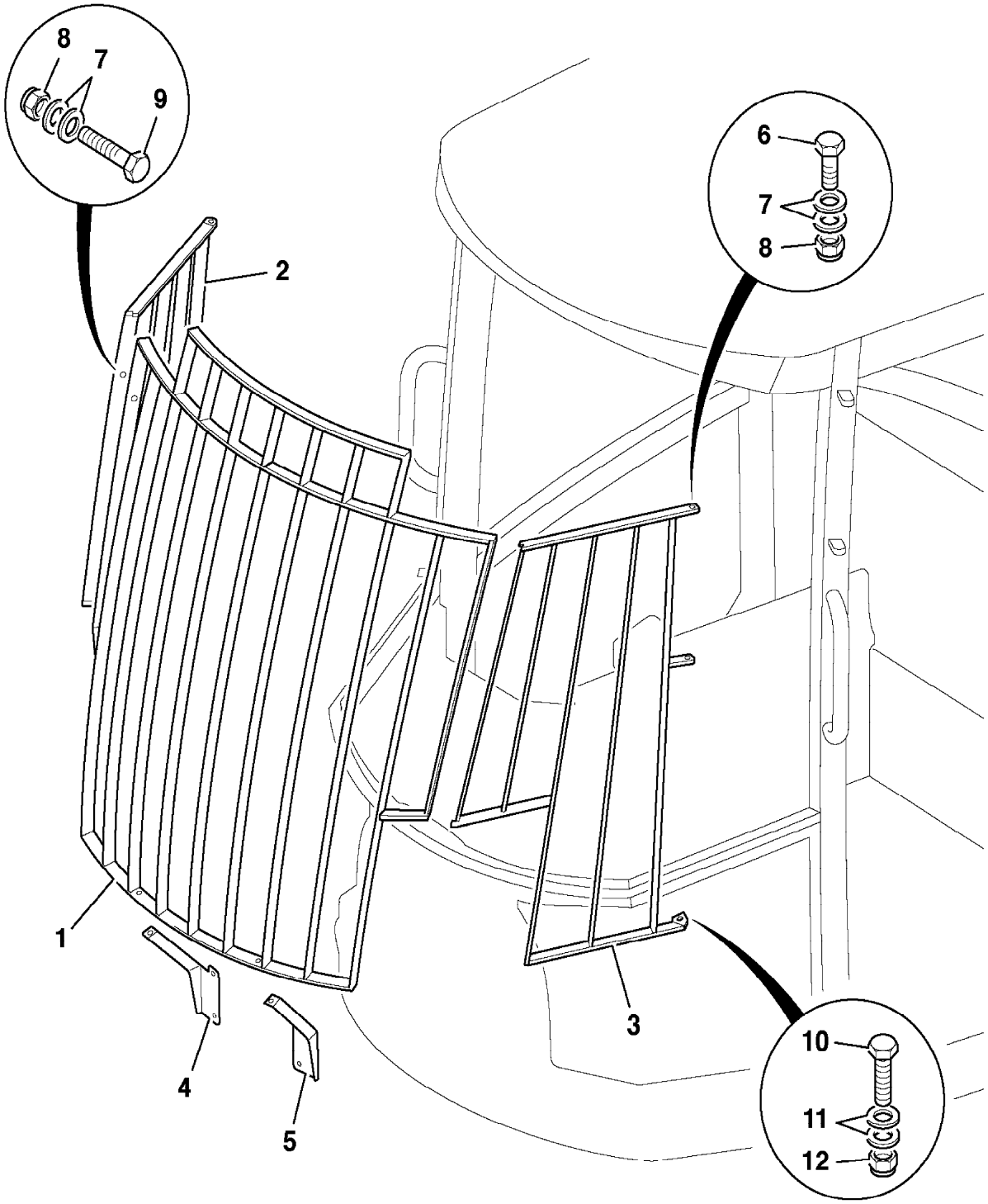
8
7
9
6
7
8
2
1
4
5
3
10
11
12
796720

9802/2740 B2-3-1 WINDOW, SIDE, OPENING

Item	Part no.	Change No.	Description	Remarks	Usage code	Qty
1	335/07991		Rail, side window			1
2	827/80319		Glass, side window			1
3	331/31247		Hinge, Block Assembly			2
4	335/09474		Hinge			2
5	331/38532		Handle, side window			1
6	1315/3212D		Bolt			1
7	1370/0103D		Nut, M6 lock			1
8	1420/0006D		Washer, M6 plain			2
9	835/00074		Cap			2
10	331/35450		Bracket, Left,stay mounting, cab window			1
11	331/35756		Moulding, plastic,outer clamp, window			1
12	813/10233		Gasket, window,cab			3
13	331/23194		Cap, plastic, door hinges			2
14	826/11040		Screw, Set Screw M8 X 20			1
15	826/11183		Screw, socket M8x45 Csk., black			2
16	823/00529		Washer, M8 black			8
17	331/45087		Bar, window stay			1
18	813/10281		Gasket			4
19	331/46389		Strut			1
20	926/90005		Seal			1
21	813/10244		Gasket, outer clamp,window			1
22	813/10239		Gasket, inner clamp,window			1
23	1370/0203D		Nut, lock			10
24	1420/0007D		Washer, M8 plain			4
25	1315/0308D		Setscrew, M8 x 30mm long			4
26	1370/0202D		Nut, thin			1

Machine groups

Details

Machine group	From serial no.	To serial no.
.426		

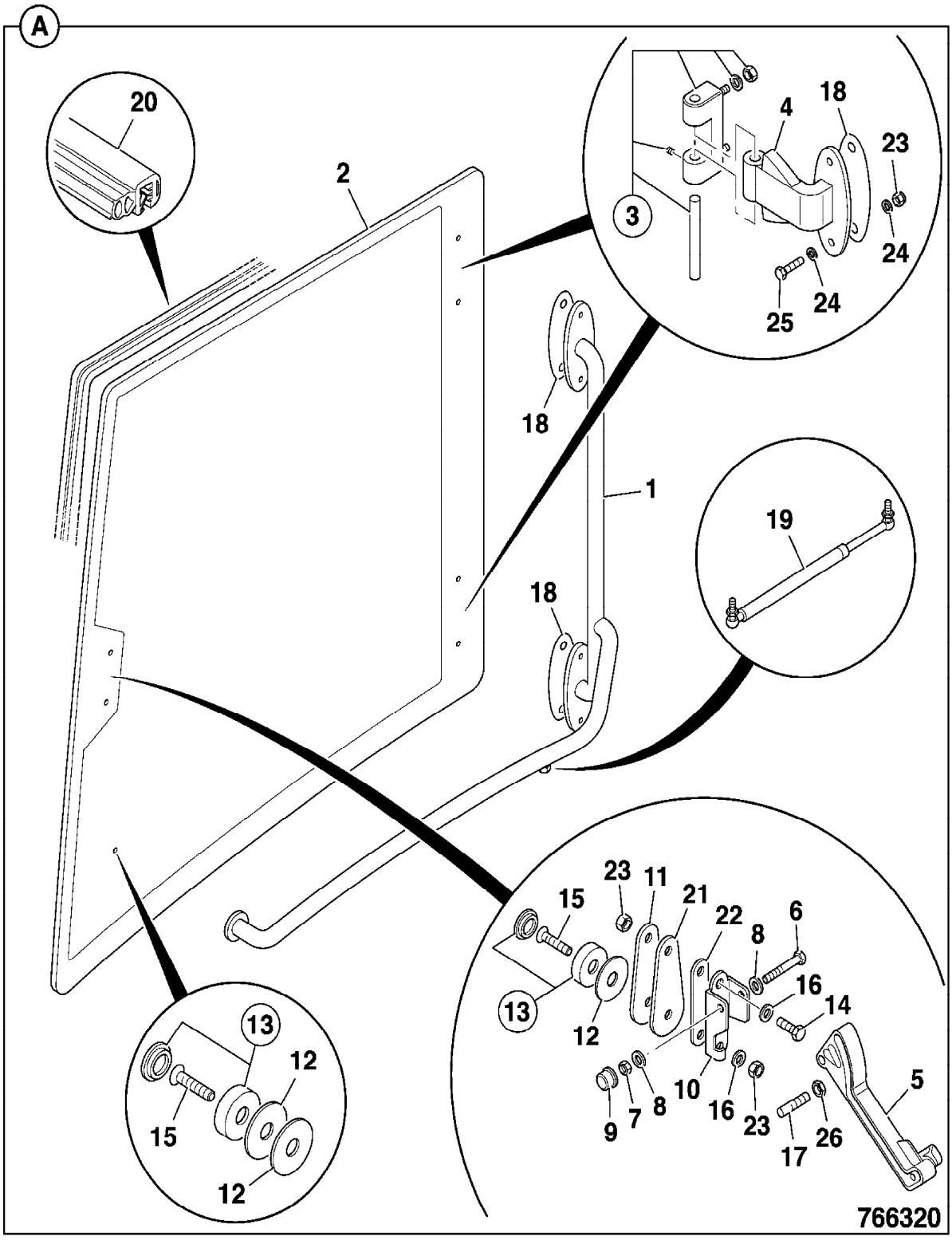
A
20
2
3
4
18
23
24
25
24
18
1
19
18
23
11
21
22
6
8
16
14
15
13
12
10
16
23
17
26
5
9
7
8
13
12
15
12
766320

9802/2740 B2-30-1 CAB MOUNTINGS

Item	Part no.	Change No.	Description	Remarks	Usage code	Qty
1	331/40790		Mounting, cab			4
2	829/31207		Pad, rebound			4
3	1315/4022D		Bolt, BOLT M24x120			4
4	335/10966		Plate, locking, M24			4

Machine groups

Details

Machine group	From serial no.	To serial no.
.426		
426		

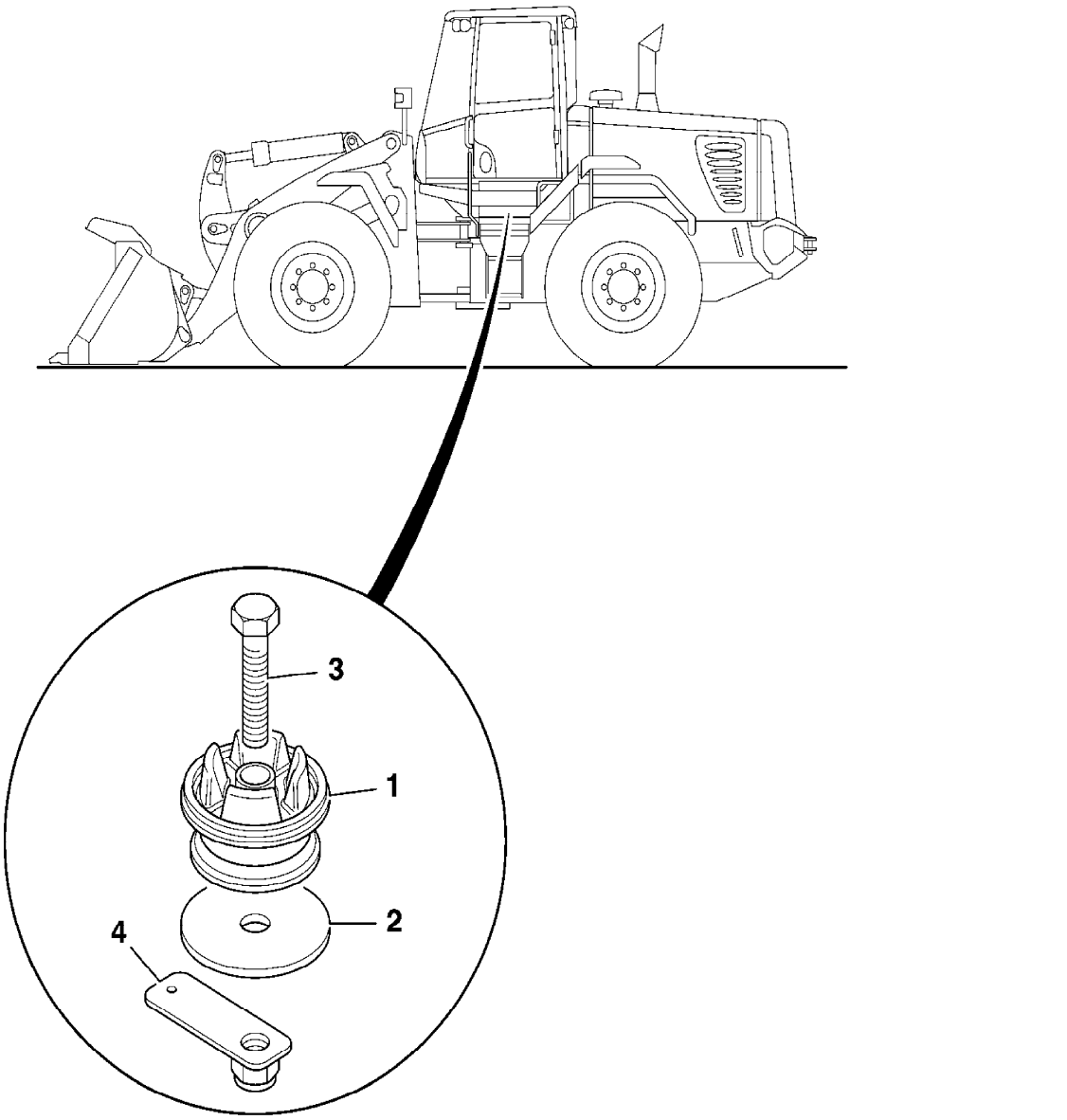

790840

9802/2740 B2-31-1 MIRROR, INTERIOR

Item	Part no.	Change No.	Description	Remarks	Usage code	Qty
1	123/04971		Mirror, interior assembly			2
2	.		'See Remark'	Not required on this machine		1
3	826/10472		Screw, M5 x 25	Qty 4 when two mirror are fitted		2

Machine groups

Details

Machine group	From serial no.	To serial no.
.426		
426		

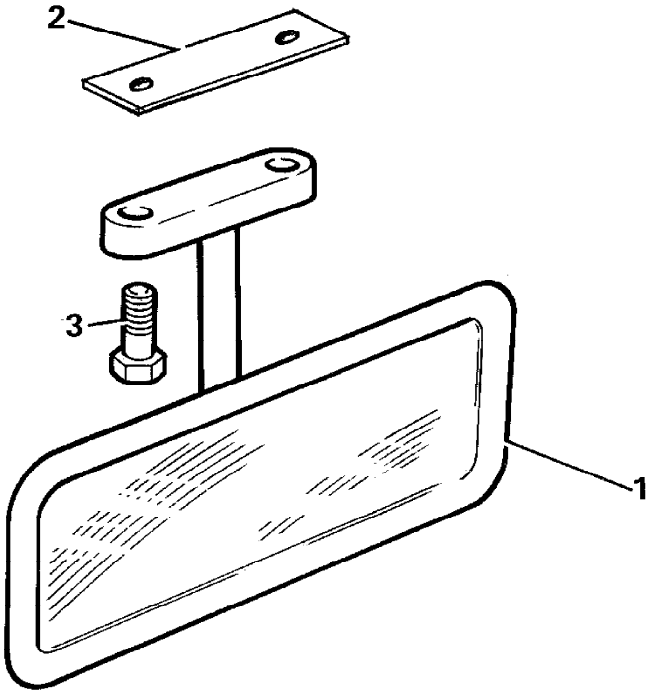

211630

9802/2740 B2-32-1 NON HEATED MIRROR, EXTERIOR

Item	Part no.	Change No.	Description	Remarks	Usage code	Qty
1	331/34508		Mirror			1
2	335/03571		Bracket, mirror			1
3	.		'See Remark'	Not fitted - see C1-24-1 for heated mirror		1
4	1315/3409D		Bolt, M10 x 35mm long			2
5	1370/0303D		Nut, M10			2
6	823/00344		Washer, nylon			8
7	2410/1103		Grommet, blind,hole dia 9.5mm, panel thkness 2-3mm			1
8	2410/1107		Grommet, blind, 17.5mm Dia.			1

Machine groups

Details

Machine group	From serial no.	To serial no.
.426		
426		

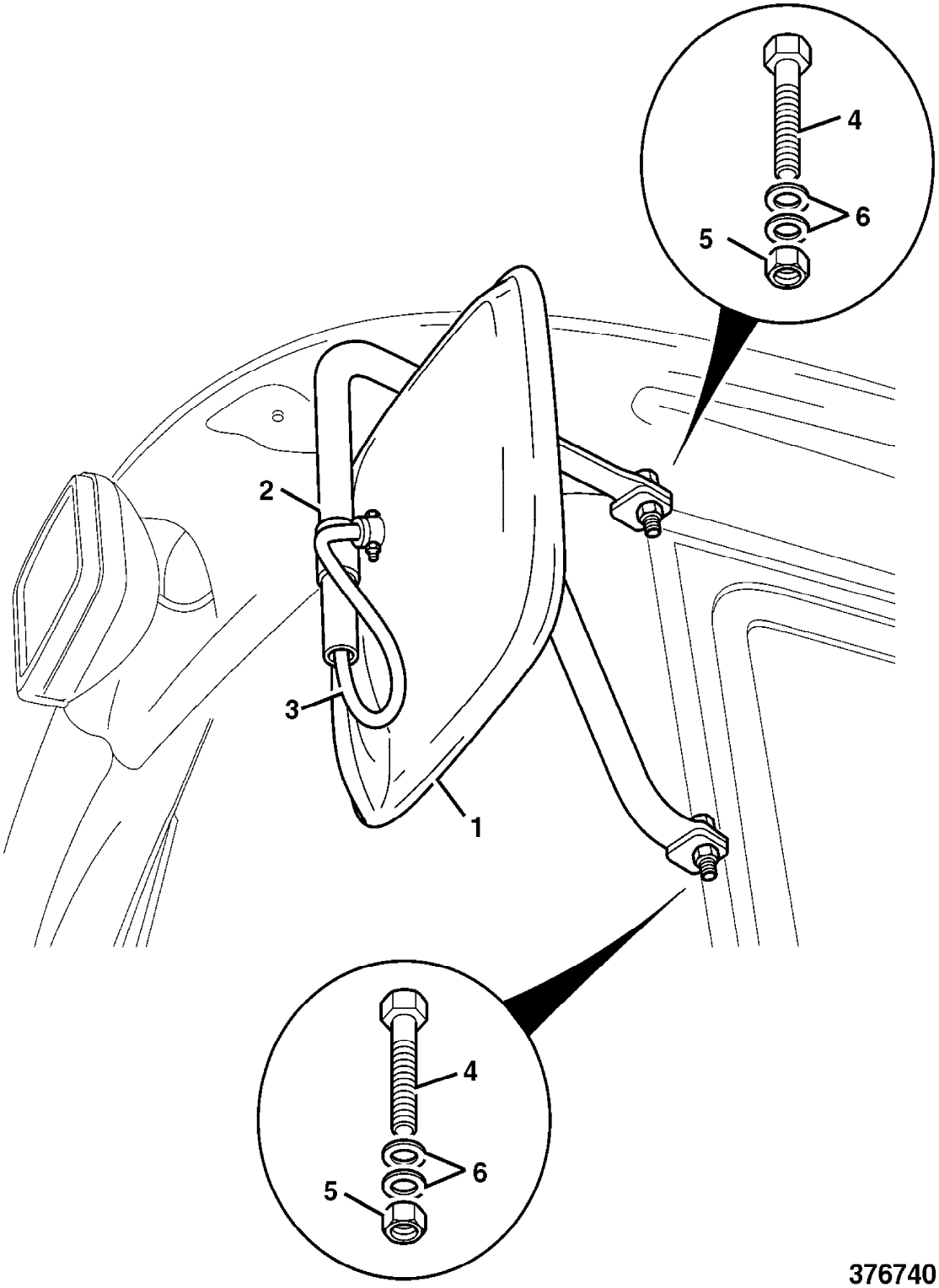

376740

9802/2740 B2-33-1 SEAT, ASSEMBLY, MECH. SUSPENSION, FABRIC

Item	Part no.	Change No.	Description	Remarks	Usage code	Qty
1	40/911024		Seat, adjustable back, mech. suspension	See B2-33-2 for components		1
2	331/42449		Base, seat			1
3	1315/0303D		Setscrew			4
4	1420/0007D		Washer, M8 plain			4
5	1315/0407D		Setscrew, M10 x 25mm long			4
6	1420/0008D		Washer, M10			4
7	331/50491		Plate, seat adapter			1
8	826/01486		Screw, M8 x 20, socket type			4
9	826/11042		Nut, Lock, M8, Black			4
10	823/00529		Washer, M8 black			8
11	122/23509		Cap			1

Machine groups

Details

Machine group	From serial no.	To serial no.
.426		
426		

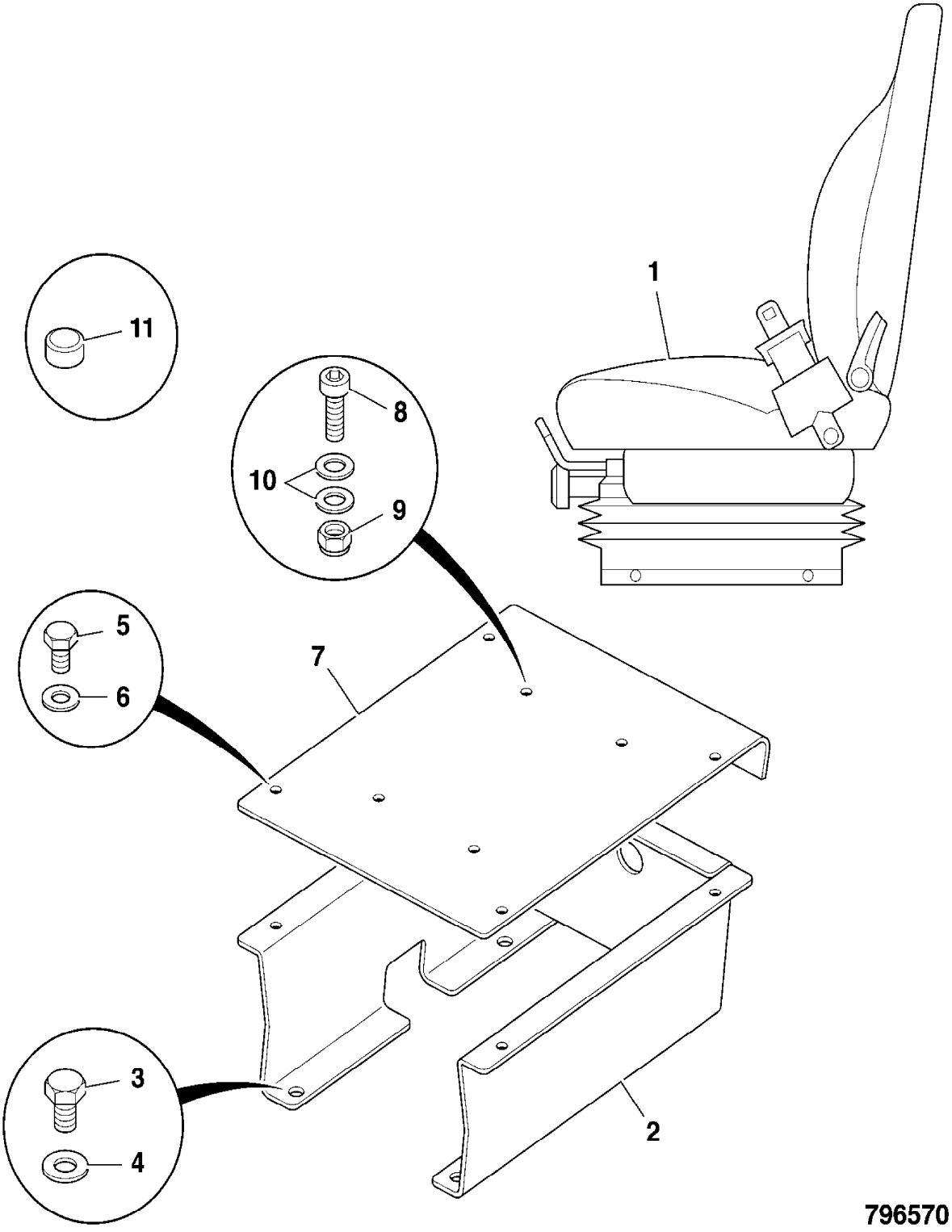
1
2
3
4
5
6
7
8
9
10
11
796570

9802/2740 B2-33-2 SEAT, COMPONENTS, MECH. SUSPENSION, FABRIC

Item	Part no.	Change No.	Description	Remarks	Usage code	Qty
0A	40/911024		Seat, adjustable back, mech. suspension			1
1	40/911080		Kit, upper assembly			1
2	40/911082		Kit, back cover			1
3	40/207703		Kit, backrest foam			1
4	40/911087		Kit, seat frame			1
5	40/911085		Kit, seat cover			1
6	40/207705		Kit, seat squab foam			1
7	40/911088		Kit, lever			1
8	40/911091		Kit, adjustment			1
9	40/911090		Kit, cross strap			1
10	40/910657		Kit, Weight Adjuster			1
11	331/36938		Kit, up / bump stop			1
13	40/910659		Kit, Damper			1
14	40/910660		Kit, Suspension			1
15	40/910661		Kit, ride indicator			1
16	40/910662		Kit, suspension cover			1
17	40/910664		Kit, Seat-belt, 2 inch			1
	40/910760		Kit, seatbelt, 3"(76mm), retractable			1
18	.		'See Remark'	Lumbar kit not fitted		1
20	1315/0303D		Setscrew			4
21	1420/0007D		Washer, M8 plain			4
22	1425/0007Z		Washer, spring			4
30	40/911093		Kit, headrest			1

Machine groups

Details

Machine group	From serial no.	To serial no.
.426		
426		

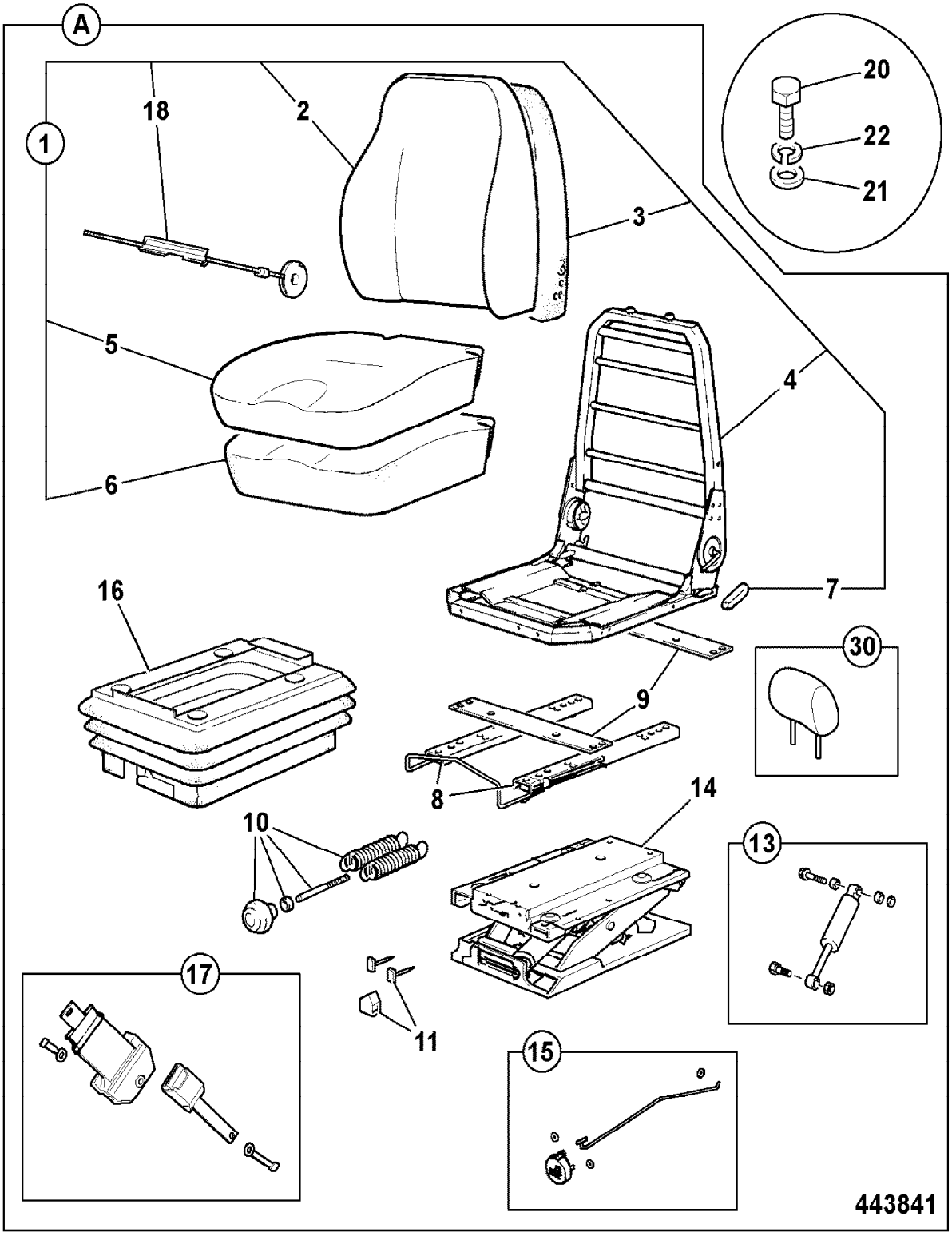
A
1
18
2
3
20
22
21
5
6
4
7
16
30
9
8
14
10
13
17
11
15
443841

9802/2740 B2-34-1 SEAT, ASSEMBLY, MECH. SUSPENSION, VINYL

Item	Part no.	Change No.	Description	Remarks	Usage code	Qty
1	40/911025		Seat, Fixed back, Mech. suspension	See B2-34-2 for components		1
2	331/42449		Base, seat			1
3	1315/0303D		Setscrew			4
4	1420/0007D		Washer, M8 plain			4
5	1315/0407D		Setscrew, M10 x 25mm long			4
6	1420/0008D		Washer, M10			4
7	331/50491		Plate, seat adapter			1
8	826/01486		Screw, M8 x 20, socket type			4
9	826/11042		Nut, Lock, M8, Black			4
10	823/00529		Washer, M8 black			8
11	122/23509		Cap			4

Machine groups

Details

Machine group	From serial no.	To serial no.
.426		
426		

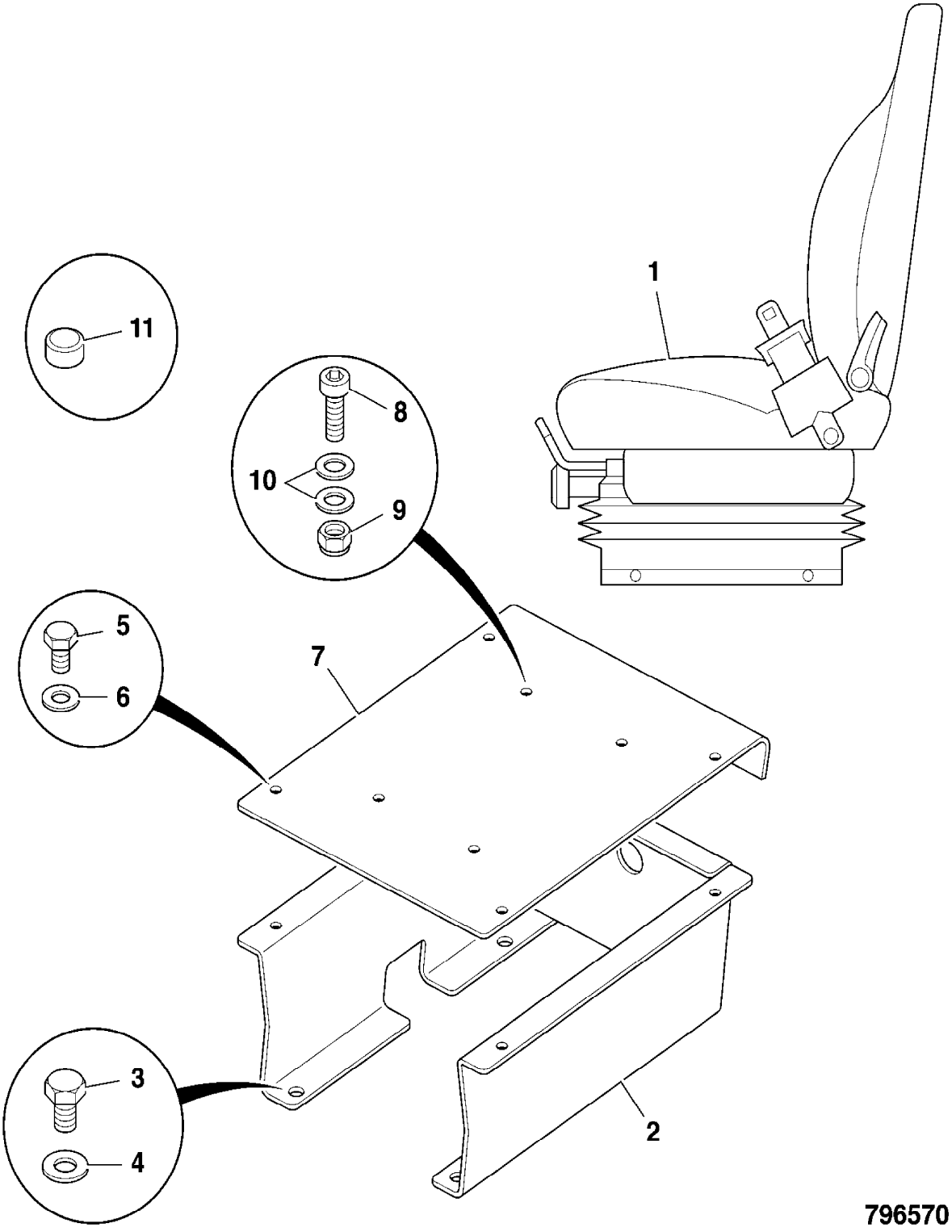
1
2
3
4
5
6
7
8
9
10
11
796570

9802/2740 B2-34-2 SEAT, COMPONENTS, MECH SUSPENSION, VINYL

Illustration Machines Top of catalogue

Item	Part no.	Change No.	Description	Remarks	Usage code	Qty
0A	40/911025		Seat, Fixed back, Mech. suspension			1
1	40/911079		:Kit, upper assembly			1
2	40/911081		:Kit, back cover			1
3	40/207703		:Kit, backrest foam			1
4	40/911087		:Kit, seat frame			1
5	40/911084		:Kit, seat cover			1
6	40/911086		:Kit, seat foam			1
7	40/911088		:Kit, lever			1
8	40/911091		:Kit, adjustment			1
9	40/911090		:Kit, cross strap			1
10	40/910657		:Kit, Weight Adjuster			1
11	331/36938		:Kit, up / bump stop			1
13	40/910659		:Kit, Damper			1
14	40/910660		:Kit, Suspension			1
15	40/910661		:Kit, ride indicator			1
16	40/910662		:Kit, suspension cover			1
17	40/910664		:Kit, Seat-belt, 2 inch			1
	40/910760		Kit, seatbelt, 3"(76mm), retractable			1
18	.		:'See Remark'	Lumbar kit not fitted		1
20	1315/0303D		Setscrew			4
21	1420/0007D		Washer, M8 plain			4
22	1425/0007Z		Washer, spring			4
30	40/911092		:Kit, headrest			1

Machine groups

Details

Machine group	From serial no.	To serial no.
.426		
426		

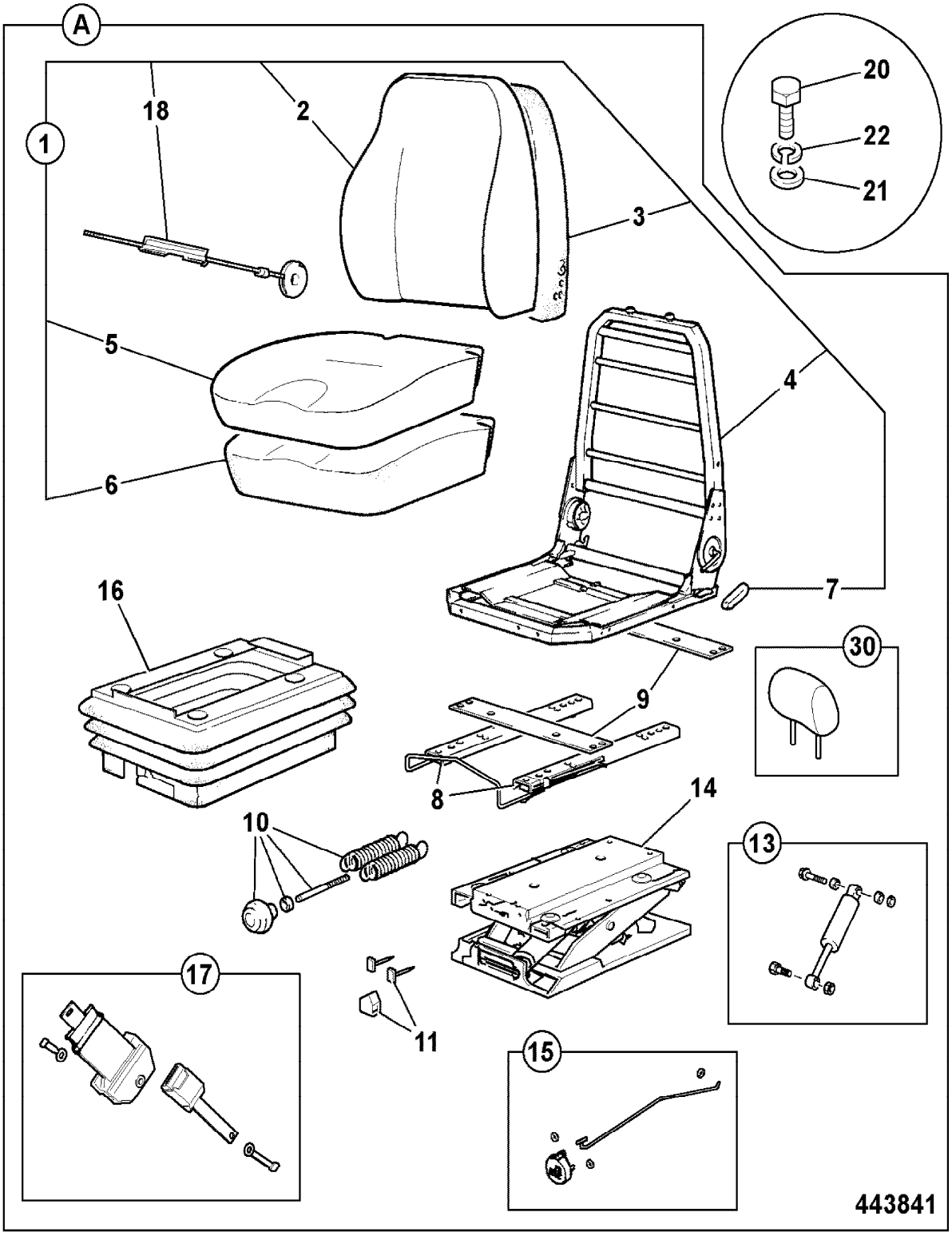
A
1
18
2
3
20
22
21
5
6
4
7
16
30
9
8
14
10
13
17
11
15
443841

9802/2740 B2-35-1 SOUNDPROOFING, CAB

Item	Part no.	Change No.	Description	Remarks	Usage code	Qty
2	331/51747		Panel, soundproofing, RH console			1
3	331/51754		Panel, soundproofing, RH console			1
4	331/51743		Panel, soundproofing, floor,RH console			1
5	331/51703		Panel, soundproofing, roof			2
6	331/51758		Panel, soundproofing, rear bulkhead			1
7	331/51814		Panel, soundproofing, rear bulkhead mldg.			1
8	331/51816		Panel, soundproofing, rear bulkhead RH			1
9	331/51815		Panel, soundproofing, rear bulkhead LH			1
10	331/51813		Panel, soundproofing, rear bulkhead mdlg.			1
11	331/51759		Panel, soundproofing, rear floor			1
12	331/51760		Panel, soundproofing, under cab floor,rear			1
13	331/51763		Panel, soundproofing, under cab floor			1
14	331/51773		Panel, soundproofing, under cab floor			1
15	331/51785		Panel, soundproofing, under cab floor			1
16	331/51781		Panel, soundproofing, under cab floor			1
17	826/01308		Retainer, insulation			13
18	331/52836		Panel, soundproofing, floor			1
19	331/52837		Panel, soundproofing, floor			1
20	331/52838		Panel, soundproofing, floor			1
21	331/52839		Panel, soundproofing, floor			1

Machine groups

Details

Machine group	From serial no.	To serial no.
.426		
426		

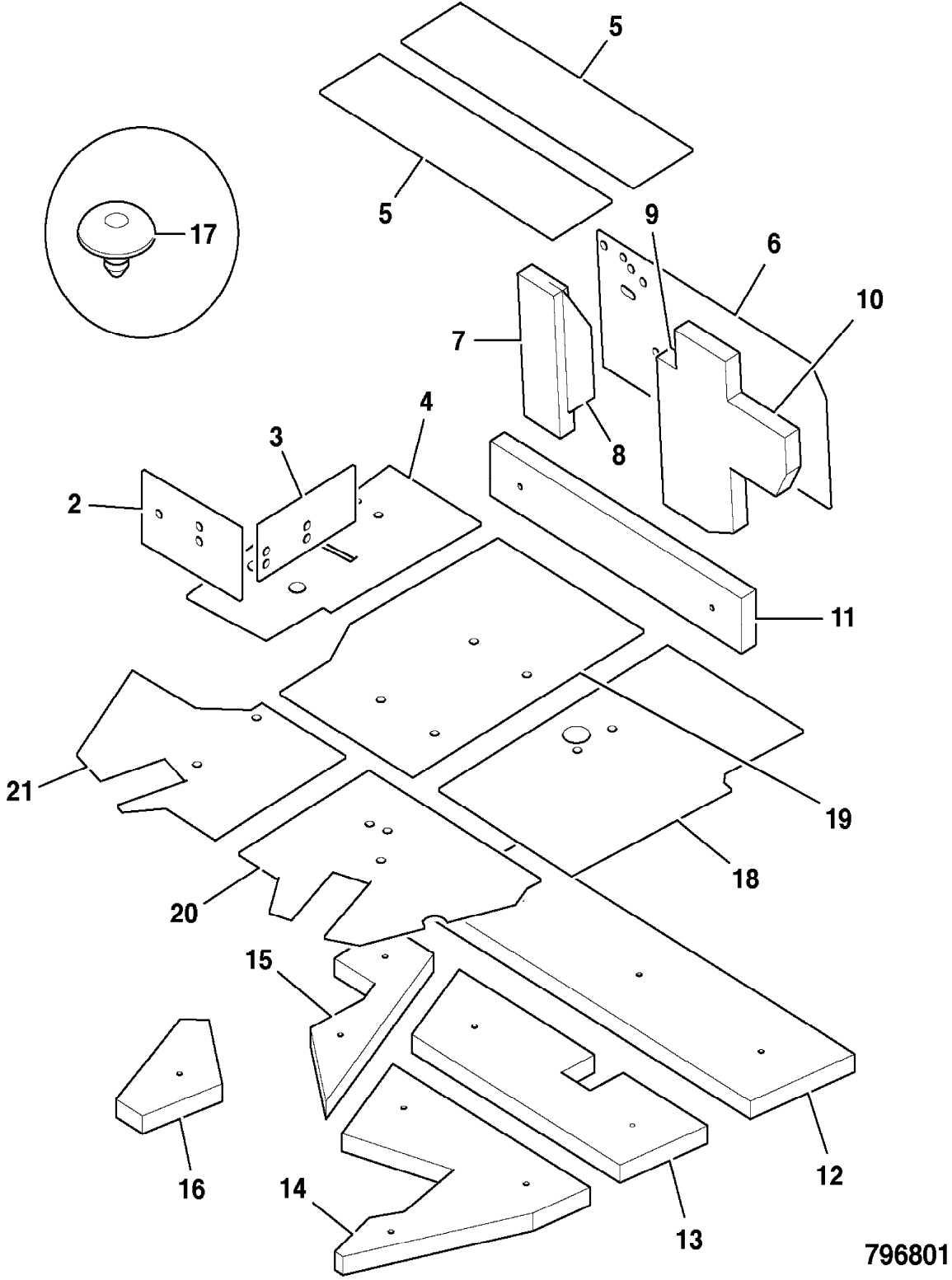
5
5
17
9
6
10
7
8
4
3
2
11
21
19
18
20
15
16
14
13
12
796801

9802/2740 B2-36-1 GLASS HAMMER

Item	Part no.	Change No.	Description	Remarks	Usage code	Qty
1	265/00678		Tool, emergency, glass breaker			1
2	265/00679		Holder, breaker tool			1
3	1430/0202		Screw, self tapping			2
4	152/17502		Ring, key 20mm diameter, approx.			1

Machine groups

Details

Machine group	From serial no.	To serial no.
.426		
426		

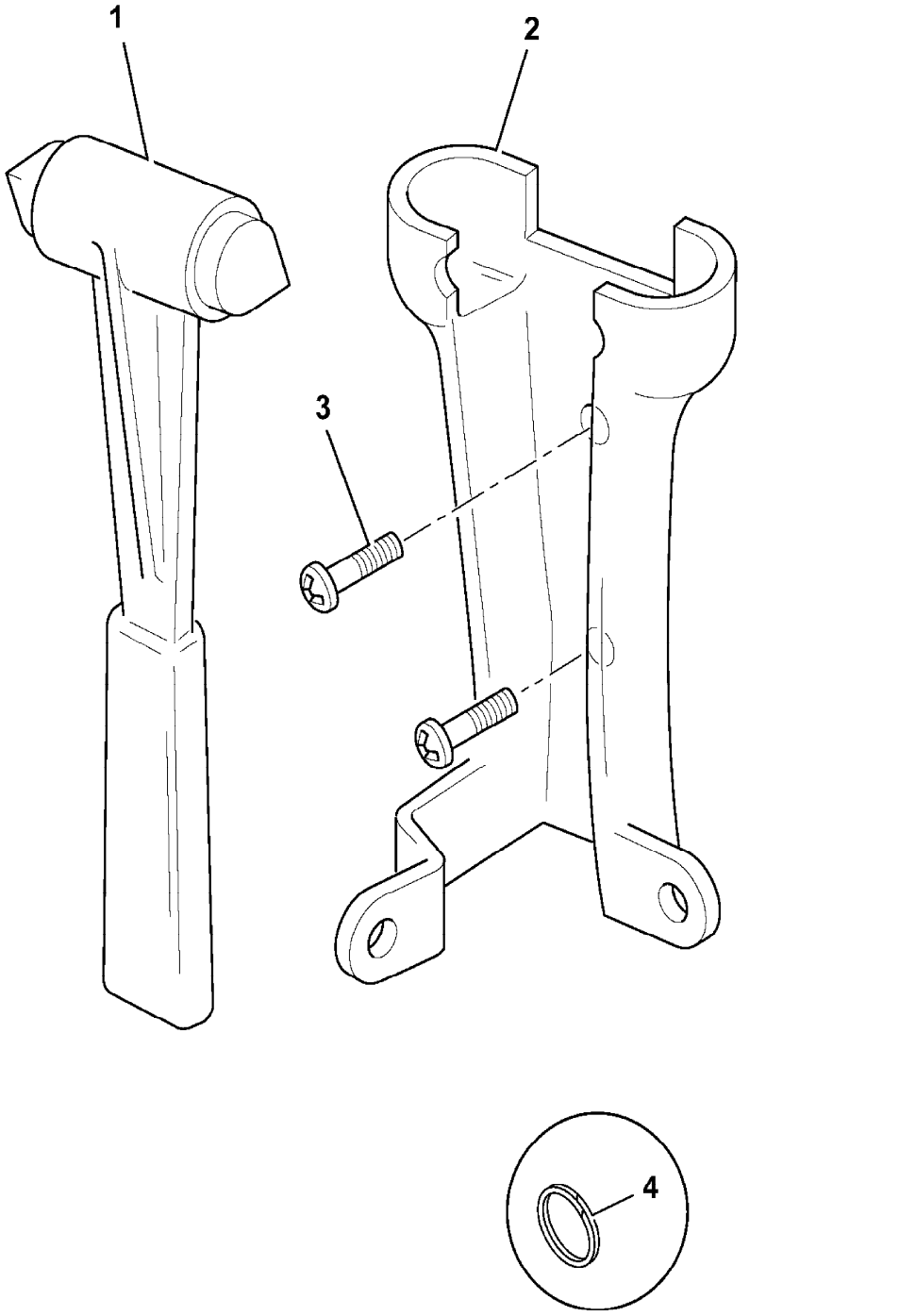

405131

9802/2740 B2-37-1 SEAT ARM REST, SALES SPECIAL

Item	Part no.	Change No.	Description	Remarks	Usage code	Qty
1	40/910970		Rest, arm	Left hand side only. Sales special 7884		1
2	N.S.P.		None serviced part			0
3	N.S.P.		None serviced part			0

Machine groups

Details

Machine group	From serial no.	To serial no.
.426		
426		

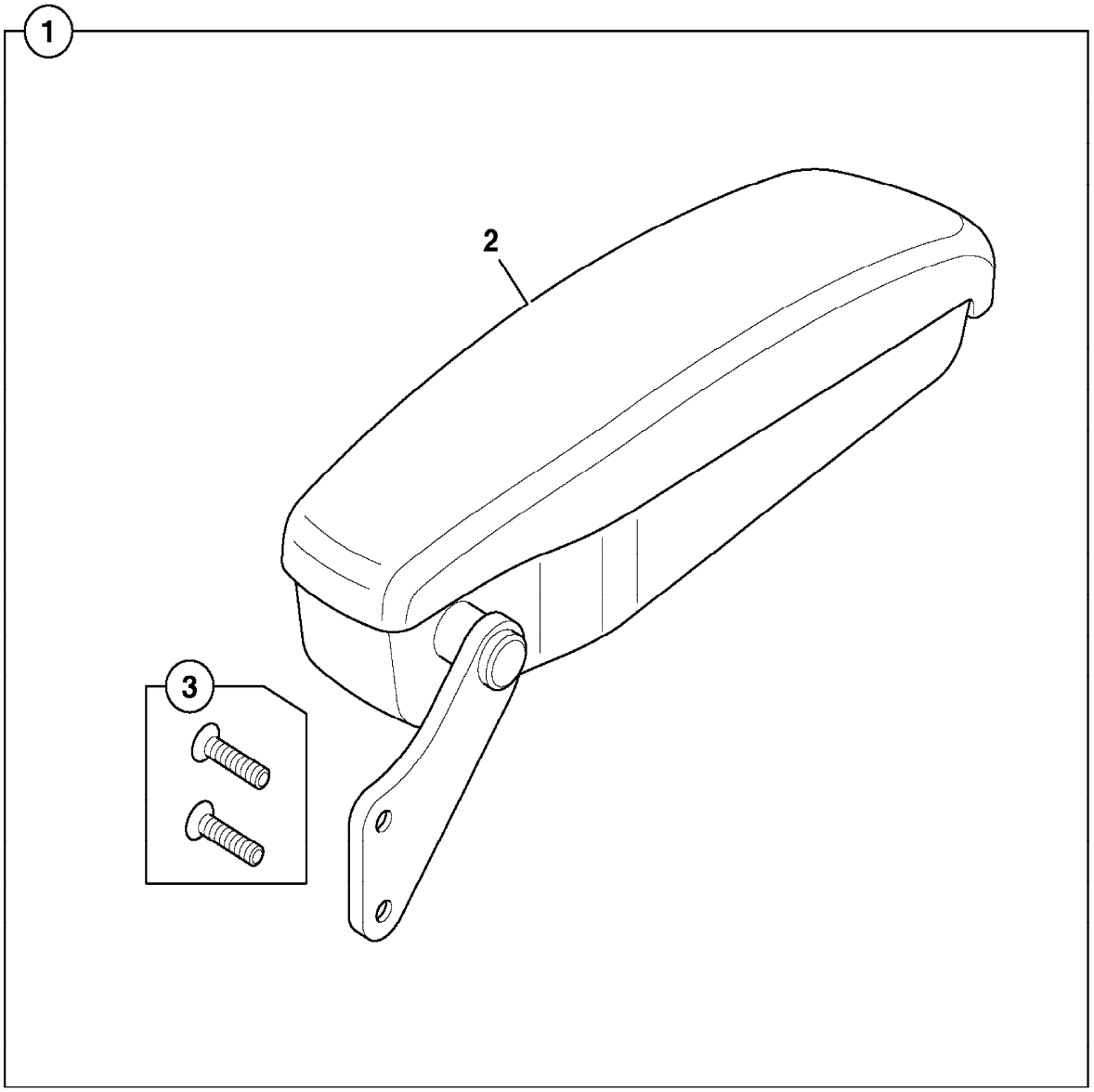

796970

9802/2740 B2-4-1 INTERIOR MOULDINGS

Item	Part no.	Change No.	Description	Remarks	Usage code	Qty
1	331/44761		Moulding, steer console			1
	331/51033		Moulding, steer console, canopy cab	Canopy cab		1
2	331/44762		Moulding, instrument panel			1
3	346/00200		Moulding, upper steer column			1
4	346/00201		Moulding, upper steer column			1
5	331/32927		Cover, Steer Column Lower			1
6	331/48879		Plate, moulding mounting			1
7	331/44770		Moulding, LH front dash			1
8	331/44769		Moulding, RH front dash			1
9	331/44763		Moulding, side console			1
	331/51032		Moulding, side console, canopy cab	Canopy cab		1
10	331/44764		Moulding, rear bulkhead			1
	331/51031		Moulding, rear bulkhead, canopy cab	Canopy cab		1
11	346/00095		Cover, fuse/relay			1
12	331/45845		Plate, access, RH console			1
13	826/01559		Screw, M6 x 16mm long, button head socket			19
14	331/42853		Lining, roof, twin roller blind			1
	331/49140		Lining, roof, Sun visor			1
	331/49141		Lining, front roller blind			1
14A	331/49362		Gasket, Foam			2
14B	813/10297		Gasket, plenum			1
15	826/00952		Fastener, drive			14
16	826/01493		Screw, countersunk, M6x25			4
17	826/01522		Screw			4
18	331/48466		Bracket, retainer, fuse/relay cover			1
19	826/10996		Screw			2
20	826/01758		Screw, Thumb 30mm long			1
20A	823/00598		Washer, Retaining			1
21	331/32481		Ashtray			1
22	826/11035		Nut, M6 Caged Nut	To fit item 9		3
23	1315/0203D		Setscrew			2
24	1420/0006D		Washer, M6 plain			2
25	826/01560		Screw, button head, M6x25			4
26	826/01406		Screw, socket flange head, M5 x 20			4
31	331/31886		Bag, Luggage Net			1

32	826/11417		Screw, countersunk, M4 x 15			4
33	335/08275		Bracket, mounting, steer column console	Mounting for item 1		1
34	1315/0305D		Screw, set M8x20			2
35	1420/0007D		Washer, M8 plain			2
36	331/26974		Vent, air(76.5mm dia.hole)	Rear bulkhead and side console mouldings		3
37	30/926491		Vent, air	Rear bulkhead only		1
38	141/00495		Vent, elbow			3
39	649/05411		Hose, convoluted	Rear bulkhead only		1
40	649/05414		Hose, air	Rear bulkhead and side console		3
41	2201/0010		Clip, jubilee	Rear bulkhead and side console		7
42	926/20300		Seal, door			A/R

Machine groups

Details

Machine group	From serial no.	To serial no.
.426		
426		

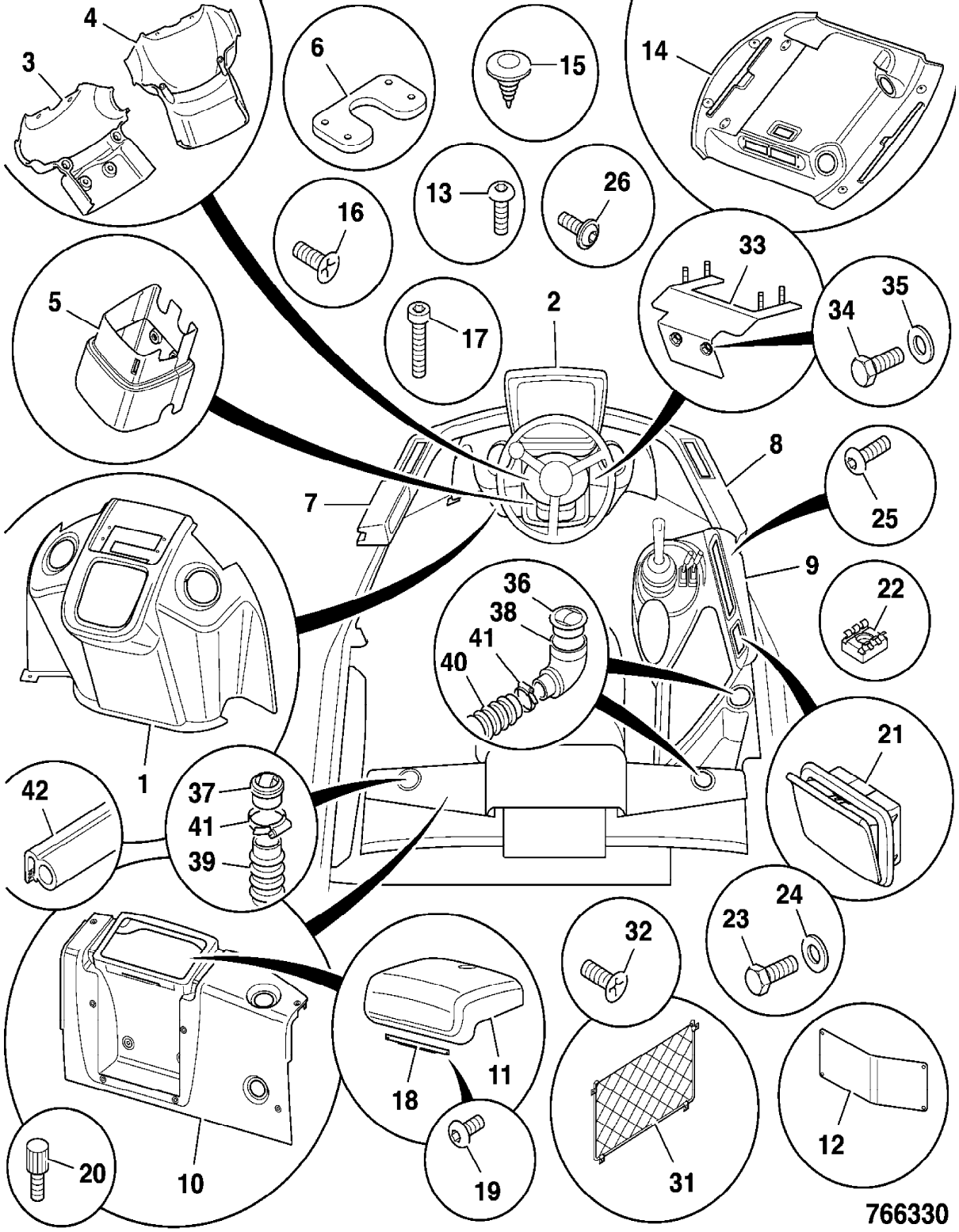
4
3
6
15
14
13
26
16
33
35
34
5
17
2
8
25
7
9
36
38
41
40
22
1
21
42
37
41
39
24
23
32
11
18
12
20
10
19
31
766330

9802/2740 B2-5-1 CAB GLAZING, TINTED, SLIDING WINDOW

Item	Part no.	Change No.	Description	Remarks	Usage code	Qty
0A	827/80319		Glass, side window			1
0B	827/80368		Glass, door			1
0C	827/80335		Glass, sliding			1
1	827/80317		Windscreen, front, tinted			1
2	827/80343		Glass, lower, right side, front			1
	331/50863		Panel, lower. right side, front	Wastemaster		1
3	827/80344		Glass, lower, left side, front			1
	331/50862		Panel, lower, left side, front	Wastemaster		1
4	827/80345		Glass, lower, left side			1
	331/50865		Panel, lower	Wastemaster		1
5	827/80322		Glass, upper, left side			1
6	827/80323		Glass, upper, right side			1
7	827/80346		Glass, lower, right side			1
	331/50865		Panel, lower	Wastemaster		1
8	827/80316		Glass, rear			1
12	926/15500		Spacer, block			46
13	331/25735		Pillar, window			4
14	826/01592		Fastener, scrivet, button head fir tree			2

Machine groups

Details

Machine group	From serial no.	To serial no.
.426		
426		

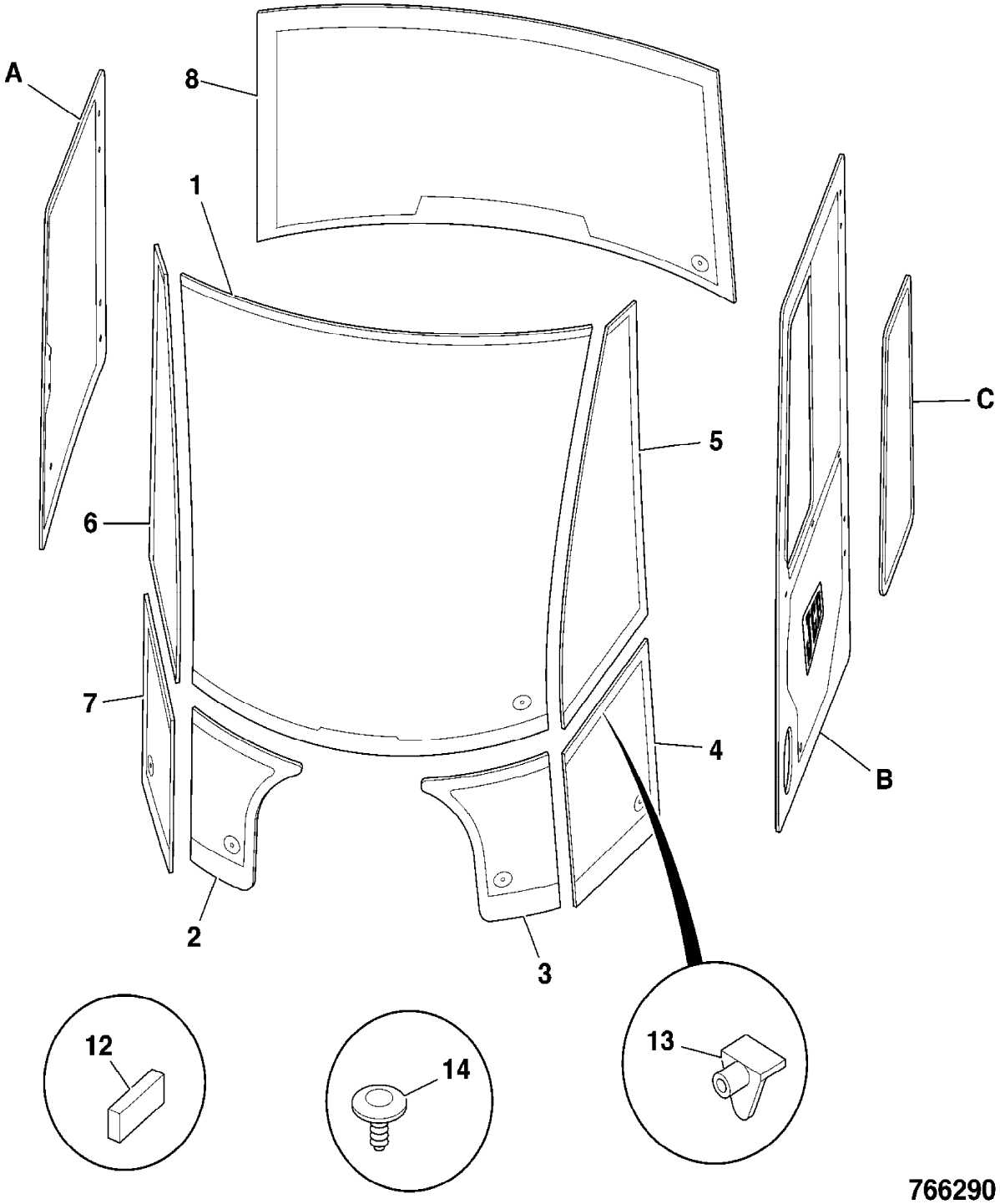
A
8
1
C
5
6
7
4
B
2
3
12
14
13
766290

9802/2740 B2-6-1 DIRECT GLAZING, REPLACEMENT MATERIAL

Illustration Machines Top of catalogue

Item	Part no.	Change No.	Description	Remarks	Usage code	Qty
1	993/55700		Adhesive, kit-JCB ultrafast, glazing			1
2	4103/2109		:Adhesive, JCB ultrafast, 310ml cartridge	See Note 1		A/R
3	4104/1206		:Cleaner, active wiper 205, 30ml			A/R
	4104/1203		:Cleaner, primer SIKA 205, 250ml			A/R
4	4201/4906		:Paint, black primer 206J, 30ml	Black ceramic ink band around glass border.		A/R
	4201/4911		:Paint, black primer 206J, 200gm			A/R
5	4102/2309		Sealant, black acrylic 221, 310ml cartridge			A/R
6	4102/0933		Sealant, DP2205 clear, silicone			A/R
7	926/15500		Spacer, block			A/R
8	4104/1310		Cleaner, hand, polyurethane, 454gm/1lb			A/R

Machine groups

Details

Machine group	From serial no.	To serial no.
.426		
426		

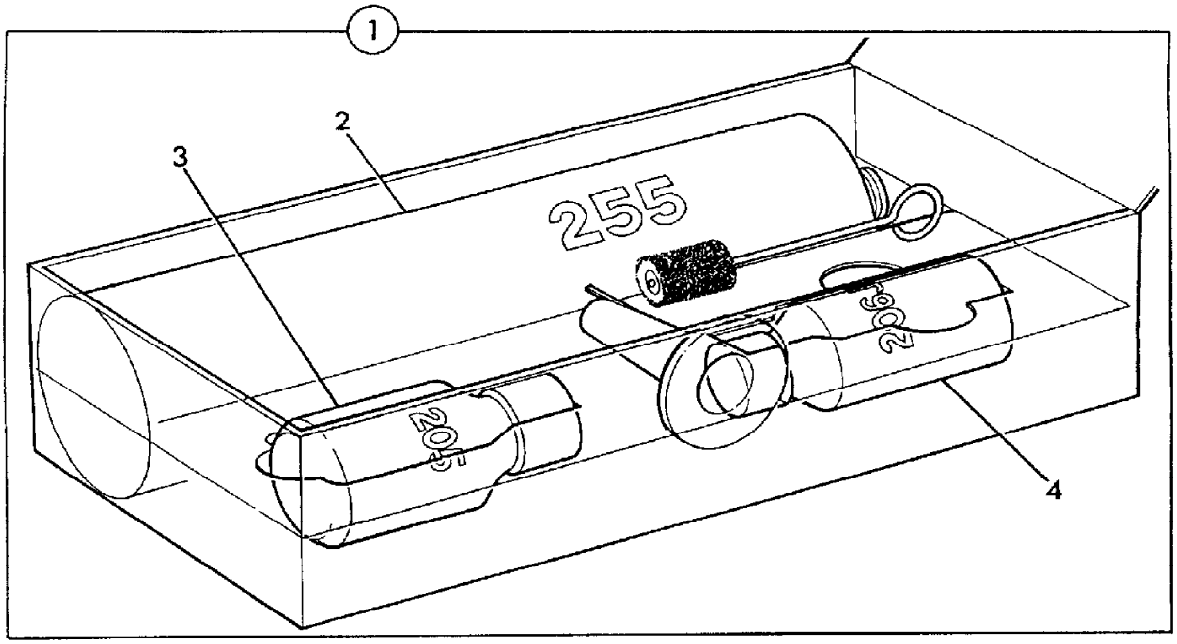
1
2
3
255
205
4

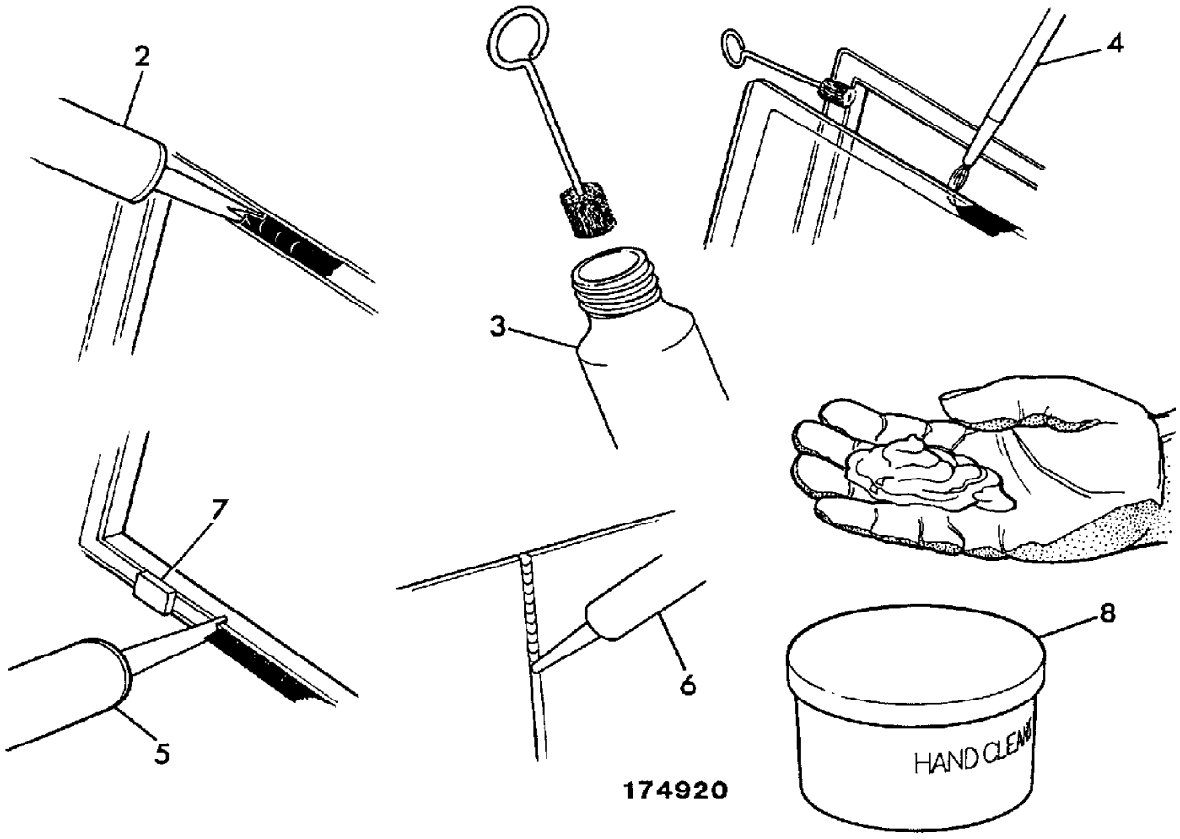
2
3
4
7
5
6
8
HAND CLEAN
174920

9802/2740 B2-7-1 VISOR, SUN

Item	Part no.	Change No.	Description	Remarks	Usage code	Qty
1	331/39598		Blind, sun			1
2	1315/0207D		Screw, M6 x 25mm			2
3	1420/0006D		Washer, M6 plain			2
4	.		'See Remark'	Not fitted		3
5	826/10879		Nut, M6			2

Machine groups

Details

Machine group	From serial no.	To serial no.
.426		
426		

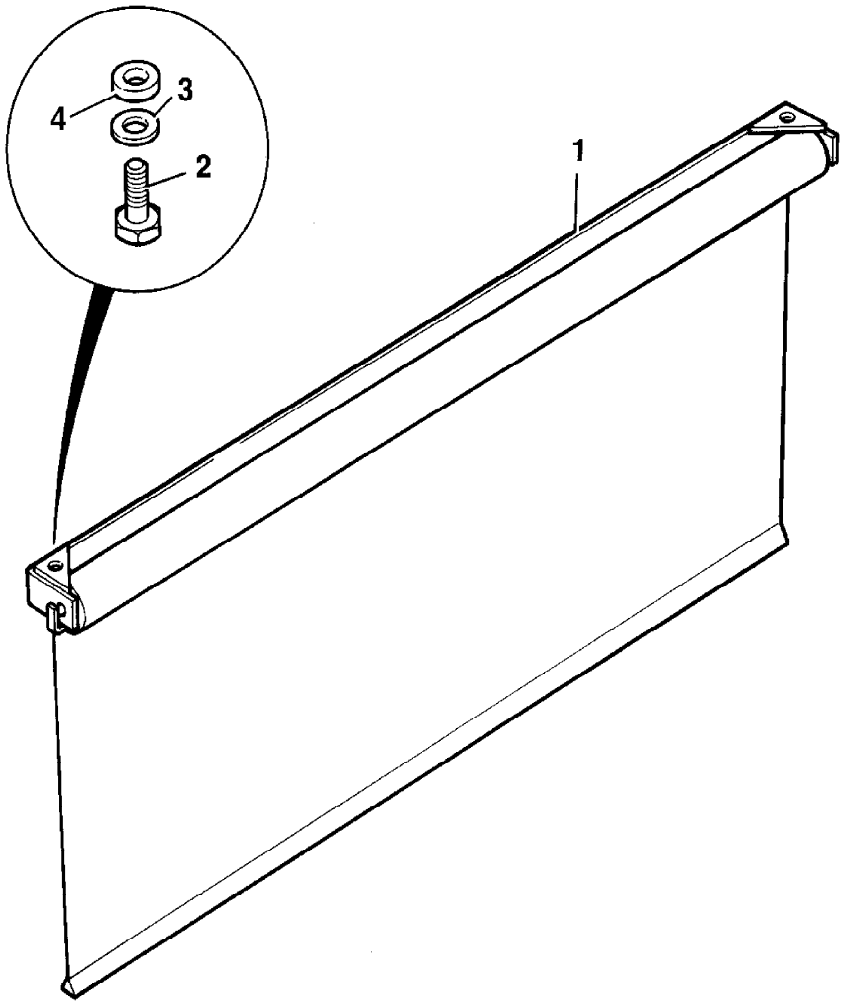

202091

9802/2740 B2-8-1 VISOR, SUN

Item	Part no.	Change No.	Description	Remarks	Usage code	Qty
1	331/24572		Visor, sun			1
2	331/49615		Bracket, sun visor			1
3	826/10973		Nut, Bollhof M5			3
4	826/10472		Screw, M5 x 25			3
5	1315/0203D		Setscrew			2
6	1420/0006D		Washer, M6 plain			2
7	826/10879		Nut, M6			2

Machine groups

Details

Machine group	From serial no.	To serial no.
.426		
426		

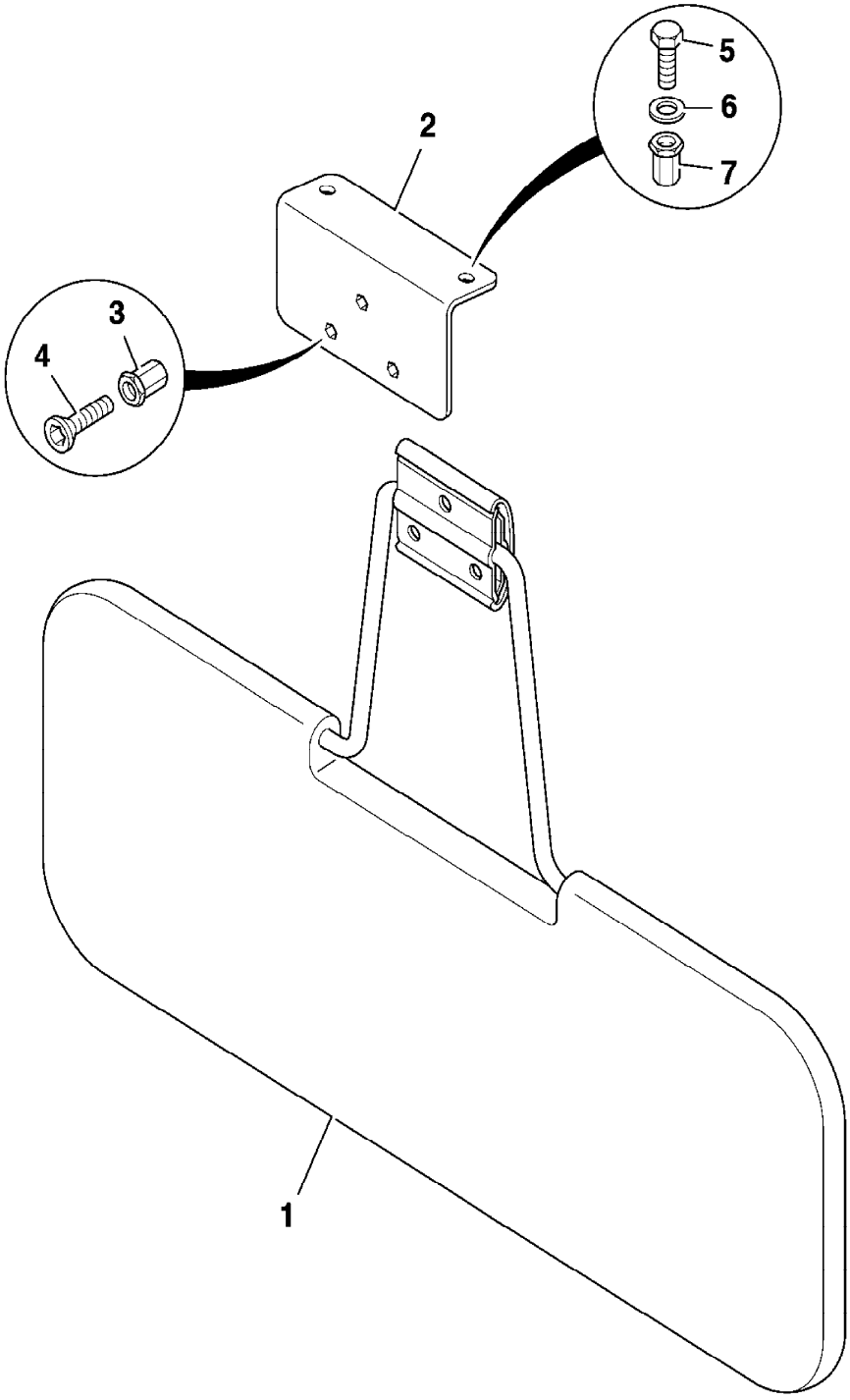

790730

9802/2740 B2-9-1 CANOPY

Item	Part no.	Change No.	Description	Remarks	Usage code	Qty
1	269/40797		Canopy			1
2	826/10879		:Nut, M6			21
3	826/10977		:Nut, rivet,M8 Hex, low profile			17
4	826/10973		:Nut, Bollhof M5			24
5	826/01181		:Nut, rivet			8
6	826/10346		:Nut, rivet			4
7	926/09800		Seal, strip			A/R
8	926/20300		Seal, door			A/R

Machine groups

Details

Machine group	From serial no.	To serial no.
.426		
426		

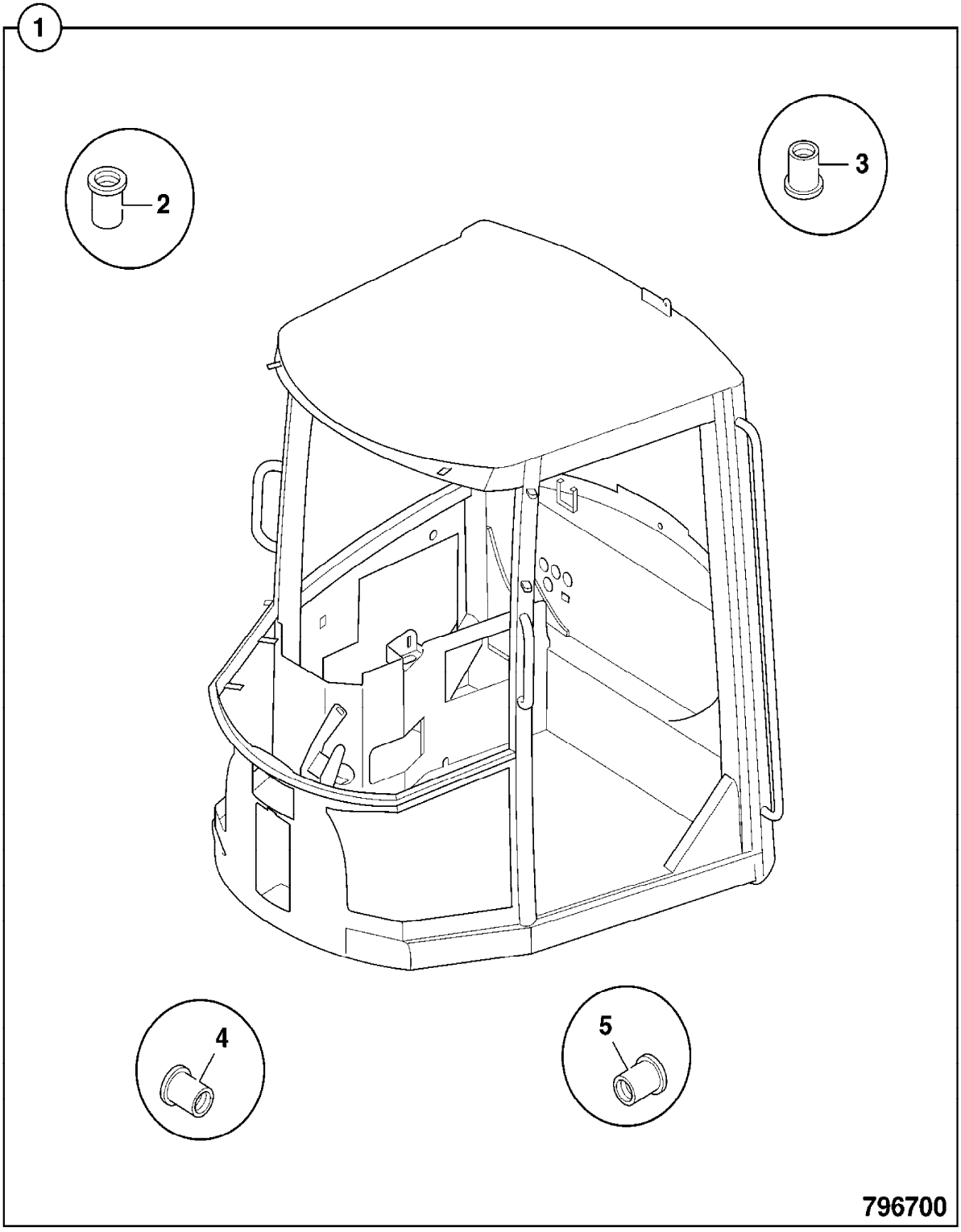
1
2
3
4
5
796700

9802/2740 B3-1-1 ARMS, LOADER, & LINKAGE, HT

Item	Part no.	Change No.	Description	Remarks	Usage code	Qty
1	335/01071		Arm, loader			1
	335/09014	Superseded	Arm, loader, hi-lift			1
	335/90380		Arm, loader, hi-lift			1
2	265/01508		Link, chassis			2
	331/49147	Superseded	Link, chassis, hi-lift			2
	331/61240		Link, chassis, hi-lift			2
3	331/16536		Plate, inter sideplate			4
4	331/28355		Lever, shovel ram, left side			1
	331/28357		Lever, shovel ram, left, non parallel	Non parallel lift		1
5	331/28356		Lever, shovel ram, right side			1
	331/28358		Lever, shovel ram, right, non parallel	Non parallel lift		1
6	335/00976		Link, bucket			2
	331/21184		Link, shovel, standard	Non parallel link		2
7	561/60026		Ram, lift		P/Ex	2
8	559/60046		Ram, shovel			2
9	1420/0011D		Washer, M16			6
10	.		'See Remark'	Shovel reset		1
11	.		'See Remark'	Lift arm reset		1
14	809/00113		Bearing			4
15	809/00115		Bearing, liner, 65x62			8
17	819/00119		Shim, 0.9 mm thick			4
18	911/32800		Pin, pivot, assembly			4
19	911/27400		Pin, pivot, 65mm x 172mm Lg.			4
20	911/27600		Pin, pivot, 65mm x 212mm Lg.			2
21	911/40070		Pin, pivot, 90 x 202, M20 securing bolts			2
22	911/28000		Pin, pivot, 75mm x 255mm Lg.			2
23	811/50572		Pin, pivot, 64.9mm x 139 lg.			4
24	911/27700		Pin, pivot, 65mm x 255mm Lg.			2
25	813/00415		Seal, pivot pin			8
26	813/00414		Seal, 65mm internal dia.			32
27	830/00599		Spacer			12
28	830/00646		Spacer, ram lever			2
29	830/00600		Spacer, keep plate			4
30	265/02782		Plate, keep			4

31	819/00103		Shim, 1mm thick, 75mm I.D			12
32	819/00094		Shim, 65 i/d, 1mm thick			48
34	1315/3731D		Bolt			2
35	1315/3716D		Bolt			4
36	1315/0708D		Setscrew			10
38	1412/0007D		Washer, large			20
40	1450/0001		Nipple, grease, straight, 1/8 BSP			24
42	1370/0603D		Nut, M16			4
43	1370/0403D		Nut, M12			4
44	816/20034		Adapter, 1/8" B.S.P M/F			4
46	1315/0710D		Setscrew			4
47	809/00118		Bearing			4
48	911/27900		Pin, pivot, 75mm x 202mm Lg.			2
49	911/40071		Pin, pivot, 90 x 247, M20 securing bolts			2
50	813/00416		Seal, 90mm internal dia			8
51	819/00104		Shim, 1mm x 90mm i/d			20
52	1315/3524D		Bolt			4
53	1420/0009D		Washer, M12			8
55	1420/0012D		Washer, plain			4
56	1315/0810D		Setscrew			4
57	823/10393		Washer, large			4
58	829/30751		Spacer			4
59	4101/0251		Sealant, Threadlock, 50ml			A/R

Machine groups

Details

Machine group	From serial no.	To serial no.
.426		
426		

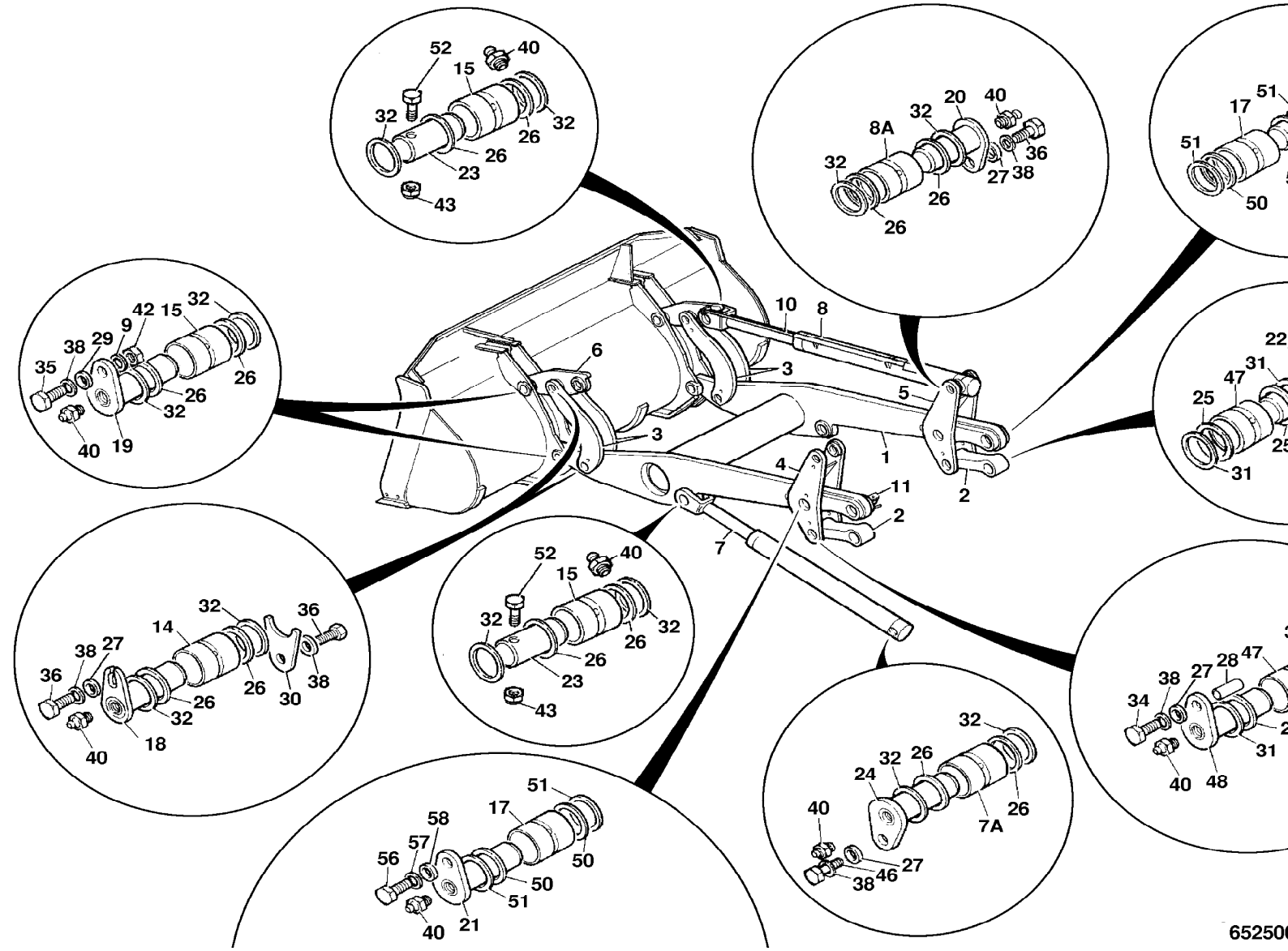
52
40
15
32
32
26
26
23
43
8A
32
20
40
36
38
27
26
26
51
17
50
42
15
32
9
29
38
35
26
32
40
19
10
8
6
3
5
3
1
4
11
2
2
7
52
40
15
32
32
26
26
23
43
32
14
36
38
27
36
26
26
30
38
32
18
40
51
17
58
57
56
50
50
51
40
21
32
32
26
24
26
40
7A
27
38
46
22
31
47
25
25
31
34
38
27
28
47
40
48
31

652500

9802/2740 B3-2-1 ARMS, LOADER, & LINKAGE, Z BAR

Item	Part no.	Change No.	Description	Remarks	Usage code	Qty
1	335/01072		Arm, loader			1
2	265/01019		Spacer			2
3	268/20050		Lever, Z Bar			1
6	331/45003		Link, Z bar			1
7	.		'See Remark'	See index E4		2
8	.		'See Remark'	See index E4		1
10	.		'See Remark'	See index D1		1
11	.		'See Remark'	See index D1		1
14	809/00140		Bearing, liner, 75x85			2
14A	809/00116		Bearing, liner, 65x85	Part of ram assembly		2
15	809/00115		Bearing, liner, 65x62			4
17	809/00119		Bearing, liner, 90x117 lg.			2
18	911/28700		Pin, pivot, 75x187			4
19	911/27400		Pin, pivot, 65mm x 172mm Lg.			2
21	911/40072		Pin, pivot, 90mm x 262mm			1
23	811/50572		Pin, pivot, 64.9mm x 139 lg.			2
24	911/27700		Pin, pivot, 65mm x 255mm Lg.			2
25	813/00415		Seal, pivot pin			6
26	813/00414		Seal, 65mm internal dia.			12
27	830/00599		Spacer			8
32	819/00094		Shim, 65 i/d, 1mm thick			18
36	1315/0708D		Setscrew			6
38	1412/0007D		Washer, large			8
40	1450/0001		Nipple, grease, straight, 1/8 BSP			12
43	1370/0403Z		Nut, M12			2
44	816/20034		Adapter, 1/8" B.S.P M/F			2
46	1315/0710Z		Bolt, M16 x 40mm			2
49	911/40071		Pin, pivot, 90 x 247, M20 securing bolts			2
50	813/00416		Seal, 90mm internal dia			6
51	819/00104		Shim, 1mm x 90mm i/d			6
52	1315/3524Z		Bolt, M12 x 140 Lg.			2
53	1420/0009Z		Washer, Plain M12			4
54	809/00152		Bearing, liner, 90x160			1
56	819/00114		Shim, 90mm internal dia, 1mm thick			5
57	819/00103		Shim, 1mm thick, 75mm I.D			12

65	1315/0810D		Setscrew			3
66	823/10393		Washer, large			3
67	829/30751		Spacer			3
68	4101/0251		Sealant, Threadlock, 50ml			A/R

Machine groups

Details

Machine group	From serial no.	To serial no.
.426		
426		

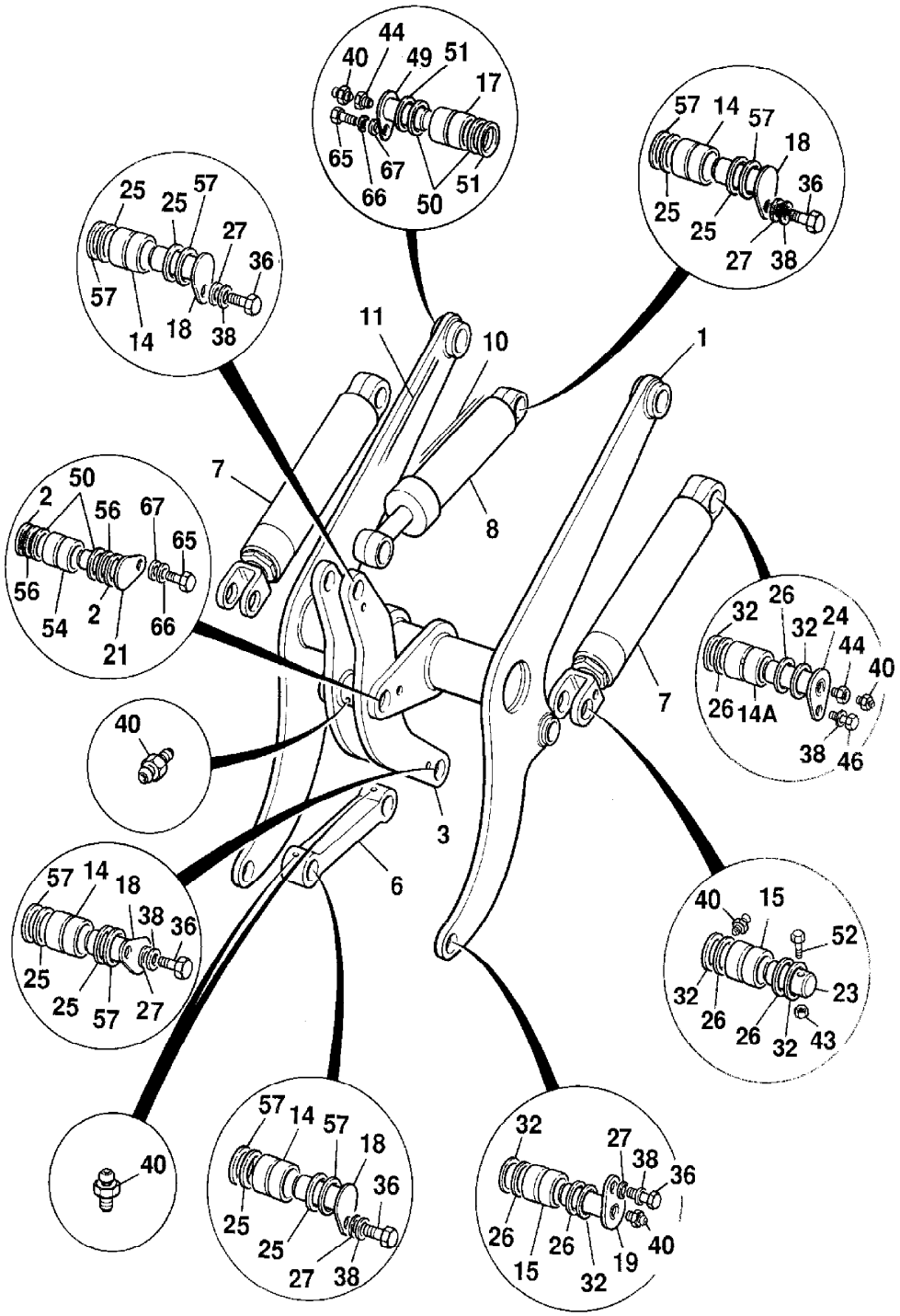
44
40
49
51
17
65
67
66
50
51
57
14
57
18
36
25
25
27
38
25
25
57
27
36
57
14
18
38
11
10
1
7
8
2
50
56
67
65
56
54
2
66
21
7
32
26
32
24
44
40
26
14A
38
46
40
3
6
57
14
18
38
36
25
25
57
27
40
15
52
32
26
23
26
32
43
57
14
57
18
36
25
25
27
38
32
27
38
36
26
26
40
15
32
19

377250

9802/2740 B3-3-1 ARMS, LOADER, & LINKAGE, HT, HIGH LIFT, SALES SPECIAL

Item	Part no.	Change No.	Description	Remarks	Usage code	Qty
0A	331/28359		Lever, shovel ram, left side	Sales special 7672		1
0B	331/28360		Lever, shovel ram, right side	436 SHL		1
0C	335/00977		Link, bucket ram	436 SHL		1
0D	331/16538		Link, chassis	436 SHL		2
1	335/00975		Arm, loader, black	436 SHL		1
2	565/60026		Ram, lift		P/Ex	2
3	561/60067		Ram, shovel, 110x65 black			2
4	.		'See Remark'	Shovel reset		1
5	.		'See Remark'	Lift arm reset		1
6	809/00113		Bearing			4
7	809/00115		Bearing, liner, 65x62			6
8	809/00136		Bush			2
9	809/00119		Bearing, liner, 90x117 lg.			4
10	911/27400		Pin, pivot, 65mm x 172mm Lg.			4
11	911/27600		Pin, pivot, 65mm x 212mm Lg.			2
12	911/40070		Pin, pivot, 90 x 202, M20 securing bolts			2
13	911/28000		Pin, pivot, 75mm x 255mm Lg.			4
14	811/50572		Pin, pivot, 64.9mm x 139 lg.			2
15	811/50573		Pin, pivot, 74.9mm x 153 lg.			2
16	813/00415		Seal, pivot pin			16
17	813/00414		Seal, 65mm internal dia.			24
18	830/00599		Spacer			16
19	830/00646		Spacer, ram lever			2
20	819/00103		Shim, 1mm thick, 75mm I.D			24
21	819/00094		Shim, 65 i/d, 1mm thick			56
22	1315/3731D		Bolt			2
23	1315/0708D		Setscrew			14
24	1315/3525D		Bolt, M12 x 150mm long			2
25	1412/0007D		Washer, large			20
26	1450/0001		Nipple, grease, straight, 1/8 BSP			24
27	1370/0403D		Nut, M12			4

28	816/20034		Adapter, 1/8" B.S.P M/F			4
29	1315/0710D		Setscrew			4
30	809/00118		Bearing			4
31	911/27900		Pin, pivot, 75mm x 202mm Lg.			2
32	911/40071		Pin, pivot, 90 x 247, M20 securing bolts			2
33	813/00416		Seal, 90mm internal dia			8
34	819/00104		Shim, 1mm x 90mm i/d			20
35	1315/3524D		Bolt			2
36	1420/0009D		Washer, M12			8
38	265/02480		Spacer			4
39	265/02782		Plate, keep			4
40	911/32800		Pin, pivot, assembly			4
41	331/16536		Plate, inter sideplate			4
43	1315/0810D		Setscrew			4
44	823/10393		Washer, large			4
45	829/30751		Spacer			4
46	4101/0251		Sealant, Threadlock, 50ml			A/R

Machine groups

Details

Machine group	From serial no.	To serial no.
.426		
426		

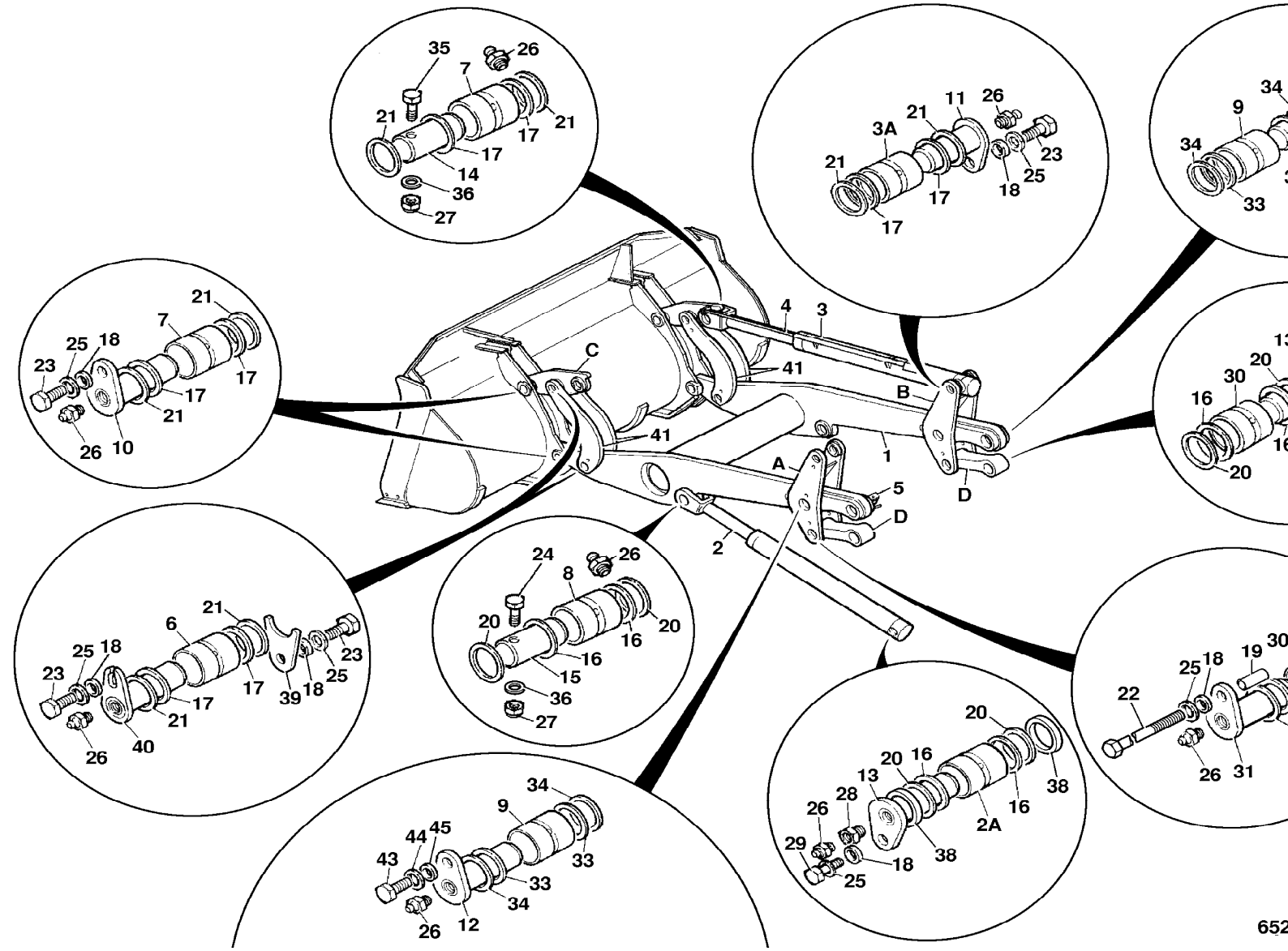
35
26
7
21
21
17
17
14
36
27
21
11
26
3A
21
23
25
18
17
17
34
9
34
33
21
7
25
18
23
17
17
21
26
10
4
3
C
41
B
41
1
A
5
D
D
2
16
30
20
20
16
20
24
26
8
20
20
16
16
15
36
27
21
6
25
18
23
23
17
17
39
18
25
21
26
40
20
20
16
13
28
26
29
18
38
38
2A
16
25
34
9
44
45
43
33
33
34
26
12
22
25
18
19
30
26
31

652

9802/2740 B3-6-1 SAFETY STRUT

Item	Part no.	Change No.	Description	Remarks	Usage code	Qty
1	121/09300		Strap			1
2	265/02482		Strut, safety, lift ram			1
3	123/02971		Stop			2

Machine groups

Details

Machine group	From serial no.	To serial no.
.426		
426		

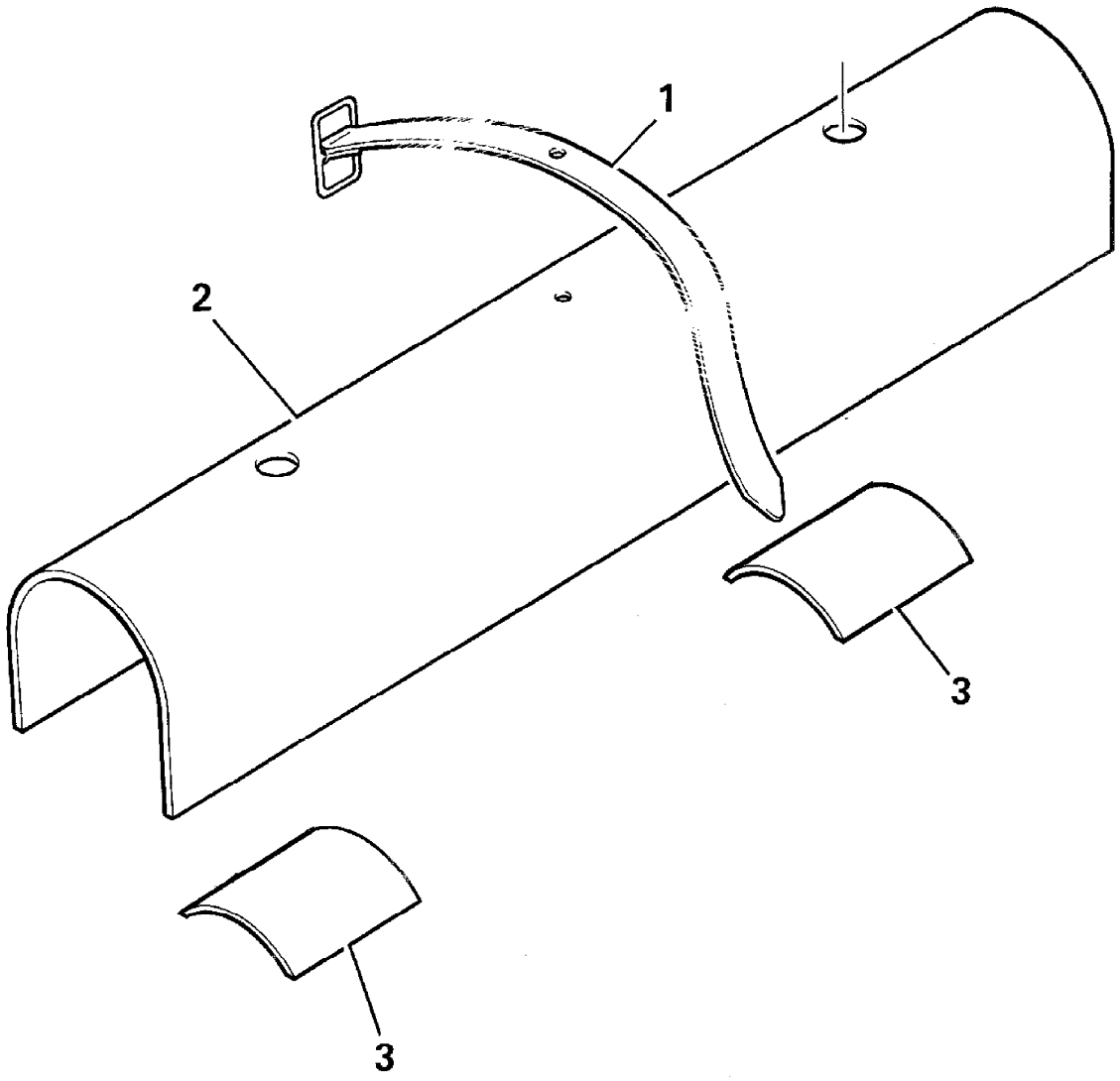

228600

9802/2740 B5-1-1 LABELS, IDENTITY

Item	Part no.	Change No.	Description	Remarks	Usage code	Qty
1	817/20206		Decal, engine cover, 426HT			2
2	817/20207		Decal, engine cover, 426ZX			2
3	817/18563		Label, tyre pressure, 426			1
4	817/17422		Decal, JCB Insignia (Black)			1
5	817/20452		Decal, 426 AGRI			1
6	817/18225		Decal, "FARMMASTER"			2
24	817/18336		Decal, "JCB"	LH/RH arm decal		2
28	817/18297		Decal, "TOOLCARRIER"			1
30	817/18356		Decal, "SUPER HI-LIFT"			1
50	817/20419		Decal, 422HT	Sales special 7691		2

Machine groups

Details

Machine group	From serial no.	To serial no.
.426		
426		

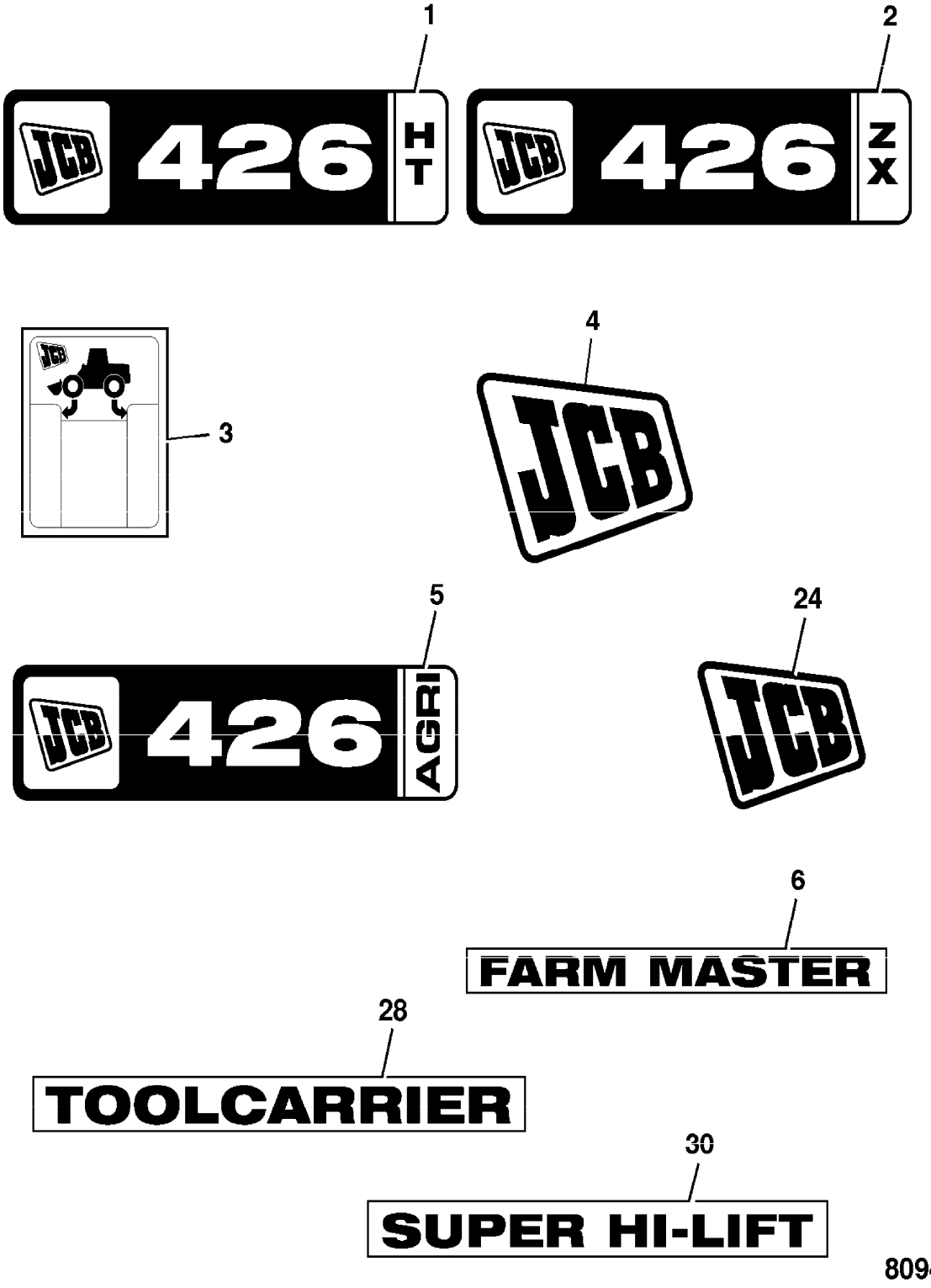
1
JCB 426 HT
2
JCB 426 ZX
3
4
JCB
5
JCB 426 AGRI
24
JCB
6
FARM MASTER
28
TOOLCARRIER
30
SUPER HI-LIFT

809401

9802/2740 B5-2-1 LABELS

Item	Part no.	Change No.	Description	Remarks	Usage code	Qty
1	817/02308		Label, Coolant Filler			1
2	817/03604		Label, danger articulation			2
3	817/02305		Label, Diesel			1
4	817/03978		Label, fuel filter, 100 hr			1
5	817/17060		Label, transmission oil			1
6	817/19856		Label, Hydraulic and trans., fill			1
7	817/01452		Label, battery, isolator			1
8	817/19853		Label, test point			1
9	817/04274		Label, wash/wipe			1
11	817/01087		Decal, tie down (chain)			6
12	817/01073		Label, caution			4
13	817/02160		Label, HI-LITE			1
16	817/04562		Label, 50 Hour Drain			1
19	817/18566		Decal, Warning, No Step	Rear fender extension		2
20	817/02937		Decal, grease points			2
21	817/02306		Label, Hydraulic Fluid			1

Machine groups

Details

Machine group	From serial no.	To serial no.
.426		
426		

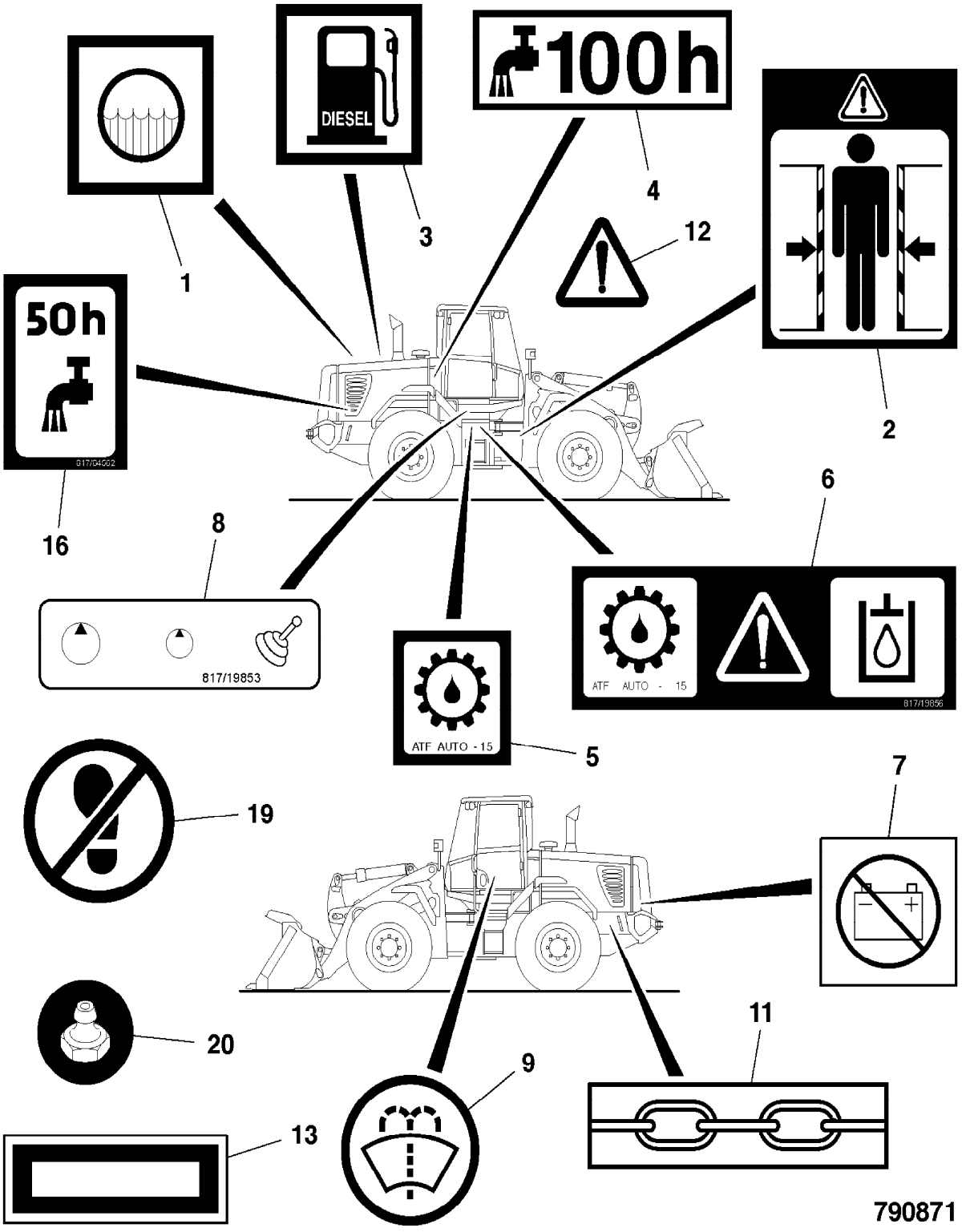
DIESEL
100h
50h
817/04002
817/19853
ATF AUTO - 15
817/19856
ATF AUTO - 15
1
2
3
4
5
6
7
8
9
11
12
13
16
19
20
790871

9802/2740 B5-3-1 LABELS, NOISE LEVEL

Item	Part no.	Change No.	Description	Remarks	Usage code	Qty
1	817/02751		Decal, internal noise			1
2	817/01661		Decal, sound pressure level, external 74 LPA			1
3	817/01662		Decal, internal noise, 75 LpA			1
4	817/01664		Label, sound level, 78 Lpa			1
5	817/03655		Label, noise, 72 LpA internal			1
6	817/01752		Label, noise, 71			1
11	817/01656		Label, external noise, 104LwA			1
12	817/01658		Label, sound power, level external			1
13	817/01659		Decal, external noise			1
14	817/05229		Label, exterior noise, 109 LWa			1
21	817/17529		Label, sound pressure, 104dB LWA			1
22	817/17531		Label, sound pressure, 106dB LWA			1
23	817/17532		Label, noise 107 LWA			1
24	817/17534		Label, noise 109 LWA			1
31	817/17530		Label, sound pressure, 105dB LWA			1
50	817/03908		Label, ear protection			1

Machine groups

Details

Machine group	From serial no.	To serial no.
.426		
426		

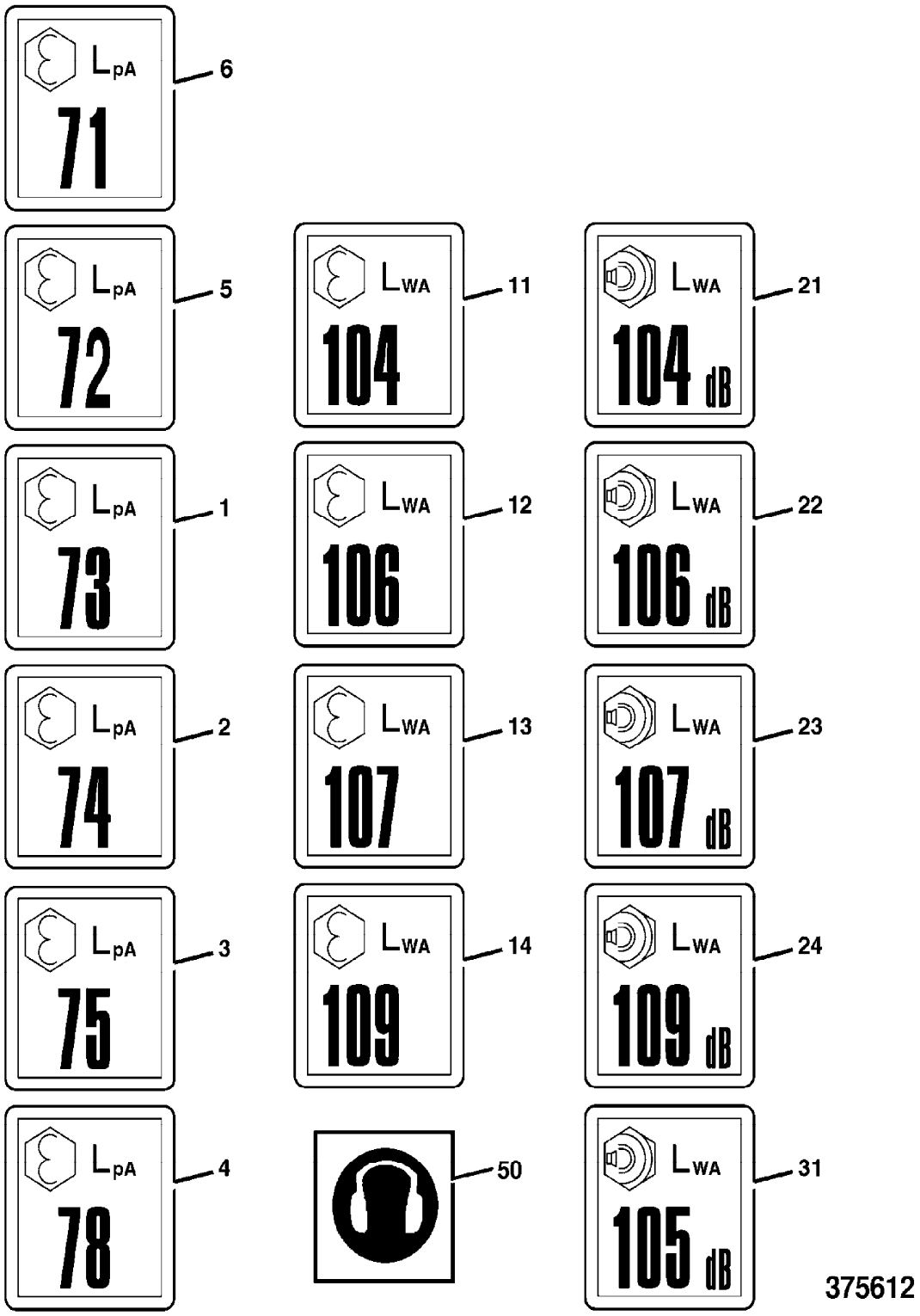
LpA
71
6
LpA
72
5
LWA
104
11
LWA
104 dB
21
LpA
73
1
LWA
106
12
LWA
106 dB
22
LpA
74
2
LWA
107
13
LWA
107 dB
23
LpA
75
3
LWA
109
14
LWA
109 dB
24
LpA
78
4
50
LWA
105 dB
31
375612

9802/2740 B5-4-1 LABELS, CAB

Item	Part no.	Change No.	Description	Remarks	Usage code	Qty
3	817/03606		Label, lever lock			1
4	817/05339		Label, Park Brake			1
5	817/01577		Label, Read Handbook			1
6	817/16687		Decal, loader control			1
	817/20361		Decal, loader control	S/special 7697and7623 (3 spool prop/4th manual)		1
7	817/04257		Label, air conditioning			1
9	817/19851		Label, fuse/relay box	See page C3-3-1		1
10	817/03643		Decal, F-N-R, column switch			1
11	817/19893		Label, primary fuse box	Primary fuse box 1. See page C3-2-1		1
11A	817/19894		Label, primary fuse	See page C3-2-1		1
12	817/03605		Decal, loader control, 3 spool			1
13	817/17584		Decal, loader control			1

Machine groups

Details

Machine group	From serial no.	To serial no.
.426		
426		

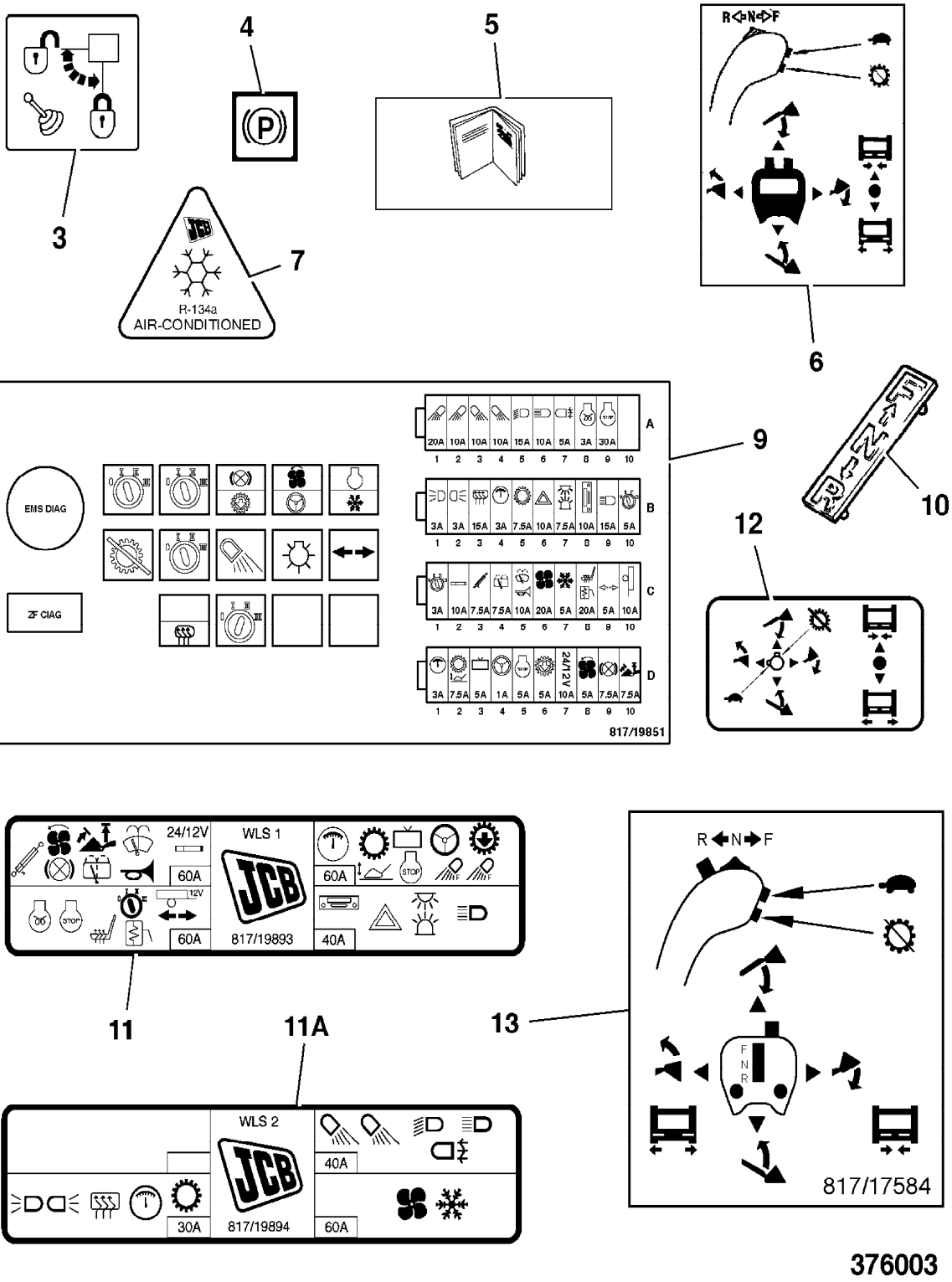
3
4
5
6
7
R-134a
AIR-CONDITIONED
R<N<F
9
10
12
EMS DIAG
ZF CIAG
817/19851
11
11A
13
WLS 1
WLS 2
817/19893
817/19894
817/17584
R N F
F
N
R
376003

9802/2740 B6-1-1 HOMOLOGATION PARTS, GERMAN

Item	Part no.	Change No.	Description	Remarks	Usage code	Qty
1	268/20059		Plate, support, lift ram			1
2	824/50011		Strip, edging			2
3	121/09300		Strap			1
4	817/03761		Label, speed limit, 40KPH			3
5	700/12500		Reflector, amber			8
7	1430/0202		Screw, self tapping			4
8	817/20147		Decal, fender extension, left side			1
9	817/20148		Decal, fender extension, right side			1
10	1370/0003Z		Nut			4
11	1420/0005Z		Washer, M5			8
13	265/01060		Wheel, chock			2
14	265/01059		Bracket, mounting, wheel chock			2
15	265/01093		Plate, spreader			2
16	1315/0305D		Screw, set M8x20			8
17	1410/0002D		Washer, WASHER 5/16in SMALL			8
18	1370/0203D		Nut, lock			8

Machine groups

Details

Machine group	From serial no.	To serial no.
.426		
426		

IMAGE NOT FOUND

9802/2740 B6-2-1 HOMOLOGATION PARTS, ITALIAN

Item	Part no.	Change No.	Description	Remarks	Usage code	Qty
1	817/20147		Decal, fender extension, left side			1
2	817/20148		Decal, fender extension, right side			1
3	268/20059		Plate, support, lift ram			1
4	121/09300		Strap			1
5	824/50011		Strip, edging			1
7	817/00054		Label, outline sticker L.H.			2
8	817/00055		Label, outline sticker R.H.			2
13	331/13777		Strut, safety, Bucket ram			1
14	123/02971		Stop			2
15	817/00878		Label, air cleaner			1
16	265/00867		Retainer, steel rope	426 ZX		1
17	265/01141		Boss, retaining			2
18	817/03604		Label, danger articulation			2
19	817/04438		Decal, 40 KPH, Italian			1
20	817/01276		Label, ignition, switch			1
21	826/01485		Washer, retaining			2
22	817/05339		Label, Park Brake			1
24	821/00172		Clip			6
25	817/19344		Plate, Italian data			1
26	1315/3720D		Bolt, M16x100, dacromet			1
27	700/12500		Reflector, amber			8
28	1430/0202		Screw, self tapping			4
29	826/00872		Screw, M5 x 16			4
30	1420/0005Z		Washer, M5			8
31	1370/0003Z		Nut			4

Machine groups

Details

Machine group	From serial no.	To serial no.
.426		
426		

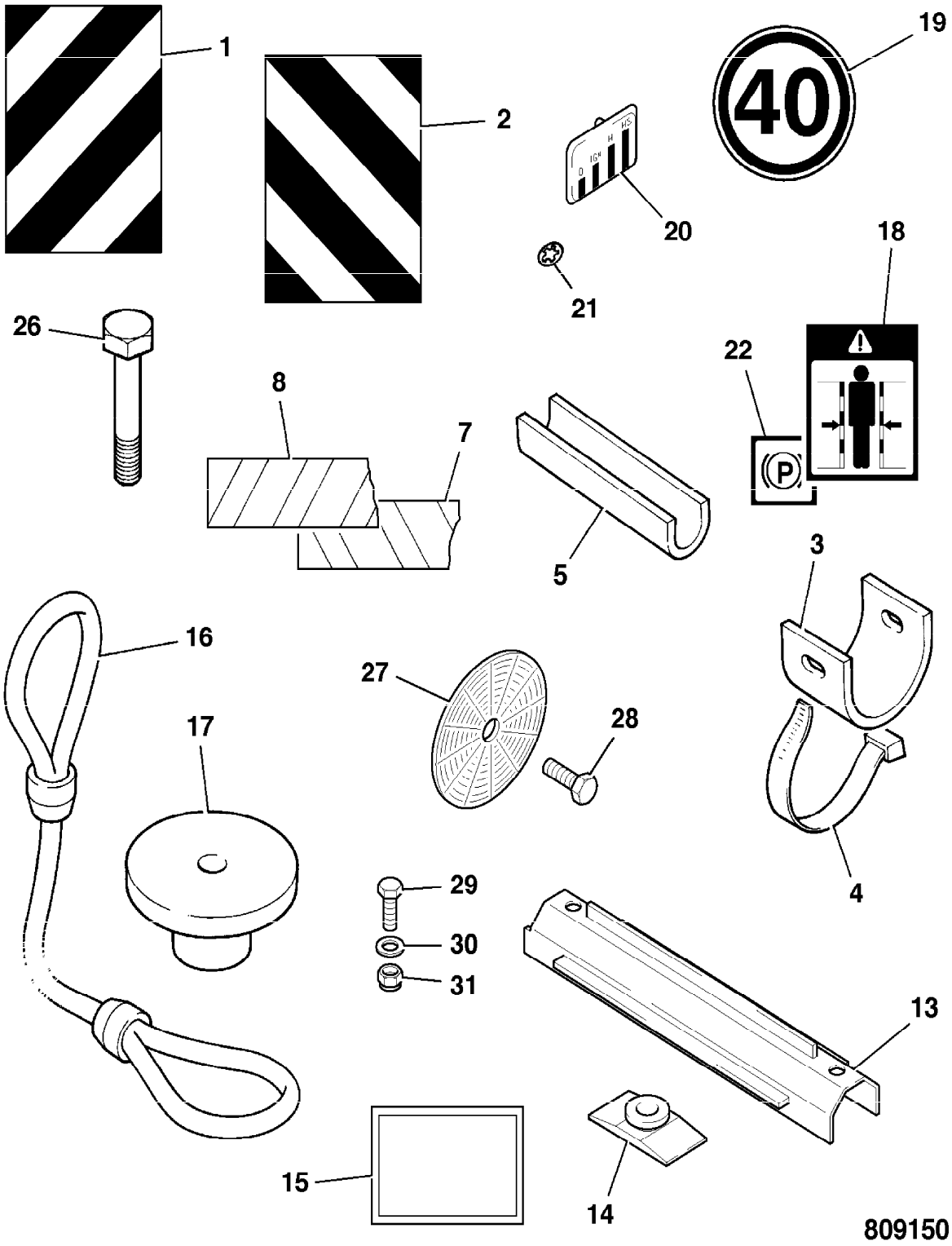
1
2
19
40
20
21
18
26
22
8
7
5
3
16
27
28
17
4
29
30
31
13
15
14
809150

9802/2740 B6-5-1 HOMOLOGATION, REAR NUMBER PLATE, GERMAN & ITALIAN

Item	Part no.	Change No.	Description	Remarks	Usage code	Qty
1	335/10790		Bracket, number plate			1
2	700/35100		Light, 24 volt, No. plate			1
2A	720/20035		Bulb, 24v 5W			1
3	721/11135		Harness, No. plate			1
4	1315/0205D		Setscrew, M6 x 20mm long			2
5	1412/0001D		Washer, large			4
6	1420/0006D		Washer, M6 plain			4
7	1370/0103D		Nut, M6 lock			2
8	826/01144		Tie, cable, 200mm long			4
9	2410/0012		Grommet			1
10	1315/0203D		Setscrew			2

Machine groups

Details

Machine group	From serial no.	To serial no.
.426		
426		

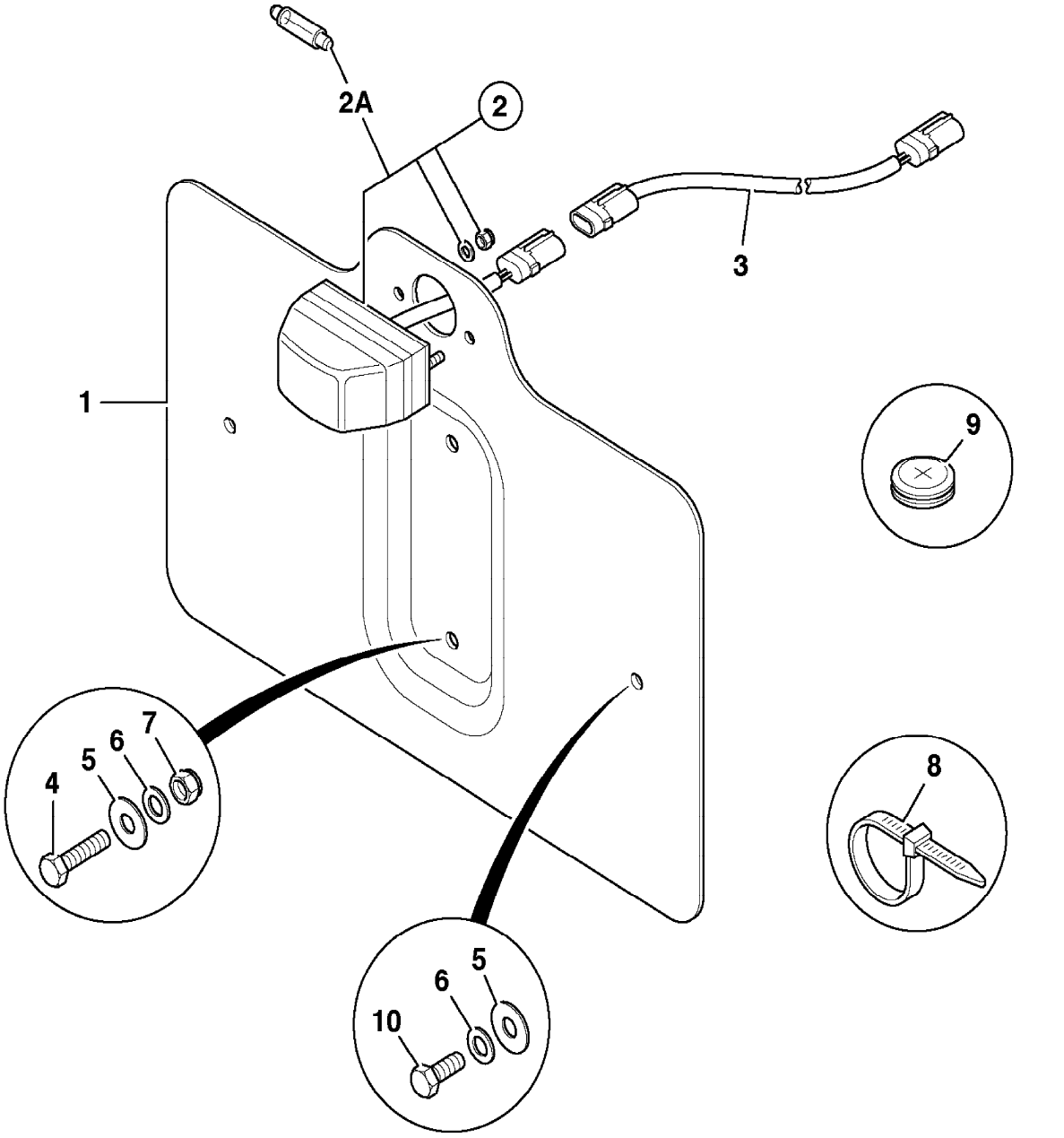

797260

9802/2740 C1-1-1 HARNESSES

Item	Part no.	Change No.	Description	Remarks	Usage code	Qty
3	721/12179		Harness, rear grille			1
3A	721/11440		Harness, link	Reverse fan to grille harness		1
4	721/11861		Harness, rear cab			1
5	721/12150		Harness, front chassis, HT	HT		1
	721/12149		Harness, front chassis, ZX	Z Bar		1
6	721/11938		Harness, rear chassis			1
7	721/11937	Superseded	Harness, engine			1
	721/12240		Harness, engine			1
9	721/11826		Harness, transmission			1
10	727/00004		Harness, CAN, 4400mm long			1
14	721/12117	Superseded	Harness, cab panel			1
	721/12239		Harness, cab panel			1
15	721/12262		Harness, water temp. sender, service salvage	Service salvage for cabs built to DEC05		1
17	721/11818		Harness, cab roof, interior			1
18	721/11579		Harness, switchable detent	Sales special 7763		1
22	826/01347		Tie, cable c/w mounting, 4.6mm x 190mm	Rear cab harness		6

Machine groups

Details

Machine group	From serial no.	To serial no.
.426		
426		

Illustration Not Available at Time of Publication

9802/2740 C1-1-5 HARNESSES, CONTROL AREA NETWORK, (CAN)

Item	Part no.	Change No.	Description	Remarks	Usage code	Qty
1	727/00005		Harness, CAN, 3550mm long			1
2	727/00006		Harness, CAN, 100mm long			1
3	727/00007		Harness, CAN, 950mm long			1
4	727/00001		Connector, T splitter			3
5	727/00003		Connector, straight			2

Machine groups

Details

Machine group	From serial no.	To serial no.
.426		
426		

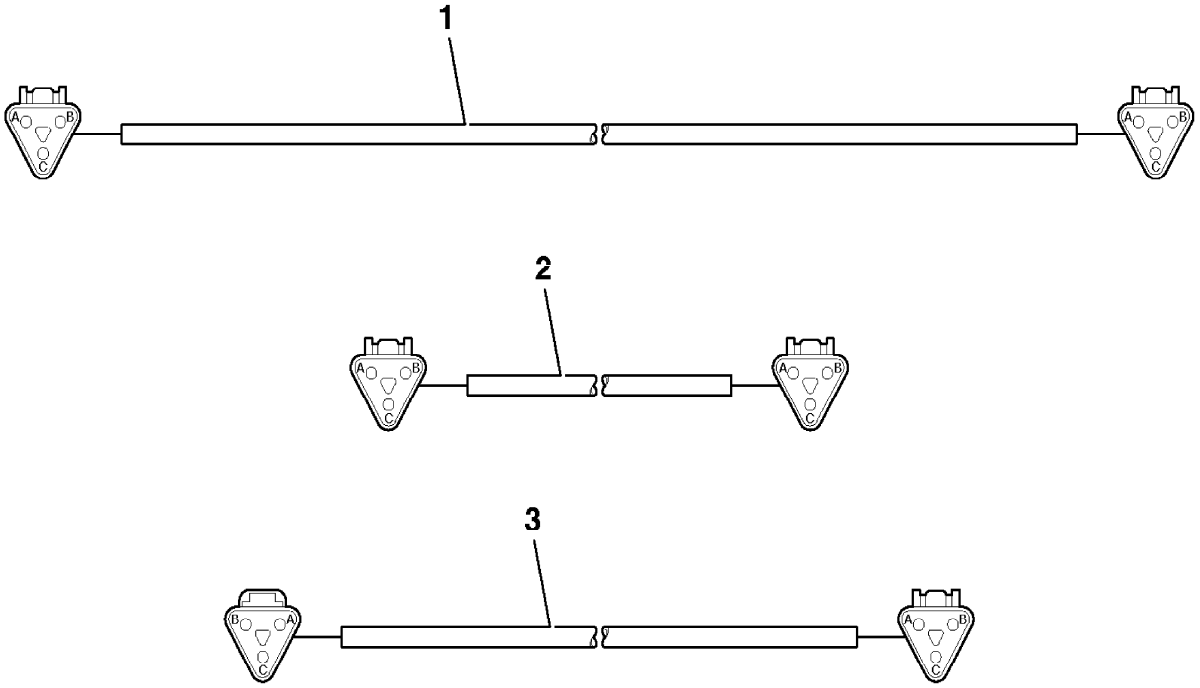

808950

9802/2740 C1-10-1 CCTV INSTALLATION

Item	Part no.	Change No.	Description	Remarks	Usage code	Qty
1	717/20268		Sensor, colour CCTV, system			1
1A	717/20283		Monitor, colour			1
1B	717/20284		Sensor, rear camera			1
1C	717/20285		Cable, 1.1m, camera to radiator			1
1D	717/20286		Cable, 3m, radiator to rear cab			1
1E	717/20287		Cable, 2m, rear cab to monitor			1
1F	717/20288		Lead, power, to plug			1
1G	331/31981		Bracket, monitor mounting			1
2	331/50153		Bracket			1
3	331/50151		Cover			1
4	826/10879		Nut, M6			4
5	826/01453		Tie, cable, double head			20
6	2410/0106		Grommet, 16mm diameter			1

Machine groups

Details

Machine group	From serial no.	To serial no.
.426		
426		

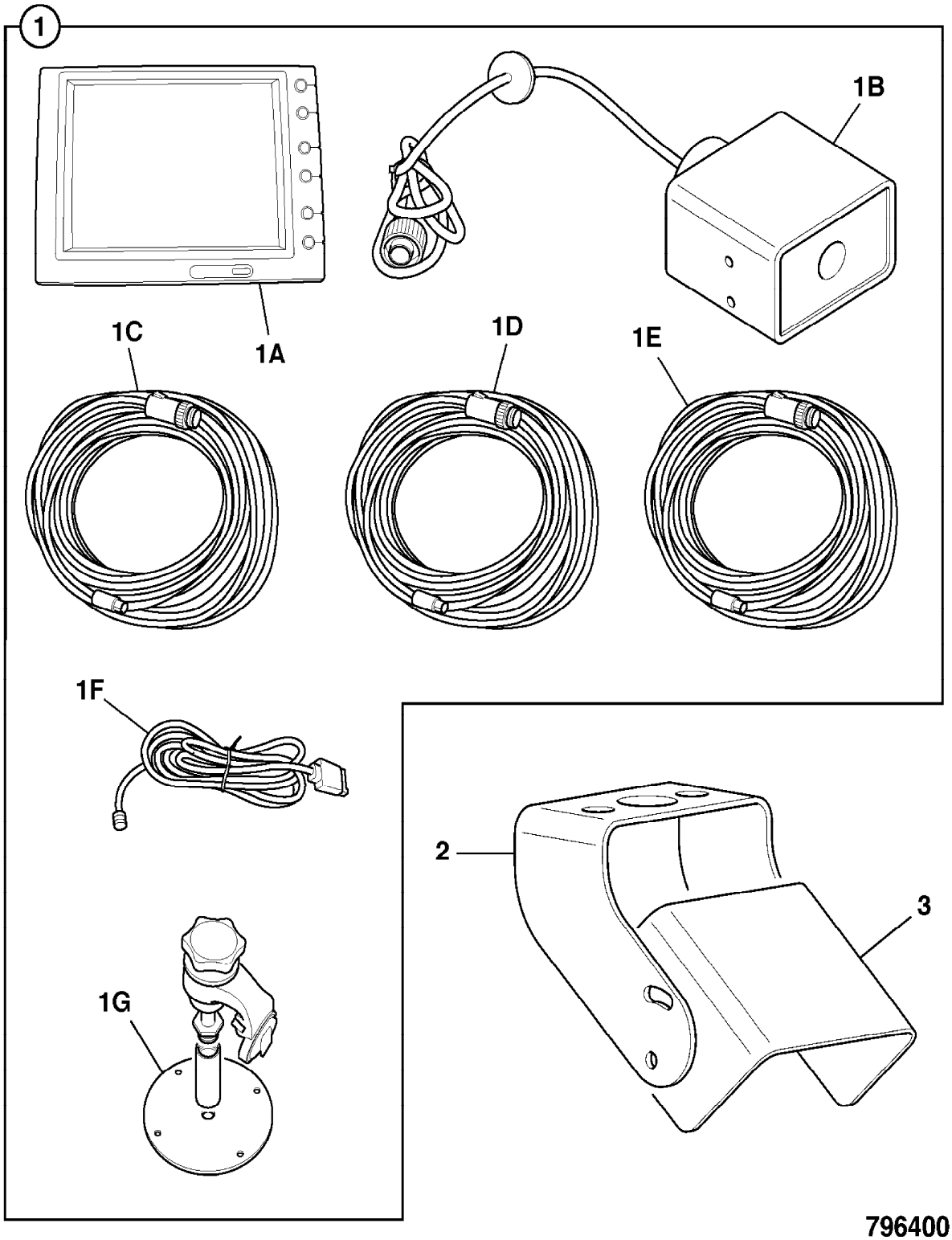
1
1A
1B
1C
1D
1E
1F
1G
2
3
796400

9802/2740 C1-11-1 CCTV INSTALLATION

Item	Part no.	Change No.	Description	Remarks	Usage code	Qty
1	717/20267		Sensor, colour CCTV, system			1
1A	717/20277		:Monitor			1
1B	717/20278		:Sensor, rear camera			1
1C	717/20279		:Cable, 1.25m			1
1D	717/20280		:Cable, 2.6m	Cable 2.6m + power cable 0.25m		1
1E	717/20281		:Cable, 3.45m			1
2	331/50155		Bracket			1
3	331/50154		Cover			1
4	1370/9403Z		Nut			2
5	826/10879		Nut, M6			4
6	826/01453		Tie, cable, double head			20
7	2410/0106		Grommet, 16mm diameter			1

Machine groups

Details

Machine group	From serial no.	To serial no.
.426		
426		

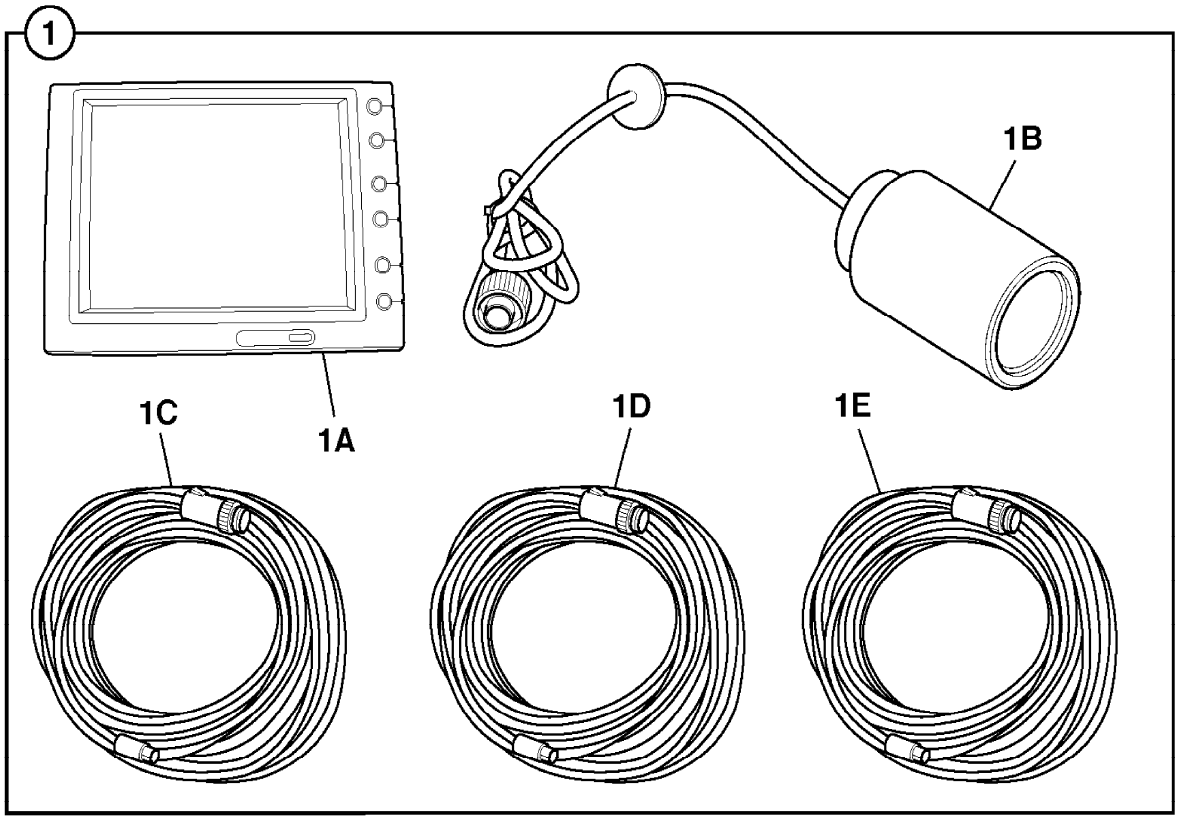

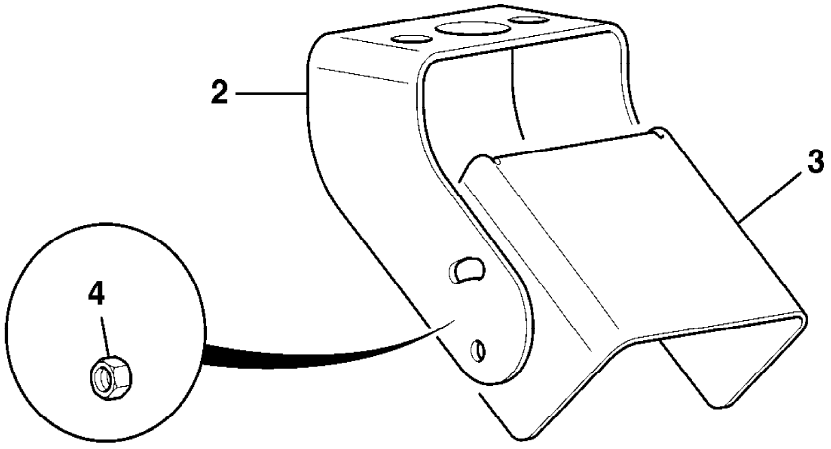

791190

9802/2740 C1-12-1 WORK LIGHT, AUXILLIARY

Item	Part no.	Change No.	Description	Remarks	Usage code	Qty
1	700/50170		Light, working, rear body mounted			2
	970/60088		Light, working, amber	Sales special 5213		1
1A	720/20032		Bulb, H3 24v 70w			1

Machine groups

Details

Machine group	From serial no.	To serial no.
.426		
426		

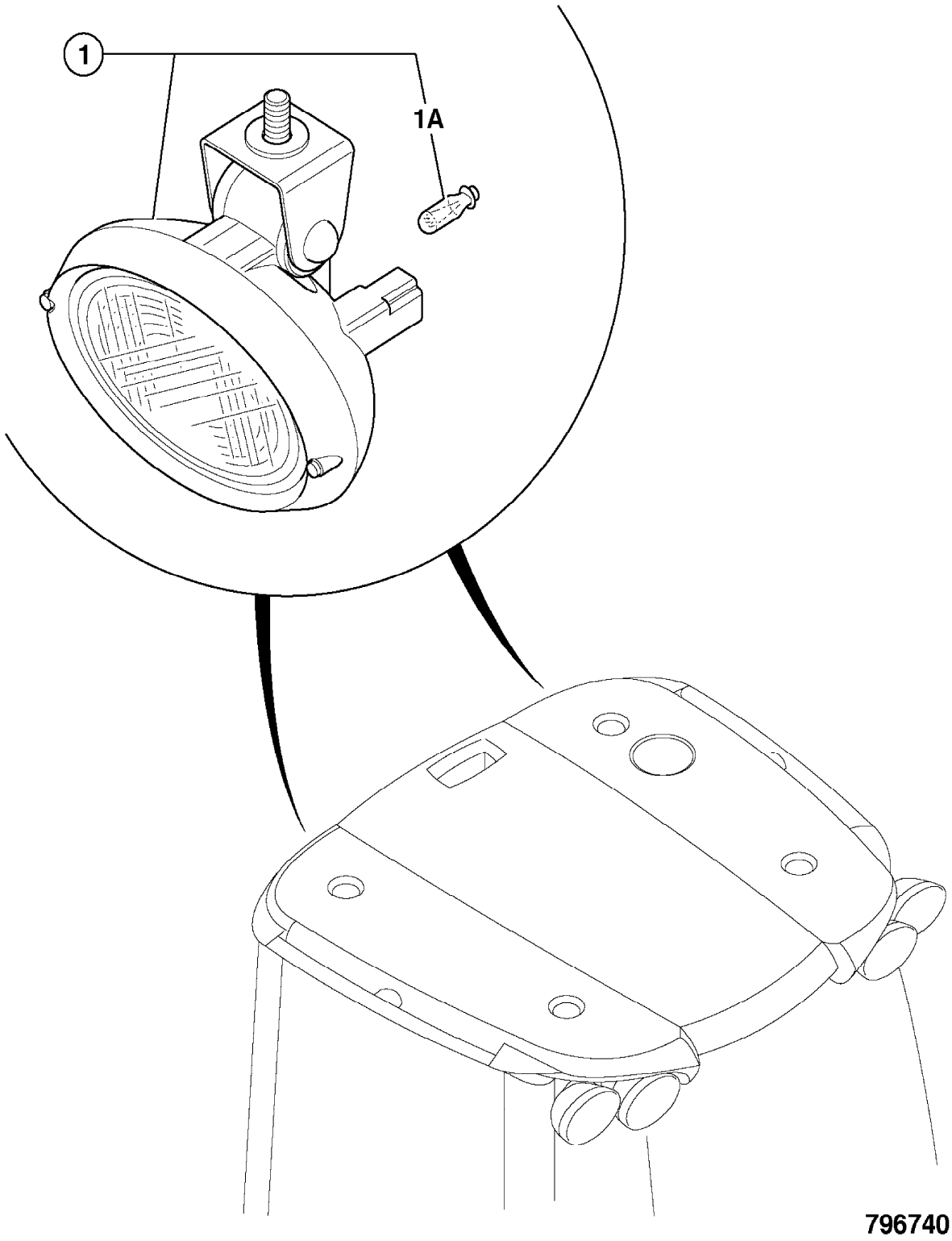
1
1A
796740

9802/2740 C1-14-1 LIGHT, BEACON, HAZARD WARNING, OPTIONAL

Item	Part no.	Change No.	Description	Remarks	Usage code	Qty
0A	269/30442		Beacon, assembly, 24 volt			1
1	331/29978		:Bracket, beacon			1
2	700/50070		:Beacon, 24 volt			1
	720/20040		::Bulb, 24v 70w H1			1
	700/09101		Bulb, 12v 55w, Halogen	12V beacon		1
3	1315/0201Z		Setscrew, M6 x 12mm long			2
4	1420/0006Z		Washer, M6			2
6	701/60031		Switch, 24V			1
	701/60000		Switch, 12V	12V beacon		1
7	701/58704		Decal, beacon switch			1
8	331/18574	S/N TBA on	Plate, clamp			1
9	335/04129	S/N TBA on	Bracket, spacer			1
10	721/11956		Harness, 12V beacon	Sales special 7003		1

Machine groups

Details

Machine group	From serial no.	To serial no.
.426		
426		

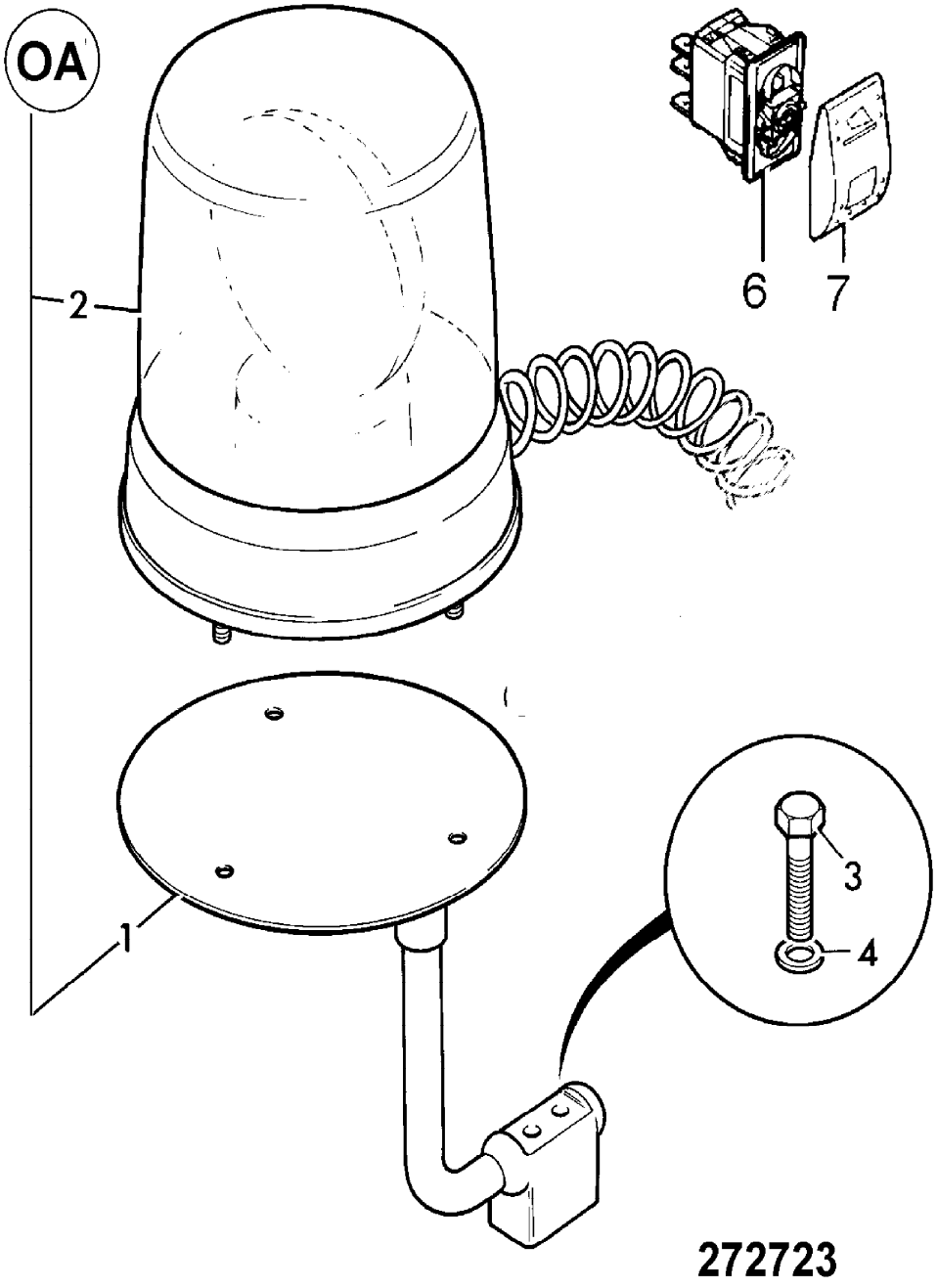
OA
2
6
7
1
3
4
272723

9802/2740 C1-15-1 LIGHT, HEAD, LEFT HAND DIP

Item	Part no.	Change No.	Description	Remarks	Usage code	Qty
1	700/50007		Light, and side repeater, LH dip, LH side			2
	700/50008		Light, and side repeater, LH dip, RH side			1
2	700/38501		:Lens, assembly, headlight, RH dip			2
3	720/15002		Bulb, sidelight 24V			1
4	720/15003		Bulb, main 24V			1
4A	720/20032		Bulb, H3 24v 70w			1
5	700/38401		Lens, indicator			1
6	720/15004		Bulb, indicator 24V			1
7	715/20030		Plug, blanking, 6 way	Sales special 8219 (Replace front lights)		2

Machine groups

Details

Machine group	From serial no.	To serial no.
.426		
426		

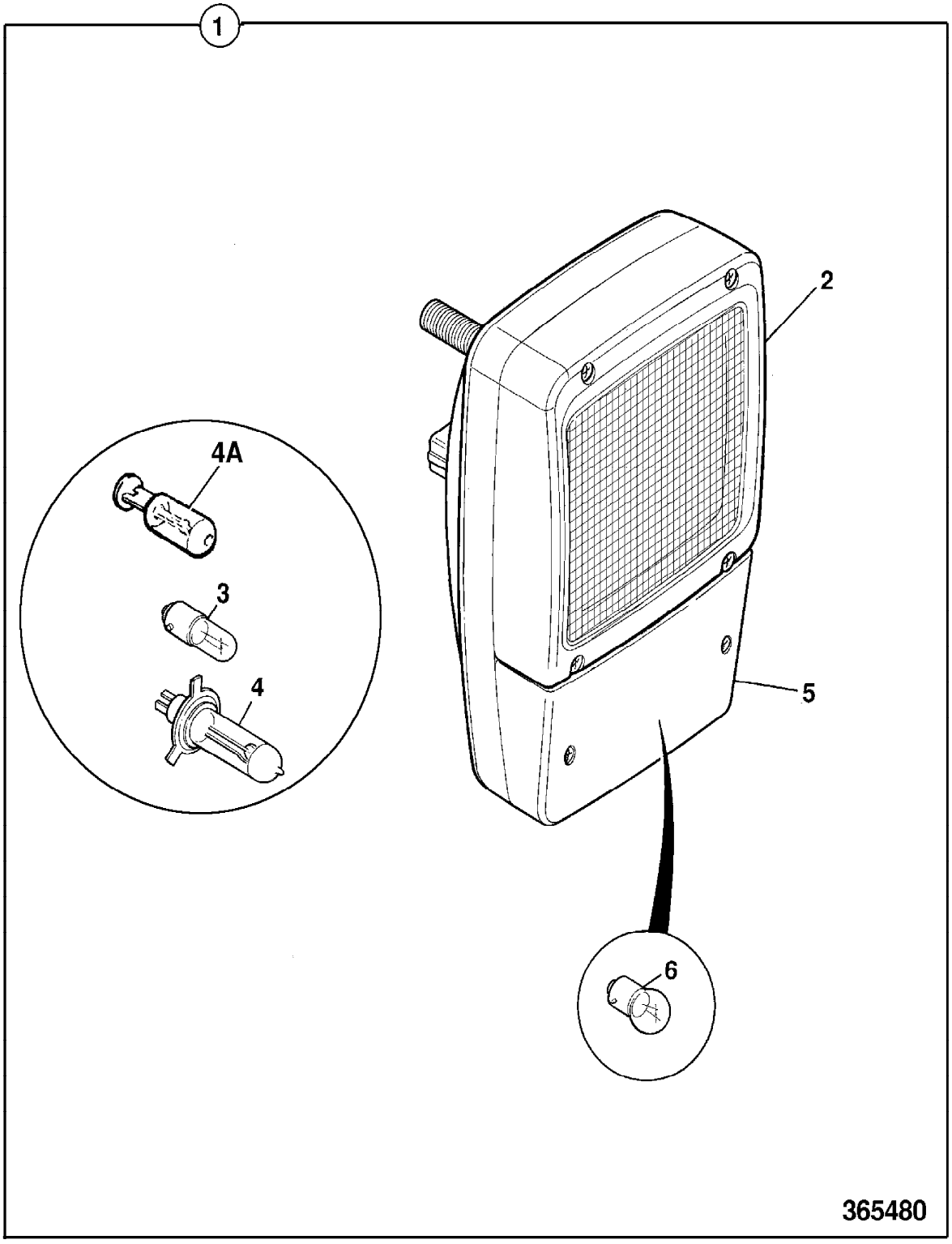
1
2
4A
3
4
5
6
365480

9802/2740 C1-16-1 LIGHT, HEAD, RIGHT HAND DIP

Item	Part no.	Change No.	Description	Remarks	Usage code	Qty
1	700/50009		Light, and side repeater, RH dip, LH side	See index B1 for light guard		1
	700/50010		Light, and side repeater, RH dip, RH side			1
2	700/38501		:Lens, assembly, headlight, RH dip			1
3	720/15002		:Bulb, sidelight 24V			1
4	720/15003		:Bulb, main 24V			1
4A	720/20032		:Bulb, H3 24v 70w			1
5	700/38401		:Lens, indicator			1
6	720/15004		:Bulb, indicator 24V			1

Machine groups

Details

Machine group	From serial no.	To serial no.
.426		
426		

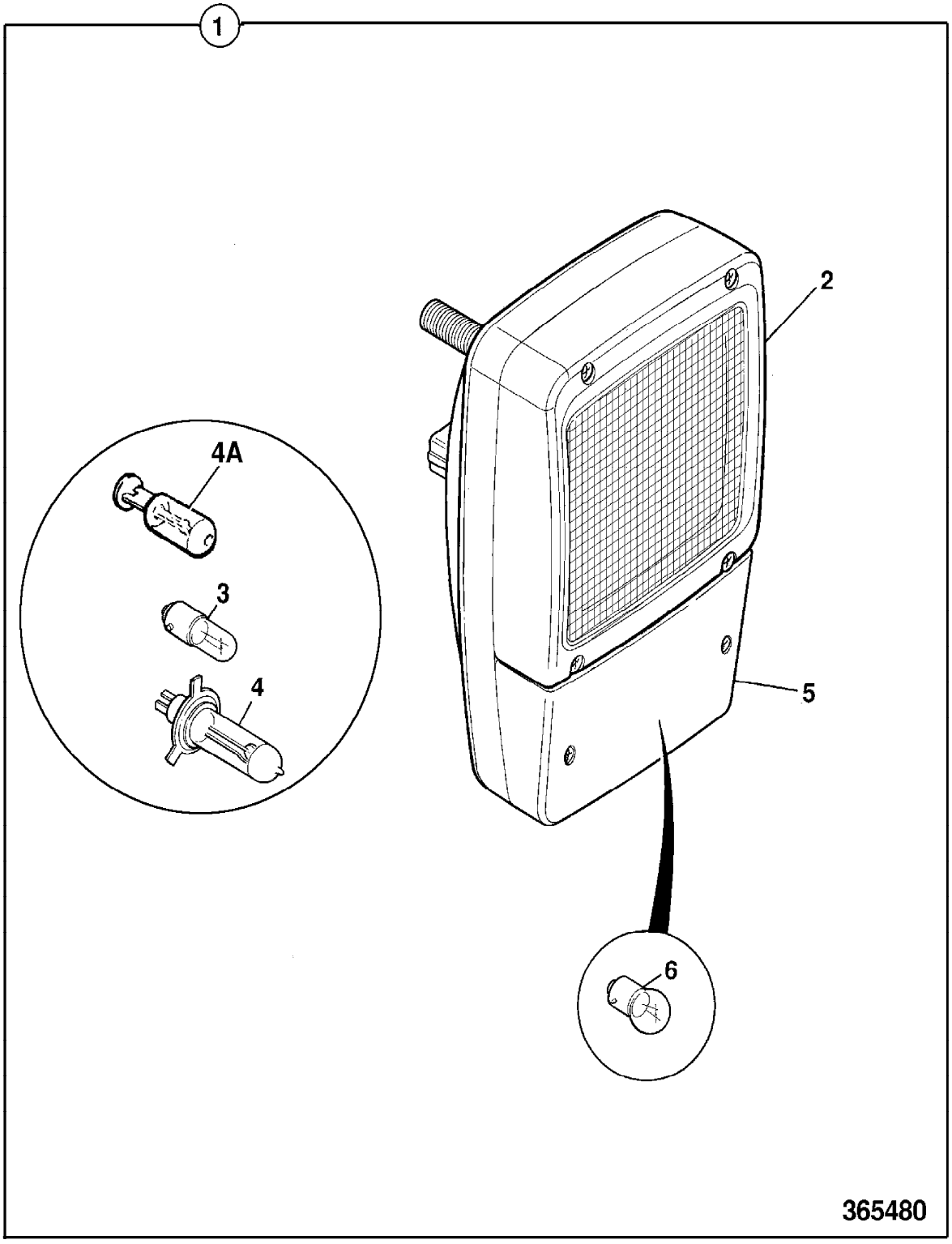
1
2
4A
3
4
5
6
365480

9802/2740 C1-17-1 LIGHT COMBINATION, REAR 24V

Item	Part no.	Change No.	Description	Remarks	Usage code	Qty
1	700/50069		Light, rear cluster, with fog light			1
1A	700/50072		:Lens, Red			1
1B	700/50073		:Lens, Amber			1
1C	700/50075		:Lens, Fog			1
1D	720/20018		:Bulb, 24v 5/21W			1
1E	720/20017		:Bulb, 24v 21W			1
1F	720/20017		:Bulb, 24v 21W			1
2	700/50068		Light, rear cluster, with reverse light			1
2A	700/50072		:Lens, Red			1
2B	700/50073		:Lens, Amber			1
2C	700/50074		:Lens, Reverse			1
2D	720/20018		:Bulb, 24v 5/21W			1
2E	720/20017		:Bulb, 24v 21W			1
2F	720/20017		:Bulb, 24v 21W			1
3	715/20017		Plug, male,6 way, Deutsch	Sales special 8219 (Rear light blanking)		2

Machine groups

Details

Machine group	From serial no.	To serial no.
.426		
426		

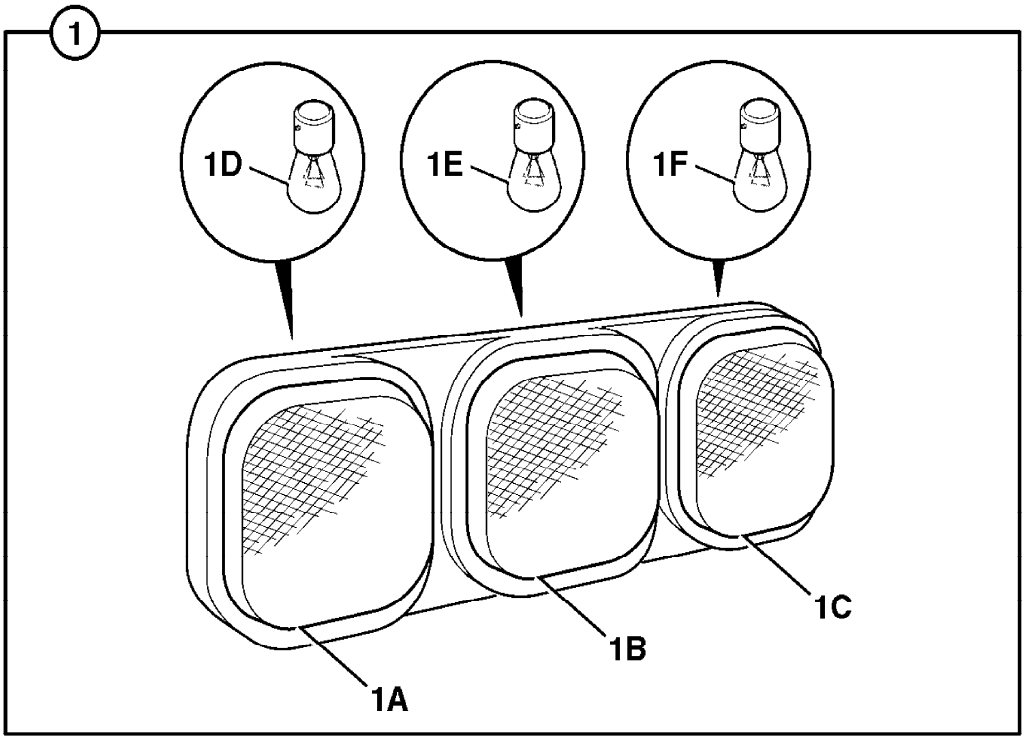
1
1D
1E
1F
1C
1B
1A

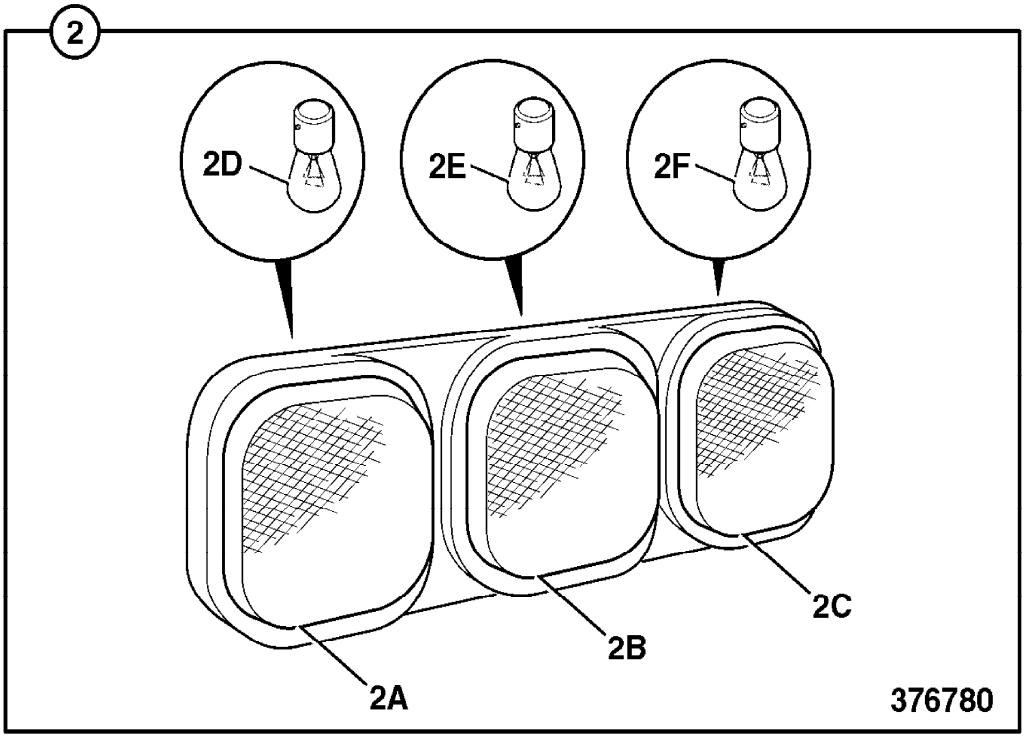
2
2D
2E
2F
2C
2B
2A
376780

9802/2740 C1-18-1 ALARM, REVERSE

Item	Part no.	Change No.	Description	Remarks	Usage code	Qty
1	717/07400		Alarm, reverse, 112 dBA			1
	717/14800		Alarm, reverse, Smart, 87 - 112dBA			1
2	265/02054		Bracket, alarm			1
3	1315/0207Z		Screw, M6 x 25mm long			4
4	1370/0103Z		Nut, Self lock, M6			4
5	1315/0305Z		Screw, M8 x 20mm long			2
6	1420/0006Z		Washer, M6			8
7	1370/0203Z		Nut, self lock, M8			2
8	1420/0007Z		Washer, plain, M8			4

Machine groups

Details

Machine group	From serial no.	To serial no.
.426		
426		

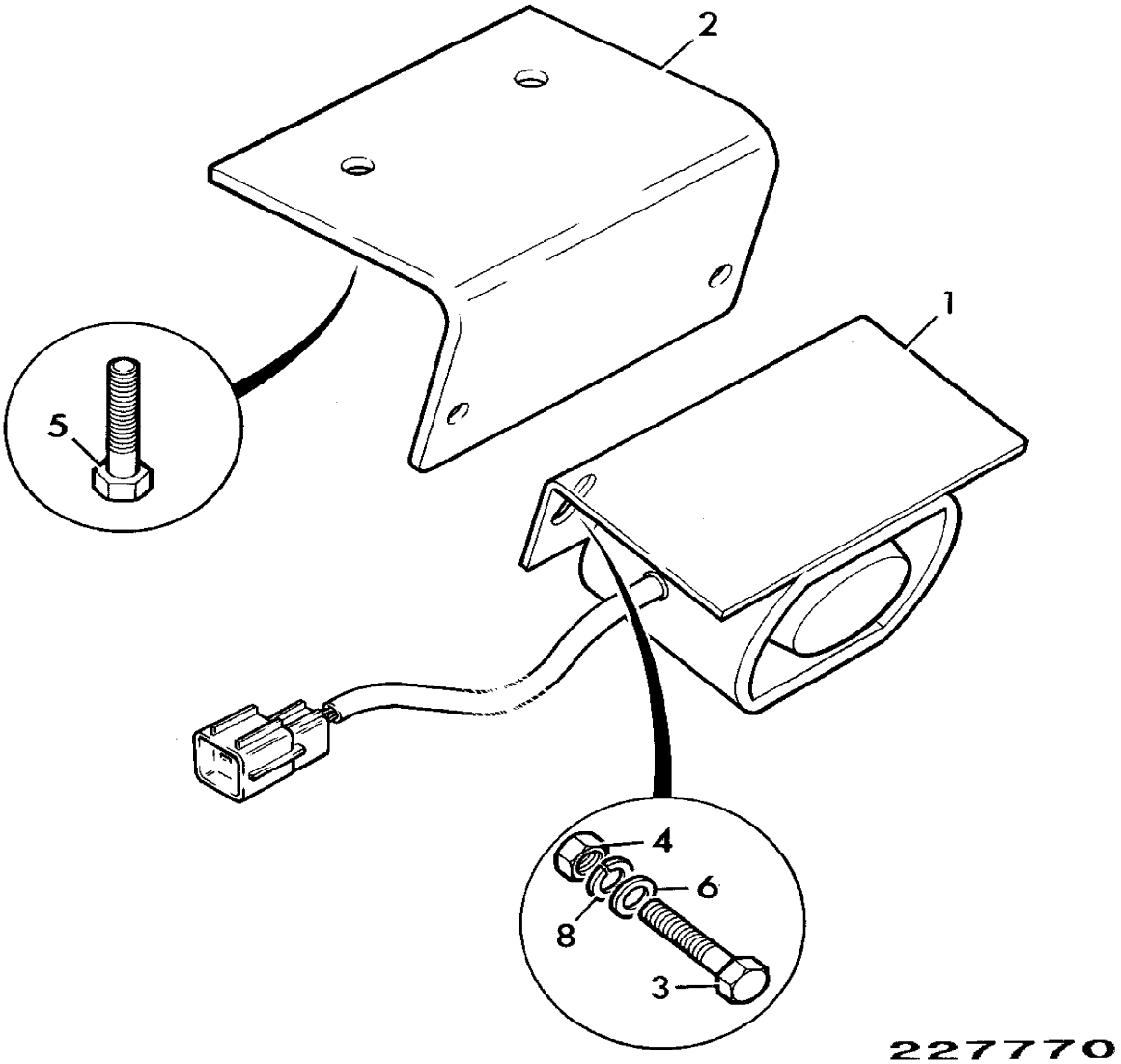
2
1
5
4
6
8
3
227770

9802/2740 C1-19-1 HORN, SINGLE TONE

Item	Part no.	Change No.	Description	Remarks	Usage code	Qty
1	717/20152		Horn			1
2	1315/0407Z		Bolt, M10x25			1
3	1420/0008Z		Washer, Plain M10			1
4	1370/0303Z		Nut, lock, M10			1

Machine groups

Details

Machine group	From serial no.	To serial no.
.426		
426		

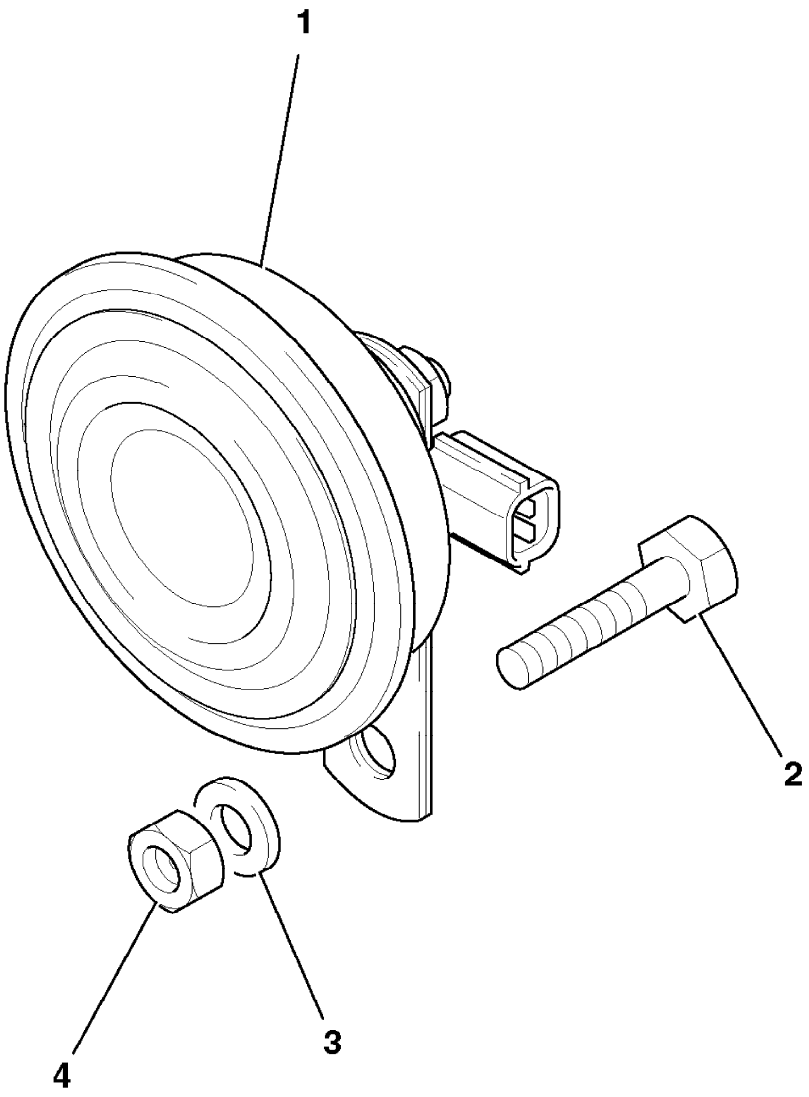

344250

9802/2740 C1-20-1 HEATED MIRROR

Item	Part no.	Change No.	Description	Remarks	Usage code	Qty
1	717/20111		Mirror, heated			1
2	335/03571		Bracket, mirror			1
3	721/11037		Harness, heated mirror			1
4	1315/3409D		Bolt, M10 x 35mm long			2
5	1370/0303D		Nut, M10			2
6	823/00344		Washer, nylon			4

Machine groups

Details

Machine group	From serial no.	To serial no.
.426		
426		

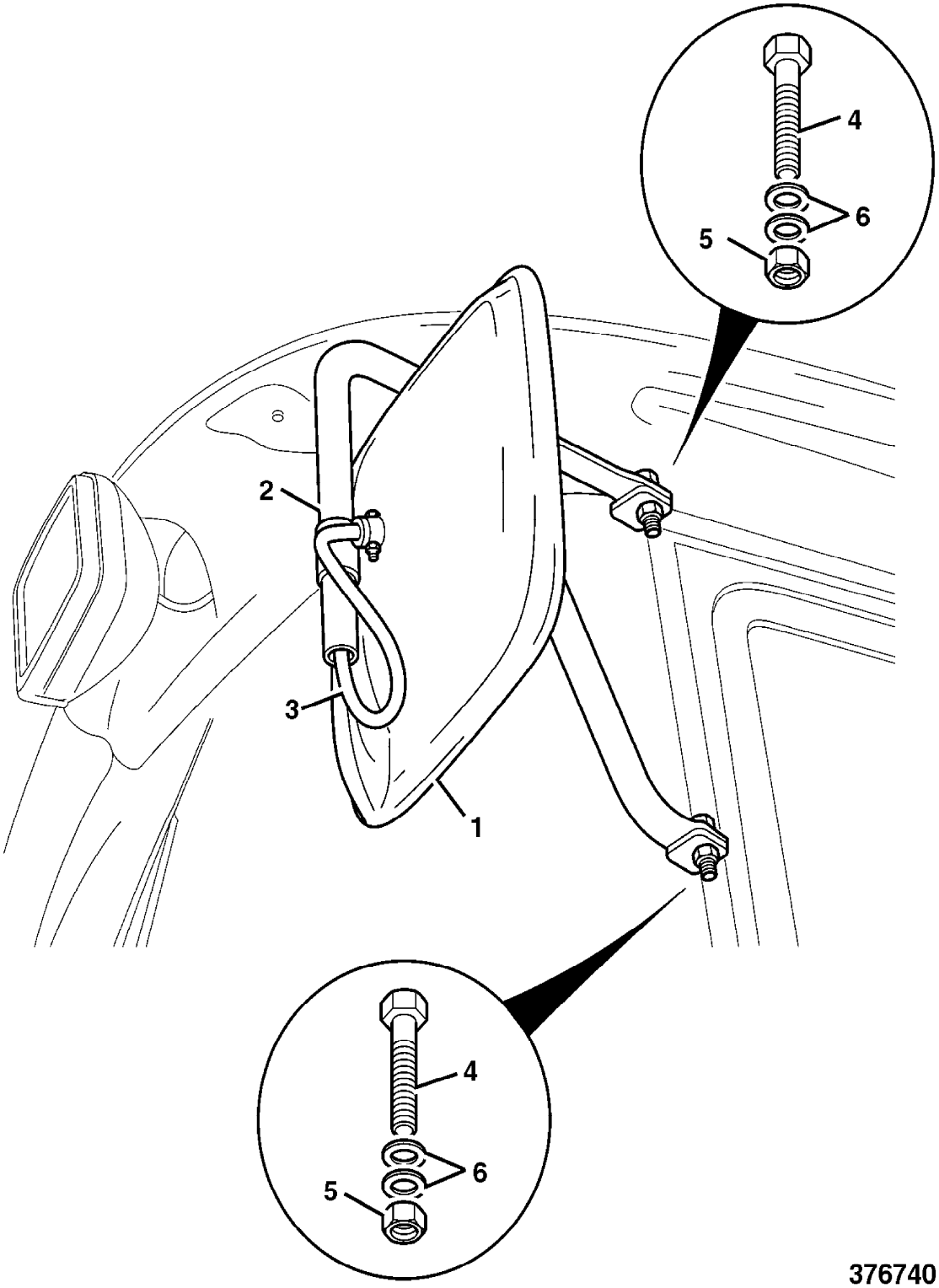

376740

9802/2740 C1-21-1 "P" CLIPS

Item	Part no.	Change No.	Description	Remarks	Usage code	Qty
1	821/00410		Clip, pipe			A/R
2	821/10087		Clip			A/R
3	826/00864		Clip, P			A/R
4	821/00306		Clip, 'P' (size No.6), 20mm clamp diameter			A/R
5	821/00329		Clip, 'P' (size No.10), 25mm clamp diameter			A/R
6	1370/0103D		Nut, M6 lock			1
7	1315/0203D		Setscrew	16 mm long		1
8	1315/0205D		Setscrew, M6 x 20mm long	20 mm long		1
9	1420/0006D		Washer, M6 plain			1
10	265/02813		Bracket, P-clip	Harness to engine block		1
11	1315/0305D		Screw, set M8x20			1
12	1420/0007D		Washer, M8 plain			1

Machine groups

Details

Machine group	From serial no.	To serial no.
.426		
426		

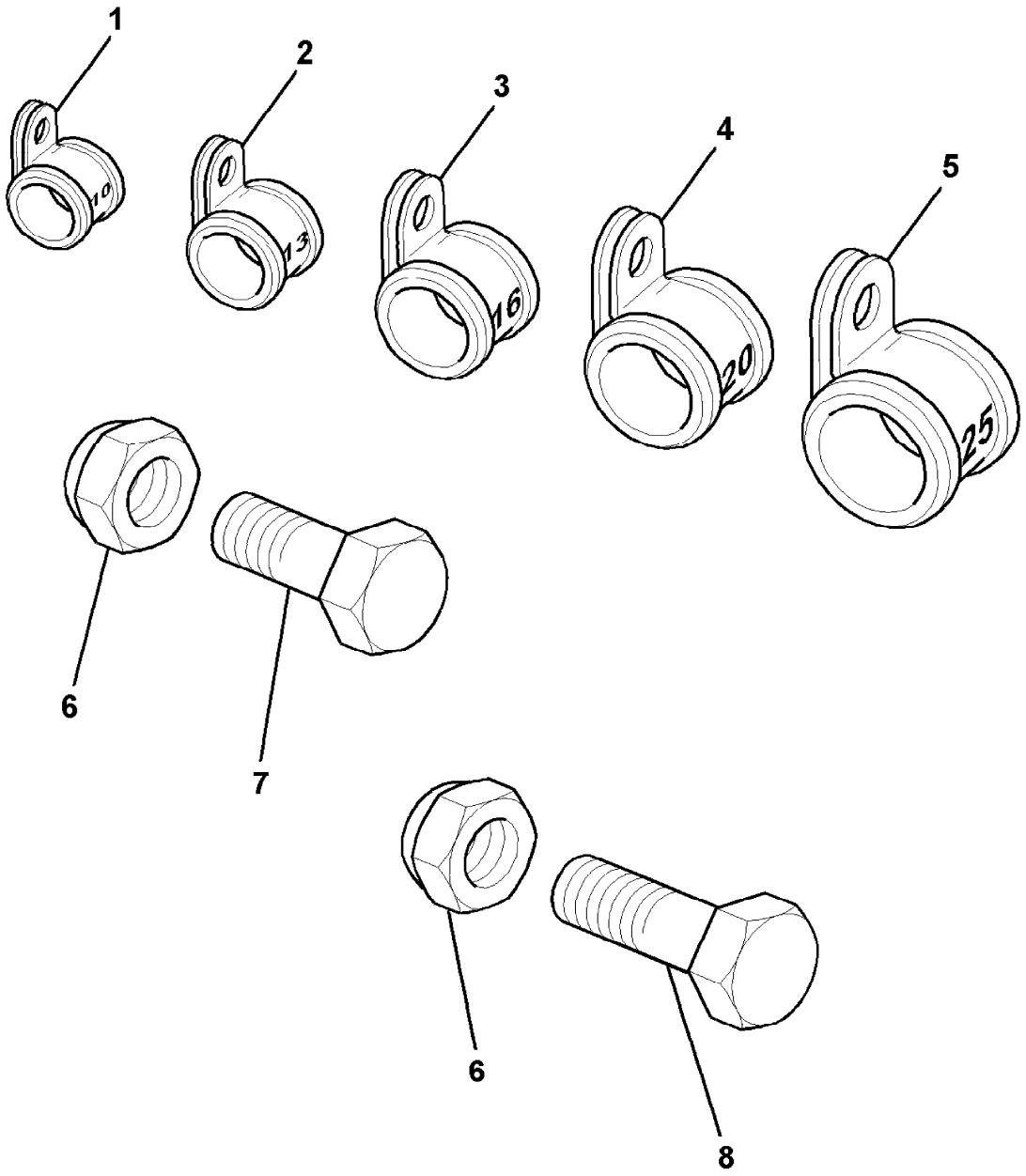

391400

9802/2740 C1-22-1 ELECTRICS TRAILER, 24 VOLT

Item	Part no.	Change No.	Description	Remarks	Usage code	Qty
1	721/11214		Harness, trailer, 24 volt			1
2	719/41400		Harness, and trailer socket			1
3	1391/3109Z		Capscrew			3
4	1420/0005Z		Washer, M5			3
5	1370/0003Z		Nut			3
6	265/02718		Bracket, mounting socket			1
7	1315/0305Z		Screw, M8 x 20mm long			2
8	1420/0007Z		Washer, plain, M8			2
9	2410/1109		Grommet			1
10	716/05300		Relay, hazard			1

Machine groups

Details

Machine group	From serial no.	To serial no.
.426		
426		

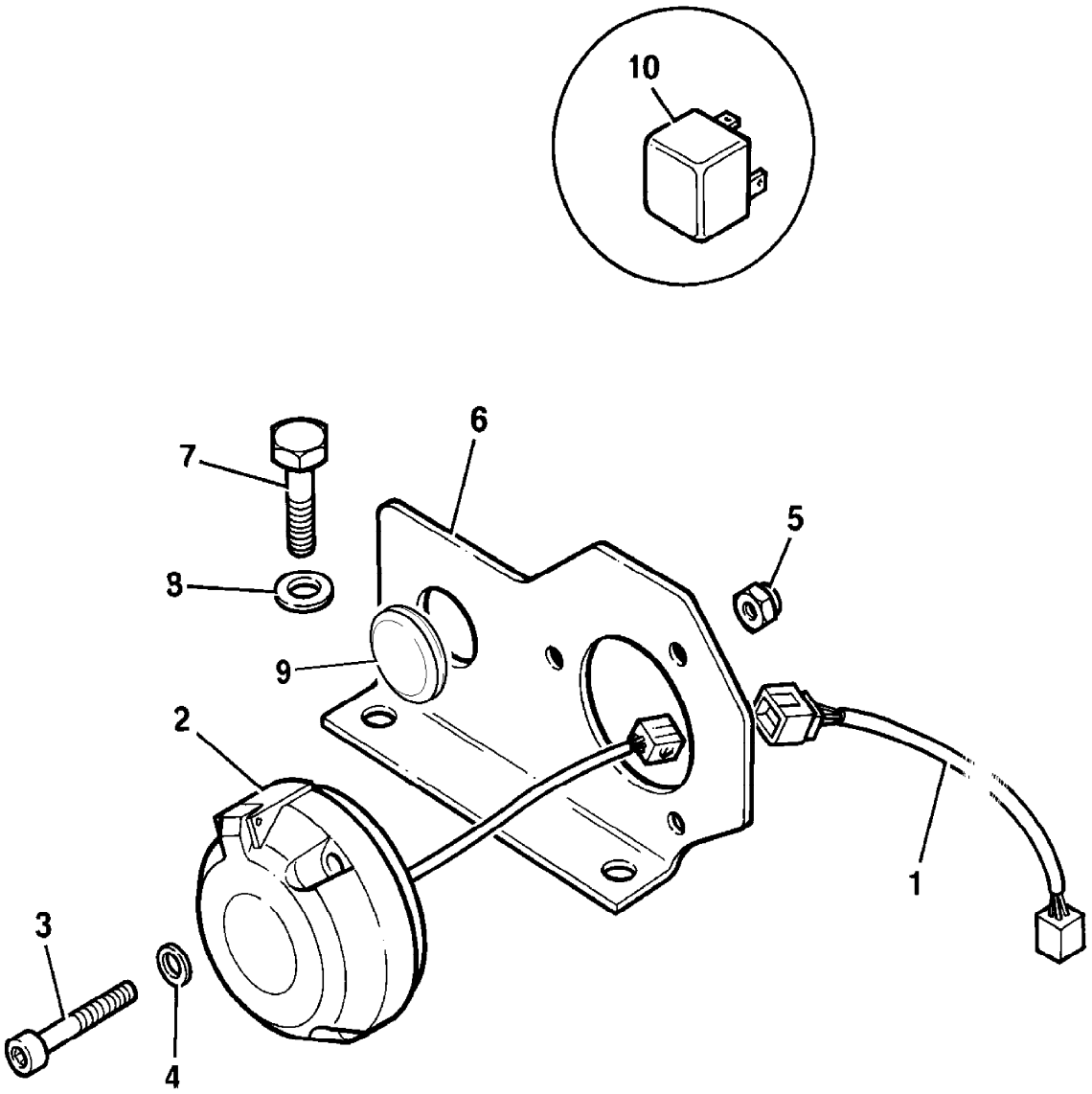

313061

9802/2740 C1-23-1 ELECTRICS TRAILER, 12 VOLT

Item	Part no.	Change No.	Description	Remarks	Usage code	Qty
1	717/14700		Convertor, 24/12 volt			1
2	719/88900		Harness, trailer			1
3	721/11213		Harness, trailor, 12 volt			1
4	1315/0105Z		Bolt, M5 x 20mm long			6
5	1420/0005Z		Washer, M5			15
6	1370/0003Z		Nut			9
7	716/11100		Relay, 24 volt dioded			6
8	716/05705		Fuse, 10 amp			1
9	719/41400		Harness, and trailer socket			1
10	1391/3109Z		Capscrew			3
11	7214/0002		Housing, 4 way pin			1
12	7214/0004		Retainer, 4 way pin			1
13	7210/0003		Seal, wire, 2.2-2.9mm OD brown			4
14	7204/0002		Terminal, male (2.0)			4
15	265/02718		Bracket, mounting socket			1
16	1315/0305Z		Screw, M8 x 20mm long			2
17	1420/0007Z		Washer, plain, M8			2
18	2410/1109		Grommet			1
19	717/15000		Kit, potting compound			A/R

Machine groups

Details

Machine group	From serial no.	To serial no.
.426		FEB06
426		FEB06

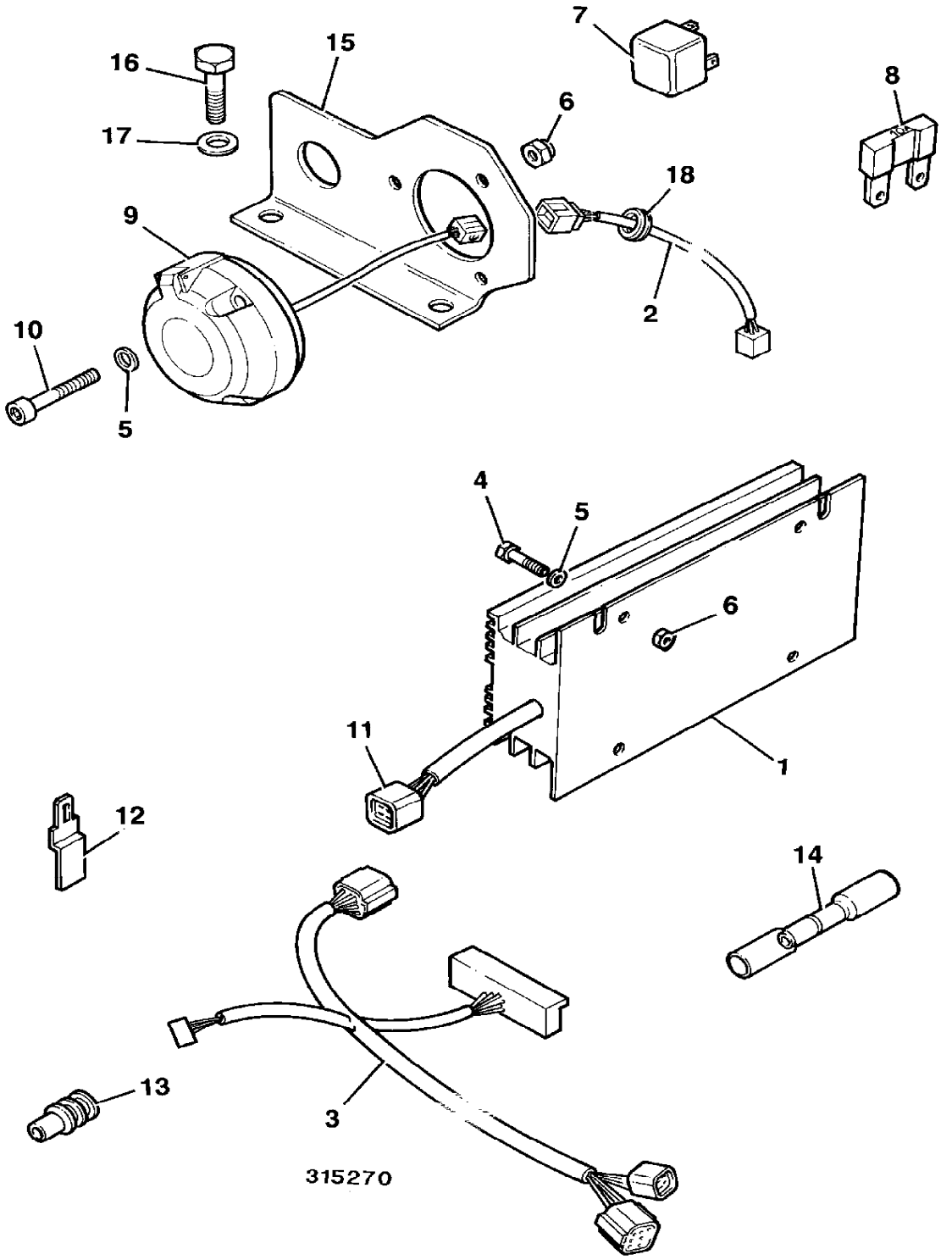
16
17
15
7
6
8
18
9
2
10
5
4
5
6
11
1
12
14
13
3
315270

9802/2740 C1-23-2 ELECTRICS TRAILER, 12 VOLT

Item	Part no.	Change No.	Description	Remarks	Usage code	Qty
1	717/14700		Convertor, 24/12 volt			1
2	331/58707		Bracket, mounting, convertor			1
3	721/11213		Harness, trailor, 12 volt			1
4	1315/0107D		Screw, setscrew M5x25			2
5	1315/0103D		Screw			5
6	1370/0003D		Nut, lock M5			10
7	716/11100		Relay, 24 volt dioded			6
8	716/05705		Fuse, 10 amp			1
9	970/61280		Harness, and trailer socket			1
10	1391/3109D		Capscrew			3
11	7214/0002		Housing, 4 way pin			1
12	7214/0004		Retainer, 4 way pin			1
13	7210/0003		Seal, wire, 2.2-2.9mm OD brown			4
14	7204/0002		Terminal, male (2.0)			4
15	331/58472		Bracket, mounting socket			1
16	1315/1110D		Screw, M30 x 40mm			1
17	1420/0015D		Washer, plain, M30			1
18	2410/1109		Grommet			1
19	821/00329		Clip, 'P' (size No.10), 25mm clamp diameter			1
20	829/00476		Boss			2
21	1420/0005D		Washer			17

Machine groups

Details

Machine group	From serial no.	To serial no.
.426	MAR06	
426	MAR06	

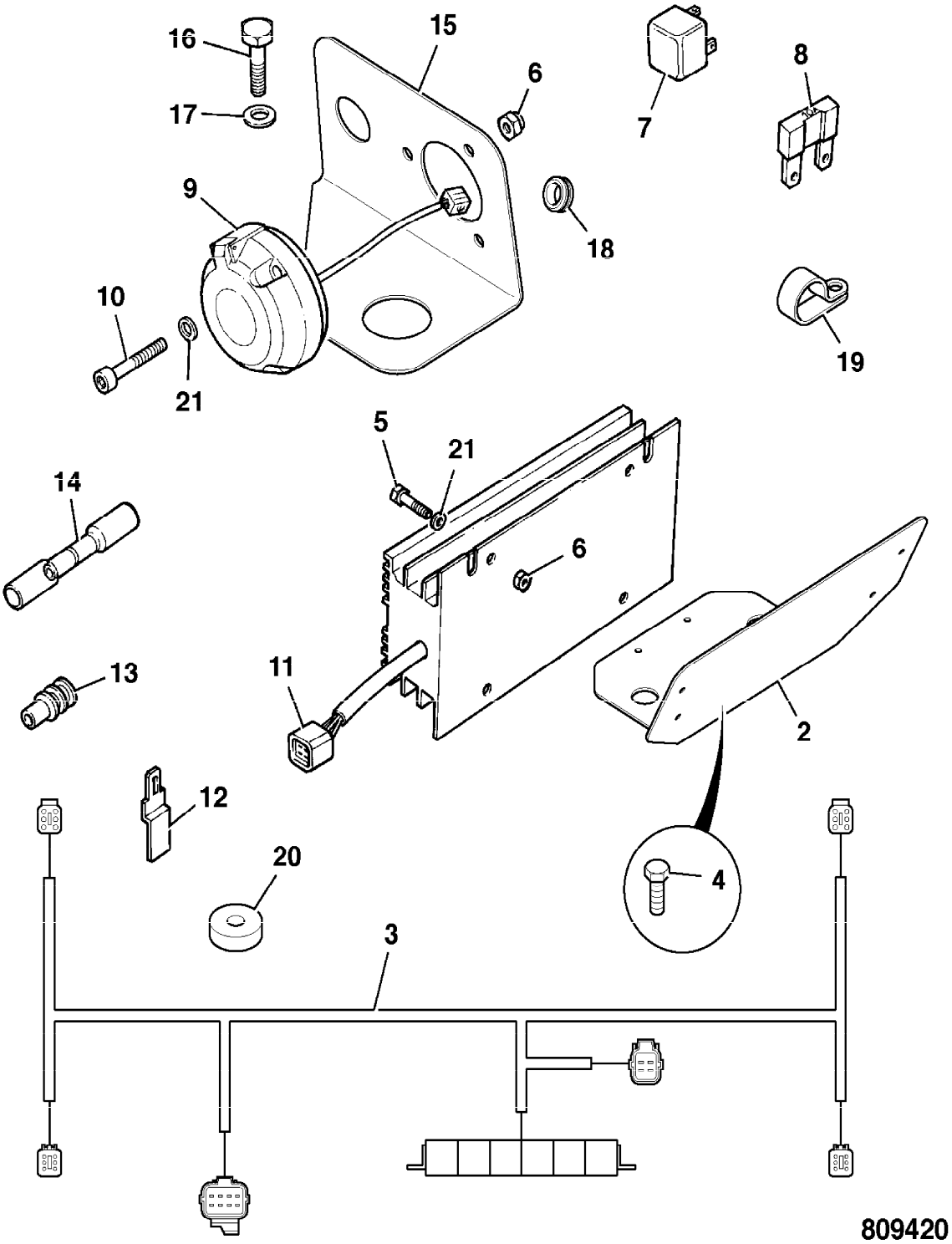
16
17
15
6
7
8
9
18
10
21
19
5
21
14
6
13
11
2
12
20
4
3
809420

9802/2740 C1-24-1 LIGHT, BRAKE, HIGH LEVEL, SALES SPECIAL

Item	Part no.	Change No.	Description	Remarks	Usage code	Qty
1	331/57483		Bracket	Sales special 8220		1
1A	829/30705		Boss			2
2	700/50189		Light, brake, 24 volt			1
3	721/12185		Harness			1
4	970/61415		Cover, engine, modification			1
5	1315/3510D		Bolt, M12 x 40			2
6	1411/0005Z		Washer			2
7	2410/0011		Grommet			1
8	1315/9401D		Setscrew			2
9	1370/9403D		Nut, locking M4			2
10	1420/0004D		Washer, plain M4			2

Machine groups

Details

Machine group	From serial no.	To serial no.
.426		
426		

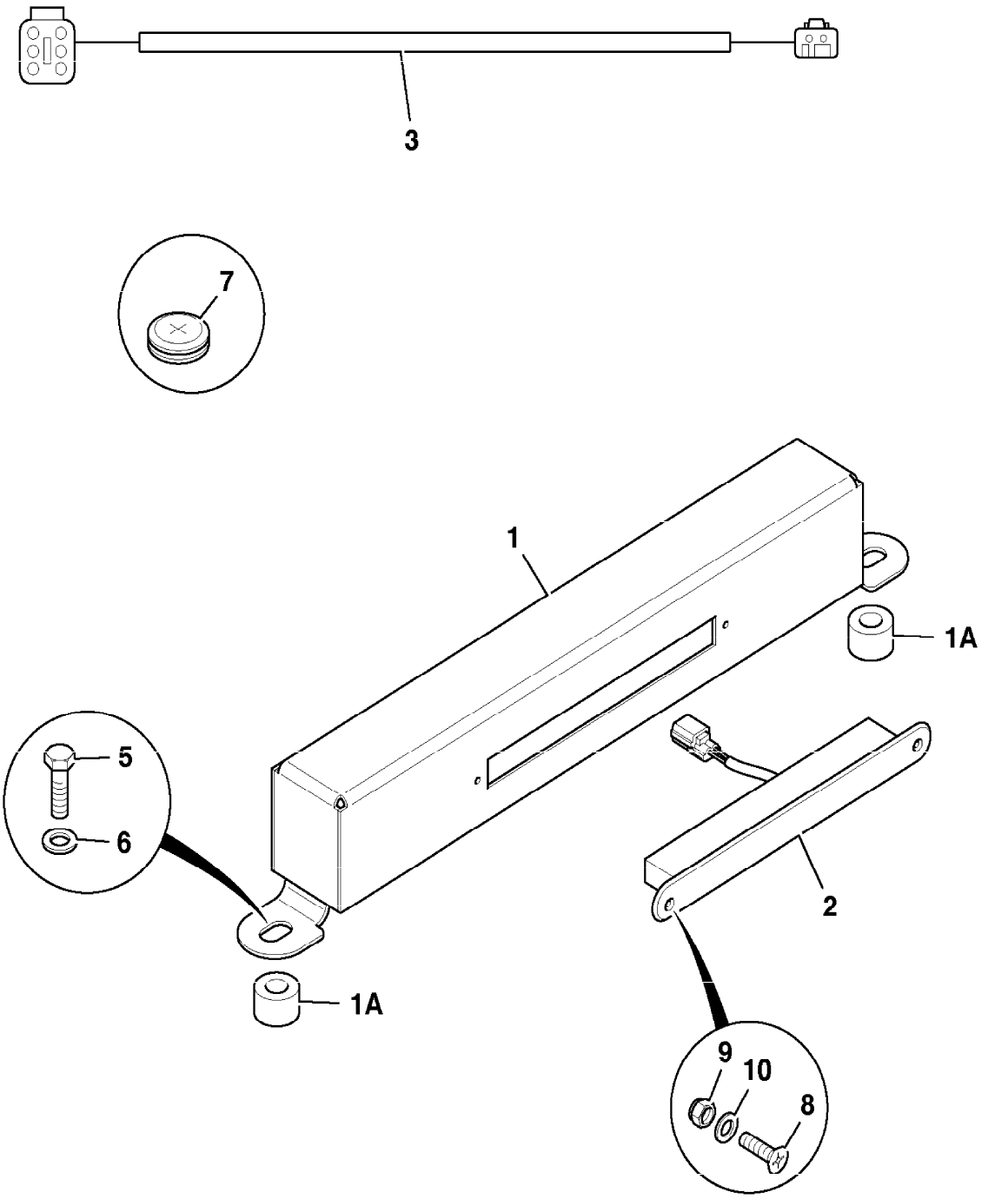

809031

9802/2740 C1-26-1 ELECTRICS, AUXILLIARY SOLENOIDS, PROPORTIONAL CONTROL

Illustration Machines Top of catalogue

Item	Part no.	Change No.	Description	Remarks	Usage code	Qty
4	721/11943		Harness, Prop. aux. control			1
5	721/11944		Harness, valve block, 4 spool			1
	721/11945		Harness, valve block, 3 spool			1
6	716/10700		Plug, single diode			2
7	728/19000		Amplifier, micro			1
9	716/11100		Relay, 24 volt dioded			1
10	701/60031		Switch, 24V			1
11	701/58713		Cover, aux, decal			1
12	701/60037		Gasket, switch			1

Machine groups

Details

Machine group	From serial no.	To serial no.
.426		
426		

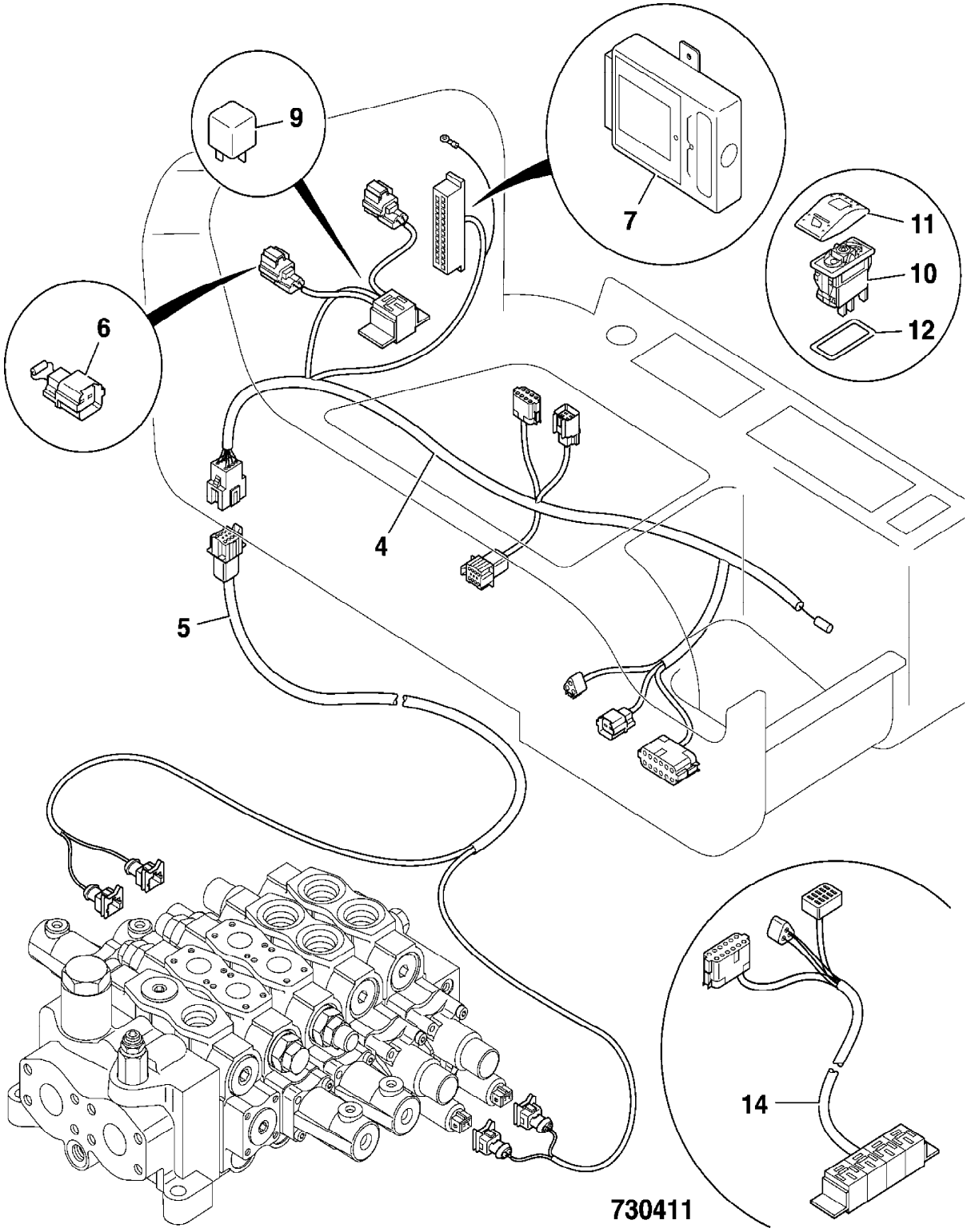
9
7
11
10
12
6
4
5
14
730411

9802/2740 C1-27-1 ELECTRICS, EMERGENCY STEER

Item	Part no.	Change No.	Description	Remarks	Usage code	Qty
0A	701/74400		Switch, pressure			1
1	TBA		Part number, Not Yet Known			1
2	718/20190		Cable			1
3	718/20191		Cable	Relay to Emergancy steer pump		1
4	718/20224		Cable			1
5	716/21900		Holder, fuse			1
6	716/30195		Fuse, 125Amp			1
7	716/30203		Relay			1
8	821/10087		Clip	Item 4 to bulkhead		2
11	1315/0205D		Setscrew, M6 x 20mm long			4
12	1315/0207D		Screw, M6 x 25mm			1
13	1420/0006D		Washer, M6 plain			10
14	1370/0103D		Nut, M6 lock			5
15	.		'See Remark'	Not fitted		1
16	.		'See Remark'	Not fitted		1
17	704/50091		Timer			1
18	826/01524		Screw, selftap			2
19	716/30133		Relay, Micro 24V			1
20	716/05703		Fuse, 5 Amp			1
21	701/60041		Switch, 24V			1
23	701/58718		Cover, steer switch decal			1

Machine groups

Details

Machine group	From serial no.	To serial no.
.426		
426		

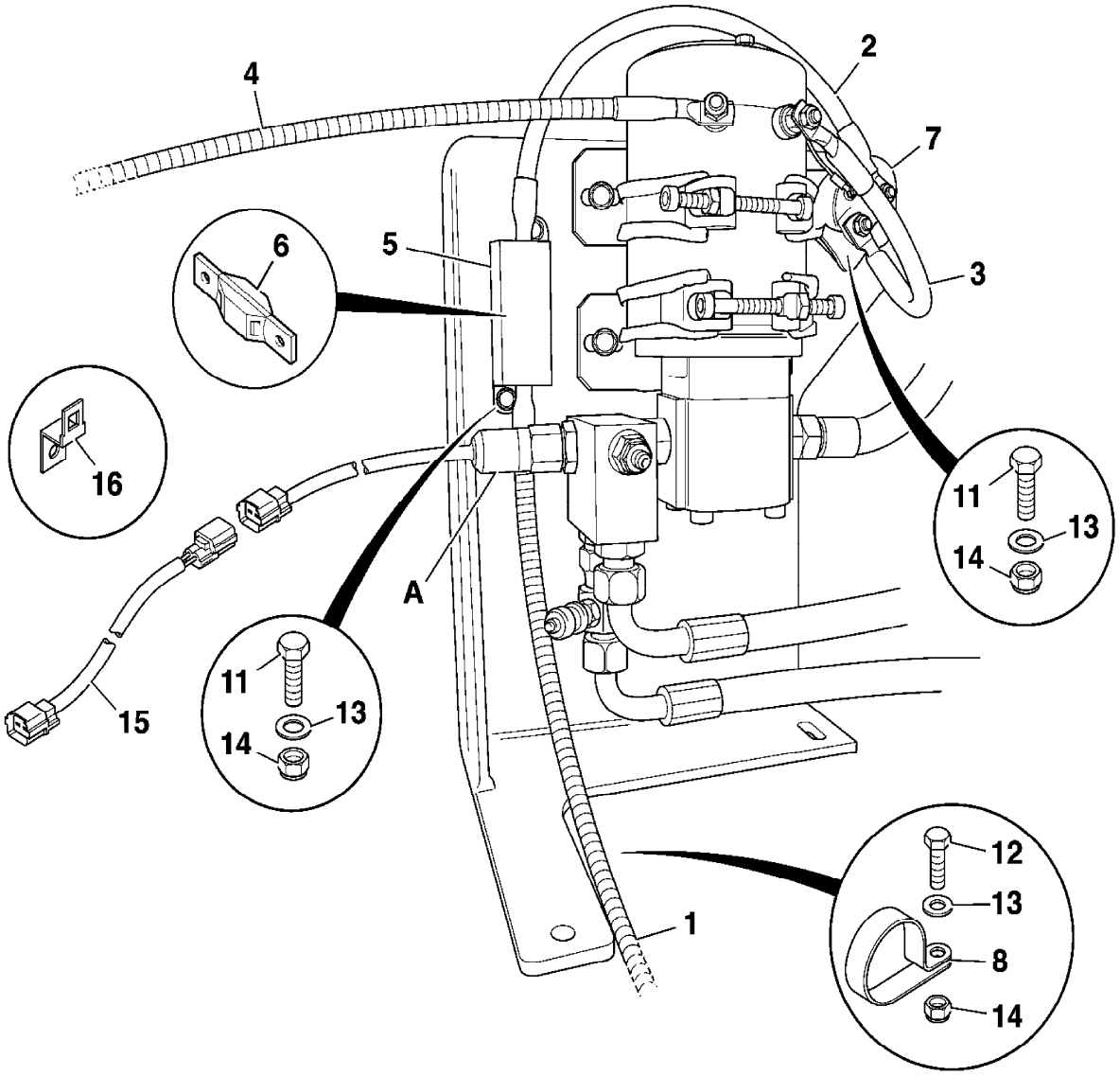

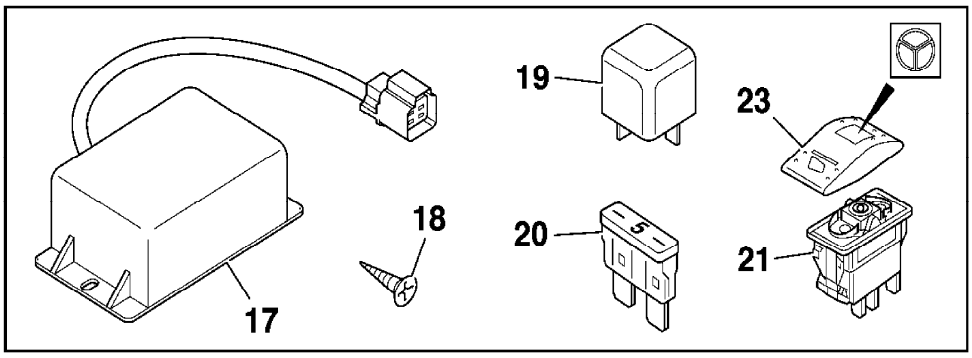

765840

9802/2740 C1-28-1 EARTH LEADS

Item	Part no.	Change No.	Description	Remarks	Usage code	Qty
1	718/20099		Lead, braided earth	Cab and Engine		2
2	1315/0405D		Setscrew	Engine mounting		1
	1315/0505D		Screw, M12x20	Cab mounting		1
3	1420/0008D		Washer, M10	Engine mounting		1
	1420/0009D		Washer, M12	Cab mounting		1
4	.		'See Remark'	Not fitted		1
5	1370/0203D		Nut, lock			1
6	1420/0007D		Washer, M8 plain	Cab mounting		1
7	.		'See Remark'	Not fitted		1

Machine groups

Details

Machine group	From serial no.	To serial no.
.426		
426		

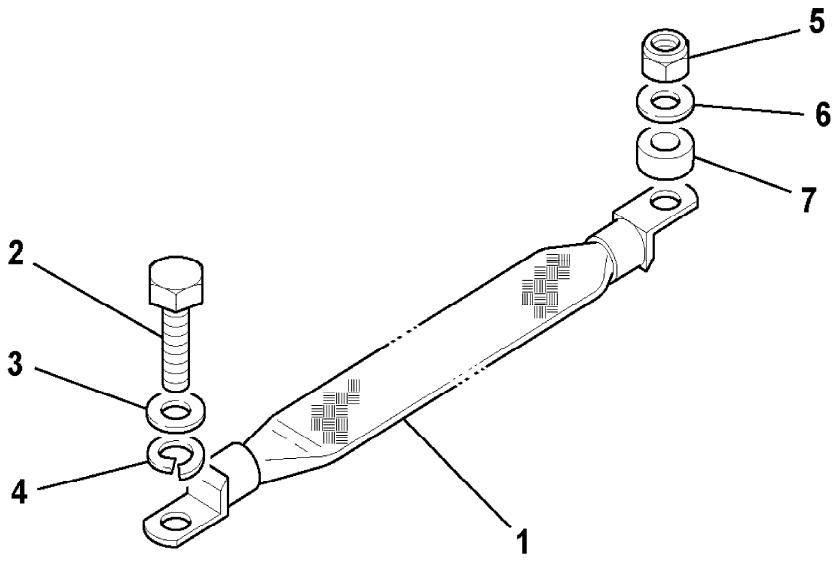

739580

9802/2740 C1-3-1 BATTERY & FITTINGS

Item	Part no.	Change No.	Description	Remarks	Usage code	Qty
1	729/10655		Battery, wet charge, 130Ah			2
2	718/20230		Cable, red			1
3	718/20138		Lead, starter to isolator, black			1
4	718/56111		Lead, battery connection			1
5	718/56089		Lead, battery to isolator			1
6	701/47400		Switch, isolator			1
6A	701/47401		Key, isolator switch			1
7	1315/0307D		Setscrew, M8x25			2
8	1420/0007D		Washer, M8 plain			4
9	1370/0203D		Nut, lock			2
10	265/00883		Clamp, battery			1
11	826/11131		Bolt, swing			3
12	1420/0006D		Washer, M6 plain			7
13	1370/0101D		Nut, plain			6
14	821/00306		Clip, 'P' (size No.6), 20mm clamp diameter			3
15	826/01277		Nut, vibration proof			3
16	331/40330		Cover, battery terminal			1
17	821/00213		Clamp, Top			4
18	821/00214		Clamp, Base			4
19	821/00215		Insert, Clamp			4
20	1315/0408D		Setscrew, M10 x 30			3
21	1420/0008D		Washer, M10			8
22	1370/0303D		Nut, M10			4
23	262/04601		Spacer	To engine mount		1
24	1315/3412D		Bolt, M10 x 50	For item 23		1
25	2410/0114		Grommet	For Rad. baffle		2
31	265/00893		Cover, battery isolator			1

Machine groups

Details

Machine group	From serial no.	To serial no.
.426		
426		

.

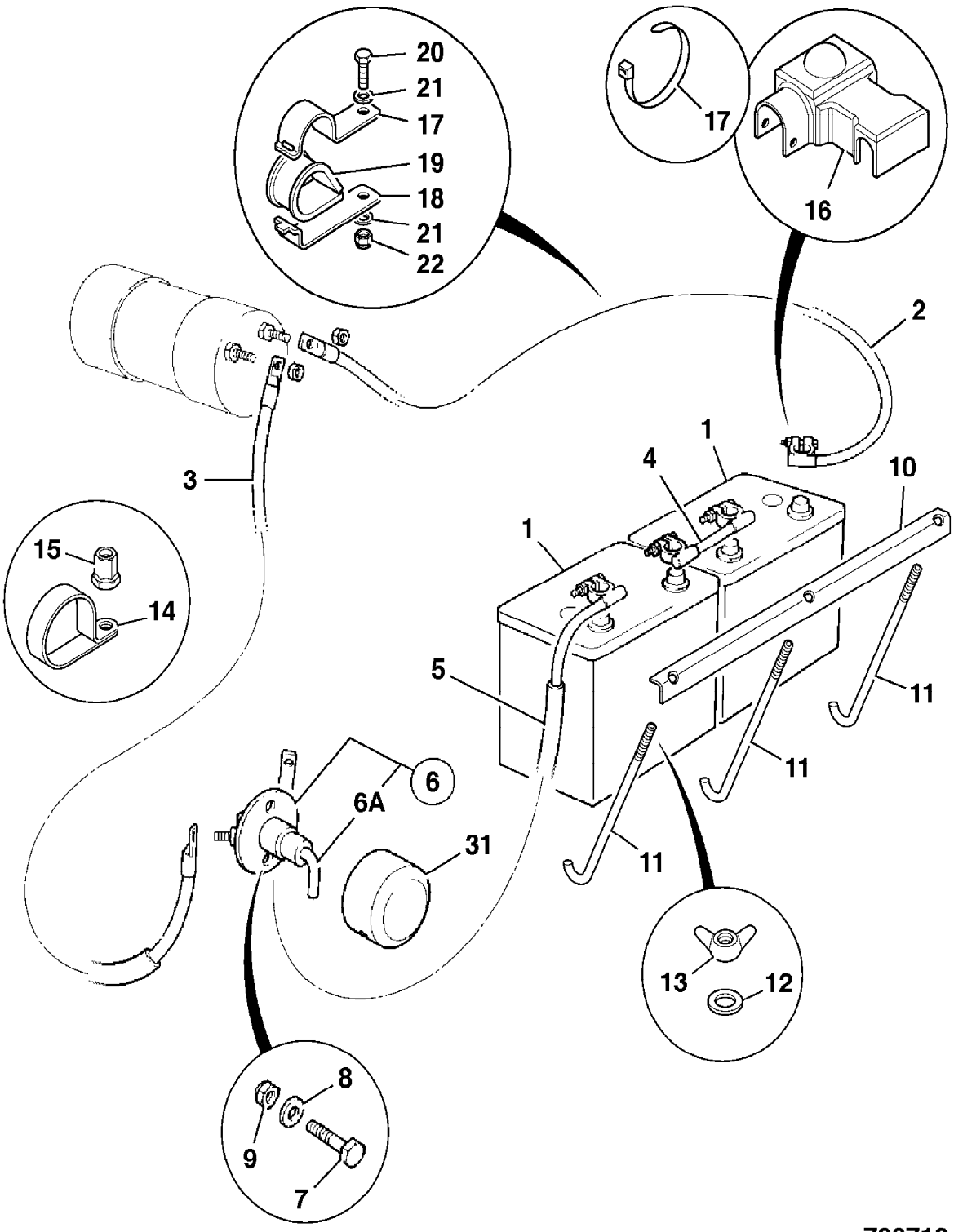

9802/2740 C2-1-1 ELECTRICAL EQUIPMENT

Item	Part no.	Change No.	Description	Remarks	Usage code	Qty
1	714/40256		Motor, starter		P/Ex	1
2	714/40388		Alternator, assembly, 24V-70amp		P/Ex	1
3	716/30233		Solenoid, fuel advance			1
4	716/30248		Solenoid			1
5	716/30128		Sender, temperature			1
6	701/58721		Switch, vacuum pressure			1
7	701/60065		Switch, engine oil pressure			1
8	717/20177		Heater, air intake			1
9	717/20179		Switch, thermo, fuel			1
10	717/20178		Harness, fuel pump			1
11	716/23400		Relay, heater 24v			1

Machine groups

Details

Machine group	From serial no.	To serial no.
.426		
426		

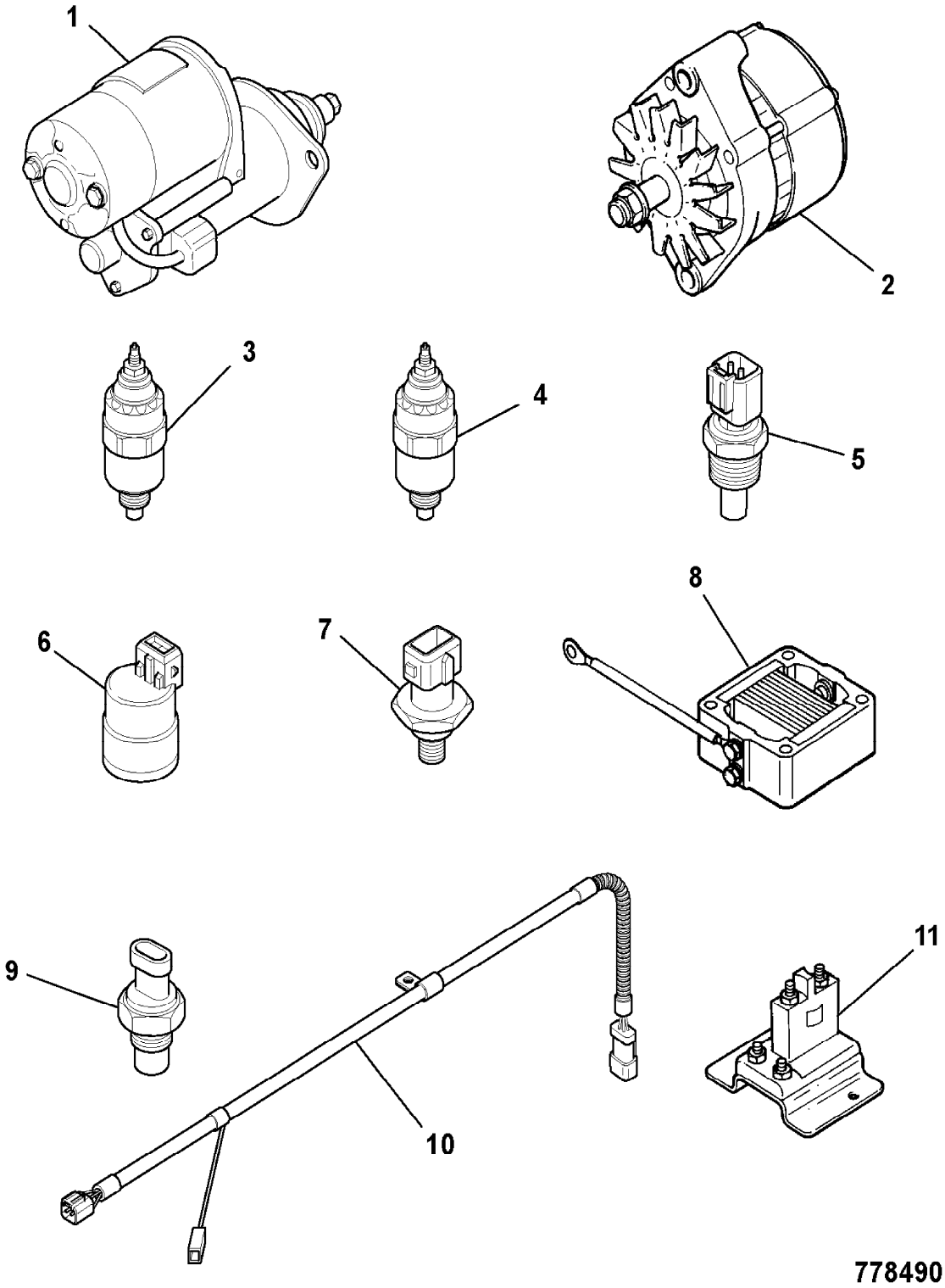
1
2
3
4
5
6
7
8
9
10
11
778490

9802/2740 C2-2-1 ENGINE PRE-HEAT

Item	Part no.	Change No.	Description	Remarks	Usage code	Qty
1	718/20278		Cable, battery to relay			1
2	716/21900		Holder, fuse			1
3	716/30195		Fuse, 125Amp			1
4	1315/0205D		Setscrew, M6 x 20mm long			4
5	1420/0006D		Washer, M6 plain			4
6	718/20191		Cable			1
7	716/23400		Relay, heater 24v			1
8	718/56115		Cable, relay to grid heater			1
9	821/10087		Clip			1
10	826/01453		Tie, cable, double head			2
11	821/00306		Clip, 'P' (size No.6), 20mm clamp diameter			1
12	265/02808		Bracket, mounting P clip	No longer fitted		1
13	1315/0505D		Screw, M12x20	No longer fitted		1
14	1420/0009D		Washer, M12	No longer fitted		1
15	1370/0103D		Nut, M6 lock	No longer fitted		1

Machine groups

Details

Machine group	From serial no.	To serial no.
.426		
426		

IMAGE NOT FOUND

9802/2740 C2-3-1 MOTOR, STARTER, 24 VOLT

Item	Part no.	Change No.	Description	Remarks	Usage code	Qty
1	714/40256		Motor, starter			1

Machine groups

Details

Machine group	From serial no.	To serial no.
.426		
426		

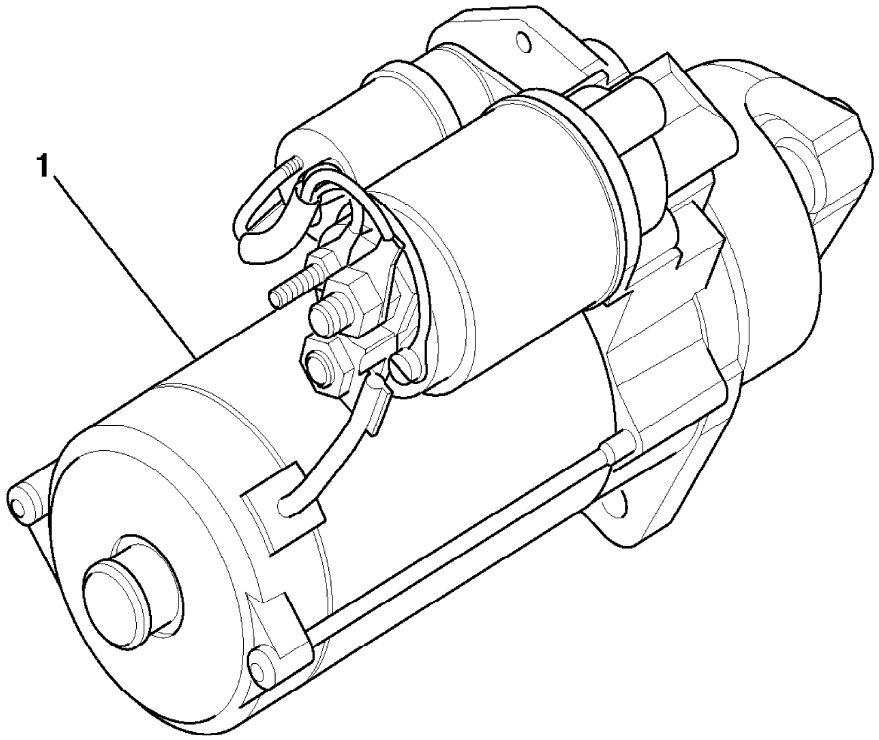

427150

9802/2740 C2-4-1 ALTERNATOR

Item	Part no.	Change No.	Description	Remarks	Usage code	Qty
	714/40388		Alternator, assembly, 24V-70amp			1

Machine groups

Details

Machine group	From serial no.	To serial no.
.426		
426		

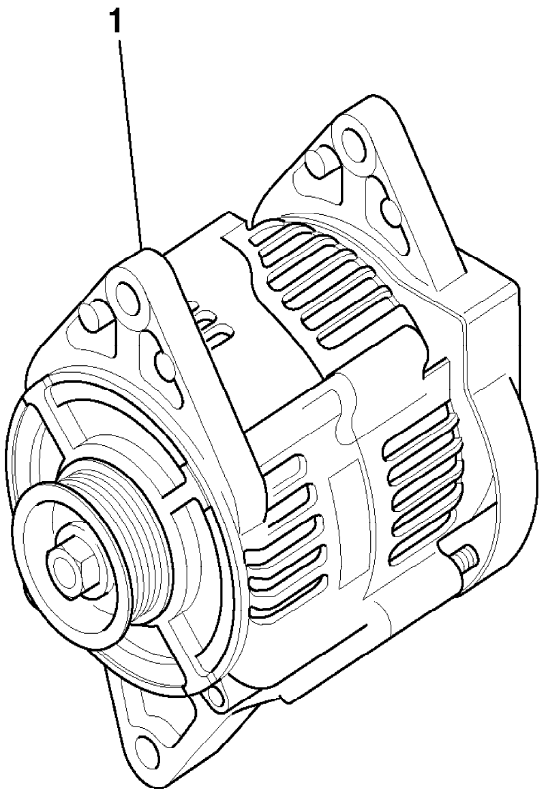

785650

9802/2740 C2-4-2 ALTERNATOR GUARD

Item	Part no.	Change No.	Description	Remarks	Usage code	Qty
	331/54641		Guard, pulley			1
2	331/37157		Bracket, guard			1
3	331/32041		Bracket, mounting, pulley guard			1
4	1315/0307D		Setscrew, M8x25			3
5	1315/0303D		Setscrew			1
6	1370/0201D		Nut, M8			3
7	1420/0007D		Washer, M8 plain			7

Machine groups

Details

Machine group	From serial no.	To serial no.
.426		
426		

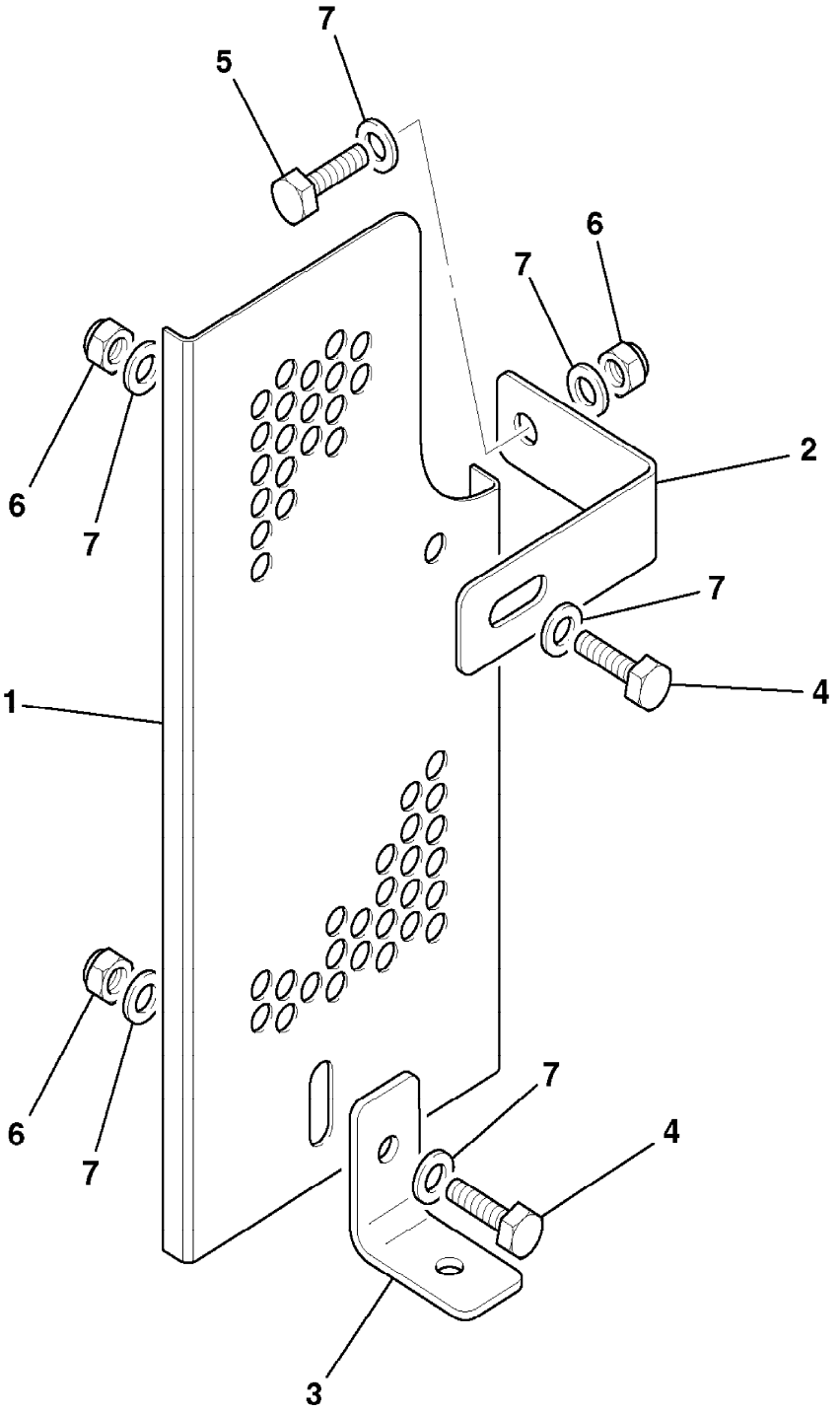

786730

9802/2740 C2-5-1 ALTERNATOR MOUNTINGS

Item	Part no.	Change No.	Description	Remarks	Usage code	Qty
1	02/911443		Bracket, alternator support			1
2	02/911007		Bolt, M8x1.25x25			3
3	826/10759		Bolt, flange head			1
4	02/911226		Nut, flange head			1
5	02/911442		Lever, alternator			1
6	02/911122		Screw, flange head, M10 x 25			1
7	02/911119		Screw			1

Machine groups

Details

Machine group	From serial no.	To serial no.
.426		
426		

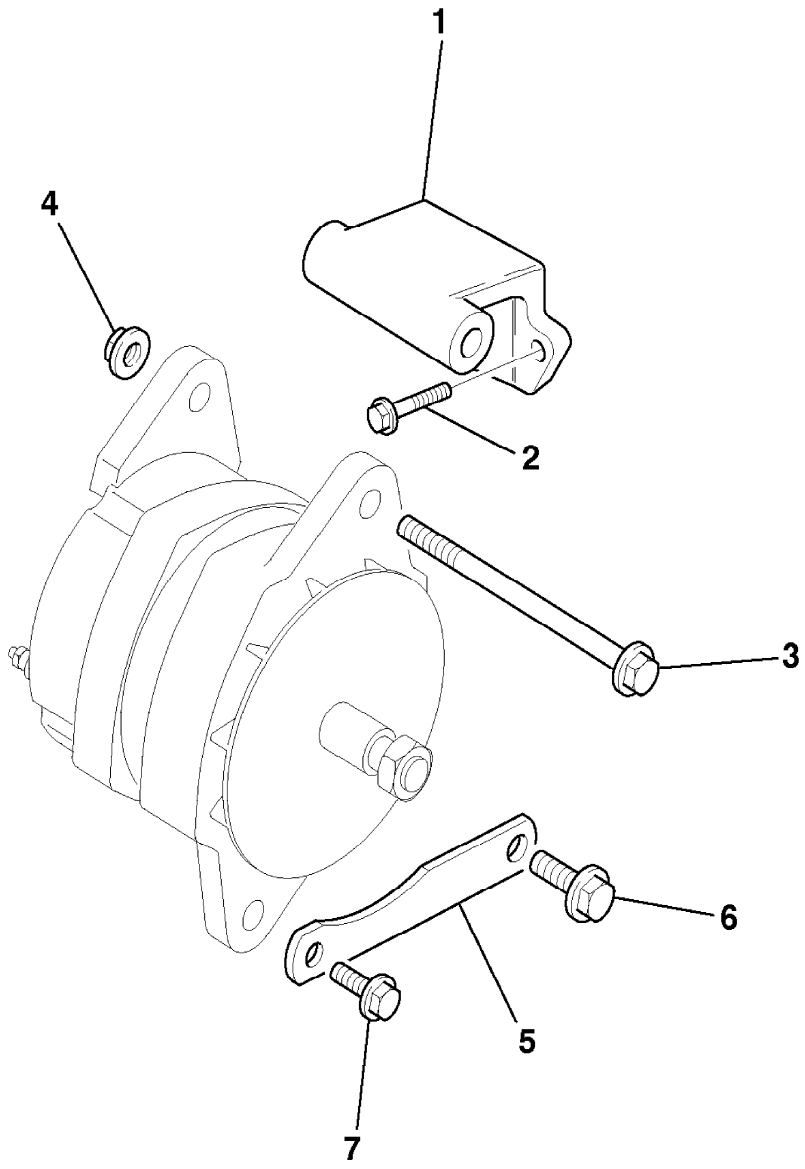

427010

9802/2740 C2-6-1 ENGINE BLOCK HEATER, 120V

Item	Part no.	Change No.	Description	Remarks	Usage code	Qty
1	30/926062		Kit-heater, engine block			1
2	721/11796		:Harness, assembly			1
3	717/09602		:Housing, plug			1
4	717/09603		:Cover, hinged			1
5	717/10201		:Element, heating			1
6	821/10151		:Clip, core plug heater			1
7	717/20119		:Shield, Heat			1
8	331/57656		Bracket, heater mounting			1
9	826/00896		Screw, M5X0.8X20mm long			2
10	1370/0003D		Nut, lock M5			2
11	1315/0308D		Setscrew, M8 x 30mm long			2
12	1370/0203D		Nut, lock			2
13	1420/0007D		Washer, M8 plain			4

Machine groups

Details

Machine group	From serial no.	To serial no.
.426		
426		

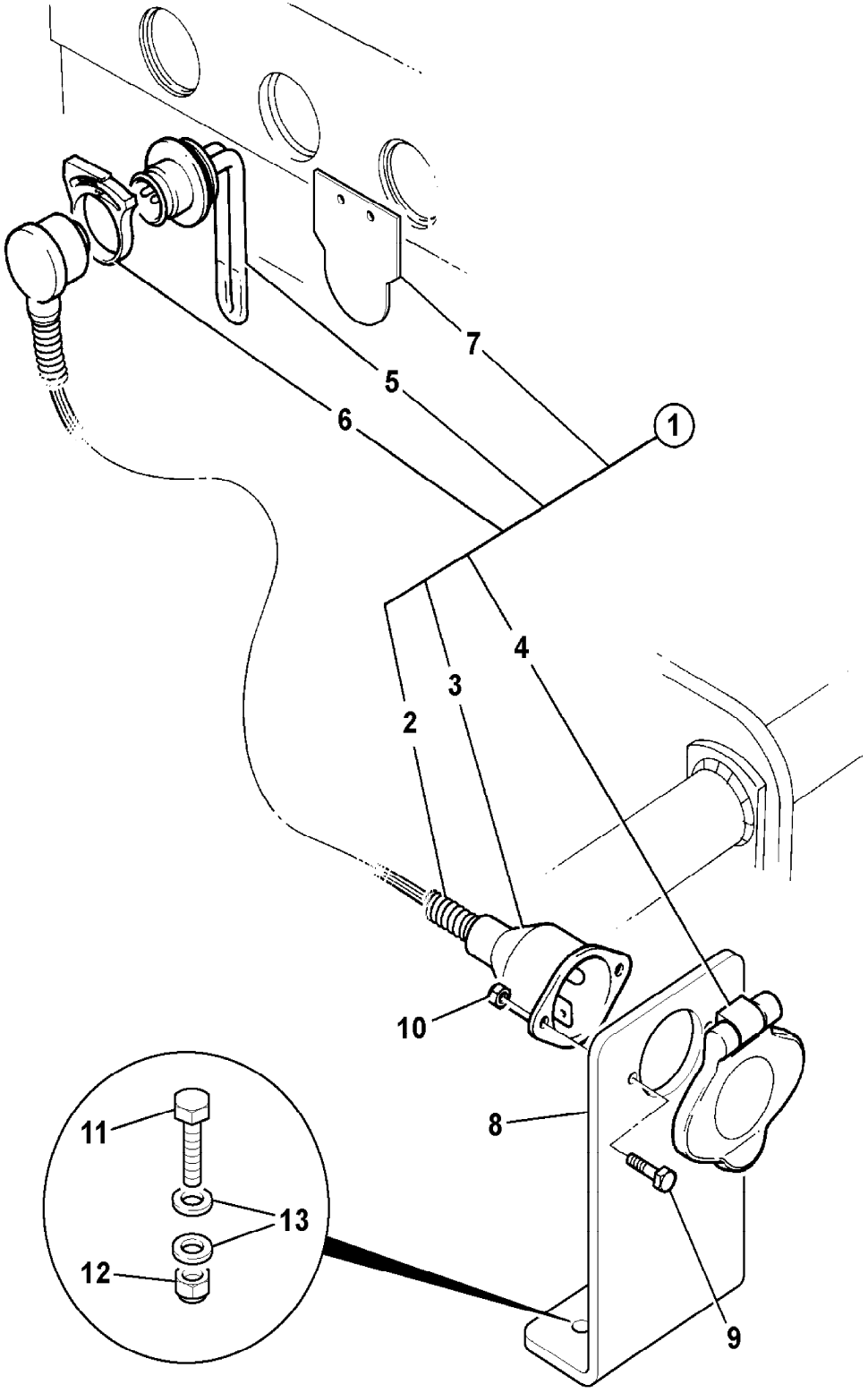

781671

9802/2740 C3-1-1 INSTRUMENT PANEL, 24 VOLT

Item	Part no.	Change No.	Description	Remarks	Usage code	Qty
1	728/80077	Superseded	Panel, instrument, including software			1
	728/80110	Superseded	Panel, instrument, including software			1
	728/80114		Panel, instrument, including software			1
20	701/80184		Switch, ignition			1
20A	701/45501		:Key, Door/Ignition, Ref 14657			1
21	704/26500		Alarm, buzzer			1

Machine groups

Details

Machine group	From serial no.	To serial no.
.426		
426		

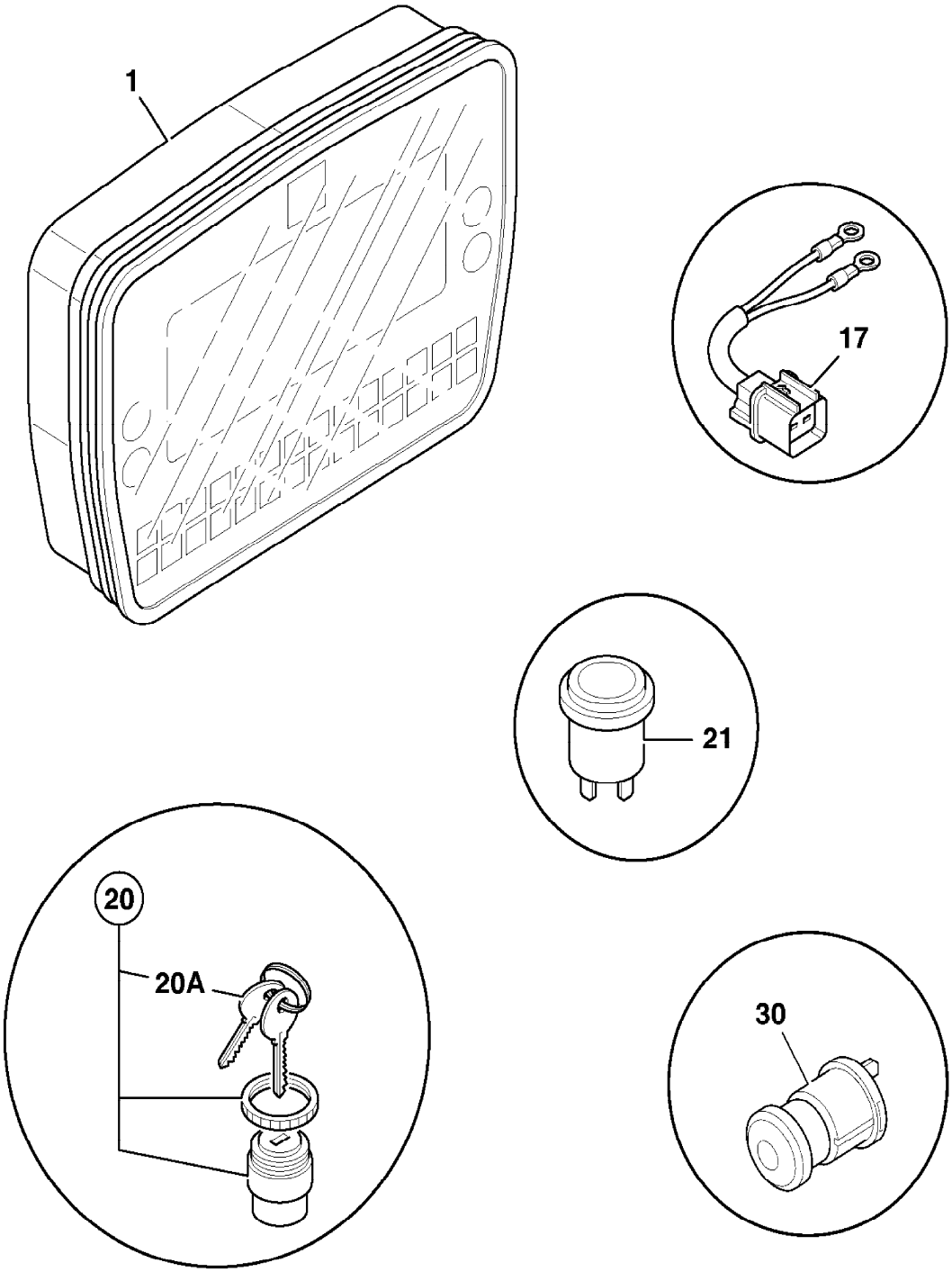

796640

9802/2740 C3-10-1 LIGHT, INTERIOR, CAB, 24 VOLT

Item	Part no.	Change No.	Description	Remarks	Usage code	Qty
1	700/37500		Light, interior			1
2	KHN1692		:Bulb, 24v 10w			1

Machine groups

Details

Machine group	From serial no.	To serial no.
.426		
426		

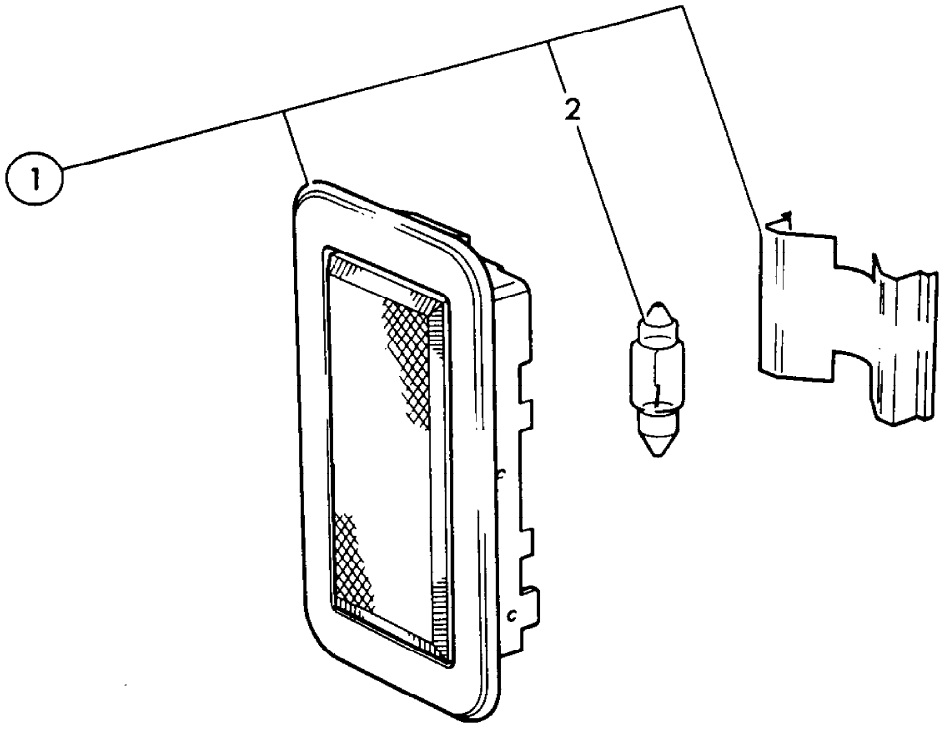

140930

9802/2740 C3-11-1 INSTRUMENT PANEL, ROOF MOUNTED

Item	Part no.	Change No.	Description	Remarks	Usage code	Qty
1	331/42748		Panel, switch, roof mounting			1
2	331/45324		Panel, stowage box			1
3	826/11021		Screw, Button Head M6x20, Stainless			8
4	701/60030		Switch, 24V			1
5	701/58826		Actuator, front worklights, switch decal			1
6	701/60032		Switch, 24V			1
7	701/58827		Cover, rear working lights, switch decal			1
8	701/60031		Switch, 24V			1
9	701/58825		Actuator, beacon, convoy warning			1
10	701/60031		Switch, 24V			1
11	701/58898		Cover, switch, heated mirror			1
12	701/60031		Switch, 24V			1
13	701/58852		Decal, heated seat, white lens			1
14	701/60010		Blank			1
15	.		'See Remark'	Radio installation see index C3		1
16	717/08600		Cover, Radio Blanking			1

Machine groups

Details

Machine group	From serial no.	To serial no.
.426		
426		

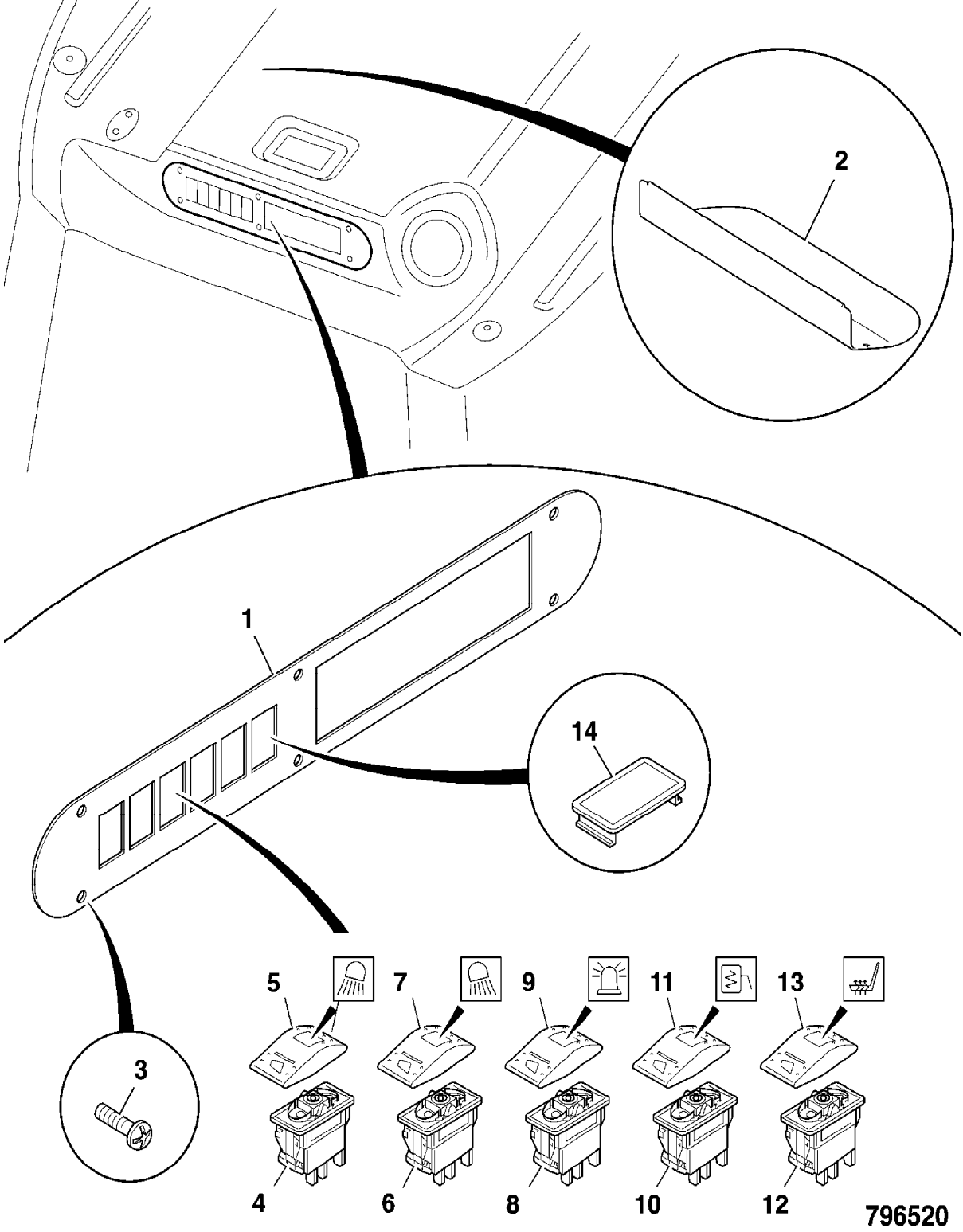
2
1
14
3
5
7
9
11
13
4
6
8
10
12
796520

9802/2740 C3-12-1 ASHTRAY & LIGHTER

Item	Part no.	Change No.	Description	Remarks	Usage code	Qty
1	265/00590		Ashtray			1
2	717/13000		Lighter, cigarette, 24 volt			1
3	265/02188		Bracket			1
4	1430/0102		Screw			4

Machine groups

Details

Machine group	From serial no.	To serial no.
.426		
426		

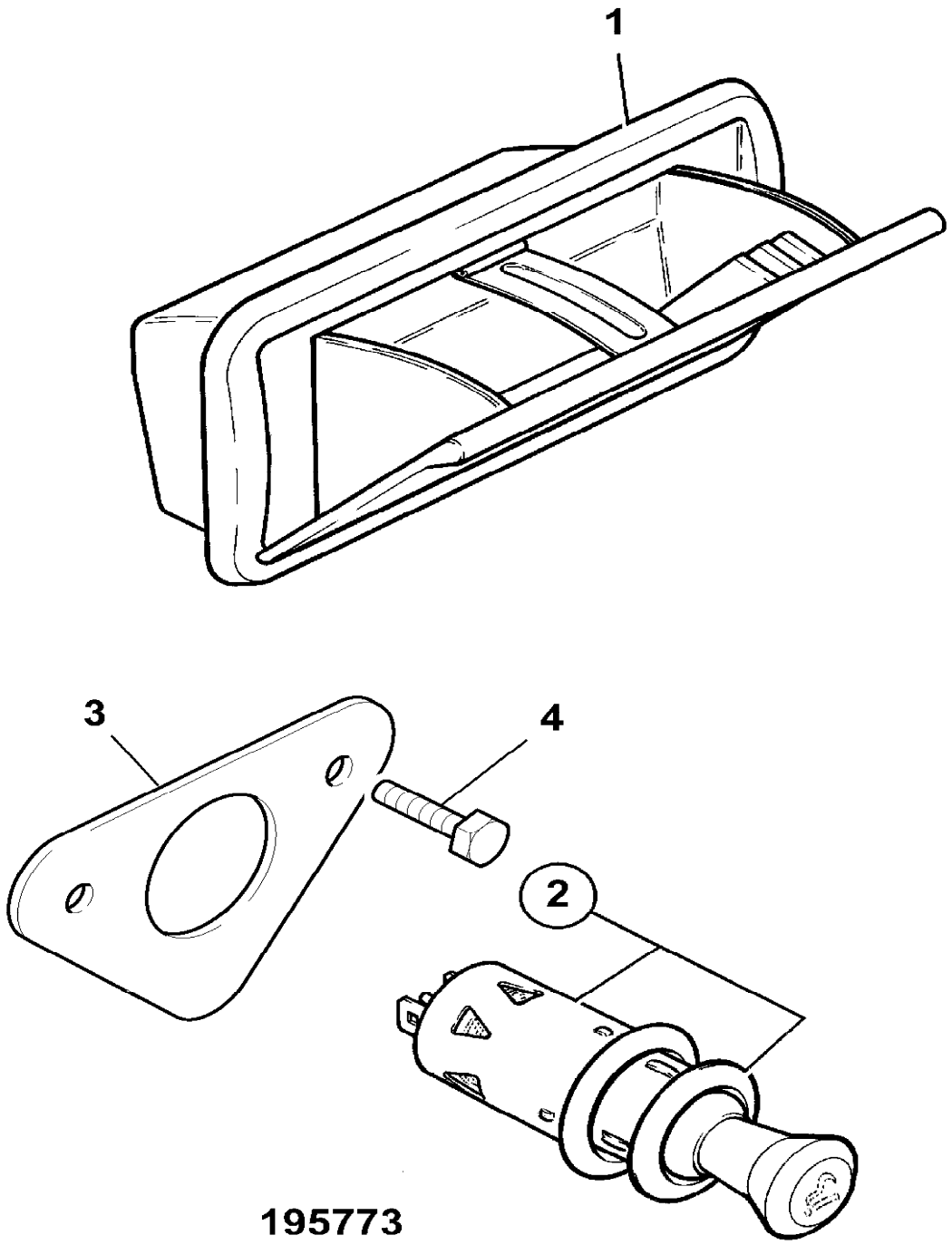
1
3
4
2
195773

9802/2740 C3-14-1 WORK LIGHTS OVAL, FRONT, 24 VOLT

Item	Part no.	Change No.	Description	Remarks	Usage code	Qty
1	700/50147		Light, front working,LH, 24 volt	Single power		1
	700/50148		Light, front working,RH, 24 volt	Single power		1
	700/50149		Light, front working,LH, 24 volt	Twin power		1
	700/50150		Light, front working,RH, 24 volt	Twin power		1
2	720/20032		:Bulb, H3 24v 70w	2 off bulbs for twin power units		1
3	335/08836		Bracket			1
4	826/00529		Screw, cap			1
5	823/00529		Washer, M8 black			1

Machine groups

Details

Machine group	From serial no.	To serial no.
.426		
426		

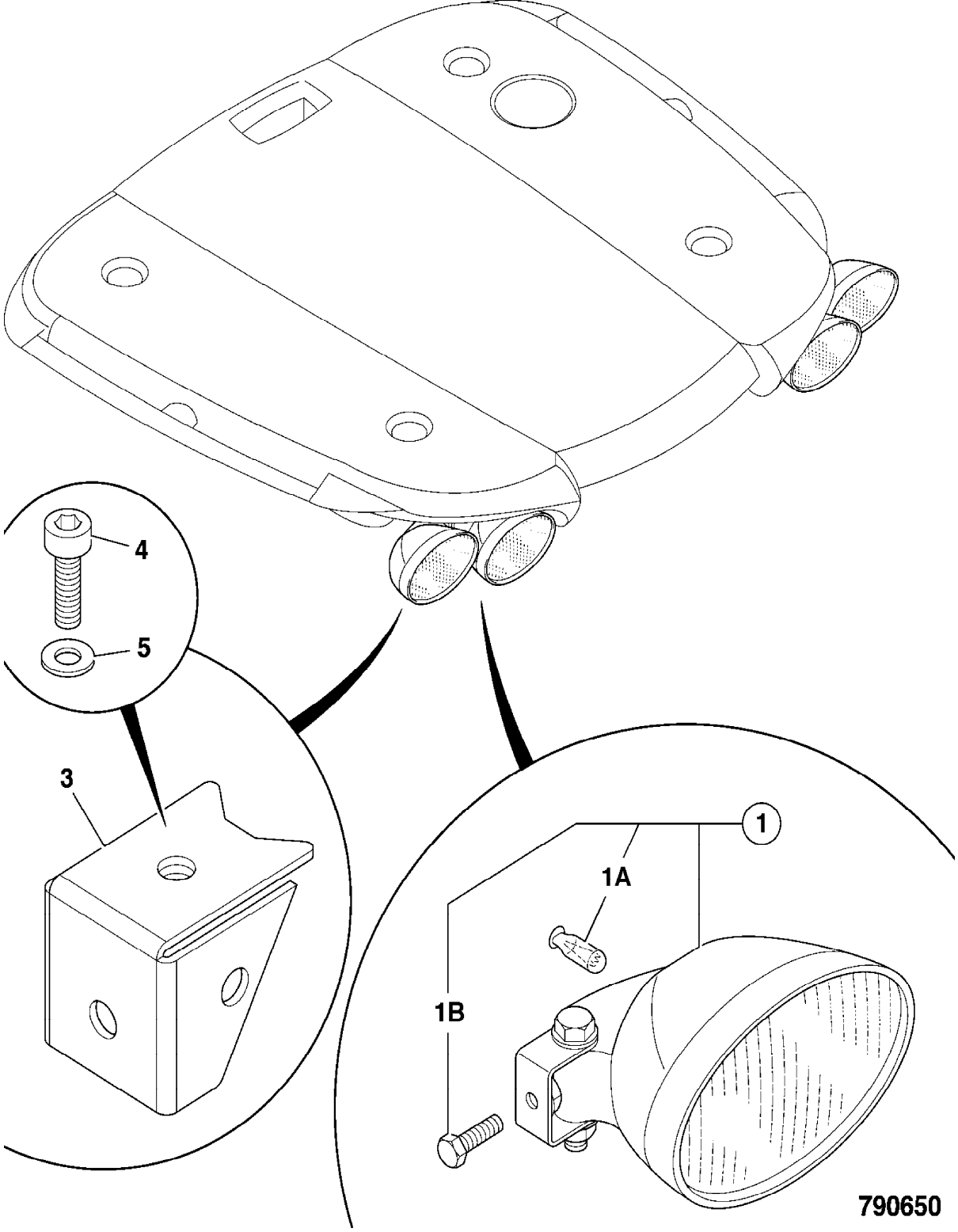
4
5
3
1
1A
1B
790650

9802/2740 C3-15-1 WORK LIGHTS OVAL, REAR, 24 VOLT

Item	Part no.	Change No.	Description	Remarks	Usage code	Qty
1	700/50147		Light, front working,LH, 24 volt			1
2	700/50148		Light, front working,RH, 24 volt			1
3	331/47737		Plate, mounting, rear work light			1
4	826/01486		Screw, M8 x 20, socket type			2
5	823/00529		Washer, M8 black			2

Machine groups

Details

Machine group	From serial no.	To serial no.
.426		
426		

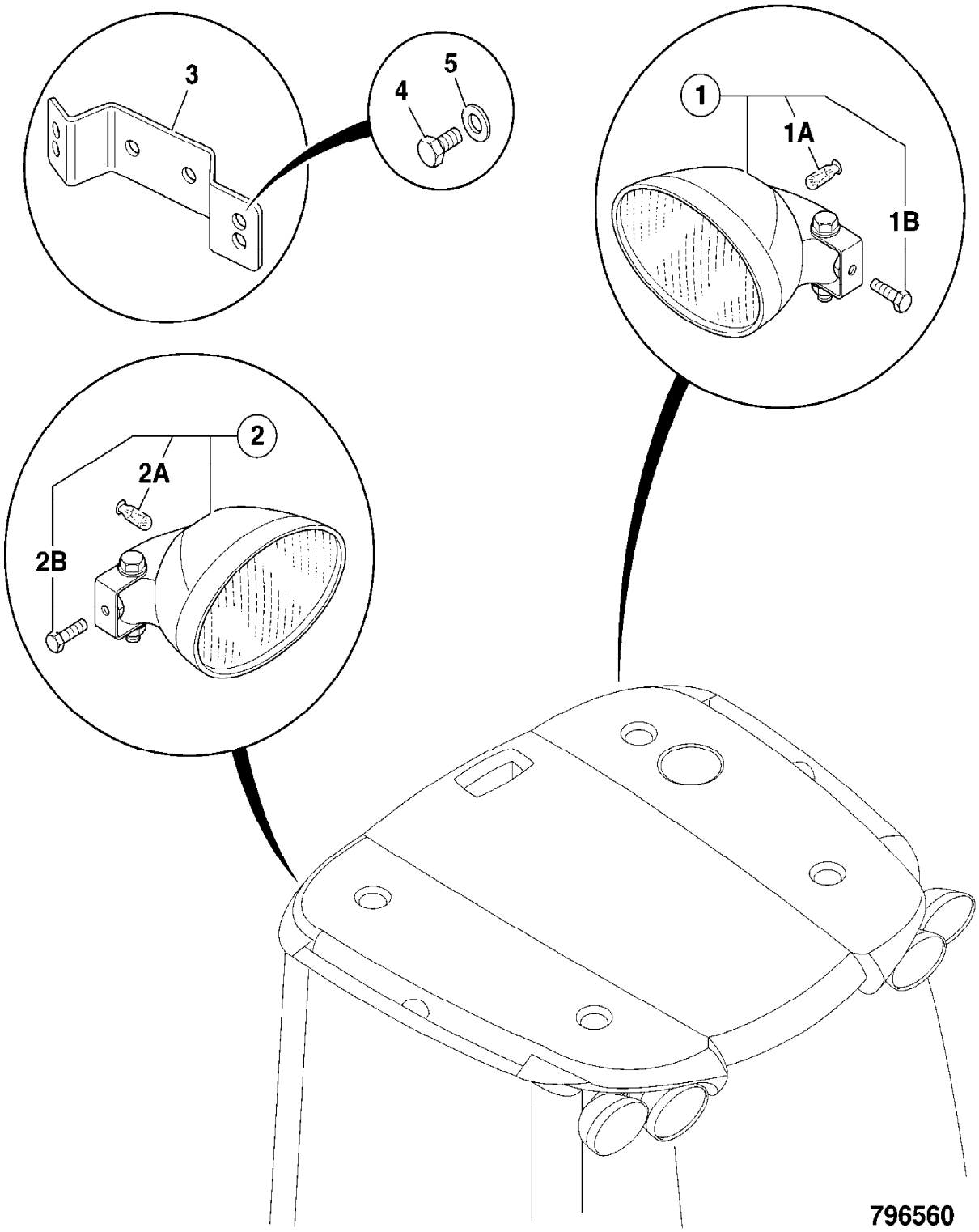
3
4
5
1
1A
1B
2
2A
2B
796560

9802/2740 C3-16-1 CONTROL UNIT, TRANSMISSION

Item	Part no.	Change No.	Description	Remarks	Usage code	Qty
1	04/600661		Unit, transmission control			1
	04/600652		Unit, transmission control, no 3rd/4th gears			1
	04/600775		Unit, control, 6 speed	Sales Special 7696,7938 and 8049		1

Machine groups

Details

Machine group	From serial no.	To serial no.
.426		
426		

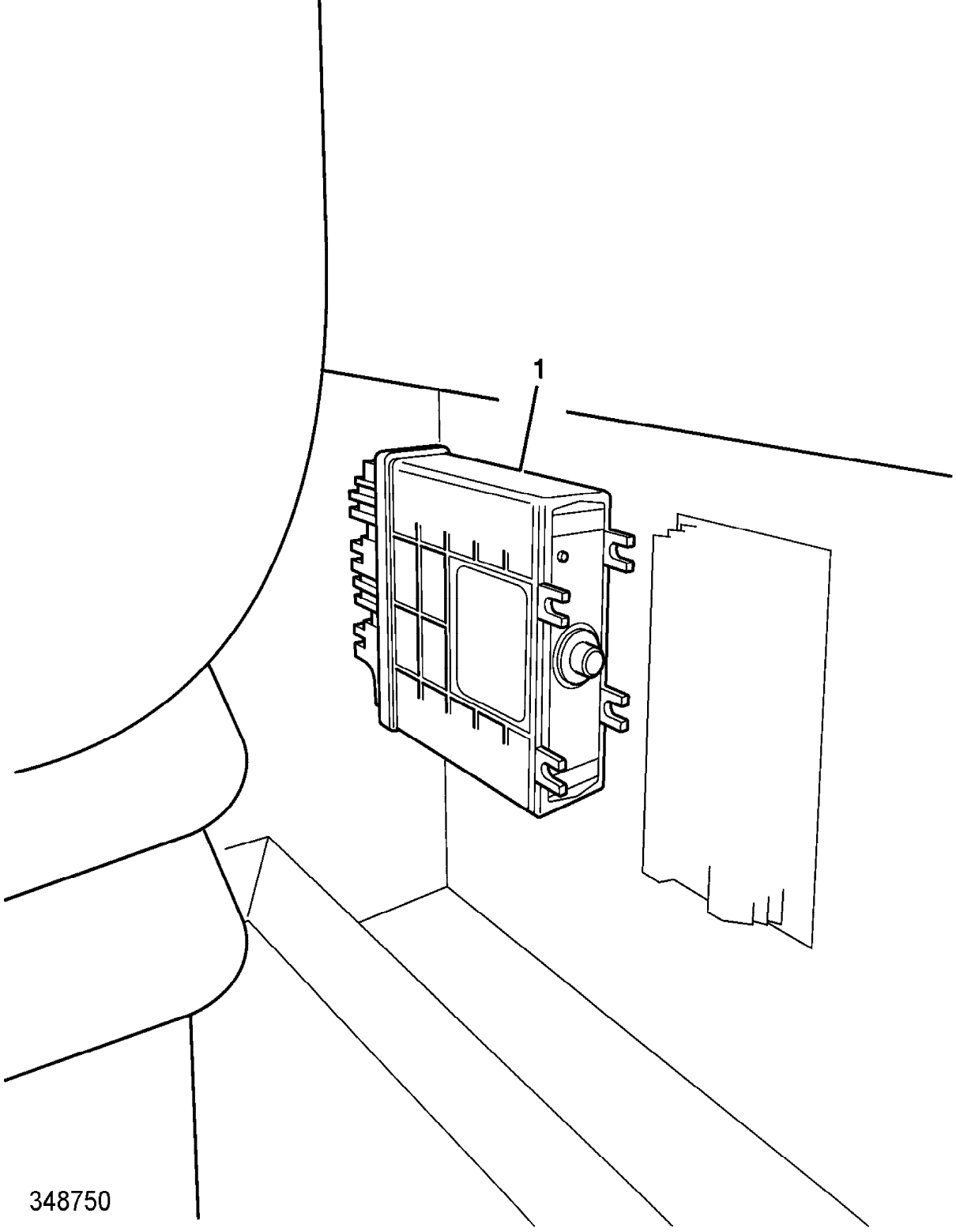
1
348750

9802/2740 C3-17-1 IN CAB CONVERTER

Item	Part no.	Change No.	Description	Remarks	Usage code	Qty
	717/20154		Convertor, volt, 24 volts to 12 volts			1
2	817/05199		Label, 12 volt output			3
3	817/05200		Label, 12V			1
4	1315/0101Z		Screw, M5 x 12mm			4
	1391/3103Z		Capscrew			2
5	1420/0005Z		Washer, M5			2
6	1370/0003Z		Nut			4
7	7214/0002		Housing, 4 way pin			1
8	7214/0004		Retainer, 4 way pin			1
9	7210/0003		Seal, wire, 2.2-2.9mm OD brown			4
10	7204/0002		Terminal, male (2.0)			4
11	717/12900		Lighter, cigarette, 12 volt			1
12	721/11957		Harness, 24V/12V convertor	Sales special 6980		1

Machine groups

Details

Machine group	From serial no.	To serial no.
.426		
426		

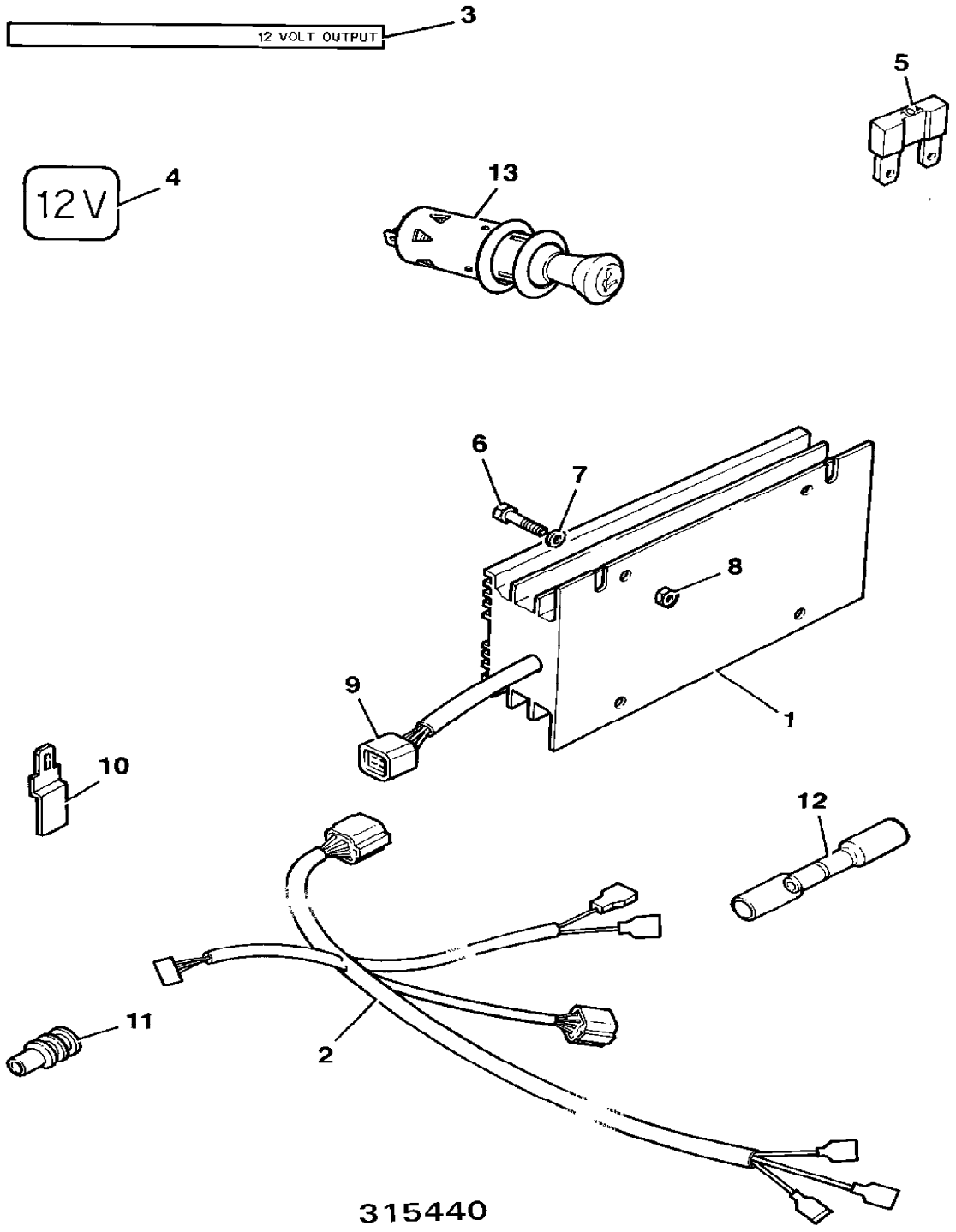
12 VOLT OUTPUT
3
5
12V
4
13
6
7
8
9
1
10
12
11
2
315440

9802/2740 C3-2-1 FUSE LINK BOX

Item	Part no.	Change No.	Description	Remarks	Usage code	Qty
1	716/30077		Box, fuselink			2
3	716/30079		Fuse, maxi fuse 30Amp			1
4	716/15900		Fuse, maxi fuse 40Amp			2
5	1315/0305D		Screw, set M8x20			5
6	1420/0007D		Washer, M8 plain			6
7	716/16400		Fuse, maxi fuse 60Amp			4
9	718/20093		Harness, Fuse Link			2
10	335/08621		Bracket, fuse			1
11	817/19893		Label, primary fuse box	Label 1		1
11A	817/19894		Label, primary fuse	Label 2		1
12	1370/0103D		Nut, M6 lock	Item 9 to 1		1
13	1315/0303D		Setscrew	Item 9 to battery		1

Machine groups

Details

Machine group	From serial no.	To serial no.
.426		
426		

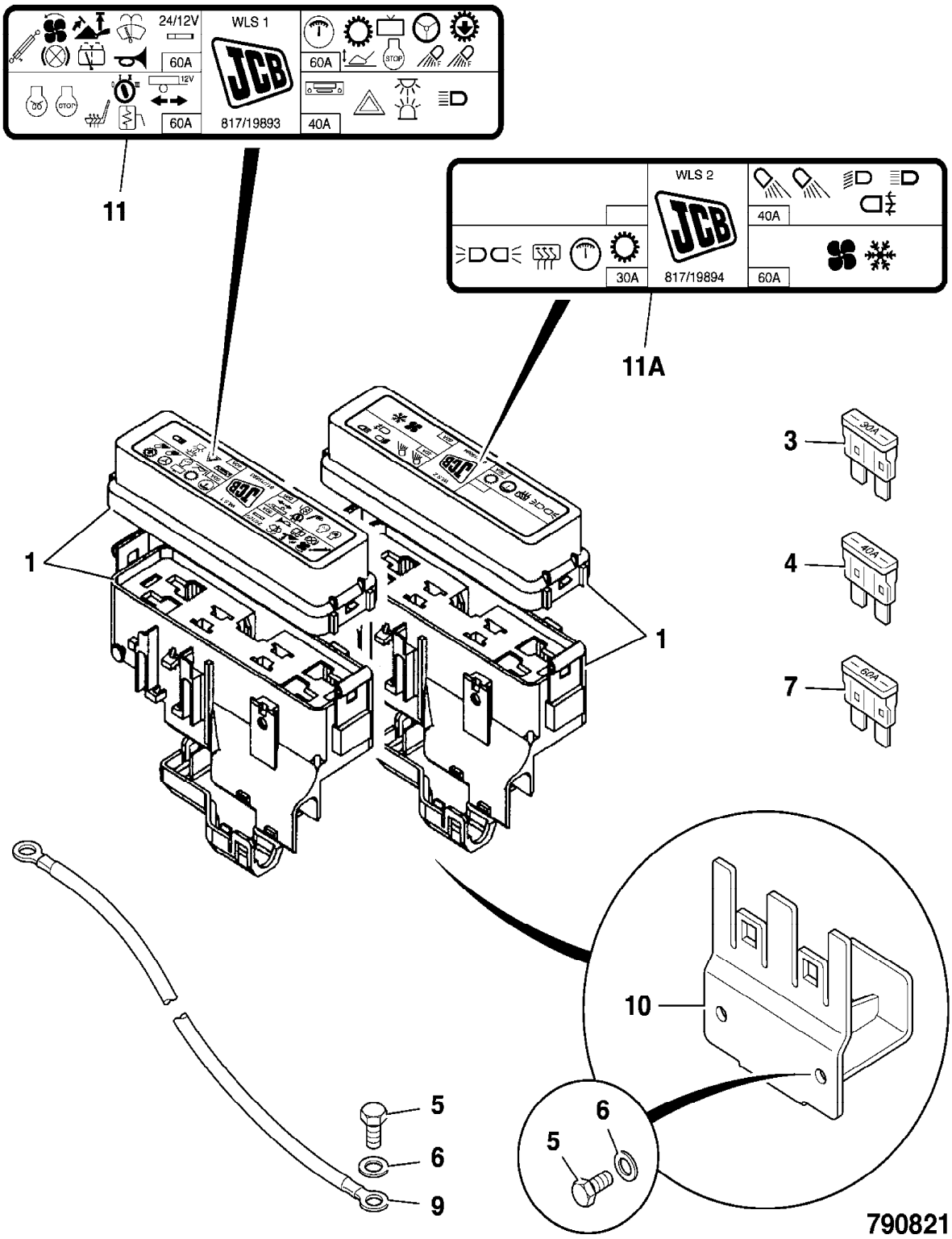
24/12V
WLS 1
60A
60A
12V
60A
817/19893
40A
11
WLS 2
40A
30A
817/19894
60A
11A
3
4
7
1
1
10
5
6
9
5
6
790821

9802/2740 C3-20-1 AIR CON. UNIT, COMPONENTS

Item	Part no.	Change No.	Description	Remarks	Usage code	Qty
0A	30/926568		Unit, air conditioning			1
	30/926615		Unit, air conditioning, epoxy coated			1
1	30/926443		:Chassis, bulkhead, blower			1
2	30/926444		:Clamp, hose			2
3	30/926445		:Clip, conduit			1
4	30/926446		:Core, evaporator			1
5	30/926451		:Core, heater			1
6	30/926452		:Core, retainer assy			1
7	30/926453		:Cover, heater			1
8	331/54573		:Cover, Air conditioning			1
9	580/12185		:Filter, fresh air, coarse dust			1
	580/12186		Filter, fresh air, fine dust	Option		1
	580/12187		Filter, carbon	Option		1
	580/12188		Filter, HEPA	Option		1
10	30/926456		:Harness			1
11	30/926457		:Harness			1
12	30/926458		:Hose, heater, 3/4			1
13	30/926459		:Housing, assy			1
14	30/926460	Superseded	:Blower, heater/air con, 24 Volt			1
	30/925355		:Blower, heater/air con., 24 Volt			1
15	30/926461		:Nut, clip,M6			1
16	30/926462		:O Ring, no. 8			1
17	30/926463		:O Ring, no. 10			1
18	30/926464		:Valve, plenum, fresh air			1
19	30/926465		:Receptacle, snap in			2
20	30/926466		:Retainer, 1/4 turn			2
21	30/926467		:Screw			20
22	30/926468		:Screw, M4 x12			7
23	30/926469		:Screw, M5			1
24	30/926470		:Screw, M6			1
25	331/14049		:Thermostat, heater/air con.			1
26	25/220402		:Valve, expansion			1
27	30/926471		:Valve, Water			1
28	30/926472		:Stud, Wing			2
29	30/926473		:Tape, Refrigeration			A/R
30	30/926474		:Tube, 1/8 10			A/R
31	30/926475		:Kit, gasket			1

Machine groups

Details

Machine group	From serial no.	To serial no.
.426		
426		

.

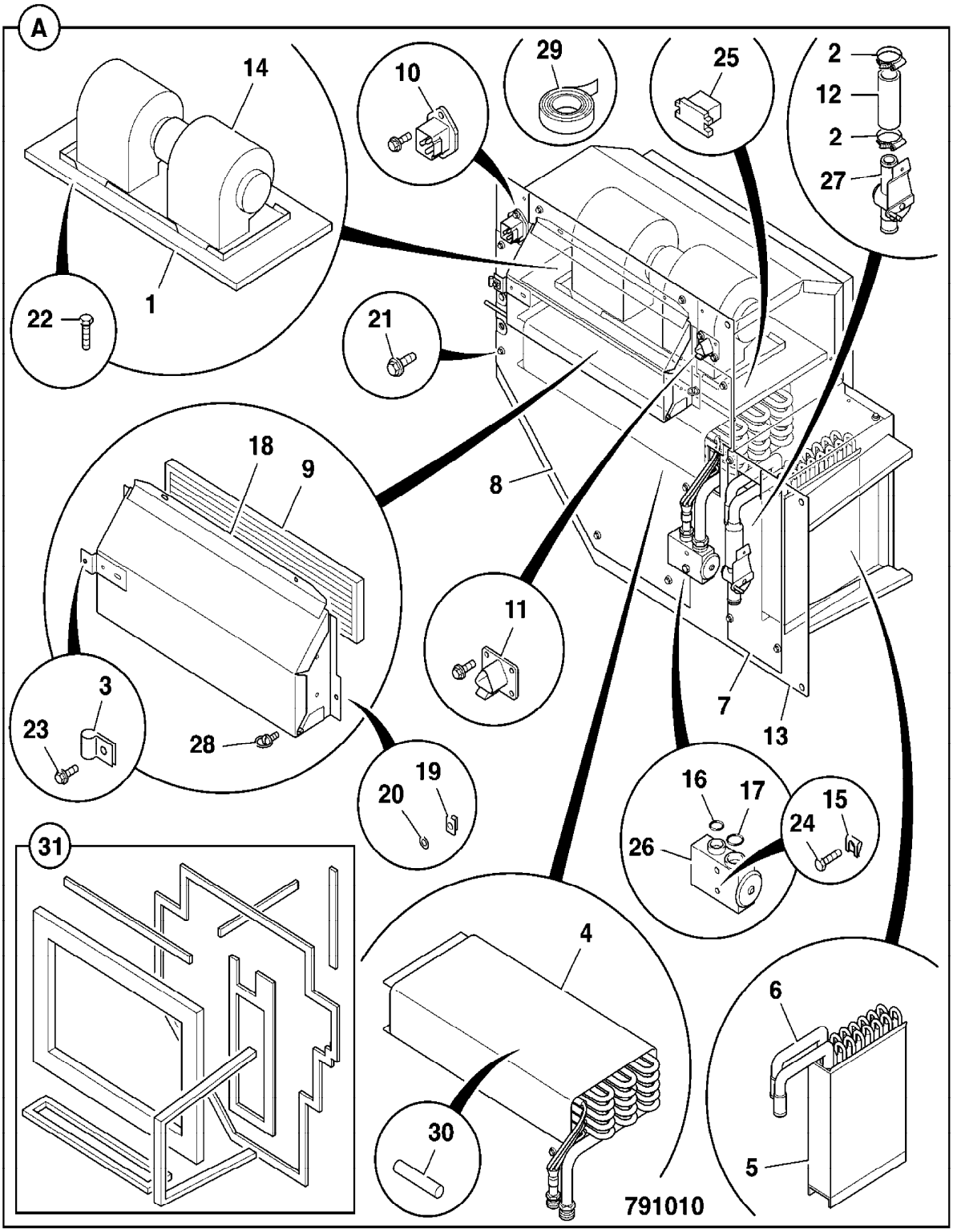

9802/2740 C3-21-1 AIR CON CONTROL

Item	Part no.	Change No.	Description	Remarks	Usage code	Qty
1	.		'See Remark'	See C3-20-1 Air con unit		1
2	331/57004		Plate, mounting, Air con.			1
3	269/40691		Switch, assy, including knob	Air con control		1
3A	30/925435		Knob, rotary control			1
4	269/40689		Switch, assy, incuding knob	Fan speed control		1
4A	30/925435		Knob, rotary control			1
5	269/40695		Switch, cable assy, heater control			2
5A	30/925435		Knob, rotary control			2
7	826/11021		Screw, Button Head M6x20, Stainless			4
8	826/01486		Screw, M8 x 20, socket type			6
9	823/00529		Washer, M8 black			6

Machine groups

Details

Machine group	From serial no.	To serial no.
.426		
426		

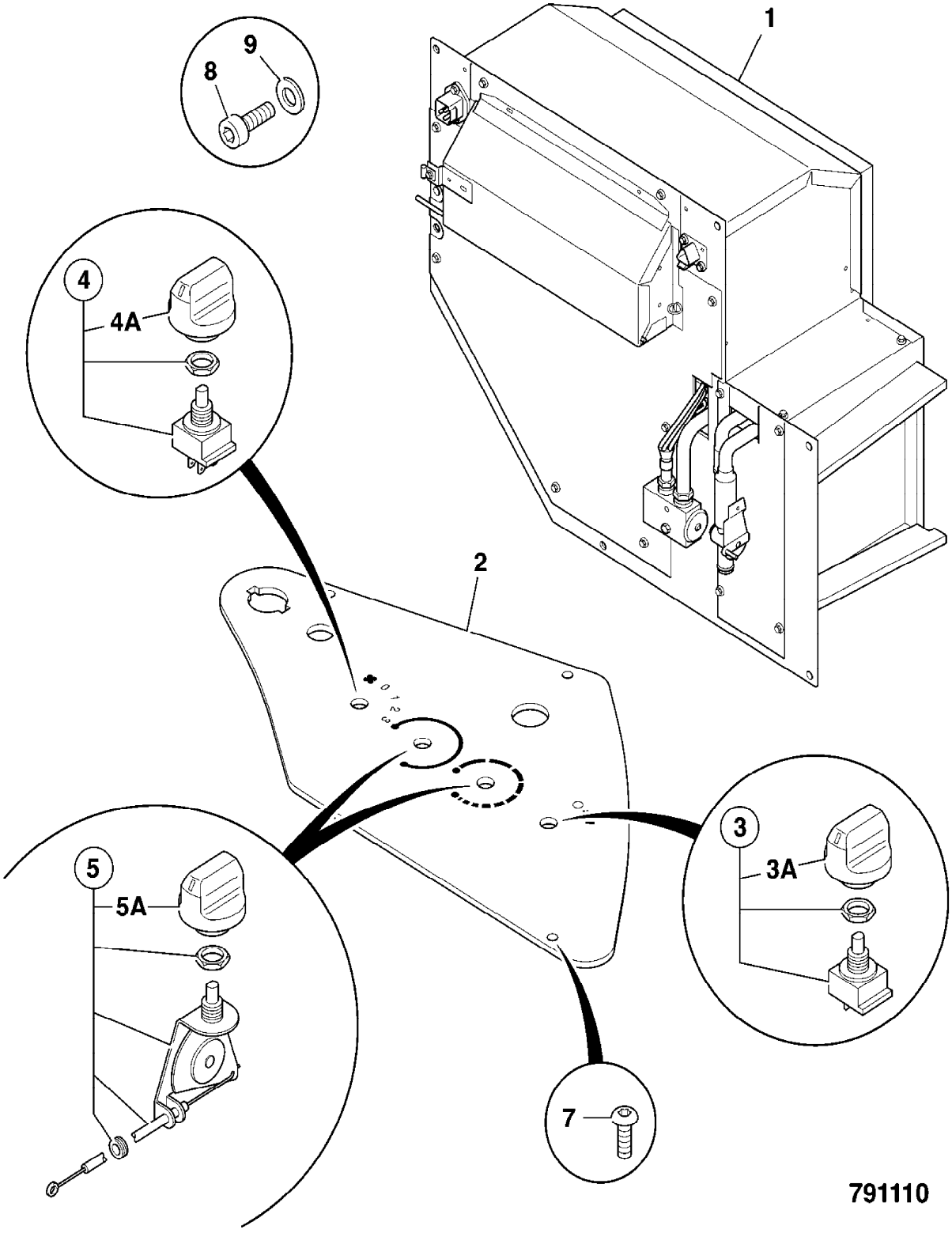
1
2
3
3A
4
4A
5
5A
7
8
9
0 1 2 3
791110

9802/2740 C3-22-1 AIR-CON, INSTALLATION

Item	Part no.	Change No.	Description	Remarks	Usage code	Qty
1	30/926390		Receiver, drier			1
1A	701/80231		Switch, binary			1
2	123/04999		Compressor, 24v	For service parts see section index		1
4	649/51962		Hose, comp. to condenser			1
5	649/51960		Hose, condenser to drier			1
6	649/51963		Hose, drier to exp.valve			1
7	649/51961		Hose, exp.valve to comp.			1
12	1420/0007D		Washer, M8 plain			1
13	1370/0203D		Nut, lock			1
15	821/00165		Clamp, 25.4mm/20mm holes, 42mm high			1
16	821/00443		Plate, cover			1
17	821/00334		Clamp			1
20	1370/0203D		Nut, lock			1
24	1315/3317D		Bolt, M8 x 75mm			1
26	1315/3309D		Bolt			1
27	1420/0007D		Washer, M8 plain			6
33	821/10091		Clamp, body	Suplied in singles 1 = 1 half		6
35	821/00428		Plate, clamp cover			3
36	821/00335		Cover			2
37	1315/3314D		Bolt			1
40	331/55902		Bracket, hose support			1
41	821/10091		Clamp, body			2
42	821/00428		Plate, clamp cover			1
43	1315/3316D		Bolt, M8x70			1
44	1420/0007D		Washer, M8 plain			2
45	1370/0203D		Nut, lock			1
46	1315/0205D		Setscrew, M6 x 20mm long			2
47	1420/0006D		Washer, M6 plain			2
48	821/00186		Clamp, top			1

49	821/00187		Clamp, base			1
50	821/00188		Insert, clamp			1
51	1315/0409D		Setscrew, M10 x 35mm long			1
52	1420/0008D		Washer, M10			2
53	1370/0303D		Nut, M10			1
54	821/00376		Clip, 'P', 20mm diameter			2
55	1315/0303D		Setscrew	Item 54 to chassis		1

Machine groups

Details

Machine group	From serial no.	To serial no.
.426		
426		

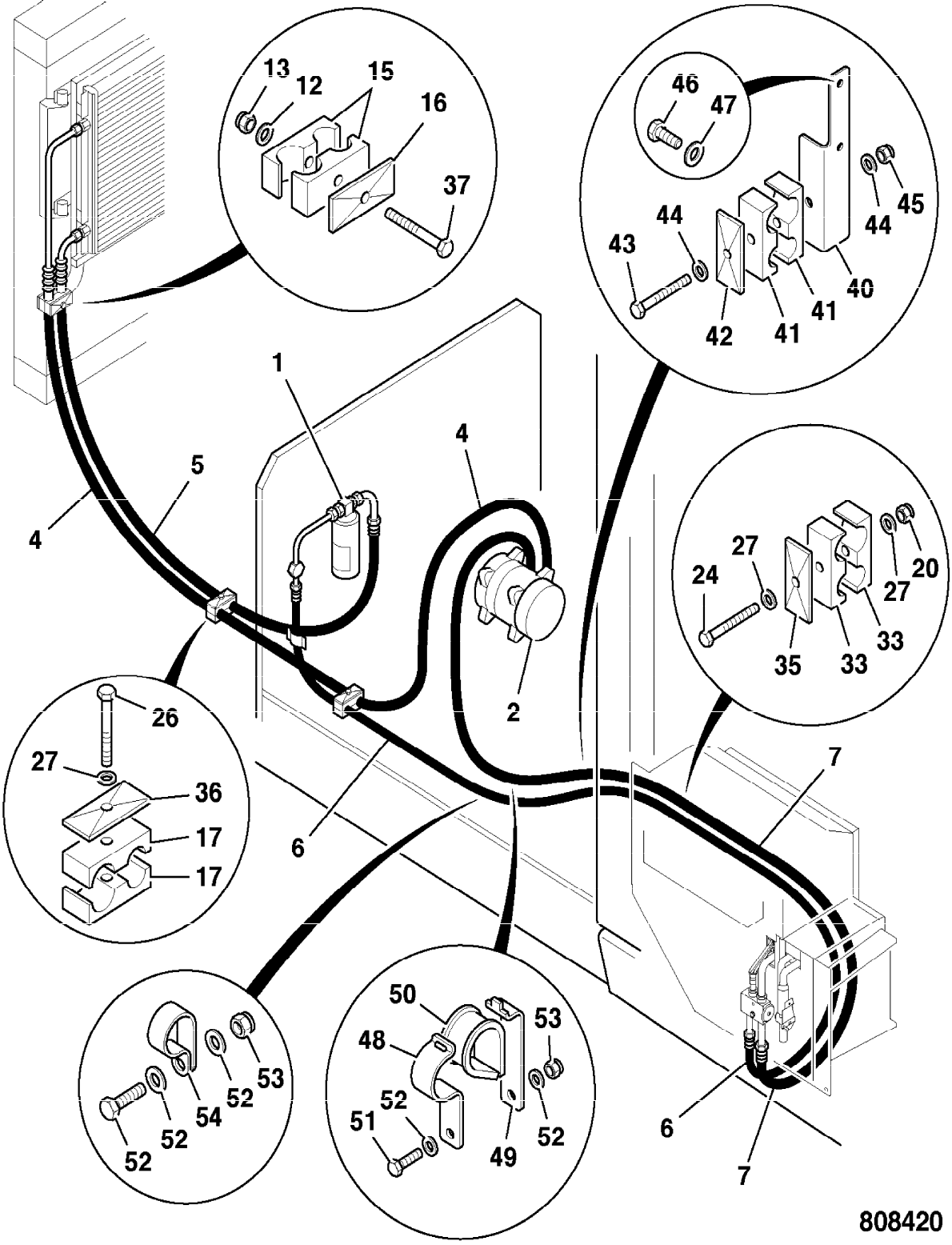
13
12
15
16
37
46
47
44
45
44
43
40
41
42
41
1
4
5
4
2
4
27
24
20
27
35
33
33
26
27
36
17
17
6
7
50
48
53
52
51
49
52
6
7
808420

9802/2740 C3-23-1 HEATER UNIT, COMPONENTS

Item	Part no.	Change No.	Description	Remarks	Usage code	Qty
0A	30/926569		Unit, heater			1
	30/926616		Unit, heater, epoxy coated			1
1	30/926443		:Chassis, bulkhead, blower			1
2	30/926444		:Clamp, hose			2
3	30/926445		:Clip, conduit			1
5	30/926451		:Core, heater			1
6	30/926452		:Core, retainer assy			1
7	30/926453		:Cover, heater			1
8	331/54574		Cover, heater			1
9	30/926455	Superseded	:Filter, fresh, paper			1
	580/12185		:Filter, fresh air, coarse dust			1
	580/12186		Filter, fresh air, fine dust	Option		1
	580/12187		Filter, carbon	Option		1
	580/12188		Filter, HEPA	Option		1
10	30/926456		:Harness			1
12	30/926458		:Hose, heater, 3/4			1
13	30/926459		:Housing, assy			1
14	30/926460	Superseded	:Blower, heater/air con, 24 Volt			1
	30/925355		:Blower, heater/air con., 24 Volt			1
18	30/926464		:Valve, plenum, fresh air			1
19	30/926465		:Receptacle, snap in			2
20	30/926466		:Retainer, 1/4 turn			2
21	30/926467		:Screw			20
22	30/926468		:Screw, M4 x12			7
23	30/926469		:Screw, M5			1
27	30/926471		:Valve, Water			1
28	30/926472		:Stud, Wing			2
31	30/926475		:Kit, gasket			1

Machine groups

Details

Machine group	From serial no.	To serial no.
.426		
426		

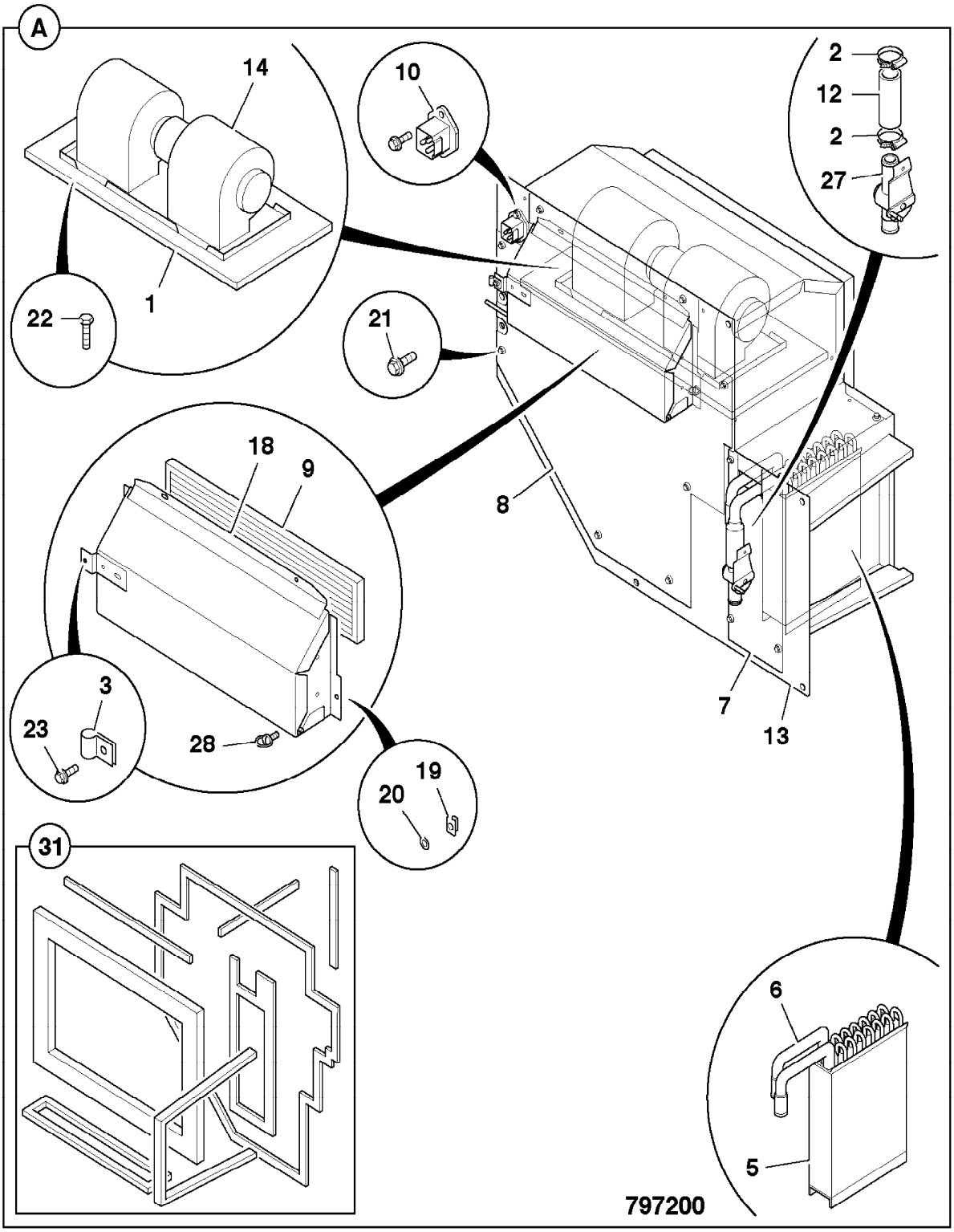
A
14
1
22
10
21
2
12
2
27
18
9
8
3
23
28
19
20
7
13
31
6
5
797200

9802/2740 C3-24-1 HEATER CONTROL

Item	Part no.	Change No.	Description	Remarks	Usage code	Qty
1	.		'See Remark'	See C3-23-1 heater unit		1
2	331/57003		Plate, mounting, heater			1
4	269/40689		Switch, assy, incuding knob	Fan speed control		1
4A	30/925435		Knob, rotary control			1
5	269/40695		Switch, cable assy, heater control			2
5A	30/925435		Knob, rotary control			2
7	826/11021		Screw, Button Head M6x20, Stainless			4
8	826/01486		Screw, M8 x 20, socket type			6
9	823/00529		Washer, M8 black			6

Machine groups

Details

Machine group	From serial no.	To serial no.
.426		
426		

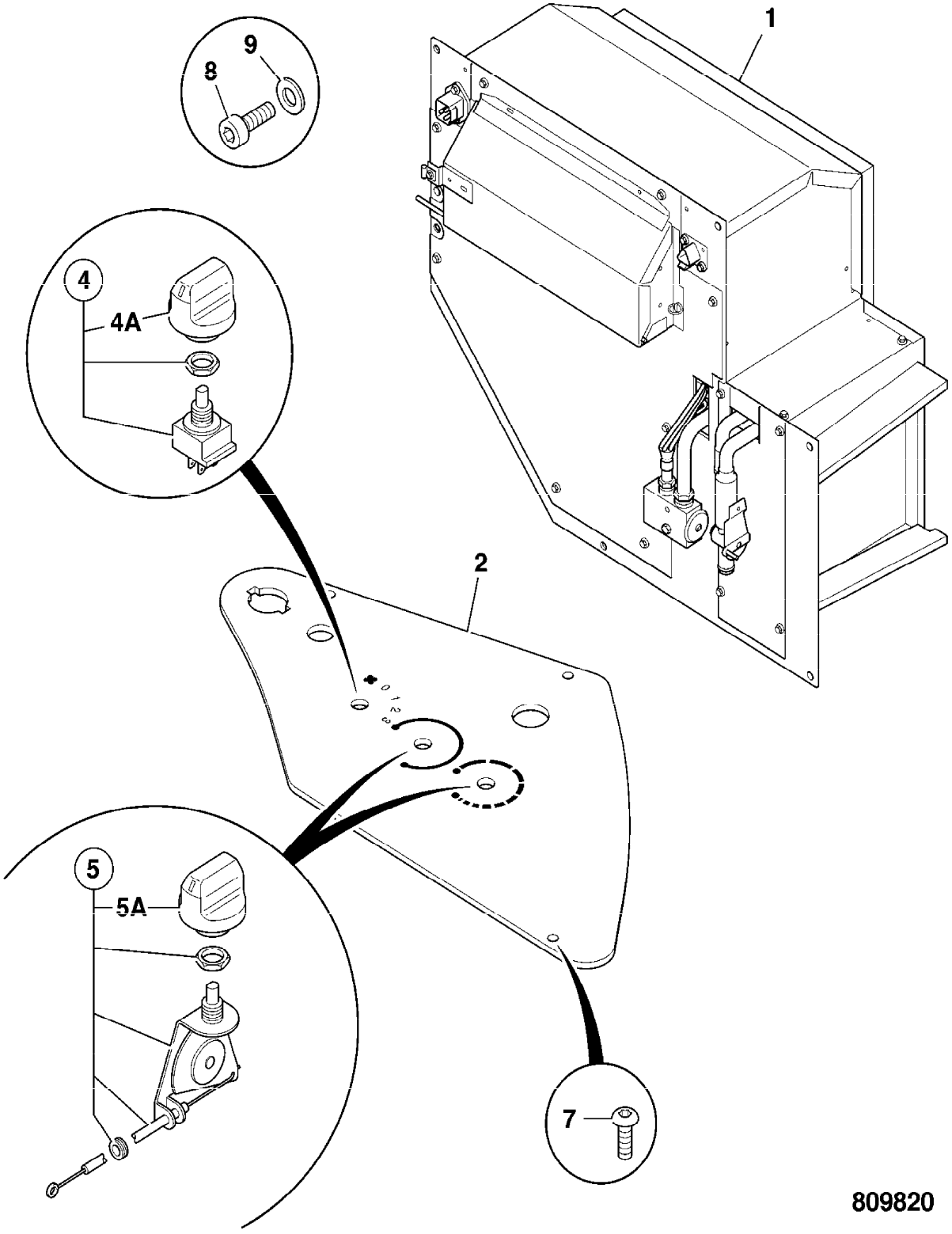

809820

9802/2740 C3-29-1 COMPONENTS, ELECTRICAL, DUMP INSTALLATION

Item	Part no.	Change No.	Description	Remarks	Usage code	Qty
1	728/23100		Unit, comtrol			1
2	721/12164		Harness, pump control			1
3	721/12145		Harness, pump control			1
4	701/42600		Switch, push button black, with microswitch			1
5	7212/0005		Housing, weatherpack, 2 way female Packard			1
6	25/220628	toS/N1231642	Valve, solenoid, park brake	See note 1	A	1
	25/223225		Valve, solenoid		B	1
6A	25/222644		:Solenoid, assembly, excluding coil		A	1
	25/223260		Solenoid, assembly, excluding coil		B	1
6B	25/221606		:Coil		A	1
	25/223261		Coil		B	1
20	721/11575		Harness, link	Canopy builds		1
21	721/10763		Harness, 2-way link 40mm long, Deutsch-AMP/Jnrtimer	Fitted to Valve 25/223225		1

Note 1

For components A and 7 to 11, see Index E1

Machine groups

Details

Machine group	From serial no.	To serial no.
.426		
426		

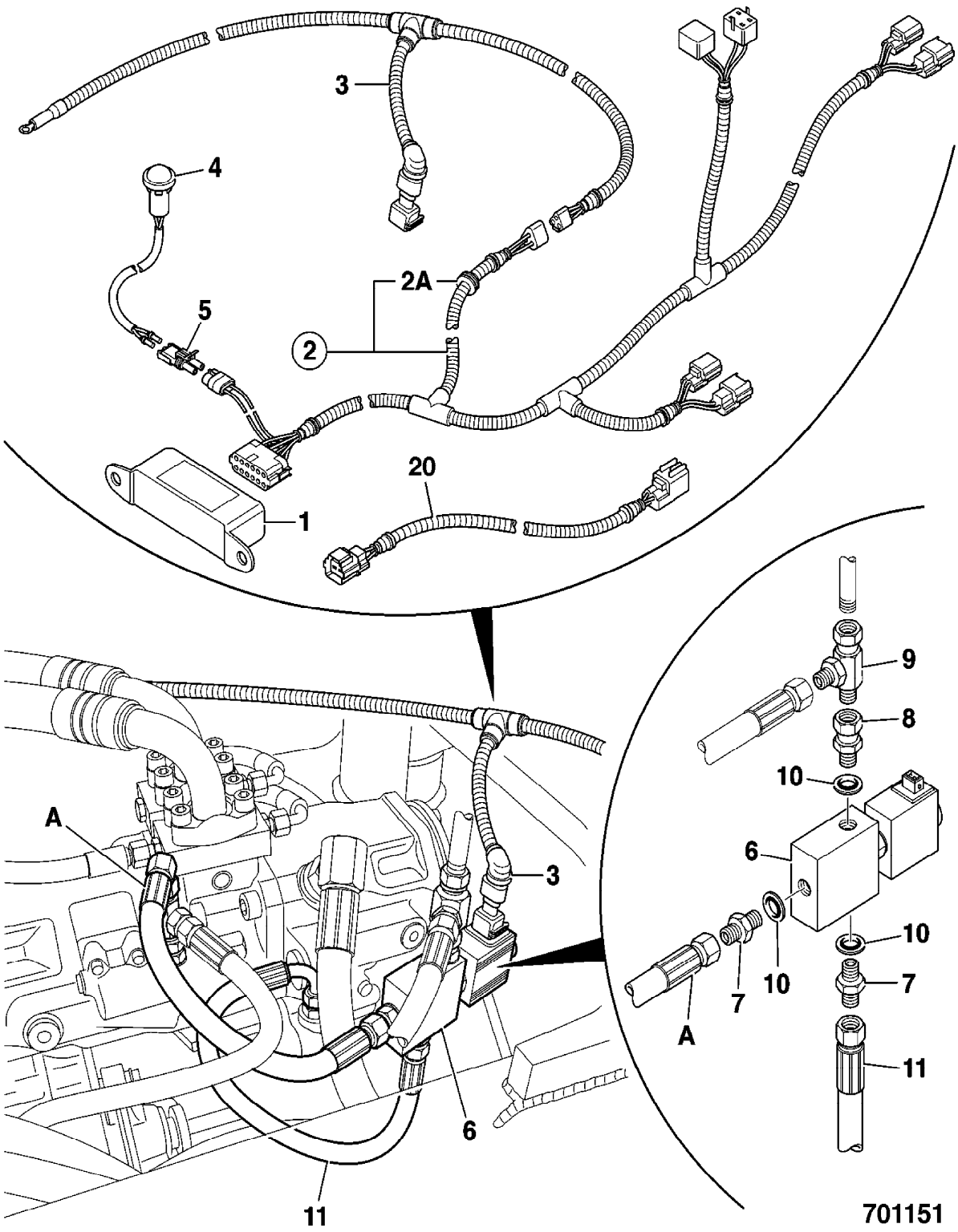
3
4
2A
5
2
20
1
A
3
6
11
9
8
10
6
10
7
10
A
7
11
701151

9802/2740 C3-3-1 FUSE AND RELAYS

Item	Part no.	Change No.	Description	Remarks	Usage code	Qty
1	335/08876		Bracket, fuse and relays			1
2	826/01486		Screw, M8 x 20, socket type			3
3	823/00529		Washer, M8 black			3
4	716/05710		Fuse, 1 Amp			1
5	716/30138		Fuse, 2 Amp			1
6	716/05701		Fuse, 3 amp			6
8	716/05703		Fuse, 5 Amp			8
9	716/05704		Fuse, 7.5 Amp			7
10	716/05705		Fuse, 10 amp			10
11	716/05706		Fuse, 15 Amp			3
12	716/05707		Fuse, 20 amp			2
13	716/05708		Fuse, 25 amp			1
14	716/05709		Fuse, 30 amp			1
15	716/24800		Fuse, 40 amp			1
16	716/30133		Relay, Micro 24V			7
17	716/11100		Relay, 24 volt dioded			6
18	716/27200		Relay, power, 70A/12V			1
19	817/19851		Label, fuse/relay box			1
20	716/05300		Relay, hazard			1
21	719/10103		Plug, harness blanking, 6-way, sealed			1

Machine groups

Details

Machine group	From serial no.	To serial no.
.426		
426		

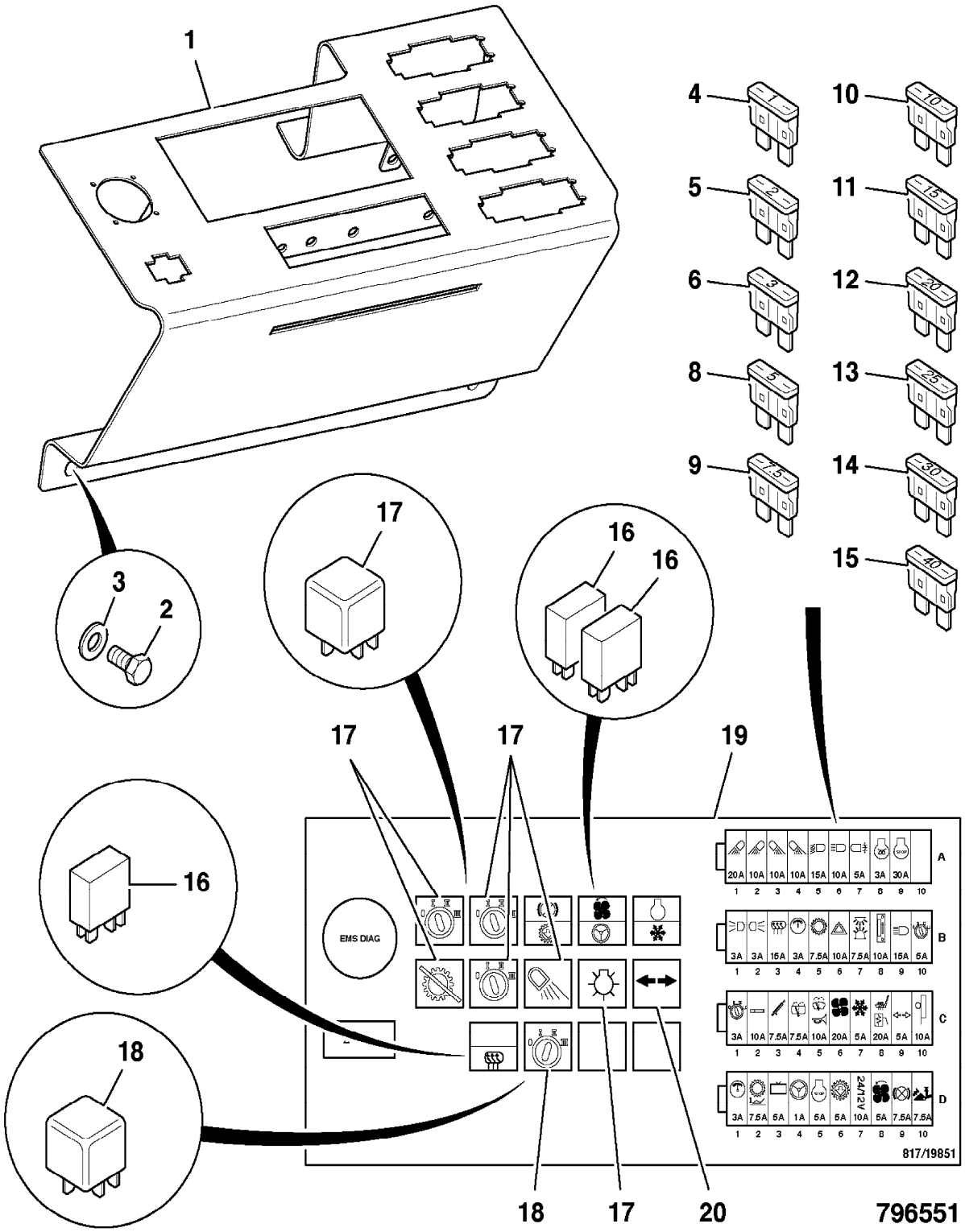
1
4
5
6
8
9
10
11
12
13
14
15
3
2
17
16
16
17
17
19
16
18
EMS DIAG
A
B
C
D
817/19851
18
17
20
796551

9802/2740 C3-5-1 SWITCH, COLUMN

Item	Part no.	Change No.	Description	Remarks	Usage code	Qty
2	04/801301		Switch, column			1

Machine groups

Details

Machine group	From serial no.	To serial no.
.426		
426		

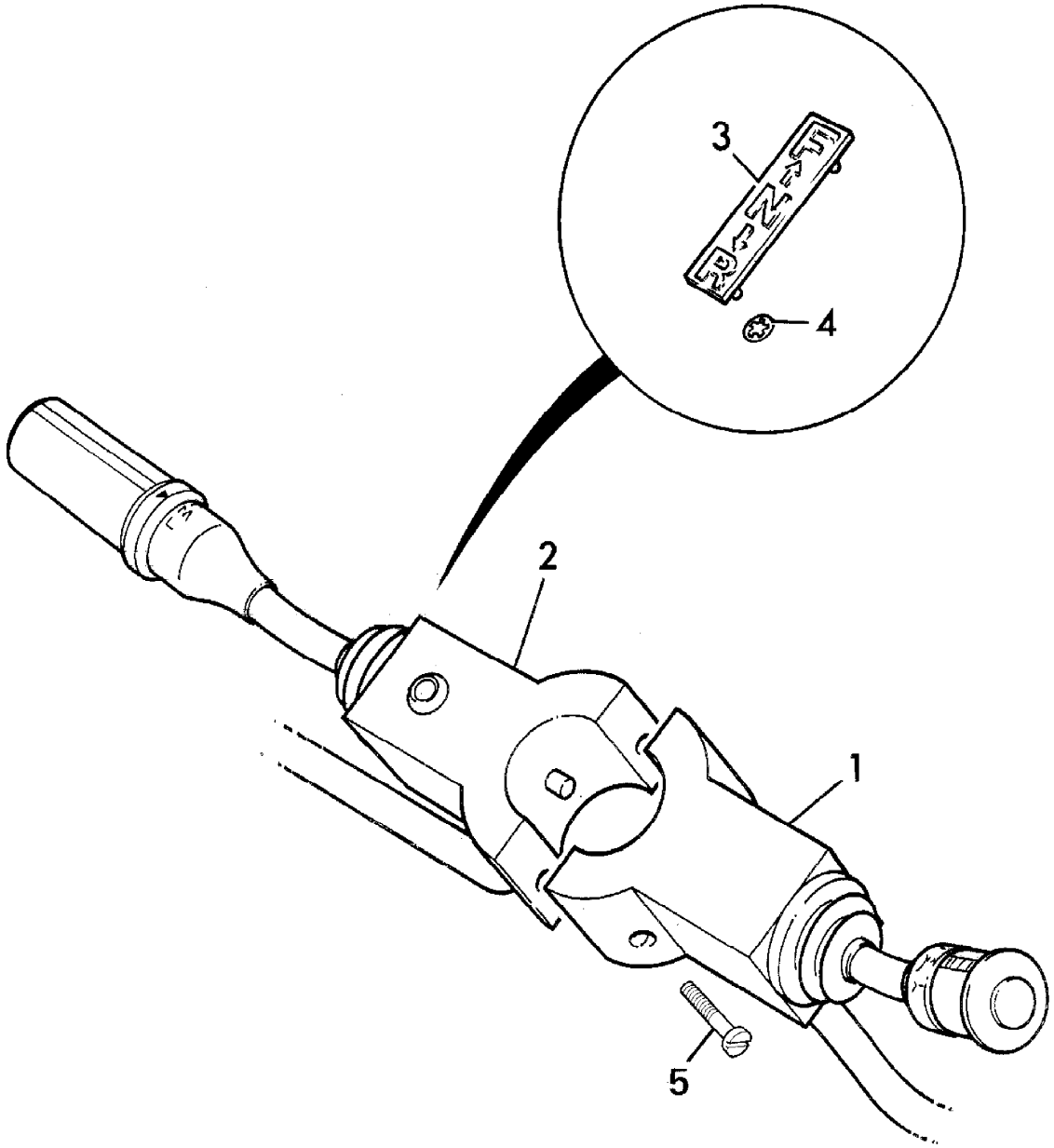

205843

9802/2740 C3-6-1 INSTRUMENT PANEL, CAB, 24 VOLT

Item	Part no.	Change No.	Description	Remarks	Usage code	Qty
1	331/43177		Panel, switch, LH dash			1
2	331/44227		Panel, switch, RH console			1
	331/51930		Panel, switch mounting	For mechanical park brake		1
3	826/11021		Screw, Button Head M6x20, Stainless			4
4	701/60041		Switch, 24V			1
5	701/58932		Switch, quickhitch, isolator			1
6	701/60031		Switch, 24V			1
7	701/58833		Actuator, auxiliary hydraulics			1
8	701/60031		Switch, 24V			1
9	701/58842		Cover, SRS switch, soft touch			1
10	701/60031		Switch, 24V			1
11	701/58930		Cover, switch, auto/manual			1
12	701/60031		Switch, 24V			1
13	701/58929		Cover, switch, trans. disconnect			1
14	700/50128		Light, indicator, AUX. ECU 12V			1
14A	701/80530		Switch, fnr paddle	Multilever only		1
16	701/60029		Switch, 24V			1
17	701/58821		Cover, hazard switch, soft touch			1
18	701/60030		Switch, 24V			1
19	701/58824		Cover, head lights switch, soft touch			1
20	701/60031		Switch, 24V			1
21	701/58829		Cover, fog light switch, soft touch			1
22	701/60033		Switch, 24V			1
23	701/58828		Cover, wash,wipe, switch decal			1
24	701/60031		Switch, 24V			1
25	701/58931		Cover, switch, emergency steer			1
26	701/60032		Switch, 24V			1
27	701/58843		Decal, Rocker Switch Top, joystick switch			1
28	701/60032		Switch, 24V			1
29	701/58835		Cover, return to dig switch, soft touch			1
30	701/80339		Switch, Parkbrake			1
31	701/60032		Switch, 24V	Pump dump		1

32	701/58823		Cover, HSC swtch	Pump dump		1

Machine groups

Details

Machine group	From serial no.	To serial no.
.426		
426		

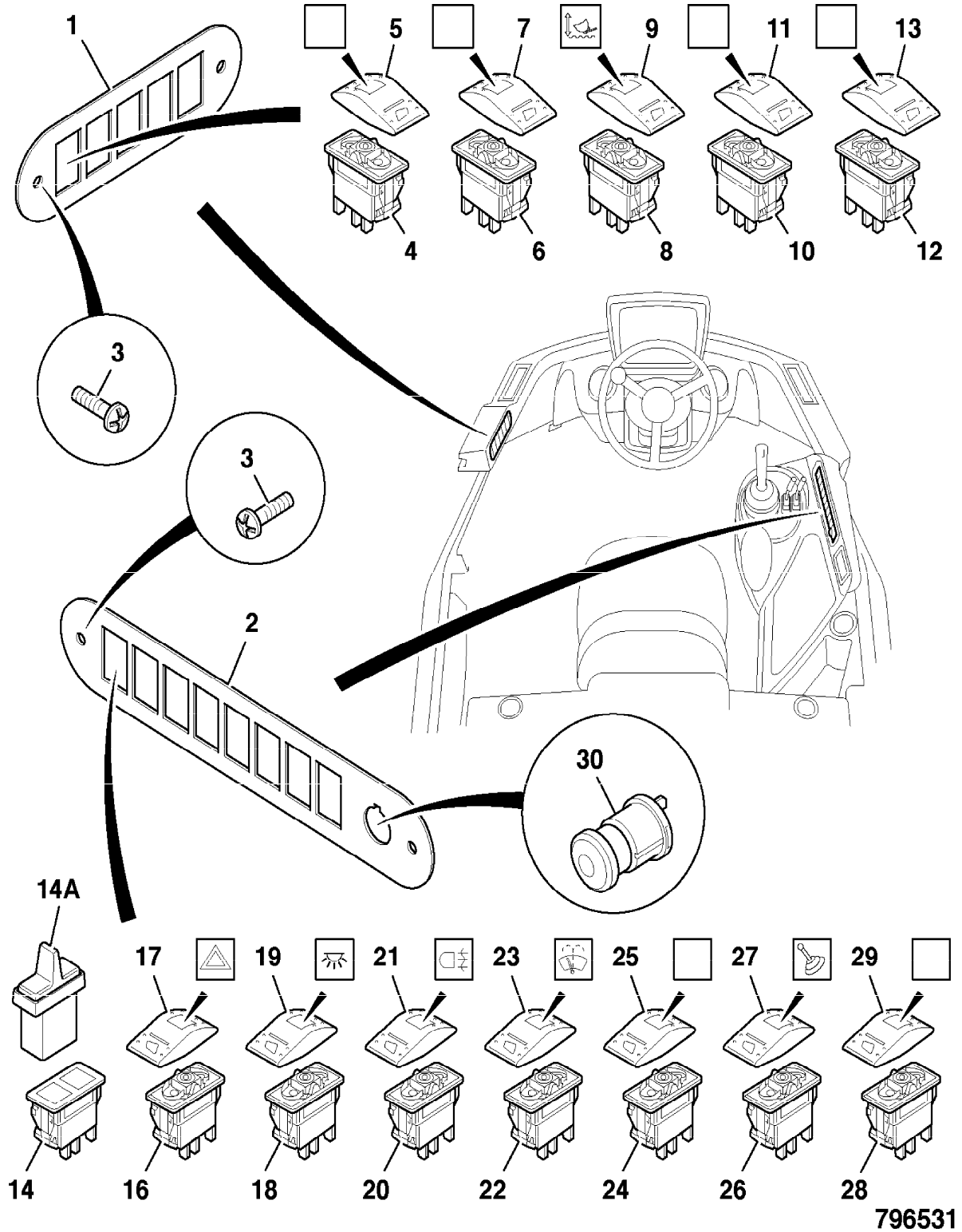

9802/2740 C3-8-1 SWITCH, COLUMN

Item	Part no.	Change No.	Description	Remarks	Usage code	Qty
1	701/44200		Switch, column indicator			1
2	04/801301		Switch, column			1
3	817/03643		Decal, F-N-R, column switch			1
4	826/01485		Washer, retaining			2
5	1391/3103Z		Capscrew			2

Machine groups

Details

Machine group	From serial no.	To serial no.
.426		
426		

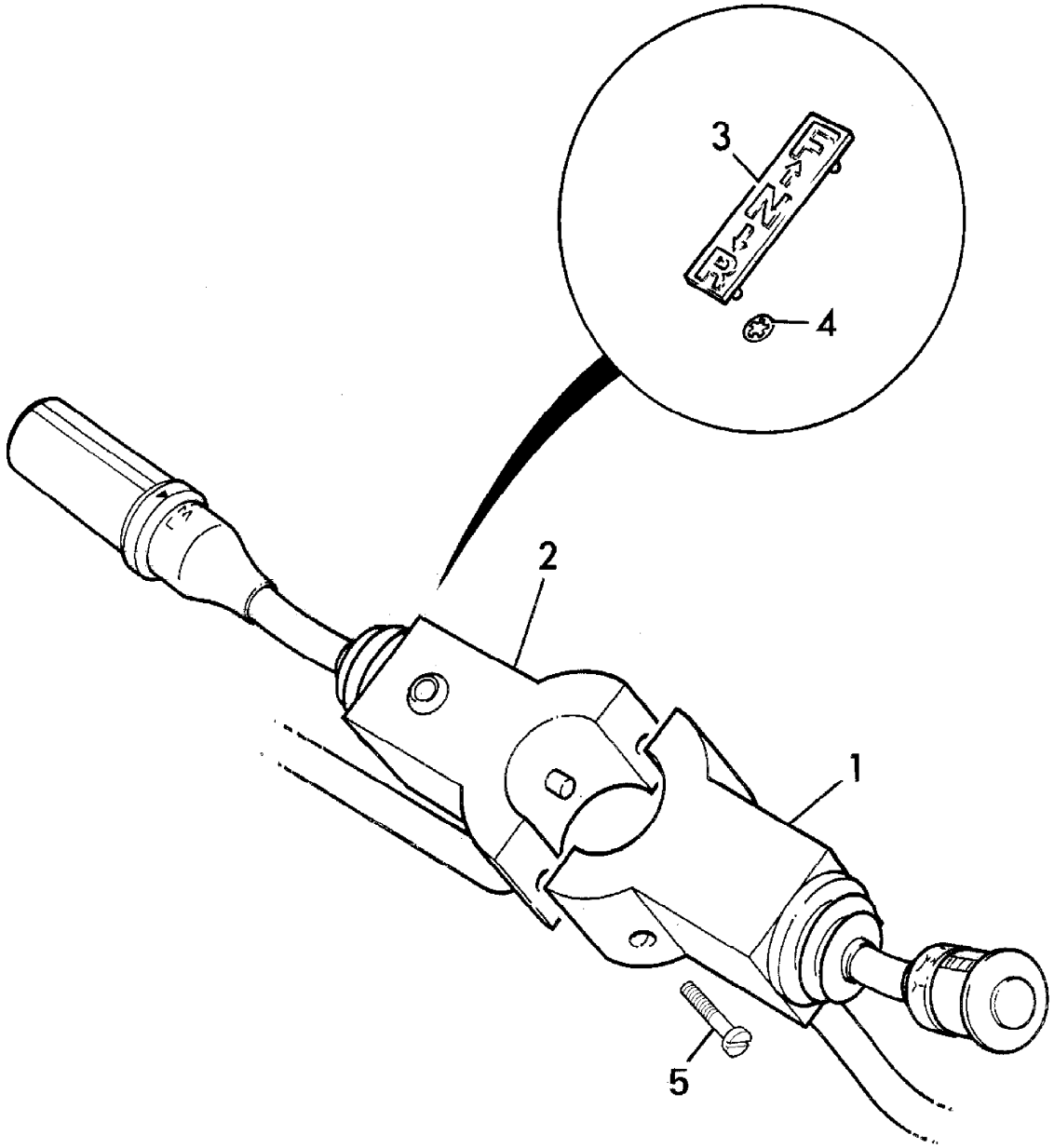

205843

9802/2740 D1-1-1 VALVE SERVO, JOYSTICK CONTROL, 2 SPOOL

Item	Part no.	Change No.	Description	Remarks	Usage code	Qty
1	928/60307		Valve, loader control			1
2	331/48993		Plate, gaiter			1
3	331/50183		Gaiter, joystick			1
4	821/10159		Clamp, ring, loader lever gaiter			1
5	826/11021		Screw, Button Head M6x20, Stainless			4
6	1391/3105D		Screw, Cap M5 x 20			4
7	331/44983		Bracket, joystick mounting			1
8	1315/0305D		Screw, set M8x20			3
9	1420/0007D		Washer, M8 plain			3
10	1315/0203D		Setscrew			5
11	1420/0006D		Washer, M6 plain			5
12	826/01101		Nut, rivet,M6 open ended, for 3 to 5.5mm plt	Fit to item 7		1
13	826/10973		Nut, Bollhof M5			4
15	826/10977		Nut, rivet,M8 Hex, low profile			3

Machine groups

Details

Machine group	From serial no.	To serial no.
.426		
426		

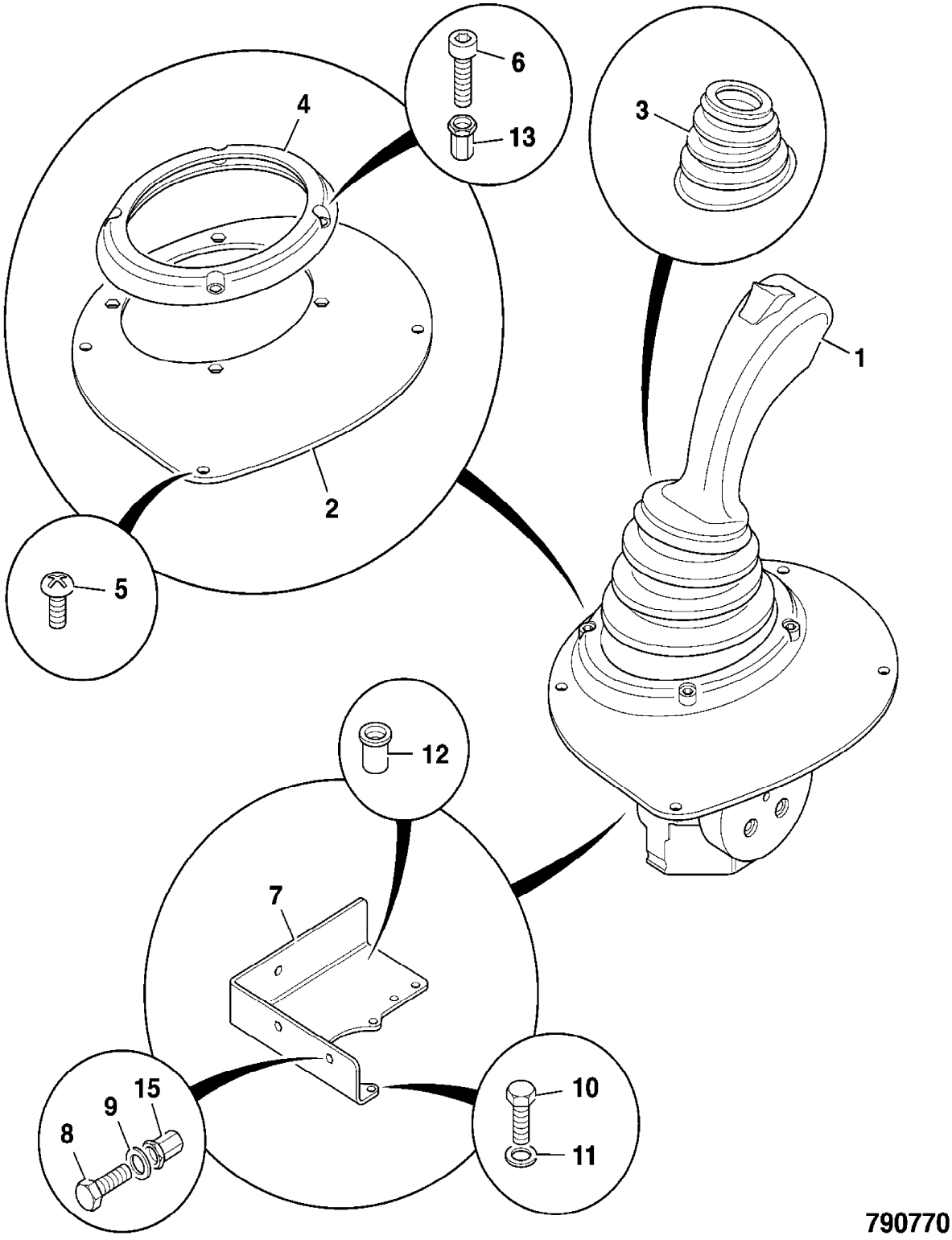

790770

9802/2740 D1-10-1 MULTI-LEVER, 3 SPOOL, AUX. LEFT

Item	Part no.	Change No.	Description	Remarks	Usage code	Qty
1	928/60322		Valve, triple lever, 3 spool			1
2	331/52682		Plate, gaiter, multilever			1
3	826/11021		Screw, Button Head M6x20, Stainless			4
4	331/48671		Bracket, mounting			1
5	826/10977		Nut, rivet,M8 Hex, low profile			3
6	1315/0305D		Screw, set M8x20			3
7	1420/0007D		Washer, M8 plain			3
8	1315/0203D		Setscrew			6
9	1420/0006D		Washer, M6 plain			6
11	826/11035		Nut, M6 Caged Nut			4
12	817/20024		Decal, multi-lever, 3 spool			1

Machine groups

Details

Machine group	From serial no.	To serial no.
.426		
426		

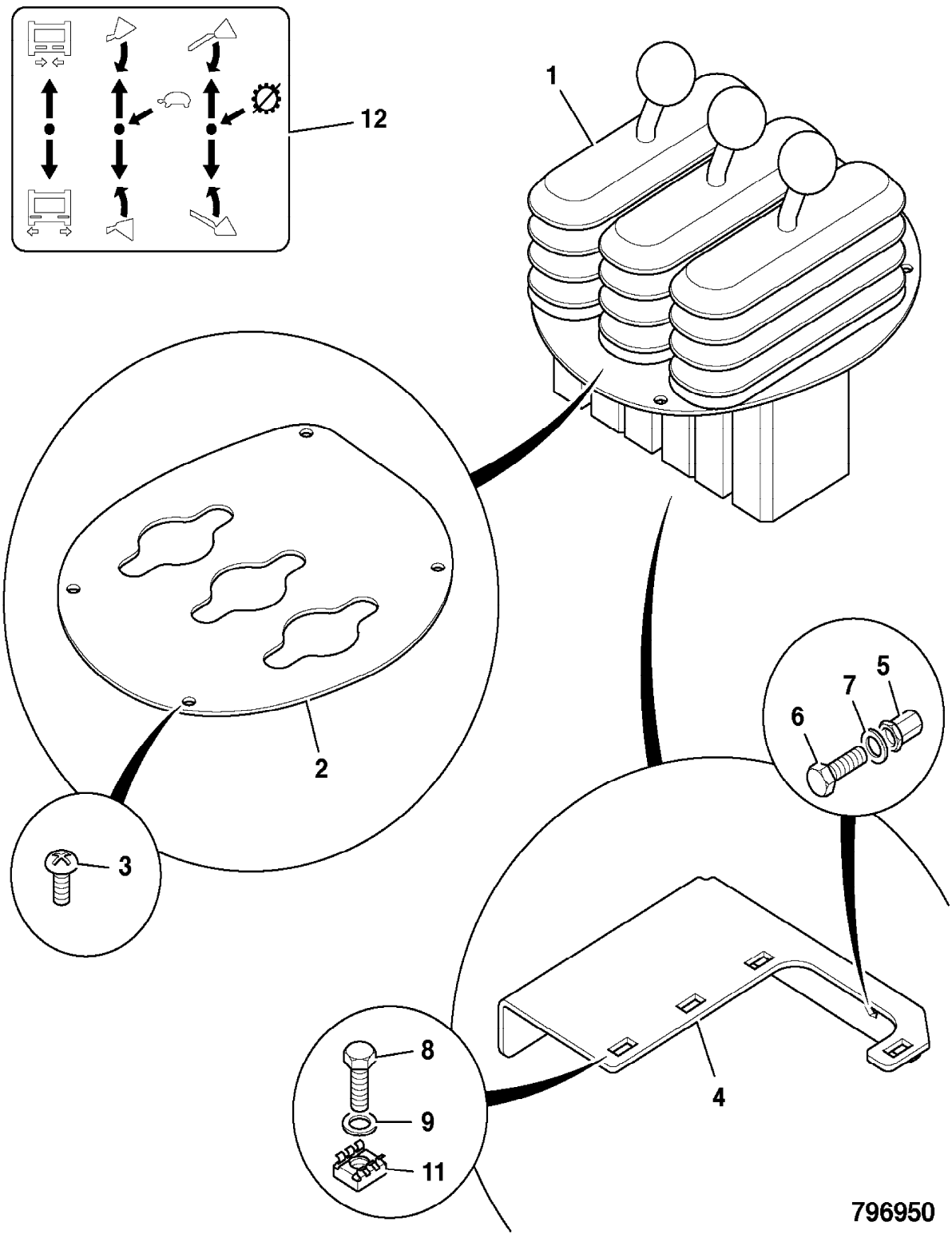
12
1
2
3
5
7
6
8
9
11
4
796950

9802/2740 D1-11-1 VALVE SERVO, JOYSTICK CONTROL, SOLENOID OPERATED AUXILIARIES

Item	Part no.	Change No.	Description	Remarks	Usage code	Qty
1	701/80332		Handle, assembly, proportional control	4 buttons,1 thumbswitch		1
2	25/212600		Valve, servo, loader control			1
3	331/50183		Gaiter, joystick			1
4	821/10159		Clamp, ring, loader lever gaiter			1
5	331/48993		Plate, gaiter			1
6	1391/3105D		Screw, Cap M5 x 20			4
7	331/44983		Bracket, joystick mounting			1
8	1315/0305D		Screw, set M8x20			3
9	1420/0007D		Washer, M8 plain			3
10	1315/0203D		Setscrew			5
11	1420/0006D		Washer, M6 plain			5
12	826/01101		Nut, rivet,M6 open ended, for 3 to 5.5mm plt	Fit to item 7		1
13	826/10973		Nut, Bollhof M5			4
15	826/10977		Nut, rivet,M8 Hex, low profile			3
19	826/11021		Screw, Button Head M6x20, Stainless			4

Machine groups

Details

Machine group	From serial no.	To serial no.
.426		
426		

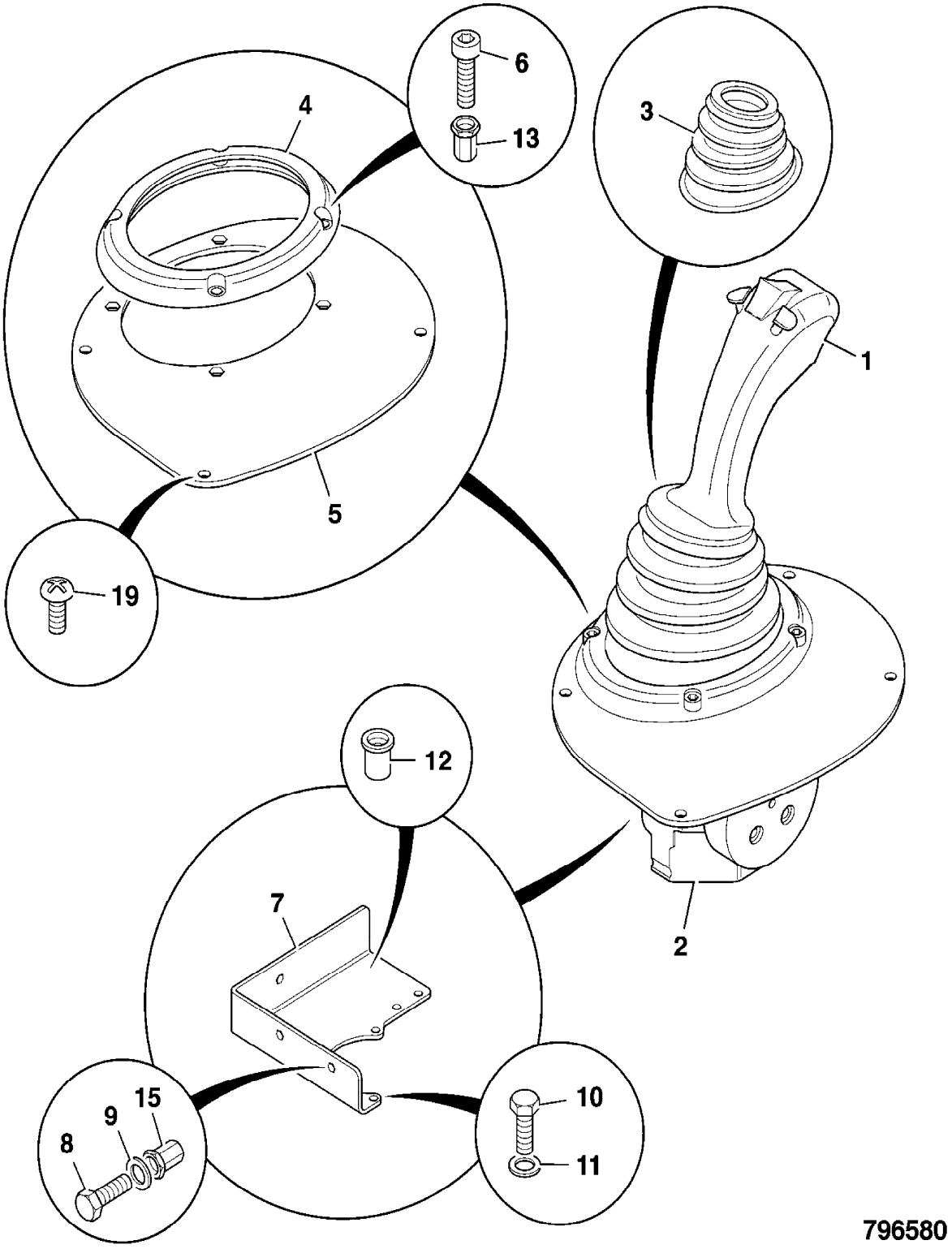

796580

9802/2740 D1-12-1 CONTROL, TILT RESET, HT

Item	Part no.	Change No.	Description	Remarks	Usage code	Qty
1	268/20031		Bracket, mounting bar			1
2	265/00724		Bar			1
3	335/90086		Bracket, reset switch			1
4	1411/0004D		Washer, plain, 7/16"medium			4
5	1370/0303D		Nut, M10			2
6	1420/0012D		Washer, plain			2
7	1370/0701D		Nut			2
8	701/80247	Superseded	Switch, proximity			1
	701/80612		Switch, proximity			1
	701/80248	Superseded	Switch, proximity	Super high lift(SHL)		1
	701/80613		Switch, proximity	Super high lift(SHL)		1
9	1315/0407D		Setscrew, M10 x 25mm long			2
10	826/01453		Tie, cable, double head			8
	826/01453		Tie, cable, double head	Super high lift		12
11	721/00857		Harness, extension	Super high lift		1

Machine groups

Details

Machine group	From serial no.	To serial no.
.426		
426		

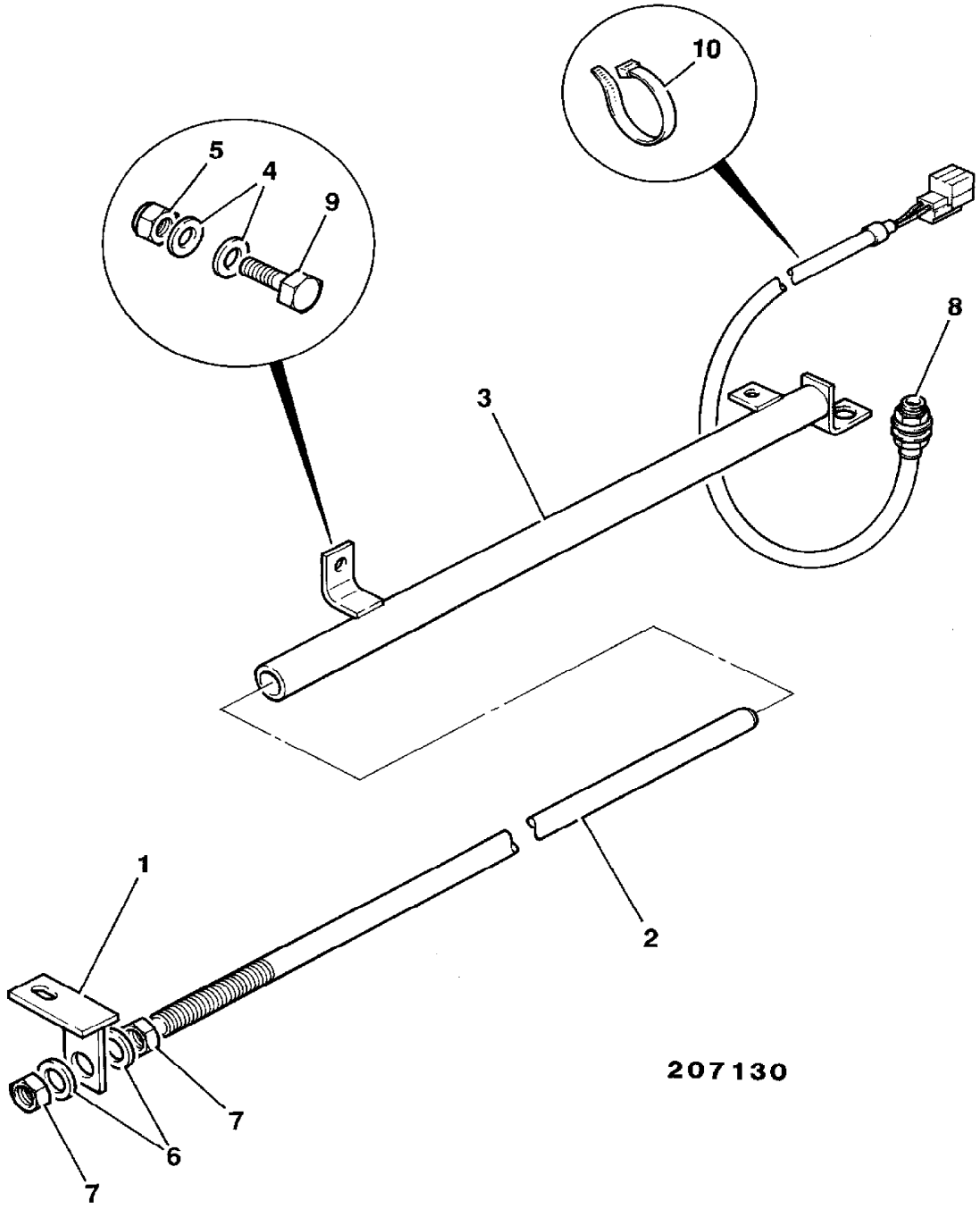
10
5
4
9
8
3
1
2
7
6
7
207130

9802/2740 D1-13-1 CONTROL, TILT RESET, Z BAR

Item	Part no.	Change No.	Description	Remarks	Usage code	Qty
1	265/01055		Bar, Z lift reset			1
2	265/01050		Pad, wear, Z tilt			2
3	701/80245	Superseded	Switch, proximity			1
	701/80611		Switch, proximity			1
4	826/01453		Tie, cable, double head			8
5	830/00599		Spacer			1
6	1315/0708D		Setscrew			1
7	1420/0011D		Washer, M16			1
8	1315/0408D		Setscrew, M10 x 30			2
9	1412/0007D		Washer, large			2
10	1420/0008D		Washer, M10			6
12	331/15076		Bar, reset			1
14	1315/3316D		Bolt, M8x70			2
15	1315/3316D		Bolt, M8x70			2
16	1420/0007D		Washer, M8 plain			4
17	828/00187		Grommet			1

Machine groups

Details

Machine group	From serial no.	To serial no.
.426		
426		

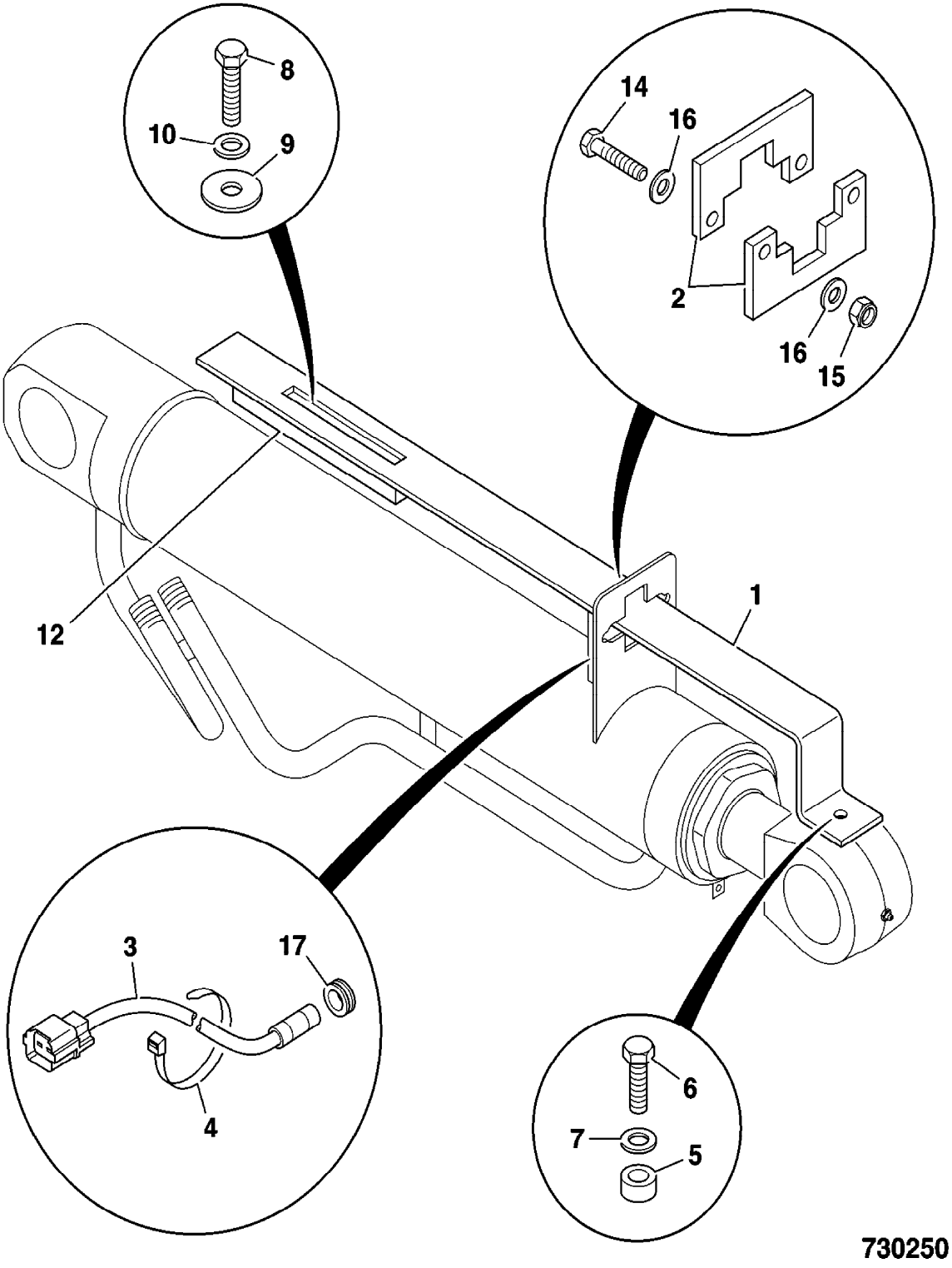
8
10
9
14
16
2
16
15
12
1
3
17
4
6
7
5
730250

9802/2740 D1-14-1 CONTROL, RESET, LIFT ARM, Z BAR

Item	Part no.	Change No.	Description	Remarks	Usage code	Qty
1	701/80244	Superseded	Switch, proximity, lift arm reset			1
	701/80608		Switch, proximity, lift arm reset			1
2	331/57703		Bracket, lift reset			1
3	2410/0308		Grommet			1
4	1315/3412D		Bolt, M10 x 50			2
5	1370/0303D		Nut, M10			2
6	1420/0008D		Washer, M10			4

Machine groups

Details

Machine group	From serial no.	To serial no.
.426		
426		

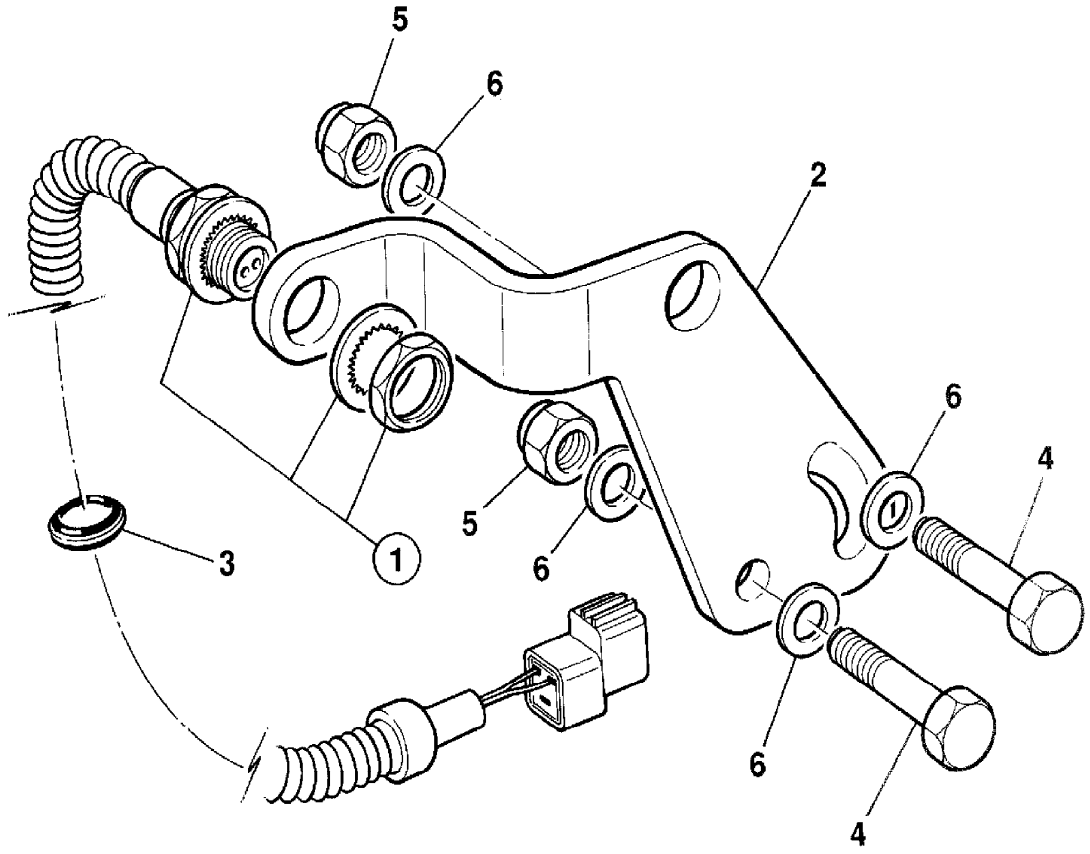

235090

9802/2740 D1-15-1 CONTROL, RESET, LIFT ARM, HT

Item	Part no.	Change No.	Description	Remarks	Usage code	Qty
1	701/80244	Superseded	Switch, proximity, lift arm reset			1
	701/80608		Switch, proximity, lift arm reset			1
2	331/57759		Bracket, lift reset			1
3	2410/0308		Grommet			1
4	1315/3412D		Bolt, M10 x 50			2
5	1370/0303D		Nut, M10			2
6	1420/0008D		Washer, M10			4

Machine groups

Details

Machine group	From serial no.	To serial no.
.426		
426		

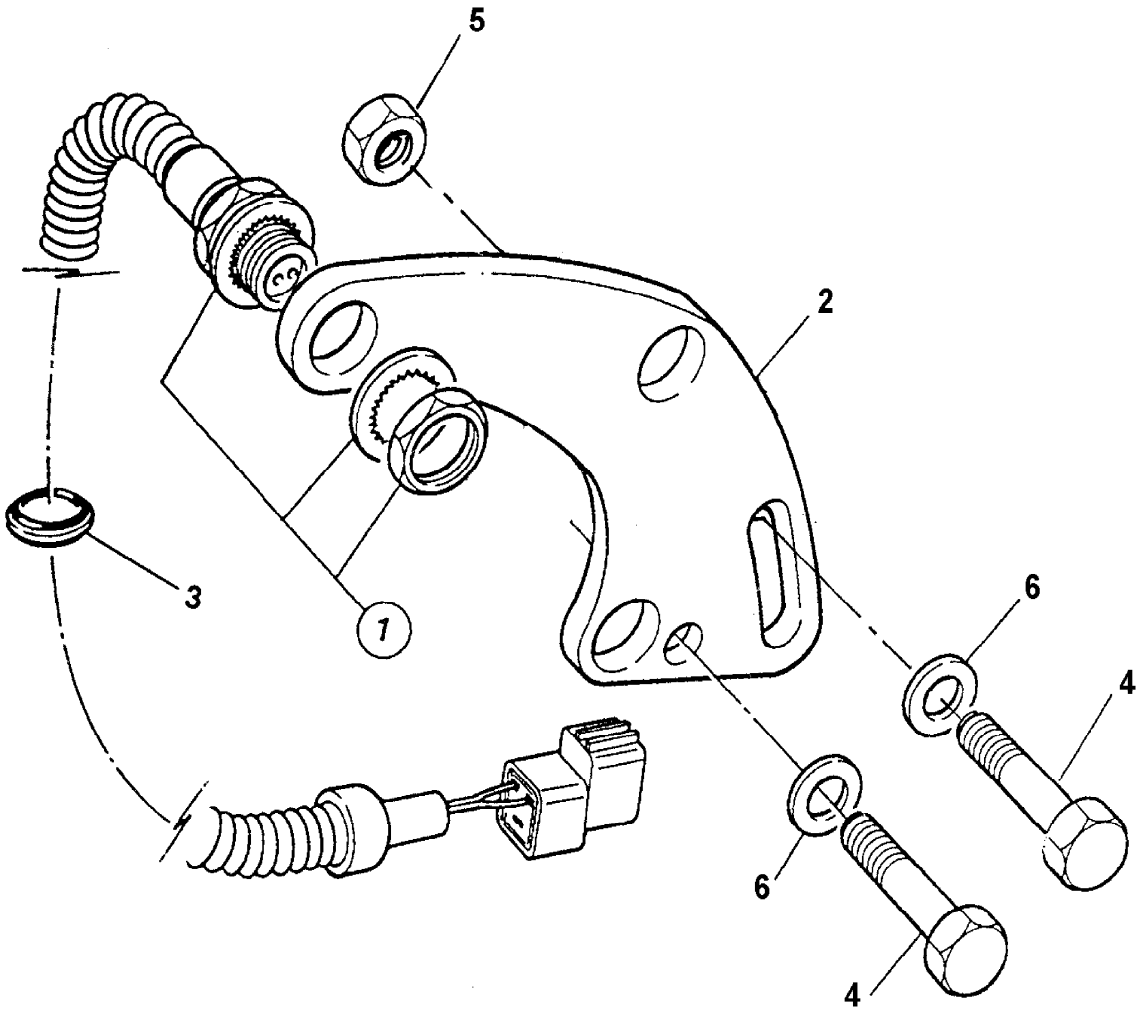

298660

9802/2740 D1-3-1 VALVE SERVO, JOYSTICK CONTROL, 3 SPOOL

Item	Part no.	Change No.	Description	Remarks	Usage code	Qty
1	928/60033		Valve, loader control	See page D1-4-1		1
	928/60347		Valve, loader control, with detented lever	Sales special 7763		1
2	331/48992		Plate, joystick gaiter			1
	331/58686		Plate, joystick gaiter, detented lever	Sales special 7763		1
3	331/50183		Gaiter, joystick			1
4	821/10159		Clamp, ring, loader lever gaiter			1
5	826/11021		Screw, Button Head M6x20, Stainless			4
6	1391/3105D		Screw, Cap M5 x 20			4
7	331/44983		Bracket, joystick mounting			1
8	1315/0305D		Screw, set M8x20			3
9	1420/0007D		Washer, M8 plain			3
10	1315/0203D		Setscrew			5
11	1420/0006D		Washer, M6 plain			5
12	826/01101		Nut, rivet,M6 open ended, for 3 to 5.5mm plt	Fit to item 7		3
13	826/10973		Nut, Bollhof M5			4
15	826/10977		Nut, rivet,M8 Hex, low profile			3

Machine groups

Details

Machine group	From serial no.	To serial no.
.426		
426		

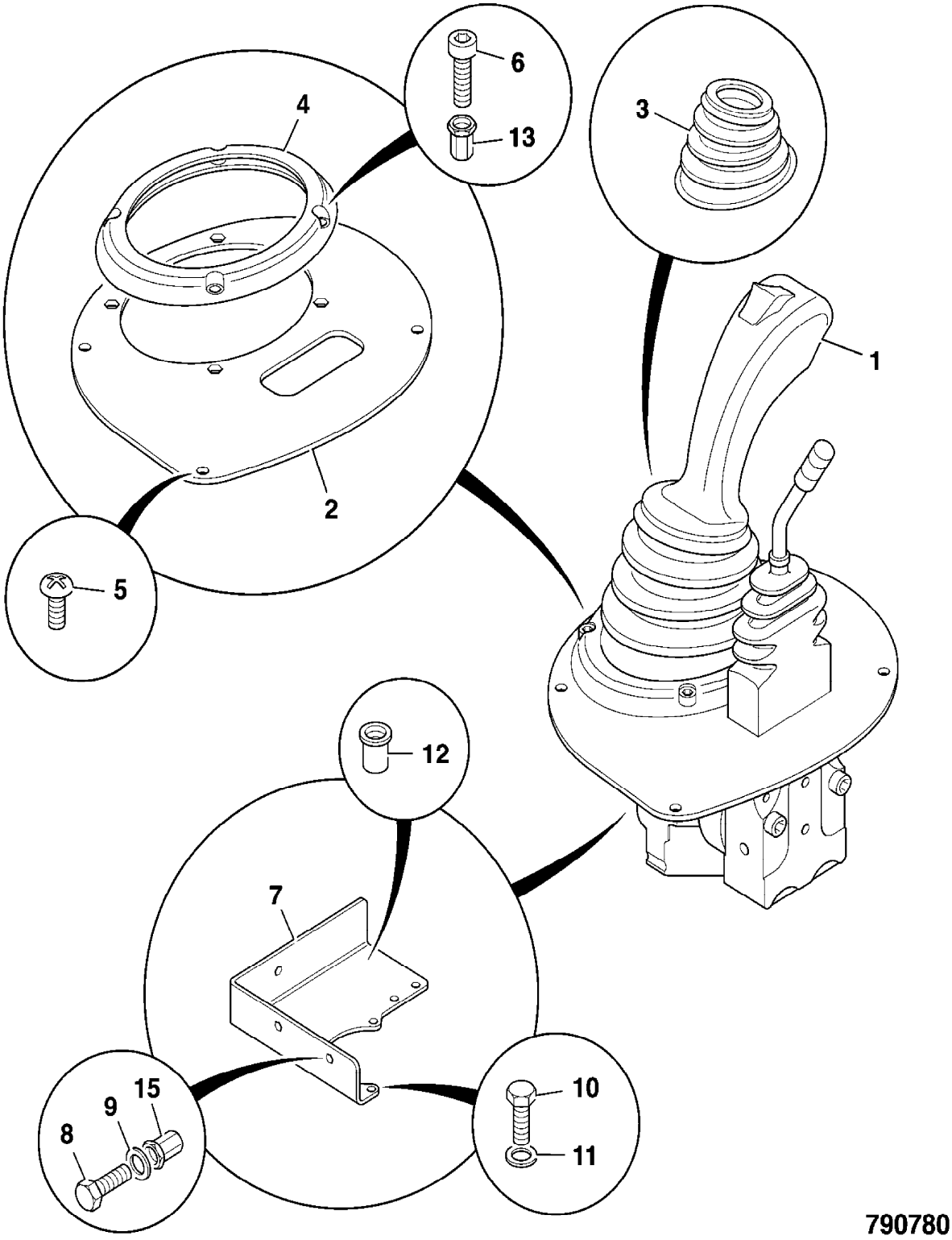
1
2
3
4
5
6
7
8
9
10
11
12
13
15
790780

9802/2740 D1-4-1 SERVO VALVE, COMPONENTS,928/60033

Item	Part no.	Change No.	Description	Remarks	Usage code	Qty
0A	928/60033		Valve, loader control			1
1	331/18840		:Handle, c/w harness, n/south operation			1
4	25/222284		:Boot, rubber			1
5	25/222285		:Nut, locking			1
6	25/222286		:Clamp			1
10	25/222287		:Plate			1
11	25/222288		:Kit, cardan detent			3
12	25/222289		:Kit, plunger			1
14	25/222290		:Kit, shim			1
20	25/222292		:Plate			1
21	25/222293		:Solenoid			3
22	25/222294		:Plunger			1
23	25/222295		:Plunger, intermediate			1
25	25/222296		:Bracket, electric			1
26	25/222297		:Bush			1
30	25/221754		:Kit-plunger			4
31	25/222142		:Regulator			1
32	25/222143		:Regulator			3
40	998/10921		:Kit, spring			1
42	998/10922		:Kit, socket and spring			3
47	25/222298		:Kit, assembly			1
48	25/222299		:Plate, intermediary			1
51	25/971501		::Valve, aux. loader control			1
52	331/42642		::Grip, handle			1
53	331/42643		::Boot, rubber			1
54	331/42644		::Plate, retaining			1
55	998/10935		::Kit, Lever, operating			1
56	25/945809		::Kit, seal and plunger			2
57	998/10936		::Kit, regulating			2
58	998/10937		::Kit, return spring			1
59	998/10938		::Kit, seal assembly			1

Machine groups

Details

Machine group	From serial no.	To serial no.
.426		
426		

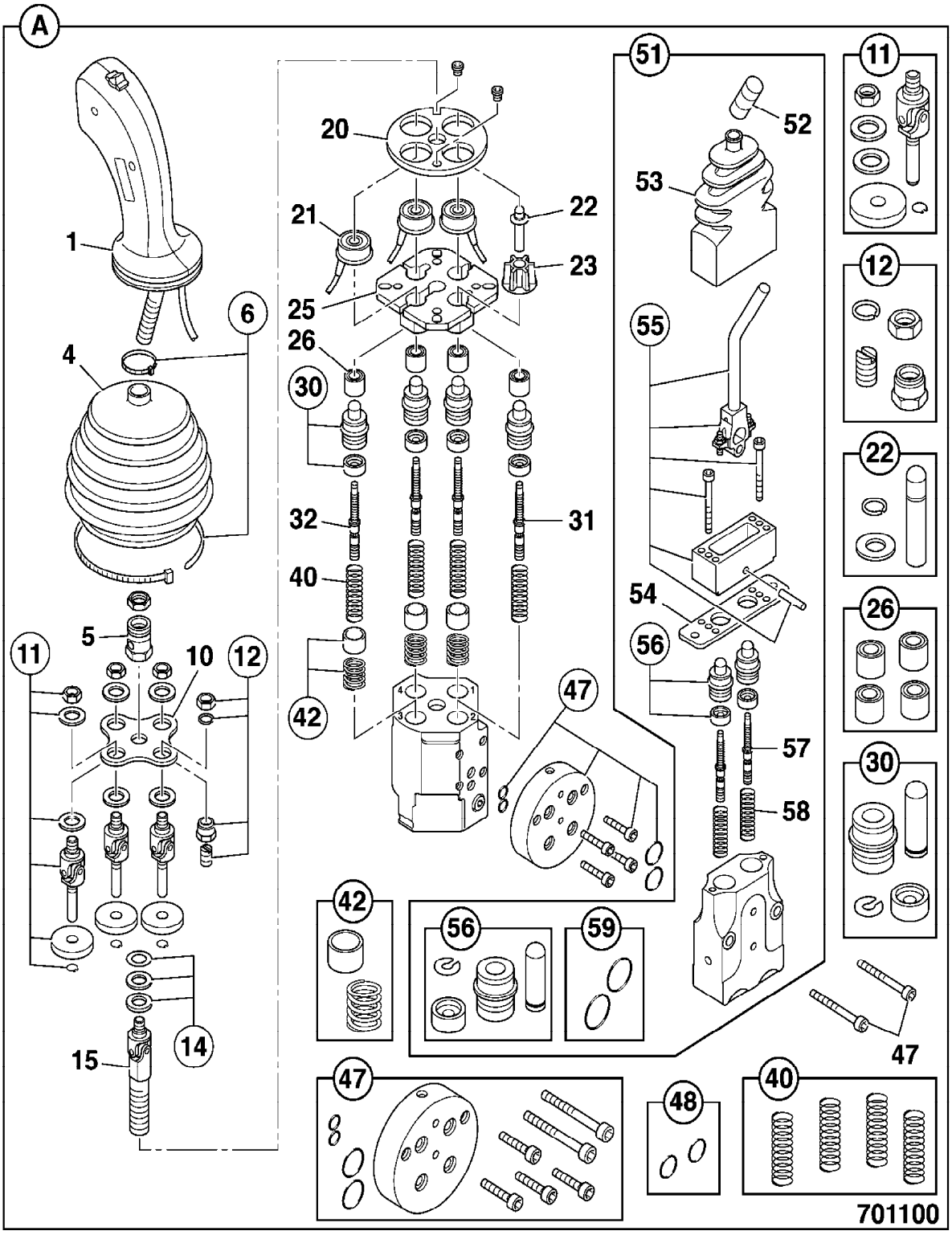
A
1
6
4
5
11
10
12
15
14
20
21
22
23
25
26
30
32
31
40
42
47
51
52
53
55
54
56
57
58
59
48
701100

9802/2740 D1-5-1 VALVE SERVO, JOYSTICK CONTROL, 4 SPOOL

Item	Part no.	Change No.	Description	Remarks	Usage code	Qty
1	928/60034		Valve, servo, twin aux.levers			1
2	331/44995		Plate, joystick gaiter			1
3	331/50183		Gaiter, joystick			1
4	821/10159		Clamp, ring, loader lever gaiter			1
5	826/11021		Screw, Button Head M6x20, Stainless			4
6	1391/3105D		Screw, Cap M5 x 20			4
7	331/44983		Bracket, joystick mounting			1
8	1315/0305D		Screw, set M8x20			3
9	1420/0007D		Washer, M8 plain			3
10	1315/0203D		Setscrew			5
11	1420/0006D		Washer, M6 plain			5
12	826/01101		Nut, rivet,M6 open ended, for 3 to 5.5mm plt	Fit to item 7		3
13	826/10973		Nut, Bollhof M5			4
15	826/10977		Nut, rivet,M8 Hex, low profile			3

Machine groups

Details

Machine group	From serial no.	To serial no.
.426		
426		

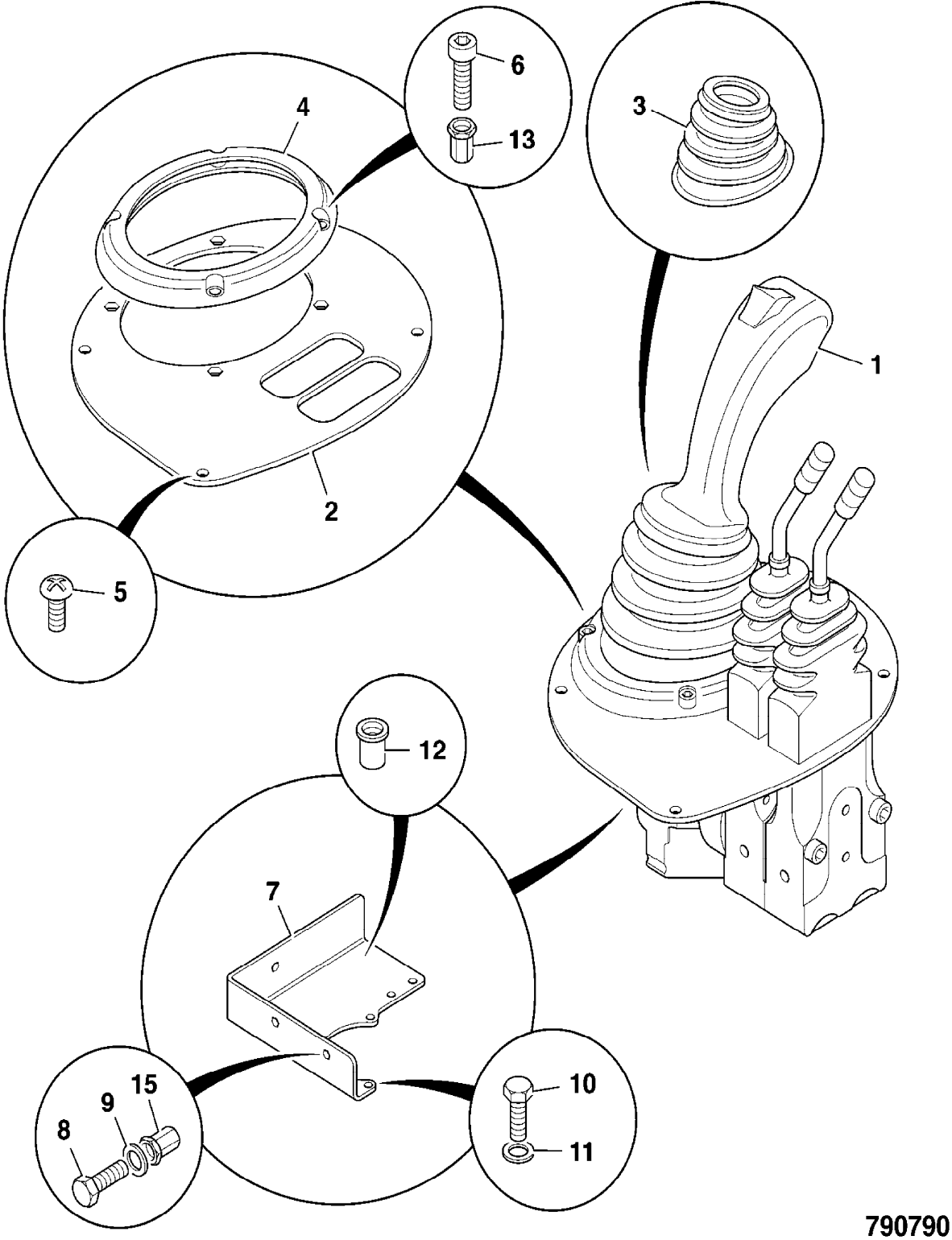

790790

9802/2740 D1-7-1 MULTI-LEVER, 2 SPOOL

Item	Part no.	Change No.	Description	Remarks	Usage code	Qty
1	928/60310		Valve, twin lever, 2 spool			1
2	331/49005		Plate, gaiter, multilever			1
3	826/11021		Screw, Button Head M6x20, Stainless			4
4	331/48671		Bracket, mounting			1
5	826/10977		Nut, rivet,M8 Hex, low profile			3
6	1315/0305D		Screw, set M8x20			3
7	1420/0007D		Washer, M8 plain			3
8	1315/0203D		Setscrew			5
9	1420/0006D		Washer, M6 plain			5
11	826/11035		Nut, M6 Caged Nut			3
12	817/19907		Decal, multi lever, 2 and 3 spool			1

Machine groups

Details

Machine group	From serial no.	To serial no.
.426		
426		

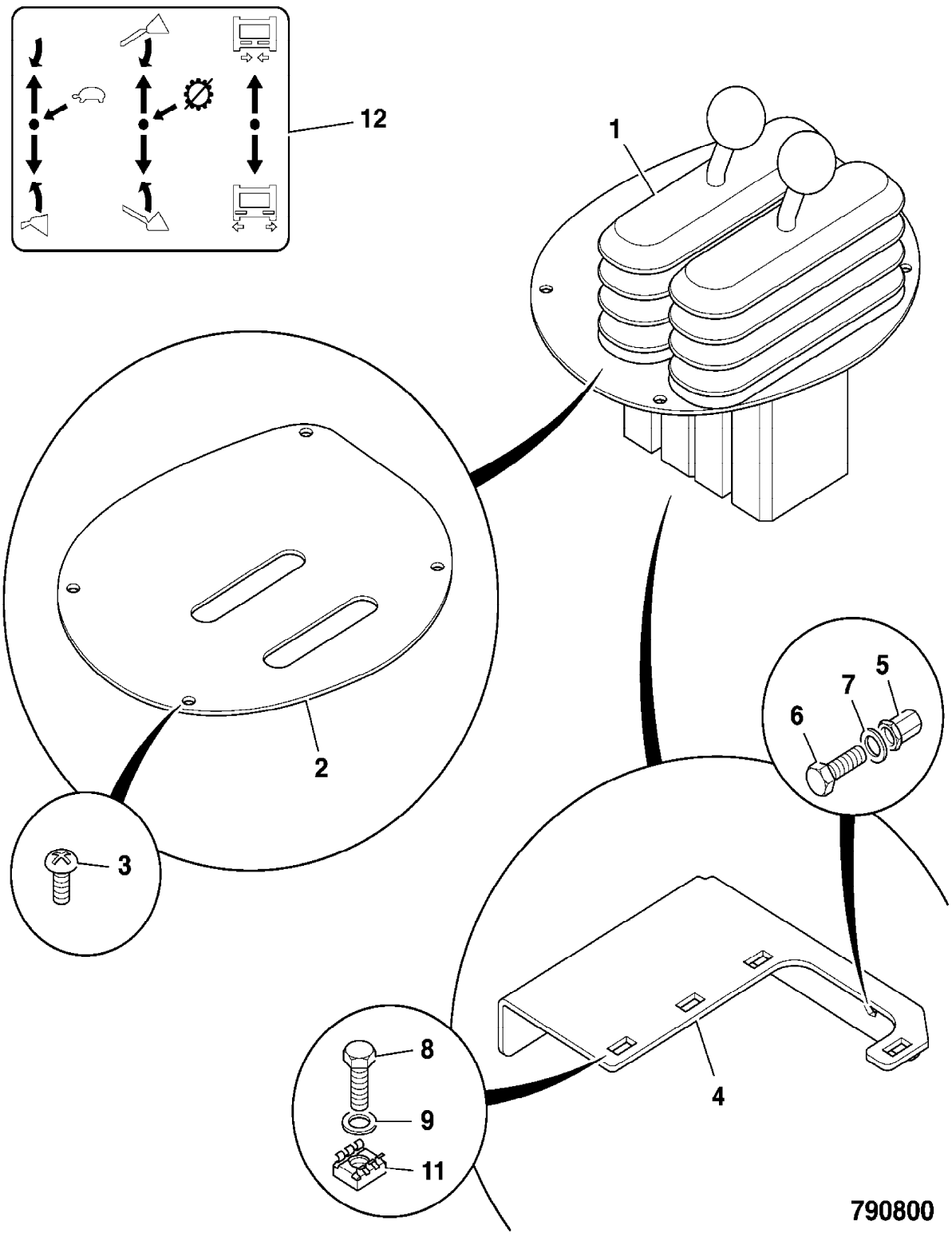
12
1
2
3
5
7
6
4
8
9
11
790800

9802/2740 D2-1-1 CONTROL, THROTTLE

Item	Part no.	Change No.	Description	Remarks	Usage code	Qty
1	.		'See Remark'	See frame D2-2-1		1
2	1315/0207D		Screw, M6 x 25mm			3
3	1420/0006D		Washer, M6 plain			3
4	826/01101		Nut, rivet,M6 open ended, for 3 to 5.5mm plt			3
5	910/45500		Cable, assembly, throttle control			1
6	262/20400		:Elbow, pivot			1
7	1370/0102D		:Nut			4
8	2000/0030		:Gaiter			2
9	256/71500		:Clamp, assembly			1
10	1358/0203D		::Nut, lock 2BA			2
11	1416/0003Z		::Washer, spring			2
12	331/36840		Bracket, throttle cable			1
13	1315/0508D		Setscrew			2
14	4101/0202		Sealant, Locking			A/R
15	1420/0009D		Washer, M12			2
16	814/00424		Spring, overload			1
17	265/00630		Lever, throttle pedal, extension			1
18	1315/0205Z		Bolt			2
19	1370/0103Z		Nut, Self lock, M6			2
20	1315/0305Z		Screw, M8 x 20mm long			1
21	1370/0203Z		Nut, self lock, M8			2
22	265/00629		Bracket, cable support			1
23	1315/3314Z		Bolt			1

Machine groups

Details

Machine group	From serial no.	To serial no.
.426		
426		

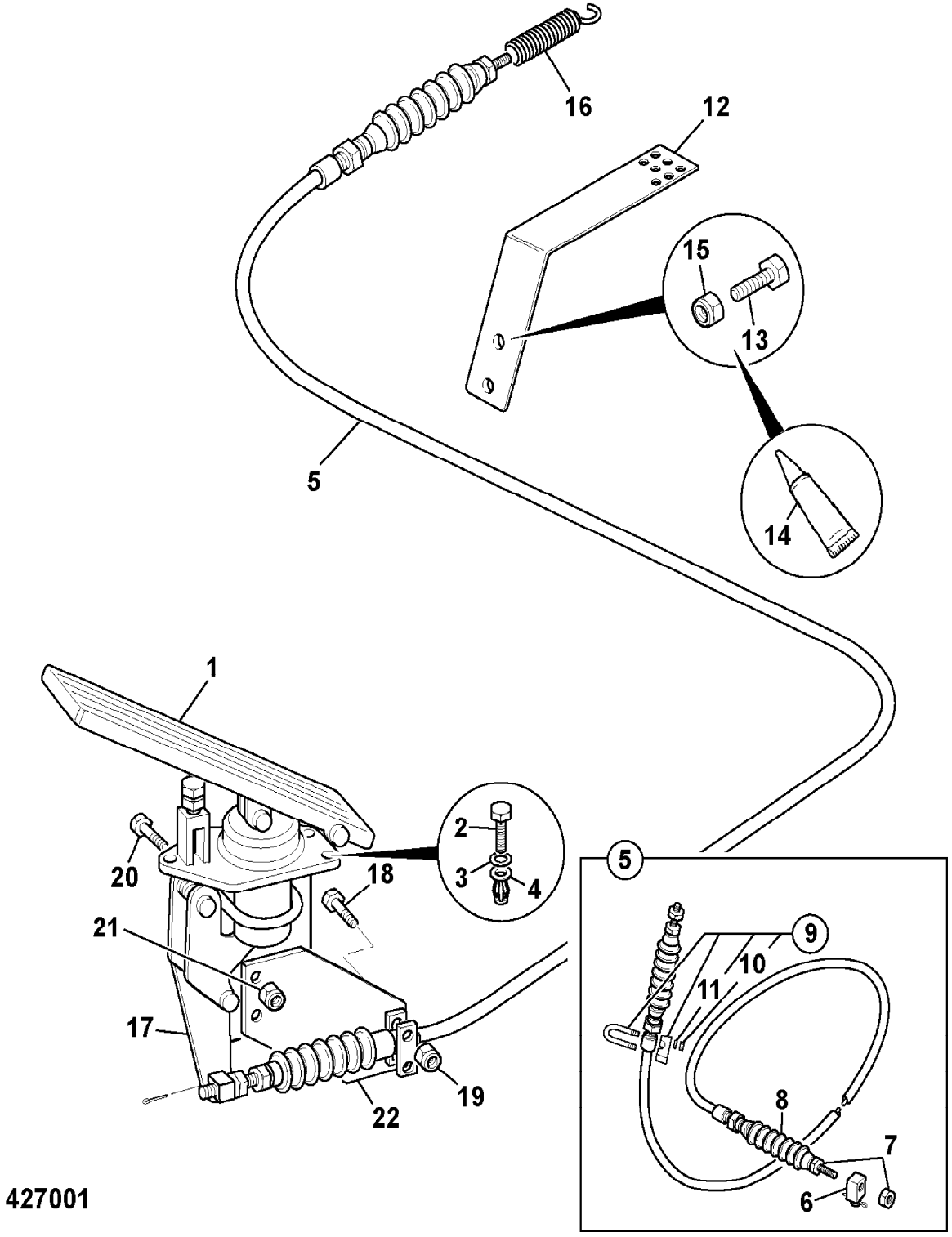

427001

9802/2740 D2-2-1 CONTROL, THROTTLE PEDAL

Item	Part no.	Change No.	Description	Remarks	Usage code	Qty
1	256/71700		Pedal, assembly, throttle control			1
2	256/71720		:Kit-pedal			1
3	256/71702		:Gaiter			1
4	256/71721		:Kit-bearing			1
4A	256/71722		::Spring			1
5	256/71723		:Kit-clamp			1
6	256/71724		:Kit-lever and push-rod			1
7	256/71725		:Kit-cable hanger			1
8	256/71500		:Clamp, assembly			1
8A	1358/0203Z		::Nut			2
8B	1416/0003Z		::Washer, spring			2
9	256/71708		:Kit-stop			1

Machine groups

Details

Machine group	From serial no.	To serial no.
.426		
426		

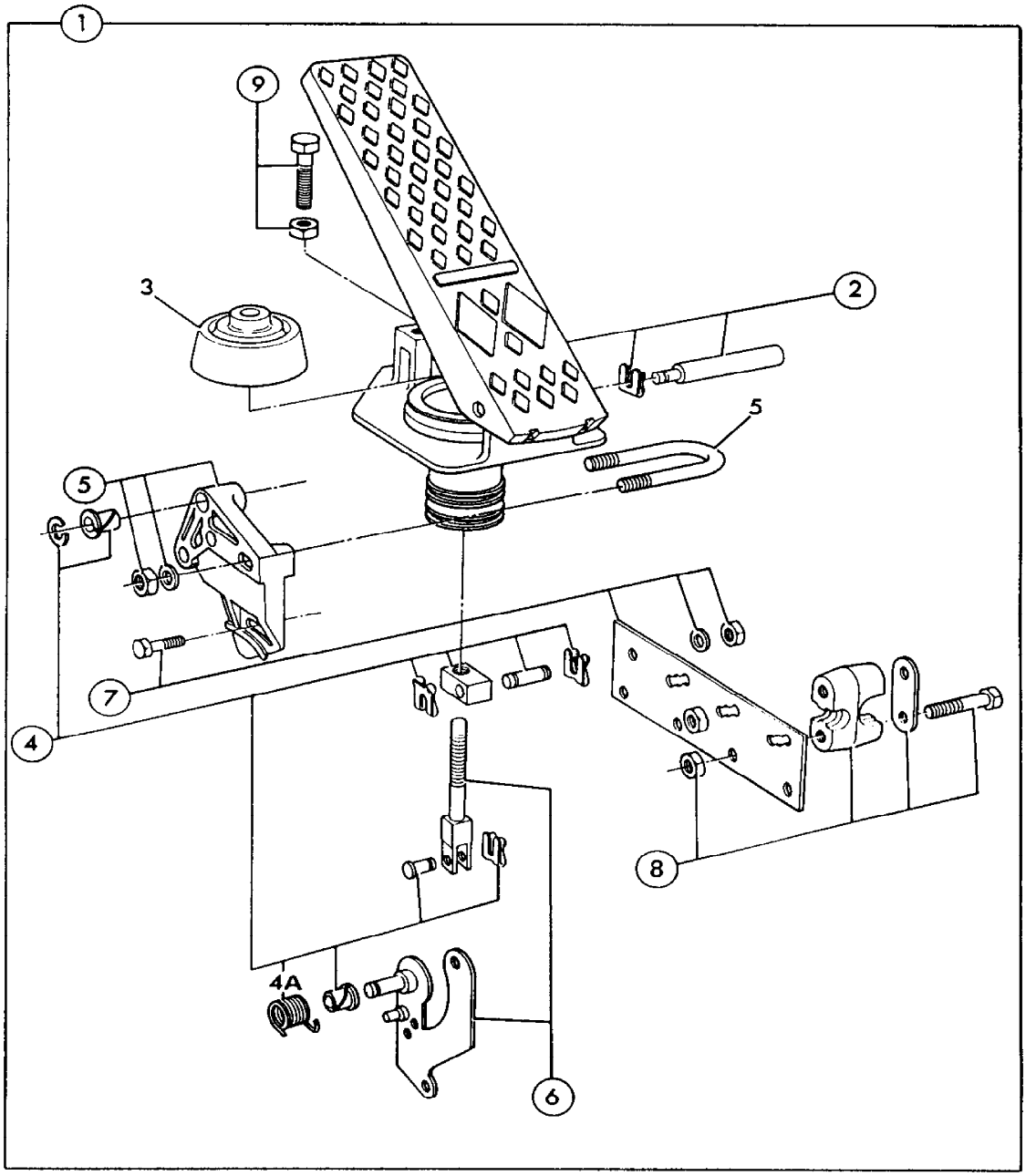

146820

9802/2740 D3-1-1 STEERING COLUMN

Item	Part no.	Change No.	Description	Remarks	Usage code	Qty
1A	331/25693		Wheel, steering, splined hub			1
1B	331/27411		Knob, spinner			1
1C	331/27487		Cap, steering wheel			1
2	162/03203		Lever, Clamp			1
3	331/49333		Column, steering, tilt			1
4	2102/0422		Pin, tension			1
5	913/10214		Pin, Clevis			2
6	821/00211		Clip, safety fastener			2
7	123/00161		Plate, retainer			1
8	331/32144		Insert, Mounting,Centre Bond			4
9	1315/0408D		Setscrew, M10 x 30			4
10	823/00326		Washer, outside			2
12	821/00190		Clip, 'E'			1
13	331/36009		Coupling			1
14	.		'See Remark'	See C3-8-1 Column switch		1
16	1315/0309D		Setscrew, M8x35			1
17	1370/0203D		Nut, lock			1

Machine groups

Details

Machine group	From serial no.	To serial no.
.426		
426		

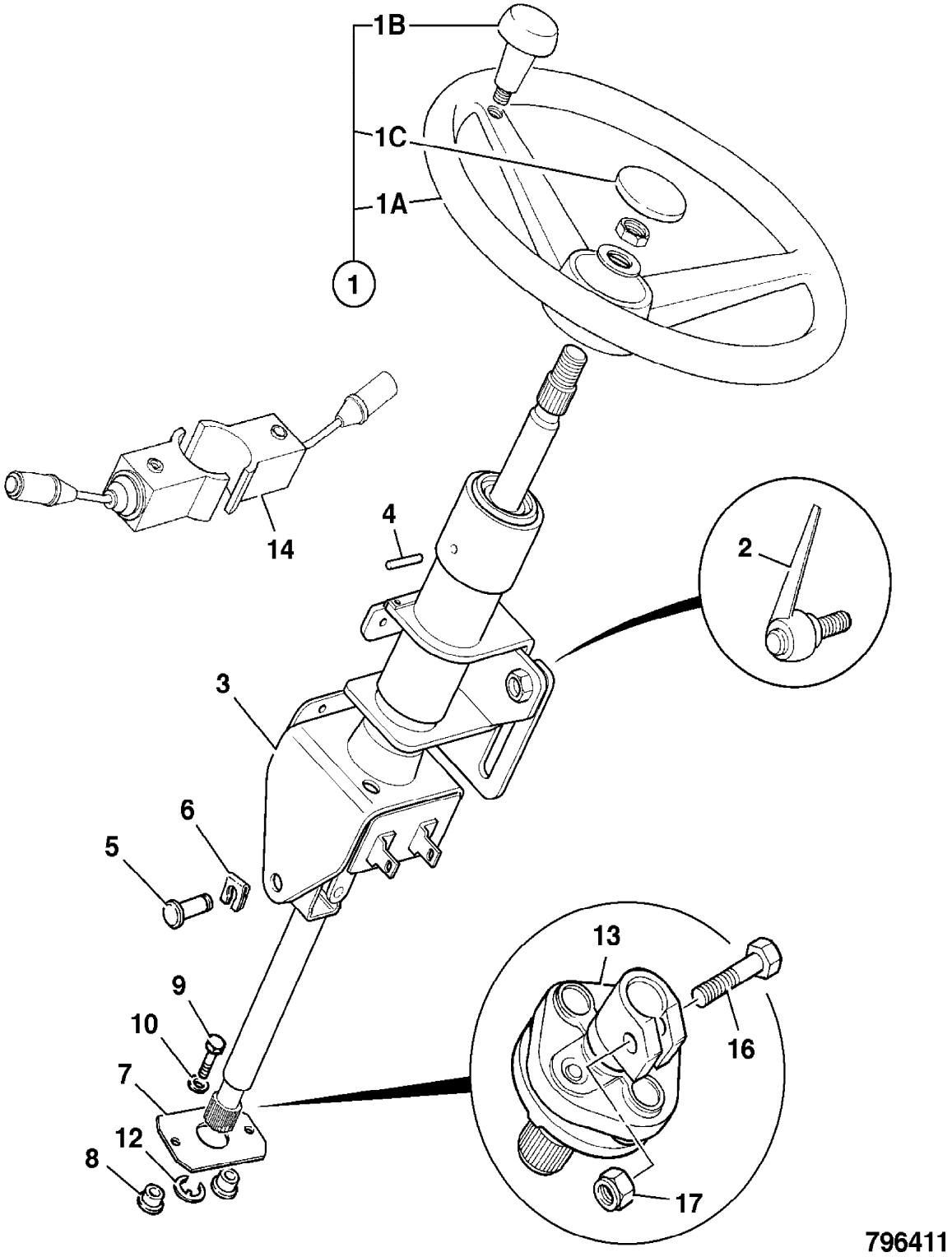
1B
1C
1A
1
14
4
2
3
6
5
9
10
7
12
8
13
16
17
796411

9802/2740 E1-1-1 CIRCUIT, LOADER END

Item	Part no.	Change No.	Description	Remarks	Usage code	Qty
1	335/06384		Pipe, lift ram			1
1A	816/00193		Cap, blanking 1"BSP, steel			2
2	268/20022		Pipe, ram shovel			1
3	615/01200		Hose, 3/4" x 1020mm			4
4	616/80068		Hose			2
	616/80101		Hose	Used when load suspension is fitted		2
5	209/71200		Hose			4
7	1315/0410D		Setscrew			4
8	1420/0008D		Washer, M10			8
9	1370/0303D		Nut, M10			2
10	616/80055		Hose			2
11	1315/3412D		Bolt, M10 x 50			2
13	264/01001		Clamp			8
	2403/0210		:O Ring			4
14	1391/3409Z		Capscrew, M10 x 35mm			16
15	1425/0008D		Washer, spring, M10			16
16	828/00417		O Ring, 1"SAE			4

Machine groups

Details

Machine group	From serial no.	To serial no.
.426		
426		

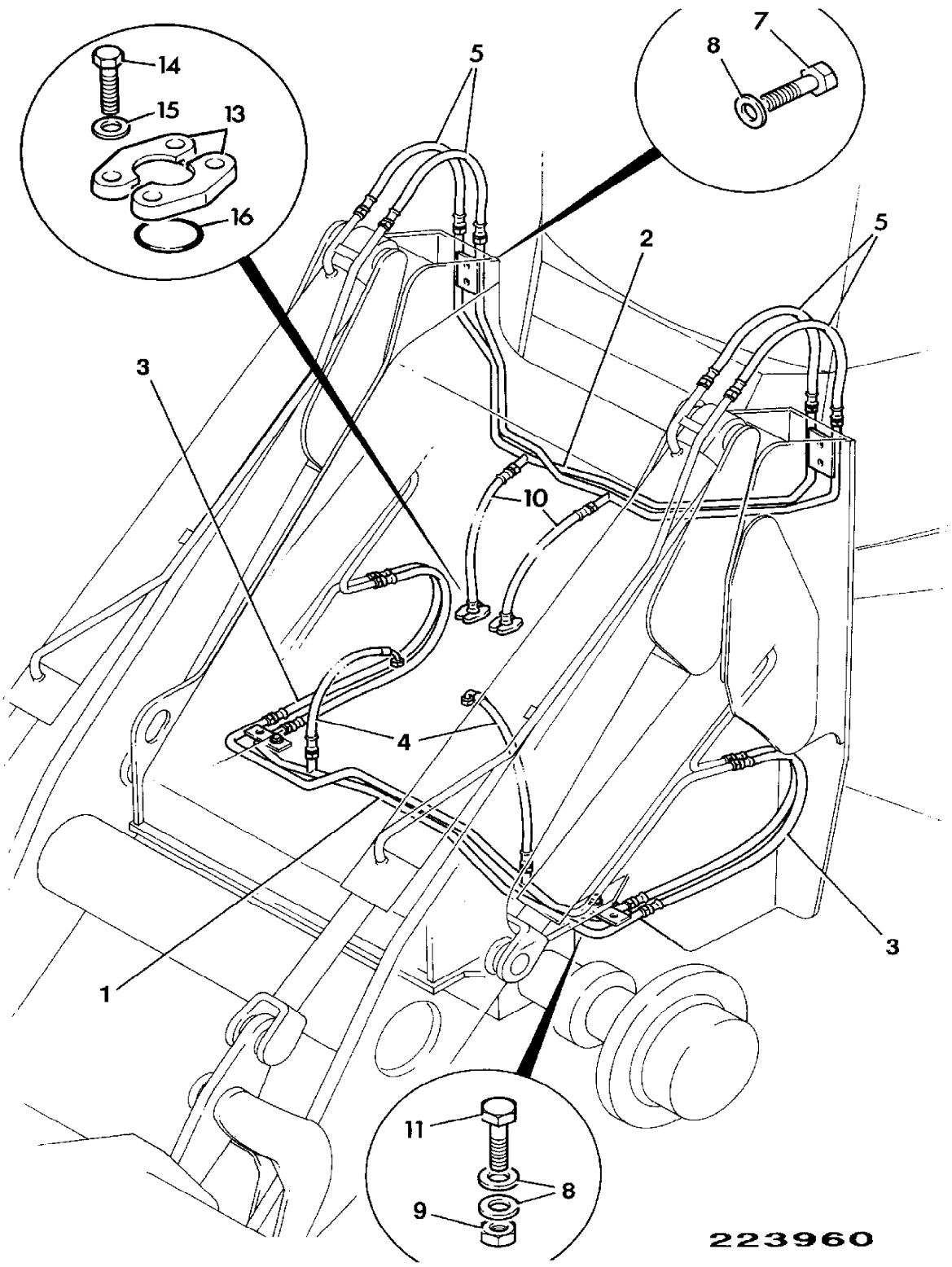
14
15
13
16
5
7
8
2
5
3
10
4
1
3
11
8
9
223960

9802/2740 E1-10-1 HOSE AND PIPEWORK, SERVO CONTROLLER, LOADER, UNDER CAB

Illustration Machines Top of catalogue

Item	Part no.	Change No.	Description	Remarks	Usage code	Qty
1	335/08864		Pipe, assembly, servo control			1
2	1315/0305Z		Screw, M8 x 20mm long			2
3	1420/0007Z		Washer, plain, M8			2
5	265/02145		Hose, servo			1
6	265/02146		Hose, servo			1
7	265/02147		Hose, servo			1
8	265/02148		Hose, servo			1
9	265/02149		Hose, servo			1
10	265/02150		Hose, servo			1
11	269/30433		Hose, "P"			1
12	631/80006		Hose, 1/4"BSP x 370mm			1
13	816/50031		Adapter, Tee			1
20	816/13133		Adapter, c/w filter			1
21	269/30601		Hose, servo, T			1
22	1745/0001		Plug, 7/16"UNF, o ring boss			1
22A	2401/0503		:O Ring			1

Machine groups

Details

Machine group	From serial no.	To serial no.
.426		
426		

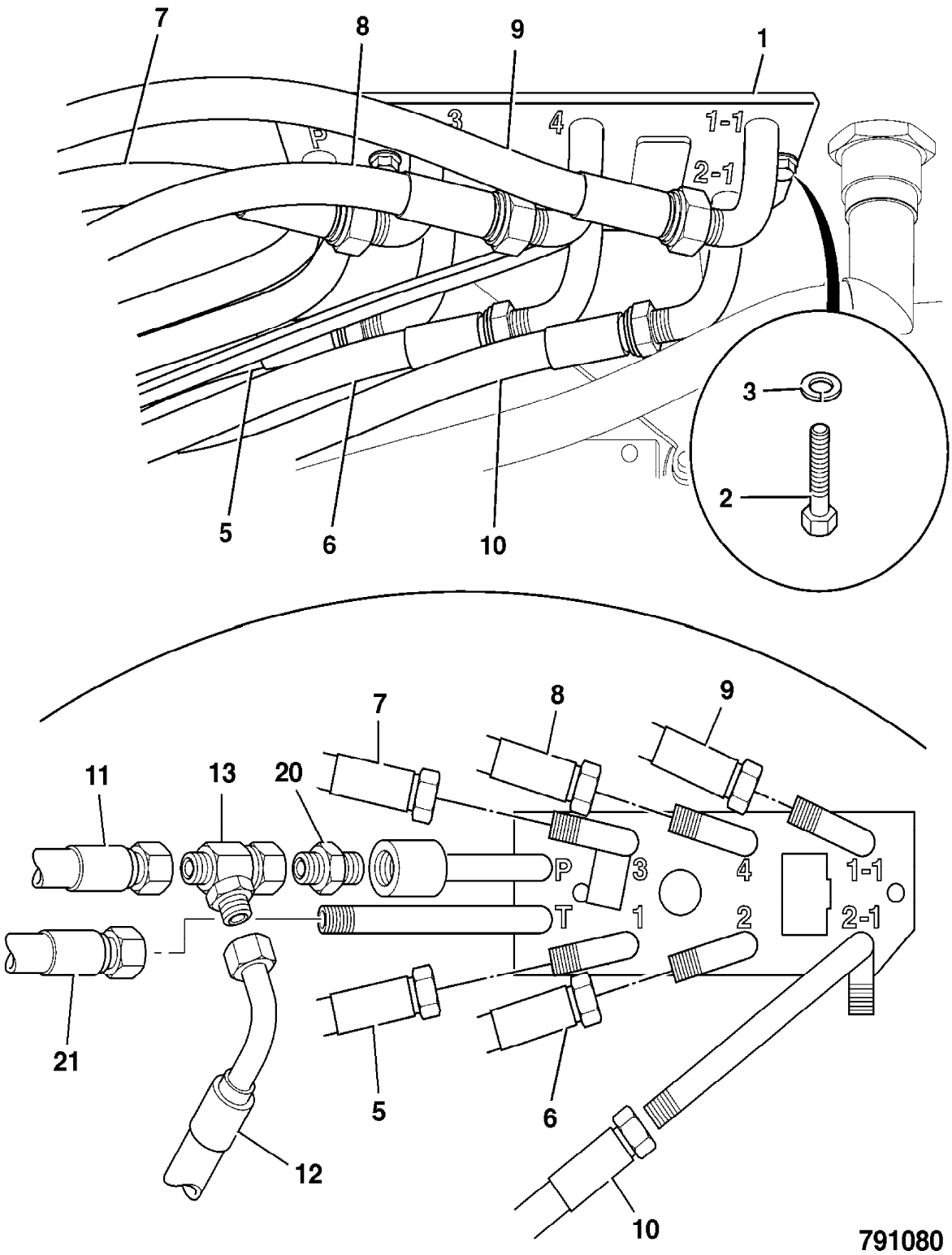

791080

9802/2740 E1-11-1 HOSE AND PIPEWORK, TEST POINTS

Item	Part no.	Change No.	Description	Remarks	Usage code	Qty
1	816/60290		Adapter, pressure test			3
2	1606/0001		Adapter			3
3	1406/0008		Seal, washer			3
4	611/80219		Hose			2
5	611/23900		Hose			1
6	817/19853		Label, test point			1

Machine groups

Details

Machine group	From serial no.	To serial no.
.426		
426		

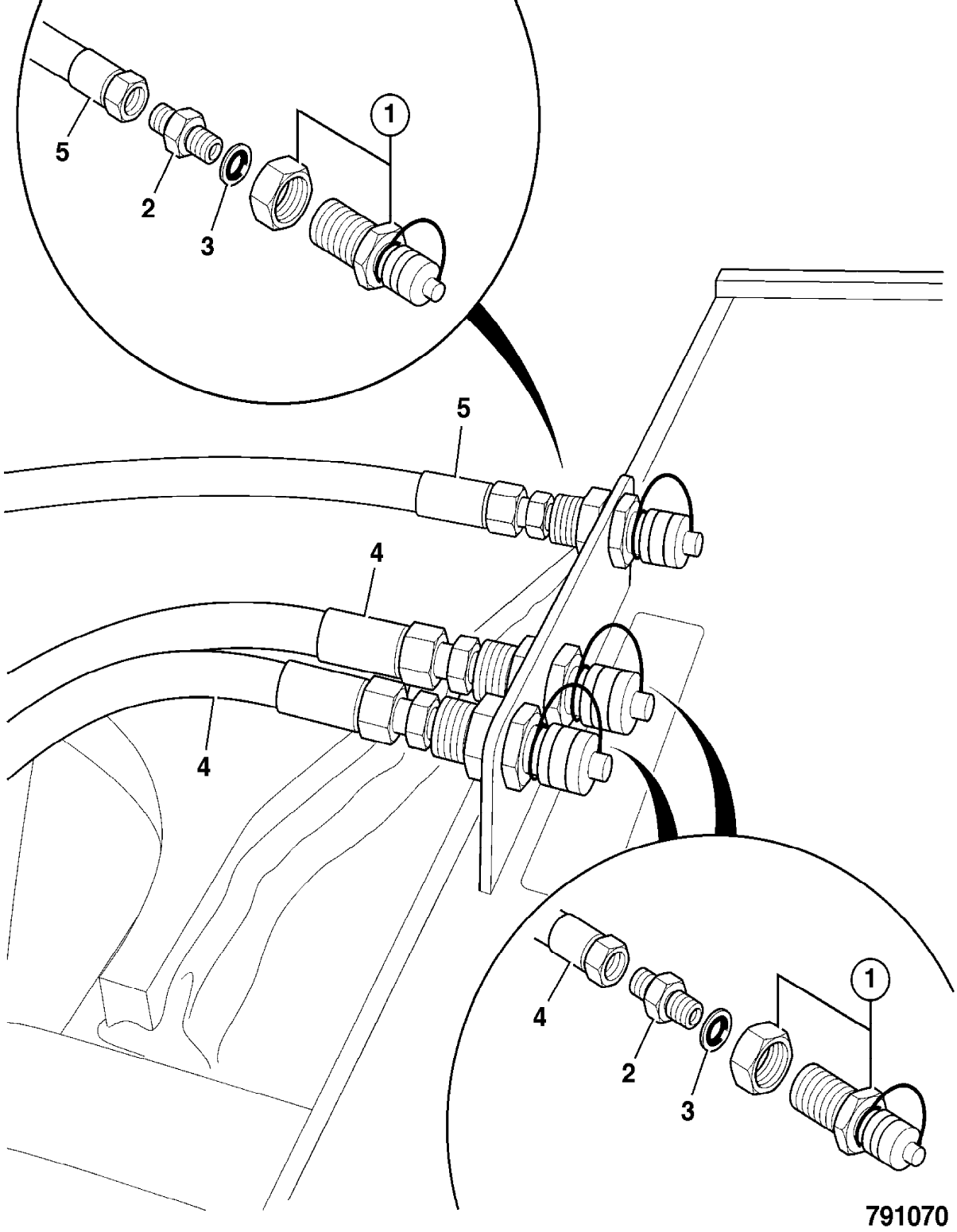
1
5
2
3
5
4
4
1
4
2
3
791070

9802/2740 E1-14-1 HOSE AND PIPEWORK, LOAD SUSPENSION

Item	Part no.	Change No.	Description	Remarks	Usage code	Qty
1	25/222127		Valve, load suspension			1
2	826/11145	Superseded	Bolt, U M10			4
	826/11580		Bolt, U M10			4
3	32/925562	toDEC05	Accumulator, 3.0L			2
	32/925852		Accumulator, zero pressure, version of 32/925790	Discharged		2
3A	928/60363		:Valve, accumuulator, including cover			1
4	1370/0303D		Nut, M10			8
5	1315/0408D		Setscrew, M10 x 30			2
6	1420/0008D		Washer, M10			10
7	1620/0002		Adapter			1
9	1620/0012		Adapter, 1" BSP, M/M			4
10	816/50097		Adapter			1
11	1620/0010		Adapter, includes 'o'ring			2
15	1603/0011		Adapter			1
16	2401/0509		O Ring			1
21	25/961900		Valve, ball			1
22	816/50031		Adapter, Tee			1
23	611/01800		Hose, straight-straight			1
24	1604/0002		Adapter, 1/4" BSP M/M			1
25	1406/0011		Seal, bonded			2
26	1612/0002		Adapter			1
28	617/22900		Hose			1
29	615/80067		Hose, 3/4 BSP			1
30	615/20800		Hose			1
31	637/80062		Hose, 1" BSP			1
38	701/60031		Switch, 24V			1
40	701/58717		Cover, float switch decal			1
47	817/16942		Decal, smooth ride			2
52	617/23900		Hose			1

Machine groups

Details

Machine group	From serial no.	To serial no.
.426		

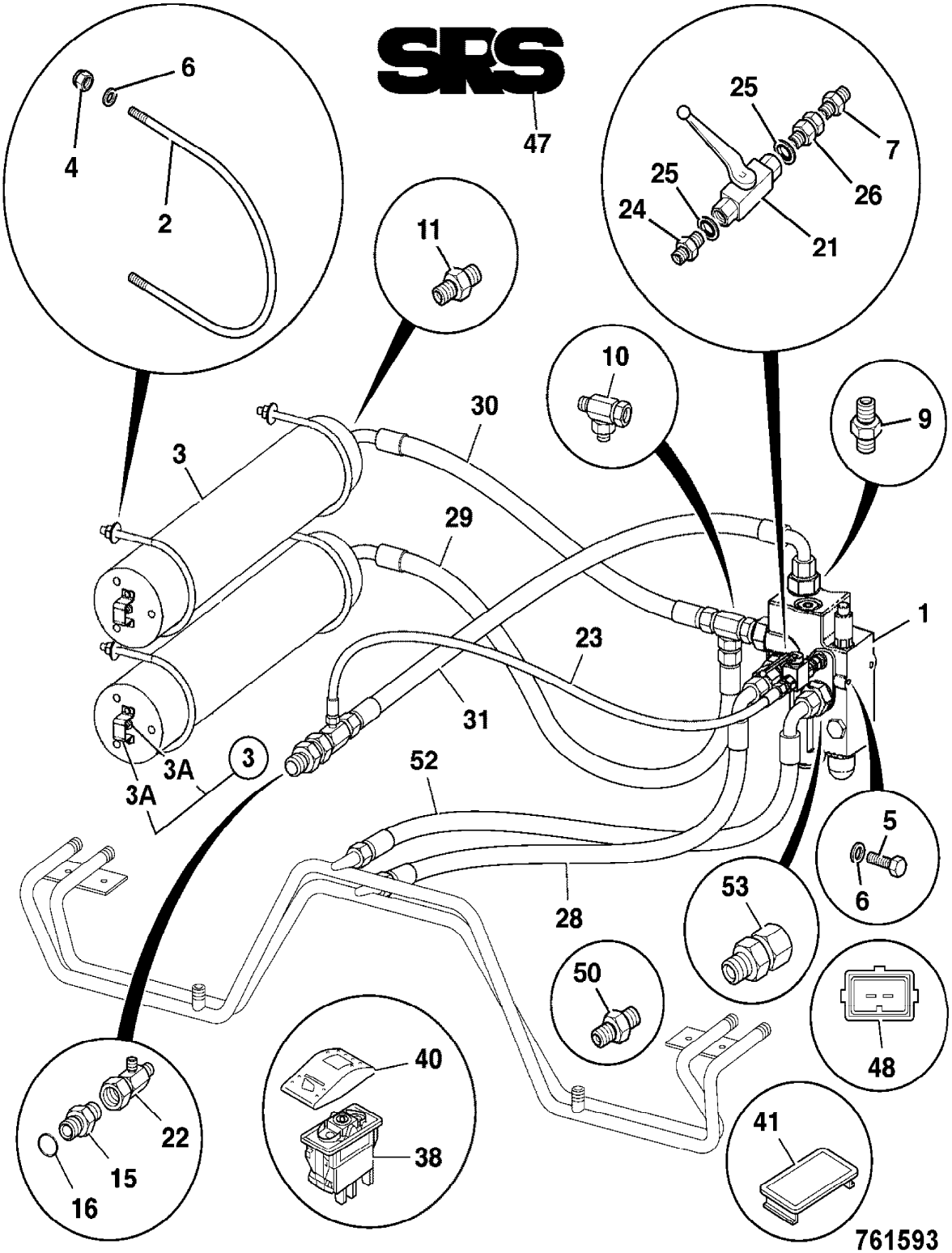
SRS
47
6
4
2
11
25
7
25
26
24
21
10
9
30
3
29
1
23
31
3A
3A
3
52
5
6
53
28
50
48
40
38
41
22
15
16
761593

9802/2740 E1-15-1 HOSE AND PIPEWORK, FAN MOTOR, COOLING BAY

Item	Part no.	Change No.	Description	Remarks	Usage code	Qty
0A	30/925628		Fan, cooling, 28"			1
0B	20/925694		Motor, hydraulic, proportional	See note 1		1
	20/925723		Motor, hydraulic, proportional			1
2	331/53398		Coupling, fan drive			1
4	1305/0105D		Screw, 5/16 x 7/8"	Fan to coupling		4
5	1420/0007D		Washer, M8 plain			4
6	1391/3408D		Capscrew			6
8	1620/0006		Adapter, 39.5mm lg. M/M			1
8A	2401/0015		O Ring			1
9	1620/0010		Adapter, includes 'o'ring			1
9A	2301/0015		O Ring			1
11	613/80242		Hose	Hose,fan motor,out		1
12	616/80150		Hose	Hose,fan motor,in		1
13	264/01001		Clamp			2
14	2401/0210		O Ring			1
15	821/10087		Clip			3
16	821/00306		Clip, 'P' (size No.6), 20mm clamp diameter			3
17	1315/0205D		Setscrew, M6 x 20mm long			3
18	1420/0006D		Washer, M6 plain			6
19	1370/0103D		Nut, M6 lock			3
20	821/00183		Clamp, top			1
21	821/00184		Clamp, base			1
22	821/00185		Insert, clamp			1
23	1315/0408D		Setscrew, M10 x 30			1
24	1420/0008D		Washer, M10			2
25	1370/0303D		Nut, M10			1
26	121/77603		Tie, cable, L=300mm x W=7.6mm			6
27	926/04800		Strip, edging			A/R
29	1425/0008Z		Washer, Spring M10			4

30	816/90618	S/N1231503 on	Adapter, elbow			1
31	631/80066	S/N1231503 on	Hose, 1/4BSPx 5150mm			1
32	4101/0200		Fluid, locking	For item 4		A/R

Note 1

Replaced with 20/925723 + hose 631/80066 + adapter 816/90618

Machine groups

Details

Machine group	From serial no.	To serial no.
.426	1231503	
426	1231503	

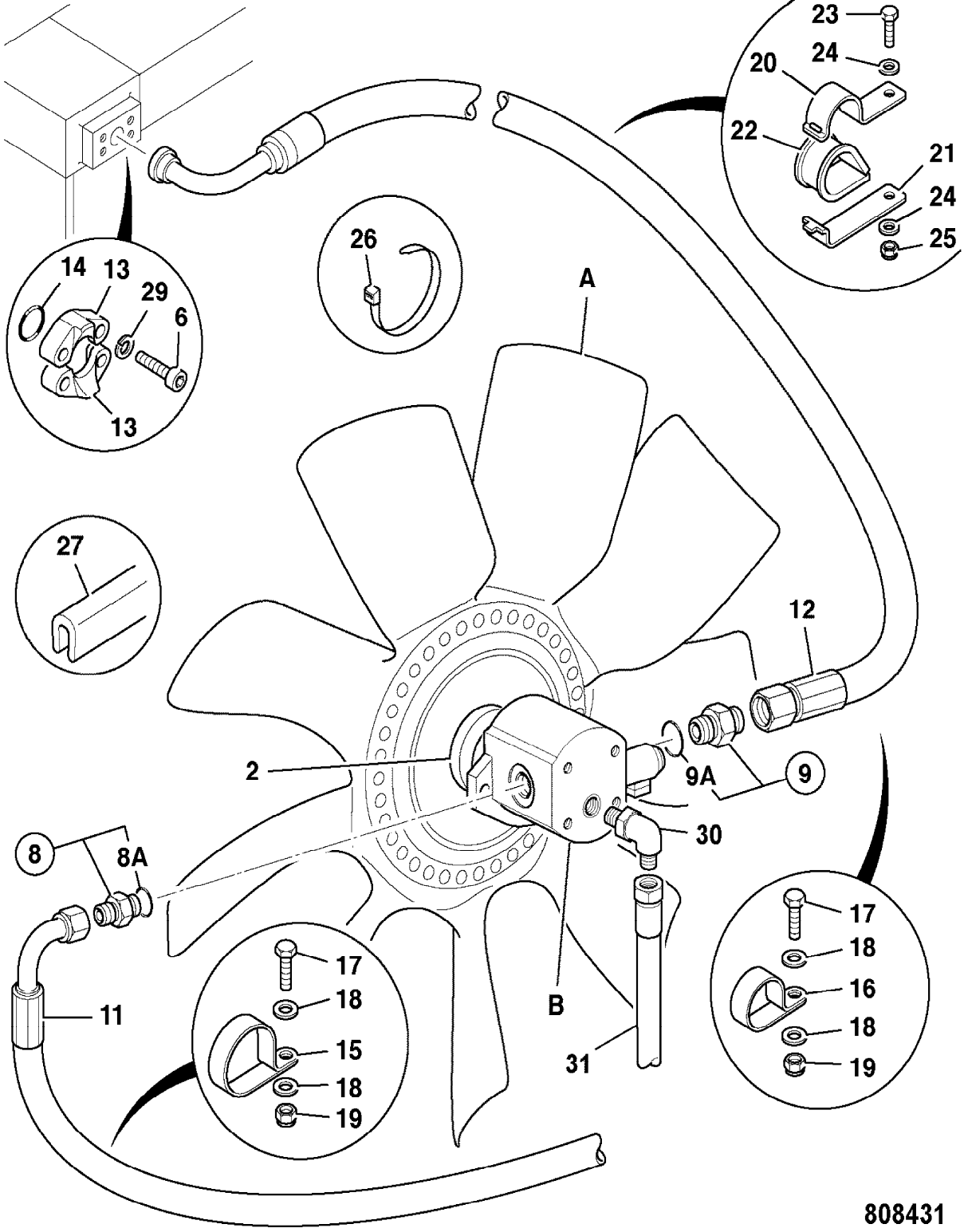
23
24
20
22
21
24
25
14
13
29
6
13
26
A
27
12
2
9A
9
30
8
8A
11
17
18
15
18
19
B
31
17
18
16
18
19
808431

9802/2740 E1-15-5 HOSE AND PIPEWORK, REVERSE FAN MOTOR, COOLING BAY

Item	Part no.	Change No.	Description	Remarks	Usage code	Qty
0A	30/925628		Fan, cooling, 28"			1
0B	20/925707		Motor, reverse fan			1
0C	721/11440		Harness, link			1
2	331/53398		Coupling, fan drive			1
4	816/00335		Adapter, 90 elbow			1
5	631/80062		Hose, 1/4 x 5150mm			1
6	1620/0001		Adapter			1
8	1620/0005		Adapter, 3/4"UNF o-ring boss, 1/2"BSP male			1
8A	2401/0506		O Ring			1
9	1620/0009		Adapter			1
9A	2401/0507		O Ring			1
11	613/80242		Hose	Hose,fan motor,out		1
12	616/80150		Hose	Hose,fan motor,in		1
13	264/01001		Clamp			2
14	2401/0210		O Ring			1
15	821/10087		Clip			3
16	821/00306		Clip, 'P' (size No.6), 20mm clamp diameter			3
17	1315/0205D		Setscrew, M6 x 20mm long			3
18	1420/0006D		Washer, M6 plain			6
19	1370/0103D		Nut, M6 lock			3
20	821/00183		Clamp, top			1
21	821/00184		Clamp, base			1
22	821/00185		Insert, clamp			1
23	1315/0408D		Setscrew, M10 x 30			1
24	1420/0008D		Washer, M10			2
25	1370/0303D		Nut, M10			1
26	121/77603		Tie, cable, L=300mm x W=7.6mm			6
27	926/04800		Strip, edging			A/R
29	1425/0008Z		Washer, Spring M10			4

Details

Machine group	From serial no.	To serial no.
.426		
426		

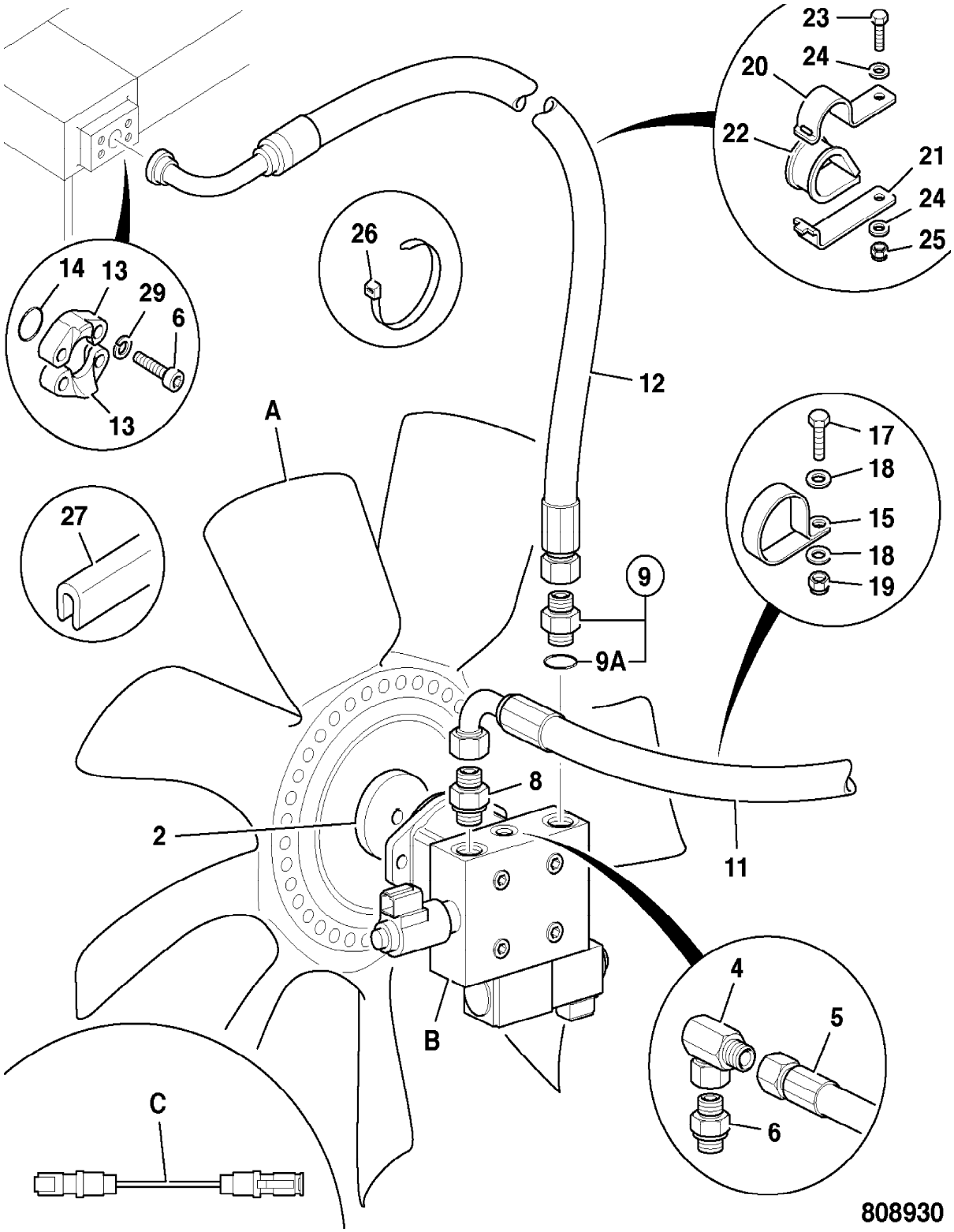

9802/2740 E1-17-1 HOSE AND PIPEWORK, STEER VALVE

Item	Part no.	Change No.	Description	Remarks	Usage code	Qty
1	35/902100		Valve, steer			1
2	1620/0005		Adapter, 3/4"UNF o-ring boss, 1/2"BSP male			4
2A	2401/0506		:O Ring			1
3	1620/0001		Adapter			1
3A	2401/0503		:O Ring			1
6	613/80181		Hose, 1/2"BSP x 2080mm lg.			1
25	615/29700		Hose, 2620 mm long			1
28	335/11104		Bracket, with T adapter			1
29	1315/0309D		Setscrew, M8x35			1
30	1420/0007D		Washer, M8 plain			2
31	1370/0203D		Nut, lock			1
33	611/21200		Hose, 1/4BSP x 610mm			1
36	816/10143		Adapter			1
38	269/40962		Hose, "SLS"	Load sense		1
39	629/80093		Hose			2
60	613/29700		Hose			1

Machine groups

Details

Machine group	From serial no.	To serial no.
.426		
426		

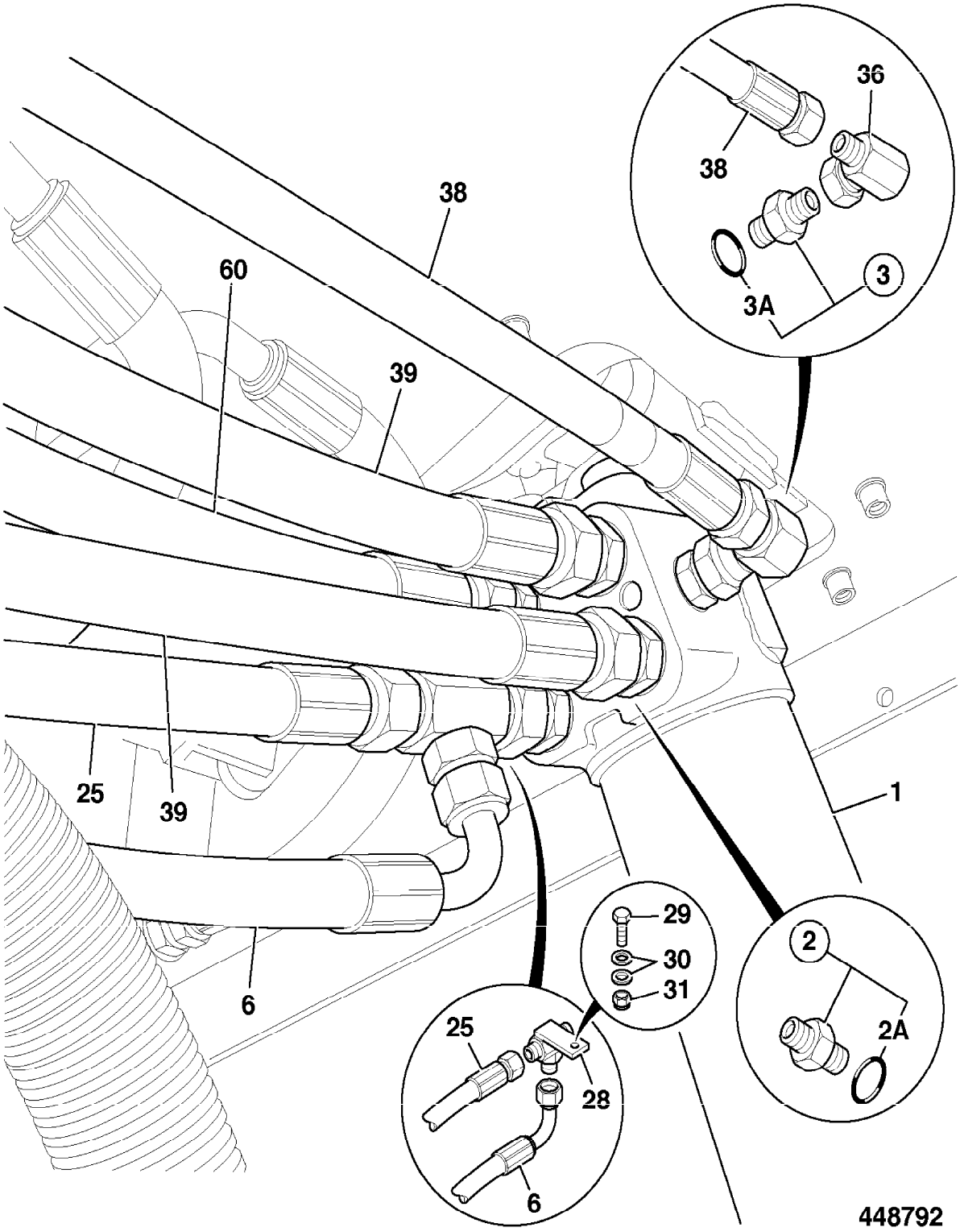
36
38
38
3
3A
60
39
25
39
1
6
29
30
31
2
2A
25
28
6
448792

9802/2740 E1-18-1 HOSE AND PIPEWORK, STEER RAMS

Item	Part no.	Change No.	Description	Remarks	Usage code	Qty
1	331/55901		Bracket, hose support			1
2	821/00350		Clamp			3
3	821/00300		Plate, clamp			3
4	1315/3315D		Bolt, M8x65, dacromet			3
5	1420/0007D		Washer, M8 plain			6
6	1370/0203D		Nut, lock			3
13	613/28100		Hose			2
14	613/31900		Hose, 1/2"BSP x 620mm lg.			1
15	613/80017		Hose			1

Machine groups

Details

Machine group	From serial no.	To serial no.
.426		
426		

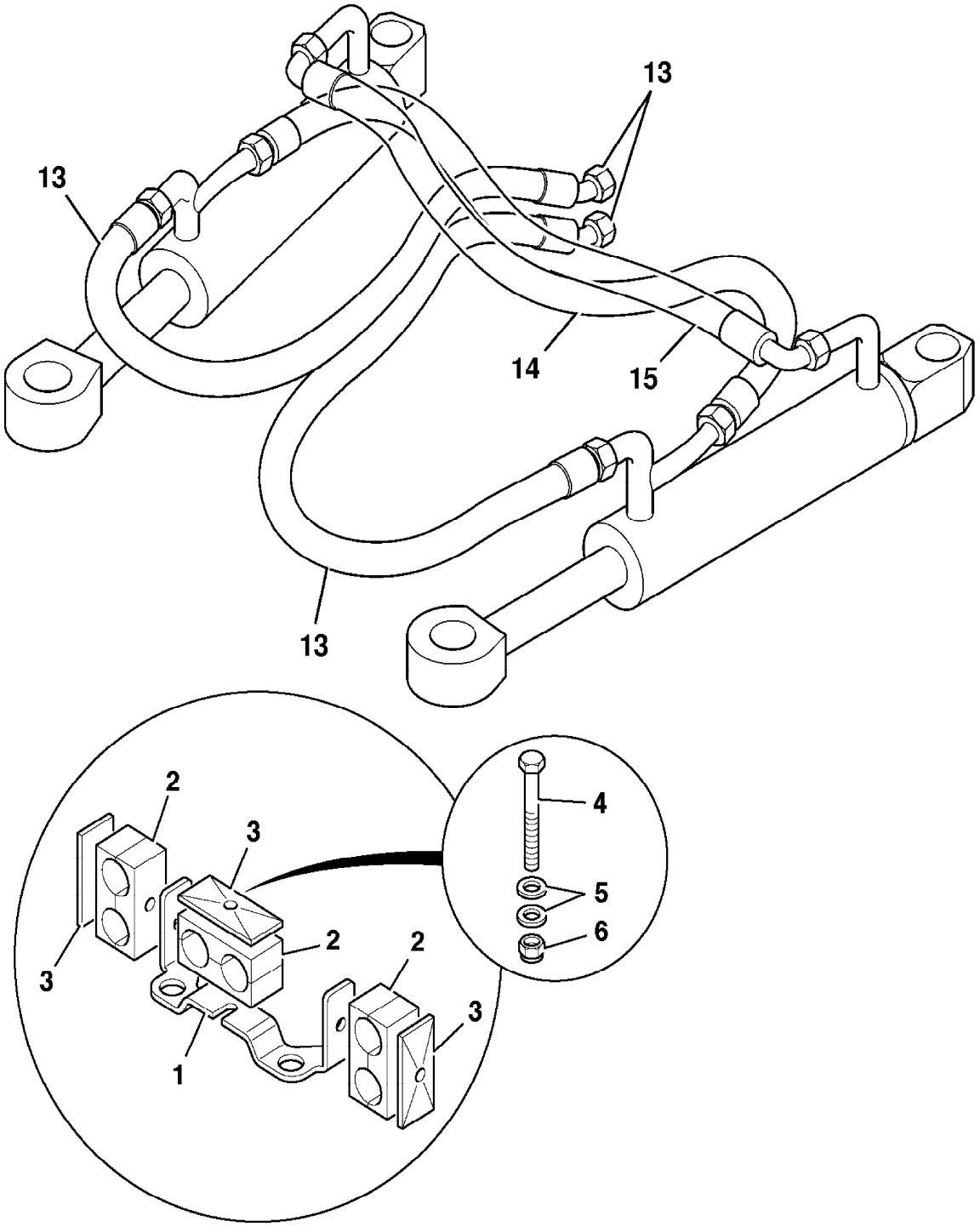

808400

9802/2740 E1-19-1 FILTER, HYDRAULIC, RETURN PIPE

Item	Part no.	Change No.	Description	Remarks	Usage code	Qty
1	668/40001		Pipe, assembly			1
2	1620/0014		Adapter			1
3	816/13170		Adapter			1
4	25/220465		Valve, check, 3 BAR			1
5	821/00405		Circlip			1
6	816/50131		Adapter, tee			1
7	638/80000		Hose, assembly			1
8	816/13211		Adapter, with bracket			1
9	265/02930		Clamp, half, servo hose			2
10	265/01560		Bracket			1
11	1370/0303D		Nut, M10			2
12	1420/0008D		Washer, M10			4
13	1315/0407D		Setscrew, M10 x 25mm long			2
14	1604/0009		Adapter			1
15	816/13169		Adapter, tee			1
16	816/00189		Plug, blanking			1

Machine groups

Details

Machine group	From serial no.	To serial no.
.426		
426		

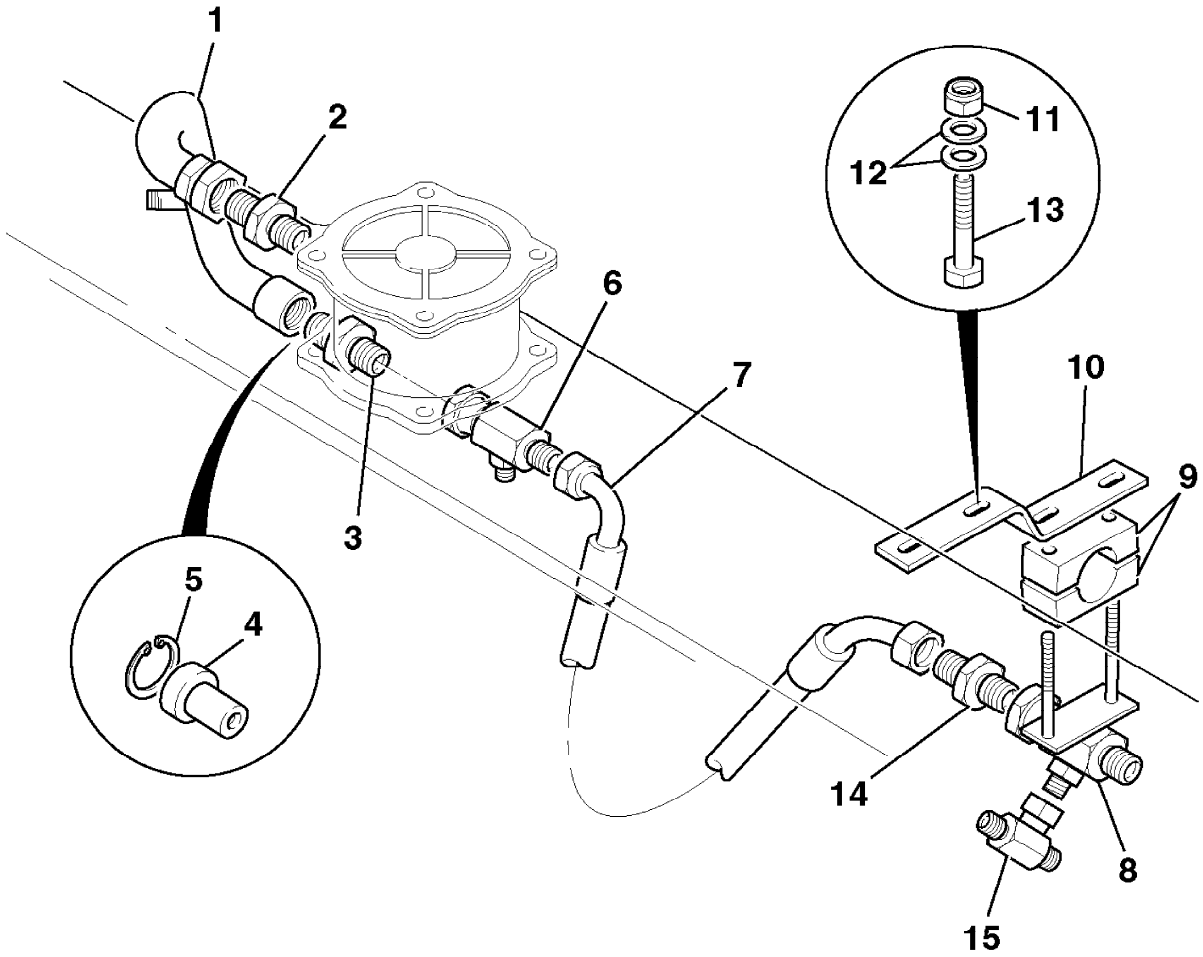

348010

9802/2740 E1-2-1 CIRCUIT, LOADER END, Z BAR

Item	Part no.	Change No.	Description	Remarks	Usage code	Qty
1	335/06384		:Pipe, lift ram			1
1A	816/00193		Cap, blanking 1"BSP, steel			2
	816/90205		Cap, blanking 1" BSP, female	Replaces 816/00193		2
3	615/01200		Hose, 3/4" x 1020mm			4
4	616/80068		Hose			2
	616/80101		Hose	Used when load suspension is fitted		2
8	1420/0008D		Washer, M10			4
9	1370/0303D		Nut, M10			2
10	616/21400		Hose			2
11	1315/3412D		Bolt, M10 x 50			2
13	264/01001		Clamp			8
14	1391/3409D		Capscrew, M10X35			16
15	1425/0008D		Washer, spring, M10			16
16	828/00417		O Ring, 1"SAE			4
17	1315/0408Z		Bolt, M10x30			1
18	821/00442		Body, clamp			2
19	821/00443		Plate, cover			1
20	1315/3318D		Bolt, M8 x 80mm			1
22	826/01106		Nut, rivet,M8			2
24	265/00938		Plate, mounting hose clamp			1
25	1420/0007D		Washer, M8 plain			3
26	1315/3312D		Bolt			2

Machine groups

Details

Machine group	From serial no.	To serial no.
.426		
426		

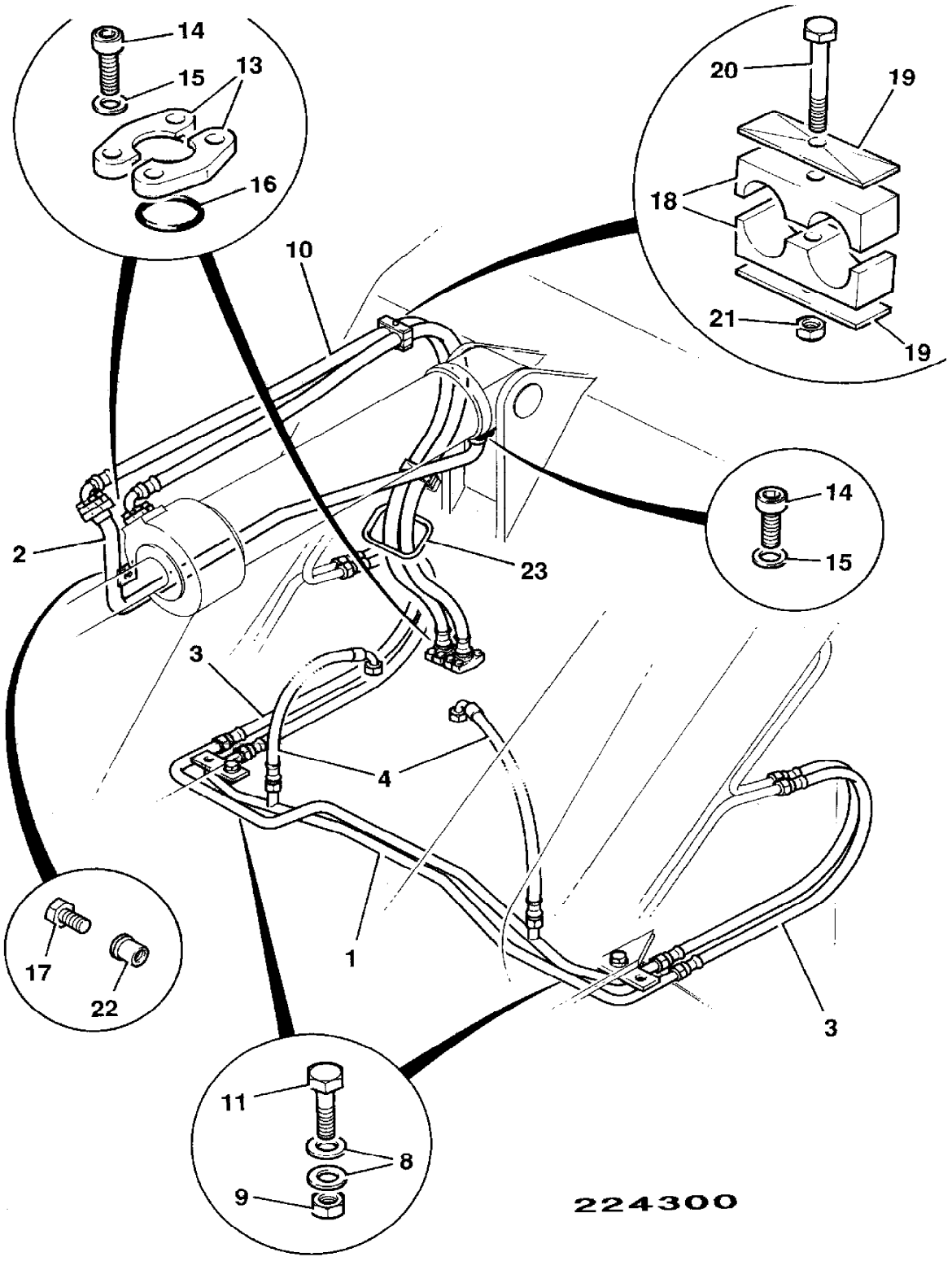
14
15
13
16
20
19
18
21
19
10
2
23
14
15
3
4
17
22
1
3
11
8
9
224300

9802/2740 E1-20-1 HOSE AND PIPEWORK, HYDRAULIC OIL COOLER

Item	Part no.	Change No.	Description	Remarks	Usage code	Qty
0A	30/925580		Cooler, hydraulic oil			1
1	TBA		Part number, Not Yet Known	Cooler in		1
2	616/80215		Hose	Cooler out		1
3	264/01001		Clamp			4
4	2401/0210		O Ring			2
5	1391/3408D		Capscrew			8
6	1425/0008Z		Washer, Spring M10			8
7	821/00183		Clamp, top			1
8	821/00184		Clamp, base			1
9	821/00185		Insert, clamp			1
11	1315/0408D		Setscrew, M10 x 30			1
12	1420/0008D		Washer, M10			2
13	1370/0303D		Nut, M10			1

Machine groups

Details

Machine group	From serial no.	To serial no.
.426		
426		

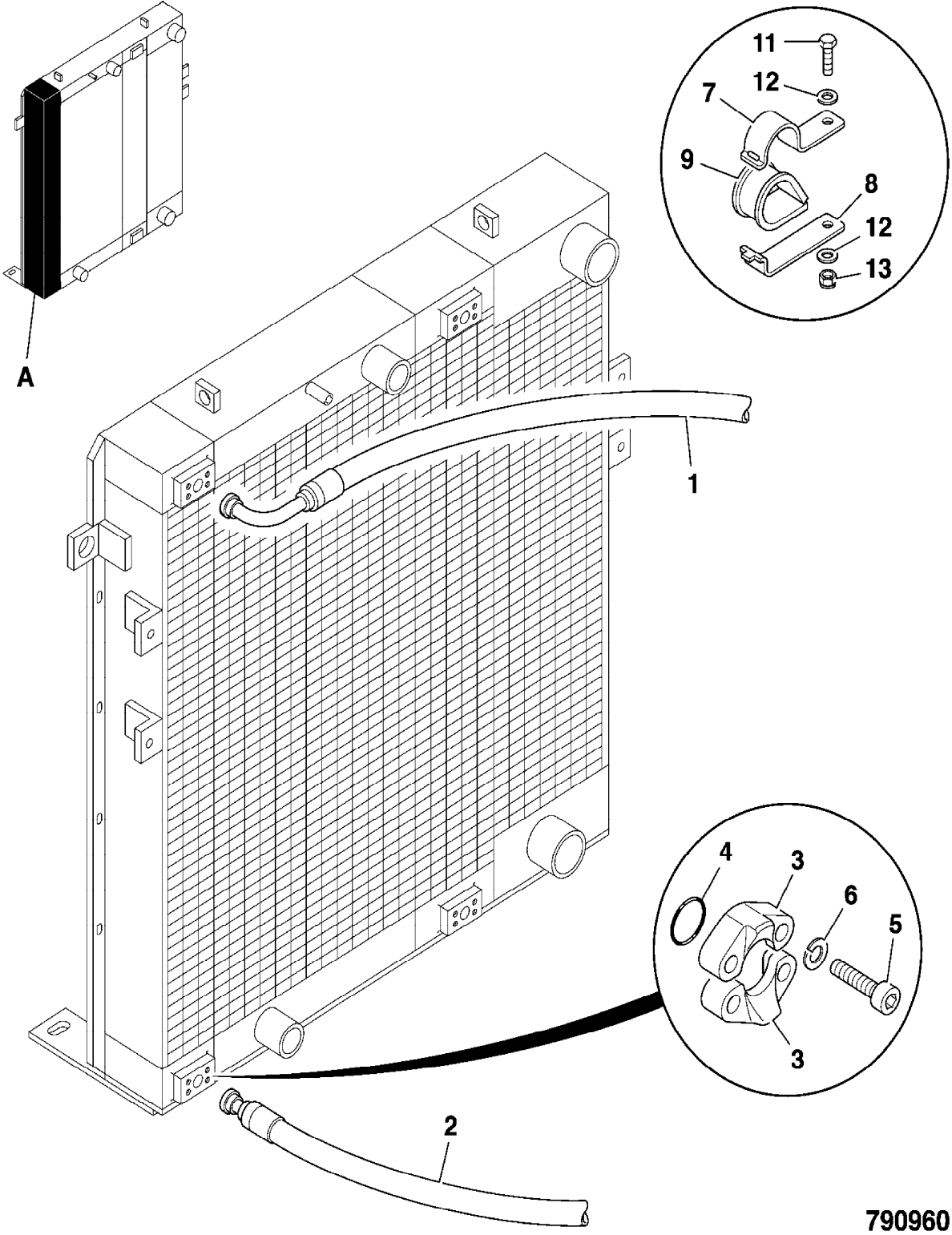
A
11
12
7
9
8
12
13
1
4
3
6
5
3
2
790960

9802/2740 E1-21-1 FILTER, HYDRAULIC

Item	Part no.	Change No.	Description	Remarks	Usage code	Qty
1	581/18071		Filter, assembly, hydraulic			1
2	990/00090		:Element, filter, 10 micron			1
3	32/100303		:Bridge			1
4	.		:'See Remark'	Seal		1
5	581/07006	Superseded	:Nut			4
	32/925294		:Nut, flange			4
5A	581/07005		:Stud			4
6	581/07003		:O Ring			1
7	32/100304		:O Ring			1
8	32/904301		:Seal, hydraulic filter			1
9	581/07004		:Cover			1
10	581/07002		:Housing, filter			1
11	32/925358		:Spring			1
12	32/100307		:Valve, by-pass, assembly			1
13	1420/0008Z		:Washer, Plain M10			4
14	1315/0407Z		:Bolt, M10x25			4
15	581/07008		:Gasket, filter element			1

Machine groups

Details

Machine group	From serial no.	To serial no.
.426		
426		

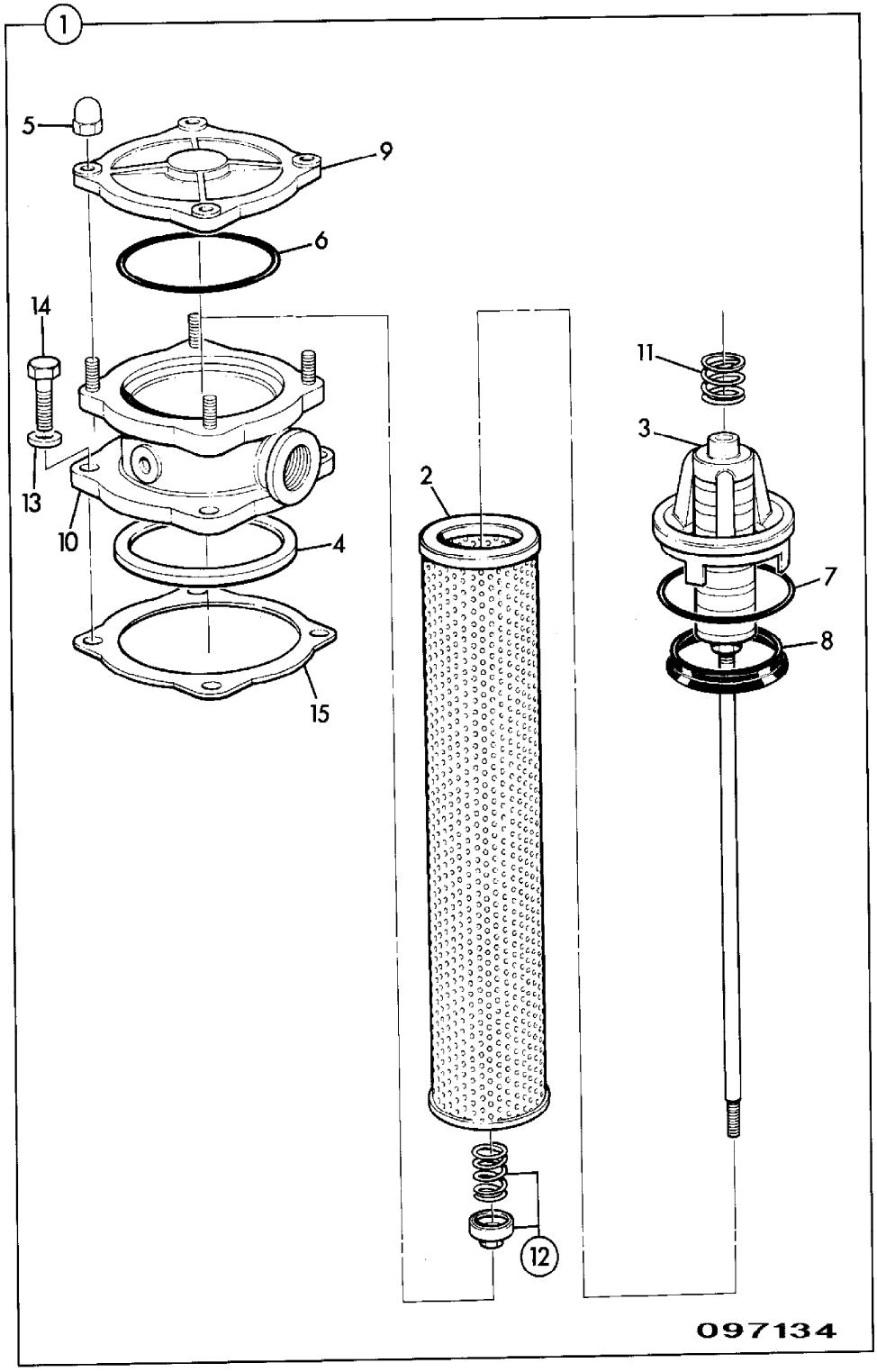
1
5
9
6
14
13
10
4
15
2
11
3
7
8
12
097134

9802/2740 E1-23-1 HOSE AND PIPEWORK, LOADER VALVE

Item	Part no.	Change No.	Description	Remarks	Usage code	Qty
0A	25/905500		Valve, check			1
0B	613/80246		Hose			1
0C	1604/0004		Adapter, male/male			1
0D	1406/0018		Seal, bonded, 1/2" BSP			2
0E	816/40016		Adapter, 90			1
1	.		'See Remark'	Loader valve		1
3	265/02145		Hose, servo	ID label 1		1
4	265/02146		Hose, servo	ID label 2		1
5	265/02147		Hose, servo	ID label 3		1
6	265/02148		Hose, servo	ID label 4		1
7	616/80076		Hose	426		1
8	616/80051		Hose			1
9	616/80056		Hose, feed			1
10	828/00418		O Ring			2
11	269/40962		Hose, "SLS"			1
12	1391/3509D		Capscrew, M12 X 35LG			8
13	1425/0009D		Washer, M12 spring			8
14	264/12501		Clamp, split flange			4
18	629/21800		Hose, 1/2" x 1200mm long			2
20	269/30601		Hose, servo, T			1
34	616/80055		Hose			2
35	616/80068		Hose			2
	616/80101		Hose	Used when load suspension is fitted		2
50	265/02149		Hose, servo			1
51	265/02150		Hose, servo			1
56	1391/3509D		Capscrew, M12 X 35LG			8
68	.		'See Remark'	Hose		1
80	816/00464		Adapter, elbow - male/female			1

Machine groups

Details

Machine group	From serial no.	To serial no.
.426		
426		

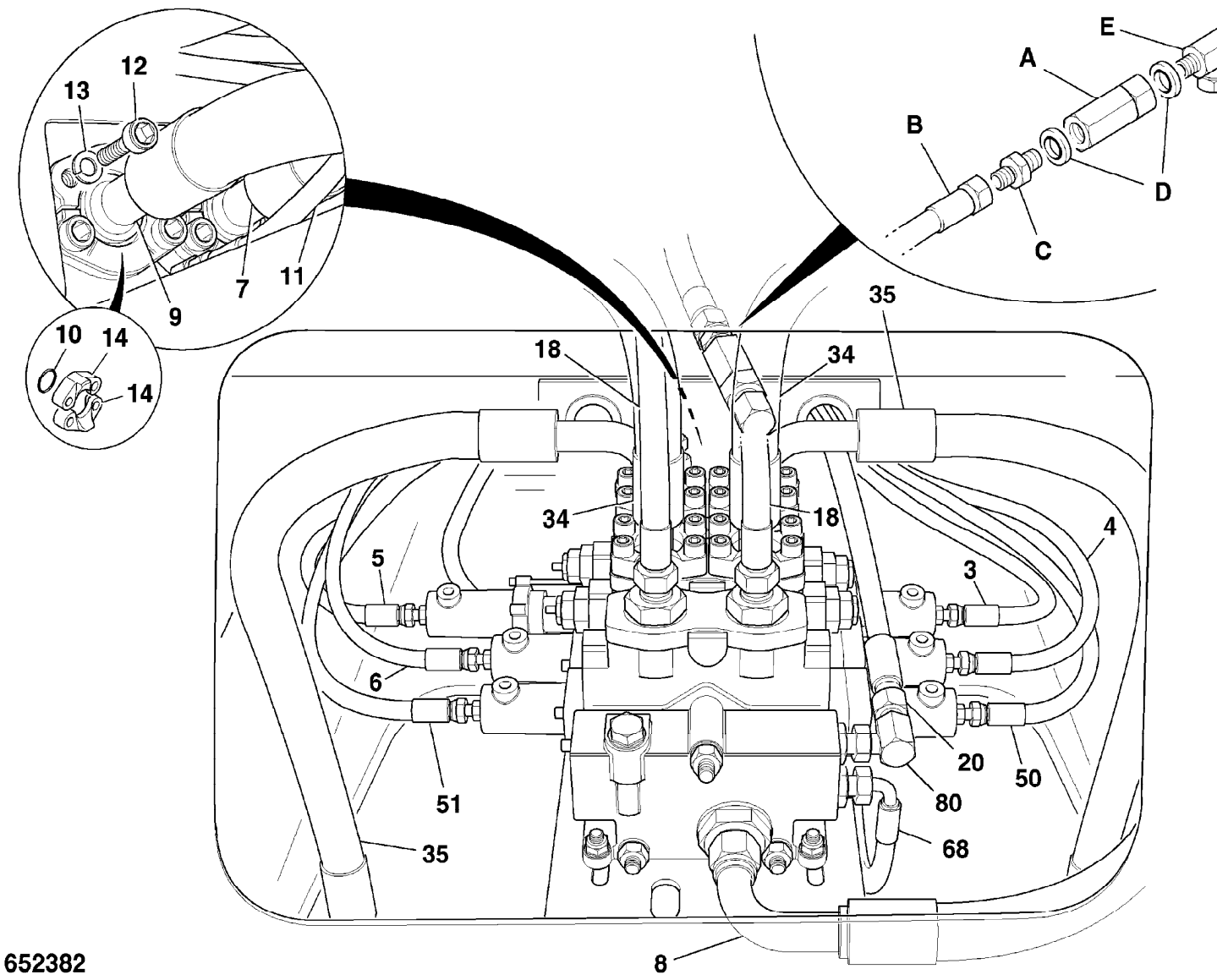

652382

9802/2740 E1-24-1 HOSE AND PIPEWORK, SOLENOID PROP., PILOT VALVE, 3 SPOOL

Item	Part no.	Change No.	Description	Remarks	Usage code	Qty
1	25/222707		Valve, assembly, prop. pilot valve	See section E3 for components		1
3	611/23900		Hose			1
4	611/28900		Hose			1
5	1620/0002		Adapter			4
5A	2401/0505		:O Ring			4
6	1391/3318D		Capscrew, M8 x 80mm, GRADE 12.9			2
7	1420/0007D		Washer, M8 plain			2
8	721/11945		Harness, valve block, 3 spool			1
9	611/22100		Hose, 1/4BSPx500	Hose P		1
10	611/80141		Hose, 1/4"BSP x 750mm	Hose T		1
11	816/50031		Adapter, Tee			1
12	816/00367		Adapter, M/M/F			1
13	648/31901		Hose, 800mm long			2
16	816/00294		Plug, blanking			2

Machine groups

Details

Machine group	From serial no.	To serial no.
.426		
426		

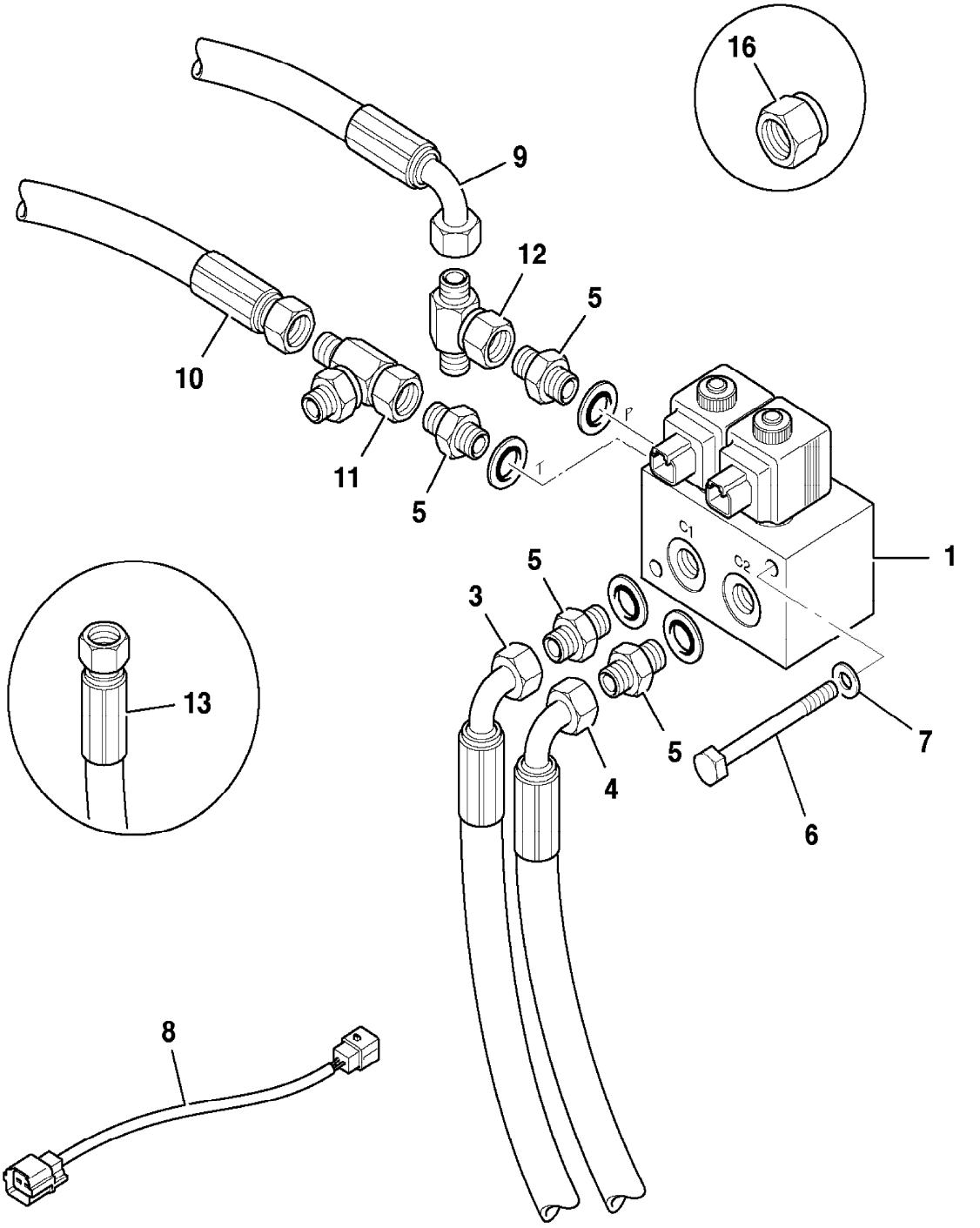

796672

9802/2740 E1-25-1 HOSE AND PIPEWORK, SOLENOID PROP., PILOT VALVE, 4 SPOOL

Item	Part no.	Change No.	Description	Remarks	Usage code	Qty
1	25/222708		Valve, assembly, prop. pilot valve	See section E3 for components		1
3	611/23900		Hose			2
4	611/28900		Hose			2
5	1620/0002		Adapter			6
5A	2401/0505		:O Ring			6
6	1391/3318D		Capscrew, M8 x 80mm, GRADE 12.9			2
7	1420/0007D		Washer, M8 plain			2
8	721/11944		Harness, valve block, 4 spool			1
9	611/22100		Hose, 1/4BSPx500			1
10	611/80141		Hose, 1/4"BSP x 750mm			1
11	816/50031		Adapter, Tee			1
12	816/00367		Adapter, M/M/F			1
13	648/31901		Hose, 800mm long			2
16	816/00294		Plug, blanking			2

Machine groups

Details

Machine group	From serial no.	To serial no.
.426		
426		

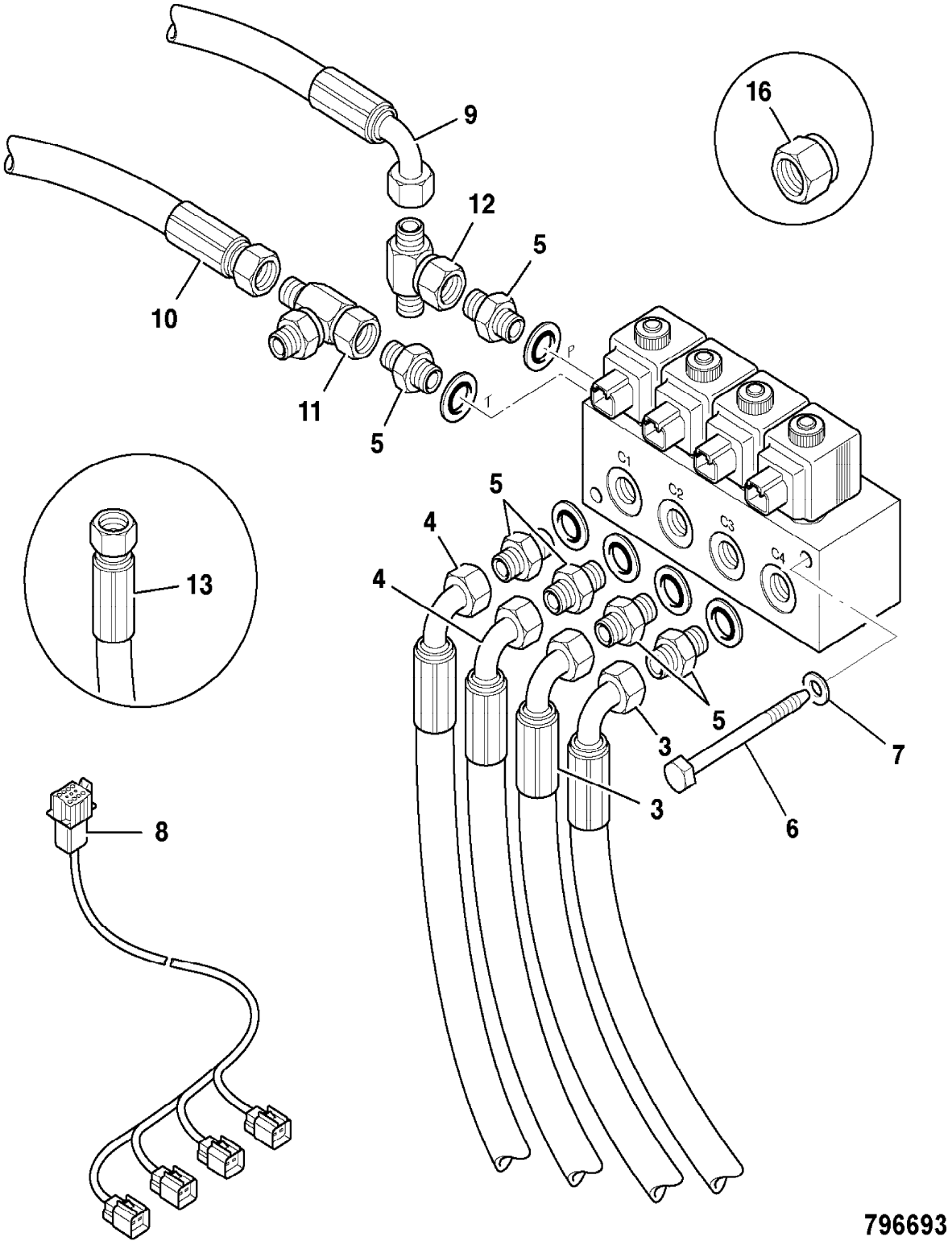

796693

9802/2740 E1-26-1 HOSE AND PIPEWORK, AUXILLARY SOLENOID, ACCUMULATOR

Illustration Machines Top of catalogue

Item	Part no.	Change No.	Description	Remarks	Usage code	Qty
1	903/05300		Accumulator			1
2	816/13220		Adapter, 4 way			1
3	816/00464		Adapter, elbow - male/female			1
4	1406/0011		Seal, bonded			1
5	1606/0001		Adapter			1
6	1406/0008		Seal, washer			1
7	816/60290		Adapter, pressure test			1
8	331/23685		Bracket, in-line filter			1
9	1315/0410D		Setscrew			2
10	1370/0303D		Nut, M10			2
11	1420/0008D		Washer, M10			4
12	611/29700		Hose, 1/4"BSP 1315mm			1
	611/27500		Hose, 1/4"BSP 955mm	Replaces 611/29700		1
13	611/30900		Hose			1
14	25/301100		Valve, check, in line			1
15	1620/0002		Adapter			1

Machine groups

Details

Machine group	From serial no.	To serial no.
.426		
426		

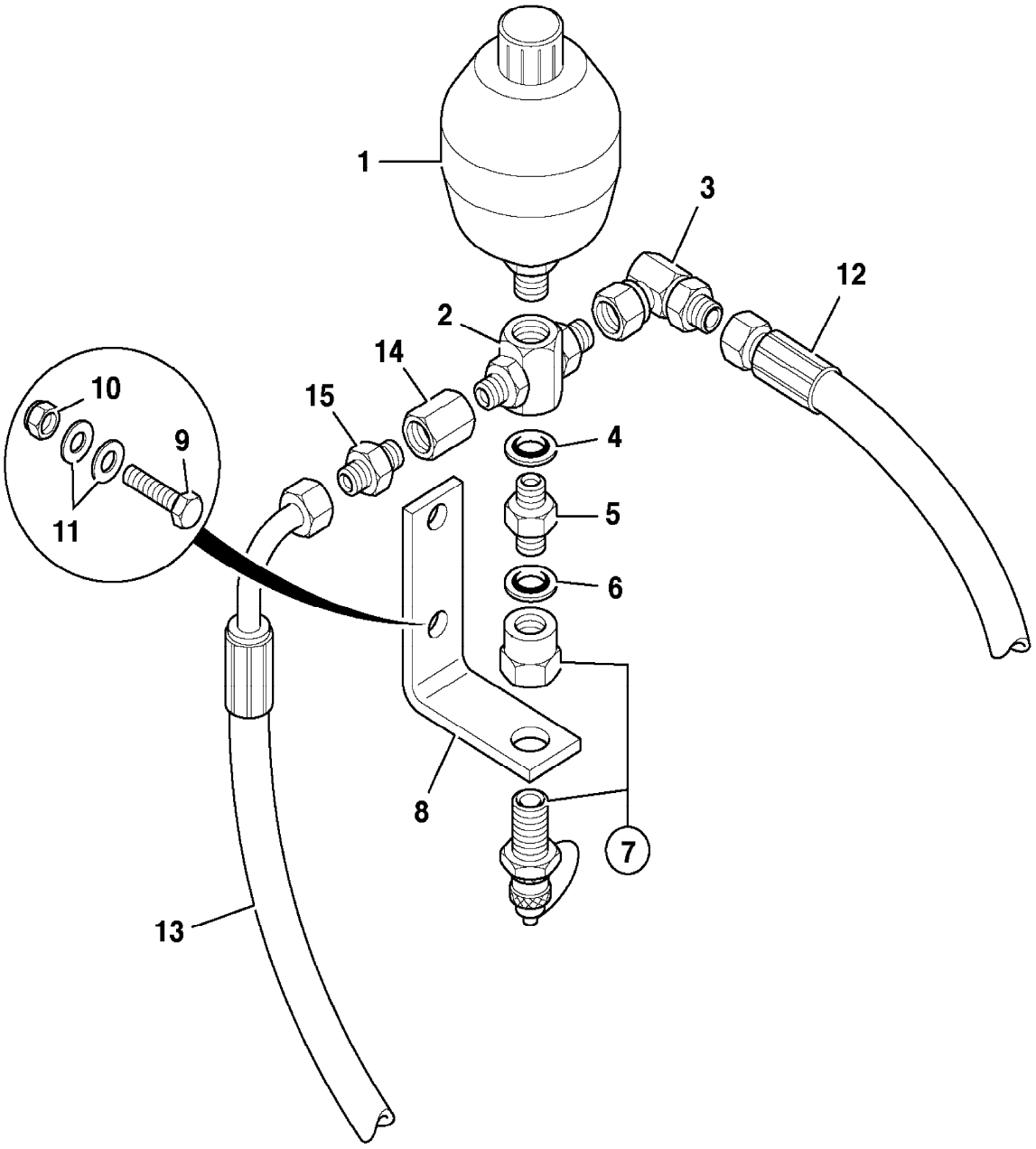

796790

9802/2740 E1-27-1 HOSE AND PIPEWORK, EMERGENCY STEER

Item	Part no.	Change No.	Description	Remarks	Usage code	Qty
1	20/925509		Pump, emergency steer			1
2	331/38636		Clamp			2
3	1315/0307D		Setscrew, M8x25			4
4	1420/0007D		Washer, M8 plain			4
5	633/30800		Hose, 1/2" x 1220 lg.			1
6	613/22400		Hose			1
7	613/02800		Hose			1
8	816/13138		Adapter, tee			1
9	816/00294		Plug, blanking			1
10	701/80305		Switch, pressure			1
10A	1406/0011		Seal, bonded			1
11	1620/0001		Adapter			1
11A	2401/0503		:O Ring			1
12	701/74400		Switch, pressure			1
13	816/50005		Adapter, Tee			1
14	816/20008		Adapter	Fitted to item 5 and 7		1
15	1620/0006		Adapter, 39.5mm lg. M/M			3
15A	2401/0507		:O Ring			1
17	816/55040		Adapter, test			1
	816/90757		Adapter, test point, stainless steel	Sales special 7126		1
23	821/00306		Clip, 'P' (size No.6), 20mm clamp diameter			2

Machine groups

Details

Machine group	From serial no.	To serial no.
.426		
426		

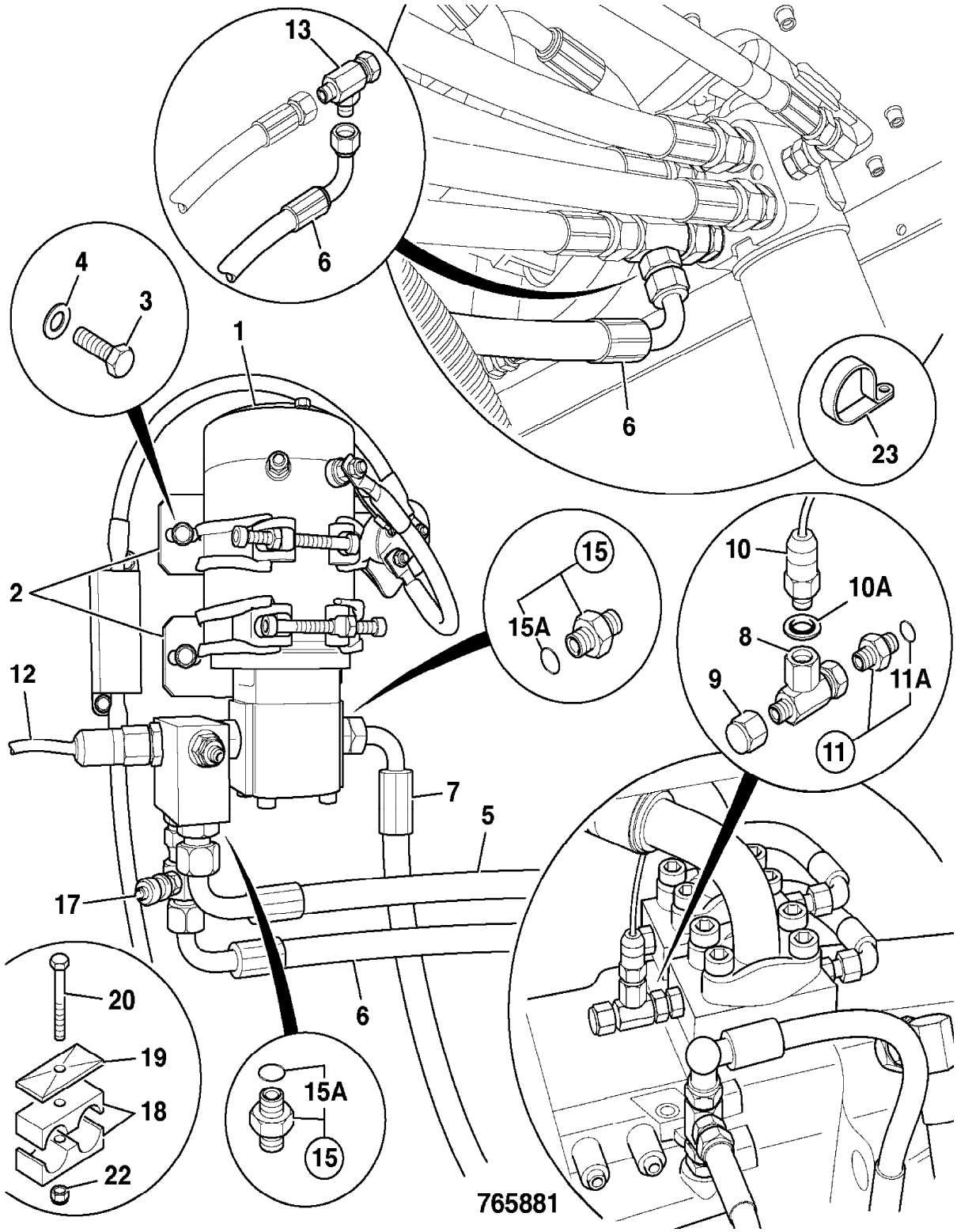
13
6
4
3
1
6
23
2
15
15A
10
10A
8
9
11A
11
12
7
5
17
6
20
19
18
22
15A
15
765881

9802/2740 E1-28-1 HOSE AND PIPEWORK, QUICKHITCH LOCKING

Item	Part no.	Change No.	Description	Remarks	Usage code	Qty
0A	1315/3418D		Bolt, M10 x 80			1
0B	1420/0008D		Washer, M10			1
0C	1370/0303D		Nut, M10			1
1	335/08596		Pipe, assembly			1
2	335/08597		Pipe, extension			1
3	25/221923		Valve, solenoid	Deutsch connector		1
4	615/46300		Hose, valve block, to b/head connection	HT Builds		2
	615/29600		Hose, 3/4" x 600mm long	ZX Builds		2
5	615/46400		Hose	HT Builds		2
	615/80076		Hose	SHL Builds		2
	615/80113		Hose, 3/4 BSP HP HOSE TYPE	ZX Builds		2
6	816/10034		Adapter			2
6A	1356/0006Z		:Nut			1
7	331/22996		Cover			1
8	829/30652		Spacer			1
9	45/910300		Coupling, 3/4" BSP male, quick release			1
10	45/908400		Coupling, 3/4 BSP, female, quick release type A			1
11	612/44200		Hose			1
12	1620/0003		Adapter			2
12A	2401/0506		:O Ring			1
13	1315/3313D		Bolt			1
14	1420/0007D		Washer, M8 plain			2
15	647/02615		:Hose, protective, (black PVC)	Cut to length approx 1.2M required		1
16	1612/0006		Adapter			2
17	1406/0021		Seal, bonded 3/4" BSP			2
18	612/31900		Hose, str/135, 1500mm long			2
19	1620/0011		Adapter			2
19A	2401/0510		:O Ring			1
20	1420/0006D		Washer, M6 plain			10
21	1370/0103D		Nut, M6 lock			5

23	331/22995		Bracket			1
27	721/11922		Harness, quickhitch, loader arm			1
28	1315/0212Z		Screw, M6 x 50			2
29	1315/0203D		Setscrew			1
30	1315/0301D		Setscrew, M8 x 12mm			1
32	701/60041		Switch, 24V			1
33	701/58932		Switch, quickhitch, isolator			1
34	701/60037		Gasket, switch			1
44	821/00367		Clip			1
45	821/00410		Clip, pipe			2

Machine groups

Details

Machine group	From serial no.	To serial no.
.426		
426		

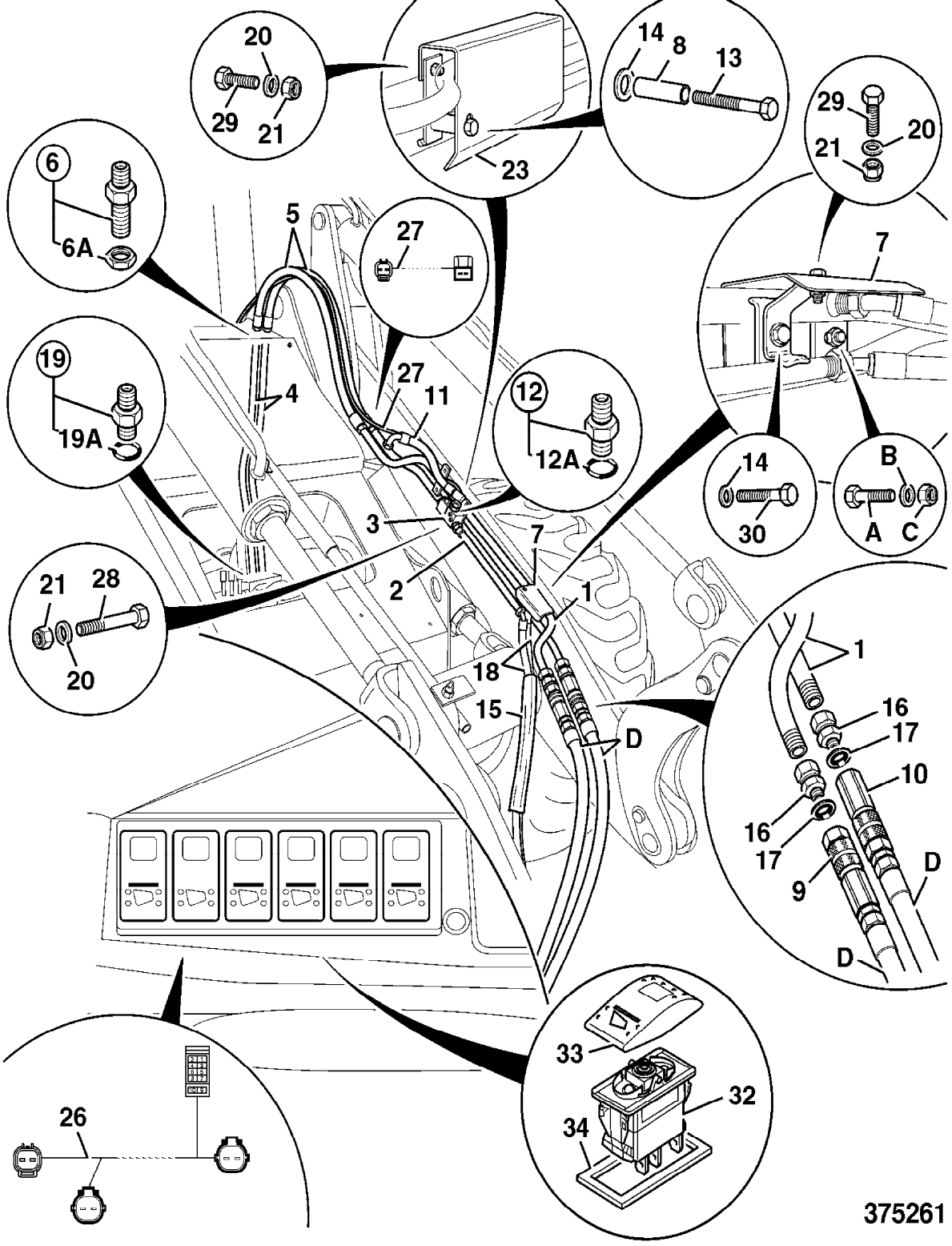
20
29
21
23
14
8
13
29
20
21
6
6A
5
27
7
19
19A
4
27
11
12
12A
14
30
B
A
C
3
2
7
1
21
28
20
18
15
D
1
16
17
10
16
17
9
D
D
26
33
32
34
375261

9802/2740 E1-29-1 HOSE AND PIPEWORK, MAIN PUMP

Item	Part no.	Change No.	Description	Remarks	Usage code	Qty
0A	933/20003		Adapter, suction port			1
0C	1315/0508D		Setscrew			4
0D	823/00309		Washer, hardened			4
0E	2401/0223		O Ring			1
1	826/01702		Screw, Set screw(Tuff Lock), M12 x 35			4
1A	823/00309		Washer, hardened			4
2	1620/0009		Adapter			1
2A	2401/0507		:O Ring			1
3	816/13138		Adapter, tee			1
4	701/80305		Switch, pressure			1
5	816/00294		Plug, blanking			1
7	649/51195		Hose, suction			1
8	650/10143		Clip, hose			2
9	933/17900		Flange, adapter			2
10	828/00417		O Ring, 1"SAE			4
11	264/01001		Clamp			4
12	1391/3413D		Capscrew			8
13	1425/0008Z		Washer, Spring M10			8
14	1620/0001		Adapter			5
14A	2401/0503		:O Ring			1
15	1745/0001		Plug, 7/16"UNF, o ring boss			1
15A	2401/0503		:O Ring			1
16	616/80056		Hose, feed			1
17	616/80051		Hose			1
48	611/24300		Hose			2
50	269/30438		Hose, "SLS"			1
51	816/50031		Adapter, Tee			1
52	611/29500		Hose, 1/4"x 250			1
53	635/33500		Hose, low pressure			1
54	828/00418		O Ring			2

Machine groups

Details

Machine group	From serial no.	To serial no.
.426		
426		

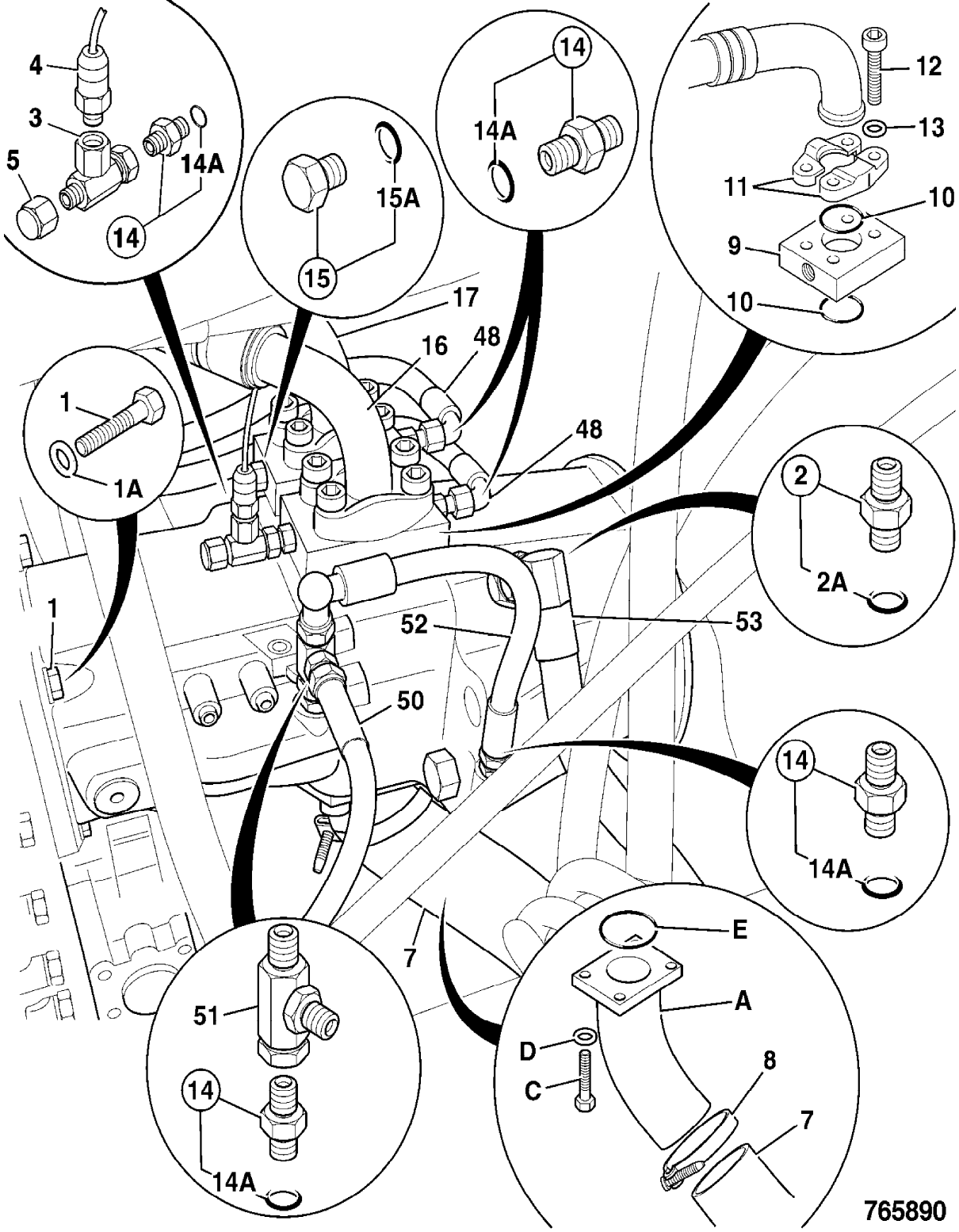
4
3
5
14A
14
15A
15
14
14A
12
13
11
10
9
10
17
16
48
48
1
1A
1
2
2A
52
53
50
14
14A
7
E
A
D
C
8
7
51
14
14A
765890

9802/2740 E1-3-1 HOSE AND PIPEWORK, DIVERTER VALVE

Item	Part no.	Change No.	Description	Remarks	Usage code	Qty
2	25/222711		Valve, diverter			1
3	611/01000		Hose	C3 port		1
3A	611/26600		Hose	C4 port		1
4	1620/0001		Adapter			6
4A	2401/0503		:O Ring			1
5	1315/0305D		Screw, set M8x20			2
6	1420/0007D		Washer, M8 plain			2
7	823/00537		Washer, sealing,rubber			2
9	265/02150		Hose, servo	P1 port		1
10	265/02149		Hose, servo	P2 port		1
11	611/28900		Hose	C1 and C2 ports		2
12	331/50274		Plate, mounting			1
13	1391/3112D		Screw, cap, M5x50			2
14	1420/0005D		Washer			2

Machine groups

Details

Machine group	From serial no.	To serial no.
.426		
426		

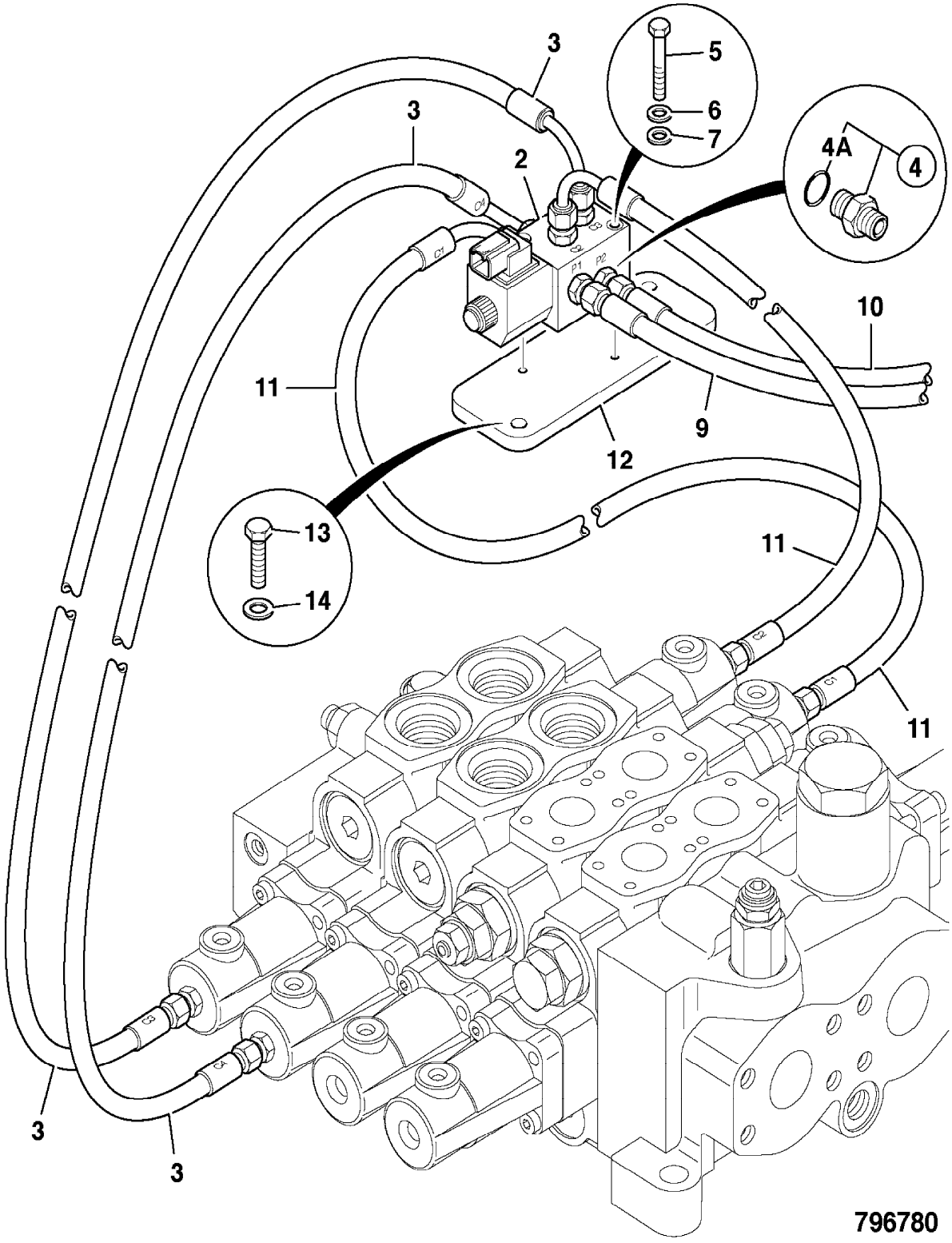
3
3
2
5
6
7
4A
4
10
11
12
9
13
14
11
11
3
3
796780

9802/2740 E1-30-1 HOSE AND PIPEWORK, CHARGE PUMP

Item	Part no.	Change No.	Description	Remarks	Usage code	Qty
1	20/925468		Pump, charge	See E2-4-1 for details		1
3	1620/0004		Adapter, 3/4"UNF SAE "O" ring, 3/8"BSP male			2
3A	2401/0505		:O Ring			1
5	1620/0006		Adapter, 39.5mm lg. M/M			1
5A	2401/0507		:O Ring			1
7	1620/0012		Adapter, 1" BSP, M/M			1
7A	2401/0510		:O Ring			1
9	701/80456		Switch, pressure, 120 bar	G Port		1
9A	2401/0506		:O Ring			1
10	816/55038		Adapter, tee, pressure test			1
11	816/55040		Adapter, test			1
14	613/80242		Hose	EF Port		1
47	637/80058		Hose	To tank. 816/00018 elbow fitted to tank port		1
47A	816/00018		Adapter, 90 Degree	Fitted to tank port		1
49	629/80128		Hose, 3/8BSP x 1870Lg	A2 Port		1
50	629/80128		Hose, 3/8BSP x 1870Lg	A1 Port		1

Machine groups

Details

Machine group	From serial no.	To serial no.
.426		
426		

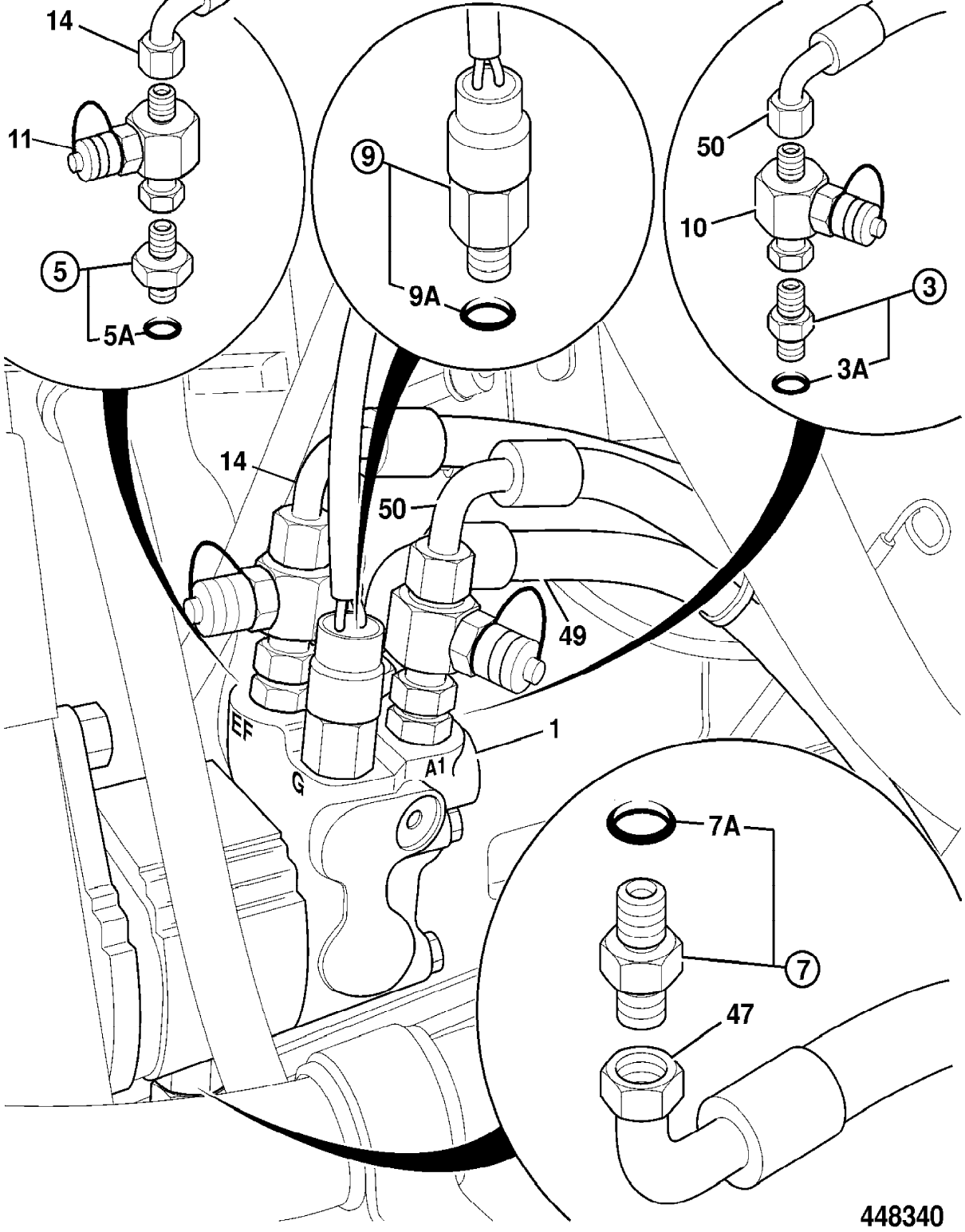
14
11
5
5A
9
9A
50
10
3
3A
14
50
49
1
EF
G
A1
7A
7
47
448340

9802/2740 E1-31-1 HOSE AND PIPEWORK, FAN MOTOR, COOLING BAY

Item	Part no.	Change No.	Description	Remarks	Usage code	Qty
0A	20/925518		Motor, hydaulic	See also index E2		1
0B	1391/3408D		Capscrew			2
0C	1420/0008D		Washer, M10			2
0D	1620/0002		Adapter			1
0E	1406/0011		Seal, bonded			1
1	616/80150		Hose			1
14	613/80242		Hose			1
15	631/80062		Hose, 1/4 x 5150mm			1
16	816/00335		Adapter, 90 elbow			1
18	1620/0010		Adapter, includes 'o'ring			1
19	816/17061		Adapter			1
20	1406/0021		Seal, bonded 3/4" BSP			2

Machine groups

Details

Machine group	From serial no.	To serial no.
.426		
426		

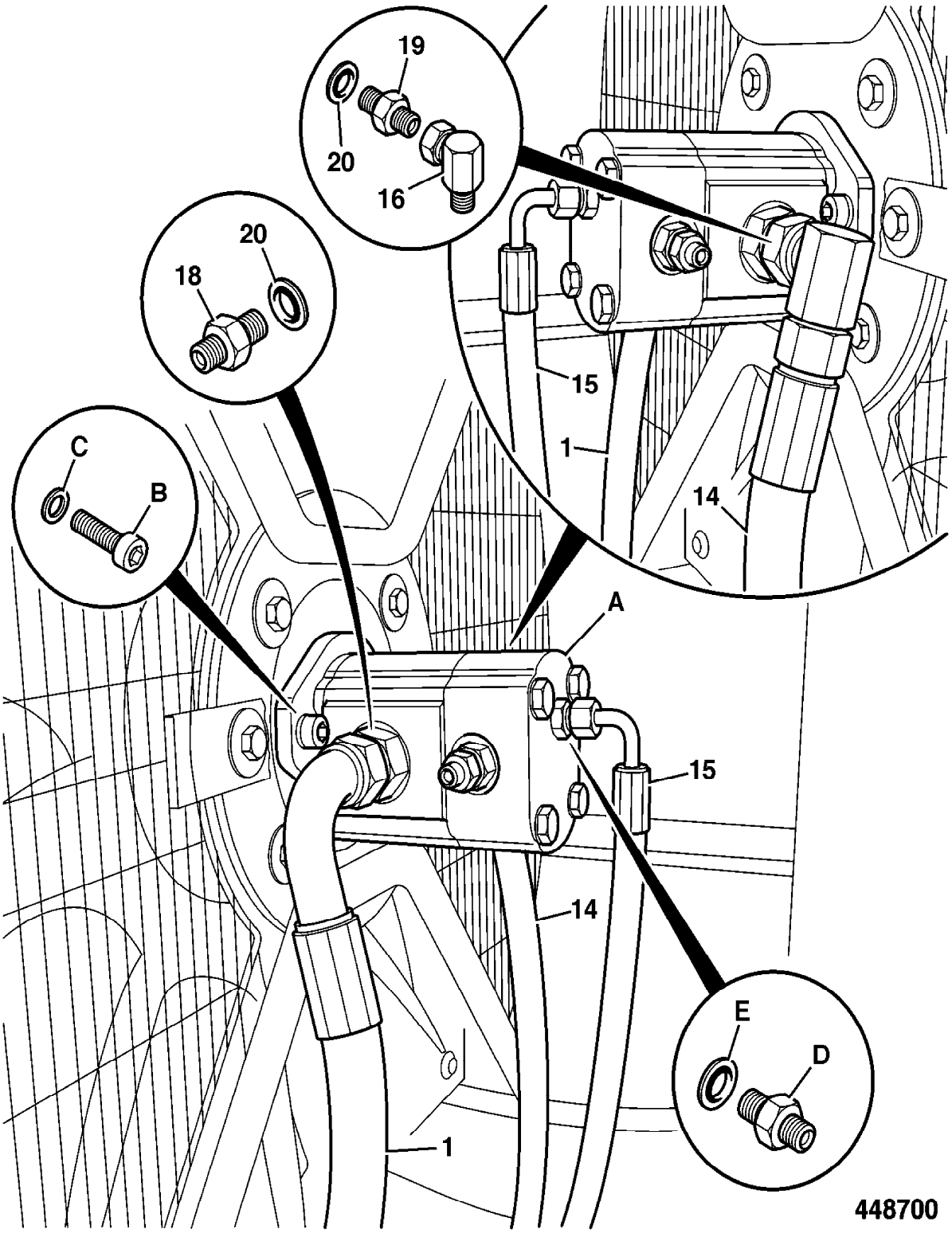
19
20
16
20
18
C
B
15
1
14
A
15
14
E
D
1
448700

9802/2740 E1-32-1 HOSE AND PIPEWORK, DUMP INSTALLATION, MAIN PUMP

Item	Part no.	Change No.	Description	Remarks	Usage code	Qty
0A	611/27900		Hose			1
1	728/23100		Unit, comtrol			1
2	721/12164		Harness, pump control			1
3	721/12145		Harness, pump control			1
4	701/42600		Switch, push button black, with microswitch			1
5	7212/0005		Housing, weatherpack, 2 way female Packard			1
6	25/220628		Valve, solenoid, park brake			1
6A	25/222644		:Solenoid, assembly, excluding coil			1
6B	25/221606		:Coil			1
7	1606/0003		Adapter			2
8	1612/0003		Adapter, male/female			1
9	816/00403		Adapter, 'T'			1
10	1406/0015		Washer, seal			3
11	611/27900		Hose			1
20	721/11575		Harness, link	Canopy		1

Machine groups

Details

Machine group	From serial no.	To serial no.
.426		1231642
426		1231642

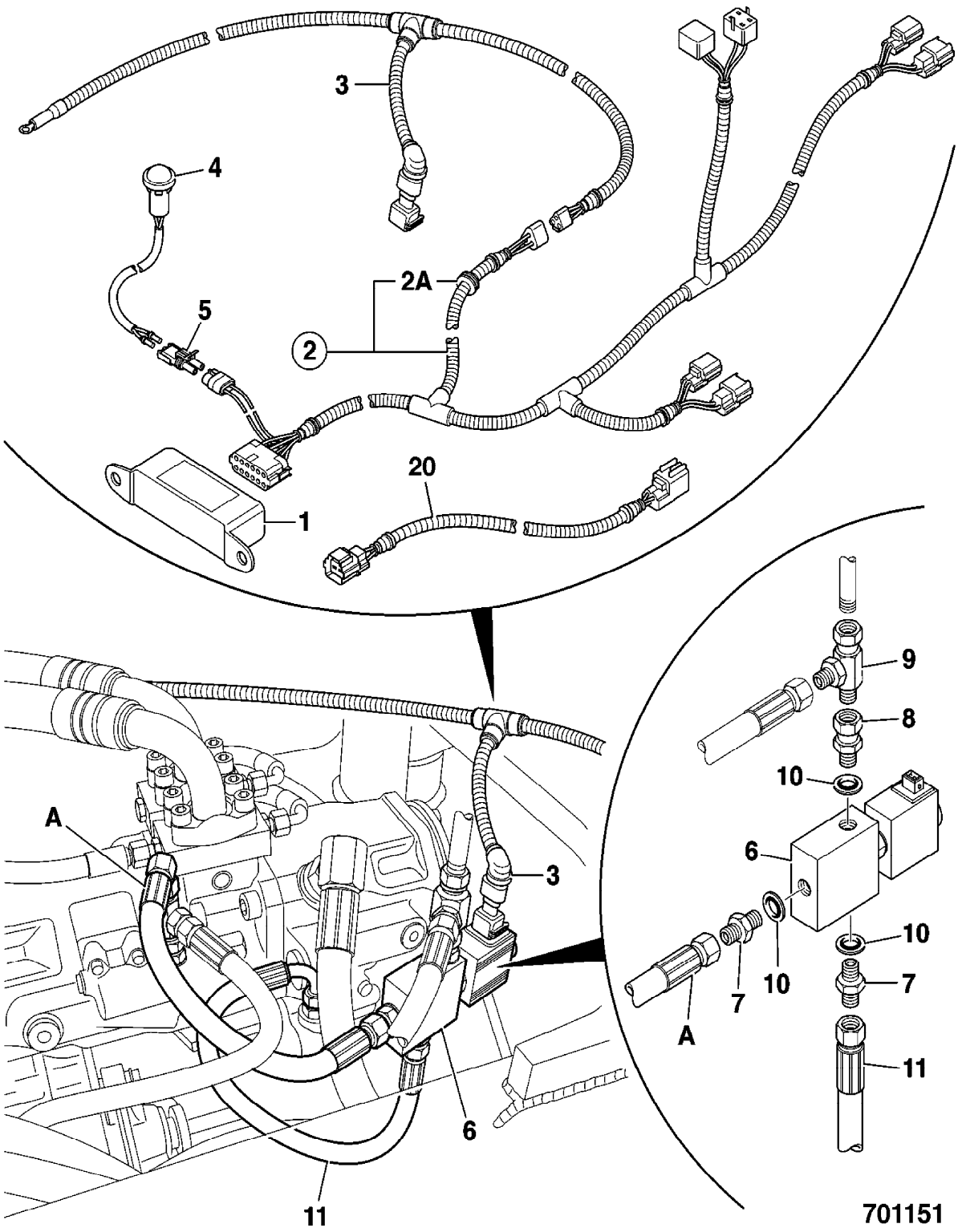
3
4
2A
5
2
20
1
A
3
6
11
9
8
10
6
10
7
10
A
7
11
701151

9802/2740 E1-32-2 HOSE AND PIPEWORK, DUMP INSTALLATION, MAIN PUMP

Item	Part no.	Change No.	Description	Remarks	Usage code	Qty
0A	611/27900		Hose			1
1	728/23100		Unit, comtrol			1
2	721/12164		Harness, pump control			1
3	721/12145		Harness, pump control			1
4	701/42600		Switch, push button black, with microswitch			1
5	7212/0005		Housing, weatherpack, 2 way female Packard			1
6	25/223225		Valve, solenoid			1
6A	25/223260		:Solenoid, assembly, excluding coil			1
6B	25/223261		:Coil			1
7	1620/0002		Adapter			2
7A	2401/0505		:O Ring			1
8	816/90009		Adapter, M/F			1
8A	2401/0505		:O Ring			1
9	816/50031		Adapter, Tee			1
11	611/27900		Hose			1
20	721/11575		Harness, link	Canopy		1
21	721/10763		Harness, 2-way link 40mm long, Deutsch-AMP/Jnrtimer	Fitted to valve 25/223225		1

Machine groups

Details

Machine group	From serial no.	To serial no.
.426	1231643	
426	1231643	

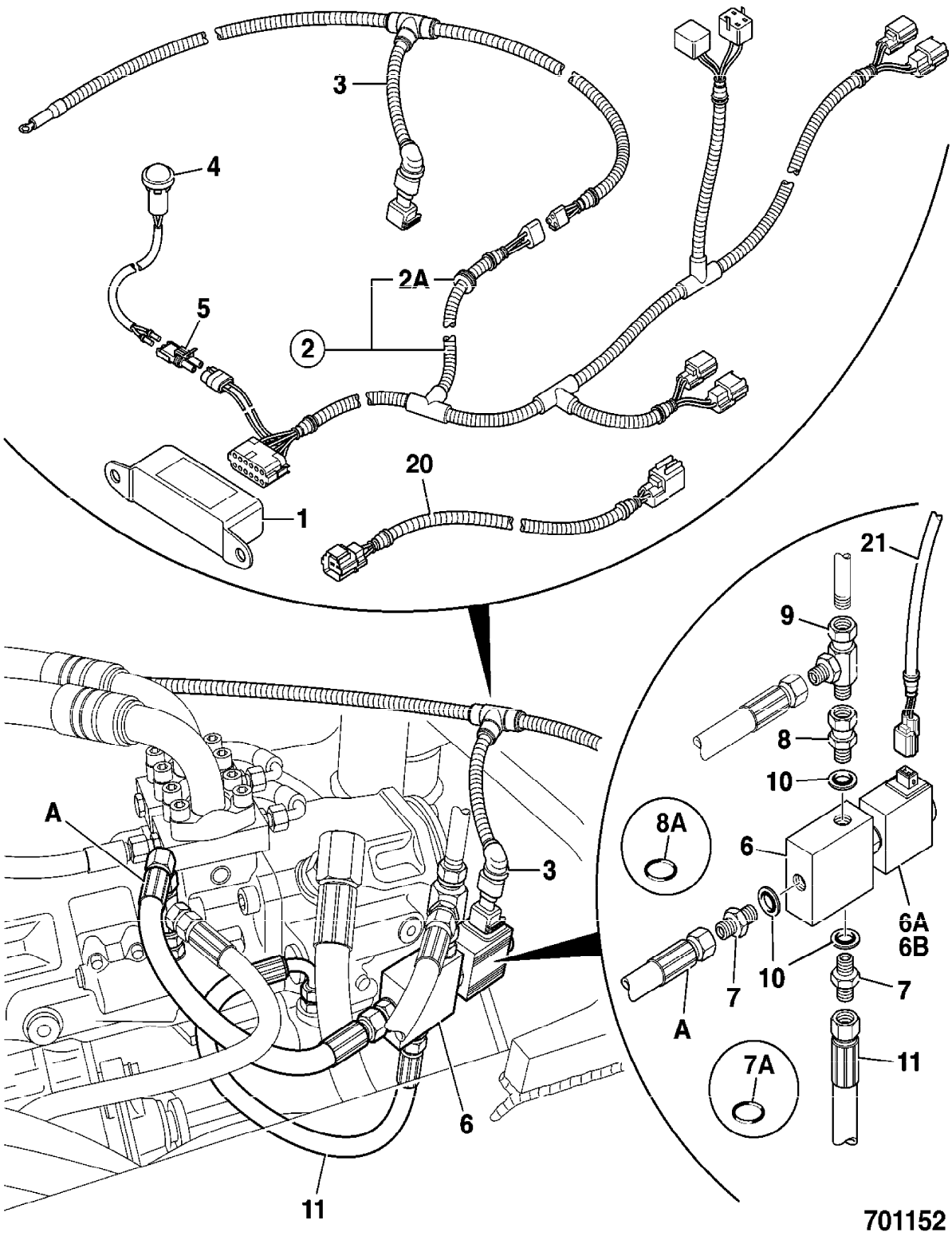
3
4
2A
5
2
20
1
21
9
8
10
8A
6
6A
6B
7
10
7
A
7A
11
A
3
6
11
701152

9802/2740 E1-4-1 CIRCUIT, LOADER END, AUXILIARY

Item	Part no.	Change No.	Description	Remarks	Usage code	Qty
1	335/08588		Pipe, auxiliary, loader arm			1
2	629/21800		Hose, 1/2" x 1200mm long			2
3	613/06600		Hose			2
4	1356/0204Z		Nut			2
5	1420/0012D		Washer, plain			2
6	1315/3418D		Bolt, M10 x 80			2
7	816/00190		Cap, blanking 1/2" BSP, female			2
8	1420/0008D		Washer, M10			4
9	1370/0303D		Nut, M10			2
10	926/08300		Strip, edging			A/R

Machine groups

Details

Machine group	From serial no.	To serial no.
.426		
426		

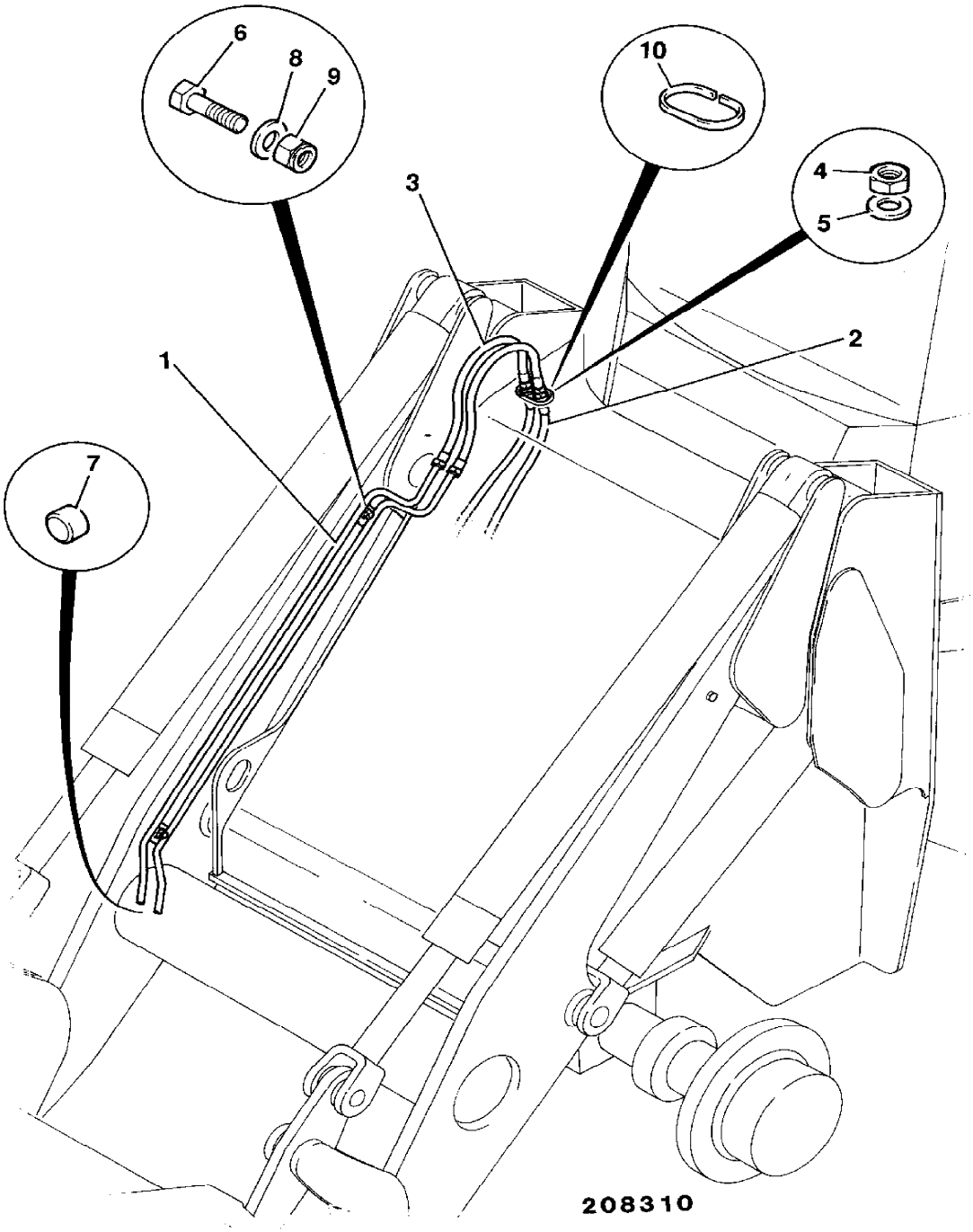
6
8
9
10
4
5
3
2
1
7
208310

9802/2740 E1-5-1 CIRCUIT, LOADER END, AUXILIARY-Z BAR

Item	Part no.	Change No.	Description	Remarks	Usage code	Qty
1	335/08588		Pipe, auxiliary, loader arm			1
2	629/23700		Hose, H.P			2
3	613/28100		Hose			2
4	1356/0204Z		Nut			2
5	1420/0012D		Washer, plain			2
6	1315/3418D		Bolt, M10 x 80			2
7	816/00190		Cap, blanking 1/2" BSP, female			2
8	1420/0008D		Washer, M10			4
9	1370/0303D		Nut, M10			2
10	821/00285		Clamp, 21.3mm/21.3mm holes, 37mm high			2
11	821/00300		Plate, clamp			1
12	1315/3314D		Bolt			1
13	1420/0007D		Washer, M8 plain			1

Machine groups

Details

Machine group	From serial no.	To serial no.
.426		
426		

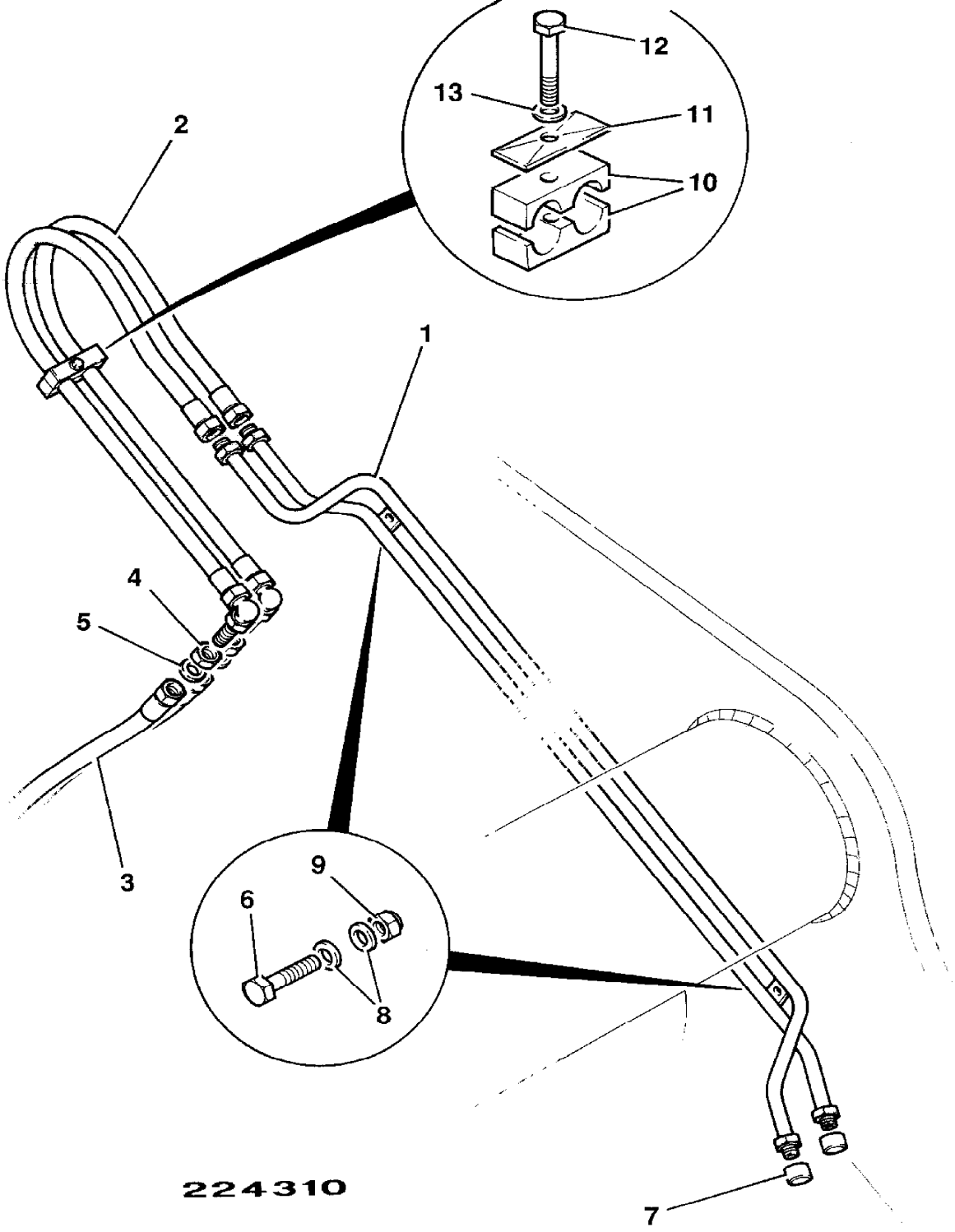
12
13
11
10
2
1
4
5
3
9
6
8
7
224310

9802/2740 E1-6-1 CIRCUIT, LOADER END, SUPER HIGH LIFT

Item	Part no.	Change No.	Description	Remarks	Usage code	Qty
1	335/06384		:Pipe, lift ram			1
1A	816/00193		Cap, blanking 1"BSP, steel			2
2	335/04527		Pipe, lift ram			1
3	615/01200		Hose, 3/4" x 1020mm			4
4	616/80068		Hose			2
	616/80101		Hose	Used when load suspension is fitted		2
5	615/47100		Hose			4
7	1315/0410Z		Bolt, M10 x 40			4
8	1420/0008Z		Washer, Plain M10			8
9	1370/0303Z		Nut, lock, M10			2
10	616/80055		Hose			2
11	1315/3412Z		Bolt			2
13	264/01001		Clamp			8
	2403/0210		:O Ring			4
14	1391/3408Z		Capscrew			16
15	1425/0008Z		Washer, Spring M10			16
16	828/00417		O Ring, 1"SAE			4
17	821/00442		Body, clamp			8
18	821/00443		Plate, cover			8
19	1315/3316Z		Bolt, M8 x 70			4
20	1420/0007Z		Washer, plain, M8			8
21	1370/0203Z		Nut, self lock, M8			4

Machine groups

Details

Machine group	From serial no.	To serial no.
.426		
426		

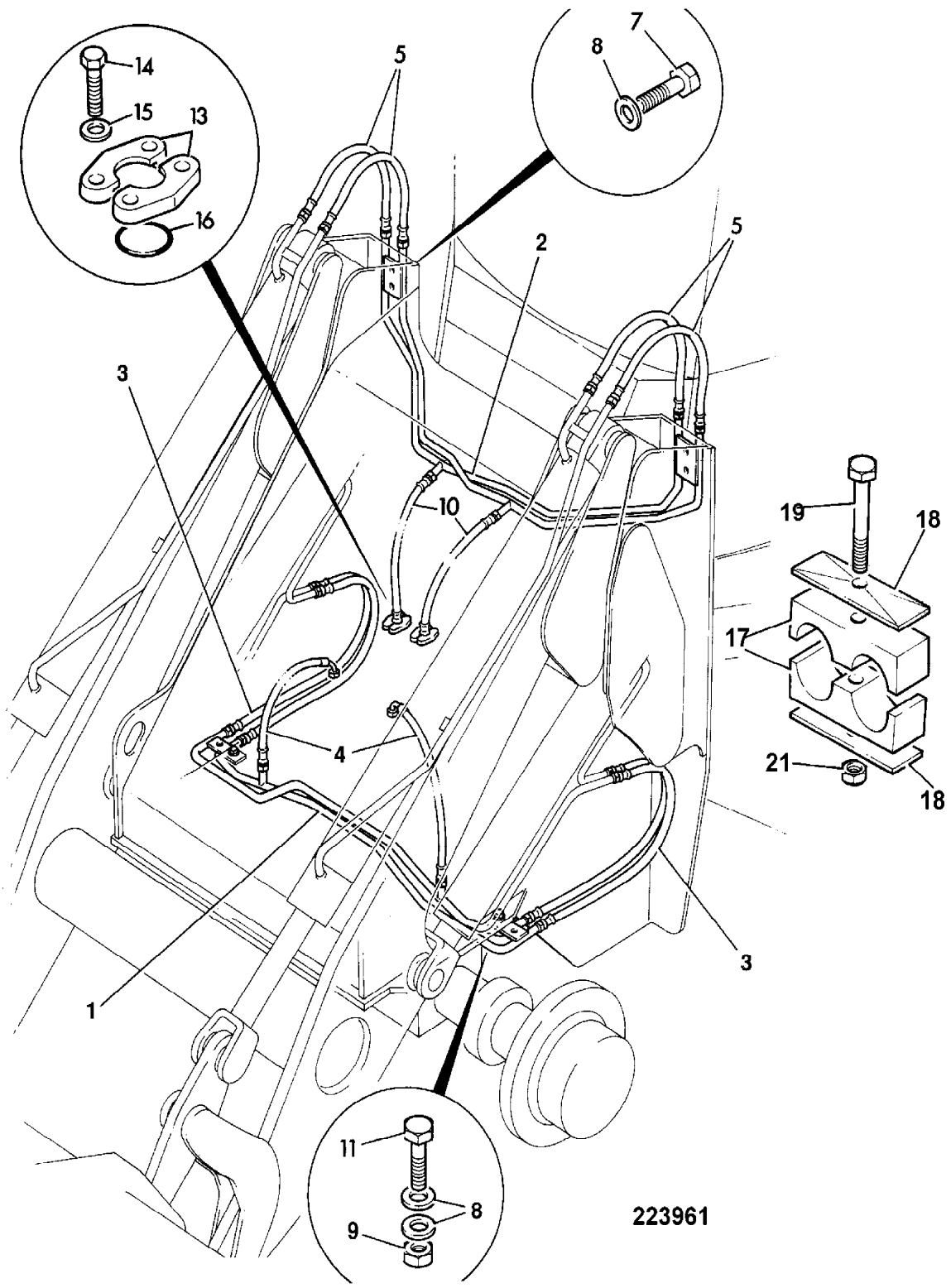
14
15
13
16
5
7
8
2
5
3
10
19
18
17
21
18
4
3
1
11
8
9
223961

9802/2740 E1-7-1 CIRCUIT, LOADER END, AUXILIARY, SUPER HIGH LIFT

Item	Part no.	Change No.	Description	Remarks	Usage code	Qty
1	335/08588		Pipe, auxiliary, loader arm			1
2	629/21800		Hose, 1/2" x 1200mm long			2
3	613/05800		Hose, 1/2" x 1200mm long			2
4	1356/0204Z		Nut			2
5	1420/0012D		Washer, plain			2
6	1315/3418D		Bolt, M10 x 80			4
7	816/00190		Cap, blanking 1/2" BSP, female			2
8	1420/0008D		Washer, M10			8
9	1370/0303D		Nut, M10			4
10	926/08300		Strip, edging			A/R
11	265/01134		Bracket, aux. hose			2
12	821/00285		Clamp, 21.3mm/21.3mm holes, 37mm high			4
13	821/00300		Plate, clamp			2
14	1315/3316D		Bolt, M8x70			2
15	1370/0203D		Nut, lock			2
16	1420/0007D		Washer, M8 plain			2

Machine groups

Details

Machine group	From serial no.	To serial no.
.426		
426		

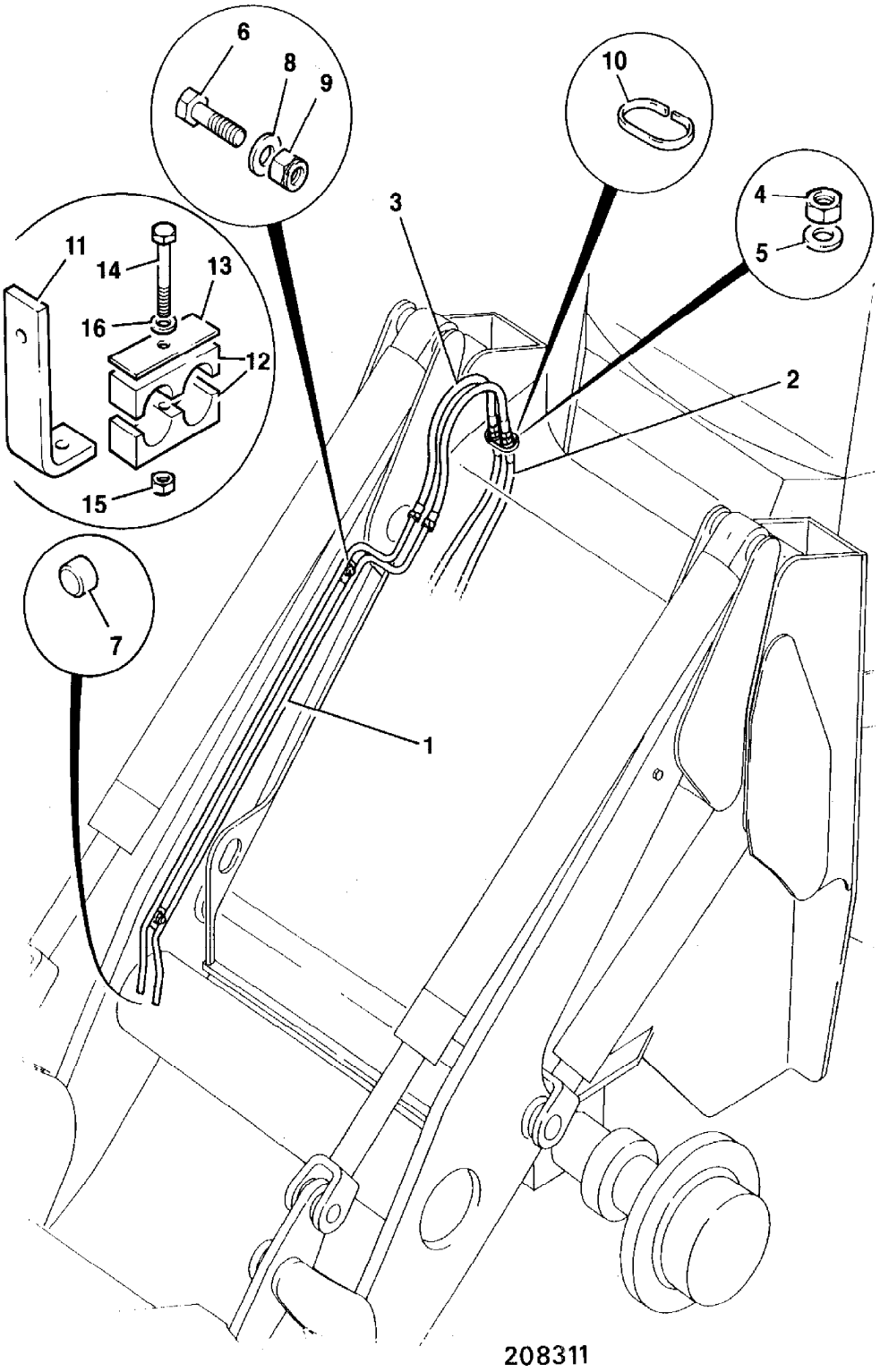
6
8
9
10
4
5
3
11
14
13
16
12
2
15
7
1
208311

9802/2740 E1-8-1 CIRCUIT, LOADER END, PARALLEL LIFT

Item	Part no.	Change No.	Description	Remarks	Usage code	Qty
1	335/06384		Pipe, lift ram			1
2	268/20022		Pipe, ram shovel			1
3	615/01200		Hose, 3/4" x 1020mm			4
	209/71600		Hose, 3/4" x 1100mm	Hi-lift. Replaced by 615/02900		4
	615/02900		Hose, 3/4 x 1300mm	Replaces 209/71600		4
	615/80023		Hose	Sales Special, wire guarded hose		4
	615/02900		Hose, 3/4 x 1300mm			1
4	616/80068		Hose			2
	616/80101		Hose	Used when load suspension is fitted		2
5	615/04700		Hose			4
	615/80049		Hose, wire guarded	Sales Special		4
7	1315/0410Z		Bolt, M10 x 40			4
8	1420/0008Z		Washer, Plain M10			8
9	1370/0303Z		Nut, lock, M10			2
10	616/80074		Hose			2
11	1315/3412Z		Bolt			2
13	264/01001		Clamp			8
14	1391/3408Z		Capscrew			16
15	1425/0008Z		Washer, Spring M10			16
16	828/00417		O Ring, 1"SAE			4

Machine groups

Details

Machine group	From serial no.	To serial no.
.426		
426		

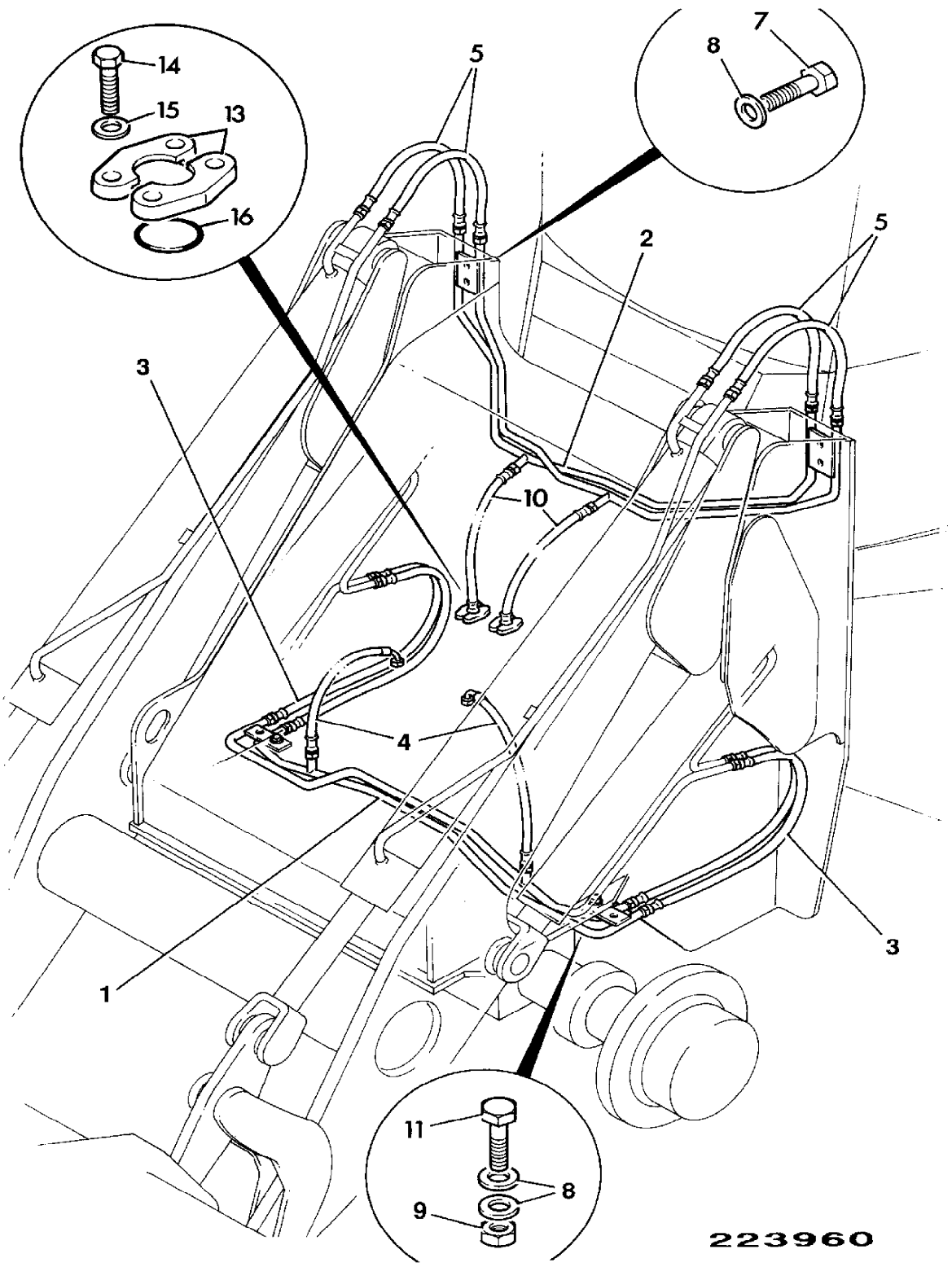
14
15
13
16
5
7
8
2
5
3
10
4
1
3
11
8
9
223960

9802/2740 E1-9-1 HOSE AND PIPEWORK, SERVO CONTROLLER, LOADER, 2 SPOOL

Item	Part no.	Change No.	Description	Remarks	Usage code	Qty
1	928/60307		Valve, loader control	See also section D1		1
14	335/08864		Pipe, assembly, servo control			1
16	631/80006		Hose, 1/4"BSP x 370mm			6
19	1604/0002		Adapter, 1/4" BSP M/M			6
20	1406/0011		Seal, bonded			6

Machine groups

Details

Machine group	From serial no.	To serial no.
.426		
426		

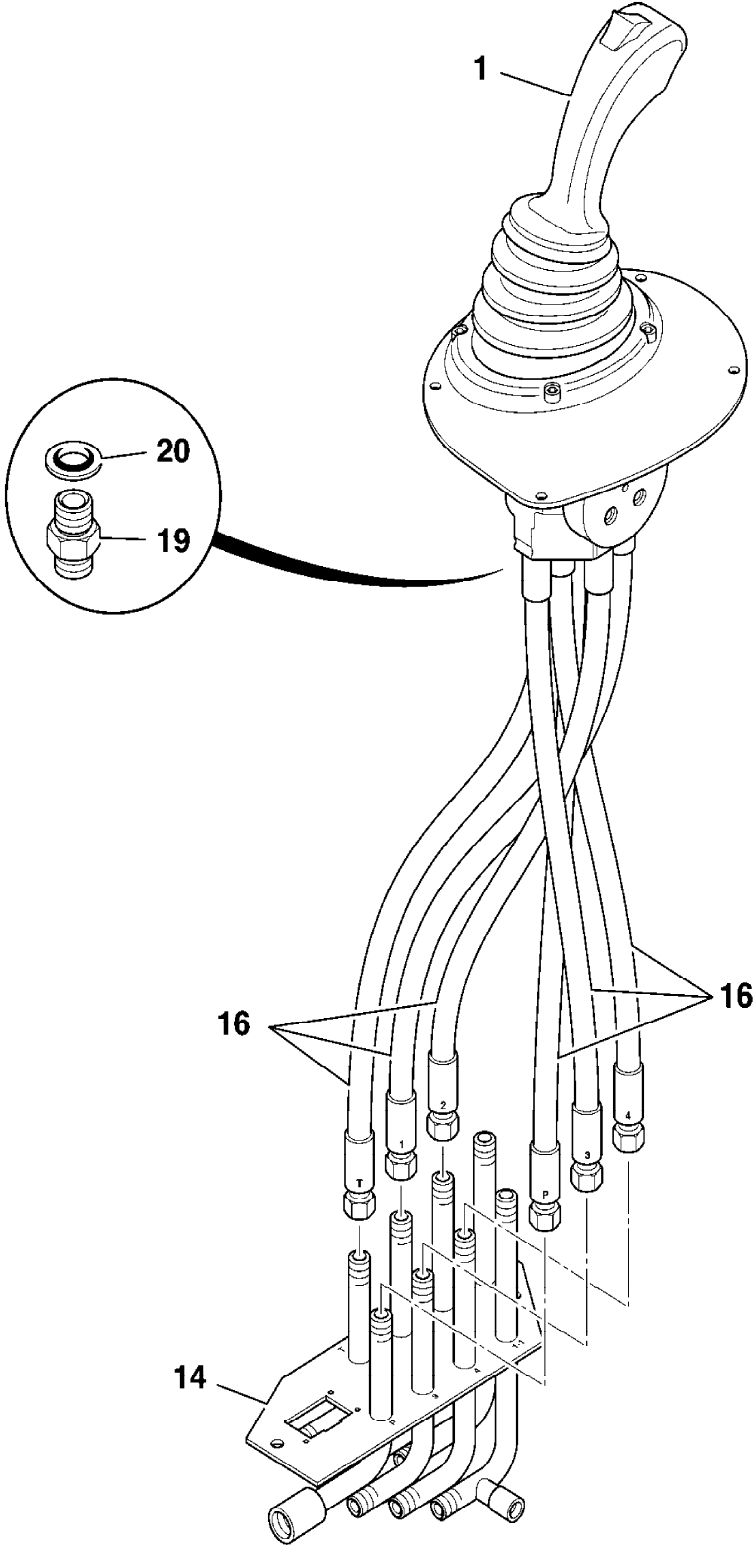

796590

9802/2740 E1-9-2 HOSE AND PIPEWORK, SERVO CONTROLLER, LOADER, 3 SPOOL

Item	Part no.	Change No.	Description	Remarks	Usage code	Qty
1	928/60033		Valve, loader control	See also section D1		1
	928/60347		Valve, loader control, with detented lever	Sales special 7763		1
14	335/08864		Pipe, assembly, servo control			1
16	631/80006		Hose, 1/4"BSP x 370mm			8
19	1604/0002		Adapter, 1/4" BSP M/M			8
20	1406/0011		Seal, bonded			8

Machine groups

Details

Machine group	From serial no.	To serial no.
.426		
426		

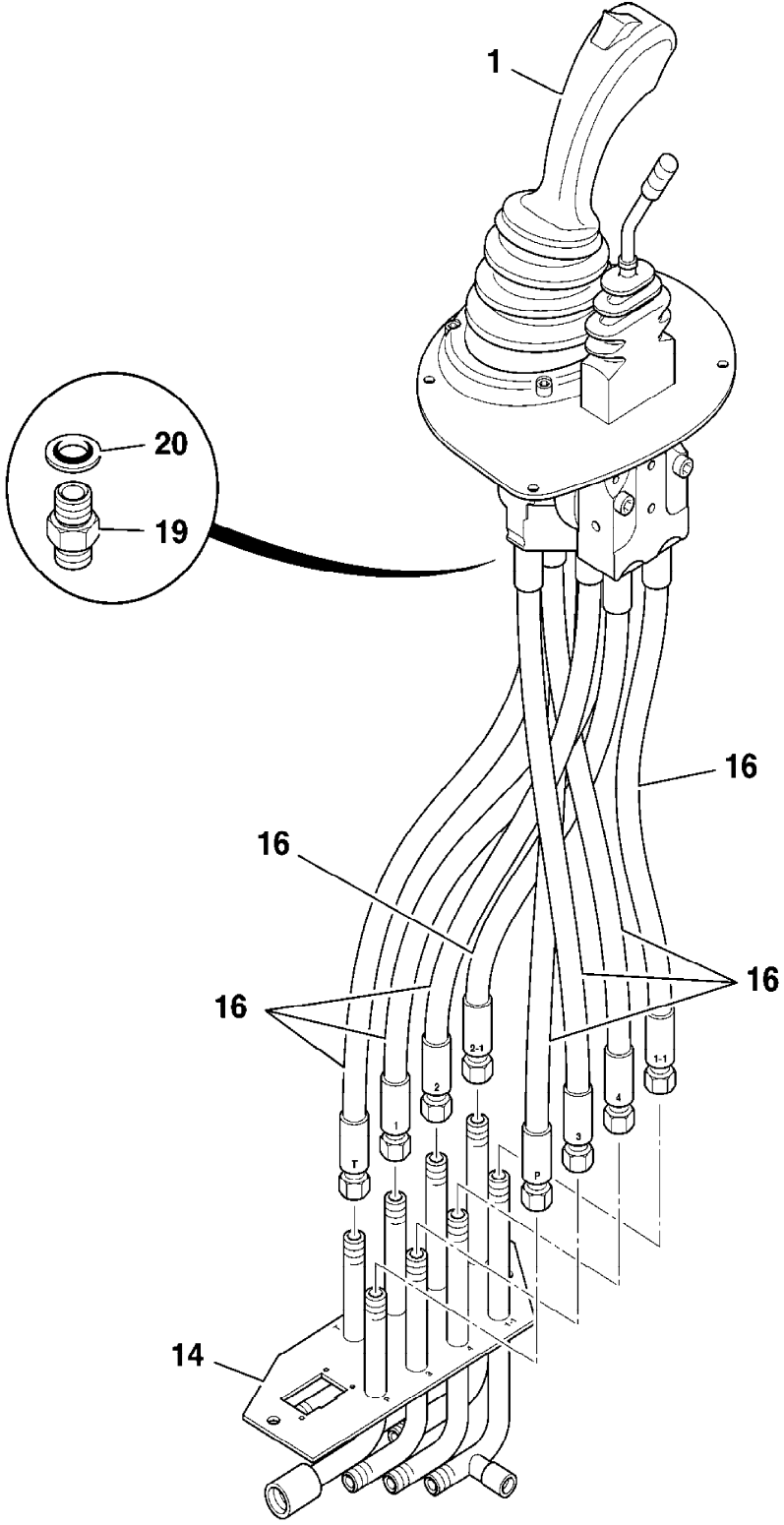

796600

9802/2740 E1-9-3 HOSE AND PIPEWORK, SERVO CONTROLLER, LOADER, 4 SPOOL

Item	Part no.	Change No.	Description	Remarks	Usage code	Qty
1	928/60034		Valve, servo, twin aux.levers	See also section D1		1
14	335/08864		Pipe, assembly, servo control			1
16	631/80006		Hose, 1/4"BSP x 370mm			10
19	1604/0002		Adapter, 1/4" BSP M/M			10
20	1406/0011		Seal, bonded			10

Machine groups

Details

Machine group	From serial no.	To serial no.
.426		
426		

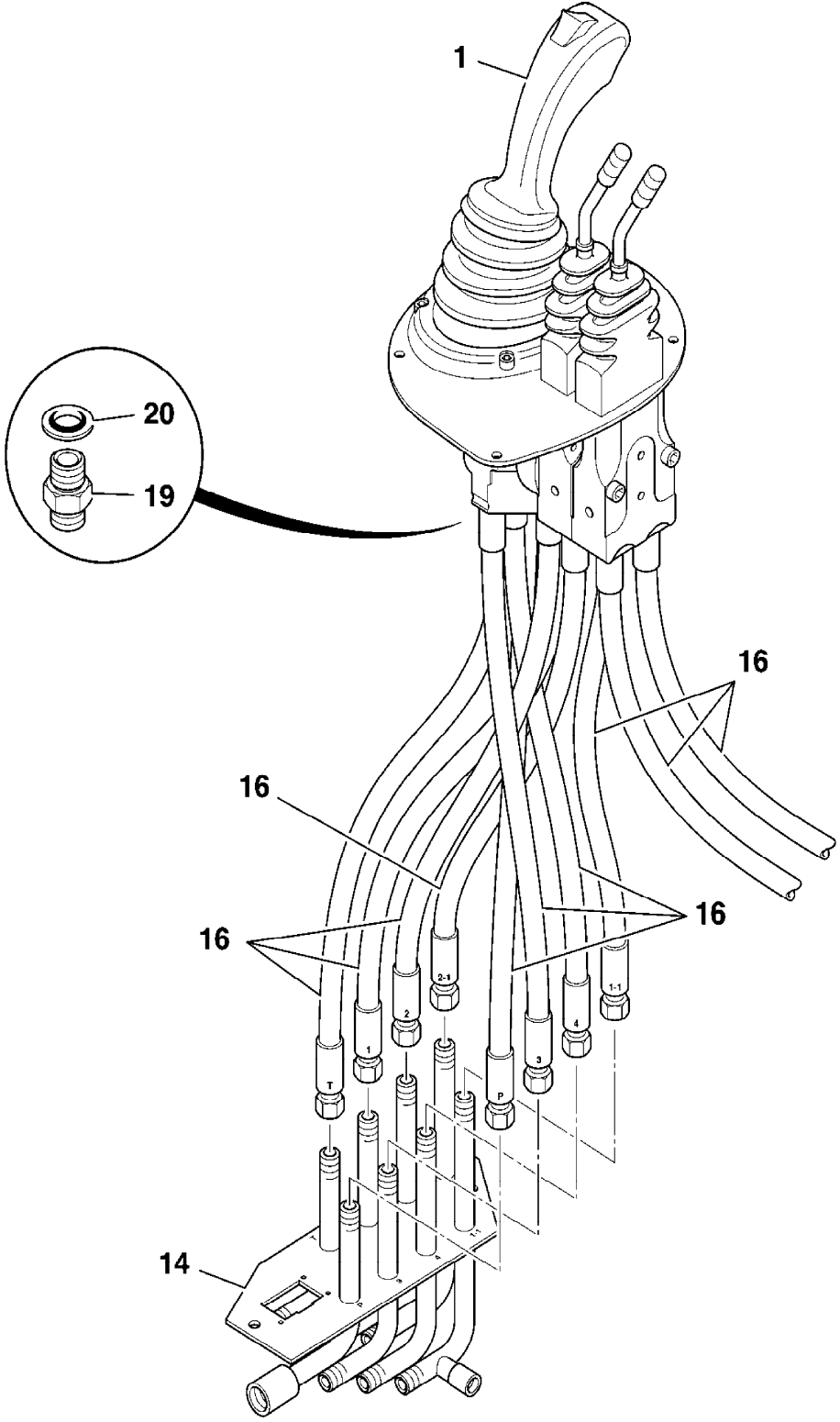

796610

9802/2740 E1-9-4 HOSE AND PIPEWORK, SERVO CONTROLLER, LOADER, 2 SPOOL MULTILEVER

Item	Part no.	Change No.	Description	Remarks	Usage code	Qty
1	928/60310		Valve, twin lever, 2 spool	See also section D1		1
10	335/08864		Pipe, assembly, servo control			1
14	631/80006		Hose, 1/4"BSP x 370mm			6
20	1620/0002		Adapter			6

Machine groups

Details

Machine group	From serial no.	To serial no.
.426		
426		

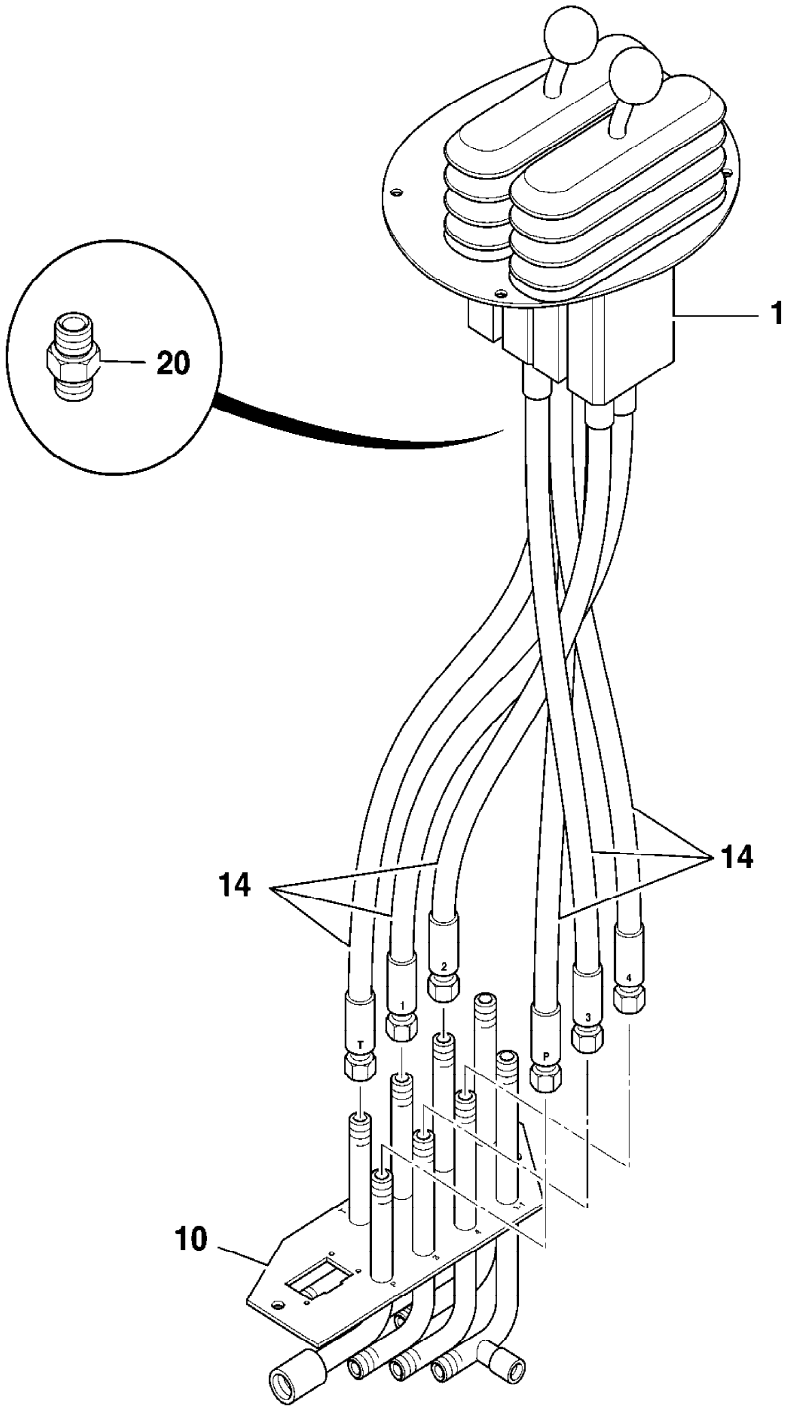

796620

9802/2740 E1-9-5 HOSE AND PIPEWORK, SERVO CONTROLLER, LOADER, 3 SPOOL MULTILEVER

Item	Part no.	Change No.	Description	Remarks	Usage code	Qty
1	928/60311		Valve, triple lever, 3 spool			1
10	335/08864		Pipe, assembly, servo control			1
14	631/80006		Hose, 1/4"BSP x 370mm			8
20	1620/0002		Adapter			8

Machine groups

Details

Machine group	From serial no.	To serial no.
.426		
426		

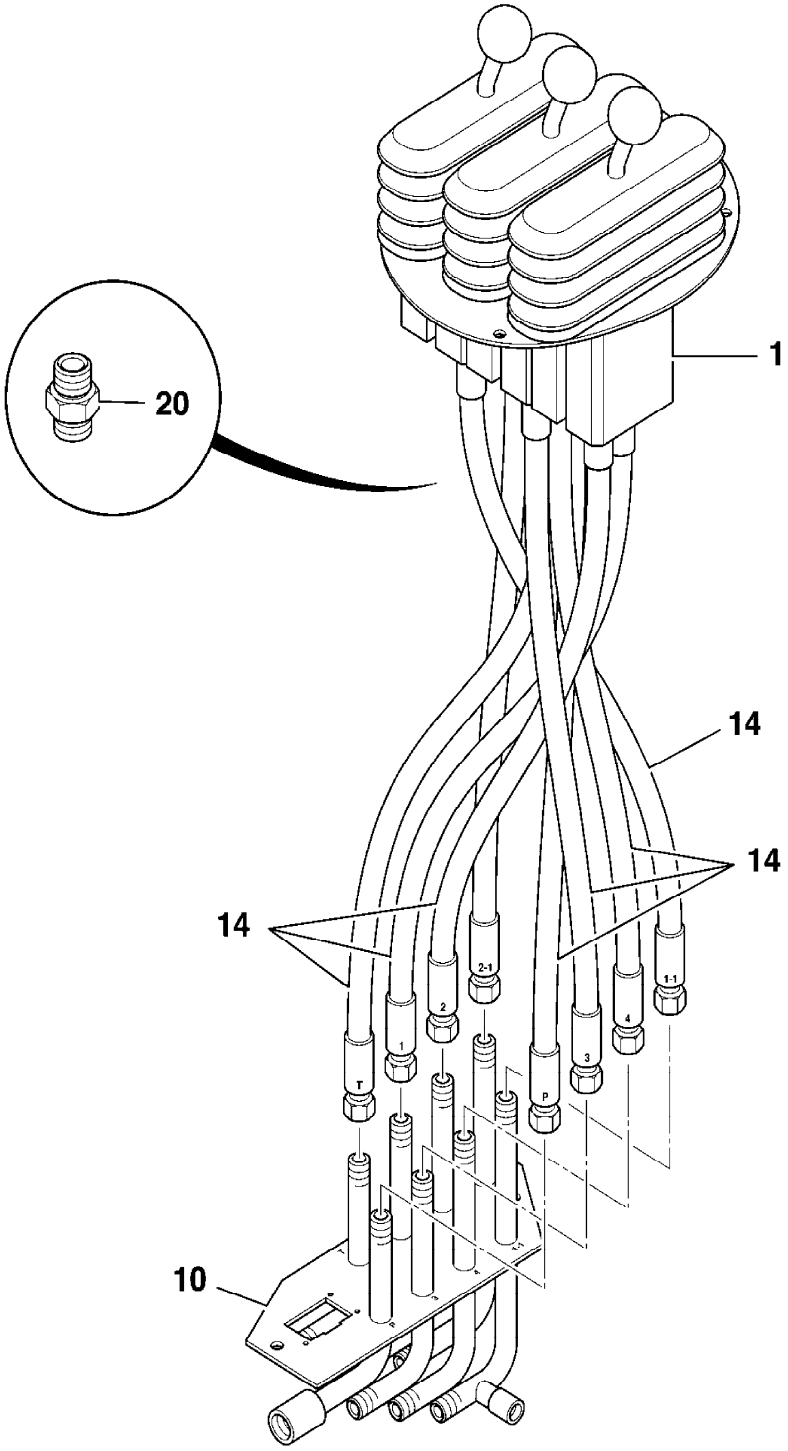

796630

9802/2740 E1-9-6 HOSE AND PIPEWORK, SERVO CONTROLLER, LOADER, SOLENOID AUX. ON VALVE BLOCK

Illustration Machines Top of catalogue

Item	Part no.	Change No.	Description	Remarks	Usage code	Qty
1	25/212600		Valve, servo, loader control	See also section D1		1
14	335/08864		Pipe, assembly, servo control			1
16	631/80006		Hose, 1/4"BSP x 370mm			6
19	1604/0002		Adapter, 1/4" BSP M/M			6
20	1406/0011		Seal, bonded			6

Machine groups

Details

Machine group	From serial no.	To serial no.
.426		
426		

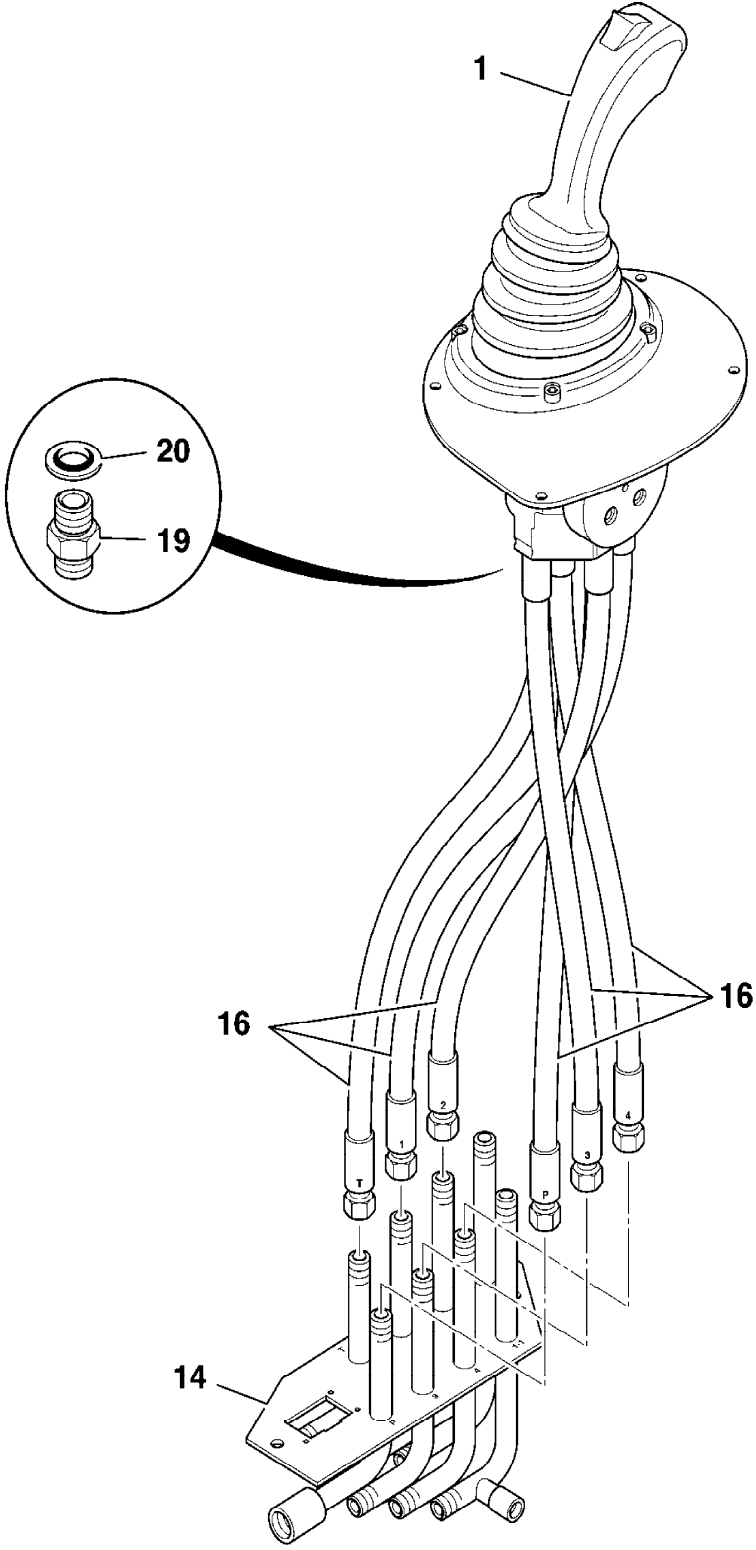

796590

9802/2740 E2-1-1 PUMP, MAIN HYDRAULIC, VALVE AND ADAPTERS

Illustration Machines Top of catalogue

Item	Part no.	Change No.	Description	Remarks	Usage code	Qty
1	20/950225		Pump, twin, 60cc			1
2	1620/0009		Adapter			1
2A	2401/0507		:O Ring			1
3	1620/0001		Adapter			2
3A	2401/0503		:O Ring			1
4	933/20003		Adapter, suction port			1
5	2401/0223		O Ring			1
6	1315/0508Z		Bolt, M12 X 30			4
7	823/00309		Washer, hardened			4
8	826/01702		Screw, Set screw(Tuff Lock), M12 x 35			4
9	1425/0011Z		Washer, spring	No longer required		4
10	04/801408		Gasket			1

Machine groups

Details

Machine group	From serial no.	To serial no.
.426		
426		

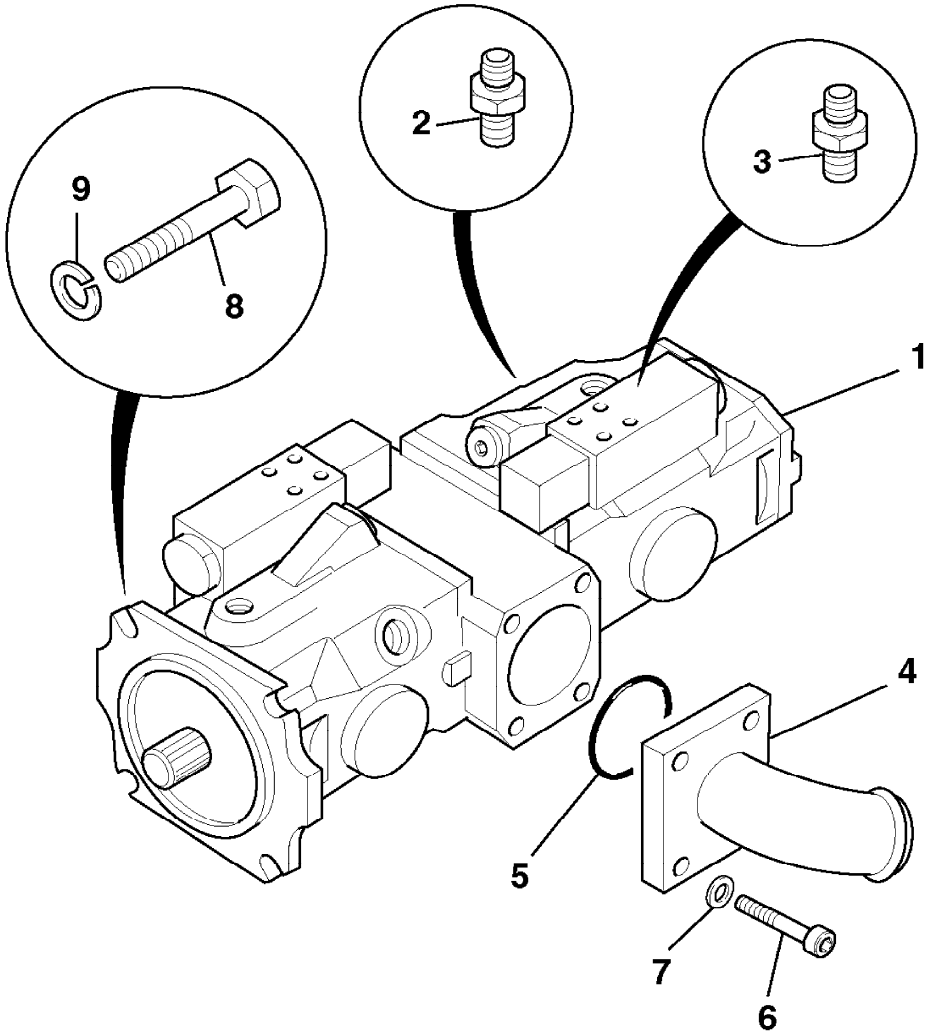

348700

9802/2740 E2-2-1 PUMP, MAIN HYDRAULIC, COMPONENTS

Item	Part no.	Change No.	Description	Remarks	Usage code	Qty
0A	20/950225		Pump, twin, 60cc			1
1	20/950908		:Valve, pilot, DFR 1			2
2	20/950910		:Seal, shaft			1
3	20/950913		:Seal, o ring			1
4	20/950914		:Seal, o ring			1
5	20/950915		:Plate, cover			1
6	20/902618		:O Ring	Use with valve item 1 to pump.		6
7	828/10412		O Ring, between pumps, 125mm x 2.5mm			1

Machine groups

Details

Machine group	From serial no.	To serial no.
.426		
426		

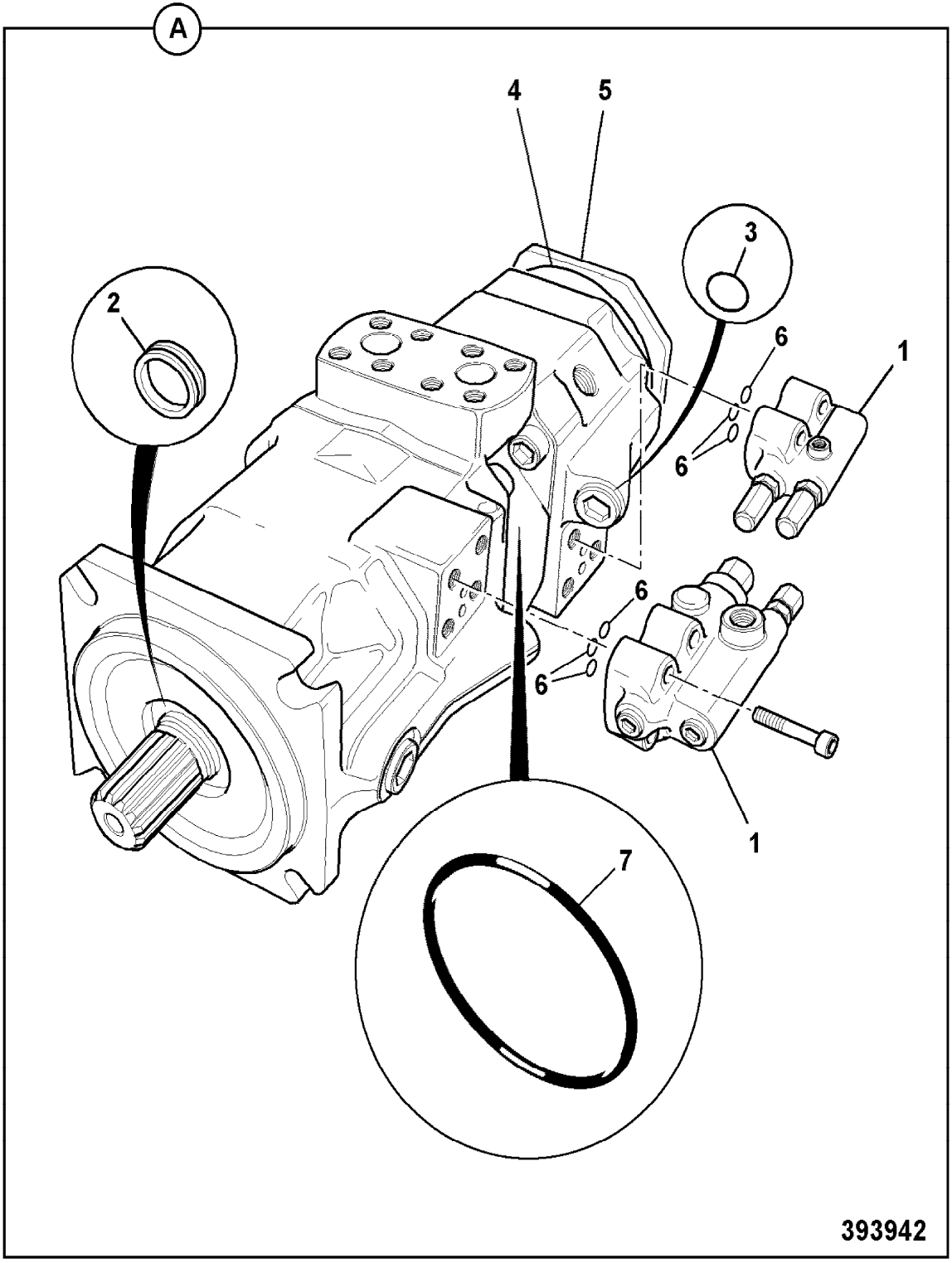
A
4
5
3
2
6
1
6
6
6
1
7
393942

9802/2740 E2-3-1 PUMP, EMERGENCY STEER

Item	Part no.	Change No.	Description	Remarks	Usage code	Qty
1	20/925509		Pump, emergency steer			1
2	25/222863		:Kit, motor			1
3	25/222864		:Kit, brush			1
4	25/222865		:Pump			1
5	25/222866		:Manifold, assembly			1
6	25/222873		:Block, manifold			1
7	25/222867		:Valve, check			1
8	25/222870		:Valve, relief			1
9	25/222868		:Adapter, screw			1
10	25/222869		:Seal			2
11	25/222871		:Adapter			1
12	25/222872		:O Ring			1
13	25/222874		:Screw			2

Machine groups

Details

Machine group	From serial no.	To serial no.
.426		
426		

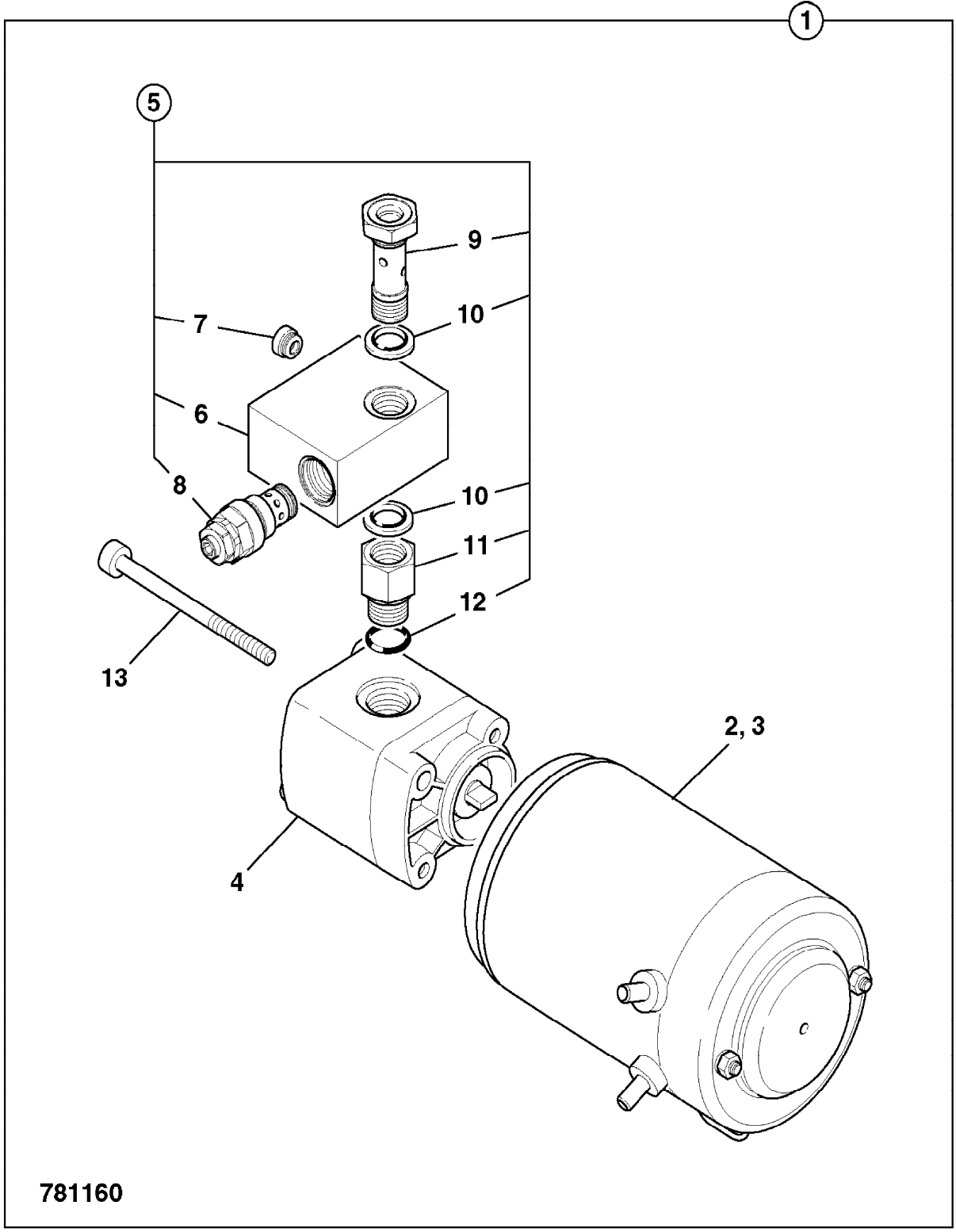
1
5
9
7
10
6
8
10
11
12
13
2, 3
4
781160

9802/2740 E2-4-1 PUMP, WITH CHARGE VALVE

Item	Part no.	Change No.	Description	Remarks	Usage code	Qty
0A	20/925468		Pump, charge			1
1	20/952295		:Valve, assembly			1
2	.		'See Remark'	Nut		1
3	.		'See Remark'	Washer		1
4	.		'See Remark'	Key - woodruff		1
5	20/950952		Kit-seal	Seal kit pump only		1

Machine groups

Details

Machine group	From serial no.	To serial no.
.426		
426		

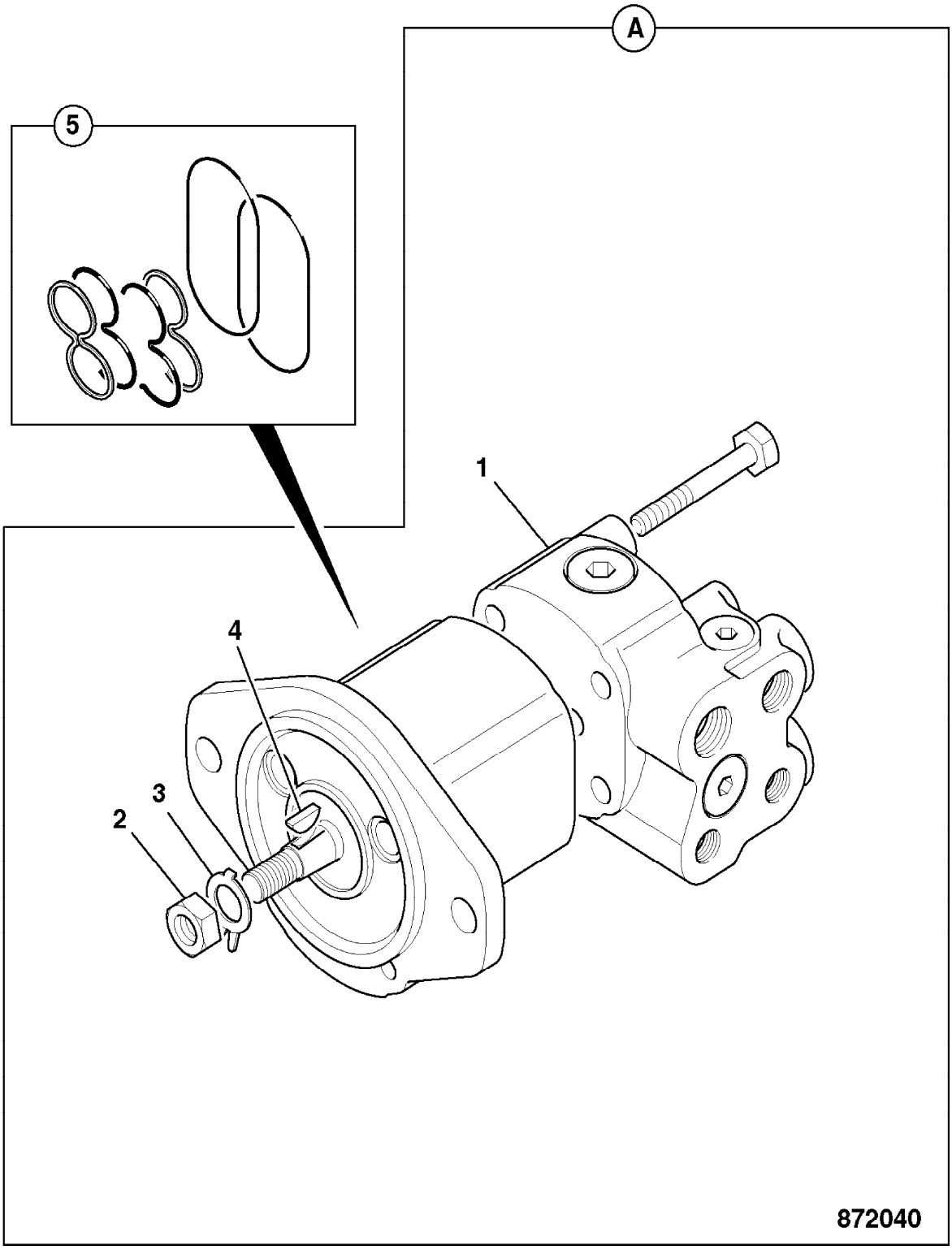
A
5
1
2
3
4
872040

9802/2740 E2-5-1 MOTOR, FAN, SINGLE DIRECTION

Item	Part no.	Change No.	Description	Remarks	Usage code	Qty
1	20/925518		Motor, hydaulic			1
2	20/951235		:Cartridge, relief valve			2
2A	20/951236		::Kit, seal			1
3	20/951078		:Key, woodruff, 3.2 X 6.5 X 16dia			1
4	20/951079		:Nut, M12 X 1.5			1
5	20/951428		:Washer, tab			1
10	20/951234		:Kit, seal			1

Machine groups

Details

Machine group	From serial no.	To serial no.
.426		
426		

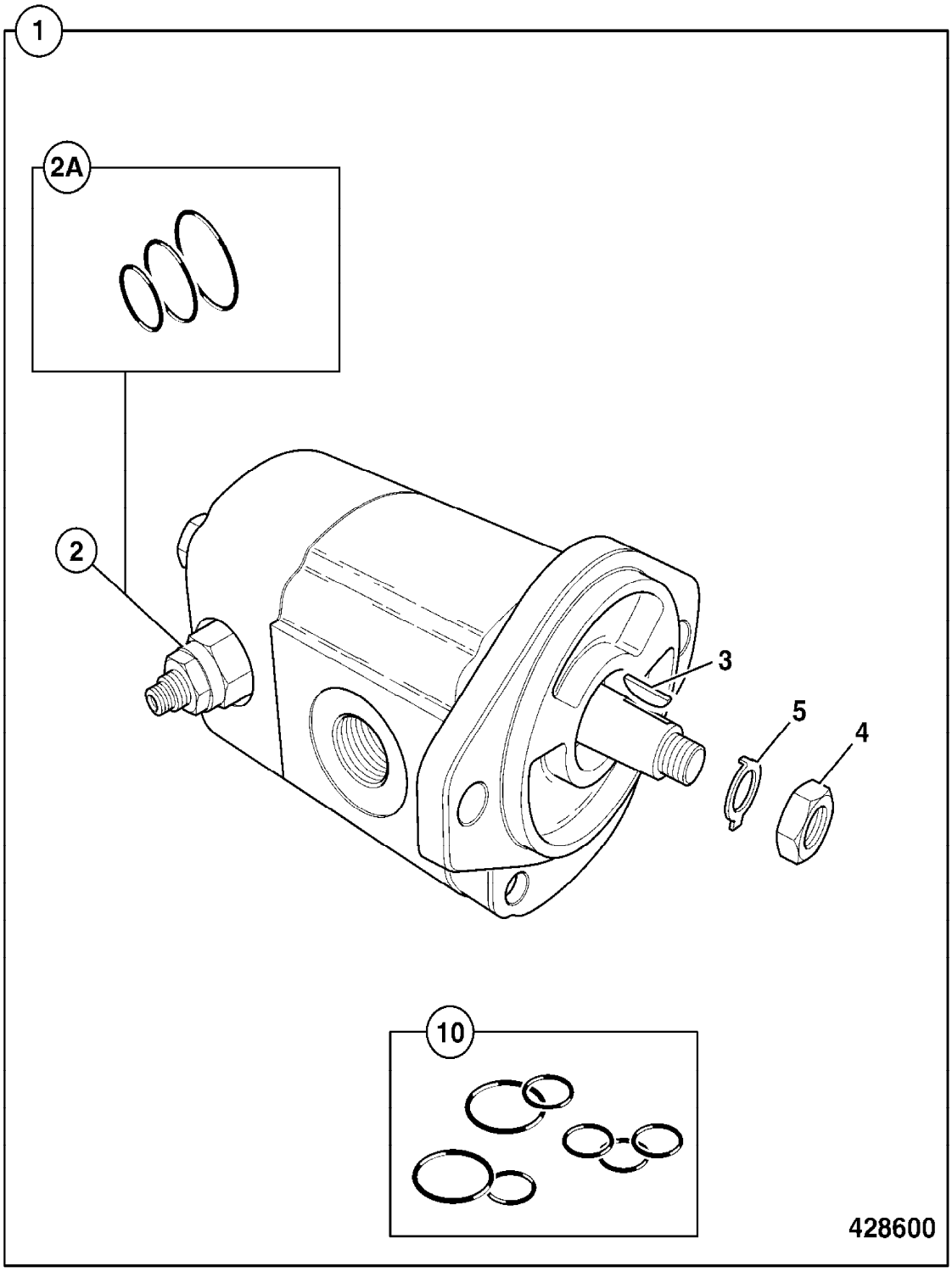
1
2A
2
3
5
4
10
428600

9802/2740 E2-6-1 MOTOR, FAN, TWO DIRECTION

Item	Part no.	Change No.	Description	Remarks	Usage code	Qty
1	20/925519		Motor, fan	Sales special 7839		1
2	20/951235		:Cartridge, relief valve			2
2A	20/951236		::Kit, seal			1
3	20/951078		:Key, woodruff, 3.2 X 6.5 X 16dia			1
4	20/951079		:Nut, M12 X 1.5	Nut		1
5	20/951428		:Washer, tab			1
10	20/951234		:Kit, seal			1

Machine groups

Details

Machine group	From serial no.	To serial no.
.426		
426		

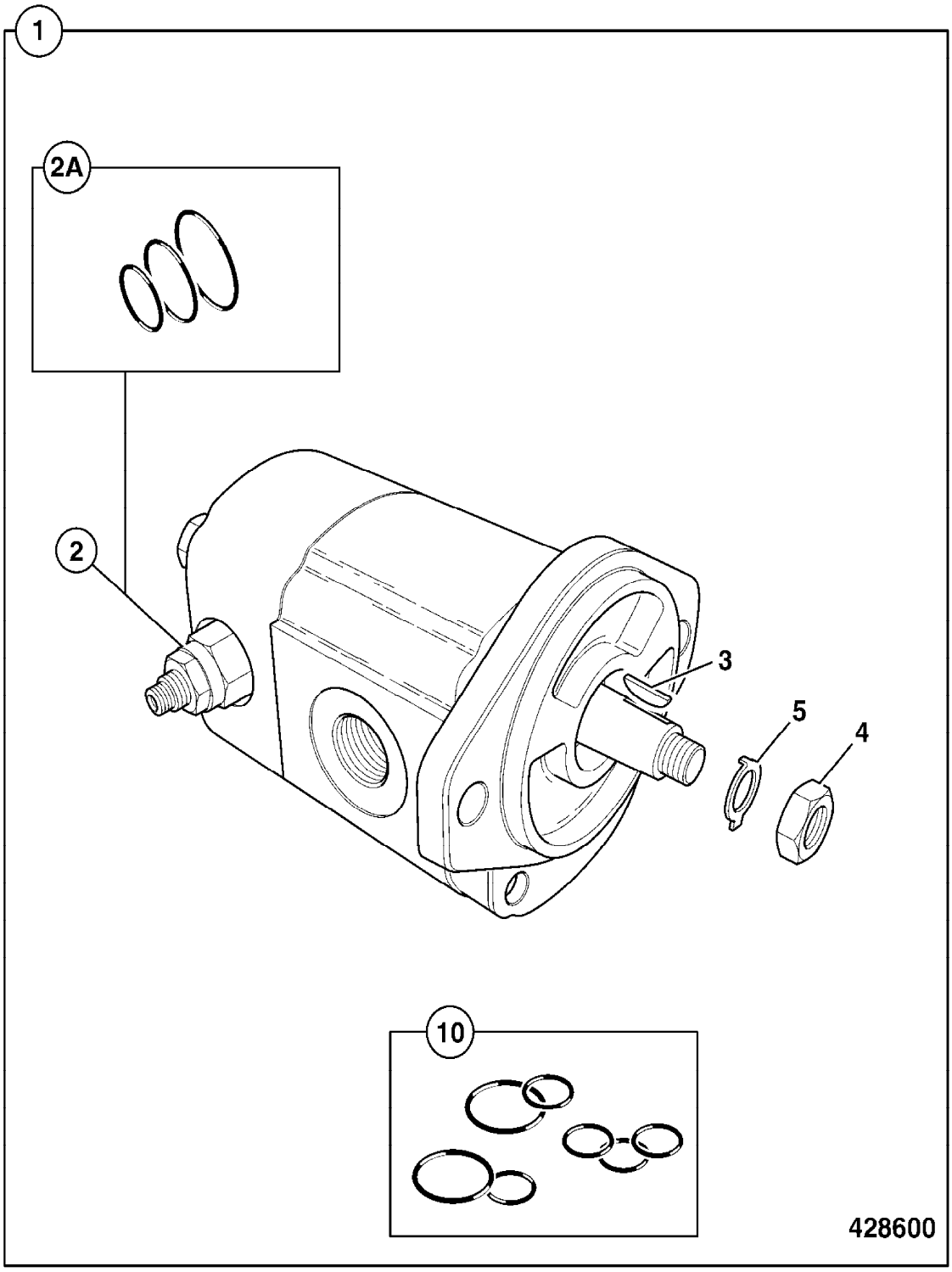
1
2A
2
3
5
4
10
428600

9802/2740 E3-1-1 VALVE, LOAD SUSPENSION

Item	Part no.	Change No.	Description	Remarks	Usage code	Qty
0A	25/222127		Valve, load suspension			1
1	25/222769		:Housing			1
2	25/222770		:Socket			1
3	25/222771		:Disc, spring			1
4	25/222772		:Seat, valve			1
5	25/222773		:Seat, valve			1
6	25/222774		:Pin, throttle			1
7	25/222775		:Screw, grub			1
8	25/222776		:Spring			1
9	25/222777		:Spring			1
10	25/222778		:Plug			1
11	25/222779		:Plug			1
12	25/222780		:Plug			1
13	25/222781		:Screw			1
14	25/222782		:Valve			1
15	25/222783		:Plug			1
16	25/222784		:Plug			1

Machine groups

Details

Machine group	From serial no.	To serial no.
.426		
426		

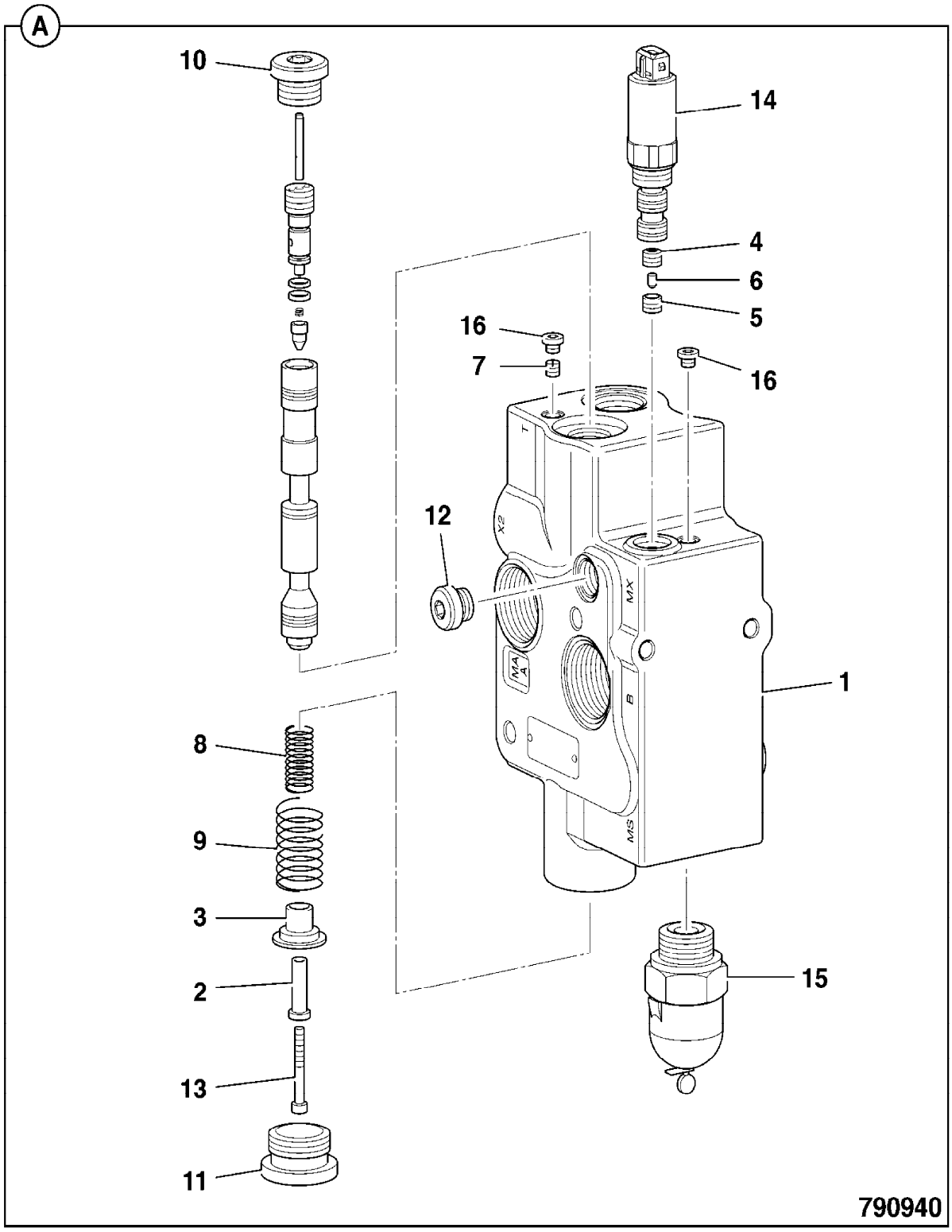
A
10
14
4
6
5
16
7
16
12
1
8
9
3
2
13
11
15
790940

9802/2740 E3-10-1 VALVE AND ADAPTERS, STEERING

Item	Part no.	Change No.	Description	Remarks	Usage code	Qty
1	35/902100		Valve, steer	436B,426B Heavy duty		1
2	1620/0005		Adapter, 3/4"UNF o-ring boss, 1/2"BSP male			4
3	1620/0001		Adapter			1
4	1315/0407Z		Bolt, M10x25			4
5	1420/0008Z		Washer, Plain M10			4

Machine groups

Details

Machine group	From serial no.	To serial no.
.426		
426		

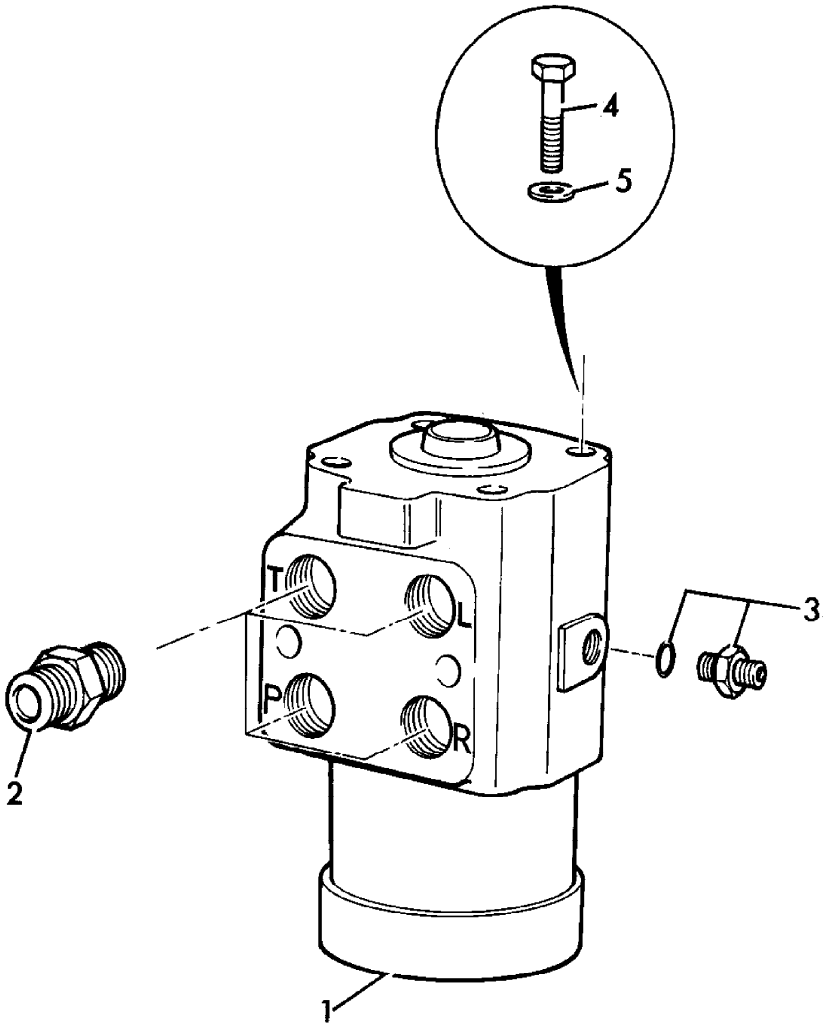

269220

9802/2740 E3-10-5 VALVE AND ADAPTERS, STEERING, OPTION, 620/75/R26 & 750/65/R26 TYRES

Item	Part no.	Change No.	Description	Remarks	Usage code	Qty
1	35/902700		Valve, steer, Farm master	426B Farm master Option		1
2	1620/0005		Adapter, 3/4"UNF o-ring boss, 1/2"BSP male			4
3	1620/0001		Adapter			1
4	1315/0407Z		Bolt, M10x25			4
5	1420/0008Z		Washer, Plain M10			4

Machine groups

Details

Machine group	From serial no.	To serial no.
.426		
426		

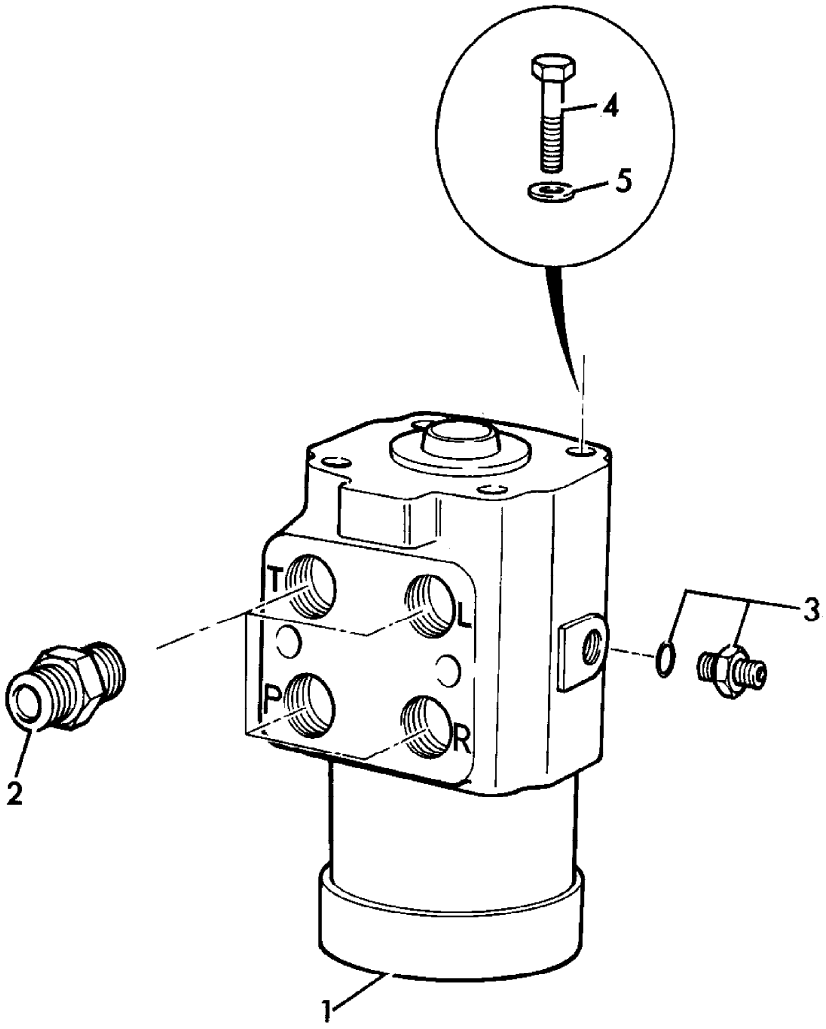

269220

9802/2740 E3-11-1 VALVE COMPONENTS, STEERING

Item	Part no.	Change No.	Description	Remarks	Usage code	Qty
1	35/902100		Valve, steer			1
2	35/902105		:Housing, valve			1
3	35/900822		::Kit, spring			1
4	35/900803		::Pin			1
5	35/900804		::Ball, check			2
6	35/900805		::Plug, anti-cavitation			2
7	35/900806		::Spring			2
8	35/900807		:Kit-bearing			1
9	35/900808		:Kit-seal			1
10	35/900809		:Bush, gland seal			1
11	35/900810		:Ring, retaining			1
12	35/900909		:Screw, set			1
13	35/902101		:Seat, valve	N.L.A.		1
14	35/902106		:Poppet	N.L.A		2
15	35/902107		:Seat	N.L.A.		2
16	35/900815		:Plate, wear			1
17	35/900816		:Shaft, drive			1
18	35/902102		:Rotor			1
19	35/902103		:Spacer			1
20	35/900819		:Cap, end			1
21	35/902104		:Screw, cap			7

Machine groups

Details

Machine group	From serial no.	To serial no.
.426		
426		

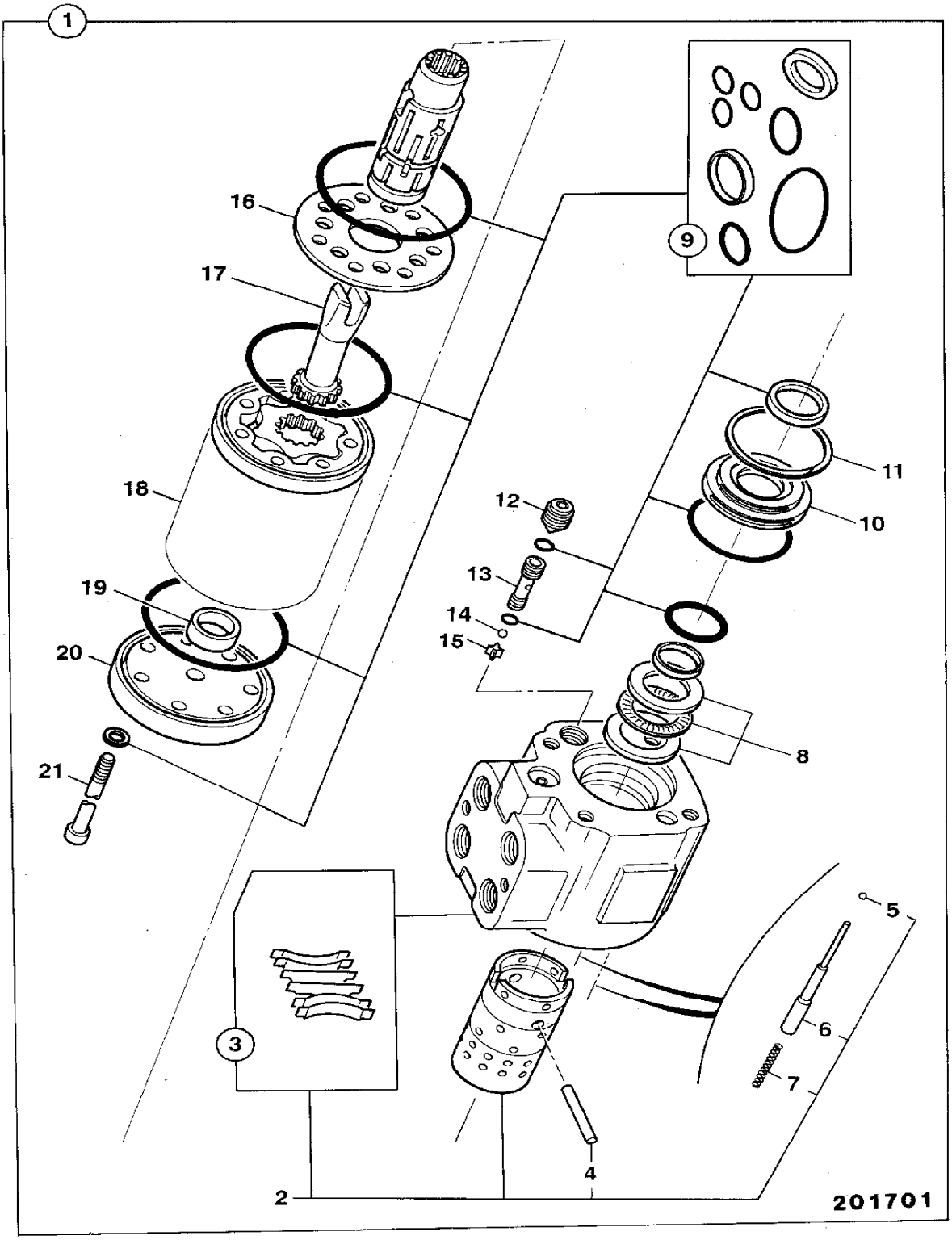
1
16
17
18
19
20
21
9
12
13
14
15
11
10
8
3
2
4
5
6
7
201701

9802/2740 E3-12-1 VALVE ASSEMBLY, 25/222708, 4 STATION PROP. PILOT VALVE

Illustration Machines Top of catalogue

Item	Part no.	Change No.	Description	Remarks	Usage code	Qty
1	25/222708		Valve, assembly, prop. pilot valve			1
1A	25/222689		:Solenoid			4
1B	717/20155		:Coil, 24 volt, Deutsch			4
6	1391/3318D		Capscrew, M8 x 80mm, GRADE 12.9			2
7	1420/0007D		Washer, M8 plain			2

Machine groups

Details

Machine group	From serial no.	To serial no.
.426		
426		

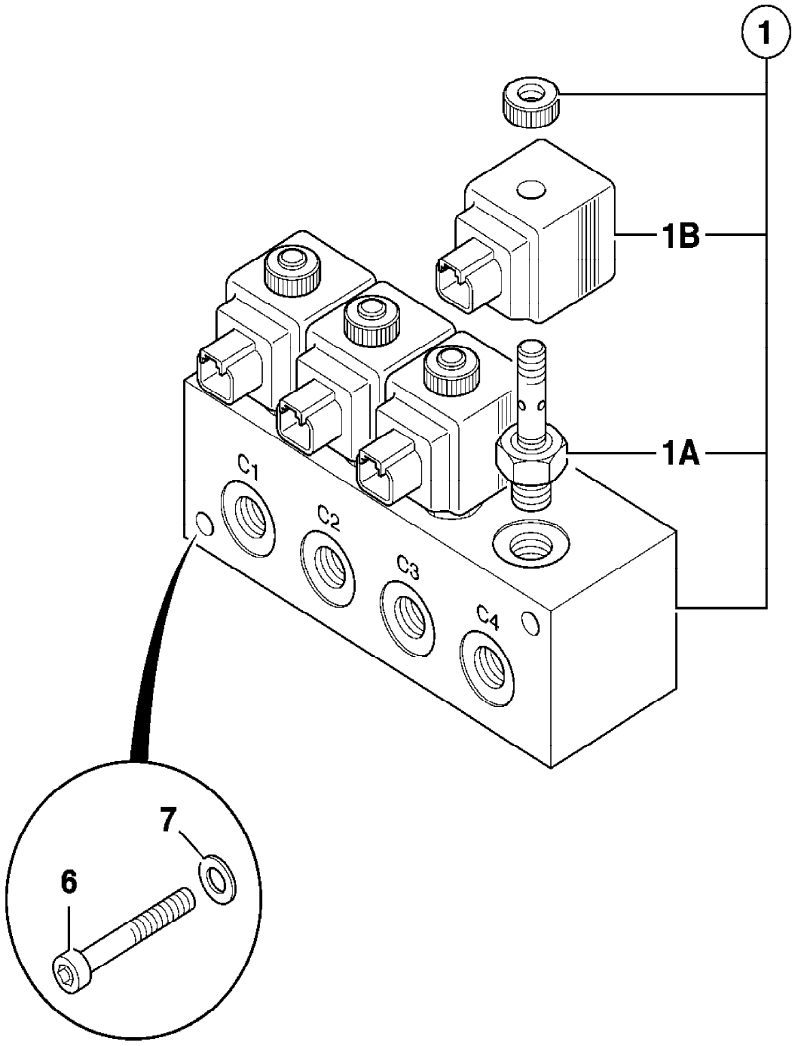

796680

9802/2740 E3-14-2 VALVE AND ADAPTERS, 25/223066,2 SPOOL ZX

Illustration Machines Top of catalogue

Item	Part no.	Change No.	Description	Remarks	Usage code	Qty
1	25/223066		Valve, assembly, 2 spool			1
2	1315/0409D		Setscrew, M10 x 35mm long			2
3	1315/3412D		Bolt, M10 x 50			2
4	1420/0008D		Washer, M10			4
5	1370/0303D		Nut, M10			4
6	1620/0001		Adapter			7
7	1620/0002		Adapter			1
8	816/15048		Adapter	Aux. ports		4
9	816/15175		Adapter			1
10	25/993700		Valve, check			1
11	821/00405		Circlip			1
12	816/00464		Adapter, elbow - male/female			1
13	817/19929		Decal, loader valve			1

Machine groups

Details

Machine group	From serial no.	To serial no.
.426		
426		

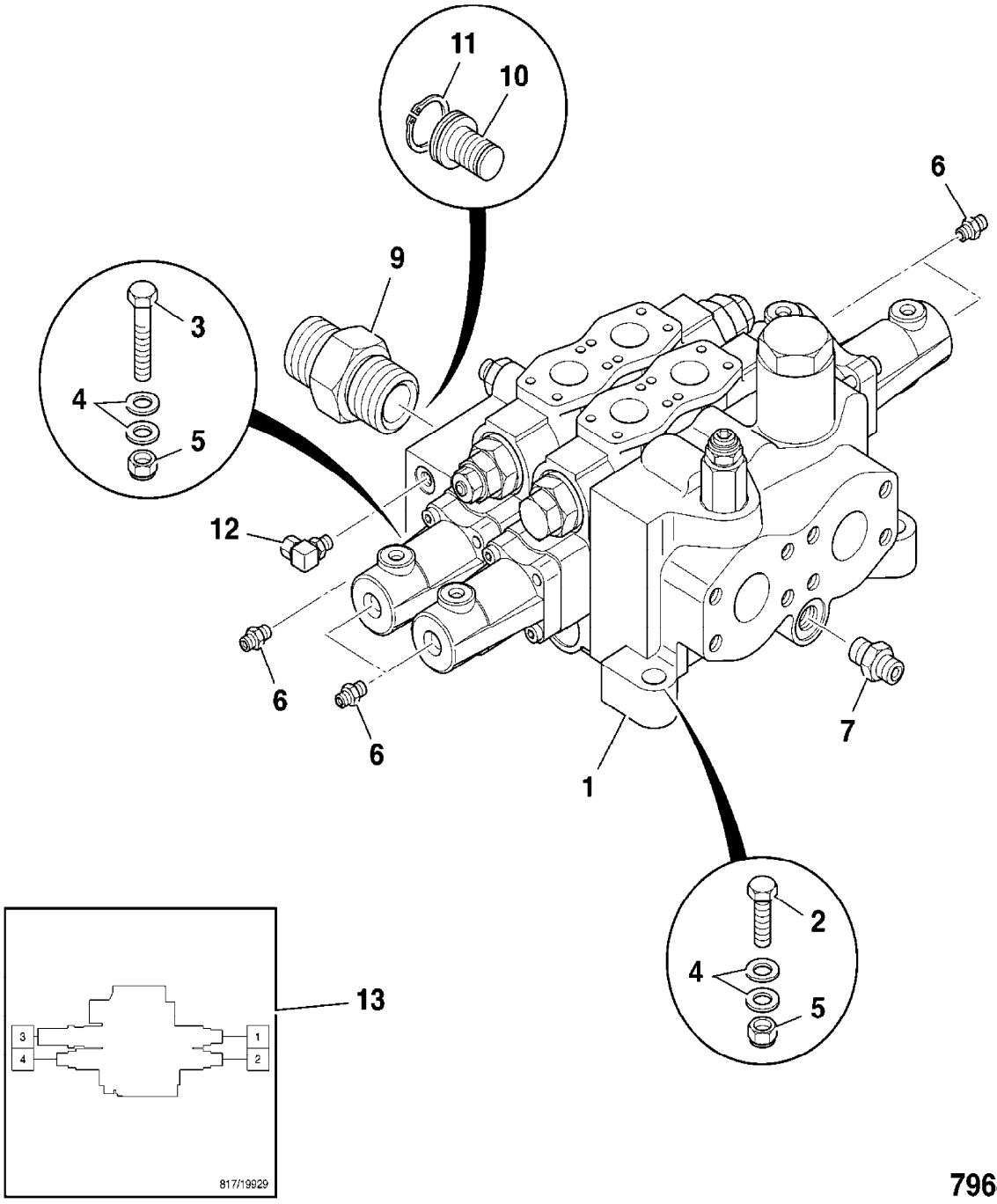

796480

9802/2740 E3-15-2 VALVE AND ADAPTERS, 25/223067,4 SPOOL ZX

Item	Part no.	Change No.	Description	Remarks	Usage code	Qty
1	25/223067		Valve, assembly, 4 spool			1
2	1315/0409D		Setscrew, M10 x 35mm long			2
3	1315/3412D		Bolt, M10 x 50			2
4	1420/0008D		Washer, M10			4
5	1370/0303D		Nut, M10			4
6	1620/0001		Adapter			11
7	1620/0002		Adapter			1
8	816/15048		Adapter			4
9	816/15175		Adapter			1
10	25/993700		Valve, check			1
11	821/00405		Circlip			1
12	816/00464		Adapter, elbow - male/female			1
13	817/19931		Decal, 4 spool, ZX			1
14	816/17061		Adapter			1

Machine groups

Details

Machine group	From serial no.	To serial no.
.426		
426		

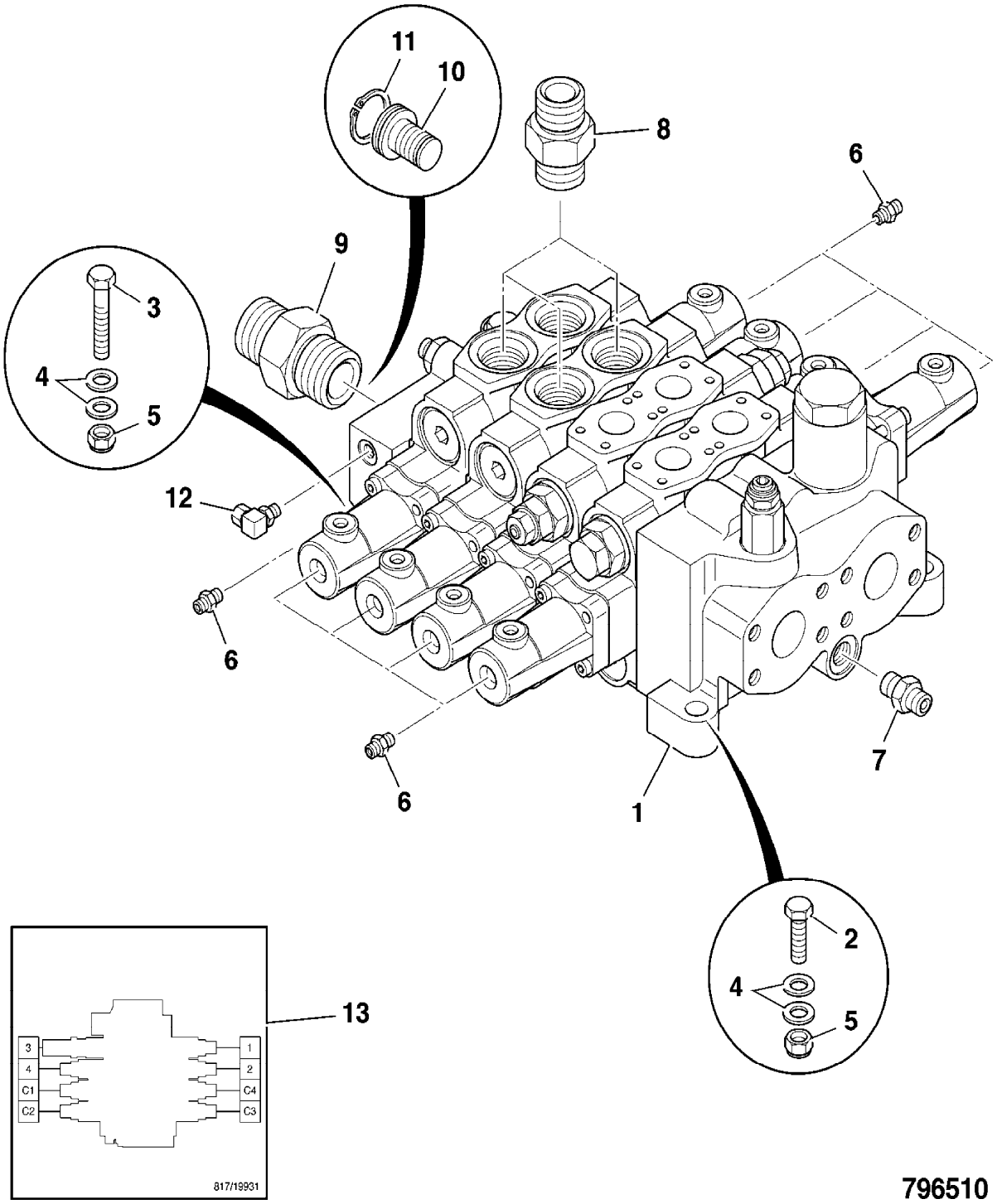
11
10
8
6
9
3
4
5
12
6
6
7
1
2
4
5
13
3
4
C1
C2
1
2
C4
C3
817/19931
796510

9802/2740 E3-2-1 VALVE ASSEMBLY, 25/213400,3 SPOOL,ZX

Item	Part no.	Change No.	Description	Remarks	Usage code	Qty
1	25/213400		Valve, assembly, 3 spool Z bar			1
2	25/220594		:Valve, section, priority steer			1
3	25/220595		:Valve, section, lift			1
3A	25/221089		:Housing			2
4	25/987602		:Valve, section, bucket			1
5	25/987603		:Valve, section, Aux.			1
6	25/220593		:Cover, end c/w pressure, reducing valve			1
7	25/202801		:Body, assembly, inlet			1
8	998/10280		Kit, seal for 1 section, between sections			1
9	25/202001		Kit, section, sealing			1
10	25/987605		Kit, sealing, inlet			1
11	25/987606		Kit, seal, end cover			1
12	998/10401		Kit, tie rod			1
13	817/03907		Decal, loader valve, 436 Z bar			1

Machine groups

Details

Machine group	From serial no.	To serial no.
.426		
426		

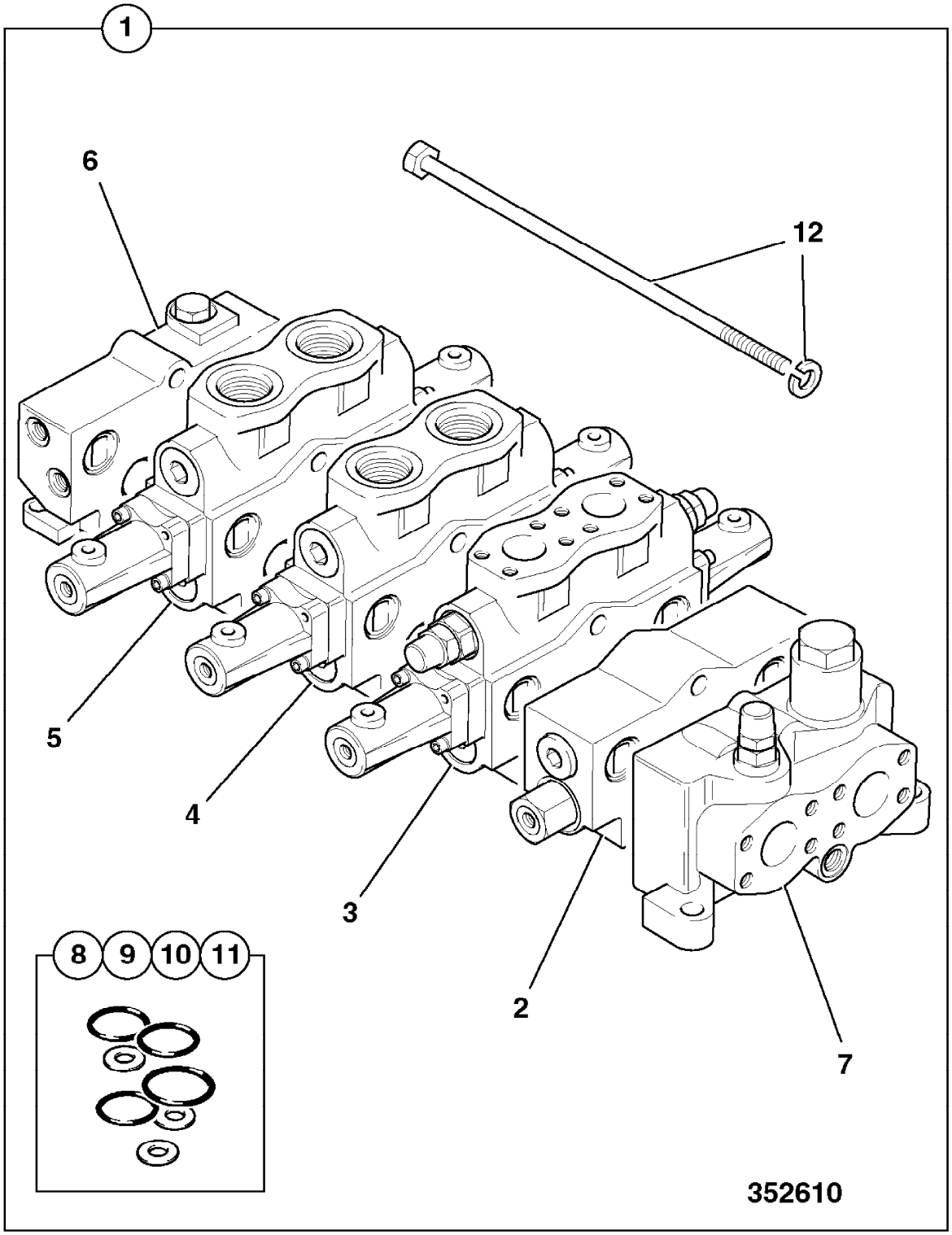
1
6
12
5
4
3
2
7
8
9
10
11
352610

9802/2740 E3-2-2 VALVE AND ADAPTERS, 25/213400,3 SPOOL,ZX

Item	Part no.	Change No.	Description	Remarks	Usage code	Qty
0A	25/905500		Valve, check			1
0C	1604/0004		Adapter, male/male			1
0D	1406/0018		Seal, bonded, 1/2" BSP			2
0E	816/40016		Adapter, 90			1
1	25/213400		Valve, assembly, 3 spool Z bar			1
2	1315/0409Z		Screw, hex. head			2
3	1420/0008Z		Washer, Plain M10			4
4	1370/0303Z		Nut, lock, M10			4
5	1315/3412Z		Bolt			2
6	1620/0001		Adapter			9
7	1620/0002		Adapter			1
8	816/15048		Adapter			2
9	2401/0510		O Ring			2
10	816/15175		Adapter			1
11	25/993700		Valve, check			1
12	821/00405		Circlip			1
13	816/17061		Adapter			1
14	816/00464		Adapter, elbow - male/female			1
15	1391/3509D		Capscrew, M12 X 35LG			8

Machine groups

Details

Machine group	From serial no.	To serial no.
.426		
426		

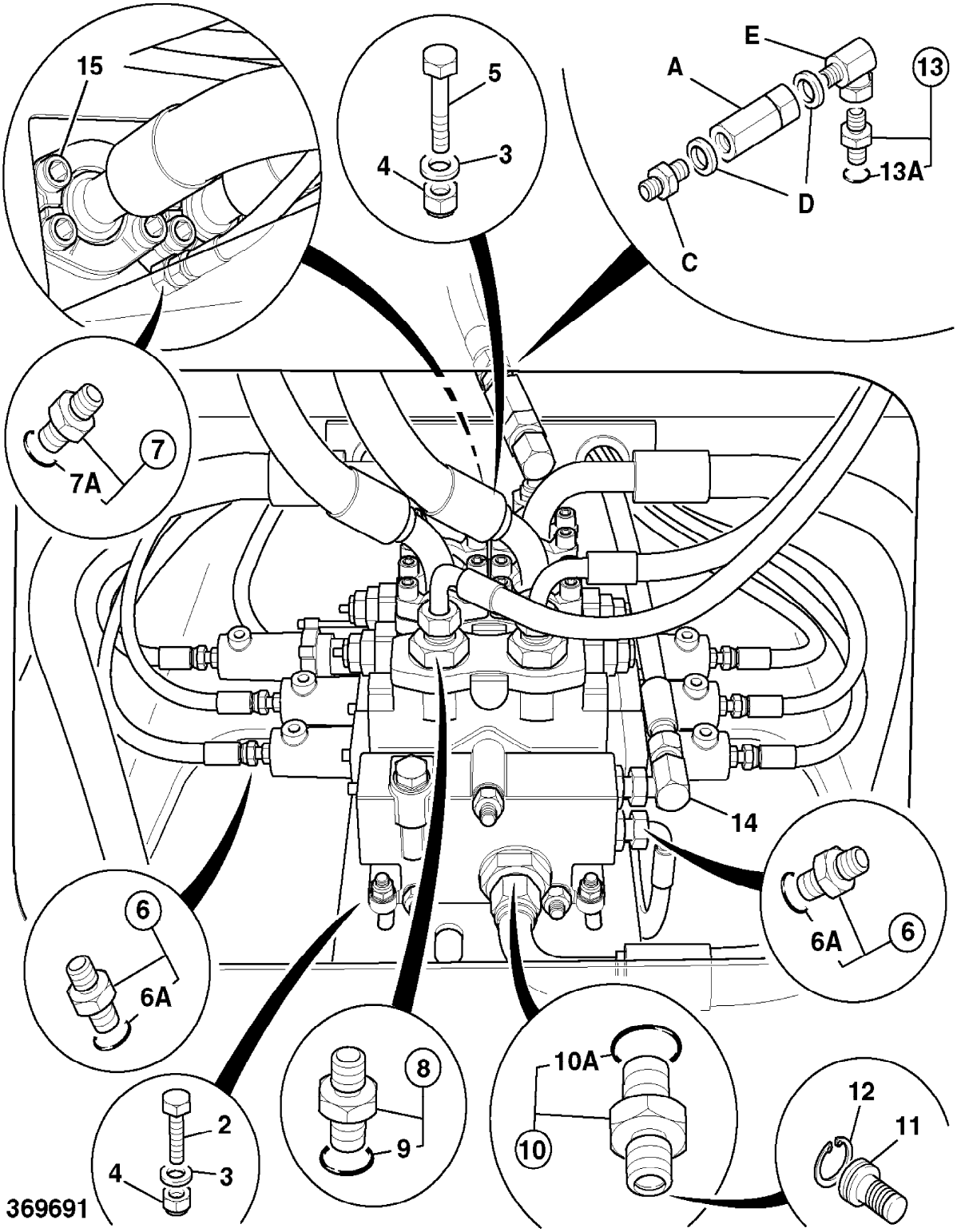
15
5
4
3
E
A
13
13A
D
C
7
7A
14
6
6A
8
9
10A
10
12
11
2
4
3
369691

9802/2740 E3-2-3 VALVE COMPONENTS, 25/213400,3 SPOOL ZX

Item	Part no.	Change No.	Description	Remarks	Usage code	Qty
0A	25/213400		Valve, assembly, 3 spool Z bar			1
1	998/10401		:Kit, tie rod			1
2	25/202801		:Body, assembly, inlet			1
3	25/222091		::Plug, with seal			1
4	25/221558		::Valve, clipper relief			1
4A	25/222160		:::Kit, seal			1
5	25/220594		:Valve, section, priority steer	Priority steer section, see index E3		1
6	25/220595		:Valve, section, lift			1
6A	25/221948		:Spool, main, lift, 426 436			1
7	25/976704		::Valve, anti cav			1
7A	25/222116		:::Kit, seal, ant-cav			1
8	25/977706		::Valve, relief, 5050 PSI-349 BAR			1
8A	25/976601		:::Kit-seal			1
9	25/222092		::Plug, with o ring			1
10	25/221186		::Spool, load check			1
11	814/10001		::Spring			1
12	25/220596		::Housing, primary, shuttle			1
13	25/997204		::Plug, assembly			1
14	25/971201		::Ball, secondary shuttle			1
15	25/971233		::Plug, expansion			1
16	25/222161		::Housing, actuator			2
17	25/222162		::Capscrew, socket head			2
18	25/222163		::Capscrew, socket head			2
19	25/971247		::Washer			2
20	25/971244		::Nut			2
21	25/221843		::Retainer, spring			2
22	25/221177		::Spring			2
23	25/222118		::Stud, spool connecting			1
24	25/971242		::Retainer, spring			3
25	25/222119		::Retainer, spring			1
26	25/971265		::Spring			1
27	25/222120		::Spacer			1
28	25/971216		::Coupling			1
29	25/222164		::Housing, actuator			1
30	25/987602		:Valve, section, bucket			1
31	25/997709		::Valve, relief assembly, anti cav (3600)			2
31A	25/976601		:::Kit-seal			1

33	25/222092		::Plug, with o ring			1
34	25/221303		::Spool, compensating			1
35	25/221178		::Spring, compensator			1
36	25/221179		::Spring, compensator, inner			1
37	25/997219		::Housing, primary shuttle			1
38	25/997204		::Plug, assembly			1
39	25/971201		::Ball, secondary shuttle			1
40	25/971233		::Plug, expansion			1
41	25/971264		::Housing, actuator			2
42	25/971246		::Screw			4
44	25/971247		::Washer			4
45	25/971244		::Nut			2
46	25/971242		::Retainer, spring			4
47	25/222121		::Spring			2
48	25/222122		::Stud, spool connecting			1
49	25/971216		::Coupling			1
50	25/994200		:Valve, section, auxiliary			1
51	25/971254		::Plug			2
52	25/222092		::Plug, with o ring			1
53	25/222303		::Unit, regulating			1
54	25/221178		::Spring, compensator			1
55	25/997219		::Housing, primary shuttle			1
56	25/997204		::Plug, assembly			1
57	25/971201		::Ball, secondary shuttle			1
58	25/971233		::Plug, expansion			1
59	25/971264		::Housing, actuator			2
60	25/971246		::Screw			4
61	25/971247		::Washer			4
62	25/971244		::Nut			2
63	25/971242		::Retainer, spring			4
64	25/222121		::Spring			2
65	25/222122		::Stud, spool connecting			1
66	25/971216		::Coupling			1
89	25/220593		:Cover, end c/w pressure, reducing valve			1
90	25/971230		::Plug, c/w O Ring			1
91	25/971213		::Spring			1
92	25/971231		::Screw, cap			1
93	25/971212		::Washer			1
94	25/971232		::Spool, regulator			1
95	25/971233		::Plug, expansion			4
96A	998/10280		:Kit, seal for 1 section, between sections			1
96B	25/987605		:Kit, sealing, inlet			1
96C	998/10404		:Kit, sealing			1
96D	25/202001		:Kit, section, sealing			1

96E	25/202001		:Kit, section, sealing			1
96F	25/987606		:Kit, seal, end cover			1

Machine groups

Details

Machine group	From serial no.	To serial no.
.426		
426		

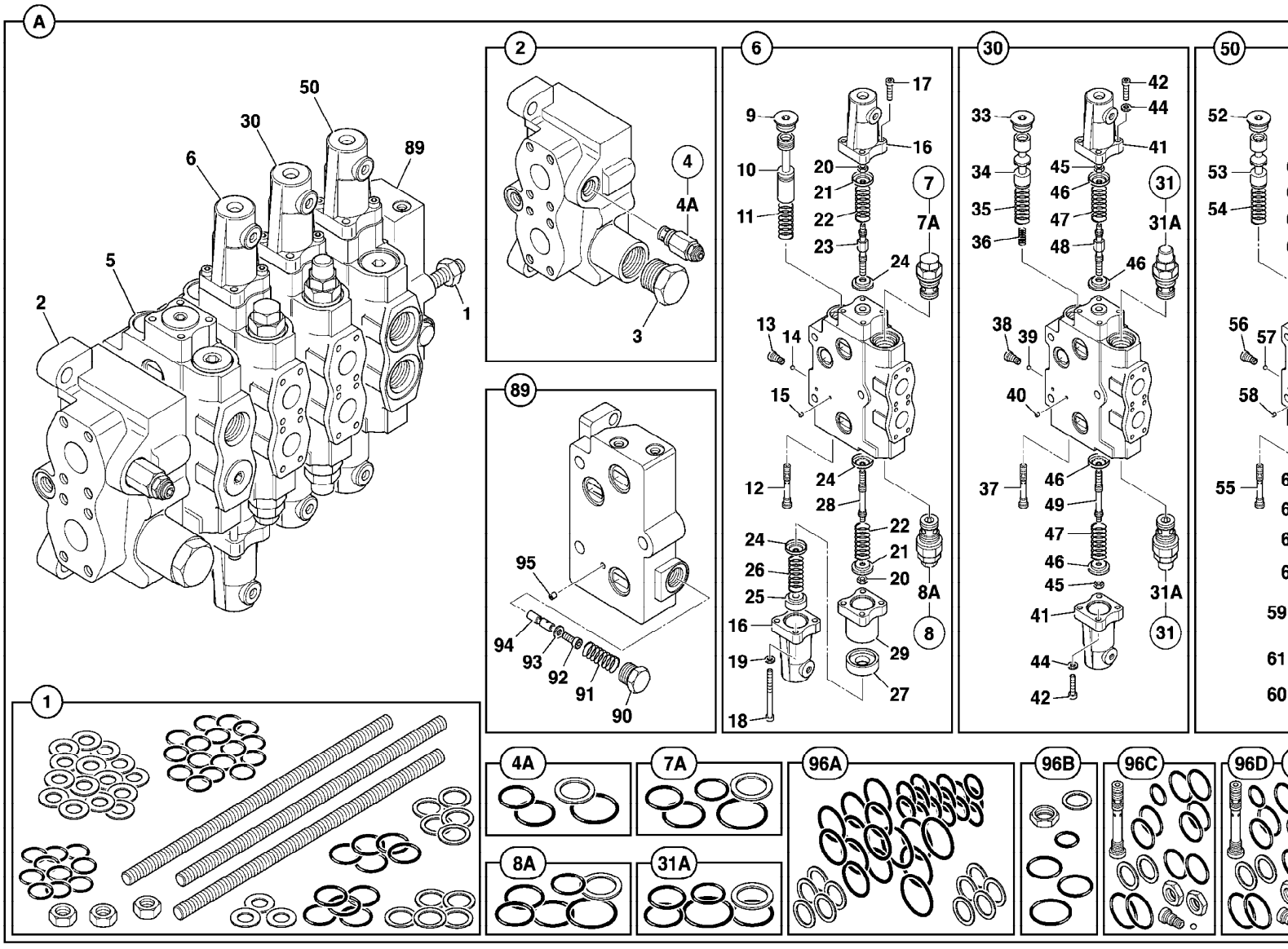

9802/2740 E3-20-1 FILTER, HYDRAULIC

Illustration Machines Top of catalogue

Item	Part no.	Change No.	Description	Remarks	Usage code	Qty
1	581/18071		Filter, assembly, hydraulic			1
2	990/00090		:Element, filter, 10 micron			1
3	32/100303		:Bridge			1
4	581/07001		:Seal, mounting			1
5	581/07006	Superseded	:Nut			4
	32/925294		:Nut, flange			4
5A	581/07005		:Stud			4
6	581/07003		:O Ring			1
7	32/100304		:O Ring			1
8	32/904301		:Seal, hydraulic filter			1
9	581/07004		:Cover			1
10	581/07002		:Housing, filter			1
11	32/925358		:Spring			1
12	32/100307		:Valve, by-pass, assembly			1
13	1420/0008Z		:Washer, Plain M10			4
14	1315/0407Z		:Bolt, M10x25			4
15	581/07008		:Gasket, filter element			1

Machine groups

Details

Machine group	From serial no.	To serial no.
.426		
426		

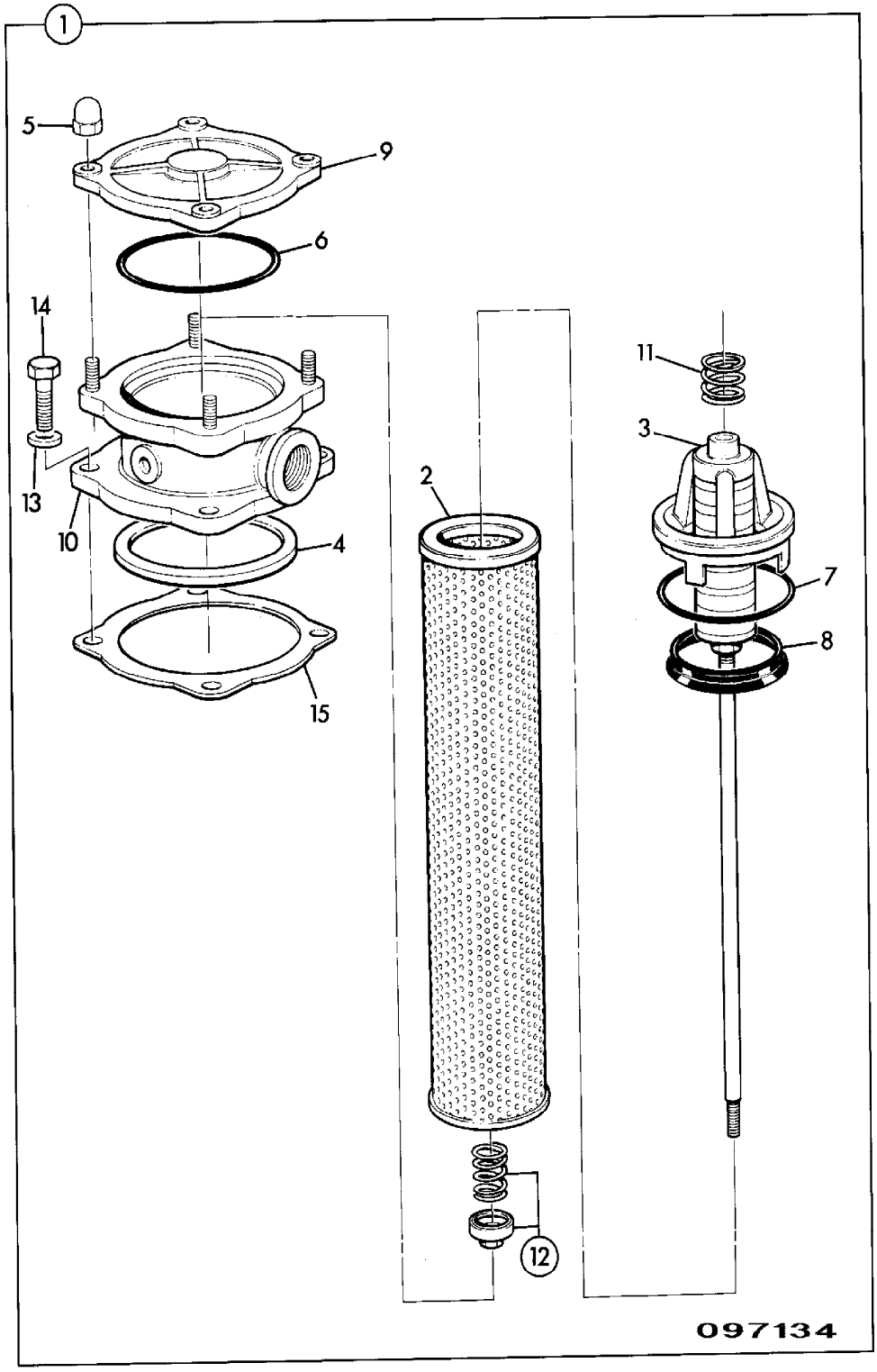
1
5
9
6
14
13
10
4
15
2
11
3
7
8
12
097134

9802/2740 E3-20-5 LUBRICANTS & FILTERS

Item	Part no.	Change No.	Description	Remarks	Usage code	Qty
1	4001/1801		Oil, EP Engine Oil 15W40, 5 Litres	Engine Oil-Service		1
	4001/1802		Oil, EP Engine oil 15W40, 25 Litres			1
	4001/1803		Oil, EP Engine oil 15W40, 200 Litres			1
2	4000/2302		Fluid, HP Universal ATF 15, 25 Litres	Transmission oil		1
	4000/2303		Fluid, HP Universal ATF 15, 200 Litres			1
3	4002/1601		Fluid, hydraulic, EP46, 5 litres	Hydraulic oil		1
	4002/1602		Fluid, hydraulic, EP46, 25 litres			1
	4002/1603		Fluid, hydraulic, EP46, 200 litres			1
4	4003/2006		Grease, HP 12.5kg	High pressure grease		1
	4003/2005		Grease, HP 50kg			1
	4003/2017		Grease, HP, 400g x 24			1
6	4006/0102		Fluid, anti-freeze, 5 litre			1
	4006/0103		Fluid, anti-freeze, 25 Ltr			1
	4006/0104		Fluid, anti-freeze, 200 Ltr			1
7	4000/1201A		Oil, LS gear, 5 litres			1
	4000/1202		Oil, LS gear, 25 litres			1
	4000/1202		Oil, LS gear, 25 litres			1
8	581/18071		Filter, assembly, hydraulic			1
9	990/00090		:Element, filter, 10 micron			1

Machine groups

Details

Machine group	From serial no.	To serial no.
.426		
426		

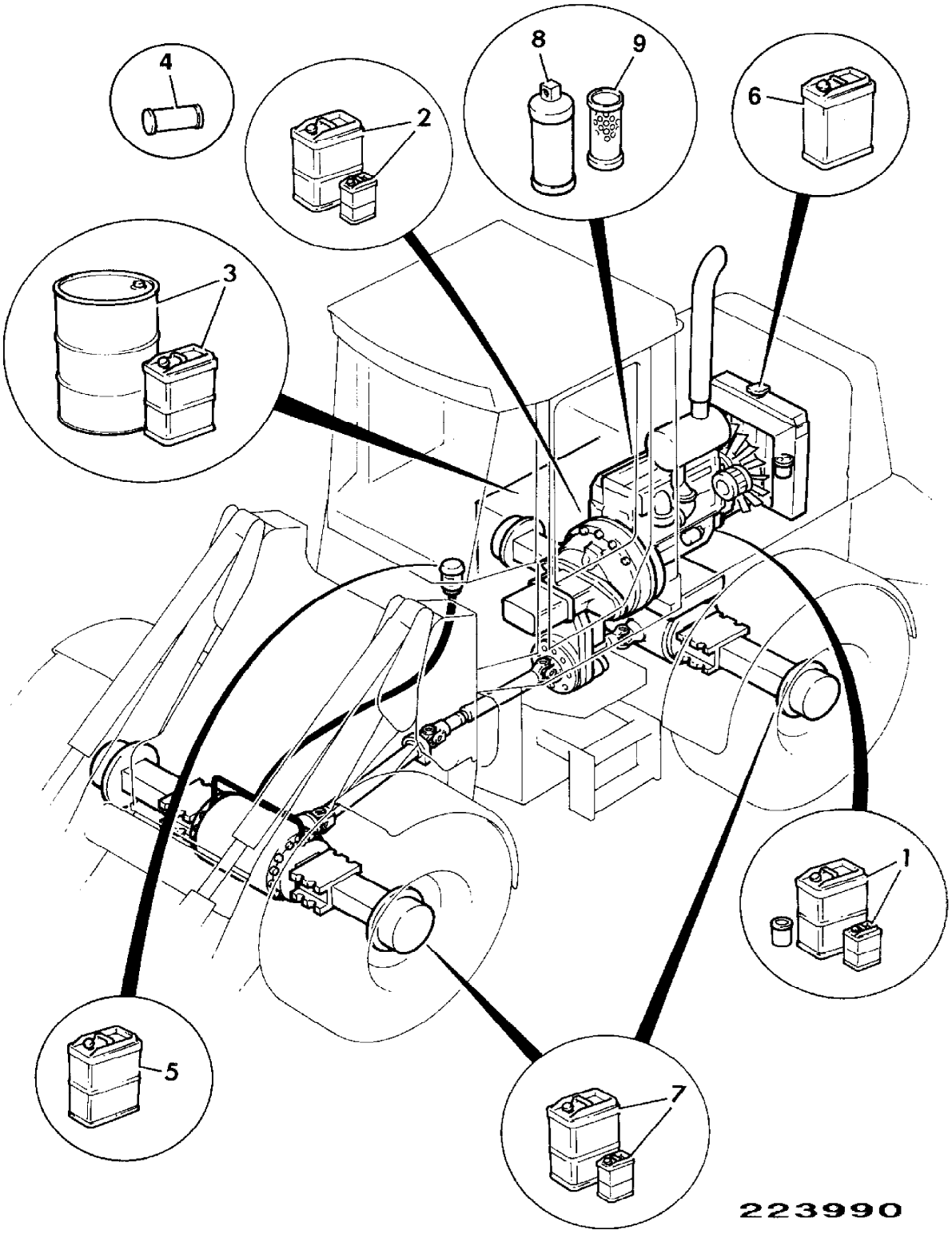
4
2
8
9
6
3
1
5
7
223990

9802/2740 E3-25-1 AUX. SERVICE, AUX. RELIEF VALVES

Item	Part no.	Change No.	Description	Remarks	Usage code	Qty
1	25/987403		Valve, aux. relief			1
2	25/976601		Kit-seal			1

Machine groups

Details

Machine group	From serial no.	To serial no.
.426		
426		

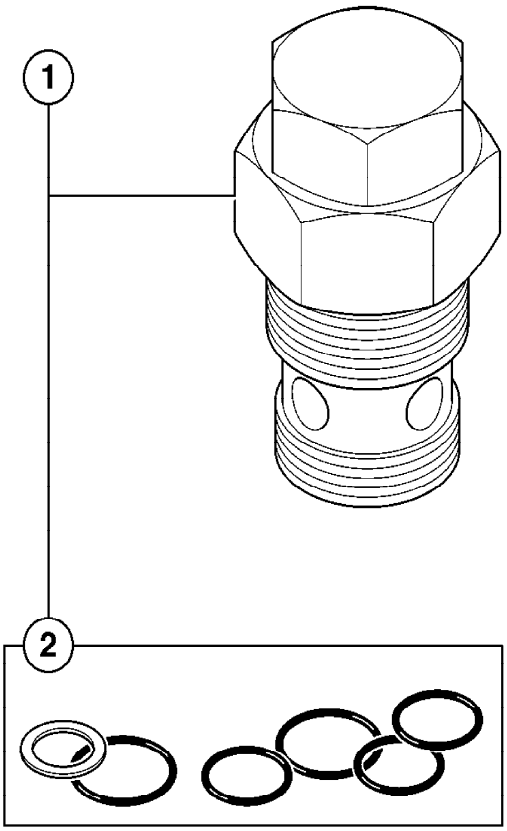

796650

9802/2740 E3-3-1 VALVE ASSEMBLY, 25/213600,3 SPOOL,HT

Item	Part no.	Change No.	Description	Remarks	Usage code	Qty
1	25/213600		Valve, assembly, 3 spool			1
2	25/220594		:Valve, section, priority steer			1
3	25/220595		:Valve, section, lift			1
4	25/201901		:Valve, section, bucket			1
5	25/994200		:Valve, section, auxiliary			1
6	25/220593		:Cover, end c/w pressure, reducing valve			1
7	25/202801		:Body, assembly, inlet			1
8	998/10280		Kit, seal for 1 section, between sections			1
9	25/202001		Kit, section, sealing			1
10	25/987605		Kit, sealing, inlet			1
11	25/987606		Kit, seal, end cover			1
12	998/10401		Kit, tie rod			1

Machine groups

Details

Machine group	From serial no.	To serial no.
.426		
426		

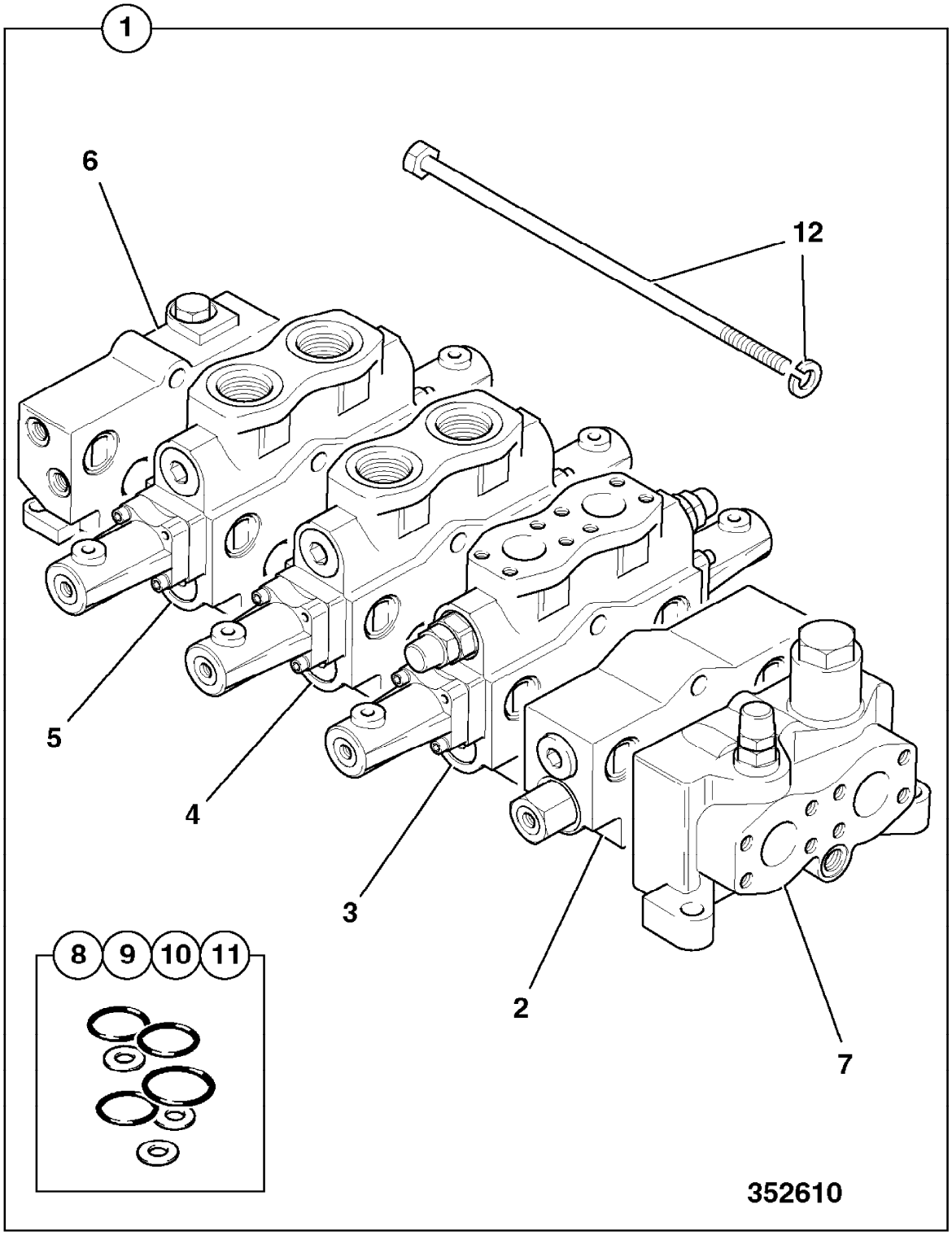
1
6
12
5
4
3
2
7
8
9
10
11
352610

9802/2740 E3-3-2 VALVE AND ADAPTERS, 25/213600,3 SPOOL,HT

Item	Part no.	Change No.	Description	Remarks	Usage code	Qty
0A	25/905500		Valve, check			1
0C	1604/0004		Adapter, male/male			1
0D	1406/0018		Seal, bonded, 1/2" BSP			2
0E	816/40016		Adapter, 90			1
1	25/213600		Valve, assembly, 3 spool			1
2	1315/0409Z		Screw, hex. head			2
3	1420/0008Z		Washer, Plain M10			4
4	1370/0303Z		Nut, lock, M10			4
5	1315/3412Z		Bolt	Valve rear to Bracket		2
6	1620/0001		Adapter			9
7	1620/0002		Adapter			1
8	816/15048		Adapter			2
9	2401/0510		O Ring			2
10	816/15175		Adapter			1
10A	2401/0511		:O Ring			1
11	25/993700		Valve, check			1
12	821/00405		Circlip			1
13	816/17061		Adapter			1
14	816/00464		Adapter, elbow - male/female			1
15	1391/3509D		Capscrew, M12 X 35LG			8
16	817/03860		Decal, loader valve			1

Machine groups

Details

Machine group	From serial no.	To serial no.
.426		
426		

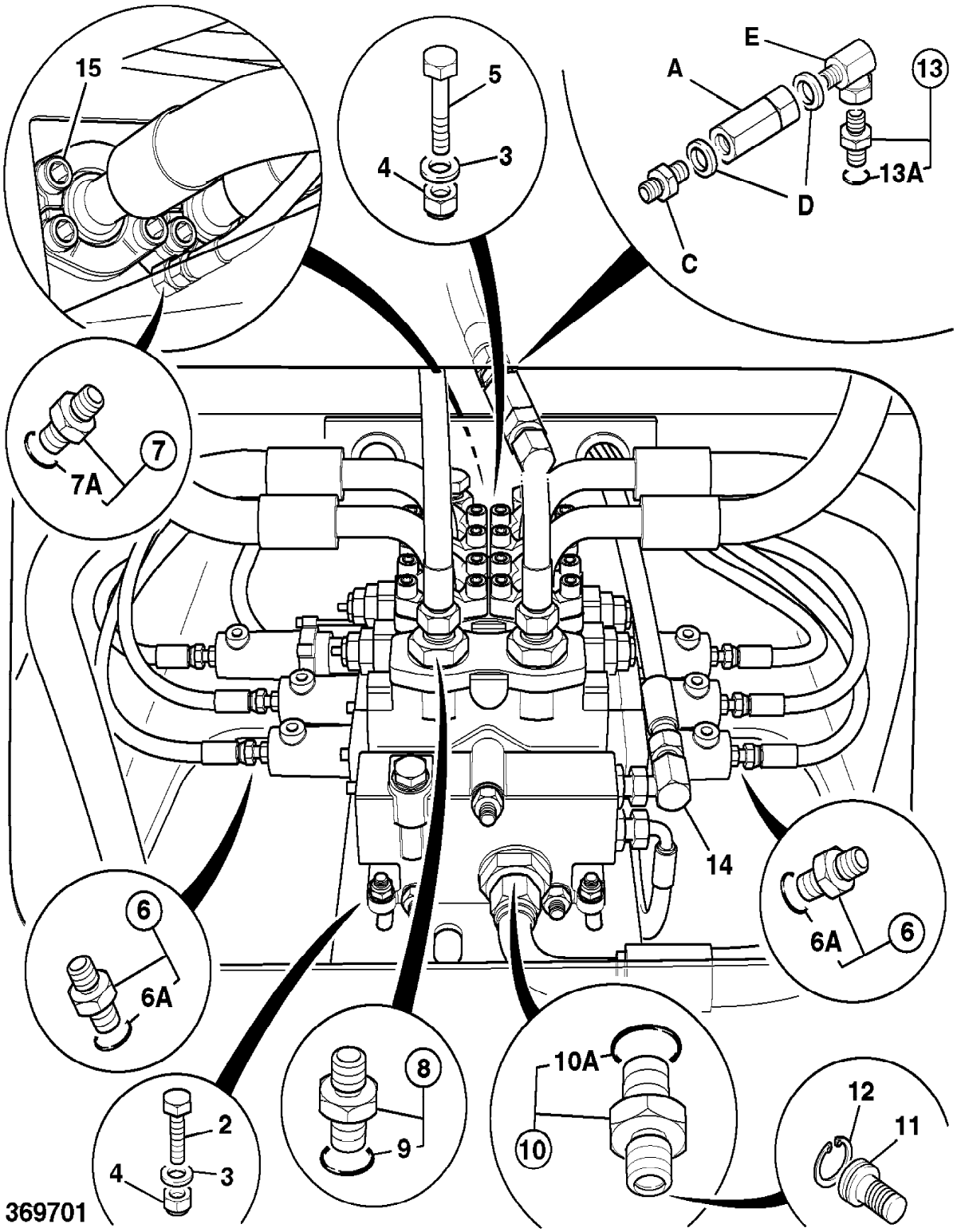
15
5
4
3
E
A
13
13A
D
C
7
7A
14
6
6A
6
6A
8
9
10A
10
12
11
2
4
3
369701

9802/2740 E3-3-3 VALVE COMPONENTS, 25/213600,3 SPOOL HT

Item	Part no.	Change No.	Description	Remarks	Usage code	Qty
0A	25/213600		Valve, assembly, 3 spool			1
1	998/10401		:Kit, tie rod			1
2	25/202801		:Body, assembly, inlet			1
3	25/222091		::Plug, with seal			1
4	25/221558		::Valve, clipper relief			1
4A	25/222160		:::Kit, seal			1
5	25/220594		:Valve, section, priority steer	Priority steer section, see index E3		1
6	25/220595		:Valve, section, lift			1
6A	25/221948		:Spool, main, lift, 426 436			1
7	25/976704		::Valve, anti cav			1
7A	25/222116		:::Kit, seal, ant-cav			1
8	25/977706		::Valve, relief, 5050 PSI-349 BAR			1
8A	25/976601		:::Kit-seal			1
9	25/222092		::Plug, with o ring			1
10	25/221186		::Spool, load check			1
11	814/10001		::Spring			1
12	25/220596		::Housing, primary, shuttle			1
13	25/997204		::Plug, assembly			1
14	25/971201		::Ball, secondary shuttle			1
15	25/971233		::Plug, expansion			1
16	25/222161		::Housing, actuator			2
17	25/222162		::Capscrew, socket head			2
18	25/222163		::Capscrew, socket head			2
19	25/971247		::Washer			2
20	25/971244		::Nut			2
21	25/221843		::Retainer, spring			2
22	25/221177		::Spring			2
23	25/222118		::Stud, spool connecting			1
24	25/971242		::Retainer, spring			3
25	25/222119		::Retainer, spring			1
26	25/971265		::Spring			1
27	25/222120		::Spacer			1
28	25/971216		::Coupling			1
29	25/222164		::Housing, actuator			1
30	25/201901		:Valve, section, bucket			1
31	25/201902		::Valve, relief, 1800 PSI-125 BAR			1
31A	25/976601		:::Kit-seal			1

32	25/997709		::Valve, relief assembly, anti cav (3600)			1
32A	25/976601		:::Kit-seal			1
33	25/222092		::Plug, with o ring			1
34	25/221303		::Spool, compensating			1
35	25/221178		::Spring, compensator			1
36	25/221179		::Spring, compensator, inner			1
37	25/997219		::Housing, primary shuttle			1
38	25/997204		::Plug, assembly			1
39	25/971201		::Ball, secondary shuttle			1
40	25/971233		::Plug, expansion			1
41	25/971264		::Housing, actuator			2
42	25/971246		::Screw			4
43	25/971247		::Washer			4
44	25/971244		::Nut			2
45	25/221843		::Retainer, spring			2
46	25/971242		::Retainer, spring			4
47	25/221177		::Spring			2
48	25/222122		::Stud, spool connecting			1
49	25/971216		::Coupling			1
50	25/994200		:Valve, section, auxiliary			1
51	25/971254		::Plug			2
52	25/222092		::Plug, with o ring			1
53	25/222303		::Unit, regulating			1
54	25/221178		::Spring, compensator			1
55	25/997219		::Housing, primary shuttle			1
56	25/997204		::Plug, assembly			1
57	25/971201		::Ball, secondary shuttle			1
58	25/971233		::Plug, expansion			1
59	25/971264		::Housing, actuator			2
60	25/971246		::Screw			4
61	25/971247		::Washer			4
62	25/971244		::Nut			2
63	25/971242		::Retainer, spring			4
64	25/222121		::Spring			2
65	25/222122		::Stud, spool connecting			1
66	25/971216		::Coupling			1
89	25/220593		:Cover, end c/w pressure, reducing valve			1
90	25/971230		::Plug, c/w O Ring			1
91	25/971213		::Spring			1
92	25/971231		::Screw, cap			1
93	25/971212		::Washer			1
94	25/971232		::Spool, regulator			1
95	25/971233		::Plug, expansion			4
96A	998/10280		:Kit, seal for 1 section, between sections			1

96B	25/987605		:Kit, sealing, inlet			1
96C	998/10404		:Kit, sealing			1
96D	25/202001		:Kit, section, sealing			1
96E	25/202001		:Kit, section, sealing			1
96F	25/987606		:Kit, seal, end cover			1

Machine groups

Details

Machine group	From serial no.	To serial no.
.426		
426		

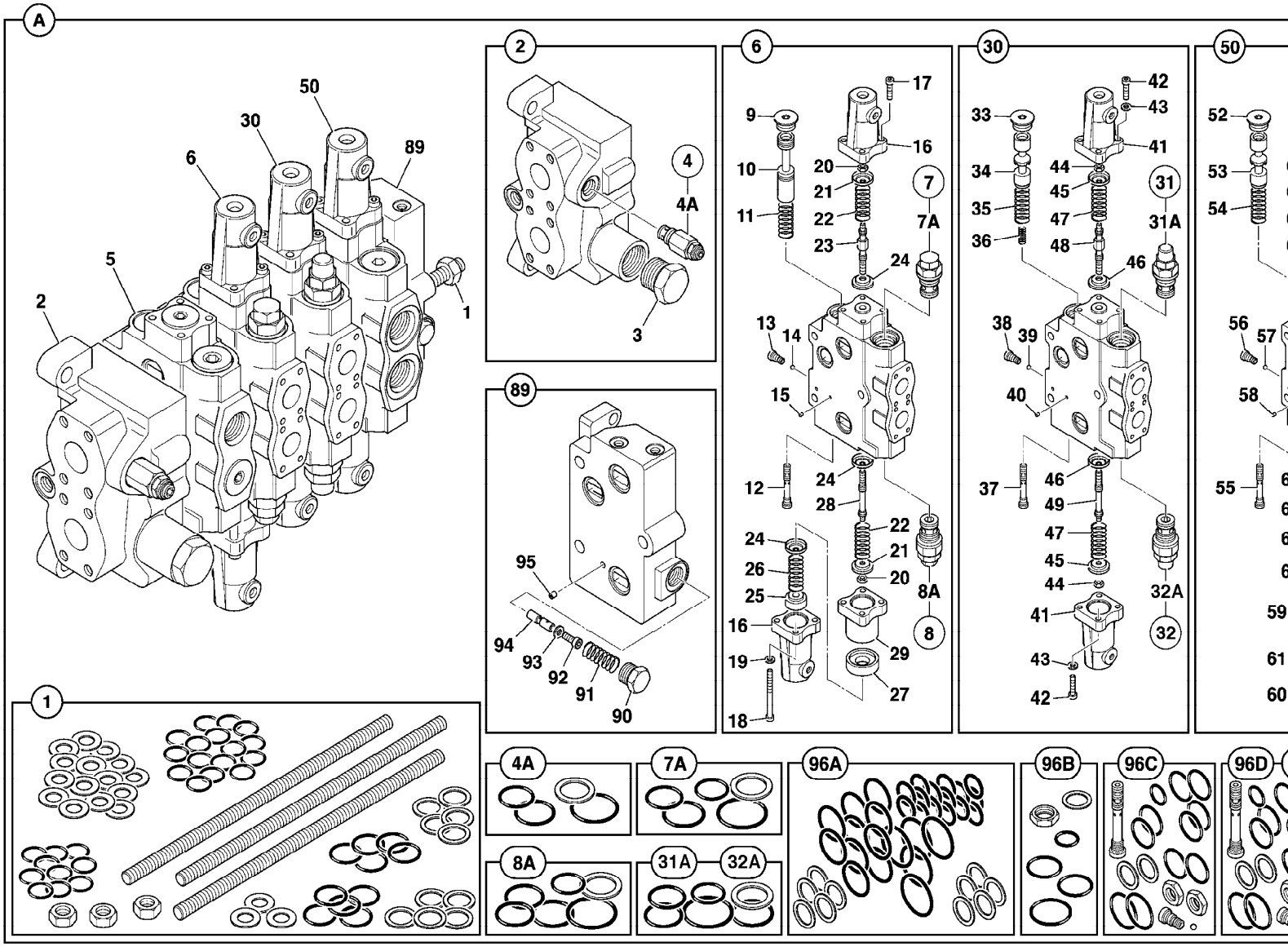

9802/2740 E3-3-4 VALVE ASSEMBLY, 3 SPOOL & ADAPTERS, HI-LIFT

Item	Part no.	Change No.	Description	Remarks	Usage code	Qty
0A	25/905500		Valve, check			1
0C	1604/0004		Adapter, male/male			1
0D	1406/0018		Seal, bonded, 1/2" BSP			2
0E	816/40016		Adapter, 90			1
1	25/213600		Valve, assembly, 3 spool			1
2	1315/0409Z		Screw, hex. head			2
3	1420/0008Z		Washer, Plain M10			4
4	1370/0303Z		Nut, lock, M10			4
5	1315/3412Z		Bolt	Valve rear to Bracket		2
6	1620/0001		Adapter			9
7	1620/0002		Adapter			1
8	816/15048		Adapter			2
9	2401/0510		O Ring			2
10	816/15175		Adapter			1
10A	2401/0511		:O Ring			1
11	25/993700		Valve, check			1
12	821/00405		Circlip			1
13	816/17061		Adapter			1
14	816/00464		Adapter, elbow - male/female			1
15	1391/3509D		Capscrew, M12 X 35LG			8
16	25/210400		Restrictor			1
17	816/13144		Adapter, m/f			1
18	816/15190		Adapter			1
19	823/00474		Washer, dowty			2

Machine groups

Details

Machine group	From serial no.	To serial no.
.426		
426		

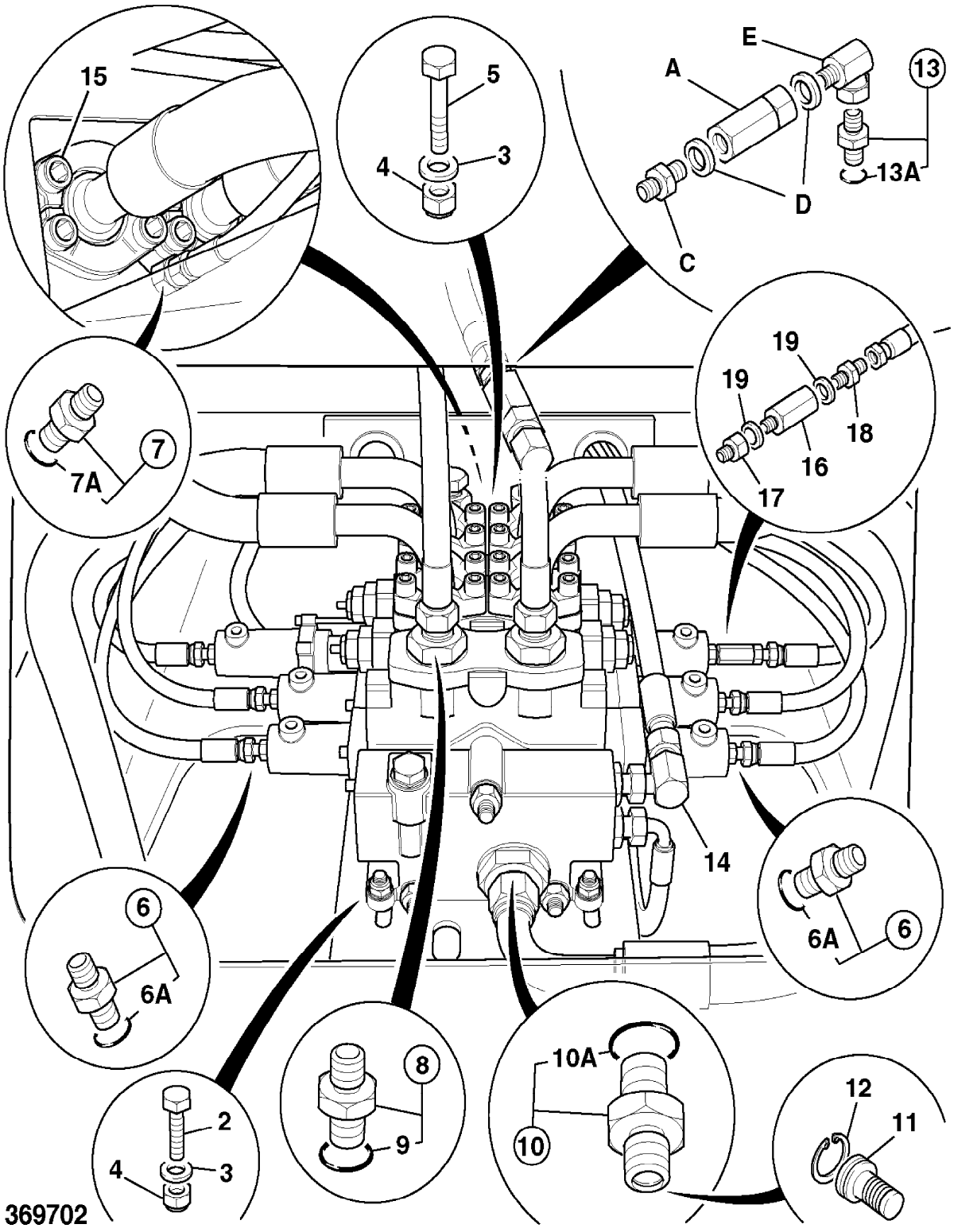
15
5
4
3
E
A
13
13A
D
C
19
19
18
16
17
7
7A
14
6
6A
6
6A
8
9
10A
10
12
11
2
4
3
369702

9802/2740 E3-4-1 VALVE ASSEMBLY, 25/213700,4 SPOOL,HT

Item	Part no.	Change No.	Description	Remarks	Usage code	Qty
1	25/213700		Valve, assembly, 4 spool			1
2	25/220594		:Valve, section, priority steer			1
3	25/220595		:Valve, section, lift			1
4	25/201901		:Valve, section, bucket			1
4A	25/221177		:Spring			2
5	25/994200		:Valve, section, auxiliary			1
5A	25/994200		:Valve, section, auxiliary			1
6	25/220593		:Cover, end c/w pressure, reducing valve			1
7	25/202801		:Body, assembly, inlet			1
8	998/10280		Kit, seal for 1 section, between sections			1
9	25/202001		Kit, section, sealing			1
10	25/987605		Kit, sealing, inlet			1
11	25/987606		Kit, seal, end cover			1
12	998/10402		Kit, 5 section, (4 spool)			1
50	817/17357		Decal, loader valve			1

Machine groups

Details

Machine group	From serial no.	To serial no.
.426		
426		

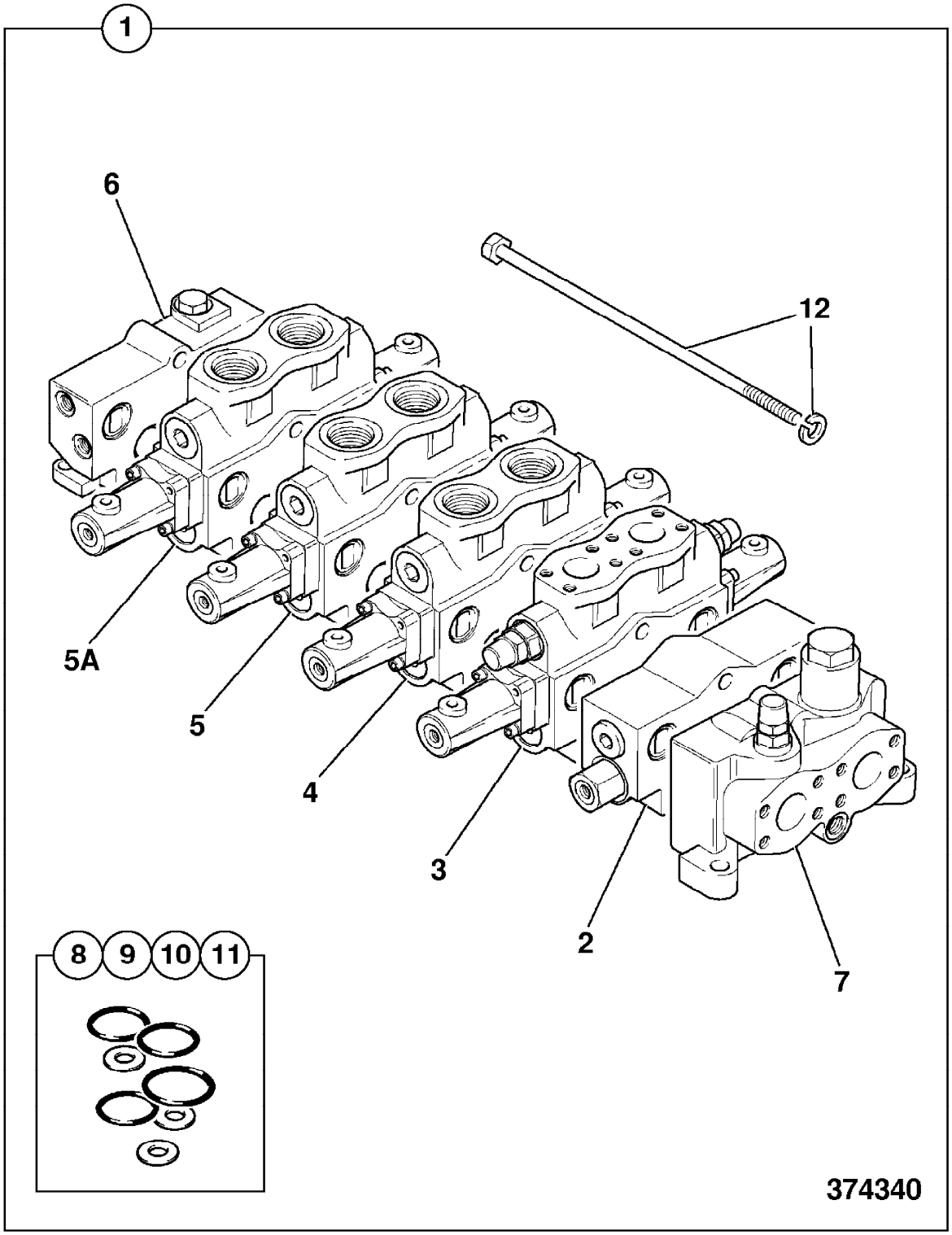
1
6
12
5A
5
4
3
2
7
8
9
10
11
374340

9802/2740 E3-4-2 VALVE AND ADAPTERS, 25/213700,4 SPOOL,HT

Illustration Machines Top of catalogue

Item	Part no.	Change No.	Description	Remarks	Usage code	Qty
1	25/213700		Valve, assembly, 4 spool			1
2	1315/0409Z		Screw, hex. head			2
3	1420/0008Z		Washer, Plain M10			4
4	1370/0303Z		Nut, lock, M10			4
5	1315/3412Z		Bolt			2
6	1620/0001		Adapter			11
7	1620/0002		Adapter			1
8	816/15048		Adapter			4
9	2401/0510		O Ring			4
10	816/15175		Adapter			1
11	25/993700		Valve, check			1
12	821/00405		Circlip			1
13	816/17061		Adapter			1
14	817/19928		Decal, 4 spool, HT			1

Machine groups

Details

Machine group	From serial no.	To serial no.
.426		
426		

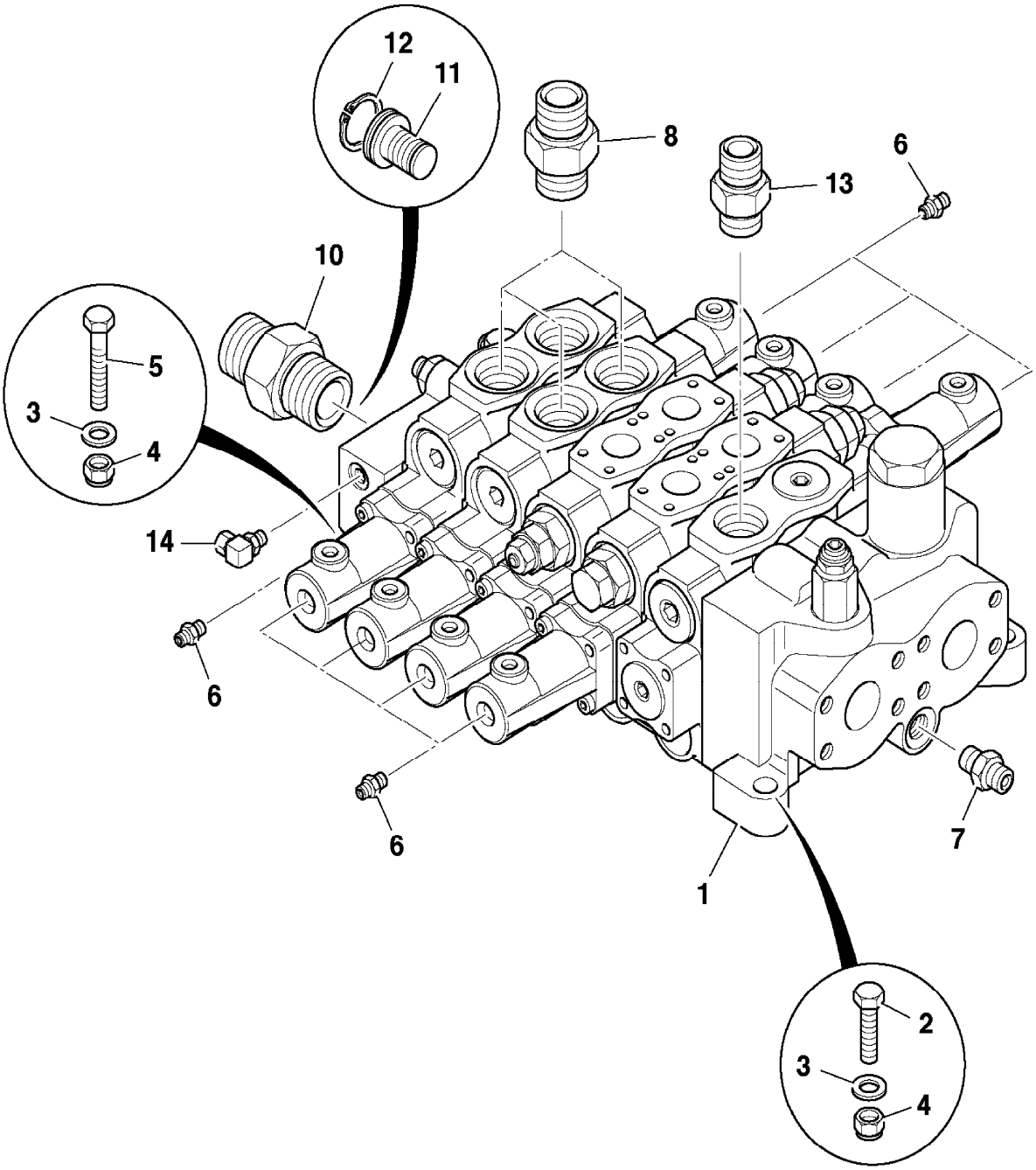

797080

9802/2740 E3-4-3 VALVE COMPONENTS, 25/213700,4 SPOOL HT

Item	Part no.	Change No.	Description	Remarks	Usage code	Qty
0A	25/213700		Valve, assembly, 4 spool			1
1	998/10402		:Kit, 5 section, (4 spool)			1
2	25/202801		:Body, assembly, inlet			1
3	25/222091		::Plug, with seal			1
4	25/221558		::Valve, clipper relief			1
4A	25/222160		:::Kit, seal			1
5	25/220594		:Valve, section, priority steer	Priority steer section, see index E3		1
6	25/220595		:Valve, section, lift			1
6A	25/221948		:Spool, main, lift, 426 436			1
7	25/976704		::Valve, anti cav			1
7A	25/222116		:::Kit, seal, ant-cav			1
8	25/977706		::Valve, relief, 5050 PSI-349 BAR			1
8A	25/976601		:::Kit-seal			1
9	25/222092		::Plug, with o ring			1
10	25/221186		::Spool, load check			1
11	814/10001		::Spring			1
12	25/220596		::Housing, primary, shuttle			1
13	25/997204		::Plug, assembly			1
14	25/971201		::Ball, secondary shuttle			1
15	25/971233		::Plug, expansion			1
16	25/222161		::Housing, actuator			2
17	25/222162		::Capscrew, socket head			2
18	25/222163		::Capscrew, socket head			2
19	25/971247		::Washer			2
20	25/971244		::Nut			2
21	25/221843		::Retainer, spring			2
22	25/221177		::Spring			2
23	25/222118		::Stud, spool connecting			1
24	25/971242		::Retainer, spring			3
25	25/222119		::Retainer, spring			1
26	25/971265		::Spring			1
27	25/222120		::Spacer			1
28	25/971216		::Coupling			1
29	25/222164		::Housing, actuator			1
30	25/201901		:Valve, section, bucket			1
31	25/201902		::Valve, relief, 1800 PSI-125 BAR			1
31A	25/976601		:::Kit-seal			1

32	25/997709		::Valve, relief assembly, anti cav (3600)			1
32A	25/976601		:::Kit-seal			1
33	25/222092		::Plug, with o ring			1
34	25/221303		::Spool, compensating			1
35	25/221178		::Spring, compensator			1
36	25/221179		::Spring, compensator, inner			1
37	25/997219		::Housing, primary shuttle			1
38	25/997204		::Plug, assembly			1
39	25/971201		::Ball, secondary shuttle			1
40	25/971233		::Plug, expansion			1
41	25/971264		::Housing, actuator			2
42	25/971246		::Screw			4
43	25/971247		::Washer			4
44	25/971244		::Nut			2
45	25/221843		::Retainer, spring			2
46	25/971242		::Retainer, spring			4
47	25/221177		::Spring			2
48	25/222122		::Stud, spool connecting			1
49	25/971216		::Coupling			1
50	25/994200		:Valve, section, auxiliary			2
51	25/971254		::Plug			2
52	25/222092		::Plug, with o ring			1
53	25/222303		::Unit, regulating			1
54	25/221178		::Spring, compensator			1
55	25/997219		::Housing, primary shuttle			1
56	25/997204		::Plug, assembly			1
57	25/971201		::Ball, secondary shuttle			1
58	25/971233		::Plug, expansion			1
59	25/971264		::Housing, actuator			2
60	25/971246		::Screw			4
61	25/971247		::Washer			4
62	25/971244		::Nut			2
63	25/971242		::Retainer, spring			4
64	25/222121		::Spring			2
65	25/222122		::Stud, spool connecting			1
66	25/971216		::Coupling			1
89	25/220593		:Cover, end c/w pressure, reducing valve			1
90	25/971230		::Plug, c/w O Ring			1
91	25/971213		::Spring			1
92	25/971231		::Screw, cap			1
93	25/971212		::Washer			1
94	25/971232		::Spool, regulator			1
95	25/971233		::Plug, expansion			4
96A	998/10280		:Kit, seal for 1 section, between sections			1

96B	25/987605		:Kit, sealing, inlet			1
96C	998/10404		:Kit, sealing			1
96D	25/202001		:Kit, section, sealing			1
96E	25/202001		:Kit, section, sealing			1
96F	25/987606		:Kit, seal, end cover			1

Machine groups

Details

Machine group	From serial no.	To serial no.
.426		
426		

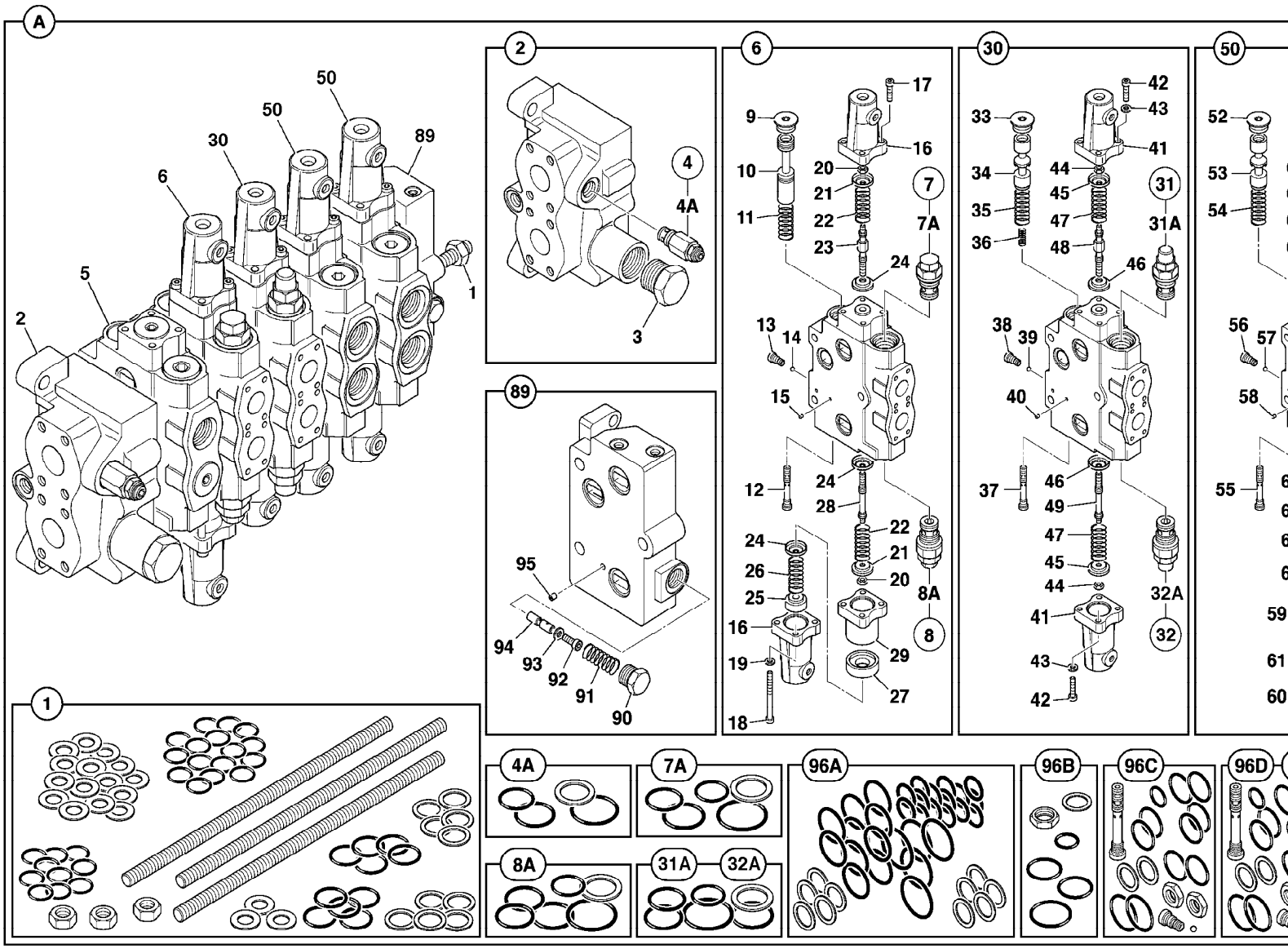

9802/2740 E3-5-1 VALVE COMPONENTS, 25/220961,3 SPOOL ZX

Item	Part no.	Change No.	Description	Remarks	Usage code	Qty
0A	25/220961		Valve, assembly, 3 spool, with solenoids			1
1	998/10401		:Kit, tie rod			1
2	25/202801		:Body, assembly, inlet			1
3	25/222091		::Plug, with seal			1
4	25/221558		::Valve, clipper relief			1
4A	25/222160		:::Kit, seal			1
5	25/220594		:Valve, section, priority steer	Priority steer section see Index E3		1
6	25/220595		:Valve, section, lift			1
6A	25/221948		:Spool, main, lift, 426 436			1
7	25/976704		::Valve, anti cav			1
7A	25/222116		:::Kit, seal, ant-cav			1
8	25/977706		::Valve, relief, 5050 PSI-349 BAR			1
8A	25/976601		:::Kit-seal			1
9	25/222092		::Plug, with o ring			1
10	25/221186		::Spool, load check			1
11	25/971208		::Spring, compensator			1
12	25/220596		::Housing, primary, shuttle			1
13	25/997204		::Plug, assembly			1
14	25/221840		::Ball, secondary shuttle			1
15	25/971233		::Plug, expansion			1
16	25/222161		::Housing, actuator			2
17	25/222162		::Capscrew, socket head			2
18	25/222163		::Capscrew, socket head			2
19	25/971247		::Washer			2
20	25/971244		::Nut			2
21	25/221843		:::Retainer, spring			2
22	25/221177		::Spring			2
23	25/222118		::Stud, spool connecting			1
24	25/971242		::Retainer, spring			3
25	25/222119		::Retainer, spring			1
26	25/222165		::Housing, solenoid			1
27	25/222120		::Spacer			1
28	25/971216		::Coupling			1
29	25/222164		::Housing, actuator			1
30	25/221020		:Valve, section, shovel			1
31	25/997709		::Valve, relief assembly, anti cav (3600)			2
31A	25/976601		:::Kit-seal			1

33	25/222092		::Plug, with o ring			1
34	25/221303		::Spool, compensating			1
35	25/221178		::Spring, compensator			1
36	25/221179		::Spring, compensator, inner			1
37	25/997219		::Housing, primary shuttle			1
38	25/997204		::Plug, assembly			1
39	25/971201		::Ball, secondary shuttle			1
40	25/971232		::Spool, regulator			1
41	25/222161		::Housing, actuator			2
42	25/222162		::Capscrew, socket head			4
44	25/971244		::Nut			2
45	25/221843		::Retainer, spring			1
46	25/971242		::Retainer, spring			2
47	25/221177		::Spring			2
48	25/222122		::Stud, spool connecting			1
49	25/971216		::Coupling			1
50	25/221302		:Valve, section, aux			1
51	25/971254		::Plug			2
52	25/221842		::Valve, solenoid, pressure reducing			2
53	25/222165		::Housing, solenoid			1
54	25/222166		::Housing, solenoid			1
55	25/222167		::Capscrew, socket head			5
56	25/971247		::Washer			5
57	25/222168		::Nut, special			2
58	25/971242		::Retainer, spring			4
59	25/222121		::Spring			2
60	25/222122		::Stud, spool connecting			1
61	25/971216		::Coupling			1
62	25/222092		::Plug, with o ring			1
63	25/221303		::Spool, compensating			1
64	25/221178		::Spring, compensator			1
65	25/997219		::Housing, primary shuttle			1
66	25/997204		::Plug, assembly			1
67	25/971201		::Ball, secondary shuttle			1
68	25/971233		::Plug, expansion			1
69	25/222169		::Plug, expansion			4
89	25/221301		:Cover, end			1
90	25/971230		::Plug, c/w O Ring			1
91	25/222170		::Spring, outer			1
92	25/222171		::Capscrew, socket head			1
93	25/971212		::Washer			1
94	25/971232		::Spool, regulator			1
95	25/971232		::Spool, regulator			6
96A	998/10403		:Kit, seal, between sections			1
96B	25/987605		:Kit, sealing, inlet			1

96C	998/10404		:Kit, sealing	Includes all seals for lift section		1
96D	25/202001		:Kit, section, sealing			1
96E	25/202001		:Kit, section, sealing			1
96F	25/987606		:Kit, seal, end cover			1

Machine groups

Details

Machine group	From serial no.	To serial no.
.426		
426		

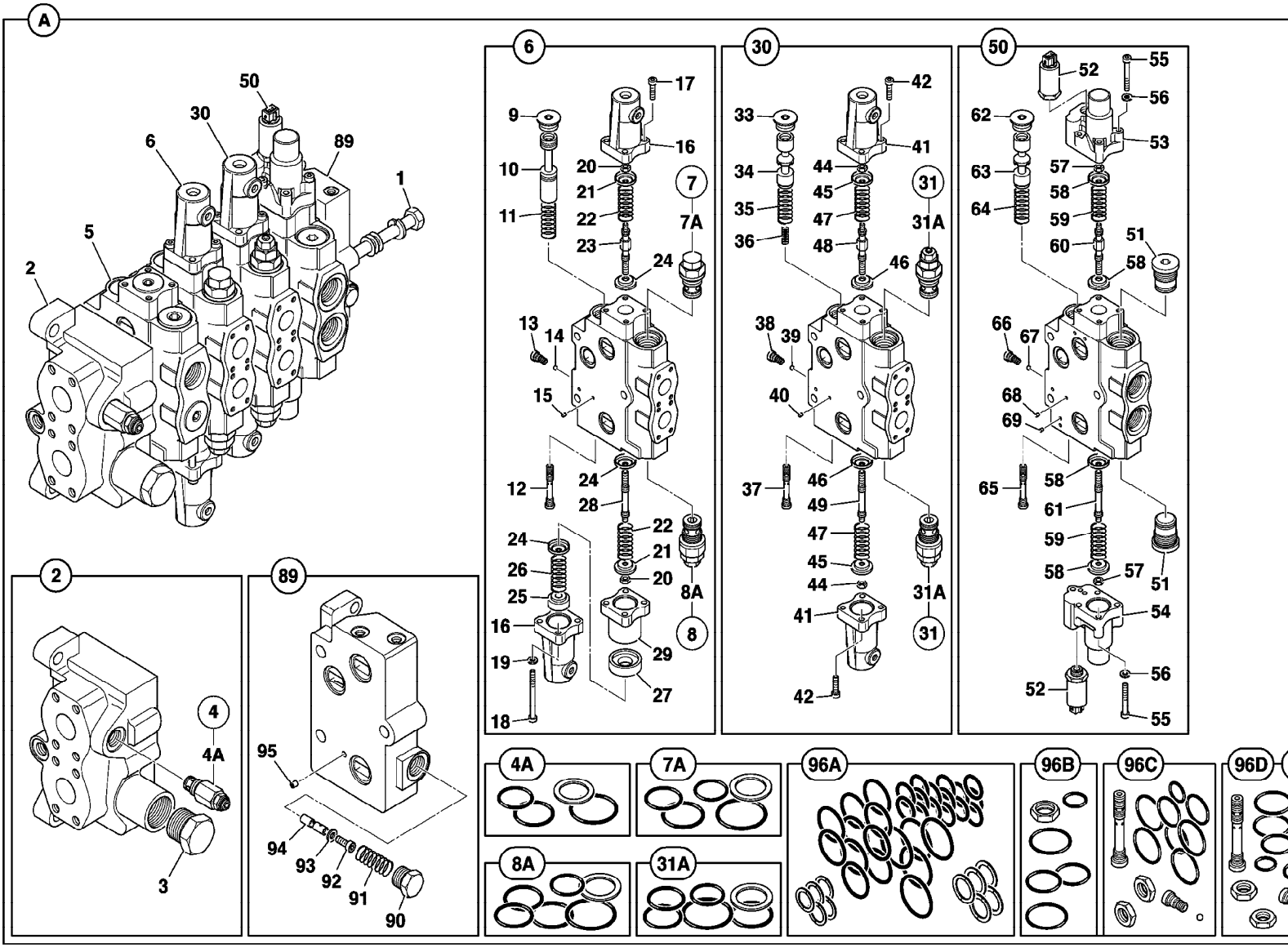

9802/2740 E3-6-1 VALVE COMPONENTS, 25/220957,3 SPOOL HT

Item	Part no.	Change No.	Description	Remarks	Usage code	Qty
0A	25/220957		Valve, assembly, 3 spool, with solenoids			1
1	998/10401		:Kit, tie rod			1
2	25/202801		:Body, assembly, inlet			1
3	25/222091		::Plug, with seal			1
4	25/221558		::Valve, clipper relief			1
4A	25/222160		:::Kit, seal			1
5	25/220594		:Valve, section, priority steer			1
6	25/220595		:Valve, section, lift			1
6A	25/221948		:Spool, main, lift, 426 436			1
7	25/976704		::Valve, anti cav			1
7A	25/222116		:::Kit, seal, ant-cav			1
8	25/977706		::Valve, relief, 5050 PSI-349 BAR			1
8A	25/976601		:::Kit-seal			1
9	25/222092		::Plug, with o ring			1
10	25/221186		::Spool, load check			1
11	814/10001		::Spring			1
12	25/220596		::Housing, primary, shuttle			1
13	25/997204		::Plug, assembly			1
14	25/971201		::Ball, secondary shuttle			1
15	25/971233		::Plug, expansion			1
16	25/222161		::Housing, actuator			2
17	25/222162		::Capscrew, socket head			2
18	25/222163		::Capscrew, socket head			2
19	25/971247		::Washer			2
20	25/971244		::Nut			2
21	25/221843		::Retainer, spring			2
22	25/221177		::Spring			2
23	25/222118		::Stud, spool connecting			1
24	25/971242		::Retainer, spring			3
25	25/222119		::Retainer, spring			1
26	25/971265		::Spring			1
27	25/222120		::Spacer			1
28	25/971216		::Coupling			1
29	25/222164		::Housing, actuator			1
30	25/201901		:Valve, section, bucket			1
31	25/201902		::Valve, relief, 1800 PSI-125 BAR			1
31A	25/976601		:::Kit-seal			1

32	25/997709		::Valve, relief assembly, anti cav (3600)			1
32A	25/976601		:::Kit-seal			1
33	25/222092		::Plug, with o ring			1
34	25/221303		::Spool, compensating			1
35	25/221178		::Spring, compensator			1
36	25/221179		::Spring, compensator, inner			1
37	25/997219		::Housing, primary shuttle			1
38	25/997204		::Plug, assembly			1
39	25/971201		::Ball, secondary shuttle			1
40	25/971233		::Plug, expansion			1
41	25/971264		::Housing, actuator			2
42	25/971246		::Screw			4
43	25/971247		::Washer			4
44	25/971244		::Nut			2
45	25/221843		::Retainer, spring			2
46	25/971242		::Retainer, spring			2
47	25/221177		::Spring			2
48	25/222122		::Stud, spool connecting			1
49	25/971216		::Coupling			1
50	25/221302		:Valve, section, aux			1
51	25/971254		::Plug			2
52	25/221842		::Valve, solenoid, pressure reducing			2
53	25/222165		::Housing, solenoid			1
54	25/222166		::Housing, solenoid			1
55	25/222167		::Capscrew, socket head			5
56	25/971247		::Washer			5
57	25/222168		::Nut, special			2
58	25/971242		::Retainer, spring			4
59	25/222121		::Spring			2
60	25/222122		::Stud, spool connecting			1
61	25/971216		::Coupling			1
62	25/222092		::Plug, with o ring			1
63	25/221303		::Spool, compensating			1
64	25/221178		::Spring, compensator			1
65	25/997219		::Housing, primary shuttle			1
66	25/997204		::Plug, assembly			1
67	25/971201		::Ball, secondary shuttle			1
68	25/971233		::Plug, expansion			1
69	25/222169		::Plug, expansion			4
89	25/221301		:Cover, end			1
90	25/971230		::Plug, c/w O Ring			1
91	25/222170		::Spring, outer			1
92	25/222171		::Capscrew, socket head			1
93	25/971212		::Washer			1

94	25/971232		::Spool, regulator			1
95	25/971233		::Plug, expansion			6
96A	998/10403		:Kit, seal, between sections			1
96B	25/987605		:Kit, sealing, inlet			1
96C	998/10404		:Kit, sealing	Includes all seals for lift section		1
96D	25/202001		:Kit, section, sealing	Shovel section		1
96E	25/202001		:Kit, section, sealing	Auxilliary section		2
96F	25/987606		:Kit, seal, end cover			1

Machine groups

Details

Machine group	From serial no.	To serial no.
.426		
426		

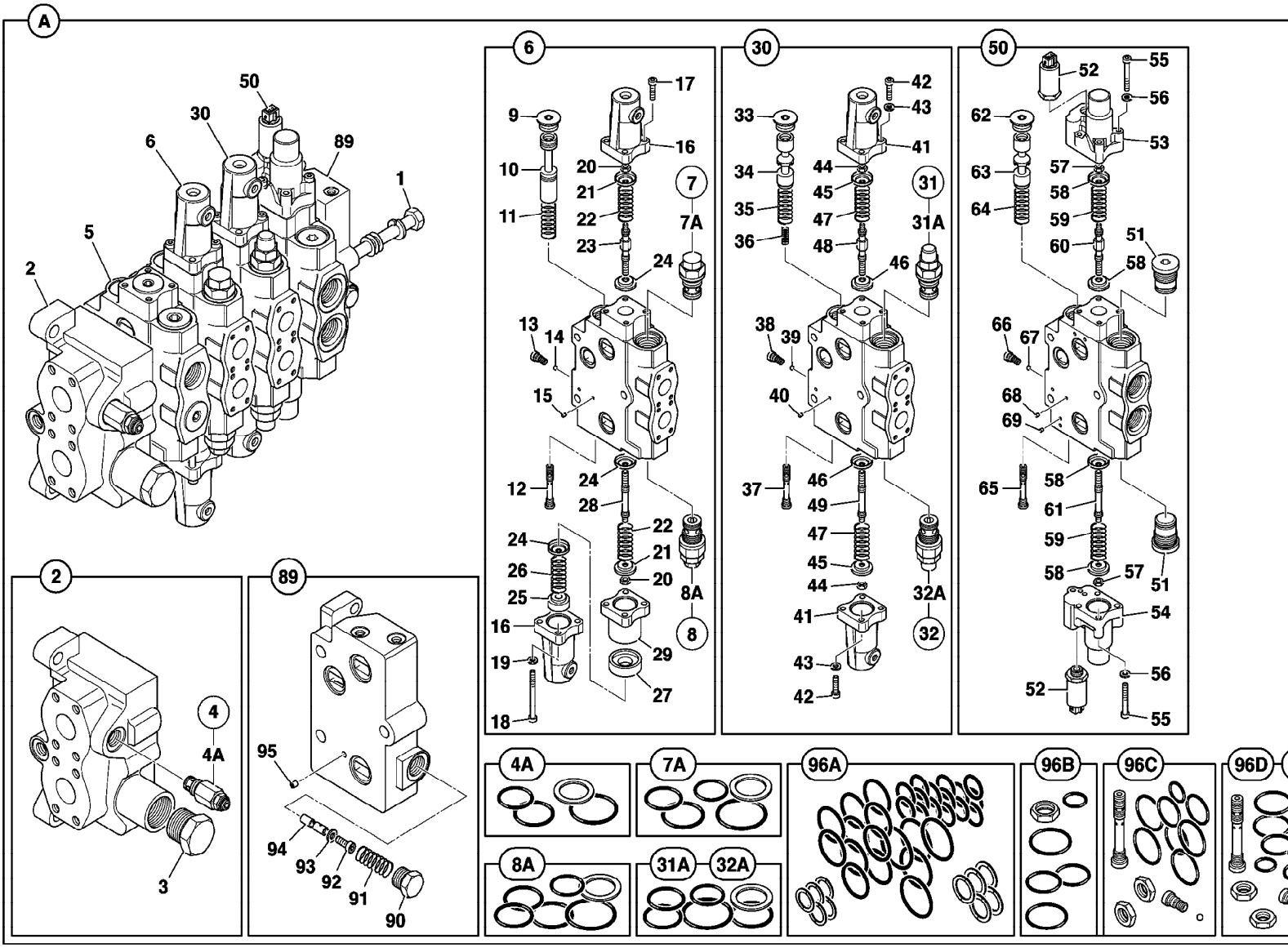

9802/2740 E3-7-1 VALVE COMPONENTS, 25/220959,4 SPOOL HT

Item	Part no.	Change No.	Description	Remarks	Usage code	Qty
0A	25/220959		Valve, assembly, 4 spool, with solenoids			1
1	998/10402		:Kit, 5 section, (4 spool)			1
2	25/202801		:Body, assembly, inlet			1
3	25/222091		::Plug, with seal			1
4	25/221558		::Valve, clipper relief			1
4A	25/222160		:::Kit, seal			1
5	25/220594		:Valve, section, priority steer			1
6	25/220595		:Valve, section, lift			1
6A	25/221948		:Spool, main, lift, 426 436			1
7	25/976704		::Valve, anti cav			1
7A	25/222116		:::Kit, seal, ant-cav			1
8	25/977706		::Valve, relief, 5050 PSI-349 BAR			1
8A	25/976601		:::Kit-seal			1
9	25/222092		::Plug, with o ring			1
10	25/221186		::Spool, load check			1
11	814/10001		::Spring			1
12	25/220596		::Housing, primary, shuttle			1
13	25/997204		::Plug, assembly			1
14	25/971201		::Ball, secondary shuttle			1
15	25/971233		::Plug, expansion			1
16	25/222161		::Housing, actuator			2
17	25/222162		::Capscrew, socket head			2
18	25/222163		::Capscrew, socket head			2
19	25/971247		::Washer			2
20	25/971244		::Nut			2
21	25/221843		::Retainer, spring			2
22	25/221177		::Spring			2
23	25/222118		::Stud, spool connecting			1
24	25/971242		::Retainer, spring			3
25	25/222119		::Retainer, spring			1
26	25/971265		::Spring			1
27	25/222120		::Spacer			1
28	25/971216		::Coupling			1
29	25/222164		::Housing, actuator			1
30	25/201901		:Valve, section, bucket			1
31	25/201902		::Valve, relief, 1800 PSI-125 BAR			1
31A	25/976601		:::Kit-seal			1

32	25/997709		::Valve, relief assembly, anti cav (3600)			1
32A	25/976601		:::Kit-seal			1
33	25/222092		::Plug, with o ring			1
34	25/221303		::Spool, compensating			1
35	25/221178		::Spring, compensator			1
36	25/221179		::Spring, compensator, inner			1
37	25/997219		::Housing, primary shuttle			1
38	25/997204		::Plug, assembly			1
39	25/971201		::Ball, secondary shuttle			1
40	25/971233		::Plug, expansion			1
41	25/971264		::Housing, actuator			2
42	25/971246		::Screw			4
43	25/971247		::Washer			4
44	25/971244		::Nut			2
45	25/221843		::Retainer, spring			2
46	25/971242		::Retainer, spring			2
47	25/221177		::Spring			2
48	25/222122		::Stud, spool connecting			1
49	25/971216		::Coupling			1
50	25/221302		:Valve, section, aux			1
51	25/971254		::Plug			2
52	25/221842		::Valve, solenoid, pressure reducing			2
53	25/222165		::Housing, solenoid			1
54	25/222166		::Housing, solenoid			1
55	25/222167		::Capscrew, socket head			5
56	25/971247		::Washer			5
57	25/222168		::Nut, special			2
58	25/971242		::Retainer, spring			4
59	25/222121		::Spring			2
60	25/222122		::Stud, spool connecting			1
61	25/971216		::Coupling			1
62	25/222092		::Plug, with o ring			1
63	25/221303		::Spool, compensating			1
64	25/221178		::Spring, compensator			1
65	25/997219		::Housing, primary shuttle			1
66	25/997204		::Plug, assembly			1
67	25/971201		::Ball, secondary shuttle			1
68	25/971233		::Plug, expansion			1
69	25/222169		::Plug, expansion			4
70	25/221362		:Valve, section, auxilairy			1
71	25/971254		::Plug			2
72	25/221842		::Valve, solenoid, pressure reducing			2
73	25/222165		::Housing, solenoid			1
74	25/222166		::Housing, solenoid			1

75	25/222167		::Capscrew, socket head			5
76	25/971247		::Washer			5
77	25/222168		::Nut, special			2
78	25/971242		::Retainer, spring			4
79	25/222121		::Spring			2
80	25/222122		::Stud, spool connecting			1
81	25/971216		::Coupling			1
82	25/222092		::Plug, with o ring			1
83	25/221303		::Spool, compensating			1
84	25/221178		::Spring, compensator			1
85	25/997219		::Housing, primary shuttle			1
86	25/997204		::Plug, assembly			1
87	25/971201		::Ball, secondary shuttle			1
88	25/971233		::Plug, expansion			1
89	25/221301		:Cover, end			1
90	25/971230		::Plug, c/w O Ring			1
91	25/222170		::Spring, outer			1
92	25/222171		::Capscrew, socket head			1
93	25/971212		::Washer			1
94	25/971232		::Spool, regulator			1
95	25/971233		::Plug, expansion			6
96A	998/10403		:Kit, seal, between sections			1
96B	25/987605		:Kit, sealing, inlet			1
96C	998/10404		:Kit, sealing	Includes all seals for lift section		1
96D	25/202001		:Kit, section, sealing	Shovel section		1
96E	25/202001		:Kit, section, sealing	Auxilliary section		2
96F	25/987606		:Kit, seal, end cover			1

Machine groups

Details

Machine group	From serial no.	To serial no.
.426		
426		

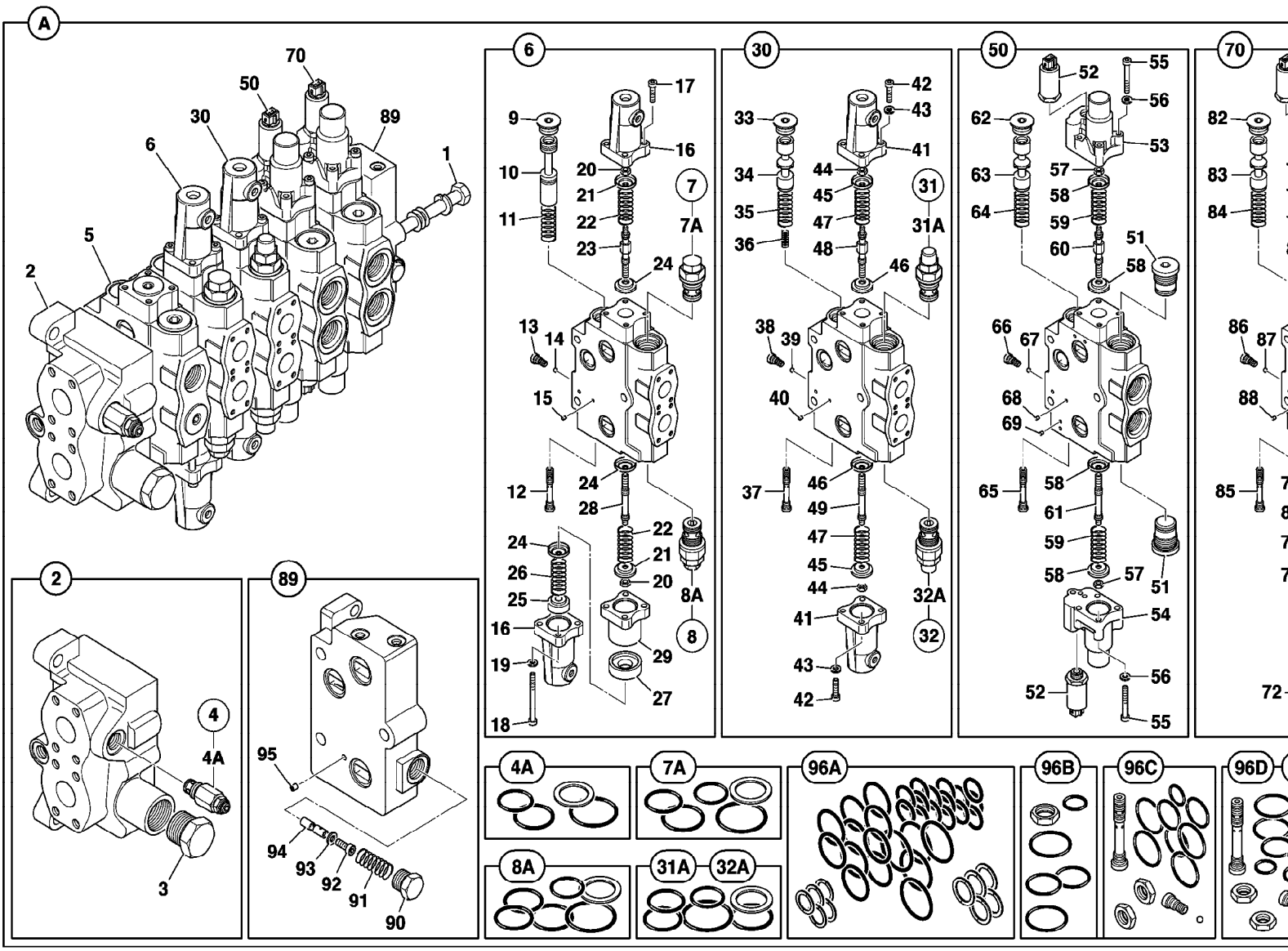
A
70
50
30
89
6
1
5
2
6
17
9
16
10
20
7
21
11
22
7A
23
24
13
14
15
12
24
28
22
24
21
26
20
25
8A
16
29
8
19
27
18
30
42
43
33
41
34
44
31
45
35
47
31A
36
48
46
38
39
40
37
46
49
47
32A
45
44
41
32
43
42
50
52
55
56
62
53
63
57
58
64
59
60
51
58
66
67
68
69
65
58
61
59
58
57
51
54
56
52
55
70
82
83
84
86
87
88
85
72
2
4
4A
3
89
95
94
93
92
91
90
4A
7A
8A
31A
32A
96A
96B
96C
96D

9802/2740 E3-8-1 ISOLATOR VALVE, 25/222746

Item	Part no.	Change No.	Description	Remarks	Usage code	Qty
1	25/222746		Valve, solenoid, isolator			1
1A	25/220555		Cartridge, valve			1
1B	25/221263		Coil, 24V			1
2	1620/0002		Adapter			3
3	1315/3210D		Bolt, M6x40			2
4	1420/0006D		Washer, M6 plain			4
5	1370/0103D		Nut, M6 lock			2

Machine groups

Details

Machine group	From serial no.	To serial no.
.426		
426		

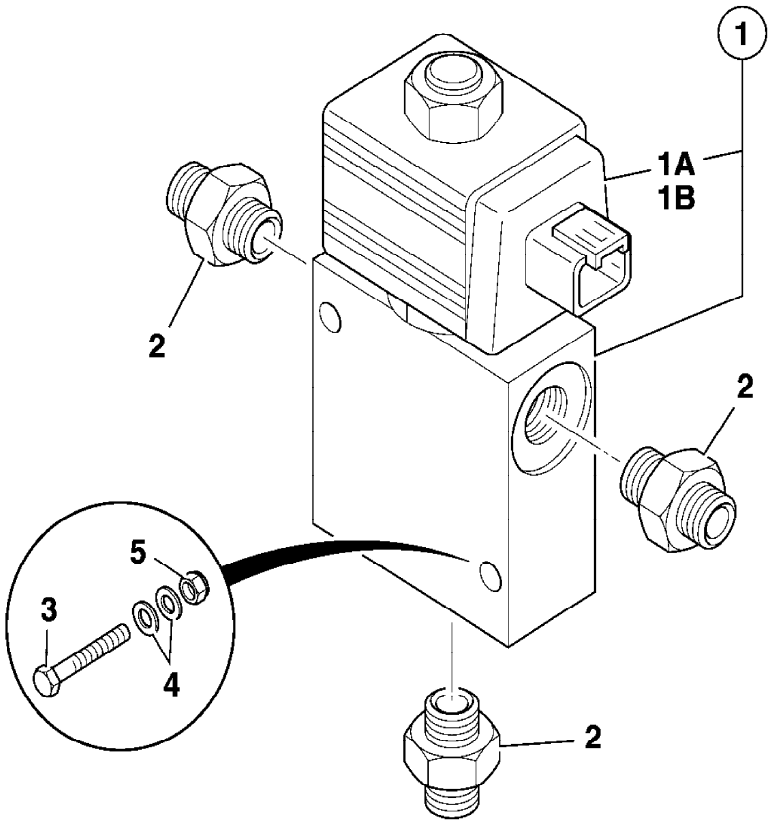

796430

9802/2740 E3-9-1 VALVE ASSEMBLY, 25/222707, 2 STATION PROP. PILOT VALVE

Item	Part no.	Change No.	Description	Remarks	Usage code	Qty
1	25/222707		Valve, assembly, prop. pilot valve			1
1A	25/222689		:Solenoid			2
1B	717/20155		:Coil, 24 volt, Deutsch			2
6	1391/3318D		Capscrew, M8 x 80mm, GRADE 12.9			2
7	1420/0007D		Washer, M8 plain			2

Machine groups

Details

Machine group	From serial no.	To serial no.
.426		
426		

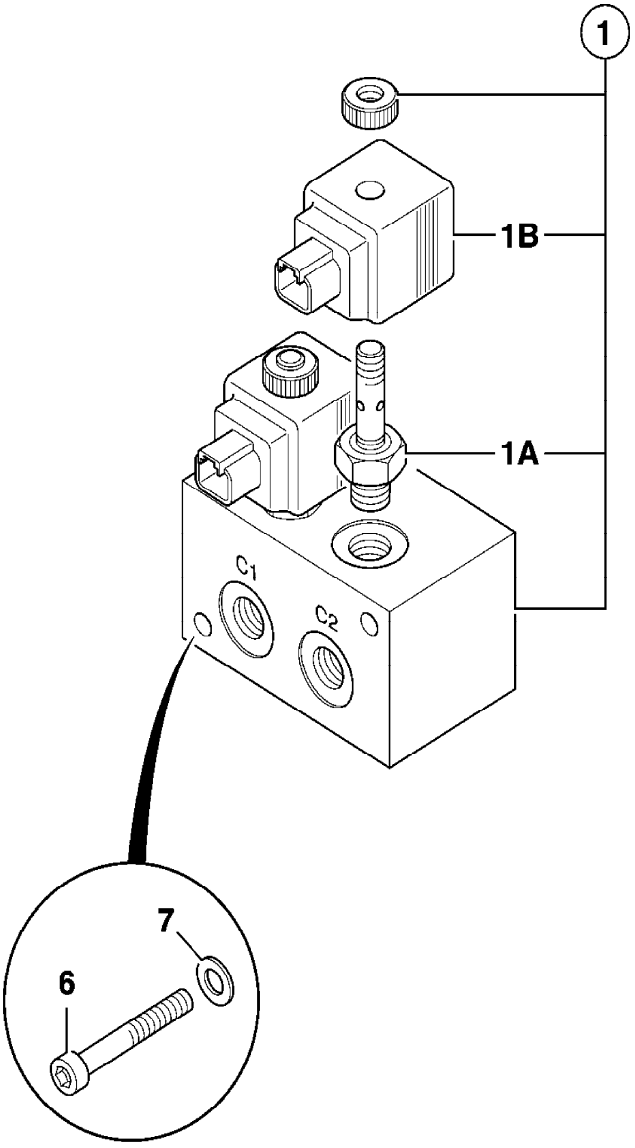

796660

9802/2740 E4-1-1 RAM, STEERING

Item	Part no.	Change No.	Description	Remarks	Usage code	Qty
1	576/60019		Ram, assembly		P/Ex	2
2	576/70019		:Cylinder, assembly			2
3	658/01424		::Pipe			2
4	556/90004		::Pipe, rod side			2
5	809/00112		:Bearing, liner, 50mm pivot bore			4
6	813/00413		:Seal, 50mm internal dia.			8
7	1450/1007		:Nipple, grease, 45 deg. angle			6
8	1403/0001		:Washer, aluminium			6
9	594/14019		:Kit-end cap, 50mm rod x 80mm cyl			2
10	2411/0506		:Seal, 50mm rod			2
11	2411/8606		:Seal, wiper			2
12	2302/0308		:O Ring			2
13	590/40113		:Rod, piston			2
14	595/27100		:Head, piston			2
15	1370/0203Z		Nut, self lock, M8			2
18	991/00102		Kit, seal, 50mm rod x 80mm cyl			2
19	G8/9		Plug			2
20	1315/3320Z		Bolt			2
21	1420/0011Z		Washer, M16 plain			2
22	1420/0007Z		Washer, plain, M8			4

Machine groups

Details

Machine group	From serial no.	To serial no.
.426		
426		

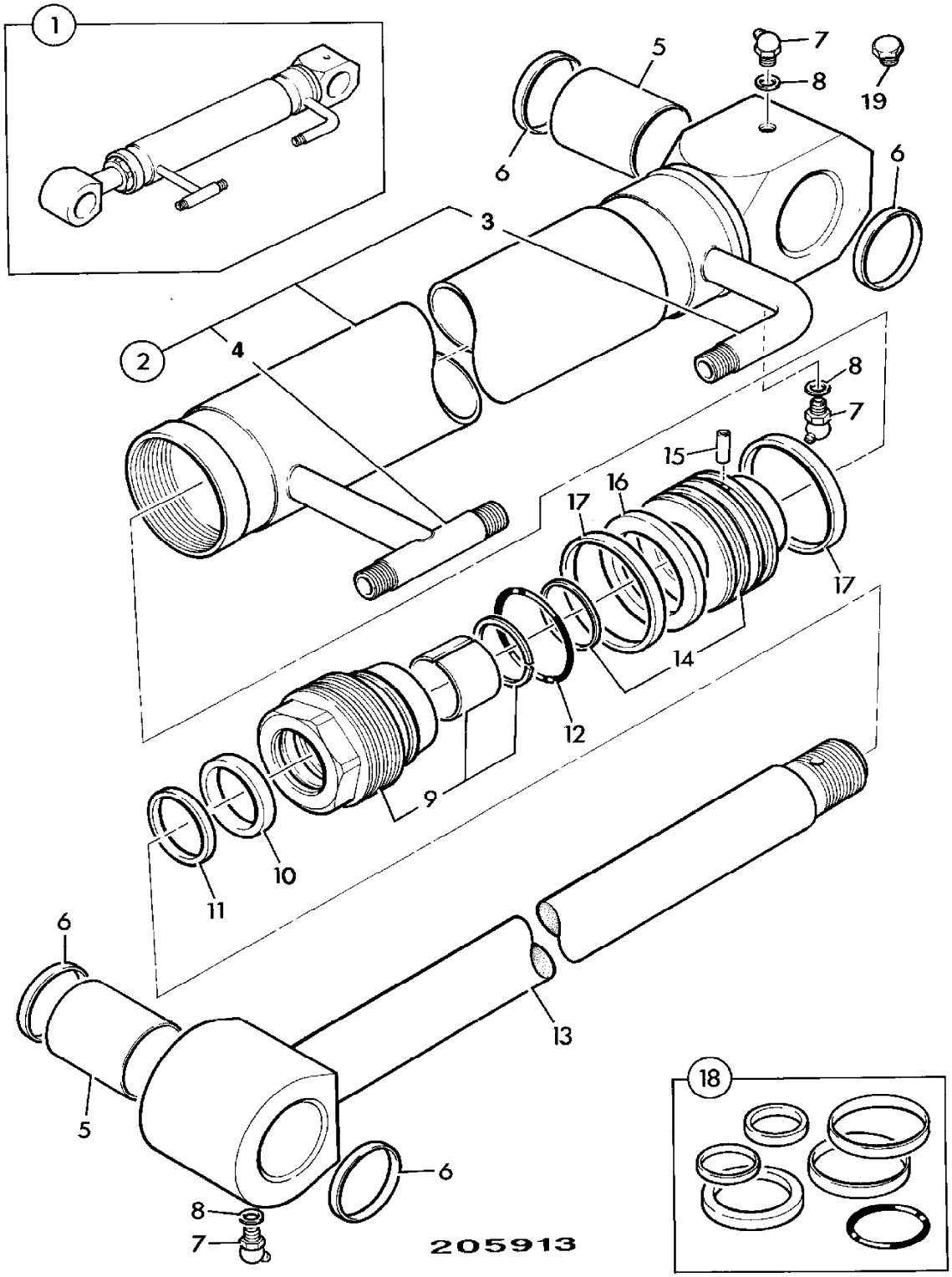
1
2
3
4
5
6
7
8
9
10
11
12
13
14
15
16
17
18
19
205913

9802/2740 E4-2-1 RAM, LIFT

Item	Part no.	Change No.	Description	Remarks	Usage code	Qty
1	561/60026		Ram, lift		P/Ex	2
2	561/70026		:Cylinder, assembly			2
3	663/00915		::Pipe			2
4	559/90004		::Pipe			2
5	809/00116		:Bearing, liner, 65x85			2
6	813/00414		:Seal, 65mm internal dia.			4
9	594/14027		:Kit-end cap, 110mm long, 60mm rod x 110mm cyl			2
10	2411/0508		:Seal, 60 x 75 x 11.4			2
11	2411/8608		:Seal, wiper, 60 x 70 x 6.8			2
12	2302/0314		:O Ring			2
13	590/40115		:Rod, piston			2
14	595/27704		:Head, piston			2
15	826/01180		:Dowel			2
16	2411/7920		:Ring, wear			4
17	2411/1139		:Seal, piston			2
18	991/00110		Kit-seal, 60mm rod x 110mm cyl			2

Machine groups

Details

Machine group	From serial no.	To serial no.
.426		
426		

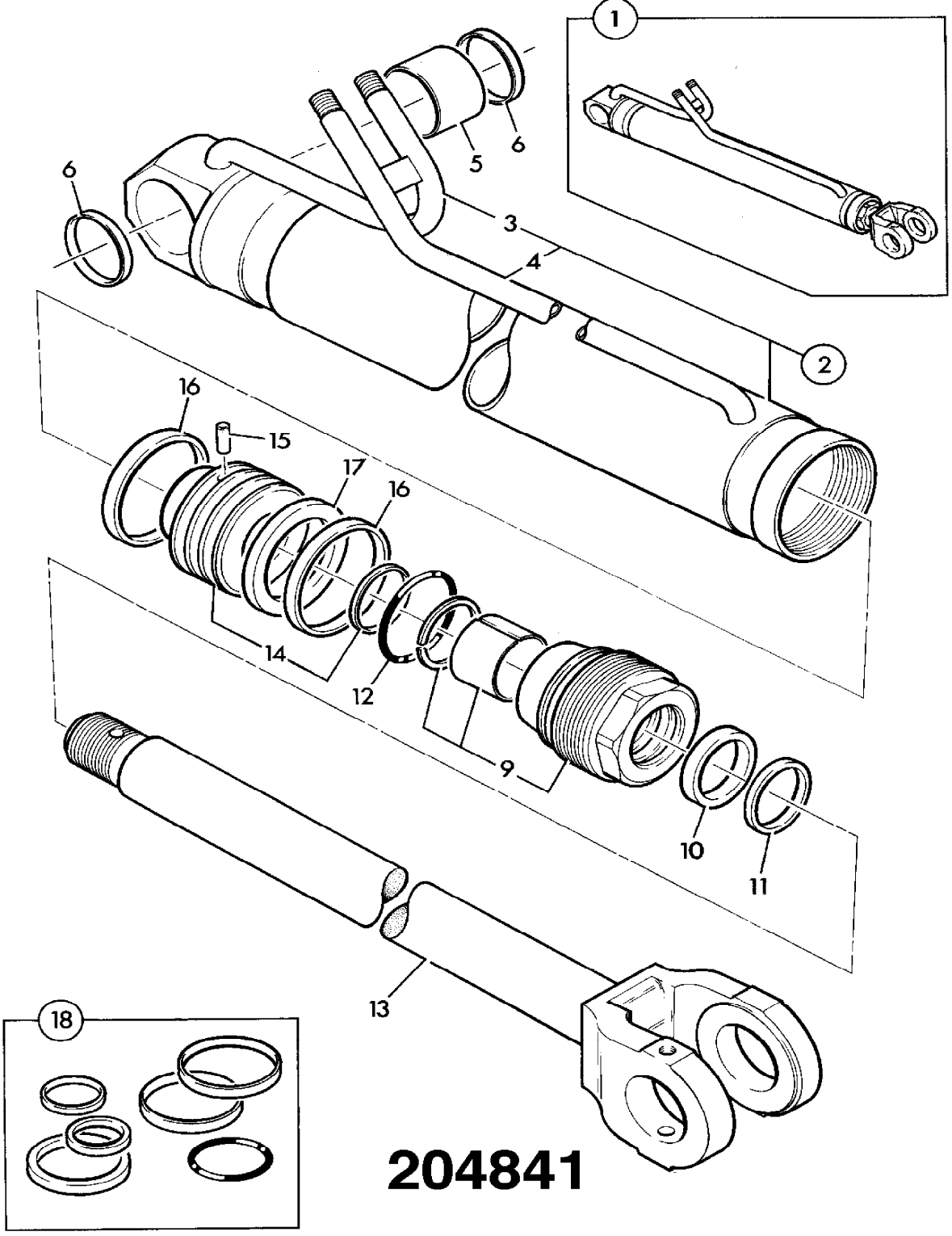

204841

9802/2740 E4-3-1 RAM, TILT

Item	Part no.	Change No.	Description	Remarks	Usage code	Qty
1	559/60046		Ram, shovel		P/Ex	2
2	559/70018		:Cylinder, assembly			2
3	663/00908		::Pipe			2
4	559/90015		::Pipe			2
5	809/00116		:Bearing, liner, 65x85			2
6	813/00414		:Seal, 65mm internal dia.			2
9	594/14031		:Kit-end cap, 60mm rod x 100mm cyl			2
10	2411/0508		:Seal, 60 x 75 x 11.4			2
11	2411/8608		:Seal, wiper, 60 x 70 x 6.8			2
12	2302/0312		:O Ring, 90 x 5.0			2
13	590/40114		:Rod, piston			2
14	595/27701		:Head, piston			2
15	826/01179		:Dowel			2
16	2411/7919		:Ring, wear			4
17	2411/1145		:Seal, piston			2
18	559/90016		:Spacer			2
19	2302/0306		:O Ring, 60 x 5.0			4
20	991/00107		Kit-seal, 100mm cyl x 60mm rod, Metric rams			2

Machine groups

Details

Machine group	From serial no.	To serial no.
.426		
426		

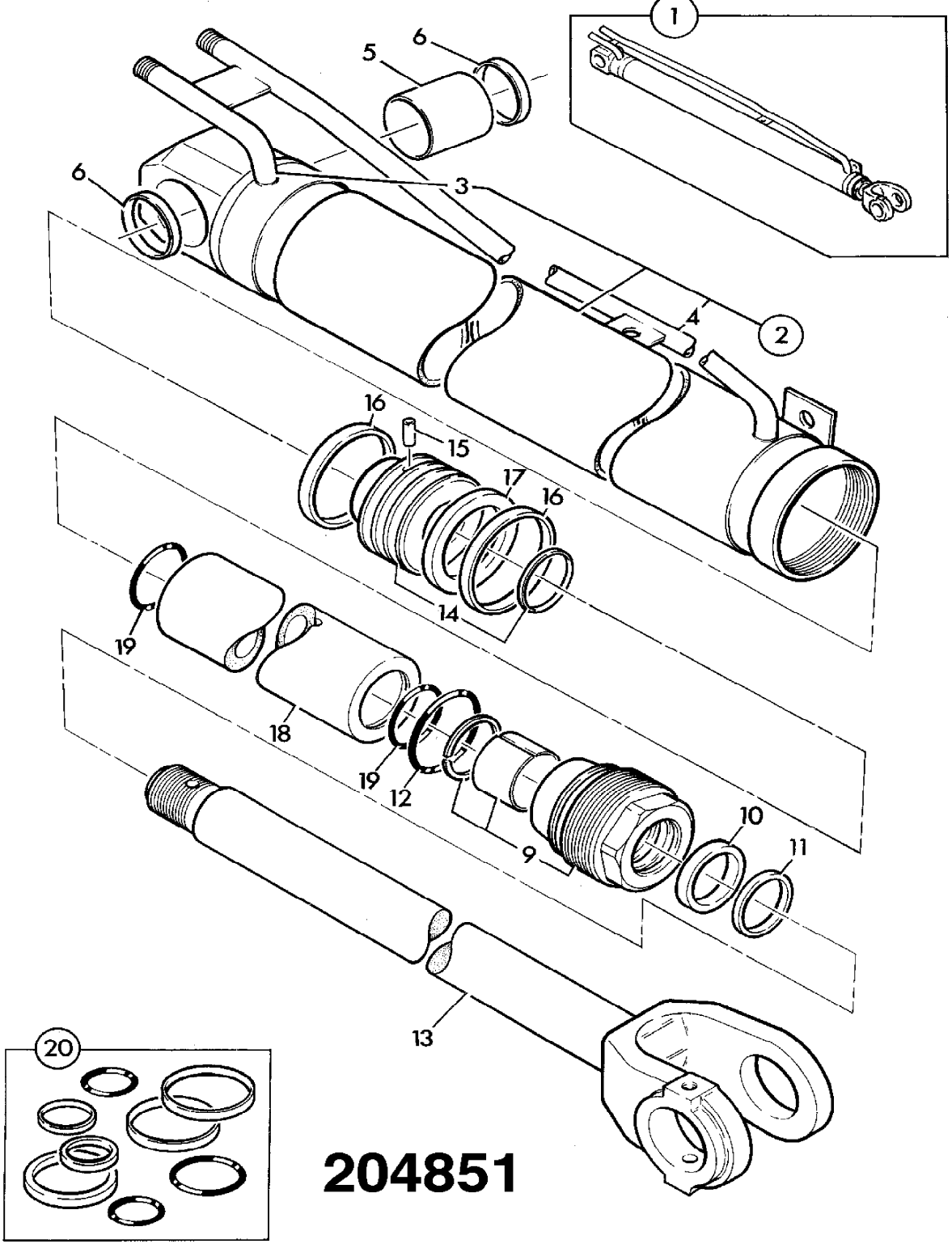

204851

9802/2740 E4-4-1 RAM, TILT, Z BAR

Item	Part no.	Change No.	Description	Remarks	Usage code	Qty
1	565/60015		Ram, tilt, Z Bar			1
2	565/70013		:Cylinder, assembly			1
3	663/00923		::Pipe			1
4	565/90004		::Pipe			1
5	594/14037		:Kit-end cap, 70mm rod x 130mm cyl			1
6	590/40170		:Rod, piston			1
7	595/27713		:Head, piston			1
8	826/01159		:Dowel			1
9	2411/7922		:Ring, wear			2
10	2411/1143		:Seal, piston head			1
11	2302/0308		:O Ring			2
12	829/30432		:Spacer			1
13	809/00140		:Bearing, liner, 75x85			2
14	813/00415		:Seal, pivot pin			4
15	1450/0001		:Nipple, grease, straight, 1/8 BSP			1
16	991/00120		:Kit-seal, 70mm rod x 130mm cyl			1

Machine groups

Details

Machine group	From serial no.	To serial no.
.426		
426		

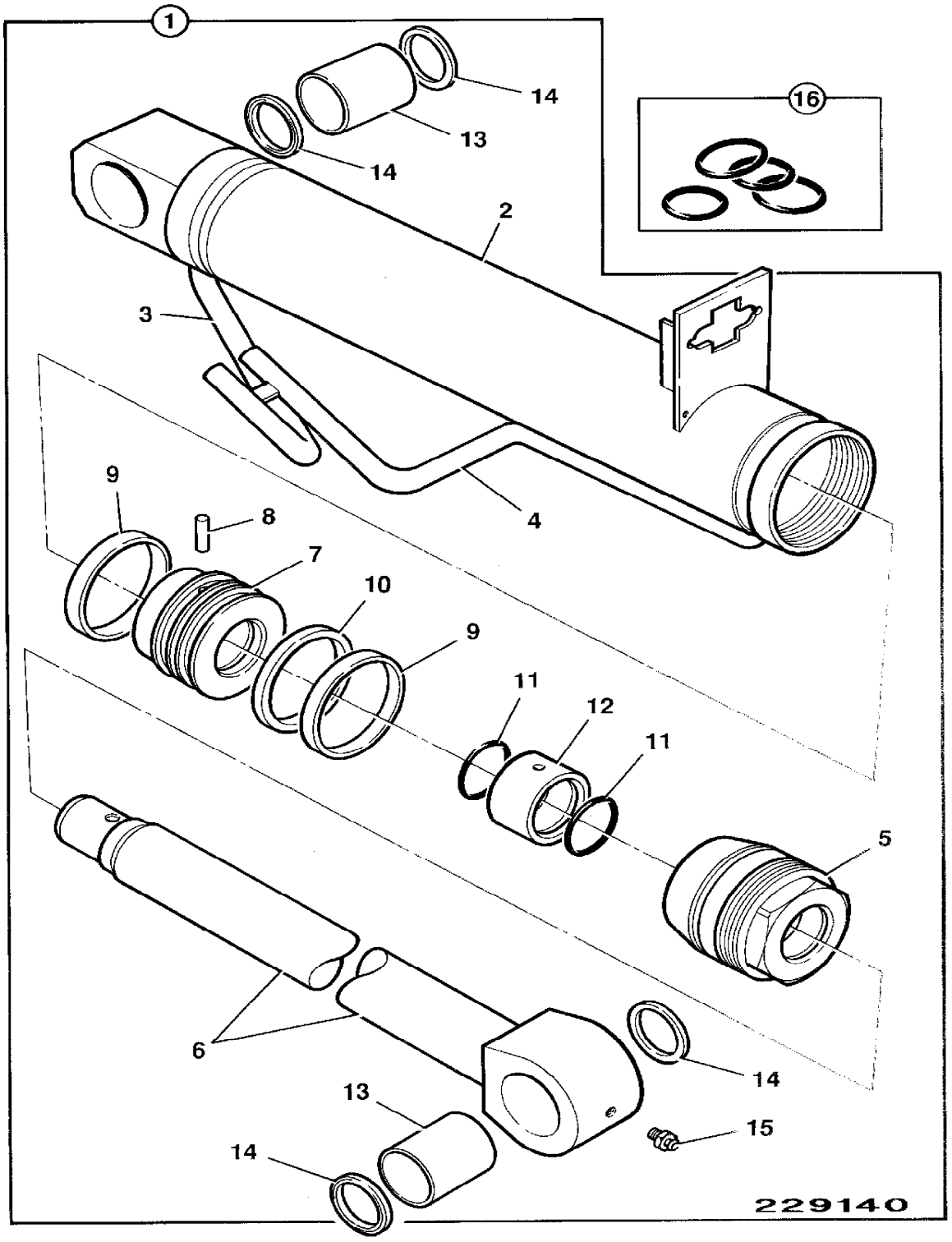
1
16
14
13
14
2
3
4
9
8
7
10
9
11
12
11
5
6
14
13
14
15
229140

9802/2740 E4-6-1 RAM, QUICKHITCH

Item	Part no.	Change No.	Description	Remarks	Usage code	Qty
1	551/60007		Ram, assembly, quickhitch			1
2	551/70008		:Cylinder, assembly			1
3	653/00067		::Pipe, piston side			2
4	590/40106		:Rod, piston			1
5	595/26700		:Piston, head			1
6	2411/7915		::Ring, wear			2
7	2411/1127		::Seal			1
8	826/01182		::Dowel			1
9	594/12100		:Cap, end, assembly			1
10	2411/0501		::Seal, gland			1
11	2411/8601		::Seal, wiper			1
12	2302/0100		::O Ring			1
13	991/00097		Kit-seal			1

Machine groups

Details

Machine group	From serial no.	To serial no.
.426		
426		

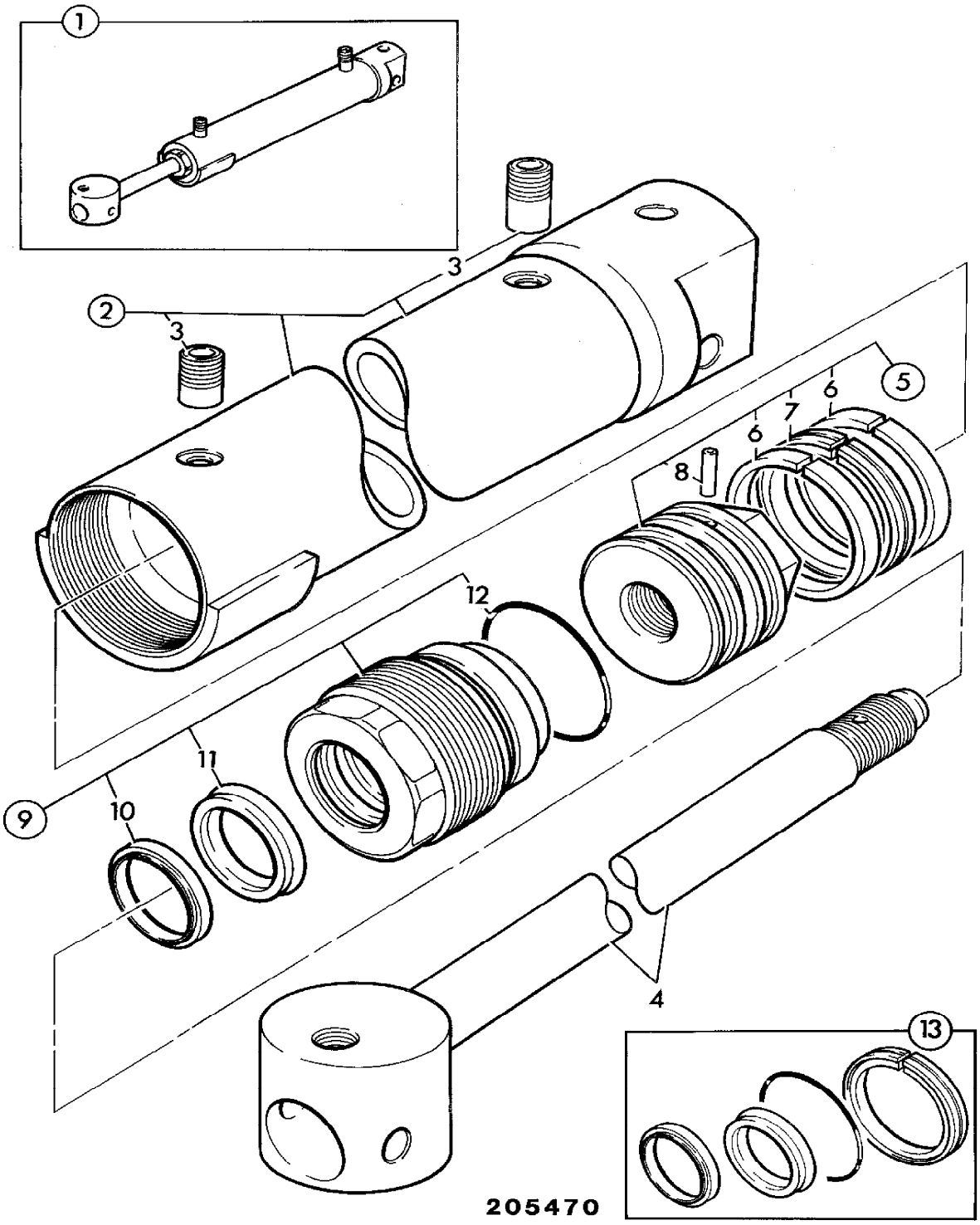
1
2
3
3
5
6
7
6
8
12
11
10
9
4
13
205470

9802/2740 F1-1-1 AXLE ASSEMBLY, FRONT PR12,10/300161, DATA PLATE REF.3286063

Item	Part no.	Change No.	Description	Remarks	Usage code	Qty
1	10/300161		Axle, front, PR12 B.O.		P/Ex	1
1A	10/908886		Adapter, elbow, 90 degree	Brake pipe adapter supplied with axle		2
2	826/10988		Bolt, 240mm long			8
3	1371/0901D		Nut			8
4	1422/0014D		Washer			16

Machine groups

Details

Machine group	From serial no.	To serial no.
.426		
426		

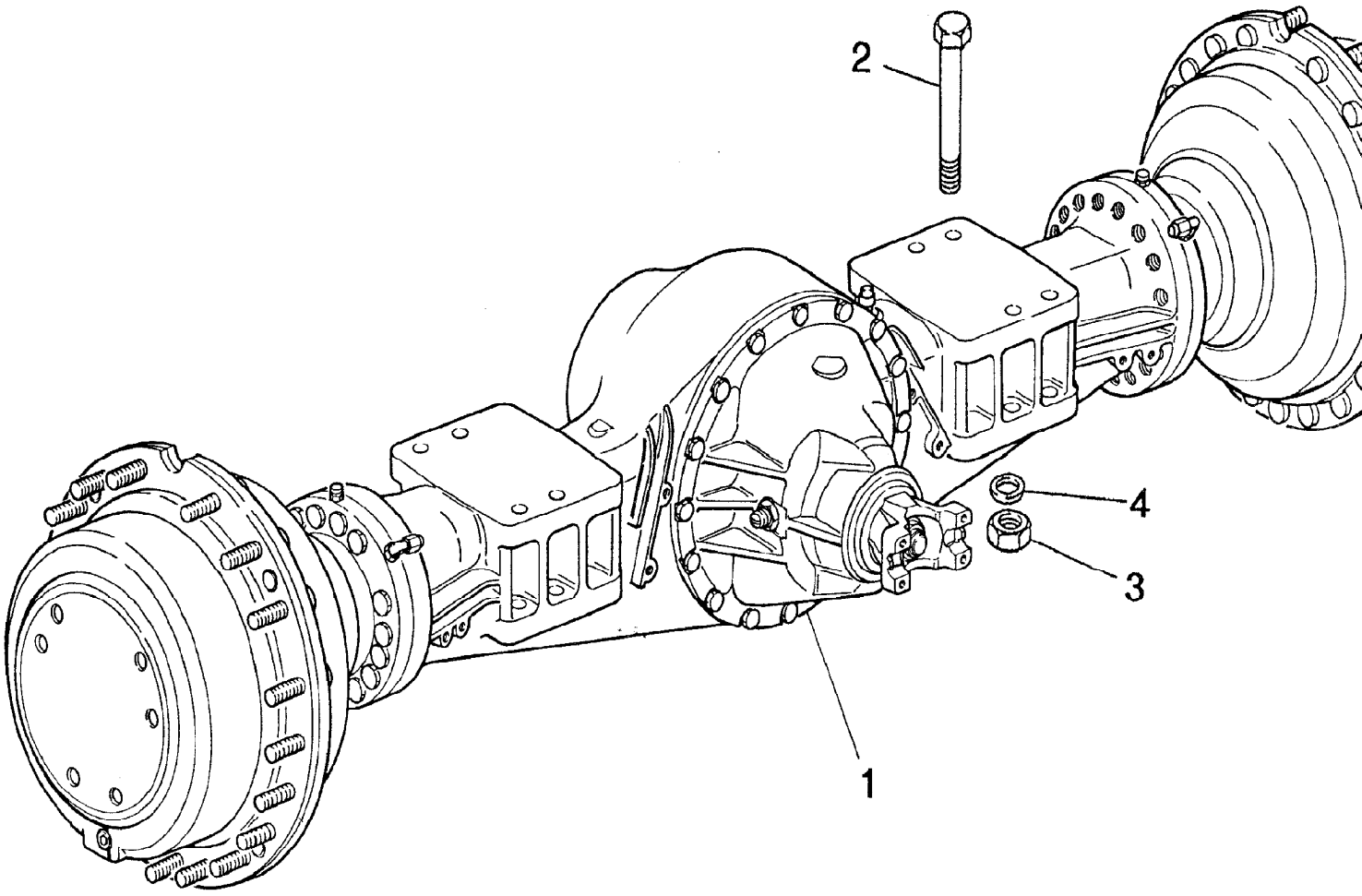

600450

9802/2740 F1-2-1 AXLE ASSEMBLY, FRONT PR12,10/300161, PLUGS & SHAFTS

Item	Part no.	Change No.	Description	Remarks	Usage code	Qty
1	10/906402		Plug, oil level			1
2	10/906406		Plate, data			1
3	.		'See Remark'	See page F1-3-1		1
4	10/906403		Breather			1
5	10/906519		Shaft, axle			2
6	10/906405		Rivet			2
7	10/906401		Plug, drain			1

Machine groups

Details

Machine group	From serial no.	To serial no.
.426		
426		

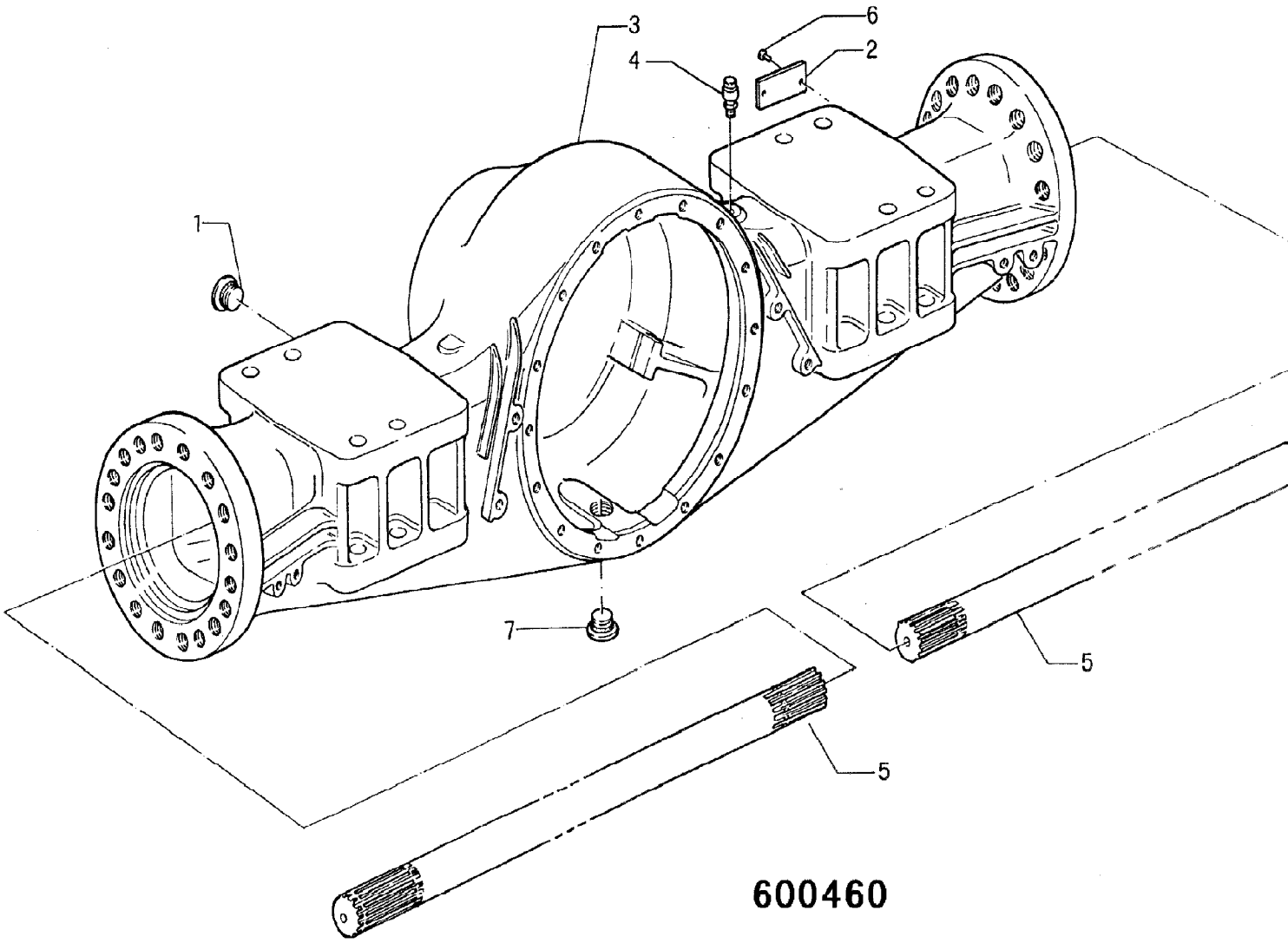

600460

9802/2740 F1-20-1 SPACERS, HEAVY DUTY AXLES

Item	Part no.	Change No.	Description	Remarks	Usage code	Qty
1	331/21662		Spacer			2
2	826/01825		Bolt, M24 X 220 Long			8
	826/10815		Bolt, 260mm long	PR 12 Axles		8
3	1371/0901D		Nut			8
4	1422/0014D		Washer			8

Machine groups

Details

Machine group	From serial no.	To serial no.
.426		
426		

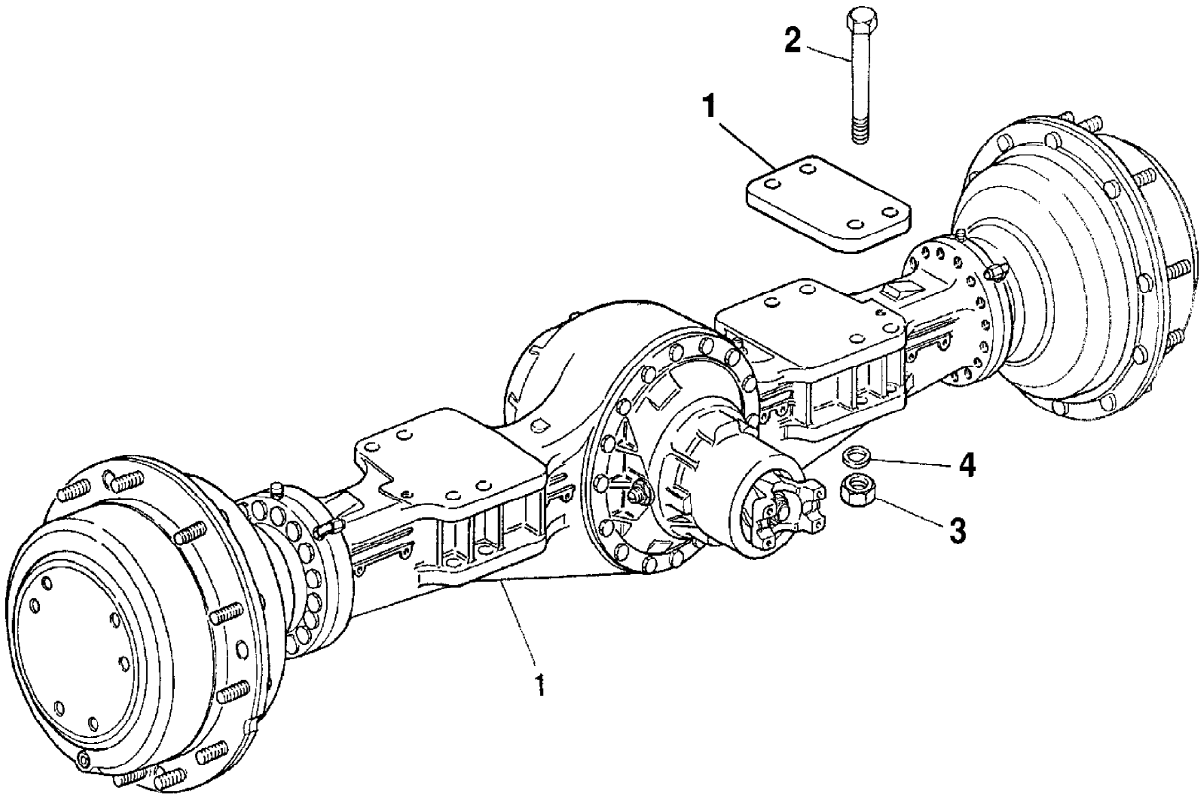

374330

9802/2740 F1-3-1 DIFFERENTIAL, FRONT PR12,10/300161, HOUSING ASSEMBLY

Item	Part no.	Change No.	Description	Remarks	Usage code	Qty
0A	10/300202		Differential, assembly			1
1	10/906407		:Pin			2
2	10/906408		:Bearing			2
3	10/906409		:Nut, locking			2
4	10/906458		:Screw			18
5	10/906705		:Bearing, thrust, side gear			2
6	10/906706		:Gear, side			2
7	10/906522		:Trunnion, pinion			1
8	10/906523		:Gear, pinion			4
9	10/908903		:Washer, thrust			4
10	10/906416		:Pin, split			1
11	10/906703		:Screw			8
12	10/906524		:Plate, connecting beam.			1
13	10/906525		:Bearing			1
14	10/906526		:Pin			1
15	10/906518		:Washer			1
16	10/906527		:Bearing			1
17	10/906528		:Shim, 3.50 mm			A/R
	10/906529		:Shim, 3.60 mm			A/R
	10/906530		:Shim, 3.70 mm			A/R
	10/906531		:Shim, 3.80 mm			A/R
	10/906532		:Shim, 3.90 mm			A/R
	10/906533		:Shim, 4.00 mm			A/R
	10/906534		:Shim, 4.10 mm			A/R
	10/906535		:Shim, 4.20 mm			A/R
	10/906536		:Shim, 4.30 mm			A/R
	10/906537		:Shim, 4.40 mm			A/R
	10/906538		:Shim, 4.50 mm			A/R
18	10/906539		:Spacer			1
19	10/906540		:Shim, 0.500 mm			1
	10/906541		:Shim, 1.00 mm			1
	10/906542		:Shim, 1.025 mm			A/R
	10/906543		:Shim, 1.050 mm			A/R
	10/906544		:Shim, 1.075 mm			A/R
	10/906545		:Shim, 1.100 mm			A/R
	10/906546		:Shim, 1.125 mm			A/R
	10/906547		:Shim, 1.150 mm			A/R
	10/906548		:Shim, 1.175 mm			A/R

	10/906549		:Shim, 1.200 mm			A/R
	10/906550		:Shim, 1.225 mm			A/R
	10/906551		:Shim, 1.250 mm			A/R
	10/906552		:Shim, 1.275 mm			A/R
	10/906553		:Shim, 1.300 mm			A/R
	10/906554		:Shim, 1.325 mm			A/R
	10/906555		:Shim, 1.350 mm			A/R
	10/906556		:Shim, 1.375 mm			A/R
	10/906557		:Shim, 1.40 mm			A/R
	10/906558		:Shim, 1.425 mm			A/R
	10/906559		:Shim, 1.450 mm			A/R
	10/906560		:Shim, 1.475 mm			A/R
	10/906561		:Shim, 1.5 mm			A/R
20	10/906456		:Pin			1
21	10/906457		:Nut			1
22	10/906458		:Screw			4
23	10/906562		:Flange, assembly			1
24	10/906563		:Bearing			1
25	10/906461		:Seal, oil, 65x120x12/14			1
26	10/906462		:Washer			1
27	10/906463		:Nut			1
28	10/906564		:Screw			16
29	10/906465		:Plate			1
30	10/906405		:Rivet			2
33	10/906570		:Housing, differential, assembly			1
34	10/300203		:Gear, crownwheel and pinnion			1
35	10/906707		:Casing, assembly			1

Machine groups

Details

Machine group	From serial no.	To serial no.
.426		
426		

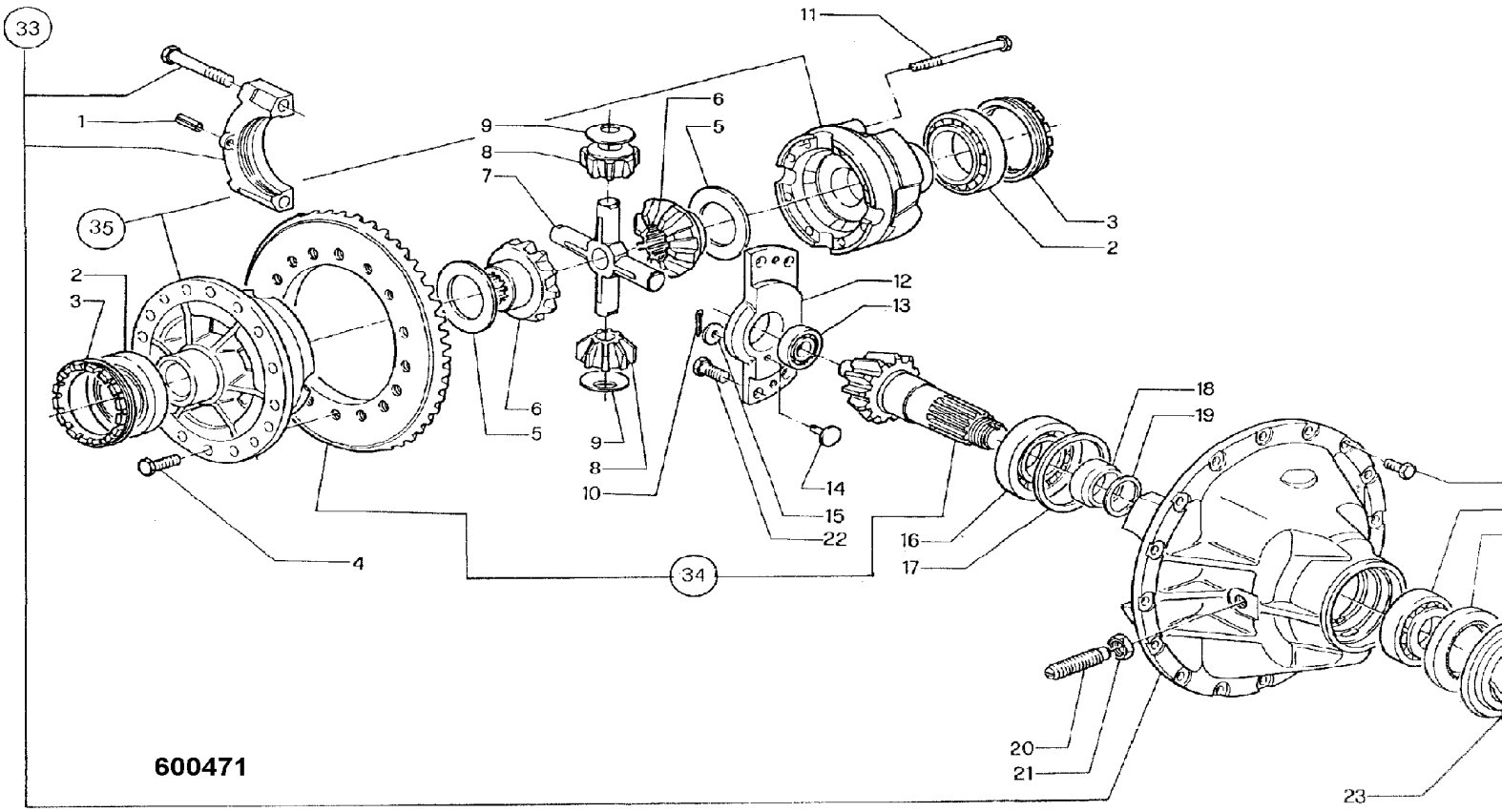
33
1
35
2
3
4
9
8
7
6
5
10
11
12
13
14
15
22
34
16
17
18
19
20
21
23
600471

9802/2740 F1-4-1 HUB & COMPONENTS, FRONT PR12,10/300161

Item	Part no.	Change No.	Description	Remarks	Usage code	Qty
1	10/906574		Cover			2
2	10/906575		O Ring			2
3	450/24415		Stop, shaft			2
4	450/24423		Bolt, M8 x 25			8
5	10/906576		Housing			2
6	10/906577		Pin			6
7	10/906479		Plug, C/w O ring			2
8	450/24417		Screw, hex hd.			12
9	10/906578		Shim, thrust bearing, 1.5 mm			6
10	10/906579		Bearing			6
11	10/906580		Spacer			6
12	10/906581		Gear			2
13	10/906582		Shim, thrust bearing, 3.00 mm			6
14	10/906583		Gear			2
15	10/906584		Ring, snap			2
16	10/906585		Drum, brake disc			2
17	10/300200		Disc, brake			8
18	10/906587		Shim, pressure plate, 4.00 mm			8
	10/906588		Shim, pressure plate, 4.5 mm			8
	10/906589		Shim, pressure plate, 5.00 mm			8
	10/906590		Shim, pressure plate, 4.25 mm			8
19	10/906591		Pin			12
20	10/906592		Ring, locking			2
21	10/908004		Kit, pressure plate			2
	10/906494		:Spring			2
	10/906495		:Ring			2
22	10/906711		Spring	N.L.A. use 10/908004		6
23	10/906713		Cup, retaining	N.L.A. use 10/908004		6
24	450/24414		Plate, locking			4
25	10/906496		Nut, locking			2
26	450/24418		Ring, snap			2
27	10/906497		Bearing, thrust			2
28	10/906498		Bearing			2
29	10/906594		Gear			2
30	10/906595		Gear			2
31	10/906596		Hub, wheel			2
32	450/24431		Stud, wheel			38
33	10/906597		Gasket			2

34	10/906598		Piston			2
35	10/906599		Gasket			2
36	10/906601		Bearing			2
37	10/906602		Seal			2
38	10/906603		Hub, sleeve, right hand			1
39	10/906509		Breather, oil			2
40	10/908886		Adapter, elbow, 90 degree			2
41	10/906604		Gasket			2
42	10/906605		Hub, sleeve, left hand			1
43	10/906606		Screw			32
44	10/906712		Pin, steady	N.L.A. use 10/908004		6
45	10/906714		Ring, locking	N.L.A. use 10/908004		6
46	10/906514		Cover, oil breather cowl			2
47	450/24432		Guard			2
48	10/906607		Cover, assembly			1

Machine groups

Details

Machine group	From serial no.	To serial no.
.426		
426		

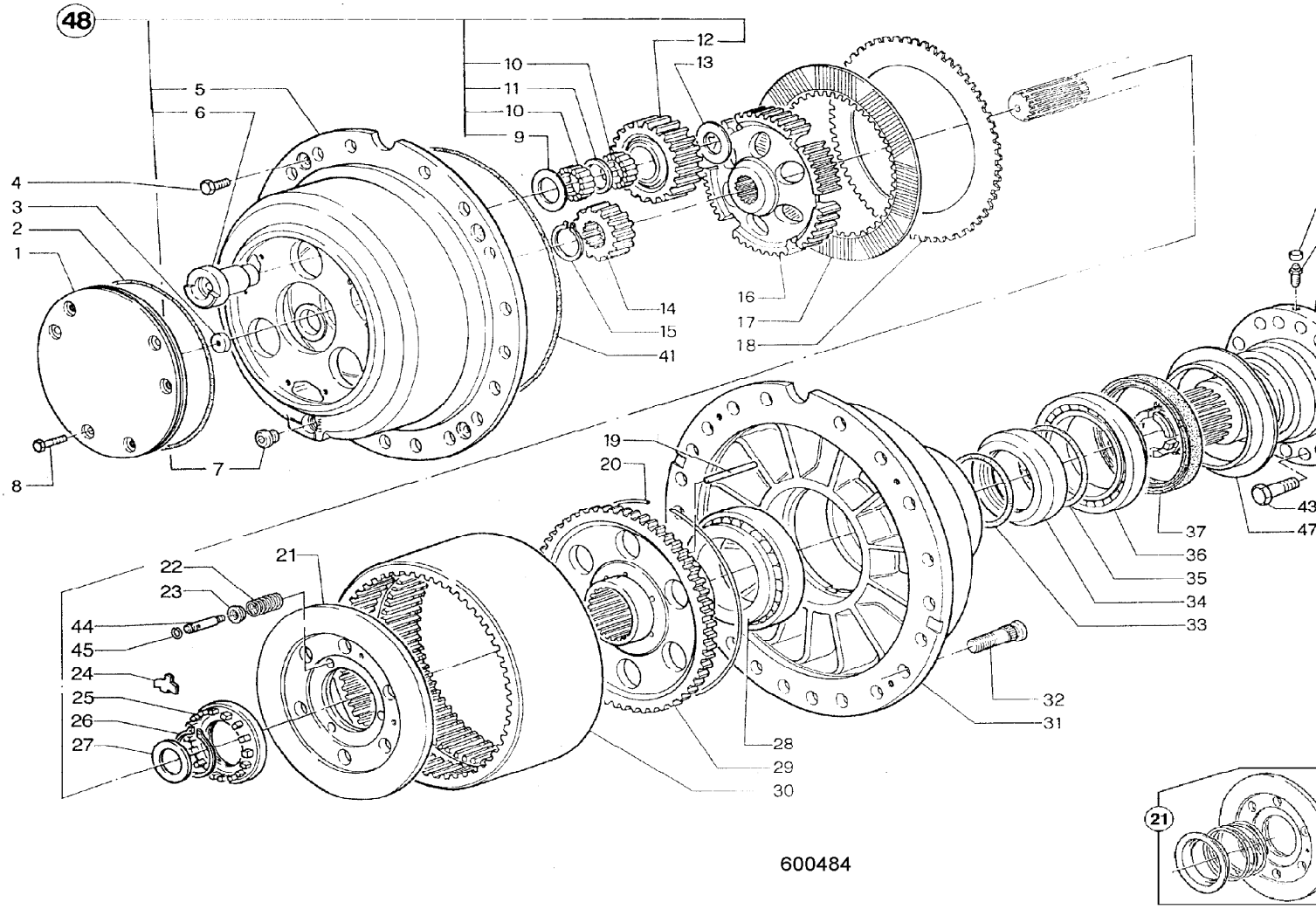
48
1
2
3
4
5
6
7
8
9
10
11
10
12
13
14
15
41
16
17
18
19
20
21
22
23
44
45
24
25
26
27
28
29
30
31
32
33
34
35
36
37
43
47
21
600484

9802/2740 F1-5-1 AXLE ASSEMBLY,L.S.D., FRONT PR12,10/300163, DATA PLATE REF.3286083

Item	Part no.	Change No.	Description	Remarks	Usage code	Qty
1	10/300163		Axle, front, LSD PR12 B.O.		P/Ex	1
1A	10/908886		Adapter, elbow, 90 degree	Brake pipe adapter supplied with axle		2
2	826/10988		Bolt, 240mm long			8
3	1371/0901D		Nut			8
4	1422/0014D		Washer			16

Machine groups

Details

Machine group	From serial no.	To serial no.
.426		
426		

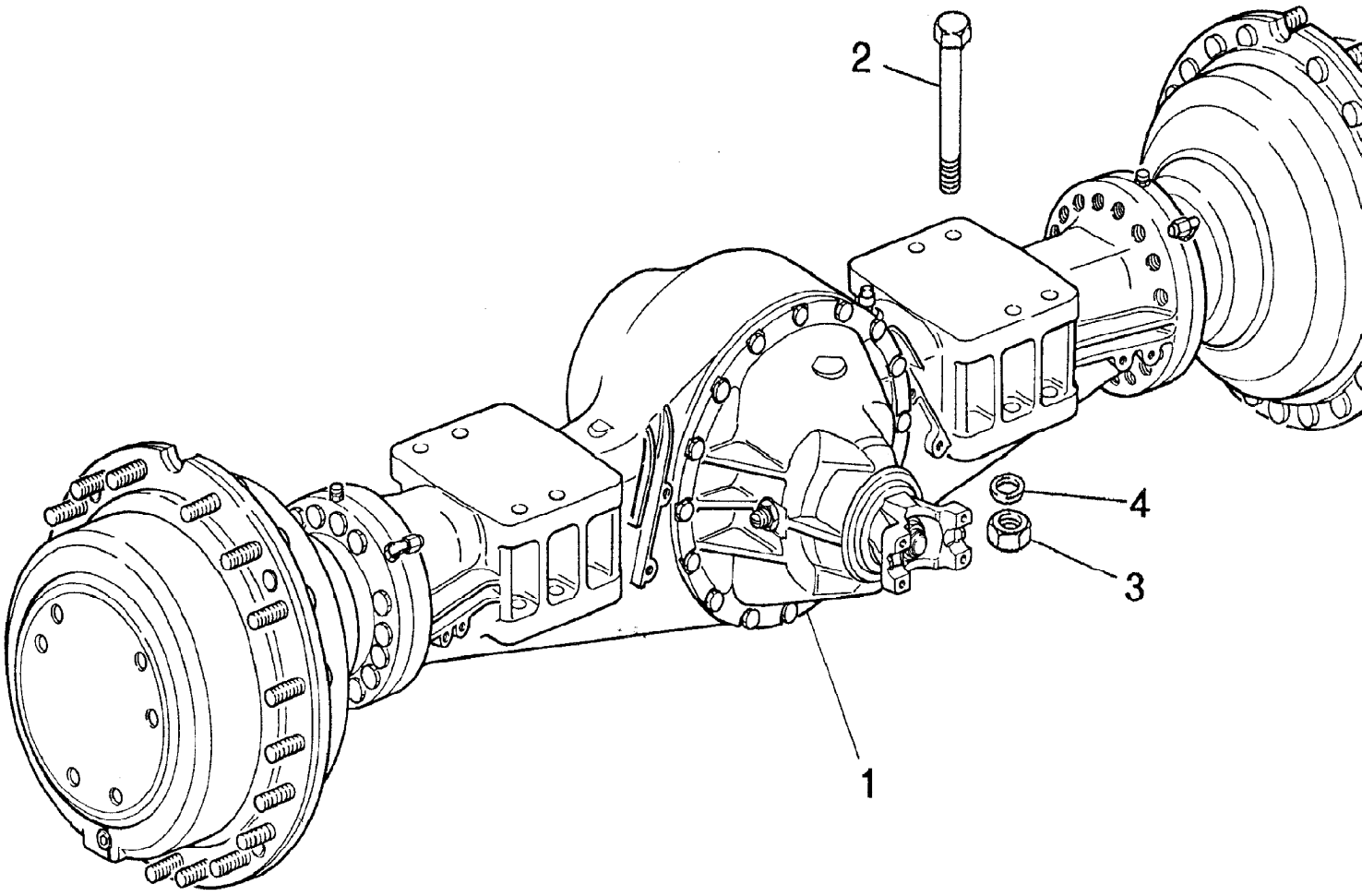

600450

9802/2740 F1-6-1 AXLE ASSEMBLY,L.S.D., FRONT

PR12,10/300163, PLUGS & SHAFTS

Item	Part no.	Change No.	Description	Remarks	Usage code	Qty
1	10/906402		Plug, oil level			1
2	10/906406		Plate, data			1
3	.		'See Remark'	See page F1-3-1		1
4	10/906403		Breather			1
5	10/906519		Shaft, axle			2
6	10/906405		Rivet			2
7	10/906401		Plug, drain			1

Machine groups

Details

Machine group	From serial no.	To serial no.
.426		
426		

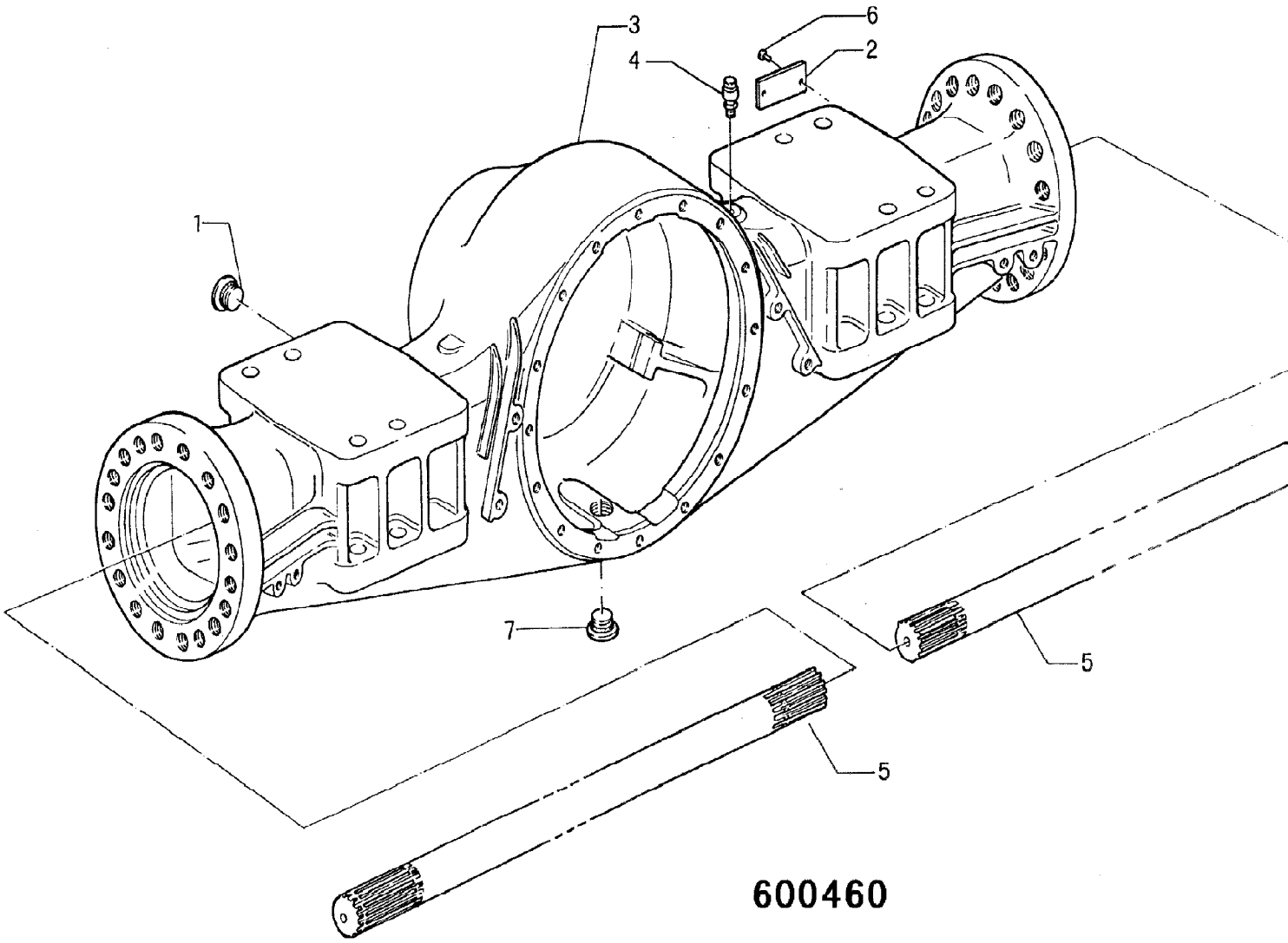

600460

9802/2740 F1-7-1 DIFFERENTIAL,L.S.D., FRONT PR12,10/300163, HOUSING ASSEMBLY

Item	Part no.	Change No.	Description	Remarks	Usage code	Qty
0A	10/300204		Differential, assembly, L.S.D.			1
1	10/906407		:Pin			2
2	10/906408		:Bearing			2
3	10/906409		:Nut, locking			2
4	10/906458		:Screw			18
5	10/906520		:Clutch, outer disc			2
6	10/906521		:Gear, side			2
7	10/300286		:Pinion, spider			1
8	10/906523		:Gear, pinion			4
9	10/906412		:Gear, side			4
10	10/906416		:Pin, split			1
11	10/906417		:Screw			8
12	10/909402		:Plate, connecting			1
13	10/909403		:Bearing			1
14	10/909404		:Pin			1
15	10/906518		:Washer			1
16	10/906527		:Bearing			1
17	10/906528		:Shim, 3.50 mm			A/R
	10/906529		:Shim, 3.60 mm			A/R
	10/906530		:Shim, 3.70 mm			A/R
	10/906531		:Shim, 3.80 mm			A/R
	10/906532		:Shim, 3.90 mm			A/R
	10/906533		:Shim, 4.00 mm			A/R
	10/906534		:Shim, 4.10 mm			A/R
	10/906535		:Shim, 4.20 mm			A/R
	10/906536		:Shim, 4.30 mm			A/R
	10/906537		:Shim, 4.40 mm			A/R
	10/906538		:Shim, 4.50 mm			A/R
18	10/906539		:Spacer			1
	10/300299		:Spacer, 21.6mm			1
	10/300300		:Spacer, 21.7mm			1
	10/300301		:Spacer, 21.725mm			1
	10/300302		:Spacer, 21.75 mm			1
	10/300303		:Spacer, 21.775 mm			1
	10/300304		:Spacer, 21.8 mm			1
	10/300305		:Spacer, 21.825 mm			1
	10/300306		:Spacer, 21.85 mm			1
	10/300307		Spacer, 21.875 mm			1

	10/300308		:Spacer, 21.9 mm			1
	10/300309		:Spacer, 21.925 mm			1
	10/300310		:Spacer, 21.95 mm			1
	10/300311		:Spacer, 21.975 mm			1
	10/300312		:Spacer, 22 mm			1
	10/300313		:Spacer, 22.025 mm			1
	10/300314		:Spacer, 22.050 mm			1
	10/300315		:Spacer, 22.1 mm			1
	10/300316		:Spacer, 22.2 mm			1
	10/300317		:Spacer, 22.3 mm			1
19	.		'See Remark'	Item 19 not used on this assembly		1
20	10/906456		:Pin			1
21	10/906457		:Nut			1
22	10/906458		:Screw			4
23	10/906562		:Flange, assembly			1
24	10/906563		:Bearing			1
25	10/906461		:Seal, oil, 65x120x12/14			1
26	10/906462		:Washer			1
27	10/906463		:Nut			1
28	10/906564		:Screw			16
29	10/906465		:Plate			1
30	10/906405		:Rivet			2
31	10/906565		:Shim, disc 3.00 mm			A/R
	10/906566		:Shim, disc 3.10 mm			A/R
	10/906567		:Shim, disc 3.20 mm			A/R
	10/906568		:Shim, disc 3.30 mm			A/R
32	10/906569		:Disc, clutch, inner			A/R
33	10/300170		:Housing, assembly, differential			1
34	10/300203		:Gear, crownwheel and pinnion			1
35	10/906707		:Casing, assembly			1
36	10/906573		:Differential, assembly, c/w trunnion and gears			1

Machine groups

Details

Machine group	From serial no.	To serial no.
.426		
426		

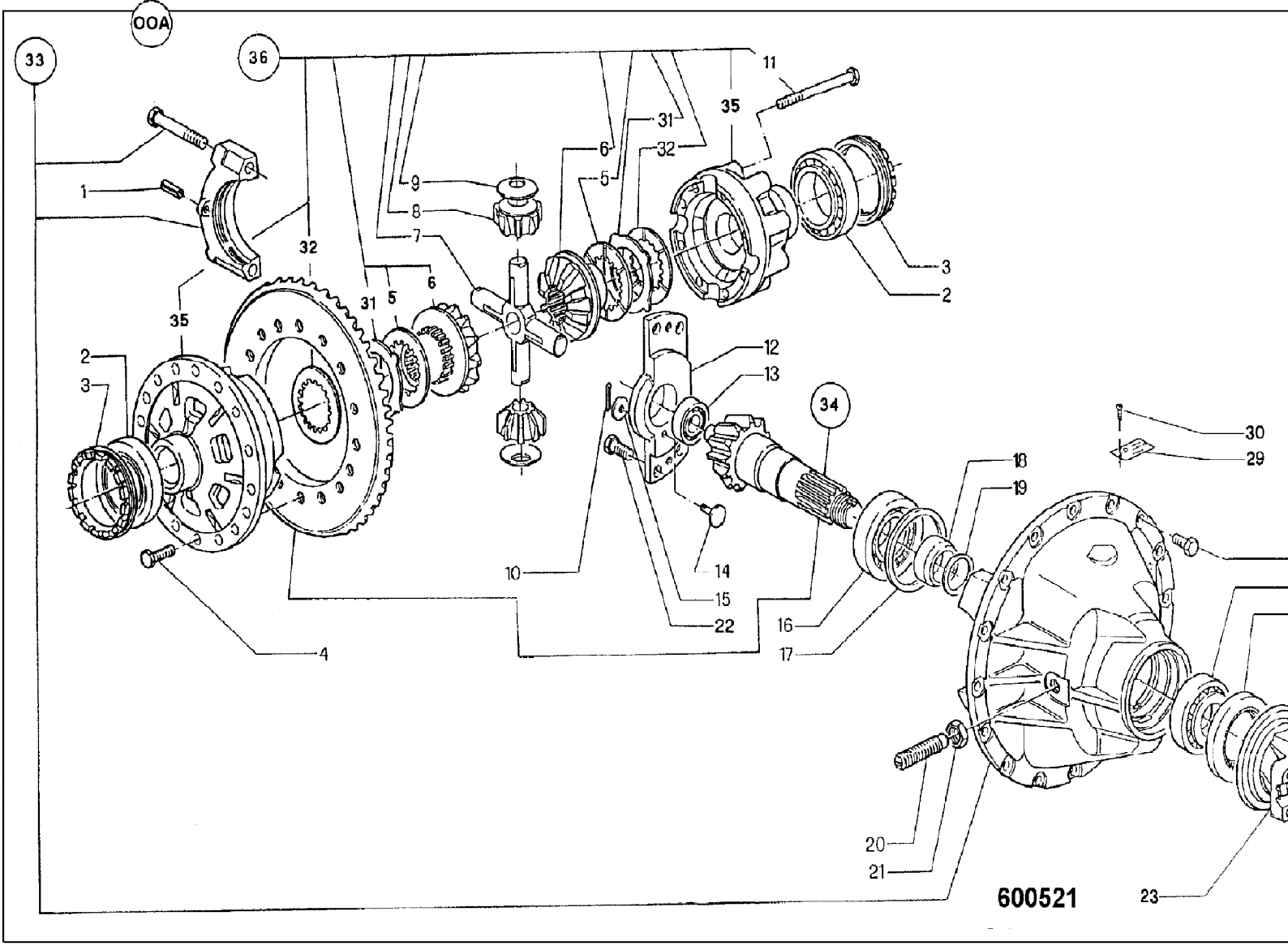
00A
33
36
11
35
31
6
32
5
9
8
7
1
32
6
31
5
35
2
3
12
13
34
30
29
18
19
10
14
15
22
16
17
4
20
21
23
600521

9802/2740 F1-8-1 HUB & COMPONENTS, FRONT PR12,10/300163

Item	Part no.	Change No.	Description	Remarks	Usage code	Qty
1	10/906574		Cover			2
2	10/906575		O Ring			2
3	450/24415		Stop, shaft			2
4	450/24423		Bolt, M8 x 25			8
5	10/906576		Housing			2
6	10/906577		Pin			6
7	10/906479		Plug, C/w O ring			2
8	450/24417		Screw, hex hd.			12
9	10/906578		Shim, thrust bearing, 1.5 mm			6
10	10/906579		Bearing			6
11	10/906580		Spacer			6
12	10/906581		Gear			2
13	10/906582		Shim, thrust bearing, 3.00 mm			6
14	10/906583		Gear			2
15	10/906584		Ring, snap			2
16	10/906585		Drum, brake disc			2
17	10/300200		Disc, brake			8
18	10/906587		Shim, pressure plate, 4.00 mm			8
	10/906588		Shim, pressure plate, 4.5 mm			8
	10/906589		Shim, pressure plate, 5.00 mm			8
	10/906590		Shim, pressure plate, 4.25 mm			8
19	10/906591		Pin			12
20	10/906592		Ring, locking			2
21	10/908004		Kit, pressure plate			2
	10/906494		:Spring			2
	10/906495		:Ring			2
22	10/906711		Spring	N.L.A. use 10/908004		6
23	10/906713		Cup, retaining	N.L.A. use 10/908004		6
24	450/24414		Plate, locking			4
25	10/906496		Nut, locking			2
26	450/24418		Ring, snap			2
27	10/906497		Bearing, thrust			2
28	10/906498		Bearing			2
29	10/906594		Gear			2
30	10/906595		Gear			2
31	10/906596		Hub, wheel			2
32	450/24431		Stud, wheel			38
33	10/906597		Gasket			2

34	10/906598		Piston			2
35	10/906599		Gasket			2
36	10/906601		Bearing			2
37	10/906602		Seal			2
38	10/906603		Hub, sleeve, right hand			1
39	10/906509		Breather, oil			2
40	10/908886		Adapter, elbow, 90 degree			2
41	10/906604		Gasket			2
42	10/906605		Hub, sleeve, left hand			1
43	10/906606		Screw			32
44	10/906712		Pin, steady	N.L.A. use 10/908004		6
45	10/906714		Ring, locking	N.L.A. use 10/908004		6
46	10/906514		Cover, oil breather cowl			2
47	450/24432		Guard			2
48	10/906607		Cover, assembly			2
49	826/11355		Nut, wheel, yellow finish			38

Machine groups

Details

Machine group	From serial no.	To serial no.
.426		
426		

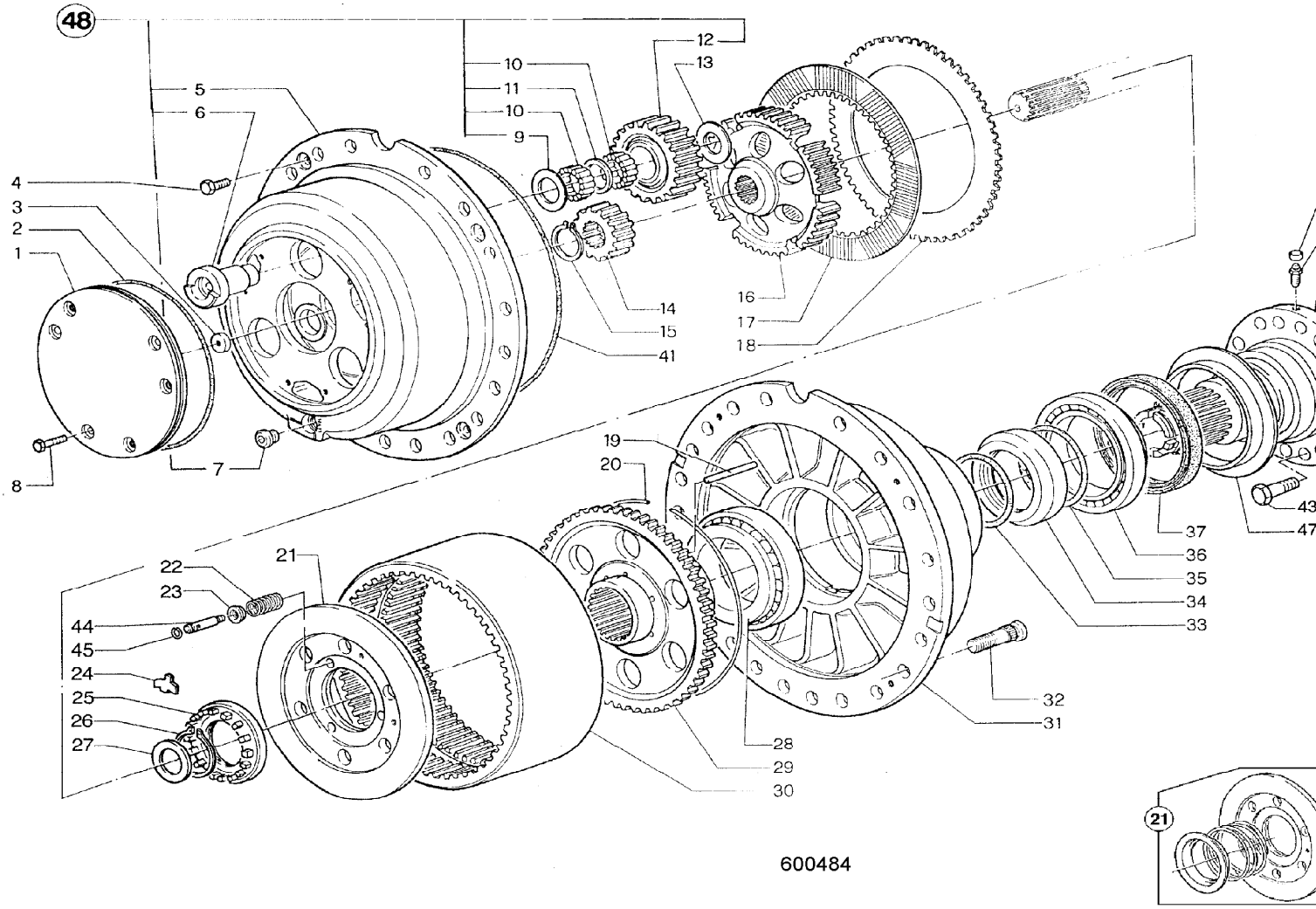
48
1
2
3
4
5
6
7
8
9
10
11
10
12
13
14
15
41
16
17
18
19
20
21
22
23
44
45
24
25
26
27
28
29
30
31
32
33
34
35
36
37
43
47
21
600484

9802/2740 F2-1-1 AXLE ASSEMBLY, REAR PR12,10/300162, DATA PLATE REF. 3286073

Item	Part no.	Change No.	Description	Remarks	Usage code	Qty
1	10/300162		Axle, rear, PR12 B.O.		P/Ex	1

Machine groups

Details

Machine group	From serial no.	To serial no.
.426		
426		

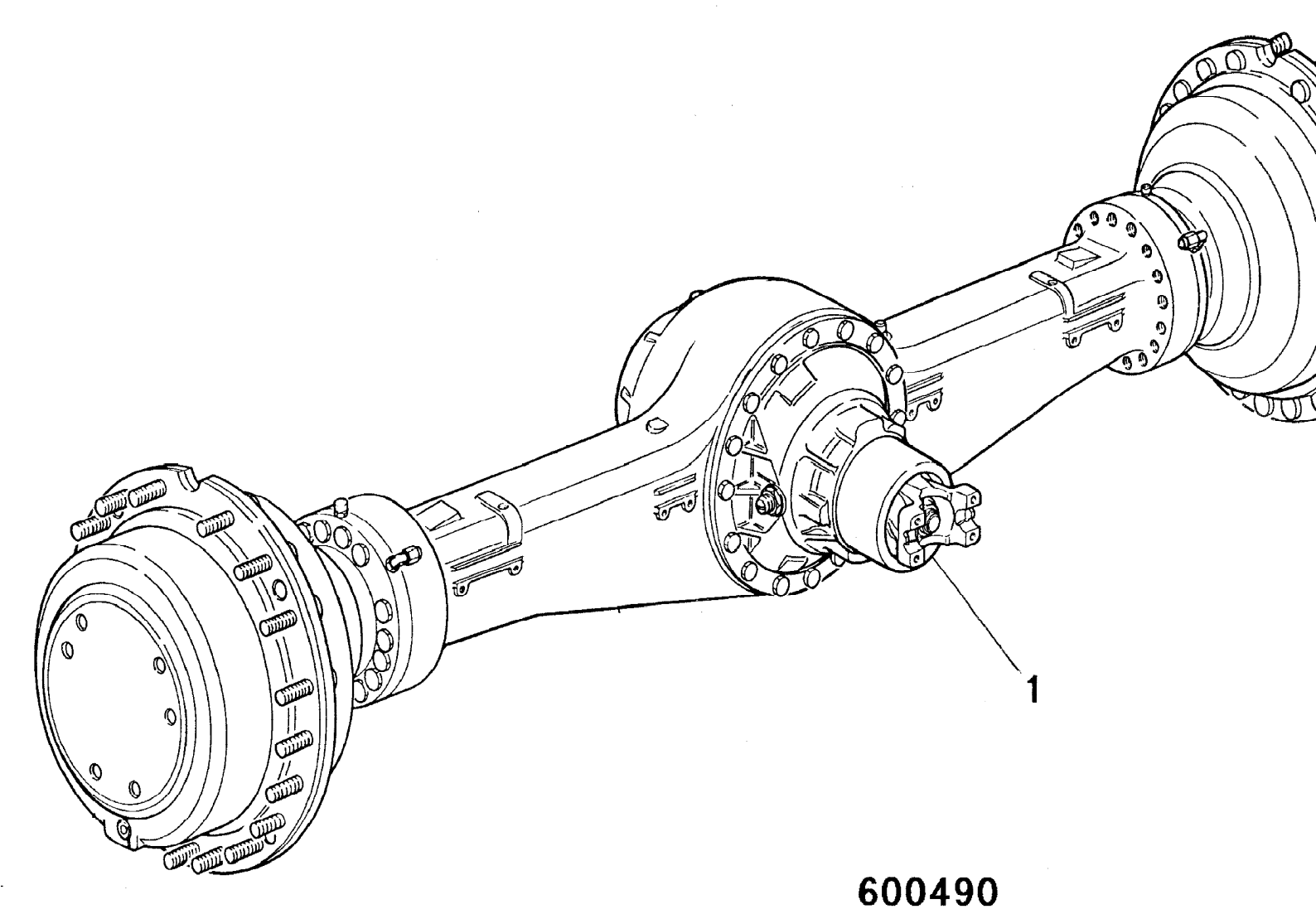

9802/2740 F2-16-1 AXLE PIVOT GREASING

Item	Part no.	Change No.	Description	Remarks	Usage code	Qty
1	816/20034		Adapter, 1/8" B.S.P M/F			2
2	1403/0001		Washer, aluminium			2
3	649/51936		Hose, 1/8BSP x 2000mm lg.			2
3A	649/51937		Hose, 1/8BSP x 2170mm lg.			1
4	200/04604		Adapter, grease			2
5	835/00017		Cap, grease nipple			2
6	821/00180		Clamp, top			1
7	821/00181		Clamp, base			1
8	821/00182		Insert, clamp			1
9	1315/0408D		Setscrew, M10 x 30			1
10	1420/0008D		Washer, M10			1
11	1370/0303D		Nut, M10			1
12	816/20041		Adapter, 90 deg.			1
13	1604/0001		Adapter			1

Machine groups

Details

Machine group	From serial no.	To serial no.
.426		
426		

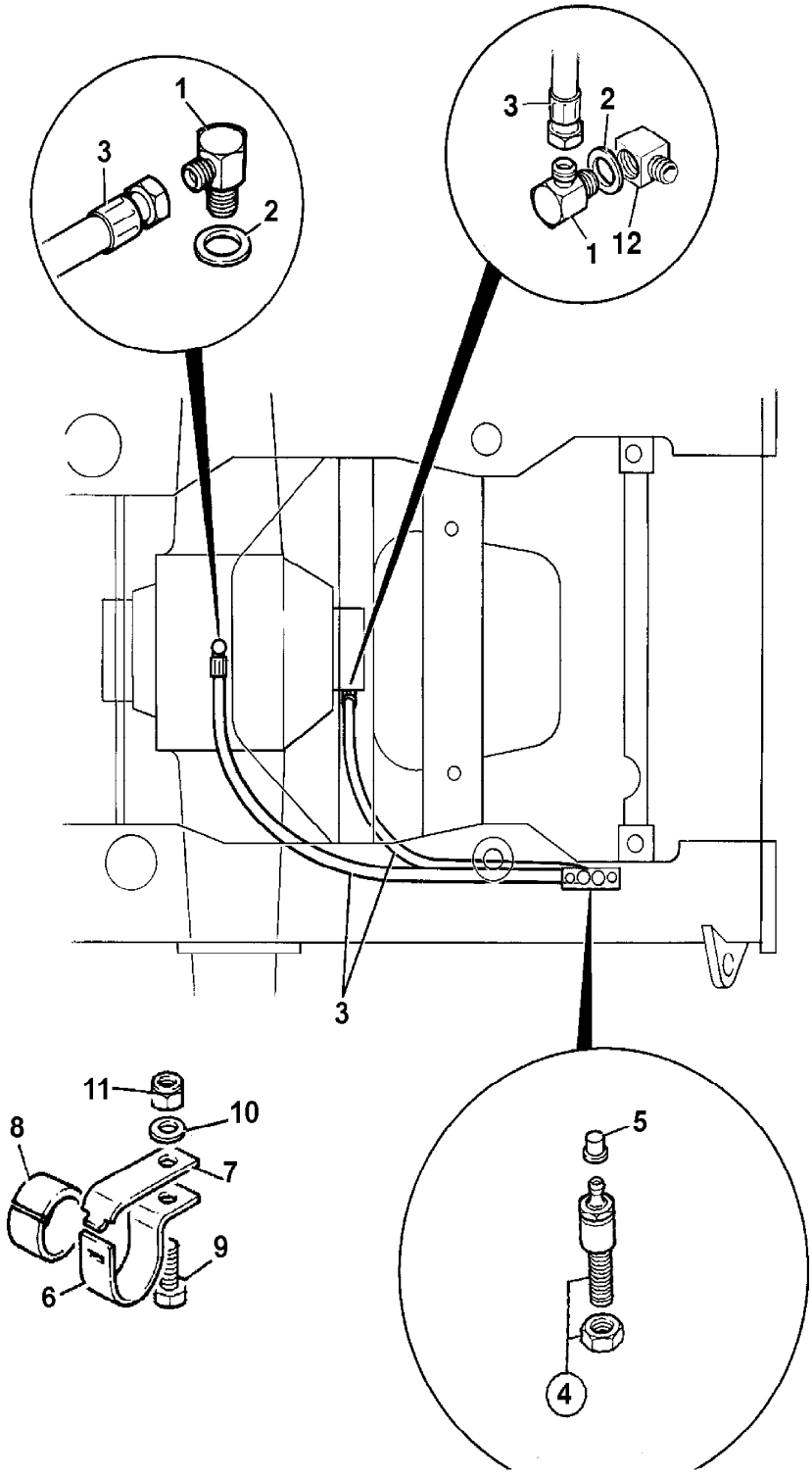

375910

9802/2740 F2-2-1 AXLE ASSEMBLY, REAR PR12,10/300162, PLUGS & SHAFTS

Item	Part no.	Change No.	Description	Remarks	Usage code	Qty
	10/906708		Shaft, axle			2
2	10/906402		Plug, oil level			1
3	10/906709		Casing, axle			1
4	10/906403		Breather			1
5	10/906406		Plate, data			1
6	10/906405		Rivet			2
7	10/906401		Plug, drain			1

Machine groups

Details

Machine group	From serial no.	To serial no.
.426		
426		

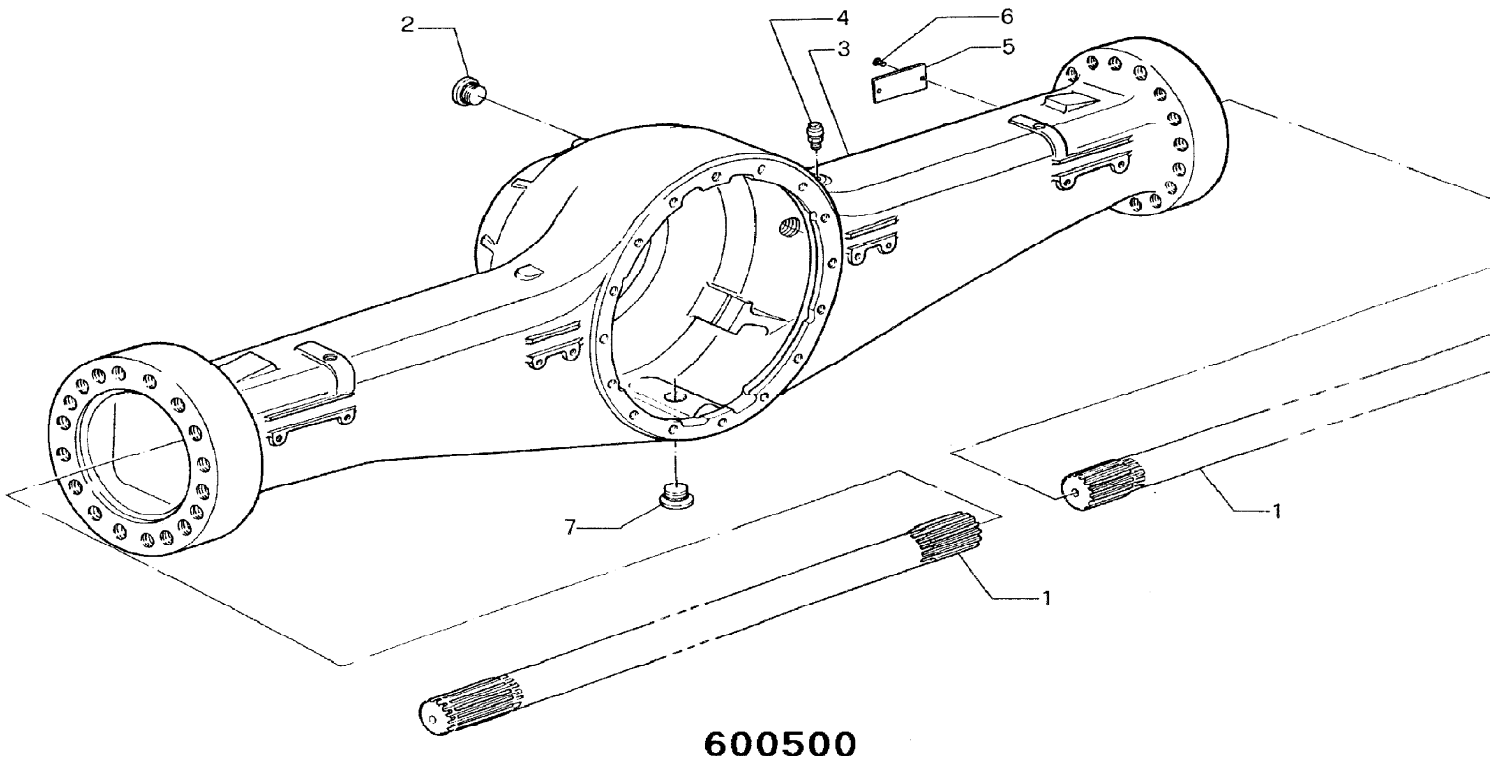

600500

9802/2740 F2-23-1 AXLE PIVOT, REAR, STD DUTY AXLES

Item	Part no.	Change No.	Description	Remarks	Usage code	Qty
1	808/00422		Bearing, rear axle, trunnion			1
2	265/02885		Mounting, rear axle			1
3	265/02886		Housing, front seal			1
4	331/50647		Trunnion			1
5	331/44618		Housing, bearing			1
6	823/10626		Washer, thrust			1
7	813/00430		Seal, front, axle pivot			2
8	813/10273		Seal			1
9	1315/3814D		Bolt, M20x60, dacromet			6
10	1391/3724		Capscrew			8
11	1422/0011D		Washer, hardened			8
12	4101/0251		Sealant, Threadlock, 50ml			A/R
13	1316/3718D		Bolt			8
14	331/44619		Cap, end			1
15	808/00423		Bearing, rear axle trunnion	Rear axle - front		1
16	835/00140		Plug, protection			8

Machine groups

Details

Machine group	From serial no.	To serial no.
.426		
426		

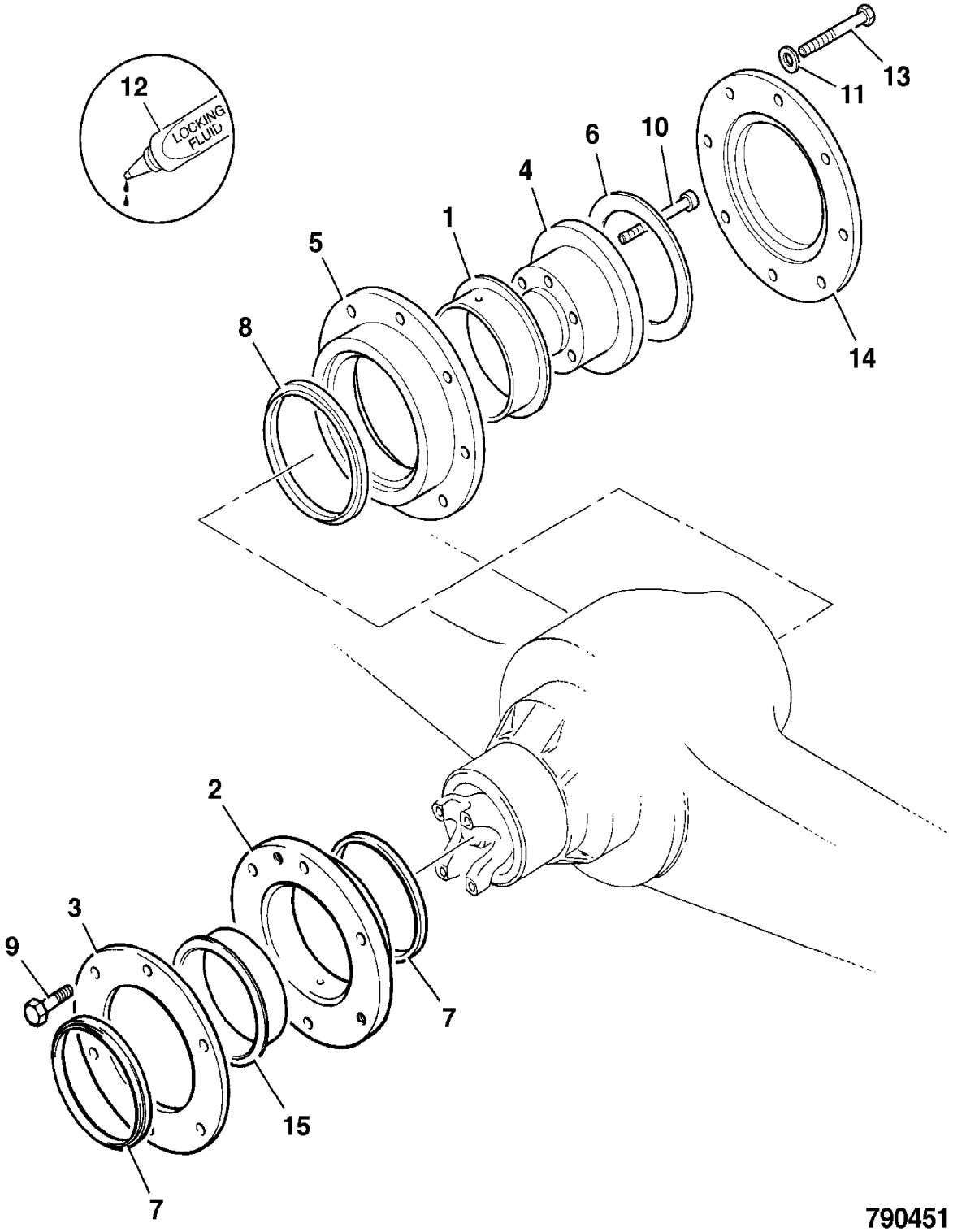
12
LOCKING FLUID
13
11
10
6
4
1
5
8
14
2
3
9
7
15
7
790451

9802/2740 F2-3-1 DIFFERENTIAL, REAR PR12,10/300162, HOUSING ASSEMBLY

Item	Part no.	Change No.	Description	Remarks	Usage code	Qty
0A	10/300205		Differential, differential, assembly			1
1	10/906407		:Pin			2
2	10/906408		:Bearing			2
3	10/906409		:Nut, locking			2
4	10/906410		:Screw			18
5	10/906701		:Bearing, thrust			2
6	10/906702		:Gear, side			2
7	10/906413		:Pin, trunnion			1
8	10/906414		:Gear, pinnion			4
9	10/906415		:Bearing, thrust			4
10	10/906416		:Pin, split			1
11	10/906703		:Screw			8
12	10/906418		:Plate, connecting			1
13	10/906419		:Bearing			1
14	10/906420		:Pin			1
15	10/906518		:Washer			1
16	10/906421		:Bearing			1
17	10/906422		:Shim, 3.50 mm			A/R
	10/906423		:Shim, 3.60 mm			A/R
	10/906424		:Shim, 3.70 mm			A/R
	10/906425		:Shim, 3.80 mm			A/R
	10/906426		:Shim, 3.90 mm			A/R
	10/906427		:Shim, 4.00 mm			A/R
	10/906428		:Shim, 4.10 mm			A/R
	10/906429		:Shim, 4.2mm			A/R
	10/906430		:Shim, 4.3mm			A/R
	10/906431		:Shim, 4.4mm			A/R
	10/906432		:Shim, 4.5mm			A/R
18	10/906433		:Spacer			1
19	10/906434		:Shim, 0.5mm			1
	10/906435		:Shim, 1.0mm			1
	10/906436		:Shim, 1.025mm			A/R
	10/906437		:Shim, 1.05mm			A/R
	10/906438		:Shim, 1.075mm			A/R
	10/906439		:Shim, 1.1mm			A/R
	10/906440		:Shim, 1.125mm			A/R
	10/906441		:Shim, 1.15mm			A/R
	10/906442		:Shim, 1.175mm			A/R

	10/906443		:Shim, 1.2mm			A/R
	10/906444		:Shim, 1.225mm			A/R
	10/906445		:Shim, 1.250mm			A/R
	10/906446		:Shim, 1.275mm			A/R
	10/906447		:Shim, 1.300mm			A/R
	10/906448		:Shim, 1.325mm			A/R
	10/906449		:Shim, 1.350mm			A/R
	10/906450		:Shim, 1.375mm			A/R
	10/906451		:Shim, 1.400mm			A/R
	10/906452		:Shim, 1.425mm			A/R
	10/906453		:Shim, 1.450mm			A/R
	10/906454		:Shim, 1.475mm			A/R
	10/906455		:Shim, 1.500mm			A/R
20	10/906456		:Pin			1
21	10/906457		:Nut			1
22	10/906458		:Screw			4
23	10/906459		:Flange, complete			1
24	10/906460		:Bearing			1
25	10/906461		:Seal, oil, 65x120x12/14			1
26	10/906462		:Washer			1
27	10/906463		:Nut			1
28	10/906464		:Screw			16
33	10/906517		:Housing, differential support, complete			1
34	10/300206		:Gear, crowmwheel and pinnion			1
35	10/906704		:Casing, assembly			1

Machine groups

Details

Machine group	From serial no.	To serial no.
.426		
426		

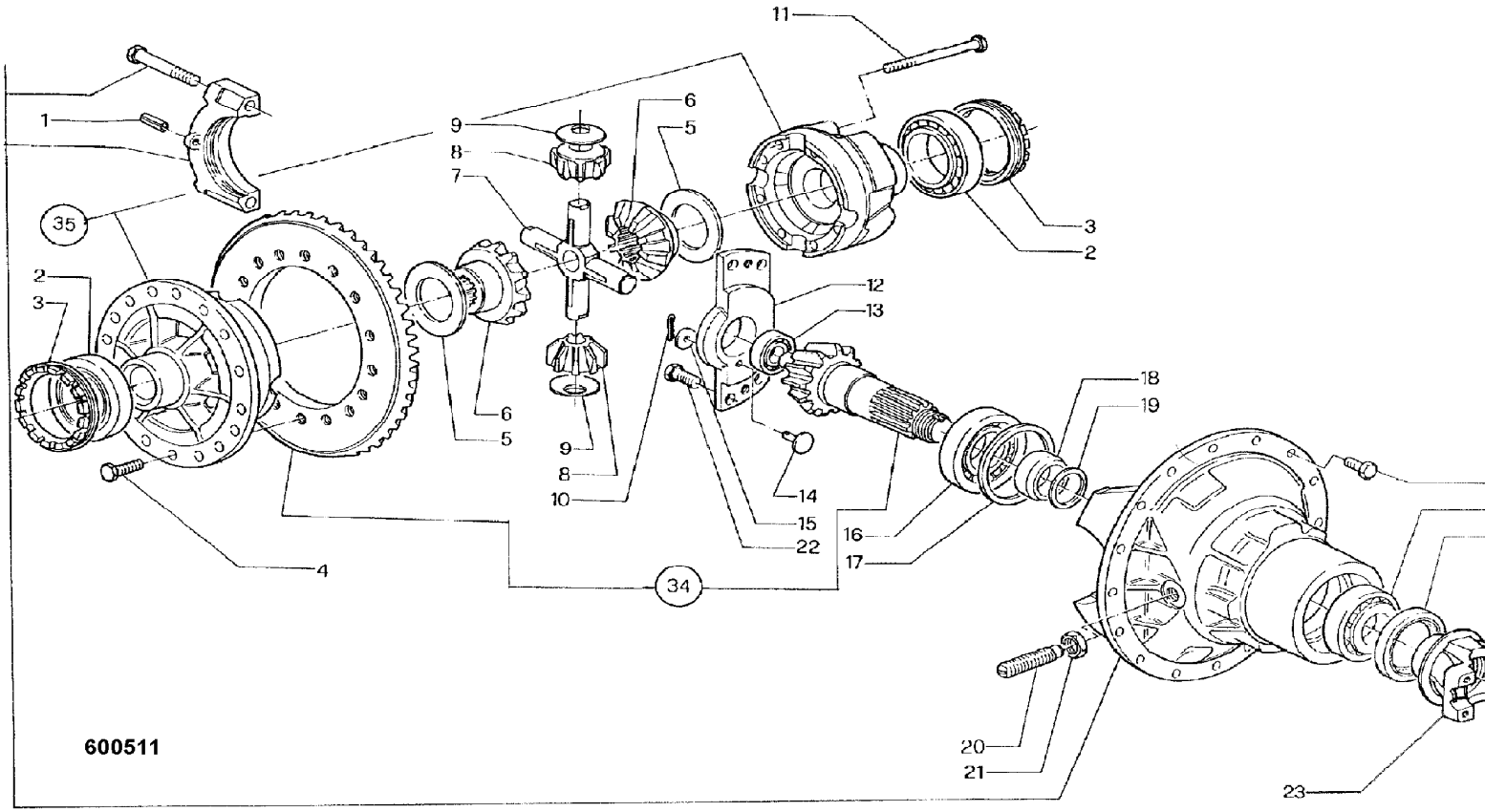
11
1
9
6
5
8
7
35
3
2
2
3
12
13
18
19
6
5
9
8
10
14
15
22
16
17
4
34
20
21
23
600511

9802/2740 F2-4-1 HUB & COMPONENTS, REAR PR12,10/300162

Item	Part no.	Change No.	Description	Remarks	Usage code	Qty
1	10/906475		Cover			2
2	10/906476		O Ring			2
3	450/24415		Stop, shaft			2
4	450/24423		Bolt, M8 x 25			8
5	10/906477		Bracket, support			2
6	10/906478		Pin			6
7	10/906479		Plug, C/w O ring			2
8	450/24417		Screw, hex hd.			12
9	450/24424		Washer, thrust			12
10	450/24426		Bearing, needle roller	25 off/gear		150
11	450/24427		Spacer			6
12	10/906481		Gear, pinion			6
13	10/906482		Seal, O ring			2
14	10/906483		Gear, side			2
15	10/906484		Ring, snap			2
	10/906489		Shim, pressure plate 4.25m, m			8
	10/906490		Shim, pressure plate 5mm			8
16	10/906485		Drum, brake disc			2
17	15/920147		Disc, brakes			8
18	10/906487		Shim, pressure plate 4mm			8
	10/906488		Shim, pressure plate 4.5mm			8
19	10/906491		Pin			12
20	10/906492		Spring, lock ring			2
21	10/908102		Kit, pressure plate			2
	10/906494		:Spring			2
	10/906495		:Ring			2
22	10/906711		Spring	N.L.A. use 10/908102		6
23	10/906713		Cup, retaining	N.L.A. use 10/908102		6
24	450/24414		Plate, locking			4
25	10/906496		Nut, locking			2
26	450/24418		Ring, snap			2
27	10/906497		Bearing, thrust			2
28	10/906498		Bearing			2
29	10/906499		Gear, support			2
30	10/906502		Gear			2
31	10/906501		Hub, wheel			2
32	450/24431		Stud, wheel			24
33	10/906503		O Ring			2

34	10/906504		Piston			2
35	10/906505		O Ring			2
36	10/906506		Bearing			2
37	10/906507		Seal, oil			2
38	10/906508		Flange, right side complete, wheel hub sleeve.			1
39	10/906509		Breather, oil			2
40	10/906510		Flange, left side complete w, heel hub sleeve			1
41	10/906511		Screw			32
42	10/906712		Pin, steady	N.L.A. use 10/908102		6
43	10/906714		Ring, locking	N.L.A. use 10/908102		6
44	10/906514		Cover, oil breather cowl			2
45	10/908886		Adapter, elbow, 90 degree			2
46	10/906515		Bracket, complete support			2
47	826/11355		Nut, wheel, yellow finish			24

Machine groups

Details

Machine group	From serial no.	To serial no.
.426		
426		

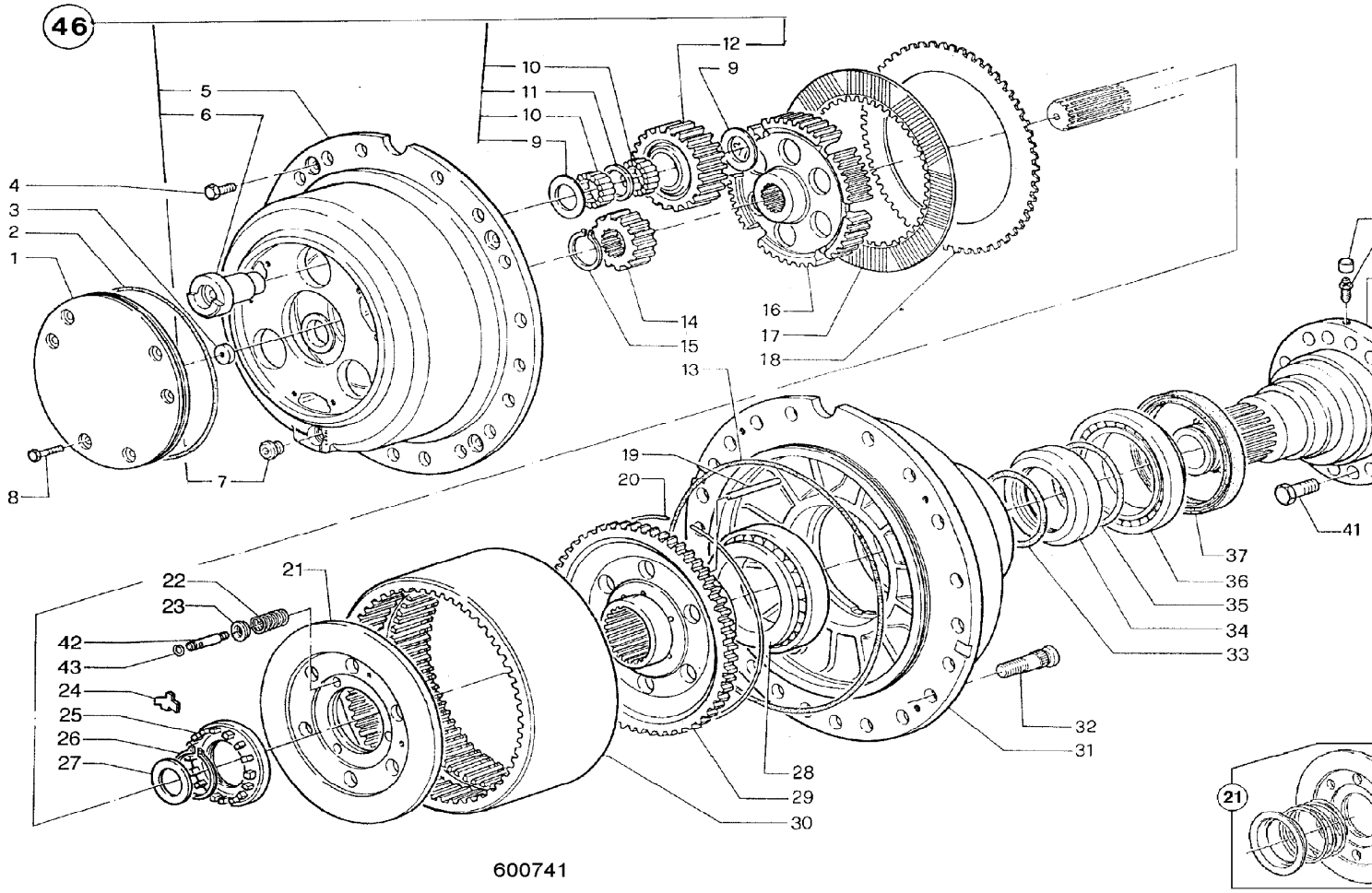
46
1
2
3
4
5
6
7
8
9
10
11
12
13
14
15
16
17
18
19
20
21
22
23
24
25
26
27
28
29
30
31
32
33
34
35
36
37
41
42
43
21

600741

9802/2740 F2-5-1 AXLE ASSEMBLY,L.S.D., REAR

PR10,10/300164, DATA PLATE REF.3286093

Item	Part no.	Change No.	Description	Remarks	Usage code	Qty
1	10/300164		Axle, rear, LSD B.O.		P/Ex	1

Machine groups

Details

Machine group	From serial no.	To serial no.
.426		
426		

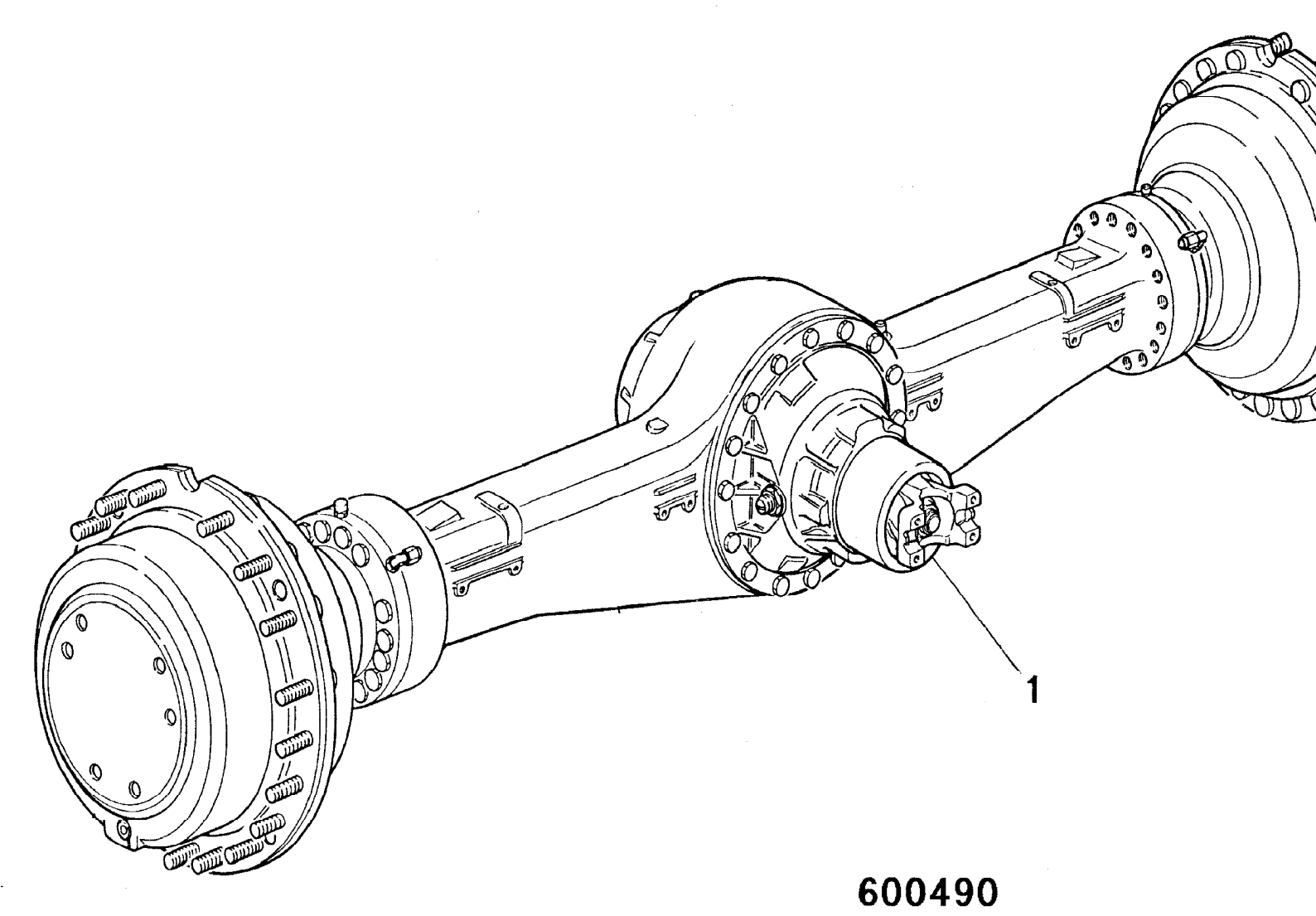

9802/2740 F2-6-1 AXLE ASSEMBLY, REAR PR10,10/300164, PLUGS & SHAFTS

Item	Part no.	Change No.	Description	Remarks	Usage code	Qty
	10/906708		Shaft, axle			2
2	10/906402		Plug, oil level			1
3	10/906709		Casing, axle			1
4	10/906403		Breather			1
5	10/906406		Plate, data			1
6	10/906405		Rivet			2
7	10/906401		Plug, drain			1

Machine groups

Details

Machine group	From serial no.	To serial no.
.426		
426		

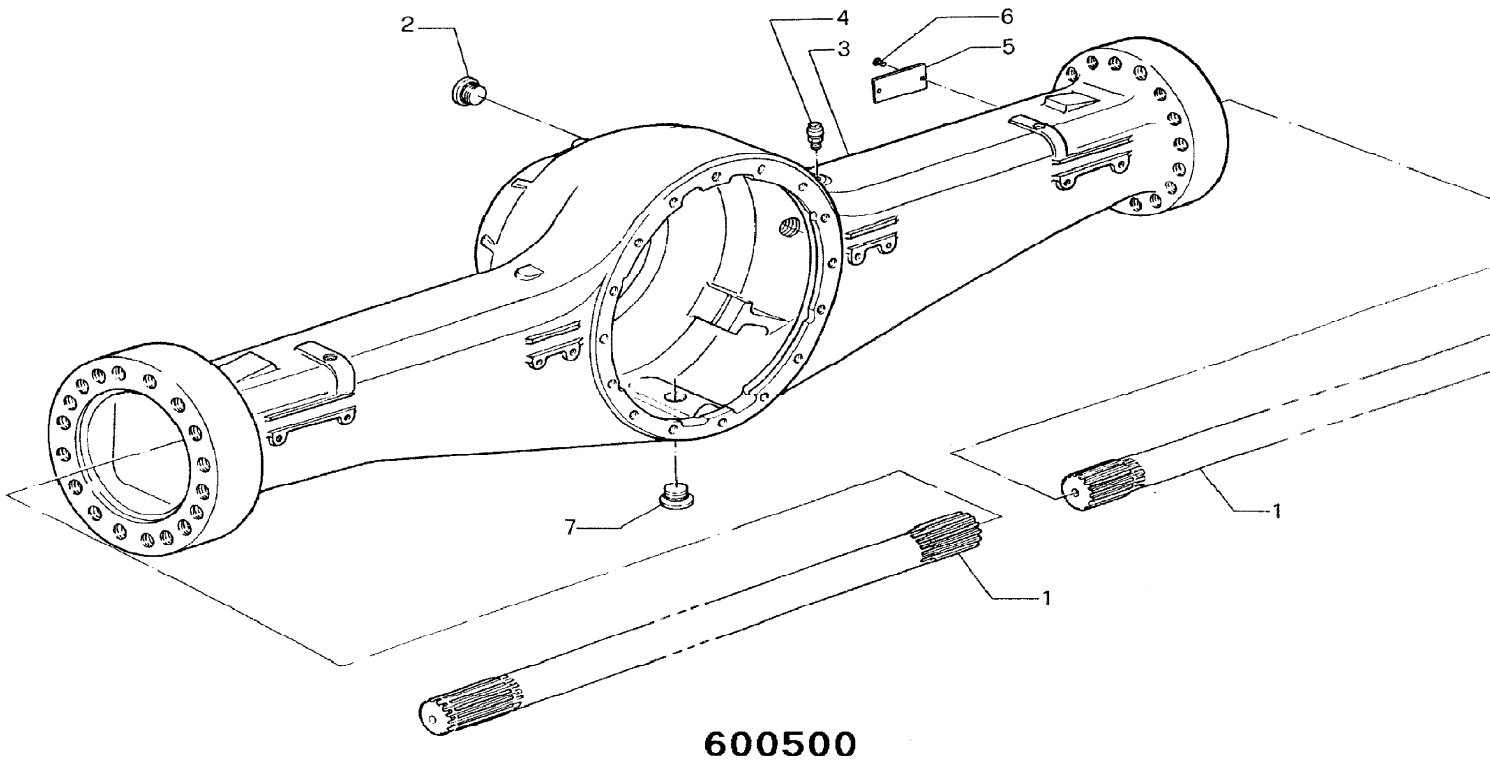

600500

9802/2740 F2-7-1 DIFFERENTIAL,L.S.D., REAR PR10,10/300164, HOUSING ASSEMBLY

Item	Part no.	Change No.	Description	Remarks	Usage code	Qty
0A	10/300207		Differential, assembly, LSD			1
1	10/906407		:Pin			2
2	10/906408		:Bearing			2
3	10/906409		:Nut, locking			2
4	10/906410		:Screw			18
5	10/906411		:Disc, outer clutch			2
6	10/906412		:Gear, side			2
7	10/906413		:Pin, trunnion			1
8	10/906414		:Gear, pinnion			4
9	10/906415		:Bearing, thrust			4
10	10/906416		:Pin, split			1
11	10/906417		:Screw			8
12	10/906418		:Plate, connecting			1
13	10/906419		:Bearing			1
14	10/906420		:Pin			1
15	10/906518		:Washer			1
16	10/906421		:Bearing			1
17	10/906422		:Shim, 3.50 mm			A/R
	10/906423		:Shim, 3.60 mm			A/R
	10/906424		:Shim, 3.70 mm			A/R
	10/906425		:Shim, 3.80 mm			A/R
	10/906426		:Shim, 3.90 mm			A/R
	10/906427		:Shim, 4.00 mm			A/R
	10/906428		:Shim, 4.10 mm			A/R
	10/906429		:Shim, 4.2mm			A/R
	10/906430		:Shim, 4.3mm			A/R
	10/906431		:Shim, 4.4mm			A/R
	10/906432		:Shim, 4.5mm			A/R
18	10/906433		:Spacer			1
19	10/906434		:Shim, 0.5mm			1
	10/906435		:Shim, 1.0mm			1
	10/906436		:Shim, 1.025mm			A/R
	10/906437		:Shim, 1.05mm			A/R
	10/906438		:Shim, 1.075mm			A/R
	10/906439		:Shim, 1.1mm			A/R
	10/906440		:Shim, 1.125mm			A/R
	10/906441		:Shim, 1.15mm			A/R
	10/906442		:Shim, 1.175mm			A/R

	10/906443		:Shim, 1.2mm			A/R
	10/906444		:Shim, 1.225mm			A/R
	10/906445		:Shim, 1.250mm			A/R
	10/906446		:Shim, 1.275mm			A/R
	10/906447		:Shim, 1.300mm			A/R
	10/906448		:Shim, 1.325mm			A/R
	10/906449		:Shim, 1.350mm			A/R
	10/906450		:Shim, 1.375mm			A/R
	10/906451		:Shim, 1.400mm			A/R
	10/906452		:Shim, 1.425mm			A/R
	10/906453		:Shim, 1.450mm			A/R
	10/906454		:Shim, 1.475mm			A/R
	10/906455		:Shim, 1.500mm			A/R
20	10/906456		:Pin			1
21	10/906457		:Nut			1
22	10/906458		:Screw			4
23	10/906459		:Flange, complete			1
24	10/906460		:Bearing			1
25	10/906461		:Seal, oil, 65x120x12/14			1
26	10/906462		:Washer			1
27	10/906463		:Nut			1
28	10/906464		:Screw			16
29	10/906465		:Plate			1
30	10/906405		:Rivet			2
31	10/906466		:Shim, Disc 2.5mm			6
	10/906467		:Shim, Disc 2.6mm			6
	10/906468		:Shim, Disc 2.7mm			6
	10/906469		:Shim, Disc 2.8mm			6
32	10/906470		:Disc, inner, clutch			4
33	10/906517		:Housing, differential support, complete			1
34	10/300206		:Gear, crowmwheel and pinnion			1
35	10/906473		:Casing, assembly			1
36	10/906474		:Casing, assembly, c/w trunnion and gears			1

Machine groups

Details

Machine group	From serial no.	To serial no.
.426		
426		

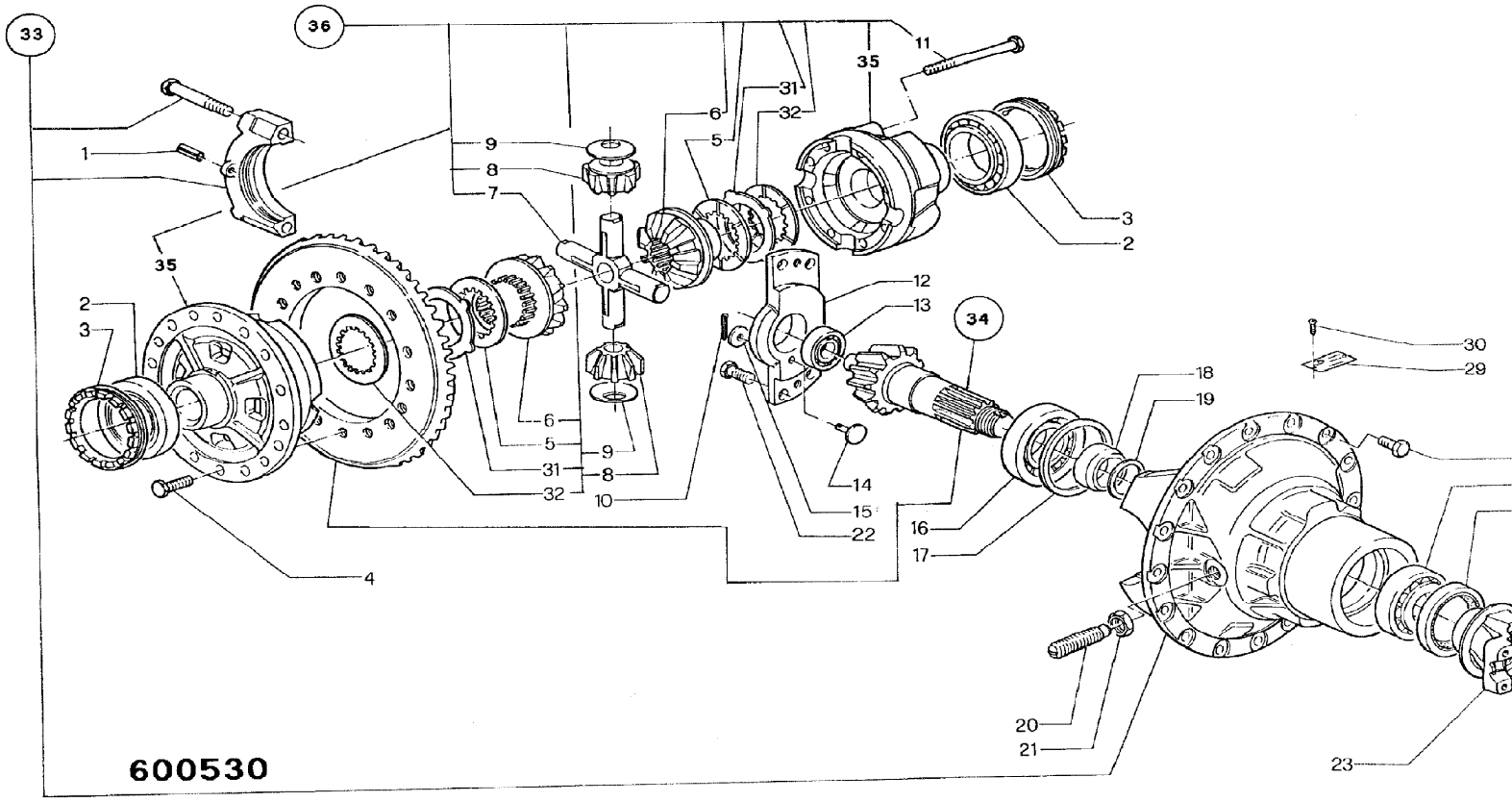
33
36
11
35
31
6
32
5
9
8
7
1
3
2
35
2
3
12
13
34
30
29
18
19
6
5
9
31
8
32
10
14
15
22
16
17
4
20
21
23
600530

9802/2740 F2-8-1 HUB & COMPONENTS, REAR PR10,10/300164

Item	Part no.	Change No.	Description	Remarks	Usage code	Qty
1	10/906475		Cover			2
2	10/906476		O Ring			2
3	450/24415		Stop, shaft			2
4	450/24423		Bolt, M8 x 25			8
5	10/906477		Bracket, support			2
6	10/906478		Pin			6
7	10/906479		Plug, C/w O ring			2
8	450/24417		Screw, hex hd.			12
9	450/24424		Washer, thrust			12
10	450/24426		Bearing, needle roller	25 off/gear		150
11	450/24427		Spacer			6
12	10/906481		Gear, pinion			6
13	10/906482		Seal, O ring			2
14	10/906483		Gear, side			2
15	10/906484		Ring, snap			2
	10/906489		Shim, pressure plate 4.25m, m			8
	10/906490		Shim, pressure plate 5mm			8
16	10/906485		Drum, brake disc			2
17	15/920147		Disc, brakes			8
18	10/906487		Shim, pressure plate 4mm			8
	10/906488		Shim, pressure plate 4.5mm			8
19	10/906491		Pin			12
20	10/906492		Spring, lock ring			2
21	10/908102		Kit, pressure plate			2
	10/906494		:Spring			2
	10/906495		:Ring			2
22	10/906711		Spring	N.L.A. use 10/908102		6
23	10/906713		Cup, retaining	N.L.A. use 10/908102		6
24	450/24414		Plate, locking			4
25	10/906496		Nut, locking			2
26	450/24418		Ring, snap			2
27	10/906497		Bearing, thrust			2
28	10/906498		Bearing			2
29	10/906499		Gear, support			2
30	10/906502		Gear			2
31	10/906501		Hub, wheel			2
32	450/24431		Stud, wheel			24
33	10/906503		O Ring			2

34	10/906504		Piston			2
35	10/906505		O Ring			2
36	10/906506		Bearing			2
37	10/906507		Seal, oil			2
38	10/906508		Flange, right side complete, wheel hub sleeve.			1
39	10/906509		Breather, oil			2
40	10/906510		Flange, left side complete w, heel hub sleeve			1
41	10/906511		Screw			32
42	10/906712		Pin, steady	N.L.A. use 10/908102		6
43	10/906714		Ring, locking	N.L.A. use 10/908102		6
44	10/906514		Cover, oil breather cowl			2
45	10/908886		Adapter, elbow, 90 degree			2
46	10/906515		Bracket, complete support			2

Machine groups

Details

Machine group	From serial no.	To serial no.
.426		
426		

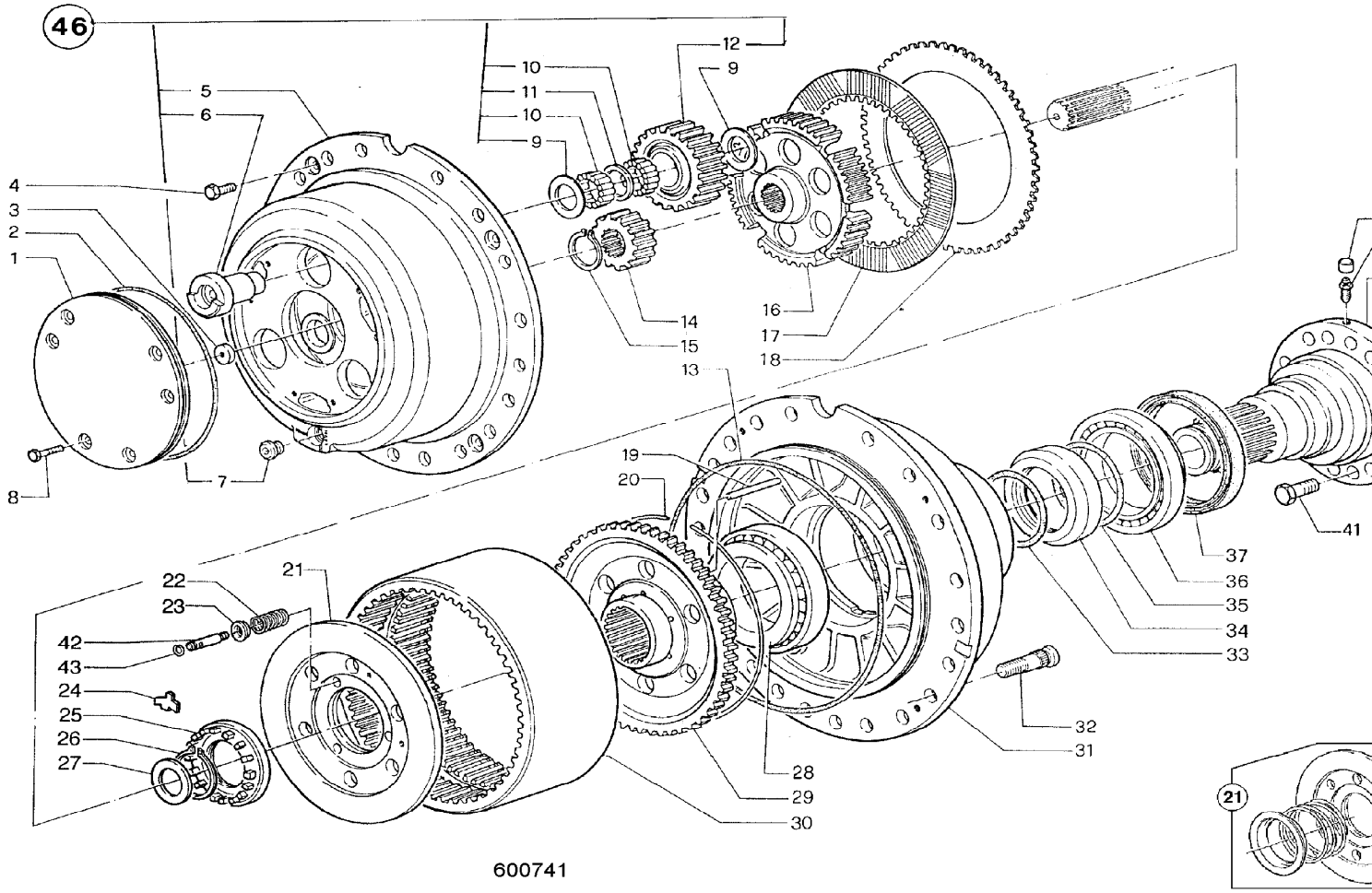
46
1
2
3
4
5
6
7
8
9
10
11
12
13
14
15
16
17
18
19
20
21
22
23
24
25
26
27
28
29
30
31
32
33
34
35
36
37
41
42
43
21

600741

9802/2740 F3-1-1 WHEELS & TYRES, 3 PIECE, MICHELIN

Item	Part no.	Change No.	Description	Remarks	Usage code	Qty
1	269/20034		Wheel, and tyre assembly, Michelin XTLA		A	4
	269/20035		Wheel, and tyre assembly, Michelin XHA		B	4
	269/20075		Wheel, and tyre assembly, Michelin XHF		C	4
	269/20107		Wheel, and tyre assembly, Michelin XLD65-1L3T		D	4
	269/20108		Wheel, and tyre assembly, Michelin XLD65-1SL3T		E	4
	269/20029		Wheel, and tyre assembly, XRO1A		F	4
	269/20030		Wheel, and tyre assembly, XMINED2		G	4
	269/30084		Wheel, and tyre assembly, michelin XTLA		H	4
	269/30085		Wheel, and tyre assembly, michelin XHA		I	4
	269/30086		Wheel, and tyre assembly, michelin XLDD2A		J	4
	269/30087		Wheel, and tyre assembly, michelin XMINE D2		K	4
	269/30197		Wheel, and tyre assembly, Michelin XLD65-1L3T		L	4
	269/30198		Wheel, and tyre assembly, Mich. XLD65-1'S'L3T		M	4
	269/30199		Wheel, and tyre assembly, Michelin XRD1A		N	4
	269/30085		Wheel, and tyre assembly, michelin XHA		P	4
	331/62431		Wheel, WandT ASSY 600R25 MICH, XLD L3T JCB 426/36	Sales special 8087	Q	4
2	41/919000		:Wheel, 3 piece		A,B,C,D,E	1
	41/919200		:Wheel, 3 piece		F,G	1
	41/922100		:Wheel, narrow, (2500 wide)		HIJKLMNPQ	1
2A	41/900502		::Ring, lock		FG	1
2B	41/908402		::Flange		A,B,C,D,E	1
	41/919201		::Flange		F,G	1
	41/922102		::Flange		HIJKLMN	1
3	265/00500		:Valve, Angled		FG	1
	253/11801		Valve		Q	1
4	42/101700		:Tyre, 20.5-25x12 ply XRD1A, Michelin		A,N	1
	42/105200		:Tyre, Michelin XHA, 20.5-25x1star L3		B,I,P	1

	42/108400		:Tyre, 555/70R25 XHF, Michelin		C	1
	42/925150		:Tyre, Michelin, 550/65R25 XLD L3		D,L	1
	42/102000		:Tyre, 17.5-25x 1 star, Michelin XRD1A		F	1
	42/104000		:Tyre, Michelin XMINED2, 17.5-25x12PR L5		G	1
	42/925151		:Tyre, Michelin, 550/65R25XLD SUPERL3		E,M	1
	42/107100		:Tyre, Michelin, 20.5 x 25 XTLA		H	1
	42/107200		:Tyre, Michelin, 20.5 x 25 XLDD2A		J	1
	42/104200		:Tyre, 20.5x25 D2 L5, Michelin XMINE		K	1
	42/925351		Tyre, 600/65 R25 MICH, XLD L3T		Q	1
5	826/11355		:Nut, wheel, yellow finish			12

Machine groups

Details

Machine group	From serial no.	To serial no.
.426		
426		

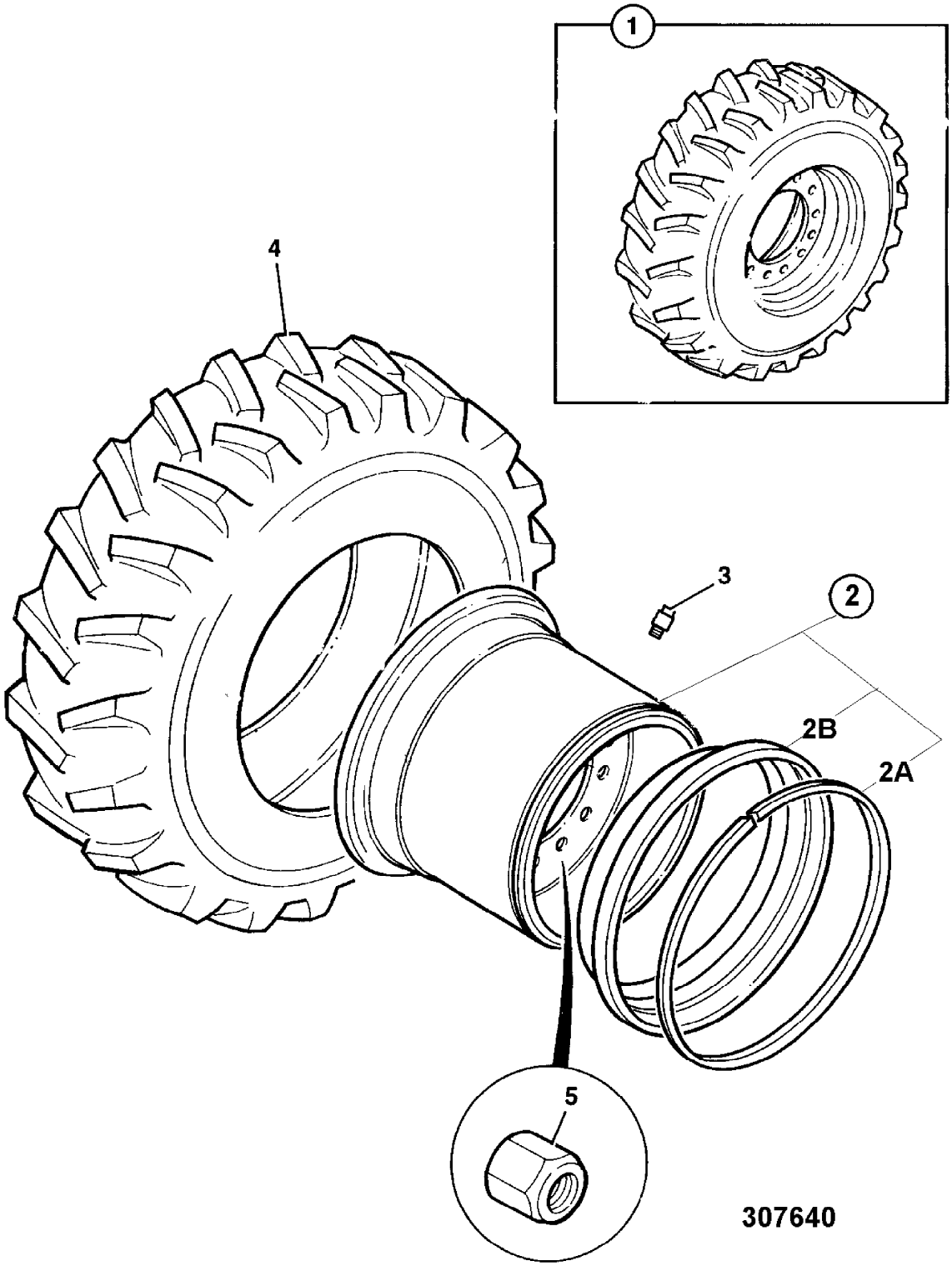
1
4
3
2
2B
2A
5
307640

9802/2740 F3-10-1 WHEELS & TYRES, 3 PIECE, FIRESTONE

Item	Part no.	Change No.	Description	Remarks	Usage code	Qty
1	269/30082		Wheel, and tyre assembly, firestone			4
2	41/922100		:Wheel, narrow, (2500 wide)			1
2A	41/900502		::Ring, lock			1
2B	41/922102		::Flange			1
3	253/11801		:Valve			1
4	42/303500		:Tyre, 20.5-25x12 ply, Firestone			1
5	826/11355		Nut, wheel, yellow finish			12

Machine groups

Details

Machine group	From serial no.	To serial no.
.426		
426		

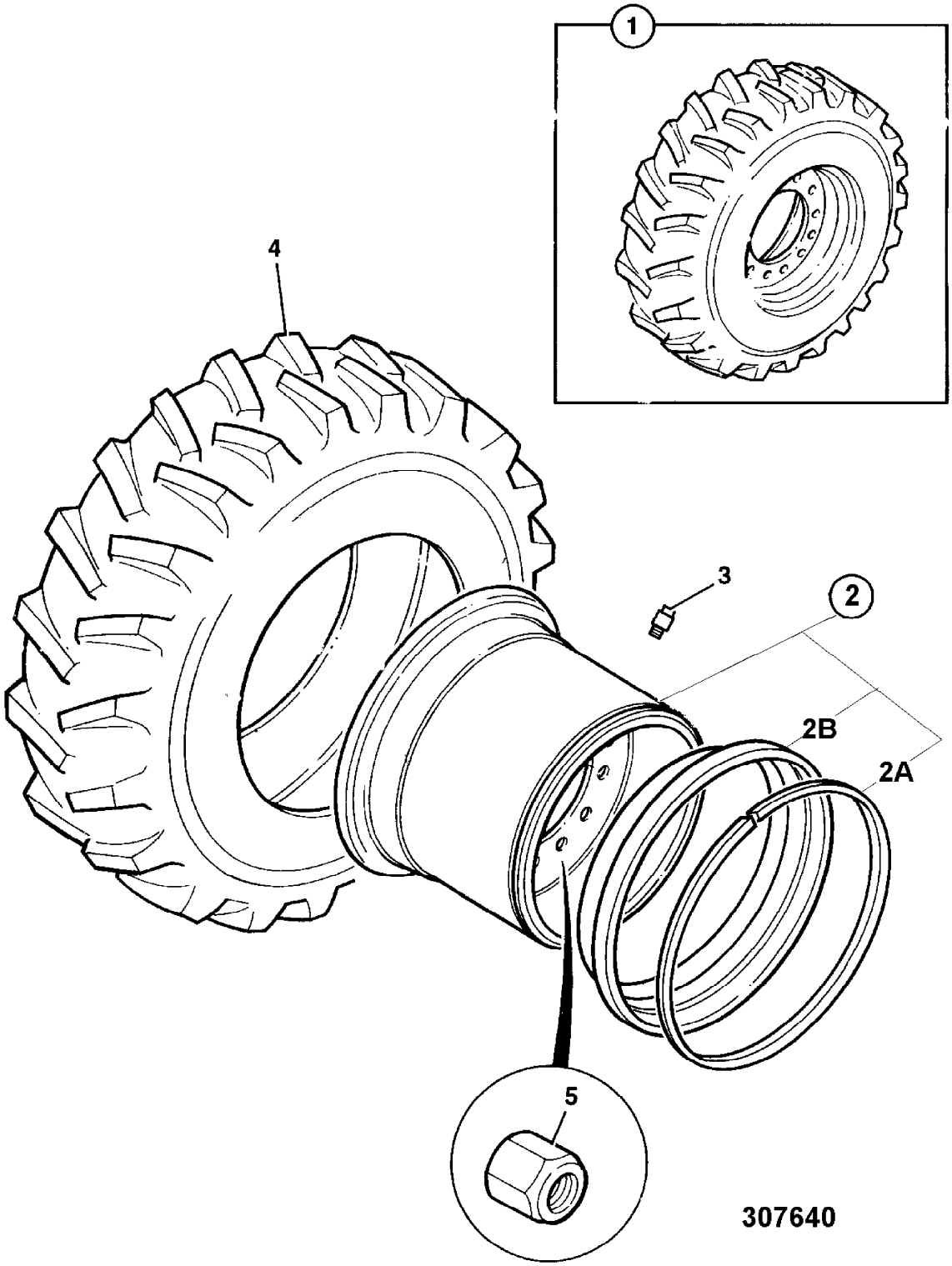
1
4
3
2
2B
2A
5
307640

9802/2740 F3-11-1 WHEELS & TYRES, MICHELIN, SALES SPECIAL

Item	Part no.	Change No.	Description	Remarks	Usage code	Qty
1	970/61271		Wheel, and tyre assembly, 17.5R25	Sales special 7691		1
2	970/61272		:Wheel			1
2A	TBA		:Part number, Not Yet Known			1
2B	TBA		:Part number, Not Yet Known			1
3	253/11801		:Valve			1
4	42/105800		:Tyre, Michelin XHA 17.5x25, 1 star L3			1
5	826/01450		Nut, wheel			A/R

Machine groups

Details

Machine group	From serial no.	To serial no.
.426		
426		

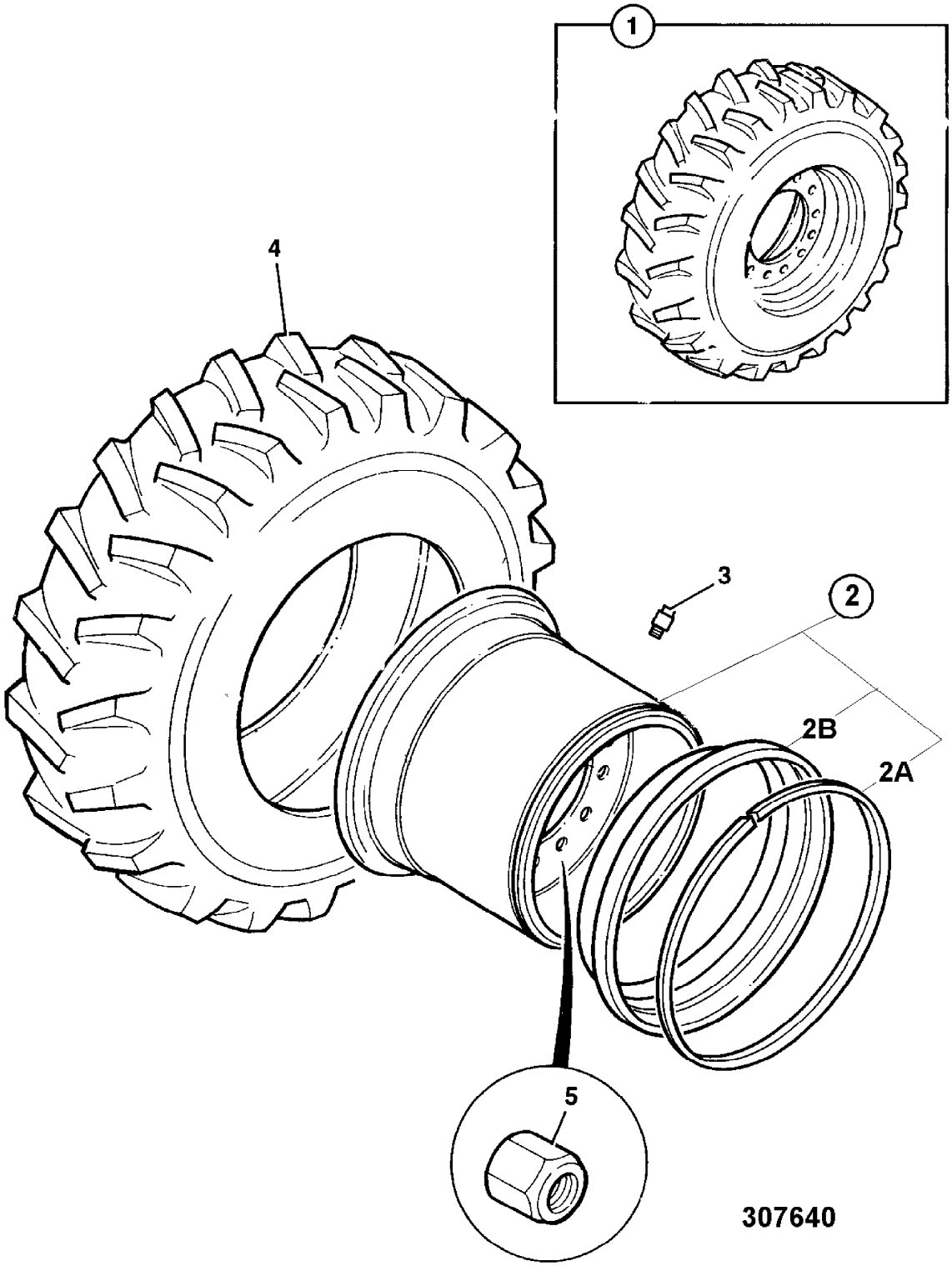
1
4
3
2
2B
2A
5
307640

9802/2740 F3-12-1 WHEELS & TYRES, SINGLE PIECE RIM, BKT

Item	Part no.	Change No.	Description	Remarks	Usage code	Qty
1	331/58777		Wheel, and tyre assembly, BKT XL GRIP			4
2	41/918900		:Wheel, single piece			1
3	265/00500		:Valve, Angled			1
4	42/925322		:Tyre, BKT, XL GRIP 17.5-25 16PR			1
5	826/01450		Nut, wheel			12
	826/11355		Nut, wheel, yellow finish	Yellow surface finish		12

Machine groups

Details

Machine group	From serial no.	To serial no.
.426		
426		

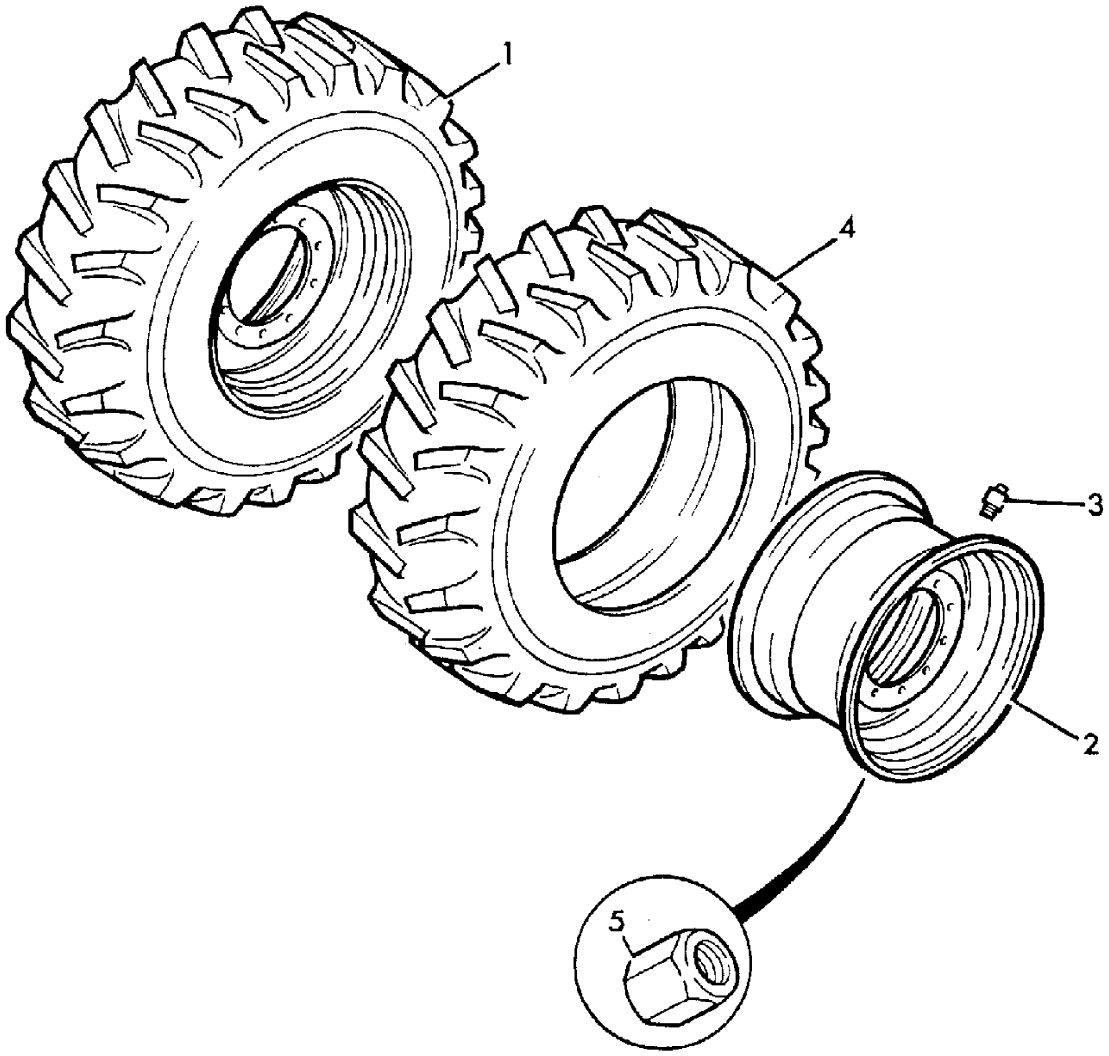

166130

9802/2740 F3-13-1 WHEELS & TYRES, 3 PIECE RIM, BKT

Item	Part no.	Change No.	Description	Remarks	Usage code	Qty
1	331/58779		Wheel, and tyre assembly, BKT XL GRIP			1
2	41/922100		:Wheel, narrow, (2500 wide)			1
2A	41/900502		::Ring, lock			1
2B	41/922102		::Flange			1
3	253/11801		:Valve			1
4	42/925323		:Tyre, BKT XL GRIP 20.5-25			1
5	826/01450		Nut, wheel			19
6	254/05503		Adapter, valve			1

Machine groups

Details

Machine group	From serial no.	To serial no.
.426		
426		

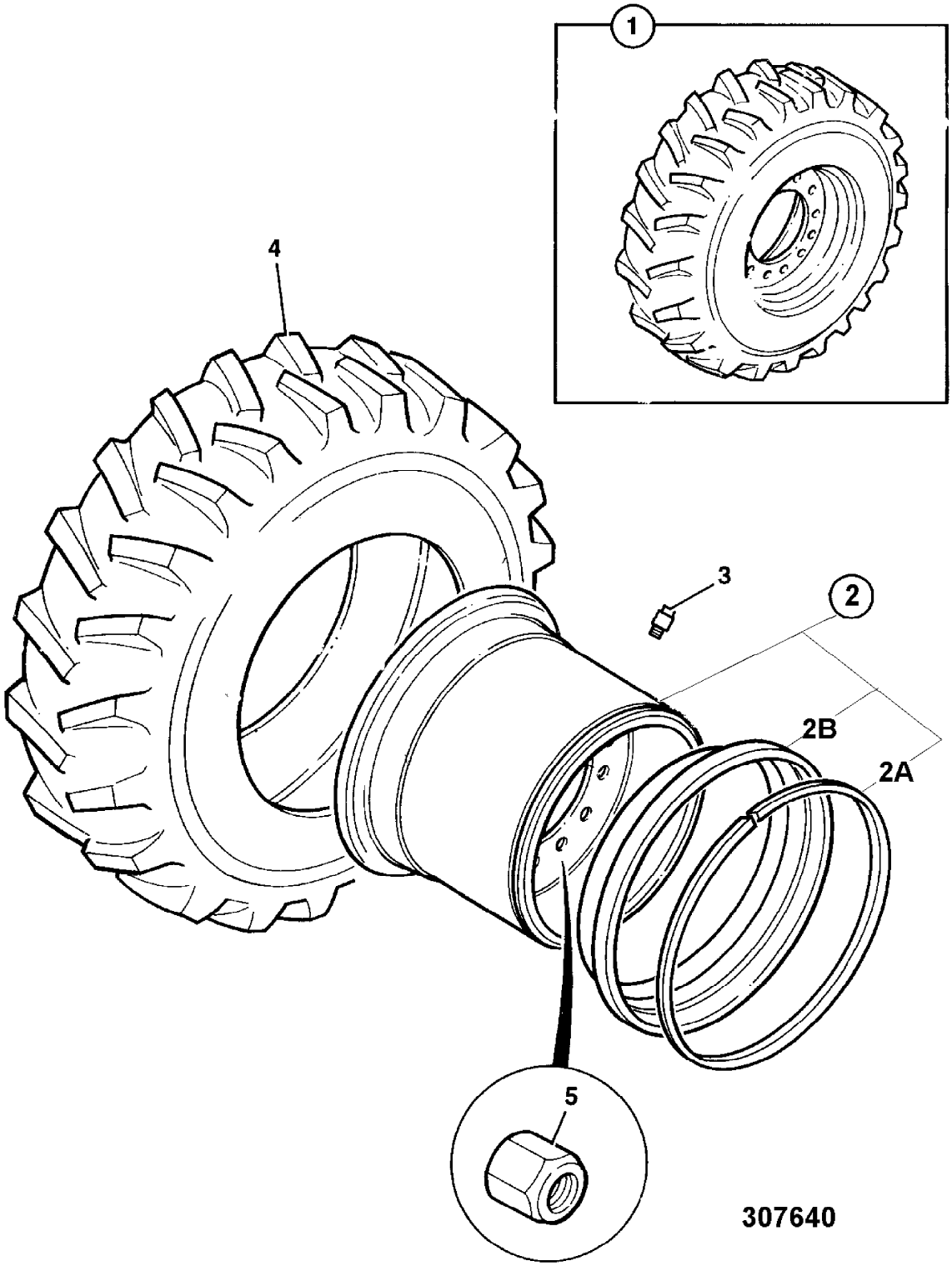
1
4
3
2
2B
2A
5
307640

9802/2740 F3-14-1 WHEELS & TYRES, SINGLE PIECE RIM, MICHELIN 750/65R26,SALES SPECIAL

Item	Part no.	Change No.	Description	Remarks	Usage code	Qty
1	269/30820		Wheel, and tyre assembly, Michelin MEGAXBIB	Sales special 7767		1
2	41/940316		:Wheel, DW25A x 26			1
3	42/925231		:Tyre, Michelin, MEGAXBIB			1
4	151/05201		:Valve			1
5	826/01450		Nut, wheel			19
	826/11355		Nut, wheel, yellow finish	Yellow surface finish		19

Machine groups

Details

Machine group	From serial no.	To serial no.
.426		
426		

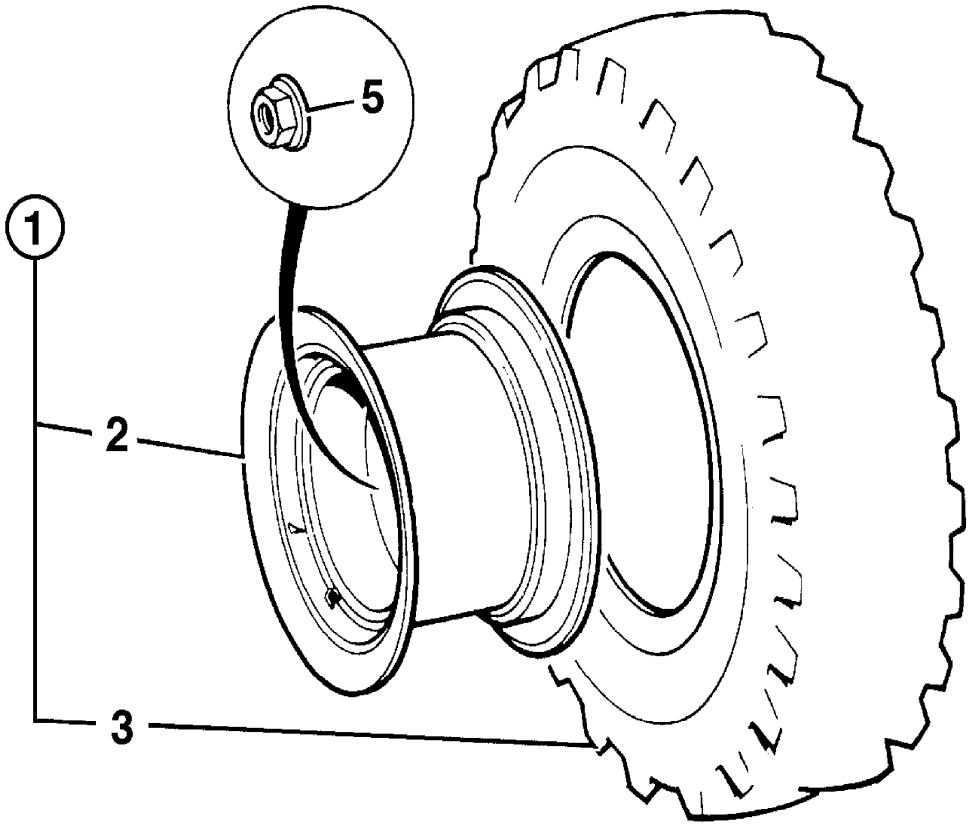

701200

9802/2740 F3-15-1 WHEELS & TYRES, 3 PIECE RIM, NOKIAN

Item	Part no.	Change No.	Description	Remarks	Usage code	Qty
1	331/61599		Wheel, and tyre assembly, 20.5R25 L-grip TL			1
2	41/922100		:Wheel, narrow, (2500 wide)			1
2A	41/900502		::Ring, lock			1
2B	41/922102		::Flange			1
3	253/11801		:Valve			1
4	42/925344		:Tyre, NOKIAN 20.5R25, L-Grip TL			1
5	826/01450		Nut, wheel			19
6	254/05503		Adapter, valve			1

Machine groups

Details

Machine group	From serial no.	To serial no.
.426		
426		

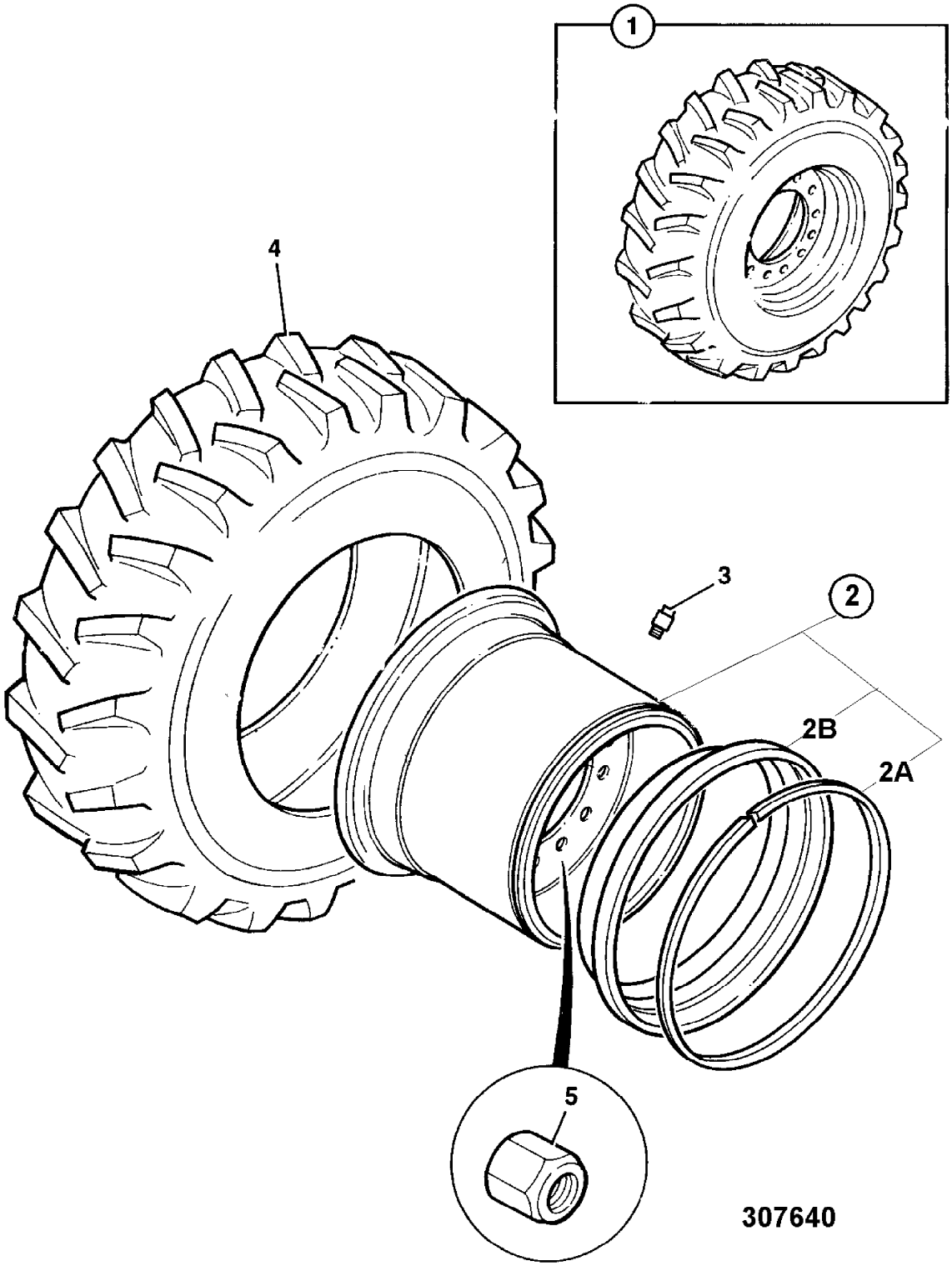
1
4
3
2
2B
2A
5
307640

9802/2740 F3-16-1 WHEELS & TYRES, 3 PIECE, ALLIANCE

Item	Part no.	Change No.	Description	Remarks	Usage code	Qty
1	331/59319		Wheel, and tyre assembly, 20.5R25 Alliance			4
2	41/922100		:Wheel, narrow, (2500 wide)			1
2A	41/900502		::Ring, lock			1
2B	41/922102		::Flange			1
3	253/11801		:Valve			1
4	42/925329		:Tyre, 20.5R25, Alliance 724			1
5	826/11355		Nut, wheel, yellow finish			12

Machine groups

Details

Machine group	From serial no.	To serial no.
.426		
426		

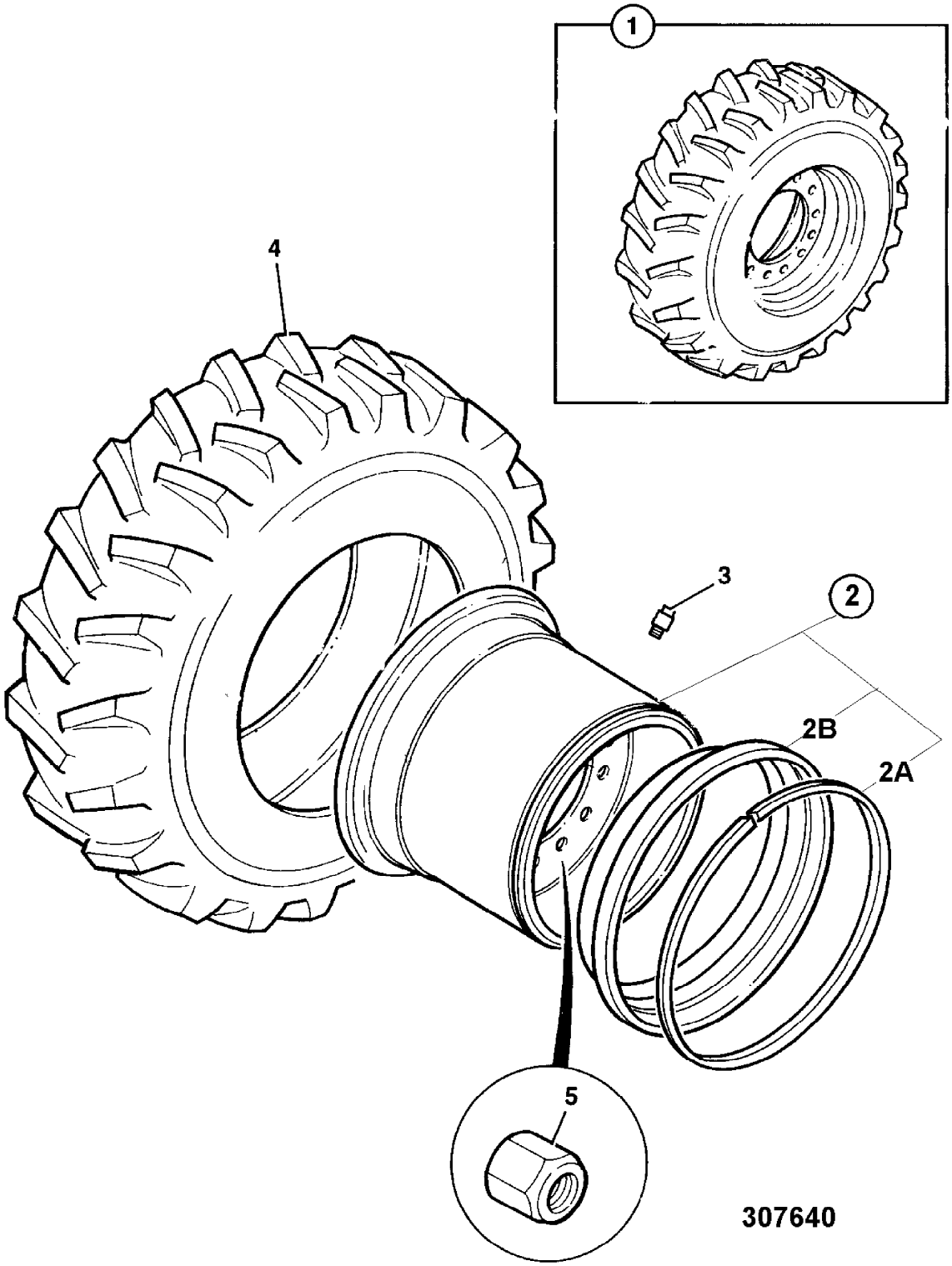
1
4
3
2
2B
2A
5
307640

9802/2740 F3-17-1 WHEELS & TYRES, SINGLE PIECE RIM, GOODYEAR 620/75R26

Item	Part no.	Change No.	Description	Remarks	Usage code	Qty
1	331/59310		Wheel, and tyre assembly, Goodyear DT82			1
2	41/940176		:Wheel, DW20A x 26 (-5			1
3	42/412900		:Tyre, 620/75R26, Goodyear			1
4	151/05201		:Valve			1
5	826/01450		Nut, wheel			19
	826/11355		Nut, wheel, yellow finish	Yellow surface finish		19

Machine groups

Details

Machine group	From serial no.	To serial no.
.426		
426		

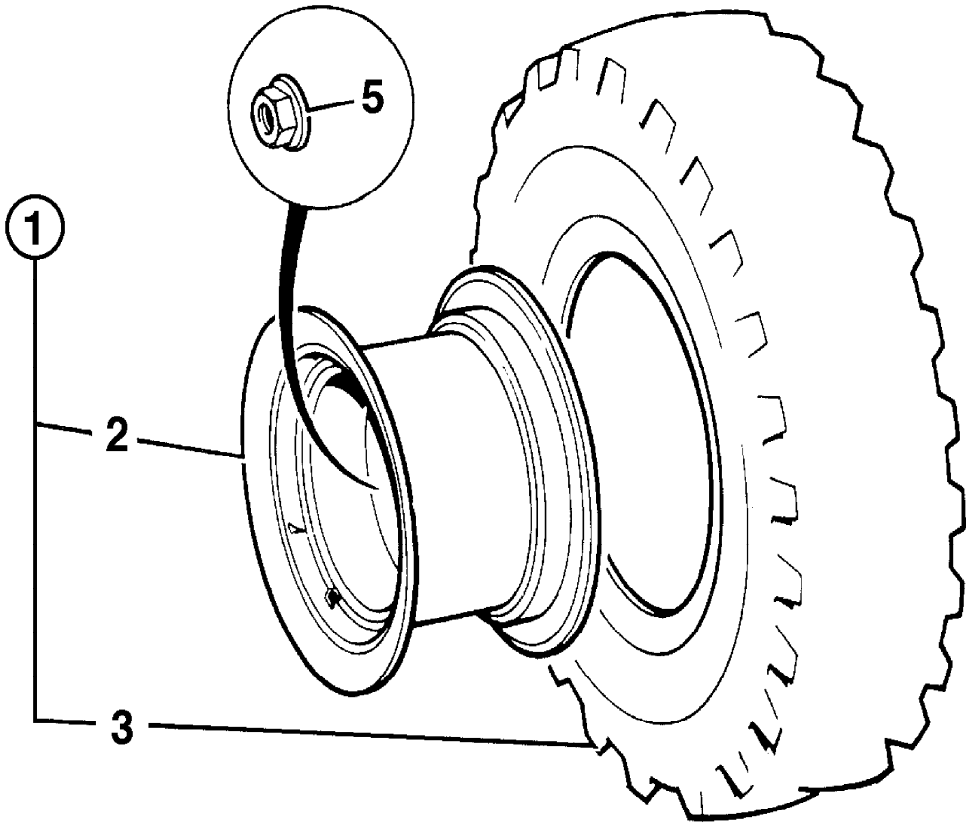

701200

9802/2740 F3-18-1 WHEELS & TYRES, MICHELIN, XSNOWPLUS, SALES SPECIAL

Item	Part no.	Change No.	Description	Remarks	Usage code	Qty
1	970/60230		Wheel, GA	Sales Special 8183		4
2	41/940177		:Wheel, 17.00-25/1.7			1
2A	41/990011		::Ring, lock	Part of 41/940177 and 41/940178		1
2B	41/990010		::Flange	Part of 41/940177 and 41/940178		1
2C	41/990009		Lock, driver	Part of 41/940177 and 41/940178		1
3	253/11801		:Valve			1
4	970/60231		:Tyre, Michelin 20.5R25, XSNOWPLUS			1
5	826/11355		Nut, wheel, yellow finish	Yellow surface finish		19

Machine groups

Details

Machine group	From serial no.	To serial no.
.426		
426		

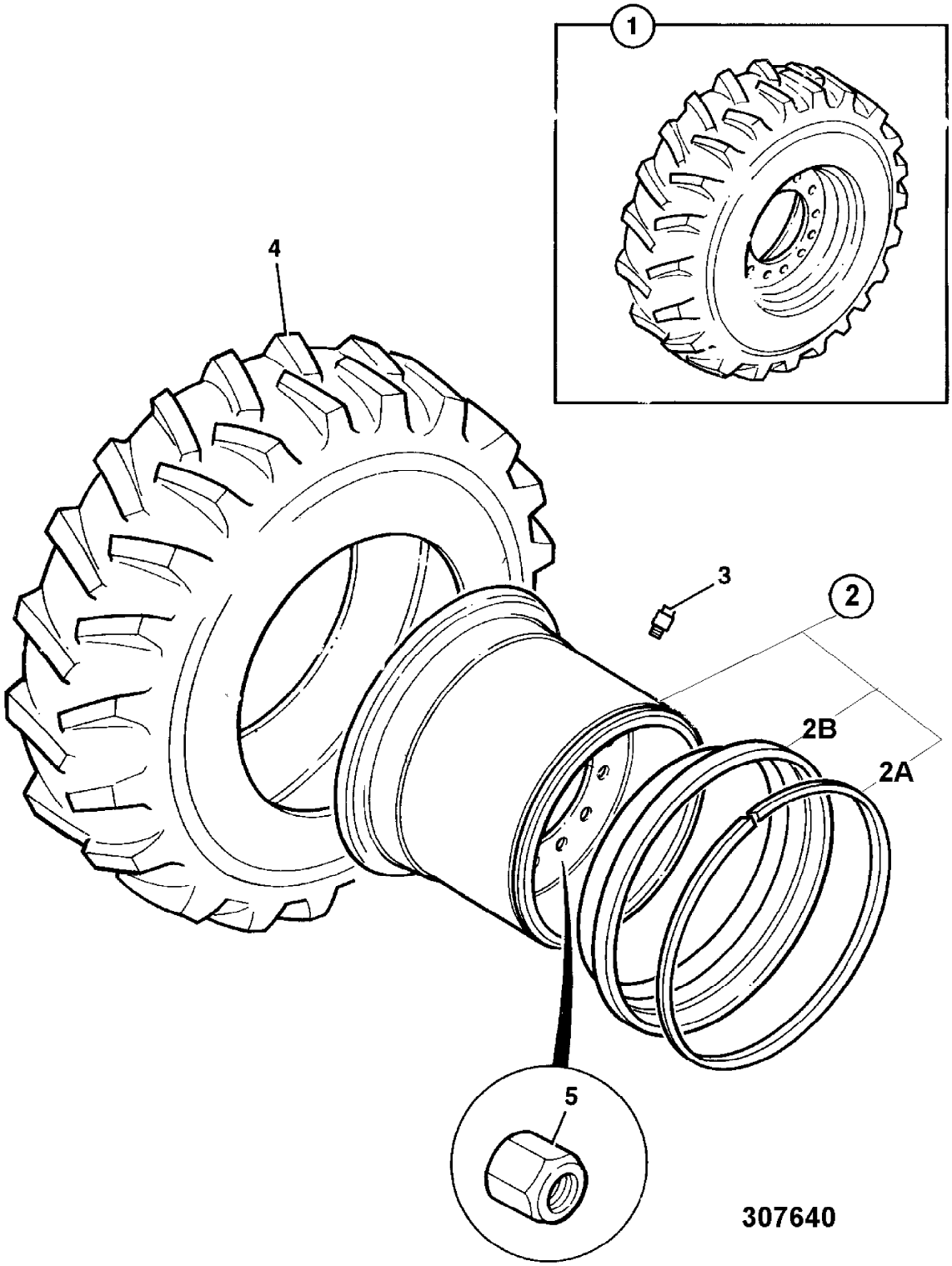
1
4
3
2
2B
2A
5
307640

9802/2740 F3-19-1 WHEELS & TYRES, 3 PIECE RIM, MICHELIN, SALES SPECIAL

Item	Part no.	Change No.	Description	Remarks	Usage code	Qty
1	269/30036		Wheel, and tyre assembly, Michelin XHA	Sales special 7672		4
2	41/940177		:Wheel, 17.00-25/1.7			1
2A	41/990011		:Ring, lock			1
2B	41/990010		:Flange			1
2C	41/990009		:Lock, driver			1
3	253/11801		:Valve			1
4	42/105200		:Tyre, Michelin XHA, 20.5-25x1star L3			1
5	826/01450		Nut, wheel			19

Machine groups

Details

Machine group	From serial no.	To serial no.
.426		
426		

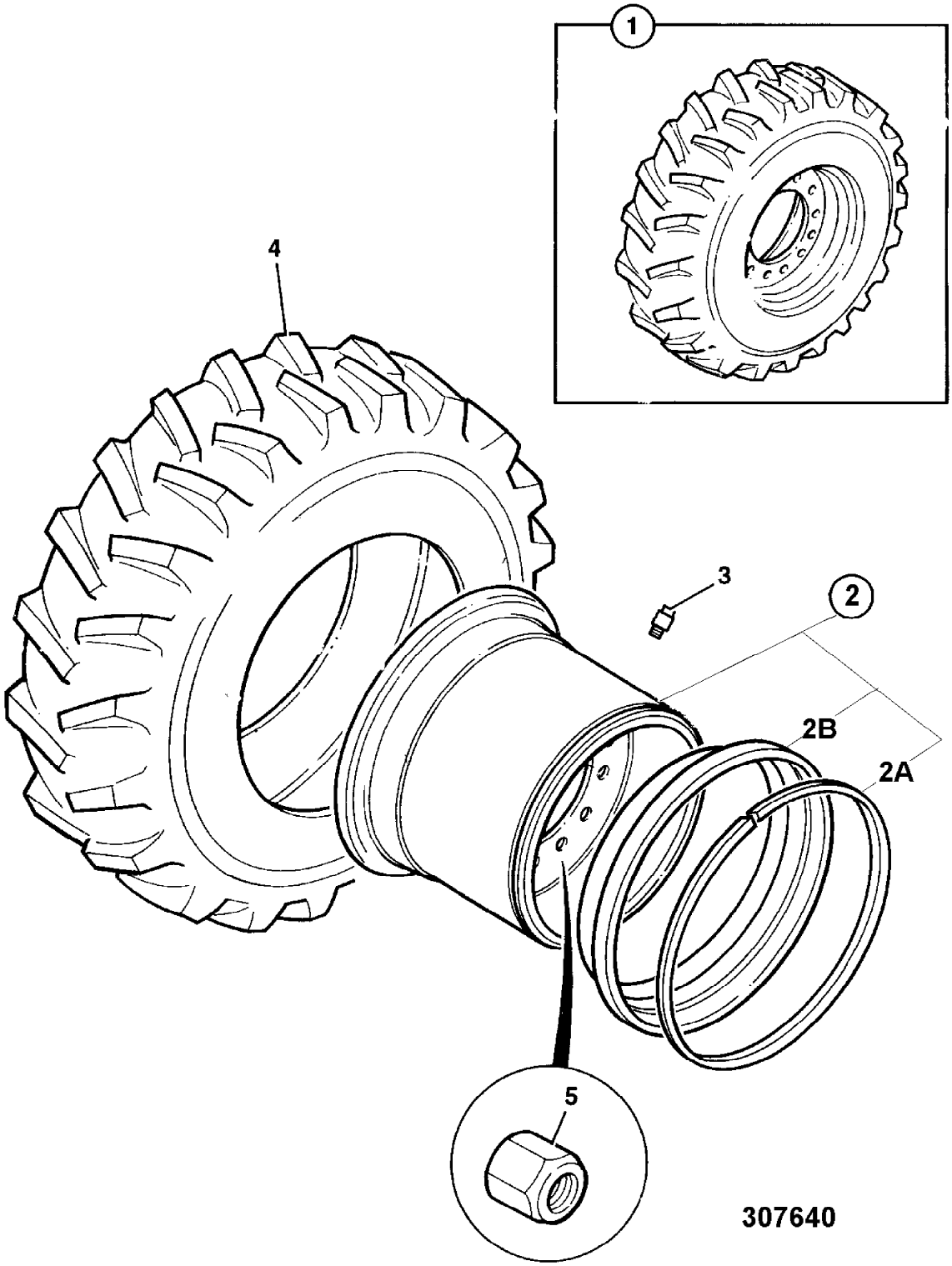
1
4
3
2
2B
2A
5
307640

9802/2740 F3-2-1 WHEELS & TYRE, SINGLE PIECE, FARM MASTER OPTION, GOODYEAR

Item	Part no.	Change No.	Description	Remarks	Usage code	Qty
1	269/20128		Wheel, and tyre assembly, Goodyear			1
2	41/933300		:Wheel, DW20Ax26			1
3	151/05201		:Valve			1
4	42/412900		:Tyre, 620/75R26, Goodyear			1
5	826/11355		Nut, wheel, yellow finish			12

Machine groups

Details

Machine group	From serial no.	To serial no.
.426		
426		

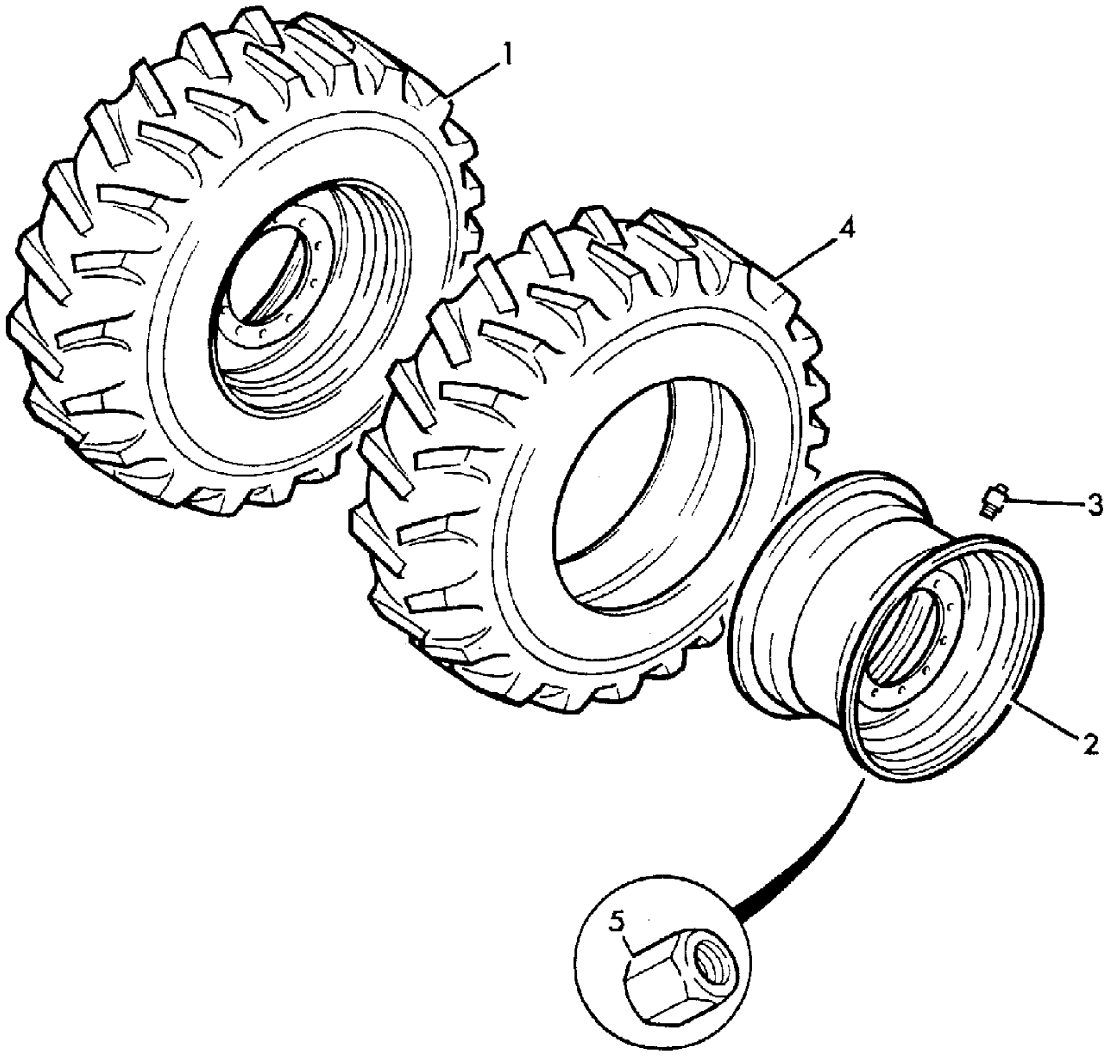

166130

9802/2740 F3-3-1 WHEELS & TYRES, 3 PIECE, GOODYEAR

Item	Part no.	Change No.	Description	Remarks	Usage code	Qty
1	269/30196		Wheel, and tyre assembly, Goodyear		A	4
	269/30200		Wheel, and tyre assembly, Goodyear GP-2B		B	4
	269/20033		Wheel, and tyre assembly, Goodyear		C	4
	331/42502		Wheel, and tyre assembly, Goodyear		D	4
	269/30202		Wheel, and tyre assembly, Goodyear RL-5K		E	4
	269/20086		Wheel, assembly, Goodyear GP-2B		G	4
	269/20087		Wheel, assembly, Goodyear RL-2+		H	4
	331/44774		Wheel, and tyre assembly, Goodyear GP-3D	Sales special 7140	I	4
	331/63418		Wheel, and tyre assembly, Goodyear HRL D/L-3A	Sales special 8250	J	4
2	41/919000		:Wheel, 3 piece		C,G,H	1
	41/922100		:Wheel, narrow, (2500 wide)		A,B,D,E,J	1
	41/940177		:Wheel, 17.00-25/1.7		I	1
2A	41/900502		::Ring, lock			1
2B	41/908402		::Flange		C,G,H	1
	41/922102		::Flange		A,B,D,E,J	1
3	253/11801		:Valve		C,G,H,I	1
	253/11801		:Valve		A,B,D,E,J	1
4	42/402000		:Tyre, 20.5-25x12 ply		A,C	1
	42/412200		:Tyre, 20.5R25 Goodyear, GP-2B		B,G	1
	42/925227		:Tyre, 20.5R25 TL-3A L3, Goodyear		D,H	1
	42/411700		:Tyre, 20.5R25 Goodyear, RL-5K		E	1
	42/925241		:Tyre, 600/65R25 Goodyear, GP-3D		I	1
	42/925314		:Tyre, 20.5-25 16 ply, HRL		J	1
5	254/05503		:Adapter, valve	Tyre inflation adaptor		1
6	826/11355		Nut, wheel, yellow finish			12

Machine groups

Details

Machine group From serial no. To serial no.

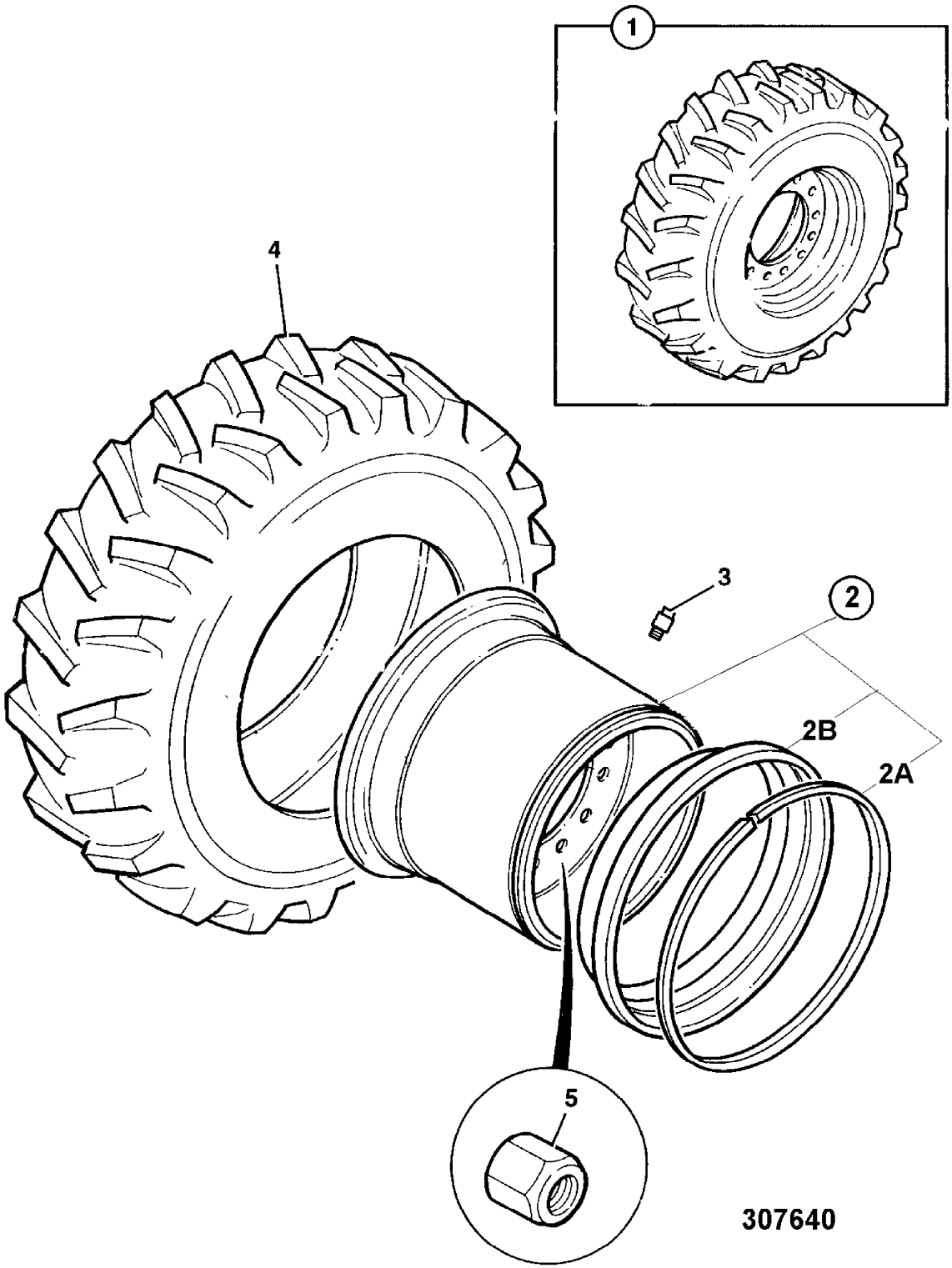
1
4
3
2
2B
2A
5
307640

9802/2740 F3-5-1 WHEELS & TYRES, 3 PIECE, BRIDGESTONE

Item	Part no.	Change No.	Description	Remarks	Usage code	Qty
1	331/28038		Wheel, assembly, VSDL, 20.5 R25 L5		A	4
	331/22165		Wheel, assembly,20.5R25, Bridgestone, VUT		B	4
	331/22166		Wheel, assembly, 20.5R25, Bridgestone, VMT		C	4
	331/28468		Wheel, assembly, 20.5R25, Bridgestone, VKT		D	4
2	41/922100		:Wheel, narrow, (2500 wide)		A,B,C,D	1
	41/900502		::Ring, lock			1
	41/922102		::Flange			1
3	253/11801		:Valve		A,B,C,D	1
4	42/925178		:Tyre, 20.5 R25 L5, VSDL		A	1
	42/925138		:Tyre, Bridgestone, 20.5R25 VUT L2		B	1
	42/925085		:Tyre, Bridgestone, 20.5R25 VMT		C	1
	42/925182		:Tyre, Bridgestone, 20.5R25, VKT		D	1
5	826/11355		Nut, wheel, yellow finish	19 per wheel, 76 per m/c		19

Machine groups

Details

Machine group	From serial no.	To serial no.
.426		
426		

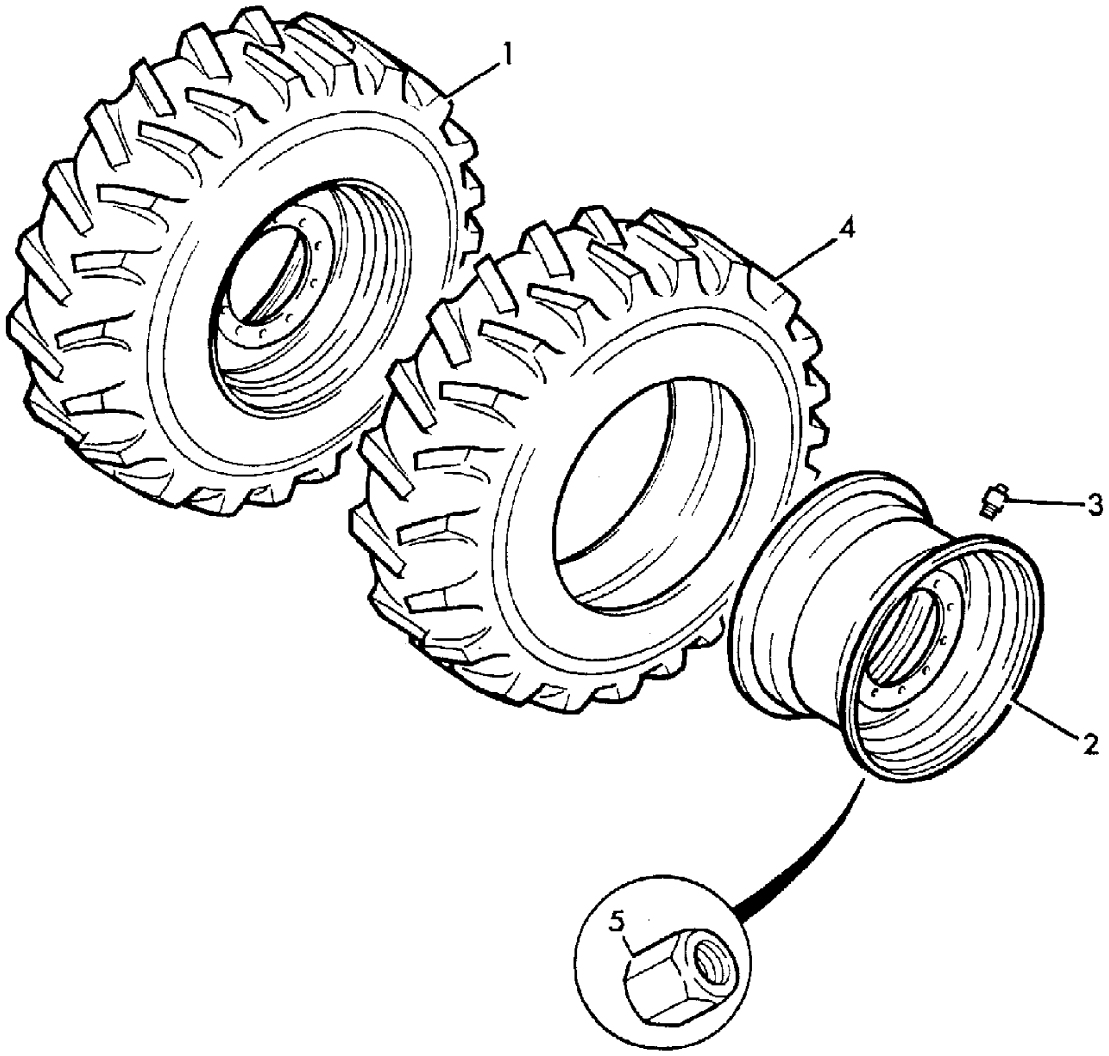

166130

9802/2740 F3-6-1 WHEELS & TYRES, SINGLE PIECE RIM, GOODYEAR

Item	Part no.	Change No.	Description	Remarks	Usage code	Qty
1	269/20025		Wheel, and tyre assembly, Goodyear SGL D/L		A	1
	269/20026		Wheel, and tyre assembly, Goodyear HRL D/L		B	1
	269/20084		Wheel, and tyre assembly, GP-2B		C	1
	331/42492		Wheel, and tyre assembly, Goodyear		D	1
	269/20128		Wheel, and tyre assembly, Goodyear		E	4
2	41/918900		:Wheel, single piece		ABCD	1
	41/933300		:Wheel, DW20Ax26		E	1
3	265/00500		:Valve, Angled		ABCD	1
	151/05201		:Valve		E	1
4	42/400600		:Tyre, 17.5-25X12 ply, Goodyear SGL		A	1
	42/410700		:Tyre, 17.5-25x16 ply, Goodyear		B	1
	42/412000		:Tyre, 17.5R25 L2, GP-2B Goodyear		C	1
	42/925226		:Tyre, 17.5R25 RT-3B L3, Goodyear		D	1
	42/412900		:Tyre, 620/75R26, Goodyear		E	1
5	826/11355		:Nut, wheel, yellow finish			12

Machine groups

Details

Machine group	From serial no.	To serial no.
.426		
426		

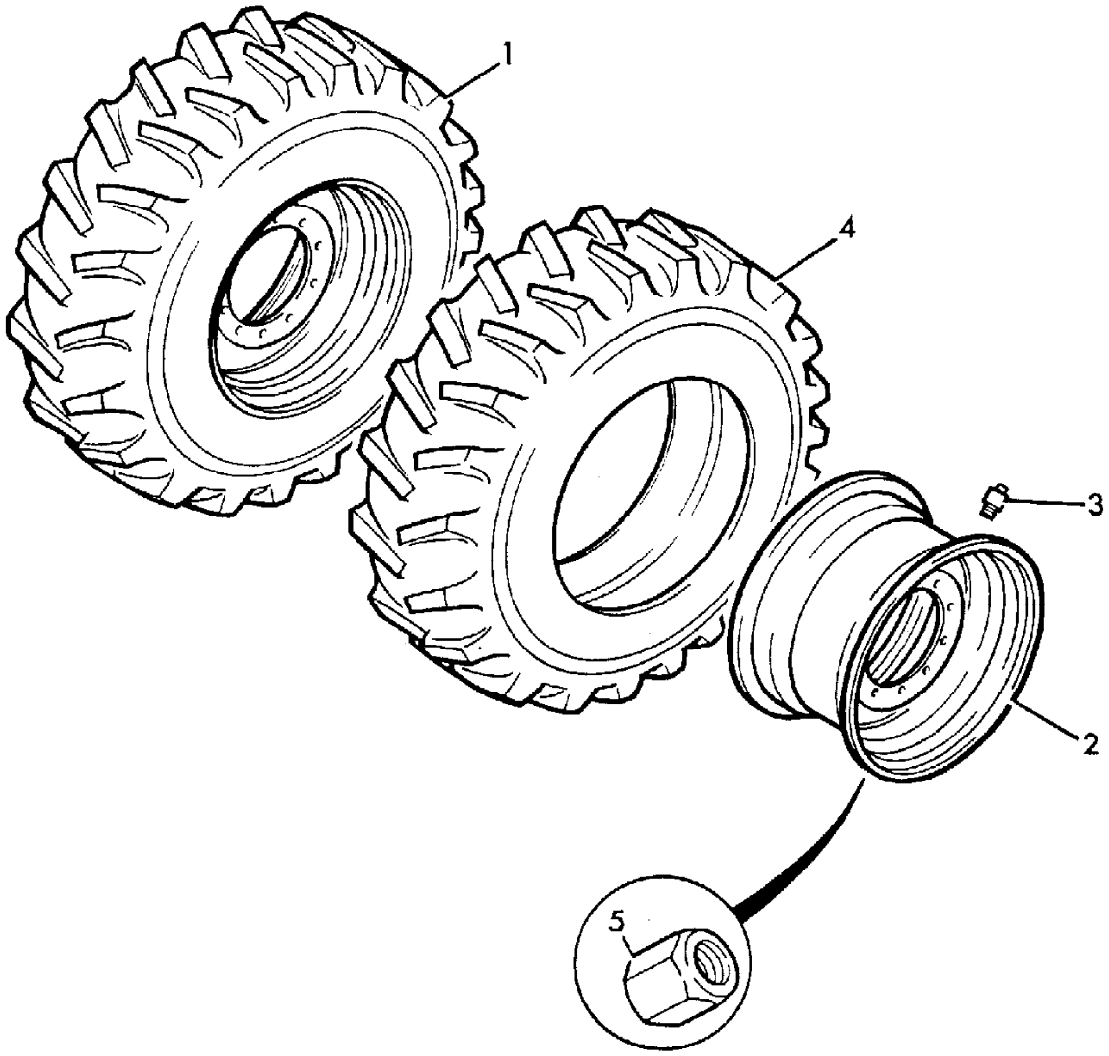

166130

9802/2740 F3-7-1 WHEELS & TYRES, SINGLE PIECE RIM, MICHELIN

Item	Part no.	Change No.	Description	Remarks	Usage code	Qty
1	269/20027		Wheel, and tyre assembly, Michelin XTLA		A	4
	269/20028		Wheel, and tyre assembly, Michelin XHA		B	4
	269/30522		Wheel, and tyre assembly, Michelin MEGA XBIB		C	1
2	41/918900		:Wheel, single piece		A,B	1
	41/940176		Wheel, DW20A x 26 (-5		C	1
3	265/00500		:Valve, Angled		A,B	1
	151/05201		Valve		C	1
4	42/106800		:Tyre, Michelin, 17.5 x 25 XTLA		A	1
	42/105800		:Tyre, Michelin XHA 17.5x25, 1 star L3		B	1
	42/925207		Tyre, Michelin MEGA XBIB		C	1
5	826/11355		Nut, wheel, yellow finish			12

Machine groups

Details

Machine group	From serial no.	To serial no.
.426		
426		

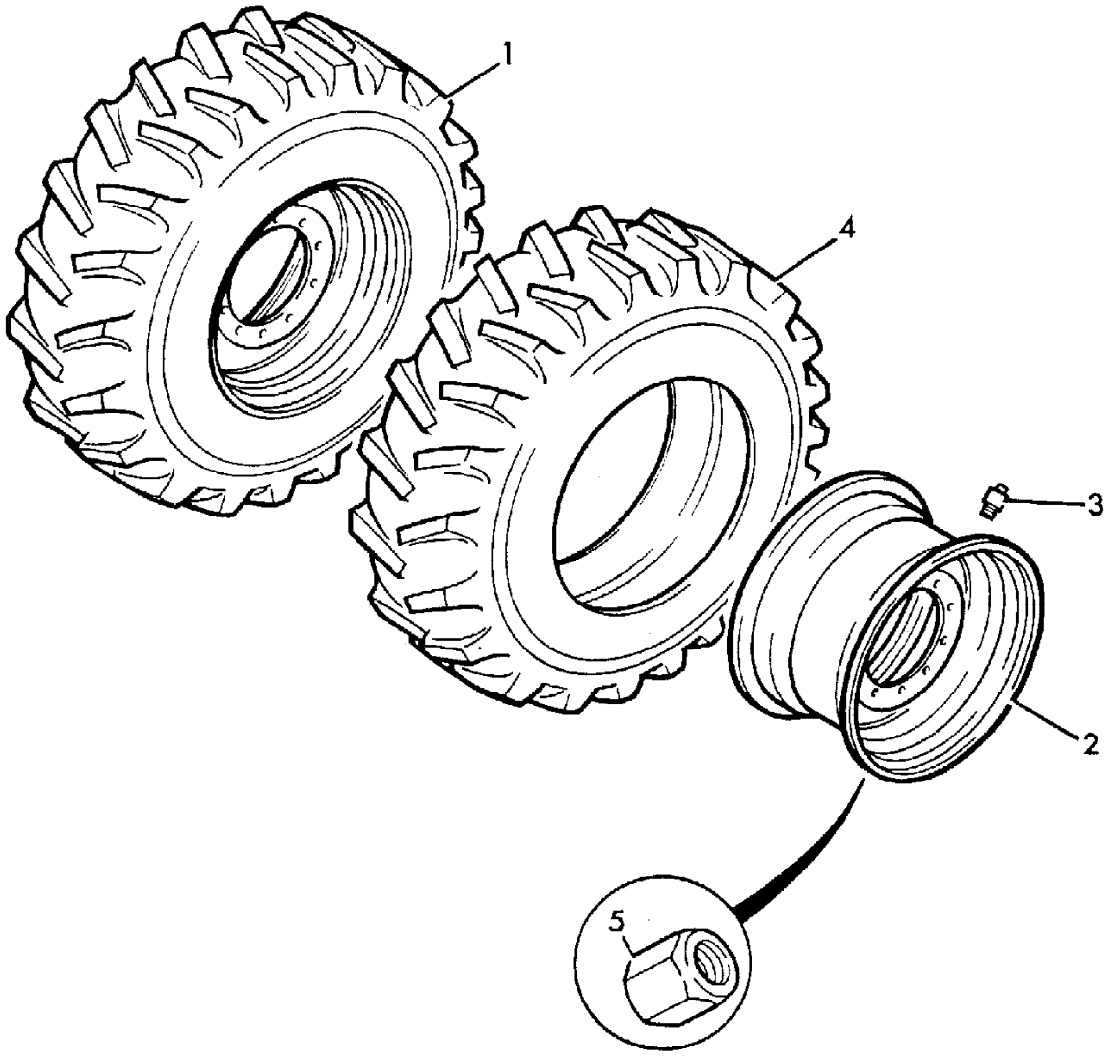

166130

9802/2740 F3-8-1 WHEELS & TYRES, SINGLE PIECE RIM, FIRESTONE

Item	Part no.	Change No.	Description	Remarks	Usage code	Qty
1	269/20024		Wheel, and tyre assembly, Firestone		A	4
2	41/918900		:Wheel, single piece		A	1
3	265/00500		:Valve, Angled		A	1
4	42/303400		:Tyre, 17.5-25x12 ply, Firestone		A	1
5	826/11355		Nut, wheel, yellow finish			12

Machine groups

Details

Machine group	From serial no.	To serial no.
.426		
426		

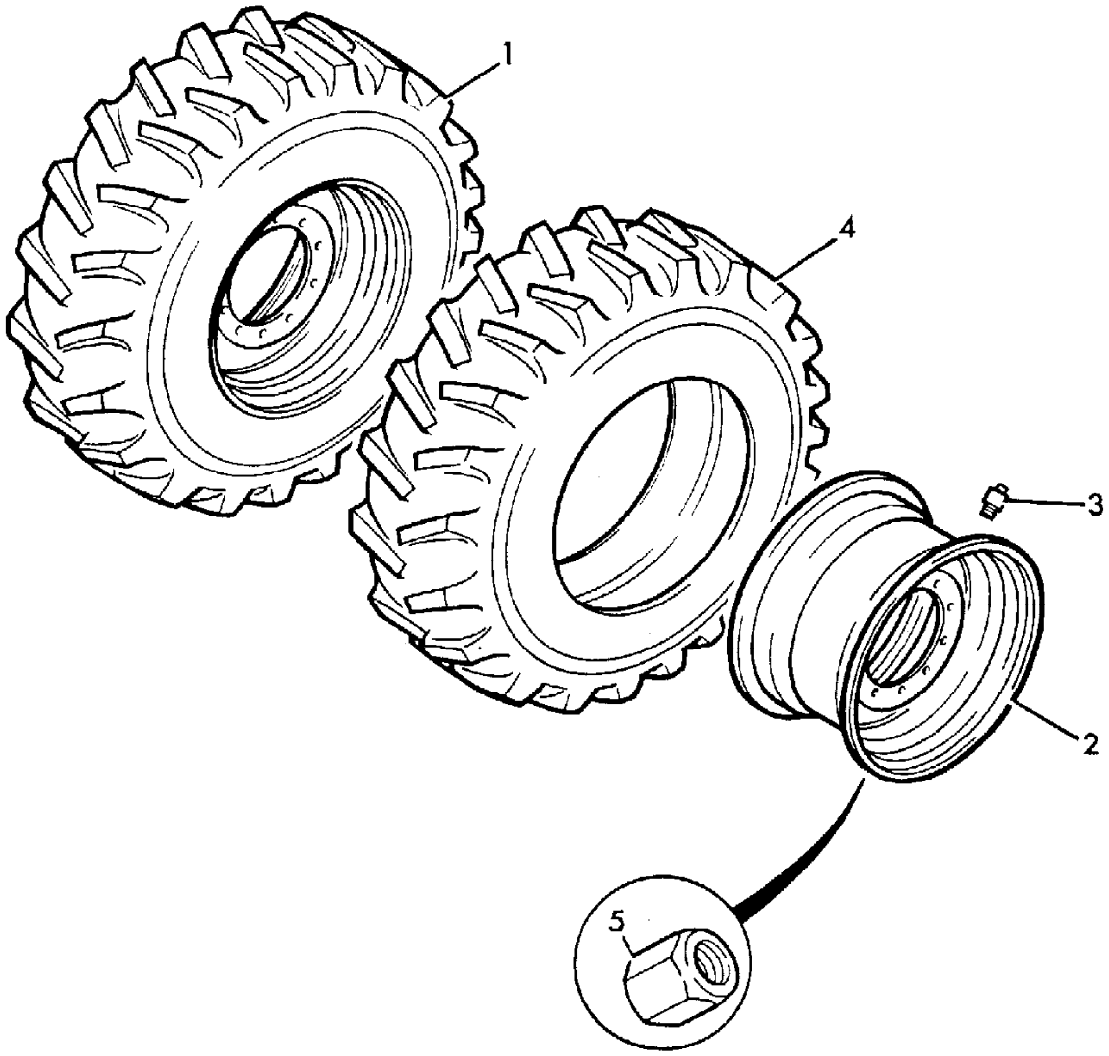

166130

9802/2740 F3-9-1 WHEELS & TYRES, SINGLE PIECE RIM, BRIDGESTONE

Item	Part no.	Change No.	Description	Remarks	Usage code	Qty
1	331/22161		Wheel, assembly, 17.5R25, Bridgestone, VUT		A	4
	331/22162		Wheel, assembly,17.5R25, Bridgestone, VMT		B	4
2	41/918900		:Wheel, single piece		A,B	1
3	151/05201		:Valve		A,B	1
4	42/925136		:Tyre, 17.5R25 Bridgestone, VUT		A	1
	42/925137		:Tyre, 17.5R25, Bridgestone, VMT		B	1
5	826/11355		Nut, wheel, yellow finish			12

Machine groups

Details

Machine group	From serial no.	To serial no.
.426		
426		

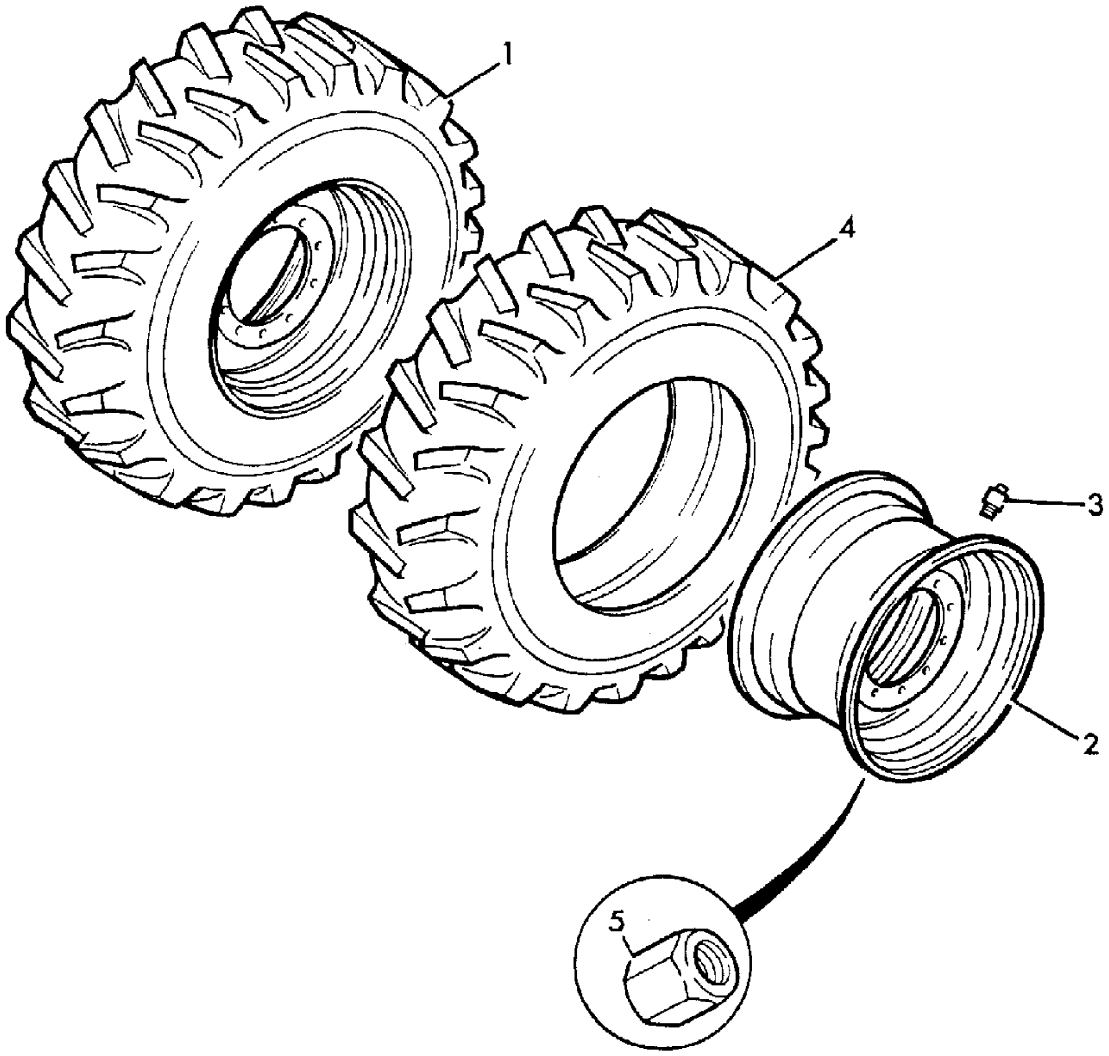

166130

9802/2740 F4-1-1 PROPSHAFTS, TRANSMISSION

Item	Part no.	Change No.	Description	Remarks	Usage code	Qty
1	914/60133		Propshaft, front, heavy duty			1
2	914/30901		:Kit-spider, cap D=35mm x 106.4			1
3	914/36804		:Bearing			1
4	914/35103		:Nut			1
5	914/60115		:Yoke, end			1
6	914/60083		Propshaft, rear			1
7	914/30901		:Kit-spider, cap D=35mm x 106.4			2
8	914/60134		Propshaft, intermediate, heavy duty			1
9	914/47901		:Yoke, flange			1
10	914/30901		:Kit-spider, cap D=35mm x 106.4			2
15	1422/0009D		Washer, hardened			4
17	116/00525		Strap			8
18	826/00892		Screw, special			16
19	1316/0509D		Bolt, grade 12.9			2
22	1371/0403D		Nut			10

Machine groups

Details

Machine group	From serial no.	To serial no.
.426		
426		

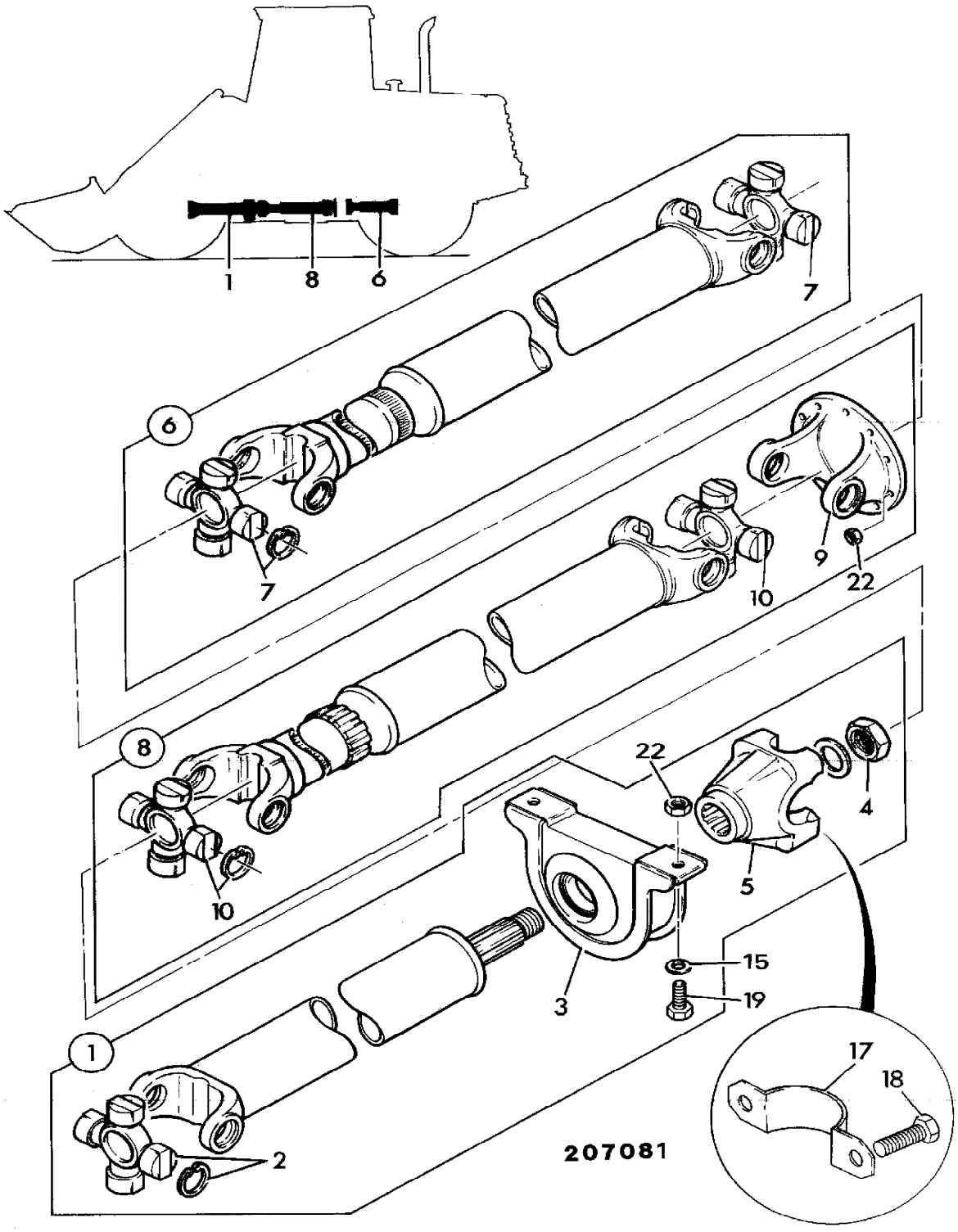
1
8
6
7
6
7
9
22
10
8
22
4
5
10
15
19
3
1
17
18
2
207081

9802/2740 F5-1-1 TRANSMISSION, MOUNTING

Item	Part no.	Change No.	Description	Remarks	Usage code	Qty
1	335/01104		Bracket, transmission, mounting			1
2	265/01983		Pad, rubber mounting			2
3	265/01984		Washer, rebound			2
4	265/01985		Washer, overload			2
5	1315/0408D		Setscrew, M10 x 30			8
6	1370/0303D		Nut, M10			8
7	1315/3833D		Bolt			2
8	1420/0012D		Washer, plain			2
9	1370/0703D		Nut, M20			2
10	1316/3817D		Bolt			4
11	1422/0012D		Washer			4
12	331/18683		Plate, locking			2
13	4101/0602		Fluid, locking			1

Machine groups

Details

Machine group	From serial no.	To serial no.
.426		
426		

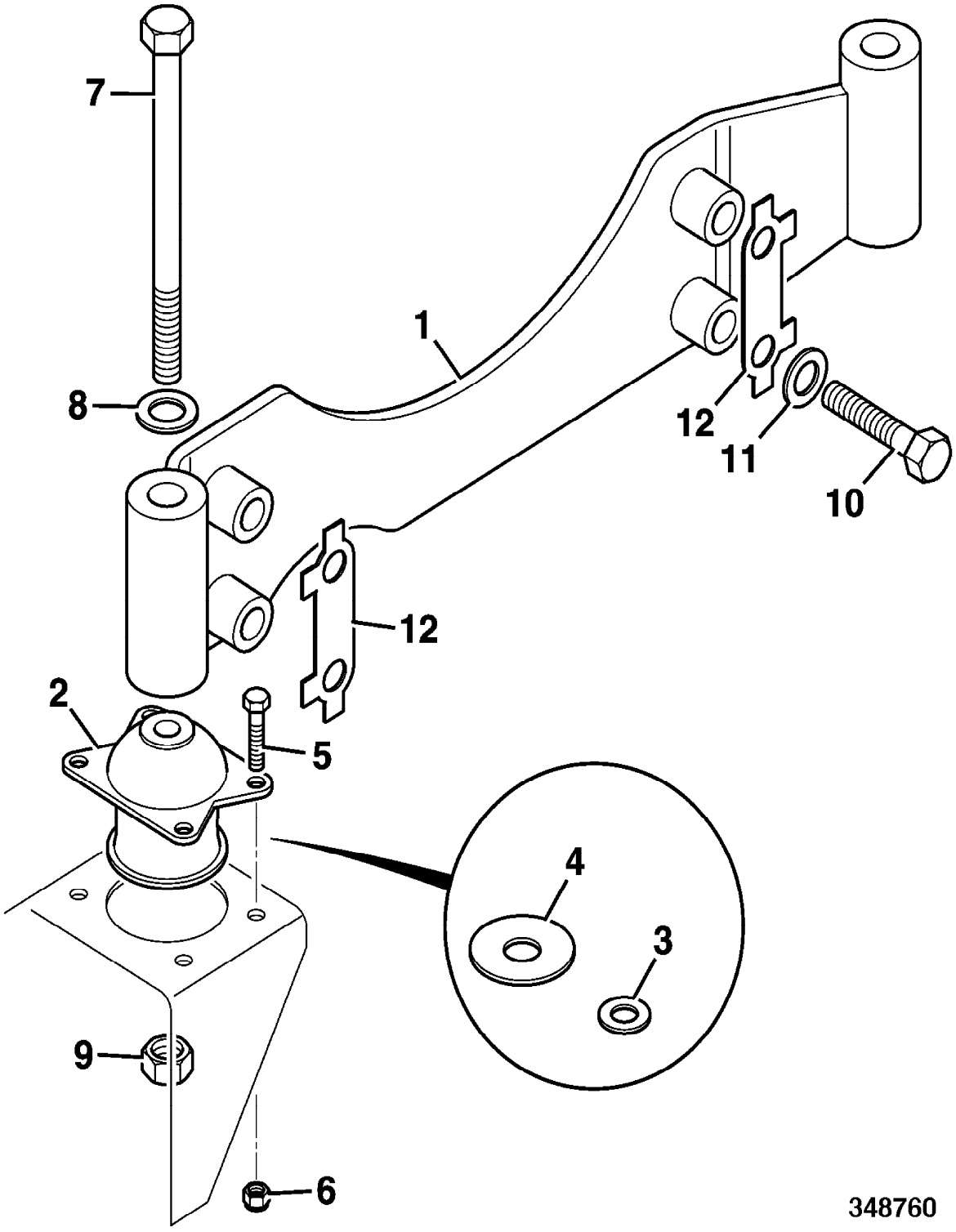
7
1
8
12
11
10
12
2
5
4
3
9
6
348760

9802/2740 F5-10-1 COUPLING GROUP, SECOND

Item	Part no.	Change No.	Description	Remarks	Usage code	Qty
1	04/600337		Shaft, 56 teeth			1
2	826/10625		Stud			1
3	04/600338	Superseded	Coupling			1
	04/600852		Coupling			1
15	04/600633		Gear, idler			1
16	04/600339		Disc			2
17	04/600340		Bearing			2
18	04/600343		Washer, axial			2
19	04/600344		Bearing			2
20	04/600551		Ring, retaining			1
21	04/600232		Bearing, roller			1
22	04/600232		Bearing, roller			1
23	04/600186		Ring, piston			2

Machine groups

Details

Machine group	From serial no.	To serial no.
.426		
426		

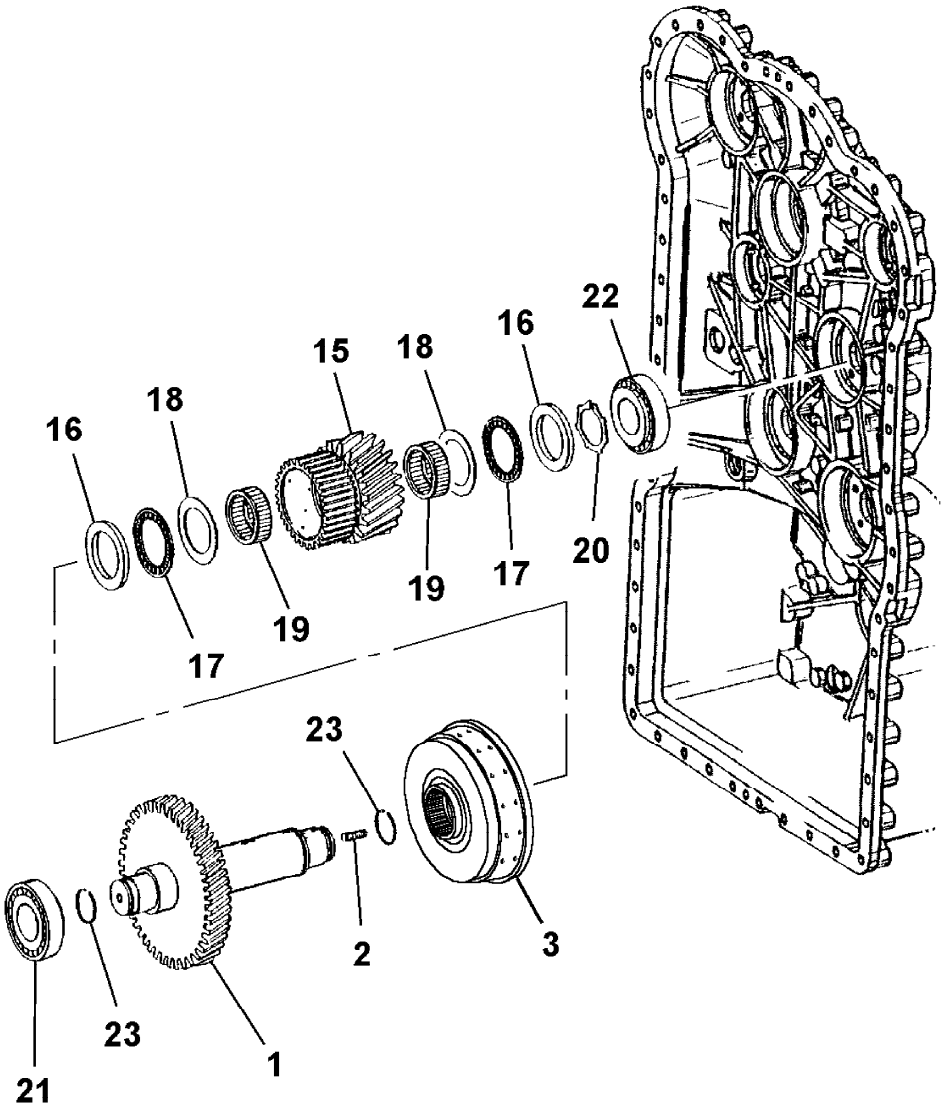

381940

9802/2740 F5-11-1 COUPLING GROUP, THIRD

Item	Part no.	Change No.	Description	Remarks	Usage code	Qty
1	04/600829		Shaft			1
2	04/600349		Gear, Idler, 55 teeth			1
3	04/600186		Ring, piston			2
4	826/10625		Stud			1
5	04/600338	Superseded	Coupling			1
	04/600852		Coupling			1
17	04/600339		Disc			2
18	04/600340		Bearing			2
19	04/600343		Washer, axial			2
20	04/600344		Bearing			2
21	04/600232		Bearing, roller			1
22	907/20009		Bearing, roller			1

Machine groups

Details

Machine group	From serial no.	To serial no.
.426		
426		

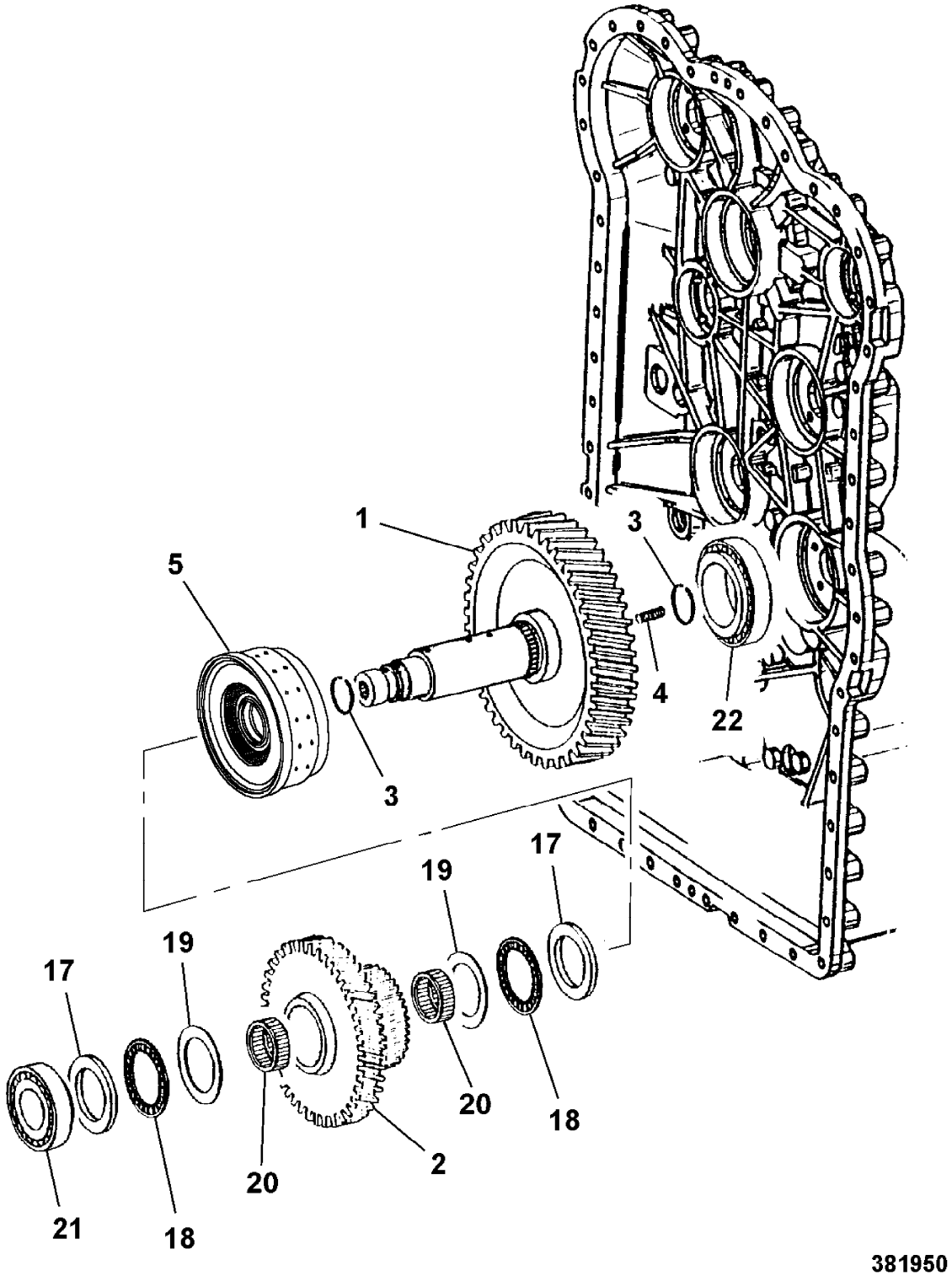
1
3
5
4
22
3
17
19
19
17
20
18
20
2
21
18
381950

9802/2740 F5-12-1 OUTPUT GROUP

Item	Part no.	Change No.	Description	Remarks	Usage code	Qty
1	04/600639		Shaft, output			1
2	907/20009		Bearing, roller			1
3	907/20009		Bearing, roller			1
4	04/800373		Seal, shaft			1
5	04/800248		Washer			2
6	04/600363		Screw, M8			4
7	04/800247		Plate, lock			2
8	04/801251		Flange, output			1
9	04/800373		Seal, shaft			1
10	04/600358		Flange			1
12	04/600359		Screw, M12 x 50mm			8
13	10/906823		O Ring			2

Machine groups

Details

Machine group	From serial no.	To serial no.
.426		
426		

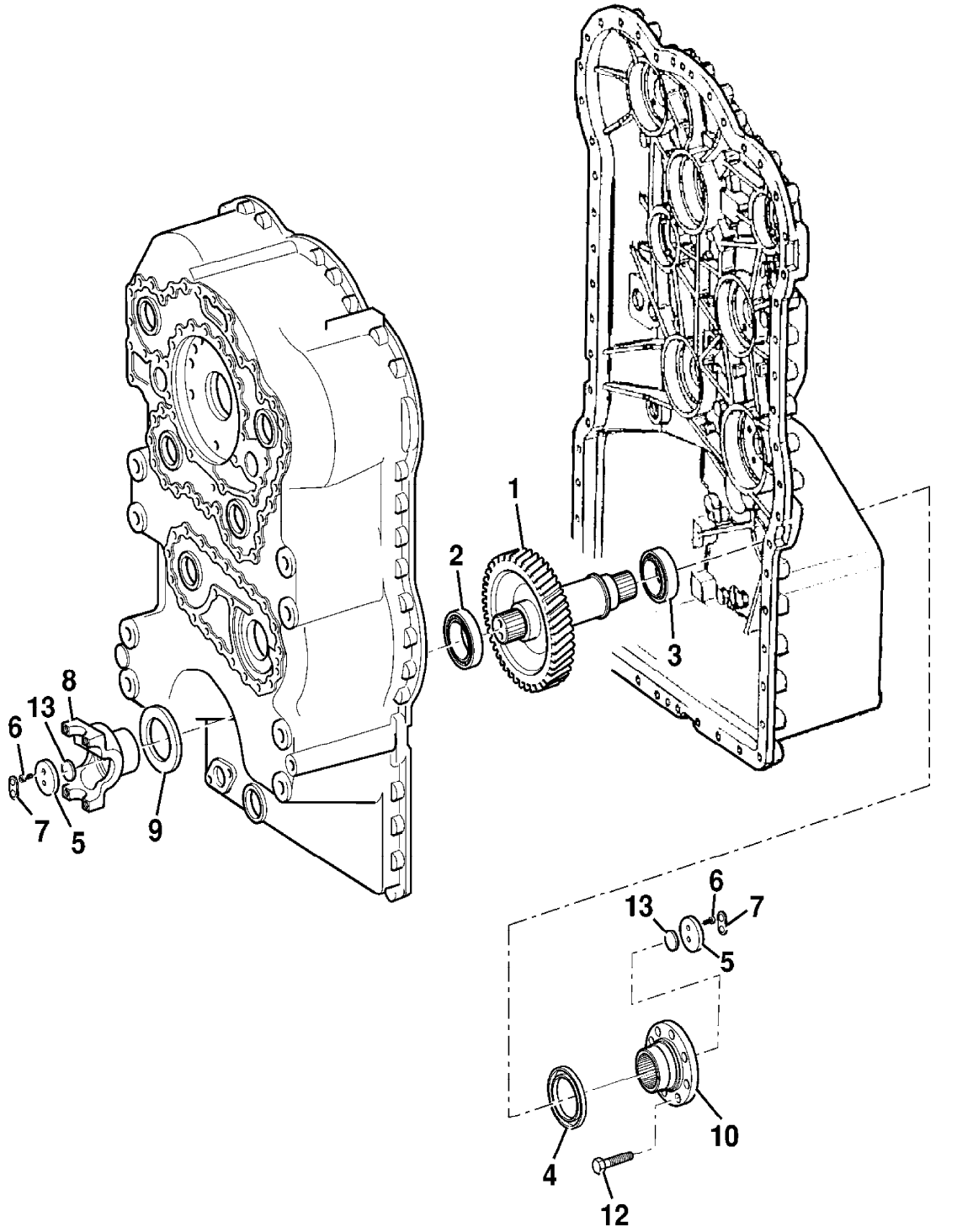
1
2
3
4
5
6
7
8
9
10
12
13
382000

9802/2740 F5-14-1 POWER TAKE-OFF

Illustration Machines Top of catalogue

Item	Part no.	Change No.	Description	Remarks	Usage code	Qty
1	04/600562		Shaft, pump			1
2	04/600399		Ring, piston			1
3	04/800687		Bearing, ball			1
4	04/600245		Ring, retaining			1
6	04/600247		Seal, seal			1
9	04/600566		Screw, cap			2
10	04/600565		Flange			1
11	04/600401		O Ring			1

Machine groups

Details

Machine group	From serial no.	To serial no.
.426		
426		

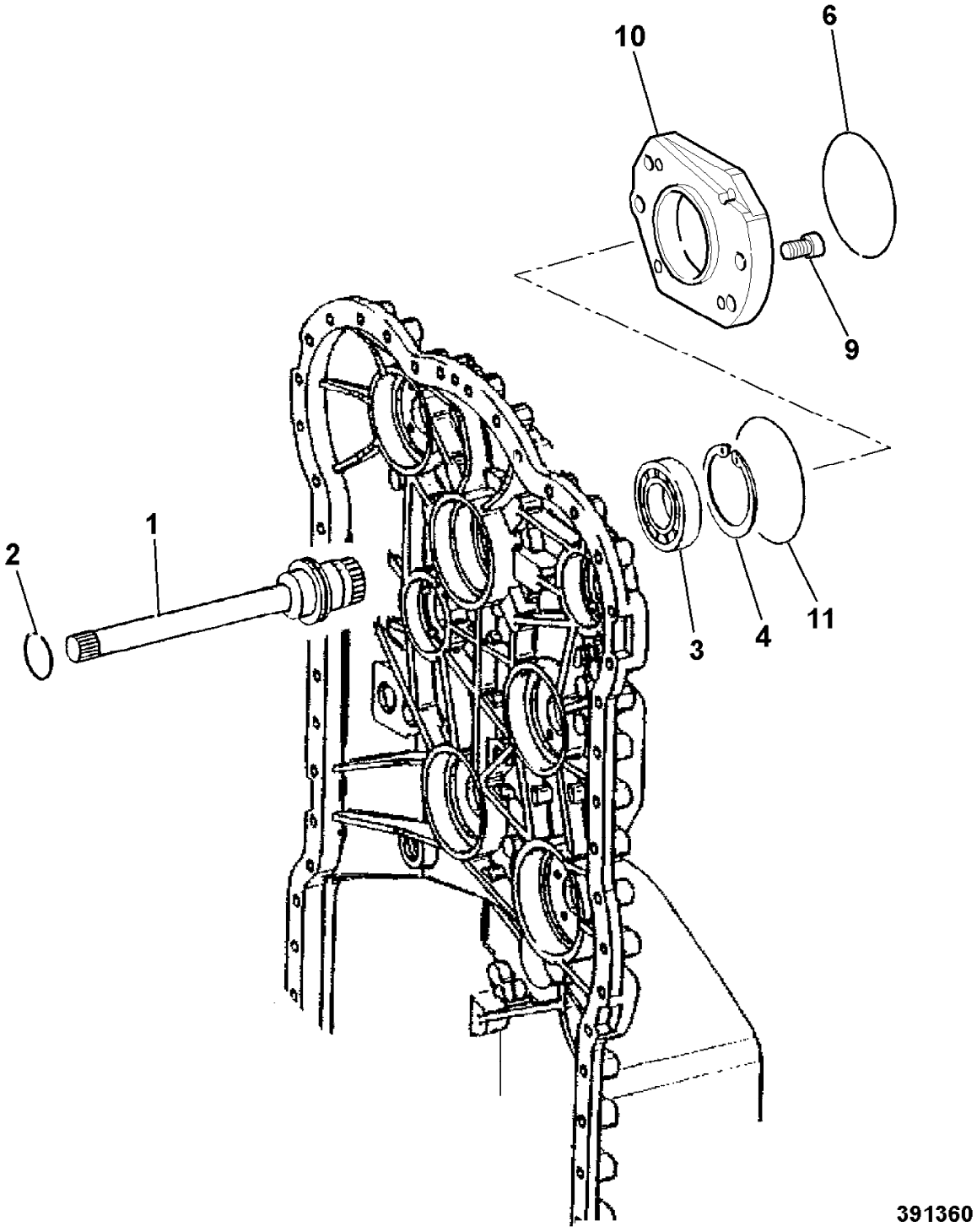
10
6
9
1
2
3
4
11
391360

9802/2740 F5-15-1 GEARSHIFT SYSTEM

Item	Part no.	Change No.	Description	Remarks	Usage code	Qty
1	331/42596		Gasket			1
2	331/42598		Plate, duct			1
4	04/600734		Panel, interm.-gearshift			1
5	826/10446		Screw, cap			37
6	04/600345		Stud, M8			14
7	04/600328		Nut			14
8	04/600735		Screw, torx M6			23
9	04/600284		Plug			1
10	04/600253		Seal, o ring			1
11	04/600255		Spring			1
12	331/42600		Piston			1
13	04/600253		Seal, o ring			1
14	04/600252		Plug, plug			1
15	04/600738		Panel, interm.gearshift			1
16	04/600278		Screen			6
17	04/600739		Duct, plate, gearshift			1
18	04/600740		Screw, torx M6			18

Machine groups

Details

Machine group	From serial no.	To serial no.
.426		
426		

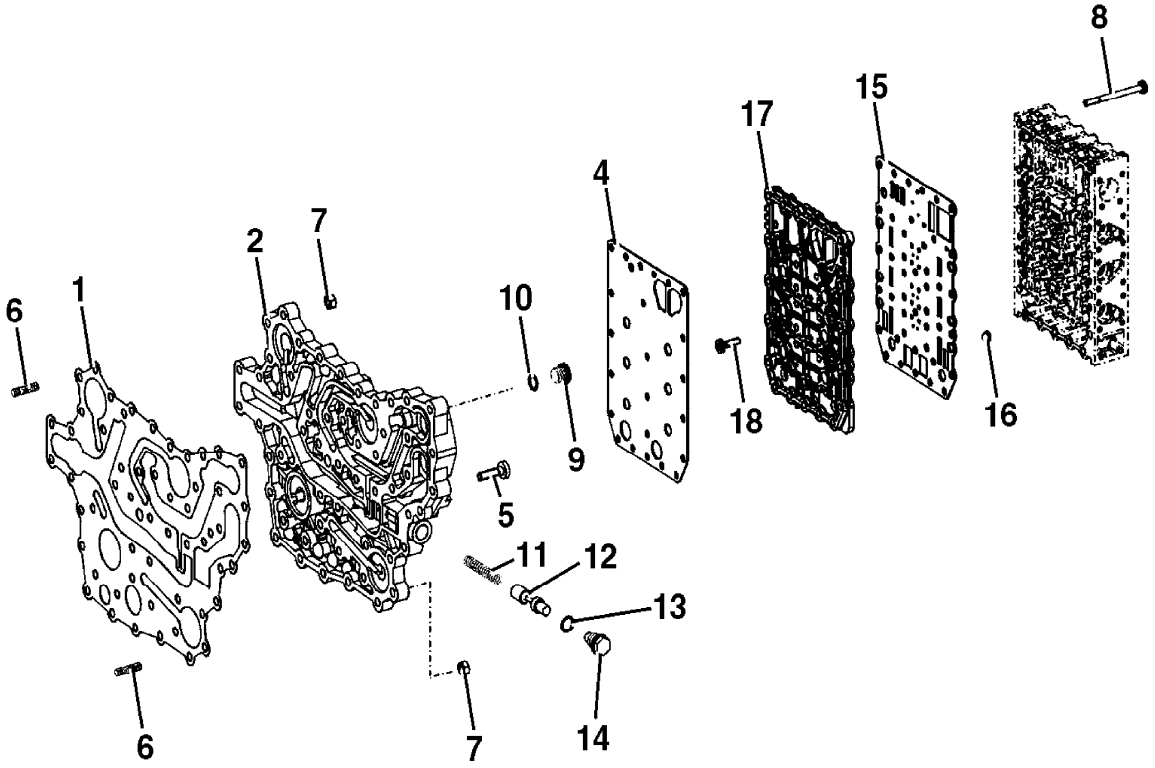

725430

9802/2740 F5-18-1 GEARSHIFT SYSTEM, VALVE COMPONENTS

Item	Part no.	Change No.	Description	Remarks	Usage code	Qty
1	928/60071		Valve, body			1
2	04/600262		Plug			8
3	10/907341		O Ring			8
4	04/600260		Orifice			6
5	04/600261		Piston			6
6	04/600263		Spring			6
7	04/600264		Piston			6
8	04/600265		Spring			6
9	04/600266		Piston			1
10	04/600267		Spring			1
11	331/42602		Piston, control			1
12	04/600269		Spring			1
13	331/42603		Gasket			1
14	04/600271		Housing			1
15	04/600407		Screw			18
16	04/600408		Regulator, pressure c/w O ring	O ring 04/600409		3
16A	04/600409		:O Ring			1
17	04/800543		Plate, fixing			3
18	04/600410		Screw			3
19	331/42603		Gasket			1
20	04/600271		Housing			1
21	04/600407		Screw			18
22	04/600408		Regulator, pressure c/w O ring	O Ring 04/600409		3
22A	04/600409		:O Ring			1
23	04/800543		Plate, fixing			3
24	04/600410		Screw			3
25	04/600411		Harness, wiring			1
26	331/42604		Gasket			1
27	04/600274		Cover			1
28	04/600407		Screw			14
29	331/42604		Gasket			1
30	04/600412		Cover			1
31	04/600276		Clamp, retaining			1
32	04/600407		Screw			14

Machine groups

Details

Machine group	From serial no.	To serial no.
.426		
426		

.

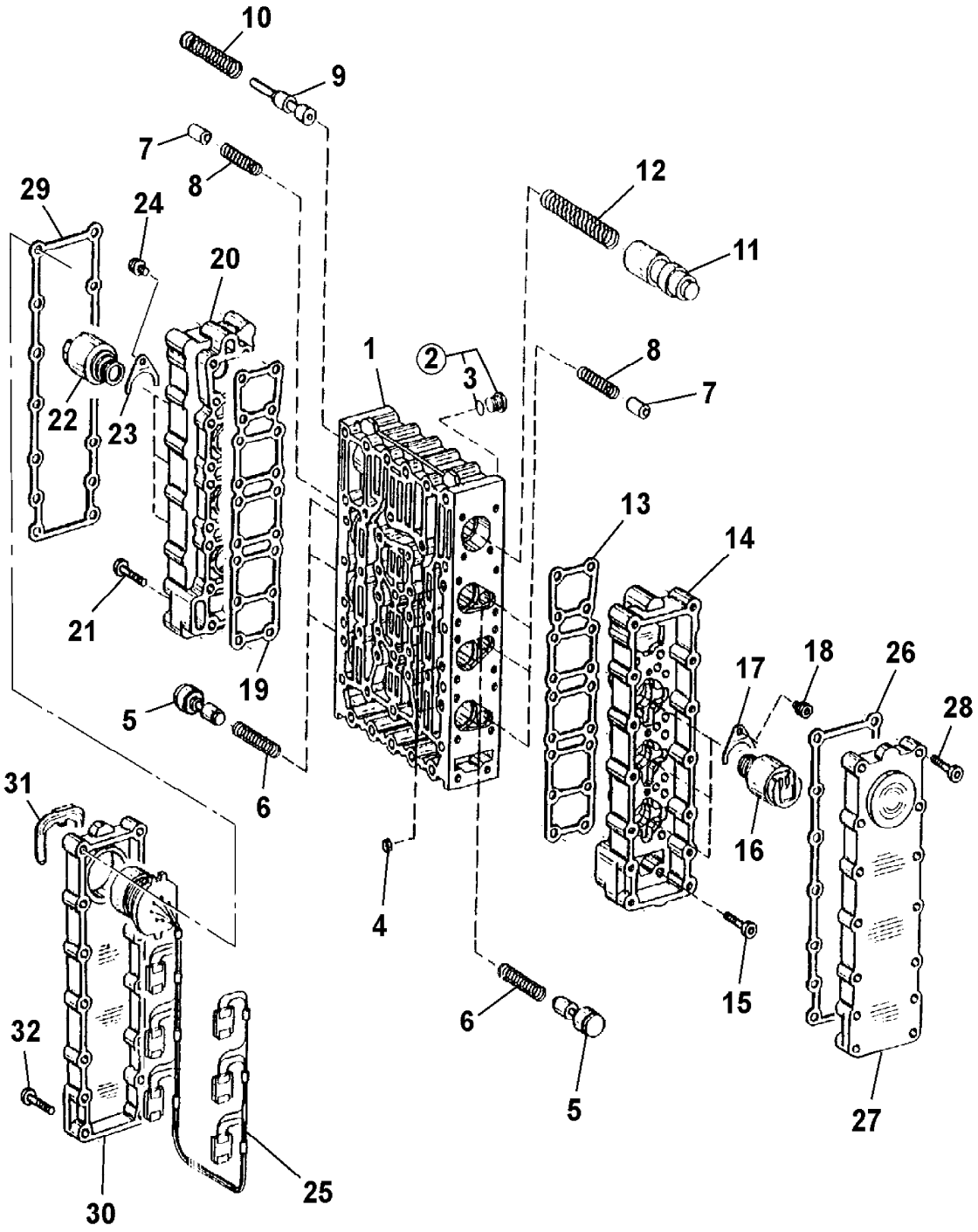

9802/2740 F5-19-1 OIL PUMP

Item	Part no.	Change No.	Description	Remarks	Usage code	Qty
1	04/600812		Pump, oil pressure			1
2	821/10061		:Ring			1
3	823/10268		:Shim, support			1
4	917/10001		:Bearing, needle			1
5	904/20152		:Seal, shaft			1
6	821/10062		:Ring, snap			1
7	04/600416		Screw, M10			10
8	828/10171		:O Ring			1
9	828/10172		O Ring			1

Machine groups

Details

Machine group	From serial no.	To serial no.
.426		
426		

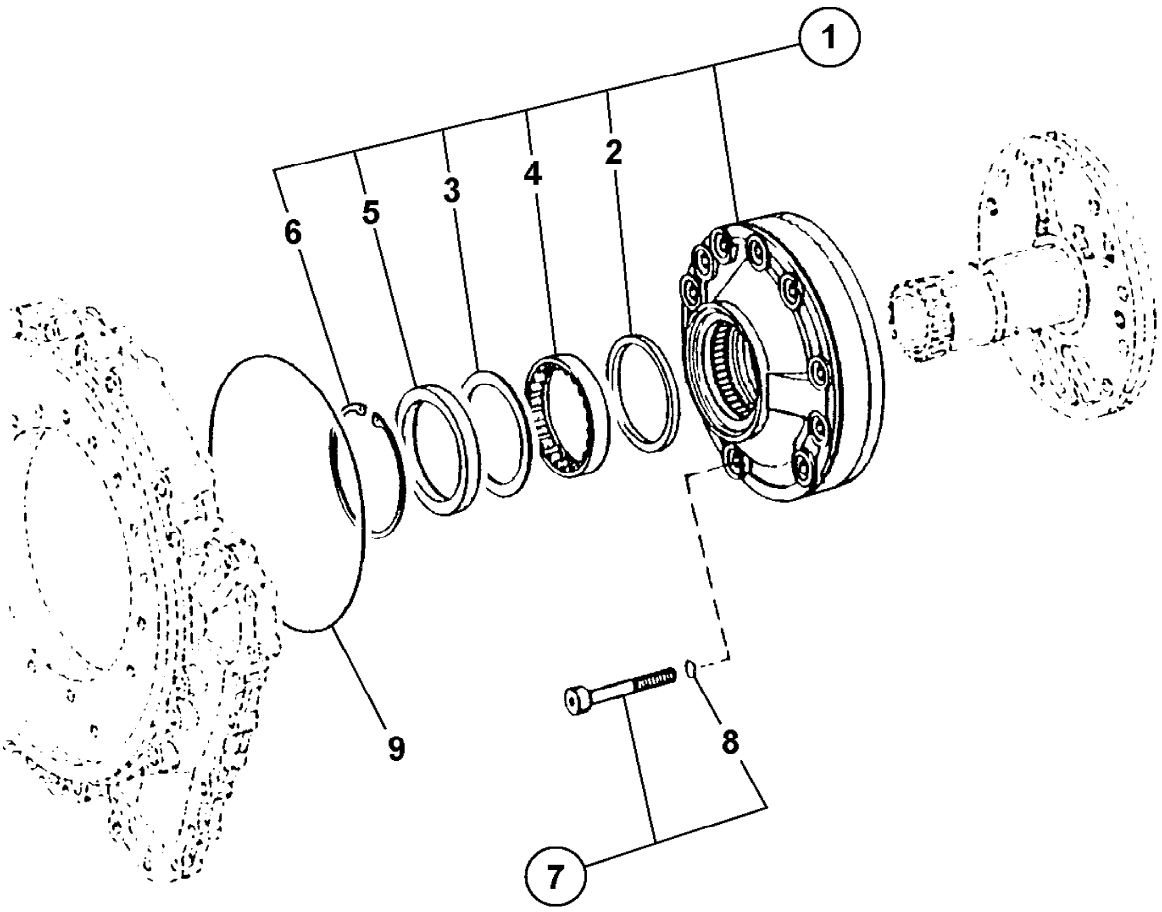

346620

9802/2740 F5-2-1 TRANSMISSION, ASSEMBLY

Item	Part no.	Change No.	Description	Remarks	Usage code	Qty
1	04/600804		Transmission, 4WG-160			1
	04/600776		Transmission, 6 Speed	See note 1 Sales special 7696,7938 and 8049		1

Note 1

04/600664 transmission + 04/600836 torque convertor

Machine groups

Details

Machine group	From serial no.	To serial no.
.426		
426		

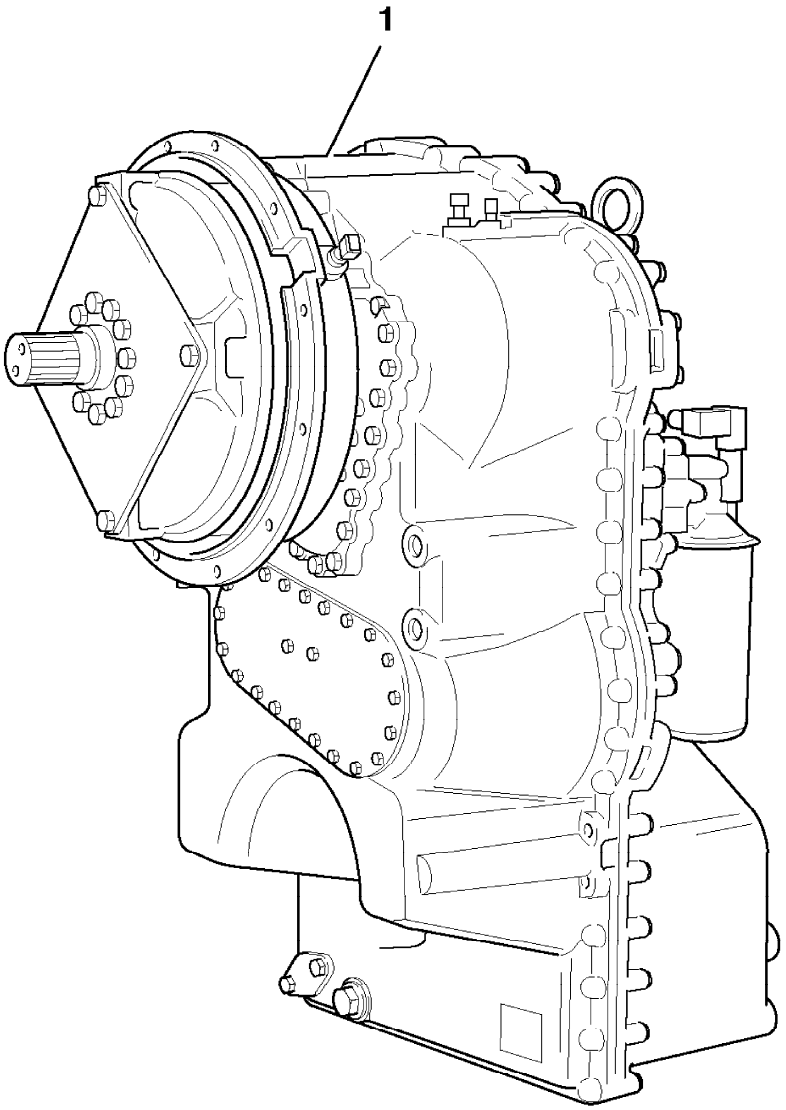

337220

9802/2740 F5-20-1 FILTER, TRANSMISSION OIL

Item	Part no.	Change No.	Description	Remarks	Usage code	Qty
1	32/925197	Superseded	Element, filter			1
	32/925905		Element, filter			1
2	32/925238		Cover, filter head			1
3	04/600146		O Ring			2
4	826/10447		Screw, cap			2

Machine groups

Details

Machine group	From serial no.	To serial no.
.426		
426		

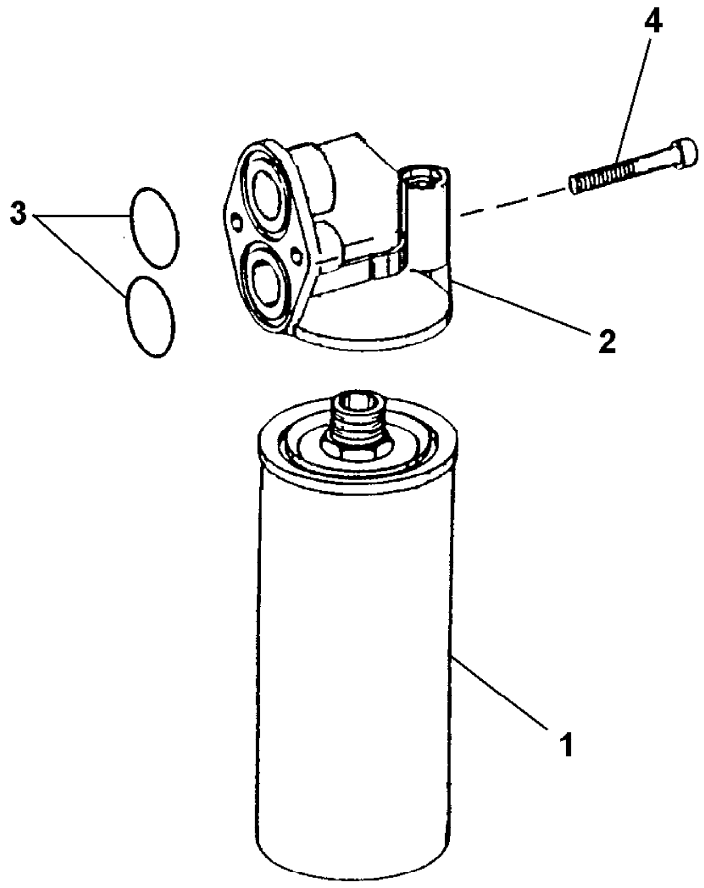

346780

9802/2740 F5-21-1 DIPSTICK, TRANSMISSION

Item	Part no.	Change No.	Description	Remarks	Usage code	Qty
3	331/30942		Tube, dipstick			1
4	335/04424		Bracket, dipstick			1
5	821/00183		Clamp, top			1
6	821/00184		Clamp, base			1
7	821/00185		Insert, clamp			1
8	1315/0309D		Setscrew, M8x35			2
9	04/800423		Gasket			1
10	331/35674		Dipstick			1
11	1315/0507D		Setscrew			1
12	1420/0008D		Washer, M10			2
13	1370/0303D		Nut, M10			1
14	1315/0407D		Setscrew, M10 x 25mm long			1
15	1420/0009D		Washer, M12			2
16	1420/0007D		Washer, M8 plain			2

Machine groups

Details

Machine group	From serial no.	To serial no.
.426		
426		

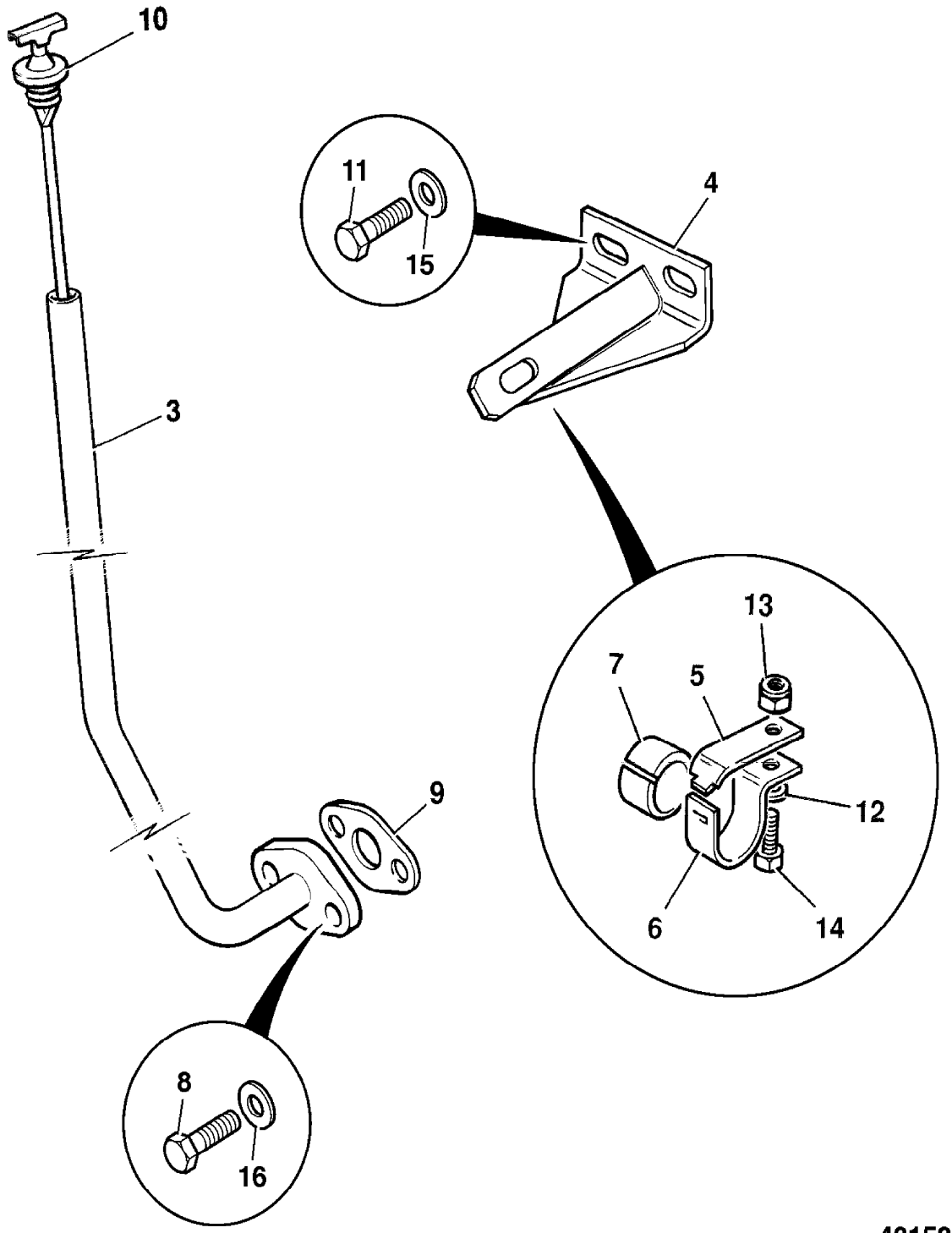

431581

9802/2740 F5-22-1 PIPEWORK, GEARBOX HOUSING

Item	Part no.	Change No.	Description	Remarks	Usage code	Qty
1	331/42513		Pipe, oil			1
2	828/10174		O Ring			2
3	826/10450		Capscrew			3
4	331/42514		Pipe, oil			1
5	04/600329		Tube, suction			1

Machine groups

Details

Machine group	From serial no.	To serial no.
.426		
426		

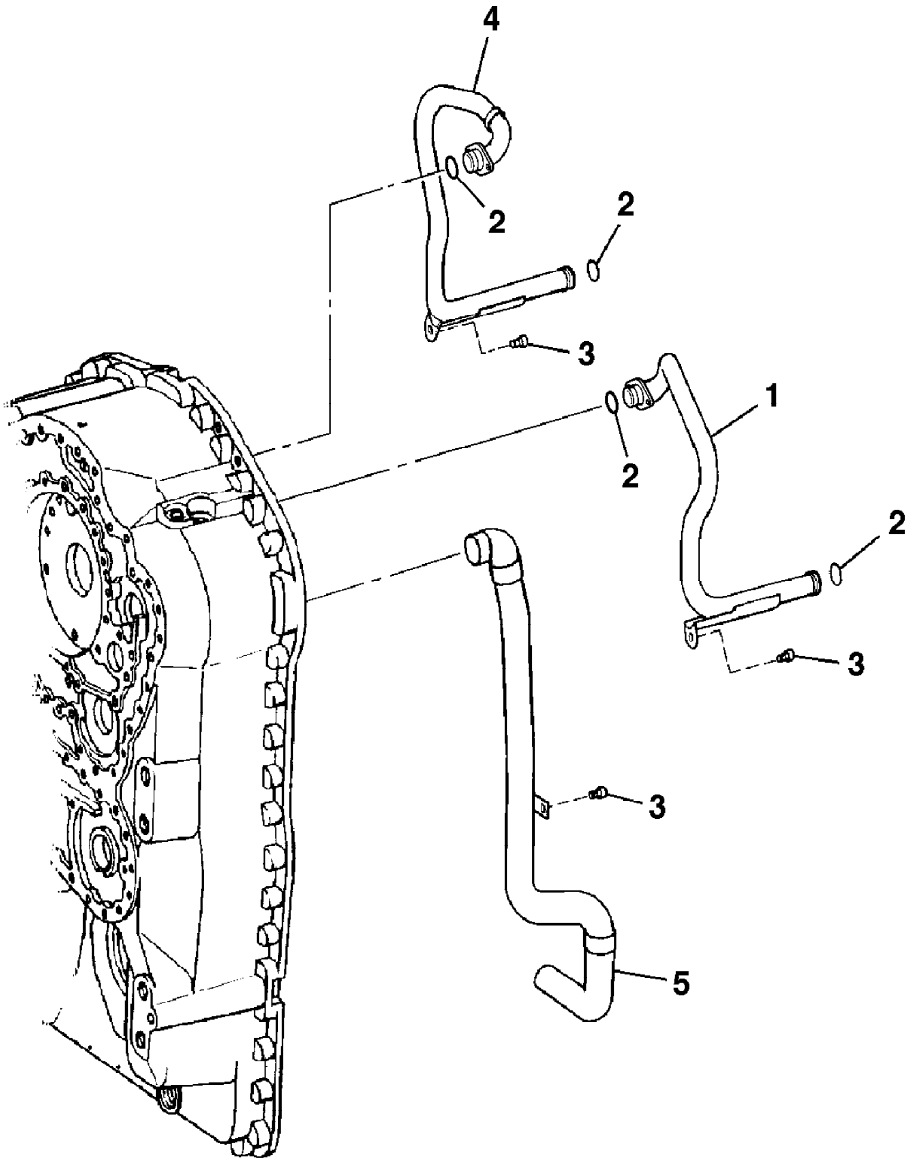

761490

9802/2740 F5-23-1 PRESSURE REGULATOR

Item	Part no.	Change No.	Description	Remarks	Usage code	Qty
1	04/600286		Valve			1
2	04/600287		Piston			1
3	04/600289		Spring, compression			1
4	04/600288		Plate, pressure			1
5	04/600290		Washer, tab			1
6	04/600749		Valve, Valve pressure relie			1

Machine groups

Details

Machine group	From serial no.	To serial no.
.426		
426		

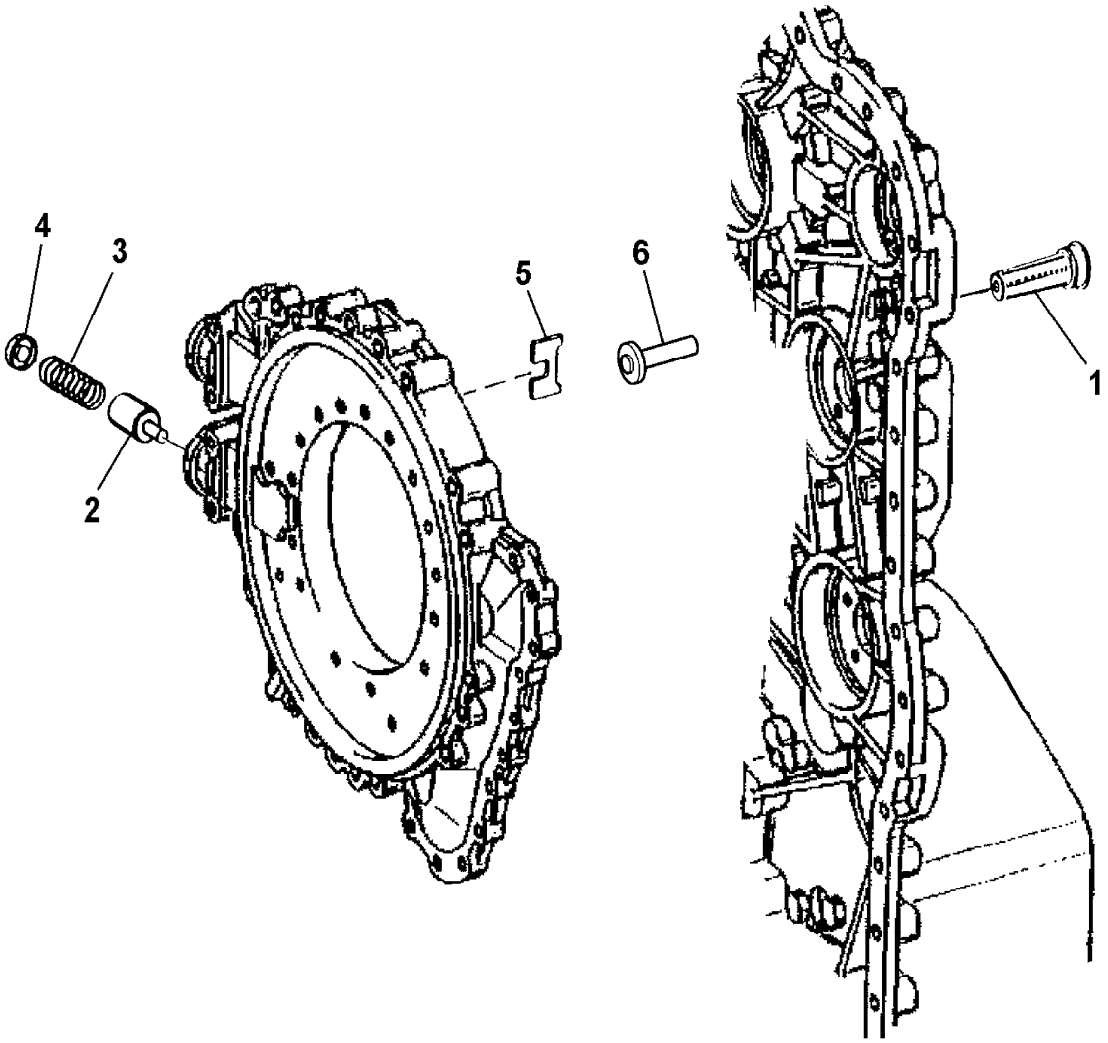

346771

9802/2740 F5-24-1 BLANKING PLATE

Item	Part no.	Change No.	Description	Remarks	Usage code	Qty
1	331/42605		Cover			1
2	04/600557		Gasket			1
4	04/600426		Screw, M8x18			23

Machine groups

Details

Machine group	From serial no.	To serial no.
.426		
426		

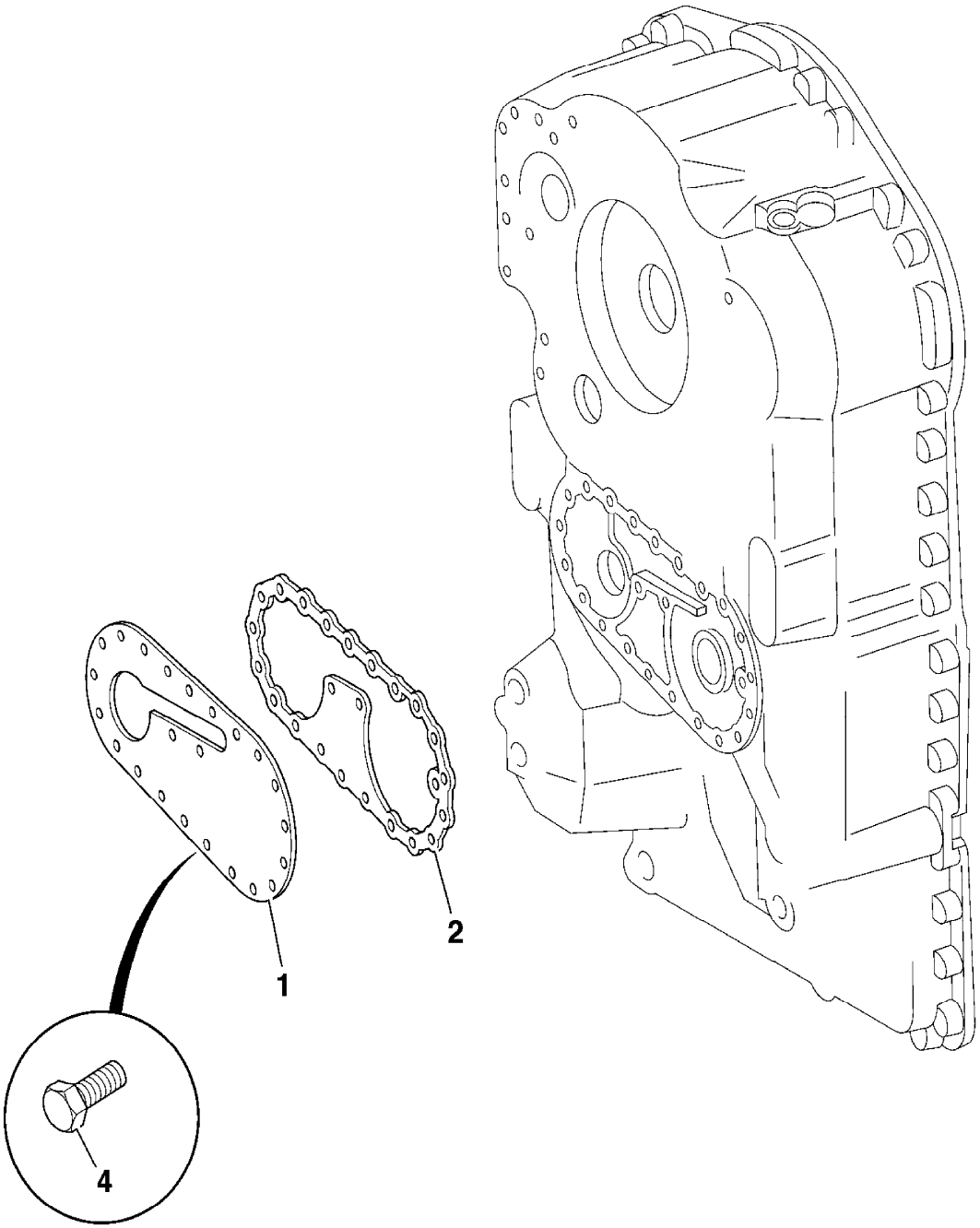

761630

9802/2740 F5-24-2 BLANKING PLATE, SALES SPECIAL

Item	Part no.	Change No.	Description	Remarks	Usage code	Qty
1	970/61265		Cover	See note 1 Sales special 7696,7938 and 8049		1
2	970/61267		Gasket			1
4	970/61266	Superseded	Bolt			8
	04/600426		Screw, M8x18			8

Note 1

Fitted to 6 speed transmission 04/600776

Machine groups

Details

Machine group	From serial no.	To serial no.
.426		
426		

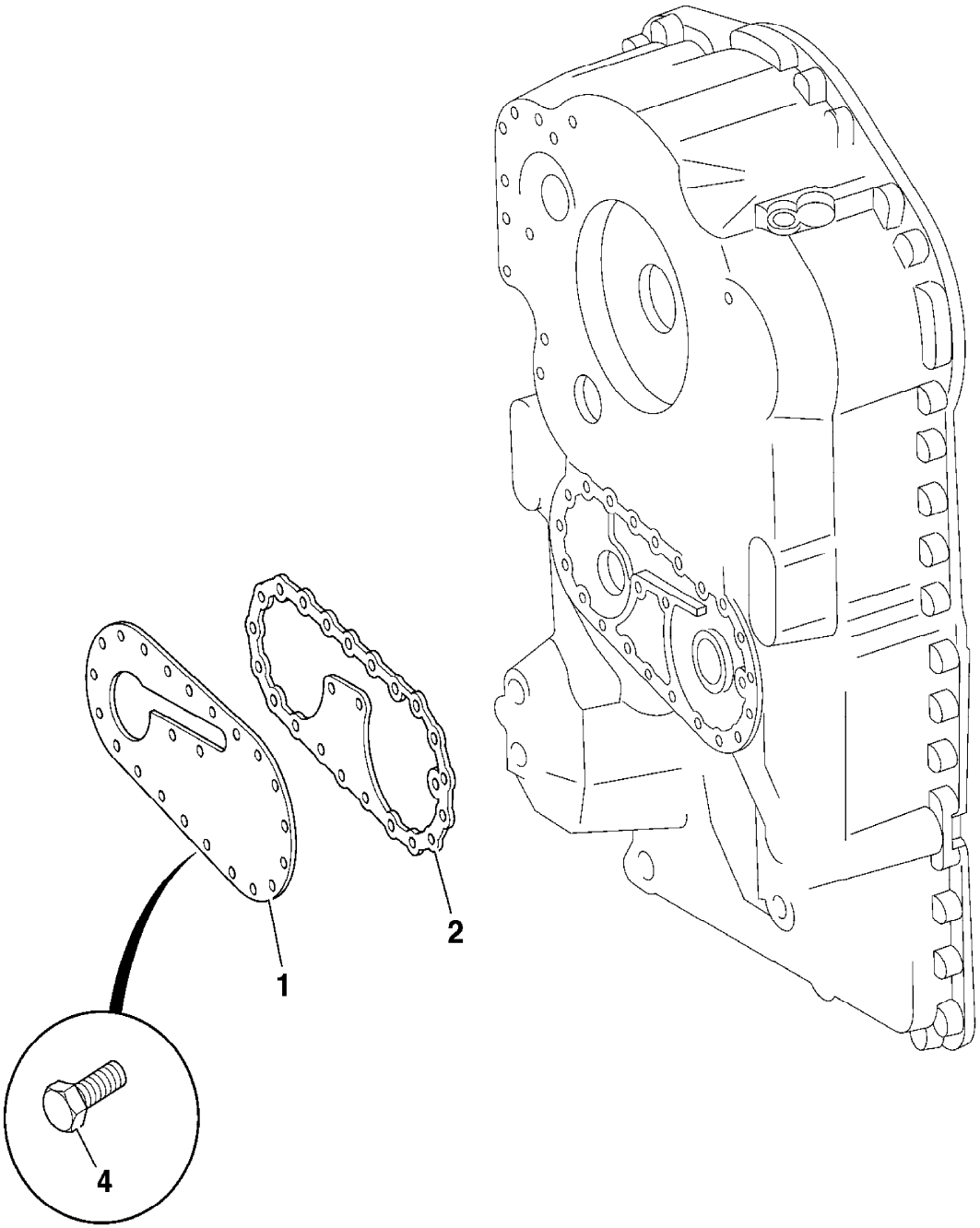

761630

9802/2740 F5-25-1 SENDERS, TRANSMISSION

Item	Part no.	Change No.	Description	Remarks	Usage code	Qty
1	717/20065		Sensor, speed			3
1A	331/42606		:O Ring			1
2	717/20066		Sensor, speed			1
2A	04/600417		:O Ring			1
3	04/600558		Screw, cap			1
4	04/600282		Plug			1
4A	04/600283		:O Ring			1
5	.		'See Remark'	04/600291		1
6	828/10207		:O Ring			1
7	717/20072		Sender, transmission, oil temperature			1
7A	828/10207		:O Ring			1

Machine groups

Details

Machine group	From serial no.	To serial no.
.426		
426		

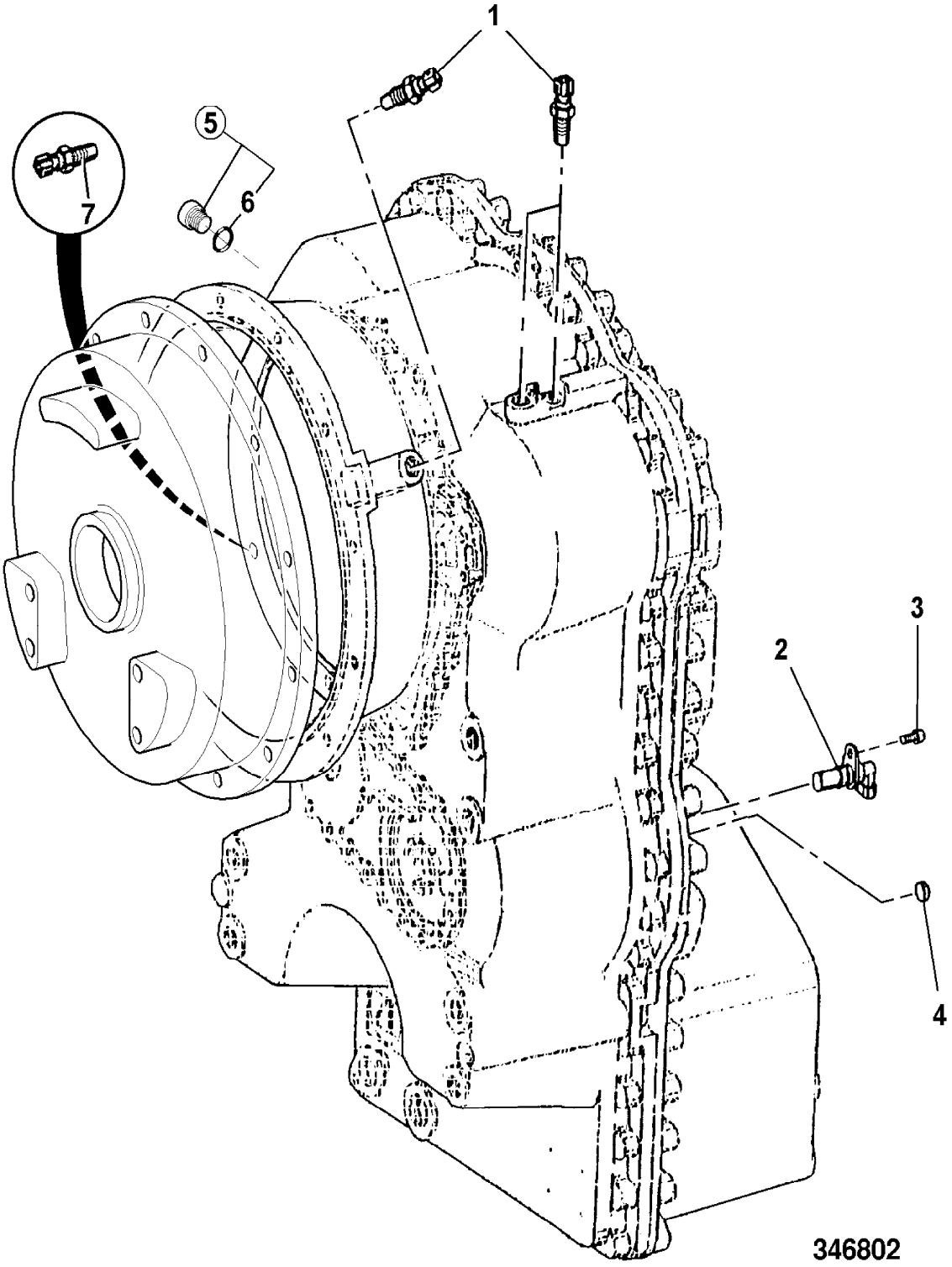
1
2
3
4
5
6
7
346802

9802/2740 F5-3-1 TORQUE CONVERTER, DRIVE PLATES

Item	Part no.	Change No.	Description	Remarks	Usage code	Qty
0A	331/17650		Housing, convertor			1
1	04/600827	Superseded	Convertor			1
	04/600836		Converter			1
2	04/600305		Bolt			18
3	331/42498		Diaphragm, engine connect			1
4	04/600546		Diaphragm			1
5	826/10442		Bolt, M12			4
6	04/600567		Washer			8

Machine groups

Details

Machine group	From serial no.	To serial no.
.426		
426		

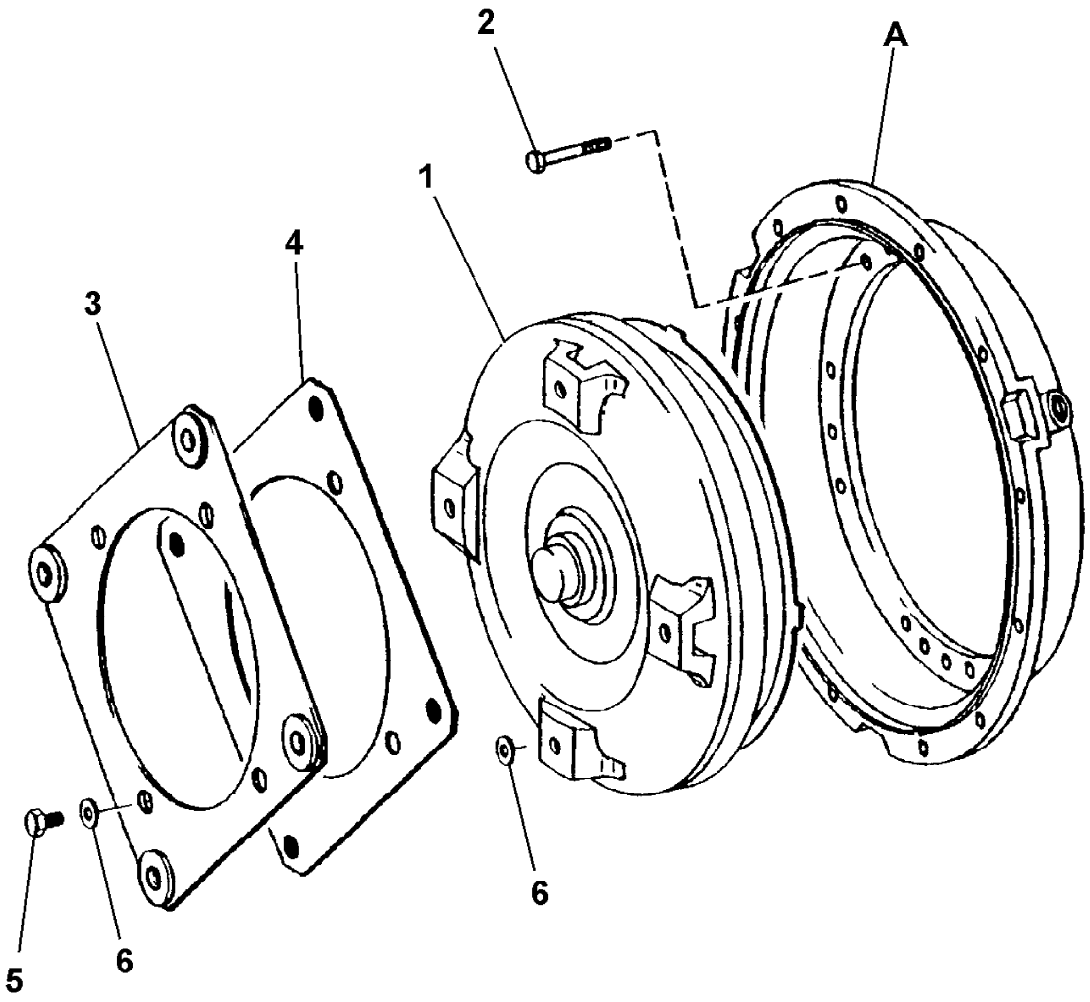

368560

9802/2740 F5-4-1 GEARBOX HOUSING

Illustration Machines Top of catalogue

Item	Part no.	Change No.	Description	Remarks	Usage code	Qty
1	826/10446		Screw, cap			15
2	826/10447		Screw, cap			4
3	331/16378		Plate, fixing			1
4	04/600323		Screw			2
5	331/16389		Cover			2
6	828/10173		O Ring			2
7	04/600550		Stud			12
8	04/600328		Nut			12
9	32/925198		Plug	Seal, 828/10175		1
9A	828/10175		O Ring	Used with 32/925198		1
10	32/925199		Plug			1
10A	828/10175		:O Ring			1
11	.		'See Remark'	Plug		1
12	.		'See Remark'	Plug		1
13	826/10445		Screw, cap			21
14	331/16385		Housing, oil feed			1
15	813/10126		Gasket, housing			1
16	04/600830		Housing, front			1
17	04/600831		Housing, rear			1
18	04/600323		Screw			44
19	04/600322		Pin			2
20	331/16378		Plate, fixing			1
21	04/600323		Screw			2
22	04/600431		Plate, cover			1
23	04/600325		Plate, cover			1
24	826/10450		Capscrew			4
25	04/800639		Breather			1

Machine groups

Details

Machine group	From serial no.	To serial no.
.426		
426		

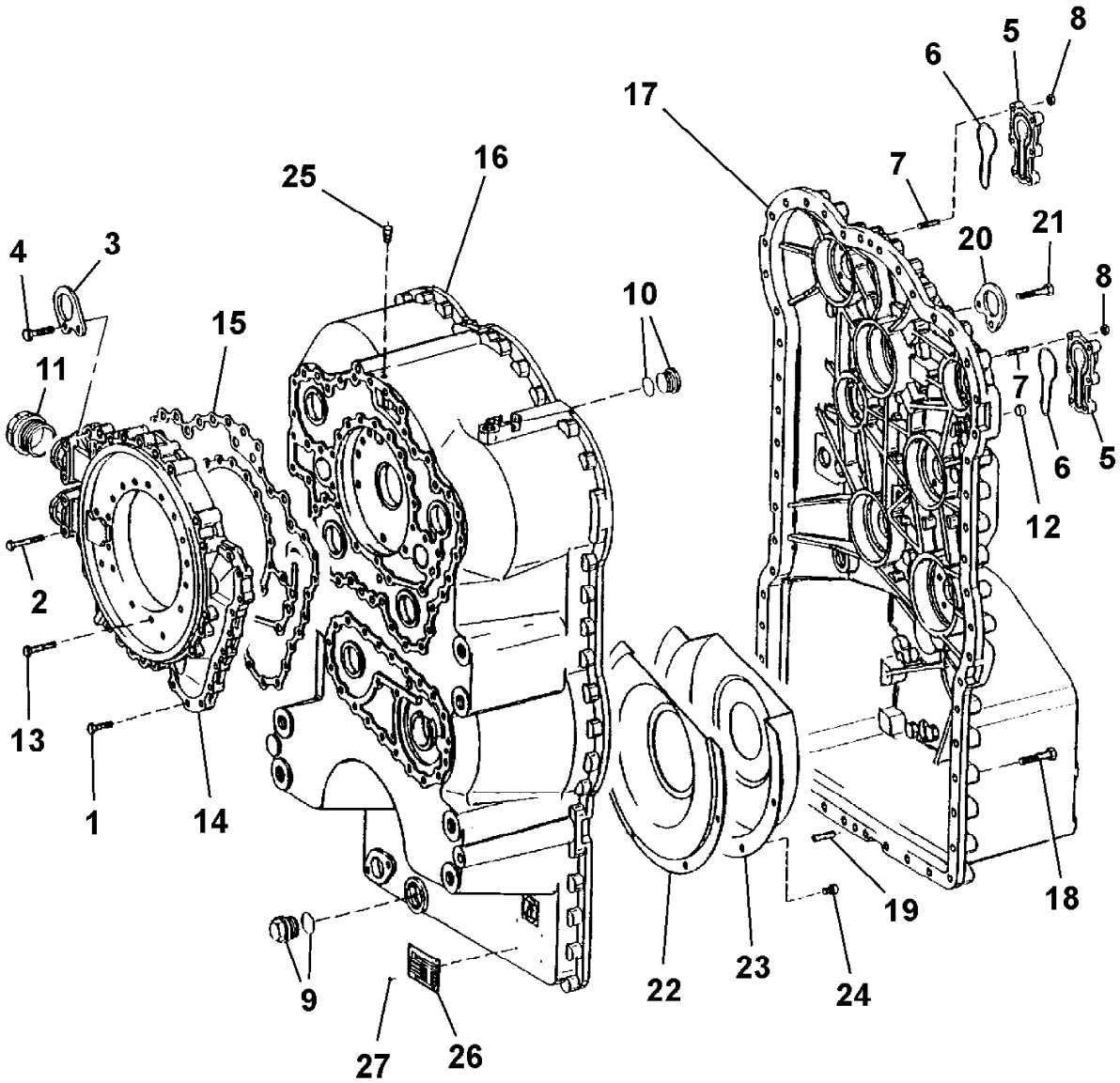

346630

9802/2740 F5-5-1 INPUT GROUP

Item	Part no.	Change No.	Description	Remarks	Usage code	Qty
1	04/600317		Shaft, Input			1
2	04/600626		Gear, input			1
3	04/600320		Ring, external retaining			1
4	914/60118		Shaft, turbine			1
5	04/600318		Ring, snap			1
6	907/20009		Bearing, roller			1
7	907/20009		Bearing, roller			1
8	04/600549		Ring, piston			2
9	04/600686		Shaft, stator			1

Machine groups

Details

Machine group	From serial no.	To serial no.
.426		
426		

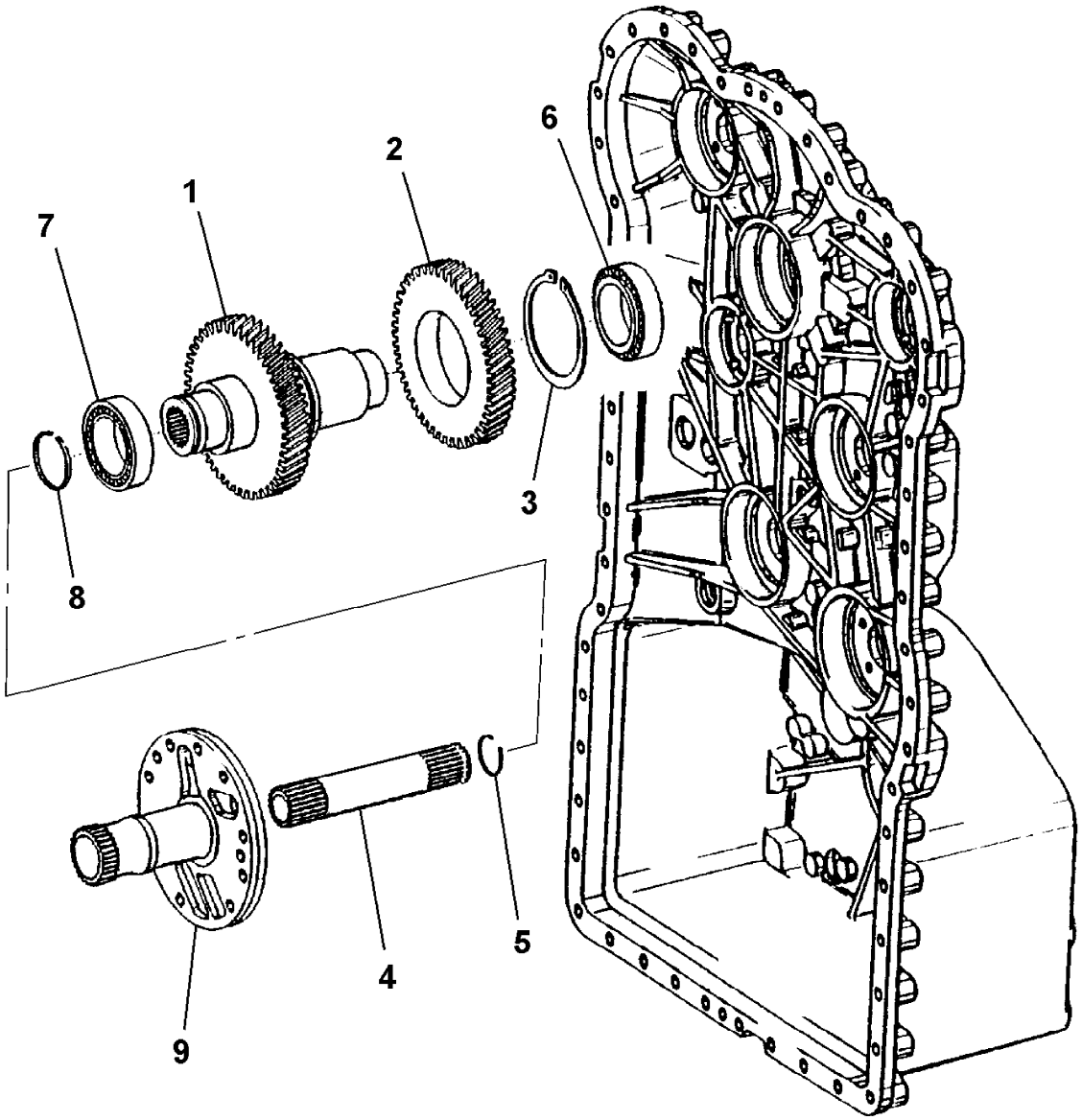

346610

9802/2740 F5-6-1 COUPLING GROUP, FIRST

Item	Part no.	Change No.	Description	Remarks	Usage code	Qty
1	04/600629		Shaft			1
2	826/10625		Stud			1
3	04/600630	Superseded	Coupling			1
	04/600849		Coupling			1
9	04/600179		Disc			1
15	04/600828		Gear, idler			1
16	04/600179		Disc			1
17	04/600180		Bearing, needle			2
18	04/600181		Washer			2
19	04/600335		Bearing, needle			1
20	04/600183		Ring, retaining			1
21	04/600232		Bearing, roller			1
22	04/600232		Bearing, roller			1
23	04/600186		Ring, piston			2

Machine groups

Details

Machine group	From serial no.	To serial no.
.426		
426		

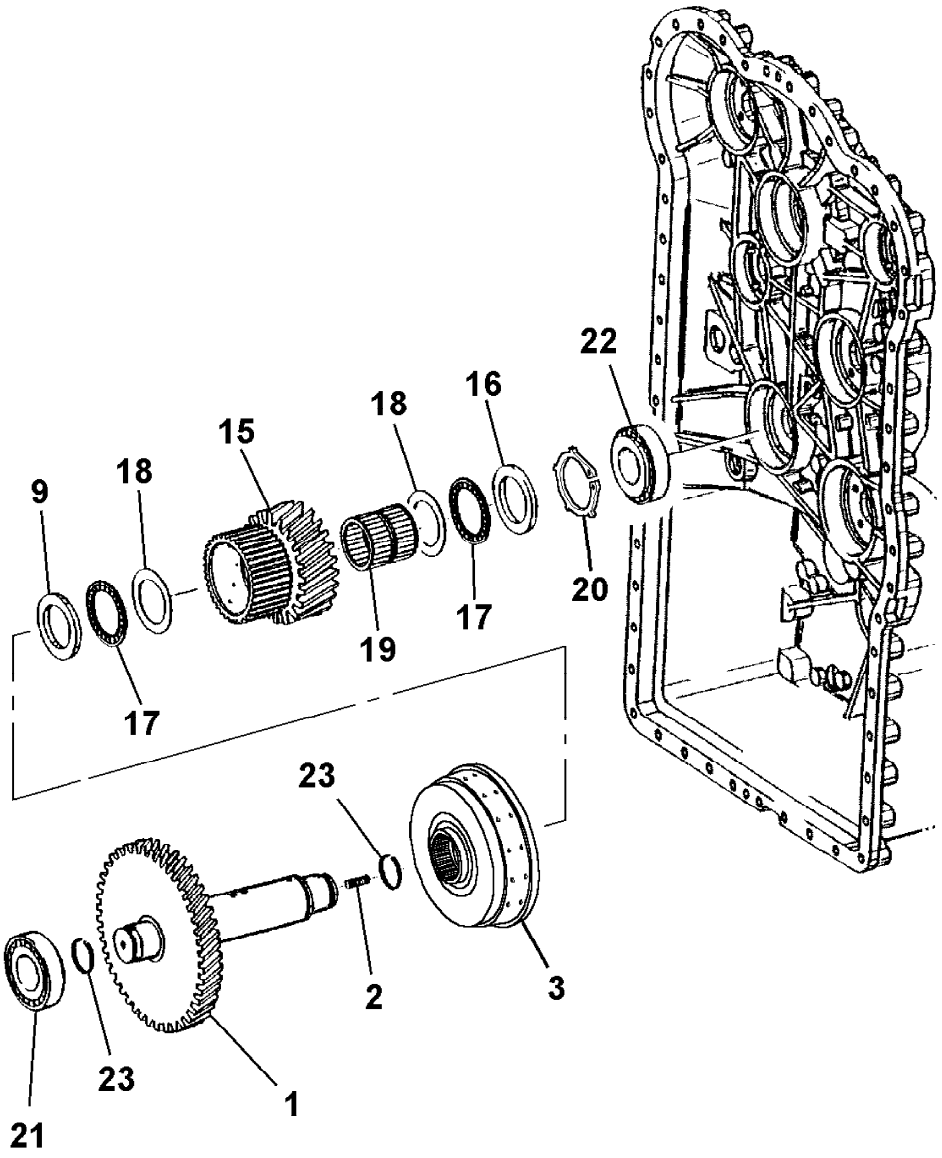

381930

9802/2740 F5-7-1 COUPLING GROUP, FORWARD

Item	Part no.	Change No.	Description	Remarks	Usage code	Qty
1	04/600354		Gear, shaft, 55 teeth			1
2	826/10625		Stud			1
3	04/600553	Superseded	Coupling			1
	04/600856		Coupling			1
7	10/907409		Circlip			1
16	04/600355		Gear, idler, 49 teeth			1
17	04/600236		Bearing, needle			1
18	04/600552		Bearing, ball			1
19	04/600238		Ring, retaining			1
21	04/600232		Bearing, roller			1
22	04/600232		Bearing, roller			1
23	04/600186		Ring, piston			2

Machine groups

Details

Machine group	From serial no.	To serial no.
.426		
426		

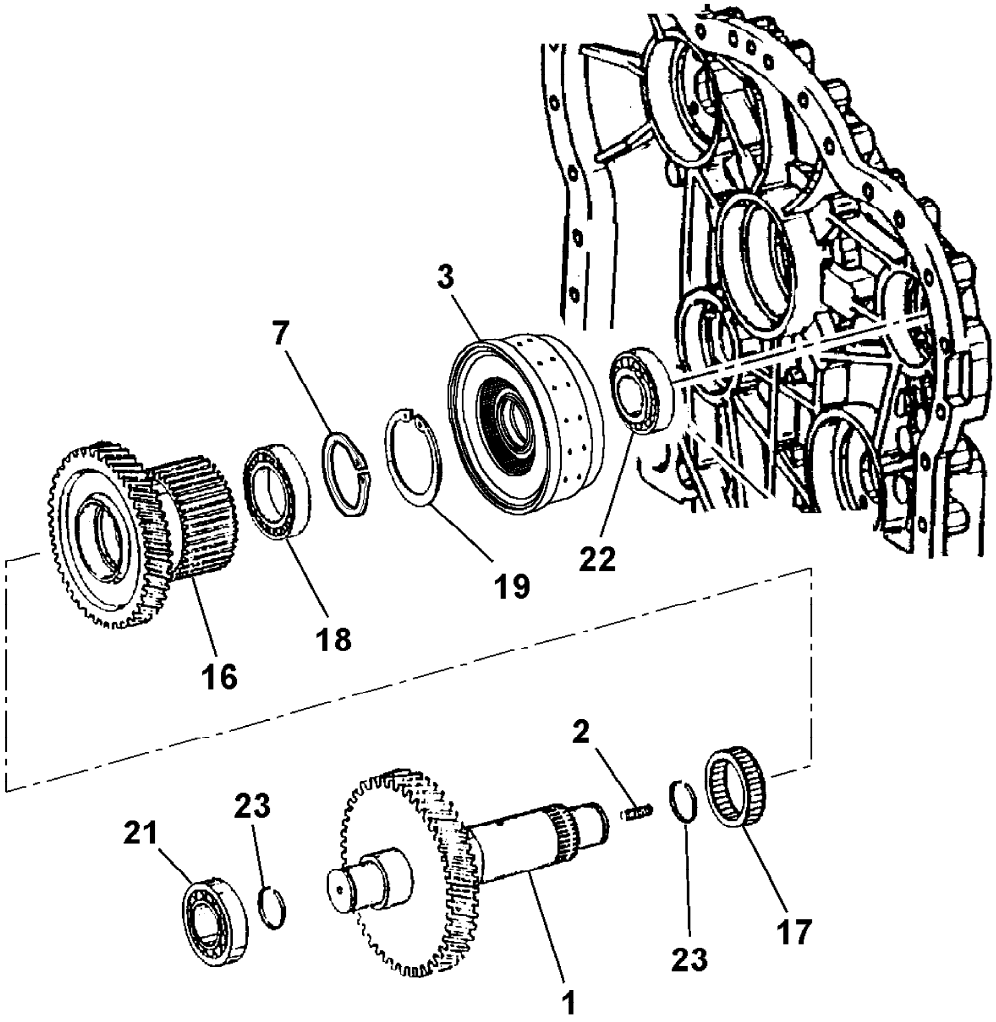

381970

9802/2740 F5-8-1 COUPLING GROUP, FOURTH

Item	Part no.	Change No.	Description	Remarks	Usage code	Qty
1	04/600635		Shaft			1
2	04/600351		Gear, 61 teeth			1
3	04/600230		Ring, retaining			1
4	826/10625		Stud			1
5	04/600637	Superseded	Coupling			1
	04/600855		Coupling			1
17	04/600636		Gear, idler			1
18	04/600339		Disc			1
19	04/600340		Bearing			2
20	04/600343		Washer, axial			3
21	04/600344		Bearing			2
22	10/904344		Ring, retaining			1
23	04/600232		Bearing, roller			1
24	04/600232		Bearing, roller			1
25	04/600186		Ring, piston			2

Machine groups

Details

Machine group	From serial no.	To serial no.
.426		
426		

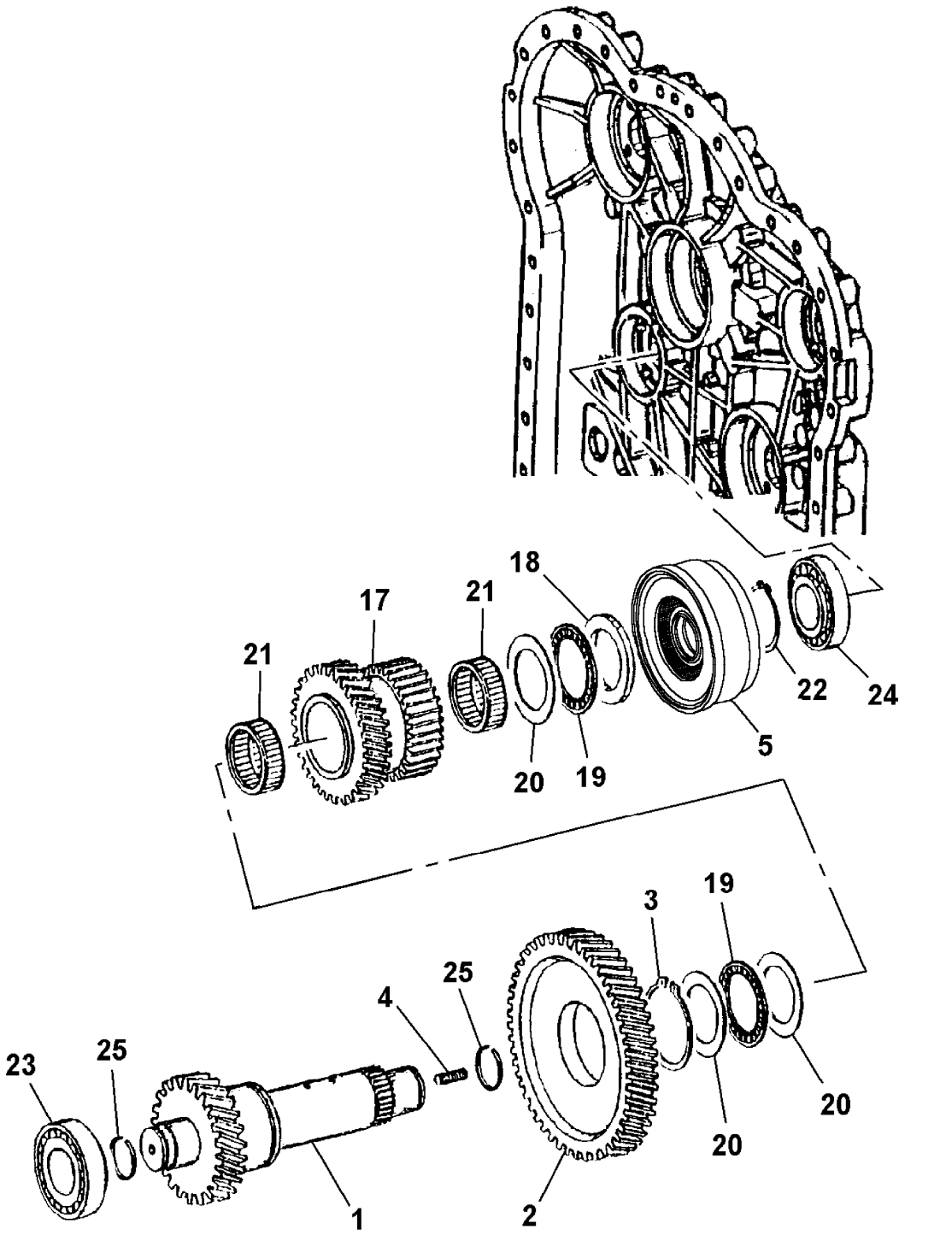

381960

9802/2740 F5-9-1 COUPLING GROUP, REVERSE

Item	Part no.	Change No.	Description	Remarks	Usage code	Qty
1	04/600357		Gear, shaft, 58 teeth			1
2	826/10625		Stud			1
3	04/600553	Superseded	Coupling			1
	04/600856		Coupling			1
16	04/600355		Gear, idler, 49 teeth			1
17	04/600236		Bearing, needle			1
18	04/600552		Bearing, ball			1
19	04/600238		Ring, retaining			1
20	10/907409		Circlip			1
21	04/600232		Bearing, roller			1
22	04/600232		Bearing, roller			1
23	04/600186		Ring, piston			2

Machine groups

Details

Machine group	From serial no.	To serial no.
.426		
426		

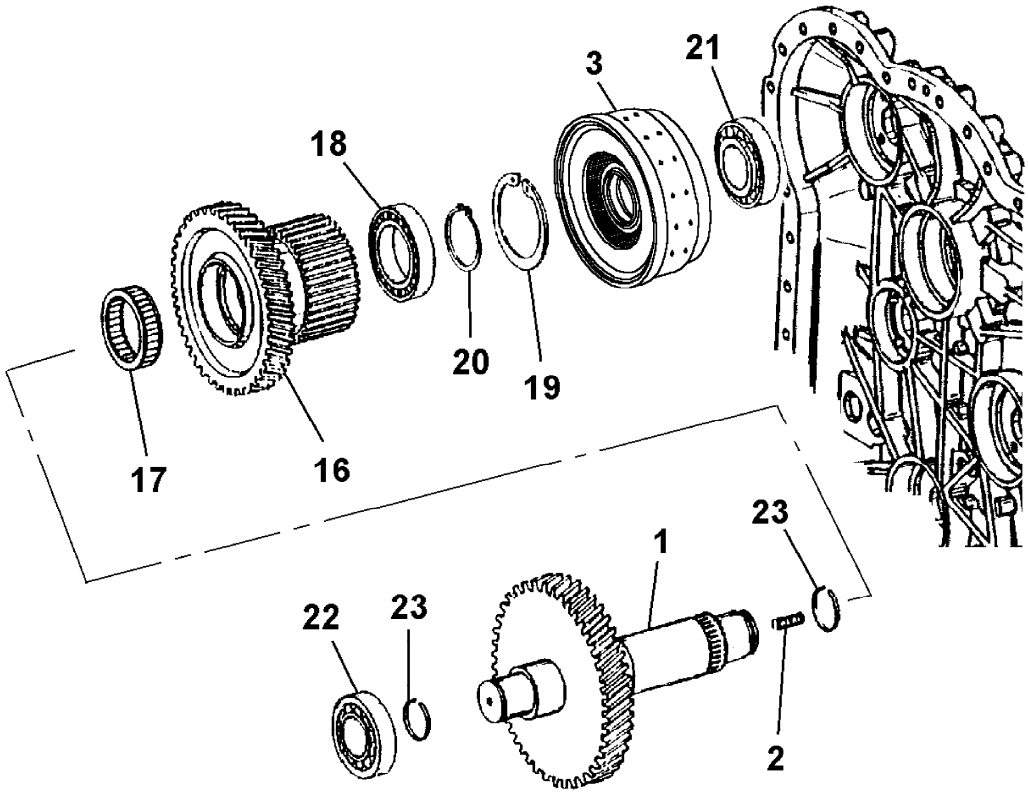

381990

9802/2740 F6-1-1 COOLER, OIL, TRANSMISSION

Item	Part no.	Change No.	Description	Remarks	Usage code	Qty
0A	30/925865		Cooler, transmission oil			1
1	616/80214		Hose, bottom rad.	Cooler out		1
2	616/80131		Hose	Cooler in		1
3	816/00018		Adapter, 90 Degree			2
4	264/01001		Clamp			4
5	1391/3408D		Capscrew			8
6	2401/0210		O Ring			2
7	821/00186		Clamp, top			2
8	821/00187		Clamp, base			2
9	821/00188		Insert, clamp			2
10	1315/0405D		Setscrew			2
11	1420/0008D		Washer, M10			4

Machine groups

Details

Machine group	From serial no.	To serial no.
.426		
426		

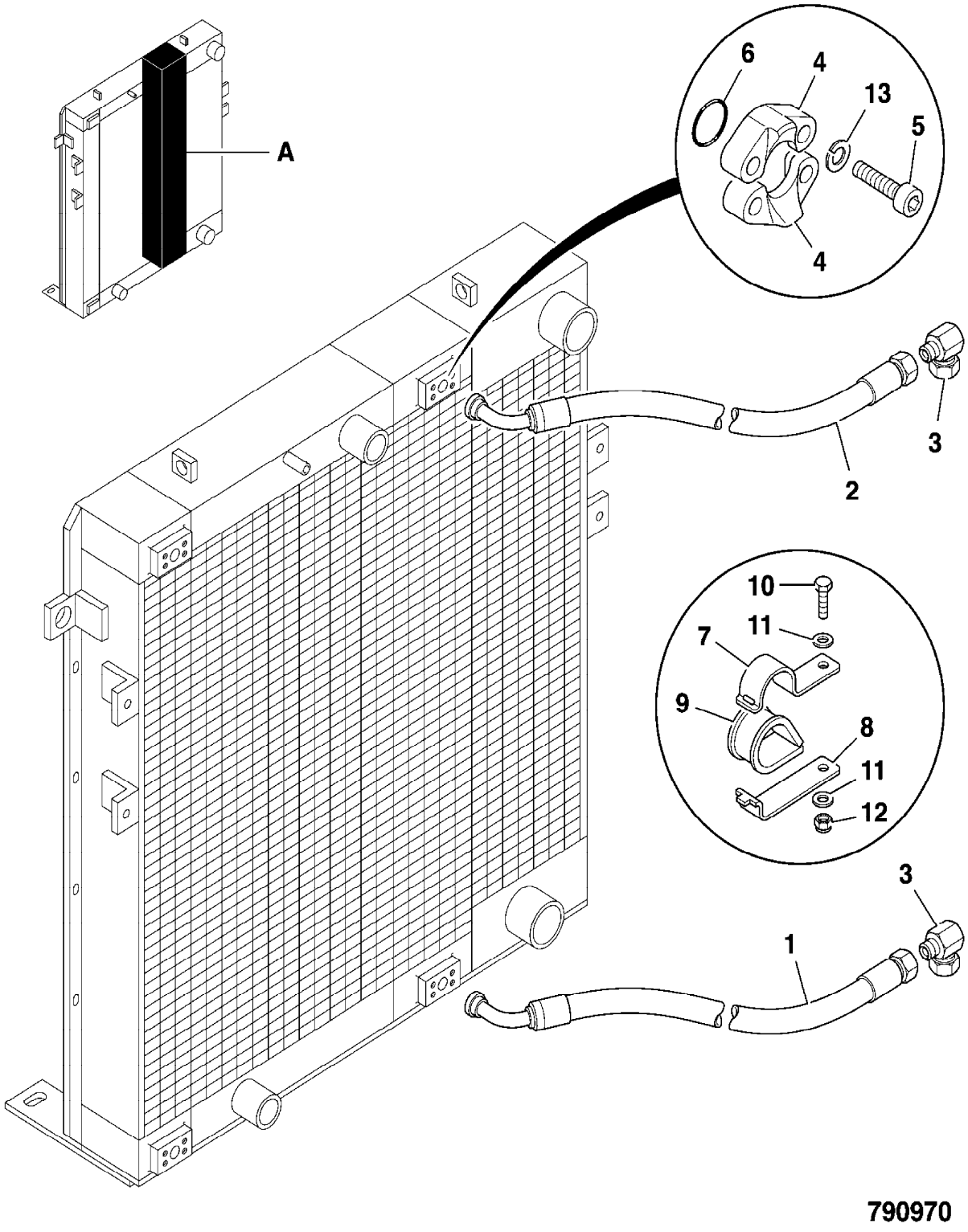

790970

9802/2740 F6-3-1 HOSE AND PIPEWORK, TRANSMISSION BY-PASS

Item	Part no.	Change No.	Description	Remarks	Usage code	Qty
1	928/60268		Valve, thermostat	Sales special 7908		1
2	331/46854		Bracket			1
3	616/80214		Hose, bottom rad.	Cooler out		1
4	637/33400		Hose	Transmission in		1
5	616/80190		Hose	Cooler in		1
6	1606/0015		Adapter			3
7	816/00018		Adapter, 90 Degree			2
8	816/00019		Adapter, T			1
9	1315/0807D		Setscrew, M20X25			2
10	1370/0603D		Nut, M16			2
11	1420/0012D		Washer, plain			4
12	1315/0308D		Setscrew, M8 x 30mm long			2
13	1370/0203D		Nut, lock			2
14	1420/0007D		Washer, M8 plain			2
17	637/80089		Hose	Transmission out		1
18	1406/0029		Seal, Dowty			3

Machine groups

Details

Machine group	From serial no.	To serial no.
.426		
426		

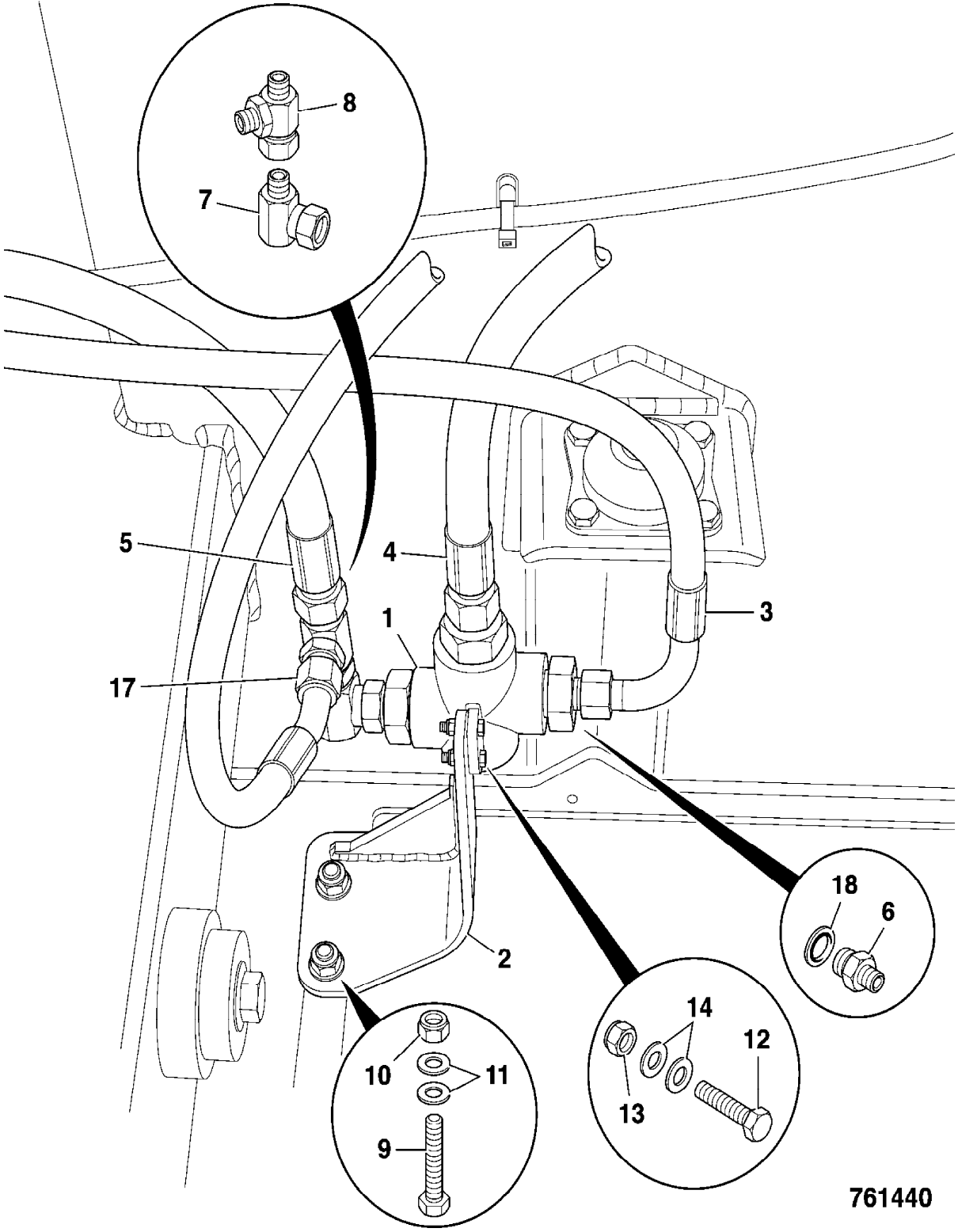
8
7
5
4
1
3
17
18
6
2
14
12
13
10
11
9
761440

9802/2740 G1-1-1 VALVE, BRAKE

Item	Part no.	Change No.	Description	Remarks	Usage code	Qty
1	15/911800	toS/N1231581	Valve, brake			1
	25/223164		Valve, brake	Replaces 15/911800		1
2	816/15160		Adapter, M18x3/8" BSP			2
3	816/15119		Adapter, M16x3/8 BSP			4
3A	1406/0015		:Washer, seal			4
4	816/15132		Adapter			1
5	1406/0011		Seal, bonded			2
6	701/74200		Switch, pressure, thread=M12, brake trans/dump	Transmission dump		1
7	701/74100		Switch, pressure, thread=M12, brake light			1
8	701/74000		Switch, brake low pressure, accumulator, thr=M10			1
10	816/55057		Adapter, tee			2
11	.		'See Remark'	plug supplied with item 1		1
12	816/15132		Adapter			1
13	993/99008		Washer, dowty, M18			1
14	816/40016		Adapter, 90			1
15	715/02300		Connector, cap			1
31	1612/0004		Adapter, male/female			1

Machine groups

Details

Machine group	From serial no.	To serial no.
.426		
426		

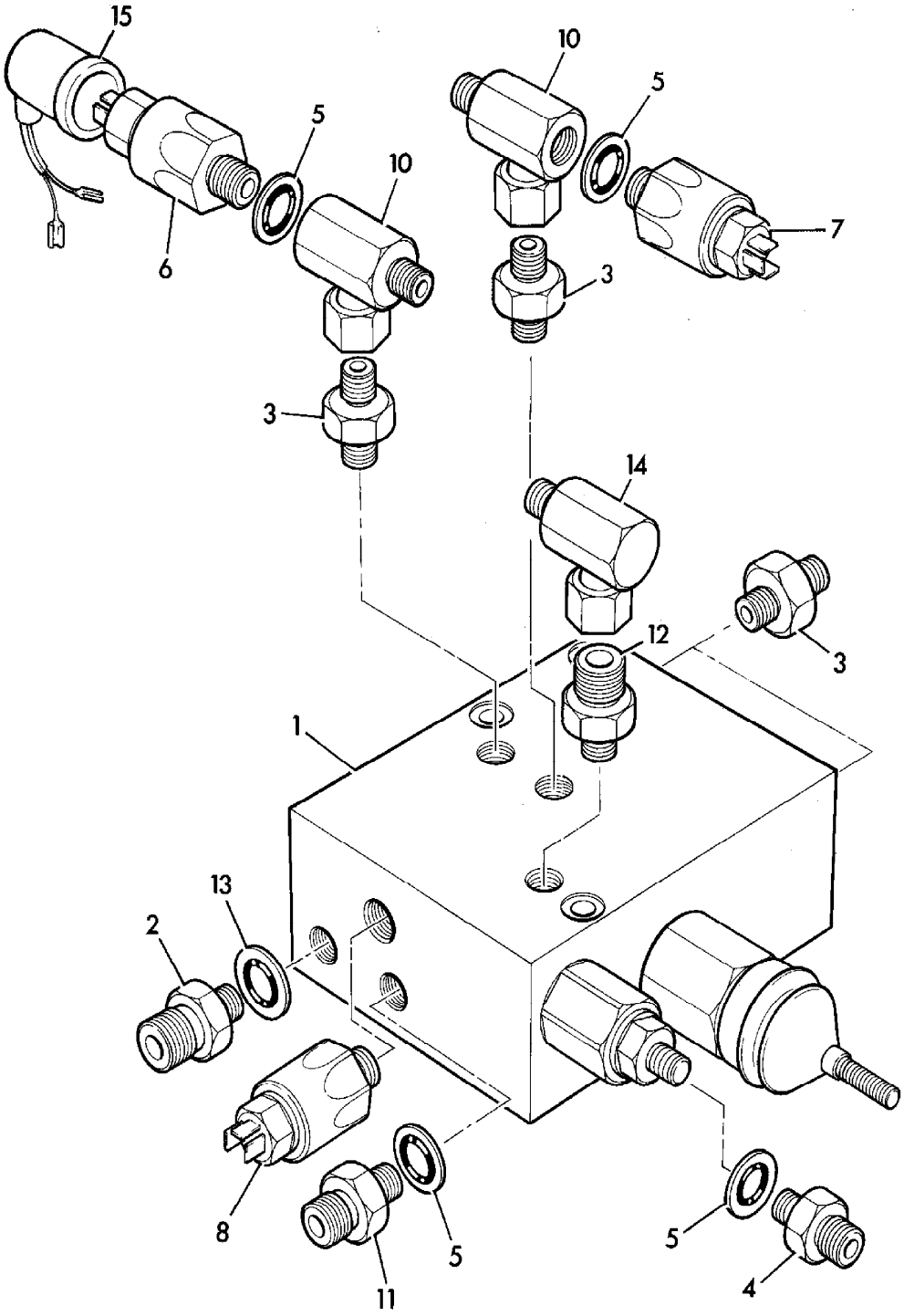

202121

9802/2740 G1-2-1 VALVE, BRAKE

Item	Part no.	Change No.	Description	Remarks	Usage code	Qty
1	15/911800	toS/N1231581	Valve, brake			1
	25/223164		Valve, brake	Replaces 15/911800		1
2	15/911501		Kit, seal			1

Machine groups

Details

Machine group	From serial no.	To serial no.
.426		
426		

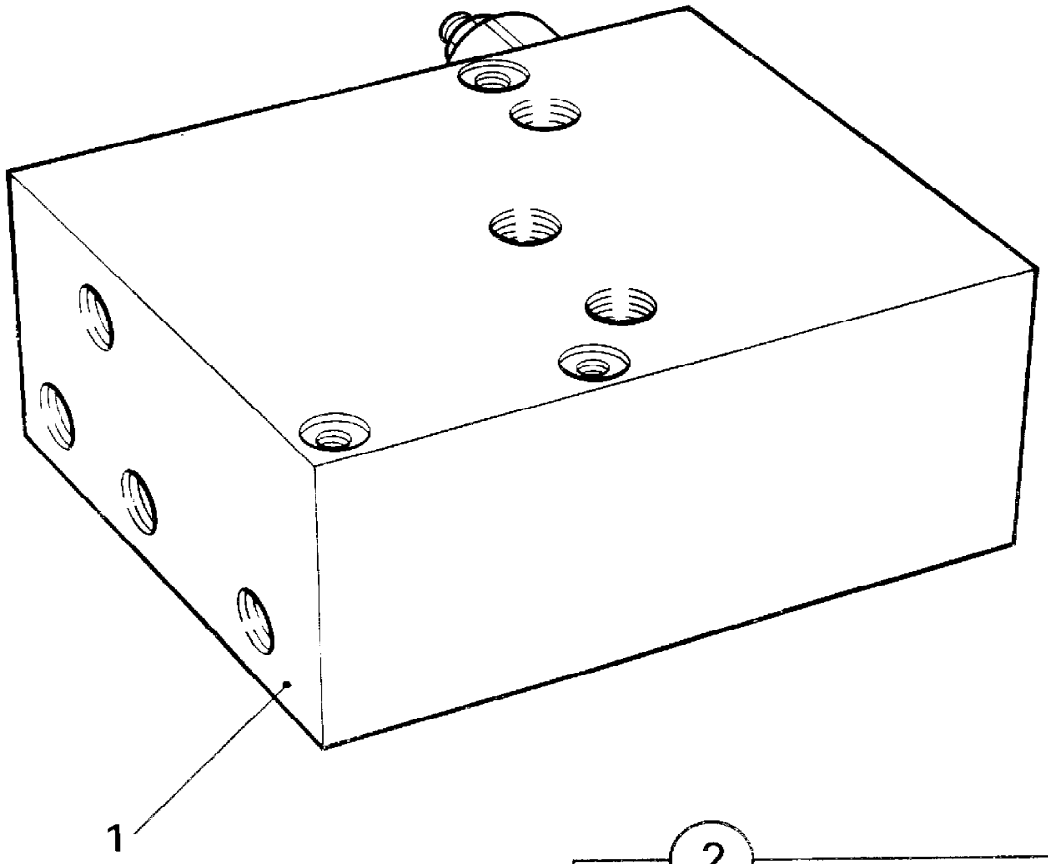

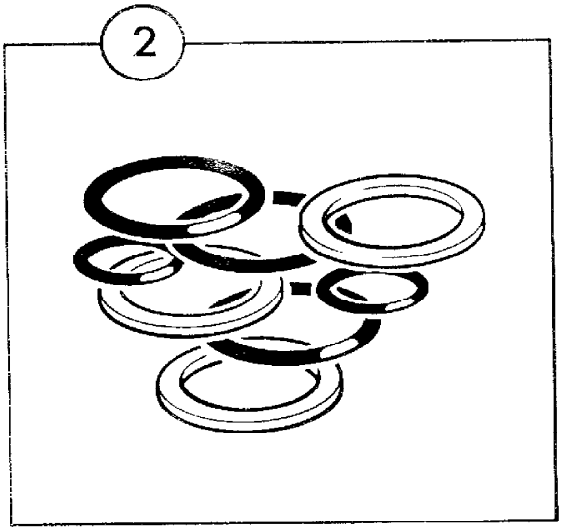

201510

9802/2740 G1-3-1 BRAKE, PARKING, CONTROL

Item	Part no.	Change No.	Description	Remarks	Usage code	Qty
1	331/21033		Gaiter, handbrake			1
2	331/17991		Lever, Parking Brake			1
2A	252/18501		:Grip, hand, black			1
3	331/21066		Plate, gaiter			1
4	826/01560		Screw, button head, M6x25			11
5	2410/1113		Grommet			1
6	701/72500		Switch			1
7	1315/3312D		Bolt			2
8	1370/0203D		Nut, lock			4
9	1420/0007D		Washer, M8 plain			13
10	910/50400		Cable, parking brake			1
11	913/02300		:Clevis, assembly			2
12	2000/0030		:Gaiter			2
13	826/00627		:Clip, 'E'			2
14	1340/0102Z		:Nut			2
15	826/10836		Screw, shouldered			1
16	1420/0006D		Washer, M6 plain			1
17	1370/0103D		Nut, M6 lock			1
18	826/10837		Screw, shouldered, M6 x 30			1
19	1420/0006D		Washer, M6 plain			1
20	1370/0103D		Nut, M6 lock			1
21	335/01751		Bracket, handbrake			1
22	1315/0305D		Screw, set M8x20			5
23	826/10879		Nut, M6			11
24	335/09527		Plate, mounting, parkbrake			1
25	331/50940		Plate, cover			1
26	826/10977		Nut, rivet,M8 Hex, low profile			5
27	331/51082		Plate, cover			1
28	1315/0310D		Setscrew, M8 x 40mm long			1
29	1315/0311D		Setscrew, M8x45			1
30	265/01570		Boss			1

Machine groups

Details

Machine group	From serial no.	To serial no.
.426		
426		

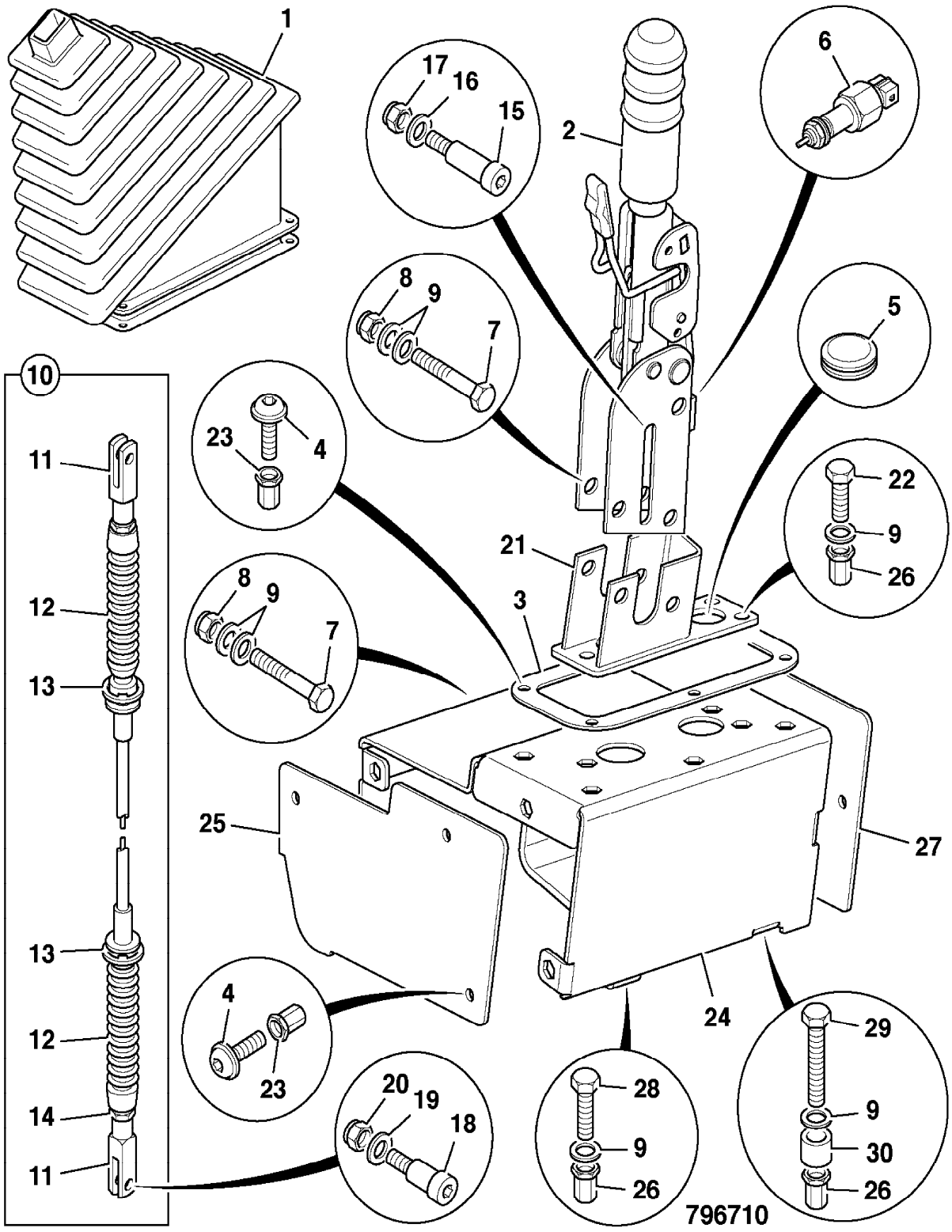

9802/2740 G1-4-1 BRAKE PEDAL

Item	Part no.	Change No.	Description	Remarks	Usage code	Qty
1	268/40142		Pedal, brake			1
2	265/00172		Pad, brake pedal			1
3	830/00330		Tube, pivot			1
4	831/00064		Bush, self lubricating			2
5	814/00376		Spring, brake pedal			1
6	1315/3420Z		Bolt, M10 X 100			1
7	1370/0303Z		Nut, lock, M10			1
8	1420/0008Z		Washer, Plain M10			1
9	1391/3307Z		Capscrew			1
10	1370/0202Z		Nut, M8			1
11	265/00286		Gaiter, single lever			1
12	826/01144		Tie, cable, 200mm long			1
13	1315/3314Z		Bolt			1
14	1370/0201Z		Nut, M8			1
15	1414/0011Z		Washer, 2 BA			4
16	157/25402		Plate, retaining gaiter			1
17	1360/0202Z		Screw, 2 B.A. x 1/2"			4

Machine groups

Details

Machine group	From serial no.	To serial no.
.426		
426		

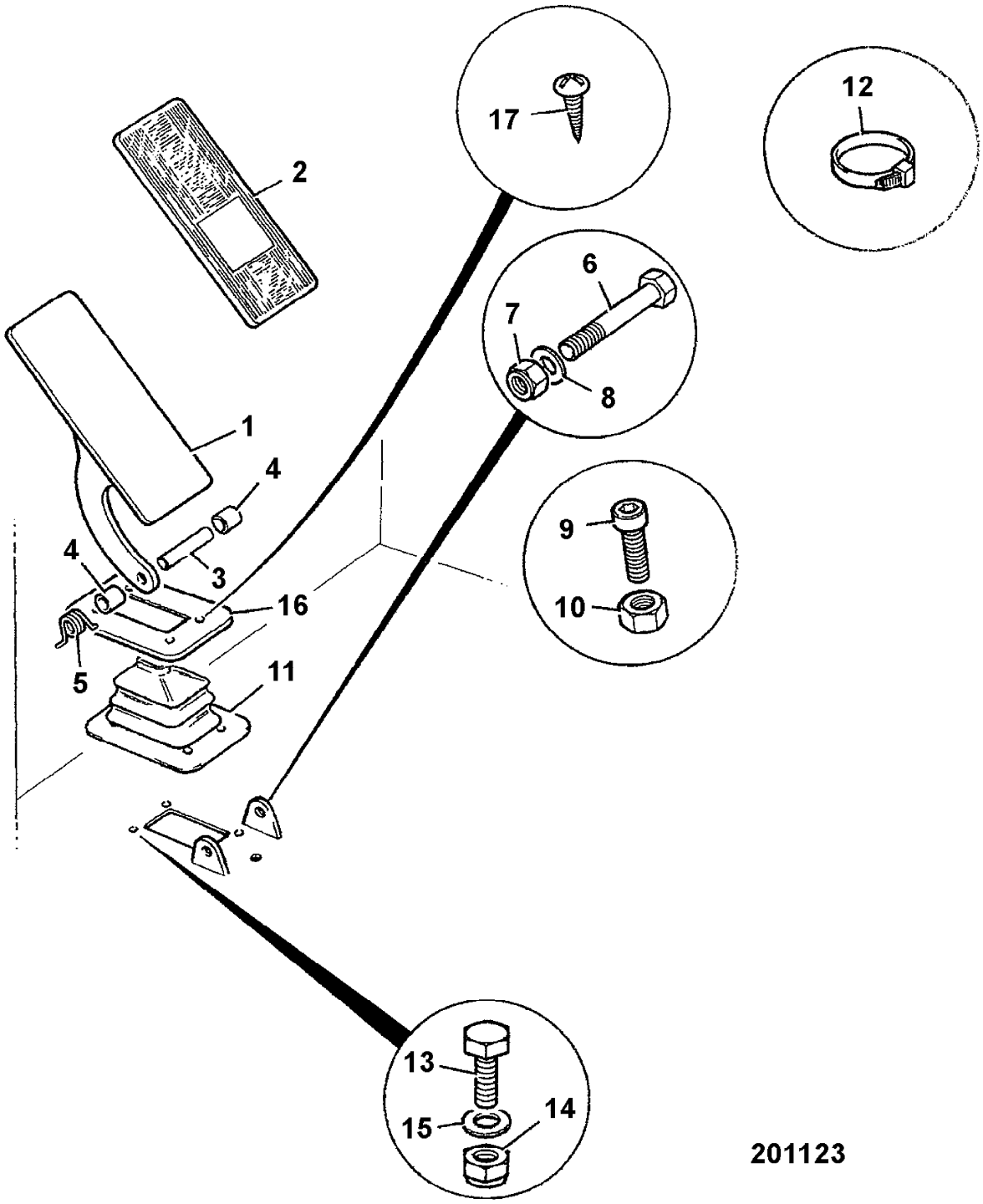

201123

9802/2740 G1-5-1 BRAKE, SYSTEM

Item	Part no.	Change No.	Description	Remarks	Usage code	Qty
0A	265/00745		Pipe, brake, front L.H.			1
	265/02651		Pipe, brake,front L.H., stainless steel	Alternative		1
	265/00745		Pipe, brake, front L.H.	H/Duty axles		1
	265/02651		Pipe, brake,front L.H., stainless steel	H/Duty axles. Alternative		1
0B	265/00746		Pipe, brake, front R.H.			1
	265/02652		Pipe, brake,front R.H., stainless steel	Alternative		1
	265/00746		Pipe, brake, front R.H.	H/Duty axles		1
	265/02652		Pipe, brake,front R.H., stainless steel	H/duty axles. Alternative		1
0C	830/13012		Pipe, brake,rear, left side			1
	830/13061		Pipe, brake,rear L.H side, stainless steel	Alternative		1
	830/13310		Pipe, brake, LH rear	H/Duty axles		1
	265/02835		Pipe, brake, rear L.H., stainless steel	H/Duty axles, stainless steel alternative		1
0D	830/13013		Pipe, brake,rear, right side			1
	830/13062		Pipe, brake,rear R.H side, stainless steel	Alternative		1
	830/13311		Pipe, brake, RH rear	H/Duty axles		1
	265/02834		Pipe, brake, rear R.H., stainless steel	H/Duty axles, alternative		1
1	15/911800	toS/N1231581	Valve, brake	See G1-1-1		1
	25/223164		Valve, brake	Replaces 15/911800		1
2	268/40142		Pedal, brake	See G1-4-1		1
4	265/00738		Bracket, brake			1
5	32/925524	toDEC05	Accumulator, piston accumulator, 0.75 Litre			2
	32/925847		Accumulator, zero pressure, version of 32/925794	Discharged		2
6	1620/0004		Adapter, 3/4"UNF SAE "O" ring, 3/8"BSP male			2
6A	2401/0505		:O Ring			1
8	1391/3316D		Screw, Cap M8 x 70			3
10	629/80128		Hose, 3/8BSP x 1870Lg			2
13	816/50033		Adapter, tee , F/M/M			2
14	913/00020		Clevis			1
15	913/00021		Pin, spring			1
16	629/21700		Hose, assembly, 3/8" x M16			1
17	629/21600		Hose, assembly, 3/8" x M16			1

18	613/31900		Hose, 1/2"BSP x 620mm lg.			1
22	821/00180		Clamp, top			2
23	821/00181		Clamp, base			2
24	821/00182		Insert, clamp			2
26	816/55063		Block, tee			2
27	1315/3409D		Bolt, M10 x 35mm long			1
28	1315/3412D		Bolt, M10 x 50			1
30	1370/0303D		Nut, M10			2
31	1420/0008D		Washer, M10			2
32	.		'See Remark'	Not fitted		1
33	816/50033		Adapter, tee , F/M/M			2
34	264/00202		Bracket			1
42	1370/0302D		Nut, thin			1
49	826/01797		Bolt, 'U'			4
50	1370/0103D		Nut, M6 lock			8
51	1420/0006D		Washer, M6 plain			8
53	612/23800		Hose			2
54	816/40006		Adapter, 90 deg			2

Machine groups

Details

Machine group	From serial no.	To serial no.
.426		
426		

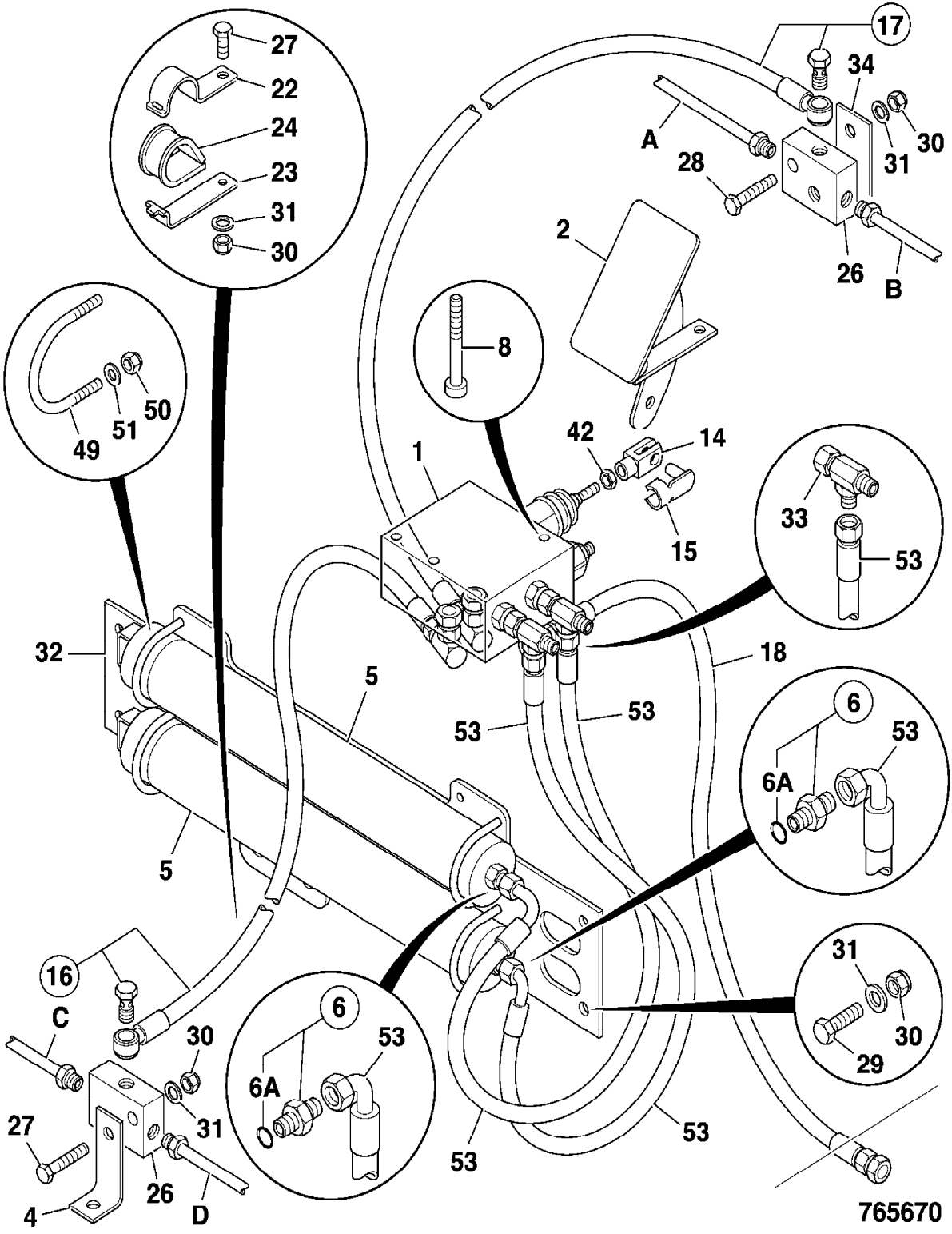
17
34
A
30
31
28
2
26
B
27
22
24
23
31
30
8
49
51
50
42
14
1
33
53
15
32
18
5
53
53
6
53
6A
5
16
C
30
31
27
26
4
D
6
53
6A
31
30
29
53
53
765670

9802/2740 G1-7-1 BRAKE CALIPER, PARKING

Item	Part no.	Change No.	Description	Remarks	Usage code	Qty
1	15/920272		Brake, Caliper,Parkbrake	See G1-8-2		1
2	15/920120		Disc, parking brake			1
3	331/13829		Bracket, mounting			1
4	829/30428		Spacer			4
5	1315/3613Z		Bolt, M14 X 55			4
6	1420/0010Z		Washer, plain			4
7	1315/3718Z		Bolt, M16 x 80			2
8	823/00603		Washer, hardened, M16			4
8A	15/915204		:Kit, rotor			1
9	1370/0603Z		Nut, M16			2
10	826/10837		Screw, shouldered, M6 x 30			1
11	1420/0006Z		Washer, M6			1
12	1370/0103Z		Nut, Self lock, M6			1
13	4101/0602		Fluid, locking			1

Machine groups

Details

Machine group	From serial no.	To serial no.
.426		
426		

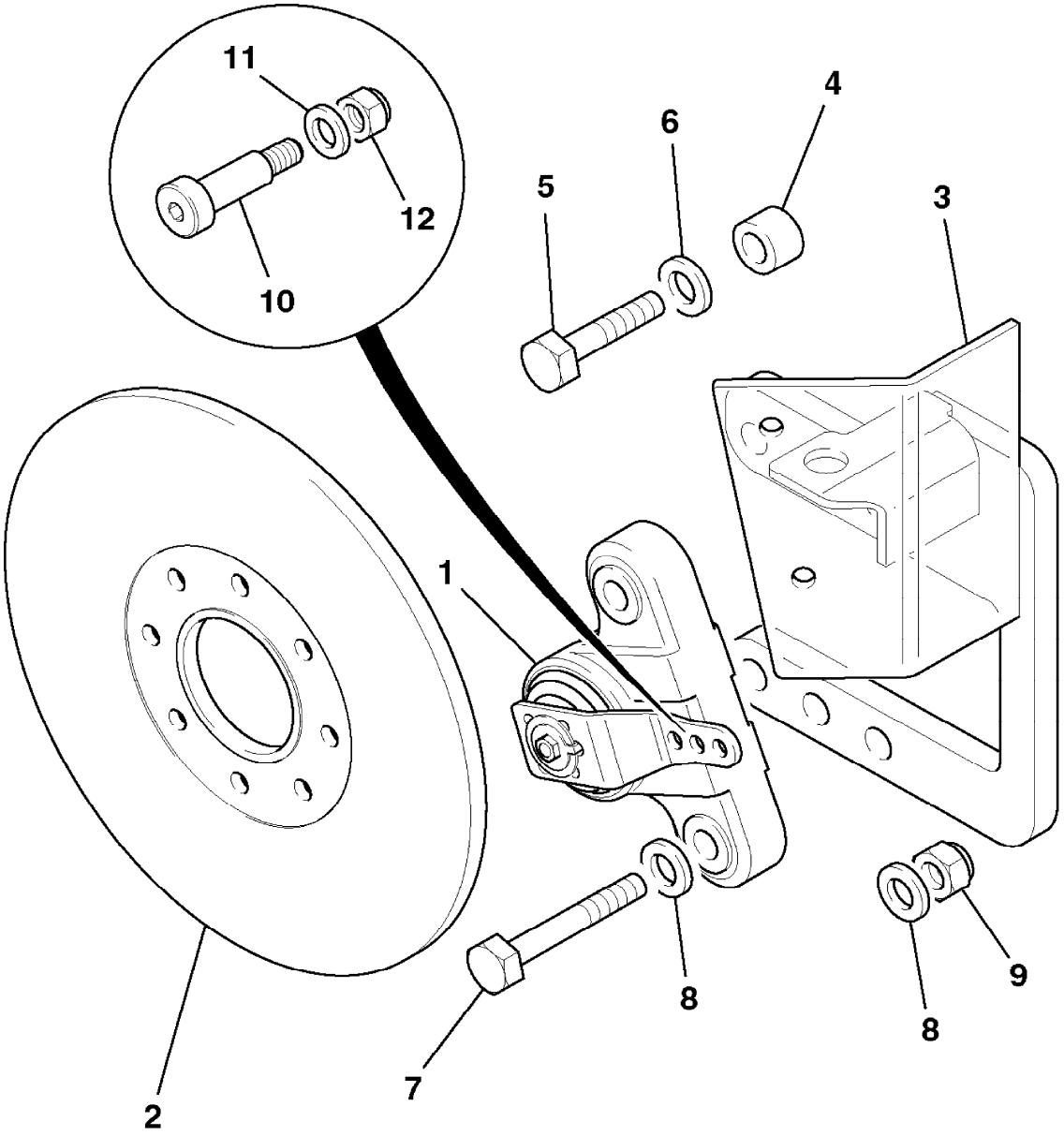

348710

9802/2740 G1-8-1 BRAKE,PARKING, CALIPER COMPONENTS

Item	Part no.	Change No.	Description	Remarks	Usage code	Qty
1	15/920272		Brake, Caliper,Parkbrake			1
2	N.S.P		:None serviced part			1
3	15/920314		:Kit, lever			1
4	15/920289		::Kit-bolt, torx head			1
5	15/920315		:Kit, spring			1
6	15/920293		:Kit-bush			1
7	478/00844		:Kit-bearing			1
8	15/915204		:Kit, rotor			1
9	15/920292		::Kit-seal			1
10	N.L.A		:::No longer available	Use item 9		1
11	N.L.A		:::No longer available	Use item 9		1
12	15/920103		:Kit-pad, brake Pad			1

Machine groups

Details

Machine group	From serial no.	To serial no.
.426		
426		

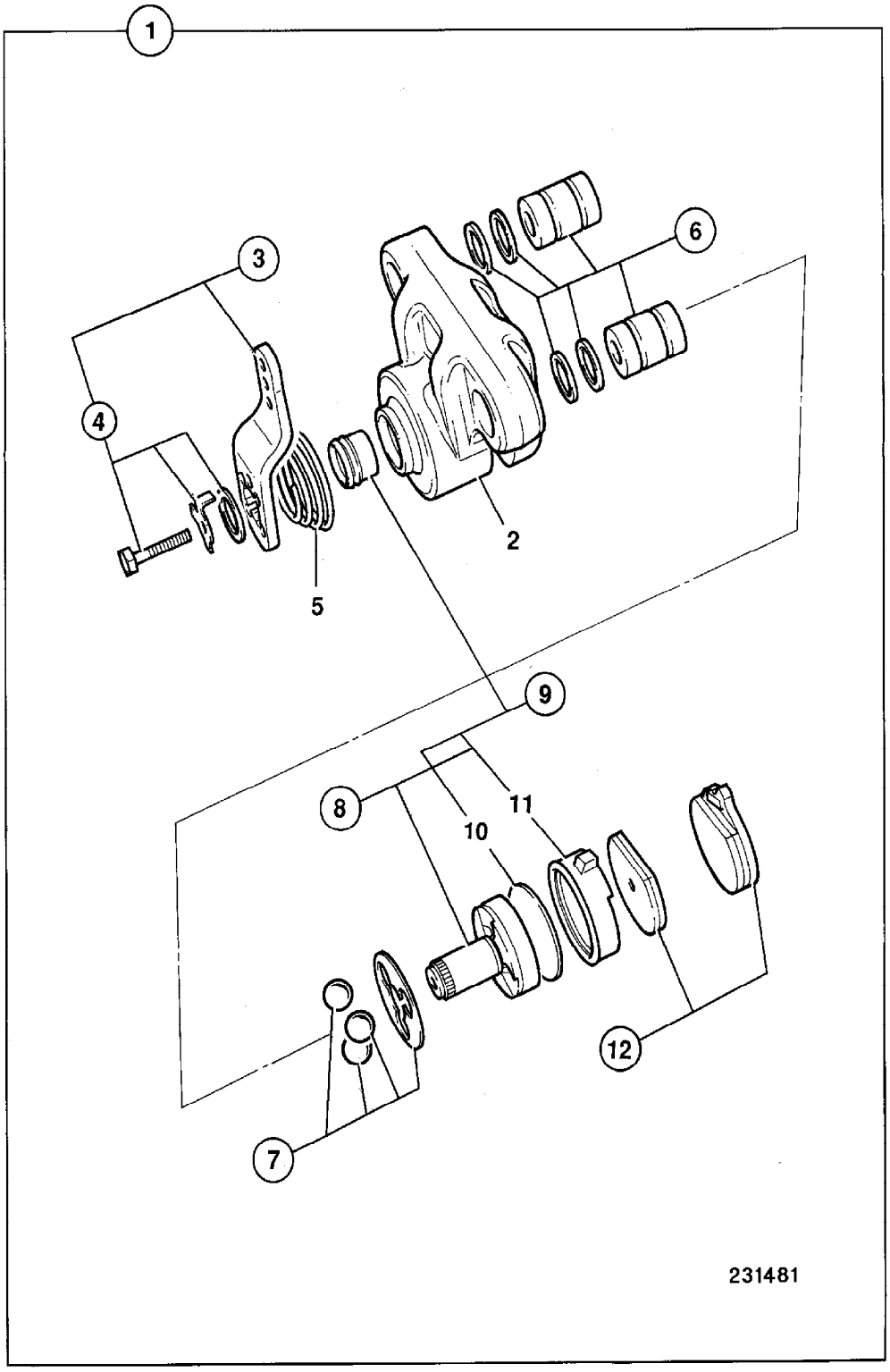
1
3
6
4
2
5
9
8
11
10
12
7
231481

9802/2740 G1-9-1 TRAILER BRAKING, SALES SPECIAL

Item	Part no.	Change No.	Description	Remarks	Usage code	Qty
1	45/902800		Coupling, male, 1/2"bsp QR	Sales special 8088		1
2	612/03000		Hose			1
3	816/50033		Adapter, tee , F/M/M			1
5	828/00144		Grommet	For chassis hole		1

Machine groups

Details

Machine group	From serial no.	To serial no.
.426		
426		

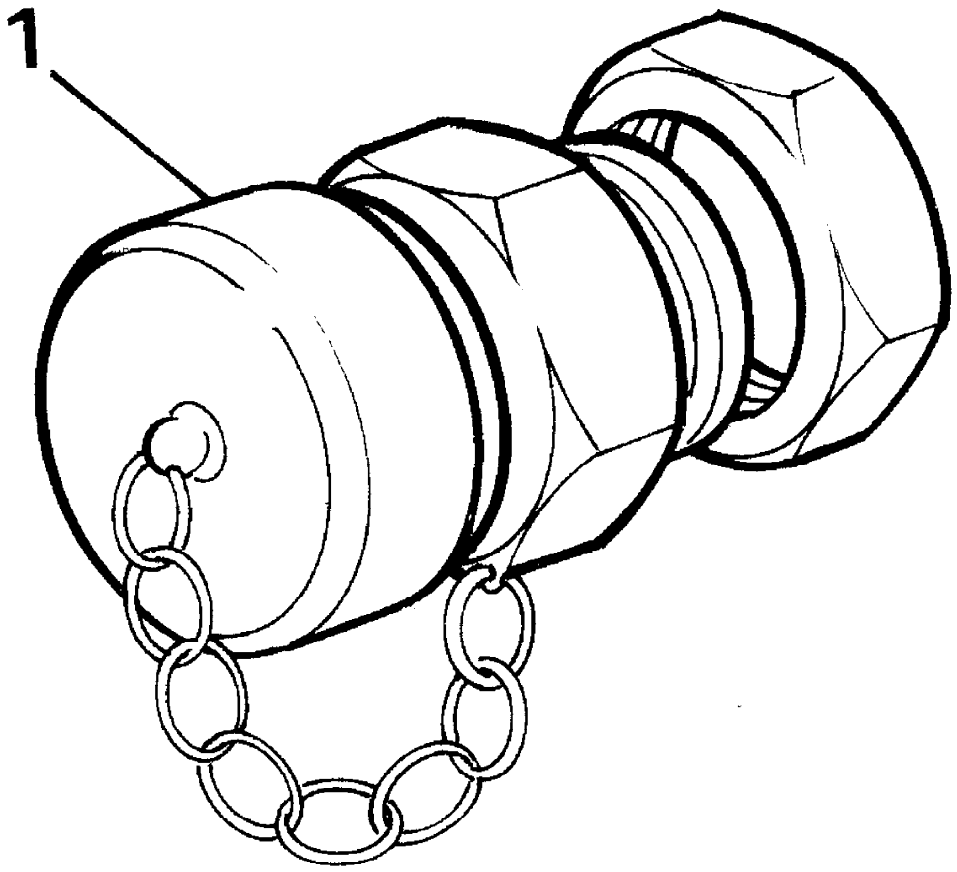

218800

9802/2740 U1-1-1 ENGINE,COMPLETE

Item	Part no.	Change No.	Description	Remarks	Usage code	Qty
1	01/145277		Engine, complete assembly, QSB5.9-44 Tier 2			1

Machine groups

Details

Machine group	From serial no.	To serial no.
.426		
426		

Illustration Not Available at Time of Publication

9802/2740 U1-3-1 BLOCK ASSEMBLY

Item	Part no.	Change No.	Description	Remarks	Usage code	Qty
	02/911660		Block, cylinder			1
2	02/910799		:Bush, camshaft			1
3	02/911124		:Bolt			14
4	02/911294		:Cap, bearing			7
5	02/910006		:Plug, expansion, D=58mm			5
6	02/910007		:Plug, expansion, D=26mm			4
7	02/910008		:Plug, expansion, 17.73mm			3
8	02/910009		:Thimble			4
9	TBA		:Part number, Not Yet Known			1
10	02/910011		::Dowel, ring			2
11	02/910798		::Nozzle, piston cooling			6
12	02/910013		::Plug, expansion, D=60mm			1
13	02/910014		::Dowel, pin			2
14	02/910015		::Plug, pipe			1
15	02/910796		::Plug			3
16	02/910503		::Plug, D=22.5mm			2
17	.		'See Remark'	Not required		0
18	02/911800		::Plug, expansion			4
19	02/910020		::Plug, expansion, D=32mm			1
20	.		'See Remark'	Not required		0
21	02/910795		::Seal, o ring			1
22	02/910066		::Plug			1
23	.		'See Remark'	Not required		0
24	TBA		Part number, Not Yet Known			A/R
25	02/911540		Cover, push rod			1
26	02/910935		Gasket, push-rod cover			1
27	02/911009		Screw			4
28	02/910855		Grommet, seal			4
29	02/911473		Panel, noise			1
30	02/911472		Nut, lock M6			2
30A	02/911112		Washer			2
31	02/910026		Hose, plain			1
32	02/910027		Clamp, hose clip			1
33	02/911543		Cover, cover, rear			1
34	02/910856		Kit-seal, rear oil			1
35	02/910792		Gasket, rear seal housing			1
36	02/911014		Screw, flange head, 8.8			6
37	02/910028		:Seal, rectangular ring			1

Machine groups

Details

Machine group	From serial no.	To serial no.
.426		
426		

.

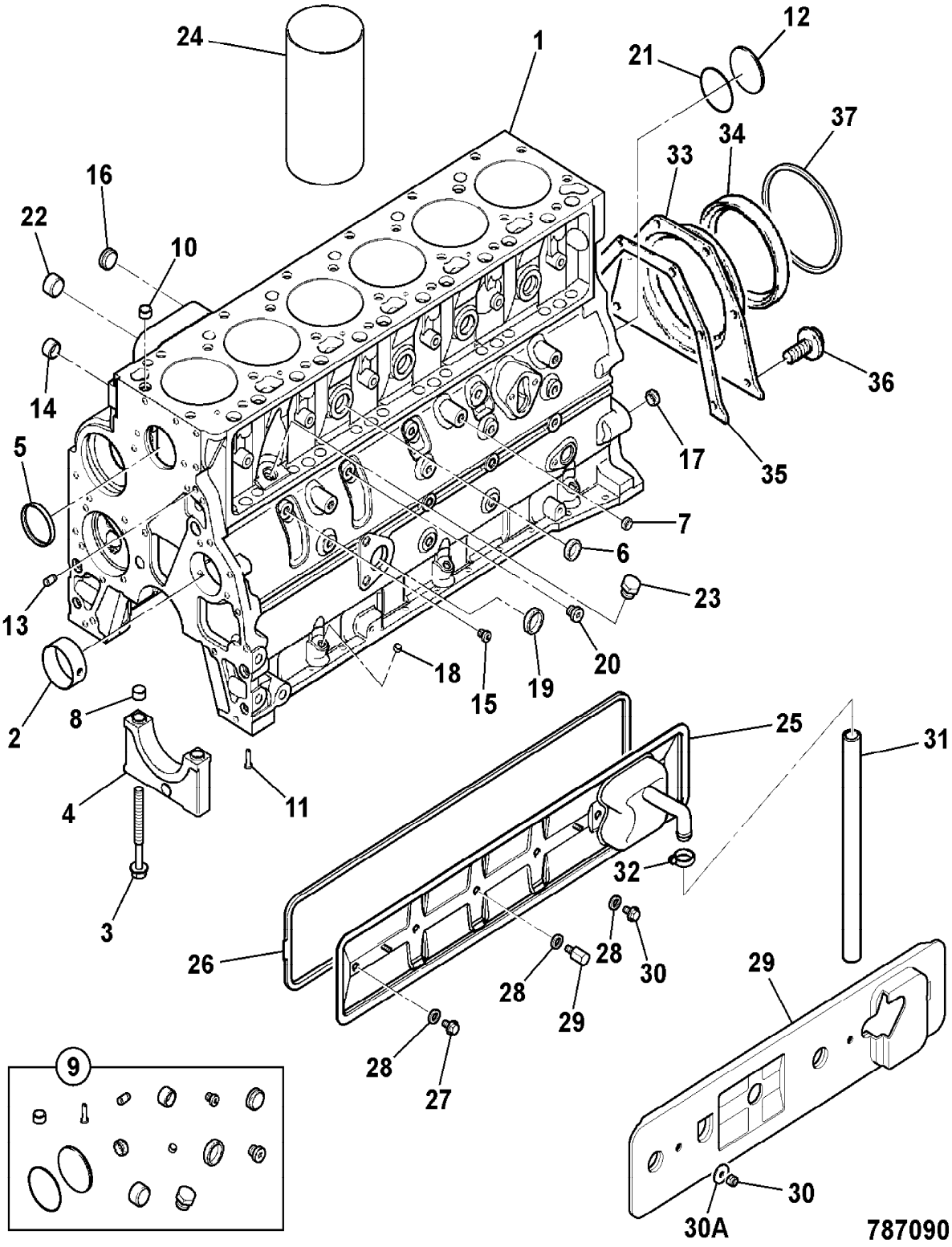

9802/2740 U1-4-1 CRANKSHAFT,BEARINGS, PISTONS & CON-RODS

Illustration Machines Top of catalogue

Item	Part no.	Change No.	Description	Remarks	Usage code	Qty
1	02/910040		Crankshaft, assembly			1
2	02/919991		:Gear, crankshaft			1
3	02/910039		:Dowel, pin			1
4	02/919901		Kit-bearing, main, standard			1
	02/919902		Kit-bearing, main, oversize - 0.25mm			A/R
	02/919903		Kit-bearing, main, oversize - 0.50mm			A/R
	02/919904		Kit-bearing, main, oversize - 0.75mm			A/R
	02/919905		Kit-bearing, main, oversize - 1.00mm			A/R
5	02/919906		Kit-bearing, thrust, oversize - .5mm			A/R
	02/919907		Kit-bearing, thrust, oversize - 1.0mm			A/R
6	02/910809		:Kit-front oil seal, SERVICE REPAIR, c/w wear sleeve			1
7	02/910859		:Kit-wear sleeve, rear			1
8	02/910860		Rod, connecting			6
9	02/911040		:Bolt, con-rod			2
10	02/919908		:Bush, small end			1
11	02/919909		Bearing, big end shell, standard			6
12	02/919909		Bearing, big end shell, standard			6
13	02/912160		Piston, assembly			6
14	02/912159		:Kit-piston ring			1
15	02/910143		:Circlip			2
15A	02/910537		:Circlip			A/R
16	02/910142		Pin, gudgeon			6

Machine groups

Details

Machine group	From serial no.	To serial no.
.426		
426		

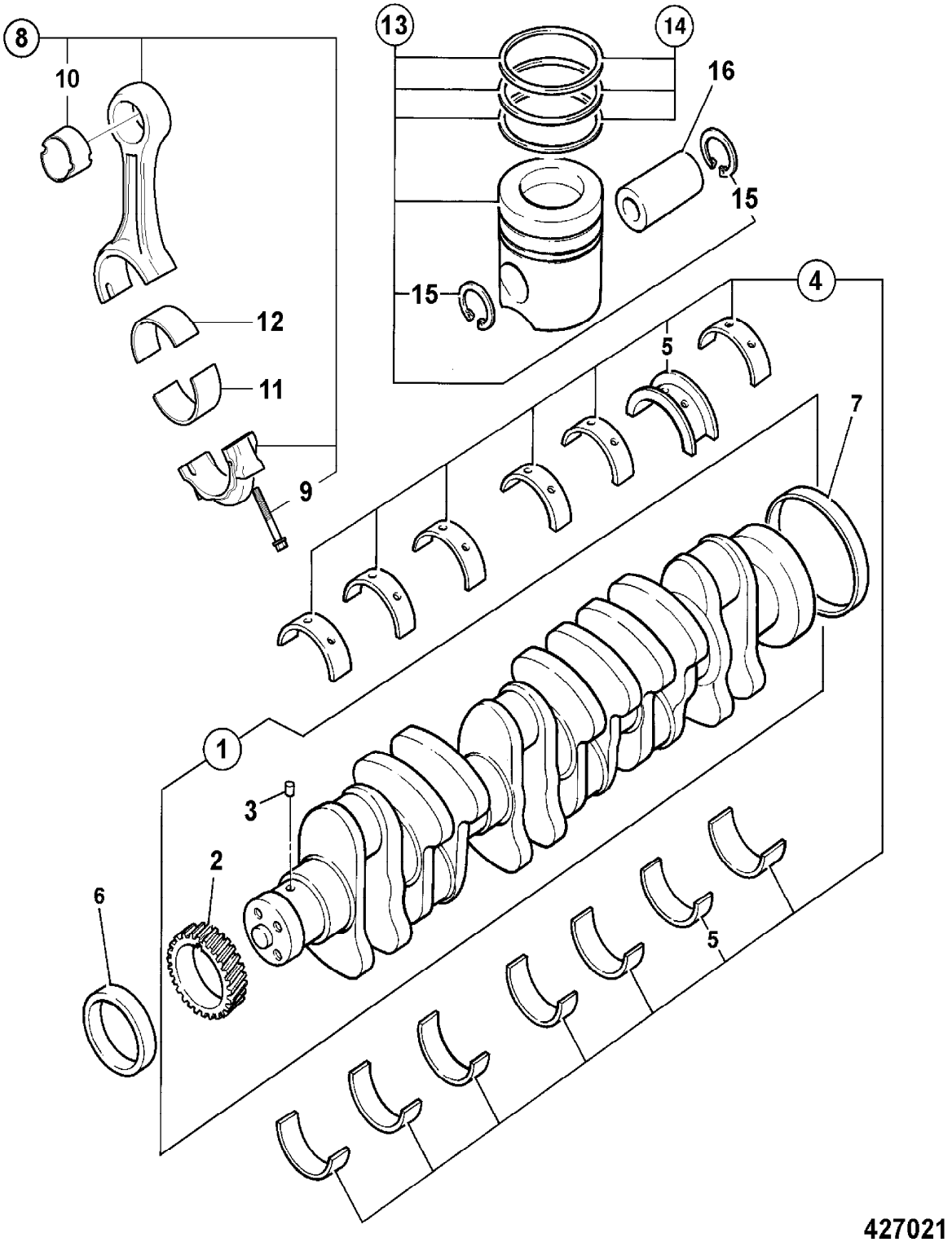

427021

9802/2740 U1-5-1 FANS, PULLEYS, & FAN BELT

Item	Part no.	Change No.	Description	Remarks	Usage code	Qty
1	02/911441		Damper, vibration			1
2	02/911003		Bolt			4
3	02/910031		Housing, assembly, fan drive			1
4	02/910035		:Hub, fan			1
5	02/910033		:Circlip			2
6	02/910032		:Bearing			1
7	02/910793		:Retainer, fan hub			1
8	02/911035		Screw			1
9	02/911126		Screw			4
10	02/910973		Pulley, fan drive			1
11	02/910044		Pulley, accessory drive			1
13	331/53398		Coupling, fan drive			1
14	30/925628		Fan, cooling, 28"			1
15	1315/0307D		Setscrew, M8x25			4
16	1420/0007D		Washer, M8 plain			4
17	02/911167		Adjuster, drive belt tension			1
18	02/911006		Bolt			1
19	02/911503		Belt, V ribbed			1
20	477/01663		Belt, drive			1
21	02/911444		Pulley, alternator			1
22	TBA		Part number, Not Yet Known			1

Machine groups

Details

Machine group	From serial no.	To serial no.
.426		
426		

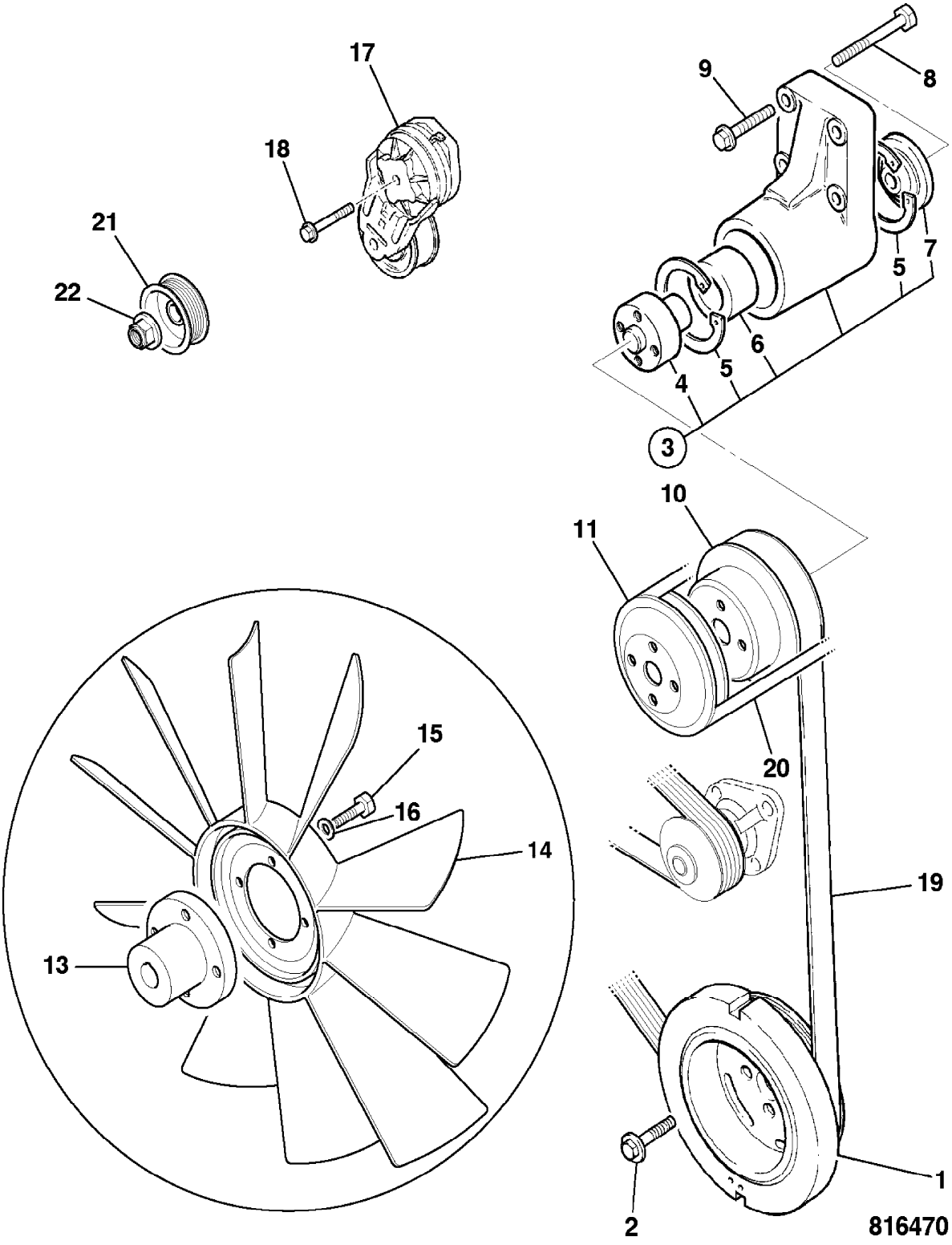
17
18
21
22
9
8
5
7
6
5
4
3
10
11
20
19
15
16
14
13
1
2
816470

9802/2740 U1-6-2 TIMING CASE, AUXILIARY DRIVE

Item	Part no.	Change No.	Description	Remarks	Usage code	Qty
1	02/910873		Gasket			1
2	02/911087		Screw			2
3	02/910733		Spacer			1
4	02/991091		Nut			1
5	02/910873		Gasket			1
6	02/910561		Plate, cover			1
7	02/910735		Gear, auxiliary drive			1

Machine groups

Details

Machine group	From serial no.	To serial no.
.426		
426		

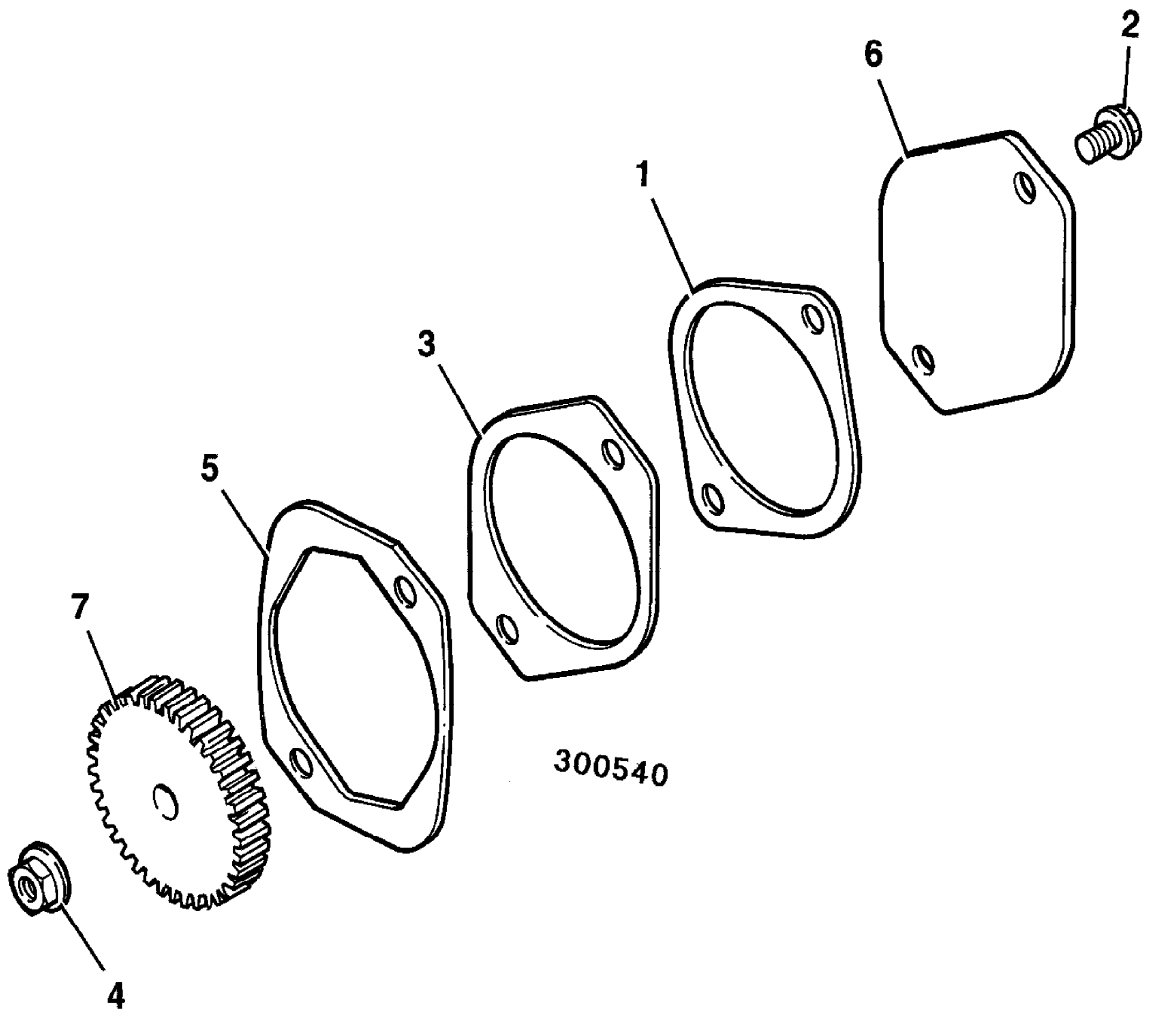
2
6
1
3
5
7
300540
4

9802/2740 U1-7-1 FLYWHEEL & HOUSING

Item	Part no.	Change No.	Description	Remarks	Usage code	Qty
1	02/910964		Housing, flywheel			1
2	02/910069		Plate, cover			1
3	02/911016		Screw			2
4	02/910571		Plug			1
5	02/910068		Plug			1
6	02/910067		O Ring			1
7	02/911015		Screw			8
8	02/911464	toE21702864	Flywheel			1
	02/912445		Flywheel, assembly			1
9	02/910575		:Gear, flywheel ring			1
10	02/911017		Screw			8
11	02/911018		Washer, plain			8
12	02/911553		Spacer, Starter Motor			1
13	826/10760		Screw, twelve point cap			3
14	TBA		Part number, Not Yet Known			1
15	TBA		Part number, Not Yet Known			1

Machine groups

Details

Machine group	From serial no.	To serial no.
.426		
426		

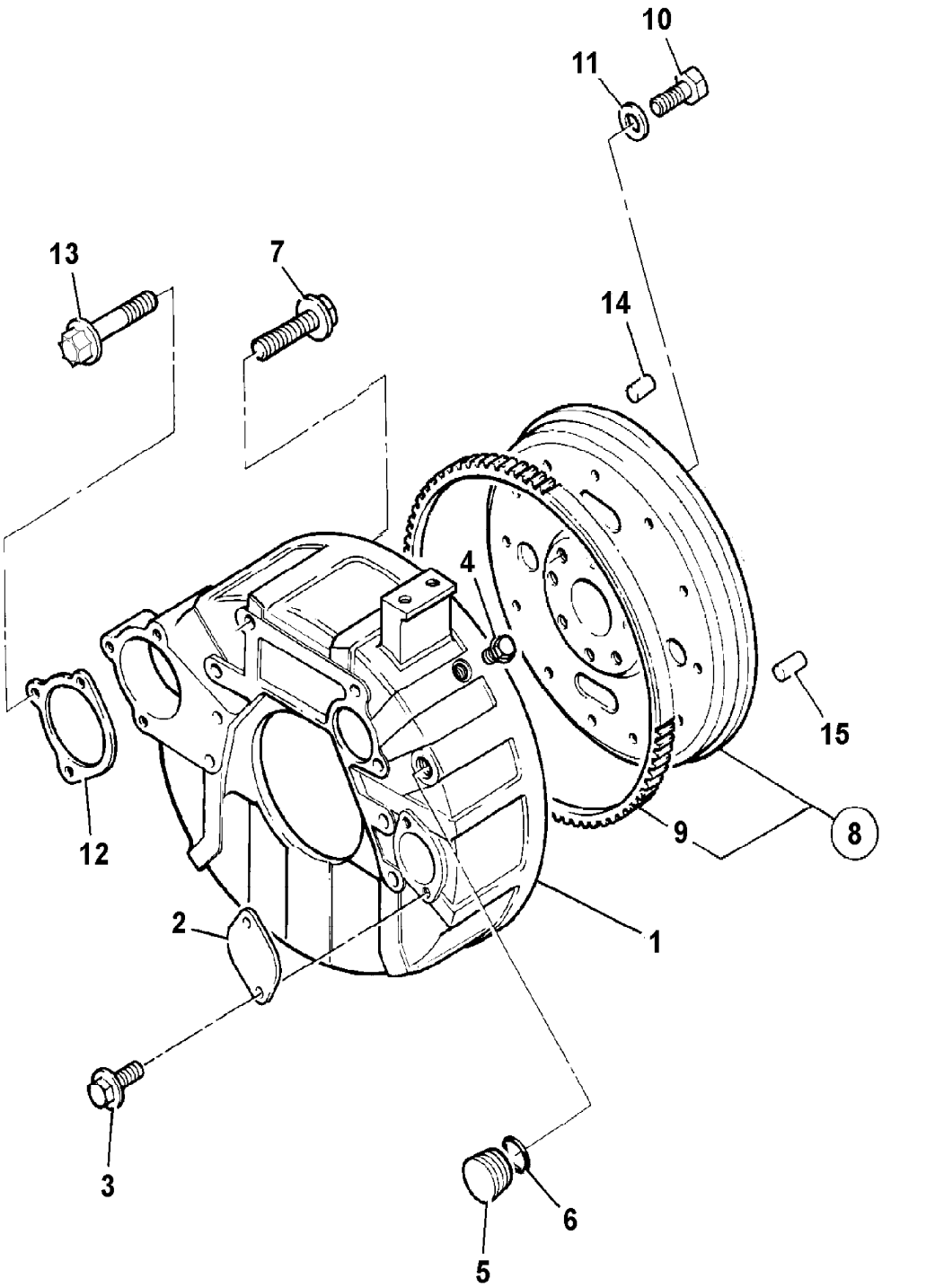

426990

9802/2740 U1-7-5 BELLHOUSING PLATE, SEALED, SALES SPECIAL

Item	Part no.	Change No.	Description	Remarks	Usage code	Qty
1	331/63862		Plate, sealed bellhousing	Sales special 8221		1
2	04/800639		Breather			1
3	1422/0008D		Washer, Hardened washer			2
4	TBA		Part number, Not Yet Known	Sealant item 1 to housing		A/R

Machine groups

Details

Machine group	From serial no.	To serial no.
.426		
426		

Illustration Not Available at Time of Publication

9802/2740 U1-8-1 ENGINE MOUNTINGS

Item	Part no.	Change No.	Description	Remarks	Usage code	Qty
1	02/911513		Bracket, engine support			1
2	02/911089		Screw, M12 X 90			2
3	02/911445		Screw, M12 X 60			2
4	331/31216		Mounting, resilient			1
5	1315/0409D		Setscrew, M10 x 35mm long			4
6	1370/0303D		Nut, M10			4
7	1420/0008D		Washer, M10			4
8	826/11028		Bolt, c/w split pin hole			1
9	1422/0012D		Washer			1
10	265/01984		Washer, rebound			1
11	265/01985		Washer, overload			1
12	2103/1111		Pin, Split			1
13	4101/0602		Fluid, locking			1

Machine groups

Details

Machine group	From serial no.	To serial no.
.426		
426		

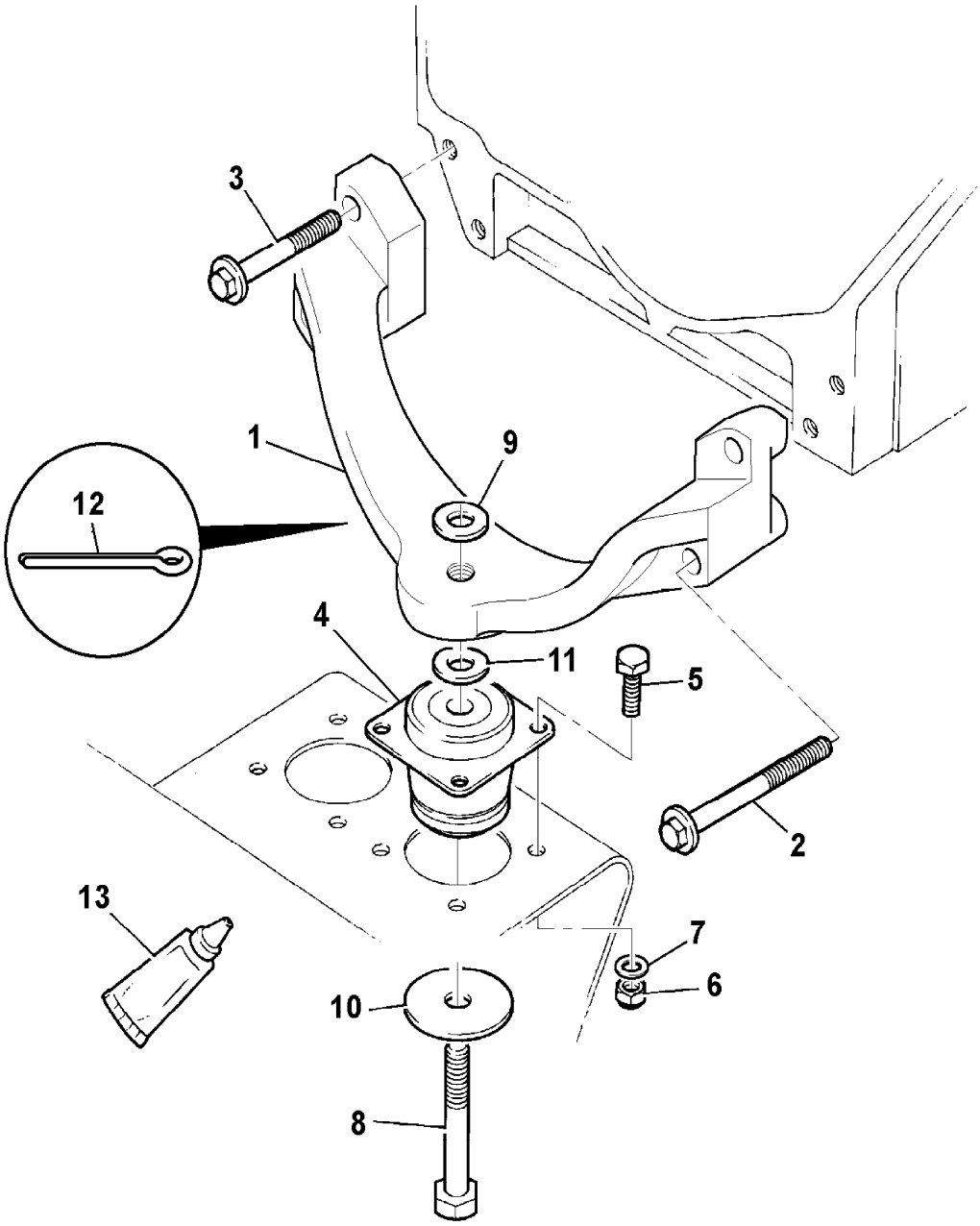

426980

9802/2740 U2-1-1 CYLINDER HEAD

Item	Part no.	Change No.	Description	Remarks	Usage code	Qty
1	02/910995		Head, cylinder, assembly			1
2	02/910099		:Plug, D=21mm			5
3	02/910016		:Plug, pipe			2
4	02/910015		:Plug, pipe			4
5	02/910066		:Plug			1
6	02/910101		:Kit-valve, inlet			6
7	N.S.P		::None serviced part	Valve inlet		1
8	02/910103		::Collet			2
9	02/910104		:Kit-valve, exhaust			6
10	N.S.P		::None serviced part	Valve exhaust		1
11	02/910103		::Collet			2
12	02/910109		:Seal, valve stem			6
13	02/910109		:Seal, valve stem			6
14	02/910993		:Spring, valve			12
15	02/910998		:Retainer, valve spring			12
16	02/910114		Insert, inlet valve			A/R
17	02/910115		Insert, exhaust valve			A/R
18	02/910118		Guide, valve, thin wall, inlet and exhaust			A/R
19	02/910117		Guide, valve, thick wall, 51.75mm long			A/R
20	02/910116		Guide, valve, thick wall, 60.50mm long			A/R
21	02/911044		Bolt, cylinder head			14
22	02/911043		Bolt, cylinder head			6
23	02/910875		Gasket, cylinder head, standard			1
24	716/30128		Sender, temperature			1
25	02/910756		Adapter, male/female			1
26	02/910876		Adapter, elbow, 1/2NPTFx19.05(3/4")			1
27	02/910015		Plug, pipe			1
28	02/910190		Pipe, feed, air charge cooler			1

Machine groups

Details

Machine group	From serial no.	To serial no.
.426		
426		

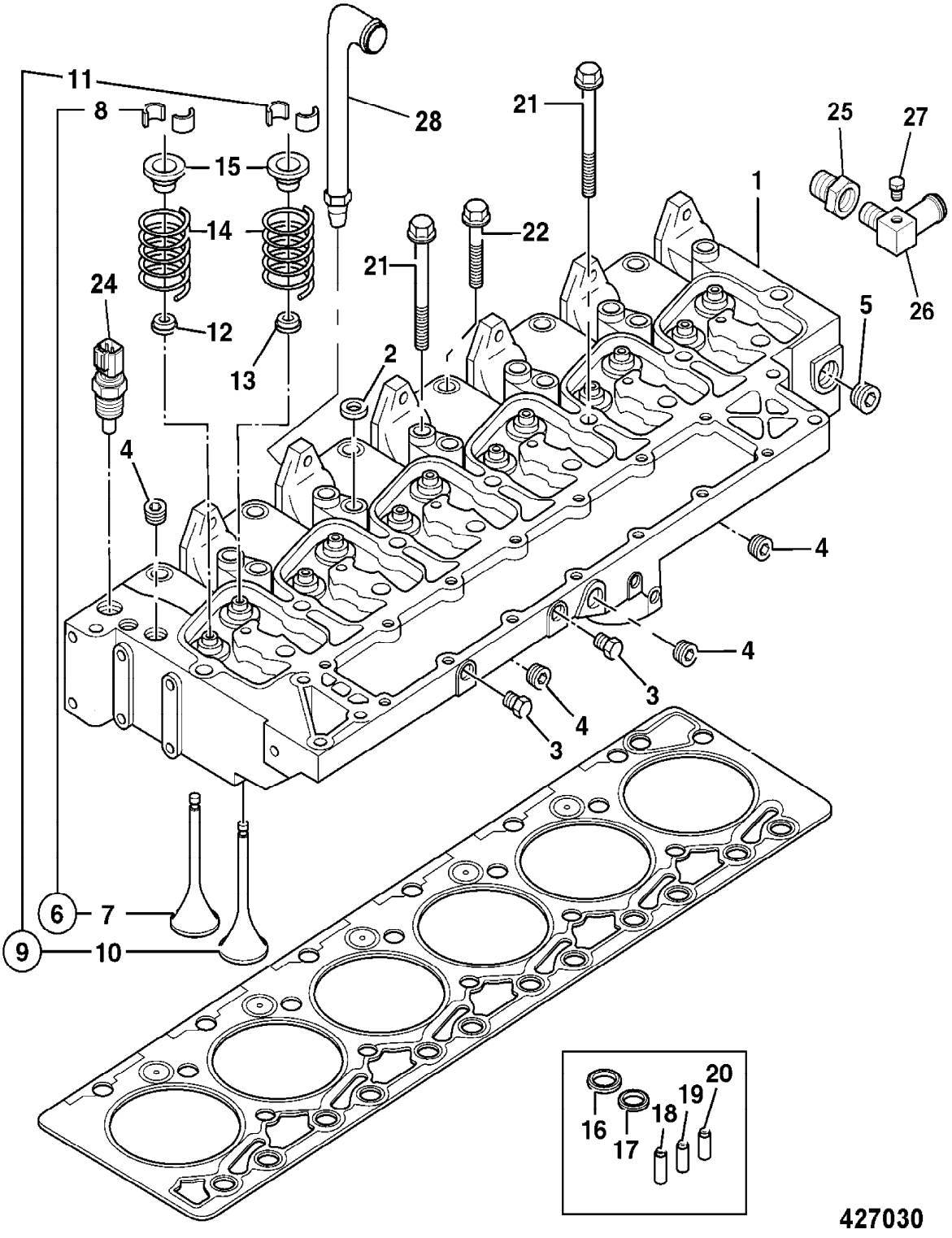
11
8
28
21
25
27
15
1
14
22
21
24
26
5
12
2
13
4
4
4
3
4
3
6
7
9
10
16
17
18
19
20
427030

9802/2740 U2-2-1 ROCKER ASSEMBLY, PUSH RODS & TAPPETS

Illustration Machines Top of catalogue

Item	Part no.	Change No.	Description	Remarks	Usage code	Qty
1	.		'See Remark'	Assembly not available		6
2	02/910159		Shaft, rocker			6
3	02/910076		Lever, rocker, inlet			6
3A	02/911139		:Insert, Insert rocker lever			1
4	02/911138		Screw, adjusting			2
5	02/910821		Nut, 3/8"-24UNF, heavy hexagon			2
6	02/910077		Lever, rocker, exhaust			6
6A	02/911139		:Insert, Insert rocker lever			1
7	02/911024		Washer, plain			2
8	02/910083		Circlip			2
9	.		'See Remark'	Not required		0
10	02/911025		Bolt			1
11	02/911030		Bolt			1
12	02/910084		Rod, push			12
13	02/910634		Tappet			12

Machine groups

Details

Machine group	From serial no.	To serial no.
.426		
426		

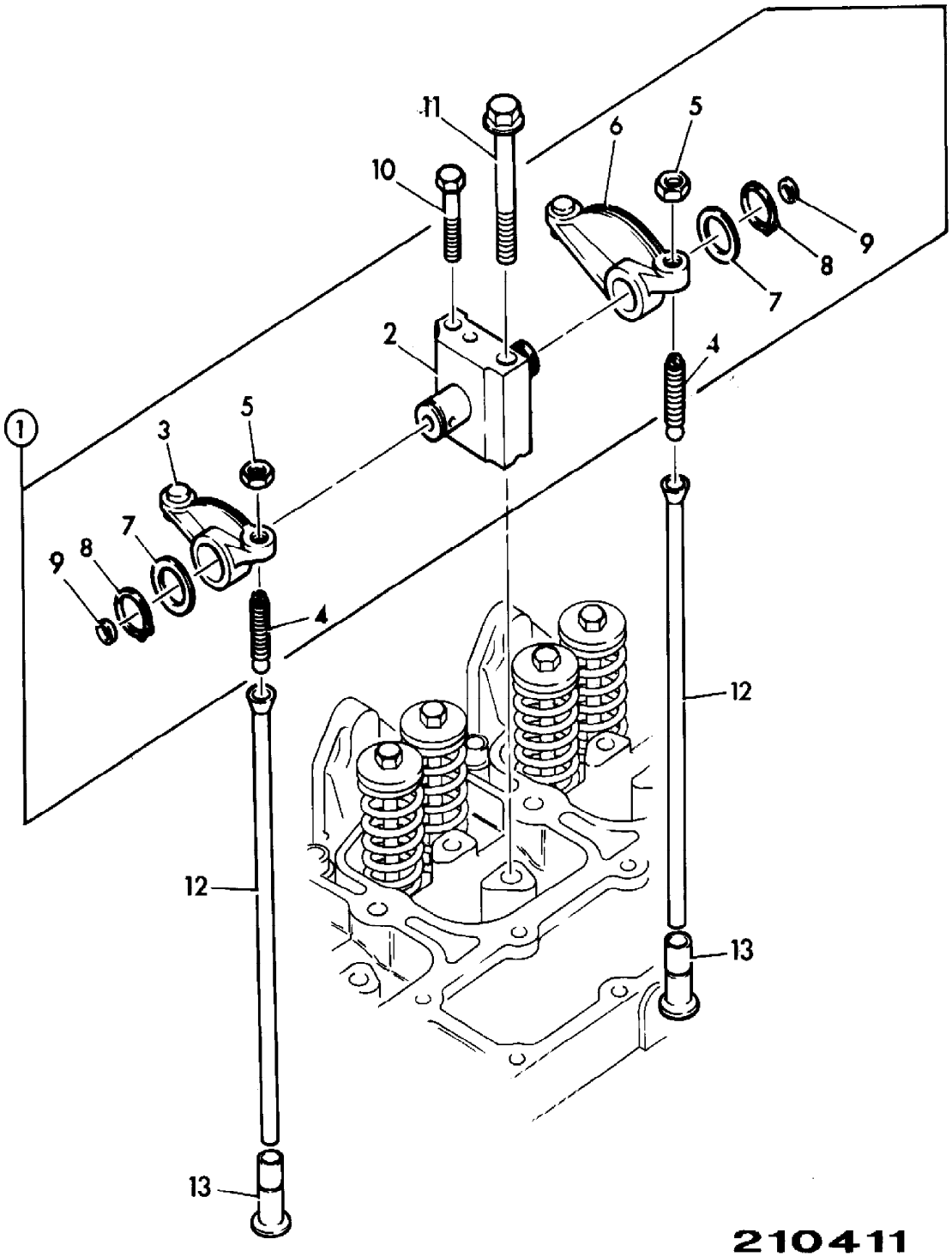

210411

9802/2740 U2-3-1 ROCKER COVER

Item	Part no.	Change No.	Description	Remarks	Usage code	Qty
1	02/910455		Cover, rocker			6
2	02/910456		Gasket, rocker cover			6
3	02/911021		Screw			6
4	02/910453		Bush			6

Machine groups

Details

Machine group	From serial no.	To serial no.
.426		
426		

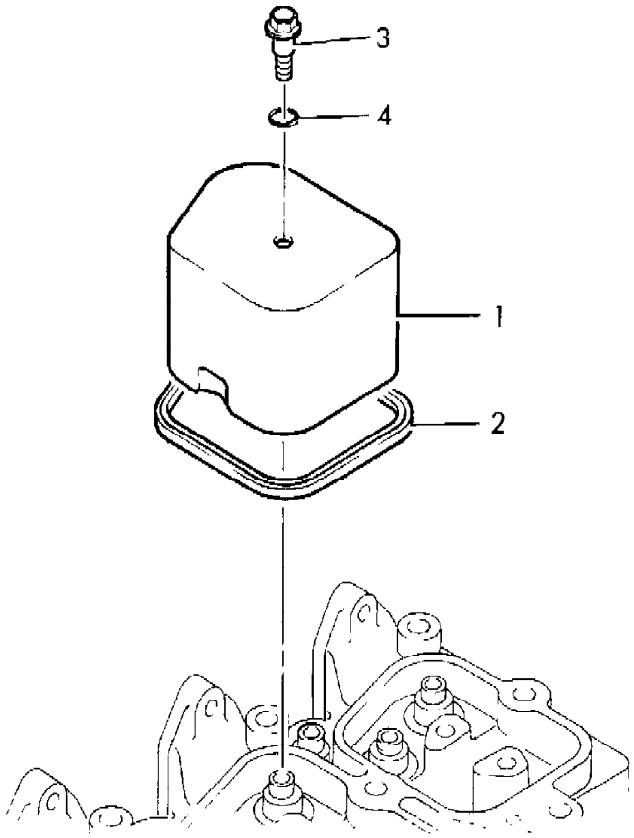

210401

9802/2740 U3-1-1 MANIFOLD, INDUCTION, & ENGINE HEATER

Item	Part no.	Change No.	Description	Remarks	Usage code	Qty
1	02/910878		Manifold, induction			1
2	02/910015		Plug, pipe			2
3	02/910879		Gasket, induction manifold			1
4	02/911376		Screw			8
5	02/911466		Connector, air intake			1
6	02/910066		Plug			1
7	717/20177		Heater, air intake			1
8	02/911377		Gasket			2
9	02/911379		Screw, flange head cap			4
10	717/20179		Switch, thermo, fuel			1
11	717/20178		Harness, fuel pump			1

Machine groups

Details

Machine group	From serial no.	To serial no.
.426		
426		

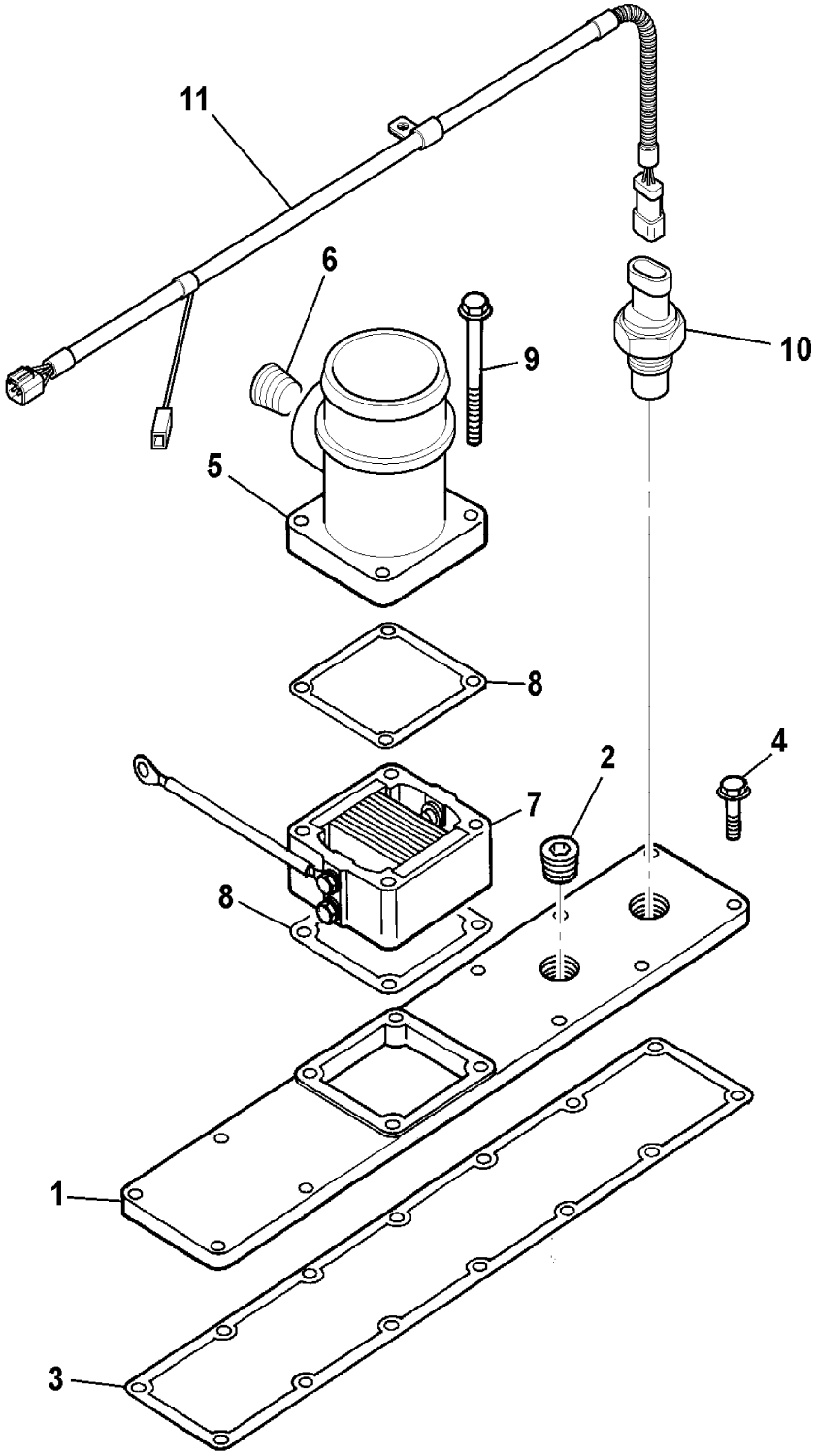

778261

9802/2740 U3-2-1 MANIFOLD, EXHAUST

Item	Part no.	Change No.	Description	Remarks	Usage code	Qty
1	02/912188		Manifold, exhaust			1
2	02/910452		Gasket			6
3	02/911037		Bolt			12
4	.		'See Remark'	Not required		1

Machine groups

Details

Machine group	From serial no.	To serial no.
.426		
426		

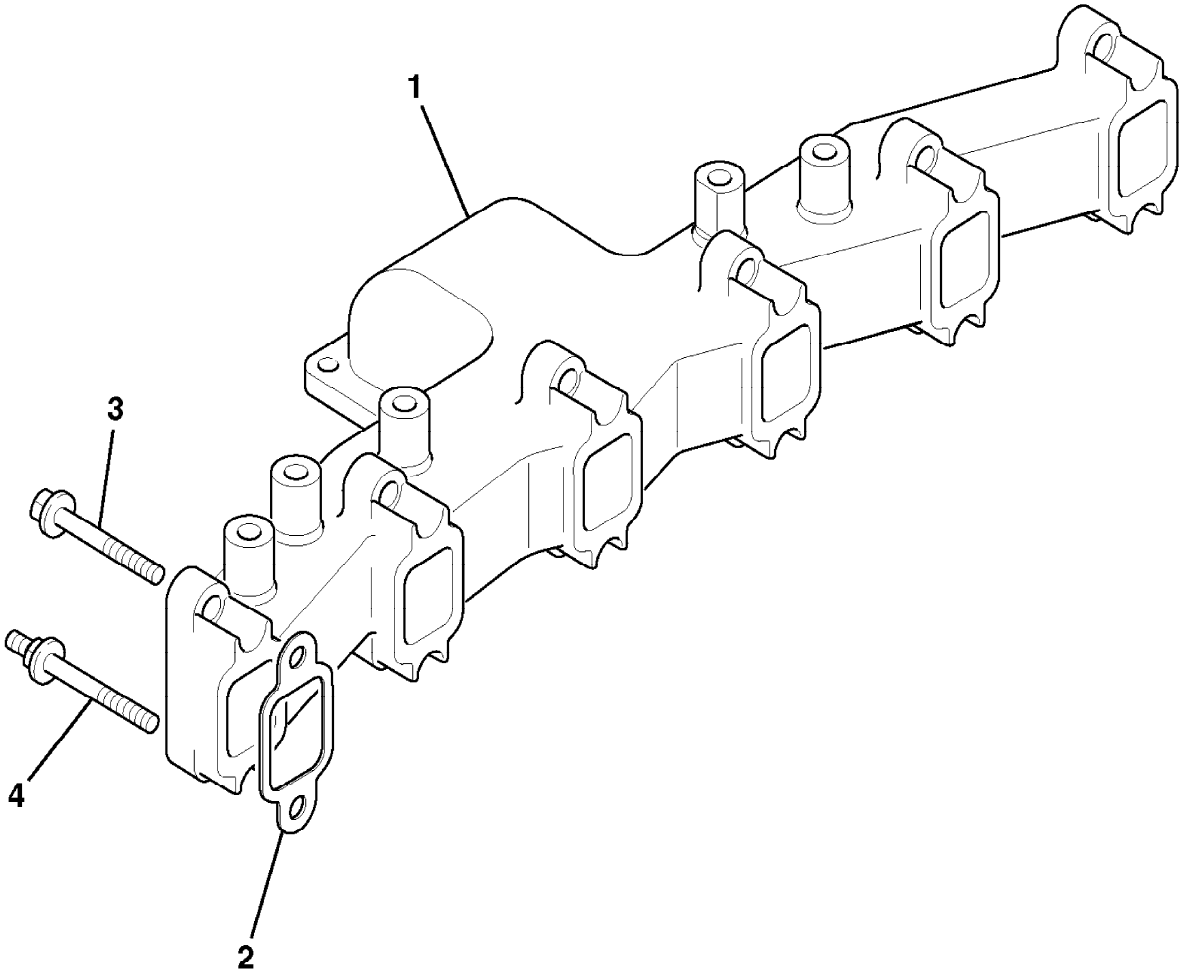

427340

9802/2740 U3-3-1 FILTER,AIR

Item	Part no.	Change No.	Description	Remarks	Usage code	Qty
1	580/12143		Filter, air assembly			1
2	32/925404		:Element, main air filter			1
3	32/925405		:Element, air filter safety			1
4	32/925452		:Cover, end			1
5	32/925364		:Clip, overcentre			3
6	JLH0103		:Valve, vacuum dump			1
7	32/925393		Bracket, air filter mounting			2
8	1315/0405D		Setscrew			4
9	1420/0008D		Washer, M10			8
10	834/11217		Hose, induction			1
11	2201/0017		Clip, worm drive			1
12	2201/0021		Clip, worm drive, 105-127mm			1
13	335/09489		Bracket, rain cap mounting			1
14	1315/0405D		Setscrew			4
15	834/11175		Hose, induction			1
16	2201/0018		Clip, jubilee			2
17	32/925395		Filter, assembly, pre-cleaner			1
18	JSH0038		:Cover, and wing nut assembly			1
19	JSH0039		:Bowl			1
20	JSH0040		:Adapter, assembly			1
21	701/58721		Switch, vacuum pressure			1

Machine groups

Details

Machine group	From serial no.	To serial no.
.426		
426		

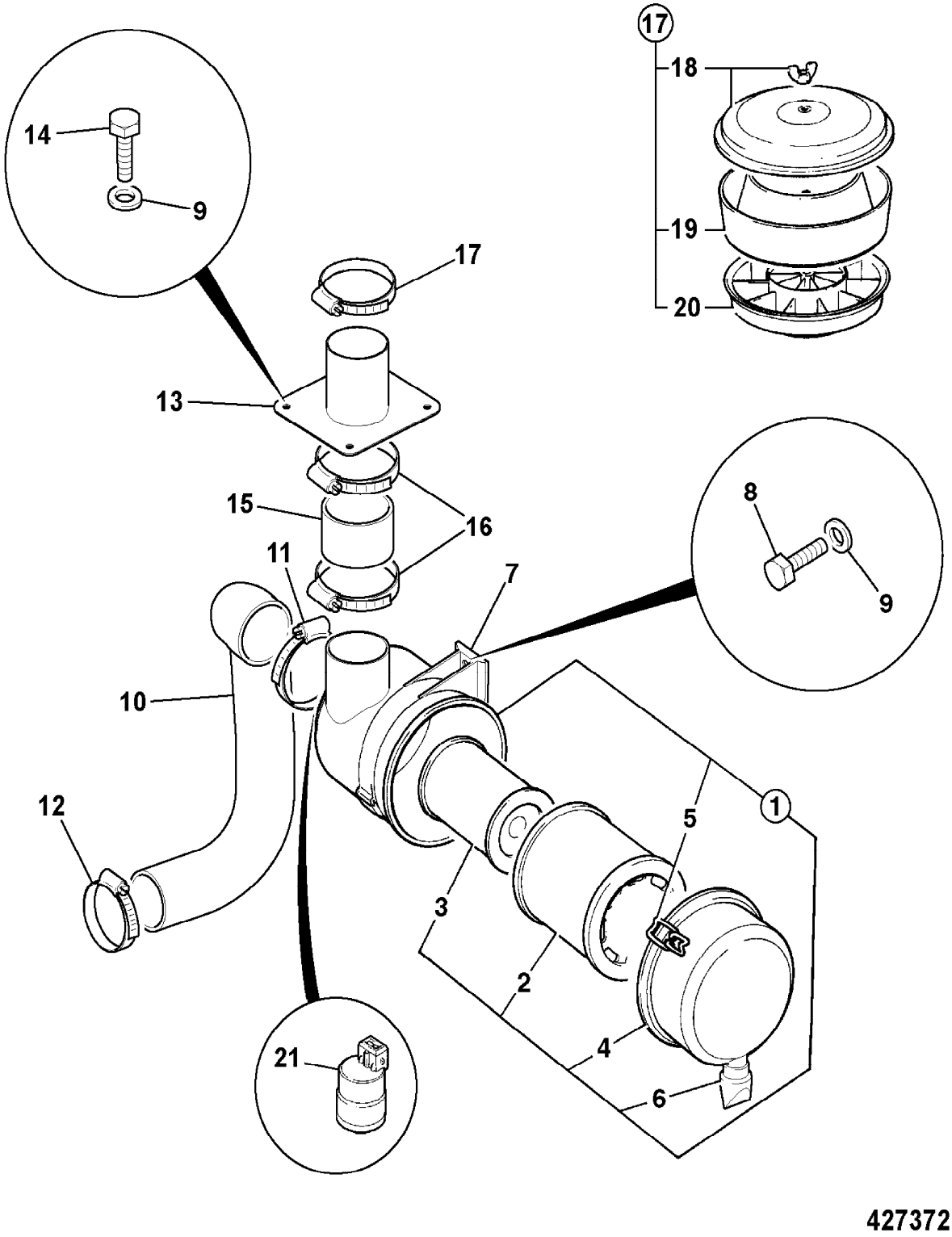

427372

9802/2740 U3-3-2 FILTER, PRE-CLEANER, OPTIONAL

Item	Part no.	Change No.	Description	Remarks	Usage code	Qty
1	580/12194		Filter, assembly, pre-cleaner			1

Machine groups

Details

Machine group	From serial no.	To serial no.
.426		
426		

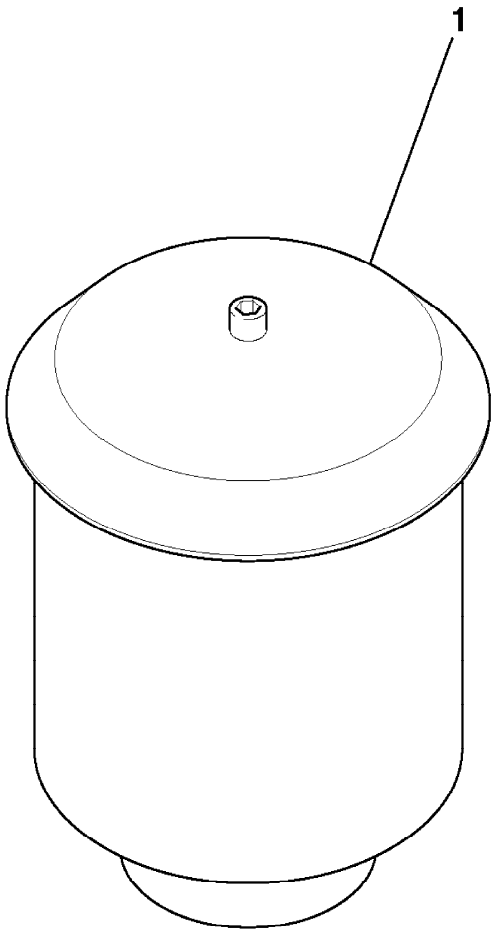

819040

9802/2740 U3-4-1 EXHAUST SYSTEM

Item	Part no.	Change No.	Description	Remarks	Usage code	Qty
	331/50811		Silencer, exhaust			1
	331/59141		Silencer, exhaust, spark arrestor	Sales special 7751		1
2	335/10653		Pipe, exhaust flexible			1
3	331/51688	Superseded	Cradle, exhaust			2
	331/58444	S/N1231516 on	Cradle, exhaust			1
4	821/10432		Clamp, 'V'			1
5	02/910747		Clamp, D=104.4			1
6	826/11310		Clamp, silencer band			2
7	1370/0303D		Nut, M10			8
8	1412/0002D		Washer, large			8
9	331/32957		Mounting, rubber			4
10	335/09417		Pipe, exhaust extension			1
11	1315/0409D		Setscrew, M10 x 35mm long			4
12	1420/0008D		Washer, M10			4

Machine groups

Details

Machine group	From serial no.	To serial no.
.426		
426		

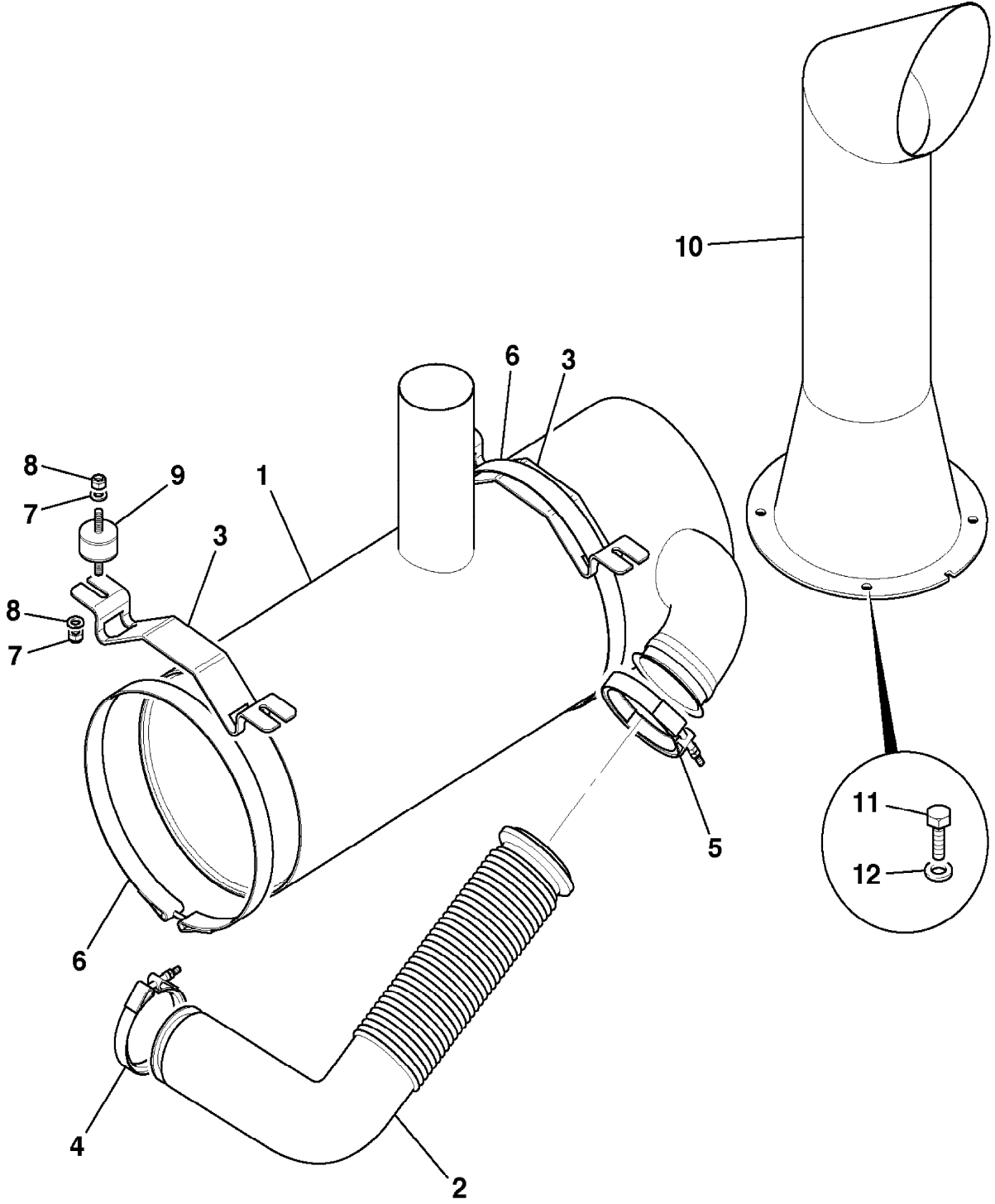

816450

9802/2740 U4-1-1 PUMP, WATER

Item	Part no.	Change No.	Description	Remarks	Usage code	Qty
1	02/910890		Pump, water			1
2	02/910886		:Seal, rectangular ring			1
3	02/911132		Screw			2

Machine groups

Details

Machine group	From serial no.	To serial no.
.426		
426		

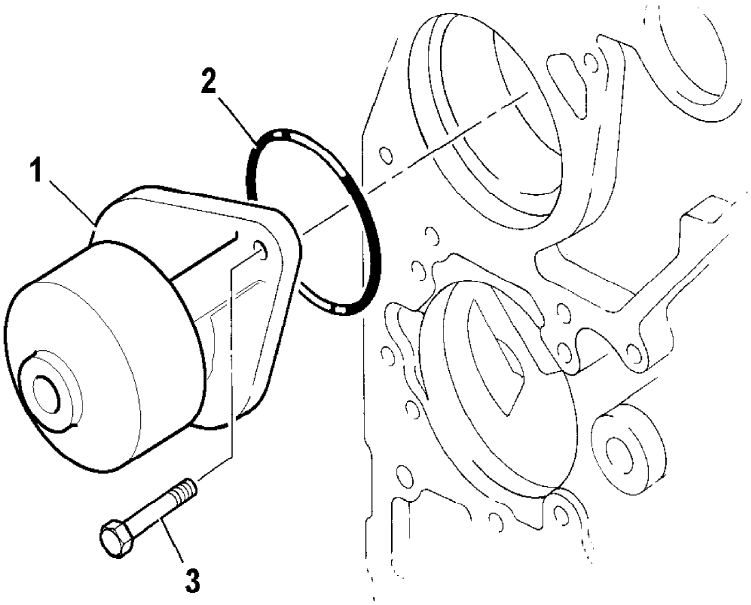

383480

9802/2740 U4-2-1 THERMOSTAT & HOUSING

Item	Part no.	Change No.	Description	Remarks	Usage code	Qty
1	02/910981		Housing, thermostat			1
2	02/910095		Thermostat			1
3	02/910096		Gasket, thermostat housing			1
4	02/911027		Bolt, M8x35			1
5	02/911133		Screw			2
6	02/911500		Housing, water inlet			1
7	02/911501		:Pin, roll			2
8	02/910015		Plug, pipe			1
9	02/910098		Seal, rectangular ring			2
10	02/911502		Connector, water inlet			1
11	02/911499		Screw			3

Machine groups

Details

Machine group	From serial no.	To serial no.
.426		
426		

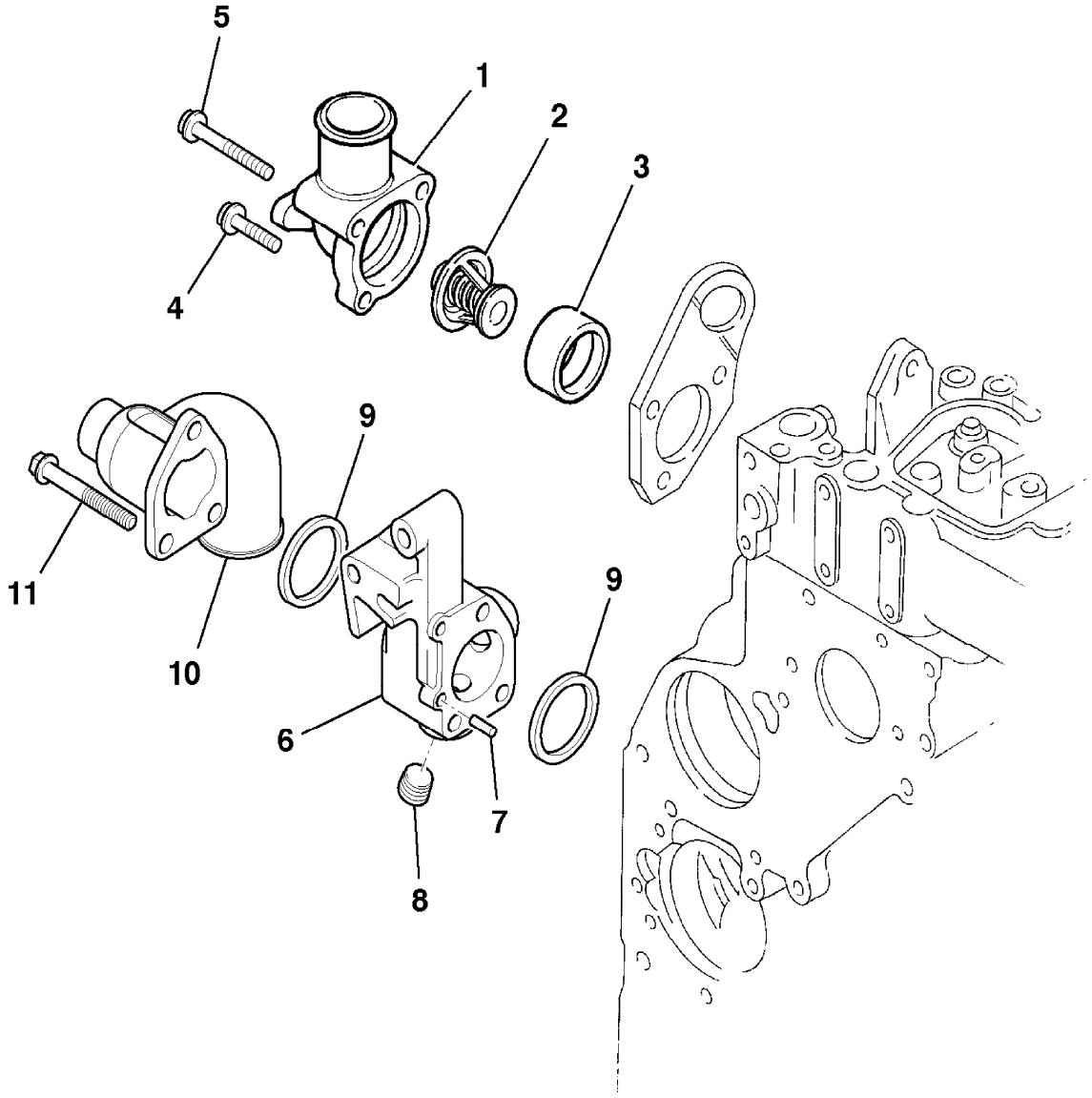

775150

9802/2740 U4-4-1 RADIATOR, FITTINGS & MOUNTINGS, FIG 1

Item	Part no.	Change No.	Description	Remarks	Usage code	Qty
1	.		'See Remark'	See section U4-5-1		1
2	331/50342		Cowling, fan			1
3	1315/0305D		Screw, set M8x20			8
4	1420/0007D		Washer, M8 plain			16
5	1370/0203D		Nut, lock			8
6	257/16801		Mounting, rubber			2
7	1412/0005D		Washer, large			10
8	1315/3516D		Bolt, M12x70			2
9	1420/0009D		Washer, M12			2
10	1370/0403D		Nut, M12			2
11	274/00233		Mounting, resilient			2
11A	120/16902		Plate, compression			2
12	1315/3721D		Bolt, M16 x 110			2
13	1420/0011D		Washer, M16			4
14	1370/0603D		Nut, M16			2
15	1315/0409D		Setscrew, M10 x 35mm long			8
16	1420/0008D		Washer, M10			8
17	1370/0303D		Nut, M10			8
18	926/07800		Seal, rubber			1
19	331/50420		Bracket, radiator mounting			1
20	1315/3512D		Bolt, M12 x 50mm long			2
21	1420/0009D		Washer, M12			4
22	1370/0403D		Nut, M12			2
23	926/07800		Seal, rubber			A/R

Machine groups

Details

Machine group	From serial no.	To serial no.
.426		
426		

.

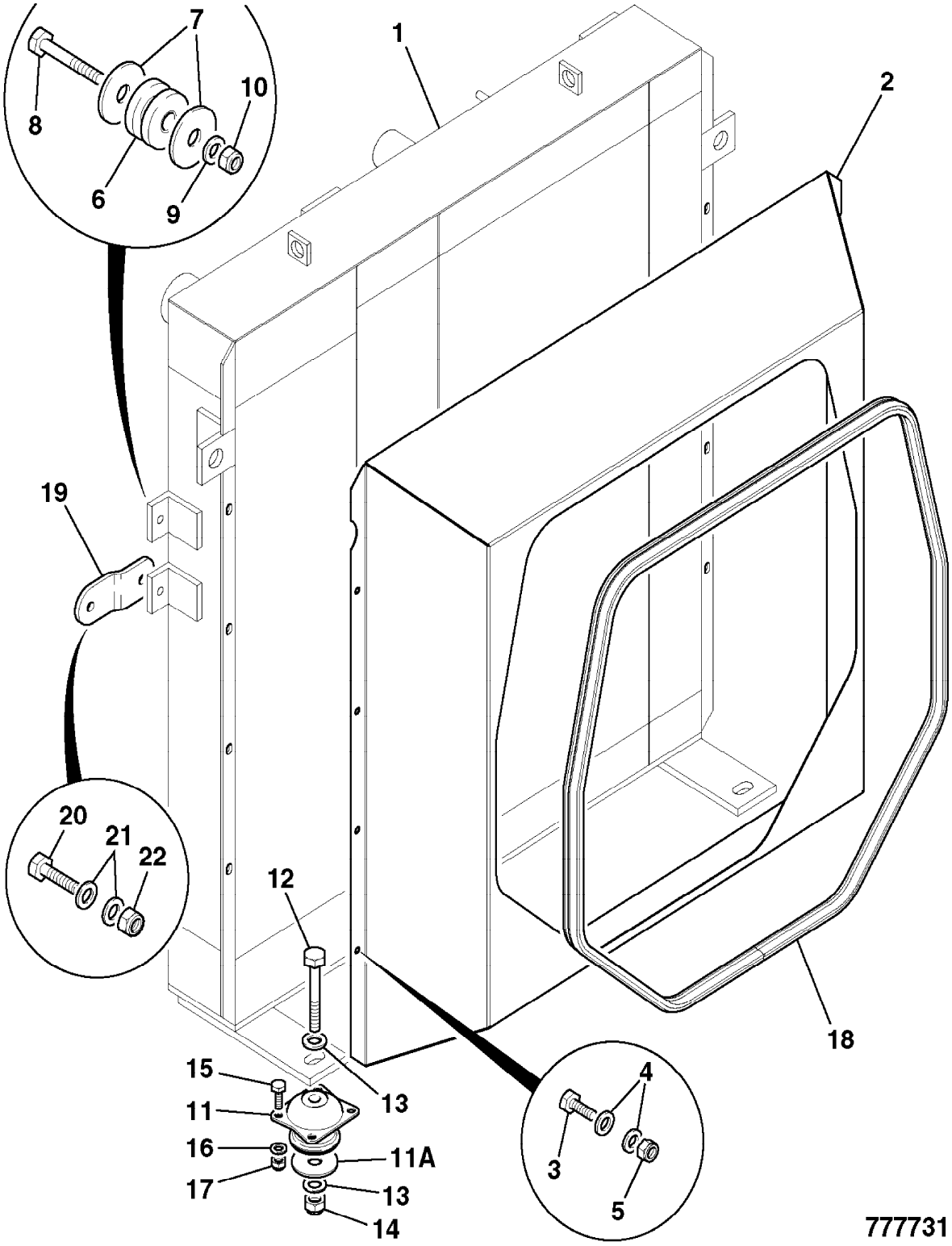

9802/2740 U4-5-1 COOLER ASSEMBLY

Item	Part no.	Change No.	Description	Remarks	Usage code	Qty
1	30/926547		Cooler, combination			1
2	30/926580		:Cooler, hydraulic oil	See section E1		1
3	30/925866		:Radiator	See section U4-6-1		1
4	30/925865		:Cooler, transmission oil	See section F6-1-1		1
5	30/926581		:Cooler, charge air	See section U4-7-1		1
6	30/926507		:Plate, base			1
7	30/926506		:Plate, support			1
8	1315/0505D		:Screw, M12x20			8
9	1315/0509D		:Screw, M12x35mm long			8
10	1420/0009D		:Washer, M12			16

Machine groups

Details

Machine group	From serial no.	To serial no.
.426		
426		

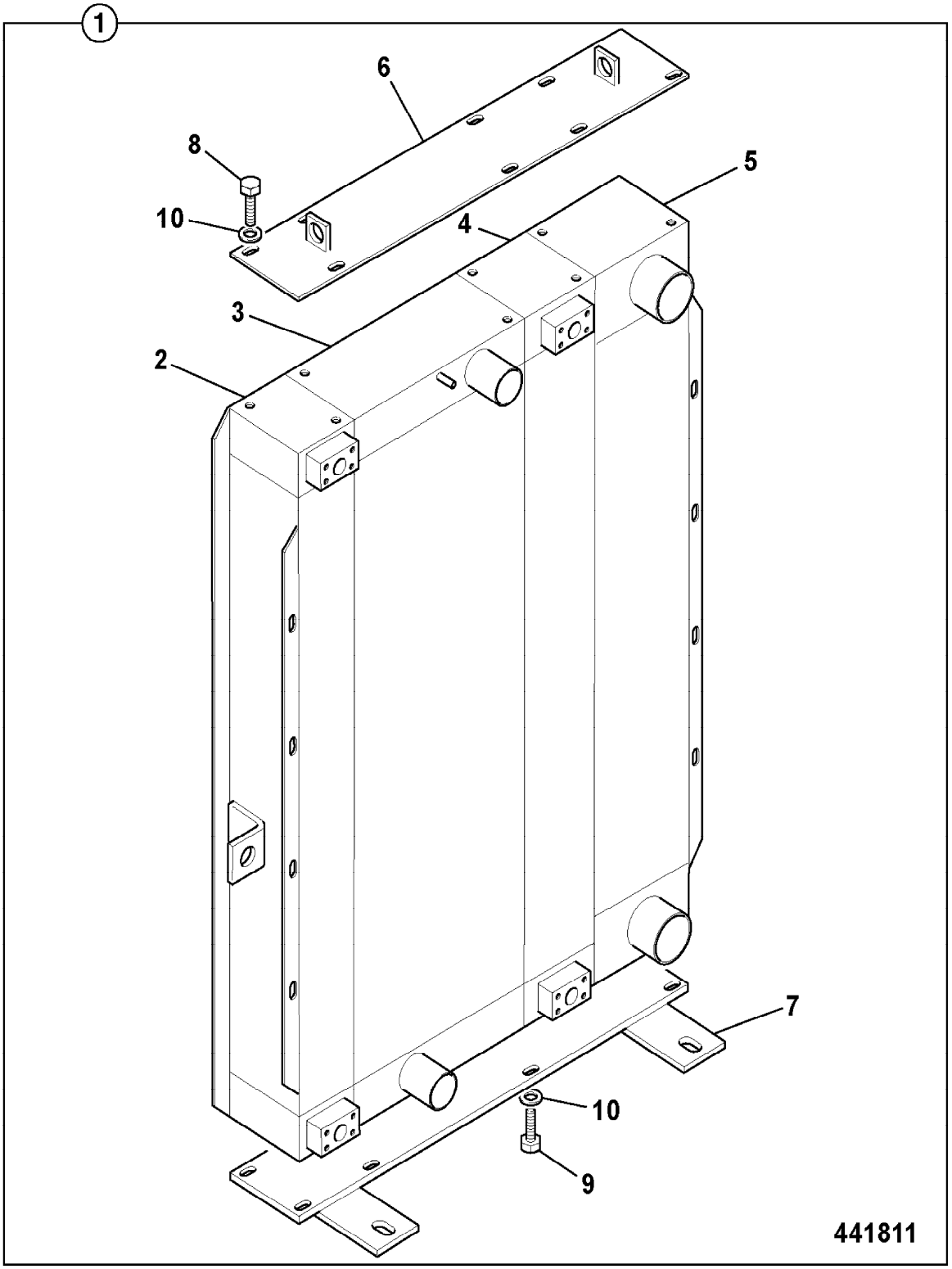
1
6
8
10
5
4
3
2
7
10
9
441811

9802/2740 U4-5-2 COOLER ASSEMBLY, EPOXY COATED

Item	Part no.	Change No.	Description	Remarks	Usage code	Qty
1	30/926613		Cooler, combinationd, epoxy coated			1

Machine groups

Details

Machine group	From serial no.	To serial no.
.426		
426		

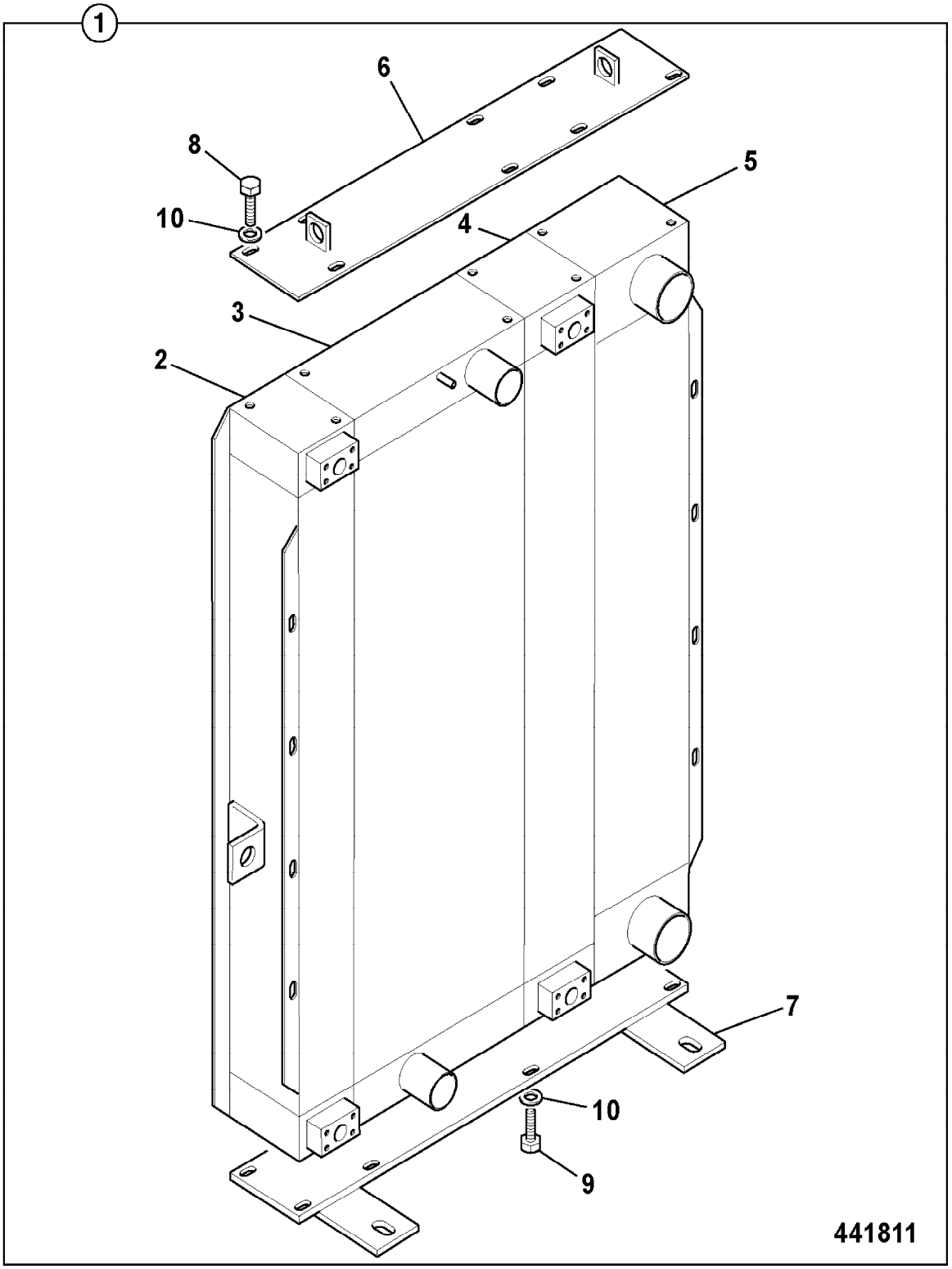
1
6
8
10
5
4
3
2
7
10
9
441811

9802/2740 U4-5-3 COOLER ASSEMBLY, WIDE CORE, OPTIONAL

Item	Part no.	Change No.	Description	Remarks	Usage code	Qty
	30/926612		Cooler, combination, wide core			1

Machine groups

Details

Machine group	From serial no.	To serial no.
.426		
426		

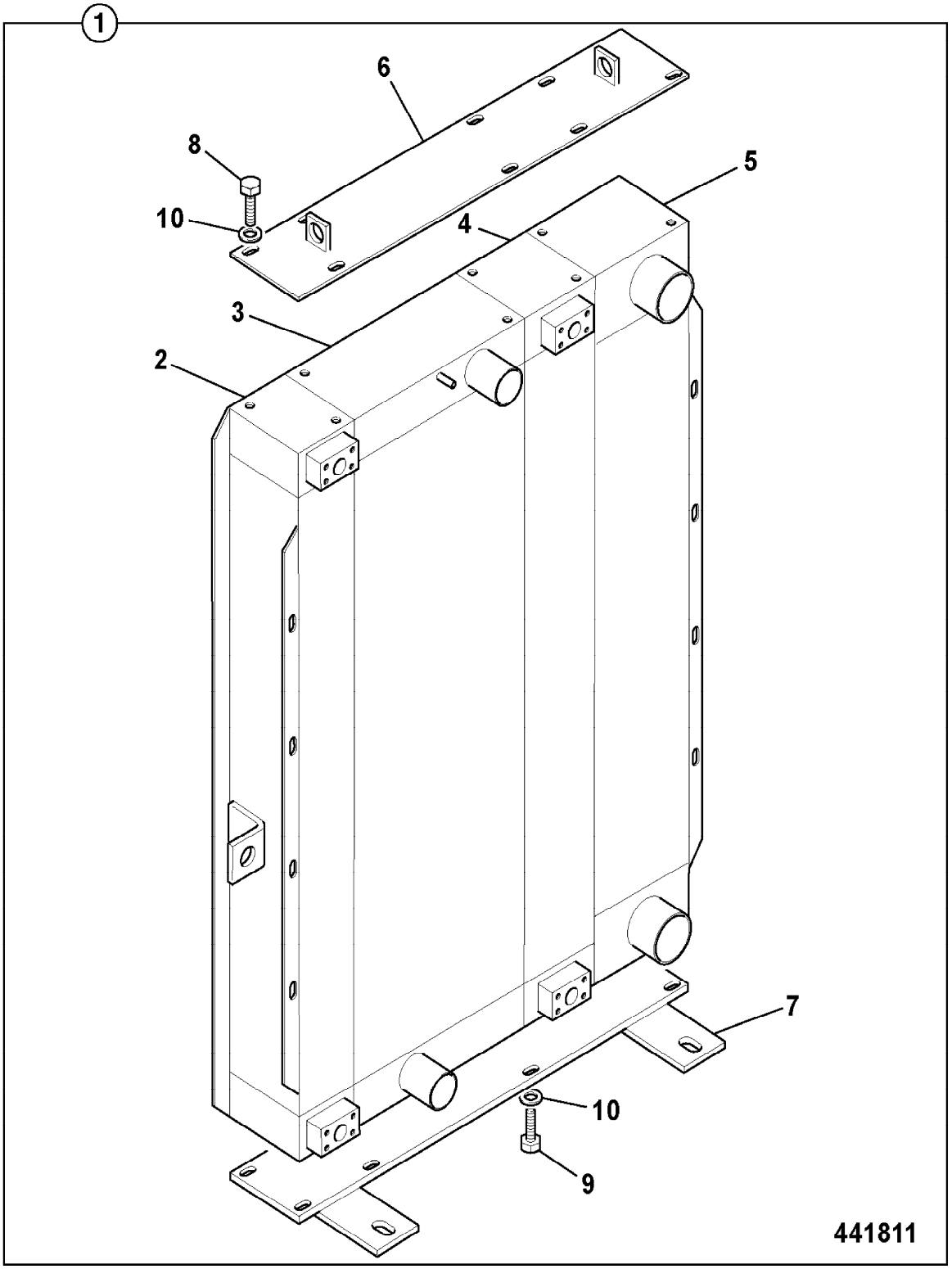
1
6
8
10
5
4
3
2
7
10
9
441811

9802/2740 U4-5-4 COOLER ASSEMBLY, WIDE CORE, EPOXY COATED

Item	Part no.	Change No.	Description	Remarks	Usage code	Qty
	30/926614		Cooler, combination, wide core,epoxy coat			1

Machine groups

Details

Machine group	From serial no.	To serial no.
.426		
426		

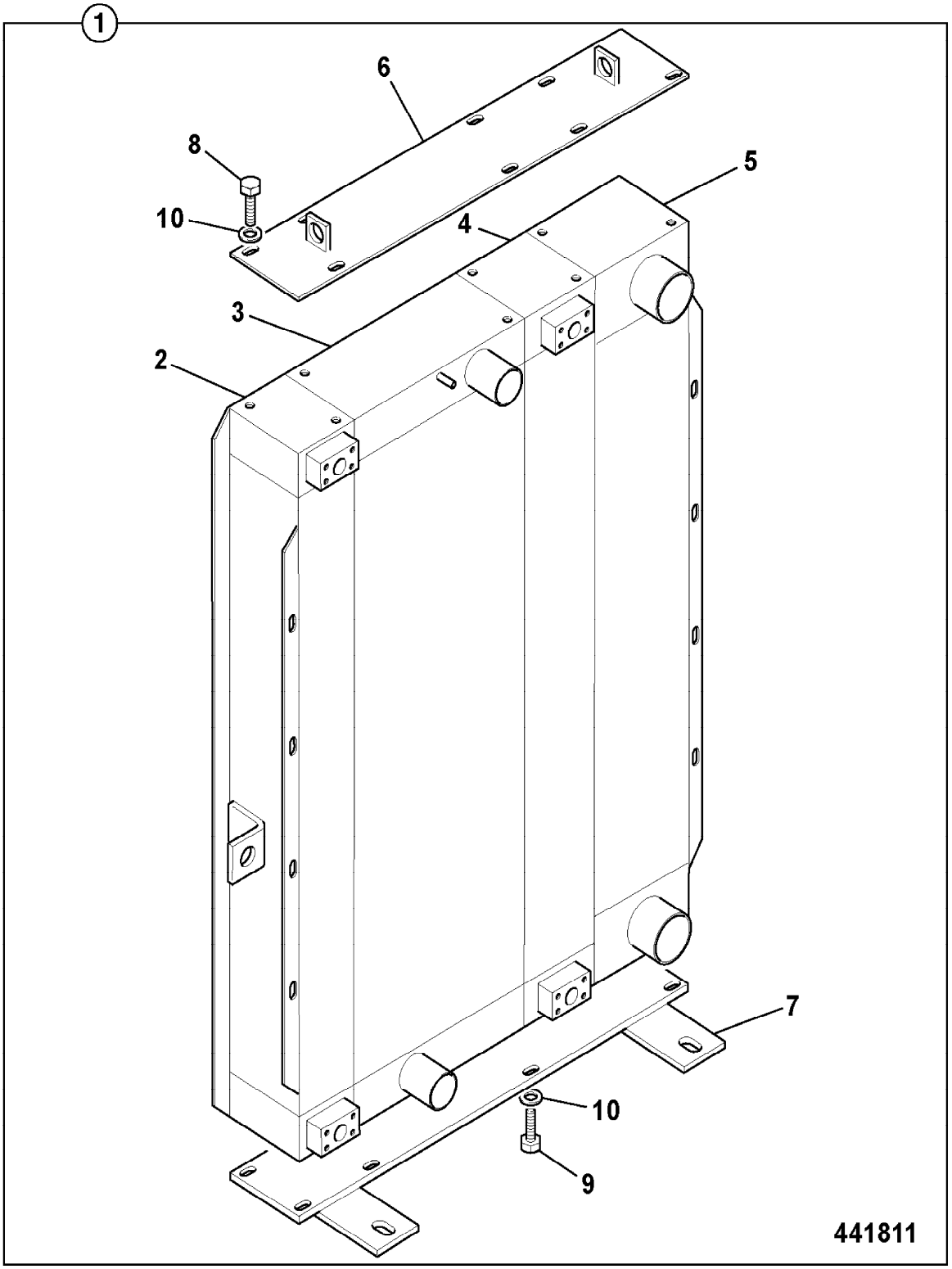
1
6
8
10
5
4
3
2
7
10
9
441811

9802/2740 U4-6-1 RADIATOR, HOSES & FITTINGS

Item	Part no.	Change No.	Description	Remarks	Usage code	Qty
	.		'See Remark'	See frame U4-5-1		1
2	834/11197		Hose, top			1
3	834/11247		Hose, bottom, 426			1
4	2201/0012		Clip, jubilee			4
5	269/40239		Tank, expansion, assembly			1
6	477/00223		:Cap, pressure assembly			1
7	477/01627		:Connector, outlet			1
8	1406/0026		:Washer, seal			1
9	32/925219		:Adapter, 90 deg elbow			2
10	477/00549		Stud, M8 x 178			1
11	331/23788		Plate, retaining, expansion tank			1
12	1370/0203D		Nut, lock			2
13	1420/0007D		Washer, M8 plain			2
14	648/00425		Hose, 9.5mm x 1030mm			1
14A	648/00422		Hose, 600mm long			1
15	648/00421		Hose, 9.5mm bore 760mm lg			2
16	2201/0003		Clip, jubilee			8
17	477/00969		Adapter			1
18	2201/0008		Clip, jubilee			3
20	834/11212		Hose, water feed			1
21	2201/0006		Clip, jubilee			6
22	25/221626		Tap, heater			1
23	834/11214		Hose, heater			1
24	816/90678		Adapter			1
25	830/00642		Pipe, water connection			1
26	821/00329		Clip, 'P' (size No.10), 25mm clamp diameter			2
26A	1315/0205D		Setscrew, M6 x 20mm long			3
26B	1370/0103D		Nut, M6 lock			3
26C	1420/0006D		Washer, M6 plain			6
27	1315/0405D		Setscrew			2
28	1420/0008D		Washer, M10			2
29	821/00347		Clamp, twin			2
30	821/00335		Cover			1
31	1315/3316D		Bolt, M8x70			1

32	1420/0007D		Washer, M8 plain			1
33	1370/0203D		Nut, lock			3
34	834/11109		Hose, heater return			1
35	2410/0209		Grommet			1
36	830/12729		Pipe, CAC compressor, to cooler			1
37	834/11108		Hose, heater feed			1
38	2201/0005		Clip, jubilee			1
39	331/55737		Bracket, water hose support			1
40	1315/0505D		Screw, M12x20			2
41	1370/0203D		Nut, lock			2
41A	1420/0009D		Washer, M12			4
42	821/00501		Clip, 70mm			2
42A	1315/0307D		Setscrew, M8x25			2
42B	1420/0007D		Washer, M8 plain			4
42C	1370/0203D		Nut, lock			2
43	821/10387		Clip, 'p' 35mm			2
43A	1315/0307D		Setscrew, M8x25			2
43B	1420/0007D		Washer, M8 plain			4
43C	1370/0203D		Nut, lock			2
44	893/14026		Coupling, hose 1/2"BSP			1
45	816/90464		Plug, blanking 1/2"BSP			1
46	331/52328		Plate, hose guide			1
47	826/10977		Nut, rivet,M8 Hex, low profile			2
48	1315/0303D		Setscrew			2
50	926/04800		Strip, edging	200mm required for item 46		A/R
51	821/00377		Clip, 'P', 30mm diameter			3
52	1315/0505D		Screw, M12x20			2
53	1420/0009D		Washer, M12			1
54	829/30608		Spacer	For item 29		1
55	821/10087		Clip	For item 14		2
56	828/10352		Grommet			1
57	265/02812		Bracket, mounting, grid heater wiring	For item 23		1
58	1315/0205D		Setscrew, M6 x 20mm long			1

59	1420/0006D		Washer, M6 plain			1
60	1370/0103D		Nut, M6 lock			1
61	331/58653		Bracket			1
61A	1315/0505D		Screw, M12x20			2
61B	1420/0009D		Washer, M12			2

Machine groups

Details

Machine group	From serial no.	To serial no.
.426		
426		

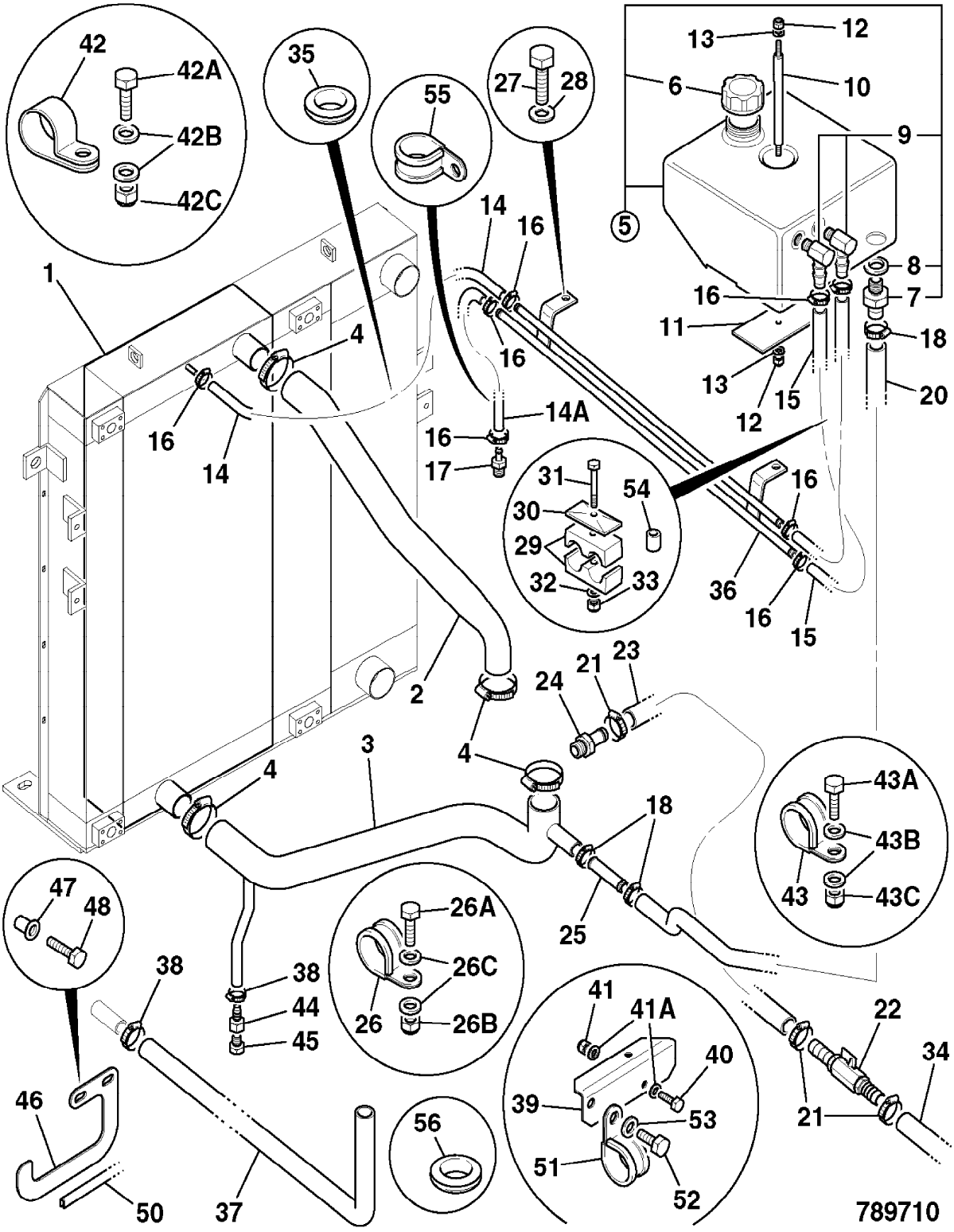
42
42A
42B
42C
35
55
27
28
13
12
6
10
9
5
8
7
16
11
18
13
15
12
20
14
16
1
4
16
14
16
14A
16
17
31
54
30
29
32
33
16
36
16
15
2
21
23
24
4
3
4
43A
43B
43
43C
18
25
47
48
26A
26C
26
26B
38
38
44
45
41
41A
40
39
53
51
52
22
34
21
46
50
37
56
789710

9802/2740 U4-7-1 COOLER, AIR CHARGE, HOSE & PIPEWORK

Item	Part no.	Change No.	Description	Remarks	Usage code	Qty
1	30/926581		Cooler, charge air			1
2	830/12991		Pipe, CAC to inlet			1
3	830/12754		Adapter, CAC pipe			1
4	830/12750		Pipe, charge air coolingC			1
5	834/10589		Coupling, flexible			1
6	834/10457		Hose, air charge cooler			3
7	821/10183		Clamp, spring loaded, T bolt			8
8	826/01194		Bolt, "u"			1
9	TBA		Part number, Not Yet Known			1
10	TBA		Part number, Not Yet Known			1
11	TBA		Part number, Not Yet Known			1
12	02/911205		Pipe, elbow, air transfer			1
13	02/910113		:Plug			1
14	02/911206		Seal, o ring			1
15	02/911467		Clamp, V band			1
16	02/911204		Nut, lock			1

Machine groups

Details

Machine group	From serial no.	To serial no.
.426		
426		

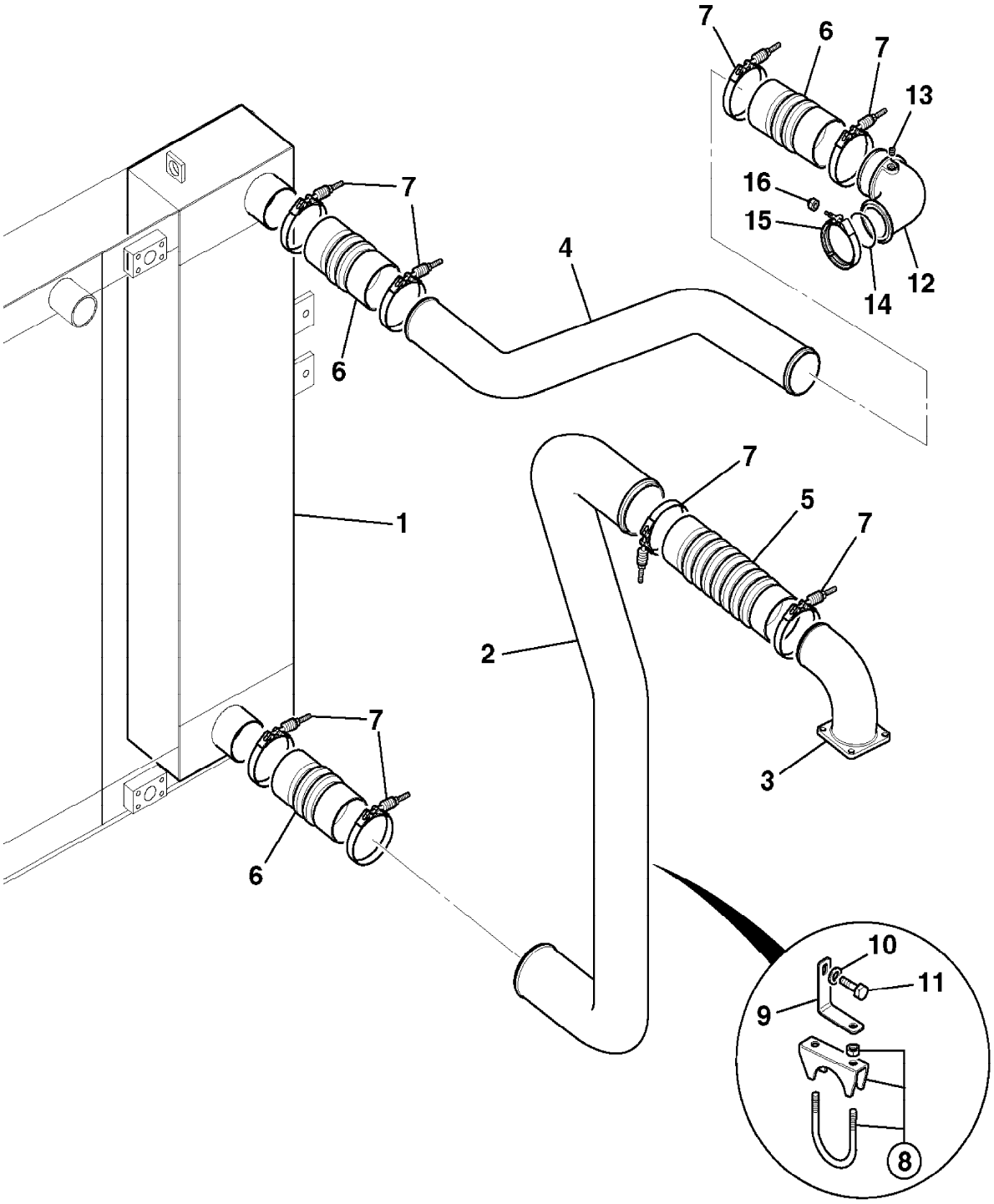

786700

9802/2740 U5-1-1 SUMP, OIL, & FITTINGS

Item	Part no.	Change No.	Description	Remarks	Usage code	Qty
1	02/910966		Kit-oil sump			1
2	02/911270		:Plate, clamping			1
3	02/911111		:Screw, M8 x 25			4
4	02/910990		:Gasket, oil sump			1
5	02/910126		Plug, oil drain			1
6	02/910122		Washer, seal			1
7	02/910724		Plug			1
8	02/910127		Washer, seal			1
9	02/911072		Screw, M8 x 21mm			36
10	02/911002		Screw, M8 x 20mm			4
11	02/910124		Pipe, oil suction			1
12	02/910889		Gasket, oil suction pipe			1
13	02/911072		Screw, M8 x 21mm			4
14	331/55482		Tube, dipstick			1
15	331/55834		Dipstick			1
16	335/10716		Bracket, dipstick support			1
17	1315/0408D		Setscrew, M10 x 30			1
18	1370/0303D		Nut, M10			1
19	1420/0008D		Washer, M10			2
20	821/00410		Clip, pipe			1
21	1315/0207D		Screw, M6 x 25mm			1
22	1370/0103D		Nut, M6 lock			1
23	1420/0006D		Washer, M6 plain			2
24	816/27034		Adapter			1

Machine groups

Details

Machine group	From serial no.	To serial no.
.426		
426		

Illustration Not Available at Time of Publication

9802/2740 U5-2-1 PUMP, OIL

Item	Part no.	Change No.	Description	Remarks	Usage code	Qty
1	02/910991	toE21720578	Pump, oil, assembly			1
	02/912577	E21720579on	Pump, lubricating oil			1
2	02/911032		Screw			4

Machine groups

Details

Machine group	From serial no.	To serial no.
.426		
426		

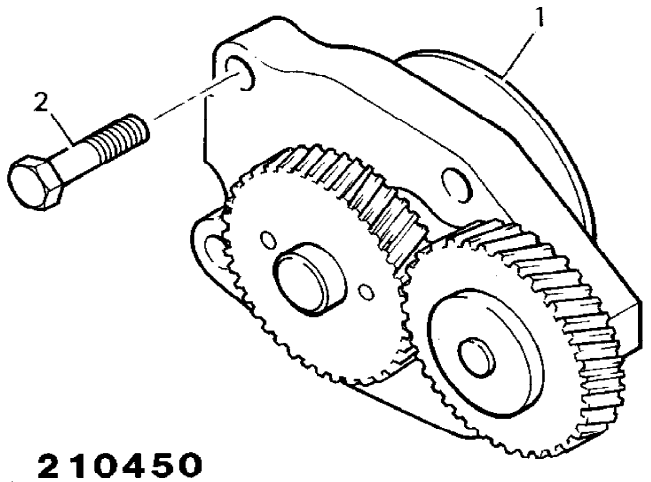

210450

9802/2740 U5-4-1 FILTER, OIL & COOLER

Illustration Machines Top of catalogue

Item	Part no.	Change No.	Description	Remarks	Usage code	Qty
1	02/910128		Head, filter			1
2	02/910129		:Adapter, filter connector			1
3	02/910832		Valve, oil pressure relief			1
4	02/910132		Plunger, pressure regulator			1
5	02/910133		Spring, oil relief valve			1
6	02/910893		O Ring			1
7	02/910135		Plug			1
8	02/910137		Element, oil cooling			1
9	02/910895		Gasket, oil cooler to block			1
10	02/910894		Gasket, oil filter head			1
11	02/911027		Bolt, M8x35			14
12	02/910970		Element, oil filter, canister type	500hr		1
13	701/60065		Switch, engine oil pressure			1

Machine groups

Details

Machine group	From serial no.	To serial no.
.426		
426		

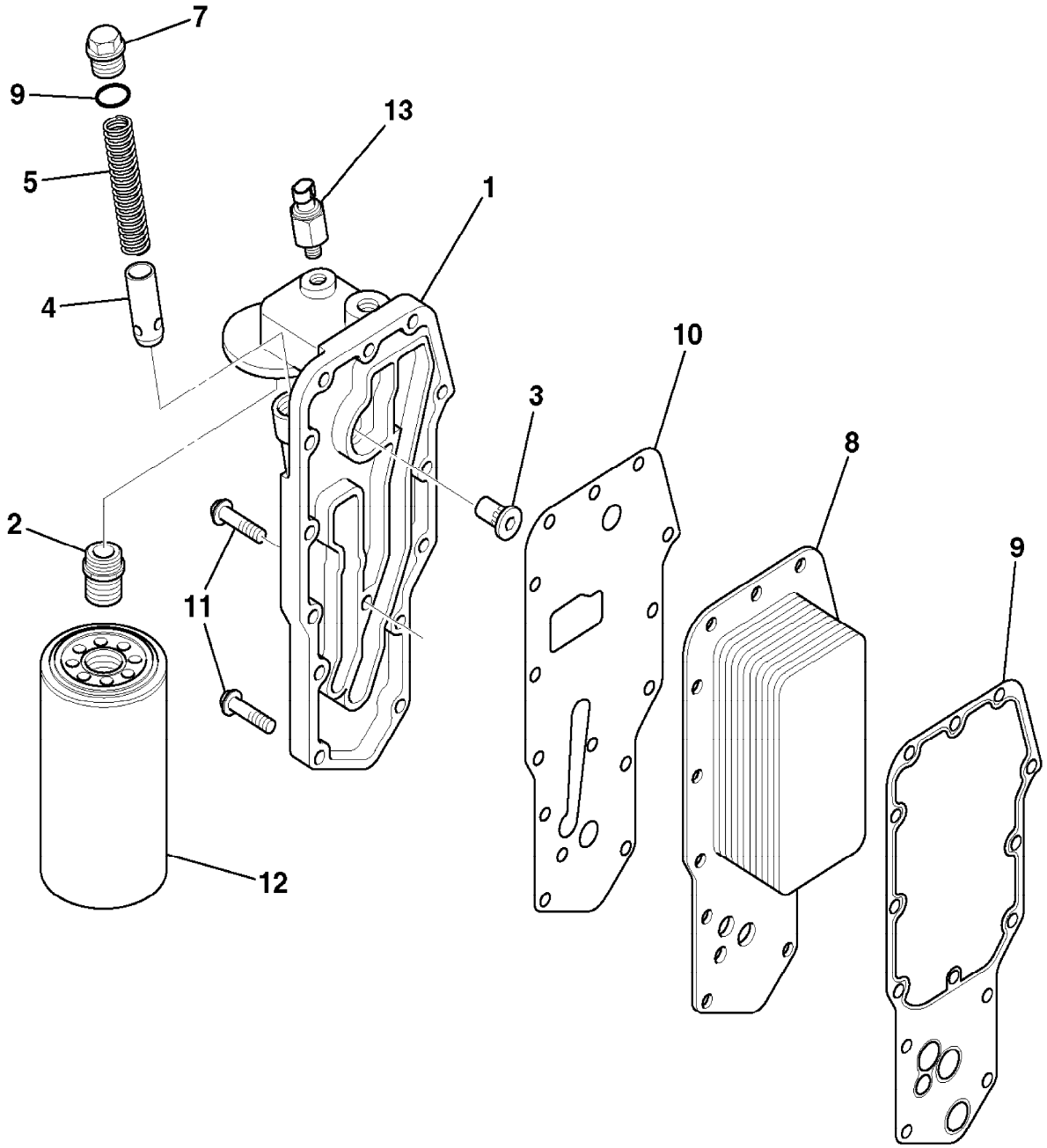

441740

9802/2740 U6-1-1 PUMP, FUEL INJECTION, INSTALLATION

Item	Part no.	Change No.	Description	Remarks	Usage code	Qty
1	17/920400		Pump, fuel injection			1
2	TBA		Part number, Not Yet Known			1
3	02/911421		Nut			1
4	02/911459		Gear, fuel pump			1
5	02/912189		Gasket			1
6	02/911455		Stud, , M8x1.25			3
7	02/911117		Nut			3
8	02/911456		Bracket, fuel pump			1
9	02/911457		Screw, round head			2
10	02/911002		Screw, M8 x 20mm			1

Machine groups

Details

Machine group	From serial no.	To serial no.
.426		
426		

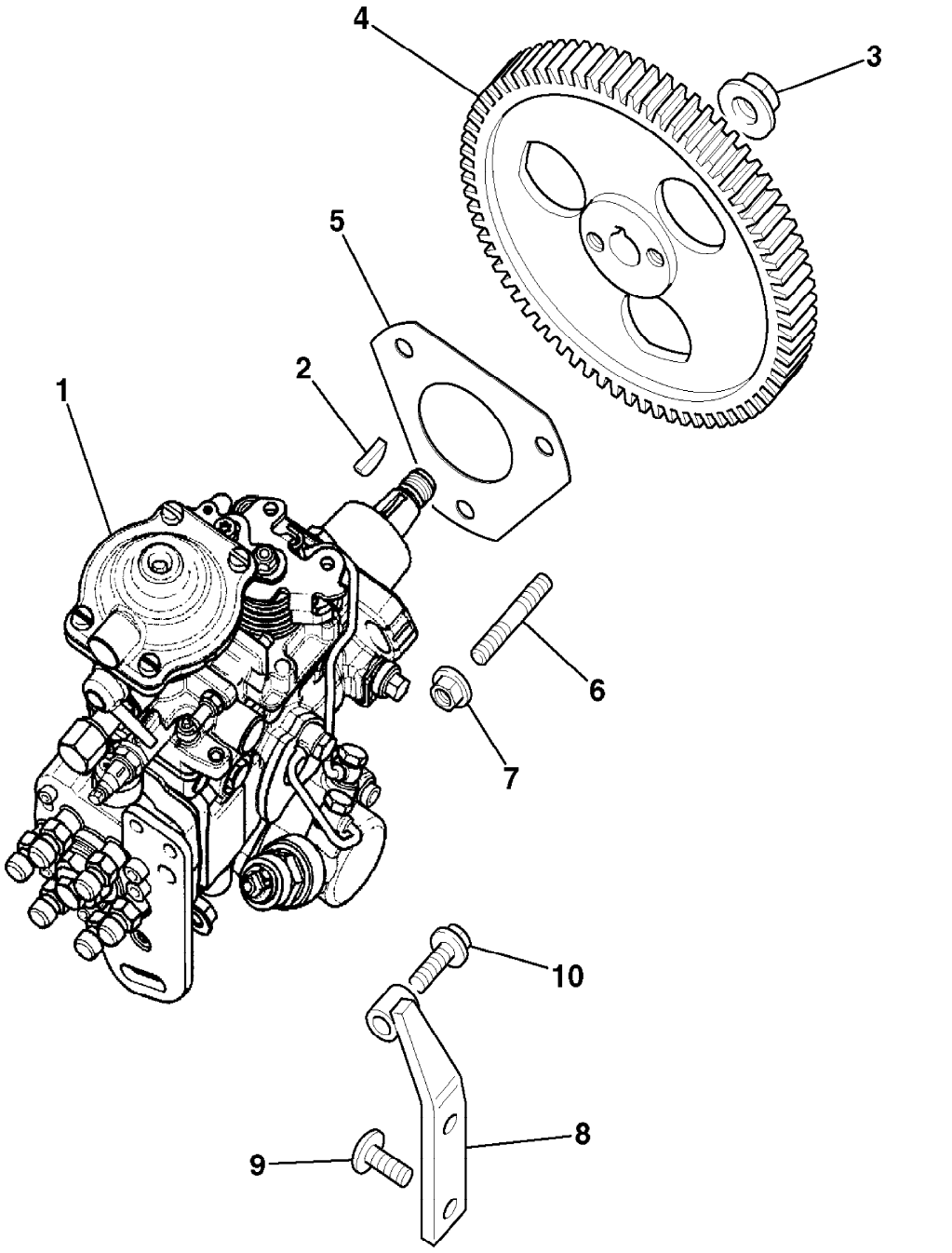
4
3
5
2
1
6
7
10
8
9
427470

9802/2740 U6-11-1 PUMP,FUEL INJECTION, SERVICE PARTS

Item	Part no.	Change No.	Description	Remarks	Usage code	Qty
1	17/920400		Pump, fuel injection			1
2	17/920019		Plate, cover			1
3	17/920018		Plate, sealing			1
4	17/920020		Screw			2
5	17/922106		Screw, shoulder			2
6	17/922107		Gasket			2
7	17/922105		Bush, flanged			1
8	17/922125		Spring			1
9	17/922123		Lever, control			1
10	17/922124		Washer			1
11	17/922122		Screw			1
12	17/922104		Washer, spring			1
13	17/922121		Lever, control			1
14	17/922103		Lever, control			1
15	17/922127		Seat, spring			1
16	17/920009		Spring			1
17	17/922126		Seat, spring			1
18	17/920007		Valve, control			1
19	17/920006		O Ring			1
20	17/920004		O Ring			1
21	17/920014		Pipe			1
22	17/922133		Bolt, banjo			2
23	17/922130		Seal, flat ring			2
24	32/911703		Washer, seal			2
25	17/920013		Adapter			1
26	17/922113		Seal, flat ring			1
27	17/920017		Screw			1
28	17/920016		O Ring			1
29	716/30233		Solenoid, fuel advance			1
30	17/920010		Terminal			1
31	17/922118		Nut, flange			1
32	17/920015		Pipe			1
33	17/922129		Bolt, banjo			2
34	17/922130		Seal, flat ring			4
35	17/920003		Nut, cap			1
36	17/920002		Ring, seal			3
37	17/920008		Sleeve, protection			1
38	17/920001		Valve, overflow			1
39	17/920011		Plate, support			1
40	17/922117		Screw, star drive			1

41	17/300223		Capscrew			2
42	17/922109		Plug			1
43	17/922110		Screw, bleed			1
44	17/922108		O Ring			1
45	17/920005		Adapter, fuel connector			6
46	17/922101		Gasket			6
47	716/30248		Solenoid			1
48	17/920012		Terminal			1
49	17/922118		Nut, flange			1

Machine groups

Details

Machine group	From serial no.	To serial no.
.426		
426		

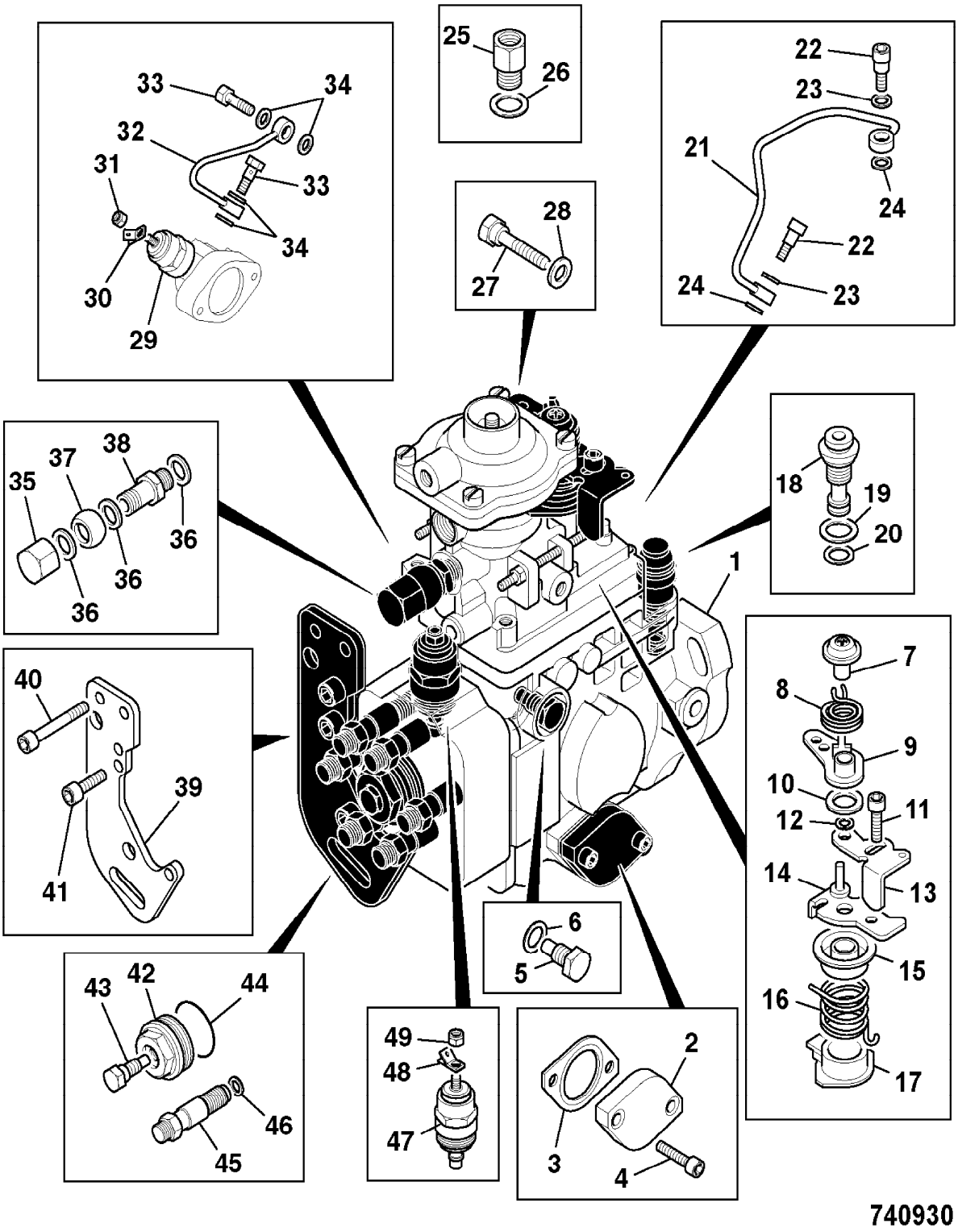
33
34
32
31
33
34
30
29
25
26
28
27
22
23
21
24
22
24
23
18
19
20
35
37
38
36
36
36
1
40
39
41
7
8
9
10
11
12
14
13
15
16
17
6
5
43
42
44
46
45
49
48
47
2
3
4
740930

9802/2740 U6-2-1 INJECTORS, FUEL, & INJECTION PIPES

Item	Part no.	Change No.	Description	Remarks	Usage code	Qty
1	02/911483		Pipes, injectors,1,2,3, assembly			1
2	02/910673		:Plate, clamping			1
3	02/910248		:Plate, clamping			1
4	02/910258		:Damper, vibration			2
5	02/910259		:Damper, vibration			6
6	02/911485		:Bracket, injector pipe			1
7	02/911079		:Screw			7
8	02/911491		:Pipe, injector No 1			1
9	02/911492		:Pipe, injector No 2			1
10	02/911493		:Pipe, injector No 3			1
11	02/911257		:Plate, clamping			3
12	02/911258		:Plate, clamping			1
13	02/911259		:Plate, clamping			1
14	02/911484		Pipes, injectors 4,5,6, assembly			1
15	02/911486		:Plate, clamping			1
16	02/910248		:Plate, clamping			1
	02/910259		:Damper, vibration			6
17	02/910259		:Damper, vibration			6
18	02/911079		:Screw			6
19	02/911494		:Pipe, injector No 4			1
20	02/911495		:Pipe, injector No 5			1
21	02/911496		:Pipe, injector No 6			1
22	02/911257		:Plate, clamping			3
23	02/911487		:Plate, clamping			1
24	02/911376		Screw			4
25	17/920200		Injector, assembly			6
26	02/910192		:Seal			1
27	02/910191		:Seal			1
28	02/910238		Bolt, banjo			6
29	02/911463		Manifold, pipe,fuel			1
30	02/911461		Connector, banjo			1
31	02/911452		Washer, sealing			2
32	02/910245		Valve, non-return			1
33	02/910244		Washer, seal			2

Machine groups

Details

Machine group	From serial no.	To serial no.
.426		
426		

.

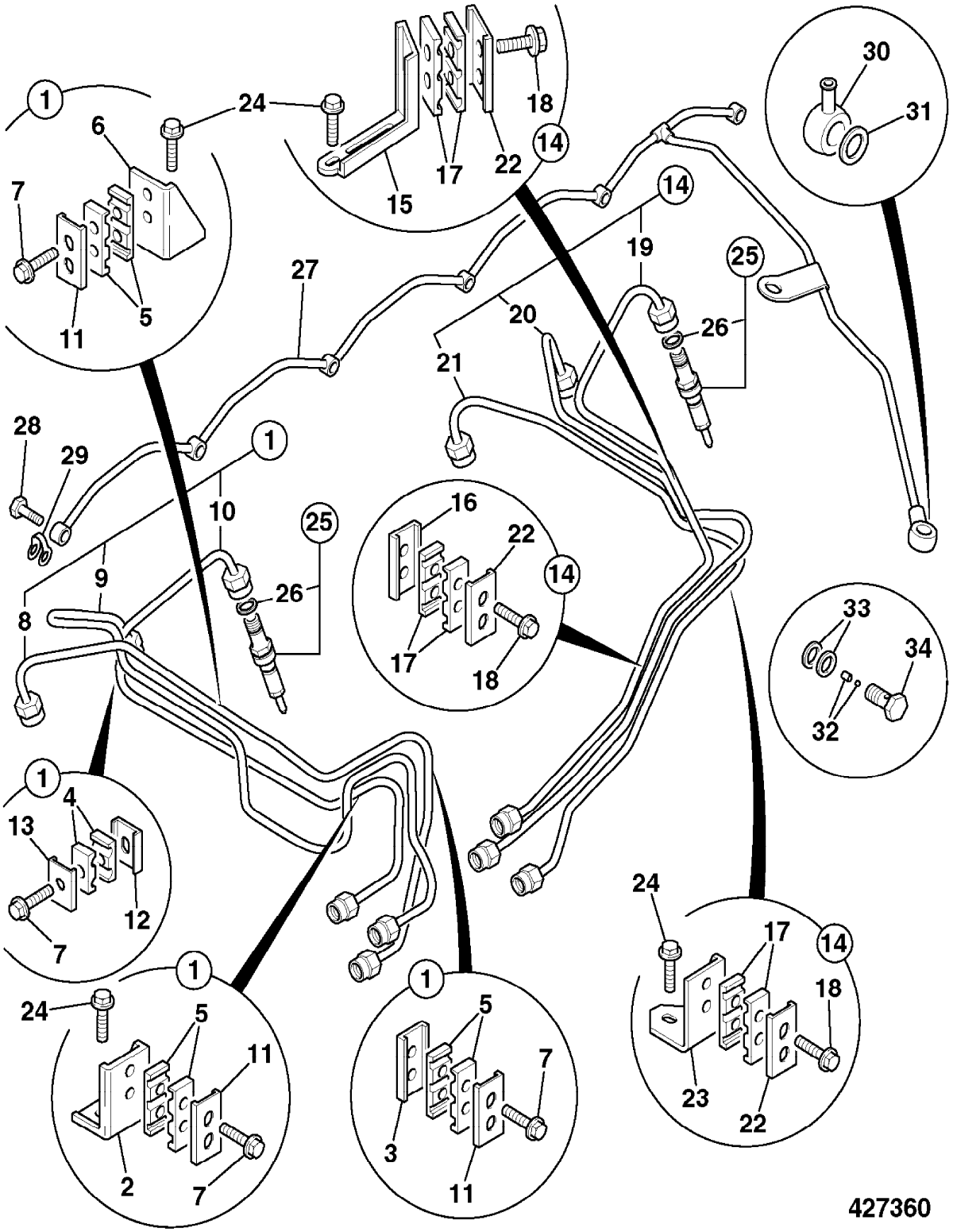

9802/2740 U6-3-1 FUEL PIPES, INJECTION PUMP

Item	Part no.	Change No.	Description	Remarks	Usage code	Qty
1	02/911453		Pipe, fuel supply			1
2	02/910294		Bolt, banjo assembly			1
3	02/911451		:Screw, captive washer cap			1
4	02/910912		:Washer, sealing			1
5	02/911452		Washer, sealing			2
6	02/912190		Pipe, air fuel control			1
7	02/911448		Seal, grommet			1
8	02/910915		Adapter, male elbow			1
9	02/911449		Screw, banjo connector			1
10	02/910244		Washer, seal			2
11	02/910272		Adapter, elbow			1

Machine groups

Details

Machine group	From serial no.	To serial no.
.426		
426		

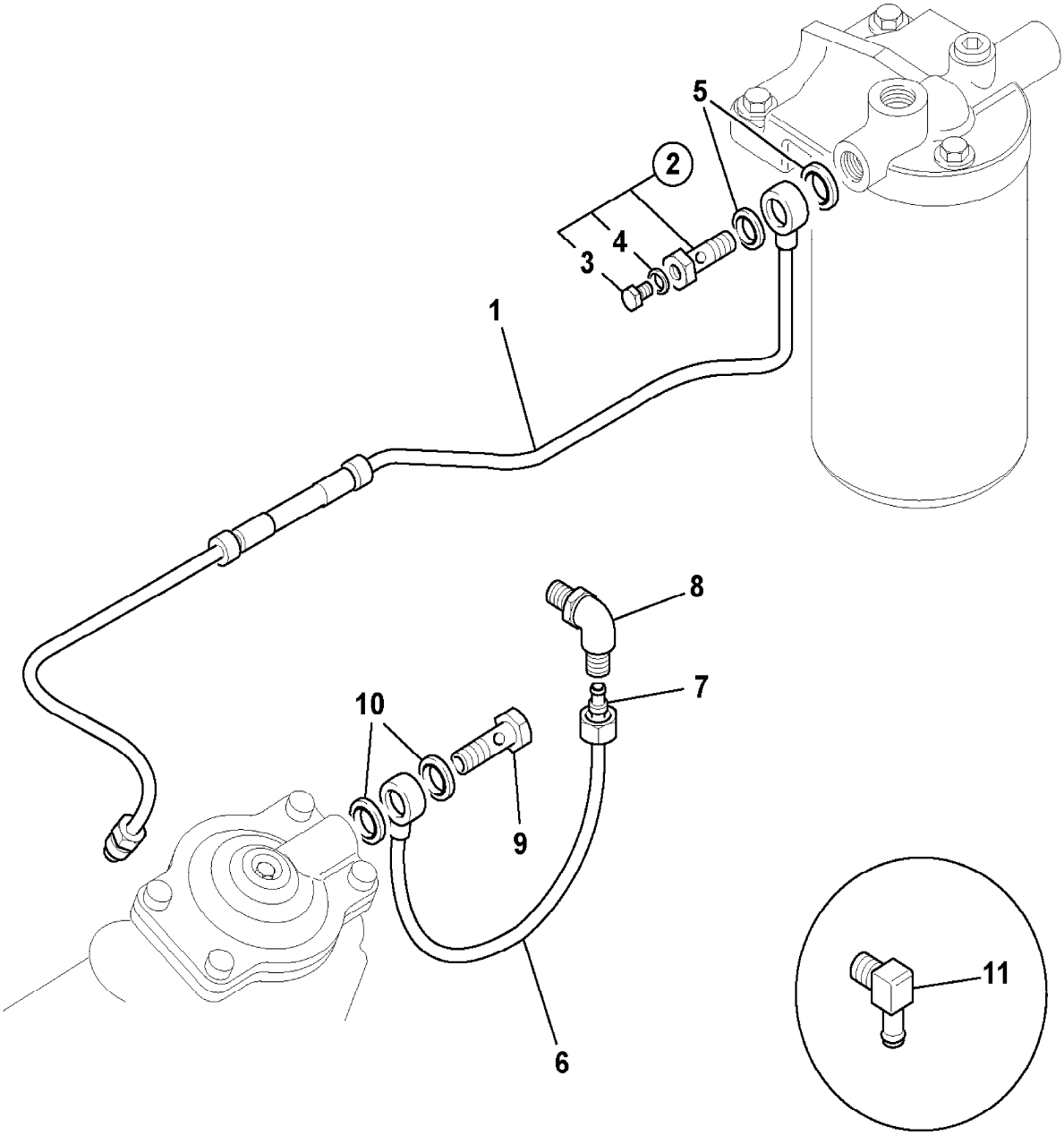

427651

9802/2740 U6-4-1 FUEL PIPES, FUEL TANK TO FILTER

Item	Part no.	Change No.	Description	Remarks	Usage code	Qty
1	32/914200		Filter, fuel sedimentor	For service parts see frame U6-6-1		1
2	647/02117		Tube			A/R
3	1315/0409D		Setscrew, M10 x 35mm long			2
4	1420/0008D		Washer, M10			4
4A	1370/0303D		Nut, M10			2
5	816/15176		Adapter, 3/8"BSP x M14			2
6	823/00507		Washer, copper			2
7	649/51934		Hose, diesel fuel, tank to sedimenter			1
8	649/51935		Hose, diesel fuel, sedimenter to l/pump			1
9	816/00439		Adapter			1
10	17/920401		Pump, fuel lift			1
11	02/910910		Gasket			1
12	02/911007		Bolt, M8x1.25x25			2
13	02/911460		Pipe, fuel supply			1
14	02/910196		Bolt, banjo			1
15	02/911452		Washer, sealing			2
16	649/51799		Hose, diesel, fuel return			1
17	TBA		Part number, Not Yet Known			1
18	823/00372		Washer			2
19	816/90761		Adapter, 90 deg. G3/4"			1
20	821/10087		Clip			1
21	1315/0205D		Setscrew, M6 x 20mm long			3
22	1420/0006D		Washer, M6 plain			6
23	1370/0103D		Nut, M6 lock			3
24	821/00306		Clip, 'P' (size No.6), 20mm clamp diameter			2
25	265/02808		Bracket, mounting P clip			2
26	1315/0507D		Setscrew			2
27	1420/0009D		Washer, M12			2
28	826/01453		Tie, cable, double head			4
29	821/00347		Clamp, twin			2
30	821/00335		Cover			1

31	1315/0312D		Setscrew			1
32	1370/0203D		Nut, lock			1
33	1420/0007D		Washer, M8 plain			2

Machine groups

Details

Machine group	From serial no.	To serial no.
.426		
426		

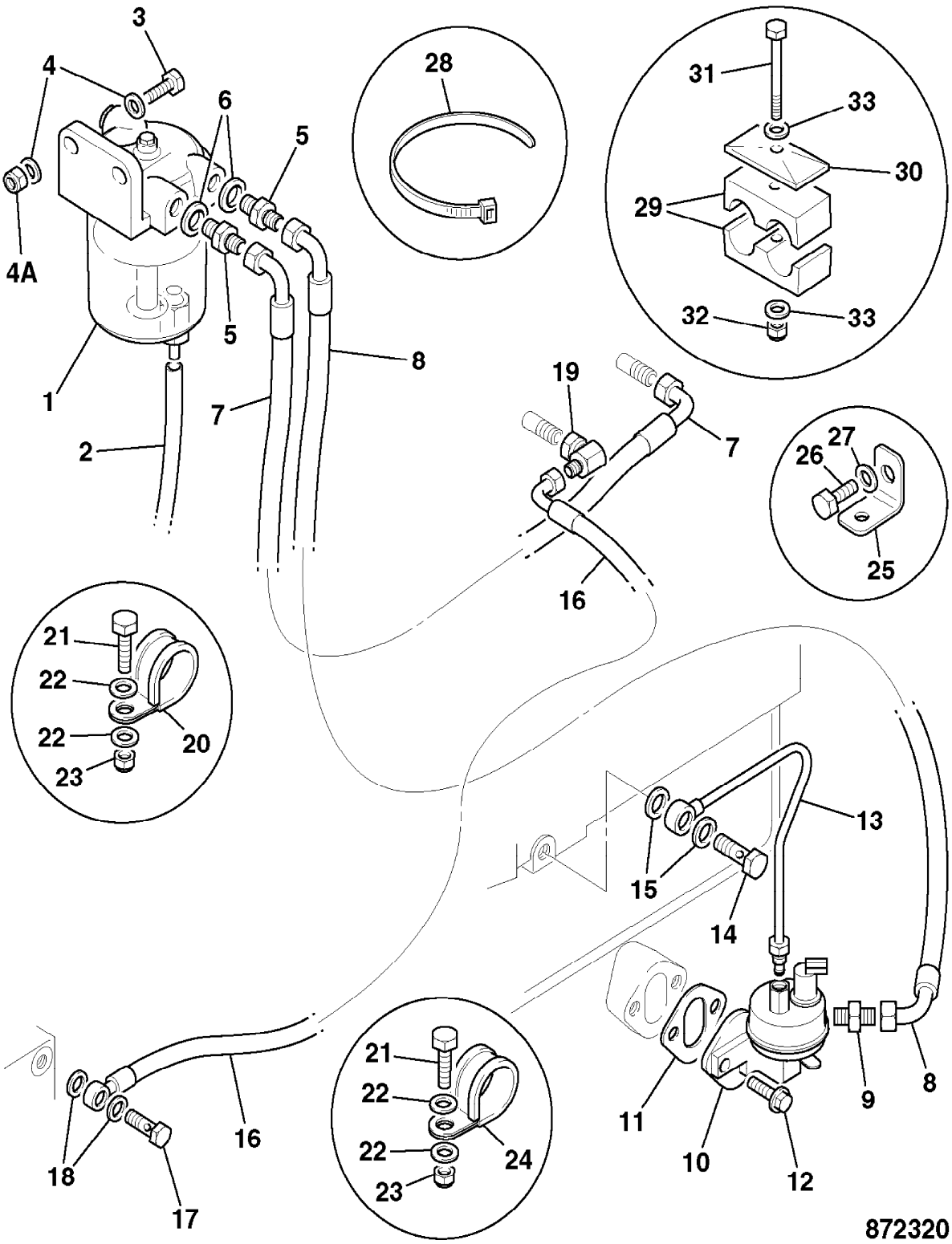
3
4
4A
6
5
5
1
2
7
8
28
31
33
30
29
32
33
19
7
16
27
26
25
21
22
22
23
20
13
15
14
21
22
22
23
24
16
18
17
11
10
12
9
8
872320

9802/2740 U6-6-1 FILTER, FUEL SEDIMENT

Item	Part no.	Change No.	Description	Remarks	Usage code	Qty
1	32/914200		Filter, fuel sedimentor			1
2	32/914201		:Head, filter			1
3	32/904702		:Nut, cap			1
4	32/904703		:Washer, nylon seal, M6			1
5	32/904713		:Screw, bleed, 5mm			1
6	32/904714		:O Ring			1
7	32/914210		:Plug			2
8	32/914211		:Washer			1
9	32/904708		:Seal			1
10	32/914202		:Filter, swirl cone			1
11	32/904707		:Washer, locking			1
12	32/914203		:Strainer, gauze			1
13	32/914204		:O Ring			1
14	32/914205		:Washer			1
15	32/914206		:Spring			1
16	32/914212		:Bowl, filter			1
17	32/914207		:Tap, drain			1
18	32/914208		:Seal			1
19	32/914209		:Washer, fibre			1

Machine groups

Details

Machine group	From serial no.	To serial no.
.426		
426		

1

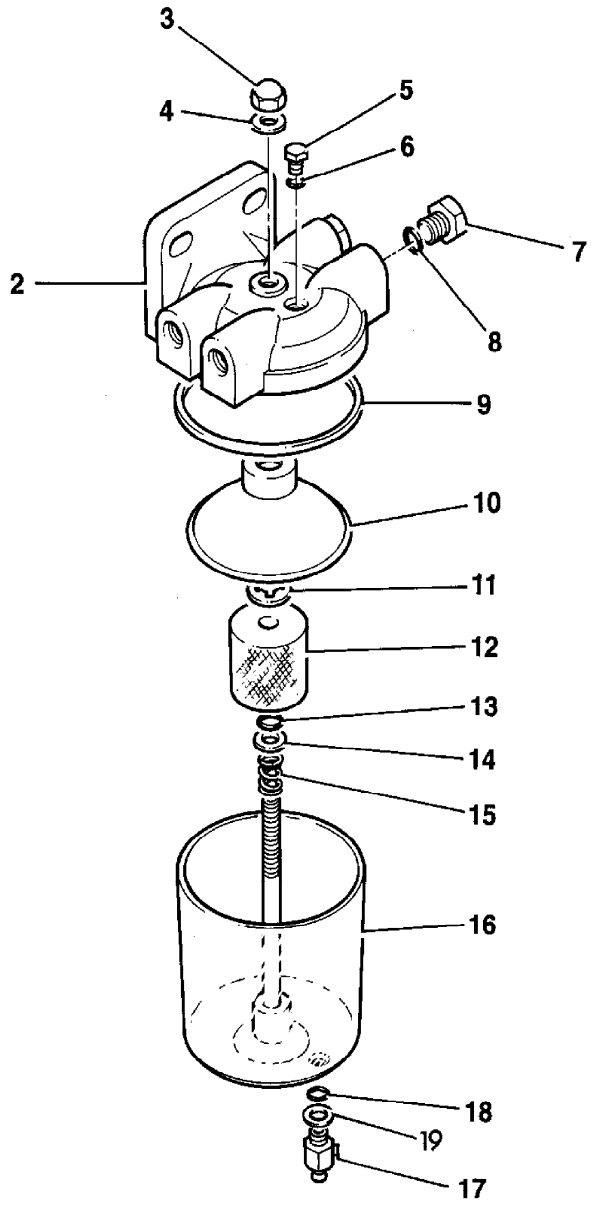

9802/2740 U6-6-5 FILTER, PRE-FILTER, SALES SPECIAL

Item	Part no.	Change No.	Description	Remarks	Usage code	Qty
1	.		'See Remark'	Pre filter(cummins ref. 3329289) S/S 8144		1
2	331/62137		Bracket			1
3	649/52138		Hose	Tank to pre-filter		1
4	649/52137		Hose	Pre-filter to pump		1
6	826/01104		Nut, rivet			2
7	1315/0407D		Setscrew, M10 x 25mm long			2
8	1420/0008D		Washer, M10			2
9	.		'See Remark'	Filter head (Cummins ref. 3930618S)		1
10	816/60106		Adapter			2
11	.		'See Remark'	3/8" x 1" UNC screw		4
12	1410/0003Z		Washer			4
13	265/02808		Bracket, mounting P clip			1
14	821/00306		Clip, 'P' (size No.6), 20mm clamp diameter			1
15	1315/0205D		Setscrew, M6 x 20mm long			1
16	1370/0103D		Nut, M6 lock			1
17	1420/0006D		Washer, M6 plain			2

Machine groups

Details

Machine group	From serial no.	To serial no.
.426		
426		

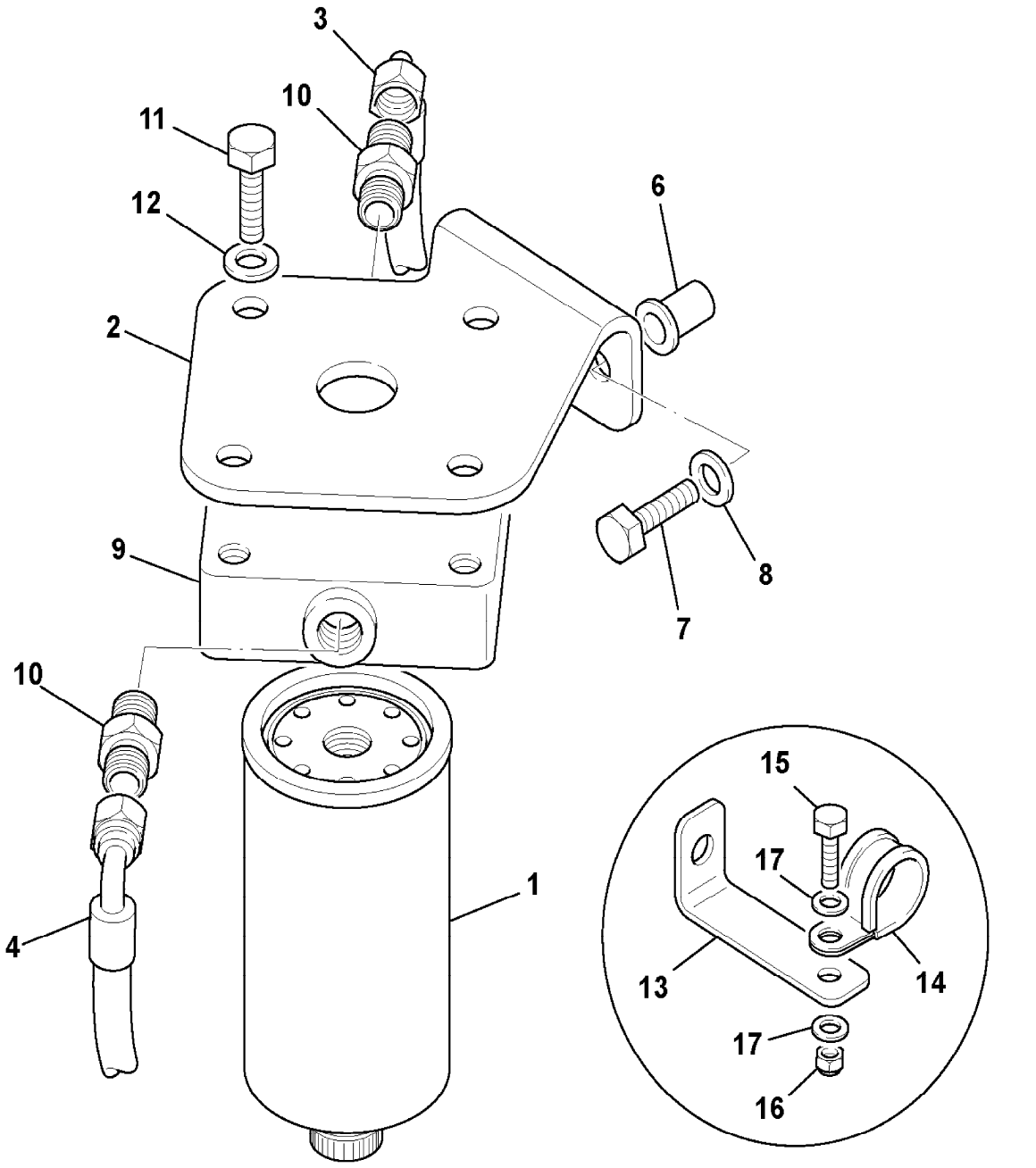

872280

9802/2740 U6-7-1 FILTER, FUEL

Illustration Machines Top of catalogue

Item	Part no.	Change No.	Description	Remarks	Usage code	Qty
1	32/925450		Filter, fuel assembly			1
2	02/912545		:Head, fuel filter			1
3	02/910796		:Plug			2
4	02/911141		:O Ring			2
5	02/911323		:Adapter			1
6	32/925451		:Element, fuel filter, cartridge			1
7	02/911027		Bolt, M8x35			1
8	02/911074		Screw, M8 x 45			1

Machine groups

Details

Machine group	From serial no.	To serial no.
.426		
426		

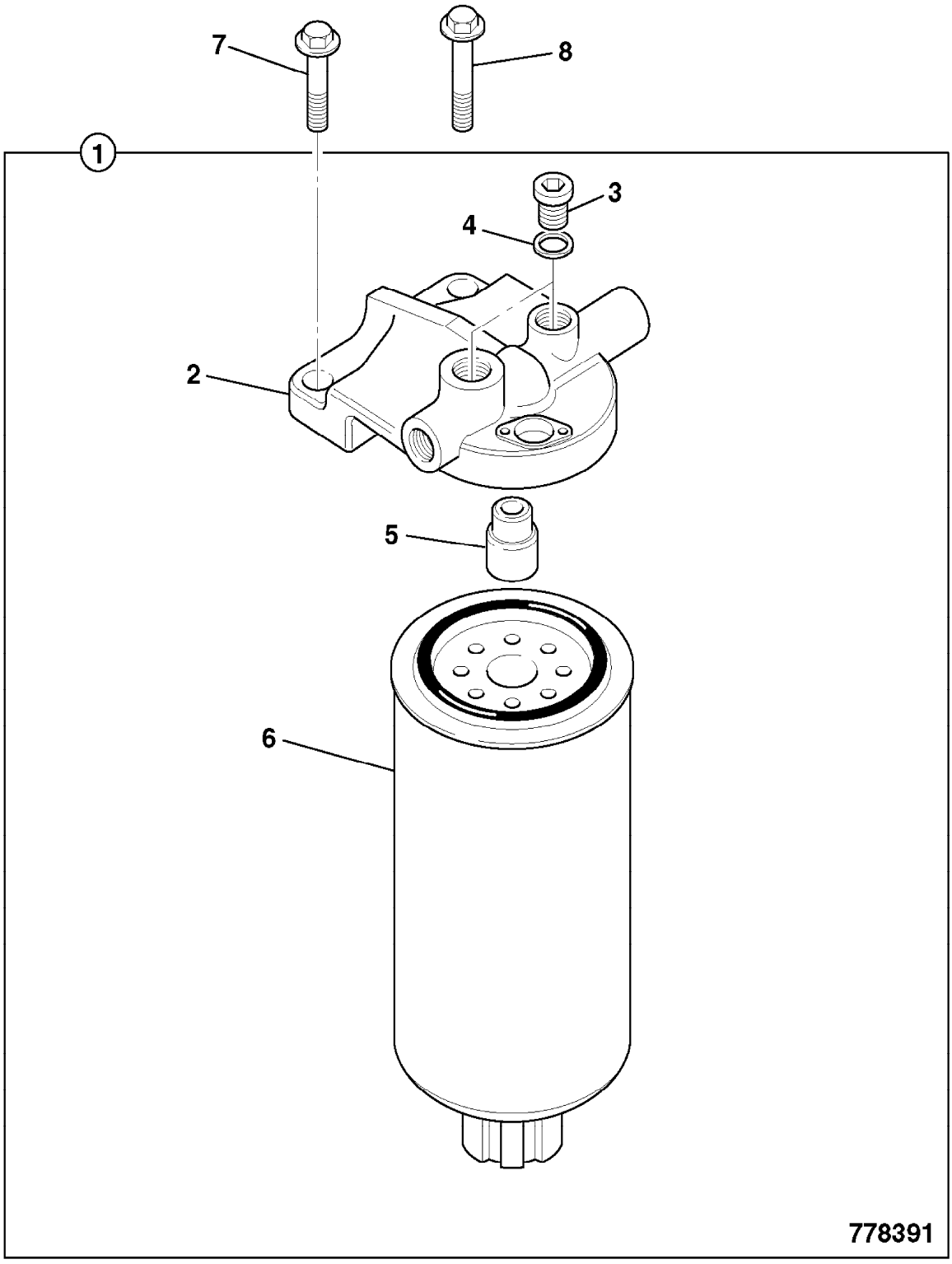
7
8
1
3
4
2
5
6
778391

9802/2740 U7-1-1 TURBOCHARGER

Item	Part no.	Change No.	Description	Remarks	Usage code	Qty
1	02/911520		Turbocharger			1
2	02/910171		:Gasket, turbo to manifold			1
3	02/910759		Gasket			1
4	02/911078		Stud			4
5	02/911036		Nut			4

Machine groups

Details

Machine group	From serial no.	To serial no.
.426		
426		

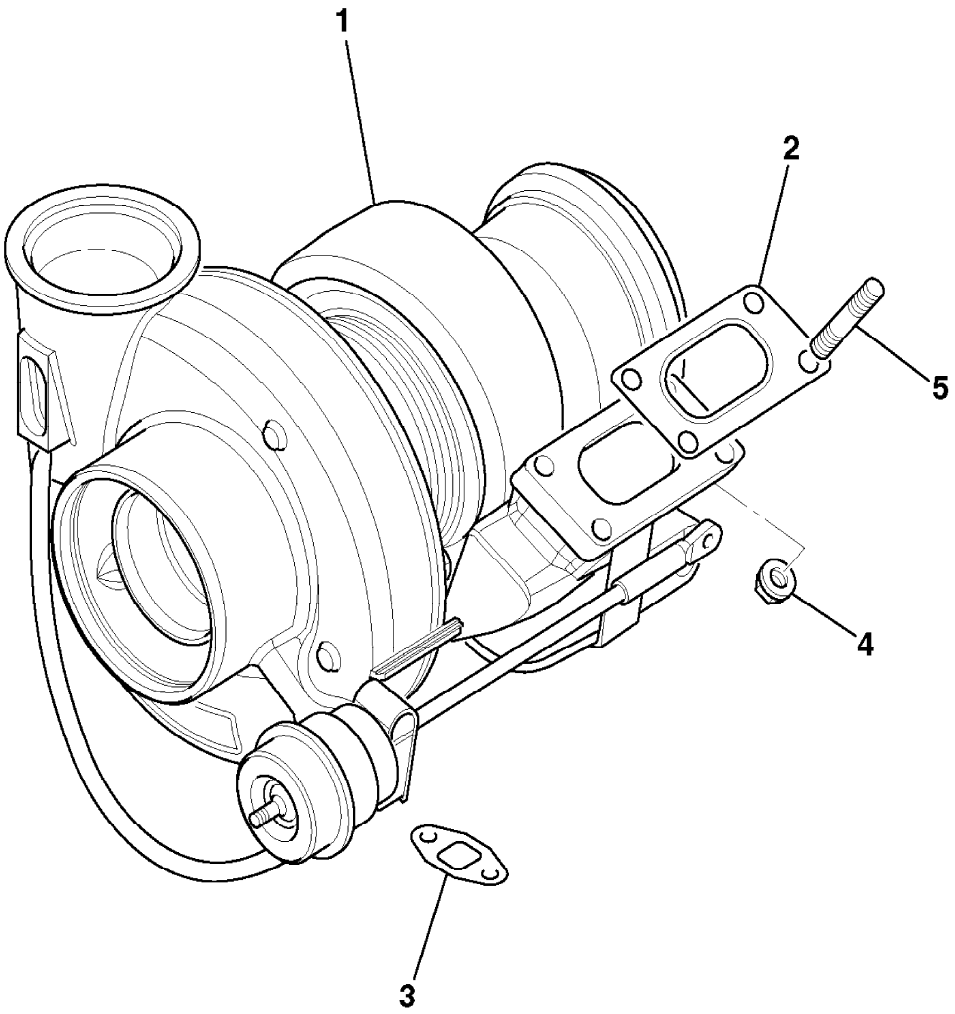

427140

9802/2740 U7-2-1 TURBO, PIPEWORK

Item	Part no.	Change No.	Description	Remarks	Usage code	Qty
1	02/910698		Hose, turbo oil feed			1
2	02/910146		O Ring			2
3	02/910164		Adapter, male/female			2
4	02/910165		O Ring			1
5	02/912191		Pipe, turbo oil drain			1
6	02/910759		Gasket			1
7	02/911002		Screw, M8 x 20mm			2
8	02/910468		Hose			1
9	02/911242		Clamp			2
10	02/910921		Elbow, turbo oil drain			1
11	02/910922		O Ring			1
12	02/910171		Gasket, turbo to manifold			1
13	02/911078		Stud			4
14	02/911036		Nut			4
15	02/911490		Clamp, tube			1
16	02/911020		Nut			1
17	02/910503		Plug, D=22.5mm			1

Machine groups

Details

Machine group	From serial no.	To serial no.
.426		
426		

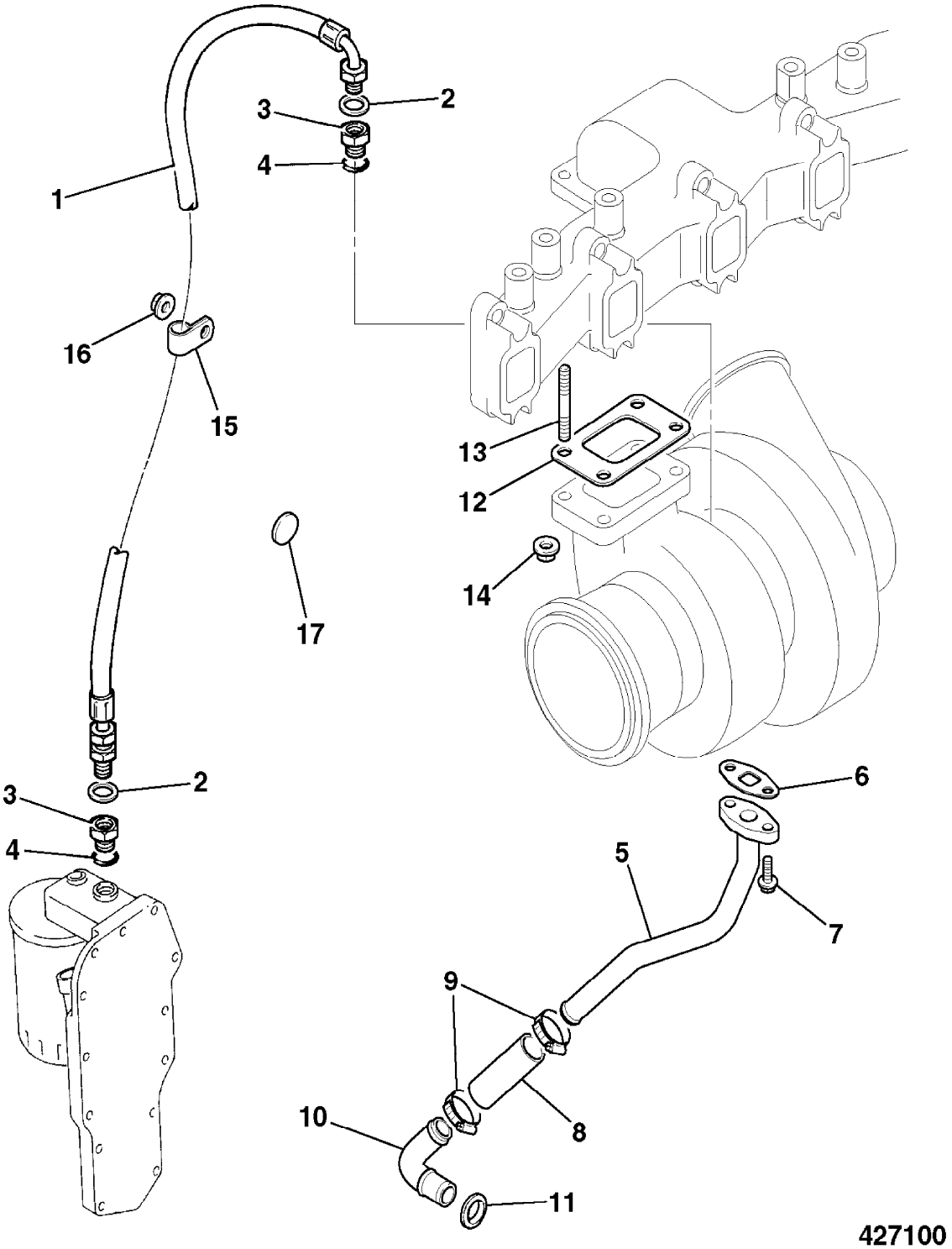
1
2
3
4
16
15
17
13
12
14
2
3
4
6
5
7
9
10
8
11
427100

9802/2740 U7-4-1 COMPRESSOR, & INSTALLATION, AIR CONDITIONING

Item	Part no.	Change No.	Description	Remarks	Usage code	Qty
1	.		'See Remark'	For Service Parts, See section index		1
2	477/01663		Belt, drive			1
3	335/11349		Bracket, compressor mounting			1
4	478/01191		Sleeve			1
5	1391/3407D		Capscrew, M10			2
6	1315/3412D		Bolt, M10 x 50			1
7	1420/0008D		Washer, M10			8
8	1315/3413D		Bolt			2
9	1370/0303D		Nut, M10			3
10	331/57801		Lever, compressor adjusting			1
11	1391/3407D		Capscrew, M10			1
12	331/32039		Guard, aircon compressor			1

Machine groups

Details

Machine group	From serial no.	To serial no.
.426		
426		

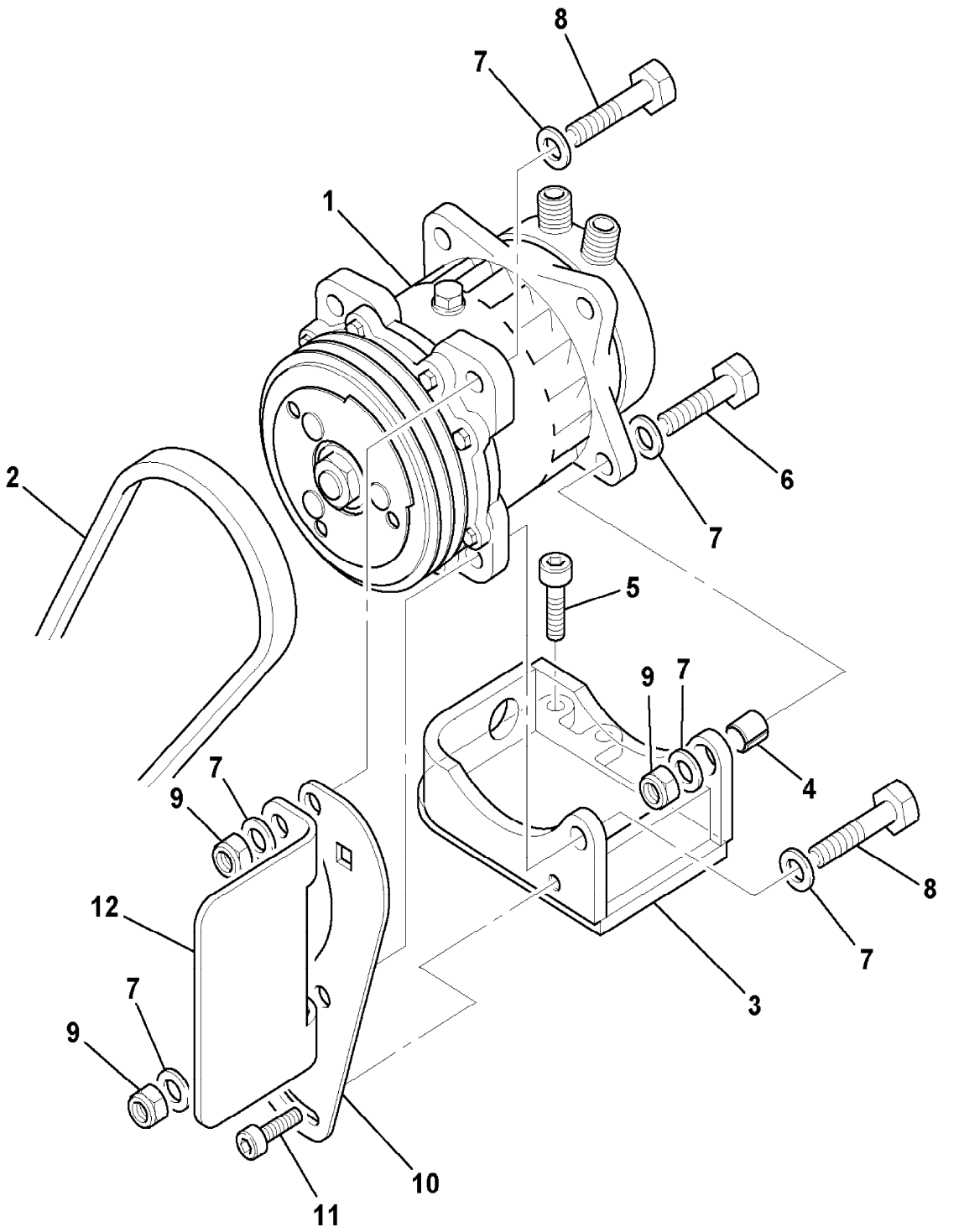

814980

9802/2740 U7-5-1 COMPRESSOR 24VOLT, AIR CONDITIONING

Item	Part no.	Change No.	Description	Remarks	Usage code	Qty
1	123/04999		Compressor, 24v			1
2	331/48057		:Clutch, and coil assembly			1
3	265/00984		:Coil, field			1
4	998/11025		::Kit-sundry parts			1
5	141/00867		:Cover, bearing dust			1

Machine groups

Details

Machine group	From serial no.	To serial no.
.426		
426		

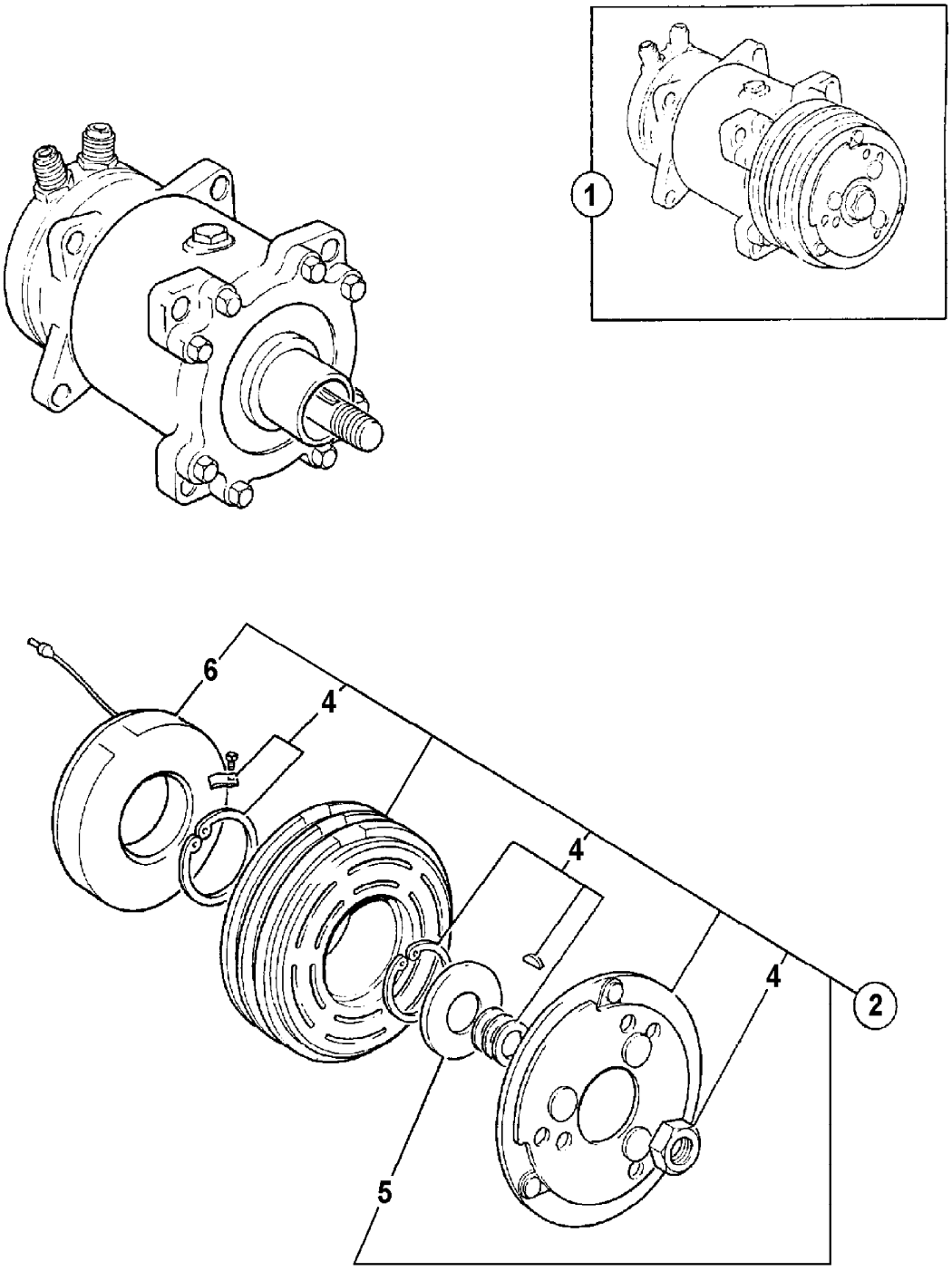

188433