CATERPILLAR®

SEBP3969
November 2003

RUTHZIL TRATOR COMERCIAL DE PEÇAS LTDA 11 97083-6812 ROLANDO

Parts Manual



See "General Information" for New Parts Manual Features.

428D Backhoe Loader

BXC1-Up (Machine)
DSX1-Up (Machine)
CRS1-Up (Engine)

Powered By 3054C Engine
This Parts Manual is also Available in .PDF Fromat on Compact Disc (CD-ROM)-Caterpillar Form No. SERP3969

Product and Dealer Information

Note: For product identification plate locations, see the section “Product Identification Information” in the Operation and Maintenance Manual.

Delivery Date: _____

Product Information

Model: _____

Product Identification Number: _____

Engine Serial Number: _____

Transmission Serial Number: _____

Generator Serial Number: _____

Attachment Serial Numbers: _____

Attachment Information: _____

Customer Equipment Number: _____

Dealer Equipment Number: _____

Dealer Information

Name: _____ Branch: _____

Address: _____

_____

_____

	Dealer Contact	Phone Number	Hours
Sales:	_____	_____	_____
Parts:	_____	_____	_____
Service:	_____	_____	_____

Informations produit et concessionnaire

Nota: Voir l'emplacement de la plaque signalétique du produit au chapitre "Informations produit" du guide d'utilisation et d'entretien.

Date de livraison: _____

Informations produit

Modèle: _____

Numéro d'identification produit: _____

Numéro de série du moteur: _____

Numéro de série de la boîte de vitesses: _____

Numéro de série de l'alternateur: _____

Numéros de série d'équipement: _____

Informations sur l'équipement: _____

Numéro matériel client: _____

Numéro matériel concessionnaire: _____

Informations concessionnaire

Nom: _____ Agence: _____

Adresse: _____

_____

_____

	Contact concessionnaire	Numéro de téléphone	Heures
Ventes:			
Pièces:			
Service:			

Información del Producto/Distribuidor

Nota: Para saber la ubicación de las placas de identificación del producto, ver la sección “Información sobre identificación del producto” en el Manual de Operación y Mantenimiento.

Fecha de entrega: _____

Información del producto

Modelo: _____

Número de identificación del producto: _____

Número de serie del motor: _____

Número de serie de la transmisión: _____

Número de serie del generador: _____

Números de serie de los accesorios: _____

Información sobre los accesorios: _____

Número del equipo del cliente: _____

Número del equipo del distribuidor: _____

Información del distribuidor

Nombre: _____ Sucursal: _____

Dirección: _____

_____

_____

	Comunicación con el distribuidor	Número de teléfono	Horas
Ventas:	_____	_____	_____
Piezas:	_____	_____	_____
Servicio:	_____	_____	_____

Informações Sobre Produto e Revendedor

Nota: Para localizações da placa de identificação do produto, consulte a seção, “Informações Sobre Identificação do Produto” no Manual de Operação e Manutenção.

Data de Entrega: _____

Informações Sobre o Produto

Modelo: _____

Número de Identificação do Produto: _____

Número de Série do Motor: _____

Número de Série da Transmissão: _____

Número de Série do Gerador: _____

Números de Série de Acessórios: _____

Informações Sobre Acessórios: _____

Número do Equipamento do Cliente: _____

Número do Equipamento do Revendedor: _____

Informações Sobre o Revendedor

Nome: _____ Filial: _____

Endereço: _____

_____

_____

	Contato do Revendedor	Telefone	Horas
Vendas:	_____	_____	_____
Peças:	_____	_____	_____
Serviço:	_____	_____	_____

Produkt- und Händlerinformation

Anmerkung: Für die Lage der Produkt-Identnummer und Seriennummern siehe Abschnitt "Produkt-Identinformation" im Betriebs- und Wartungshandbuch.

Lieferdatum: _____

Produkt-Identinformation

Modell: _____

Produkt-Identnummer: _____

Seriennummer des Motors: _____

Seriennummer des Getriebes: _____

Seriennummer des Generators: _____

Seriennummern der Arbeitsgeräte: _____

Arbeitsgeräteinformation: _____

Kundennummer: _____

Händlernummer: _____

Händlerinformation

Name: _____ Niederlassung: _____

Adresse: _____

_____

_____

	Kontaktperson beim Händler	Telefon	Dienststunden
Verkauf:	_____	_____	_____
Ersatzteile:	_____	_____	_____
Service:	_____	_____	_____

MEMORANDA

TABLE OF CONTENTS

Name	Page
GENERAL INFORMATION	A23
REPAIR ALTERNATIVES	A42
SUPPLEMENTAL COOLANT ADDITIVES	A47
MAINTENANCE PARTS	A52
INDEX	A78
MACHINE ARRANGEMENT	1
BACKHOE AR-EXTENDABLE STICK	1
BACKHOE AR-STANDARD STICK	9
BACKHOE AR	10
BACKHOE AR-STANDARD STICK	11
BACKHOE AR	13
BACKHOE AR-STANDARD STICK	14
CHASSIS AR	15
COMMON AR	16
CONVERSION AR-CERTIFICATION	16
ENGINE ARRANGEMENT	20
ENGINE AR	20
ENGINE AR-PRIMARY	22
BASIC ENGINE	24
CAMSHAFT GP	24
COVER GP-VALVE MECHANISM	25
CRANKSHAFT GP	27
CYLINDER BLOCK GP	29
CYLINDER HEAD GP	32
DRIVE GP-FAN	34
FLYWHEEL GP	35
HOUSING GP-FLYWHEEL	36
HOUSING GP-FRONT	37
LIFTING GP-ENGINE	39
MOUNTING GP-ENGINE	40
MOUNTING GP-ENGINE & TMSN	41
PAN GP-OIL	43
PISTON & ROD GP	45
PLUG GP-ENGINE	47
PULLEY GP-CRANKSHAFT	49
VALVE MECHANISM GP	50
LUBRICATION SYSTEM	51
FILLER GP-ENGINE OIL	51
PUMP GP-ENGINE OIL	52
COOLING SYSTEM	53
CONNECTION GP-WATER	53
COOLER GP-FLTR BASE & ENG OIL	54
FAN GP-SUCTION	56
FITTING GP-HEATER & AIR COND	58
LINES GP-POWER TRAIN COOLER	59
PUMP GP-WATER	63
RADIATOR & FAN GP	65
RADIATOR & HYD OIL COOLER GP	67
AIR INLET AND EXHAUST SYSTEM	73
AIR CLEANER GP	73
COVER GP-AIR INLET	76
EXTENSION GP-EXHAUST	77
INDICATOR GP-AIR FILTER CHANGE	78
LINES GP-AIR	80
MUFFLER GP	83
TURBOCHARGER GP	84
FUEL SYSTEM	86
CONTROL GP-GOV & ACCELERATOR	86
FILTER GP-FUEL	88
LINES GP-FUEL	90
PUMP GP-FUEL INJECTION	92
PUMP GP-FUEL PRIMING	98
SEPARATOR GP-WATER	99
TANK & MTG GP-FUEL	100
TANK GP-FUEL	101
ELECTRICAL AND STARTING SYSTEM	103
ALTERNATOR GP-CHARGING	103
BATTERY GP	104
CONTROL GP-POSITION	112
GLOW PLUG GP	113
HEATER GP-JACKET WATER	114
INSTALLATION GP-SECURITY	115
LAMP GP-FLOOD	117
LAMP GP-HEAD & SIGNAL	120
LAMP GP-REGISTRATION PLATE	128
LAMP GP-STOP & TAIL	129
LAMP GP-WARNING BEACON	131
LIGHTING GP-FLOOD	133
LIGHTING GP-ROADING	144
LIGHTING GP-WARNING	161
LIGHTING GP-WARNING BEACON	163
PLUG GP-CONNECTOR	165
STARTING MOTOR GP-ELECTRIC	166
SWITCH GP-PRESSURE	169
SWITCH GP-TEMPERATURE	170
WARNING GP-BACKUP	171
WIRING GP-AIR CONDITIONER	173
WIRING GP-AUTOSHIFT	176
WIRING GP-CAB	178
WIRING GP-CONSOLE	183
WIRING GP-ENGINE	189
WIRING GP-HEATER	193
WIRING GP-KICKOUT & POSITIONER	195
WIRING GP-PLATFORM	196
WIRING GP-POWER RECEPTACLE	202
WIRING GP-REAR	203
WIRING GP-RIDE CONTROL	206

TABLE OF CONTENTS

Name	Page
WIRING GP-SENSOR	214
WIRING GP-STABILIZER ALARM	215
WIRING GP-STEERING	217
POWER TRAIN	218
AXLE GP-DRIVE & STEERING	218
AXLE GP-REAR	220
CONTROL GP-DIFFERENTIAL LOCK	225
CONTROL GP-TRANSMISSION	226
DIFFERENTIAL & BEVEL GEAR GP	227
DIFFERENTIAL GP	229
DRIVE AR-BACKHOE LOADER	230
DRIVE GP-FLEXIBLE COUPLING	231
FILLER GP-POWER TRAIN OIL	232
HOUSING & FLANGE GP-AXLE	234
LOCKOUT GP-FOURTH GEAR	236
MOUNTING GP-AXLE	237
PLANETARY GP-FINAL DRIVE	238
POWER TRAIN AR	239
SHAFT GP-DRIVE	241
TRANSMISSION & MOUNTING GP	245
TRANSMISSION AR-DIRECT DRIVE	247
TRANSMISSION AR-POWER SHIFT	247
TRANSMISSION GP-DIRECT DRIVE	248
TRANSMISSION GP-POWER SHIFT	254
VALVE GP-RELIEF	260
VALVE GP-SOLENOID	261
VALVE GP-TIRE	266
WHEEL & TIRE AR	267
WHEEL & TIRE GP	272
BRAKING SYSTEM	289
BRAKE GP-PARKING	289
CONTROL GP-PARKING BRAKE	290
CONTROL GP-SERVICE BRAKE	292
LEVER GP-HAND CONTROL	295
RESERVOIR GP-BRAKE	296
STEERING SYSTEM	297
CONTROL GP-STEERING	297
KNOB GP-STEERING	299
LINES GP-STEERING	300
PUMP GP-METERING	303
STEERING WHEEL GP	304
VALVE GP-PRIORITY	305
FRAME AND BODY	306
BOX GP-BATTERY	306
BUMPER GP-FRONT	311
COUNTERWEIGHT GP	312
DOOR GP-BATTERY	316
FENDER GP-FRONT	317
FENDER GP-REAR	319
FLOORPLATE GP	320
FRAME GP-LOADER	322
FRAME GP-SLIDING	324
FRAME GP-SWING	326
GUARD GP-DRIVE SHAFT	331
GUARD GP-LIGHTING	332
GUARD GP-LINES	334
HOOD & GUARD GP	336
HOOD GP-ENGINE	338
LINER GP-SOUND SUPPRESSION	341
MOUNTING GP-REGISTRATION	342
REFLECTOR GP	344
SUPPRESSION AR-SOUND	345
HYDRAULIC SYSTEM	346
ACCUMULATOR GP-RIDE CONTROL	346
CONNECTOR GP-VALVE	347
CONTROL AR-RIDE	348
CONTROL GP-HANDLE	350
CONTROL GP-HYDRAULIC HAND	352
CONTROL GP-HYDRAULIC PEDAL	365
CONVERSION GP-HYD HAND CONTROL	369
COUPLING GP	370
COVER & VALVE GP-BANK	371
CYLINDER GP-BACKHOE BUCKET	372
CYLINDER GP-BOOM	376
CYLINDER GP-EXTENDABLE STICK	378
CYLINDER GP-LIFT	381
CYLINDER GP-MULTIPURPOSE BUKT	382
CYLINDER GP-STABILIZER	384
CYLINDER GP-STICK	385
CYLINDER GP-SWING	386
CYLINDER GP-TILT	388
DRAIN GP-HYDRAULIC	390
HYDRAULIC AR	391
KIT-RIDE CONTROL	397
LINES GP-BACKHOE	398
LINES GP-BACKHOE AUXILIARY	402
LINES GP-BOOM	440
LINES GP-BUCKET CYLINDER	441
LINES GP-DRAIN	443
LINES GP-EXTENDABLE STICK	445
LINES GP-LIFT CYLINDER	446
LINES GP-LOAD CONTROL VALVE	451
LINES GP-LOADER AUXILIARY	462
LINES GP-MULTIPURPOSE BUCKET	466
LINES GP-PILOT	474
LINES GP-PUMP	477
LINES GP-RETURN	486
LINES GP-RIDE CONTROL	487
LINES GP-SIDESHIFT LOCK	489
LINES GP-STABILIZER	497
LINES GP-STICK	501
LINES GP-SWING	509
LINES GP-TILT CYLINDER	519

TABLE OF CONTENTS

Name	Page
LOCK GP-HYDRAULIC FOOT CONTROL	523
LOCK GP-HYDRAULIC HAND CONTROL	524
MOUNTING GP-BANK VALVE	525
MOUNTING GP-CYLINDER	527
MOUNTING GP-HYDRAULIC PUMP	528
MOUNTING GP-LINES	529
PUMP GP-PISTON	533
ROTATING GP-PUMP	536
SHAFT GP-POWER TAKE-OFF	537
STABILIZER AR	538
TANK GP-HYDRAULIC	539
VALVE & MTG GP-BANK	541
VALVE AR-BANK 4	542
VALVE AR-BANK 5	542
VALVE AR-BANK 6	543
VALVE GP-AUXILIARY	544
VALVE GP-BANK 2	547
VALVE GP-BANK 3	549
VALVE GP-BANK 4	551
VALVE GP-BANK 5	553
VALVE GP-BANK 6	556
VALVE GP-CHECK	558
VALVE GP-CONTROL	559
VALVE GP-LOAD CONTROL	579
VALVE GP-PUMP CONTROL	581
VALVE GP-SOLENOID	584
IMPLEMENTS	586
ARM GP-LIFT	586
BOOM GP	588
BRACKET GP-TRANSPORT	590
HOUSING AS-EXTENDABLE STICK	592
LINK GP-SHIPPING	593
LINKAGE GP-BACKHOE BUCKET	594
LOADER AR	597
LOCK GP-STABILIZER LEG	598
LOCK GP-TRANSPORT	599
MOUNTING GP-STICK	604
PAD GP-STABILIZER	605
STABILIZER GP-BACKHOE	606
STICK GP-EXTENDABLE	609
STICK GP-HOE	613
WORK TOOLS	615
BUCKET AR-MULTIPURPOSE	615
BUCKET AS-GENERAL PURPOSE	621
BUCKET GP-HOE	625
BUCKET GP-MULTIPURPOSE	666
COUPLER GP-QUICK	677
EDGE GP-CUTTING	683
FORK AR	685
FORK GP	686
GUARD GP-BUCKET	687
MOUNTING GP-BUCKET	689
MOUNTING GP-FORK	693
SHIPPING AR-BUCKET	694
STOP GP-BUCKET	695
TOOTH GP-UNI	697
OPERATOR STATION	698
AIR CONDITIONER & MOUNTING GP	698
AIR CONDITIONER GP	700
ARMREST GP	702
CAB AR	703
CAB AR-ENCLOSED ROPS	705
CAB GP	707
CANOPY AR	711
CANOPY GP-OPEN ROPS	712
COMPARTMENT GP-LITERATURE	713
COMPRESSOR GP-REFRIGERANT	714
CONDENSER & MTG GP-REFRIGERANT	716
CONSOLE GP-FRONT	717
CONSOLE GP-OPERATOR	719
CONSOLE GP-SIDE	721
COVER GP-CONSOLE	727
COVER GP-FIREWALL	728
COVER GP-POST	730
DOOR GP-LH	731
DOOR GP-RH	733
DUCT GP-AIR	735
FLOOR MAT GP	739
HEATER & MTG GP-CAB	741
HEATER GP-CAB	743
HORN GP-ELECTRIC	745
LEVER GP-GOVERNOR CONTROL	746
LINES GP-HEATER	747
LINES GP-HEATER & AIR COND	749
MIRROR GP-REAR VIEW	751
MODULE GP-WARNING INDICATOR	753
MOTOR GP-WINDOW WIPER	755
MOUNTING GP-INSTRUMENT PANEL	756
PANEL GP-INSTRUMENT	760
PEDAL GP-GOVERNOR	761
SEAT BELT GP	762
SEAT GP	763
SEAT GP-SUSPENSION	770
SUPPRESSION GP-SOUND	776
SUSPENSION GP-SEAT	778
TACHOMETER GP-ELECTRIC	781
TRIM GP-CAB	783
VISOR GP-CAB	784
WASHER GP-WINDOW	785
WINDOW GP-CAB	787
WINDOW GP-DOOR	793
WIPER GP-WINDOW	797

TABLE OF CONTENTS

Name	Page	Name	Page
SERVICE EQUIPMENT AND SUPPLIES	799		
FILM GP	799		
INSTALLATION AR-WHEEL CHOCK	801		
LOCK GP-VANDALISM	802		
PLATE & FILM GP	804		
PLATE AS-SIDE REFLECTIVE	809		
PART NUMBER INDEX	B1		

TABLE DES MATIÈRES

Désignation	Page
GÉNÉRALITÉS	A26
OPTIONS DE RÉPARATION	A43
ADDITIFS POUR LIQUIDE DE REFROIDISSEMENT	A48
PIÈCES DE RECHANGE	A56
INDEX	A90
VERSION DE MACHINE	1
PELLE RÉTRO - BRAS TÉLESCOPIQUE (VERSION)	1
PELLE RÉTRO - BRAS NORMAL (VERSION)	9
PELLE RÉTRO (VERSION)	10
PELLE RÉTRO - BRAS NORMAL (VERSION)	11
PELLE RÉTRO (VERSION)	13
PELLE RÉTRO - BRAS NORMAL (VERSION)	14
VERSION DE CHASSIS	15
VERSION NORMALE	16
VERSION DE TRANSFORMATION - HOMOLOGATION	16
VERSION DE MOTEUR	20
MOTEUR (VERSION)	20
MOTEUR (VERSION PRINCIPALE)	22
MOTEUR STANDARD	24
ARBRE A CAMES (ASS)	24
CACHE-SOUPAPES (ASS)	25
VILEBREQUIN (ASS)	27
BLOC-CYLINDRES (ASS)	29
CULASSE (ASS)	32
ENTRAÎNEMENT DE VENTILATEUR (ASS)	34
VOLANT MOTEUR (ASS)	35
CARTER DE VOLANT (ASS)	36
CARTER AV (ASS)	37
OEILLETONS DE LEVAGE MOTEUR (ASS)	39
MONTAGE DE MOTEUR (ASS)	40
MONTAGE DE MOTEUR ET BOÎTE (ASS)	41
HUILE MOTEUR - CARTER (ASS)	43
PISTON ET BIELLE (ASS)	45
BOUCHON DE MOTEUR (ASS)	47
VILEBREQUIN - POULIE (ASS)	49
CULBUTERIE (ASS)	50
CIRCUIT DE GRAISSAGE	51
BOUCHON DE REMPLISSAGE D'HUILE MOTEUR (ASS)	51
POMPE A HUILE MOTEUR (ASS)	52
CIRCUIT DE REFROIDISSEMENT	53
RACCORD D'EAU (ASS)	53
SUPPORT DE FILTRE ET REFROIDISSEUR D'HUILE MOTEUR	54
VENTILATEUR ASPIRANT (ASS)	56
RACCORD-RÉCHAUFFEUR ET CLIMATISEUR (ASS)	58
CANALISATIONS DE REFROIDIS. DE TRANSMISSION	59
POMPE A EAU (ASS)	63
RADIATEUR ET VENTILATEUR (ASS)	65
RADIATEUR ET REFROIDISSEUR D'HUILE HYDRAULIQUE (ASS)	67
CIRCUIT D'ADMISSION D'AIR ET D'ÉCHAPPEMENT	73
FILTRE A AIR (ASS)	73
COUVERCLE DE COLLECTEUR D'ADMISSION (ASS)	76
RALLONGE D'ÉCHAPPEMENT (ASS)	77
INDICATEUR DE COLMATAGE DE FILTRE À AIR (ASS)	78
CANALISATIONS D'AIR (ASS)	80
SILENCIEUX (ASS)	83
TURBOCOMPRESSEUR (ASS)	84
CIRCUIT DE CARBURANT	86
COMMANDE DE RÉGULATEUR ET D'ACCÉLÉRATEUR (ASS)	86
FILTRE A CARBURANT (ASS)	88
CANALISATIONS DE CARBURANT (ASS)	90
POMPE D'INJECTION DE CARBURANT (ASS)	92
POMPE D'AMORÇAGE DE CARBURANT (ASS)	98
SÉPARATEUR D'EAU (ASS)	99
RÉSERVOIR DE CARBURANT ET MONTAGE (ASS)	100
RÉSERVOIR DE CARBURANT (ASS)	101
CIRCUIT ÉLECTRIQUE ET DE DÉMARRAGE	103
ALTERNATEUR DE CHARGE (ASS)	103
BATTERIE (ASS)	104
COMMANDE DE POSITION (ASS)	112
BOUGIE DE PRÉCHAUFFAGE (ASS)	113

* TRADUCTION NON DISPONIBLE AU MOMENT DE LA PUBLICATION

TABLE DES MATIÈRES

Désignation	Page
EAU DES CHEMISES - RECHAUFFEUR (ASS)	114
MONTAGE-SÉCURITÉ (ASS)	115
LAMPE - PHARE (ASS)	117
LAMPE - PHARE ET CLIGNOTANT	120
LAMPE-PLAQUE D'IMMATRICULATION (ASS)	128
FEUX ARRIÈRE ET FEUX D'ARRÊT	129
LAMPE - GYROPHARE (ASS)	131
ÉCLAIRAGE - PROJECTEURS (ASS)	133
ÉCLAIRAGE - FEUX DE ROUTE (ASS)	144
ÉCLAIRAGE - AVERTISSEUR (ASS)	161
ÉCLAIRAGE - GYROPHARE (ASS)	163
PRISE (ASS)	165
DÉMARREUR ÉLECTRIQUE (ASS)	166
MANOCONTACT	169
BOUTON DE TEMPÉRATURE	170
AVERTISSEUR DE RECUL (ASS)	171
CABLAGE - CLIMATISEUR (ASS)	173
CABLAGE DE CHANGEMENT DE VITESSES AUTOMATIQUE (ASS)	176
CABLAGE DE CABINE (ASS)	178
CABLAGE DE CONSOLE (ASS)	183
CABLAGE DE MOTEUR (ASS)	189
CABLAGE DU CHAUFFAGE DE CABINE (ASS)	193
CÂBLAGE DE PRISE DE FORCE ET LIMITEUR (ASS)	195
CABLAGE - PLATE-FORME (ASS)	196
CABLAGE DE PRISE DE FORCE	202
CABLAGE AR (ASS)	203
CÂBLAGE DE COMMANDE DE TRANSLATION (ASS)	206
CABLAGE - CAPTEUR (ASS)	214
CABLAGE D'AVERTISSEUR DE STABILISATEUR (ASS)	215
CABLAGE DE DIRECTION (ASS)	217
TRANSMISSION	218
ESSIEU MOTEUR ET DIRECTEUR (ASS)	218
ESSIEU AR (ASS)	220
COMMANDE DE DIFFÉRENTIEL - VERROUILLAGE (ASS)	225
COMMANDE DE BOITE DE VITESSES (ASS)	226
COURONNE ET DIFFERENTIEL (ASS)	227
DIFFERENTIEL (ASS)	229
VERSION D'ENTRAÎNEMENT DE CHARGEUSE-PELLETEUSE	230
ENTRAÎNEMENT D'ACCOUPLEMENT FLEXIBLE (ASS)	231
GOULOTTE DE REMPLISSAGE D'HUILE DE TRANSMISSION	232
CARTER ET BRIDE D'ESSIEU (ASS)	234
VERROULLAGE - QUATRIEME VITESSE (ASS)	236
MONTAGE D'ESSIEU (ASS)	237
TRAINS PLANÉTAIRES-RÉDUCTEURS (ASS)	238
TRANSMISSION (VERSION)	239
ARBRE D'ENTRAÎNEMENT (ASS)	241
BOITE DE VITESSES ET MONTAGE (ASS)	245
BOITE MECANIQUE (VERSION)	247
BOÎTE POWER SHIFT (VERSION)	247
BOÎTE MÉCANIQUE (ASS)	248
BOÎTE POWER SHIFT (ASS)	254
CLAPET DE DECHARGE (ASS)	260
SOUPAPE - SOLÉNOÏDE (ASS)	261
PNEU - GROUPE DE VALVE	266
ROUE ET PNEU (VERSION)	267
ROUE ET PNEU (ASS)	272
CIRCUIT DE FREINAGE	289
FREIN DE STATIONNEMENT (ASS)	289
COMMANDE DE FREIN DE STATIONNEMENT (ASS)	290
FREIN DE MANOEUVRE - COMMANDE (ASS)	292
LEVIER DE COMMANDE MANUELLE	295
RÉSERVOIR-FREIN (ASS)	296
CIRCUIT DE DIRECTION	297
COMMANDE DE DIRECTION (ASS)	297
BOUTON DE DIRECTION (ASS)	299
CANALISATIONS DE DIRECTION (ASS)	300
POMPE DE REGULARISATION DE DEBIT (ASS)	303
VOLANT DE DIRECTION (ASS)	304
SOUPAPE DE PRIORITE (ASS)	305
CHÂSSIS ET BENNE	306
COMPARTIMENT DE BATTERIE (ASS)	306
PARE-CHOCS AV (ASS)	311
CONTREPOIDS (ASS)	312
PORTE DE BATTERIE (ASS)	316
GARDE-BOUE AV (ASS)	317
GARDE-BOUE AR (ASS)	319
TÔLE DE PLANCHER (ASS)	320
BATI - CHARGEUSE (ASS)	322
BATI - DEPORT LATERAL (ASS)	324
BÂTI D'ORIENTATION (ASS)	326

* TRADUCTION NON DISPONIBLE AU MOMENT DE LA PUBLICATION

TABLE DES MATIÈRES

Désignation	Page
BLINDAGE D'ARBRE DE TRANSMISSION (ASS)	331
PROTECTION - ÉCLAIRAGE (ASS)	332
PROTECTEUR DES CANALISATIONS (ASS)	334
CAPOT ET PROTECTION (ASS)	336
CAPOT DU MOTEUR (ASS)	338
REVÊTEMENT D'INSONORISATION (ASS)	341
MONTAGE - IMMATRICULATION (ASS)	342
RÉFLECTEUR (ASS)	344
INSONORISATION (VERSION)	345
CIRCUIT HYDRAULIQUE	346
ACCUMULATEUR - COMMANDE DE TRANSLATION (ASS)	346
RACCORD DE SOUPAPE (ASS)	347
COMMANDE DE TRANSLATION (VERSION)	348
COMMANDE DE POIGNÉE (ASS)	350
COMMANDE HYDRAULIQUE MANUELLE (ASS)	352
COMMANDE HYDRAULIQUE DE PÉDALE (ASS)	365
ENSEMBLE DE TRANSFORM.-COMMANDE MANUELLE HYDR.	369
ACCOUPLEMENT (ASS)	370
CACHE-SOUPAPES ET RANGÉE DE SOUPAPES (ASS)	371
VÉRIN DE GODET RÉTRO (ASS)	372
VERIN DE FLECHE (ASS)	376
VÉRIN DU BRAS TELESCOPIQUE (ASS)	378
VÉRIN DE LEVAGE (ASS)	381
VÉRIN - GODET TOUS-TRAVAUX (ASS)	382
VERIN DE STABILISATEUR (ASS)	384
VERIN DE BRAS (ASS)	385
VÉRIN D'ORIENTATION (ASS)	386
VÉRIN D'INCLINAISON (ASS)	388
VIDANGE - HYDRAULIQUE (ASS)	390
VERSION HYDRAULIQUE	391
KIT - COMMANDE DE TRANSLATION	397
CANALISATIONS DE PELLE RÉTRO (ASS)	398
CANALISATIONS SECONDAIRES DE PELLE RÉTRO (ASS)	402
FLECHE - CANALISATIONS	440
CANALISATIONS DE VÉRIN DE GODET (ASS)	441
CANALISATIONS DE VIDANGE (ASS)	443
CANALISATIONS DU BRAS TELESCOPIQUE (ASS)	445
CANALISATIONS DE VÉRIN DE LEVAGE (ASS)	446
CANALISATIONS-VALVE DE CONTROLE DE CHARGE	451
CANALISATIONS-CHARGEUSE AUXILIAIRE (ASS)	462
CANALISATIONS - GODET TOUS-TRAVAUX (ASS)	466
CANALISATIONS A COMMANDE PILOTE (ASS)	474
CANALISATIONS DE POMPE (ASS)	477
*LINES GP-RETURN	486
CANALISATIONS DE COMMANDE DE MARCHE	487
CANALISATIONS DE VERROUILLAGE DE DEPORT LATERALE	489
CANALISATIONS DE STABILISATEUR (ASS)	497
CANALISATIONS DE BRAS (ASS)	501
CANALISATIONS D'ORIENTATION (ASS)	509
CANALISATIONS DU VÉRIN D'INCLINAISON (ASS)	519
VERROUILLAGE DE COMMANDE HYDRAULIQUE À PIED (ASS)	523
VERROUILLAGE DE COMMANDE MANUELLE HYDRAUL. (ASS)	524
MONTAGE-DISTRIBUTEUR (ASS)	525
MONTAGE DE VÉRIN (ASS)	527
MONTAGE - POMPE HYDRAULIQUE (ASS)	528
MONTAGE DE CANALISATIONS (ASS)	529
POMPE A PISTONS (ASS)	533
GROUPE DE ROTATION DE POMPE	536
ARBRE DE PRISE DE FORCE (ASS)	537
STABILISATEUR (VERSION)	538
RÉSERVOIR HYDRAULIQUE (ASS)	539
DISTRIBUTEURS ET MONTAGE (ASS)	541
DISTRIBUTEUR 4 ÉLÉMENTS (VERSION)	542
DISTRIBUTEUR 5 ÉLÉMENTS (VERSION)	542
DISTRIBUTEUR 6 ÉLÉMENTS (VERSION)	543
DISTRIBUTEUR HYDRAULIQUE AUXILIAIRE (ASS)	544
DISTRIBUTEUR DOUBLE ÉLÉMENT (ASS)	547
DISTRIBUTEUR TRIPLE ÉLÉMENT (ASS)	549

* TRADUCTION NON DISPONIBLE AU MOMENT DE LA PUBLICATION

TABLE DES MATIÈRES

Désignation	Page
DISTRIBUTEUR 4 ÉLÉMENTS (ASS)	551
DISTRIBUTEUR 5 ÉLÉMENTS (ASS)	553
DISTRIBUTEUR 6 ÉLÉMENTS (ASS)	556
*VALVE GP-CHECK	558
DISTRIBUTEUR (ASS)	559
DISTRIBUTEUR DE CHARGE (ASS)	579
*VALVE GP-PUMP CONTROL	581
SOUPAPE - SOLÉNOÏDE (ASS)	584
ÉQUIPEMENTS	586
BRAS DE LEVAGE (ASS)	586
FLECHE (ASS)	588
*BOOM GP	589
SUPPORT D'EXPÉDITION (ASS)	590
CARTER DE BRAS TÉLESCOPIQUE (ENS)	592
LIAISON-EXPÉDITION (ASS)	593
TIMONERIE DE GODET RÉTRO (ASS)	594
CHARGEUSE (VERSION)	597
VERROUILLAGE DE STABILISATEUR (ASS)	598
VERROUILLAGE POUR L'EXPÉDITION (ASS)	599
MONTAGE DE BRAS (ASS)	604
SEMELLE DE STABILISATEUR	605
PELLE RÉTRO - STABILISATEUR (ASS)	606
BRAS TÉLESCOPIQUE (ASS)	609
BRAS DE PELLE RETRO (ASS)	613
OUTILS DE TRAVAIL	615
GODET TOUS-TRAVAUX (VERSION)	615
*BUCKET AR-MULTIPURPOSE	620
GODET NORMAL (ENS)	621
GODET RETRO (ASS)	625
GODET TOUS-TRAVAUX (ASS)	666
COUPLEUR EXPRESS (ASS)	677
LAME DE COUPE (ASS)	683
FOURCHE (VERSION)	685
FOURCHE (ASS)	686
PROTECTION DE GODET (ASS)	687
GODET - MONTAGE (ASS)	689
MONTAGE FOURCHE (ASS)	693
GODET - VERSION D'EXPÉDITION	694
ARRÊT-GODET (ASS)	695
DENT MONOBLOC (ASS)	697
POSTE DE CONDUITE	698
CLIMATISEUR ET MONTAGE (ASS)	698
CLIMATISEUR (ASS)	700
ACCOUDOIR (ASS)	702
CABINE (VERSION)	703
CABINE ROPS FERMÉE (VERSION)	705
CABINE (ASS)	707
TOIT (VERSION)	711
TOIT-ROPS OUVERT (ASS)	712
POCHE A DOCUMENTS (ASS)	713
COMPRESSEUR DE REFRIGERANT (ASS)	714
CONDENSATEUR ET MONTAGE (RÉFRIGÉRANT)	716
CONSOLE AV (ASS)	717
CONSOLE DE CONDUITE (ASS)	719
CONSOLE LATÉRALE (ASS)	721
COUVERCLE DE LA CONSOLE (ASS)	727
COUVERCLE-CLOISON PARE-FEU (ENS)	728
COUVERCLE (ASS) MONTANT	730
PORTIERE GAUCHE (ASS)	731
PORTIERE DROITE (ASS)	733
GAINE D'AIR (ASS)	735
TAPIS DU PLANCHER (ASS)	739
CHAUFFAGE ET MONTAGE - CABINE (ASS)	741
CHAUFFAGE DE CABINE (ASS)	743
KLAXON ÉLECTRIQUE (ASS)	745
LEVIER DE COMMANDE DE REGULATEUR (ASS)	746
CANALISATIONS DE CHAUFFAGE (ASS)	747
CANALISATIONS-RÉCHAUFFEUR ET CLIMATISEUR (ASS)	749
RÉTROVISEUR (ASS)	751
MODULE - TÉMOIN (ASS)	753
MOTEUR D'ESSUIE-GLACE (ASS)	755
MONTAGE DU TABLEAU DE BORD (ASS)	756
TABLEAU DE BORD (ASS)	760
RÉGULATEUR - PÉDALE (ASS)	761
CEINTURE DE SECURITE (ASS)	762
SIÈGE (ASS)	763
SIÈGE AVEC SUSPENSION (ASS)	770
INSONORISATION (ASS)	776
SIÈGE AVEC SUSPENSION (ASS)	778
COMPTE-TOURS ÉLECTRIQUE (ASS)	781
GARNITURE POUR CABINE (ASS)	783
RETROVISEUR - CABINE (ASS)	784
LAVE-GLACE - VITRE (ASS)	785
VITRE DE CABINE (ASS)	787
GLACE DE PORTIÈRE (ASS)	793
ESSUIE-GLACE (ASS)	797
MATÉRIEL ET FOURNITURES D'ENTRETIEN	799
PLAQUE SIGNALÉTIQUE (ASS)	799

* TRADUCTION NON DISPONIBLE AU MOMENT DE LA PUBLICATION

TABLE DES MATIÈRES

Désignation	Page	Désignation	Page
MONTAGE DE CALE DE ROUE (VERSION)	801		
VERROUILLAGE ANTI-VANDALISME (ASS)	802		
PLAQUES SIGNALETIQUES ET AUTOCOLLANTS (ASS)	804		
PLAQUE LATERALE RELECTRICE (ENS)	809		
INDEX DE NUMÉROS DE PIÈCES	B1		

* TRADUCTION NON DISPONIBLE AU MOMENT DE LA PUBLICATION

CONTENIDO

Nombre	Página
INFORMACIÓN GENERAL	A30
ALTERNATIVAS DE REPARACIÓN	A44
ADITIVOS DE REFRIGERANTE SUPLEMENTARIOS	A49
PIEZAS DE MANTENIMIENTO	A62
INDICE	A102
CONFIGURACIÓN DE MÁQUINA	1
BRAZO EXTENDIBLE DE RETROEXCAVADOR (CONFIG)	1
BRAZO ESTÁNDAR DE RETROEXCAVADOR (CONFIG)	9
RETROEXCAVADOR (CONFIG)	10
BRAZO ESTÁNDAR DE RETROEXCAVADOR (CONFIG)	11
RETROEXCAVADOR (CONFIG)	13
BRAZO ESTÁNDAR DE RETROEXCAVADOR (CONFIG)	14
CHASIS (CONFIG)	15
CONFIGURACIÓN COMÚN	16
CONFIGURACIÓN DE TRANSFORMACIÓN PARA CERTIFICACIÓN	16
CONFIGURACIÓN DE MOTOR	20
CONFIGURACIÓN DE MOTORES	20
MOTOR PRIMARIO (CONFIG)	22
MOTOR BÁSICO	24
ÁRBOL DE LEVAS (GR)	24
TAPA DEL MECANISMO DE VÁLVULAS (GR)	25
CIGÜEÑAL (GR)	27
BLOQUE MOTOR (GR)	29
CULATA DE CILINDROS (GR)	32
IMPULSOR DE VENTILADOR (GR)	34
VOLANTE (GR)	35
VOLANTE - CAJA DE (GR)	36
CAJA DELANTERA (GR)	37
CÁNCAMOS DE LEVANTAMIENTO DEL MOTOR (GR)	39
MONTAJE DEL MOTOR (GR)	40
MONTAJE DEL MOTOR Y LA TRANSMISIÓN (GR)	41
CÁRTER - COLECTOR DEL (GR)	43
PISTÓN Y BIELA (GR)	45
TAPÓN DEL MOTOR (GR)	47
CIGÜEÑAL - POLEA DE (GR)	49
MECANISMO DE VÁLVULAS (GR)	50
SISTEMA DE LUBRICACIÓN	51
TUBO DE LLENADO DE ACEITE (GR)	51
BOMBA DE ACEITE DEL MOTOR (GR)	52
SISTEMA DE ENFRIAMIENTO	53
AGUA - CONEXIÓN DE (GR)	53
ENFRIADOR DE ACEITE DEL MOTOR Y BASE DEL FILTRO	54
SUCCIÓN - VENTILADOR DE (GR)	56
CONEXION DE CALENTADOR Y ACOND. DE AIRE (GR)	58
TUBERÍAS DEL ENFRIADOR DEL TREN DE FUERZA (GR)	59
BOMBA DE AGUA (GR)	63
RADIADOR Y VENTILADOR (GR)	65
RADIADOR Y ENFRIADOR DE ACEITE HIDRÁULICO (GR)	67
SISTEMA DE ADMISIÓN Y ESCAPE	73
FILTRO DE AIRE (GR)	73
TAPA DE ADMISIÓN DE AIRE (GR)	76
EXTENSIÓN DEL ESCAPE (GR)	77
INDICADOR DE CAMBIO DE FILTRO DE ACEITE (GR)	78
AIRE - TUBERÍAS DE (GR)	80
SILENCIADOR (GR)	83
TURBOCOMPRESOR (GR)	84
SISTEMA DE COMBUSTIBLE	86
CONTROL DEL REGULADOR Y ACELERADOR (GR)	86
FILTRO DE COMBUSTIBLE (GR)	88
TUBERÍAS DE COMBUSTIBLE (GR)	90
BOMBA DE INYECCIÓN DE COMBUSTIBLE (GR)	92
BOMBA DE CEBADO DE COMBUSTIBLE (GR)	98
SEPARADOR DE AGUA (GR)	99
TANQUE DE COMBUSTIBLE Y GRUPO DE MONTAJE	100
COMBUSTIBLE - TANQUE DE (GR)	101
SISTEMA ELÉCTRICO Y DE ARRANQUE	103
CARGA - ALTERNADOR DE (GR)	103
BATERÍA (GR)	104
CONTROL DE POSICION (GR)	112
BUJÍA INCANDESCENTE (GR)	113
AGUA DE LAS CAMISAS - CALENTADOR DEL (GR)	114
INSTALACION DE SEGURIDAD (GR)	115
REFLECTOR (GR)	117

* NO HAY TRADUCCION DISPONIBLE EN EL MOMENTO DE LA IMPRESION

CONTENIDO

Nombre	Página
LÁMPARA DE LUZ DELANTERA Y DE SEÑAL (GR)	120
LAMPARA DE PLACA DE REGISTRO (GR)	128
LUCES DE PARADA Y COLA (GR)	129
LÁMPARA DE BALIZA DE ADVERTENCIA (GR)	131
LUCES DE REFLECTOR (GR)	133
LUCES DE DESPLAZAMIENTO (GR)	144
LUCES DE ADVERTENCIA (GR)	161
LUZ DE BALIZA (GR)	163
ENCHUFE DE CONECTOR (GR)	165
MOTOR DE ARRANQUE ELÉCTRICO (GR)	166
INTERRUPTOR DE PRESIÓN (GR)	169
INTERRUPTOR PARA LA TEMPERATURA (GR)	170
RETROCESO - ALARMA DE (GR)	171
CABLES DEL ACONDICIONADOR DE AIRE (GR)	173
CABLES DE CAMBIO AUTOMATICO (GR)	176
CABLES DE LA CABINA (GR)	178
CABLES DE LA CONSOLA (GR)	183
CABLES DEL MOTOR (GR)	189
CABLES DE CALEFACCIÓN (GR)	193
CABLES DEL POSICIONADOR Y DE DESCONEXIÓN (GR)	195
CABLES DE LA PLATAFORMA (GR)	196
CABLES DEL RECEPTÁCULO DE FUERZA (GR)	202
CABLES POSTERIORES (GR)	203
CABLES DE CONTROL DE AMORTIGUACIÓN (GR)	206
CABLES DE SENSOR (GR)	214
CABLES DE LA ALARMA DEL ESTABILIZADOR (GR)	215
CABLES DE LA DIRECCIÓN (GR)	217
TREN DE FUERZA	218
EJE DE IMPULSIÓN Y DE DIRECCIÓN (GR)	218
EJE TRASERO (GR)	220
CONTROL DE TRABA DEL DIFERENCIAL (GR)	225
CONTROL DE LA TRANSMISIÓN (GR)	226
DIFERENCIAL Y CORONA (GR)	227
DIFERENCIAL (GR)	229
CONFIG. DEL MANDO, CARGADOR RETROEXCAVADORA	230
ACOPLAMIENTO FLEXIBLE - MANDO DE (GR)	231
TUBO DE LLENADO DE ACEITE DE LA TRANSMISIÓN (GR)	232
GRUPO DE PESTAÑA Y RESINTO, EJE	234
TRABA DE CUARTA VELOCIDAD (GR)	236
EJE - GRUPO DE MONTAJE	237
GRUPO PLANETARIO, MANDO FINAL	238
TREN DE FUERZA (CONFIG)	239
EJE DE MANDO (GR)	241
MONTAJE Y TRANSMISIÓN(GR)	245
TRANSMISION DIRECTA (CONFIG)	247
SERVOTRANSMISIÓN (CONFIG)	247
TRANSMISIÓN DIRECTA (GR)	248
SERVOTRANSMISIÓN (GR)	254
VÁLVULA DE ALIVIO (GR)	260
VÁLVULA DE SOLENOIDE (GR)	261
VÁLVULA DEL NEUMÁTICO (GR)	266
RUEDA Y LLANTA (CONFIG)	267
RUEDA Y NEUMÁTICO (GR)	272
SISTEMA DE FRENOS	289
FRENO DE ESTACIONAMIENTO (GR)	289
CONTROL DEL FRENO DE ESTACIONAMIENTO	290
FRENO DE SERVICIO - CONTROL (GR)	292
CONTROL MANUAL DE PALANCA (GR)	295
TANQUE DEL SISTEMA DE FRENOS (GR)	296
SISTEMA DE DIRECCIÓN	297
CONTROL DE DIRECCIÓN (GR)	297
GRUPO PERILLA, DIRECCIÓN	299
TUBERÍAS DE DIRECCIÓN (GR)	300
DOSIFICACIÓN - BOMBA DE (GR)	303
VOLANTE DE DIRECCIÓN (GR)	304
PRIORIDAD - VÁLVULA DE (GR)	305
BASTIDOR Y CAJA	306
CAJA DE BATERÍA	306
PARAGOLPES DELANTERO	311
CONTRAPESO (GR)	312
TAPA DE LA BATERÍA (GR)	316
GUARDABARROS DELANTERO (GR)	317
GUARDABARROS TRASERO (GR)	319
PLANCHA DEL PISO (GR)	320
BASTIDOR DEL CARGADOR (GR)	322
BASTIDOR DE DESPLAZAMIENTO LATERAL (GR)	324
BASTIDOR DE ROTACIÓN (GR)	326
PROTECTOR DEL EJE IMPULSOR (GR)	331

* NO HAY TRADUCCION DISPONIBLE EN EL MOMENTO DE LA IMPRESION

CONTENIDO

Nombre	Página
PROTECTOR DE LAS LUCES (GR)	332
PROTECTOR DE LAS TUBERÍAS (GR)	334
CAPO Y PROTECTOR (GR)	336
CAPÓ DEL MOTOR (GR)	338
REVESTIMIENTO DE INSONORIZACION (GR)	341
MONTAJE-REGISTRO (GR)	342
REFLECTOR (GR)	344
INSONORIZADOR (CONFIG)	345
SISTEMA HIDRÁULICO	346
ACUMULADOR DE CONTROL DE AMORTIGUACION (GR)	346
CONECTOR DE VALVULA (GR)	347
CONTROL DE AMORTIGUACIÓN (CONFIG)	348
CONTROL DE MANIJA (GR)	350
CONTROL HIDRÁULICO MANUAL (GR)	352
GRUPO DE CONTROL DE PEDAL HIDRÁULICO	365
CONVERSION DE CONTROL DE MANO HIDRAULICO (GR)	369
ACOPLAMIENTO (GR)	370
TAPA Y GRUPO DE VALVULAS (GR)	371
CILINDRO DE CUCHARÓN RETROEXCAVADOR (GR)	372
CILINDRO DE LA PLUMA (GR)	376
CILINDRO DEL BRAZO EXTENSIBLE (GR)	378
CILINDRO DE LEVANTAMIENTO (GR)	381
CILINDRO DE CUCHARÓN DE USO MÚLTIPLE (GR)	382
CILINDRO ESTABILIZADOR (GR)	384
CILINDRO DEL BRAZO (GR)	385
CILINDRO DE ROTACIÓN (GR)	386
INCLINACIÓN HORIZONTAL - CILINDRO DE (GR)	388
DRENAJE HIDRÁULICO (GR)	390
HIDRÁULICA (CONFIG)	391
JUEGO DE CONTROL DE OPERACION	397
TUBERIAS DE LA RETROEXCAVADORA (GR)	398
TUBERIAS AUXILIARES-RETROEXCAVADORA (GR)	402
TUBERÍAS DE LA PLUMA (GR)	440
TUBERÍAS DEL CILINDRO DEL CUCHARÓN (GR)	441
TUBERÍAS DE DRENAJE (GR)	443
TUBERÍAS DE LA PALANCA EXTENDIBLE (GR)	445
CILINDRO DE LEVANTAMIENTO - TUBERÍAS DEL (GR)	446
TUBERIAS DE VALVULA DE CONTROL DE CARGA (GR)	451
TUBERIAS DE AUXILIAR DE CARGADOR (GR)	462
TUBERÍAS DEL CUCHARÓN DE USO MÚLTIPLE	466
TUBERÍAS CON SERVOMANDO (GR)	474
BOMBA - TUBERÍAS DE (GR)	477
*LINES GP-RETURN	486
TUBERIAS DE CONTROL DE LA SUSPENSIÓN (GR)	487
TUBERÍAS DE TRABA DEL DESPLAZAMIENTO LATERAL (GR)	489
TUBERÍAS DEL ESTABILIZADOR (GR)	497
TUBERÍAS DEL BRAZO (GR)	501
TUBERÍAS DE GIRO (GR)	509
TUBERÍAS DEL CILINDRO DE INCLINACIÓN (GR)	519
TRABA DEL CONTROL HIDRÁULICO DEL PEDAL	523
TRABA DE CONTROL HIDRÁULICO MANUAL (GR)	524
MONTAJE DE BANCADA DE VALVULA (GR)	525
MONTAJE DE CILINDRO (GR)	527
MONTAJE DE LA BOMBA HIDRÁULICA (GR)	528
MONTAJE DE TUBERIAS (GR)	529
BOMBA DE PISTONES (GR)	533
GRUPO GIRATORIO DE BOMBA	536
EJE DE TOMA DE FUERZA (GR)	537
ESTABILIZADOR (CONFIG)	538
TANQUE HIDRÁULICO (GR)	539
MONTAJE Y VALVULA DEL BANCO(GR)	541
GRUPO DE CUATRO VALVULAS (CONFIG)	542
GRUPO DE 5 VALVULAS (CONFIG)	542
GRUPO DE 6 VALVULAS (CONFIG)	543
VÁLVULA AUXILIAR (GR)	544
VÁLVULAS HIDRÁULICAS - GRUPO DE 2	547
GRUPO DE 3 VÁLVULAS HIDRÁULICAS	549
GRUPO DE 4 VÁLVULAS HIDRÁULICAS	551
BANCADA 5 (GR)	553
VÁLVULAS HIDRÁULICAS - GRUPO DE 6	556
*VALVE GP-CHECK	558

* NO HAY TRADUCCION DISPONIBLE EN EL MOMENTO DE LA IMPRESION

CONTENIDO

Nombre	Página
VÁLVULA DE CONTROL (GR)	559
VÁLVULA DE CONTROL DE CARGA (GR)	579
*VALVE GP-PUMP CONTROL	581
VÁLVULA DE SOLENOIDE (GR)	584
IMPLEMENTOS	586
GRUPO DE BRAZO DE LEVANTAMIENTO	586
PLUMA (GR)	588
*BOOM GP	589
SOPORTE PARA EL TRANSPORTE	590
CAJA DE BRAZO EXTENSIBLE (CONJ)	592
TIRANTE DE EMBARQUE (GR)	593
VARILLAJE DEL CUCHARÓN RETROEXCAVADOR (GR)	594
CARGADOR (CONFIG)	597
TRABA DEL ESTABILIZADOR	598
TRABA DE TRANSPORTE DE LA MÁQUINA (GR)	599
MONTAJE DEL BRAZO (GR)	604
ZAPATA DE ESTABILIZADOR (GR)	605
RETROEXCAVADOR - ESTABILIZADOR DEL (GR)	606
BRAZO EXTENSIBLE (GR)	609
BRAZO DE RETROEXCAVADOR (GR)	613
HERRAMIENTAS	615
CUCHARÓN DE USO MÚLTIPLE (CONFIG)	615
*BUCKET AR-MULTIPURPOSE	620
CUCHARÓN DE USO GENERAL (CONJ)	621
CUCHARÓN RETROEXCAVADOR (GR)	625
CUCHARÓN DE USO MÚLTIPLE (GR)	666
ACOPLADOR RÁPIDO (GR)	677
CUCHILLA (GR)	683
HORQUILLA (CONFIG)	685
HORQUILLA (GR)	686
GRUPO DE PROTECTOR DEL CUCHARON	687
MONTAJE DEL CUCHARÓN (GR)	689
HORQUILLA - GRUPO DE MONTAJE DE LA	693
CUCHARÓN DE EMBARQUE (CONFIG)	694
TOPE DE CUCHARON (GR)	695
DIENTE DE UNA PIEZA (UNI-TOOTH) (GR)	697
PUESTO DEL OPERADOR	698
ACONDICIONADOR DE AIRE Y MONTAJE (GR)	698
ACONDICIONADOR DE AIRE (GR)	700
POSABRAZOS (GR)	702
CABINA (CONFIG)	703
SISTEMA ROPS DE CABINA CERRADA (CONFIG)	705
CABINA (GR)	707
TECHO (CONFIG)	711
TECHO ROPS ABIERTO (GR)	712
COMPARTIMIENTO DE LITERATURA DE SERVICIO (GR)	713
COMPRESOR DE REFRIGERANTE (GR)	714
CONDENSADOR DEL REFRIGERANTE Y MONTAJE (GR)	716
CONSOLA DELANTERA (GR)	717
CONSOLA DEL OPERADOR (GR)	719
CONSOLA LATERAL (GR)	721
TAPA DE LA CONSOLA (GR)	727
TAPA DE MAMPARA PARAFUEGO (GR)	728
TAPA DE POSTE (GR)	730
PUERTA IZQUIERDA (GR)	731
PUERTA DERECHA (GR)	733
CONDUCTO DE AIRE (GR)	735
ALFOMBRILLA DEL PISO (GR)	739
CALEFACCIÓN Y MONTAJE DE LA CABINA (GR)	741
CALEFACCIÓN DE LA CABINA (GR)	743
BOCINA ELÉCTRICA (GR)	745
PALANCA DE CONTROL DEL REGULADOR (GR)	746
TUBERÍAS DE LA CALEFACCIÓN (GR)	747
TUBERIAS DE CALENTEDOR Y ACONDICIONADOR DE AIRE (GR)	749
RETROVISOR (GR)	751
MÓDULO INDICADOR DE ADVERTENCIA (GR)	753
MOTOR-LIMPIAPARABRISAS (GR)	755
MONTAJE DEL TABLERO DE INSTRUMENTOS (GR)	756
TABLERO DE INSTRUMENTOS (GR)	760
REGULADOR - PEDAL DEL (GR)	761
CINTURÓN DE SEGURIDAD (GR)	762
ASIENTO (GR)	763
SUSPENSIÓN - ASIENTO CON (GR)	770
INSONORIZADOR (GR)	776
ASIENTO CON SUSPENSIÓN (GR)	778
TACÓMETRO ELÉCTRICO (GR)	781
GUARNICIONES DE LA CABINA (GR)	783

* NO HAY TRADUCCION DISPONIBLE EN EL MOMENTO DE LA IMPRESION

CONTENIDO

Nombre	Página
VISERA (GR)	784
LAVAPARABRISAS DE LA VENTANA (GR)	785
VENTANA DE LA CABINA (GR)	787
VENTANA DE LA PUERTA (GR)	793
LIMPIAPARABRISAS DE LA VENTANA (GR)	797
EQUIPOS Y SUMINISTRO DE SERVICIOS	799
ETIQUETA DE ADVERTENCIA (GR)	799
INSTALACIÓN DE LA TRABA DE LA RUEDA	801
TRABA CONTRA EL VANDALISMO (GR)	802
CALCOMANÍAS Y PLACAS DE IDENTIFICACIÓN (GR)	804
PLACA LATERAL REFLECTORA	809
INDICE DE NUMEROS DE PIEZA	B1

* NO HAY TRADUCCION DISPONIBLE EN EL MOMENTO DE LA IMPRESION

ÍNDICE

Designação	Página
INFORMAÇÃO GERAL	A34
ALTERNATIVAS DE REPARO	A45
ADITIVOS SUPLEMENTARES DO LÍQUIDO ARREFECEDOR	A50
PEÇAS DE MANUTENÇÃO	A68
ÍNDICE	A115
ARRANJO DA MÁQUINA	1
RETROESCAVADEIRA - BRAÇO ESTENDÍVEL	1
RETROESCAVADEIRA - BRAÇO PADRÃO	9
RETROESCAVADORA	10
RETROESCAVADEIRA - BRAÇO PADRÃO	11
RETROESCAVADORA	13
RETROESCAVADEIRA - BRAÇO PADRÃO	14
CHASSI	15
ARRANJO BÁSICO	16
GR. DE CONVERSÃO - CERTIFICADO	16
ARRANJO DO MOTOR	20
MOTOR	20
MOTOR PRIMÁRIO	22
MOTOR BÁSICO	24
EIXO-COMANDO DE VÁLVULA	24
TAMPA - MECANISMO DAS VÁLVULAS	25
VIRABREQUIM	27
BLOCO DO MOTOR	29
CABEÇOTE DO MOTOR	32
COMANDO DO VENTILADOR	34
VOLANTE DO MOTOR	35
CAIXA DO VOLANTE DO MOTOR	36
CAIXA DIANTEIRA	37
LEVANTAMENTO DO MOTOR	39
MONTAGEM - MOTOR	40
MONTAGEM - MOTOR E TRANSMISSÃO	41
CÁRTER DO ÓLEO DO MOTOR	43
PISTÃO E BIELA	45
BUJÃO DO MOTOR	47
POLIA DO VIRABREQUIM	49
MECANISMO DAS VÁLVULAS	50
SISTEMA DE LUBRIFICAÇÃO	51
BOCAL DE ENCHIMENTO DE ÓLEO DO MOTOR	51
BOMBA DE ÓLEO - MOTOR	52
SISTEMA DE ARREFECIMENTO	53
CONEXÃO - TUBO D'ÁGUA	53
ARREFECEDOR DE ÓLEO DO MOTOR E BASE DO FILTRO	54
VENTILADOR DE SUCÇÃO	56
CONEXÃO-AQUECEDOR & AR CONDICIONADO	58
TUBOS - ARREFECEDOR DO TREM DE FORÇA	59
BOMBA DE ÁGUA	63
RADIADOR E VENTILADOR	65
RADIADOR E ARREFECEDOR DO ÓLEO HIDRÁULICO	67
SISTEMA DE ADMISSÃO E ESCAPE DE AR	73
PURIFICADOR DE AR	73
TAMPA - ADMISSÃO DE AR	76
EXTENSÃO DO TUBO DE ESCAPE	77
INDICADOR - TROCA DO FILTRO DE AR	78
TUBOS - AR	80
SILENCIADOR	83
TURBOALIMENTADOR	84
SISTEMA DO COMBUSTÍVEL	86
CONTROLE DO GOVERNADOR E ACELERADOR	86
FILTRO - COMBUSTÍVEL	88
TUBOS - COMBUSTÍVEL	90
BOMBA DE INJEÇÃO DO COMBUSTÍVEL	92
BOMBA DE ESCORVA DO COMBUSTÍVEL	98
SEPARADOR DE ÁGUA	99
TANQUE DE COMBUSTÍVEL E MONTAGEM	100
TANQUE DE COMBUSTÍVEL	101
SISTEMA ELÉTRICO DE PARTIDA	103
ALTERNADOR DE CORRENTE	103
BATERIA	104
CONTROLE - POSIÇÃO	112
VELA DE AQUECIMENTO; VELA INCANDESCENTE	113
AQUECEDOR DA ÁGUA DO MOTOR	114
INSTALAÇÃO-SEGURANÇA	115
LÂMPADA - FAROL	117

* TRADUÇÃO NÃO DISPONÍVEL NO MOMENTO DA IMPRESSÃO

ÍNDICE

Designação	Página
LÂMPADA DIANTEIRA E DE SINAL	120
LAMPADA-PLACA DE REGISTRO	128
LUZ TRASEIRA E DE FREIO	129
LUZ GIRATÓRIA DE ALARME	131
SISTEMA DE ILUMINAÇÃO - FARÓIS	133
ILUMINAÇÃO - RODOVIÁRIA	144
SISTEMA DE ILUMINAÇÃO - ADVERTÊNCIA	161
SIST. DE ILUMINAÇÃO - PISCA-PISCA GIRATÓRIO DE ADVERTÊNCIA	163
BUJÃO - CONECTOR	165
MOTOR ELÉTRICO DE PARTIDA	166
INTERRUPTOR - PRESSÃO	169
INTERRUPTOR - TEMPERATURA	170
ALARME DE MARCHA À RÉ	171
CABOS/FIOS ELÉTRICOS - AR CONDICIONADO	173
CABOS/FIOS ELÉTRICOS - CONTROLE ELET. DAS MARCHAS	176
CABOS/FIOS ELÉTRICOS - CABINE	178
CABOS/FIOS ELÉTRICOS DO CONSOLE	183
CABOS/FIOS ELÉTRICOS - MOTOR	189
CABOS/FIOS ELÉTRICOS - AQUECEDOR	193
CABOS/FIOS ELÉTRICOS - POSICIONADOR E DESENGATE AUTOMÁTICO	195
CABOS/FIOS ELÉTRICOS - PLATAFORMA	196
CABOS/FIOS ELÉTRICOS - TOMADA DE FORÇA	202
CABOS/FIOS ELÉTRICOS - TRASEIROS	203
CABOS/FIOS ELÉTRICOS - ABSORÇÃO DE IMPACTOS	206
CABOS/FIOS ELÉTRICOS - SENSOR	214
CABOS/FIOS ELÉTRICOS - ALARME DO ESTABILIZADOR	215
CABOS/FIOS ELÉTRICOS - DIREÇÃO	217
TREM DE FORÇA	218
EIXO DE PROPULSÃO E DIREÇÃO	218
SEMI-EIXO TRASEIRO	220
CONTROLE DA TRAVA DO DIFERENCIAL	225
CONTROLE DA TRANSMISSÃO	226
DIFERENCIAL E COROA	227
DIFERENCIAL	229
COMANDO - RETROESCAVADEIRA	230
COMANDO - ACOPLAMENTO FLEXÍVEL	231
BOCAL DE ENCHIMENTO DE ÓLEO DO TREM DE FORÇA	232
ALOJAMENTO E FLANGE - EIXO	234
TRAVA - QUARTA MARCHA	236
MONTAGEM DO EIXO	237
GR. PLANETÁRIO - COMANDO FINAL	238
TREM DE FORÇA	239
EIXO DE TRANSMISSÃO	241
TRANSMISSÃO E MONTAGEM	245
TRANSMISSÃO DIRETA	247
SERVO-TRANSMISSÃO	247
TRANSMISSÃO DIRETA	248
SERVOTRANSMISSÃO	254
VÁLVULA DE ALÍVIO	260
VÁLVULA SOLENÓIDE	261
VÁLVULA DE PNEU	266
RODA E PNEU	267
SISTEMA DE FREIOS	289
FREIO DE ESTACIONAMENTO	289
CONTROLE DO FREIO DE ESTACIONAMENTO	290
CONTROLE DO FREIO DE SERVIÇO	292
ALAVANCA DE CONTROLE MANUAL	295
TANQUE DO FREIO	296
SISTEMA DE DIREÇÃO	297
CONTROLE DE DIREÇÃO	297
BOTÃO - DIREÇÃO	299
TUBOS - DIREÇÃO	300
BOMBA REGULADORA	303
VOLANTE	304
VÁLVULA DE PRIORIDADE	305
CHASSI E CARCAÇA	306
CAIXA - BATERIA	306
PÁRA-CHOQUE DIANTEIRO	311
CONTRAPESO	312
TAMPA - ACESSO À BATERIA	316
PÁRA-LAMA DIANTEIRO	317
PÁRA-LAMA TRASEIRO	319
CHAPA DO PISO	320
CHASSI DIANTEIRO	322
ARMAÇÃO DESLIZANTE	324
ARMAÇÃO OSCILANTE	326
PROTETOR - EIXO DE TRANSMISSÃO	331
PROTETOR - ILUMINAÇÃO	332
PROTETOR - TUBOS	334
CAPÔ E PROTETOR	336
CAPÔ DO MOTOR	338
REVESTIMENTO PARA REDUÇÃO DE BARULHO	341
MONTAGEM DA PLACA DE REGISTRO	342

* TRADUÇÃO NÃO DISPONÍVEL NO MOMENTO DA IMPRESSÃO

ÍNDICE

Designação	Página
REFLETOR	344
RUÍDO - ARRANJO PARA SUPRESSÃO	345
SISTEMA HIDRÁULICO	346
ACUMULADOR DO SISTEMA DE ABSORÇÃO DE IMPACTOS	346
VÁLVULA DO CONECTOR	347
SISTEMA DE ABSORÇÃO DE IMPACTOS	348
CONTROLE-CABO	350
CONTROLE HIDRÁULICO MANUAL	352
CONTROLE - PEDAL HIDRÁULICO	365
CONVERSÃO-CONTROLE MANUAL HIDRÁULICO	369
ACOPLAMENTO	370
TAMPA & VÁLVULA-BANCO	371
CILINDRO DA CAÇAMBA RETROESCAVADEIRA	372
CILINDRO DA LANÇA	376
CILINDRO DO BRAÇO ESTENDÍVEL	378
CILINDRO DE LEVANTAMENTO	381
CILINDRO - CAÇAMBA DE MÚLTIPLAS APLICAÇÕES	382
CILINDRO DO ESTABILIZADOR	384
CILINDRO DO BRAÇO	385
CILINDRO DE GIRO	386
CILINDRO DE INCLINAÇÃO	388
DRENO DO ÓLEO HIDRÁULICO	390
COMANDO HIDRÁULICO	391
JOGO - SISTEMA DE ABSORÇÃO DE IMPACTOS	397
TUBOS - RETROESCAVADEIRA	398
TUBOS AUXILIARES - RETROESCAVADEIRA	402
TUBOS - LANÇA	440
TUBOS - CILINDRO DA CAÇAMBA	441
TUBOS - DRENAGEM	443
TUBOS - BRAÇO COM EXTENSÃO	445
TUBOS - CILINDRO DE LEVANTAMENTO	446
TUBOS - VÁLVULA DE CONTROLE DE CARGA	451
TUBOS AUXILIARES	462
TUBOS - CAÇAMBA DE MÚLTIPLAS APLICAÇÕES	466
TUBOS - CIRCUITO PILOTO	474
TUBOS - BOMBA	477
*LINES GP-RETURN	486
TUBOS - ABSORÇÃO DE IMPACTOS	487
TUBOS - TRAVAMENTO DE DESLOCAMENTO LATERAL	489
TUBOS - ESTABILIZADOR	497
TUBOS - BRAÇO	501
TUBOS - GIRO	509
TUBOS - CILINDRO DE INCLINAÇÃO	519
TRAVA - PEDAL DE CONTROLE HIDRÁULICO	523
TRAVA - CONTROLE MANUAL HIDRÁULICO	524
MONTAGEM - BANCO DE VÁLVULAS	525
MONTAGEM - CILINDRO	527
MONTAGEM - BOMBA HIDRÁULICA	528
MONTAGEM - TUBOS	529
BOMBA DE PISTÃO	533
GRUPO ROTATIVO DA BOMBA	536
EIXO DA TOMADA DE FORÇA	537
ESTABILIZADOR	538
TANQUE HIDRÁULICO	539
VÁLVULA DE CONTROLE E MONTAGEM	541
CONJUNTO DE 4 VÁLVULAS	542
GRUPO DE VÁLVULAS - 5	542
GRUPO DE VÁLVULAS - SEIS	543
VÁLVULA AUXILIAR	544
GRUPO DE VÁLVULAS DE CONTROLE - DUPLO	547
GRUPO DE VÁLVULAS DE CONTROLE - TRIPLO	549
GRUPO DE VÁLVULAS DE CONTROLE - QUÁDRUPLO	551
GRUPO DE VÁLVULAS DE CONTROLE - CINCO	553
GRUPO DE VÁLVULAS DE CONTROLE - SEIS	556
*VALVE GP-CHECK	558
VÁLVULA DE CONTROLE	559
VÁLVULA - CONTROLE DE CARGA	579
*VALVE GP-PUMP CONTROL	581
VÁLVULA SOLENÓIDE	584
ACESSÓRIOS	586
BRAÇO DE LEVANTAMENTO	586
LANÇA	588
*BOOM GP	589
SUPORTE PARA TRANSPORTE	590
ALOJAMENTO DO BRAÇO EXTENSÍVEL	592
ELO - EMBARQUE	593
ARTICULAÇÃO DA CAÇAMBA DA RETROESCAVADEIRA	594
CAÇAMBA DIANTEIRA	597
TRAVA DA PERNA DO ESTABILIZADOR	598
TRAVA - TRANSPORTE	599
MONTAGEM - BRAÇO	604

* TRADUÇÃO NÃO DISPONÍVEL NO MOMENTO DA IMPRESSÃO

ÍNDICE

Designação	Página
CALÇO DO ESTABILIZADOR	605
ESTABILIZADOR - RETROESCAVADEIRA	606
BRAÇO ESTENDÍVEL	609
BRAÇO - CAÇAMBA RETRO-ESCAVADORA	613
FERRAMENTAS DE TRABALHO	615
CAÇAMBA DE MÚLTIPLAS APLICAÇÕES	615
*BUCKET AR-MULTIPURPOSE	620
CAÇAMBA PARA APLICAÇÃO GERAL	621
CAÇAMBA RETROESCAVADORA	625
CAÇAMBA DE MÚLTIPLAS APLICAÇÕES	666
ACOPLADOR RÁPIDO	677
BORDA CORTANTE	683
GARFO	685
PROTETOR - CAÇAMBA	687
MONTAGEM - CAÇAMBA	689
MONTAGEM - GARFO	693
AR. DE EMBARQUE DA CAÇAMBA	694
BATENTE - CAÇAMBA	695
UNI-DENTE	697
POSTO DO OPERADOR	698
CONDICIONADOR DE AR E MONTAGEM	698
CONDICIONADOR DE AR	700
BRAÇO DO ASSENTO	702
CABINE	703
CABINE - ESTRUTURA ROPS COBERTA	705
CABINE	707
TOLDO	711
TOLDO - ESTRUTURA ROPS ABERTA	712
COMPARTIMENTO PARA LITERATURA	713
COMPRESSOR DE REFRIGERANTE	714
CONDENSADOR DO REFRIGERANTE E MONTAGEM	716
POSTO DE CONTROLE/CONSOLE DIANTEIRO	717
CONSOLE DO OPERADOR	719
CONSOLE LATERAL	721
TAMPA - CONSOLO	727
TAMPA-PAINEL TRASEIRO DO MOTOR	728
TAMPA-COLUNA	730
PORTA - LADO ESQUERDO	731
PORTA - LADO DIREITO	733
DUCTO DE AR	735
TAPETE	739
AQUECEDOR DA CABINE E MONTAGEM	741
AQUECEDOR DA CABINE	743
BUZINA ELÉTRICA	745
ALAVANCA DE CONTROLE DO GOVERNADOR	746
TUBOS - AQUECEDOR	747
TUBULAÇÕES - AQUECEDOR E AR CONDICIONADO	749
ESPELHO RETROVISOR	751
MÓDULO - INDICADOR DE ALARME	753
MOTOR - LIMPADOR DO VIDRO	755
MONTAGEM - PAINEL DE INSTRUMENTOS	756
PAINEL DE INSTRUMENTOS	760
PEDAL DO GOVERNADOR	761
CINTO DE SEGURANÇA	762
ASSENTO	763
ASSENTO COM SUSPENSÃO	770
REDUÇÃO DE RUÍDO	776
SUSPENSÃO - ASSENTO	778
TACÔMETRO - ELÉTRICO	781
LISTRA DA CABINE	783
PÁRA-SOL DA CABINE	784
LAVADOR DO VIDRO	785
JANELA DA CABINE	787
VIDRO DA PORTA	793
LIMPADOR DO VIDRO	797
EQUIPAMENTOS DE SERVIÇO E SUPRIMENTOS	799
DECALQUE	799
GR. DE INSTALAÇÃO - CALÇO DA RODA	801
CADEADO CONTRA VANDALISMO	802
PLACA E DECALQUE	804
PLACA LATERAL REFLETIVA	809
ÍNDICE DE NÚMERO DE PEÇA	B1

* TRADUÇÃO NÃO DISPONÍVEL NO MOMENTO DA IMPRESSÃO

INHALTSVERZEICHNIS

Bezeichnung	Seite
ALLGEMEINE HINWEISE	A38
REPARATURALTERNATIVEN	A46
KÜHLMITTELZUSATZ	A51
WARTUNGSTEILE	A73
STICHWORTVERZEICHNIS	A127
MASCHINE	1
HECKBAGGER-TELESKOPSTIEL	1
STANDARDHECKBAGGERSTIEL	9
HECKBAGGER	10
STANDARDHECKBAGGERSTIEL	11
HECKBAGGER	13
STANDARDHECKBAGGERSTIEL	14
FAHRWERK	15
GRUNDAUSFÜHRUNG	16
UMBAUSATZ - ZULASSUNG	16
MOTOR	20
MOTORAUSFÜHRUNG	20
MOTOR (GRUNDAUSFÜHRUNG)	24
NOCKENWELLE	24
VENTILDECKEL	25
KURBELWELLE	27
MOTORBLOCK	29
ZYLINDERKOPF	32
LÜFTERANTRIEB	34
SCHWUNGRAD	35
SCHWUNGRADGEHÄUSE	36
STIRNRADGEHÄUSE	37
MOTORHUBÖSE	39
MOTORAUFLAGER	40
MOTOR- UND GETRIEBEAUFLAGER	41
ÖLWANNE	43
PLEUELSTANGE UND KOLBEN	45
MOTORSTOPFEN	47
KURBELWELLEN-RIEMENSCHEIBE	49
VENTILSTEUERUNG	50
SCHMIERSYSTEM	51
MOTORÖLEINFÜLLSTUTZEN	51
SCHMIERPUMPE	52
KÜHLSYSTEM	53
KÜHLWASSERANSCHLUSS	53
MOTORÖLKÜHLER UND FILTER-SOCKEL	54
SAUGLÜFTER	56
ANSCHLUSS - HEIZUNG U. KLIMAANLAGE	58
ÖLKÜHLERLEITUNGEN (KRAFTÜBERTRAGUNG)	59
KÜHLWASSERPUMPE	63
KÜHLER UND LÜFTER	65
KÜHLER UND HYDRAULIKÖLKÜHLER	67
LUFTANSAUG- UND ABGASSYSTEM	73
LUFTREINIGER	73
LUFTEINLASSDECKEL	76
AUSPUFFROHRVERLÄNGERUNG	77
LUFTFILTERWARTUNGSANZEIGE	78
DRUCKLUFTLEITUNGEN	80
SCHALLDÄMPFER	83
TURBOLADER	84
KRAFTSTOFFSYSTEM	86
REGLER- UND GASPEDALGESTÄNGE	86
KRAFTSTOFFILTER	88
KRAFTSTOFFLEITUNGEN	90
KRAFTSTOFFEINSPRITZPUMPE	92
KRAFTSTOFF-ENTLÜFTUNGSPUMPE	98
WASSERABSCHEIDER	99
KRAFTSTOFFTANK U. BEFESTIGUNG	100
KRAFTSTOFFTANK	101
ELEKTRISCHE ANLAGE UND STARTSYSTEM	103
DREHSTROMGENERATOR	103
BATTERIE	104
STELLUNGSSTEUERUNG	112
GLÜHKERZE	113
UMLAUFKÜHLWASSERHEIZUNG	114
SICHERHEITSEINBAUSATZ	115
ARBEITSLEUCHTEN	117
SCHEINWERFER U. RICHTUNGSLEUCHTE	120
ZULASSUNGSSCHILDLEUCHTE	128
BREMS- UND RÜCKLEUCHTE	129
RUNDUM-KENNLEUCHTE	131
ARBEITSLEUCHTEN	133
BELEUCHTUNGSANLAGE (STRASSENAUSRÜSTUNG)	144
WARNLEUCHTEN	161
RUNDUM-KENNLEUCHTE	163
VERBINDUNGSSTECKER	165
STARTERMOTOR	166
DRUCKSCHALTER	169

* ÜBERSETZUNG ZUM ZEITPUNKT DER DRUCKLEGUNG NICHT VORHANDEN

INHALTSVERZEICHNIS

Bezeichnung	Seite
TEMPERATURSCHALTER	170
RÜCKFAHRWARNHORN	171
KLIMAANLAGENVERDRAHTUNG	173
SCHALTAUTOMATIKVERDRAHTUNG	176
FAHRERHAUSVERDRAHTUNG	178
KONSOLENVERDRAHTUNG	183
MOTORVERDRAHTUNG	189
HEIZUNGSVERDRAHTUNG	193
VERDRAHTUNG - SCHAUFELAUSSCHALTER U. EINSTELLER	195
FAHRERPLATTFORMVERDRAHTUNG	196
STECKDOSENVERDRAHTUNG	202
VERDRAHTUNG, HINTEN	203
SCHWINGUNGSDÄMPFUNGSVERDRAHTUNG	206
SENSORVERDRAHTUNG	214
SEITENSTÜTZENALARMVERDRAHTUNG	215
LENKVERDRAHTUNG	217
KRAFTÜBERTRAGUNG	218
ANTRIEBS- UND LENKACHSE	218
HINTERACHSE	220
DIFFERENTIALSPERRENGESTÄNGE	225
GETRIEBESTEUERUNG	226
DIFFERENTIAL UND TELLERRAD	227
DIFFERENTIAL	229
ANTRIEB - BAGGERLADER	230
KUPPLUNGSANTRIEB, ELAST.	231
GETRIEBEÖLFÜLLSTUTZEN	232
ACHSGEHÄUSEFLANSCH	234
VERRIEGELUNG - VIERTER GANG	236
ACHSENANBAUSATZ	237
SEITENANTRIEB - PLANETENGETRIEBE	238
KRAFTÜBERTRAGUNG	239
ANTRIEBSWELLE	241
GETRIEBE U. BEFESTIGUNG	245
MECHANISCHES GETRIEBE	247
LASTSCHALTGETRIEBE	247
WECHSELGETRIEBE	248
LASTSCHALTGETRIEBE	254
ÜBERDRUCKVENTIL	260
MAGNETVENTIL	261
REIFENVENTIL	266
RAD UND REIFEN	267
BREMSSYSTEM	289
FESTSTELLBREMSE	289
FESTSTELLBREMSGESTÄNGE	290
BREMSGESTÄNGE	292
HANDSTEUERHEBEL	295
BREMSTANK	296
LENKSYSTEM	297
LENKBETÄTIGUNG	297
LENKKNOPF	299
LENKÖLLEITUNGEN	300
ZUMESSPUMPE	303
LENKRAD	304
VORRANGVENTIL	305
RAHMEN UND FAHRGESTELL	306
BATTERIEKASTEN	306
FRONTSTOSSSTANGE	311
GEGENGEWICHT	312
BATTERIEDECKEL	316
SCHUTZBLECHE, VORNE	317
SCHUTZBLECHE, HINTEN	319
BODENBLECH	320
LADERRAHMEN	322
GLEITRAHMEN	324
SCHWENKRAHMEN	326
ANTRIEBSWELLENVERKLEIDUNG	331
BLITZSCHUTZ	332
LEITUNGSVERKLEIDUNG	334
MOTORHAUBE UND VERKLEIDUNG	336
MOTORHAUBE	338
SCHALLDÄMPFENDE VERKLEIDUNG	341
TYPENSCHILDBEFESTIGUNG	342
REFLEKTOR	344
SCHALLDÄMPFUNG	345
HYDRAULIKSYSTEM	346
DRUCKSPEICHER, HYDRAULISCHE SCHWINGUNGSDÄMPFUNG	346
VERBINDUNGSVENTIL	347
HYDRAULISCHE SCHWINGUNGSDÄMPFUNG	348
STEUERHEBEL	350
HYDRAULIKHANDSTEUERUNG	352
HYDRAULIKPEDALSTEUERUNG	365
UMRÜSTSATZ - HYDRAULIKHEBEL	369
ANSCHLUSS	370
VENTILANORDNUNGSDECKEL	371
HECKBAGGERLÖFFELZYLINDER	372
AUSLEGERZYLINDER	376
TELESKOPSTIELZYLINDER	378
HUBZYLINDER	381
KOMBISCHAUFELZYLINDER	382
SEITENSTÜTZENZYLINDER	384
STIELZYLINDER	385
SCHWENKZYLINDER	386

* ÜBERSETZUNG ZUM ZEITPUNKT DER DRUCKLEGUNG NICHT VORHANDEN

INHALTSVERZEICHNIS

Bezeichnung	Seite
KIPPZYLINDER	388
HYDRAULIKÖLABLASS	390
HYDRAULIKSYSTEM	391
HYDRAULISCHE SCHWINGUNGSDÄMPFUNG - EINBAUSATZ	397
TIEFLÖFFELLEITUNGEN	398
TIEFLÖFFEL-HYDRAULIKNOTLEITUNGEN	402
AUSLEGERLEITUNGEN	440
LÖFFELZYLINDERLEITUNGEN	441
ABLASSLEITUNGEN	443
TELESKOPSTIELLEITUNGEN	445
HUBZYLINDERLEITUNGEN	446
LASTSTEUERVENTILLEITUNGEN	451
LADERZUSATZLEITUNGEN	462
KOMBISCHAUFELLEITUNGEN	466
VORSTEUERLEITUNGEN	474
HYDRAULIKPUMPE UND LEITUNGEN	477
*LINES GP-RETURN	486
SCHWINGUNGSDÄMPFUNGSLEITUNGEN	487
SEITENSCHUBSPERRLEITUNGEN	489
SEITENSTÜTZENLEITUNGEN	497
STIELZYLINDERLEITUNGEN	501
SCHWENKLEITUNGEN	509
NEIGEZYLINDERLEITUNGEN	519
HYDRAULIKFUSSSTEUERUNGSSPERRE	523
HYDRAULIKSPERRE (HANDBEDIENUNG)	524
VENTILANORDNUNGS-BEFESTIGUNGSSATZ	525
ZYLINDERAUFHÄNGUNG	527
HYDRAULIKPUMPENBEFESTIGUNG	528
LEITUNGS-BEFESTIGUNGSTEILE	529
KOLBENPUMPE	533
KOLBENPUMPENUMLAUFSATZ	536
ZAPFWELLE	537
SEITENSTÜTZEN	538
HYDRAULIKTANK	539
VENTILBLOCK U. BEFESTIGUNG	541
4-BLOCK-VENTILSATZ	542
5-VENTIL-BLOCK	542
6-FACH-VENTILBLOCK	543
ZUSATZVENTIL	544
VENTILSATZ (2-VENTIL)	547
VENTILSATZ (3-VENTIL)	549
VENTILSATZ (4-VENTIL)	551
VENTILSATZ (5-VENTIL)	553
VENTILSATZ (6-VENTIL)	556
*VALVE GP-CHECK	558
STEUERVENTIL	559
LASTSTEUERVENTIL	579
*VALVE GP-PUMP CONTROL	581
MAGNETVENTIL	584
ARBEITSGERÄTE	586
HUBARM	586
AUSLEGER	588
*BOOM GP	589
TRANSPORTHALTERUNG	590
GEHÄUSE - AUSFAHRBARER STIEL	592
TRANSPORTSPERRE	593
HECKBAGGERLÖFFELGESTÄNGE	594
LADESCHAUFEL	597
SEITENSTÜTZENFUSSSPERRE	598
TRANSPORTSPERRE	599
STIELAUFHÄNGUNG	604
SEITENSTÜTZENPLATTEN	605
SEITENSTÜTZEN	606
TELESKOPSTIEL	609
LÖFFELSTIEL	613
ARBEITSGERÄTE	615
KOMBISCHAUFEL	615
*BUCKET AR-MULTIPURPOSE	620
UNIVERSALSCHAUFEL	621
HECKBAGGERLÖFFEL	625
KOMBISCHAUFEL	666
SCHNELLWECHSELEINRICHTUNG	677
SCHNEIDMESSER	683
GABEL	685
PALETTENGABEL	686
SCHAUFELSCHUTZ	687
SCHAUFELAUFHÄNGUNG	689
GABELBEFESTIGUNG	693
SCHAUFELTRANSPORTAUSFÜHRUNG	694
SCHAUFELANSCHLAG	695
UNIVERSAL-ZAHNSPITZE	697
FAHRERHAUS	698
KLIMAANLAGE UND AUFHÄNGUNG	698
KLIMAANLAGE	700
ARMLEHNE	702
FAHRERHAUS	703
FAHRERHAUS MIT ÜBERROLLSCHUTZ	705
FAHRERHAUS	707
WETTERDACH	711
FAHRERHAUS M. OFFENEM ÜBERROLLSCHUTZ	712
LITERATURABLAGE	713
KÄLTEMITTELKOMPRESSOR	714

* ÜBERSETZUNG ZUM ZEITPUNKT DER DRUCKLEGUNG NICHT VORHANDEN

INHALTSVERZEICHNIS

Bezeichnung	Seite
KÄLTEMITTELKONDENSATOR U. BEFESTIGUNGSTEILE	716
FRONTSTEUERPULT	717
STEUERKONSOLE	719
SEITENKONSOLE	721
STEUERKONSOLENABDECKUNG	727
FEUERWANDABDECKUNG	728
PFOSTENABDECKUNG	730
FAHRERHAUSTÜR (LINKS)	731
FAHRERHAUSTÜR (RECHTS)	733
LUFTKANAL	735
FUSSMATTE	739
FAHRERHAUSHEIZUNG U. BEFESTIGUNGSTEILE	741
FAHRERHAUSHEIZUNG	743
WARNHORN, ELEKTR.	745
DREHZAHLREGLER - STEUERHEBEL	746
HEIZUNGSLEITUNGEN	747
HEIZUNGS- U. KLIMAANLAGENLEITUNGEN	749
RÜCKSPIEGEL	751
WARNANZEIGEMODUL	753
SCHEIBENWISCHERMOTOR	755
INASTRUMENTENTAFEL-EINBAUSATZ	756
INSTRUMENTENTAFEL	760
GASPEDAL	761
SICHERHEITSGURT	762
FAHRERSITZ	763
SCHWINGSITZ	770
SCHALLDÄMPFUNG	776
FAHRERSITZFEDERUNG	778
DREHZAHLMESSER, ELEKTR.	781
FAHRERHAUS - HALTETEILE	783
FAHRERHAUS, SONNENBLENDE	784
SCHEIBENWASCHANLAGE	785
FAHRERHAUSFENSTER	787
TÜRFENSTER	793
SCHEIBENWISCHER	797
WARTUNGSAUSRÜSTUNG UND -ZUBEHÖR	799
AUFKLEBER	799
UNTERLEGKEIL - EINBAUSATZ	801
VORHÄNGESCHLOSS	802
SCHILD UND AUFKLEBER	804
RÜCKSTRAHLER	809
ERSATZTEILNUMMERNINDEX	B1

* ÜBERSETZUNG ZUM ZEITPUNKT DER DRUCKLEGUNG NICHT VORHANDEN

1. MACHINE IDENTIFICATION

Caterpillar machines are identified by Product Identification Numbers (PIN). Some components included in a machine may be identified by Serial Numbers (S/N). Typical components that will be serialized include engines, transmissions, bulldozers, and rippers. The machine and engine are further identified by arrangement numbers and in some cases modification numbers. These numbers are shown on the product identification plate(s) and on the master plate in the operator's compartment.

Caterpillar dealers need all of these numbers to determine accurate parts identification.

SIS *New Feature*

Effective First Quarter 2001 the Caterpillar Product Identification Number (PIN) changed from 8 to 17 characters. In an effort to provide uniform equipment identification, Caterpillar and other construction equipment manufacturers are moving to comply with the latest version of the product identification numbering standard. Non-road machine PINs are defined by ISO 10261. The new PIN format will apply to all Caterpillar machines and generator sets. The PIN plates and frame marking will display the 17 character PIN. The new format will look like the following:

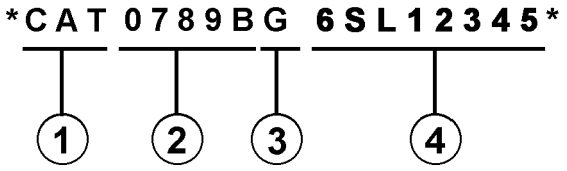

Where:

1. Caterpillar's World Manufacturing Code (characters 1-3)

2. Machine Descriptor (characters 4-8)

3. Check Character (character 9)

4. Machine Indicator Section (MIS) or Product Sequence Number (characters 10-17). These were previously referred to as the Serial Number.

Machines and generator sets produced before First Quarter 2001 will maintain their 8 character PIN format.

Components such as engines, transmissions, axles, etc. and work tools will continue to use an 8 character Serial Number (S/N).

2. ORDERING PARTS

⚠ WARNING

When replacement parts are required for this product Caterpillar recommends using Caterpillar replacement parts or parts with equivalent specifications including, but not limited to, physical dimensions, type, strength and material.

Failure to heed this warning can lead to premature failures, product damage, personal injury or death.

Quality Caterpillar replacement parts are available from Caterpillar dealers throughout the world. Their parts inventories are up to date and include all parts normally required to protect your investment in Caterpillar machines. Dealers may offer repair kits or remanufactured parts to allow selection of the most effective repair alternative for a particular situation. When ordering parts, your order should specify the quantity, part number, part name, and the serial number/product identification number of the machine for which the parts are needed.

3. PARTS MANUAL ORGANIZATION

Product information in this manual is presented as "information elements" that represent all of the components for the specific model. Engine Arrangement and Seat Group are examples of information elements. The information elements are organized alphabetically by part name and secondarily by part number within each major section of the manual.

4. TABLE OF CONTENTS

A table of contents (TOC) is found at the beginning of the manual. The TOC lists each section of the manual with a complete list of all information elements organized as they appear in the manual. Page numbers are provided for quick reference to detailed parts identification illustrations and serviceable consist lists.

5. MAINTENANCE PARTS INDEX

The Maintenance Parts Index, located near the beginning of the manual, references most frequently used maintenance part numbers, providing description, quantity, usage and page number. This information is organized alphabetically by part description.

6. INDEX

The index located near the front of the manual is an alphabetical listing of all information elements included in the manual. Page numbers are provided for quick reference to detailed parts identification illustrations and serviceable consist lists.

7. PART NUMBER INDEX

A numerical index listing all part numbers and the corresponding page number(s) appears at the back of the manual.

8. CAPTIONS

Captions located at the beginning of each information element identify the part number and part name along with additional descriptive information. PIN and S/N information found in each caption should be used to select correct information for a specific machine. Field replacement options, identification of optional attachment components, and where used ("part of") information is also provided.

The first line of a caption is shown in larger type font to indicate the beginning of an information element. Captions for additional pages that may be required to illustrate an information element will be shown in standard type font and will include the term *(contd.)* .

9. NON-SERVICED PARTS

In some instances it is necessary to display non-serviced parts that are a link to a lower level serviceable consist lists. These non-serviced part numbers are shown in *italic* type indicating that they are not available.

10. PARTS LIST REFERENCE NUMBERS

Numbers shown in the Ref No column correspond to numbers used in the associated graphic(s). An alphabetic suffix may be added to a reference number to identify lower level consist items. Numbers shown in the Graphic Ref column refer to the graphic number identifier displayed in the lower left corner of each illustration. The Graphic Ref number may be used in combination with the item Ref No to determine the correct part number. There may be intentional omission of a Ref No in a consist list as information is updated to reflect the latest serviceable part numbers.

11. INDENTED PART NAMES

When a part name is indented in a parts list, it is part of (included in) the group or assembly under which it is indented.

12. ILLUSTRATION REFERENCE LETTERS

When necessary, illustrations contain reference letters (A, B, C etc.) that are intended to track lines and harnesses from one point to another. They are also used to show where to reconnect illustrations that have been separated.

13. ABBREVIATIONS AND SYMBOLS

O.D. – Outside Diameter
I.D. – Inside Diameter
A – Not Part Of This Group
B – Use As Required
C – Change From Previous Type
D – Order By The Meter
E – Order By The Centimeter
F – Not Shown
G – Order By The Inch
I – See Hose Fabrication Guide
M – Metric Part
R – Remfg Part May Be Available
Y – Separate Illustration
Z – Not Serviced Separately

SIS *New Feature*

14.<END>

This symbol indicates the end of an information element.

NOTE:

Continuing improvement and advancement of product design may cause changes to your machine which may not be included in this publication. Whenever a question arises regarding your caterpillar product or this publication, please consult your caterpillar dealer for the latest available information.

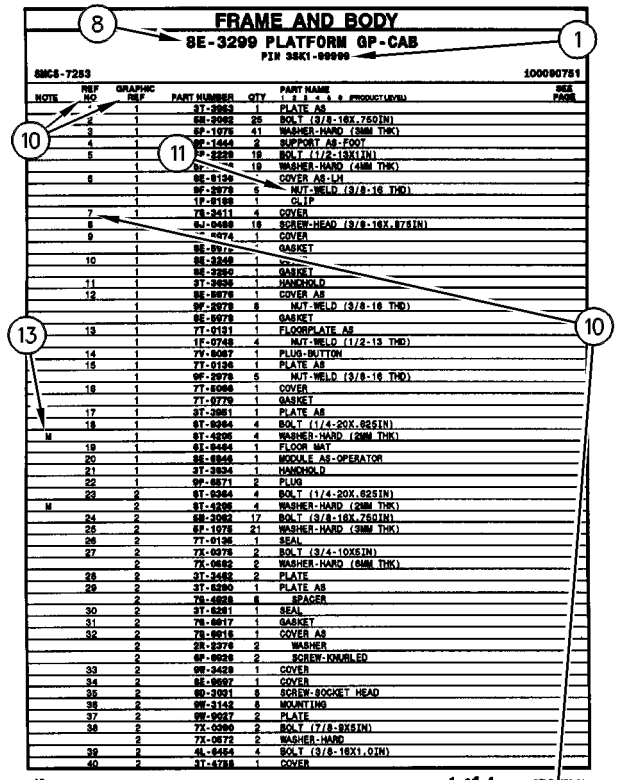

NOTE	REF NO	GRAPHIC REF	PART NUMBER	QTY	PART NAME (1 2 3 4 5 6 PRODUCT LEVEL)	SEE PAGE
	1	1	3T-2953	1	PLATE AS	
	2	1	5B-2992	25	BOLT (3/8-16X.750IN)	
	3	1	5P-1075	41	WASHER-HARD (3MM THK)	
	4	1	8P-1444	2	SUPPORT AS-FOOT	
	5	1	5P-2229	19	BOLT (1/2-13X1IN)	
		1	5P-[illegible]4	19	WASHER-HARD (4MM THK)	
	6	1	9E-6136	1	COVER AS-LH	
		1	9F-2979	6	NUT-WELD (3/8-16 THD)	
		1	1P-6188	1	CLIP	
	7	1	7S-3411	4	COVER	
	8	1	6J-0488	18	SCREW-HEAD (3/8-16X.875IN)	
	9	1	[illegible]-4474	1	COVER	
		1	9E-6[illegible]7		GASKET	
	10	1	9E-3249	1	[illegible]	
		1	9E-3250	1	GASKET	
	11	1	3T-3635	1	HANDHOLD	
	12	1	9E-6678	1	COVER AS	
		1	9F-2979	8	NUT-WELD (3/8-16 THD)	
		1	9E-6678	1	GASKET	
	13	1	7T-0131	1	FLOORPLATE AS	
		1	1F-0748	4	NUT-WELD (1/2-13 THD)	
	14	1	7Y-6087	1	PLUG-BUTTON	
	15	1	7T-0136	1	PLATE AS	
		1	9F-2979	6	NUT-WELD (3/8-16 THD)	
	16	1	7T-6086	1	COVER	
		1	7T-0779	1	GASKET	
	17	1	3T-3981	1	PLATE AS	
	18	1	6T-9364	4	BOLT (1/4-20X.625IN)	
M		1	6T-4205	4	WASHER-HARD (2MM THK)	
	19	1	6L-6464	1	FLOOR MAT	
	20	1	9E-6946	1	MODULE AS-OPERATOR	
	21	1	3T-3634	1	HANDHOLD	
	22	1	9P-6571	2	PLUG	
	23	2	6T-9364	4	BOLT (1/4-20X.625IN)	
M		2	6T-4205	4	WASHER-HARD (2MM THK)	
	24	2	5B-3062	17	BOLT (3/8-16X.750IN)	
	26	2	5P-1075	21	WASHER-HARD (3MM THK)	
	26	2	7T-0135	1	SEAL	
	27	2	7X-0378	2	BOLT (3/4-10X5IN)	
		2	7X-0662	2	WASHER-HARD (5MM THK)	
	28	2	3T-3482	2	PLATE	
	29	2	3T-6290	1	PLATE AS	
		2	7S-6028	6	SPACER	
	30	2	3T-6281	1	SEAL	
	31	2	7S-6017	1	GASKET	
	32	2	7S-6016	1	COVER AS	
		2	2R-2276	2	WASHER	
		2	6P-6028	2	SCREW-KNURLED	
	33	2	9W-3429	1	COVER	
	34	2	9E-6697	1	COVER	
	35	2	9D-3031	8	SCREW-SOCKET HEAD	
	36	2	9W-3142	8	MOUNTING	
	37	2	9W-9027	2	PLATE	
	38	2	7X-0390	2	BOLT (7/8-9X5IN)	
		2	7X-0672	2	WASHER-HARD	
	39	2	4L-6454	4	BOLT (3/8-16X1.0IN)	
	40	2	3T-4788	1	COVER	

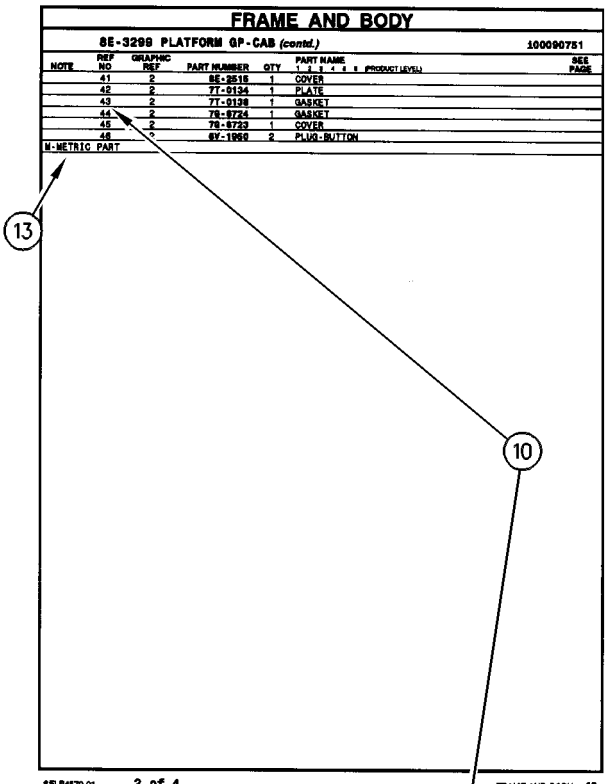

NOTE	REF NO	GRAPHIC REF	PART NUMBER	QTY	PART NAME (1 2 3 4 5 6 PRODUCT LEVEL)	SEE PAGE
	41	2	8E-3515	1	COVER	
	42	2	7T-0134	1	PLATE	
	43	2	7T-0139	1	GASKET	
	44	2	7S-6724	1	GASKET	
	45	2	7S-6723	1	COVER	
	46	2	6V-1969	2	PLUG-BUTTON	

M-METRIC PART

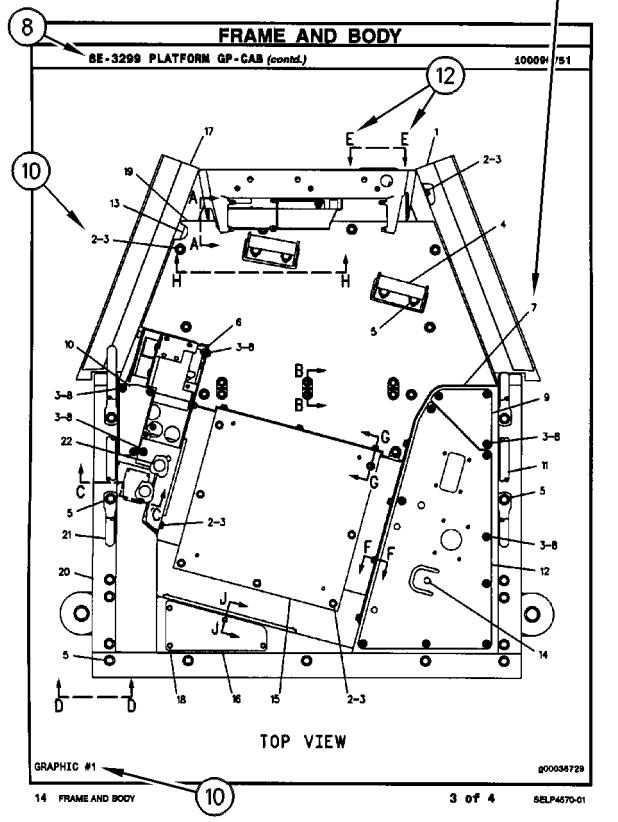

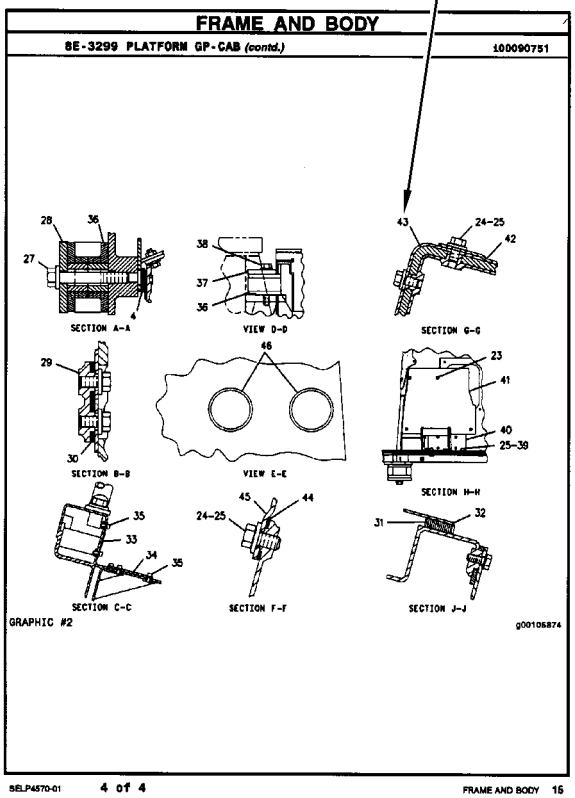

1. IDENTIFICATION DE LA MACHINE

Toutes les machines Caterpillar portent un numéro d'identification (PIN). Certains composants des machines peuvent porter des numéros de série (S/N). En général, parmi les composants qui portent des numéros de série il y a les moteurs, les transmissions, les bulldozers et les rippers. En plus, la machine et le moteur peuvent recevoir des numéros de version, et dans certains cas, de modification. Ces numéros figurent sur les plaques de numéro de série et sur la plaque signalétique principale qui se trouve dans le poste de conduite.

Les concessionnaires Caterpillar doivent connaître tous ces numéros pour identifier correctement les pièces.

SIS ***Nouvelle Caractéristique***

À partir du premier trimestre 2001, le numéro d'identification produit (PIN) Caterpillar passe de 8 à 17 caractères. Afin de permettre une identification uniforme des matériels, Caterpillar et d'autres constructeurs de machines de travaux publics s'efforcent de se conformer à la norme la plus récente portant sur les numéros d'identification des produits. Les numéros d'identification (PIN) de machines de chantier sont définis par la norme ISO 10261. Le nouveau format du numéro d'identification est valable pour toutes les machines et tous les groupes électrogènes Caterpillar. Le numéro d'identification produit (PIN) figurant sur la plaque et sur le châssis se composera de 17 caractères. Le nouveau format ressemblera à ceci:

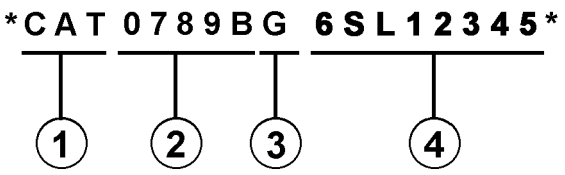

Il se décomposera de la façon suivante:

1. Code international de fabrication de Caterpillar (caractères 1 à 3)

2. Descriptif de la machine (caractères 4 à 8)

3. Contrôle (caractère 9)

4. Indicateur machine (MIS) ou numéro de séquence produit (caractères 10 à 17). Ceux-ci étaient auparavant désignés sous le terme de numéro de série.

Les machines et les groupes électrogènes construits avant le premier trimestre 2001 garderont le format à 8 caractères du numéro d'identification produit (PIN).

Les organes tels que les moteurs, les boîtes de vitesses, les essieux, etc., continueront d'être désignés par un numéro de série (S/N) à 8 caractères.

2. COMMANDE DE PIÈCES

⚠ DANGER

Lorsqu'il faut remplacer des pièces de rechange pour ce produit Caterpillar recommande d'utiliser les pièces de rechange Caterpillar ou les pièces qui ont des spécifications équivalentes dont les dimensions physiques, le type, la force et le matériau. Ces équivalences ne se limitent pas à l'énoncé précédent.

L'inobservation de cette mise en garde peut entraîner des défaillances prématurées, des dommages au produit, des blessures ou même la mort.

Les concessionnaires Caterpillar fournissent dans le monde entier des pièces de rechange de qualité Caterpillar. Leurs stocks de pièces sont constamment réapprovisionnés et comptent toutes les pièces nécessaires pour assurer la bonne marche de vos machines Caterpillar. Certains concessionnaires proposent également des kits de réparation ou des pièces rénovées, ce qui permet de choisir la solution la plus économique dans une situation donnée. Lors des commandes de pièces, mentionner la quantité, le numéro et la désignation des pièces ainsi que le numéro de série ou le numéro d'identification (PIN) de la machine pour laquelle ces pièces sont requises.

3. ORGANISATION DU CATALOGUE DE PIÈCES

Les renseignements sur les produits sont présentés sous forme de "Information element" (élément d'information) représentant tous les composants d'un modèle donné. "Engine Arrangement" (version de moteur) et "Seat Group" (assemblage de siège)" sont des exemples d'éléments d'information. Les éléments d'information sont classés par ordre alphabétique par la désignation standard des pièces et par numéros de pièces dans chaque partie importante du manuel.

4. TABLE DES MATIÈRES

Nouvelle Caractéristique

La table des matières se trouve au début du manuel. La table des matières fournit la liste de tous les chapitres du manuel avec une liste complète de tous les éléments d'information classés par ordre d'apparition dans le manuel. Les numéros de page sont fournis afin que l'utilisateur puisse trouver rapidement les illustrations détaillées concernant l'identification des pièces et les listes des pièces d'entretien.

5. INDEX DES PIÈCES D'ENTRETIEN

La rubrique "Index des pièces d'entretien" qui se trouve au début du manuel renvoie aux pièces d'entretien les plus fréquemment utilisées en précisant la désignation, la quantité, là où la pièce est utilisée et le numéro de page. Ces pièces sont classés par ordre alphabétique.

6. INDEX

L'index qui se trouve vers le début du manuel est une liste alphabétique de tous les éléments d'information du manuel. Les numéros de page sont fournis afin que l'utilisateur puisse trouver rapidement les illustrations détaillées concernant l'identification des pièces et les listes des pièces d'entretien.

7. INDEX DES NUMÉROS DE PIÈCES

Une liste numérique de tous les numéros de pièces et des pages correspondantes se trouve à la fin du manuel.

8. LÉGENDES

Les légendes qui se trouvent en haut de chaque page de chaque élément d'information fournissent le numéro de pièce, la désignation ainsi que des renseignements supplémentaires sur les pièces. Les renseignements concernant les numéros de série (S/N) qui se trouvent dans chaque légende doivent être utilisés pour sélectionner les informations correctes pour un moteur donné. Les informations concernant les options de remplacement sur le chantier, l'identification des composants des équipements offerts en option et les lieux d'application sont aussi fournies.

Nouvelle Caractéristique

Les lettres de la première ligne d'une légende sont présentées en police plus grande afin d'indiquer le début d'une unité d'information. Les légendes qui pourraient être requises pour des pages supplémentaires afin d'illustrer une unité d'information seront présentées en police standard et comprendront le terme (à suivre).

9. PIÈCES NON FOURNIES

Nouvelle Caractéristique

Dans certains cas, il est nécessaire d'indiquer les pièces non fournies qui sont en aval de la liste des pièces d'entretien. Les numéros des pièces non fournies dans la liste des pièces et les légendes seront en italique pour signaler qu'ils ne sont pas disponibles.

10. NUMÉROS DE RÉFÉRENCE DE LA LISTE DES PIÈCES

Nouvelle Caractéristique

Les numéros indiqués dans la colonne des numéros de références correspondent aux numéros utilisés dans les illustrations auxquelles ils sont associés. Un suffixe alphabétique peut être ajouté à un numéro de référence pour identifier la liste des articles en aval. Les numéros indiqués dans la colonne de référence de l'illustration renvoient à l'identification du numéro affiché dans le coin inférieur gauche de chaque illustration. Le numéro de référence de l'illustration pourrait être utilisé avec le numéro de référence de l'article pour déterminer le numéro de pièce correct. Il peut y avoir une omission intentionnelle d'un numéro de référence dans une liste de pièces suite à la mise à jour des informations en vue de refléter les numéros de pièces les plus récentes.

11. DÉSIGNATIONS DE PIÈCES EN RETRAIT

Lorsqu'une désignation de pièce est en retrait, cela veut dire que l'article en regard fait partie de l'ensemble sous lequel il figure.

12. LETTRES DE RÉFÉRENCE DES ILLUSTRATIONS

Quand cela est nécessaire, les illustrations comportent des lettres de référence (A, B, C, etc.) pour montrer le trajet des canalisations et faisceaux de câbles d'un point à l'autre. Elles sont utilisées également pour indiquer où relier les illustrations séparées auparavant.

13. ABRÉVIATIONS ET SYMBOLES

O.D. – Diamètre extérieur
I.D. – Diamètre intérieur
A – Ne fait pas partie de ce groupe
B – Utiliser selon besoin
C – Modification
D – Commander par mètre
E – Commander par centimètre
F – Non représenté
G – Commander par pouce
I – Voir "Hose Fabrication Guide"
M – Pièce métrique
R – Pièce rénovée éventuellement disponible
Y – Illustration séparée
Z – Non fourni séparément

NOTA:

En raison du progrès technique et des améliorations continuelles apportées au matériel, votre machine comporte peut-être des modifications qui n'apparaissent pas dans la présente publication. En cas de doute sur un détail de votre machine Caterpillar ou sur le texte de la présente publication, adressez-vous à votre concessionnaire Caterpillar.

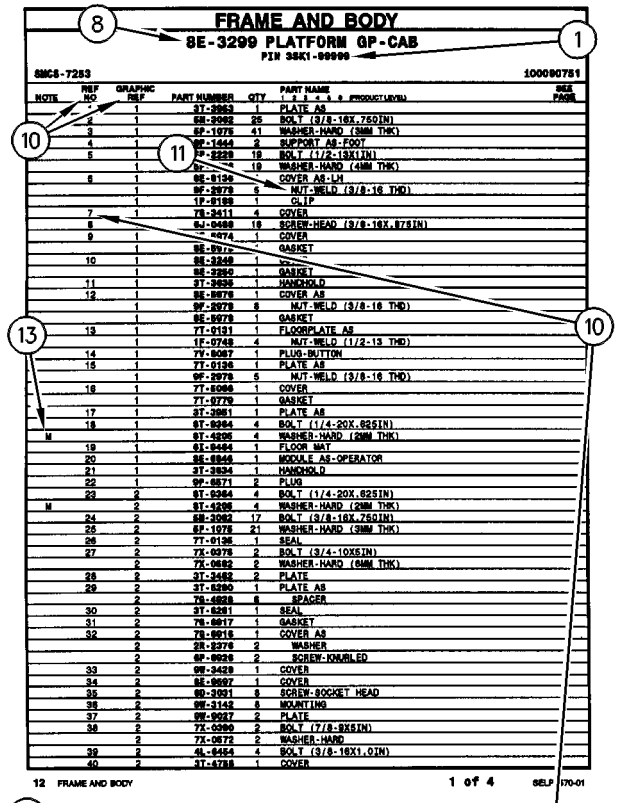

FRAME AND BODY

8E-3299 PLATFORM GP-CAB

PIN 38K1-09999

SMCS-7253 100090751

NOTE	REF NO	GRAPHIC REF	PART NUMBER	QTY	PART NAME (1 2 3 4 5 6 PRODUCT LEVEL)	SEE PAGE
	1	1	3T-2953	1	PLATE AS	
	2	1	5B-2992	25	BOLT (3/8-16X.750IN)	
	3	1	6P-1075	41	WASHER-HARD (3MM THK)	
	4	1	8P-1444	2	SUPPORT AS-FOOT	
	5	1	9P-2229	19	BOLT (1/2-13X1IN)	
		1	9P-[illegible]4	19	WASHER-HARD (4MM THK)	
	6	1	9E-8136	1	COVER AS-LH	
		1	9F-2979	6	NUT-WELD (3/8-16 THD)	
		1	1P-8188	1	CLIP	
	7	1	7S-3411	4	COVER	
	8	1	6J-0488	18	SCREW-HEAD (3/8-16X.875IN)	
	9	1	[illegible]-4474	1	COVER	
		1	9E-8[illegible]7	1	GASKET	
	10	1	9E-3248	1	[illegible]	
		1	9E-3250	1	GASKET	
	11	1	3T-3635	1	HANDHOLD	
	12	1	9E-8078	1	COVER AS	
		1	9F-2979	8	NUT-WELD (3/8-16 THD)	
		1	9E-8078	1	GASKET	
	13	1	7T-0131	1	FLOORPLATE AS	
		1	1F-0748	4	NUT-WELD (1/2-13 THD)	
	14	1	7Y-8087	1	PLUG-BUTTON	
	15	1	7T-0136	1	PLATE AS	
		1	9F-2978	6	NUT-WELD (3/8-16 THD)	
	16	1	7T-8086	1	COVER	
		1	7T-8779	1	GASKET	
	17	1	3T-3981	1	PLATE AS	
	18	1	6T-9364	4	BOLT (1/4-20X.625IN)	
M		1	6T-4205	4	WASHER-HARD (2MM THK)	
	19	1	6L-8484	1	FLOOR MAT	
	20	1	9E-8946	1	MODULE AS-OPERATOR	
	21	1	3T-3634	1	HANDHOLD	
	22	1	9P-8571	2	PLUG	
	23	2	6T-9364	4	BOLT (1/4-20X.625IN)	
M		2	6T-4205	4	WASHER-HARD (2MM THK)	
	24	2	5B-3062	17	BOLT (3/8-16X.750IN)	
	26	2	6F-1075	21	WASHER-HARD (3MM THK)	
	26	2	7T-0135	1	SEAL	
	27	2	7X-0378	2	BOLT (3/4-10X5IN)	
		2	7X-0682	2	WASHER-HARD (6MM THK)	
	28	2	3T-3482	2	PLATE	
	29	2	3T-8280	1	PLATE AS	
		2	7S-0038	8	SPACER	
	30	2	3T-8281	1	SEAL	
	31	2	7S-0017	1	GASKET	
	32	2	7S-0016	1	COVER AS	
		2	2R-2276	2	WASHER	
		2	6P-0028	2	SCREW-KNURLED	
	33	2	9W-3429	1	COVER	
	34	2	9E-0007	1	COVER	
	35	2	9D-3031	8	SCREW-SOCKET HEAD	
	36	2	9W-3142	8	MOUNTING	
	37	2	9W-9027	2	PLATE	
	38	2	7X-0390	2	BOLT (7/8-9X5IN)	
		2	7X-0672	2	WASHER-HARD	
	39	2	4L-8454	4	BOLT (3/8-16X1.0IN)	
	40	2	3T-4788	1	COVER	

12 FRAME AND BODY 1 of 4 SELP4570-01

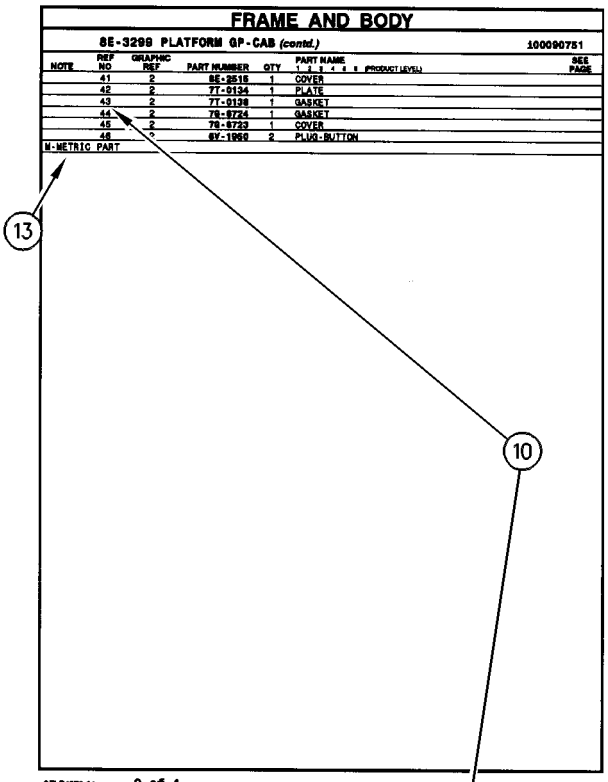

FRAME AND BODY

8E-3299 PLATFORM GP-CAB (contd.) 100090751

NOTE	REF NO	GRAPHIC REF	PART NUMBER	QTY	PART NAME (1 2 3 4 5 6 PRODUCT LEVEL)	SEE PAGE
	41	2	8E-3515	1	COVER	
	42	2	7T-0134	1	PLATE	
	43	2	7T-0139	1	GASKET	
	44	2	7S-0724	1	GASKET	
	45	2	7S-0723	1	COVER	
	46	2	6Y-1969	2	PLUG-BUTTON	

M-METRIC PART

SELP4570-01 2 of 4 FRAME AND BODY 13

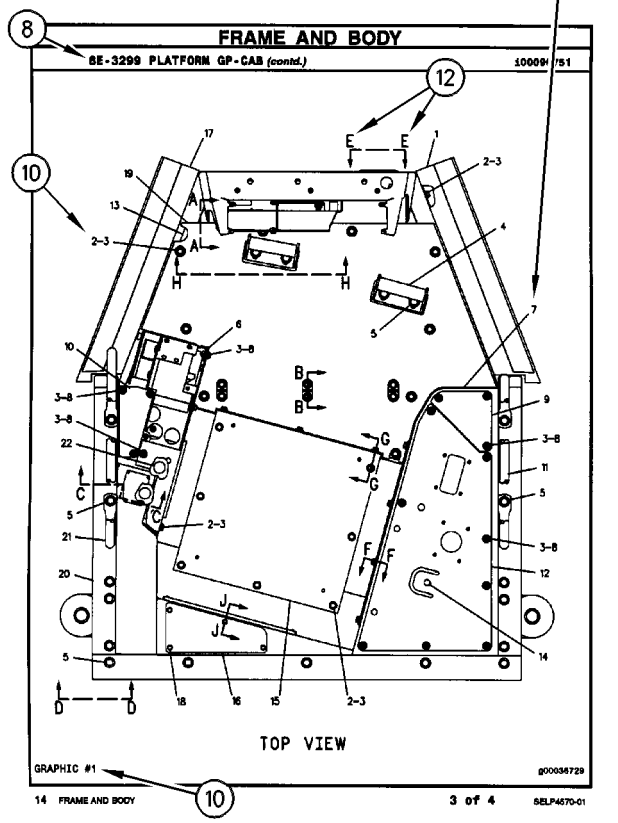

FRAME AND BODY

8E-3299 PLATFORM GP-CAB (contd.) 100090751

GRAPHIC #1 g00036729

TOP VIEW

14 FRAME AND BODY 3 of 4 SELP4570-01

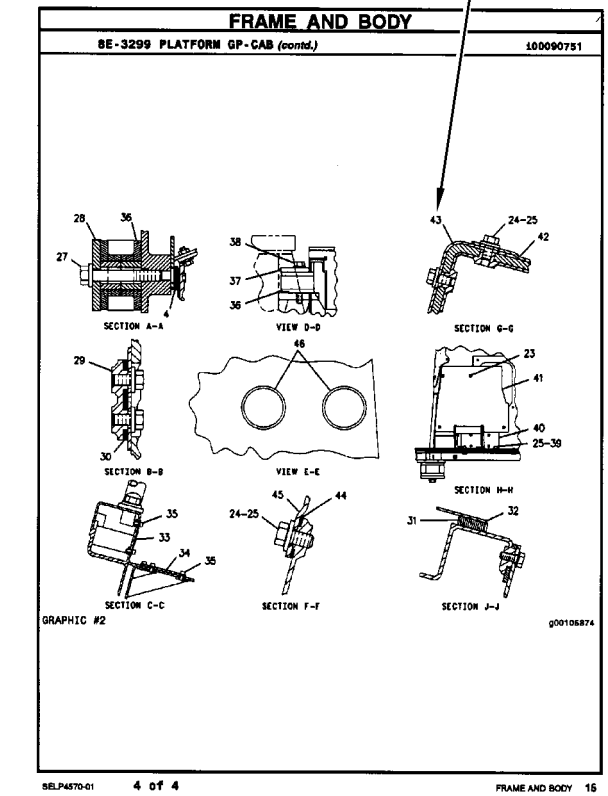

FRAME AND BODY

8E-3299 PLATFORM GP-CAB (contd.) 100090751

SECTION A-A

VIEW D-D

SECTION G-G

SECTION B-B

VIEW E-E

SECTION H-H

SECTION C-C

SECTION F-F

SECTION J-J

GRAPHIC #2 g00105874

SELP4570-01 4 of 4 FRAME AND BODY 15

1. MÁQUINAS

Las máquinas Caterpillar se identifican con Números de Identificación del Producto (PIN). Algunos componentes incluídos en la máquina pueden estar identificados con Números de Serie (N/S). Los componentes que tienen típicamente esta identificación incluyen motores, transmisiones, hojas topadoras y desgarradores. La máquina y el motor se identifican además con Números de Configuración y en algunos casos, Números de Modificación. Estos números están en las placas de identificación del producto o en la placa principal en la cabina del operador.

Los distribuidores Caterpillar necesitan estos números para identificar con exactitud los números de piezas de repuesto.

SIS *Nueva Característica*

A partir del primer trimestre del 2001, el Número de Identificación de Producto (PIN) de Caterpillar cambió de 8 a 17 caracteres. Para hacer más uniforme el método de identificación de equipos, Caterpillar y otros fabricantes de equipo de construcción han tomado medidas para cumplir con la versión más reciente de la norma de numeración de identificación de productos. Los Números de Identificación de Producto para máquinas que no se operan en carreteras son definidos por la norma ISO 10261. El nuevo formato PIN corresponderá a todas las máquinas y grupos electrógenos Caterpillar. Las placas y los caracteres PIN estampados en el bastidor mostrarán el PIN de 17 caracteres. El nuevo formato tendrá la apariencia siguiente:

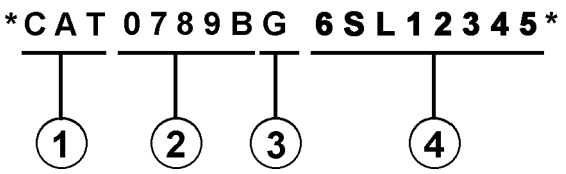

Significado de los caracteres:

1. Código de Fabricación Mundial de Caterpillar (caracteres 1-3)

2. Sección Descriptor de la Máquina (caracteres 4-8)

3. Carácter de Verificación (carácter 9)

4. Sección Indicador de la Máquina (MIS) o Número de Secuencia de Producto (caracteres 10-17). Anteriormente, estos caracteres constituían el Número de Serie.

Las máquinas y grupos electrógenos producidos antes del primer semestre del 2001 mantendrán su formato PIN de 8 caracteres.

Los componentes como motores, transmisiones, ejes, herramientas de trabajo, etc., continuarán usando un Número de Serie (S/N) de 8 caracteres.

2. COMO PEDIR REPUESTOS

⚠ ADVERTENCIA

Cuando se necesiten piezas de repuesto para este producto, Caterpillar recomienda usar piezas de repuesto Caterpillar o piezas que tengan especificaciones equivalentes incluyendo, pero sin estar limitadas a, dimensiones físicas, tipo, fortaleza y material.

El no hacer caso de esta advertencia puede llevar a fallas prematuras, daños al producto y lesiones graves o mortales.

Las piezas de repuesto Caterpillar de calidad están a la disposición de los distribuidores Caterpillar en todo el mundo. Sus existencias actualizadas incluyen todas las piezas normalmente requeridas para proteger su inversión en máquinas Caterpillar. Los distribuidores pueden tener juegos de reparación o piezas remanufacturadas para permitir la selección de la mejor alternativa de reparación en un caso en particular. Al pedir piezas de repuesto, especifique en su pedido la cantidad, el número de pieza, el nombre de la pieza y el número de serie/número de identificación del producto, de la máquina para la cual se necesitan estas piezas.

3. ORGANIZACION DEL MANUAL DE PIEZAS

La información sobre el producto, se presenta en este manual, como "elementos de información" que representan todos los componentes de un modelo específico. Las configuraciones de motores y los grupos de asientos son ejemplos de elementos de información. Los elementos de información están organizados primeramente por nombres de piezas en orden alfabético y en segundo lugar, por el número de pieza dentro de cada sección principal del manual.

4. CONTENIDO

La página de Contenido se encuentra al principio del manual. El Contenido indica cada sección del manual con una lista completa de todos los elementos de información organizados en el orden que aparecen en el manual. Los números de página proporcionan una referencia rápida a las ilustraciones detalladas de identificación de piezas y a las listas de componentes de repuesto de dichas piezas.

5. ÍNDICE DE PIEZAS DE MANTENIMIENTO

Al principio de este catálogo se encuentra un índice de los números de piezas utilizadas más frecuentemente para el mantenimiento, que incluye descripción, cantidad necesaria, lugar de utilización y número de página. Esta información está organizada alfabéticamente, por descripción de la pieza.

6. ÍNDICE

El Índice, ubicado cerca del principio del manual, es una lista en orden alfabético de todos los elementos de información incluídos en el manual. Los números de página proporcionan una referencia rápida a las ilustraciones detalladas de identificación de piezas y a las listas de componentes de repuesto de dichas piezas.

7. INDICE NUMÉRICO DE PIEZAS

Un índice numérico de piezas con el correspondiente número de página aparece al final de este catálogo.

8. TÍTULOS

Los títulos ubicados al principio de cada elemento de información identifican el número y el nombre de la pieza junto con información descriptiva. Se debe usar información sobre los Números de Identificación de Pieza (PIN) y los números de serie (S/N) para seleccionar la información que corresponda a una máquina en particular. También se suministra información sobre las opciones de reparación en el campo, la identificación de componentes de accesorios optativos y el lugar de ubicación de la pieza ("es parte de").

La primera línea del título se muestra con un tipo de letra más grande para indicar el comienzo de un elemento de información. Si se requieren páginas adicionales para ilustrar un elemento de información, los títulos se muestran con un tipo de letra normal y la continuación se indica entre paréntesis.

9. PIEZAS QUE NO SE SUMINISTRAN COMO REPUESTO

En algunos casos es necesario indicar piezas que no se suministran como repuesto pero que pueden estar conectadas a listas de componentes de otras piezas de repuesto. En tal caso, dichas piezas se muestran en cursiva para indicar que no son piezas disponibles.

10. NÚMEROS DE REFERENCIA

Los números en la columna de No. de Referencia corresponden a los números indicados en la ilustración que pertenece a ese número de pieza. Los números que tienen un sufijo alfabético identifican artículos de las listas de componentes de piezas. Los números en la columna de Referencia de la ilustración se identifican en la esquina inferior izquierda de cada ilustración. Para determinar el número de pieza correcto se puede utilizar tanto el No. de Referencia de la ilustración como el No. de Referencia del artículo. A medida que se actualiza la información para indicar los más recientes números de piezas de repuesto, puede omitirse intencionalmente un No. de Referencia en una lista de componentes de piezas.

11. NOMBRES DE PIEZA SANGRADOS

Cuando el nombre de una pieza está sangrado en una lista, significa que esta pieza forma parte del grupo o conjunto del renglón inmediatamente superior.

12. LETRAS DE REFERENCIA DE ILUSTRACIONES

Las ilustraciones contienen algunas veces letras de referencia (A, B, C etc.) cuyo propósito es seguir el trayecto de líneas y mazos de cables de un punto a otro. También se utilizan para mostrar dónde volver a unir ilustraciones que se habían separado.

13. ABREVIATURAS Y SIMBOLOS

O.D. – Diámetro exterior
I.D. – Diámetro interior
A – No es pieza de este grupo
B – Utilizado según la demanda
C – Indica cambio
D – Se pide por metro
E – Se pide por centímetro
F – No se muestra
G – Se pide por pulgada
I – Ver "Hose Fabrication Guide"
M – Pieza métrica
R – Puede estar disponible como pieza remanufacturada
Y – Ilustración separada
Z – No se suministra por separado

SIS *Nueva Característica*

14.<END>

Este símbolo indica el final de un elemento de información.

NOTA:

Las contínuas mejoras y adelantos en diseño podrían originar cambios a su máquina que no se incluyen en esta publicación. Cuando tenga alguna pregunta acerca de su producto Caterpillar o de esta publicación, consulte al distribuidor Caterpillar para obtener la información más reciente.

FRAME AND BODY

8E-3299 PLATFORM GP-CAB

PIN 3SK1-09999

SMCS-7253 100090751

NOTE	REF NO	GRAPHIC REF	PART NUMBER	QTY	PART NAME (1 2 3 4 5 6 PRODUCT LEVEL)	SEE PAGE
	1	1	3T-3953	1	PLATE AS	
	2	1	5B-2992	25	BOLT (3/8-16X.750IN)	
	3	1	6P-1075	41	WASHER-HARD (3MM THK)	
	4	1	6P-1444	2	SUPPORT AS-FOOT	
	5	1	6P-2228	19	BOLT (1/2-13X1IN)	
		1	6P-[illegible]4	19	WASHER-HARD (4MM THK)	
	6	1	8E-8136	1	COVER AS-LH	
		1	8F-2978	6	NUT-WELD (3/8-16 THD)	
		1	1P-8188	1	CLIP	
	7	1	7S-3411	4	COVER	
	8	1	6J-0488	18	SCREW-HEAD (3/8-16X.875IN)	
	9	1	[illegible]-4474	1	COVER	
		1	8E-8[illegible]7		GASKET	
	10	1	8E-3248	1	[illegible]	
		1	8E-3250	1	GASKET	
	11	1	3T-3835	1	HANDHOLD	
	12	1	8E-8878	1	COVER AS	
		1	8F-2978	8	NUT-WELD (3/8-16 THD)	
		1	8E-8078	1	GASKET	
	13	1	7T-0131	1	FLOORPLATE AS	
		1	1F-0748	4	NUT-WELD (1/2-13 THD)	
	14	1	7Y-8087	1	PLUG-BUTTON	
	15	1	7T-0136	1	PLATE AS	
		1	8F-2978	6	NUT-WELD (3/8-16 THD)	
	16	1	7T-8086	1	COVER	
		1	7T-8779	1	GASKET	
	17	1	3T-3981	1	PLATE AS	
	18	1	6T-9364	4	BOLT (1/4-20X.625IN)	
M		1	6T-4205	4	WASHER-HARD (2MM THK)	
	19	1	6L-8484	1	FLOOR MAT	
	20	1	9E-8946	1	MODULE AS-OPERATOR	
	21	1	3T-3834	1	HANDHOLD	
	22	1	9P-8571	2	PLUG	
	23	2	6T-9364	4	BOLT (1/4-20X.625IN)	
M		2	6T-4205	4	WASHER-HARD (2MM THK)	
	24	2	5B-3062	17	BOLT (3/8-16X.750IN)	
	25	2	6P-1075	21	WASHER-HARD (3MM THK)	
	26	2	7T-0135	1	SEAL	
	27	2	7X-0378	2	BOLT (3/4-10X5IN)	
		2	7X-0682	2	WASHER-HARD (6MM THK)	
	28	2	3T-3482	2	PLATE	
	29	2	3T-8280	1	PLATE AS	
		2	7S-0038	8	SPACER	
	30	2	3T-8281	1	SEAL	
	31	2	7S-8017	1	GASKET	
	32	2	7S-8018	1	COVER AS	
		2	2R-2276	2	WASHER	
		2	6P-8028	2	SCREW-KNURLED	
	33	2	9W-3429	1	COVER	
	34	2	8E-8697	1	COVER	
	35	2	9D-3031	8	SCREW-SOCKET HEAD	
	36	2	9W-3142	8	MOUNTING	
	37	2	9W-9027	2	PLATE	
	38	2	7X-0390	2	BOLT (7/8-9X5IN)	
		2	7X-0672	2	WASHER-HARD	
	39	2	4L-8454	4	BOLT (3/8-16X1.0IN)	
	40	2	3T-4788	1	COVER	

12 FRAME AND BODY 1 of 4 SELP4570-01

FRAME AND BODY

8E-3299 PLATFORM GP-CAB (contd.)

100090751

NOTE	REF NO	GRAPHIC REF	PART NUMBER	QTY	PART NAME (1 2 3 4 5 6 PRODUCT LEVEL)	SEE PAGE
	41	2	8E-3515	1	COVER	
	42	2	7T-0134	1	PLATE	
	43	2	7T-0139	1	GASKET	
	44	2	7S-8724	1	GASKET	
	45	2	7S-8723	1	COVER	
	46	2	6V-1969	2	PLUG-BUTTON	

M-METRIC PART

SELP4570-01 2 of 4 FRAME AND BODY 13

FRAME AND BODY

8E-3299 PLATFORM GP-CAB (contd.)

100090751

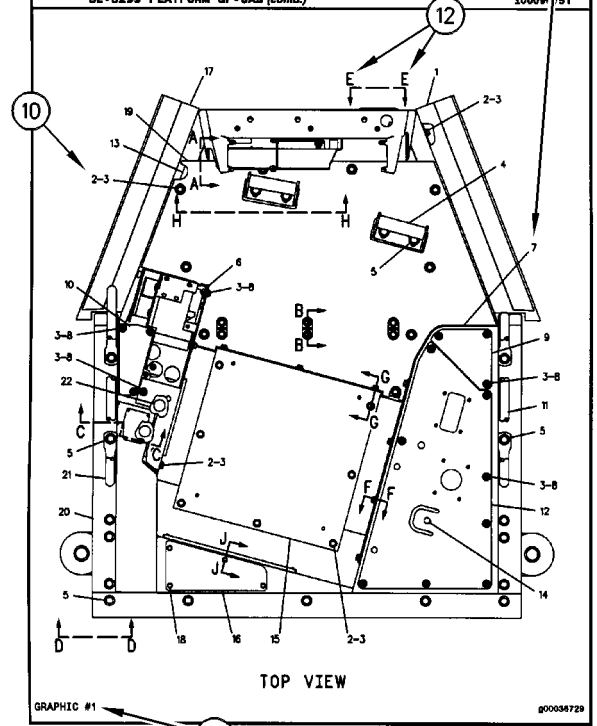

GRAPHIC #1 g00036729

14 FRAME AND BODY 3 of 4 SELP4570-01

FRAME AND BODY

8E-3299 PLATFORM GP-CAB (contd.)

100090751

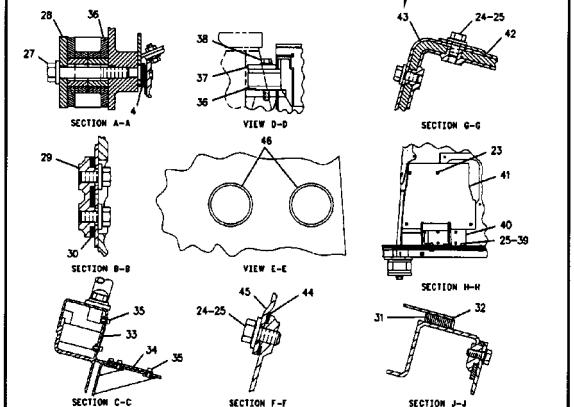

GRAPHIC #2 g00105874

SELP4570-01 4 of 4 FRAME AND BODY 15

INFORMAÇÃO GERAL

1. IDENTIFICAÇÃO DA MÁQUINA

As máquinas Caterpillar são identificadas pelos Números de Informação do Produto (PIN). Alguns componentes incluídos numa máquina podem ser identificados por Números de Série (S/N). Componentes típicos que serão enumerados com números de série incluem motores, transmissões, lâminas e ríperes. Além do número de série, a máquina e o motor são ainda identificados por números de arranjo e, em alguns casos, números de modificações. Tais números encontram-se na(s) placa(s) de identificação do produto e na placa mestre no compartimento do operador.

SIS ***Novidades***

A partir do primeiro trimestre de 2001 o Número de Identificação de Produto da Caterpillar (PIN) precisa ser mudado de 8 para 17 caracteres. Esforçando-se para fornecer uma identificação uniforme de equipamentos, a Caterpillar e outros fabricantes de equipamento de construção estão mudando para atender a versão mais atualizada do padrão de identificação de produtos. Os números de PIN para produtos de aplicações não rodoviárias são definidos pela ISO 10261. O novo formato de número PIN será adotado em todas as máquinas e grupos geradores Caterpillar. As placas e as marcações do chassi mostrarão os 17 dígitos de PIN. O novo formato terá a seguinte disposição:

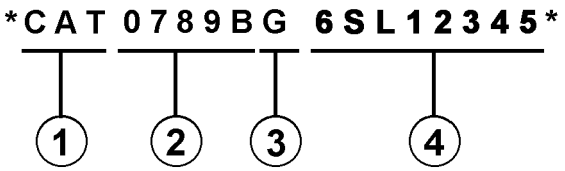

Onde:

1. Código de Fabricação Mundial da Caterpillar (dígitos 1-3)

2. Descrição da Máquina (dígitos 4-8)

3. Dígito de Verificação (dígito 9)

4. Seção de Indicador da Máquina (MIS) ou Número de Seqüência de Produto (dígitos 10-17). Estes eram anteriormente chamados de Número de Série.

Máquinas e grupos geradores produzidos antes do primeiro trimestre de 2001 manterão o formato de 8 caracteres de PIN.

Componentes como motores, transmissões, eixos, ferramentas de trabalho, etc. continuarão a usar Número de Série (S/N) com oito caracteres.

2. COMO OBTER PEÇAS

⚠ CUIDADO

Quando peças de substituição são exigidas para este produto, a Caterpillar recomenda a utilização de peças de substituição Caterpillar ou peças com as especificações equivalentes incluindo, mas não limitadas, à dimensões físicas, tipos, resistência e materiais.

A inobservância desta advertência poderá resultar em falhas prematuras, danos ao produto, ferimentos ou morte.

As Peças de Reposição de Qualidade Caterpillar encontram-se disponíveis nos revendedores Caterpillar no mundo inteiro. Seus estoques de peças são atualizados e incluem todas as peças normalmente necessárias para proteger seu investimento em máquinas Caterpillar. Alguns revendedores podem oferecer jogos de reparo ou peças de troca/remanufaturadas disponíveis como uma opção da alternativa de reparo mais eficaz para uma situação específica. Ao encomendar peças, seu pedido deve especificar a quantidade, o número e o nome da peça e o número de série/número de identificação do produto referentes à máquina para a qual as peças se destinam.

3. ORGANIZAÇÃO DO MANUAL DE PEÇAS

A informação do produto neste manual é apresentada em forma de "elementos de informação" que representam todos os componentes para o modelo específico. Arranjo de Motor e Grupo de Assento são exemplos de elementos de informação. Os elementos de informação são organizados em ordem alfabética por nome de peça ou secundariamente, por número de peça incluído em cada seção principal do manual.

4. LISTA DE CONTEÚDOS

A Lista de Conteúdos (TOC) se encontra no princípio do manual. A Lista de Conteúdos (TOC) relaciona em cada seção do manual uma lista completa com todos os elementos de informação organizados conforme aparecem no manual. Números de página são fornecidos para que se tenha referência rápida de ilustrações de peças detalhadas e listas de conteúdos que podem receber serviço de manutenção.

5. ÍNDICE DE PEÇAS DE MANUTENÇÃO

O Índice de Peças de Manutenção, localizado perto do princípio do manual, faz referência aos números de peça de manutenção usados com maior frequência, fornecendo uma descrição, a quantidade, o uso e o número de página. Esta informação é organizada com a descrição da peça em ordem alfabética.

6. ÍNDICE

O Índice localizado perto do princípio do manual, consiste de uma lista em ordem alfabética de todos os elementos de informação incluídos no manual. Números de página são fornecidos para que se tenha referência rápida de ilustrações de peças detalhadas e listas de conteúdos que podem receber serviço de manutenção.

7. ÍNDICE DE NÚMERO DE PEÇA

Um índice numérico relacionando todos os números de peça e a(s) página(s) correspondentes, aparece no final do manual.

8. LEGENDAS

As legendas localizadas no início de cada elemento de informação identificam o número e o nome de peça, juntamente com informação descritiva adicional. Informações sobre o Número de Informação do Produto (PIN) e o Número de Série (S/N) encontradas em cada legenda devem ser usadas para selecionar a informação correta sobre uma máquina específica. Opções de substituição no campo, identificação de componentes de acessórios opcionais e informações sobre onde são utilizados ("parte de") são também fornecidas.

A primeira linha de uma legenda é indicada em tipo maior para indicar o princípio de um elemento de informação. Legendas para páginas adicionais que podem ser necessárias para ilustrar um elemento de informação serão apresentadas em tipo padrão e incluirão o termo *(continua)* .

9. NÃO DISPONÍVEL SEPARADAMENTE

Em alguns casos, é necessário mostrar peças não disponíveis separadamente que têm uma ligação com listas de conteúdos de nível inferior que podem receber serviço de manutenção. Os números de peça destes componentes não disponíveis aparecerão em *itálico* , a fim de indicar que não estão disponíveis.

10. NÙMEROS DE REFERÊNCIA À LISTA DE PEÇAS

Os números indicados na coluna Ref No (No. de Referência) correspondem-se aos números usados no(s) gráfico(s) correspondente(s). Um sufixo com letras pode ser acrescentado a um número de referência para identificar itens de conteúdo de nível inferior. Os números indicados na coluna Graphic Ref (Referência de Gráfico) referem-se ao identificador de número de gráfico presente no canto esquerdo inferior de cada ilustração. O número de Referência de Gráfico pode ser usado em combinação com o item Ref No para determinar-se o número de peça correto. Poderá haver omissão intencional de um número de referência (Ref No) de uma lista de conteúdos uma vez que as informações são atualizadas para refletir os números de peça mais recentes que podem receber serviço de manutenção.

11. NOMES DE PEÇAS DESALINHADOS

Quando um nome de peça encontra-se desalinhado numa lista de peças, significa que tal item faz parte do (está incluído no) grupo ou conjunto sob o qual está relacionado.

12. LETRAS DE REFERÊNCIA NAS ILUSTRAÇÕES

Quando necessário, as ilustrações contêm letras de referência (A, B, C, etc.) que são utilizadas para seguir tubulações e cabos elétricos de um ponto a outro. Também foram utilizadas para indicar onde se pode reconectar as ilustrações que foram separadas.

13. ABREVIAÇÕES E SÍMBOLOS

O.D. – "Outside Diameter" (Diâmetro Externo)
I.D. – "Inside Diameter" (Diâmetro Interno)
A – Não faz parte deste grupo
B – Use conforme necessário
C – Indica modificação
D – Vendido por metro
E – Vendido por centímetro
F – Não ilustrado
G – Vendido por polegada
I – Consulte o seu revendedor quanto a mangueira
M – Peça métrica
R – Peça remanufaturada pode estar disponível; consulte o seu revendedor Cat
Y – Ilustração separada
Z – Não disponível separadamente

SIS *Novidades*

14. <END>

Este símbolo indica o final de um elemento de informação.

NOTA:

Os contínuos aperfeiçoamentos e avanços no projeto do produto podem ocasionar modificações em sua máquina que talvez ainda não estejam incluídas nesta publicação. Sempre que surgirem dúvidas quanto a um produto Caterpillar ou quanto à presente publicação, consulte o seu revendedor Caterpillar para obter as informações mais recentes disponíveis.

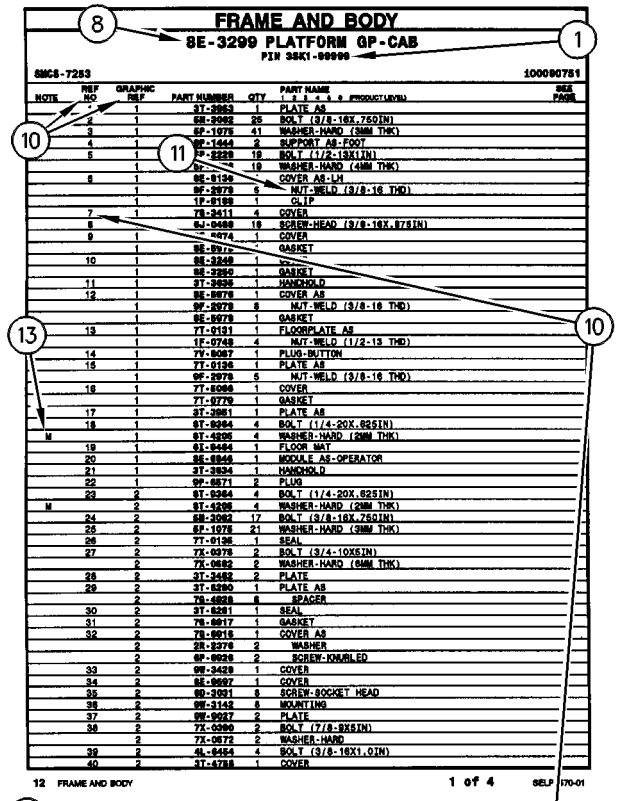

FRAME AND BODY

8E-3299 PLATFORM GP-CAB

PIN 38K1-09999

SMCS-7253 100090751

NOTE	REF NO	GRAPHIC REF	PART NUMBER	QTY	PART NAME (1 2 3 4 5 6 PRODUCT LEVEL)	SEE PAGE
	1	1	3T-3963	1	PLATE AS	
	2	1	5B-2992	25	BOLT (3/8-16X.750IN)	
	3	1	6P-1075	41	WASHER-HARD (38MM THK)	
	4	1	9P-1444	2	SUPPORT AS-FOOT	
	5	1	9P-2228	19	BOLT (1/2-13X1IN)	
		1	9P-[illegible]74	19	WASHER-HARD (41MM THK)	
	6	1	9E-9136	1	COVER AS-LH	
		1	9F-2979	6	NUT-WELD (3/8-16 THD)	
		1	1P-0188	1	CLIP	
	7	1	7S-3411	4	COVER	
	8	1	6J-0488	18	SCREW-HEAD (3/8-16X.875IN)	
	9	1	9P-[illegible]474	1	COVER	
		1	9E-[illegible]17		GASKET	
	10	1	9E-3249	1	[illegible]	
		1	9E-3250	1	GASKET	
	11	1	3T-3935	1	HANDHOLD	
	12	1	9E-9078	1	COVER AS	
		1	9F-2979	8	NUT-WELD (3/8-16 THD)	
		1	9E-9079	1	GASKET	
	13	1	7T-0131	1	FLOORPLATE AS	
		1	1F-0748	4	NUT-WELD (1/2-13 THD)	
	14	1	7Y-9087	1	PLUG-BUTTON	
	15	1	7T-0136	1	PLATE AS	
		1	9F-2979	6	NUT-WELD (3/8-16 THD)	
	16	1	7T-9096	1	COVER	
		1	7T-9779	1	GASKET	
	17	1	3T-3981	1	PLATE AS	
	18	1	6T-9364	4	BOLT (1/4-20X.625IN)	
M		1	6T-4205	4	WASHER-HARD (2MM THK)	
	19	1	6L-9484	1	FLOOR MAT	
	20	1	9E-9946	1	MODULE AS-OPERATOR	
	21	1	3T-3934	1	HANDHOLD	
	22	1	9P-8571	2	PLUG	
	23	2	6T-9364	4	BOLT (1/4-20X.625IN)	
M		2	6T-4205	4	WASHER-HARD (2MM THK)	
	24	2	5B-3062	17	BOLT (3/8-16X.750IN)	
	26	2	6F-1075	21	WASHER-HARD (38MM THK)	
	26	2	7T-0135	1	SEAL	
	27	2	7X-0378	2	BOLT (3/4-10X5IN)	
		2	7X-0682	2	WASHER-HARD (64MM THK)	
	28	2	3T-3482	2	PLATE	
	29	2	3T-5290	1	PLATE AS	
		2	7S-0038	8	SPACER	
	30	2	3T-5281	1	SEAL	
	31	2	7S-9017	1	GASKET	
	32	2	7S-9016	1	COVER AS	
		2	2R-2276	2	WASHER	
		2	6P-9028	2	SCREW-KNURLED	
	33	2	9W-3429	1	COVER	
	34	2	9E-9697	1	COVER	
	35	2	9D-3031	8	SCREW-SOCKET HEAD	
	36	2	9W-3142	8	MOUNTING	
	37	2	9W-9027	2	PLATE	
	38	2	7X-0390	2	BOLT (7/8-9X5IN)	
		2	7X-0672	2	WASHER-HARD	
	39	2	4L-9454	4	BOLT (3/8-16X1.0IN)	
	40	2	3T-4788	1	COVER	

12 FRAME AND BODY 1 of 4 SELP4570-01

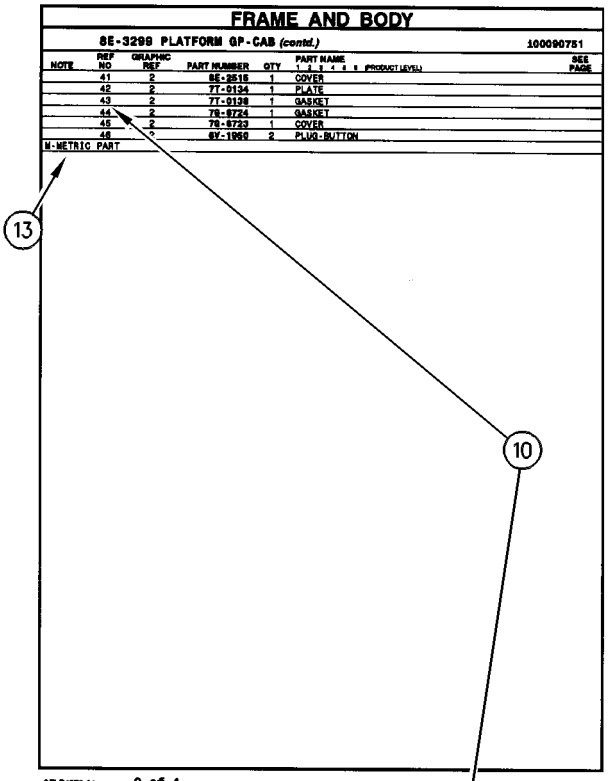

FRAME AND BODY

8E-3299 PLATFORM GP-CAB (contd.)

100090751

NOTE	REF NO	GRAPHIC REF	PART NUMBER	QTY	PART NAME (1 2 3 4 5 6 PRODUCT LEVEL)	SEE PAGE
	41	2	8E-3515	1	COVER	
	42	2	7T-0134	1	PLATE	
	43	2	7T-0139	1	GASKET	
	44	2	7S-9724	1	GASKET	
	45	2	7S-9723	1	COVER	
	46	2	6Y-1969	2	PLUG-BUTTON	

M-METRIC PART

SELP4570-01 2 of 4 FRAME AND BODY 13

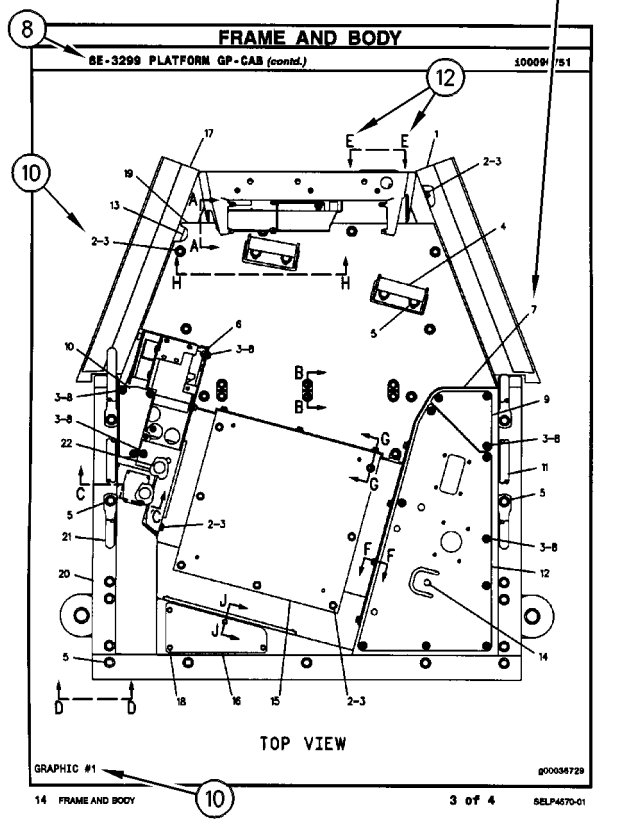

FRAME AND BODY

8E-3299 PLATFORM GP-CAB (contd.)

100090751

TOP VIEW

GRAPHIC #1 g00036729

14 FRAME AND BODY 3 of 4 SELP4570-01

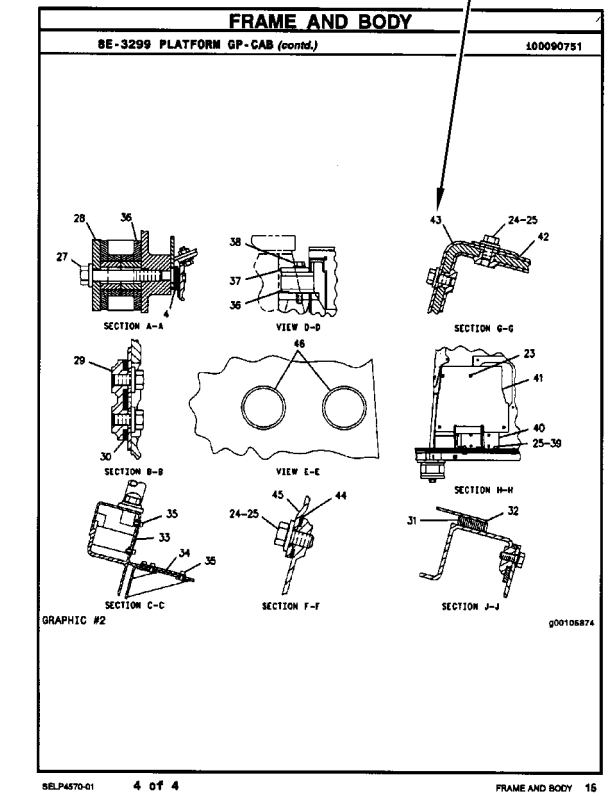

FRAME AND BODY

8E-3299 PLATFORM GP-CAB (contd.)

100090751

SECTION A-A VIEW D-D SECTION G-G

SECTION B-B VIEW E-E SECTION H-H

SECTION C-C SECTION F-F SECTION J-J

GRAPHIC #2 g00105874

SELP4570-01 4 of 4 FRAME AND BODY 15

ALLGEMEINE HINWEISE

1. MASCHINENKENNZEICHNUNG

Caterpillar-Maschinen sind mit PRODUCT IDENTIFICATION NUMBERS (PIN) (Produkt-Identnummern) gekennzeichnet. Einige Baugruppen, z.B. Motoren, Getriebe, Planierschilde und Aufreißer, sind mit SERIAL NUMBERS (S/N) (Seriennummern) gekennzeichnet. An der Maschine und am Motor befinden sich außerdem ARRANGEMENT NUMBERS (Ausrüstungsnummern) sowie in einigen Fällen MODIFICATION NUMBERS (Änderungsnummern). Sie befinden sich auf den PIN-Schildern und auf dem Typenschild im Fahrerhaus.

Bei Ersatzteilbestellungen müssen dem Händler alle diese Nummern zur Verfügung gestellt werden.

SIS ***Neu im Parts Manual***

Vom ersten Quartal 2001 ab wurde die Caterpillar Produkt-Identnummer (PIN) von 8 auf 17 Zeichen geändert. Um zur Standardisierung der Produkt-Identnummer beizutragen, sind Caterpillar und andere Baumaschinenhersteller bestrebt, die aktuellste Norm zur Produkt-Identnummerierung einzuführen. Produkt-Identnummern für Baumaschinen sind durch ISO 10261 definiert. Das neue Format der Produkt-Identnummern gilt für alle Caterpillar-Maschinen und -Stromaggregate. Die Produkt-Identschilder und -Identrahmenmarkierung enthalten die aus 17 Zeichen bestehende Identnummer. Das neue Format hat folgende Abschnitte:

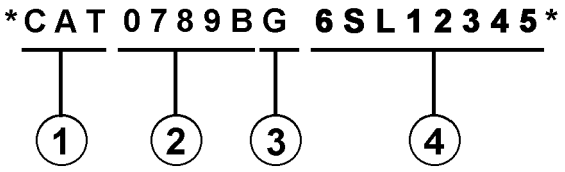

Abschnitte:

1. Caterpillars weltweiter Herstellungscode (Zeichen 1-3)

2. Modell (Zeichen 4-8)

3. Kontrollzeichen (Zeichen 9)

4. Maschinenspezifische Kennung (MIS) oder Produktsequenznummer (Zeichen 10-17). Diese wurde früher als Seriennummer bezeichnet.

Für vor dem ersten Quartal 2001 hergestellte Maschinen und Stromaggregate wird das aus 8 Zeichen bestehende PIN-Format beibehalten.

Bauteile wie z.B. Motoren, Getriebe, Achsen sowie Arbeitsgeräte werden weiterhin eine aus 8 Zeichen bestehende Seriennummer (S/N) aufweisen.

2. BESTELLEN VON ERSATZTEILEN

⚠ WARNUNG

Wenn für diese Maschine Ersatzteile benötigt werden, empfiehlt Caterpillar, ausschließlich Caterpillar-Ersatzteile oder solche zu verwenden, die die gleichen technischen Merkmale hinsichtlich Typ, Festigkeit, Werkzeugeigenschaften und die gleichen Maße aufweisen.

Bei Nichtbeachtung dieser Warnung besteht Verletzungs- oder sogar Lebensgefahr! Ferner kann Nichtbeachtung vorzeitige Ausfälle der Teile und Beschädigung der Maschine zur Folge haben.

Original Caterpillar-Ersatzteile können weltweit bei jedem Caterpillar-Händlern bestellt werden. Die umfangreichen Händlerlager enthalten normalerweise alle Teile, die Sie für Ihre Caterpillar-Maschine benötigen. Einige Händler bieten Reparatursätze, Austausch- oder werküberholte Teile an, so daß Sie eine Auswahl unter verschiedenen Reparaturmöglichkeiten treffen können. Ihre Bestellung muß folgende Angaben enthalten: Anzahl der benötigten Teile, Bestellnummer, Bezeichnung des Teils, Serien-Nr./Produkt-Ident-Nr., Ausrüstungs-Nr. und Änderungs-Nr. der Maschine, für die diese Teile benötigt werden.

3. AUFBAU DES PARTS MANUAL

Die Produktinformationen für alle Komponenten eines bestimmten Modells sind in INFORMATION ELEMENTS (Informationseinheiten) gegliedert. ENGINE ARRANGEMENT (Motorausführung) und SEAT GROUP (Fahrersitz) sind Beispiele für solche Informationseinheiten. Sie sind innerhalb jeder Gruppe alphabetisch, entsprechend der Ersatzteilbezeichnung, und zusätzlich numerisch, entsprechend der Ersatzteilnummer, geordnet.

4. INHALTSVERZEICHNIS

Das Inhaltsverzeichnis befindet sich am Anfang des Buches. Im Inhaltsverzeichnis werden die einzelnen Abschnitte des Buches aufgeführt. Die Abschnitte enthalten eine vollständige Aufstellung aller Informationseinheiten. Diese sind entsprechend ihrem Erscheinen im Buch geordnet. Das Inhaltsverzeichnis enthält Seitenangaben für Schnellverweise auf detaillierte Abbildungen und Teillisten.

5. INDEX FÜR WARTUNGSTEILE

Der Index für Wartungsteile vorn im Buch enthält die Bestellnummern, Seitenangaben, Mengenangaben und Informationen über den Einsatzbereich für die am häufigsten benötigten Ersatzteile. Die Angaben sind alphabetisch entsprechend der Teilebezeichnung geordnet.

6. INDEX

Der Index vorn im Buch enthält eine alphabetische Liste aller Informationseinheiten. Er enthält Seitenangaben für Schnellverweise auf detaillierte Abbildungen und Teillisten.

7. INDEX FÜR BESTELLNUMMERN

Hinten im Buch befindet sich ein numerischer Index, mit allen Bestellnummern und dem Hinweis auf die Seite, auf der sich die betreffende Abbildung befindet.

8. ÜBERSCHRIFTEN

Die Überschriften, die sich am Anfang jeder der Informationseinheiten befinden, enthalten Bestellnummern, Ersatzteilbezeichnungen und zusätzliche beschreibende Informationen. Produkt-Ident- und Seriennummern in den Überschriften sollten zur Auswahl der richtigen Informationen für die betreffende Maschine verwendet werden. Die Überschriften enthalten außerdem Informationen über möglichen Außendienstersatz, mögliche Baugerätekomponenten und die Baugruppe, zu der das Teil gehört.

Die erste Zeile einer Überschrift erscheint in einer größeren Schriftart, um den Anfang einer Informationseinheit zu kennzeichnen. Überschriften für zusätzliche Seiten, die zur Erläuterung einer Informationseinheit notwendig sind, erscheinen in normaler Schriftart und enthalten den Begriff "(contd.)".

9. NICHT EINZELN LIEFERBARE TEILE

In einigen Fällen ist es notwendig nicht lieferbare Teile, die selbst mit einer eigenen Teilliste im Buch vertreten sind, aufzuführen. Die Bestellnummern dieser nicht einzeln lieferbaren Teile erscheinen kursiv, wodurch angezeigt wird, daß sie nur in Verbindung mit anderen Teilen lieferbar sind.

10. REFERENZNUMMER FÜR ERSATZTEILE

Die Zahlen, die in der Spalte "Ref No" aufgeführt sind, stimmen mit den Zahlen in den beigefügten Abbildungen überein. Ein Buchstaben-Suffix kann zu einer Referenznummer hinzugefügt werden, um zu kennzeichnen, daß das Teil mit einer eigenen Teilliste im Buch aufgeführt ist. Die in der Spalte "Graphic Ref" angeführten Zahlen verweisen auf die Identifikationsnummer der Abbildung, die sich in der linken unteren Ecke der Abbildung befindet. Diese Nummer kann zusammen mit der Referenznummer des Teils angegeben werden, um die richtige Ersatzteilnummer zu ermitteln. Referenznummern können absichtlich weggelassen werden, da die Nummern der lieferbaren Ersatzteile ständig aktualisiert werden.

11. EINGERÜCKTE BEZEICHNUNGEN

Wenn eine Bezeichnung eingerückt ist, wird dadurch angezeigt, daß das Teil zu einer Baugruppe gehört, unter deren Bezeichnung es eingerückt ist.

12. REFERENZBUCHSTABEN

Falls erforderlich sind in den Abbildungen Referenzbuchstaben enthalten (z.B. A, B, C, usw.), die Leitungen und Kabelbäume von einem Punkt zum anderen verfolgen. Außerdem geben sie die Stelle an, an der getrennte Abbildungen fortgesetzt werden.

13. ABKÜRZUNGEN UND SYMBOLE

O.D. – Außendurchmesser
I.D. – Innendurchmesser
A – kein Teil dieser Gruppe
B – nach Bedarf verwenden
C – Hinweis auf eine Änderung
D – in Meter-Länge bestellen
E – in Zentimeter-Länge bestellen
F – nicht gezeigt
G – in Zoll-Länge bestellen
I – siehe "Hose Fabrication Guide"
M – metrisches Teil
R – werküberholtes Teil unter Umständen lieferbar
Y – separate Abbildung
Z – nicht einzeln lieferbar

SIS *Neu im Parts Manual*

14. <END>

Dieses Symbol zeigt das Ende eines Informationselements an.

ALLGEMEINE HINWEISE

ANMERKUNG:

Ständig vorgenommene Verbesserungen und Weiterentwicklungen an Ihrer Maschine können Änderungen verursachen, die in der vorliegenden Ausgabe noch nicht berücksichtigt sind. Fragen zu Ihrer Caterpillar-Maschine oder diesem Ersatzteilbuch beantwortet Ihr Caterpillar-Händler.

ALLGEMEINE HINWEISE

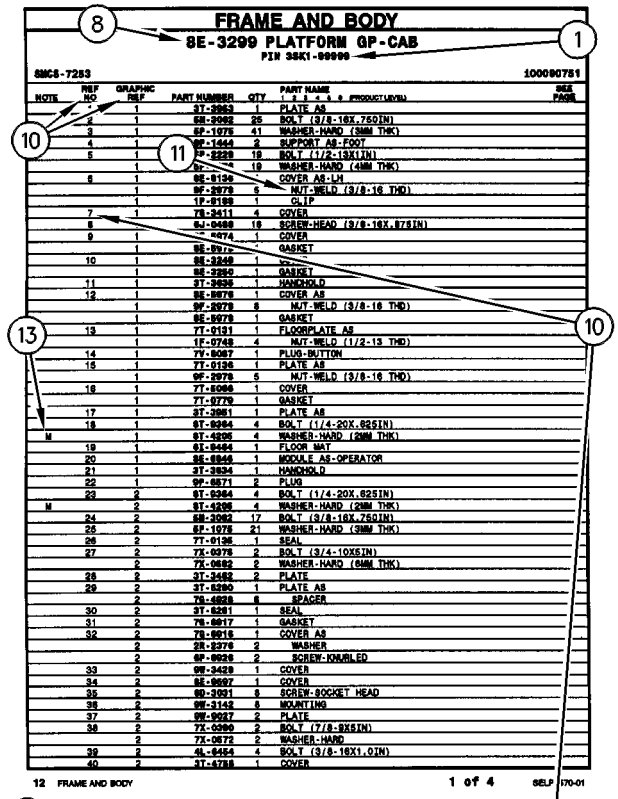

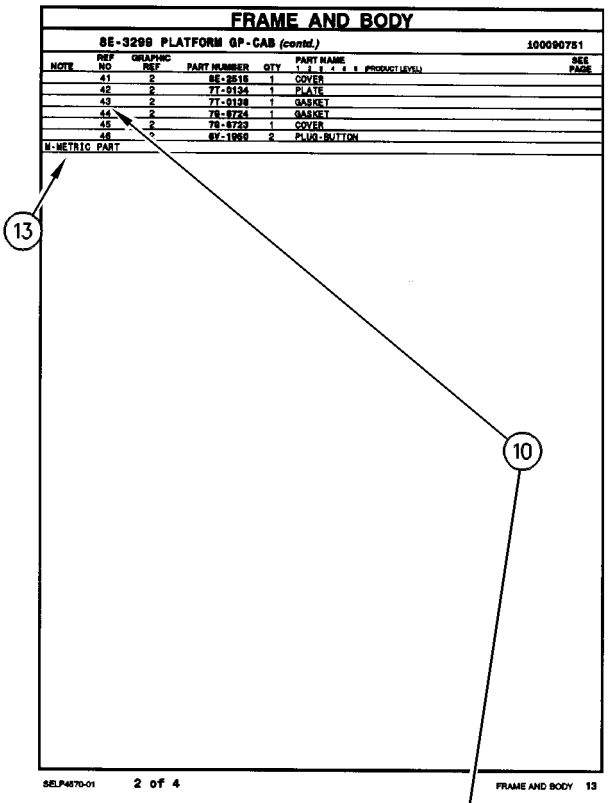

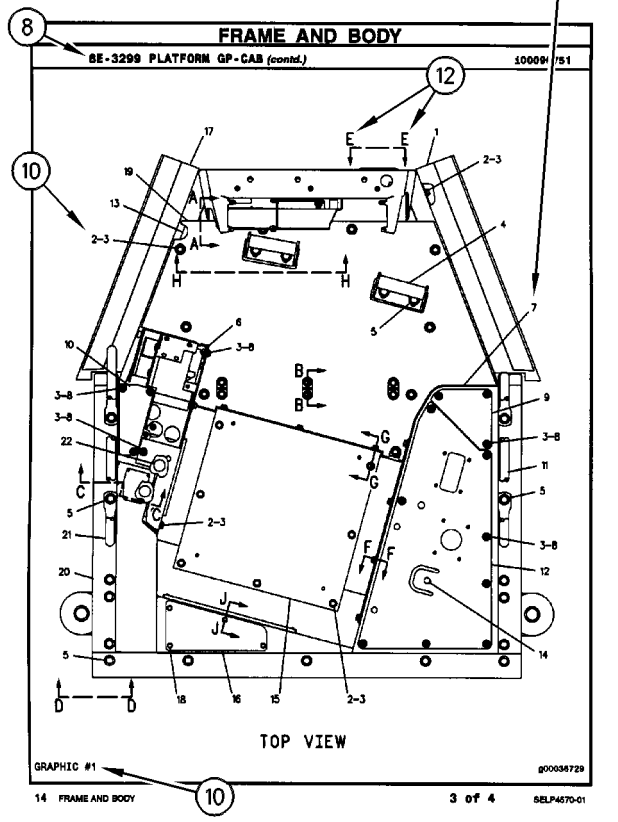

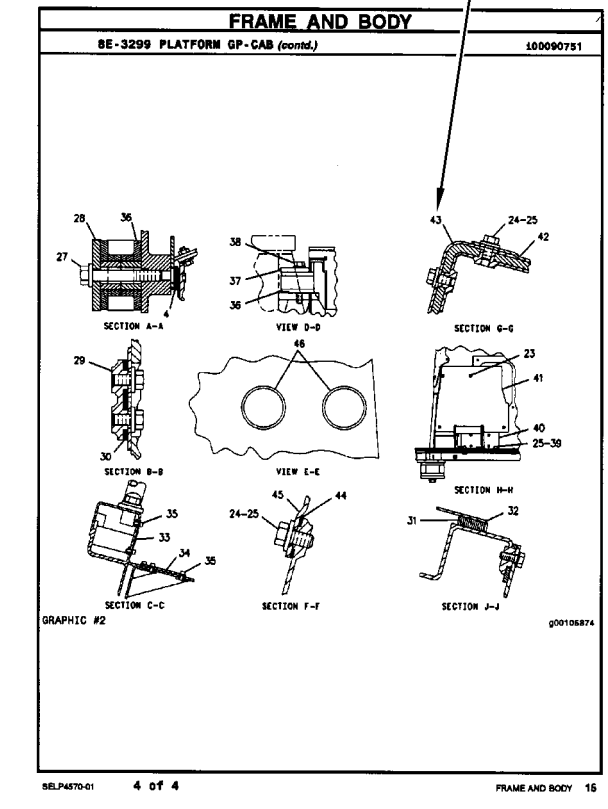

REMANUFACTURED COMPONENTS

As an option when making repairs consider Caterpillar Remanufactured Components. Components that are available through the Caterpillar Remanufactured Program are identified three ways in the parts book:

- with the letter R in the note field of the parts list
- with an R* at the beginning of the first line of the caption
- with an *R at the end of the first line of the caption

Typical components included in the Remanufacturing Program include:

ALTERNATORS
CONNECTING RODS
CRANKSHAFTS - UNDERSIZE
CRANKSHAFTS - UPGRADE TO NEW
CYLINDER HEADS
ELECTRONIC CONTROL MODULES (ECM)
ELECTRONIC SENSORS
FUEL INJECTORS
FUEL NOZZLES
FUEL PUMPS
GOVERNORS
OIL PUMPS
PISTONS
SHORT BLOCKS
STARTERS
TURBOCHARGERS - COMPLETE
TURBOCHARGER CARTRIDGES
WATER PUMPS

Caterpillar Remanufactured engines for many engine arrangements are also available.

OPTIONS DE RÉPARATION

COMPOSANTS RÉNOVÉS

Comme option de réparation, considérer les composants rénovés Caterpillar. Les composants disponibles dans le cadre du programme Caterpillar de composants rénovés sont identifiés de trois façons dans le catalogue de pièces:

- avec la lettre "R" dans l'espace note de la liste des pièces
- avec R* au début de la première ligne des légendes
- avec *R à la fin de la première ligne des légendes

Les composants suivants figurent parmi les composants typiques du programme de rénovation:

ALTERNATEURS
BIELLES
VILEBREQUINS - SOUS-DIMENSIONNÉS
VILEBREQUINS - REMIS À NEUF
CULASSES
MODULES DE COMMANDE ÉLECTRONIQUE (ECM)
CAPTEURS ÉLECTRONIQUES
INJECTEURS
TÊTES D'INJECTEURS
POMPES À CARBURANT
RÉGULATEURS
POMPES À HUILE
PISTONS
BLOCS EMBIELLÉS
DÉMARREURS
TURBOCOMPRESSEURS - COMPLETS
CARTOUCHES DE TURBOCOMPRESSEUR
POMPES À EAU

Des moteurs rénovés sont aussi disponibles pour plusieurs versions de moteur.

ALTERNATIVAS DE REPARACIÓN

COMPONENTES REMANUFACTURADOS

Al hacer reparaciones, tenga en cuenta la opción de Componentes Remanufacturados Caterpillar. Los componentes que están disponibles por medio del programa de Productos Remanufacturados Caterpillar se identifican de tres maneras en el manual de piezas:

- con la letra R en el espacio de Nota de la lista de piezas
- con una R* al comienzo de la primera línea de la leyenda
- con una *R al final de la primera línea de la leyenda

Los componentes que se incluyen típicamente en el Programa de Productos Remanufacturados son:

ALTERNADORES
BIELAS
CIGÜEÑALES - BAJOMEDIDA
CIGÜEÑALES - REMANUFACTURADOS A NUEVO
CULATAS
MÓDULOS DE CONTROL ELECTRÓNICO (ECM)
SENSORES ELECTRONICOS
INYECTORES
BOQUILLAS
BOMBAS DE COMBUSTIBLE
REGULADORES
BOMBAS DE ACEITE
PISTONES
MONOBLOQUES
MOTORES DE ARRANQUE
TURBOCOMPRESORES - COMPLETOS
NÚCLEOS DE TURBOCOMPRESOR
BOMBAS DE AGUA

También hay disponibles motores Remanufacturados Caterpillar para muchas de las configuraciones de motores.

COMPONENTES REMANUFATURADOS

Considere o uso de Componentes Remanufaturados Caterpillar ao efetuar reparos. Os componentes disponíveis através do Programa de Remanufatura Caterpillar são identificados de três formas no manual de peças:

- com um R na área da nota da lista de peças
- com um R* no princípio da primeira linha da legenda
- com um *R no final da primeira linha da legenda

Os componentes típicos que constam no Programa de Remanufatura incluem:

ALTERNADORES
BIELAS
VIRABREQUINS - SUBMEDIDAS
VIRABREQUINS - ATUALIZAÇÃO
CABEÇOTES
MÓDULOS DE CONTROLE ELETRÔNICO (ECM)
SENSORES ELETRÔNICOS
INJETORES DE COMBUSTÍVEL
BICOS DE ABASTECIMENTO DE COMBUSTÍVEL
BOMBAS DE COMBUSTÍVEL
GOVERNADORES
BOMBAS DE ÓLEO
PISTÕES
BLOCOS BÁSICOS DO MOTOR
MOTORES DE PARTIDA
TURBOALIMENTADORES - COMPLETOS
CARTUCHOS DE TURBOALIMENTADORES
BOMBAS D'ÁGUA

Motores Remanufaturados Caterpillar também encontram-se disponíveis para diversos arranjos de motor.

REPARATURALTERNATIVEN

WERKÜBERHOLTE AT-PRODUKTE

Bei Reparaturen sollten werküberholte AT-Produkte von Caterpillar in Betracht gezogen werden. Die durch das AT-Programm von Caterpillar erhältlichen Teile sind im Parts Book auf drei verschiedene Arten gekennzeichnet:

- mit dem Buchstaben R in der Spalte NOTE der Ersatzteilliste
- mit einem R* am Anfang der ersten Zeile der Überschrift
- mit einem *R am Ende der ersten Zeile der Überschrift

Das AT-Programm umfaßt u.a. folgende Produkte:

DREHSTROMGENERATOREN
PLEUELSTANGEN
KURBELWELLEN - MIT UNTERMASS
KURBELWELLEN - MIT ORIGINALMASS
ZYLINDERKÖPFE
ELEKTRONISCHE STEUEREINHEITEN (EMC)
ELEKTRONISCHE SENSOREN
PUMPENDÜSEN
EINSPRITZDÜSEN
KRAFTSTOFFPUMPEN
DREHZAHLREGLER
ÖLPUMPEN
KOLBEN
TEILMOTOREN
ANLASSER
TURBOLADER - KOMPLETT
TURBOLADERLAUFZEUGE
KÜHLWASSERPUMPEN

Viele Motoren können durch werküberholte AT-Motoren von Caterpillar ersetzt werden.

SUPPLEMENTAL COOLANT ADDITIVES

CUSTOMER BENEFITS:

Protects against cavitation, foam, erosion, corrosion, and scale buildup in cooling systems.

- Provides measured coolant conditioner.

DESCRIPTION:

Additives deplete from the coolant with normal operation. For this reason, Supplemental Coolant Additives (SCA) must be added to all heavy duty coolants at regular intervals. In addition, when not using a fully formulated, pre-charged antifreeze, like Caterpillar's DEAC, an initial charge of SCA must be added to the cooling system. The amount of SCA added to the system is dependent on the capacity of the system.

The SCA for initial fill is provided as a liquid. SCA's for maintenance intervals are available in liquid form and as a spin-on element. (No Spin-on available for 3600 Family of Engines)

NOTE:

The amount of SCA added at initial fill is not the same as the amount added at maintenance intervals.

The coolant additive elements can be used with any ethylene or propylene glycol type antifreeze which meets ASTM D4985 or ASTM D5345 Specifications.

NOTE:

For use with standard heavy duty coolant only, not for use with Extended Life Coolant.

PARTS NEEDED:

Cooling System Capacity		Liquid SCA at Initial Fill	Liquid SCA at Maintenance*	Spin-on SCA Maintenance Element*
Liters	Gallons			
22-30	(6-8)	3P-2044 (1)	6V-3542 (1)	111-2370 (1)
30-38	(8-10)	3P-2044 (1) 6V-3542 (1)	111-2372 (1)	111-2369 (1)
38-49	(10-13)	3P-2044 (1) 8T-1589 (1)	111-2372 (1)	111-2369 (1)
49-64	(13-17)	3P-2044 (2)	8T-1589 (1)	9N-3368 (1)
64-83	(17-22)	3P-2044 (2) 8T-1589 (1)	111-2372 (1) 6V-3542 (1)	111-2371 (1)
83-114	(22-30)	3P-2044 (3) 8T-1589 (1)	3P-2044 (1)	9N-3718 (1)
114-163	(30-43)	3P-2044 (5)	3P-2044 (1) 6V-3542 (1)	111-2371 (2)
163-242	(43-64)	3P-2044 (8)	3P-2044 (2)	9N-3718 (2)

** Normal maintenance period is 250 hrs. See your Operation and Maintenance Manual for complete coolant maintenance instructions.*

( ) Indicates quantity required.

ADDITIFS POUR LIQUIDE DE REFROIDISSEMENT

AVANTAGES POUR LE CLIENT

L'additif protège contre la cavitation, la mousse, l'érosion, la corrosion et l'accumulation de dépôts dans le circuit de refroidissement.

- L'additif complémentaire fournit une quantité mesurée d'additif.

DESCRIPTION:

Les additifs s'épuisent pendant l'utilisation du moteur. C'est pourquoi l'on doit ajouter de l'additif au liquide de refroidissement/antigel pour moteurs diesel à intervalles réguliers. En plus, si l'on n'utilise pas de l'antigel entièrement formulé et pré-chargé comme le liquide de refroidissement/antigel Caterpillar pour moteurs diesel, une quantité initiale d'additif doit être ajoutée au circuit de refroidissement. La quantité d'additif à ajouter au circuit dépend de la contenance du circuit.

L'additif pour le remplissage initial est fourni sous forme liquide. L'additif pour l'entretien ultérieur est disponible sous forme liquide et sous forme d'élément à visser. (Il n'y a pas d'élément à visser pour les moteurs de la famille 3600).

NOTA:

La quantité d'additif à ajouter au remplissage initial diffère de la quantité à ajouter aux intervalles d'entretien.

Les éléments d'additif peuvent être utilisés avec tout antigel de type éthylène ou propylène-glycol conforme à la norme ASTM D4985 ou ASTM D5345.

NOTA:

A utiliser uniquement avec du liquide de refroidissement pour moteurs diesel et non avec le liquide de refroidissement longue durée.

PIÈCES NÉCESSAIRES:

Contenance du circuit de refroidissement		Additif liquide au remplissage initial	Additif liquide aux intervalles d'entretien*	Elément d'additif à visser aux intervalles d'entretien*
Litres	Gallons U.S.			
22-30	(6-8)	3P-2044 (1)	6V-3542 (1)	111-2370 (1)
30-38	(8-10)	3P-2044 (1) 6V-3542 (1)	111-2372 (1)	111-2369 (1)
38-49	(10-13)	3P-2044 (1) 8T-1589 (1)	111-2372 (1)	111-2369 (1)
49-64	(13-17)	3P-2044 (2)	8T-1589 (1)	9N-3368 (1)
64-83	(17-22)	3P-2044 (2) 8T-1589 (1)	111-2372 (1) 6V-3542 (1)	111-2371 (1)
83-114	(22-30)	3P-2044 (3) 8T-1589 (1)	3P-2044 (1)	9N-3718 (1)
114-163	(30-43)	3P-2044 (5)	3P-2044 (1) 6V-3542 (1)	111-2371 (2)
163-242	(43-64)	3P-2044 (8)	3P-2044 (2)	9N-3718 (2)

** L'intervalle d'entretien normal est de 250 heures-service. Voir le Guide d'utilisation et d'entretien pour de plus amples renseignements concernant l'entretien du circuit de refroidissement.*

( ) Indique la quantité exigée.

ADITIVOS DE REFRIGERANTE SUPLEMENTARIOS

VENTAJAS PARA EL USUARIO:

Protegen contra la cavitación, la formación de espuma, la corrosión y la acumulación de escamas en los sistemas de enfriamiento.

- Suministra un acondicionador dosificado de refrigerante.

DESCRIPCIÓN:

Los aditivos en el refrigerante se agotan con la operación normal. Por esta razón, se debe agregar Aditivo de refrigerante suplementario (SCA) a todos los refrigerantes para servicio pesado, a intervalos regulares. Además, cuando no se usa un anticongelante de precarga completo, tal como el DEAC de Caterpillar, es necesario agregar una cantidad de aditivo de refrigerante suplementario inicial al sistema de enfriamiento. La cantidad de aditivo que se debe agregar depende de la capacidad del sistema.

El SCA de llenado inicial es líquido. El que se usa para el mantenimiento está disponible tanto en líquido como en un elemento enroscable. (No hay elemento enroscable disponible para la Familia de Motores 3600).

NOTA:

La cantidad de aditivo de llenado inicial no es la misma que se agrega en los intervalos de mantenimiento.

Los elementos de aditivo de refrigerante se pueden usar con cualquier anticongelante de tipo glicol etilénico o propílico que esté de acuerdo con las especificaciones de las normas ASTM D4985 o ASTM D5345.

NOTA:

Se debe utilizar únicamente con refrigerante estándar para servicio pesado; no se debe usar con Refrigerante de Larga Duración.

PIEZAS NECESARIAS:

Capacidad del Sistema de Enfriamiento		SCA líquido de llenado inicial	SCA líquido de mantenimiento*	Elemento de mantenimiento enroscable*
litros	gal EE.UU.			
22-30	6-8	3P-2044 (1)	6V-3542 (1)	111-2370 (1)
30-38	8-10	3P-2044 (1) 6V-3542 (1)	111-2372 (1)	111-2369 (1)
38-49	10-13	3P-2044 (1) 8T-1589 (1)	111-2372 (1)	111-2369 (1)
49-64	13-17	3P-2044 (2)	8T-1589 (1)	9N-3368 (1)
64-83	17-22	3P-2044 (2) 8T-1589 (1)	111-2372 (1) 6V-3542 (1)	111-2371 (1)
83-114	22-30	3P-2044 (3) 8T-1589 (1)	3P-2044 (1)	9N-3718 (1)
114-163	30-43	3P-2044 (5)	3P-2044 (1) 6V-3542 (1)	111-2371 (2)
163-242	43-64	3P-2044 (8)	3P-2044 (2)	9N-3718 (2)

** El período normal de mantenimiento es de 250 horas. Para ver las instrucciones completas sobre el mantenimiento del refrigerante, consulte el Manual de Operación y Mantenimiento.*

( ) Indica la cantidad necesaria.

ADITIVOS SUPLEMENTARES DO LÍQUIDO ARREFECEDOR

BENEFÍCIOS PARA O CLIENTE:

Protege contra cavitação, espuma, erosão, corrosão e acúmulo de crostas nos sistemas de arrefecimento.

- Fornece uma quantidade pré-determinada de condicionador de arrefecimento.

DESCRIÇÃO:

Com a operação normal, os aditivos se esgotam do líquido arrefecedor. Por isso, Aditivos Suplementares do Líquido Arrefecedor (SCA) devem ser acrescentados a todos os líquidos arrefecedores para serviço pesado em intervalos regulares. Além disso, quando um anticongelante pré-carregado, totalmente formulado não for usado, como o DEAC Caterpillar, uma carga inicial de SCA deve ser acrescentada ao sistema de arrefecimento. A quantidade de SCA acrescentada ao sistema depende da capacidade do sistema.

O SCA para abastecimento inicial é fornecido em forma de líquido. Os aditivos suplementares (SCA) para intervalos de manutenção estão à disposição em forma líquida e como um elemento com roscas. (Exceto os Motores da Família 3600)

NOTA:

A quantidade de SCA adicionada no abastecimento inicial não é a mesma que a acrescentada nos intervalos de manutenção.

Os elementos do aditivo do líquido arrefecedor podem ser usados com qualquer tipo de anticongelante etileno ou propileno que satisfaz as Especificações ASTM D4985 ou ASTM D5345.

NOTA:

Para uso apenas com líquido arrefecedor para serviço pesado padrão, não deve ser usado com Líquido Arrefecedor de Vida Longa.

PEÇAS NECESSÁRIAS:

Capacidade do Sistema de Arrefecimento		Líquido SCA Durante Abastecimento Inicial	Líquido SCA Durante Manutenção*	Elemento de Manutenção de SCA com Roscas*
Litros	Galões			
22-30	6-8	3P-2044 (1)	6V-3542 (1)	111-2370 (1)
30-38	8-10	3P-2044 (1) 6V-3542 (1)	111-2372 (1)	111-2369 (1)
38-49	10-13	3P-2044 (1) 8T-1589 (1)	111-2372 (1)	111-2369 (1)
49-64	13-17	3P-2044 (2)	8T-1589 (1)	9N-3368 (1)
64-83	17-22	3P-2044 (2) 8T-1589 (1)	111-2372 (1) 6V-3542 (1)	111-2371 (1)
83-114	22-30	3P-2044 (3) 8T-1589 (1)	3P-2044 (1)	9N-3718 (1)
114-163	30-43	3P-2044 (5)	3P-2044 (1) 6V-3542 (1)	111-2371 (2)
163-242	43-64	3P-2044 (8)	3P-2044 (2)	9N-3718 (2)

** O período normal de manutenção é de 250 horas. Consulte o Manual de Operação e Manutenção para obter instruções completas quanto à manutenção do líquido arrefecedor.*

( ) Indica a quantidade exigida.

KÜHLMITTELZUSATZ

VORTEILE FÜR DEN KUNDEN:

Schutz gegen Kavitation, Schaumbildung, Erosion, Korrosion und Kesselsteinbildung in Kühlsystemen.

- Richtig dosierter Kühlmittelzusatz

BESCHREIBUNG:

Additive erschöpfen sich während des Motorbetriebs. Deshalb muß allen HD-Kühlmitteln regelmäßig Kühlmittelzusatz beigefügt werden. Wenn bei Erstfüllung kein vollwertiges Fertigkühlmittel, wie das Frostschutz- und Kühlmittel für Dieselmotoren von Caterpiller (DEAC), verwendet wird, muß bei Erstfüllung Kühlmittelzusatz beigefügt werden. Wieviel Kühlmittelzusatz beigefügt werden muß, hängt vom Inhalt des Kühlsystems ab.

Für Erstfüllung ist Kühlmittelzusatz nur in flüssiger Form erhältlich. Für Wartungsintervalle ist Kühlmittelzusatz in flüssiger Form und als Zusatzelement erhältlich. (Für die Motorbaureihe 3600 sind keine Zusatzelemente erhältlich.)

ANMERKUNG:

Die Kühlmittelmenge bei Erstfüllung ist nicht die gleiche Menge, die bei Wartungsintervallen beigefügt werden muß.

Die Kühlmittelzusatzelemente können mit allen Frostschutzmitteln auf Ethylen- oder Propylenglykolbasis verwendet werden, die den Standards nach ASTM D4985 oder ASTM D5345 entsprechen.

ANMERKUNG:

Den Kühlmittelzusatz nicht mit Langzeitkühlmittel (ELC) von Caterpillar verwenden. Der Kühlmittelzusatz ist nur für HD-Kühlmittel bestimmt.

TEILEBEZEICHNUNG:

Kühlsysteminhalt		Kühlmittelzusatz bei Erstfüllung	Flüssiger Kühlmittelzusatz bei Wartung*	Kühlmittelzusatzelement bei Wartung*
Liter	US-Gall.			
22-30	(6-8)	3P-2044 (1)	6V-3542 (1)	111-2370 (1)
30-38	(8-10)	3P-2044 (1) 6V-3542 (1)	111-2372 (1)	111-2369 (1)
38-49	(10-13)	3P-2044 (1) 8T-1589 (1)	111-2372 (1)	111-2369 (1)
49-64	(13-17)	3P-2044 (2)	8T-1589 (1)	9N-3368 (1)
64-83	(17-22)	3P-2044 (2) 8T-1589 (1)	111-2372 (1) 6V-3542 (1)	111-2371 (1)
83-114	(22-30)	3P-2044 (3) 8T-1589 (1)	3P-2044 (1)	9N-3718 (1)
114-163	(30-43)	3P-2044 (5)	3P-2044 (1) 6V-3542 (1)	111-2371 (2)
163-242	(43-64)	3P-2044 (8)	3P-2044 (2)	9N-3718 (2)

** Der normale Wartungsintervall beträgt 250 Betriebsstunden. Für vollständige Anweisungen zur Wartung des Kühlsystems, siehe Betriebs- und Wartungshandbuch.*

( ) Erforderliche Anzahl

MAINTENANCE PARTS

DESCRIPTION	PART NUMBER	QTY	WHERE USED	PAGE
AIR INLET AND EXHAUST SYSTEM				
INDICATOR GP-AIR FILTER CHANGE	8N-2694	1	INDICATOR GP-AIR FILTER CHANGE	78
BASIC ENGINE				
HOSE (BREATHER)	198-8645	1	COVER GP-VALVE MECHANISM	25
PLUG-SUMP DRAIN	7C-0351	2	PAN GP-OIL	43
SPRING (BREATHER HOSE)	162-1565	1	COVER GP-VALVE MECHANISM	25
COOLING SYSTEM				
CAP AS (RADIATOR)	227-4376	1	RADIATOR & HYD OIL COOLER GP	69
		1	RADIATOR & HYD OIL COOLER GP	72
PLUG (ENGINE OIL FILTER LINES)	225-7941	1	COOLER GP-FLTR BASE & ENG OIL	54
REGULATOR-WATER TEMPERATURE	225-6908	1	CONNECTION GP-WATER	53
SEAL-O-RING (WATER TEMPERATURE REGULATOR)	225-6909	1	CONNECTION GP-WATER	53
ELECTRICAL AND STARTING SYSTEM				
BATTERY (12 VOLT)	3T-5760	2	BATTERY GP	104
		1	BATTERY GP	106
		1	BATTERY GP	108
	230-6368	1	BATTERY GP	110
BELT-DRIVE (WARNING BEACON)	9X-8139	1	LAMP GP-WARNING BEACON	131
		1	LAMP GP-WARNING BEACON	132
FUSE (10 AMP)	113-8490	2	LIGHTING GP-FLOOD	133
		2	LIGHTING GP-FLOOD	138
		1	WIRING GP-AIR CONDITIONER	173
		1	WIRING GP-POWER RECEPTACLE	202
		1	WIRING GP-RIDE CONTROL	208
		1	WIRING GP-RIDE CONTROL	210
		1	WIRING GP-RIDE CONTROL	212
		1	WIRING GP-CAB	181
FUSE (10-AMPERE)	3K-8782	1	LAMP GP-WARNING BEACON	131
		1	LAMP GP-WARNING BEACON	132
	113-8490	2	LIGHTING GP-FLOOD	142
		1	WIRING GP-RIDE CONTROL	206
FUSE (15 AMP)	113-8491	3	LIGHTING GP-FLOOD	133
		2	LIGHTING GP-FLOOD	136
		2	LIGHTING GP-FLOOD	138
FUSE (15-AMPERE)	113-8491	2	LIGHTING GP-FLOOD	140
		2	LIGHTING GP-FLOOD	142
FUSE (20 AMP)	113-8492	2	WIRING GP-CAB	178
FUSE (5 AMP)	141-2759	1	WIRING GP-CAB	178
		1	WIRING GP-STEERING	217
GLOW PLUG	232-6662	4	GLOW PLUG GP	113
HOLDER AS-BRUSH	7T-6092	1	STARTING MOTOR GP-ELECTRIC	166
LAMP AS (ROTATING WARNING)	185-7016	1	LAMP GP-WARNING BEACON	132
LAMP AS (12-VOLT)	165-5655	1	INSTALLATION GP-SECURITY	115
LAMP-HEAD (12 VOLT)	9W-3324	1	LAMP GP-HEAD & SIGNAL	124
		1	LAMP GP-HEAD & SIGNAL	126
LAMP-HEAD (12-VOLT, 60/55 WATT)	9W-3324	1	LAMP GP-HEAD & SIGNAL	120
		1	LAMP GP-HEAD & SIGNAL	122
LAMP (12 VOLT)	195-9712	1	LAMP GP-REGISTRATION PLATE	128
LAMP (12-VOLT)	7X-9065	1	WIRING GP-CONSOLE	185

MAINTENANCE PARTS

DESCRIPTION	PART NUMBER	QTY	WHERE USED	PAGE
LAMP (12-VOLT) (CONVERTER OIL TEMP)	7X-9065	1	WIRING GP-CONSOLE	187
LAMP (12-VOLT) (COOLANT TEMPERATURE GAUGE)	7X-9065	1	WIRING GP-CONSOLE	187
LAMP (12-VOLT) (FUEL LEVEL)	7X-9065	1	WIRING GP-CONSOLE	187
LAMP (12 VOLT) (MINIATURE)	100-3246	2	LAMP GP-HEAD & SIGNAL	124
		2	LAMP GP-HEAD & SIGNAL	126
LAMP (12-VOLT) (VOLT METER)	7X-9065	1	WIRING GP-CONSOLE	187
LAMP (12 VOLT) (21 WATT)	5G-3244	1	LAMP GP-HEAD & SIGNAL	124
		1	LAMP GP-HEAD & SIGNAL	126
LAMP (12-VOLT, 21-WATT)	5G-3244	1	LAMP GP-HEAD & SIGNAL	120
		1	LAMP GP-HEAD & SIGNAL	122
LAMP (12-VOLT, 4-WATT)	100-3246	1	LAMP GP-HEAD & SIGNAL	120
		1	LAMP GP-HEAD & SIGNAL	122
LAMP (12 VOLT, 55 WATT)	9X-8118	1	LAMP GP-WARNING BEACON	132
	9W-0607	1	LAMP GP-FLOOD	118
		1	LAMP GP-FLOOD	119
		1	LIGHTING GP-FLOOD	136
LAMP (12-VOLT, 55-WATT)	9X-8118	1	LAMP GP-WARNING BEACON	131
	9W-0607	1	LIGHTING GP-FLOOD	142
		1	LIGHTING GP-FLOOD	140
LAMP (12 VOLT, 55 WATT) (FLOOD)	9W-0607	1	LIGHTING GP-FLOOD	136
LAMP (12 VOLT/21 WATT)	5G-3244	1	LAMP GP-FLOOD	117
LAMP (12 VOLT)(55 WATT)	9W-0607	1	LIGHTING GP-FLOOD	133
LAMP (12 VOLT/55 WATT)	9W-0607	1	LIGHTING GP-FLOOD	138
LAMP (12 VOLT)(55 WATT)	9W-0607	1	LIGHTING GP-FLOOD	133
LAMP (12 VOLT/55 WATT)	9W-0607	1	LIGHTING GP-FLOOD	138
LAMP (12VOLT/21WATT) (TURN SIGNAL)	3C-4883	1	LAMP GP-STOP & TAIL	130
LAMP (12VOLT/21/5WATT) (STOP)	3C-6516	1	LAMP GP-STOP & TAIL	130
LENS	8I-4721	1	LAMP GP-FLOOD	117
LENS (AMBER)	100-3250	1	LAMP GP-HEAD & SIGNAL	120
		1	LAMP GP-HEAD & SIGNAL	122
	9X-8121	1	LAMP GP-WARNING BEACON	131
		1	LAMP GP-WARNING BEACON	132
LENS-AMBER	100-3250	1	LAMP GP-HEAD & SIGNAL	124
		1	LAMP GP-HEAD & SIGNAL	126
LENS AS	100-3248	1	LAMP GP-HEAD & SIGNAL	120
		1	LAMP GP-HEAD & SIGNAL	124
		1	LAMP GP-HEAD & SIGNAL	126
	100-3249	1	LAMP GP-HEAD & SIGNAL	122
	136-3848	1	LAMP GP-HEAD & SIGNAL	124
		1	LAMP GP-HEAD & SIGNAL	126
LENS AS (FLOOD)	202-6611	1	LAMP GP-FLOOD	119
	202-6614	1	LAMP GP-FLOOD	118
LENS (CLEAR)	176-0346	1	LIGHTING GP-FLOOD	138
LENS (CLEAR) (FLOODLAMP)	176-0346	1	LIGHTING GP-FLOOD	136
LENS (STOP/TURN SIGNAL)	092-6279	1	LAMP GP-STOP & TAIL	130
REFLECTOR	9R-1499	2	LIGHTING GP-ROADING	146
		2	LIGHTING GP-ROADING	149
		2	LIGHTING GP-ROADING	152
		2	LIGHTING GP-ROADING	155
		2	LIGHTING GP-ROADING	158

MAINTENANCE PARTS

DESCRIPTION	PART NUMBER	QTY	WHERE USED	PAGE
FRAME AND BODY				
FITTING-GREASE (1/8-27 THD)	3B-8488	2	FRAME GP-SLIDING	324
	3B-8489	2	FRAME GP-SLIDING	324
FUEL SYSTEM				
CAP-FUEL	201-0330	1	TANK GP-FUEL	102
ELEMENT-FILTER (FUEL)	228-9130	1	PUMP GP-FUEL PRIMING	98
FILTER ELEMENT AS-FUEL	1R-1804	1	FILTER GP-FUEL	88
HYDRAULIC SYSTEM				
CAP AS	6V-9830	2	LINES GP-LOADER AUXILIARY	462
	6V-9831	2	LINES GP-LIFT CYLINDER	446
		2	LINES GP-LOAD CONTROL VALVE	459
CAP-DUST	6V-0852	1	CONNECTOR GP-VALVE	347
		1	LINES GP-PILOT	474
CAP-FILL (HYDRAULIC TANK)	237-3797	1	TANK GP-HYDRAULIC	539
FILTER	4T-4520	1	VALVE GP-CONTROL	559
		1	VALVE GP-CONTROL	561
		1	VALVE GP-CONTROL	563
		1	VALVE GP-CONTROL	565
		1	VALVE GP-CONTROL	567
		1	VALVE GP-CONTROL	569
		1	VALVE GP-CONTROL	571
		1	VALVE GP-CONTROL	573
		1	VALVE GP-CONTROL	575
		1	VALVE GP-CONTROL	577
FILTER AS-OIL (CLEANOUT/HIGH EFFICIENCY)	126-1817	1	HYDRAULIC AR	396
		1	HYDRAULIC AR	397
FILTER AS-OIL (HYDRAULIC) (FIRE RESISTANT)	134-3014	1	HYDRAULIC AR	396
		1	HYDRAULIC AR	397
FILTER (HYDRAULIC TANK BREATHER)	9R-9925	1	TANK GP-HYDRAULIC	539
FITTING-GREASE (1/8-27 THD)	3B-8489	4	MOUNTING GP-CYLINDER	527
SEAL-O-RING	2M-9780	1	LINES GP-EXTENDABLE STICK	445
IMPLEMENTS				
FITTING-GREASE	3B-8488	3	BOOM GP	588
	3B-8489	5	LINKAGE GP-BACKHOE BUCKET	596
		2	MOUNTING GP-STICK	604
FITTING-GREASE (1/8-27 THD)	3B-8488	1	STICK GP-HOE	613
	3B-8489	1	STICK GP-EXTENDABLE	609
		1	STICK GP-EXTENDABLE	611
		2	STICK GP-HOE	613
LUBRICATION SYSTEM				
FILTER AS-ENGINE OIL	7W-2326	1	FILLER GP-ENGINE OIL	51

MAINTENANCE PARTS

DESCRIPTION	PART NUMBER	QTY	WHERE USED	PAGE
OPERATOR STATION				
BLADE AS	102-2940	2	WIPER GP-WINDOW	797
BLADE-WIPER	5C-8813	1	WIPER GP-WINDOW	797
FILTER	206-7514	1	AIR CONDITIONER & MOUNTING GP	698
		1	HEATER & MTG GP-CAB	741
FILTER-AIR	170-7272	1	HEATER GP-CAB	743
FILTER-AIR (CAB AIR)	170-7272	1	AIR CONDITIONER GP	700
LAMP (12 VOLT)	122-7137	1	TACHOMETER GP-ELECTRIC	781
		1	TACHOMETER GP-ELECTRIC	782
LAMP (12 VOLT) (MINIATURE)	189-3610	1	MODULE GP-WARNING INDICATOR	753
LAMP (12 VOLT, 10 WATT)	6R-7490	1	SUPPRESSION GP-SOUND	776
V-BELT (AIR CONDITIONING COMPRESSOR)	1W-2934	1	COMPRESSOR GP-REFRIGERANT	715
V-BELT SET (INCLUDES 2 BELTS)	3N-1491	1	CAB AR	704
		1	CAB AR-ENCLOSED ROPS	706
	5L-3308	1	CAB AR	703
		1	CAB AR-ENCLOSED ROPS	705
		1	CANOPY AR	711
POWER TRAIN				
BREATHER	7T-3251	1	TRANSMISSION GP-POWER SHIFT	256
BREATHER (AXLE)	197-9155	1	AXLE GP-DRIVE & STEERING	218
BREATHER (TRANSMISSION)	7T-3251	1	TRANSMISSION GP-DIRECT DRIVE	249
CAP	2D-2633	1	VALVE GP-TIRE	267
CAP (VALVE STEM)	2D-2633	1	VALVE GP-TIRE	266
FILTER AS-OIL (TRANSMISSION)	119-4740	1	TRANSMISSION AR-DIRECT DRIVE	247
		1	TRANSMISSION AR-POWER SHIFT	247
PLUG AS-MAGNETIC	152-6144	3	AXLE GP-DRIVE & STEERING	218
		1	DIFFERENTIAL & BEVEL GEAR GP	227
PLUG-MAGNETIC	9R-6602	2	AXLE GP-REAR	222
SEAL-O-RING	5P-6718	1	TRANSMISSION GP-POWER SHIFT	256
STRAINER	7T-2651	1	TRANSMISSION GP-POWER SHIFT	254
STRAINER (TRANSMISSION CASE)	7T-2651	1	TRANSMISSION GP-DIRECT DRIVE	250
VALVE AS-RELIEF (AIR VENT)	5F-5434	1	MOUNTING GP-AXLE	237
SERVICE EQUIPMENT AND SUPPLIES				
KEY	5P-8500	1	LOCK GP-VANDALISM	803
PADLOCK GP	5P-8502	2	LOCK GP-VANDALISM	802
		3	LOCK GP-VANDALISM	803
SLEEVE	8Y-6364	1	LOCK GP-VANDALISM	803
WORK TOOLS				
FITTING-GREASE	3B-8489	2	BUCKET GP-MULTIPURPOSE	668
		2	BUCKET GP-MULTIPURPOSE	674
		2	BUCKET GP-MULTIPURPOSE	675
FITTING-GREASE (1/8-27 THD)	3B-8489	2	BUCKET GP-MULTIPURPOSE	666
		2	BUCKET GP-MULTIPURPOSE	667
		2	BUCKET GP-MULTIPURPOSE	669
		2	MOUNTING GP-BUCKET	689
FITTING-HYDRAULIC	8B-7121	1	COUPLER GP-QUICK	678

PIÈCES DE RECHANGE

DESCRIPTION	NUMÉRO DE PIECÈS	QTÉ	DOMAINE D'APPLICATION	PAGE
CHÂSSIS ET BENNE				
GRAISSEUR (FILET 1/8-27)	3B-8488	2	BATI - DEPORT LATERAL (ASS)	324
	3B-8489	2	BATI - DEPORT LATERAL (ASS)	324
CIRCUIT D'ADMISSION D'AIR ET D'ÉCHAPPEMENT				
INDICATEUR DE COLMATAGE DE FILTRE À AIR (ASS)	8N-2694	1	INDICATEUR DE COLMATAGE DE FILTRE À AIR (ASS)	78
CIRCUIT DE CARBURANT				
BOUCHON DE CARBURANT	201-0330	1	RÉSERVOIR DE CARBURANT (ASS)	102
ÉLÉMENT DE FILTRE (CARBURANT)	228-9130	1	POMPE D'AMORÇAGE DE CARBURANT (ASS)	98
ÉLÉMENT DE FILTRE (ENS)-CARBURANT	1R-1804	1	FILTRE A CARBURANT (ASS)	88
CIRCUIT DE GRAISSAGE				
FILTRE A HUILE MOTEUR (ENS)	7W-2326	1	BOUCHON DE REMPLISSAGE D'HUILE MOTEUR (ASS)	51
CIRCUIT DE REFROIDISSEMENT				
BOUCHON FILETÉ (CANALISATIONS DE FILTRE À HUILE DE MOTEUR)	225-7941	1	SUPPORT DE FILTRE ET REFROIDISSEUR D'HUILE MOTEUR	54
CHAPEAU (ENS) (RADIATEUR)	227-4376	1	RADIATEUR ET REFROIDISSEUR D'HUILE HYDRAULIQUE (ASS)	69
		1	RADIATEUR ET REFROIDISSEUR D'HUILE HYDRAULIQUE (ASS)	72
JOINT TORIQUE (RÉGULATEUR DE TEMPÉRATURE D'EAU)	225-6909	1	RACCORD D'EAU (ASS)	53
THERMOSTAT-TEMPÉRATURE D'EAU	225-6908	1	RACCORD D'EAU (ASS)	53
CIRCUIT ÉLECTRIQUE ET DE DÉMARRAGE				
AMPOULE (12 VOLTS)	7X-9065	1	CABLAGE DE CONSOLE (ASS)	185
	195-9712	1	LAMPE-PLAQUE D'IMMATRICULATION (ASS)	128
AMPOULE (12 VOLTS) (INDICATEUR DE TEMPÉRATURE DE LIQUIDE DE REFROIDISSEMENT)	7X-9065	1	CABLAGE DE CONSOLE (ASS)	187
AMPOULE (12 VOLTS) (MINIATURE)	100-3246	2	LAMPE - PHARE ET CLIGNOTANT	124
		2	LAMPE - PHARE ET CLIGNOTANT	126
AMPOULE (12 VOLTS) (NIVEAU DE CARBURANT)	7X-9065	1	CABLAGE DE CONSOLE (ASS)	187
AMPOULE (12 VOLTS) (TEMPÉRATURE D'HUILE DE CONVERTISSEUR)	7X-9065	1	CABLAGE DE CONSOLE (ASS)	187
AMPOULE (12 VOLTS) (VOLTMÈTRE)	7X-9065	1	CABLAGE DE CONSOLE (ASS)	187
AMPOULE (12 VOLTS) (21 WATTS)	5G-3244	1	LAMPE - PHARE ET CLIGNOTANT	124
		1	LAMPE - PHARE ET CLIGNOTANT	126
AMPOULE (12 VOLTS/ 21 WATTS)	5G-3244	1	LAMPE - PHARE (ASS)	117
AMPOULE (12 VOLTS, 55 WATTS)	9W-0607	1	ÉCLAIRAGE - PROJECTEURS (ASS)	136
		1	LAMPE - PHARE (ASS)	118
	9X-8118	1	LAMPE - GYROPHARE (ASS)	132
	9W-0607	1	LAMPE - PHARE (ASS)	119
AMPOULE (12 VOLTS, 55 WATTS) (PROJECTEUR)	9W-0607	1	ÉCLAIRAGE - PROJECTEURS (ASS)	136
AMPOULE (12 VOLTS)(55 WATTS)	9W-0607	1	ÉCLAIRAGE - PROJECTEURS (ASS)	133

PIÈCES DE RECHANGE

DESCRIPTION	NUMÉRO DE PIECÈS	QTÉ	DOMAINE D'APPLICATION	PAGE
AMPOULE (12 VOLTS/55 WATTS)	9W-0607	1	ÉCLAIRAGE - PROJECTEURS (ASS)	138
AMPOULE (12V, 21W)	5G-3244	1	LAMPE - PHARE ET CLIGNOTANT	120
		1	LAMPE - PHARE ET CLIGNOTANT	122
AMPOULE (12V, 4W)	100-3246	1	LAMPE - PHARE ET CLIGNOTANT	120
		1	LAMPE - PHARE ET CLIGNOTANT	122
AMPOULE (12V, 55W)	9W-0607	1	ÉCLAIRAGE - PROJECTEURS (ASS)	140
		1	ÉCLAIRAGE - PROJECTEURS (ASS)	142
	9X-8118	1	LAMPE - GYROPHARE (ASS)	131
AMPOULE (12VOLTS/ 21/ 5WATTS) (ARRÊT)	3C-6516	1	FEUX ARRIÈRE ET FEUX D'ARRÊT	130
AMPOULE (12VOLTS/ 21WATTS) (CLIGNOTANT DE DIRECTION)	3C-4883	1	FEUX ARRIÈRE ET FEUX D'ARRÊT	130
BATTERIE (12 VOLTS)	3T-5760	2	BATTERIE (ASS)	104
		1	BATTERIE (ASS)	106
		1	BATTERIE (ASS)	108
	230-6368	1	BATTERIE (ASS)	110
BOUGIE DE PRECHAUFFAGE	232-6662	4	BOUGIE DE PRÉCHAUFFAGE (ASS)	113
ENTRAÎNEMENT POUR COURROIE (GYROPHARE)	9X-8139	1	LAMPE - GYROPHARE (ASS)	132
		1	LAMPE - GYROPHARE (ASS)	131
FUSIBLE (10A)	3K-8782	1	LAMPE - GYROPHARE (ASS)	131
		1	LAMPE - GYROPHARE (ASS)	132
	113-8490	1	CABLAGE - CLIMATISEUR (ASS)	173
		1	CÂBLAGE DE COMMANDE DE TRANSLATION (ASS)	206
		1	CÂBLAGE DE COMMANDE DE TRANSLATION (ASS)	208
		1	CÂBLAGE DE COMMANDE DE TRANSLATION (ASS)	210
		1	CÂBLAGE DE COMMANDE DE TRANSLATION (ASS)	212
		1	CABLAGE DE PRISE DE FORCE	202
		2	ÉCLAIRAGE - PROJECTEURS (ASS)	133
		2	ÉCLAIRAGE - PROJECTEURS (ASS)	138
		2	ÉCLAIRAGE - PROJECTEURS (ASS)	142
		1	CABLAGE DE CABINE (ASS)	181
FUSIBLE (15A)	113-8491	3	ÉCLAIRAGE - PROJECTEURS (ASS)	133
		2	ÉCLAIRAGE - PROJECTEURS (ASS)	136
		2	ÉCLAIRAGE - PROJECTEURS (ASS)	138
		2	ÉCLAIRAGE - PROJECTEURS (ASS)	140
		2	ÉCLAIRAGE - PROJECTEURS (ASS)	142
FUSIBLE (20 A)	113-8492	2	CABLAGE DE CABINE (ASS)	178
FUSIBLE (5A)	141-2759	1	CABLAGE DE CABINE (ASS)	178
		1	CABLAGE DE DIRECTION (ASS)	217
LAMPE - FEUX AV (12 VOLTS)	9W-3324	1	LAMPE - PHARE ET CLIGNOTANT	124
		1	LAMPE - PHARE ET CLIGNOTANT	126
LAMPE - FEUX AV (12V, 60/55W)	9W-3324	1	LAMPE - PHARE ET CLIGNOTANT	120
		1	LAMPE - PHARE ET CLIGNOTANT	122
LAMPE (ENS) (TÉMOIN ROTATIF)	185-7016	1	LAMPE - GYROPHARE (ASS)	132
LAMPE (ENS) (12 VOLTS)	165-5655	1	MONTAGE-SÉCURITÉ (ASS)	115
LENTILLE	8I-4721	1	LAMPE - PHARE (ASS)	117
LENTILLE (ENS)	100-3248	1	LAMPE - PHARE ET CLIGNOTANT	126
	136-3848	1	LAMPE - PHARE ET CLIGNOTANT	124
	100-3248	1	LAMPE - PHARE ET CLIGNOTANT	120

PIÈCES DE RECHANGE

DESCRIPTION	NUMÉRO DE PIECÈS	QTÉ	DOMAINE D'APPLICATION	PAGE
		1	LAMPE - PHARE ET CLIGNOTANT	124
	100-3249	1	LAMPE - PHARE ET CLIGNOTANT	122
	136-3848	1	LAMPE - PHARE ET CLIGNOTANT	126
LENTILLE (ENS) (PROJECTEUR)	202-6611	1	LAMPE - PHARE (ASS)	119
	202-6614	1	LAMPE - PHARE (ASS)	118
LENTILLE (JAUNE)	9X-8121	1	LAMPE - GYROPHARE (ASS)	131
		1	LAMPE - GYROPHARE (ASS)	132
	100-3250	1	LAMPE - PHARE ET CLIGNOTANT	120
		1	LAMPE - PHARE ET CLIGNOTANT	122
LENTILLE ORANGE	100-3250	1	LAMPE - PHARE ET CLIGNOTANT	124
		1	LAMPE - PHARE ET CLIGNOTANT	126
LENTILLE (SIGNAL D'ARRÊT/ CLIGNOTANT DE DIRECTION)	092-6279	1	FEUX ARRIÈRE ET FEUX D'ARRÊT	130
LENTILLE (TRANSPARENT)	176-0346	1	ÉCLAIRAGE - PROJECTEURS (ASS)	138
LENTILLE (TRANSPARENT) (PROJECTEUR)	176-0346	1	ÉCLAIRAGE - PROJECTEURS (ASS)	136
PORTE-BALAIS (ENS)	7T-6092	1	DÉMARREUR ÉLECTRIQUE (ASS)	166
RÉFLECTEUR	9R-1499	2	ÉCLAIRAGE - FEUX DE ROUTE (ASS)	146
		2	ÉCLAIRAGE - FEUX DE ROUTE (ASS)	149
		2	ÉCLAIRAGE - FEUX DE ROUTE (ASS)	152
		2	ÉCLAIRAGE - FEUX DE ROUTE (ASS)	155
		2	ÉCLAIRAGE - FEUX DE ROUTE (ASS)	158

PIÈCES DE RECHANGE

DESCRIPTION	NUMÉRO DE PIECÈS	QTÉ	DOMAINE D'APPLICATION	PAGE
CIRCUIT HYDRAULIQUE				
BOUCHON DE REMPLISSAGE (RÉSERVOIR HYDRAULIQUE)	237-3797	1	RÉSERVOIR HYDRAULIQUE (ASS)	539
CHAPEAU (ENS)	6V-9830	2	CANALISATIONS-CHARGEUSE AUXILIAIRE (ASS)	462
	6V-9831	2	CANALISATIONS DE VÉRIN DE LEVAGE (ASS)	446
		2	CANALISATIONS-VALVE DE CONTROLE DE CHARGE	459
FILTRE	4T-4520	1	DISTRIBUTEUR (ASS)	559
		1	DISTRIBUTEUR (ASS)	561
		1	DISTRIBUTEUR (ASS)	563
		1	DISTRIBUTEUR (ASS)	565
		1	DISTRIBUTEUR (ASS)	567
		1	DISTRIBUTEUR (ASS)	569
		1	DISTRIBUTEUR (ASS)	571
		1	DISTRIBUTEUR (ASS)	573
		1	DISTRIBUTEUR (ASS)	575
		1	DISTRIBUTEUR (ASS)	577
FILTRE À HUILE (ENS) (HYDRAULIQUE) (ININFLAMMABLE)	134-3014	1	VERSION HYDRAULIQUE	396
		1	VERSION HYDRAULIQUE	397
FILTRE À HUILE (ENS) (NETTOYAGE/ GRANDE EFFICACITÉ)	126-1817	1	VERSION HYDRAULIQUE	396
		1	VERSION HYDRAULIQUE	397
FILTRE (RENIFLARD DE RÉSERVOIR HYDRAULIQUE)	9R-9925	1	RÉSERVOIR HYDRAULIQUE (ASS)	539
GRAISSEUR (FILET 1/8-27)	3B-8489	4	MONTAGE DE VÉRIN (ASS)	527
JOINT TORIQUE	2M-9780	1	CANALISATIONS DU BRAS TELESCOPIQUE (ASS)	445
PARE-POUSSIERE	6V-0852	1	CANALISATIONS A COMMANDE PILOTE (ASS)	474
		1	RACCORD DE SOUPAPE (ASS)	347
ÉQUIPEMENTS				
GRAISSEUR	3B-8488	3	FLECHE (ASS)	588
	3B-8489	2	MONTAGE DE BRAS (ASS)	604
		5	TIMONERIE DE GODET RÉTRO (ASS)	596
GRAISSEUR (FILET 1/8-27)	3B-8488	1	BRAS DE PELLE RETRO (ASS)	613
	3B-8489	2	BRAS DE PELLE RETRO (ASS)	613
		1	BRAS TÉLESCOPIQUE (ASS)	609
		1	BRAS TÉLESCOPIQUE (ASS)	611
MATÉRIEL ET FOURNITURES D'ENTRETIEN				
CADENAS (ASS)	5P-8502	2	VERROUILLAGE ANTI-VANDALISME (ASS)	802
		3	VERROUILLAGE ANTI-VANDALISME (ASS)	803
CLÉ	5P-8500	1	VERROUILLAGE ANTI-VANDALISME (ASS)	803
MANCHON	8Y-6364	1	VERROUILLAGE ANTI-VANDALISME (ASS)	803

PIÈCES DE RECHANGE

DESCRIPTION	NUMÉRO DE PIECÈS	QTÉ	DOMAINE D'APPLICATION	PAGE
MOTEUR STANDARD				
BOUCHON-VIDANGE DU CARTER	7C-0351	2	HUILE MOTEUR - CARTER (ASS)	43
FLEXIBLE (RENIFLARD)	198-8645	1	CACHE-SOUPAPES (ASS)	25
RESSORT (FLEXIBLE DE RENIFLARD)	162-1565	1	CACHE-SOUPAPES (ASS)	25
OUTILS DE TRAVAIL				
GRAISSEUR	3B-8489	2	GODET TOUS-TRAVAUX (ASS)	668
		2	GODET TOUS-TRAVAUX (ASS)	674
		2	GODET TOUS-TRAVAUX (ASS)	675
	8B-7121	1	COUPLEUR EXPRESS (ASS)	678
GRAISSEUR (FILET 1/8-27)	3B-8489	2	GODET - MONTAGE (ASS)	689
		2	GODET TOUS-TRAVAUX (ASS)	666
		2	GODET TOUS-TRAVAUX (ASS)	667
		2	GODET TOUS-TRAVAUX (ASS)	669
POSTE DE CONDUITE				
AMPOULE (12 VOLTS)	122-7137	1	COMPTE-TOURS ÉLECTRIQUE (ASS)	781
		1	COMPTE-TOURS ÉLECTRIQUE (ASS)	782
AMPOULE (12 VOLTS) (MINIATURE)	189-3610	1	MODULE - TÉMOIN (ASS)	753
AMPOULE (12V, 10W)	6R-7490	1	INSONORISATION (ASS)	776
BALAI D'ESSUIE-GLACE	5C-8813	1	ESSUIE-GLACE (ASS)	797
BALAI D'ESSUIE-GLACE (ENS)	102-2940	2	ESSUIE-GLACE (ASS)	797
COURROIE TRAPEZOIDALE (COMPRESSEUR CLIMATISATION)	1W-2934	1	COMPRESSEUR DE REFRIGERANT (ASS)	715
FILTRE	206-7514	1	CHAUFFAGE ET MONTAGE - CABINE (ASS)	741
		1	CLIMATISEUR ET MONTAGE (ASS)	698
FILTRE À AIR	170-7272	1	CHAUFFAGE DE CABINE (ASS)	743
FILTRE À AIR (AÉRATION DE LA CABINE)	170-7272	1	CLIMATISEUR (ASS)	700
JEU DE COURROIES TRAPEZOIDALES (COMPREND 2 COURROIES)	3N-1491	1	CABINE ROPS FERMÉE (VERSION)	706
		1	CABINE (VERSION)	704
	5L-3308	1	CABINE ROPS FERMÉE (VERSION)	705
		1	CABINE (VERSION)	703
		1	TOIT (VERSION)	711

PIÈCES DE RECHANGE

DESCRIPTION	NUMÉRO DE PIECÈS	QTÉ	DOMAINE D'APPLICATION	PAGE
TRANSMISSION				
BOUCHON AIMANTÉ	9R-6602	2	ESSIEU AR (ASS)	222
BOUCHON MAGNÉTIQUE (ENS)	152-6144	1	COURONNE ET DIFFERENTIEL (ASS)	227
		3	ESSIEU MOTEUR ET DIRECTEUR (ASS)	218
CHAPEAU	2D-2633	1	PNEU - GROUPE DE VALVE	267
CHAPEAU (TIGE DE SOUPAPE)	2D-2633	1	PNEU - GROUPE DE VALVE	266
CLAPET DE DECHARGE (PURGEUR D'AIR)	5F-5434	1	MONTAGE D'ESSIEU (ASS)	237
CREPINE	7T-2651	1	BOÎTE POWER SHIFT (ASS)	254
CREPINE (CARTER DE BOITE DE VITESSES)	7T-2651	1	BOÎTE MÉCANIQUE (ASS)	250
FILTRE À HUILE (ENS) (BOîTE DE VITESSES)	119-4740	1	BOITE MECANIQUE (VERSION)	247
		1	BOÎTE POWER SHIFT (VERSION)	247
JOINT TORIQUE	5P-6718	1	BOÎTE POWER SHIFT (ASS)	256
RENIFLARD	7T-3251	1	BOÎTE POWER SHIFT (ASS)	256
RENIFLARD (BOîTE DE VITESSES)	7T-3251	1	BOÎTE MÉCANIQUE (ASS)	249
RENIFLARD (ESSIEU)	197-9155	1	ESSIEU MOTEUR ET DIRECTEUR (ASS)	218

PIEZAS DE MANTENIMIENTO

DESCRIPCION	NUMERO DE PIEZA	CANT	SE UTILIZA EN	PAGINA
BASTIDOR Y CAJA				
CONEXIÓN DE ENGRASE (ROSCA DE 1/8-27)	3B-8488	2	BASTIDOR DE DESPLAZAMIENTO LATERAL (GR)	324
	3B-8489	2	BASTIDOR DE DESPLAZAMIENTO LATERAL (GR)	324
EQUIPOS Y SUMINISTRO DE SERVICIOS				
CANDADO (GR)	5P-8502	2	TRABA CONTRA EL VANDALISMO (GR)	802
		3	TRABA CONTRA EL VANDALISMO (GR)	803
LLAVE	5P-8500	1	TRABA CONTRA EL VANDALISMO (GR)	803
MANGUITO	8Y-6364	1	TRABA CONTRA EL VANDALISMO (GR)	803
HERRAMIENTAS				
ACOPLAMIENTO HIDRÁULICO	8B-7121	1	ACOPLADOR RÁPIDO (GR)	678
CONEXIÓN DE ENGRASE	3B-8489	2	CUCHARÓN DE USO MÚLTIPLE (GR)	668
		2	CUCHARÓN DE USO MÚLTIPLE (GR)	674
		2	CUCHARÓN DE USO MÚLTIPLE (GR)	675
CONEXIÓN DE ENGRASE (ROSCA DE 1/8-27)	3B-8489	2	CUCHARÓN DE USO MÚLTIPLE (GR)	666
		2	CUCHARÓN DE USO MÚLTIPLE (GR)	667
		2	CUCHARÓN DE USO MÚLTIPLE (GR)	669
		2	MONTAJE DEL CUCHARÓN (GR)	689
IMPLEMENTOS				
CONEXIÓN DE ENGRASE	3B-8488	3	PLUMA (GR)	588
	3B-8489	2	MONTAJE DEL BRAZO (GR)	604
		5	VARILLAJE DEL CUCHARÓN RETROEXCAVADOR (GR)	596
CONEXIÓN DE ENGRASE (ROSCA DE 1/8-27)	3B-8488	1	BRAZO DE RETROEXCAVADOR (GR)	613
	3B-8489	2	BRAZO DE RETROEXCAVADOR (GR)	613
		1	BRAZO EXTENSIBLE (GR)	609
		1	BRAZO EXTENSIBLE (GR)	611
MOTOR BÁSICO				
MANGUERA (RESPIRADERO)	198-8645	1	TAPA DEL MECANISMO DE VÁLVULAS (GR)	25
RESORTE (RESPIRADERO DE MANGUERA)	162-1565	1	TAPA DEL MECANISMO DE VÁLVULAS (GR)	25
TAPON DE DRENAJE DE SUMIDERO	7C-0351	2	CÁRTER - COLECTOR DEL (GR)	43

PIEZAS DE MANTENIMIENTO

DESCRIPCION	NUMERO DE PIEZA	CANT	SE UTILIZA EN	PAGINA
PUESTO DEL OPERADOR				
CORREA TRAPEZOIDAL (COMPRESOR DE AIRE ACONDICIONADO)	1W-2934	1	COMPRESOR DE REFRIGERANTE (GR)	715
FILTRO	206-7514	1	ACONDICIONADOR DE AIRE Y MONTAJE (GR)	698
		1	CALEFACCIÓN Y MONTAJE DE LA CABINA (GR)	741
FILTRO DE AIRE	170-7272	1	CALEFACCIÓN DE LA CABINA (GR)	743
FILTRO DE AIRE (AIRE DE LA CABINA)	170-7272	1	ACONDICIONADOR DE AIRE (GR)	700
HOJA DE LIMPIAPARABRISAS	5C-8813	1	LIMPIAPARABRISAS DE LA VENTANA (GR)	797
HOJA DE LIMPIAPARABRISAS (CONJ)	102-2940	2	LIMPIAPARABRISAS DE LA VENTANA (GR)	797
JUEGO DE CORREAS TRAPEZOIDALES (INCLUYE 2 CORREAS)	3N-1491	1	CABINA (CONFIG)	704
		1	SISTEMA ROPS DE CABINA CERRADA (CONFIG)	706
	5L-3308	1	CABINA (CONFIG)	703
		1	SISTEMA ROPS DE CABINA CERRADA (CONFIG)	705
		1	TECHO (CONFIG)	711
LÁMPARA (12 VOLTIOS)	122-7137	1	TACÓMETRO ELÉCTRICO (GR)	781
		1	TACÓMETRO ELÉCTRICO (GR)	782
LÁMPARA (12 VOLTIOS) (MINIATURA)	189-3610	1	MÓDULO INDICADOR DE ADVERTENCIA (GR)	753
LÁMPARA (12 VOLTIOS, 10 VATIOS)	6R-7490	1	INSONORIZADOR (GR)	776
SISTEMA DE ADMISIÓN Y ESCAPE				
INDICADOR DE CAMBIO DE FILTRO DE ACEITE (GR)	8N-2694	1	INDICADOR DE CAMBIO DE FILTRO DE ACEITE (GR)	78
SISTEMA DE COMBUSTIBLE				
ELEMENTO DE FILTRO (COMBUSTIBLE)	228-9130	1	BOMBA DE CEBADO DE COMBUSTIBLE (GR)	98
ELEMENTO DE FILTRO DE COMBUSTIBLE (CONJ)	1R-1804	1	FILTRO DE COMBUSTIBLE (GR)	88
TAPA PARA EL COMBUSTIBLE	201-0330	1	COMBUSTIBLE - TANQUE DE (GR)	102
SISTEMA DE ENFRIAMIENTO				
REGULADOR DE TEMPERATURA DEL AGUA	225-6908	1	AGUA - CONEXIÓN DE (GR)	53
SELLO ANULAR (REGULADOR DE TEMPERATURA DEL AGUA)	225-6909	1	AGUA - CONEXIÓN DE (GR)	53
TAPÓN (CONJ) (RADIADOR)	227-4376	1	RADIADOR Y ENFRIADOR DE ACEITE HIDRÁULICO (GR)	69
		1	RADIADOR Y ENFRIADOR DE ACEITE HIDRÁULICO (GR)	72
TAPÓN (TUBERIAS DE FILTRO DE ACEITE DEL MOTOR)	225-7941	1	ENFRIADOR DE ACEITE DEL MOTOR Y BASE DEL FILTRO	54
SISTEMA DE LUBRICACIÓN				
FILTRO DE ACEITE DEL MOTOR (CONJ)	7W-2326	1	TUBO DE LLENADO DE ACEITE (GR)	51
SISTEMA ELÉCTRICO Y DE ARRANQUE				

PIEZAS DE MANTENIMIENTO

DESCRIPCION	NUMERO DE PIEZA	CANT	SE UTILIZA EN	PAGINA
BATERÍA (12 VOLTIOS)	3T-5760	2	BATERÍA (GR)	104
		1	BATERÍA (GR)	106
		1	BATERÍA (GR)	108
	230-6368	1	BATERÍA (GR)	110
BUJÍA INCANDESCENTE	232-6662	4	BUJÍA INCANDESCENTE (GR)	113
CRISTAL	8I-4721	1	REFLECTOR (GR)	117
CRISTAL (AMBAR)	9X-8121	1	LÁMPARA DE BALIZA DE ADVERTENCIA (GR)	131
		1	LÁMPARA DE BALIZA DE ADVERTENCIA (GR)	132
	100-3250	1	LÁMPARA DE LUZ DELANTERA Y DE SEÑAL (GR)	120
		1	LÁMPARA DE LUZ DELANTERA Y DE SEÑAL (GR)	122
CRISTAL (SEÑAL DE PARADA/GIRO)	092-6279	1	LUCES DE PARADA Y COLA (GR)	130
CRISTAL (TRANSPARENTE)	176-0346	1	LUCES DE REFLECTOR (GR)	138
CRISTAL (TRANSPARENTE) (REFLECTOR)	176-0346	1	LUCES DE REFLECTOR (GR)	136
FUSIBLE (10 A)	113-8490	1	CABLES DE CONTROL DE AMORTIGUACIÓN (GR)	208
		1	CABLES DE CONTROL DE AMORTIGUACIÓN (GR)	210
		1	CABLES DE CONTROL DE AMORTIGUACIÓN (GR)	212
		1	CABLES DE LA CABINA (GR)	181
		1	CABLES DEL ACONDICIONADOR DE AIRE (GR)	173
		1	CABLES DEL RECEPTÁCULO DE FUERZA (GR)	202
		2	LUCES DE REFLECTOR (GR)	133
		2	LUCES DE REFLECTOR (GR)	138
FUSIBLE (10-AMPERIOS)	113-8490	1	CABLES DE CONTROL DE AMORTIGUACIÓN (GR)	206
	3K-8782	1	LÁMPARA DE BALIZA DE ADVERTENCIA (GR)	131
		1	LÁMPARA DE BALIZA DE ADVERTENCIA (GR)	132
	113-8490	2	LUCES DE REFLECTOR (GR)	142
FUSIBLE (15 A)	113-8491	3	LUCES DE REFLECTOR (GR)	133
		2	LUCES DE REFLECTOR (GR)	136
		2	LUCES DE REFLECTOR (GR)	138
FUSIBLE (15 AMPERIOS)	113-8491	2	LUCES DE REFLECTOR (GR)	140
		2	LUCES DE REFLECTOR (GR)	142
FUSIBLE (20 A)	113-8492	2	CABLES DE LA CABINA (GR)	178
FUSIBLE (5 AMP)	141-2759	1	CABLES DE LA CABINA (GR)	178
		1	CABLES DE LA DIRECCIÓN (GR)	217
LÁMPARA (CONJ) (ADVERTENCIA DE ROTACIÓN)	185-7016	1	LÁMPARA DE BALIZA DE ADVERTENCIA (GR)	132
LÁMPARA (CONJ) (12 VOLTIOS)	165-5655	1	INSTALACION DE SEGURIDAD (GR)	115
LÁMPARA DE FARO DELANTERO (12 VOLTIOS)	9W-3324	1	LÁMPARA DE LUZ DELANTERA Y DE SEÑAL (GR)	124
		1	LÁMPARA DE LUZ DELANTERA Y DE SEÑAL (GR)	126

PIEZAS DE MANTENIMIENTO

DESCRIPCION	NUMERO DE PIEZA	CANT	SE UTILIZA EN	PAGINA
LÁMPARA DE FARO DELANTERO (12 VOLTIOS, 60/55 VATIOS)	9W-3324	1	LÁMPARA DE LUZ DELANTERA Y DE SEÑAL (GR)	120
		1	LÁMPARA DE LUZ DELANTERA Y DE SEÑAL (GR)	122
LÁMPARA (12 V)	195-9712	1	LAMPARA DE PLACA DE REGISTRO (GR)	128
LÁMPARA (12 VOLTIOS)	7X-9065	1	CABLES DE LA CONSOLA (GR)	185
LÁMPARA (12 VOLTIOS) (MEDIDOR DE TEMPERATURA DEL REFRIGERANTE)	7X-9065	1	CABLES DE LA CONSOLA (GR)	187
LÁMPARA (12 VOLTIOS) (MINIATURA)	100-3246	2	LÁMPARA DE LUZ DELANTERA Y DE SEÑAL (GR)	124
		2	LÁMPARA DE LUZ DELANTERA Y DE SEÑAL (GR)	126
LÁMPARA (12 VOLTIOS) (NIVEL DE COMBUSTIBLE)	7X-9065	1	CABLES DE LA CONSOLA (GR)	187
LÁMPARA (12 VOLTIOS) (TEMPERATURA DE ACEITE DEL CONVERTIDOR)	7X-9065	1	CABLES DE LA CONSOLA (GR)	187
LÁMPARA (12 VOLTIOS) (VOLTIMETRO)	7X-9065	1	CABLES DE LA CONSOLA (GR)	187
LÁMPARA (12 VOLTIOS, 21 VATIOS)	5G-3244	1	LÁMPARA DE LUZ DELANTERA Y DE SEÑAL (GR)	120
		1	LÁMPARA DE LUZ DELANTERA Y DE SEÑAL (GR)	122
LÁMPARA (12 VOLTIOS) (21 VATIOS)	5G-3244	1	LÁMPARA DE LUZ DELANTERA Y DE SEÑAL (GR)	124
		1	LÁMPARA DE LUZ DELANTERA Y DE SEÑAL (GR)	126
LÁMPARA (12 VOLTIOS, 4 VATIOS)	100-3246	1	LÁMPARA DE LUZ DELANTERA Y DE SEÑAL (GR)	120
		1	LÁMPARA DE LUZ DELANTERA Y DE SEÑAL (GR)	122
LÁMPARA (12 VOLTIOS, 55 VATIOS)	9W-0607	1	LUCES DE REFLECTOR (GR)	136
	9X-8118	1	LÁMPARA DE BALIZA DE ADVERTENCIA (GR)	131
		1	LÁMPARA DE BALIZA DE ADVERTENCIA (GR)	132
	9W-0607	1	LUCES DE REFLECTOR (GR)	140
		1	LUCES DE REFLECTOR (GR)	142
		1	REFLECTOR (GR)	118
		1	REFLECTOR (GR)	119
LÁMPARA (12 VOLTIOS, 55 VATIOS) (REFLECTOR)	9W-0607	1	LUCES DE REFLECTOR (GR)	136
LÁMPARA (12 VOLTIOS/21 VATIOS)	5G-3244	1	REFLECTOR (GR)	117
LÁMPARA (12 VOLTIOS/21 VATIOS) (SEÑAL DE VIRAJE)	3C-4883	1	LUCES DE PARADA Y COLA (GR)	130
LÁMPARA (12 VOLTIOS/21/5 VATIOS) (PARADA)	3C-6516	1	LUCES DE PARADA Y COLA (GR)	130
LÁMPARA (12 VOLTIOS)(55 VATIOS)	9W-0607	1	LUCES DE REFLECTOR (GR)	133
LÁMPARA (12 VOLTIOS/55 VATIOS)	9W-0607	1	LUCES DE REFLECTOR (GR)	138
LENTE AMBAR	100-3250	1	LÁMPARA DE LUZ DELANTERA Y DE SEÑAL (GR)	124
		1	LÁMPARA DE LUZ DELANTERA Y DE SEÑAL (GR)	126

PIEZAS DE MANTENIMIENTO

DESCRIPCION	NUMERO DE PIEZA	CANT	SE UTILIZA EN	PAGINA
MANDO DE CORREA (BALIZA GIRATORIA DE ADVERTENCIA)	9X-8139	1	LÁMPARA DE BALIZA DE ADVERTENCIA (GR)	131
		1	LÁMPARA DE BALIZA DE ADVERTENCIA (GR)	132
PORTAESCOBILLAS (CONJ)	7T-6092	1	MOTOR DE ARRANQUE ELÉCTRICO (GR)	166
REFLECTOR	9R-1499	2	LUCES DE DESPLAZAMIENTO (GR)	146
		2	LUCES DE DESPLAZAMIENTO (GR)	149
		2	LUCES DE DESPLAZAMIENTO (GR)	152
		2	LUCES DE DESPLAZAMIENTO (GR)	155
		2	LUCES DE DESPLAZAMIENTO (GR)	158
VIDRIO (CONJ)	100-3248	1	LÁMPARA DE LUZ DELANTERA Y DE SEÑAL (GR)	120
		1	LÁMPARA DE LUZ DELANTERA Y DE SEÑAL (GR)	124
		1	LÁMPARA DE LUZ DELANTERA Y DE SEÑAL (GR)	126
	100-3249	1	LÁMPARA DE LUZ DELANTERA Y DE SEÑAL (GR)	122
	136-3848	1	LÁMPARA DE LUZ DELANTERA Y DE SEÑAL (GR)	124
		1	LÁMPARA DE LUZ DELANTERA Y DE SEÑAL (GR)	126
VIDRIO (CONJ) (FARO)	202-6611	1	REFLECTOR (GR)	119
VIDRIO (CONJ) (REFLECTOR)	202-6614	1	REFLECTOR (GR)	118

PIEZAS DE MANTENIMIENTO

DESCRIPCION	NUMERO DE PIEZA	CANT	SE UTILIZA EN	PAGINA
SISTEMA HIDRÁULICO				
CONEXIÓN DE ENGRASE (ROSCA DE 1/8-27)	3B-8489	4	MONTAJE DE CILINDRO (GR)	527
FILTRO	4T-4520	1	VÁLVULA DE CONTROL (GR)	559
		1	VÁLVULA DE CONTROL (GR)	561
		1	VÁLVULA DE CONTROL (GR)	563
		1	VÁLVULA DE CONTROL (GR)	565
		1	VÁLVULA DE CONTROL (GR)	567
		1	VÁLVULA DE CONTROL (GR)	569
		1	VÁLVULA DE CONTROL (GR)	571
		1	VÁLVULA DE CONTROL (GR)	573
		1	VÁLVULA DE CONTROL (GR)	575
		1	VÁLVULA DE CONTROL (GR)	577
FILTRO DE ACEITE (CONJ) (HIDRAULICO) (RESISTENTE AL FUEGO)	134-3014	1	HIDRÁULICA (CONFIG)	396
		1	HIDRÁULICA (CONFIG)	397
FILTRO DE ACEITE (CONJ) (LIMPIEZA/ALTA EFICIENCIA)	126-1817	1	HIDRÁULICA (CONFIG)	396
		1	HIDRÁULICA (CONFIG)	397
FILTRO (RESPIRADERO DEL TANQUE)	9R-9925	1	TANQUE HIDRÁULICO (GR)	539
SELLO ANULAR	2M-9780	1	TUBERÍAS DE LA PALANCA EXTENDIBLE (GR)	445
TAPA CONTRA EL POLVO	6V-0852	1	CONECTOR DE VALVULA (GR)	347
		1	TUBERÍAS CON SERVOMANDO (GR)	474
TAPA, LLENADO (TANQUE HIDRÁULICO)	237-3797	1	TANQUE HIDRÁULICO (GR)	539
TAPÓN (CONJ)	6V-9830	2	TUBERIAS DE AUXILIAR DE CARGADOR (GR)	462
	6V-9831	2	CILINDRO DE LEVANTAMIENTO - TUBERÍAS DEL (GR)	446
		2	TUBERIAS DE VALVULA DE CONTROL DE CARGA (GR)	459
TREN DE FUERZA				
COLADOR	7T-2651	1	SERVOTRANSMISIÓN (GR)	254
COLADOR (CAJA DE TRANSMISION)	7T-2651	1	TRANSMISIÓN DIRECTA (GR)	250
FILTRO DE ACEITE (CONJ) (TRANSMISION)	119-4740	1	SERVOTRANSMISIÓN (CONFIG)	247
		1	TRANSMISION DIRECTA (CONFIG)	247
RESPIRADERO	7T-3251	1	SERVOTRANSMISIÓN (GR)	256
RESPIRADERO (EJE)	197-9155	1	EJE DE IMPULSIÓN Y DE DIRECCIÓN (GR)	218
RESPIRADERO (TRANSMISION)	7T-3251	1	TRANSMISIÓN DIRECTA (GR)	249
SELLO ANULAR	5P-6718	1	SERVOTRANSMISIÓN (GR)	256
TAPA	2D-2633	1	VÁLVULA DEL NEUMÁTICO (GR)	267
TAPA (VASTAGO DE LA VÁLVULA)	2D-2633	1	VÁLVULA DEL NEUMÁTICO (GR)	266
TAPON CONJ-MAGNETICO	152-6144	1	DIFERENCIAL Y CORONA (GR)	227
		3	EJE DE IMPULSIÓN Y DE DIRECCIÓN (GR)	218
TAPÓN MAGNÉTICO	9R-6602	2	EJE TRASERO (GR)	222
VALVULA (RESPIRADERO DE AIRE)	5F-5434	1	EJE - GRUPO DE MONTAJE	237

PEÇAS DE MANUTENÇÃO

DESCRIÇÃO	NÚMERO DE PEÇA	QUANT	UTILIZADA EM	PÁGINA
ACESSÓRIOS				
GRAXEIRA	3B-8488	3	LANÇA	588
	3B-8489	5	ARTICULAÇÃO DA CAÇAMBA DA RETROESCAVADEIRA	596
		2	MONTAGEM - BRAÇO	604
GRAXEIRA (ROSCA 1/8-27 POL)	3B-8488	1	BRAÇO - CAÇAMBA RETRO-ESCAVADORA	613
	3B-8489	2	BRAÇO - CAÇAMBA RETRO-ESCAVADORA	613
		1	BRAÇO ESTENDÍVEL	609
		1	BRAÇO ESTENDÍVEL	611
CHASSI E CARCAÇA				
GRAXEIRA (ROSCA 1/8-27 POL)	3B-8488	2	ARMAÇÃO DESLIZANTE	324
	3B-8489	2	ARMAÇÃO DESLIZANTE	324
EQUIPAMENTOS DE SERVIÇO E SUPRIMENTOS				
CADEADO	5P-8502	2	CADEADO CONTRA VANDALISMO	802
		3	CADEADO CONTRA VANDALISMO	803
CHAVE	5P-8500	1	CADEADO CONTRA VANDALISMO	803
LUVA	8Y-6364	1	CADEADO CONTRA VANDALISMO	803
FERRAMENTAS DE TRABALHO				
CONEXÃO HIDRÁULICA	8B-7121	1	ACOPLADOR RÁPIDO	678
GRAXEIRA	3B-8489	2	CAÇAMBA DE MÚLTIPLAS APLICAÇÕES	668
		2	CAÇAMBA DE MÚLTIPLAS APLICAÇÕES	674
		2	CAÇAMBA DE MÚLTIPLAS APLICAÇÕES	675
GRAXEIRA (ROSCA 1/8-27 POL)	3B-8489	2	CAÇAMBA DE MÚLTIPLAS APLICAÇÕES	666
		2	CAÇAMBA DE MÚLTIPLAS APLICAÇÕES	667
		2	CAÇAMBA DE MÚLTIPLAS APLICAÇÕES	669
		2	MONTAGEM - CAÇAMBA	689
MOTOR BÁSICO				
BUJÃO - DRENAGEM DO RESERVATÓRIO	7C-0351	2	CÁRTER DO ÓLEO DO MOTOR	43
MANGUEIRA (RESPIRO)	198-8645	1	TAMPA - MECANISMO DAS VÁLVULAS	25
MOLA (MANGUEIRA DO RESPIRO)	162-1565	1	TAMPA - MECANISMO DAS VÁLVULAS	25

PEÇAS DE MANUTENÇÃO

DESCRIÇÃO	NÚMERO DE PEÇA	QUANT	UTILIZADA EM	PÁGINA
POSTO DO OPERADOR				
CORREIA EM V (COMPRESSOR DE CONDIC. DE AR)	1W-2934	1	COMPRESSOR DE REFRIGERANTE	715
FILTRO	206-7514	1	AQUECEDOR DA CABINE E MONTAGEM	741
		1	CONDICIONADOR DE AR E MONTAGEM	698
FILTRO - AR	170-7272	1	AQUECEDOR DA CABINE	743
FILTRO - AR (AR DA CABINE)	170-7272	1	CONDICIONADOR DE AR	700
JOGO DE CORREIAS EM V (INCLUI 2 CORREIAS)	3N-1491	1	CABINE	704
		1	CABINE - ESTRUTURA ROPS COBERTA	706
	5L-3308	1	CABINE	703
		1	CABINE - ESTRUTURA ROPS COBERTA	705
		1	TOLDO	711
LÂMINA	102-2940	2	LIMPADOR DO VIDRO	797
LÂMINA DO LIMPADOR DE PÁRA-BRISA	5C-8813	1	LIMPADOR DO VIDRO	797
LÂMPADA (12 V)	122-7137	1	TACÔMETRO - ELÉTRICO	781
		1	TACÔMETRO - ELÉTRICO	782
LÂMPADA (12 V) (MINIATURA)	189-3610	1	MÓDULO - INDICADOR DE ALARME	753
LÂMPADA (12 VOLTS, 10 WATTS)	6R-7490	1	REDUÇÃO DE RUÍDO	776
SISTEMA DE ADMISSÃO E ESCAPE DE AR				
INDICADOR - TROCA DO FILTRO DE AR	8N-2694	1	INDICADOR - TROCA DO FILTRO DE AR	78
SISTEMA DE ARREFECIMENTO				
REGULADOR DE TEMPERATURA DA ÁGUA	225-6908	1	CONEXÃO - TUBO D'ÁGUA	53
RETENTOR DE ANEL-O (REGULADOR DA TEMPERATURA DA ÁGUA)	225-6909	1	CONEXÃO - TUBO D'ÁGUA	53
TAMPA (RADIADOR)	227-4376	1	RADIADOR E ARREFECEDOR DO ÓLEO HIDRÁULICO	69
		1	RADIADOR E ARREFECEDOR DO ÓLEO HIDRÁULICO	72
TAMPÃO (TUBULAÇÕES DO FILTRO DE ÓLEO DO MOTOR)	225-7941	1	ARREFECEDOR DE ÓLEO DO MOTOR E BASE DO FILTRO	54
SISTEMA DE LUBRIFICAÇÃO				
FILTRO - ÓLEO DO MOTOR	7W-2326	1	BOCAL DE ENCHIMENTO DE ÓLEO DO MOTOR	51
SISTEMA DO COMBUSTÍVEL				
ELEMENTO - FILTRANTE (COMBUSTÍVEL)	228-9130	1	BOMBA DE ESCORVA DO COMBUSTÍVEL	98
ELEMENTO - FILTRO DE COMBUSTÍVEL	1R-1804	1	FILTRO - COMBUSTÍVEL	88
TAMPA - TANQUE DE COMBUSTÍVEL	201-0330	1	TANQUE DE COMBUSTÍVEL	102
SISTEMA ELÉTRICO DE PARTIDA				
BATERIA (12 V)	3T-5760	2	BATERIA	104
		1	BATERIA	106
		1	BATERIA	108

PEÇAS DE MANUTENÇÃO

DESCRIÇÃO	NÚMERO DE PEÇA	QUANT	UTILIZADA EM	PÁGINA
	230-6368	1	BATERIA	110
CORREIA DE COMANDO (PISCA-PISCA DE ADVERTÊNCIA)	9X-8139	1	LUZ GIRATÓRIA DE ALARME	131
		1	LUZ GIRATÓRIA DE ALARME	132
FAROL DIANTEIRO (12 V)	9W-3324	1	LÂMPADA DIANTEIRA E DE SINAL	124
		1	LÂMPADA DIANTEIRA E DE SINAL	126
FAROL DIANTEIRO (12-VOLTS, 60/55 WATTS)	9W-3324	1	LÂMPADA DIANTEIRA E DE SINAL	120
		1	LÂMPADA DIANTEIRA E DE SINAL	122
FUSÍVEL (10 A)	113-8490	1	CABOS/FIOS ELÉTRICOS - ABSORÇÃO DE IMPACTOS	208
		1	CABOS/FIOS ELÉTRICOS - ABSORÇÃO DE IMPACTOS	210
		1	CABOS/FIOS ELÉTRICOS - ABSORÇÃO DE IMPACTOS	212
		1	CABOS/FIOS ELÉTRICOS - AR CONDICIONADO	173
		1	CABOS/FIOS ELÉTRICOS - CABINE	181
		1	CABOS/FIOS ELÉTRICOS - TOMADA DE FORÇA	202
		2	SISTEMA DE ILUMINAÇÃO - FARÓIS	133
		2	SISTEMA DE ILUMINAÇÃO - FARÓIS	138
FUSÍVEL (10 AMPERES)	3K-8782	1	LUZ GIRATÓRIA DE ALARME	131
		1	LUZ GIRATÓRIA DE ALARME	132
	113-8490	1	CABOS/FIOS ELÉTRICOS - ABSORÇÃO DE IMPACTOS	206
		2	SISTEMA DE ILUMINAÇÃO - FARÓIS	142
FUSÍVEL (15 A)	113-8491	3	SISTEMA DE ILUMINAÇÃO - FARÓIS	133
		2	SISTEMA DE ILUMINAÇÃO - FARÓIS	136
		2	SISTEMA DE ILUMINAÇÃO - FARÓIS	138
FUSÍVEL (15 AMPERES)	113-8491	2	SISTEMA DE ILUMINAÇÃO - FARÓIS	140
		2	SISTEMA DE ILUMINAÇÃO - FARÓIS	142
FUSÍVEL (20 A)	113-8492	2	CABOS/FIOS ELÉTRICOS - CABINE	178
FUSÍVEL (5 AMP)	141-2759	1	CABOS/FIOS ELÉTRICOS - CABINE	178
		1	CABOS/FIOS ELÉTRICOS - DIREÇÃO	217
LÂMPADA (ALERTA GIRATÓRIO)	185-7016	1	LUZ GIRATÓRIA DE ALARME	132
LÂMPADA (12 V)	195-9712	1	LAMPADA-PLACA DE REGISTRO	128
LÂMPADA (12 V) (MINIATURA)	100-3246	2	LÂMPADA DIANTEIRA E DE SINAL	126
		2	LÂMPADA DIANTEIRA E DE SINAL	124
LÂMPADA (12 V) (21 WATT)	5G-3244	1	LÂMPADA DIANTEIRA E DE SINAL	126
		1	LÂMPADA DIANTEIRA E DE SINAL	124
LÂMPADA (12-VOLTS)	7X-9065	1	CABOS/FIOS ELÉTRICOS DO CONSOLE	185
	165-5655	1	INSTALAÇÃO-SEGURANÇA	115
LÂMPADA (12 VOLTS - 55 WATTS)	9W-0607	1	SISTEMA DE ILUMINAÇÃO - FARÓIS	133
LÂMPADA (12-VOLTS) (MEDIDOR DA TEMPERATURA DO LÍQUIDO ARREFECEDOR)	7X-9065	1	CABOS/FIOS ELÉTRICOS DO CONSOLE	187
LÂMPADA (12-VOLTS) (NÍVEL DO COMBUSTÍVEL)	7X-9065	1	CABOS/FIOS ELÉTRICOS DO CONSOLE	187
LÂMPADA (12-VOLTS) (TEMPERATURA DO ÓLEO DO CONVERSOR)	7X-9065	1	CABOS/FIOS ELÉTRICOS DO CONSOLE	187
LÂMPADA (12-VOLTS) (VOLTÍMETRO)	7X-9065	1	CABOS/FIOS ELÉTRICOS DO CONSOLE	187

PEÇAS DE MANUTENÇÃO

DESCRIÇÃO	NÚMERO DE PEÇA	QUANT	UTILIZADA EM	PÁGINA
LÂMPADA (12-VOLTS, 21-WATTS)	5G-3244	1	LÂMPADA DIANTEIRA E DE SINAL	120
		1	LÂMPADA DIANTEIRA E DE SINAL	122
LÂMPADA (12-VOLTS, 4-WATTS)	100-3246	1	LÂMPADA DIANTEIRA E DE SINAL	120
		1	LÂMPADA DIANTEIRA E DE SINAL	122
LÂMPADA (12 VOLTS, 55 WATTS)	9W-0607	1	SISTEMA DE ILUMINAÇÃO - FARÓIS	136
	9X-8118	1	LUZ GIRATÓRIA DE ALARME	132
	9W-0607	1	LÂMPADA - FAROL	118
		1	LÂMPADA - FAROL	119
LÂMPADA (12-VOLTS, 55-WATTS)	9X-8118	1	LUZ GIRATÓRIA DE ALARME	131
	9W-0607	1	SISTEMA DE ILUMINAÇÃO - FARÓIS	140
		1	SISTEMA DE ILUMINAÇÃO - FARÓIS	142
LÂMPADA (12 VOLTS, 55 WATTS) (FAROL)	9W-0607	1	SISTEMA DE ILUMINAÇÃO - FARÓIS	136
LÂMPADA (12 VOLTS/21 WATTS)	5G-3244	1	LÂMPADA - FAROL	117
LÂMPADA (12 VOLTS/21 WATTS) (SETA DE DIREÇÃO)	3C-4883	1	LUZ TRASEIRA E DE FREIO	130
LÂMPADA (12 VOLTS/21/5 WATTS) (PARAR)	3C-6516	1	LUZ TRASEIRA E DE FREIO	130
LÂMPADA (12 VOLTS/55 WATTS)	9W-0607	1	SISTEMA DE ILUMINAÇÃO - FARÓIS	138
LENTE	8I-4721	1	LÂMPADA - FAROL	117
	100-3248	1	LÂMPADA DIANTEIRA E DE SINAL	120
		1	LÂMPADA DIANTEIRA E DE SINAL	124
		1	LÂMPADA DIANTEIRA E DE SINAL	126
	100-3249	1	LÂMPADA DIANTEIRA E DE SINAL	122
	136-3848	1	LÂMPADA DIANTEIRA E DE SINAL	124
		1	LÂMPADA DIANTEIRA E DE SINAL	126
LENTE ÂMBAR	100-3250	1	LÂMPADA DIANTEIRA E DE SINAL	124
		1	LÂMPADA DIANTEIRA E DE SINAL	126
LENTE (ÂMBER)	9X-8121	1	LUZ GIRATÓRIA DE ALARME	131
		1	LUZ GIRATÓRIA DE ALARME	132
	100-3250	1	LÂMPADA DIANTEIRA E DE SINAL	120
		1	LÂMPADA DIANTEIRA E DE SINAL	122
LENTE (FAROL)	202-6614	1	LÂMPADA - FAROL	118
LENTE (FAROL DIANTEIRO)	202-6611	1	LÂMPADA - FAROL	119
LENTE (SINAL DE PARADA/CURVA)	092-6279	1	LUZ TRASEIRA E DE FREIO	130
LENTE (TRANSPARENTE)	176-0346	1	SISTEMA DE ILUMINAÇÃO - FARÓIS	138
LENTE (TRANSPARENTE) (FAROL)	176-0346	1	SISTEMA DE ILUMINAÇÃO - FARÓIS	136
REFLETOR	9R-1499	2	ILUMINAÇÃO - RODOVIÁRIA	146
		2	ILUMINAÇÃO - RODOVIÁRIA	149
		2	ILUMINAÇÃO - RODOVIÁRIA	152
		2	ILUMINAÇÃO - RODOVIÁRIA	155
		2	ILUMINAÇÃO - RODOVIÁRIA	158
SUPORTE - ESCOVA	7T-6092	1	MOTOR ELÉTRICO DE PARTIDA	166
VELA DE AQUECIMENTO; VELA INCANDESCENTE	232-6662	4	VELA DE AQUECIMENTO; VELA INCANDESCENTE	113

PEÇAS DE MANUTENÇÃO

DESCRIÇÃO	NÚMERO DE PEÇA	QUANT	UTILIZADA EM	PÁGINA
SISTEMA HIDRÁULICO				
FILTRO	4T-4520	1	VÁLVULA DE CONTROLE	559
		1	VÁLVULA DE CONTROLE	561
		1	VÁLVULA DE CONTROLE	563
		1	VÁLVULA DE CONTROLE	565
		1	VÁLVULA DE CONTROLE	567
		1	VÁLVULA DE CONTROLE	569
		1	VÁLVULA DE CONTROLE	571
		1	VÁLVULA DE CONTROLE	573
		1	VÁLVULA DE CONTROLE	575
		1	VÁLVULA DE CONTROLE	577
FILTRO - ÓLEO (HIDRÁULICO) (RESISTENTE A FOGO)	134-3014	1	COMANDO HIDRÁULICO	396
		1	COMANDO HIDRÁULICO	397
FILTRO - ÓLEO (LIMPEZA / ALTA EFICIÊNCIA)	126-1817	1	COMANDO HIDRÁULICO	396
		1	COMANDO HIDRÁULICO	397
FILTRO (RESPIRO DO TANQUE HIDRAULICO)	9R-9925	1	TANQUE HIDRÁULICO	539
GRAXEIRA (ROSCA 1/8-27 POL)	3B-8489	4	MONTAGEM - CILINDRO	527
RETENTOR DE ANEL-O	2M-9780	1	TUBOS - BRAÇO COM EXTENSÃO	445
TAMPA	6V-9830	2	TUBOS AUXILIARES	462
	6V-9831	2	TUBOS - CILINDRO DE LEVANTAMENTO	446
		2	TUBOS - VÁLVULA DE CONTROLE DE CARGA	459
TAMPA - ENCHIMENTO (TANQUE HIDRÁULICO)	237-3797	1	TANQUE HIDRÁULICO	539
TAMPA CONTRA POEIRA	6V-0852	1	TUBOS - CIRCUITO PILOTO	474
		1	VÁLVULA DO CONECTOR	347
TREM DE FORÇA				
BUJÃO MAGNÉTICO	9R-6602	2	SEMI-EIXO TRASEIRO	222
FILTRO - ÓLEO (TRANSMISSÃO)	119-4740	1	SERVO-TRANSMISSÃO	247
		1	TRANSMISSÃO DIRETA	247
RESPIRO	7T-3251	1	SERVOTRANSMISSÃO	256
RESPIRO (EIXO)	197-9155	1	EIXO DE PROPULSÃO E DIREÇÃO	218
RESPIRO (TRANSMISSÃO)	7T-3251	1	TRANSMISSÃO DIRETA	249
RETENTOR DE ANEL-O	5P-6718	1	SERVOTRANSMISSÃO	256
TAMPA	2D-2633	1	VÁLVULA DE PNEU	267
TAMPA (HASTE DA VALVULA)	2D-2633	1	VÁLVULA DE PNEU	266
TELA FILTRANTE	7T-2651	1	SERVOTRANSMISSÃO	254
TELA FILTRANTE (CAIXA DE TRANSMISSÃO)	7T-2651	1	TRANSMISSÃO DIRETA	250
TOMADA - MAGNETICA	152-6144	1	DIFERENCIAL E COROA	227
		3	EIXO DE PROPULSÃO E DIREÇÃO	218
VÁLVULA DE ALÍVIO (RESPIRO DE AR)	5F-5434	1	MONTAGEM DO EIXO	237

WARTUNGSTEILE

BESCHREIBUNG	ERSATZTEIL-NUMMER	MENGE	VERWENDET IN	SEITE
ARBEITSGERÄTE				
HYDRAULIKANSCHLUSSSTÜCK	8B-7121	1	SCHNELLWECHSELEINRICHTUNG	678
SCHMIERNIPPEL	3B-8488	3	AUSLEGER	588
	3B-8489	5	HECKBAGGERLÖFFELGESTÄNGE	596
		2	KOMBISCHAUFEL	668
		2	KOMBISCHAUFEL	674
		2	KOMBISCHAUFEL	675
		2	STIELAUFHÄNGUNG	604
SCHMIERNIPPEL (1/8-27-GEWINDE)	3B-8489	2	SCHAUFELAUFHÄNGUNG	689
	3B-8488	1	LÖFFELSTIEL	613
	3B-8489	2	KOMBISCHAUFEL	666
		2	KOMBISCHAUFEL	667
		2	KOMBISCHAUFEL	669
		2	LÖFFELSTIEL	613
		1	TELESKOPSTIEL	609
		1	TELESKOPSTIEL	611
ELEKTRISCHE ANLAGE UND STARTSYSTEM				
ABDECKGLAS	8I-4721	1	ARBEITSLEUCHTEN	117
	100-3248	1	SCHEINWERFER U. RICHTUNGSLEUCHTE	120
		1	SCHEINWERFER U. RICHTUNGSLEUCHTE	124
		1	SCHEINWERFER U. RICHTUNGSLEUCHTE	126
	100-3249	1	SCHEINWERFER U. RICHTUNGSLEUCHTE	122
	136-3848	1	SCHEINWERFER U. RICHTUNGSLEUCHTE	124
		1	SCHEINWERFER U. RICHTUNGSLEUCHTE	126
ABDECKGLAS (ARBEITSSCHEIN-WERFER)	202-6611	1	ARBEITSLEUCHTEN	119
	202-6614	1	ARBEITSLEUCHTEN	118
ABDECKGLAS (BREMSLICHT/RICH-TUNGSBLINKER)	092-6279	1	BREMS- UND RÜCKLEUCHTE	130
ABDECKGLAS (DURCHSICHTIG)	176-0346	1	ARBEITSLEUCHTEN	138
ABDECKGLAS (DURCHSICHTIG) (ARBEITSLEUCHTE)	176-0346	1	ARBEITSLEUCHTEN	136
ABDECKGLAS (GELB)	9X-8121	1	RUNDUM-KENNLEUCHTE	131
		1	RUNDUM-KENNLEUCHTE	132
	100-3250	1	SCHEINWERFER U. RICHTUNGSLEUCHTE	120
		1	SCHEINWERFER U. RICHTUNGSLEUCHTE	122
		1	SCHEINWERFER U. RICHTUNGSLEUCHTE	124
		1	SCHEINWERFER U. RICHTUNGSLEUCHTE	126
BATTERIE (12 V)	3T-5760	2	BATTERIE	104
		1	BATTERIE	106
		1	BATTERIE	108
	230-6368	1	BATTERIE	110

WARTUNGSTEILE

BESCHREIBUNG	ERSATZTEIL-NUMMER	MENGE	VERWENDET IN	SEITE
BELEUCHTUNGSANLAGE (RUNDUM-KENNLEUCHTE)	185-7016	1	RUNDUM-KENNLEUCHTE	132
BELEUCHTUNGSANLAGE (12 V)	165-5655	1	SICHERHEITSEINBAUSATZ	115
BÜRSTENHALTER	7T-6092	1	STARTERMOTOR	166
GLÜHKERZE	232-6662	4	GLÜHKERZE	113
LAUFBAND UND ANTRIEB (RUNDUM-KENNLEUCHTE)	9X-8139	1	RUNDUM-KENNLEUCHTE	131
		1	RUNDUM-KENNLEUCHTE	132
LEUCHTE (12 V)	7X-9065	1	KONSOLENVERDRAHTUNG	185
	195-9712	1	ZULASSUNGSSCHILDLEUCHTE	128
LEUCHTE (12 V) (KRAFTSTOFFSTAND)	7X-9065	1	KONSOLENVERDRAHTUNG	187
LEUCHTE (12 V) (KÜHLMITTELTEMPERATURANZEIGE)	7X-9065	1	KONSOLENVERDRAHTUNG	187
LEUCHTE (12 V) (MINIATURLEUCHTE)	100-3246	2	SCHEINWERFER U. RICHTUNGSLEUCHTE	124
		2	SCHEINWERFER U. RICHTUNGSLEUCHTE	126
LEUCHTE (12 V) (ÖLTEMPERATURWANDLER)	7X-9065	1	KONSOLENVERDRAHTUNG	187
LEUCHTE (12 V) (SPANNUNGSMESSER)	7X-9065	1	KONSOLENVERDRAHTUNG	187
LEUCHTE (12 V) (21 W)	5G-3244	1	SCHEINWERFER U. RICHTUNGSLEUCHTE	124
		1	SCHEINWERFER U. RICHTUNGSLEUCHTE	126
LEUCHTE (12 V, 21 W)	5G-3244	1	SCHEINWERFER U. RICHTUNGSLEUCHTE	120
		1	SCHEINWERFER U. RICHTUNGSLEUCHTE	122
LEUCHTE (12 V/ 21W) (FAHRTRICHTUNGSANZEIGER)	3C-4883	1	BREMS- UND RÜCKLEUCHTE	130
LEUCHTE (12 V/ 21/5 W) (ABSTELLEN)	3C-6516	1	BREMS- UND RÜCKLEUCHTE	130
LEUCHTE (12 V, 4 W)	100-3246	1	SCHEINWERFER U. RICHTUNGSLEUCHTE	120
		1	SCHEINWERFER U. RICHTUNGSLEUCHTE	122
LEUCHTE (12 V, 55 W)	9W-0607	1	ARBEITSLEUCHTEN	119
		1	ARBEITSLEUCHTEN	136
		1	ARBEITSLEUCHTEN	140
		1	ARBEITSLEUCHTEN	142
	9X-8118	1	RUNDUM-KENNLEUCHTE	131
		1	RUNDUM-KENNLEUCHTE	132
	9W-0607	1	ARBEITSLEUCHTEN	118
LEUCHTE (12 V, 55 W) (ARBEITSSCHEINWERFER)	9W-0607	1	ARBEITSLEUCHTEN	136
LEUCHTE (12 V/21 W)	5G-3244	1	ARBEITSLEUCHTEN	117
LEUCHTE (12 V)(55 W)	9W-0607	1	ARBEITSLEUCHTEN	133
LEUCHTE (12V/55W)	9W-0607	1	ARBEITSLEUCHTEN	138
REFLEKTOR	9R-1499	2	BELEUCHTUNGSANLAGE (STRASSENAUSRÜSTUNG)	146
		2	BELEUCHTUNGSANLAGE (STRASSENAUSRÜSTUNG)	149
		2	BELEUCHTUNGSANLAGE (STRASSENAUSRÜSTUNG)	152

WARTUNGSTEILE

BESCHREIBUNG	ERSATZTEIL-NUMMER	MENGE	VERWENDET IN	SEITE
		2	BELEUCHTUNGSANLAGE (STRASSENAUSRÜSTUNG)	155
		2	BELEUCHTUNGSANLAGE (STRASSENAUSRÜSTUNG)	158
SCHEINWERFER (12 V)	9W-3324	1	SCHEINWERFER U. RICHTUNGSLEUCHTE	124
		1	SCHEINWERFER U. RICHTUNGSLEUCHTE	126
SCHEINWERFER (12 V, 60/55 W)	9W-3324	1	SCHEINWERFER U. RICHTUNGSLEUCHTE	120
		1	SCHEINWERFER U. RICHTUNGSLEUCHTE	122
SICHERUNG (10 A)	3K-8782	1	RUNDUM-KENNLEUCHTE	131
		1	RUNDUM-KENNLEUCHTE	132
	113-8490	2	ARBEITSLEUCHTEN	133
		2	ARBEITSLEUCHTEN	138
		2	ARBEITSLEUCHTEN	142
		1	KLIMAANLAGENVERDRAHTUNG	173
		1	SCHWINGUNGSDÄMPFUNGSVER-DRAHTUNG	206
		1	SCHWINGUNGSDÄMPFUNGSVER-DRAHTUNG	208
		1	SCHWINGUNGSDÄMPFUNGSVER-DRAHTUNG	210
		1	SCHWINGUNGSDÄMPFUNGSVER-DRAHTUNG	212
		1	STECKDOSENVERDRAHTUNG	202
		1	FAHRERHAUSVERDRAHTUNG	181
SICHERUNG (15 A)	113-8491	3	ARBEITSLEUCHTEN	133
		2	ARBEITSLEUCHTEN	136
		2	ARBEITSLEUCHTEN	138
		2	ARBEITSLEUCHTEN	140
		2	ARBEITSLEUCHTEN	142
SICHERUNG (20 A)	113-8492	2	FAHRERHAUSVERDRAHTUNG	178
SICHERUNG (5 A)	141-2759	1	FAHRERHAUSVERDRAHTUNG	178
		1	LENKVERDRAHTUNG	217

WARTUNGSTEILE

BESCHREIBUNG	ERSATZTEIL-NUMMER	MENGE	VERWENDET IN	SEITE
FAHRERHAUS				
FILTER	206-7514	1	FAHRERHAUSHEIZUNG U. BEFESTIGUNGSTEILE	741
		1	KLIMAANLAGE UND AUFHÄNGUNG	698
KEILRIEMEN (KLIMAANLAGENKOMPRESSOR)	1W-2934	1	KÄLTEMITTELKOMPRESSOR	715
KEILRIEMENSATZ (EINSCHL. 2 RIEMEN)	3N-1491	1	FAHRERHAUS	704
		1	FAHRERHAUS MIT ÜBERROLLSCHUTZ	706
	5L-3308	1	FAHRERHAUS	703
		1	FAHRERHAUS MIT ÜBERROLLSCHUTZ	705
		1	WETTERDACH	711
LEUCHTE (12 V)	122-7137	1	DREHZAHLMESSER, ELEKTR.	781
		1	DREHZAHLMESSER, ELEKTR.	782
LEUCHTE (12 V) (MINIATURLEUCHTE)	189-3610	1	WARNANZEIGEMODUL	753
LEUCHTE (12V, 10W)	6R-7490	1	SCHALLDÄMPFUNG	776
LUFTFILTER	170-7272	1	FAHRERHAUSHEIZUNG	743
LUFTFILTER (FAHRERHAUSLUFT)	170-7272	1	KLIMAANLAGE	700
SCHEIBENWISCHERBLATT	102-2940	2	SCHEIBENWISCHER	797
WISCHERBLATT	5C-8813	1	SCHEIBENWISCHER	797
HYDRAULIKSYSTEM				
EINFÜLLKAPPE (HYDRAULIKTANK)	237-3797	1	HYDRAULIKTANK	539
FILTER	4T-4520	1	STEUERVENTIL	559
		1	STEUERVENTIL	561
		1	STEUERVENTIL	563
		1	STEUERVENTIL	565
		1	STEUERVENTIL	567
		1	STEUERVENTIL	569
		1	STEUERVENTIL	571
		1	STEUERVENTIL	573
		1	STEUERVENTIL	575
		1	STEUERVENTIL	577
FILTER (HYDRAULIKTANKENTLÜFTER)	9R-9925	1	HYDRAULIKTANK	539
KAPPE	6V-9830	2	LADERZUSATZLEITUNGEN	462
	6V-9831	2	HUBZYLINDERLEITUNGEN	446
		2	LASTSTEUERVENTILLEITUNGEN	459
O-RING-DICHTUNG	2M-9780	1	TELESKOPSTIELLEITUNGEN	445
ÖLFILTER (HYDRAULISCH) (SCHWER ENTFLAMMBAR)	134-3014	1	HYDRAULIKSYSTEM	396
		1	HYDRAULIKSYSTEM	397
ÖLFILTER (REINIGUNG/HOCHLEISTUNG)	126-1817	1	HYDRAULIKSYSTEM	396
		1	HYDRAULIKSYSTEM	397
SCHMIERNIPPEL (1/8-27-GEWINDE)	3B-8489	4	ZYLINDERAUFHÄNGUNG	527
STAUBKAPPE	6V-0852	1	VERBINDUNGSVENTIL	347
		1	VORSTEUERLEITUNGEN	474
KRAFTSTOFFSYSTEM				
FILTER (KRAFTSTOFF)	228-9130	1	KRAFTSTOFF-ENTLÜFTUNGSPUMPE	98
KRAFTSTOFFFILTEREINSATZ	1R-1804	1	KRAFTSTOFFILTER	88
KRAFTSTOFFTANKKAPPE	201-0330	1	KRAFTSTOFFTANK	102

WARTUNGSTEILE

BESCHREIBUNG	ERSATZTEIL-NUMMER	MENGE	VERWENDET IN	SEITE
KRAFTÜBERTRAGUNG				
DRUCKBEGRENZUNGSVENTIL (ENTLÜFTUNGSVORRICHTUNG)	5F-5434	1	ACHSENANBAUSATZ	237
ENTLÜFTER	7T-3251	1	LASTSCHALTGETRIEBE	256
ENTLÜFTER (ACHSE)	197-9155	1	ANTRIEBS- UND LENKACHSE	218
ENTLÜFTER (GETRIEBE)	7T-3251	1	WECHSELGETRIEBE	249
KAPPE	2D-2633	1	REIFENVENTIL	267
KAPPE (VENTILSCHAFT)	2D-2633	1	REIFENVENTIL	266
MAGNETISCHE SCHRAUBE	152-6144	3	ANTRIEBS- UND LENKACHSE	218
		1	DIFFERENTIAL UND TELLERRAD	227
MAGNETSTOPFEN	9R-6602	2	HINTERACHSE	222
O-RING-DICHTUNG	5P-6718	1	LASTSCHALTGETRIEBE	256
ÖLFILTER (GETRIEBE)	119-4740	1	LASTSCHALTGETRIEBE	247
		1	MECHANISCHES GETRIEBE	247
SIEB	7T-2651	1	LASTSCHALTGETRIEBE	254
SIEB (GETRIEBEGEHÄUSE)	7T-2651	1	WECHSELGETRIEBE	250
KÜHLSYSTEM				
KAPPE (KÜHLER)	227-4376	1	KÜHLER UND HYDRAULIKÖLKÜHLER	69
		1	KÜHLER UND HYDRAULIKÖLKÜHLER	72
O-RING-DICHTUNG (KÜHLWASSERTHERMOSTAT)	225-6909	1	KÜHLWASSERANSCHLUSS	53
SCHRAUBE (MOTORÖLFILTERLEITUNGEN)	225-7941	1	MOTORÖLKÜHLER UND FILTERSOCKEL	54
WASSERTEMPERATURREGLER	225-6908	1	KÜHLWASSERANSCHLUSS	53
LUFTANSAUG- UND ABGASSYSTEM				
LUFTFILTERWARTUNGSANZEIGE	8N-2694	1	LUFTFILTERWARTUNGSANZEIGE	78
MOTOR (GRUNDAUSFÜHRUNG)				
FEDER (ENTLÜFTERSCHLAUCH)	162-1565	1	VENTILDECKEL	25
ÖLWANNEN-ABLASSCHRAUBE	7C-0351	2	ÖLWANNE	43
SCHLAUCHLEITUNG (ENTLÜFTER)	198-8645	1	VENTILDECKEL	25
RAHMEN UND FAHRGESTELL				
SCHMIERNIPPEL (1/8-27-GEWINDE)	3B-8488	2	GLEITRAHMEN	324
	3B-8489	2	GLEITRAHMEN	324
SCHMIERSYSTEM				
ÖLFILTER	7W-2326	1	MOTORÖLEINFÜLLSTUTZEN	51
WARTUNGSAUSRÜSTUNG UND -ZUBEHÖR				
BUCHSE	8Y-6364	1	VORHÄNGESCHLOSS	803
SCHLÜSSEL	5P-8500	1	VORHÄNGESCHLOSS	803
VORHÄNGESCHLOSS	5P-8502	2	VORHÄNGESCHLOSS	802
		3	VORHÄNGESCHLOSS	803

INDEX

Name	Page
A	
ACCUMULATOR GP-REFRIGERANT	749
ACCUMULATOR GP-RIDE CONTROL	346
AIR CLEANER GP	73 75
AIR CONDITIONER & MOUNTING GP	698
AIR CONDITIONER GP	700
ALTERNATOR GP-CHARGING	103
ARM GP-LIFT	586
ARMREST GP	702
AXLE GP-DRIVE & STEERING	218
AXLE GP-REAR	220
B	
BACKHOE AR–ONE WAY LINES	10
BACKHOE AR–ONE WAY LINES–BOOM, STICK LOCKS	10
BACKHOE AR–ONE WAY LINES, NARROW FRAME	13
BACKHOE AR–STANDARD STICK–ONE WAY LINES–BOOM, STICK LOCKS–NARROW FRAME	13
BACKHOE AR-EXTENDABLE STICK	1 5 6
BACKHOE AR-EXTENDABLE STICK–BOOM AND STICK LOCKS	3
BACKHOE AR-EXTENDABLE STICK–BOOM, STICK LOCKS	1 5
BACKHOE AR-EXTENDABLE STICK–BOOM, STICK LOCKS–NARROW FRAME	4 7
BACKHOE AR-EXTENDABLE STICK–NARROW FRAME	2 3 7
BACKHOE AR-EXTENDABLE STICK–NARROW FRAME, ONE WAY LINES, BOOM AND STICK LOCKS	4
BACKHOE AR-EXTENDABLE STICK–ONE WAY LINES	2
BACKHOE AR-EXTENDABLE STICK–ONE WAY LINES, BOOM AND STICK LOCKS	6
BACKHOE AR-EXTENDABLE STICK–ONE WAY LINES, BOOM AND STICK LOCKS, NARROW FRAME	8
BACKHOE AR-EXTENDABLE STICK–ONE WAY LINES, NARROW FRAME	8
BACKHOE AR-STANDARD STICK	11
BACKHOE AR-STANDARD STICK–BOOM, STICK LOCKS	9 11
BACKHOE AR-STANDARD STICK–STANDARD STICK	9
BACKHOE AR-STANDARD STICK–STANDARD STICK–BOOM, STICK LOCKS–NARROW FRAME	12 14
BACKHOE AR-STANDARD STICK–STANDARD STICK–NARROW FRAME	12 14
BATTERY GP	106 108
BATTERY GP–HEAVY DUTY	104 110
BATTERY (12 VOLT)	104 106 108 110
BELT-DRIVE (WARNING BEACON)	131
BELT-DRIVE (WARNING BEACON)	132
BLADE AS	797
BLADE-WIPER	797
BOOM GP	588 589
BOOT	391 393
BOX GP-BATTERY	307 308 309 310
BOX GP-BATTERY–POWER SHIFT	306
BRACKET AS	104 106
BRACKET GP-TRANSPORT	590 591
BRAKE GP-PARKING	289
BREATHER	256
BREATHER (AXLE)	218
BREATHER (TRANSMISSION)	249
BUCKET AR-MULTIPURPOSE	615 616 617 618 619 620
BUCKET AS-GENERAL PURPOSE	621 622 623 624
BUCKET GP-HOE–HEAVY DUTY	630 631 632 633 634 640 641

INDEX

Name	Page
	642
	648
	649
	650
	651
	652
	653
	664
BUCKET GP-HOE–HIGH CAPACITY	635
	636
	637
	638
	654
	655
	656
	657
BUCKET GP-HOE–ROCK	658
	659
	660
	661
	662
	665
BUCKET GP-HOE–STANDARD DUTY	625
	626
	627
	628
	629
	639
	643
	644
	645
	646
	647
	663
BUCKET GP-MULTIPURPOSE	666
	667
	668
	669
	670
	672
	674
	675
BUMPER GP-FRONT	311

C

CAB AR	703
	704
CAB AR-ENCLOSED ROPS	705
	706
CAB GP	707
	709
CAMSHAFT GP	24
CANOPY AR	711
CANOPY GP-OPEN ROPS	712
CAP	267
CAP AS	446
	459
	462
CAP AS (RADIATOR)	69
	72
CAP-DUST	347
	474
CAP-FILL (HYDRAULIC TANK)	539
CAP-FUEL	102
CAP (VALVE STEM)	266
CHASSIS AR–NARROW FRAME	15
CHASSIS AR–STANDARD FRAME	15
COMMON AR	16
COMPARTMENT GP-LITERATURE	713
COMPRESSOR GP-REFRIGERANT	714
	715
CONDENSER & MTG GP-REFRIGERANT	716
CONNECTION GP-WATER	53
CONNECTOR GP	451
CONNECTOR GP-VALVE	347
CONSOLE GP-FRONT	717
	718
CONSOLE GP-OPERATOR–LH	719
CONSOLE GP-OPERATOR–RH	720
CONSOLE GP-SIDE	724
	725
	726
CONSOLE GP-SIDE–LH	722
CONSOLE GP-SIDE–LH–AIR CONDITIONING	721
	723
CONTROL AR-RIDE	349
CONTROL AR-RIDE–AUTOSHIFT	348
CONTROL AR-RIDE–AUTOSHIFT WITH LOADER LOCKS	348
CONTROL AR-RIDE–STANDARD SHIFT	348
CONTROL AR-RIDE–STANDARD SHIFT WITH LOADER LOCKS	348
CONTROL GP-DIFFERENTIAL LOCK	225
CONTROL GP-GOV & ACCELERATOR	86
CONTROL GP-HANDLE–STABILIZER	350
	351
CONTROL GP-HYDRAULIC HAND	352
	354
	356
CONTROL GP-HYDRAULIC HAND–KIT	358
CONTROL GP-HYDRAULIC HAND–LOADER SINGLE TILT	361
CONTROL GP-HYDRAULIC HAND–PARALLEL LIFT	359
	362
CONTROL GP-HYDRAULIC HAND–STABILIZER	363
	364

INDEX

Name	Page
CONTROL GP-HYDRAULIC PEDAL	365, 367
CONTROL GP-PARKING BRAKE	290, 291
CONTROL GP-POSITION	112, 195
CONTROL GP-SERVICE BRAKE	292
CONTROL GP-STEERING	297, 298
CONTROL GP-TRANSMISSION	226
CONVERSION AR-CERTIFICATION	16, 17
CONVERSION AR-CERTIFICATION–AUTOSHIFT	18
CONVERSION AR-CERTIFICATION–EXTENDABLE STICK	18
CONVERSION AR-CERTIFICATION–SIDESHIFT–MECHANICAL LOADER	17
CONVERSION AR-CERTIFICATION–STANDARD SHIFT	19
CONVERSION GP-HYD HAND CONTROL–KIT	369
COOLANT HEATER LINES	749
COOLER GP-ENGINE OIL	54
COOLER GP-FLTR BASE & ENG OIL	54
COUNTERWEIGHT GP	312, 313, 314, 315
COUPLER GP-QUICK	677, 678, 679, 680, 681, 682
COUPLING GP	370
COVER & VALVE GP-BANK	371
COVER GP-AIR INLET	76
COVER GP-CONSOLE	727
COVER GP-FIREWALL	728, 729
COVER GP-POST	730
COVER GP-VALVE MECHANISM	25
CRANKSHAFT GP	27
CYLINDER AS	292
CYLINDER BLOCK GP	29, 31
CYLINDER GP-BACKHOE BUCKET	372
CYLINDER GP-BACKHOE BUCKET–EXTENDABLE STICK	374
CYLINDER GP-BOOM	376
CYLINDER GP-EXTENDABLE STICK	378, 379
CYLINDER GP-LIFT	381
CYLINDER GP-MULTIPURPOSE BUKT	382
CYLINDER GP-STABILIZER	384
CYLINDER GP-STICK	385
CYLINDER GP-SWING	386, 387
CYLINDER GP-TILT	388
CYLINDER HEAD GP	32, 33

D

Name	Page
DIFFERENTIAL & BEVEL GEAR GP	227
DIFFERENTIAL GP	229
DOOR GP-BATTERY	316
DOOR GP-LH	731
DOOR GP-RH	733
DRAIN GP-HYDRAULIC	390
DRIVE AR-BACKHOE LOADER–2 WHEEL STEER–ALL WHEEL DRIVE	230
DRIVE GP-FAN	34
DRIVE GP-FLEXIBLE COUPLING	231
DUCT GP-AIR–HEATER	738
DUCT GP-AIR–POWERSHIFT	737
DUCT GP-AIR–STANDARD SHIFT	735

E

Name	Page
EDGE GP-CUTTING	683, 684
ELEMENT-FILTER (FUEL)	98
ENGINE AR	20, 21
ENGINE AR-PRIMARY	22, 23
EXTENSION GP-EXHAUST	77

F

Name	Page
FAN AS	700, 743
FAN GP-SUCTION	56, 57
FENDER GP-FRONT	317, 318
FENDER GP-REAR	319
FILLER GP-ENGINE OIL	51
FILLER GP-POWER TRAIN OIL	232, 233
FILM (AIR RECIRCULATION)	700
FILM-AWS	806
FILM (BUCKET CONTROL)	354, 805
FILM (BUCKET CONTROL)	806
FILM (BULK) (.095M)	806
FILM-CAT	338
FILM (CATERPILLAR)	705

INDEX

Name	Page
	706
	800
FILM-CONTROL (AIR CONDITIONER)	698
	741
	806
FILM (CONTROL PLATE)	805
FILM (CTR PIVOT/BOOM LOCK)	805
FILM GP	799
	800
FILM-IDENTIFICATION (FUSE PANEL)	230
	806
FILM (IGNITION SWITCH)	115
FILM-INDICATOR	185
	617
	618
	620
	806
FILM-INDICATOR (BUCKET)	616
	617
FILM-INDICATOR (BUCKET LEVEL) (BUCKET)	615
FILM-INDICATOR (416D)	183
FILM-INDICATOR (416D)	806
FILM (INST)	806
FILM (INST) (MULTIPURPOSE BUCKET CONTROL)	392
FILM-INSTRUCTION	112
	806
FILM-INSTRUCTION (BUCKET CONTROL)	391
	392
	393
	394
	807
FILM-INSTRUCTION (E-STICK)	365
FILM-INSTRUCTION (EXTENDABLE STICK)	806
FILM-INSTRUCTION (NO STEP)	806
FILM-INSTRUCTION (RETURN FLOW)	408
	412
	416
	420
	424
	428
	432
	436
	806
FILM-LIFT	804
FILM-LIFT & TIE DOWN	804
	807
FILM (MACHINE SECURITY SYSTEM)	115
FILM (MULTIPURPOSE BUCKET)	394
	806
FILM (MULTIPURPOSE BUCKET) (MECHANICAL BUCKET CONTROL)	392
FILM (PLATE-NAME)	346
FILM (RIDE CONTROL)	349
	397
FILM (SISHF/BOOM LOCK)	805
FILM (STABILIZER CONTROL)	538
FILM (START)	115
FILM (START SWITCH)	758
	760
	805
FILM (STD CROSS PATTERN)	805
FILM-STRIPE (278CM)	338
FILM-STRIPE (400CM)	703
FILM-STRIPE (400CM)	705
	706
FILM-STRIPE (400CM)	704
FILM-TIE DOWN	804
FILM (VARIABLE SPEED)	86
	805
FILM-WARNING	804
	805
FILM-WARNING (HIGH PRESSURE CYLINDER)	409
	412
	416
	420
	424
	428
	432
	436
	487
	807
FILM (20 KM/HR)	18
	19
FILTER	559
	561
	563
	565
	567
	569
	571
	573
	575
	577
	698
	741
FILTER-AIR	743
FILTER-AIR (CAB AIR)	700
FILTER AS-ENGINE OIL	51
FILTER AS-OIL (CLEANOUT/HIGH EFFICIENCY)	396
	397
FILTER AS-OIL (HYDRAULIC) (FIRE RESISTANT)	396
	397
FILTER AS-OIL (TRANSMISSION)	247
FILTER BASE & ENG OIL COOLER	54
FILTER ELEMENT AS-FUEL	88

INDEX

Name	Page
FILTER GP-FUEL	88
FILTER (HYDRAULIC TANK BREATHER)	539
FITTING GP-HEATER & AIR COND	58
FITTING-GREASE	586
	588
	596
	604
	668
	674
	675
FITTING-GREASE (1/8-27 THD)	324
	527
	586
	609
	611
	613
	666
	667
	669
	689
FITTING-HYDRAULIC	678
FLASHER AS	198
FLOOR MAT GP	739
	740
FLOORPLATE GP	320
FLYWHEEL GP	35
FORK AR	685
FORK GP	686
FRAME GP-LOADER–NARROW–PARALLEL LIFT	323
FRAME GP-LOADER–PARALLEL LIFT	322
FRAME GP-SLIDING	324
FRAME GP-SWING	326
	329
FUSE (10 AMP)	133
	138
	173
	181
	202
	208
	210
	212
FUSE (10-AMPERE)	131
	132
	142
	206
FUSE (15 AMP)	133
	136
	138
FUSE (15-AMPERE)	140
	142
FUSE (20 AMP)	178
FUSE (5 AMP)	178
	217

G

Name	Page
GLOW PLUG	113
GLOW PLUG GP	113
GUARD GP-BUCKET–FRONT	687
	688
GUARD GP-BUCKET (FRONT)	18
	19
GUARD GP-DRIVE SHAFT–ALL WHEEL DRIVE–ALL WHEEL STEER	331
GUARD GP-LIGHTING	332
GUARD GP-LIGHTING–REAR	333
GUARD GP-LINES	334
GUARD GP-LINES–NARROW FRAME	335

H

Name	Page
HEATER & MTG GP-CAB	741
HEATER GP-CAB	743
HEATER GP-JACKET WATER	114
HOLDER AS-BRUSH	166
HOOD & GUARD GP	336
HOOD GP-ENGINE	338
HORN GP-ELECTRIC–REAR	745
HOSE (BREATHER)	25
HOUSING & FLANGE GP-AXLE	234
	235
HOUSING AS-EXTENDABLE STICK	592
HOUSING GP-DIFFERENTIAL	227
HOUSING GP-FLYWHEEL	36
HOUSING GP-FRONT	37
HYDRAULIC AR–CUSHION SWING–SIDESHIFT NARROW FRAME	395
HYDRAULIC AR–CUSHION SWING–SIDESHIFT STANDARD FRAME	395
HYDRAULIC AR–GENERAL PURPOSE BUCKET	391
	393
HYDRAULIC AR–GENERAL PURPOSE BUCKET–LOCKS	391
	393
HYDRAULIC AR–MULTIPURPOSE BUCKET	392
	394
HYDRAULIC AR–MULTIPURPOSE BUCKET–LOCKS	392
	394
HYDRAULIC AR–NARROW FRAME	397
HYDRAULIC AR–STANDARD FRAME	396
HYDRAULIC AR–STANDARD SWING–NARROW FRAME	395
HYDRAULIC AR–STANDARD SWING–STANDARD FRAME	394

INDEX

Name	Page
I	
INDICATOR AS	187
INDICATOR GP-AIR FILTER CHANGE	78
	79
INSTALLATION AR-WHEEL CHOCK	801
INSTALLATION GP-SECURITY	115
INSTALLATION GP-SECURITY (MACHINE SECURITY)	115
K	
KEY	803
KEY AS-ELECTRONIC (SECURITY)	115
KIT-ACCUMULATOR SERVICE	346
KIT-ADJUSTER	702
KIT-BEARING	220
KIT-BRAKE CALIPER	289
KIT-CAM (COUNTERCLOCKWISE)	289
KIT-CONNECTING PLUG (12-PIN)	183
KIT-CONNECTING PLUG (2 PIN)	138
	144
	181
	203
	215
	261
	700
KIT-CONNECTING PLUG (2 PIN)	133
	291
KIT-CONNECTING PLUG (2-PIN)	115
	173
	193
	198
	210
	212
KIT-CONNECTING PLUG (3 PIN)	112
	144
	178
	181
KIT-CONNECTING PLUG (4 PIN)	138
	178
	181
	203
	215
KIT-CONNECTING PLUG (4 PIN)	133
KIT-CONNECTING PLUG (4-PIN)	210
	212
KIT-CONNECTING PLUG (4-PIN)	136
KIT-CONNECTING PLUG (6 PIN)	138
	146
	149
	152
	178
	181
	203
KIT-CONNECTING PLUG (6 PIN)	133
KIT-CONNECTING PLUG (6-PIN)	210
	212
KIT-CONNECTING PLUG (8 PIN)	178
	709
KIT-CONNECTING PLUG (8-PIN)	183
KIT-CONTACT (STARTING MOTOR)	166
KIT-CUSHION	702
KIT-GEAR (STARTING MOTOR)	166
KIT-HARDWARE	584
KIT-PLANETARY CARRIER	238
KIT-RECEPTACLE (12 PIN)	754
KIT-RECEPTACLE (12-PIN)	176
KIT-RECEPTACLE (2 PIN)	144
	171
	196
	203
	215
	217
	256
	262
	263
	264
	265
	359
	567
	569
	571
	584
	585
KIT-RECEPTACLE (2 PIN)	181
KIT-RECEPTACLE (2-PIN)	226
KIT-RECEPTACLE (3 PIN)	144
	165
	203
	214
	263
	264
	265
KIT-RECEPTACLE (3-PIN)	391
	392
KIT-RECEPTACLE (4 PIN)	181
KIT-RECEPTACLE (4 PIN)	181
KIT-RECEPTACLE (4 PIN)	133
KIT-RECEPTACLE (4 PIN)	138
KIT-RECEPTACLE (4-PIN)	115
	129
	208
	210
	212
KIT-RECEPTACLE (4-PIN)	193
KIT-RECEPTACLE (4-PIN)	136
KIT-RECEPTACLE (4 PIN) (SIDE)	181
KIT-RECEPTACLE (6 PIN)	133
	138

INDEX

Name	Page
	181
	755
	797
KIT-RECEPTACLE (6 PIN)	124
	126
	133
KIT-RECEPTACLE (6 PIN)	138
KIT-RECEPTACLE (6-PIN)	210
	212
KIT-RECEPTACLE (8 PIN)	203
	753
KIT-RECEPTACLE (8 PIN)	178
KIT-REPAIR	797
KIT-RIDE CONTROL	397
KIT-ROLLER BEARING	238
KIT-SEAL	114
KIT-SEAL (STEERING METERING PUMP)	303
KIT-SERVICE	761
KIT-SLIDER BLOCK	770
	772
	774
KIT-SPIDER	218
KIT-SPIDER & BEARING	241
	242
	243
	244
KNOB GP-STEERING	299

L

Name	Page
LAMP AS (ROTATING WARNING)	132
LAMP AS (12-VOLT)	115
LAMP GP-DOME	776
LAMP GP-FLOOD–REAR FOG	117
LAMP GP-FLOOD–12 VOLT	118
	119
LAMP GP-HEAD & SIGNAL–LH	122
	126
LAMP GP-HEAD & SIGNAL–RH	120
	124
LAMP GP-REGISTRATION PLATE	128
LAMP GP-STOP & TAIL	129
LAMP GP-STOP & TAIL–12 VOLT	130
LAMP GP-WARNING BEACON	131
	132
LAMP-HEAD (12 VOLT)	124
	126
LAMP-HEAD (12-VOLT, 60/55 WATT)	120
	122
LAMP (12 VOLT)	128
	781
	782
LAMP (12-VOLT)	185
LAMP (12-VOLT) (CONVERTER OIL TEMP)	187
LAMP (12-VOLT) (COOLANT TEMPERATURE GAUGE)	187
LAMP (12-VOLT) (FUEL LEVEL)	187
LAMP (12 VOLT) (MINIATURE)	124
	126
	753
LAMP (12-VOLT) (VOLT METER)	187
LAMP (12 VOLT, 10 WATT)	776
LAMP (12 VOLT) (21 WATT)	124
	126
LAMP (12-VOLT, 21-WATT)	120
	122
LAMP (12-VOLT, 4-WATT)	120
	122
LAMP (12 VOLT, 55 WATT)	132
	136
LAMP (12 VOLT, 55 WATT)	118
	119
LAMP (12-VOLT, 55-WATT)	131
	140
	142
LAMP (12 VOLT, 55 WATT) (FLOOD)	136
LAMP (12 VOLT/21 WATT)	117
LAMP (12 VOLT)(55 WATT)	133
LAMP (12 VOLT)(55 WATT)	133
LAMP (12 VOLT/55 WATT)	138
LAMP (12 VOLT/55 WATT)	138
LAMP (12VOLT/21WATT) (TURN SIGNAL)	130
LAMP (12VOLT/21/5WATT) (STOP)	130
LENS	117
LENS (AMBER)	120
	122
LENS (AMBER)	131
	132
LENS-AMBER	124
	126
LENS AS	120
	122
	124
	126
LENS AS (FLOOD)	118
	119
LENS (CLEAR)	138
LENS (CLEAR) (FLOODLAMP)	136
LENS (STOP/TURN SIGNAL)	130
LEVER GP-GOVERNOR CONTROL	746
LEVER GP-HAND CONTROL	295
LIFTING GP-ENGINE	39
LIGHTING GP-FLOOD	133
	136
	138
	140
	142
LIGHTING GP-ROADING–FOG LIGHT	144
LIGHTING GP-ROADING–LH–DIP BEAM	146

INDEX

Name	Page
LIGHTING GP-ROADING–LH DIP BEAM–SIDE SHIFT –CANOPY	155
LIGHTING GP-ROADING–RH–DIP BEAM	149
LIGHTING GP-ROADING–RH DIP BEAM–SIDE SHIFT–CANOPY	158
LIGHTING GP-ROADING–SIDE REPEATER	152
LIGHTING GP-WARNING	161
LIGHTING GP-WARNING BEACON	163
	164
LINER GP-SOUND SUPPRESSION	341
LINES GP-AIR	81
LINES GP-AIR–CRANKCASE BREATHER	80
	82
LINES GP-BACKHOE–NARROW FRAME	400
LINES GP-BACKHOE–STANDARD FRAME	398
LINES GP-BACKHOE AUXILIARY	432
	436
LINES GP-BACKHOE AUXILIARY–EXTENDABLE STICK–STANDARD FRAME	402
LINES GP-BACKHOE AUXILIARY–KIT	408
	412
	416
	420
LINES GP-BACKHOE AUXILIARY–NARROW FRAME	405
	407
	424
	428
LINES GP-BACKHOE AUXILIARY–STANDARD STICK	404
LINES GP-BOOM	440
LINES GP-BUCKET CYLINDER	441
LINES GP-DRAIN	443
LINES GP-DRAIN–BOOM, STICK LOCKS	444
LINES GP-EXTENDABLE STICK	445
LINES GP-FUEL	90
LINES GP-HEATER	747
LINES GP-HEATER & AIR COND	749
LINES GP-LIFT CYLINDER	446
	448
	450
LINES GP-LOAD CONTROL VALVE–BOOM AND STICK	451
LINES GP-LOAD CONTROL VALVE–LIFT, TILT	458
LINES GP-LOAD CONTROL VALVE–PARALLEL LIFT	454
LINES GP-LOADER AUXILIARY	462
	464
LINES GP-MULTIPURPOSE BUCKET	466
	468
	470
	472
LINES GP-PILOT	474
LINES GP-POWER TRAIN COOLER	59
LINES GP-POWER TRAIN COOLER–POWER SHIFT	61
LINES GP-PUMP	477
	479
	482
	483
	485
LINES GP-PUMP–6 BANK	484
LINES GP-RETURN	486
LINES GP-RIDE CONTROL	487
LINES GP-SIDESHIFT LOCK–NARROW FRAME	491
	495
LINES GP-SIDESHIFT LOCK–STANDARD FRAME	489
	493
LINES GP-STABILIZER	497
	499
LINES GP-STEERING–2 WHEEL STEER–ALL WHEEL DRIVE	300
LINES GP-STICK	501
LINES GP-STICK–EXTENSION	502
	505
LINES GP-SWING–CUSHION–NARROW FRAME	516
LINES GP-SWING–CUSHION–STANDARD FRAME	513
LINES GP-SWING–NARROW FRAME	511
LINES GP-SWING–STANDARD FRAME	509
LINES GP-TILT CYLINDER	519
	521
LINK GP-SHIPPING	593
LINKAGE GP-BACKHOE BUCKET	594
	596
LOADER AR	597
LOCK GP-HYDRAULIC FOOT CONTROL	523
LOCK GP-HYDRAULIC HAND CONTROL	524
LOCK GP-STABILIZER LEG	598
LOCK GP-TRANSPORT–EXTENDABLE STICK	601
LOCK GP-TRANSPORT–LOADER	599
	600
LOCK GP-TRANSPORT–STABILIZER	603
LOCK GP-TRANSPORT–STANDARD STICK	602
LOCK GP-VANDALISM	802
LOCK GP-VANDALISM–PARALLEL LIFT	803
LOCKOUT GP-FOURTH GEAR	236

M

Name	Page
MIRROR GP-REAR VIEW	751
	752
MODULE GP-WARNING INDICATOR	753
	754
MOTOR GP-WINDOW WIPER	755

INDEX

Name	Page
MOUNTING GP-AXLE–ALL WHEEL DRIVE	237
MOUNTING GP-BANK VALVE–BACKHOE	526
MOUNTING GP-BANK VALVE–LOADER, MECHANICAL	525
MOUNTING GP-BUCKET–BACKHOE	692
MOUNTING GP-BUCKET–BACKHOE–QUICK COUPLER	690, 691
MOUNTING GP-BUCKET–LOADER	689
MOUNTING GP-CYLINDER–MULTIPURPOSE	527
MOUNTING GP-ENGINE	40
MOUNTING GP-ENGINE & TMSN	41
MOUNTING GP-ENGINE & TMSN–POWER SHIFT	42
MOUNTING GP-FORK	693
MOUNTING GP-HYDRAULIC PUMP	528
MOUNTING GP-INSTRUMENT PANEL–FRONT CONSOLE	756, 757
MOUNTING GP-INSTRUMENT PANEL–SIDE	758
MOUNTING GP-LINES	529, 530, 531, 532
MOUNTING GP-REGISTRATION	342, 343
MOUNTING GP-STICK	604
MUFFLER GP	83

P

PAD GP-STABILIZER	605
PADLOCK GP	802, 803
PAN GP-OIL	43
PANEL GP-INSTRUMENT–SIDE	760
PEDAL GP-GOVERNOR	761
PIN GP-AXLE	218
PISTON & ROD GP	45
PLANETARY GP-FINAL DRIVE	238
PLATE & FILM GP	804, 805
PLATE AS-SIDE REFLECTIVE	809
PLATE-IDENTIFICATION	17, 18, 19
PLUG AS-MAGNETIC	218, 227
PLUG (ENGINE OIL FILTER LINES)	54
PLUG GP-CONNECTOR–RETURN TO DIG	165
PLUG GP-ENGINE	47, 48
PLUG-MAGNETIC	222
PLUG-SUMP DRAIN	43
POWER TRAIN AR–ALL WHEEL DRIVE–AUTOSHIFT	239, 240
POWER TRAIN AR–ALL WHEEL DRIVE–STANDARD SHIFT	239, 240
POWER TRAIN AR–2 WHEEL STEER	239
PULLEY GP-CRANKSHAFT	49
PUMP GP-ENGINE OIL	52
PUMP GP-FUEL INJECTION	92, 93, 96
PUMP GP-FUEL PRIMING	98
PUMP GP-METERING	303
PUMP GP-PISTON	533
PUMP GP-TRANSMISSION	250, 254
PUMP GP-WATER	63

R

RADIATOR & FAN GP	65, 66
RADIATOR & HYD OIL COOLER GP	67, 69, 70, 72
REFLECTOR	146, 149, 152, 155, 158
REFLECTOR GP–SIDE SHIFT	344
REGULATOR-WATER TEMPERATURE	53
RELAY AS (12 VOLT)	133, 140, 142, 176, 206, 208, 217
RELAY AS (12 VOLT)	173, 193
RELAY AS (12-VOLT)	189
RELAY AS (12 VOLT) (DEAD ENGINE LOWER)	181
RELAY AS (12 VOLT) (DEAD ENGINE LOWER,RIDE CONTROL)	210, 212
RELAY AS (12 VOLT) (HEATER & AIR COND)	193
RELAY AS (12 VOLT) (HIGH SPEED)	173
RELAY AS (12 VOLT) (LIGHTING)	136, 138
RELAY AS (12-VOLT) (SECURITY ENGINE)	115
RELAY AS (12 VOLT) (SIDE CONTROL)	178

INDEX

Name	Page
RELAY AS (12 VOLT) (STANDARD/AUXILIARY FLOOD)	136
RELAY AS (12 VOLT) (STANDARD/AUXILIARY FLOOD)	138
RESERVOIR GP-BRAKE	296
ROTATING GP-PUMP	536
S	
SEAL-O-RING	256, 445
SEAL-O-RING (WATER TEMPERATURE REGULATOR)	53
SEAT BELT GP	762
SEAT GP	763, 765, 767
SEAT GP-SUSPENSION	770, 772, 774, 775
SENDER-TEMPERATURE	189
SEPARATOR GP-WATER	99
SHAFT GP-DRIVE	243
SHAFT GP-DRIVE–ALL WHEEL DRIVE	244
SHAFT GP-DRIVE–FRONT–POWERSHIFT	242
SHAFT GP-DRIVE–REAR	241
SHAFT GP-POWER TAKE-OFF	537
SHIPPING AR-BUCKET	694
SLEEVE	803
SLEEVE-CABLE SPLICE	713
SPEAKER	776
SPRING (BREATHER HOSE)	25
STABILIZER AR	538
STABILIZER GP-BACKHOE	606
STABILIZER GP-BACKHOE–SLOTTED LEG	608
STABILIZER GP-BACKHOE–STANDARD LEG	607
STARTING MOTOR GP-ELECTRIC	166, 168
STEERING WHEEL	298
STEERING WHEEL GP	304
STICK GP-EXTENDABLE	609, 611
STICK GP-HOE	613
STOP GP-BUCKET–BACKHOE	695, 696
STRAINER	254
STRAINER (TRANSMISSION CASE)	250
SUN VISOR	784
SUPPRESSION AR-SOUND	345
SUPPRESSION AR-SOUND– NATURALLY ASPIRATED	345
SUPPRESSION GP-SOUND	776
SUSPENSION GP-SEAT–AIR	778
SWITCH AS	393
SWITCH AS (AIR INLET)	79
SWITCH AS (DETENT)	392
SWITCH AS (HEATER)	193
SWITCH AS (HORN)	183
SWITCH AS (HYDRAULIC LOCK)	391
SWITCH AS-KEY START	760
SWITCH AS-LIMIT	292
SWITCH AS (LOADER VALVE)	394
SWITCH AS (NEUTRAL LOCK)	183
SWITCH AS-PRESSURE	206, 208, 210, 212
SWITCH AS-PRESSURE (HIGH - LOW)	173
SWITCH AS-PUSH BUTTON	359
SWITCH AS-PUSH BUTTON (TRANSMISSION NEUTRAL)	226
SWITCH AS (RIDE CONTROL)	208
SWITCH AS (RIDE CONTROL-STANDARD)	397
SWITCH AS-ROCKER (FRONT FLOOD)	142
SWITCH AS-ROCKER (HAZARD)	183
SWITCH AS-ROCKER (HEATER FAN SPEED)	173, 193
SWITCH AS-ROCKER (REAR FLOOD)	142
SWITCH AS-ROCKER (RIDE CONTROL)	206, 210, 212
SWITCH AS-ROCKER (RIDE CONTROL) (STANDARD SHIFT)	349
SWITCH AS-ROLLER (RETURN TO DIG)	214
SWITCH AS (TURN SIGNAL)	180
SWITCH GP	391, 392, 394
SWITCH GP (HYDRAULIC LOCK)	393
SWITCH GP-PRESSURE	169
SWITCH GP-TEMPERATURE	170
SWITCH-THERMOSTAT	700
SWITCH (TIMING ADVANCE)	93
SWITCH (40-DEG) (ENGINE COOLANT TEMPERATURE)	96
SYNCHRONIZER GP	248
T	
TACHOMETER GP-ELECTRIC	703, 704, 705, 706, 781, 782
TANK & MTG GP-FUEL	100
TANK GP-FUEL	101, 102
TANK GP-HYDRAULIC	539

INDEX

Name	Page
TOOTH GP-UNI	697
TRANSMISSION & MOUNTING GP–ALL WHEEL DRIVE	246
TRANSMISSION & MOUNTING GP–ALL WHEEL DRIVE–STANDARD SHIFT	245
TRANSMISSION AR-DIRECT DRIVE–ALL WHEEL DRIVE	247
TRANSMISSION AR-POWER SHIFT–ALL WHEEL DRIVE	247
TRANSMISSION GP-DIRECT DRIVE–ALL WHEEL DRIVE	248
TRANSMISSION GP-POWER SHIFT–ALL WHEEL DRIVE	254
TRIM GP-CAB	783
TURBOCHARGER GP	84

V

Name	Page
V-BELT (AIR CONDITIONING COMPRESSOR)	715
V-BELT SET (INCLUDES 2 BELTS)	703 704 705 706 711
VALVE & MTG GP-BANK–STABILIZER	541
VALVE AR-BANK 4	542
VALVE AR-BANK 5	542 543
VALVE AR-BANK 6	543
VALVE AS-RELIEF (AIR VENT)	237
VALVE AS (WATER)	698 741
VALVE-GAS	346
VALVE GP-AUXILIARY–KIT	544 545 546
VALVE GP-BANK 2–LOADER	547 548
VALVE GP-BANK 3–BACKHOE	550
VALVE GP-BANK 3–LOADER	549
VALVE GP-BANK 4–BACKHOE	552
VALVE GP-BANK 4–BACKHOE–SIDE SHIFT	551
VALVE GP-BANK 5–BACKHOE	554
VALVE GP-BANK 5–BACKHOE–SIDE SHIFT	553
VALVE GP-BANK 6–BACKHOE	557
VALVE GP-BANK 6–BACKHOE –SIDE SHIFT	556
VALVE GP-CHECK–BACK PRESSURE	558
VALVE GP-CONTROL–AUXILIARY	559
VALVE GP-CONTROL–BOOM	575
VALVE GP-CONTROL–BUCKET	573
VALVE GP-CONTROL–CLAM	571
VALVE GP-CONTROL–EXTENDABLE STICK;AUXILIARY	565
VALVE GP-CONTROL–LIFT	561
VALVE GP-CONTROL–STICK	577
VALVE GP-CONTROL–SWING	563
VALVE GP-CONTROL–TILT	567 569
VALVE GP-LOAD CONTROL–TILT	579
VALVE GP-PRIORITY–STEERING	305
VALVE GP-PUMP CONTROL	581 582
VALVE GP-RELIEF	254 260 305 559 571 575
VALVE GP-RELIEF (CLUTCH PRESSURE)	248
VALVE GP-RELIEF (CONVERTER)	248
VALVE GP-SHUTOFF	390
VALVE GP-SOLENOID	261 262 263 264 265 584 585
VALVE GP-SOLENOID (12 V) (AIR FUEL RATIO CONTROL)	92
VALVE GP-TIRE	266 267
VALVE MECHANISM GP	50
VALVE-SHUTOFF	58 390
VISOR GP-CAB	784

W

Name	Page
WARNING GP-BACKUP	171
WASHER GP-WINDOW	785
WHEEL & TIRE AR–ALL WHEEL DRIVE	267 268 269 270 271
WHEEL & TIRE AR–REAR	271 272
WHEEL & TIRE AR–TWO WHEEL DRIVE	267
WHEEL & TIRE GP	277
WHEEL & TIRE GP–FRONT	276 277 278 280 283 284
WHEEL & TIRE GP–LH	272 273 274

INDEX

Name	Page
	275
	278
	279
	280
	281
	282
	283
	284
	285
	286
	287
	288
WHEEL & TIRE GP–REAR	273
	274
	281
	282
	285
	286
WHEEL & TIRE GP–RH	272
	274
	275
	279
	280
	281
	282
	283
	284
	285
	286
	287
	288
WINDOW GP-CAB–LH	789
WINDOW GP-CAB–REAR	791
WINDOW GP-CAB–RH	787
WINDOW GP-DOOR–LH	795
WINDOW GP-DOOR–RH	793
WIPER GP-WINDOW	797
WIRING GP-AIR CONDITIONER	173
WIRING GP-AUTOSHIFT	176
WIRING GP-CAB	178
	181
WIRING GP-CAB–TURN SIGNAL	180
WIRING GP-CONSOLE–FRONT	183
WIRING GP-CONSOLE–SIDE	185
WIRING GP-CONSOLE–SIDE, DELUXE	187
WIRING GP-ENGINE	189
WIRING GP-HEATER	193
WIRING GP-KICKOUT & POSITIONER	195
WIRING GP-PLATFORM	198
WIRING GP-PLATFORM–SERVICE	196
WIRING GP-POWER RECEPTACLE	202
WIRING GP-REAR	203
WIRING GP-RIDE CONTROL	206
	210
WIRING GP-RIDE CONTROL–AUTOSHIFT	208
	212
WIRING GP-SENSOR	214
WIRING GP-STABILIZER ALARM	215
WIRING GP-STEERING–ALL WHEEL DRIVE	217

INDEX

Désignation	Page

A

ACCOUDOIR (ASS)	702
ACCOUPLEMENT (ASS)	370
ACCUMULATEUR - CLIMATISEUR (ASS)	749
ACCUMULATEUR - COMMANDE DE TRANSLATION (ASS)	346
ALTERNATEUR DE CHARGE (ASS)	103
AMPOULE (12 VOLTS)	128
	185
	781
	782
AMPOULE (12 VOLTS) (INDICATEUR DE TEMPÉRATURE DE LIQUIDE DE REFROIDISSEMENT)	187
AMPOULE (12 VOLTS) (MINIATURE)	753
AMPOULE (12 VOLTS) (MINIATURE)	124
	126
AMPOULE (12 VOLTS) (NIVEAU DE CARBURANT)	187
AMPOULE (12 VOLTS) (TEMPÉRATURE D'HUILE DE CONVERTISSEUR)	187
AMPOULE (12 VOLTS) (VOLTMÈTRE)	187
AMPOULE (12 VOLTS) (21 WATTS)	124
	126
AMPOULE (12 VOLTS/ 21 WATTS)	117
AMPOULE (12 VOLTS, 55 WATTS)	118
	119
	132
AMPOULE (12 VOLTS, 55 WATTS)	136
AMPOULE (12 VOLTS, 55 WATTS) (PROJECTEUR)	136
AMPOULE (12 VOLTS)(55 WATTS)	133
AMPOULE (12 VOLTS)(55 WATTS)	133
AMPOULE (12 VOLTS/55 WATTS)	138
AMPOULE (12 VOLTS)(55 WATTS)	133
AMPOULE (12 VOLTS/55 WATTS)	138
AMPOULE (12V, 10W)	776
AMPOULE (12V, 21W)	120
	122
AMPOULE (12V, 4W)	120
	122
AMPOULE (12V, 55W)	131
AMPOULE (12V, 55W)	140
	142
AMPOULE (12VOLTS/ 21/ 5WATTS) (ARRÊT)	130
AMPOULE (12VOLTS/ 21WATTS) (CLIGNOTANT DE DIRECTION)	130
ARBRE A CAMES (ASS)	24
ARBRE DE PRISE DE FORCE (ASS)	537
ARBRE D'ENTRAÎNEMENT (ASS)	241
	242
	243
	244
ARRÊT-GODET (ASS)	695
	696
AUTOCOLLANT - DIRECTION INTÉGRALE	806
AUTOCOLLANT (ALTERNANCE DIAGONALE STANDARD)	805
AUTOCOLLANT-ARRIMAGE	804
AUTOCOLLANT-CAT	338
AUTOCOLLANT (CATERPILLAR)	705
	706
	800
AUTOCOLLANT-COMMANDE (CLIMATISEUR)	698
	741
	806
AUTOCOLLANT (COMMANDE DE GODET)	806
AUTOCOLLANT (COMMANDE DE GODET)	354
AUTOCOLLANT (COMMANDE DE GODET)	805
AUTOCOLLANT (COMMANDE DE STABILISATEUR)	538
AUTOCOLLANT (COMMANDE DE TRANSLATION)	349
AUTOCOLLANT (COMMANDE DE TRANSLATION)	397
AUTOCOLLANT (CONTACTEUR D'ALLUMAGE)	115
AUTOCOLLANT (CONTACTEUR DE DÉMARRAGE)	758
	760
	805
AUTOCOLLANT DE MISE EN GARDE	804
	805
AUTOCOLLANT DE MISE EN GARDE (VÉRIN HAUTE PRESSION)	409
	412
	416
	420
	424
	428
	432
	436
	487
	807
AUTOCOLLANT (DÉMARRAGE)	115
AUTOCOLLANT D'IDENTIFICATION (PANNEAU DE FUSIBLES)	230
	806
AUTOCOLLANT (EN ROULEAU) (0,095M)	806
AUTOCOLLANT (GODET TOUS-TRAVAUX)	394
AUTOCOLLANT (GODET TOUS-TRAVAUX)	806
AUTOCOLLANT (GODET TOUS-TRAVAUX) (COMMANDE MÉCANIQUE DE GODET)	392
AUTOCOLLANT (INSTRUCTIONS)	806
AUTOCOLLANT (INSTRUCTIONS) (COMMANDE DE GODET TOUS-TRAVAUX)	392
AUTOCOLLANT-LEVAGE	804
AUTOCOLLANT-LEVAGE ET ARRIMAGE	804

INDEX

Désignation	Page
	807
AUTOCOLLANT (PLAQUE DE COMMANDE)	805
AUTOCOLLANT (PLAQUE-NOM)	346
AUTOCOLLANT (RECIRCULATION D'AIR)	700
AUTOCOLLANT (SYSTÈME DE SÉCURITÉ DE LA MACHINE)	115
AUTOCOLLANT (VERROUILLAGE D'ARTICULATION CENTRALE/ FLÈCHE)	805
AUTOCOLLANT (VERRROUILLAGE DÉPORT LATÉRAL/ FLÈCHE)	805
AUTOCOLLANT (VITESSE VARIABLE)	86
	805
AUTOCOLLANT (20 KM/H)	18
	19
AVERTISSEUR DE RECUL (ASS)	171
AXE D'ESSIEU (ASS)	218

B

BALAI D'ESSUIE-GLACE	797
BALAI D'ESSUIE-GLACE (ENS)	797
BANDE AUTOCOLLANTE (278CM)	338
BANDE AUTOCOLLANTE (400 CM)	703
	704
	705
	706
BATI - CHARGEUSE (ASS)	322
	323
BATI - DEPORT LATERAL (ASS)	324
BÂTI D'ORIENTATION (ASS)	326
	329
BATTERIE (ASS)	104
BATTERIE (ASS)	106
	110
BATTERIE (ASS)	108
BATTERIE (12 VOLTS)	104
	106
	108
	110
BLINDAGE D'ARBRE DE TRANSMISSION (ASS)	331
BLOC-CYLINDRES (ASS)	29
	31
BOITE DE VITESSES ET MONTAGE (ASS)	245
	246
BOÎTE MÉCANIQUE (ASS)	248
BOITE MECANIQUE (VERSION)	247
BOÎTE POWER SHIFT (ASS)	254
BOÎTE POWER SHIFT (VERSION)	247
*BOOM GP	589
BOUCHON AIMANTÉ	222
BOUCHON DE CARBURANT	102
BOUCHON DE MOTEUR (ASS)	47
	48
BOUCHON DE REMPLISSAGE D'HUILE MOTEUR (ASS)	51
BOUCHON DE REMPLISSAGE (RÉSERVOIR HYDRAULIQUE)	539
BOUCHON FILETÉ (CANALISATIONS DE FILTRE À HUILE DE MOTEUR)	54
BOUCHON MAGNÉTIQUE (ENS)	227
BOUCHON MAGNÉTIQUE (ENS)	218
BOUCHON-VIDANGE DU CARTER	43
BOUGIE DE PRECHAUFFAGE	113
BOUGIE DE PRÉCHAUFFAGE (ASS)	113
BOUTON DE DIRECTION (ASS)	299
BOUTON DE TEMPÉRATURE	170
BRAS DE LEVAGE (ASS)	586
BRAS DE PELLE RETRO (ASS)	613
BRAS TÉLESCOPIQUE (ASS)	609
	611
*BUCKET AR-MULTIPURPOSE	620

C

CABINE (ASS)	707
	709
CABINE ROPS FERMÉE (VERSION)	705
	706
CABINE (VERSION)	704
CABINE (VERSION)	703
CABLAGE - CAPTEUR (ASS)	214
CABLAGE - CLIMATISEUR (ASS)	173
CABLAGE - PLATE-FORME (ASS)	198
CABLAGE - PLATE-FORME (ASS)	196
CABLAGE AR (ASS)	203
CABLAGE D'AVERTISSEUR DE STABILISATEUR (ASS)	215
CABLAGE DE CABINE (ASS)	178
	180
	181
CABLAGE DE CHANGEMENT DE VITESSES AUTOMATIQUE (ASS)	176
CÂBLAGE DE COMMANDE DE TRANSLATION (ASS)	206
	208
	210
	212
CABLAGE DE CONSOLE (ASS)	183
	185
CABLAGE DE CONSOLE (ASS)	187
CABLAGE DE DIRECTION (ASS)	217
CABLAGE DE MOTEUR (ASS)	189
CABLAGE DE PRISE DE FORCE	202
CÂBLAGE DE PRISE DE FORCE ET LIMITEUR (ASS)	195
CABLAGE DU CHAUFFAGE DE CABINE (ASS)	193
CACHE-SOUPAPES (ASS)	25

INDEX

Désignation	Page
CACHE-SOUPAPES ET RANGÉE DE SOUPAPES (ASS)	371
CADENAS (ASS)	802
	803
CANALISATIONS - GODET TOUS-TRAVAUX (ASS)	466
	468
	470
	472
CANALISATIONS A COMMANDE PILOTE (ASS)	474
CANALISATIONS-CHARGEUSE AUXILIAIRE (ASS)	462
	464
CANALISATIONS D'AIR (ASS)	80
	81
	82
CANALISATIONS DE BRAS (ASS)	501
	502
	505
CANALISATIONS DE CARBURANT (ASS)	90
CANALISATIONS DE CHAUFFAGE (ASS)	747
CANALISATIONS DE COMMANDE DE MARCHE	487
CANALISATIONS DE DIRECTION (ASS)	300
CANALISATIONS DE PELLE RÉTRO (ASS)	398
	400
CANALISATIONS DE POMPE (ASS)	477
	479
	482
	483
	484
	485
CANALISATIONS DE RÉCHAUFFEUR DE LIQUIDE DE REFROIDISSEMENT	749
CANALISATIONS DE REFROIDIS. DE TRANSMISSION	59
	61
CANALISATIONS DE STABILISATEUR (ASS)	497
	499
CANALISATIONS DE VÉRIN DE GODET (ASS)	441
CANALISATIONS DE VÉRIN DE LEVAGE (ASS)	446
	448
	450
CANALISATIONS DE VERROUILLAGE DE DEPORT LATERALE	489
	491
	493
	495
CANALISATIONS DE VIDANGE (ASS)	443
	444
CANALISATIONS D'ORIENTATION (ASS)	509
	511
	513
	516
CANALISATIONS DU BRAS TELESCOPIQUE (ASS)	445
CANALISATIONS DU VÉRIN D'INCLINAISON (ASS)	519
	521
CANALISATIONS-RÉCHAUFFEUR ET CLIMATISEUR (ASS)	749
CANALISATIONS SECONDAIRES DE PELLE RÉTRO (ASS)	402
	404
	405
	407
	408
	412
	416
	420
	424
	428
	432
	436
CANALISATIONS-VALVE DE CONTROLE DE CHARGE	451
	454
	458
CAPOT DU MOTEUR (ASS)	338
CAPOT ET PROTECTION (ASS)	336
CARTER AV (ASS)	37
CARTER DE BRAS TÉLESCOPIQUE (ENS)	592
CARTER DE DIFFÉRENTIEL (ASS)	227
CARTER DE VOLANT (ASS)	36
CARTER ET BRIDE D'ESSIEU (ASS)	234
	235
CEINTURE DE SECURITE (ASS)	762
CHAPEAU	267
CHAPEAU (ENS)	446
	459
	462
CHAPEAU (ENS) (RADIATEUR)	69
	72
CHAPEAU (TIGE DE SOUPAPE)	266
CHARGEUSE (VERSION)	597
CHAUFFAGE DE CABINE (ASS)	743
CHAUFFAGE ET MONTAGE - CABINE (ASS)	741
CLAPET DE DECHARGE (ASS)	260
	305
	571
CLAPET DE DECHARGE (ASS)	254
CLAPET DE DECHARGE (ASS)	559
	575
CLAPET DE DECHARGE (ASS) (CONVERTISSEUR)	248
CLAPET DE DECHARGE (ASS) (PRESSION D'EMBRAYAGE)	248

INDEX

Désignation	Page
CLAPET DE DECHARGE (PURGEUR D'AIR)	237
CLAPET (ENS) (EAU)	698
	741
CLÉ	803
CLÉ ÉLECTRONIQUE (ENS) (SÉCURITÉ)	115
CLIGNOTANT (ENS)	198
CLIMATISEUR (ASS)	700
CLIMATISEUR ET MONTAGE (ASS)	698
COMMANDE DE BOITE DE VITESSES (ASS)	226
COMMANDE DE DIFFÉRENTIEL - VERROUILLAGE (ASS)	225
COMMANDE DE DIRECTION (ASS)	297
	298
COMMANDE DE FREIN DE STATIONNEMENT (ASS)	290
	291
COMMANDE DE POIGNÉE (ASS)	350
	351
COMMANDE DE POSITION (ASS)	112
	195
COMMANDE DE RÉGULATEUR ET D'ACCÉLÉRATEUR (ASS)	86
COMMANDE DE TRANSLATION (VERSION)	348
	349
COMMANDE HYDRAULIQUE DE PÉDALE (ASS)	367
COMMANDE HYDRAULIQUE DE PÉDALE (ASS)	365
COMMANDE HYDRAULIQUE MANUELLE (ASS)	352
	354
	356
	358
	359
	361
	362
	363
	364
COMPARTIMENT DE BATTERIE (ASS)	306
	307
	308
	309
	310
COMPRESSEUR DE REFRIGERANT (ASS)	714
	715
COMPTE-TOURS ÉLECTRIQUE (ASS)	703
	704
	781
	782
COMPTE-TOURS ÉLECTRIQUE (ASS)	705
	706
CONDENSATEUR ET MONTAGE (RÉFRIGÉRANT)	716
CONNEXION (ASS)	451
CONSOLE AV (ASS)	717
	718
CONSOLE DE CONDUITE (ASS)	719
	720
CONSOLE LATÉRALE (ASS)	721
	722
	723
	724
	725
	726
CONTACTEUR DE DÉMARRAGE À CLÉ (ENS)	760
CONTACTEUR (ENS)	393
CONTACTEUR (ENS) (ADMISSION D'AIR)	79
CONTACTEUR (ENS) (BLOCAGE AU POINT MORT)	183
CONTACTEUR (ENS) (CLIGNOTANT DE DIRECTION)	180
CONTACTEUR (ENS) (COMMANDE DE TRANSLATION)	208
CONTACTEUR (ENS) (COMMANDE DE TRANSLATION STANDARD)	397
CONTACTEUR (ENS) (CRAN)	392
CONTACTEUR (ENS) (KLAXON)	183
CONTACTEUR (ENS) (RÉCHAUFFEUR)	193
CONTACTEUR (ENS) (SOUPAPE DE CHARGEUSE)	394
CONTACTEUR (ENS) (VERROUILLAGE HYDRAULIQUE)	391
CONTREPOIDS (ASS)	312
	313
	314
	315
COUPLEUR EXPRESS (ASS)	677
	678
	679
	680
	681
	682
COURONNE ET DIFFERENTIEL (ASS)	227
COURROIE TRAPEZOIDALE (COMPRESSEUR CLIMATISATION)	715
COUVERCLE (ASS) MONTANT	730
COUVERCLE-CLOISON PARE-FEU (ENS)	728
	729
COUVERCLE DE COLLECTEUR D'ADMISSION (ASS)	76
COUVERCLE DE LA CONSOLE (ASS)	727
CREPINE	254
CREPINE (CARTER DE BOITE DE VITESSES)	250
CULASSE (ASS)	32
	33
CULBUTERIE (ASS)	50

INDEX

Désignation	Page

D

DÉMARREUR ÉLECTRIQUE (ASS)	166
	168
DENT MONOBLOC (ASS)	697
DIFFERENTIEL (ASS)	229
DISJONCTEUR DE SECURITE (ENS)	292
DISTRIBUTEUR (ASS)	559
	561
	563
	565
	567
	569
	571
	573
	575
	577
DISTRIBUTEUR DE CHARGE (ASS)	579
DISTRIBUTEUR DOUBLE ÉLÉMENT (ASS)	547
	548
DISTRIBUTEUR HYDRAULIQUE AUXILIAIRE (ASS)	544
	545
	546
DISTRIBUTEUR TRIPLE ÉLÉMENT (ASS)	549
	550
DISTRIBUTEUR 4 ÉLÉMENTS (ASS)	551
	552
DISTRIBUTEUR 4 ÉLÉMENTS (VERSION)	542
DISTRIBUTEUR 5 ÉLÉMENTS (ASS)	553
	554
DISTRIBUTEUR 5 ÉLÉMENTS (VERSION)	542
	543
DISTRIBUTEUR 6 ÉLÉMENTS (ASS)	556
	557
DISTRIBUTEUR 6 ÉLÉMENTS (VERSION)	543
DISTRIBUTEURS ET MONTAGE (ASS)	541

E

EAU DES CHEMISES - RECHAUFFEUR (ASS)	114
ÉCLAIRAGE - AVERTISSEUR (ASS)	161
ÉCLAIRAGE - FEUX DE ROUTE (ASS)	144
ÉCLAIRAGE - FEUX DE ROUTE (ASS)	146
	149
	152
	155
	158
ÉCLAIRAGE - GYROPHARE (ASS)	163
	164
ÉCLAIRAGE - PROJECTEURS (ASS)	133
	136
	138
	140
	142
ÉLÉMENT DE FILTRE (CARBURANT)	98
ÉLÉMENT DE FILTRE (ENS)-CARBURANT	88
ENSEMBLE DE TRANSFORM.-COMMANDE MANUELLE HYDR.	369
ENTRAÎNEMENT D'ACCOUPLEMENT FLEXIBLE (ASS)	231
ENTRAÎNEMENT DE VENTILATEUR (ASS)	34
ENTRAÎNEMENT POUR COURROIE (GYROPHARE)	132
ENTRAÎNEMENT POUR COURROIE (GYROPHARE)	131
ESSIEU AR (ASS)	220
ESSIEU MOTEUR ET DIRECTEUR (ASS)	218
ESSUIE-GLACE (ASS)	797

F

FEUX ARRIÈRE ET FEUX D'ARRÊT	129
FEUX ARRIÈRE ET FEUX D'ARRÊT	129
	130
FILTRE	559
	561
	563
	565
	567
	569
	571
	573
	575
	577
	698
	741
FILTRE À AIR	743
FILTRE À AIR (AÉRATION DE LA CABINE)	700
FILTRE A AIR (ASS)	73
	75
FILTRE A CARBURANT (ASS)	88
FILTRE À HUILE (ENS) (BOÎTE DE VITESSES)	247
FILTRE À HUILE (ENS) (HYDRAULIQUE) (ININFLAMMABLE)	396
	397
FILTRE À HUILE (ENS) (NETTOYAGE/ GRANDE EFFICACITÉ)	396
	397
FILTRE A HUILE MOTEUR (ENS)	51
FILTRE (RENIFLARD DE RÉSERVOIR HYDRAULIQUE)	539
FLECHE - CANALISATIONS	440
FLECHE (ASS)	588
FLEXIBLE (RENIFLARD)	25
FOURCHE (ASS)	686
FOURCHE (VERSION)	685

INDEX

Désignation	Page
FREIN DE MANOEUVRE - COMMANDE (ASS)	292
FREIN DE STATIONNEMENT (ASS)	289
FUSIBLE (10A)	131
	132
	133
	181
	202
FUSIBLE (10A)	138
FUSIBLE (10A)	142
	173
	206
	208
	210
	212
FUSIBLE (15A)	133
FUSIBLE (15A)	136
	138
FUSIBLE (15A)	140
	142
FUSIBLE (20 A)	178
FUSIBLE (5A)	178
	217

G

GAINE	391
	393
GAINE D'AIR (ASS)	735
	737
	738
GARDE-BOUE AR (ASS)	319
GARDE-BOUE AV (ASS)	317
	318
GARNITURE POUR CABINE (ASS)	783
GLACE DE PORTIÈRE (ASS)	793
	795
GODET - MONTAGE (ASS)	690
	691
	692
GODET - MONTAGE (ASS)	689
GODET - VERSION D'EXPÉDITION	694
GODET NORMAL (ENS)	621
	622
	623
	624
GODET RETRO (ASS)	625
	626
	627
	628
	629
	630
	631
	632
	633
	634
	635
	636
	637
	638
	639
	640
	641
	642
	643
	644
	645
	646
	647
	648
	649
	650
	651
	652
	653
	654
	655
	656
	657
	658
	659
	660
	661
	662
	663
	664
	665
GODET TOUS-TRAVAUX (ASS)	666
	667
	668
	669
	670
	672
	674
	675
GODET TOUS-TRAVAUX (VERSION)	615
	616
GODET TOUS-TRAVAUX (VERSION)	616
	617
	618
	619
	620
GOULOTTE DE REMPLISSAGE D'HUILE DE TRANSMISSION	232
	233
GRAISSEUR	586
	588
	596
	604
	668

INDEX

Désignation	Page
	674
	675
	678
GRAISSEUR (FILET 1/8-27)	324
	527
	586
	613
GRAISSEUR (FILET 1/8-27)	689
GRAISSEUR (FILET 1/8-27)	609
	611
GRAISSEUR (FILET 1/8-27)	666
	667
	669
GROUPE DE ROTATION DE POMPE	536

H

HAUT-PARLEUR	776
HUILE MOTEUR - CARTER (ASS)	43

I

INDICATEUR DE COLMATAGE DE FILTRE À AIR (ASS)	78
	79
INDICATEUR (ENS)	187
INSONORISATION (ASS)	776
INSONORISATION (VERSION)	345
INTERRUPTEUR - BOUTON-POUSSOIR (ENS)	359
INTERRUPTEUR - BOUTON-POUSSOIR (ENS) (POINT MORT DE LA BOÎTE DE VITESSES)	226
INTERRUPTEUR - CONTACTEUR (AVANCE À L'INJECTION)	93
INTERRUPTEUR - CONTACTEUR (40-DEG) (TEMPÉRATURE DU LIQUIDE DE REFROIDISSEMENT DU MOTEUR)	96
INTERRUPTEUR - THERMOSTAT	700
INTERRUPTEUR (ASS)	391
	392
	394
INTERRUPTEUR (ASS) (VERROUILLAGE HYDRAULIQUE)	393
INTERRUPTEUR BALANCIER (ENS) (COMMANDE DE TRANSLATION)	206
	210
	212
INTERRUPTEUR BALANCIER (ENS) (COMMANDE DE TRANSLATION) (PASSAGE DES VITESSES STANDARD)	349
INTERRUPTEUR BALANCIER (ENS) (FEUX DE DÉTRESSE)	183
INTERRUPTEUR BALANCIER (ENS) (PROJECTEUR ARRIÈRE)	142
INTERRUPTEUR BALANCIER (ENS) (PROJECTEUR AVANT)	142
INTERRUPTEUR BALANCIER (ENS) (VITESSE DE VENTILATEUR DE RÉCHAUFFEUR)	193
INTERRUPTEUR BALANCIER (ENS) (VITESSE DE VENTILATEUR DE RÉCHAUFFEUR)	173
INTERRUPTEUR ROTATIF (RETOUR AU CREUSAGE)	214

J

JEU DE COURROIES TRAPEZOIDALES (COMPREND 2 COURROIES)	703
	704
	705
	706
	711
JOINT TORIQUE	256
	445
JOINT TORIQUE (RÉGULATEUR DE TEMPÉRATURE D'EAU)	53

K

KIT - COMMANDE DE TRANSLATION	397
KIT - COUSSIN	702
KIT DE BLOC COULISSANT	770
	772
	774
KIT DE BOUGIE (12 BROCHES)	183
KIT DE BOUGIE (2 BROCHES)	115
	133
	138
	144
	173
	181
	193
	198
	203
	210
	212
	215
	291
KIT DE BOUGIE (2 BROCHES)	261
KIT DE BOUGIE (2 BROCHES)	700
KIT DE BOUGIE (3 BROCHES)	112
	144
	178
	181
KIT DE BOUGIE (4 BROCHES)	133
	136
	138
	178
	181
	203

INDEX

Désignation	Page
	210
	212
	215
KIT DE BOUGIE (6 BROCHES)	133
	138
	146
	149
	152
	178
	181
	203
	210
	212
KIT DE BOUGIE (8 BROCHES)	178
	183
	709
KIT DE BOULONNERIE	584
KIT DE CAME (SENS INVERSE D'HORLOGE)	289
KIT DE CONTACTEUR (DÉMARREUR)	166
KIT DE COUSSINET	220
KIT DE CROISILLON	218
KIT DE CROISILLON ET ROULEMENT	241
	242
	243
	244
KIT DE JOINTS	114
KIT DE JOINTS (POMPE DOSEUSE DE DIRECTION)	303
KIT DE PORTEUR PLANÉTAIRE	238
KIT DE PRISE FEMELLE (12 BROCHES)	176
KIT DE PRISE FEMELLE (12 BROCHES)	754
KIT DE PRISE FEMELLE (2 BROCHES)	181
	196
	203
	215
	217
	226
	256
	567
	569
	571
KIT DE PRISE FEMELLE (2 BROCHES)	359
KIT DE PRISE FEMELLE (2 BROCHES)	144
	171
KIT DE PRISE FEMELLE (2 BROCHES)	262
	263
	264
	265
	584
	585
KIT DE PRISE FEMELLE (3 BROCHES)	203
	391
	392
KIT DE PRISE FEMELLE (3 BROCHES)	214
KIT DE PRISE FEMELLE (3 BROCHES)	144
	165
KIT DE PRISE FEMELLE (3 BROCHES)	263
	264
	265
KIT DE PRISE FEMELLE (4 BROCHES)	115
	136
	138
	181
	193
	208
KIT DE PRISE FEMELLE (4 BROCHES)	210
	212
KIT DE PRISE FEMELLE (4 BROCHES)	129
KIT DE PRISE FEMELLE (4 BROCHES)	133
KIT DE PRISE FEMELLE (4 BROCHES) (LATÉRAL)	181
KIT DE PRISE FEMELLE (6 BROCHES)	133
	138
	181
	755
	797
KIT DE PRISE FEMELLE (6 BROCHES)	210
	212
KIT DE PRISE FEMELLE (6 BROCHES)	124
	126
KIT DE PRISE FEMELLE (6 BROCHES)	133
KIT DE PRISE FEMELLE (8 BROCHES)	178
	203
	753
KIT DE REGLAGE	702
KIT DE RÉPARATION	797
KIT DE ROULEMENT À GALETS	238
KIT D'ENGRENAGE (DÉMARREUR)	166
KIT D'ENTRETIEN	761
KIT D'ENTRETIEN D'ACCUMULATEUR	346
KIT D'ETRIER DE FREIN	289
KLAXON ÉLECTRIQUE (ASS)	745

L

LAME DE COUPE (ASS)	683
	684
LAMPE - FEUX AV (12 VOLTS)	124
	126
LAMPE - FEUX AV (12V, 60/55W)	120
	122
LAMPE - GYROPHARE (ASS)	131
	132
LAMPE - PHARE (ASS)	117
	119
LAMPE - PHARE (ASS)	118
LAMPE - PHARE ET CLIGNOTANT	120
	122
	124
	126

INDEX

Désignation	Page
LAMPE (ENS) (TÉMOIN ROTATIF)	132
LAMPE (ENS) (12 VOLTS)	115
LAMPE-PLAQUE D'IMMATRICULATION (ASS)	128
LAVE-GLACE - VITRE (ASS)	785
LENTILLE	117
LENTILLE (ENS)	120
	122
	124
	126
LENTILLE (ENS)	126
LENTILLE (ENS) (PROJECTEUR)	118
	119
LENTILLE (JAUNE)	131
	132
LENTILLE (JAUNE)	120
	122
LENTILLE ORANGE	124
	126
LENTILLE (SIGNAL D'ARRÊT/ CLIGNOTANT DE DIRECTION)	130
LENTILLE (TRANSPARENT)	138
LENTILLE (TRANSPARENT)	138
LENTILLE (TRANSPARENT) (PROJECTEUR)	136
LEVIER DE COMMANDE DE REGULATEUR (ASS)	746
LEVIER DE COMMANDE MANUELLE	295
LIAISON-EXPÉDITION (ASS)	593
*LINES GP-RETURN	486

M

MANCHON	803
MANCHON DE JONCTION DE CABLES	713
MANOCONTACT	169
MANOCONTACT (ENS)	206
	208
	210
	212
MANOCONTACT (ENS) (HAUTE - BASSE)	173
MODULE - TÉMOIN (ASS)	753
	754
MONTAGE - IMMATRICULATION (ASS)	342
	343
MONTAGE - POMPE HYDRAULIQUE (ASS)	528
MONTAGE DE BRAS (ASS)	604
MONTAGE DE CALE DE ROUE (VERSION)	801
MONTAGE DE CANALISATIONS (ASS)	529
	530
	531
	532
MONTAGE DE MOTEUR (ASS)	40
MONTAGE DE MOTEUR ET BOÎTE (ASS)	41
	42
MONTAGE DE VÉRIN (ASS)	527
MONTAGE D'ESSIEU (ASS)	237
MONTAGE-DISTRIBUTEUR (ASS)	525
	526
MONTAGE DU TABLEAU DE BORD (ASS)	756
	757
	758
MONTAGE FOURCHE (ASS)	693
MONTAGE-SÉCURITÉ (ASS)	115
MONTAGE-SÉCURITÉ (ASS) (SÉCURITÉ MACHINE)	115
MOTEUR D'ESSUIE-GLACE (ASS)	755
MOTEUR (VERSION)	20
	21
MOTEUR (VERSION PRINCIPALE)	22
	23

O

OEILLETONS DE LEVAGE MOTEUR (ASS)	39

P

PARE-CHOCS AV (ASS)	311
PARE-POUSSIERE	347
	474
PARE-SOLEIL	784
PELLE RÉTRO - BRAS NORMAL (VERSION)	9
	11
	12
	14
PELLE RÉTRO - BRAS TÉLESCOPIQUE (VERSION)	1
	2
	3
	4
	5
	6
	7
	8
PELLE RÉTRO - STABILISATEUR (ASS)	606
	607
	608
PELLE RÉTRO (VERSION)	10
	13
PISTON ET BIELLE (ASS)	45
PLAFONNIER (ASS)	776
PLAQUE (IDENTIFICATION)	17
	18
PLAQUE (IDENTIFICATION)	18
	19
PLAQUE LATERALE RELECTRICE (ENS)	809
PLAQUE SIGNALETIQUE	185
	617
	618
	620

INDEX

Désignation	Page
	806
PLAQUE SIGNALÉTIQUE (ASS)	799
	800
PLAQUE SIGNALETIQUE (GODET)	616
	617
PLAQUE SIGNALETIQUE (NIVEAU DU GODET) (GODET)	615
PLAQUE SIGNALETIQUE (416D)	183
	806
PLAQUES SIGNALETIQUES ET AUTOCOLLANTS (ASS)	804
	805
PNEU - GROUPE DE VALVE	266
	267
POCHE A DOCUMENTS (ASS)	713
POMPE A EAU (ASS)	63
POMPE A HUILE MOTEUR (ASS)	52
POMPE A PISTONS (ASS)	533
POMPE D'AMORÇAGE DE CARBURANT (ASS)	98
POMPE DE BOÎTE DE VITESSES (ASS)	250
	254
POMPE DE REGULARISATION DE DEBIT (ASS)	303
POMPE D'INJECTION DE CARBURANT (ASS)	92
	93
	96
PORTE-BALAIS (ENS)	166
PORTE DE BATTERIE (ASS)	316
PORTIERE DROITE (ASS)	733
PORTIERE GAUCHE (ASS)	731
PRISE (ASS)	165
PROTECTEUR DES CANALISATIONS (ASS)	334
	335
PROTECTION - ÉCLAIRAGE (ASS)	332
	333
PROTECTION DE GODET (ASS)	687
	688
PROTECTION DE GODET (ASS) (AVANT)	18
	19

R

Désignation	Page
RACCORD DE SOUPAPE (ASS)	347
RACCORD D'EAU (ASS)	53
RACCORD-RÉCHAUFFEUR ET CLIMATISEUR (ASS)	58
RADIATEUR ET REFROIDISSEUR D'HUILE HYDRAULIQUE (ASS)	67
	69
RADIATEUR ET REFROIDISSEUR D'HUILE HYDRAULIQUE (ASS)	70
	72
RADIATEUR ET VENTILATEUR (ASS)	65
	66
RALLONGE D'ÉCHAPPEMENT (ASS)	77
RÉFLECTEUR	146
	149
	152
	155
	158
RÉFLECTEUR (ASS)	344
REFROIDISSEUR D'HUILE MOTEUR (ASS)	54
REFROIDISSEUR HUILE MOTEUR ET SUPPORT DE FILTRE	54
RÉGULATEUR - PÉDALE (ASS)	761
RELAIS (ENS) (12 VOLTS)	133
	173
	176
	189
	193
	206
	208
	217
RELAIS (ENS) (12 VOLTS)	140
	142
RELAIS (ENS) (12 VOLTS) (ABAISSEMENT MOTEUR COUPÉ)	181
RELAIS (ENS) (12 VOLTS) (ABAISSEMENT MOTEUR COUPÉ, COMMANDE ANTI-TANGAGE)	210
	212
RELAIS (ENS) (12 VOLTS) (COMMANDE LATÉRALE)	178
RELAIS (ENS) (12 VOLTS) (ÉCLAIRAGE)	136
	138
RELAIS (ENS) (12 VOLTS) (PROJECTEUR STANDARD/ AUXILIAIRE)	136
	138
RELAIS (ENS) (12 VOLTS) (RÉCHAUFFEUR ET CLIMATISEUR)	193
RELAIS (ENS) (12 VOLTS) (SÉCURITÉ DU MOTEUR)	115
RELAIS (ENS) (12 VOLTS) (VITESSE RAPIDE)	173
RENIFLARD	256
RENIFLARD (BOÎTE DE VITESSES)	249
RENIFLARD (ESSIEU)	218
RÉSERVOIR DE CARBURANT (ASS)	101
	102
RÉSERVOIR DE CARBURANT ET MONTAGE (ASS)	100
RÉSERVOIR-FREIN (ASS)	296
RÉSERVOIR HYDRAULIQUE (ASS)	539
RESSORT (FLEXIBLE DE RENIFLARD)	25
RETROVISEUR - CABINE (ASS)	784
RÉTROVISEUR (ASS)	751
	752
REVÊTEMENT D'INSONORISATION (ASS)	341

INDEX

Désignation	Page
ROTATION DE LA ROUE DU VENTILATEUR SOUFFLANT	112
	806
ROTATION DE LA ROUE DU VENTILATEUR SOUFFLANT (BRAS-E)	365
ROTATION DE LA ROUE DU VENTILATEUR SOUFFLANT (BRAS TÉLESCOPIQUE)	806
ROTATION DE LA ROUE DU VENTILATEUR SOUFFLANT (COMMANDE DE GODET)	391
	392
	393
	394
	807
ROTATION DE LA ROUE DU VENTILATEUR SOUFFLANT (DÉBIT DE RETOUR)	408
	412
	416
	420
	424
	428
	432
	436
	806
ROTATION DE LA ROUE DU VENTILATEUR SOUFFLANT (N. D'ÉTAPE)	806
ROUE ET PNEU (ASS)	272
	273
	274
	275
	276
	277
	278
	279
	280
	281
	282
	283
	284
	285
	286
	287
	288
ROUE ET PNEU (VERSION)	267
	268
	269
	270
	271
	272

S

SEMELLE DE STABILISATEUR	605
SÉPARATEUR D'EAU (ASS)	99
SIÈGE (ASS)	763
	765
	767
SIÈGE AVEC SUSPENSION (ASS)	770
	772
	774
	775
	778
SILENCIEUX (ASS)	83
SONDE THERMIQUE	189
SOUPAPE - GAZ (CIRCUIT DE FREINAGE)	346
SOUPAPE - SOLÉNOÏDE (ASS)	263
	264
	265
	584
	585
SOUPAPE - SOLÉNOÏDE (ASS)	262
SOUPAPE - SOLÉNOÏDE (ASS)	261
SOUPAPE - SOLÉNOÏDE (ASS) (12 VOLTS) (RAPPORT AIR-CARBURANT)	92
SOUPAPE D'ARRÊT	58
	390
SOUPAPE D'ARRÊT (ASS)	390
SOUPAPE DE PRIORITE (ASS)	305
STABILISATEUR (VERSION)	538
SUPPORT DE FILTRE ET REFROIDISSEUR D'HUILE MOTEUR	54
SUPPORT D'EXPÉDITION (ASS)	590
	591
SUPPORT (ENS)	104
	106
SYNCHRONISEUR (ASS)	248

T

TABLEAU DE BORD (ASS)	760
TAPIS DU PLANCHER (ASS)	739
	740
THERMOSTAT-TEMPÉRATURE D'EAU	53
TIMONERIE DE GODET RÉTRO (ASS)	594
	596
TOIT-ROPS OUVERT (ASS)	712
TOIT (VERSION)	711
TÔLE DE PLANCHER (ASS)	320
TRAINS PLANÉTAIRES-RÉDUCTEURS (ASS)	238
TRANSMISSION (VERSION)	239
	240
TURBOCOMPRESSEUR (ASS)	84

V

*VALVE GP-CHECK	558
*VALVE GP-PUMP CONTROL	581
	582
VENTILATEUR ASPIRANT (ASS)	56
	57

INDEX

Désignation	Page
VENTILATEUR (ENS)	700
	743
VÉRIN - GODET TOUS-TRAVAUX (ASS)	382
VERIN DE BRAS (ASS)	385
VERIN DE FLECHE (ASS)	376
VÉRIN DE GODET RÉTRO (ASS)	372
	374
VÉRIN DE LEVAGE (ASS)	381
VERIN DE STABILISATEUR (ASS)	384
VÉRIN D'INCLINAISON (ASS)	388
VÉRIN D'ORIENTATION (ASS)	386
	387
VÉRIN DU BRAS TELESCOPIQUE (ASS)	378
	379
VERIN (ENS)	292
VERROUILLAGE ANTI-VANDALISME (ASS)	802
	803
VERROUILLAGE DE COMMANDE HYDRAULIQUE À PIED (ASS)	523
VERROUILLAGE DE COMMANDE MANUELLE HYDRAUL. (ASS)	524
VERROUILLAGE DE STABILISATEUR (ASS)	598
VERROUILLAGE POUR L'EXPÉDITION (ASS)	599
	600
	601
	602
	603
VERROULLAGE - QUATRIEME VITESSE (ASS)	236
VERSION DE CHASSIS	15
VERSION DE TRANSFORMATION - HOMOLOGATION	16
	17
	18
	19
VERSION D'ENTRAÎNEMENT DE CHARGEUSE-PELLETEUSE	230
VERSION HYDRAULIQUE	391
	392
	393
	394
	395
	396
	397
VERSION NORMALE	16
VIDANGE - HYDRAULIQUE (ASS)	390
VILEBREQUIN - POULIE (ASS)	49
VILEBREQUIN (ASS)	27
VITRE DE CABINE (ASS)	787
	789
	791
VOLANT DE DIRECTION	298
VOLANT DE DIRECTION (ASS)	304
VOLANT MOTEUR (ASS)	35

INDICE

Nombre	Página

A

ACONDICIONADOR DE AIRE (GR)	700
ACONDICIONADOR DE AIRE Y MONTAJE (GR)	698
ACOPLADOR RÁPIDO (GR)	677
	678
	679
	680
	681
	682
ACOPLAMIENTO FLEXIBLE - MANDO DE (GR)	231
ACOPLAMIENTO (GR)	370
ACOPLAMIENTO HIDRÁULICO	678
ACUMULADOR DE CONTROL DE AMORTIGUACION (GR)	346
ACUMULADOR DEL ACONDICIONADOR DE AIRE (GR)	749
AGUA - CONEXIÓN DE (GR)	53
AGUA DE LAS CAMISAS - CALENTADOR DEL (GR)	114
AIRE - TUBERÍAS DE (GR)	80
	81
	82
ALFOMBRILLA DEL PISO (GR)	739
	740
ALOJAMIENTO GR-DIFERENCIAL	227
ALTAVOZ	776
ÁRBOL DE LEVAS (GR)	24
ASIENTO CON SUSPENSIÓN (GR)	778
ASIENTO (GR)	763
	765
	767

B

BANCADA 5 (GR)	553
	554
BASE DEL FILTRO Y ACEITE REFRIGERANTE DE MOTOR	54
BASTIDOR DE DESPLAZAMIENTO LATERAL (GR)	324
BASTIDOR DE ROTACIÓN (GR)	326
	329
BASTIDOR DEL CARGADOR (GR)	322
	323
BATERÍA (GR)	104
	106
	108
	110
BATERÍA (12 VOLTIOS)	104
	106
	108
	110
BLOQUE DESLIZANTE-JUEGO	770
	772
	774
BLOQUE MOTOR (GR)	29
	31
BOCINA ELÉCTRICA (GR)	745
BOMBA - TUBERÍAS DE (GR)	477
	479
	482
	483
	484
	485
BOMBA DE ACEITE DEL MOTOR (GR)	52
BOMBA DE AGUA (GR)	63
BOMBA DE CEBADO DE COMBUSTIBLE (GR)	98
BOMBA DE INYECCIÓN DE COMBUSTIBLE (GR)	92
	93
	96
BOMBA DE LA TRANSMISIÓN (GR)	250
	254
BOMBA DE PISTONES (GR)	533
*BOOM GP	589
BRAZO DE RETROEXCAVADOR (GR)	613
BRAZO ESTÁNDAR DE RETROEXCAVADOR (CONFIG)	9
	11
	12
	14
BRAZO EXTENDIBLE DE RETROEXCAVADOR (CONFIG)	1
	2
	3
	4
	5
	6
	7
	8
BRAZO EXTENSIBLE (GR)	609
BRAZO EXTENSIBLE (GR)	611
*BUCKET AR-MULTIPURPOSE	620
BUJÍA INCANDESCENTE	113
BUJÍA INCANDESCENTE (GR)	113

C

CABINA (CONFIG)	703
	704
CABINA (GR)	707
	709
CABLES DE CALEFACCIÓN (GR)	193

* NO HAY TRADUCCION DISPONIBLE EN EL MOMENTO DE LA IMPRESION

INDICE

Nombre	Página
CABLES DE CAMBIO AUTOMATICO (GR)	176
CABLES DE CONTROL DE AMORTIGUACIÓN (GR)	206
	208
	210
	212
CABLES DE LA ALARMA DEL ESTABILIZADOR (GR)	215
CABLES DE LA CABINA (GR)	178
	180
	181
CABLES DE LA CONSOLA (GR)	183
CABLES DE LA CONSOLA (GR)	185
CABLES DE LA CONSOLA (GR)	187
CABLES DE LA DIRECCIÓN (GR)	217
CABLES DE LA PLATAFORMA (GR)	196
	198
CABLES DE SENSOR (GR)	214
CABLES DEL ACONDICIONADOR DE AIRE (GR)	173
CABLES DEL MOTOR (GR)	189
CABLES DEL POSICIONADOR Y DE DESCONEXIÓN (GR)	195
CABLES DEL RECEPTÁCULO DE FUERZA (GR)	202
CABLES POSTERIORES (GR)	203
CAJA DE BATERÍA	306
	307
	308
	309
	310
CAJA DE BRAZO EXTENSIBLE (CONJ)	592
CAJA DELANTERA (GR)	37
CALCOMANIA-AMARRAR	804
CALCOMANÍA (ARRANQUE)	115
CALCOMANÍA (CATERPILLAR)	705
	706
	800
CALCOMANÍA (CONTROL DE AMORTIGUACION)	349
	397
CALCOMANÍA (CONTROL DE CUCHARÓN)	354
CALCOMANÍA (CONTROL DE CUCHARÓN)	805
	806
CALCOMANÍA (CONTROL DE ESTABILIZADOR)	538
CALCOMANÍA (*CONTROL PLATE)	805
CALCOMANÍA (CUCHARÓN DE USO MULTIPLE)	394
CALCOMANÍA (CUCHARÓN DE USO MULTIPLE)	806
CALCOMANÍA (CUCHARÓN DE USO MULTIPLE) (CONTROL MECANICO DE CUCHARON)	392
CALCOMANÍA DE ADVERTENCIA	112
	804
	805
	806
CALCOMANÍA DE ADVERTENCIA (BRAZO-E)	365
CALCOMANÍA DE ADVERTENCIA (CILINDRO PARA ALTA PRESION)	807
CALCOMANÍA DE ADVERTENCIA (CILINDRO PARA ALTA PRESION)	409
	412
	416
	420
	424
	428
	432
	436
	487
CALCOMANÍA DE ADVERTENCIA (CONTROL DE CUCHARÓN)	391
	392
	393
	394
	807
CALCOMANÍA DE ADVERTENCIA (*EXTENDABLE STICK)	806
CALCOMANÍA DE ADVERTENCIA (FLUJO DE RETORNO)	408
	412
	416
	420
	424
	428
	432
	436
	806
CALCOMANÍA DE ADVERTENCIA (NO PISAR)	806
CALCOMANÍA DE IDENTIFICACIÓN (TABLERO DE FUSIBLES)	230
	806
CALCOMANÍA DE RAYAS (278CM)	338
CALCOMANÍA DE RAYAS (400CM)	703
	704
	705
	706
CALCOMANÍA-DIRECCIÓN EN TODAS LAS RUEDAS	806
CALCOMANÍA (INSTRUCCIÓN)	806
CALCOMANÍA (INSTRUCCIÓN) (CONTROL DE CUCHARON DE USO MULTIPLE)	392
CALCOMANÍA (INTERRUPTOR DE ARRANQUE)	758

* NO HAY TRADUCCION DISPONIBLE EN EL MOMENTO DE LA IMPRESION

INDICE

Nombre	Página
	760
	805
CALCOMANÍA (INTERRUPTOR DE ENCENDIDO)	115
CALCOMANIA-LEVANTAMIENTO Y AMARRE	804
	807
CALCOMANIA-LEVANTAR	804
CALCOMANÍA (PATRON ESTANDAR/ CRUZADO)	805
CALCOMANÍA (PLACA, NOMBRE)	346
CALCOMANÍA (RECIRCULACIÓN DE AIRE)	700
CALCOMANÍA (SISTEMA DE SEGURIDAD DE LA MÁQUINA)	115
CALCOMANÍA (TRABA DE LA PLUMA/ DESPLAZAMIENTO LATERAL)	805
CALCOMANÍA (TRABA DE LA PLUMA/ PIVOTE CENTRAL)	805
CALCOMANÍA (VELOCIDAD VARIABLE)	86
	805
CALCOMANÍA (VOLUMEN) (.095M)	806
CALCOMANÍA (20 KM/HR)	18
	19
CALCOMANÍAS Y PLACAS DE IDENTIFICACIÓN (GR)	804
	805
CALEFACCIÓN DE LA CABINA (GR)	743
CALEFACCIÓN Y MONTAJE DE LA CABINA (GR)	741
CÁNCAMOS DE LEVANTAMIENTO DEL MOTOR (GR)	39
CANDADO (GR)	802
	803
CAPÓ DEL MOTOR (GR)	338
CAPO Y PROTECTOR (GR)	336
CARGA - ALTERNADOR DE (GR)	103
CARGADOR (CONFIG)	597
CÁRTER - COLECTOR DEL (GR)	43
CHASIS (CONFIG)	15
CIGÜEÑAL - POLEA DE (GR)	49
CIGÜEÑAL (GR)	27
CILINDRO (CONJ)	292
CILINDRO DE CUCHARÓN DE USO MÚLTIPLE (GR)	382
CILINDRO DE CUCHARÓN RETROEXCAVADOR (GR)	372
	374
CILINDRO DE LA PLUMA (GR)	376
CILINDRO DE LEVANTAMIENTO - TUBERÍAS DEL (GR)	446
	448
	450
CILINDRO DE LEVANTAMIENTO (GR)	381
CILINDRO DE ROTACIÓN (GR)	386
	387
CILINDRO DEL BRAZO EXTENSIBLE (GR)	378
	379
CILINDRO DEL BRAZO (GR)	385
CILINDRO ESTABILIZADOR (GR)	384
CINTURÓN DE SEGURIDAD (GR)	762
COLADOR	254
COLADOR (CAJA DE TRANSMISION)	250
COMBUSTIBLE - TANQUE DE (GR)	101
	102
COMPARTIMIENTO DE LITERATURA DE SERVICIO (GR)	713
COMPRESOR DE REFRIGERANTE (GR)	714
	715
CONDENSADOR DEL REFRIGERANTE Y MONTAJE (GR)	716
CONDUCTO DE AIRE (GR)	735
	737
	738
CONECTOR DE VALVULA (GR)	347
CONEXION DE CALENTADOR Y ACOND. DE AIRE (GR)	58
CONEXIÓN DE ENGRASE	586
	588
	596
	604
	668
	674
	675
CONEXIÓN DE ENGRASE (ROSCA DE 1/8-27)	324
	527
	609
	611
	613
CONEXIÓN DE ENGRASE (ROSCA DE 1/8-27)	586
	666
	667
	669
	689
CONFIG. DEL MANDO, CARGADOR RETROEXCAVADORA	230
CONFIGURACIÓN COMÚN	16
CONFIGURACIÓN DE MOTORES	20
	21
CONFIGURACIÓN DE TRANSFORMACIÓN PARA CERTIFICACIÓN	16
	17
	18
	19
CONJUNTO DE DESTELLADOR	198

* NO HAY TRADUCCION DISPONIBLE EN EL MOMENTO DE LA IMPRESION

INDICE

Nombre	Página
CONJUNTO DE LLAVE, ELECTRONICA (SEGURIDAD)	115
CONSOLA DEL OPERADOR (GR)	719
	720
CONSOLA DELANTERA (GR)	717
	718
CONSOLA LATERAL (GR)	721
	722
	723
	724
	725
	726
CONTRAPESO (GR)	312
	313
	314
	315
CONTROL DE AMORTIGUACIÓN (CONFIG)	348
	349
CONTROL DE DIRECCIÓN (GR)	297
	298
CONTROL DE LA TRANSMISIÓN (GR)	226
CONTROL DE MANIJA (GR)	350
	351
CONTROL DE POSICION (GR)	112
	195
CONTROL DE TRABA DEL DIFERENCIAL (GR)	225
CONTROL DEL FRENO DE ESTACIONAMIENTO	290
	291
CONTROL DEL REGULADOR Y ACELERADOR (GR)	86
CONTROL HIDRÁULICO MANUAL (GR)	352
	354
	356
	358
	359
	361
	362
	363
	364
CONTROL MANUAL DE PALANCA (GR)	295
CONVERSION DE CONTROL DE MANO HIDRAULICO (GR)	369
CORREA TRAPEZOIDAL (COMPRESOR DE AIRE ACONDICIONADO)	715
CRISTAL	117
CRISTAL (AMBAR)	120
	122
	131
	132
CRISTAL (SEÑAL DE PARADA/GIRO)	130
CRISTAL (TRANSPARENTE)	138
CRISTAL (TRANSPARENTE)	138
CRISTAL (TRANSPARENTE) (REFLECTOR)	136
CUCHARÓN DE EMBARQUE (CONFIG)	694
CUCHARÓN DE USO GENERAL (CONJ)	621
	622
	623
	624
CUCHARÓN DE USO MÚLTIPLE (CONFIG)	616
	617
	618
	619
	620
CUCHARÓN DE USO MÚLTIPLE (CONFIG)	615
CUCHARÓN DE USO MÚLTIPLE (GR)	667
	668
	669
	670
	672
	674
	675
CUCHARÓN DE USO MÚLTIPLE (GR)	666
CUCHARÓN RETROEXCAVADOR (GR)	625
	626
	627
	628
	629
	630
	631
	632
	633
	634
	635
	636
	637
	638
	639
	640
	641
	642
	643
	644
	645
	646
	647
	648
	649
	650
	651
	652
	653
	654
	655
	656

* NO HAY TRADUCCION DISPONIBLE EN EL MOMENTO DE LA IMPRESION

INDICE

Nombre	Página
	657
	658
	659
	660
	661
	662
	663
	664
	665
CUCHILLA (GR)	683
	684
CULATA DE CILINDROS (GR)	32
	33

D

DETECTOR DE TEMPERATURA	189
DIENTE DE UNA PIEZA (UNI-TOOTH) (GR)	697
DIFERENCIAL (GR)	229
DIFERENCIAL Y CORONA (GR)	227
DOSIFICACIÓN - BOMBA DE (GR)	303
DRENAJE HIDRÁULICO (GR)	390

E

EJE - GRUPO DE MONTAJE	237
EJE DE IMPULSIÓN Y DE DIRECCIÓN (GR)	218
EJE DE MANDO (GR)	241
	242
	243
	244
EJE DE TOMA DE FUERZA (GR)	537
EJE TRASERO (GR)	220
ELEMENTO DE FILTRO (COMBUSTIBLE)	98
ELEMENTO DE FILTRO DE COMBUSTIBLE (CONJ)	88
ENCHUFE DE CONECTOR (GR)	165
ENFRIADOR DE ACEITE DEL MOTOR (GR)	54
ENFRIADOR DE ACEITE DEL MOTOR Y BASE DEL FILTRO	54
ESTABILIZADOR (CONFIG)	538
ETIQUETA DE ADVERTENCIA (GR)	799
	800
EXTENSIÓN DEL ESCAPE (GR)	77

F

FILTRO	559
	561
	563
	565
	567
	569
	571
	573
	575
	577
	698
	741
FILTRO DE ACEITE (CONJ) (HIDRAULICO) (RESISTENTE AL FUEGO)	396
	397
FILTRO DE ACEITE (CONJ) (LIMPIEZA/ALTA EFICIENCIA)	396
	397
FILTRO DE ACEITE (CONJ) (TRANSMISION)	247
FILTRO DE ACEITE (CONJ) (TRANSMISION)	247
FILTRO DE ACEITE DEL MOTOR (CONJ)	51
FILTRO DE AIRE	743
FILTRO DE AIRE (AIRE DE LA CABINA)	700
FILTRO DE AIRE (GR)	73
	75
FILTRO DE COMBUSTIBLE (GR)	88
FILTRO (RESPIRADERO DEL TANQUE)	539
FRENO DE ESTACIONAMIENTO (GR)	289
FRENO DE SERVICIO - CONTROL (GR)	292
FUNDA	391
	393
FUSIBLE (10 A)	133
	138
	173
	181
	202
	208
	210
	212
FUSIBLE (10-AMPERIOS)	206
FUSIBLE (10-AMPERIOS)	131
	132
	142
FUSIBLE (15 A)	133
	136
	138
FUSIBLE (15 AMPERIOS)	140
	142
FUSIBLE (20 A)	178
FUSIBLE (5 AMP)	217
FUSIBLE (5 AMP)	178

G

GRUPO DE BRAZO DE LEVANTAMIENTO	586
GRUPO DE CLAVIJA, EJE	218
GRUPO DE CONEXION	451
GRUPO DE CONTROL DE PEDAL HIDRÁULICO	365

* NO HAY TRADUCCION DISPONIBLE EN EL MOMENTO DE LA IMPRESION

INDICE

Nombre	Página
	367
GRUPO DE CUATRO VALVULAS (CONFIG)	542
GRUPO DE PESTAÑA Y RESINTO, EJE	234
	235
GRUPO DE PROTECTOR DEL CUCHARON	687
	688
GRUPO DE PROTECTOR DEL CUCHARON (*FRONT)	18
	19
GRUPO DE 3 VÁLVULAS HIDRÁULICAS	549
	550
GRUPO DE 4 VÁLVULAS HIDRÁULICAS	551
	552
GRUPO DE 5 VALVULAS (CONFIG)	542
	543
GRUPO DE 6 VALVULAS (CONFIG)	543
GRUPO GIRATORIO DE BOMBA	536
GRUPO PERILLA, DIRECCIÓN	299
GRUPO PLANETARIO, MANDO FINAL	238
GUARDABARROS DELANTERO (GR)	317
	318
GUARDABARROS TRASERO (GR)	319
GUARNICIONES DE LA CABINA (GR)	783

H

HIDRÁULICA (CONFIG)	391
	392
	393
	394
	397
HIDRÁULICA (CONFIG)	394
	395
	396
HOJA DE LIMPIAPARABRISAS	797
HOJA DE LIMPIAPARABRISAS (CONJ)	797
HORQUILLA - GRUPO DE MONTAJE DE LA	693
HORQUILLA (CONFIG)	685
HORQUILLA (GR)	686

I

IMPULSOR DE VENTILADOR (GR)	34
INCLINACIÓN HORIZONTAL - CILINDRO DE (GR)	388
INDICADOR (CONJ)	187
INDICADOR DE CAMBIO DE FILTRO DE ACEITE (GR)	78
	79
INSONORIZADOR (CONFIG)	345
INSONORIZADOR (GR)	776
INSTALACIÓN DE LA TRABA DE LA RUEDA	801
INSTALACION DE SEGURIDAD (GR)	115
INSTALACION DE SEGURIDAD (GR) (SEGURIDAD DE LA MÁQUINA)	115
INTERRUPTOR (AVANCE DE SINCRONIZACION)	93
INTERRUPTOR (CONJ)	393
INTERRUPTOR (CONJ) (ADMISION DE AIRE)	79
INTERRUPTOR (CONJ) (BOCINA)	183
INTERRUPTOR (CONJ) (CALEFACTOR)	193
INTERRUPTOR (CONJ) (CONTROL DE AMORT.)	208
INTERRUPTOR (CONJ) (CONTROL DE SUSPENSION-ESTANDAR)	397
INTERRUPTOR (CONJ) (DE TOPE)	392
INTERRUPTOR (CONJ) (SEÑAL DE VIRAJE)	180
INTERRUPTOR (CONJ) (TRABA EN NEUTRAL)	183
INTERRUPTOR (CONJ) (TRABA HIDRÁULICA)	391
INTERRUPTOR (CONJ) (VÁLVULA DEL CARGADOR)	394
INTERRUPTOR DE ARRANQUE CON LLAVE (CONJ)	760
INTERRUPTOR DE LÍMITE (CONJ)	292
INTERRUPTOR DE PRESIÓN (CONJ)	206
	208
	210
	212
INTERRUPTOR DE PRESIÓN (CONJ) (ALTA - BAJA)	173
INTERRUPTOR DE PRESIÓN (GR)	169
INTERRUPTOR DE RODILLO (CONJ) (REGRESO A POSICION DE EXCAVACION)	214
INTERRUPTOR DE VOLQUETE (CONJ) (CONTROL DE AMORTIGUACION) (CAMBIO ESTANDAR)	349
INTERRUPTOR DE VOLQUETE (CONJ) (LUZ DE TRABAJO DELANTERA)	142
INTERRUPTOR DE VOLQUETE (CONJ) (*REAR FLOOD)	142
INTERRUPTOR DE VOLQUETE (CONJ) (*RIDE CONTROL)	206
	210
	212
INTERRUPTOR DE VOLQUETE (CONJ) (RIESGO)	183
INTERRUPTOR DE VOLQUETE (CONJ) (VELOCIDAD DEL VENTILADOR DEL CALENTADOR)	193
INTERRUPTOR DE VOLQUETE (CONJ) (VELOCIDAD DEL VENTILADOR DEL CALENTADOR)	173

* NO HAY TRADUCCION DISPONIBLE EN EL MOMENTO DE LA IMPRESION

INDICE

Nombre	Página
INTERRUPTOR DEL TERMOSTATO	700
INTERRUPTOR (GR)	391
	392
	394
INTERRUPTOR (GR) (TRABA HIDRÁULICA)	393
INTERRUPTOR PARA LA TEMPERATURA (GR)	170
INTERRUPTOR PULSADOR (CONJ)	359
INTERRUPTOR PULSADOR (CONJ) (TRANSMISION NEUTRAL)	226
INTERRUPTOR (40 GRADOS) (TEMPERATURA DE REFRIGERANTE DE MOTOR)	96
J	
JUEGO-ACUMULADOR DE SERVICIO	346
JUEGO DE AJUSTE DEL ASIENTO	702
JUEGO DE AMORTIGUADOR	702
JUEGO DE COJINETE DE RODILLOS	238
JUEGO DE COJINETES	220
JUEGO DE CONTACTOR (MOTOR DE ARRANQUE)	166
JUEGO DE CONTROL DE OPERACION	397
JUEGO DE CORREAS TRAPEZOIDALES (INCLUYE 2 CORREAS)	703
	704
	705
	706
	711
JUEGO DE CRUCETA	218
JUEGO DE CRUCETA Y COJINETE	241
	242
	243
	244
JUEGO DE ENCHUFE (12-CLAVIJAS)	183
JUEGO DE ENCHUFE (2 CLAVIJAS)	115
	133
	138
	144
	173
	181
	193
	203
	210
	212
	215
	261
	291
	700
JUEGO DE ENCHUFE (2 CLAVIJAS)	198
	210
	212
JUEGO DE ENCHUFE (3 CLAVIJAS)	144
	178
	181
JUEGO DE ENCHUFE (3 CLAVIJAS)	112
JUEGO DE ENCHUFE (4-CLAVIJA)	136
	210
	212
JUEGO DE ENCHUFE (4 CLAVIJAS)	133
	138
	178
	181
	203
	215
JUEGO DE ENCHUFE (6 CLAVIJAS)	133
	138
	178
	181
	203
JUEGO DE ENCHUFE (6 CLAVIJAS)	146
	149
	152
JUEGO DE ENCHUFE (6-CLAVIJAS)	210
	212
JUEGO DE ENCHUFE (6-CLAVIJAS)	210
	212
JUEGO DE ENCHUFE (8 CLAVIJAS)	178
	709
JUEGO DE ENCHUFE (8-CLAVIJAS)	183
JUEGO DE ENGRANAJES (MOTOR DE ARRANQUE)	166
JUEGO DE FRENO DE HORQUILLA	289
JUEGO DE LEVA (ROTACIÓN HACIA LA IZQUIERDA)	289
JUEGO DE RECEPTÁCULO (12 CLAVIJAS)	754
JUEGO DE RECEPTÁCULO (12-CLAVIJAS)	176
JUEGO DE RECEPTÁCULO (2 CLAVIJAS)	181
	196
	203
	215
	217
	256
	262
	263
	264
	265
	567
	569
	571
JUEGO DE RECEPTÁCULO (2 CLAVIJAS)	171
	226
JUEGO DE RECEPTÁCULO (2 CLAVIJAS)	144
	359
	584
	585

* NO HAY TRADUCCION DISPONIBLE EN EL MOMENTO DE LA IMPRESION

INDICE

Nombre	Página
JUEGO DE RECEPTÁCULO (3 CLAVIJAS)	203, 263, 264, 265
JUEGO DE RECEPTÁCULO (3 CLAVIJAS)	144, 214
JUEGO DE RECEPTÁCULO (3 CLAVIJAS)	165
JUEGO DE RECEPTÁCULO (3-CLAVIJAS)	391, 392
JUEGO DE RECEPTÁCULO (4-CLAVIJA)	115, 129, 136, 193, 208, 210, 212
JUEGO DE RECEPTÁCULO (4 CLAVIJAS)	181
JUEGO DE RECEPTÁCULO (4 CLAVIJAS)	133
JUEGO DE RECEPTÁCULO (4 CLAVIJAS)	138
JUEGO DE RECEPTÁCULO (4 CLAVIJAS) (LADO)	181
JUEGO DE RECEPTÁCULO (6 CLAVIJAS)	138, 181, 755, 797
JUEGO DE RECEPTÁCULO (6 CLAVIJAS)	133
JUEGO DE RECEPTÁCULO (6 CLAVIJAS)	124, 126
JUEGO DE RECEPTÁCULO (6 CLAVIJAS)	133
JUEGO DE RECEPTÁCULO (6-CLAVIJAS)	210, 212
JUEGO DE RECEPTÁCULO (8 CLAVIJAS)	178, 203
JUEGO DE RECEPTÁCULO (8 CLAVIJAS)	753
JUEGO DE REPARACIÓN (TUBERÍAS DEL FRENO)	797
JUEGO DE SELLOS	114
JUEGO DE SELLOS (*STEERING METERING PUMP)	303
JUEGO DE SERVICIO	761
JUEGO DE TORNILLERÍA	584
JUEGO-PORTA PLANETARIO	238

L

Nombre	Página
LÁMPARA (CONJ) (ADVERTENCIA DE ROTACIÓN)	132
LÁMPARA (CONJ) (12 VOLTIOS)	115
LÁMPARA DE BALIZA DE ADVERTENCIA (GR)	131
LÁMPARA DE BALIZA DE ADVERTENCIA (GR)	132
LÁMPARA DE FARO DELANTERO (12 VOLTIOS)	124, 126
LÁMPARA DE FARO DELANTERO (12 VOLTIOS, 60/55 VATIOS)	120, 122
LÁMPARA DE LUZ DELANTERA Y DE SEÑAL (GR)	120, 122, 124, 126
LAMPARA DE PLACA DE REGISTRO (GR)	128
LÁMPARA DEL TECHO (GR)	776
LÁMPARA (12 V)	128
LÁMPARA (12 VOLTIOS)	185, 781, 782
LÁMPARA (12 VOLTIOS) (MEDIDOR DE TEMPERATURA DEL REFRIGERANTE)	187
LÁMPARA (12 VOLTIOS) (MINIATURA)	124, 126, 753
LÁMPARA (12 VOLTIOS) (NIVEL DE COMBUSTIBLE)	187
LÁMPARA (12 VOLTIOS) (TEMPERATURA DE ACEITE DEL CONVERTIDOR)	187
LÁMPARA (12 VOLTIOS) (VOLTIMETRO)	187
LÁMPARA (12 VOLTIOS, 10 VATIOS)	776
LÁMPARA (12 VOLTIOS, 21 VATIOS)	120, 122
LÁMPARA (12 VOLTIOS) (21 VATIOS)	124, 126
LÁMPARA (12 VOLTIOS, 4 VATIOS)	120, 122
LÁMPARA (12 VOLTIOS, 55 VATIOS)	131, 132, 136, 140, 142
LÁMPARA (12 VOLTIOS, 55 VATIOS)	118, 119
LÁMPARA (12 VOLTIOS, 55 VATIOS) (REFLECTOR)	136
LÁMPARA (12 VOLTIOS/21 VATIOS)	117
LÁMPARA (12 VOLTIOS/21 VATIOS) (SEÑAL DE VIRAJE)	130
LÁMPARA (12 VOLTIOS/21/5 VATIOS) (PARADA)	130
LÁMPARA (12 VOLTIOS)(55 VATIOS)	133
LÁMPARA (12 VOLTIOS)(55 VATIOS)	133
LÁMPARA (12 VOLTIOS/55 VATIOS)	138
LÁMPARA (12 VOLTIOS)(55 VATIOS)	133
LAVAPARABRISAS DE LA VENTANA (GR)	785

* NO HAY TRADUCCION DISPONIBLE EN EL MOMENTO DE LA IMPRESION

INDICE

Nombre	Página
LENTE AMBAR	124
	126
LIMPIAPARABRISAS DE LA VENTANA (GR)	797
*LINES GP-RETURN	486
LLAVE	803
LUCES DE ADVERTENCIA (GR)	161
LUCES DE DESPLAZAMIENTO (GR)	144
	146
	149
	152
	155
	158
LUCES DE PARADA Y COLA (GR)	129
	130
LUCES DE REFLECTOR (GR)	133
	136
	138
	140
	142
LUZ DE BALIZA (GR)	163
	164

M

MANDO DE CORREA (BALIZA GIRATORIA DE ADVERTENCIA)	131
	132
MANGUERA (RESPIRADERO)	25
MANGUITO	803
MANGUITO DE EMPALME DE CABLE	713
MECANISMO DE VÁLVULAS (GR)	50
MÓDULO INDICADOR DE ADVERTENCIA (GR)	753
	754
MONTAJE DE BANCADA DE VALVULA (GR)	525
	526
MONTAJE DE CILINDRO (GR)	527
MONTAJE DE LA BOMBA HIDRÁULICA (GR)	528
MONTAJE DE TUBERIAS (GR)	529
	530
	531
	532
MONTAJE DEL BRAZO (GR)	604
MONTAJE DEL CUCHARÓN (GR)	689
MONTAJE DEL CUCHARÓN (GR)	690
	691
	692
MONTAJE DEL MOTOR (GR)	40
MONTAJE DEL MOTOR Y LA TRANSMISIÓN (GR)	41
	42
MONTAJE DEL TABLERO DE INSTRUMENTOS (GR)	756
	757
	758
MONTAJE-REGISTRO (GR)	342
	343
MONTAJE Y TRANSMISIÓN(GR)	245
	246
MONTAJE Y VALVULA DEL BANCO(GR)	541
MOTOR DE ARRANQUE ELÉCTRICO (GR)	166
	168
MOTOR-LIMPIAPARABRISAS (GR)	755
MOTOR PRIMARIO (CONFIG)	22
	23

P

PALANCA DE CONTROL DEL REGULADOR (GR)	746
PARAGOLPES DELANTERO	311
PISTÓN Y BIELA (GR)	45
PLACA-CAT	338
PLACA DE CONTROL (ACONDICIONADOR DE AIRE)	741
	806
PLACA DE CONTROL (ACONDICIONADOR DE AIRE)	698
PLACA DE IDENTIFICACION	17
	18
	19
PLACA INDICADORA	185
	617
	618
	620
	806
PLACA INDICADORA (CUCHARÓN)	616
	617
PLACA INDICADORA (NIVEL DEL CUCHARON) (CUCHARÓN)	615
PLACA INDICADORA (416D)	183
	806
PLACA LATERAL REFLECTORA	809
PLANCHA DEL PISO (GR)	320
PLUMA (GR)	588
PORTAESCOBILLAS (CONJ)	166
POSABRAZOS (GR)	702
PRIORIDAD - VÁLVULA DE (GR)	305
PROTECTOR DE LAS LUCES (GR)	332
	333
PROTECTOR DE LAS TUBERÍAS (GR)	334
	335
PROTECTOR DEL EJE IMPULSOR (GR)	331
PUERTA DERECHA (GR)	733
PUERTA IZQUIERDA (GR)	731

* NO HAY TRADUCCION DISPONIBLE EN EL MOMENTO DE LA IMPRESION

INDICE

Nombre	Página
R	
RADIADOR Y ENFRIADOR DE ACEITE HIDRÁULICO (GR)	67, 69, 70, 72
RADIADOR Y VENTILADOR (GR)	65, 66
REFLECTOR	146, 149, 152, 155, 158
REFLECTOR (GR)	117, 118, 344
REFLECTOR (GR)	119
REGULADOR - PEDAL DEL (GR)	761
REGULADOR DE TEMPERATURA DEL AGUA	53
RELÉ (CONJ) (12 VOLTIOS)	133, 140, 142, 173, 176, 189, 193, 206, 208, 217
RELÉ (CONJ) (12 VOLTIOS) (ALTA VELOCIDAD)	173
RELÉ (CONJ) (12 VOLTIOS) (BAJADA DE MOTOR INOPERANTE)	181
RELÉ (CONJ) (12 VOLTIOS) (CALENTADOR Y ACONDICIONADOR DE AIRE)	193
RELÉ (CONJ) (12 VOLTIOS) (CONTROL LATERAL)	178
RELÉ (CONJ) (12 VOLTIOS) (ESTANDAR/REFLECTORES AUXILIARES)	136
RELÉ (CONJ) (12 VOLTIOS) (ESTANDAR/REFLECTORES AUXILIARES)	138
RELÉ (CONJ) (12 VOLTIOS) (LUCES)	136, 138
RELÉ (CONJ) (12 VOLTIOS) (MOTOR DE SEGURIDAD)	115
RELÉ (CONJ) (12 VOLTIOS) (PUNTO MUERTO INFERIOR, CONTROL DE SUSPENSION)	210, 212
RESORTE (RESPIRADERO DE MANGUERA)	25
RESPIRADERO	256
RESPIRADERO (EJE)	218
RESPIRADERO (TRANSMISION)	249
RETROCESO - ALARMA DE (GR)	171
RETROEXCAVADOR - ESTABILIZADOR DEL (GR)	606, 607, 608
RETROEXCAVADOR (CONFIG)	10, 13
RETROVISOR (GR)	751, 752
REVESTIMIENTO DE INSONORIZACION (GR)	341
RUEDA Y LLANTA (CONFIG)	267, 268, 269, 270, 271, 272
RUEDA Y NEUMÁTICO (GR)	272, 273, 274, 275, 276, 277, 278, 279, 280, 281, 282, 283, 284, 285, 286, 287, 288
S	
SELLO ANULAR	256, 445
SELLO ANULAR (REGULADOR DE TEMPERATURA DEL AGUA)	53
SEPARADOR DE AGUA (GR)	99
SERVOTRANSMISIÓN (CONFIG)	247
SERVOTRANSMISIÓN (GR)	254
SILENCIADOR (GR)	83
SINCRONIZADOR (GR)	248
SISTEMA ROPS DE CABINA CERRADA (CONFIG)	705, 706
SOPORTE (CONJ)	104, 106

* NO HAY TRADUCCION DISPONIBLE EN EL MOMENTO DE LA IMPRESION

INDICE

Nombre	Página
SOPORTE PARA EL TRANSPORTE	590
	591
SUCCIÓN - VENTILADOR DE (GR)	56
	57
SUSPENSIÓN - ASIENTO CON (GR)	770
	772
	774
	775

T

TABLERO DE INSTRUMENTOS (GR)	760
TACÓMETRO ELÉCTRICO (GR)	703
	704
	705
	706
TACÓMETRO ELÉCTRICO (GR)	781
	782
TANQUE DE COMBUSTIBLE Y GRUPO DE MONTAJE	100
TANQUE DEL SISTEMA DE FRENOS (GR)	296
TANQUE HIDRÁULICO (GR)	539
TAPA	267
TAPA CONTRA EL POLVO	347
	474
TAPA DE ADMISIÓN DE AIRE (GR)	76
TAPA DE LA BATERÍA (GR)	316
TAPA DE LA CONSOLA (GR)	727
TAPA DE MAMPARA PARAFUEGO (GR)	728
	729
TAPA DE POSTE (GR)	730
TAPA DEL MECANISMO DE VÁLVULAS (GR)	25
TAPA, LLENADO (TANQUE HIDRÁULICO)	539
TAPA PARA EL COMBUSTIBLE	102
TAPA (VASTAGO DE LA VÁLVULA)	266
TAPA Y GRUPO DE VALVULAS (GR)	371
TAPÓN (CONJ)	446
	459
	462
TAPON CONJ-MAGNETICO	218
	227
TAPÓN (CONJ) (RADIADOR)	69
	72
TAPON DE DRENAJE DE SUMIDERO	43
TAPÓN DEL MOTOR (GR)	47
	48
TAPÓN MAGNÉTICO	222
TAPÓN (TUBERIAS DE FILTRO DE ACEITE DEL MOTOR)	54
TECHO (CONFIG)	711
TECHO ROPS ABIERTO (GR)	712
TIRANTE DE EMBARQUE (GR)	593
TOPE DE CUCHARON (GR)	695
	696
TRABA CONTRA EL VANDALISMO (GR)	802
	803
TRABA DE CONTROL HIDRÁULICO MANUAL (GR)	524
TRABA DE CUARTA VELOCIDAD (GR)	236
TRABA DE TRANSPORTE DE LA MÁQUINA (GR)	599
	600
	601
	602
	603
TRABA DEL CONTROL HIDRÁULICO DEL PEDAL	523
TRABA DEL ESTABILIZADOR	598
TRANSMISION DIRECTA (CONFIG)	247
TRANSMISIÓN DIRECTA (GR)	248
TREN DE FUERZA (CONFIG)	239
	240
TUBERIAS AUXILIARES-RETROEXCAVADORA (GR)	412
	416
	420
	424
	428
	432
	436
TUBERIAS AUXILIARES-RETROEXCAVADORA (GR)	402
	404
	405
	407
	408
TUBERÍAS CON SERVOMANDO (GR)	474
TUBERIAS DE AUXILIAR DE CARGADOR (GR)	462
	464
TUBERIAS DE CALEFACCION	749
TUBERIAS DE CALENTEDOR Y ACONDICIONADOR DE AIRE (GR)	749
TUBERÍAS DE COMBUSTIBLE (GR)	90
TUBERIAS DE CONTROL DE LA SUSPENSIÓN (GR)	487
TUBERÍAS DE DIRECCIÓN (GR)	300
TUBERÍAS DE DRENAJE (GR)	443
	444
TUBERÍAS DE GIRO (GR)	509
	511
	513
	516
TUBERÍAS DE LA CALEFACCIÓN (GR)	747
TUBERÍAS DE LA PALANCA EXTENDIBLE (GR)	445

* NO HAY TRADUCCION DISPONIBLE EN EL MOMENTO DE LA IMPRESION

INDICE

Nombre	Página
TUBERÍAS DE LA PLUMA (GR)	440
TUBERIAS DE LA RETROEXCAVADORA (GR)	398
	400
TUBERÍAS DE TRABA DEL DESPLAZAMIENTO LATERAL (GR)	489
	491
	493
	495
TUBERIAS DE VALVULA DE CONTROL DE CARGA (GR)	451
	454
	458
TUBERÍAS DEL BRAZO (GR)	501
	502
	505
TUBERÍAS DEL CILINDRO DE INCLINACIÓN (GR)	519
	521
TUBERÍAS DEL CILINDRO DEL CUCHARÓN (GR)	441
TUBERÍAS DEL CUCHARÓN DE USO MÚLTIPLE	466
	468
	470
	472
TUBERÍAS DEL ENFRIADOR DEL TREN DE FUERZA (GR)	59
	61
TUBERÍAS DEL ESTABILIZADOR (GR)	497
	499
TUBO DE LLENADO DE ACEITE DE LA TRANSMISIÓN (GR)	232
	233
TUBO DE LLENADO DE ACEITE (GR)	51
TURBOCOMPRESOR (GR)	84

V

*VALVE GP-CHECK	558
*VALVE GP-PUMP CONTROL	581
	582
VÁLVULA AUXILIAR (GR)	544
	545
	546
VÁLVULA (CONJ) (AGUA)	698
	741
VÁLVULA DE ALIVIO (GR)	305
	559
	575
VÁLVULA DE ALIVIO (GR)	260
	571
VÁLVULA DE ALIVIO (GR)	254
VÁLVULA DE ALIVIO (GR) (CONVERTIDOR)	248
VÁLVULA DE ALIVIO (GR) (PRESIÓN DE EMBRAGUE)	248
VÁLVULA DE CONTROL DE CARGA (GR)	579
VÁLVULA DE CONTROL (GR)	559
	569
	571
VÁLVULA DE CONTROL (GR)	561
	563
	565
	567
	573
	575
	577
VÁLVULA DE CORTE	58
	390
VÁLVULA DE CORTE (GR)	390
VÁLVULA DE GAS	346
VÁLVULA DE SOLENOIDE (GR)	261
	262
	263
	264
	265
	584
	585
VÁLVULA DE SOLENOIDE (GR) (12 VOLTIOS) (CONTROL DE RELACIÓN DE COMBUSTIBLE/AIRE)	92
VÁLVULA DEL NEUMÁTICO (GR)	267
VÁLVULA DEL NEUMÁTICO (GR)	266
VALVULA (RESPIRADERO DE AIRE)	237
VÁLVULAS HIDRÁULICAS - GRUPO DE 2	547
	548
VÁLVULAS HIDRÁULICAS - GRUPO DE 6	556
	557
VARILLAJE DEL CUCHARÓN RETROEXCAVADOR (GR)	594
	596
VENTANA DE LA CABINA (GR)	787
	789
	791
VENTANA DE LA PUERTA (GR)	793
	795
VENTILADOR (CONJ)	700
	743
VIDRIO (CONJ)	120
	122
	124
	126
VIDRIO (CONJ) (FARO)	119
VIDRIO (CONJ) (REFLECTOR)	118
VISERA	784
VISERA (GR)	784

* NO HAY TRADUCCION DISPONIBLE EN EL MOMENTO DE LA IMPRESION

INDICE

Nombre	Página	Nombre	Página
VOLANTE - CAJA DE (GR)	36		
VOLANTE DE DIRECCIÓN	298		
VOLANTE DE DIRECCIÓN (GR)	304		
VOLANTE (GR)	35		

Z

ZAPATA DE ESTABILIZADOR (GR)	605		

* NO HAY TRADUCCION DISPONIBLE EN EL MOMENTO DE LA IMPRESION

ÍNDICE

Designação	Página

A

ACOPLADOR RÁPIDO 677, 678, 679, 680, 681, 682
ACOPLAMENTO 370
ACUMULADOR - AR CONDICIONADO 749
ACUMULADOR DO SISTEMA DE ABSORÇÃO DE IMPACTOS 346
ALARME DE MARCHA À RÉ 171
ALAVANCA DE CONTROLE DO GOVERNADOR 746
ALAVANCA DE CONTROLE MANUAL 295
ALOJAMENTO - DIFERENCIAL 227
ALOJAMENTO DO BRAÇO EXTENSÍVEL 592
ALOJAMENTO E FLANGE - EIXO 234, 235
ALTERNADOR DE CORRENTE 103
ALTO-FALANTE 776
AQUECEDOR DA ÁGUA DO MOTOR 114
AQUECEDOR DA CABINE 743
AQUECEDOR DA CABINE E MONTAGEM 741
AR. DE EMBARQUE DA CAÇAMBA 694
ARMAÇÃO DESLIZANTE 324
ARMAÇÃO OSCILANTE 326, 329
ARRANJO BÁSICO 16
ARREFECEDOR - ÓLEO DO MOTOR 54
ARREFECEDOR DE ÓLEO DO MOTOR E BASE DO FILTRO 54
ARTICULAÇÃO DA CAÇAMBA DA RETROESCAVADEIRA 594, 596
ASSENTO 763, 765, 767
ASSENTO COM SUSPENSÃO 770, 772, 774, 775

B

BATENTE - CAÇAMBA 695, 696
BATERIA 104, 106, 108, 110
BATERIA (12 V) 104, 106
BLOCO DO MOTOR 29, 31
BOCAL DE ENCHIMENTO DE ÓLEO DO MOTOR 51
BOCAL DE ENCHIMENTO DE ÓLEO DO TREM DE FORÇA 232, 233
BOMBA DA TRANSMISSÃO 250, 254
BOMBA DE ÁGUA 63
BOMBA DE ESCORVA DO COMBUSTÍVEL 98
BOMBA DE INJEÇÃO DO COMBUSTÍVEL 92, 93, 96
BOMBA DE ÓLEO - MOTOR 52
BOMBA DE PISTÃO 533
BOMBA REGULADORA 303
*BOOM GP 589
BORDA CORTANTE 683, 684
BOTÃO - DIREÇÃO 299
BRAÇO - CAÇAMBA RETRO-ESCAVADORA 613
BRAÇO DE LEVANTAMENTO 586
BRAÇO DO ASSENTO 702
BRAÇO ESTENDÍVEL 609, 611
*BUCKET AR-MULTIPURPOSE 620
BUJÃO - CONECTOR 165
BUJÃO - DRENAGEM DO RESERVATÓRIO 43
BUJÃO DO MOTOR 47, 48
BUJÃO MAGNÉTICO 222
BUZINA ELÉTRICA 745

C

CABEÇOTE DO MOTOR 32, 33
CABINE 703, 704, 707, 709
CABINE - ESTRUTURA ROPS COBERTA 705, 706
CABOS/FIOS ELÉTRICOS - ABSORÇÃO DE IMPACTOS 206, 208, 210, 212
CABOS/FIOS ELÉTRICOS - ALARME DO ESTABILIZADOR 215

* TRADUÇÃO NÃO DISPONÍVEL NO MOMENTO DA IMPRESSÃO

ÍNDICE

Designação	Página
CABOS/FIOS ELÉTRICOS - AQUECEDOR	193
CABOS/FIOS ELÉTRICOS - AR CONDICIONADO	173
CABOS/FIOS ELÉTRICOS - CABINE	178
	180
	181
CABOS/FIOS ELÉTRICOS - CONTROLE ELET. DAS MARCHAS	176
CABOS/FIOS ELÉTRICOS - DIREÇÃO	217
CABOS/FIOS ELÉTRICOS - MOTOR	189
CABOS/FIOS ELÉTRICOS - PLATAFORMA	196
	198
CABOS/FIOS ELÉTRICOS - POSICIONADOR E DESENGATE AUTOMÁTICO	195
CABOS/FIOS ELÉTRICOS - SENSOR	214
CABOS/FIOS ELÉTRICOS - TOMADA DE FORÇA	202
CABOS/FIOS ELÉTRICOS - TRASEIROS	203
CABOS/FIOS ELÉTRICOS DO CONSOLE	183
	185
	187
CAÇAMBA DE MÚLTIPLAS APLICAÇÕES	615
	616
	617
	618
	619
	620
	666
	667
	668
	669
	670
	672
	674
	675
CAÇAMBA DIANTEIRA	597
CAÇAMBA PARA APLICAÇÃO GERAL	621
	622
	623
	624
CAÇAMBA RETROESCAVADORA	625
	626
	627
	628
	629
	630
	631
	632
	633
	634
	635
	636
	637
	638
	639
	640
	641
	642
	643
	644
	645
	646
	647
	648
	649
	650
	651
	652
	653
	654
	655
	656
	657
	658
	659
	660
	661
	662
	663
	664
	665
CADEADO	802
	803
CADEADO CONTRA VANDALISMO	802
	803
CAIXA - BATERIA	306
	307
	308
	309
	310
CAIXA DIANTEIRA	37
CAIXA DO VOLANTE DO MOTOR	36
CALÇO DO ESTABILIZADOR	605
CAPÔ DO MOTOR	338
CAPÔ E PROTETOR	336
CÁRTER DO ÓLEO DO MOTOR	43
CHAPA DO PISO	320
CHASSI	15
CHASSI DIANTEIRO	322
	323
CHAVE	803
CHAVE - ELETRÔNICO (SEGURANÇA)	115
CHAVE INTERRUPTORA DE PARTIDA	760
CILINDRO	292
CILINDRO - CAÇAMBA DE MÚLTIPLAS APLICAÇÕES	382

* TRADUÇÃO NÃO DISPONÍVEL NO MOMENTO DA IMPRESSÃO

ÍNDICE

Designação	Página
CILINDRO DA CAÇAMBA RETROESCAVADEIRA	372 374
CILINDRO DA LANÇA	376
CILINDRO DE GIRO	386 387
CILINDRO DE INCLINAÇÃO	388
CILINDRO DE LEVANTAMENTO	381
CILINDRO DO BRAÇO	385
CILINDRO DO BRAÇO ESTENDÍVEL	378 379
CILINDRO DO ESTABILIZADOR	384
CINTO DE SEGURANÇA	762
COMANDO - ACOPLAMENTO FLEXÍVEL	231
COMANDO - RETROESCAVADEIRA	230
COMANDO DO VENTILADOR	34
COMANDO HIDRÁULICO	391 392 393 394 395 396 397
COMPARTIMENTO PARA LITERATURA	713
COMPRESSOR DE REFRIGERANTE	714 715
CONDENSADOR DO REFRIGERANTE E MONTAGEM	716
CONDICIONADOR DE AR	700
CONDICIONADOR DE AR E MONTAGEM	698
CONECTOR	451
CONEXÃO - TUBO D'ÁGUA	53
CONEXÃO-AQUECEDOR & AR CONDICIONADO	58
CONEXÃO HIDRÁULICA	678
CONJUNTO DE 4 VÁLVULAS	542
CONSOLE DO OPERADOR	719 720
CONSOLE LATERAL	721 722 723 724 725 726
CONTRAPESO	312 313 314 315
CONTROLE - PEDAL HIDRÁULICO	365 367
CONTROLE - POSIÇÃO	112 195
CONTROLE-CABO	350 351
CONTROLE DA TRANSMISSÃO	226
CONTROLE DA TRAVA DO DIFERENCIAL	225
CONTROLE DE DIREÇÃO	297 298
CONTROLE DO FREIO DE ESTACIONAMENTO	290 291
CONTROLE DO FREIO DE SERVIÇO	292
CONTROLE DO GOVERNADOR E ACELERADOR	86
CONTROLE HIDRÁULICO MANUAL	352 354 356 358 359 361 362 363 364
CONVERSÃO-CONTROLE MANUAL HIDRÁULICO	369
CORREIA DE COMANDO (PISCA-PISCA DE ADVERTÊNCIA)	131 132
CORREIA EM V (COMPRESSOR DE CONDIC. DE AR)	715

D

Designação	Página
DECALQUE	799 800
DECALQUE - ADVERTÊNCIA	804 805
DECALQUE - ADVERTÊNCIA (CILINDRO DE ALTA PRESSÃO)	409 412 416 420 424 428 432 436 487 807
DECALQUE - AMARRAÇÃO	804
DECALQUE - CAT	338
DECALQUE - CONTROLE (CONDICIONADOR DE AR)	698 741 806
DECALQUE - DIREÇÃO EM TODAS AS RODAS	806

* TRADUÇÃO NÃO DISPONÍVEL NO MOMENTO DA IMPRESSÃO

ÍNDICE

Designação	Página
DECALQUE - IDENTIFICAÇÃO (PAINEL DE FUSÍVEIS)	230
DECALQUE - IDENTIFICAÇÃO (PAINEL DE FUSÍVEIS)	806
DECALQUE - INDICADOR	185, 617, 618, 620, 806
DECALQUE - INDICADOR (CAÇAMBA)	616, 617
DECALQUE - INDICADOR (NÍVEL DA CAÇAMBA) (CAÇAMBA)	615
DECALQUE - INDICADOR (416D)	183, 806
DECALQUE - INSTRUÇÃO	112, 806
DECALQUE - INSTRUÇÃO (BRAÇO - E)	365
DECALQUE - INSTRUÇÃO (BRAÇO EXTENSÍVEL)	806
DECALQUE - INSTRUÇÃO (CONTROLE DA CAÇAMBA)	391, 392, 393, 394, 807
DECALQUE - INSTRUÇÃO (FLUXO DE RETORNO)	408, 412, 416, 420, 424, 428, 432, 436, 806
DECALQUE - INSTRUÇÃO (SEM DEGRAUS)	806
DECALQUE - LEVANTAMENTO	804
DECALQUE - LEVANTAMENTO E AMARRAÇÃO	804, 807
DECALQUE - TIRA (278CM)	338
DECALQUE - TIRA (400 CM)	703, 704, 705, 706
DECALQUE (CAÇAMBA PARA MÚLTIPLAS APLICAÇÕES)	394
DECALQUE (CAÇAMBA PARA MÚLTIPLAS APLICAÇÕES)	806
DECALQUE (CAÇAMBA PARA MÚLTIPLAS APLICAÇÕES) (CONTROLE MECÂNICO DA CAÇAMBA)	392
DECALQUE (CATERPILLAR)	705, 706, 800
DECALQUE (CHAVE INTERRUPTORA DE PARTIDA)	805
DECALQUE (CONTROLE DA CAÇAMBA)	354, 805, 806
DECALQUE (CONTROLE DO ESTABILIZADOR)	538
DECALQUE (GRANEL) (0,095 M)	806
DECALQUE (IGNIÇÃO)	115
DECALQUE (INST)	806
DECALQUE (INST) (CONTROLE DA CAÇAMBA DE APLICAÇÃO MÚLTIPLA)	392
DECALQUE (INTERRUPTOR DE PARTIDA)	758, 760
DECALQUE (PADRÃO CRUZADO PADRÃO)	805
DECALQUE (PARTIDA)	115
DECALQUE (PIVÔ DE CONTROLE - TRAVA DA LANÇA)	805
DECALQUE (PLACA - NOME)	346
DECALQUE (PLACA DE CONTROLE)	805
DECALQUE (RECIRCULAÇÃO DE AR)	700
DECALQUE (SISHF - TRAVA DA LANÇA)	805
DECALQUE (SISTEMA DE ABSORÇÃO DE IMPACTOS)	349, 397
DECALQUE (SISTEMA DE SEGURANÇA DA MÁQUINA)	115
DECALQUE (VELOCIDADE VARIÁVEL)	86, 805
DECALQUE (20KM/HORA)	18, 19
DIFERENCIAL	229
DIFERENCIAL E COROA	227
DRENO DO ÓLEO HIDRÁULICO	390
DUCTO DE AR	735, 737, 738

E

EIXO-COMANDO DE VÁLVULA	24
EIXO DA TOMADA DE FORÇA	537
EIXO DE PROPULSÃO E DIREÇÃO	218
EIXO DE TRANSMISSÃO	241, 242, 243, 244
ELEMENTO - FILTRANTE (COMBUSTÍVEL)	98
ELEMENTO - FILTRO DE COMBUSTÍVEL	88
ELO - EMBARQUE	593

* TRADUÇÃO NÃO DISPONÍVEL NO MOMENTO DA IMPRESSÃO

ÍNDICE

Designação	Página
EMISSOR - TEMPERATURA	189
ESPELHO RETROVISOR	751
	752
ESTABILIZADOR	538
ESTABILIZADOR - RETROESCAVADEIRA	606
	607
	608
EXTENSÃO DO TUBO DE ESCAPE	77

F

FAROL DIANTEIRO (12 V)	124
	126
FAROL DIANTEIRO (12-VOLTS, 60/55 WATTS)	120
	122
FILTRO	559
	561
	563
	565
	567
	569
	571
	573
	575
	577
	698
	741
FILTRO - AR	743
FILTRO - AR (AR DA CABINE)	700
FILTRO - COMBUSTÍVEL	88
FILTRO - ÓLEO DO MOTOR	51
FILTRO - ÓLEO (HIDRÁULICO) (RESISTENTE A FOGO)	396
	397
FILTRO - ÓLEO (LIMPEZA / ALTA EFICIÊNCIA)	396
	397
FILTRO - ÓLEO (TRANSMISSÃO)	247
FILTRO (RESPIRO DO TANQUE HIDRAULICO)	539
FREIO DE ESTACIONAMENTO	289
FUSÍVEL (10 A)	133
	138
	173
	181
	202
	208
	210
	212
FUSÍVEL (10 AMPERES)	131
	132
	142
	206
FUSÍVEL (15 A)	133
	136
	138
FUSÍVEL (15 AMPERES)	140
	142
FUSÍVEL (20 A)	178
FUSÍVEL (5 AMP)	217
FUSÍVEL (5 AMP)	178

G

GARFO	685
	686
GR. DE CONVERSÃO - CERTIFICADO	16
	17
	18
	19
GR. DE INSTALAÇÃO - CALÇO DA RODA	801
GR. PLANETÁRIO - COMANDO FINAL	238
GRAXEIRA	586
	588
	596
	604
	668
	674
	675
GRAXEIRA (ROSCA 1/8-27 POL)	324
	527
	586
	609
	611
	613
	666
	667
	669
	689
GRUPO DE VÁLVULAS - SEIS	543
GRUPO DE VÁLVULAS - 5	542
	543
GRUPO DE VÁLVULAS DE CONTROLE - CINCO	553
	554
GRUPO DE VÁLVULAS DE CONTROLE - DUPLO	547
	548
GRUPO DE VÁLVULAS DE CONTROLE - QUÁDRUPLO	551
	552
GRUPO DE VÁLVULAS DE CONTROLE - SEIS	556
	557

* TRADUÇÃO NÃO DISPONÍVEL NO MOMENTO DA IMPRESSÃO

ÍNDICE

Designação	Página
GRUPO DE VÁLVULAS DE CONTROLE - TRIPLO	549, 550
GRUPO ROTATIVO DA BOMBA	536
I	
ILUMINAÇÃO - RODOVIÁRIA	144, 146, 149, 152, 155, 158
INDICADOR	187
INDICADOR - TROCA DO FILTRO DE AR	78, 79
INSTALAÇÃO-SEGURANÇA	115
INSTALAÇÃO-SEGURANÇA (SEGURANÇA DA MÁQUINA)	115
INTERRUPTOR	391, 392, 393, 394
INTERRUPTOR - BALANCIM (FAROL DIANTEIRO)	142
INTERRUPTOR - BALANCIM (FAROL TRASEIRO)	142
INTERRUPTOR - BALANCIM (PERIGO)	183
INTERRUPTOR - BALANCIM (SISTEMA DE ABSORÇÃO DE IMPACTOS)	206, 210, 212
INTERRUPTOR - BALANCIM (SISTEMA DE ABSORÇÃO DE IMPACTOS) (MUDANÇA PADRAO)	349
INTERRUPTOR - BALANCIM (VELOCIDADE DO VENTILADOR DO AQUECEDOR)	193
INTERRUPTOR - BALANCIM (VELOCIDADE DO VENTILADOR DO AQUECEDOR)	173
INTERRUPTOR - BOTÃO	359
INTERRUPTOR - BOTÃO (NEUTRALIZADOR DA TRANSMISSÃO)	226
INTERRUPTOR - LIMITADOR	292
INTERRUPTOR - PRESSÃO	169, 206, 208, 210, 212
INTERRUPTOR - PRESSÃO (ALTA - BAIXA)	173
INTERRUPTOR - ROLETAS (RETORNAR A EXCAVAÇÃO)	214
INTERRUPTOR - TEMPERATURA	170
INTERRUPTOR - TERMOSTATO	700
INTERRUPTOR (ADMISSÃO DE AR)	79
INTERRUPTOR (AQUECEDOR)	193
INTERRUPTOR (AVANÇO DE REGULAGEM)	93
INTERRUPTOR (BUZINA)	183
INTERRUPTOR (RETÉM)	392
INTERRUPTOR (SETA DE DIREÇÃO)	180
INTERRUPTOR (SISTEMA DE ABSORÇÃO DE IMPACTOS)	208
INTERRUPTOR (SISTEMA DE ABSORÇÃO DE IMPACTOS-PADRÃO)	397
INTERRUPTOR (TRAVA HIDRÁULICA)	391, 393
INTERRUPTOR (TRAVA NEUTRA)	183
INTERRUPTOR (VÁLVULA DE CARREGADEIRA)	394
INTERRUPTOR (40 GRAUS) (TEMPERATURA DO LÍQUIDO ARREFECEDOR)	96
J	
JANELA DA CABINE	787, 789, 791
JOGO - EXCÊNTRICO (SENTIDO ANTI-HORÁRIO)	289
JOGO - PORTA SISTEMA PLANETÁRIO	238
JOGO - SERVIÇO DO ACUMULADOR	346
JOGO - SISTEMA DE ABSORÇÃO DE IMPACTOS	397
JOGO DE AJUSTADOR	702
JOGO DE ALMOFADA	702
JOGO DE BLOCO DESLIZADOR	770, 772, 774
JOGO DE CONTATO (MOTOR DE PARTIDA)	166
JOGO DE CORREIAS EM V (INCLUI 2 CORREIAS)	703, 704, 705, 706, 711
JOGO DE CRUZETA	218
JOGO DE CRUZETA E MANCAL	241, 242, 243, 244
JOGO DE ENGRENAGEM (MOTOR DE PARTIDA)	166
JOGO DE FIXADORES	584
JOGO DE MANCAL	220
JOGO DE MANUTENÇÃO	761
JOGO DE PINCA DO FREIO	289
JOGO DE RECEPTÁCULO (12 PINOS)	176

* TRADUÇÃO NÃO DISPONÍVEL NO MOMENTO DA IMPRESSÃO

ÍNDICE

Designação	Página
JOGO DE RECEPTÁCULO (12 PINOS)	754
JOGO DE RECEPTÁCULO (2 PINOS)	144
	171
	181
	196
	203
	215
	217
	226
	256
	262
	263
	264
	265
	359
	567
	569
	571
	584
	585
JOGO DE RECEPTÁCULO (3 PINOS)	144
	165
	203
	214
	263
	264
	265
	391
JOGO DE RECEPTÁCULO (3 PINOS)	392
JOGO DE RECEPTÁCULO (4 PINOS)	115
	133
	136
	181
	193
	208
	210
	212
JOGO DE RECEPTÁCULO (4 PINOS)	129
	138
JOGO DE RECEPTÁCULO (4 PINOS) (LATERAL)	181
JOGO DE RECEPTÁCULO (6 PINOS)	133
	138
	181
	210
	212
	755
	797
JOGO DE RECEPTÁCULO (6 PINOS)	124
	126
	138
JOGO DE RECEPTÁCULO (8 PINOS)	178
	203

Designação	Página
	753
JOGO DE REPARO	797
JOGO DE RETENTOR	114
JOGO DE RETENTOR (BOMBA DE MEDIÇÃO DA DIREÇÃO)	303
JOGO DE ROLAMENTO DOS ROLETES	238
JOGO DE TOMADA DE CONEXÃO (12 PINOS)	183
JOGO DE TOMADA DE CONEXÃO (2 PINOS)	115
	133
	138
	144
	173
	181
	193
	198
	203
	210
	212
	215
	261
	291
	700
JOGO DE TOMADA DE CONEXÃO (3 PINOS)	144
	178
	181
JOGO DE TOMADA DE CONEXÃO (3 PINOS)	112
JOGO DE TOMADA DE CONEXÃO (4 PINOS)	133
	136
	138
	178
	181
	203
	210
	212
	215
JOGO DE TOMADA DE CONEXÃO (6 PINOS)	133
	138
	146
	149
	152
	178
	181
	203
	210
	212
JOGO DE TOMADA DE CONEXÃO (8 PINOS)	178
	183
	709

L

LÂMINA	797

* TRADUÇÃO NÃO DISPONÍVEL NO MOMENTO DA IMPRESSÃO

ÍNDICE

Designação	Página
LÂMINA DO LIMPADOR DE PÁRA-BRISA	797
LÂMPADA - FAROL	117
	118
	119
LÂMPADA - TETO	776
LÂMPADA (ALERTA GIRATÓRIO)	132
LÂMPADA DIANTEIRA E DE SINAL	120
	122
	124
	126
LAMPADA-PLACA DE REGISTRO	128
LÂMPADA (12 V)	128
	781
	782
LÂMPADA (12 V) (MINIATURA)	124
	126
	753
LÂMPADA (12 V) (21 WATT)	124
	126
LÂMPADA (12-VOLTS)	115
	185
LÂMPADA (12 VOLTS - 55 WATTS)	133
LÂMPADA (12-VOLTS) (MEDIDOR DA TEMPERATURA DO LÍQUIDO ARREFECEDOR)	187
LÂMPADA (12-VOLTS) (NÍVEL DO COMBUSTÍVEL)	187
LÂMPADA (12-VOLTS) (TEMPERATURA DO ÓLEO DO CONVERSOR)	187
LÂMPADA (12-VOLTS) (VOLTÍMETRO)	187
LÂMPADA (12 VOLTS, 10 WATTS)	776
LÂMPADA (12-VOLTS, 21-WATTS)	120
	122
LÂMPADA (12-VOLTS, 4-WATTS)	120
	122
LÂMPADA (12 VOLTS, 55 WATTS)	132
	136
LÂMPADA (12 VOLTS, 55 WATTS)	118
	119
LÂMPADA (12-VOLTS, 55-WATTS)	131
	140
	142
LÂMPADA (12 VOLTS, 55 WATTS) (FAROL)	136
LÂMPADA (12 VOLTS/21 WATTS)	117
LÂMPADA (12 VOLTS/21 WATTS) (SETA DE DIREÇÃO)	130
LÂMPADA (12 VOLTS/21/5 WATTS) (PARAR)	130
LÂMPADA (12 VOLTS/55 WATTS)	138
LANÇA	588
LAVADOR DO VIDRO	785
LENTE	117
	120
	122
	124
	126
LENTE ÂMBAR	124
	126
LENTE (ÂMBER)	120
	122
	131
	132
LENTE (FAROL)	118
LENTE (FAROL DIANTEIRO)	119
LENTE (SINAL DE PARADA/CURVA)	130
LENTE (TRANSPARENTE)	138
LENTE (TRANSPARENTE) (FAROL)	136
LEVANTAMENTO DO MOTOR	39
LIMPADOR DO VIDRO	797
*LINES GP-RETURN	486
LISTRA DA CABINE	783
LUVA	803
LUVA DE JUNÇÃO DE CABO	713
LUZ GIRATÓRIA DE ALARME	131
	132
LUZ INTERMITENTE	198
LUZ TRASEIRA E DE FREIO	129
	130

M

Designação	Página
MANGUEIRA (RESPIRO)	25
MECANISMO DAS VÁLVULAS	50
MÓDULO - INDICADOR DE ALARME	753
	754
MOLA (MANGUEIRA DO RESPIRO)	25
MONTAGEM - BANCO DE VÁLVULAS	525
	526
MONTAGEM - BOMBA HIDRÁULICA	528
MONTAGEM - BRAÇO	604
MONTAGEM - CAÇAMBA	689
	690
	691
	692
MONTAGEM - CILINDRO	527
MONTAGEM - GARFO	693
MONTAGEM - MOTOR	40
MONTAGEM - MOTOR E TRANSMISSÃO	41
	42
MONTAGEM - PAINEL DE INSTRUMENTOS	756
	757
	758
MONTAGEM - TUBOS	529
	530
	531
	532
MONTAGEM DA PLACA DE REGISTRO	342

* TRADUÇÃO NÃO DISPONÍVEL NO MOMENTO DA IMPRESSÃO

ÍNDICE

Designação	Página
	343
MONTAGEM DO EIXO	237
MOTOR	20
	21
MOTOR - LIMPADOR DO VIDRO	755
MOTOR ELÉTRICO DE PARTIDA	166
	168
MOTOR PRIMÁRIO	22
	23

P

PAINEL DE INSTRUMENTOS	760
PÁRA-CHOQUE DIANTEIRO	311
PÁRA-LAMA DIANTEIRO	317
	318
PÁRA-LAMA TRASEIRO	319
PÁRA-SOL	784
PÁRA-SOL DA CABINE	784
PEDAL DO GOVERNADOR	761
PINO - EIXO	218
PISTÃO E BIELA	45
PLACA DE IDENTIFICAÇÃO	17
	18
	19
PLACA E DECALQUE	804
	805
PLACA LATERAL REFLETIVA	809
POLIA DO VIRABREQUIM	49
PORTA - LADO DIREITO	733
PORTA - LADO ESQUERDO	731
POSTO DE CONTROLE/CONSOLE DIANTEIRO	717
	718
PROTETOR - CAÇAMBA	687
	688
PROTETOR - CAÇAMBA (DIANTEIRO)	18
	19
PROTETOR - EIXO DE TRANSMISSÃO	331
PROTETOR - ILUMINAÇÃO	332
	333
PROTETOR - TUBOS	334
	335
PROTETOR DE BORRACHA CONTRA POEIRA	391
	393
PURIFICADOR DE AR	73
	75

R

RADIADOR E ARREFECEDOR DO ÓLEO HIDRÁULICO	67
	69
	70
	72
RADIADOR E VENTILADOR	65
	66
REDUÇÃO DE RUÍDO	776
REFLETOR	146
	149
	152
	155
	158
	344
REGULADOR DE TEMPERATURA DA ÁGUA	53
RELÉ (CONJ) (12 V)	133
	140
	142
	173
	176
	193
	206
	208
	217
RELÉ (CONJ) (12 V) (ABAIXAMENTO DO MOTOR DESLIGADO)	181
RELÉ (CONJ) (12 V) (ALTA VELOCIDADE)	173
RELÉ (CONJ) (12 V) (AQUECEDOR E COND AR)	193
RELÉ (CONJ) (12 V) (CONTROLE DE PERCURSO INFERIOR, MOTOR INOPERANTE)	210
	212
RELÉ (CONJ) (12 V) (CONTROLE LATERAL)	178
RELÉ (CONJ) (12 V) (FAROL PADRAO / AUXILIAR)	136
	138
RELÉ (CONJ) (12 V) (ILUMINAÇÃO)	136
	138
RELÉ (CONJ) (12-VOLTS)	189
RELÉ (CONJ) (12-VOLTS) (MOTOR DE SEGURANÇA)	115
RESPIRO	256
RESPIRO (EIXO)	218
RESPIRO (TRANSMISSÃO)	249
RETENTOR DE ANEL-O	256
	445
RETENTOR DE ANEL-O (REGULADOR DA TEMPERATURA DA ÁGUA)	53
RETROESCAVADEIRA - BRAÇO ESTENDÍVEL	1
	2
	3
	4
	5

* TRADUÇÃO NÃO DISPONÍVEL NO MOMENTO DA IMPRESSÃO

ÍNDICE

Designação	Página
	6
	7
	8
RETROESCAVADEIRA - BRAÇO PADRÃO	9
	11
	12
	14
RETROESCAVADORA	10
	13
REVESTIMENTO PARA REDUÇÃO DE BARULHO	341
RODA E PNEU	267
	268
	269
	270
	271
	272
	273
	274
	275
	276
	277
	278
	279
	280
	281
	282
	283
	284
	285
	286
	287
	288
RUÍDO - ARRANJO PARA SUPRESSÃO	345

S

SEMI-EIXO TRASEIRO	220
SEPARADOR DE ÁGUA	99
SERVO-TRANSMISSÃO	247
SERVOTRANSMISSÃO	254
SILENCIADOR	83
SINCRONIZADOR	248
SIST. DE ILUMINAÇÃO - PISCA-PISCA GIRATÓRIO DE ADVERTÊNCIA	163
	164
SISTEMA DE ABSORÇÃO DE IMPACTOS	348
	349
SISTEMA DE ILUMINAÇÃO - ADVERTÊNCIA	161
SISTEMA DE ILUMINAÇÃO - FARÓIS	133
	136
	138
	140
	142
SUPORTE	104
	106
SUPORTE - ESCOVA	166
SUPORTE PARA TRANSPORTE	590
	591
SUSPENSÃO - ASSENTO	778

T

TACÔMETRO - ELÉTRICO	703
	704
	705
	706
	781
	782
TAMPA	267
	446
	459
	462
TAMPA - ACESSO À BATERIA	316
TAMPA - ADMISSÃO DE AR	76
TAMPA - CONSOLO	727
TAMPA - ENCHIMENTO (TANQUE HIDRÁULICO)	539
TAMPA - MECANISMO DAS VÁLVULAS	25
TAMPA - TANQUE DE COMBUSTÍVEL	102
TAMPA & VÁLVULA-BANCO	371
TAMPA-COLUNA	730
TAMPA CONTRA POEIRA	347
	474
TAMPA (HASTE DA VALVULA)	266
TAMPA-PAINEL TRASEIRO DO MOTOR	728
	729
TAMPA (RADIADOR)	69
	72
TAMPÃO (TUBULAÇÕES DO FILTRO DE ÓLEO DO MOTOR)	54
TANQUE DE COMBUSTÍVEL	101
	102
TANQUE DE COMBUSTÍVEL E MONTAGEM	100
TANQUE DO FREIO	296
TANQUE HIDRÁULICO	539
TAPETE	739
	740
TELA FILTRANTE	254
TELA FILTRANTE (CAIXA DE TRANSMISSÃO)	250
TOLDO	711
TOLDO - ESTRUTURA ROPS ABERTA	712
TOMADA - MAGNETICA	218
	227
TRANSMISSÃO DIRETA	247

* TRADUÇÃO NÃO DISPONÍVEL NO MOMENTO DA IMPRESSÃO

ÍNDICE

Designação	Página
	248
TRANSMISSÃO E MONTAGEM	245
	246
TRAVA - CONTROLE MANUAL HIDRÁULICO	524
TRAVA - PEDAL DE CONTROLE HIDRÁULICO	523
TRAVA - QUARTA MARCHA	236
TRAVA - TRANSPORTE	599
	600
	601
	602
	603
TRAVA DA PERNA DO ESTABILIZADOR	598
TREM DE FORÇA	239
	240
TUBOS - ABSORÇÃO DE IMPACTOS	487
TUBOS - AQUECEDOR	747
TUBOS - AR	80
	81
	82
TUBOS - ARREFECEDOR DO TREM DE FORÇA	59
	61
TUBOS - BOMBA	477
	479
	482
	483
	484
	485
TUBOS - BRAÇO	501
	502
	505
TUBOS - BRAÇO COM EXTENSÃO	445
TUBOS - CAÇAMBA DE MÚLTIPLAS APLICAÇÕES	466
	468
	470
	472
TUBOS - CILINDRO DA CAÇAMBA	441
TUBOS - CILINDRO DE INCLINAÇÃO	519
	521
TUBOS - CILINDRO DE LEVANTAMENTO	446
	448
	450
TUBOS - CIRCUITO PILOTO	474
TUBOS - COMBUSTÍVEL	90
TUBOS - DIREÇÃO	300
TUBOS - DRENAGEM	443
	444
TUBOS - ESTABILIZADOR	497
	499
TUBOS - GIRO	509
	511
	513
	516
TUBOS - LANÇA	440
TUBOS - RETROESCAVADEIRA	398
	400
TUBOS - TRAVAMENTO DE DESLOCAMENTO LATERAL	489
	491
	493
	495
TUBOS - VÁLVULA DE CONTROLE DE CARGA	451
	454
	458
TUBOS AUXILIARES	462
	464
TUBOS AUXILIARES - RETROESCAVADEIRA	402
	404
	405
	407
	408
	412
	416
	420
	424
	428
	432
	436
TUBOS DO AQUECEDOR	749
TUBULAÇÕES - AQUECEDOR E AR CONDICIONADO	749
TURBOALIMENTADOR	84

U

UNI-DENTE	697

V

*VALVE GP-CHECK	558
*VALVE GP-PUMP CONTROL	581
	582
VÁLVULA - CONTROLE DE CARGA	579
VÁLVULA (ÁGUA)	698
	741
VÁLVULA AUXILIAR	544
	545
	546
VÁLVULA DE ALÍVIO	254
	260
	305
	559

* TRADUÇÃO NÃO DISPONÍVEL NO MOMENTO DA IMPRESSÃO

ÍNDICE

Designação	Página
	571
	575
VÁLVULA DE ALÍVIO (CONVERSOR)	248
VÁLVULA DE ALÍVIO (PRESSAO DA EMBREAGEM)	248
VÁLVULA DE ALÍVIO (RESPIRO DE AR)	237
VÁLVULA DE CONTROLE	559
	561
	563
	565
	567
	569
	571
	573
	575
	577
VÁLVULA DE CONTROLE E MONTAGEM	541
VÁLVULA DE GÁS	346
VÁLVULA DE PARADA	58
	390
VÁLVULA DE PNEU	266
	267
VÁLVULA DE PRIORIDADE	305
VÁLVULA DO CONECTOR	347
VÁLVULA SOLENÓIDE	261
	262
	263
	264
	265
	584
	585
VÁLVULA SOLENÓIDE (12 V) (CONTROLE DA RAZÃO DE AR E COMBUSTÍVEL)	92
VELA DE AQUECIMENTO; VELA INCANDESCENTE	113
VENTILADOR	700
	743
VENTILADOR DE SUCÇÃO	56
	57
VIDRO DA PORTA	793
	795
VIRABREQUIM	27
VOLANTE	304
VOLANTE DA DIREÇÃO	298
VOLANTE DO MOTOR	35

* TRADUÇÃO NÃO DISPONÍVEL NO MOMENTO DA IMPRESSÃO

STICHWORTVERZEICHNIS

Bezeichnung	Seite
A	
ABDECKGLAS	117, 120, 122, 124, 126
ABDECKGLAS (ARBEITSSCHEINWERFER)	118, 119
ABDECKGLAS (BREMSLICHT/RICHTUNGS-BLINKER)	130
ABDECKGLAS (DURCHSICHTIG)	138
ABDECKGLAS (DURCHSICHTIG) (ARBEITSLEUCHTE)	136
ABDECKGLAS (GELB)	120, 122, 124, 126, 131, 132
ABLASSLEITUNGEN	443, 444
ABSPERRVENTIL	58, 390
ACHSBOLZEN	218
ACHSENANBAUSATZ	237
ACHSGEHÄUSEFLANSCH	234, 235
ANSCHLUSS	370
ANSCHLUSS - HEIZUNG U. KLIMAANLAGE	58
ANTRIEB - BAGGERLADER	230
ANTRIEBS- UND LENKACHSE	218
ANTRIEBSWELLE	241, 242, 243, 244
ANTRIEBSWELLENVERKLEIDUNG	331
ANZEIGE	187
ARBEITSLEUCHTEN	117, 118, 119, 133, 136, 138, 140, 142
ARMLEHNE	702
AUFKLEBER	799, 800
AUFKLEBER - ALLRADLENKUNG	806
AUFKLEBER - ANZEIGE	185, 617, 618, 620
AUFKLEBER - ANZEIGE (SCHAUFEL)	616, 617
AUFKLEBER - ANZEIGE (SCHAUFELHÖHE) (SCHAUFEL)	615
AUFKLEBER - ANZEIGE (416D)	183, 806
AUFKLEBER - CAT	338
AUFKLEBER - FESTZURREN	804
AUFKLEBER - HEBE- U. VERZURRPUNKT	804, 807
AUFKLEBER - HEBEN	804
AUFKLEBER (BULK) (0,095M)	806
AUFKLEBER (CATERPILLAR)	705, 706, 800
AUFKLEBER (INST)	806
AUFKLEBER (INST) (KOMBISCHAUFELSTEUERUNG)	392
AUFKLEBER (KOMBISCHAUFEL)	394, 806
AUFKLEBER (KOMBISCHAUFEL) (MECHANISCHE SCHAUFELSTEUERUNG)	392
AUFKLEBER (KONTROLLE) (KLIMAANLAGE)	698, 741
AUFKLEBER (KONTROLLE) (KLIMAANLAGE)	806
AUFKLEBER (LUFTUMLAUF)	700
AUFKLEBER (MASCHINENSICHERHEITSSYSTEM)	115
AUFKLEBER (NAMENSSCHILD)	346
AUFKLEBER (SCHAUFELSTEUERUNG)	354, 805, 806
AUFKLEBER (SCHWINGUNGSDÄMPFUNG)	349, 397
AUFKLEBER (SISHF/AUSLEGERSPERRVORRICHTUNG)	805
AUFKLEBER (STANDARD-KREUZMUSTER)	805
AUFKLEBER (START)	115
AUFKLEBER (STARTSCHALTER)	758, 760, 805
AUFKLEBER (STARTSCHLÜSSELSCHALTER)	115
AUFKLEBER (STEUERPLATTE)	805
AUFKLEBER (STÜTZENSTEUERUNG)	538
AUFKLEBER (VARIABLE GESCHWINDIGKEIT)	86, 805

* ÜBERSETZUNG ZUM ZEITPUNKT DER DRUCKLEGUNG NICHT VORHANDEN

STICHWORTVERZEICHNIS

Bezeichnung	Seite
AUFKLEBER (ZENTRALE DREHVORRICHTUNG/AUSLEGERSPERRVORRICHTUNG)	805
AUFKLEBER (20 KM/H)	18
	19
AUFKLEBER (278 CM)	338
AUFKLEBER (400 CM)	703
	704
	705
	706
AUSLEGER	588
AUSLEGERLEITUNGEN	440
AUSLEGERZYLINDER	376
AUSPUFFROHRVERLÄNGERUNG	77
B	
BATTERIE	104
	106
	108
	110
BATTERIE (12 V)	104
	106
	108
	110
BATTERIEDECKEL	316
BATTERIEKASTEN	306
	307
	308
	309
	310
BEFESTIGUNGSTEILE	584
BELEUCHTUNGSANLAGE (RUNDUMKENNLEUCHTE)	132
BELEUCHTUNGSANLAGE (STRASSENAUSRÜSTUNG)	144
	146
	149
	152
	155
	158
BELEUCHTUNGSANLAGE (12 V)	115
BLINKER	198
BLITZSCHUTZ	332
	333
BODENBLECH	320
*BOOM GP	589
BREMS- UND RÜCKLEUCHTE	129
	130
BREMSGESTÄNGE	292
BREMSSATTEL-EINBAUSATZ	289
BREMSTANK	296
BUCHSE	803
BUCHSE - KABELSPLEISSUNG	713
*BUCKET AR-MULTIPURPOSE	620
BÜRSTENHALTER	166
D	
DICHTUNGSSATZ	114
DICHTUNGSSATZ (LENKUNGSZUMESSPUMPE)	303
DIFFERENTIAL	229
DIFFERENTIAL UND TELLERRAD	227
DIFFERENTIALSPERRENGESTÄNGE	225
DIFFERENZIALGEHÄUSE	227
DREHSTROMGENERATOR	103
DREHZAHLMESSER, ELEKTR.	704
	705
	706
	781
	782
DREHZAHLMESSER, ELEKTR.	703
DREHZAHLREGLER - STEUERHEBEL	746
DRUCKBEGRENZUNGSVENTIL (ENTLÜFTUNGSVORRICHTUNG)	237
DRUCKKNOPFSCHALTER	359
DRUCKKNOPFSCHALTER (GETRIEBE NEUTRAL)	226
DRUCKLUFTLEITUNGEN	80
	81
	82
DRUCKSCHALTER	169
	206
	208
	210
	212
DRUCKSCHALTER (HOCH - NIEDRIG)	173
DRUCKSPEICHER, HYDRAULISCHE SCHWINGUNGSDÄMPFUNG	346
DRUCKSPEICHERWARTUNGSSATZ	346
E	
EINFÜLLKAPPE (HYDRAULIKTANK)	539
EINSTELLER-EINBAUSATZ	702
ELEKTRONISCHER SCHLÜSSEL (SICHERHEIT)	115
ENDSCHALTER	292
ENTLÜFTER	256
ENTLÜFTER (ACHSE)	218
ENTLÜFTER (GETRIEBE)	249
F	
FAHRERHAUS	703

* ÜBERSETZUNG ZUM ZEITPUNKT DER DRUCKLEGUNG NICHT VORHANDEN

STICHWORTVERZEICHNIS

Bezeichnung	Seite
	704
	707
	709
FAHRERHAUS - HALTETEILE	783
FAHRERHAUS M. OFFENEM ÜBERROLL-SCHUTZ	712
FAHRERHAUS MIT ÜBERROLLSCHUTZ	705
	706
FAHRERHAUS, SONNENBLENDE	784
FAHRERHAUSBELEUCHTUNG	776
FAHRERHAUSFENSTER	787
	789
	791
FAHRERHAUSHEIZUNG	743
FAHRERHAUSHEIZUNG U. BEFESTIGUNGS-TEILE	741
FAHRERHAUSTÜR (LINKS)	731
FAHRERHAUSTÜR (RECHTS)	733
FAHRERHAUSVERDRAHTUNG	178
	180
	181
FAHRERPLATTFORMVERDRAHTUNG	196
	198
FAHRERSITZ	763
	765
	767
FAHRERSITZFEDERUNG	778
FAHRWERK	15
FEDER (ENTLÜFTERSCHLAUCH)	25
FESTSTELLBREMSE	289
FESTSTELLBREMSGESTÄNGE	290
	291
FEUERWANDABDECKUNG	728
	729
FILTER	559
	561
	563
	565
	567
	569
	571
	573
	575
	577
	698
	741
FILTER (HYDRAULIKTANKENTLÜFTER)	539
FILTER (KRAFTSTOFF)	98
FILTERSOCKEL U. MOTORÖLKÜHLER	54
FRONTSTEUERPULT	717
	718
FRONTSTOSSSTANGE	311
FUSSMATTE	739
	740

G

Bezeichnung	Seite
GABEL	685
GABELBEFESTIGUNG	693
GASPEDAL	761
GASVENTIL	346
GEGENGEWICHT	312
	313
	314
	315
GEHÄUSE - AUSFAHRBARER STIEL	592
GETRIEBE U. BEFESTIGUNG	245
	246
GETRIEBEÖLFÜLLSTUTZEN	232
	233
GETRIEBEPUMPE	250
	254
GETRIEBESTEUERUNG	226
GETRIEBESYNCHRONISIERSATZ	248
GLEITRAHMEN	324
GLEITSCHIENENBLOCK-EINBAUSATZ	770
	772
	774
GLÜHKERZE	113
GRUNDAUSFÜHRUNG	16

H

Bezeichnung	Seite
HALTERUNG	104
	106
HANDSTEUERHEBEL	295
HECKBAGGER	10
	13
HECKBAGGER-TELESKOPSTIEL	1
	2
	3
	4
	5
	6
	7
	8
HECKBAGGERLÖFFEL	625
	626
	627
	628
	629
	630
	631
	632
	633
	634

* ÜBERSETZUNG ZUM ZEITPUNKT DER DRUCKLEGUNG NICHT VORHANDEN

STICHWORTVERZEICHNIS

Bezeichnung	Seite
	635
	636
	637
	638
	639
	640
	641
	642
	643
	644
	645
	646
	647
	648
	649
	650
	651
	652
	653
	654
	655
	656
	657
	658
	659
	660
	661
	662
	663
	664
	665
HECKBAGGERLÖFFELGESTÄNGE	594
	596
HECKBAGGERLÖFFELZYLINDER	372
	374
HEIZUNGS- U. KLIMAANLAGENLEITUNGEN	749
HEIZUNGSLEITUNGEN	747
	749
HEIZUNGSVERDRAHTUNG	193
HINTERACHSE	220
HUBARM	586
HUBZYLINDER	381
HUBZYLINDERLEITUNGEN	446
	448
	450
HYDRAULIKANSCHLUSSSTÜCK	678
HYDRAULIKFUSSSTEUERUNGSSPERRE	523
HYDRAULIKHANDSTEUERUNG	352
	354
	356
	358
	359
	361
	362
	363
	364
HYDRAULIKÖLABLASS	390
HYDRAULIKPEDALSTEUERUNG	365
	367
HYDRAULIKPUMPE UND LEITUNGEN	477
	479
	482
	483
	484
	485
HYDRAULIKPUMPENBEFESTIGUNG	528
HYDRAULIKSPERRE (HANDBEDIENUNG)	524
HYDRAULIKSYSTEM	391
	392
	393
	394
	395
	396
	397
HYDRAULIKTANK	539
HYDRAULISCHE SCHWINGUNGSDÄMPFUNG	348
	349
HYDRAULISCHE SCHWINGUNGSDÄMPFUNG - EINBAUSATZ	397
I	
IDENTIFIKATIONSSCHILD	17
	18
	19
IDENTIFIZIERUNGS-AUFKLEBER (SICHERUNGSTAFEL)	230
IDENTIFIZIERUNGS-AUFKLEBER (SICHERUNGSTAFEL)	806
INASTRUMENTENTAFEL-EINBAUSATZ	756
	757
	758
INSTRUKTIONS-AUFKLEBER	112
	806
INSTRUKTIONS-AUFKLEBER (E-STIEL)	365
INSTRUKTIONS-AUFKLEBER (*EXTENDABLE STICK)	806
INSTRUKTIONS-AUFKLEBER (NICHT BETRETEN)	806
INSTRUKTIONS-AUFKLEBER (RÜCKFLUSS)	408
	806
INSTRUKTIONS-AUFKLEBER (RÜCKFLUSS)	412
	416
	420
	424

* ÜBERSETZUNG ZUM ZEITPUNKT DER DRUCKLEGUNG NICHT VORHANDEN

STICHWORTVERZEICHNIS

Bezeichnung	Seite
	428
	432
	436
INSTRUKTIONS-AUFKLEBER (SCHAUFEL-STEUERUNG)	391
	392
	393
	394
INSTRUKTIONS-AUFKLEBER (SCHAUFEL-STEUERUNG)	807
INSTRUMENTENTAFEL	760

K

KÄLTEMITTELKOMPRESSOR	714
	715
KÄLTEMITTELKONDENSATOR U. BEFESTIGUNGSTEILE	716
KAPPE	267
	446
	459
	462
KAPPE (KÜHLER)	69
	72
KAPPE (VENTILSCHAFT)	266
KEILRIEMEN (KLIMAANLAGENKOMPRESSOR)	715
KEILRIEMENSATZ (EINSCHL. 2 RIEMEN)	711
KEILRIEMENSATZ (EINSCHL. 2 RIEMEN)	703
	704
	705
	706
KIPPSCHALTER (HEIZGEBLÄSEGESCHWINGIGKEITSSTUFE)	173
KIPPSCHALTER (HEIZGEBLÄSEGESCHWINGIGKEITSSTUFE)	193
KIPPSCHALTER (HINTERER ARBEITSSCHEINWERFER)	142
KIPPSCHALTER (SCHWINGUNGSDÄMPFUNG)	206
	210
	212
KIPPSCHALTER (SCHWINGUNGSDÄMPFUNG) (STANDARDSCHALTUNG)	349
KIPPSCHALTER (VORDERE ARBEITSSCHEINWERFER)	142
KIPPSCHALTER (WARNSCHALTER)	183
KIPPZYLINDER	388
KLIMAANLAGE	700
KLIMAANLAGE UND AUFHÄNGUNG	698
KLIMAANLAGENDRUCKSPEICHER	749
KLIMAANLAGENVERDRAHTUNG	173
KOLBENPUMPE	533
KOLBENPUMPENUMLAUFSATZ	536
KOMBISCHAUFEL	615
	616
	617
	618
	619
	620
	666
	667
	668
	669
	670
	672
	674
	675
KOMBISCHAUFELLEITUNGEN	466
	468
	470
	472
KOMBISCHAUFELZYLINDER	382
KONSOLENVERDRAHTUNG	183
	185
	187
KONTAKT-EINBAUSATZ (STARTERMOTOR)	166
KRAFTSTOFF-ENTLÜFTUNGSPUMPE	98
KRAFTSTOFFEINSPRITZPUMPE	92
	93
	96
KRAFTSTOFFFILTEREINSATZ	88
KRAFTSTOFFILTER	88
KRAFTSTOFFLEITUNGEN	90
KRAFTSTOFFTANK	101
	102
KRAFTSTOFFTANK U. BEFESTIGUNG	100
KRAFTSTOFFTANKKAPPE	102
KRAFTÜBERTRAGUNG	239
	240
KREUZGELENK-EINBAUSATZ	218
KREUZGELENKLAGER-EINBAUSATZ	241
	242
	243
	244
KÜHLER UND HYDRAULIKÖLKÜHLER	67
	69
	70
	72
KÜHLER UND LÜFTER	65
	66
KÜHLWASSERANSCHLUSS	53
KÜHLWASSERPUMPE	63
KUPPLUNGSANTRIEB, ELAST.	231
KURBELWELLE	27
KURBELWELLEN-RIEMENSCHEIBE	49

* ÜBERSETZUNG ZUM ZEITPUNKT DER DRUCKLEGUNG NICHT VORHANDEN

STICHWORTVERZEICHNIS

Bezeichnung	Seite
L	
LADERRAHMEN	322, 323
LADERZUSATZLEITUNGEN	462, 464
LADESCHAUFEL	597
LAGERSATZ	220
LASTSCHALTGETRIEBE	247, 254
LASTSTEUERVENTIL	579
LASTSTEUERVENTILLEITUNGEN	451, 454, 458
LAUFBAND UND ANTRIEB (RUNDUMKENNLEUCHTE)	131, 132
LAUFROLLENSCHALTER (RÜCKFÜHRUNG IN DIE GRABSTELLUNG)	214
LAUTSPRECHER	776
LEITUNGS-BEFESTIGUNGSTEILE	529, 530, 531, 532
LEITUNGSVERKLEIDUNG	334, 335
LENKBETÄTIGUNG	297, 298
LENKKNOPF	299
LENKÖLLEITUNGEN	300
LENKRAD	298, 304
LENKVERDRAHTUNG	217
LEUCHTE (12 V)	128, 185, 781, 782
LEUCHTE (12 V) (KRAFTSTOFFSTAND)	187
LEUCHTE (12 V) (KÜHLMITTELTEMPERATURANZEIGE)	187
LEUCHTE (12 V) (MINIATURLEUCHTE)	124, 126, 753
LEUCHTE (12 V) (ÖLTEMPERATURWANDLER)	187
LEUCHTE (12 V) (SPANNUNGSMESSER)	187
LEUCHTE (12 V) (21 W)	124, 126
LEUCHTE (12 V, 21 W)	120, 122
LEUCHTE (12 V/ 21W) (FAHRTRICHTUNGSANZEIGER)	130
LEUCHTE (12 V/ 21/5 W) (ABSTELLEN)	130
LEUCHTE (12 V, 4 W)	120, 122
LEUCHTE (12 V, 55 W)	119, 131, 132
LEUCHTE (12 V, 55 W)	118
LEUCHTE (12 V, 55 W)	136
LEUCHTE (12 V, 55 W)	140, 142
LEUCHTE (12 V, 55 W) (ARBEITSSCHEINWERFER)	136
LEUCHTE (12 V/21 W)	117
LEUCHTE (12 V)(55 W)	133
LEUCHTE (12 V)(55 W)	133
LEUCHTE (12 V)(55 W)	133
LEUCHTE (12V, 10W)	776
LEUCHTE (12V/55W)	138
LEUCHTE (12V/55W)	138
*LINES GP-RETURN	486
LITERATURABLAGE	713
LÖFFELSTIEL	613
LÖFFELZYLINDERLEITUNGEN	441
LUFTEINLASSDECKEL	76
LÜFTER	700, 743
LÜFTERANTRIEB	34
LUFTFILTER	743
LUFTFILTER (FAHRERHAUSLUFT)	700
LUFTFILTERWARTUNGSANZEIGE	78, 79
LUFTKANAL	735, 737, 738
LUFTREINIGER	73, 75
M	
MAGNETISCHE SCHRAUBE	218, 227
MAGNETSTOPFEN	222
MAGNETVENTIL	261, 262, 263, 264, 265, 584, 585
MAGNETVENTIL (12 V) (LUFT/KRAFTSTOFF-VERHÄLTNIS-STEUERUNG)	92
MANSCHETTE	391, 393
MECHANISCHES GETRIEBE	247
MOTOR- UND GETRIEBEAUFLAGER	41

* ÜBERSETZUNG ZUM ZEITPUNKT DER DRUCKLEGUNG NICHT VORHANDEN

STICHWORTVERZEICHNIS

Bezeichnung	Seite
	42
MOTORAUFLAGER	40
MOTORAUSFÜHRUNG	20
	21
	22
	23
MOTORBLOCK	29
	31
MOTORHAUBE	338
MOTORHAUBE UND VERKLEIDUNG	336
MOTORHUBÖSE	39
MOTORÖLEINFÜLLSTUTZEN	51
MOTORÖLKÜHLER	54
MOTORÖLKÜHLER UND FILTERSOCKEL	54
MOTORSTOPFEN	47
	48
MOTORVERDRAHTUNG	189

N

NEIGEZYLINDERLEITUNGEN	519
	521
NOCKENSATZ (NACH LINKS)	289
NOCKENWELLE	24

O

O-RING-DICHTUNG	256
	445
O-RING-DICHTUNG (KÜHLWASSERTHERMOSTAT)	53
ÖLFILTER	51
ÖLFILTER (GETRIEBE)	247
ÖLFILTER (HYDRAULISCH) (SCHWER ENTFLAMMBAR)	396
	397
ÖLFILTER (REINIGUNG/HOCHLEISTUNG)	396
	397
ÖLKÜHLERLEITUNGEN (KRAFTÜBERTRAGUNG)	59
	61
ÖLWANNE	43
ÖLWANNEN-ABLASSSCHRAUBE	43

P

PALETTENGABEL	686
PANETENTRÄGERSATZ	238
PFOSTENABDECKUNG	730
PLEUELSTANGE UND KOLBEN	45
POLSTEREINBAUSATZ	702

Bezeichnung	Seite

R

RAD UND REIFEN	267
	268
	269
	270
	271
	272
	273
	274
	275
	276
	277
	278
	279
	280
	281
	282
	283
	284
	285
	286
	287
	288
REFLEKTOR	146
	149
	152
	155
	158
	344
REGLER- UND GASPEDALGESTÄNGE	86
REIFENVENTIL	266
	267
RELAIS (12 V)	133
	140
	142
	173
	176
	189
	193
	206
	208
	217
RELAIS (12 V) (ABSENKEN BEI AUSGEFALLENEM MOTOR)	181
RELAIS (12 V) (ABSENKEN BEI FUNKTIONUNFÄHIGEM MOTOR, SCHWINGUNGSDÄMPFUNG)	210
	212
RELAIS (12 V) (BELEUCHTUNG)	136
	138
RELAIS (12 V) (HEIZUNG U. KLIMAANLAGE)	193
RELAIS (12 V) (HOHE GESCHWINDIGKEIT)	173
RELAIS (12 V) (SEITENSTEUERUNG)	178

* ÜBERSETZUNG ZUM ZEITPUNKT DER DRUCKLEGUNG NICHT VORHANDEN

STICHWORTVERZEICHNIS

Bezeichnung	Seite
RELAIS (12 V) (SICHERHEIT MOTOR)	115
RELAIS (12 V) (STANDARD-/ZUSATZARBEITS-SCHEINWERFER)	136
	138
REPARATURSATZ	797
ROLLENLAGER-EINBAUSATZ	238
RÜCKFAHRWARNHORN	171
RÜCKSPIEGEL	751
	752
RÜCKSTRAHLER	809
RUNDUM-KENNLEUCHTE	131
	132
	163
	164

S

SAUGLÜFTER	56
	57
SCHALLDÄMPFENDE VERKLEIDUNG	341
SCHALLDÄMPFER	83
SCHALLDÄMPFUNG	345
	776
SCHALTAUTOMATIKVERDRAHTUNG	176
SCHALTER	391
	392
	393
	394
SCHALTER (FAHRTRICHTUNGSANZEIGER)	180
SCHALTER (HEIZUNG)	193
SCHALTER (HUPE)	183
SCHALTER (HYDRAULIKSPERRE)	391
	393
SCHALTER (LADERVENTIL)	394
SCHALTER (LUFTEINLASS)	79
SCHALTER (NEUTRALSPERRE)	183
SCHALTER (RASTE)	392
SCHALTER (SCHWINGUNGSDÄMPFUNG)	208
SCHALTER (SCHWINGUNGSDÄMPFUNG - STANDARD)	397
SCHALTER (SPRITZVERSTELLUNG)	93
SCHALTER (40 GRAD) (MOTORKÜHLMITTEL-TEMPERATUR)	96
SCHAUFELANSCHLAG	695
	696
SCHAUFELAUFHÄNGUNG	689
	690
	691
	692
SCHAUFELSCHUTZ	687
	688
SCHAUFELSCHUTZ (VORN)	18
SCHAUFELSCHUTZ (VORN)	19
SCHAUFELTRANSPORTAUSFÜHRUNG	694
SCHEIBENWASCHANLAGE	785
SCHEIBENWISCHER	797
SCHEIBENWISCHERBLATT	797
SCHEIBENWISCHERMOTOR	755
SCHEINWERFER U. RICHTUNGSLEUCHTE	120
	122
	124
	126
SCHEINWERFER (12 V)	124
	126
SCHEINWERFER (12 V, 60/55 W)	120
	122
SCHILD UND AUFKLEBER	804
	805
SCHLAUCHLEITUNG (ENTLÜFTER)	25
SCHLÜSSEL	803
SCHMIERNIPPEL	586
	588
	596
	604
	668
	674
	675
SCHMIERNIPPEL (1/8-27-GEWINDE)	324
	527
	586
	609
	611
	613
SCHMIERNIPPEL (1/8-27-GEWINDE)	666
	667
	669
	689
SCHMIERPUMPE	52
SCHNEIDMESSER	683
	684
SCHNELLWECHSELEINRICHTUNG	677
	678
	679
	680
	681
	682
SCHRAUBE (MOTORÖLFILTERLEITUNGEN)	54
SCHUTZBLECHE, HINTEN	319
SCHUTZBLECHE, VORNE	317
	318
SCHWENKLEITUNGEN	509
	511
	513
	516
SCHWENKRAHMEN	326
	329

* ÜBERSETZUNG ZUM ZEITPUNKT DER DRUCKLEGUNG NICHT VORHANDEN

STICHWORTVERZEICHNIS

Bezeichnung	Seite
SCHWENKZYLINDER	386
	387
SCHWINGSITZ	770
	772
	774
	775
SCHWINGUNGSDÄMPFUNGSLEITUNGEN	487
SCHWINGUNGSDÄMPFUNGSVERDRAHTUNG	206
	208
	210
	212
SCHWUNGRAD	35
SCHWUNGRADGEHÄUSE	36
SEITENANTRIEB - PLANETENGETRIEBE	238
SEITENKONSOLE	721
	722
	723
	724
	725
	726
SEITENSCHUBSPERRLEITUNGEN	489
	491
	493
	495
SEITENSTÜTZEN	538
	606
	607
	608
SEITENSTÜTZENALARMVERDRAHTUNG	215
SEITENSTÜTZENFUSSSPERRE	598
SEITENSTÜTZENLEITUNGEN	497
	499
SEITENSTÜTZENPLATTEN	605
SEITENSTÜTZENZYLINDER	384
SENSORANSCHLUSSSATZ (12 STIFTE)	183
SENSORANSCHLUSSSATZ (2POLIG)	115
	133
	138
	144
	173
	181
	193
	198
	203
	210
	212
	215
	261
	291
SENSORANSCHLUSSSATZ (2POLIG)	700
SENSORANSCHLUSSSATZ (3POLIG)	112
	144
	178
	181
SENSORANSCHLUSSSATZ (4 POLIG)	138
	181
SENSORANSCHLUSSSATZ (4 POLIG)	133
	178
	203
	215
SENSORANSCHLUSSSATZ (4 STIFTE)	136
	210
	212
SENSORANSCHLUSSSATZ (6 STIFTE)	210
	212
SENSORANSCHLUSSSATZ (6POLIG)	133
	138
	178
	181
	203
SENSORANSCHLUSSSATZ (6POLIG)	146
	149
	152
SENSORANSCHLUSSSATZ (8 STIFTE)	183
SENSORANSCHLUSSSATZ (8POLIG)	178
	709
SENSORVERDRAHTUNG	214
SICHERHEITSEINBAUSATZ	115
SICHERHEITSEINBAUSATZ (MASCHINENSICHERHEIT)	115
SICHERHEITSGURT	762
SICHERUNG (10 A)	131
	132
	133
	138
	142
	173
	181
	202
	206
	208
	210
	212
SICHERUNG (15 A)	133
	136
	138
	140
	142
SICHERUNG (20 A)	178
SICHERUNG (5 A)	178
	217
SIEB	254
SIEB (GETRIEBEGEHÄUSE)	250
SONNENBLENDE	784
STANDARDHECKBAGGERSTIEL	9

* ÜBERSETZUNG ZUM ZEITPUNKT DER DRUCKLEGUNG NICHT VORHANDEN

STICHWORTVERZEICHNIS

Bezeichnung	Seite
	11
	12
	14
STARTERMOTOR	166
	168
STARTSCHLÜSSELSCHALTER	760
STAUBKAPPE	347
	474
STECKDOSEN - EINBAUSATZ (12 STIFTE)	176
STECKDOSEN - EINBAUSATZ (12POLIG)	754
STECKDOSEN - EINBAUSATZ (2POLIG)	144
	171
	181
	196
	203
	215
	217
	226
	256
	262
	263
	264
	265
	359
STECKDOSEN - EINBAUSATZ (2POLIG)	567
	569
	571
	584
	585
STECKDOSEN - EINBAUSATZ (3 STIFTE)	391
STECKDOSEN - EINBAUSATZ (3 STIFTE)	392
STECKDOSEN - EINBAUSATZ (3POLIG)	144
	165
	203
	214
	263
	264
	265
STECKDOSEN - EINBAUSATZ (4 POLIG)	133
	138
STECKDOSEN - EINBAUSATZ (4 POLIG)	181
STECKDOSEN - EINBAUSATZ (4 POLIG) (SEITE)	181
STECKDOSEN - EINBAUSATZ (4 STIFTE)	115
	129
	136
	193
	208
	210
	212
STECKDOSEN - EINBAUSATZ (6 STIFTE)	210
	212
STECKDOSEN - EINBAUSATZ (6POLIG)	133
	138
	181
	755
	797
STECKDOSEN - EINBAUSATZ (6POLIG)	124
	126
STECKDOSEN - EINBAUSATZ (8POLIG)	178
	203
	753
STECKDOSENVERDRAHTUNG	202
STELLUNGSSTEUERUNG	112
	195
STEUERHEBEL	350
	351
STEUERKONSOLE	719
	720
STEUERKONSOLENABDECKUNG	727
STEUERVENTIL	559
	561
	563
	565
	567
	569
	571
	573
	575
	577
STIELAUFHÄNGUNG	604
STIELZYLINDER	385
STIELZYLINDERLEITUNGEN	501
	502
	505
STIRNRADGEHÄUSE	37

T

Bezeichnung	Seite
TELESKOPSTIEL	609
	611
TELESKOPSTIELLEITUNGEN	445
TELESKOPSTIELZYLINDER	378
	379
TEMPERATURGEBER	189
TEMPERATURSCHALTER	170
THERMOSTATSCHALTER	700
TIEFLÖFFEL-HYDRAULIKNOTLEITUNGEN	402
	404
	405
	407
	408
	412
	416
	420
	424

* ÜBERSETZUNG ZUM ZEITPUNKT DER DRUCKLEGUNG NICHT VORHANDEN

STICHWORTVERZEICHNIS

Bezeichnung	Seite
	428
	432
	436
TIEFLÖFFELLEITUNGEN	398
	400
TRANSPORTHALTERUNG	590
	591
TRANSPORTSPERRE	593
	599
	600
	601
	602
	603
TURBOLADER	84
TÜRFENSTER	793
	795
TYPENSCHILDBEFESTIGUNG	342
	343

U

ÜBERDRUCKVENTIL	254
	260
	305
	559
	571
	575
ÜBERDRUCKVENTIL (KUPPLUNGSDRUCK)	248
ÜBERDRUCKVENTIL (WANDLER)	248
UMBAUSATZ - ZULASSUNG	16
	17
	18
	19
UMLAUFKÜHLWASSERHEIZUNG	114
UMRÜSTSATZ - HYDRAULIKHEBEL	369
UNIVERSAL-ZAHNSPITZE	697
UNIVERSALSCHAUFEL	621
	622
	623
	624
UNTERLEGKEIL - EINBAUSATZ	801

V

*VALVE GP-CHECK	558
*VALVE GP-PUMP CONTROL	581
	582
VENTIL (WASSER)	698
	741
VENTILANORDNUNGS-BEFESTIGUNGS-SATZ	525
	526
VENTILANORDNUNGSDECKEL	371
VENTILBLOCK U. BEFESTIGUNG	541
VENTILDECKEL	25
VENTILSATZ (2-VENTIL)	547
	548
VENTILSATZ (3-VENTIL)	549
	550
VENTILSATZ (4-VENTIL)	551
	552
VENTILSATZ (5-VENTIL)	553
	554
VENTILSATZ (6-VENTIL)	556
	557
VENTILSTEUERUNG	50
VERBINDER	451
VERBINDUNGSSTECKER	165
VERBINDUNGSVENTIL	347
VERDRAHTUNG - SCHAUFELAUSSCHALTER U. EINSTELLER	195
VERDRAHTUNG, HINTEN	203
VERRIEGELUNG - VIERTER GANG	236
VORHÄNGESCHLOSS	802
	803
VORRANGVENTIL	305
VORSTEUERLEITUNGEN	474

W

WARNANZEIGEMODUL	753
	754
WARNAUFKLEBER	804
	805
WARNAUFKLEBER (HOCHDRUCKZYLINDER)	409
	412
	416
	420
	424
	428
	432
	436
	487
	807
WARNHORN, ELEKTR.	745
WARNLEUCHTEN	161
WARTUNGSSATZ	761
WASSERABSCHEIDER	99
WASSERTEMPERATURREGLER	53
WECHSELGETRIEBE	248
WETTERDACH	711
WISCHERBLATT	797

* ÜBERSETZUNG ZUM ZEITPUNKT DER DRUCKLEGUNG NICHT VORHANDEN

STICHWORTVERZEICHNIS

Bezeichnung	Seite
Z	
ZAHNRADSATZ (STARTERMOTOR)	166
ZAPFWELLE	537
ZULASSUNGSSCHILDLEUCHTE	128
ZUMESSPUMPE	303
ZUSATZVENTIL	544
	545
	546
ZYLINDER	292
ZYLINDERAUFHÄNGUNG	527
ZYLINDERKOPF	32
	33
4	
4-BLOCK-VENTILSATZ	542
5	
5-VENTIL-BLOCK	542
	543
6	
6-FACH-VENTILBLOCK	543

* ÜBERSETZUNG ZUM ZEITPUNKT DER DRUCKLEGUNG NICHT VORHANDEN

MACHINE ARRANGEMENT

240-8490 BACKHOE AR-EXTENDABLE STICK

S/N: BXC1-UP; DSX1-UP
AN ATTACHMENT

SMCS-6504, 6533 **i01971158**

NOTE	PART NUMBER	QTY	PART NAME 1 2 3 4 5 6 (PRODUCT LEVEL)	SEE PAGE
Y	**206-0518**	1	CYLINDER GP-BACKHOE BUCKET	374
Y	*183-6059*	1	FRAME GP-SWING	329
Y	*183-8506*	1	LINES GP-BACKHOE	398
Y	*183-8508*	1	LINES GP-BACKHOE AUXILIARY	402
Y	*183-8543*	1	LINES GP-BOOM	440
Y	*175-7618*	1	LINES GP-SIDESHIFT LOCK	489
Y	*183-8544*	1	LINES GP-STICK	501
Y	*183-8548*	1	LINES GP-STICK	505
Y	*167-8330*	1	LINKAGE GP-BACKHOE BUCKET	596
Y	*186-2950*	1	MOUNTING GP-LINES	532
Y	*184-9950*	1	MOUNTING GP-STICK	604
Y	*184-9754*	1	STICK GP-EXTENDABLE	611

Y-SEPARATE ILLUSTRATION

<END>

240-8491 BACKHOE AR-EXTENDABLE STICK–BOOM, STICK LOCKS

S/N: BXC1-UP; DSX1-UP
AN ATTACHMENT

SMCS-6504, 6533 **i01971171**

NOTE	PART NUMBER	QTY	PART NAME 1 2 3 4 5 6 (PRODUCT LEVEL)	SEE PAGE
Y	**206-0518**	1	CYLINDER GP-BACKHOE BUCKET	374
Y	*183-6059*	1	FRAME GP-SWING	329
Y	*183-8506*	1	LINES GP-BACKHOE	398
Y	*183-8508*	1	LINES GP-BACKHOE AUXILIARY	402
Y	*186-1594*	1	LINES GP-DRAIN	444
Y	*183-8549*	1	LINES GP-LOAD CONTROL VALVE	451
Y	*175-7618*	1	LINES GP-SIDESHIFT LOCK	489
Y	*183-8548*	1	LINES GP-STICK	505
Y	*167-8330*	1	LINKAGE GP-BACKHOE BUCKET	596
Y	*186-2950*	1	MOUNTING GP-LINES	532
Y	*184-9950*	1	MOUNTING GP-STICK	604
Y	*184-9754*	1	STICK GP-EXTENDABLE	611

Y-SEPARATE ILLUSTRATION

<END>

MACHINE ARRANGEMENT

240-8492 BACKHOE AR-EXTENDABLE STICK–ONE WAY LINES

S/N: BXC1-UP; DSX1-UP

AN ATTACHMENT

SMCS-6504, 6533 **i01998547**

NOTE	PART NUMBER	QTY	PART NAME 1 2 3 4 5 6 (PRODUCT LEVEL)	SEE PAGE
Y	**206-0518**	1	CYLINDER GP-BACKHOE BUCKET	374
Y	*183-6059*	1	FRAME GP-SWING	329
Y	*183-8506*	1	LINES GP-BACKHOE	398
Y	*235-5867*	1	LINES GP-BACKHOE AUXILIARY	436
Y	*183-8508*	1	LINES GP-BACKHOE AUXILIARY	402
Y	*183-8543*	1	LINES GP-BOOM	440
Y	*175-7618*	1	LINES GP-SIDESHIFT LOCK	489
Y	*183-8544*	1	LINES GP-STICK	501
Y	*183-8547*	1	LINES GP-STICK (EXTENSION)	502
Y	*167-8330*	1	LINKAGE GP-BACKHOE BUCKET	596
Y	*184-9950*	1	MOUNTING GP-STICK	604
Y	*184-9754*	1	STICK GP-EXTENDABLE	611

Y-SEPARATE ILLUSTRATION

<END>

240-8493 BACKHOE AR-EXTENDABLE STICK–NARROW FRAME

S/N: BXC1-UP; DSX1-UP

AN ATTACHMENT

SMCS-6504, 6533 **i01970982**

NOTE	PART NUMBER	QTY	PART NAME 1 2 3 4 5 6 (PRODUCT LEVEL)	SEE PAGE
Y	**206-0518**	1	CYLINDER GP-BACKHOE BUCKET	374
Y	*183-6059*	1	FRAME GP-SWING	329
Y	*235-5867*	1	LINES GP-BACKHOE AUXILIARY	436
Y	*183-8506*	1	LINES GP-BACKHOE	398
Y	*183-8508*	1	LINES GP-BACKHOE AUXILIARY	402
Y	*186-1594*	1	LINES GP-DRAIN	444
Y	*183-8549*	1	LINES GP-LOAD CONTROL VALVE	451
Y	*175-7618*	1	LINES GP-SIDESHIFT LOCK	489
Y	*183-8547*	1	LINES GP-STICK	502
Y	*167-8330*	1	LINKAGE GP-BACKHOE BUCKET	596
Y	*186-2950*	1	MOUNTING GP-LINES	532
Y	*184-9950*	1	MOUNTING GP-STICK	604
Y	*184-9754*	1	STICK GP-EXTENDABLE	611

Y-SEPARATE ILLUSTRATION

<END>

MACHINE ARRANGEMENT

240-8504 BACKHOE AR-EXTENDABLE STICK–NARROW FRAME

S/N: BXC1-UP; DSX1-UP

AN ATTACHMENT

SMCS-6504, 6533 **i01998549**

NOTE	PART NUMBER	QTY	PART NAME 1 2 3 4 5 6 (PRODUCT LEVEL)	SEE PAGE
Y	**206-0518**	1	CYLINDER GP-BACKHOE BUCKET	374
Y	*183-6059*	1	FRAME GP-SWING	329
Y	*183-8524*	1	LINES GP-BACKHOE	400
Y	*183-8526*	1	LINES GP-BACKHOE AUXILIARY	405
Y	*183-8543*	1	LINES GP-BOOM	440
Y	*183-8523*	1	LINES GP-SIDESHIFT LOCK	491
Y	*183-8544*	1	LINES GP-STICK	501
Y	*183-8548*	1	LINES GP-STICK (EXTENSION)	505
Y	*167-8330*	1	LINKAGE GP-BACKHOE BUCKET	596
Y	*186-2950*	1	MOUNTING GP-LINES	532
Y	*184-9950*	1	MOUNTING GP-STICK	604
Y	*184-9754*	1	STICK GP-EXTENDABLE	611

Y-SEPARATE ILLUSTRATION

<END>

240-8505 BACKHOE AR-EXTENDABLE STICK–

BOOM AND STICK LOCKS

S/N: BXC1-UP; DSX1-UP

AN ATTACHMENT

SMCS-6504, 6533 **i01998553**

NOTE	PART NUMBER	QTY	PART NAME 1 2 3 4 5 6 (PRODUCT LEVEL)	SEE PAGE
Y	**206-0518**	1	CYLINDER GP-BACKHOE BUCKET	374
Y	*183-6059*	1	FRAME GP-SWING	329
Y	*183-8524*	1	LINES GP-BACKHOE	400
Y	*235-5864*	1	LINES GP-BACKHOE AUXILIARY	428
Y	*183-8526*	1	LINES GP-BACKHOE AUXILIARY	405
Y	*183-8543*	1	LINES GP-BOOM	440
Y	*183-8523*	1	LINES GP-SIDESHIFT LOCK	491
Y	*183-8544*	1	LINES GP-STICK	501
Y	*183-8547*	1	LINES GP-STICK (EXTENSION)	502
Y	*167-8330*	1	LINKAGE GP-BACKHOE BUCKET	596
Y	*186-2950*	1	MOUNTING GP-LINES	532
Y	*184-9950*	1	MOUNTING GP-STICK	604
Y	*184-9754*	1	STICK GP-EXTENDABLE	611

Y-SEPARATE ILLUSTRATION

<END>

MACHINE ARRANGEMENT

240-8506 BACKHOE AR-EXTENDABLE STICK–BOOM, STICK LOCKS–
NARROW FRAME
S/N: BXC1-UP; DSX1-UP
AN ATTACHMENT

SMCS-6504, 6533 **i01970905**

NOTE	PART NUMBER	QTY	PART NAME 1 2 3 4 5 6 (PRODUCT LEVEL)	SEE PAGE
Y	**206-0518**	1	CYLINDER GP-BACKHOE BUCKET	374
Y	*183-6059*	1	FRAME GP-SWING	329
Y	*183-8524*	1	LINES GP-BACKHOE	400
Y	*183-8526*	1	LINES GP-BACKHOE AUXILIARY	405
Y	*186-1594*	1	LINES GP-DRAIN	444
Y	*183-8549*	1	LINES GP-LOAD CONTROL VALVE	451
Y	*183-8523*	1	LINES GP-SIDESHIFT LOCK	491
Y	*183-8548*	1	LINES GP-STICK	505
Y	*167-8330*	1	LINKAGE GP-BACKHOE BUCKET	596
Y	*186-2950*	1	MOUNTING GP-LINES	532
Y	*184-9950*	1	MOUNTING GP-STICK	604
Y	*184-9754*	1	STICK GP-EXTENDABLE	611

Y-SEPARATE ILLUSTRATION

<END>

240-8507 BACKHOE AR-EXTENDABLE STICK–
NARROW FRAME, ONE WAY LINES, BOOM AND STICK LOCKS
S/N: BXC1-UP; DSX1-UP
AN ATTACHMENT

SMCS-6504, 6533 **i01970995**

NOTE	PART NUMBER	QTY	PART NAME 1 2 3 4 5 6 (PRODUCT LEVEL)	SEE PAGE
Y	**206-0518**	1	CYLINDER GP-BACKHOE BUCKET	374
Y	*183-6059*	1	FRAME GP-SWING	329
Y	*235-5864*	1	LINES GP-BACKHOE AUXILIARY	428
Y	*183-8524*	1	LINES GP-BACKHOE	400
Y	*183-8526*	1	LINES GP-BACKHOE AUXILIARY	405
Y	*186-1593*	1	LINES GP-DRAIN	443
Y	*183-8549*	1	LINES GP-LOAD CONTROL VALVE	451
Y	*183-8523*	1	LINES GP-SIDESHIFT LOCK	491
Y	*183-8547*	1	LINES GP-STICK	502
Y	*167-8330*	1	LINKAGE GP-BACKHOE BUCKET	596
Y	*186-2950*	1	MOUNTING GP-LINES	532
Y	*184-9950*	1	MOUNTING GP-STICK	604
Y	*184-9754*	1	STICK GP-EXTENDABLE	611

Y-SEPARATE ILLUSTRATION

<END>

MACHINE ARRANGEMENT

240-8689 BACKHOE AR-EXTENDABLE STICK

S/N: BXC1-UP

AN ATTACHMENT

SMCS-6504, 6533 **i01970921**

NOTE	PART NUMBER	QTY	PART NAME 1 2 3 4 5 6 (PRODUCT LEVEL)	SEE PAGE
Y	**206-0518**	1	CYLINDER GP-BACKHOE BUCKET	374
Y	*183-6059*	1	FRAME GP-SWING	329
Y	*183-8506*	1	LINES GP-BACKHOE	398
Y	*183-8508*	1	LINES GP-BACKHOE AUXILIARY	402
Y	*183-8543*	1	LINES GP-BOOM	440
Y	*175-7618*	1	LINES GP-SIDESHIFT LOCK	489
Y	*183-8544*	1	LINES GP-STICK	501
Y	*183-8548*	1	LINES GP-STICK	505
Y	*175-7877*	1	LINK GP-SHIPPING	593
Y	*151-7928*	1	LINKAGE GP-BACKHOE BUCKET	594
Y	*186-2950*	1	MOUNTING GP-LINES	532
Y	*184-9950*	1	MOUNTING GP-STICK	604
Y	*184-6786*	1	STICK GP-EXTENDABLE	609

Y-SEPARATE ILLUSTRATION

<END>

240-8690 BACKHOE AR-EXTENDABLE STICK–BOOM, STICK LOCKS

S/N: BXC1-UP

AN ATTACHMENT

SMCS-6504, 6533 **i01970924**

NOTE	PART NUMBER	QTY	PART NAME 1 2 3 4 5 6 (PRODUCT LEVEL)	SEE PAGE
Y	**206-0518**	1	CYLINDER GP-BACKHOE BUCKET	374
Y	*183-6059*	1	FRAME GP-SWING	329
Y	*183-8506*	1	LINES GP-BACKHOE	398
Y	*183-8508*	1	LINES GP-BACKHOE AUXILIARY	402
Y	*186-1594*	1	LINES GP-DRAIN	444
Y	*183-8549*	1	LINES GP-LOAD CONTROL VALVE	451
Y	*175-7618*	1	LINES GP-SIDESHIFT LOCK	489
Y	*183-8548*	1	LINES GP-STICK	505
Y	*175-7877*	1	LINK GP-SHIPPING	593
Y	*151-7928*	1	LINKAGE GP-BACKHOE BUCKET	594
Y	*186-2950*	1	MOUNTING GP-LINES	532
Y	*184-9950*	1	MOUNTING GP-STICK	604
Y	*184-6786*	1	STICK GP-EXTENDABLE	609

Y-SEPARATE ILLUSTRATION

<END>

MACHINE ARRANGEMENT

240-8691 BACKHOE AR-EXTENDABLE STICK

S/N: BXC1-UP

AN ATTACHMENT

SMCS-6504, 6533 **i02003446**

NOTE	PART NUMBER	QTY	PART NAME 1 2 3 4 5 6 (PRODUCT LEVEL)	SEE PAGE
Y	**206-0518**	1	CYLINDER GP-BACKHOE BUCKET	374
Y	*183-6059*	1	FRAME GP-SWING	329
Y	*235-5867*	1	LINES GP-BACKHOE AUXILIARY	436
Y	*183-8506*	1	LINES GP-BACKHOE	398
Y	*183-8508*	1	LINES GP-BACKHOE AUXILIARY	402
Y	*183-8543*	1	LINES GP-BOOM	440
Y	*175-7618*	1	LINES GP-SIDESHIFT LOCK	489
Y	*183-8544*	1	LINES GP-STICK	501
Y	*183-8547*	1	LINES GP-STICK (EXTENSION)	502
Y	*175-7877*	1	LINK GP-SHIPPING	593
Y	*151-7928*	1	LINKAGE GP-BACKHOE BUCKET	594
Y	*186-2950*	1	MOUNTING GP-LINES	532
Y	*184-9950*	1	MOUNTING GP-STICK	604
Y	*184-6786*	1	STICK GP-EXTENDABLE	609

Y-SEPARATE ILLUSTRATION

<END>

240-8692 BACKHOE AR-EXTENDABLE STICK–

ONE WAY LINES, BOOM AND STICK LOCKS

S/N: BXC1-UP

AN ATTACHMENT

SMCS-6504, 6533 **i01971000**

NOTE	PART NUMBER	QTY	PART NAME 1 2 3 4 5 6 (PRODUCT LEVEL)	SEE PAGE
Y	**206-0518**	1	CYLINDER GP-BACKHOE BUCKET	374
Y	*183-6059*	1	FRAME GP-SWING	329
Y	*235-5867*	1	LINES GP-BACKHOE AUXILIARY	436
Y	*183-8506*	1	LINES GP-BACKHOE	398
Y	*183-8508*	1	LINES GP-BACKHOE AUXILIARY	402
Y	*186-1594*	1	LINES GP-DRAIN	444
Y	*183-8549*	1	LINES GP-LOAD CONTROL VALVE	451
Y	*175-7618*	1	LINES GP-SIDESHIFT LOCK	489
Y	*183-8547*	1	LINES GP-STICK	502
Y	*175-7877*	1	LINK GP-SHIPPING	593
Y	*151-7928*	1	LINKAGE GP-BACKHOE BUCKET	594
Y	*186-2950*	1	MOUNTING GP-LINES	532
Y	*184-9950*	1	MOUNTING GP-STICK	604
Y	*184-6786*	1	STICK GP-EXTENDABLE	609

Y-SEPARATE ILLUSTRATION

<END>

MACHINE ARRANGEMENT

240-8699 BACKHOE AR-EXTENDABLE STICK–NARROW FRAME

S/N: DSX1-UP

AN ATTACHMENT

SMCS-6504, 6533 **i02003447**

NOTE	PART NUMBER	QTY	PART NAME 1 2 3 4 5 6 (PRODUCT LEVEL)	SEE PAGE
Y	**206-0518**	1	CYLINDER GP-BACKHOE BUCKET	374
Y	*183-6059*	1	FRAME GP-SWING	329
Y	*183-8524*	1	LINES GP-BACKHOE	400
Y	*183-8526*	1	LINES GP-BACKHOE AUXILIARY	405
Y	*183-8543*	1	LINES GP-BOOM	440
Y	*183-8523*	1	LINES GP-SIDESHIFT LOCK	491
Y	*183-8544*	1	LINES GP-STICK	501
Y	*183-8548*	1	LINES GP-STICK (EXTENSION)	505
Y	*175-7877*	1	LINK GP-SHIPPING	593
Y	*151-7928*	1	LINKAGE GP-BACKHOE BUCKET	594
Y	*186-2950*	1	MOUNTING GP-LINES	532
Y	*184-9950*	1	MOUNTING GP-STICK	604
Y	*184-6786*	1	STICK GP-EXTENDABLE	609

Y-SEPARATE ILLUSTRATION

<END>

240-8700 BACKHOE AR-EXTENDABLE STICK–BOOM, STICK LOCKS–NARROW FRAME

S/N: DSX1-UP

AN ATTACHMENT

SMCS-6504, 6533 **i01970939**

NOTE	PART NUMBER	QTY	PART NAME 1 2 3 4 5 6 (PRODUCT LEVEL)	SEE PAGE
Y	**206-0518**	1	CYLINDER GP-BACKHOE BUCKET	374
Y	*183-6059*	1	FRAME GP-SWING	329
Y	*183-8524*	1	LINES GP-BACKHOE	400
Y	*183-8526*	1	LINES GP-BACKHOE AUXILIARY	405
Y	*186-1593*	1	LINES GP-DRAIN	443
Y	*183-8549*	1	LINES GP-LOAD CONTROL VALVE	451
Y	*183-8523*	1	LINES GP-SIDESHIFT LOCK	491
Y	*183-8548*	1	LINES GP-STICK	505
Y	*175-7877*	1	LINK GP-SHIPPING	593
Y	*151-7928*	1	LINKAGE GP-BACKHOE BUCKET	594
Y	*186-2950*	1	MOUNTING GP-LINES	532
Y	*184-9950*	1	MOUNTING GP-STICK	604
Y	*184-6786*	1	STICK GP-EXTENDABLE	609

Y-SEPARATE ILLUSTRATION

<END>

MACHINE ARRANGEMENT

240-8701 BACKHOE AR-EXTENDABLE STICK–
ONE WAY LINES, NARROW FRAME
S/N: DSX1-UP
AN ATTACHMENT

SMCS-6504, 6533 **i02003452**

NOTE	PART NUMBER	QTY	PART NAME 1 2 3 4 5 6 (PRODUCT LEVEL)	SEE PAGE
Y	**206-0518**	1	CYLINDER GP-BACKHOE BUCKET	374
Y	*183-6059*	1	FRAME GP-SWING	329
Y	*235-5864*	1	LINES GP-BACKHOE AUXILIARY	428
Y	*183-8524*	1	LINES GP-BACKHOE	400
Y	*183-8526*	1	LINES GP-BACKHOE AUXILIARY	405
Y	*183-8543*	1	LINES GP-BOOM	440
Y	*183-8523*	1	LINES GP-SIDESHIFT LOCK	491
Y	*183-8544*	1	LINES GP-STICK	501
Y	*183-8547*	1	LINES GP-STICK (EXTENSION)	502
Y	*175-7877*	1	LINK GP-SHIPPING	593
Y	*151-7928*	1	LINKAGE GP-BACKHOE BUCKET	594
Y	*186-2950*	1	MOUNTING GP-LINES	532
Y	*184-9950*	1	MOUNTING GP-STICK	604
Y	*184-6786*	1	STICK GP-EXTENDABLE	609

Y-SEPARATE ILLUSTRATION

<END>

240-8702 BACKHOE AR-EXTENDABLE STICK–
ONE WAY LINES, BOOM AND STICK LOCKS, NARROW FRAME
S/N: DSX1-UP
AN ATTACHMENT

SMCS-6504, 6533 **i02003454**

NOTE	PART NUMBER	QTY	PART NAME 1 2 3 4 5 6 (PRODUCT LEVEL)	SEE PAGE
Y	**206-0518**	1	CYLINDER GP-BACKHOE BUCKET	374
Y	*183-6059*	1	FRAME GP-SWING	329
Y	*235-5864*	1	LINES GP-BACKHOE AUXILIARY	428
Y	*183-8524*	1	LINES GP-BACKHOE	400
Y	*183-8526*	1	LINES GP-BACKHOE AUXILIARY	405
Y	*186-1593*	1	LINES GP-DRAIN	443
Y	*183-8549*	1	LINES GP-LOAD CONTROL VALVE	451
Y	*183-8523*	1	LINES GP-SIDESHIFT LOCK	491
Y	*183-8547*	1	LINES GP-STICK (EXTENSION)	502
Y	*175-7877*	1	LINK GP-SHIPPING	593
Y	*151-7928*	1	LINKAGE GP-BACKHOE BUCKET	594
Y	*186-2950*	1	MOUNTING GP-LINES	532
Y	*184-9950*	1	MOUNTING GP-STICK	604
Y	*184-6786*	1	STICK GP-EXTENDABLE	609

Y-SEPARATE ILLUSTRATION

<END>

MACHINE ARRANGEMENT

240-8683 BACKHOE AR-STANDARD STICK—STANDARD STICK

S/N: BXC1-UP
AN ATTACHMENT

SMCS-6502, 6504 **i02003500**

NOTE	PART NUMBER	QTY	PART NAME 1 2 3 4 5 6 (PRODUCT LEVEL)	SEE PAGE
Y	**206-0514**	1	CYLINDER GP-BACKHOE BUCKET	372
Y	*183-6058*	1	FRAME GP-SWING	326
Y	*183-8506*	1	LINES GP-BACKHOE	398
Y	*183-8543*	1	LINES GP-BOOM	440
Y	*193-0703*	1	LINES GP-BUCKET CYLINDER	441
Y	*183-8530*	1	LINES GP-SIDESHIFT LOCK	493
Y	*183-8544*	1	LINES GP-STICK	501
Y	*175-7877*	1	LINK GP-SHIPPING	593
Y	*151-7928*	1	LINKAGE GP-BACKHOE BUCKET	594
Y	*165-7769*	1	MOUNTING GP-LINES (BACKHOE)	529
Y	*175-7620*	1	MOUNTING GP-LINES (BANK VALVE)	531
Y	*184-6178*	1	STICK GP-HOE	613

Y-SEPARATE ILLUSTRATION

<END>

240-8684 BACKHOE AR-STANDARD STICK—BOOM, STICK LOCKS

S/N: BXC1-UP
AN ATTACHMENT

SMCS-6502, 6504 **i02003502**

NOTE	PART NUMBER	QTY	PART NAME 1 2 3 4 5 6 (PRODUCT LEVEL)	SEE PAGE
Y	**206-0514**	1	CYLINDER GP-BACKHOE BUCKET	372
Y	*183-6058*	1	FRAME GP-SWING	326
Y	*183-8506*	1	LINES GP-BACKHOE	398
Y	*193-0703*	1	LINES GP-BUCKET CYLINDER	441
Y	*186-1594*	1	LINES GP-DRAIN	444
Y	*183-8549*	1	LINES GP-LOAD CONTROL VALVE	451
Y	*183-8530*	1	LINES GP-SIDESHIFT LOCK	493
Y	*175-7877*	1	LINK GP-SHIPPING	593
Y	*151-7928*	1	LINKAGE GP-BACKHOE BUCKET	594
Y	*175-7620*	1	MOUNTING GP-LINES (BANK VALVE)	531
Y	*186-2950*	1	MOUNTING GP-LINES (BACKHOE)	532
Y	*184-6178*	1	STICK GP-HOE	613

Y-SEPARATE ILLUSTRATION

<END>

MACHINE ARRANGEMENT

240-8685 BACKHOE AR—ONE WAY LINES

S/N: BXC1-UP

AN ATTACHMENT

SMCS-6502, 6504 **i01970997**

NOTE	PART NUMBER	QTY	PART NAME 1 2 3 4 5 6 (PRODUCT LEVEL)	SEE PAGE
Y	**206-0514**	1	CYLINDER GP-BACKHOE BUCKET	372
Y	*183-6059*	1	FRAME GP-SWING	329
Y	*235-5865*	1	LINES GP-BACKHOE AUXILIARY	432
Y	*183-8506*	1	LINES GP-BACKHOE	398
Y	*183-8509*	1	LINES GP-BACKHOE AUXILIARY	404
Y	*183-8543*	1	LINES GP-BOOM	440
Y	*193-0703*	1	LINES GP-BUCKET CYLINDER	441
Y	*175-7618*	1	LINES GP-SIDESHIFT LOCK	489
Y	*183-8544*	1	LINES GP-STICK	501
Y	*175-7877*	1	LINK GP-SHIPPING	593
Y	*151-7928*	1	LINKAGE GP-BACKHOE BUCKET	594
Y	*186-2950*	1	MOUNTING GP-LINES	532
Y	*184-6178*	1	STICK GP-HOE	613

Y-SEPARATE ILLUSTRATION

<END>

240-8686 BACKHOE AR—ONE WAY LINES—BOOM, STICK LOCKS

S/N: BXC1-UP

AN ATTACHMENT

SMCS-6502, 6504 **i01970998**

NOTE	PART NUMBER	QTY	PART NAME 1 2 3 4 5 6 (PRODUCT LEVEL)	SEE PAGE
Y	**206-0514**	1	CYLINDER GP-BACKHOE BUCKET	372
Y	*183-6059*	1	FRAME GP-SWING	329
Y	*235-5865*	1	LINES GP-BACKHOE AUXILIARY	432
Y	*183-8506*	1	LINES GP-BACKHOE	398
Y	*183-8509*	1	LINES GP-BACKHOE AUXILIARY	404
Y	*193-0703*	1	LINES GP-BUCKET CYLINDER	441
Y	*186-1594*	1	LINES GP-DRAIN	444
Y	*183-8549*	1	LINES GP-LOAD CONTROL VALVE	451
Y	*175-7618*	1	LINES GP-SIDESHIFT LOCK	489
Y	*175-7877*	1	LINK GP-SHIPPING	593
Y	*151-7928*	1	LINKAGE GP-BACKHOE BUCKET	594
Y	*186-2950*	1	MOUNTING GP-LINES	532
Y	*184-6178*	1	STICK GP-HOE	613

Y-SEPARATE ILLUSTRATION

<END>

MACHINE ARRANGEMENT

240-8687 BACKHOE AR-STANDARD STICK

S/N: BXC1-UP
AN ATTACHMENT

SMCS-6502, 6504 **i02003542**

NOTE	PART NUMBER	QTY	PART NAME 1 2 3 4 5 6 (PRODUCT LEVEL)	SEE PAGE
Y	**206-0514**	1	CYLINDER GP-BACKHOE BUCKET	372
Y	*183-6058*	1	FRAME GP-SWING	326
Y	*183-8506*	1	LINES GP-BACKHOE	398
Y	*183-8543*	1	LINES GP-BOOM	440
Y	*193-0703*	1	LINES GP-BUCKET CYLINDER	441
Y	*175-7618*	1	LINES GP-SIDESHIFT LOCK	489
Y	*183-8544*	1	LINES GP-STICK	501
Y	*175-7877*	1	LINK GP-SHIPPING	593
Y	*151-7928*	1	LINKAGE GP-BACKHOE BUCKET	594
Y	*172-8508*	1	MOUNTING GP-LINES (BANK VALVE)	530
Y	*186-2950*	1	MOUNTING GP-LINES (BACKHOE)	532
Y	*184-6178*	1	STICK GP-HOE	613

Y-SEPARATE ILLUSTRATION

<END>

240-8688 BACKHOE AR-STANDARD STICK–BOOM, STICK LOCKS

S/N: BXC1-UP
AN ATTACHMENT

SMCS-6502, 6504 **i02003543**

NOTE	PART NUMBER	QTY	PART NAME 1 2 3 4 5 6 (PRODUCT LEVEL)	SEE PAGE
Y	**206-0514**	1	CYLINDER GP-BACKHOE BUCKET	372
Y	*183-6058*	1	FRAME GP-SWING	326
Y	*183-8506*	1	LINES GP-BACKHOE	398
Y	*193-0703*	1	LINES GP-BUCKET CYLINDER	441
Y	*186-1594*	1	LINES GP-DRAIN	444
Y	*183-8549*	1	LINES GP-LOAD CONTROL VALVE	451
Y	*175-7618*	1	LINES GP-SIDESHIFT LOCK	489
Y	*175-7877*	1	LINK GP-SHIPPING	593
Y	*151-7928*	1	LINKAGE GP-BACKHOE BUCKET	594
Y	*172-8508*	1	MOUNTING GP-LINES (BANK VALVE)	530
Y	*186-2950*	1	MOUNTING GP-LINES (BACKHOE)	532
Y	*184-6178*	1	STICK GP-HOE	613

Y-SEPARATE ILLUSTRATION

<END>

MACHINE ARRANGEMENT

240-8693 BACKHOE AR-STANDARD STICK—STANDARD STICK—NARROW FRAME

S/N: DSX1-UP

AN ATTACHMENT

SMCS-6502, 6504 **i02003546**

NOTE	PART NUMBER	QTY	PART NAME 1 2 3 4 5 6 (PRODUCT LEVEL)	SEE PAGE
Y	**206-0514**	1	CYLINDER GP-BACKHOE BUCKET	372
Y	*183-6058*	1	FRAME GP-SWING	326
Y	*183-8524*	1	LINES GP-BACKHOE	400
Y	*183-8543*	1	LINES GP-BOOM	440
Y	*193-0703*	1	LINES GP-BUCKET CYLINDER	441
Y	*183-8532*	1	LINES GP-SIDESHIFT LOCK	495
Y	*183-8544*	1	LINES GP-STICK	501
Y	*175-7877*	1	LINK GP-SHIPPING	593
Y	*151-7928*	1	LINKAGE GP-BACKHOE BUCKET	594
Y	*175-7620*	1	MOUNTING GP-LINES (BANK VALVE)	531
Y	*186-2950*	1	MOUNTING GP-LINES (BACKHOE)	532
Y	*184-6178*	1	STICK GP-HOE	613

Y-SEPARATE ILLUSTRATION

<END>

240-8694 BACKHOE AR-STANDARD STICK—STANDARD STICK—BOOM, STICK LOCKS—NARROW FRAME

S/N: DSX1-UP

NARROW FRAME

AN ATTACHMENT

SMCS-6502, 6504 **i02003547**

NOTE	PART NUMBER	QTY	PART NAME 1 2 3 4 5 6 (PRODUCT LEVEL)	SEE PAGE
Y	**206-0514**	1	CYLINDER GP-BACKHOE BUCKET	372
Y	*183-6058*	1	FRAME GP-SWING	326
Y	*183-8524*	1	LINES GP-BACKHOE	400
Y	*193-0703*	1	LINES GP-BUCKET CYLINDER	441
Y	*186-1593*	1	LINES GP-DRAIN	443
Y	*183-8549*	1	LINES GP-LOAD CONTROL VALVE	451
Y	*183-8532*	1	LINES GP-SIDESHIFT LOCK	495
Y	*175-7877*	1	LINK GP-SHIPPING	593
Y	*151-7928*	1	LINKAGE GP-BACKHOE BUCKET	594
Y	*175-7620*	1	MOUNTING GP-LINES (BANK VALVE)	531
Y	*186-2950*	1	MOUNTING GP-LINES (BACKHOE)	532
Y	*184-6178*	1	STICK GP-HOE	613

Y-SEPARATE ILLUSTRATION

<END>

MACHINE ARRANGEMENT

240-8695 BACKHOE AR–ONE WAY LINES, NARROW FRAME

S/N: DSX1-UP

AN ATTACHMENT

SMCS-6502, 6504 **i01972326**

NOTE	PART NUMBER	QTY	PART NAME 1 2 3 4 5 6 (PRODUCT LEVEL)	SEE PAGE
Y	**206-0514**	1	CYLINDER GP-BACKHOE BUCKET	372
Y	*183-6059*	1	FRAME GP-SWING	329
Y	*235-5862*	1	LINES GP-BACKHOE AUXILIARY	424
Y	*183-8524*	1	LINES GP-BACKHOE	400
Y	*183-8527*	1	LINES GP-BACKHOE AUXILIARY	407
Y	*183-8543*	1	LINES GP-BOOM	440
Y	*193-0703*	1	LINES GP-BUCKET CYLINDER	441
Y	*183-8523*	1	LINES GP-SIDESHIFT LOCK	491
Y	*183-8544*	1	LINES GP-STICK	501
Y	*175-7877*	1	LINK GP-SHIPPING	593
Y	*151-7928*	1	LINKAGE GP-BACKHOE BUCKET	594
Y	*186-2950*	1	MOUNTING GP-LINES	532
Y	*184-6178*	1	STICK GP-HOE	613

Y-SEPARATE ILLUSTRATION

<END>

240-8696 BACKHOE AR–STANDARD STICK–ONE WAY LINES–BOOM, STICK LOCKS–NARROW FRAME

S/N: DSX1-UP

AN ATTACHMENT

SMCS-6502, 6504 **i01972328**

NOTE	PART NUMBER	QTY	PART NAME 1 2 3 4 5 6 (PRODUCT LEVEL)	SEE PAGE
Y	**206-0514**	1	CYLINDER GP-BACKHOE BUCKET	372
Y	*183-6059*	1	FRAME GP-SWING	329
Y	*235-5862*	1	LINES GP-BACKHOE AUXILIARY	424
Y	*183-8524*	1	LINES GP-BACKHOE	400
Y	*183-8527*	1	LINES GP-BACKHOE AUXILIARY	407
Y	*193-0703*	1	LINES GP-BUCKET CYLINDER	441
Y	*186-1593*	1	LINES GP-DRAIN	443
Y	*183-8549*	1	LINES GP-LOAD CONTROL VALVE	451
Y	*183-8523*	1	LINES GP-SIDESHIFT LOCK	491
Y	*175-7877*	1	LINK GP-SHIPPING	593
Y	*151-7928*	1	LINKAGE GP-BACKHOE BUCKET	594
Y	*186-2950*	1	MOUNTING GP-LINES	532
Y	*184-6178*	1	STICK GP-HOE	613

Y-SEPARATE ILLUSTRATION

<END>

MACHINE ARRANGEMENT

240-8697 BACKHOE AR-STANDARD STICK—STANDARD STICK—NARROW FRAME

S/N: DSX1-UP

AN ATTACHMENT

SMCS-6502, 6504 **i02003549**

NOTE	PART NUMBER	QTY	PART NAME 1 2 3 4 5 6 (PRODUCT LEVEL)	SEE PAGE
Y	**206-0514**	1	CYLINDER GP-BACKHOE BUCKET	372
Y	*183-6058*	1	FRAME GP-SWING	326
Y	*183-8524*	1	LINES GP-BACKHOE	400
Y	*183-8543*	1	LINES GP-BOOM	440
Y	*193-0703*	1	LINES GP-BUCKET CYLINDER	441
Y	*183-8523*	1	LINES GP-SIDESHIFT LOCK	491
Y	*183-8544*	1	LINES GP-STICK	501
Y	*175-7877*	1	LINK GP-SHIPPING	593
Y	*151-7928*	1	LINKAGE GP-BACKHOE BUCKET	594
Y	*172-8508*	1	MOUNTING GP-LINES (BANK VALVE)	530
Y	*186-2950*	1	MOUNTING GP-LINES (BACKHOE)	532
Y	*184-6178*	1	STICK GP-HOE	613

Y-SEPARATE ILLUSTRATION

<END>

240-8698 BACKHOE AR-STANDARD STICK—STANDARD STICK—BOOM, STICK LOCKS—NARROW FRAME

S/N: DSX1-UP

NARROW FRAME

AN ATTACHMENT

SMCS-6502, 6504 **i02003552**

NOTE	PART NUMBER	QTY	PART NAME 1 2 3 4 5 6 (PRODUCT LEVEL)	SEE PAGE
Y	**206-0514**	1	CYLINDER GP-BACKHOE BUCKET	372
Y	*183-6058*	1	FRAME GP-SWING	326
Y	*183-8524*	1	LINES GP-BACKHOE	400
Y	*193-0703*	1	LINES GP-BUCKET CYLINDER	441
Y	*186-1593*	1	LINES GP-DRAIN	443
Y	*183-8549*	1	LINES GP-LOAD CONTROL VALVE	451
Y	*183-8523*	1	LINES GP-SIDESHIFT LOCK	491
Y	*175-7877*	1	LINK GP-SHIPPING	593
Y	*151-7928*	1	LINKAGE GP-BACKHOE BUCKET	594
Y	*172-8508*	1	MOUNTING GP-LINES (BANK VALVE)	530
Y	*186-2950*	1	MOUNTING GP-LINES (BACK HOE)	532
Y	*184-6178*	1	STICK GP-HOE	613

Y-SEPARATE ILLUSTRATION

<END>

MACHINE ARRANGEMENT

237-9288 CHASSIS AR—STANDARD FRAME

S/N: BXC1-UP

PART OF 214-6993 COMMON AR

SMCS-7000 **i01994197**

NOTE	PART NUMBER	QTY	PART NAME 1 2 3 4 5 6 (PRODUCT LEVEL)	SEE PAGE
Y	*234-8892*	1	CONTROL GP-GOV & ACCELERATOR	86
Y	*183-3130*	1	CONTROL GP-HYDRAULIC HAND	359
Y	*185-0080*	1	FLOORPLATE GP	320
Y	*236-2070*	1	FRAME GP-LOADER	322
Y	*185-8857*	1	FRAME GP-SLIDING	324
Y	*9R-9999*	1	GUARD GP-LINES	334
Y	*241-3406*	1	HOOD & GUARD GP	336
Y	*188-9097*	1	LINES GP-PILOT	474
Y	*183-6076*	1	LOCK GP-TRANSPORT	603
Y	*185-7741*	1	PLATE & FILM GP	804
Y	*238-6700*	1	PLATE & FILM GP	805
Y	*126-5707*	1	STABILIZER GP-BACKHOE	606
Y	*214-6908*	1	TANK & MTG GP-FUEL	100
Y	*238-1165*	1	WIRING GP-CONSOLE	183
Y	*242-8521*	1	WIRING GP-PLATFORM	198
Y	*185-8807*	1	WIRING GP-REAR	203

Y-SEPARATE ILLUSTRATION

<END>

237-9289 CHASSIS AR—NARROW FRAME

S/N: DSX1-UP

PART OF 214-6994 COMMON AR

SMCS-7000 **i01982477**

NOTE	PART NUMBER	QTY	PART NAME 1 2 3 4 5 6 (PRODUCT LEVEL)	SEE PAGE
Y	*234-8892*	1	CONTROL GP-GOV & ACCELERATOR	86
Y	*183-3130*	1	CONTROL GP-HYDRAULIC HAND	359
Y	*185-0080*	1	FLOORPLATE GP	320
Y	*236-2072*	1	FRAME GP-LOADER	323
Y	*185-8857*	1	FRAME GP-SLIDING	324
Y	*183-1276*	1	GUARD GP-LINES	335
Y	*241-3406*	1	HOOD & GUARD GP	336
Y	*188-9097*	1	LINES GP-PILOT	474
Y	*183-6076*	1	LOCK GP-TRANSPORT	603
Y	*185-7754*	1	PLATE & FILM GP	805
Y	*238-6700*	1	PLATE & FILM GP	805
Y	*126-5707*	1	STABILIZER GP-BACKHOE	606
Y	*214-6908*	1	TANK & MTG GP-FUEL	100
Y	*238-1165*	1	WIRING GP-CONSOLE	183
Y	*242-8521*	1	WIRING GP-PLATFORM	198
Y	*185-8807*	1	WIRING GP-REAR	203

Y-SEPARATE ILLUSTRATION

<END>

MACHINE ARRANGEMENT

214-6993 COMMON AR

S/N: BXC1-UP

SMCS-7000 **i01961712**

NOTE	PART NUMBER	QTY	PART NAME 1 2 3 4 5 6 (PRODUCT LEVEL)	SEE PAGE
Y	*185-1932*	1	BOOM GP	589
Y	*237-9288*	1	CHASSIS AR	15
Y	*237-6463*	1	DRIVE AR-BACKHOE LOADER (AWD/2WS)	230
Y	*237-9297*	1	HYDRUALIC AR	396
Y	*112-1827*	1	LOADER AR	597
Y	*184-7970*	1	POWER TRAIN AR	239
Y-SEPARATE ILLUSTRATION				

<END>

214-6994 COMMON AR

S/N: DSX1-UP

SMCS-7000 **i01961713**

NOTE	PART NUMBER	QTY	PART NAME 1 2 3 4 5 6 (PRODUCT LEVEL)	SEE PAGE
Y	*185-1932*	1	BOOM GP	589
Y	*237-9289*	1	CHASSIS AR	15
Y	*237-6463*	1	DRIVE AR-BACKHOE LOADER (AWD/2WS)	230
Y	*237-9298*	1	HYDRUALIC AR	397
Y	*112-1827*	1	LOADER AR	597
Y	*184-7970*	1	POWER TRAIN AR	239
Y-SEPARATE ILLUSTRATION				

<END>

123-4202 CONVERSION AR-CERTIFICATION

S/N: BXC1-UP; DSX1-UP

AN ATTACHMENT

SMCS-7000 **i01505526**

NOTE	PART NUMBER	QTY	PART NAME 1 2 3 4 5 6 (PRODUCT LEVEL)	SEE PAGE
Y	*110-6017*	1	MOUNTING GP-REGISTRATION	343
	196-4096	1	RADIO GP-AM/FM CASSETTE	
Y-SEPARATE ILLUSTRATION				

<END>

MACHINE ARRANGEMENT

190-2802 CONVERSION AR-CERTIFICATION—SIDESHIFT—MECHANICAL LOADER

S/N: BXC1-UP; DSX1-UP

AN ATTACHMENT

SMCS-7000 **i01484545**

NOTE	PART NUMBER	QTY	PART NAME 1 2 3 4 5 6 (PRODUCT LEVEL)	SEE PAGE
Y	*193-2342*	1	HORN GP-ELECTRIC	745
Y	**189-3823**	2	LOCK GP-HYDRAULIC FOOT CONTROL	523
Y	*106-2404*	1	LOCK GP-HYDRAULIC HAND CONTROL	524
Y	*113-0081*	1	LOCK GP-STABILIZER LEG	598
Y	*152-0184*	1	REFLECTOR GP	344
Y	*190-7557*	1	WIRING GP-POWER RECEPTACLE	202

Y-SEPARATE ILLUSTRATION

<END>

190-2803 CONVERSION AR-CERTIFICATION

S/N: BXC1-UP; DSX1-UP

ITALY

AN ATTACHMENT

SMCS-7000 **i01998419**

NOTE	PART NUMBER	QTY	PART NAME 1 2 3 4 5 6 (PRODUCT LEVEL)	SEE PAGE
	125-2632	1	COVER GP-SWITCH	
	114-3421	1	COVER AS	
Y	*206-3407*	1	GUARD GP-BUCKET (FRONT)	688
Y	*113-0020*	1	GUARD GP-LIGHTING	332
Y	*186-2737*	1	LIGHTING GP-WARNING	161
	206-3411	1	LOCK AS	
Y	*121-9797*	1	LOCK GP-TRANSPORT (LOADER)	599
Y	*177-4727*	1	LOCK GP-TRANSPORT (BACKHOE)	602
Y	*101-4447*	1	MOUNTING GP-REGISTRATION	342
	190-1288	1	PLATE GP	
	8T-9530	4	TACK-FASTENER	
	159-7342	1	PLATE-IDENTIFICATION	
	170-3492	1	FILM-INSTRUCTION (PARKING BRAKE)	

Y-SEPARATE ILLUSTRATION

<END>

MACHINE ARRANGEMENT

190-6413 CONVERSION AR-CERTIFICATION—EXTENDABLE STICK

S/N: BXC1-UP; DSX1-UP
ITALY
AN ATTACHMENT

SMCS-7000 **i01998417**

NOTE	PART NUMBER	QTY	PART NAME 1 2 3 4 5 6 (PRODUCT LEVEL)	SEE PAGE
	125-2632	1	COVER GP-SWITCH	
	114-3421	1	COVER AS	
Y	*206-3407*	1	GUARD GP-BUCKET (FRONT)	688
	101-4415	1	FILM	
Y	*113-0020*	1	GUARD GP-LIGHTING	332
Y	*186-2737*	1	LIGHTING GP-WARNING	161
	206-3411	1	LOCK AS	
Y	*121-9797*	1	LOCK GP-TRANSPORT (LOADER)	599
Y	*177-4726*	1	LOCK GP-TRANSPORT (BACKHOE)	601
Y	*101-4447*	1	MOUNTING GP-REGISTRATION	342
Y	*101-4419*	3	PLATE AS-SIDE REFLECTIVE	809
	190-1288	1	PLATE GP	
	8T-9530	4	TACK-FASTENER	
	159-7342	1	PLATE-IDENTIFICATION	
	170-3492	1	FILM-INSTRUCTION (PARKING BRAKE)	

Y-SEPARATE ILLUSTRATION

<END>

206-3409 CONVERSION AR-CERTIFICATION—AUTOSHIFT

S/N: BXC1-UP; DSX1-UP
AN ATTACHMENT

SMCS-7000 **i02011517**

NOTE	PART NUMBER	QTY	PART NAME 1 2 3 4 5 6 (PRODUCT LEVEL)	SEE PAGE
Y	*204-5261*	1	GUARD GP-BUCKET (FRONT)	687
Y	*113-0018*	1	INSTALLATION AR-WHEEL CHOCK	801
	190-1289	1	PLATE & FILM GP	
	8T-9530	4	TACK-FASTENER	
	106-0827	4	FILM (20 KM/HR)	
	131-6010	1	FILM-INSTRUCTION (WHEEL CHOCK)	
	159-7342	1	PLATE-IDENTIFICATION	
	133-8877	1	TOOL GP-HAND	

Y-SEPARATE ILLUSTRATION

<END>

MACHINE ARRANGEMENT

206-4924 CONVERSION AR-CERTIFICATION—STANDARD SHIFT

S/N: BXC1-UP; DSX1-UP

AN ATTACHMENT

SMCS-7000 **i01889398**

NOTE	PART NUMBER	QTY	PART NAME 1 2 3 4 5 6 (PRODUCT LEVEL)	SEE PAGE
Y	*204-5261*	1	GUARD GP-BUCKET (FRONT)	687
Y	*113-0018*	1	INSTALLATION AR-WHEEL CHOCK	801
Y	*130-8149*	1	LOCKOUT GP-FOURTH GEAR	236
	190-1289	1	PLATE & FILM GP	
	8T-9530	4	TACK-FASTENER	
	106-0827	4	FILM (20 KM/HR)	
	131-6010	1	FILM-INSTRUCTION (WHEEL CHOCK)	
	159-7342	1	PLATE-IDENTIFICATION	
	034-1432	4	STRAP-CABLE	
	133-8877	1	TOOL GP-HAND	

Y-SEPARATE ILLUSTRATION

<END>

ENGINE ARRANGEMENT

214-6891 ENGINE AR

S/N: DSX1-UP

AN ATTACHMENT

SMCS-1000 **i02003067**

NOTE	PART NUMBER	QTY	PART NAME 1 2 3 4 5 6 (PRODUCT LEVEL)	SEE PAGE
Y	*234-1979*	1	AIR CLEANER GP	73
Y	**234-3059**	1	ENGINE AR-PRIMARY	22
Y	*236-2486*	1	EXTENSION GP-EXHAUST	77
Y	*234-7510*	1	FILLER GP-ENGINE OIL	51
Y	**238-9828**	1	INDICATOR GP-AIR FILTER CHANGE	78
Y	*235-2972*	1	LINES GP-FUEL	90
Y	*235-3420*	1	MUFFLER GP	83
Y	*235-3170*	1	SEPARATOR GP-WATER	99
Y	*234-1991*	1	WIRING GP-ENGINE	189

Y-SEPARATE ILLUSTRATION

ENGINE ARRANGEMENT

214-6893 ENGINE AR

S/N: BXC1-UP; DSX1-UP

AN ATTACHMENT

SMCS-1000 **i01998369**

NOTE	PART NUMBER	QTY	PART NAME 1 2 3 4 5 6 (PRODUCT LEVEL)	SEE PAGE
Y	*234-1979*	1	AIR CLEANER GP	73
Y	*234-3061*	1	ENGINE AR-PRIMARY	23
Y	*236-2486*	1	EXTENSION GP-EXHAUST	77
Y	*234-7510*	1	FILLER GP-ENGINE OIL	51
Y	*235-2972*	1	LINES GP-FUEL	90
Y	*235-3420*	1	MUFFLER GP	83
Y	*235-3170*	1	SEPARATOR GP-WATER	99
Y	*234-1991*	1	WIRING GP-ENGINE	189

Y-SEPARATE ILLUSTRATION

ENGINE ARRANGEMENT

234-3059 ENGINE AR-PRIMARY

S/N: CRS1-UP
62 BRAKE KW (84 BHP) AT 2200 RPM
PART OF 214-6891 ENGINE AR
AN ATTACHMENT

SMCS-1000 **i02003222**

NOTE	PART NUMBER	QTY	PART NAME 1 2 3 4 5 6 (PRODUCT LEVEL)	SEE PAGE
Y	*237-0027*	1	ALTERNATOR GP-CHARGING	103
Y	*232-7528*	1	CAMSHAFT GP	24
Y	*231-0033*	1	CONNECTION GP-WATER	53
Y	*232-6177*	1	COOLER GP-FLTR BASE & ENG OIL	54
Y	*231-0149*	1	COVER GP-AIR INLET	76
Y	*246-2582*	1	COVER GP-VALVE MECHANISM	25
Y	*232-7439*	1	CRANKSHAFT GP	27
Y	*232-7606*	1	CYLINDER BLOCK GP	31
Y	*232-7524*	1	CYLINDER HEAD GP	33
Y	*236-8241*	1	DRIVE GP-FAN	34
Y	*230-7300*	1	FLYWHEEL GP	35
Y	*232-6661*	1	GLOW PLUG GP	113
Y	*236-8238*	1	HOUSING GP-FLYWHEEL	36
Y	*232-3670*	1	HOUSING GP-FRONT	37
Y	*233-7432*	1	LIFTING GP-ENGINE	39
Y	*237-3658*	1	MOUNTING GP-ENGINE	40
Y	*237-0025*	1	PAN GP-OIL	43
Y	*232-7442*	1	PISTON & ROD GP	45
Y	*225-4317*	1	PLUG GP-ENGINE	47
Y	*230-7569*	1	PLUG GP-ENGINE	48
Y	*230-7353*	1	PULLEY GP-CRANKSHAFT	49
Y	*230-7578*	1	PUMP GP-ENGINE OIL	52
Y	*237-2528*	1	PUMP GP-FUEL INJECTION	96
Y	*230-7355*	1	PUMP GP-WATER	63
Y	*237-0024*	1	STARTING MOTOR GP-ELECTRIC	168
Y	*237-4896*	1	SWITCH GP-PRESSURE	169
Y	*235-8749*	1	SWITCH GP-TEMPERATURE	170
Y	*237-3924*	1	TURBOCHARGER GP	84
Y	*232-7526*	1	VALVE MECHANISM GP	50
			AVAILABLE GASKET KIT(S):	
	239-9897	1	KIT-GASKET (TOP)	
	235-3556	1	KIT-GASKET (BOTTOM)	

Y-SEPARATE ILLUSTRATION

ENGINE ARRANGEMENT

234-3061 ENGINE AR-PRIMARY

S/N: CRS1-UP
75 BRAKE KW (100 BHP) AT 2200 RPM
PART OF 214-6893 ENGINE AR
AN ATTACHMENT

SMCS-1000 **i02002378**

NOTE	PART NUMBER	QTY	PART NAME 1 2 3 4 5 6 (PRODUCT LEVEL)	SEE PAGE
Y	*237-0027*	1	ALTERNATOR GP-CHARGING	103
Y	*232-7528*	1	CAMSHAFT GP	24
Y	*231-0033*	1	CONNECTION GP-WATER	53
Y	*232-6177*	1	COOLER GP-FLTR BASE & ENG OIL	54
Y	*231-0149*	1	COVER GP-AIR INLET	76
Y	*246-2582*	1	COVER GP-VALVE MECHANISM	25
Y	*232-7439*	1	CRANKSHAFT GP	27
Y	*232-7606*	1	CYLINDER BLOCK GP	31
Y	*232-7524*	1	CYLINDER HEAD GP	33
Y	*236-8241*	1	DRIVE GP-FAN	34
Y	*233-9417*	1	FILTER GP-FUEL	88
Y	*230-7300*	1	FLYWHEEL GP	35
Y	*232-6661*	1	GLOW PLUG GP	113
Y	*236-8238*	1	HOUSING GP-FLYWHEEL	36
Y	*232-3670*	1	HOUSING GP-FRONT	37
Y	*233-7432*	1	LIFTING GP-ENGINE	39
Y	*237-3658*	1	MOUNTING GP-ENGINE	40
Y	*237-0025*	1	PAN GP-OIL	43
Y	*232-7442*	1	PISTON & ROD GP	45
Y	*225-4317*	1	PLUG GP-ENGINE	47
Y	*230-7569*	1	PLUG GP-ENGINE	48
Y	*230-7353*	1	PULLEY GP-CRANKSHAFT	49
Y	*230-7578*	1	PUMP GP-ENGINE OIL	52
Y	*236-8229*	1	PUMP GP-FUEL INJECTION	93
Y	*230-7355*	1	PUMP GP-WATER	63
Y	*237-0024*	1	STARTING MOTOR GP-ELECTRIC	168
Y	*237-4896*	1	SWITCH GP-PRESSURE	169
Y	*235-8749*	1	SWITCH GP-TEMPERATURE	170
Y	*237-3924*	1	TURBOCHARGER GP	84
Y	*232-7526*	1	VALVE MECHANISM GP	50
			AVAILABLE GASKET KIT(S):	
	239-9897	1	KIT-GASKET	
	235-3556	1	KIT-GASKET	

Y-SEPARATE ILLUSTRATION

232-7528 CAMSHAFT GP

S/N: CRS1-UP
PART OF 234-3059, 234-3061 ENGINE AR-PRIMARY
AN ATTACHMENT

SMCS-1210, 1211, 1212 **i01998661**

NOTE	REF NO	GRAPHIC REF	PART NUMBER	QTY	PART NAME 1 2 3 4 5 6 (PRODUCT LEVEL)	SEE PAGE
	1	1	**1B-8736**	1	KEY-WOODRUFF	
	2	1	**225-5967**	1	CAMSHAFT	

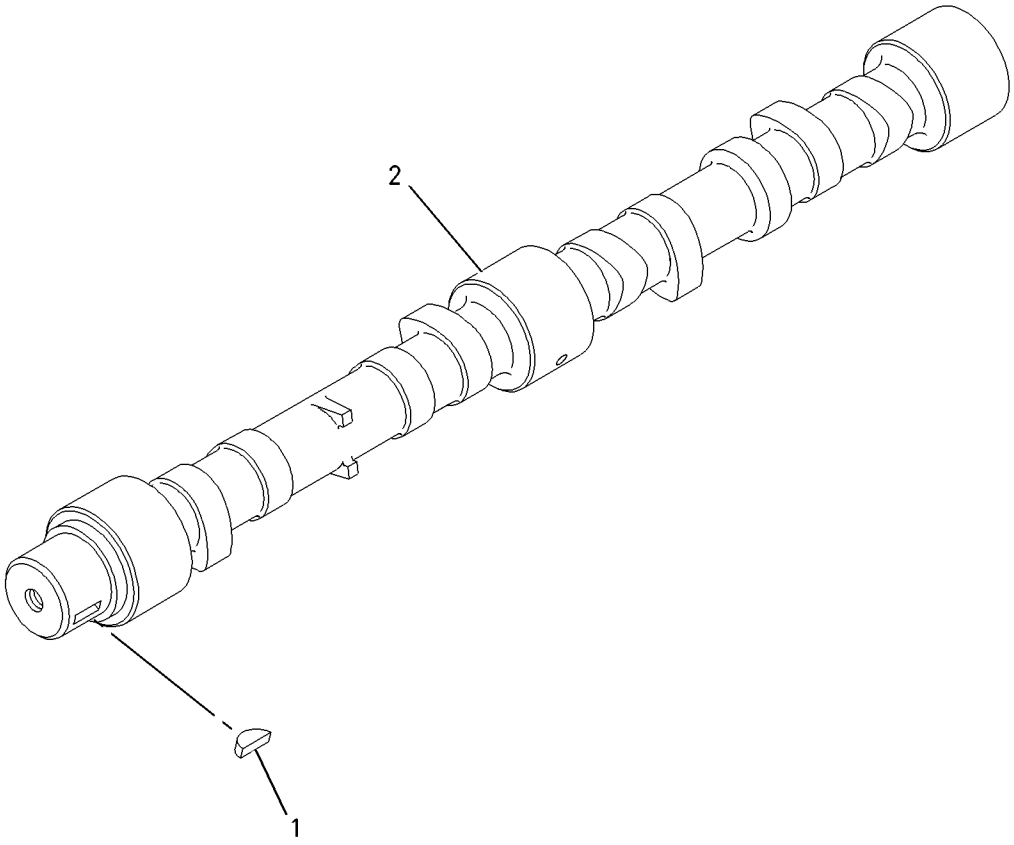

GRAPHIC #1 **<END>** g00911297

246-2582 COVER GP-VALVE MECHANISM

S/N: CRS1-UP

PART OF 234-3059, 234-3061 ENGINE AR-PRIMARY

AN ATTACHMENT

SMCS-1107, 1120 **i02002647**

NOTE	REF NO	GRAPHIC REF	PART NUMBER	QTY	PART NAME 1 2 3 4 5 6 (PRODUCT LEVEL)	SEE PAGE
	1	1	**6I-0260**	2	BOLT (M8X1.25X25MM)	
	2	1	**6I-0846**	3	BOLT (M6X1.0X14MM)	
	3	1	**6I-0917**	1	BOLT (M6X1.0X25MM)	
	4	1	**7C-1281**	1	BRACKET	
	5	1	**100-4841**	2	BOLT (M6X1.0X10MM)	
	6	1	**5D-1026**	1	CLAMP-HOSE	
	7	1	**162-1565**	1	SPRING (BREATHER HOSE)	
	8	1	**198-8645**	1	HOSE (BREATHER)	
	9	1	**225-6522**	1	PLUG-CUP	
	10	1	**230-9127**	1	COVER	
	11	1	**230-9144**	1	CONNECTOR	
	11A	1	**150-7732**	1	SEAL-O-RING	
	11B	1	**225-6455**	2	BOLT	
	11C	1	**225-6517**	1	GASKET	
	12	1	**237-0769**	1	SHIELD-HEAT	
	13	1	**246-1163**	1	FILLER AS-OIL	
	13A	1	**229-4896**	1	SEAL-O-RING	

246-2582 **COVER GP-VALVE MECHANISM** *(contd.)* **i02002647**

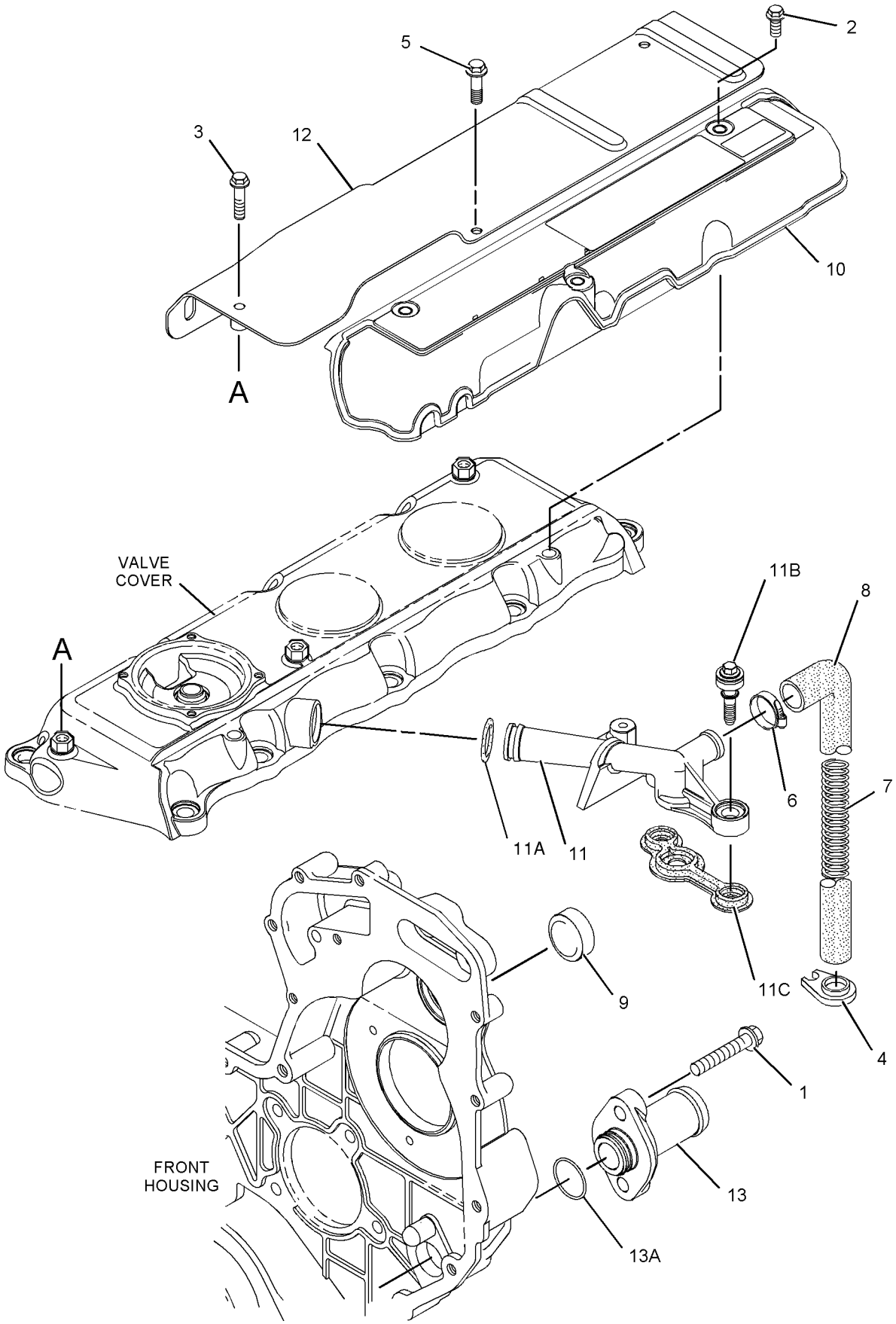

GRAPHIC #1 **<END>** g01039843

BASIC ENGINE

232-7439 CRANKSHAFT GP

S/N: CRS1-UP

PART OF 234-3059, 234-3061 ENGINE AR-PRIMARY

AN ATTACHMENT

SMCS-1202, 1203, 1204, 1230, 1231, 1232 **i01998651**

NOTE	REF NO	GRAPHIC REF	PART NUMBER	QTY	PART NAME 1 2 3 4 5 6 (PRODUCT LEVEL)	SEE PAGE
	1	1	**1B-8736**	1	KEY-WOODRUFF	
	2	1	**216-8314**	1	GEAR-CRANKSHAFT (34 TEETH)	
	3	1	**232-7400**	1	CRANKSHAFT GP	
B	4	1	**225-7772**	1	BEARING SET-MAIN	
B		1	**233-3784**	1	KIT-CRANKSHAFT BEARING (.25MM US)	
B		1	**233-3785**	1	KIT-CRANKSHAFT BEARING (.50MM US)	
B		1	**233-3786**	1	KIT-CRANKSHAFT BEARING (.76MM US)	
B	5	1	**225-7781**	1	BEARING SET-ROD (STANDARD)	
B		1	**233-3788**	1	KIT-ROD BEARING (.25MM US)	
B		1	**233-3789**	1	KIT-ROD BEARING (.50MM US)	
B		1	**233-3790**	1	KIT-ROD BEARING (.76MM US)	
B	6	1	**032-9090**	2	WASHER-THRUST (STANDARD-UPPER)	
B		1	**067-6873**	2	WASHER-THRUST (.18MM OS)	
B	7	1	**032-9091**	2	WASHER-THRUST (STANDARD-LOWER)	
B		1	**067-6874**	2	WASHER-THRUST (.18MM OS)	

B-USE AS REQUIRED

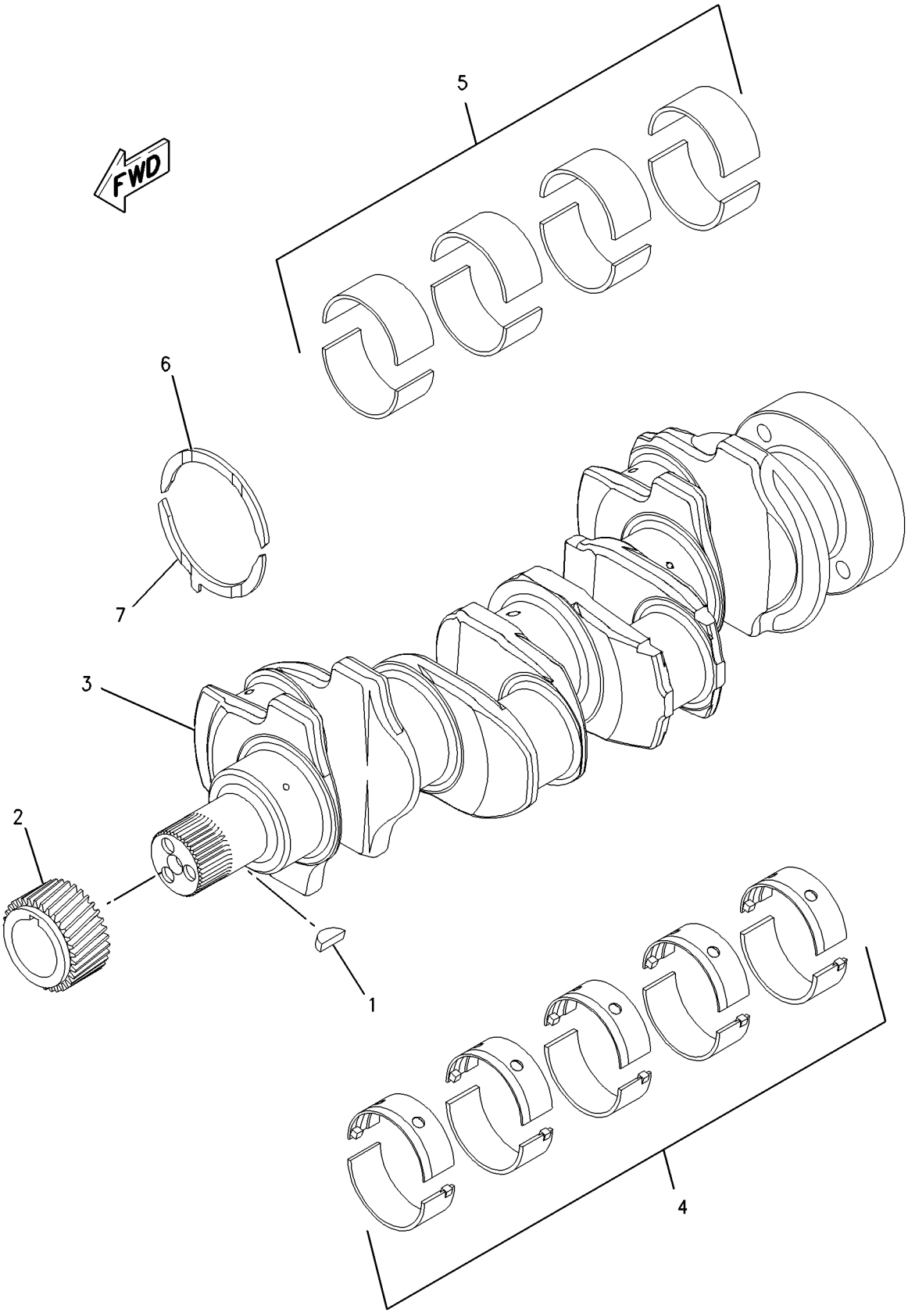

GRAPHIC #1 **<END>** g00950782

232-7604 CYLINDER BLOCK GP

S/N: CRS1-UP

PART OF 232-7606 CYLINDER BLOCK GP

AN ATTACHMENT

SMCS-1201 **i01887247**

NOTE	REF NO	GRAPHIC REF	PART NUMBER	QTY	PART NAME 1 2 3 4 5 6 (PRODUCT LEVEL)	SEE PAGE
	1	1	**6I-0572**	4	BOLT (M8X1.25.20MM)	
	2	1	**035-8068**	10	BOLT	
	3	1	**067-6002**	10	DOWEL	
	4	1	**067-6006**	1	PLUG	
	5	1	**067-6043**	1	PLUG-SIDE	
	6	1	**100-4841**	4	BOLT (M6X1.0X10MM)	
	7	1	**185-0884**	2	DOWEL	
	8	1	**225-7944**	1	GASKET	
	9	1	**225-8858**	2	PLUG	
	10	1	**232-3751**	1	PLATE-BLANKING	
	11	1	**232-7440**	1	BEARING	
	12	1	**232-7454**	4	JET AS-PISTON COOLING	
	13	1	**232-7596**	1	PLUG	
	14	1	**232-7597**	2	PLUG	
	15	1	**232-7599**	1	PLUG	
	16	1	**232-7600**	1	PLUG-CUP	
	17	1	**232-7603**	1	PLUG	

232-7604 **CYLINDER BLOCK GP** ***(contd.)*** **i01887247**

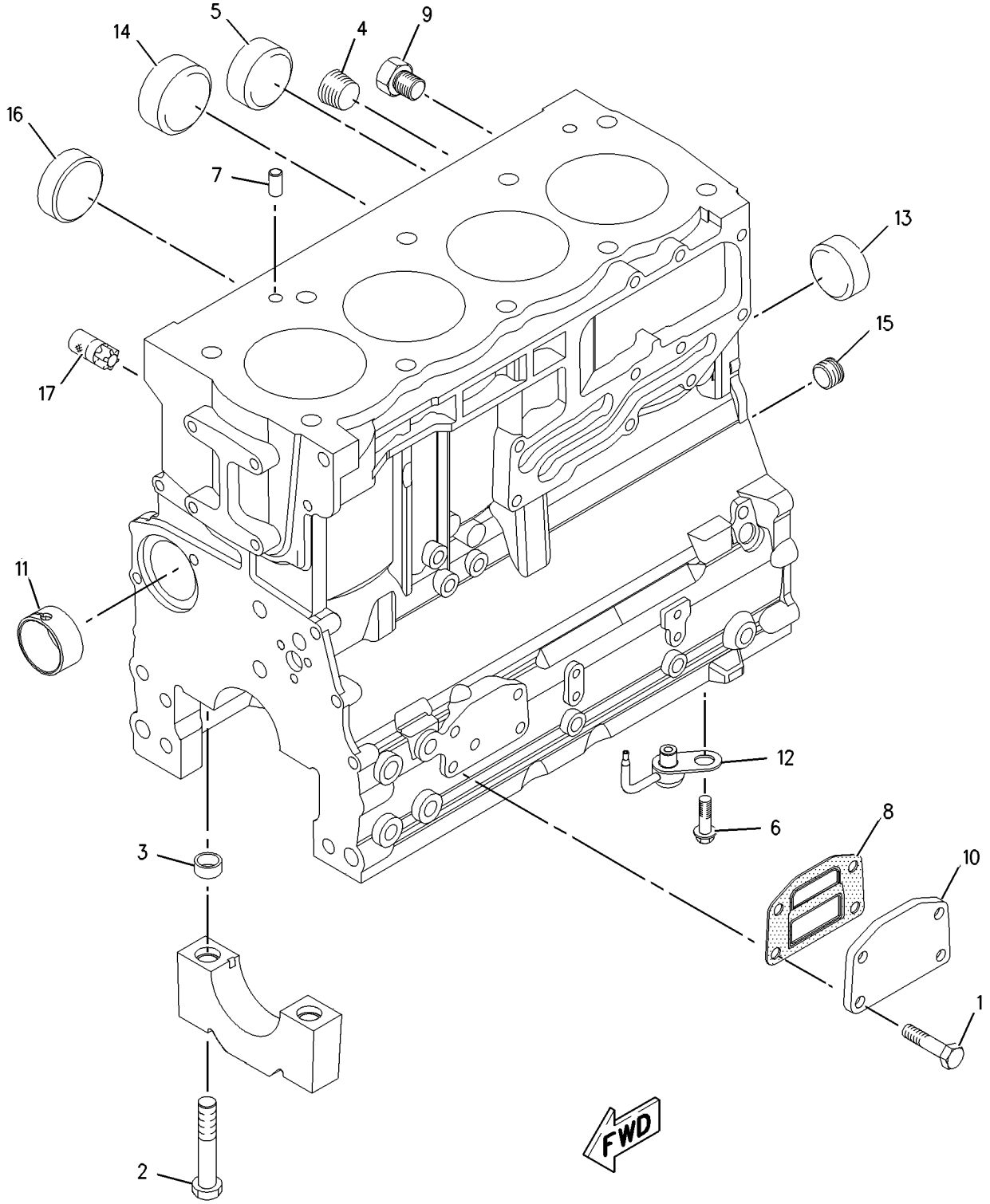

GRAPHIC #1 **<END>** g00951214

BASIC ENGINE

232-7606 CYLINDER BLOCK GP

S/N: CRS1-UP

PART OF 234-3059, 234-3061 ENGINE AR-PRIMARY

AN ATTACHMENT

SMCS-1201 **i01998679**

NOTE	REF NO	GRAPHIC REF	PART NUMBER	QTY	PART NAME 1 2 3 4 5 6 (PRODUCT LEVEL)	SEE PAGE
	1	1	**209-9219**	10	BOLT (M8X1.25X16MM)	
	2	1	**232-7449**	1	HOUSING AS	
Y	3	1	**232-7604**	1	CYLINDER BLOCK GP	29

Y-SEPARATE ILLUSTRATION

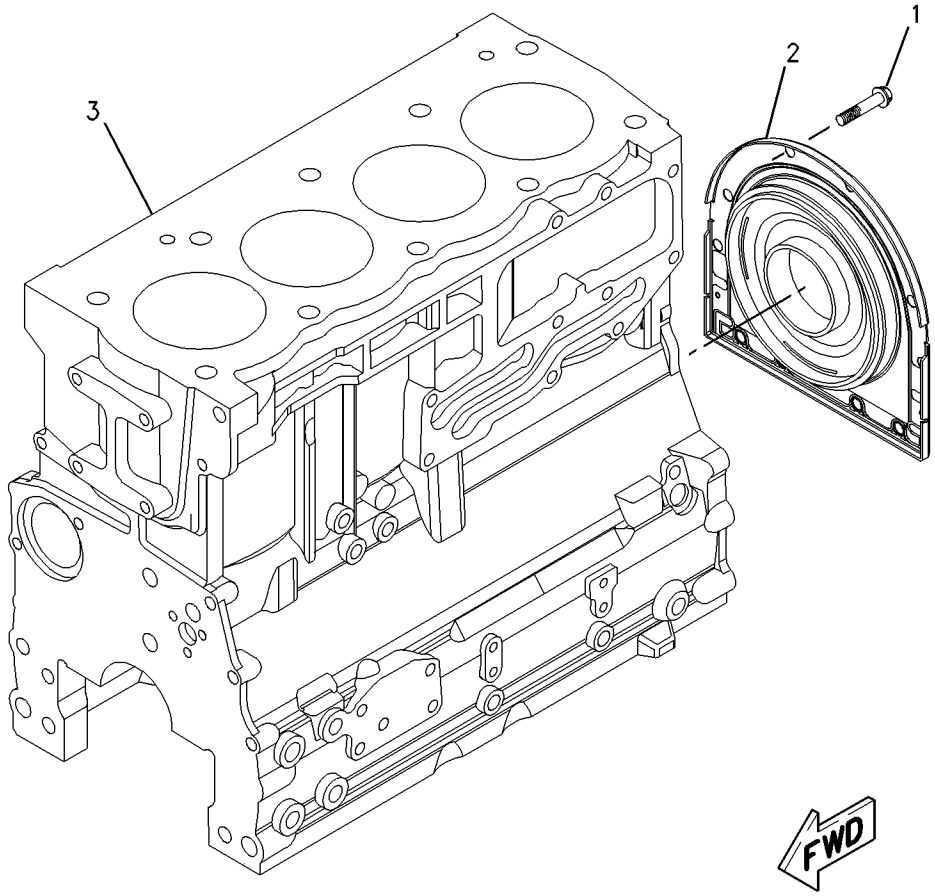

GRAPHIC #1 **<END>** g00952056

232-7519 CYLINDER HEAD GP

S/N: CRS1-UP
PART OF 232-7524 CYLINDER HEAD GP
AN ATTACHMENT

SMCS-1100, 1101, 1103, 1104, 1105, 1106, 1108, 1109, 1115, 1117, 1121, 1124, 1125 **i02005443**

NOTE	REF NO	GRAPHIC REF	PART NUMBER	QTY	PART NAME 1 2 3 4 5 6 (PRODUCT LEVEL)	SEE PAGE
	1	1	**2B-0858**	1	PLUG-PIPE	
	2	1	**9Y-5015**	2	PLUG-FREEZE	
	3	1	**067-6006**	4	PLUG	
	4	1	**147-1979**	16	RETAINER	
	5	1	**185-0882**	8	GUIDE-VALVE (INTAKE)	
	6	1	**199-9751**	1	SEAL-O-RING	
	7	1	**225-5493**	4	INSERT-VALVE (INLET)	
	8	1	**225-5494**	4	INSERT-VALVE (EXHAUST)	
	9	1	**225-5495**	4	VALVE-INLET	
	10	1	**225-5496**	8	SPRING-VALVE	
	11	1	**225-5497**	8	SEAL-VALVE	
	12	1	**225-5498**	8	CAP	
	13	1	**225-5499**	4	VALVE-EXHAUST	
	14	1	**232-1322**	1	PLUG	

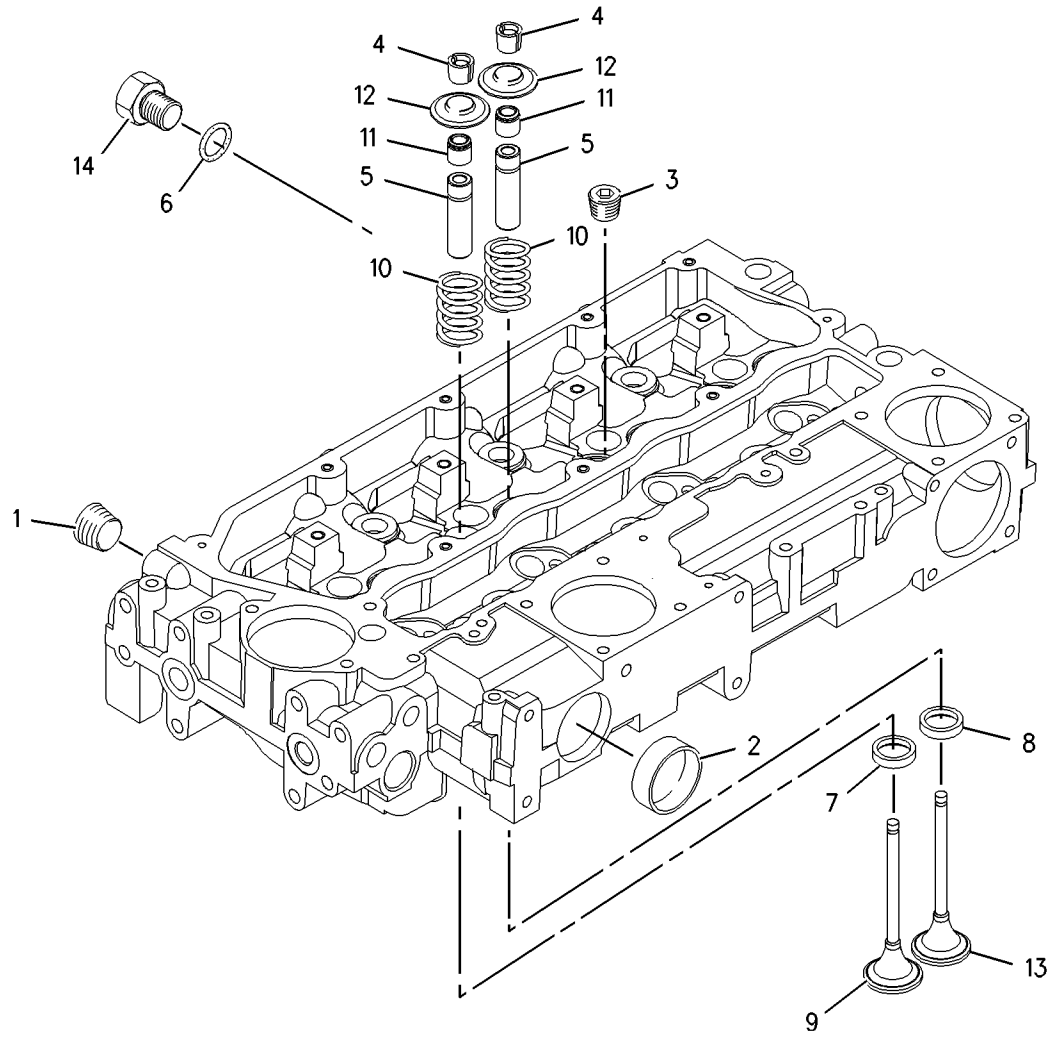

GRAPHIC #1 **<END>** g00951196

232-7524 CYLINDER HEAD GP

S/N: CRS1-UP

PART OF 234-3059, 234-3061 ENGINE AR-PRIMARY

AN ATTACHMENT

SMCS-1100, 1101, 1103, 1104, 1105, 1106, 1108, 1109, 1115, 1117, 1121, 1124, 1125

i01998641

NOTE	REF NO	GRAPHIC REF	PART NUMBER	QTY	PART NAME 1 2 3 4 5 6 (PRODUCT LEVEL)	SEE PAGE
	1	1	**225-5501**	7	BOLT	
	2	1	**225-5502**	3	BOLT	
	3	1	**240-7194**	1	GASKET-HEAD	
Y	4	1	**232-7519**	1	CYLINDER HEAD GP	32

Y-SEPARATE ILLUSTRATION

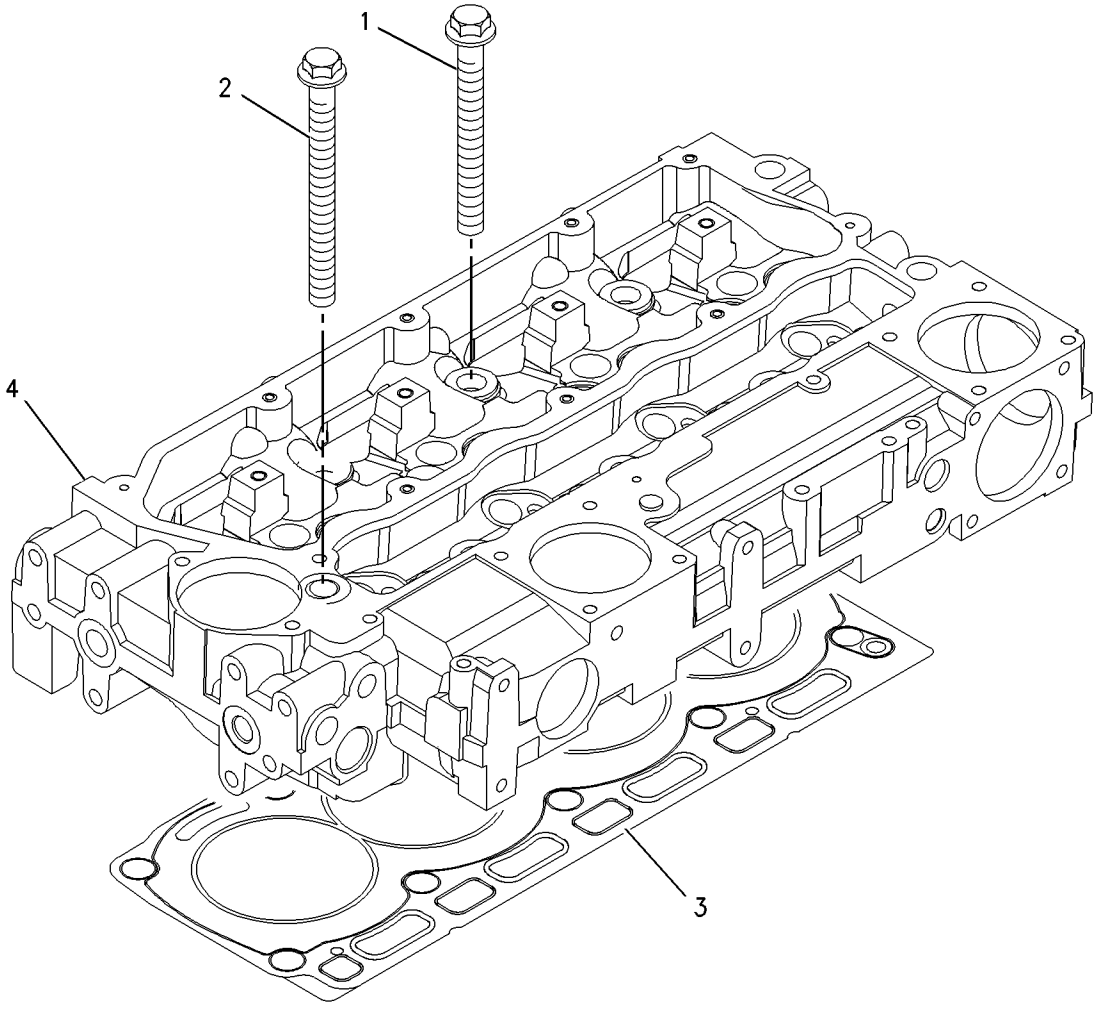

GRAPHIC #1

<END>

g00909291

236-8241 DRIVE GP-FAN

S/N: CRS1-UP
PART OF 234-3059, 234-3061 ENGINE AR-PRIMARY
AN ATTACHMENT

SMCS-1357, 1358, 1359, 1390 **i01998687**

NOTE	REF NO	GRAPHIC REF	PART NUMBER	QTY	PART NAME 1 2 3 4 5 6 (PRODUCT LEVEL)	SEE PAGE
	1	1	**111-0859**	4	BOLT (M10X1.5X35MM)	
	2	1	**230-8065**	1	HOUSING AS	

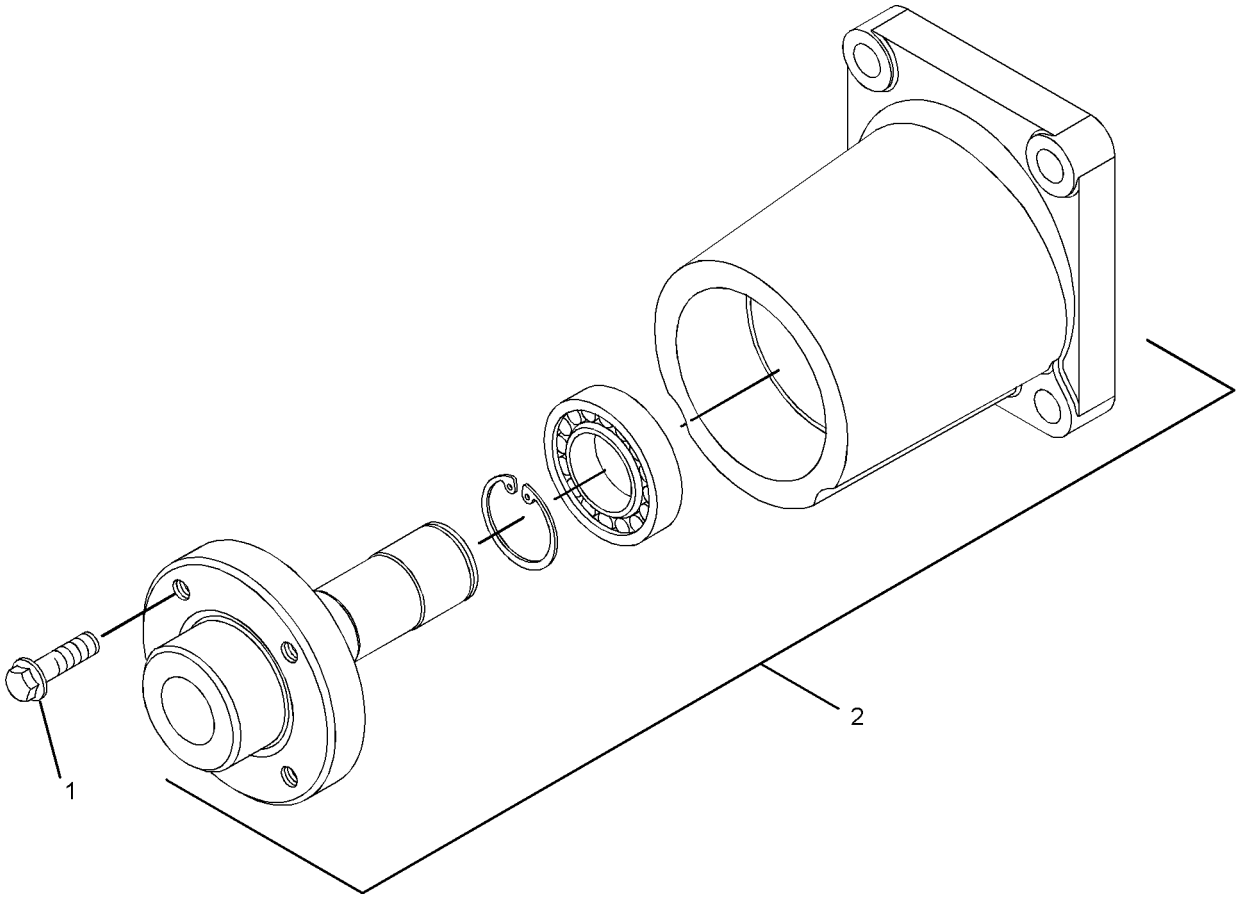

GRAPHIC #1 **<END>** g01022188

BASIC ENGINE

230-7300 FLYWHEEL GP

S/N: CRS1-UP
PART OF 234-3059, 234-3061 ENGINE AR-PRIMARY
AN ATTACHMENT

SMCS-1156, 1158 **i02004994**

NOTE	REF NO	GRAPHIC REF	PART NUMBER	QTY	PART NAME 1 2 3 4 5 6 (PRODUCT LEVEL)	SEE PAGE
	1	1	**0S-1603**	6	BOLT (1/2-20X1.5 IN)	
	2	1	**5P-8245**	6	WASHER-HARD (13.5X25.5X3MM THK)	
	3	1	**245-9828**	1	FLYWHEEL AS	
	4	1	**033-7687**	1	RING (126 TEETH)	

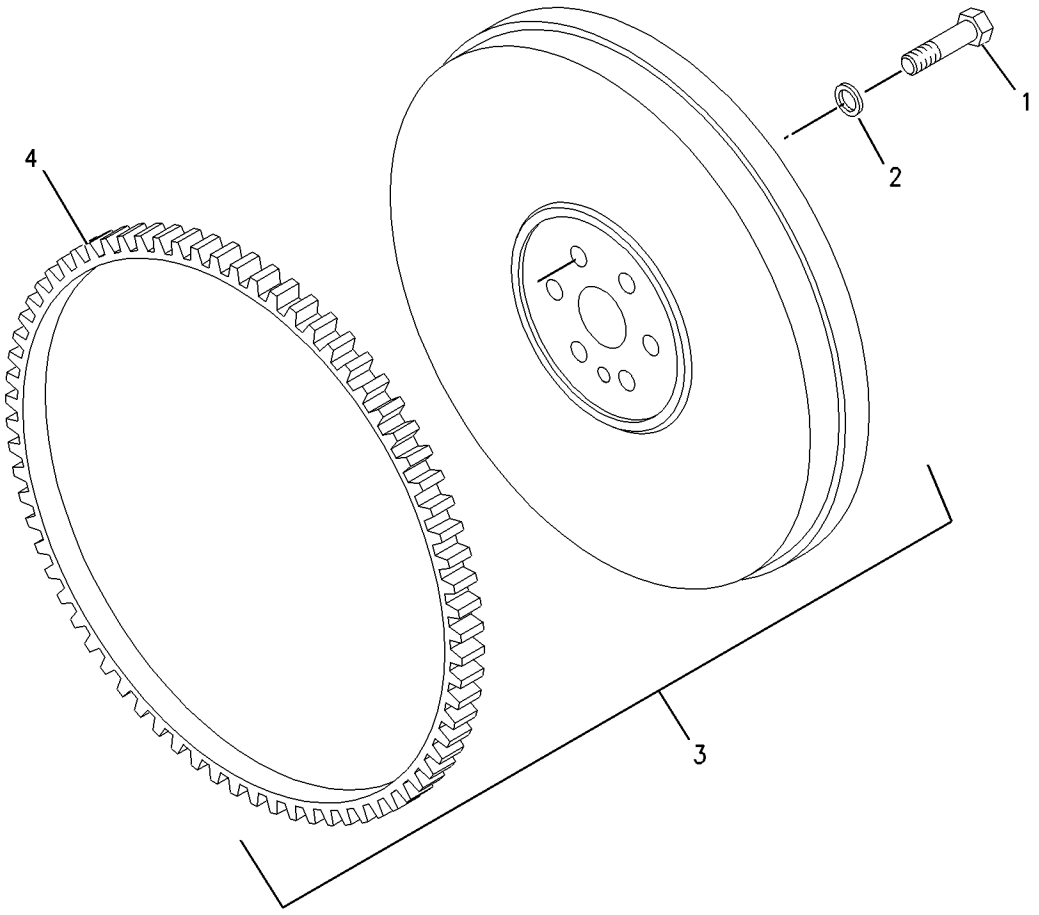

GRAPHIC #1 **<END>** g00955555

236-8238 HOUSING GP-FLYWHEEL

S/N: CRS1-UP
PART OF 234-3059, 234-3061 ENGINE AR-PRIMARY
AN ATTACHMENT

SMCS-1157 **i01925938**

NOTE	REF NO	GRAPHIC REF	PART NUMBER	QTY	PART NAME 1 2 3 4 5 6 (PRODUCT LEVEL)	SEE PAGE
	1	1	**6I-0423**	2	BOLT (M12X1.75X30MM)	
	2	1	**6I-0847**	1	PLUG	
	3	1	**7W-1176**	1	PLATE-COVER	
	4	1	**7W-4642**	1	SHIELD-DUST	
	5	1	**067-6123**	2	DOWEL	
	6	1	**114-4363**	2	BOLT (M8X1.25X12MM)	
	7	1	**101-3617**	3	PLUG	
	8	1	**121-0883**	6	BOLT (M10X1.5X30MM)	
	9	1	**220-8631**	1	HOUSING-FLYWHEEL	

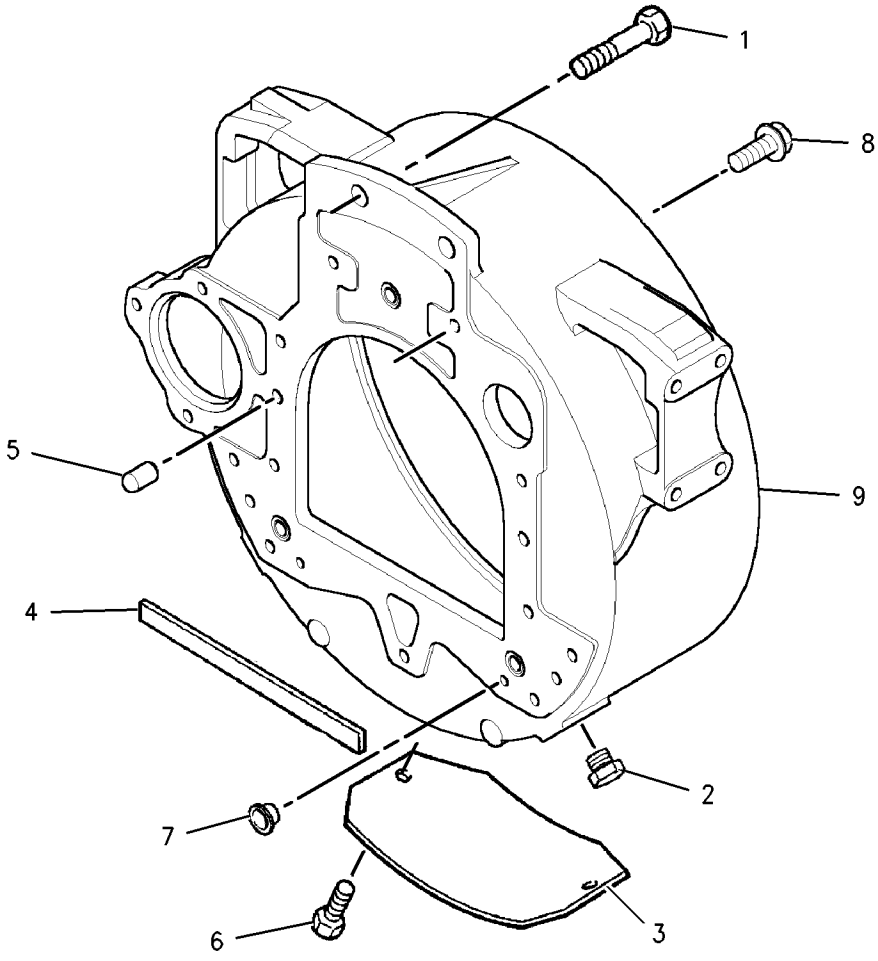

GRAPHIC #1 **<END>** g00902549

BASIC ENGINE

232-3670 HOUSING GP-FRONT

S/N: CRS1-UP

PART OF 234-3059, 234-3061 ENGINE AR-PRIMARY

AN ATTACHMENT

SMCS-1151, 1162, 1166 **i01896798**

NOTE	REF NO	GRAPHIC REF	PART NUMBER	QTY	PART NAME 1 2 3 4 5 6 (PRODUCT LEVEL)	SEE PAGE
	1	1	**1B-8736**	1	KEY-WOODRUFF	
	2	1	**6I-0217**	8	BOLT (M8X1.25X20MM)	
	3	1	**6I-0645**	4	BOLT (M8X1.25X25MM)	
	4	1	**6I-0789**	3	BOLT (M10X1.5X60MM)	
	5	1	**7C-4616**	1	BOLT (M12X1.75X45MM)	
	6	1	**067-6179**	1	DOWEL	
	7	1	**067-6897**	1	HUB-IDLER GEAR	
	8	1	**067-6900**	1	PLATE-RETAINING	
	9	1	**100-3751**	5	BOLT (M8X1.25X65MM)	
	10	1	**124-3815**	10	BOLT (M8X16X1.25MM)	
	11	1	**133-1011**	1	WASHER	
	12	1	**216-8633**	1	GEAR AS-IDLER (73 TEETH)	
	12A	1	**067-6899**	2	BUSHING-IDLER GEAR	
	13	1	**216-8634**	1	GEAR-CAMSHAFT (68 TEETH)	
	14	1	**225-8278**	1	HOUSING-FRONT	
	15	1	**225-8280**	1	SEAL-CRANKSHAFT	
	16	1	**225-8281**	1	GASKET	
	17	1	**225-8282**	1	GASKET	
	18	1	**232-3657**	1	COVER AS-FRONT	
	19	1	**232-3666**	1	WASHER-THRUST	

232-3670 **HOUSING GP-FRONT** *(contd.)* **i01896798**

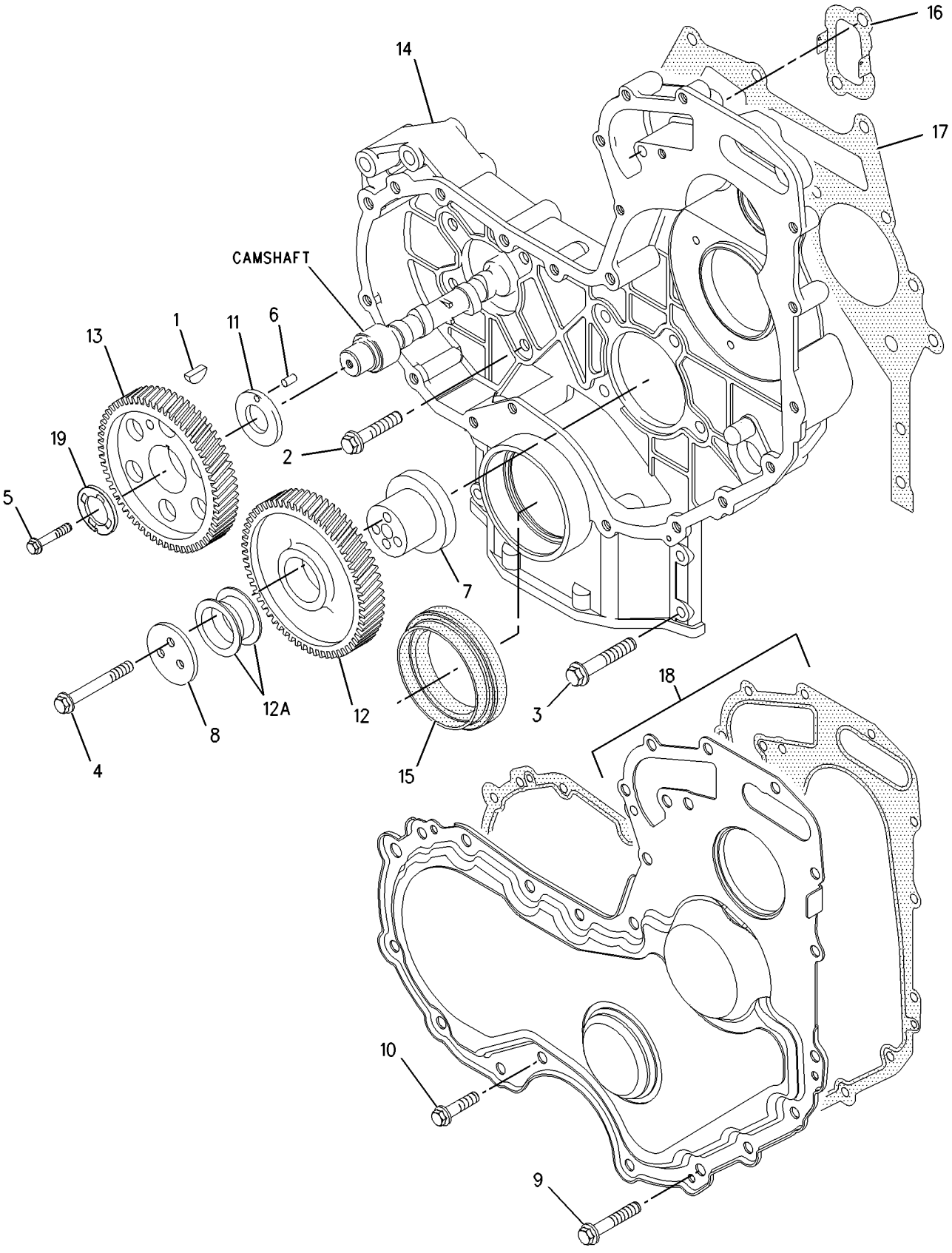

GRAPHIC #1 **<END>** g00985089

233-7432 LIFTING GP-ENGINE

S/N: CRS1-UP
PART OF 234-3059, 234-3061 ENGINE AR-PRIMARY
AN ATTACHMENT

SMCS-1122 **i01998680**

NOTE	REF NO	GRAPHIC REF	PART NUMBER	QTY	PART NAME 1 2 3 4 5 6 (PRODUCT LEVEL)	SEE PAGE
	1	1	**100-4830**	4	BOLT (M10X1.5X20MM)	
	2	1	**225-8848**	2	PLATE	

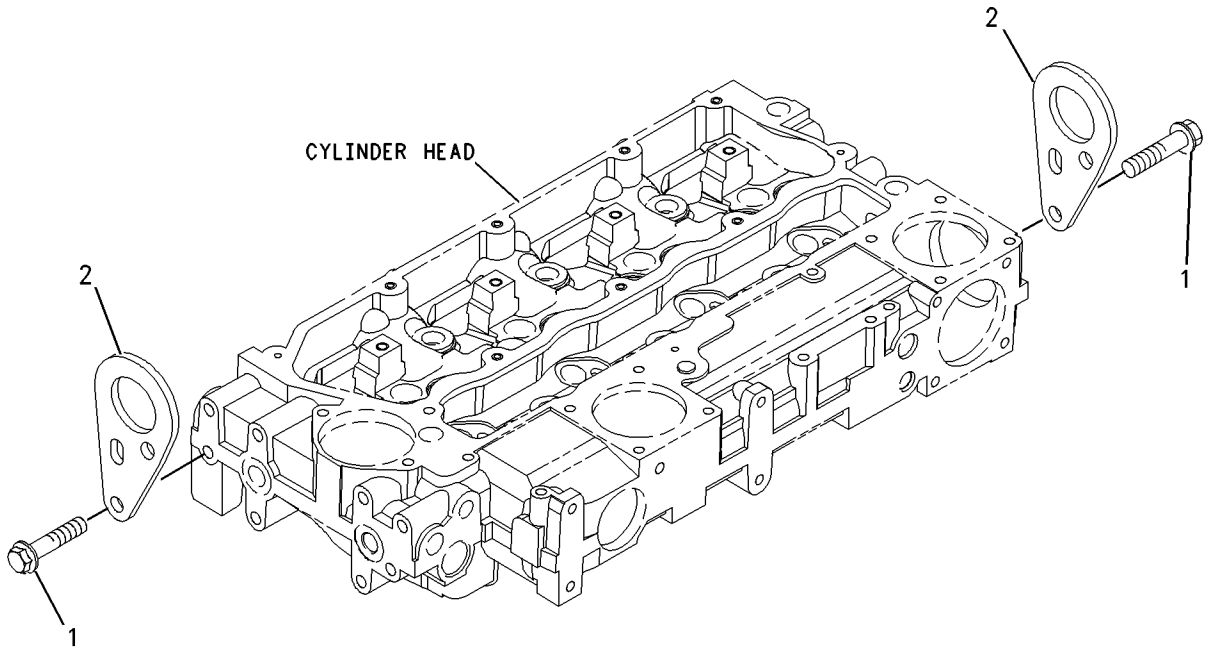

GRAPHIC #1 **<END>** g00955299

237-3658 MOUNTING GP-ENGINE

S/N: CRS1-UP

PART OF 234-3059, 234-3061 ENGINE AR-PRIMARY

AN ATTACHMENT

SMCS-1152, 1153, 1154 **i01998683**

NOTE	REF NO	GRAPHIC REF	PART NUMBER	QTY	PART NAME 1 2 3 4 5 6 (PRODUCT LEVEL)	SEE PAGE
	1	1	**101-2987**	6	PLUG	
	2	1	**6H-3616**	3	PLUG-PROTECTION	
	3	1	**195-2132**	1	SUPPORT-FRONT	
	4	1	**195-2134**	1	SUPPORT-FRONT	
	5	1	**195-2136**	8	STUD	
	6	1	**195-2221**	8	NUT	

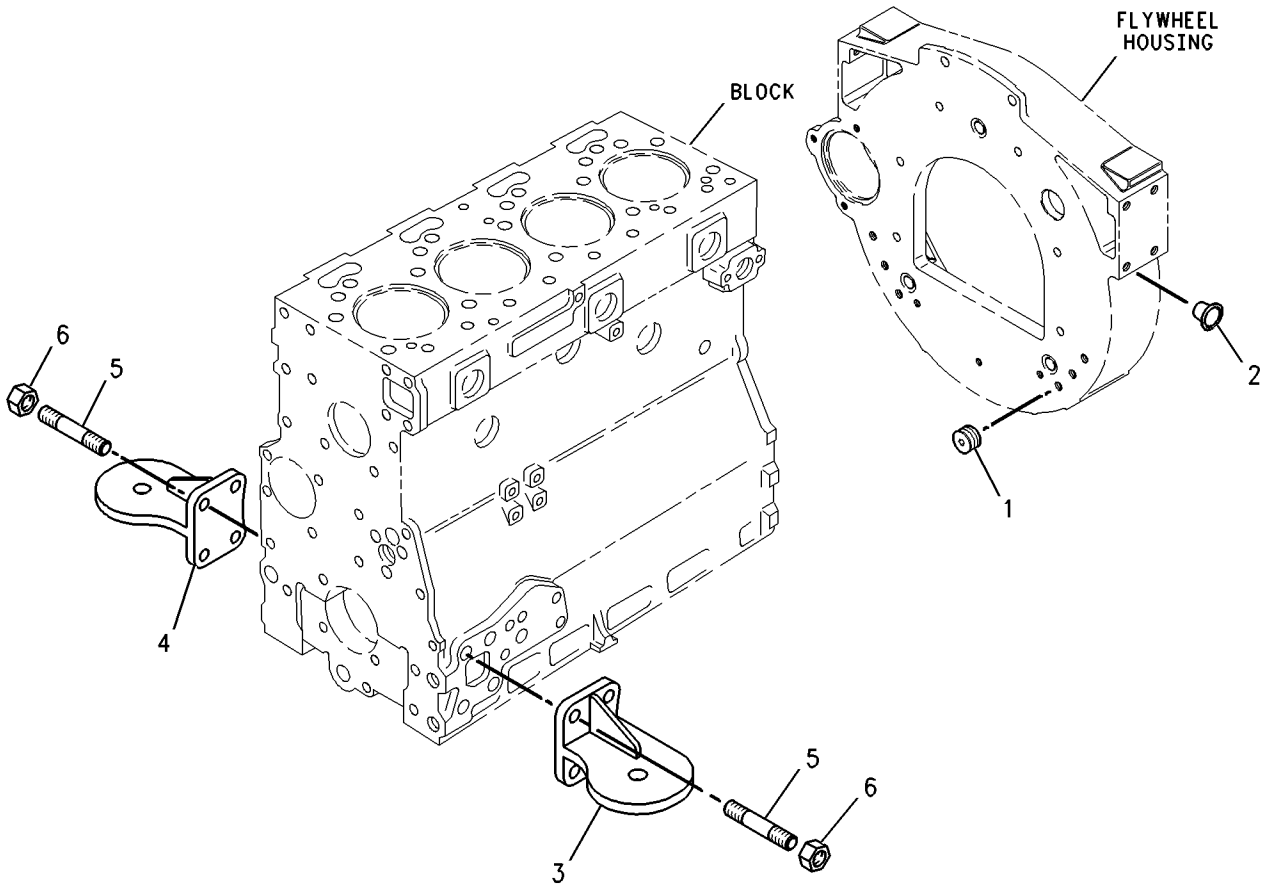

GRAPHIC #1 **<END>** g00738284

143-0782 MOUNTING GP-ENGINE & TMSN

S/N: BXC1-UP; DSX1-UP
PART OF 214-7012, 214-7014 POWER TRAIN AR
AN ATTACHMENT

SMCS-1152, 1153, 1154 **i01670193**

NOTE	REF NO	GRAPHIC REF	PART NUMBER	QTY	PART NAME 1 2 3 4 5 6 (PRODUCT LEVEL)	SEE PAGE
	1	1	**3E-4892**	4	WASHER	
	2	1	**3E-4924**	2	MOUNTING AS	
	3	1	**6Y-9915**	2	MOUNT AS	
	4	1	**9W-9953**	2	SLEEVE	
	5	1	**8T-4121**	12	WASHER-HARD (11X21X2.5MM THK)	
M	6	1	**8T-4132**	4	NUT (M16X2 THD)	
M	7	1	**8T-4174**	4	BOLT (M16X2.0X120MM)	
M	8	1	**8T-4196**	12	BOLT (M10X1.5X35MM)	
	9	1	**9X-8257**	8	WASHER (17.5X30X3.5MM THK)	

M-METRIC PART

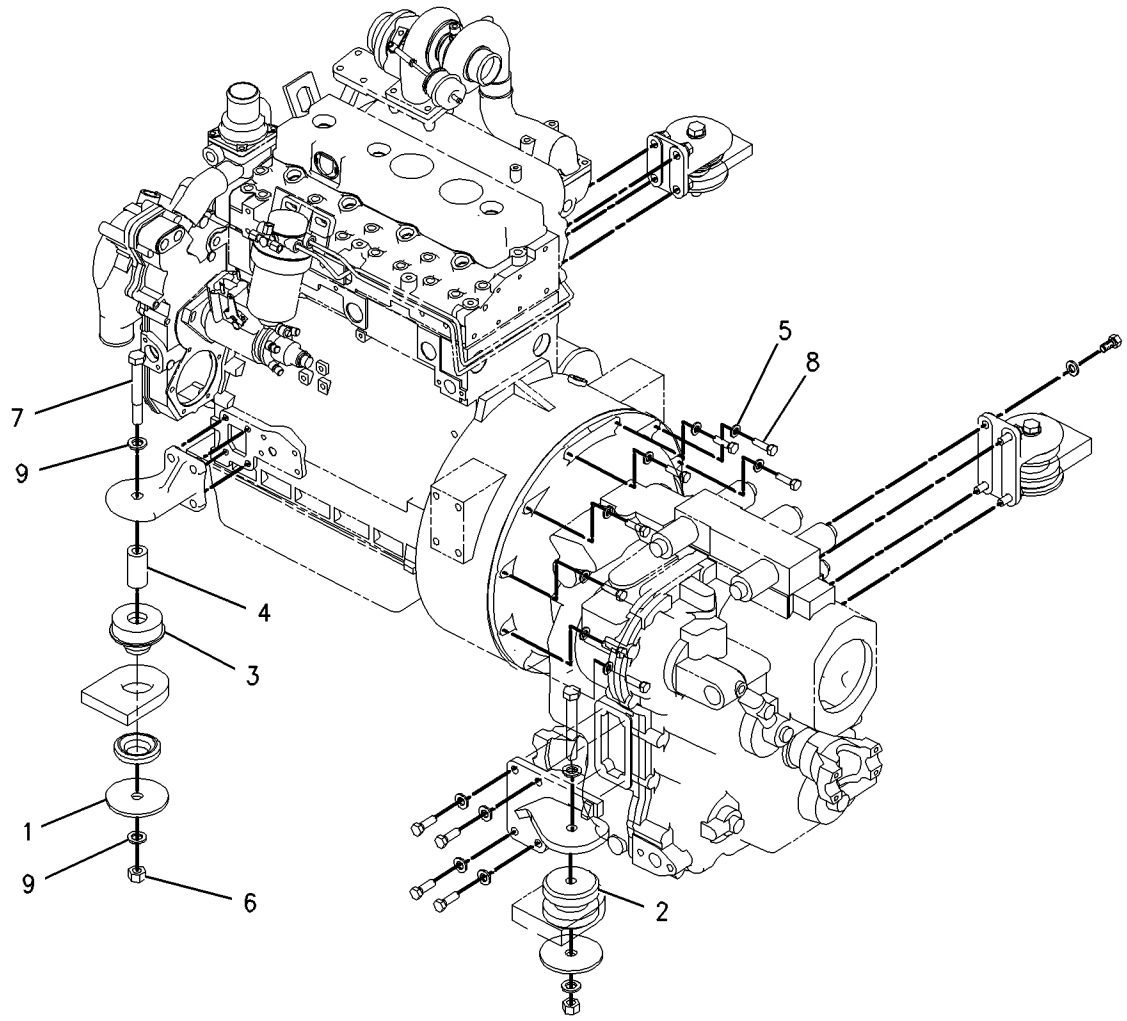

GRAPHIC #1 **<END>** g00863051

143-0788 MOUNTING GP-ENGINE & TMSN–POWER SHIFT

S/N: BXC1-UP; DSX1-UP
PART OF 214-7013, 214-7015 POWER TRAIN AR
AN ATTACHMENT

SMCS-1152, 1153, 1154 **i01738987**

NOTE	REF NO	GRAPHIC REF	PART NUMBER	QTY	PART NAME 1 2 3 4 5 6 (PRODUCT LEVEL)	SEE PAGE
	1	1	**3E-4892**	4	WASHER	
	2	1	**3E-4924**	2	MOUNTING AS	
	3	1	**6Y-9915**	2	MOUNT AS	
	4	1	**9W-9953**	2	SLEEVE	
M	5	1	**8T-4174**	4	BOLT (M16X2.0X120MM)	
M	6	1	**8T-4196**	12	BOLT (M10X1.5X35MM)	
	7	1	**9X-8257**	8	WASHER (17.5X30X3.5MM THK)	
	8	1	**8T-4121**	12	WASHER-HARD (11X21X2.5MM THK)	
M	9	1	**8T-4132**	4	NUT (M16X2 THD)	

M-METRIC PART

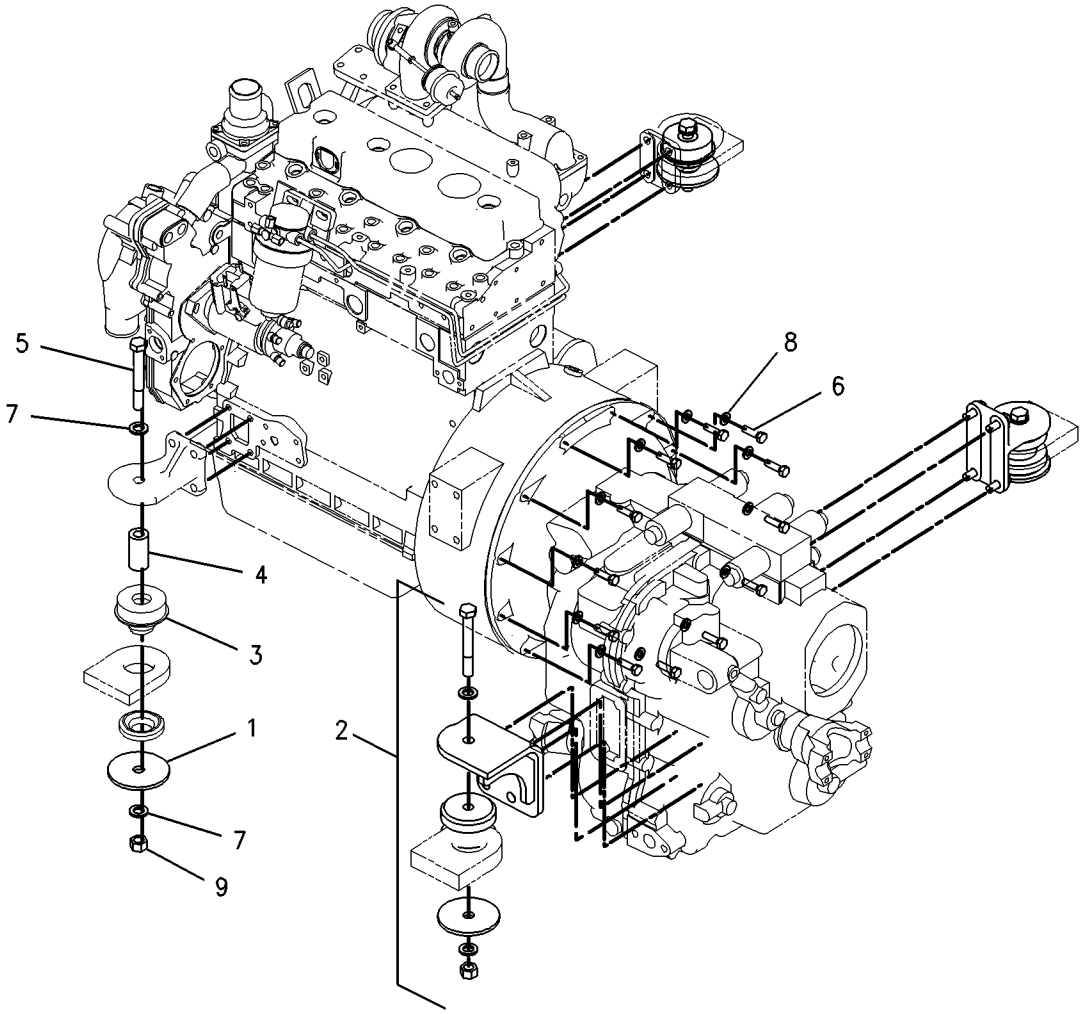

GRAPHIC #1 **<END>** g00890687

237-0025 PAN GP-OIL

S/N: CRS1-UP

PART OF 234-3059, 234-3061 ENGINE AR-PRIMARY

AN ATTACHMENT

SMCS-1302 **i01998684**

NOTE	REF NO	GRAPHIC REF	PART NUMBER	QTY	PART NAME 1 2 3 4 5 6 (PRODUCT LEVEL)	SEE PAGE
	1	1	**5P-6718**	2	SEAL-O-RING	
	2	1	**6I-0217**	12	BOLT (M8X1.25X20MM)	
	3	1	**6I-0260**	2	BOLT (M8X1.25X25MM)	
	4	1	**6I-0289**	1	PLUG	
	5	1	**6I-0363**	2	BOLT (M6X1.0X20MM)	
	6	1	**6I-0572**	2	BOLT (M8X1.25.20MM)	
	7	1	**7C-0351**	2	PLUG-SUMP DRAIN	
	8	1	**067-6213**	1	GASKET	
	9	1	**101-3771**	6	BOLT	
	10	1	**225-6004**	1	PAN AS-OIL	
	10A	1	**7C-1224**	2	INSERT	
	11	1	**225-6005**	1	GASKET	
	12	1	**225-6041**	1	TUBE	
	13	1	**230-8094**	1	BRIDGE	

237-0025 **PAN GP-OIL** ***(contd.)*** **i01998684**

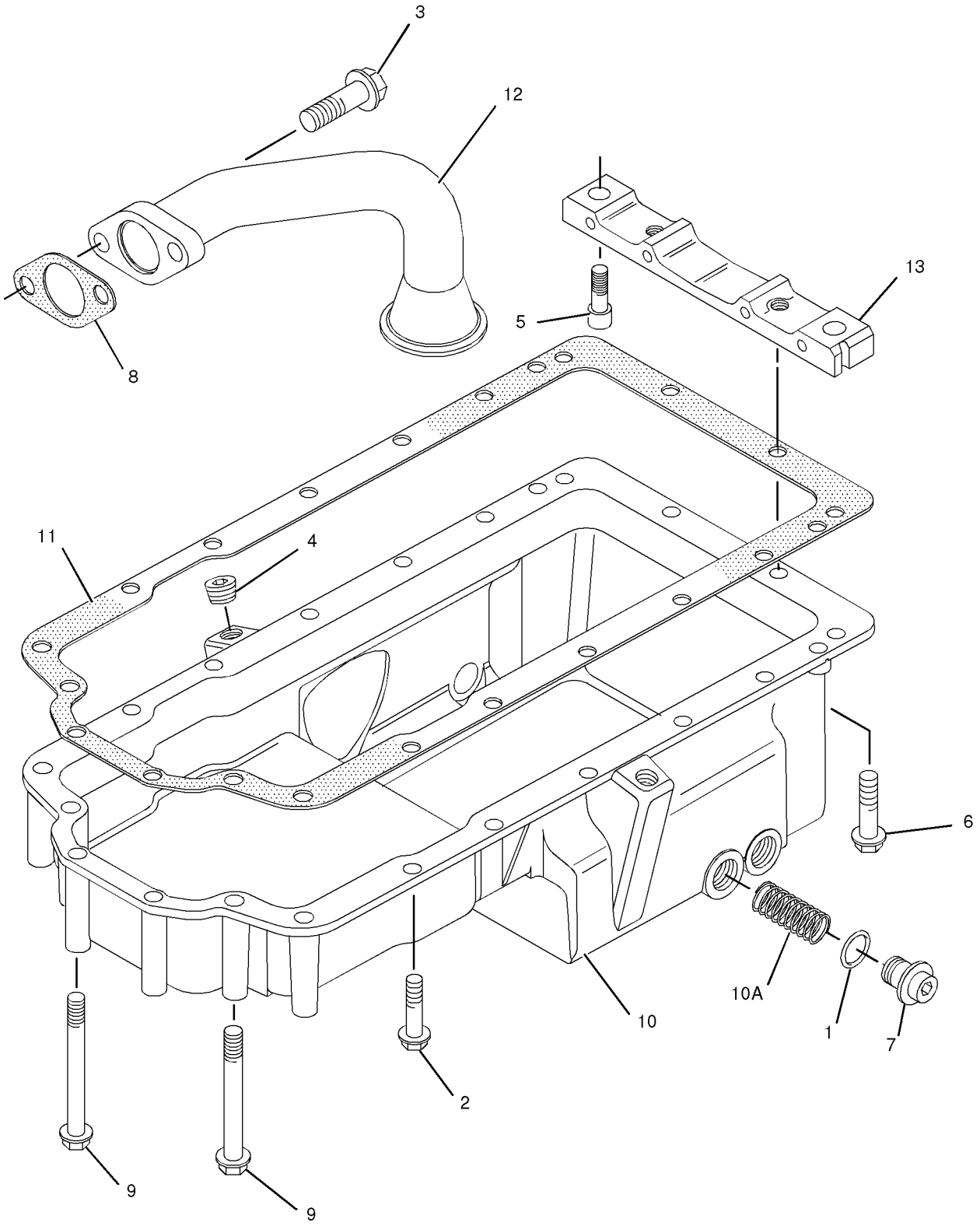

GRAPHIC #1 **<END>** g01036037

232-7442 PISTON & ROD GP

S/N: CRS1-UP

PART OF 234-3059, 234-3061 ENGINE AR-PRIMARY

AN ATTACHMENT

SMCS-1213, 1214, 1215, 1218, 1219, 1225, 1239 **i01998628**

NOTE	REF NO	GRAPHIC REF	PART NUMBER	QTY	PART NAME 1 2 3 4 5 6 (PRODUCT LEVEL)	SEE PAGE
	1	1	**225-5437**	4	PISTON AS	
					(EACH PISTON AS INCLUDES)	
	2	1	**124-3536**	2	RING-RETAINING	
	3	1	**225-5436**	1	KIT-PISTON RING	
J	4	1	**225-5441**	4	ROD AS (L)	
					—OR—	
J		1	**225-5451**	4	ROD AS (K)	
					—OR—	
J		1	**225-5453**	4	ROD AS (J)	
					—OR—	
J		1	**225-5454**	4	ROD AS (H)	
					—OR—	
J		1	**225-5458**	4	ROD AS (G)	
					—OR—	
J		1	**225-5459**	4	ROD AS (F)	
					(EACH ROD AS INCLUDES)	
	5	1	**225-5438**	1	BUSHING	
	6	1	**225-5439**	2	BOLT	

J-ENSURE THAT CORRECT ROD LENGTH IS FITTED

232-7442 **PISTON & ROD GP** *(contd.)* **i01998628**

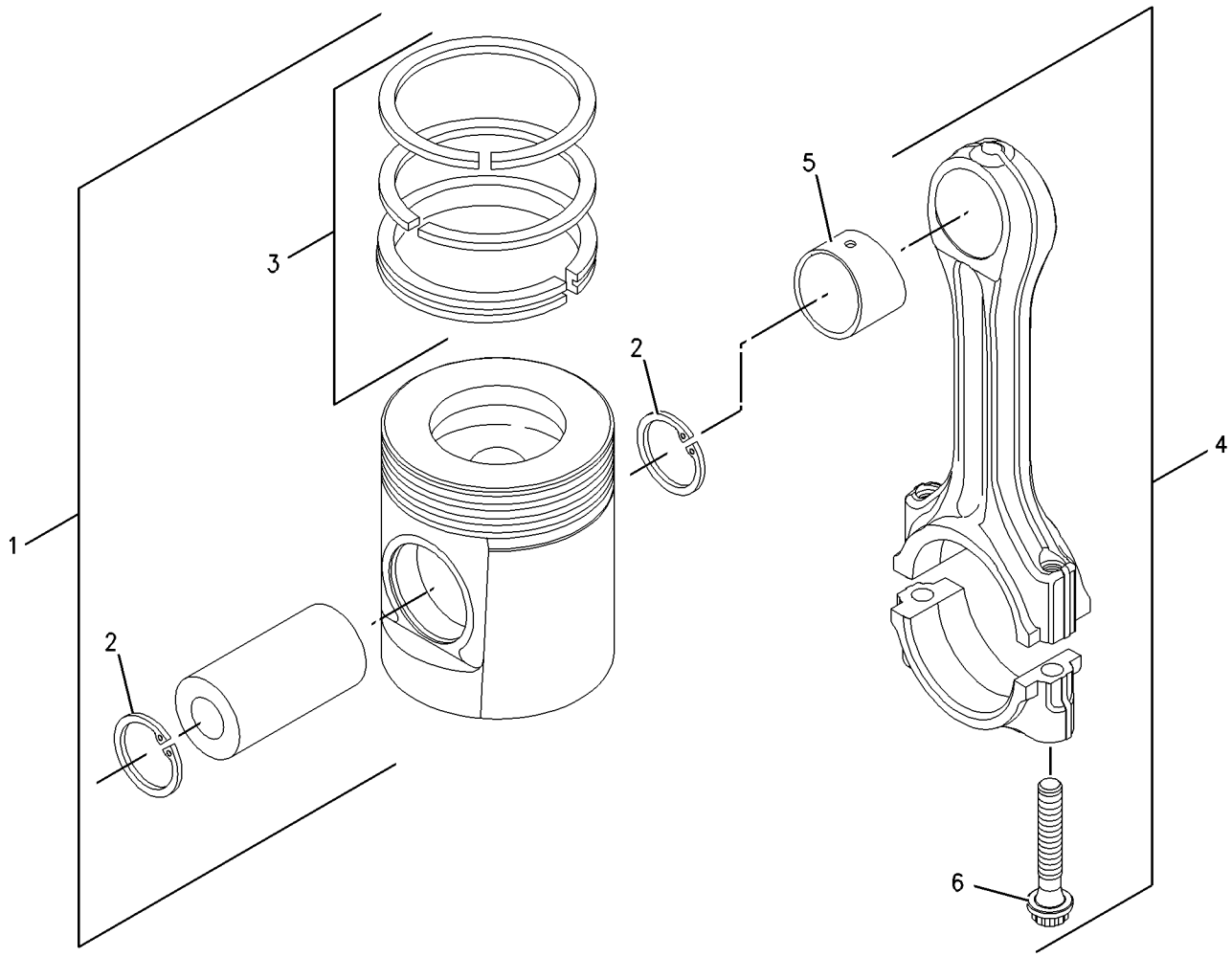

GRAPHIC #1 **<END>** g00909669

BASIC ENGINE

225-4317 PLUG GP-ENGINE

S/N: CRS1-UP

PART OF 234-3059, 234-3061 ENGINE AR-PRIMARY

AN ATTACHMENT

SMCS-1000 **i01772005**

NOTE	REF NO	GRAPHIC REF	PART NUMBER	QTY	PART NAME 1 2 3 4 5 6 (PRODUCT LEVEL)	SEE PAGE
	1	1	**2B-0858**	3	PLUG-PIPE	

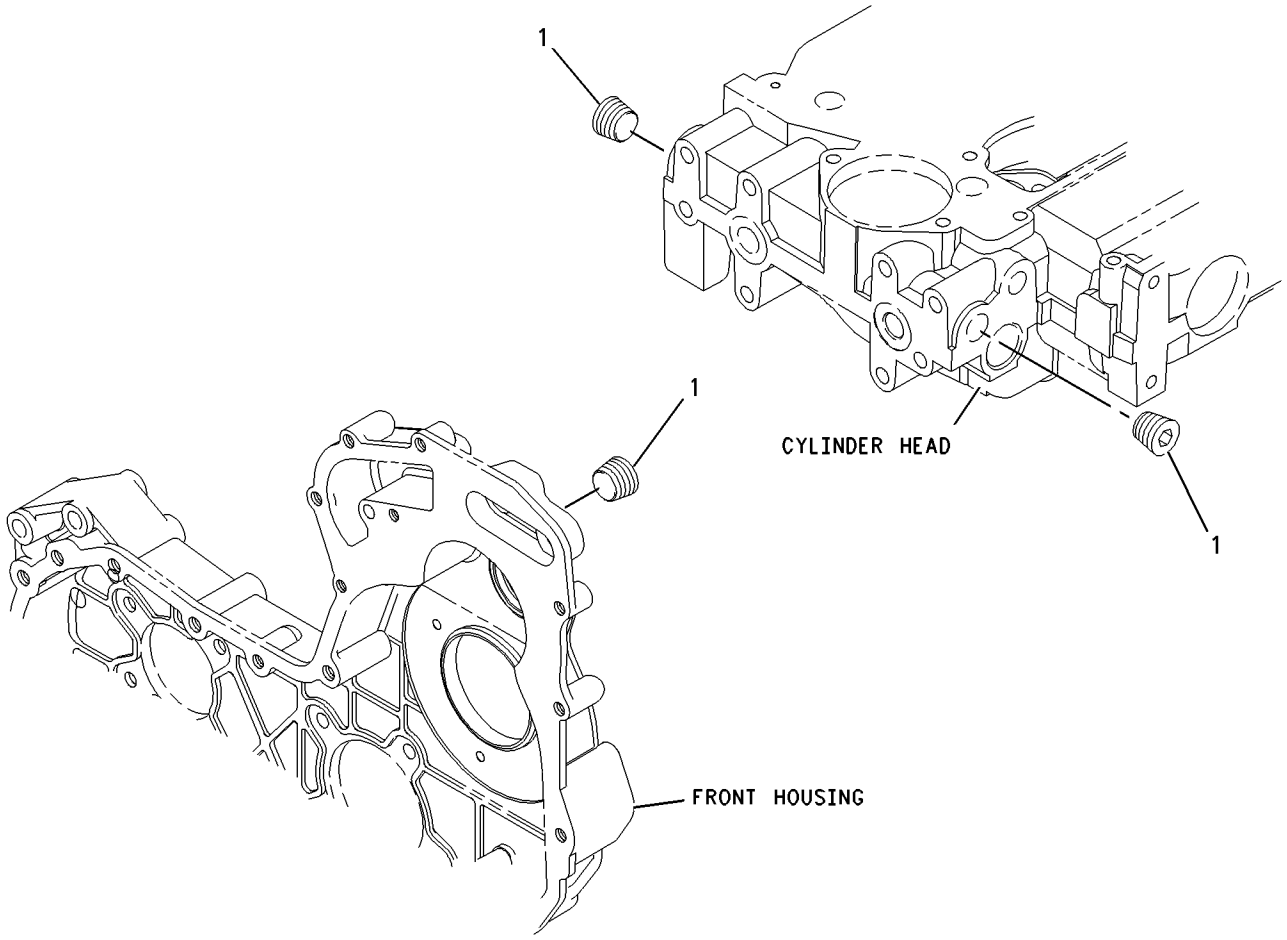

GRAPHIC #1 **<END>** g00911937

230-7569 PLUG GP-ENGINE

S/N: CRS1-UP
PART OF 234-3059, 234-3061 ENGINE AR-PRIMARY
AN ATTACHMENT

SMCS-1000 **i01896487**

NOTE	REF NO	GRAPHIC REF	PART NUMBER	QTY	PART NAME 1 2 3 4 5 6 (PRODUCT LEVEL)	SEE PAGE
	1	1	**231-0046**	1	PLUG	

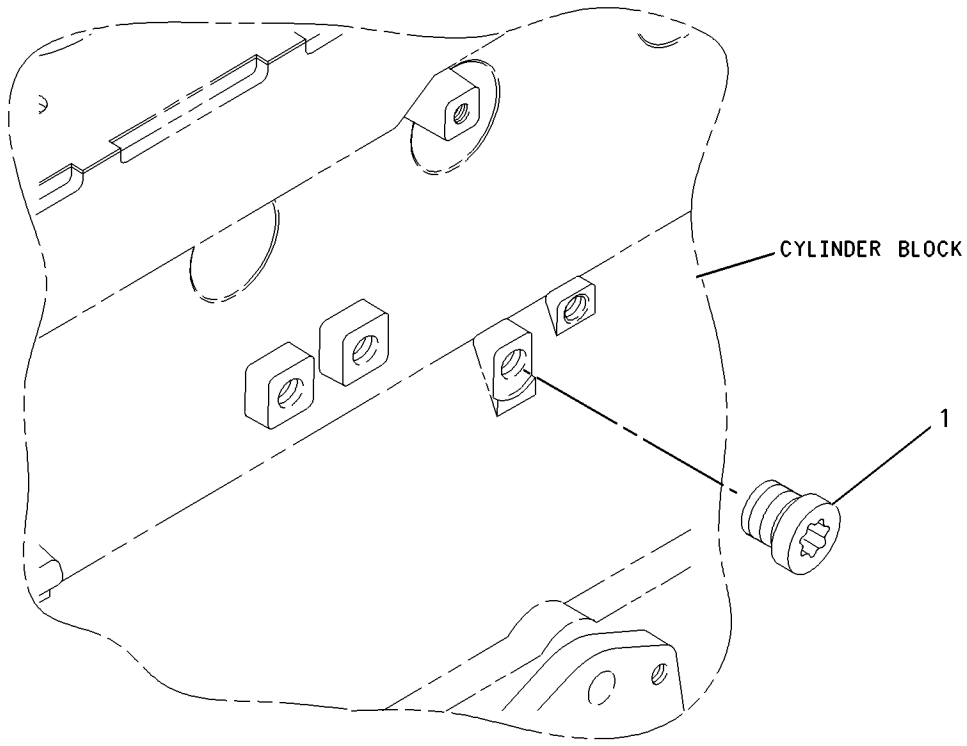

GRAPHIC #1 **<END>** g00911955

230-7353 PULLEY GP-CRANKSHAFT

S/N: CRS1-UP
PART OF 234-3059, 234-3061 ENGINE AR-PRIMARY
AN ATTACHMENT

SMCS-1205 **i01998616**

NOTE	REF NO	GRAPHIC REF	PART NUMBER	QTY	PART NAME 1 2 3 4 5 6 (PRODUCT LEVEL)	SEE PAGE
	1	1	**6I-0501**	1	BLOCK	
	2	1	**6I-0502**	1	PULLEY	
	3	1	**7W-4634**	3	BOLT	

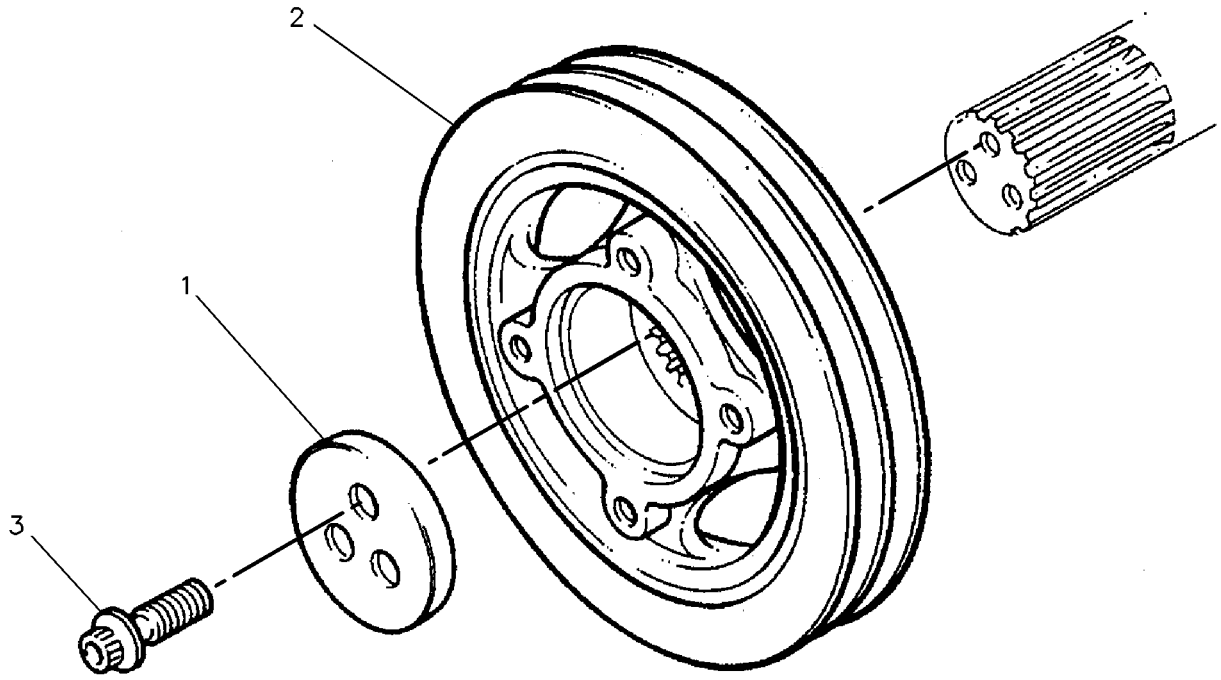

GRAPHIC #1 **<END>** g00130941

BASIC ENGINE

232-7526 VALVE MECHANISM GP

S/N: CRS1-UP

PART OF 234-3059, 234-3061 ENGINE AR-PRIMARY

AN ATTACHMENT

SMCS-1102, 1112, 1121, 1123, 1208, 1209 **i02002526**

NOTE	REF NO	GRAPHIC REF	PART NUMBER	QTY	PART NAME 1 2 3 4 5 6 (PRODUCT LEVEL)	SEE PAGE
	1	1	**067-6095**	8	ROD	
	2	1	**138-2053**	8	TAPPET	
	3	1	**225-5963**	1	ROCKER ARM AS	
	4	1	**225-5625**	4	LEVER AS	
					(EACH INCLUDES)	
	5	1	**5B-9079**	1	NUT-JAM (3/8-24 THD)	
	6	1	**185-1546**	1	SCREW	
	7	1	**225-5634**	1	SHAFT AS	
	8	1	**225-5629**	2	PLUG	
	9	1	**225-5638**	3	SPRING	
	10	1	**225-5640**	4	LEVER AS	
					(EACH INCLUDES)	
	11	1	**5B-9079**	1	NUT-JAM (3/8-24 THD)	
	12	1	**185-1546**	1	SCREW	
	13	1	**225-5959**	2	CLIP	
	14	1	**225-5960**	1	BOLT	
	15	1	**225-5961**	2	WASHER	
	16	1	**225-5962**	3	BOLT	

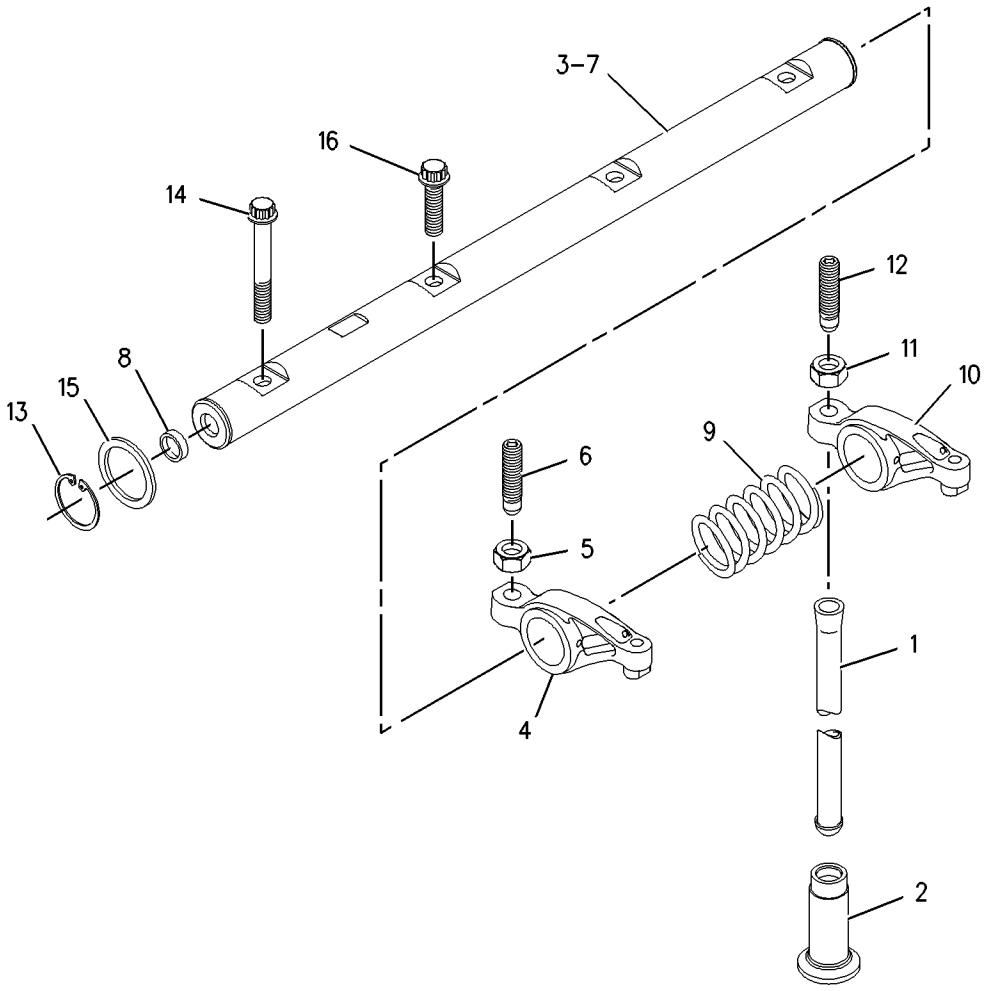

GRAPHIC #1 **<END>** g00910253

LUBRICATION SYSTEM

234-7510 FILLER GP-ENGINE OIL

S/N: BXC1-UP; DSX1-UP
PART OF 214-6891, 214-6893 ENGINE AR
AN ATTACHMENT

SMCS-1316 **i01991953**

NOTE	PART NUMBER	QTY	PART NAME 1 2 3 4 5 6 (PRODUCT LEVEL)	SEE PAGE
	6I-1497	1	SEAL	
	7W-2326	1	FILTER AS-ENGINE OIL	
	9M-7958	1	CLAMP-HOSE	
	127-4471	1	CLAMP-HOSE	
	234-7509	1	TUBE AS	
	234-7954	1	HOSE (OIL FILLER)	
	234-8815	1	TUBE AS	
	235-2491	1	BRACKET AS	
M	**8T-3490**	1	NUT-WELD (M10X1.5 THD)	
	236-6651	1	CAP AS	
	236-6652	1	GAUGE-OIL LEVEL	
	239-3683	1	SUPPORT	
	147-0385	2	CLIP	
	7D-7233	1	CLIP	
	7X-7729	7	WASHER (11X25X3MM THK)	
M	**8T-4133**	1	NUT (M10X1.5 THD)	
M	**8T-4136**	4	BOLT (M10X1.5X25MM)	
M	**8T-4195**	2	BOLT (M10X1.5X30MM)	

M-METRIC PART

<END>

LUBRICATION SYSTEM

230-7578 PUMP GP-ENGINE OIL

S/N: CRS1-UP
PART OF 234-3059, 234-3061 ENGINE AR-PRIMARY
AN ATTACHMENT

SMCS-1304, 1315 **i01896485**

NOTE	REF NO	GRAPHIC REF	PART NUMBER	QTY	PART NAME 1 2 3 4 5 6 (PRODUCT LEVEL)	SEE PAGE
	1	1	**100-4461**	5	BOLT (M10X50MM)	
	2	1	**225-8329**	1	PUMP AS-ENGINE OIL	

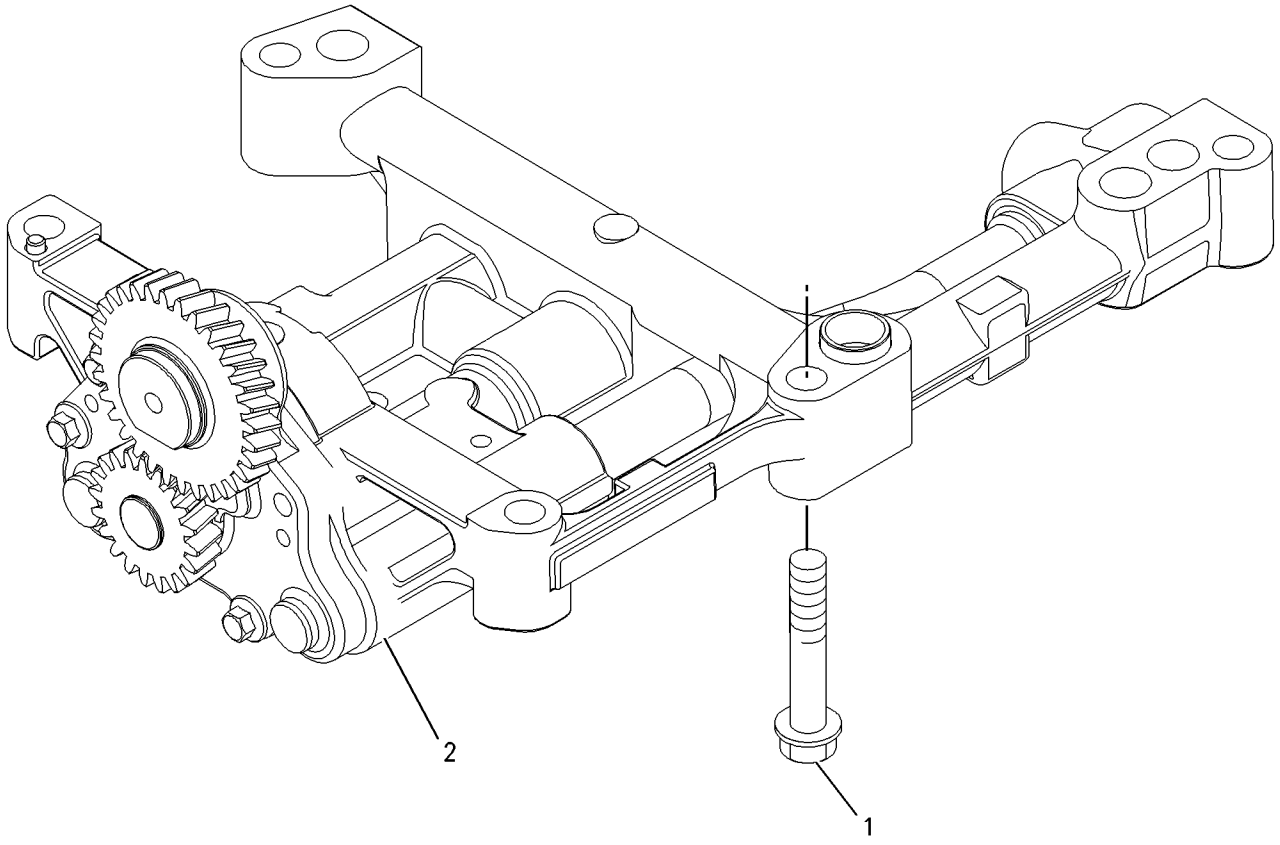

GRAPHIC #1 **<END>** g00911993

231-0033 CONNECTION GP-WATER

S/N: CRS1-UP
PART OF 234-3059, 234-3061 ENGINE AR-PRIMARY
AN ATTACHMENT

SMCS-1380 **i01998620**

NOTE	REF NO	GRAPHIC REF	PART NUMBER	QTY	PART NAME 1 2 3 4 5 6 (PRODUCT LEVEL)	SEE PAGE
	1	1	**6I-0260**	2	BOLT (M8X1.25X25MM)	
	2	1	**231-0030**	1	CONNECTION AS	
	2A	1	**225-6908**	1	REGULATOR-WATER TEMPERATURE	
	2B	1	**225-6909**	1	SEAL-O-RING (WATER TEMPERATURE REGULATOR)	

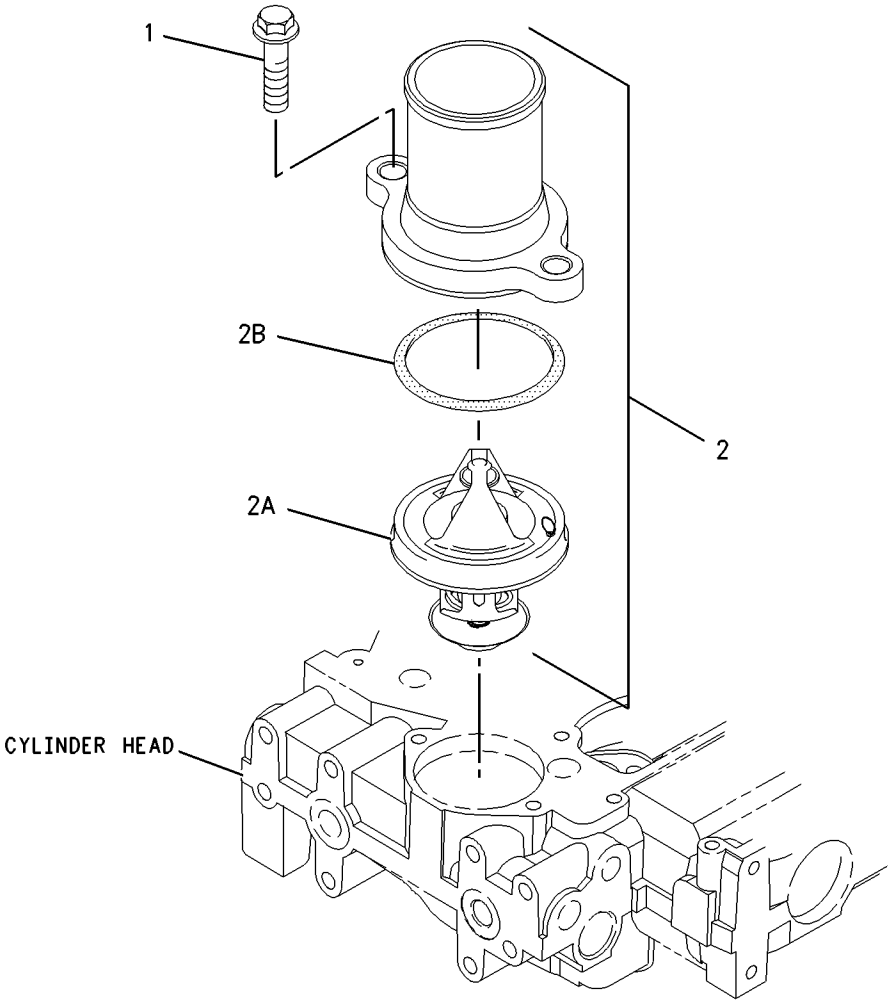

GRAPHIC #1 **<END>** g00950832

232-6177 COOLER GP-FLTR BASE & ENG OIL

S/N: CRS1-UP

PART OF 234-3059, 234-3061 ENGINE AR-PRIMARY

AN ATTACHMENT

SMCS-1306, 1378 **i01998626**

NOTE	REF NO	GRAPHIC REF	PART NUMBER	QTY	PART NAME 1 2 3 4 5 6 (PRODUCT LEVEL)	SEE PAGE
	1	1	**6I-0572**	4	BOLT (M8X1.25.20MM)	
	2	1	**6I-0645**	4	BOLT (M8X1.25X25MM)	
	3	1	**199-9267**	1	SEAL-O-RING	
	4	1	**225-7941**	1	PLUG (ENGINE OIL FILTER LINES)	
	5	1	**225-7944**	2	GASKET	
	6	1	**230-8279**	1	HEAD AS-OIL FILTER	
	6A	1	**118-9145**	1	CONNECTOR	
	7	1	**232-3722**	1	COOLER GP-ENGINE OIL	
	7A	1	**6I-0260**	10	BOLT (M8X1.25X25MM)	
	7B	1	**6I-4374**	3	BOLT	
M	7C	1	**101-3895**	4	BOLT (M8X1.25X35MM)	
	7D	1	**225-6817**	1	COOLER-OIL	
	7E	1	**225-6818**	2	SEAL	
	7F	1	**225-6820**	1	GASKET	
	8	1	**232-3751**	1	PLATE	
	9	1	**232-3861**	1	PLUG	
	10	1	**8T-7876**	1	SEAL-O-RING	

M-METRIC PART

232-6177 **COOLER GP-FLTR BASE & ENG OIL** ***(contd.)*** **i01998626**

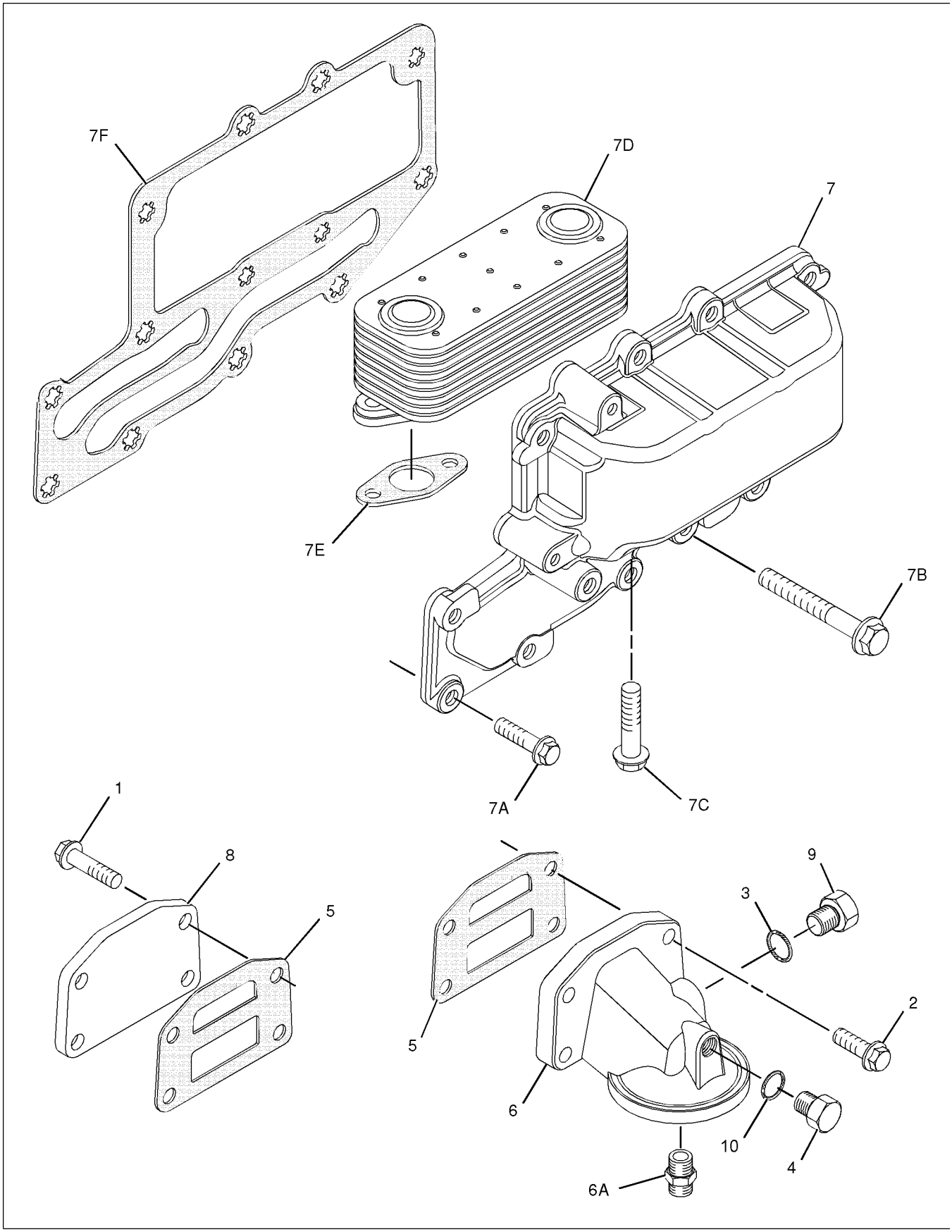

GRAPHIC #1 **<END>** g01029301

COOLING SYSTEM

145-6713 FAN GP-SUCTION

S/N: BXC1-UP; DSX1-UP

PART OF 214-7006 CAB AR, 214-7008 CAB AR-ENCLOSED ROPS, 214-7004 CANOPY AR

AN ATTACHMENT

SMCS-1356, 1360 **i01644770**

NOTE	REF NO	GRAPHIC REF	PART NUMBER	QTY	PART NAME 1 2 3 4 5 6 (PRODUCT LEVEL)	SEE PAGE
	1	1	**5P-4116**	4	WASHER-HARD (8.8X20.5X2MM THK)	
M	2	1	**8T-4908**	6	BOLT (M8X1.25X25MM)	
	3	1	**127-6980**	2	GUARD AS-FAN	
	4	1	**130-3880**	1	PULLEY-FAN DRIVE	
	5	1	**142-3388**	1	SPACER-FAN	
	6	1	**142-3391**	1	SPIDER AS	
M	7	1	**153-3061**	4	BOLT-HEX HEAD (M8X1.25X130MM)	
	8	1	**8T-4224**	6	WASHER-HARD (8.8X16X2MM THK)	

M-METRIC PART

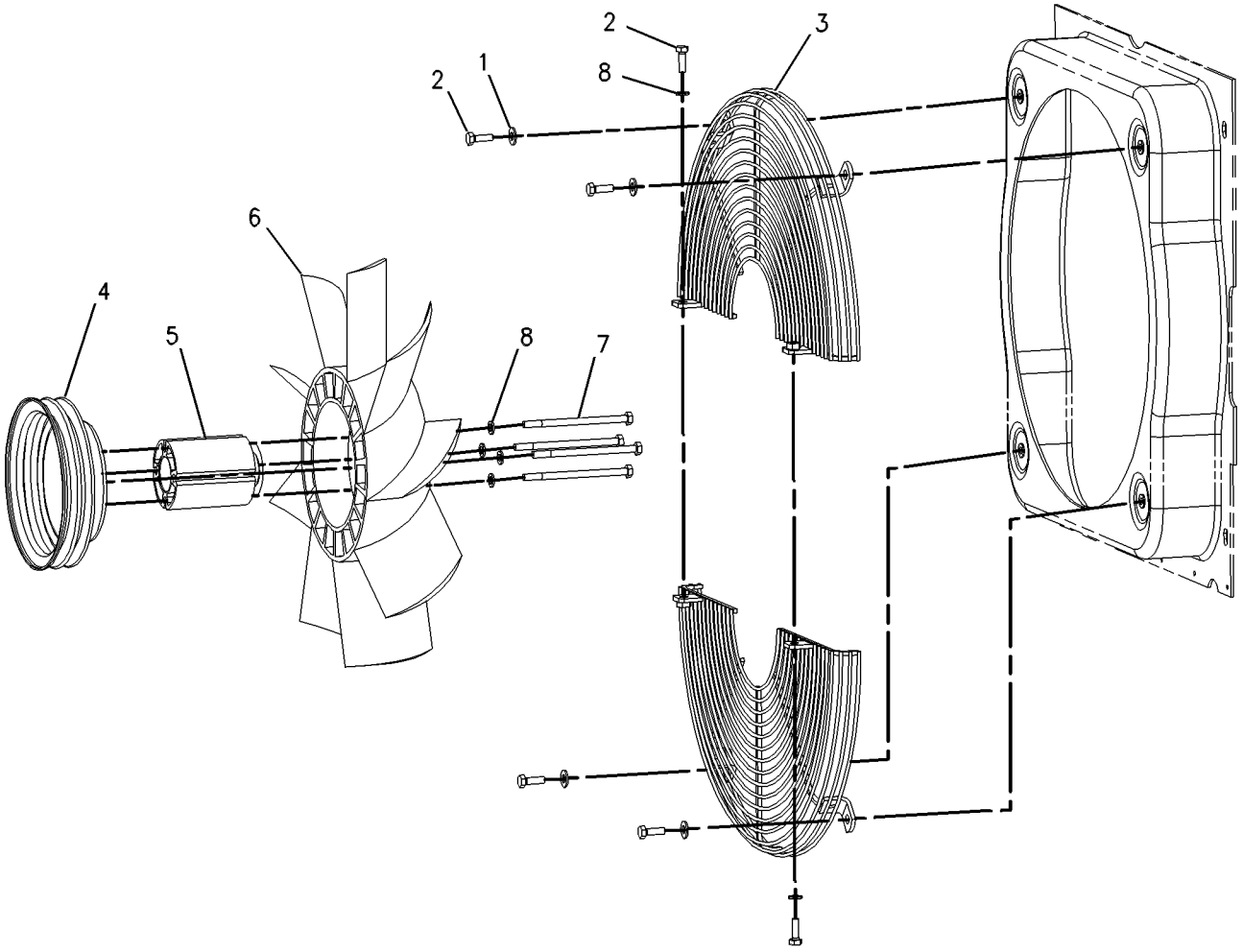

GRAPHIC #1 **<END>** g00367570

COOLING SYSTEM

147-1559 FAN GP-SUCTION

S/N: BXC1-UP; DSX1-UP
PART OF 214-7007 CAB AR, 214-7009 CAB AR-ENCLOSED ROPS
AN ATTACHMENT

SMCS-1356, 1360 **i02005528**

NOTE	REF NO	GRAPHIC REF	PART NUMBER	QTY	PART NAME 1 2 3 4 5 6 (PRODUCT LEVEL)	SEE PAGE
	1	1	**130-3879**	1	PULLEY-FAN DRIVE	
	2	1	**142-3388**	1	SPACER	
	3	1	**142-3391**	1	SPIDER AS (9 BLADES)	
	4	1	**242-9751**	1	GUARD AS	
M	5	1	**153-3061**	4	BOLT (M8X1.25X130MM)	
	6	1	**5P-4116**	4	WASHER-HARD (8.8X20.5X2MM THK)	
	7	1	**8T-4224**	6	WASHER-HARD (8.8X16X2MM THK)	
M	8	1	**8T-4908**	6	BOLT (M8X1.25X25MM)	

M-METRIC PART

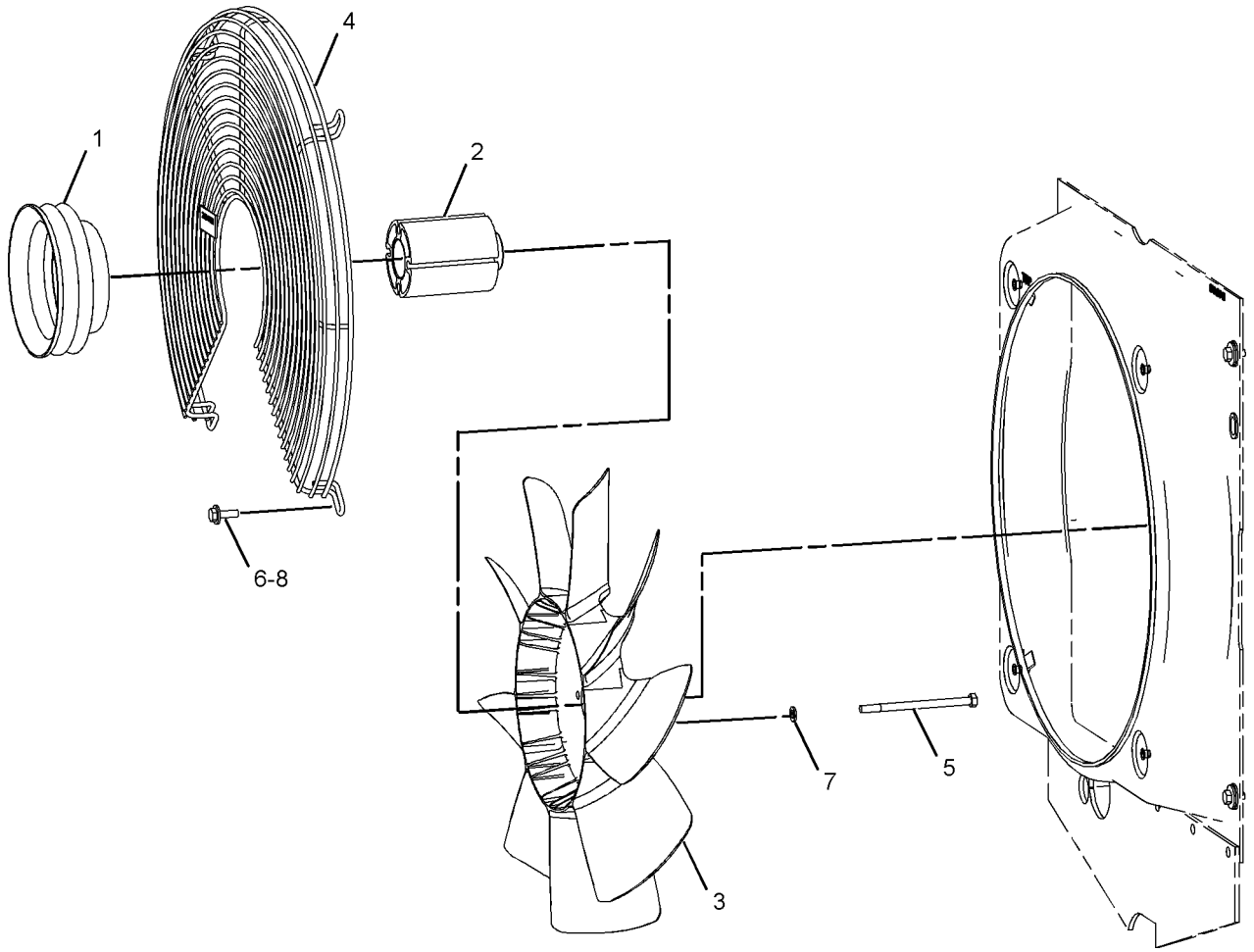

GRAPHIC #1 **<END>** g01037455

198-9723 FITTING GP-HEATER & AIR COND

S/N: BXC1-UP; DSX1-UP

PART OF 214-7006, 214-7007 CAB AR, 214-7008, 214-7009 CAB AR-ENCLOSED ROPS AN ATTACHMENT

SMCS-7309 **i01484572**

NOTE	REF NO	GRAPHIC REF	PART NUMBER	QTY	PART NAME 1 2 3 4 5 6 (PRODUCT LEVEL)	SEE PAGE
	1	1	**6B-4661**	1	BUSHING-REDUCER	
	2	1	**8F-8151**	1	VALVE-SHUTOFF	
	3	1	**004-6557**	1	BUSHING-REDUCER	
	4	1	**004-6810**	1	ELBOW	

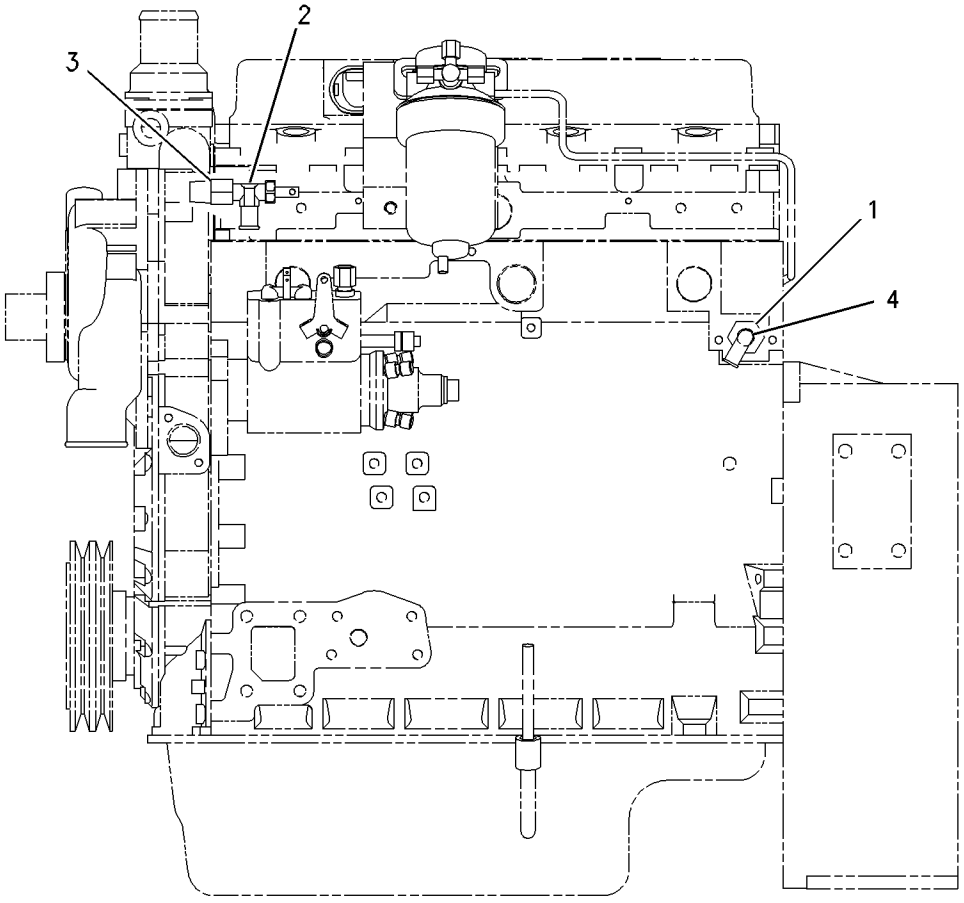

GRAPHIC #1 **<END>** g00772489

143-0786 LINES GP-POWER TRAIN COOLER

S/N: BXC1-UP; DSX1-UP
PART OF 214-7012, 214-7014 POWER TRAIN AR
AN ATTACHMENT

SMCS-1375, 3016 **i01498723**

NOTE	REF NO	GRAPHIC REF	PART NUMBER	QTY	PART NAME 1 2 3 4 5 6 (PRODUCT LEVEL)	SEE PAGE
B	1	1	**7K-1181**	2	STRAP-CABLE	
	2	1	**118-7286**	1	BRACKET AS	
	3	1	**130-9984**	2	CLIP (SLOT)	
	4	1	**138-6904**	1	HOSE AS	
	5	1	**138-6913**	1	HOSE AS	
	6	1	**159-0186**	2	CLAMP	
	7	1	*148-8339*	1	CONNECTOR GP	
		1	**6V-8716**	1	CONNECTOR	
		1	**6V-9746**	1	SEAL-O-RING	
		1	**7M-8485**	1	SEAL-O-RING	
	8	1	*148-8360*	1	ELBOW GP	
		1	**6V-9182**	1	ELBOW	
		1	**6V-9746**	1	SEAL-O-RING	
		1	**7M-8485**	1	SEAL-O-RING	
	9	1	**5P-4116**	2	WASHER-HARD (8.8X20.5X2MM THK)	
	10	1	**8T-4121**	2	WASHER-HARD (11X21X2.5MM THK)	
M	11	1	**8T-4136**	1	BOLT (M10X1.5X25MM)	
M	12	1	**8T-4137**	1	BOLT (M10X1.5X20MM)	
M	13	1	**8T-4189**	2	BOLT (M8X1.25X20MM)	
M	14	1	**8T-4192**	2	BOLT (M12X1.75X25MM)	
	15	1	**8T-4223**	2	WASHER-HARD (13.5X25.5X3MM THK)	
	16	1	**8T-7529**	3	CLIP (SLOT)	

B-USE AS REQUIRED
M-METRIC PART

143-0786 **LINES GP-POWER TRAIN COOLER** *(contd.)* **i01498723**

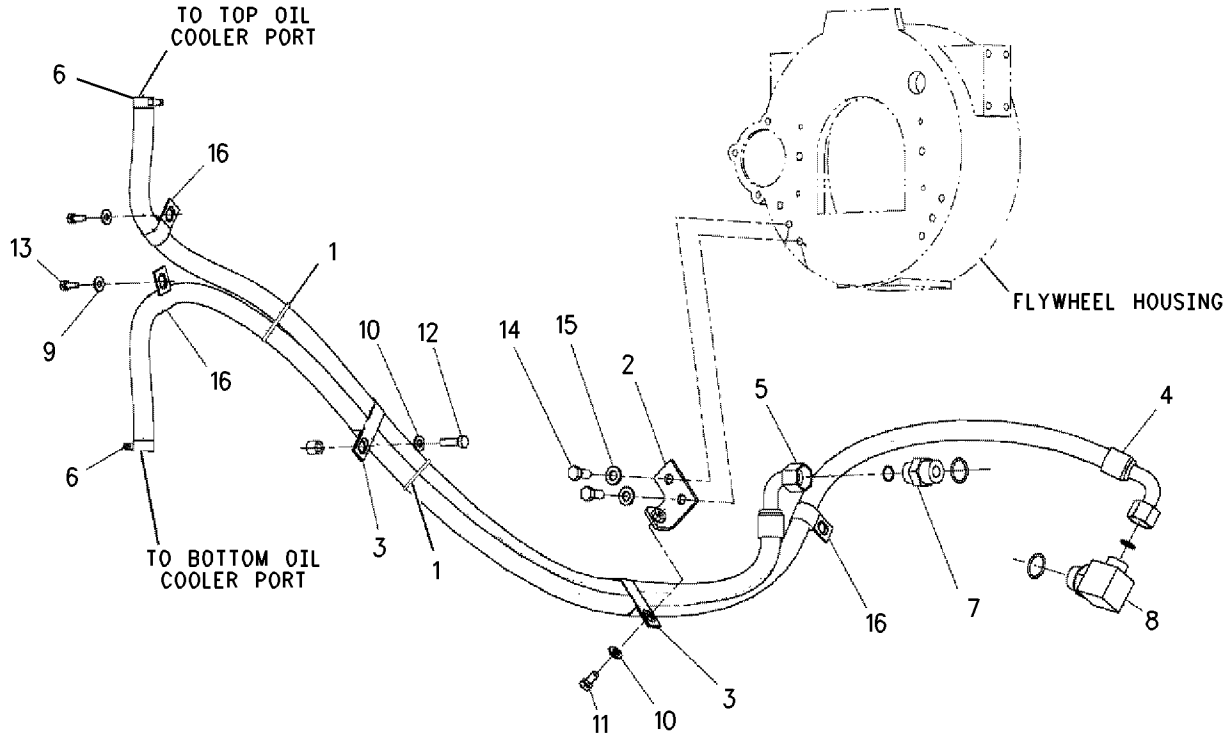

GRAPHIC #1 **<END>** g00777719

COOLING SYSTEM

143-0789 LINES GP-POWER TRAIN COOLER—POWER SHIFT

S/N: BXC1-UP; DSX1-UP
PART OF 214-7013, 214-7015 POWER TRAIN AR
AN ATTACHMENT

SMCS-1375, 3016 **i01776282**

NOTE	REF NO	GRAPHIC REF	PART NUMBER	QTY	PART NAME 1 2 3 4 5 6 (PRODUCT LEVEL)	SEE PAGE
E	1	1	**136-1955**	2	HOSE (77CM)	
	2	1	**7K-1181**	1	STRAP-CABLE	
	3	1	**118-7286**	1	BRACKET AS	
	4	1	**130-9984**	2	CLIP	
	5	1	**138-6914**	1	HOSE AS	
	6	1	**150-3370**	1	REGULATOR AS-TMSN TEMPERATURE	
		1	**154-0875**	1	SEAL-O-RING	
	7	1	**150-3374**	1	MANIFOLD	
	8	1	**153-3761**	1	HOSE AS	
	9	1	**159-0186**	6	CLAMP	
	10	1	*148-8339*	1	CONNECTOR GP	
		1	**6V-8716**	1	CONNECTOR	
		1	**6V-9746**	1	SEAL-O-RING	
		1	**7M-8485**	1	SEAL-O-RING	
	11	1	*148-8360*	1	ELBOW GP	
		1	**6V-9182**	1	ELBOW	
		1	**6V-9746**	1	SEAL-O-RING	
		1	**7M-8485**	1	SEAL-O-RING	
	12	1	*153-9909*	1	FITTING AS	
		1	**3E-4075**	1	FITTING	
		1	**3D-2824**	1	SEAL-O-RING	
	13	1	*153-9910*	1	ELBOW AS	
		1	**032-8487**	1	ELBOW	
		1	**3D-2824**	1	SEAL-O-RING	
	14	1	*153-9911*	2	FITTING AS	
					(EACH INCLUDES)	
		1	**033-6783**	1	FITTING	
		1	**3D-2824**	1	SEAL-O-RING	
	15	1	**5P-4116**	2	WASHER-HARD (8.8X20.5X2MM THK)	
	16	1	**7X-7729**	4	WASHER (11X25X3MM THK)	
M	17	1	**8T-4136**	1	BOLT (M10X1.5X25MM)	
M	18	1	**8T-4137**	1	BOLT (M10X1.5X20MM)	
M	19	1	**8T-4189**	2	BOLT (M8X1.25X20MM)	
M	20	1	**8T-4192**	2	BOLT (M12X1.75X25MM)	
	21	1	**8T-4223**	2	WASHER-HARD (13.5X25.5X3MM THK)	
M	22	1	**8T-6466**	2	BOLT (M10X1.50X60MM)	
	23	1	**8T-7529**	3	CLIP (SLOT)	

E-ORDER BY THE CENTIMETER
M-METRIC PART

143-0789 **LINES GP-POWER TRAIN COOLER** *(contd.)* **i01776282**

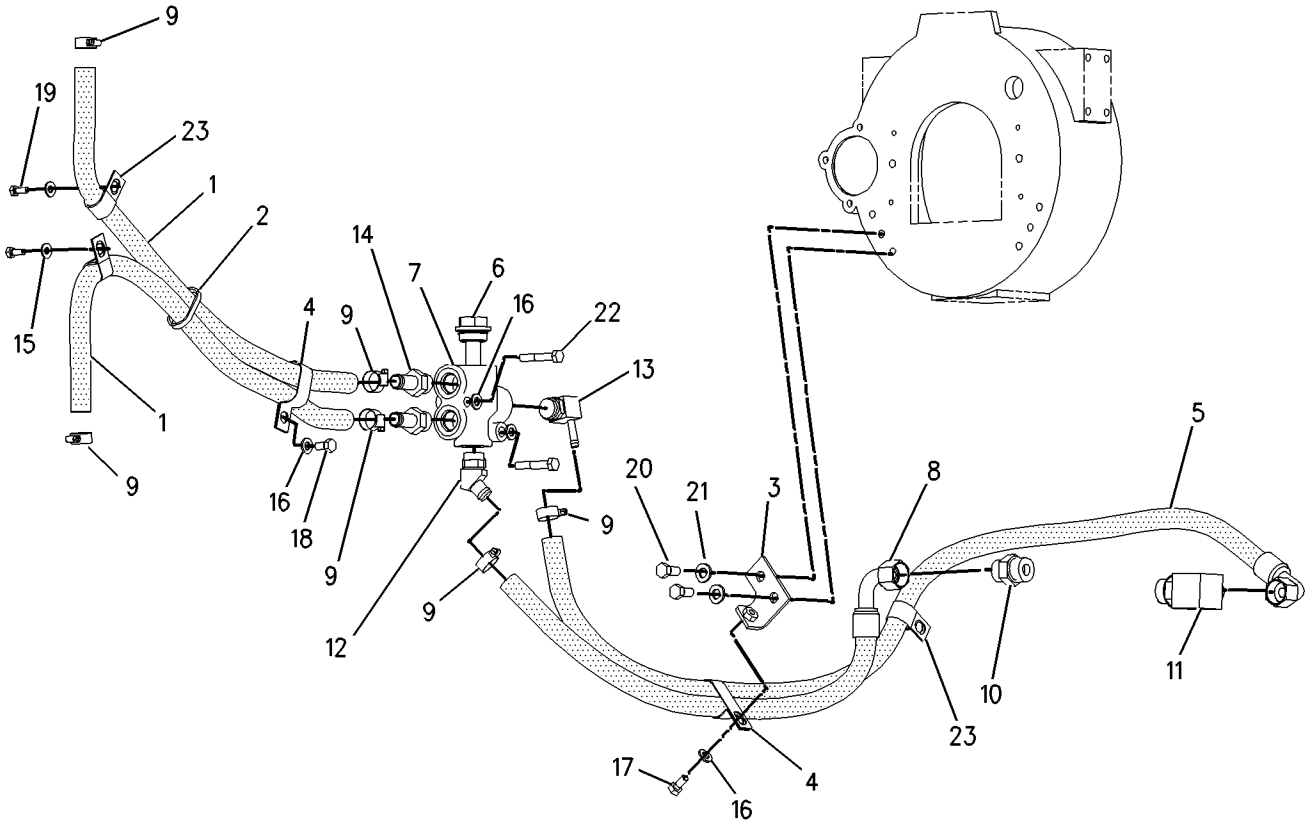

GRAPHIC #1 **<END>** g00908151

230-7355 PUMP GP-WATER

S/N: CRS1-UP

PART OF 234-3059, 234-3061 ENGINE AR-PRIMARY

AN ATTACHMENT

SMCS-1361 **i01896488**

NOTE	REF NO	GRAPHIC REF	PART NUMBER	QTY	PART NAME 1 2 3 4 5 6 (PRODUCT LEVEL)	SEE PAGE
	1	1	**6I-0217**	2	BOLT (M8X1.25X20MM)	
	2	1	**6I-0254**	2	BOLT (M8X1.25X30MM)	
	3	1	**100-3751**	5	BOLT (M8X1.25X65MM)	
	4	1	**113-8129**	2	BOLT (M8X75MM)	
	5	1	**225-7741**	1	CONNECTION AS	
	6	1	**225-7738**	1	SEAL-O-RING	
	7	1	**225-7739**	1	SEAL-O-RING	
	8	1	**225-8016**	1	PUMP GP-WATER	
	9	1	**225-8019**	1	GASKET	

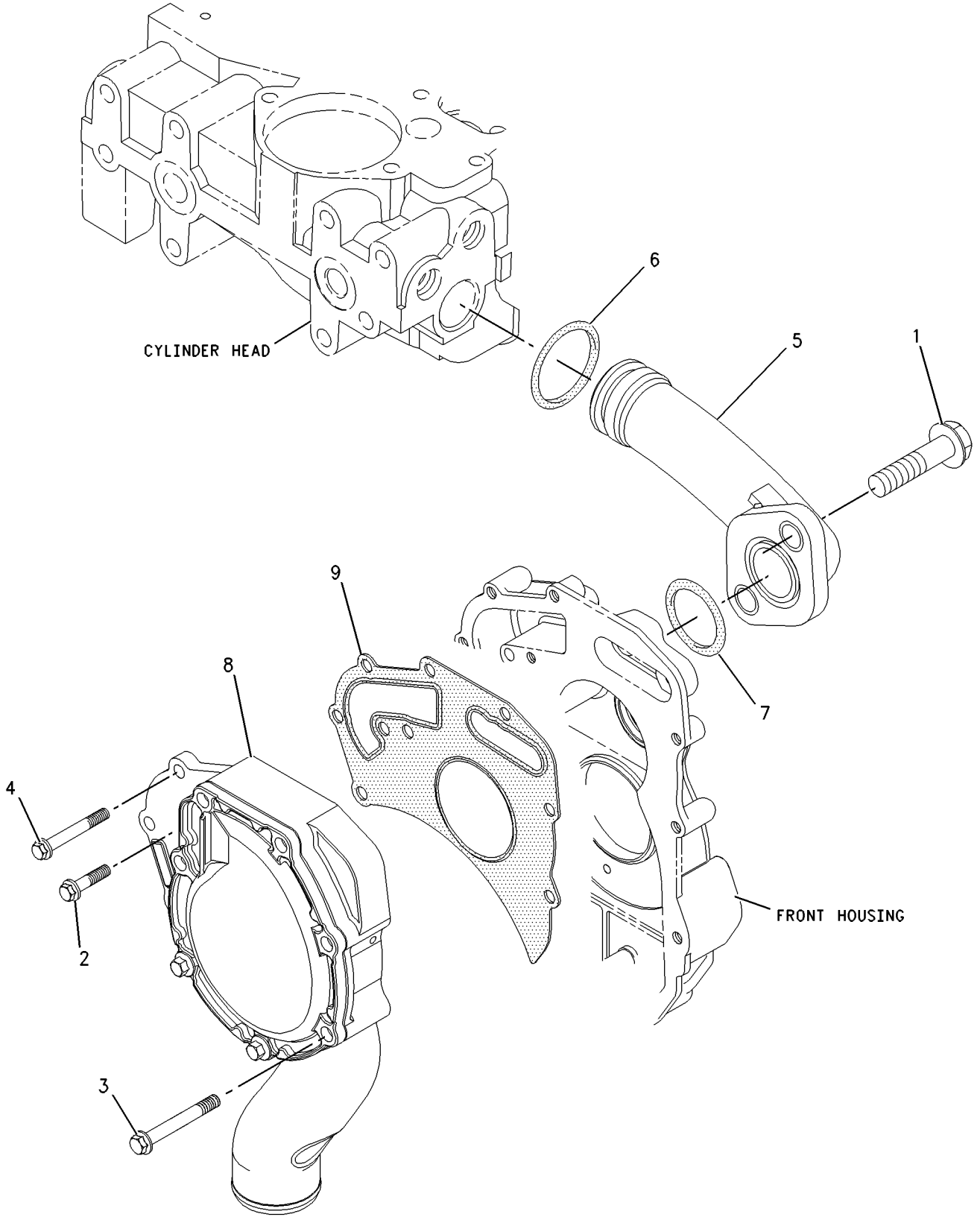

GRAPHIC #1 **<END>** g00912411

234-7834 RADIATOR & FAN GP

S/N: BXC1-UP; DSX1-UP
PART OF 234-7836 RADIATOR & HYD OIL COOLER GP
AN ATTACHMENT

SMCS-1353, 1356 **i01989362**

NOTE	REF NO	GRAPHIC REF	PART NUMBER	QTY	PART NAME 1 2 3 4 5 6 (PRODUCT LEVEL)	SEE PAGE
	1	1	**123-4065**	6	RIVET-POP	
	2	1	**141-7512**	1	BAFFLE	
	3	1	**180-2441**	1	SHROUD AS	
Y	4	1	**235-1974**	1	RADIATOR & HYD OIL COOLER GP	69
	5	1	**7X-0579**	4	WASHER-HARD (8.8X25.5X2MM THK)	
M	6	1	**8T-4200**	4	BOLT (M8X1.25X16MM)	

M-METRIC PART
Y-SEPARATE ILLUSTRATION

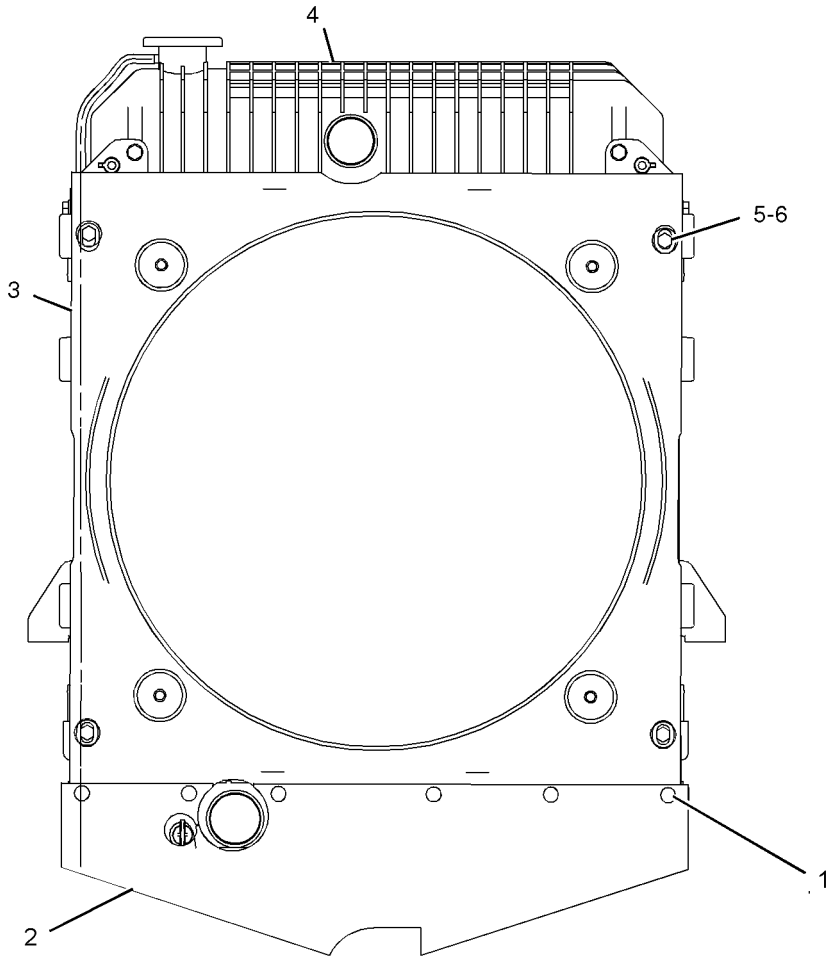

GRAPHIC #1 **<END>** g01030668

COOLING SYSTEM

236-5808 RADIATOR & FAN GP

S/N: BXC1-UP; DSX1-UP
PART OF 236-5807 RADIATOR & HYD OIL COOLER GP
AN ATTACHMENT

SMCS-1353, 1356 **i01989357**

NOTE	REF NO	GRAPHIC REF	PART NUMBER	QTY	PART NAME 1 2 3 4 5 6 (PRODUCT LEVEL)	SEE PAGE
	1	1	**123-4065**	6	RIVET-POP	
	2	1	**141-7512**	1	BAFFLE	
	3	1	**180-2441**	1	SHROUD AS	
		1	**214-3520**	4	NUT-SHOULDER	
Y	4	1	**236-5809**	1	RADIATOR & HYD OIL COOLER GP	72
	5	1	**7X-0579**	4	WASHER-HARD (8.8X25.5X2MM THK)	
M	6	1	**8T-4200**	4	BOLT (M8X1.25X16MM)	

M-METRIC PART
Y-SEPARATE ILLUSTRATION

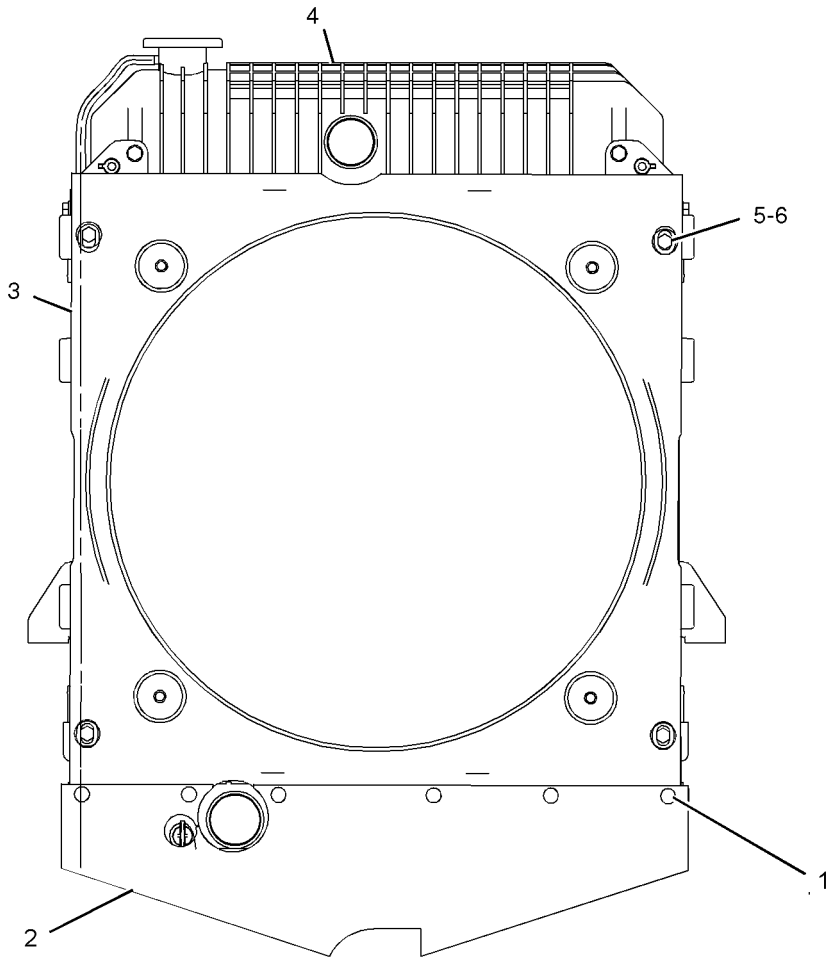

GRAPHIC #1 **<END>** g01030773

234-7836 RADIATOR & HYD OIL COOLER GP

S/N: BXC1-UP; DSX1-UP
AN ATTACHMENT

SMCS-1353, 1374 **i01967456**

NOTE	REF NO	GRAPHIC REF	PART NUMBER	QTY	PART NAME 1 2 3 4 5 6 (PRODUCT LEVEL)	SEE PAGE
D	1	1	**5P-6129**		TUBE (.1M)	
	2	1	**2W-9710**	2	MOUNT AS	
	3	1	**6N-6984**	2	MOUNT	
	4	1	**140-3640**	2	PLATE	
	5	1	**214-7457**	2	CLAMP-T'BOLT	
	6	1	**214-7458**	2	CLAMP-T'BOLT	
Y	7	1	*234-7834*	1	RADIATOR & FAN GP	65
	8	1	**235-1966**	1	HOSE	
	9	1	**235-1967**	1	HOSE	
	10	1	**7X-0603**	2	WASHER-HARD (9.9X35X2.5MM THK)	
M	11	1	**8T-4133**	2	NUT (M10X1.5 THD)	
M	12	1	**8T-4186**	2	BOLT (M10X1.5X40MM)	
	13	1	**8T-4222**	4	WASHER-PLATED (11X32X2.5MM THK)	
M	14	1	**8T-4908**	2	BOLT (M8X1.25X25MM)	

D-ORDER BY THE METER
M-METRIC PART
Y-SEPARATE ILLUSTRATION

234-7836 **RADIATOR & HYD OIL COOLER GP** *(contd.)* **i01967456**

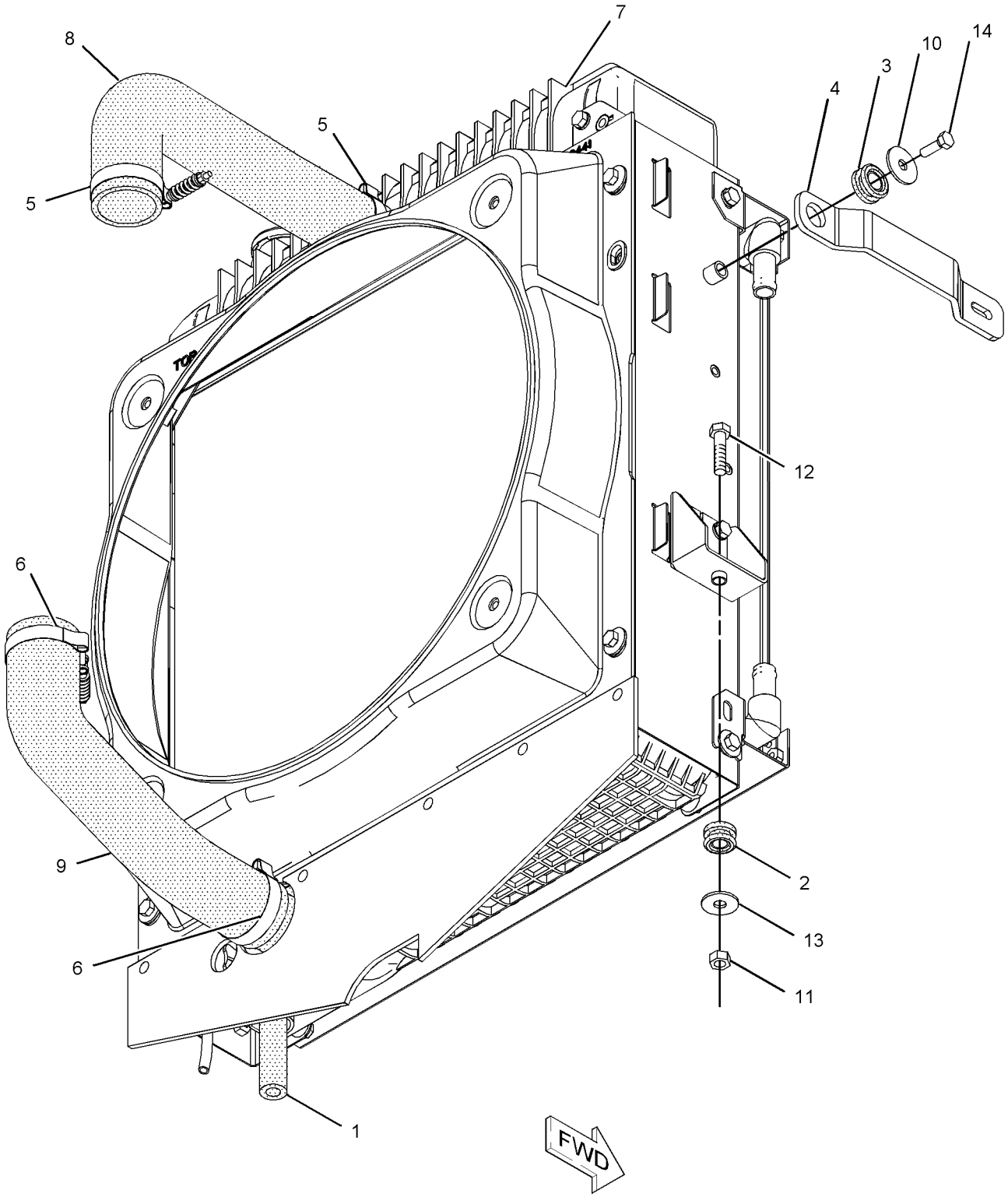

GRAPHIC #1 **<END>** g01022788

235-1974 RADIATOR & HYD OIL COOLER GP

S/N: BXC1-UP; DSX1-UP
PART OF 234-7834 RADIATOR & FAN GP
AN ATTACHMENT

SMCS-1353, 1374 **i01967451**

NOTE	REF NO	GRAPHIC REF	PART NUMBER	QTY	PART NAME 1 2 3 4 5 6 (PRODUCT LEVEL)	SEE PAGE
	1	1	**8C-0572**	2	WASHER (8.8X25.5X2MM THK)	
	2	1	**140-3634**	1	RADIATOR AS	
	2A	1	**140-2358**	1	PLUG AS	
		1	**2D-6392**	1	SEAL-O-RING	
		1	**5F-9144**	1	SEAL-O-RING	
		1	**145-6005**	2	GASKET	
	3	1	**142-0724**	1	COOLER AS-OIL (HYDRAULIC, TRANSMISSION)	
	3A	1	**123-4065**	16	RIVET-POP	
	3B	1	**140-3635**	1	CORE AS (13 PLATE) (TRANSMISSION)	
	3C	1	**140-3639**	1	CORE AS (15 PLATE) (HYDRAULIC)	
	4	1	**151-8752**	2	BUSHING	
	5	1	**227-4376**	1	CAP AS (RADIATOR)	
M	6	1	**8T-4200**	4	BOLT (M8X1.25X16MM)	
	7	1	**8T-4224**	2	WASHER-HARD (8.8X16X2MM THK)	

M-METRIC PART

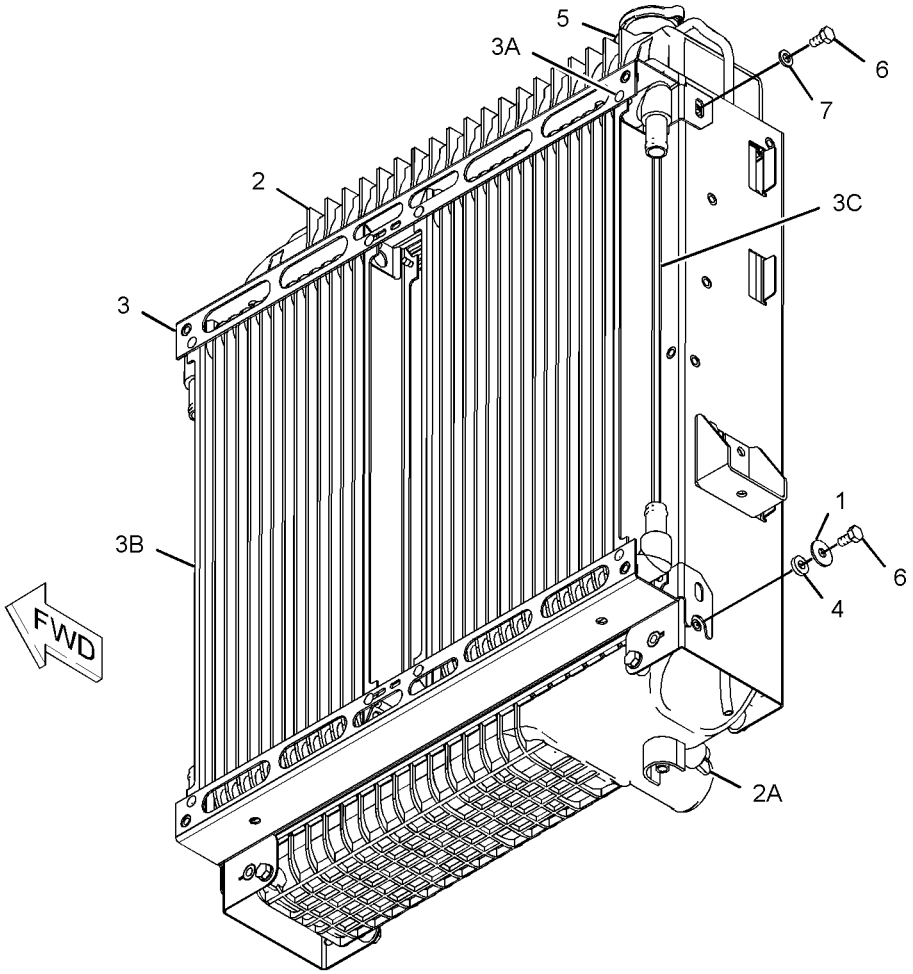

GRAPHIC #1 **<END>** g01024633

COOLING SYSTEM

236-5807 RADIATOR & HYD OIL COOLER GP

S/N: BXC1-UP; DSX1-UP
AN ATTACHMENT

SMCS-1353, 1374 **i01970247**

NOTE	REF NO	GRAPHIC REF	PART NUMBER	QTY	PART NAME 1 2 3 4 5 6 (PRODUCT LEVEL)	SEE PAGE
D	1	1	**5P-6129**		TUBE (.1M)	
	2	1	**2W-9710**	2	MOUNT AS	
	3	1	**6N-6984**	2	MOUNT	
	4	1	**140-3640**	2	PLATE	
	5	1	**214-7457**	2	CLAMP-T'BOLT	
	6	1	**214-7458**	2	CLAMP-T'BOLT	
	7	1	**235-1966**	1	HOSE	
	8	1	**235-1967**	1	HOSE	
Y	9	1	*236-5808*	1	RADIATOR & FAN GP	66
	10	1	**7X-0603**	2	WASHER-HARD (9.9X35X2.5MM THK)	
M	11	1	**8T-4133**	2	NUT (M10X1.5 THD)	
M	12	1	**8T-4186**	2	BOLT (M10X1.5X40MM)	
	13	1	**8T-4222**	4	WASHER-PLATED (11X32X2.5MM THK)	
M	14	1	**8T-4908**	2	BOLT (M8X1.25X25MM)	

D-ORDER BY THE METER
M-METRIC PART
Y-SEPARATE ILLUSTRATION

236-5807 **RADIATOR & HYD OIL COOLER GP** *(contd.)* **i01970247**

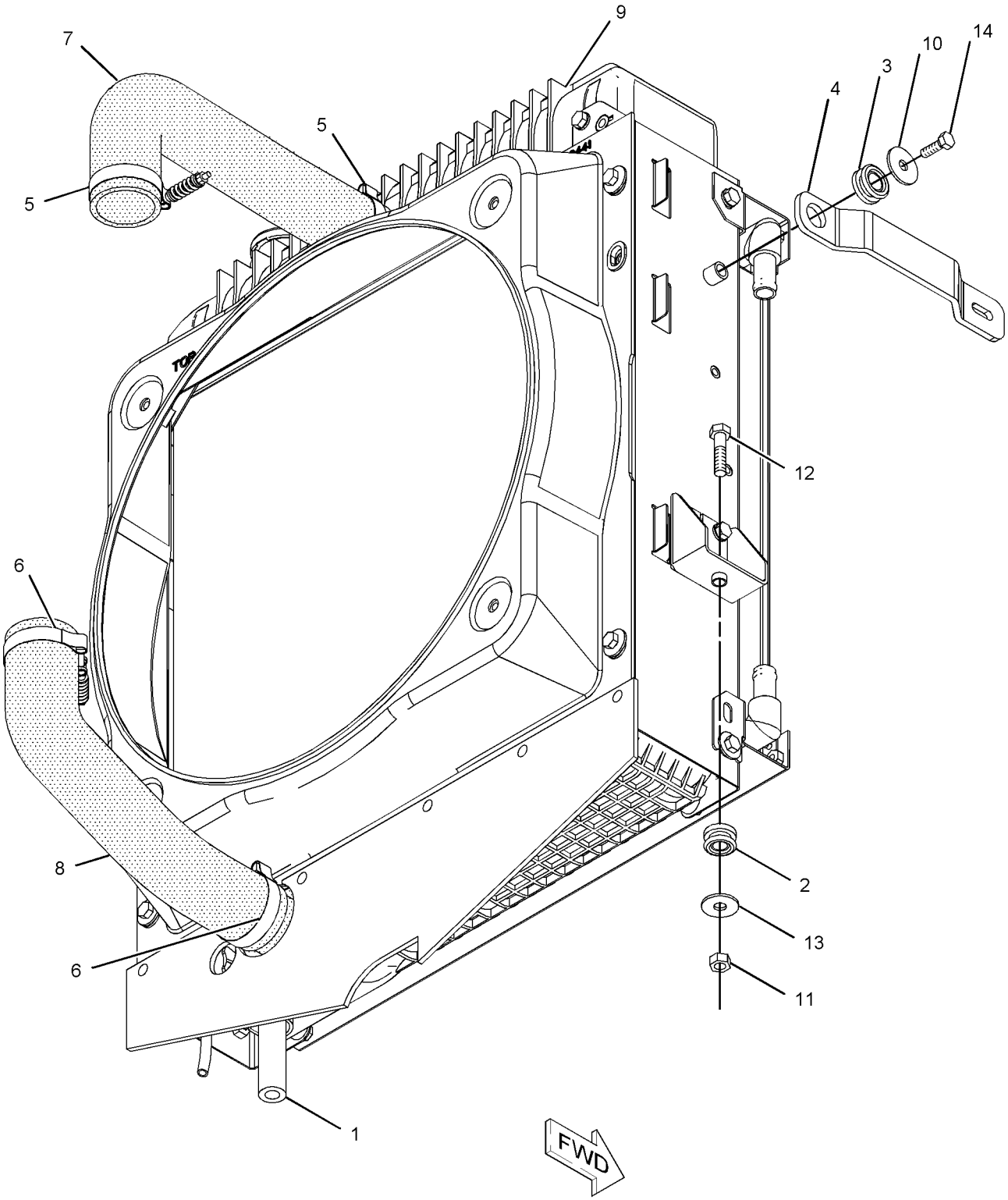

GRAPHIC #1 **<END>** g01023383

COOLING SYSTEM

236-5809 RADIATOR & HYD OIL COOLER GP

S/N: BXC1-UP; DSX1-UP
PART OF 236-5808 RADIATOR & FAN GP
AN ATTACHMENT

SMCS-1353, 1374 **i01994427**

NOTE	REF NO	GRAPHIC REF	PART NUMBER	QTY	PART NAME 1 2 3 4 5 6 (PRODUCT LEVEL)	SEE PAGE
	1	1	**8C-0572**	2	WASHER (8.8X25.5X2MM THK)	
	2	1	**140-3634**	1	RADIATOR AS	
		1	**140-2358**	1	PLUG AS	
		1	**2D-6392**	1	SEAL-O-RING	
		1	**5F-9144**	1	SEAL-O-RING	
		1	**145-6005**	2	GASKET	
	3	1	**151-8752**	2	BUSHING	
	4	1	**227-4376**	1	CAP AS (RADIATOR)	
	5	1	**235-1975**	1	COOLER AS-OIL	
		1	**123-4065**	16	RIVET-POP	
M	6	1	**8T-4200**	4	BOLT (M8X1.25X16MM)	
	7	1	**8T-4224**	2	WASHER-HARD (8.8X16X2MM THK)	

M-METRIC PART

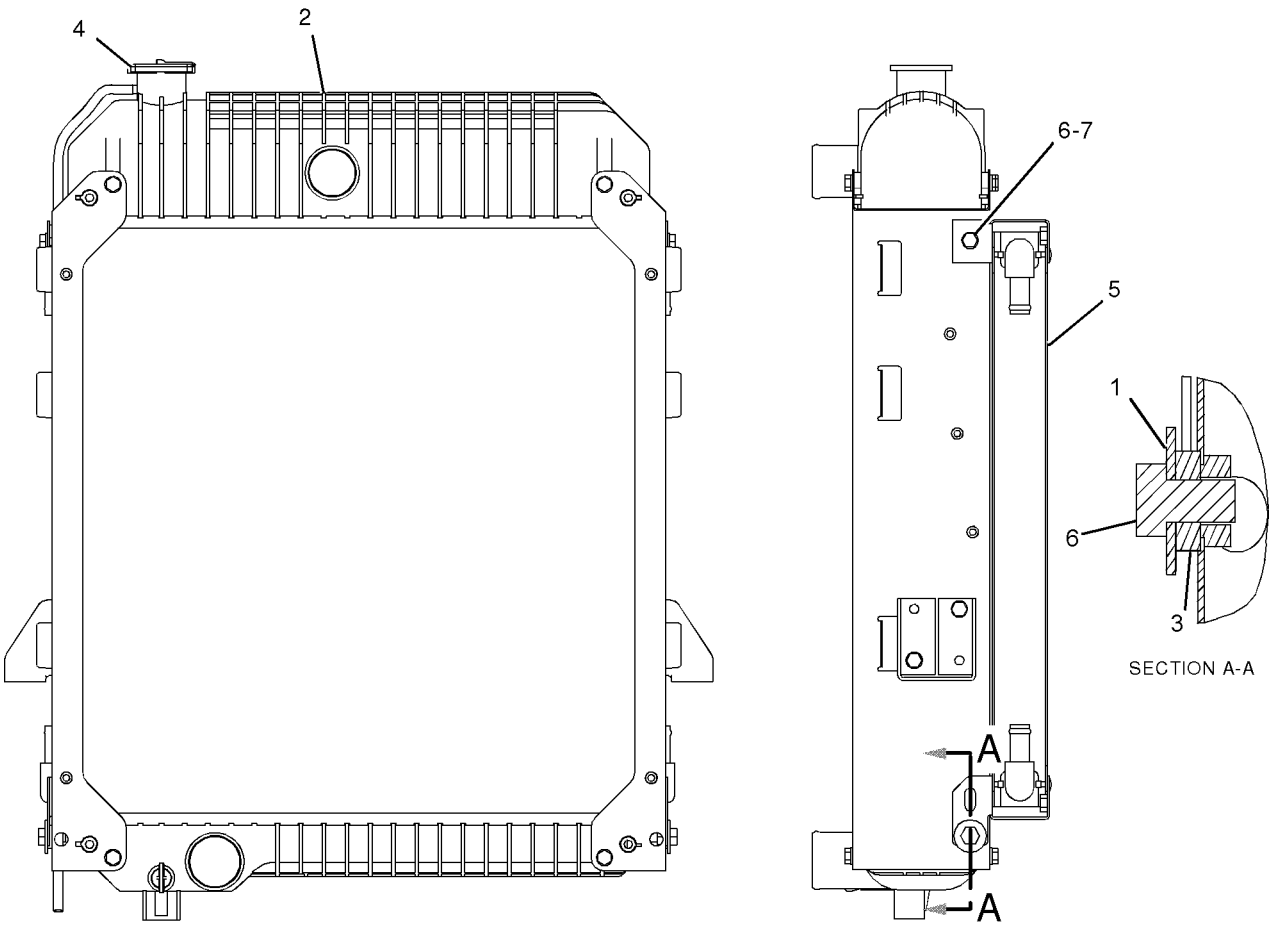

GRAPHIC #1 **<END>** g01032227

AIR INLET AND EXHAUST SYSTEM

234-1979 AIR CLEANER GP

S/N: BXC1-UP; DSX1-UP
PART OF 214-6891, 214-6893 ENGINE AR
AN ATTACHMENT

SMCS-1051, 1054 **i01998400**

NOTE	REF NO	GRAPHIC REF	PART NUMBER	QTY	PART NAME 1 2 3 4 5 6 (PRODUCT LEVEL)	SEE PAGE
D	1	1	**8T-2563**		SEAL (0.7M)	
	2	1	**5P-0600**	1	CLAMP-HOSE	
	3	1	**5P-4868**	1	CLAMP-HOSE	
	4	1	**6V-3582**	1	CLAMP-HOSE	
	5	1	**110-2445**	1	CLAMP-HOSE	
	6	1	**127-4471**	1	CLAMP-HOSE	
Y	7	1	**234-1981**	1	AIR CLEANER GP	75
	8	1	**234-2622**	1	HOSE-AIR	
	9	1	**234-5121**	1	HOSE-AIR	
	10	1	**238-9192**	1	PLATE AS	
	11	1	**242-1920**	1	DUCT AS (AIR INTAKE)	
M	12	1	**8T-4189**	2	BOLT (M8X1.25X20MM)	
	13	1	**8T-4224**	6	WASHER-HARD (8.8X16X2MM THK)	
M	14	1	**8T-7547**	4	BOLT (M8X1.25X30MM)	

D-ORDER BY THE METER
M-METRIC PART
Y-SEPARATE ILLUSTRATION

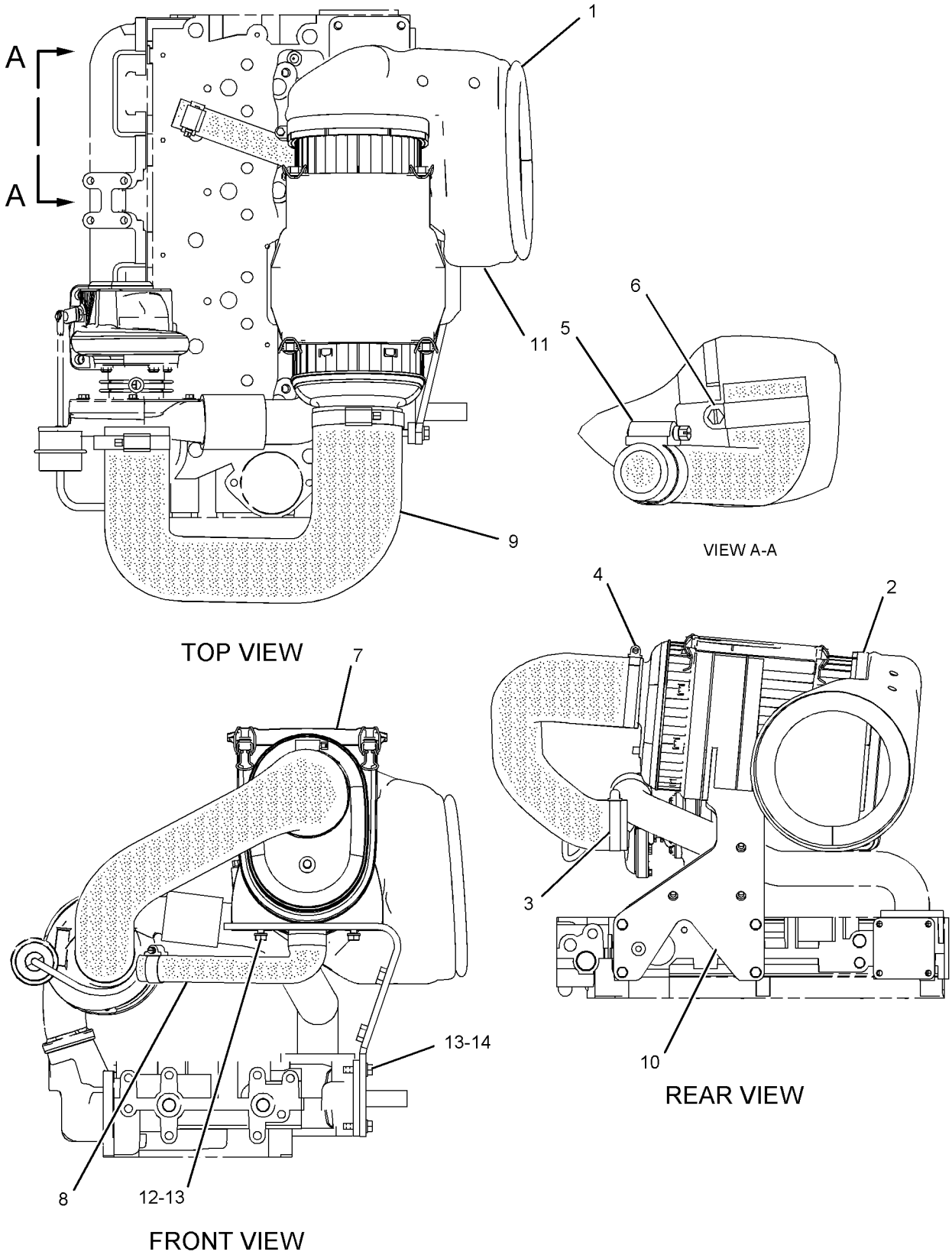

GRAPHIC #1 **<END>** g01035153

AIR INLET AND EXHAUST SYSTEM

234-1981 AIR CLEANER GP

S/N: BXC1-UP; DSX1-UP
PART OF 234-1979 AIR CLEANER GP
AN ATTACHMENT

SMCS-1051, 1054 **i01998481**

NOTE	REF NO	GRAPHIC REF	PART NUMBER	QTY	PART NAME 1 2 3 4 5 6 (PRODUCT LEVEL)	SEE PAGE
	1	1	**227-7447**	1	FRAME (ELEMENT)	
	2	1	**227-7448**	1	ELEMENT-PRIMARY	
	3	1	**227-7449**	1	FILTER ELEMENT AS-AIR (SECONDARY)	
	4	1	**237-4157**	1	COVER	

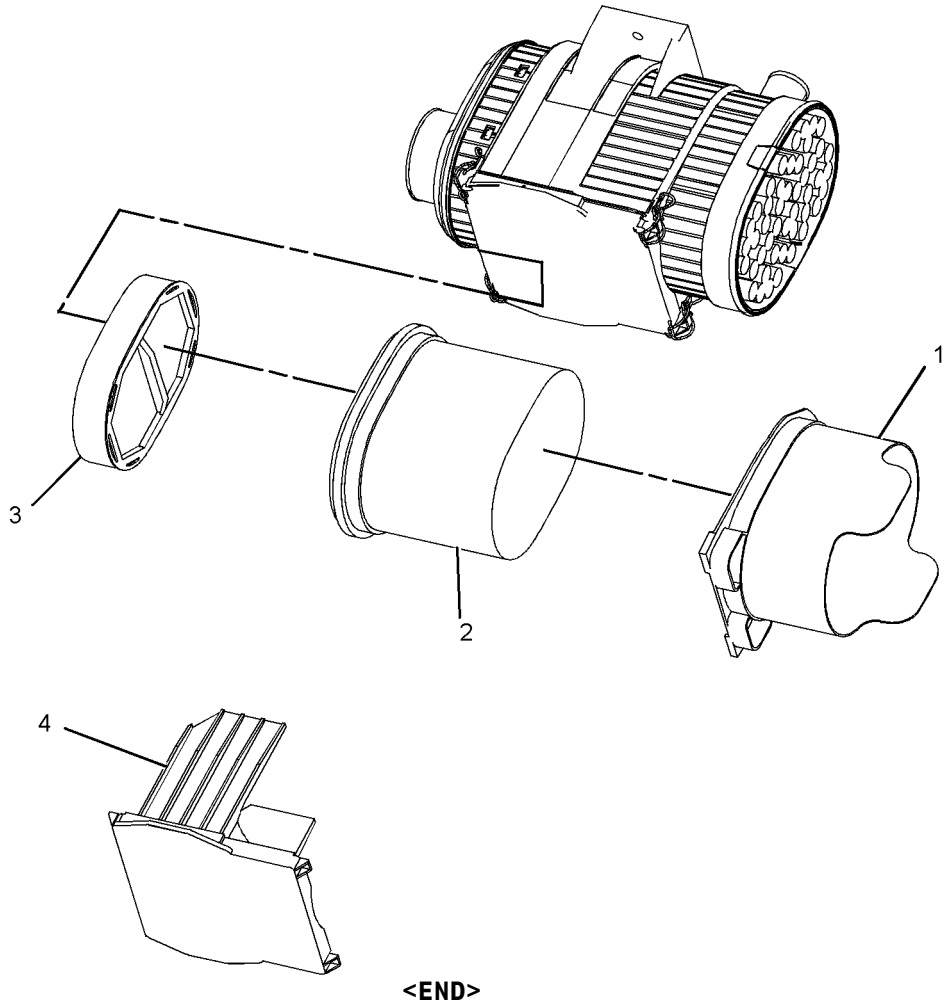

GRAPHIC #1 **<END>** g01035095

AIR INLET AND EXHAUST SYSTEM

231-0149 COVER GP-AIR INLET

S/N: CRS1-UP
PART OF 234-3059, 234-3061 ENGINE AR-PRIMARY
AN ATTACHMENT

SMCS-1087 **i01892308**

NOTE	REF NO	GRAPHIC REF	PART NUMBER	QTY	PART NAME 1 2 3 4 5 6 (PRODUCT LEVEL)	SEE PAGE
	1	1	**6I-0572**	12	BOLT (M8X1.25.20MM)	
	2	1	**114-2579**	3	GASKET	
	3	1	**115-1162**	3	PLATE	

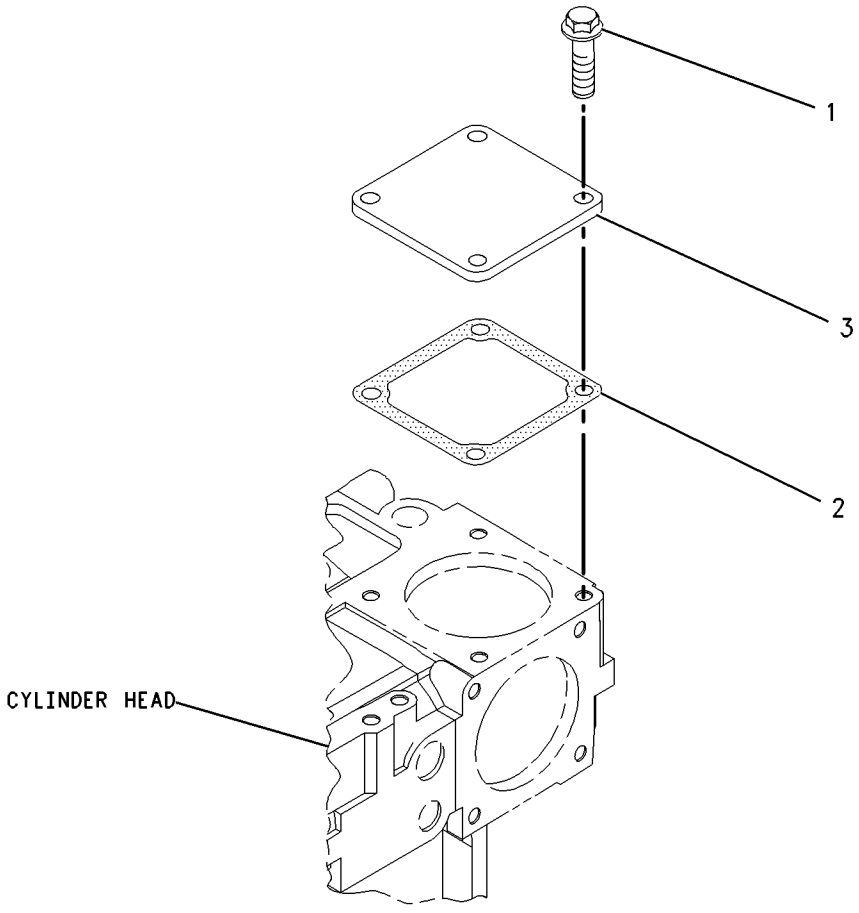

GRAPHIC #1 **<END>** g00986215

AIR INLET AND EXHAUST SYSTEM

236-2486 EXTENSION GP-EXHAUST

S/N: BXC1-UP; DSX1-UP
PART OF 214-6891, 214-6893 ENGINE AR
AN ATTACHMENT

SMCS-1061 **i01991962**

NOTE	REF NO	GRAPHIC REF	PART NUMBER	QTY	PART NAME 1 2 3 4 5 6 (PRODUCT LEVEL)	SEE PAGE
	1	1	**7E-3870**	1	CLAMP	
	2	1	**236-5860**	1	PLATE AS	
	3	1	**239-2270**	1	PIPE-EXTENSION	
	4	1	**8T-4121**	3	WASHER-HARD (11X21X2.5MM THK)	
M	5	1	**8T-4136**	3	BOLT (M10X1.5X25MM)	

M-METRIC PART

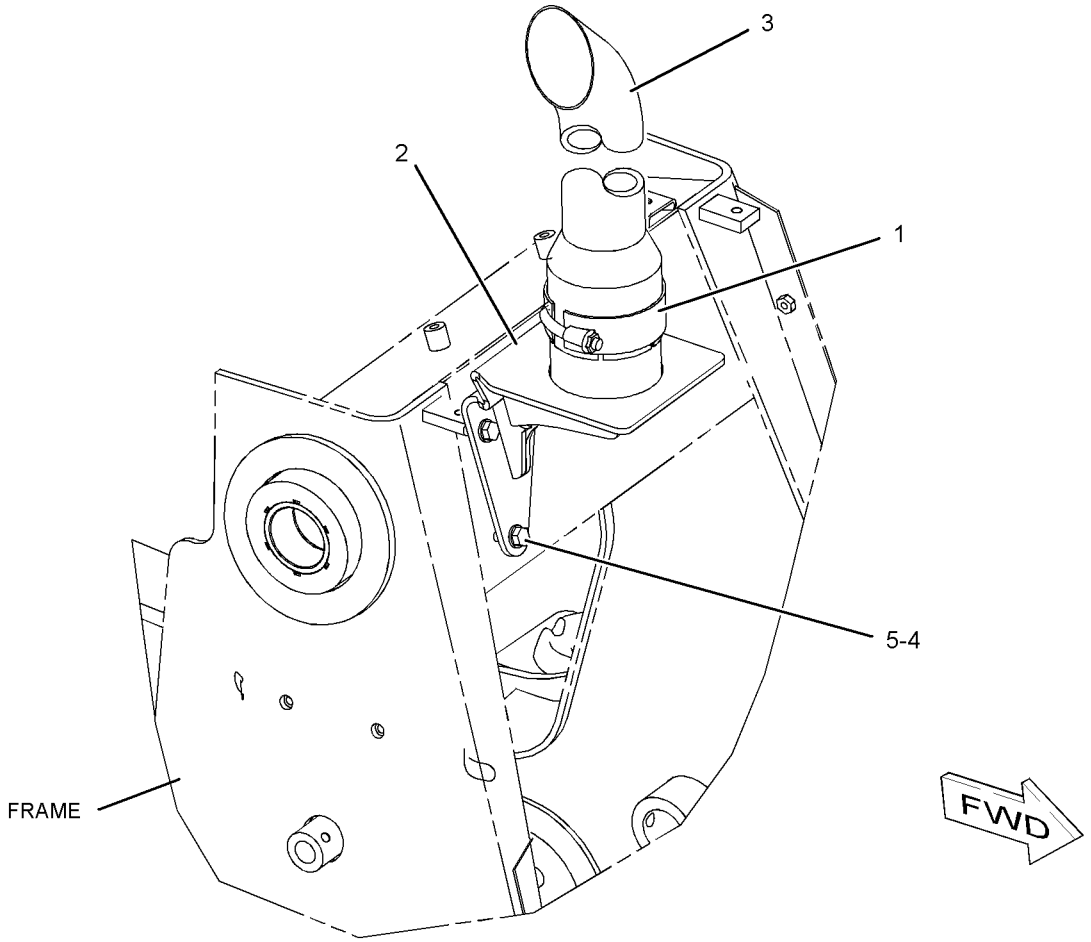

GRAPHIC #1 **<END>** g01040352

AIR INLET AND EXHAUST SYSTEM

238-9828 INDICATOR GP-AIR FILTER CHANGE

S/N: BXC1-UP; DSX1-UP

PART OF 214-7006, 214-7007 CAB AR, 214-7004 CANOPY AR, 214-6891 ENGINE AR

AN ATTACHMENT

SMCS-7452 **i02007397**

NOTE	REF NO	GRAPHIC REF	PART NUMBER	QTY	PART NAME 1 2 3 4 5 6 (PRODUCT LEVEL)	SEE PAGE
D	1	1	**6V-1363**		HOSE (.1M)	
	2	1	**225-9303**	1	FITTING	
	3	1	*240-2569*	1	INDICATOR GP-FILTER CHANGE	
	3A	1	**5W-9411**	1	SEAL-O-RING	
	3B	1	**8N-2694**	1	INDICATOR GP-AIR FILTER CHANGE	
	3C	1	**119-6723**	1	FITTING	
	3D	1	**123-0275**	1	FITTING (FILTER)	
	4	1	**4D-8123**	1	CLIP	
M	5	1	**8T-4138**	2	BOLT (M6X1X20MM)	
	6	1	**8T-4205**	2	WASHER-HARD (7.2X14.5X2MM THK)	

D-ORDER BY THE METER
M-METRIC PART

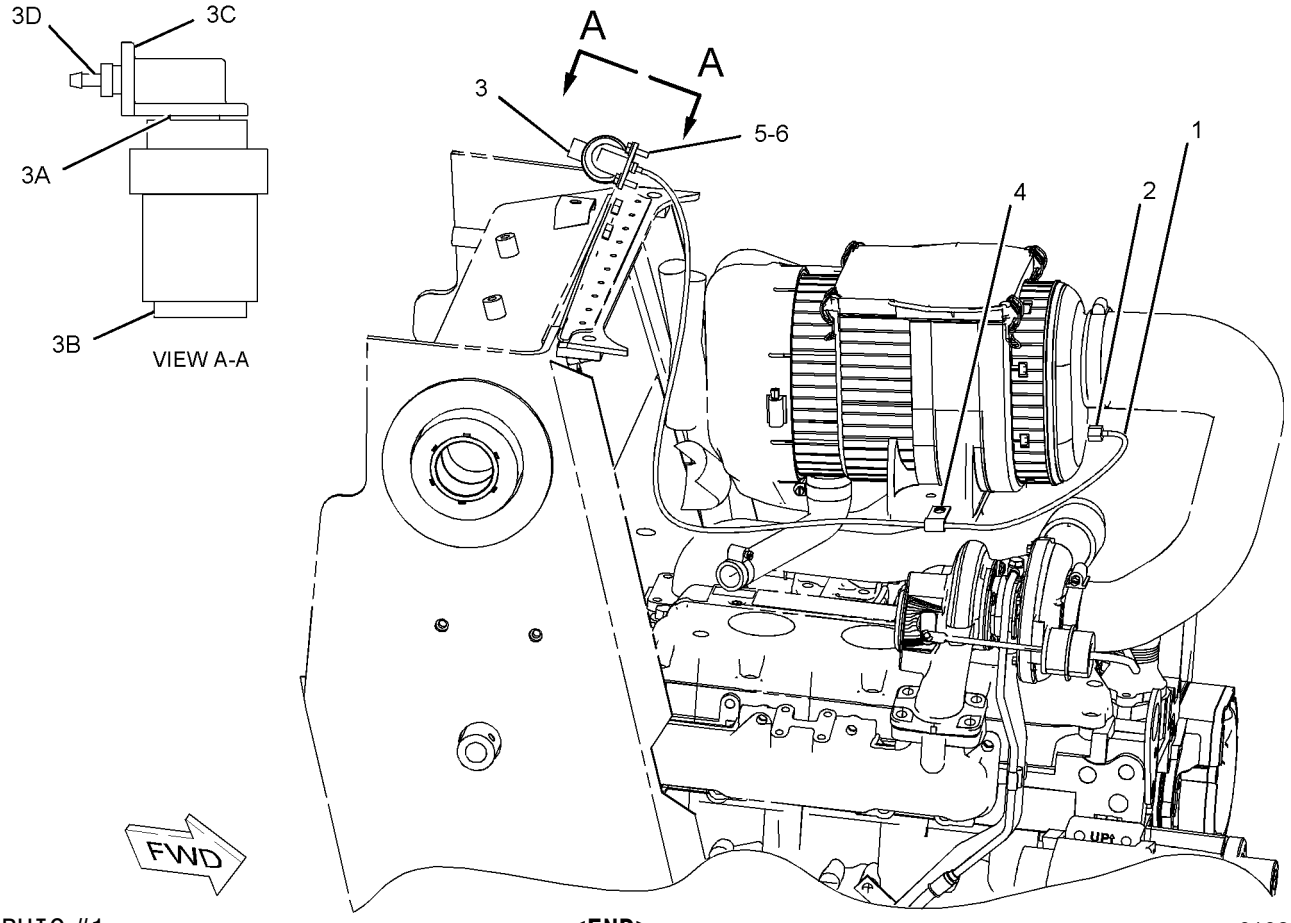

GRAPHIC #1 **<END>** g01022647

AIR INLET AND EXHAUST SYSTEM

239-6996 INDICATOR GP-AIR FILTER CHANGE

S/N: BXC1-UP; DSX1-UP
PART OF 214-7008, 214-7009 CAB AR-ENCLOSED ROPS
AN ATTACHMENT

SMCS-7452 **i01968468**

NOTE	REF NO	GRAPHIC REF	PART NUMBER	QTY	PART NAME 1 2 3 4 5 6 (PRODUCT LEVEL)	SEE PAGE
D	1	1	**6V-1363**		HOSE (.1M)	
	2	1	**225-9303**	1	FITTING	
	3	1	*240-2568*	1	INDICATOR GP-FILTER CHANGE	
	3A	1	**5W-9411**	1	SEAL-O-RING	
	3B	1	**119-6723**	1	FITTING	
	3C	1	**123-0275**	1	FITTING (FILTER)	
	3D	1	**136-5308**	1	SWITCH AS (AIR INLET)	
	4	1	**4D-8123**	1	CLIP	
M	5	1	**8T-4138**	2	BOLT (M6X1X20MM)	
	6	1	**8T-4205**	2	WASHER-HARD (7.2X14.5X2MM THK)	

D-ORDER BY THE METER
M-METRIC PART

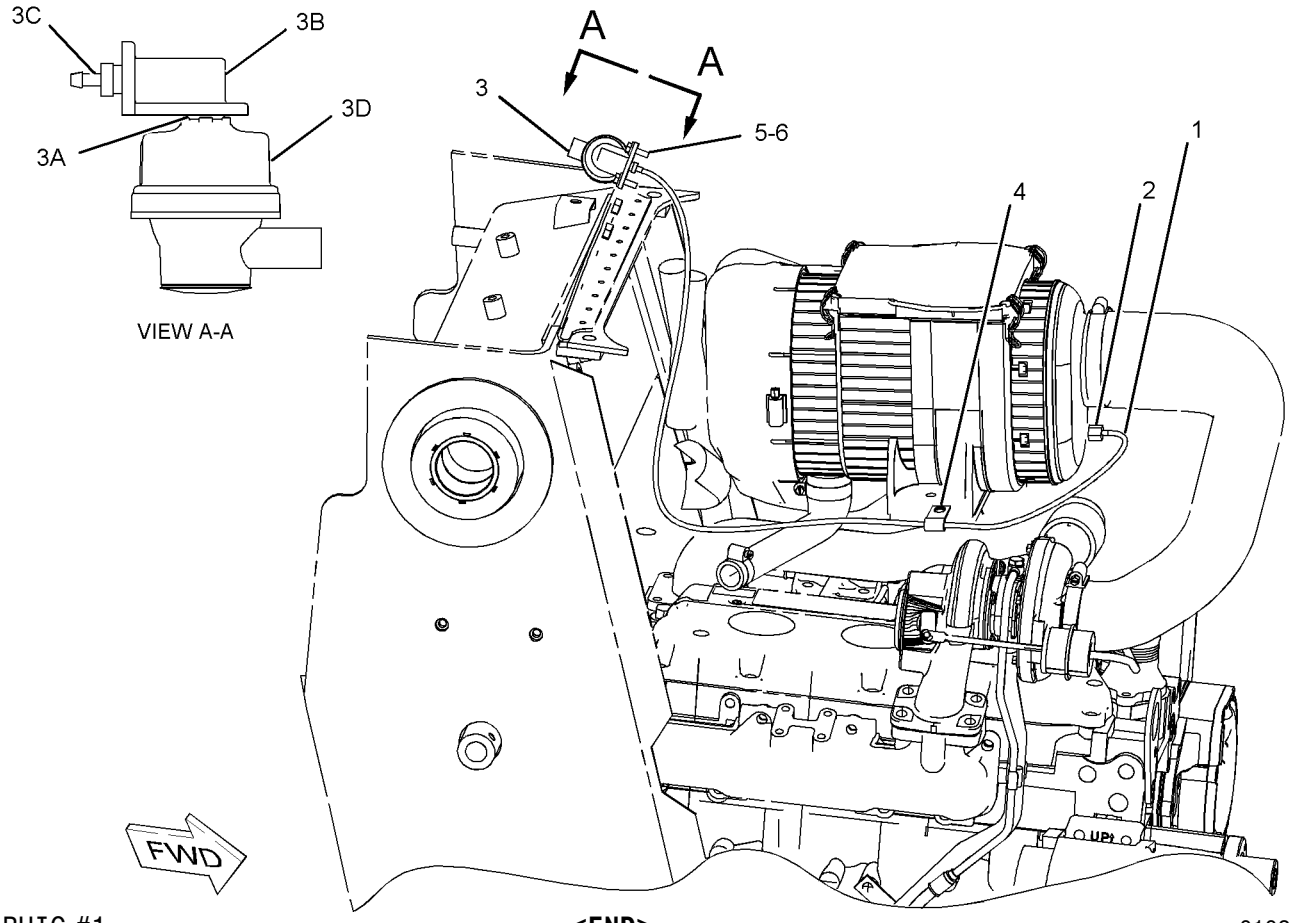

GRAPHIC #1 **<END>** g01022629

AIR INLET AND EXHAUST SYSTEM

239-5761 LINES GP-AIR–CRANKCASE BREATHER

S/N: BXC1-UP; DSX1-UP

AN ATTACHMENT

SMCS-1071 **i01971580**

NOTE	REF NO	GRAPHIC REF	PART NUMBER	QTY	PART NAME 1 2 3 4 5 6 (PRODUCT LEVEL)	SEE PAGE
	1	1	**5P-4868**	1	CLAMP-HOSE	
	2	1	**8T-6726**	1	CLAMP-HOSE	
	3	1	**8T-9402**	2	CLAMP-HOSE	
	4	1	**239-5763**	1	HOSE AS (AIR)	
	5	1	**239-5766**	1	HOSE (FUMES)	

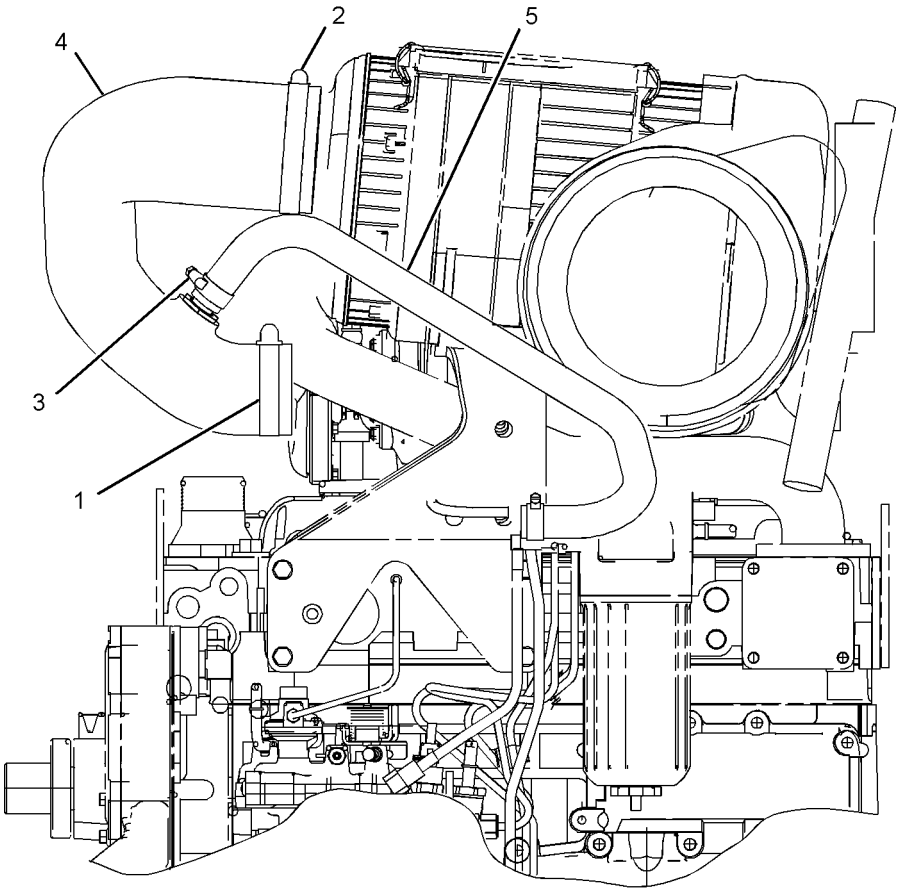

LEFT SIDE VIEW

GRAPHIC #1

<END>

g01025778

AIR INLET AND EXHAUST SYSTEM

242-1529 LINES GP-AIR

S/N: BXC1-UP; DSX1-UP
AN ATTACHMENT

SMCS-1071 **i01971737**

NOTE	REF NO	GRAPHIC REF	PART NUMBER	QTY	PART NAME 1 2 3 4 5 6 (PRODUCT LEVEL)	SEE PAGE
	1	1	**5P-4868**	1	CLAMP-HOSE	
	2	1	**8T-6726**	1	CLAMP-HOSE	
	3	1	**234-5121**	1	HOSE-AIR	

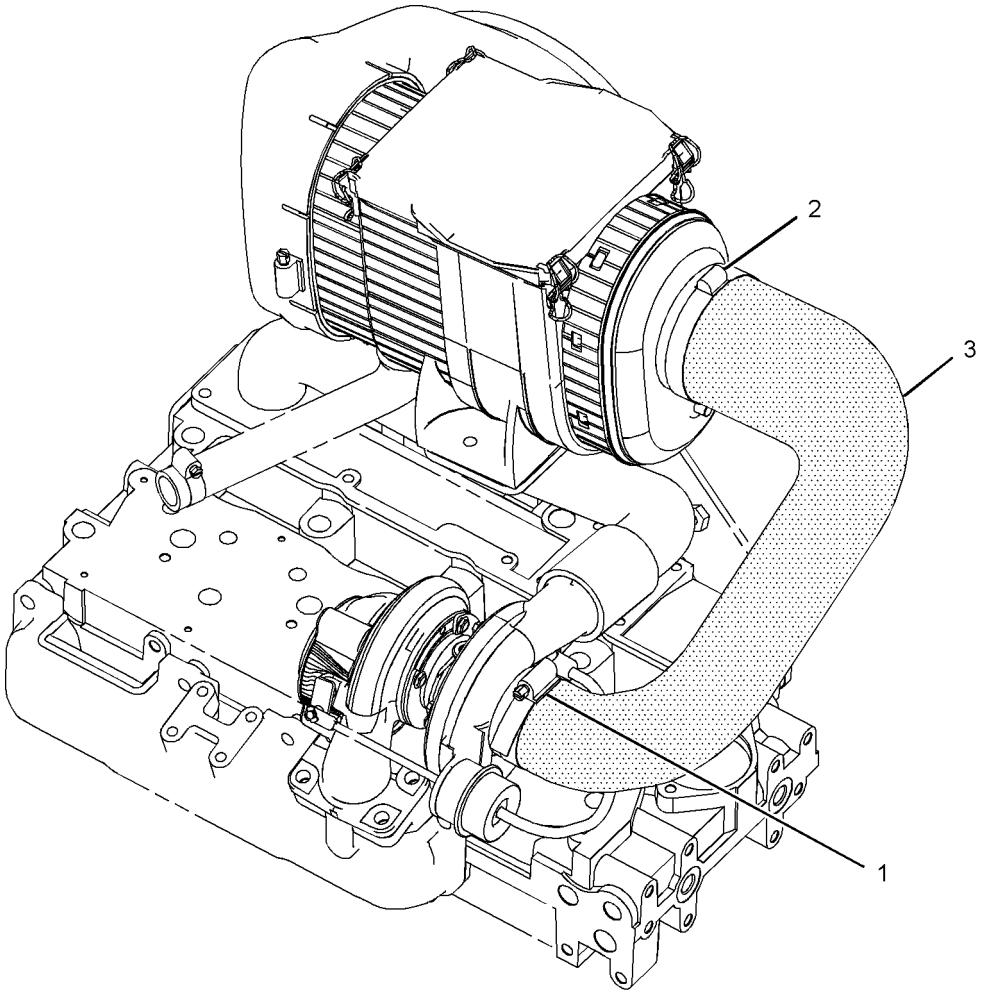

GRAPHIC #1 **<END>** g01025805

AIR INLET AND EXHAUST SYSTEM

242-9947 LINES GP-AIR–CRANKCASE BREATHER

S/N: BXC1-UP; DSX1-UP

AN ATTACHMENT

SMCS-1071 **i01967432**

NOTE	REF NO	GRAPHIC REF	PART NUMBER	QTY	PART NAME 1 2 3 4 5 6 (PRODUCT LEVEL)	SEE PAGE
	1	1	*239-5761*	1	LINES GP-AIR (CRANKCASE BREATHER)	
	1A	1	**5P-4868**	1	CLAMP-HOSE	
	1B	1	**8T-6726**	1	CLAMP-HOSE	
	1C	1	**8T-9402**	2	CLAMP-HOSE	
	1D	1	**239-5763**	1	HOSE AS (AIR)	
	1E	1	**239-5766**	1	HOSE (FUMES)	

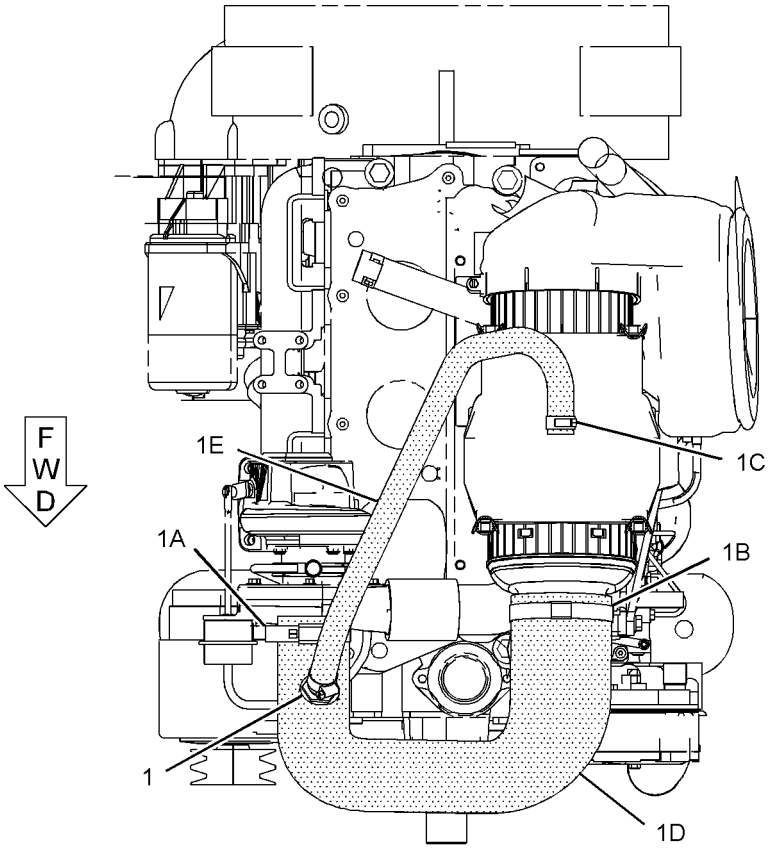

TOP VIEW

GRAPHIC #1 **<END>** g01024888

235-3420 MUFFLER GP

S/N: BXC1-UP; DSX1-UP
PART OF 214-6891, 214-6893 ENGINE AR
AN ATTACHMENT

SMCS-1062 **i01998497**

NOTE	REF NO	GRAPHIC REF	PART NUMBER	QTY	PART NAME 1 2 3 4 5 6 (PRODUCT LEVEL)	SEE PAGE
	1	1	**6I-0563**	3	NUT (M10)	
	2	1	**147-5553**	3	STUD	
	3	1	**235-5363**	1	MUFFLER AS (TURBO)	
	4	1	**236-2507**	2	CLAMP AS (MUFFLER)	
	5	1	**237-0975**	1	PLATE AS	
M	5A	1	**8T-3490**	4	NUT-WELD (M10X1.5 THD)	
	6	1	**237-0976**	1	PLATE AS	
M	6A	1	**8T-3490**	1	NUT-WELD (M10X1.5 THD)	
	7	1	**8T-4121**	19	WASHER-HARD (11X21X2.5MM THK)	
M	8	1	**8T-4133**	4	NUT (M10X1.5 THD)	
M	9	1	**8T-4136**	4	BOLT (M10X1.5X25MM)	
M	10	1	**8T-4195**	8	BOLT (M10X1.5X30MM)	

M-METRIC PART

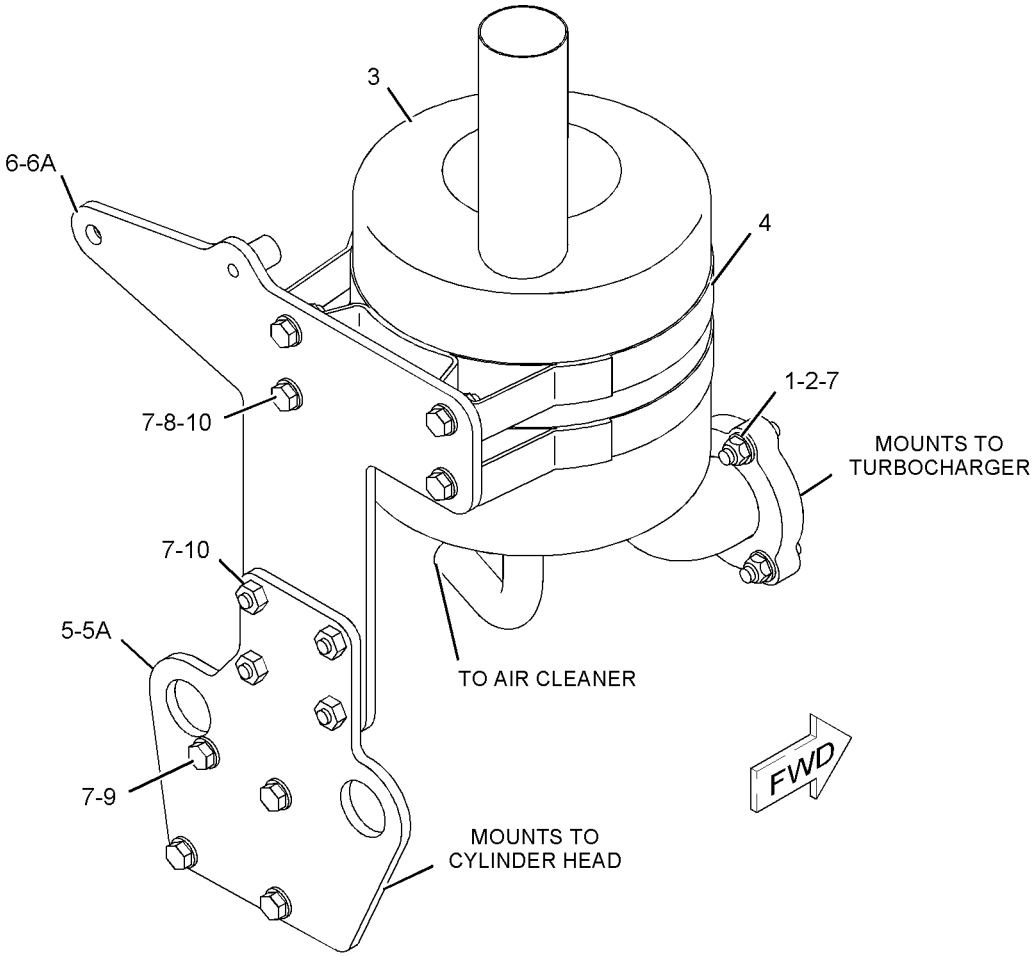

GRAPHIC #1 **<END>** g01036144

AIR INLET AND EXHAUST SYSTEM

237-3924 TURBOCHARGER GP

S/N: CRS1-UP

PART OF 234-3059, 234-3061 ENGINE AR-PRIMARY

AN ATTACHMENT

SMCS-1052, 1053 **i01999121**

NOTE	REF NO	GRAPHIC REF	PART NUMBER	QTY	PART NAME 1 2 3 4 5 6 (PRODUCT LEVEL)	SEE PAGE
	1	1	**6I-0217**	2	BOLT (M8X1.25X20MM)	
	2	1	**6I-0563**	4	NUT (M10)	
	3	1	**6I-0572**	4	BOLT (M8X1.25.20MM)	
	4	1	**106-8916**	2	BOLT (M6X16MM)	
	5	1	**141-1667**	2	CLAMP-HOSE	
	6	1	**149-4236**	4	STUD	
	7	1	**174-9638**	8	BOLT	
	8	1	**194-5390**	1	GASKET-MANIFOLD	
	9	1	**225-8530**	1	GASKET	
	10	1	**225-8533**	1	GASKET	
	11	1	**225-8534**	1	GASKET	
	12	1	**225-8536**	1	GASKET	
	13	1	**234-3029**	1	HOSE	
	14	1	**234-3030**	1	GASKET	
	15	1	**237-2799**	1	TUBE AS	
	15A	1	**225-8524**	3	BOLT	
	15B	1	**225-8526**	7	WASHER	
	16	1	**237-3786**	1	TURBOCHARGER GP	
	17	1	**237-3791**	1	TUBE AS	
	18	1	**237-3794**	1	BOLT	
	19	1	**237-3921**	1	CLIP	
	20	1	**237-3922**	1	PIPE-EXHAUST	
	21	1	**237-3923**	1	MANIFOLD-EXHAUST	

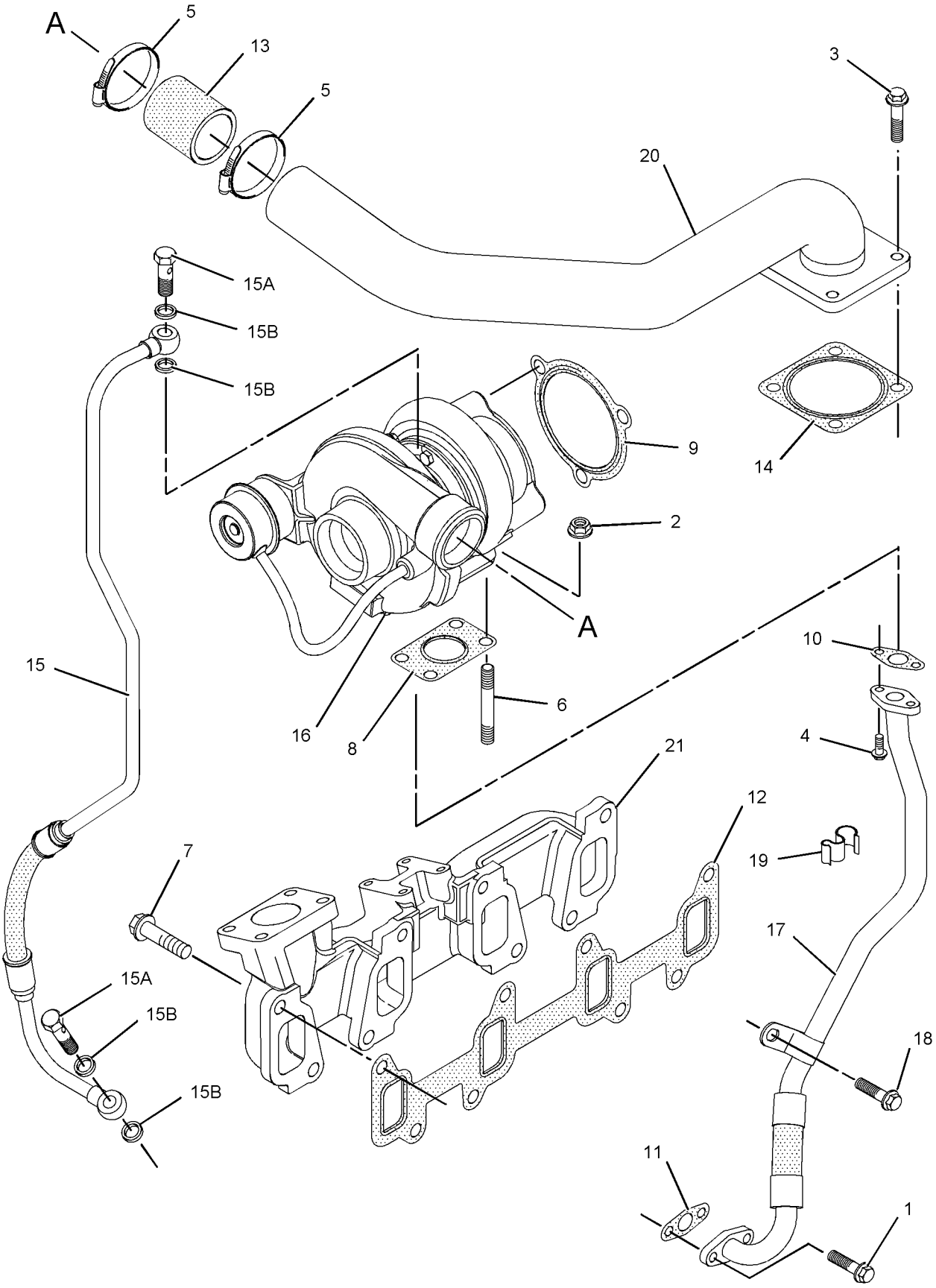

GRAPHIC #1 **<END>** g01031810

FUEL SYSTEM

234-8892 CONTROL GP-GOV & ACCELERATOR

S/N: BXC1-UP; DSX1-UP

PART OF 237-9288, 237-9289 CHASSIS AR

SMCS-1265, 1276 **i01983688**

NOTE	REF NO	GRAPHIC REF	PART NUMBER	QTY	PART NAME 1 2 3 4 5 6 (PRODUCT LEVEL)	SEE PAGE
	1	1	**7K-1181**	3	STRAP-CABLE	
	2	1	**8X-5489**	1	SLEEVE	
	3	1	**164-1077**	1	PANEL AS	
M		1	**6V-9632**	4	NUT-WELD (M6X1 THD)	
Y	4	1	**164-1078**	1	PEDAL GP-GOVERNOR	761
Y	5	1	**183-3887**	1	LEVER GP-GOVERNOR CONTROL	746
	6	1	**190-5139**	1	FILM (VARIABLE SPEED)	
	7	1	**202-6113**	1	BRACKET AS	
M		1	**6V-9632**	3	NUT-WELD (M6X1 THD)	
	8	1	**235-0128**	1	CABLE AS	
M		1	**5C-2890**	1	NUT (M6X1 THD)	
		1	**8T-4742**	2	END-YOKE ROD	
		1	**8T-4744**	2	PIN AS-SPRING	
		1	**222-2690**	1	CLIP	
	9	1	**239-1434**	1	PLATE	
	10	1	**239-1435**	1	BRACKET AS	
M		1	**8T-3612**	2	NUT-WELD (M8X1.25 THD)	
M	11	1	**119-5025**	4	SCREW-FLAT HEAD (M6X1X25MM)	
	12	1	**151-4841**	3	BLOCK	
	13	1	**164-1395**	1	KNOB	
	14	1	**3S-2093**	1	STRAP-CABLE	
M	15	1	**8T-4138**	3	BOLT (M6X1X20MM)	
	16	1	**8T-4205**	3	WASHER-HARD (7.2X14.5X2MM THK)	
	17	1	**8T-4224**	4	WASHER-HARD (8.8X16X2MM THK)	
M	18	1	**8T-4908**	4	BOLT (M8X1.25X25MM)	
M	19	1	**9X-2044**	7	SCREW-TRUSS HEAD (M6X1X16MM)	

M-METRIC PART
Y-SEPARATE ILLUSTRATION

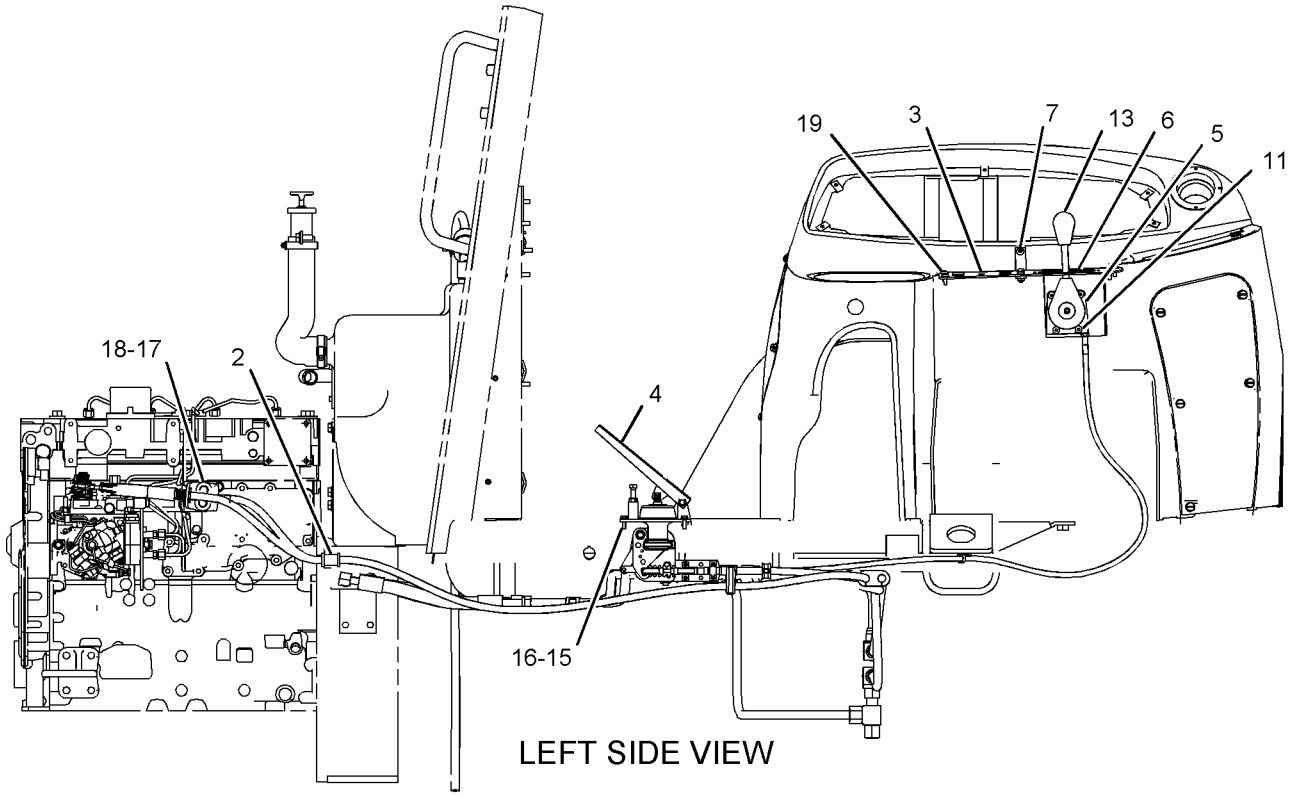

LEFT SIDE VIEW

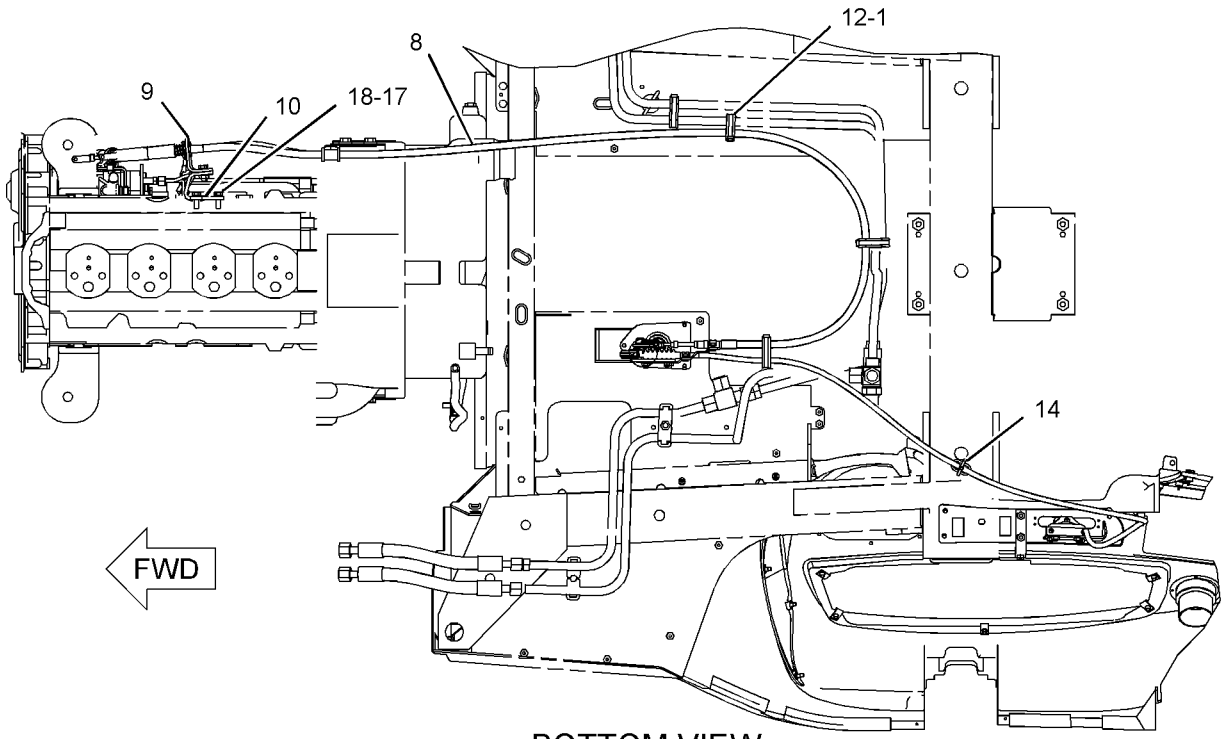

BOTTOM VIEW

GRAPHIC #1

<END>

g01031631

233-9417 FILTER GP-FUEL

S/N: CRS1-UP
PART OF 234-3061 ENGINE AR-PRIMARY
AN ATTACHMENT

SMCS-1261 **i01998681**

NOTE	REF NO	GRAPHIC REF	PART NUMBER	QTY	PART NAME 1 2 3 4 5 6 (PRODUCT LEVEL)	SEE PAGE
	1	1	**237-0285**	1	BRACKET	
J	2	1	**120-6872**	3	BOLT	
	3	1	**160-7197**	1	CLIP	
	4	1	**237-0286**	1	PLUG	
	5	1	**215-9508**	1	CONNECTOR-SPECIAL	
	6	1	**215-9509**	1	CONNECTOR-SPECIAL	
	7	1	**232-3126**	1	CLIP	
	8	1	**238-8864**	1	PUMP GP-FUEL PRIMING	
	8A	1	**1R-1804**	1	FILTER ELEMENT AS-FUEL	
J	9	1	**232-9758**	3	WASHER	
	10	1	**232-9759**	1	LINE AS-FUEL	
	11	1	**237-0284**	1	LINE AS-FUEL	
	12	1	**232-1115**	1	CLIP-PIPE	
					AVAILABLE REPAIR KIT(S):	
J			**240-9756**	1	MOUNTING GP-PRIMING PUMP	

J-KIT MARKED J CONTAINS PARTS MARKED J

233-9417 **FILTER GP-FUEL** ***(contd.)*** **i01998681**

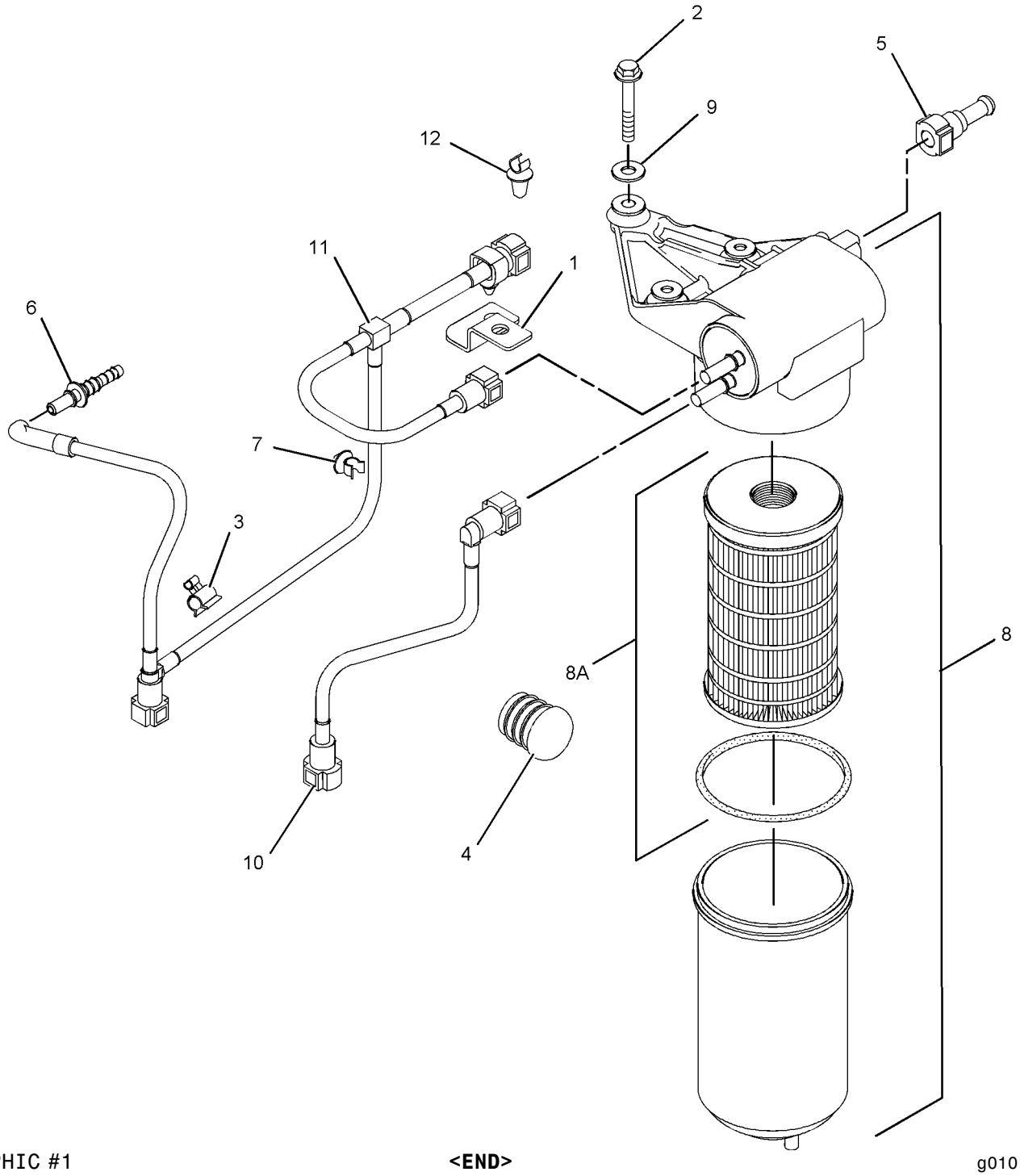

GRAPHIC #1 **<END>** g01011853

FUEL SYSTEM

235-2972 LINES GP-FUEL

S/N: BXC1-UP; DSX1-UP
PART OF 214-6891, 214-6893 ENGINE AR
AN ATTACHMENT

SMCS-1274 **i01998503**

NOTE	REF NO	GRAPHIC REF	PART NUMBER	QTY	PART NAME 1 2 3 4 5 6 (PRODUCT LEVEL)	SEE PAGE
	1	1	**1P-4278**	9	CLAMP-HOSE	
	2	1	**8B-6127**	1	CLIP	
	3	1	**190-9838**	1	TUBE AS	
E	3A	1	**5P-0078**		TUBE (34CM)	
	3B	1	**6V-8553**	1	NUT (11/16X16THD)	
	3C	1	**6V-8560**	1	SLEEVE	
	4	1	**215-9513**	1	CONNECTOR	
	5	1	**238-1830**	1	TUBE AS	
	5A	1	**6V-8553**	1	NUT (11/16X16THD)	
	6	1	**241-0022**	1	LINE AS-FUEL	
	6A	1	**1P-4278**	1	CLAMP-HOSE	
E	6B	1	**5P-1420**		HOSE (59CM)	
	7	1	**241-4275**	1	TEE-SPECIAL	
	8	1	**0S-0550**	1	CLIP	
	9	1	**1P-7009**	1	CLIP	
	10	1	**6D-7573**	1	CLIP	
	11	1	**6K-8178**	1	CLIP	
M	12	1	**8T-1159**	1	BOLT-SOCKET HEAD (M10X1.5X25MM)	
	13	1	**8T-4121**	3	WASHER-HARD (11X21X2.5MM THK)	
M	14	1	**8T-4179**	1	BOLT (M12X1.75X20MM)	
	15	1	**8T-4223**	1	WASHER-HARD (13.5X25.5X3MM THK)	
E	16	1	**5P-1442**		HOSE (81CM)	
E	17	1	**5P-1420**		HOSE (122CM)	

E-ORDER BY THE CENTIMETER
M-METRIC PART

235-2972 **LINES GP-FUEL** ***(contd.)*** **i01998503**

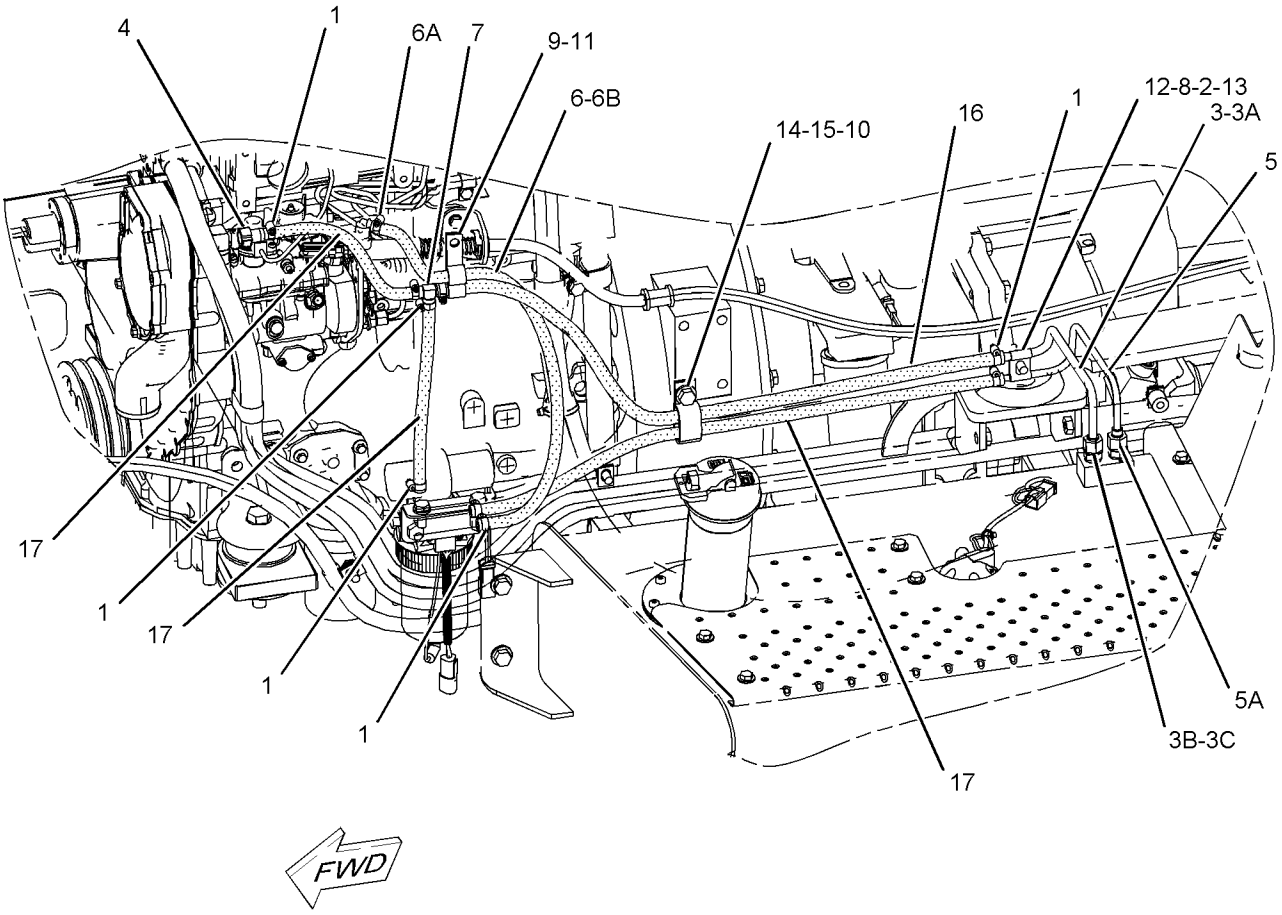

GRAPHIC #1 **<END>** g01035314

236-8228 PUMP GP-FUEL INJECTION

S/N: CRS1-UP
PART OF 236-8229 PUMP GP-FUEL INJECTION
AN ATTACHMENT

SMCS-1251, 1290 **i01999156**

NOTE	REF NO	GRAPHIC REF	PART NUMBER	QTY	PART NAME 1 2 3 4 5 6 (PRODUCT LEVEL)	SEE PAGE
	1	1	**152-3968**	1	SEAL-O-RING	
	2	1	**176-6219**	1	VALVE GP-SOLENOID (12 V) (AIR FUEL RATIO CONTROL)	
	3	1	**193-0161**	1	KIT-CONNECTOR	

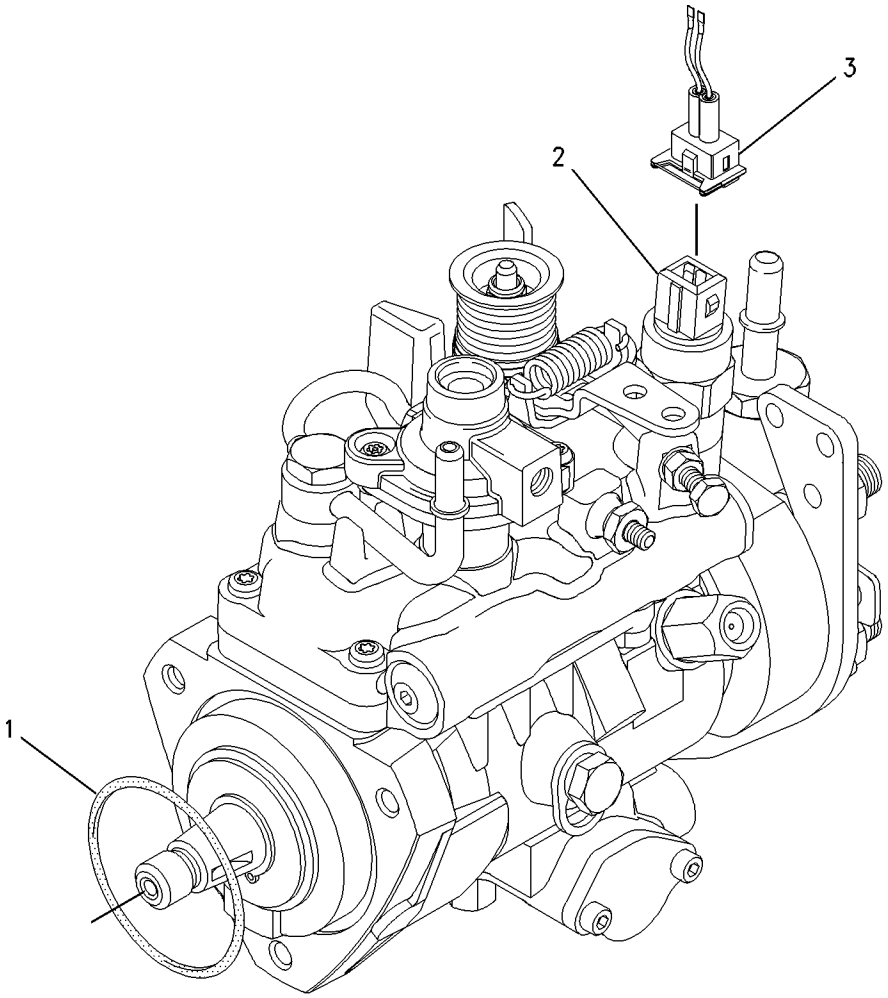

GRAPHIC #1 **<END>** g01006440

236-8229 PUMP GP-FUEL INJECTION

S/N: CRS1-UP
PART OF 234-3061 ENGINE AR-PRIMARY
AN ATTACHMENT

SMCS-1251, 1290 **i01998686**

NOTE	REF NO	GRAPHIC REF	PART NUMBER	QTY	PART NAME 1 2 3 4 5 6 (PRODUCT LEVEL)	SEE PAGE
	1	1	**6I-0217**	1	BOLT (M8X1.25X20MM)	
	2	1	**6I-0260**	3	BOLT (M8X1.25X25MM)	
	3	1	**6I-0291**	1	NUT (M8X1.25)	
	4	1	**035-8017**	1	UNION	
	5	1	**067-6264**	1	FITTING-FLARED	
	6	1	**067-6265**	1	FITTING-BRASS	
	7	1	**100-4830**	1	BOLT (M10X1.5X20MM)	
	8	1	**111-3422**	1	NUT	
	9	1	**111-3423**	1	WASHER	
	10	1	**140-8714**	1	CLIP	
	11	1	**230-7886**	1	TUBE AS	
	11A	1	**067-6999**	1	OLIVE	
	11B	1	**106-8835**	1	NUT	
	12	1	**230-8989**	1	GEAR-FUEL PUMP	
	13	1	**230-8995**	1	TUBE AS (CYL NO.1)	
	14	1	**230-8996**	1	TUBE AS (CYL NO.2)	
	15	1	**230-8997**	1	TUBE AS (CYL NO.3)	
	16	1	**230-8998**	1	TUBE AS (CYL NO.4)	
	17	2	**232-1323**	1	PLUG-CUP	
	18	1	**232-1328**	1	CAP	
	19	1	**232-1794**	3	HOSE	
	20	1	**232-2725**	2	CLIP	
	21	1	**232-2726**	1	CLIP	
	22	1	**232-3149**	1	WASHER	
	23	1	**232-3157**	1	BRACKET	
	24	1	**232-3158**	4	CLAMP-INJECTOR	
	25	1	**232-3274**	4	BOLT	
	26	2	**235-1790**	1	SWITCH (TIMING ADVANCE)	
	27	1	**236-1674**	4	INJECTOR AS-FUEL	
					(EACH INCLUDES)	
		1	**236-1673**	1	NOZZLE	
	27A	1	**140-8718**	1	WASHER	
Y	28	1	**236-8228**	1	PUMP GP-FUEL INJECTION	92

Y-SEPARATE ILLUSTRATION

236-8229 **PUMP GP-FUEL INJECTION** *(contd.)* **i01998686**

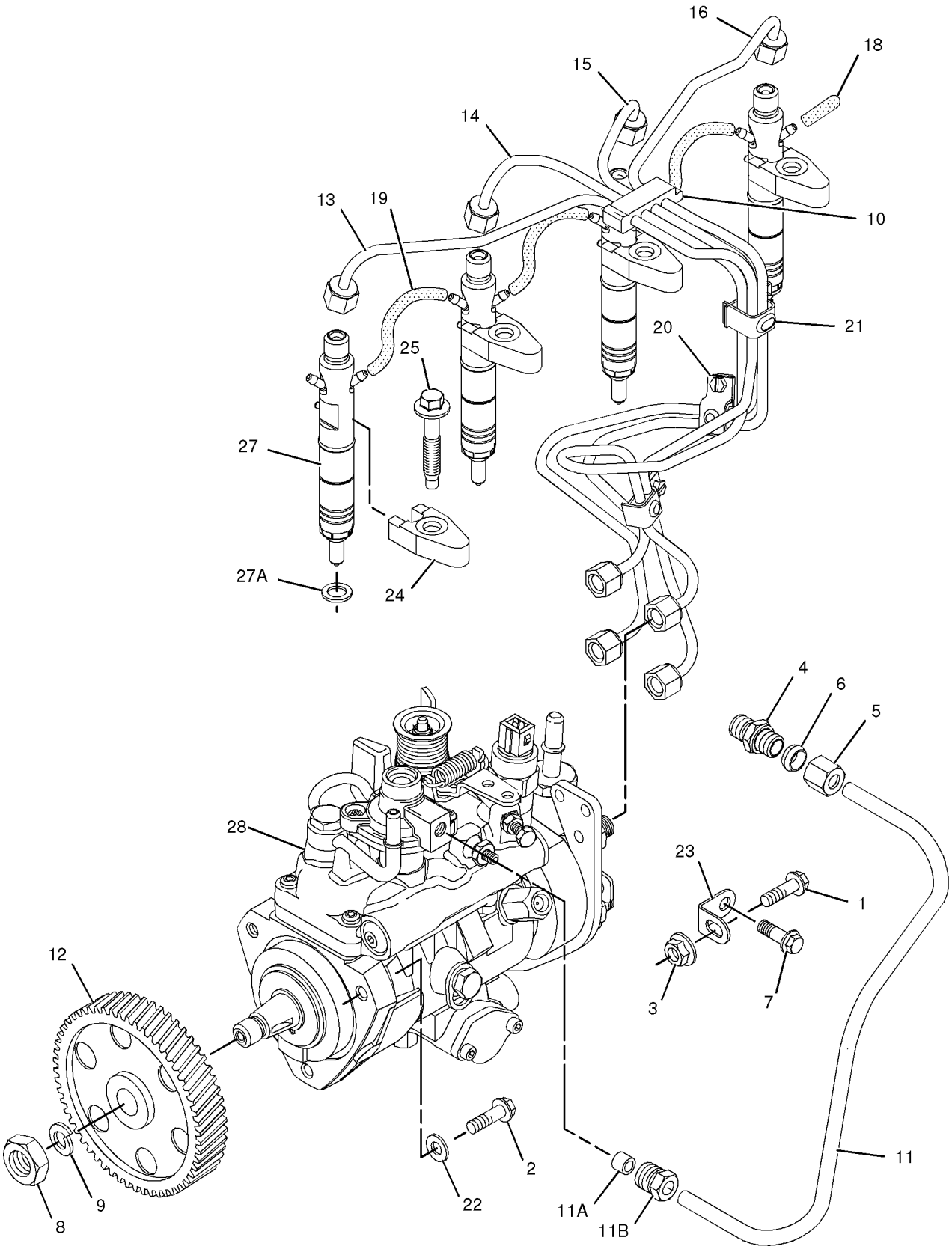

GRAPHIC #1 g01022784

236-8229 **PUMP GP-FUEL INJECTION** *(contd.)* **i01998686**

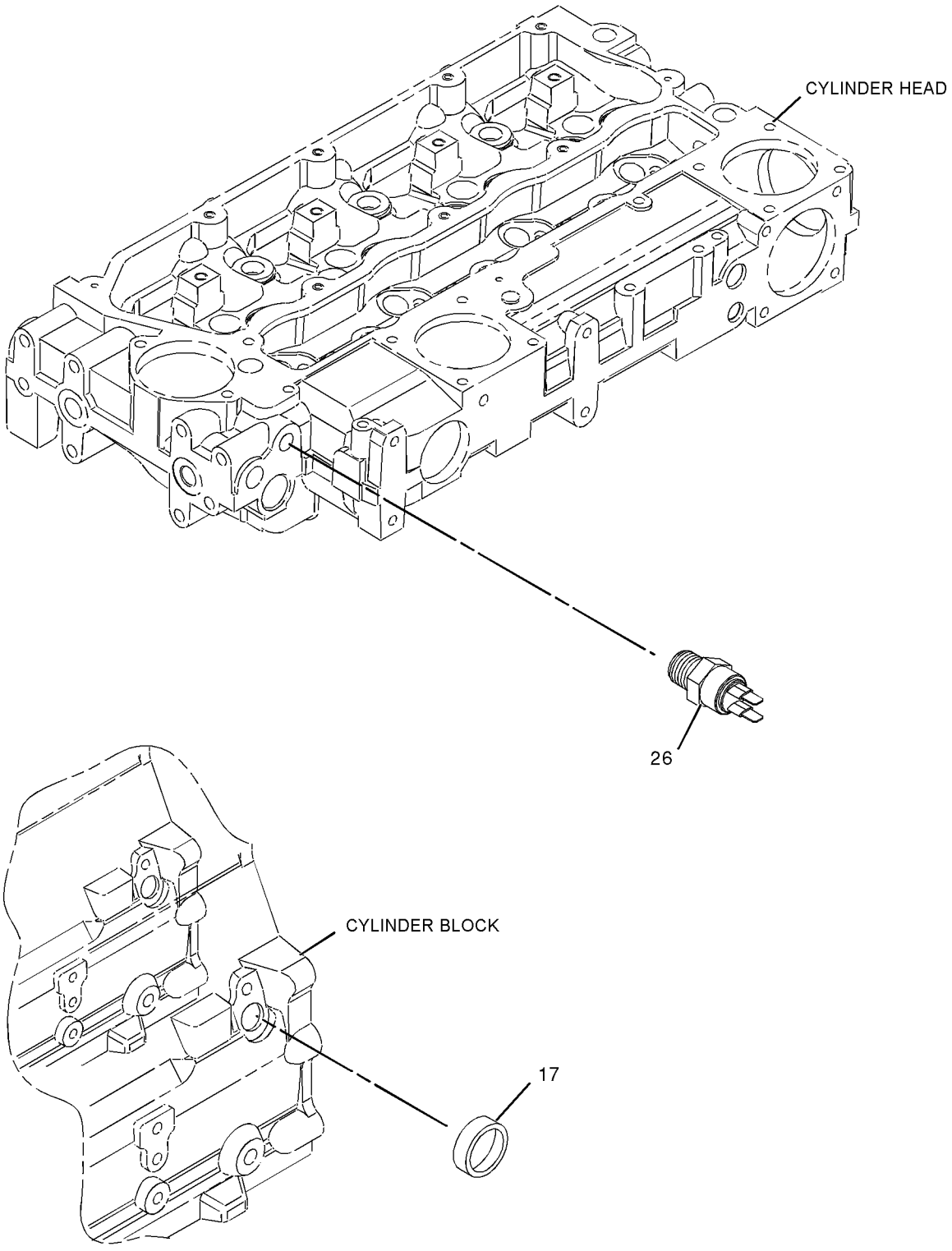

GRAPHIC #2 **<END>** g01022785

237-2528 PUMP GP-FUEL INJECTION

S/N: CRS1-UP
PART OF 234-3059 ENGINE AR-PRIMARY
AN ATTACHMENT

SMCS-1251, 1290 **i02007394**

NOTE	REF NO	GRAPHIC REF	PART NUMBER	QTY	PART NAME 1 2 3 4 5 6 (PRODUCT LEVEL)	SEE PAGE
	1	1	**6I-0217**	1	BOLT (M8X1.25X20MM)	
	2	1	**6I-0260**	3	BOLT (M8X1.25X25MM)	
	3	1	**6I-0291**	1	NUT (M8X1.25)	
	4	1	**9F-2247**	1	PLUG-PIPE	
	5	1	**100-4830**	1	BOLT (M10X1.5X20MM)	
	6	1	**111-3422**	1	NUT	
	7	1	**111-3423**	1	WASHER	
	8	1	**124-3815**	1	BOLT (M8X16X1.25MM)	
	9	1	**140-8714**	1	CLIP	
	10	1	**230-8989**	1	GEAR-FUEL PUMP	
	11	1	**230-8995**	1	TUBE AS (CYL NO.1)	
	12	1	**230-8996**	1	TUBE AS (CYL NO.2)	
	13	1	**230-8997**	1	TUBE AS (CYL NO.3)	
	14	1	**230-8998**	1	TUBE AS (CYL NO.4)	
	15	1	**240-5571**	1	BRACKET	
	16	1	**232-3126**	1	CLIP	
	17	1	**232-1323**	1	PLUG-CUP	
	18	1	**232-1328**	1	CAP	
	19	1	**232-1793**	1	CABLE	
	20	1	**232-1794**	3	HOSE	
	21	1	**232-2725**	2	CLIP	
	22	1	**232-2726**	1	CLIP	
	23	1	**232-3149**	3	WASHER	
	24	1	**232-3157**	1	BRACKET	
	25	1	**238-8671**	1	CLAMP-INJECTOR	
	26	1	**232-3274**	4	BOLT	
	27	1	**235-1790**	1	SWITCH (40-DEG) (ENGINE COOLANT TEMPERATURE)	
	28	1	**236-1674**	4	INJECTOR AS-FUEL	
	28A	1	**140-8718**	1	WASHER	
	28B	1	**236-1673**	1	NOZZLE	
	29	1	**237-2527**	1	PUMP GP-FUEL INJECTION	

237-2528 **PUMP GP-FUEL INJECTION** *(contd.)* **i02007394**

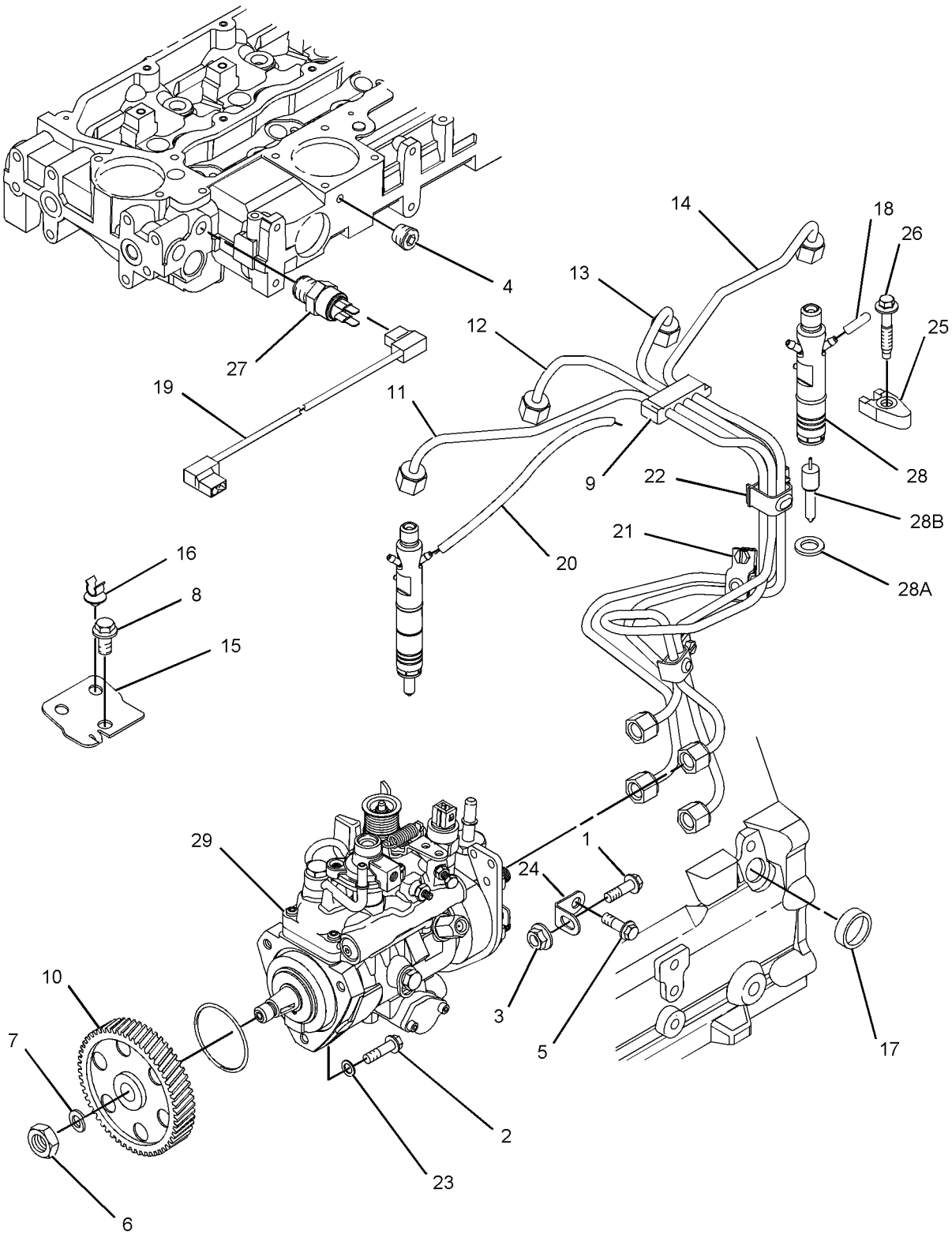

GRAPHIC #1 **<END>** g01021884

228-9129 PUMP GP-FUEL PRIMING

S/N: BXC1-UP; DSX1-UP
PART OF 235-3170 SEPARATOR GP-WATER
AN ATTACHMENT

SMCS-1258 **i02010462**

NOTE	REF NO	GRAPHIC REF	PART NUMBER	QTY	PART NAME 1 2 3 4 5 6 (PRODUCT LEVEL)	SEE PAGE
	1	1	**118-8118**	1	RING-RETAINING	
	2	1	**228-9130**	1	ELEMENT-FILTER (FUEL)	
	3	1	**228-9132**	1	FITTING (FUEL PUMP)	
F			**149-9954**	1	DRAIN AS (SENSOR)	
	4	1	**193-0618**	1	SENSOR GP-MOISTURE (WATER SEPARATOR)	
		1	**192-7877**	1	RETAINER	

F-NOT SHOWN

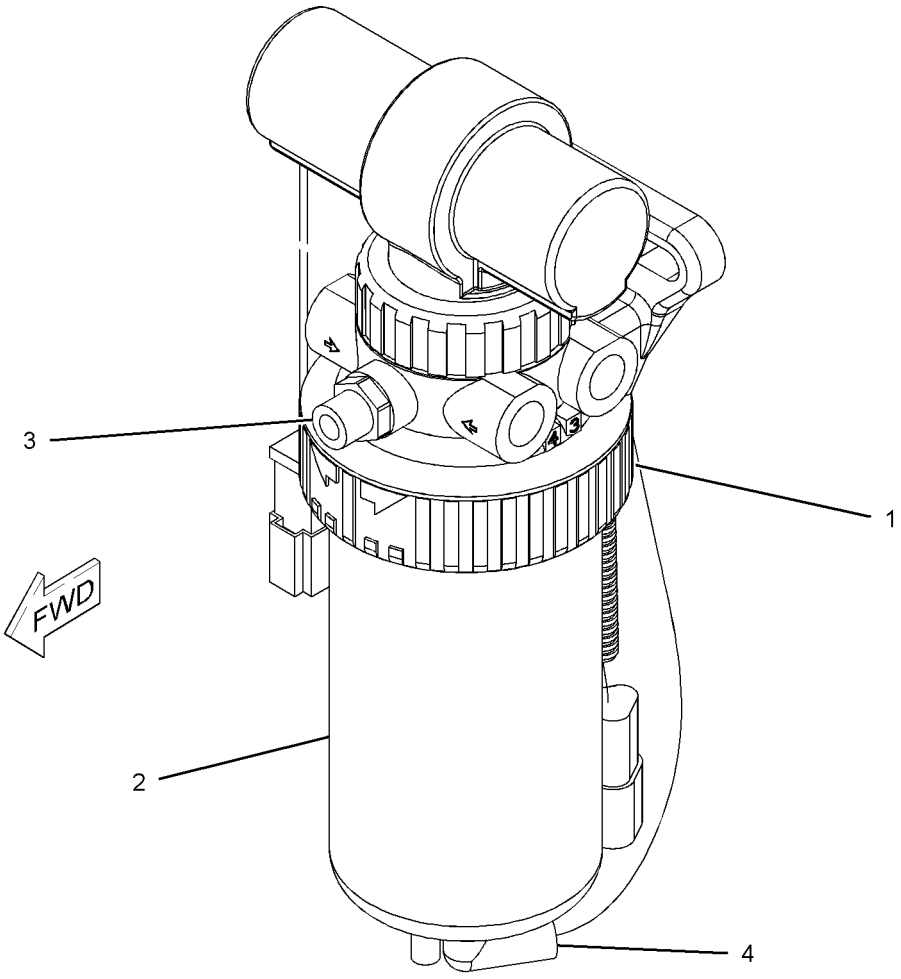

GRAPHIC #1 **<END>** g01039647

FUEL SYSTEM

235-3170 SEPARATOR GP-WATER

S/N: BXC1-UP; DSX1-UP
PART OF 214-6891, 214-6893 ENGINE AR
AN ATTACHMENT

SMCS-1263 **i01991957**

NOTE	REF NO	GRAPHIC REF	PART NUMBER	QTY	PART NAME 1 2 3 4 5 6 (PRODUCT LEVEL)	SEE PAGE
	1	1	**3S-2093**	1	STRAP-CABLE	
	2	1	**069-4080**	1	FITTING-COUPLING	
	3	1	*165-7951*	2	CONNECTOR AS	
		1	**3J-1907**	1	SEAL-O-RING	
		1	**157-1669**	1	CONNECTOR	
Y	4	1	**228-9129**	1	PUMP GP-FUEL PRIMING	98
	5	1	**237-2197**	1	BRACKET AS	
	6	1	**3J-1907**	2	SEAL-O-RING	
	7	1	**8T-4121**	4	WASHER-HARD (11X21X2.5MM THK)	
M	8	1	**8T-4136**	2	BOLT (M10X1.5X25MM)	
M	9	1	**8T-4196**	2	BOLT (M10X1.5X35MM)	
	10	1	**9S-4191**	2	PLUG	

M-METRIC PART
Y-SEPARATE ILLUSTRATION

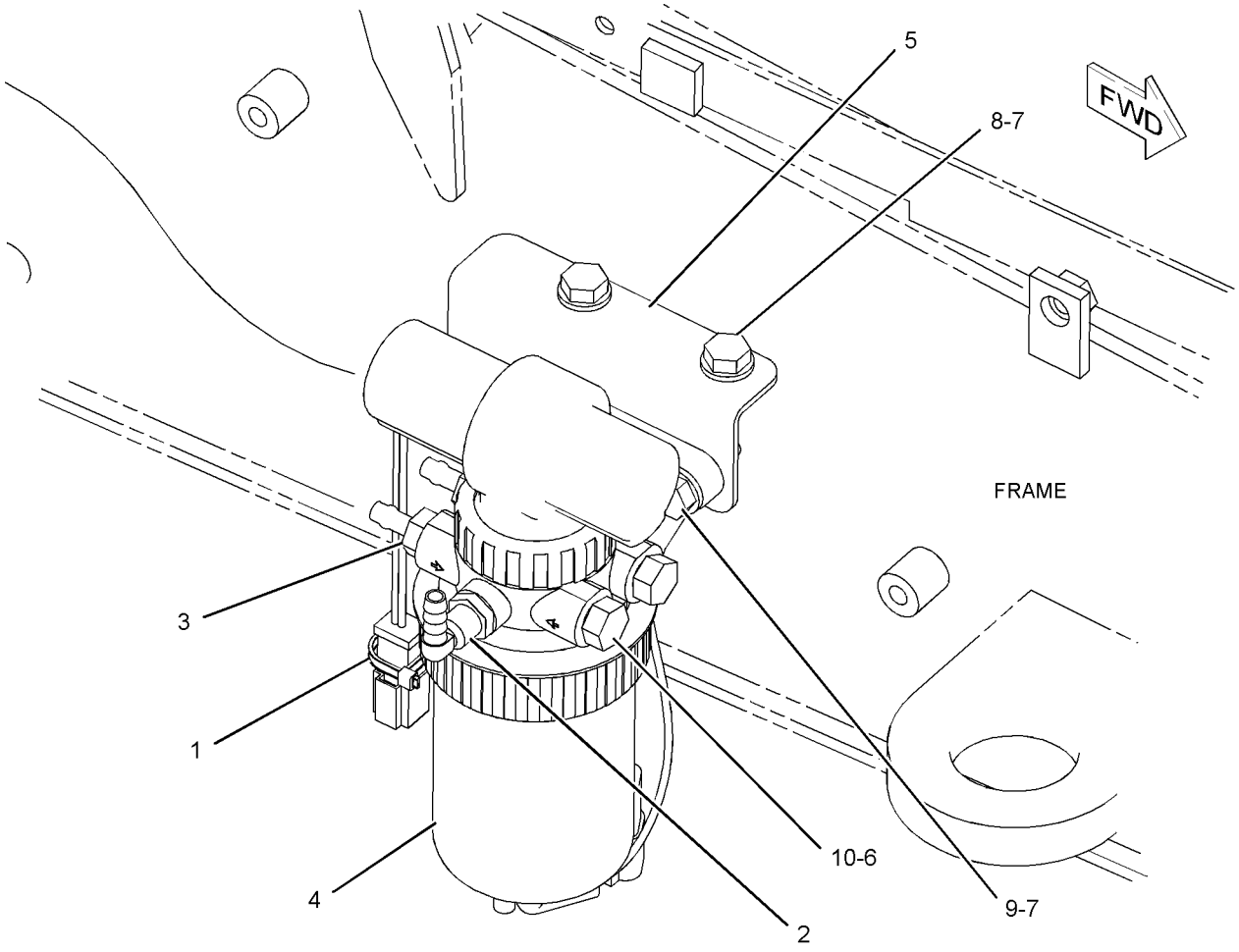

GRAPHIC #1 **<END>** g01040336

FUEL SYSTEM

214-6908 TANK & MTG GP-FUEL

S/N: BXC1-UP; DSX1-UP

PART OF 237-9288, 237-9289 CHASSIS AR

SMCS-1273 **i01964439**

NOTE	REF NO	GRAPHIC REF	PART NUMBER	QTY	PART NAME 1 2 3 4 5 6 (PRODUCT LEVEL)	SEE PAGE
	1	1	**164-3876**	1	STEP AS	
M		1	**8T-3612**	4	NUT-WELD	
	2	1	**190-5123**	1	PLATE AS	
M		1	**8T-3612**	3	NUT-WELD	
	3	1	**201-1837**	1	TREAD	
Y	4	1	**214-6949**	1	TANK GP-FUEL	101
	5	1	**5P-4116**	7	WASHER-HARD (8.8X20.5X2MM THK)	
M	6	1	**8T-4183**	4	BOLT (M12X1.75X40MM)	
M	7	1	**8T-4189**	7	BOLT (M8X1.25X20MM)	
M	8	1	**8T-4200**	4	BOLT (M8X1.25X16MM)	
	9	1	**8T-4223**	4	WASHER-HARD (13.5X25.5X3MM THK)	
	10	1	**8T-4224**	4	WASHER-HARD (8.8X16X2MM THK)	

M-METRIC PART
Y-SEPARATE ILLUSTRATION

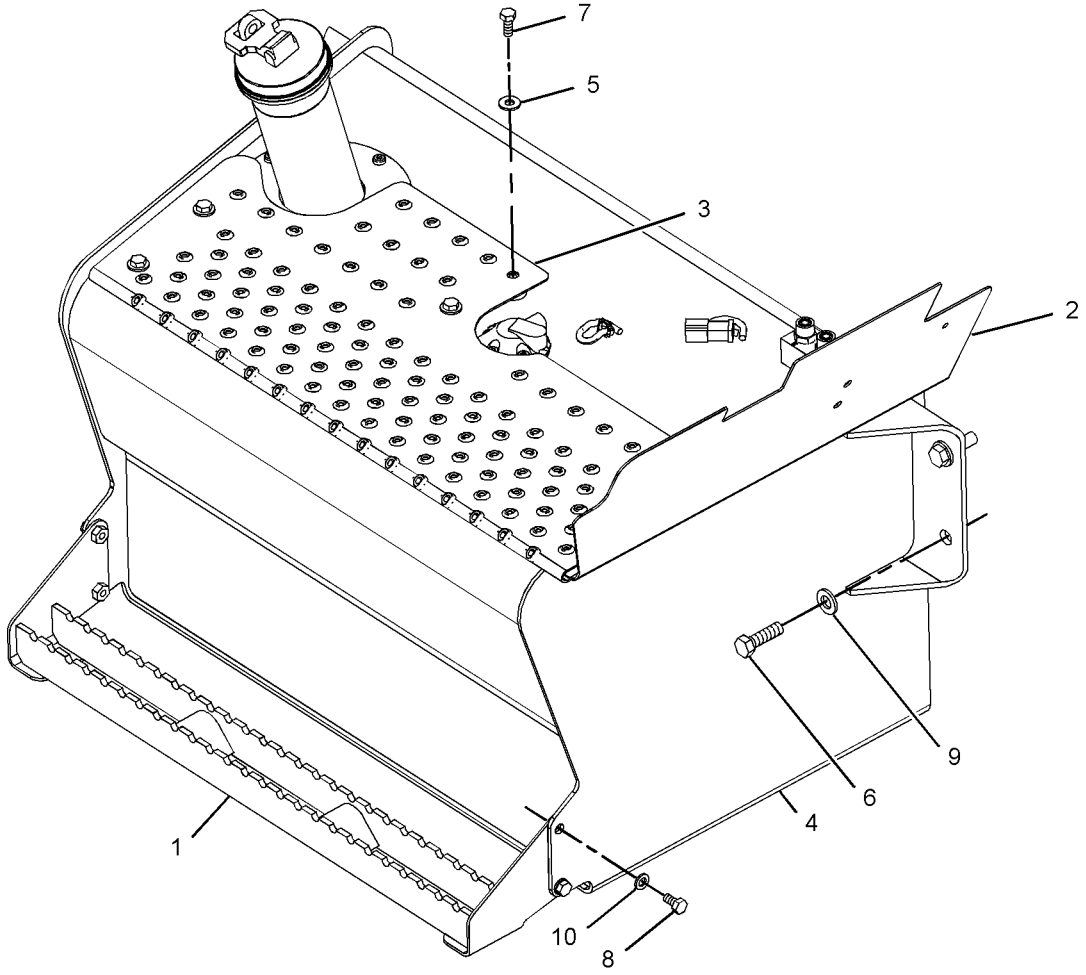

GRAPHIC #1 **<END>** g01021020

FUEL SYSTEM

214-6949 TANK GP-FUEL

S/N: BXC1-UP; DSX1-UP

PART OF 214-6908 TANK & MTG GP-FUEL

SMCS-1273 **i01998577**

NOTE	REF NO	GRAPHIC REF	PART NUMBER	QTY	PART NAME 1 2 3 4 5 6 (PRODUCT LEVEL)	SEE PAGE
	1	1	**8L-8413**	1	STRAP-CABLE	
	2	1	**9R-7240**	1	GASKET	
	3	1	**131-0232**	1	COVER	
	4	1	**187-8936**	1	SENDER AS-FUEL LEVEL	
		1	**3E-3365**	1	WEDGE-RECEPTACLE LOCK (2-PIN)	
		1	**102-8802**	1	KIT-RECEPTACLE (2-PIN)	
		1	**186-3735**	2	PIN-CONNECTOR	
Y	5	1	*244-2603*	1	TANK GP-FUEL	102

Y-SEPARATE ILLUSTRATION

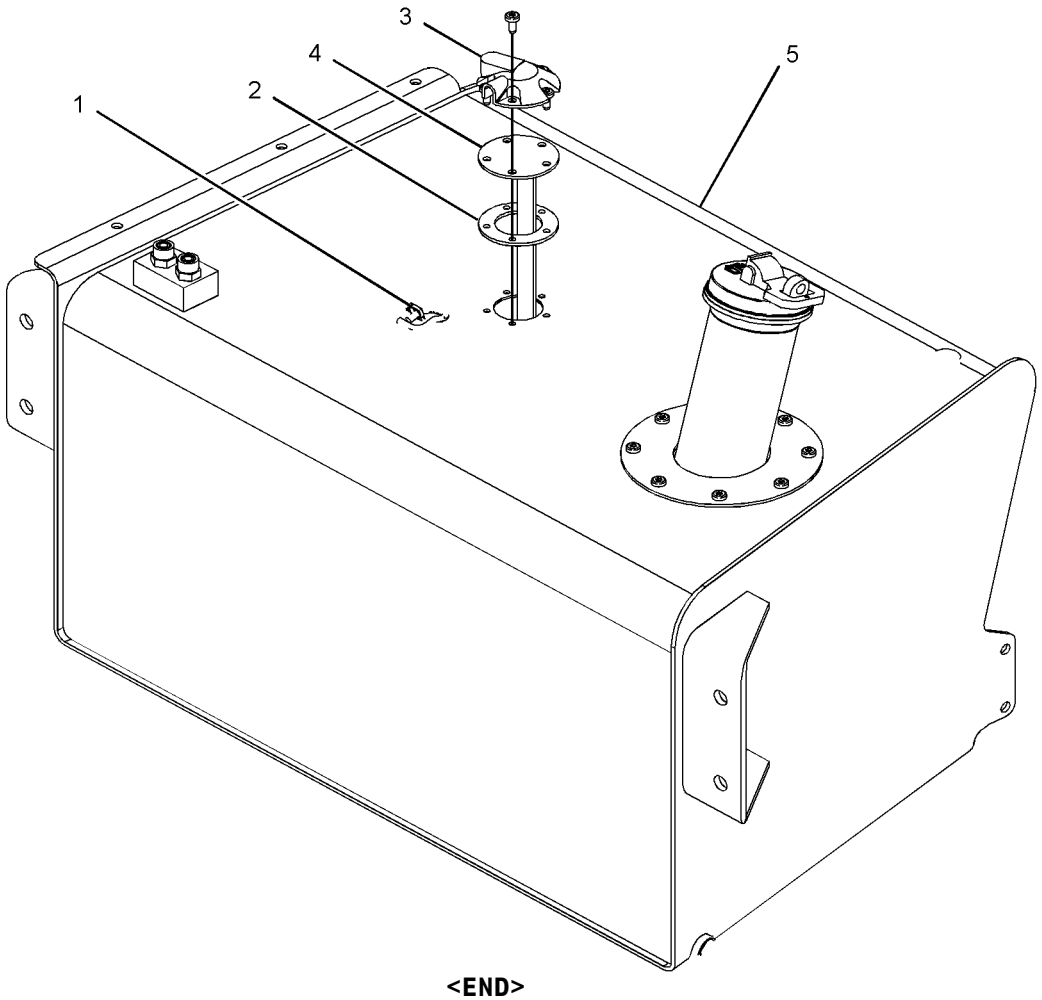

GRAPHIC #1 **<END>** g01033979

FUEL SYSTEM

244-2603 TANK GP-FUEL

S/N: BXC1-UP; DSX1-UP
PART OF 214-6949 TANK GP-FUEL

SMCS-1273 **i01987738**

NOTE	REF NO	GRAPHIC REF	PART NUMBER	QTY	PART NAME 1 2 3 4 5 6 (PRODUCT LEVEL)	SEE PAGE
	1	1	**201-0330**	1	CAP-FUEL	
	2	1	**201-1835**	1	TUBE AS	
	3	1	**214-6948**	1	TANK AS-FUEL	
	4	1	**106-8020**	1	GASKET	
M	5	1	**123-4950**	8	SCREW-PAN HEAD (M6X1X16MM)	
	6	1	*148-8326*	2	CONNECTOR GP	
					(EACH INCLUDES)	
		1	**3J-7354**	1	SEAL-O-RING	
		1	**6V-8397**	1	SEAL-O-RING	
		1	**6V-9872**	1	CONNECTOR	
	7	1	*148-8407*	1	PLUG GP	
		1	**3J-1907**	1	SEAL-O-RING	
		1	**9S-4191**	1	PLUG	
F			**180-3730**	1	FILTER AS-FUEL (FILLER NECK SCREEN)	

F-NOT SHOWN
M-METRIC PART

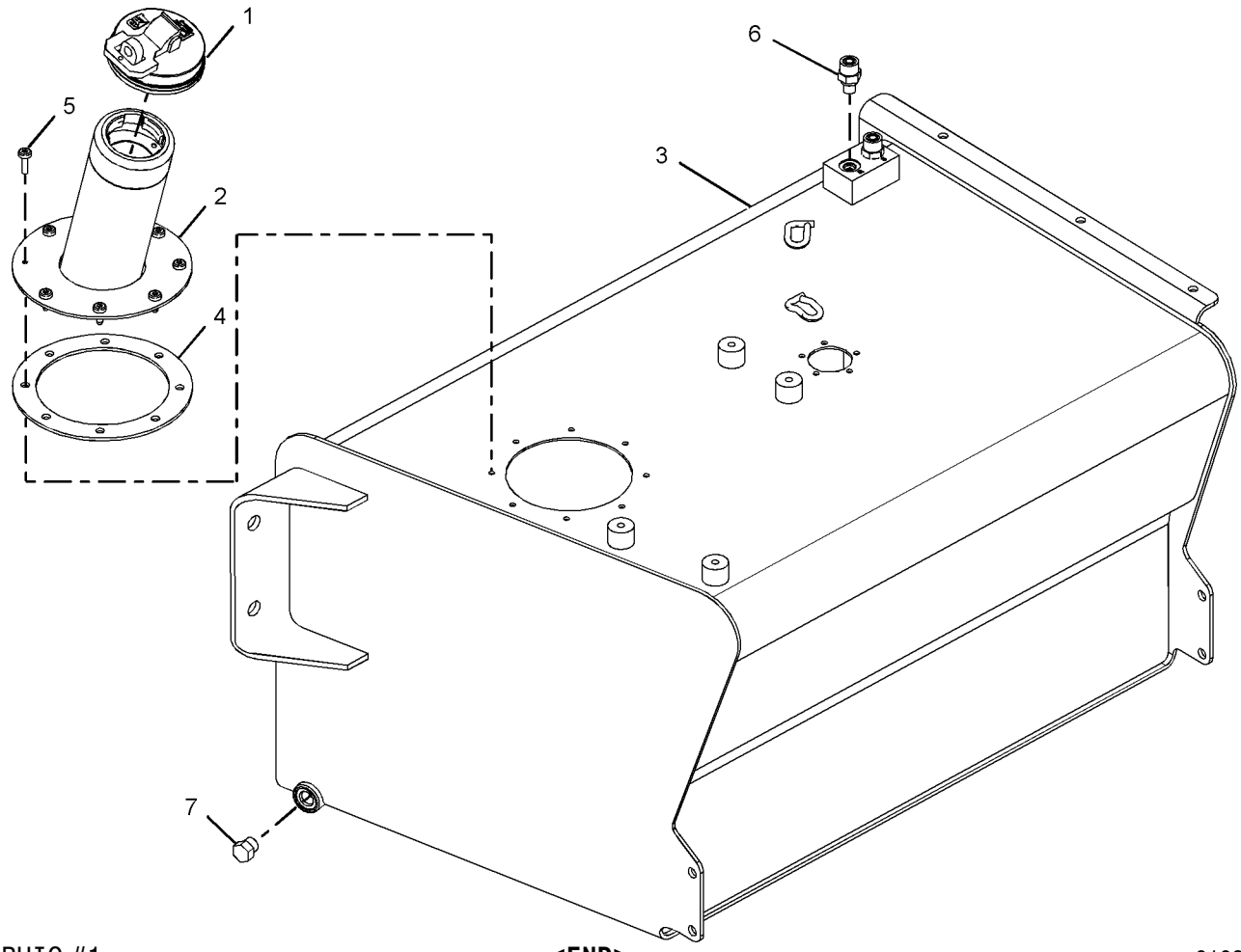

GRAPHIC #1 **<END>** g01030318

237-0027 ALTERNATOR GP-CHARGING

S/N: CRS1-UP

PART OF 234-3059, 234-3061 ENGINE AR-PRIMARY

AN ATTACHMENT

SMCS-1405 **i01991983**

NOTE	REF NO	GRAPHIC REF	PART NUMBER	QTY	PART NAME 1 2 3 4 5 6 (PRODUCT LEVEL)	SEE PAGE
	1	1	**6B-0933**	1	SPACER (10.31X19.05X6.35MM THK)	
	2	1	**6I-0260**	1	BOLT (M8X1.25X25MM)	
	3	1	**6I-0454**	1	BOLT (M10X1.5X70MM)	
	4	1	**6I-0594**	1	NUT (M10X1.5)	
	5	1	**7W-2632**	1	WASHER (8.5X16.8X1.6MM THK)	
	6	1	**067-6366**	1	WASHER (M8)	
	7	1	**100-8451**	1	BOLT	
	8	1	**113-6349**	1	NUT	
	9	1	**140-8783**	2	BOLT (M10X45MM)	
	10	1	**225-3145**	1	ALTERNATOR GP-CHARGING	
	11	1	**233-9530**	1	BRACKET	
	12	1	**233-9531**	1	LEVER-ADJUSTING	
	13	1	**233-9532**	1	PULLEY-ALTERNATOR	

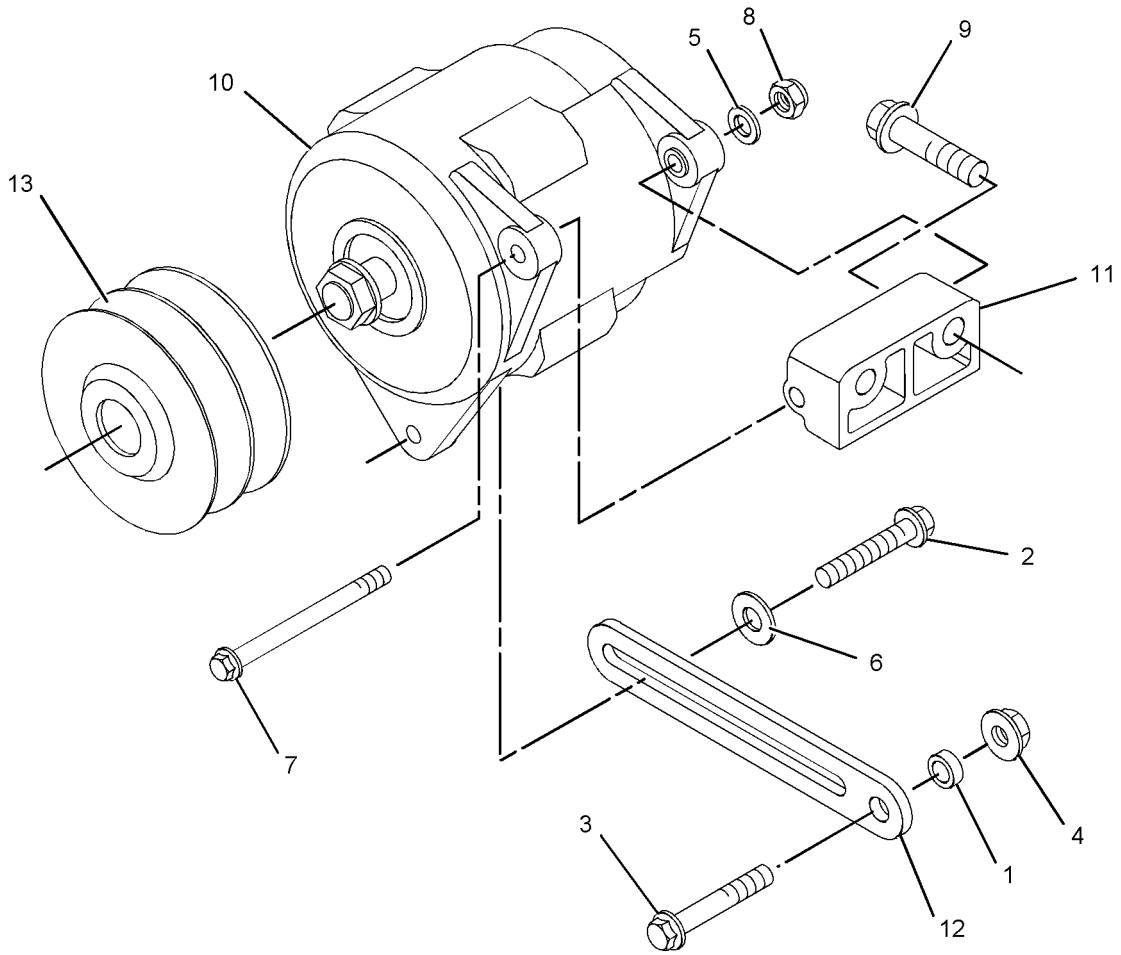

GRAPHIC #1 **<END>** g01039667

119-8016 BATTERY GP—HEAVY DUTY

S/N: BXC1-UP; DSX1-UP
PART OF 228-4589, 228-4591 BOX GP-BATTERY
AN ATTACHMENT

SMCS-1401 **i02005191**

NOTE	REF NO	GRAPHIC REF	PART NUMBER	QTY	PART NAME 1 2 3 4 5 6 (PRODUCT LEVEL)	SEE PAGE
	1	1	**141-1658**	1	CABLE AS-BATTERY (POSITIVE)	
E		1	**5P-0761**		CABLE (00GA)(RED) (94CM)	
D		1	**6V-2722**		TUBE-HEAT SHRINK (0.07M)	
		1	**1S-7252**	1	TERMINAL-RING (FOR 3/8IN BOLT)	
E		1	**8Y-8081**		TUBE (48CM)	
		1	**7T-9987**	1	COVER-TERMINAL	
		1	**8N-0869**	1	COVER-TERMINAL (RED) (RING)	
		1	**3T-3349**	1	STUDBOLT (M18X57.5MM)	
		1	**1M-6120**	2	NUT (5/16-18 THD)	
	1A	1	**3S-6049**	1	TERMINAL AS-BATTERY (POSITIVE)	
		1	**1M-6119**	1	BOLT (5/16-18X1.375 IN)	
		1	**1M-6120**	1	NUT (5/16-18 THD)	
C	2	1	**178-9242**	2	BRACKET AS	
	3	1	**130-8293**	1	CABLE AS-BATTERY (NEGATIVE)	
E		1	**5P-0747**		CABLE (00GA)(BLACK) (46CM)	
	3A	1	**1S-7251**	1	TERMINAL-RING (FOR 1/2IN BOLT)	
	3B	1	**7N-5274**	2	COVER-TERMINAL (BLACK) (BATTERY)	
	3C	1	**3S-6050**	2	TERMINAL AS-BATTERY (NEGATIVE)	
					(EACH INCLUDES)	
		1	**1M-6119**	1	BOLT (5/16-18X1.375 IN)	
		1	**1M-6120**	1	NUT (5/16-18 THD)	
	4	1	**7X-7729**	4	WASHER (11X25X3MM THK)	
M	5	1	**8T-5005**	2	BOLT (M10X1.50X70MM)	
	6	1	**3T-5760**	2	BATTERY (12 VOLT)	
	7	1	**4H-2558**	1	GROMMET	
	8	1	**8T-4223**	1	WASHER-HARD (13.5X25.5X3MM THK)	
	9	1	**7K-1181**	2	STRAP-CABLE	
	10	1	**4P-8134**	1	CLIP	
	11	1	**3S-2093**	2	STRAP-CABLE	
M	12	1	**8T-4133**	2	NUT (M10X1.5 THD)	
	13	1	**038-9317**	2	TREAD	
M	14	1	**8T-4137**	2	BOLT (M10X1.5X20MM)	

C-CHANGE FROM PREVIOUS TYPE
D-ORDER BY THE METER
E-ORDER BY THE CENTIMETER
M-METRIC PART

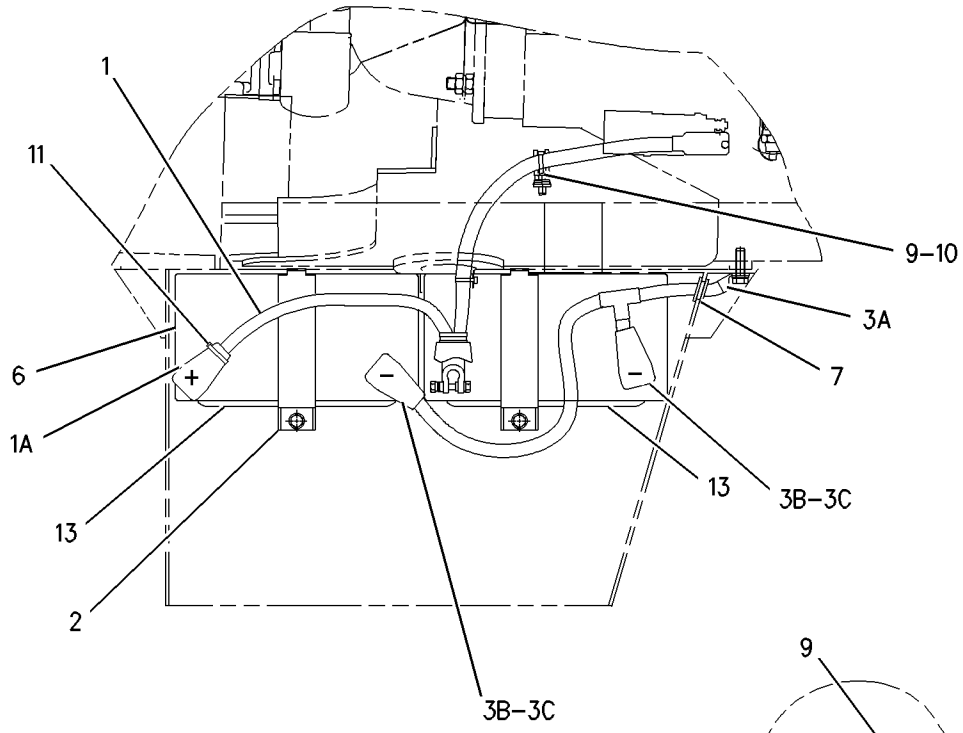

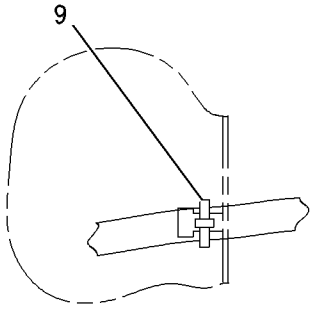

VIEW A–A

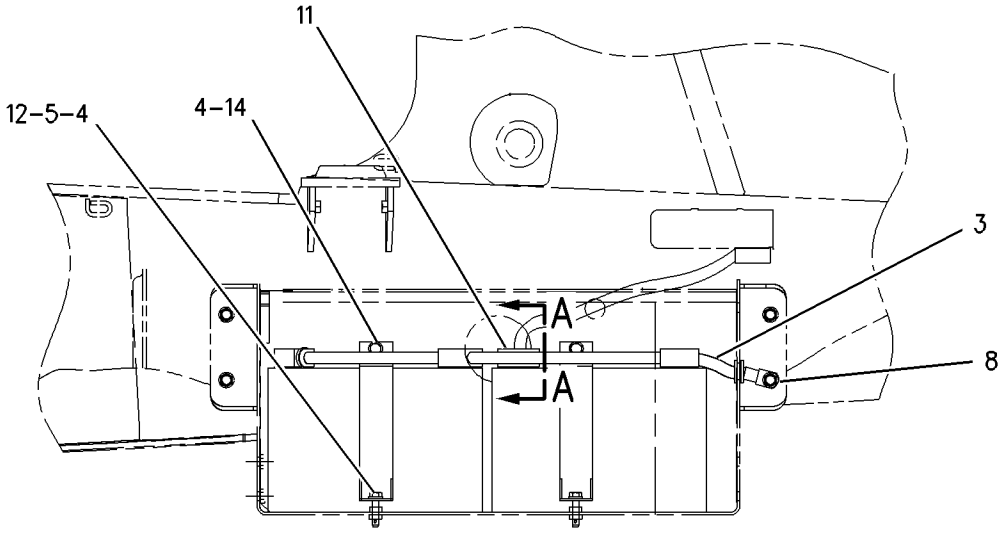

GRAPHIC #1 **<END>** g00802459

122-5865 BATTERY GP

S/N: BXC1-UP; DSX1-UP
PART OF 228-4588, 228-4590 BOX GP-BATTERY
AN ATTACHMENT

SMCS-1401 **i02005194**

NOTE	REF NO	GRAPHIC REF	PART NUMBER	QTY	PART NAME 1 2 3 4 5 6 (PRODUCT LEVEL)	SEE PAGE
	1	1	**3T-5760**	1	BATTERY (12 VOLT)	
	2	1	**8T-4223**	1	WASHER-HARD (13.5X25.5X3MM THK)	
	3	1	**7X-7729**	2	WASHER (11X25X3MM THK)	
C	4	1	**178-9242**	1	BRACKET AS	
	5	1	**130-8292**	1	CABLE AS-BATTERY (NEGATIVE)	
E		1	**5P-0747**		CABLE (00GA)(BLACK) (13CM)	
	5A	1	**1S-7251**	1	TERMINAL-RING (FOR 1/2IN BOLT)	
	5B	1	**7N-5274**	1	COVER-TERMINAL (BLACK) (BATTERY)	
	5C	1	**3S-6050**	1	TERMINAL AS-BATTERY (NEGATIVE)	
		1	**1M-6119**	1	BOLT (5/16-18X1.375 IN)	
		1	**1M-6120**	1	NUT (5/16-18 THD)	
	6	1	**141-1656**	1	CABLE AS-BATTERY (POSITIVE)	
		1	**1S-7252**	1	TERMINAL-RING (FOR 3/8IN BOLT)	
E		1	**5P-0761**		CABLE (00GA)(RED) (56CM)	
D		1	**6V-2722**		TUBE-HEAT SHRINK (0.07M)	
		1	**8N-0869**	1	COVER-TERMINAL (RED)	
		1	**8Y-8081**		TUBE	
		1	**3S-6049**	1	TERMINAL AS-BATTERY (POSITIVE)	
		1	**1M-6120**	1	NUT (5/16-18 THD)	
		1	**1M-6119**	1	BOLT (5/16-18X1.375 IN)	
	7	1	**4H-2558**	1	GROMMET	
	8	1	**7K-1181**	2	STRAP-CABLE	
M	9	1	**8T-5005**	1	BOLT (M10X1.50X70MM)	
	10	1	**4P-8134**	1	CLIP	
	11	1	**3S-2093**	1	STRAP-CABLE	
M	12	1	**8T-4133**	1	NUT (M10X1.5 THD)	
	13	1	**038-9317**	1	TREAD	
M	14	1	**8T-4137**	2	BOLT (M10X1.5X20MM)	
	15	1	**8T-4121**	1	WASHER-HARD (11X21X2.5MM THK)	

C-CHANGE FROM PREVIOUS TYPE
D-ORDER BY THE METER
E-ORDER BY THE CENTIMETER
M-METRIC PART

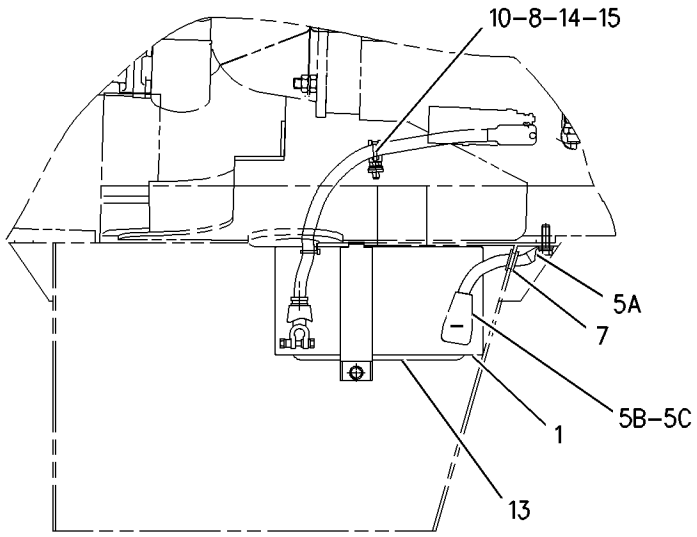

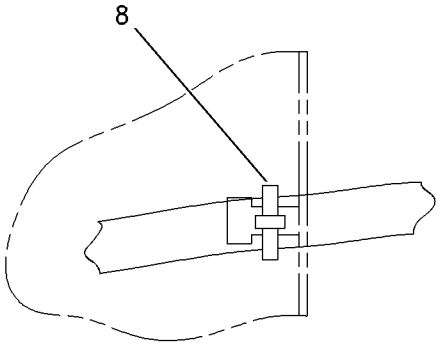

VIEW A-A

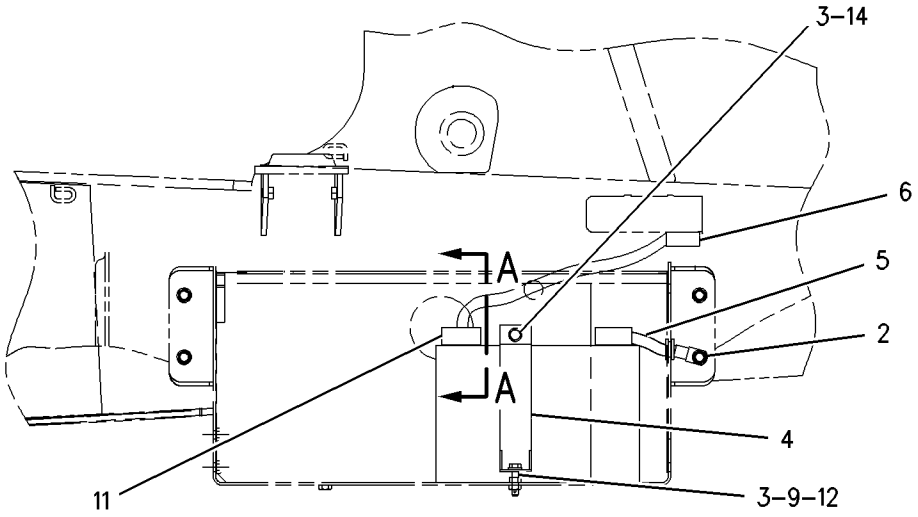

GRAPHIC #1 **<END>** g00852156

223-6181 BATTERY GP

S/N: BXC1-UP; DSX1-UP
PART OF 228-4587 BOX GP-BATTERY
AN ATTACHMENT

SMCS-1401 **i02005261**

NOTE	REF NO	GRAPHIC REF	PART NUMBER	QTY	PART NAME 1 2 3 4 5 6 (PRODUCT LEVEL)	SEE PAGE
	1	1	**3T-5760**	1	BATTERY (12 VOLT)	
	2	1	**7K-1181**	1	STRAP-CABLE	
	3	1	**8R-0768**	2	ROD-RETAINING	
	4	1	**102-4176**	1	HOLD-DOWN	
	5	1	**223-5623**	1	CABLE AS-BATTERY (POSITIVE)	
		1	**1S-7252**	1	TERMINAL-RING (FOR 3/8IN BOLT)	
		1	**5P-0761**		CABLE (00GA)(RED) (6CM)	
		1	**6V-2722**		TUBE-HEAT SHRINK (1DM)	
		1	**8N-0869**	1	COVER-TERMINAL (RED)	
		1	**8Y-8081**		TUBE (58CM)	
		1	**3S-6049**	1	TERMINAL AS-BATTERY (POSITIVE)	
		1	**1M-6119**	1	BOLT (5/16-18X1.375 IN)	
		1	**1M-6120**	1	NUT (5/16-18 THD)	
	6	1	**223-5624**	1	CABLE AS-BATTERY (NEGATIVE)	
		1	**1S-7251**	1	TERMINAL-RING (FOR 1/2IN BOLT)	
		1	**5P-0747**		CABLE (00GA)(BLACK) (27CM)	
		1	**7N-5274**	1	COVER-TERMINAL (BLACK)	
		1	**3S-6050**	1	TERMINAL AS-BATTERY (NEGATIVE)	
		1	**1M-6119**	1	BOLT (5/16-18X1.375 IN)	
		1	**1M-6120**	1	NUT (5/16-18 THD)	
	7	1	**4H-2558**	1	GROMMET	
	8	1	**5P-4116**	2	WASHER-HARD (8.8X20.5X2MM THK)	
M	9	1	**8T-7963**	2	LOCKNUT (M8X1.25 THD)	

M-METRIC PART

223-6181 **BATTERY GP** ***(contd.)*** **i02005261**

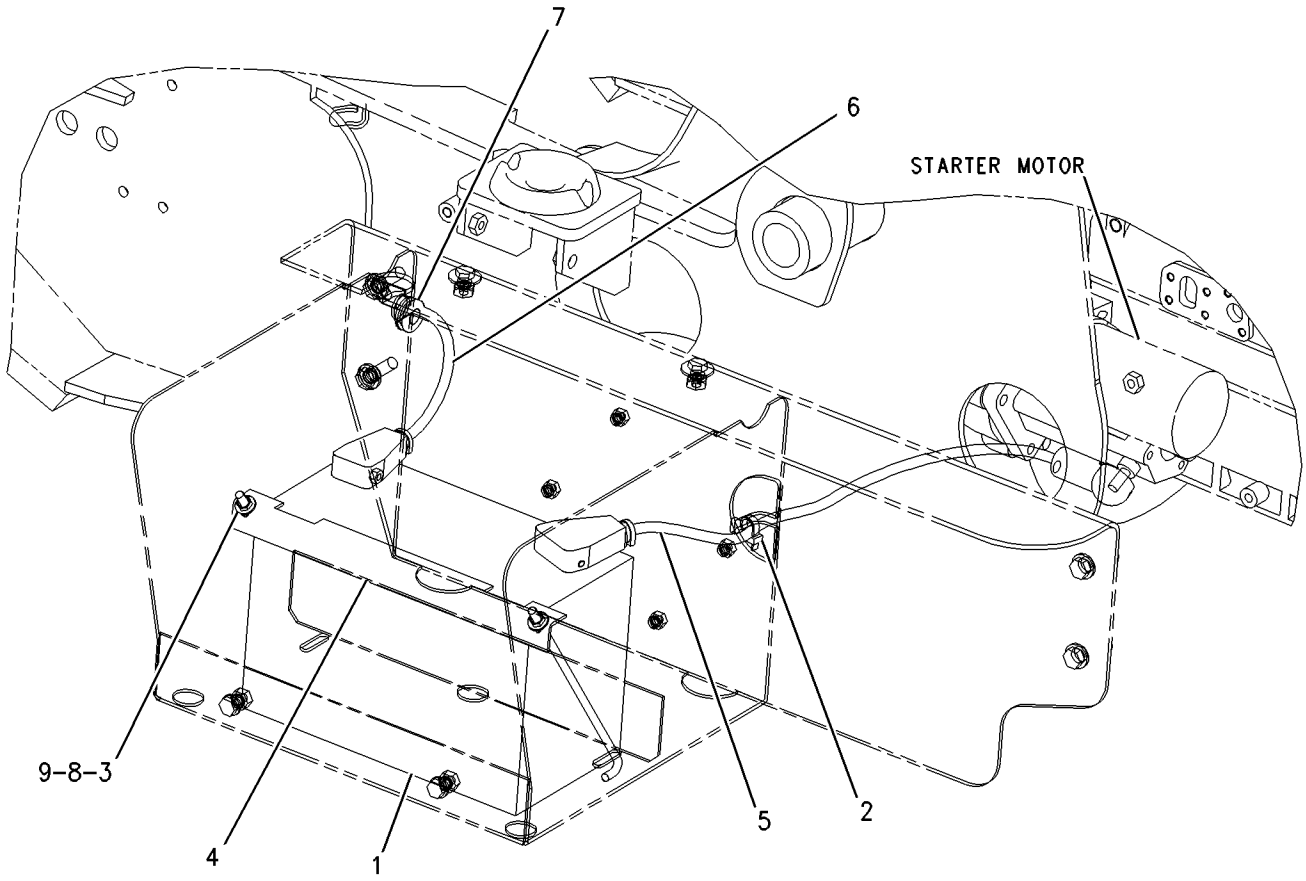

GRAPHIC #1 **<END>** g00997551

235-2854 BATTERY GP—HEAVY DUTY

S/N: BXC1-UP; DSX1-UP

AN ATTACHMENT

SMCS-1401 **i01970217**

NOTE	REF NO	GRAPHIC REF	PART NUMBER	QTY	PART NAME 1 2 3 4 5 6 (PRODUCT LEVEL)	SEE PAGE
	1	1	**038-9317**	1	TREAD	
	2	1	**213-6091**	1	CABLE AS-BATTERY	
E	2A	1	**5P-0761**		CABLE (00GA)(RED) (35CM)	
	2B	1	**7T-9987**	1	COVER-TERMINAL	
		1	**8L-8413**	1	STRAP-CABLE	
		1	**8L-8413**	2	STRAP-CABLE	
		1	**8N-0869**	1	COVER-TERMINAL (RED)	
		1	**8S-3020**	1	TERMINAL-CABLE	
E	2C	1	**8Y-8081**		TUBE (35CM)	
	2D	1	**3S-6049**	1	TERMINAL AS-BATTERY (POSITIVE)	
		1	**1M-6119**	1	BOLT (5/16-18X1.375 IN)	
		1	**1M-6120**	1	NUT (5/16-18 THD)	
	3	1	**213-6092**	1	CABLE AS-BATTERY	
	3A	1	**1S-7252**	1	TERMINAL-RING	
E	3B	1	**5P-0747**		CABLE (00GA)(BLACK) (47CM)	
	3C	1	**7N-5274**	1	COVER-TERMINAL (BLACK)	
		1	**8L-8413**	1	STRAP-CABLE	
		1	**8L-8413**	2	STRAP-CABLE	
		1	**9G-8909**	1	COVER-TERMINAL (BLACK)	
	3D	1	**3S-6050**	1	TERMINAL AS-BATTERY (NEGATIVE)	
		1	**1M-6119**	1	BOLT (5/16-18X1.375 IN)	
		1	**1M-6120**	1	NUT (5/16-18 THD)	
	4	1	**230-6368**	1	BATTERY (12 VOLT)	
	5	1	**240-4639**	1	BRACKET AS	
	6	1	**7X-7729**	2	WASHER (11X25X3MM THK)	
M	7	1	**8T-4133**	1	NUT (M10X1.5 THD)	
M	8	1	**8T-4137**	1	BOLT (M10X1.5X20MM)	
M	9	1	**8T-5005**	1	BOLT (M10X1.50X70MM)	

E-ORDER BY THE CENTIMETER
M-METRIC PART

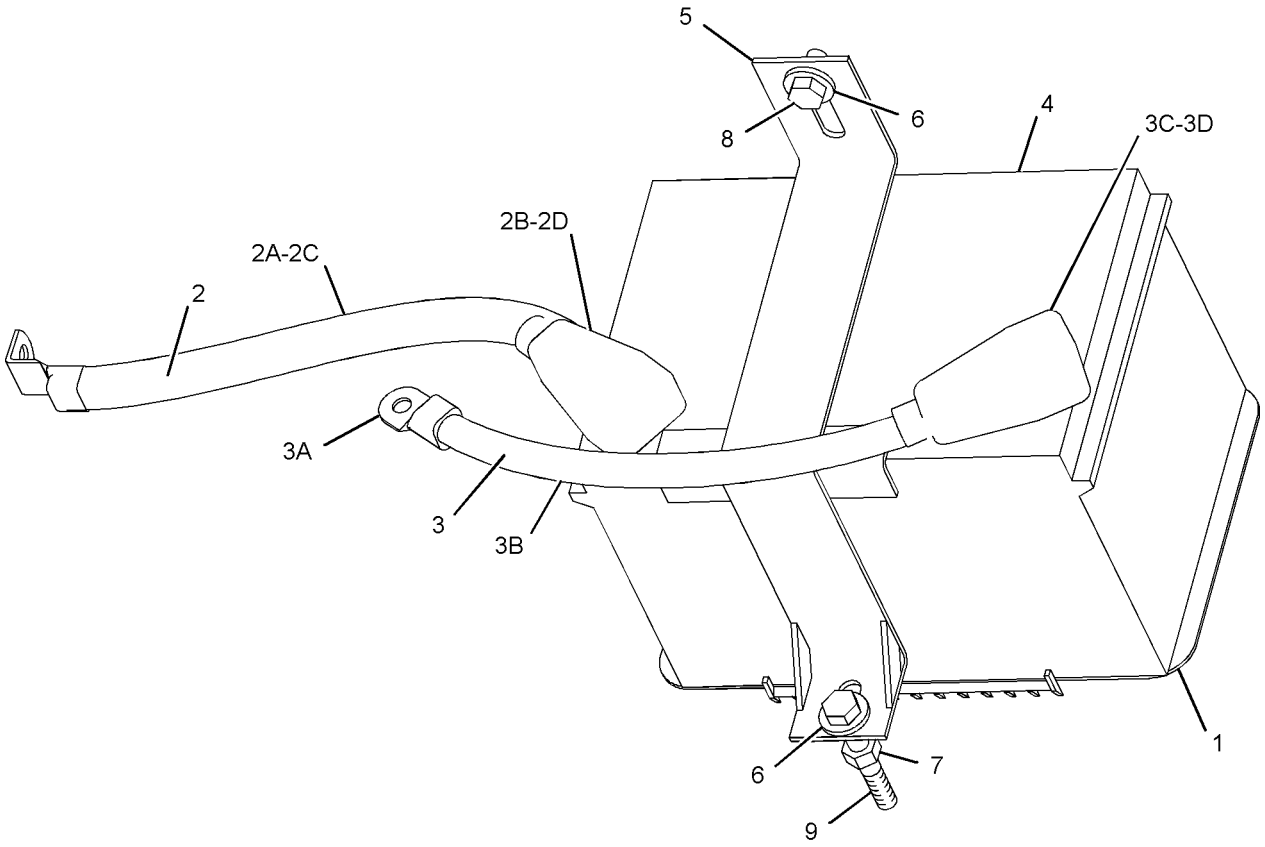

GRAPHIC #1 **<END>** g01023322

3E-7843 CONTROL GP-POSITION

S/N: BXC1-UP; DSX1-UP
PART OF 122-1644 WIRING GP-KICKOUT & POSITIONER
ALSO AN ATTACHMENT

SMCS-5112 **i01736277**

NOTE	REF NO	GRAPHIC REF	PART NUMBER	QTY	PART NAME 1 2 3 4 5 6 (PRODUCT LEVEL)	SEE PAGE
	1	1	**9X-5617**	1	FILM-INSTRUCTION	
	2	1	**8T-8730**	3	SOCKET-CONNECTOR	
	3	1	**155-2260**	1	KIT-CONNECTING PLUG (3 PIN)	
					(KIT SERVICES PLUG AS AND WEDGE)	

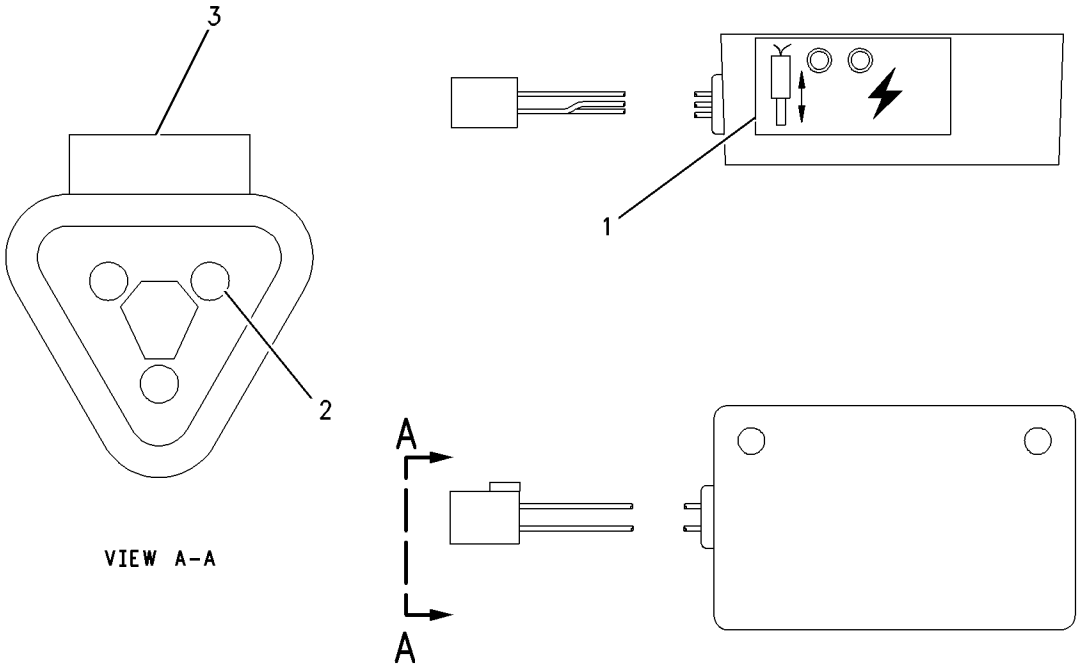

GRAPHIC #1 **<END>** g00868780

232-6661 GLOW PLUG GP

S/N: CRS1-UP
PART OF 234-3059, 234-3061 ENGINE AR-PRIMARY
AN ATTACHMENT

SMCS-1412 **i01988284**

NOTE	REF NO	GRAPHIC REF	PART NUMBER	QTY	PART NAME 1 2 3 4 5 6 (PRODUCT LEVEL)	SEE PAGE
	1	1	**244-3316**	1	SUPPORT	
	2	1	**232-6662**	4	GLOW PLUG	

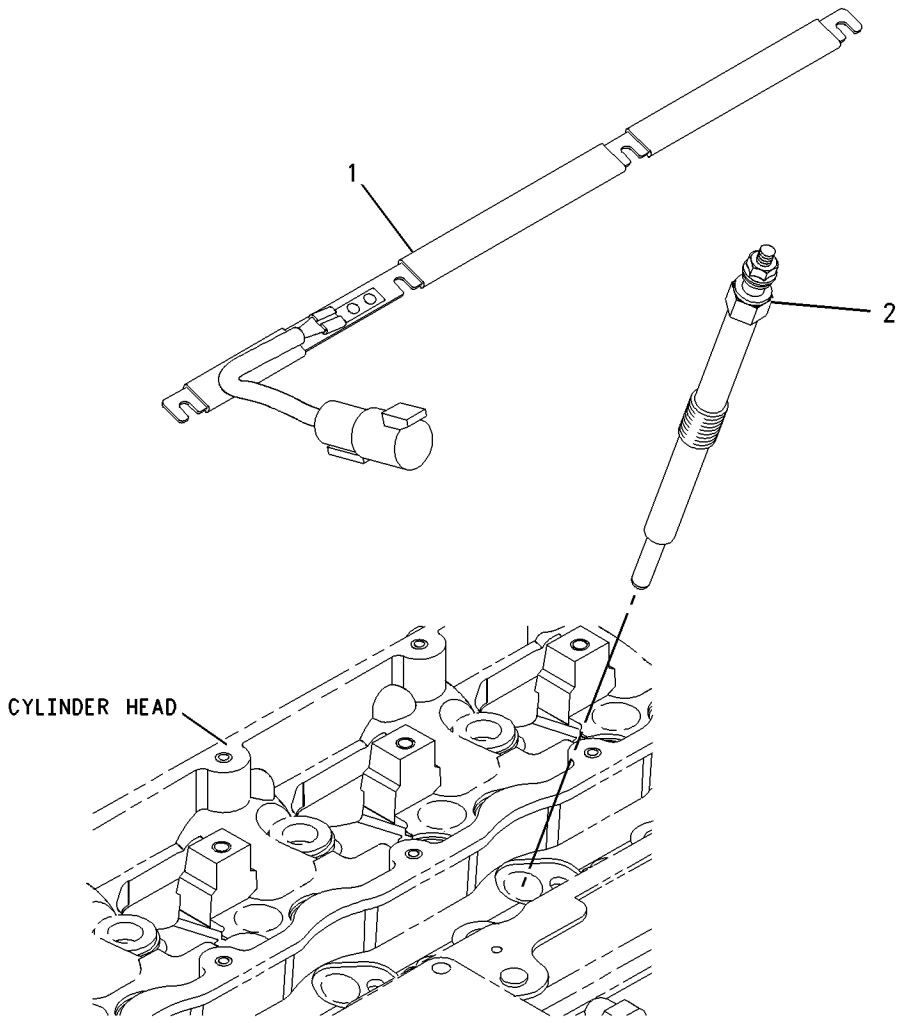

GRAPHIC #1 **<END>** g00950927

234-1710 HEATER GP-JACKET WATER

S/N: BXC1-UP; DSX1-UP
AN ATTACHMENT

SMCS-1383 **i02007383**

NOTE	REF NO	GRAPHIC REF	PART NUMBER	QTY	PART NAME 1 2 3 4 5 6 (PRODUCT LEVEL)	SEE PAGE
	1	1	**231-3058**	1	HEATER GP-JACKET WATER	
	1A	1	**219-3271**	1	ELEMENT AS (JACKET WATER HEATER) (240 VOLT,1000 WATT)	
		1	**133-3413**	1	KIT-SEAL	
		1	**133-6517**	1	CAP AS-DUST	
	1B	1	**231-3057**	1	CORD AS-HEATER	
	2	1	**3S-2093**	3	STRAP-CABLE	

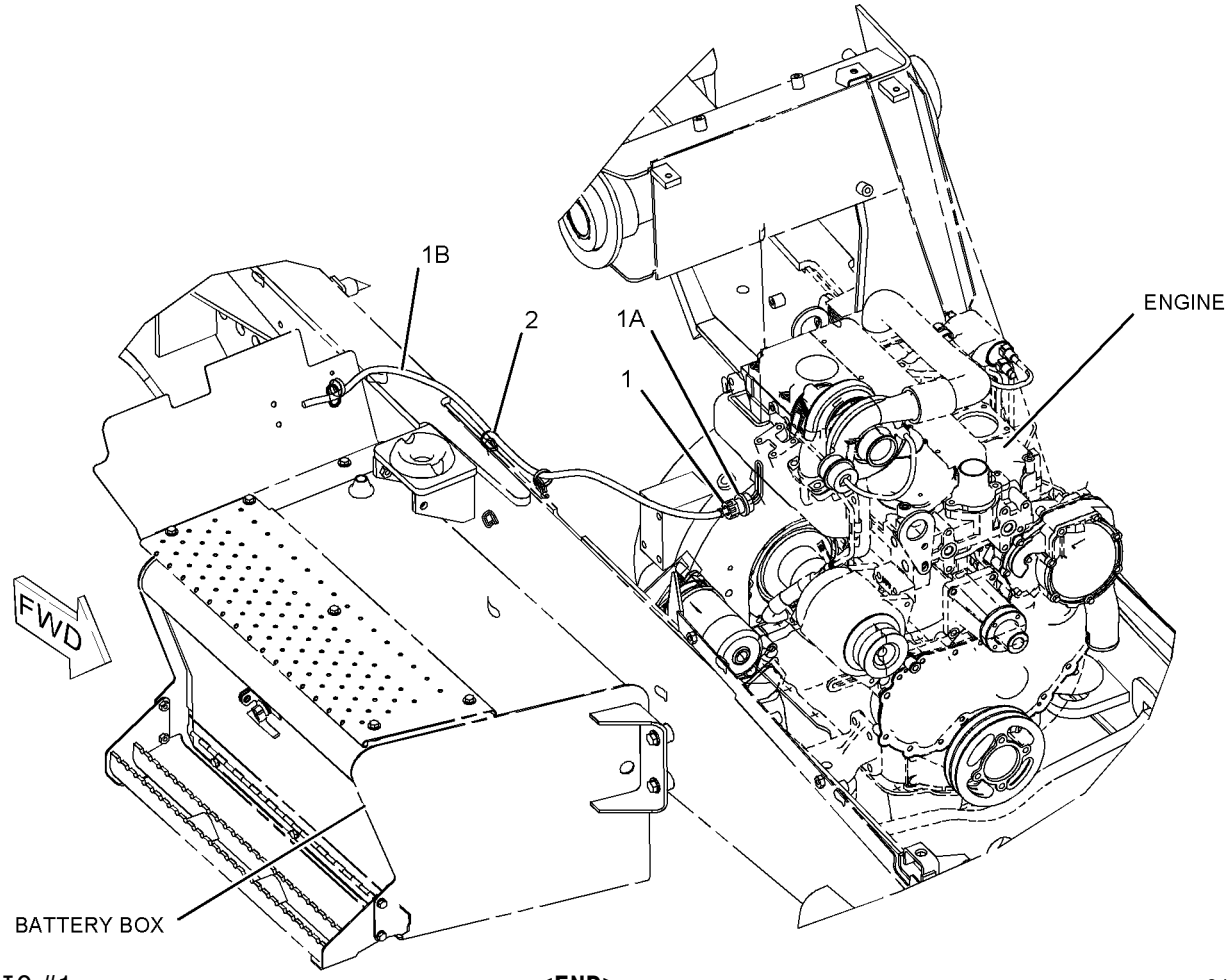

GRAPHIC #1 **<END>** g01023289

186-0310 INSTALLATION GP-SECURITY

S/N: BXC1-UP; DSX1-UP

AN ATTACHMENT

SMCS-7631 **i01994661**

NOTE	REF NO	GRAPHIC REF	PART NUMBER	QTY	PART NAME 1 2 3 4 5 6 (PRODUCT LEVEL)	SEE PAGE
	1	1	**3E-3371**	1	WEDGE-RECEPTACLE LOCK (3-PIN)	
	2	1	**6I-1418**	3	SPACER (8.2X12.7X28.7MM THK)	
B	3	1	**6K-0806**	9	STRAP-CABLE	
	4	1	**8T-9655**	6	MOUNT (ISOLATION)	
	5	1	**9N-0869**	6	WASHER-HARD (8.8X25.5X2.0MM THK)	
	6	1	**115-1615**	1	RELAY AS (12-VOLT) (SECURITY ENGINE)	
Y	7	1	*186-0304*	1	WIRING GP-PLATFORM	196
	8	1	**207-5262**	1	INSTALLATION GP-SECURITY (MACHINE SECURITY)	
		1	**232-9737**	1	SOFTWARE GP-MACHINE (MACHINE SECURITY SYSTEM)	
		1	**206-5162**	2	KEY AS-ELECTRONIC (SECURITY)	
		1	**219-6314**	2	KEY RING (IDENTIFICATION)	
	9	1	**205-0826**	1	FILM (MACHINE SECURITY SYSTEM)	
B	10	1	**198-5389**	1	FILM (IGNITION SWITCH)	
	11	1	**205-8257**	1	COIL AS (EXCITER)	
	12	1	**211-1813**	1	HARNESS AS-CONTROL (SECURITY)	
		1	**102-8802**	1	KIT-RECEPTACLE (2-PIN)	
					(KIT INCLUDES RECEPTACLE AS. & WEDGE)	
		1	**102-8803**	1	KIT-RECEPTACLE (3-PIN)	
					(KIT INCLUDES RECEPTACLE AS. & WEDGE)	
		1	**102-8804**	1	KIT-RECEPTACLE (4-PIN)	
					(KIT INCLUDES RECEPTACLE AS. & WEDGE)	
		1	**155-2260**	2	KIT-CONNECTING PLUG (3-PIN)	
					(EACH KIT INCLUDES PLUG AS., WEDGES, & INTERFACE SEAL)	
		1	**155-2270**	1	KIT-CONNECTING PLUG (2-PIN)	
					(KIT INCLUDES PLUG AS., WEDGE, & INTERFACE SEAL)	
		1	**155-2271**	1	KIT-CONNECTING PLUG (4-PIN)	
					(KIT INCLUDES PLUG AS., WEDGE, & INTERFACE SEAL)	
B	13	1	**224-3385**	1	FILM (START)	
	14	1	**222-3870**	1	COIL AS (FERRITE)	
		1	**102-8802**	2	KIT-RECEPTACLE (2-PIN)	
					(EACH KIT INCLUDES RECEPTACLE AS. & WEDGE)	
E		1	**9X-1813**		SLEEVE (15CM)	
M	15	1	**129-3178**	1	LOCKNUT (M6X1 THD)	
M	16	1	**147-4502**	1	BOLT-SOCKET HEAD (M6X1X10.0MM)	
	17	1	**165-5655**	1	LAMP AS (12-VOLT)	
		1	**186-3735**	3	PIN-CONNECTOR	
	18	1	**102-8803**	1	KIT-RECEPTACLE (3-PIN)	
					(KIT INCLUDES RECEPTACLE AS. & WEDGE)	
M	19	1	**5C-7261**	3	NUT (M8X1.25 THD)	
M	20	1	**7X-0818**	3	BOLT (M8X1.25X45MM)	

B-USE AS REQUIRED
E-ORDER BY THE CENTIMETER
M-METRIC PART
Y-SEPARATE ILLUSTRATION

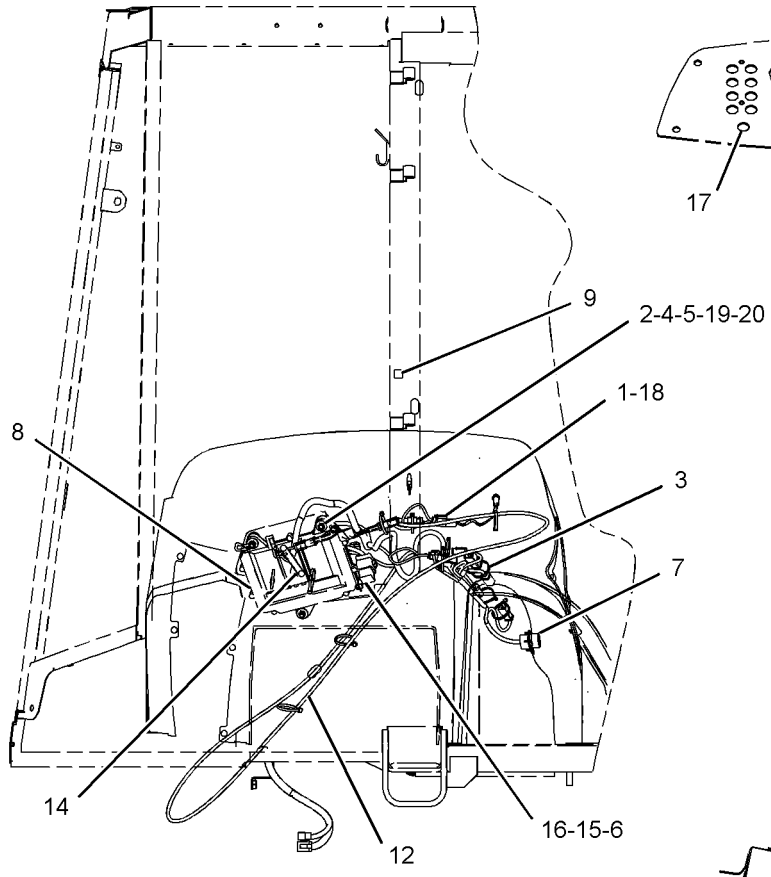

RIGHT SIDE VIEW

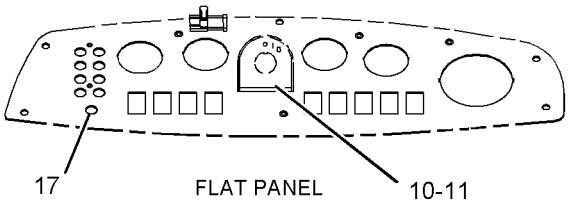

FLAT PANEL

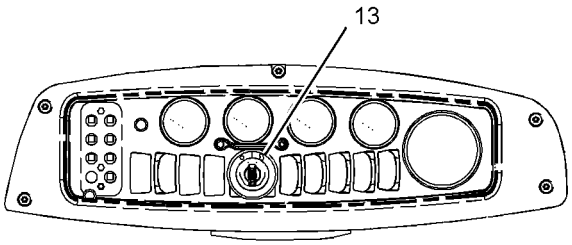

SECTION A-A

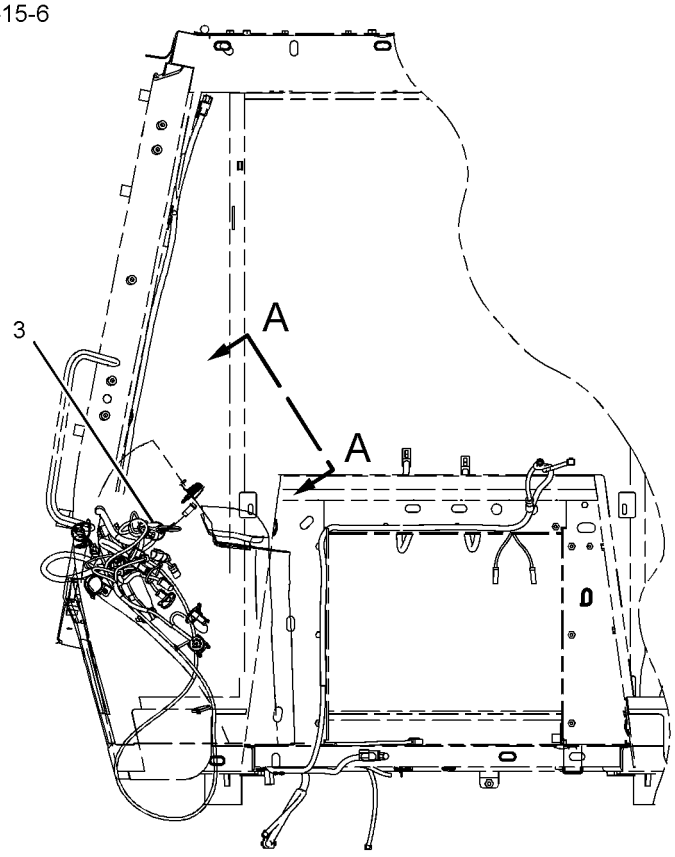

FRONT VIEW

GRAPHIC #1 **<END>** g01037784

220-8698 LAMP GP-FLOOD–REAR FOG

S/N: BXC1-UP; DSX1-UP
PART OF 185-8811 LIGHTING GP-ROADING
AN ATTACHMENT

SMCS-1429, 1434 **i01797371**

NOTE	REF NO	GRAPHIC REF	PART NUMBER	QTY	PART NAME 1 2 3 4 5 6 (PRODUCT LEVEL)	SEE PAGE
	1	1	**4S-1988**	2	TERMINAL (BLADE-CRIMP TYPE)	
	2	1	**5G-3244**	1	LAMP (12 VOLT/21 WATT)	
	3	1	**8I-4721**	1	LENS	
	4	1	**1H-3338**	2	LOCKWASHER	
M	5	1	**5C-2890**	2	NUT (M6X1 THD)	
M	6	1	**6V-8837**	2	BOLT (M6X1X16 MM)	

M-METRIC PART

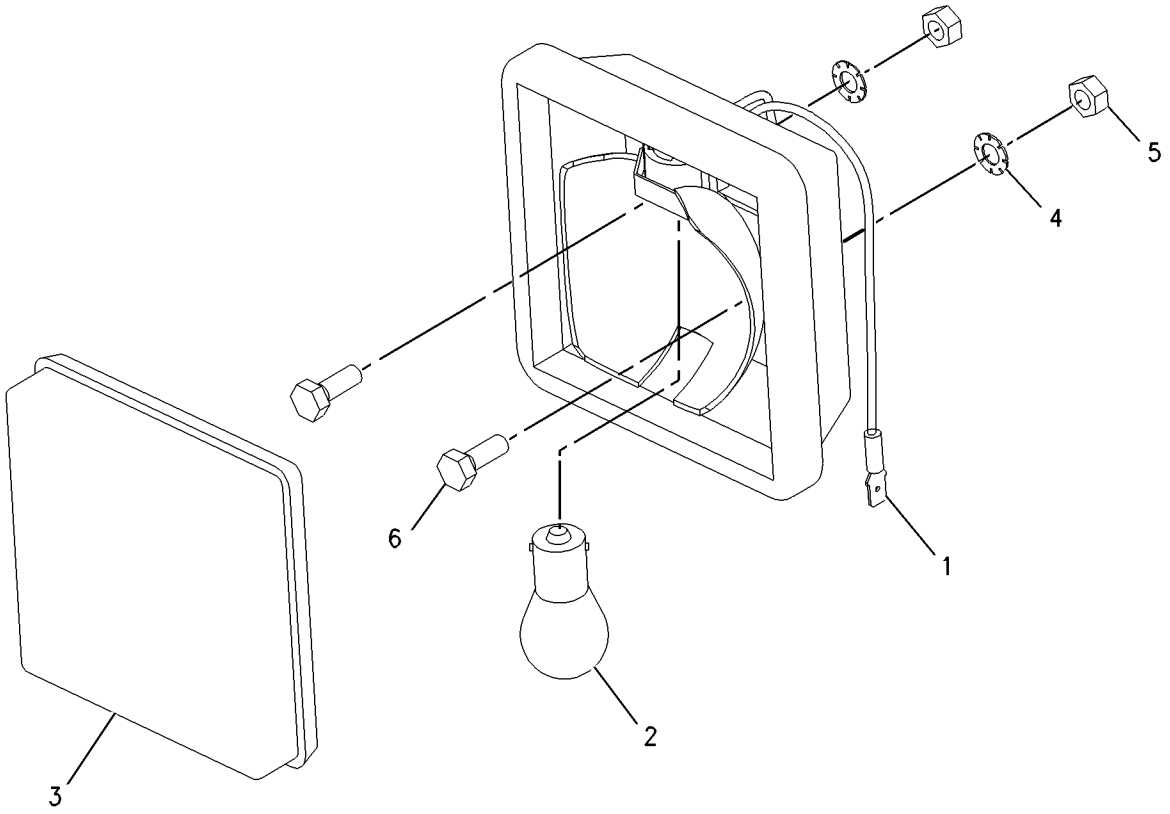

GRAPHIC #1 **<END>** g00934379

234-4328 LAMP GP-FLOOD–12 VOLT

S/N: BXC1-UP; DSX1-UP
PART OF 241-0095, 241-0096 LIGHTING GP-FLOOD
AN ATTACHMENT

SMCS-1429, 1434 **i01967462**

NOTE	REF NO	GRAPHIC REF	PART NUMBER	QTY	PART NAME 1 2 3 4 5 6 (PRODUCT LEVEL)	SEE PAGE
	1	1	**9W-0607**	1	LAMP (12 VOLT, 55 WATT)	
M	2	1	**8T-4133**	1	NUT (M10X1.5 THD)	
	3	1	**9X-4244**	2	SCREW	
	4	1	**202-6614**	1	LENS AS (FLOOD)	
	5	1	**234-7730**	1	BODY AS	
	6	1	**164-7556**	1	CLIP	
	7	1	**234-7731**	1	BRACKET AS	

M-METRIC PART

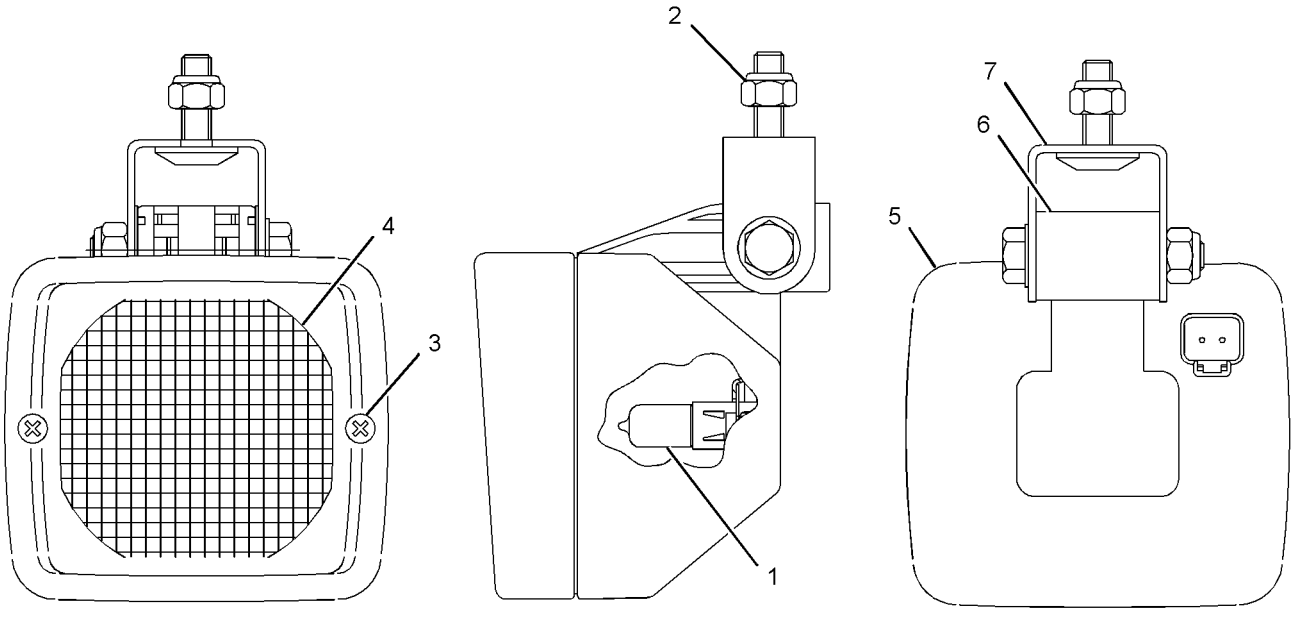

FRONT VIEW LEFT SIDE VIEW REAR VIEW

GRAPHIC #1

<END>

g01022763

234-4329 LAMP GP-FLOOD–12 VOLT

S/N: BXC1-UP; DSX1-UP
PART OF 241-0096 LIGHTING GP-FLOOD
AN ATTACHMENT

SMCS-1429, 1434 **i01980497**

NOTE	REF NO	GRAPHIC REF	PART NUMBER	QTY	PART NAME 1 2 3 4 5 6 (PRODUCT LEVEL)	SEE PAGE
	1	1	**9W-0607**	1	LAMP (12 VOLT, 55 WATT)	
M	2	1	**8T-4133**	1	NUT (M10X1.5 THD)	
	3	1	**9X-4244**	2	SCREW	
	4	1	**202-6611**	1	LENS AS (FLOOD)	
	5	1	**234-7730**	1	BODY AS	
	6	1	**164-7556**	1	CLIP	
	7	1	**234-7731**	1	BRACKET AS	

M-METRIC PART

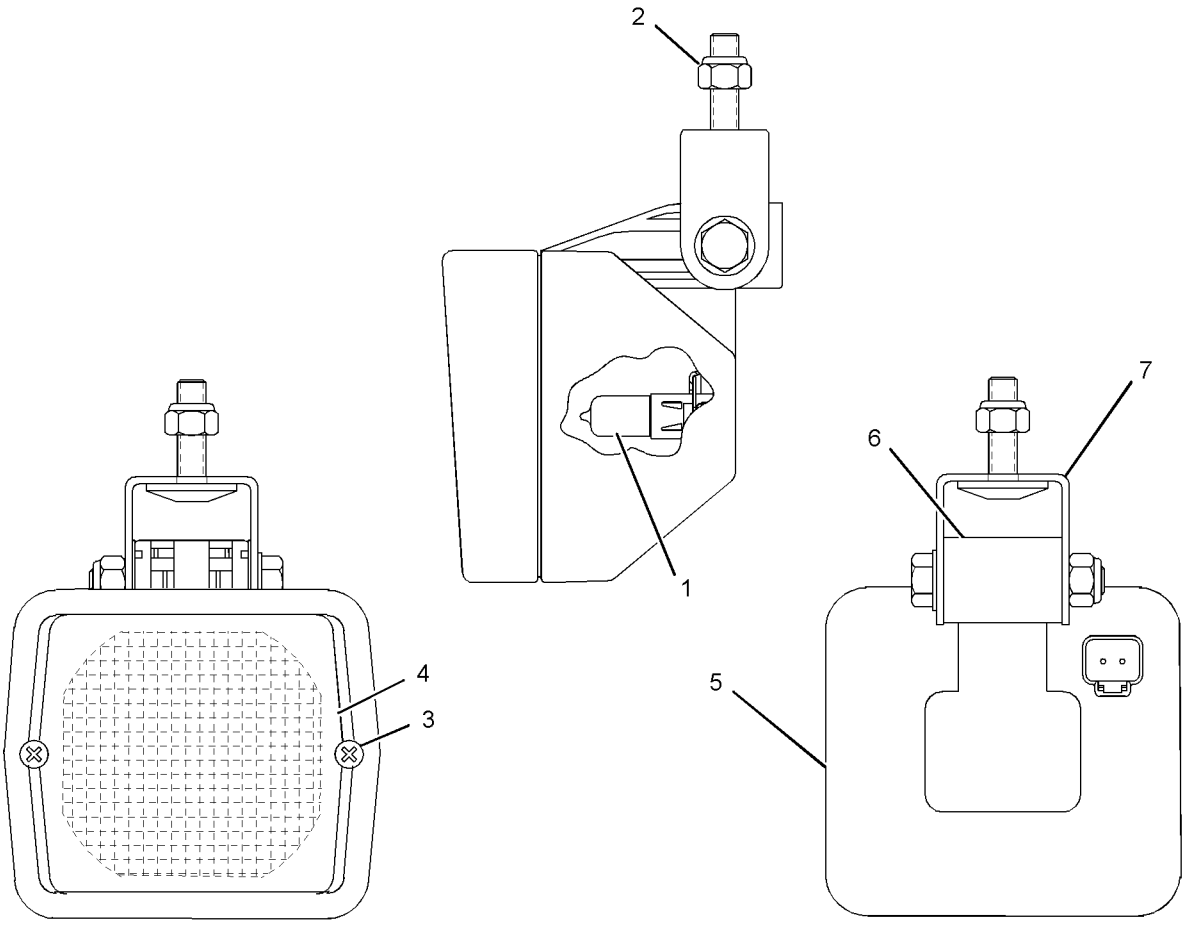

GRAPHIC #1 **<END>** g01026923

3E-7584 LAMP GP-HEAD & SIGNAL–RH

S/N: BXC1-UP; DSX1-UP
12 VOLT
PART OF 186-0315, 191-6551 LIGHTING GP-ROADING
AN ATTACHMENT

SMCS-1429 **i02005210**

NOTE	REF NO	GRAPHIC REF	PART NUMBER	QTY	PART NAME 1 2 3 4 5 6 (PRODUCT LEVEL)	SEE PAGE
	1	1	**9X-4244**	4	SCREW	
	2	1	**100-3251**	2	SCREW-LENS	
	3	1	**9X-9865**	1	SEAL	
	4	1	**100-3248**	1	LENS AS	
	5	1	**9W-3324**	1	LAMP-HEAD (12-VOLT, 60/55 WATT)	
	6	1	**100-3247**	1	BODY AS-LAMP	
M	7	1	**8T-5005**	1	BOLT (M10X1.50X70MM)	
M	8	1	**8T-0389**	1	LOCKNUT (M10X1.5 THD)	
	9	1	**100-3253**	1	SPACER	
	10	1	**100-3254**	1	SPACER	
	11	1	**100-3255**	1	WASHER	
	12	1	**102-8805**	1	KIT-RECEPTACLE (6-PIN)	
					(KIT SERVICES RECEPTACLE AS AND WEDGE)	
	13	1	**186-3735**	5	PIN-CONNECTOR	
	14	1	**3E-3383**	1	WEDGE-RECEPTACLE LOCK (6-PIN)	
	15	1	**8T-8737**	1	PLUG-SEAL	
	16	1	**100-3246**	1	LAMP (12-VOLT, 4-WATT)	
	17	1	**5G-3244**	1	LAMP (12-VOLT, 21-WATT)	
	18	1	**100-3250**	1	LENS (AMBER)	

M-METRIC PART

3E-7584 LAMP GP-HEAD & SIGNAL *(contd.)* **i02005210**

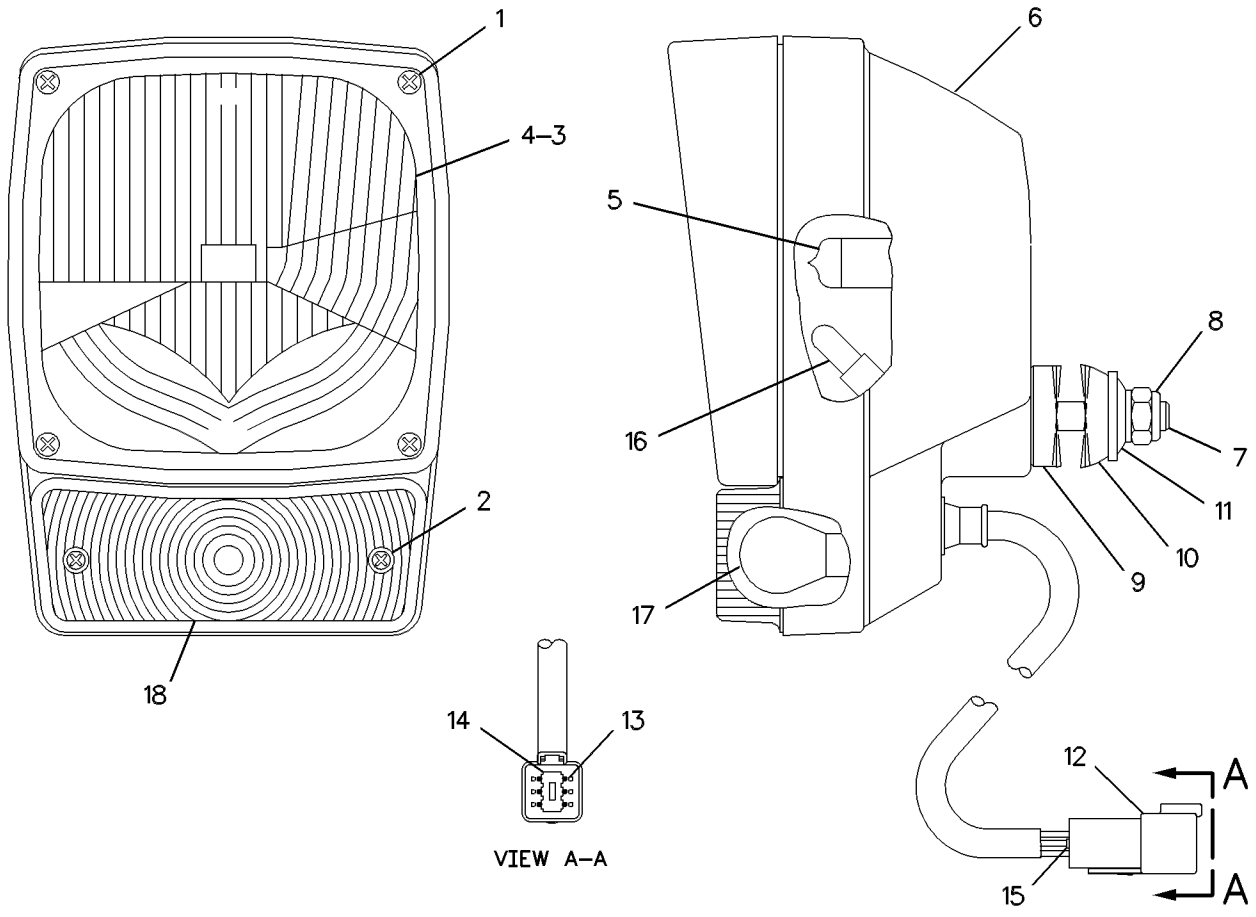

GRAPHIC #1 **<END>** g00547414

3E-7585 LAMP GP-HEAD & SIGNAL–LH

S/N: BXC1-UP; DSX1-UP
12 VOLT
PART OF 186-0314, 191-6550 LIGHTING GP-ROADING
AN ATTACHMENT

SMCS-1429 **i02005214**

NOTE	REF NO	GRAPHIC REF	PART NUMBER	QTY	PART NAME 1 2 3 4 5 6 (PRODUCT LEVEL)	SEE PAGE
	1	1	**9X-4244**	4	SCREW	
	2	1	**100-3251**	2	SCREW-LENS	
	3	1	**9X-9865**	1	SEAL	
	4	1	**100-3249**	1	LENS AS	
	5	1	**9W-3324**	1	LAMP-HEAD (12-VOLT, 60/55 WATT)	
	6	1	**100-3247**	1	BODY AS-LAMP	
M	7	1	**8T-5005**	1	BOLT (M10X1.50X70MM)	
M	8	1	**8T-0389**	1	LOCKNUT (M10X1.5 THD)	
	9	1	**100-3253**	1	SPACER	
	10	1	**100-3254**	1	SPACER	
	11	1	**100-3255**	1	WASHER	
	12	1	**102-8805**	1	KIT-RECEPTACLE (6-PIN)	
	13	1	**186-3735**	5	PIN-CONNECTOR	
	14	1	**3E-3383**	1	WEDGE-RECEPTACLE LOCK (6-PIN)	
	15	1	**8T-8737**	1	PLUG-SEAL	
	16	1	**100-3246**	1	LAMP (12-VOLT, 4-WATT)	
	17	1	**5G-3244**	1	LAMP (12-VOLT, 21-WATT)	
	18	1	**100-3250**	1	LENS (AMBER)	

M-METRIC PART

3E-7585 LAMP GP-HEAD & SIGNAL *(contd.)* **i02005214**

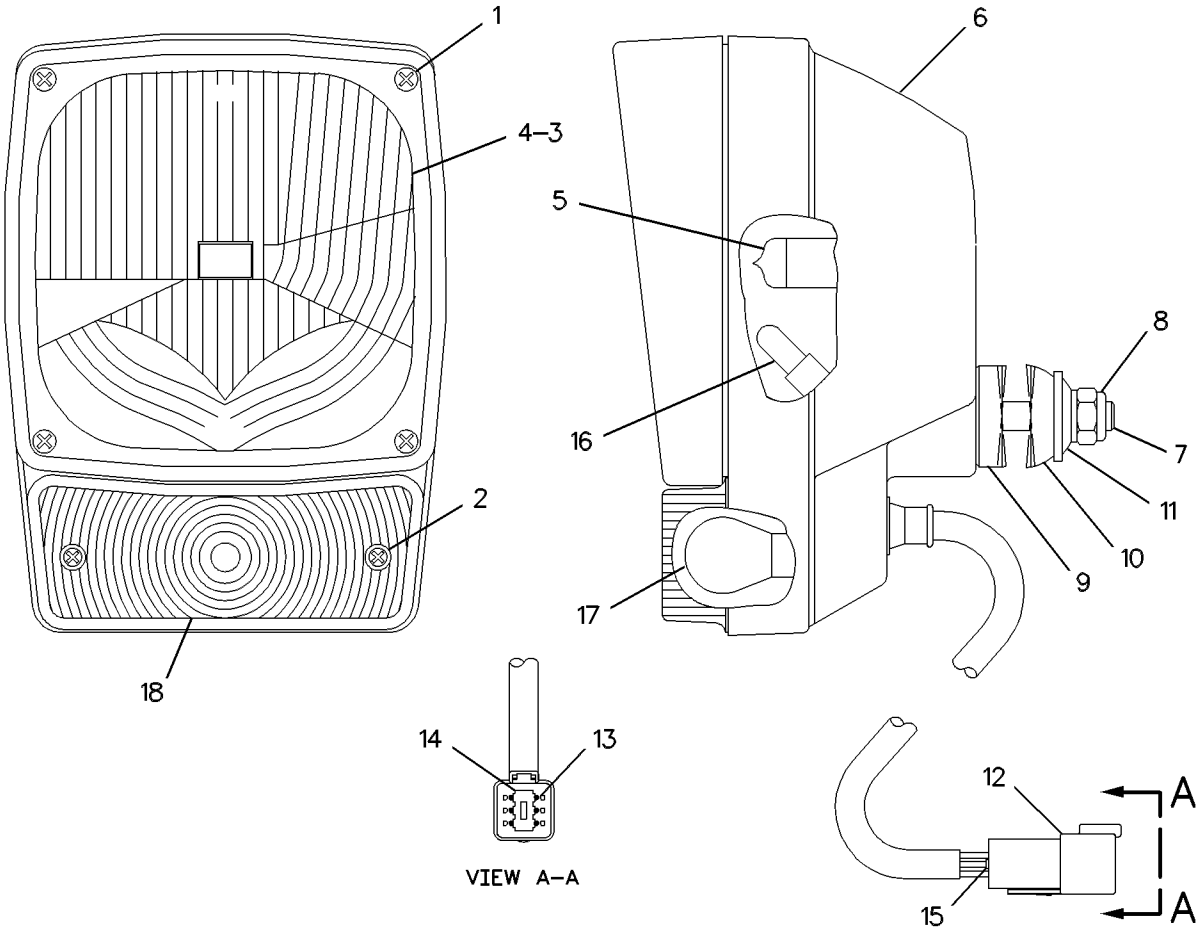

GRAPHIC #1 **<END>** g00460922

3E-9382 LAMP GP-HEAD & SIGNAL—RH

S/N: BXC1-UP; DSX1-UP
PART OF 186-0316 LIGHTING GP-ROADING
AN ATTACHMENT

SMCS-1429 **i01740450**

NOTE	REF NO	GRAPHIC REF	PART NUMBER	QTY	PART NAME 1 2 3 4 5 6 (PRODUCT LEVEL)	SEE PAGE
	1	1	**9X-4244**	4	SCREW	
	2	1	**100-3251**	2	SCREW-LENS	
	3	1	**9X-9865**	1	SEAL	
	4	1	**100-3248**	1	LENS AS	
	5	1	**5G-3244**	1	LAMP (12 VOLT) (21 WATT)	
	6	1	**136-3846**	1	BODY AS-LAMP	
M	7	1	**8T-5005**	1	BOLT (M10X1.50X70MM)	
M	8	1	**8T-0389**	1	LOCKNUT (M10X1.5 THD)	
	9	1	**100-3253**	1	SPACER-SPHERICAL	
	10	1	**100-3254**	1	SPACER-SPHERICAL	
	11	1	**100-3255**	1	WASHER	
	12	1	**102-8805**	1	KIT-RECEPTACLE (6 PIN)	
					(KIT SERVICES RECEPTACLE AS AND WEDGE)	
	13	1	**186-3735**	5	PIN-CONNECTOR	
	14	1	**3E-3383**	1	WEDGE-RECEPTACLE LOCK	
	15	1	**8T-8737**	1	PLUG-SEAL	
	16	1	**100-3246**	2	LAMP (12 VOLT) (MINIATURE)	
	17	1	**9W-3324**	1	LAMP-HEAD (12 VOLT)	
	18	1	**100-3250**	1	LENS-AMBER	
	19	1	**136-3848**	1	LENS AS	

M-METRIC PART

3E-9382 LAMP GP-HEAD & SIGNAL *(contd.)* **i01740450**

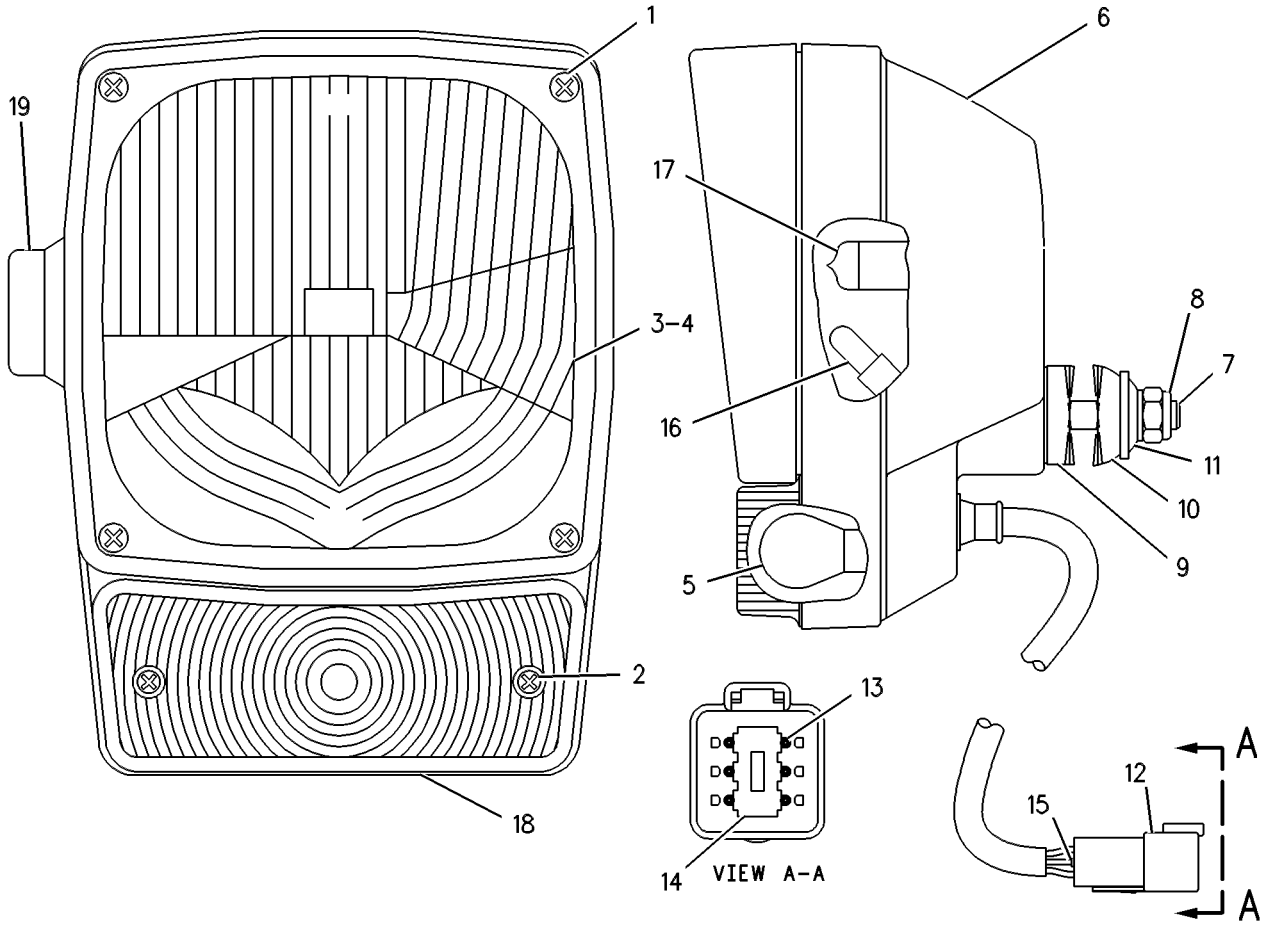

GRAPHIC #1 **<END>** g00265786

104-5255 LAMP GP-HEAD & SIGNAL–LH

S/N: BXC1-UP; DSX1-UP
PART OF 186-0316 LIGHTING GP-ROADING
AN ATTACHMENT

SMCS-1429 **i01740455**

NOTE	REF NO	GRAPHIC REF	PART NUMBER	QTY	PART NAME 1 2 3 4 5 6 (PRODUCT LEVEL)	SEE PAGE
	1	1	**9X-4244**	4	SCREW	
	2	1	**100-3251**	2	SCREW-LENS	
	3	1	**9X-9865**	1	SEAL	
	4	1	**100-3248**	1	LENS AS	
	5	1	**5G-3244**	1	LAMP (12 VOLT) (21 WATT)	
	6	1	**136-3848**	1	LENS AS	
M	7	1	**8T-5005**	1	BOLT (M10X1.50X70MM)	
M	8	1	**8T-0389**	1	LOCKNUT (M10X1.5 THD)	
	9	1	**100-3253**	1	SPACER-SPHERICAL	
	10	1	**100-3254**	1	SPACER-SPHERICAL	
	11	1	**100-3255**	1	WASHER	
	12	1	**102-8805**	1	KIT-RECEPTACLE (6 PIN)	
					(KIT SERVICES RECEPTACLE AS AND WEDGE)	
	13	1	**186-3735**	5	PIN-CONNECTOR	
	14	1	**3E-3383**	1	WEDGE-RECEPTACLE LOCK	
	15	1	**8T-8737**	1	PLUG-SEAL	
	16	1	**100-3246**	2	LAMP (12 VOLT) (MINIATURE)	
	17	1	**9W-3324**	1	LAMP-HEAD (12 VOLT)	
	18	1	**100-3250**	1	LENS-AMBER	
	19	1	**136-3845**	1	BODY AS-LAMP	

M-METRIC PART

104-5255 LAMP GP-HEAD & SIGNAL *(contd.)* **i01740455**

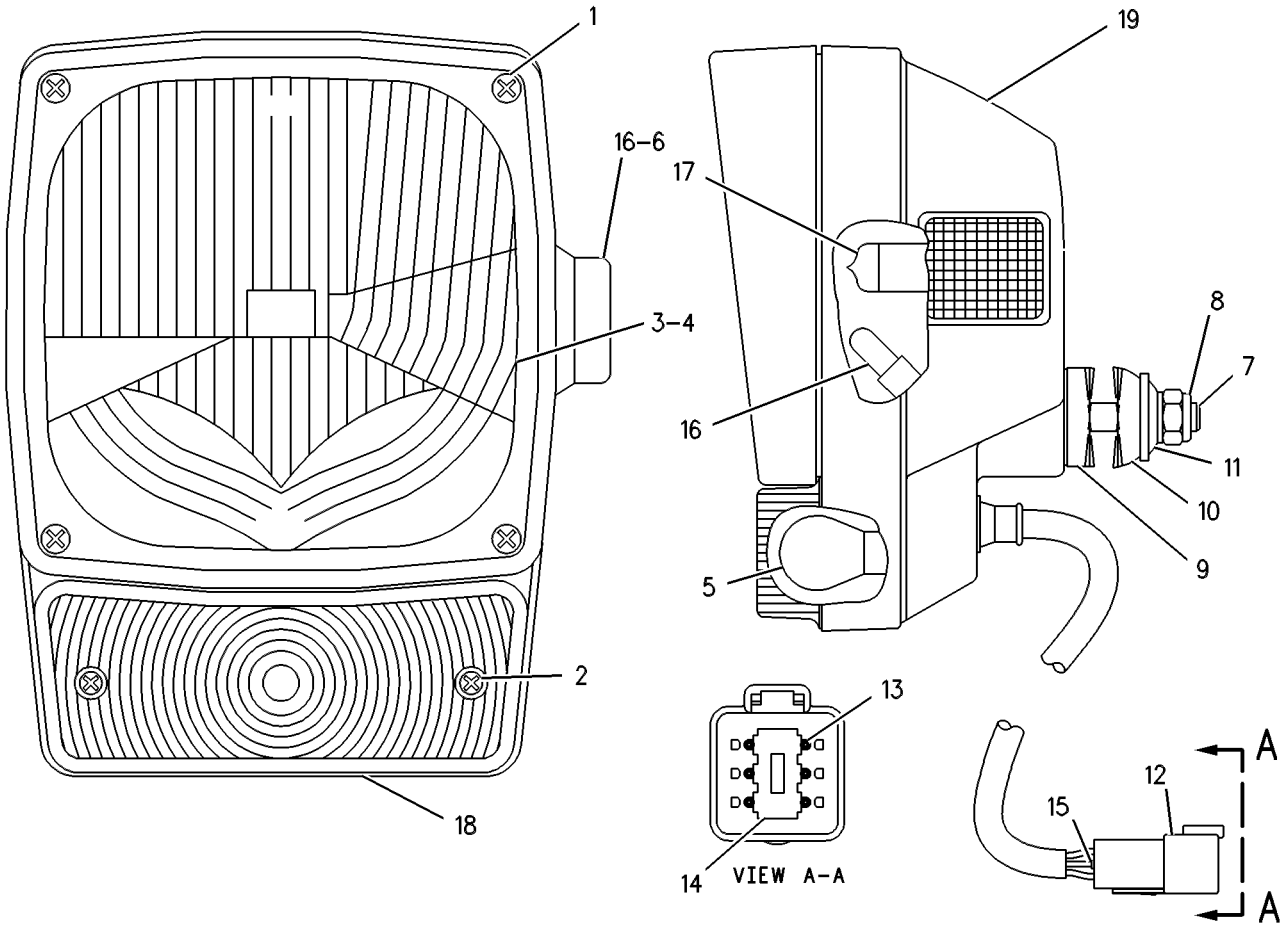

GRAPHIC #1 **<END>** g00269389

101-4448 LAMP GP-REGISTRATION PLATE

S/N: BXC1-UP; DSX1-UP
PART OF 101-4447, 110-6017 MOUNTING GP-REGISTRATION
AN ATTACHMENT

SMCS-1429 **i01496005**

NOTE	REF NO	GRAPHIC REF	PART NUMBER	QTY	PART NAME 1 2 3 4 5 6 (PRODUCT LEVEL)	SEE PAGE
	1	1	**195-9712**	1	LAMP (12 VOLT)	
M	2	1	**5C-2874**	2	NUT (M5X.8 THD)	
	3	1	**8F-1434**	2	LOCKWASHER	
M	4	1	**8T-4753**	2	SCREW (M5X0.8X20MM)	
	5	1	**9M-2307**	2	WASHER (.203X.75X.075 IN THK)	

M-METRIC PART

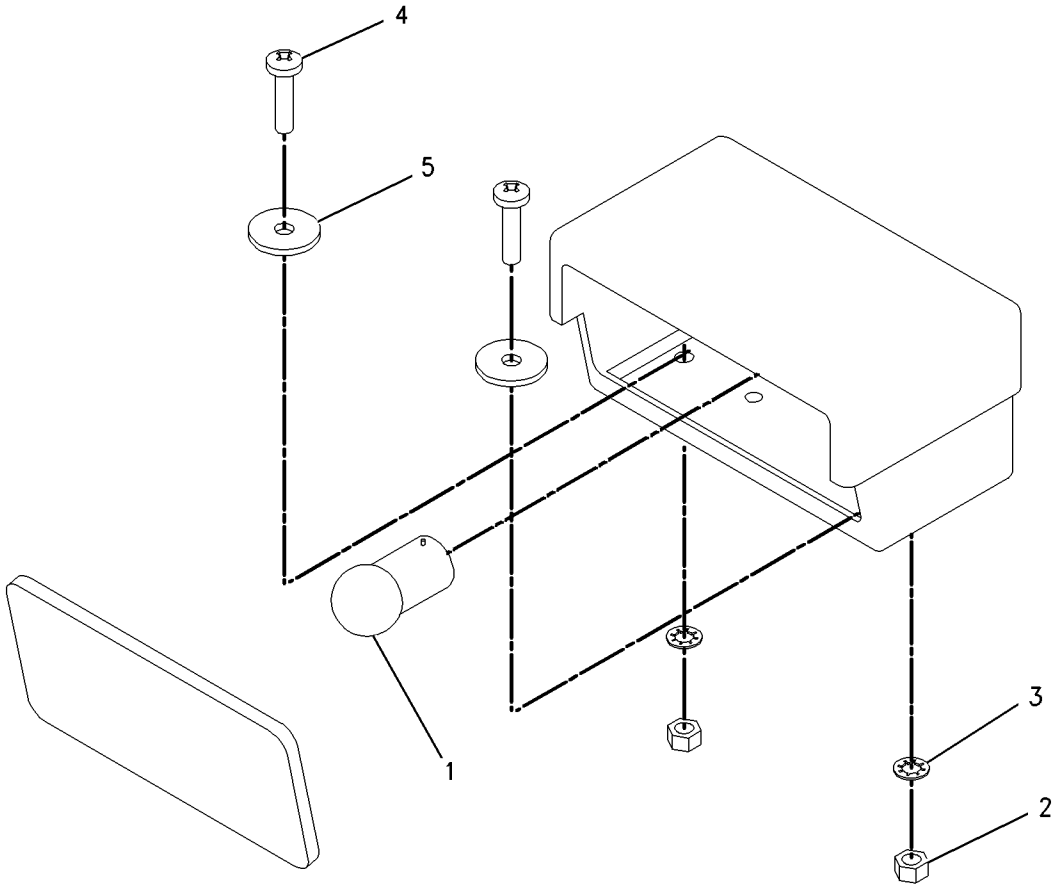

GRAPHIC #1 **<END>** g00776774

9R-2385 LAMP GP-STOP & TAIL

S/N: BXC1-UP; DSX1-UP

PART OF 186-0314, 186-0315, 186-0316, 191-6550, 191-6551 LIGHTING GP-ROADING AN ATTACHMENT

SMCS-1432 **i02000026**

NOTE	REF NO	GRAPHIC REF	PART NUMBER	QTY	PART NAME 1 2 3 4 5 6 (PRODUCT LEVEL)	SEE PAGE
	1	1	**9R-9568**	1	HARNESS AS-REAR LIGHTING	
		1	**102-8804**	1	KIT-RECEPTACLE (4-PIN)	
					(KIT SERVICES RECEPTACLE AS. AND WEDGE)	
Y	2	1	**092-2992**	1	LAMP GP-STOP & TAIL	130

Y-SEPARATE ILLUSTRATION

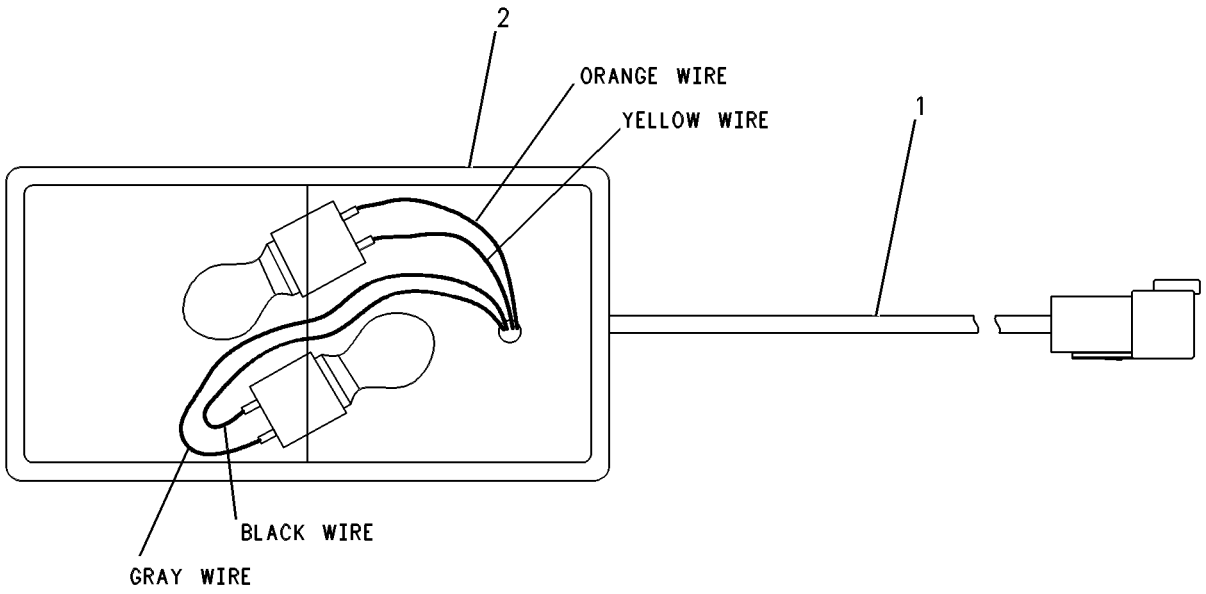

GRAPHIC #1 **<END>** g00258939

092-2992 LAMP GP-STOP & TAIL–12 VOLT

S/N: BXC1-UP; DSX1-UP
PART OF 9R-2385 LAMP GP-STOP & TAIL
AN ATTACHMENT

SMCS-1432 **i01936440**

NOTE	REF NO	GRAPHIC REF	PART NUMBER	QTY	PART NAME 1 2 3 4 5 6 (PRODUCT LEVEL)	SEE PAGE
	1	1	**3C-4883**	1	LAMP (12VOLT/21WATT) (TURN SIGNAL)	
	2	1	**3C-6516**	1	LAMP (12VOLT/21/5WATT) (STOP)	
	3	1	**092-6279**	1	LENS (STOP/TURN SIGNAL)	
M	4	1	**3C-3681**	4	NUT	
M	5	1	**3C-3682**	4	SCREW	

M-METRIC PART

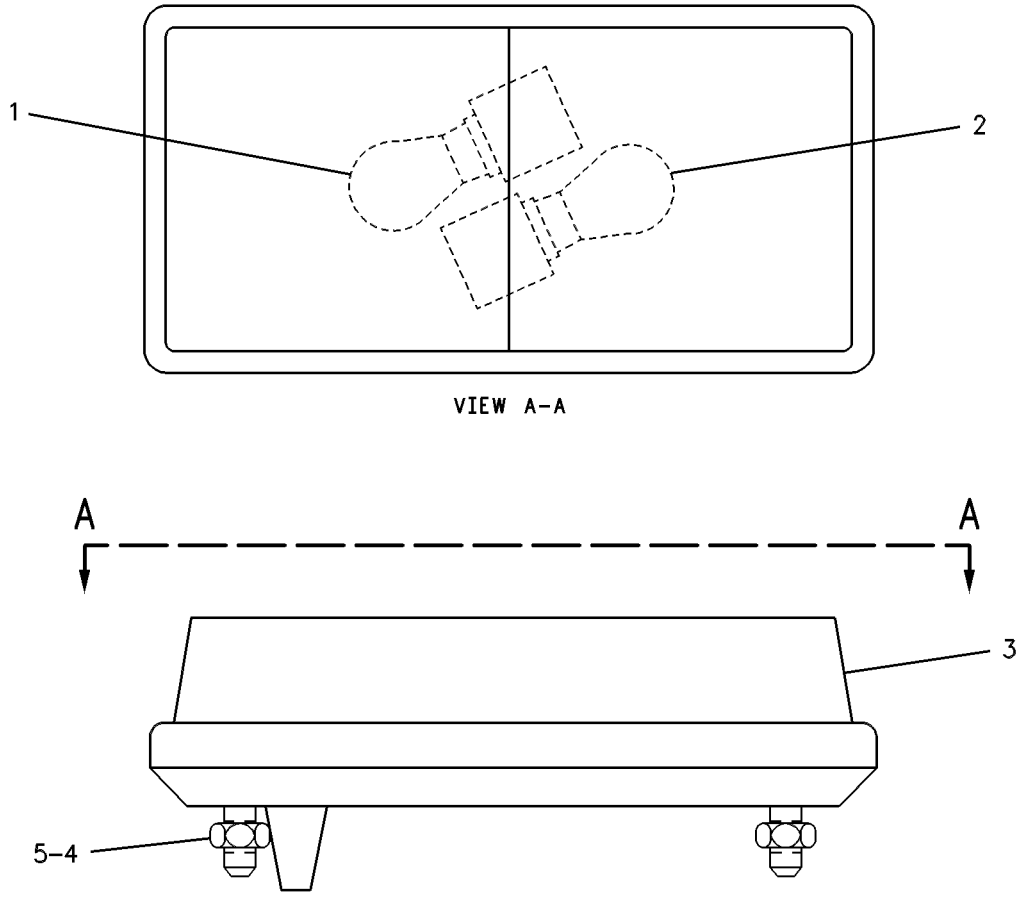

GRAPHIC #1 **<END>** g00257025

180-3663 LAMP GP-WARNING BEACON

S/N: BXC1-UP; DSX1-UP

PART OF 186-2737 LIGHTING GP-WARNING, 141-8292 LIGHTING GP-WARNING BEACON

AN ATTACHMENT

SMCS-1431 **i02005242**

NOTE	REF NO	GRAPHIC REF	PART NUMBER	QTY	PART NAME 1 2 3 4 5 6 (PRODUCT LEVEL)	SEE PAGE
	1	1	**185-7015**	1	LAMP AS	
	2	1	**9X-8139**	1	BELT-DRIVE (WARNING BEACON)	
	3	1	**9X-8121**	1	LENS (AMBER)	
	4	1	**9X-8118**	1	LAMP (12-VOLT, 55-WATT)	
	5	1	**8T-4205**	3	WASHER-HARD (7.2X14.5X2MM THK)	
M	6	1	**5C-2890**	3	NUT (M6X1 THD)	
	7	1	**179-5434**	1	PLUG AS	
	8	1	**3K-8782**	1	FUSE (10-AMPERE)	

M-METRIC PART

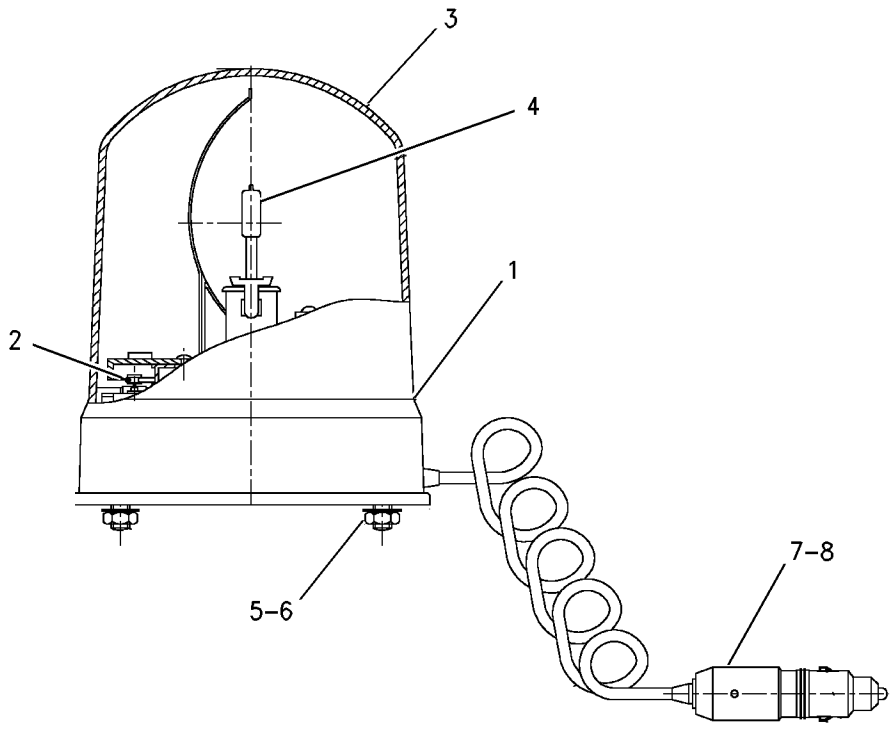

GRAPHIC #1 **<END>** g00781707

180-3664 LAMP GP-WARNING BEACON

S/N: BXC1-UP; DSX1-UP
PART OF 104-9502 LIGHTING GP-WARNING BEACON
AN ATTACHMENT

SMCS-1431 **i02000029**

NOTE	REF NO	GRAPHIC REF	PART NUMBER	QTY	PART NAME 1 2 3 4 5 6 (PRODUCT LEVEL)	SEE PAGE
	1	1	**185-7016**	1	LAMP AS (ROTATING WARNING)	
	2	1	**9X-8139**	1	BELT-DRIVE (WARNING BEACON)	
	3	1	**9X-8121**	1	LENS (AMBER)	
	4	1	**9X-8118**	1	LAMP (12 VOLT, 55 WATT)	
	5	1	**179-5434**	1	PLUG AS	
	6	1	**3K-8782**	1	FUSE (10-AMPERE)	

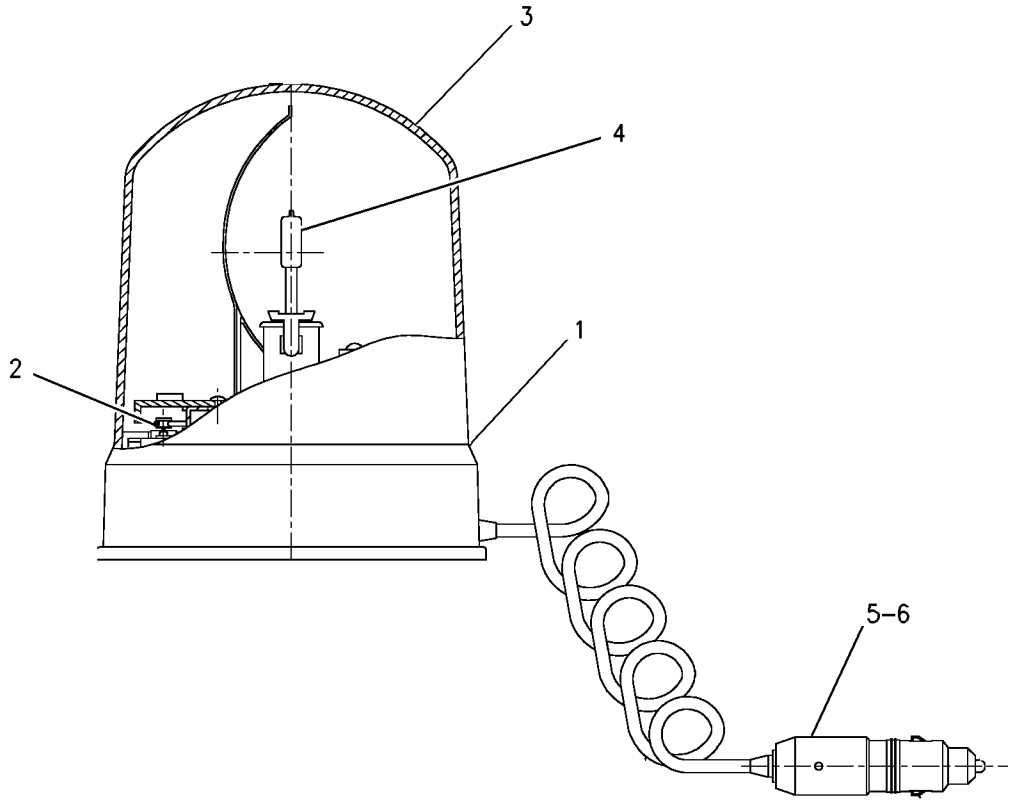

GRAPHIC #1 **<END>** g00781826

ELECTRICAL AND STARTING SYSTEM

185-8815 LIGHTING GP-FLOOD

S/N: BXC1-UP; DSX1-UP
PART OF 214-7008, 214-7009 CAB AR-ENCLOSED ROPS
AN ATTACHMENT

SMCS-1434 **i01662538**

NOTE	REF NO	GRAPHIC REF	PART NUMBER	QTY	PART NAME 1 2 3 4 5 6 (PRODUCT LEVEL)	SEE PAGE
D	1	1	**141-0924**		SEAL (5.8M)	
	2	1	**3E-9362**	2	RELAY AS (12 VOLT DC)	
	3	1	**3S-2093**	14	STRAP-CABLE	
	4	1	**105-8069**	4	LAMP GP-FLOOD	
					(EACH INCLUDES)	
		1	**9W-0607**	1	LAMP (12 VOLT)(55 WATT)	
		1	**142-5789**	4	SCREW	
	5	1	**113-8490**	2	FUSE (10 AMP)	
	6	1	**113-8491**	3	FUSE (15 AMP)	
	7	1	**146-9439**	3	RELAY AS (12 VOLT)	
	8	1	**155-6457**	2	MOUNT	
	9	1	**169-0591**	1	SWITCH AS (REAR FLOOD)	
		1	**111-7899**	1	GASKET	
	10	1	**169-0593**	1	SWITCH AS (FRONT FLOOD)	
		1	**111-7899**	1	GASKET	
	11	1	**169-0595**	1	SWITCH AS (BEACON)	
		1	**111-7899**	1	GASKET	
	12	1	**176-0311**	2	LAMP GP-FLOOD	
					(EACH INCLUDES)	
		1	**9W-0607**	1	LAMP (12 VOLT)(55 WATT)	
		1	**102-8804**	1	KIT-RECEPTACLE (4 PIN)	
					(KIT SERVICES RECEPTACLE AS. AND WEDGE)	
		1	**176-0346**	1	LENS (1)	
	13	1	**176-0312**	2	LAMP GP-FLOOD	
					(EACH INCLUDES)	
		1	**186-3735**	2	PIN-CONNECTOR	
		1	**9W-0607**	1	LAMP (12 VOLT)(55 WATT)	
		1	**176-0346**	1	LENS (1)	
	14	1	**178-7539**	2	RECEPTACLE AS (POWER PORT)	
	15	1	**179-5435**	2	FLANGE	
	16	1	**187-8094**	1	ROOF	
	17	1	**200-0648**	1	HARNESS AS (EXTENSION)	
		1	**102-8805**	1	KIT-RECEPTACLE (6 PIN)	
					(KIT SERVICES RECEPTACLE AS. AND WEDGE)	
		1	**8L-8413**	8	STRAP-CABLE	
		1	**8T-8737**	3	PLUG-SEAL	
		1	**111-6795**	2	HOUSING-RELAY	
		1	**111-6816**	2	LOCK	
		1	**155-2270**	1	KIT-CONNECTING PLUG (2 PIN)	
					(KIT SERVICES PLUG AS. AND WEDGE)	
		1	**155-2274**	1	KIT-CONNECTING PLUG (6 PIN)	
					(KIT SERVICES PLUG AS. AND WEDGE)	
	18	1	**202-5705**	1	HARNESS AS	
		1	**155-2271**	2	KIT-CONNECTING PLUG (4 PIN)	
					(KIT SERVICES PLUG AS. AND WEDGE)	
		1	**102-8805**	1	KIT-RECEPTACLE (6 PIN)	
					(KIT SERVICES RECEPTACLE AS. AND WEDGE)	
M	19	1	**138-8454**	2	SCREW-TRUSS HEAD	
	20	1	**156-0283**	7	WASHER-HARD (8.4X35X2.5MM THK)	
	21	1	**3E-6922**	4	SCREW-RECESS FLAT HEAD (NO. 6-19X12.7MM)	
	22	1	**4B-4863**	2	WASHER (4.7X11X1.2MM THK)	
M	23	1	**8T-4133**	4	NUT (M10X1.5 THD)	
M	24	1	**8T-5093**	7	BOLT-LOCKING (M8X1.25X25MM)	
	25	1	**141-0924**	3	SEAL (0.025M)	
	26	1	**141-0924**	2	SEAL (0.035M)	

D-ORDER BY THE METER
M-METRIC PART

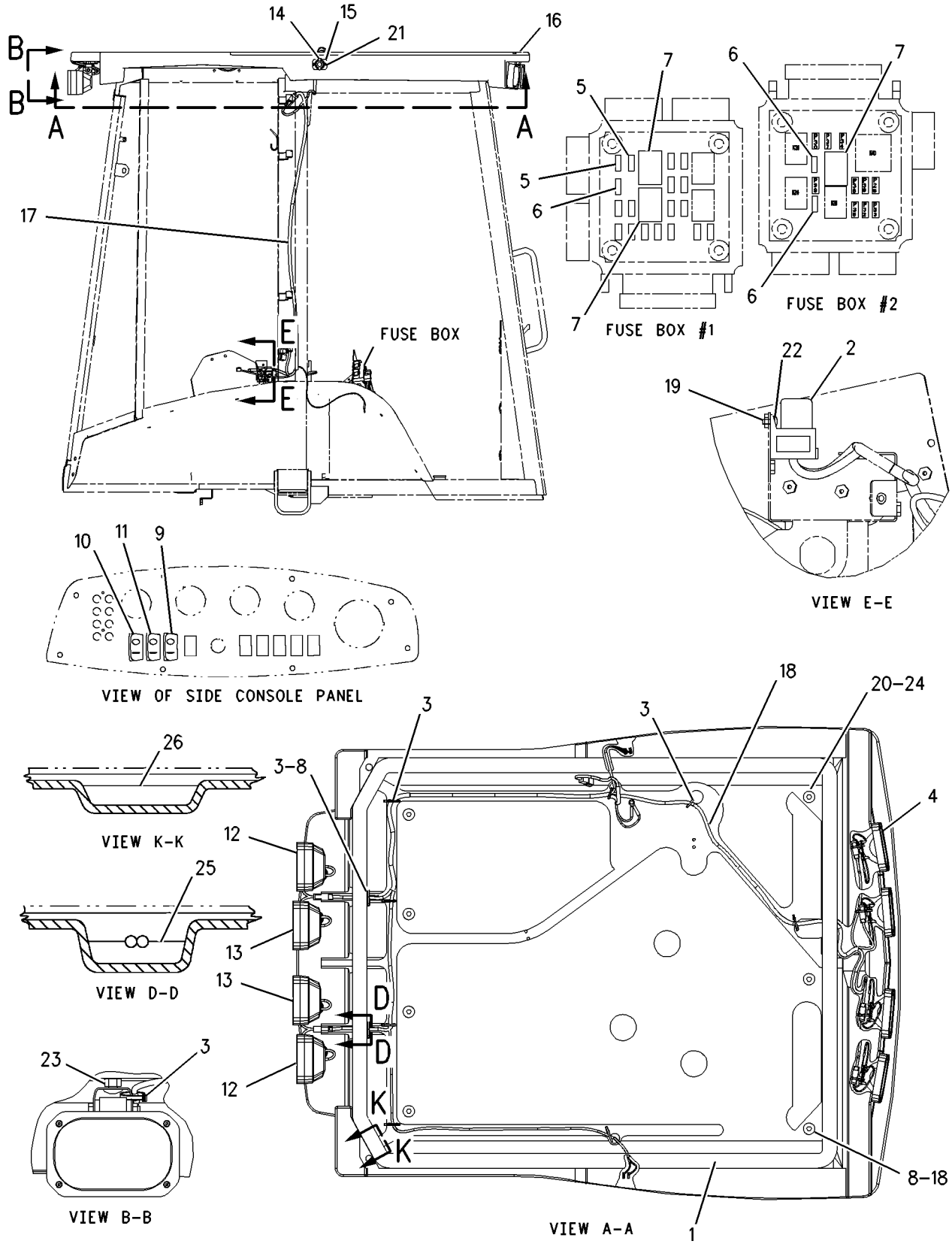

GRAPHIC #1 **<END>** g00858106

202-5707 LIGHTING GP-FLOOD

S/N: BXC1-UP; DSX1-UP
AN ATTACHMENT

SMCS-1434 **i02000035**

NOTE	REF NO	GRAPHIC REF	PART NUMBER	QTY	PART NAME 1 2 3 4 5 6 (PRODUCT LEVEL)	SEE PAGE
D	1	1	**141-0924**		SEAL (5.8M)	
	2	1	**3E-9362**	2	RELAY AS (12 VOLT) (STANDARD/AUXILIARY FLOOD)	
	3	1	**3S-2093**	15	STRAP-CABLE	
	4	1	**9R-6247**	2	STRAP-CABLE	
	5	1	**105-8069**	2	LAMP GP-FLOOD	
					(EACH INCLUDES)	
		1	**9W-0607**	1	LAMP (12 VOLT, 55 WATT)	
		1	**142-5789**	4	SCREW	
	6	1	**113-8491**	2	FUSE (15 AMP)	
	7	1	**146-9439**	2	RELAY AS (12 VOLT) (LIGHTING)	
	8	1	**155-6457**	2	MOUNT	
	9	1	**156-0283**	7	WASHER-HARD (8.4X35X2.5MM THK)	
	10	1	**169-0590**	1	SWITCH AS (REAR FLOOD)	
		1	**111-7899**	1	GASKET	
	11	1	**169-0592**	1	SWITCH AS (FRONT FLOOD)	
		1	**111-7899**	1	GASKET	
	12	1	**169-0595**	1	SWITCH AS (WARNING BEACON)	
		1	**111-7899**	1	GASKET	
	13	1	**173-3175**	1	CIRCUIT BREAKER AS (ROADING LAMP)	
	14	1	**176-0311**	2	LAMP GP-FLOOD	
					(EACH INCLUDES)	
		1	**8T-8737**	2	PLUG-SEAL	
		1	**9W-0607**	1	LAMP (12 VOLT, 55 WATT) (FLOOD)	
		1	**176-0346**	1	LENS (CLEAR) (FLOODLAMP)	
		1	**102-8804**	1	KIT-RECEPTACLE (4-PIN)	
	15	1	**178-7539**	2	RECEPTACLE AS (POWER PORT)	
	16	1	**179-5435**	2	FLANGE	
	17	1	**187-8093**	1	ROOF	
	18	1	**200-0648**	1	HARNESS AS-LIGHTING (RH)	
		1	**102-8805**	1	KIT-RECEPTACLE (6-PIN)	
		1	**155-2270**	1	KIT-CONNECTING PLUG (2-PIN)	
		1	**155-2274**	1	KIT-CONNECTING PLUG (6-PIN)	
	19	1	**202-5705**	1	HARNESS AS-LIGHTING (ROOF)	
		1	**102-8805**	1	KIT-RECEPTACLE (6-PIN)	
		1	**155-2271**	1	KIT-CONNECTING PLUG (4-PIN)	
M	20	1	**138-8454**	2	SCREW-TRUSS HEAD (M4X0.7X10MM)	
	21	1	**3E-6922**	4	SCREW-RECESS FLAT HEAD (NO. 6-19X12.7MM)	
	22	1	**4B-4863**	2	WASHER (4.7X11X1.2MM THK)	
M	23	1	**8T-4133**	2	NUT (M10X1.5 THD)	
M	24	1	**8T-5093**	7	BOLT-LOCKING (M8X1.25X25MM)	
D	25	1	**141-0924**	2	SEAL (0.035M)	
D	26	1	**141-0924**	3	SEAL (0.025M)	

D-ORDER BY THE METER
M-METRIC PART

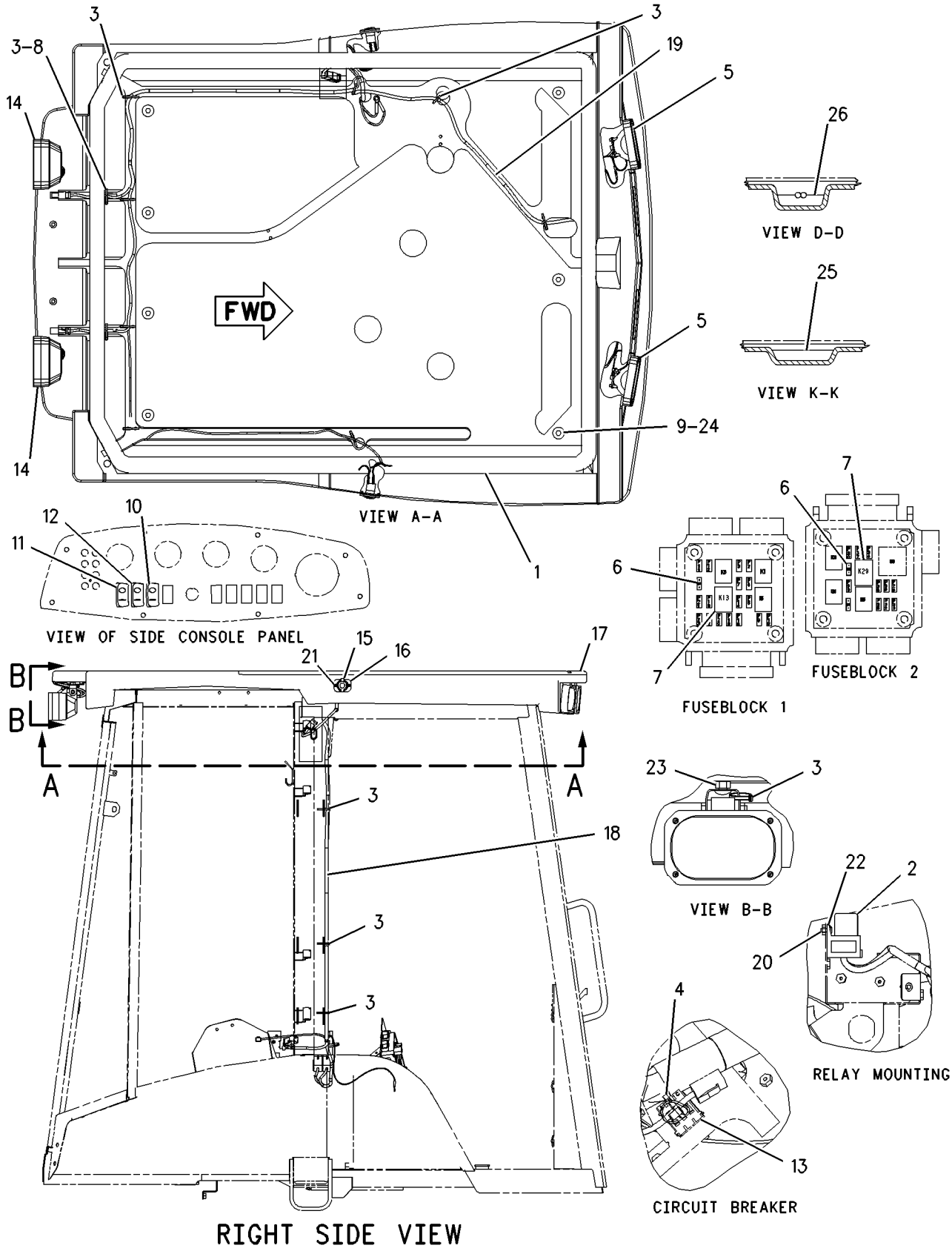

GRAPHIC #1 **<END>** g00885220

ELECTRICAL AND STARTING SYSTEM

202-5708 LIGHTING GP-FLOOD

S/N: BXC1-UP; DSX1-UP
AN ATTACHMENT

SMCS-1434 **i01936502**

NOTE	REF NO	GRAPHIC REF	PART NUMBER	QTY	PART NAME 1 2 3 4 5 6 (PRODUCT LEVEL)	SEE PAGE
D	1	1	**141-0924**		SEAL (5.8M)	
	2	1	**3E-9362**	2	RELAY AS (12 VOLT) (STANDARD/AUXILIARY FLOOD)	
	3	1	**3S-2093**	17	STRAP-CABLE	
	4	1	**9R-6247**	2	STRAP-CABLE	
	5	1	**105-8069**	4	LAMP GP-FLOOD (FRONT)	
					(EACH INCLUDES)	
		1	**9W-0607**	1	LAMP (12 VOLT/55 WATT)	
		1	**142-5789**	4	SCREW	
	6	1	**113-8490**	2	FUSE (10 AMP)	
	7	1	**113-8491**	2	FUSE (15 AMP)	
	8	1	**146-9439**	3	RELAY AS (12 VOLT) (LIGHTING)	
	9	1	**155-6457**	2	MOUNT	
	10	1	**156-0283**	7	WASHER-HARD (8.4X35X2.5MM THK)	
	11	1	**169-0591**	1	SWITCH AS (REAR FLOOD)	
		1	**111-7899**	1	GASKET	
	12	1	**169-0593**	1	SWITCH AS (FRONT FLOOD)	
		1	**111-7899**	1	GASKET	
	13	1	**169-0595**	1	SWITCH AS (BEACON)	
		1	**111-7899**	1	GASKET	
	14	1	**173-3175**	1	CIRCUIT BREAKER AS (ROADING LAMPS)	
	15	1	**176-0311**	2	LAMP GP-FLOOD (REAR)	
					(EACH INCLUDES)	
		1	**8T-8737**	2	PLUG-SEAL	
		1	**9W-0607**	1	LAMP (12 VOLT/55 WATT)	
		1	**102-8804**	1	KIT-RECEPTACLE (4 PIN)	
		1	**176-0346**	1	LENS (CLEAR)	
	16	1	**176-0312**	2	LAMP GP-FLOOD (REAR)	
					(EACH INCLUDES)	
		1	**9W-0607**	1	LAMP (12 VOLT/55 WATT)	
		1	**176-0346**	1	LENS (CLEAR)	
		1	**9X-3401**	2	PIN-CONNECTOR	
	17	1	**178-7539**	2	RECEPTACLE AS	
	18	1	**179-5435**	2	FLANGE	
	19	1	**187-8094**	1	ROOF	
	20	1	**200-0648**	1	HARNESS AS-LIGHTING (RH)	
		1	**102-8805**	1	KIT-RECEPTACLE (6 PIN)	
		1	**155-2270**	1	KIT-CONNECTING PLUG (2 PIN)	
		1	**155-2274**	1	KIT-CONNECTING PLUG (6 PIN)	
	21	1	**202-5705**	1	HARNESS AS-LIGHTING (ROOF)	
		1	**102-8805**	1	KIT-RECEPTACLE (6 PIN)	
		1	**155-2271**	1	KIT-CONNECTING PLUG (4 PIN)	
M	22	1	**138-8454**	2	SCREW-TRUSS HEAD (M4X0.7X10MM)	
	23	1	**3E-6922**	4	SCREW-RECESS FLAT HEAD (NO. 6-19X12.7MM)	
	24	1	**4B-4863**	2	WASHER (4.7X11X1.2MM THK)	
M	25	1	**8T-4133**	4	NUT (M10X1.5 THD)	
M	26	1	**8T-5093**	7	BOLT-LOCKING (M8X1.25X25MM)	
D	27	1	**141-0924**	3	SEAL (0.025M)	
D	28	1	**141-0924**	2	SEAL (0.035M)	

D-ORDER BY THE METER
M-METRIC PART

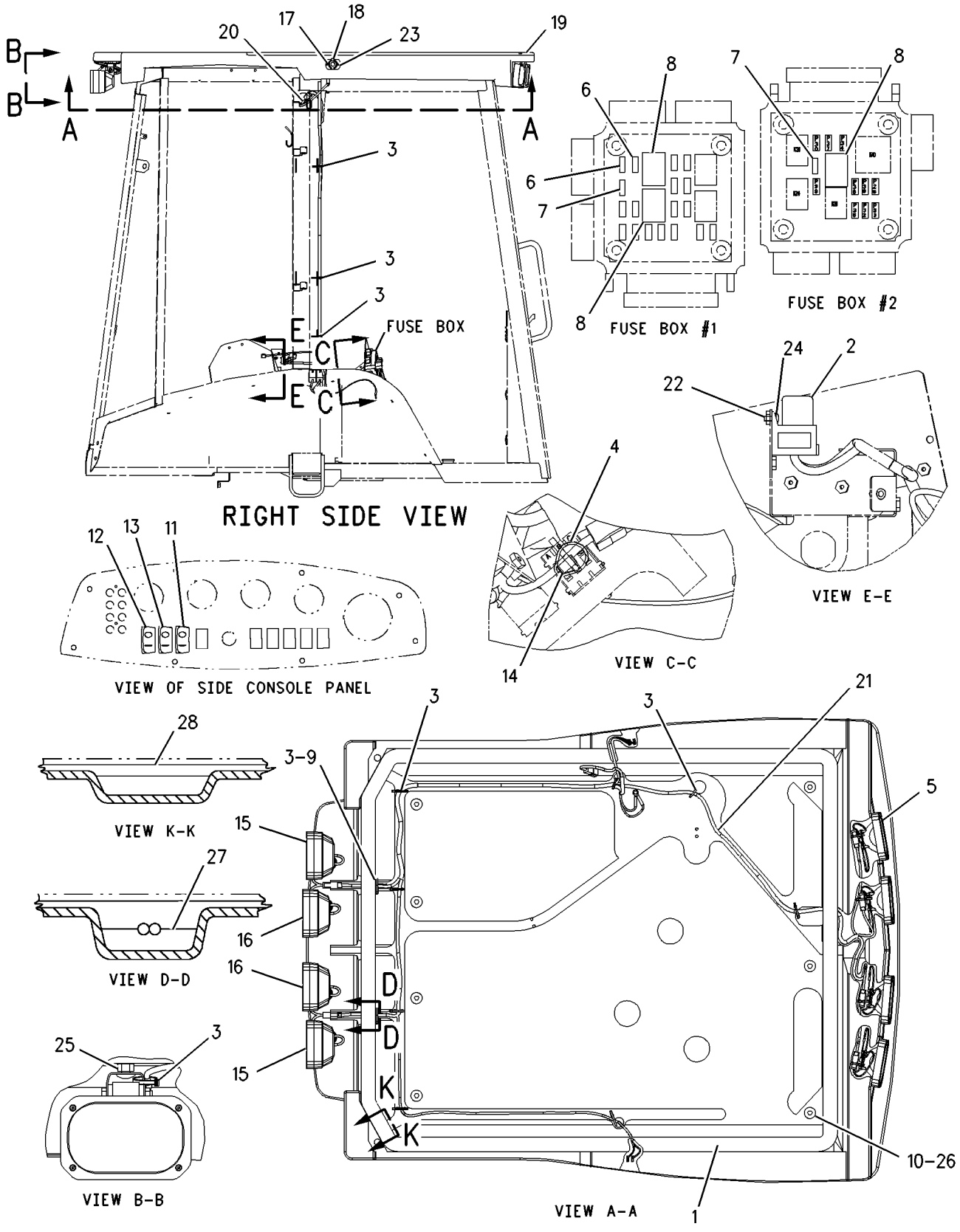

GRAPHIC #1 **<END>** g00885744

ELECTRICAL AND STARTING SYSTEM

241-0095 LIGHTING GP-FLOOD

S/N: BXC1-UP; DSX1-UP
AN ATTACHMENT

SMCS-1434 **i02010848**

NOTE	REF NO	GRAPHIC REF	PART NUMBER	QTY	PART NAME 1 2 3 4 5 6 (PRODUCT LEVEL)	SEE PAGE
	1	1	**3E-9362**	2	RELAY AS (12 VOLT)	
	2	1	**9R-6247**	2	STRAP-CABLE	
	3	1	**105-8069**	2	LAMP GP-FLOOD	
		1	**9W-0607**	1	LAMP (12-VOLT, 55-WATT)	
		1	**142-5789**	4	SCREW	
	4	1	**113-8491**	2	FUSE (15-AMPERE)	
	5	1	**146-9439**	2	RELAY AS (12 VOLT)	
	6	1	**155-6457**	2	MOUNT	
	7	1	**169-0590**	1	SWITCH AS (REAR FLOOD)	
		1	**111-7899**	1	GASKET	
	8	1	**169-0592**	1	SWITCH AS (FRONT FLOOD)	
		1	**111-7899**	1	GASKET	
	9	1	**169-0595**	1	SWITCH AS (BEACON)	
		1	**111-7899**	1	GASKET	
	10	1	**173-3175**	1	CIRCUIT BREAKER AS	
	11	1	**178-7539**	2	RECEPTACLE AS (POWER PORT)	
	12	1	**179-5435**	2	FLANGE	
	13	1	**187-8093**	1	ROOF	
	14	1	**200-0648**	1	HARNESS AS-LIGHTING	
		1	**102-8805**	1	KIT-RECEPTACLE (6-PIN)	
		1	**155-2270**	1	KIT-CONNECTING PLUG (2-PIN)	
		1	**155-2274**	1	KIT-CONNECTING PLUG (6-PIN)	
Y	15	1	**234-4328**	2	LAMP GP-FLOOD	118
	16	1	**241-0093**	1	HARNESS AS-LIGHTING (ROOF)	
		1	**102-8802**	2	KIT-RECEPTACLE (2-PIN)	
		1	**102-8805**	1	KIT-RECEPTACLE (6-PIN)	
		1	**155-2270**	4	KIT-CONNECTING PLUG (2-PIN)	
M	17	1	**138-8454**	2	SCREW-TRUSS HEAD (M4X0.7X10MM)	
	18	1	**156-0283**	7	WASHER-HARD (8.4X35X2.5MM THK)	
	19	1	**3E-6922**	4	SCREW-RECESS FLAT HEAD (NO. 6-19X12.7MM)	
	20	1	**3S-2093**	15	STRAP-CABLE	
	21	1	**4B-4863**	2	WASHER (4.7X11X1.2MM THK)	
M	22	1	**8T-5093**	7	BOLT-LOCKING (M8X1.25X25MM)	
D	23	1	**141-0924**		SEAL (.6M)	

D-ORDER BY THE METER
M-METRIC PART
Y-SEPARATE ILLUSTRATION

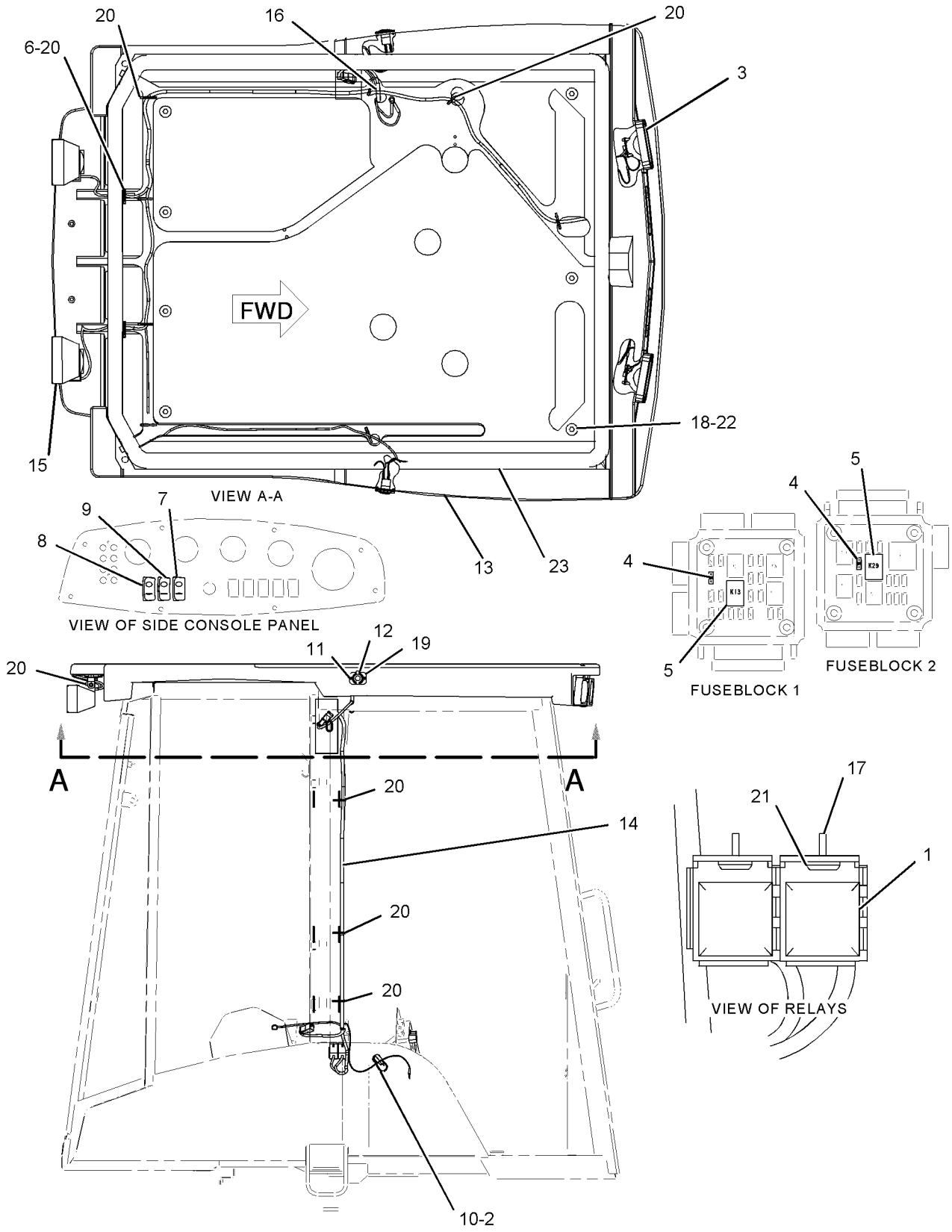

RIGHT SIDE VIEW

GRAPHIC #1 **<END>** g01039871

241-0096 LIGHTING GP-FLOOD

S/N: BXC220-UP; DSX210-UP
AN ATTACHMENT

SMCS-1434 **i02011547**

NOTE	REF NO	GRAPHIC REF	PART NUMBER	QTY	PART NAME 1 2 3 4 5 6 (PRODUCT LEVEL)	SEE PAGE
	1	1	**3E-9362**	2	RELAY AS (12 VOLT)	
	2	1	**9R-6247**	2	STRAP-CABLE	
	3	1	**105-8069**	4	LAMP GP-FLOOD	
					(EACH INCLUDES)	
		1	**9W-0607**	1	LAMP (12-VOLT, 55-WATT)	
		1	**142-5789**	1	SCREW	
	4	1	**113-8490**	2	FUSE (10-AMPERE)	
	5	1	**113-8491**	2	FUSE (15-AMPERE)	
	6	1	**146-9439**	3	RELAY AS (12 VOLT)	
	7	1	**155-6457**	2	MOUNT	
	8	1	**169-0591**	1	SWITCH AS-ROCKER (REAR FLOOD)	
		1	**111-7899**	1	GASKET	
	9	1	**169-0593**	1	SWITCH AS-ROCKER (FRONT FLOOD)	
		1	**111-7899**	1	GASKET	
	10	1	**169-0595**	1	SWITCH AS (BEACON)	
		1	**111-7899**	1	GASKET	
	11	1	**173-3175**	1	CIRCUIT BREAKER AS (20 AMP)	
	12	1	**178-7539**	2	RECEPTACLE AS (POWER PORT)	
	13	1	**179-5435**	2	FLANGE	
	14	1	**187-8094**	1	ROOF	
	15	1	**200-0648**	1	HARNESS AS-LIGHTING	
		1	**102-8805**	1	KIT-RECEPTACLE (6-PIN)	
		1	**155-2270**	1	KIT-CONNECTING PLUG (2-PIN)	
		1	**155-2274**	1	KIT-CONNECTING PLUG (6-PIN)	
Y	16	1	**234-4328**	2	LAMP GP-FLOOD	118
	17	1	**241-0093**	1	HARNESS AS-LIGHTING (ROOF)	
		1	**102-8802**	2	KIT-RECEPTACLE (2-PIN)	
		1	**102-8805**	1	KIT-RECEPTACLE (6-PIN)	
		1	**155-2270**	4	KIT-CONNECTING PLUG (2-PIN)	
M	18	1	**138-8454**	2	SCREW-TRUSS HEAD (M4X0.7X10MM)	
	19	1	**156-0283**	7	WASHER-HARD (8.4X35X2.5MM THK)	
Y	20	1	**234-4329**	2	LAMP GP-FLOOD	119
	21	1	**3E-6922**	4	SCREW-RECESS FLAT HEAD (NO. 6-19X12.7MM)	
	22	1	**3S-2093**	17	STRAP-CABLE	
	23	1	**4B-4863**	2	WASHER (4.7X11X1.2MM THK)	
M	24	1	**8T-5093**	7	BOLT-LOCKING (M8X1.25X25MM)	
D	25	1	**141-0924**		SEAL (.6M)	

D-ORDER BY THE METER
M-METRIC PART
Y-SEPARATE ILLUSTRATION

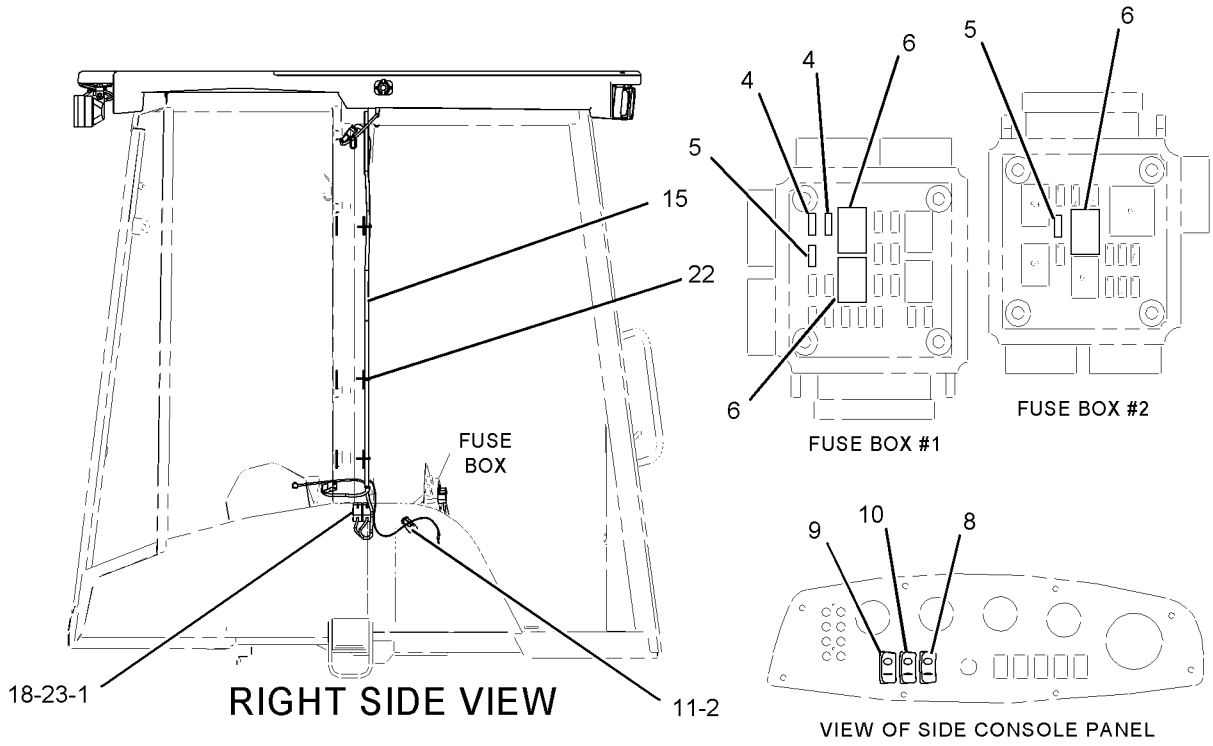

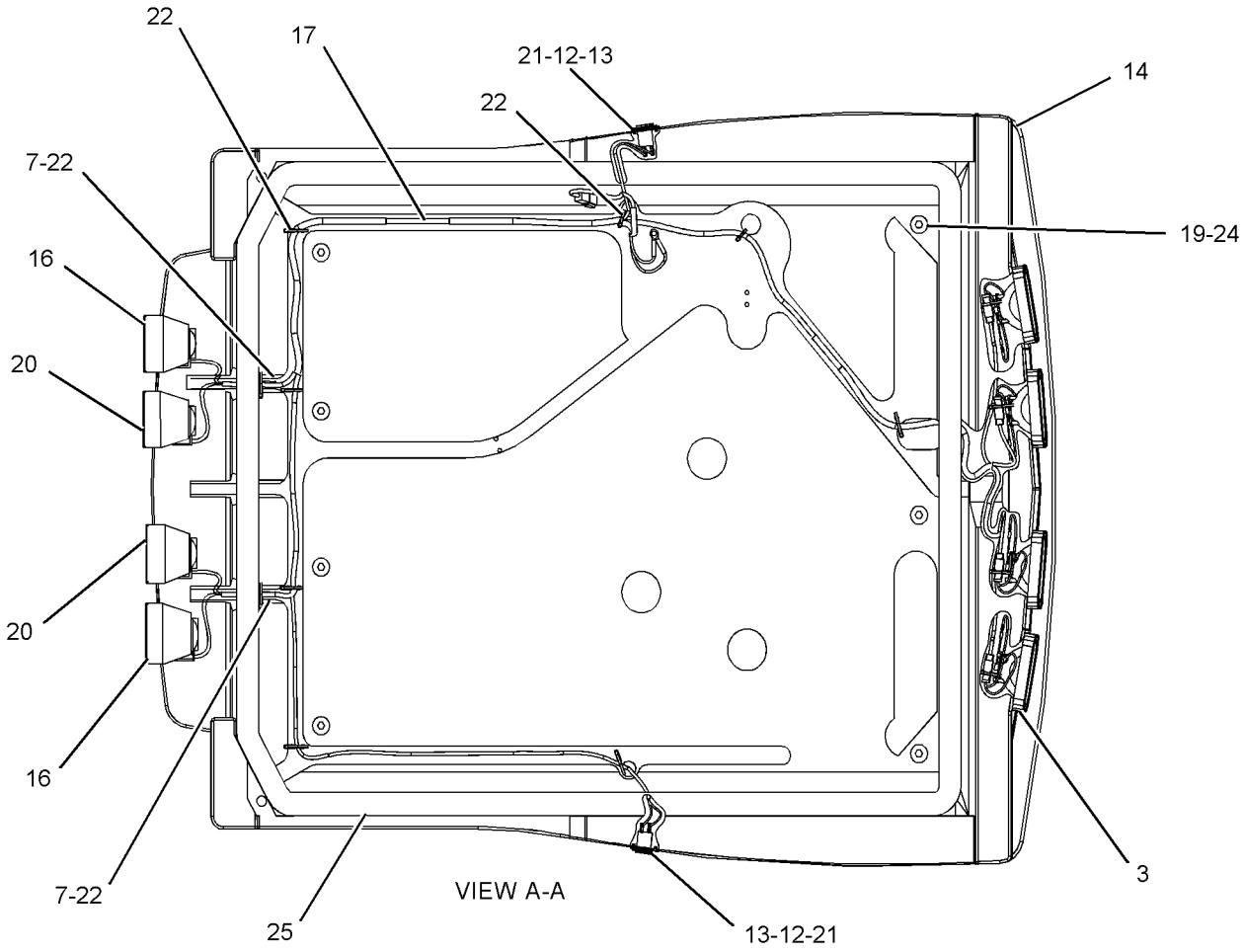

GRAPHIC #1 **<END>** g01040140

185-8811 LIGHTING GP-ROADING—FOG LIGHT

S/N: BXC1-UP; DSX1-UP
AN ATTACHMENT

SMCS-1429 **i01862869**

NOTE	REF NO	GRAPHIC REF	PART NUMBER	QTY	PART NAME 1 2 3 4 5 6 (PRODUCT LEVEL)	SEE PAGE
	1	1	**8Q-4396**	1	PLATE AS	
	2	1	**229-9862**	1	PLATE AS	
	3	1	**169-0611**	1	SWITCH AS (FOG LAMPS)	
		1	**111-7899**	1	GASKET	
		1	**142-9117**	1	CONNECTOR	
	4	1	**189-6561**	1	HARNESS AS-PLATFORM	
		1	**102-8802**	1	KIT-RECEPTACLE (2 PIN)	
		1	**102-8803**	1	KIT-RECEPTACLE (3 PIN)	
	5	1	**189-6562**	1	HARNESS AS-OPERATOR CONTROLS	
		1	**155-2260**	1	KIT-CONNECTING PLUG (3 PIN)	
	6	1	**189-6563**	1	HARNESS AS-REAR LIGHTING	
		1	**155-2270**	1	KIT-CONNECTING PLUG (2 PIN)	
CY	7	1	**220-8698**	1	LAMP GP-FLOOD (BASIC)	117
	8	1	**3S-2093**	16	STRAP-CABLE	
	9	1	**4P-7581**	2	CLIP	
M	10	1	**8T-4138**	2	BOLT (M6X1X20MM)	
	11	1	**8T-4224**	2	WASHER-HARD (8.8X16X2MM THK)	

C-CHANGE FROM PREVIOUS TYPE
M-METRIC PART
Y-SEPARATE ILLUSTRATION

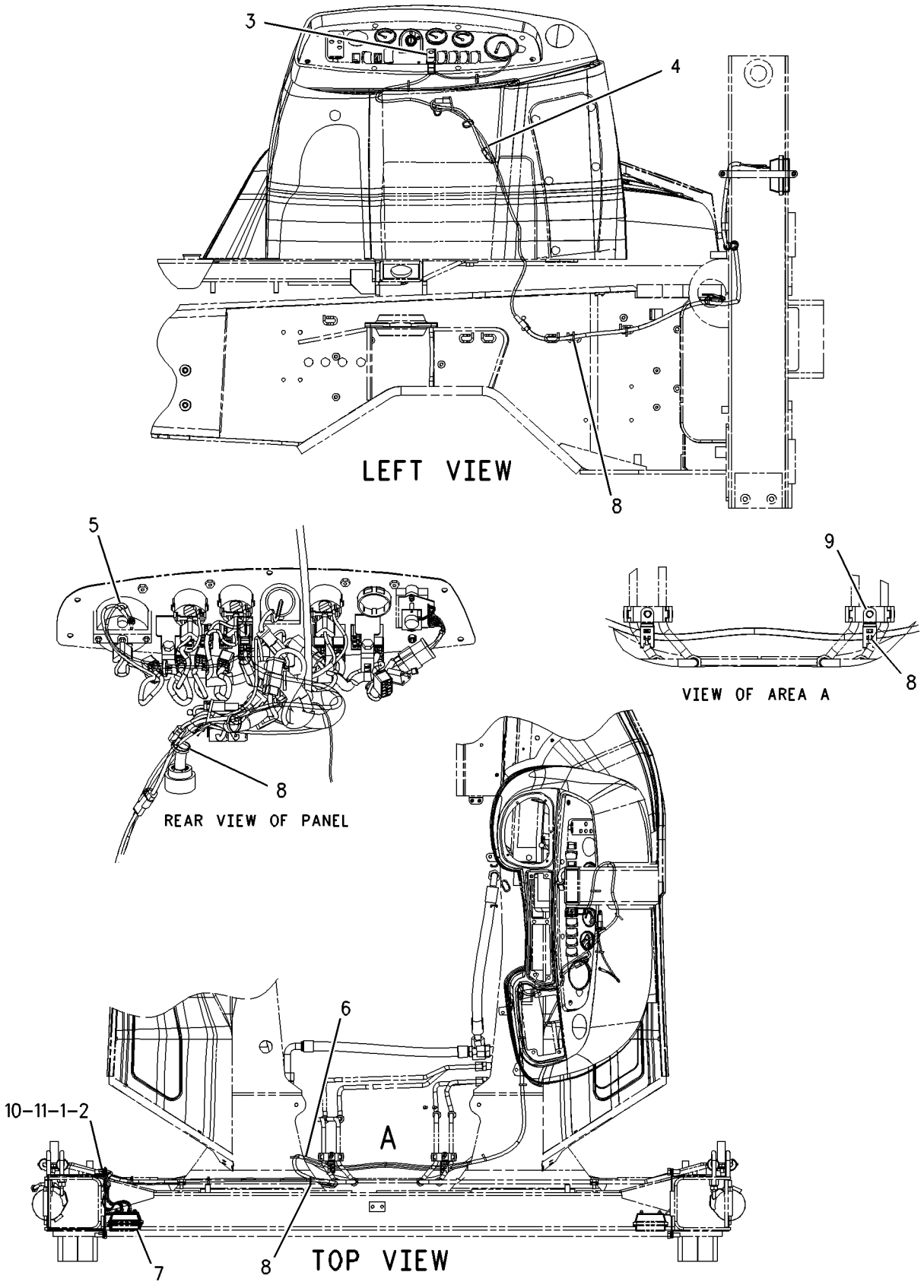

GRAPHIC #1 **<END>** g00935951

186-0314 LIGHTING GP-ROADING—LH—DIP BEAM

S/N: BXC1-UP; DSX1-UP
AN ATTACHMENT

SMCS-1429 **i01543175**

NOTE	REF NO	GRAPHIC REF	PART NUMBER	QTY	PART NAME 1 2 3 4 5 6 (PRODUCT LEVEL)	SEE PAGE
Y	1	1	**3E-7585**	2	LAMP GP-HEAD & SIGNAL	122
	2	1,2	**3S-2093**	8	STRAP-CABLE	
	3	1	**8T-8737**	2	PLUG-SEAL	
	4	2	**9R-1499**	2	REFLECTOR	
Y	5	2	*9R-2385*	2	LAMP GP-STOP & TAIL	129
	6	1	**9R-6247**	2	STRAP-CABLE	
	7	1	**155-2263**	2	WEDGE-PLUG LOCK (6 PIN)	
	8	1	**164-1096**	1	BRACKET-LH	
	9	1	**164-1097**	1	BRACKET-RH	
	10	1	**169-0594**	1	SWITCH AS (ROADING)	
		1	**111-7899**	1	GASKET	
	11	1	**173-3175**	1	CIRCUIT BREAKER AS	
	12	1	**155-2274**	2	KIT-CONNECTING PLUG (6 PIN)	
					(KIT SERVICES PLUG AS AND WEDGE)	
	13	1	**8T-4121**	4	WASHER-HARD (11X21X2.5MM THK)	
M	14	1	**8T-4137**	4	BOLT (M10X1.5X20MM)	

M-METRIC PART
Y-SEPARATE ILLUSTRATION

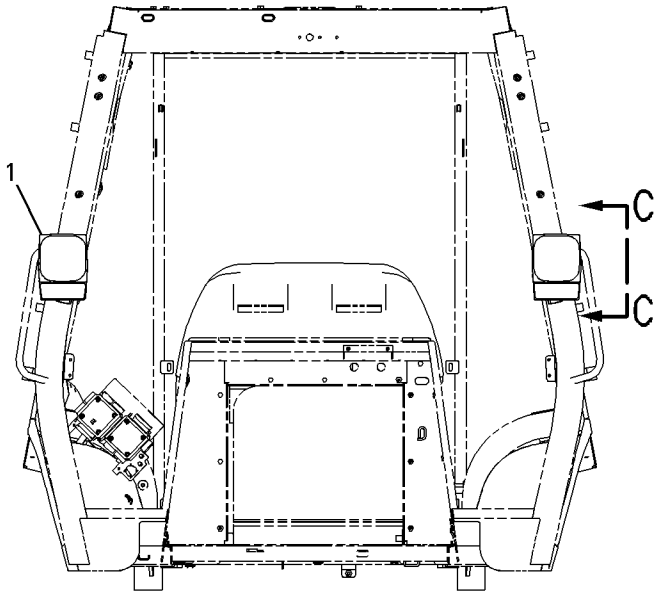

FRONT VIEW

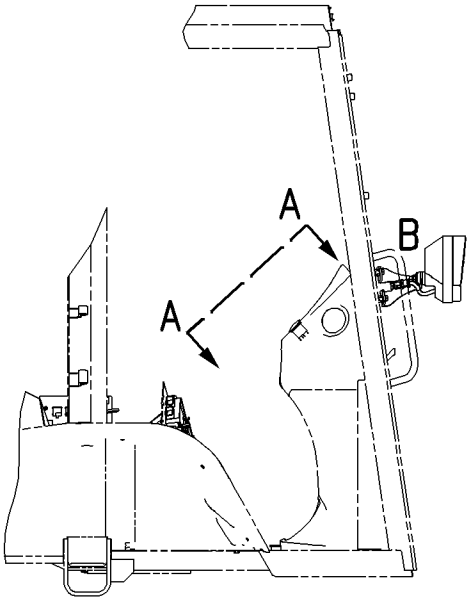

RIGHT SIDE VIEW

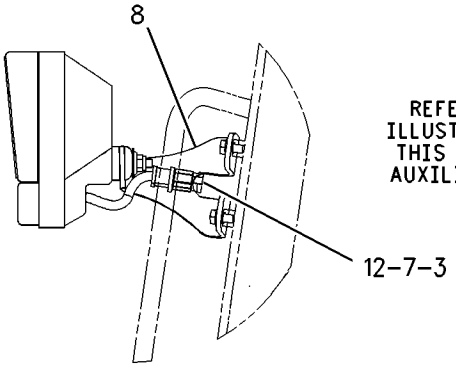

SECTION C-C

REFER TO ALL ILLUSTRATIONS IN THIS GROUP FOR AUXILIARY VIEWS

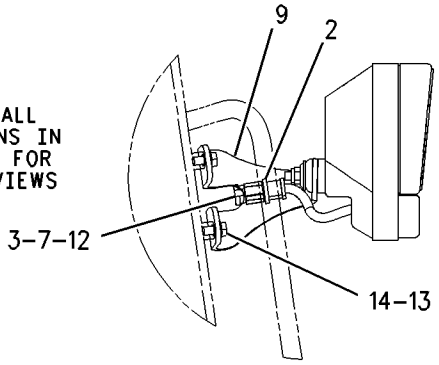

VIEW OF AREA B

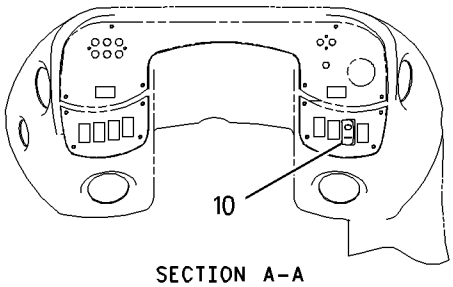

SECTION A-A

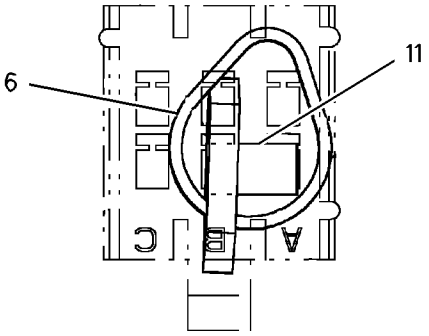

BREAKER POSITION VIEW

GRAPHIC #1 g00801721

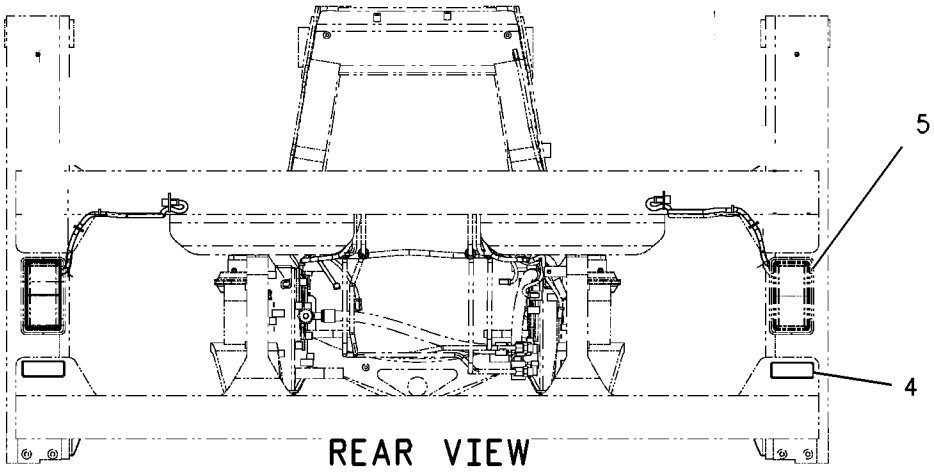

REAR VIEW

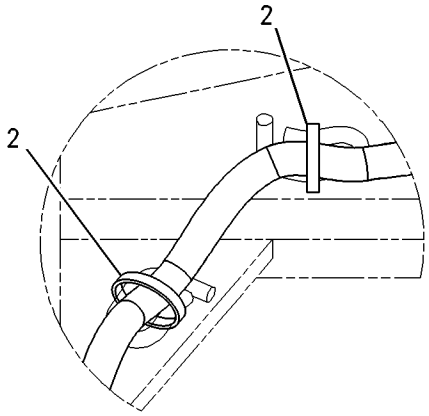

VIEW OF AREA F

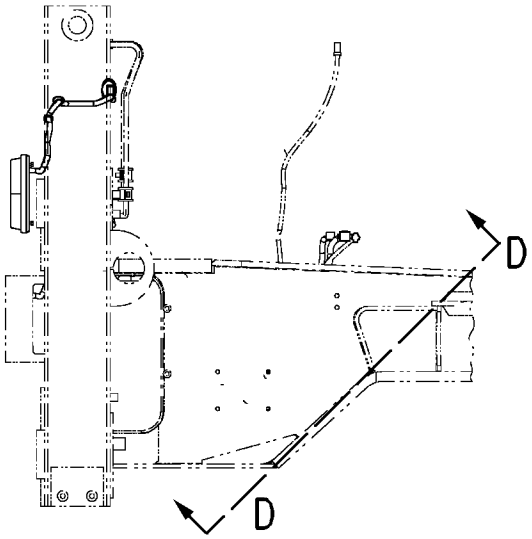

RIGHT SIDE VIEW

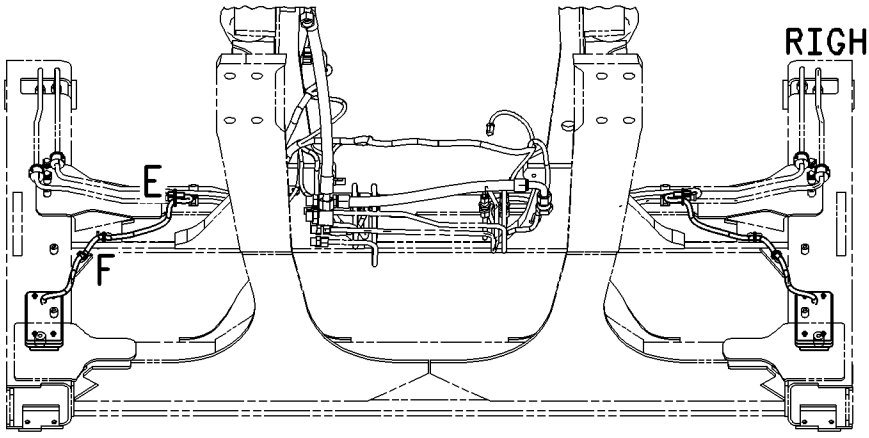

SECTION D-D

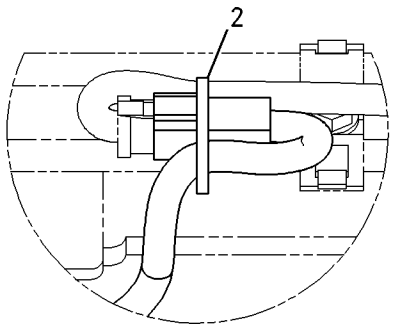

VIEW OF AREA E

GRAPHIC #2 **<END>** g00804661

186-0315 LIGHTING GP-ROADING—RH—DIP BEAM

S/N: BXC1-UP; DSX1-UP
AN ATTACHMENT

SMCS-1429 **i01543226**

NOTE	REF NO	GRAPHIC REF	PART NUMBER	QTY	PART NAME 1 2 3 4 5 6 (PRODUCT LEVEL)	SEE PAGE
Y	1	1	**3E-7584**	2	LAMP GP-HEAD & SIGNAL	120
	2	2	**3S-2093**	8	STRAP-CABLE	
	3	1	**8T-8737**	2	PLUG-SEAL	
	4	2	**9R-1499**	2	REFLECTOR	
Y	5	2	*9R-2385*	2	LAMP GP-STOP & TAIL	129
	6	1	**9R-6247**	2	STRAP-CABLE	
	7	1	**155-2263**	2	WEDGE-PLUG LOCK (6 PIN)	
	8	1	**164-1096**	1	BRACKET-LH	
	9	1	**164-1097**	1	BRACKET-RH	
	10	1	**169-0594**	1	SWITCH AS (ROADING)	
		1	**111-7899**	1	GASKET	
	11	1	**173-3175**	1	CIRCUIT BREAKER AS	
	12	1	**155-2274**	2	KIT-CONNECTING PLUG (6 PIN)	
					(KIT SERVICES PLUG AS AND WEDGE)	
	13	1	**8T-4121**	4	WASHER-HARD (11X21X2.5MM THK)	
M	14	1	**8T-4137**	4	BOLT (M10X1.5X20MM)	

M-METRIC PART
Y-SEPARATE ILLUSTRATION

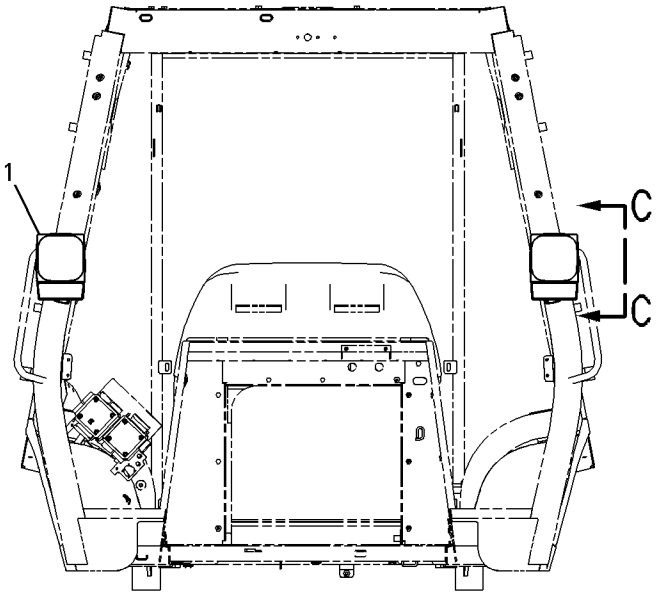

FRONT VIEW

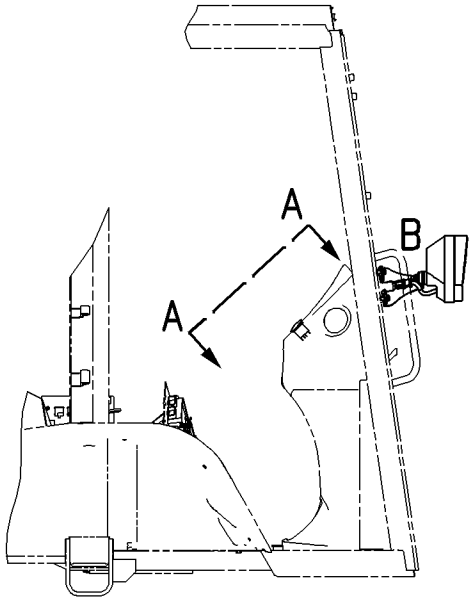

RIGHT SIDE VIEW

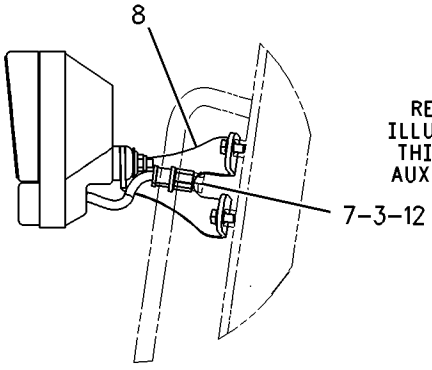

SECTION C-C

REFER TO ALL ILLUSTRATIONS IN THIS GROUP FOR AUXILIARY VIEWS

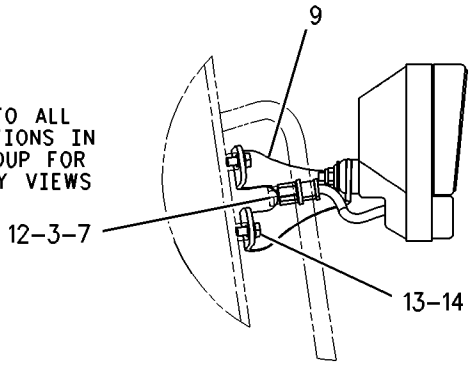

VIEW OF AREA B

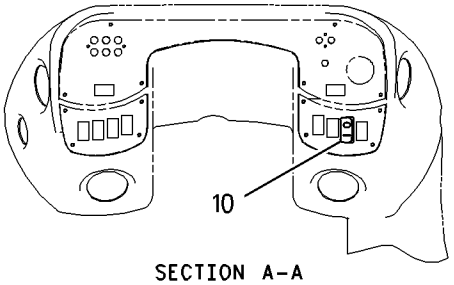

SECTION A-A

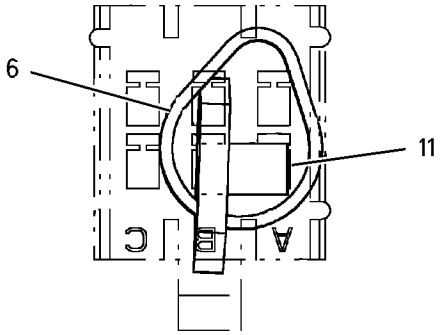

BREAKER POSITION VIEW

GRAPHIC #1 g00801749

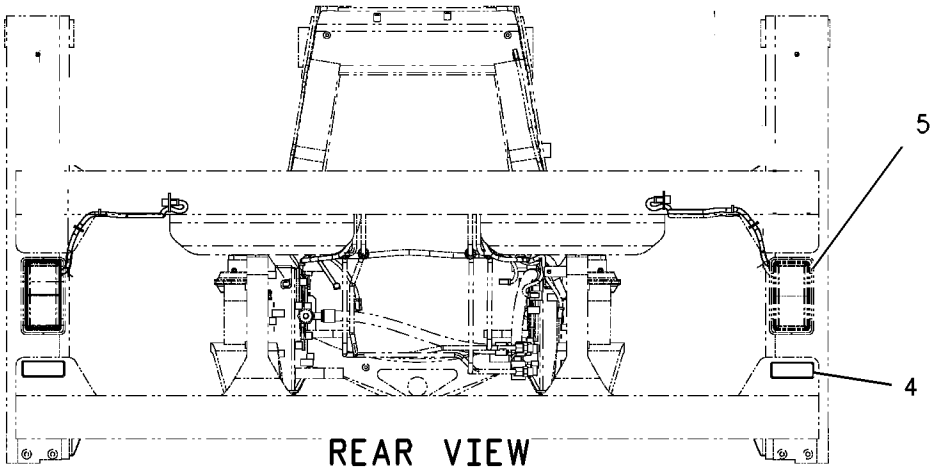

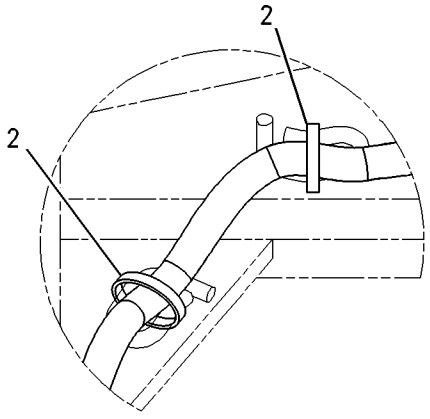

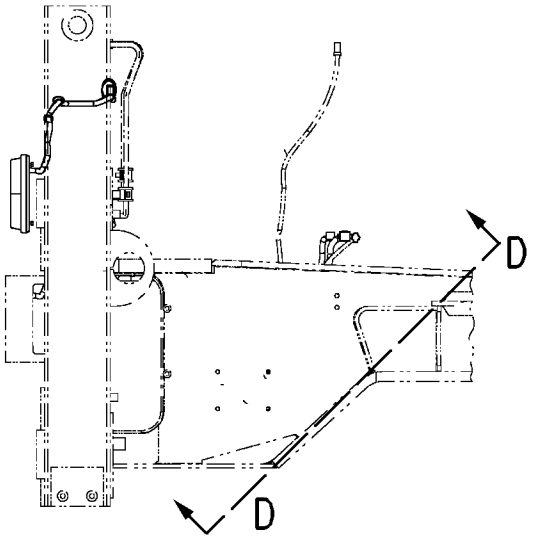

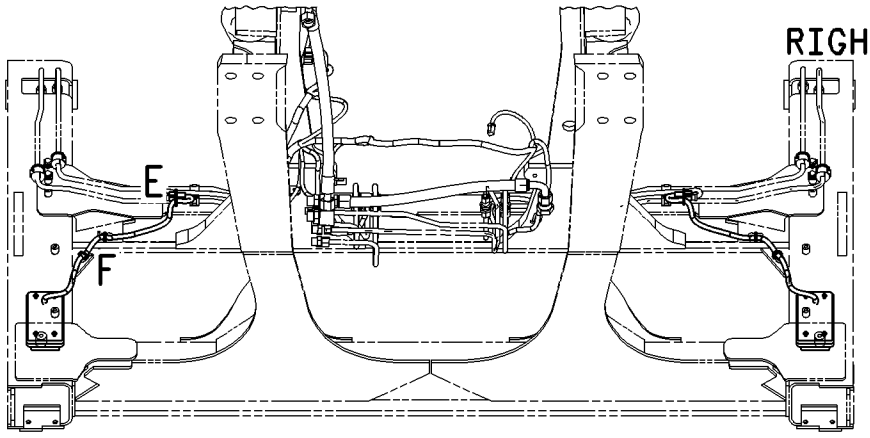

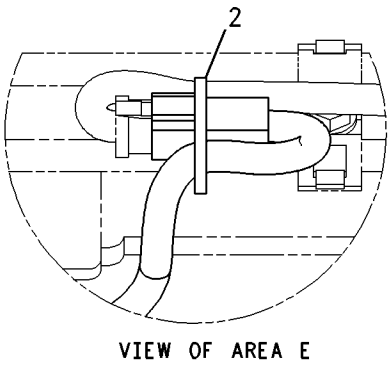

GRAPHIC #2 **<END>** g00804788

186-0316 LIGHTING GP-ROADING—SIDE REPEATER

S/N: BXC1-UP; DSX1-UP
AN ATTACHMENT

SMCS-1429 **i01543315**

NOTE	REF NO	GRAPHIC REF	PART NUMBER	QTY	PART NAME 1 2 3 4 5 6 (PRODUCT LEVEL)	SEE PAGE
Y	1	1	**3E-9382**	1	LAMP GP-HEAD & SIGNAL	124
	2	1,2	**3S-2093**	8	STRAP-CABLE	
	3	1	**8T-8737**	2	PLUG-SEAL	
	4	2	**9R-1499**	2	REFLECTOR	
Y	5	2	*9R-2385*	2	LAMP GP-STOP & TAIL	129
	6	1	**9R-6247**	2	STRAP-CABLE	
Y	7	1	**104-5255**	1	LAMP GP-HEAD & SIGNAL	126
	8	1	**155-2263**	2	WEDGE-PLUG LOCK (6 PIN)	
	9	1	**164-1096**	1	BRACKET-LH	
	10	1	**164-1097**	1	BRACKET-RH	
	11	1	**169-0594**	1	SWITCH AS (ROADING)	
		1	**111-7899**	1	GASKET	
	12	1	**173-3175**	1	CIRCUIT BREAKER AS	
	13	1	**155-2274**	2	KIT-CONNECTING PLUG (6 PIN)	
					(KIT SERVICES PLUG AS AND WEDGE)	
	14	1	**8T-4121**	4	WASHER-HARD (11X21X2.5MM THK)	
M	15	1	**8T-4137**	4	BOLT (M10X1.5X20MM)	

M-METRIC PART
Y-SEPARATE ILLUSTRATION

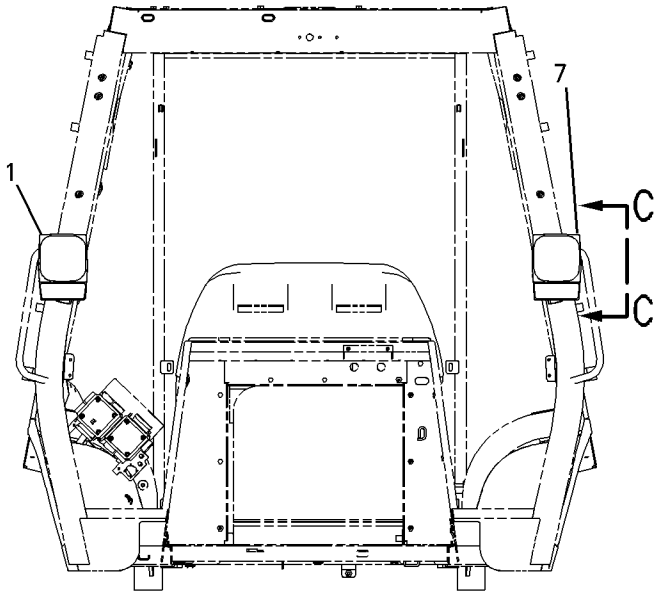

FRONT VIEW

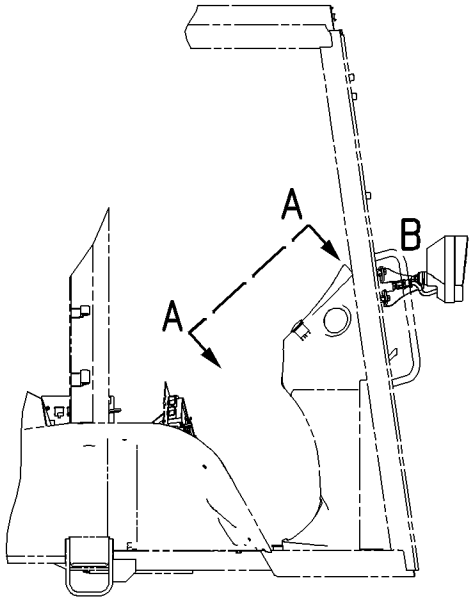

RIGHT SIDE VIEW

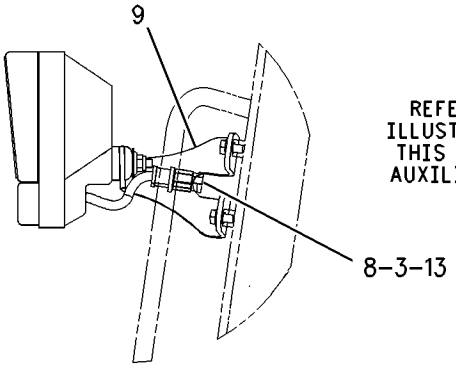

SECTION C-C

REFER TO ALL ILLUSTRATIONS IN THIS GROUP FOR AUXILIARY VIEWS

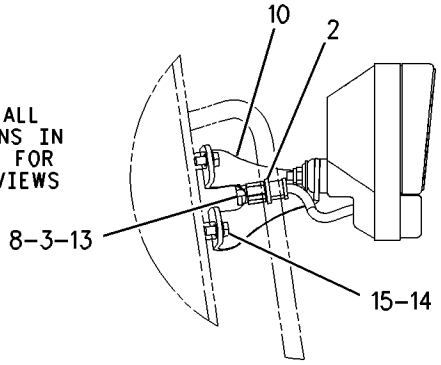

VIEW OF AREA B

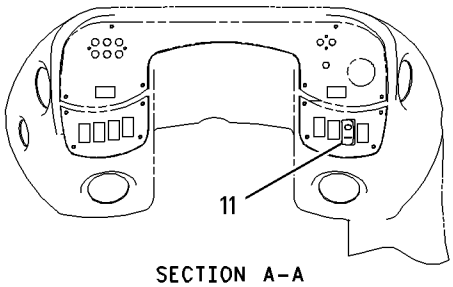

SECTION A-A

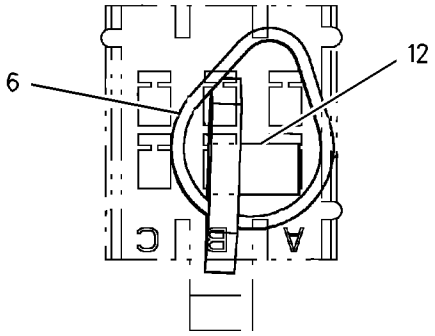

BREAKER POSITION VIEW

GRAPHIC #1 g00801784

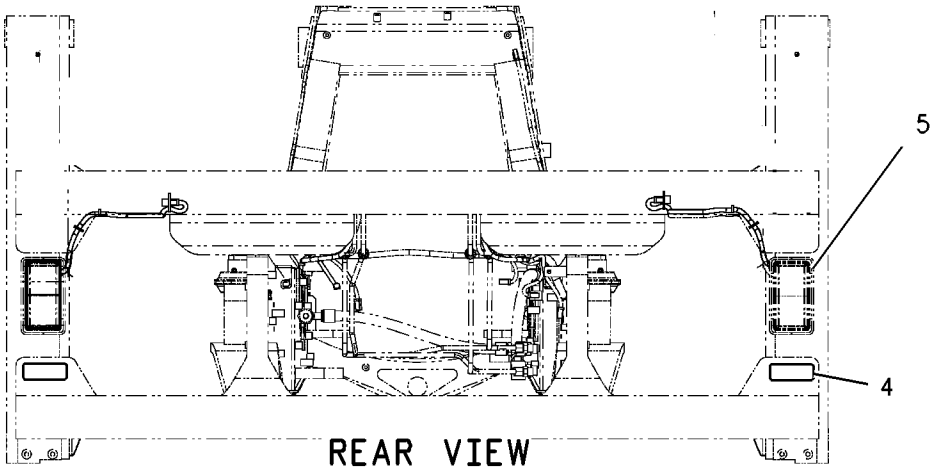

REAR VIEW

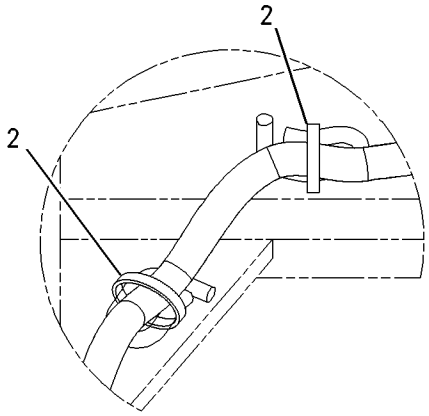

VIEW OF AREA F

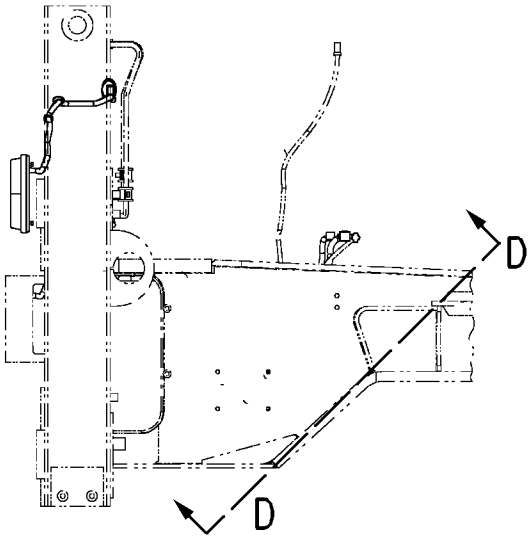

RIGHT SIDE VIEW

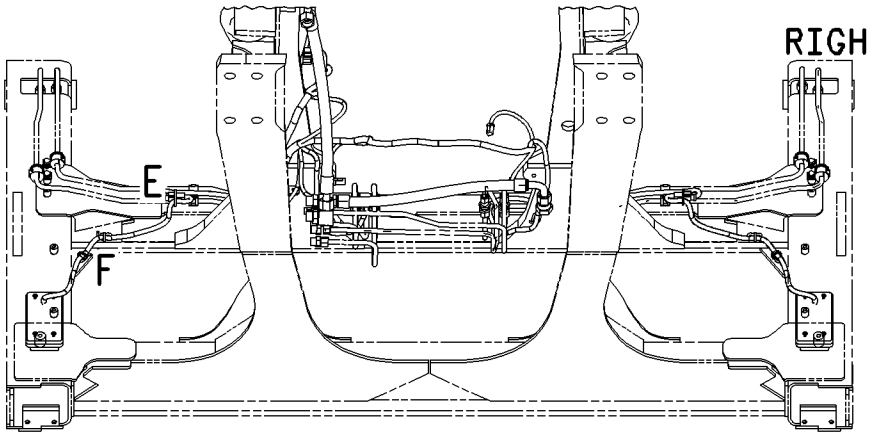

SECTION D-D

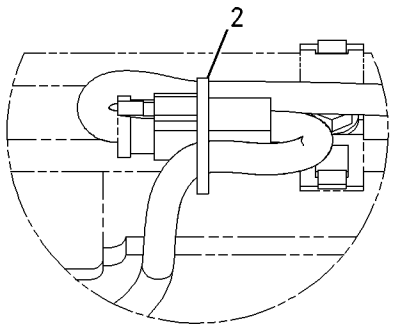

VIEW OF AREA E

GRAPHIC #2 **<END>** g00803893

191-6550 LIGHTING GP-ROADING—LH DIP BEAM—SIDE SHIFT—CANOPY

S/N: BXC1-UP; DSX1-UP

AN ATTACHMENT

SMCS-1429 **i02000041**

NOTE	REF NO	GRAPHIC REF	PART NUMBER	QTY	PART NAME 1 2 3 4 5 6 (PRODUCT LEVEL)	SEE PAGE
Y	1	1	**3E-7585**	2	LAMP GP-HEAD & SIGNAL	122
	2	1	**8T-8737**	2	PLUG-SEAL	
	3	2	**9R-1499**	2	REFLECTOR	
Y	4	2	*9R-2385*	2	LAMP GP-STOP & TAIL	129
	5	2	**9R-6247**	2	STRAP-CABLE	
	6	1	**137-6215**	1	BRACKET	
	7	1	**137-6216**	1	BRACKET	
	8	1	**155-2263**	2	WEDGE-PLUG LOCK (6 PIN)	
	9	1	**169-0594**	1	SWITCH AS (ROADING)	
		1	**111-7899**	1	GASKET	
	10	2	**173-3175**	1	CIRCUIT BREAKER AS	
	11	1	**155-2274**	2	KIT-CONNECTING PLUG (6-PIN)	
					(KIT SERVICES PLUG AS AND WEDGE)	
	12	1	**213-8479**	1	SWITCH AS-MULTIFUNCTION (LIGHTS, TURN SIGNALS & WIPER)	
	13	1,2	**3S-2093**	8	STRAP-CABLE	
M	14	1	**8T-0352**	2	BOLT (M5X0.8X45MM)	
	15	1	**8T-4121**	4	WASHER-HARD (11X21X2.5MM THK)	
M	16	1	**8T-4137**	4	BOLT (M10X1.5X20MM)	

M-METRIC PART
Y-SEPARATE ILLUSTRATION

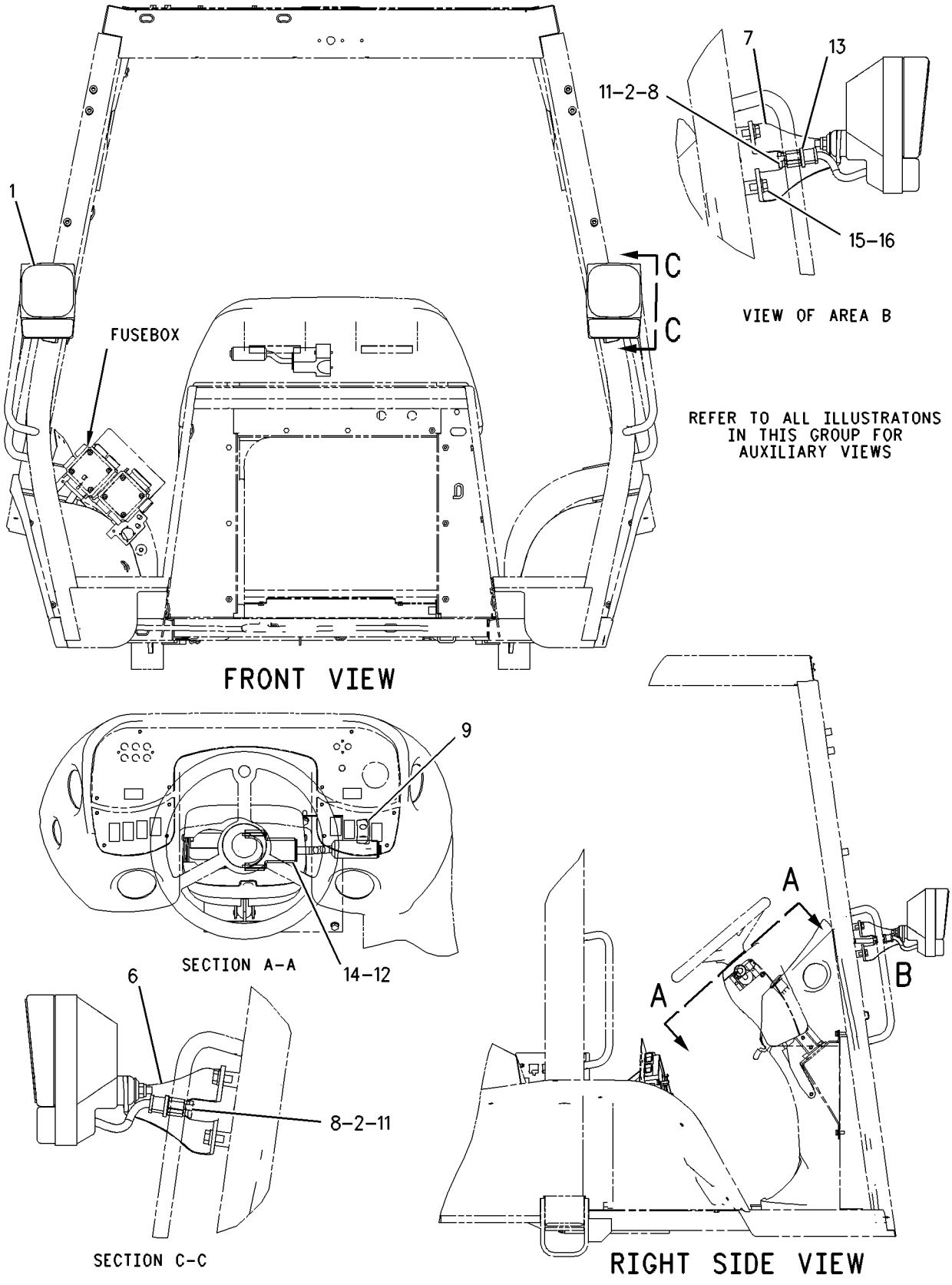

GRAPHIC #1 g00873225

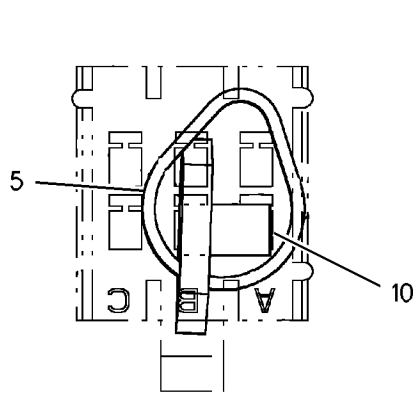

BREAKER POSITION VIEW

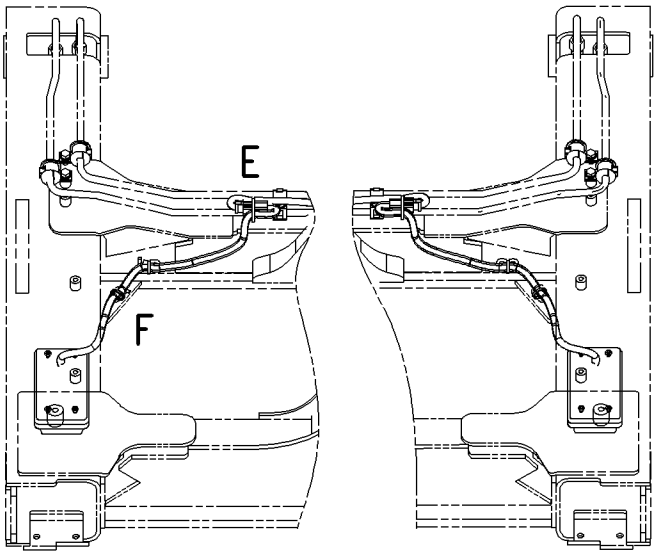

SECTION D-D

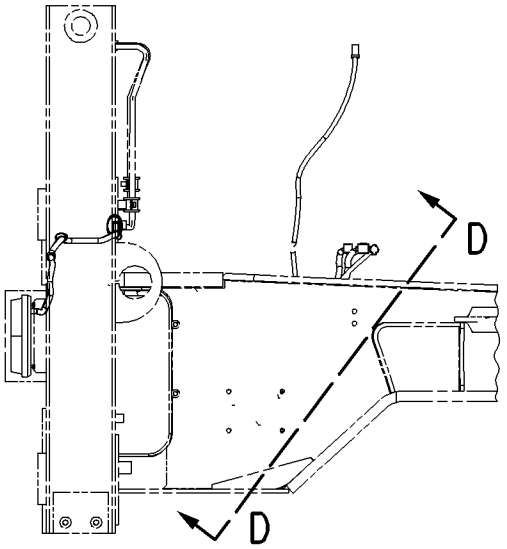

RIGHT SIDE VIEW

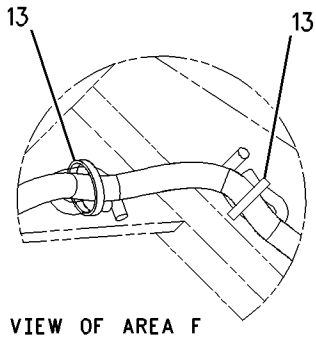

VIEW OF AREA F

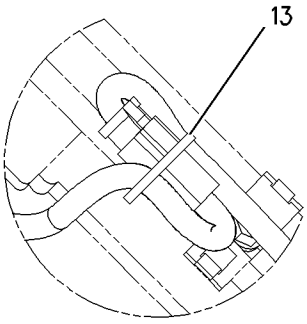

VIEW OF AREA E

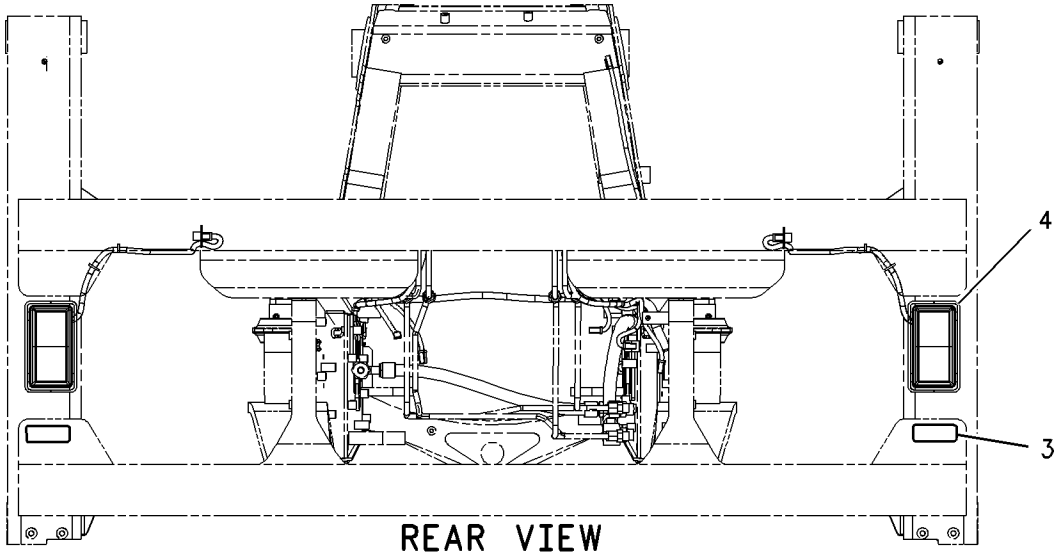

REAR VIEW

GRAPHIC #2 **<END>** g00873226

191-6551 LIGHTING GP-ROADING—RH DIP BEAM—SIDE SHIFT—CANOPY

S/N: BXC1-UP; DSX1-UP

CANOPY

AN ATTACHMENT

SMCS-1429 **i02000039**

NOTE	REF NO	GRAPHIC REF	PART NUMBER	QTY	PART NAME 1 2 3 4 5 6 (PRODUCT LEVEL)	SEE PAGE
Y	1	1	**3E-7584**	2	LAMP GP-HEAD & SIGNAL	120
	2	1	**8T-8737**	2	PLUG-SEAL	
	3	2	**9R-1499**	2	REFLECTOR	
Y	4	2	*9R-2385*	2	LAMP GP-STOP & TAIL	129
	5	2	**9R-6247**	2	STRAP-CABLE	
	6	1	**137-6215**	1	BRACKET	
	7	1	**137-6216**	1	BRACKET	
	8	1	**155-2263**	2	WEDGE-PLUG LOCK (6 PIN)	
	9	1	**169-0594**	1	SWITCH AS (ROADING)	
		1	**111-7899**	1	GASKET	
	10	2	**173-3175**	1	CIRCUIT BREAKER AS	
	11	1	**155-2274**	2	KIT-CONNECTING PLUG (6-PIN)	
					(KIT SERVICES PLUG AS AND WEDGE)	
	12	1	**213-8479**	1	SWITCH AS-MULTIFUNCTION (LIGHTS, TURN SIGNALS & WIPER)	
	13	1,2	**3S-2093**	8	STRAP-CABLE	
M	14	1	**8T-0352**	2	BOLT (M5X0.8X45MM)	
	15	1	**8T-4121**	4	WASHER-HARD (11X21X2.5MM THK)	
M	16	1	**8T-4137**	4	BOLT (M10X1.5X20MM)	

M-METRIC PART
Y-SEPARATE ILLUSTRATION

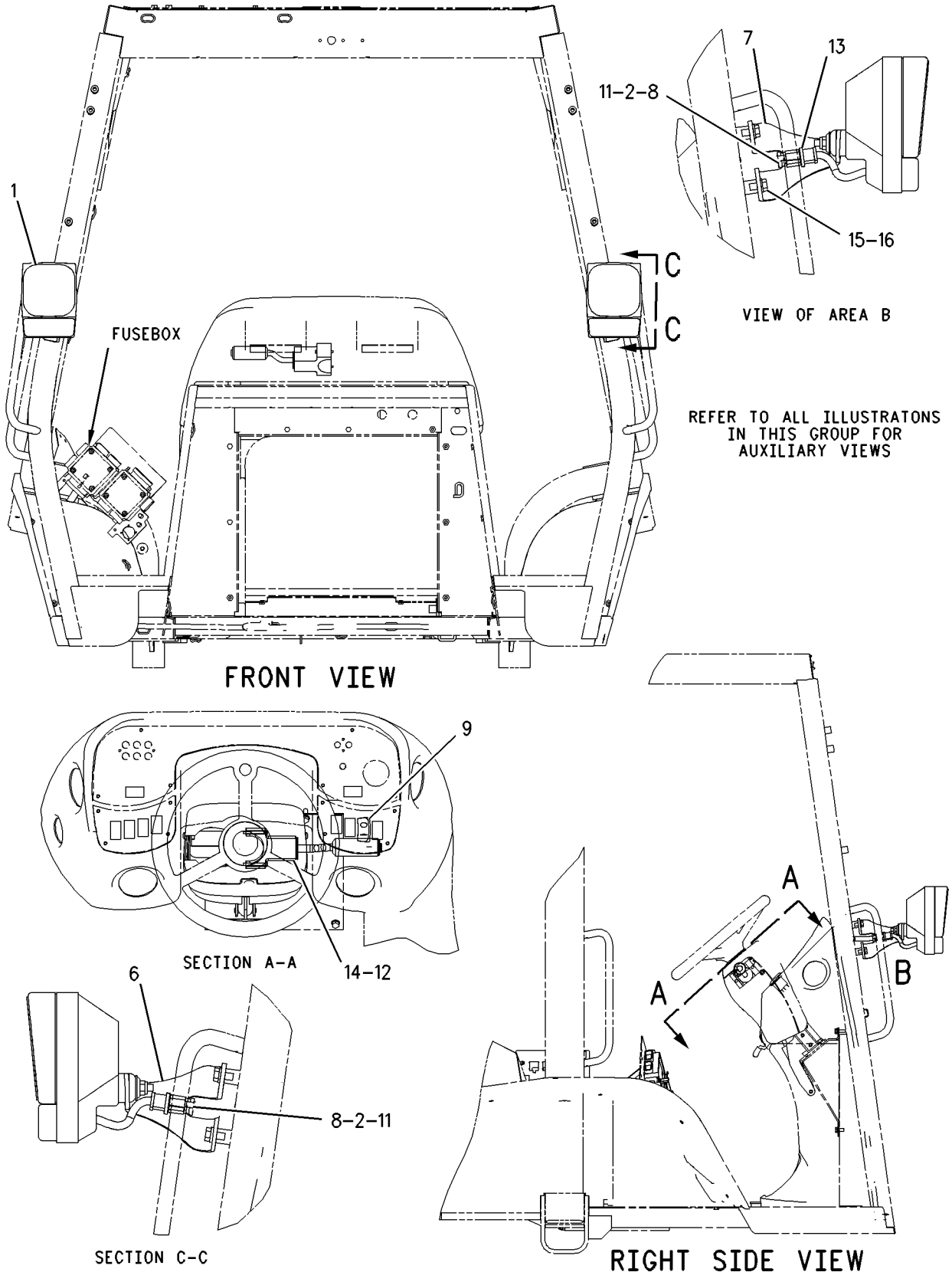

GRAPHIC #1

g00873225

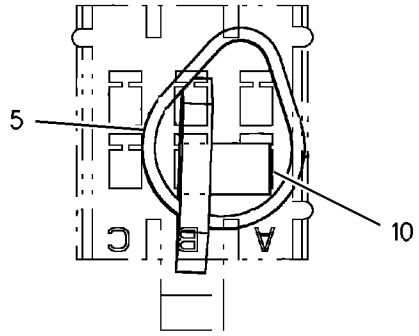

BREAKER POSITION VIEW

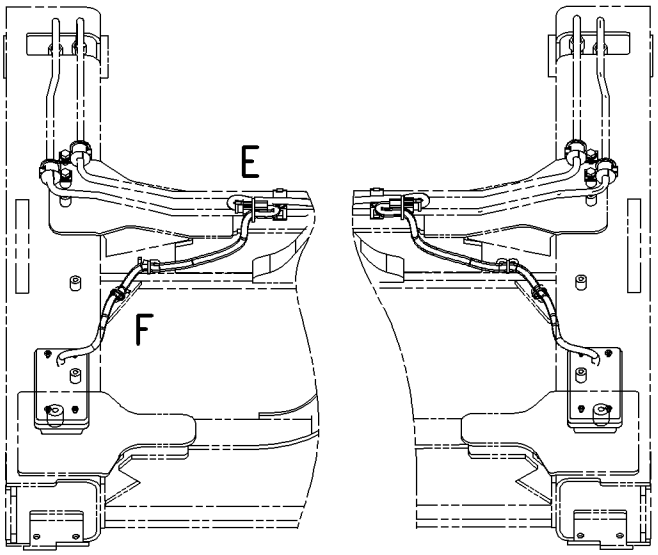

SECTION D-D

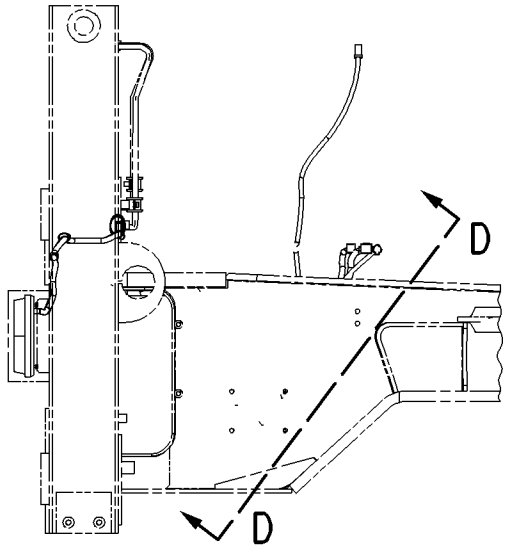

RIGHT SIDE VIEW

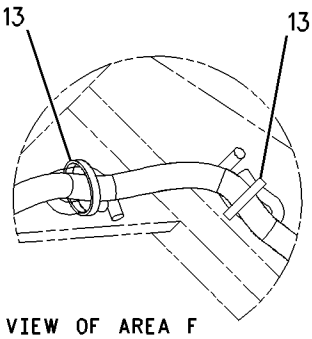

VIEW OF AREA F

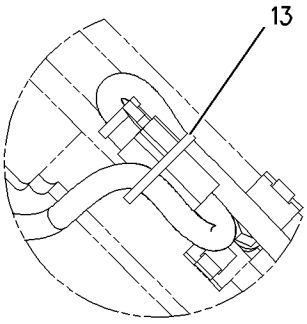

VIEW OF AREA E

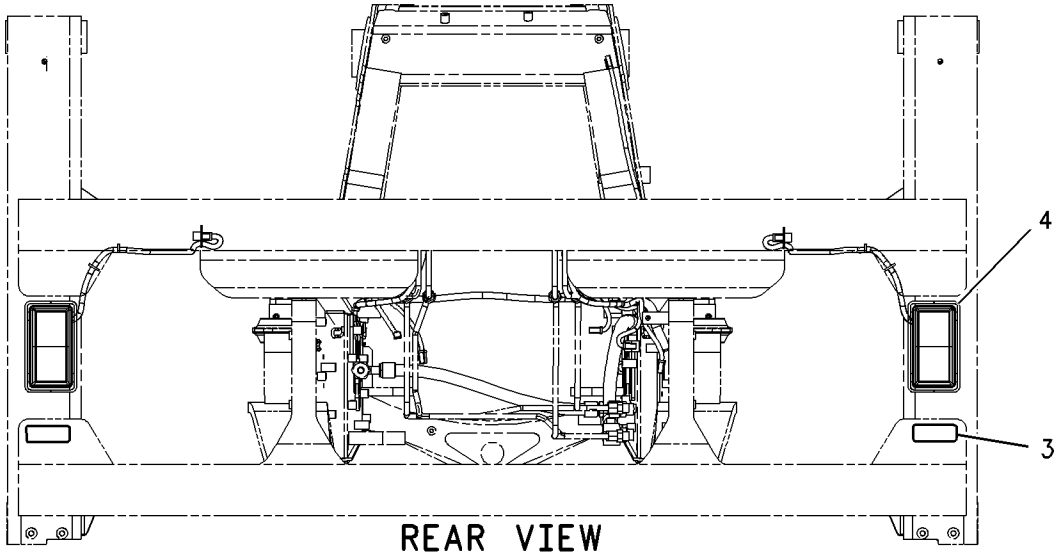

REAR VIEW

GRAPHIC #2 **<END>** g00873226

186-2737 LIGHTING GP-WARNING

S/N: BXC1-UP; DSX1-UP
ITALY
PART OF 190-2803, 190-6413 CONVERSION AR-CERTIFICATION
AN ATTACHMENT

SMCS-1429, 1431 **i01738989**

NOTE	REF NO	GRAPHIC REF	PART NUMBER	QTY	PART NAME 1 2 3 4 5 6 (PRODUCT LEVEL)	SEE PAGE
M	1	1	**8T-5027**	6	NUT (M6X1.0 THD)	
	2	1	**114-4916**	1	BRACKET AS-RH	
	3	1	**122-2050**	1	BRACKET AS-LH	
Y	4	1	**180-3663**	2	LAMP GP-WARNING BEACON	131
M	5	1	**8T-4138**	6	BOLT (M6X1X20MM) (BEACON)	
	6	1	**8T-4205**	6	WASHER-HARD (7.2X14.5X2MM THK)	

M-METRIC PART
Y-SEPARATE ILLUSTRATION

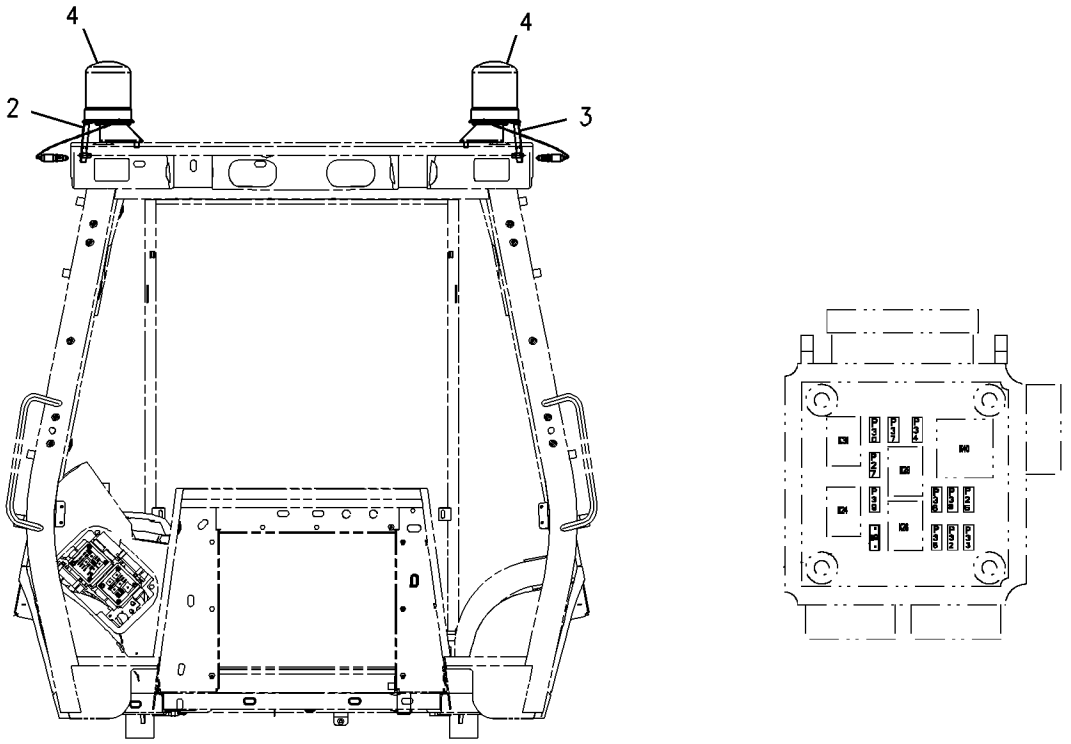

FRONT VIEW

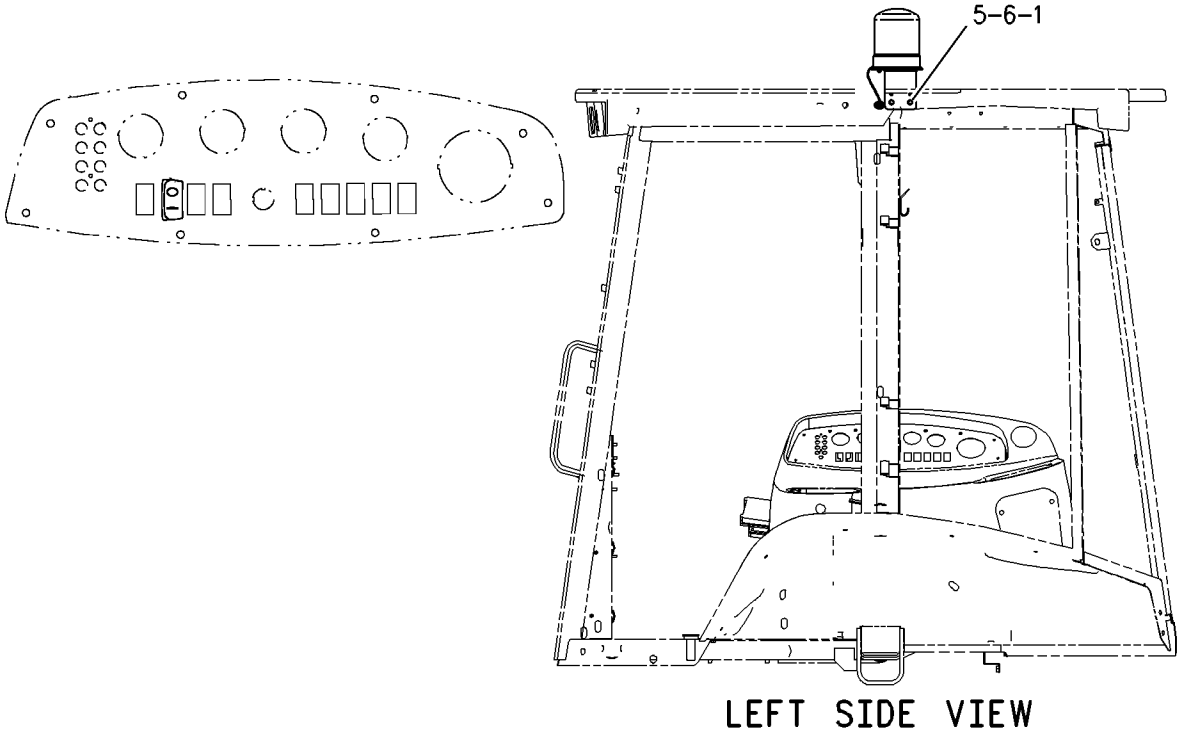

LEFT SIDE VIEW

GRAPHIC #1 **<END>** g00890692

104-9502 LIGHTING GP-WARNING BEACON

S/N: BXC1-UP; DSX1-UP
AN ATTACHMENT

SMCS-1431 **i01262819**

NOTE	REF NO	GRAPHIC REF	PART NUMBER	QTY	PART NAME 1 2 3 4 5 6 (PRODUCT LEVEL)	SEE PAGE
CY	1	1	**180-3664**	1	LAMP GP-WARNING BEACON	132
	2	1	**104-9504**	1	PLATE	
M	3	1	**135-7242**	3	SCREW-PAN HEAD	

C-CHANGE FROM PREVIOUS TYPE
M-METRIC PART
Y-SEPARATE ILLUSTRATION

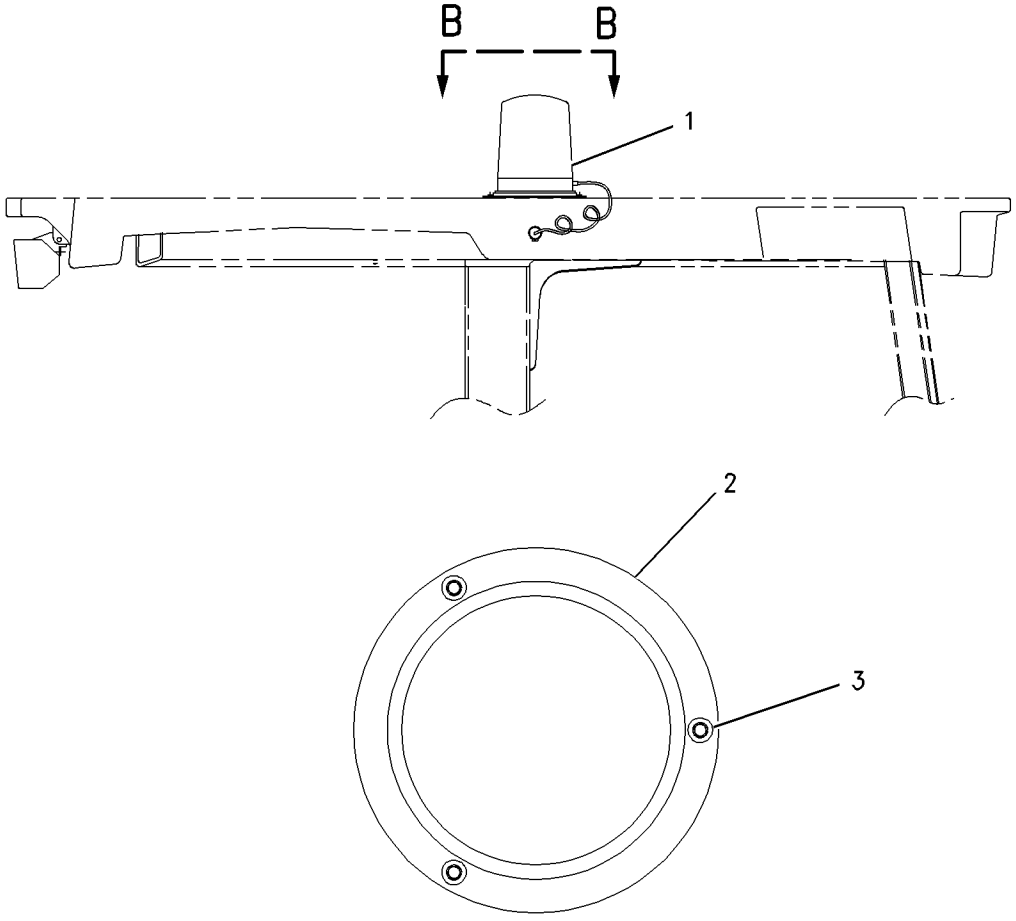

VIEW B-B

GRAPHIC #1 **<END>** g00673021

141-8292 LIGHTING GP-WARNING BEACON

S/N: BXC1-UP; DSX1-UP
AN ATTACHMENT

SMCS-1431 **i01428442**

NOTE	REF NO	GRAPHIC REF	PART NUMBER	QTY	PART NAME 1 2 3 4 5 6 (PRODUCT LEVEL)	SEE PAGE
CY	1	1	**180-3663**	1	LAMP GP-WARNING BEACON	131
	2	1	**114-4916**	1	BRACKET AS-RH	
	3	1	**146-0218**	3	NUT	
M	4	1	**132-0111**	3	SCREW (M6X1.0X35MM)	
	5	1	**8T-4205**	3	WASHER-HARD (7.2X14.5X2MM THK)	

C-CHANGE FROM PREVIOUS TYPE
M-METRIC PART
Y-SEPARATE ILLUSTRATION

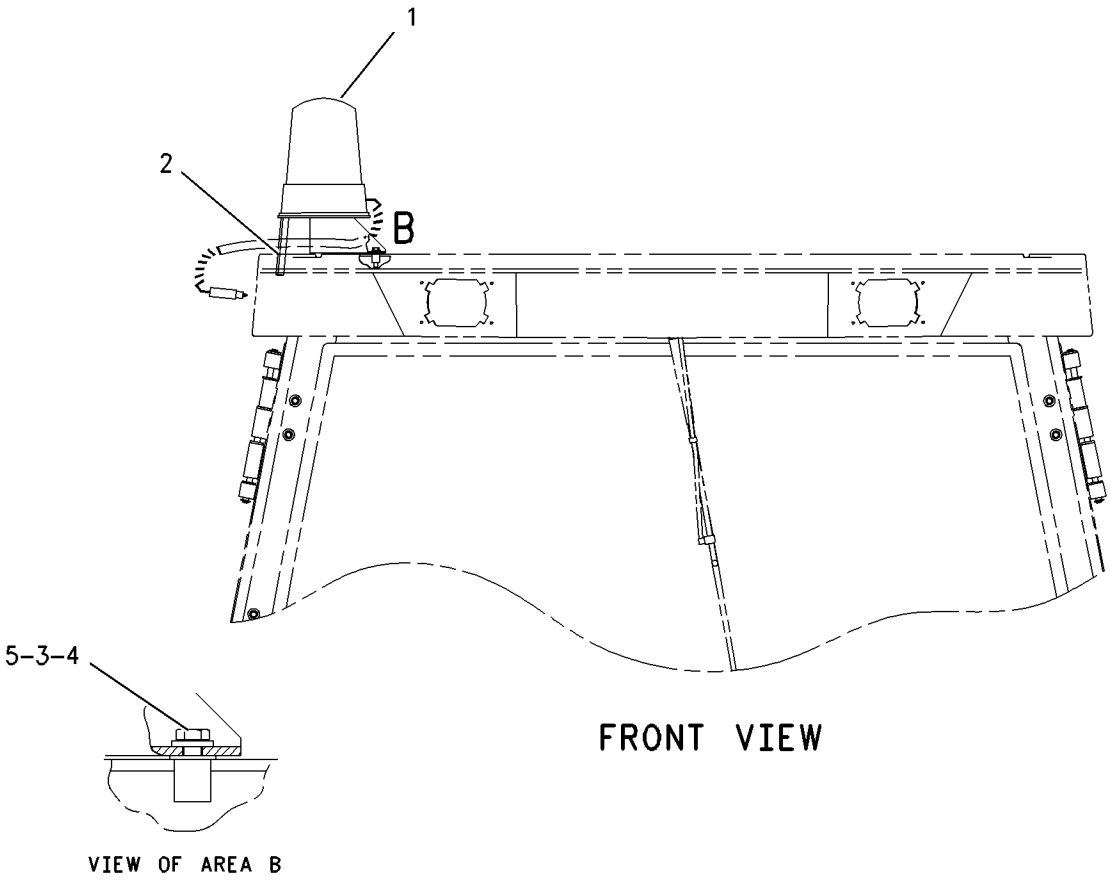

GRAPHIC #1 **<END>** g00748243

219-8656 PLUG GP-CONNECTOR—RETURN TO DIG

S/N: BXC1-UP; DSX1-UP
AN ATTACHMENT

SMCS-1408 **i01721526**

NOTE	PART NUMBER	QTY	PART NAME 1 2 3 4 5 6 (PRODUCT LEVEL)	SEE PAGE
	102-8803	1	KIT-RECEPTACLE (3 PIN)	
			(KIT SERVICES RECEPTACLE AS AND WEDGE)	
	8T-8737	3	PLUG-SEAL	

<END>

ELECTRICAL AND STARTING SYSTEM

143-0539 STARTING MOTOR GP-ELECTRIC*R

S/N: CRS1-UP

PART OF 237-0024 STARTING MOTOR GP-ELECTRIC

AN ATTACHMENT

SMCS-1453 **i01955580**

NOTE	REF NO	GRAPHIC REF	PART NUMBER	QTY	PART NAME 1 2 3 4 5 6 (PRODUCT LEVEL)	SEE PAGE
	1	1	**8C-9778**	1	PLUNGER AS	
	2	1	**8C-9783**	1	GASKET	
	3	1	**2P-8104**	1	BEARING	
	4	1	**7T-6092**	1	HOLDER AS-BRUSH	
M	5	1	**8T-4133**	2	NUT (M10X1.5 THD)	
	6	1	**7T-6088**	1	BEARING AS	
	7	1	**7T-6087**	1	WASHER	
	8	1	**7T-6093**	1	CLUTCH AS	
	9	1	**8J-4455**	1	BALL	
	10	1	**7T-6090**	1	SPRING	
	11	1	**8T-4121**	2	WASHER-HARD (11X21X2.5MM THK)	
	12	1	**3E-5153**	1	COVER-STARTING MOTOR	
M	13	1	**9X-2036**	1	SCREW-PAN HEAD	
	14	1	**8F-1434**	1	LOCKWASHER	
	15	1	**100-4113**	1	SWITCH AS (STARTER) (12V)	
	16	1	**100-4119**	1	ARMATURE AS	
	17	1	**100-4118**	1	CASE AS-STARTING MOTOR	
	18	1	**100-4115**	1	HOUSING-STARTING MOTOR	
	19	1	**143-1344**	1	FRAME-STARTER	
	20	1	**100-3685**	1	CAP	
	21	1	**3E-5154**	1	BUSHING-STARTING MOTOR	
					AVAILABLE REPAIR KIT(S):	
			7T-6099	1	KIT-GEAR (STARTING MOTOR)	
					(INCLUDES RETAINER, PINION & ROLLERS)	
			8C-5457	1	KIT-CONTACT (STARTING MOTOR)	
					(INCLUDES NUT, WASHER, PLATE, BUSHINGS, & BOLT)	
			146-6729	1	KIT-HARDWARE (STARTING MOTOR)	
					(INCLUDES BOLTS, SCREWS, SCREW ASSEMBLIES & PLATE)	
			100-4112	1	KIT-CONTACT (STARTING MOTOR)	
					(INCLUDES NUT, WASHERS, SEAL, BUSHINGS, PLATE & BOLT)	

M-METRIC PART

143-0539 STARTING MOTOR GP-ELECTRIC *(contd.)* **i01955580**

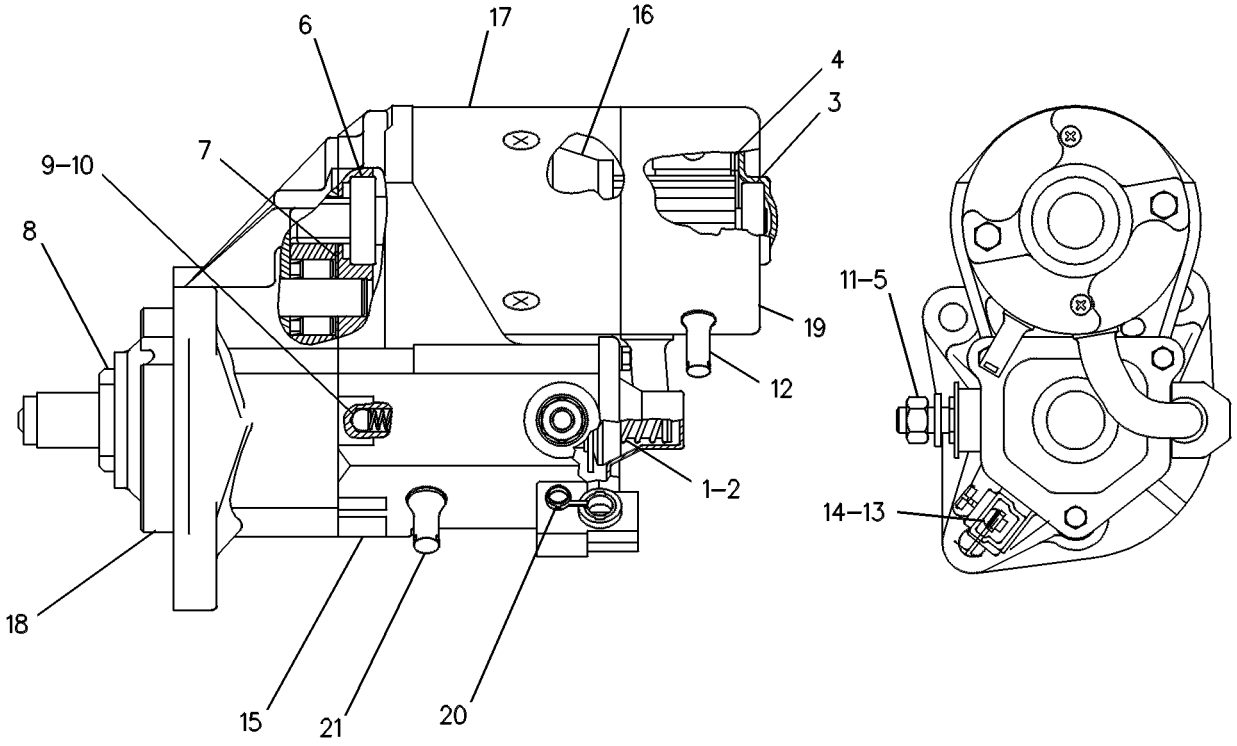

GRAPHIC #1 **<END>** g00131126

237-0024 STARTING MOTOR GP-ELECTRIC

S/N: CRS1-UP
PART OF 234-3059, 234-3061 ENGINE AR-PRIMARY
AN ATTACHMENT

SMCS-1453 **i01991978**

NOTE	REF NO	GRAPHIC REF	PART NUMBER	QTY	PART NAME 1 2 3 4 5 6 (PRODUCT LEVEL)	SEE PAGE
	1	1	**6I-0364**	3	STUD (M10X1.5X30MM)	
	2	1	**6I-0594**	3	NUT (M10X1.5)	
YR	3	1	**143-0539**	1	STARTING MOTOR GP-ELECTRIC	166

R-REMFG PART MAY BE AVAILABLE
Y-SEPARATE ILLUSTRATION

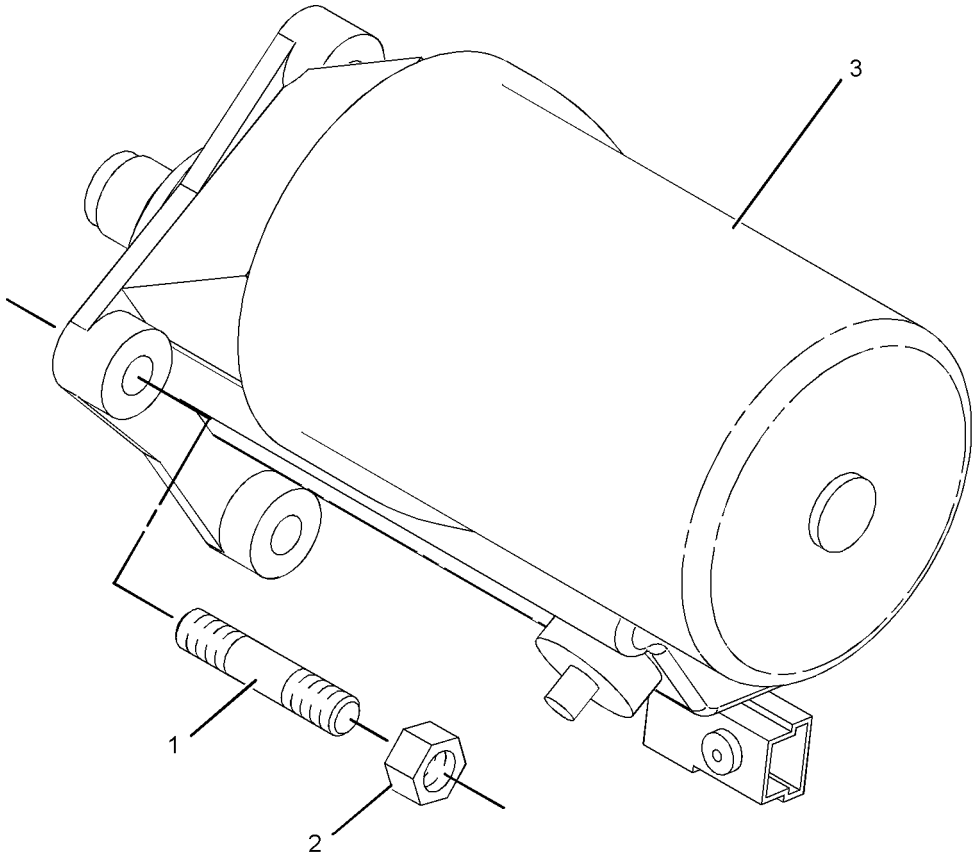

GRAPHIC #1 **<END>** g01039910

237-4896 SWITCH GP-PRESSURE

S/N: CRS1-UP

PART OF 234-3059, 234-3061 ENGINE AR-PRIMARY

AN ATTACHMENT

SMCS-1435 **i01991988**

NOTE	REF NO	GRAPHIC REF	PART NUMBER	QTY	PART NAME 1 2 3 4 5 6 (PRODUCT LEVEL)	SEE PAGE
	1	1	**237-4894**	1	SWITCH-OIL PRESS (ENGINE)	

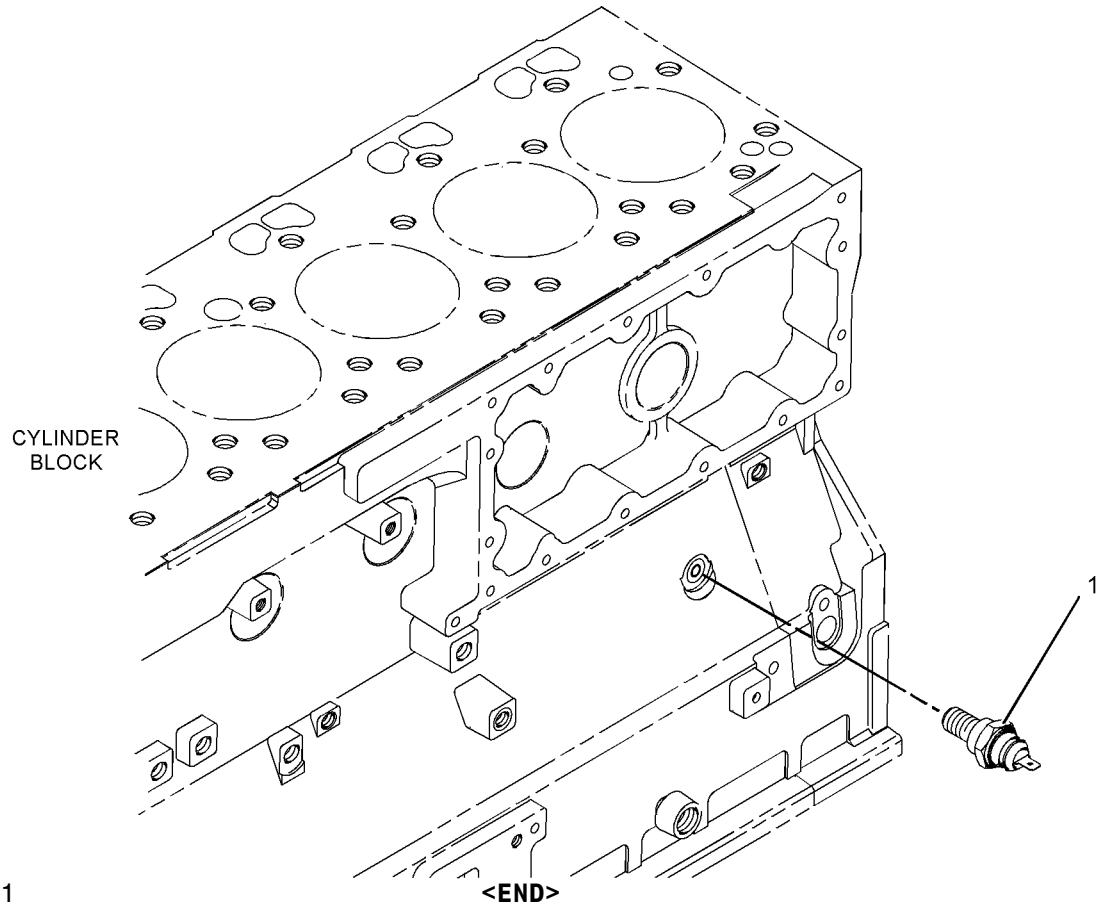

GRAPHIC #1 g01039594

<END>

235-8749 SWITCH GP-TEMPERATURE

S/N: CRS1-UP
PART OF 234-3059, 234-3061 ENGINE AR-PRIMARY
AN ATTACHMENT

SMCS-7400, 7417 **i01998673**

NOTE	REF NO	GRAPHIC REF	PART NUMBER	QTY	PART NAME 1 2 3 4 5 6 (PRODUCT LEVEL)	SEE PAGE
	1	1	**199-9751**	1	SEAL-O-RING	
	2	1	**235-8747**	1	SWITCH-WATER TEMPERATURE	

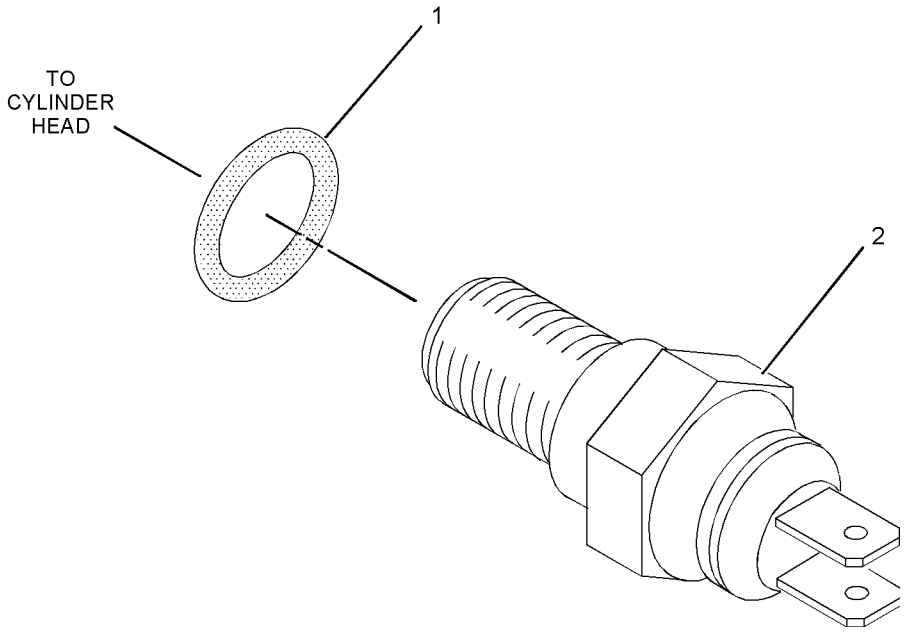

GRAPHIC #1 **<END>** g01036068

193-2343 WARNING GP-BACKUP

S/N: BXC1-UP; DSX1-UP
AN ATTACHMENT

SMCS-7406 **i01936509**

NOTE	REF NO	GRAPHIC REF	PART NUMBER	QTY	PART NAME 1 2 3 4 5 6 (PRODUCT LEVEL)	SEE PAGE
	1	1	**9U-2277**	1	CLIP AS	
	2	1	**154-5428**	1	WARNING GP-BACKUP	
		1	**102-8802**	1	KIT-RECEPTACLE (2 PIN)	
BM	3	1	**111-4627**	1	SCREW-MACHINE (M6X1.0X30MM)	
BM	4	1	**5C-2890**	1	NUT (M6X1 THD)	
BM	5	1	**9X-2044**	2	SCREW-TRUSS HEAD (M6X1X16MM)	
B	6	1	**9X-6165**	2	WASHER (6.5X22X2.5MM THK)	

B-USE AS REQUIRED
M-METRIC PART

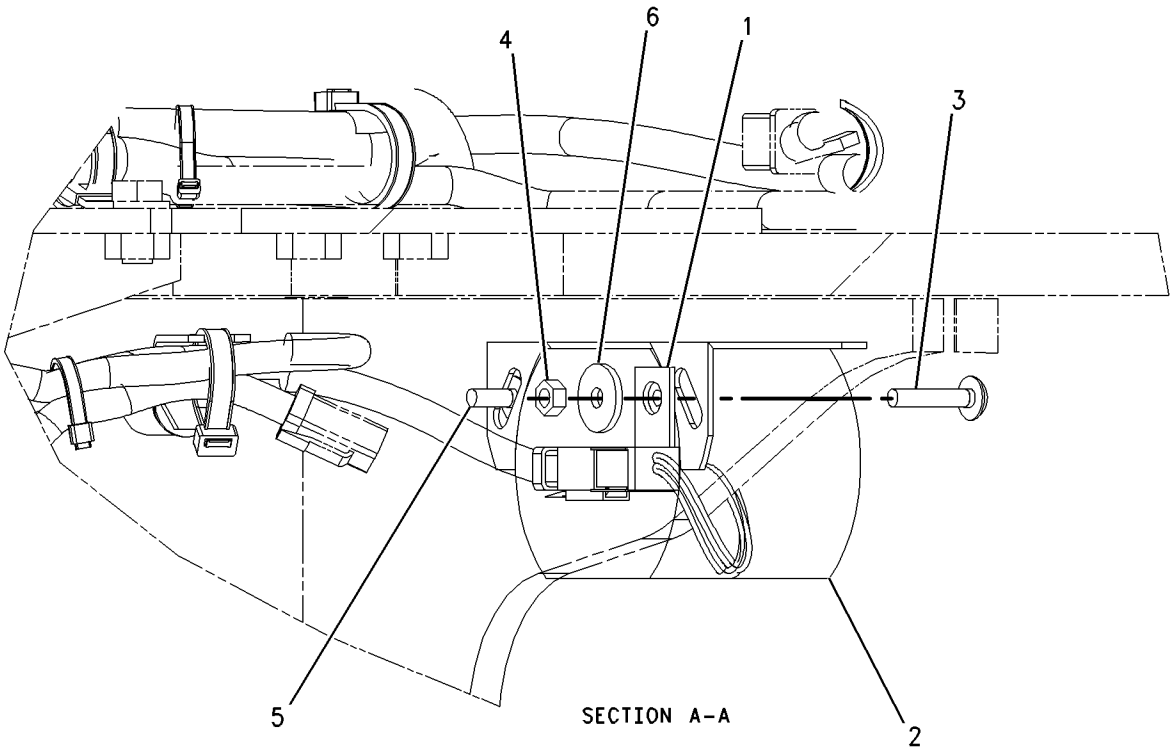

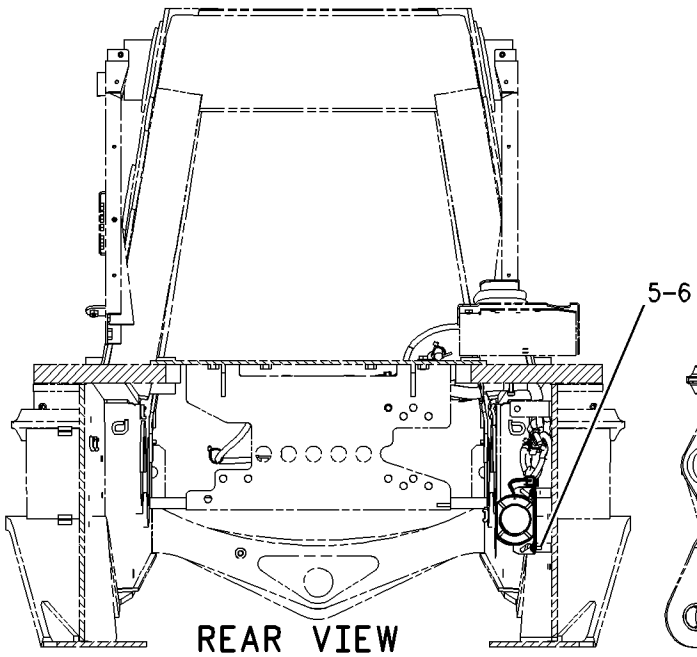

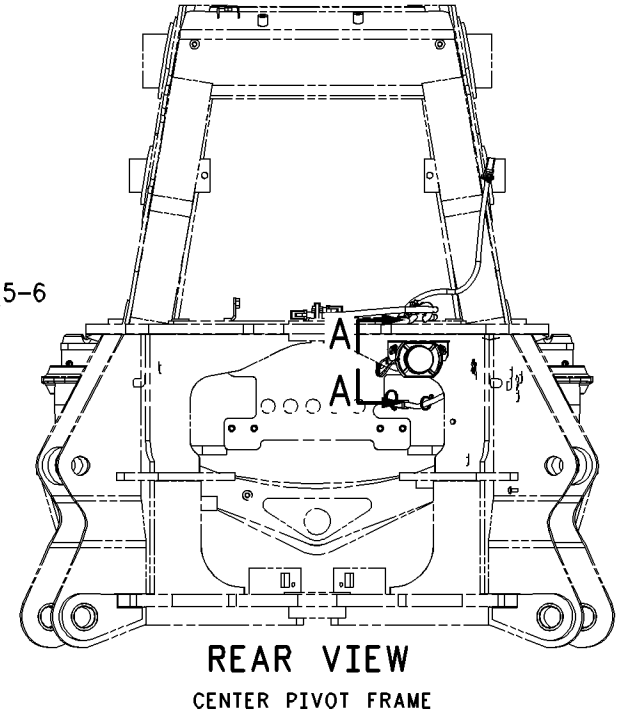

GRAPHIC #1 **<END>** g00831275

238-1811 WIRING GP-AIR CONDITIONER

S/N: BXC1-UP; DSX1-UP
PART OF 214-7007 CAB AR, 214-7009 CAB AR-ENCLOSED ROPS
AN ATTACHMENT

SMCS-1408, 7320 **i01985046**

NOTE	REF NO	GRAPHIC REF	PART NUMBER	QTY	PART NAME 1 2 3 4 5 6 (PRODUCT LEVEL)	SEE PAGE
	1	1	**3E-9362**	1	RELAY AS (12 VOLT) (HIGH SPEED)	
	2	1	**8Y-7833**	1	WIRE AS	
	3	2	**106-8704**	1	SUPPRESSOR AS-ARC	
		2	**102-8802**	1	KIT-RECEPTACLE (2-PIN)	
					(INCLUDES RECEPTACLE AND WEDGE)	
		2	**186-3735**	2	PIN-CONNECTOR	
	4	2	**113-8490**	1	FUSE (10 AMP)	
	5	1	**131-3201**	2	BOOT	
	6	2	**169-0605**	1	SWITCH AS-ROCKER (HEATER FAN SPEED)	
		2	**111-7899**	1	GASKET	
	7	2	**169-0606**	1	SWITCH AS-ROCKER (HEAT / AC)	
		2	**111-7899**	1	GASKET	
	8	2	**170-2237**	1	RELAY AS (12 VOLT)	
	9	1	**229-8377**	1	CIRCUIT BREAKER AS (35AMP)	
		1	**6V-8378**	2	NUT (10-32 THD)	
		1	**8F-1434**	2	LOCKWASHER (INTERNAL TOOTH)	
		1	**8T-0328**	2	WASHER-HARD (5.5X10X1MM THK)	
	10	1	**229-8413**	1	HARNESS AS-HEATER & AIR COND	
		1	**102-8802**	1	KIT-RECEPTACLE (2-PIN)	
					(INCLUDES RECEPTACLE AND WEDGE)	
		1	**102-8804**	1	KIT-RECEPTACLE (4-PIN)	
					(INCLUDES RECEPTACLE AND WEDGE)	
		1	**155-2270**	1	KIT-CONNECTING PLUG (2-PIN)	
					(INCLUDES PLUG AND WEDGE)	
		1	**177-9645**	1	KIT-RECEPTACLE (2-PIN)	
					(INCLUDES RECEPTACLE AND WEDGE)	
		1	**177-9648**	1	KIT-CONNECTING PLUG (2-PIN)	
					(INCLUDES PLUG AND WEDGE)	
	11	2	**236-6923**	1	SWITCH AS-PRESSURE (HIGH - LOW)	
	12	2	**238-7492**	1	HARNESS AS-HEATER & AIR COND	
		2	**102-8802**	1	KIT-RECEPTACLE (2-PIN)	
					(INCLUDES RECEPTACLE AND WEDGE)	
		2	**155-2270**	2	KIT-CONNECTING PLUG (2-PIN)	
					(EACH INCLUDES PLUG AND WEDGE)	
M	13	1	**138-8454**	1	SCREW-TRUSS HEAD (M4X0.7X10MM)	
	14	1	**213-7315**	2	SCREW-TRUSS HEAD (M4X0.7X25MM)	
	15	1,2	**3S-2093**	3	STRAP-CABLE	
	16	1	**4B-4863**	1	WASHER (4.7X11X1.2MM THK)	
	17	2	**4P-8134**	1	CLIP	
	18	2	**8T-4121**	2	WASHER-HARD (11X21X2.5MM THK)	
M	19	2	**8T-4133**	1	NUT (M10X1.5 THD)	
M	20	2	**8T-4195**	1	BOLT (M10X1.5X30MM)	

M-METRIC PART

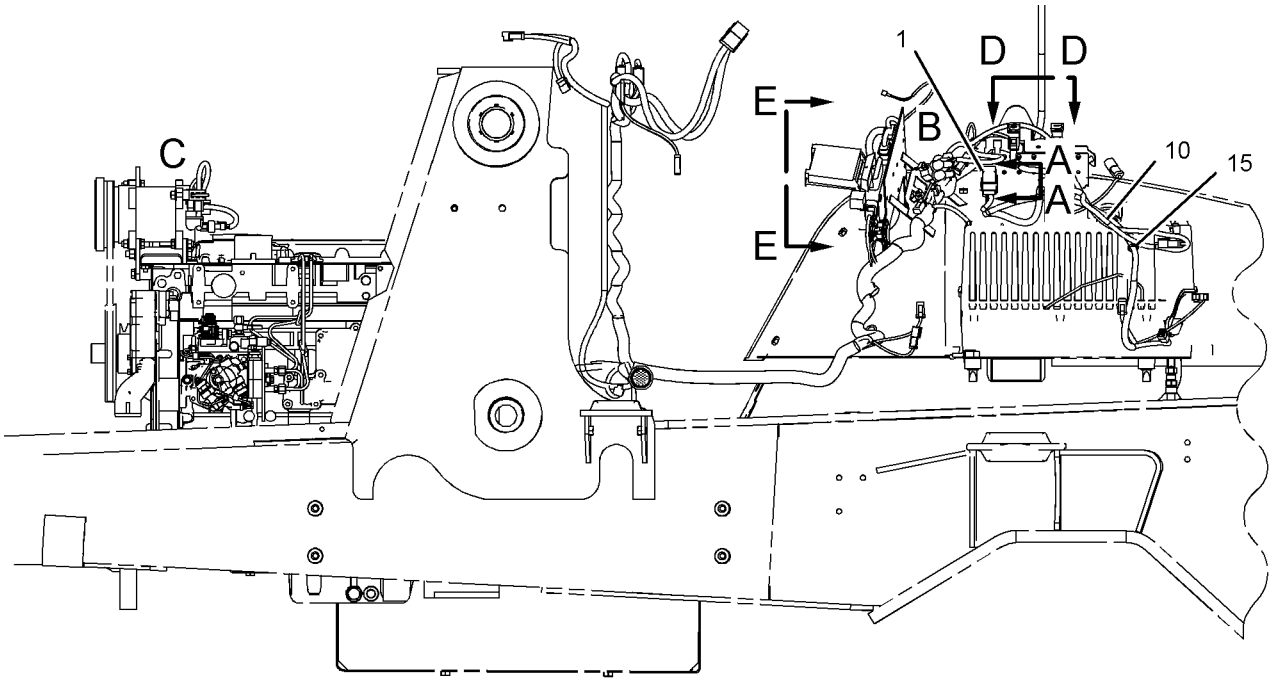

LEFT SIDE VIEW

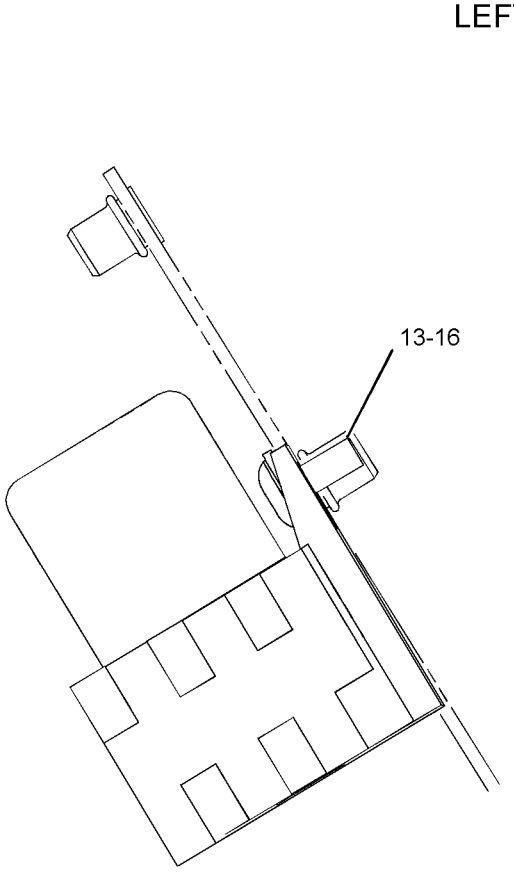

VIEW A-A

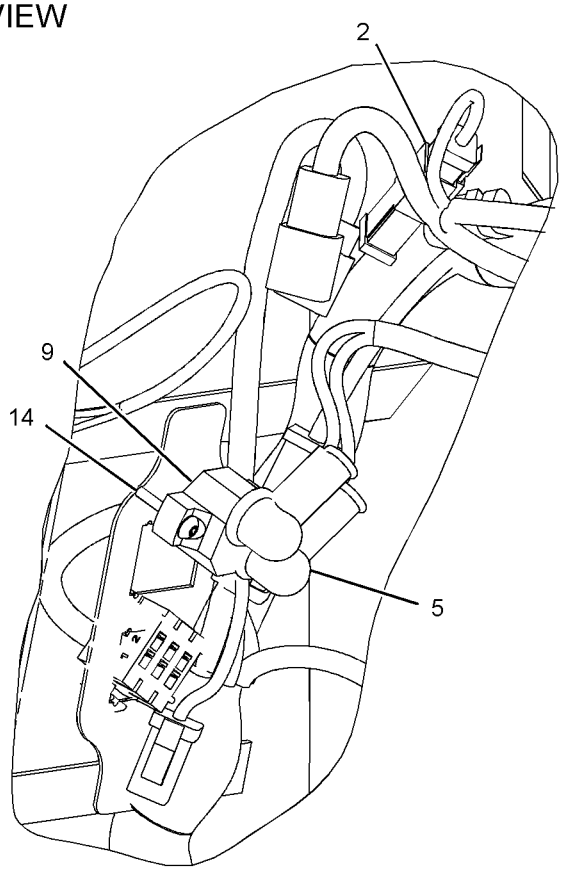

VIEW OF AREA B

GRAPHIC #1

g01032689

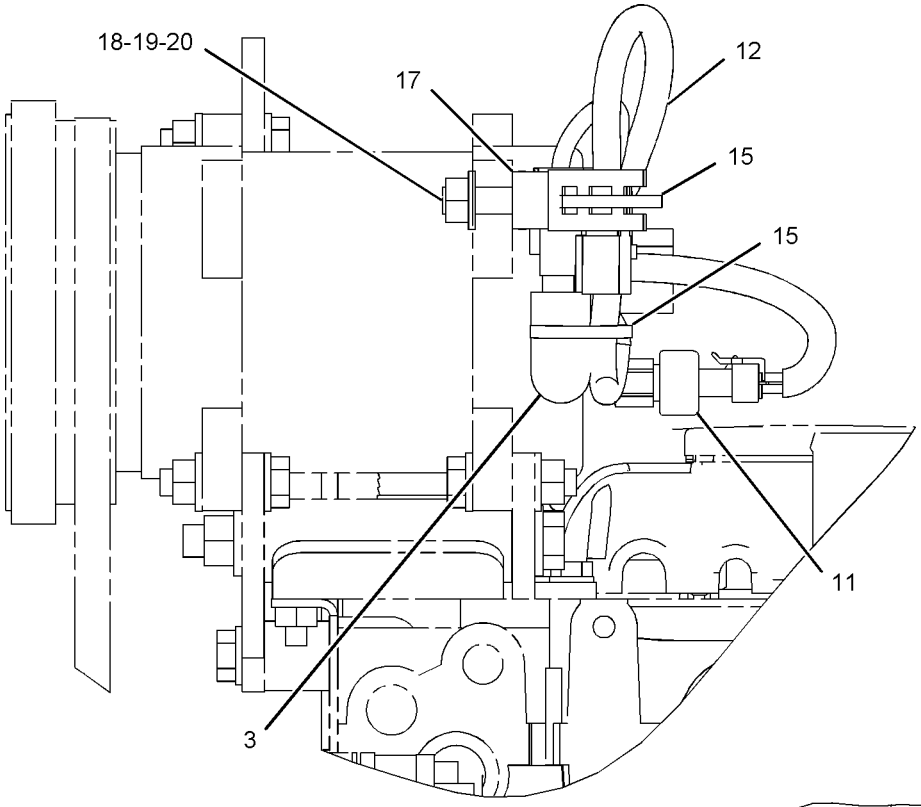

VIEW OF AREA C

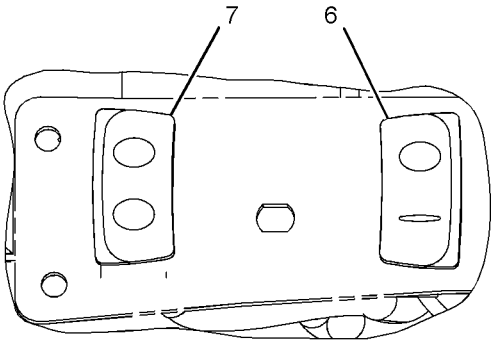

VIEW D-D

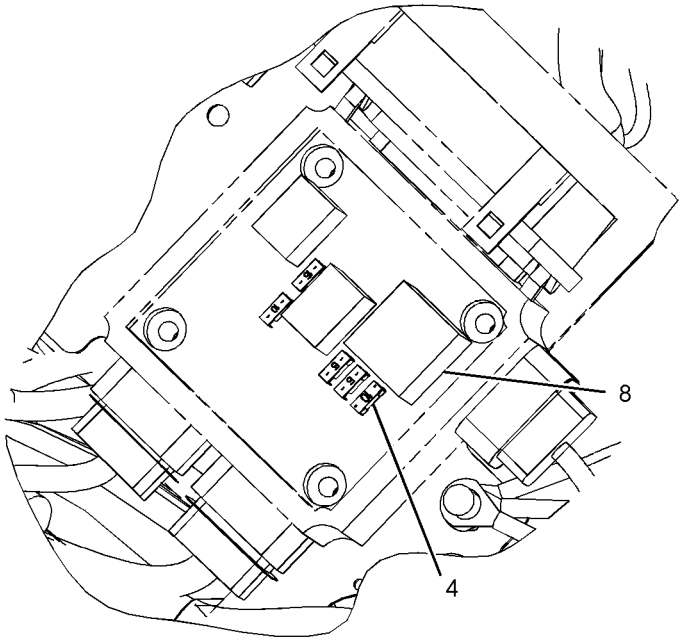

VIEW E-E

GRAPHIC #2 **<END>** g01032690

237-8037 WIRING GP-AUTOSHIFT

S/N: BXC1-UP; DSX1-UP
PART OF 214-7013, 214-7015 POWER TRAIN AR
AN ATTACHMENT

SMCS-3104, 3168 **i01994421**

NOTE	REF NO	GRAPHIC REF	PART NUMBER	QTY	PART NAME 1 2 3 4 5 6 (PRODUCT LEVEL)	SEE PAGE
	1	1	**3E-8679**	1	DIODE AS-LIGHT	
	2	1	**3S-2093**	17	STRAP-CABLE	
	3	1	**6K-0806**	5	STRAP-CABLE	
	4	1	**7K-1181**	2	STRAP-CABLE	
	5	1	**8Y-7833**	1	WIRE AS	
	6	1	**106-8704**	1	SUPPRESSOR AS-ARC	
		1	**102-8802**	2	KIT-RECEPTACLE (2-PIN)	
		1	**186-3735**	1	PIN-CONNECTOR	
	7	1	**155-8522**	3	MOUNT	
	8	1	**169-0604**	1	SWITCH AS-ROCKER (AUTOSHIFT) (AUTOSHIFT)	
		1	**111-7899**	1	GASKET	
	9	1	**174-6411**	1	HARNESS AS-TRANSMISSION (AUTOSHIFT SWITCH)	
		1	**155-2271**	1	KIT-CONNECTING PLUG (4-PIN)	
	10	1	**174-6415**	1	HARNESS AS-PLATFORM (AUTOSHIFT)	
		1	**102-8802**	1	KIT-RECEPTACLE (2-PIN)	
		1	**102-8804**	1	KIT-RECEPTACLE (4-PIN)	
		1	**102-8805**	1	KIT-RECEPTACLE (6-PIN)	
		1	**102-8801**	1	KIT-RECEPTACLE (12-PIN)	
		1	**155-2256**	1	KIT-CONNECTING PLUG (12-PIN)	
		1	**155-2271**	1	KIT-CONNECTING PLUG (4-PIN)	
	11	1	**174-6649**	1	CONTROL GP-TRANSMISSION	
	12	1	**209-1925**	1	HARNESS AS-TRANSMISSION (AUTOSHIFT CONTROL)	
			102-8804	1	KIT-RECEPTACLE (4-PIN)	
			155-2255	2	KIT-CONNECTING PLUG (12-PIN)	
			155-2270	3	KIT-CONNECTING PLUG (2-PIN)	
	13	1	**209-1947**	1	HARNESS AS-TRANSMISSION (AUTOSHIFT)	
		1	**102-8801**	1	KIT-RECEPTACLE (12-PIN)	
		1	**102-8802**	1	KIT-RECEPTACLE (2-PIN)	
		1	**155-2260**	2	KIT-CONNECTING PLUG (3-PIN)	
		1	**155-2270**	4	KIT-CONNECTING PLUG (2-PIN)	
	14	1	**237-3655**	1	CONTROL GP-POWER TRAIN	
M	15	1	**095-0756**	4	SCREW-MACHINE	
M	16	1	**138-8454**	1	SCREW-TRUSS HEAD (M4X0.7X10MM)	
	17	1	**3E-9362**	1	RELAY AS (12 VOLT)	
	18	1	**4B-4863**	1	WASHER (4.7X11X1.2MM THK)	
	19	1	**4P-7429**	1	CLIP	
M	20	1	**5C-9553**	4	BOLT (M6X1X16MM)	
M	21	1	**8T-4179**	1	BOLT (M12X1.75X20MM)	
	22	1	**8T-4223**	1	WASHER-HARD (13.5X25.5X3MM THK)	
	23	1	**9X-8256**	4	WASHER (6.6X12X2MM THK)	

M-METRIC PART

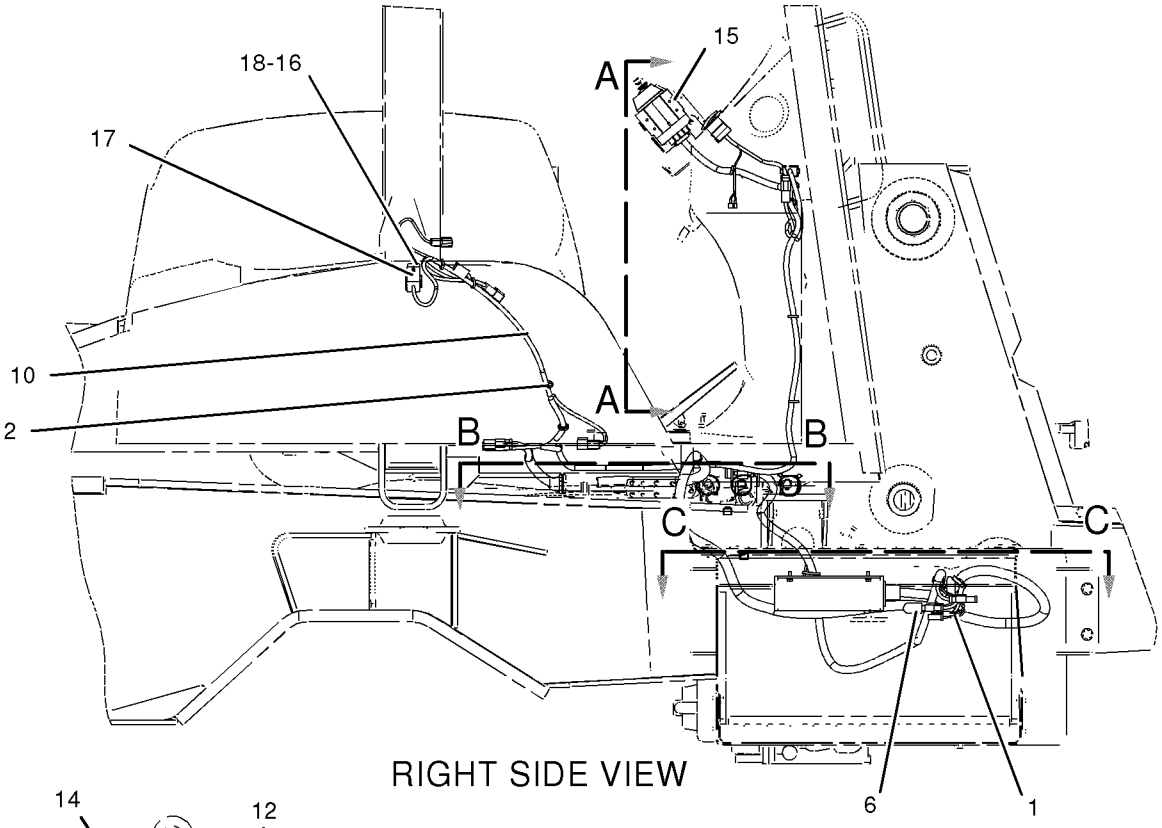

RIGHT SIDE VIEW

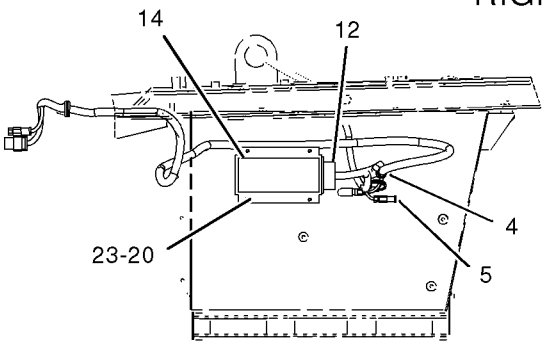

SECTION C-C

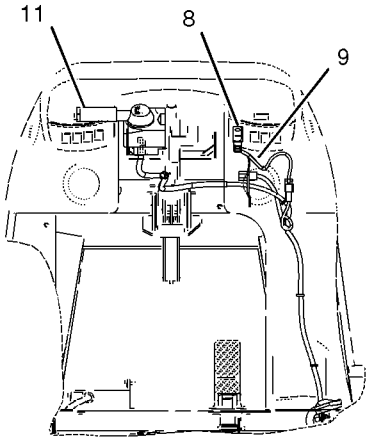

SECTION A-A

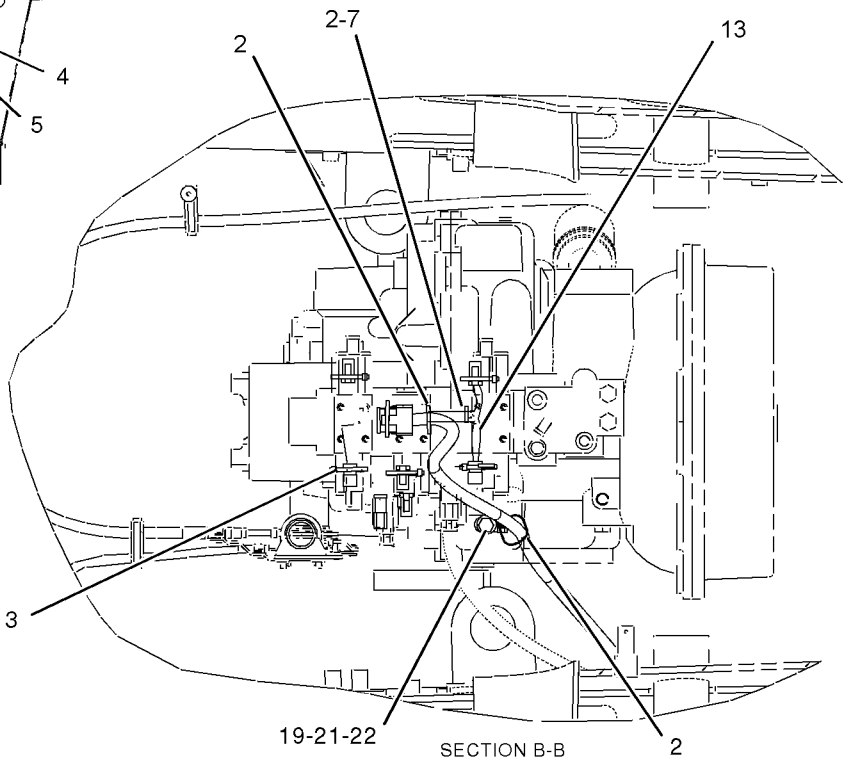

SECTION B-B

GRAPHIC #1 **<END>** g01032412

185-8801 WIRING GP-CAB

S/N: BXC1-UP; DSX1-UP

PART OF 214-7006, 214-7007 CAB AR, 214-7008, 214-7009 CAB AR-ENCLOSED ROPS AN ATTACHMENT

SMCS-1408, 7301 **i01937003**

NOTE	REF NO	GRAPHIC REF	PART NUMBER	QTY	PART NAME 1 2 3 4 5 6 (PRODUCT LEVEL)	SEE PAGE
	1	1	**8E-1118**	1	ANTENNA AS	
	2	1	**8R-6111**	1	CABLE AS-COAXIAL	
	3	1	**113-8492**	2	FUSE (20 AMP)	
	4	1	**141-2759**	1	FUSE (5 AMP)	
	5	1	**146-9439**	1	RELAY AS (12 VOLT) (SIDE CONTROL)	
	6	1	**169-0596**	1	SWITCH AS (REAR WIPER/WASHER)	
		1	**111-7899**	1	GASKET	
	7	1	**179-1215**	1	HARNESS AS-CAB (UPPER CAB CONTROLS)	
		1	**102-8806**	1	KIT-RECEPTACLE (8 PIN)	
		1	**155-2260**	1	KIT-CONNECTING PLUG (3 PIN)	
		1	**155-2271**	1	KIT-CONNECTING PLUG (4 PIN)	
		1	**155-2274**	1	KIT-CONNECTING PLUG (6 PIN)	
		1	**155-2265**	1	KIT-CONNECTING PLUG (8 PIN)	
	8	1	**213-8479**	1	SWITCH AS-MULTIFUNCTION (LIGHTS, TURN SIGNALS & WIPER)	
	9	1	**3S-2093**	6	STRAP-CABLE	
	10	1	**4P-8134**	1	CLIP	
M	11	1	**8T-0352**	2	BOLT (M5X0.8X45MM)	
	12	1	**8T-4121**	2	WASHER-HARD (11X21X2.5MM THK)	
M	13	1	**8T-4133**	2	NUT (M10X1.5 THD)	

M-METRIC PART

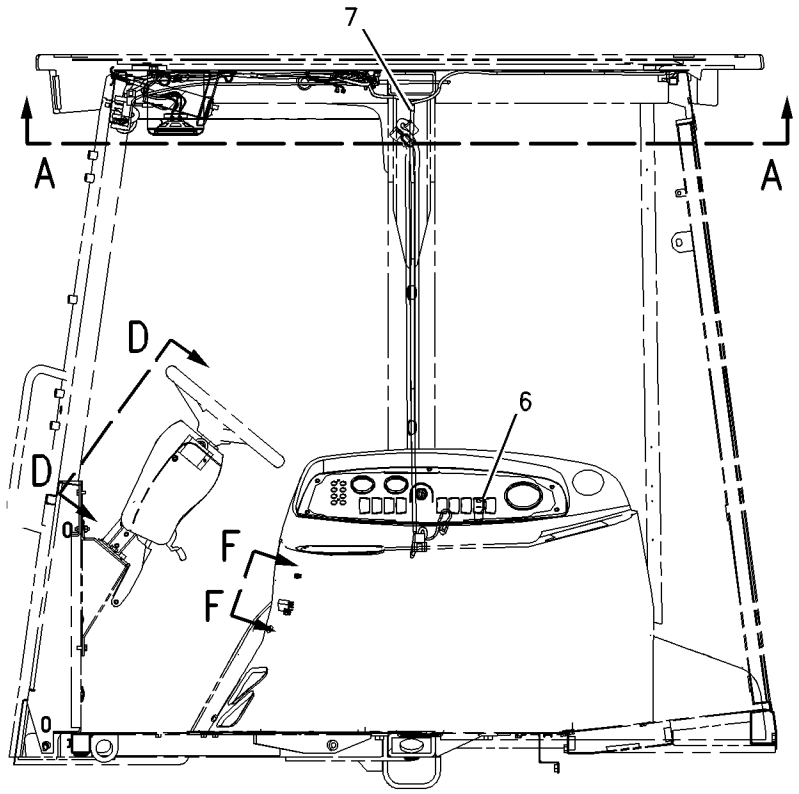

LEFT SIDE VIEW

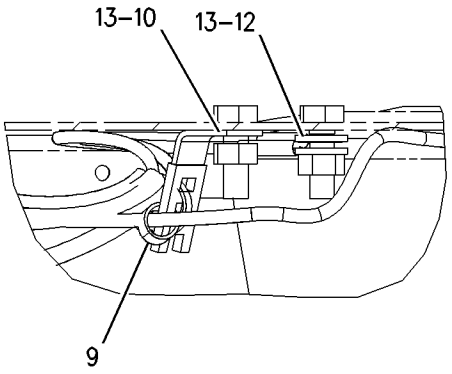

SECTION E-E

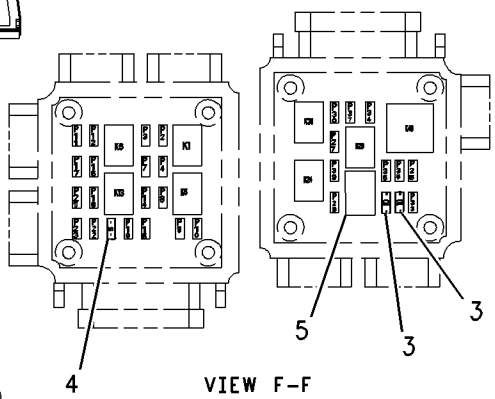

VIEW F-F

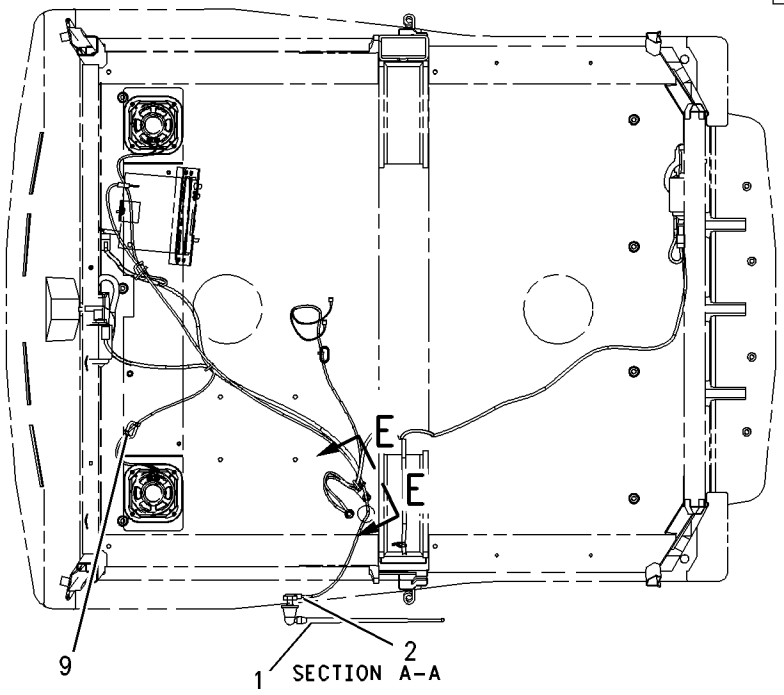

SECTION A-A

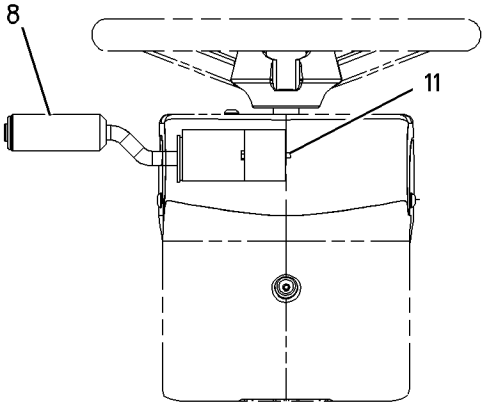

SECTION D-D

GRAPHIC #1 **<END>** g00874126

185-8802 WIRING GP-CAB–TURN SIGNAL

S/N: BXC1-UP; DSX1-UP
PART OF 214-7004 CANOPY AR
AN ATTACHMENT

SMCS-1408, 7301 **i02000604**

NOTE	REF NO	GRAPHIC REF	PART NUMBER	QTY	PART NAME 1 2 3 4 5 6 (PRODUCT LEVEL)	SEE PAGE
	1	1	**138-4894**	1	SWITCH AS (TURN SIGNAL)	
		1	**111-7899**	1	GASKET	
	2	1	**164-1601**	1	BRACKET	
	3	1	**183-4492**	1	HARNESS AS-OPERATOR CONTROLS (TURN SIGNAL)	
		1	**102-8801**	1	KIT-RECEPTACLE (12-PIN)	
					(KIT SERVICES RECEPTACLE AS AND WEDGE)	
M	4	1	**125-3298**	3	BOLT-SOCKET HEAD (M5X.8X12MM)	

M-METRIC PART

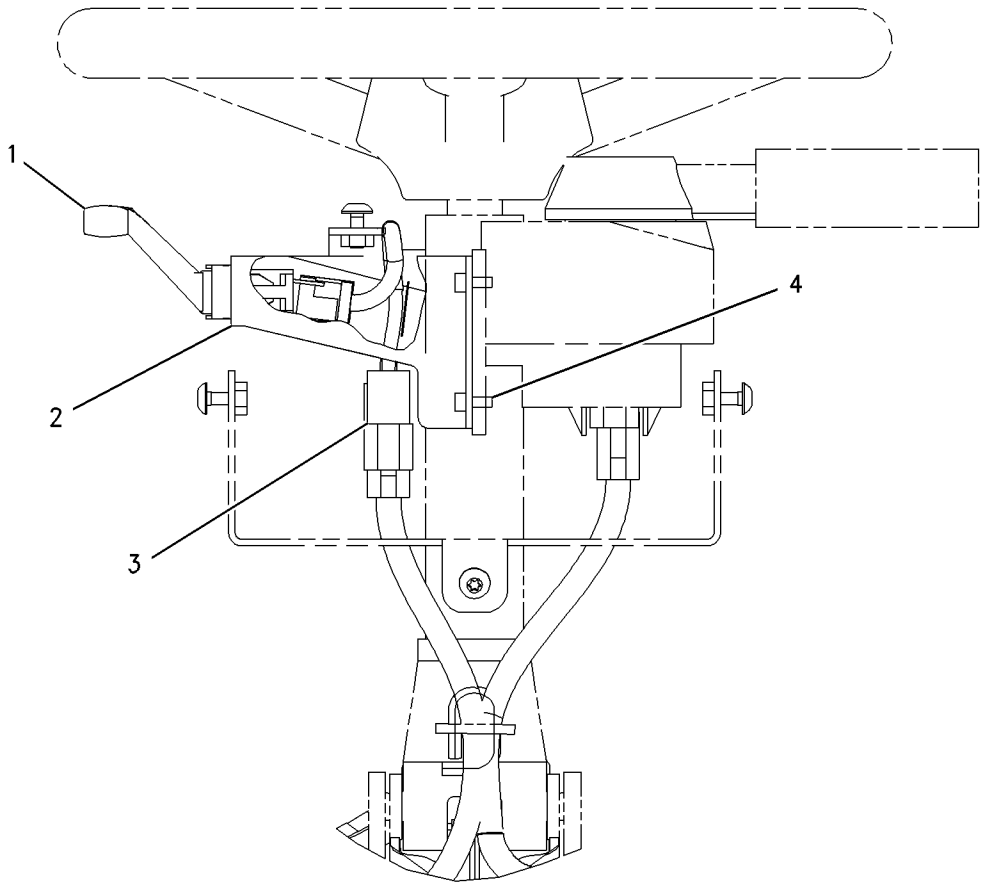

GRAPHIC #1 **<END>** g00746428

194-1950 WIRING GP-CAB

S/N: BXC1-UP; DSX1-UP

AN ATTACHMENT

SMCS-1408, 7301 **i01937523**

NOTE	REF NO	GRAPHIC REF	PART NUMBER	QTY	PART NAME 1 2 3 4 5 6 (PRODUCT LEVEL)	SEE PAGE
	1	1	**3E-9362**	2	RELAY AS (12 VOLT) (DEAD ENGINE LOWER)	
	2	1	**3S-2093**	24	STRAP-CABLE	
	3	1	**106-8704**	1	SUPPRESSOR AS-ARC	
		1	**3E-3365**	1	WEDGE-RECEPTACLE LOCK (2 PIN)	
		1	**186-3735**	2	PIN-CONNECTOR	
		1	**102-8802**	1	KIT-RECEPTACLE (2 PIN)	
	4	1	**113-8490**	1	FUSE (10 AMP)	
	5	1	**193-8639**	1	SWITCH AS (DEAD ENGINE LOWER)	
		1	**111-7899**	1	GASKET	
	6	1	**194-1937**	1	HARNESS AS-CONSOLE (DEAD ENGINE LOWER)	
		1	**102-8804**	1	KIT-RECEPTACLE (4 PIN)	
		1	**155-2260**	1	KIT-CONNECTING PLUG (3 PIN)	
		1	**155-2270**	1	KIT-CONNECTING PLUG (2 PIN)	
	7	1	**194-1938**	1	HARNESS AS-CONSOLE (SIDE)	
		1	**102-8804**	1	KIT-RECEPTACLE (4 PIN) (SIDE)	
		1	**155-2271**	1	KIT-CONNECTING PLUG (4 PIN)	
		1	**155-2270**	1	KIT-CONNECTING PLUG (2 PIN)	
	8	1	**194-1940**	1	HARNESS AS-PLATFORM	
		1	**102-8804**	1	KIT-RECEPTACLE (4 PIN)	
		1	**102-8805**	1	KIT-RECEPTACLE (6 PIN)	
	9	1	**194-1941**	1	HARNESS AS-CONSOLE (FRONT)	
		1	**155-2270**	1	KIT-CONNECTING PLUG (2 PIN)	
		1	**155-2274**	1	KIT-CONNECTING PLUG (6 PIN)	
M	10	1	**138-8454**	2	SCREW-TRUSS HEAD (M4X0.7X10MM)	
	11	1	**4B-4863**	2	WASHER (4.7X11X1.2MM THK)	

M-METRIC PART

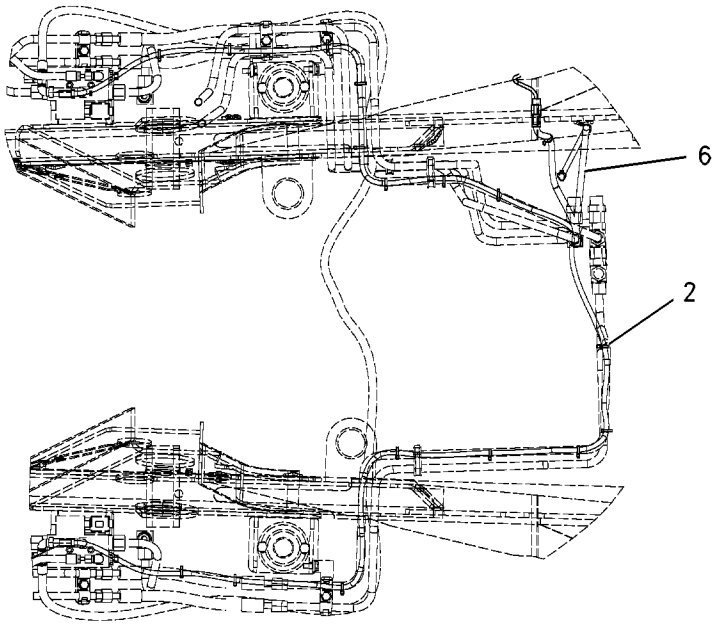

SECTION B-B

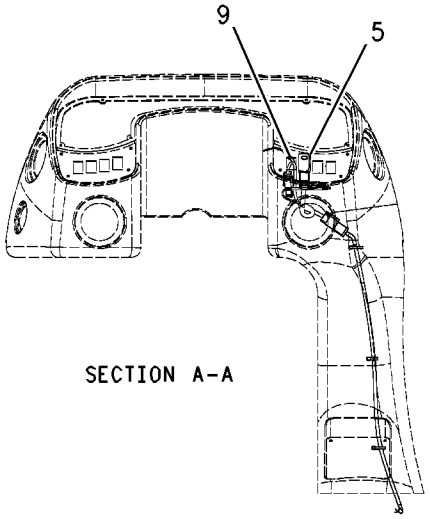

SECTION A-A

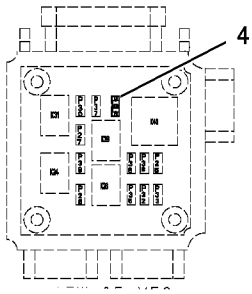

FUSE BOX

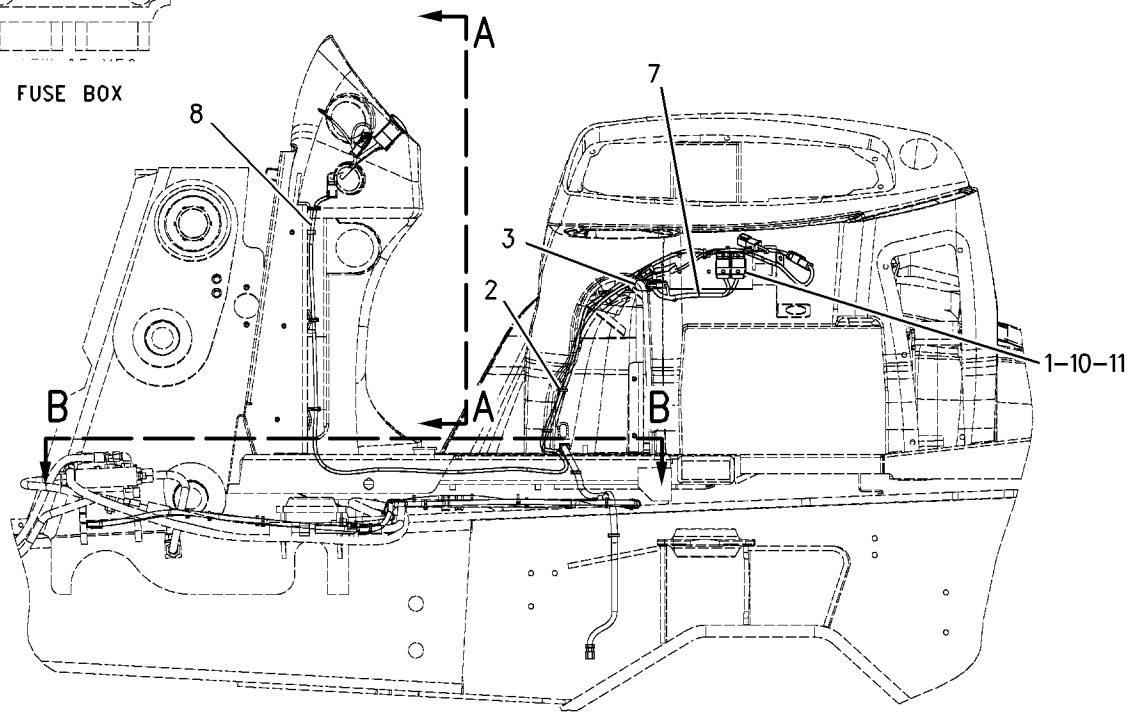

GRAPHIC #1 **<END>** g00774126

238-1165 WIRING GP-CONSOLE–FRONT

S/N: BXC1-UP; DSX1-UP

PART OF 237-9288, 237-9289 CHASSIS AR

SMCS-1408 **i01982214**

NOTE	REF NO	GRAPHIC REF	PART NUMBER	QTY	PART NAME 1 2 3 4 5 6 (PRODUCT LEVEL)	SEE PAGE
Y	1	2	**144-9931**	1	MODULE GP-WARNING INDICATOR (WITHOUT ALARM)	753
	2	2	**157-1997**	2	SPACER (4.34X15.88X6.34MM THK)	
	3	2	**167-3701**	1	HARNESS AS-CONSOLE	
		2	**102-8805**	1	KIT-RECEPTACLE (6-PIN)	
		2	**155-2255**	1	KIT-CONNECTING PLUG (12-PIN)	
		2	**155-2265**	1	KIT-CONNECTING PLUG (8-PIN)	
	4	2	**169-0587**	1	SWITCH AS (HORN)	
		2	**111-7899**	1	GASKET	
	5	2	**169-0588**	1	SWITCH AS (NEUTRAL LOCK)	
		2	**111-7899**	1	GASKET	
	6	2	**187-1644**	7	PLUG	
	7	2	**205-7700**	1	KIT-SERVICE METER	
					INCLUDES FILM	
	8	2	**229-8182**	1	SWITCH AS-ROCKER (HAZARD)	
		2	**111-7899**	1	GASKET	
M	9	2	**095-0741**	2	SCREW-MACHINE (M6X1THD)	
M	10	2	**099-0492**	2	LOCKNUT (M6X1 THD)	
	11	2	**116-7491**	2	ANCHOR	
	12	2	**188-0863**	1	FILM-INDICATOR (416D)	
	13	2	**3S-2093**	6	STRAP-CABLE	
M	14	2	**8T-2659**	2	LOCKNUT (M4X6H THD)	

M-METRIC PART
Y-SEPARATE ILLUSTRATION

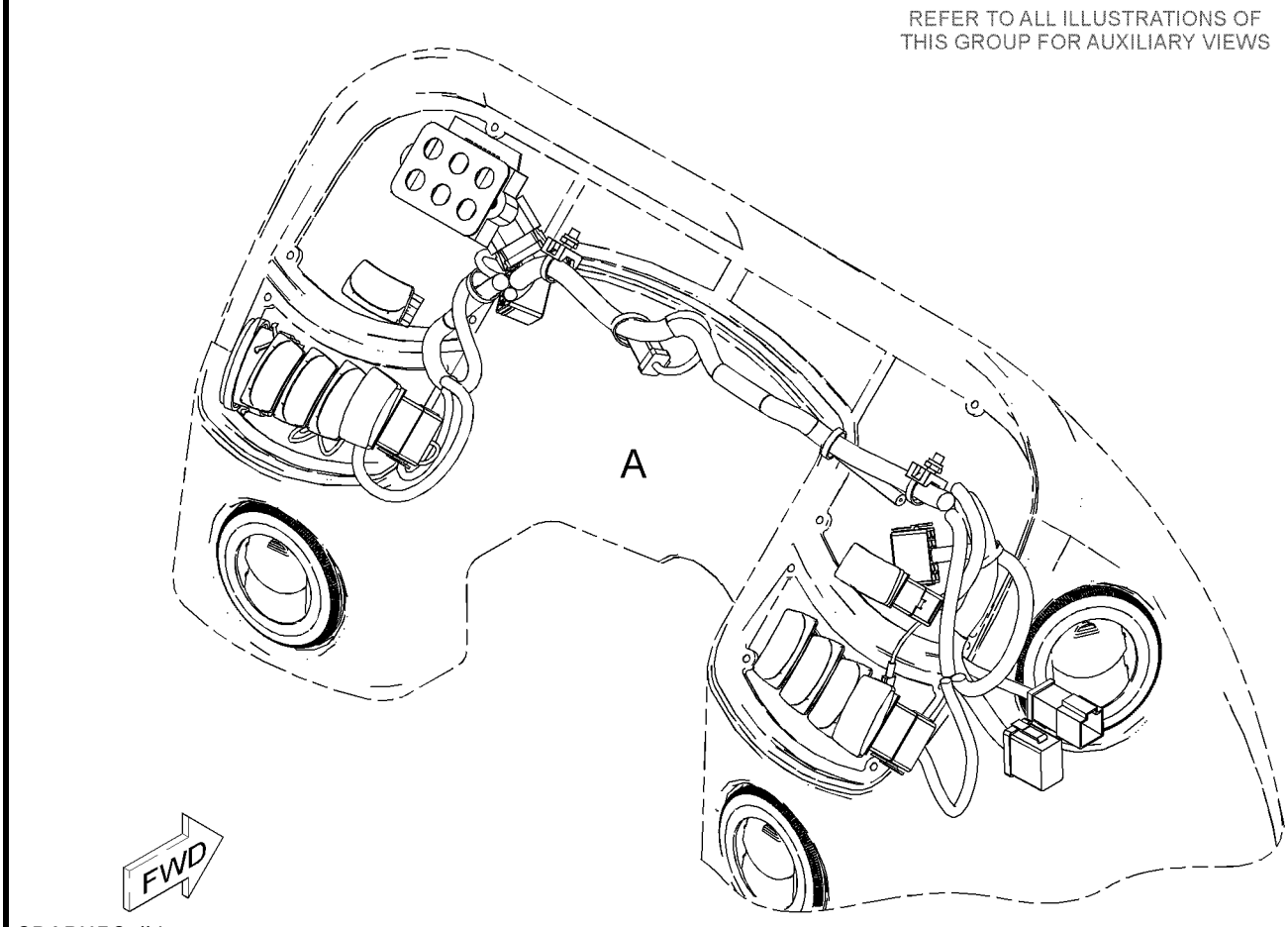

GRAPHIC #1 g01034859

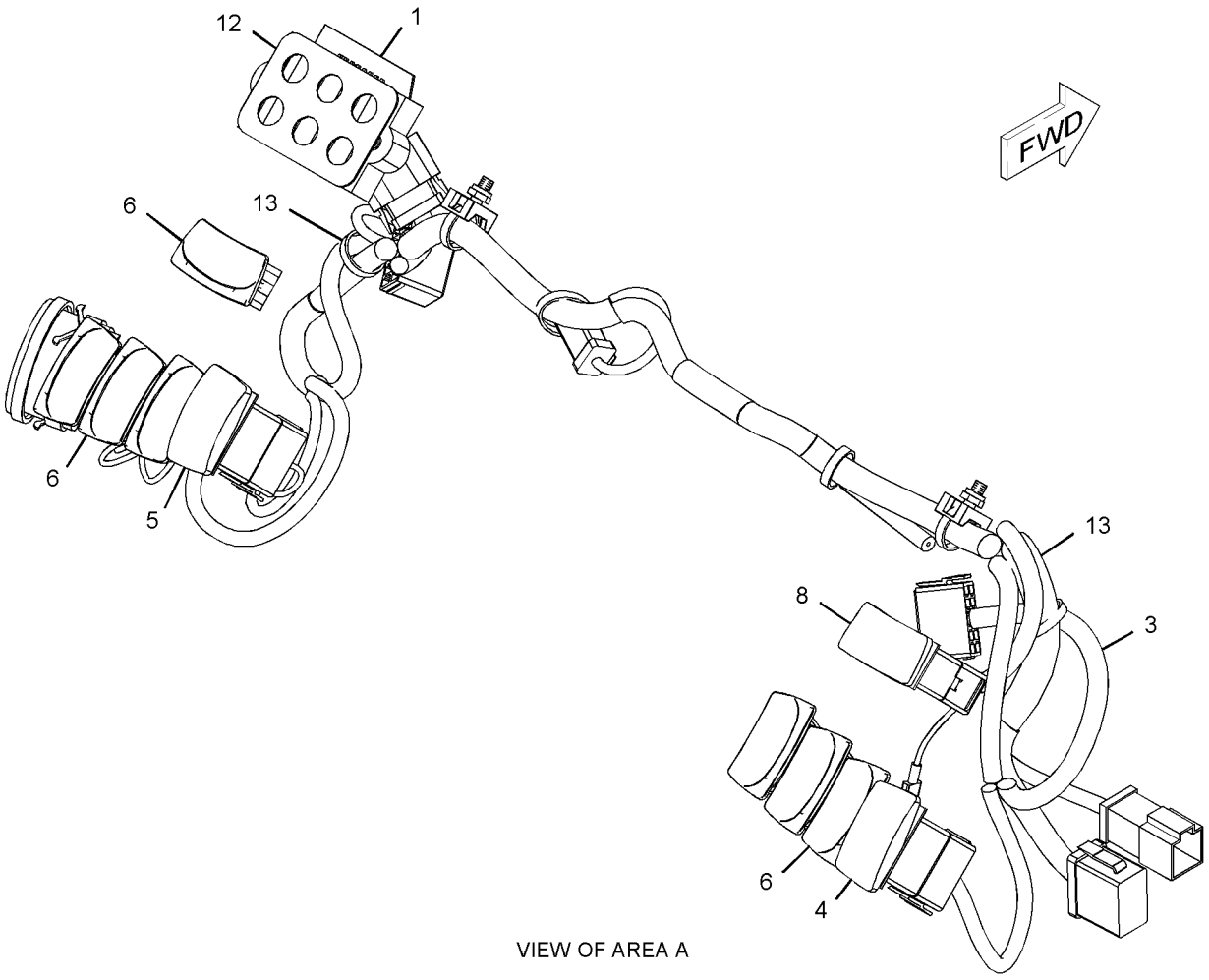

VIEW OF AREA A

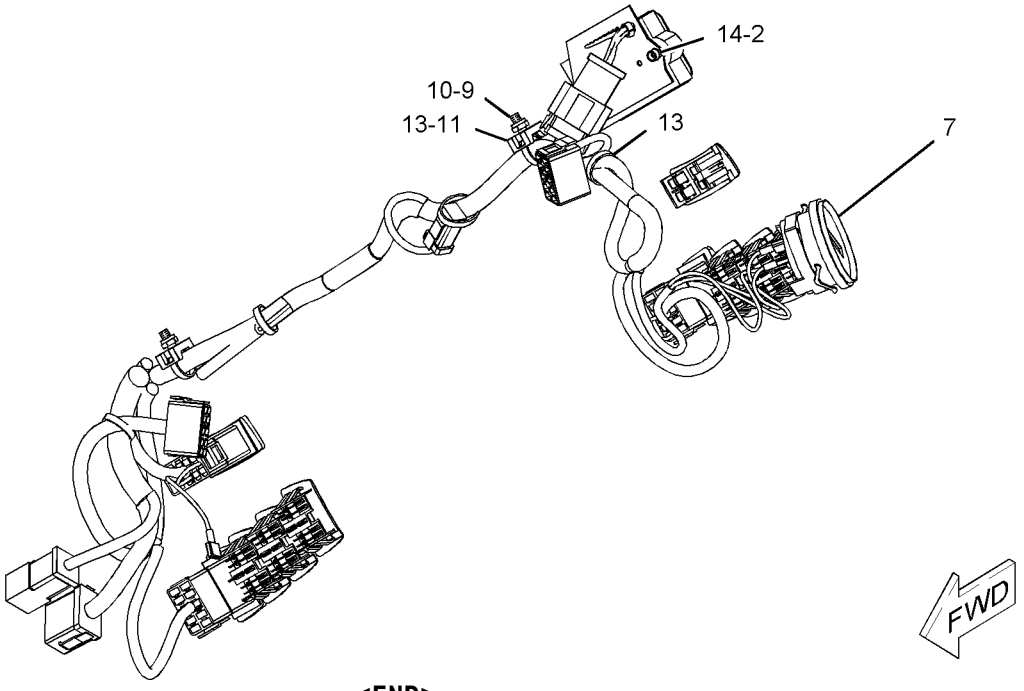

GRAPHIC #2 **<END>** g01034860

238-1166 WIRING GP-CONSOLE–SIDE

S/N: BXC1-UP; DSX1-UP
PART OF 214-7006, 214-7007 CAB AR, 214-7004 CANOPY AR
AN ATTACHMENT

SMCS-1408 **i02005280**

NOTE	REF NO	GRAPHIC REF	PART NUMBER	QTY	PART NAME 1 2 3 4 5 6 (PRODUCT LEVEL)	SEE PAGE
	1	1	**6K-0806**	4	STRAP-CABLE	
	2	1	**7K-1181**	3	STRAP-CABLE	
	3	1	**157-1997**	2	SPACER (4.34X15.88X6.34MM THK)	
	4	1	**169-0586**	1	SWITCH AS-ROCKER (STARTING AID)	
		1	**111-7899**	1	GASKET	
	5	1	**172-9200**	1	SUPPRESSOR-ARC	
	6	1	**184-5293**	1	PLUG	
	7	1	**187-1644**	6	PLUG	
	8	1	**205-4286**	1	HARNESS AS-INSTRUMENT PANEL	
		1	**102-8803**	1	KIT-RECEPTACLE (3-PIN)	
					(INCLUDES RECEPTACLE AND WEDGE)	
		1	**102-8804**	1	KIT-RECEPTACLE (4-PIN)	
					(INCLUDES RECEPTACLE AND WEDGE)	
		1	**155-2255**	1	KIT-CONNECTING PLUG (12-PIN)	
					(INCLUDES PLUG AND WEDGE)	
		1	**155-2260**	1	KIT-CONNECTING PLUG (3-PIN)	
					(INCLUDES PLUG AND WEDGE)	
		1	**155-2270**	1	KIT-CONNECTING PLUG (2-PIN)	
					(INCLUDES PLUG AND WEDGE)	
		1	**155-2271**	2	KIT-CONNECTING PLUG (4-PIN)	
					(EACH INCLUDES PLUG AND WEDGE)	
		1	**155-2274**	2	KIT-CONNECTING PLUG (6-PIN)	
					(EACH INCLUDES PLUG AND WEDGE)	
	9	1	**222-5794**	1	FILM-INDICATOR	
Y	10	1	*223-6539*	1	MODULE GP-WARNING INDICATOR	754
	11	1	**226-7164**	1	GAUGE GP-COOLANT TEMPERATURE	
		1	**4B-2043**	3	NUT (8-32 THD)	
		1	**7X-9065**	1	LAMP (12-VOLT)	
		1	**9B-7233**	3	LOCKWASHER	
M	12	1	**095-0741**	1	SCREW-MACHINE (M6X1THD)	
	13	1	**116-7491**	1	ANCHOR	
	14	1	**134-2305**	3	SEAL	
	15	1	**170-6305**	1	INDICATOR AS (FUEL LEVEL)	
		1	**4B-2043**	3	NUT (8-32 THD)	
		1	**7X-9065**	1	LAMP (12-VOLT)	
		1	**9B-7233**	3	LOCKWASHER	
	16	1	**170-6542**	1	INDICATOR AS (CONVERTER OIL TEMP)	
		1	**4B-2043**	3	NUT (8-32 THD)	
		1	**7X-9065**	1	LAMP (12-VOLT)	
		1	**9B-7233**	3	LOCKWASHER	
	17	1	**196-2966**	1	PLUG	
	18	1	**3S-2093**	11	STRAP-CABLE	
	19	1	**4P-8134**	3	CLIP	
M	20	1	**8T-2659**	2	LOCKNUT (M4X6H THD)	
M	21	1	**8T-4133**	3	NUT (M10X1.5 THD)	
M	22	1	**8T-4191**	3	BOLT (M10X1.5X16MM)	

M-METRIC PART
Y-SEPARATE ILLUSTRATION

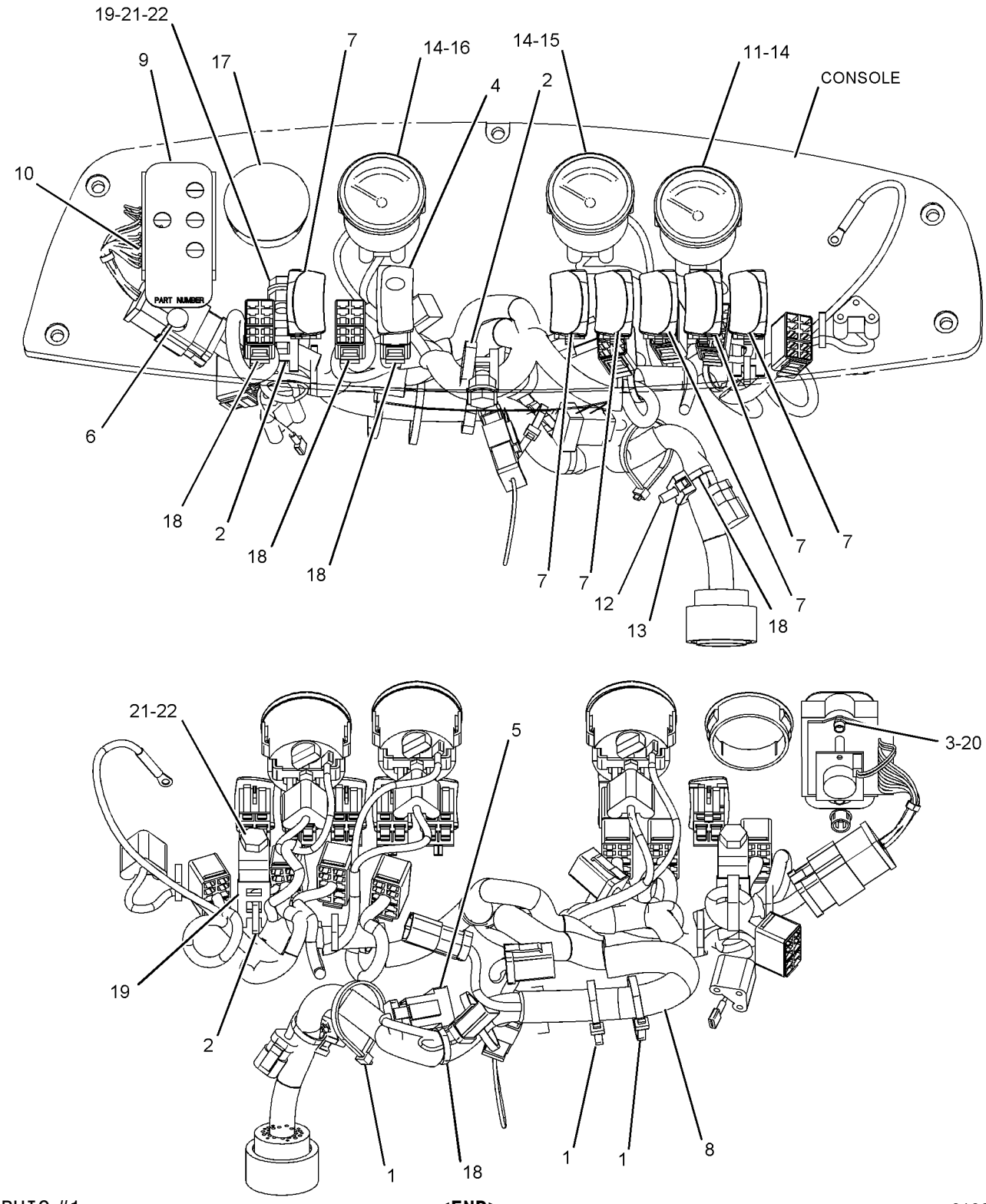

GRAPHIC #1

<END>

g01026150

238-1167 WIRING GP-CONSOLE—SIDE, DELUXE

S/N: BXC1-UP; DSX1-UP
PART OF 214-7008, 214-7009 CAB AR-ENCLOSED ROPS
AN ATTACHMENT

SMCS-1408 **i02000627**

NOTE	REF NO	GRAPHIC REF	PART NUMBER	QTY	PART NAME 1 2 3 4 5 6 (PRODUCT LEVEL)	SEE PAGE
	1	1	**6K-0806**	4	STRAP-CABLE	
	2	1	**7K-1181**	1	STRAP-CABLE	
	3	1	**134-0404**	1	INDICATOR AS	
	4	1	**157-1997**	2	SPACER (4.34X15.88X6.34MM THK)	
	5	1	**169-0586**	1	SWITCH AS-ROCKER (STARTING AID)	
		1	**111-7899**	1	GASKET	
	6	1	**172-9200**	1	SUPPRESSOR-ARC	
	7	1	**184-5293**	1	PLUG	
	8	1	**187-1644**	6	PLUG	
	9	1	**189-0148**	1	MODULE GP-WARNING INDICATOR	
	10	1	**226-7164**	1	GAUGE GP-COOLANT TEMPERATURE	
		1	**4B-2043**	6	NUT (8-32 THD)	
		1	**7X-9065**	1	LAMP (12-VOLT) (COOLANT TEMPERATURE GAUGE)	
		1	**9B-7233**	3	LOCKWASHER	
M	11	1	**095-0741**	1	SCREW-MACHINE (M6X1THD)	
	12	1	**116-7491**	1	ANCHOR	
	13	1	**134-2305**	4	SEAL	
	14	1	**170-6305**	1	INDICATOR AS (FUEL LEVEL)	
		1	**4B-2043**	3	NUT (8-32 THD)	
		1	**7X-9065**	1	LAMP (12-VOLT) (FUEL LEVEL)	
		1	**9B-7233**	3	LOCKWASHER	
	15	1	**170-6309**	1	INDICATOR AS (VOLT METER)	
		1	**4B-2043**	3	NUT (8-32 THD)	
		1	**7X-9065**	1	LAMP (12-VOLT) (VOLT METER)	
		1	**9B-7233**	3	LOCKWASHER	
	16	1	**170-6542**	1	INDICATOR AS (CONVERTER OIL TEMP)	
		1	**4B-2043**	3	NUT (8-32 THD)	
		1	**7X-9065**	1	LAMP (12-VOLT) (CONVERTER OIL TEMP)	
		1	**9B-7233**	3	LOCKWASHER	
	17	1	**172-6224**	1	FILM-INDICATOR	
	18	1	**205-4286**	1	HARNESS AS-CONSOLE	
		1	**102-8803**	1	KIT-RECEPTACLE (3-PIN)	
		1	**102-8804**	1	KIT-RECEPTACLE (4-PIN)	
		1	**155-2255**	1	KIT-CONNECTING PLUG (12-PIN)	
		1	**155-2260**	1	KIT-CONNECTING PLUG (3-PIN)	
		1	**155-2270**	2	KIT-CONNECTING PLUG (2-PIN)	
		1	**155-2274**	2	KIT-CONNECTING PLUG (6-PIN)	
B	19	1	**3S-2093**	14	STRAP-CABLE	
M	20	1	**8T-2659**	2	LOCKNUT (M4X6H THD)	

B-USE AS REQUIRED
M-METRIC PART

238-1167 **WIRING GP-CONSOLE** *(contd.)* **i02000627**

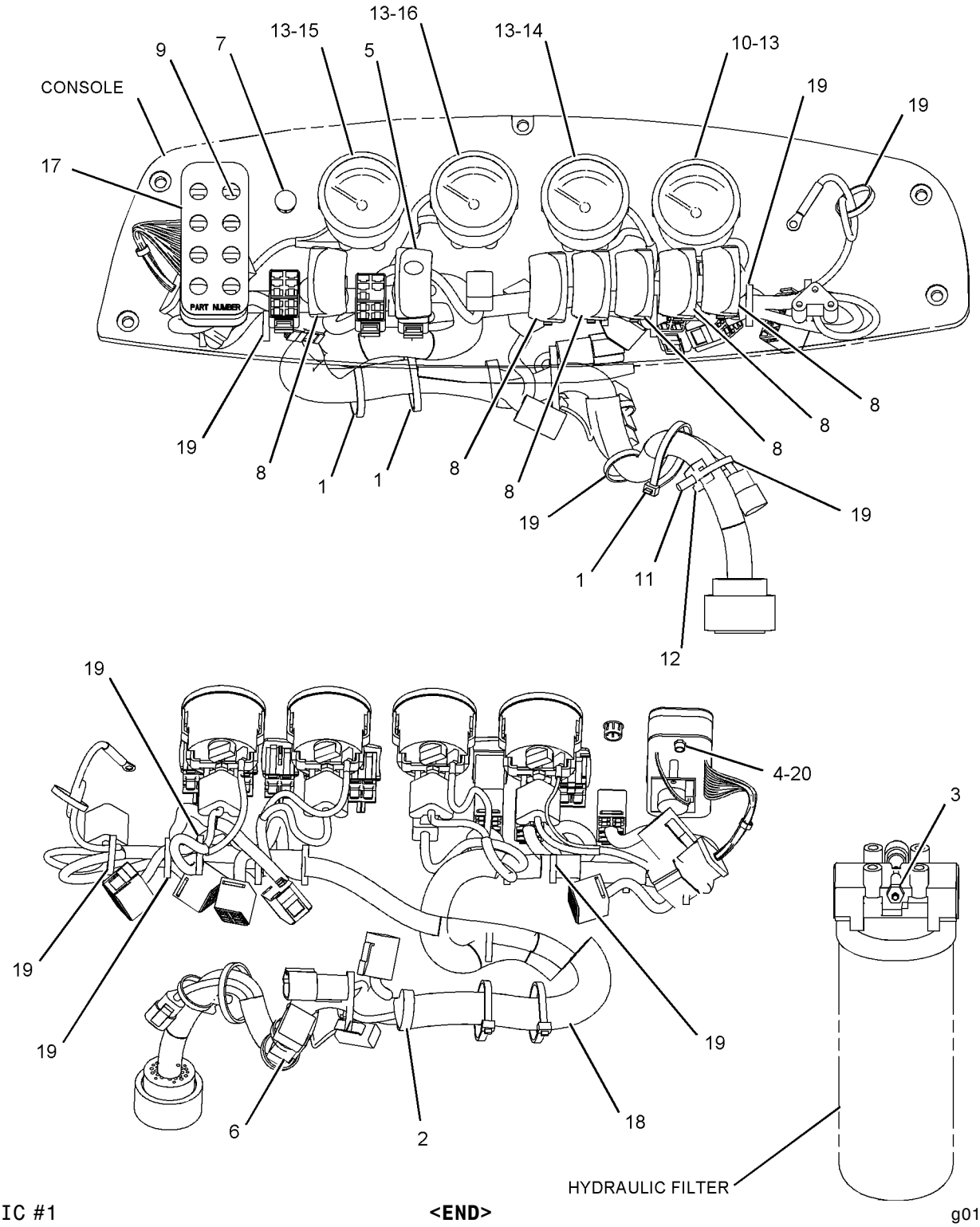

GRAPHIC #1 **<END>** g01037139

234-1991 WIRING GP-ENGINE

S/N: BXC1-UP; DSX1-UP
PART OF 214-6891, 214-6893 ENGINE AR
AN ATTACHMENT

SMCS-1408 **i01991950**

NOTE	REF NO	GRAPHIC REF	PART NUMBER	QTY	PART NAME 1 2 3 4 5 6 (PRODUCT LEVEL)	SEE PAGE
	1	1	**4W-9972**	1	SENDER-TEMPERATURE	
		1	**4B-2049**	1	NUT (10-32 THD)	
		1	**8F-1434**	1	LOCKWASHER (INTERNAL TOOTH)	
		1	**8T-0328**	1	WASHER-HARD (5.5X10X1MM THK)	
	2	1,2	**7K-1181**	2	STRAP-CABLE	
B	3	1	**8T-8737**	7	PLUG-SEAL	
	4	1,2	**115-1615**	2	RELAY AS (12-VOLT)	
	5	1	**155-8522**	1	MOUNT	
	6	2	**164-9425**	1	HORN AS (LOW TONE)	
	7	2	**178-8465**	1	HARNESS AS (WIRE)	
		2	**102-8802**	1	KIT-RECEPTACLE (2-PIN)	
					(INCLUDES RECEPTACLE AS AND WEDGE)	
		2	**100-3320**	1	PLUG AS-CONNECTOR (2 PIN)	
	8	2	**213-6094**	1	CABLE AS	
E		2	**8C-3056**		CABLE (2 GA) (85CM)	
		2	**8T-8799**	1	BOOT	
E		2	**119-3662**		TUBE-HEAT SHRINK (7CM)	
	9	2	**234-1992**	1	HARNESS AS-ENGINE	
		2	**102-8802**	1	KIT-RECEPTACLE (2-PIN)	
					(INCLUDES RECEPTACLE AS AND WEDGE)	
		2	**9X-1054**	2	PLUG AS-CONNECTOR (4 PIN)	
		2	**155-2260**	3	KIT-CONNECTING PLUG (3-PIN)	
					(INCLUDES PLUG AS AND WEDGE)	
		2	**155-2270**	12	KIT-CONNECTING PLUG (2-PIN)	
		2	**167-3693**	1	PLUG AS	
		2	**177-9645**	1	KIT-RECEPTACLE (2-PIN)	
					(INCLUDES RECEPTACLE AS AND WEDGE)	
	10	1	**238-9397**	1	RESISTOR AS	
	11	2	**243-5027**	1	NUT AS	
	12	2	**244-3106**	1	SENDER AS-TEMPERATURE	
		2	**102-8802**	1	KIT-RECEPTACLE (2-PIN)	
					(INCLUDES RECEPTACLE AS AND WEDGE)	
		2	**186-3735**	2	PIN-CONNECTOR	
	13	1	**155-2270**	1	KIT-CONNECTING PLUG (2-PIN)	
					(INCLUDES PLUG AS AND WEDGE)	
	14	1	**102-8802**	1	KIT-RECEPTACLE (2-PIN)	
	15	1	**102-8803**	1	KIT-RECEPTACLE (3-PIN)	
					(BOTH INCLUDE RECEPTACLE AS AND WEDGE)	
	16	1	**3J-1907**	1	SEAL-O-RING	
	17	1,2	**3S-2093**	32	STRAP-CABLE	
	18	2	**4P-7581**	8	CLIP	
	19	2	**4P-8134**	5	CLIP	
M	20	2	**5C-2874**	2	NUT (M5X.8 THD)	
M	21	1	**5C-2890**	1	NUT (M6X1 THD)	
	22	1	**6K-0806**	3	STRAP-CABLE	
M	23	1	**6V-7357**	1	BOLT (M6X1.0X25MM)	
	24	2	**8F-1434**	2	LOCKWASHER (INTERNAL TOOTH)	
	25	2	**8T-0328**	2	WASHER-HARD (5.5X10X1MM THK)	
	26	2	**8T-4121**	9	WASHER-HARD (11X21X2.5MM THK)	
M	27	2	**8T-4136**	1	BOLT (M10X1.5X25MM)	
M	28	2	**8T-4137**	8	BOLT (M10X1.5X20MM)	
M	29	2	**8T-4138**	1	BOLT (M6X1X20MM)	
M	30	2	**8T-4189**	1	BOLT (M8X1.25X20MM)	
	31	1,2	**8T-4205**	3	WASHER-HARD (7.2X14.5X2MM THK)	
	32	2	**8T-4224**	1	WASHER-HARD (8.8X16X2MM THK)	

B-USE AS REQUIRED
E-ORDER BY THE CENTIMETER
M-METRIC PART

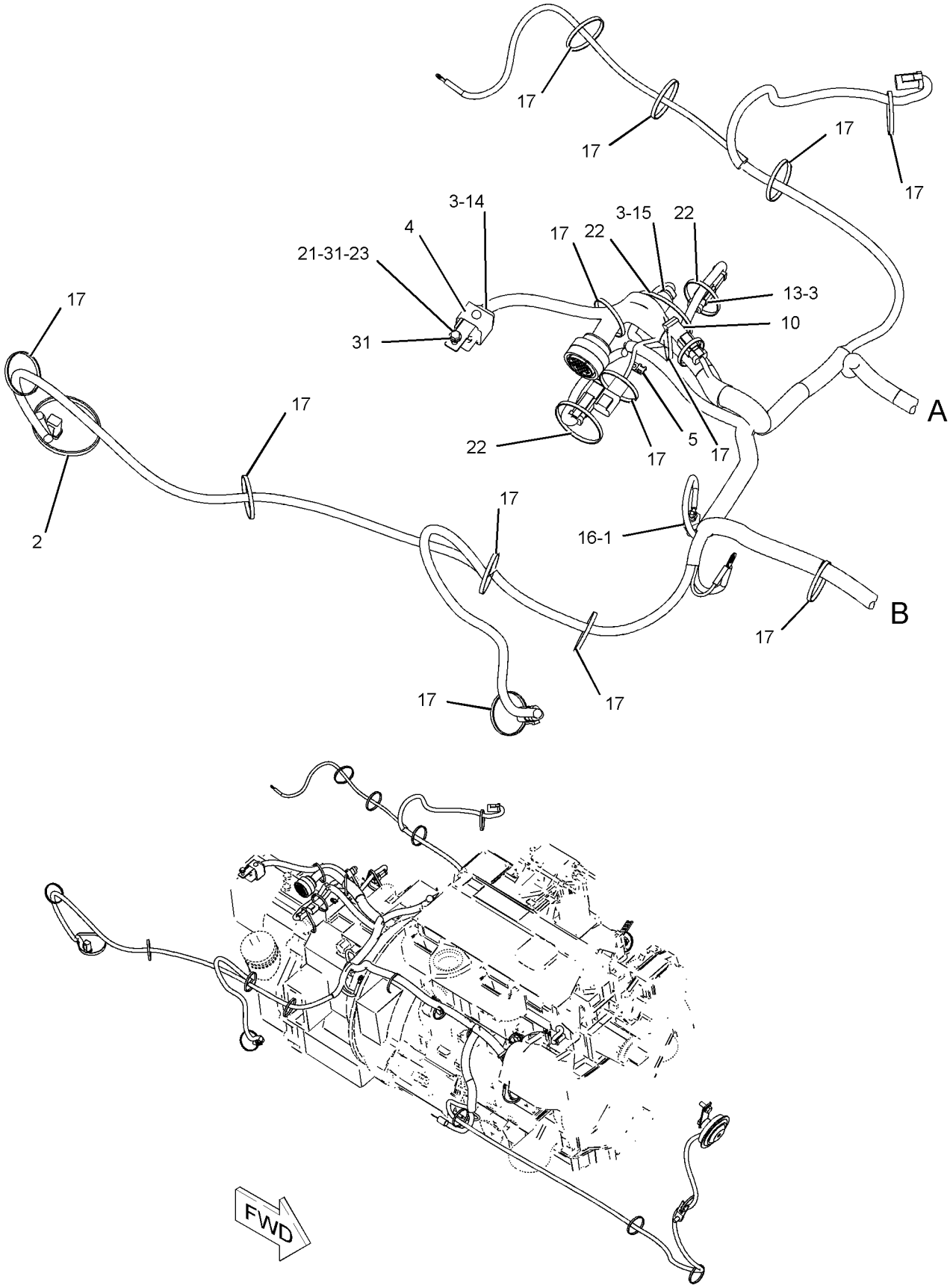

GRAPHIC #1

g01039490

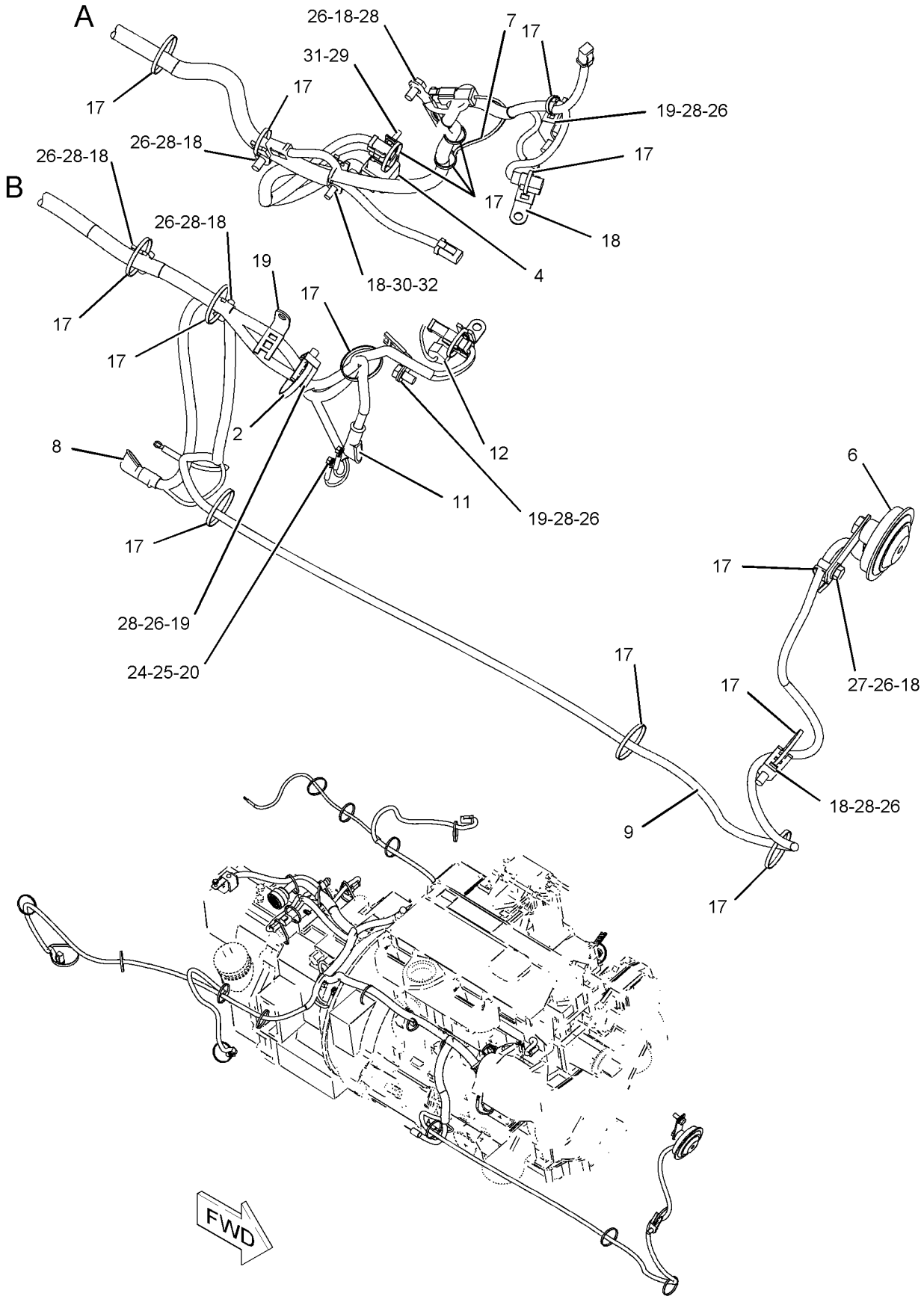

GRAPHIC #2 **<END>** g01039491

186-2731 WIRING GP-HEATER

S/N: BXC1-UP; DSX1-UP
PART OF 214-7006 CAB AR, 214-7008 CAB AR-ENCLOSED ROPS
AN ATTACHMENT

SMCS-1408, 7304 **i02000069**

NOTE	REF NO	GRAPHIC REF	PART NUMBER	QTY	PART NAME 1 2 3 4 5 6 (PRODUCT LEVEL)	SEE PAGE
	1	1	**3E-9362**	1	RELAY AS (12 VOLT)	
	2	1	**3S-2093**	3	STRAP-CABLE	
	3	1	**131-3201**	2	BOOT	
	4	1	**169-0605**	1	SWITCH AS-ROCKER (HEATER FAN SPEED)	
		1	**111-7899**	1	GASKET	
	5	1	**170-2237**	1	RELAY AS (12 VOLT) (HEATER & AIR COND)	
C	6	1	**229-8377**	1	CIRCUIT BREAKER AS (35AMP) (FAN BLOWER)	
		1	**6V-8378**	2	NUT (10-32 THD)	
		1	**8F-1434**	2	LOCKWASHER (INTERNAL TOOTH)	
		1	**8T-0328**	2	WASHER-HARD (5.5X10X1MM THK)	
	7	1	**184-2422**	1	SWITCH AS (HEATER)	
		1	**111-7899**	1	GASKET	
C	8	1	**229-8413**	1	HARNESS AS-HEATER & AIR COND	
		1	**102-8802**	1	KIT-RECEPTACLE (2-PIN)	
		1	**102-8804**	1	KIT-RECEPTACLE (4-PIN)	
		1	**155-2270**	1	KIT-CONNECTING PLUG (2-PIN)	
		1	**177-9645**	1	KIT-RECEPTACLE (2-PIN)	
		1	**177-9648**	1	KIT-CONNECTING PLUG (2-PIN)	
M	9	1	**138-8454**	1	SCREW-TRUSS HEAD (M4X0.7X10MM)	
	10	1	**4B-4863**	1	WASHER (4.7X11X1.2MM THK)	
	11	1	**213-7315**	2	SCREW-TRUSS HEAD (M4X0.7X25MM)	

C-CHANGE FROM PREVIOUS TYPE
M-METRIC PART

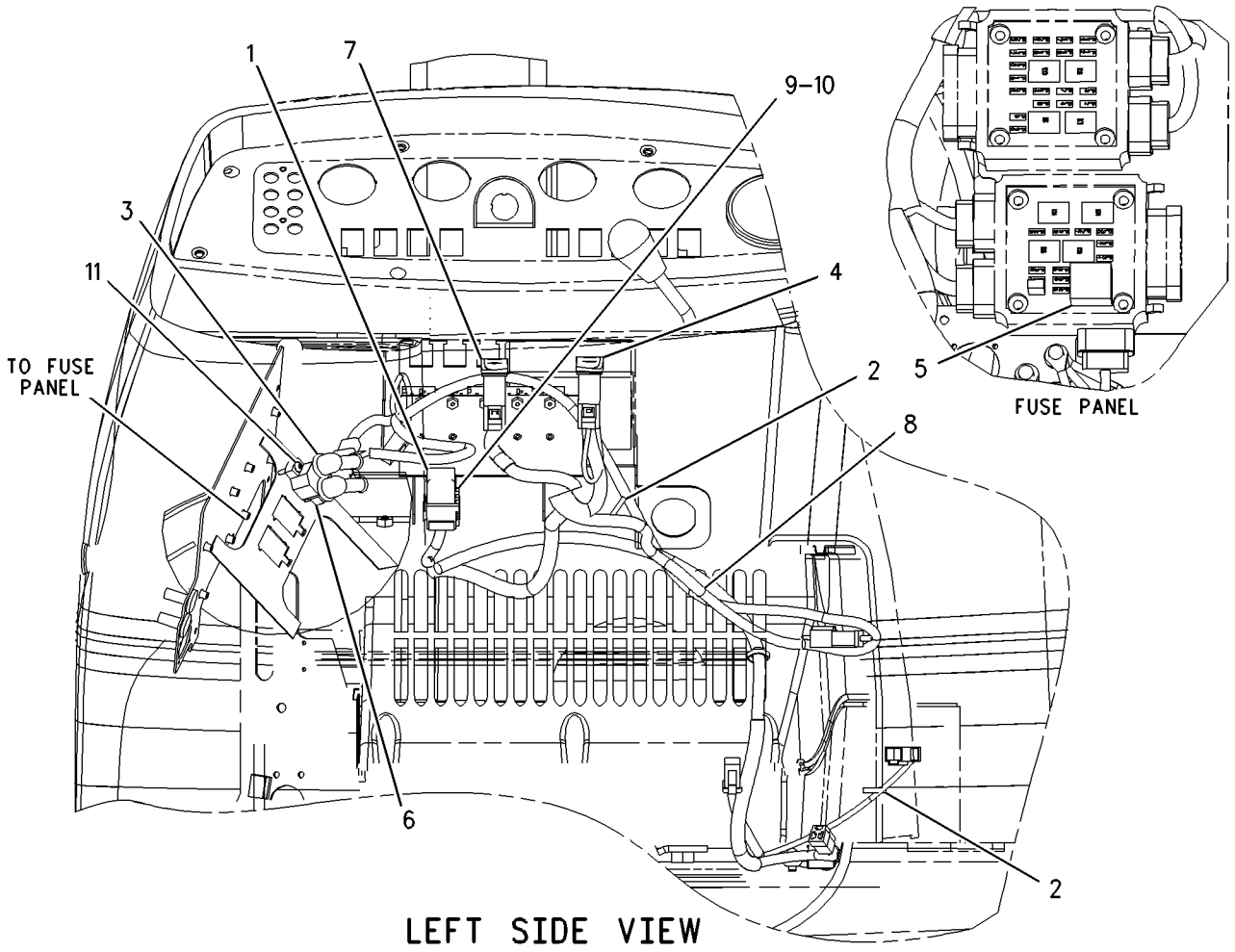

GRAPHIC #1 **<END>** g00931489

122-1644 WIRING GP-KICKOUT & POSITIONER

S/N: BXC1-UP; DSX1-UP
PART OF 112-1827 LOADER AR
ALSO AN ATTACHMENT

SMCS-5109, 5112, 5734 **i02000066**

NOTE	REF NO	GRAPHIC REF	PART NUMBER	QTY	PART NAME 1 2 3 4 5 6 (PRODUCT LEVEL)	SEE PAGE
Y	1	1	**3E-7843**	1	CONTROL GP-POSITION	112
	2	1	**5G-7820**	1	MAGNET AS	
	3	1	**8T-4985**	2	CLAMP-HOSE (M8X1.25X25MM)	
	4	1	**122-1647**	1	BRACKET AS	
	5	1	**122-1648**	1	HARNESS AS-CONTROL (BUCKET POSITIONER) (BUCKET)	
		1	**102-8803**	2	KIT-RECEPTACLE (3-PIN)	
B	6	1	**163-6290**	2	PLATE	
M	7	1	**8T-4199**	2	BOLT (M8X1.25X12MM)	
	8	1	**8T-4224**	2	WASHER-HARD (8.8X16X2MM THK)	
M	9	1	**8T-4908**	2	BOLT (M8X1.25X25MM)	
B	10	1	**3S-2093**	14	STRAP-CABLE	

B-USE AS REQUIRED
M-METRIC PART
Y-SEPARATE ILLUSTRATION

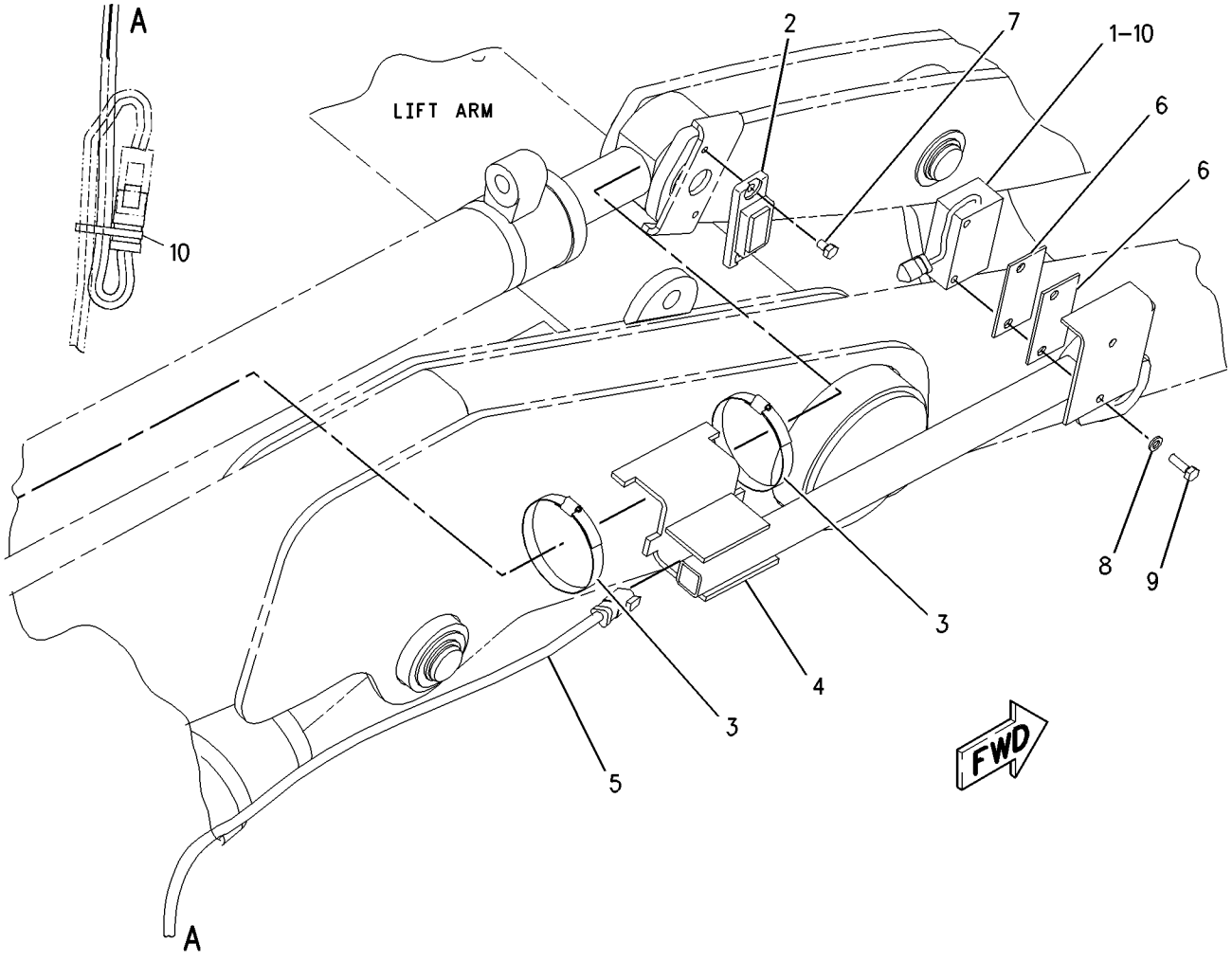

GRAPHIC #1 **<END>** g00656249

186-0304 WIRING GP-PLATFORM–SERVICE

S/N: BXC1-UP; DSX1-UP
PART OF 186-0310 INSTALLATION GP-SECURITY
AN ATTACHMENT

SMCS-1408 **i01781083**

NOTE	REF NO	GRAPHIC REF	PART NUMBER	QTY	PART NAME 1 2 3 4 5 6 (PRODUCT LEVEL)	SEE PAGE
	1	1	**3S-2093**	4	STRAP-CABLE	
	2	1	**4I-3038**	4	WASHER (3.3X8X0.5MM THK)	
	3	1	**183-7581**	1	HARNESS AS-PLATFORM	
		1	**102-8802**	1	KIT-RECEPTACLE (2 PIN)	
	4	1	**224-6193**	4	BOLT-SOCKET HEAD	
M	5	1	**8T-2658**	4	LOCKNUT (M3X0.5 THD)	

M-METRIC PART

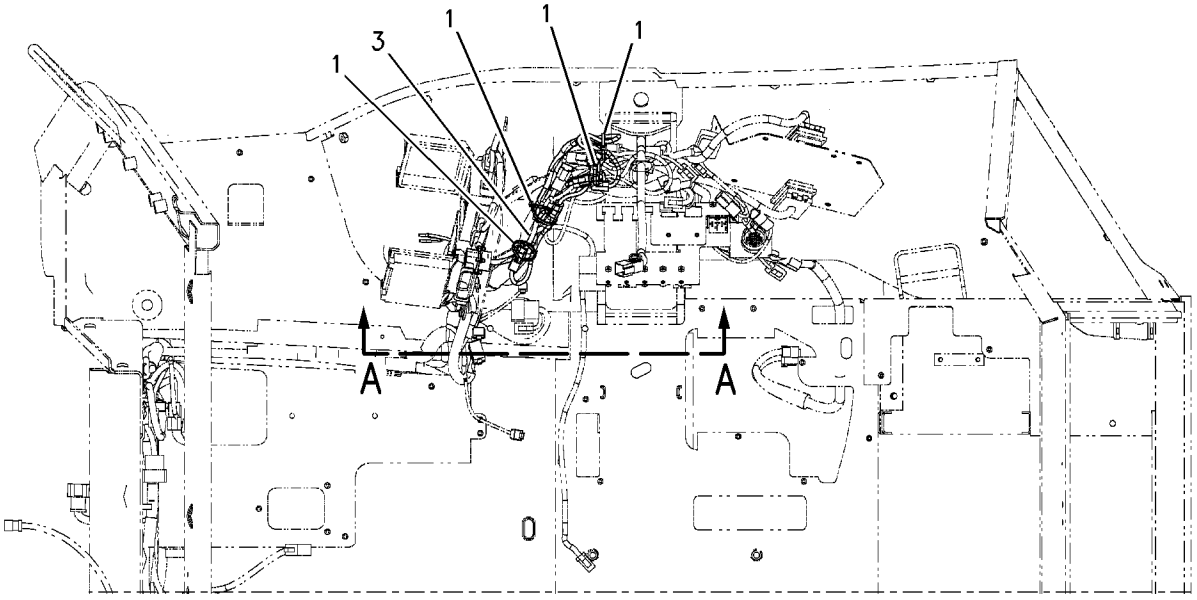

TOP VIEW

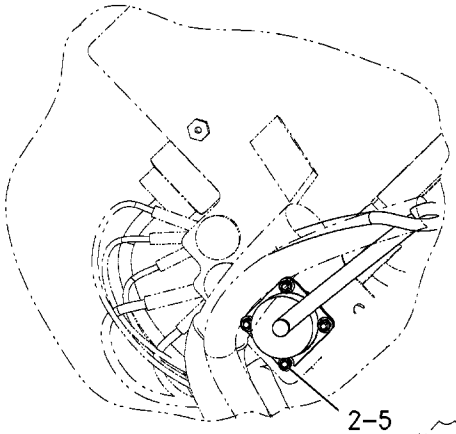

SECTION C-C

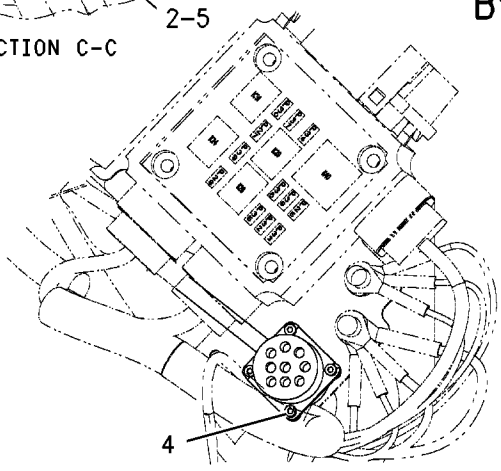

SECTION B-B

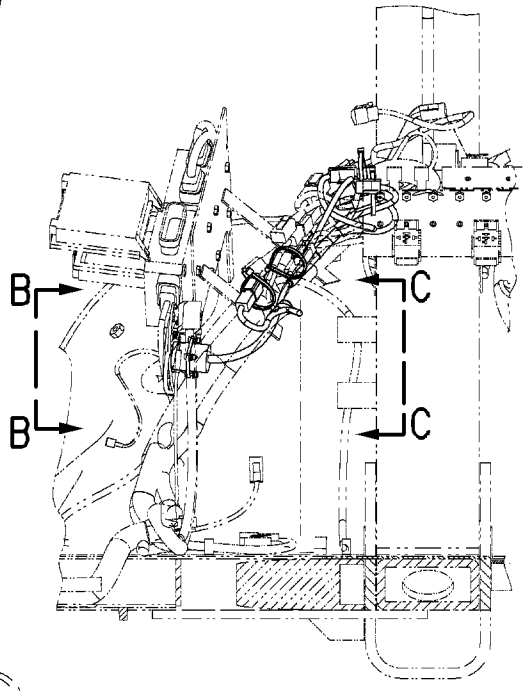

SECTION A-A

GRAPHIC #1 **<END>** g00743623

242-8521 WIRING GP-PLATFORM

S/N: BXC1-UP; DSX1-UP

PART OF 237-9288, 237-9289 CHASSIS AR

SMCS-1408 **i01993843**

NOTE	REF NO	GRAPHIC REF	PART NUMBER	QTY	PART NAME 1 2 3 4 5 6 (PRODUCT LEVEL)	SEE PAGE
D	1	2	**5P-5923**		SEAL (.035M)	
D	2	2	**5P-7657**	3	SEAL (.032M EA)	
	3	1	**6K-0806**	8	STRAP-CABLE	
	4	2	**7G-1060**	1	STRAP AS-GROUND	
	5	1	**7T-4848**	1	FLASHER AS	
	6	2	**7Y-3883**	1	CABLE AS	
		2	**1S-7251**	2	TERMINAL-RING (FOR 1/2IN BOLT)	
B	7	1	**8T-8737**	15	PLUG-SEAL	
	8	1	**128-4249**	2	LOCKWASHER	
	9	2	**164-1056**	1	CHANNEL	
	10	1	**167-3700**	1	HARNESS AS-PLATFORM	
		1	**102-8802**	1	KIT-RECEPTACLE (2-PIN)	
					(KIT INCLUDES RECEPTACLE AS. & WEDGE)	
		1	**102-8803**	1	KIT-RECEPTACLE (3-PIN)	
					(KIT INCLUDES RECEPTACLE AS. & WEDGE)	
		1	**102-8804**	1	KIT-RECEPTACLE (4-PIN)	
					(KIT INCLUDES RECEPTACLE AS. & WEDGE)	
		1	**102-8805**	1	KIT-RECEPTACLE (6-PIN)	
					(KIT INCLUDES RECEPTACLE AS. & WEDGE)	
		1	**102-8806**	1	KIT-RECEPTACLE (8-PIN)	
					(KIT INCLUDES RECEPTACLE AS. & WEDGE)	
		1	**102-8801**	1	KIT-RECEPTACLE (12-PIN)	
					(KIT INCLUDES RECEPTACLE AS. & WEDGE)	
		1	**155-2255**	2	KIT-CONNECTING PLUG (12-PIN)	
					(EACH KIT INCLUDES PLUG AS., WEDGE, & INTERFACE SEAL)	
		1	**155-2265**	1	KIT-CONNECTING PLUG (8-PIN)	
					(KIT INCLUDES PLUG AS., WEDGE, & INTERFACE SEAL)	
		1	**155-2260**	3	KIT-CONNECTING PLUG (3-PIN)	
					(EACH KIT INCLUDES PLUG AS., WEDGES, & INTERFACE SEAL)	
		1	**155-2270**	6	KIT-CONNECTING PLUG (2-PIN)	
					(EACH KIT INCLUDES PLUG AS., WEDGE, & INTERFACE SEAL)	
		1	**155-2271**	3	KIT-CONNECTING PLUG (4-PIN)	
					(EACH KIT INCLUDES PLUG AS., WEDGE, & INTERFACE SEAL)	
		1	**155-2274**	1	KIT-CONNECTING PLUG (6-PIN)	
					(KIT INCLUDES PLUG AS., WEDGE, & INTERFACE SEAL)	
		1	**177-9648**	2	KIT-CONNECTING PLUG (2-PIN)	
					(EACH KIT INCLUDES PLUG AS., WEDGE, & INTERFACE SEAL)	
	11	1	**184-6430**	1	COVER	
	12	1	**211-0052**	2	NUT (11/16-18 THD)	
	13	2	**213-6097**	1	HARNESS AS (POWER)	
	14	1	**240-0541**	1	BLOCK AS (FUSE)	
	15	1	**240-0542**	1	BLOCK AS (FUSE)	
M	16	1	**095-0733**	8	SCREW-MACHINE	
M	17	1	**138-8454**	3	SCREW-TRUSS HEAD (M4X0.7X10MM)	
B	18	1	**102-8802**	4	KIT-RECEPTACLE (2-PIN)	
					(EACH KIT INCLUDES RECEPTACLE AS. & WEDGE)	
B	19	1	**102-8803**	1	KIT-RECEPTACLE (3-PIN)	
					(KIT INCLUDES RECEPTACLE AS. & WEDGE)	
B	20	1	**102-8804**	1	KIT-RECEPTACLE (4-PIN)	
					(KIT INCLUDES RECEPTACLE AS. & WEDGE)	

242-8521 **WIRING GP-PLATFORM** ***(contd.)*** **i01993843**

NOTE	REF NO	GRAPHIC REF	PART NUMBER	QTY	PART NAME 1 2 3 4 5 6 (PRODUCT LEVEL)	SEE PAGE
	21	1,2	**3S-2093**	26	STRAP-CABLE	
	22	1	**4B-4863**	11	WASHER (4.7X11X1.2MM THK)	
M	23	1	**5C-7261**	2	NUT (M8X1.25 THD)	
	24	2	**7X-7729**	2	WASHER (11X25X3MM THK)	
	25	1,2	**8T-4121**	6	WASHER-HARD (11X21X2.5MM THK)	
M	26	1	**8T-4133**	2	NUT (M10X1.5 THD)	
M	27	2	**8T-4136**	3	BOLT (M10X1.5X25MM)	
M	28	2	**8T-4171**	2	BOLT (M6X1X12MM)	
M	29	2	**8T-4179**	1	BOLT (M12X1.75X20MM)	
	30	2	**8T-4205**	2	WASHER-HARD (7.2X14.5X2MM THK)	
	31	2	**8T-4223**	1	WASHER-HARD (13.5X25.5X3MM THK)	
	32	1	**8T-4224**	2	WASHER-HARD (8.8X16X2MM THK)	
	33	1	**9X-6772**	3	STRAP-CABLE	

B-USE AS REQUIRED
D-ORDER BY THE METER
M-METRIC PART

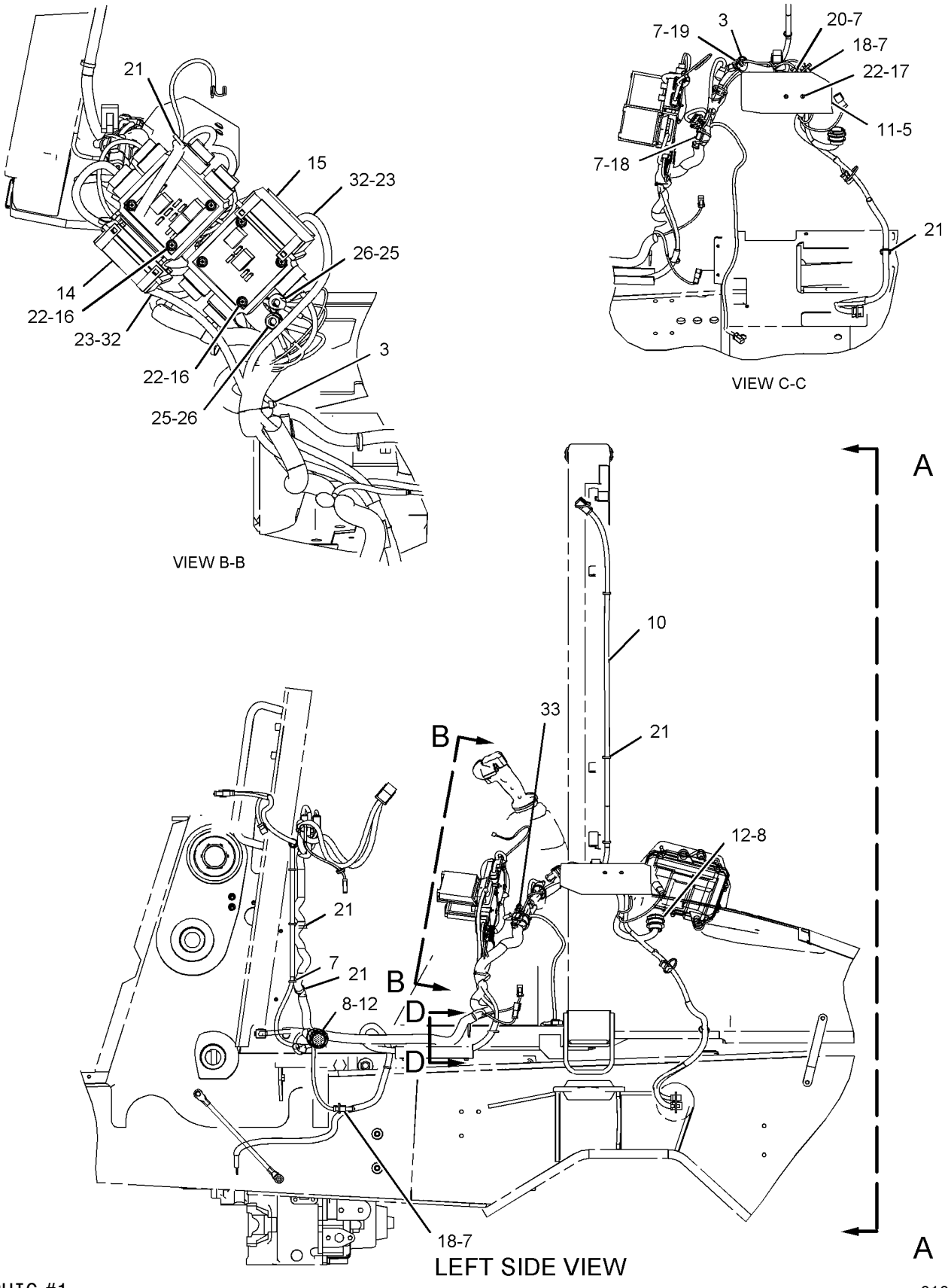

GRAPHIC #1

g01034371

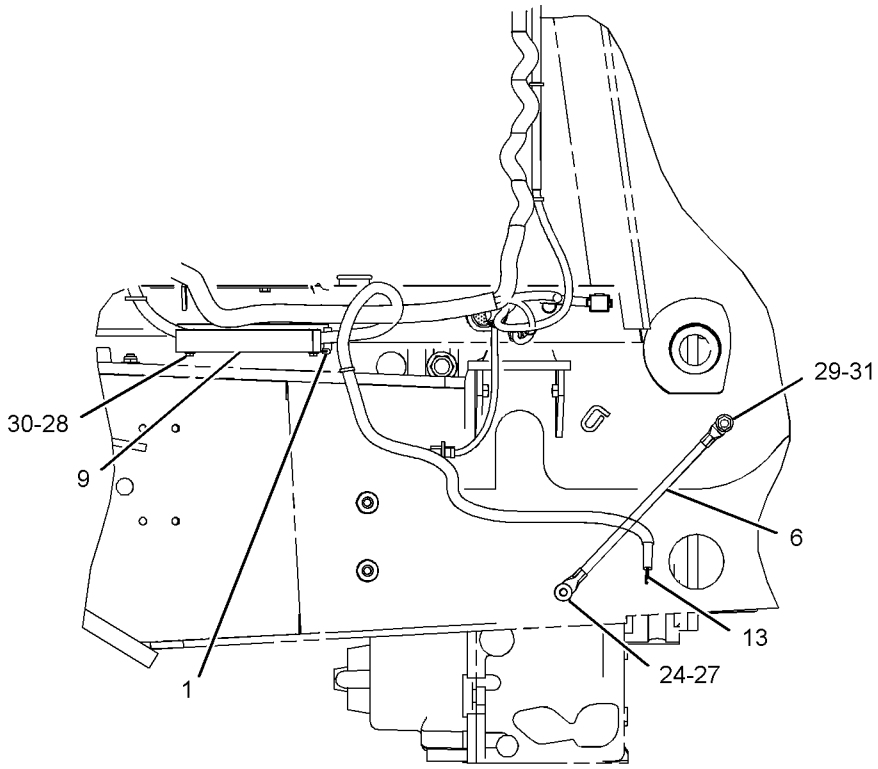

RIGHT SIDE VIEW

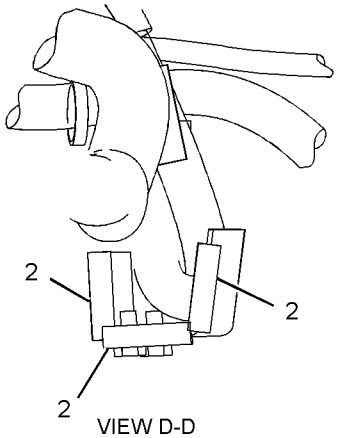

VIEW D-D

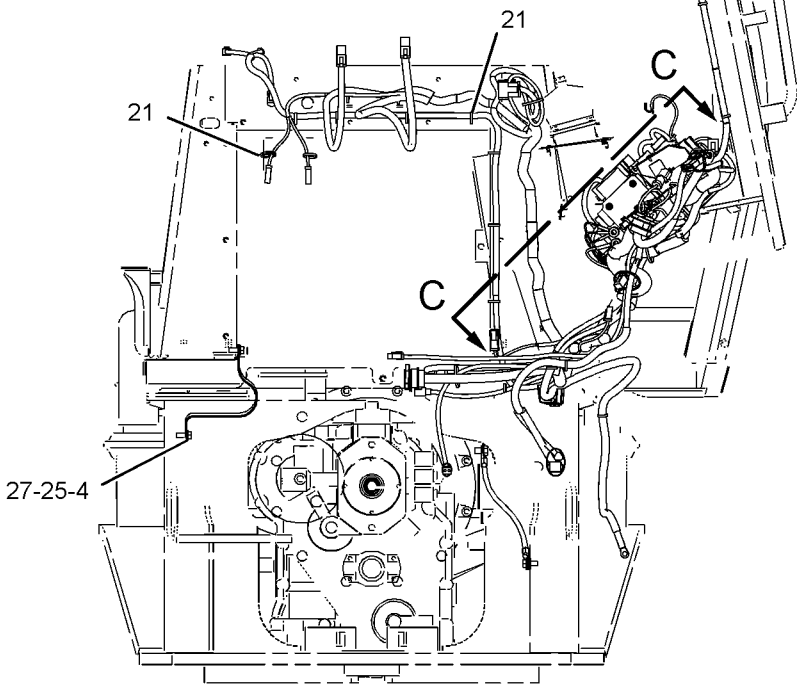

VIEW A-A

GRAPHIC #2 **<END>** g01034372

190-7557 WIRING GP-POWER RECEPTACLE

S/N: BXC1-UP; DSX1-UP
PART OF 214-7008, 214-7009 CAB AR-ENCLOSED ROPS, 190-2802 CONVERSION
AR-CERTIFICATION
AN ATTACHMENT

SMCS-1408, 7301 **i02000063**

NOTE	REF NO	GRAPHIC REF	PART NUMBER	QTY	PART NAME 1 2 3 4 5 6 (PRODUCT LEVEL)	SEE PAGE
	1	1	**113-8490**	1	FUSE (10 AMP)	
	2	1	**178-7539**	1	RECEPTACLE AS (POWER PORT)	
	3	1	**3S-2093**	1	STRAP-CABLE	

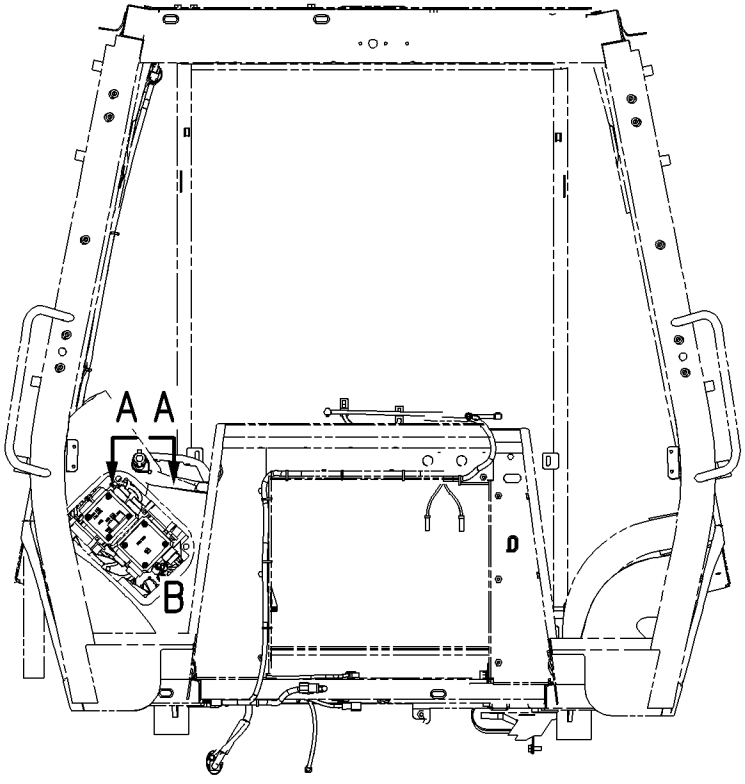

FRONT VIEW

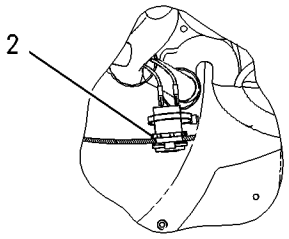

SECTION A-A

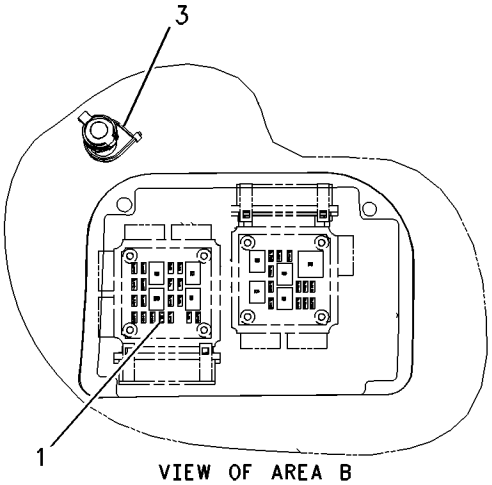

VIEW OF AREA B

GRAPHIC #1 **<END>** g00878859

185-8807 WIRING GP-REAR

S/N: BXC1-UP; DSX1-UP

PART OF 237-9288, 237-9289 CHASSIS AR

SMCS-1408 **i01670257**

NOTE	REF NO	GRAPHIC REF	PART NUMBER	QTY	PART NAME 1 2 3 4 5 6 (PRODUCT LEVEL)	SEE PAGE
B	1	1,2	**3S-2093**	8	STRAP-CABLE	
	2	1,2	**7K-1181**	6	STRAP-CABLE	
B	3	2	**8T-8737**	8	PLUG-SEAL	
	4	2	**9U-2277**	1	CLIP AS	
B	5	2	**155-8522**	1	MOUNT	
	6	1	**167-3707**	1	HARNESS AS (REAR END)	
		1	**102-8803**	1	KIT-RECEPTACLE (3 PIN)	
					(KIT SERVICES RECEPTACLE AS AND WEDGE)	
		1	**102-8806**	1	KIT-RECEPTACLE (8 PIN)	
					(KIT SERVICES RECEPTACLE AS AND WEDGE)	
		1	**155-2270**	1	KIT-CONNECTING PLUG (2 PIN)	
					(KIT SERVICES PLUG AS AND WEDGE)	
		1	**155-2271**	1	KIT-CONNECTING PLUG (4 PIN)	
					(KIT SERVICES PLUG AS AND WEDGE)	
		1	**155-2274**	1	KIT-CONNECTING PLUG (6 PIN)	
					(KIT SERVICES PLUG AS AND WEDGE)	
	7	2	**169-0597**	1	SWITCH AS (SIDE SHIFT LOCK)	
		2	**111-7899**	1	GASKET	
	8	2	**096-4415**	1	LOCKWASHER	
BM	9	2	**150-4086**	1	SCREW (M4X.7X16MM)	
B	10	2	**102-8802**	4	KIT-RECEPTACLE (2 PIN)	
					(KIT SERVICES RECEPTACLE AS AND WEDGE)	
	11	2	**4P-7428**	1	CLIP	
	12	2	**4P-7581**	2	CLIP	
BM	13	2	**8T-2659**	1	LOCKNUT (M4X0.7 THD)	
	14	2	**8T-4121**	2	WASHER-HARD (11X21X2.5MM THK)	
M	15	2	**8T-4133**	2	NUT (M10X1.5 THD)	
M	16	2	**8T-4137**	1	BOLT (M10X1.5X20MM)	
M	17	2	**8T-4195**	1	BOLT (M10X1.5X30MM)	

B-USE AS REQUIRED
M-METRIC PART

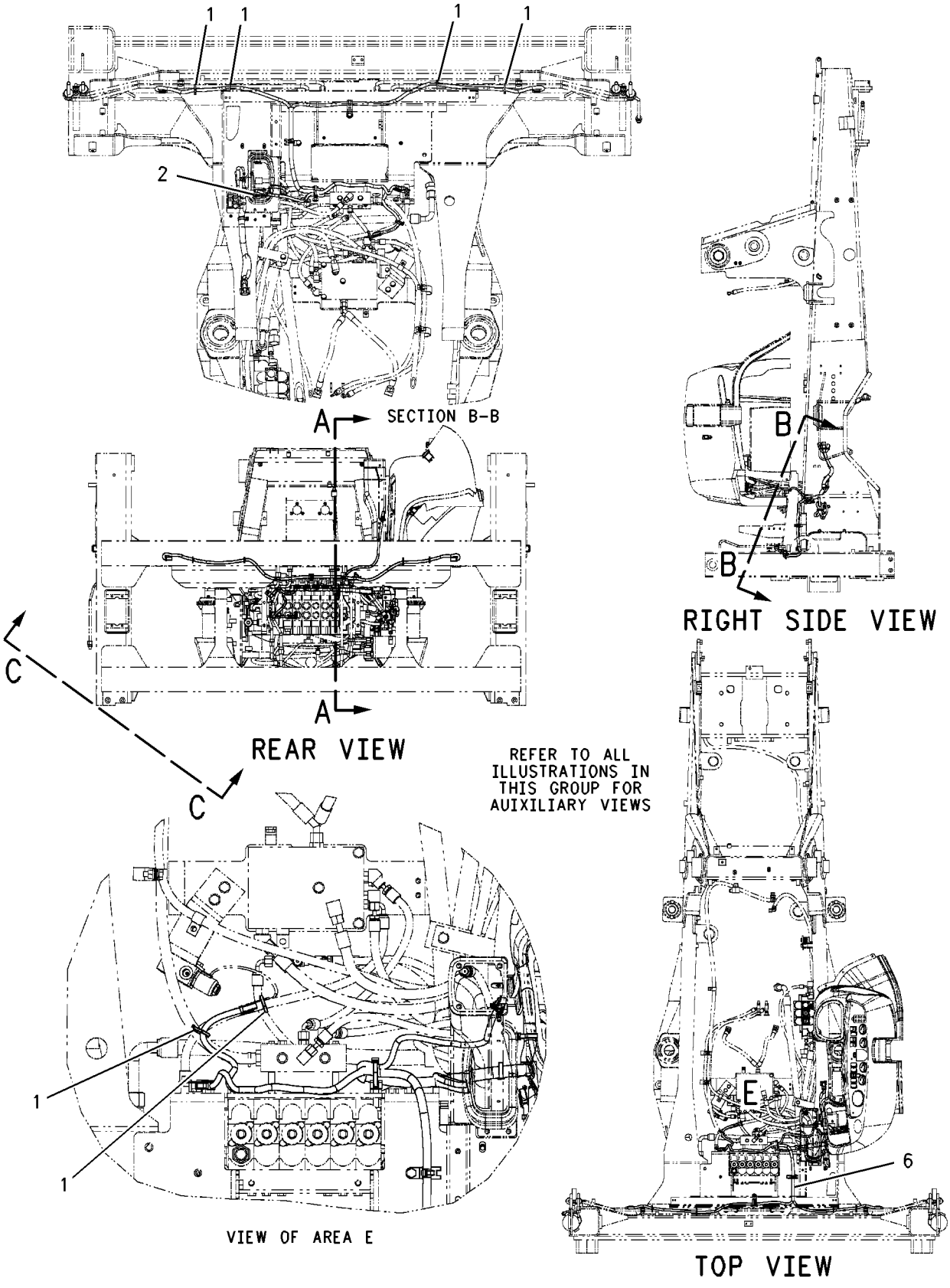

GRAPHIC #1 g00863376

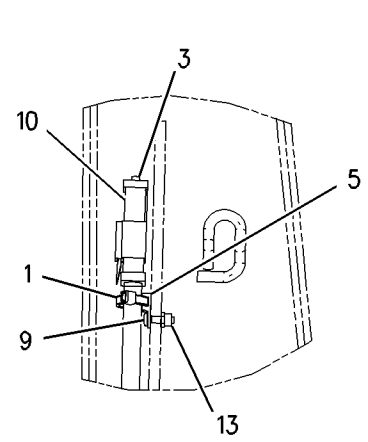

VIEW OF AREA G

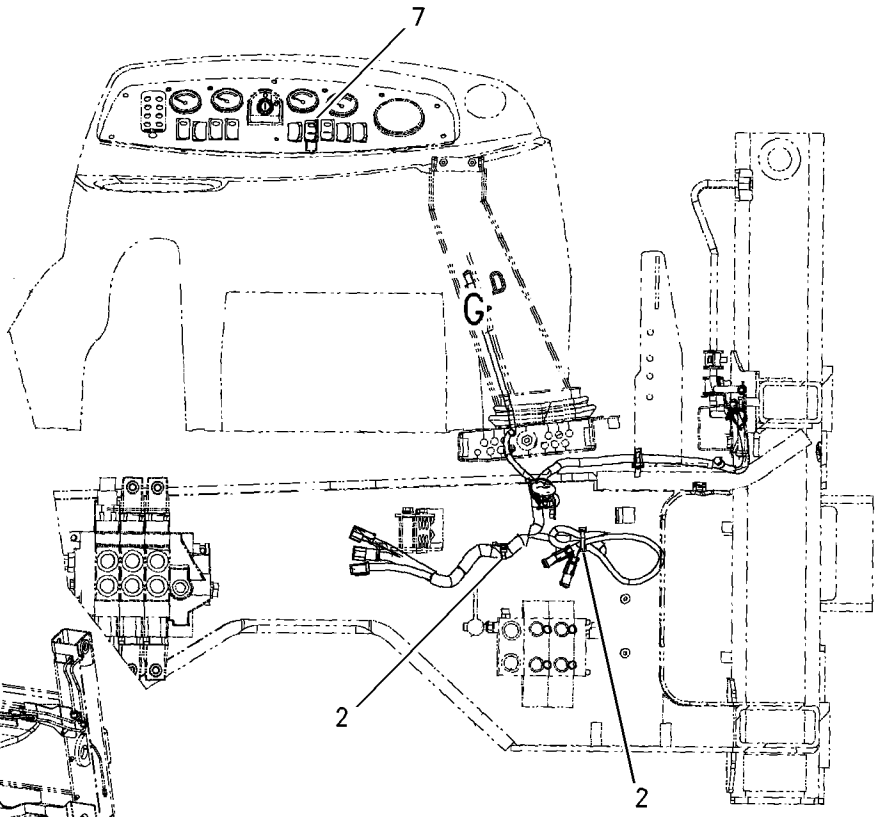

SECTION A-A

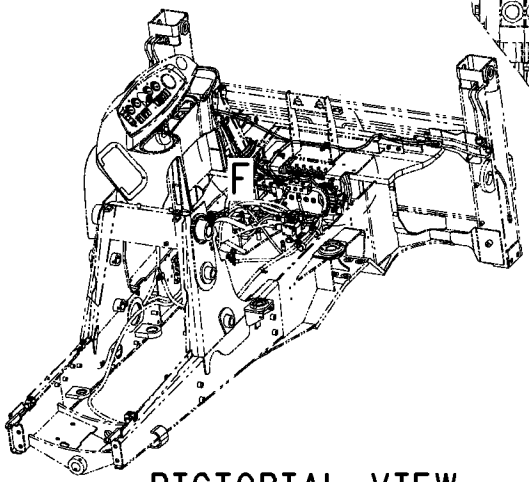

PICTORIAL VIEW

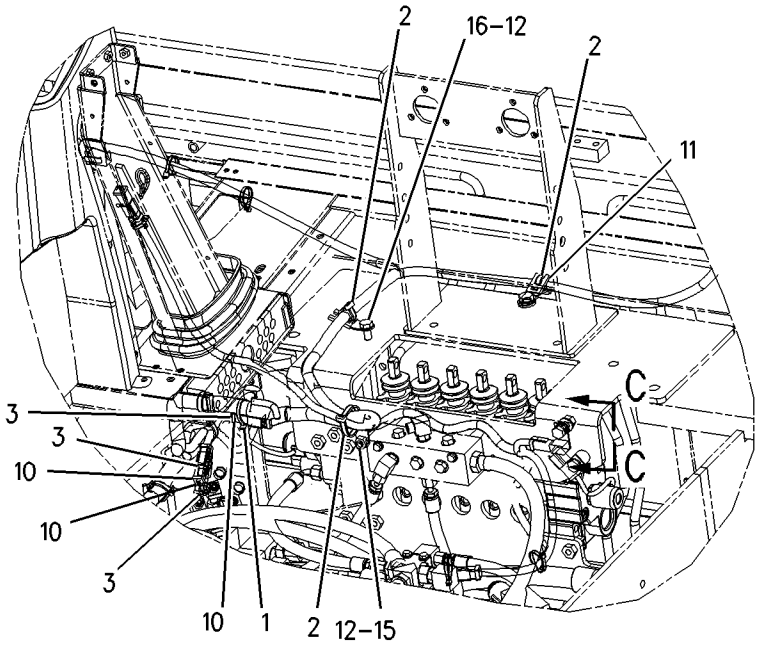

VIEW OF AREA F

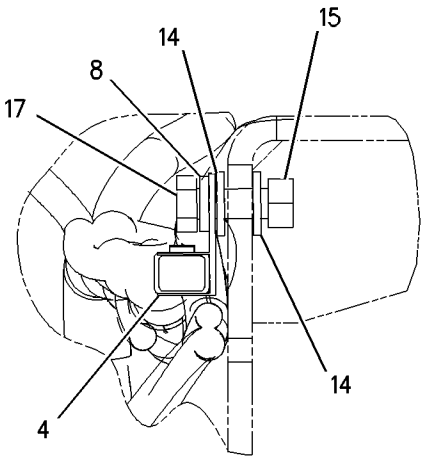

SECTION C-C

GRAPHIC #2 **<END>** g00863287

186-0311 WIRING GP-RIDE CONTROL

S/N: BXC1-UP; DSX1-UP
PART OF 239-9400 CONTROL AR-RIDE
AN ATTACHMENT

SMCS-1408 **i02011348**

NOTE	REF NO	GRAPHIC REF	PART NUMBER	QTY	PART NAME 1 2 3 4 5 6 (PRODUCT LEVEL)	SEE PAGE
	1	1	**3E-9362**	1	RELAY AS (12 VOLT)	
	2	1	**3S-2093**	18	STRAP-CABLE	
	3	1	**106-8704**	1	SUPPRESSOR AS-ARC	
		1	**3E-3365**	1	WEDGE-RECEPTACLE LOCK (2-PIN)	
		1	**186-3735**	2	PIN-CONNECTOR	
		1	**102-8802**	1	KIT-RECEPTACLE (2-PIN)	
	4	1	**113-8490**	1	FUSE (10-AMPERE)	
	5	1	**131-9203**	1	SWITCH AS-PRESSURE	
		1	**186-3735**	3	PIN-CONNECTOR	
		1	**3E-3371**	1	WEDGE-RECEPTACLE LOCK (3-PIN)	
		1	**102-8803**	1	KIT-RECEPTACLE (3-PIN)	
	6	1	**169-0607**	1	SWITCH AS-ROCKER (RIDE CONTROL)	
		1	**111-7899**	1	GASKET	
	7	1	**174-6395**	1	HARNESS AS-RIDE CONTROL (FRONT CONSOLE)	
		1	**155-2270**	1	KIT-CONNECTING PLUG (2-PIN)	
		1	**155-2274**	1	KIT-CONNECTING PLUG (6-PIN)	
	8	1	**174-6398**	1	HARNESS AS-RIDE CONTROL (PLATFORM)	
		1	**102-8804**	1	KIT-RECEPTACLE (4-PIN)	
		1	**102-8805**	1	KIT-RECEPTACLE (6-PIN)	
		1	**155-2270**	2	KIT-CONNECTING PLUG (2-PIN)	
		1	**155-2260**	1	KIT-CONNECTING PLUG (3-PIN)	
		1	**155-2274**	1	KIT-CONNECTING PLUG (6-PIN)	
	9	1	**200-2996**	1	HARNESS AS-RIDE CONTROL (FRAME, LEFT SIDE)	
		1	**102-8803**	1	KIT-RECEPTACLE (3-PIN)	
		1	**155-2260**	1	KIT-CONNECTING PLUG (3-PIN)	
		1	**155-2270**	1	KIT-CONNECTING PLUG (2-PIN)	
M	10	1	**138-8454**	1	SCREW-TRUSS HEAD (M4X0.7X10MM)	
	11	1	**3J-1907**	1	SEAL-O-RING	
	12	1	**4B-4863**	1	WASHER (4.7X11X1.2MM THK)	
	13	1	**4P-8134**	1	CLIP	

M-METRIC PART

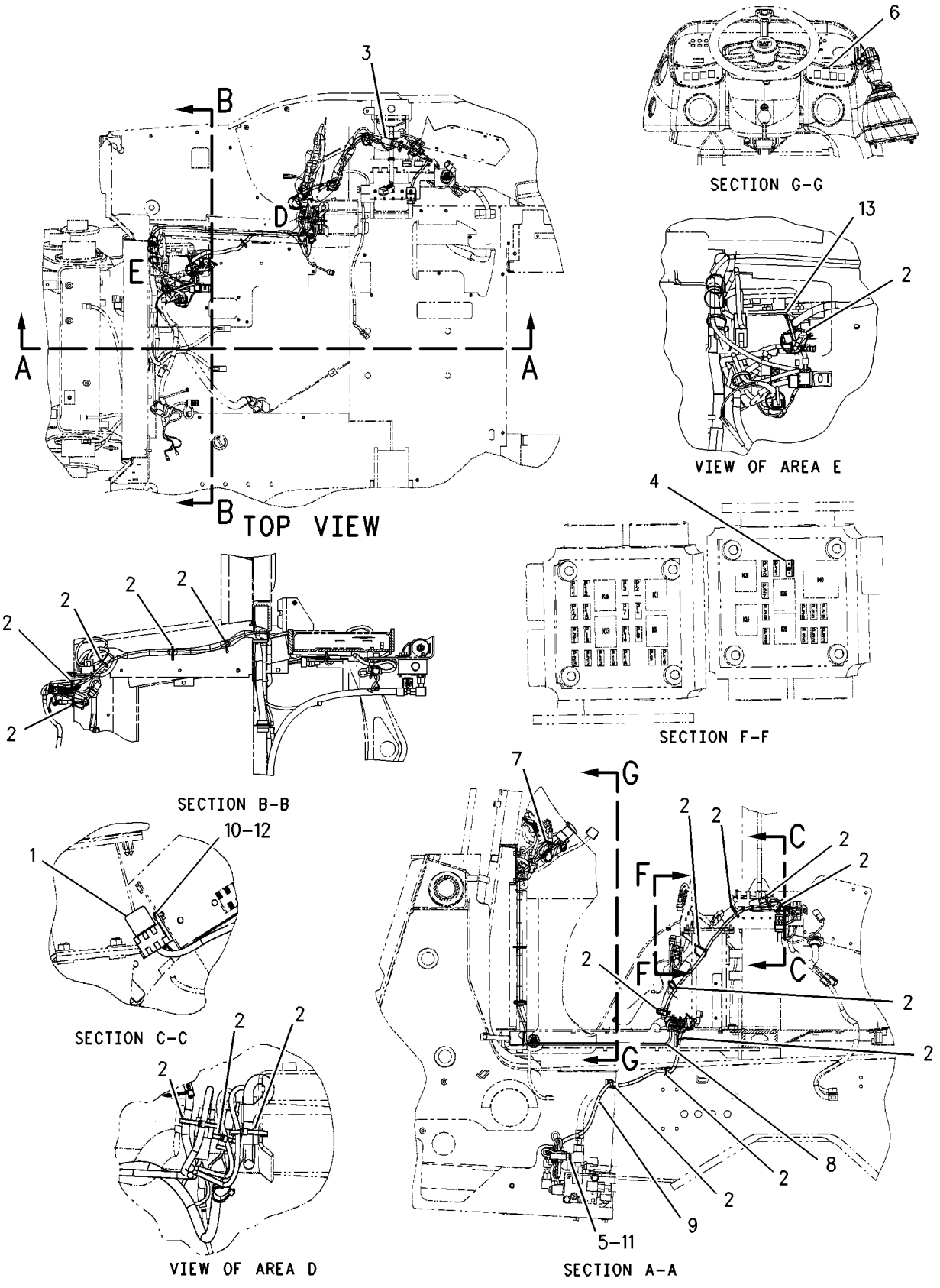

GRAPHIC #1 **<END>** g00775260

186-0312 WIRING GP-RIDE CONTROL–AUTOSHIFT

S/N: BXC1-UP; DSX1-UP
PART OF 239-9403 CONTROL AR-RIDE, 239-9410 KIT-RIDE CONTROL
AN ATTACHMENT

SMCS-1408 **i02000090**

NOTE	REF NO	GRAPHIC REF	PART NUMBER	QTY	PART NAME 1 2 3 4 5 6 (PRODUCT LEVEL)	SEE PAGE
	1	1	**3E-9362**	1	RELAY AS (12 VOLT)	
	2	1	**3S-2093**	18	STRAP-CABLE	
	3	1	**106-8704**	2	SUPPRESSOR AS-ARC	
					(EACH INCLUDES)	
		1	**102-8802**	1	KIT-RECEPTACLE (2-PIN)	
		1	**186-3735**	2	PIN-CONNECTOR	
	4	1	**113-8490**	1	FUSE (10 AMP)	
	5	1	**131-9203**	1	SWITCH AS-PRESSURE	
		1	**102-8803**	1	KIT-RECEPTACLE (3-PIN)	
		1	**186-3735**	3	PIN-CONNECTOR	
	6	1	**169-0608**	1	SWITCH AS (RIDE CONTROL)	
		1	**111-7899**	1	GASKET	
	7	1	**174-6395**	1	HARNESS AS-RIDE CONTROL (FRONT CONSOLE)	
		1	**155-2270**	1	KIT-CONNECTING PLUG (2-PIN)	
		1	**155-2274**	1	KIT-CONNECTING PLUG (6-PIN)	
	8	1	**174-6398**	1	HARNESS AS-RIDE CONTROL (PLATFORM)	
		1	**102-8804**	1	KIT-RECEPTACLE (4-PIN)	
		1	**102-8805**	1	KIT-RECEPTACLE (6-PIN)	
		1	**155-2270**	1	KIT-CONNECTING PLUG (2-PIN)	
		1	**155-2260**	1	KIT-CONNECTING PLUG (3-PIN)	
		1	**155-2274**	1	KIT-CONNECTING PLUG (6-PIN)	
	9	1	**200-2996**	1	HARNESS AS-RIDE CONTROL (FRAME)	
		1	**102-8803**	1	KIT-RECEPTACLE (3-PIN)	
		1	**155-2260**	1	KIT-CONNECTING PLUG (3-PIN)	
		1	**155-2270**	1	KIT-CONNECTING PLUG (2-PIN)	
M	10	1	**138-8454**	1	SCREW-TRUSS HEAD (M4X0.7X10MM)	
	11	1	**3J-1907**	1	SEAL-O-RING	
	12	1	**4B-4863**	1	WASHER (4.7X11X1.2MM THK)	
	13	1	**4P-8134**	1	CLIP	

M-METRIC PART

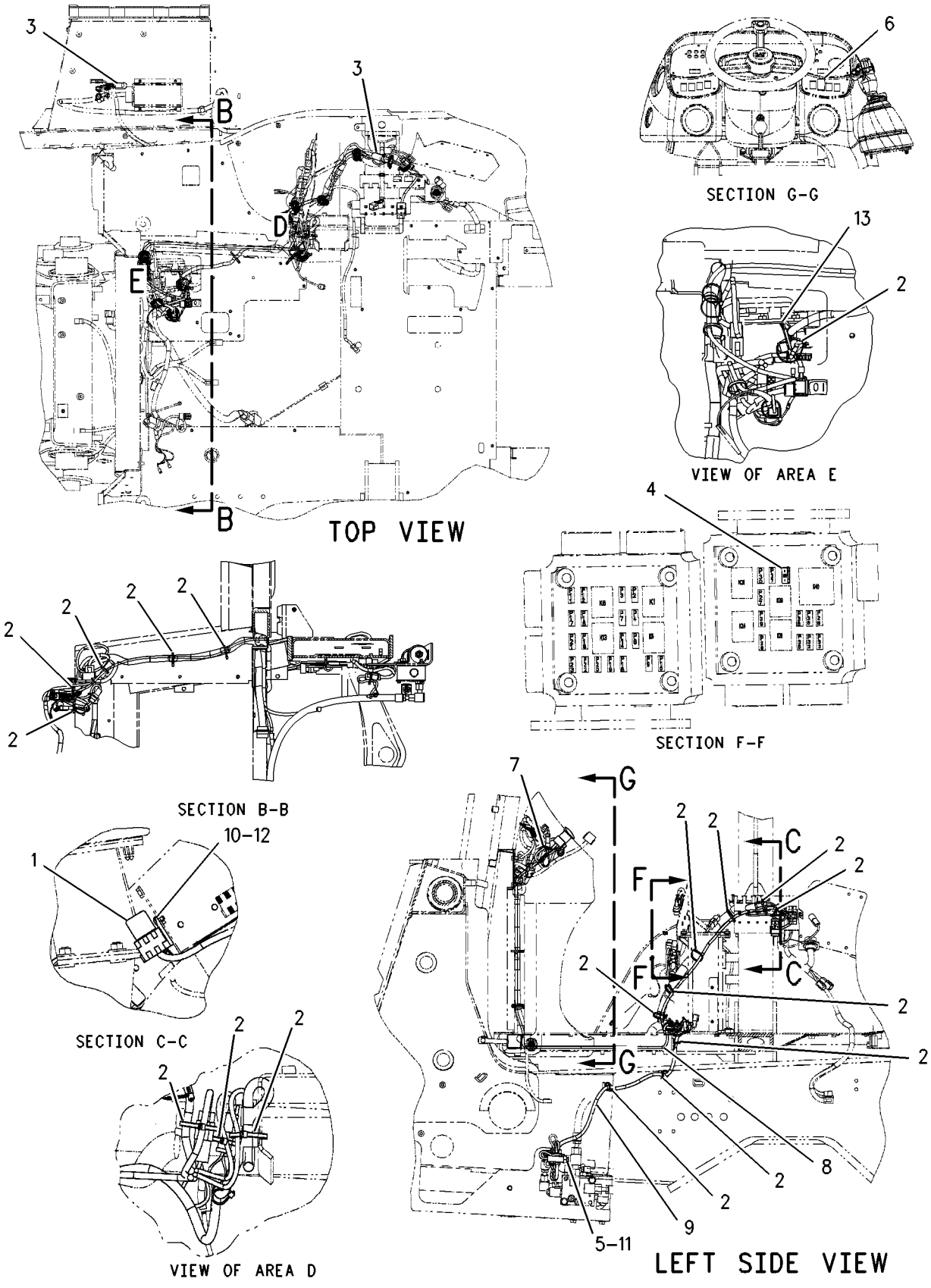

GRAPHIC #1 **<END>** g00863443

194-1947 WIRING GP-RIDE CONTROL

S/N: BXC1-UP; DSX1-UP
PART OF 239-9404 CONTROL AR-RIDE
AN ATTACHMENT

SMCS-1408 **i02001095**

NOTE	REF NO	GRAPHIC REF	PART NUMBER	QTY	PART NAME 1 2 3 4 5 6 (PRODUCT LEVEL)	SEE PAGE
	1	1	**3E-9362**	3	RELAY AS (12 VOLT) (DEAD ENGINE LOWER,RIDE CONTROL)	
	2	1	**3S-2093**	39	STRAP-CABLE	
	3	1	**106-8704**	2	SUPPRESSOR AS-ARC	
					(EACH INCLUDES)	
		1	**3E-3365**	1	WEDGE-RECEPTACLE LOCK (2-PIN)	
		1	**186-3735**	2	PIN-CONNECTOR	
		1	**102-8802**	1	KIT-RECEPTACLE (2-PIN)	
	4	1	**113-8490**	1	FUSE (10 AMP)	
	5	1	**131-9203**	1	SWITCH AS-PRESSURE	
		1	**3E-3371**	1	WEDGE-RECEPTACLE LOCK (3-PIN)	
		1	**186-3735**	3	PIN-CONNECTOR	
		1	**102-8803**	1	KIT-RECEPTACLE (3-PIN)	
	6	1	**169-0607**	1	SWITCH AS-ROCKER (RIDE CONTROL)	
		1	**111-7899**	1	GASKET	
	7	1	**174-6398**	1	HARNESS AS-RIDE CONTROL (PLATFORM)	
		1	**102-8804**	1	KIT-RECEPTACLE (4-PIN)	
		1	**102-8805**	1	KIT-RECEPTACLE (6-PIN)	
		1	**155-2270**	2	KIT-CONNECTING PLUG (2-PIN)	
		1	**155-2260**	1	KIT-CONNECTING PLUG (3-PIN)	
		1	**155-2274**	1	KIT-CONNECTING PLUG (6-PIN)	
	8	1	**194-1937**	1	HARNESS AS-RIDE CONTROL (FRAME, RIGHT SIDE) (DEAD ENGINE LOWER)	
		1	**102-8804**	1	KIT-RECEPTACLE (4-PIN)	
		1	**155-2260**	1	KIT-CONNECTING PLUG (3-PIN)	
		1	**155-2270**	1	KIT-CONNECTING PLUG (2-PIN)	
	9	1	**194-1938**	1	HARNESS AS-RIDE CONTROL (SIDE CONSOLE)	
		1	**102-8804**	2	KIT-RECEPTACLE (4-PIN)	
		1	**155-2271**	2	KIT-CONNECTING PLUG (4-PIN)	
		1	**155-2270**	1	KIT-CONNECTING PLUG (2-PIN)	
	10	1	**194-1941**	1	HARNESS AS-RIDE CONTROL (FRONT CONSOLE)	
		1	**155-2270**	1	KIT-CONNECTING PLUG (2-PIN)	
		1	**155-2274**	1	KIT-CONNECTING PLUG (6-PIN)	
	11	1	**200-2996**	1	HARNESS AS-RIDE CONTROL (FRAME, LEFT SIDE)	
		1	**102-8803**	1	KIT-RECEPTACLE (3-PIN)	
		1	**155-2260**	1	KIT-CONNECTING PLUG (3-PIN)	
		1	**155-2270**	1	KIT-CONNECTING PLUG (2-PIN)	
M	12	1	**138-8454**	3	SCREW-TRUSS HEAD (M4X0.7X10MM)	
	13	1	**3J-1907**	1	SEAL-O-RING	
	14	1	**4B-4863**	3	WASHER (4.7X11X1.2MM THK)	
	15	1	**4P-8134**	1	CLIP	

M-METRIC PART

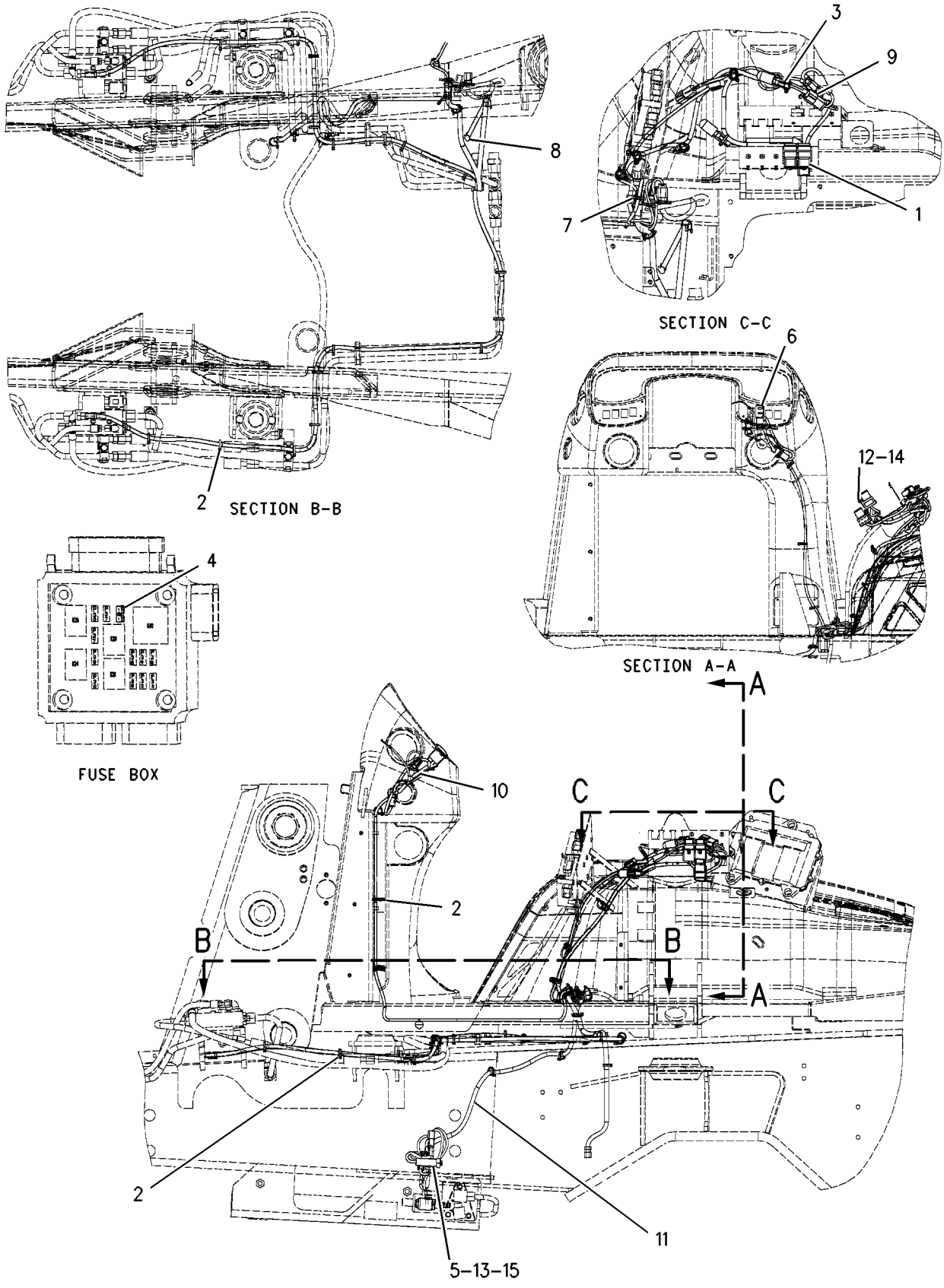

GRAPHIC #1 **<END>** g00771699

ELECTRICAL AND STARTING SYSTEM

194-1948 WIRING GP-RIDE CONTROL–AUTOSHIFT

S/N: BXC1-UP; DSX1-UP
PART OF 239-9405, 239-9413 CONTROL AR-RIDE
AN ATTACHMENT

SMCS-1408 **i02001097**

NOTE	REF NO	GRAPHIC REF	PART NUMBER	QTY	PART NAME 1 2 3 4 5 6 (PRODUCT LEVEL)	SEE PAGE
	1	1	**3E-9362**	3	RELAY AS (12 VOLT) (DEAD ENGINE LOWER,RIDE CONTROL)	
	2	1	**3S-2093**	39	STRAP-CABLE	
	3	1	**106-8704**	2	SUPPRESSOR AS-ARC	
					(EACH INCLUDES)	
		1	**102-8802**	1	KIT-RECEPTACLE (2-PIN)	
		1	**186-3735**	2	PIN-CONNECTOR	
	4	1	**113-8490**	1	FUSE (10 AMP)	
	5	1	**131-9203**	1	SWITCH AS-PRESSURE	
		1	**102-8803**	1	KIT-RECEPTACLE (3-PIN)	
		1	**186-3735**	3	PIN-CONNECTOR	
	6	1	**169-0608**	1	SWITCH AS-ROCKER (RIDE CONTROL)	
		1	**111-7899**	1	GASKET	
	7	1	**174-6398**	1	HARNESS AS-RIDE CONTROL (PLATFORM)	
		1	**102-8804**	1	KIT-RECEPTACLE (4-PIN)	
		1	**102-8805**	1	KIT-RECEPTACLE (6-PIN)	
		1	**155-2270**	2	KIT-CONNECTING PLUG (2-PIN)	
		1	**155-2260**	1	KIT-CONNECTING PLUG (3-PIN)	
		1	**155-2274**	1	KIT-CONNECTING PLUG (6-PIN)	
	8	1	**194-1937**	1	HARNESS AS-RIDE CONTROL (FRAME, RIGHT SIDE)	
		1	**102-8804**	1	KIT-RECEPTACLE (4-PIN)	
		1	**155-2260**	2	KIT-CONNECTING PLUG (3-PIN)	
		1	**155-2270**	2	KIT-CONNECTING PLUG (2-PIN)	
	9	1	**194-1938**	1	HARNESS AS-RIDE CONTROL (SIDE CONSOLE)	
		1	**102-8804**	2	KIT-RECEPTACLE (4-PIN)	
		1	**155-2271**	2	KIT-CONNECTING PLUG (4-PIN)	
		1	**155-2270**	1	KIT-CONNECTING PLUG (2-PIN)	
	10	1	**194-1941**	1	HARNESS AS-RIDE CONTROL (FRONT CONSOLE)	
		1	**155-2270**	1	KIT-CONNECTING PLUG (2-PIN)	
		1	**155-2274**	1	KIT-CONNECTING PLUG (6-PIN)	
	11	1	**200-2996**	1	HARNESS AS-RIDE CONTROL (FRAME, LEFT SIDE)	
		1	**102-8803**	1	KIT-RECEPTACLE (3-PIN)	
		1	**155-2260**	1	KIT-CONNECTING PLUG (3-PIN)	
		1	**155-2270**	1	KIT-CONNECTING PLUG (2-PIN)	
M	12	1	**138-8454**	3	SCREW-TRUSS HEAD (M4X0.7X10MM)	
	13	1	**3J-1907**	1	SEAL-O-RING	
	14	1	**4B-4863**	3	WASHER (4.7X11X1.2MM THK)	
	15	1	**4P-8134**	1	CLIP	

M-METRIC PART

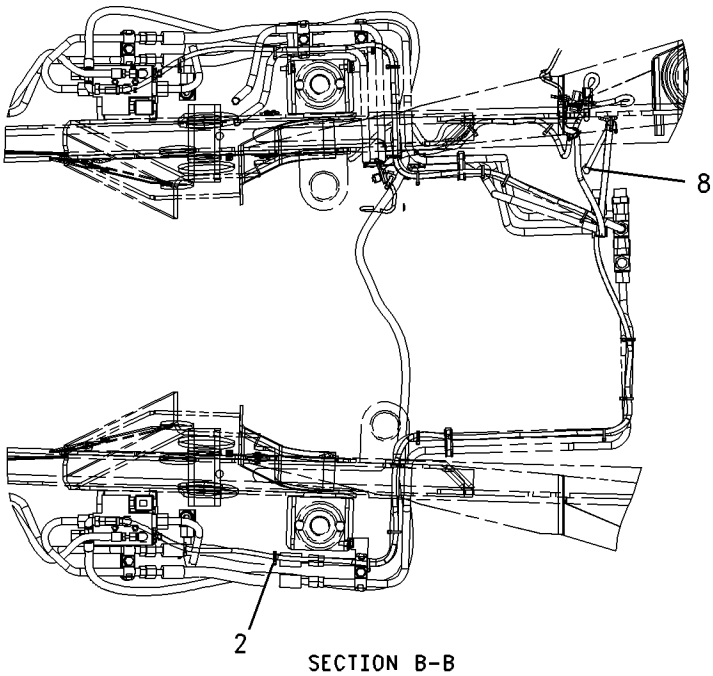

SECTION B-B

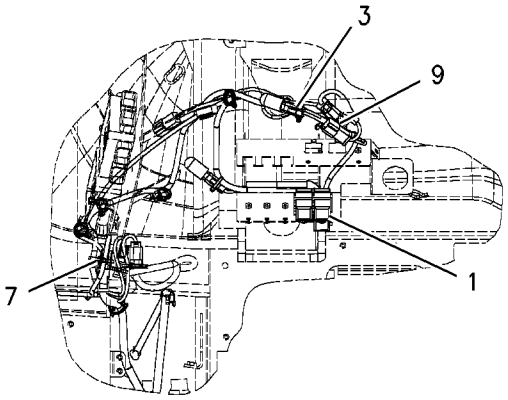

SECTION C-C

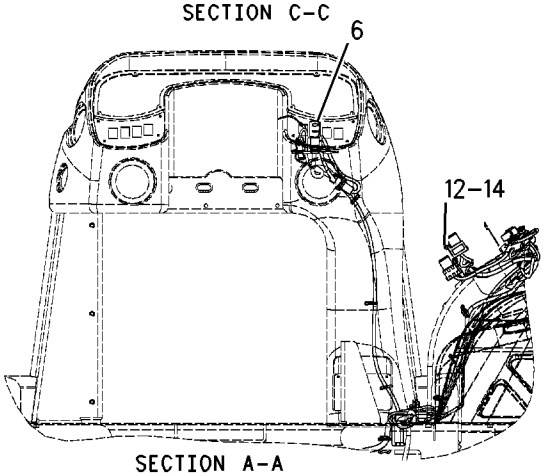

SECTION A-A

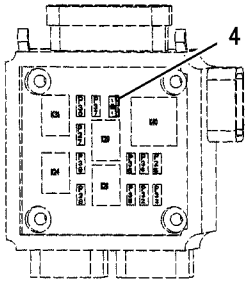

FUSE BOX

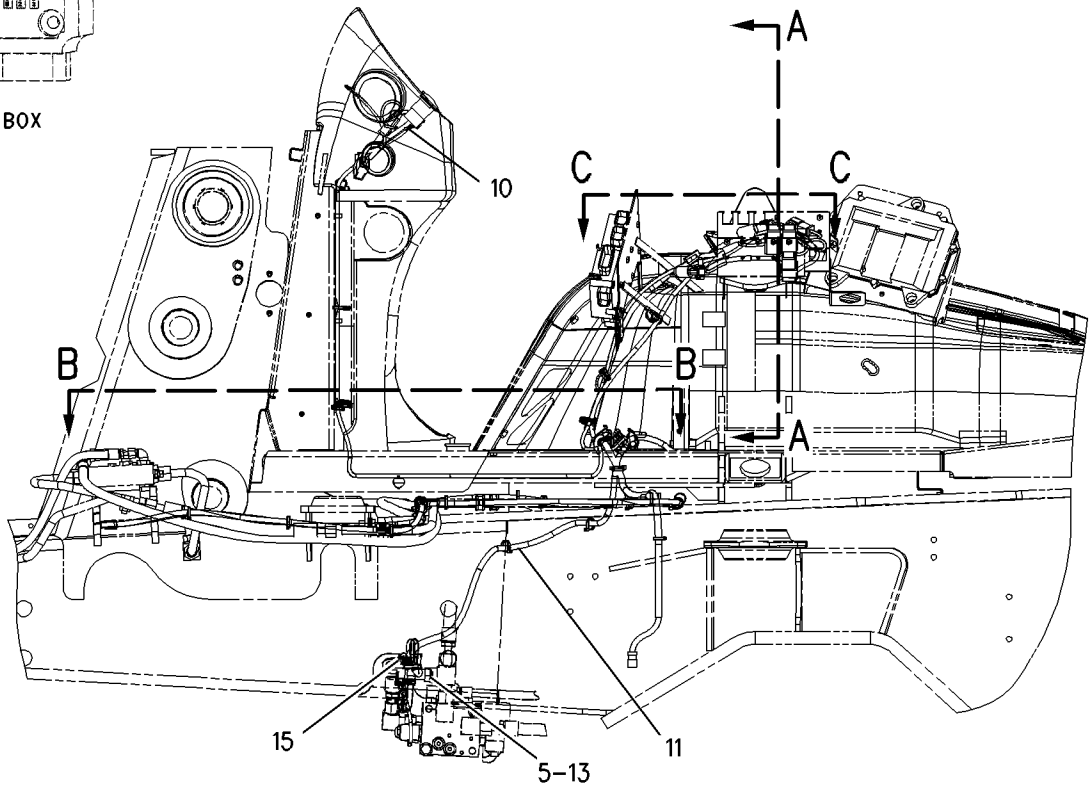

GRAPHIC #1 **<END>** g00774535

122-1645 WIRING GP-SENSOR

S/N: BXC1-UP; DSX1-UP
AN ATTACHMENT

SMCS-1408 **i01938046**

NOTE	REF NO	GRAPHIC REF	PART NUMBER	QTY	PART NAME 1 2 3 4 5 6 (PRODUCT LEVEL)	SEE PAGE
	1	1	**3S-2093**	38	STRAP-CABLE	
	2	1	**118-7790**	1	BRACKET AS	
M	3	1	**8T-4138**	2	BOLT (M6X1X20MM)	
	4	1	**8T-4205**	2	WASHER-HARD (7.2X14.5X2MM THK)	
	5	1	**107-5605**	1	HARNESS AS-WORK TOOL (SENSOR)	
		1	**102-8803**	1	KIT-RECEPTACLE (3 PIN)	
	6	1	**206-1486**	1	SWITCH AS-ROLLER (RETURN TO DIG)	
		1	**2H-3922**	1	LOCKWASHER	
		1	**6V-8363**	2	SCREW (10-32X0.312 IN)	
		1	**6V-8370**	1	NUT-HEX (3/4-32 THD)	
		1	**8F-1434**	2	LOCKWASHER	
		1	**9X-0199**	1	BOOT-SWITCH	

M-METRIC PART

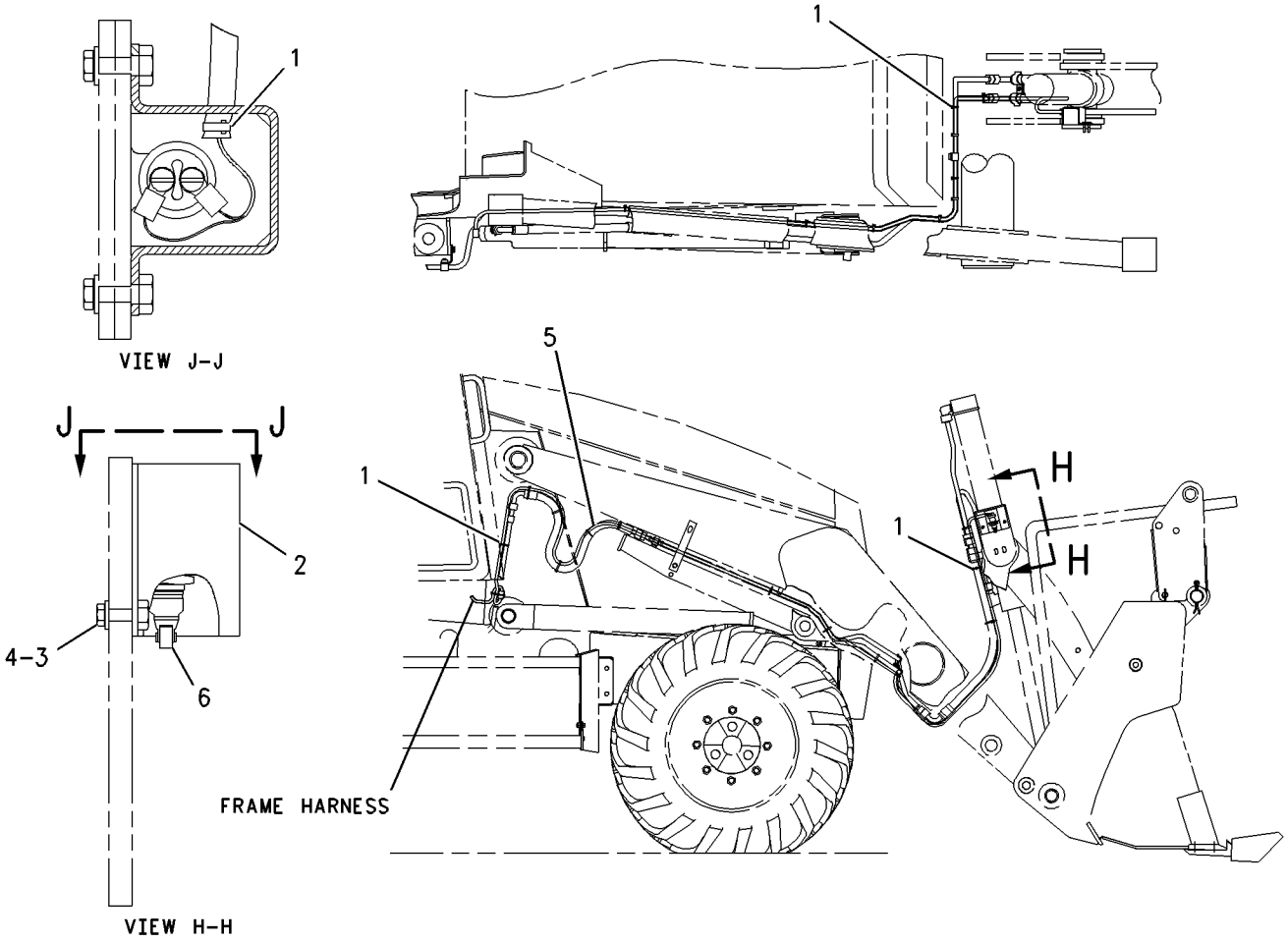

GRAPHIC #1 **<END>** g00890606

186-0307 WIRING GP-STABILIZER ALARM

S/N: BXC1-UP; DSX1-UP
PART OF 210-8918 STABILIZER AR
AN ATTACHMENT

SMCS-1408, 7222, 7400 **i01807130**

NOTE	REF NO	GRAPHIC REF	PART NUMBER	QTY	PART NAME 1 2 3 4 5 6 (PRODUCT LEVEL)	SEE PAGE
	1	1	**3S-2093**	9	STRAP-CABLE	
	2	1	**136-5185**	1	HORN	
	3	1	**172-9200**	1	SUPPRESSOR-ARC	
	4	1	**186-0320**	1	HARNESS AS-ALARM (STABILIZER)	
		1	**102-8802**	3	KIT-RECEPTACLE (2 PIN)	
		1	**155-2270**	2	KIT-CONNECTING PLUG (2 PIN)	
		1	**155-2271**	1	KIT-CONNECTING PLUG (4 PIN)	

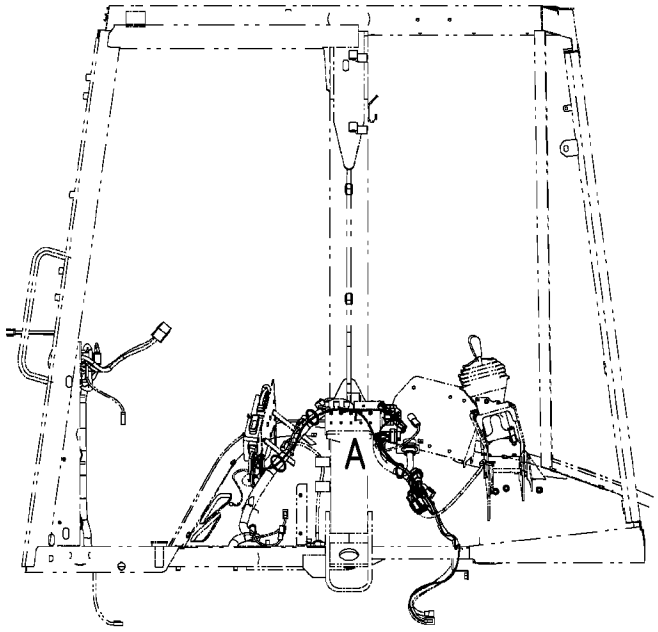

LEFT SIDE VIEW

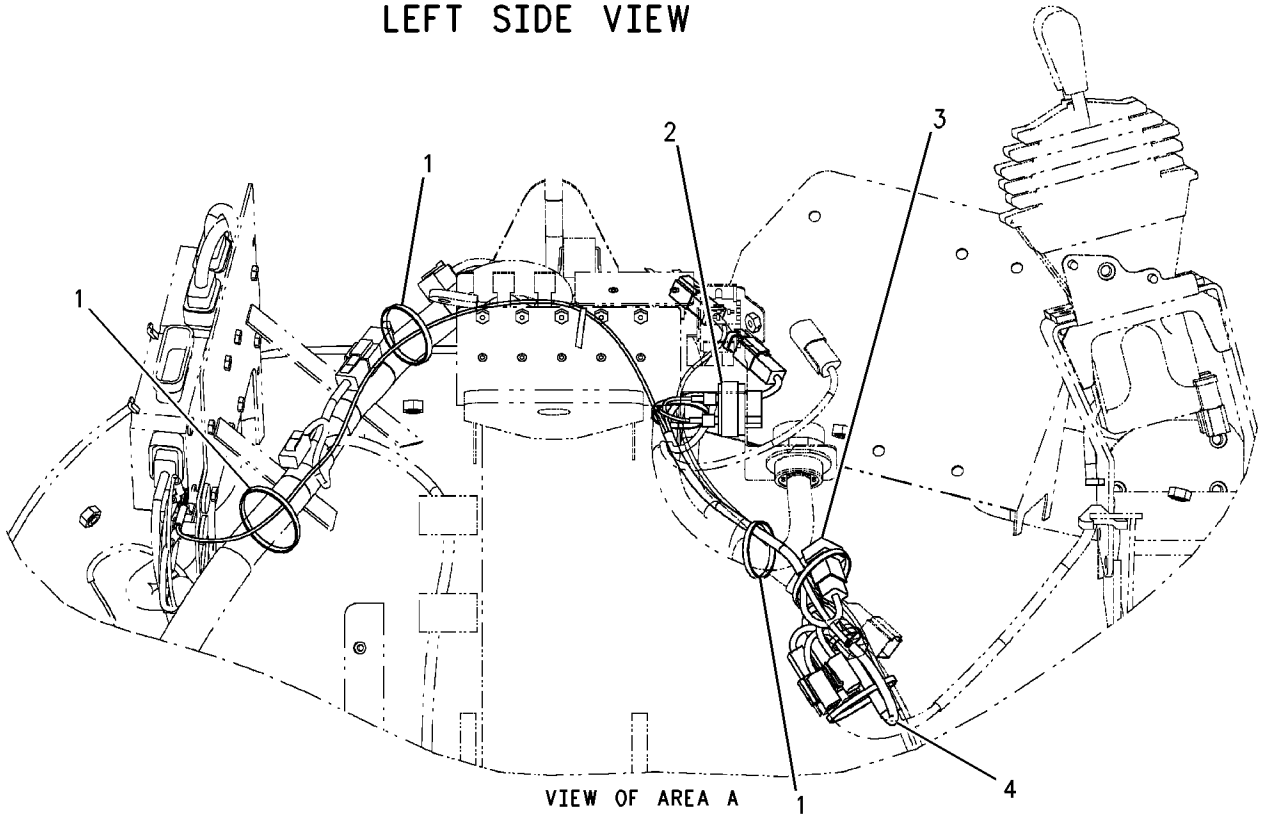

VIEW OF AREA A

GRAPHIC #1 **<END>** g00864642

186-0309 WIRING GP-STEERING–ALL WHEEL DRIVE

S/N: BXC1-UP; DSX1-UP

PART OF 237-6463 DRIVE AR-BACKHOE LOADER

SMCS-1408, 4334 **i01734161**

NOTE	REF NO	GRAPHIC REF	PART NUMBER	QTY	PART NAME 1 2 3 4 5 6 (PRODUCT LEVEL)	SEE PAGE
	1	1	**3S-2093**	1	STRAP-CABLE	
	2	1	**106-8704**	1	SUPPRESSOR AS-ARC	
		1	**102-8802**	1	KIT-RECEPTACLE (2 PIN)	
					(KIT INCLUDES RECEPTACLE AS AND WEDGE)	
		1	**3E-3365**	1	WEDGE-RECEPTACLE LOCK (2 PIN)	
		1	**8T-8729**	2	PIN-CONNECTOR	
	3	1	**141-2759**	1	FUSE (5 AMP)	
	4	1	**146-9439**	1	RELAY AS (12 VOLT)	
	5	1	**169-0598**	1	SWITCH AS (ALL WHEEL DRIVE)	
		1	**111-7899**	1	GASKET	

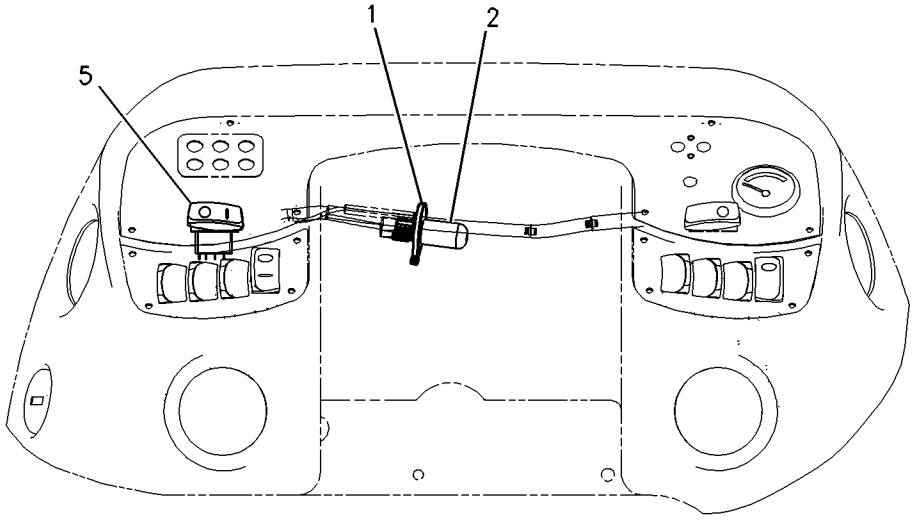

FRONT VIEW

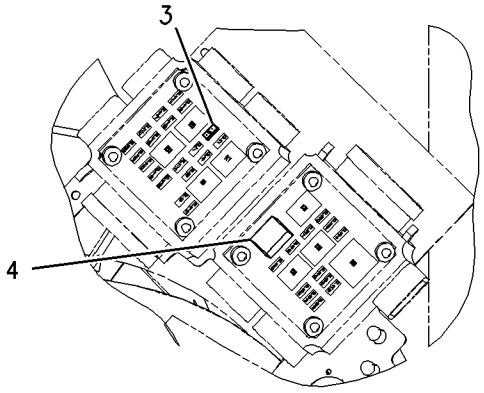

FUSE PANEL

GRAPHIC #1 **<END>** g00732887

POWER TRAIN

231-0705 AXLE GP-DRIVE & STEERING

S/N: BXC1-UP; DSX1-UP

PART OF 237-6463 DRIVE AR-BACKHOE LOADER

SMCS-3020, 3250, 3258, 3259, 3260, 3264, 3278, 4050, 4313 **i01994447**

NOTE	REF NO	GRAPHIC REF	PART NUMBER	QTY	PART NAME 1 2 3 4 5 6 (PRODUCT LEVEL)	SEE PAGE
	1	1	**154-5404**	2	BEARING	
	2	1	**199-0639**	4	SCREW (WHEEL HUB)	
	3	1	**207-4254**	6	BOLT	
	4	1	**207-4258**	2	NUT	
	5	1	**219-8798**	2	SEAL-LIP TYPE	
	6	1	**209-9875**	2	DOWEL	
	7	1	**197-9155**	1	BREATHER (AXLE)	
	8	1	**209-7456**	2	BUSHING	
	9	1	**211-6735**	2	SEAL-O-RING	
	10	1	**214-5097**	1	CYLINDER GP-STEERING	
		1	**215-2023**	1	KIT-SEAL	
	11	1	**152-6144**	3	PLUG AS-MAGNETIC	
	12	1	**208-0321**	11	BOLT-FLANGE HEAD (M12X1.75X33MM)	
	13	1	**209-7464**	2	SEAL	
M	14	1	**199-0683**	16	BOLT (M16X2X38MM)	
	15	1	**210-5937**	2	WASHER (46X66X3MM THK)	
B	16	1	**198-7841**	8	SHIM (.15MM THK)	
B	17	1	**198-7842**	4	SHIM (.2MM THK)	
B	18	1	**198-7843**	4	SHIM (.5MM THK)	
Y	19	1	**238-5258**	1	DIFFERENTIAL & BEVEL GEAR GP	227
	20	1	**210-5942**	2	RING	
	21	1	**209-9883**	1	HOUSING	
	22	1	**210-5946**	2	SHAFT GP-AXLE	
					(EACH INCLUDES)	
		1	**174-4643**	4	KIT-SPIDER	
		1	**174-4671**	1	YOKE	
	23	1	**209-9886**	2	TIE ROD GP	
					(EACH INCLUDES)	
	23A	1	**217-2883**	1	TIE ROD	
	23B	1	**217-2884**	1	BALL JOINT	
	23C	1	**217-2885**	1	NUT	
	24	1	**209-9887**	1	BUSHING	
	25	1	**210-5947**	2	WASHER-THRUST (44.6X58X7MM THK)	
	26	1	**216-7473**	4	PIN GP-AXLE	
					(EACH INCLUDES)	
	26A	1	**198-7823**	1	BEARING AS	
	26B	1	**198-7825**	1	SEAL	
	26C	1	**198-7838**	1	PIN	
Y	27	1	**210-5924**	2	PLANETARY GP-FINAL DRIVE	238
Y	28	1	**209-9884**	1	HOUSING & FLANGE GP-AXLE (RH)	234
Y	29	1	**209-9885**	1	HOUSING & FLANGE GP-AXLE (LH)	235
	30	1	**069-4707**	1	SEALANT (GASKET)	

B-USE AS REQUIRED
M-METRIC PART
Y-SEPARATE ILLUSTRATION

231-0705 AXLE GP-DRIVE & STEERING *(contd.)* i01994447

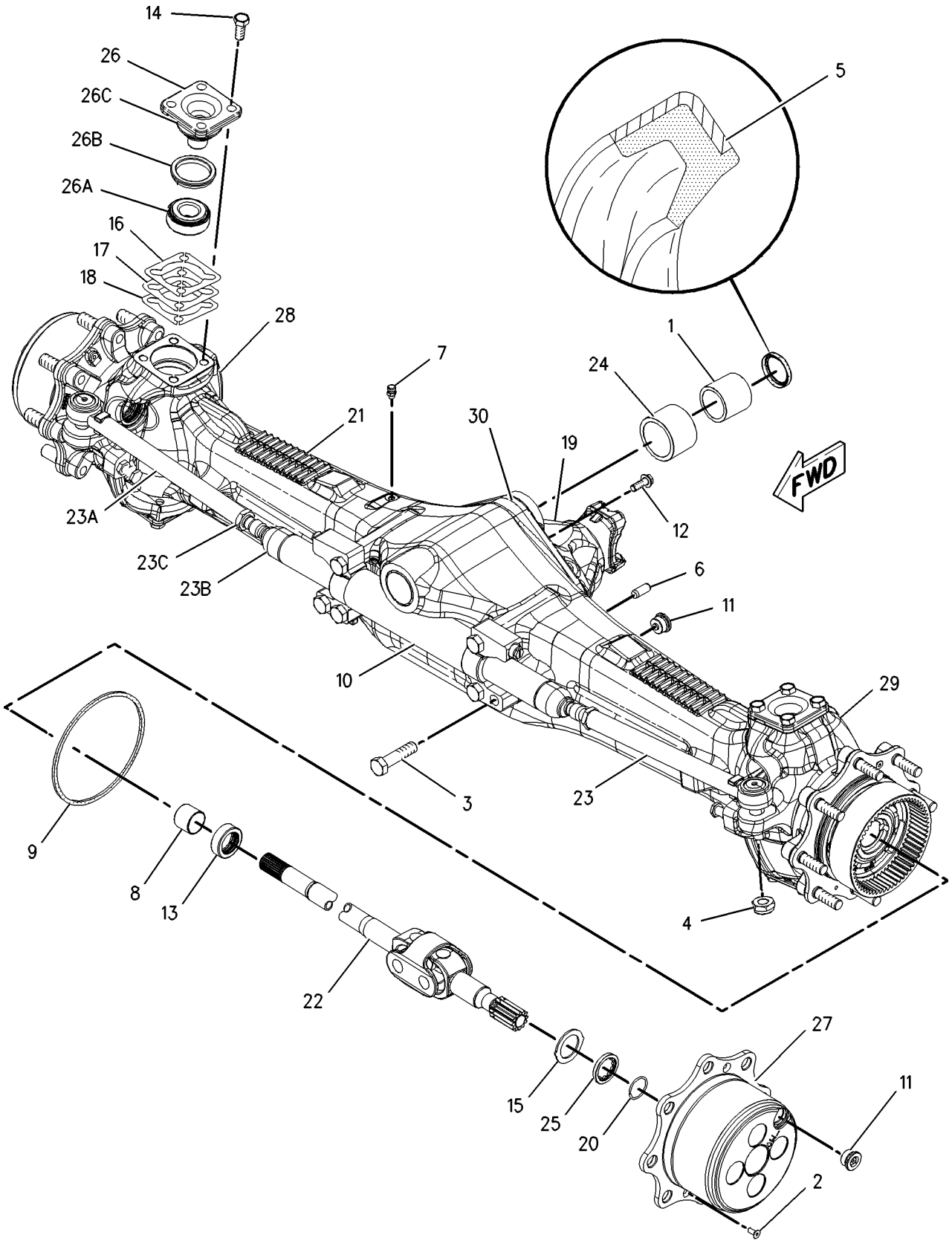

GRAPHIC #1 **<END>** g00997535

POWER TRAIN

156-2857 AXLE GP-REAR

S/N: BXC1-UP; DSX1-UP

PART OF 237-6463 DRIVE AR-BACKHOE LOADER

SMCS-3278, 3282 **i02005300**

NOTE	REF NO	GRAPHIC REF	PART NUMBER	QTY	PART NAME 1 2 3 4 5 6 (PRODUCT LEVEL)	SEE PAGE
	1	1	**118-5837**	2	SHAFT AS	
					(EACH INCLUDES)	
	1A	1	**9R-5219**	8	BOLT-SPECIAL	
	2	2	**9R-2407**	1	RETAINER AS	
	2A	2	**3N-6408**	1	CUP-BEARING (TAPERED ROLLER BEARING)	
	2B	2	**4K-5843**	1	CUP-BEARING (TAPERED ROLLER BEARING)	
	3	1	**156-1928**	1	HOUSING AS-LH	
	3A	1	**6Y-7652**	1	CUP-BEARING (TAPERED ROLLER BEARING)	
	3B	1	**8S-9151**	1	CUP-BEARING (TAPERED ROLLER BEARING)	
	3C	1	**156-1929**	2	STUD	
	3D	1	**156-1930**	1	GEAR-PLANET RING (56 TEETH)	
	4	1	**156-2571**	1	HOUSING AS-RH	
	4A	1	**6Y-7652**	1	CUP-BEARING (TAPERED ROLLER BEARING)	
	4B	1	**8S-9151**	1	CUP-BEARING (TAPERED ROLLER BEARING)	
	4C	1	**156-1929**	2	STUD	
	4D	1	**156-1930**	1	GEAR-PLANET RING (56 TEETH)	
	5	1	**186-4117**	2	CARRIER AS	
					(EACH INCLUDES)	
	5A	1	**7T-6652**	1	CONE-BEARING (TAPERED ROLLER BEARING) (TAPERED ROLLER BEARING)	
	5B	1	**9R-2417**	3	WASHER (33.07X48.38X1.06MM THK)	
	5C	1	**9R-2418**	6	WASHER (32.94X57.21X.78MM THK)	
	5D	1	**9R-2419**	3	KIT-BEARING	
	5E	1	**9R-2420**	1	RETAINER	
	5F	1	**9R-2421**	3	SHAFT	
	5G	1	**186-4118**	3	GEAR-PLANET (20 TEETH)	
	6	1	**9F-2167**	2	SCREW-PURGE	
	7	1	**9R-0883**	1	PIN	
	8	1	**9R-0823**	1	LEVER AS	
B	9	2	**9R-2427**	1	SHIM (0.965MM THK)	
B		2	**9R-2428**	1	SHIM (1.118MM THK)	
B		2	**9R-2429**	1	SHIM (1.270MM THK)	
B		2	**9R-2430**	1	SHIM (1.422MM THK)	
B		2	**9R-2431**	1	SHIM (1.575MM THK)	
B		2	**9R-2432**	1	SHIM (1.727MM THK)	
B		2	**9R-2433**	1	SHIM (1.880MM THK)	
B		2	**9R-2434**	1	SHIM (2.032MM THK)	
	10	1	**9R-2425**	2	WASHER (23.088X69.6X9.52MM THK)	
	11	1	**156-2572**	1	HOUSING-REAR BRAKE (RH)	
	12	1	**9R-9410**	2	SEAL-REAR BRAKE	
	13	1	**9R-9409**	2	SEAL-REAR BRAKE	
	14	1	**9R-9408**	2	PISTON-REAR BRAKE	
B	15	2	**9R-2446**	1	SPACER (45.86X50.98X31.858MM THK)	
B		2	**9R-2447**	1	SPACER (45.86X50.98X31.908MM THK)	
B		2	**9R-2448**	1	SPACER (45.86X50.98X31.959MM THK)	
B		2	**9R-2449**	1	SPACER (45.86X50.98X32.010MM THK)	
B		2	**9R-2450**	1	SPACER (45.86X50.98X32.061MM THK)	
B		2	**9R-2451**	1	SPACER (45.86X50.98X32.112MM THK)	
B		2	**9R-2452**	1	SPACER (45.86X50.98X32.162MM THK)	
B		2	**9R-2453**	1	SPACER (45.86X50.98X32.213MM THK)	
B		2	**9R-2454**	1	SPACER (45.86X50.98X32.264MM THK)	
B		2	**9R-2455**	1	SPACER (45.86X50.98X32.315MM THK)	
B		2	**9R-2456**	1	SPACER (45.86X50.98X32.366MM THK)	
B		2	**9R-2457**	1	SPACER (45.86X50.98X32.416MM THK)	
B		2	**9R-2458**	1	SPACER (45.86X50.98X32.467MM THK)	
B		2	**9R-2459**	1	SPACER (45.86X50.98X32.518MM THK)	

156-2857 AXLE GP-REAR *(contd.)* i02005300

NOTE	REF NO	GRAPHIC REF	PART NUMBER	QTY	PART NAME 1 2 3 4 5 6 (PRODUCT LEVEL)	SEE PAGE
B		2	**9R-2460**	1	SPACER (45.86X50.98X32.569MM THK)	
	16	1	**230-4017**	8	DISC-BRAKE	
	17	1	**9R-2474**	2	PIN	
	18	1	**9R-9401**	8	PLATE	
	19	1	**8S-4740**	12	BOLT (9/16-12X5 IN)	
	20	1	**9R-9398**	2	MANIFOLD-BRAKE TUBE	
	21	1	**8H-1607**	2	SEAL-O-RING	
	22	1	**9R-2424**	2	GEAR (16 TEETH)	
	23	1	**8M-8157**	4	SEAL-O-RING	
	24	2	**2A-4576**	1	CUP-BEARING (TAPERED ROLLER BEARING)	
	25	2	**5L-9656**	1	CONE-BEARING (TAPERED ROLLER BEARING)	
	26	1	**9X-8880**	25	BOLT (5/8-11X2 IN)	
	27	2	**9R-2508**	1	HOUSING	
	28	2	**113-1147**	1	FLANGE	
	29	2	**9R-2497**	1	SEAL	
	30	2	**9R-2501**	1	WASHER (32.5X60.5X5.6MM THK) (5.6MM THK)	
	31	2	**9R-2502**	1	NUT (1 1/4-18 THD)	
	32	2	**3B-5302**	1	PIN-COTTER	
	33	2	**9R-2498**	1	RETAINER	
	34	2	**3B-4509**	6	LOCKWASHER	
	35	2	**3K-3379**	6	BOLT (9/16-12X1IN)	
	36	1	**9X-8883**	1	BOLT (5/8-11X2.75 IN)	
	37	1	**5L-9018**	4	BOLT-SOCKET HEAD (1/4X20X1.75 IN)	
	38	1	**8T-6760**	2	PLUG-PIPE	
	39	2	**9R-2499**	1	SEAL AS	
	40	2	**9R-2496**	1	SEAL	
	41	2	**7T-6653**	1	CONE-BEARING (TAPERED ROLLER BEARING)	
	42	1	**118-5839**	2	SEAL-REAR AXLE	
	43	2	**9R-2512**	1	SEAL	
	44	1	**030-1957**	2	CONE-BEARING (TAPERED ROLLER BEARING)	
	45	2	**7T-6654**	1	CONE-BEARING (TAPERED ROLLER BEARING)	
	46	1	**9R-2505**	1	SEAL	
	47	1	**9R-2504**	1	SHAFT	
M	48	1	**9R-2507**	1	SCREW-SPECIAL	
	49	2	**7T-7621**	1	BEARING AS	
	50	2	**9R-2494**	1	RING	
	51	2	**9R-2480**	1	CASE AS	
	52	2	**2S-0480**	1	CUP-BEARING (TAPERED ROLLER BEARING)	
	53	2	**2S-0479**	1	CONE-BEARING (TAPERED ROLLER BEARING)	
	54	1	**9R-2506**	1	FORK	
	55	2	**9R-2492**	1	WASHER (64.389X78.74X3.124MM THK) (3.1MM THK)	
	56	2	**9R-2493**	1	RING	
	57	2	**9R-2488**	1	GEAR (16 TEETH)	
	58	2	**9R-2482**	1	COUPLING	
	59	1	**156-1934**	1	HOUSING-BRAKE	
	60	2	**9R-2486**	1	SPRING	
	61	2	**9R-2483**	1	ADAPTER	
	62	2	**9R-2484**	2	BUSHING-TERMINAL	
	63	2	**9R-2490**	2	WASHER (76.2X101.6X1.5MM THK)	
	64	2	**9R-2491**	1	SPIDER	
	65	2	**9R-9403**	4	PINION	
	66	2	**9R-2489**	4	WASHER-SPRING	
	67	2	**9R-2485**	8	BOLT (1/2-13X1.85IN)	
	68	1	**9R-2495**	2	SEAL	
	69	2	**118-9117**	1	GEAR SET	
M	70	2	**9R-6671**	12	BOLT (1/2-20X1.62IN)	
	71	2	**2M-2570**	12	LOCKNUT	
	72	2	**9R-2503**	1	BLOCK	
	73	1	**2L-6267**	1	LOCKNUT	

156-2857 AXLE GP-REAR *(contd.)* i02005300

NOTE	REF NO	GRAPHIC REF	PART NUMBER	QTY	PART NAME 1 2 3 4 5 6 (PRODUCT LEVEL)	SEE PAGE
	74	2	**0T-0318**	2	BOLT (7/16-14X1 IN)	
	75	2	**9R-2487**	1	GEAR (16 TEETH)	
B	76	1	**9R-2435**	2	SPACER (22.86X53.85X1.25MM THK)	
B		1	**9R-2436**	2	SPACER (22.86X53.85X1.35MM THK)	
B		1	**9R-2437**	2	SPACER (22.86X53.85X1.45MM THK)	
B		1	**9R-2438**	2	SPACER (22.86X53.85X1.55MM THK)	
B		1	**9R-2439**	2	SPACER (22.86X53.85X1.65MM THK)	
B		1	**9R-2440**	2	SPACER (22.86X53.85X1.75MM THK)	
B		1	**9R-2441**	2	SPACER (22.86X53.85X1.85MM THK)	
B		1	**9R-2442**	2	SPACER (22.86X53.85X1.96MM THK)	
B		1	**9R-2443**	2	SPACER (22.86X53.85X2.06MM THK)	
B		1	**9R-2444**	2	SPACER (22.86X53.85X2.16MM THK)	
B		1	**9R-2445**	2	SPACER (22.86X53.85X2.26MM THK)	
	77	2	**9R-6602**	2	PLUG-MAGNETIC	
	78	1	**5P-0540**	4	NUT-HEX FULL (9/16-18 THD)	
	79	1	**156-2573**	1	HOUSING-BRAKE	
	80	1	**156-1933**	1	HOUSING-REAR BRAKE (LH)	
	81	1	**9R-2426**	2	LOCK	
M	82	1	**9R-2466**	2	BOLT (7/8-14X1.625IN)	

B-USE AS REQUIRED
M-METRIC PART

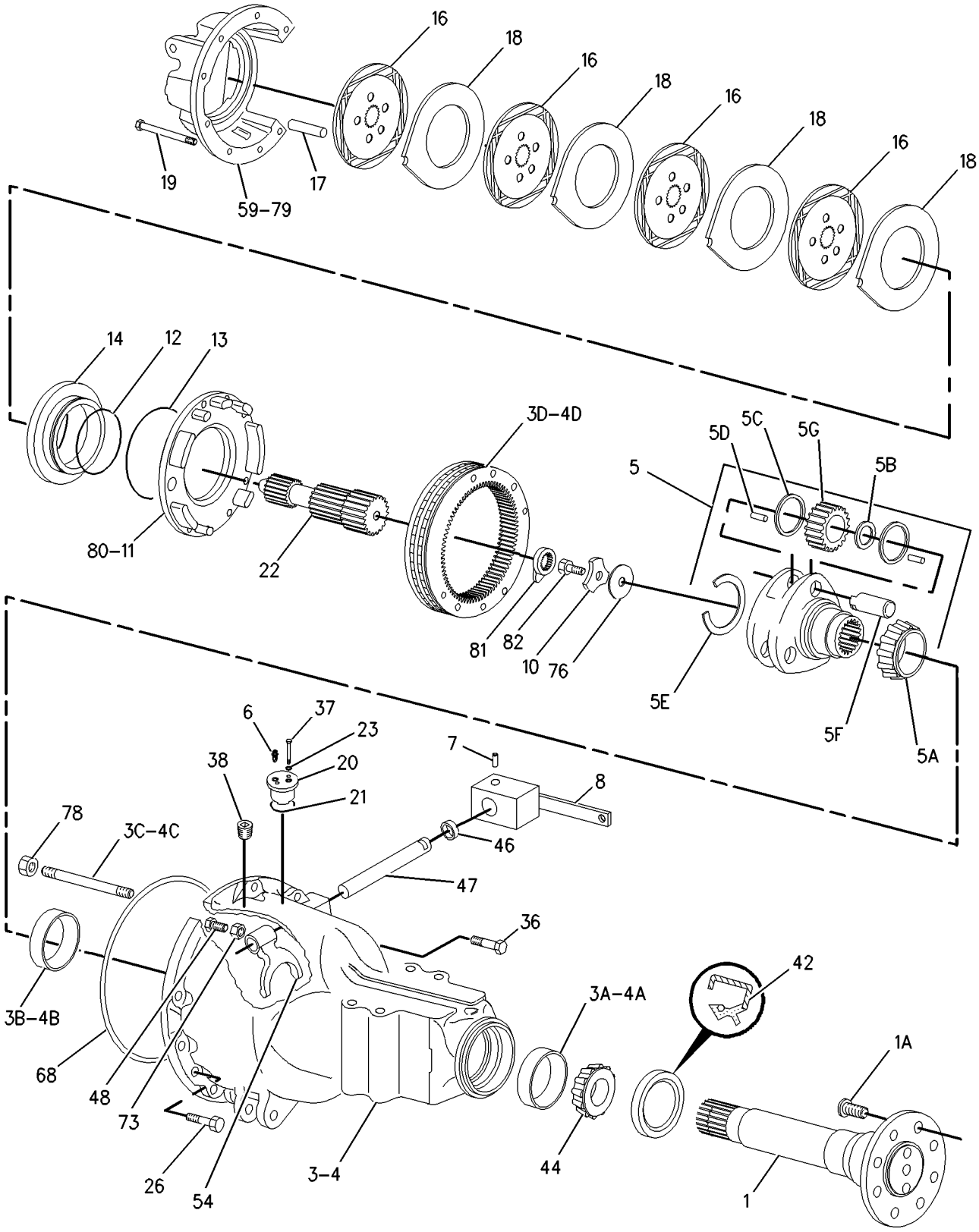

GRAPHIC #1 g00986345

156-2857 AXLE GP-REAR *(contd.)* **i02005300**

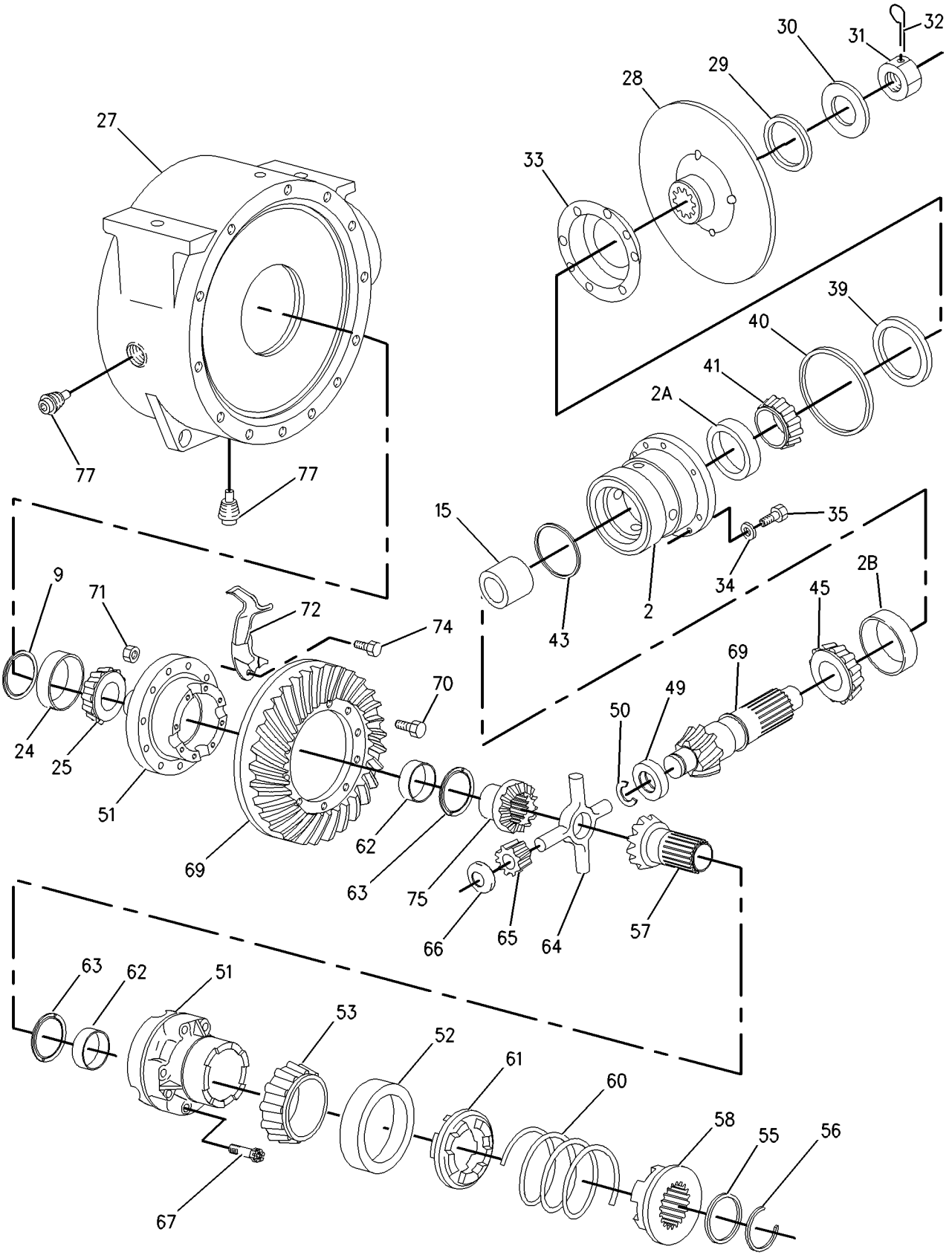

GRAPHIC #2 **<END>** g00986346

POWER TRAIN

191-9114 CONTROL GP-DIFFERENTIAL LOCK

S/N: BXC1-UP; DSX1-UP

PART OF 184-7970 POWER TRAIN AR

SMCS-3264, 3272, 3273 **i01956939**

NOTE	REF NO	GRAPHIC REF	PART NUMBER	QTY	PART NAME 1 2 3 4 5 6 (PRODUCT LEVEL)	SEE PAGE
	1	1	**9R-5567**	1	PLATE AS	
M	2	1	**8T-4244**	1	NUT (M12X1.75 THD)	
	3	1	**5P-0372**	2	LOCK PIN	
	4	1	**8B-1419**	1	PIN-CLEVIS	
	5	1	**191-9113**	1	ROD AS	
C	6	1	**8T-4815**	1	ROD END	
	7	1	**8C-4987**	1	PIN-CLEVIS	
M	8	1	**8T-4133**	1	NUT (M10X1.5 THD)	
	9	1	**9R-3051**	1	ROD	
	10	1	**9R-2806**	1	PIN	
	11	1	**9R-2807**	1	CLIP	
	12	1	**103-4867**	1	SPRING	
	13	1	**9R-1581**	1	BOOT	
C	14	1	**8T-5063**	1	ROD END	

C-CHANGE FROM PREVIOUS TYPE
M-METRIC PART

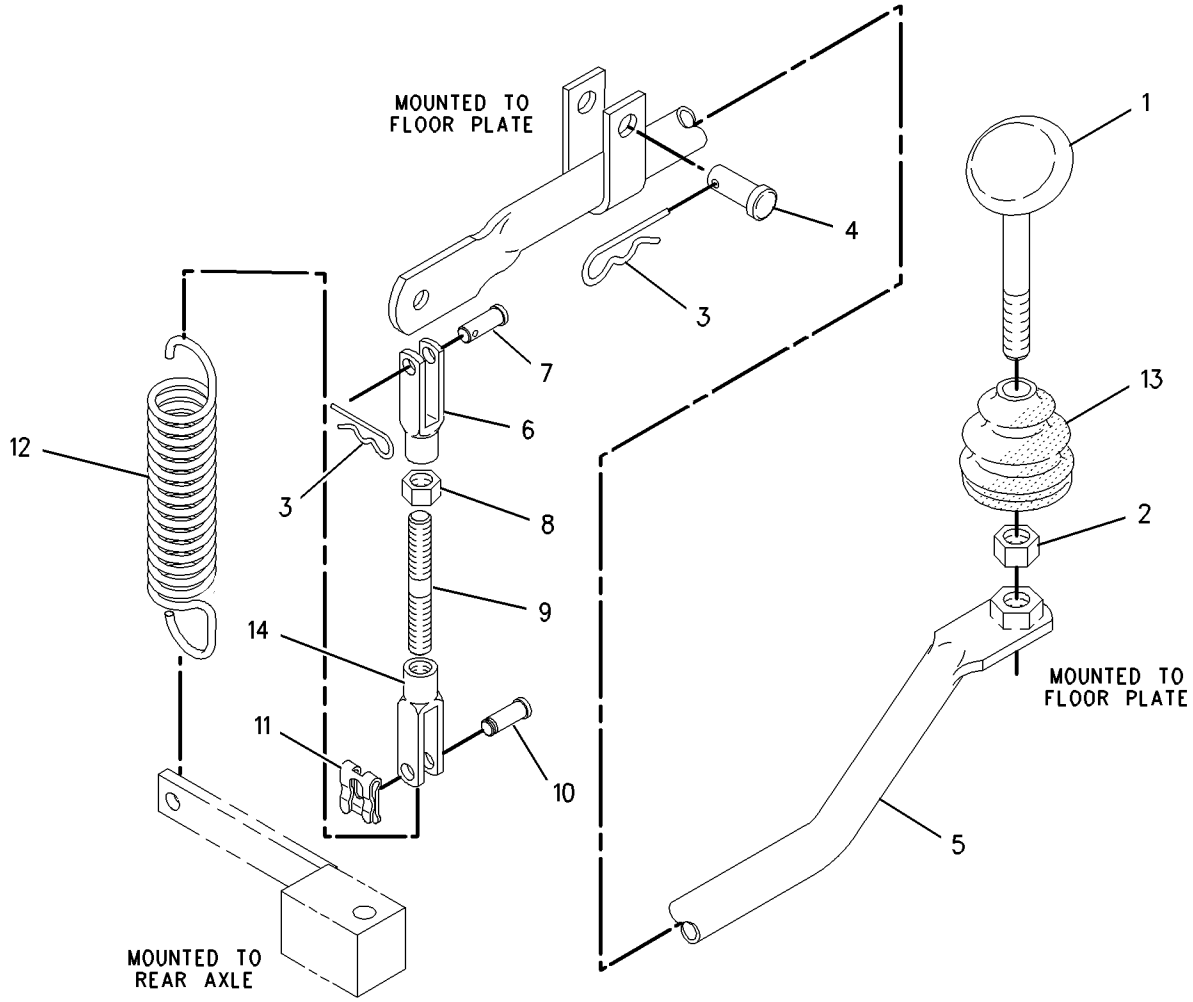

GRAPHIC #1 **<END>** g00995446

164-1130 CONTROL GP-TRANSMISSION

S/N: BXC1-UP; DSX1-UP
PART OF 214-7012, 214-7014 POWER TRAIN AR
AN ATTACHMENT

SMCS-3065 **i01984704**

NOTE	REF NO	GRAPHIC REF	PART NUMBER	QTY	PART NAME 1 2 3 4 5 6 (PRODUCT LEVEL)	SEE PAGE
	1	1	**102-8802**	1	KIT-RECEPTACLE (2-PIN)	
	2	1	**3E-3365**	1	WEDGE-RECEPTACLE LOCK (2 PIN)	
	3	1	**9R-1766**	1	KNOB (BOTTOM)	
	4	1	**9R-1767**	1	BOOT	
	5	1	**9R-9868**	1	SWITCH AS-PUSH BUTTON (TRANSMISSION NEUTRAL)	
		1	**9X-3401**	2	PIN-CONNECTOR	
	6	1	**107-5591**	1	NUT-JAM (3/4-16 THD)	
	7	1	**164-1113**	1	PLATE	
	8	1	**164-1153**	1	KNOB (TOP)	
	9	1	**164-1197**	1	ROD AS	
	10	1	**164-1365**	1	BOOT	
	11	1	**164-1368**	4	CLIP	
	12	1	**174-6640**	1	CONTROL GP-TRANSMISSION	
	13	1	**8T-4223**	1	WASHER-HARD (13.5X25.5X3MM THK)	
M	14	1	**8T-4956**	1	BOLT (M12X1.75X35MM)	
	15	1	**8T-9501**	2	SCREW (10-16X.75 IN)	

M-METRIC PART

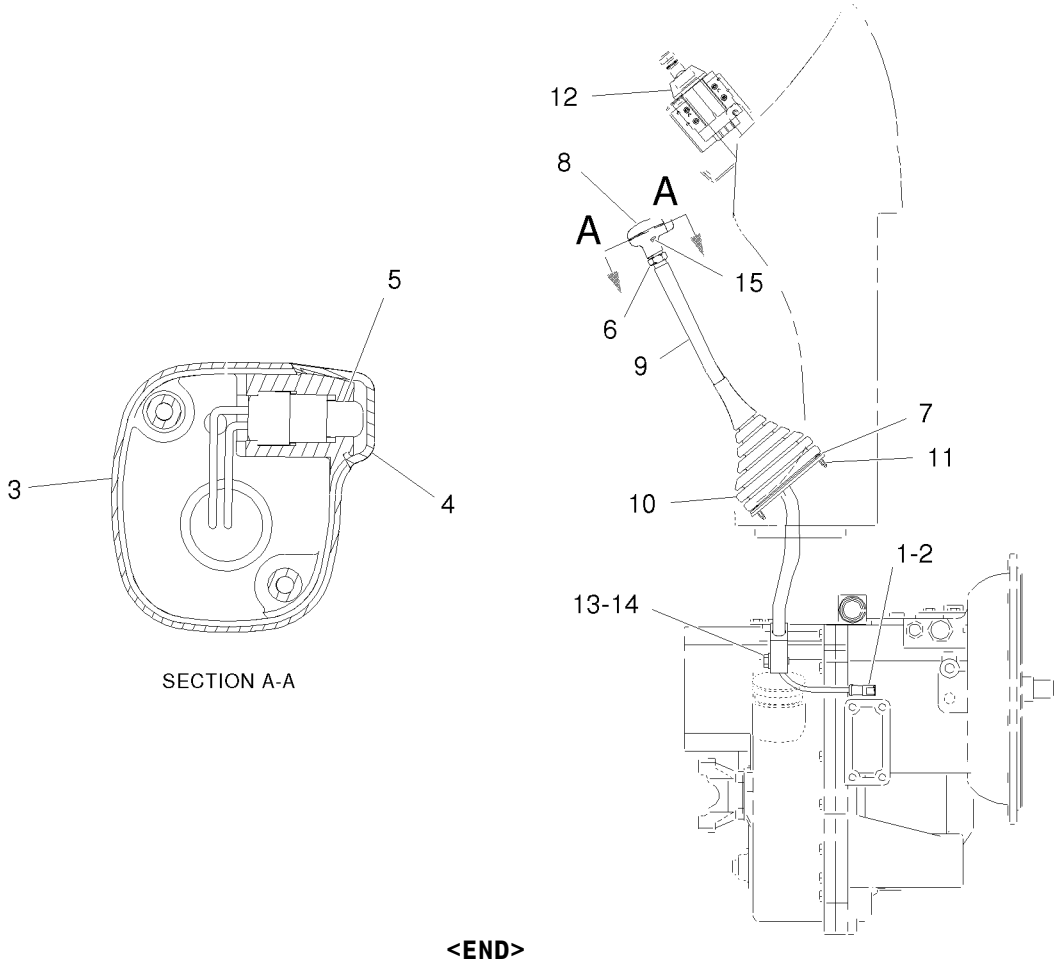

SECTION A-A

GRAPHIC #1 **<END>** g01028519

238-5258 DIFFERENTIAL & BEVEL GEAR GP

S/N: BXC1-UP; DSX1-UP

PART OF 231-0705 AXLE GP-DRIVE & STEERING

SMCS-3256, 3258, 3281, 3283, 3284 **i02005301**

NOTE	REF NO	GRAPHIC REF	PART NUMBER	QTY	PART NAME 1 2 3 4 5 6 (PRODUCT LEVEL)	SEE PAGE
	1	1	**4J-0520**	1	SEAL-O-RING	
	2	1	**216-4457**	1	SEAL	
	3	1	**216-4458**	2	BEARING	
	4	1	**136-7808**	1	BEARING AS-TAPERED ROLLER	
	5	1	**216-4461**	1	BEARING	
	6	1	**209-7454**	2	NUT (M94X2 THD)	
	7	1	**152-6144**	1	PLUG AS-MAGNETIC	
	8	1	**209-7462**	2	WASHER (40X50X.06MM THK)	
	9	1	**209-7463**	1	SLEEVE (COLLAPSIBLE)	
M	10	1	**199-0695**	2	BOLT (M6X1X14MM)	
	11	1	**209-7472**	1	NUT (M24X1.5 THD)	
	12	1	**216-4465**	1	WASHER (24.5X52X10MM THK)	
	13	1	**216-4464**	1	YOKE	
	14	1	**199-0858**	2	RETAINER	
Y	15	1	**216-9498**	1	DIFFERENTIAL GP	229
	16	1	**238-5257**	1	GEAR GP-BEVEL	
	17	1	**217-2880**	4	DOWEL	
	18	1	**216-5515**	1	HOUSING GP-DIFFERENTIAL	
	18A	1	**208-0322**	4	BOLT-FLANGE HEAD	
B	19	1	**209-7473**	1	SHIM (2.5MM THK)	
B			**219-8751**	1	SHIM (2.6MM THK)	
B			**219-8752**	1	SHIM (2.7MM THK)	
B			**219-8753**	1	SHIM (2.8MM THK)	
B			**219-8754**	1	SHIM (2.9MM THK)	
B			**219-8755**	1	SHIM (3.0MM THK)	
B			**219-8756**	1	SHIM (3.1MM THK)	
B			**219-8757**	1	SHIM (3.2MM THK)	
B			**219-8758**	1	SHIM (3.3MM THK)	
B			**219-8759**	1	SHIM (3.4MM THK)	

B-USE AS REQUIRED
M-METRIC PART
Y-SEPARATE ILLUSTRATION

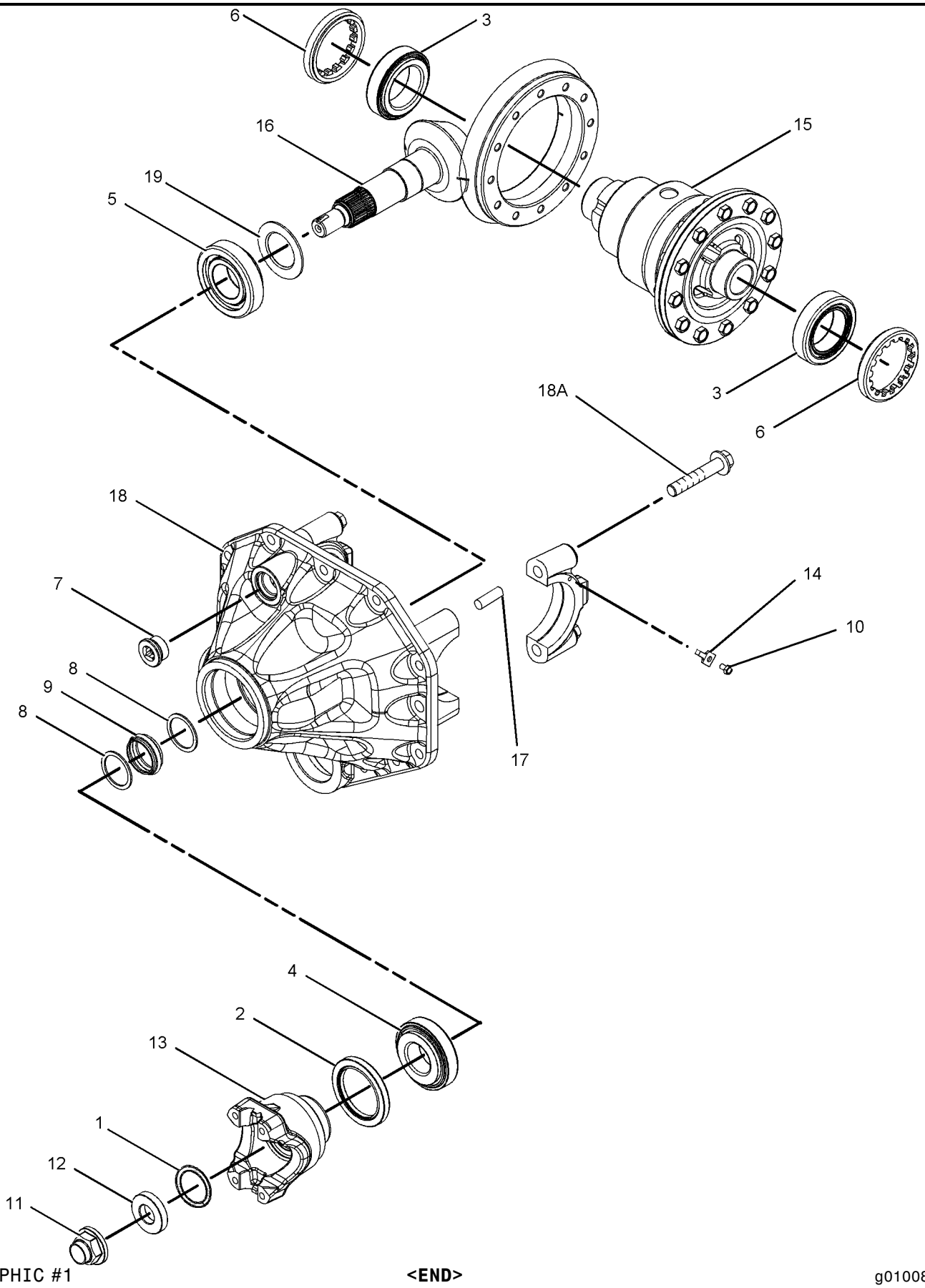

GRAPHIC #1 **<END>** g01008372

216-9498 DIFFERENTIAL GP

S/N: BXC1-UP; DSX1-UP

PART OF 238-5258 DIFFERENTIAL & BEVEL GEAR GP

SMCS-3258 **i02005424**

NOTE	REF NO	GRAPHIC REF	PART NUMBER	QTY	PART NAME 1 2 3 4 5 6 (PRODUCT LEVEL)	SEE PAGE
	1	1	**216-8687**	1	COVER	
	2	1	**216-8689**	1	HOUSING-DIFFERENTIAL	
	3	1	**229-5093**	2	WASHER-THRUST (49X72X1.5MM THK)	
M	4	1	**144-6734**	12	BOLT (M10X1.5X30MM)	
					AVAILABLE REPAIR KIT(S):	
			216-8700		GEAR GP-BEVEL (KIT)	
					(INCLUDES PIN,WASHERS,PIN,DISC AND GEARS)	

M-METRIC PART

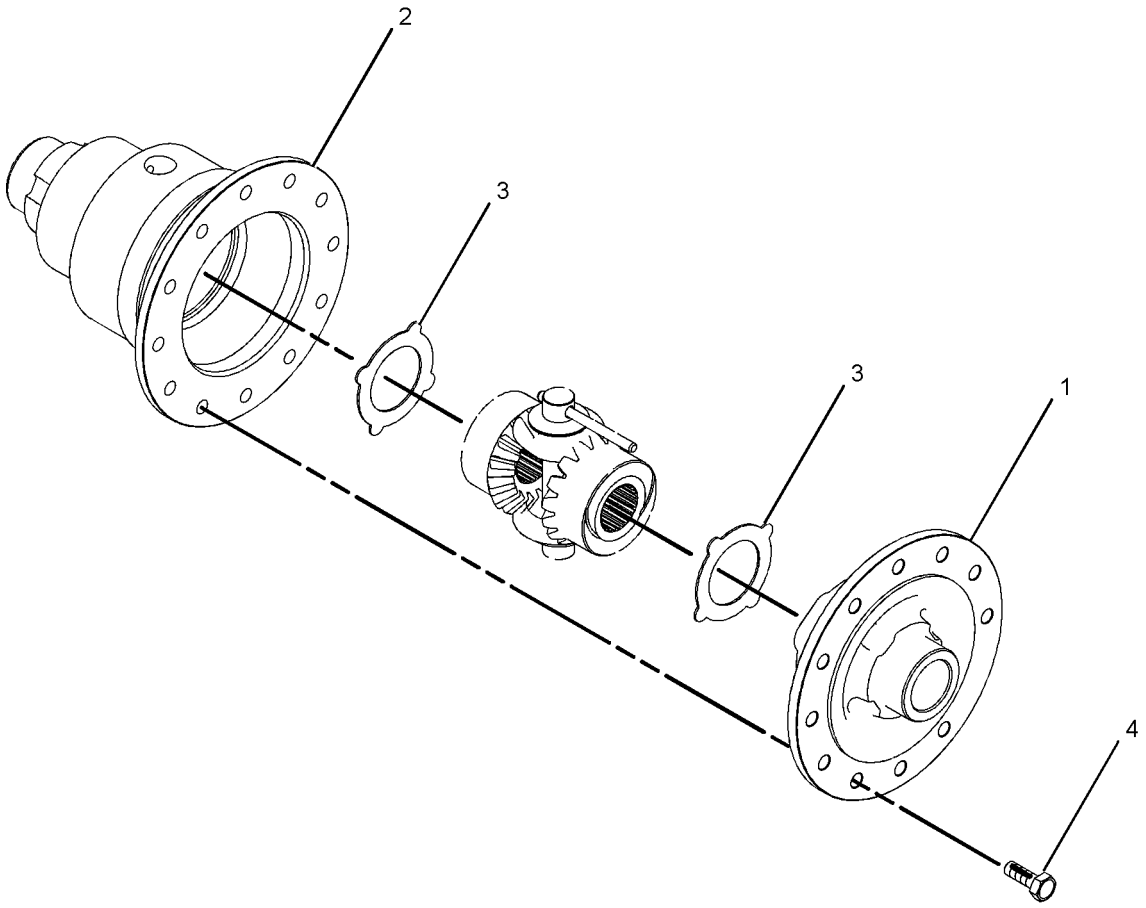

GRAPHIC #1 **<END>** g01008123

237-6463 DRIVE AR-BACKHOE LOADER–2 WHEEL STEER–ALL WHEEL DRIVE

S/N: BXC1-UP; DSX1-UP

PART OF 214-6993, 214-6994 COMMON AR

SMCS-3278, 4313 **i02006242**

NOTE	PART NUMBER	QTY	PART NAME 1 2 3 4 5 6 (PRODUCT LEVEL)	SEE PAGE
Y	**231-0705**	1	AXLE GP-DRIVE & STEERING (FRONT)	218
Y	**156-2857**	1	AXLE GP-REAR	220
	202-5710	1	FILM-IDENTIFICATION (FUSE PANEL)	
	231-9352	1	FILM-IDENTIFICATION (FUSE PANEL)	
Y	*190-8954*	1	LINES GP-PUMP	477
Y	*202-5711*	1	LINES GP-STEERING	300
Y	*202-6199*	1	MOUNTING GP-AXLE	237
Y	*238-8550*	1	PUMP GP-METERING	303
Y	*186-0309*	1	WIRING GP-STEERING (AWD)	217

Y-SEPARATE ILLUSTRATION

<END>

111-7907 DRIVE GP-FLEXIBLE COUPLING

S/N: BXC1-UP; DSX1-UP

PART OF 185-7586 TRANSMISSION AR-DIRECT DRIVE, 185-7587 TRANSMISSION AR-POWER SHIFT

AN ATTACHMENT

SMCS-3252 **i01053593**

NOTE	REF NO	GRAPHIC REF	PART NUMBER	QTY	PART NAME 1 2 3 4 5 6 (PRODUCT LEVEL)	SEE PAGE
M	1	1	**8T-4200**	8	BOLT (M8X1.25X16MM)	
M	2	1	**6V-8455**	6	BOLT (M10X1.5X16MM)	
	3	1	**117-9713**	1	PLATE-CONVERTER REINFORCEMENT	
	4	1	**8T-4224**	8	WASHER-HARD (2MM THK)	
	5	1	**111-7906**	1	PLATE-CONVERTER DRIVE	

M-METRIC PART

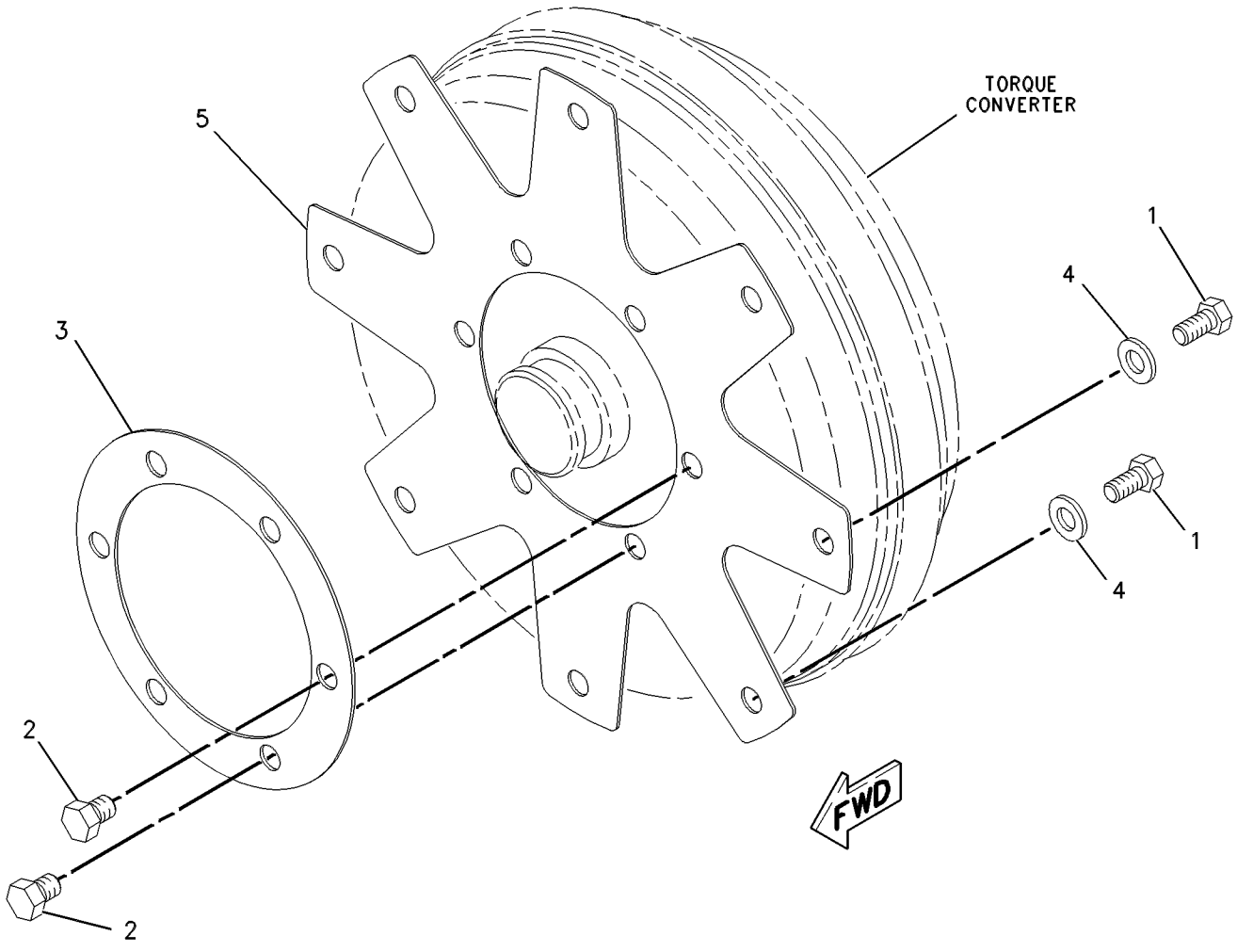

GRAPHIC #1 **<END>** g00547374

234-7527 FILLER GP-POWER TRAIN OIL

S/N: BXC1-UP; DSX1-UP
PART OF 214-7012, 214-7014 POWER TRAIN AR
AN ATTACHMENT

SMCS-3005, 3081 **i01985077**

NOTE	REF NO	GRAPHIC REF	PART NUMBER	QTY	PART NAME 1 2 3 4 5 6 (PRODUCT LEVEL)	SEE PAGE
	1	1	**9P-1872**	1	SPACER	
	2	1	**234-9613**	1	TUBE AS	
	3	1	**236-7295**	1	GAUGE GP-OIL LEVEL (DIPSTICK)	
	4	1	**4J-0522**	1	SEAL-O-RING	
	5	1	**5P-7854**	1	CLIP	
	6	1	**8S-0023**	1	CLIP (SLOT)	
	7	1	**8S-0024**	1	CLIP (TAB)	
	8	1	**8T-4121**	1	WASHER-HARD (11X21X2.5MM THK)	
M	9	1	**8T-4136**	1	BOLT (M10X1.5X25MM)	
	10	1	**8T-4223**	3	WASHER-HARD (13.5X25.5X3MM THK)	
M	11	1	**8T-4956**	2	BOLT (M12X1.75X35MM)	
M	12	1	**8T-6868**	1	BOLT (M12X1.75X80MM)	

M-METRIC PART

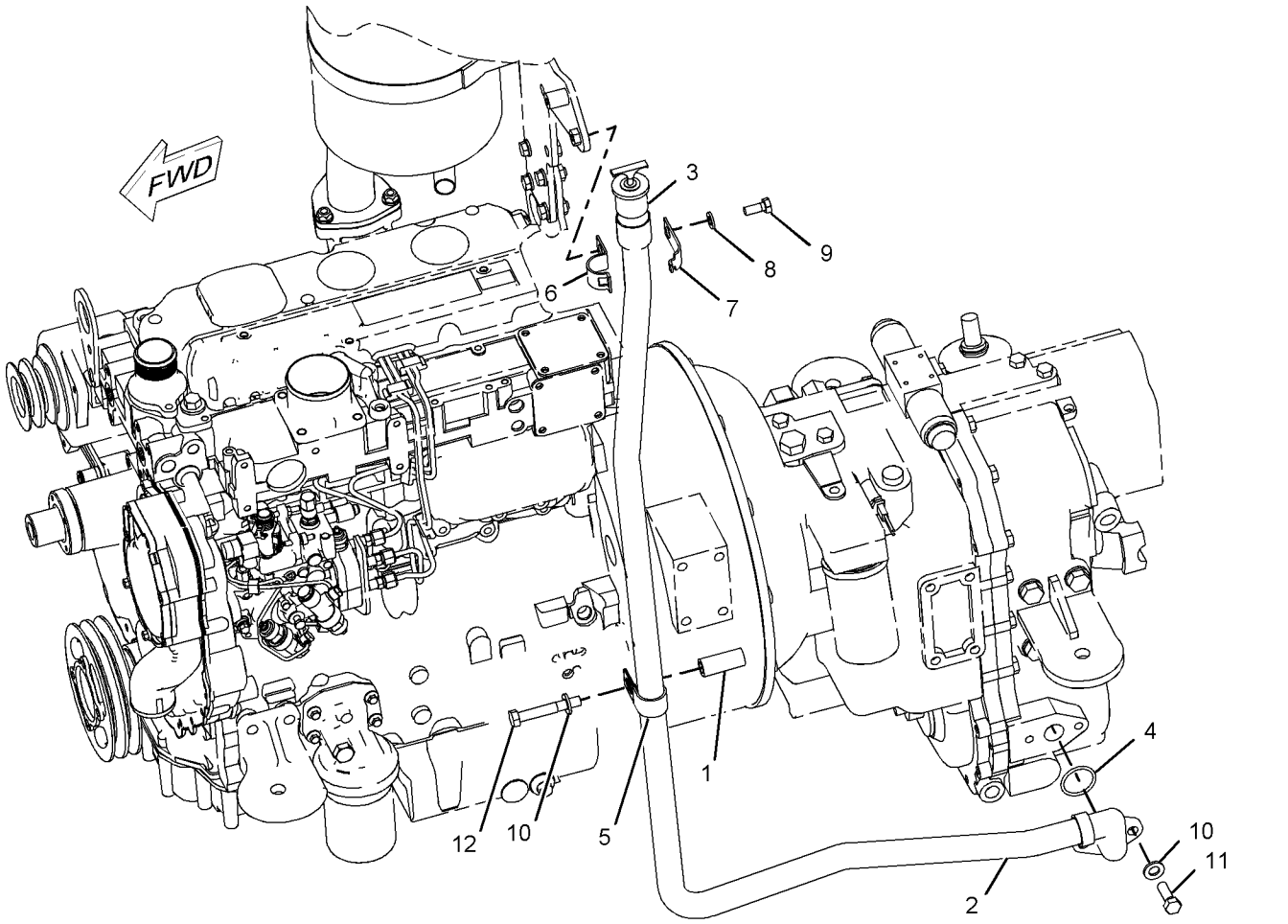

GRAPHIC #1 **<END>** g01033492

234-7528 FILLER GP-POWER TRAIN OIL

S/N: BXC1-UP; DSX1-UP
PART OF 214-7013, 214-7015 POWER TRAIN AR
AN ATTACHMENT

SMCS-3005, 3081 **i01988393**

NOTE	REF NO	GRAPHIC REF	PART NUMBER	QTY	PART NAME 1 2 3 4 5 6 (PRODUCT LEVEL)	SEE PAGE
	1	1	**9P-1872**	1	SPACER	
	2	1	**236-7295**	1	GAUGE GP-OIL LEVEL (DIPSTICK)	
M	3	1	**8T-6868**	1	BOLT (M12X1.75X80MM)	
	4	1	**4J-0522**	1	SEAL-O-RING	
	5	1	**5P-7854**	1	CLIP	
	6	1	**8S-0023**	1	CLIP (SLOT)	
	7	1	**8S-0024**	1	CLIP (TAB)	
	8	1	**8T-4121**	1	WASHER-HARD (11X21X2.5MM THK)	
M	9	1	**8T-4136**	1	BOLT (M10X1.5X25MM)	
	10	1	**8T-4223**	3	WASHER-HARD (13.5X25.5X3MM THK)	
M	11	1	**8T-4956**	2	BOLT (M12X1.75X35MM)	

M-METRIC PART

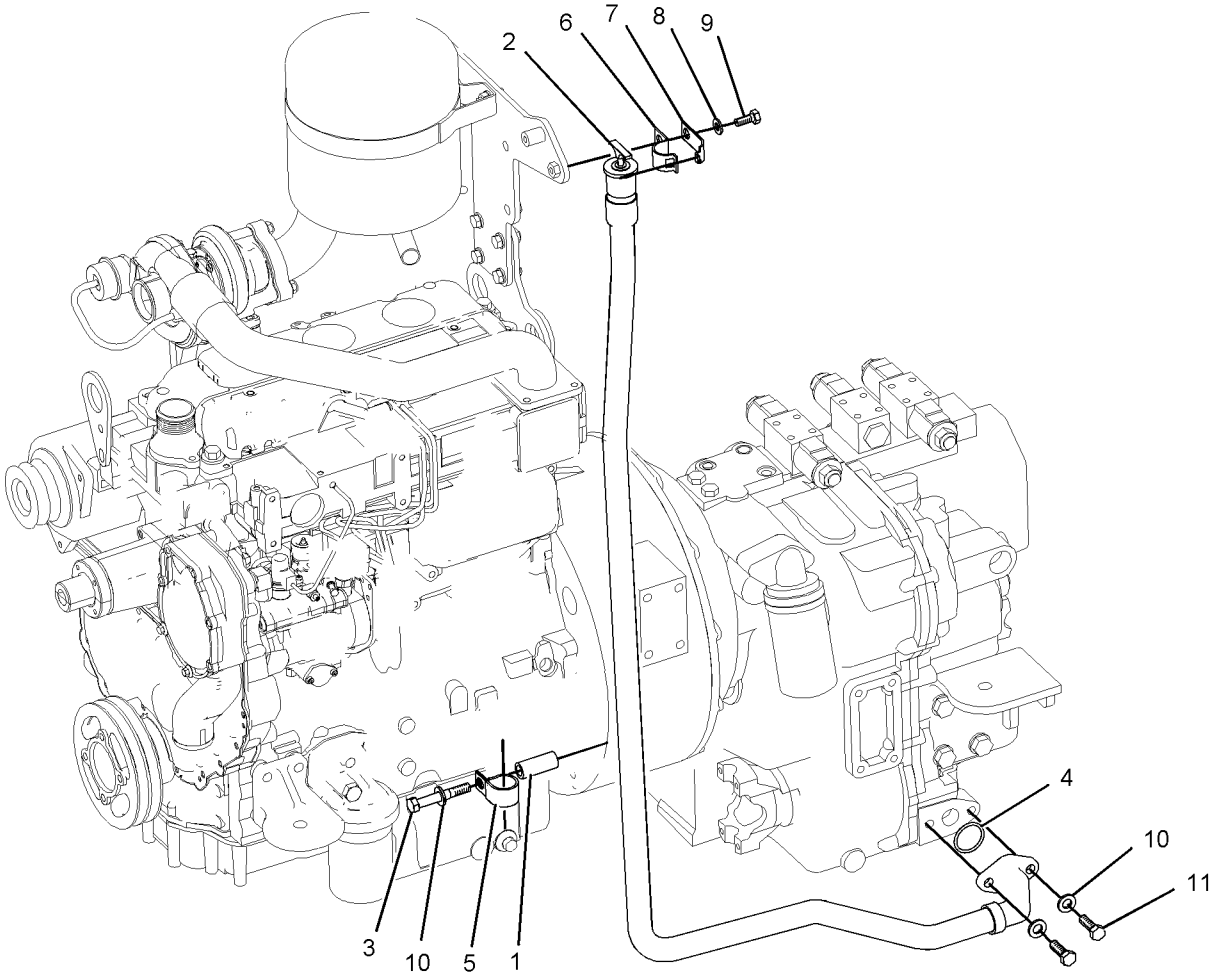

GRAPHIC #1 **<END>** g01030592

209-9884 HOUSING & FLANGE GP-AXLE

S/N: BXC1-UP; DSX1-UP

PART OF 231-0705 AXLE GP-DRIVE & STEERING

SMCS-4057, 4234 **i02005837**

NOTE	REF NO	GRAPHIC REF	PART NUMBER	QTY	PART NAME 1 2 3 4 5 6 (PRODUCT LEVEL)	SEE PAGE
	1	1	**217-2877**	1	HOUSING GP-AXLE (RH)	
	1A	1	**199-0648**	1	NUT-JAM	
	1B	1	**198-7814**	1	BOLT (M16X100MM)	
	1C	1	**209-7460**	1	BUSHING	
	1D	1	**209-7465**	1	SEAL	
	1E	1	**231-0700**	1	HOUSING	
	2	1	*231-0703*	1	FLANGE AS	
	2A	1	**2S-0480**	2	CUP-BEARING (TAPERED ROLLER BEARING)	
	2B	1	**178-8608**	2	CONE	
	2C	1	**226-4346**	8	STUD	
	2D	1	**229-5092**	1	SEAL	
	3	1	**226-4366**	1	NUT-SPANNER	
	4	1	**226-4370**	1	BOLT-LOCKING	
	5	1	**229-5085**	1	SPACER (110X123X18.36MM THK)	
	6	1	**217-2879**	1	GEAR GP-RING	
	7	1	**226-4365**	1	WASHER-TAB	
					AVAILABLE REPAIR KIT(S):	
			231-0676	1	KIT-FLANGE	
					(INCLUDES STUDS)	

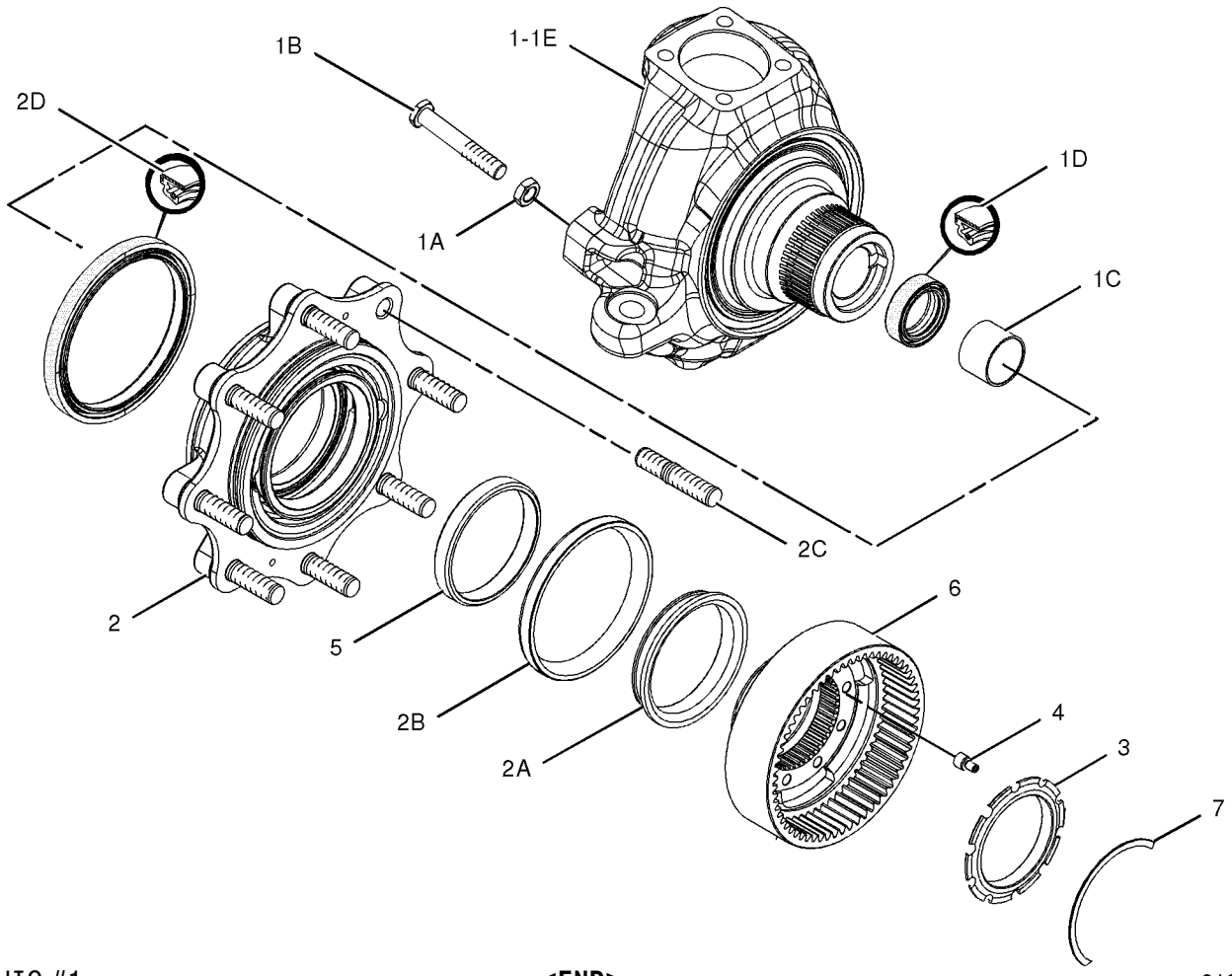

GRAPHIC #1 **<END>** g01038238

209-9885 HOUSING & FLANGE GP-AXLE

S/N: BXC1-UP; DSX1-UP

PART OF 231-0705 AXLE GP-DRIVE & STEERING

SMCS-4057, 4234 **i02006067**

NOTE	REF NO	GRAPHIC REF	PART NUMBER	QTY	PART NAME 1 2 3 4 5 6 (PRODUCT LEVEL)	SEE PAGE
	1	1	**217-2878**	1	HOUSING GP-AXLE (LH)	
	1A	1	**199-0648**	1	NUT-JAM	
	1B	1	**198-7814**	1	BOLT (M16X100MM)	
	1C	1	**209-7460**	1	BUSHING	
	1D	1	**209-7465**	1	SEAL	
	1E	1	**231-0700**	1	HOUSING	
	2	1	**231-0703**	1	FLANGE AS	
	2A	1	**2S-0480**	1	CUP-BEARING (TAPERED ROLLER BEARING)	
	2B	1	**178-8608**	1	CONE	
	2C	1	**226-4346**	1	STUD	
	2D	1	**229-5092**	1	SEAL	
	3	1	**226-4366**	1	NUT-SPANNER	
	4	1	**226-4370**	1	BOLT-LOCKING	
	5	1	**229-5085**	1	SPACER (110X123X18.36MM THK)	
	6	1	**217-2879**	1	GEAR GP-RING	
	7	1	**226-4365**	1	WASHER-TAB	

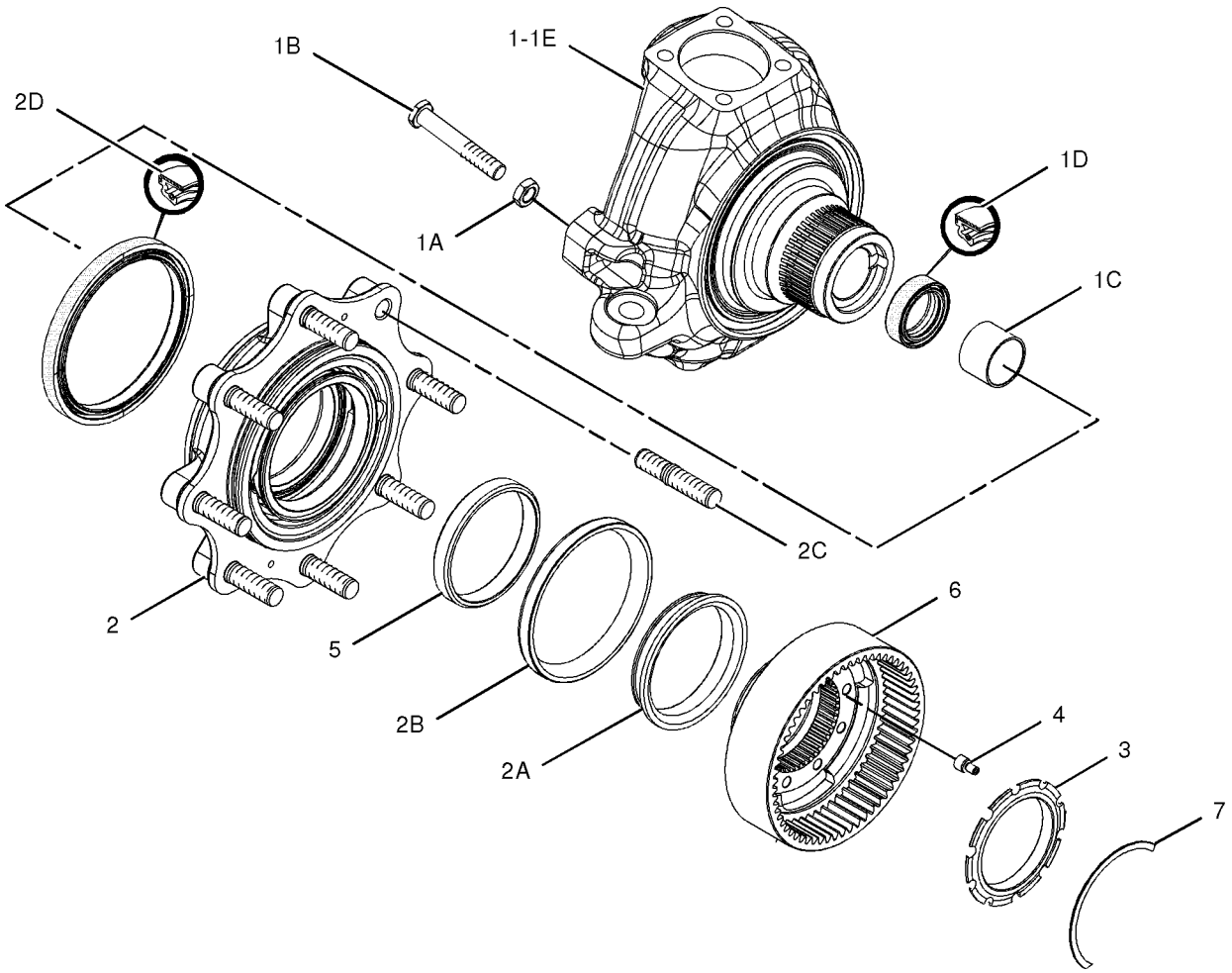

GRAPHIC #1 **<END>** g01038243

130-8149 LOCKOUT GP-FOURTH GEAR

S/N: BXC1-UP; DSX1-UP
PART OF 206-4924 CONVERSION AR-CERTIFICATION
AN ATTACHMENT

SMCS-7000 **i01127124**

NOTE	REF NO	GRAPHIC REF	PART NUMBER	QTY	PART NAME 1 2 3 4 5 6 (PRODUCT LEVEL)	SEE PAGE
	1	1	**120-9763**	1	PLUG-LOCKOUT	
	2	1	**3J-1907**	1	SEAL-O-RING (11.89MM ID)	
D	3	1	**8C-8418**		LOCKWIRE (0.4M)	
	4	1	**8S-8158**	1	SEAL-WIRE	
	5	1	**127-5469**	1	WASHER-LOCK	

D-ORDER BY THE METER

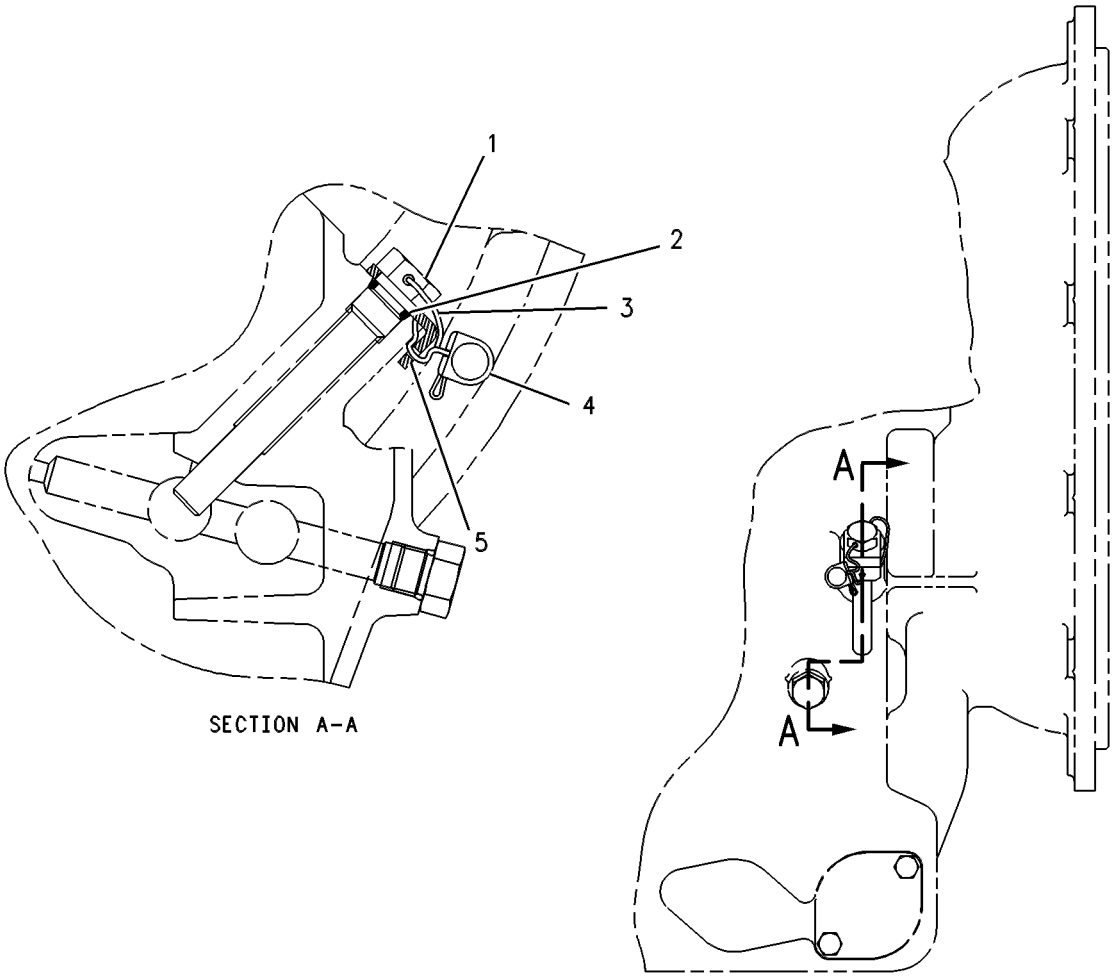

SECTION A-A

GRAPHIC #1 **<END>** g00258869

202-6199 MOUNTING GP-AXLE—ALL WHEEL DRIVE

S/N: BXC1-UP; DSX1-UP

PART OF 237-6463 DRIVE AR-BACKHOE LOADER

SMCS-3268 **i01964646**

NOTE	REF NO	GRAPHIC REF	PART NUMBER	QTY	PART NAME 1 2 3 4 5 6 (PRODUCT LEVEL)	SEE PAGE
B	1	1	**1K-7082**	1	WASHER (2X4X1/32 IN THK)	
	2	1	**5F-5434**	1	VALVE AS-RELIEF (AIR VENT)	
B	3	1	**9R-9702**	2	WASHER (56X100X1.6MM THK)	
	4	1	**112-9629**	1	PIN	
	5	1	**165-8996**	2	WASHER-THRUST (55.5X100.5X5MM THK)	
M	6	1	**7X-2570**	8	BOLT (M20X2.5X220MM)	
M	7	1	**8T-4131**	8	NUT (M20X2.5 THD)	
M	8	1	**8T-5041**	1	BOLT (M12X1.75X120MM)	
	9	1	**8T-5439**	16	WASHER (21.5X45X6MM THK)	
M	10	1	**8T-8549**	1	LOCKNUT (M12X1.75 THD)	

B-USE AS REQUIRED
M-METRIC PART

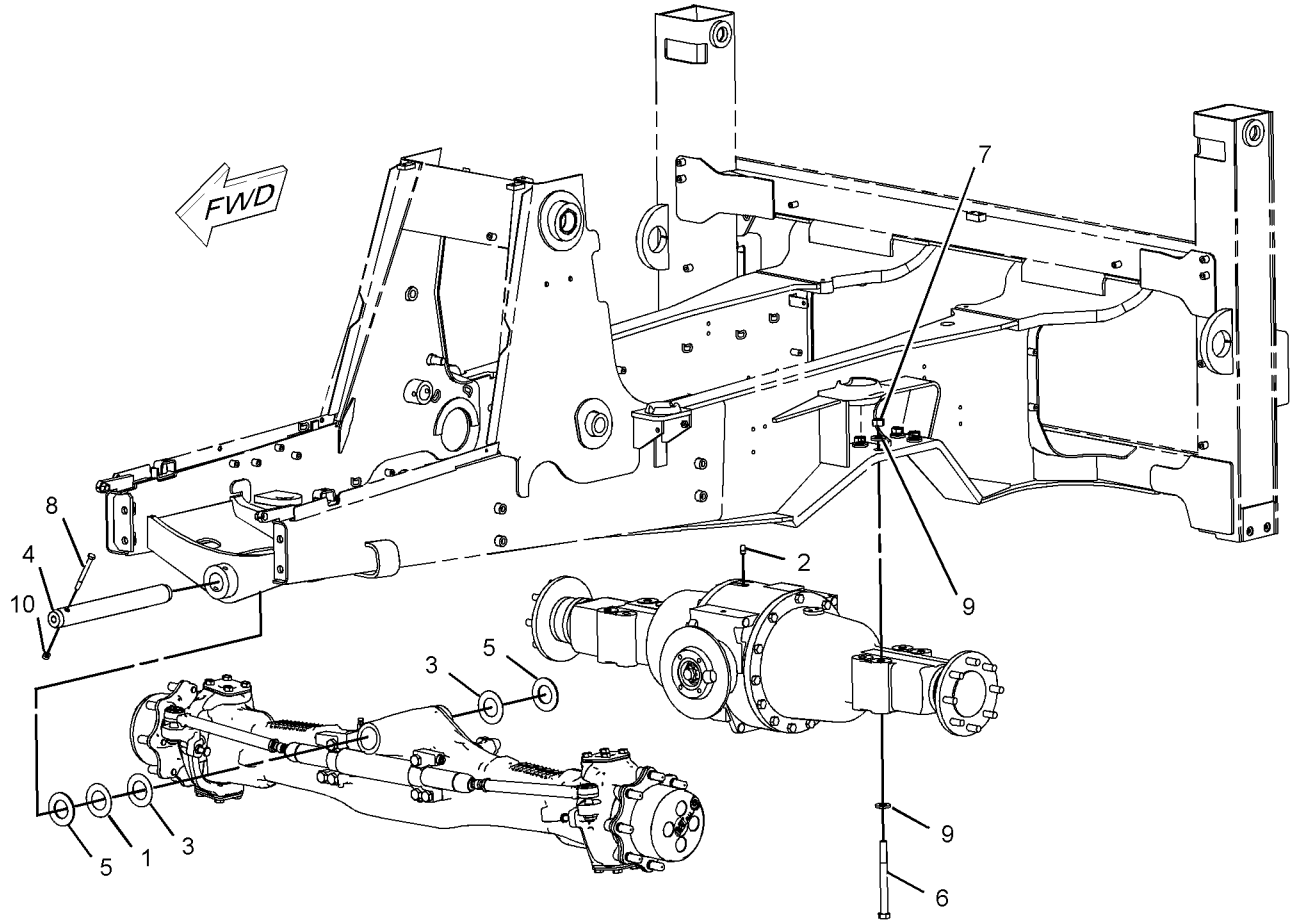

GRAPHIC #1 **<END>** g01021004

210-5924 PLANETARY GP-FINAL DRIVE

S/N: BXC1-UP; DSX1-UP

PART OF 231-0705 AXLE GP-DRIVE & STEERING

SMCS-4050 **i01946542**

NOTE	REF NO	GRAPHIC REF	PART NUMBER	QTY	PART NAME 1 2 3 4 5 6 (PRODUCT LEVEL)	SEE PAGE
	1	1	**210-5931**	4	RETAINER	
	2	1	**210-5934**	4	GEAR-PLANET	
	3	1	**095-0924**	4	RING-RETAINING	
	4	1	**209-7466**	1	KIT-PLANETARY CARRIER	
	5	1	**219-8783**	23	KIT-ROLLER BEARING	

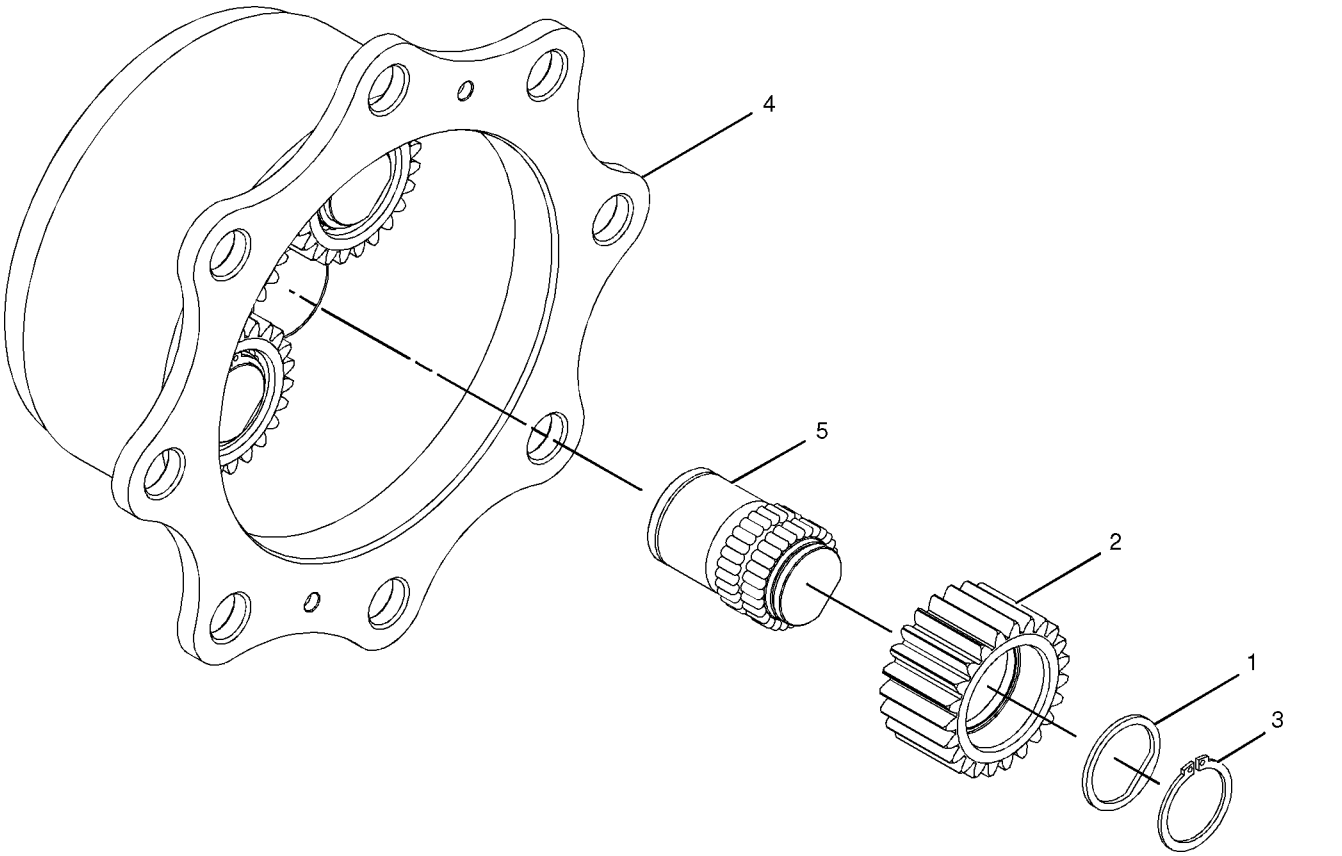

GRAPHIC #1 **<END>** g01013213

POWER TRAIN

184-7970 POWER TRAIN AR–2 WHEEL STEER

S/N: BXC1-UP; DSX1-UP

PART OF 214-6993, 214-6994 COMMON AR

SMCS-3000, 4000 **i01439916**

NOTE	PART NUMBER	QTY	PART NAME 1 2 3 4 5 6 (PRODUCT LEVEL)	SEE PAGE
Y	*191-9114*	1	CONTROL GP-DIFFERENTIAL LOCK	225
Y	*184-6570*	1	CONTROL GP-PARKING BRAKE	291
Y	*165-6918*	1	CONTROL GP-SERVICE BRAKE	292
Y	*184-7898*	1	MOUNTING GP-INSTRUMENT PANEL	756
Y	*113-1151*	1	SHAFT GP-DRIVE	241

Y-SEPARATE ILLUSTRATION

<END>

214-7012 POWER TRAIN AR–ALL WHEEL DRIVE–STANDARD SHIFT

S/N: BXC1-UP; DSX1-UP

AN ATTACHMENT

SMCS-3000, 4000 **i01969807**

NOTE	PART NUMBER	QTY	PART NAME 1 2 3 4 5 6 (PRODUCT LEVEL)	SEE PAGE
	164-1105	1	CONSOLE-FRONT	
Y	*164-1130*	1	CONTROL GP-TRANSMISSION	226
Y	*234-7527*	1	FILLER GP-POWER TRAIN OIL	232
Y	*143-0786*	1	LINES GP-POWER TRAIN COOLER	59
Y	*143-0782*	1	MOUNTING GP-ENGINE & TMSN	41
Y	*185-3525*	1	MOUNTING GP-INSTRUMENT PANEL	757
Y	*202-5733*	1	SHAFT GP-DRIVE	244
Y	*185-7586*	1	TRANSMISSION AR-DIRECT DRIVE	247

Y-SEPARATE ILLUSTRATION

<END>

214-7013 POWER TRAIN AR–ALL WHEEL DRIVE–AUTOSHIFT

S/N: BXC1-UP; DSX1-UP

AN ATTACHMENT

SMCS-3000, 4000 **i01969812**

NOTE	PART NUMBER	QTY	PART NAME 1 2 3 4 5 6 (PRODUCT LEVEL)	SEE PAGE
	164-1146	1	CONSOLE-FRONT	
Y	*234-7528*	1	FILLER GP-POWER TRAIN OIL	233
Y	*143-0789*	1	LINES GP-POWER TRAIN COOLER	61
Y	*143-0788*	1	MOUNTING GP-ENGINE & TMSN	42
Y	*185-3525*	1	MOUNTING GP-INSTRUMENT PANEL	757
Y	*138-4559*	1	SHAFT GP-DRIVE	242
Y	*185-7587*	1	TRANSMISSION AR-POWER SHIFT	247
Y	*237-8037*	1	WIRING GP-AUTOSHIFT (AUTOSHIFT)	176

Y-SEPARATE ILLUSTRATION

<END>

214-7014 POWER TRAIN AR–ALL WHEEL DRIVE–STANDARD SHIFT

S/N: BXC1-UP; DSX1-UP
AN ATTACHMENT

SMCS-3000, 4000 **i02000056**

NOTE	PART NUMBER	QTY	PART NAME 1 2 3 4 5 6 (PRODUCT LEVEL)	SEE PAGE
Y	*237-9541*	1	CONSOLE GP-FRONT	717
Y	*164-1130*	1	CONTROL GP-TRANSMISSION	226
Y	*164-1141*	1	DUCT GP-AIR	735
Y	*234-7527*	1	FILLER GP-POWER TRAIN OIL	232
Y	*143-0786*	1	LINES GP-POWER TRAIN COOLER	59
Y	*143-0782*	1	MOUNTING GP-ENGINE & TMSN	41
Y	*185-3525*	1	MOUNTING GP-INSTRUMENT PANEL	757
Y	*202-5733*	1	SHAFT GP-DRIVE	244
Y	*185-7586*	1	TRANSMISSION AR-DIRECT DRIVE	247

Y-SEPARATE ILLUSTRATION

<END>

214-7015 POWER TRAIN AR–ALL WHEEL DRIVE–AUTOSHIFT

S/N: BXC1-UP; DSX1-UP
AN ATTACHMENT

SMCS-3000, 4000 **i02000059**

NOTE	PART NUMBER	QTY	PART NAME 1 2 3 4 5 6 (PRODUCT LEVEL)	SEE PAGE
Y	*237-9542*	1	CONSOLE GP-FRONT	718
Y	*164-1142*	1	DUCT GP-AIR	737
Y	*234-7528*	1	FILLER GP-POWER TRAIN OIL	233
Y	*143-0789*	1	LINES GP-POWER TRAIN COOLER	61
Y	*143-0788*	1	MOUNTING GP-ENGINE & TMSN	42
Y	*185-3525*	1	MOUNTING GP-INSTRUMENT PANEL	757
Y	*202-5732*	1	SHAFT GP-DRIVE	243
Y	*185-7587*	1	TRANSMISSION AR-POWER SHIFT	247
Y	*237-8037*	1	WIRING GP-AUTOSHIFT (AUTOSHIFT)	176

Y-SEPARATE ILLUSTRATION

<END>

113-1151 SHAFT GP-DRIVE–REAR

S/N: BXC1-UP; DSX1-UP

PART OF 184-7970 POWER TRAIN AR

SMCS-3253 **i01108413**

NOTE	REF NO	GRAPHIC REF	PART NUMBER	QTY	PART NAME 1 2 3 4 5 6 (PRODUCT LEVEL)	SEE PAGE
	1	1	**8T-0799**	4	BOLT (1/2-20X1-1/2)	
	2	1	**5V-2545**	2	STRAP	
	3	1	**107-6826**	4	BOLT (M24X19.1MM)	
	4	1	**113-1150**	1	SHAFT AS-MAIN	
		1	**117-9887**	2	KIT-SPIDER & BEARING	
	5	1	**8T-4223**	4	WASHER-HARD (3MM THK)	

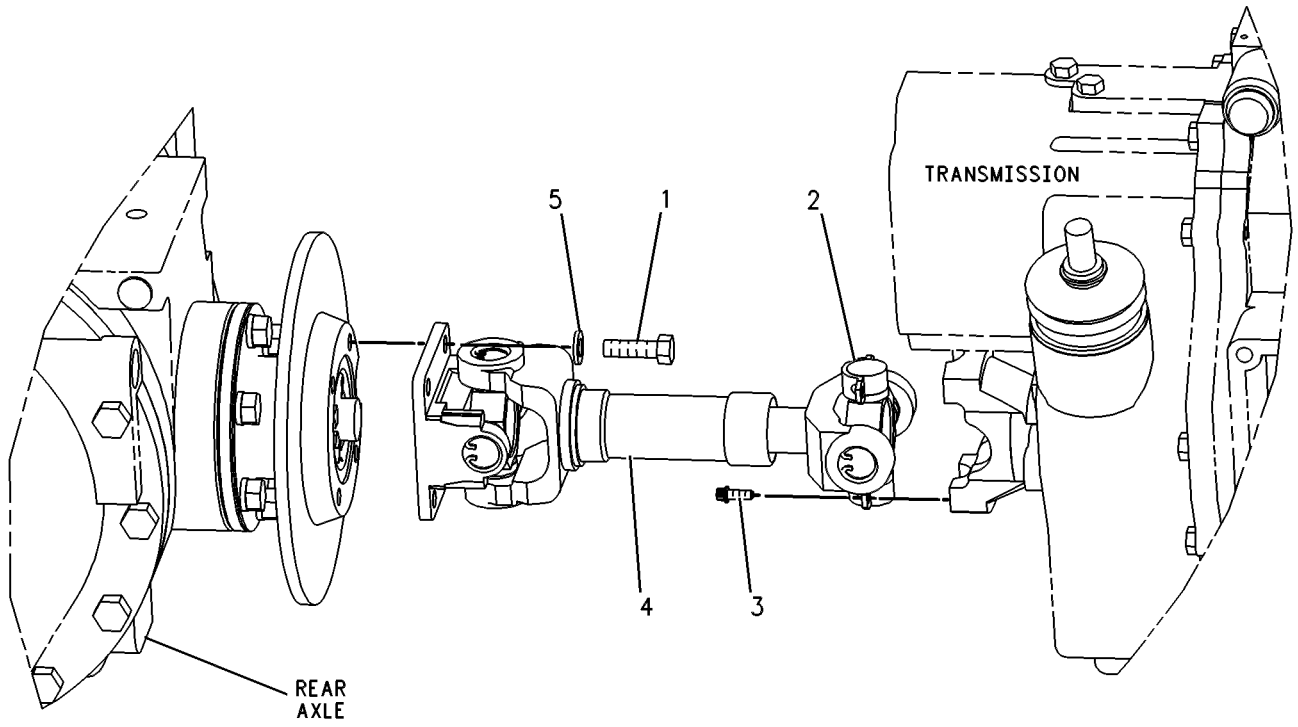

GRAPHIC #1 **<END>** g00131518

138-4559 SHAFT GP-DRIVE–FRONT–POWERSHIFT

S/N: BXC1-UP; DSX1-UP
PART OF 214-7013 POWER TRAIN AR
AN ATTACHMENT

SMCS-3253 **i01108417**

NOTE	REF NO	GRAPHIC REF	PART NUMBER	QTY	PART NAME 1 2 3 4 5 6 (PRODUCT LEVEL)	SEE PAGE
	1	1	**5V-2545**	4	STRAP	
	2	1	**107-6826**	8	BOLT (M24X19.1MM)	
	3	1	**138-4560**	1	SHAFT AS	
		1	**117-9887**	2	KIT-SPIDER & BEARING	

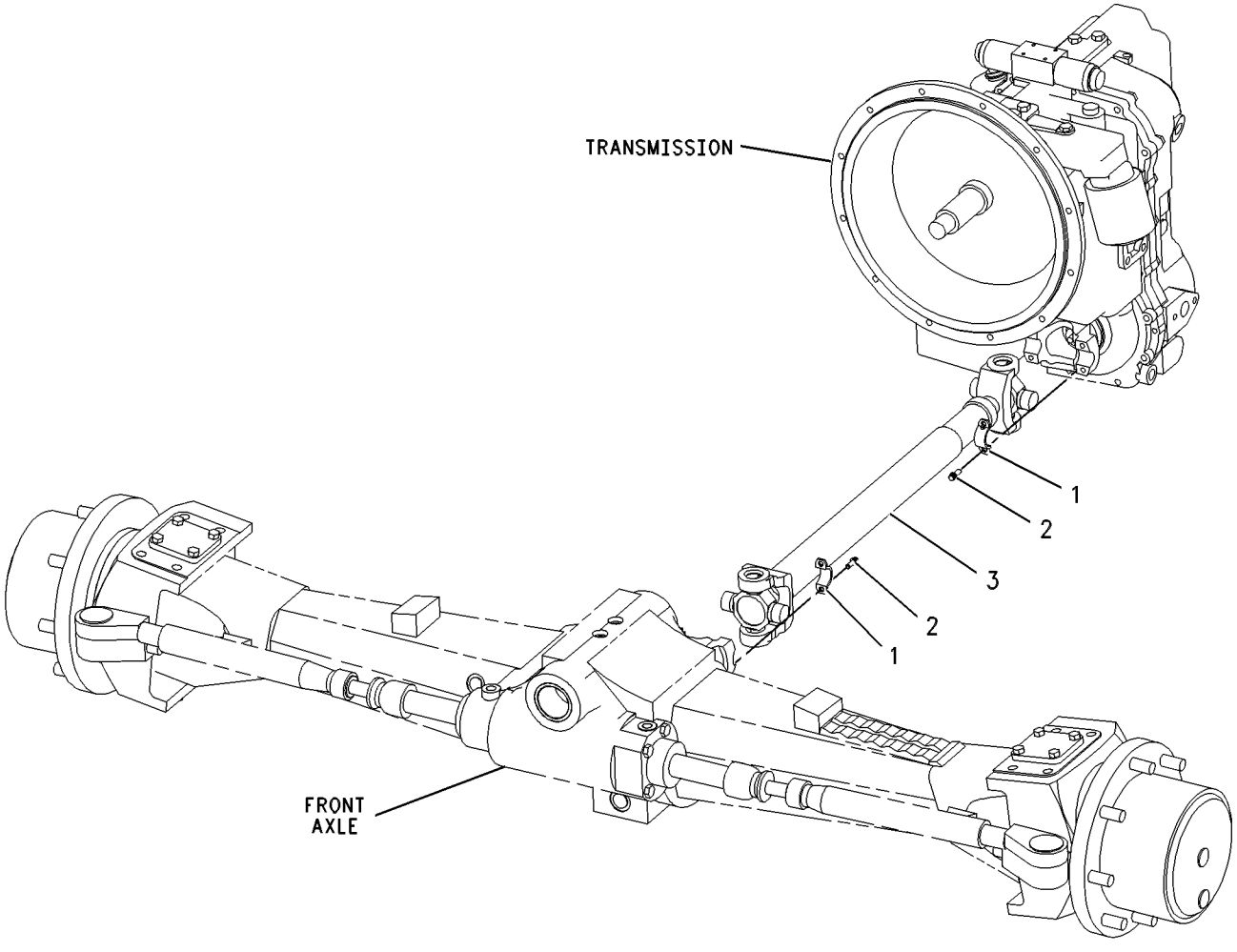

GRAPHIC #1 **<END>** g00286414

202-5732 SHAFT GP-DRIVE

S/N: BXC1-UP; DSX1-UP
PART OF 214-7015 POWER TRAIN AR
AN ATTACHMENT

SMCS-3253 **i02000925**

NOTE	REF NO	GRAPHIC REF	PART NUMBER	QTY	PART NAME 1 2 3 4 5 6 (PRODUCT LEVEL)	SEE PAGE
	1	1	**5V-2545**	4	STRAP	
M	2	1	**107-6826**	8	BOLT (M24X19.1MM)	
	3	1	**202-7875**	1	SHAFT AS-FRONT	
		1	**117-9887**	2	KIT-SPIDER & BEARING	

M-METRIC PART

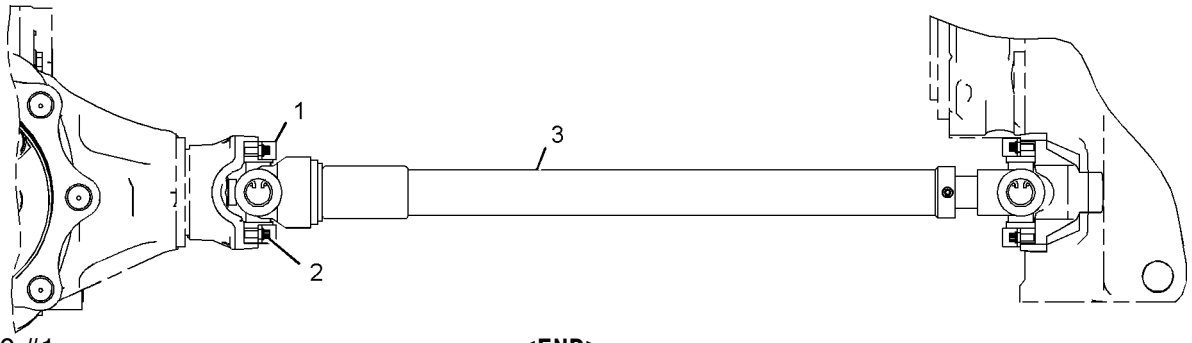

GRAPHIC #1 **<END>** g01036556

202-5733 SHAFT GP-DRIVE–ALL WHEEL DRIVE

S/N: BXC1-UP; DSX1-UP
PART OF 214-7014 POWER TRAIN AR
AN ATTACHMENT

SMCS-3253 **i01994455**

NOTE	REF NO	GRAPHIC REF	PART NUMBER	QTY	PART NAME 1 2 3 4 5 6 (PRODUCT LEVEL)	SEE PAGE
	1	1	**5V-2545**	4	STRAP	
M	2	1	**107-6826**	8	BOLT (M24X19.1MM)	
	3	1	**202-7874**	1	SHAFT AS	
		1	**117-9887**	2	KIT-SPIDER & BEARING	

M-METRIC PART

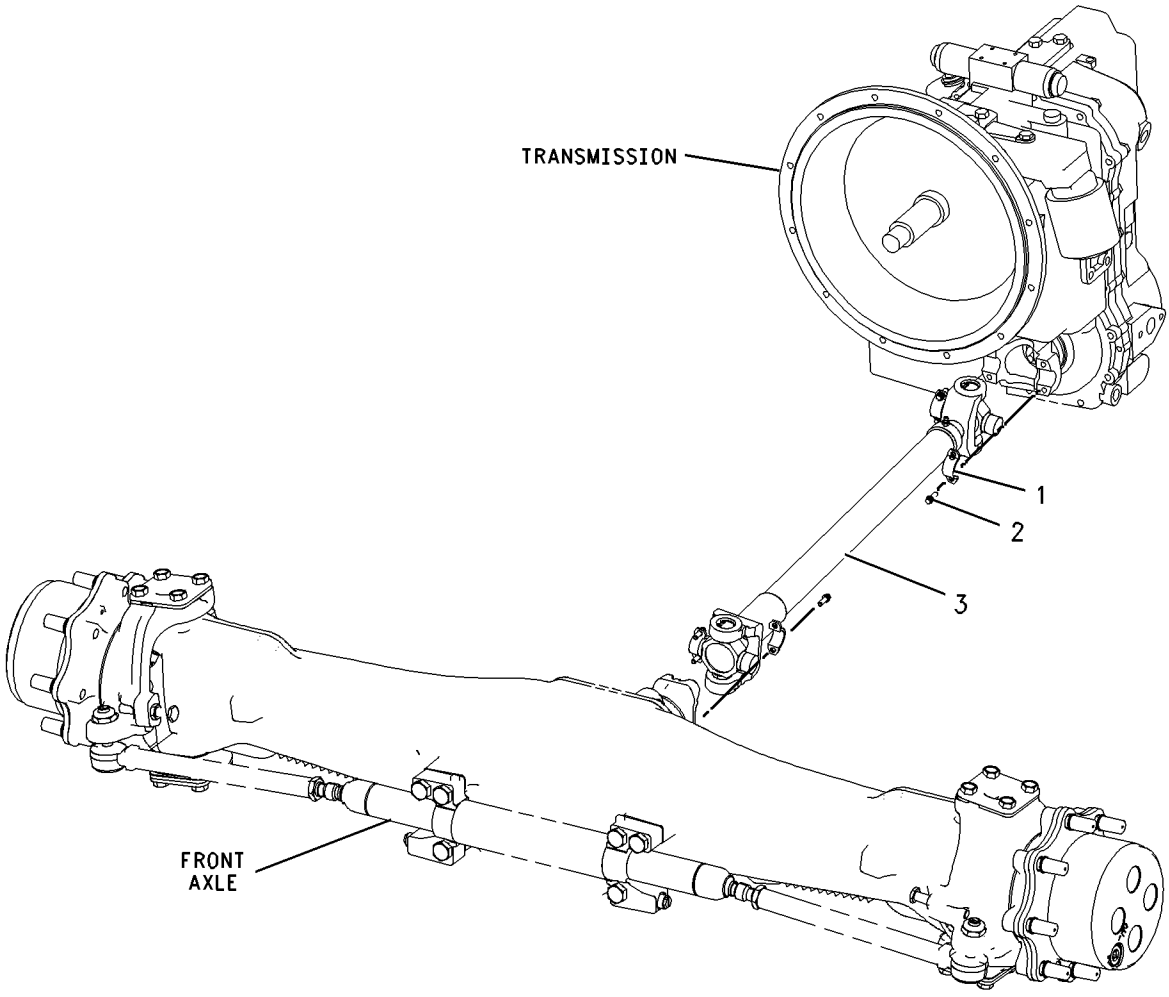

GRAPHIC #1 **<END>** g00996052

202-6008 TRANSMISSION & MOUNTING GP–ALL WHEEL DRIVE–STANDARD SHIFT

S/N: BXC1-UP; DSX1-UP

PART OF 185-7586 TRANSMISSION AR-DIRECT DRIVE AN ATTACHMENT

SMCS-3030 **i01949166**

NOTE	REF NO	GRAPHIC REF	PART NUMBER	QTY	PART NAME 1 2 3 4 5 6 (PRODUCT LEVEL)	SEE PAGE
	1	1	**113-9221**	1	SUPPORT-REAR	
	2	1	**138-7137**	1	SUPPORT AS	
Y	3	1	**201-8562**	1	TRANSMISSION GP-DIRECT DRIVE (ALL WHEEL DRIVE)	248
M	4	1	**7X-2553**	4	BOLT (M16X2X40MM)	
	5	1	**8T-4223**	4	WASHER-HARD (13.5X25.5X3MM THK)	
M	6	1	**8T-4956**	4	BOLT (M12X1.75X35MM)	
	7	1	**9X-8257**	4	WASHER (17.5X30X3.5MM THK)	

M-METRIC PART
Y-SEPARATE ILLUSTRATION

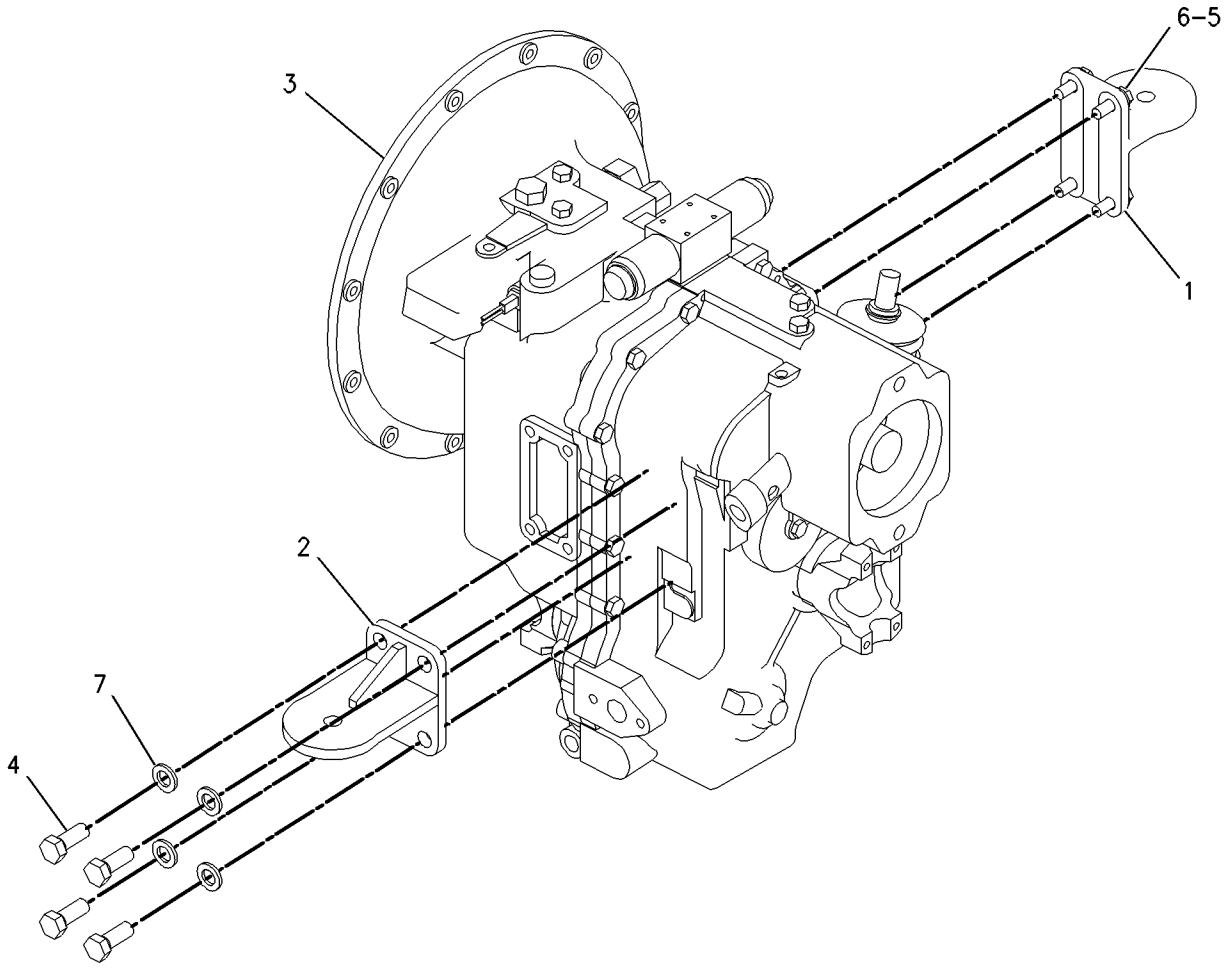

GRAPHIC #1 **<END>** g00869096

202-7432 TRANSMISSION & MOUNTING GP—ALL WHEEL DRIVE

S/N: BXC1-UP; DSX1-UP
PART OF 185-7587 TRANSMISSION AR-POWER SHIFT
AN ATTACHMENT

SMCS-3030 **i02005403**

NOTE	REF NO	GRAPHIC REF	PART NUMBER	QTY	PART NAME 1 2 3 4 5 6 (PRODUCT LEVEL)	SEE PAGE
	1	1	**113-9221**	1	SUPPORT-REAR	
	2	1	**138-7138**	1	SUPPORT AS	
Y	3	1	**192-0849**	1	TRANSMISSION GP-POWER SHIFT (ALL WHEEL DRIVE)	254
M	4	1	**7X-2553**	4	BOLT (M16X2X40MM)	
	5	1	**8T-4223**	4	WASHER-HARD (13.5X25.5X3MM THK)	
M	6	1	**8T-4956**	4	BOLT (M12X1.75X35MM)	
	7	1	**9X-8257**	4	WASHER (17.5X30X3.5MM THK)	

M-METRIC PART
Y-SEPARATE ILLUSTRATION

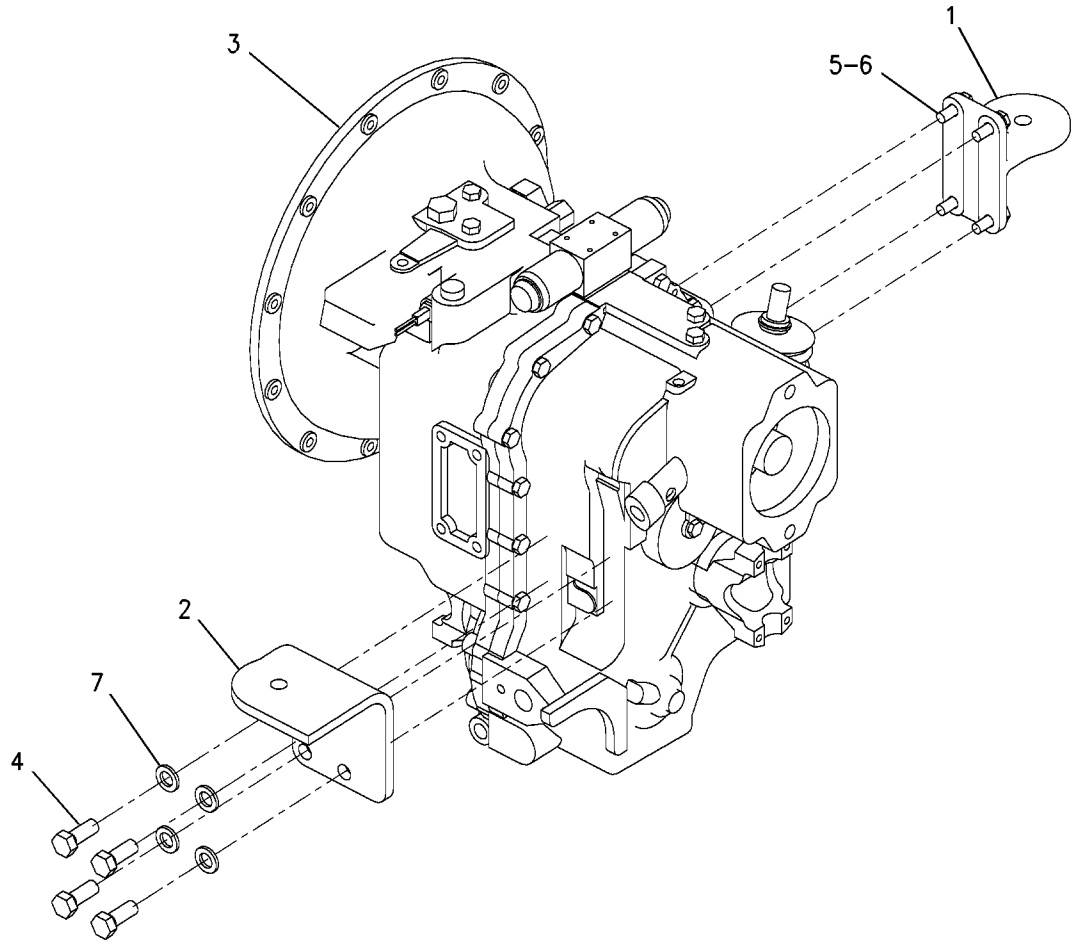

GRAPHIC #1 **<END>** g00797515

185-7586 TRANSMISSION AR-DIRECT DRIVE—ALL WHEEL DRIVE

S/N: BXC1-UP; DSX1-UP
PART OF 214-7012, 214-7014 POWER TRAIN AR
AN ATTACHMENT

SMCS-3030 **i01981638**

NOTE	PART NUMBER	QTY	PART NAME 1 2 3 4 5 6 (PRODUCT LEVEL)	SEE PAGE
Y	*111-7907*	1	DRIVE GP-FLEXIBLE COUPLING	231
Y	*202-6008*	1	TRANSMISSION & MOUNTING GP	245
	119-4740	1	FILTER AS-OIL (TRANSMISSION)	
	140-7393	1	TORQUE CONVERTER AS	
			—OR—	
	212-6215	1	TORQUE CONVERTER AS	
Y-SEPARATE ILLUSTRATION				

<END>

185-7587 TRANSMISSION AR-POWER SHIFT—ALL WHEEL DRIVE

S/N: BXC1-UP; DSX1-UP
PART OF 214-7013, 214-7015 POWER TRAIN AR
AN ATTACHMENT

SMCS-3030 **i01999288**

NOTE	PART NUMBER	QTY	PART NAME 1 2 3 4 5 6 (PRODUCT LEVEL)	SEE PAGE
Y	*111-7907*	1	DRIVE GP-FLEXIBLE COUPLING	231
	119-4740	1	FILTER AS-OIL (TRANSMISSION)	
	212-6215	1	TORQUE CONVERTER AS	
Y	**202-7432**	1	TRANSMISSION & MOUNTING GP	246
Y-SEPARATE ILLUSTRATION				

<END>

201-8562 TRANSMISSION GP-DIRECT DRIVE—ALL WHEEL DRIVE

S/N: BXC1-UP; DSX1-UP

PART OF 202-6008 TRANSMISSION & MOUNTING GP

AN ATTACHMENT

SMCS-3030 **i01981326**

NOTE	REF NO	GRAPHIC REF	PART NUMBER	QTY	PART NAME 1 2 3 4 5 6 (PRODUCT LEVEL)	SEE PAGE
	1	3	**174-9711**	1	GASKET	
	2	3	**175-0054**	1	SEAL-O-RING	
	3	3	**9M-1974**	3	WASHER-HARD (8.8X16X2MM THK)	
	4	3	**122-3652**	2	PLUG	
	5	3	**121-7405**	1	VALVE GP-RELIEF (CLUTCH PRESSURE)	
	5A	3	**6V-9178**	1	SEAL-O-RING	
	5B	3	**7X-4744**	1	SEAL-O-RING	
	5C	3	**106-9586**	1	SEAL-O-RING	
	6	3	**121-7396**	1	VALVE GP-RELIEF (CONVERTER)	
	6A	3	**6V-4589**	1	SEAL-O-RING	
	6B	3	**8L-2746**	1	SEAL-O-RING	
M	7	1,3	**8C-5748**	7	BOLT (M8X1.25X55MM)	
	8	1	**9P-9150**	4	WASHER (8.25X18X.84MM THK)	
	9	2	**192-0845**	1	CASE AS	
	10	2	**156-9275**	1	CASE-TRANSMISSION	
	11	1,2,3	**9S-4191**	10	PLUG	
	12	1,2,3	**3J-1907**	11	SEAL-O-RING	
M	13	1	**6V-8335**	14	BOLT-SELF LOCKING (M10X1.5X40MM)	
	14	2	**7T-3022**	2	SLEEVE	
	15	2	**123-8906**	3	CUP-TAPERED ROLLER	
	16	2	**123-8905**	3	CONE	
	17	2	**9U-8886**	4	RING-SEAL (44.95MM ID)	
	18	2	**7T-3021**	2	SYNCHRONIZER GP	
	19	2	**161-3249**	1	RING-RETAINING	
	20	2	**8E-5707**	1	PLATE-END	
	21	2	**121-0697**	1	WASHER-THRUST (45X65X5MM THK)	
	22	2	**172-6050**	2	BEARING-SPECIAL	
	23	2	**095-0927**	1	RING-RETAINING	
	24	2	**121-0714**	1	PISTON	
	25	2	**178-9566**	1	SPRING-PISTON	
	26	2	**121-0885**	1	RETAINER	
	27	2	**6T-9196**	1	SEAL	
	28	2	**6T-9194**	8	PLATE	
	29	2	**6Y-7957**	8	DISC-FRICTION	
	30	2	**190-9767**	1	SHAFT AS	
	31	2	**121-0904**	1	GEAR AS	
	32	2	**123-8912**	2	BEARING-ROLLER	
	33	2	**122-1877**	1	WASHER-THRUST (40X65X4MM THK)	
	34	2	**211-6758**	1	GEAR (19 TEETH)	
	35	2	**121-1251**	1	GEAR (28 TEETH)	
	36	2	**117-4650**	1	GEAR (37 TEETH)	
	37	2	**6T-9160**	1	GEAR (43 TEETH)	
	38	2	**121-1253**	1	GEAR (37 TEETH)	
	39	2	**6V-8500**	2	BEARING	
	40	2	**7T-3017**	1	SPACER (52.5X59X9.6MM THK)	
	41	2	**7T-3018**	1	SLEEVE	
	42	2	**6Y-2326**	1	RING	
	43	2	**122-1878**	1	RING-SEAL	
	44	2	**122-1879**	1	SPACER (58X67.5X2MM THK)	
B	45	2	**104-3288**	1	SHIM (0.05MM THK)	
B		2	**121-2059**	1	SHIM (0.08MM THK)	
B		2	**121-2060**	1	SHIM (0.18MM THK)	
B		2	**121-2061**	1	SHIM (0.6MM THK)	
M	46	3	**6V-7731**	2	BOLT (M10X1.5X70MM)	
	47	3	**6Y-2035**	1	GASKET	

201-8562 TRANSMISSION GP-DIRECT DRIVE *(contd.)* i01981326

NOTE	REF NO	GRAPHIC REF	PART NUMBER	QTY	PART NAME 1 2 3 4 5 6 (PRODUCT LEVEL)	SEE PAGE
	48	3	**7T-3119**	1	HOUSING	
	49	2	**121-2062**	1	WASHER-THRUST (35X55X4MM THK)	
	50	2	**7T-3034**		SHIM (2.02MM THK)	
B	51	2	**6T-9144**	1	SHIM (.051MM THK)	
B		2	**6T-9147**	1	SHIM (.076MM THK)	
B		2	**6T-9146**	1	SHIM (.127MM THK)	
B		2	**6T-9145**	1	SHIM (.178MM THK)	
B		2	**6T-9143**	1	SHIM (.381MM THK)	
B		2	**6T-9142**	1	SHIM (.508MM THK)	
	52	3	**1H-9721**	1	PLUG-EXPANSION	
	53	3	**6K-0806**	1	STRAP-CABLE	
	54	3	**7T-3111**	1	COVER	
	55	1	**120-9762**	4	SEAL-O-RING	
	56	3	**121-7391**	1	LEVER	
	57	2	**005-0469**	2	CUP-BEARING	
	58	2	**005-0471**	2	CONE-BEARING	
	59	2	**211-6759**	1	SHAFT (OUTPUT)	
	60	2	**123-8910**	1	CUP-TAPERED ROLLER	
	61	2	**123-8909**	1	CONE-BEARING	
	62	2	**7T-2646**	2	SPACER (66X79.5X2.02MM THK)	
B	63	2	**6T-9166**	2	SHIM (0.051MM THK)	
B		2	**6T-9165**	2	SHIM (0.076MM THK)	
B		2	**6T-9164**	2	SHIM (0.178MM THK)	
B		2	**6T-9163**	2	SHIM (0.599MM THK)	
	64	3	**7T-3251**	1	BREATHER (TRANSMISSION)	
M	65	1	**6V-8210**	2	BOLT (M8X1.25X16 MM)	
	66	1	**106-9861**	1	PLATE-COVER	
	67	2	**7T-3051**	1	PLUG	
	68	2	**8T-1580**	1	CUP	
	69	2	**8T-1581**	1	CONE	
	70	2	**6Y-2737**	1	CUP-BEARING	
	71	2	**6Y-2736**	1	CONE-BEARING	
	72	2	**121-2500**	3	WASHER-THRUST (50X70X4MM THK)	
	73	2	**121-2511**	1	SHAFT	
	74	2	**121-2537**	1	SHAFT-REVERSE	
	75	2	**121-2545**	1	SHAFT AS-INPUT	
		2	**123-0714**	1	BEARING	
		2	**123-2920**	3	PLUG	
	76	2	**121-2603**	1	GEAR (40 TEETH)	
	77	2	**121-2604**	1	GEAR (27 TEETH)	
	78	2	**121-0694**	1	WASHER-THRUST (40X70X4MM THK)	
	79	2	**122-1882**	2	PLATE-END	
	80	2	**122-1881**	12	PLATE-CLUTCH	
	81	2	**122-1880**	12	DISC	
	82	2	**6V-8757**	3	RING	
	83	2	**178-8200**	2	RETAINER-SPRING	
	84	2	**178-8134**	2	SPRING	
	85	2	**178-8132**	2	SEAL	
M	86	1	**121-9875**	4	BOLT (M10X1.5X55MM)	
	87	2	**122-6787**	2	YOKE AS	
		2	**123-1377**	1	GUARD	
	88	2	**122-1883**	1	SPACER (38X45X5MM THK)	
	89	2	**122-1885**	2	SPACER (51X55X4MM THK)	
	90	2	**123-8913**	4	BEARING-ROLLER	
	91	2	**172-5317**	2	BEARING-SPECIAL	
	92	2	**122-3649**	2	RING-RETAINING	
	93	2	**7T-3195**	2	WASHER (12.3X47X6.35MM THK)	
	94	3	**123-2920**	1	PLUG	
M	95	2	**6V-8097**	2	BOLT (M12X1.75X30MM)	

201-8562 TRANSMISSION GP-DIRECT DRIVE *(contd.)* i01981326

NOTE	REF NO	GRAPHIC REF	PART NUMBER	QTY	PART NAME 1 2 3 4 5 6 (PRODUCT LEVEL)	SEE PAGE
	96	2	**5P-8066**	2	SEAL-O-RING	
	97	2	**122-1884**	1	SPACER (45X49X8MM THK)	
	98	2	**121-7385**	1	PUMP GP-TRANSMISSION	
		2	**208-8240**	1	SEAL-LIP TYPE	
	99	2	**7X-4741**	1	SEAL (140MM ID)	
	100	2	**122-1886**	1	RING-SEAL	
	101	1	**014-5645**	3	BALL	
	102	1	**6Y-1341**	2	SPRING	
	103	1	**121-7403**	1	FORK-SHIFT	
	104	1	**121-7389**	1	ROD AS-GEARSHIFT	
	105	1	**121-7390**	1	ROD AS-GEARSHIFT	
	106	1	**7T-3249**	2	SCREW (3/8-24X0.75 IN)	
	107	2	**123-8907**	2	CONE-BEARING	
	108	2	**123-8908**	2	CUP-TAPERED ROLLER	
	109	3	**7T-3109**	1	PIN	
	110	1	**121-7404**	1	FORK-SHIFT	
	111	3	**127-3017**	1	SEAT AS	
	112	2	**6V-5100**	1	SEAL-O-RING	
	113	3	**3S-2093**	1	STRAP-CABLE	
	114	2	**1U-8846**	1	SEALANT-GASKET	
	115	1	**123-2919**	2	NUT (M11X1 THD)	
	116	1	**122-1876**	1	TUBE	
	117	1	**6Y-1896**	1	PLUG AS	
		1	**5P-6718**	1	SEAL-O-RING	
	118	1	**123-2918**	1	SLEEVE	
	119	2	**121-7398**	1	SPACER (70X79.5X2MM THK)	
B	120	2	**121-7399**	1	SHIM (0.05MM THK)	
B		2	**121-7400**	1	SHIM (0.08MM THK)	
B		2	**121-7401**	1	SHIM (0.18MM THK)	
B		2	**121-7402**	1	SHIM (0.6MM THK)	
	121	1	**9W-5460**	1	RING	
	122	1	**4F-7952**	1	SEAL-O-RING	
	123	1	**7T-2651**	1	STRAINER (TRANSMISSION CASE)	
	124	2	**178-8133**	2	GUIDE-SPRING	
M	125	1	**9X-6615**	4	BOLT (M5X.8X30MM)	
Y	126	3	**121-4036**	1	VALVE GP-SOLENOID (ALL WHEEL DRIVE)	261
Y	127	3	**223-8181**	1	VALVE GP-SOLENOID (FORWARD, NEUTRAL, REVERSE)	265
	128	1	**3G-6927**	1	ADAPTER	
	129	1	**7T-3253**	2	DOWEL	
	130	2	**216-2267**	2	SEAL-LIP TYPE	
	131	1	**122-6785**	1	PLUG AS	

B-USE AS REQUIRED
M-METRIC PART
Y-SEPARATE ILLUSTRATION

201-8562 TRANSMISSION GP-DIRECT DRIVE *(contd.)* i01981326

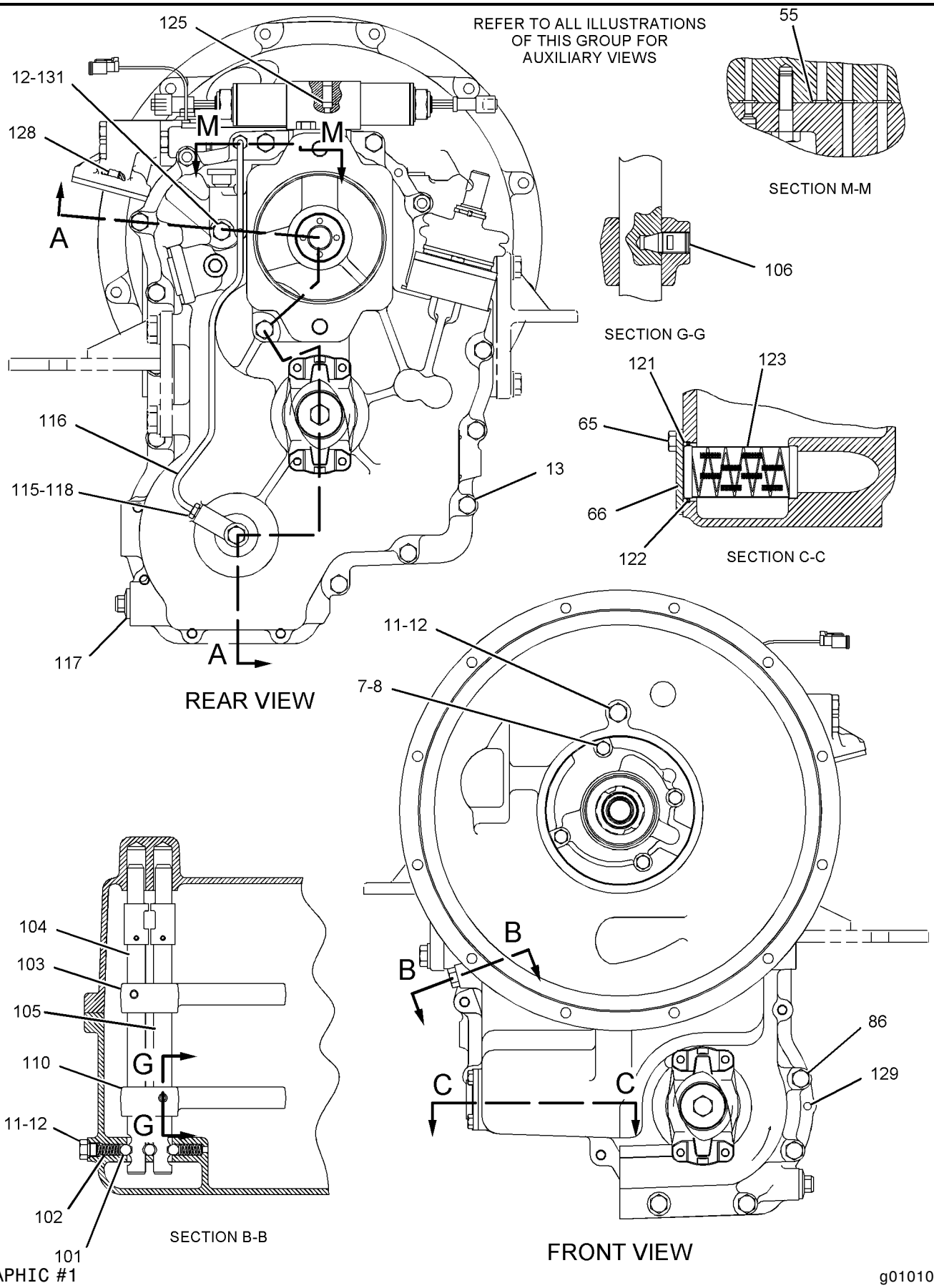

GRAPHIC #1

g01010746

201-8562 TRANSMISSION GP-DIRECT DRIVE *(contd.)* i01981326

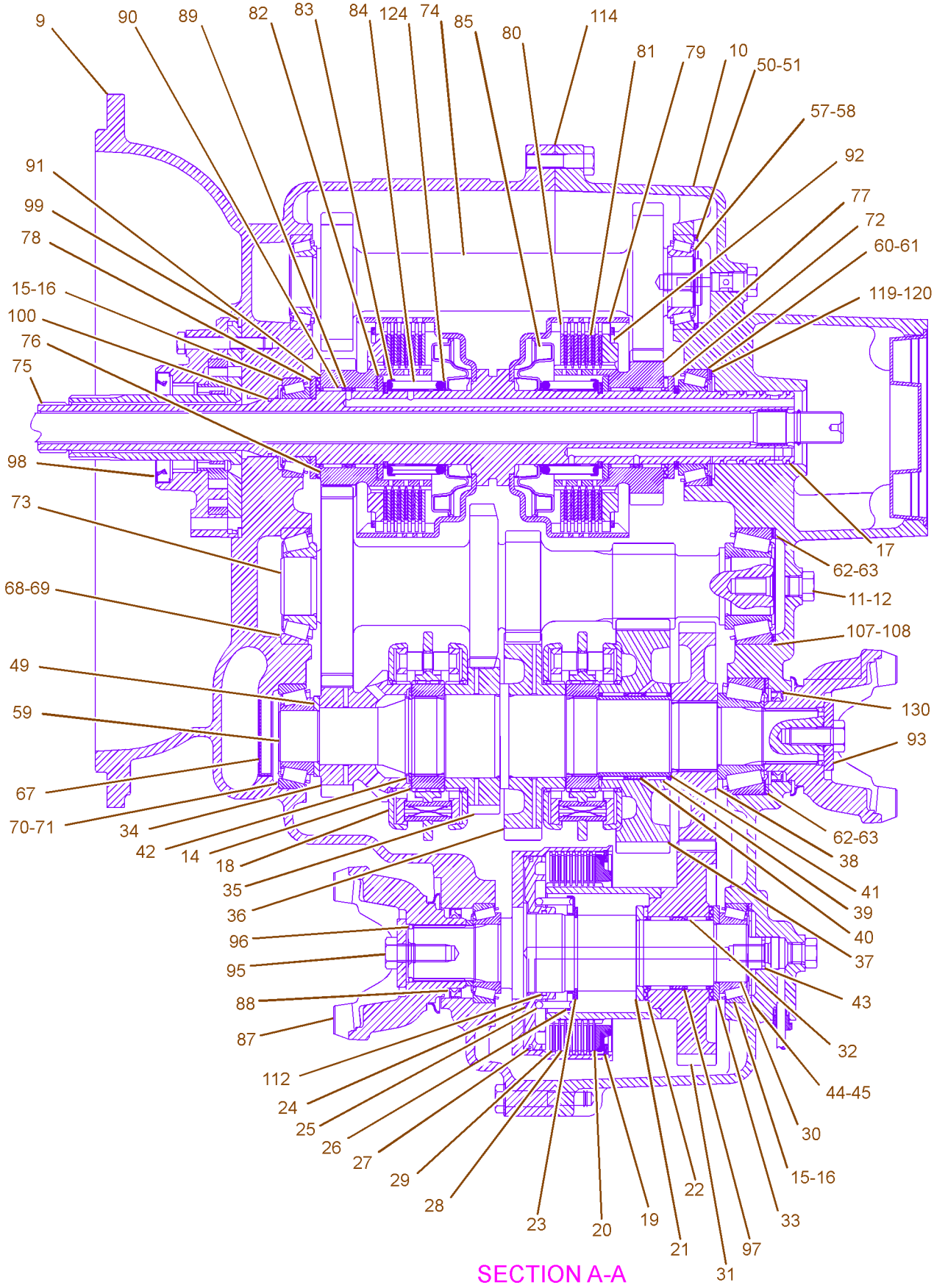

SECTION A-A

GRAPHIC #2 g01010748

201-8562 TRANSMISSION GP-DIRECT DRIVE *(contd.)* i01981326

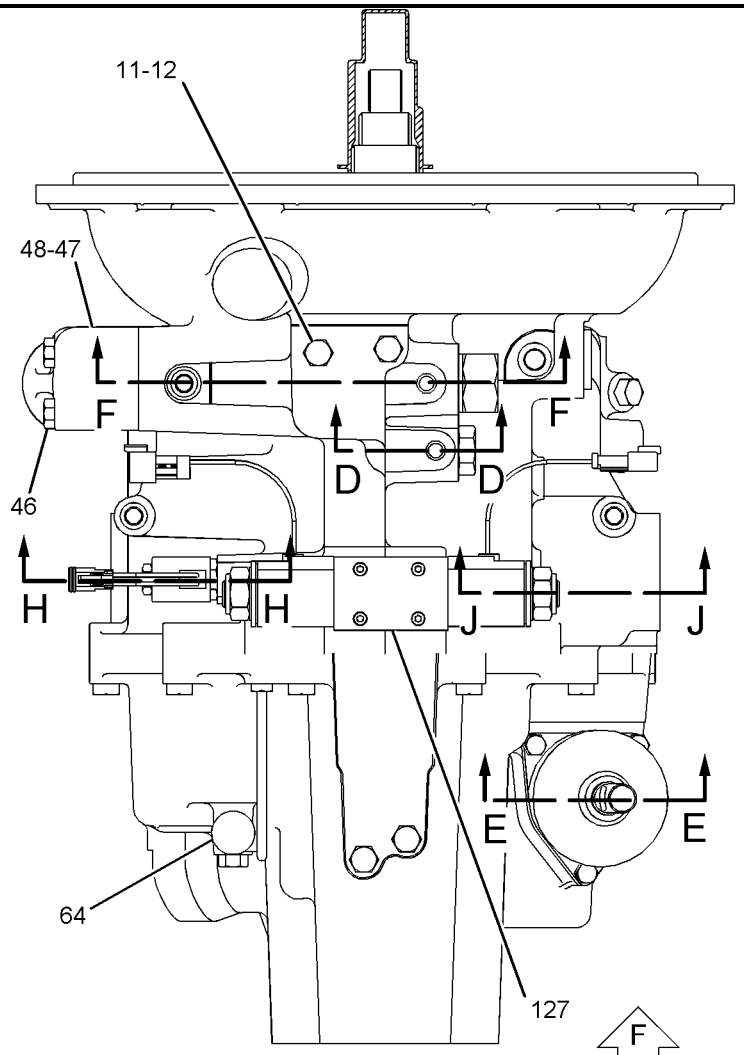

TOP VIEW

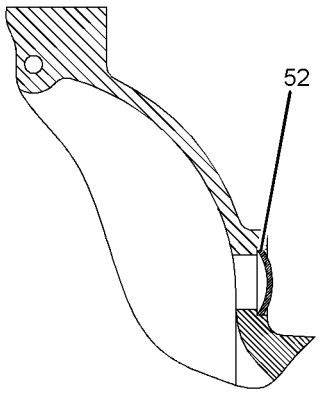

SECTION J-J

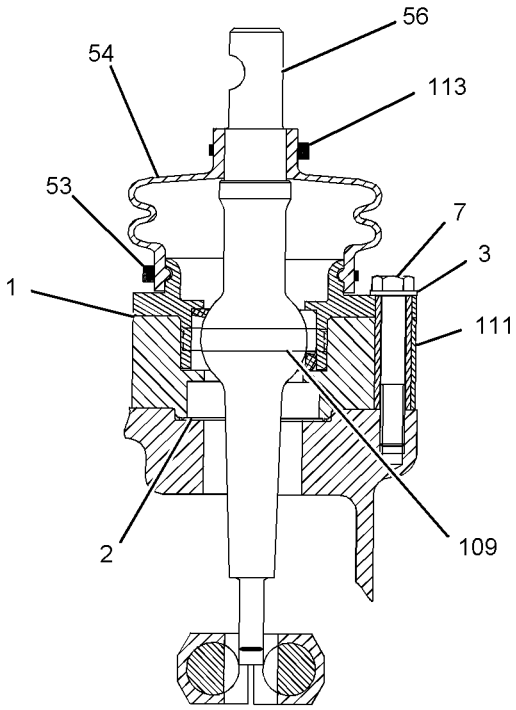

SECTION E-E

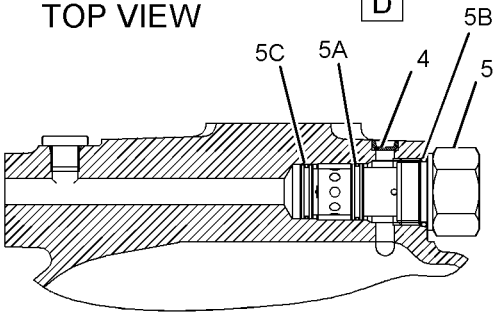

SECTION F-F

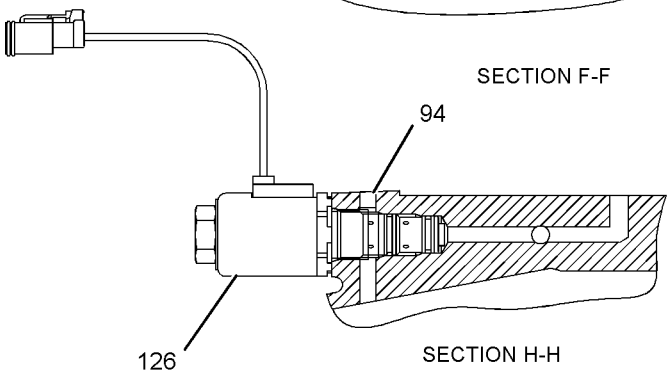

SECTION H-H

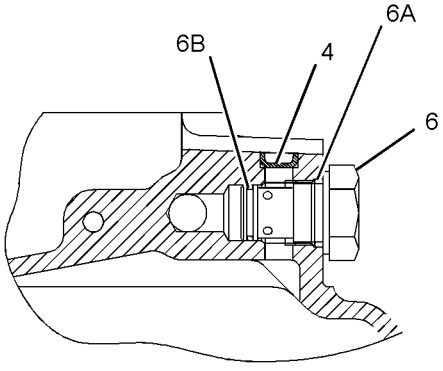

SECTION D-D

GRAPHIC #3 **<END>** g01010751

192-0849 TRANSMISSION GP-POWER SHIFT—ALL WHEEL DRIVE

S/N: BXC1-UP; DSX1-UP

PART OF 202-7432 TRANSMISSION & MOUNTING GP

AN ATTACHMENT

SMCS-3030 **i01797259**

NOTE	REF NO	GRAPHIC REF	PART NUMBER	QTY	PART NAME 1 2 3 4 5 6 (PRODUCT LEVEL)	SEE PAGE
	1	2	**178-9566**	2	SPRING-PISTON	
M	2	1	**8C-5748**	4	BOLT (M8X1.25X55MM)	
	3	1,2	**161-3249**	1	RING-RETAINING	
	4	1,2	**8T-1581**	1	CONE	
	5	1,3	**150-7732**	2	SEAL-O-RING	
M	6	3	**8T-0271**	2	BOLT-SOCKET HEAD (M10X1.5X35MM)	
	7	2,3	**8T-1580**	1	CUP	
	8	3	**4F-7952**	1	SEAL-O-RING	
	9	1	**147-0218**	1	TUBE AS-TRANSFER	
Y	10	1	**148-8988**	1	VALVE GP-SOLENOID	263
M	11	1	**8C-8545**	2	BOLT-SOCKET HEAD	
	12	1,2	**120-9762**	5	SEAL-O-RING	
Y	13	1	**148-8986**	1	VALVE GP-SOLENOID	262
	14	1	**147-0253**	1	CASE AS-REAR	
		1	**9W-0717**	11	PLUG	
	15	1	**121-7398**	1	SPACER (2MM THK)	
B		1	**121-7402**	1	SHIM (0.6MM THK)	
B		1	**121-7401**	1	SHIM (0.18MM THK)	
B		1	**121-7400**	1	SHIM (0.08MM THK)	
B		1	**121-7399**	1	SHIM (0.05MM THK)	
	16	3	**7T-2651**	1	STRAINER	
	17	3	**9W-5460**	1	RING	
Y	18	3	**147-0209**	1	VALVE GP-RELIEF	260
	19	3	**121-7396**	1	VALVE GP-RELIEF	
		3	**6V-4589**	1	SEAL-O-RING	
		3	**8L-2746**	1	SEAL-O-RING	
	20	1	**7T-2646**	2	SPACER (2.02MM THK)	
B		1	**6T-9166**	2	SHIM (0.051MM THK)	
B		1	**6T-9165**	2	SHIM (0.076MM THK)	
B		1	**6T-9164**	2	SHIM (0.178MM THK)	
		1	**6T-9163**	2	SHIM (0.599MM THK)	
	21	3	**6T-9202**	2	PLUG	
Y	22	3	**121-4036**	2	VALVE GP-SOLENOID	261
	23	3	**106-9861**	1	PLATE-COVER	
	24	2	**122-1878**	1	RING-SEAL	
	25	1	**147-0201**	1	TUBE AS	
	26	1,3	**7W-3556**	12	WASHER (146.03X213X8MM THK)	
	27	1,3	**147-0234**	6	BOLT (9/16-18X21MM)	
B	28	1	**1U-8846**		SEALANT-GASKET	
	29	1	**5P-8066**	2	SEAL-O-RING	
M	30	1,2	**6V-8097**	3	BOLT (M12X1.75X30MM)	
	31	1,2	**7T-3195**	3	WASHER (6.35MM THK)	
	32	1	**122-6787**	2	YOKE AS	
		1	**123-1377**	1	GUARD	
	33	1	**8T-2193**	2	SEAL-LIP (48.0MM ID)	
	34	1	**121-7385**	1	PUMP GP-TRANSMISSION	
		1	**124-6612**	1	SEAL-LIP TYPE (57.15MM ID)	
	35	1	**9P-9150**	4	WASHER (8.25X18X.84MM THK)	
	36	2	**173-0332**	1	SHAFT AS	
		2	**163-9091**	1	PLUG	
	37	1	**7X-4741**	1	SEAL (140MM ID)	
	38	1,3	**9S-4185**	3	PLUG	
	39	1,3	**3K-0360**	3	SEAL-O-RING	
	40	1,2	**123-8906**	5	CUP-TAPERED ROLLER	
	41	1,2	**123-8905**	5	CONE-TAPERED	

192-0849 TRANSMISSION GP-POWER SHIFT *(contd.)* i01797259

NOTE	REF NO	GRAPHIC REF	PART NUMBER	QTY	PART NAME 1 2 3 4 5 6 (PRODUCT LEVEL)	SEE PAGE
	42	1,2	**121-0694**	2	WASHER-THRUST (4MM THK)	
	43	1,2	**172-5317**	6	BEARING-SPECIAL	
	44	2	**123-8913**	2	BEARING-ROLLER	
	45	2	**147-0224**	1	GEAR (45 AND 32 TEETH)	
	46	1,2	**8E-5707**	7	PLATE-END	
	47	1,2	**6V-8757**	6	RING	
	48	1,2	**6T-9194**	45	PLATE	
	49	1,2	**6Y-7929**	37	DISC-FRICTION	
	50	1,2	**9U-8875**	6	RING-RETAINING	
	51	1,2	**121-2500**	4	WASHER-THRUST (4MM THK)	
	52	1,2	**147-0202**	2	GEAR (45 AND 24 TEETH)	
	53	2	**147-0257**	1	SHAFT AS-INPUT	
		2	**123-2920**	3	PLUG	
	54	2	**9U-8886**	4	RING-SEAL (44.95MM ID)	
	55	2	**123-8910**	1	CUP-TAPERED ROLLER	
	56	2	**123-8909**	1	CONE-TAPERED ROLLER	
	57	1,2	**7T-6655**	4	BEARING	
	58	1,2	**147-0259**	2	SPACER (18.7MM THK)	
	59	1,2	**147-0238**	5	SPRING AS	
	60	1,2	**6V-5100**	5	SEAL-O-RING	
	61	1,2	**147-0228**	4	PISTON-CLUTCH	
	62	1,2	**6T-9196**	7	SEAL	
	63	2	**122-1886**	1	RING-SEAL	
	64	2	**123-8907**	3	CONE-TAPERED ROLLER	
	65	2	**123-8908**	3	CUP-TAPERED ROLLER	
	66	2	**147-0212**	1	GEAR (42 TEETH)	
	67	2	**147-0216**	1	GEAR (38 TEETH)	
	68	2	**147-0203**	3	WASHER-THRUST (5MM THK)	
	69	2	**147-0258**	1	SPACER (16MM THK)	
	70	2	**147-0215**	1	GEAR (45 AND 19 TEETH)	
	71	2	**172-6050**	6	BEARING-SPECIAL	
	72	2	**122-1877**	3	WASHER-THRUST (4MM THK)	
	73	1,2	**6Y-1192**	7	RING-SEAL (32MM ID)	
	74	2	**123-8912**	6	BEARING-ROLLER	
	75	3	**9S-4191**	14	PLUG	
	76	2	**147-0264**	1	GEAR (45 AND 28 TEETH)	
	77	2	**147-0260**	1	RETAINER-SPRING	
	78	2	**095-0928**	1	RING-RETAINING	
	79	2	**147-0205**	2	WASHER	
	80	2	**147-0248**	1	SPACER (15.8MM THK)	
	81	2	**157-2090**	1	GEAR (38 TEETH)	
	82	2	**172-6743**	2	BEARING-SPECIAL	
	83	2	**147-0242**	1	GEAR (32 TEETH)	
	84	2	**150-3757**	2	BEARING	
	85	2	**009-2062**	2	SEAL-O-RING	
	86	2	**157-2088**	2	PISTON AS	
	87	2	**147-0261**	1	SHAFT AS-OUTPUT (REAR)	
		2	**9W-0717**	2	PLUG	
	88	2	**095-0927**	1	RING-RETAINING	
	89	2	**122-1884**	1	SPACER (8MM THK)	
	90	2	**147-0210**	1	GEAR (45 AND 36 TEETH)	
	91	2	**147-0207**	1	SHAFT AS-OUTPUT (FRONT)	
	92	1,2	**122-1879**	2	SPACER (2MM THK)	
B		1,2	**104-3288**	2	SHIM (0.05MM THK)	
B		1,2	**121-2059**	2	SHIM (0.08MM THK)	
B		1,2	**121-2060**	2	SHIM (0.18MM THK)	
B		1,2	**121-2061**	2	SHIM (0.6MM THK)	
M	93	3	**6V-8210**	2	BOLT (M8X1.25X16 MM)	
	94	3	**147-0236**	1	TUBE AS-TRANSFER	

192-0849 TRANSMISSION GP-POWER SHIFT *(contd.)* i01797259

NOTE	REF NO	GRAPHIC REF	PART NUMBER	QTY	PART NAME 1 2 3 4 5 6 (PRODUCT LEVEL)	SEE PAGE
	95	1	**147-0226**	1	TUBE AS	
	96	1	**147-0256**	1	SHAFT AS-REVERSE	
		1	**9W-0717**	1	PLUG	
		1	**147-0270**	1	ORIFICE	
	97	3	**147-0211**	1	ELBOW AS	
		3	**3G-6927**	1	ADAPTER	
	98	2	**6Y-7957**	8	DISC-FRICTION	
	99	2	**147-0227**	1	PISTON-CLUTCH	
M	100	3	**6V-8335**	16	BOLT-SELF LOCKING (M10X1.5X40MM)	
	101	3	**147-0262**	4	WASHER (1.5MM THK)	
	102	3	**147-0266**	2	BOLT (3/4-16X21MM)	
	103	3	**189-5746**	1	SENSOR GP-SPEED	
		3	**102-8802**	1	KIT-RECEPTACLE (2 PIN)	
		3	**3E-3365**	1	WEDGE-RECEPTACLE LOCK (2 PIN)	
		3	**186-3735**	2	PIN-CONNECTOR	
E		3	**9X-1386**		SLEEVE (14CM)	
		3	**171-5349**	1	STRAP-MARKER	
	104	3	**1V-6341**	1	SEAL	
	105	3	**3J-1907**	14	SEAL-O-RING	
M	106	3	**8T-0643**	1	BOLT (M10X1.50X80MM)	
	107	3	**6Y-1896**	1	PLUG AS-DRAIN	
		3	**5P-6718**	1	SEAL-O-RING	
	108	1,2,3	**205-9244**	4	PLUG	
M	109	3	**9X-6615**	12	BOLT (M5X.8X30MM)	
	110	3	**7T-3253**	2	DOWEL	
	111	3	**7T-3251**	1	BREATHER	
	112	1	**192-0850**	1	CASE AS	
		1	**9W-0717**	4	PLUG	
		1	**147-0268**	4	PLUG	
	113	1	**122-1883**	1	SPACER (5MM THK)	
	114	2	**121-0885**	1	RETAINER	
Y	115	1	**199-3117**	1	VALVE GP-SOLENOID	264

B-USE AS REQUIRED
E-ORDER BY THE CENTIMETER
M-METRIC PART
Y-SEPARATE ILLUSTRATION

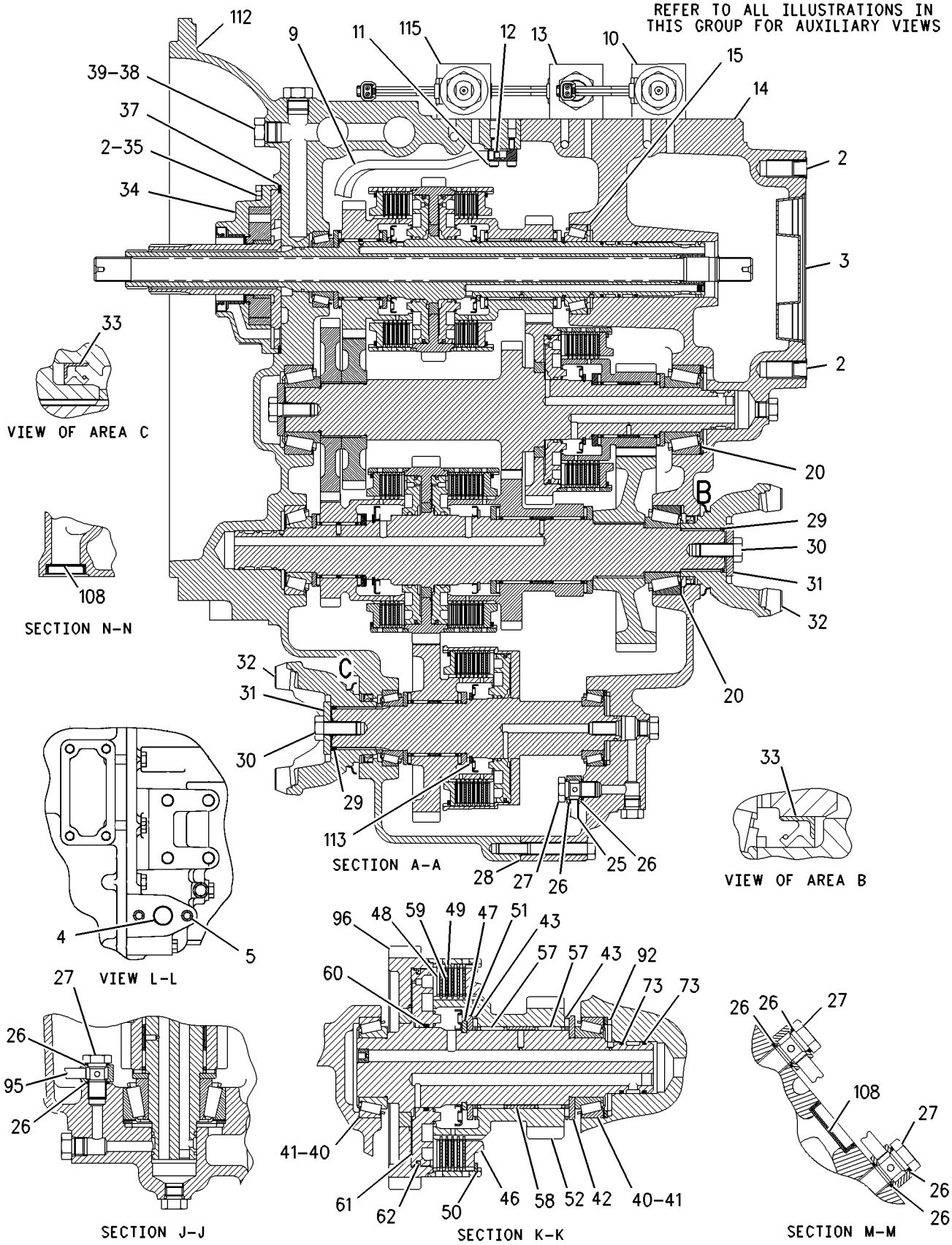

GRAPHIC #1 g00927745

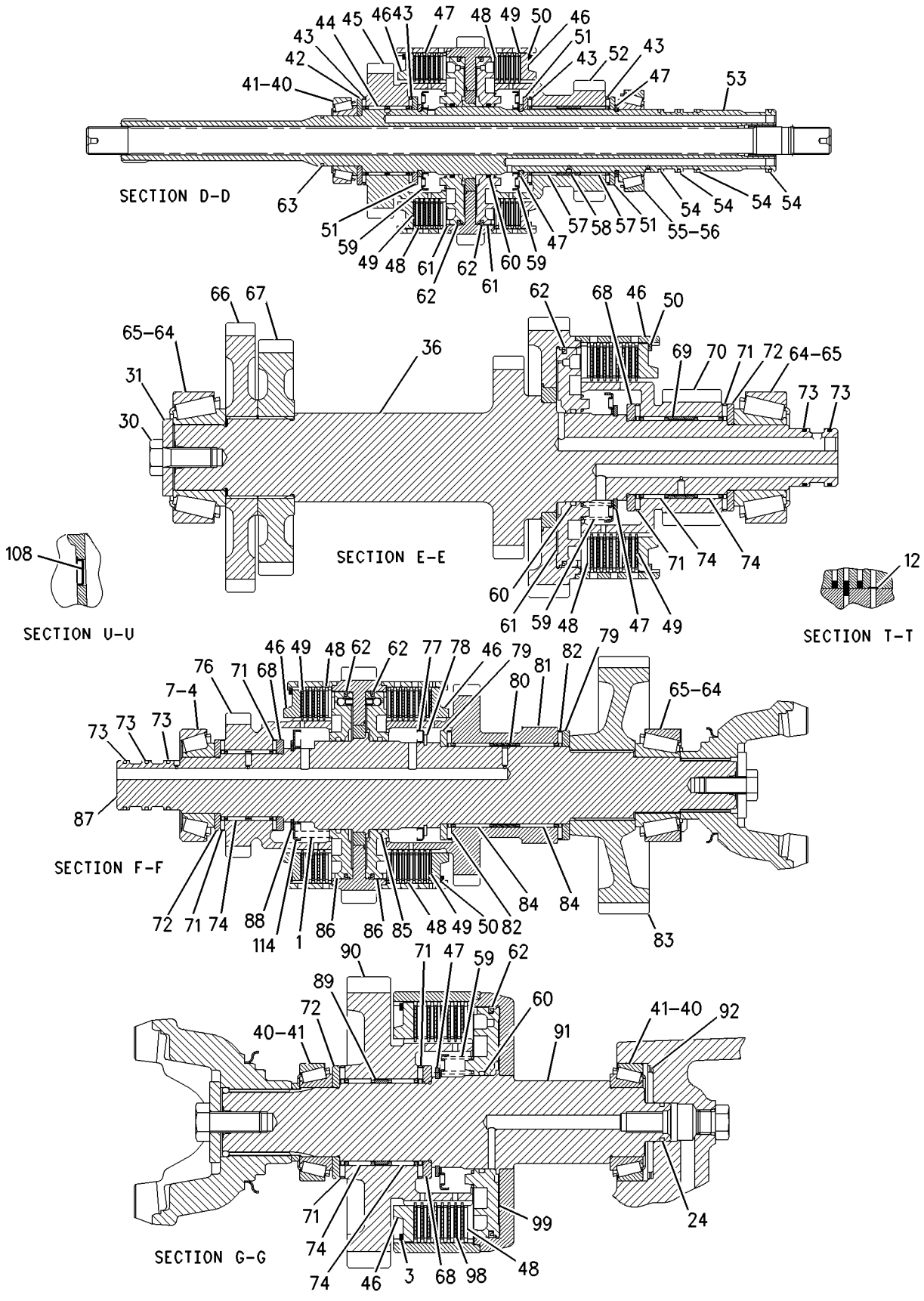

GRAPHIC #2 g00797176

192-0849 TRANSMISSION GP-POWER SHIFT *(contd.)* **i01797259**

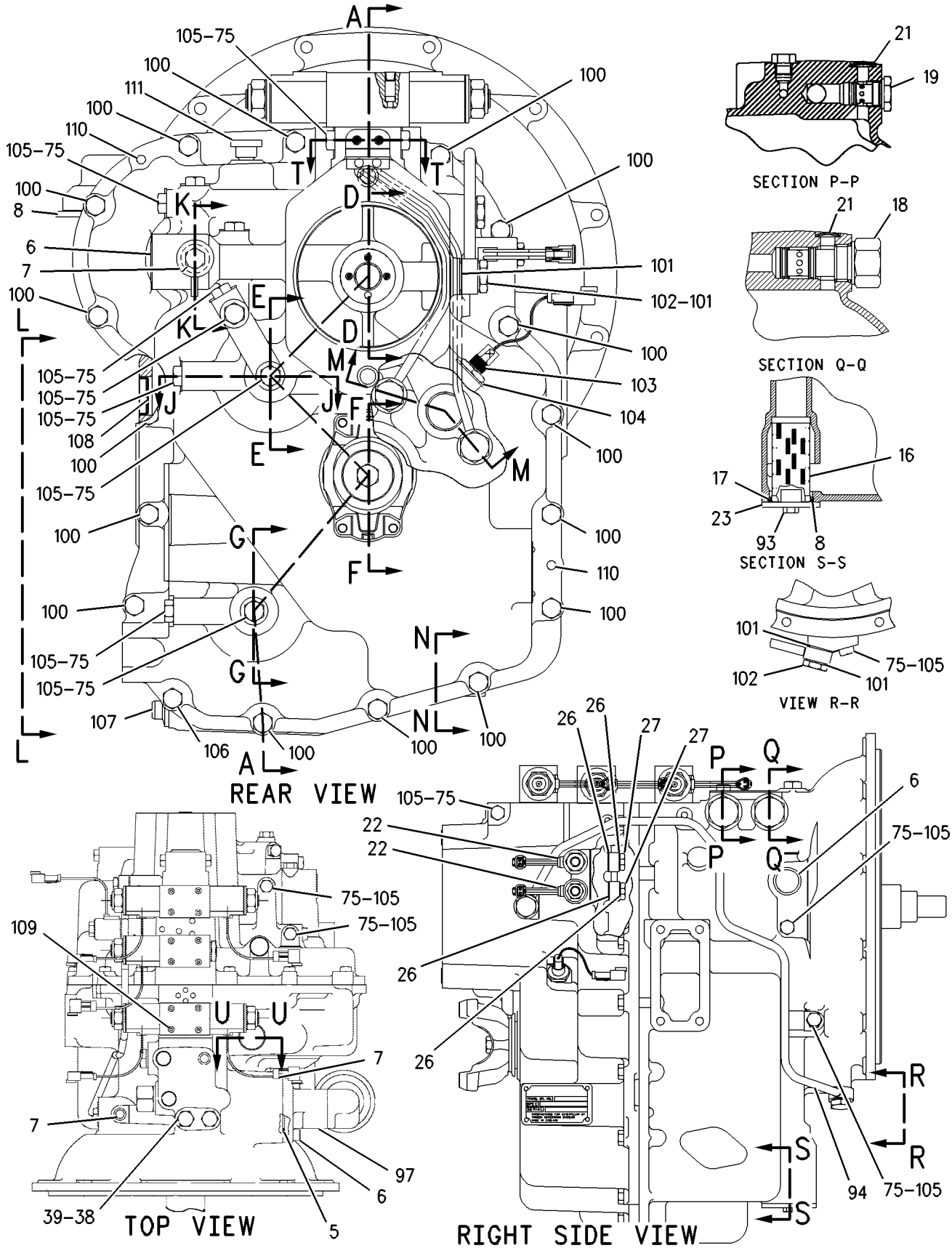

GRAPHIC #3 **<END>** g00797077

147-0209 VALVE GP-RELIEF

S/N: BXC1-UP; DSX1-UP
PART OF 192-0849 TRANSMISSION GP-POWER SHIFT
AN ATTACHMENT

SMCS-3133, 3182, 3210, 3213 **i00724885**

NOTE	REF NO	GRAPHIC REF	PART NUMBER	QTY	PART NAME 1 2 3 4 5 6 (PRODUCT LEVEL)	SEE PAGE
	1	1	**7X-4744**	1	SEAL-O-RING	
	2	1	**6V-9178**	1	SEAL-O-RING (25.12MM ID)	
	3	1	**106-9586**	1	SEAL-O-RING (23.52MM ID)	

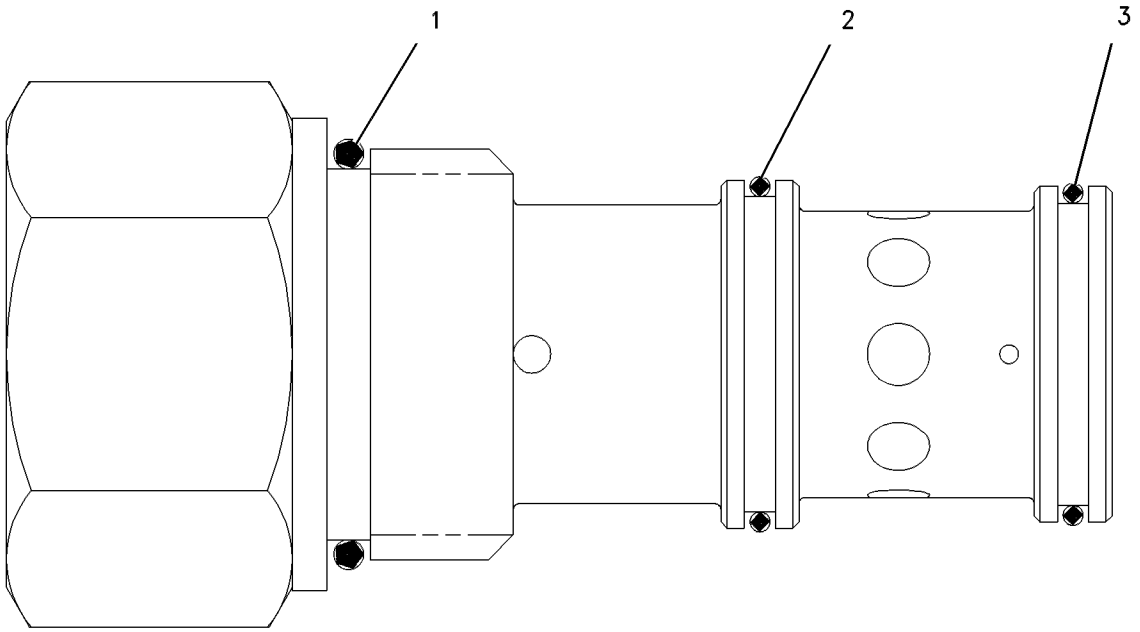

GRAPHIC #1 **<END>** g00304718

121-4036 VALVE GP-SOLENOID

S/N: BXC1-UP; DSX1-UP

PART OF 201-8562 TRANSMISSION GP-DIRECT DRIVE, 192-0849 TRANSMISSION GP-POWER SHIFT

AN ATTACHMENT

SMCS-3174 **i01745053**

NOTE	REF NO	GRAPHIC REF	PART NUMBER	QTY	PART NAME 1 2 3 4 5 6 (PRODUCT LEVEL)	SEE PAGE
	1	1	**3J-9196**	1	NUT-JAM (1/2-20 THD)	
	2	1	**122-1672**	1	CARTRIDGE AS	
	3	1	**130-0013**	1	COIL AS	
	4	1	**1S-9593**	2	STRAP-CABLE	
		1	**102-8807**	1	KIT-CONNECTING PLUG (2 PIN)	
					(KIT SERVICES RECEPTACLE AS AND WEDGE)	
		1	**3E-3362**	1	WEDGE-PLUG LOCK (2 PIN)	
		1	**186-3736**	2	SOCKET-CONNECTOR	
					AVAILABLE REPAIR KIT(S):	
			122-1135	1	KIT-SEAL	

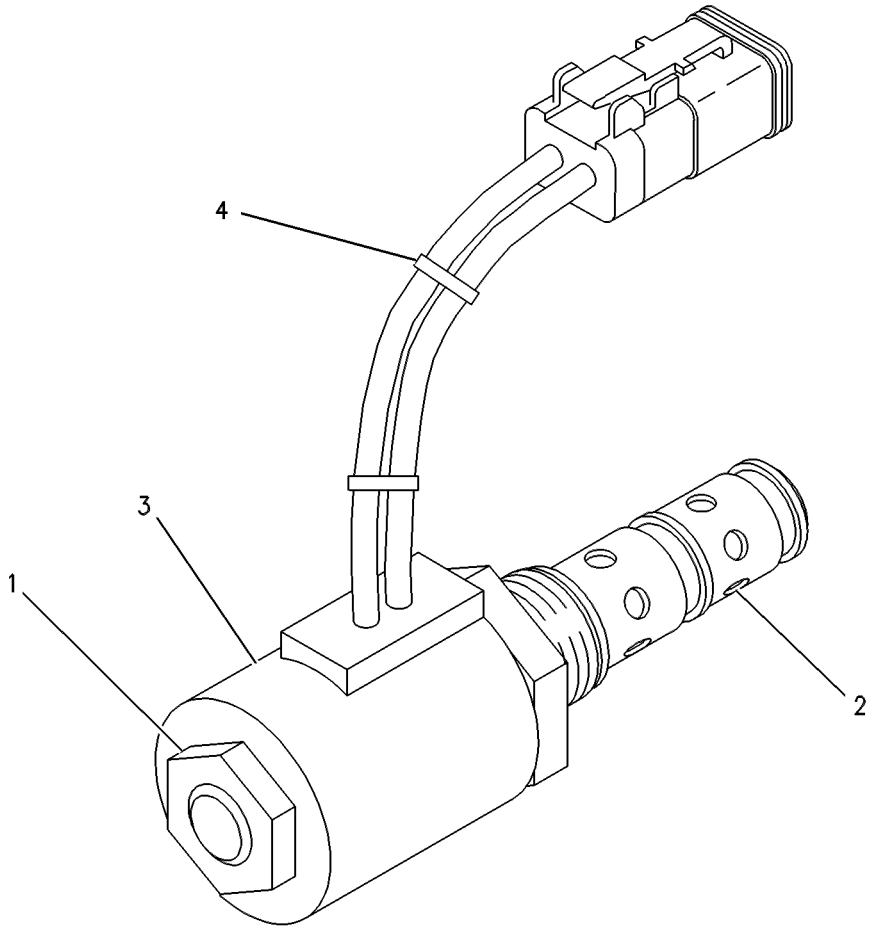

GRAPHIC #1 **<END>** g00131539

148-8986 VALVE GP-SOLENOID

S/N: BXC1-UP; DSX1-UP
PART OF 192-0849 TRANSMISSION GP-POWER SHIFT
AN ATTACHMENT

SMCS-3174 **i01710046**

NOTE	REF NO	GRAPHIC REF	PART NUMBER	QTY	PART NAME 1 2 3 4 5 6 (PRODUCT LEVEL)	SEE PAGE
	1	1	**117-2911**	1	COIL AS	
		1	**1S-9593**	2	STRAP-CABLE	
		1	**102-8802**	1	KIT-RECEPTACLE (2 PIN)	
					(KIT SERVICES RECEPTACLE AS AND WEDGE)	
		1	**3E-3365**	1	WEDGE-RECEPTACLE LOCK (2 PIN)	
		1	**186-3735**	2	PIN-CONNECTOR	
	2	1	**061-8639**	2	SEAL-O-RING (15.54MM ID)	
	3	1	**8L-2779**	4	SEAL-O-RING	
	4	1	**202-0040**	1	NUT-LOCKING	
	5	1	**150-4932**	1	PLUG-ORIFICE	
	6	1	**143-4655**	1	WASHER (M18.4X24.8X0.8MM THK)	

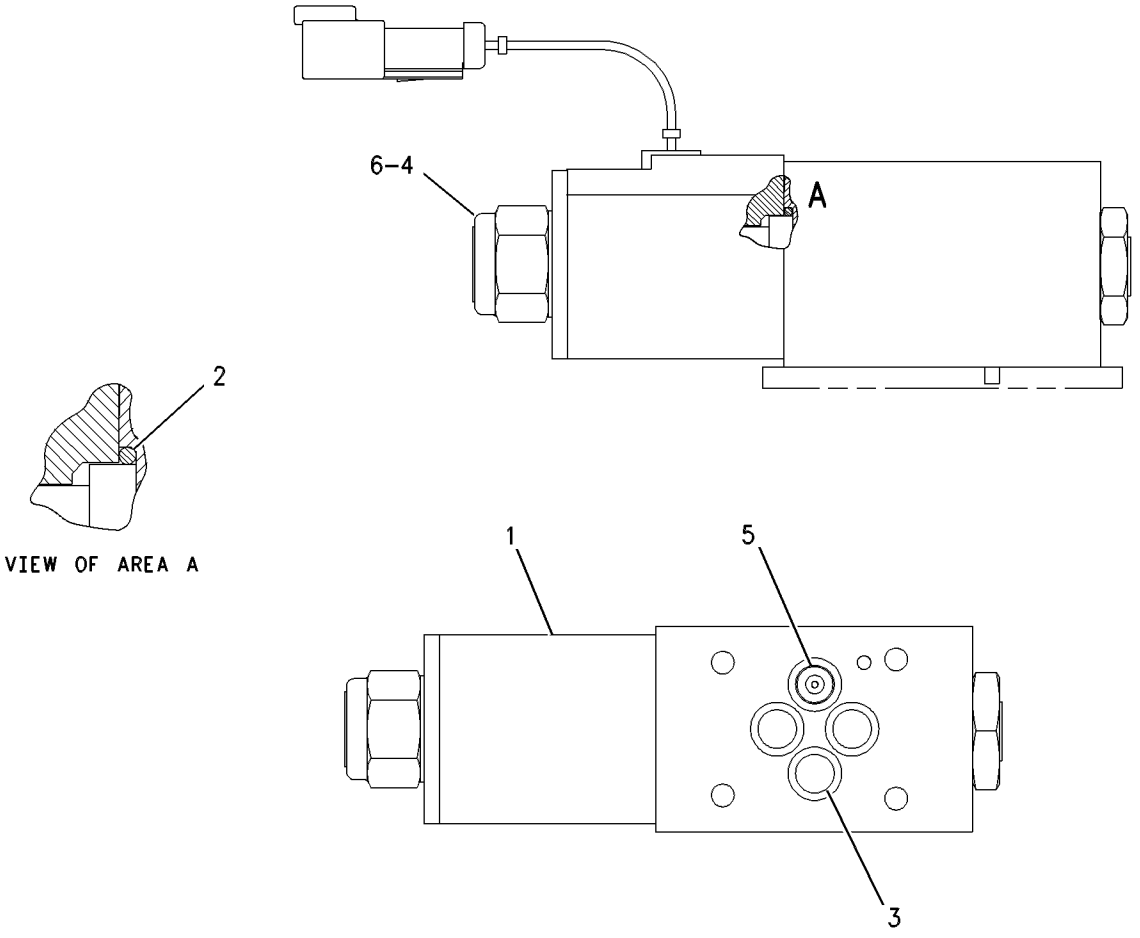

GRAPHIC #1 **<END>** g00304719

148-8988 VALVE GP-SOLENOID

S/N: BXC1-UP; DSX1-UP
PART OF 192-0849 TRANSMISSION GP-POWER SHIFT
AN ATTACHMENT

SMCS-3174 **i01710043**

NOTE	REF NO	GRAPHIC REF	PART NUMBER	QTY	PART NAME 1 2 3 4 5 6 (PRODUCT LEVEL)	SEE PAGE
	1	1	**117-2911**	1	COIL AS	
		1	**1S-9593**	2	STRAP-CABLE	
		1	**102-8802**	1	KIT-RECEPTACLE (2 PIN)	
					(KIT SERVICES RECEPTACLE AS AND WEDGE)	
		1	**3E-3365**	1	WEDGE-RECEPTACLE LOCK (2 PIN)	
		1	**186-3735**	2	PIN-CONNECTOR	
	2	1	**130-0912**	1	COIL AS	
		1	**1S-9593**	2	STRAP-CABLE	
		1	**102-8803**	1	KIT-RECEPTACLE (3 PIN)	
					(KIT SERVICES RECEPTACLE AS AND WEDGE)	
		1	**3E-3371**	1	WEDGE-RECEPTACLE LOCK (3 PIN)	
		1	**186-3735**	2	PIN-CONNECTOR	
		1	**8T-8737**	1	PLUG-SEAL	
	3	1	**061-8639**	2	SEAL-O-RING (15.54MM ID)	
	4	1	**8L-2779**	4	SEAL-O-RING	
	5	1	**202-0040**	2	NUT-LOCKING	
	6	1	**150-4932**	1	PLUG-ORIFICE	
	7	1	**143-4655**	2	WASHER (M18.4X24.8X0.8MM THK)	

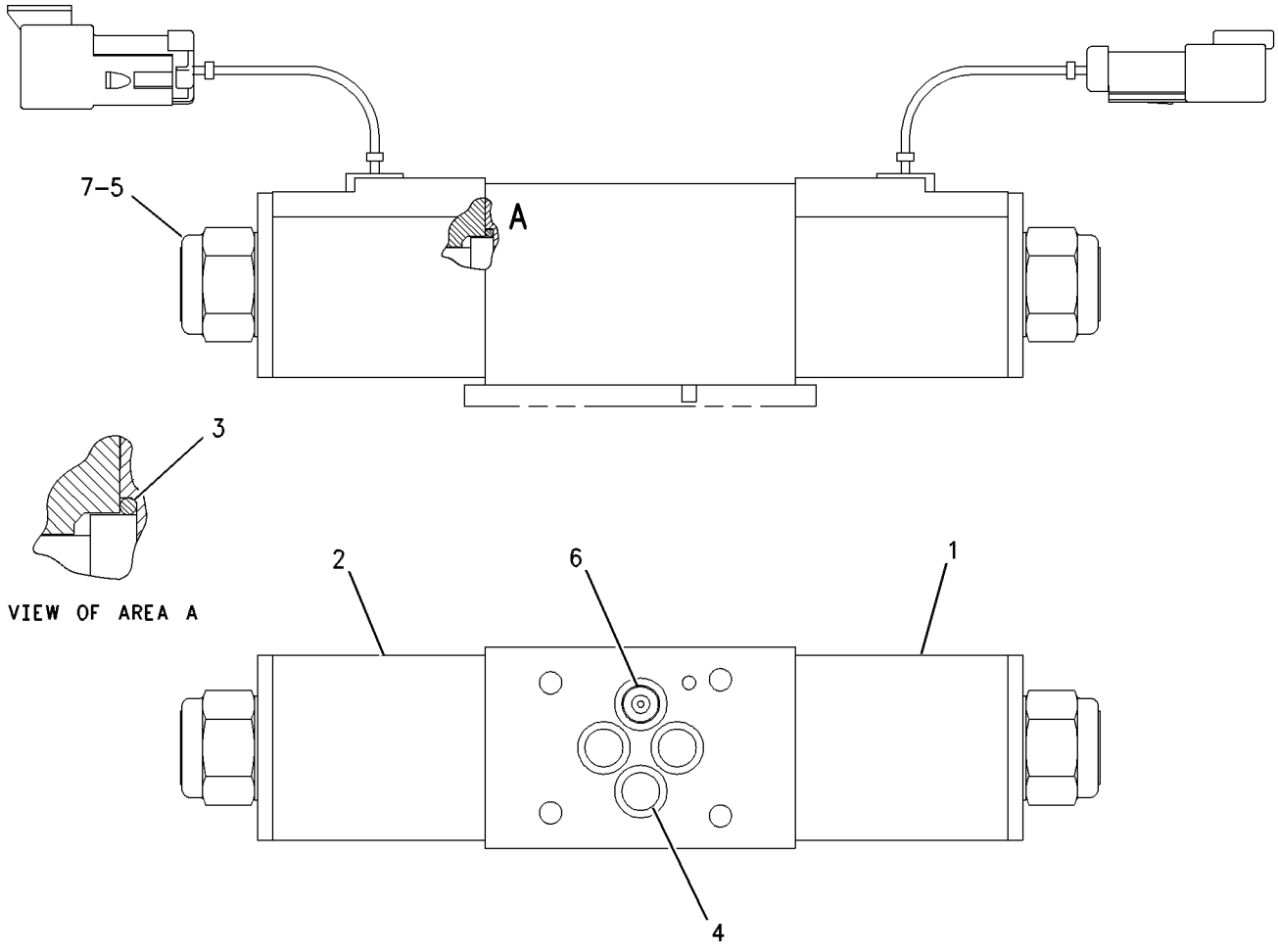

GRAPHIC #1 **<END>** g00304722

199-3117 VALVE GP-SOLENOID

S/N: BXC1-UP; DSX1-UP
PART OF 192-0849 TRANSMISSION GP-POWER SHIFT
AN ATTACHMENT

SMCS-3174 **i01828991**

NOTE	REF NO	GRAPHIC REF	PART NUMBER	QTY	PART NAME 1 2 3 4 5 6 (PRODUCT LEVEL)	SEE PAGE
	1	1	**117-2911**	1	COIL AS	
		1	**1S-9593**	2	STRAP-CABLE	
		1	**102-8802**	1	KIT-RECEPTACLE (2 PIN)	
		1	**3E-3365**	1	WEDGE-RECEPTACLE LOCK (2 PIN)	
		1	**8T-8729**	2	PIN-CONNECTOR	
	2	1	**130-0912**	1	COIL AS	
		1	**1S-9593**	2	STRAP-CABLE	
		1	**102-8803**	1	KIT-RECEPTACLE (3 PIN)	
		1	**3E-3371**	1	WEDGE-RECEPTACLE LOCK (3 PIN)	
		1	**8T-8729**	2	PIN-CONNECTOR	
		1	**8T-8737**	1	PLUG-SEAL	
	3	1	**061-8639**	2	SEAL-O-RING	
	4	1	**8L-2779**	4	SEAL-O-RING	
	5	1	**202-0040**	2	NUT-LOCKING	
	6	1	**218-3597**	1	PLUG-ORIFICE	
	7	1	**143-4655**	2	WASHER (M18.4X24.8X0.8MM THK)	

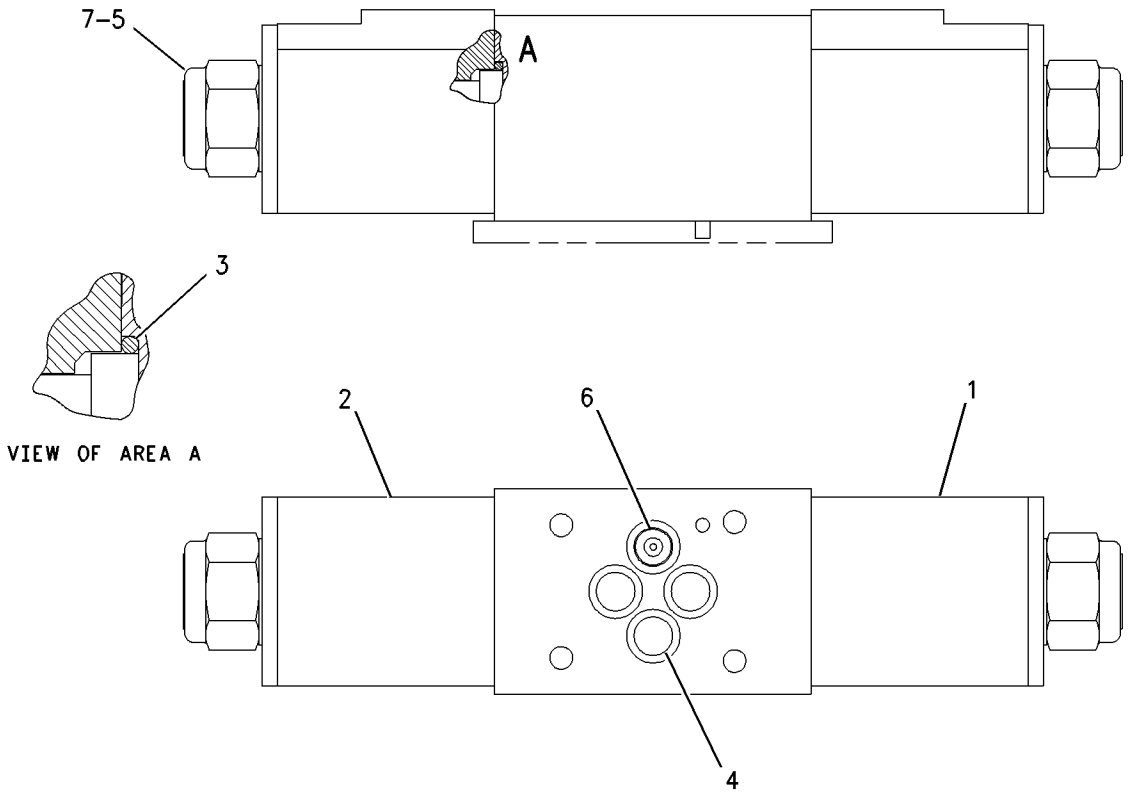

GRAPHIC #1 **<END>** g00817783

223-8181 VALVE GP-SOLENOID

S/N: BXC1-UP; DSX1-UP
PART OF 201-8562 TRANSMISSION GP-DIRECT DRIVE
AN ATTACHMENT

SMCS-3174 **i01950403**

NOTE	REF NO	GRAPHIC REF	PART NUMBER	QTY	PART NAME 1 2 3 4 5 6 (PRODUCT LEVEL)	SEE PAGE
	1	1	**117-2911**	1	COIL AS	
		1	**1S-9593**	2	STRAP-CABLE	
		1	**102-8802**	1	KIT-RECEPTACLE (2 PIN)	
		1	**3E-3365**	1	WEDGE-RECEPTACLE LOCK (2 PIN)	
		1	**186-3735**	2	PIN-CONNECTOR	
	2	1	**130-0912**	1	COIL AS	
		1	**1S-9593**	2	STRAP-CABLE	
		1	**102-8803**	1	KIT-RECEPTACLE (3 PIN)	
		1	**3E-3371**	1	WEDGE-RECEPTACLE LOCK (3 PIN)	
		1	**186-3735**	2	PIN-CONNECTOR	
		1	**8T-8737**	1	PLUG-SEAL	
	3	1	**143-6227**	1	PLUG-ORIFICE	
	4	1	**202-0040**	2	NUT-LOCKING	
	5	1	**061-8639**	2	SEAL-O-RING	
	6	1	**143-4655**	2	WASHER (M18.4X24.8X0.8MM THK)	
	7	1	**8L-2779**	4	SEAL-O-RING	

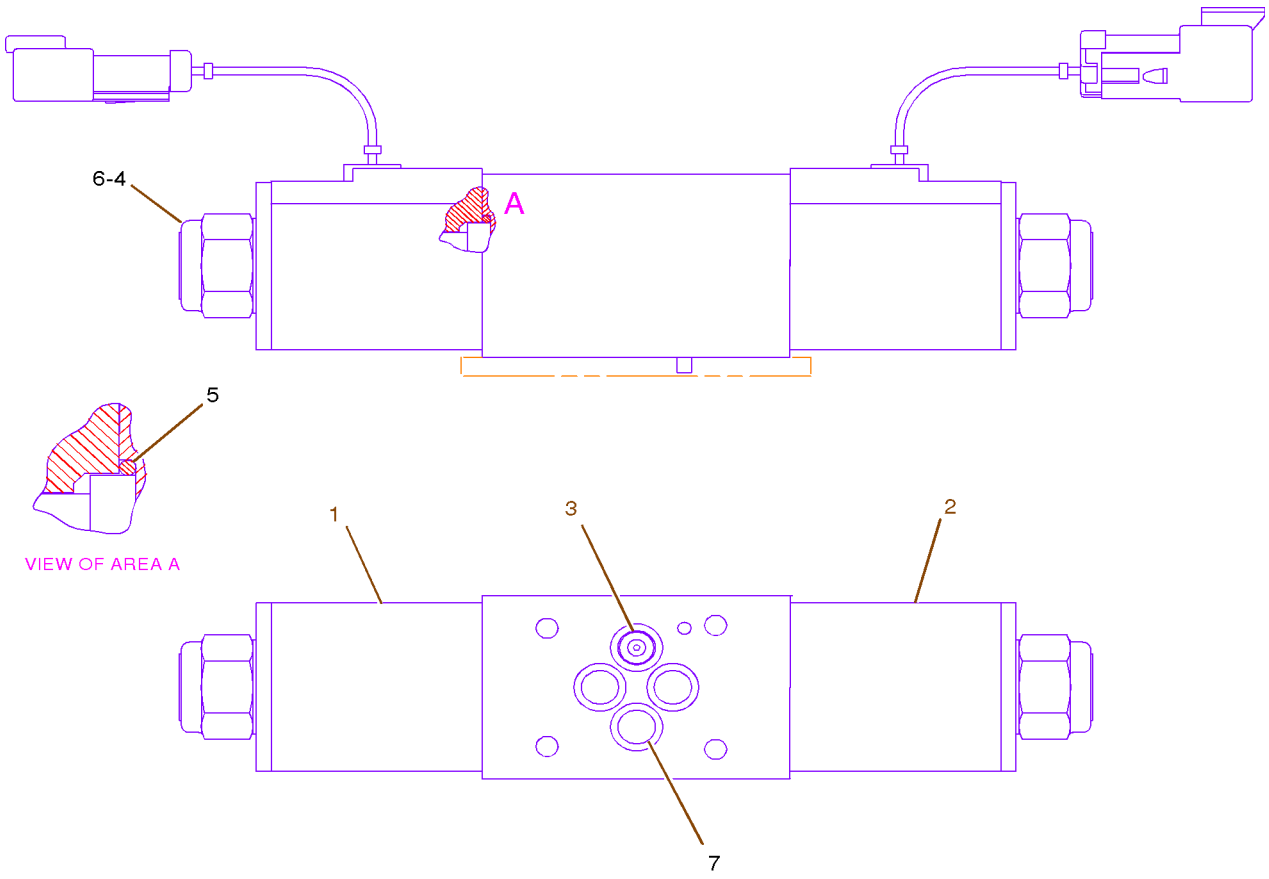

GRAPHIC #1 **<END>** g01010971

6D-0337 VALVE GP-TIRE

S/N: BXC1-UP; DSX1-UP

PART OF 119-7771, 119-7772, 119-7783, 119-7784, 178-7228, 178-7229, 195-6330, 195-6331, 216-9118, 216-9119, 216-9124, 216-9125, 234-2851, 234-2852, 234-2858, 234-2859, 238-9673, 238-9674, 238-9676, 238-9677, 238-9679, 238-9680 WHEEL & TIRE GP

AN ATTACHMENT

SMCS-4203 **i01954585**

NOTE	REF NO	GRAPHIC REF	PART NUMBER	QTY	PART NAME 1 2 3 4 5 6 (PRODUCT LEVEL)	SEE PAGE
	1	1	**6D-0443**	1	HOUSING AS-CORE	
	2	1	**2D-2628**	1	CORE-VALVE	
	3	1	**2D-2633**	1	CAP (VALVE STEM)	
	4	1	**8D-2707**	2	SPUD AS	
					(EACH INCLUDES)	
	5	1	**2D-2629**	1	GROMMET	
	6	1	**2D-2630**	1	WASHER	
	7	1	**2D-2631**	1	NUT (.482-26 THD)	

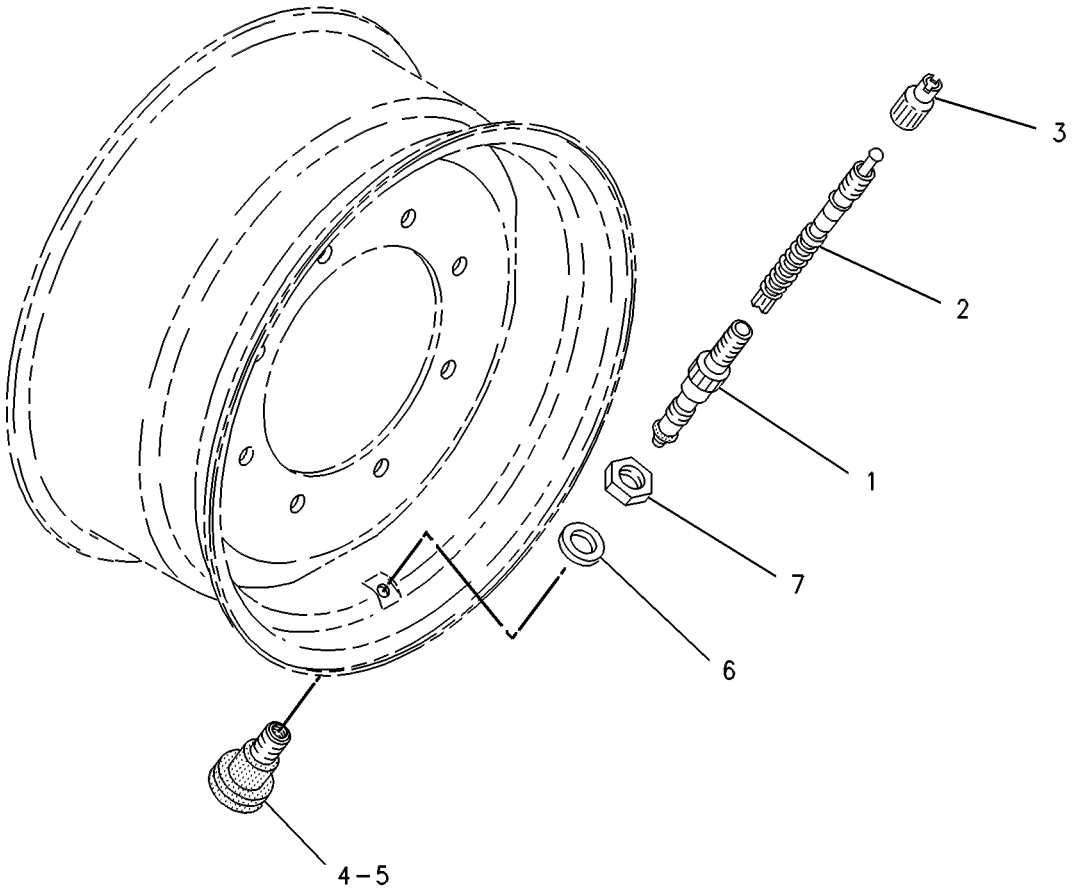

GRAPHIC #1 **<END>** g00121904

201-1920 VALVE GP-TIRE

S/N: BXC1-UP; DSX1-UP
PART OF 201-1869, 201-1870, 201-1875, 201-1876, 201-1956, 201-1957, 201-1960, 201-1961, 201-1963, 201-1964, 216-9148, 216-9149, 234-2847, 234-2848 WHEEL & TIRE GP
AN ATTACHMENT

SMCS-4203 **i01551797**

NOTE	PART NUMBER	QTY	PART NAME 1 2 3 4 5 6 (PRODUCT LEVEL)	SEE PAGE
	6D-0337	1	VALVE GP-TIRE	
	6D-0443	1	HOUSING AS-CORE	
	2D-2628	1	CORE-VALVE	
	2D-2633	1	CAP	
	8D-2707	1	SPUD AS	
	2D-2629	1	GROMMET	
	2D-2630	1	WASHER-RING	
	2D-2631	1	NUT (.482-26 THD)	

<END>

195-6332 WHEEL & TIRE AR—ALL WHEEL DRIVE

S/N: BXC1-UP; DSX1-UP
PART OF 238-6967 WHEEL & TIRE AR
AN ATTACHMENT

SMCS-4201, 4202, 4203, 4208, 4209 **i01963673**

NOTE	PART NUMBER	QTY	PART NAME 1 2 3 4 5 6 (PRODUCT LEVEL)	SEE PAGE
	141-7221	16	NUT-HEX FLANGE (3/4-16 THD)	
Y	*195-6330*	1	WHEEL & TIRE GP (RH)	275
Y	*195-6331*	1	WHEEL & TIRE GP (LH)	275

Y-SEPARATE ILLUSTRATION

<END>

238-6955 WHEEL & TIRE AR—TWO WHEEL DRIVE

S/N: BXC1-UP; DSX1-UP
AN ATTACHMENT

SMCS-4201, 4202, 4203, 4208, 4209 **i01961946**

NOTE	PART NUMBER	QTY	PART NAME 1 2 3 4 5 6 (PRODUCT LEVEL)	SEE PAGE
Y	*178-7227*	1	WHEEL & TIRE GP (REAR)	274
Y	*201-1874*	1	WHEEL & TIRE GP (FRONT)	277

Y-SEPARATE ILLUSTRATION

<END>

238-6956 WHEEL & TIRE AR—ALL WHEEL DRIVE

S/N: BXC1-UP; DSX1-UP
AN ATTACHMENT

SMCS-4201, 4202, 4203, 4208, 4209 **i01961945**

NOTE	PART NUMBER	QTY	PART NAME 1 2 3 4 5 6 (PRODUCT LEVEL)	SEE PAGE
Y	*119-7773*	1	WHEEL & TIRE GP (REAR)	273
Y	*201-1874*	1	WHEEL & TIRE GP (FRONT)	277

Y-SEPARATE ILLUSTRATION

<END>

238-6957 WHEEL & TIRE AR—ALL WHEEL DRIVE

S/N: BXC1-UP; DSX1-UP
AN ATTACHMENT

SMCS-4201, 4202, 4203, 4208, 4209 **i01961944**

NOTE	PART NUMBER	QTY	PART NAME 1 2 3 4 5 6 (PRODUCT LEVEL)	SEE PAGE
Y	*119-7782*	1	WHEEL & TIRE GP (REAR)	273
Y	*201-1874*	1	WHEEL & TIRE GP (FRONT)	277

Y-SEPARATE ILLUSTRATION

<END>

238-6959 WHEEL & TIRE AR—ALL WHEEL DRIVE

S/N: BXC1-UP; DSX1-UP
AN ATTACHMENT

SMCS-4201, 4202, 4203, 4208, 4209 **i01961941**

NOTE	PART NUMBER	QTY	PART NAME 1 2 3 4 5 6 (PRODUCT LEVEL)	SEE PAGE
Y	*216-9117*	1	WHEEL & TIRE GP (REAR)	281
Y	*216-9147*	1	WHEEL & TIRE GP (FRONT)	283

Y-SEPARATE ILLUSTRATION

<END>

238-6960 WHEEL & TIRE AR—ALL WHEEL DRIVE

S/N: BXC1-UP
AN ATTACHMENT

SMCS-4201, 4202, 4203, 4208, 4209 **i01961936**

NOTE	PART NUMBER	QTY	PART NAME 1 2 3 4 5 6 (PRODUCT LEVEL)	SEE PAGE
Y	*216-9123*	1	WHEEL & TIRE GP (REAR)	282
Y	*216-9147*	1	WHEEL & TIRE GP (FRONT)	283

Y-SEPARATE ILLUSTRATION

<END>

238-6963 WHEEL & TIRE AR—ALL WHEEL DRIVE

S/N: BXC1-UP; DSX1-UP
AN ATTACHMENT

SMCS-4201, 4202, 4203, 4208, 4209 **i01963723**

NOTE	PART NUMBER	QTY	PART NAME 1 2 3 4 5 6 (PRODUCT LEVEL)	SEE PAGE
Y	*234-2846*	1	WHEEL & TIRE GP (FRONT)	284
Y	*234-2857*	1	WHEEL & TIRE GP (REAR)	286

Y-SEPARATE ILLUSTRATION

<END>

238-6964 WHEEL & TIRE AR—ALL WHEEL DRIVE

S/N: BXC1-UP; DSX1-UP
AN ATTACHMENT

SMCS-4201, 4202, 4203, 4208, 4209 **i01963739**

NOTE	PART NUMBER	QTY	PART NAME 1 2 3 4 5 6 (PRODUCT LEVEL)	SEE PAGE
Y	*234-2846*	1	WHEEL & TIRE GP (FRONT)	284
Y	*234-2850*	1	WHEEL & TIRE GP (REAR)	285

Y-SEPARATE ILLUSTRATION

<END>

238-6965 WHEEL & TIRE AR—ALL WHEEL DRIVE

S/N: BXC1-UP; DSX1-UP
AN ATTACHMENT

SMCS-4201, 4202, 4203, 4208, 4209 **i01961934**

NOTE	PART NUMBER	QTY	PART NAME 1 2 3 4 5 6 (PRODUCT LEVEL)	SEE PAGE
Y	*119-7782*	1	WHEEL & TIRE GP (REAR)	273
Y	*201-1962*	1	WHEEL & TIRE GP (FRONT)	280

Y-SEPARATE ILLUSTRATION

<END>

238-6966 WHEEL & TIRE AR—ALL WHEEL DRIVE

S/N: BXC1-UP; DSX1-UP
AN ATTACHMENT

SMCS-4201, 4202, 4203, 4208, 4209 **i01961960**

NOTE	PART NUMBER	QTY	PART NAME 1 2 3 4 5 6 (PRODUCT LEVEL)	SEE PAGE
Y	*238-9672*	1	WHEEL & TIRE AR (REAR)	271
Y	*201-1962*	1	WHEEL & TIRE GP (FRONT)	280

Y-SEPARATE ILLUSTRATION

<END>

238-6967 WHEEL & TIRE AR—ALL WHEEL DRIVE

S/N: BXC1-UP; DSX1-UP
AN ATTACHMENT

SMCS-4201, 4202, 4203, 4208, 4209 **i01961961**

NOTE	PART NUMBER	QTY	PART NAME 1 2 3 4 5 6 (PRODUCT LEVEL)	SEE PAGE
Y	*195-6332*	1	WHEEL & TIRE AR (REAR)	267
Y	*201-1868*	1	WHEEL & TIRE GP (FRONT)	276

Y-SEPARATE ILLUSTRATION

<END>

238-6970 WHEEL & TIRE AR—ALL WHEEL DRIVE

S/N: BXC1-UP; DSX1-UP
AN ATTACHMENT

SMCS-4201, 4202, 4203, 4208, 4209 **i01961965**

NOTE	PART NUMBER	QTY	PART NAME 1 2 3 4 5 6 (PRODUCT LEVEL)	SEE PAGE
Y	*238-9675*	1	WHEEL & TIRE AR (REAR)	271
Y	*201-1949*	1	WHEEL & TIRE GP (FRONT)	278

Y-SEPARATE ILLUSTRATION

<END>

238-6971 WHEEL & TIRE AR—ALL WHEEL DRIVE

S/N: BXC1-UP; DSX1-UP
AN ATTACHMENT

SMCS-4201, 4202, 4203, 4208, 4209 **i01961966**

NOTE	PART NUMBER	QTY	PART NAME 1 2 3 4 5 6 (PRODUCT LEVEL)	SEE PAGE
Y	*238-9678*	1	WHEEL & TIRE AR (REAR)	272
Y	*201-1949*	1	WHEEL & TIRE GP (FRONT)	278

Y-SEPARATE ILLUSTRATION

<END>

238-6973 WHEEL & TIRE AR—ALL WHEEL DRIVE

S/N: BXC1-UP; DSX1-UP
AN ATTACHMENT

SMCS-4201, 4202, 4203, 4208, 4209 **i01961968**

NOTE	PART NUMBER	QTY	PART NAME 1 2 3 4 5 6 (PRODUCT LEVEL)	SEE PAGE
Y	*238-9675*	1	WHEEL & TIRE AR (REAR)	271
Y	*201-1955*	1	WHEEL & TIRE GP (FRONT)	278

Y-SEPARATE ILLUSTRATION

<END>

238-6974 WHEEL & TIRE AR—ALL WHEEL DRIVE

S/N: BXC1-UP; DSX1-UP
AN ATTACHMENT

SMCS-4201, 4202, 4203, 4208, 4209 **i01961969**

NOTE	PART NUMBER	QTY	PART NAME 1 2 3 4 5 6 (PRODUCT LEVEL)	SEE PAGE
Y	*238-9678*	1	WHEEL & TIRE AR (REAR)	272
Y	*201-1955*	1	WHEEL & TIRE GP (FRONT)	278

Y-SEPARATE ILLUSTRATION

<END>

238-9672 WHEEL & TIRE AR—REAR

S/N: BXC1-UP; DSX1-UP
PART OF 238-6966 WHEEL & TIRE AR
AN ATTACHMENT

SMCS-4201, 4202, 4203, 4208, 4209 **i01946202**

NOTE	PART NUMBER	QTY	PART NAME 1 2 3 4 5 6 (PRODUCT LEVEL)	SEE PAGE
Y	*238-9673*	1	WHEEL & TIRE GP (LH)	287
Y	*238-9674*	1	WHEEL & TIRE GP (RH)	287
	141-7221	16	NUT-HEX FLANGE (3/4-16 THD)	

Y-SEPARATE ILLUSTRATION

<END>

238-9675 WHEEL & TIRE AR—REAR

S/N: BXC1-UP; DSX1-UP
PART OF 238-6970, 238-6973 WHEEL & TIRE AR
AN ATTACHMENT

SMCS-4201, 4202, 4203, 4208, 4209 **i01946203**

NOTE	PART NUMBER	QTY	PART NAME 1 2 3 4 5 6 (PRODUCT LEVEL)	SEE PAGE
Y	*238-9676*	1	WHEEL & TIRE GP (LH)	287
Y	*238-9677*	1	WHEEL & TIRE GP (RH)	288
	141-7221	16	NUT-HEX FLANGE (3/4-16 THD)	

Y-SEPARATE ILLUSTRATION

<END>

238-9678 WHEEL & TIRE AR—REAR

S/N: BXC1-UP; DSX1-UP
PART OF 238-6971, 238-6974 WHEEL & TIRE AR
AN ATTACHMENT

SMCS-4201, 4202, 4203, 4208, 4209 **i01946204**

NOTE	PART NUMBER	QTY	PART NAME 1 2 3 4 5 6 (PRODUCT LEVEL)	SEE PAGE
Y	*238-9679*	1	WHEEL & TIRE GP (LH)	288
Y	*238-9680*	1	WHEEL & TIRE GP (RH)	288
	141-7221	16	NUT-HEX FLANGE (3/4-16 THD)	

Y-SEPARATE ILLUSTRATION

<END>

119-7771 WHEEL & TIRE GP—LH

S/N: BXC1-UP; DSX1-UP
PART OF 119-7773 WHEEL & TIRE GP
AN ATTACHMENT

SMCS-4201, 4202, 4203, 4208, 4209 **i01968131**

NOTE	PART NUMBER	QTY	PART NAME 1 2 3 4 5 6 (PRODUCT LEVEL)	SEE PAGE
C	*146-8319*	1	TIRE (16.9 X 28-12PLY)	
Y	**6D-0337**	1	VALVE GP-TIRE	266
	119-7776	1	WHEEL AS (REAR)	

C-CHANGE FROM PREVIOUS TYPE
Y-SEPARATE ILLUSTRATION

<END>

119-7772 WHEEL & TIRE GP—RH

S/N: BXC1-UP; DSX1-UP
PART OF 119-7773 WHEEL & TIRE GP
AN ATTACHMENT

SMCS-4201, 4202, 4203, 4208, 4209 **i01969158**

NOTE	PART NUMBER	QTY	PART NAME 1 2 3 4 5 6 (PRODUCT LEVEL)	SEE PAGE
	146-8319	1	TIRE (16.9 X 28-12PLY)	
Y	**6D-0337**	1	VALVE GP-TIRE	266
	119-7776	1	WHEEL AS (REAR)	

Y-SEPARATE ILLUSTRATION

<END>

119-7773 WHEEL & TIRE GP–REAR

S/N: BXC1-UP; DSX1-UP
PART OF 238-6956 WHEEL & TIRE AR
AN ATTACHMENT

SMCS-4201, 4202, 4203, 4208, 4209 **i01778131**

NOTE	PART NUMBER	QTY	PART NAME 1 2 3 4 5 6 (PRODUCT LEVEL)	SEE PAGE
	141-7221	16	NUT-HEX FLANGE (3/4-16)	
Y	*119-7771*	1	WHEEL & TIRE GP (LH)	272
Y	*119-7772*	1	WHEEL & TIRE GP (RH)	272

Y-SEPARATE ILLUSTRATION

<END>

119-7782 WHEEL & TIRE GP–REAR

S/N: BXC1-UP; DSX1-UP
PART OF 238-6957, 238-6965 WHEEL & TIRE AR
AN ATTACHMENT

SMCS-4201, 4202, 4203, 4208, 4209 **i01778133**

NOTE	PART NUMBER	QTY	PART NAME 1 2 3 4 5 6 (PRODUCT LEVEL)	SEE PAGE
	141-7221	1	NUT-HEX FLANGE (3/4-16)	
Y	*119-7783*	1	WHEEL & TIRE GP (LH)	273
Y	*119-7784*	1	WHEEL & TIRE GP (RH)	274

Y-SEPARATE ILLUSTRATION

<END>

119-7783 WHEEL & TIRE GP–LH

S/N: BXC1-UP; DSX1-UP
PART OF 119-7782 WHEEL & TIRE GP
AN ATTACHMENT

SMCS-4201, 4202, 4203, 4208, 4209 **i01778135**

NOTE	PART NUMBER	QTY	PART NAME 1 2 3 4 5 6 (PRODUCT LEVEL)	SEE PAGE
	135-5893	1	TIRE (18.4/15X26)	
Y	**6D-0337**	1	VALVE GP-TIRE	266
	119-7785	1	WHEEL AS-REAR	

Y-SEPARATE ILLUSTRATION

<END>

119-7784 WHEEL & TIRE GP–RH

S/N: BXC1-UP; DSX1-UP
PART OF 119-7782 WHEEL & TIRE GP
AN ATTACHMENT

SMCS-4201, 4202, 4203, 4208, 4209 **i01778139**

NOTE	PART NUMBER	QTY	PART NAME 1 2 3 4 5 6 (PRODUCT LEVEL)	SEE PAGE
	135-5893	1	TIRE (18.4X15-26PLY)	
Y	**6D-0337**	1	VALVE GP-TIRE	266
	119-7785	1	WHEEL AS-REAR	

Y-SEPARATE ILLUSTRATION

<END>

178-7227 WHEEL & TIRE GP–REAR

S/N: BXC1-UP; DSX1-UP
PART OF 238-6955 WHEEL & TIRE AR
FOR USE WITH FOUR WHEEL DRIVE
AN ATTACHMENT

SMCS-4201, 4202, 4203, 4208, 4209 **i01776160**

NOTE	PART NUMBER	QTY	PART NAME 1 2 3 4 5 6 (PRODUCT LEVEL)	SEE PAGE
	141-7221	16	NUT-HEX FLANGE (3/4-16)	
Y	*178-7228*	1	WHEEL & TIRE GP (LH)	274
Y	*178-7229*	1	WHEEL & TIRE GP (RH)	275

Y-SEPARATE ILLUSTRATION

<END>

178-7228 WHEEL & TIRE GP–LH

S/N: BXC1-UP; DSX1-UP
PART OF 178-7227 WHEEL & TIRE GP
AN ATTACHMENT

SMCS-4201, 4202, 4203, 4208, 4209 **i01776403**

NOTE	PART NUMBER	QTY	PART NAME 1 2 3 4 5 6 (PRODUCT LEVEL)	SEE PAGE
	178-7230	1	TIRE (16.9X28-12PLY)	
	119-7776	1	WHEEL AS (REAR)	
Y	**6D-0337**	1	VALVE GP-TIRE	266

Y-SEPARATE ILLUSTRATION

<END>

178-7229 WHEEL & TIRE GP–RH

S/N: BXC1-UP; DSX1-UP
PART OF 178-7227 WHEEL & TIRE GP
AN ATTACHMENT

SMCS-4201, 4202, 4203, 4208, 4209 **i01776450**

NOTE	PART NUMBER	QTY	PART NAME 1 2 3 4 5 6 (PRODUCT LEVEL)	SEE PAGE
	178-7230	1	TIRE (16.9X28-12PLY)	
	119-7776	1	WHEEL AS (REAR)	
Y	**6D-0337**	1	VALVE GP-TIRE	266

Y-SEPARATE ILLUSTRATION

<END>

195-6330 WHEEL & TIRE GP–RH

S/N: BXC1-UP; DSX1-UP
PART OF 195-6332 WHEEL & TIRE AR
AN ATTACHMENT

SMCS-4201, 4202, 4203, 4208, 4209 **i01964064**

NOTE	PART NUMBER	QTY	PART NAME 1 2 3 4 5 6 (PRODUCT LEVEL)	SEE PAGE
	195-6329	1	TIRE (440/80R28)	
Y	**6D-0337**	1	VALVE GP-TIRE	266
	119-7776	1	WHEEL AS (REAR)	

Y-SEPARATE ILLUSTRATION

<END>

195-6331 WHEEL & TIRE GP–LH

S/N: BXC1-UP; DSX1-UP
PART OF 195-6332 WHEEL & TIRE AR
AN ATTACHMENT

SMCS-4201, 4202, 4203, 4208, 4209 **i01964152**

NOTE	PART NUMBER	QTY	PART NAME 1 2 3 4 5 6 (PRODUCT LEVEL)	SEE PAGE
	195-6329	1	TIRE (440/80R28)	
Y	**6D-0337**	1	VALVE GP-TIRE	266
	119-7776	1	WHEEL AS (REAR)	

Y-SEPARATE ILLUSTRATION

<END>

201-1868 WHEEL & TIRE GP–FRONT

S/N: BXC1-UP; DSX1-UP
PART OF 238-6967 WHEEL & TIRE AR
AN ATTACHMENT

SMCS-4201, 4202, 4203, 4208, 4209 **i01962234**

NOTE	PART NUMBER	QTY	PART NAME 1 2 3 4 5 6 (PRODUCT LEVEL)	SEE PAGE
	201-1915	1	MOUNTING GP-WHEEL (FRONT)	
M	**178-1304**	8	NUT-HEX FLANGE (M20X1.5 THD)	
	8T-5439	8	WASHER (21.5X45X6MM THK)	
Y	*201-1869*	1	WHEEL & TIRE GP (LH)	276
Y	*201-1870*	1	WHEEL & TIRE GP (RH)	276

M-METRIC PART
Y-SEPARATE ILLUSTRATION

<END>

201-1869 WHEEL & TIRE GP–FRONT

S/N: BXC1-UP; DSX1-UP
PART OF 201-1868 WHEEL & TIRE GP
AN ATTACHMENT

SMCS-4201, 4202, 4203, 4208, 4209 **i01962587**

NOTE	PART NUMBER	QTY	PART NAME 1 2 3 4 5 6 (PRODUCT LEVEL)	SEE PAGE
	194-0832	1	TIRE (340/80R18)	
Y	*201-1920*	1	VALVE GP-TIRE	267
	202-6186	1	WHEEL AS (FRONT)	

Y-SEPARATE ILLUSTRATION

<END>

201-1870 WHEEL & TIRE GP–FRONT

S/N: BXC1-UP; DSX1-UP
PART OF 201-1868 WHEEL & TIRE GP
AN ATTACHMENT

SMCS-4201, 4202, 4203, 4208, 4209 **i01962262**

NOTE	PART NUMBER	QTY	PART NAME 1 2 3 4 5 6 (PRODUCT LEVEL)	SEE PAGE
	194-0832	1	TIRE (340/80R18)	
Y	*201-1920*	1	VALVE GP-TIRE	267
	202-6186	1	WHEEL AS (FRONT)	

Y-SEPARATE ILLUSTRATION

<END>

201-1874 WHEEL & TIRE GP—FRONT

S/N: BXC1-UP; DSX1-UP
PART OF 238-6955, 238-6956, 238-6957 WHEEL & TIRE AR
AN ATTACHMENT

SMCS-4201, 4202, 4203, 4208, 4209 **i01551481**

NOTE	PART NUMBER	QTY	PART NAME 1 2 3 4 5 6 (PRODUCT LEVEL)	SEE PAGE
Y	*201-1875*	1	WHEEL & TIRE GP	277
Y	*201-1876*	1	WHEEL & TIRE GP	277
	201-1915	1	MOUNTING GP-WHEEL	
	8T-5439	8	WASHER (21.5X45X6MM THK)	
M	**178-1304**	8	NUT-HEX FLANGE	

M-METRIC PART
Y-SEPARATE ILLUSTRATION

<END>

201-1875 WHEEL & TIRE GP

S/N: BXC1-UP; DSX1-UP
PART OF 201-1874 WHEEL & TIRE GP
AN ATTACHMENT

SMCS-4201, 4202, 4203, 4208, 4209 **i02007685**

NOTE	PART NUMBER	QTY	PART NAME 1 2 3 4 5 6 (PRODUCT LEVEL)	SEE PAGE
	9R-6481	1	TIRE (12.5X18-10PLY)	
Y	*201-1920*	1	VALVE GP-TIRE	267
	195-6339	1	WHEEL AS (FRONT)	

Y-SEPARATE ILLUSTRATION

<END>

201-1876 WHEEL & TIRE GP

S/N: BXC1-UP; DSX1-UP
PART OF 201-1874 WHEEL & TIRE GP
AN ATTACHMENT

SMCS-4201, 4202, 4203, 4208, 4209 **i02007687**

NOTE	PART NUMBER	QTY	PART NAME 1 2 3 4 5 6 (PRODUCT LEVEL)	SEE PAGE
	9R-6481	1	TIRE (12.5X18-10PLY)	
Y	*201-1920*	1	VALVE GP-TIRE	267
	195-6339	1	WHEEL AS (FRONT)	

Y-SEPARATE ILLUSTRATION

<END>

201-1949 WHEEL & TIRE GP—FRONT

S/N: BXC1-UP; DSX1-UP
PART OF 238-6970, 238-6971 WHEEL & TIRE AR
AN ATTACHMENT

SMCS-4201, 4202, 4203, 4208, 4209 **i01962596**

NOTE	PART NUMBER	QTY	PART NAME 1 2 3 4 5 6 (PRODUCT LEVEL)	SEE PAGE
	201-1915	1	MOUNTING GP-WHEEL (FRONT)	
	8T-5439	16	WASHER (21.5X45X6MM THK)	
	201-1919	16	NUT (M20X1.5 THD)	
Y	*201-1960*	1	WHEEL & TIRE GP (LH)	279
Y	*201-1961*	1	WHEEL & TIRE GP (RH)	279

Y-SEPARATE ILLUSTRATION

<END>

201-1955 WHEEL & TIRE GP—FRONT

S/N: BXC1-UP; DSX1-UP
PART OF 238-6973, 238-6974 WHEEL & TIRE AR
AN ATTACHMENT

SMCS-4201, 4202, 4203, 4208, 4209 **i01962598**

NOTE	PART NUMBER	QTY	PART NAME 1 2 3 4 5 6 (PRODUCT LEVEL)	SEE PAGE
	201-1915	1	MOUNTING GP-WHEEL (FRONT)	
	8T-5439	16	WASHER (21.5X45X6MM THK)	
	201-1919	16	NUT (M20X1.5 THD)	
Y	*201-1956*	1	WHEEL & TIRE GP (LH)	278
Y	*201-1957*	1	WHEEL & TIRE GP (RH)	279

Y-SEPARATE ILLUSTRATION

<END>

201-1956 WHEEL & TIRE GP—LH

S/N: BXC1-UP; DSX1-UP
PART OF 201-1955 WHEEL & TIRE GP
AN ATTACHMENT

SMCS-4201, 4202, 4203, 4208, 4209 **i01962520**

NOTE	PART NUMBER	QTY	PART NAME 1 2 3 4 5 6 (PRODUCT LEVEL)	SEE PAGE
	187-6075	1	TIRE (335/80R18)	
Y	*201-1920*	1	VALVE GP-TIRE	267
	202-6186	1	WHEEL AS (FRONT)	

Y-SEPARATE ILLUSTRATION

<END>

201-1957 WHEEL & TIRE GP–RH

S/N: BXC1-UP; DSX1-UP
PART OF 201-1955 WHEEL & TIRE GP
AN ATTACHMENT

SMCS-4201, 4202, 4203, 4208, 4209 **i01962541**

NOTE	PART NUMBER	QTY	PART NAME 1 2 3 4 5 6 (PRODUCT LEVEL)	SEE PAGE
	187-6075	1	TIRE (335/80R18)	
Y	*201-1920*	1	VALVE GP-TIRE	267
	202-6186	1	WHEEL AS (FRONT)	

Y-SEPARATE ILLUSTRATION

<END>

201-1960 WHEEL & TIRE GP–LH

S/N: BXC1-UP; DSX1-UP
PART OF 201-1949 WHEEL & TIRE GP
AN ATTACHMENT

SMCS-4201, 4202, 4203, 4208, 4209 **i01962565**

NOTE	PART NUMBER	QTY	PART NAME 1 2 3 4 5 6 (PRODUCT LEVEL)	SEE PAGE
	201-1879	1	TIRE (12.5/80R18 R4)	
Y	*201-1920*	1	VALVE GP-TIRE	267
	202-6186	1	WHEEL AS (FRONT)	

Y-SEPARATE ILLUSTRATION

<END>

201-1961 WHEEL & TIRE GP–RH

S/N: BXC1-UP; DSX1-UP
PART OF 201-1949 WHEEL & TIRE GP
AN ATTACHMENT

SMCS-4201, 4202, 4203, 4208, 4209 **i01962570**

NOTE	PART NUMBER	QTY	PART NAME 1 2 3 4 5 6 (PRODUCT LEVEL)	SEE PAGE
	201-1879	1	TIRE (12.5/80R18 R4)	
Y	*201-1920*	1	VALVE GP-TIRE	267
	202-6186	1	WHEEL AS (FRONT)	

Y-SEPARATE ILLUSTRATION

<END>

201-1962 WHEEL & TIRE GP—FRONT

S/N: BXC1-UP; DSX1-UP
PART OF 238-6965, 238-6966 WHEEL & TIRE AR
AN ATTACHMENT

SMCS-4201, 4202, 4203, 4208, 4209 **i02007689**

NOTE	PART NUMBER	QTY	PART NAME 1 2 3 4 5 6 (PRODUCT LEVEL)	SEE PAGE
	201-1915	1	MOUNTING GP-WHEEL (FRONT)	
	8T-5439	16	WASHER (21.5X45X6MM THK)	
	201-1919	16	NUT (M20X1.5 THD)	
Y	*201-1963*	1	WHEEL & TIRE GP (LH)	280
Y	*201-1964*	1	WHEEL & TIRE GP (RH)	280

Y-SEPARATE ILLUSTRATION

<END>

201-1963 WHEEL & TIRE GP—LH

S/N: BXC1-UP; DSX1-UP
PART OF 201-1962 WHEEL & TIRE GP
AN ATTACHMENT

SMCS-4201, 4202, 4203, 4208, 4209 **i01962575**

NOTE	PART NUMBER	QTY	PART NAME 1 2 3 4 5 6 (PRODUCT LEVEL)	SEE PAGE
	201-1929	1	TIRE (340/80R18)	
Y	*201-1920*	1	VALVE GP-TIRE	267
	202-6186	1	WHEEL AS (FRONT)	

Y-SEPARATE ILLUSTRATION

<END>

201-1964 WHEEL & TIRE GP—RH

S/N: BXC1-UP; DSX1-UP
PART OF 201-1962 WHEEL & TIRE GP
AN ATTACHMENT

SMCS-4201, 4202, 4203, 4208, 4209 **i02007691**

NOTE	PART NUMBER	QTY	PART NAME 1 2 3 4 5 6 (PRODUCT LEVEL)	SEE PAGE
	201-1929	1	TIRE (340/80R18)	
Y	*201-1920*	1	VALVE GP-TIRE	267
	195-6339	1	WHEEL AS (FRONT)	

Y-SEPARATE ILLUSTRATION

<END>

216-9117 WHEEL & TIRE GP–REAR

S/N: BXC1-UP; DSX1-UP
TWO WHEEL STEER
PART OF 238-6959 WHEEL & TIRE AR
AN ATTACHMENT

SMCS-4201, 4202, 4203, 4208, 4209 **i01938150**

NOTE	PART NUMBER	QTY	PART NAME 1 2 3 4 5 6 (PRODUCT LEVEL)	SEE PAGE
Y	*216-9118*	1	WHEEL & TIRE GP (LH)	281
Y	*216-9119*	1	WHEEL & TIRE GP (RH)	281
	141-7221	16	NUT-HEX FLANGE (3/4-16 THD)	

Y-SEPARATE ILLUSTRATION

<END>

216-9118 WHEEL & TIRE GP–LH

S/N: BXC1-UP; DSX1-UP
PART OF 216-9117 WHEEL & TIRE GP
AN ATTACHMENT

SMCS-4201, 4202, 4203, 4208, 4209 **i01938153**

NOTE	PART NUMBER	QTY	PART NAME 1 2 3 4 5 6 (PRODUCT LEVEL)	SEE PAGE
	216-9112	1	TIRE (18.4-26)	
Y	**6D-0337**	1	VALVE GP-TIRE	266
	119-7785	1	WHEEL AS (REAR)	

Y-SEPARATE ILLUSTRATION

<END>

216-9119 WHEEL & TIRE GP–RH

S/N: BXC1-UP; DSX1-UP
PART OF 216-9117 WHEEL & TIRE GP
AN ATTACHMENT

SMCS-4201, 4202, 4203, 4208, 4209 **i01938149**

NOTE	PART NUMBER	QTY	PART NAME 1 2 3 4 5 6 (PRODUCT LEVEL)	SEE PAGE
	216-9112	1	TIRE (18.4-26)	
Y	**6D-0337**	1	VALVE GP-TIRE	266
	119-7785	1	WHEEL AS (REAR)	

Y-SEPARATE ILLUSTRATION

<END>

216-9123 WHEEL & TIRE GP–REAR

S/N: BXC1-UP
TWO WHEEL STEER
PART OF 238-6960 WHEEL & TIRE AR
AN ATTACHMENT

SMCS-4201, 4202, 4203, 4208, 4209 **i01938154**

NOTE	PART NUMBER	QTY	PART NAME 1 2 3 4 5 6 (PRODUCT LEVEL)	SEE PAGE
Y	*216-9124*	1	WHEEL & TIRE GP (LH)	282
Y	*216-9125*	1	WHEEL & TIRE GP (RH)	282
	141-7221	16	NUT-HEX FLANGE (3/4-16 THD)	

Y-SEPARATE ILLUSTRATION

<END>

216-9124 WHEEL & TIRE GP–LH

S/N: BXC1-UP
PART OF 216-9123 WHEEL & TIRE GP
AN ATTACHMENT

SMCS-4201, 4202, 4203, 4208, 4209 **i01938148**

NOTE	PART NUMBER	QTY	PART NAME 1 2 3 4 5 6 (PRODUCT LEVEL)	SEE PAGE
	216-9113	1	TIRE (16.9-28)	
Y	**6D-0337**	1	VALVE GP-TIRE	266
	119-7776	1	WHEEL AS (REAR)	

Y-SEPARATE ILLUSTRATION

<END>

216-9125 WHEEL & TIRE GP–RH

S/N: BXC1-UP
PART OF 216-9123 WHEEL & TIRE GP
AN ATTACHMENT

SMCS-4201, 4202, 4203, 4208, 4209 **i01938147**

NOTE	PART NUMBER	QTY	PART NAME 1 2 3 4 5 6 (PRODUCT LEVEL)	SEE PAGE
	216-9113	1	TIRE (16.9-28)	
Y	**6D-0337**	1	VALVE GP-TIRE	266
	119-7776	1	WHEEL AS (REAR)	

Y-SEPARATE ILLUSTRATION

<END>

216-9147 WHEEL & TIRE GP–FRONT

S/N: BXC1-UP; DSX1-UP
PART OF 238-6959, 238-6960 WHEEL & TIRE AR
AN ATTACHMENT

SMCS-4201, 4202, 4203, 4208, 4209 **i02007694**

NOTE	PART NUMBER	QTY	PART NAME 1 2 3 4 5 6 (PRODUCT LEVEL)	SEE PAGE
	201-1915	1	MOUNTING GP-WHEEL (FRONT)	
	8T-5439	16	WASHER (21.5X45X6MM THK)	
	201-1919	16	NUT (M20X1.5 THD)	
Y	*216-9148*	1	WHEEL & TIRE GP (LH)	283
Y	*216-9149*	1	WHEEL & TIRE GP (RH)	283

Y-SEPARATE ILLUSTRATION

<END>

216-9148 WHEEL & TIRE GP–LH

S/N: BXC1-UP; DSX1-UP
PART OF 216-9147 WHEEL & TIRE GP
AN ATTACHMENT

SMCS-4201, 4202, 4203, 4208, 4209 **i01962597**

NOTE	PART NUMBER	QTY	PART NAME 1 2 3 4 5 6 (PRODUCT LEVEL)	SEE PAGE
	216-9111	1	TIRE (12.5/80-18 10PLY)	
Y	*201-1920*	1	VALVE GP-TIRE	267
	202-6186	1	WHEEL AS (FRONT)	

Y-SEPARATE ILLUSTRATION

<END>

216-9149 WHEEL & TIRE GP–RH

S/N: BXC1-UP; DSX1-UP
PART OF 216-9147 WHEEL & TIRE GP
AN ATTACHMENT

SMCS-4201, 4202, 4203, 4208, 4209 **i01962048**

NOTE	PART NUMBER	QTY	PART NAME 1 2 3 4 5 6 (PRODUCT LEVEL)	SEE PAGE
	216-9111	1	TIRE (12.5/80-18 10PLY)	
Y	*201-1920*	1	VALVE GP-TIRE	267
	202-6186	1	WHEEL AS (FRONT)	

Y-SEPARATE ILLUSTRATION

<END>

234-2846 WHEEL & TIRE GP—FRONT

S/N: BXC1-UP; DSX1-UP
PART OF 238-6963, 238-6964 WHEEL & TIRE AR
AN ATTACHMENT

SMCS-4201, 4202, 4203, 4208, 4209 **i02007700**

NOTE	PART NUMBER	QTY	PART NAME 1 2 3 4 5 6 (PRODUCT LEVEL)	SEE PAGE
	201-1915	1	MOUNTING GP-WHEEL (FRONT)	
	8T-5439	16	WASHER (21.5X45X6MM THK)	
	201-1919	16	NUT (M20X1.5 THD)	
Y	**234-2847**	1	WHEEL & TIRE GP (LH)	284
Y	**234-2848**	1	WHEEL & TIRE GP (RH)	284

Y-SEPARATE ILLUSTRATION

<END>

234-2847 WHEEL & TIRE GP—LH

S/N: BXC1-UP; DSX1-UP
PART OF 234-2846 WHEEL & TIRE GP
AN ATTACHMENT

SMCS-4201, 4202, 4203, 4208, 4209 **i02007707**

NOTE	PART NUMBER	QTY	PART NAME 1 2 3 4 5 6 (PRODUCT LEVEL)	SEE PAGE
	234-2842	1	TIRE (12.5/80-18)	
Y	*201-1920*	1	VALVE GP-TIRE	267
	202-6186	1	WHEEL AS (FRONT)	

Y-SEPARATE ILLUSTRATION

<END>

234-2848 WHEEL & TIRE GP—RH

S/N: BXC1-UP; DSX1-UP
PART OF 234-2846 WHEEL & TIRE GP
AN ATTACHMENT

SMCS-4201, 4202, 4203, 4208, 4209 **i02007708**

NOTE	PART NUMBER	QTY	PART NAME 1 2 3 4 5 6 (PRODUCT LEVEL)	SEE PAGE
	234-2842	1	TIRE (12.5/80-18)	
Y	*201-1920*	1	VALVE GP-TIRE	267
	202-6186	1	WHEEL AS (FRONT)	

Y-SEPARATE ILLUSTRATION

<END>

234-2850 WHEEL & TIRE GP–REAR

S/N: BXC1-UP; DSX1-UP
PART OF 238-6964 WHEEL & TIRE AR
AN ATTACHMENT

SMCS-4201, 4202, 4203, 4208, 4209 **i01935955**

NOTE	PART NUMBER	QTY	PART NAME 1 2 3 4 5 6 (PRODUCT LEVEL)	SEE PAGE
	141-7221	16	NUT-HEX FLANGE (3/4-16 THD)	
Y	*234-2851*	1	WHEEL & TIRE GP (LH)	285
Y	*234-2852*	1	WHEEL & TIRE GP (RH)	285

Y-SEPARATE ILLUSTRATION

<END>

234-2851 WHEEL & TIRE GP–LH

S/N: BXC1-UP; DSX1-UP
PART OF 234-2850 WHEEL & TIRE GP
AN ATTACHMENT

SMCS-4201, 4202, 4203, 4208, 4209 **i01935957**

NOTE	PART NUMBER	QTY	PART NAME 1 2 3 4 5 6 (PRODUCT LEVEL)	SEE PAGE
	234-2849	1	TIRE (16.9-28 TI-06 12PLY)	
Y	**6D-0337**	1	VALVE GP-TIRE	266
	119-7776	1	WHEEL AS (REAR)	

Y-SEPARATE ILLUSTRATION

<END>

234-2852 WHEEL & TIRE GP–RH

S/N: BXC1-UP; DSX1-UP
PART OF 234-2850 WHEEL & TIRE GP
AN ATTACHMENT

SMCS-4201, 4202, 4203, 4208, 4209 **i01935959**

NOTE	PART NUMBER	QTY	PART NAME 1 2 3 4 5 6 (PRODUCT LEVEL)	SEE PAGE
	234-2849	1	TIRE (16.9-28 TI-06 12PLY)	
Y	**6D-0337**	1	VALVE GP-TIRE	266
	119-7776	1	WHEEL AS (REAR)	

Y-SEPARATE ILLUSTRATION

<END>

234-2857 WHEEL & TIRE GP–REAR

S/N: BXC1-UP; DSX1-UP
PART OF 238-6963 WHEEL & TIRE AR
AN ATTACHMENT

SMCS-4201, 4202, 4203, 4208, 4209 **i01935961**

NOTE	PART NUMBER	QTY	PART NAME 1 2 3 4 5 6 (PRODUCT LEVEL)	SEE PAGE
	141-7221	16	NUT-HEX FLANGE (3/4-16 THD)	
Y	*234-2858*	1	WHEEL & TIRE GP (LH)	286
Y	*234-2859*	1	WHEEL & TIRE GP (RH)	286

Y-SEPARATE ILLUSTRATION

<END>

234-2858 WHEEL & TIRE GP–LH

S/N: BXC1-UP; DSX1-UP
PART OF 234-2857 WHEEL & TIRE GP
AN ATTACHMENT

SMCS-4201, 4202, 4203, 4208, 4209 **i01935962**

NOTE	PART NUMBER	QTY	PART NAME 1 2 3 4 5 6 (PRODUCT LEVEL)	SEE PAGE
	234-2856	1	TIRE (18.4-26 TI-06 12PLY)	
Y	**6D-0337**	1	VALVE GP-TIRE	266
	119-7785	1	WHEEL AS (REAR)	

Y-SEPARATE ILLUSTRATION

<END>

234-2859 WHEEL & TIRE GP–RH

S/N: BXC1-UP; DSX1-UP
PART OF 234-2857 WHEEL & TIRE GP
AN ATTACHMENT

SMCS-4201, 4202, 4203, 4208, 4209 **i01935965**

NOTE	PART NUMBER	QTY	PART NAME 1 2 3 4 5 6 (PRODUCT LEVEL)	SEE PAGE
	234-2856	1	TIRE (18.4-26 TI-06 12PLY)	
Y	**6D-0337**	1	VALVE GP-TIRE	266
	119-7785	1	WHEEL AS (REAR)	

Y-SEPARATE ILLUSTRATION

<END>

238-9673 WHEEL & TIRE GP–LH

S/N: BXC1-UP; DSX1-UP
PART OF 238-9672 WHEEL & TIRE AR
AN ATTACHMENT

SMCS-4201, 4202, 4203, 4208, 4209 **i02005425**

NOTE	PART NUMBER	QTY	PART NAME 1 2 3 4 5 6 (PRODUCT LEVEL)	SEE PAGE
	201-1975	1	TIRE (440/80 R28)	
Y	**6D-0337**	1	VALVE GP-TIRE	266
	119-7776	1	WHEEL AS (REAR)	

Y-SEPARATE ILLUSTRATION

<END>

238-9674 WHEEL & TIRE GP–RH

S/N: BXC1-UP; DSX1-UP
PART OF 238-9672 WHEEL & TIRE AR
AN ATTACHMENT

SMCS-4201, 4202, 4203, 4208, 4209 **i02005426**

NOTE	PART NUMBER	QTY	PART NAME 1 2 3 4 5 6 (PRODUCT LEVEL)	SEE PAGE
	201-1975	1	TIRE (440/80 R28)	
Y	**6D-0337**	1	VALVE GP-TIRE	266
	119-7776	1	WHEEL AS (REAR)	

Y-SEPARATE ILLUSTRATION

<END>

238-9676 WHEEL & TIRE GP–LH

S/N: BXC1-UP; DSX1-UP
PART OF 238-9675 WHEEL & TIRE AR
AN ATTACHMENT

SMCS-4201, 4202, 4203, 4208, 4209 **i02005427**

NOTE	PART NUMBER	QTY	PART NAME 1 2 3 4 5 6 (PRODUCT LEVEL)	SEE PAGE
	201-1974	1	TIRE (16.9R28)	
Y	**6D-0337**	1	VALVE GP-TIRE	266
	119-7776	1	WHEEL AS (REAR)	

Y-SEPARATE ILLUSTRATION

<END>

238-9677 WHEEL & TIRE GP–RH

S/N: BXC1-UP; DSX1-UP
PART OF 238-9675 WHEEL & TIRE AR
AN ATTACHMENT

SMCS-4201, 4202, 4203, 4208, 4209 **i02005428**

NOTE	PART NUMBER	QTY	PART NAME 1 2 3 4 5 6 (PRODUCT LEVEL)	SEE PAGE
	201-1974	1	TIRE (16.9R28)	
Y	**6D-0337**	1	VALVE GP-TIRE	266
	119-7776	1	WHEEL AS (REAR)	

Y-SEPARATE ILLUSTRATION

<END>

238-9679 WHEEL & TIRE GP–LH

S/N: BXC1-UP; DSX1-UP
PART OF 238-9678 WHEEL & TIRE AR
AN ATTACHMENT

SMCS-4201, 4202, 4203, 4208, 4209 **i02005429**

NOTE	PART NUMBER	QTY	PART NAME 1 2 3 4 5 6 (PRODUCT LEVEL)	SEE PAGE
	201-1880	1	TIRE (480/80R26)	
Y	**6D-0337**	1	VALVE GP-TIRE	266
	119-7785	1	WHEEL AS (REAR)	

Y-SEPARATE ILLUSTRATION

<END>

238-9680 WHEEL & TIRE GP–RH

S/N: BXC1-UP; DSX1-UP
PART OF 238-9678 WHEEL & TIRE AR
AN ATTACHMENT

SMCS-4201, 4202, 4203, 4208, 4209 **i02005430**

NOTE	PART NUMBER	QTY	PART NAME 1 2 3 4 5 6 (PRODUCT LEVEL)	SEE PAGE
	201-1880	1	TIRE (480/80R26)	
Y	**6D-0337**	1	VALVE GP-TIRE	266
	119-7785	1	WHEEL AS (REAR)	

Y-SEPARATE ILLUSTRATION

<END>

BRAKING SYSTEM

129-0138 BRAKE GP-PARKING

S/N: BXC1-UP; DSX1-UP

PART OF 184-6570 CONTROL GP-PARKING BRAKE

SMCS-3275, 3276, 3277, 4267 **i01876851**

NOTE	REF NO	GRAPHIC REF	PART NUMBER	QTY	PART NAME 1 2 3 4 5 6 (PRODUCT LEVEL)	SEE PAGE
	1	1	**230-3809**	1	BRAKE AS	
		1	**230-3810**	1	KIT-BRAKE LINING	
					(INCLUDES LINING AND SPRING)	
		1	**230-3811**	1	KIT-BRAKE CALIPER	
					(INCLUDES LINING,NUTS,WASHERS,BOOT,	
					THRUST BEARING,BOLT,SLEEVE/BOLT AS,SLEEVE PROTECTORS)	
		1	**166-9413**	1	KIT-CAM (COUNTERCLOCKWISE)	
					(INCLUDES CAM,BEARING,RETAINER)	
	2	1	**124-9464**	1	BRACKET	
	3	1	**130-7282**	1	BRACKET	

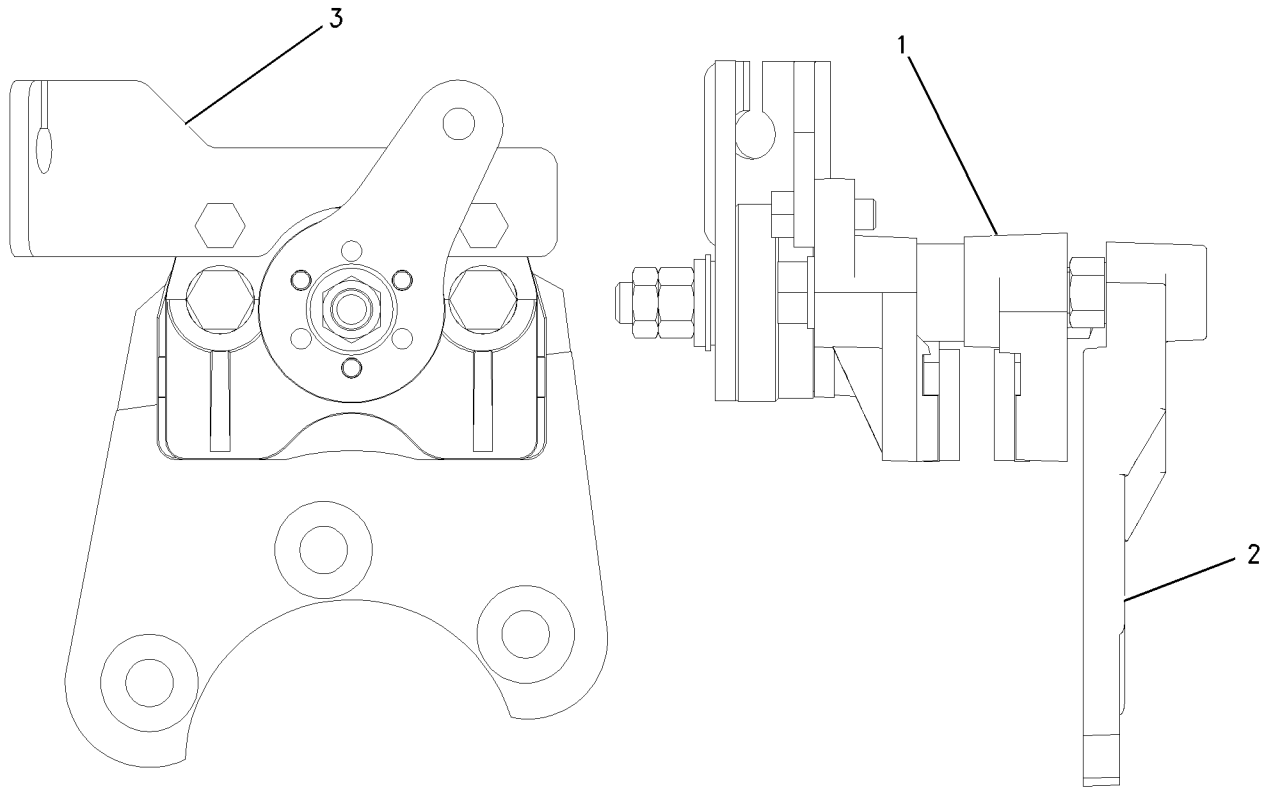

GRAPHIC #1 **<END>** g00729467

163-0754 CONTROL GP-PARKING BRAKE

S/N: BXC1-UP; DSX1-UP

PART OF 184-6570 CONTROL GP-PARKING BRAKE

SMCS-4282, 4284 **i01388150**

NOTE	REF NO	GRAPHIC REF	PART NUMBER	QTY	PART NAME 1 2 3 4 5 6 (PRODUCT LEVEL)	SEE PAGE
Y	1	1	**163-0753**	1	LEVER GP-HAND CONTROL	295
	2	1	**163-0755**	1	CABLE GP	
		1	**6V-8759**	1	RING-RETAINING	

Y-SEPARATE ILLUSTRATION

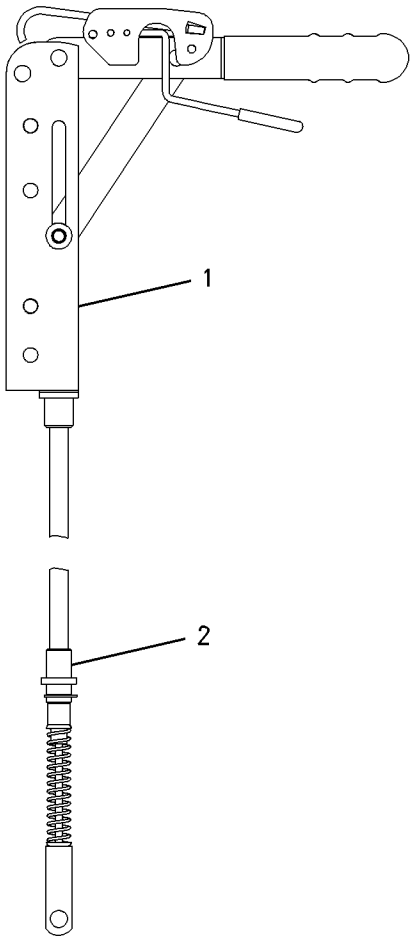

GRAPHIC #1 **<END>** g00729449

184-6570 CONTROL GP-PARKING BRAKE

S/N: BXC1-UP; DSX1-UP

PART OF 184-7970 POWER TRAIN AR

SMCS-4282, 4284 **i01499369**

NOTE	REF NO	GRAPHIC REF	PART NUMBER	QTY	PART NAME 1 2 3 4 5 6 (PRODUCT LEVEL)	SEE PAGE
Y	1	1	**129-0138**	1	BRAKE GP-PARKING	289
	2	1	**154-5416**	1	SWITCH AS (PARKING BRAKE ALARM)	
		1	**155-2270**	1	KIT-CONNECTING PLUG (2 PIN)	
					(KIT SERVICES PLUG AS. AND WEDGE)	
Y	3	1	**163-0754**	1	CONTROL GP-PARKING BRAKE	290
	4	1	**180-7245**	1	BRACKET AS	
M	5	1	**6V-9189**	2	LOCKNUT (M8X1.25 THD)	
	6	1	**7M-0242**	3	WASHER (5MM THK)	
	7	1	**8S-4734**	3	BOLT (9/16-12X2 IN)	
M	8	1	**8T-0276**	2	BOLT (M8X1.25X45MM)	
	9	1	**8T-4224**	2	WASHER-HARD (8.8X16X2MM THK)	
	10	1	**9R-2806**	1	PIN	
	11	1	**9R-2807**	1	CLIP	
M	12	1	**9X-2043**	4	SCREW-TRUSS HEAD (M6X1X14MM)	

M-METRIC PART
Y-SEPARATE ILLUSTRATION

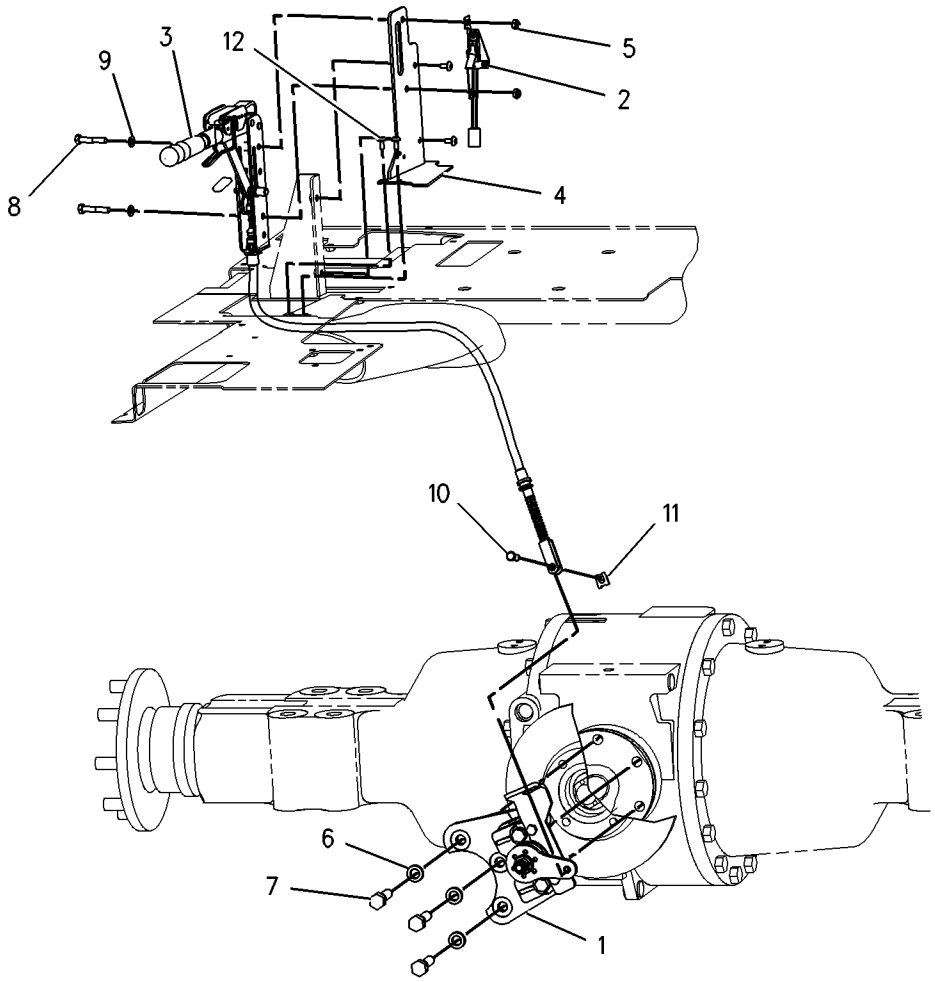

GRAPHIC #1 **<END>** g00725939

BRAKING SYSTEM

165-6918 CONTROL GP-SERVICE BRAKE

S/N: BXC1-UP; DSX1-UP

PART OF 184-7970 POWER TRAIN AR

SMCS-4269 **i02005432**

NOTE	REF NO	GRAPHIC REF	PART NUMBER	QTY	PART NAME 1 2 3 4 5 6 (PRODUCT LEVEL)	SEE PAGE
Y	1	1	**4E-8619**	1	RESERVOIR GP-BRAKE	296
	2	1	**5G-8108**	1	CLAMP	
	3	1	**6S-8620**	4	CLAMP-HOSE	
	4	1	**9R-8189**	2	PUSHROD	
	5	1	**9R-9334**	1	BRACKET AS	
	6	1	**105-8034**	2	SWITCH AS-LIMIT	
I	7	1	**155-8154**	2	HOSE AS	
	8	1	**165-6595**	1	PIN AS	
	9	1	**165-6599**	2	ROD END (YOKE)	
	10	1	**165-6601**	2	SPACER (20.75X45X35MMTHK)	
	11	1	**165-6602**	2	SPRING	
	12	1	**165-6603**	1	PLATE	
	13	1	**167-8160**	1	PLATE AS	
	14	1	*167-8161*	1	CYLINDER AS	
		1	**201-2157**	1	KIT-SERVICE	
		1	**113-5049**	1	TUBE AS	
I	15	1	**167-8164**	2	HOSE AS	
	16	1	**171-8623**	1	GROMMET	
	17	1	**174-7820**	2	TUBE AS	
	18	1	*184-6581*	2	CONNECTOR AS	
					(EACH INCLUDES)	
		1	**3J-1907**	1	SEAL-O-RING	
		1	**195-5830**	1	CONNECTOR	
C	19	1	**205-3759**	1	BRACKET AS	
M		1	**8T-7547**	4	BOLT (M8X1.25X30MM)	
C	20	1	**205-3760**	1	PEDAL AS-LH	
		1	**165-6585**	1	BEARING-SLEEVE	
C	21	1	**205-3761**	1	PEDAL AS-RH	
		1	**165-6585**	1	BEARING-SLEEVE	
	22	1	**212-3518**	1	PLATE AS	
	23	1	*148-8325*	2	CONNECTOR GP	
					(EACH INCLUDES)	
		1	**3J-1907**	1	SEAL-O-RING	
		1	**4J-5477**	1	SEAL-O-RING	
		1	**6V-8641**	1	CONNECTOR	
	24	1	*148-8368*	2	ELBOW GP	
					(EACH INCLUDES)	
		1	**3J-1907**	1	SEAL-O-RING	
		1	**4J-5477**	1	SEAL-O-RING	
		1	**6V-8627**	1	ELBOW	
	25	1	**1A-0621**	2	GROMMET	
	26	1	**1A-5350**	2	CLIP	
	27	1	**1H-1200**	1	PIN-SPRING	
	28	1	**2P-1279**	2	LOCKNUT (9/16-18 THD)	
	29	1	**3S-2093**	1	STRAP-CABLE	
	30	1	**4J-5477**	4	SEAL-O-RING	
M	31	1	**5C-7261**	9	NUT (M8X1.25 THD)	
M	32	1	**8T-4133**	2	NUT (M10X1.5 THD)	
M	33	1	**8T-4138**	6	BOLT (M6X1X20MM)	
M	34	1	**8T-4189**	4	BOLT (M8X1.25X20MM)	
M	35	1	**8T-4200**	1	BOLT (M8X1.25X16MM)	
	36	1	**8T-4205**	6	WASHER-HARD (7.2X14.5X2MM THK)	
	37	1	**8T-4224**	14	WASHER-HARD (8.8X16X2MM THK)	
	38	1	**9R-2807**	2	CLIP	
	39	1	**9R-7138**	2	PIN-CLEVIS	
M	40	1	**9X-2042**	7	SCREW-TRUSS HEAD (M6X1X12MM)	

165-6918 **CONTROL GP-SERVICE BRAKE** *(contd.)* **i02005432**

NOTE	REF NO	GRAPHIC REF	PART NUMBER	QTY	PART NAME 1 2 3 4 5 6 (PRODUCT LEVEL)	SEE PAGE
E	41	1	**5P-1442**	2	HOSE (23.6CM)	

C-CHANGE FROM PREVIOUS TYPE
E-ORDER BY THE CENTIMETER
I-REFER TO HYDRAULIC INFORMATION SYSTEM
M-METRIC PART
Y-SEPARATE ILLUSTRATION

165-6918 **CONTROL GP-SERVICE BRAKE** ***(contd.)*** **i02005432**

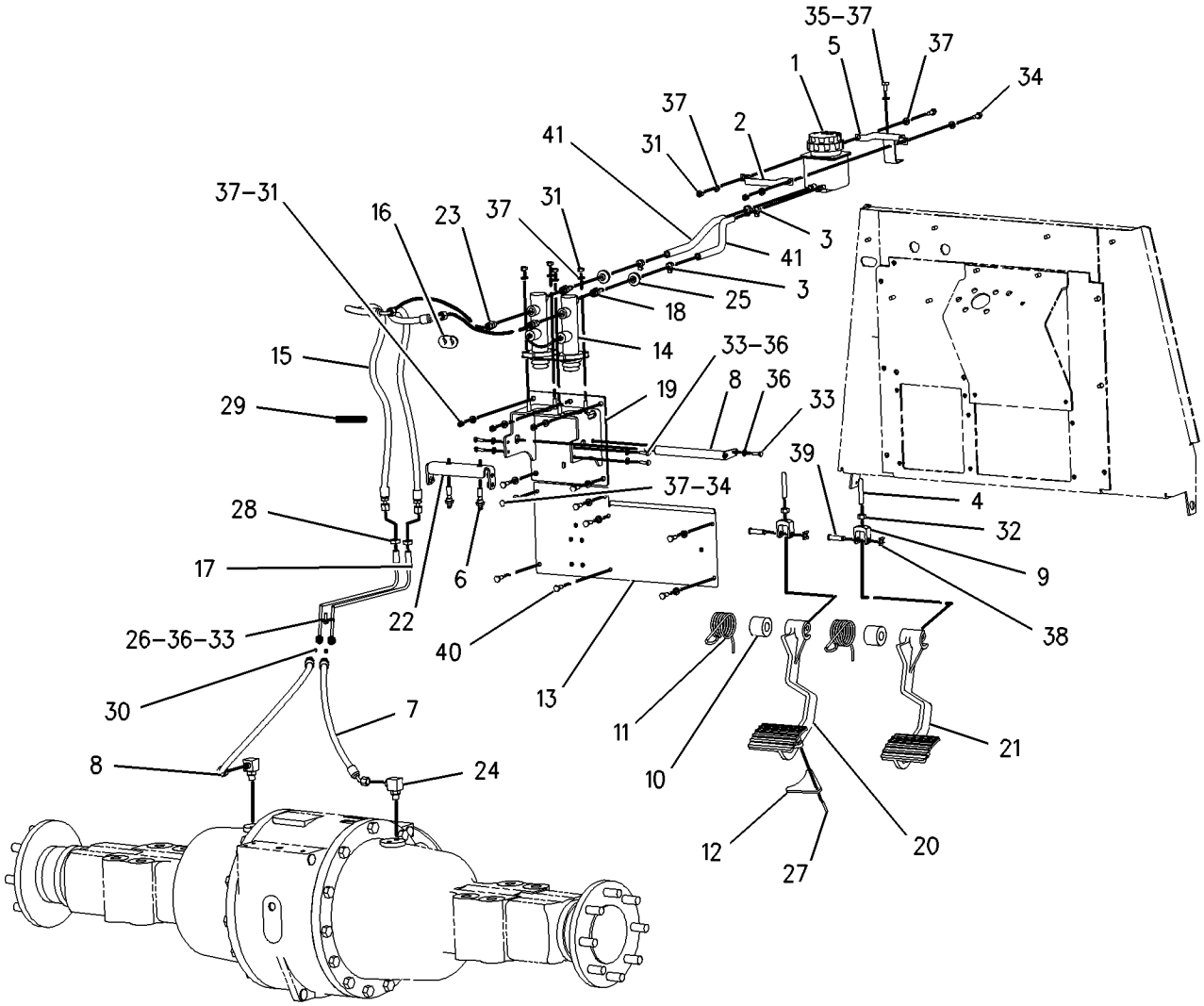

GRAPHIC #1 **<END>** g00864649

163-0753 LEVER GP-HAND CONTROL

S/N: BXC1-UP; DSX1-UP

PART OF 163-0754 CONTROL GP-PARKING BRAKE

SMCS-4284 **i01388136**

NOTE	REF NO	GRAPHIC REF	PART NUMBER	QTY	PART NAME 1 2 3 4 5 6 (PRODUCT LEVEL)	SEE PAGE
	1	1	**7R-8239**	2	SPACER	
	2	1	**039-9133**	1	PIN (38.86 MM LG)	
	3	1	**164-9598**	1	GRIP	
	4	1	**164-9599**	1	COVER	
	5	1	**3B-4610**	1	COTTER	
	6	1	**8T-4224**	2	WASHER-HARD (8.8X16X2MM THK)	

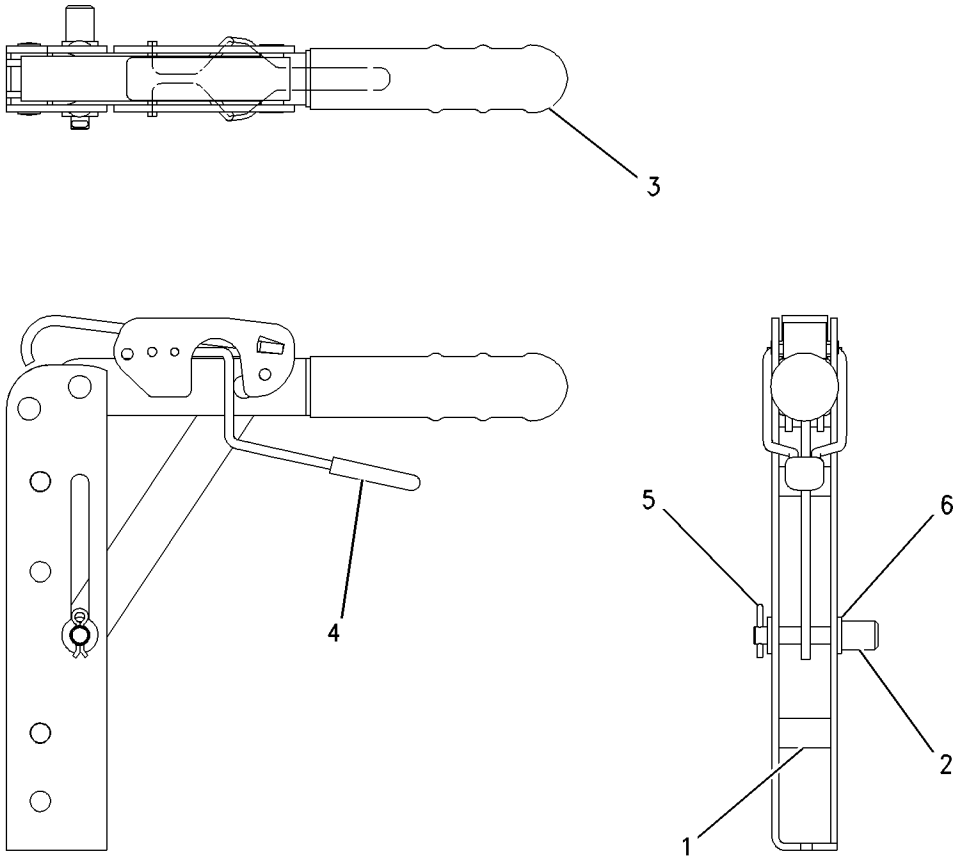

GRAPHIC #1 **<END>** g00729504

4E-8619 RESERVOIR GP-BRAKE

S/N: BXC1-UP; DSX1-UP

PART OF 165-6918 CONTROL GP-SERVICE BRAKE

SMCS-4291 **i01670353**

NOTE	REF NO	GRAPHIC REF	PART NUMBER	QTY	PART NAME 1 2 3 4 5 6 (PRODUCT LEVEL)	SEE PAGE
	1	1	**7N-7779**	1	SOCKET-CONNECTOR	
	2	1	**7N-9737**	1	HOUSING-PLUG	
	3	1	**7N-7780**	1	PIN-CONNECTOR	
F		1	**8R-6263**		INDICATOR AS	
					AVAILABLE REPAIR KIT(S):	
			159-7907	1	KIT-BRAKE RESERVOIR	

F-NOT SHOWN

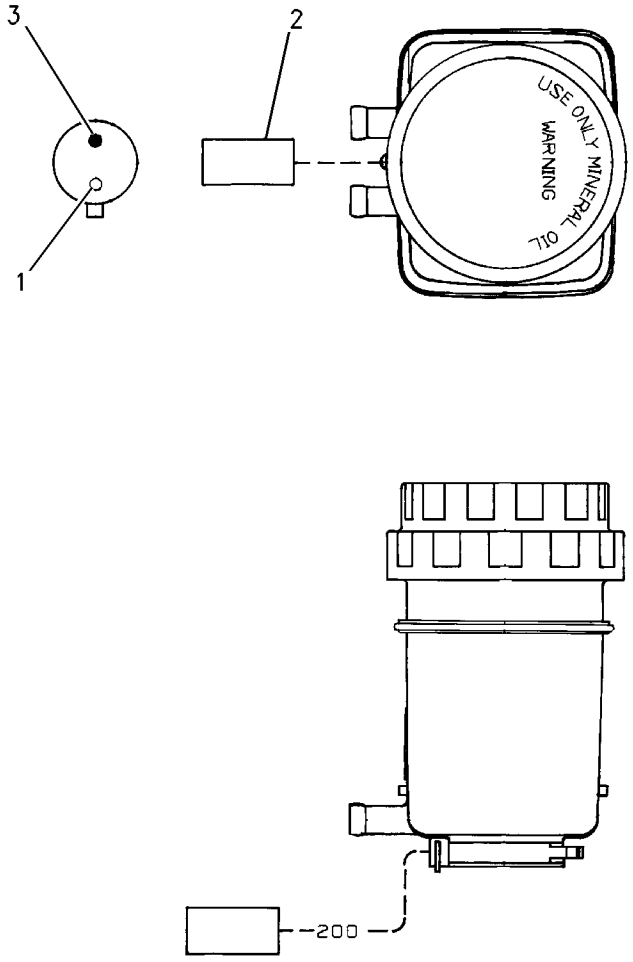

GRAPHIC #1 **<END>** g00862942

STEERING SYSTEM

183-4897 CONTROL GP-STEERING

S/N: BXC1-UP; DSX1-UP
PART OF 214-7008, 214-7009 CAB AR-ENCLOSED ROPS
AN ATTACHMENT

SMCS-4309, 4310, 4322, 4338, 4343 **i01783030**

NOTE	REF NO	GRAPHIC REF	PART NUMBER	QTY	PART NAME 1 2 3 4 5 6 (PRODUCT LEVEL)	SEE PAGE
Y	1	1	*153-9580*	1	STEERING WHEEL GP	304
	2	1	**163-7940**	1	PANEL AS	
	3	1	**185-3529**	1	CONSOLE AS	
	4	1	**206-6974**	1	STEERING COLUMN AS	
M	5	1	**5C-7261**	2	NUT (M8X1.25 THD)	
	6	1	**8T-4121**	2	WASHER-HARD (11X21X2.5MM THK)	
M	7	1	**8T-4136**	2	BOLT (M10X1.5X25MM)	
M	8	1	**8T-4189**	2	BOLT (M8X1.25X20MM)	
	9	1	**8T-4224**	4	WASHER-HARD (8.8X16X2MM THK)	
M	10	1	**8T-8894**	4	BOLT-SOCKET HEAD (M10X1.5X20MM)	
M	11	1	**9X-2044**	6	SCREW-TRUSS HEAD (M6X1X16MM)	

M-METRIC PART
Y-SEPARATE ILLUSTRATION

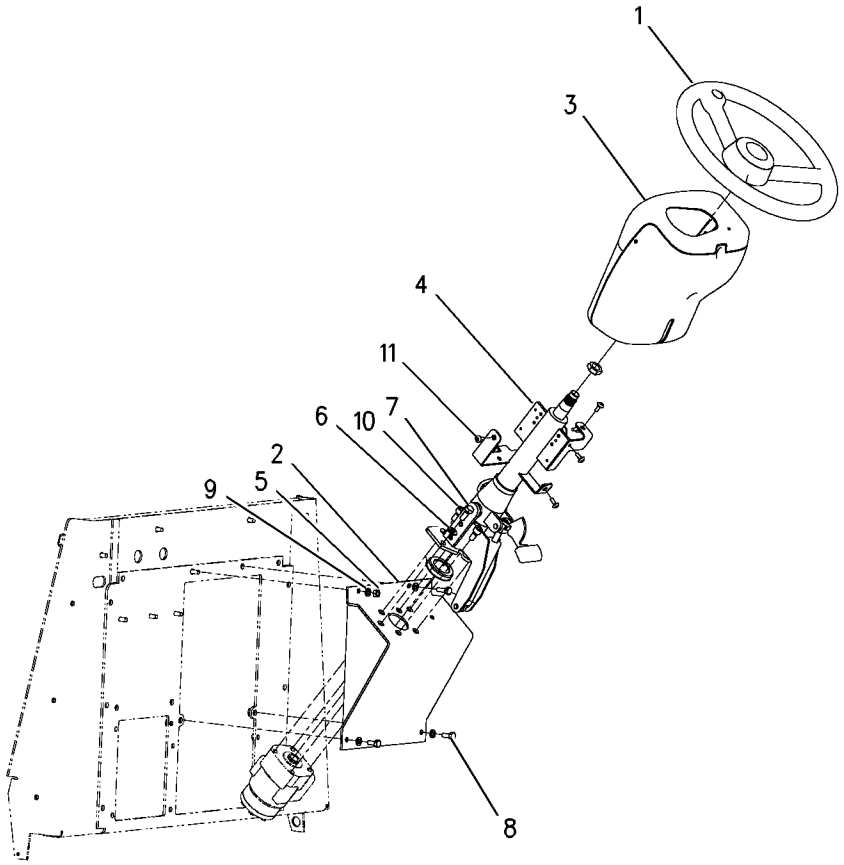

GRAPHIC #1 **<END>** g00875322

STEERING SYSTEM

183-4898 CONTROL GP-STEERING

S/N: BXC1-UP; DSX1-UP
AN ATTACHMENT

SMCS-4309, 4310, 4322, 4338, 4343 **i01673625**

NOTE	REF NO	GRAPHIC REF	PART NUMBER	QTY	PART NAME 1 2 3 4 5 6 (PRODUCT LEVEL)	SEE PAGE
	1	1	**1V-9385**	1	COVER-EMBLEM	
	2	1	**163-7940**	1	PANEL AS	
	3	1	**180-8170**	1	COLUMN AS-STEER	
M		1	**6V-8227**	1	NUT (M18X1.5-6 THD)	
M		1	**6V-9632**	5	NUT-WELD (M6X1 THD)	
		1	**7T-1099**	1	LINK	
	4	1	**185-3529**	1	CONSOLE AS	
	5	1	**032-1557**	1	STEERING WHEEL	
M	6	1	**5C-7261**	2	NUT (M8X1.25 THD)	
	7	1	**8T-4121**	2	WASHER-HARD (11X21X2.5MM THK)	
M	8	1	**8T-4136**	2	BOLT (M10X1.5X25MM)	
M	9	1	**8T-4189**	2	BOLT (M8X1.25X20MM)	
	10	1	**8T-4224**	4	WASHER-HARD (8.8X16X2MM THK)	
M	11	1	**8T-8894**	4	BOLT-SOCKET HEAD (M10X1.5X20MM)	
	12	1	**9K-5635**	3	SCREW-TAPPING (8-18X1.0 IN)	
M	13	1	**9X-2044**	6	SCREW-TRUSS HEAD (M6X1X16MM)	

M-METRIC PART

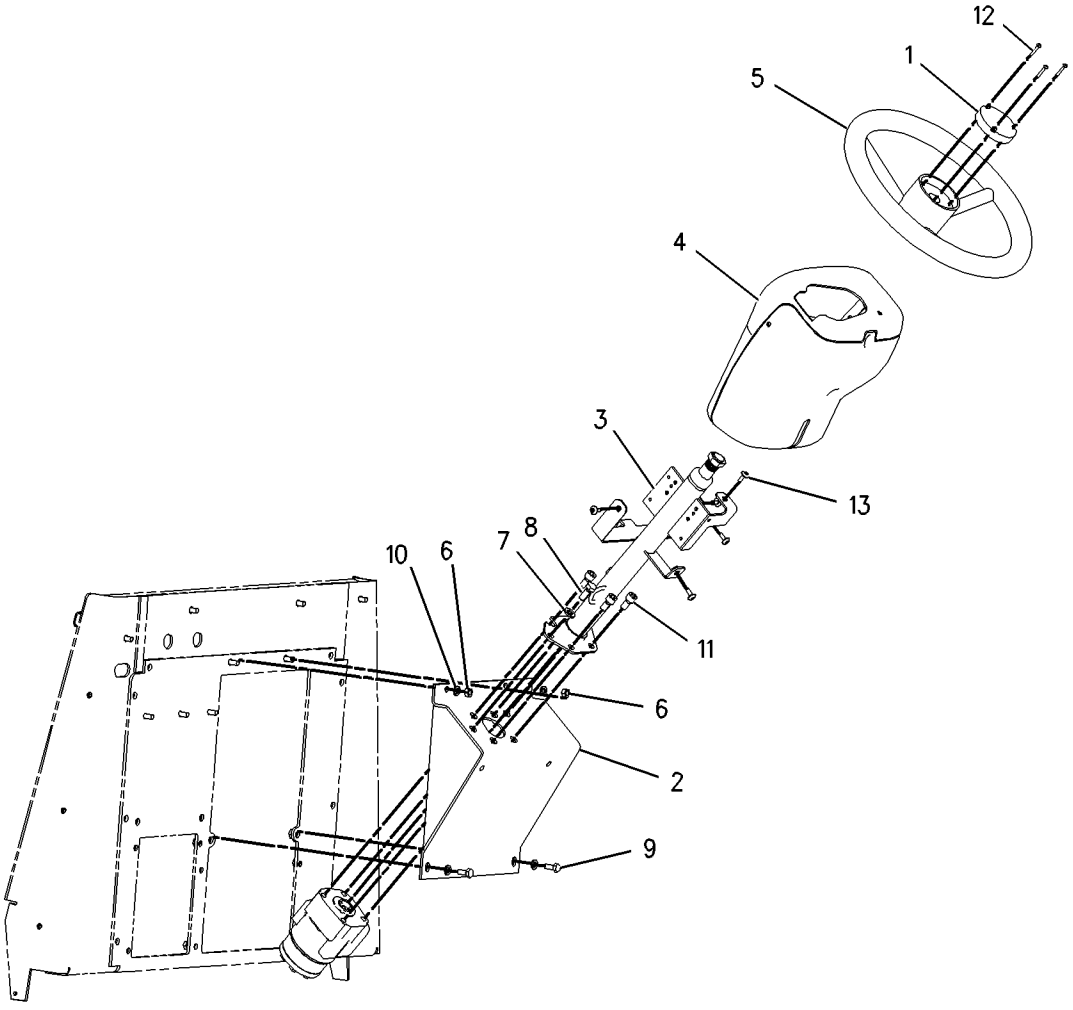

GRAPHIC #1 **<END>** g00856951

STEERING SYSTEM

153-7369 KNOB GP-STEERING

S/N: BXC1-UP; DSX1-UP
FIELD INSTALLATION
AN ATTACHMENT

SMCS-4309 **i01029926**

NOTE	REF NO	GRAPHIC REF	PART NUMBER	QTY	PART NAME 1 2 3 4 5 6 (PRODUCT LEVEL)	SEE PAGE
M	1	1	**8T-6869**	1	BOLT (M8X1.25X60MM)	
	2	1	**8T-4224**	1	WASHER-HARD (2MM THK)	
M	3	1	**5C-7261**	1	NUT (M8X1.25 THD)	

M-METRIC PART

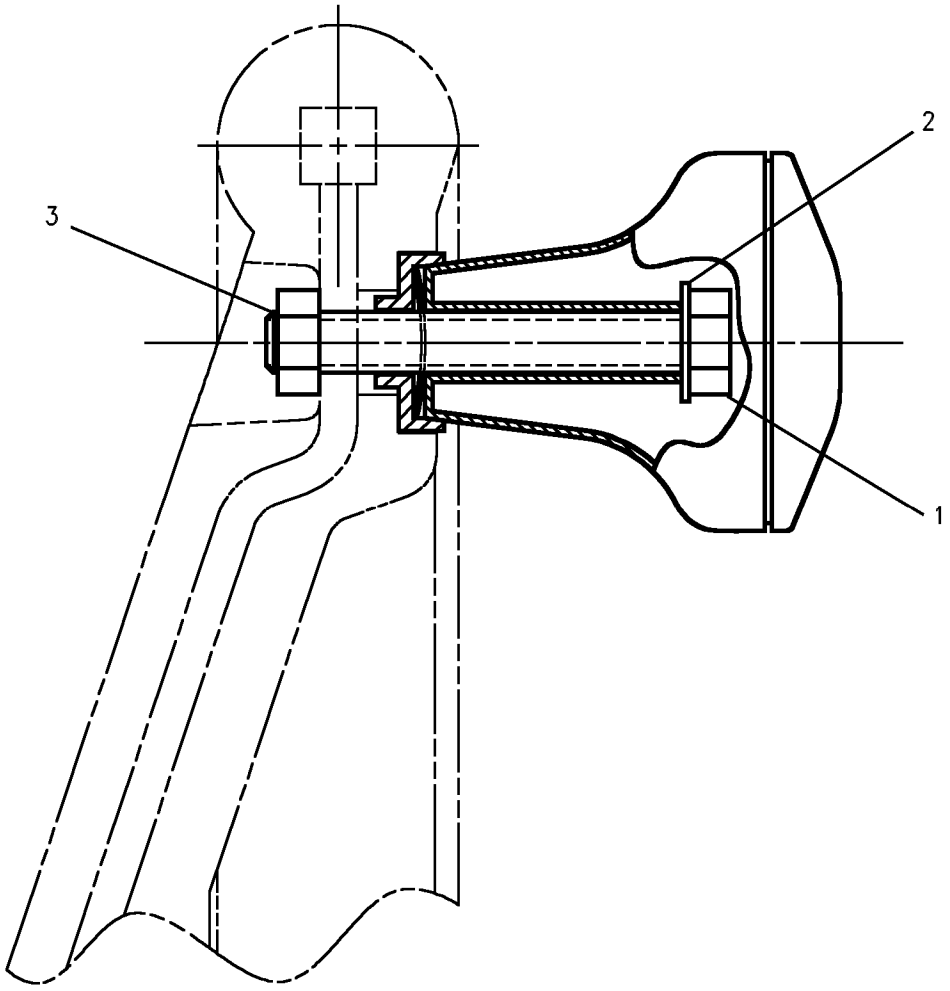

GRAPHIC #1 **<END>** g00534771

STEERING SYSTEM

202-5711 LINES GP-STEERING–2 WHEEL STEER–ALL WHEEL DRIVE

S/N: BXC1-UP; DSX1-UP

PART OF 237-6463 DRIVE AR-BACKHOE LOADER

SMCS-4304 **i01909583**

NOTE	REF NO	GRAPHIC REF	PART NUMBER	QTY	PART NAME 1 2 3 4 5 6 (PRODUCT LEVEL)	SEE PAGE
G	1	1	**160-2248**		SLEEVE-ABRASION (8IN)	
	2	1	**5D-1026**	2	CLAMP-HOSE	
	3	1	**7K-1181**	5	STRAP-CABLE	
I	4	1	**117-3242**	1	HOSE AS	
	5	1	*195-2037*	1	FITTING AS	
		1	**3K-0360**	1	SEAL-O-RING	
		1	**034-3679**	1	FITTING	
	6	1	**204-0317**	1	CONNECTOR AS	
		1	**3K-0360**	1	SEAL-O-RING	
		1	**6V-8397**	1	SEAL-O-RING	
		1	**092-3635**	1	CONNECTOR	
	7	1	**210-7465**	1	HOSE AS	
	8	1	**210-7466**	1	HOSE AS	
I	9	1	**214-3159**	1	HOSE AS	
	10	1	*148-8316*	1	CONNECTOR AS	
		1	**3J-7354**	1	SEAL-O-RING	
		1	**4J-5477**	1	SEAL-O-RING	
		1	**6V-8647**	1	CONNECTOR	
	11	1	*148-8318*	2	CONNECTOR GP	
					(EACH INCLUDES)	
		1	**3K-0360**	1	SEAL-O-RING	
		1	**6V-8397**	1	SEAL-O-RING	
		1	**6V-8634**	1	CONNECTOR	
	12	1	*148-8346*	1	ELBOW GP	
		1	**3K-0360**	1	SEAL-O-RING	
		1	**6V-8398**	1	SEAL-O-RING	
		1	**8T-1686**	1	ELBOW	
	13	1	*148-8367*	1	ELBOW GP	
		1	**6V-8397**	1	SEAL-O-RING	
		1	**6V-9850**	1	ELBOW (SWIVEL)	
	14	1	*148-8369*	1	ELBOW GP	
		1	**3J-7354**	1	SEAL-O-RING	
		1	**4J-5477**	1	SEAL-O-RING	
		1	**6V-8628**	1	ELBOW	
	15	1	*148-8383*	2	ELBOW AS	
					(EACH INCLUDES)	
		1	**3K-0360**	1	SEAL-O-RING	
		1	**6V-8397**	1	SEAL-O-RING	
		1	**8T-1683**	1	ELBOW	
	16	1	*164-5544*	2	ELBOW GP	
					(EACH INCLUDES)	
		1	**3E-2333**	1	ELBOW	
		1	**6V-8398**	1	SEAL-O-RING	
	17	1	**5K-5338**	1	CLIP	
	18	1	**5P-4295**	2	CLIP	
	19	1	**5P-7462**	1	CLIP (SLOT)	
	20	1	**5P-7463**	1	CLIP (TAB)	
	21	1	**6D-4246**	1	CLIP	
	22	1	**6V-0683**	1	GROMMET	
	23	1	**8T-4121**	4	WASHER-HARD (11X21X2.5MM THK)	
M	24	1	**8T-4136**	4	BOLT (M10X1.5X25MM)	
	25	1	**9M-8406**	1	CLIP	
E	26	1	**5P-1505**		HOSE (53CM)	

E-ORDER BY THE CENTIMETER
G-ORDER BY THE INCH
I-SEE HOSE FABRICATION GUIDE
M-METRIC PART

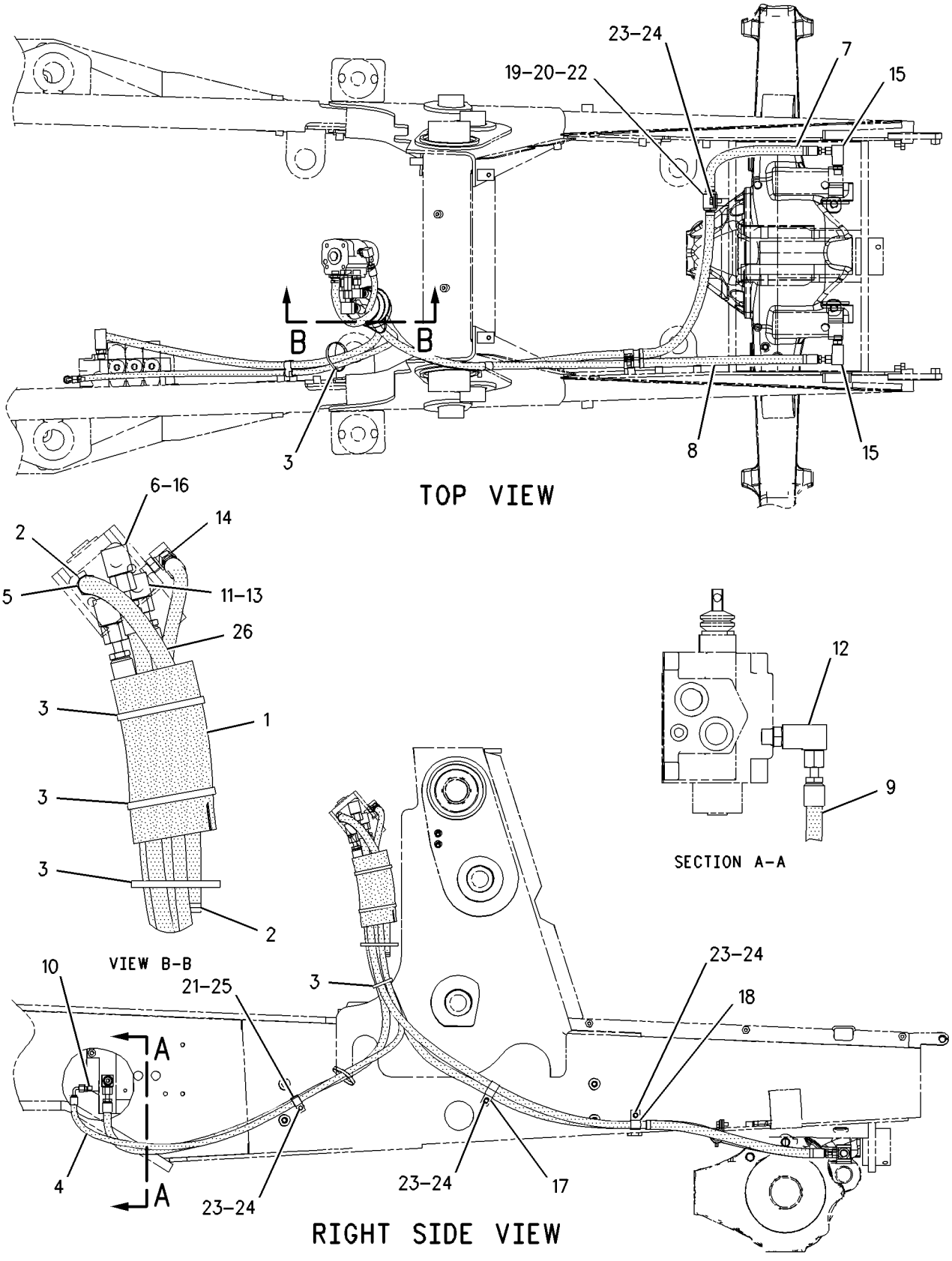

GRAPHIC #1 **<END>** g00995068

STEERING SYSTEM

238-8550 PUMP GP-METERING

S/N: BXC1-UP; DSX1-UP

PART OF 237-6463 DRIVE AR-BACKHOE LOADER

SMCS-4312 **i01982156**

NOTE	PART NUMBER	QTY	PART NAME 1 2 3 4 5 6 (PRODUCT LEVEL)	SEE PAGE
	227-4709	1	KIT-SEAL (STEERING METERING PUMP)	

<END>

STEERING SYSTEM

153-9580 STEERING WHEEL GP

S/N: BXC1-UP; DSX1-UP
PART OF 183-4897 CONTROL GP-STEERING
AN ATTACHMENT

SMCS-4309 **i00810363**

NOTE	REF NO	GRAPHIC REF	PART NUMBER	QTY	PART NAME 1 2 3 4 5 6 (PRODUCT LEVEL)	SEE PAGE
	1	1	**8R-2916**	1	BUTTON AS	
	2	1	**145-9291**	1	WHEEL AS-STEERING	
	3	1	**153-7368**	1	PLUG	

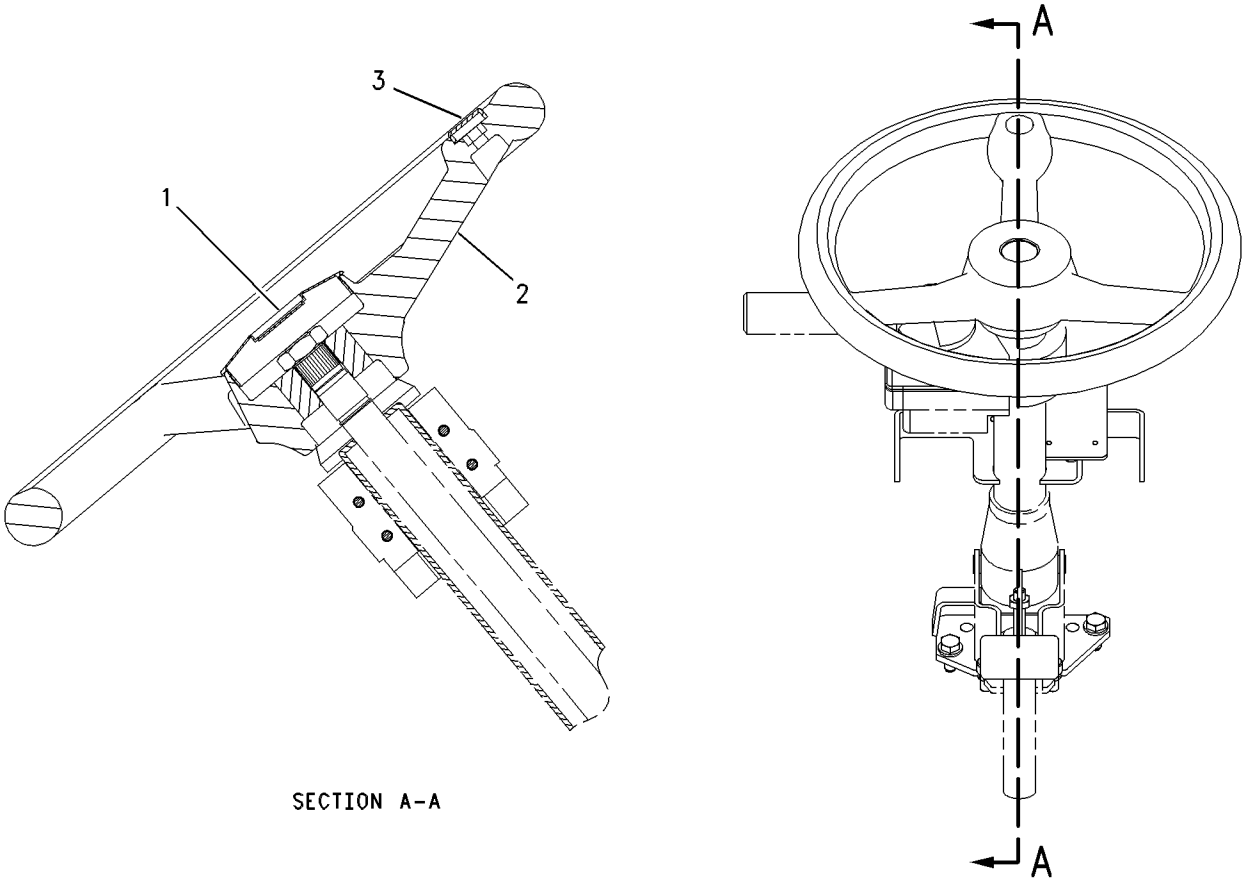

SECTION A-A

GRAPHIC #1 **<END>** g00319225

188-7471 VALVE GP-PRIORITY–STEERING

S/N: BXC1-UP; DSX1-UP

PART OF 185-5911, 185-5913 VALVE GP-BANK 2, 185-5912, 185-5914 VALVE GP-BANK 3 AN ATTACHMENT

SMCS-4320, 5137 **i01695195**

NOTE	REF NO	GRAPHIC REF	PART NUMBER	QTY	PART NAME 1 2 3 4 5 6 (PRODUCT LEVEL)	SEE PAGE
	1	1	**9S-8006**	1	PLUG	
	2	1	**103-4754**	1	SPRING	
	3	1	**9T-0655**	1	VALVE GP-RELIEF	
	3A	1	**1S-8947**	1	SEAL-O-RING	
	3B	1	**3D-2824**	1	SEAL-O-RING	
	3C	1	**9T-0656**	1	RING	
	4	1	**5B-9318**	1	BALL	
	5	1	**180-9157**	1	SEAT AS	
	5A	1	**4T-7807**	1	RING-BACKUP	
	5B	1	**7J-0204**	1	SEAL-O-RING	
	5C	1	**8T-2360**	1	SEAL-O-RING	
	6	1	**9S-9334**	1	PLUG	
	7	1	**7M-8485**	1	SEAL-O-RING	

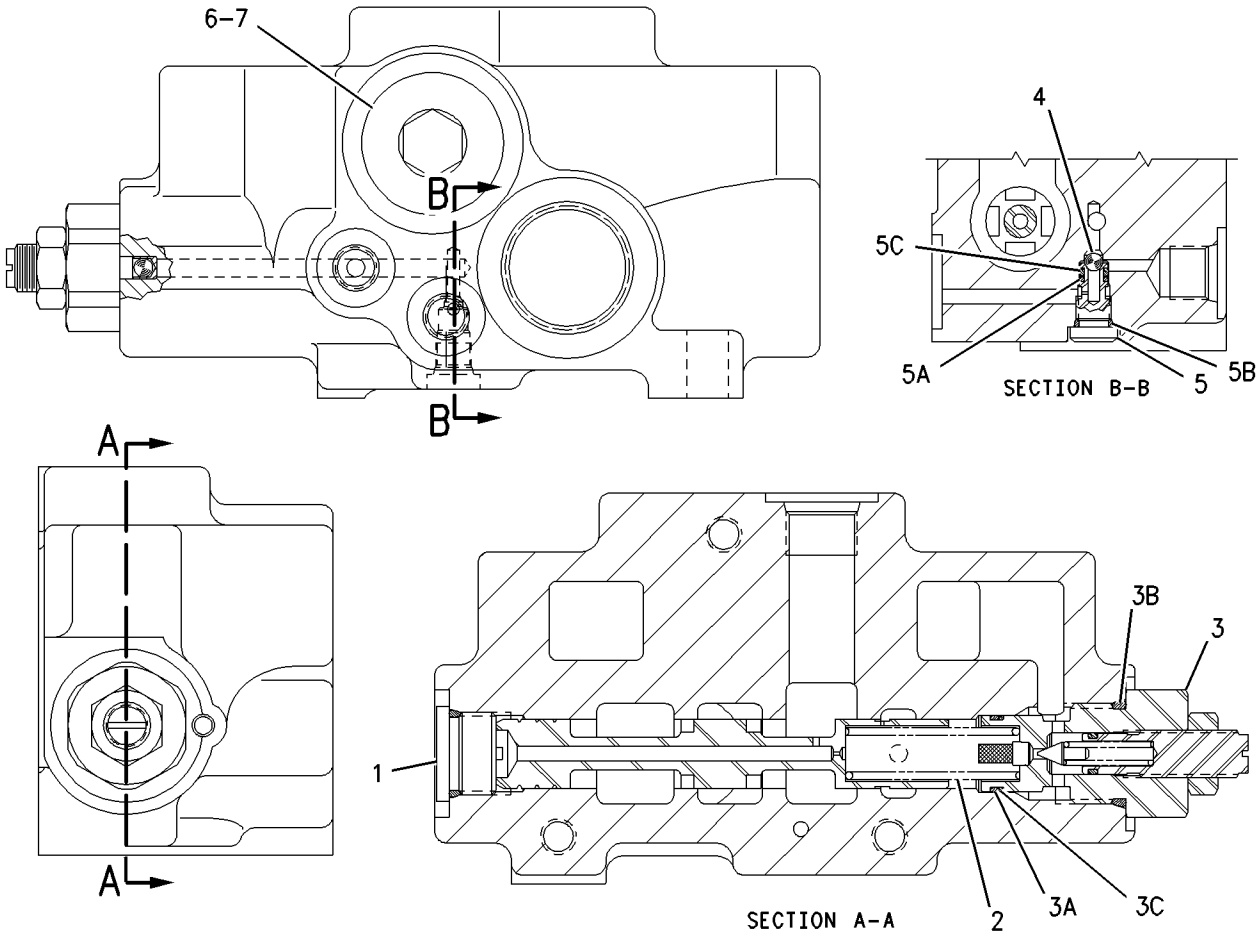

GRAPHIC #1 **<END>** g00872884

188-0859 BOX GP-BATTERY—POWER SHIFT

S/N: BXC1-UP; DSX1-UP
PART OF 228-4590, 228-4591 BOX GP-BATTERY
AN ATTACHMENT

SMCS-7257 **i01650172**

NOTE	REF NO	GRAPHIC REF	PART NUMBER	QTY	PART NAME 1 2 3 4 5 6 (PRODUCT LEVEL)	SEE PAGE
M	1	1	**8T-2910**	2	NUT-WING	
Y	2	1	**118-6842**	1	DOOR GP-BATTERY	316
	3	1	**118-6854**	1	TREAD	
	4	1	**139-3562**	1	COVER	
	5	1	**164-3876**	1	STEP AS	
	6	1	**188-0858**	1	BATTERY BOX AS	
	7	1	**190-5122**	1	PLATE AS	
	8	1	**5P-4116**	6	WASHER-HARD (8.8X20.5X2MM THK)	
M	9	1	**8T-4183**	4	BOLT (M12X1.75X40MM)	
M	10	1	**8T-4189**	6	BOLT (M8X1.25X20MM)	
M	11	1	**8T-4200**	7	BOLT (M8X1.25X16MM)	
	12	1	**8T-4223**	4	WASHER-HARD (13.5X25.5X3MM THK)	
	13	1	**8T-4224**	7	WASHER-HARD (8.8X16X2MM THK)	
M	14	1	**8T-7963**	1	LOCKNUT	

M-METRIC PART
Y-SEPARATE ILLUSTRATION

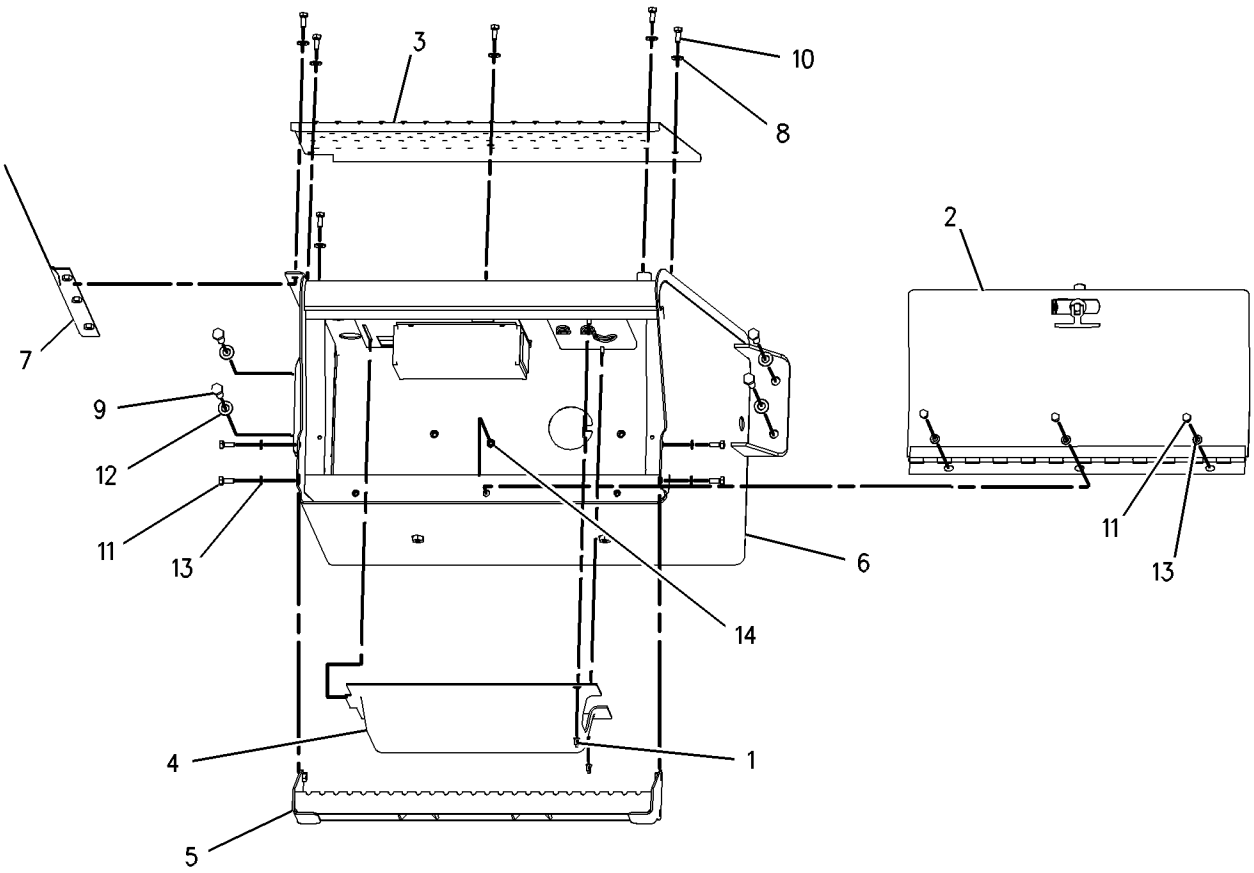

GRAPHIC #1 **<END>** g00795345

FRAME AND BODY

188-0860 BOX GP-BATTERY

S/N: BXC1-UP; DSX1-UP
PART OF 228-4588, 228-4589 BOX GP-BATTERY
AN ATTACHMENT

SMCS-7257 **i01650179**

NOTE	REF NO	GRAPHIC REF	PART NUMBER	QTY	PART NAME 1 2 3 4 5 6 (PRODUCT LEVEL)	SEE PAGE
	1	1	**7T-8895**	1	GROMMET	
Y	2	1	**118-6842**	1	DOOR GP-BATTERY	316
	3	1	**118-6854**	1	TREAD	
	4	1	**164-3876**	1	STEP AS	
	5	1	**188-0857**	1	BATTERY BOX AS	
	6	1	**190-5122**	1	PLATE AS	
	7	1	**5P-4116**	6	WASHER-HARD (8.8X20.5X2MM THK)	
M	8	1	**8T-4183**	4	BOLT (M12X1.75X40MM)	
M	9	1	**8T-4189**	6	BOLT (M8X1.25X20MM)	
M	10	1	**8T-4200**	7	BOLT (M8X1.25X16MM)	
	11	1	**8T-4223**	4	WASHER-HARD (13.5X25.5X3MM THK)	
	12	1	**8T-4224**	7	WASHER-HARD (8.8X16X2MM THK)	
M	13	1	**8T-7963**	1	LOCKNUT	

M-METRIC PART
Y-SEPARATE ILLUSTRATION

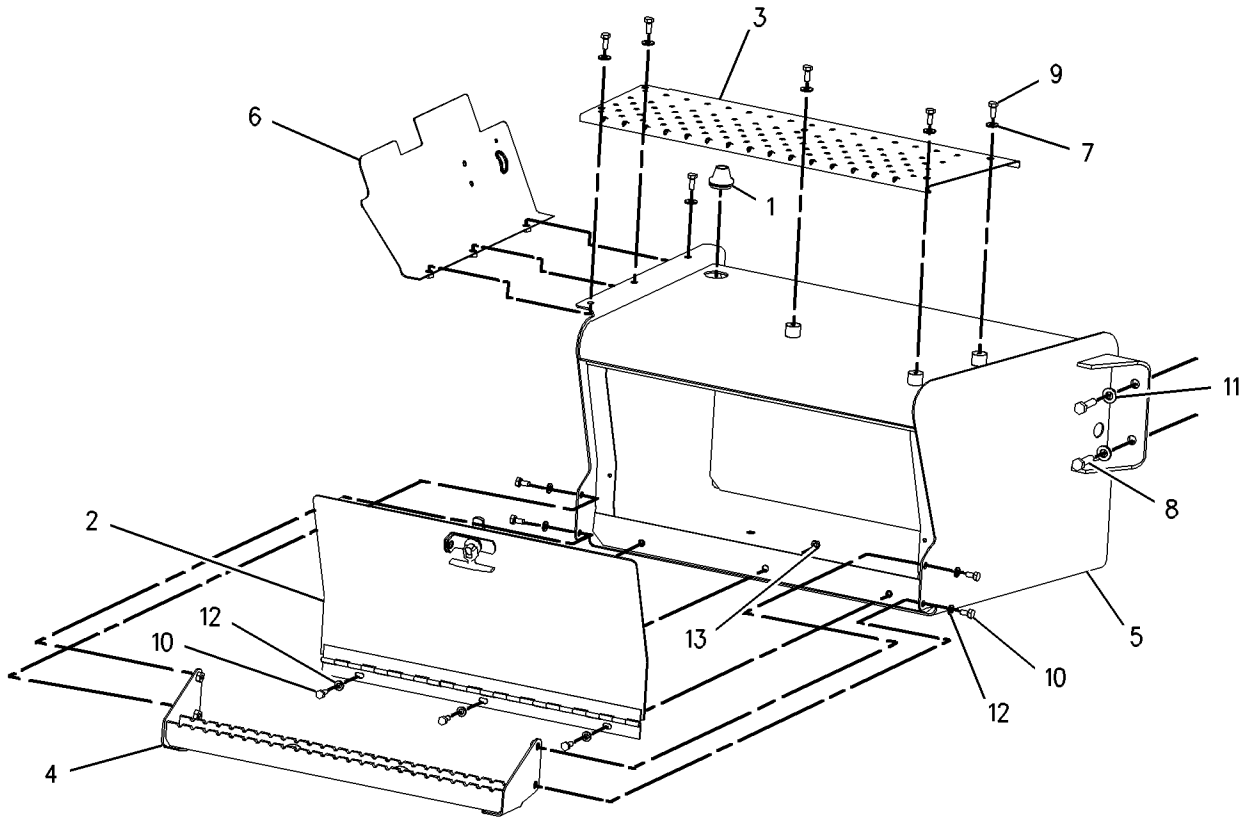

GRAPHIC #1 **<END>** g00852685

223-6178 BOX GP-BATTERY

S/N: BXC1-UP; DSX1-UP
PART OF 228-4587 BOX GP-BATTERY
AN ATTACHMENT

SMCS-7257 **i02000018**

NOTE	REF NO	GRAPHIC REF	PART NUMBER	QTY	PART NAME 1 2 3 4 5 6 (PRODUCT LEVEL)	SEE PAGE
	1	1	**148-7868**	1	STEP AS	
	2	1	**214-1669**	1	BOX AS	
		1	**7T-1099**	1	LINK	
M		1	**8T-3490**	4	NUT-WELD (M10X1.5 THD)	
M		1	**8T-3612**	4	NUT-WELD (M8X1.25 THD)	
	3	1	**214-1670**	1	PLATE	
	4	1	**7X-0578**	2	WASHER-HARD (10.2X32X2.5MM THK)	
	5	1	**8T-4121**	2	WASHER-HARD (11X21X2.5MM THK)	
M	6	1	**8T-4136**	4	BOLT (M10X1.5X25MM)	
M	7	1	**8T-4183**	4	BOLT (M12X1.75X40MM)	
	8	1	**8T-4223**	4	WASHER-HARD (13.5X25.5X3MM THK)	
	9	1	**7T-8895**	1	GROMMET	

M-METRIC PART

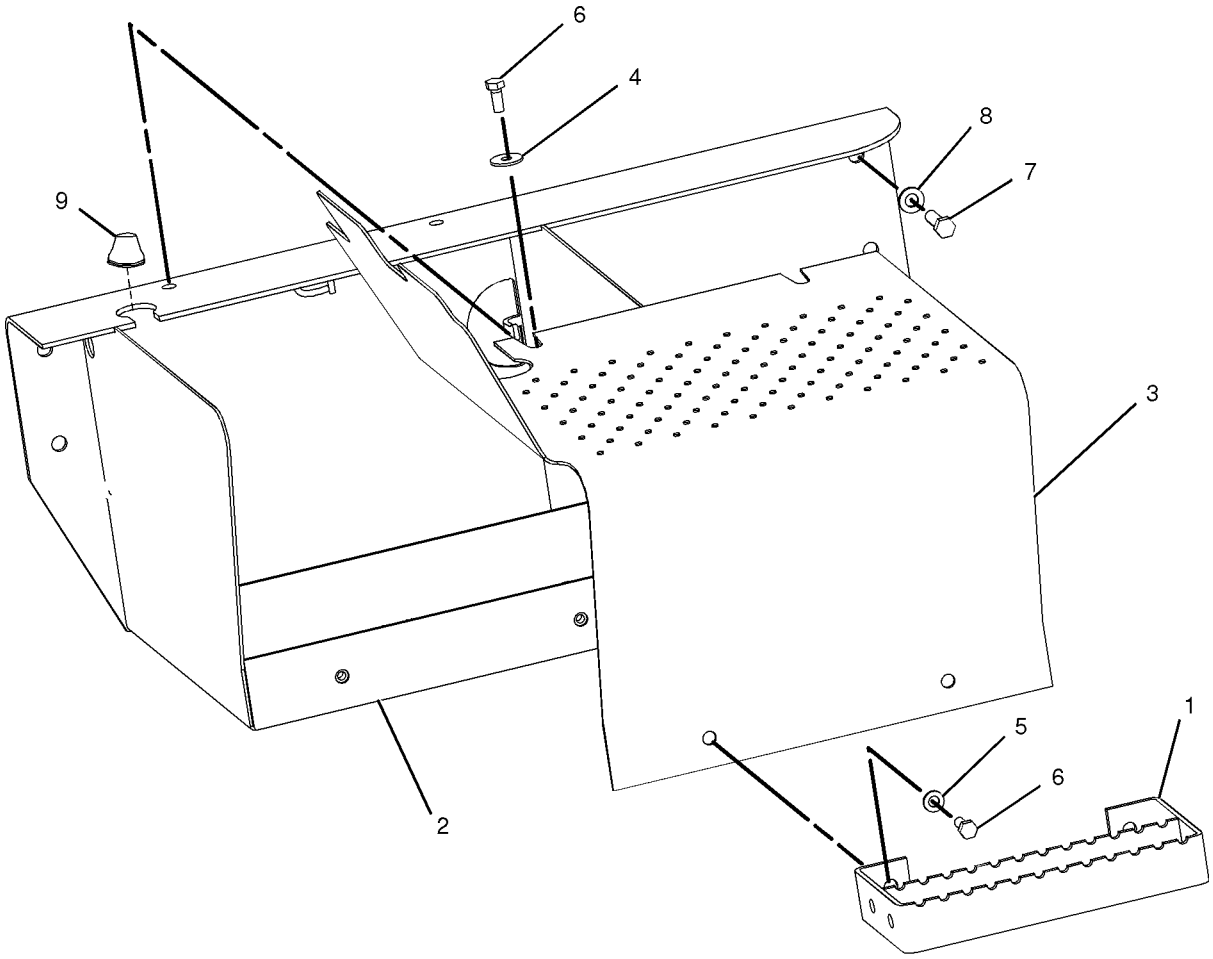

GRAPHIC #1 **<END>** g01034933

228-4587 BOX GP-BATTERY

S/N: BXC1-UP; DSX1-UP
STANDARD & AUTOSHIFT TRANSMISSION, NO STORAGE, STANDARD BATTERY
AN ATTACHMENT

SMCS-7257 **i01807040**

NOTE	PART NUMBER	QTY	PART NAME 1 2 3 4 5 6 (PRODUCT LEVEL)	SEE PAGE
Y	*223-6181*	1	BATTERY GP	108
Y	*223-6178*	1	BOX GP-BATTERY	308
Y-SEPARATE ILLUSTRATION				

<END>

228-4588 BOX GP-BATTERY

S/N: BXC1-UP; DSX1-UP
STANDARD TRANSMISSION, STORAGE, STANDARD BATTERY
AN ATTACHMENT

SMCS-7257 **i01807029**

NOTE	PART NUMBER	QTY	PART NAME 1 2 3 4 5 6 (PRODUCT LEVEL)	SEE PAGE
Y	*122-5865*	1	BATTERY GP	106
Y	*188-0860*	1	BOX GP-BATTERY	307
Y-SEPARATE ILLUSTRATION				

<END>

228-4589 BOX GP-BATTERY

S/N: BXC1-UP; DSX1-UP
STANDARD TRANSMISSION, STORAGE, HEAVY DUTY BATTERY
AN ATTACHMENT

SMCS-7257 **i01807016**

NOTE	PART NUMBER	QTY	PART NAME 1 2 3 4 5 6 (PRODUCT LEVEL)	SEE PAGE
Y	*119-8016*	1	BATTERY GP	104
Y	*188-0860*	1	BOX GP-BATTERY	307
Y-SEPARATE ILLUSTRATION				

<END>

228-4590 BOX GP-BATTERY

S/N: BXC1-UP; DSX1-UP
AUTOSHIFT TRANSMISSION, STORAGE, STANDARD BATTERY
AN ATTACHMENT

SMCS-7257 **i01807067**

NOTE	PART NUMBER	QTY	PART NAME 1 2 3 4 5 6 (PRODUCT LEVEL)	SEE PAGE
Y	*122-5865*	1	BATTERY GP	106
Y	*188-0859*	1	BOX GP-BATTERY	306
Y-SEPARATE ILLUSTRATION				

<END>

FRAME AND BODY

228-4591 BOX GP-BATTERY

S/N: BXC1-UP; DSX1-UP
AUTOSHIFT TRANSMISSION, STORAGE, HEAVY DUTY
AN ATTACHMENT

SMCS-7257 **i01807049**

NOTE	PART NUMBER	QTY	PART NAME 1 2 3 4 5 6 (PRODUCT LEVEL)	SEE PAGE
Y	*119-8016*	1	BATTERY GP	104
Y	*188-0859*	1	BOX GP-BATTERY	306

Y-SEPARATE ILLUSTRATION

<END>

FRAME AND BODY

112-1809 BUMPER GP-FRONT

S/N: BXC1-UP; DSX1-UP
AN ATTACHMENT

SMCS-7156 **i01108522**

NOTE	REF NO	GRAPHIC REF	PART NUMBER	QTY	PART NAME 1 2 3 4 5 6 (PRODUCT LEVEL)	SEE PAGE
	1	1	**7X-0572**	4	WASHER-HARD (M24.0X44.5X6MM THK)	
	2	1	**113-4495**	1	BUMPER AS	
M	3	1	**7X-2568**	4	BOLT (M20X2.5X180MM)	

M-METRIC PART

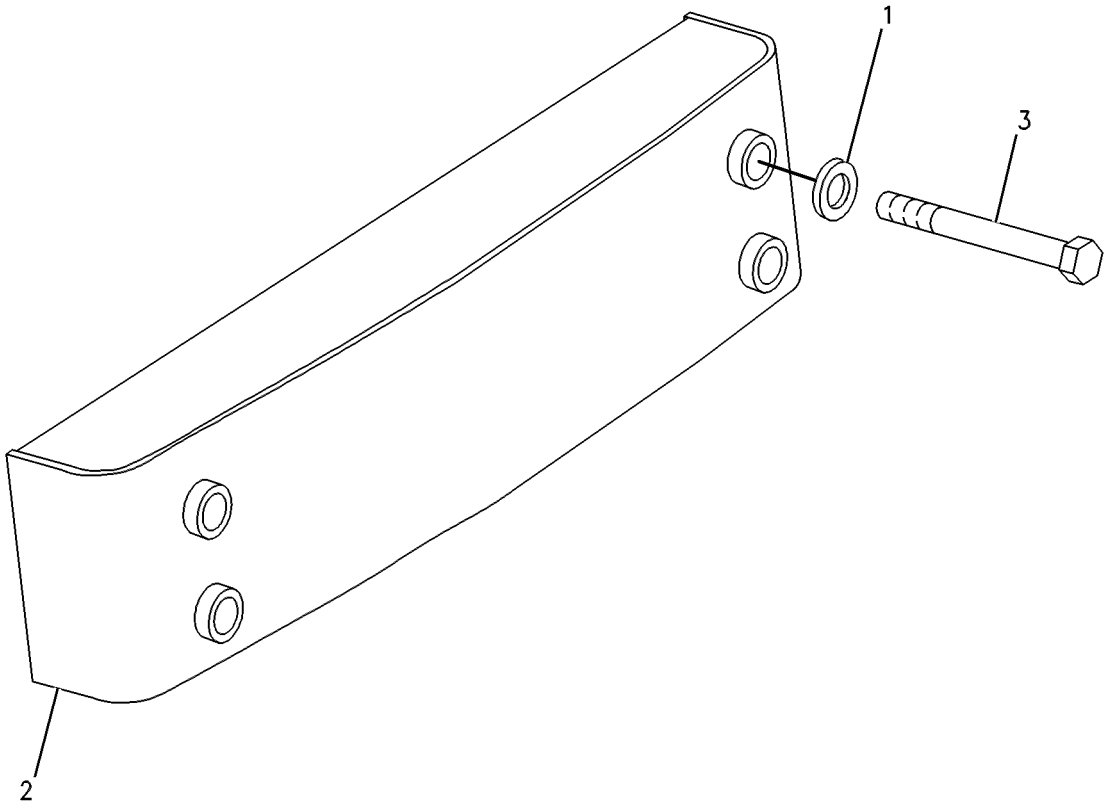

GRAPHIC #1 **<END>** g00257015

106-5878 COUNTERWEIGHT GP

S/N: BXC1-UP; DSX1-UP
145KG (320 LB)
AN ATTACHMENT

SMCS-7056 **i01943220**

NOTE	REF NO	GRAPHIC REF	PART NUMBER	QTY	PART NAME 1 2 3 4 5 6 (PRODUCT LEVEL)	SEE PAGE
	1	1	**112-4417**	1	COUNTERWEIGHT (144KG)	
M	2	1	**8C-8478**	4	BOLT (M20X2.5X140MM)	
	3	1	**8T-4123**	4	WASHER-PLATED (22X35X3.5MM THK)	

M-METRIC PART

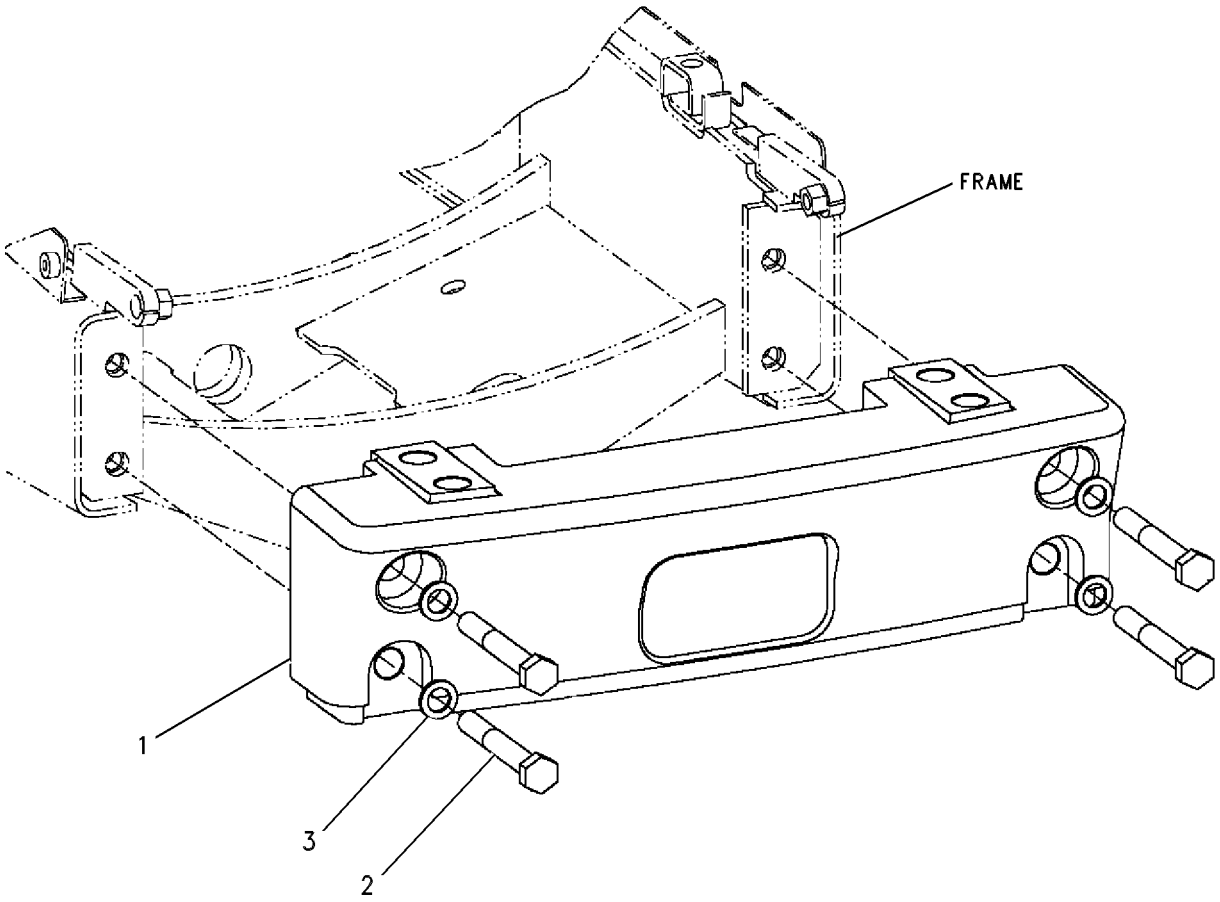

GRAPHIC #1 **<END>** g00257331

106-5879 COUNTERWEIGHT GP

S/N: BXC1-UP; DSX1-UP
249KG (550 LB)
AN ATTACHMENT

SMCS-7056 **i01995085**

NOTE	REF NO	GRAPHIC REF	PART NUMBER	QTY	PART NAME 1 2 3 4 5 6 (PRODUCT LEVEL)	SEE PAGE
	1	1	**240-0019**	1	COUNTERWEIGHT GP	
	2	1	**112-4417**	1	COUNTERWEIGHT (144KG)	
	3	1	**112-4418**	1	COUNTERWEIGHT (101.6KG)	
	4	1	**113-7906**	2	U-BOLT	
M	5	1	**8T-4001**	4	NUT (M24X3 THD)	
	6	1	**8T-4167**	4	WASHER-HARD (26X44X4MM THK)	
M	7	1	**8C-8478**	4	BOLT (M20X2.5X140MM)	
	8	1	**8T-4123**	4	WASHER-PLATED (22X35X3.5MM THK)	

M-METRIC PART

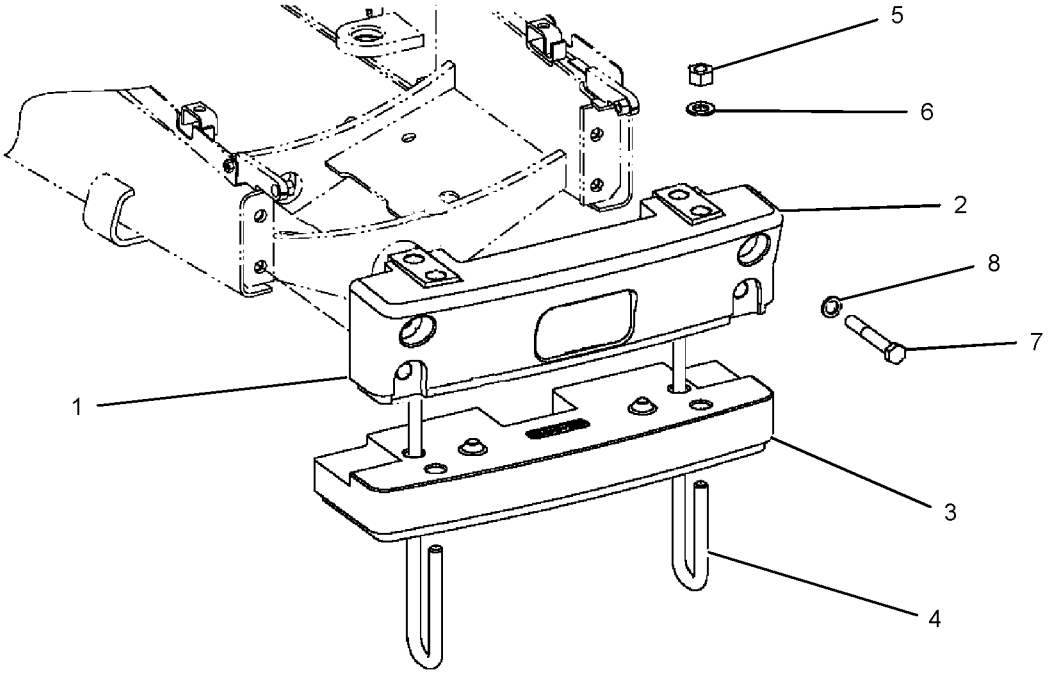

GRAPHIC #1 **<END>** g01032581

FRAME AND BODY

106-5880 COUNTERWEIGHT GP

S/N: BXC1-UP; DSX1-UP
354KG (780 LB)
AN ATTACHMENT

SMCS-7056 **i01990715**

NOTE	REF NO	GRAPHIC REF	PART NUMBER	QTY	PART NAME 1 2 3 4 5 6 (PRODUCT LEVEL)	SEE PAGE
	1	1	**240-0018**	1	COUNTERWEIGHT GP	
	2	1	**112-4417**	1	COUNTERWEIGHT (144KG)	
	3	1	**112-4418**	2	COUNTERWEIGHT (101.6KG)	
	4	1	**113-7905**	2	U-BOLT	
	5	1	**8T-4167**	4	WASHER-HARD (26X44X4MM THK)	
M	6	1	**8T-4001**	4	NUT (M24X3 THD)	
M	7	1	**8C-8478**	4	BOLT (M20X2.5X140MM)	
	8	1	**8T-4123**	4	WASHER-PLATED (22X35X3.5MM THK)	

M-METRIC PART

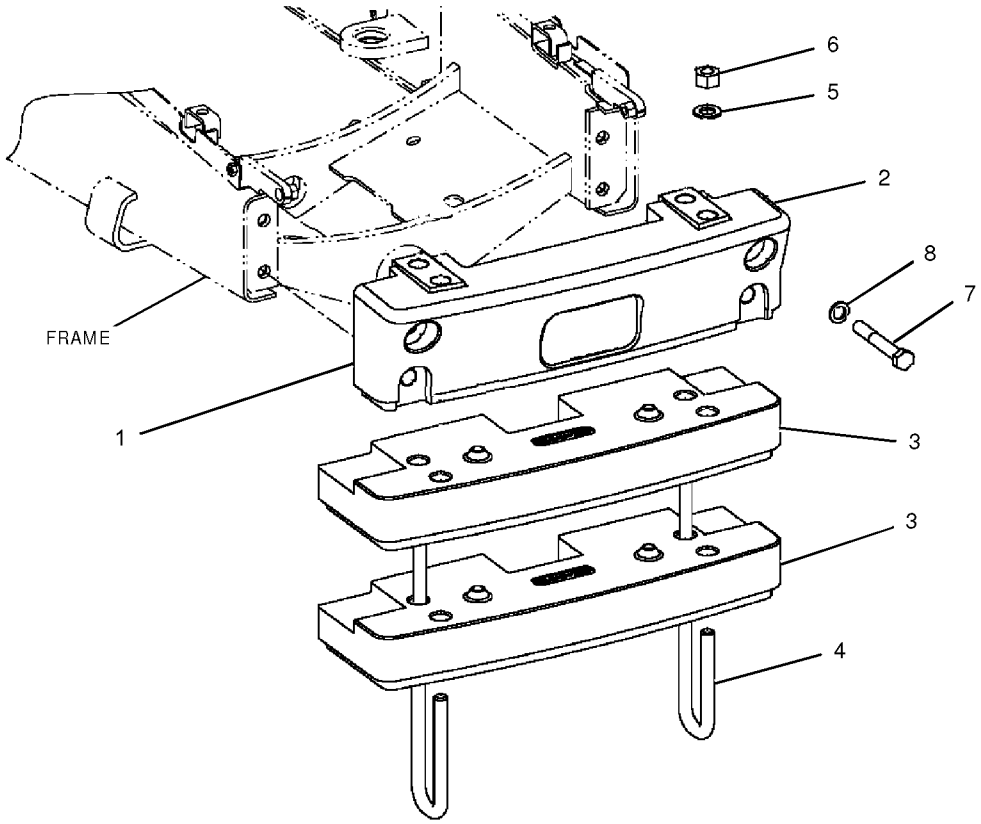

GRAPHIC #1 **<END>** g01031087

FRAME AND BODY

106-5881 COUNTERWEIGHT GP

S/N: BXC1-UP; DSX1-UP
459KG (1010 LB)
AN ATTACHMENT

SMCS-7056 **i01995087**

NOTE	REF NO	GRAPHIC REF	PART NUMBER	QTY	PART NAME 1 2 3 4 5 6 (PRODUCT LEVEL)	SEE PAGE
	1	1	**240-0017**	1	COUNTERWEIGHT GP	
	2	1	**112-4417**	1	COUNTERWEIGHT (144KG)	
	3	1	**112-4418**	3	COUNTERWEIGHT (101.6KG)	
	4	1	**113-2662**	2	U-BOLT	
M	5	1	**8T-4001**	4	NUT (M24X3 THD)	
	6	1	**8T-4167**	4	WASHER-HARD (26X44X4MM THK)	
M	7	1	**8C-8478**	4	BOLT (M20X2.5X140MM)	
	8	1	**8T-4123**	4	WASHER-PLATED (22X35X3.5MM THK)	

M-METRIC PART

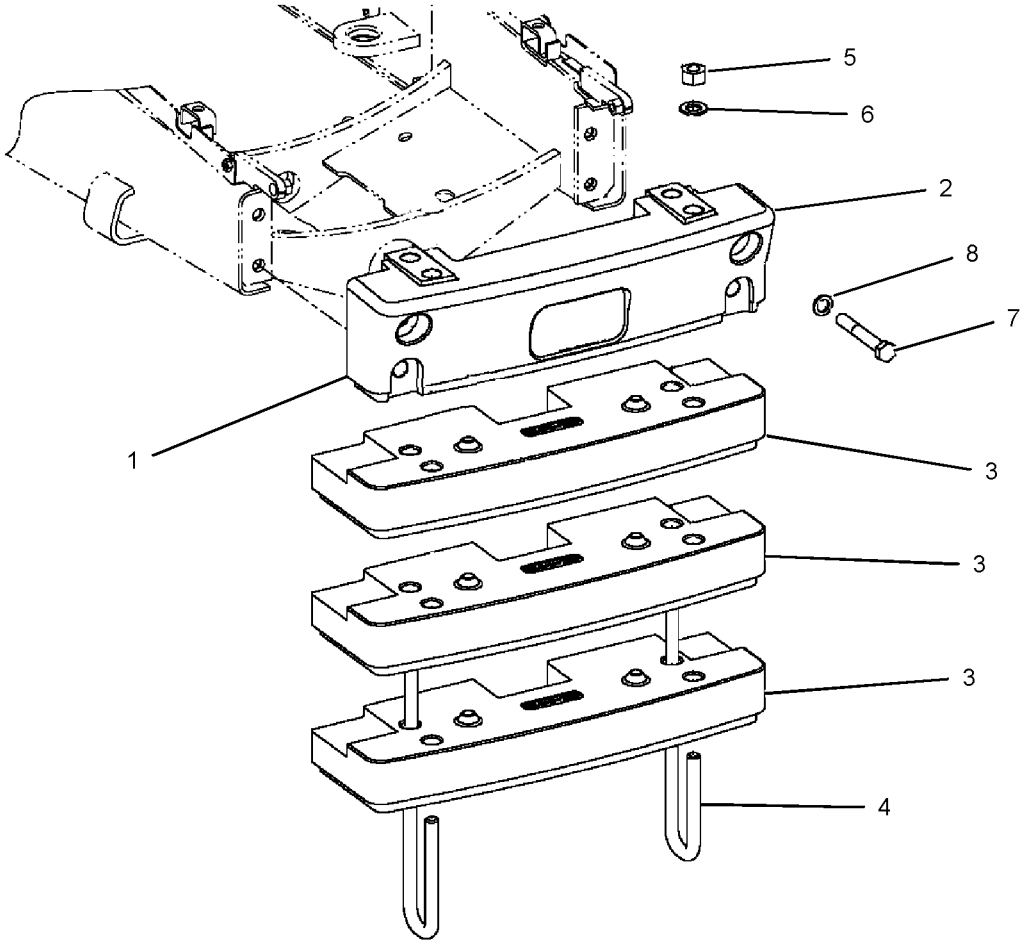

GRAPHIC #1 **<END>** g01032615

118-6842 DOOR GP-BATTERY

S/N: BXC1-UP; DSX1-UP
PART OF 188-0859, 188-0860 BOX GP-BATTERY
AN ATTACHMENT

SMCS-7273 **i01399418**

NOTE	REF NO	GRAPHIC REF	PART NUMBER	QTY	PART NAME 1 2 3 4 5 6 (PRODUCT LEVEL)	SEE PAGE
	1	1	**8C-8522**	1	PAWL-LATCH	
	2	1	**129-4741**	1	LATCH AS-T-BAR	
	3	1	**151-2963**	1	DOOR AS	
M	4	1	**6V-7743**	2	LOCKNUT (M6X1 THD)	
M	5	1	**8T-4133**	2	NUT (M10X1.5 THD)	
	6	1	**8T-4205**	2	WASHER-HARD (7.2X14.5X2MM THK)	

M-METRIC PART

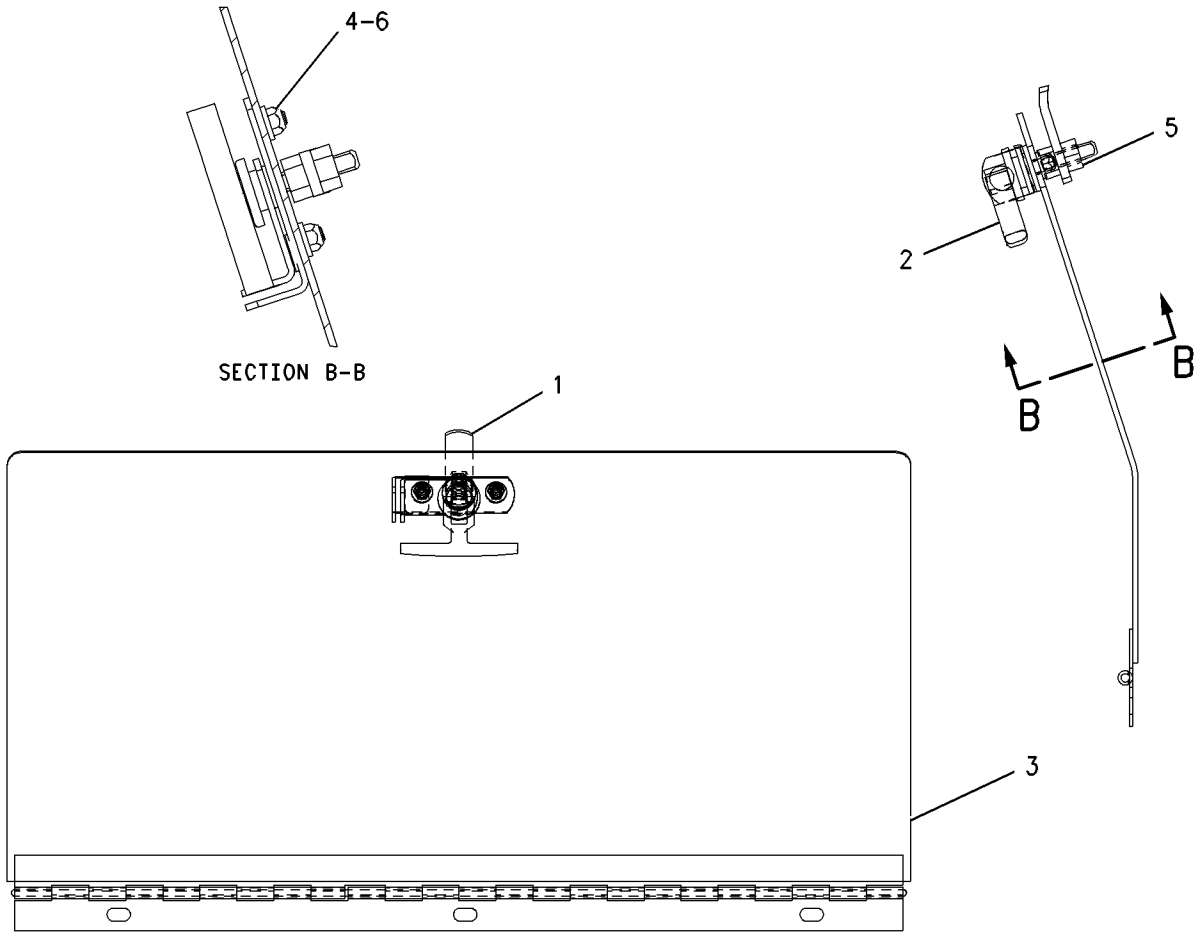

GRAPHIC #1 **<END>** g00739059

FRAME AND BODY

162-3996 FENDER GP-FRONT

S/N: BXC1-UP; DSX1-UP
AN ATTACHMENT

SMCS-7252 **i02000024**

NOTE	REF NO	GRAPHIC REF	PART NUMBER	QTY	PART NAME 1 2 3 4 5 6 (PRODUCT LEVEL)	SEE PAGE
	1	1	**162-3998**	1	FENDER AS (LH)	
	2	1	**162-3999**	1	FENDER AS (RH)	
	3	1	**162-4004**	2	FENDER	
M	4	1	**6V-7744**	4	LOCKNUT (M10X1.5 THD)	
	5	1	**8T-4121**	4	WASHER-HARD (11X21X2.5MM THK)	
	6	1	**8T-4122**	4	WASHER-HARD (17X32X3.5MM THK)	
M	7	1	**8T-4195**	4	BOLT (M10X1.5X30MM)	
	8	1	**8T-4222**	4	WASHER-PLATED (11X32X2.5MM THK)	
M	9	1	**8T-4779**	4	BOLT (M16X2X35MM)	

M-METRIC PART

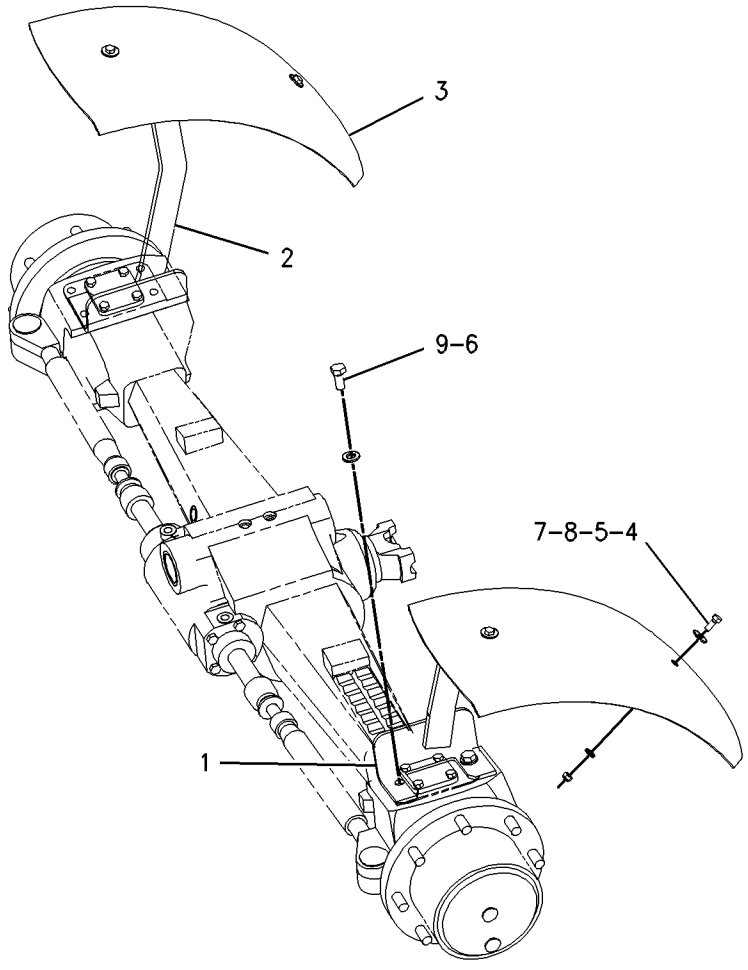

GRAPHIC #1 **<END>** g00770856

201-3954 FENDER GP-FRONT

S/N: BXC1-UP; DSX1-UP
AN ATTACHMENT

SMCS-7252 **i01983299**

NOTE	REF NO	GRAPHIC REF	PART NUMBER	QTY	PART NAME 1 2 3 4 5 6 (PRODUCT LEVEL)	SEE PAGE
	1	1	**162-4004**	2	FENDER (FRONT)	
M	2	1	**199-0783**	4	BOLT (M16X2X38MM)	
	3	1	**222-1801**	1	BRACKET AS (LH)	
	4	1	**222-1802**	1	BRACKET AS (RH)	
M	5	1	**6V-7744**	4	LOCKNUT (M10X1.5 THD)	
	6	1	**8T-4121**	4	WASHER-HARD (11X21X2.5MM THK)	
	7	1	**8T-4122**	12	WASHER-HARD (17X32X3.5MM THK)	
M	8	1	**8T-4195**	4	BOLT (M10X1.5X30MM)	
	9	1	**8T-4222**	4	WASHER-PLATED (11X32X2.5MM THK)	
M	10	1	**8T-4778**	4	LOCKNUT (M16X2 THD)	

M-METRIC PART

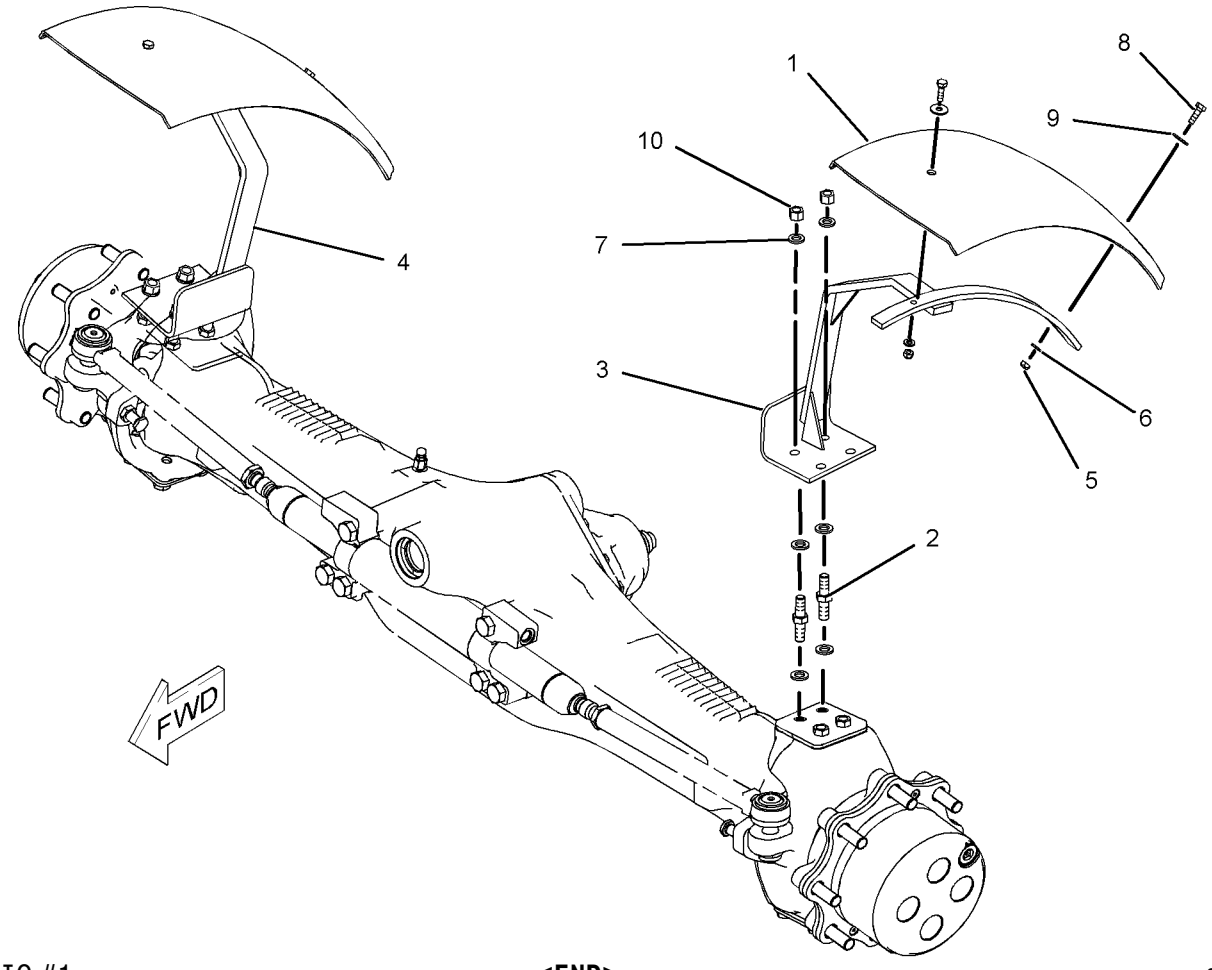

GRAPHIC #1 **<END>** g01027709

164-1149 FENDER GP-REAR

S/N: BXC1-UP; DSX1-UP
PART OF 214-7006, 214-7007 CAB AR, 214-7008, 214-7009 CAB AR-ENCLOSED ROPS, 214-7004 CANOPY AR
AN ATTACHMENT

SMCS-7252 **i01354034**

NOTE	REF NO	GRAPHIC REF	PART NUMBER	QTY	PART NAME 1 2 3 4 5 6 (PRODUCT LEVEL)	SEE PAGE
	1	1	**156-0283**	14	WASHER-HARD (2.5MM THK)	
	2	1	**167-8285**	1	FENDER-RH	
	3	1	**167-8286**	1	FENDER-LH	
M	4	1	**8T-4189**	14	BOLT (M8X1.25X20MM)	

M-METRIC PART

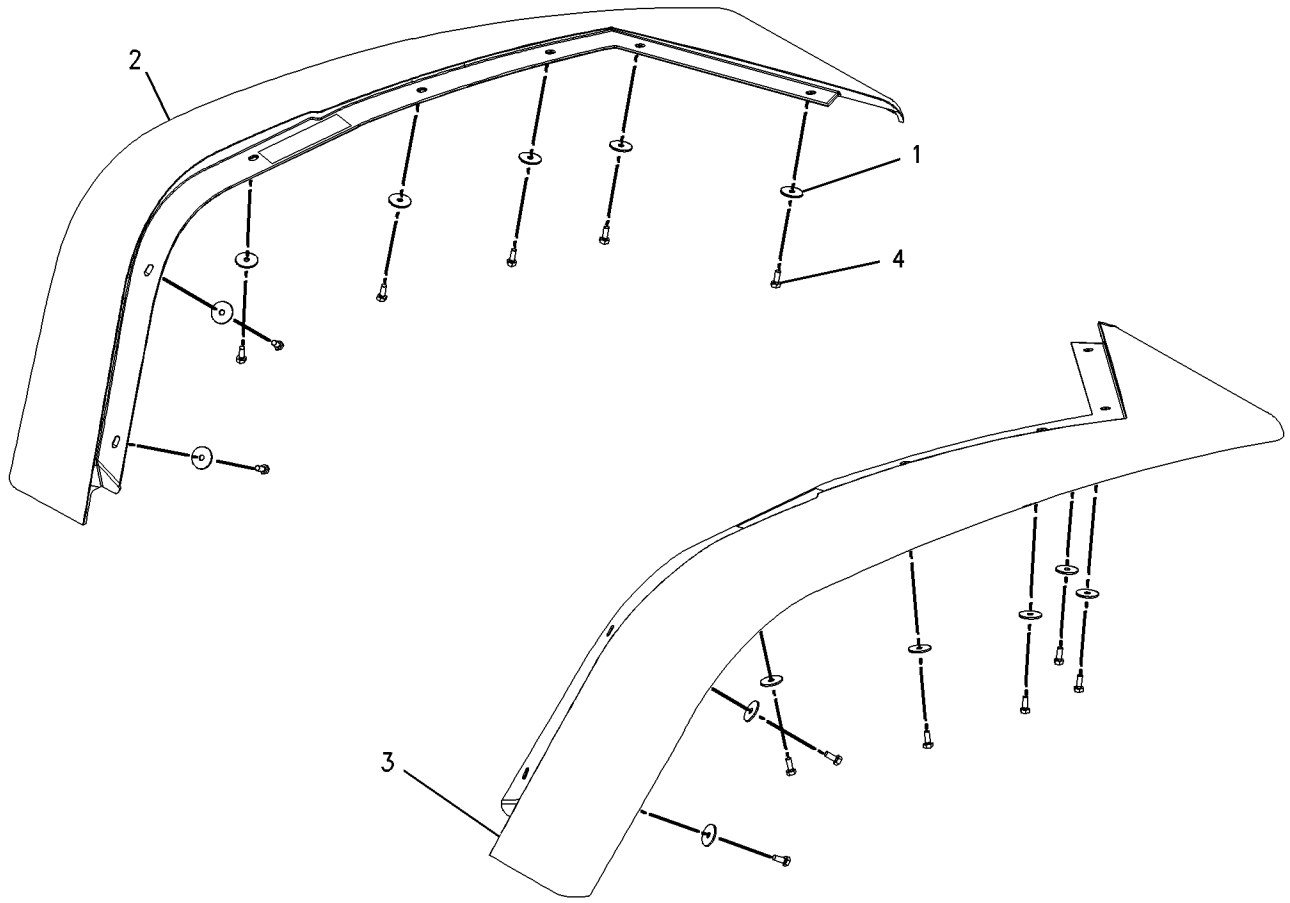

GRAPHIC #1 **<END>** g00714945

FRAME AND BODY

185-0080 FLOORPLATE GP

S/N: BXC1-UP; DSX1-UP

PART OF 237-9288, 237-9289 CHASSIS AR

SMCS-7265 **i01771942**

NOTE	REF NO	GRAPHIC REF	PART NUMBER	QTY	PART NAME 1 2 3 4 5 6 (PRODUCT LEVEL)	SEE PAGE
B	1	1	**9R-0393**	6	SHIM (1.6 MM THK)	
	2	1	**9R-0394**	2	MOUNT AS	
	3	1	**118-2990**	2	MOUNT AS	
	4	1	**164-1102**	1	PLATE AS	
	5	1	**164-1103**	1	PLATE	
	6	1	**184-6436**	1	PLATE	
	7	1	**201-4822**	1	PLATE AS	
	8	1	**1L-6377**	2	BUTTON-PLUG	
	9	1	**8C-3291**	4	WASHER (M17X90X10MM THK)	
	10	1	**8M-2770**	1	CLIP	
M	11	1	**8T-4001**	2	NUT (M24X3 THD)	
	12	1	**8T-4121**	1	WASHER-HARD (11X21X2.5MM THK)	
	13	1	**8T-4122**	2	WASHER-HARD (17X32X3.5MM THK)	
M	14	1	**8T-4132**	2	NUT (M16X2 THD)	
M	15	1	**8T-4137**	1	BOLT (M10X1.5X20MM)	
	16	1	**8T-4167**	2	WASHER-HARD (26X44X4MM THK)	
M	17	1	**8T-4174**	2	BOLT (M16X2.0X120MM)	
M	18	1	**8T-4649**	2	BOLT (M24X3X140MM)	
	19	1	**9R-9869**	4	WASHER-HARD (M26X120X10MM THK)	
M	20	1	**9X-2042**	11	SCREW-TRUSS HEAD (M6X1X12MM)	

B-USE AS REQUIRED
M-METRIC PART

185-0080 **FLOORPLATE GP** *(contd.)* **i01771942**

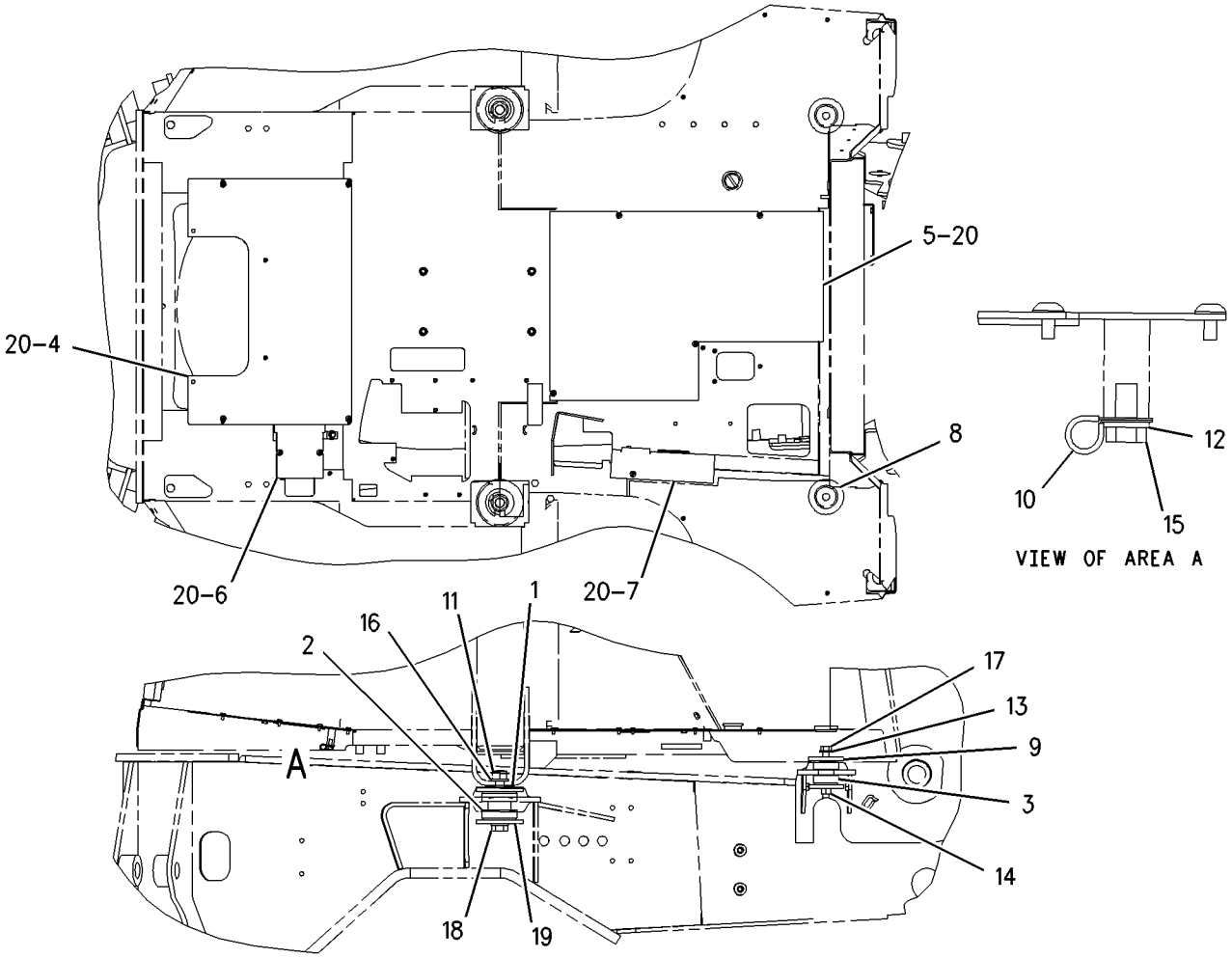

GRAPHIC #1 **<END>** g00809282

FRAME AND BODY

236-2070 FRAME GP-LOADER—PARALLEL LIFT

S/N: BXC1-UP

PART OF 237-9288 CHASSIS AR

SMCS-7054 **i01982422**

NOTE	REF NO	GRAPHIC REF	PART NUMBER	QTY	PART NAME 1 2 3 4 5 6 (PRODUCT LEVEL)	SEE PAGE
	1	1	**126-5693**	2	TUBE AS	
	2	1	**126-5701**	4	PLATE-RETAINER	
B	3	1	**193-1681**	6	PAD	
B	4	1	**193-1683**	1	PAD	
B	5	1	**193-1684**	1	PAD	
B	6	1	**193-1685**	2	PAD	
B	7	1	**193-1686**	1	PAD	
B	8	1	**193-1687**	1	PAD	
B	9	1	**193-1688**	4	PAD	
B	10	1	**193-1689**	2	PAD	
	11	1	**236-2064**	1	FRAME AS	
M	12	1	**8T-4191**	8	BOLT (M10X1.5X16MM)	

B-USE AS REQUIRED
M-METRIC PART

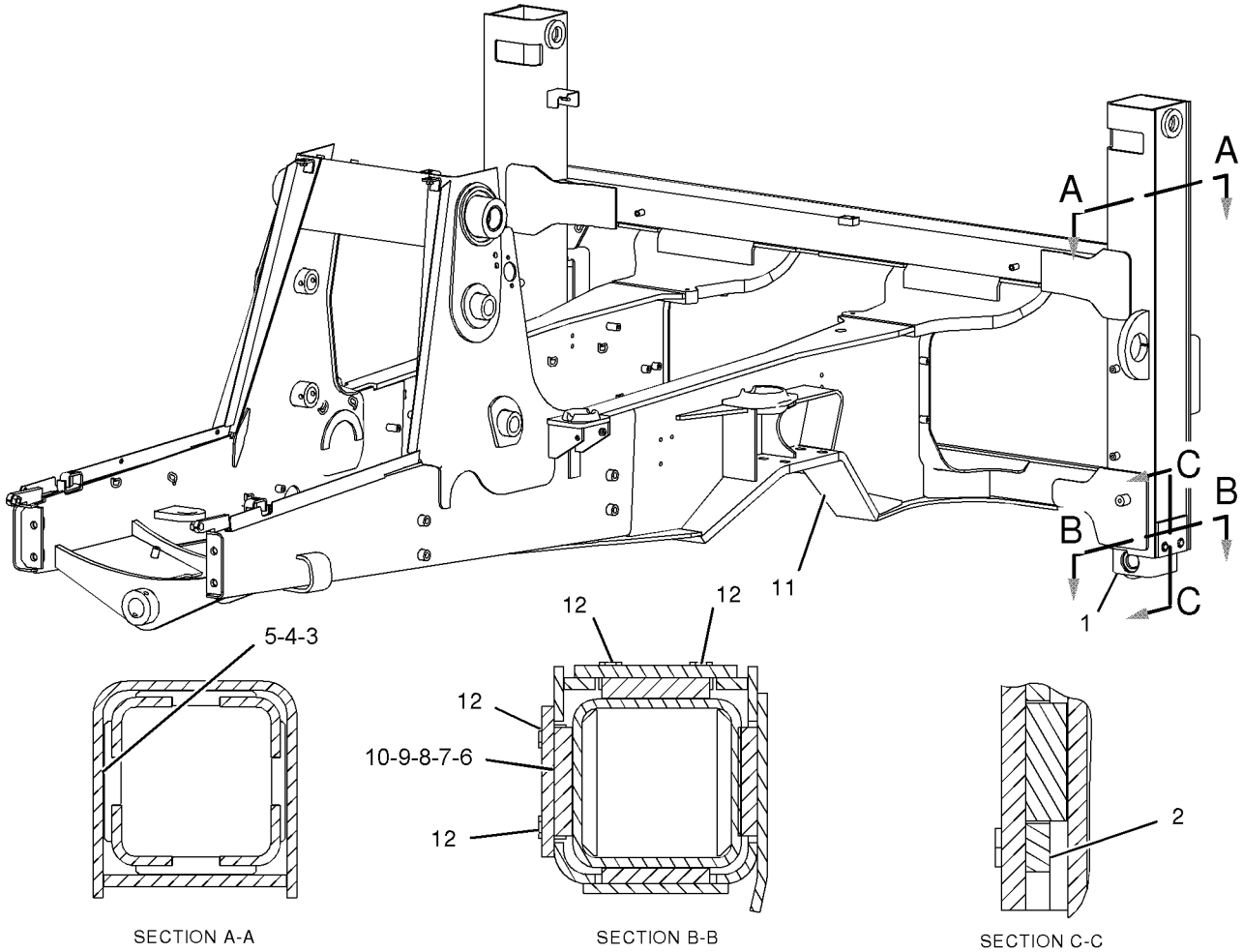

GRAPHIC #1 **<END>** g01033245

236-2072 FRAME GP-LOADER—NARROW—PARALLEL LIFT

S/N: DSX1-UP

PART OF 237-9289 CHASSIS AR

SMCS-7054 **i02005262**

NOTE	REF NO	GRAPHIC REF	PART NUMBER	QTY	PART NAME 1 2 3 4 5 6 (PRODUCT LEVEL)	SEE PAGE
M	1	1	**8T-4191**	8	BOLT (M10X1.5X16MM)	
	2	1	**126-5701**	4	PLATE-RETAINER	
B	3	1	**193-1681**	6	PAD	
B	4	1	**193-1683**	1	PAD	
B	5	1	**193-1684**	1	PAD	
B	6	1	**193-1685**	2	PAD	
B	7	1	**193-1686**	1	PAD	
B	8	1	**193-1687**	1	PAD	
B	9	1	**193-1688**	4	PAD	
B	10	1	**193-1689**	2	PAD	
	11	1	**236-2066**	1	FRAME AS	

B-USE AS REQUIRED
M-METRIC PART

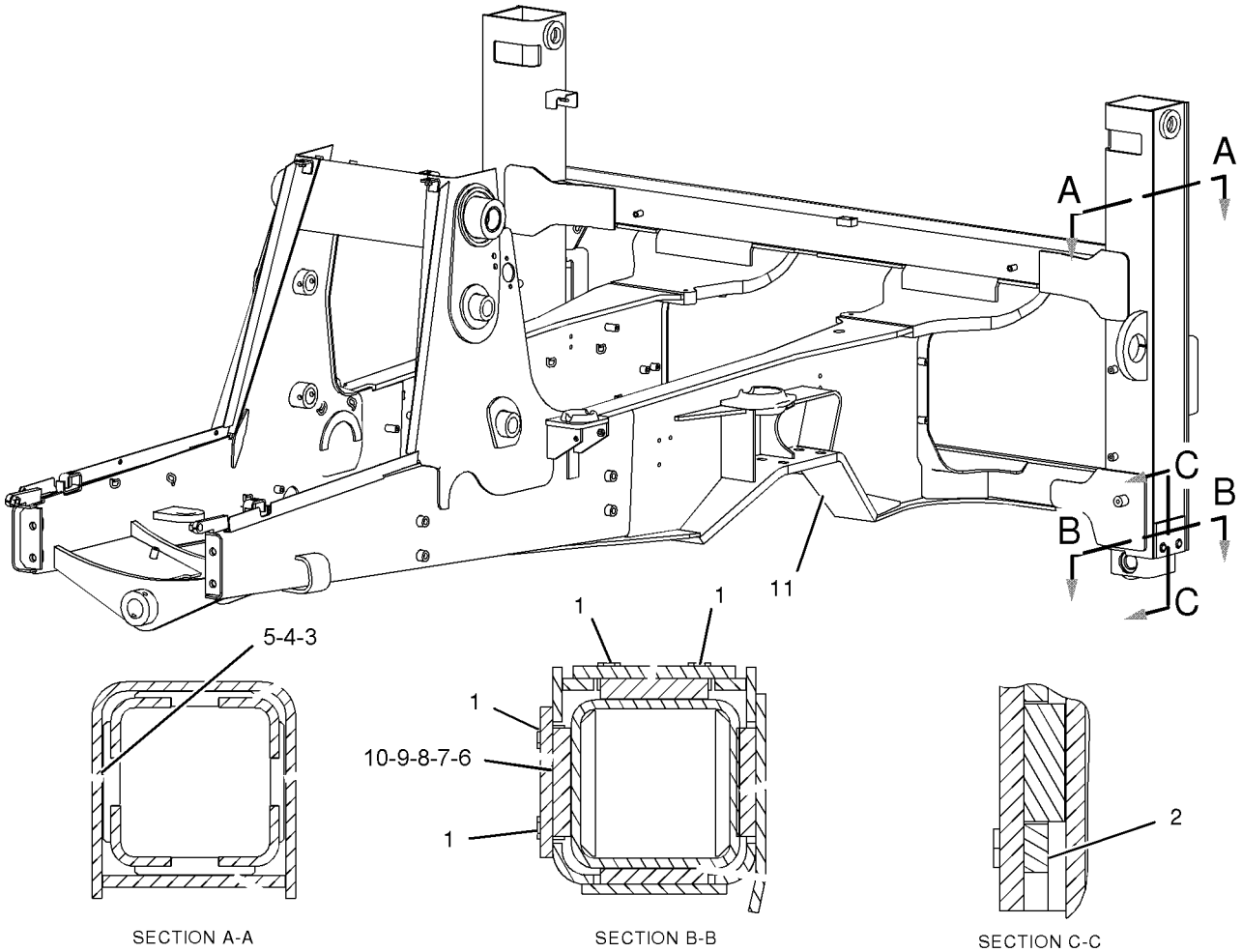

GRAPHIC #1 **<END>** g01037165

FRAME AND BODY

185-8857 FRAME GP-SLIDING

S/N: BXC1-UP; DSX1-UP

PART OF 237-9288, 237-9289 CHASSIS AR

SMCS-5804, 6508 **i01711741**

NOTE	REF NO	GRAPHIC REF	PART NUMBER	QTY	PART NAME 1 2 3 4 5 6 (PRODUCT LEVEL)	SEE PAGE
	1	1	**3B-8488**	2	FITTING-GREASE (1/8-27 THD)	
	2	1	**3B-8489**	2	FITTING-GREASE (1/8-27 THD)	
	3	1	**9R-0481**	2	WASHER	
	4	1	**9R-5386**	4	CYLINDER	
	5	1	**9R-5387**	4	PISTON	
	6	1	**9R-7092**	2	BAR	
	7	1	**9R-7701**	1	CAP AS	
		1	**9R-4110**	2	BEARING-SLEEVE	
	8	1	**201-0582**	1	FRAME AS	
		1	**9C-8895**	3	BOSS	
	8A	1	**9R-0366**	1	WASHER (5MM THK)	
	8B	1	**9R-0413**	1	BEARING	
	8C	1	**9R-4110**	2	BEARING-SLEEVE	
	8D	1	**102-4560**	1	BEARING-SLEEVE	
	9	1	**209-6188**	4	PLATE	
	10	1	**030-3239**	4	RING-BACKUP	
M	11	1	**114-6099**	6	BOLT-HEX HEAD	
	12	1	**7K-9205**	4	SEAL-LIP	
M	13	1	**7X-2465**	6	BOLT (M24X3.0X180MM)	
	14	1	**8F-6711**	4	SEAL-O-RING	
M	15	1	**8T-4001**	6	NUT (M24X3 THD)	
	16	1	**8T-4167**	12	WASHER-HARD (26X44X4MM THK)	

M-METRIC PART

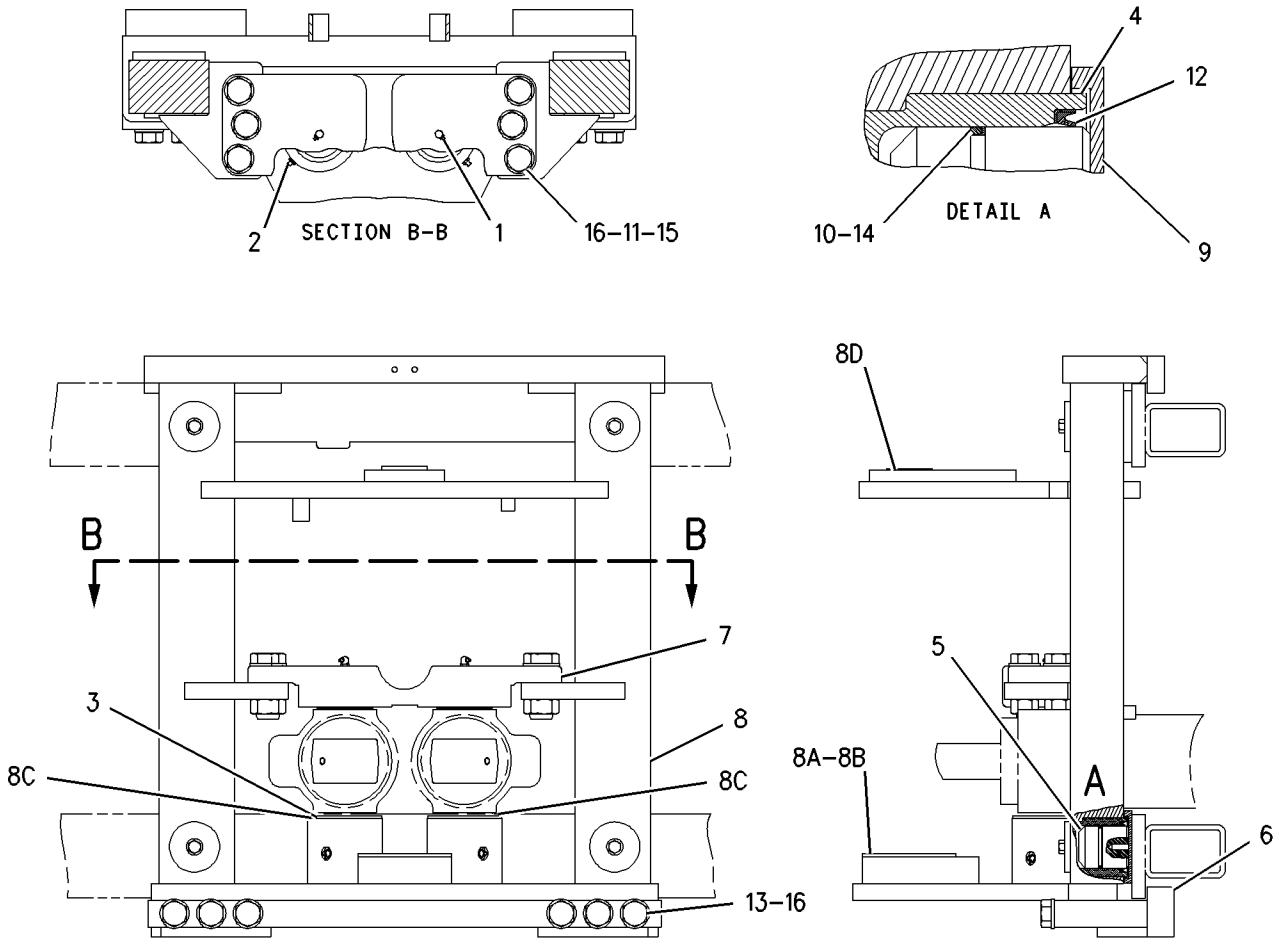

GRAPHIC #1 **<END>** g00880837

FRAME AND BODY

183-6058 FRAME GP-SWING

S/N: BXC1-UP; DSX1-UP
PART OF 240-8683, 240-8684, 240-8687, 240-8688, 240-8693, 240-8694, 240-8697, 240-8698 BACKHOE AR-STANDARD STICK
AN ATTACHMENT

SMCS-6506 **i01985184**

NOTE	REF NO	GRAPHIC REF	PART NUMBER	QTY	PART NAME 1 2 3 4 5 6 (PRODUCT LEVEL)	SEE PAGE
	1	2	**5P-7958**	1	SLEEVE-CABLE SPLICE	
	2	2	**6K-0806**	1	STRAP-CABLE	
	3	2	**8T-4837**	1	WASHER (48X85X6MM THK)	
	4	1	**8Y-7203**	1	WEDGE	
	5	1	**8Y-7204**	1	WEDGE	
	6	2	**130-0484**	1	PIN	
B	7	2	**9R-5429**	2	SPACER (67.5X120X3MM THK)	
B	8	2	**9R-5437**	4	WASHER (56X90X.5MM THK)	
	9	1	**236-6954**	1	FRAME AS	
		1	**9R-0366**	1	WASHER (80X140X5MM THK)	
	10	1,2	**9R-7882**	2	SPACER (14X25X7MM THK)	
B	11	2	**9R-8291**	2	SPACER (66X125X1MM THK)	
	12	1	**9R-8594**	1	PIN AS	
	13	2	**9R-8599**	1	PLATE	
	14	2	**9R-8760**	2	PLATE	
	15	1	**101-4015**	1	BRACKET	
	16	2	**101-4016**	1	PLATE AS	
	17	1	**101-4020**	1	PIN AS	
	18	2	**159-0960**	1	PIN AS	
	19	2	**102-1940**	1	STOP	
	20	2	**237-5330**	2	PIN	
	21	1	**131-8775**	1	BRACKET AS	
	22	2	**134-0143**	1	CABLE	
	23	1	*142-6132*	1	ROD AS	
M		1	**6V-7687**	1	LOCKNUT (M12X1.75THD)	
		1	**123-7034**	1	ROD	
C	24	1	**237-0803**	1	SPRING	
B	25	2	**210-1706**	1	SHIM (0.5MM THK)	
B	26	2	**210-1707**	1	SHIM (1MM THK)	
	27	1	**222-0841**	1	CABLE AS	
	28	1,2	**3B-8489**	6	FITTING-GREASE	
	29	2	**4D-7794**	3	CLIP	
M	30	1	**6V-7687**	3	LOCKNUT (M12X1.75THD)	
	31	1	**7X-7729**	2	WASHER (11X25X3MM THK)	
M	32	2	**8T-3652**	1	NUT (M42X25THD)	
	33	2	**8T-4121**	7	WASHER-HARD (11X21X2.5MM THK)	
M	34	2	**8T-4133**	2	NUT (M10X1.5 THD)	
M	35	1,2	**8T-4136**	5	BOLT (M10X1.5X25MM)	
M	36	1,2	**8T-4139**	2	BOLT (M12X1.75X30MM)	
M	37	2	**8T-4195**	2	BOLT (M10X1.5X30MM)	
	38	2	**8T-4224**	4	WASHER-HARD (8.8X16X2MM THK)	
	39	1,2	**8T-4821**	2	WASHER (13.5X40X3MM THK)	
M	40	2	**8T-4908**	4	BOLT (M8X1.25X25MM)	
CM	41	1	**8T-5092**	2	BOLT (M12X1.75X150MM)	
M	42	2	**8T-8894**	1	BOLT-SOCKET HEAD (M10X1.5X20MM)	

B-USE AS REQUIRED
C-CHANGE FROM PREVIOUS TYPE
M-METRIC PART

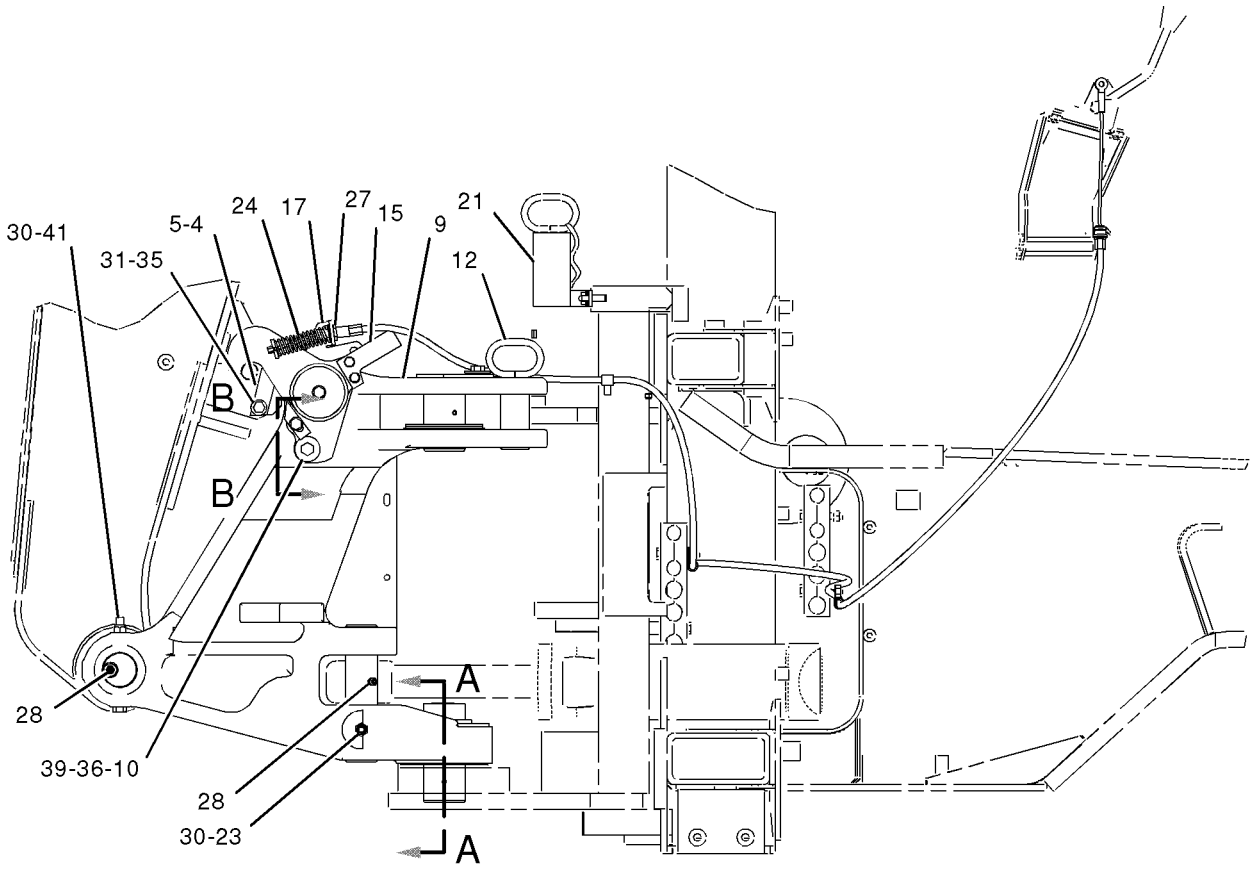

LEFT SIDE VIEW

GRAPHIC #1 g01030938

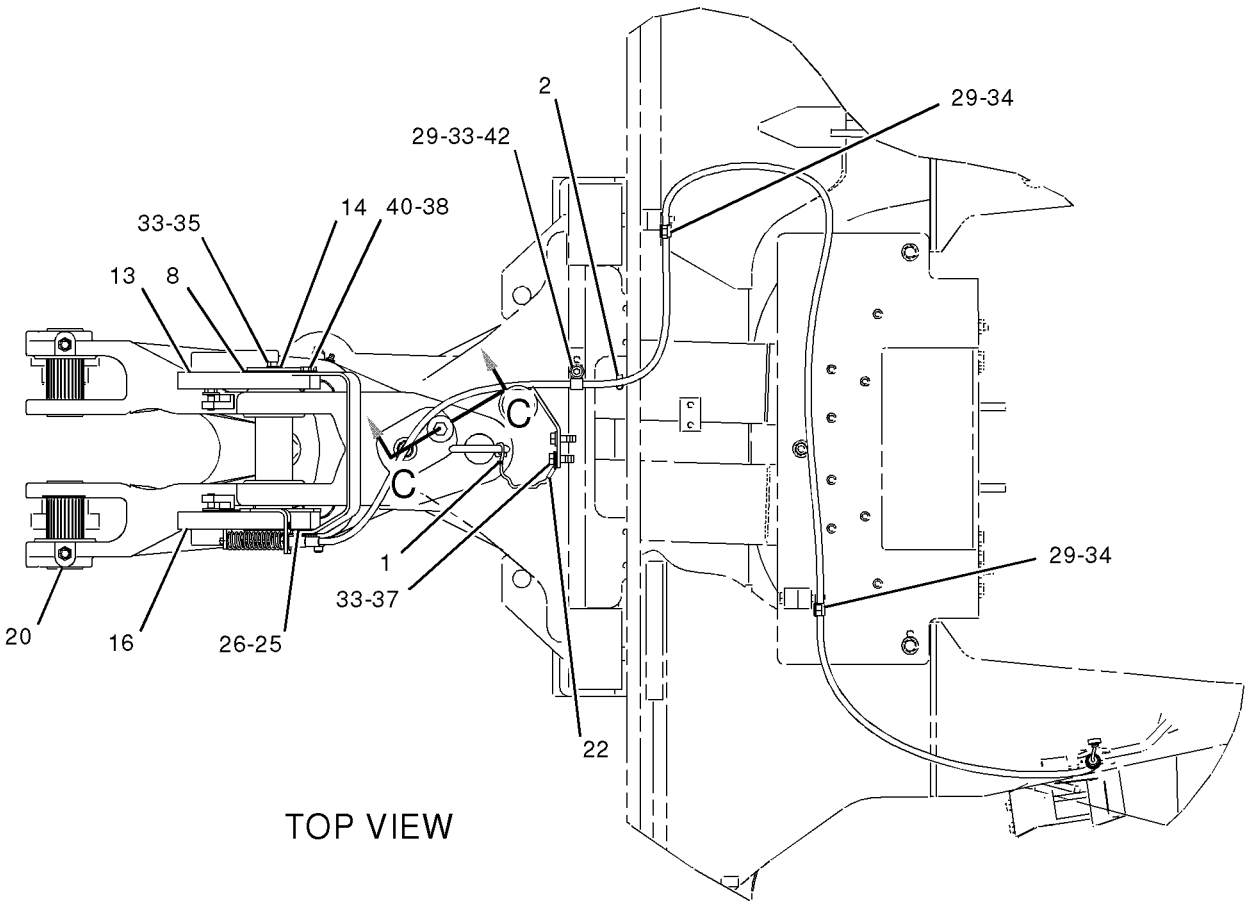

TOP VIEW

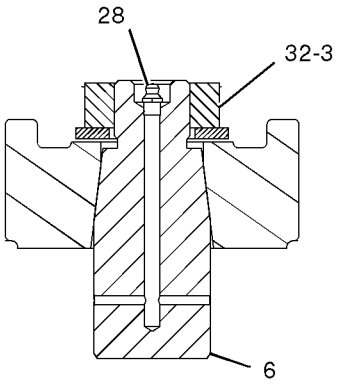

SECTION A-A

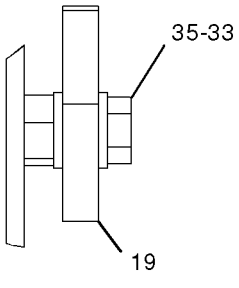

VIEW B-B

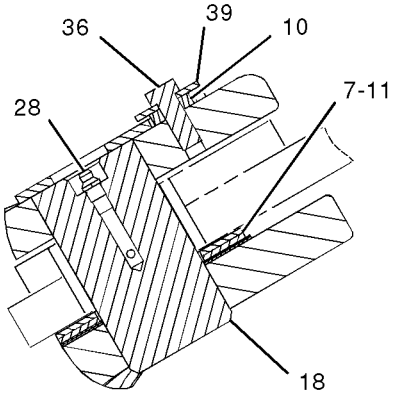

SECTION C-C

GRAPHIC #2 **<END>** g01031432

183-6059 FRAME GP-SWING

S/N: BXC1-UP; DSX1-UP

PART OF 240-8490, 240-8491, 240-8492, 240-8493, 240-8504, 240-8505, 240-8506, 240-8507, 240-8689, 240-8690, 240-8691, 240-8692, 240-8699, 240-8700, 240-8701, 240-8702 BACKHOE AR-EXTENDABLE STICK, 240-8685, 240-8686, 240-8695, 240-8696 BACKHOE AR-STANDARD STICK

AN ATTACHMENT

SMCS-6506 **i01985159**

NOTE	REF NO	GRAPHIC REF	PART NUMBER	QTY	PART NAME 1 2 3 4 5 6 (PRODUCT LEVEL)	SEE PAGE
	1	1	**5P-7958**	1	SLEEVE-CABLE SPLICE	
	2	1	**6K-0806**	1	STRAP-CABLE	
	3	1	**8T-4837**	1	WASHER (48X85X6MM THK)	
	4	1	**8Y-7203**	1	WEDGE	
	5	1	**8Y-7204**	1	WEDGE	
	6	1	**130-0484**	1	PIN	
B	7	1	**9R-5429**	2	SPACER (67.5X120X3MM THK)	
B	8	1	**9R-5437**	4	WASHER (56X90X.5MM THK)	
	9	1	**236-6954**	1	FRAME AS	
		1	**9R-0366**	1	WASHER (80X140X5MM THK)	
	10	1	**9R-7882**	2	SPACER (14X25X7MM THK)	
B	11	1	**9R-8291**	2	SPACER (66X125X1MM THK)	
	12	1	**9R-8594**	1	PIN AS	
	13	1	**9R-8599**	1	PLATE	
	14	1	**9R-8760**	2	PLATE	
	15	1	**101-4015**	1	BRACKET	
	16	1	**101-4016**	1	PLATE AS	
	17	1	**102-1940**	1	STOP	
	18	1	**107-6697**	1	PIN AS	
	19	1	**159-0959**	1	PIN AS	
	20	1	**237-5330**	2	PIN	
	21	1	**131-8775**	1	BRACKET AS	
	22	1	**134-0143**	1	CABLE	
	23	1	*142-6132*	1	ROD AS	
M		1	**6V-7687**	1	LOCKNUT (M12X1.75THD)	
		1	**123-7034**	1	ROD	
C	24	1	**237-0803**	1	SPRING	
B	25	1	**210-1706**	1	SHIM (0.5MM THK)	
B	26	1	**210-1707**	1	SHIM (1MM THK)	
	27	1	**222-0841**	1	CABLE AS	
		1	**8U-6970**	1	RING-RETAINING	
	28	1	**3B-8489**	6	FITTING-GREASE	
	29	1	**4D-7794**	3	CLIP	
M	30	1	**6V-7687**	3	LOCKNUT (M12X1.75THD)	
	31	1	**7X-7729**	2	WASHER (11X25X3MM THK)	
M	32	1	**8T-3652**	1	NUT (M42X25THD)	
	33	1	**8T-4121**	7	WASHER-HARD (11X21X2.5MM THK)	
M	34	1	**8T-4133**	2	NUT (M10X1.5 THD)	
M	35	1	**8T-4136**	5	BOLT (M10X1.5X25MM)	
M	36	1	**8T-4139**	2	BOLT (M12X1.75X30MM)	
M	37	1	**8T-4195**	2	BOLT (M10X1.5X30MM)	
	38	1	**8T-4224**	4	WASHER-HARD (8.8X16X2MM THK)	
	39	1	**8T-4821**	2	WASHER (13.5X40X3MM THK)	
M	40	1	**8T-4908**	4	BOLT (M8X1.25X25MM)	
CM	41	1	**8T-5092**	2	BOLT (M12X1.75X150MM)	
M	42	1	**8T-8894**	1	BOLT-SOCKET HEAD (M10X1.5X20MM)	

B-USE AS REQUIRED
C-CHANGE FROM PREVIOUS TYPE
M-METRIC PART

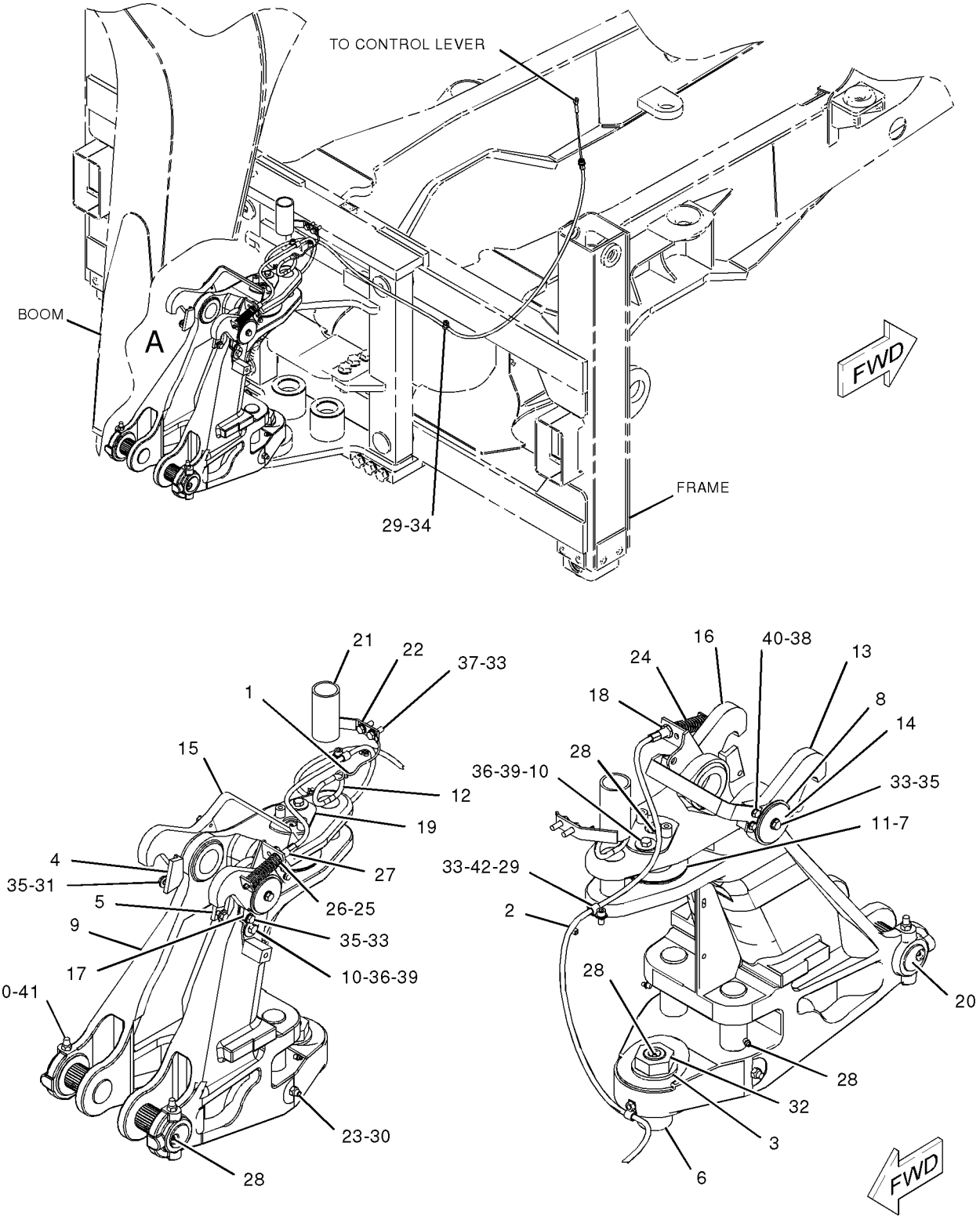

VIEW OF AREA A

GRAPHIC #1 **<END>** g01030953

9R-1233 GUARD GP-DRIVE SHAFT—ALL WHEEL DRIVE—
ALL WHEEL STEER
S/N: BXC1-UP; DSX1-UP
AN ATTACHMENT

SMCS-7153 **i01811263**

NOTE	REF NO	GRAPHIC REF	PART NUMBER	QTY	PART NAME 1 2 3 4 5 6 (PRODUCT LEVEL)	SEE PAGE
	1	1	**213-8481**	1	GUARD AS	
M	2	1	**8T-4183**	4	BOLT (M12X1.75X40MM)	
	3	1	**8T-4223**	4	WASHER-HARD (13.5X25.5X3MM THK)	

M-METRIC PART

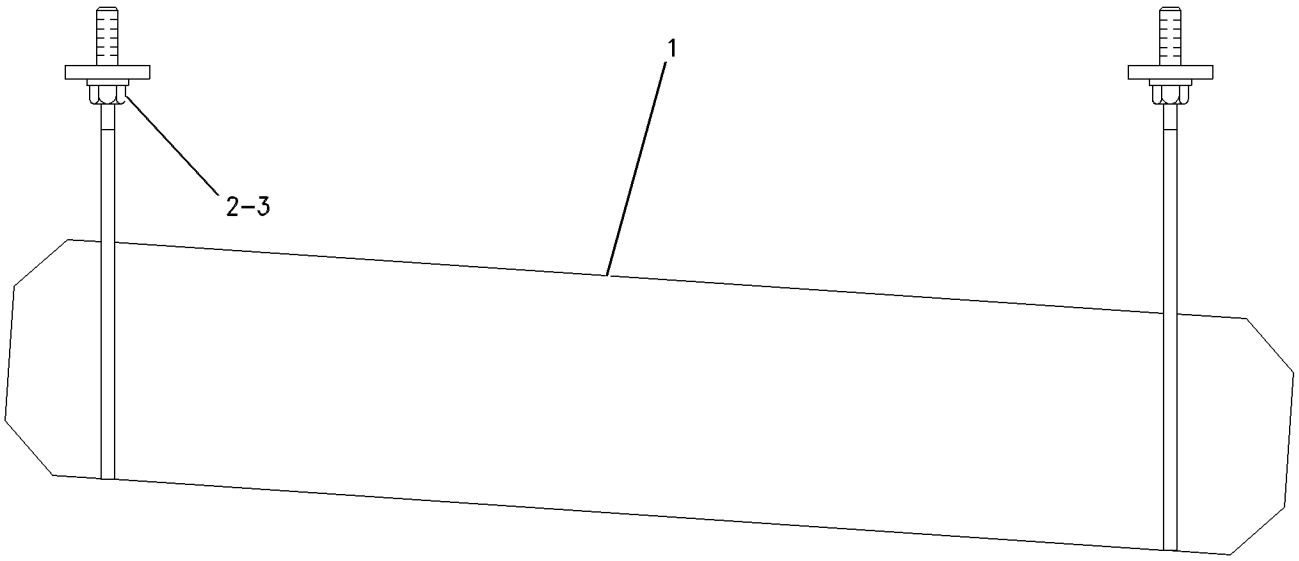

GRAPHIC #1 **<END>** g00287430

113-0020 GUARD GP-LIGHTING

S/N: BXC1-UP; DSX1-UP
PART OF 190-2803, 190-6413 CONVERSION AR-CERTIFICATION
AN ATTACHMENT

SMCS-1429, 7150 **i00534873**

NOTE	REF NO	GRAPHIC REF	PART NUMBER	QTY	PART NAME 1 2 3 4 5 6 (PRODUCT LEVEL)	SEE PAGE
	1	1	**114-4917**	4	COVER AS-FRONT	
	2	1	**101-4416**	4	COVER-WORK LIGHT	

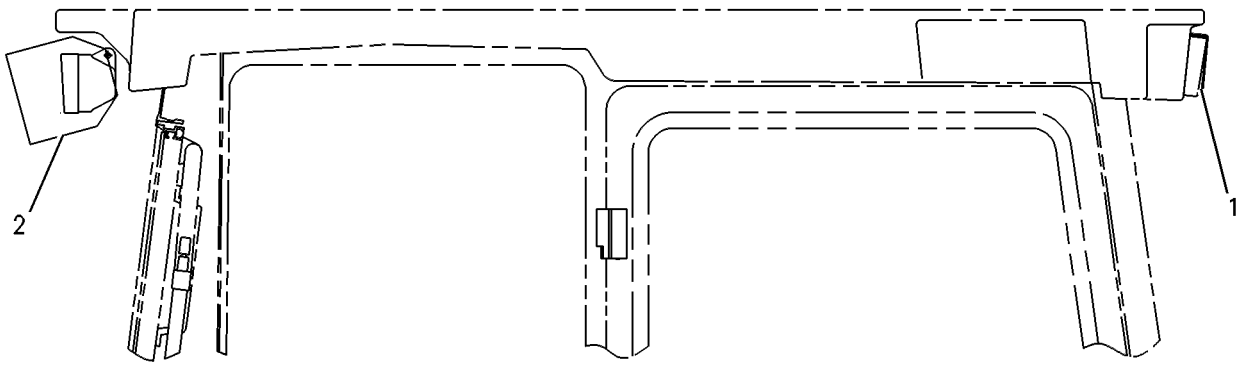

RIGHT SIDE VIEW

GRAPHIC #1 **<END>** g00258873

FRAME AND BODY

137-1821 GUARD GP-LIGHTING–REAR

S/N: BXC1-UP; DSX1-UP

AN ATTACHMENT

SMCS-1429, 7150 **i01395753**

NOTE	REF NO	GRAPHIC REF	PART NUMBER	QTY	PART NAME 1 2 3 4 5 6 (PRODUCT LEVEL)	SEE PAGE
	1	1	**137-1822**	2	GUARD AS-REAR	
M	2	1	**8T-4138**	4	BOLT (M6X1.0X20MM)	
M	3	1	**5C-2890**	4	NUT (M6X1 THD)	
	4	1	**8T-4205**	8	WASHER-HARD (7.2X14.5X2MM THK)	

M-METRIC PART

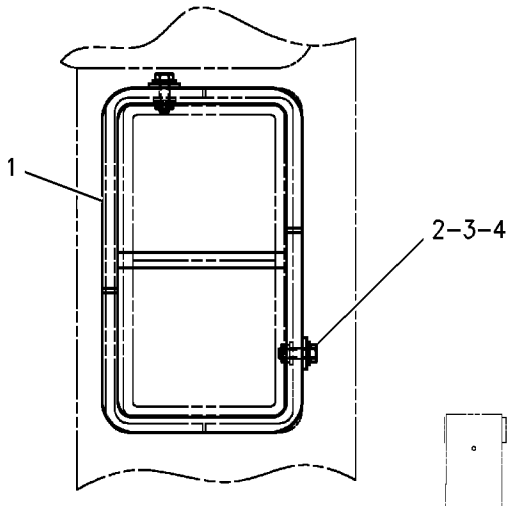

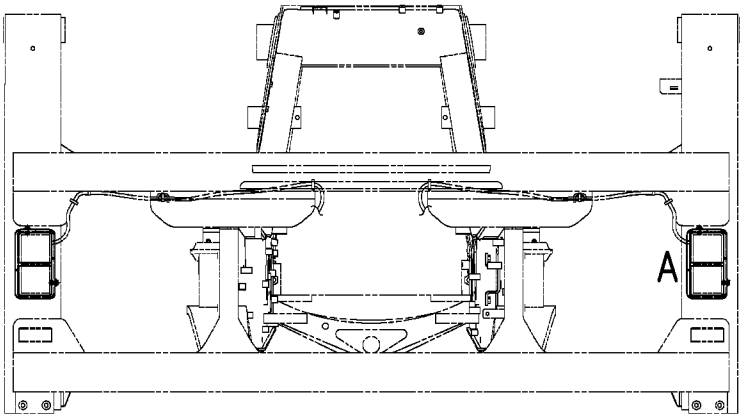

GRAPHIC #1 **<END>** g00736938

FRAME AND BODY

9R-9999 GUARD GP-LINES

S/N: BXC1-UP

PART OF 237-9288 CHASSIS AR

SMCS-7167 **i00529890**

NOTE	REF NO	GRAPHIC REF	PART NUMBER	QTY	PART NAME 1 2 3 4 5 6 (PRODUCT LEVEL)	SEE PAGE
	1	1	**9R-9997**	1	GUARD-RH	
	2	1	**9R-9998**	1	GUARD-LH	
	3	1	**8T-4121**	8	WASHER (2.5MM THK)	
M	4	1	**8T-4137**	8	BOLT (M10X1.50X20MM)	

M-METRIC PART

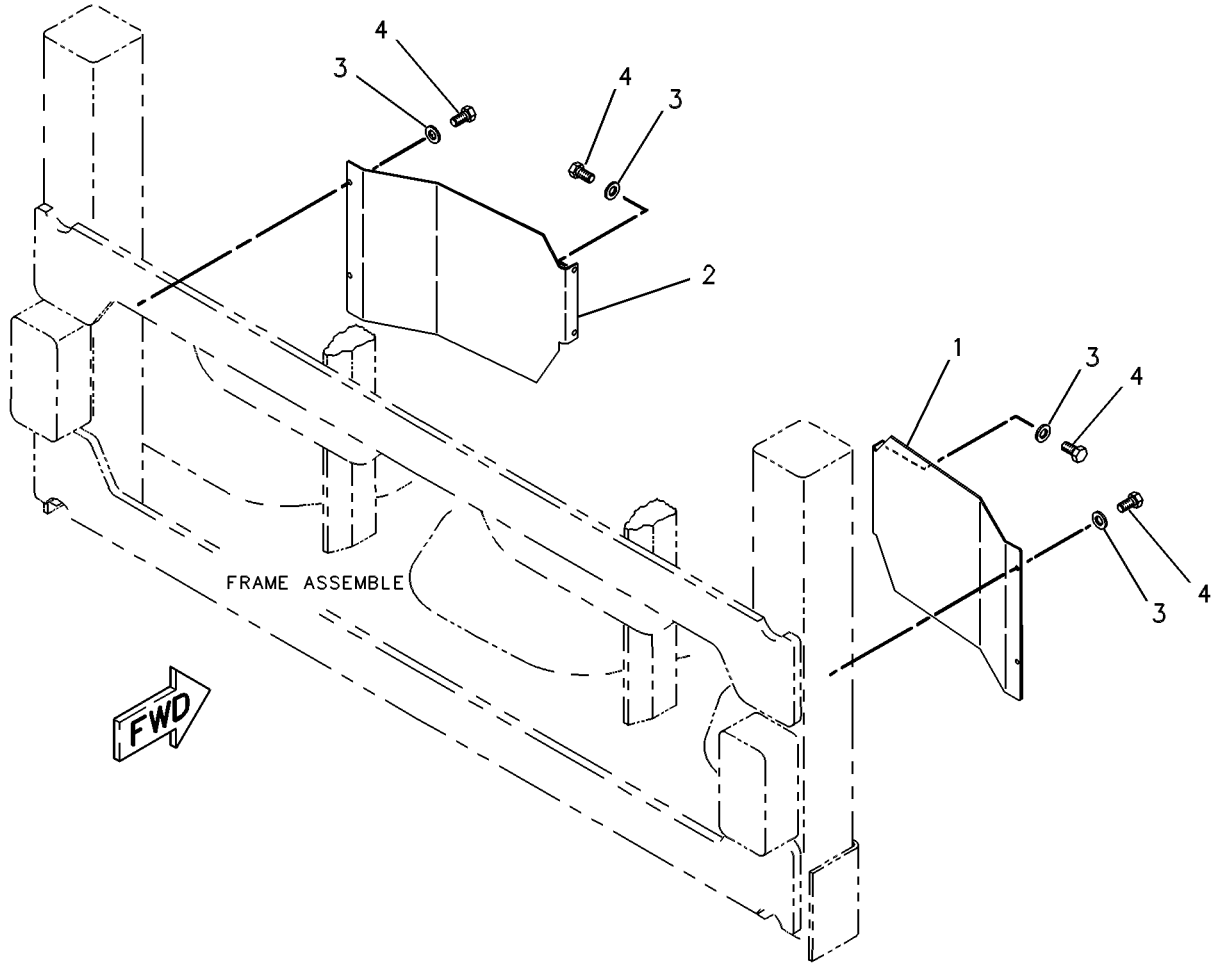

GRAPHIC #1 **<END>** g00257652

183-1276 GUARD GP-LINES—NARROW FRAME

S/N: DSX1-UP

PART OF 237-9289 CHASSIS AR

SMCS-7167 **i01371751**

NOTE	REF NO	GRAPHIC REF	PART NUMBER	QTY	PART NAME 1 2 3 4 5 6 (PRODUCT LEVEL)	SEE PAGE
	1	1	**183-1277**	1	GUARD-LH	
	2	1	**183-1278**	1	GUARD-RH	
	3	1	**8T-4121**	8	WASHER-HARD (11X21X2.5MM THK)	
M	4	1	**8T-4137**	8	BOLT (M10X1.5X20MM)	

M-METRIC PART

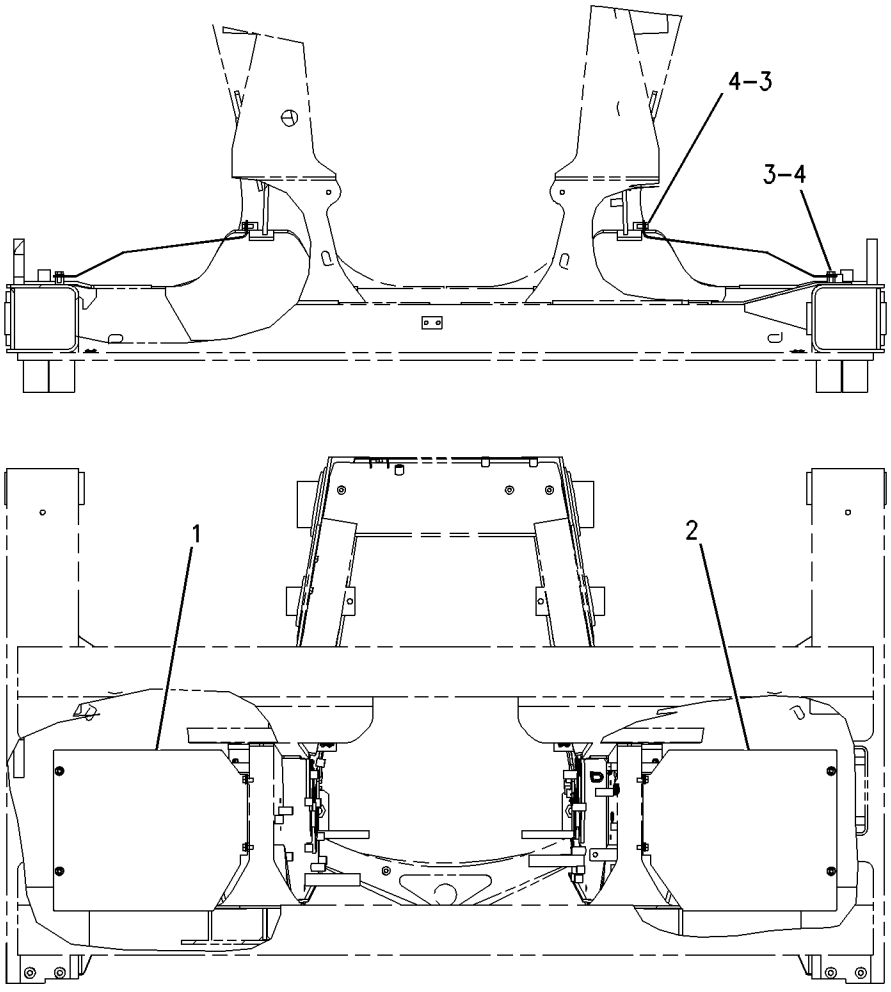

GRAPHIC #1 **<END>** g00726113

FRAME AND BODY

241-3406 HOOD & GUARD GP

S/N: BXC1-UP; DSX1-UP

PART OF 237-9288, 237-9289 CHASSIS AR

SMCS-7150, 7251 **i01994314**

NOTE	REF NO	GRAPHIC REF	PART NUMBER	QTY	PART NAME 1 2 3 4 5 6 (PRODUCT LEVEL)	SEE PAGE
	1	1	**112-4415**	2	BUMPER AS	
	2	1	**112-4416**	1	GUARD AS	
M		1	**6V-9632**	1	NUT-WELD (M6X1 THD)	
M		1	**8T-3490**	1	NUT-WELD (M10X1.5 THD)	
M		1	**8T-3612**	6	NUT-WELD (M8X1.25 THD)	
	3	1	**123-0428**	2	BAR	
	4	1	**123-4065**	6	RIVET-POP	
	5	1	**141-7514**	2	BAFFLE	
	6	1	**145-4476**	1	ENCLOSURE GP (RH)	
	7	1	**188-0862**	1	GRILL AS	
	8	1	**188-0865**	1	BAFFLE	
	9	1	**234-9066**	1	ENCLOSURE GP-ENGINE	
Y	10	1	*240-3478*	1	HOOD GP-ENGINE	338
	11	1	**5P-4115**	1	WASHER-HARD (7.2X19X2MM THK)	
M	12	1	**7X-2554**	2	BOLT (M16X2X70MM)	
	13	1	**7X-7729**	3	WASHER (11X25X3MM THK)	
	14	1	**8T-4121**	8	WASHER-HARD (11X21X2.5MM THK)	
M	15	1	**8T-4133**	1	NUT (M10X1.5 THD)	
M	16	1	**8T-4136**	2	BOLT (M10X1.5X25MM)	
M	17	1	**8T-4137**	6	BOLT (M10X1.5X20MM)	
M	18	1	**8T-4138**	1	BOLT (M6X1X20MM)	
M	19	1	**8T-4182**	2	BOLT (M10X1.5X45MM)	
M	20	1	**8T-4191**	3	BOLT (M10X1.5X16MM)	
M	21	1	**8T-4196**	2	BOLT (M10X1.5X35MM)	
	22	1	**8T-4222**	5	WASHER-PLATED (11X32X2.5MM THK)	
	23	1	**8T-4224**	6	WASHER-HARD (8.8X16X2MM THK)	
M	24	1	**8T-7547**	6	BOLT (M8X1.25X30MM)	
	25	1	**9X-8257**	2	WASHER (17.5X30X3.5MM THK)	
	26	1	**179-5571**		SEAL (61CM)	
	27	1	**3E-6600**		SEAL (83CM)	

M-METRIC PART
Y-SEPARATE ILLUSTRATION

241-3406 **HOOD & GUARD GP** *(contd.)* **i01994314**

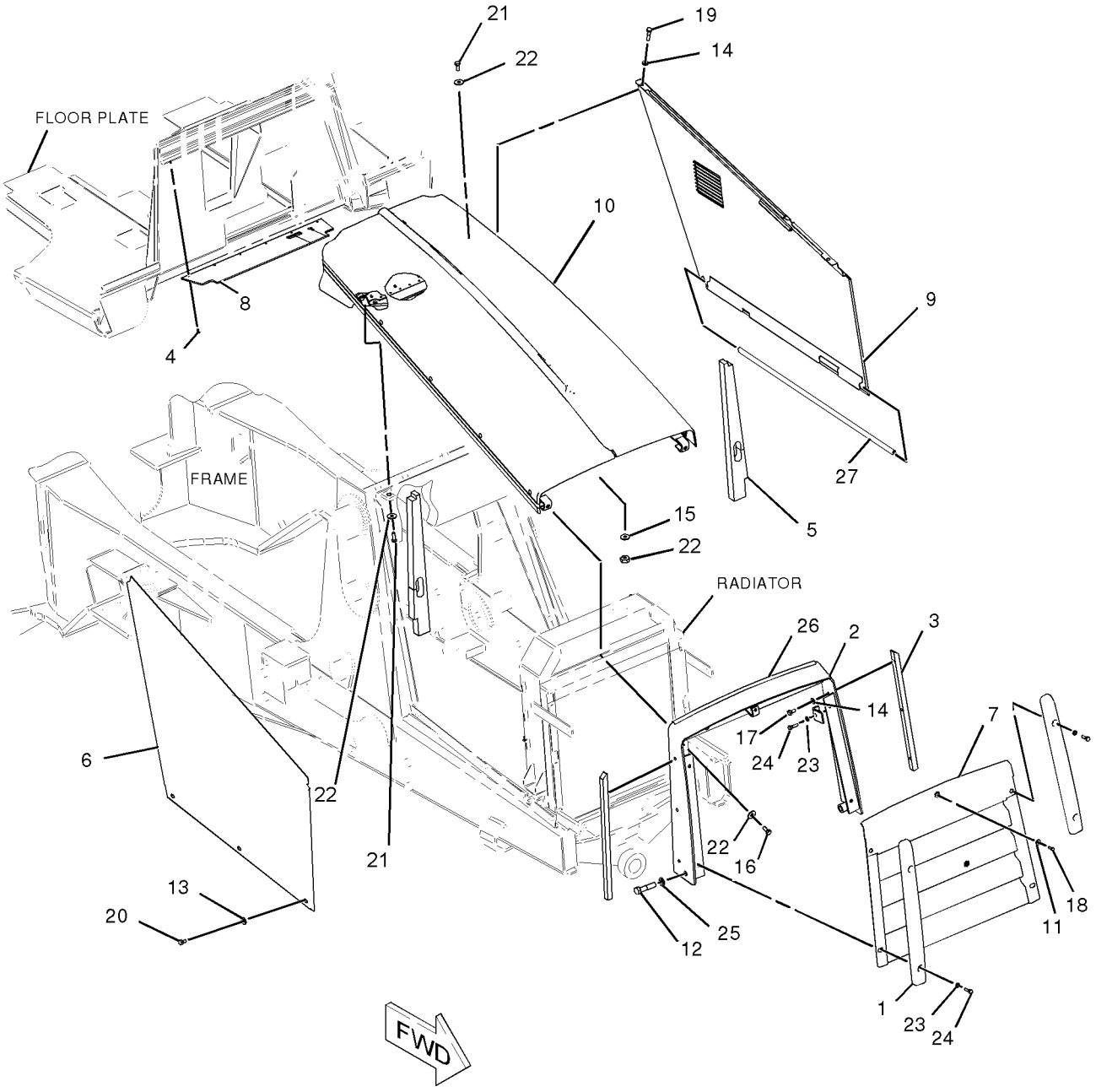

GRAPHIC #1 **<END>** g01033283

240-3478 HOOD GP-ENGINE

S/N: BXC1-UP; DSX1-UP

PART OF 241-3406 HOOD & GUARD GP

SMCS-7251 **i01990797**

NOTE	REF NO	GRAPHIC REF	PART NUMBER	QTY	PART NAME 1 2 3 4 5 6 (PRODUCT LEVEL)	SEE PAGE
	1	1	**4V-5091**	2	GROMMET	
	2	2	**5D-4822**	4	RING-RETAINING	
	3	1	**5P-9000**	1	LOCK AS-CYLINDER	
	4	2	**114-8972**	1	HINGE AS	
	5	1	**122-5923**	1	BAFFLE	
	6	1	**123-4065**	11	RIVET-POP	
	7	2	**131-0827**	1	PLATE-LH	
	8	2	**131-0828**	1	PLATE-RH	
	9	1	**141-7515**	1	BAFFLE	
	10	2	**191-9110**	1	HOOD AS	
	11	1	**195-6523**	1	PLATE	
	12	2	**210-8922**	1	BLOCK	
	13	2	**221-0965**	1	HINGE AS	
		2	**8T-6904**	1	PIN-CLEVIS	
	14	2	**221-0966**	1	LEVER AS	
		2	**8T-6904**	1	PIN-CLEVIS	
	15	2	**221-0968**	1	HOOD AS	
		2	**8T-9501**	6	SCREW (10-16X.75 IN)	
	16	2	**221-0972**	1	BLOCK	
	17	1	**221-0973**	1	LATCH	
	18	2	**221-0974**	1	HINGE AS	
	19	1	**221-0976**	1	PLATE	
	20	2	**221-8444**	1	HINGE AS	
	21	2	**224-8945**	1	FILM-WARNING (ETHER)	
	22	2	**238-4441**	1	FILM	
	23	1	**240-3479**	1	SUPPORT AS	
		1	**7T-0525**	2	SHIM (3MM THK)	
M		1	**8T-3490**	5	NUT-WELD (M10X1.5 THD)	
M	24	1	**099-3649**	3	BOLT (M8X1.25X40MM)	
	25	1	**139-3785**	8	RIVET-POP	
	26	1	**4B-4274**	8	WASHER (5.5X13X1.2MM THK)	
M	27	1	**5C-2890**	2	NUT (M6X1 THD)	
M	28	2	**5C-7261**	2	NUT (M8X1.25 THD)	
	29	1	**7X-0579**	2	WASHER-HARD (8.8X25.5X2MM THK)	
M	30	1,2	**8T-4189**	10	BOLT (M8X1.25X20MM)	
	31	1,2	**8T-4205**	3	WASHER-HARD (7.2X14.5X2MM THK)	
	32	1,2	**8T-4224**	15	WASHER-HARD (8.8X16X2MM THK)	
M	33	2	**8T-5091**	2	BOLT (M8X1.25X20MM)	
	34	2	**8T-6902**	2	CLIP	
M	35	1	**9X-2044**	2	SCREW-TRUSS HEAD (M6X1X16MM)	
	36	1	**3E-8211**		FILM-STRIPE (278CM)	
E	37	2	**126-8472**		SEAL (144CM)	
	38	2	**191-9111**	1	FILM-CAT	

E-ORDER BY THE CENTIMETER
M-METRIC PART

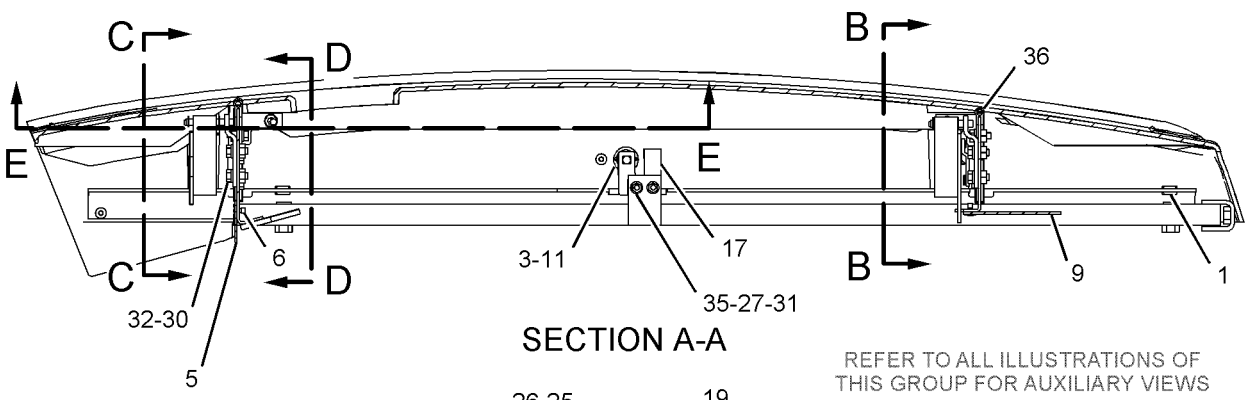

SECTION A-A

REFER TO ALL ILLUSTRATIONS OF THIS GROUP FOR AUXILIARY VIEWS

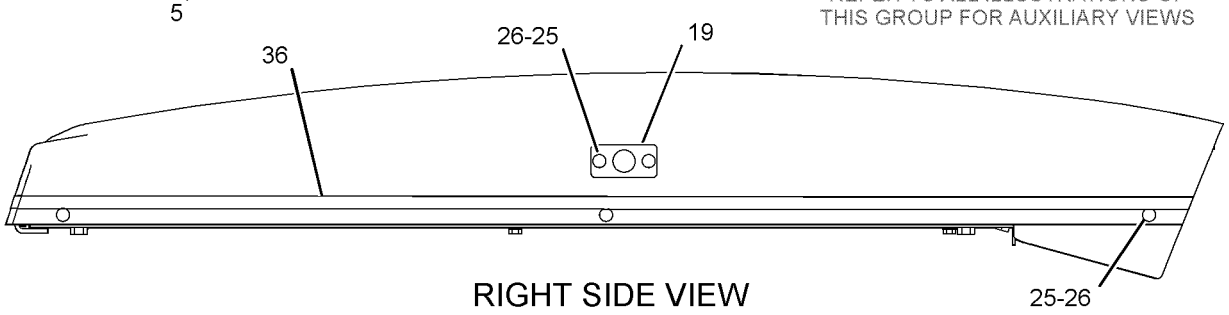

RIGHT SIDE VIEW

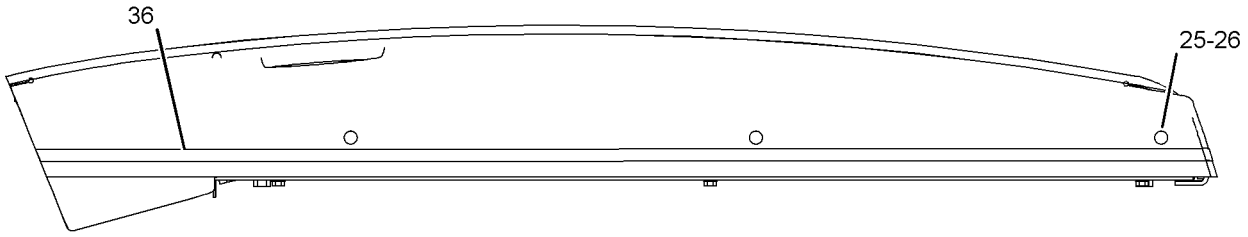

LEFT SIDE VIEW

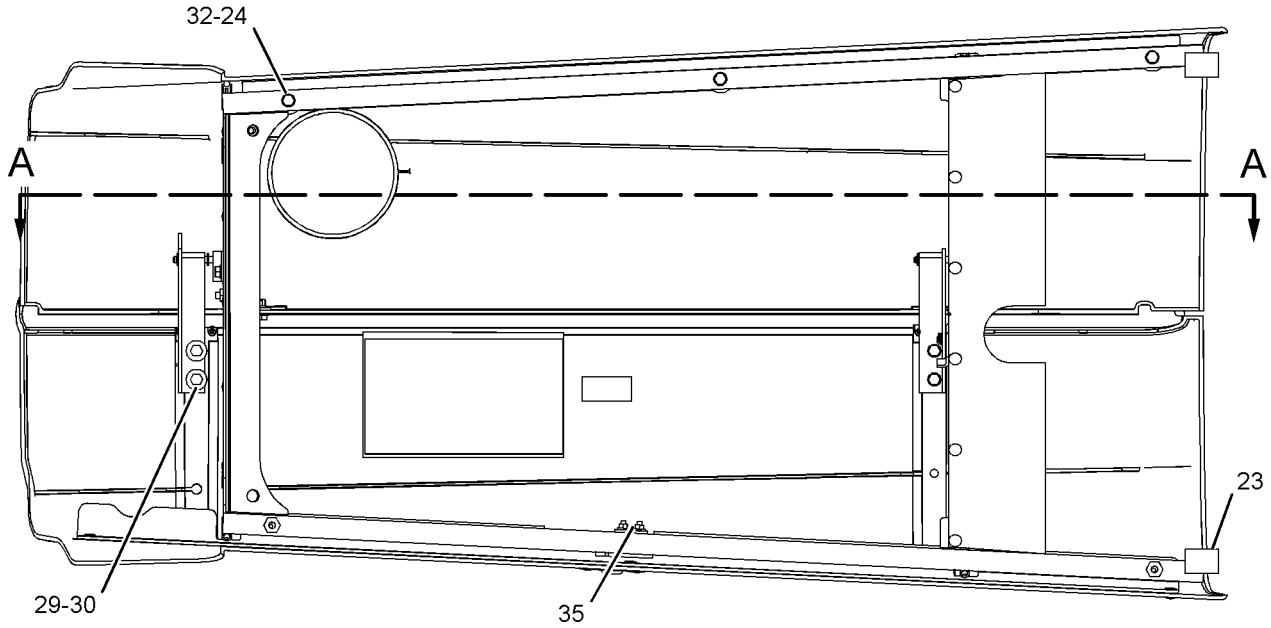

BOTTOM VIEW

GRAPHIC #1

g01031641

240-3478 **HOOD GP-ENGINE** *(contd.)* **i01990797**

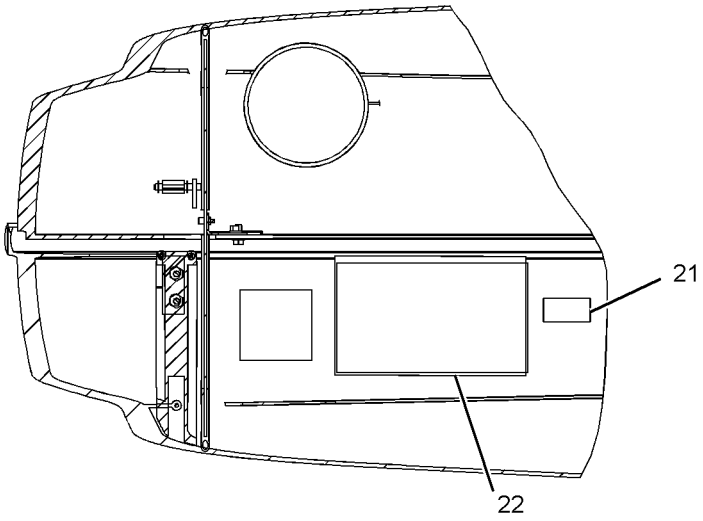

SECTION E-E

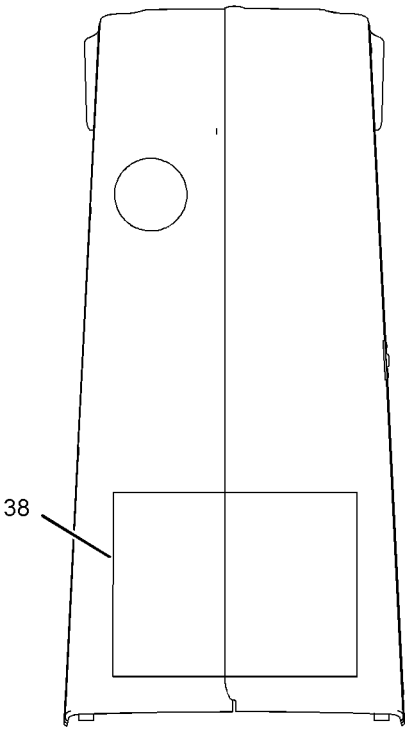

TOP VIEW

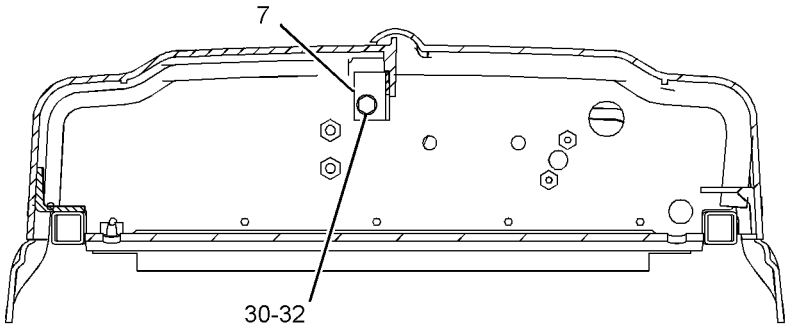

SECTION D-D

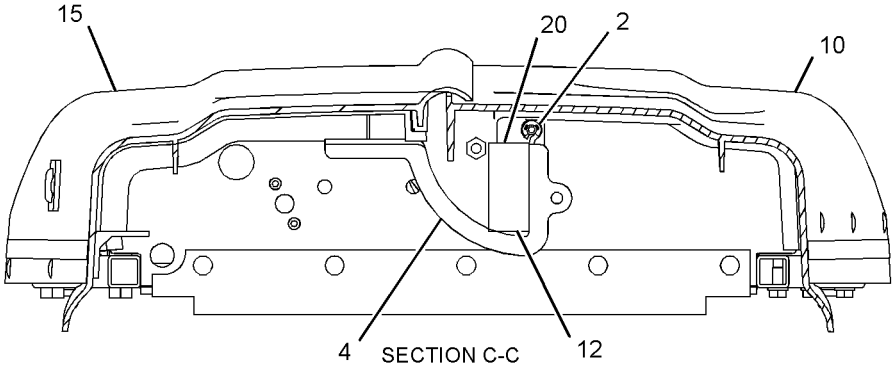

SECTION C-C

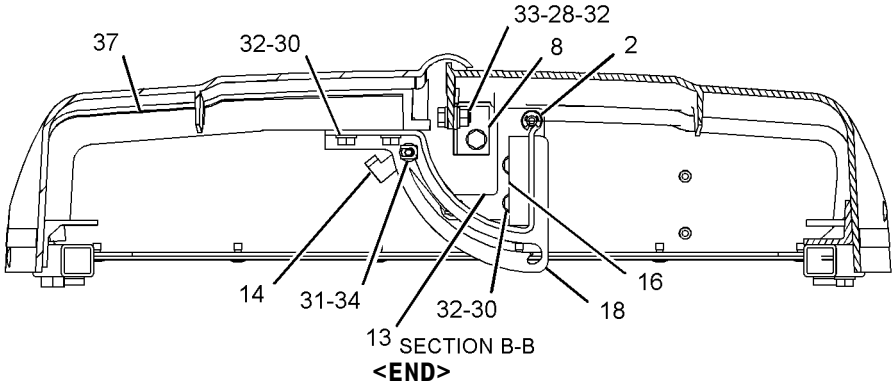

SECTION B-B

GRAPHIC #2

<END>

g01031642

235-2545 LINER GP-SOUND SUPPRESSION

S/N: BXC1-UP; DSX1-UP
PART OF 235-2612, 241-0168 SUPPRESSION AR-SOUND
AN ATTACHMENT

SMCS-1801 **i01985065**

NOTE	REF NO	GRAPHIC REF	PART NUMBER	QTY	PART NAME 1 2 3 4 5 6 (PRODUCT LEVEL)	SEE PAGE
	1	1	**236-5606**	1	INSULATION (LH)	
	2	1	**236-5607**	1	INSULATION (LH)	
	3	1	**236-5608**	1	INSULATION (RH)	
	4	1	**236-5681**	1	INSULATION (RH)	

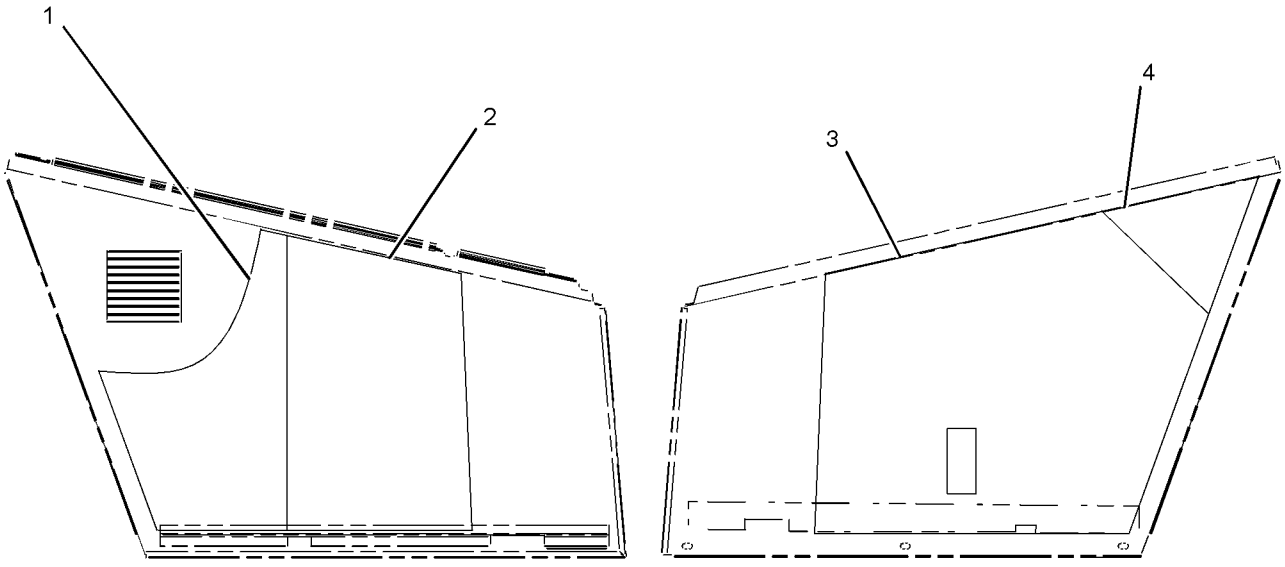

LEFT SIDE PANEL VIEW RIGHT SIDE PANEL VIEW

GRAPHIC #1 **<END>** g01030776

101-4447 MOUNTING GP-REGISTRATION

S/N: BXC1-UP; DSX1-UP
PART OF 190-2803, 190-6413 CONVERSION AR-CERTIFICATION
AN ATTACHMENT

SMCS-1429, 7050 **i02000046**

NOTE	REF NO	GRAPHIC REF	PART NUMBER	QTY	PART NAME 1 2 3 4 5 6 (PRODUCT LEVEL)	SEE PAGE
Y	1	1	**101-4448**	1	LAMP GP-REGISTRATION PLATE	128
	2	1	**101-4449**	1	HARNESS AS-REAR LIGHTING	
	3	1	**101-4456**	1	PLATE AS-NUMBER	
M	4	1	**8T-4136**	1	BOLT (M10X1.5X25MM)	
	5	1	**8T-4121**	1	WASHER-HARD (11X21X2.5MM THK)	

M-METRIC PART
Y-SEPARATE ILLUSTRATION

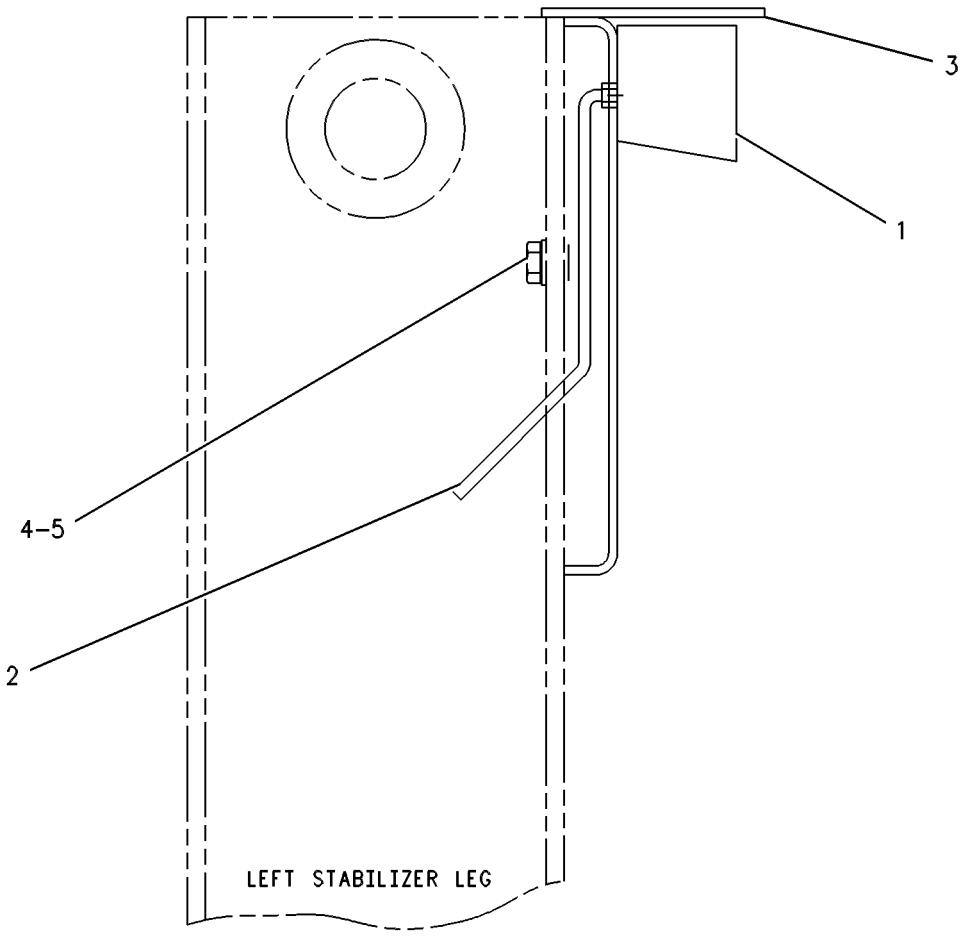

GRAPHIC #1 **<END>** g00259116

110-6017 MOUNTING GP-REGISTRATION

S/N: BXC1-UP; DSX1-UP
PART OF 123-4202 CONVERSION AR-CERTIFICATION
AN ATTACHMENT

SMCS-1429, 7050 **i02000049**

NOTE	REF NO	GRAPHIC REF	PART NUMBER	QTY	PART NAME 1 2 3 4 5 6 (PRODUCT LEVEL)	SEE PAGE
Y	1	1	**101-4448**	1	LAMP GP-REGISTRATION PLATE	128
	2	1	**101-4449**	1	HARNESS AS-REAR LIGHTING	
	3	1	**111-0394**	1	PLATE AS	
M	4	1	**8T-4136**	1	BOLT (M10X1.5X25MM)	
	5	1	**8T-4121**	1	WASHER-HARD (11X21X2.5MM THK)	

M-METRIC PART
Y-SEPARATE ILLUSTRATION

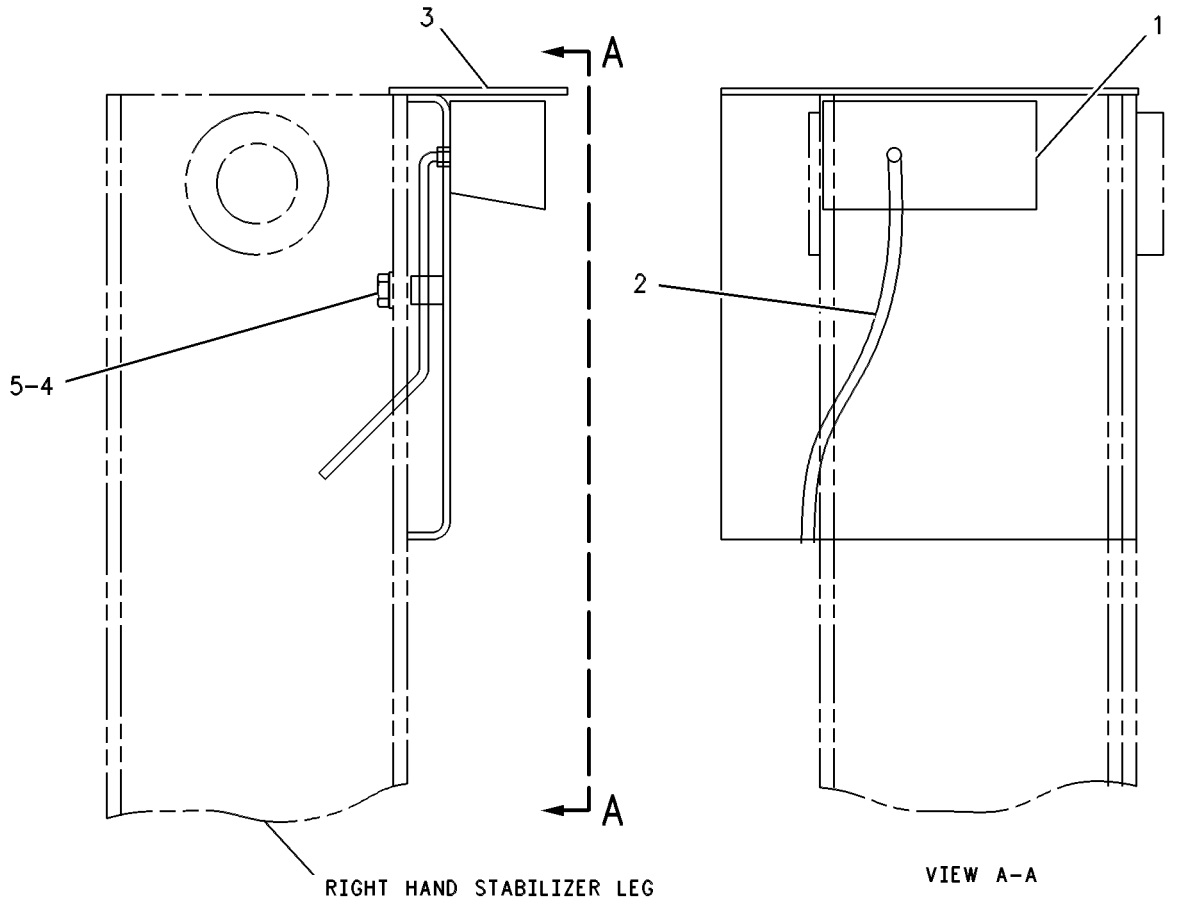

GRAPHIC #1 **<END>** g00264913

152-0184 REFLECTOR GP–SIDE SHIFT

S/N: BXC1-UP; DSX1-UP
PART OF 190-2802 CONVERSION AR-CERTIFICATION
AN ATTACHMENT

SMCS-1429 **i01571336**

NOTE	REF NO	GRAPHIC REF	PART NUMBER	QTY	PART NAME 1 2 3 4 5 6 (PRODUCT LEVEL)	SEE PAGE
	1	1	**9R-2404**	4	REFLECTOR-AMBER	

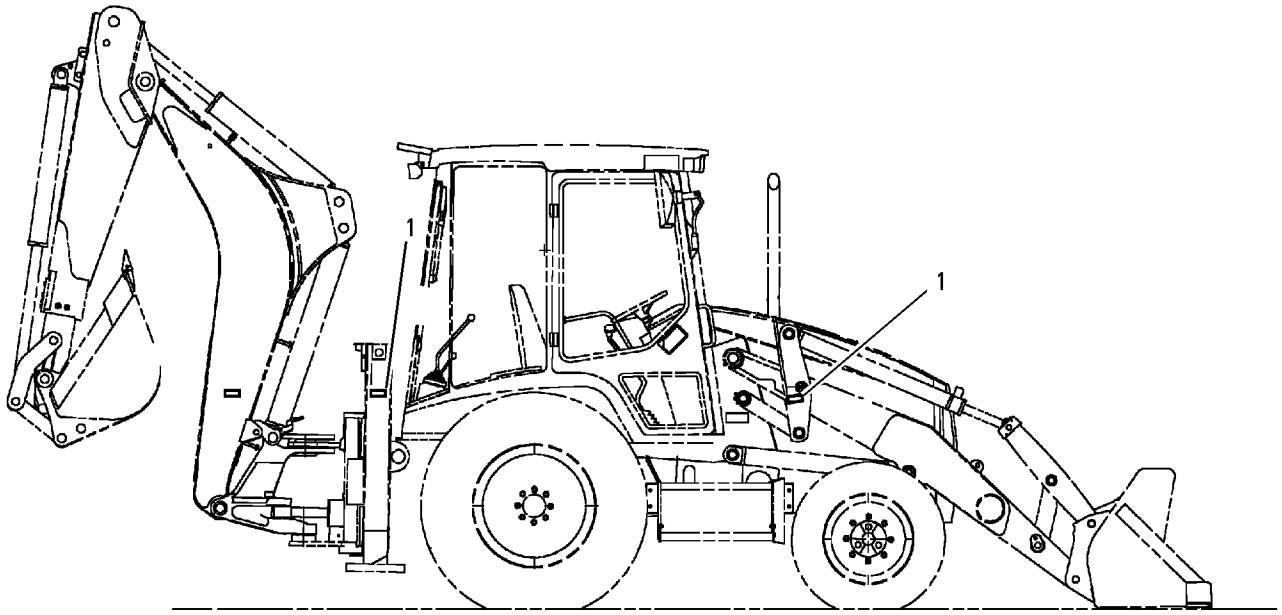

GRAPHIC #1 **<END>** g00816109

235-2612 SUPPRESSION AR-SOUND—NATURALLY ASPIRATED

S/N: BXC1-UP; DSX1-UP
AN ATTACHMENT

SMCS-7076, 7261 **i01970154**

NOTE	PART NUMBER	QTY	PART NAME 1 2 3 4 5 6 (PRODUCT LEVEL)	SEE PAGE
Y	*235-2545*	1	LINER GP-SOUND SUPPRESSION	341
Y-SEPARATE ILLUSTRATION				

<END>

241-0168 SUPPRESSION AR-SOUND

S/N: BXC1-UP; DSX1-UP
AN ATTACHMENT

SMCS-7076, 7261 **i01971981**

NOTE	PART NUMBER	QTY	PART NAME 1 2 3 4 5 6 (PRODUCT LEVEL)	SEE PAGE
Y	**235-2545**	1	LINER GP-SOUND SUPPRESSION	341
Y-SEPARATE ILLUSTRATION				

<END>

162-3960 ACCUMULATOR GP-RIDE CONTROL

S/N: BXC1-UP; DSX1-UP
PART OF 235-5861 LINES GP-RIDE CONTROL
AN ATTACHMENT

SMCS-5077 **i01983319**

NOTE	REF NO	GRAPHIC REF	PART NUMBER	QTY	PART NAME 1 2 3 4 5 6 (PRODUCT LEVEL)	SEE PAGE
	1	1	**158-2306**	1	VALVE-GAS	
	2	1	**170-0503**	1	FILM (PLATE-NAME)	
					AVAILABLE REPAIR KIT(S):	
			160-0496	1	KIT-ACCUMULATOR SERVICE	

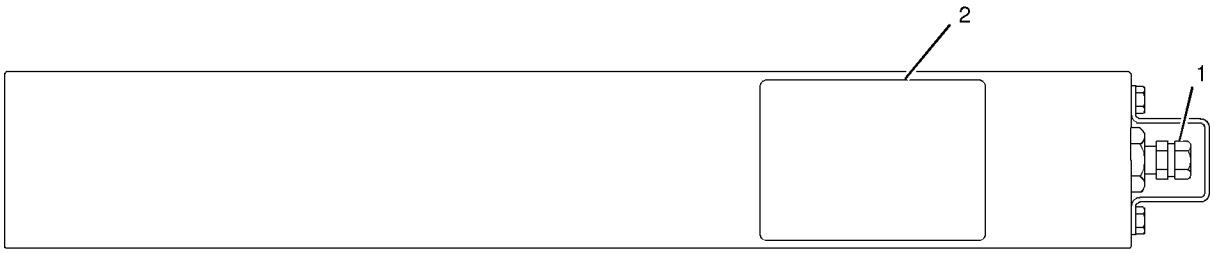

GRAPHIC #1 **<END>** g01027026

HYDRAULIC SYSTEM

202-6139 CONNECTOR GP-VALVE

S/N: BXC1-UP; DSX1-UP

PART OF 237-9297, 237-9298 HYDRAULIC AR

SMCS-5079, 5137, 7553 **i01998941**

NOTE	REF NO	GRAPHIC REF	PART NUMBER	QTY	PART NAME 1 2 3 4 5 6 (PRODUCT LEVEL)	SEE PAGE
	1	1	**6V-0852**	1	CAP-DUST	
	2	1	*150-3062*	1	TEE AS	
		1	**3J-7354**	1	SEAL-O-RING	
		1	**4J-5477**	1	SEAL-O-RING	
		1	**101-1787**	1	TEE AS	
	3	1	*164-5567*	1	FITTING AS	
		1	**3J-1907**	1	SEAL-O-RING	
		1	**6V-3965**	1	FITTING (QUICK DISCONNECT)	
I	4	1	**190-8957**	1	HOSE AS	
	5	1	*200-3947*		ADAPTER AS	
		1	**3J-1907**	1	SEAL-O-RING	
		1	**4J-5477**	1	SEAL-O-RING	
		1	**200-3946**	1	ADAPTER	
	6	1	*148-8316*	1	CONNECTOR AS	
		1	**3J-7354**	1	SEAL-O-RING	
		1	**4J-5477**	1	SEAL-O-RING	
		1	**6V-8647**	1	CONNECTOR	

I-REFER TO HYDRAULIC INFORMATION SYSTEM

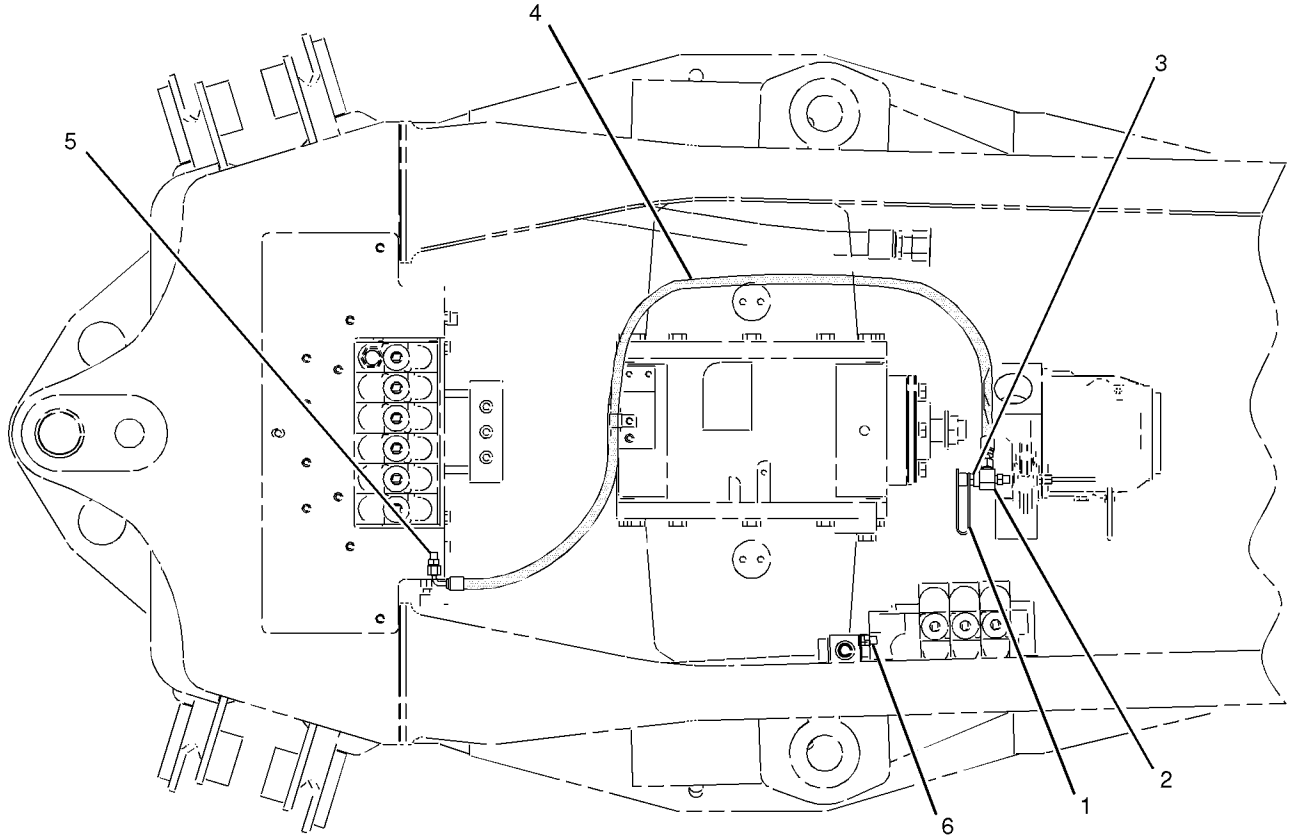

GRAPHIC #1 **<END>** g01034437

HYDRAULIC SYSTEM

239-9400 CONTROL AR-RIDE—STANDARD SHIFT

S/N: BXC1-UP; DSX1-UP
AN ATTACHMENT

SMCS-5004 **i01971583**

NOTE	PART NUMBER	QTY	PART NAME 1 2 3 4 5 6 (PRODUCT LEVEL)	SEE PAGE
Y	*235-5861*	1	LINES GP-RIDE CONTROL	487
Y	*186-0311*	1	WIRING GP-RIDE CONTROL	206

Y-SEPARATE ILLUSTRATION

<END>

239-9403 CONTROL AR-RIDE—AUTOSHIFT

S/N: BXC1-UP; DSX1-UP
AN ATTACHMENT

SMCS-5004 **i01971585**

NOTE	PART NUMBER	QTY	PART NAME 1 2 3 4 5 6 (PRODUCT LEVEL)	SEE PAGE
Y	*235-5861*	1	LINES GP-RIDE CONTROL	487
Y	*186-0312*	1	WIRING GP-RIDE CONTROL	208

Y-SEPARATE ILLUSTRATION

<END>

239-9404 CONTROL AR-RIDE—STANDARD SHIFT WITH LOADER LOCKS

S/N: BXC1-UP; DSX1-UP
AN ATTACHMENT

SMCS-5004 **i01971587**

NOTE	PART NUMBER	QTY	PART NAME 1 2 3 4 5 6 (PRODUCT LEVEL)	SEE PAGE
Y	*235-5861*	1	LINES GP-RIDE CONTROL	487
Y	*194-1947*	1	WIRING GP-RIDE CONTROL	210

Y-SEPARATE ILLUSTRATION

<END>

239-9405 CONTROL AR-RIDE—AUTOSHIFT WITH LOADER LOCKS

S/N: BXC1-UP; DSX1-UP
AN ATTACHMENT

SMCS-5004 **i01988988**

NOTE	PART NUMBER	QTY	PART NAME 1 2 3 4 5 6 (PRODUCT LEVEL)	SEE PAGE
Y	*235-5861*	1	LINES GP-RIDE CONTROL	487
Y	*194-1948*	1	WIRING GP-RIDE CONTROL	212

Y-SEPARATE ILLUSTRATION

<END>

HYDRAULIC SYSTEM

239-9413 CONTROL AR-RIDE

S/N: BXC1-UP; DSX1-UP
WITH DEAD ENGINE LOWER
FIELD INSTALLATION

SMCS-5004 **i02001099**

NOTE	PART NUMBER	QTY	PART NAME 1 2 3 4 5 6 (PRODUCT LEVEL)	SEE PAGE
	173-4514	2	FILM (RIDE CONTROL)	
Y	*235-5861*	1	LINES GP-RIDE CONTROL	487
	169-0607	1	SWITCH AS-ROCKER (RIDE CONTROL) (STANDARD SHIFT)	
	111-7899	1	GASKET	
Y	*194-1948*	1	WIRING GP-RIDE CONTROL	212

Y-SEPARATE ILLUSTRATION

<END>

HYDRAULIC SYSTEM

222-0365 CONTROL GP-HANDLE–STABILIZER

S/N: BXC1-UP; DSX1-UP
PART OF 228-5730 CONTROL GP-HYDRAULIC HAND
AN ATTACHMENT

SMCS-5063, 5705 **i01854772**

NOTE	REF NO	GRAPHIC REF	PART NUMBER	QTY	PART NAME 1 2 3 4 5 6 (PRODUCT LEVEL)	SEE PAGE
	1	1	**228-4593**	1	GAITER	
	2	1	**228-4594**	1	CABLE AS	
	3	1	**228-4595**	1	SWITCH AS	
	4	1	**228-4596**	1	ROD	
	5	1	**228-4597**	1	CLIP	
	6	1	**228-4592**	1	KNOB	
M	7	1	**5C-2890**	1	NUT (M6X1 THD)	
	8	1	**8T-4742**	1	END-YOKE ROD	
	9	1	**8T-4744**	1	PIN AS-SPRING	

M-METRIC PART

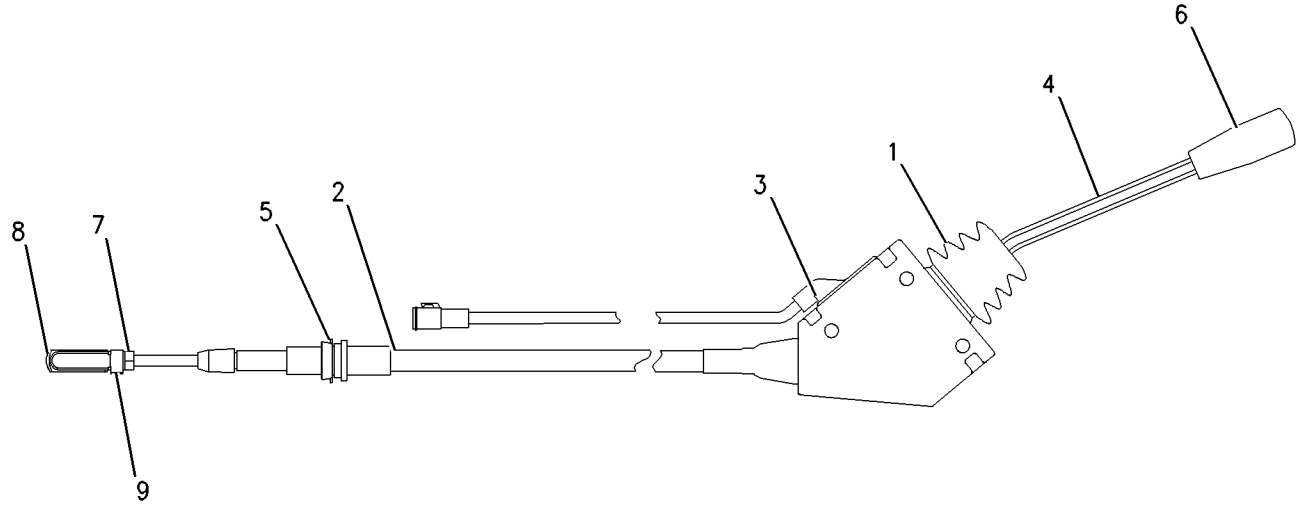

GRAPHIC #1 **<END>** g00949570

222-9436 CONTROL GP-HANDLE–STABILIZER

S/N: BXC1-UP; DSX1-UP
PART OF 228-5731 CONTROL GP-HYDRAULIC HAND
AN ATTACHMENT

SMCS-5063, 5705 **i01854909**

NOTE	REF NO	GRAPHIC REF	PART NUMBER	QTY	PART NAME 1 2 3 4 5 6 (PRODUCT LEVEL)	SEE PAGE
	1	1	**228-4593**	1	GAITER	
	2	1	**228-4594**	1	CABLE AS	
	3	1	**228-4596**	1	ROD	
	4	1	**228-4597**	1	CLIP	
	5	1	**228-4592**	1	KNOB	
M	6	1	**5C-2890**	1	NUT (M6X1 THD)	
	7	1	**8T-4742**	1	END-YOKE ROD	
	8	1	**8T-4744**	1	PIN AS-SPRING	

M-METRIC PART

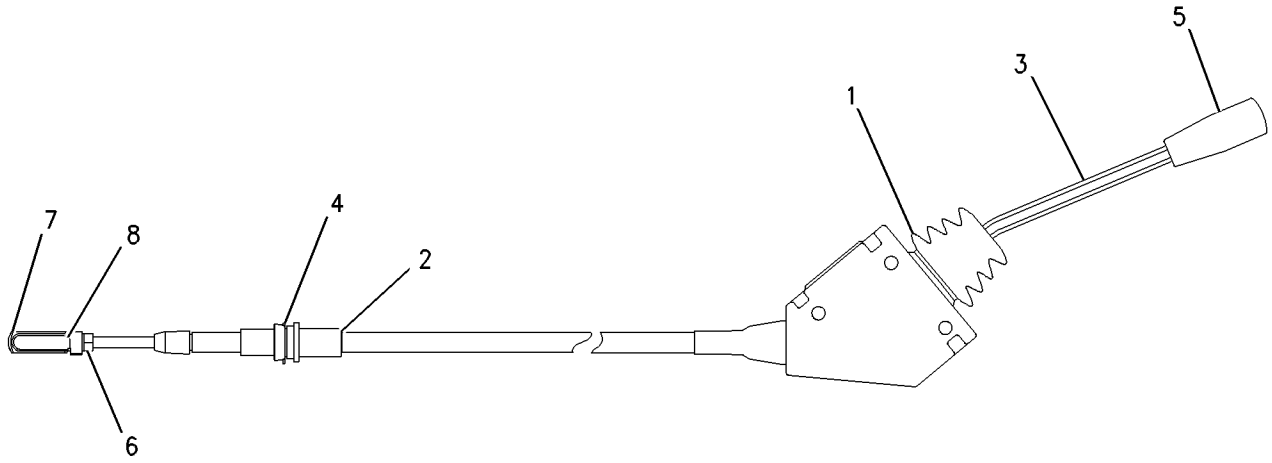

GRAPHIC #1 **<END>** g00949564

HYDRAULIC SYSTEM

164-1400 CONTROL GP-HYDRAULIC HAND

S/N: BXC1-UP; DSX1-UP
STANDARD
AN ATTACHMENT

SMCS-5063 **i01434312**

NOTE	REF NO	GRAPHIC REF	PART NUMBER	QTY	PART NAME 1 2 3 4 5 6 (PRODUCT LEVEL)	SEE PAGE
	1	1	**8T-4773**	4	BALL JOINT	
	2	1	**8T-4815**	4	ROD END	
	3	1	**9R-9901**	6	FASTENER (CLIP)	
	4	1	**164-1361**	2	BOOT	
	5	1	**164-1371**	1	PLATE	
	6	1	**164-1399**	2	KNOB	
	7	1	**164-1402**	2	SLEEVE	
	8	1	**164-1404**	2	SPACER (23MM THK)	
	9	1	**164-1406**	4	ROD	
	10	1	**164-1409**	1	LEVER AS	
	11	1	**164-1411**	1	LEVER AS	
	12	1	**164-1435**	2	PLATE	
	13	1	**164-1560**	1	TOWER AS	
	14	1	**167-8248**	1	CONSOLE-REAR	
	15	1	**170-6312**	4	BEARING	
	16	1	**179-8235**	4	LOCKPIN	
	17	1	**190-5130**	1	FILM	
M	18	1	**6V-7744**	8	LOCKNUT (M10X1.50 THD)	
	19	1	**7X-7729**	8	WASHER (11X25X3MM THK)	
	20	1	**8C-4987**	4	PIN-CLEVIS	
	21	1	**8T-4121**	8	WASHER-HARD (11X21X2.5MM THK)	
M	22	1	**8T-4133**	8	NUT (M10X1.5 THD)	
M	23	1	**8T-4138**	6	BOLT (M6X1X20MM)	
M	24	1	**8T-4172**	2	BOLT (M10X1.50X80MM)	
M	25	1	**8T-4195**	2	BOLT (M10X1.5X30MM)	
M	26	1	**8T-6466**	2	BOLT (M10X1.50X60MM)	
	27	1	**9X-2038**	4	WASHER (7X19X2MM THK)	
M	28	1	**9X-2045**	4	SCREW-TRUSS HEAD (M6X1X20MM)	
	29	1	**9X-8256**	6	WASHER (6.6X12X2MM THK)	

M-METRIC PART

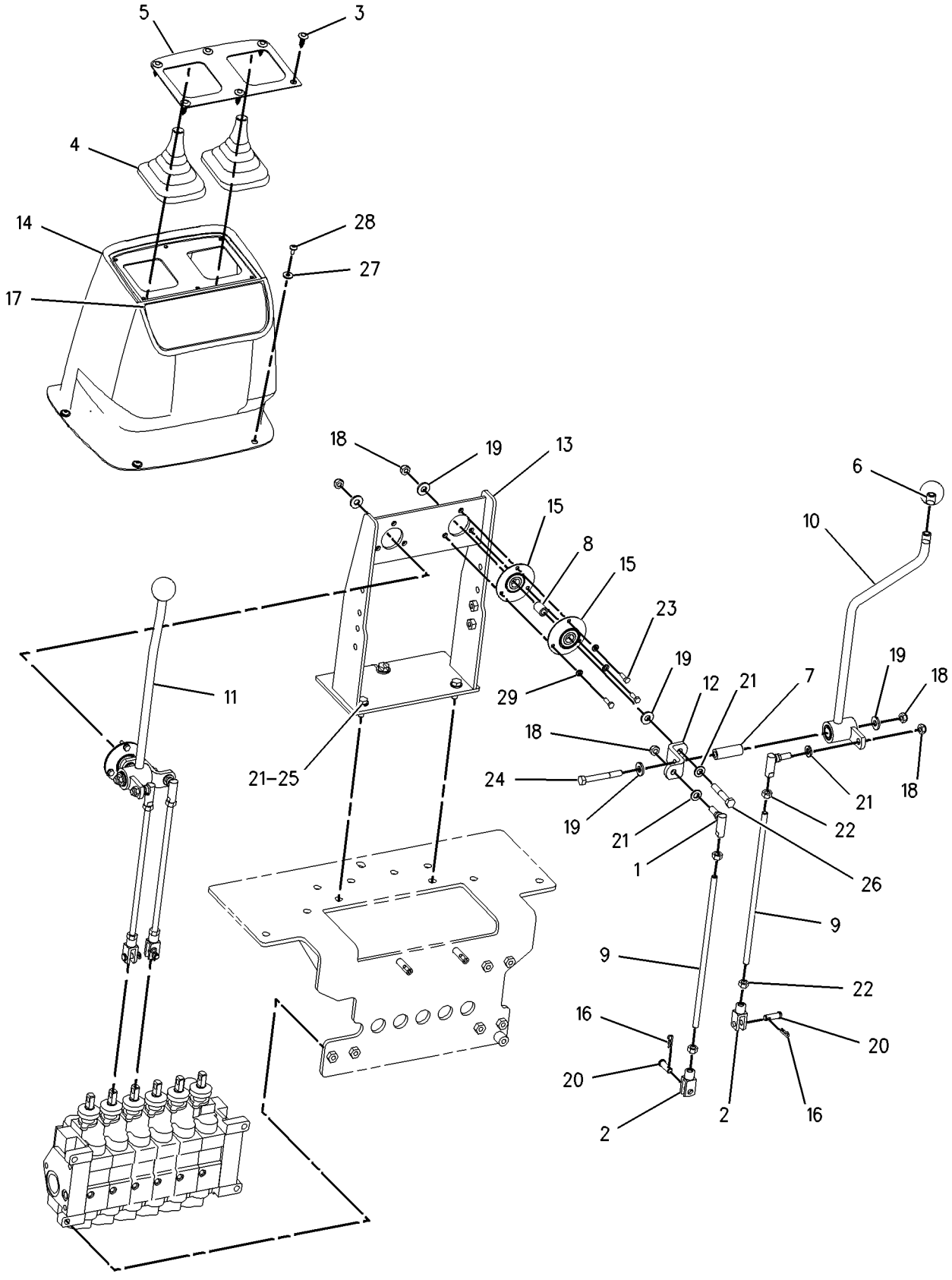

GRAPHIC #1 **<END>** g00739022

HYDRAULIC SYSTEM

164-1420 CONTROL GP-HYDRAULIC HAND

S/N: BXC1-UP; DSX1-UP
EXCAVATOR
PART OF 164-1430 CONVERSION GP-HYD HAND CONTROL
AN ATTACHMENT

SMCS-5063 **i02000614**

NOTE	REF NO	GRAPHIC REF	PART NUMBER	QTY	PART NAME 1 2 3 4 5 6 (PRODUCT LEVEL)	SEE PAGE
	1	1	**9X-8256**	6	WASHER (6.6X12X2MM THK)	
	2	1	**8T-4773**	10	BALL JOINT	
	3	1	**8T-4815**	2	ROD END	
	4	1	**9R-9901**	6	FASTENER (CLIP)	
	5	1	**142-7405**	2	COLLAR	
	6	1	**164-1361**	2	BOOT	
	7	1	**164-1371**	1	PLATE	
	8	1	**164-1399**	2	KNOB	
	9	1	**164-1402**	2	SLEEVE	
	10	1	**164-1404**	2	SPACER (23MM THK)	
	11	1	**164-1409**	1	LEVER AS (RH)	
	12	1	**164-1411**	1	LEVER AS (LH)	
	13	1	**164-1421**	1	PLATE	
	14	1	**164-1422**	1	SHAFT AS	
	15	1	**164-1425**	1	COUPLER AS	
	16	1	**164-1427**	2	ROD	
	17	1	**164-1429**	1	COUPLER AS	
	18	1	**164-1435**	2	PLATE	
	19	1	**164-1438**	2	ROD	
	20	1	**164-1441**	2	ROD	
	21	1	**164-1560**	1	TOWER AS	
	22	1	**167-8248**	1	CONSOLE-REAR	
	23	1	**170-6312**	4	BEARING	
	24	1	**9R-2807**	2	CLIP	
	25	1	**190-5128**	1	FILM (BUCKET CONTROL)	
M	26	1	**6V-7744**	14	LOCKNUT (M10X1.5 THD)	
M	27	1	**6V-8932**	2	SETSCREW-SOCKET (M6X1X10MM)	
	28	1	**7X-7729**	8	WASHER (11X25X3MM THK)	
	29	1	**9R-2806**	2	PIN	
	30	1	**8T-4121**	20	WASHER-HARD (11X21X2.5MM THK)	
M	31	1	**8T-4133**	16	NUT (M10X1.5 THD)	
M	32	1	**8T-4138**	6	BOLT (M6X1X20MM)	
M	33	1	**8T-4172**	2	BOLT (M10X1.50X80MM)	
M	34	1	**8T-4195**	6	BOLT (M10X1.5X30MM)	
M	35	1	**8T-6466**	2	BOLT (M10X1.50X60MM)	
	36	1	**9X-2038**	4	WASHER (7X19X2MM THK)	
M	37	1	**9X-2045**	4	SCREW-TRUSS HEAD (M6X1X20MM)	

M-METRIC PART

164-1420 **CONTROL GP-HYDRAULIC HAND** *(contd.)* **i02000614**

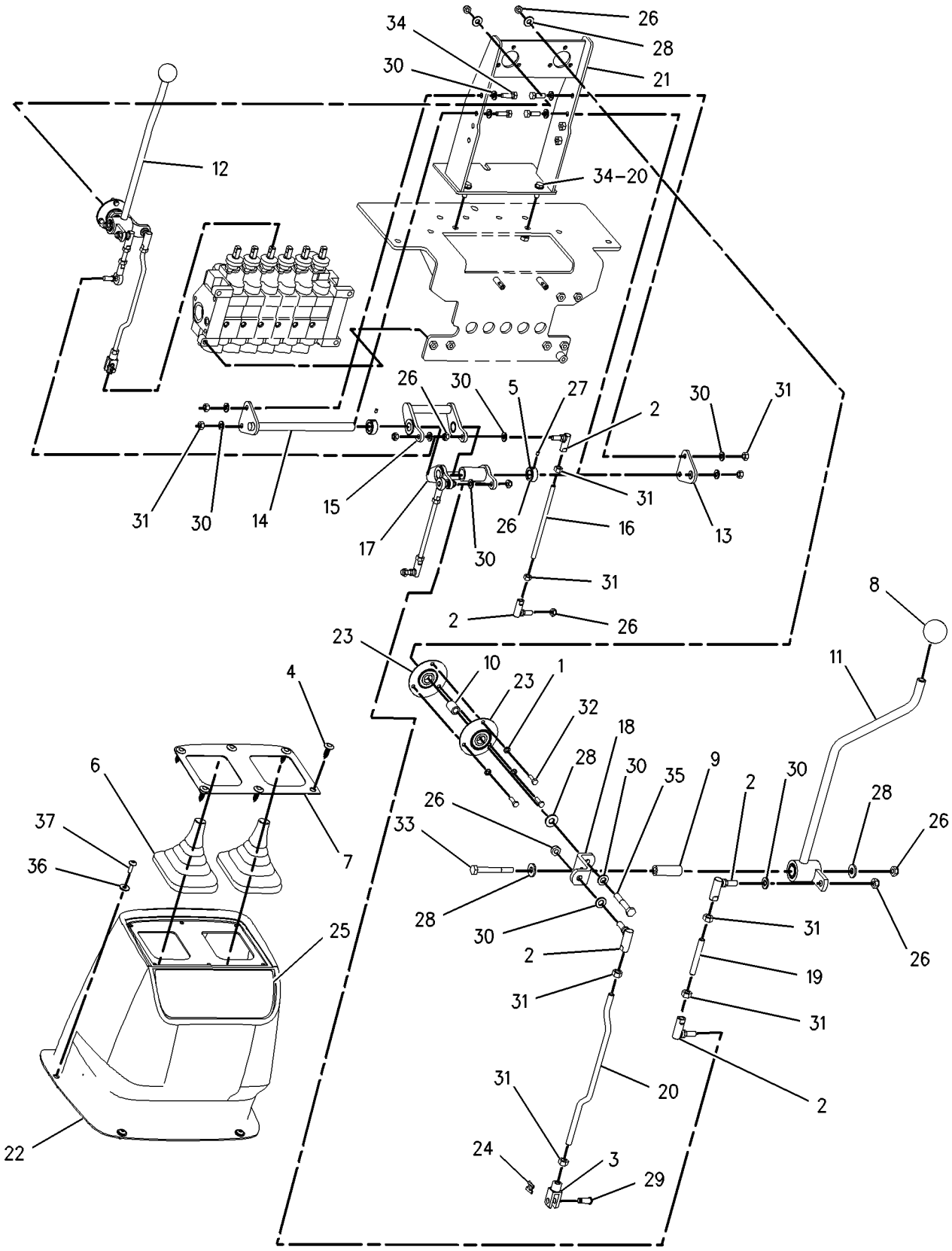

GRAPHIC #1 **<END>** g00756911

164-1440 CONTROL GP-HYDRAULIC HAND

S/N: BXC1-UP; DSX1-UP
STANDARD, CROSS
PART OF 164-1450 CONTROL GP-HYDRAULIC HAND
AN ATTACHMENT

SMCS-5063 **i01665889**

NOTE	REF NO	GRAPHIC REF	PART NUMBER	QTY	PART NAME 1 2 3 4 5 6 (PRODUCT LEVEL)	SEE PAGE
	1	1	**8T-4773**	4	BALL JOINT	
	2	1	**8T-4815**	4	ROD END	
	3	1	**9R-9901**	6	FASTENER	
	4	1	**164-1361**	2	BOOT	
	5	1	**164-1371**	1	PLATE	
	6	1	**164-1399**	2	KNOB	
	7	1	**164-1406**	2	ROD	
	8	1	**164-1441**	2	ROD	
	9	1	**164-1447**	1	LEVER AS-RH	
	10	1	**164-1451**	1	BRACKET AS	
	11	1	**164-1452**	1	BRACKET AS	
	12	1	**164-1455**	1	LEVER AS-LH	
	13	1	**164-1565**	1	TOWER AS	
	14	1	**167-8248**	1	CONSOLE-REAR	
	15	1	**179-8235**	4	LOCK PIN	
	16	1	**190-5131**	1	FILM-WARNING	
	17	1	**190-5134**	2	FILM (PATTERN)	
M	18	1	**6V-7744**	4	LOCKNUT (M10X1.5 THD)	
	19	1	**8C-4987**	4	PIN-CLEVIS	
	20	1	**8T-4121**	6	WASHER-HARD (11X21X2.5MM THK)	
M	21	1	**8T-4133**	8	NUT (M10X1.5 THD)	
M	22	1	**8T-4195**	2	BOLT (M10X1.5X30MM)	
	23	1	**8T-4224**	8	WASHER-HARD (8.8X16X2MM THK)	
M	24	1	**8T-7547**	8	BOLT (M8X1.25X30MM)	
	25	1	**9X-2038**	4	WASHER (7X19X2MM THK)	
M	26	1	**9X-2045**	4	SCREW-TRUSS HEAD (M6X1X20MM)	

M-METRIC PART

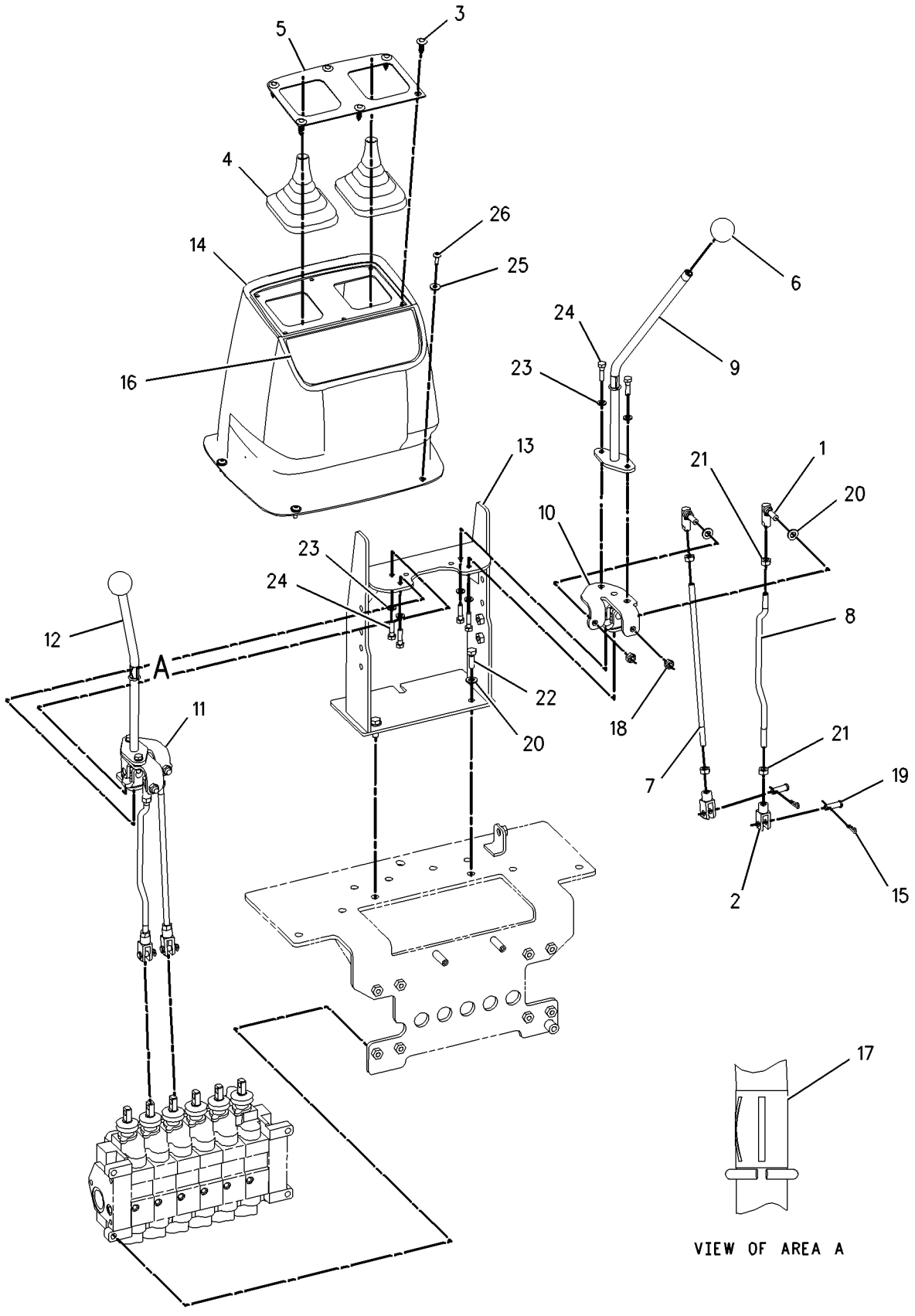

GRAPHIC #1 **<END>** g00860216

164-1450 CONTROL GP-HYDRAULIC HAND–KIT

S/N: BXC1-UP; DSX1-UP
FOUR TO TWO LEVER, MECHANICAL CONTROLS
AN ATTACHMENT

SMCS-5063 **i01502288**

NOTE	REF NO	GRAPHIC REF	PART NUMBER	QTY	PART NAME 1 2 3 4 5 6 (PRODUCT LEVEL)	SEE PAGE
Y	1	1	*164-1440*	1	CONTROL GP-HYDRAULIC HAND	356

Y-SEPARATE ILLUSTRATION

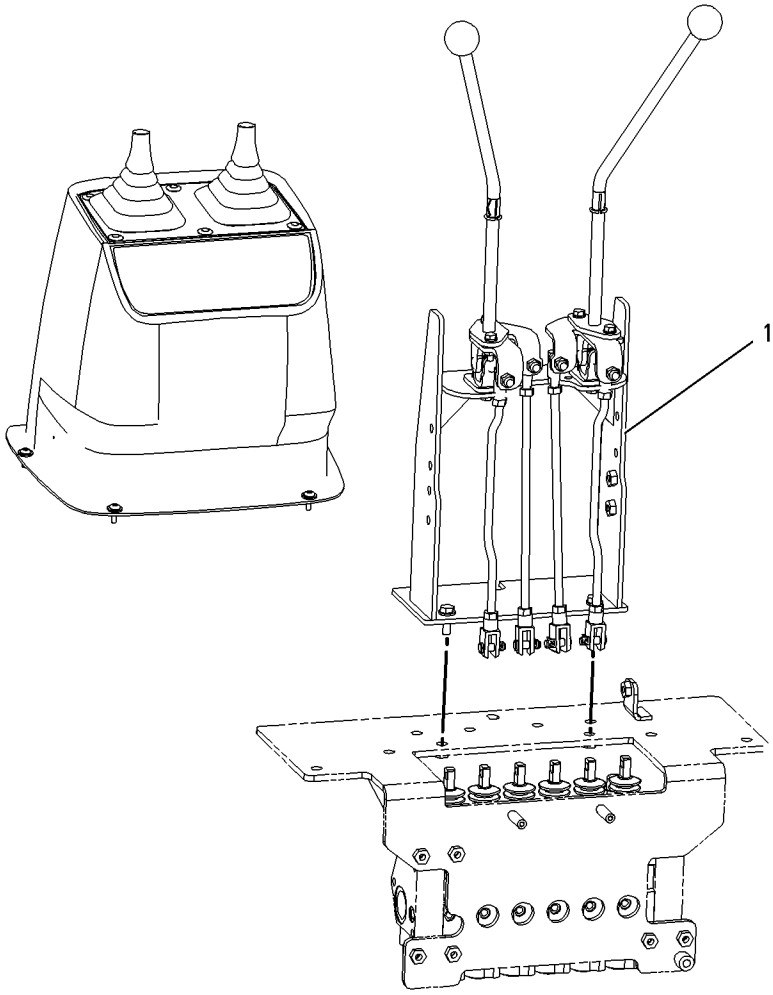

GRAPHIC #1 **<END>** g00779256

183-3130 CONTROL GP-HYDRAULIC HAND–PARALLEL LIFT

S/N: BXC1-UP; DSX1-UP

PART OF 237-9288, 237-9289 CHASSIS AR

SMCS-5063 **i01668748**

NOTE	REF NO	GRAPHIC REF	PART NUMBER	QTY	PART NAME 1 2 3 4 5 6 (PRODUCT LEVEL)	SEE PAGE
	1	1	**1K-0502**	7	WASHER (25.4X16.3X1.2MM THK)	
	2	1	**2R-0364**	3	RING-RETAINING	
	3	1	**3E-3365**	1	WEDGE-RECEPTACLE LOCK (2 PIN)	
	4	1	**5H-3193**	1	PIN-SPRING	
	5	1	**8T-4773**	2	BALL JOINT	
	6	1	**8T-4815**	2	ROD END	
	7	1	**9R-1765**	1	KNOB	
	8	1	**9R-1766**	1	KNOB	
	9	1	**9R-1767**	1	BOOT	
	10	1	**9R-9868**	1	SWITCH AS-PUSH BUTTON	
		1	**186-3735**	2	PIN-CONNECTOR	
	11	1	**107-5591**	1	NUT-JAM (3/4-16 THD)	
	12	1	**164-1368**	8	CLIP	
	13	1	**164-1369**	1	PLATE	
	14	1	**179-8235**	2	LOCK PIN	
	15	1	**183-3121**	1	BRACKET AS	
	16	1	**183-3122**	1	LEVER AS	
	17	1	**183-3125**	1	ROD	
	18	1	**183-3127**	1	ROD	
	19	1	**183-3135**	1	JOINT AS	
	20	1	**183-3137**	1	PIN	
	21	1	**201-8069**	1	SEAL	
	22	1	**102-8802**	1	KIT-RECEPTACLE (2 PIN)	
					(KIT INCLUDES RECEPTACLE AS AND WEDGE)	
	23	1	**3S-2093**	1	STRAP-CABLE	
M	24	1	**6V-7744**	2	LOCKNUT (M10X1.5 THD)	
	25	1	**8C-4987**	2	PIN-CLEVIS	
	26	1	**8T-4121**	4	WASHER-HARD (11X21X2.5MM THK)	
M	27	1	**8T-4133**	6	NUT (M10X1.5 THD)	
M	28	1	**8T-4195**	2	BOLT (M10X1.5X30MM)	
	29	1	**8T-4223**	2	WASHER-HARD (13.5X25.5X3MM THK)	
	30	1	**8T-9501**	2	SCREW (10-16X.75 IN)	

M-METRIC PART

183-3130 **CONTROL GP-HYDRAULIC HAND** ***(contd.)*** **i01668748**

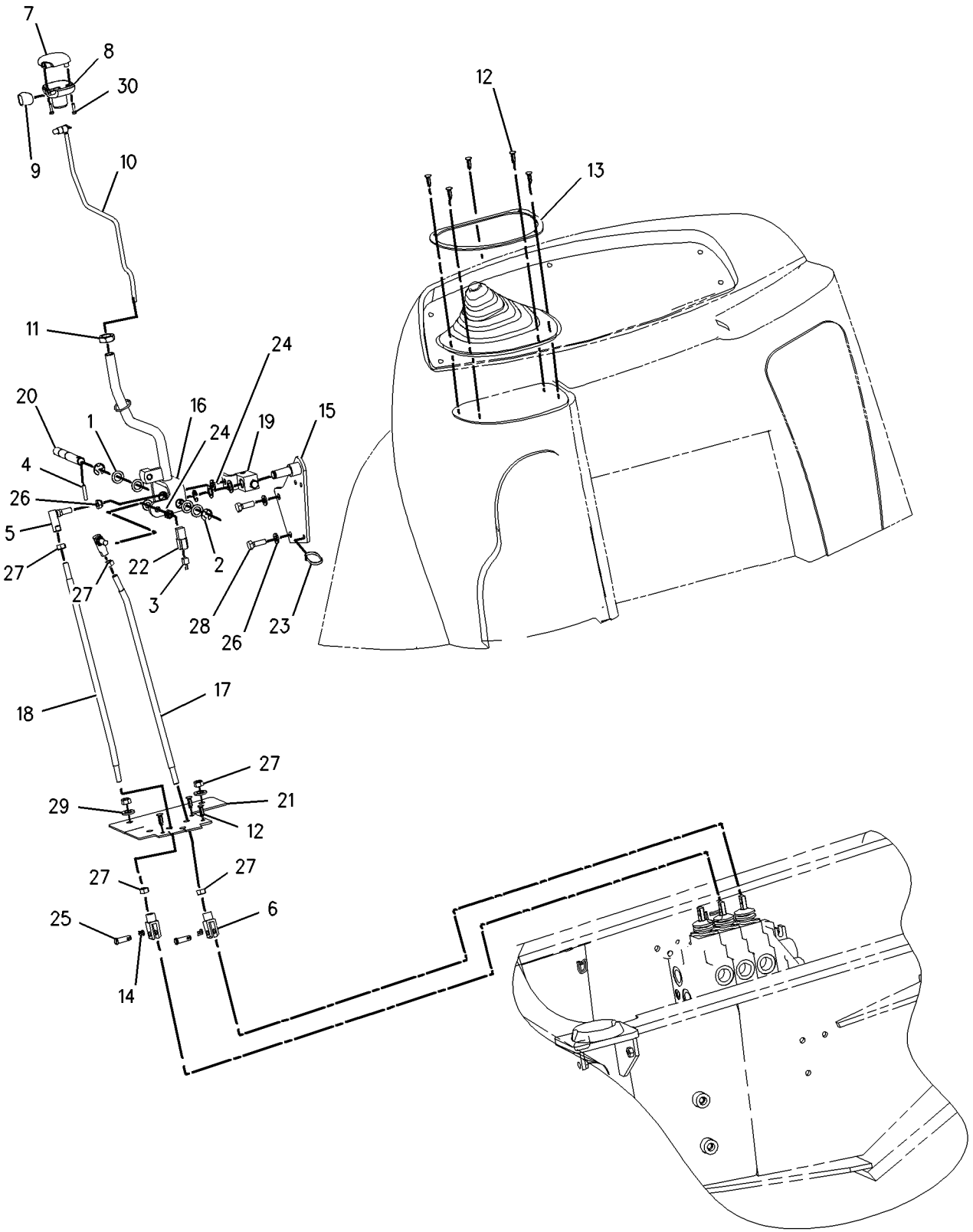

GRAPHIC #1 **<END>** g00862023

183-3150 CONTROL GP-HYDRAULIC HAND–LOADER SINGLE TILT

S/N: BXC1-UP; DSX1-UP
PART OF 186-5337, 186-5338 HYDRAULIC AR
AN ATTACHMENT

SMCS-5063 **i01657347**

NOTE	REF NO	GRAPHIC REF	PART NUMBER	QTY	PART NAME 1 2 3 4 5 6 (PRODUCT LEVEL)	SEE PAGE
	1	1	**1K-0502**	3	WASHER (25.4X16.3X1.2MM THK)	
	2	1	**2R-0364**	1	RING-RETAINING	
	3	1	**8T-4773**	1	BALL JOINT	
	4	1	**8T-4815**	1	ROD END	
M	5	1	**134-0453**	1	TURN BUCKLE	
	6	1	**164-1395**	1	KNOB	
	7	1	**179-8235**	1	LOCK PIN	
	8	1	**183-3151**	1	LEVER AS	
		1	**183-3136**	1	BEARING	
	9	1	**183-3153**	1	ROD	
	10	1	**183-3156**	1	ROD	
	11	1	**8C-4987**	1	PIN-CLEVIS	
	12	1	**8T-4121**	1	WASHER-HARD (11X21X2.5MM THK)	
M	13	1	**8T-4133**	3	NUT (M10X1.5 THD)	
M	14	1	**9X-2065**	1	NUT	

M-METRIC PART

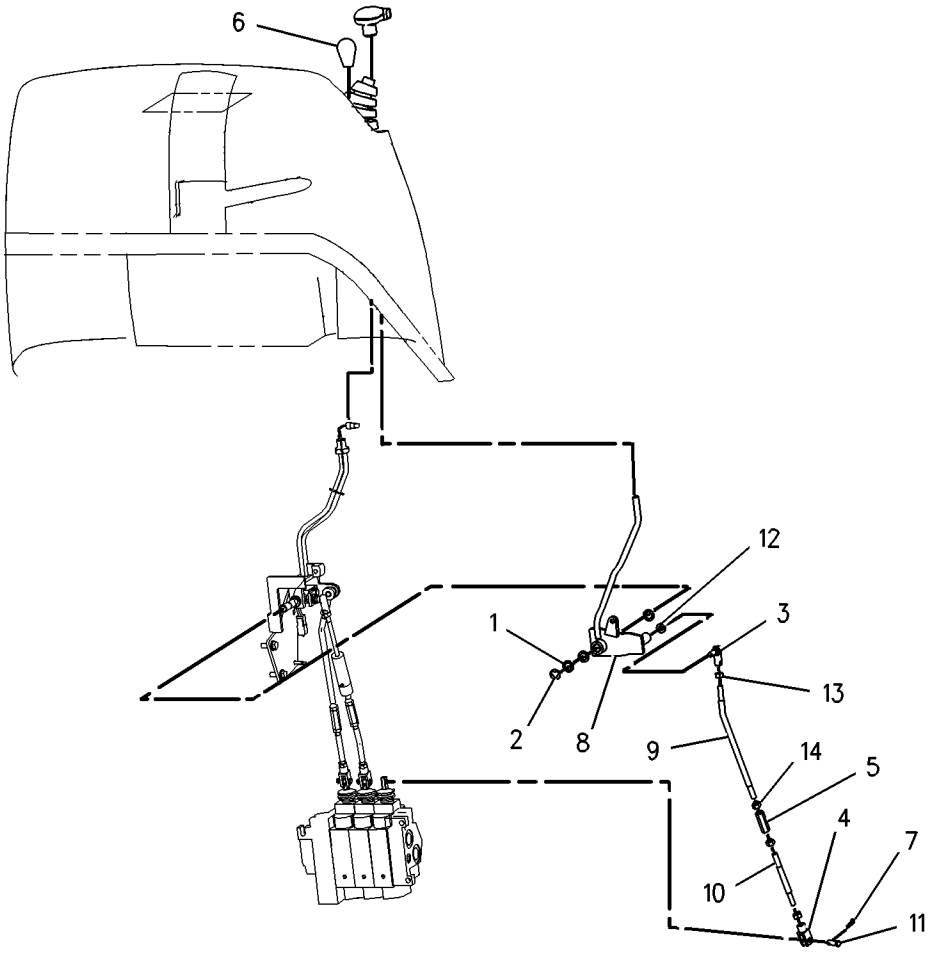

GRAPHIC #1 **<END>** g00738135

183-3159 CONTROL GP-HYDRAULIC HAND–PARALLEL LIFT

S/N: BXC1-UP; DSX1-UP
PART OF 185-0062, 185-0063 HYDRAULIC AR
AN ATTACHMENT

SMCS-5063 **i01397127**

NOTE	REF NO	GRAPHIC REF	PART NUMBER	QTY	PART NAME 1 2 3 4 5 6 (PRODUCT LEVEL)	SEE PAGE
	1	1	**1K-0502**	3	WASHER (25.4X16.3X1.2MM THK)	
	2	1	**2R-0364**	1	RING-RETAINING	
	3	1	**8T-4773**	1	BALL JOINT	
	4	1	**8T-4815**	1	ROD END	
	5	1	**164-1395**	1	KNOB	
	6	1	**179-8235**	1	LOCKPIN	
	7	1	**183-3125**	1	ROD	
	8	1	**183-3151**	1	LEVER AS	
	9	1	**8C-4987**	1	PIN-CLEVIS	
	10	1	**8T-4121**	1	WASHER-HARD (11X21X2.5MM THK)	
M	11	1	**8T-4133**	2	NUT (M10X1.5 THD)	

M-METRIC PART

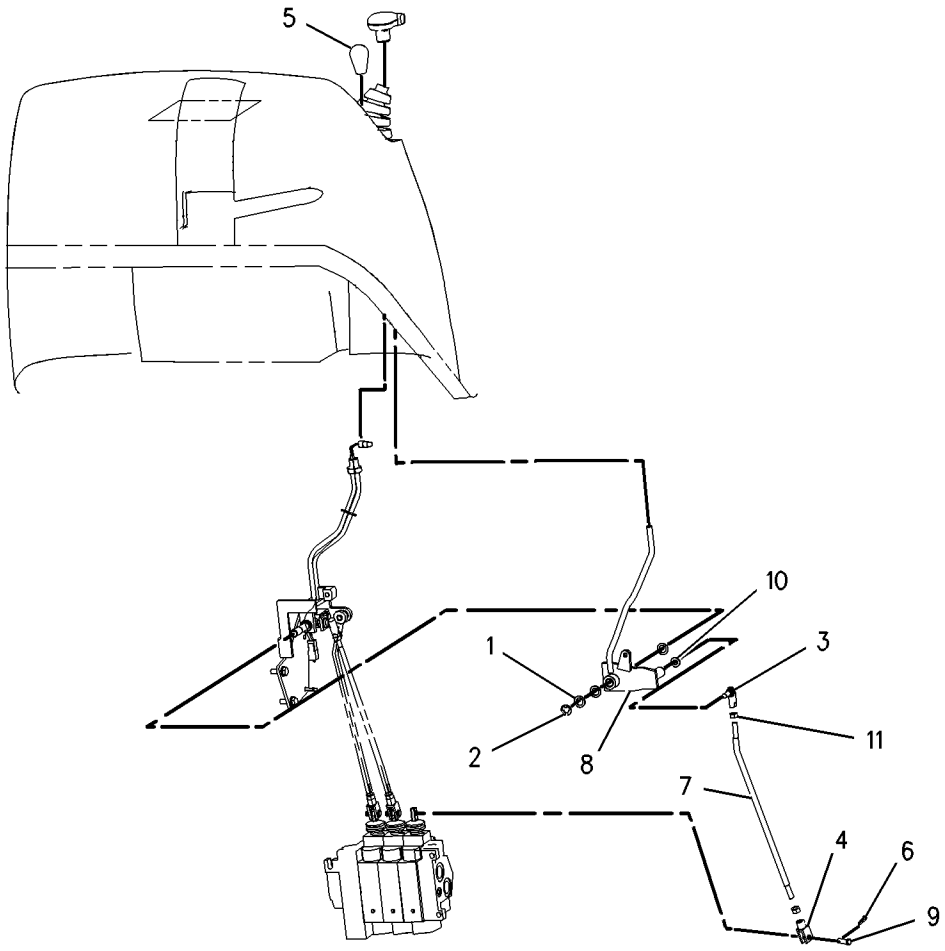

GRAPHIC #1 **<END>** g00738112

228-5730 CONTROL GP-HYDRAULIC HAND–STABILIZER

S/N: BXC1-UP; DSX1-UP
PART OF 210-8918 STABILIZER AR
AN ATTACHMENT

SMCS-5063 **i01854905**

NOTE	REF NO	GRAPHIC REF	PART NUMBER	QTY	PART NAME 1 2 3 4 5 6 (PRODUCT LEVEL)	SEE PAGE
	1	1	**210-8914**	1	PLATE	
	2	1	**210-8917**	2	LEVER GP-CONTROL VALVE (STABILIZER)	
		1	**8T-0328**	1	WASHER-HARD (5.5X10X1MM THK)	
M		1	**134-1374**	1	BOLT-SOCKET HEAD (M5X.8X20MM)	
M		1	**136-0155**	1	SETSCREW	
	3	1	**217-3383**	1	BRACKET AS	
Y	4	1	**222-0365**	2	CONTROL GP-HANDLE	350
	5	1	**229-1203**	1	COVER	
M	6	1	**129-3178**	3	LOCKNUT (M6X1 THD)	
M	7	1	**5C-2890**	7	NUT (M6X1 THD)	
M	8	1	**5C-9553**	4	BOLT (M6X1X16MM)	
	9	1	**5P-4115**	3	WASHER-HARD (7.2X19X2MM THK)	
M	10	1	**7X-0465**	3	BOLT (M6X1X100MM)	
	11	1	**8T-4205**	11	WASHER-HARD (7.2X14.5X2MM THK)	
M	12	1	**9X-2043**	3	SCREW-TRUSS HEAD (M6X1X14MM)	

M-METRIC PART
Y-SEPARATE ILLUSTRATION

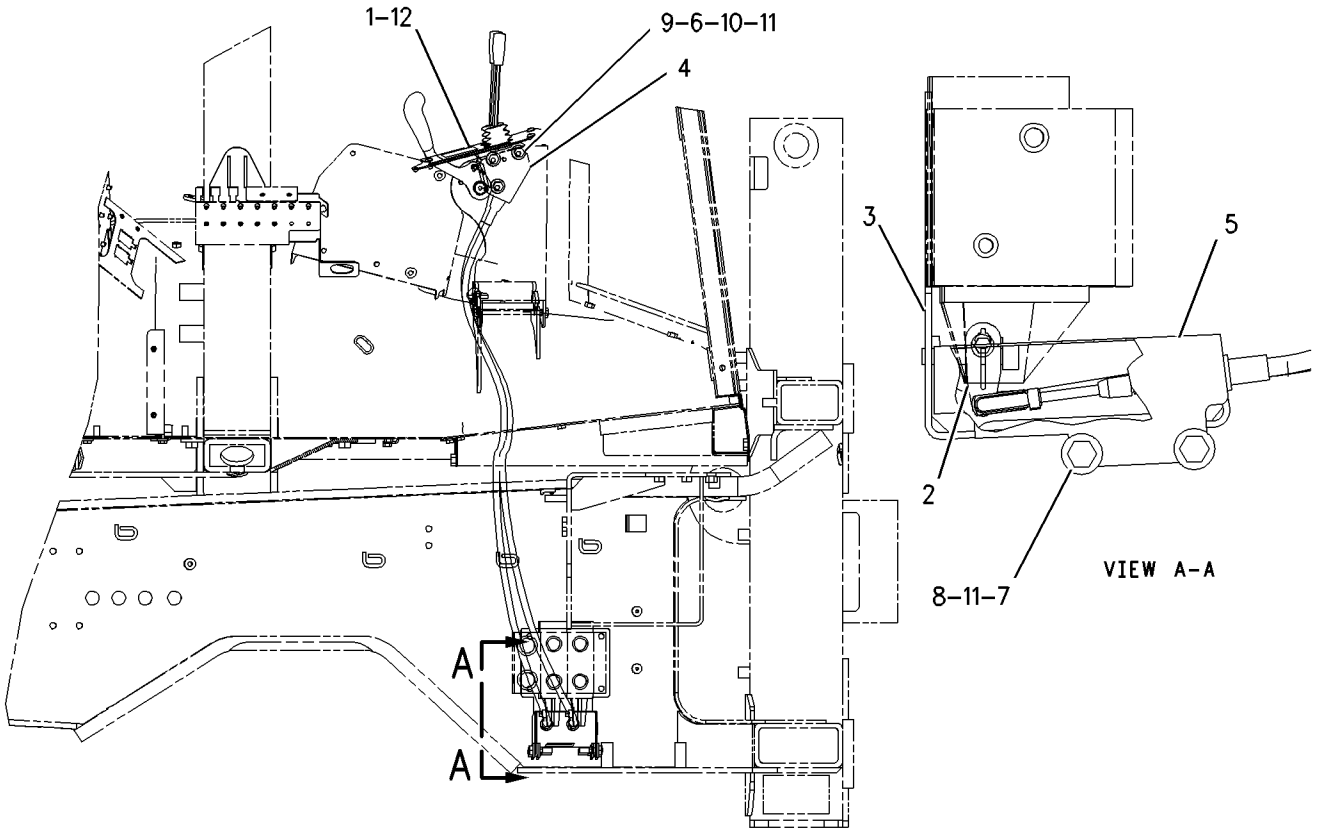

RIGHT SIDE VIEW

GRAPHIC #1 **<END>** g00955405

HYDRAULIC SYSTEM

228-5731 CONTROL GP-HYDRAULIC HAND–STABILIZER

S/N: BXC1-UP; DSX1-UP
PART OF 210-8919 STABILIZER AR
AN ATTACHMENT

SMCS-5063 **i01854904**

NOTE	REF NO	GRAPHIC REF	PART NUMBER	QTY	PART NAME 1 2 3 4 5 6 (PRODUCT LEVEL)	SEE PAGE
	1	1	**210-8914**	1	PLATE	
	2	1	**210-8917**	2	LEVER GP-CONTROL VALVE (STABILIZER)	
		1	**8T-0328**	1	WASHER-HARD (5.5X10X1MM THK)	
M		1	**134-1374**	1	BOLT-SOCKET HEAD (M5X.8X20MM)	
M		1	**136-0155**	1	SETSCREW	
	3	1	**217-3383**	1	BRACKET AS	
Y	4	1	**222-9436**	2	CONTROL GP-HANDLE	351
	5	1	**229-1203**	1	COVER	
M	6	1	**129-3178**	3	LOCKNUT (M6X1 THD)	
M	7	1	**5C-2890**	4	NUT (M6X1 THD)	
M	8	1	**5C-9553**	4	BOLT (M6X1X16MM)	
	9	1	**5P-4115**	3	WASHER-HARD (7.2X19X2MM THK)	
M	10	1	**7X-0465**	3	BOLT (M6X1X100MM)	
	11	1	**8T-4205**	11	WASHER-HARD (7.2X14.5X2MM THK)	
M	12	1	**9X-2043**	3	SCREW-TRUSS HEAD (M6X1X14MM)	

M-METRIC PART
Y-SEPARATE ILLUSTRATION

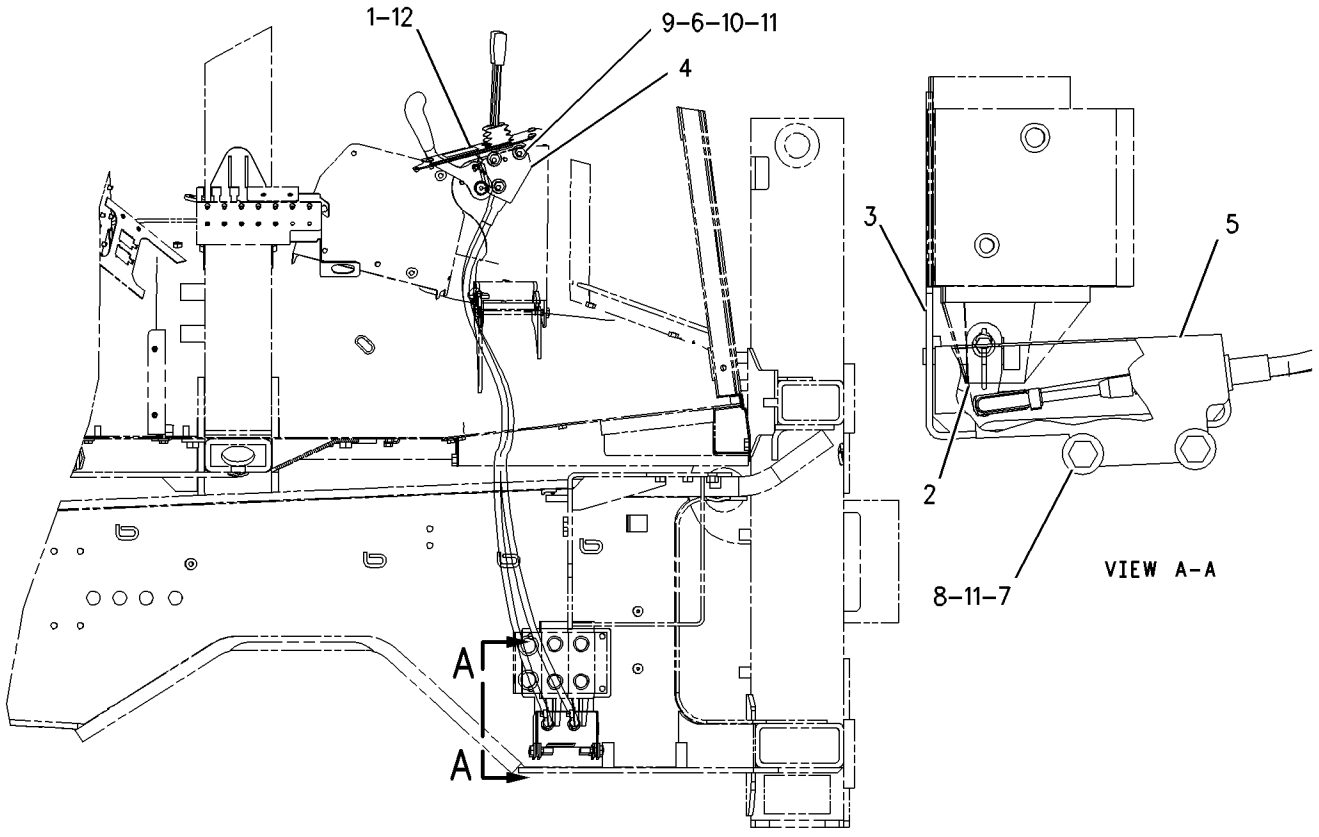

RIGHT SIDE VIEW

GRAPHIC #1 **<END>** g00955405

164-1540 CONTROL GP-HYDRAULIC PEDAL

S/N: BXC1-UP; DSX1-UP
EXTENDABLE STICK
PART OF 240-3182, 240-3185 VALVE AR-BANK 5, 240-3183, 240-3186 VALVE AR-BANK 6, 204-9195, 204-9196, 204-9198, 204-9199 VALVE GP-AUXILIARY
AN ATTACHMENT

SMCS-5063 **i01565058**

NOTE	REF NO	GRAPHIC REF	PART NUMBER	QTY	PART NAME 1 2 3 4 5 6 (PRODUCT LEVEL)	SEE PAGE
M	1	1	**6V-8335**	1	BOLT-SELF LOCKING (M10X1.5X40MM)	
	2	1	**8T-4815**	1	ROD END	
	3	1	**8T-6431**	1	ROD END (M10X1.50 THD)	
	4	1	**109-0533**	1	SEAL	
B	5	1	**133-8916**	1	FILM-INSTRUCTION (E-STICK)	
	6	1	**164-1541**	1	PEDAL AS-RH	
	7	1	**164-1544**	1	SUPPORT AS	
	8	1	**164-1547**	1	SHAFT AS	
	9	1	**164-1549**	1	ROD	
	10	1	**179-8235**	1	LOCKPIN	
B	11	1	**198-0098**	1	FILM (STANDARD STICK)	
M	12	1	**6V-7744**	1	LOCKNUT (M10X1.5 THD)	
	13	1	**8C-4987**	1	PIN-CLEVIS	
	14	1	**8M-3175**	1	WASHER-HARD (10.2X16X3MM THK)	
	15	1	**8T-4121**	4	WASHER-HARD (11X21X2.5MM THK)	
M	16	1	**8T-4133**	2	NUT (M10X1.5 THD)	
M	17	1	**8T-4186**	1	BOLT (M10X1.5X40MM)	
M	18	1	**8T-4195**	2	BOLT (M10X1.5X30MM)	

B-USE AS REQUIRED
M-METRIC PART

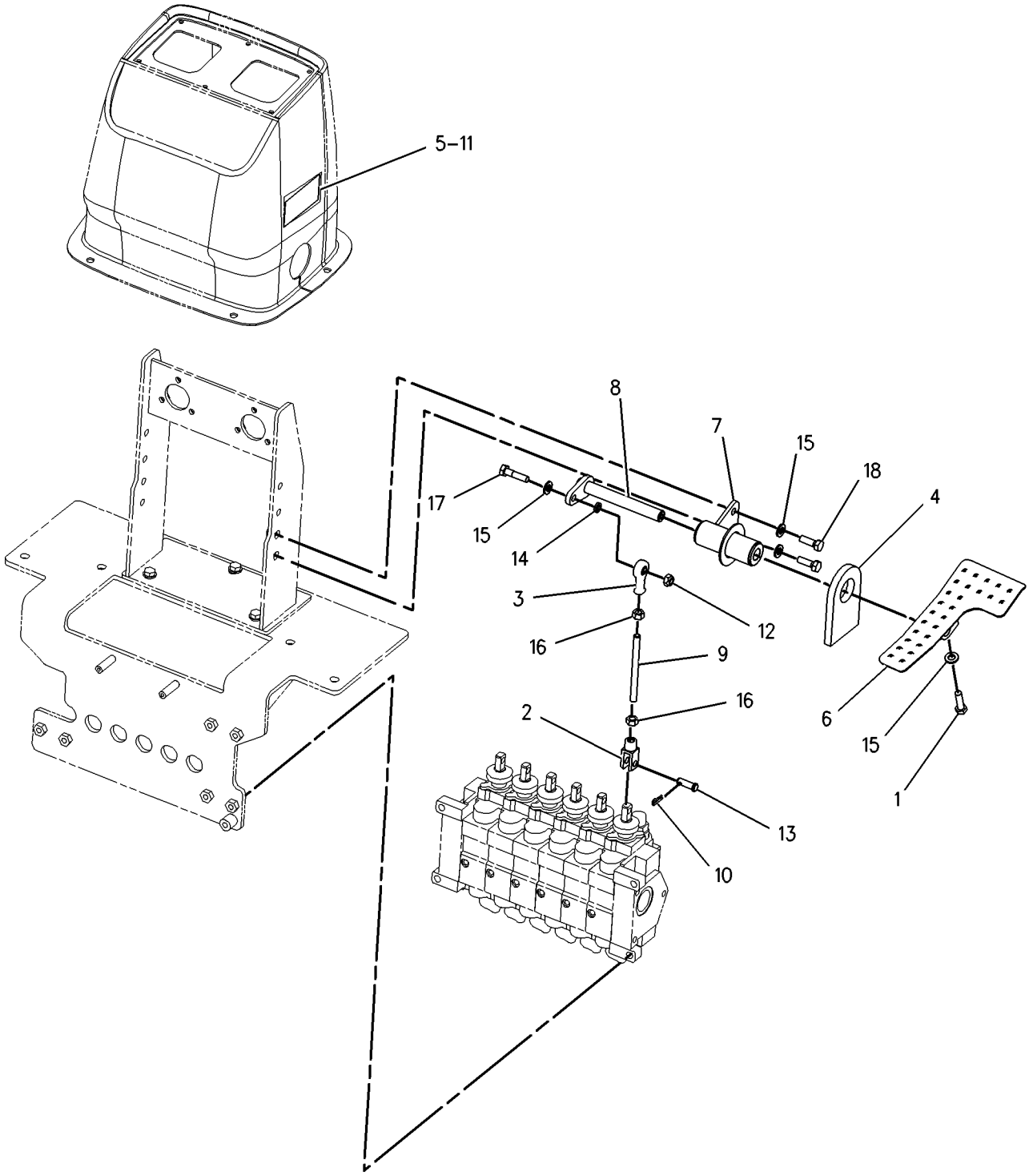

GRAPHIC #1 **<END>** g00813303

164-1550 CONTROL GP-HYDRAULIC PEDAL

S/N: BXC1-UP; DSX1-UP
AUXILIARY
PART OF 240-3183, 240-3186 VALVE AR-BANK 6, 204-9197, 204-9200 VALVE GP-AUXILIARY
AN ATTACHMENT

SMCS-5063 **i01565056**

NOTE	REF NO	GRAPHIC REF	PART NUMBER	QTY	PART NAME 1 2 3 4 5 6 (PRODUCT LEVEL)	SEE PAGE
M	1	1	**6V-8335**	1	BOLT-SELF LOCKING (M10X1.5X40MM)	
	2	1	**8T-4815**	1	ROD END	
	3	1	**8T-6431**	1	ROD END (M10X1.50 THD)	
	4	1	**109-0533**	1	SEAL	
	5	1	**164-1544**	1	SUPPORT AS	
	6	1	**164-1547**	1	SHAFT AS	
	7	1	**164-1549**	1	ROD	
	8	1	**164-1551**	1	PEDAL AS-LH	
	9	1	**179-8235**	1	LOCKPIN	
M	10	1	**6V-7744**	1	LOCKNUT (M10X1.5 THD)	
	11	1	**8C-4987**	1	PIN-CLEVIS	
	12	1	**8M-3175**	1	WASHER-HARD (10.2X16X3MM THK)	
	13	1	**8T-4121**	6	WASHER-HARD (11X21X2.5MM THK)	
M	14	1	**8T-4133**	4	NUT (M10X1.5 THD)	
M	15	1	**8T-4186**	1	BOLT (M10X1.5X40MM)	
M	16	1	**8T-4195**	2	BOLT (M10X1.5X30MM)	

M-METRIC PART

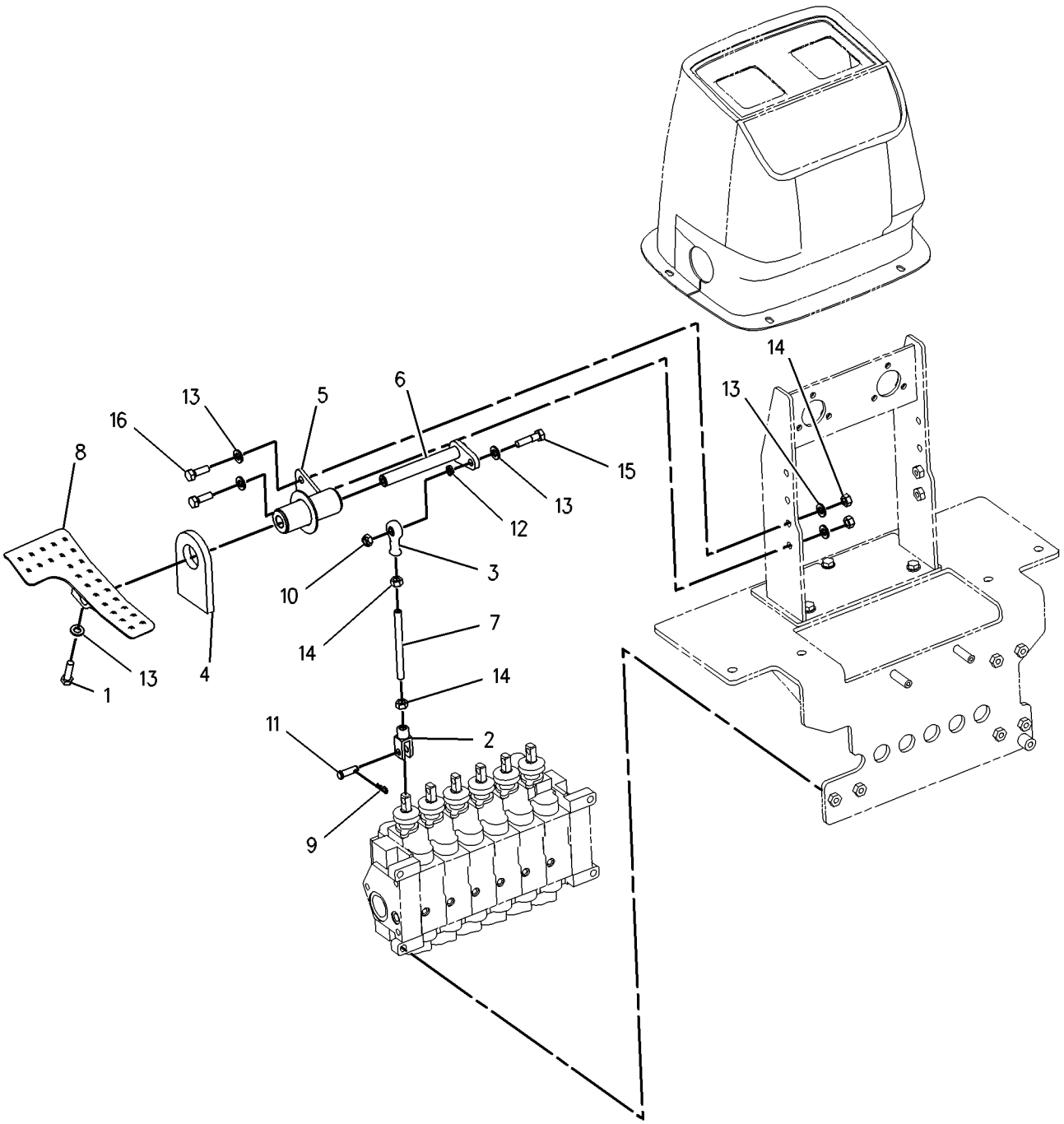

GRAPHIC #1 **<END>** g00745736

HYDRAULIC SYSTEM

164-1430 CONVERSION GP-HYD HAND CONTROL–KIT

S/N: BXC1-UP; DSX1-UP
EXCAVATOR TWO LEVER
AN ATTACHMENT

SMCS-5063 **i01472254**

NOTE	REF NO	GRAPHIC REF	PART NUMBER	QTY	PART NAME 1 2 3 4 5 6 (PRODUCT LEVEL)	SEE PAGE
Y	1	1	*164-1420*	1	CONTROL GP-HYDRAULIC HAND	354
Y-SEPARATE ILLUSTRATION						

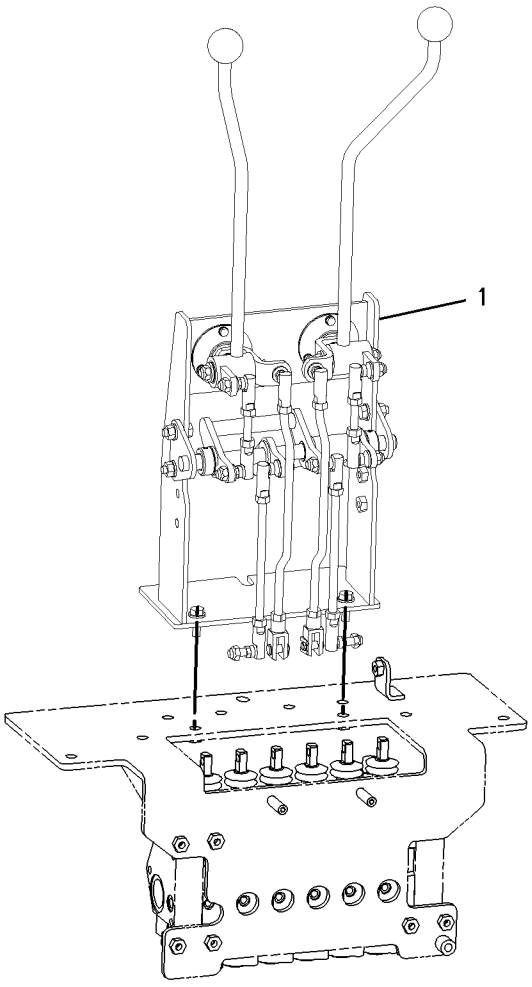

GRAPHIC #1 **<END>** g00770742

HYDRAULIC SYSTEM

132-8769 COUPLING GP

S/N: BXC1-UP; DSX1-UP
AN ATTACHMENT

SMCS-5057 **i01499420**

NOTE	REF NO	GRAPHIC REF	PART NUMBER	QTY	PART NAME 1 2 3 4 5 6 (PRODUCT LEVEL)	SEE PAGE
	1	1	**106-0406**	1	COUPLING	
	2	1	**106-0401**	1	COUPLING	

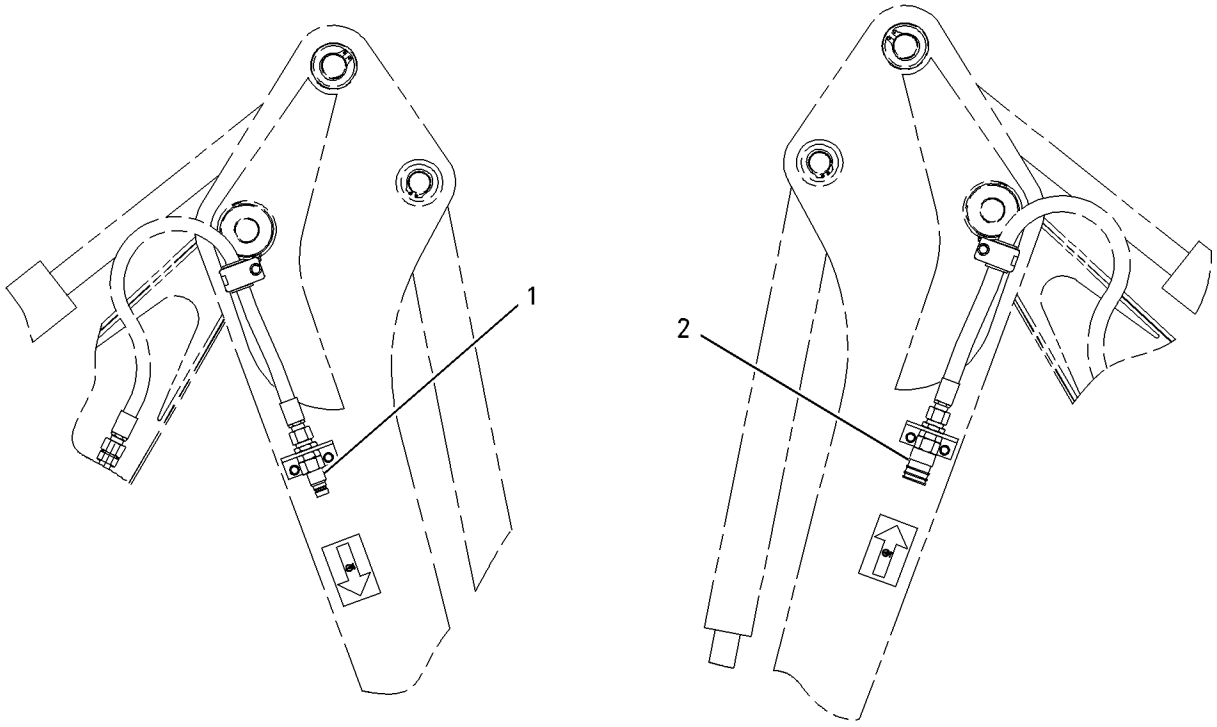

LEFT SIDE VIEW RIGHT SIDE VIEW

GRAPHIC #1 **<END>** g00778121

202-2236 COVER & VALVE GP-BANK

S/N: BXC1-UP; DSX1-UP
PART OF 203-5486 VALVE GP-BANK 4, 203-5487 VALVE GP-BANK 5, 203-5488 VALVE GP-BANK 6
AN ATTACHMENT

SMCS-5051, 5117 **i01700734**

NOTE	REF NO	GRAPHIC REF	PART NUMBER	QTY	PART NAME 1 2 3 4 5 6 (PRODUCT LEVEL)	SEE PAGE
	1	1	**9S-8002**	1	PLUG	
	2	1	**197-3709**	1	VALVE GP-RELIEF	
		1	**4K-1388**	1	SEAL-O-RING	
		1	**5K-9090**	1	SEAL-O-RING	
		1	**6E-0358**	1	RING-BACKUP	
	3	1	**197-4938**	1	ORFICE	
	4	1	**9S-8004**	1	PLUG	
	5	1	**197-6415**	1	PLUG	
	6	1	**6E-4317**	1	SPRING	
	7	1	**9S-8006**	1	PLUG	
	8	1	**2M-9780**	1	SEAL-O-RING	
	9	1	**3J-7354**	1	SEAL-O-RING	

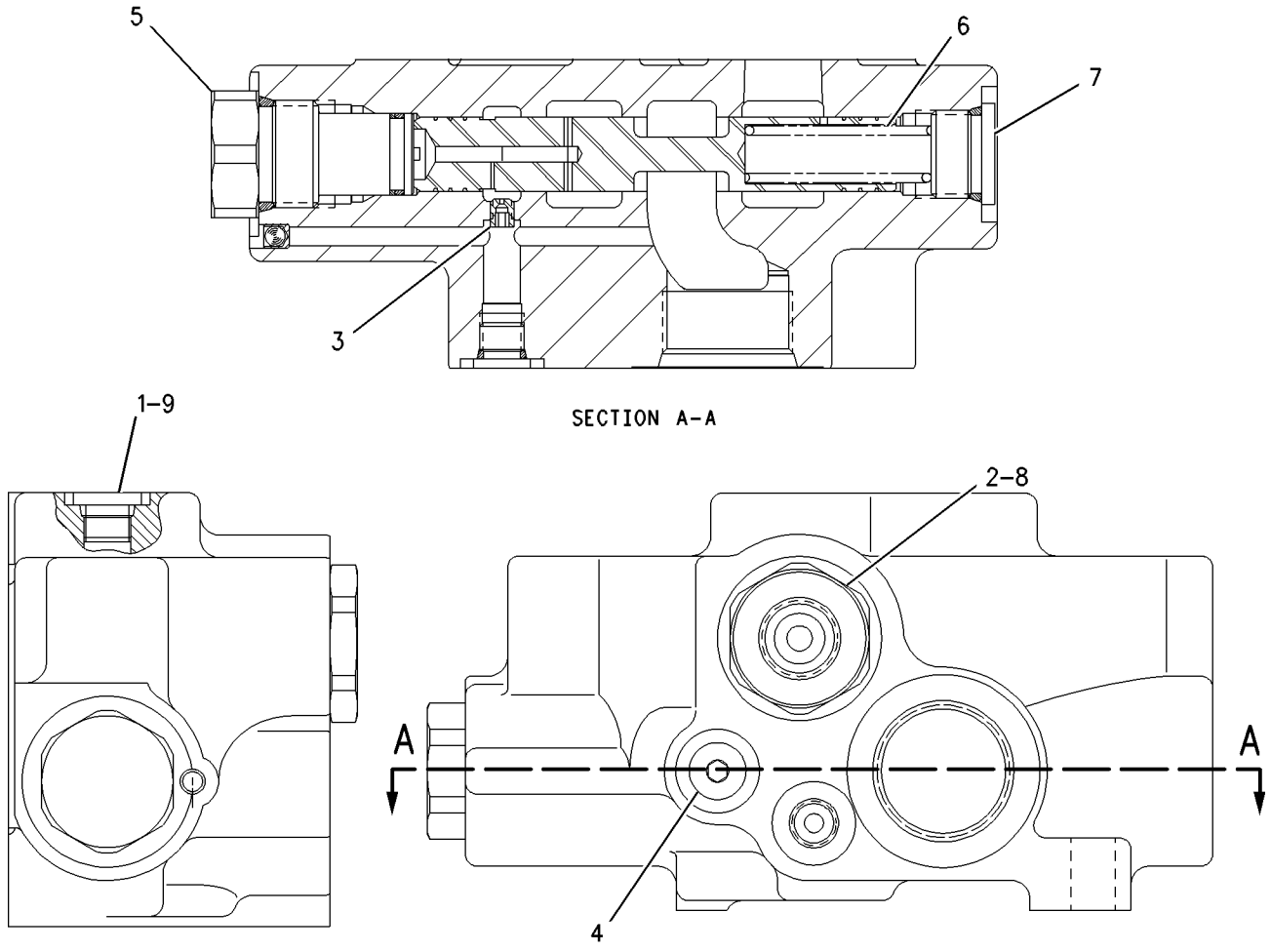

GRAPHIC #1 **<END>** g00875845

HYDRAULIC SYSTEM

206-0514 CYLINDER GP-BACKHOE BUCKET

S/N: BXC1-UP; DSX1-UP
88.9MM BORE X 854MM STROKE
PART OF 240-8683, 240-8684, 240-8685, 240-8686, 240-8687, 240-8688, 240-8693, 240-8694, 240-8695, 240-8696, 240-8697, 240-8698 BACKHOE AR-STANDARD STICK AN ATTACHMENT

SMCS-5457 **i01644505**

NOTE	REF NO	GRAPHIC REF	PART NUMBER	QTY	PART NAME 1 2 3 4 5 6 (PRODUCT LEVEL)	SEE PAGE
	1	1	**180-6603**	1	PISTON	
	2	1	**187-3510**	1	HEAD	
	3	1	**206-0513**	1	CYLINDER AS	
		1	**6V-8398**	1	SEAL-O-RING	
	3A	1	**9R-7960**	2	BEARING-SLEEVE	
	4	1	**209-9241**	1	ROD AS	
	4A	1	**9R-0162**	2	BEARING	
	5	1	**106-1251**	1	WASHER	
	6	1	**167-2201**	1	SEAL AS-BUFFER	
	7	1	**167-2312**	1	SEAL-U-CUP	
	8	1	**2H-3931**	1	SEAL-O-RING	
	9	1	**2H-4145**	1	SEAL-O-RING	
	10	1	**4J-9224**	1	RING-BACKUP	
	11	1	**4T-8054**	1	SEAL AS	
	12	1	**5J-8156**	1	WIPER-ROD	
	13	1	**7J-9885**	1	RING-WEAR	
	14	1	**8T-0785**	1	RING-WEAR	
M	15	1	**8T-1605**	1	BOLT (M36X4X100MM)	

M-METRIC PART

206-0514 CYLINDER GP-BACKHOE BUCKET *(contd.)* i01644505

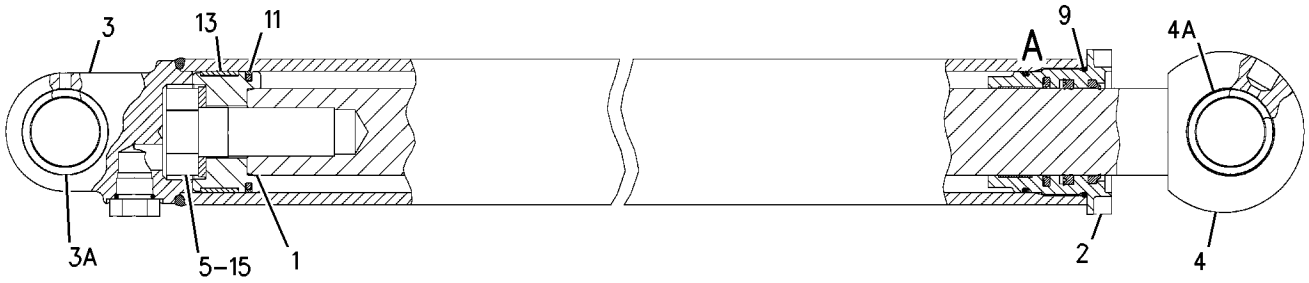

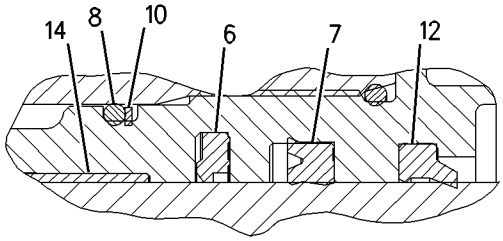

VIEW OF AREA A

GRAPHIC #1 **<END>** g00850067

206-0518 CYLINDER GP-BACKHOE BUCKET—EXTENDABLE STICK

S/N: BXC1-UP; DSX1-UP
88.9MM BORE X 854MM STROKE
PART OF 240-8490, 240-8491, 240-8492, 240-8493, 240-8504, 240-8505, 240-8506, 240-8507, 240-8689, 240-8690, 240-8691, 240-8692, 240-8699, 240-8700, 240-8701, 240-8702 BACKHOE AR-EXTENDABLE STICK
AN ATTACHMENT

SMCS-5457 **i01584121**

NOTE	REF NO	GRAPHIC REF	PART NUMBER	QTY	PART NAME 1 2 3 4 5 6 (PRODUCT LEVEL)	SEE PAGE
	1	1	**180-6111**	1	ROD AS	
	1A	1	**9R-0162**	2	BEARING	
	2	1	**180-6603**	1	PISTON	
	3	1	**187-3510**	1	HEAD	
	4	1	**206-0517**	1	CYLINDER AS	
		1	**6V-8398**	1	SEAL-O-RING	
		1	**180-6110**	1	CAP	
	5	1	**106-1251**	1	WASHER	
	6	1	**167-2201**	1	SEAL AS-BUFFER	
	7	1	**167-2312**	1	SEAL-U-CUP	
	8	1	**2H-3931**	1	SEAL-O-RING	
	9	1	**2H-4145**	1	SEAL-O-RING	
	10	1	**4J-9224**	1	RING-BACKUP	
	11	1	**4T-8054**	1	SEAL AS	
	12	1	**5J-8156**	1	WIPER-ROD	
	13	1	**7J-9885**	1	RING-WEAR	
	14	1	**8T-0785**	1	RING-WEAR	
M	15	1	**8T-1605**	1	BOLT (M36X4X100MM)	

M-METRIC PART

206-0518 CYLINDER GP-BACKHOE BUCKET *(contd.)* i01584121

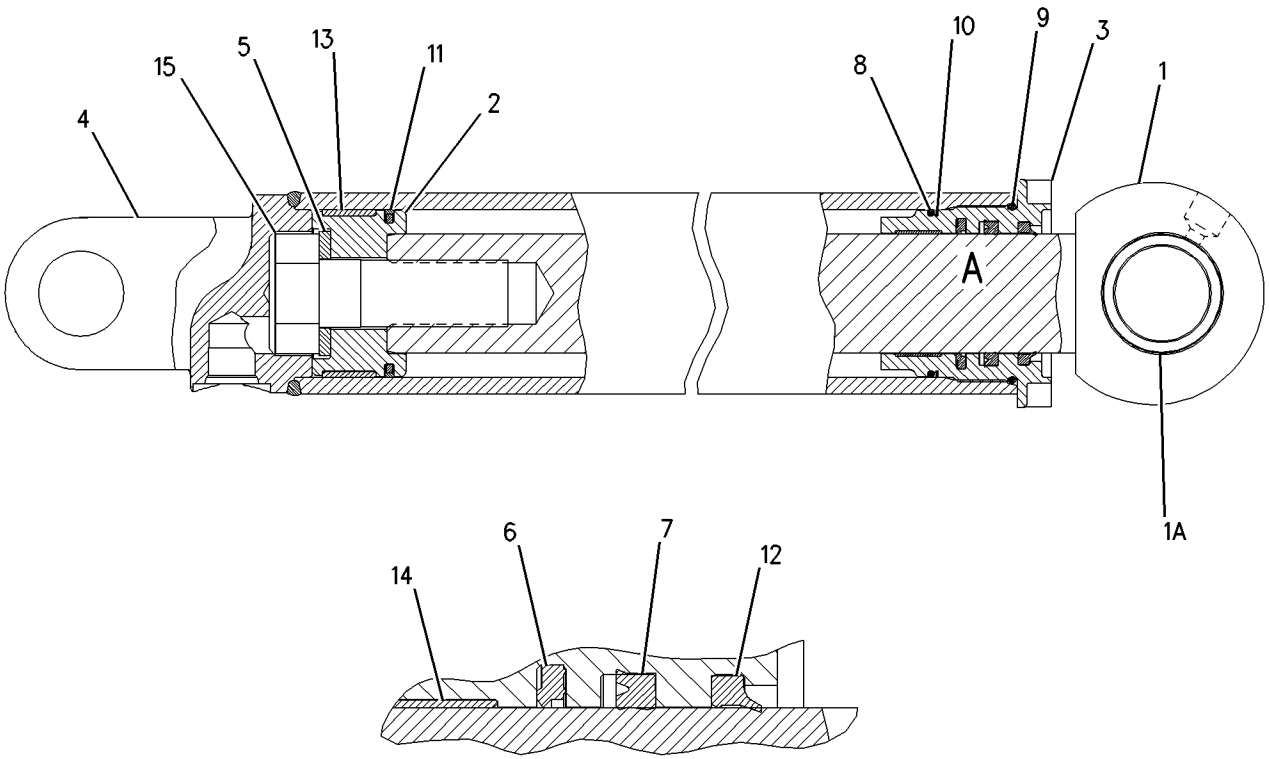

VIEW OF AREA A

GRAPHIC #1 **<END>** g00822004

HYDRAULIC SYSTEM

206-3630 CYLINDER GP-BOOM

S/N: BXC1-UP; DSX1-UP
120.7MM BORE X 1000MM STROKE
PART OF 237-9297, 237-9298 HYDRAULIC AR

SMCS-5456 **i01981681**

NOTE	REF NO	GRAPHIC REF	PART NUMBER	QTY	PART NAME 1 2 3 4 5 6 (PRODUCT LEVEL)	SEE PAGE
	1	1	**206-3629**	1	CYLINDER AS	
	1A	1	**6V-9746**	1	SEAL-O-RING	
	1B	1	**9R-0139**	1	BEARING-SLEEVE	
	2	1	**170-9066**	1	BOLT (1 1/2-12X101.6MM)	
	3	1	**3S-6162**	1	WASHER-HARD (40.5X67X6MM THK)	
	4	1	**8T-8390**	1	RING-WEAR	
	5	1	**4T-8588**	1	SEAL AS	
	6	1	**9X-7260**	1	RING-WEAR	
	7	1	**167-2202**	1	SEAL AS-BUFFER	
	8	1	**167-2310**	1	SEAL-U-CUP	
	9	1	**191-6558**	1	HEAD	
	10	1	**231-3540**	1	SEAL-WIPER	
	11	1	**175-7903**	1	SEAL-O-RING	
	12	1	**2J-3961**	1	RING-BACKUP	
R	13	1	**159-5848**	1	ROD AS	
	13A	1	**9R-0139**	2	BEARING-SLEEVE	
	14	1	**154-8051**	1	PISTON	
	15	1	**9T-5444**	1	PLUNGER	
	16	1	**6L-6208**	1	SPRING	
	17	1	**175-7902**	1	SEAL-O-RING	
					AVAILABLE REPAIR KIT(S):	
			235-0973	1	KIT-SEAL	

R-REMFG PART MAY BE AVAILABLE

206-3630 CYLINDER GP-BOOM *(contd.)* i01981681

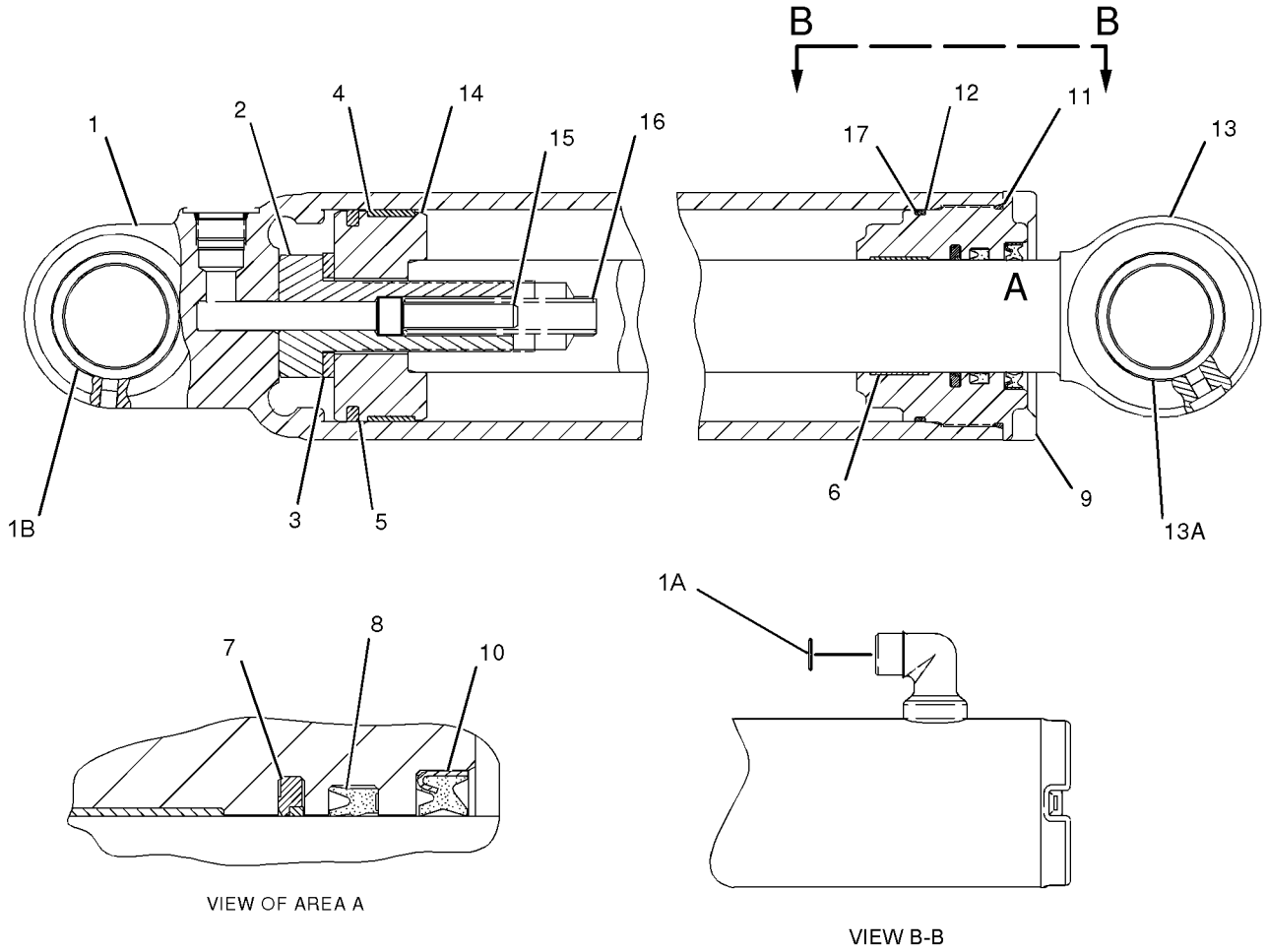

GRAPHIC #1 **<END>** g01027454

155-6586 CYLINDER GP-EXTENDABLE STICK

S/N: BXC1-UP; DSX1-UP
PART OF 184-6786, 184-9754 STICK GP-EXTENDABLE
AN ATTACHMENT

SMCS-5486 **i01961861**

NOTE	PART NUMBER	QTY	PART NAME 1 2 3 4 5 6 (PRODUCT LEVEL)	SEE PAGE
Y	**191-7725**	1	CYLINDER GP-EXTENDABLE STICK	379
Y	*162-2351*	1	LINES GP-EXTENDABLE STICK	445

Y-SEPARATE ILLUSTRATION

<END>

191-7725 CYLINDER GP-EXTENDABLE STICK

S/N: BXC1-UP; DSX1-UP
76.2MM BORE X 1067MM STROKE
PART OF 155-6586 CYLINDER GP-EXTENDABLE STICK
AN ATTACHMENT

SMCS-5486 **i01864178**

NOTE	REF NO	GRAPHIC REF	PART NUMBER	QTY	PART NAME 1 2 3 4 5 6 (PRODUCT LEVEL)	SEE PAGE
	1	1	**9T-2212**	1	PISTON	
	2	1	**164-7176**	1	ROD AS	
	3	1	**191-7727**	1	CYLINDER AS	
		1	**6V-8398**	1	SEAL-O-RING	
	4	1	**167-2186**	1	SEAL AS-BUFFER	
	5	1	**167-2294**	1	SEAL-U-CUP	
	6	1	**226-8202**	1	SEAL-WIPER	
M	7	1	**173-9779**	1	BOLT-HEX HEAD (M24X3.0X80MM)	
	8	1	**175-7896**	1	SEAL-O-RING	
	9	1	**191-6159**	1	HEAD	
	10	1	**4T-6780**	1	RING-WEAR	
	11	1	**5H-8848**	1	SEAL-O-RING	
	12	1	**6J-1972**	1	SEAL AS	
	13	1	**6J-5731**	1	RING-BACKUP	
	14	1	**6J-5733**	1	RING-WEAR	
	15	1	**6V-8237**	1	WASHER (26X44X4MM THK)	

M-METRIC PART

191-7725 CYLINDER GP-EXTENDABLE STICK *(contd.)* i01864178

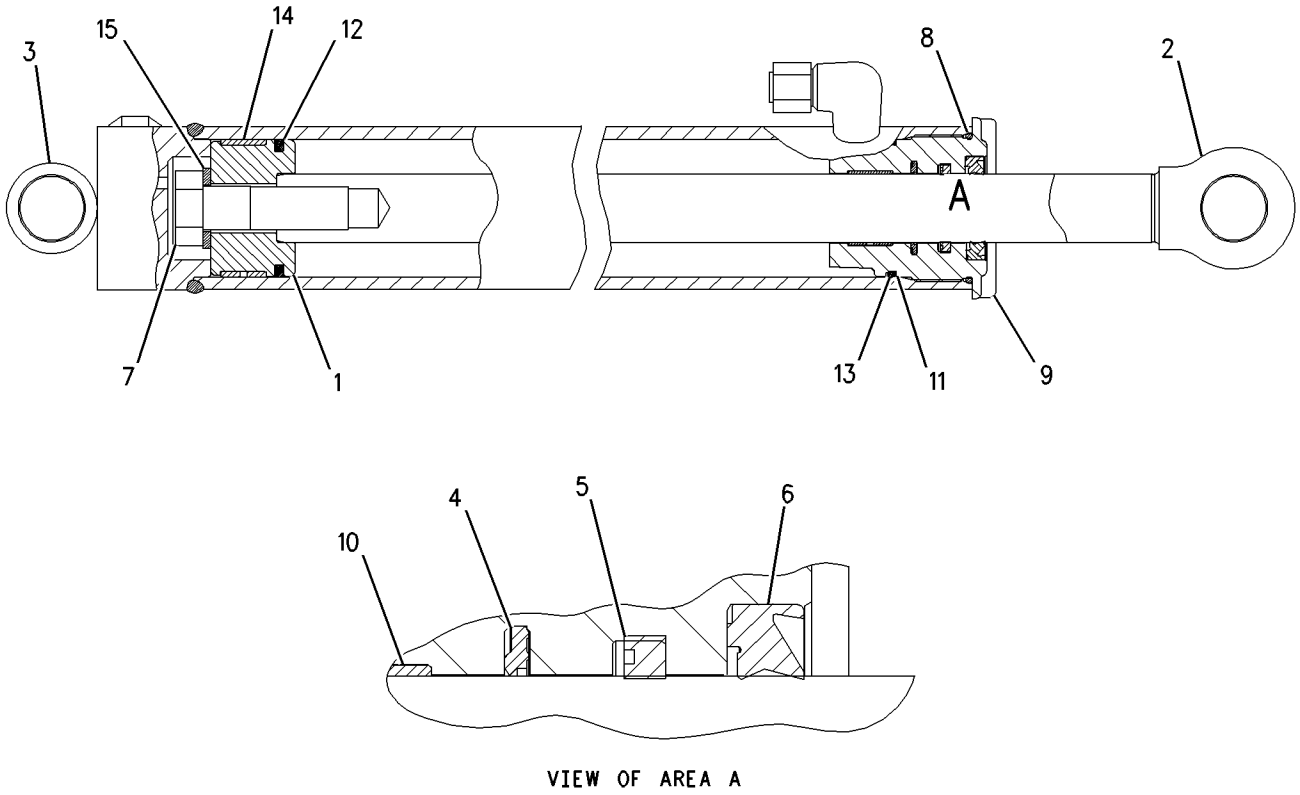

VIEW OF AREA A

GRAPHIC #1 **<END>** g00950327

HYDRAULIC SYSTEM

192-3791 CYLINDER GP-LIFT

S/N: BXC1-UP; DSX1-UP
85MM BORE X 699.2MM STROKE
PART OF 237-9297, 237-9298 HYDRAULIC AR

SMCS-5102 **i01982238**

NOTE	REF NO	GRAPHIC REF	PART NUMBER	QTY	PART NAME 1 2 3 4 5 6 (PRODUCT LEVEL)	SEE PAGE
	1	1	**119-2110**	1	ROD AS	
	1A	1	**9R-0321**	2	BEARING-SLEEVE	
	2	1	**185-1502**	1	PISTON	
	3	1	**192-3792**	1	CYLINDER AS	
	3A	1	**9R-0153**	2	BEARING-SLEEVE	
	3B	1	**7J-9108**	1	SEAL-O-RING	
	4	1	**192-3849**	1	HEAD	
	5	1	**141-0711**	1	RING-WEAR	
	6	1	**167-2195**	1	SEAL AS-BUFFER	
	7	1	**167-2304**	1	SEAL-U-CUP	
	8	1	**229-9382**	1	SEAL-WIPER	
M	9	1	**173-9683**	1	BOLT (M30X3.5X90MM)	
	10	1	**184-1687**	1	SEAL AS	
	11	1	**1H-7339**	1	SEAL-O-RING	
	12	1	**2H-6338**	1	SEAL-O-RING	
	13	1	**4T-5613**	1	RING-WEAR	
	14	1	**8J-2574**	1	RING-BACKUP	
	15	1	**9X-8399**	1	WASHER (33X56X6MM THK)	

M-METRIC PART

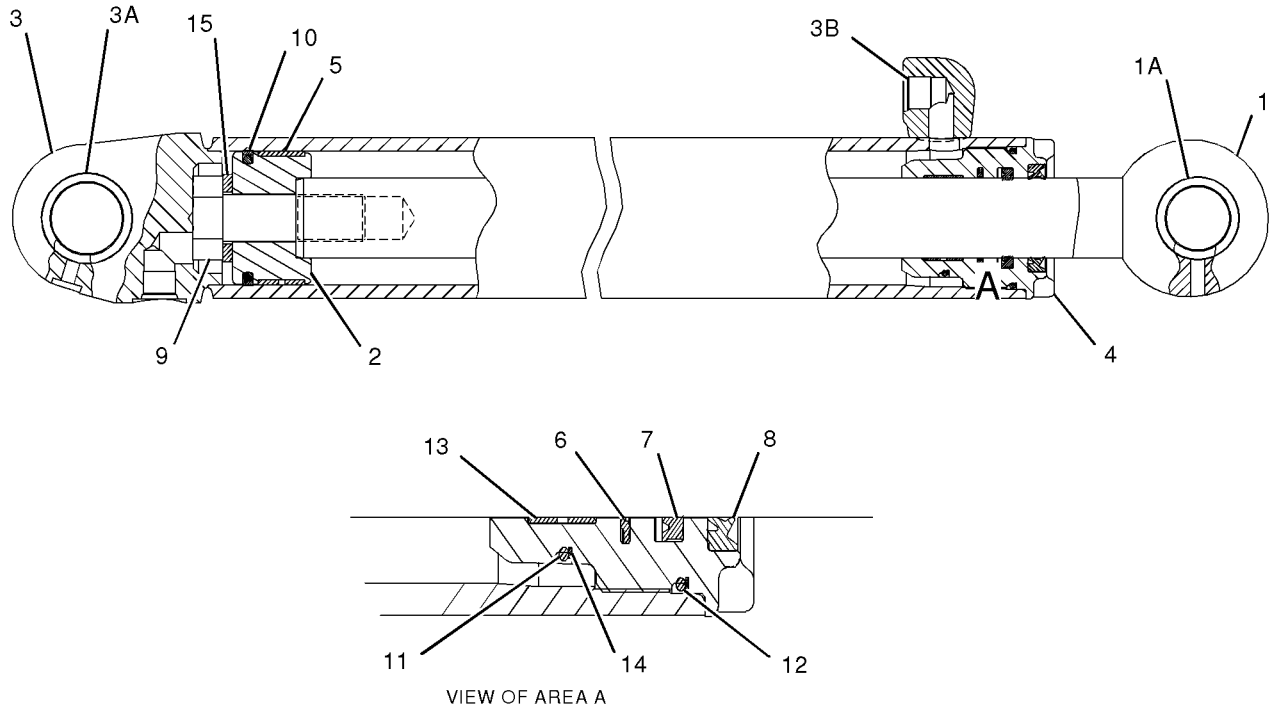

VIEW OF AREA A

GRAPHIC #1 **<END>** g01027301

HYDRAULIC SYSTEM

185-1839 CYLINDER GP-MULTIPURPOSE BUKT

S/N: BXC1-UP; DSX1-UP
76.2MM BORE X 260MM STROKE
PART OF 111-8634, 111-8635, 112-0938, 112-0939, 124-0486, 124-0487, 124-0488, 124-0489, 164-4659, 208-0827 BUCKET AR-MULTIPURPOSE
AN ATTACHMENT

SMCS-5457 **i01863206**

NOTE	REF NO	GRAPHIC REF	PART NUMBER	QTY	PART NAME 1 2 3 4 5 6 (PRODUCT LEVEL)	SEE PAGE
	1	1	**6E-0122**	1	HEAD	
	2	1	**9T-2212**	1	PISTON	
R	3	1	**9T-4008**	1	ROD AS	
	3A	1	**9T-4007**	2	BEARING	
R	4	1	**9T-4009**	1	CYLINDER AS	
	5	1	**167-2186**	1	SEAL AS-BUFFER	
	6	1	**167-2294**	1	SEAL-U-CUP	
	7	1	**226-8202**	1	SEAL-WIPER	
	8	1	**1H-7339**	1	SEAL-O-RING	
	9	1	**4T-6780**	1	RING-WEAR	
	10	1	**5P-8250**	1	WASHER (28X49X5MM THK)	
	11	1	**6F-7037**	1	BOLT (1-14X3.25IN)	
	12	1	**6J-1972**	1	SEAL AS	
	13	1	**6J-5733**	1	RING-WEAR	
	14	1	**8J-2574**	1	RING-BACKUP	
					AVAILABLE REPAIR KIT(S):	
			235-0354	1	KIT-SEAL	

R-REMFG PART MAY BE AVAILABLE

185-1839 CYLINDER GP-MULTIPURPOSE BUKT *(contd.)* i01863206

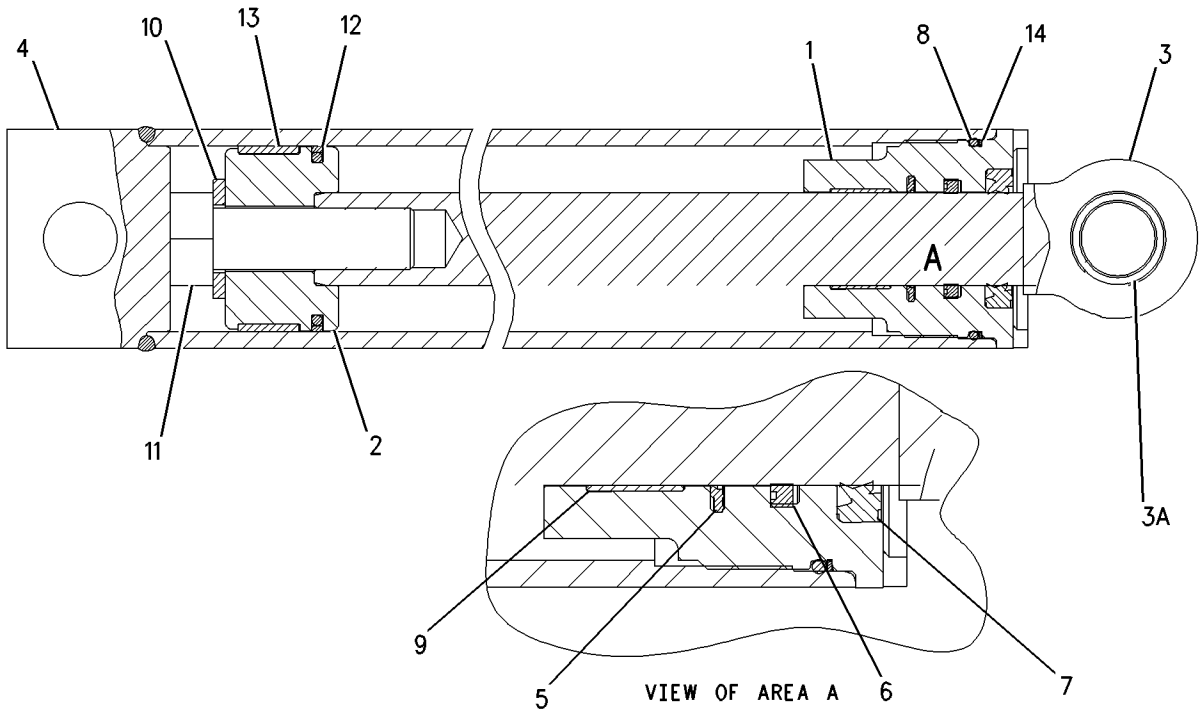

GRAPHIC #1 **<END>** g00949845

173-4565 CYLINDER GP-STABILIZER

S/N: BXC1-UP; DSX1-UP
70MM (2.76IN) BORE X 760MM (29.92IN) STROKE
PART OF 237-9297, 237-9298 HYDRAULIC AR

SMCS-5468 **i01991667**

NOTE	REF NO	GRAPHIC REF	PART NUMBER	QTY	PART NAME 1 2 3 4 5 6 (PRODUCT LEVEL)	SEE PAGE
	1	1	**126-6951**	1	CYLINDER AS	
		1	**9R-7215**	1	BEARING	
	2	1	**5B-9385**	1	BOLT (1-14X2.5 IN)	
	3	1	**5P-8250**	1	WASHER (28X49X5MM THK)	
	4	1	**8J-0112**	1	RING-WEAR	
	5	1	**5J-7010**	1	SEAL AS	
	6	1	**9T-0805**	1	PISTON	
	7	1	**175-7895**	1	SEAL-O-RING	
	8	1	**4J-9225**	1	RING-BACKUP	
	9	1	**151-5349**	1	HEAD	
	10	1	**126-6953**	1	ROD AS	
	11	1	**4T-6907**	1	RING-WEAR	
	12	1	**167-2300**	1	SEAL-U-CUP	
	13	1	**167-2191**	1	SEAL AS-BUFFER	
	14	1	**231-3539**	1	SEAL-WIPER	

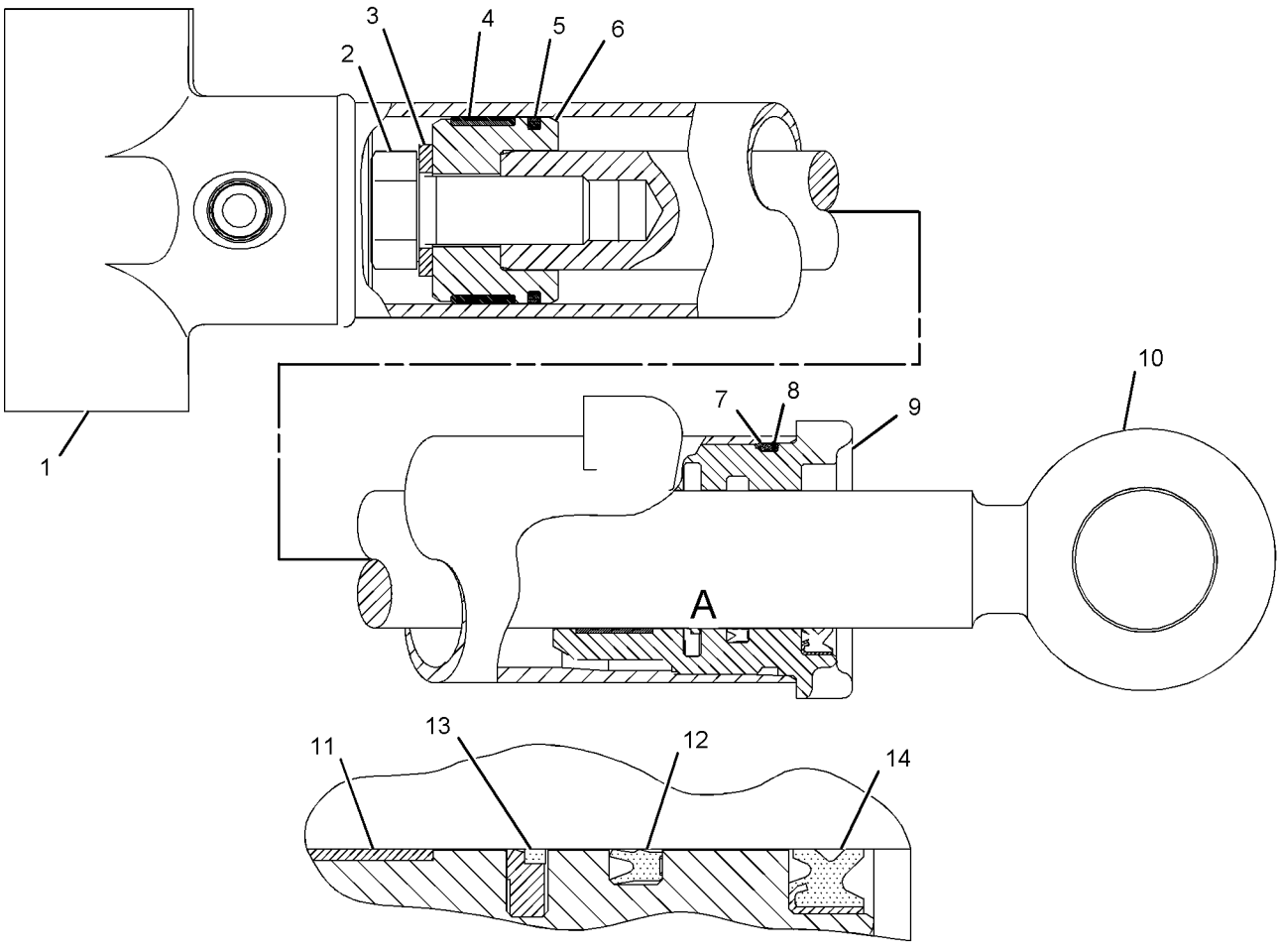

VIEW OF AREA A

GRAPHIC #1 **<END>** g01031551

HYDRAULIC SYSTEM

235-9831 CYLINDER GP-STICK

S/N: BXC1-UP; DSX1-UP
114.3MM BORE X 700MM STROKE
PART OF 237-9297, 237-9298 HYDRAULIC AR

SMCS-5458 **i01994438**

NOTE	REF NO	GRAPHIC REF	PART NUMBER	QTY	PART NAME 1 2 3 4 5 6 (PRODUCT LEVEL)	SEE PAGE
	1	1	**235-9832**	1	HEAD	
	2	1	**235-9833**	1	PISTON	
	3	1	**235-9835**	1	ROD AS	
	3A	1	**9R-0139**	2	BEARING-SLEEVE	
	4	1	**244-6869**	1	CYLINDER AS	
	4A	1	**6V-8398**	1	SEAL-O-RING	
	4B	1	**9R-0139**	2	BEARING-SLEEVE	
	5	1	**167-2201**	1	SEAL AS-BUFFER	
	6	1	**167-2312**	1	SEAL-U-CUP	
	7	1	**175-7902**	1	SEAL-O-RING	
	8	1	**225-3281**	1	SEAL-WIPER	
	9	1	**4J-3745**	1	RING-WEAR	
	10	1	**4J-9220**	1	RING-BACKUP	
	11	1	**4M-0189**	1	SEAL-O-RING	
	12	1	**5J-4986**	1	SEAL AS	
	13	1	**5J-7878**	1	NUT-SELF LOCKING	
	14	1	**8T-0785**	1	RING-WEAR	

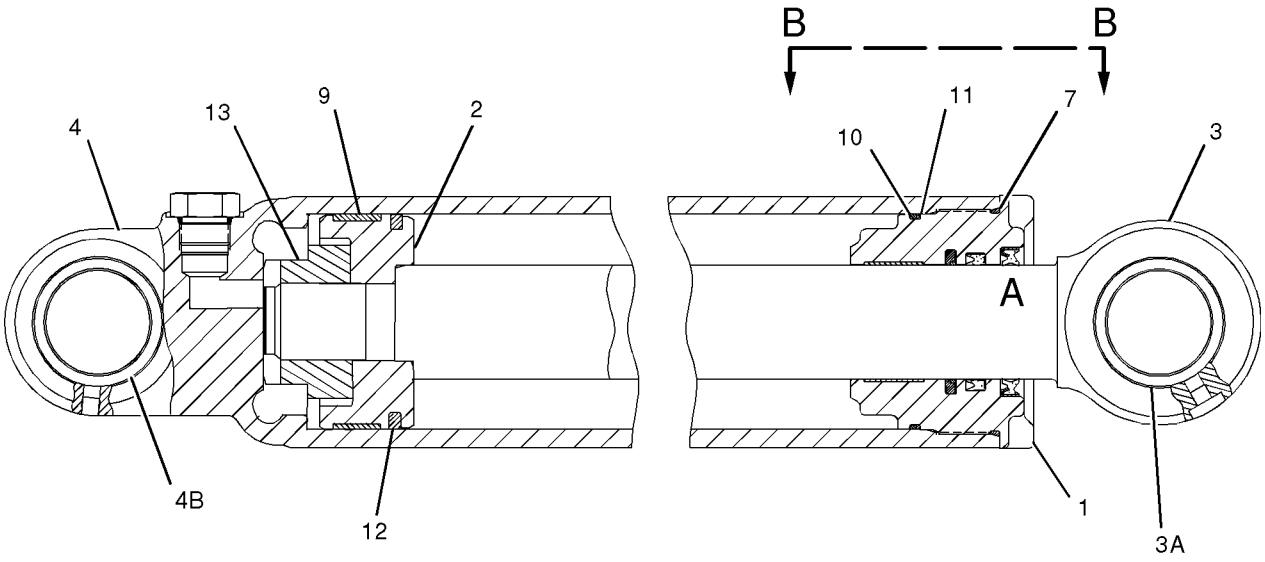

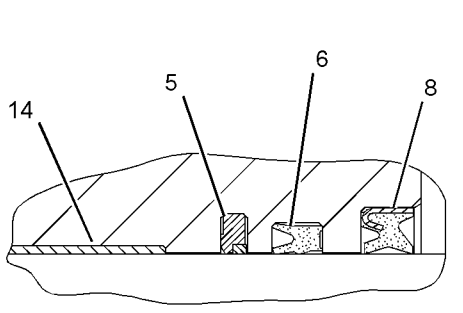

VIEW OF AREA A

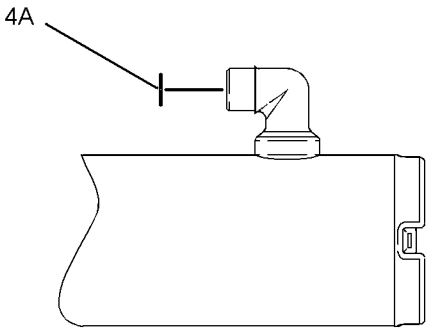

VIEW B-B

GRAPHIC #1 **<END>** g01032384

191-7735 CYLINDER GP-SWING

S/N: BXC1-UP; DSX1-UP
101.6MM BORE X 249.0MM STROKE
PART OF 237-9297, 237-9298 HYDRAULIC AR

SMCS-5105 **i02010800**

NOTE	REF NO	GRAPHIC REF	PART NUMBER	QTY	PART NAME 1 2 3 4 5 6 (PRODUCT LEVEL)	SEE PAGE
	1	1	**191-7734**	1	CYLINDER AS	
		1	**9T-2883**	2	BEARING	
	2	1	**169-6947**	1	NUT (1 1/2 X 12 THD)	
	3	1	**6J-2797**	1	RING-WEAR	
	4	1	**5J-5402**	1	SEAL AS	
	5	1	**112-1773**	1	PISTON	
	6	1	**9X-4611**	1	SEAL-O-RING	
	7	1	**2K-6830**	1	RING-BACKUP	
	8	1	**191-6577**	1	HEAD-CYLINDER	
R	9	1	**125-7894**	1	ROD AS	
	9A	1	**6E-1478**	1	PLUNGER	
	9B	1	**2Y-5821**	1	RING	
	9C	1	**102-3582**	1	WASHER (2.5MM THK)	
	9D	1	**3N-5739**	1	SPRING	
	9E	1	**9R-9505**	2	BEARING-SLEEVE	
	10	1	**229-9382**	1	SEAL-WIPER	
	11	1	**167-2304**	1	SEAL-U-CUP	
	12	1	**167-2195**	1	SEAL AS-BUFFER	
	13	1	**4T-5613**	1	RING-WEAR	
	14	1	**8H-7521**	1	SEAL-O-RING	

R-REMFG PART MAY BE AVAILABLE

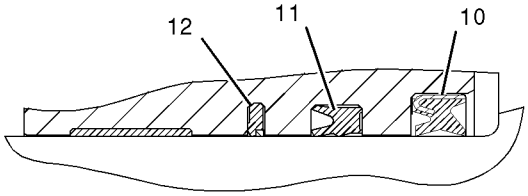

VIEW OF AREA B

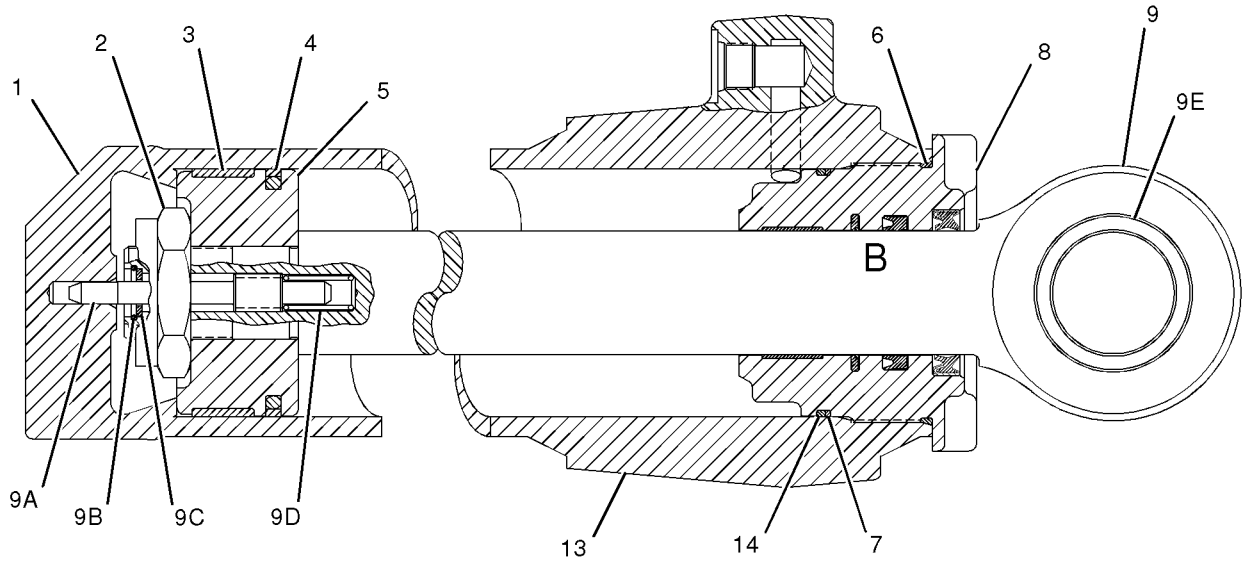

GRAPHIC #1 **<END>** g01039831

191-8161 CYLINDER GP-SWING

S/N: BXC1-UP; DSX1-UP
101.6MM BORE X 249MM STROKE
PART OF 237-9297, 237-9298 HYDRAULIC AR

SMCS-5105 **i01982353**

NOTE	REF NO	GRAPHIC REF	PART NUMBER	QTY	PART NAME 1 2 3 4 5 6 (PRODUCT LEVEL)	SEE PAGE
	1	1	**191-7738**	1	CYLINDER AS	
	1A	1	**9T-2883**	2	BEARING	
	2	1	**169-6947**	1	NUT (1 1/2 X 12 THD)	
	3	1	**6J-2797**	1	RING-WEAR	
	4	1	**5J-5402**	1	SEAL AS	
	5	1	**112-1773**	1	PISTON	
	6	1	**9X-4611**	1	SEAL-O-RING	
	7	1	**2K-6830**	1	RING-BACKUP	
	8	1	**191-6577**	1	HEAD-CYLINDER	
R	9	1	**125-7894**	1	ROD AS	
	9A	1	**6E-1478**	1	PLUNGER	
	9B	1	**2Y-5821**	1	RING	
	9C	1	**102-3582**	1	WASHER (2.5MM THK)	
	9D	1	**3N-5739**	1	SPRING	
	9E	1	**9R-9505**	2	BEARING-SLEEVE	
	10	1	**229-9382**	1	SEAL-WIPER	
	11	1	**167-2304**	1	SEAL-U-CUP	
	12	1	**167-2195**	1	SEAL AS-BUFFER	
	13	1	**4T-5613**	1	RING-WEAR	
	14	1	**8H-7521**	1	SEAL-O-RING	

R-REMFG PART MAY BE AVAILABLE

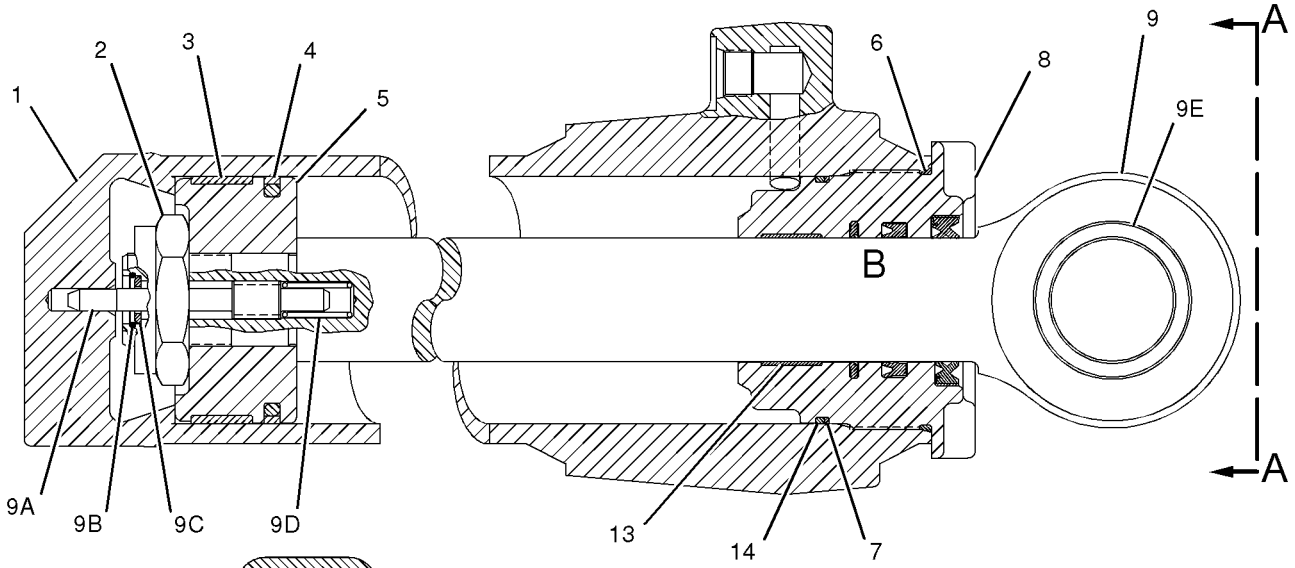

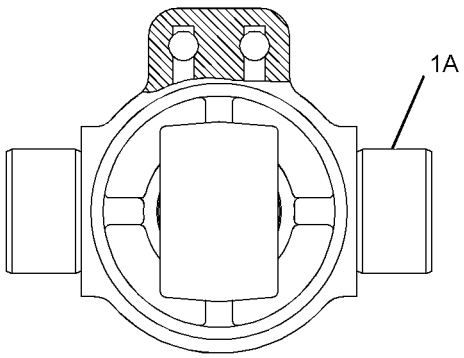

VIEW A-A

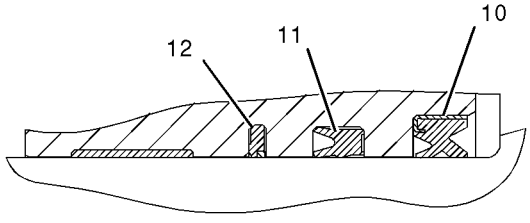

VIEW OF AREA B

GRAPHIC #1 **<END>** g01027621

HYDRAULIC SYSTEM

192-3884 CYLINDER GP-TILT

S/N: BXC1-UP; DSX1-UP
75MM BORE X 884.5MM STROKE
PART OF 237-9297, 237-9298 HYDRAULIC AR

SMCS-5104 **i01883937**

NOTE	REF NO	GRAPHIC REF	PART NUMBER	QTY	PART NAME 1 2 3 4 5 6 (PRODUCT LEVEL)	SEE PAGE
	1	1	**184-2365**	1	ROD AS	
	1A	1	**9R-0321**	2	BEARING-SLEEVE	
	2	1	**184-2409**	1	PISTON	
	3	1	**192-3886**	1	CYLINDER AS	
	3A	1	**6V-8398**	1	SEAL-O-RING	
	3B	1	*184-1580*	1	CAP AS	
		1	**9R-0153**	2	BEARING-SLEEVE	
	4	1	**143-8918**	1	RING-WEAR	
	5	1	**167-2195**	1	SEAL AS-BUFFER	
	6	1	**167-2304**	1	SEAL-U-CUP	
	7	1	**229-9382**	1	SEAL-WIPER	
M	8	1	**173-9779**	1	BOLT (M24X3.0X80MM)	
	9	1	**210-7029**	1	SEAL AS	
	10	1	**191-6149**	1	HEAD	
	11	1	**1H-7339**	1	SEAL-O-RING	
	12	1	**4T-5613**	1	RING-WEAR	
	13	1	**6J-2420**	1	RING	
	14	1	**6V-8237**	1	WASHER (26X44X4MM THK)	
	15	1	**8F-8882**	1	SEAL-O-RING	

M-METRIC PART

192-3884 CYLINDER GP-TILT ***(contd.)*** **i01883937**

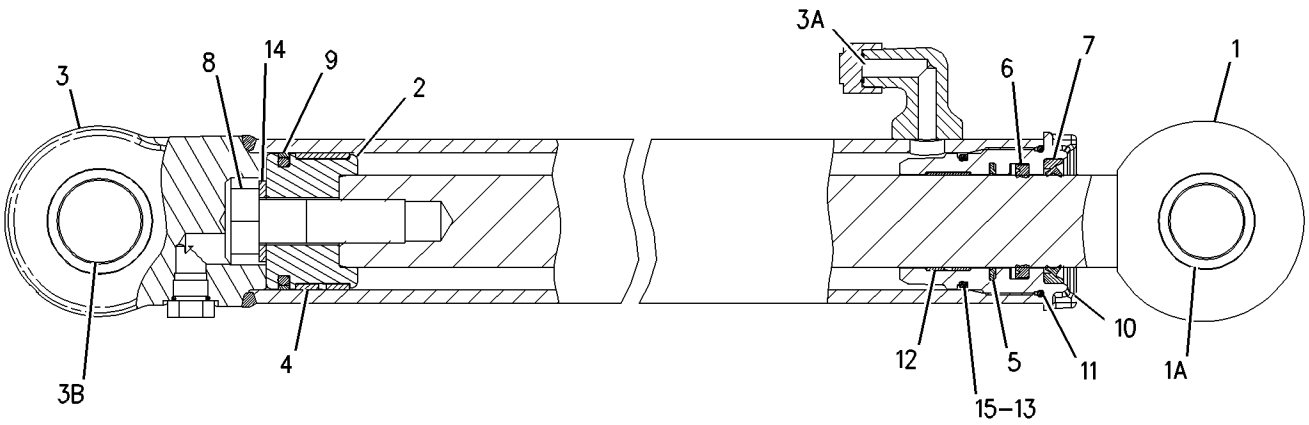

GRAPHIC #1 **<END>** g00976279

HYDRAULIC SYSTEM

208-8658 DRAIN GP-HYDRAULIC

S/N: BXC1-UP; DSX1-UP
AN ATTACHMENT

SMCS-5050, 5070 **i01667411**

NOTE	REF NO	GRAPHIC REF	PART NUMBER	QTY	PART NAME 1 2 3 4 5 6 (PRODUCT LEVEL)	SEE PAGE
E	1	1	**5P-0743**		HOSE (40CM)	
	2	1	**8T-0154**	1	CLAMP-HOSE	
	3	1	*165-2273*	1	VALVE GP-SHUTOFF	
		1	**3K-0360**	1	SEAL-O-RING (16.36MM ID)	
		1	**6V-7238**	1	VALVE-SHUTOFF	

E-ORDER BY THE CENTIMETER

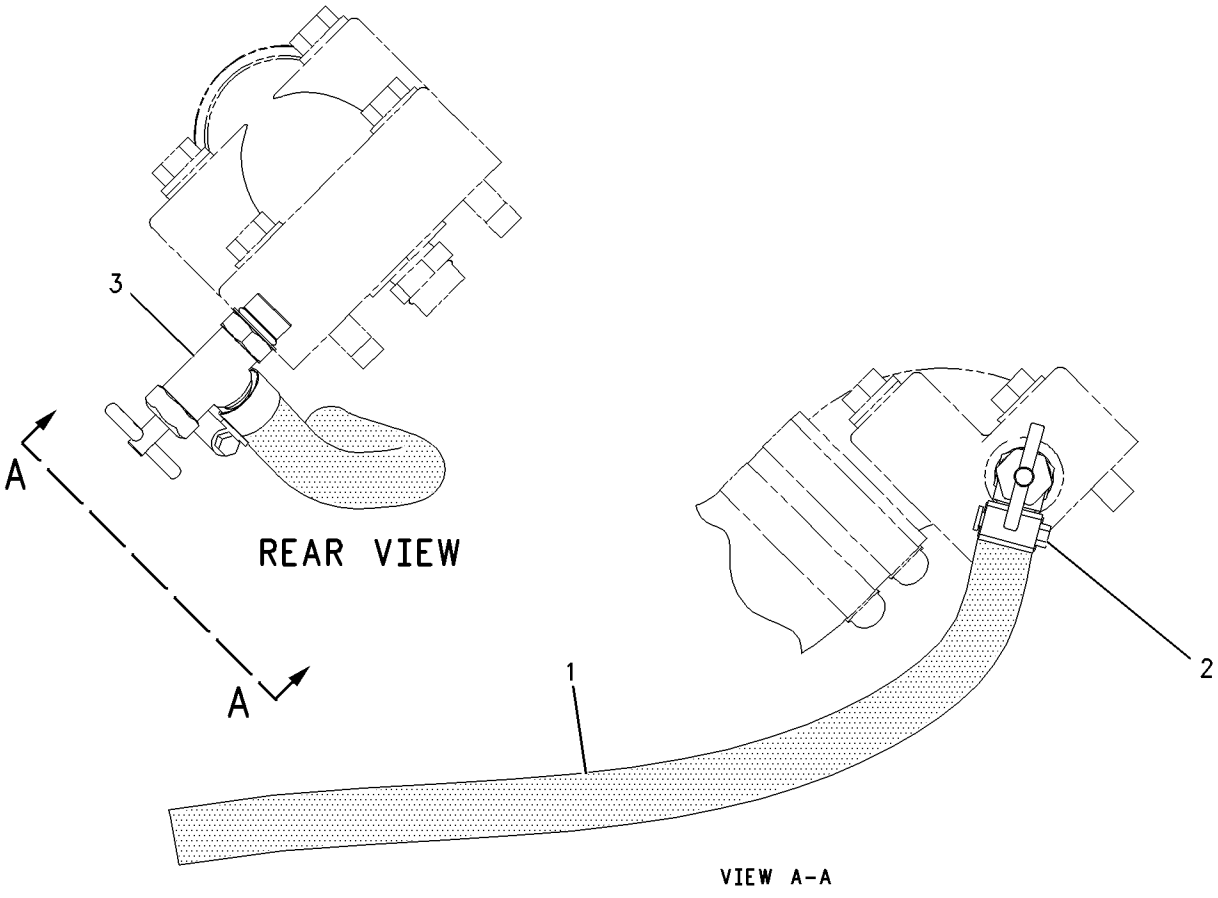

GRAPHIC #1 **<END>** g00861490

185-0060 HYDRAULIC AR—GENERAL PURPOSE BUCKET

S/N: BXC1-UP; DSX1-UP
2 BANK, PARALLEL LIFT
AN ATTACHMENT

SMCS-5050 **i02003557**

NOTE	PART NUMBER	QTY	PART NAME 1 2 3 4 5 6 (PRODUCT LEVEL)	SEE PAGE
	164-1363	1	BOOT	
	186-5298	1	FILM-INSTRUCTION (BUCKET CONTROL)	
Y	*189-8797*	1	LINES GP-LIFT CYLINDER	448
Y	*189-0551*	1	LINES GP-TILT CYLINDER	519
Y	*185-1598*	1	MOUNTING GP-BANK VALVE	525
Y	*119-4595*	1	MOUNTING GP-BUCKET	689
Y	**185-5913**	1	VALVE GP-BANK 2	548

Y-SEPARATE ILLUSTRATION

<END>

185-0061 HYDRAULIC AR—GENERAL PURPOSE BUCKET—LOCKS

S/N: BXC1-UP; DSX1-UP
2 BANK, PARALLEL LIFT
AN ATTACHMENT

SMCS-5050 **i02003559**

NOTE	PART NUMBER	QTY	PART NAME 1 2 3 4 5 6 (PRODUCT LEVEL)	SEE PAGE
	164-1363	1	BOOT	
	186-5298	1	FILM-INSTRUCTION (BUCKET CONTROL)	
Y	*183-8552*	1	LINES GP-LOAD CONTROL VALVE	454
Y	*185-1598*	1	MOUNTING GP-BANK VALVE	525
Y	*119-4595*	1	MOUNTING GP-BUCKET	689
	211-3372	1	SWITCH GP	
	130-2758	1	HOUSING-SWITCH	
	130-2759	1	HOUSING-DETENT	
	131-0379	1	SWITCH AS (HYDRAULIC LOCK)	
	102-8803	1	KIT-RECEPTACLE (3-PIN)	
			(KIT INCLUDES RECEPTACLE AS.& WEDGE)	
	3E-3371	1	WEDGE-RECEPTACLE LOCK (3-PIN)	
	8T-8729	3	PIN-CONNECTOR	
Y	**185-5913**	1	VALVE GP-BANK 2	548

Y-SEPARATE ILLUSTRATION

<END>

HYDRAULIC SYSTEM

185-0062 HYDRAULIC AR—MULTIPURPOSE BUCKET

S/N: BXC1-UP; DSX1-UP
3 BANK, PARALLEL LIFT
AN ATTACHMENT

SMCS-5050 **i02003560**

NOTE	PART NUMBER	QTY	PART NAME 1 2 3 4 5 6 (PRODUCT LEVEL)	SEE PAGE
	164-1364	1	BOOT	
Y	*183-3159*	1	CONTROL GP-HYDRAULIC HAND	362
	188-0861	1	FILM (INST) (MULTIPURPOSE BUCKET CONTROL)	
	186-5298	1	FILM-INSTRUCTION (BUCKET CONTROL)	
Y	*189-8797*	1	LINES GP-LIFT CYLINDER	448
Y	*112-6403*	1	LINES GP-LOADER AUXILIARY	464
Y	*189-0551*	1	LINES GP-TILT CYLINDER	519
Y	*185-1598*	1	MOUNTING GP-BANK VALVE	525
Y	*119-4595*	1	MOUNTING GP-BUCKET	689
Y	**185-5914**	1	VALVE GP-BANK 3	550

Y-SEPARATE ILLUSTRATION

<END>

185-0063 HYDRAULIC AR—MULTIPURPOSE BUCKET—LOCKS

S/N: BXC1-UP; DSX1-UP
3 BANK, PARALLEL LIFT
AN ATTACHMENT

SMCS-5050 **i02003562**

NOTE	PART NUMBER	QTY	PART NAME 1 2 3 4 5 6 (PRODUCT LEVEL)	SEE PAGE
	164-1364	1	BOOT	
Y	*183-3159*	1	CONTROL GP-HYDRAULIC HAND	362
	198-0102	1	FILM (MULTIPURPOSE BUCKET) (MECHANICAL BUCKET CONTROL)	
	186-5298	1	FILM-INSTRUCTION (BUCKET CONTROL)	
Y	*183-8552*	1	LINES GP-LOAD CONTROL VALVE	454
Y	*112-6403*	1	LINES GP-LOADER AUXILIARY	464
Y	*185-1598*	1	MOUNTING GP-BANK VALVE	525
Y	*119-4595*	1	MOUNTING GP-BUCKET	689
	211-3372	1	SWITCH GP	
	130-2758	1	HOUSING-SWITCH	
	130-2759	1	HOUSING-DETENT	
	131-0379	1	SWITCH AS (DETENT)	
	102-8803	1	KIT-RECEPTACLE (3-PIN)	
			(KIT SERVICES RECEPTACLE AS & WEDGE)	
	186-3735	3	PIN-CONNECTOR	
Y	**185-5914**	1	VALVE GP-BANK 3	550

Y-SEPARATE ILLUSTRATION

<END>

186-5335 HYDRAULIC AR—GENERAL PURPOSE BUCKET

S/N: BXC1-UP; DSX1-UP
2 BANK, SINGLE TILT
AN ATTACHMENT

SMCS-5050 **i02003565**

NOTE	PART NUMBER	QTY	PART NAME 1 2 3 4 5 6 (PRODUCT LEVEL)	SEE PAGE
	164-1363	1	BOOT	
	186-5298	1	FILM-INSTRUCTION (BUCKET CONTROL)	
Y	*163-9371*	1	LINES GP-LIFT CYLINDER	446
Y	*200-4153*	1	LINES GP-LIFT CYLINDER	450
Y	*189-0555*	1	LINES GP-TILT CYLINDER	521
Y	*185-1598*	1	MOUNTING GP-BANK VALVE	525
Y	**185-5911**	1	VALVE GP-BANK 2	547

Y-SEPARATE ILLUSTRATION

<END>

186-5336 HYDRAULIC AR—GENERAL PURPOSE BUCKET—LOCKS

S/N: BXC1-UP; DSX1-UP
2 BANK, SINGLE TILT
AN ATTACHMENT

SMCS-5050 **i02003566**

NOTE	PART NUMBER	QTY	PART NAME 1 2 3 4 5 6 (PRODUCT LEVEL)	SEE PAGE
	164-1363	1	BOOT	
	186-5298	1	FILM-INSTRUCTION (BUCKET CONTROL)	
Y	*183-8559*	1	LINES GP-LOAD CONTROL VALVE	458
Y	*185-1598*	1	MOUNTING GP-BANK VALVE	525
	211-3372	1	SWITCH GP (HYDRAULIC LOCK)	
	130-2758	1	HOUSING-SWITCH	
	130-2759	1	HOUSING-DETENT	
	131-0379	1	SWITCH AS	
Y	**185-5911**	1	VALVE GP-BANK 2	547

Y-SEPARATE ILLUSTRATION

<END>

186-5337 HYDRAULIC AR—MULTIPURPOSE BUCKET

S/N: BXC1-UP; DSX1-UP
3 BANK, SINGLE TILT
AN ATTACHMENT

SMCS-5050 **i02003613**

NOTE	PART NUMBER	QTY	PART NAME 1 2 3 4 5 6 (PRODUCT LEVEL)	SEE PAGE
	164-1364	1	BOOT	
Y	*183-3150*	1	CONTROL GP-HYDRAULIC HAND	361
	198-0102	1	FILM (MULTIPURPOSE BUCKET)	
	186-5298	1	FILM-INSTRUCTION (BUCKET CONTROL)	
Y	*163-9371*	1	LINES GP-LIFT CYLINDER	446
Y	*200-4153*	1	LINES GP-LIFT CYLINDER	450
Y	*106-5876*	1	LINES GP-LOADER AUXILIARY	462
Y	*189-0555*	1	LINES GP-TILT CYLINDER	521
Y	*185-1598*	1	MOUNTING GP-BANK VALVE	525
Y	**185-5912**	1	VALVE GP-BANK 3	549

Y-SEPARATE ILLUSTRATION

<END>

186-5338 HYDRAULIC AR—MULTIPURPOSE BUCKET—LOCKS

S/N: BXC1-UP; DSX1-UP
3 BANK, SINGLE TILT
AN ATTACHMENT

SMCS-5050 **i02003627**

NOTE	PART NUMBER	QTY	PART NAME 1 2 3 4 5 6 (PRODUCT LEVEL)	SEE PAGE
	164-1364	1	BOOT	
Y	*183-3150*	1	CONTROL GP-HYDRAULIC HAND	361
	198-0102	1	FILM (MULTIPURPOSE BUCKET)	
	186-5298	1	FILM-INSTRUCTION (BUCKET CONTROL)	
Y	*183-8559*	1	LINES GP-LOAD CONTROL VALVE	458
Y	*106-5876*	1	LINES GP-LOADER AUXILIARY	462
Y	*185-1598*	1	MOUNTING GP-BANK VALVE	525
	211-3372	1	SWITCH GP	
	130-2758	1	HOUSING-SWITCH	
	130-2759	1	HOUSING-DETENT	
	131-0379	1	SWITCH AS (LOADER VALVE)	
Y	**185-5912**	1	VALVE GP-BANK 3	549

Y-SEPARATE ILLUSTRATION

<END>

202-6122 HYDRAULIC AR—STANDARD SWING—STANDARD FRAME

S/N: BXC1-UP; DSX1-UP
AN ATTACHMENT

SMCS-5050 **i01668181**

NOTE	PART NUMBER	QTY	PART NAME 1 2 3 4 5 6 (PRODUCT LEVEL)	SEE PAGE
Y	*183-8505*	1	LINES GP-SWING	509

Y-SEPARATE ILLUSTRATION

<END>

202-6123 HYDRAULIC AR–CUSHION SWING–SIDESHIFT STANDARD FRAME

S/N: BXC1-UP; DSX1-UP

AN ATTACHMENT

SMCS-5050 **i01806999**

NOTE	PART NUMBER	QTY	PART NAME 1 2 3 4 5 6 (PRODUCT LEVEL)	SEE PAGE
Y	*202-6120*	1	LINES GP-SWING	513

Y-SEPARATE ILLUSTRATION

<END>

202-6124 HYDRAULIC AR–STANDARD SWING–NARROW FRAME

S/N: BXC1-UP; DSX1-UP

AN ATTACHMENT

SMCS-5050 **i01668206**

NOTE	PART NUMBER	QTY	PART NAME 1 2 3 4 5 6 (PRODUCT LEVEL)	SEE PAGE
Y	*183-8522*	1	LINES GP-SWING	511

Y-SEPARATE ILLUSTRATION

<END>

202-6125 HYDRAULIC AR–CUSHION SWING–SIDESHIFT NARROW FRAME

S/N: BXC1-UP; DSX1-UP

AN ATTACHMENT

SMCS-5050 **i01807009**

NOTE	PART NUMBER	QTY	PART NAME 1 2 3 4 5 6 (PRODUCT LEVEL)	SEE PAGE
Y	*202-6121*	1	LINES GP-SWING	516

Y-SEPARATE ILLUSTRATION

<END>

HYDRAULIC SYSTEM

237-9297 HYDRAULIC AR–STANDARD FRAME

S/N: BXC1-UP

PART OF 214-6993 COMMON AR

SMCS-5050 **i02010670**

NOTE	PART NUMBER	QTY	PART NAME 1 2 3 4 5 6 (PRODUCT LEVEL)	SEE PAGE
Y	*202-6139*	1	CONNECTOR GP-VALVE	347
Y	**206-3630**	1	CYLINDER GP-BOOM	376
Y	**192-3791**	2	CYLINDER GP-LIFT	381
Y	**173-4565**	2	CYLINDER GP-STABILIZER	384
Y	**235-9831**	1	CYLINDER GP-STICK	385
Y	**191-7735**	1	CYLINDER GP-SWING	386
Y	**191-8161**	1	CYLINDER GP-SWING	387
Y	**192-3884**	2	CYLINDER GP-TILT	388
	210-6243	1	FILTER GP-OIL (HYDRAULIC)	
	126-1817	1	FILTER AS-OIL (CLEANOUT/HIGH EFFICIENCY)	
			–OR–	
	134-3014	1	FILTER AS-OIL (HYDRAULIC) (FIRE RESISTANT)	
Y	*235-4551*	1	LINES GP-PUMP	479
Y	*235-4799*	1	LINES GP-RETURN	486
Y	*185-3414*	1	LINES GP-STABILIZER	497
Y	*185-3167*	1	MOUNTING GP-BANK VALVE	526
Y	*112-1826*	1	MOUNTING GP-HYDRAULIC PUMP	528
Y	**235-4110**	1	PUMP GP-PISTON	533
Y	*234-6926*	1	TANK GP-HYDRAULIC	539
Y	*185-9784*	1	VALVE & MTG GP-BANK (STABILIZER)	541

Y-SEPARATE ILLUSTRATION

<END>

237-9298 HYDRAULIC AR–NARROW FRAME

S/N: DSX1-UP

PART OF 214-6994 COMMON AR

SMCS-5050 **i02010671**

NOTE	PART NUMBER	QTY	PART NAME 1 2 3 4 5 6 (PRODUCT LEVEL)	SEE PAGE
Y	*202-6139*	1	CONNECTOR GP-VALVE	347
Y	**206-3630**	1	CYLINDER GP-BOOM	376
Y	**192-3791**	2	CYLINDER GP-LIFT	381
Y	**173-4565**	2	CYLINDER GP-STABILIZER	384
Y	**235-9831**	1	CYLINDER GP-STICK	385
Y	**191-7735**	1	CYLINDER GP-SWING	386
Y	**191-8161**	1	CYLINDER GP-SWING	387
Y	**192-3884**	2	CYLINDER GP-TILT	388
	210-6243	1	FILTER GP-OIL (HYDRAULIC)	
	126-1817	1	FILTER AS-OIL (CLEANOUT/HIGH EFFICIENCY)	
			–OR–	
	134-3014	1	FILTER AS-OIL (HYDRAULIC) (FIRE RESISTANT)	
Y	*235-4551*	1	LINES GP-PUMP	479
Y	*235-4799*	1	LINES GP-RETURN	486
Y	*185-9751*	1	LINES GP-STABILIZER	499
Y	*185-3167*	1	MOUNTING GP-BANK VALVE	526
Y	*112-1826*	1	MOUNTING GP-HYDRAULIC PUMP	528
Y	**235-4110**	1	PUMP GP-PISTON	533
Y	*234-6926*	1	TANK GP-HYDRAULIC	539
Y	*185-9784*	1	VALVE & MTG GP-BANK (STABILIZER)	541

Y-SEPARATE ILLUSTRATION

<END>

239-9410 KIT-RIDE CONTROL

S/N: BXC1-UP; DSX1-UP

FIELD INSTALLATION

SMCS-5004 **i01971708**

NOTE	PART NUMBER	QTY	PART NAME 1 2 3 4 5 6 (PRODUCT LEVEL)	SEE PAGE
	173-4514	2	FILM (RIDE CONTROL)	
Y	*235-5861*	1	LINES GP-RIDE CONTROL	487
	169-0607	1	SWITCH AS (RIDE CONTROL-STANDARD)	
	111-7899	1	GASKET	
Y	*186-0312*	1	WIRING GP-RIDE CONTROL	208

Y-SEPARATE ILLUSTRATION

<END>

HYDRAULIC SYSTEM

183-8506 LINES GP-BACKHOE–STANDARD FRAME

S/N: BXC1-UP; DSX1-UP

PART OF 240-8490, 240-8491, 240-8492, 240-8493, 240-8689, 240-8690, 240-8691, 240-8692 BACKHOE AR-EXTENDABLE STICK, 240-8683, 240-8684, 240-8685, 240-8686, 240-8687, 240-8688 BACKHOE AR-STANDARD STICK

AN ATTACHMENT

SMCS-5057 **i01496787**

NOTE	REF NO	GRAPHIC REF	PART NUMBER	QTY	PART NAME 1 2 3 4 5 6 (PRODUCT LEVEL)	SEE PAGE
	1	1	**106-5813**	4	BLOCK	
	2	1	**106-5814**	4	PLATE	
	3	1	**111-3798**	2	CLAMP-RH	
	4	1	**176-9154**	1	BRACKET-RH	
	5	1	**183-8488**	1	HOSE AS	
	6	1	**183-8490**	1	HOSE AS	
	7	1	**183-8492**	1	HOSE AS	
	8	1	**183-8494**	1	HOSE AS	
	9	1	**183-8500**	1	HOSE AS	
	10	1	**183-8502**	1	HOSE AS	
	11	1	*148-8341*	6	CONNECTOR GP	
					(EACH INCLUDES)	
		1	**3D-2824**	1	SEAL-O-RING	
		1	**6V-8713**	1	CONNECTOR (1-14 THD X 1 1/16-12 THD)	
		1	**7J-9108**	1	SEAL-O-RING	
	12	1	**2P-1293**	2	LOCKNUT-BULKHEAD (1 3/16-12 THD)	
M	13	1	**6V-7744**	10	LOCKNUT (M10X1.5 THD)	
	14	1	**6V-8398**	2	SEAL-O-RING	
	15	1	**6V-9169**	2	NUT-BULKHEAD (13/16-16 THD)	
	16	1	**6V-9170**	2	NUT-BULKHEAD (1-14 THD)	
	17	1	**6V-9746**	2	SEAL-O-RING	
	18	1	**7J-9108**	2	SEAL-O-RING	
	19	1	**8T-4121**	2	WASHER-HARD (11X21X2.5MM THK)	
M	20	1	**8T-4136**	2	BOLT (M10X1.5X25MM)	
M	21	1	**8T-5005**	10	BOLT (M10X1.50X70MM)	

M-METRIC PART

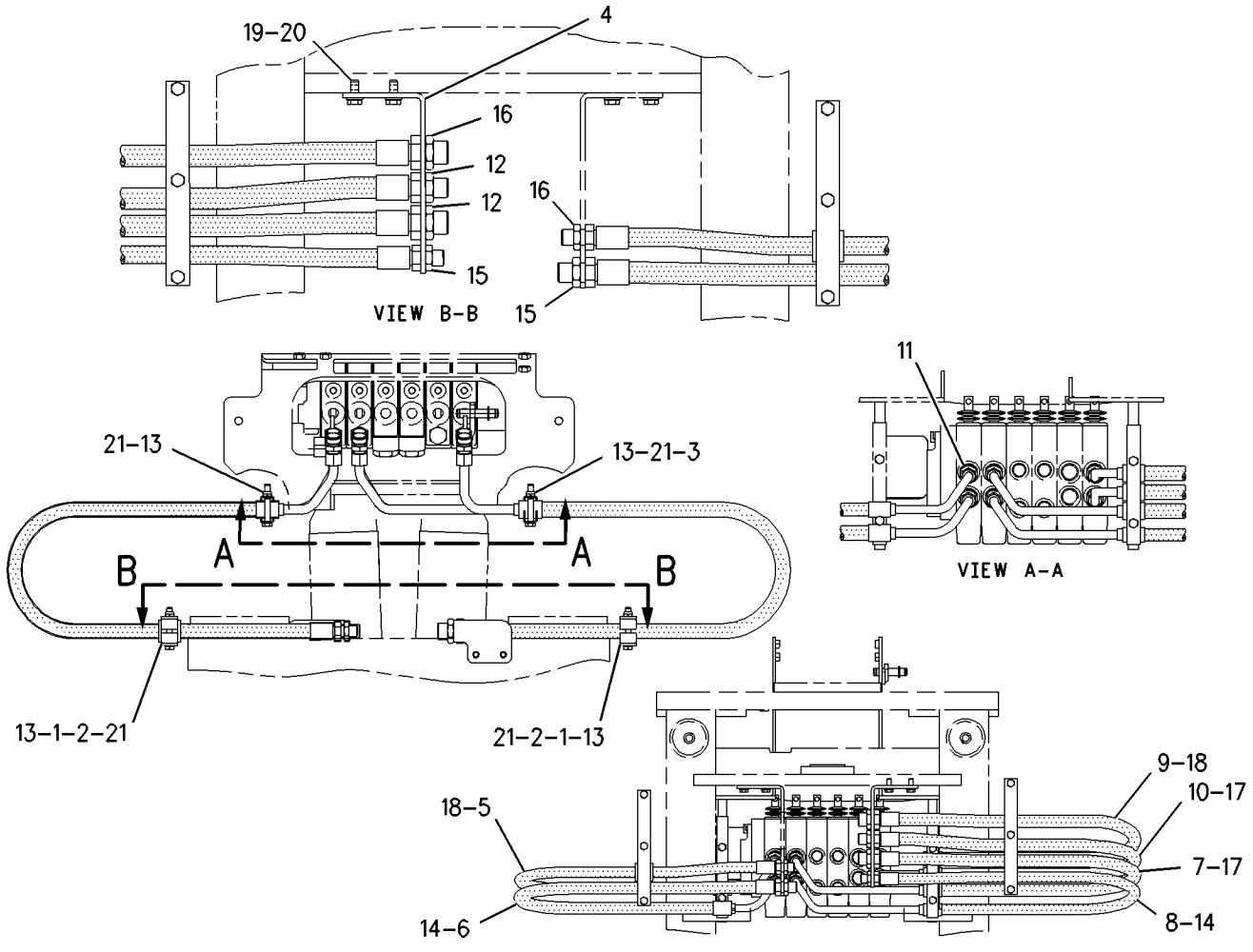

GRAPHIC #1 **<END>** g00726759

HYDRAULIC SYSTEM

183-8524 LINES GP-BACKHOE—NARROW FRAME

S/N: BXC1-UP; DSX1-UP

PART OF 240-8504, 240-8505, 240-8506, 240-8507, 240-8699, 240-8700, 240-8701, 240-8702 BACKHOE AR-EXTENDABLE STICK, 240-8693, 240-8694, 240-8695, 240-8696, 240-8697, 240-8698 BACKHOE AR-STANDARD STICK

AN ATTACHMENT

SMCS-5057 **i01379049**

NOTE	REF NO	GRAPHIC REF	PART NUMBER	QTY	PART NAME 1 2 3 4 5 6 (PRODUCT LEVEL)	SEE PAGE
M	1	1	**6V-7744**	10	LOCKNUT (M10X1.50 THD)	
	2	1	**106-5813**	4	BLOCK	
	3	1	**106-5814**	4	PLATE	
	4	1	**111-3798**	2	CLAMP-RH	
	5	1	**176-9154**	1	BRACKET-RH	
	6	1	**183-8512**	1	HOSE AS	
	7	1	**183-8513**	1	HOSE AS	
	8	1	**183-8514**	1	HOSE AS	
	9	1	**183-8515**	1	HOSE AS	
	10	1	**183-8518**	1	HOSE AS	
	11	1	**183-8519**	1	HOSE AS	
	12	1	*148-8341*	6	CONNECTOR GP	
					(EACH INCLUDES)	
		1	**3D-2824**	1	SEAL-O-RING (23.47MM ID)	
		1	**6V-8713**	1	CONNECTOR (1-14 THD X 1 1/16-12 THD)	
		1	**7J-9108**	1	SEAL-O-RING (15.72MM ID)	
	13	1	**2P-1293**	2	LOCKNUT-BULKHEAD (1 3/16-12 THD)	
	14	1	**6V-8398**	2	SEAL-O-RING (12.47MM ID)	
	15	1	**6V-9169**	2	NUT-BULKHEAD (13/16-16 THD)	
	16	1	**6V-9170**	2	NUT-BULKHEAD (1-14 THD)	
	17	1	**6V-9746**	2	SEAL-O-RING (18.94MM ID)	
	18	1	**7J-9108**	2	SEAL-O-RING (15.72MM ID)	
	19	1	**8T-4121**	2	WASHER-HARD (11X21X2.5MM THK)	
M	20	1	**8T-4136**	2	BOLT (M10X1.5X25MM)	
M	21	1	**8T-5005**	10	BOLT (M10X1.50X70MM)	

M-METRIC PART

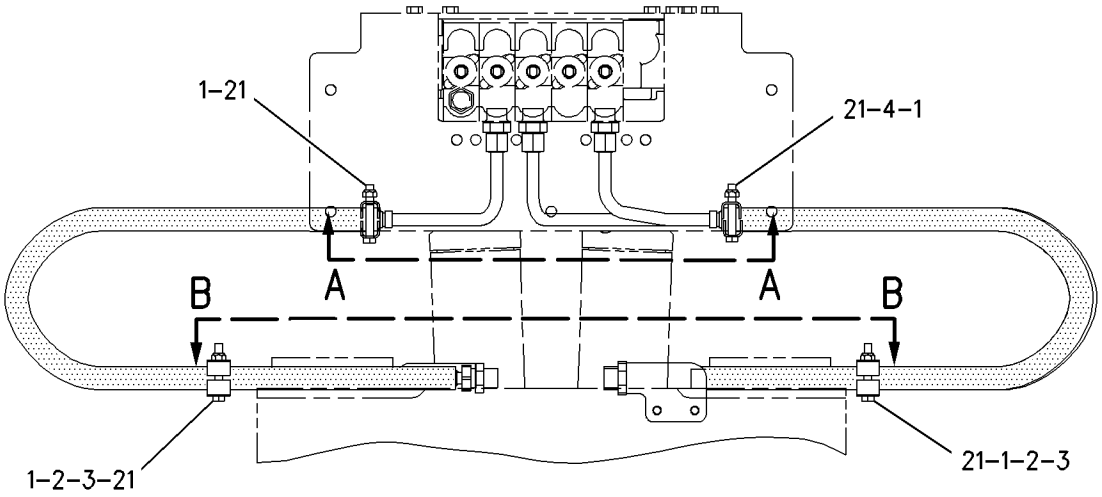

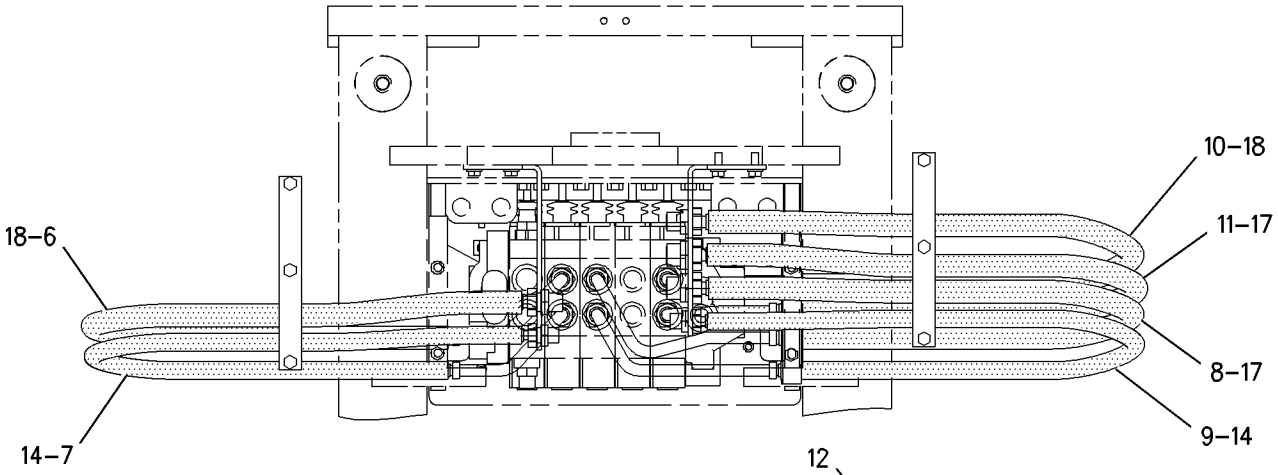

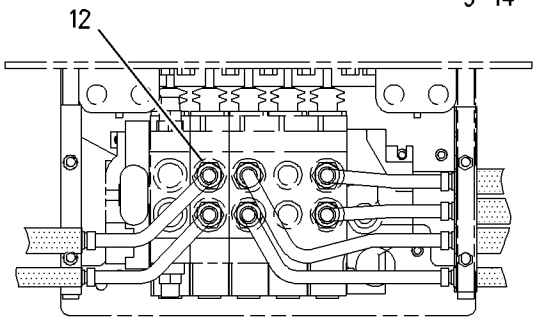

VIEW A-A

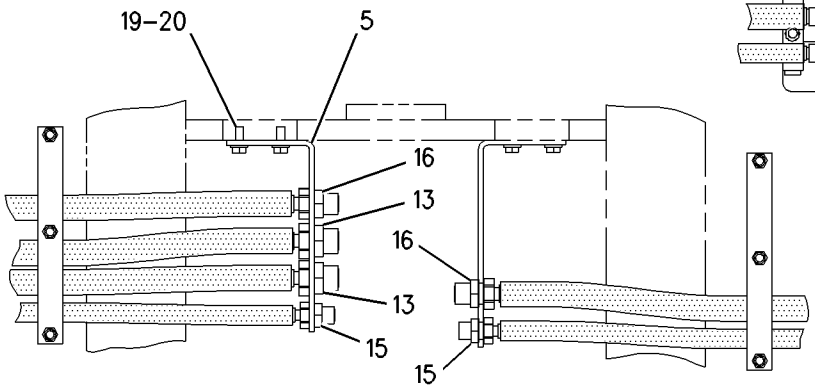

VIEW B-B

GRAPHIC #1 **<END>** g00728830

183-8508 LINES GP-BACKHOE AUXILIARY–EXTENDABLE STICK–STANDARD FRAME

S/N: BXC1-UP; DSX1-UP

PART OF 240-8490, 240-8491, 240-8492, 240-8493, 240-8689, 240-8690, 240-8691, 240-8692 BACKHOE AR-EXTENDABLE STICK AN ATTACHMENT

SMCS-5057 **i01490817**

NOTE	REF NO	GRAPHIC REF	PART NUMBER	QTY	PART NAME 1 2 3 4 5 6 (PRODUCT LEVEL)	SEE PAGE
	1	1	**176-0145**	2	CLAMP	
	2	1	**176-9152**	1	BRACKET-LH	
	3	1	**183-8484**	1	HOSE AS	
	4	1	**183-8486**	1	HOSE AS	
	5	1	*148-8341*	2	CONNECTOR GP	
					(EACH INCLUDES)	
		1	**3D-2824**	1	SEAL-O-RING	
		1	**6V-8713**	1	CONNECTOR (1-14 THD X 1 1/16-12 THD)	
		1	**7J-9108**	1	SEAL-O-RING	
	6	1	**2P-1293**	1	LOCKNUT-BULKHEAD (1 3/16-12 THD)	
	7	1	**6V-8398**	1	SEAL-O-RING	
	8	1	**6V-9169**	1	NUT-BULKHEAD (13/16-16 THD)	
	9	1	**6V-9746**	1	SEAL-O-RING	
	10	1	**8T-4121**	2	WASHER-HARD (11X21X2.5MM THK)	
M	11	1	**8T-4136**	2	BOLT (M10X1.5X25MM)	

M-METRIC PART

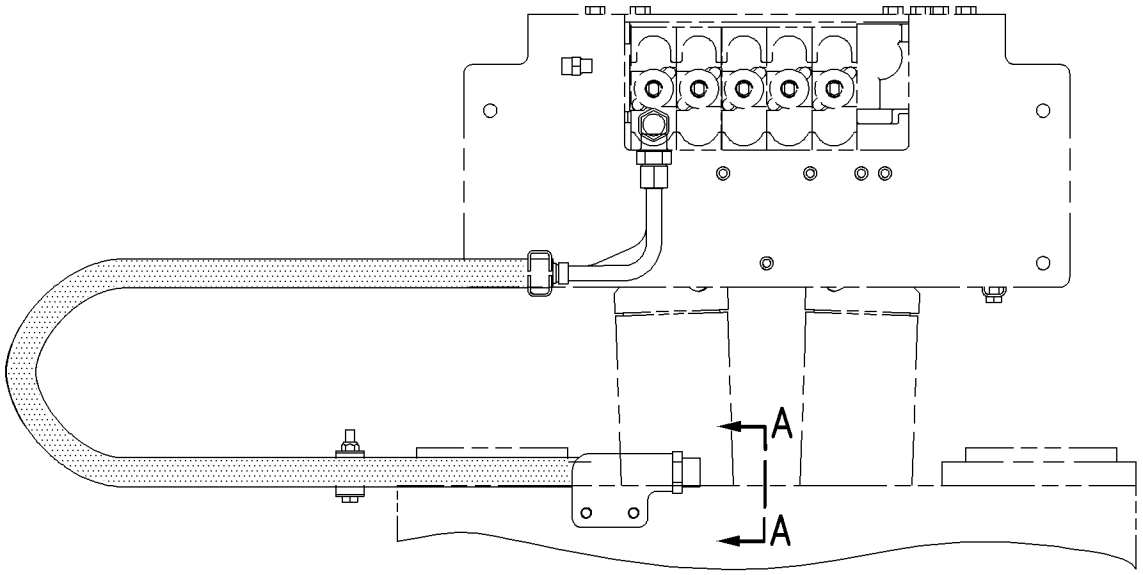

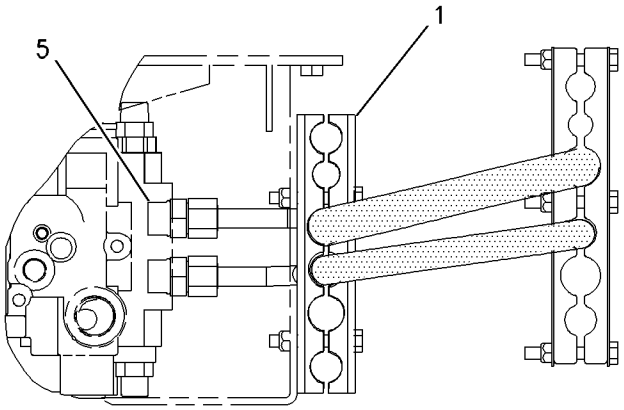

VIEW B-B

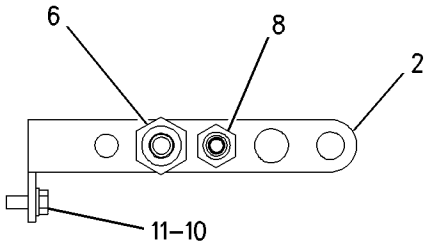

VIEW A-A

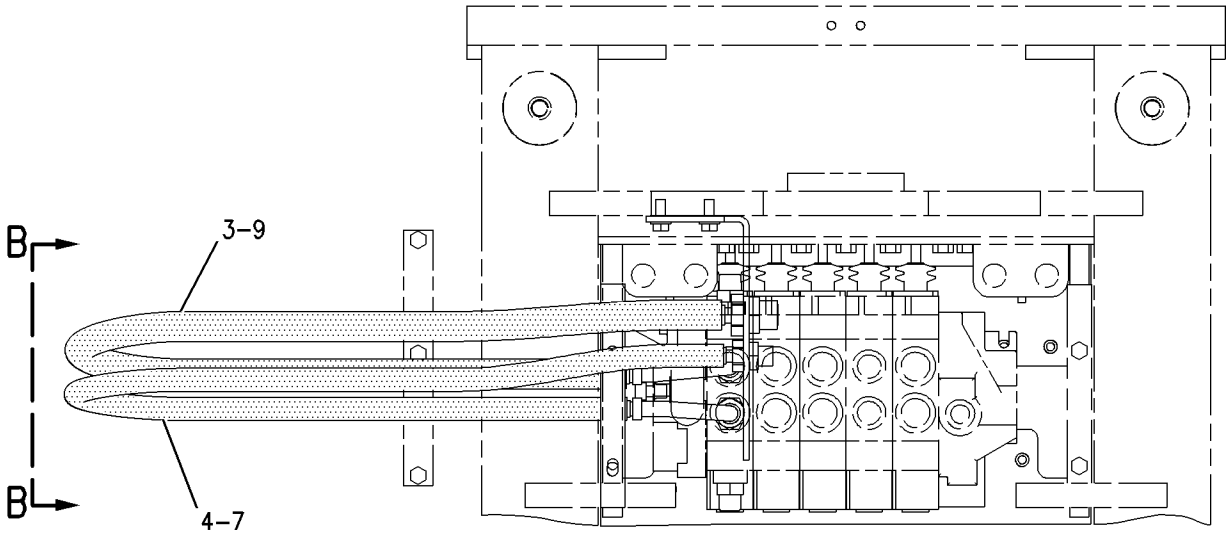

GRAPHIC #1 **<END>** g00774236

183-8509 LINES GP-BACKHOE AUXILIARY–STANDARD STICK

S/N: BXC1-UP

PART OF 240-8685, 240-8686 BACKHOE AR-STANDARD STICK

AN ATTACHMENT

SMCS-5057 **i01499432**

NOTE	REF NO	GRAPHIC REF	PART NUMBER	QTY	PART NAME 1 2 3 4 5 6 (PRODUCT LEVEL)	SEE PAGE
	1	1	**176-0145**	2	CLAMP	
	2	1	**176-9152**	1	BRACKET-LH	
	3	1	**183-8484**	1	HOSE AS	
	4	1	*148-8341*	1	CONNECTOR GP	
		1	**3D-2824**	1	SEAL-O-RING	
		1	**6V-8713**	1	CONNECTOR (1-14 THD X 1 1/16-12 THD)	
		1	**7J-9108**	1	SEAL-O-RING	
	5	1	*148-8408*	1	PLUG AS	
		1	**3D-2824**	1	SEAL-O-RING	
		1	**9S-4183**	1	PLUG	
	6	1	**2P-1293**	1	LOCKNUT-BULKHEAD (1 3/16-12 THD)	
	7	1	**6V-9746**	1	SEAL-O-RING	
	8	1	**8T-4121**	2	WASHER-HARD (11X21X2.5MM THK)	
M	9	1	**8T-4136**	2	BOLT (M10X1.5X25MM)	

M-METRIC PART

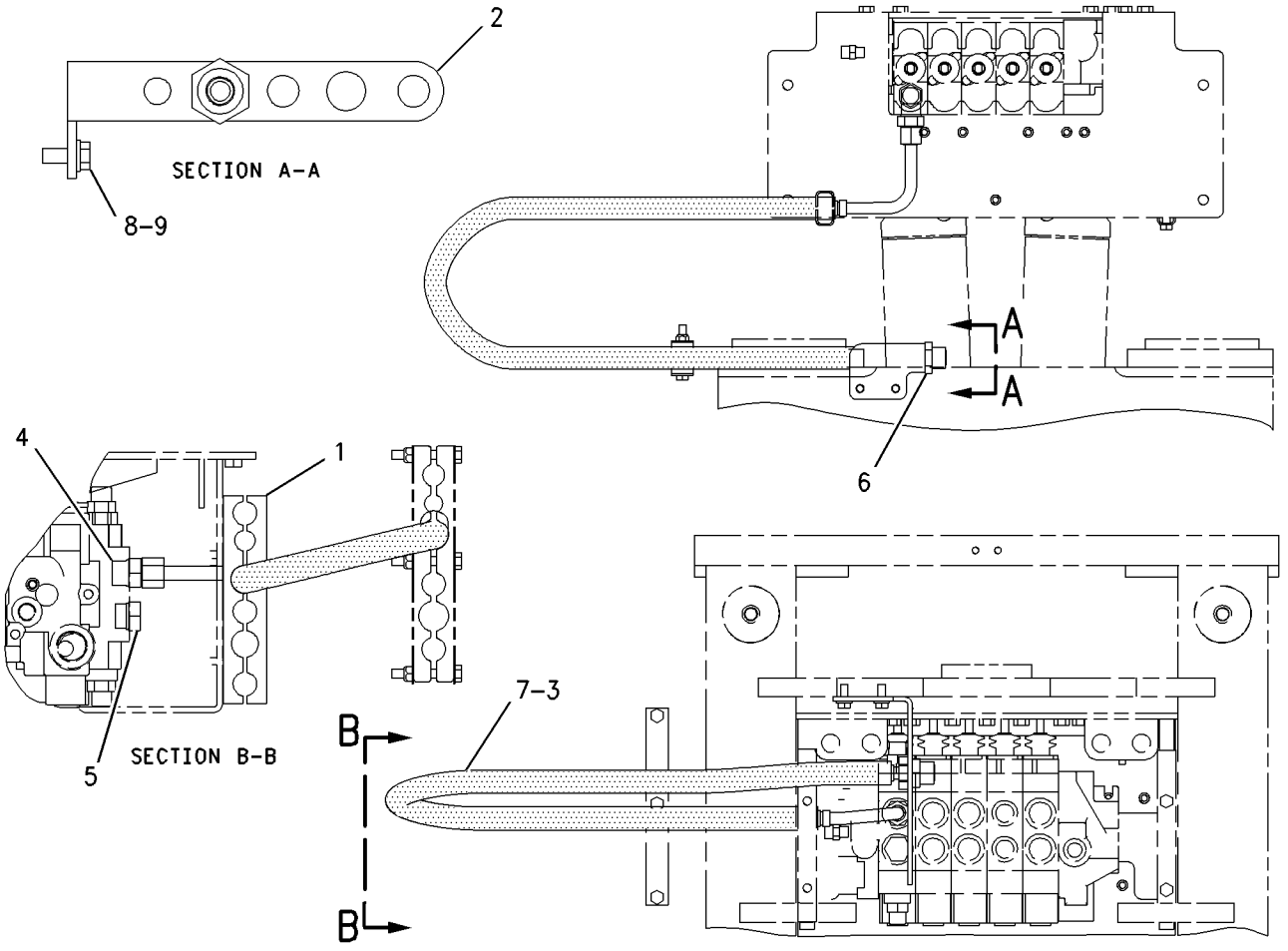

GRAPHIC #1 **<END>** g00778144

183-8526 LINES GP-BACKHOE AUXILIARY—NARROW FRAME

S/N: BXC1-UP; DSX1-UP

PART OF 240-8504, 240-8505, 240-8506, 240-8507, 240-8699, 240-8700, 240-8701, 240-8702 BACKHOE AR-EXTENDABLE STICK

AN ATTACHMENT

SMCS-5057 **i01626541**

NOTE	REF NO	GRAPHIC REF	PART NUMBER	QTY	PART NAME 1 2 3 4 5 6 (PRODUCT LEVEL)	SEE PAGE
	1	1	**176-0145**	2	CLAMP	
	2	1	**176-9152**	1	BRACKET-LH	
	3	1	**183-8510**	1	HOSE AS	
	4	1	**183-8511**	1	HOSE AS	
	5	1	*148-8341*	2	CONNECTOR GP	
					(EACH INCLUDES)	
		1	**3D-2824**	1	SEAL-O-RING	
		1	**6V-8713**	1	CONNECTOR	
		1	**7J-9108**	1	SEAL-O-RING	
	6	1	**2P-1293**	1	LOCKNUT-BULKHEAD (1 3/16-12 THD)	
	7	1	**6V-8398**	1	SEAL-O-RING	
	8	1	**6V-9169**	1	NUT-BULKHEAD (13/16-16 THD)	
	9	1	**6V-9746**	1	SEAL-O-RING	
	10	1	**8T-4121**	2	WASHER-HARD (11X21X2.5MM THK)	
M	11	1	**8T-4136**	2	BOLT (M10X1.5X25MM)	

M-METRIC PART

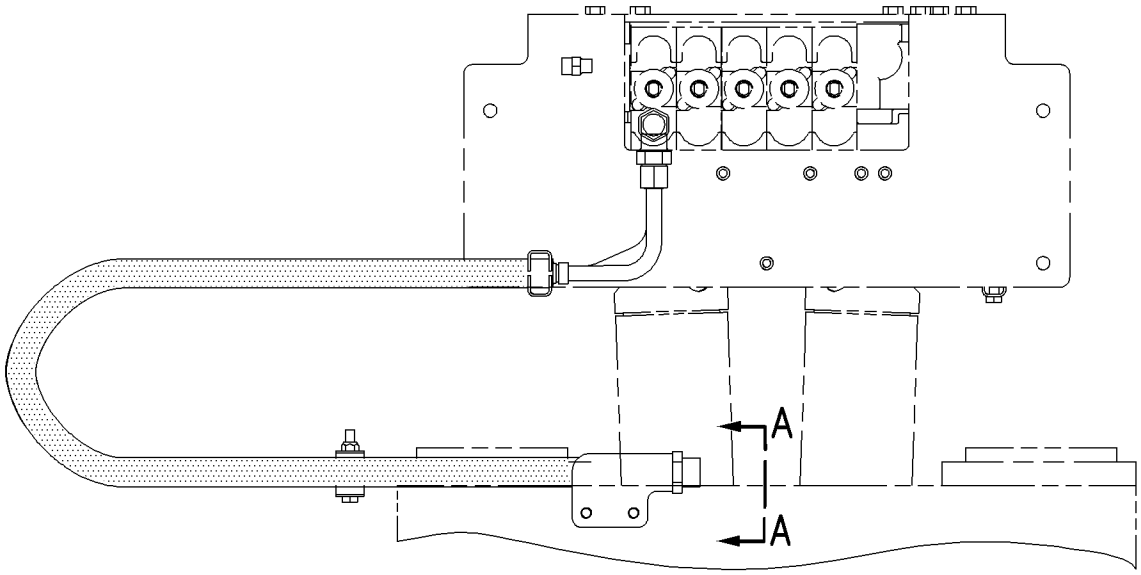

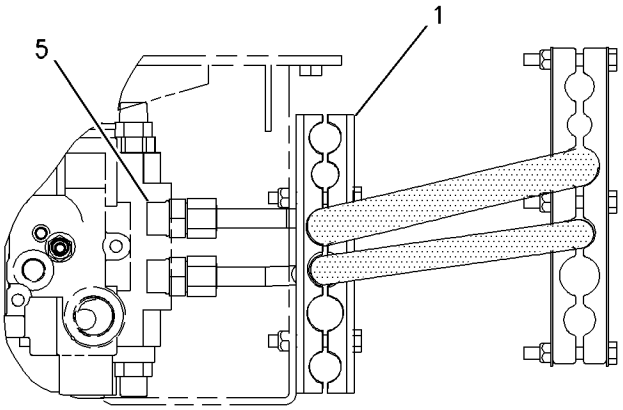

VIEW B-B

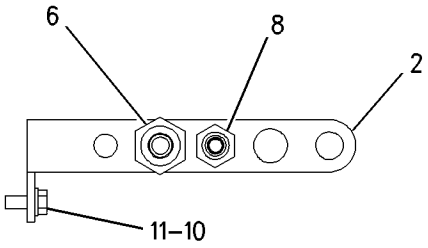

VIEW A-A

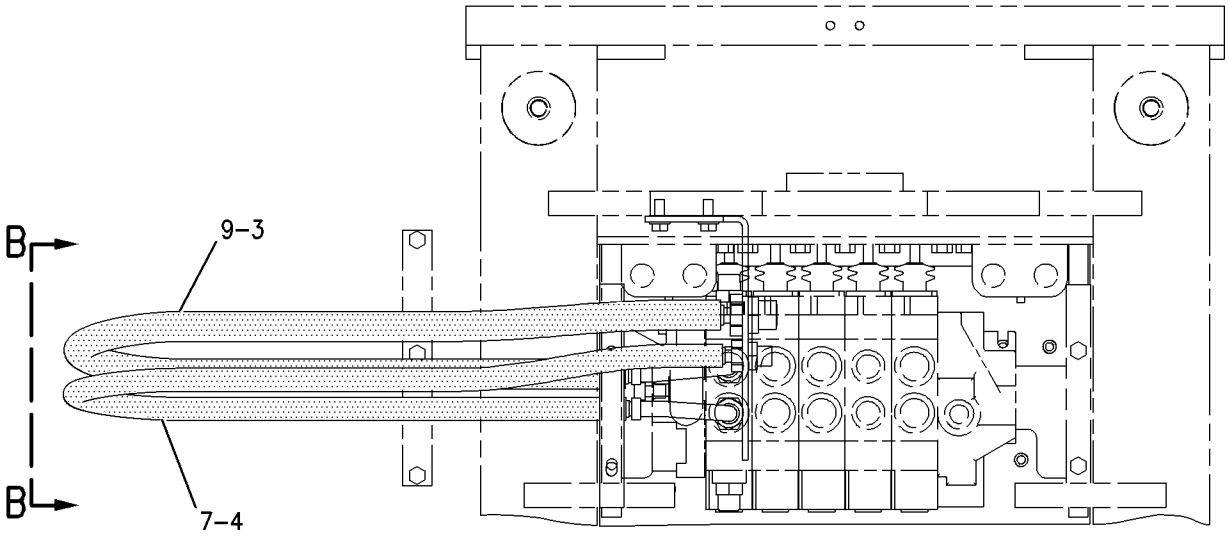

GRAPHIC #1 **<END>** g00842370

183-8527 LINES GP-BACKHOE AUXILIARY—NARROW FRAME

S/N: DSX1-UP

PART OF 240-8695, 240-8696 BACKHOE AR-STANDARD STICK

AN ATTACHMENT

SMCS-5057 **i01626547**

NOTE	REF NO	GRAPHIC REF	PART NUMBER	QTY	PART NAME 1 2 3 4 5 6 (PRODUCT LEVEL)	SEE PAGE
	1	1	**176-0145**	2	CLAMP	
	2	1	**176-9152**	1	BRACKET-LH	
	3	1	**183-8510**	1	HOSE AS	
	4	1	*148-8341*	1	CONNECTOR GP	
		1	**3D-2824**	1	SEAL-O-RING	
		1	**6V-8713**	1	CONNECTOR	
		1	**7J-9108**	1	SEAL-O-RING	
	5	1	*148-8408*	1	PLUG AS	
		1	**3D-2824**	1	SEAL-O-RING	
		1	**9S-4183**	1	PLUG	
	6	1	**2P-1293**	1	LOCKNUT-BULKHEAD (1 3/16-12 THD)	
	7	1	**6V-9746**	1	SEAL-O-RING	
	8	1	**8T-4121**	2	WASHER-HARD (11X21X2.5MM THK)	
M	9	1	**8T-4136**	2	BOLT (M10X1.5X25MM)	

M-METRIC PART

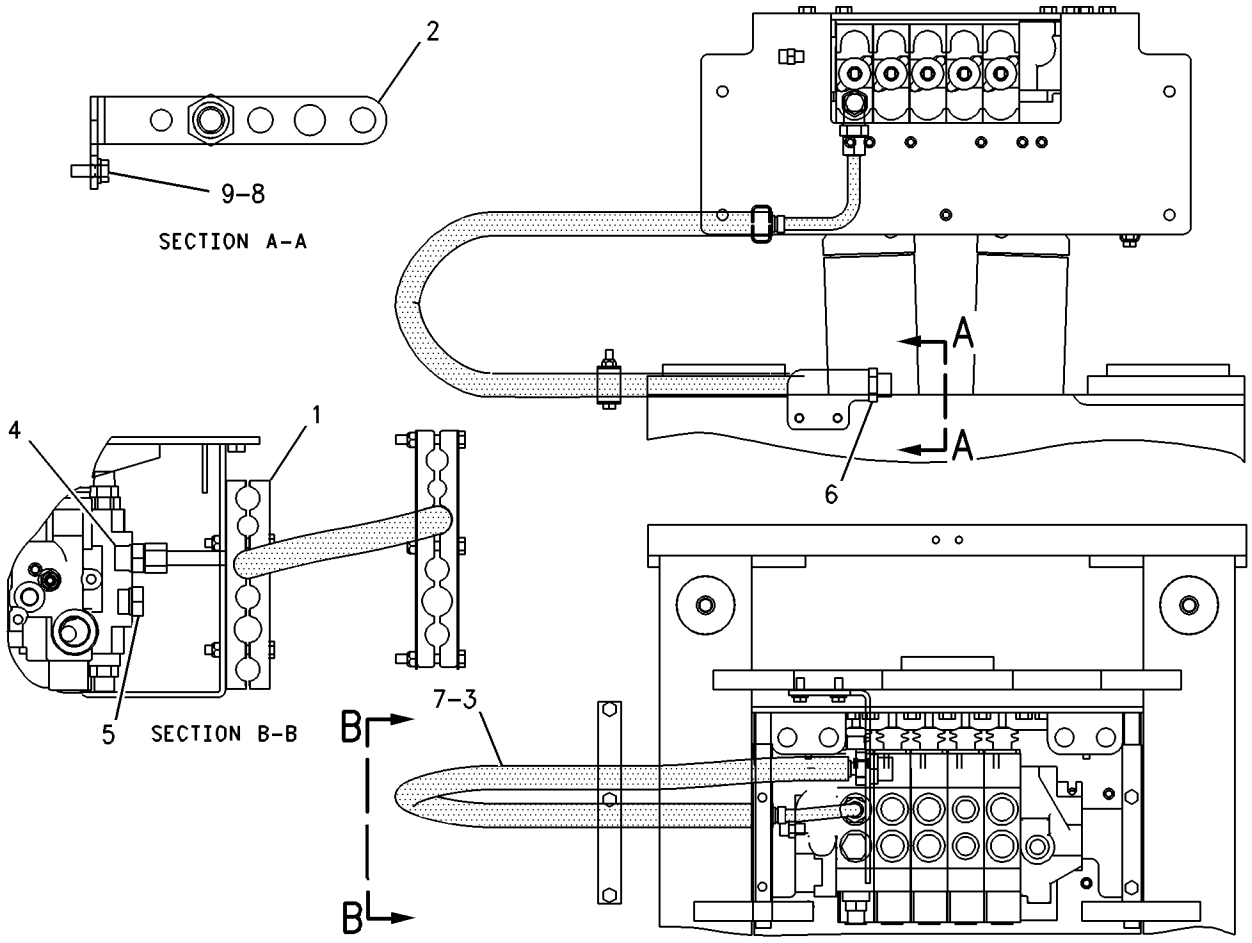

GRAPHIC #1 **<END>** g00842379

HYDRAULIC SYSTEM

199-9617 LINES GP-BACKHOE AUXILIARY–KIT

S/N: BXC1-UP; DSX1-UP
STANDARD STICK, NARROW FRAME, HAMMER
AN ATTACHMENT

SMCS-5057 **i01986880**

NOTE	REF NO	GRAPHIC REF	PART NUMBER	QTY	PART NAME 1 2 3 4 5 6 (PRODUCT LEVEL)	SEE PAGE
	1	1,2	**101-0863**	2	FILM-INSTRUCTION (RETURN FLOW)	
I	2	1	**106-0409**	1	HOSE AS	
	3	1	**107-6696**	1	TUBE AS	
	4	1	**107-6697**	1	PIN AS	
M		1	**8T-3490**	1	NUT-WELD (M10X1.5 THD)	
	5	2	**107-6698**	1	BRACKET AS	
	6	1	**107-6701**	1	TUBE AS	
	7	2	**107-6707**	1	BRACKET	
	8	1	**107-6708**	1	BRACKET	
I	9	1	**107-6717**	1	HOSE AS	
	10	1	**107-6718**	1	TUBE AS	
	11	2	**109-1260**	1	BRACKET	
	12	1	**159-0959**	1	PIN AS	
		1	**9R-2672**	2	BOSS (M10X20MM)	
	13	2	**122-0536**	1	BRACKET	
	14	1,2	**123-7637**	2	CAP	
	15	1,2	**168-8192**	1	HOSE AS	
	16	1	**168-8193**	1	TUBE AS	
I	17	2	**168-8493**	1	HOSE AS	
I	18	1,2	**176-9294**	1	HOSE AS	
Y	19	1,2	*178-7481*	1	VALVE GP-CHECK	558
I	20	2	**183-8510**	1	HOSE AS	
I	21	1	**204-9204**	1	HOSE AS	
	22	2	*148-8341*	1	CONNECTOR GP	
		2	**3D-2824**	1	SEAL-O-RING	
		2	**6V-8713**	1	CONNECTOR	
		2	**7J-9108**	1	SEAL-O-RING	
	23	1	*148-8352*	1	ELBOW GP	
		1	**5K-9090**	1	SEAL-O-RING	
		1	**6V-9854**	1	ELBOW (SWIVEL)	
	24	1	*150-3052*	1	CONNECTOR AS	
		1	**5K-9090**	1	SEAL-O-RING	
		1	**7M-8485**	1	SEAL-O-RING	
		1	**107-6709**	1	CONNECTOR	
	25	2	*150-3053*	1	CONNECTOR AS	
		2	**6V-9746**	1	SEAL-O-RING	
		2	**7M-8485**	1	SEAL-O-RING	
		2	**108-3872**	1	CONNECTOR	
	26	1	*150-3068*	1	UNION AS	
		1	**5K-9090**	2	SEAL-O-RING	
		1	**6V-9649**	1	UNION-90 DEGREE	
	27	2	**2P-1293**	2	LOCKNUT (1 3/16-12 THD)	
B	28	1,2	**5K-9090**	5	SEAL-O-RING	
	29	2	**5P-7466**	1	CLIP (SLOT)	
	30	2	**5P-7467**	1	CLIP (TAB)	
	31	1,2	**5P-7468**	4	CLIP (SLOT)	
	32	1,2	**5P-7469**	4	CLIP (TAB)	
	33	2	**5P-8112**	1	GROMMET	
	34	1,2	**5P-8444**	4	GROMMET	
M	35	2	**6V-7744**	2	LOCKNUT (M10X1.5 THD)	
	36	1	**6V-9172**	1	NUT (1 7/16-12 THD)	
	37	1,2	**6V-9746**	3	SEAL-O-RING	
	38	1,2	**7S-3916**	4	CLIP (TAB)	
	39	1,2	**7S-3919**	4	CLIP (SLOT)	
B	40	1,2	**8T-1889**	3	CLIP (SLOT)	

199-9617 LINES GP-BACKHOE AUXILIARY *(contd.)* i01986880

NOTE	REF NO	GRAPHIC REF	PART NUMBER	QTY	PART NAME 1 2 3 4 5 6 (PRODUCT LEVEL)	SEE PAGE
B	41	1,2	**8T-1890**	3	CLIP (TAB)	
B	42	1,2	**8T-4121**	11	WASHER-HARD (11X21X2.5MM THK)	
M	43	2	**8T-4133**	1	NUT (M10X1.5 THD)	
BM	44	1,2	**8T-4136**	9	BOLT (M10X1.5X25MM)	
M	45	1	**8T-4137**	1	BOLT (M10X1.5X20MM)	
M	46	1,2	**8T-4139**	9	BOLT (M12X1.75X30MM)	
M	47	2	**8T-4195**	1	BOLT (M10X1.5X30MM)	
	48	1,2	**8T-4223**	9	WASHER-HARD (13.5X25.5X3MM THK)	
M	49	2	**8T-4244**	2	NUT (M12X1.75 THD)	
	50	2	**202-6018**	4	FILM-WARNING (HIGH PRESSURE CYLINDER)	
B	51	2	*148-8335*	1	CONNECTOR AS	
		2	**5K-9090**	1	SEAL-O-RING	
		2	**6V-8635**	1	CONNECTOR	
		2	**7M-8485**	1	SEAL-O-RING	
BI	52	2	**236-9900**	1	HOSE AS	
B	53	2	**236-9980**	1	TUBE AS	

B-USE AS REQUIRED
I-REFER TO HYDRAULIC INFORMATION SYSTEM
M-METRIC PART
Y-SEPARATE ILLUSTRATION

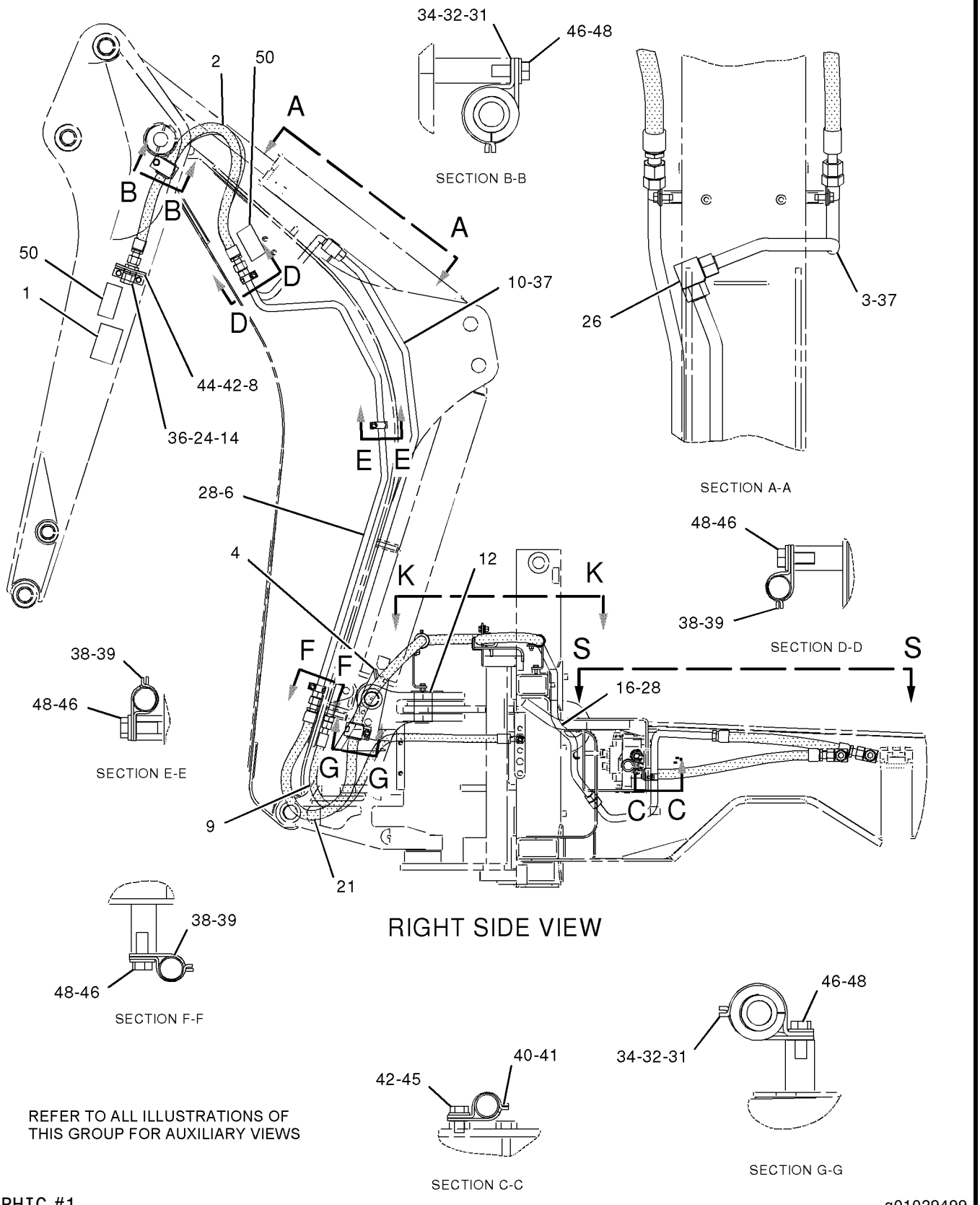

GRAPHIC #1

g01029499

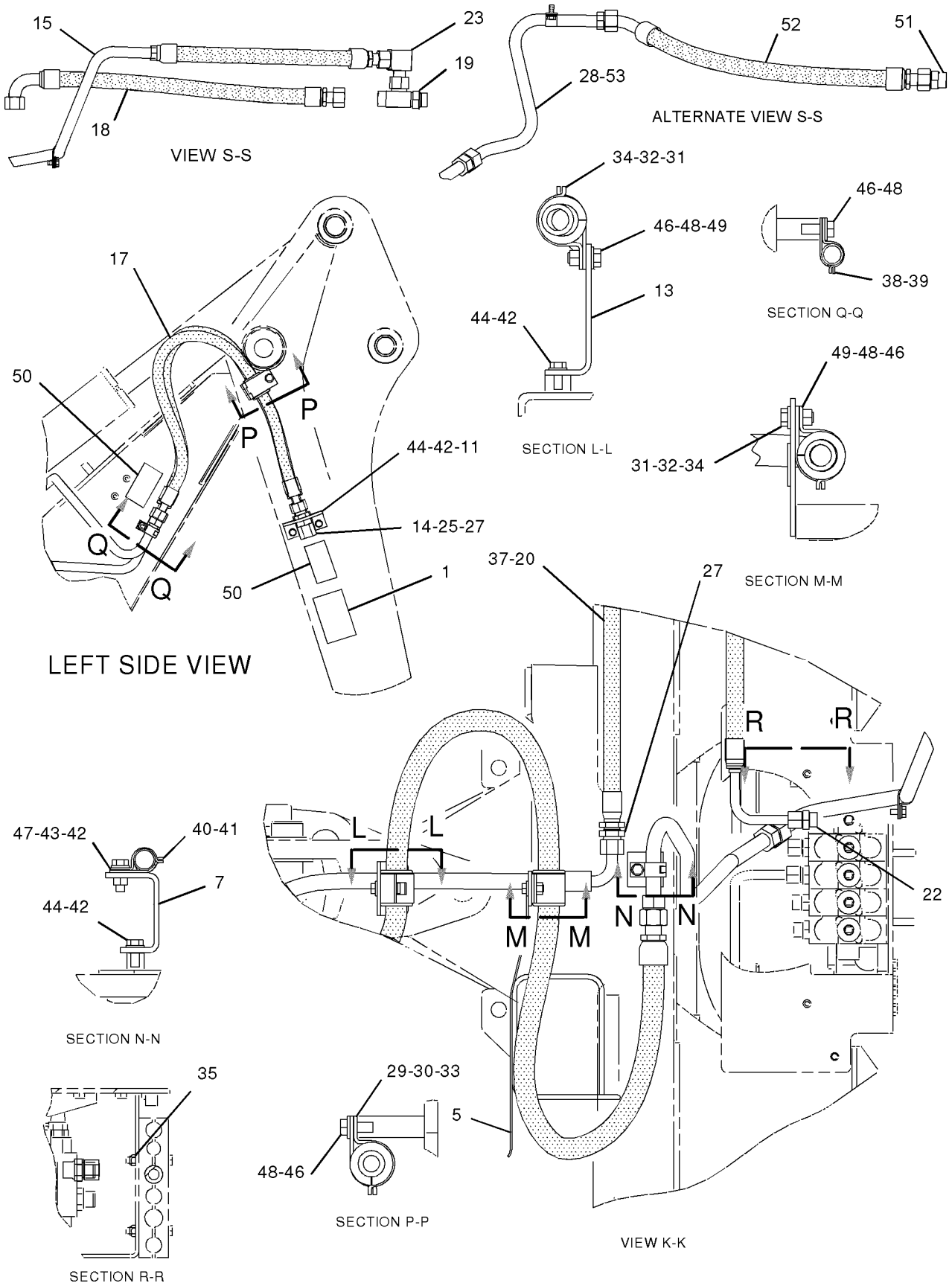

GRAPHIC #2 **<END>** g01029500

HYDRAULIC SYSTEM

199-9618 LINES GP-BACKHOE AUXILIARY–KIT

S/N: BXC1-UP; DSX1-UP
EXTENDABLE STICK, NARROW FRAME, HAMMER
AN ATTACHMENT

SMCS-5057 **i01981323**

NOTE	REF NO	GRAPHIC REF	PART NUMBER	QTY	PART NAME 1 2 3 4 5 6 (PRODUCT LEVEL)	SEE PAGE
	1	1,2	**101-0863**	2	FILM-INSTRUCTION (RETURN FLOW)	
I	2	1	**106-0409**	1	HOSE AS	
	3	1	**107-6696**	1	TUBE AS	
	4	2	**107-6698**	1	BRACKET AS	
	5	1	**107-6701**	1	TUBE AS	
	6	2	**107-6707**	1	BRACKET	
	7	1	**107-6708**	1	BRACKET	
	8	2	**109-1260**	1	BRACKET	
	9	2	**122-0536**	1	BRACKET	
	10	1,2	**123-7637**	2	CAP	
	11	2	**168-8192**	1	HOSE AS	
	12	1	**168-8193**	1	TUBE AS	
I	13	1	**168-8493**	1	HOSE AS	
I	14	1	**204-9204**	1	HOSE AS	
	15	2	*148-8352*	1	ELBOW GP	
		2	**5K-9090**	1	SEAL-O-RING	
		2	**6V-9854**	1	ELBOW (SWIVEL)	
	16	1	*150-3052*	1	CONNECTOR AS	
		1	**5K-9090**	1	SEAL-O-RING	
		1	**7M-8485**	1	SEAL-O-RING	
		1	**107-6709**	1	CONNECTOR	
	17	2	*150-3053*	1	CONNECTOR AS	
		2	**6V-9746**	1	SEAL-O-RING	
		2	**7M-8485**	1	SEAL-O-RING	
		2	**108-3872**	1	CONNECTOR	
	18	2	**2P-1293**	1	LOCKNUT (1 3/16-12 THD)	
B	19	1,2	**5K-9090**	5	SEAL-O-RING	
	20	2	**5P-7466**	1	CLIP (SLOT)	
	21	2	**5P-7467**	1	CLIP (TAB)	
	22	1,2	**5P-7468**	4	CLIP (SLOT)	
	23	1,2	**5P-7469**	4	CLIP (TAB)	
	24	2	**5P-8112**	1	GROMMET	
	25	1,2	**5P-8444**	4	GROMMET	
	26	1	**6V-9172**	1	NUT (1 7/16-12 THD)	
	27	1	**6V-9746**	1	SEAL-O-RING	
	28	1,2	**7S-3916**	4	CLIP (TAB)	
	29	1,2	**7S-3919**	4	CLIP (SLOT)	
B	30	1,2	**8T-1889**	3	CLIP (SLOT)	
B	31	1,2	**8T-1890**	3	CLIP (TAB)	
B	32	1,2	**8T-4121**	9	WASHER-HARD (11X21X2.5MM THK)	
M	33	2	**8T-4133**	1	NUT (M10X1.5 THD)	
BM	34	1,2	**8T-4136**	7	BOLT (M10X1.5X25MM)	
M	35	1	**8T-4137**	1	BOLT (M10X1.5X20MM)	
M	36	1,2	**8T-4139**	6	BOLT (M12X1.75X30MM)	
M	37	1,2	**8T-4184**	2	BOLT (M12X1.75X45MM)	
M	38	2	**8T-4195**	1	BOLT (M10X1.5X30MM)	
	39	1,2	**8T-4223**	8	WASHER-HARD (13.5X25.5X3MM THK)	
M	40	2	**8T-4244**	2	NUT (M12X1.75 THD)	
	41	1,2	**202-6018**	4	FILM-WARNING (HIGH PRESSURE CYLINDER)	
B	42	2	*148-8335*	1	CONNECTOR AS	
		2	**6V-8635**	1	CONNECTOR	
		2	**5K-9090**	1	SEAL-O-RING	
		2	**7M-8485**	1	SEAL-O-RING	
BI	43	2	**236-9900**	1	HOSE AS	
B	44	2	**236-9980**	1	TUBE AS	

B-USE AS REQUIRED
I-REFER TO HYDRAULIC INFORMATION SYSTEM
M-METRIC PART

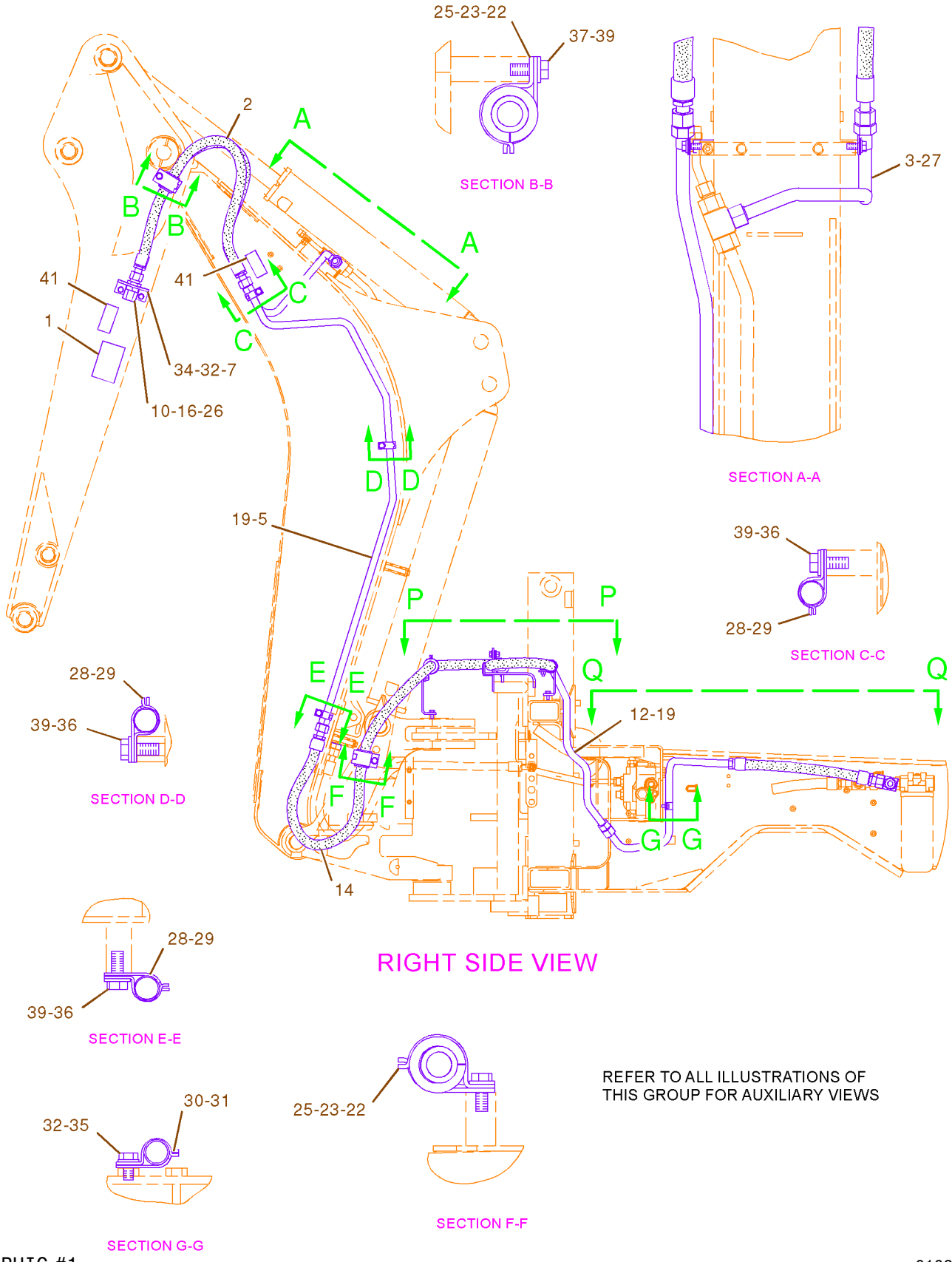

GRAPHIC #1

g01032093

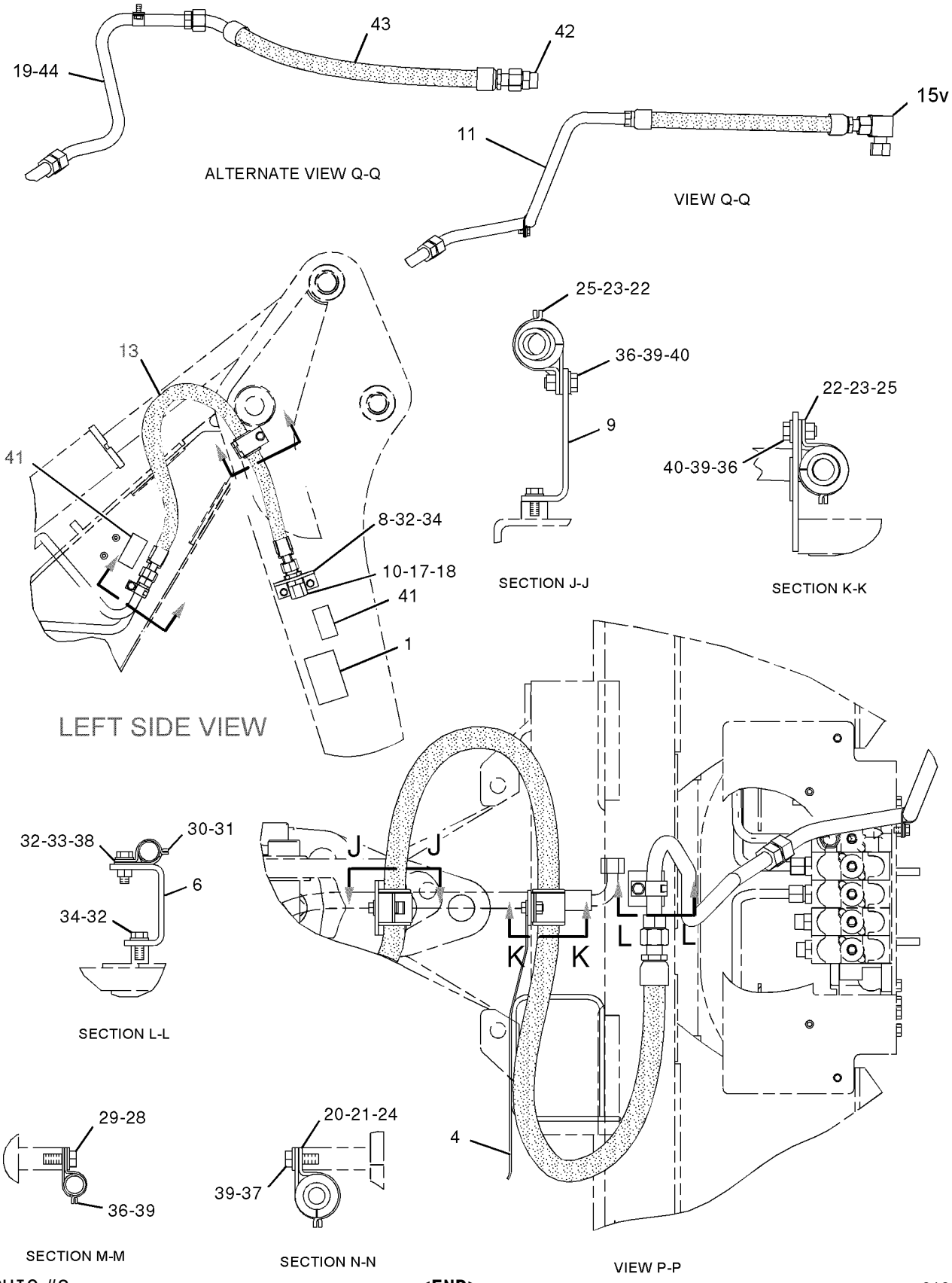

GRAPHIC #2

<END>

g01032092

HYDRAULIC SYSTEM

199-9695 LINES GP-BACKHOE AUXILIARY–KIT

S/N: BXC1-UP; DSX1-UP
STANDARD STICK, STANDARD FRAME, HAMMER
AN ATTACHMENT

SMCS-5057 **i01981324**

NOTE	REF NO	GRAPHIC REF	PART NUMBER	QTY	PART NAME 1 2 3 4 5 6 (PRODUCT LEVEL)	SEE PAGE
	1	1	**101-0863**	2	FILM-INSTRUCTION (RETURN FLOW)	
I	2	1	**106-0409**	1	HOSE AS	
	3	2	**107-6696**	1	TUBE AS	
	4	1	**107-6697**	1	PIN AS	
M		1	**8T-3490**	1	NUT-WELD (M10X1.5 THD)	
	5	1	**107-6698**	1	BRACKET AS	
	6	1	**107-6701**	1	TUBE AS	
	7	2	**107-6707**	1	BRACKET	
	8	1	**107-6708**	1	BRACKET	
I	9	1	**107-6717**	1	HOSE AS	
	10	1	**107-6718**	1	TUBE AS	
	11	1	**109-1260**	1	BRACKET	
I	12	1	**120-0147**	1	HOSE AS	
	13	1	**159-0959**	1	PIN AS	
		1	**9R-2672**	2	BOSS (M10X20MM)	
	14	2	**122-0536**	1	BRACKET	
	15	1	**123-7637**	2	CAP	
	16	2	**168-8192**	1	HOSE AS	
	17	1	**168-8193**	1	TUBE AS	
I	18	1	**168-8493**	1	HOSE AS	
I	19	2	**176-9294**	1	HOSE AS	
	20	2	**178-7481**	1	VALVE GP-CHECK	
		2	**5K-9090**	2	SEAL-O-RING	
		2	**7M-8485**	1	SEAL-O-RING	
I	21	1	**183-8484**	1	HOSE AS	
	22	2	**202-6018**	4	FILM-WARNING (HIGH PRESSURE CYLINDER)	
BI	23	2	**236-9900**	1	HOSE AS	
B	24	2	**236-9980**	1	TUBE AS	
B	25	2	*148-8335*	1	CONNECTOR AS	
		2	**6V-8635**	1	CONNECTOR	
		2	**5K-9090**	1	SEAL-O-RING	
		2	**7M-8485**	1	SEAL-O-RING	
	26	1	*148-8341*	1	CONNECTOR GP	
		1	**3D-2824**	1	SEAL-O-RING	
		1	**6V-8713**	1	CONNECTOR	
		1	**7J-9108**	1	SEAL-O-RING	
	27	2	*148-8352*	1	ELBOW GP	
		2	**5K-9090**	1	SEAL-O-RING	
		2	**6V-9854**	1	ELBOW (SWIVEL)	
	28	2	*150-3052*	1	CONNECTOR AS	
		2	**5K-9090**	1	SEAL-O-RING	
		2	**7M-8485**	1	SEAL-O-RING	
		2	**107-6709**	1	CONNECTOR	
	29	2	*150-3053*	1	CONNECTOR AS	
		2	**6V-9746**	1	SEAL-O-RING	
		2	**7M-8485**	1	SEAL-O-RING	
		2	**108-3872**	1	CONNECTOR	
	30	1	*150-3068*	1	UNION AS	
		1	**5K-9090**	2	SEAL-O-RING	
		1	**6V-9649**	1	UNION-90 DEGREE	
	31	2	**2P-1293**	2	LOCKNUT (1 3/16-12 THD)	
B	32	1	**5K-9090**	5	SEAL-O-RING	
	33	1	**5P-7466**	1	CLIP (SLOT)	
	34	2	**5P-7467**	1	CLIP (TAB)	
	35	1	**5P-7468**	4	CLIP (SLOT)	

199-9695 LINES GP-BACKHOE AUXILIARY *(contd.)* i01981324

NOTE	REF NO	GRAPHIC REF	PART NUMBER	QTY	PART NAME 1 2 3 4 5 6 (PRODUCT LEVEL)	SEE PAGE
	36	1,2	**5P-7469**	4	CLIP (TAB)	
	37	2	**5P-8112**	1	GROMMET	
	38	2	**5P-8444**	4	GROMMET	
M	39	2	**6V-7744**	2	LOCKNUT (M10X1.5 THD)	
	40	2	**6V-9172**	1	NUT (1 7/16-12 THD)	
	41	2	**6V-9746**	3	SEAL-O-RING	
	42	2	**7S-3916**	4	CLIP (TAB)	
	43	2	**7S-3919**	4	CLIP (SLOT)	
B	44	1	**8T-1889**	3	CLIP (SLOT)	
B	45	1,2	**8T-1890**	3	CLIP (TAB)	
B	46	2	**8T-4121**	11	WASHER-HARD (11X21X2.5MM THK)	
M	47	2	**8T-4133**	1	NUT (M10X1.5 THD)	
BM	48	2	**8T-4136**	9	BOLT (M10X1.5X25MM)	
M	49	2	**8T-4137**	1	BOLT (M10X1.5X20MM)	
M	50	1,2	**8T-4139**	9	BOLT (M12X1.75X30MM)	
M	51	2	**8T-4195**	1	BOLT (M10X1.5X30MM)	
	52	1,2	**8T-4223**	9	WASHER-HARD (13.5X25.5X3MM THK)	
M	53	2	**8T-4244**	2	NUT (M12X1.75 THD)	

B-USE AS REQUIRED
I-REFER TO HYDRAULIC INFORMATION SYSTEM
M-METRIC PART

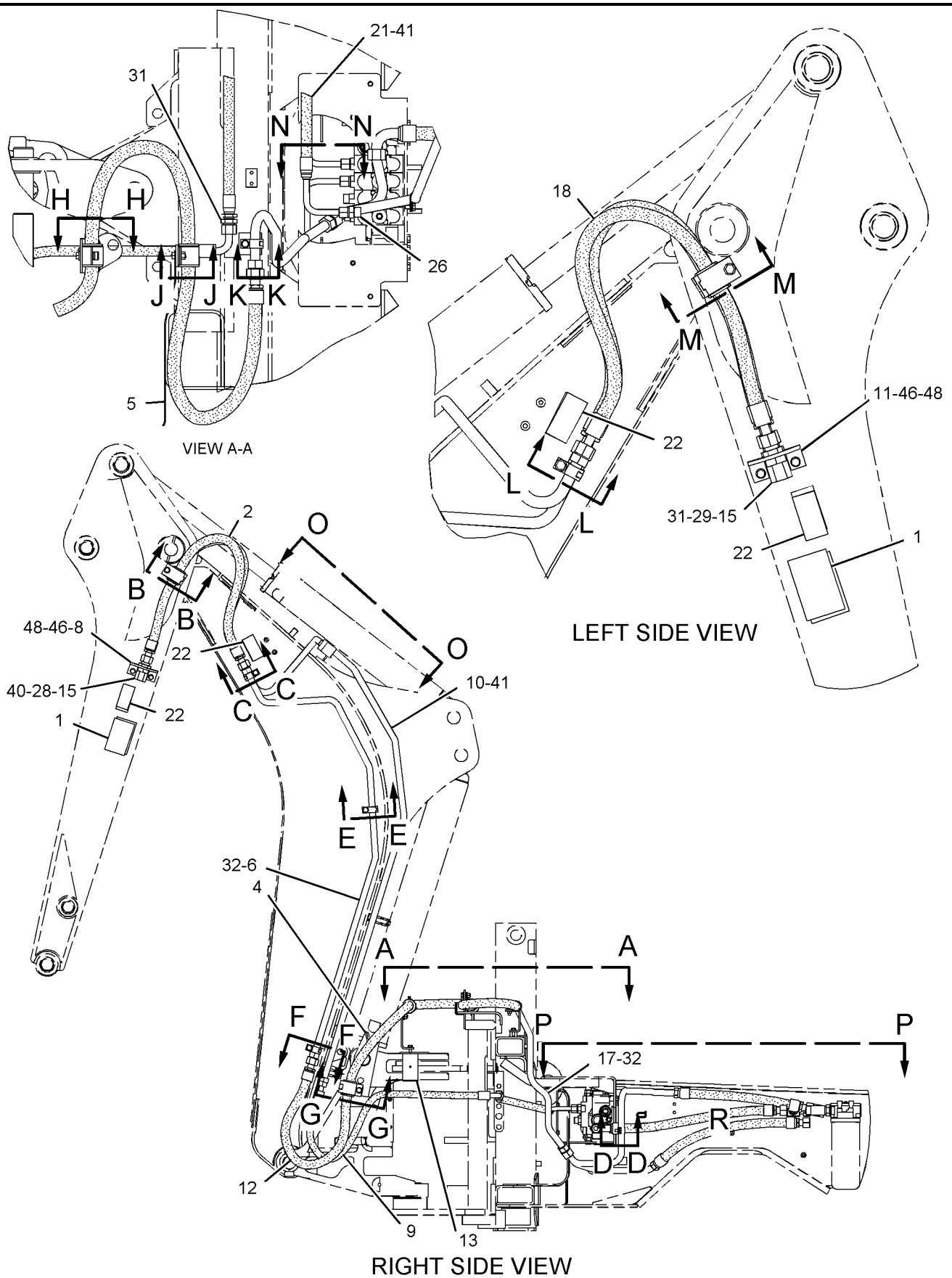

GRAPHIC #1

g01032167

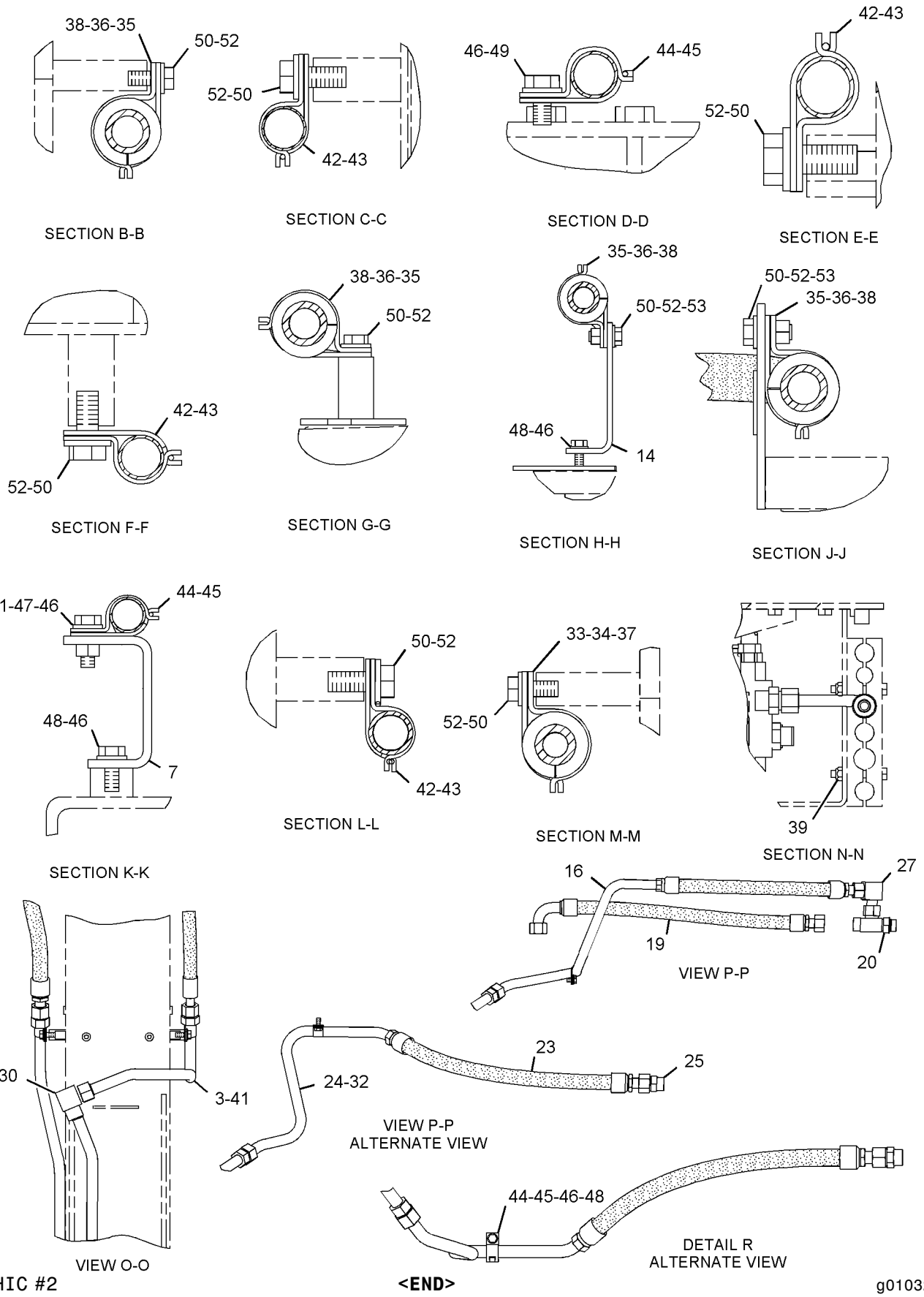

GRAPHIC #2 **<END>** g01032168

HYDRAULIC SYSTEM

199-9696 LINES GP-BACKHOE AUXILIARY–KIT

S/N: BXC1-UP; DSX1-UP
EXTENDABLE STICK, STANDARD FRAME, HAMMER
AN ATTACHMENT

SMCS-5057 **i01981325**

NOTE	REF NO	GRAPHIC REF	PART NUMBER	QTY	PART NAME 1 2 3 4 5 6 (PRODUCT LEVEL)	SEE PAGE
	1	1	**101-0863**	2	FILM-INSTRUCTION (RETURN FLOW)	
I	2	1	**106-0409**	1	HOSE AS	
	3	2	**107-6696**	1	TUBE AS	
	4	1	**107-6698**	1	BRACKET AS	
	5	1	**107-6701**	1	TUBE AS	
	6	2	**107-6707**	1	BRACKET	
	7	1	**107-6708**	1	BRACKET	
	8	1	**109-1260**	1	BRACKET	
I	9	1	**120-0147**	1	HOSE AS	
	10	2	**122-0536**	1	BRACKET	
	11	1	**123-7637**	2	CAP	
	12	2	**168-8192**	1	HOSE AS	
	13	1	**168-8193**	1	TUBE AS	
I	14	1	**168-8493**	1	HOSE AS	
	15	1	**202-6018**	4	FILM-WARNING (HIGH PRESSURE CYLINDER)	
BI	16	2	**236-9900**	1	HOSE AS	
B	17	2	**236-9980**	1	TUBE AS	
B	18	2	*148-8335*	1	CONNECTOR AS	
		2	**5K-9090**	1	SEAL-O-RING	
		2	**7M-8485**	1	SEAL-O-RING	
		2	**6V-8635**	1	CONNECTOR	
	19	2	*148-8352*	1	ELBOW GP	
		2	**5K-9090**	1	SEAL-O-RING	
		2	**6V-9854**	1	ELBOW (SWIVEL)	
	20	1	*150-3052*	1	CONNECTOR AS	
		1	**5K-9090**	1	SEAL-O-RING	
		1	**7M-8485**	1	SEAL-O-RING	
		1	**107-6709**	1	CONNECTOR	
	21	1	*150-3053*	1	CONNECTOR AS	
		1	**6V-9746**	1	SEAL-O-RING	
		1	**7M-8485**	1	SEAL-O-RING	
		1	**108-3872**	1	CONNECTOR	
	22	1	**2P-1293**	1	LOCKNUT (1 3/16-12 THD)	
B	23	1,2	**5K-9090**	5	SEAL-O-RING	
	24	2	**5P-7466**	1	CLIP (SLOT)	
	25	2	**5P-7467**	1	CLIP (TAB)	
	26	2	**5P-7468**	4	CLIP (SLOT)	
	27	2	**5P-7469**	4	CLIP (TAB)	
	28	2	**5P-8112**	1	GROMMET	
	29	2	**5P-8444**	4	GROMMET	
	30	1	**6V-9172**	1	NUT (1 7/16-12 THD)	
	31	2	**6V-9746**	1	SEAL-O-RING	
	32	2	**7S-3916**	4	CLIP (TAB)	
	33	2	**7S-3919**	4	CLIP (SLOT)	
B	34	2	**8T-1889**	3	CLIP (SLOT)	
B	35	2	**8T-1890**	3	CLIP (TAB)	
B	36	1,2	**8T-4121**	9	WASHER-HARD (11X21X2.5MM THK)	
M	37	2	**8T-4133**	1	NUT (M10X1.5 THD)	
BM	38	1,2	**8T-4136**	7	BOLT (M10X1.5X25MM)	
M	39	2	**8T-4137**	1	BOLT (M10X1.5X20MM)	
M	40	1,2	**8T-4139**	6	BOLT (M12X1.75X30MM)	
M	41	2	**8T-4184**	2	BOLT (M12X1.75X45MM)	
M	42	1,2	**8T-4195**	1	BOLT (M10X1.5X30MM)	
	43	2	**8T-4223**	8	WASHER-HARD (13.5X25.5X3MM THK)	
M	44	2	**8T-4244**	2	NUT (M12X1.75 THD)	

B-USE AS REQUIRED
I-REFER TO HYDRAULIC INFORMATION SYSTEM
M-METRIC PART

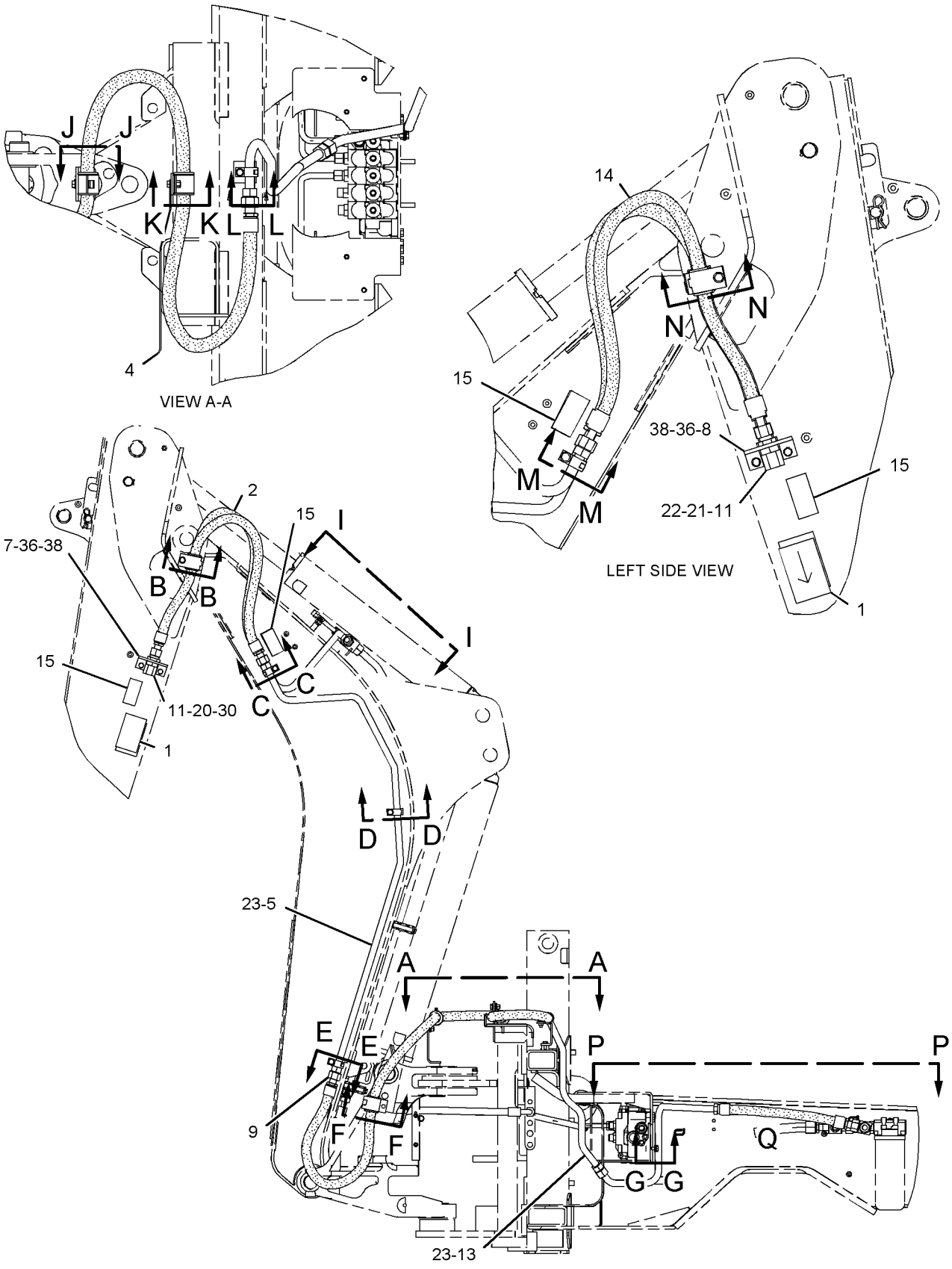

GRAPHIC #1

g01032602

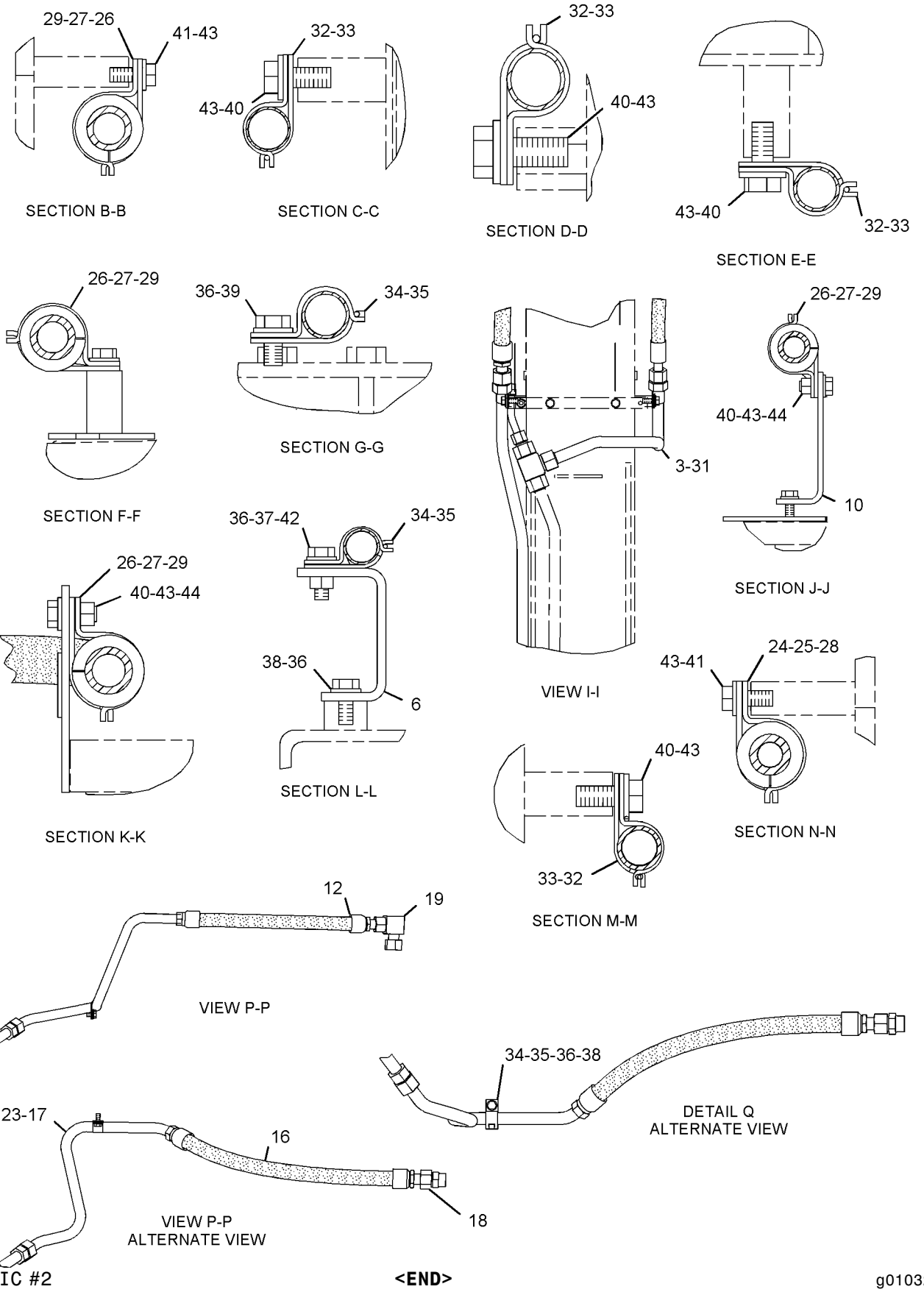

GRAPHIC #2 **<END>** g01032603

HYDRAULIC SYSTEM

235-5862 LINES GP-BACKHOE AUXILIARY—NARROW FRAME

S/N: DSX1-UP

PART OF 240-8695, 240-8696 BACKHOE AR-STANDARD STICK

AN ATTACHMENT

SMCS-5057 **i01986713**

NOTE	REF NO	GRAPHIC REF	PART NUMBER	QTY	PART NAME 1 2 3 4 5 6 (PRODUCT LEVEL)	SEE PAGE
	1	1	**101-0863**	2	FILM-INSTRUCTION (RETURN FLOW)	
I	2	1	**106-0409**	1	HOSE AS	
	3	1	**107-6696**	1	TUBE AS	
	4	2	**107-6698**	1	BRACKET AS	
	5	1	**107-6701**	1	TUBE AS	
	6	2	**107-6707**	1	BRACKET	
	7	1	**107-6708**	1	BRACKET	
I	8	1	**107-6717**	1	HOSE AS	
	9	1	**107-6718**	1	TUBE AS	
	10	1	**109-1260**	1	BRACKET	
	11	2	**122-0536**	1	BRACKET	
	12	1	**123-7637**	2	CAP	
	13	1	**168-8193**	1	TUBE AS	
I	14	1	**168-8493**	1	HOSE AS	
B	15	1	**202-6018**	4	FILM-WARNING (HIGH PRESSURE CYLINDER)	
I	16	1	**204-9204**	1	HOSE AS	
I	17	1	**236-9900**	1	HOSE AS	
	18	1	**236-9980**	1	TUBE AS	
	19	1	*148-8335*	1	CONNECTOR AS	
		1	**5K-9090**	1	SEAL-O-RING	
		1	**6V-8635**	1	CONNECTOR	
		1	**7M-8485**	1	SEAL-O-RING	
	20	1	*150-3052*	1	CONNECTOR AS	
		1	**5K-9090**	1	SEAL-O-RING	
		1	**7M-8485**	1	SEAL-O-RING	
		1	**107-6709**	1	CONNECTOR	
	21	1	*150-3053*	1	CONNECTOR AS	
		1	**6V-9746**	1	SEAL-O-RING	
		1	**7M-8485**	1	SEAL-O-RING	
		1	**108-3872**	1	CONNECTOR	
	22	2	*150-3068*	1	UNION AS	
		2	**5K-9090**	2	SEAL-O-RING	
		2	**6V-9649**	1	UNION-90 DEGREE	
	23	1	**2P-1293**	1	LOCKNUT (1 3/16-12 THD)	
	24	1	**5K-9090**	5	SEAL-O-RING	
	25	2	**5P-7466**	1	CLIP (SLOT)	
	26	2	**5P-7467**	1	CLIP (TAB)	
	27	2	**5P-7468**	4	CLIP (SLOT)	
	28	2	**5P-7469**	4	CLIP (TAB)	
	29	2	**5P-8112**	1	GROMMET	
	30	2	**5P-8444**	4	GROMMET	
	31	1	**6V-9172**	1	NUT (1 7/16-12 THD)	
	32	1	**6V-9746**	2	SEAL-O-RING	
	33	2	**7S-3916**	4	CLIP (TAB)	
	34	2	**7S-3919**	4	CLIP (SLOT)	
	35	2	**8T-1889**	2	CLIP (SLOT)	
	36	2	**8T-1890**	2	CLIP (TAB)	
	37	1,2	**8T-4121**	11	WASHER-HARD (11X21X2.5MM THK)	
M	38	2	**8T-4133**	1	NUT (M10X1.5 THD)	
M	39	1,2	**8T-4136**	9	BOLT (M10X1.5X25MM)	
M	40	2	**8T-4139**	5	BOLT (M12X1.75X30MM)	
M	41	2	**8T-4184**	2	BOLT (M12X1.75X45MM)	
M	42	2	**8T-4195**	1	BOLT (M10X1.5X30MM)	
	43	2	**8T-4223**	11	WASHER-HARD (13.5X25.5X3MM THK)	
M	44	2	**8T-4244**	2	NUT (M12X1.75 THD)	

235-5862 **LINES GP-BACKHOE AUXILIARY** ***(contd.)*** **i01986713**

NOTE	REF NO	GRAPHIC REF	PART NUMBER	QTY	PART NAME 1 2 3 4 5 6 (PRODUCT LEVEL)	SEE PAGE
M	45	2	**8T-4956**	2	BOLT (M12X1.75X35MM)	

B-USE AS REQUIRED
I-REFER TO HYDRAULIC INFORMATION SYSTEM
M-METRIC PART

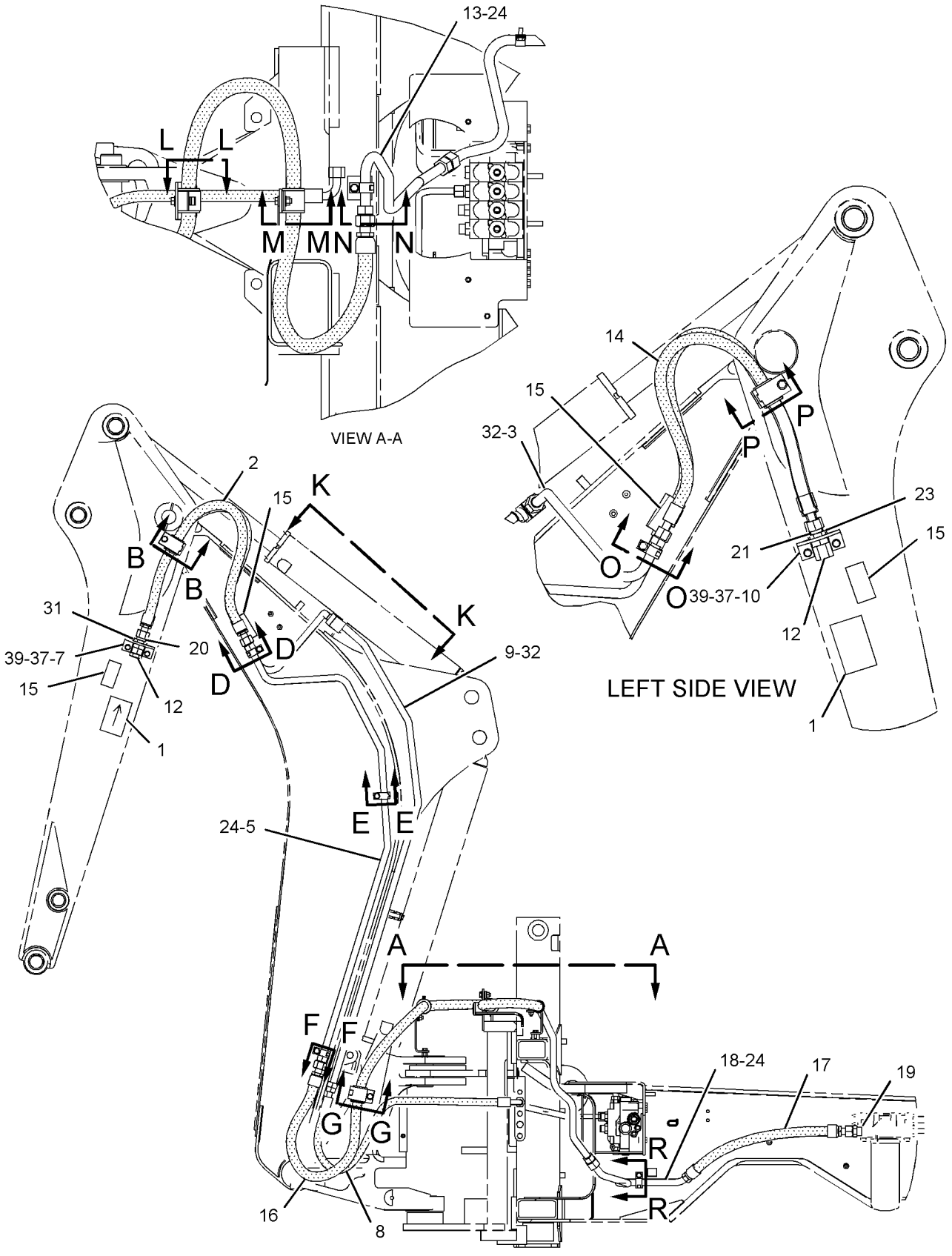

GRAPHIC #1

g01036091

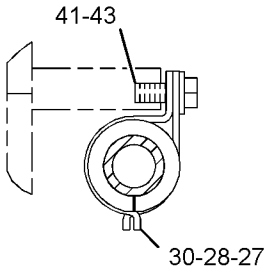

SECTION B-B

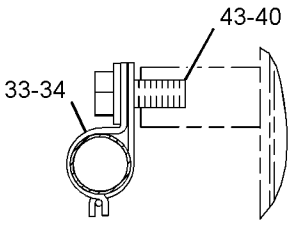

SECTION D-D

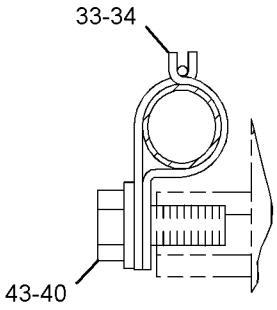

SECTION E-E

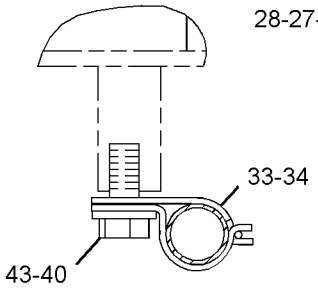

SECTION F-F

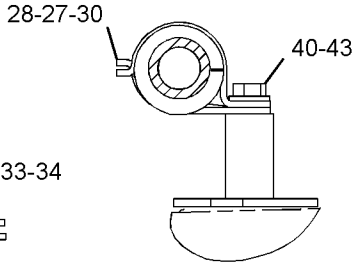

SECTION G-G

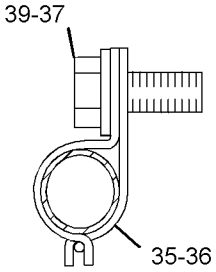

SECTION R-R

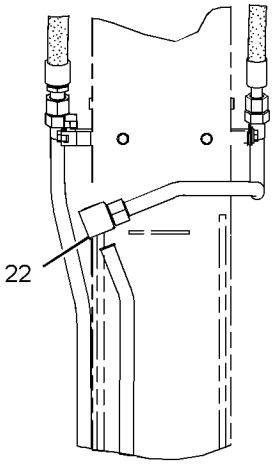

VIEW K-K

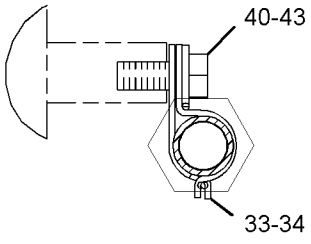

SECTION O-O

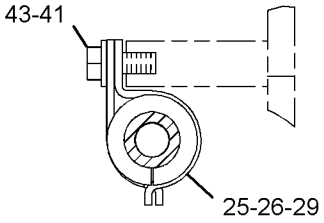

SECTION P-P

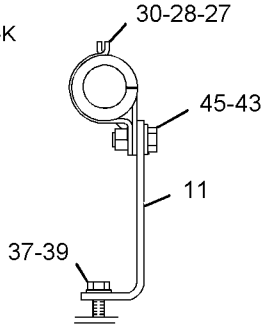

SECTION L-L

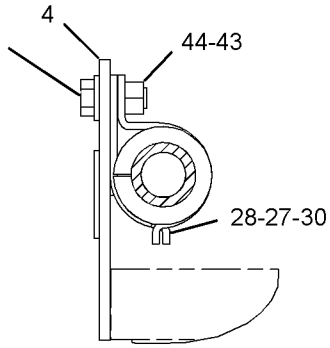

SECTION M-M

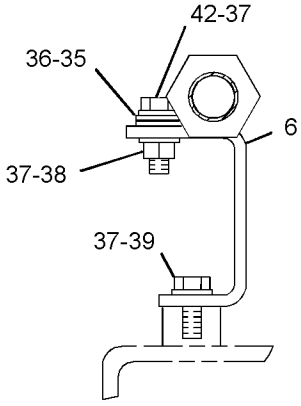

SECTION N-N

GRAPHIC #2 **<END>** g01036093

HYDRAULIC SYSTEM

235-5864 LINES GP-BACKHOE AUXILIARY—NARROW FRAME

S/N: BXC1-UP; DSX1-UP

PART OF 240-8505, 240-8507, 240-8701, 240-8702 BACKHOE AR-EXTENDABLE STICK AN ATTACHMENT

SMCS-5057 **i01986692**

NOTE	REF NO	GRAPHIC REF	PART NUMBER	QTY	PART NAME 1 2 3 4 5 6 (PRODUCT LEVEL)	SEE PAGE
	1	1	**101-0863**	2	FILM-INSTRUCTION (RETURN FLOW)	
I	2	1	**106-0409**	1	HOSE AS	
	3	1	**107-6696**	1	TUBE AS	
	4	1	**107-6698**	1	BRACKET AS	
	5	1	**107-6701**	1	TUBE AS	
	6	2	**107-6707**	1	BRACKET	
	7	1	**107-6708**	1	BRACKET	
I	8	1	**107-6717**	1	HOSE AS	
	9	1	**107-6718**	1	TUBE AS	
	10	2	**107-6719**	1	TUBE AS	
	11	1	**109-1260**	1	BRACKET	
	12	2	**122-0536**	1	BRACKET	
	13	1	**123-7637**	2	CAP	
	14	1	**168-8193**	1	TUBE AS	
I	15	1	**168-8493**	1	HOSE AS	
B	16	1	**202-6018**	4	FILM-WARNING (HIGH PRESSURE CYLINDER)	
I	17	1	**204-9204**	1	HOSE AS	
I	18	1	**236-9900**	1	HOSE AS	
	19	1	**236-9980**	1	TUBE AS	
	20	1	*148-8335*	1	CONNECTOR AS	
		1	**5K-9090**	1	SEAL-O-RING	
		1	**6V-8635**	1	CONNECTOR	
		1	**7M-8485**	1	SEAL-O-RING	
	21	1	*150-3052*	1	CONNECTOR AS	
		1	**5K-9090**	1	SEAL-O-RING	
		1	**7M-8485**	1	SEAL-O-RING	
		1	**107-6709**	1	CONNECTOR	
	22	1	*150-3053*	1	CONNECTOR AS	
		1	**6V-9746**	1	SEAL-O-RING	
		1	**7M-8485**	1	SEAL-O-RING	
		1	**108-3872**	1	CONNECTOR	
	23	2	*150-3057*	1	TEE AS	
		2	**5K-9090**	3	SEAL-O-RING	
		2	**6V-8792**	1	TEE-FACE SEAL	
	24	2	*150-3071*	1	REDUCER AS	
		2	**6V-8945**	1	REDUCER-O-RING	
		2	**7J-9108**	1	SEAL-O-RING	
	25	1	**2P-1293**	1	LOCKNUT (1 3/16-12 THD)	
	26	1	**5K-9090**	5	SEAL-O-RING	
	27	2	**5P-7466**	1	CLIP (SLOT)	
	28	2	**5P-7467**	1	CLIP (TAB)	
	29	2	**5P-7468**	4	CLIP (SLOT)	
	30	2	**5P-7469**	4	CLIP (TAB)	
	31	2	**5P-8112**	1	GROMMET	
	32	2	**5P-8444**	4	GROMMET	
	33	2	**6V-8398**	1	SEAL-O-RING	
	34	1	**6V-9172**	1	NUT (1 7/16-12 THD)	
	35	1	**6V-9746**	2	SEAL-O-RING	
	36	2	**7S-3916**	4	CLIP (TAB)	
	37	2	**7S-3919**	4	CLIP (SLOT)	
	38	2	**8T-1889**	2	CLIP (SLOT)	
	39	2	**8T-1890**	2	CLIP (TAB)	
	40	1,2	**8T-4121**	12	WASHER-HARD (11X21X2.5MM THK)	
M	41	2	**8T-4133**	1	NUT (M10X1.5 THD)	
M	42	1,2	**8T-4136**	10	BOLT (M10X1.5X25MM)	

235-5864 LINES GP-BACKHOE AUXILIARY *(contd.)* i01986692

NOTE	REF NO	GRAPHIC REF	PART NUMBER	QTY	PART NAME 1 2 3 4 5 6 (PRODUCT LEVEL)	SEE PAGE
M	43	2	**8T-4139**	5	BOLT (M12X1.75X30MM)	
M	44	2	**8T-4184**	2	BOLT (M12X1.75X45MM)	
M	45	2	**8T-4195**	1	BOLT (M10X1.5X30MM)	
	46	2	**8T-4223**	11	WASHER-HARD (13.5X25.5X3MM THK)	
M	47	2	**8T-4244**	2	NUT (M12X1.75 THD)	
M	48	2	**8T-4956**	2	BOLT (M12X1.75X35MM)	
	49	2	**9R-1004**	1	CLIP (TAB)	
	50	2	**9R-1005**	1	CLIP (SLOT)	
	51	2	**9X-6579**	1	NUT-ORIFICE (7/16-12 THD)	

B-USE AS REQUIRED
I-REFER TO HYDRAULIC INFORMATION SYSTEM
M-METRIC PART

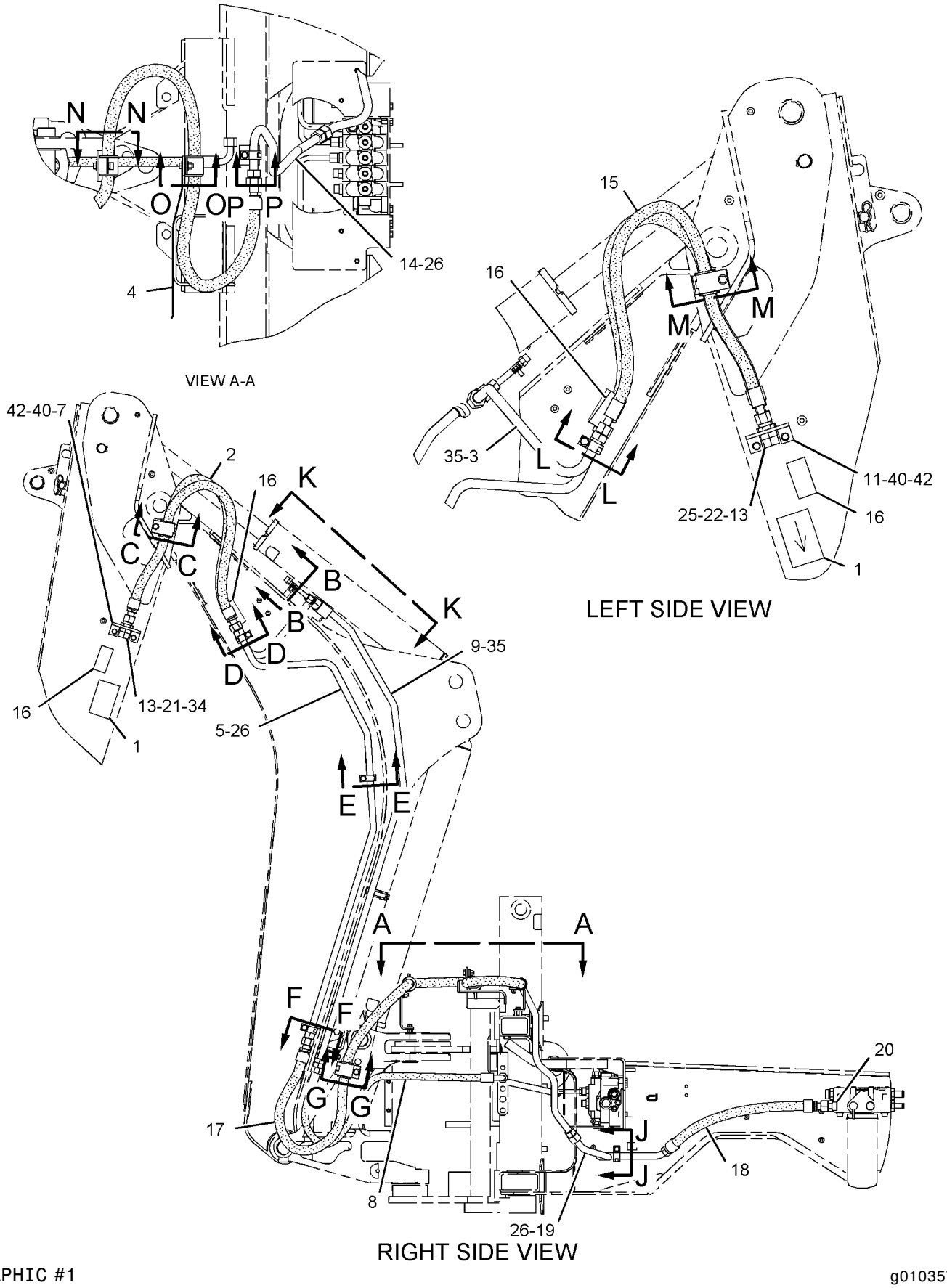

GRAPHIC #1

g01035705

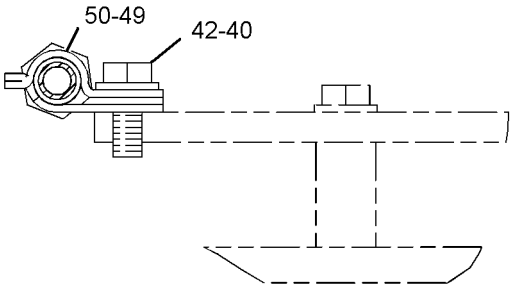

SECTION B-B

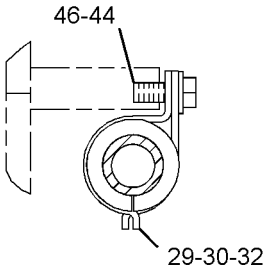

SECTION C-C

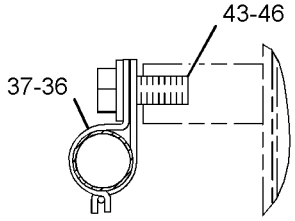

SECTION D-D

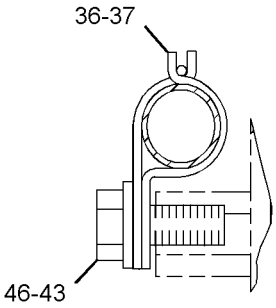

SECTION E-E

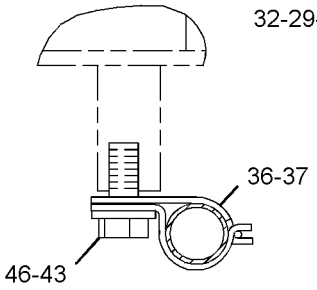

SECTION F-F

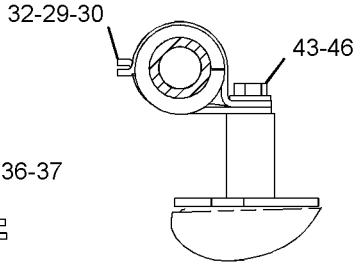

SECTION G-G

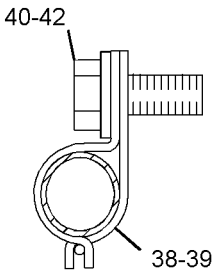

SECTION J-J

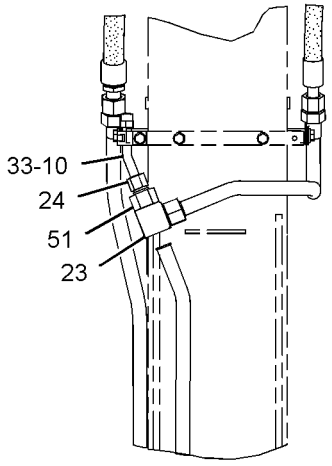

VIEW K-K

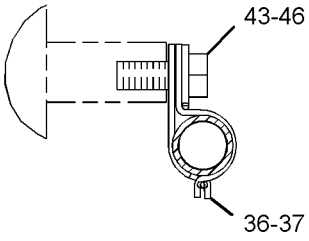

SECTION L-L

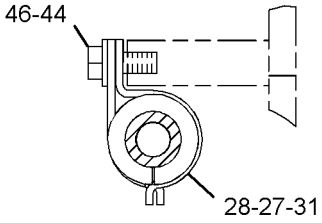

SECTION M-M

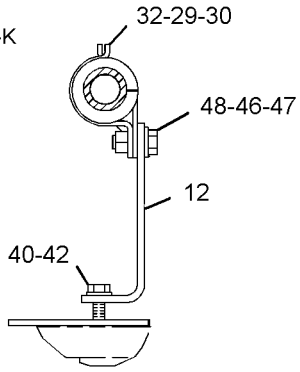

SECTION N-N

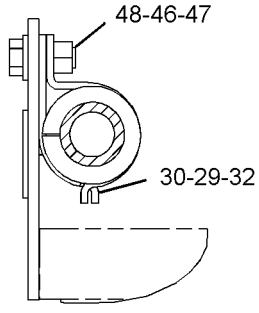

SECTION O-O

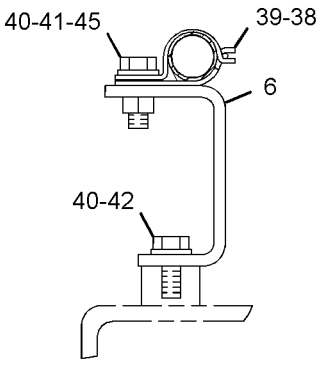

SECTION P-P

GRAPHIC #2 **<END>** g01035706

HYDRAULIC SYSTEM

235-5865 LINES GP-BACKHOE AUXILIARY

S/N: BXC1-UP

PART OF 240-8685, 240-8686 BACKHOE AR-STANDARD STICK

AN ATTACHMENT

SMCS-5057 **i01986689**

NOTE	REF NO	GRAPHIC REF	PART NUMBER	QTY	PART NAME 1 2 3 4 5 6 (PRODUCT LEVEL)	SEE PAGE
	1	1	**101-0863**	2	FILM-INSTRUCTION (RETURN FLOW)	
I	2	1	**106-0409**	1	HOSE AS	
	3	1	**107-6696**	1	TUBE AS	
	4	2	**107-6698**	1	BRACKET AS	
	5	1	**107-6701**	1	TUBE AS	
	6	2	**107-6707**	1	BRACKET	
	7	1	**107-6708**	1	BRACKET	
I	8	1	**107-6717**	1	HOSE AS	
	9	1	**107-6718**	1	TUBE AS	
	10	1	**109-1260**	1	BRACKET	
I	11	1	**120-0147**	1	HOSE AS	
	12	2	**122-0536**	1	BRACKET	
	13	1	**123-7637**	2	CAP	
	14	1	**168-8193**	1	TUBE AS	
I	15	1	**168-8493**	1	HOSE AS	
B	16	1	**202-6018**	4	FILM-WARNING (HIGH PRESSURE CYLINDER)	
I	17	1	**236-9900**	1	HOSE AS	
	18	1	**236-9980**	1	TUBE AS	
	19	1	*148-8335*	1	CONNECTOR AS	
		1	**5K-9090**	1	SEAL-O-RING	
		1	**6V-8635**	1	CONNECTOR	
		1	**7M-8485**	1	SEAL-O-RING	
	20	1	*150-3052*	1	CONNECTOR AS	
		1	**5K-9090**	1	SEAL-O-RING	
		1	**7M-8485**	1	SEAL-O-RING	
		1	**107-6709**	1	CONNECTOR	
	21	1	*150-3053*	1	CONNECTOR AS	
		1	**6V-9746**	1	SEAL-O-RING	
		1	**7M-8485**	1	SEAL-O-RING	
		1	**108-3872**	1	CONNECTOR	
	22	2	*150-3068*	1	UNION AS	
		2	**5K-9090**	2	SEAL-O-RING	
		2	**6V-9649**	1	UNION-90 DEGREE	
	23	1	**2P-1293**	1	LOCKNUT (1 3/16-12 THD)	
	24	1	**5K-9090**	5	SEAL-O-RING	
	25	2	**5P-7466**	1	CLIP (SLOT)	
	26	2	**5P-7467**	1	CLIP (TAB)	
	27	2	**5P-7468**	4	CLIP (SLOT)	
	28	2	**5P-7469**	4	CLIP (TAB)	
	29	2	**5P-8112**	1	GROMMET	
	30	2	**5P-8444**	4	GROMMET	
	31	1	**6V-9172**	1	NUT (1 7/16-12 THD)	
	32	1	**6V-9746**	2	SEAL-O-RING	
	33	2	**7S-3916**	4	CLIP (TAB)	
	34	2	**7S-3919**	4	CLIP (SLOT)	
	35	2	**8T-1889**	2	CLIP (SLOT)	
	36	2	**8T-1890**	2	CLIP (TAB)	
	37	1,2	**8T-4121**	11	WASHER-HARD (11X21X2.5MM THK)	
M	38	2	**8T-4133**	1	NUT (M10X1.5 THD)	
M	39	1,2	**8T-4136**	9	BOLT (M10X1.5X25MM)	
M	40	2	**8T-4139**	5	BOLT (M12X1.75X30MM)	
M	41	2	**8T-4184**	2	BOLT (M12X1.75X45MM)	
M	42	2	**8T-4195**	1	BOLT (M10X1.5X30MM)	
	43	2	**8T-4223**	11	WASHER-HARD (13.5X25.5X3MM THK)	
M	44	2	**8T-4244**	2	NUT (M12X1.75 THD)	

235-5865 LINES GP-BACKHOE AUXILIARY *(contd.)* i01986689

NOTE	REF NO	GRAPHIC REF	PART NUMBER	QTY	PART NAME 1 2 3 4 5 6 (PRODUCT LEVEL)	SEE PAGE
M	45	2	**8T-4956**	2	BOLT (M12X1.75X35MM)	

B-USE AS REQUIRED
I-REFER TO HYDRAULIC INFORMATION SYSTEM
M-METRIC PART

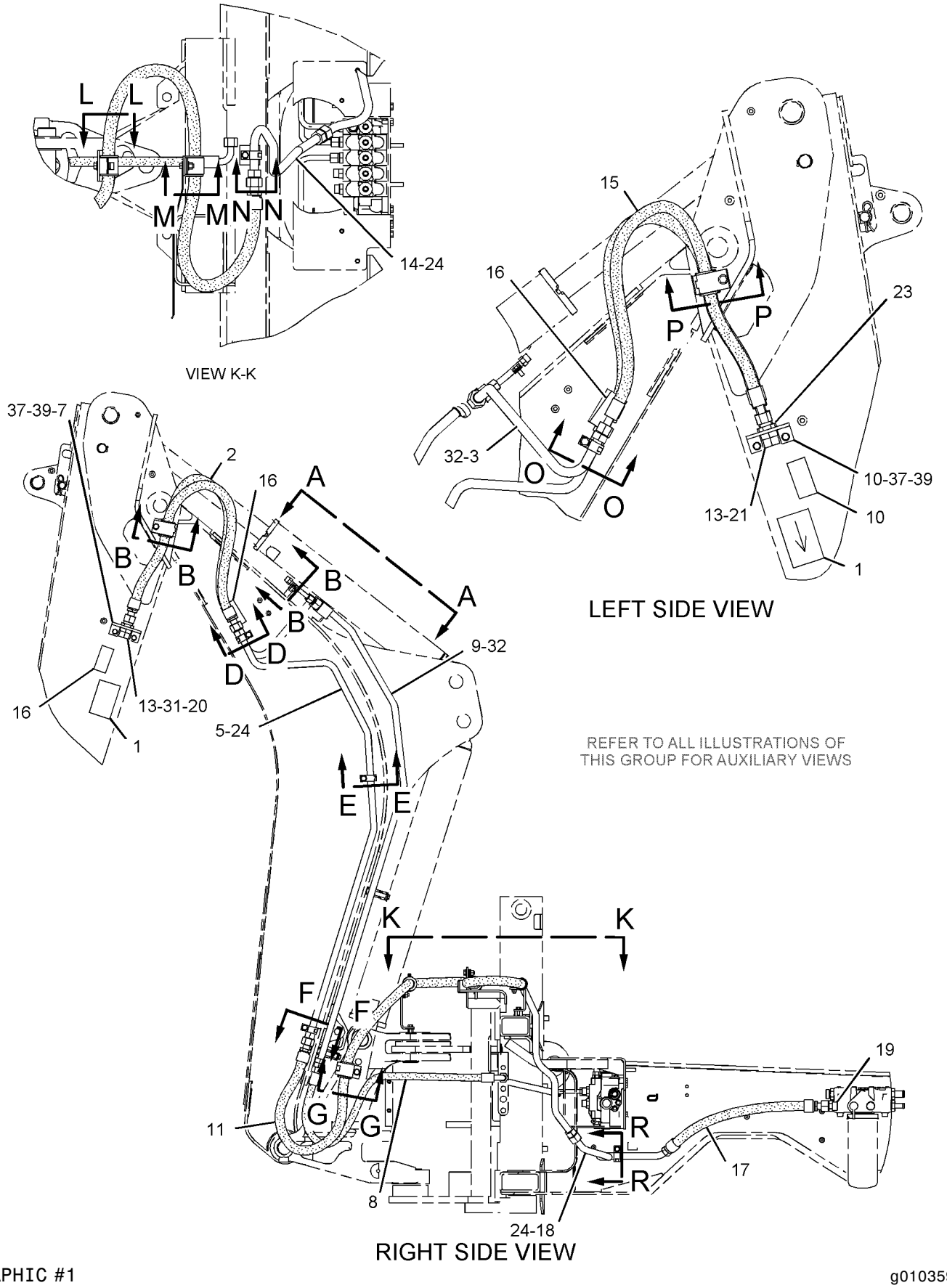

GRAPHIC #1

g01035938

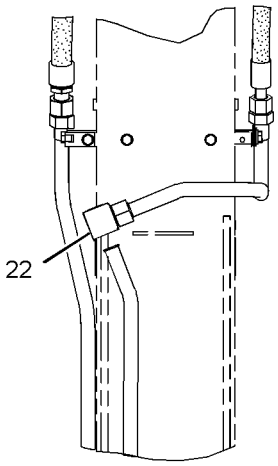

VIEW A-A

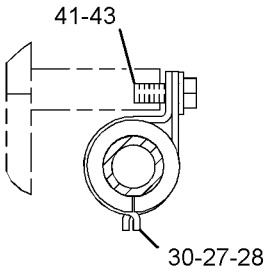

SECTION B-B

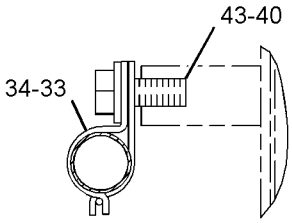

SECTION D-D

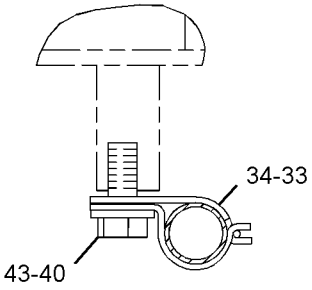

SECTION F-F

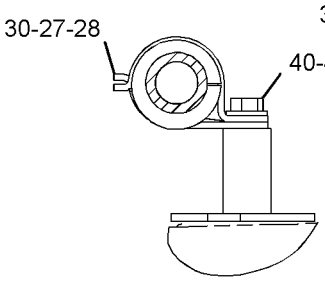

SECTION G-G

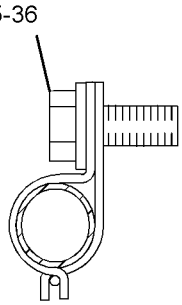

SECTION R-R

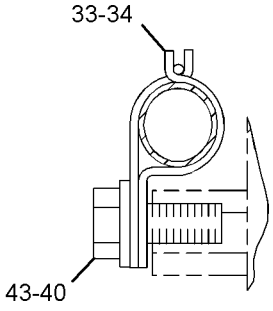

SECTION E-E

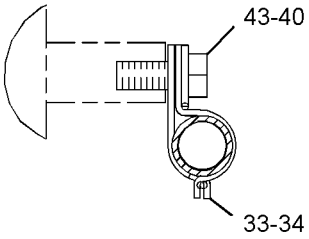

SECTION O-O

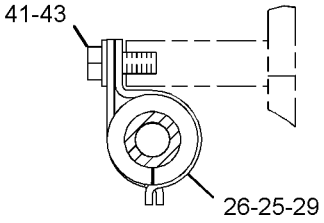

SECTION P-P

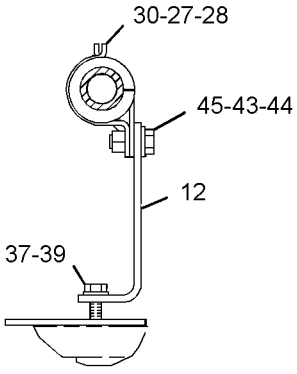

SECTION L-L

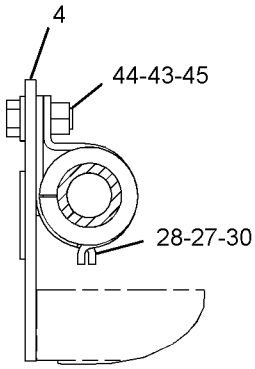

SECTION M-M

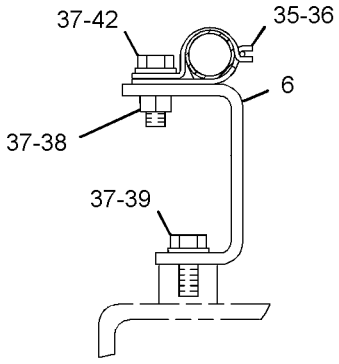

SECTION P-P

GRAPHIC #2

<END>

g01035939

HYDRAULIC SYSTEM

235-5867 LINES GP-BACKHOE AUXILIARY

S/N: BXC1-UP; DSX1-UP

PART OF 240-8492, 240-8493, 240-8691, 240-8692 BACKHOE AR-EXTENDABLE STICK AN ATTACHMENT

SMCS-5057 **i01986652**

NOTE	REF NO	GRAPHIC REF	PART NUMBER	QTY	PART NAME 1 2 3 4 5 6 (PRODUCT LEVEL)	SEE PAGE
	1	1	**101-0863**	2	FILM-INSTRUCTION (RETURN FLOW)	
I	2	1	**106-0409**	1	HOSE AS	
	3	1	**107-6696**	1	TUBE AS	
	4	2	**107-6698**	1	BRACKET AS	
	5	1	**107-6701**	1	TUBE AS	
	6	2	**107-6707**	1	BRACKET	
	7	1	**107-6708**	1	BRACKET	
I	8	1	**107-6717**	1	HOSE AS	
	9	1	**107-6718**	1	TUBE AS	
	10	2	**107-6719**	1	TUBE AS	
	11	1	**109-1260**	1	BRACKET	
I	12	1	**120-0147**	1	HOSE AS	
	13	2	**122-0536**	1	BRACKET	
	14	1	**123-7637**	2	CAP	
	15	1	**168-8193**	1	TUBE AS	
I	16	1	**168-8493**	1	HOSE AS	
B	17	1	**202-6018**	4	FILM-WARNING (HIGH PRESSURE CYLINDER)	
I	18	1	**236-9900**	1	HOSE AS	
	19	1	**236-9980**	1	TUBE AS	
	20	1	*148-8335*	1	CONNECTOR AS	
		1	**5K-9090**	1	SEAL-O-RING	
		1	**6V-8635**	1	CONNECTOR	
		1	**7M-8485**	1	SEAL-O-RING	
	21	1	*150-3052*	1	CONNECTOR AS	
		1	**5K-9090**	1	SEAL-O-RING	
		1	**7M-8485**	1	SEAL-O-RING	
		1	**107-6709**	1	CONNECTOR	
	22	1	*150-3053*	1	CONNECTOR AS	
		1	**6V-9746**	1	SEAL-O-RING	
		1	**7M-8485**	1	SEAL-O-RING	
		1	**108-3872**	1	CONNECTOR	
	23	2	*150-3057*	1	TEE AS	
		2	**5K-9090**	3	SEAL-O-RING	
		2	**6V-8792**	1	TEE-FACE SEAL	
	24	2	*150-3071*	1	REDUCER AS	
		2	**6V-8945**	1	REDUCER-O-RING	
		2	**7J-9108**	1	SEAL-O-RING	
	25	1	**2P-1293**	1	LOCKNUT (1 3/16-12 THD)	
	26	1	**5K-9090**	5	SEAL-O-RING	
	27	2	**5P-7466**	1	CLIP (SLOT)	
	28	2	**5P-7467**	1	CLIP (TAB)	
	29	2	**5P-7468**	4	CLIP (SLOT)	
	30	2	**5P-7469**	4	CLIP (TAB)	
	31	2	**5P-8112**	1	GROMMET	
	32	2	**5P-8444**	4	GROMMET	
	33	2	**6V-8398**	1	SEAL-O-RING	
	34	1	**6V-9172**	1	NUT (1 7/16-12 THD)	
	35	1	**6V-9746**	2	SEAL-O-RING	
	36	2	**7S-3916**	4	CLIP (TAB)	
	37	2	**7S-3919**	4	CLIP (SLOT)	
	38	2	**8T-1889**	2	CLIP (SLOT)	
	39	2	**8T-1890**	2	CLIP (TAB)	
	40	1,2	**8T-4121**	12	WASHER-HARD (11X21X2.5MM THK)	
M	41	2	**8T-4133**	1	NUT (M10X1.5 THD)	
M	42	1,2	**8T-4136**	10	BOLT (M10X1.5X25MM)	

235-5867 LINES GP-BACKHOE AUXILIARY *(contd.)* i01986652

NOTE	REF NO	GRAPHIC REF	PART NUMBER	QTY	PART NAME 1 2 3 4 5 6 (PRODUCT LEVEL)	SEE PAGE
M	43	2	**8T-4139**	5	BOLT (M12X1.75X30MM)	
M	44	2	**8T-4184**	2	BOLT (M12X1.75X45MM)	
M	45	2	**8T-4195**	1	BOLT (M10X1.5X30MM)	
	46	2	**8T-4223**	11	WASHER-HARD (13.5X25.5X3MM THK)	
M	47	2	**8T-4244**	2	NUT (M12X1.75 THD)	
M	48	2	**8T-4956**	2	BOLT (M12X1.75X35MM)	
	49	2	**9R-1004**	1	CLIP (TAB)	
	50	2	**9R-1005**	1	CLIP (SLOT)	
	51	2	**9X-6579**	1	NUT-ORIFICE (7/16-12 THD)	

B-USE AS REQUIRED
I-REFER TO HYDRAULIC INFORMATION SYSTEM
M-METRIC PART

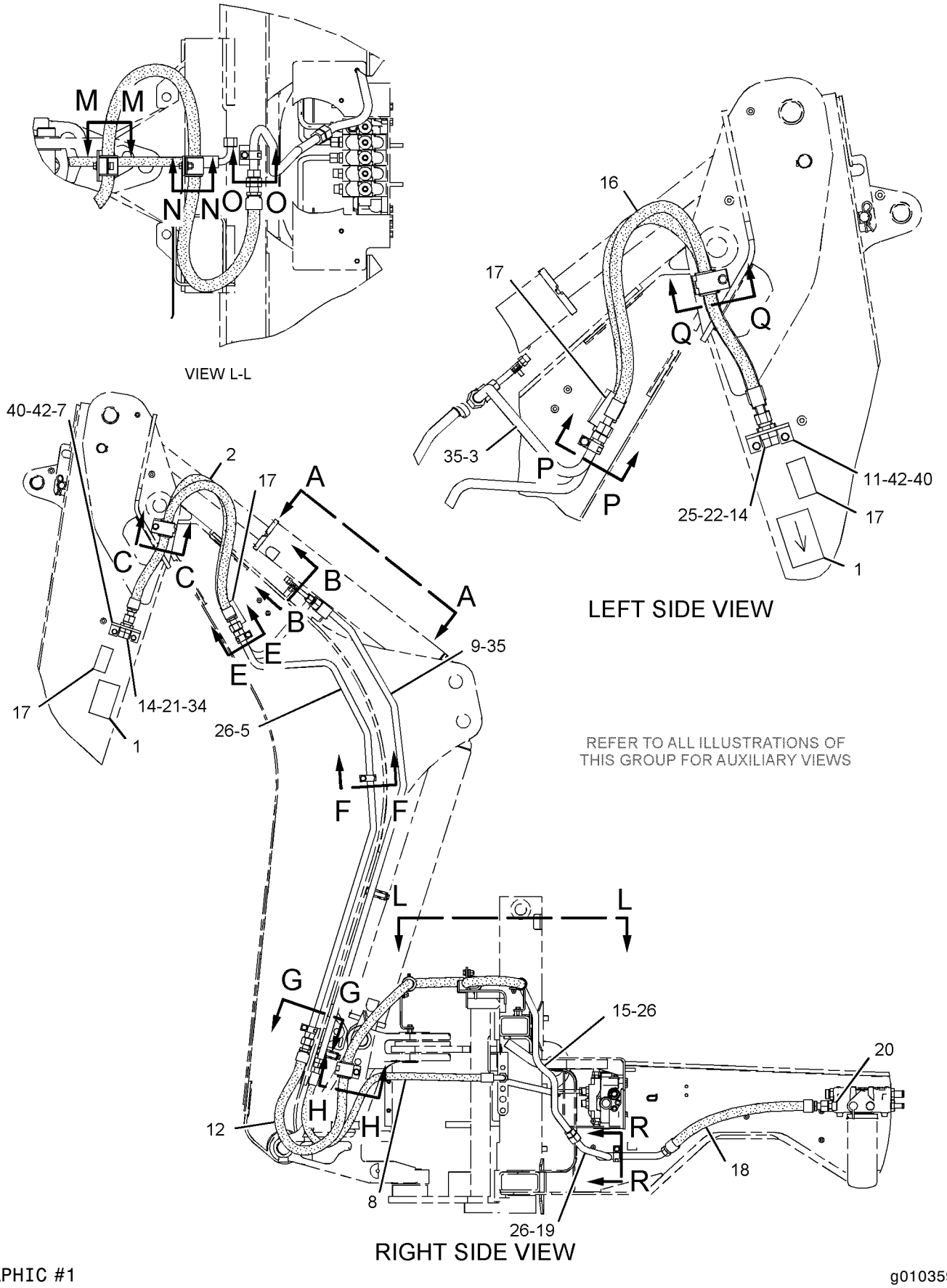

GRAPHIC #1

g01035971

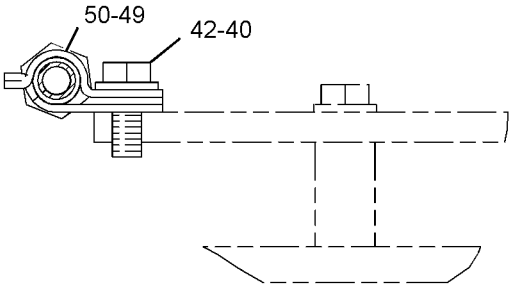

SECTION B-B

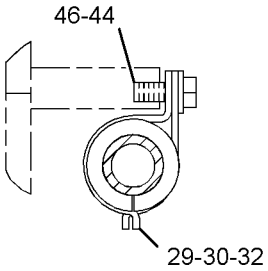

SECTION C-C

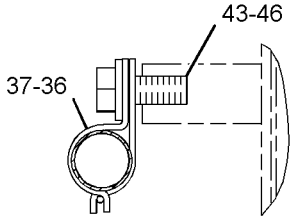

SECTION E-E

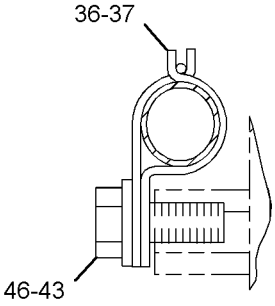

SECTION F-F

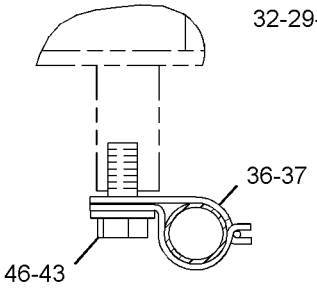

SECTION G-G

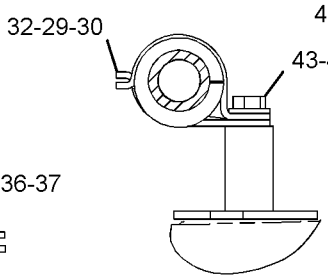

SECTION H-H

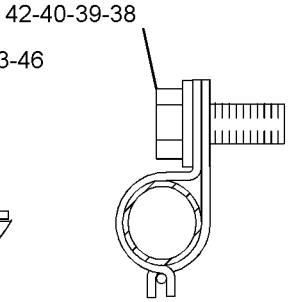

SECTION R-R

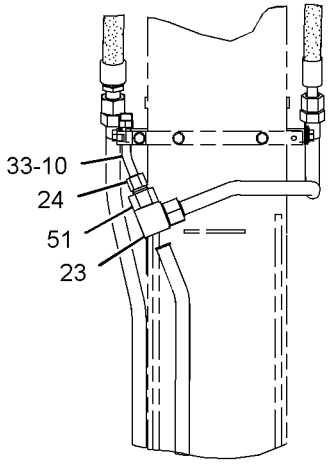

VIEW A-A

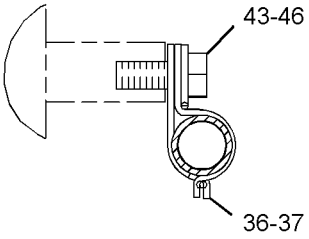

SECTION P-P

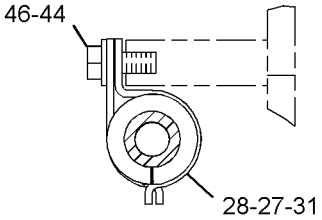

SECTION Q-Q

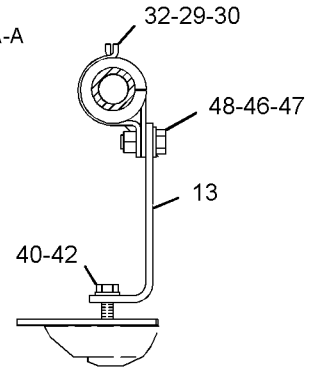

SECTION M-M

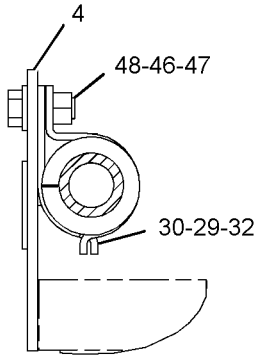

SECTION N-N

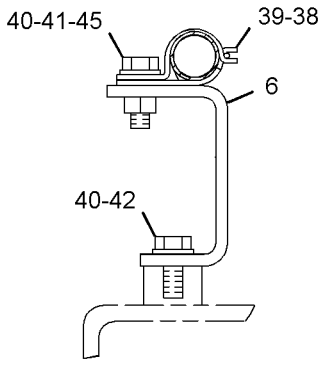

SECTION O-O

GRAPHIC #2 **<END>** g01035972

HYDRAULIC SYSTEM

183-8543 LINES GP-BOOM

S/N: BXC1-UP; DSX1-UP
PART OF 240-8490, 240-8492, 240-8504, 240-8505, 240-8689, 240-8691, 240-8699, 240-8701 BACKHOE AR-EXTENDABLE STICK, 240-8683, 240-8685, 240-8687, 240-8693, 240-8695, 240-8697 BACKHOE AR-STANDARD STICK
AN ATTACHMENT

SMCS-5057, 5456 **i01626765**

NOTE	REF NO	GRAPHIC REF	PART NUMBER	QTY	PART NAME 1 2 3 4 5 6 (PRODUCT LEVEL)	SEE PAGE
	1	1	**5P-0599**	1	CLAMP	
	2	1	**9R-4619**	1	SUPPORT AS	
I	3	1	**183-4843**	1	HOSE AS	
I	4	1	**199-8927**	1	HOSE AS	
	5	1	**207-5477**	1	TUBE AS	
	6	1	*148-8327*	1	CONNECTOR GP	
		1	**3D-2824**	1	SEAL-O-RING	
		1	**6V-8637**	1	CONNECTOR-SEAL	
		1	**6V-9746**	1	SEAL-O-RING	
	7	1	**7J-9108**	1	SEAL-O-RING	
	8	1	**8T-1887**	1	CLIP (SLOT)	
	9	1	**8T-1888**	1	CLIP (TAB)	
	10	1	**8T-4121**	1	WASHER-HARD (11X21X2.5MM THK)	
M	11	1	**8T-4137**	1	BOLT (M10X1.5X20MM)	

I-SEE HOSE FABRICATION GUIDE
M-METRIC PART

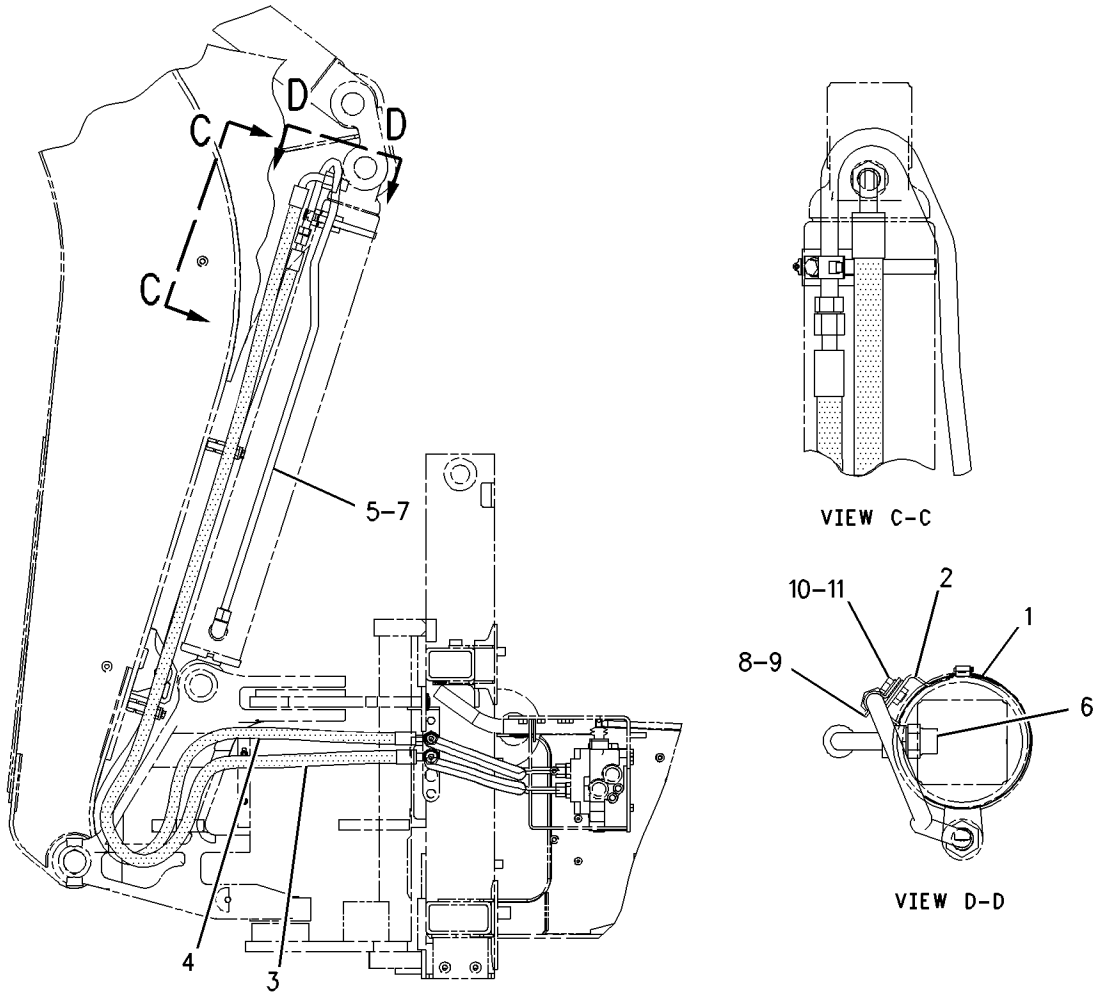

GRAPHIC #1 **<END>** g00842621

HYDRAULIC SYSTEM

193-0703 LINES GP-BUCKET CYLINDER

S/N: BXC1-UP; DSX1-UP

PART OF 240-8683, 240-8684, 240-8685, 240-8686, 240-8687, 240-8688, 240-8693, 240-8694, 240-8695, 240-8696, 240-8697, 240-8698 BACKHOE AR-STANDARD STICK AN ATTACHMENT

SMCS-5057, 5457 **i01650104**

NOTE	REF NO	GRAPHIC REF	PART NUMBER	QTY	PART NAME 1 2 3 4 5 6 (PRODUCT LEVEL)	SEE PAGE
	1	1	**5P-0599**	2	CLAMP	
	2	1	**9R-5948**	1	BLOCK	
I	3	1	**9R-9218**	1	HOSE AS	
I	4	1	**9R-9221**	1	HOSE AS	
	5	1	**187-4343**	1	TUBE AS	
	6	1	**195-0268**	1	BRACKET AS	
I	7	1	**197-0573**	1	HOSE AS	
	8	1	**212-9338**	1	HOSE AS	
	9	1	*148-8362*	1	ELBOW GP	
		1	**3D-2824**	1	SEAL-O-RING	
		1	**5K-9090**	1	SEAL-O-RING	
		1	**8T-6684**	1	ELBOW	
	10	1	*148-8455*	1	UNION GP	
		1	**6V-8997**	1	UNION	
		1	**6V-9746**	2	SEAL-O-RING	
	11	1	*148-8457*	1	UNION GP	
		1	**6V-8398**	2	SEAL-O-RING	
		1	**6V-8995**	1	UNION-BULKHEAD	
	12	1	**2P-1293**	1	LOCKNUT-BULKHEAD (1 3/16-12 THD)	
	13	1	**5P-7464**	1	CLIP (SLOT)	
	14	1	**5P-7465**	1	CLIP (TAB)	
	15	1	**5P-7466**	1	CLIP (SLOT)	
	16	1	**5P-7467**	1	CLIP (TAB)	
	17	1	**5P-8112**	1	GROMMET	
	18	1	**6V-1249**	1	GROMMET	
	19	1	**6V-9169**	1	NUT-BULKHEAD (13/16-16 THD)	
	20	1	**6V-9746**	1	SEAL-O-RING	
	21	1	**8T-1889**	1	CLIP (SLOT)	
	22	1	**8T-1890**	1	CLIP (TAB)	
	23	1	**8T-4121**	1	WASHER-HARD (11X21X2.5MM THK)	
M	24	1	**8T-4137**	1	BOLT (M10X1.5X20MM)	
M	25	1	**8T-4139**	2	BOLT (M12X1.75X30MM)	
	26	1	**8T-4223**	2	WASHER-HARD (13.5X25.5X3MM THK)	

I-SEE HOSE FABRICATION GUIDE
M-METRIC PART

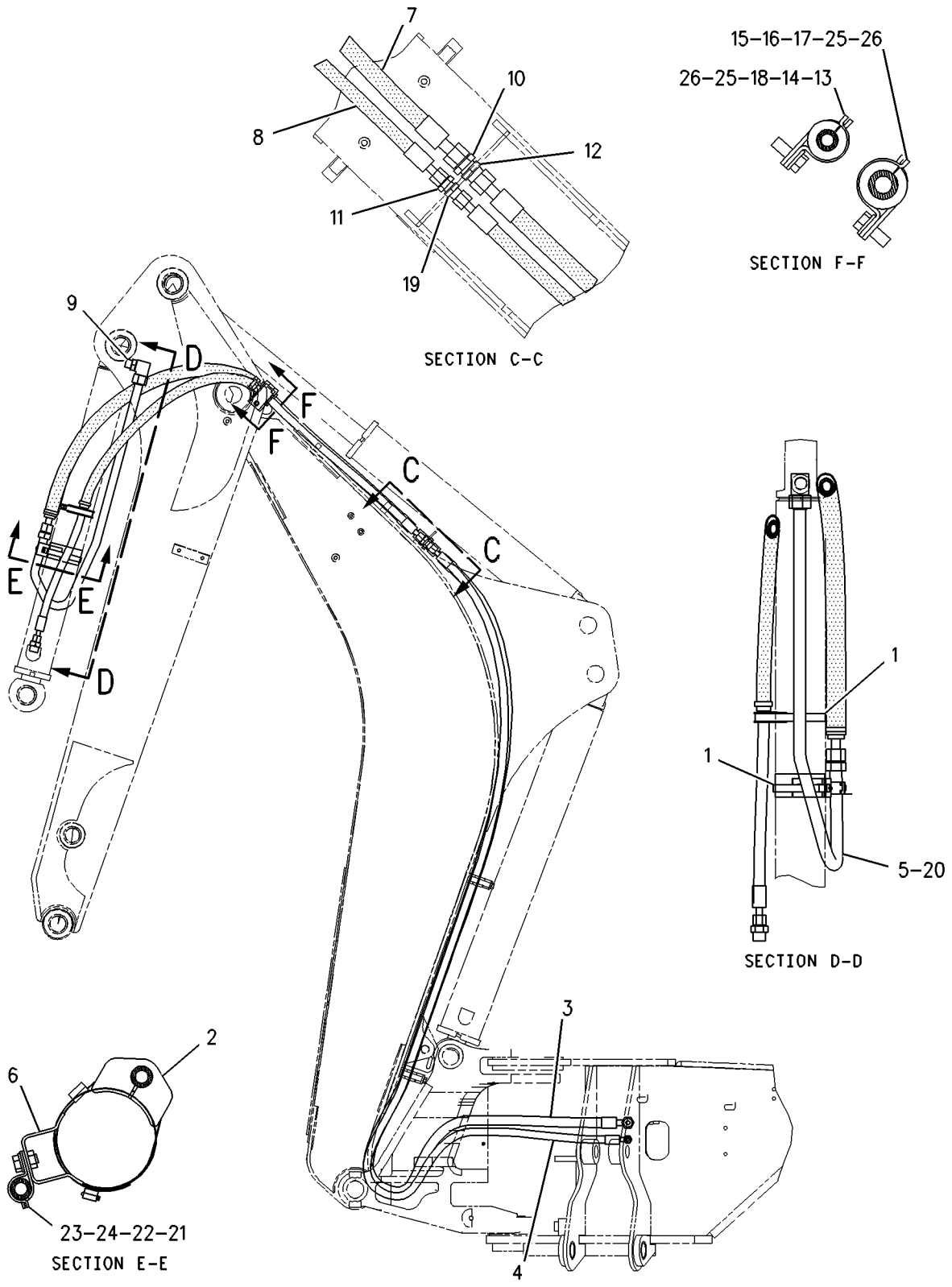

GRAPHIC #1 **<END>** g00852576

186-1593 LINES GP-DRAIN

S/N: BXC1-UP; DSX1-UP
BOOM AND STICK LOCKS, STANDARD FRAME
PART OF 240-8507, 240-8700, 240-8702 BACKHOE AR-EXTENDABLE STICK, 240-8694, 240-8696, 240-8698 BACKHOE AR-STANDARD STICK
AN ATTACHMENT

SMCS-5057 **i01963966**

NOTE	REF NO	GRAPHIC REF	PART NUMBER	QTY	PART NAME 1 2 3 4 5 6 (PRODUCT LEVEL)	SEE PAGE
I	1	1	**176-8127**	1	HOSE AS	
C	2	1	**228-6331**	1	HOSE AS	
C	3	1	*9X-3965*	1	TEE	
	4	1	*148-8458*	1	UNION GP	
		1	**6V-8397**	2	SEAL-O-RING	
		1	**6V-9807**	1	UNION	
	5	1	**6V-8397**	1	SEAL-O-RING	
	6	1	**6V-9168**	1	NUT (11/16-16 THD)	
C	7	1	**5D-1026**	3	CLAMP-HOSE	

C-CHANGE FROM PREVIOUS TYPE
I-REFER TO HYDRAULIC INFORMATION SYSTEM

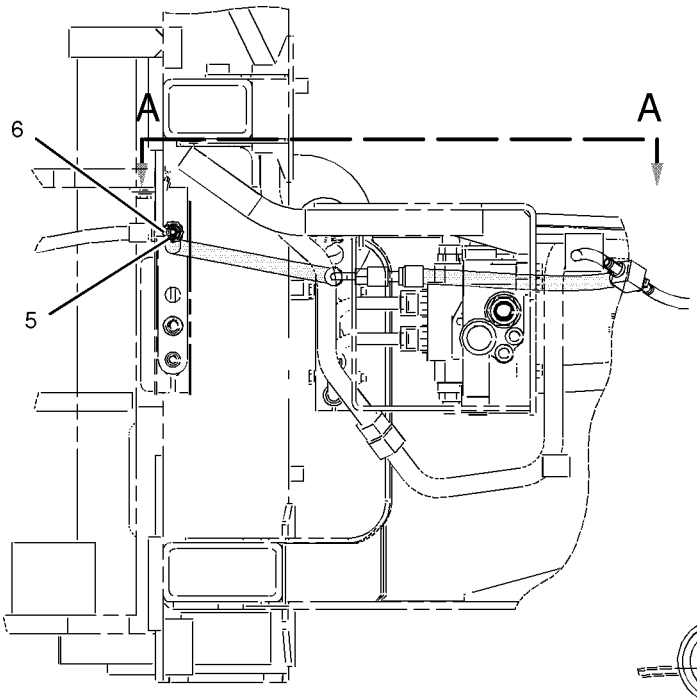

RIGHT SIDE VIEW

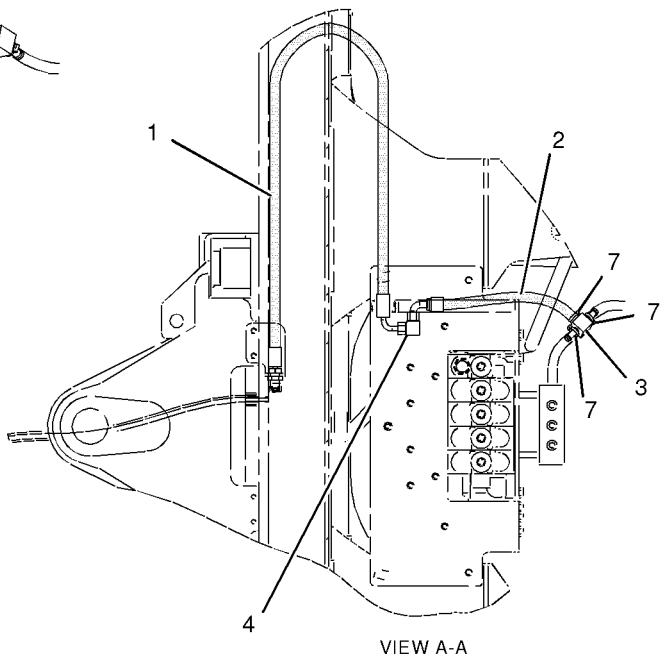

VIEW A-A

GRAPHIC #1 **<END>** g01025624

186-1594 LINES GP-DRAIN–BOOM, STICK LOCKS

S/N: BXC1-UP; DSX1-UP

PART OF 240-8491, 240-8493, 240-8506, 240-8690, 240-8692 BACKHOE AR-EXTENDABLE STICK, 240-8684, 240-8686, 240-8688 BACKHOE AR-STANDARD STICK AN ATTACHMENT

SMCS-5057 **i01854786**

NOTE	REF NO	GRAPHIC REF	PART NUMBER	QTY	PART NAME 1 2 3 4 5 6 (PRODUCT LEVEL)	SEE PAGE
	1	1	**5D-1026**	3	CLAMP-HOSE	
	2	1	**9X-3965**	1	TEE	
I	3	1	**176-8123**	1	HOSE AS	
	4	1	**228-6331**	1	HOSE AS	
	5	1	*148-8458*	1	UNION GP	
		1	**6V-8397**	2	SEAL-O-RING	
		1	**6V-9807**	1	UNION	
	6	1	**6V-8397**	1	SEAL-O-RING	
	7	1	**6V-9168**	1	NUT (11/16-16 THD)	

I-SEE HOSE FABRICATION GUIDE

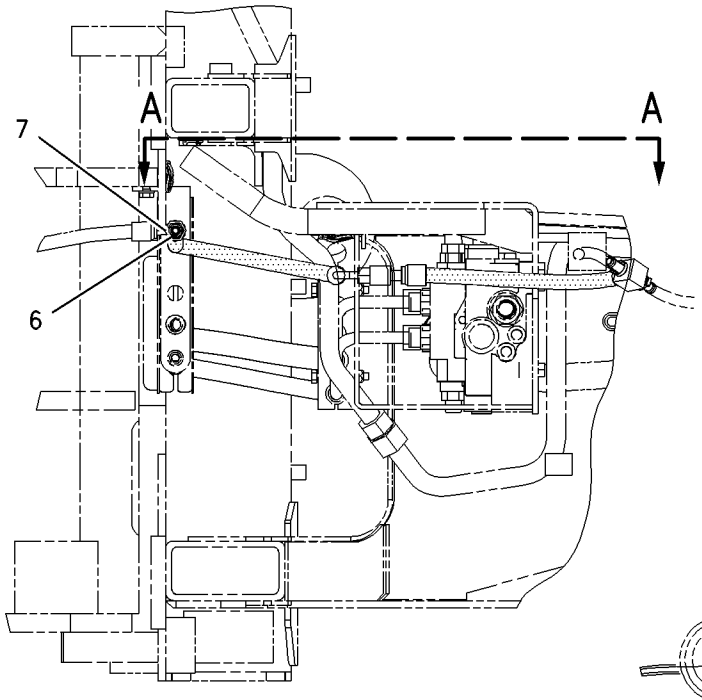

RIGHT SIDE VIEW

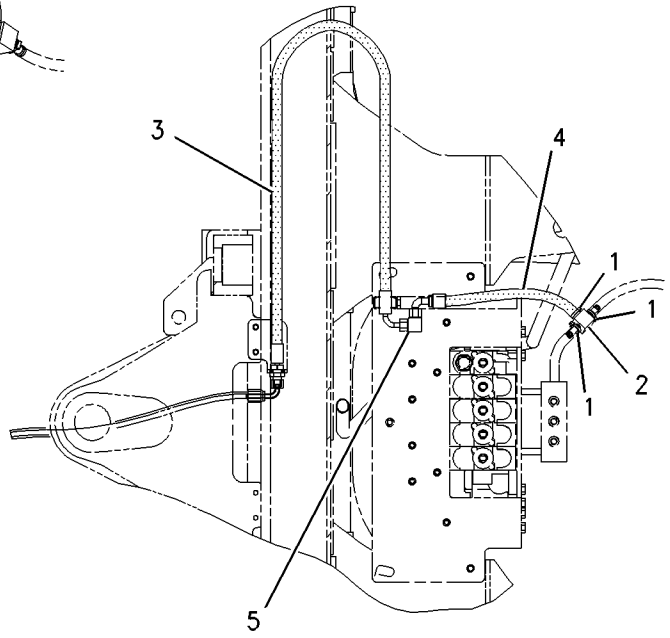

VIEW A-A

GRAPHIC #1 **<END>** g00949552

HYDRAULIC SYSTEM

162-2351 LINES GP-EXTENDABLE STICK

S/N: BXC1-UP; DSX1-UP
PART OF 155-6586 CYLINDER GP-EXTENDABLE STICK
AN ATTACHMENT

SMCS-5057 **i01887699**

NOTE	REF NO	GRAPHIC REF	PART NUMBER	QTY	PART NAME 1 2 3 4 5 6 (PRODUCT LEVEL)	SEE PAGE
	1	1	**5P-0598**	1	CLAMP	
	2	1	**9R-2004**	1	BLOCK	
	3	1	**162-2353**	1	TUBE AS	
	4	1	**203-9048**	1	TUBE AS	
	5	1	*148-8390*	1	ELBOW GP	
		1	**2M-9780**	1	SEAL-O-RING	
		1	**6V-8626**	1	ELBOW	
		1	**7J-9108**	1	SEAL-O-RING	

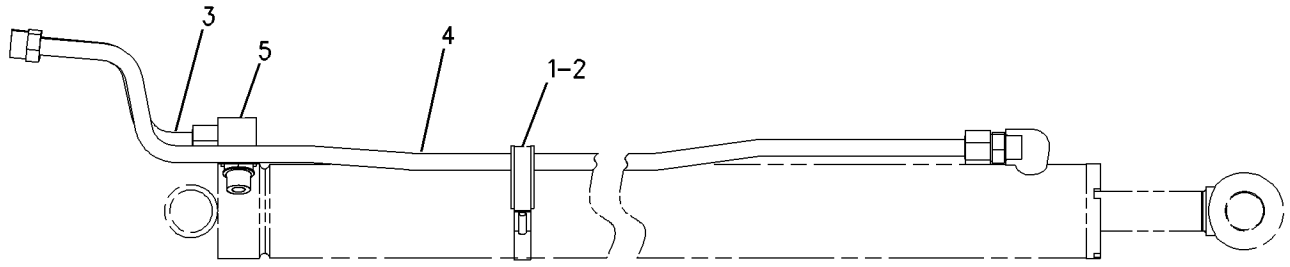

GRAPHIC #1 **<END>** g00865371

HYDRAULIC SYSTEM

163-9371 LINES GP-LIFT CYLINDER

S/N: BXC1-UP; DSX1-UP
PART OF 186-5335, 186-5337 HYDRAULIC AR
AN ATTACHMENT

SMCS-5057, 5102 **i01981949**

NOTE	REF NO	GRAPHIC REF	PART NUMBER	QTY	PART NAME 1 2 3 4 5 6 (PRODUCT LEVEL)	SEE PAGE
	1	1	**7K-1181**	1	STRAP-CABLE	
C	2	1	**112-5823**	1	TUBE AS	
C	3	1	**112-5827**	1	TUBE AS	
I	4	1	**120-1324**	4	HOSE AS	
	5	1	**122-4872**	1	BRACKET AS	
	6	1	**122-4873**	1	BRACKET AS	
C	7	1	**158-3412**	6	CLIP (SLOT)	
C	8	1	**230-7649**	1	TUBE AS	
C	9	1	**230-7651**	1	TUBE AS	
	10	1	*148-8341*	1	CONNECTOR GP	
		1	**3D-2824**	1	SEAL-O-RING	
		1	**6V-8713**	1	CONNECTOR	
		1	**7J-9108**	1	SEAL-O-RING	
	11	1	*148-8446*	3	TEE GP-SWIVEL	
					(EACH INCLUDES)	
		1	**6V-9838**	1	TEE-SWIVEL	
		1	**7J-9108**	2	SEAL-O-RING	
	12	1	*150-3063*	1	TEE AS	
		1	**3D-2824**	1	SEAL-O-RING	
		1	**7J-9108**	2	SEAL-O-RING	
		1	**120-9809**	1	TEE	
	13	1	**151-4841**	1	BLOCK	
C	14	1	**230-7650**	1	TUBE AS	
	15	1	**6V-8398**	4	SEAL-O-RING	
	16	1	**6V-9831**	2	CAP AS	
C	17	1	**7J-9108**	1	SEAL-O-RING	
C	18	1	**8T-4121**	5	WASHER-HARD (11X21X2.5MM THK)	
CM	19	1	**8T-4133**	1	NUT (M10X1.5 THD)	
M	20	1	**8T-4136**	4	BOLT (M10X1.5X25MM)	
CM	21	1	**8T-4137**	1	BOLT (M10X1.5X20MM)	
C	22	1	**9R-7803**	3	CLIP (TAB)	

C-CHANGE FROM PREVIOUS TYPE
I-REFER TO HYDRAULIC INFORMATION SYSTEM
M-METRIC PART

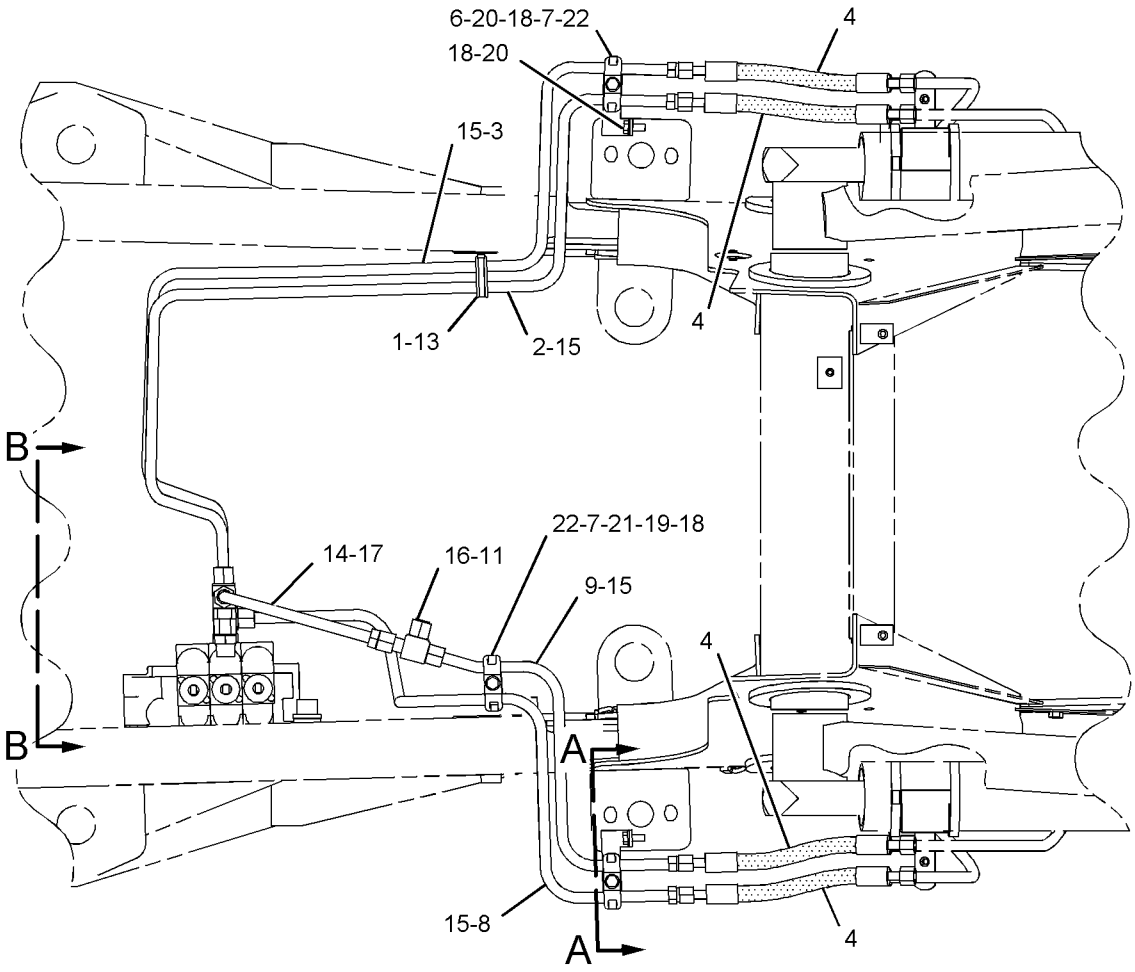

TOP VIEW

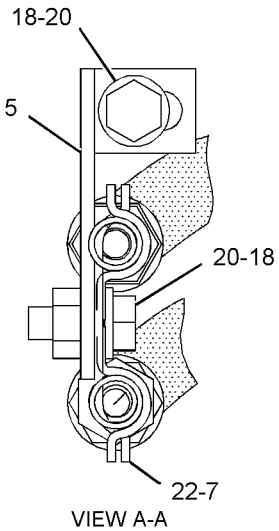

VIEW A-A

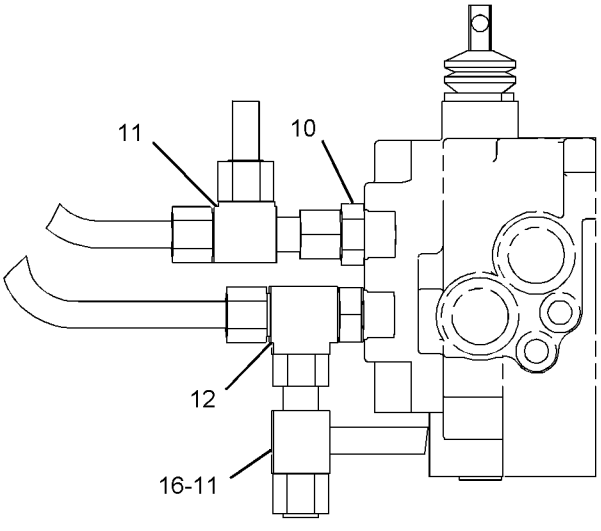

VIEW B-B

GRAPHIC #1

<END>

g01028616

HYDRAULIC SYSTEM

189-8797 LINES GP-LIFT CYLINDER

S/N: BXC1-UP; DSX1-UP
PART OF 185-0060, 185-0062 HYDRAULIC AR
AN ATTACHMENT

SMCS-5057, 5102 **i01956949**

NOTE	REF NO	GRAPHIC REF	PART NUMBER	QTY	PART NAME 1 2 3 4 5 6 (PRODUCT LEVEL)	SEE PAGE
C	1	1	**7K-1181**	1	STRAP-CABLE	
	2	1	**8T-6726**	4	CLAMP-HOSE	
C	3	1	**112-5823**	1	TUBE AS	
C	4	1	**112-5827**	1	TUBE AS	
	5	1	**112-5844**	1	TUBE AS	
	6	1	**112-5847**	1	TUBE AS	
I	7	1	**118-9039**	4	HOSE AS	
	8	1	**122-4872**	1	BRACKET AS	
	9	1	**122-4873**	1	BRACKET AS	
	10	1	**143-0777**	1	PLATE AS	
	11	1	**143-0779**	1	PLATE AS	
C	12	1	**158-3412**	10	CLIP (SLOT)	
	13	1	**198-7336**	1	TUBE AS	
	14	1	**198-7337**	1	TUBE AS	
C	15	1	**230-7649**	1	TUBE AS	
C	16	1	**230-7651**	1	TUBE AS	
	17	1	*148-8341*	1	CONNECTOR GP	
		1	**3D-2824**	1	SEAL-O-RING	
		1	**6V-8713**	1	CONNECTOR	
		1	**7J-9108**	1	SEAL-O-RING	
	18	1	*148-8390*	2	ELBOW GP	
					(EACH INCLUDES)	
		1	**2M-9780**	1	SEAL-O-RING	
		1	**6V-8626**	1	ELBOW	
		1	**7J-9108**	1	SEAL-O-RING	
	19	1	*148-8446*	3	TEE GP-SWIVEL	
					(EACH INCLUDES)	
		1	**6V-9838**	1	TEE-SWIVEL	
		1	**7J-9108**	2	SEAL-O-RING	
	20	1	*150-3063*	1	TEE AS	
		1	**3D-2824**	1	SEAL-O-RING	
		1	**7J-9108**	2	SEAL-O-RING	
		1	**120-9809**	1	TEE	
	21	1	**151-4841**	1	BLOCK	
C	22	1	**230-7650**	1	TUBE AS	
	23	1	**6V-8398**	8	SEAL-O-RING	
	24	1	**6V-9831**	2	CAP AS	
C	25	1	**7J-9108**	1	SEAL-O-RING	
C	26	1	**8T-4121**	7	WASHER-HARD (11X21X2.5MM THK)	
CM	27	1	**8T-4133**	1	NUT (M10X1.5 THD)	
M	28	1	**8T-4136**	6	BOLT (M10X1.5X25MM)	
CM	29	1	**8T-4137**	1	BOLT (M10X1.5X20MM)	
C	30	1	**9R-7803**	5	CLIP (TAB)	

C-CHANGE FROM PREVIOUS TYPE
I-REFER TO HYDRAULIC INFORMATION SYSTEM
M-METRIC PART

189-8797 LINES GP-LIFT CYLINDER *(contd.)* i01956949

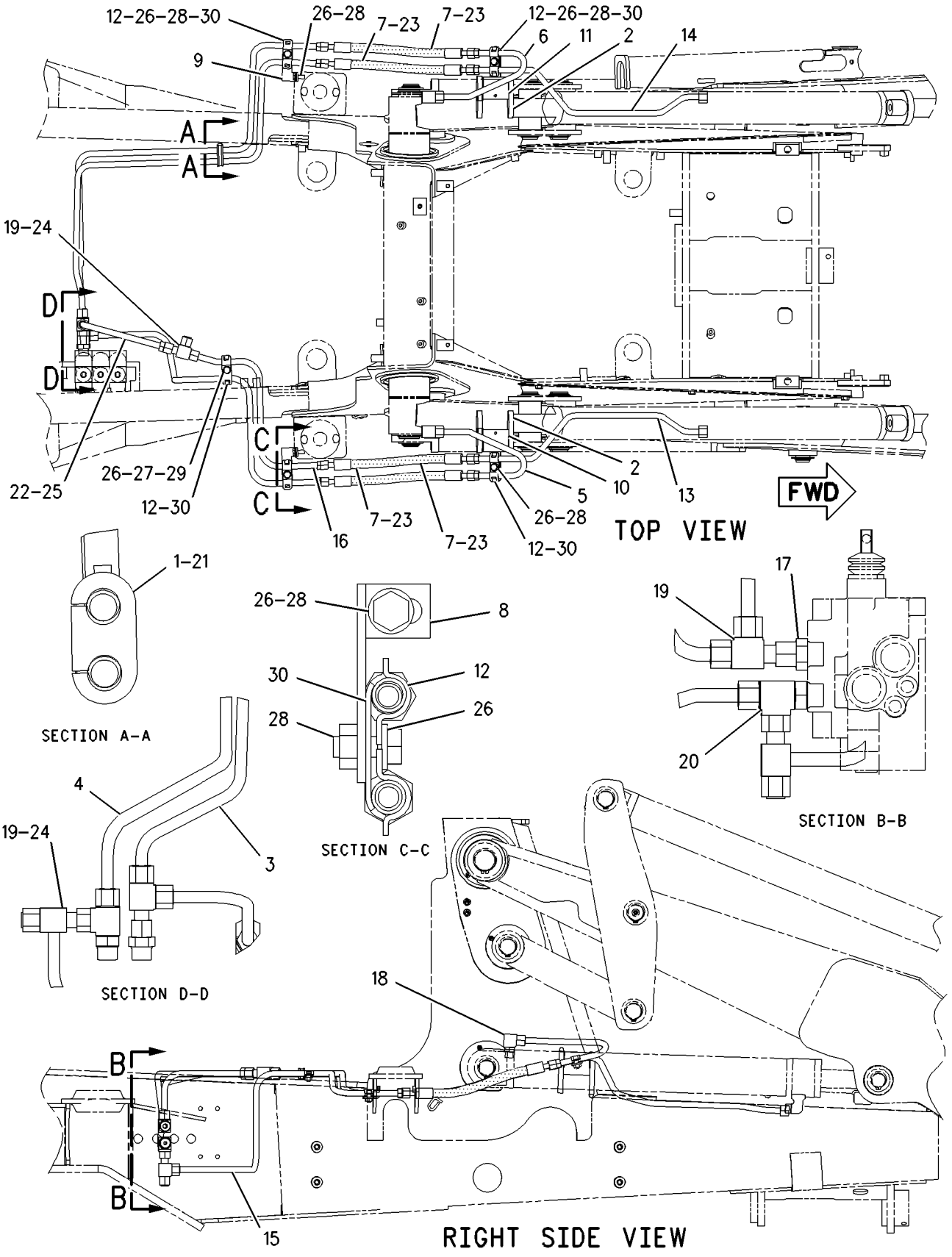

GRAPHIC #1 **<END>** g00996071

HYDRAULIC SYSTEM

200-4153 LINES GP-LIFT CYLINDER

S/N: BXC1-UP; DSX1-UP
PART OF 186-5335, 186-5337 HYDRAULIC AR
AN ATTACHMENT

SMCS-5057, 5102 **i01621817**

NOTE	REF NO	GRAPHIC REF	PART NUMBER	QTY	PART NAME 1 2 3 4 5 6 (PRODUCT LEVEL)	SEE PAGE
	1	1	**8T-6726**	4	CLAMP-HOSE	
	2	1	**9R-7070**	1	PLATE AS	
	3	1	**9R-7071**	1	PLATE AS	
	4	1	**120-8413**	1	TUBE AS	
	5	1	**120-8414**	1	TUBE AS	
	6	1	**158-3412**	4	CLIP (SLOT)	
	7	1	**198-8352**	1	TUBE AS	
	8	1	**198-8353**	1	TUBE AS	
	9	1	*148-8390*	2	ELBOW GP	
					(EACH INCLUDES)	
		1	**2M-9780**	1	SEAL-O-RING	
		1	**6V-8626**	1	ELBOW	
		1	**7J-9108**	1	SEAL-O-RING	
	10	1	**6V-8398**	4	SEAL-O-RING	
	11	1	**8T-4121**	2	WASHER-HARD (11X21X2.5MM THK)	
M	12	1	**8T-4136**	2	BOLT (M10X1.5X25MM)	
	13	1	**9R-7803**	2	CLIP	

M-METRIC PART

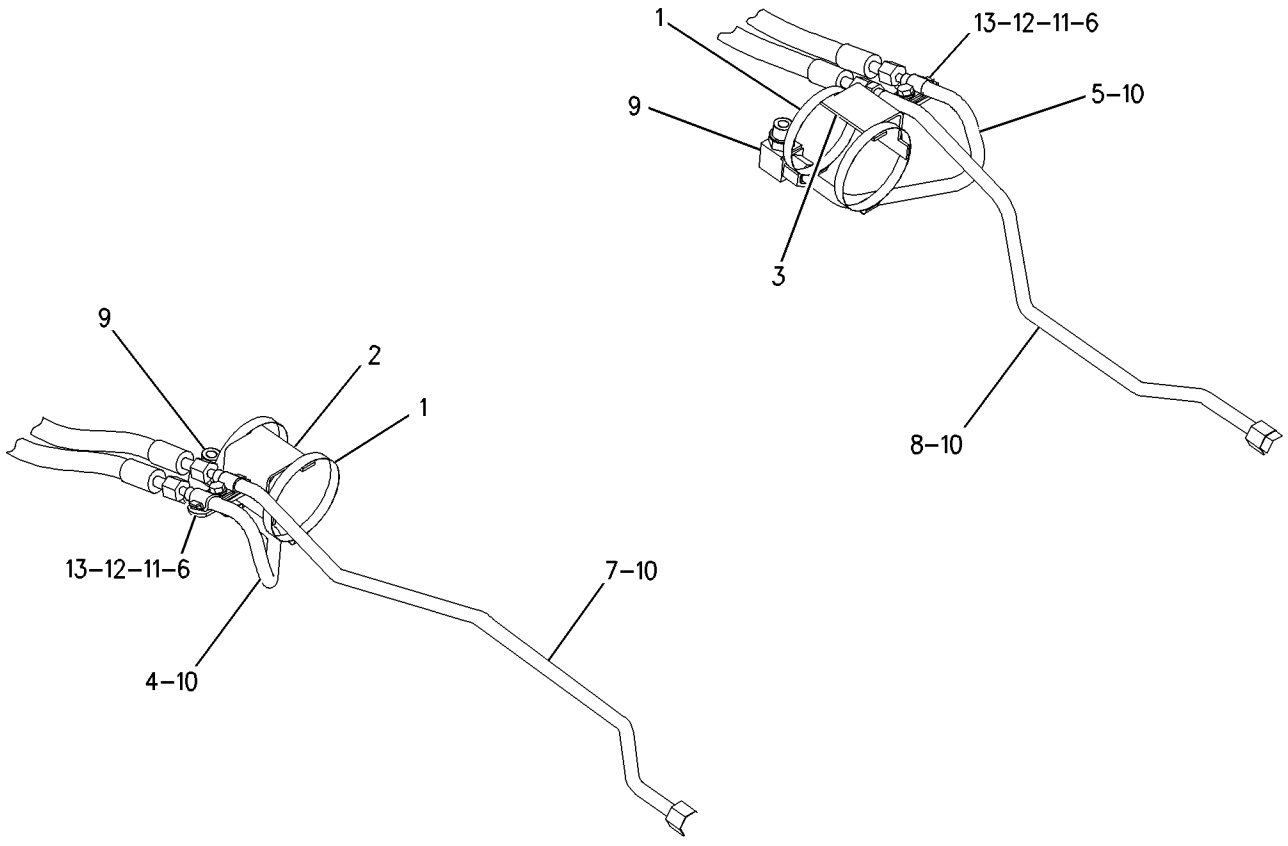

GRAPHIC #1 **<END>** g00839159

183-8549 LINES GP-LOAD CONTROL VALVE–BOOM AND STICK

S/N: BXC1-UP; DSX1-UP

PART OF 240-8491, 240-8493, 240-8506, 240-8507, 240-8690, 240-8692, 240-8700, 240-8702 BACKHOE AR-EXTENDABLE STICK, 240-8684, 240-8686, 240-8688, 240-8694, 240-8696, 240-8698 BACKHOE AR-STANDARD STICK

AN ATTACHMENT

SMCS-5057, 5811 **i01984305**

NOTE	REF NO	GRAPHIC REF	PART NUMBER	QTY	PART NAME 1 2 3 4 5 6 (PRODUCT LEVEL)	SEE PAGE
	1	1	**5P-0599**	6	CLAMP	
	2	1	**7X-3164**	1	ADAPTER-SWIVEL	
	3	1	**7X-3166**	1	ADAPTER-SWIVEL	
CI	4	1	**236-7661**	1	HOSE AS	
	5	1	**9R-4619**	1	SUPPORT AS	
I	6	1	**9R-9285**	1	HOSE AS	
	7	1	**160-8282**	1	BRACKET	
I	8	1	**160-8283**	1	HOSE AS	
	9	1	**160-9777**	1	BRACKET	
CI	10	1	**236-7528**	1	HOSE AS	
I	11	1	**165-6982**	1	HOSE AS	
C	12	1	**9R-5948**	1	BLOCK	
	13	1	**175-6918**	1	VALVE GP-LOAD CONTROL	
	14	1	**175-6919**	1	VALVE GP-LOAD CONTROL	
I	15	1	**176-8121**	1	HOSE AS	
I	16	1	**176-8122**	1	HOSE AS	
I	17	1	**199-8927**	1	HOSE AS	
	18	1	**207-8598**	1	TUBE AS	
	19	1	*148-8322*	1	CONNECTOR GP	
		1	**2M-9780**	1	SEAL-O-RING	
		1	**6V-8640**	1	CONNECTOR	
		1	**6V-9746**	1	SEAL-O-RING	
	20	1	*148-8325*	1	CONNECTOR GP	
		1	**3J-1907**	1	SEAL-O-RING	
		1	**4J-5477**	1	SEAL-O-RING	
		1	**6V-8641**	1	CONNECTOR	
	21	1	*148-8336*	1	CONNECTOR AS	
		1	**3J-1907**	1	SEAL-O-RING	
		1	**6V-8397**	1	SEAL-O-RING	
		1	**6V-8636**	1	CONNECTOR	
	22	1	*148-8341*	1	CONNECTOR GP	
		1	**3D-2824**	1	SEAL-O-RING	
		1	**6V-8713**	1	CONNECTOR	
		1	**7J-9108**	1	SEAL-O-RING	
	23	1	*148-8345*	1	CONNECTOR GP	
		1	**2M-9780**	1	SEAL-O-RING	
		1	**6V-8398**	1	SEAL-O-RING	
		1	**6V-8638**	1	CONNECTOR	
C	24	1	*171-6725*	1	ELBOW AS	
		1	**3D-2824**	1	SEAL-O-RING	
C		1	**8T-6451**	1	ELBOW	
		1	**6V-9746**	1	SEAL-O-RING	
	25	1	*148-8368*	1	ELBOW GP	
		1	**3J-1907**	1	SEAL-O-RING	
		1	**4J-5477**	1	SEAL-O-RING	
		1	**6V-8627**	1	ELBOW	
	26	1	*148-8417*	1	REDUCER AS	
		1	**6V-8397**	1	SEAL-O-RING	
		1	**6V-8941**	1	REDUCER	
	27	1	*148-8435*	1	TEE AS	
		1	**3J-1907**	1	SEAL-O-RING	
		1	**6V-8397**	2	SEAL-O-RING	
		1	**6V-8781**	1	TEE-FACE SEAL	

183-8549 LINES GP-LOAD CONTROL VALVE *(contd.)* i01984305

NOTE	REF NO	GRAPHIC REF	PART NUMBER	QTY	PART NAME 1 2 3 4 5 6 (PRODUCT LEVEL)	SEE PAGE
	28	1	*148-8446*	1	TEE GP-SWIVEL	
		1	**6V-9838**	1	TEE-SWIVEL	
		1	**7J-9108**	2	SEAL-O-RING	
	29	1	*148-8449*	1	TEE GP-SWIVEL	
		1	**6V-9746**	2	SEAL-O-RING	
		1	**6V-9839**	1	TEE-SWIVEL	
	30	1	*164-5561*	1	ADAPTER AS	
		1	**2M-9780**	1	SEAL-O-RING	
		1	**5P-1042**	1	ADAPTER-O-RING	
C	31	1	**233-2138**	1	VALVE GP-RESTRICTOR	
	32	1	**3D-2824**	1	SEAL-O-RING	
	33	1	**3K-0360**	1	SEAL-O-RING	
C	34	1	*148-8327*	2	CONNECTOR AS	
					(EACH INCLUDES)	
C		1	**3D-2824**	1	SEAL-O-RING	
C		1	**6V-8637**	1	CONNECTOR	
C		1	**6V-9746**	1	SEAL-O-RING	
C	35	1	*161-9916*	1	ADAPTER GP	
C		1	**2M-9780**	1	SEAL-O-RING	
C		1	**6V-7420**	1	ADAPTER	
M	36	1	**6V-7744**	1	LOCKNUT (M10X1.5 THD)	
	37	1	**6V-8555**	1	NUT-FACE SEAL (1-14THD)	
	38	1	**6V-8556**	1	NUT (1 3/16-12 THD)	
C	39	1	*215-3191*	1	REDUCER AS	
C		1	**4J-5477**	1	SEAL-O-RING	
C		1	**6V-8937**	1	REDUCER-O-RING	
	40	1	**7J-9108**	1	SEAL-O-RING	
	41	1	**8M-2773**	3	CLIP	
	42	1	**8T-1887**	1	CLIP (SLOT)	
	43	1	**8T-1888**	1	CLIP (TAB)	
	44	1	**8T-4121**	4	WASHER-HARD (11X21X2.5MM THK)	
M	45	1	**8T-4137**	1	BOLT (M10X1.5X20MM)	
	46	1	**8T-4224**	3	WASHER-HARD (8.8X16X2MM THK)	
M	47	1	**8T-6466**	1	BOLT (M10X1.50X60MM)	
M	48	1	**8T-7329**	1	BOLT (M8X1.25X55MM)	
M	49	1	**8T-7963**	1	LOCKNUT (M8X1.25 THD)	
BF			**3S-2093**	25	STRAP-CABLE	

B-USE AS REQUIRED
C-CHANGE FROM PREVIOUS TYPE
F-NOT SHOWN
I-REFER TO HYDRAULIC INFORMATION SYSTEM
M-METRIC PART

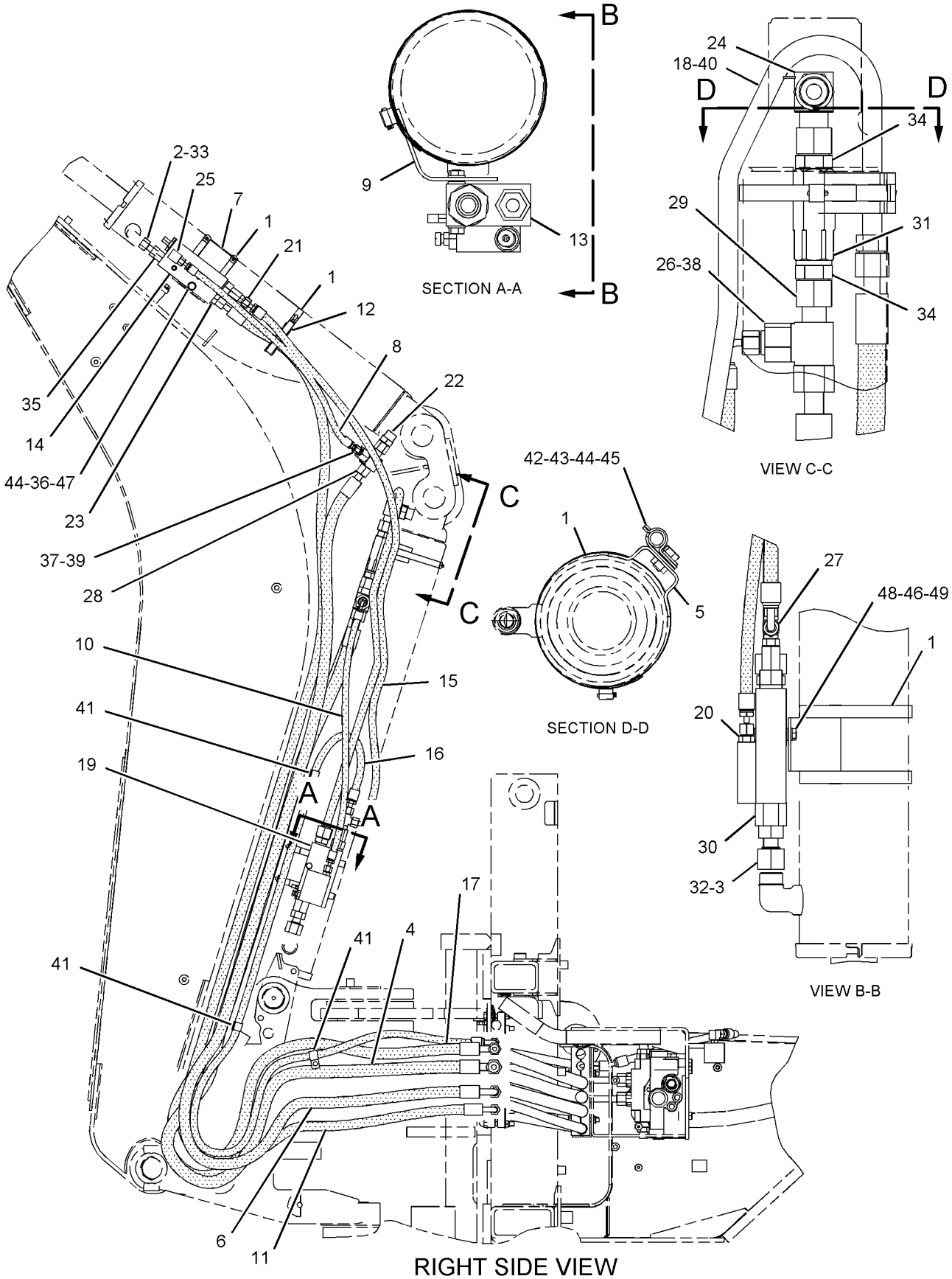

RIGHT SIDE VIEW

<END>

GRAPHIC #1

g01031953

HYDRAULIC SYSTEM

183-8552 LINES GP-LOAD CONTROL VALVE—PARALLEL LIFT

S/N: BXC1-UP; DSX1-UP
PART OF 185-0061, 185-0063 HYDRAULIC AR
AN ATTACHMENT

SMCS-5057, 5811 **i01956954**

NOTE	REF NO	GRAPHIC REF	PART NUMBER	QTY	PART NAME 1 2 3 4 5 6 (PRODUCT LEVEL)	SEE PAGE
C	1	1	**7K-1181**	3	STRAP-CABLE	
	2	2	**7X-3164**	2	ADAPTER-SWIVEL	
	3	1,2	**8T-6726**	8	CLAMP-HOSE	
I	4	1	**8X-5561**	2	HOSE AS	
	5	2	**9M-6738**	4	CLAMP-HOSE	
	6	1	**9R-5948**	4	BLOCK	
C	7	1	**112-5823**	1	TUBE AS	
C	8	1	**112-5827**	1	TUBE AS	
	9	1	**112-5830**	1	TUBE AS	
	10	1	**112-5833**	1	TUBE AS	
I	11	1	**118-9039**	4	HOSE AS	
	12	1	**122-4870**	1	BRACKET AS	
	13	1	**122-4871**	1	BRACKET AS	
	14	2	**122-4872**	1	BRACKET AS	
	15	1	**122-4873**	1	BRACKET AS	
	16	2	**156-9370**	1	BRACKET AS	
	17	2	**156-9371**	1	BRACKET AS	
C	18	1,2	**158-3412**	18	CLIP (SLOT)	
I	19	2	**161-3981**	2	HOSE AS	
	20	1	**161-4057**	1	TUBE AS	
	21	1	**161-4059**	1	TUBE AS	
I	22	1	**161-6209**	2	HOSE AS	
	23	2	**175-6916**	2	VALVE GP-LOAD CONTROL	
	24	1	**175-6917**	2	VALVE GP-LOAD CONTROL	
	25	1	**179-7135**	1	BRACKET (RH)	
	26	1	**179-7136**	1	BRACKET (LH)	
I	27	1	**180-4194**	1	HOSE AS	
	28	1	**187-4331**	1	TUBE AS	
	29	1	**187-4332**	1	TUBE AS	
	30	1	**207-8596**	1	TUBE AS	
	31	1	**207-8597**	1	TUBE AS	
	32	1	**215-4016**	1	PLATE AS	
M		1	**8T-3490**	2	NUT-WELD	
	33	1	**216-0582**	1	PLATE AS	
M		1	**8T-3490**	2	NUT-WELD	
I	34	1	**216-7660**	2	HOSE AS	
C	35	1	**230-7649**	1	TUBE AS	
C	36	1	**230-7651**	1	TUBE AS	
	37	2	*148-8315*	4	CONNECTOR GP	
					(EACH INCLUDES)	
		2	**2M-9780**	1	SEAL-O-RING	
		2	**6V-8642**	1	CONNECTOR	
		2	**7J-9108**	1	SEAL-O-RING	
	38	1,2	*148-8341*	3	CONNECTOR GP	
					(EACH INCLUDES)	
		1,2	**3D-2824**	1	SEAL-O-RING	
		1,2	**6V-8713**	1	CONNECTOR	
		1,2	**7J-9108**	1	SEAL-O-RING	
	39	2	*148-8345*	2	CONNECTOR GP	
					(EACH INCLUDES)	
		2	**2M-9780**	1	SEAL-O-RING	
		2	**6V-8398**	1	SEAL-O-RING	
		2	**6V-8638**	1	CONNECTOR	
	40	2	*148-8368*	4	ELBOW GP	
					(EACH INCLUDES)	

183-8552 LINES GP-LOAD CONTROL VALVE *(contd.)* i01956954

NOTE	REF NO	GRAPHIC REF	PART NUMBER	QTY	PART NAME 1 2 3 4 5 6 (PRODUCT LEVEL)	SEE PAGE
		2	**3J-1907**	1	SEAL-O-RING	
		2	**4J-5477**	1	SEAL-O-RING	
		2	**6V-8627**	1	ELBOW	
	41	1	*148-8426*	2	TEE GP	
					(EACH INCLUDES)	
		1	**3K-0360**	1	SEAL-O-RING	
		1	**6V-8397**	1	SEAL-O-RING	
		1	**6V-8398**	1	SEAL-O-RING	
		1	**8T-6696**	1	TEE-O-RING	
	42	1,2	*148-8446*	7	TEE GP-SWIVEL	
					(EACH INCLUDES)	
		1,2	**6V-9838**	1	TEE-SWIVEL	
		1,2	**7J-9108**	2	SEAL-O-RING	
	43	2	*150-3063*	1	TEE AS	
		2	**3D-2824**	1	SEAL-O-RING	
		2	**7J-9108**	2	SEAL-O-RING	
		2	**120-9809**	1	TEE	
C	44	1	**151-4841**	3	BLOCK	
	45	2	*156-3691*	2	ADAPTER AS	
					(EACH INCLUDES)	
		2	**3J-1907**	1	SEAL-O-RING	
		2	**4J-5477**	1	SEAL-O-RING	
		2	**081-6352**	1	ADAPTER	
C	46	1	**230-7650**	1	TUBE AS	
	47	2	**2M-9780**	4	SEAL-O-RING	
	48	2	**3K-0360**	2	SEAL-O-RING	
	49	1	**6V-7420**	2	ADAPTER	
	50	1,2	**6V-8397**	2	SEAL-O-RING	
	51	1	**6V-8398**	12	SEAL-O-RING	
	52	2	**6V-8555**	2	NUT-FACE SEAL (1-14THD)	
	53	2	**6V-8938**	2	REDUCER-O-RING	
	54	1	**6V-9831**	2	CAP AS	
C	55	1	**7J-9108**	1	SEAL-O-RING	
	56	2	**8T-3001**	2	ELBOW	
C	57	1,2	**8T-4121**	17	WASHER-HARD (11X21X2.5MM THK)	
CM	58	1	**8T-4133**	1	NUT (M10X1.5 THD)	
M	59	1,2	**8T-4136**	10	BOLT (M10X1.5X25MM)	
CM	60	1	**8T-4137**	1	BOLT (M10X1.5X20MM)	
M	61	1	**8T-4195**	2	BOLT (M10X1.5X30MM)	
M	62	1	**8T-4196**	4	BOLT (M10X1.5X35MM)	
M	63	2	**8T-6912**	8	BOLT (M8X1.25X50MM)	
M	64	2	**8T-7963**	8	LOCKNUT	
C	65	1,2	**9R-7803**	9	CLIP (TAB)	
BF			**3S-2093**	40	STRAP-CABLE	

B-USE AS REQUIRED
C-CHANGE FROM PREVIOUS TYPE
F-NOT SHOWN
I-REFER TO HYDRAULIC INFORMATION SYSTEM
M-METRIC PART

183-8552 **LINES GP-LOAD CONTROL VALVE** ***(contd.)*** **i01956954**

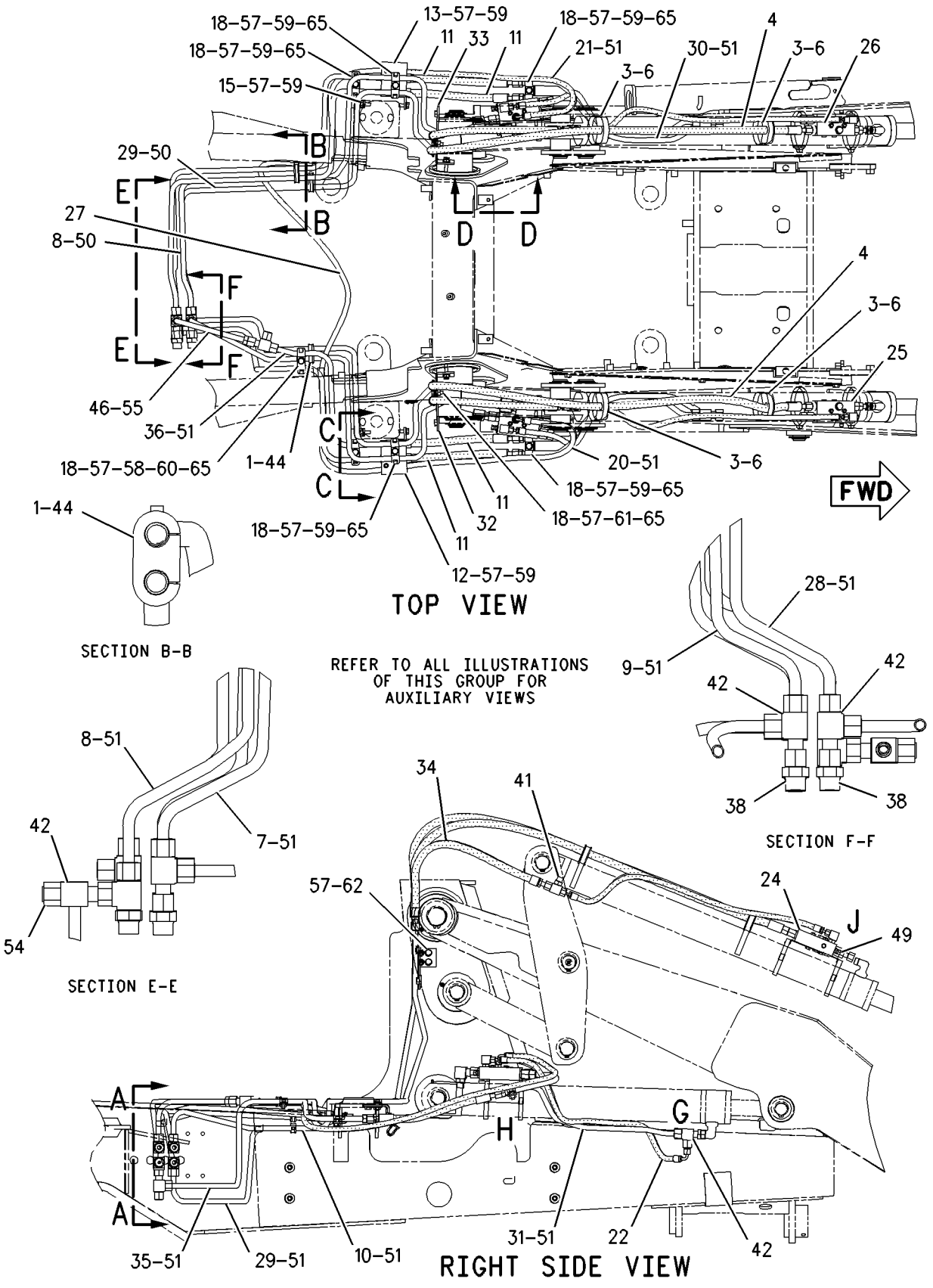

GRAPHIC #1 g00996452

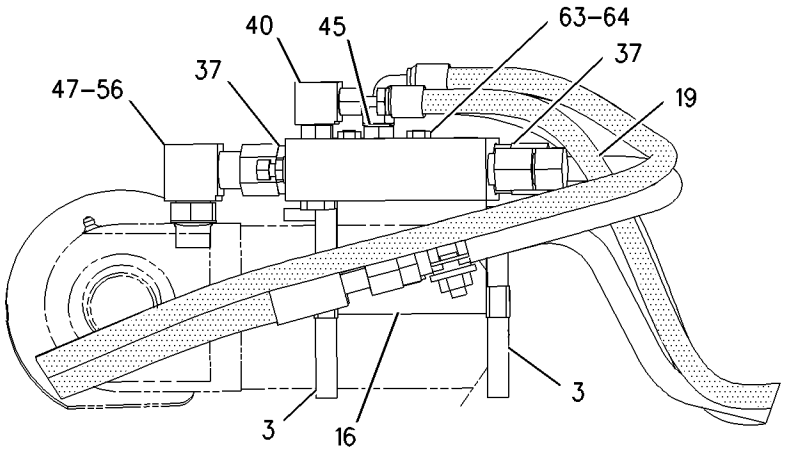

VIEW OF AREA H

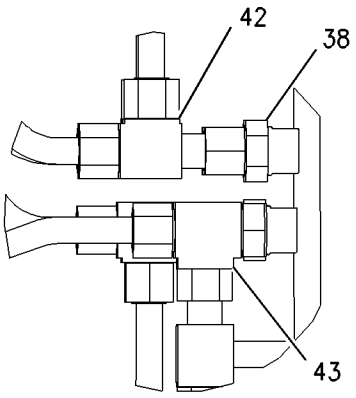

SECTION A-A

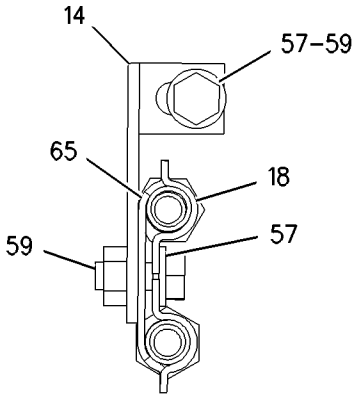

SECTION C-C

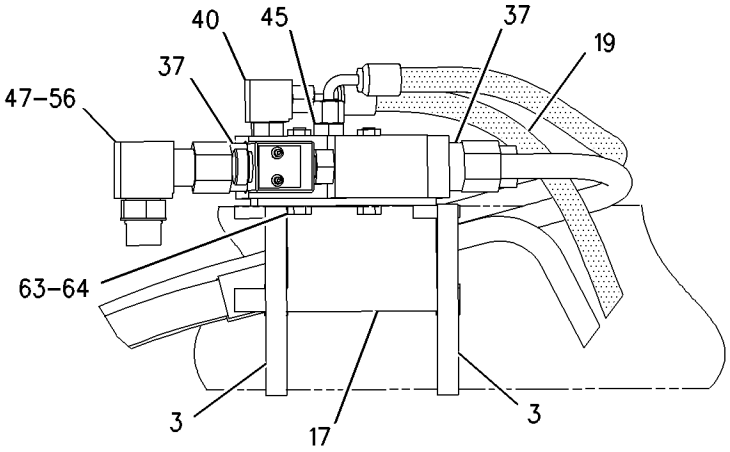

SECTION D-D

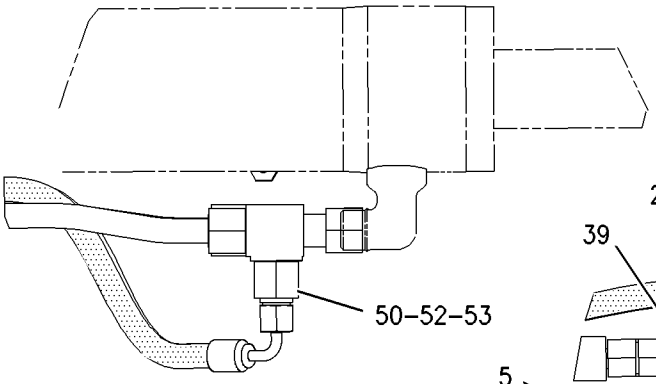

VIEW OF AREA G

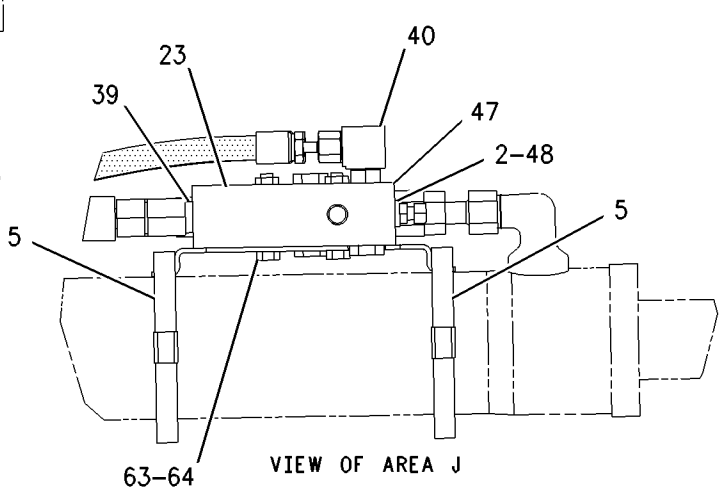

VIEW OF AREA J

GRAPHIC #2 **<END>** g00996453

HYDRAULIC SYSTEM

183-8559 LINES GP-LOAD CONTROL VALVE–LIFT, TILT

S/N: BXC1-UP; DSX1-UP
PART OF 186-5336, 186-5338 HYDRAULIC AR
AN ATTACHMENT

SMCS-5057, 5811 **i02010016**

NOTE	REF NO	GRAPHIC REF	PART NUMBER	QTY	PART NAME 1 2 3 4 5 6 (PRODUCT LEVEL)	SEE PAGE
	1	2	**5P-0599**	1	CLAMP	
C	2	1	**7K-1181**	2	STRAP-CABLE	
	3	2	**8T-6726**	4	CLAMP-HOSE	
I	4	1	**8W-4002**	2	HOSE AS	
I	5	1	**9R-7069**	4	HOSE AS	
I	6	1	**9R-9198**	2	HOSE AS	
	7	1	**9R-9316**	1	BRACKET AS	
	8	2	**9R-9375**	1	PLATE	
Y	9	1	**9T-5455**	1	VALVE GP-LOAD CONTROL (TILT)	579
C	10	2	**112-5823**	1	TUBE AS	
C	11	2	**112-5827**	1	TUBE AS	
	12	1	**122-4872**	1	BRACKET AS	
	13	1	**122-4873**	1	BRACKET AS	
	14	1	**122-5822**	1	BRACKET AS	
	15	2	**156-3837**	2	CLIP (SLOT)	
	16	2	**156-3838**	1	CLIP (TAB)	
C	17	1,2	**158-3412**	18	CLIP (SLOT)	
	18	1,2	**159-0738**	1	BRACKET AS	
	19	2	**159-0739**	1	BRACKET AS	
	20	2	**159-0783**	1	TUBE AS	
	21	2	**159-0784**	1	TUBE AS	
	22	2	**159-0974**	1	TUBE AS	
	23	2	**159-0975**	1	TUBE AS	
I	24	2	**161-3981**	2	HOSE AS	
	25	2	**175-6916**	2	VALVE GP-LOAD CONTROL (LIFT)	
I	26	1	**180-4194**	1	HOSE AS	
	27	1	**187-3162**	1	TUBE AS	
	28	1	**187-3163**	1	TUBE AS	
	29	1	**187-3164**	1	TUBE AS	
	30	1	**187-3166**	1	TUBE AS	
	31	1	**192-8775**	1	TUBE AS	
	32	1	**207-8593**	1	TUBE AS	
	33	1	**207-8594**	1	TUBE AS	
	34	1	**207-8595**	1	TUBE AS	
C	35	1	**230-7649**	1	TUBE AS	
C	36	1	**230-7651**	1	TUBE AS	
	37	2	*148-8315*	4	CONNECTOR GP	
					(EACH INCLUDES)	
		2	**2M-9780**	1	SEAL-O-RING	
		2	**6V-8642**	1	CONNECTOR	
		2	**7J-9108**	1	SEAL-O-RING	
	38	1	*148-8340*	2	CONNECTOR GP	
					(EACH INCLUDES)	
		1	**3K-0360**	1	SEAL-O-RING	
		1	**6V-8398**	1	SEAL-O-RING	
		1	**6V-8639**	1	CONNECTOR	
	39	1,2	*148-8341*	3	CONNECTOR GP	
					(EACH INCLUDES)	
		1,2	**3D-2824**	1	SEAL-O-RING	
		1,2	**6V-8713**	1	CONNECTOR	
		1,2	**7J-9108**	1	SEAL-O-RING	
	40	1	*148-8342*	1	CONNECTOR GP	
		1	**3K-0360**	1	SEAL-O-RING	
		1	**6V-8632**	1	CONNECTOR	
		1	**7J-9108**	1	SEAL-O-RING	

183-8559 LINES GP-LOAD CONTROL VALVE *(contd.)* i02010016

NOTE	REF NO	GRAPHIC REF	PART NUMBER	QTY	PART NAME 1 2 3 4 5 6 (PRODUCT LEVEL)	SEE PAGE
	41	2	*148-8368*	2	ELBOW GP	
					(EACH INCLUDES)	
		2	**3J-1907**	1	SEAL-O-RING	
		2	**4J-5477**	1	SEAL-O-RING	
		2	**6V-8627**	1	ELBOW	
	42	1,2	*148-8390*	3	ELBOW GP	
					(EACH INCLUDES)	
		1,2	**2M-9780**	1	SEAL-O-RING	
		1,2	**6V-8626**	1	ELBOW	
		1,2	**7J-9108**	1	SEAL-O-RING	
	43	1	*148-8393*	2	ELBOW GP	
					(EACH INCLUDES)	
		1	**6V-9852**	1	ELBOW (SWIVEL)	
		1	**7J-9108**	1	SEAL-O-RING	
	44	1,2	*148-8446*	5	TEE GP-SWIVEL	
					(EACH INCLUDES)	
		1,2	**6V-9838**	1	TEE-SWIVEL	
		1,2	**7J-9108**	2	SEAL-O-RING	
	45	1	*150-3037*	1	ELBOW GP	
		1	**3K-0360**	1	SEAL-O-RING	
		1	**7J-9108**	1	SEAL-O-RING	
		1	**8T-2530**	1	ELBOW	
	46	2	*150-3063*	1	TEE AS	
		2	**3D-2824**	1	SEAL-O-RING	
		2	**7J-9108**	2	SEAL-O-RING	
		2	**120-9809**	1	TEE	
	47	1	**151-4841**	2	BLOCK	
	48	2	*156-3691*	2	ADAPTER AS	
					(EACH INCLUDES)	
		2	**3J-1907**	1	SEAL-O-RING	
		2	**4J-5477**	1	SEAL-O-RING	
		2	**081-6352**	1	ADAPTER	
C	49	1	**230-7650**	1	TUBE AS	
M	50	2	**3T-0850**	2	SCREW	
	51	1	**6V-8397**	2	SEAL-O-RING	
	52	1,2	**6V-8398**	14	SEAL-O-RING	
	53	1	**6V-8555**	2	NUT-FACE SEAL (1-14THD)	
	54	1	**6V-8938**	2	REDUCER-O-RING	
	55	1,2	**6V-9831**	2	CAP AS	
C	56	1	**7J-9108**	1	SEAL-O-RING	
	57	1	**8T-1891**	2	CLIP (SLOT)	
	58	1	**8T-1892**	2	CLIP (TAB)	
C	59	1,2	**8T-4121**	16	WASHER-HARD (11X21X2.5MM THK)	
CM	60	1	**8T-4133**	1	NUT (M10X1.5 THD)	
M	61	1,2	**8T-4136**	10	BOLT (M10X1.5X25MM)	
CM	62	1	**8T-4137**	2	BOLT (M10X1.5X20MM)	
M	63	1,2	**8T-4195**	4	BOLT (M10X1.5X30MM)	
M	64	2	**8T-6912**	4	BOLT (M8X1.25X50MM)	
M	65	2	**8T-7963**	4	LOCKNUT (M8X1.25 THD)	
C	66	1,2	**9R-7803**	9	CLIP (TAB)	
BF			**3S-2093**	45	STRAP-CABLE	

B-USE AS REQUIRED
C-CHANGE FROM PREVIOUS TYPE
F-NOT SHOWN
I-REFER TO HYDRAULIC INFORMATION SYSTEM
M-METRIC PART
Y-SEPARATE ILLUSTRATION

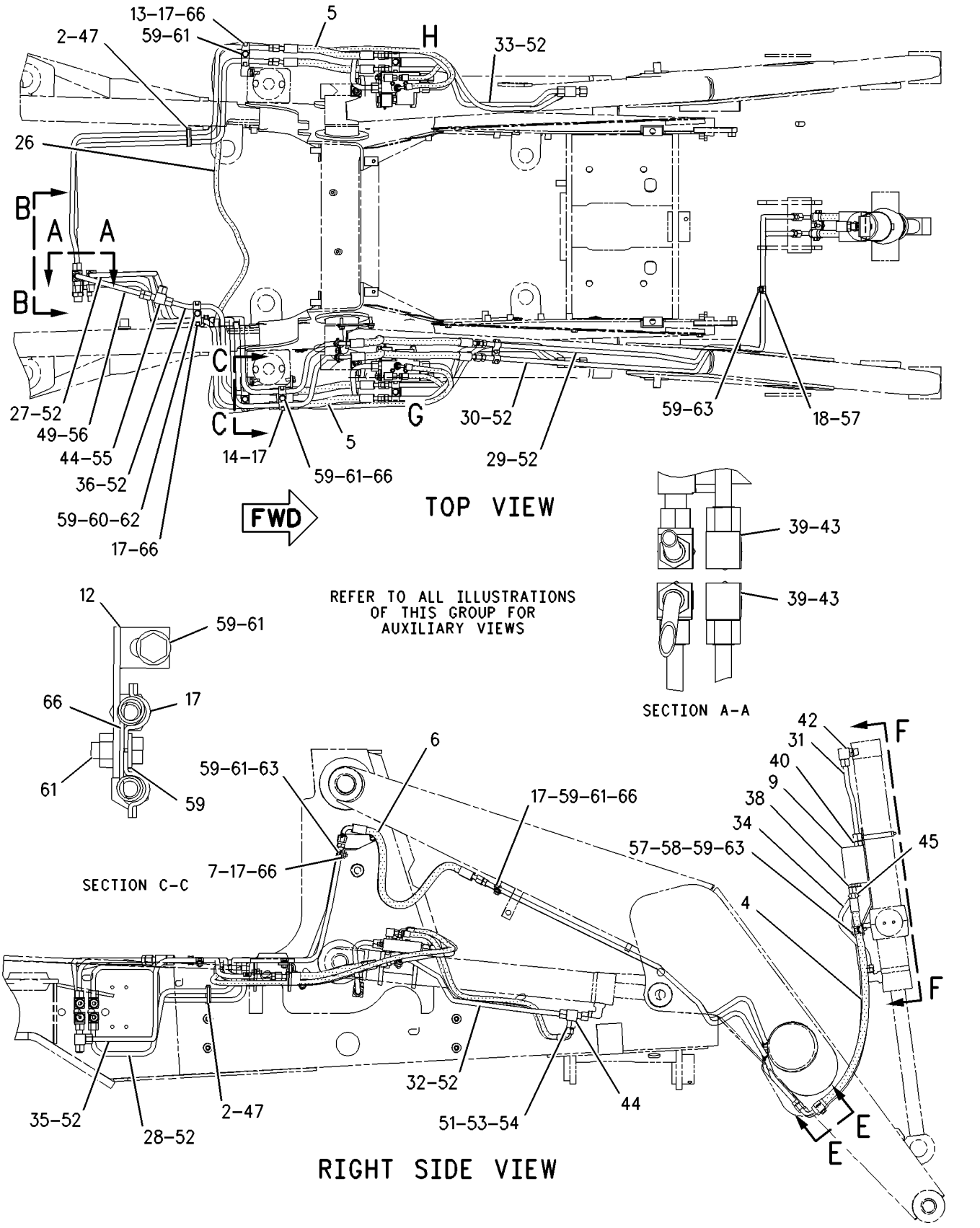

GRAPHIC #1 g00996259

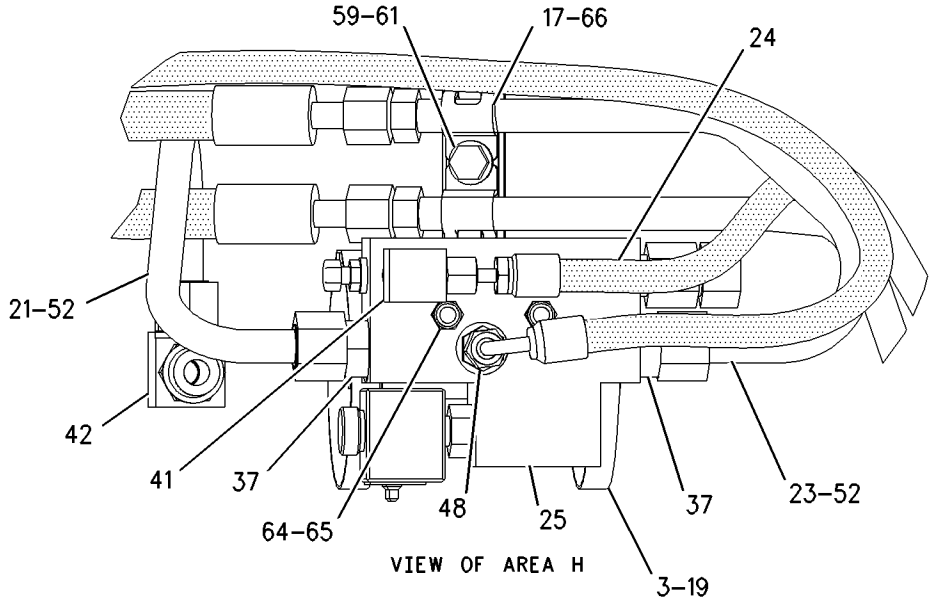

VIEW OF AREA H

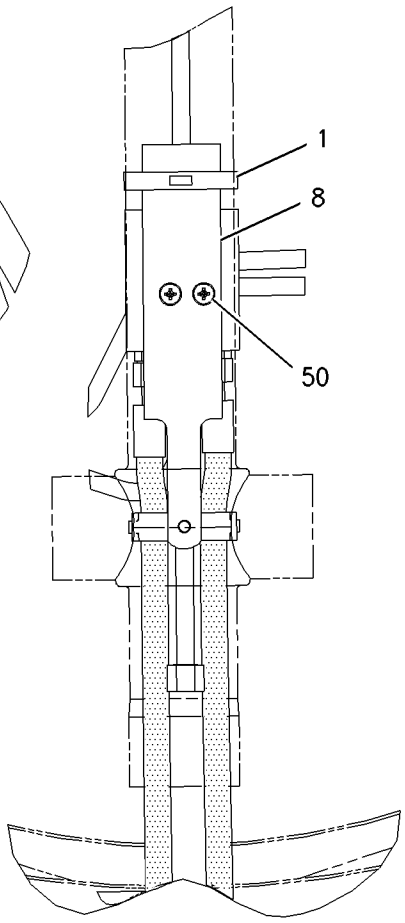

VIEW F-F

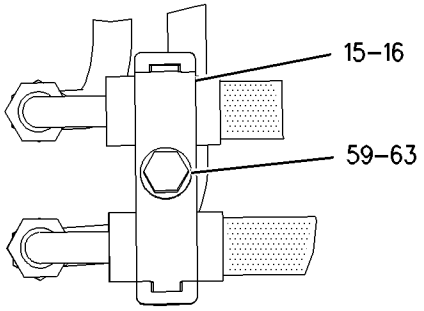

VIEW E-E

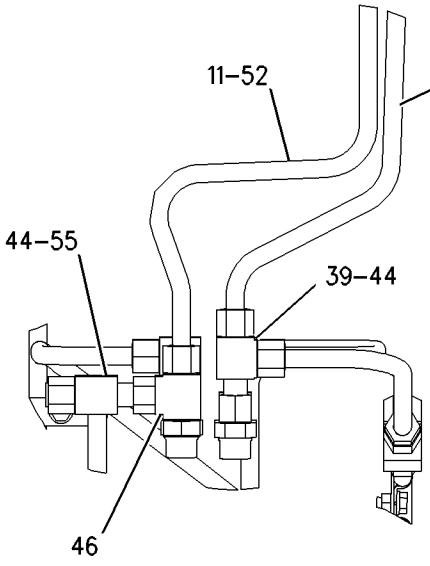

SECTION B-B

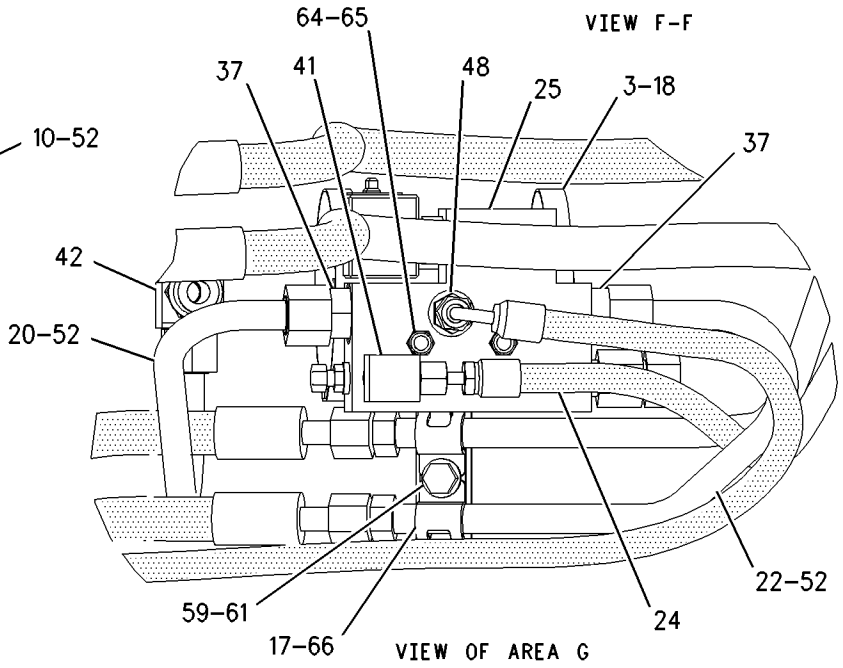

VIEW OF AREA G

GRAPHIC #2 **<END>** g00996261

HYDRAULIC SYSTEM

106-5876 LINES GP-LOADER AUXILIARY

S/N: BXC1-UP; DSX1-UP
ONE CIRCUIT, SCISSORS
PART OF 186-5337, 186-5338 HYDRAULIC AR
AN ATTACHMENT

SMCS-5057 **i01984656**

NOTE	REF NO	GRAPHIC REF	PART NUMBER	QTY	PART NAME 1 2 3 4 5 6 (PRODUCT LEVEL)	SEE PAGE
	1	1	**6V-9830**	2	CAP AS	
I	2	1	**9R-9198**	2	HOSE AS	
	3	1	**9R-9319**	1	BRACKET AS	
M		1	**8T-3490**	1	NUT-WELD (M10X1.5 THD)	
	4	1	**116-4616**	1	TUBE AS	
	5	1	**116-4617**	1	TUBE AS	
	6	1	**122-5823**	1	BRACKET AS	
M		1	**8T-3490**	1	NUT-WELD (M10X1.5 THD)	
	7	1	**151-4841**	1	BLOCK	
	8	1	**133-7332**	1	TUBE AS	
	9	1	**133-7333**	1	TUBE AS	
	10	1	**9R-7803**	4	CLIP (TAB)	
	11	1	**6V-8398**	6	SEAL-O-RING	
	12	1	*148-8341*	2	CONNECTOR GP	
					(EACH INCLUDES)	
		1	**3D-2824**	1	SEAL-O-RING	
		1	**6V-8713**	1	CONNECTOR	
		1	**7J-9108**	1	SEAL-O-RING	
M	13	1	**8T-4137**	1	BOLT (M10X1.5X20MM)	
	14	1	**8T-4121**	8	WASHER-HARD (11X21X2.5MM THK)	
	15	1	**7K-1181**	1	STRAP-CABLE	
M	16	1	**8T-4136**	3	BOLT (M10X1.5X25MM)	
M	17	1	**8T-4195**	3	BOLT (M10X1.5X30MM)	
	18	1	**158-3412**	8	CLIP (SLOT)	

I-REFER TO HYDRAULIC INFORMATION SYSTEM
M-METRIC PART

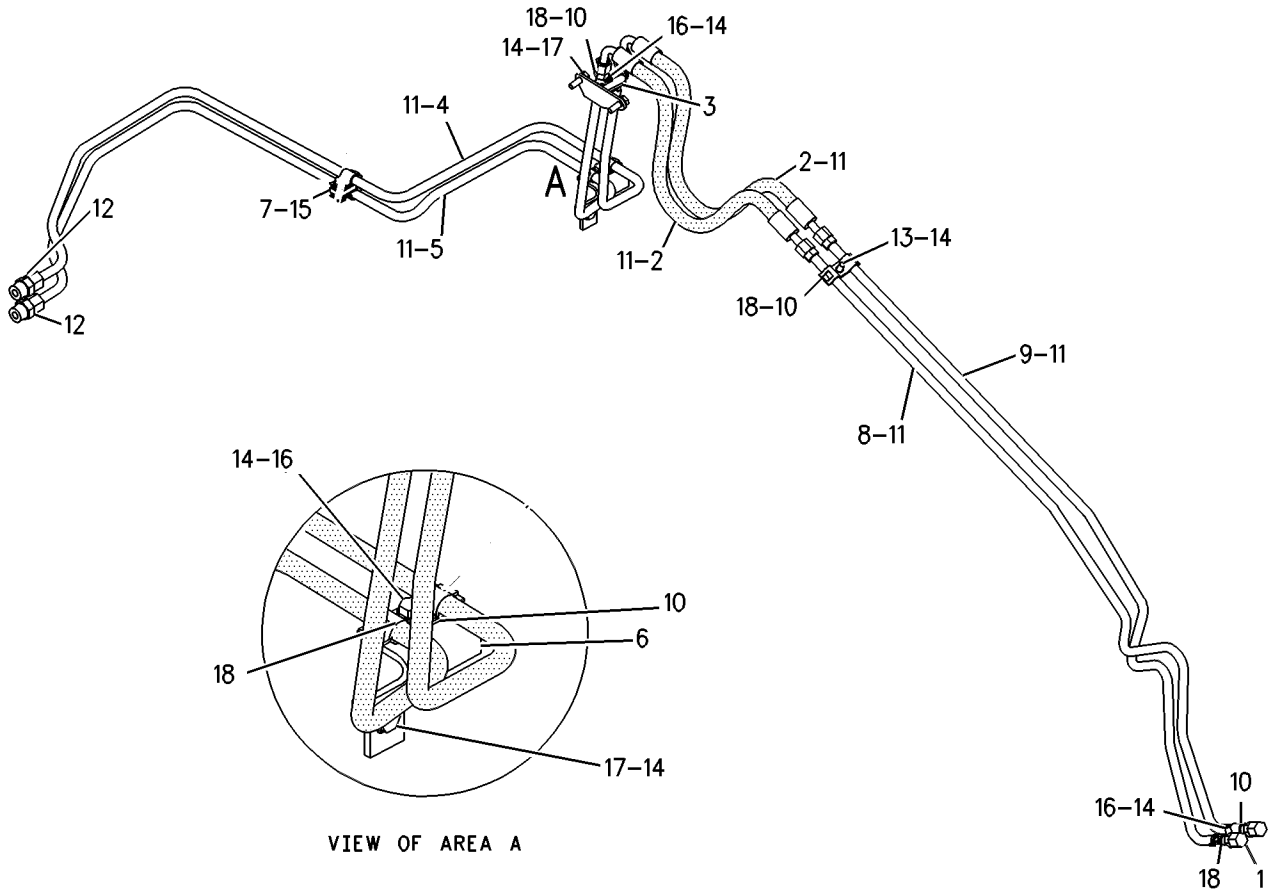

GRAPHIC #1 **<END>** g00889518

HYDRAULIC SYSTEM

112-6403 LINES GP-LOADER AUXILIARY

S/N: BXC1-UP; DSX1-UP
PART OF 185-0062, 185-0063 HYDRAULIC AR
AN ATTACHMENT

SMCS-5057 **i01763903**

NOTE	REF NO	GRAPHIC REF	PART NUMBER	QTY	PART NAME 1 2 3 4 5 6 (PRODUCT LEVEL)	SEE PAGE
	1	1	**6V-9830**	2	CAP AS	
	2	1	**7K-1181**	2	STRAP-CABLE	
	3	1	**112-5841**	1	TUBE AS	
	4	1	**112-5842**	1	TUBE AS	
I	5	1	**180-2531**	2	HOSE AS	
	6	1	**215-1383**	1	TUBE AS	
	7	1	**215-1384**	1	TUBE AS	
	8	1	*148-8341*	1	CONNECTOR GP	
		1	**3D-2824**	1	SEAL-O-RING	
		1	**6V-8713**	1	CONNECTOR	
		1	**7J-9108**	1	SEAL-O-RING	
	9	1	*148-8382*	1	ELBOW GP	
		1	**3D-2824**	1	SEAL-O-RING	
		1	**7J-9108**	1	SEAL-O-RING	
		1	**8T-0404**	1	ELBOW	
	10	1	**151-4841**	2	BLOCK	
	11	1	**6V-8398**	6	SEAL-O-RING	
	12	1	**8T-4121**	10	WASHER-HARD (11X21X2.5MM THK)	
M	13	1	**8T-4136**	8	BOLT (M10X1.5X25MM)	
M	14	1	**8T-4137**	2	BOLT (M10X1.5X20MM)	
	15	1	**9R-1004**	10	CLIP (TAB)	
	16	1	**9R-1005**	10	CLIP (SLOT)	

I-SEE HOSE FABRICATION GUIDE
M-METRIC PART

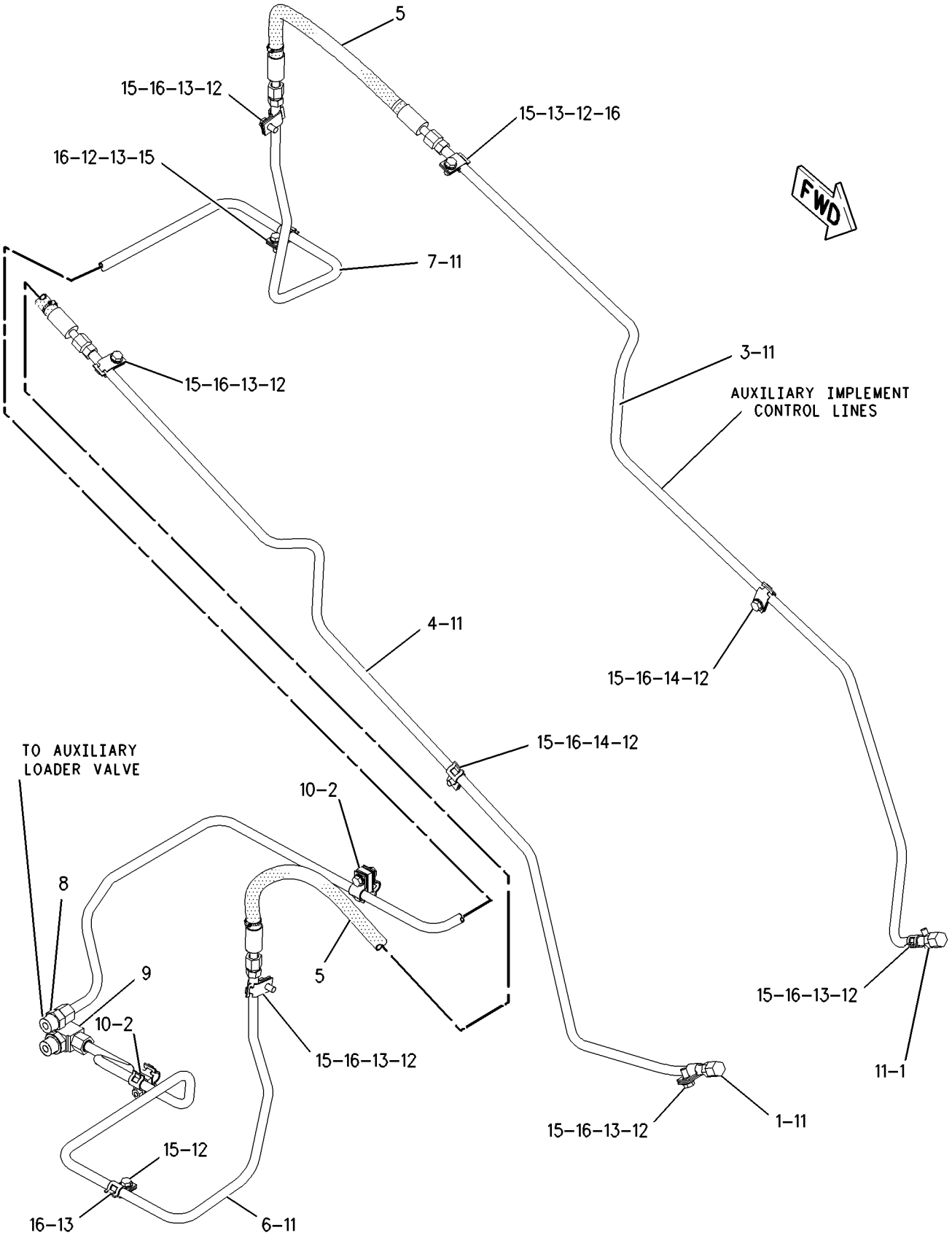

GRAPHIC #1 **<END>** g00902868

HYDRAULIC SYSTEM

9R-3712 LINES GP-MULTIPURPOSE BUCKET

S/N: BXC1-UP; DSX1-UP
PART OF 112-0938, 112-0939 BUCKET AR-MULTIPURPOSE
AN ATTACHMENT

SMCS-5057 **i01710049**

NOTE	REF NO	GRAPHIC REF	PART NUMBER	QTY	PART NAME 1 2 3 4 5 6 (PRODUCT LEVEL)	SEE PAGE
	1	1	**6V-1249**	2	GROMMET	
I	2	1	**8E-3081**	1	HOSE AS	
I	3	1	**9R-0418**	2	HOSE AS	
I	4	1	**9R-5971**	1	HOSE AS	
I	5	1	**100-7442**	1	HOSE AS	
I	6	1	**117-7520**	1	HOSE AS	
	7	1	**148-8336**	4	CONNECTOR GP	
					(EACH INCLUDES)	
		1	**3J-1907**	1	SEAL-O-RING	
		1	**6V-8397**	1	SEAL-O-RING	
		1	**6V-8636**	1	CONNECTOR	
	8	1	**150-3060**	2	TEE AS	
					(EACH INCLUDES)	
		1	**6V-8397**	2	SEAL-O-RING	
		1	**6V-8398**	1	SEAL-O-RING	
		1	**8T-3444**	1	TEE-UNION ORIFICE	
	9	1	**5P-7464**	2	CLIP (SLOT)	
	10	1	**5P-7465**	2	CLIP (TAB)	
	11	1	**8T-1891**	4	CLIP (SLOT)	
	12	1	**8T-1892**	4	CLIP (TAB)	
	13	1	**8T-4121**	2	WASHER-HARD (11X21X2.5MM THK)	
M	14	1	**8T-4136**	2	BOLT (M10X1.5X25MM)	
M	15	1	**8T-4192**	2	BOLT (M12X1.75X25MM)	
	16	1	**8T-4223**	2	WASHER-HARD (13.5X25.5X3MM THK)	

I-SEE HOSE FABRICATION GUIDE
M-METRIC PART

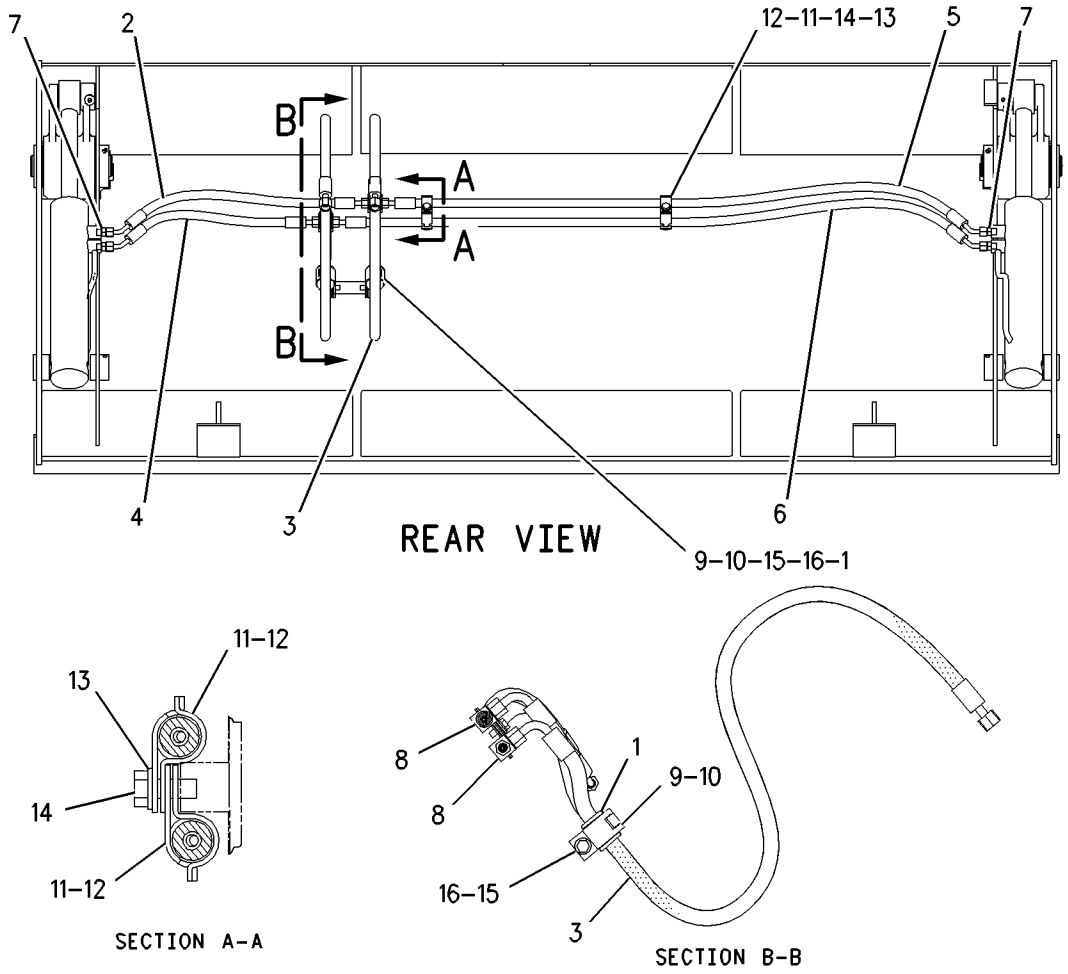

GRAPHIC #1 **<END>** g00882884

HYDRAULIC SYSTEM

9R-5788 LINES GP-MULTIPURPOSE BUCKET

S/N: BXC1-UP; DSX1-UP
PART OF 111-8634, 111-8635 BUCKET AR-MULTIPURPOSE
AN ATTACHMENT

SMCS-5057 **i01709708**

NOTE	REF NO	GRAPHIC REF	PART NUMBER	QTY	PART NAME 1 2 3 4 5 6 (PRODUCT LEVEL)	SEE PAGE
	1	1	**6V-1249**	2	GROMMET	
I	2	1	**7I-5486**	1	HOSE AS	
I	3	1	**9R-0418**	2	HOSE AS	
I	4	1	**100-7443**	1	HOSE AS	
I	5	1	**100-7444**	1	HOSE AS	
I	6	1	**131-2127**	1	HOSE AS	
	7	1	*148-8336*	4	CONNECTOR GP	
					(EACH INCLUDES)	
		1	**3J-1907**	1	SEAL-O-RING	
		1	**6V-8397**	1	SEAL-O-RING	
		1	**6V-8636**	1	CONNECTOR	
	8	1	*150-3060*	2	TEE AS	
					(EACH INCLUDES)	
		1	**6V-8397**	2	SEAL-O-RING	
		1	**6V-8398**	1	SEAL-O-RING	
		1	**8T-3444**	1	TEE-UNION ORIFICE	
	9	1	**5P-7464**	2	CLIP (SLOT)	
	10	1	**5P-7465**	2	CLIP (TAB)	
C	11	1	**8T-1891**	4	CLIP (SLOT)	
C	12	1	**8T-1892**	4	CLIP (TAB)	
C	13	1	**8T-4121**	2	WASHER-HARD (11X21X2.5MM THK)	
CM	14	1	**8T-4136**	2	BOLT (M10X1.5X25MM)	
M	15	1	**8T-4192**	2	BOLT (M12X1.75X25MM)	
	16	1	**8T-4223**	2	WASHER-HARD (13.5X25.5X3MM THK)	

C-CHANGE FROM PREVIOUS TYPE
I-SEE HOSE FABRICATION GUIDE
M-METRIC PART

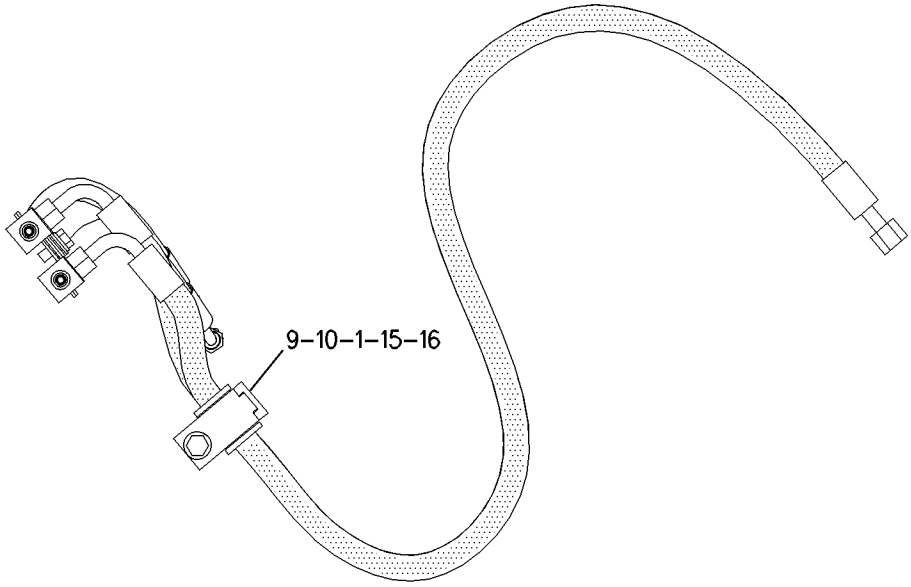

SECTION B–B

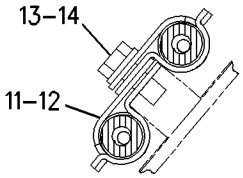

SECTION A–A

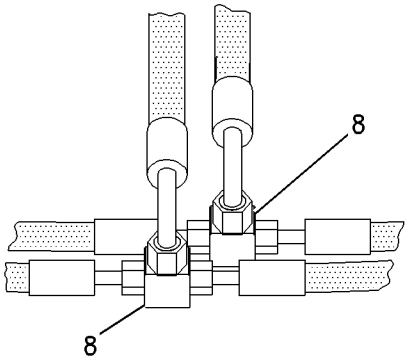

SECTION C–C

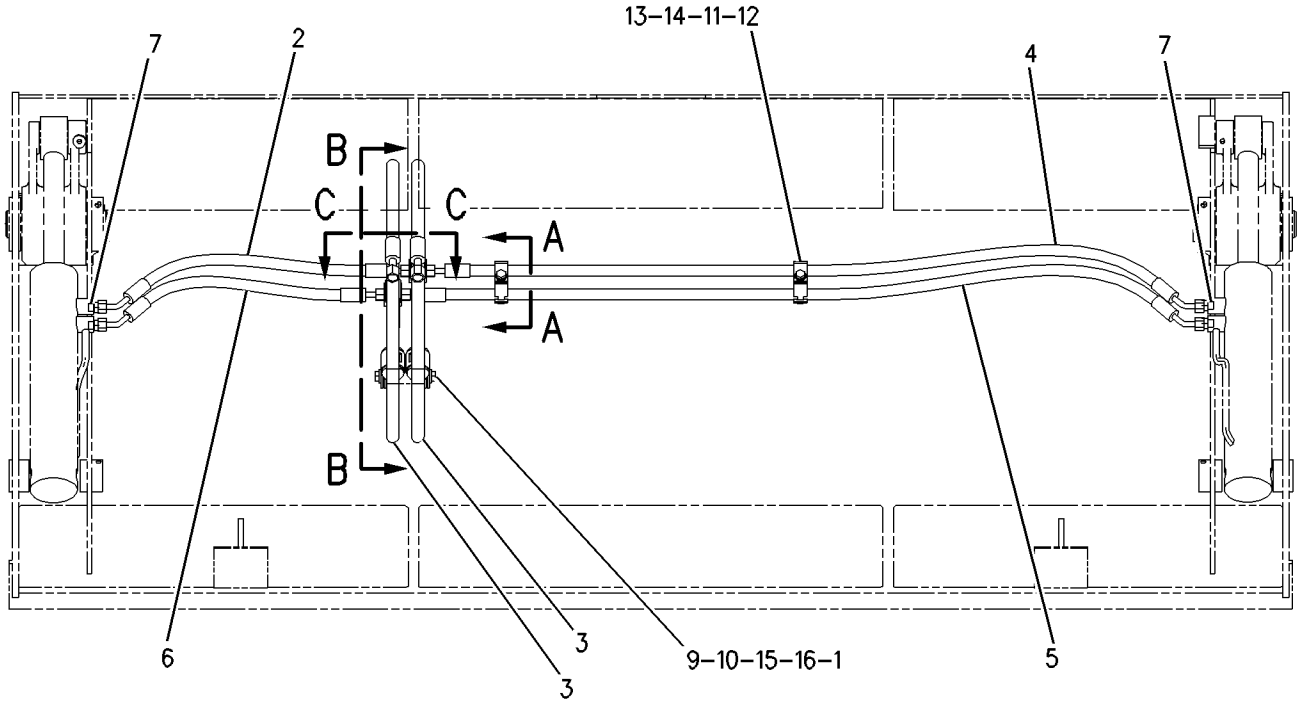

GRAPHIC #1 **<END>** g00879948

HYDRAULIC SYSTEM

118-4930 LINES GP-MULTIPURPOSE BUCKET

S/N: BXC1-UP; DSX1-UP

PART OF 124-0487, 124-0488, 208-0827 BUCKET AR-MULTIPURPOSE

AN ATTACHMENT

SMCS-5057 **i01790282**

NOTE	REF NO	GRAPHIC REF	PART NUMBER	QTY	PART NAME 1 2 3 4 5 6 (PRODUCT LEVEL)	SEE PAGE
I	1	1	**9W-4363**	1	HOSE AS	
I	2	1	**120-4553**	1	HOSE AS	
I	3	1	**122-0668**	2	HOSE AS	
I	4	1	**122-0669**	2	HOSE AS	
	5	1	*148-8336*	4	CONNECTOR AS	
					(EACH INCLUDES)	
		1	**3J-1907**	1	SEAL-O-RING	
		1	**6V-8397**	1	SEAL-O-RING	
		1	**6V-8636**	1	CONNECTOR	
	6	1	*150-3060*	2	TEE AS	
					(EACH INCLUDES)	
		1	**6V-8397**	2	SEAL-O-RING	
		1	**6V-8398**	1	SEAL-O-RING	
		1	**8T-3444**	1	TEE-UNION ORIFICE	
	7	1	**5P-7464**	2	CLIP (SLOT)	
	8	1	**5P-7465**	2	CLIP (TAB)	
	9	1	**6V-1249**	2	GROMMET	
	10	1	**8T-1891**	4	CLIP (SLOT)	
	11	1	**8T-1892**	4	CLIP (TAB)	
	12	1	**8T-4121**	2	WASHER-HARD (11X21X2.5MM THK)	
M	13	1	**8T-4136**	2	BOLT (M10X1.5X25MM)	
M	14	1	**8T-4192**	2	BOLT (M12X1.75X25MM)	
	15	1	**8T-4223**	2	WASHER-HARD (13.5X25.5X3MM THK)	

I-SEE HOSE FABRICATION GUIDE
M-METRIC PART

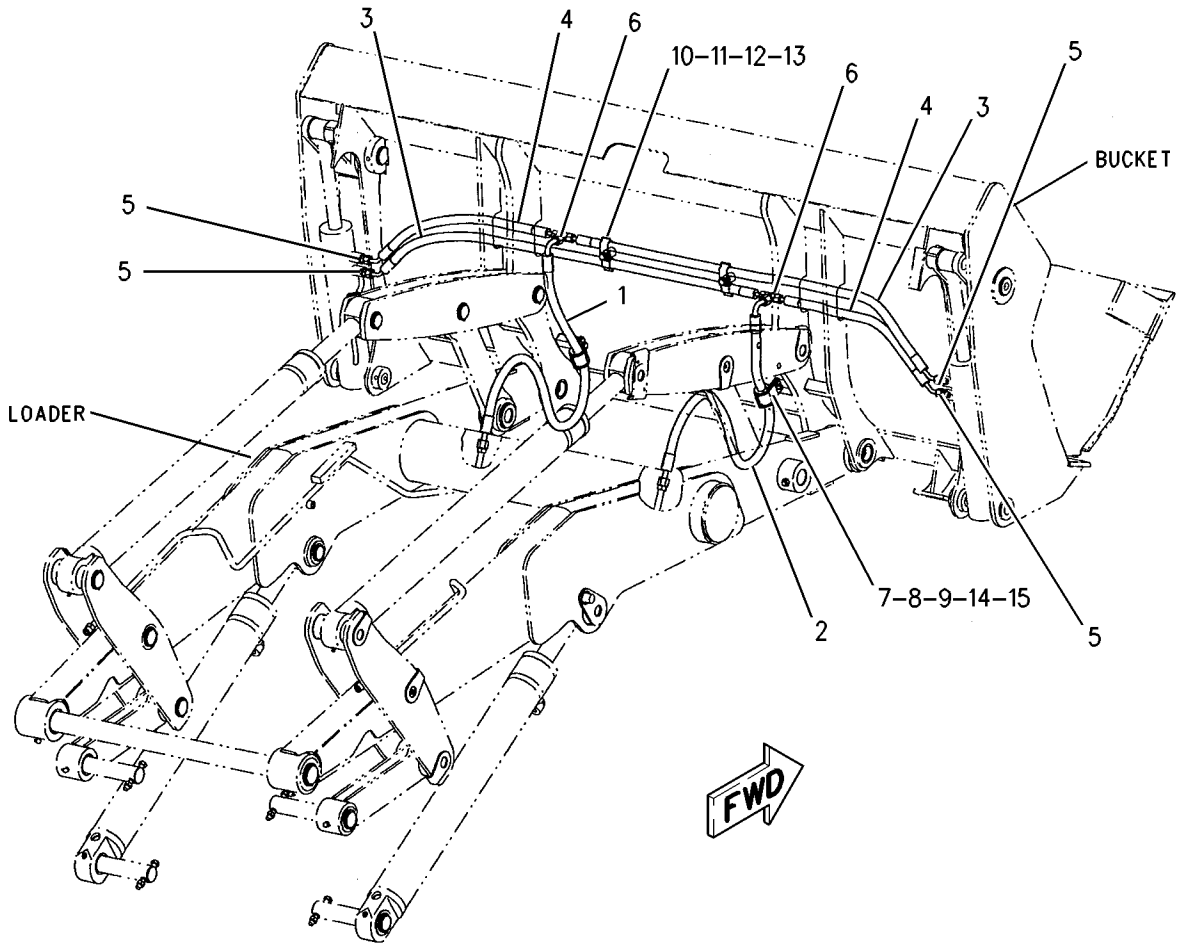

GRAPHIC #1 **<END>** g00916210

HYDRAULIC SYSTEM

119-4112 LINES GP-MULTIPURPOSE BUCKET

S/N: BXC1-UP; DSX1-UP

PART OF 124-0486, 124-0489, 164-4659 BUCKET AR-MULTIPURPOSE

AN ATTACHMENT

SMCS-5057 **i01981450**

NOTE	REF NO	GRAPHIC REF	PART NUMBER	QTY	PART NAME 1 2 3 4 5 6 (PRODUCT LEVEL)	SEE PAGE
I	1	1	**235-6020**	1	HOSE AS	
I	2	1	**235-6017**	2	HOSE AS	
I	3	1	**235-6019**	1	HOSE AS	
I	4	1	**235-6018**	2	HOSE AS	
	5	1	*148-8336*	4	CONNECTOR AS	
					(EACH INCLUDES)	
		1	**3J-1907**	1	SEAL-O-RING	
		1	**6V-8397**	1	SEAL-O-RING	
		1	**6V-8636**	1	CONNECTOR	
	6	1	*150-3060*	2	TEE AS	
					(EACH INCLUDES)	
		1	**6V-8397**	2	SEAL-O-RING	
		1	**6V-8398**	1	SEAL-O-RING	
		1	**8T-3444**	1	TEE-UNION ORIFICE	
	7	1	**5P-7464**	2	CLIP (SLOT)	
	8	1	**5P-7465**	2	CLIP (TAB)	
	9	1	**6V-1249**	2	GROMMET	
	10	1	**8T-1887**	4	CLIP (SLOT)	
	11	1	**8T-1888**	4	CLIP (TAB)	
	12	1	**8T-4121**	2	WASHER-HARD (11X21X2.5MM THK)	
M	13	1	**8T-4136**	2	BOLT (M10X1.5X25MM)	
M	14	1	**8T-4192**	2	BOLT (M12X1.75X25MM)	
	15	1	**8T-4223**	2	WASHER-HARD (13.5X25.5X3MM THK)	

I-REFER TO HYDRAULIC INFORMATION SYSTEM
M-METRIC PART

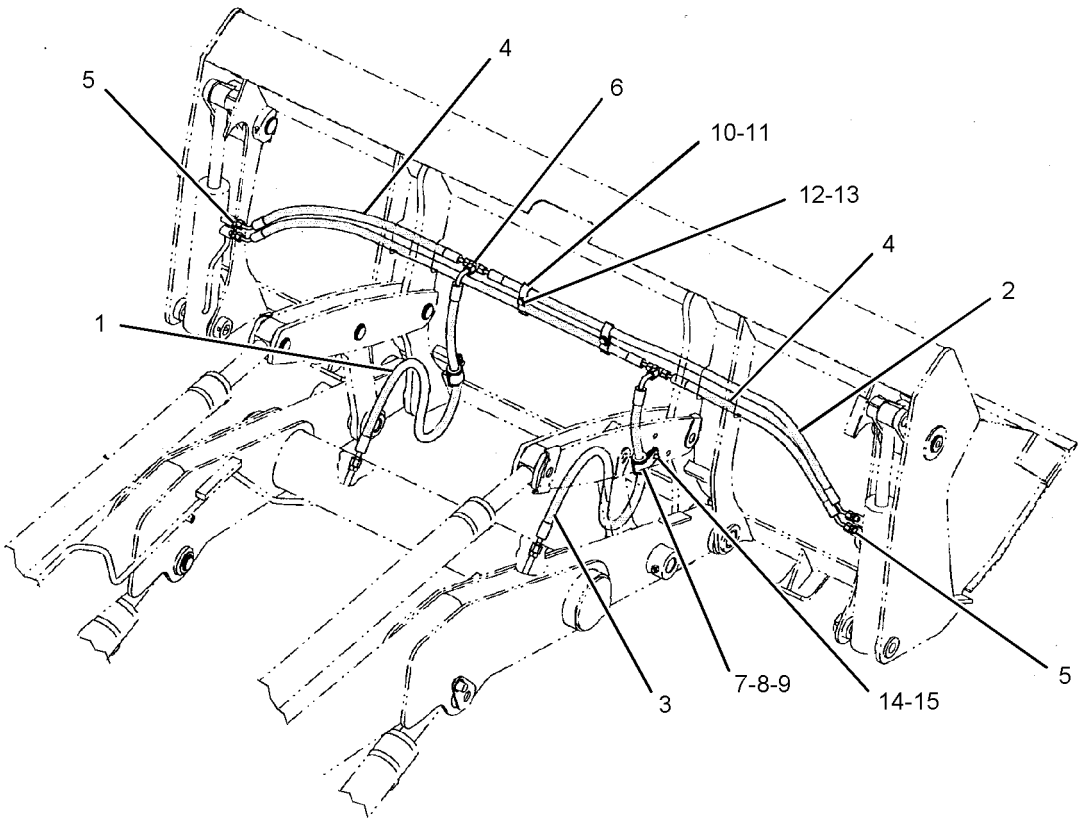

GRAPHIC #1 **<END>** g01035200

HYDRAULIC SYSTEM

188-9097 LINES GP-PILOT

S/N: BXC1-UP; DSX1-UP
PRESSURE, STABILIZER ONLY
PART OF 237-9288, 237-9289 CHASSIS AR

SMCS-5057, 5059 **i02001541**

NOTE	REF NO	GRAPHIC REF	PART NUMBER	QTY	PART NAME 1 2 3 4 5 6 (PRODUCT LEVEL)	SEE PAGE
	1	1,2	**5D-1026**	2	CLAMP-HOSE	
	2	2	**6V-0852**	1	CAP-DUST	
	3	1	*090-5725*	1	ELBOW	
	4	2	**111-1374**	1	BRACKET	
	5	2	*164-5567*	1	FITTING AS	
		2	**3J-1907**	1	SEAL-O-RING	
		2	**6V-3965**	1	FITTING (QUICK DISCONNECT)	
	6	2	**166-1579**	1	CLIP	
	7	2	*166-2033*	1	TEE GP	
		2	**4J-5477**	1	SEAL-O-RING	
		2	**7X-2444**	1	TEE-SWIVEL	
	8	2	*174-6740*	1	TEE AS	
		2	**2M-9780**	1	SEAL-O-RING	
		2	**122-1113**	1	TEE-O-RING (12.7MM ID)	
	9	1,2	**210-8916**	1	BLOCK	
	10	2	*148-8325*	1	CONNECTOR GP	
		2	**3J-1907**	1	SEAL-O-RING	
		2	**4J-5477**	1	SEAL-O-RING	
		2	**6V-8641**	1	CONNECTOR	
	11	2	*148-8407*	1	PLUG GP	
		2	**3J-1907**	1	SEAL-O-RING	
		2	**9S-4191**	1	PLUG	
	12	1	**3J-1907**	1	SEAL-O-RING	
M	13	2	**5C-7261**	1	NUT (M8X1.25 THD)	
M	14	2	**5C-9553**	1	BOLT (M6X1X16MM)	
	15	2	**5P-4115**	2	WASHER-HARD (7.2X19X2MM THK)	
	16	2	**6D-4246**	5	CLIP	
	17	2	**9M-8406**	1	CLIP	
	18	2	**6V-9828**	1	CAP AS	
	19	2	**7D-7233**	1	CLIP	
	20	2	**8T-4121**	4	WASHER-HARD (11X21X2.5MM THK)	
M	21	2	**8T-4133**	2	NUT (M10X1.5 THD)	
M	22	2	**8T-4189**	1	BOLT (M8X1.25X20MM)	
M	23	2	**8T-4195**	2	BOLT (M10X1.5X30MM)	
	24	2	**8T-4224**	2	WASHER-HARD (8.8X16X2MM THK)	
	25	1	**5P-1505**		HOSE (275CM)	

M-METRIC PART

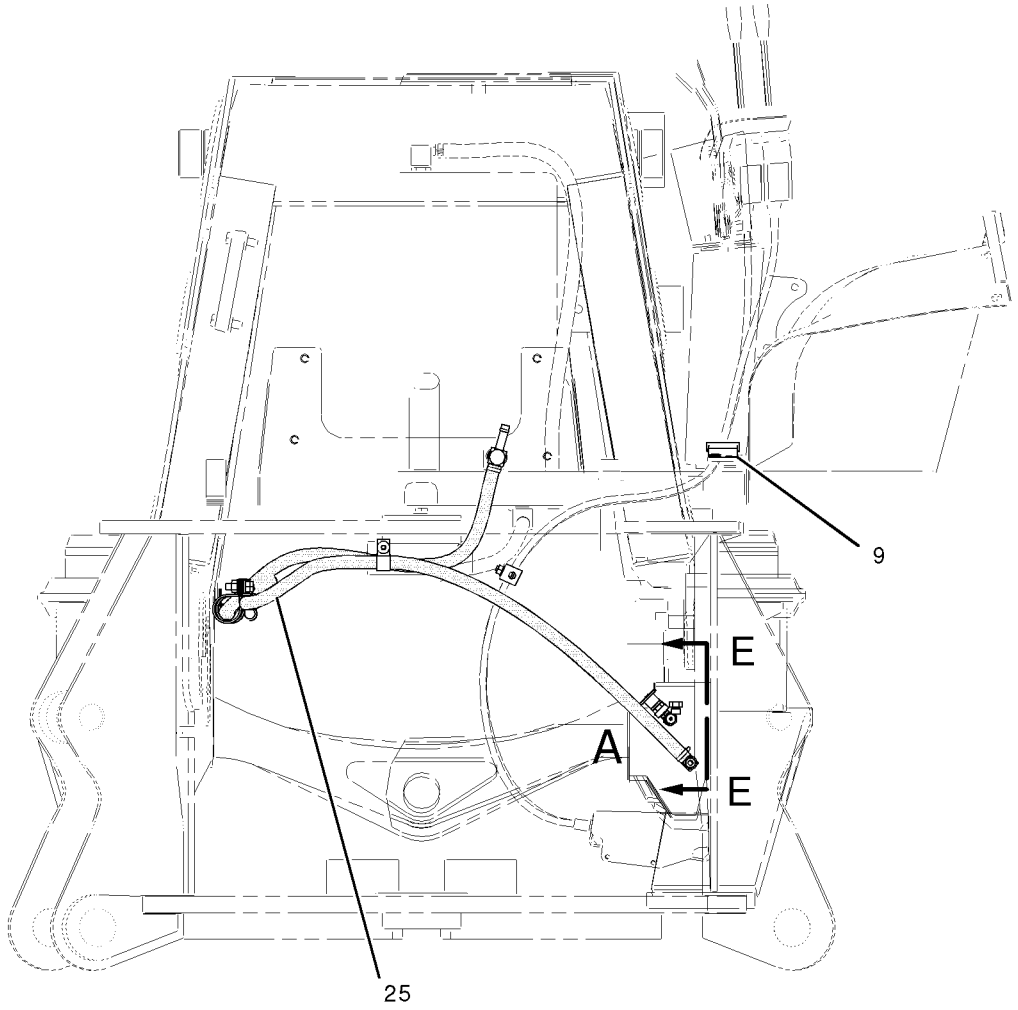

REAR VIEW

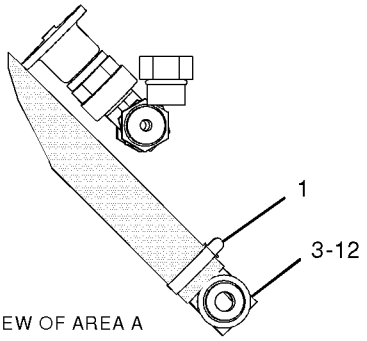

VIEW OF AREA A

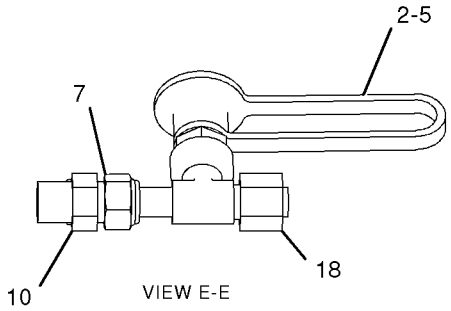

VIEW E-E

GRAPHIC #1

g01035818

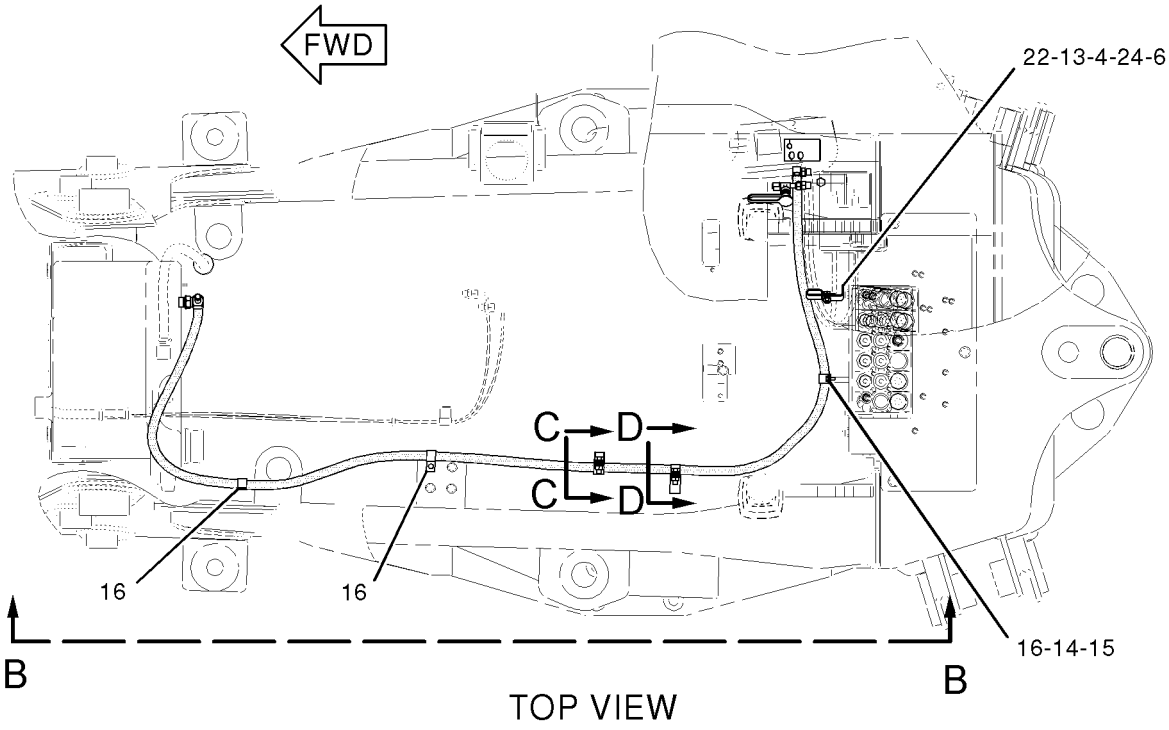

TOP VIEW

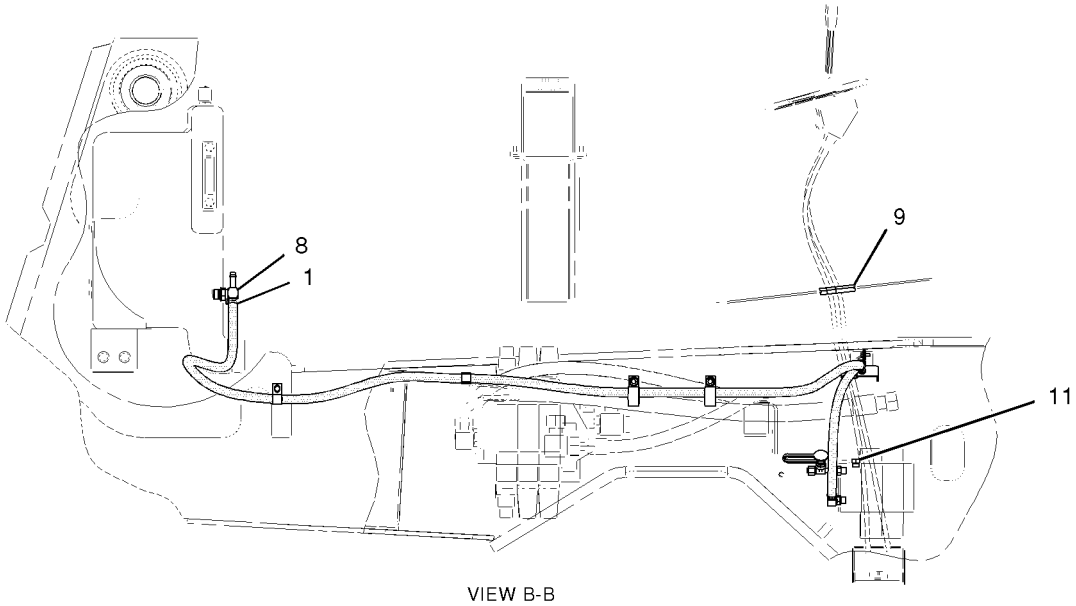

VIEW B-B

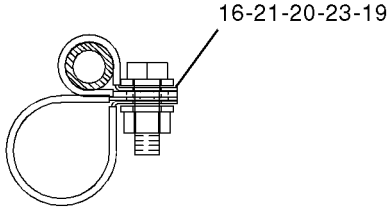

VIEW C-C

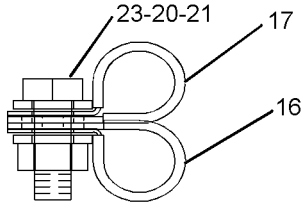

VIEW D-D

GRAPHIC #2 **<END>** g01035820

HYDRAULIC SYSTEM

190-8954 LINES GP-PUMP

S/N: BXC1-UP; DSX1-UP

PART OF 237-6463 DRIVE AR-BACKHOE LOADER

SMCS-5057 **i01799091**

NOTE	REF NO	GRAPHIC REF	PART NUMBER	QTY	PART NAME 1 2 3 4 5 6 (PRODUCT LEVEL)	SEE PAGE
I	1	1	**120-4604**	1	HOSE AS	
I	2	1	**190-8956**	1	HOSE AS	
	3	1	**220-0248**	1	PLATE AS	
	4	1	*148-8316*	2	CONNECTOR AS	
					(EACH INCLUDES)	
		1	**3J-7354**	1	SEAL-O-RING	
		1	**4J-5477**	1	SEAL-O-RING	
		1	**6V-8647**	1	CONNECTOR	
	5	1	*148-8351*	1	ELBOW GP	
		1	**4J-5477**	1	SEAL-O-RING	
		1	**6V-9849**	1	ELBOW (SWIVEL)	
	6	1	*148-8369*	1	ELBOW GP	
		1	**3J-7354**	1	SEAL-O-RING	
		1	**4J-5477**	1	SEAL-O-RING	
		1	**6V-8628**	1	ELBOW	
	7	1	**5K-0906**	2	BOLT (5/16-18X0.63 IN)	
	8	1	**6K-8178**	1	CLIP	
	9	1	**8T-4121**	1	WASHER-HARD (11X21X2.5MM THK)	
M	10	1	**8T-4137**	1	BOLT (M10X1.5X20MM)	
	11	1	**8T-4224**	2	WASHER-HARD (8.8X16X2MM THK)	
	12	1	**9M-8406**	1	CLIP	

I-SEE HOSE FABRICATION GUIDE
M-METRIC PART

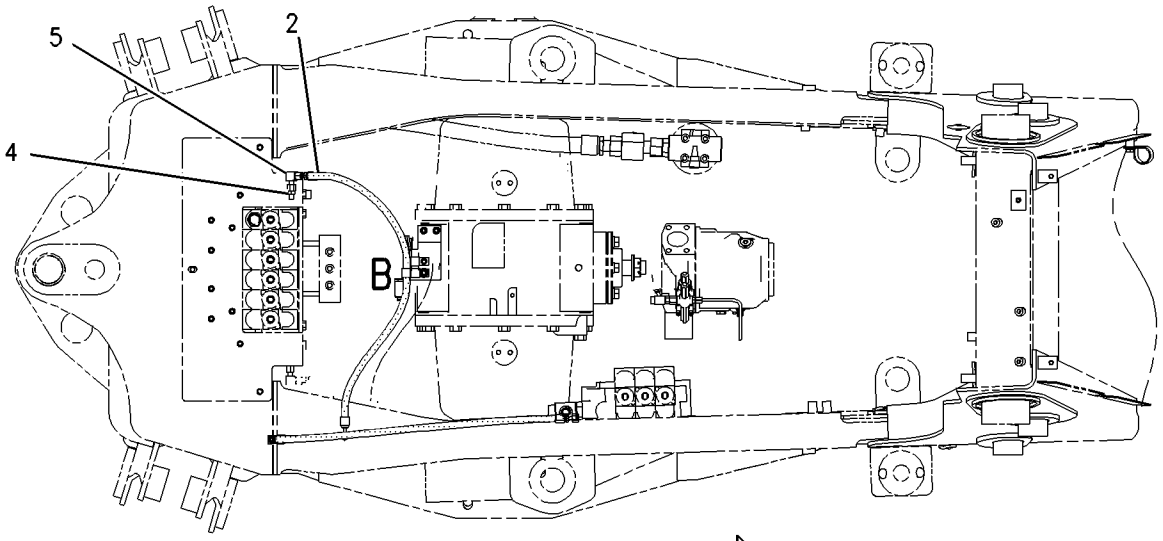

TOP VIEW



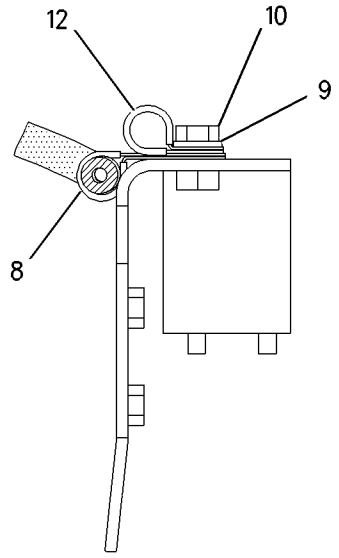

SECTION C-C

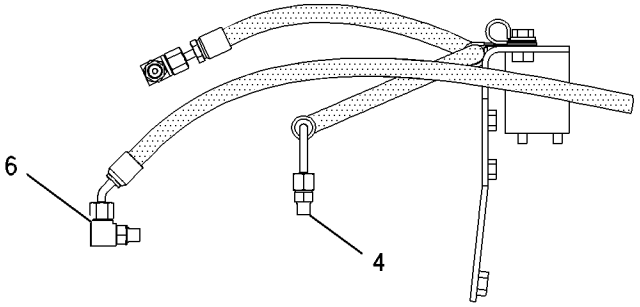

VIEW OF AREA A

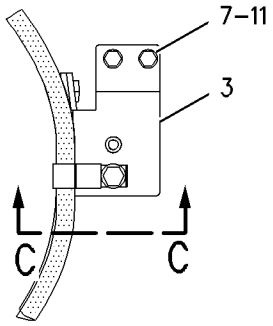

VIEW OF AREA B

RIGHT SIDE VIEW

GRAPHIC #1 **<END>** g01007716

HYDRAULIC SYSTEM

235-4551 LINES GP-PUMP

S/N: BXC1-UP; DSX1-UP

PART OF 237-9297, 237-9298 HYDRAULIC AR

SMCS-5057 **i02000631**

NOTE	REF NO	GRAPHIC REF	PART NUMBER	QTY	PART NAME 1 2 3 4 5 6 (PRODUCT LEVEL)	SEE PAGE
	1	1,2	**5D-1026**	2	CLAMP-HOSE	
	2	2	**5P-4868**	2	CLAMP-HOSE	
	3	2	**6V-0852**	1	CAP-DUST	
	4	1,2	**7K-1181**	5	STRAP-CABLE	
	5	2	**110-2445**	4	CLAMP-HOSE	
	6	1	**130-9984**	1	CLIP	
	7	1	**144-0367**	1	CLAMP-HOSE	
	8	2	**159-0186**	4	CLAMP	
	9	2	**211-4348**	1	ELBOW	
	10	1	**215-9632**	1	SPACER (12X20X20MM THK)	
	11	2	**148-8357**	1	ELBOW GP	
		2	**5K-9090**	1	SEAL-O-RING	
		2	**7M-8485**	1	SEAL-O-RING	
	12	2	**232-0252**	1	TEE	
	13	2	**235-4553**	1	BRACKET AS	
M		2	**8T-3490**	3	NUT-WELD (M10X1.5 THD)	
I	14	1	**235-5306**	1	HOSE AS	
	15	2	**235-7091**	1	HOSE	
	16	1	**235-8528**	1	HOSE	
E	17	1	**5P-1505**		HOSE (72CM)	
	18	2	*148-8352*	1	ELBOW GP	
		2	**5K-9090**	1	SEAL-O-RING	
		2	**6V-9854**	1	ELBOW (SWIVEL)	
	19	1	*148-8362*	1	ELBOW GP	
		1	**3D-2824**	1	SEAL-O-RING	
		1	**5K-9090**	1	SEAL-O-RING	
		1	**8T-6684**	1	ELBOW	
	20	2	*148-8422*	1	TEE AS	
		2	**5K-9090**	1	SEAL-O-RING	
		2	**6V-9746**	1	SEAL-O-RING	
		2	**7M-8485**	1	SEAL-O-RING	
		2	**8T-6356**	1	TEE-O-RING PORT	
	21	2	*150-3027*	1	ELBOW AS	
		2	**2M-9780**	1	SEAL-O-RING	
		2	**6V-5653**	1	ELBOW (7/8-14 THD)	
E	22	1	**5P-1506**		HOSE (95CM)	
	23	2	*164-5567*	1	FITTING AS	
		2	**3J-1907**	1	SEAL-O-RING	
		2	**6V-3965**	1	FITTING (QUICK DISCONNECT)	
E	24	2	**136-1955**		HOSE (201CM)	
	25	2	**1P-4584**	2	FLANGE-HALF	
	26	2	**5P-4116**	2	WASHER-HARD (8.8X20.5X2MM THK)	
	27	2	**6J-2680**	1	SEAL-O-RING	
	28	1,2	**7D-7233**	3	CLIP	
E	29	2	**136-1955**		HOSE (100CM)	
	30	1,2	**8T-4121**	11	WASHER-HARD (11X21X2.5MM THK)	
M	31	1,2	**8T-4136**	5	BOLT (M10X1.5X25MM)	
M	32	1	**8T-4137**	2	BOLT (M10X1.5X20MM)	
M	33	1	**8T-4182**	1	BOLT (M10X1.5X45MM)	
M	34	2	**8T-4183**	4	BOLT (M12X1.75X40MM)	
M	35	2	**8T-4189**	2	BOLT (M8X1.25X20MM)	
M	36	1	**8T-4195**	3	BOLT (M10X1.5X30MM)	
	37	2	**8T-4223**	4	WASHER-HARD (13.5X25.5X3MM THK)	
	38	1,2	**8T-7529**	3	CLIP	

E-ORDER BY THE CENTIMETER
I-REFER TO HYDRAULIC INFORMATION SYSTEM
M-METRIC PART

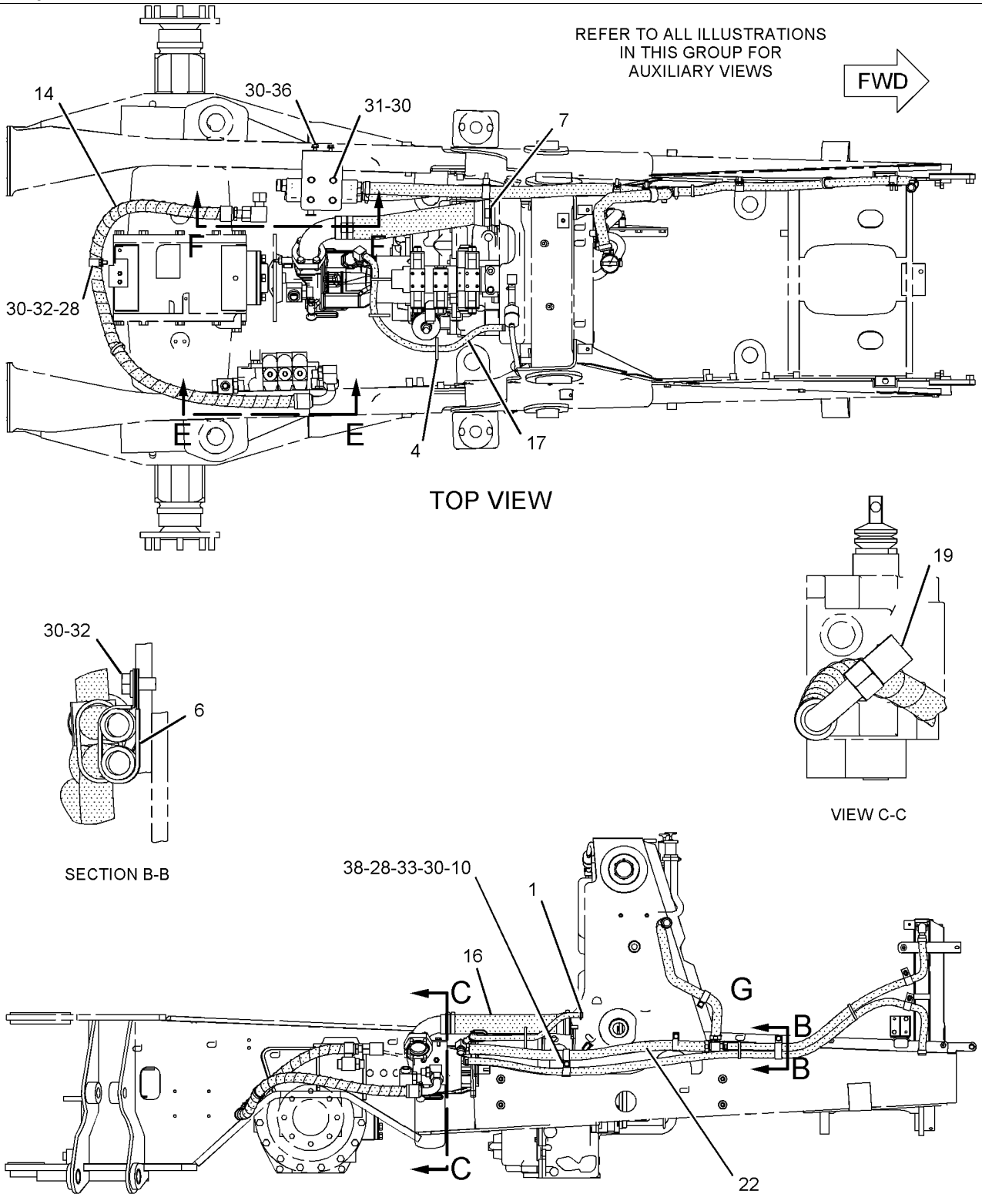

GRAPHIC #1 g01035283

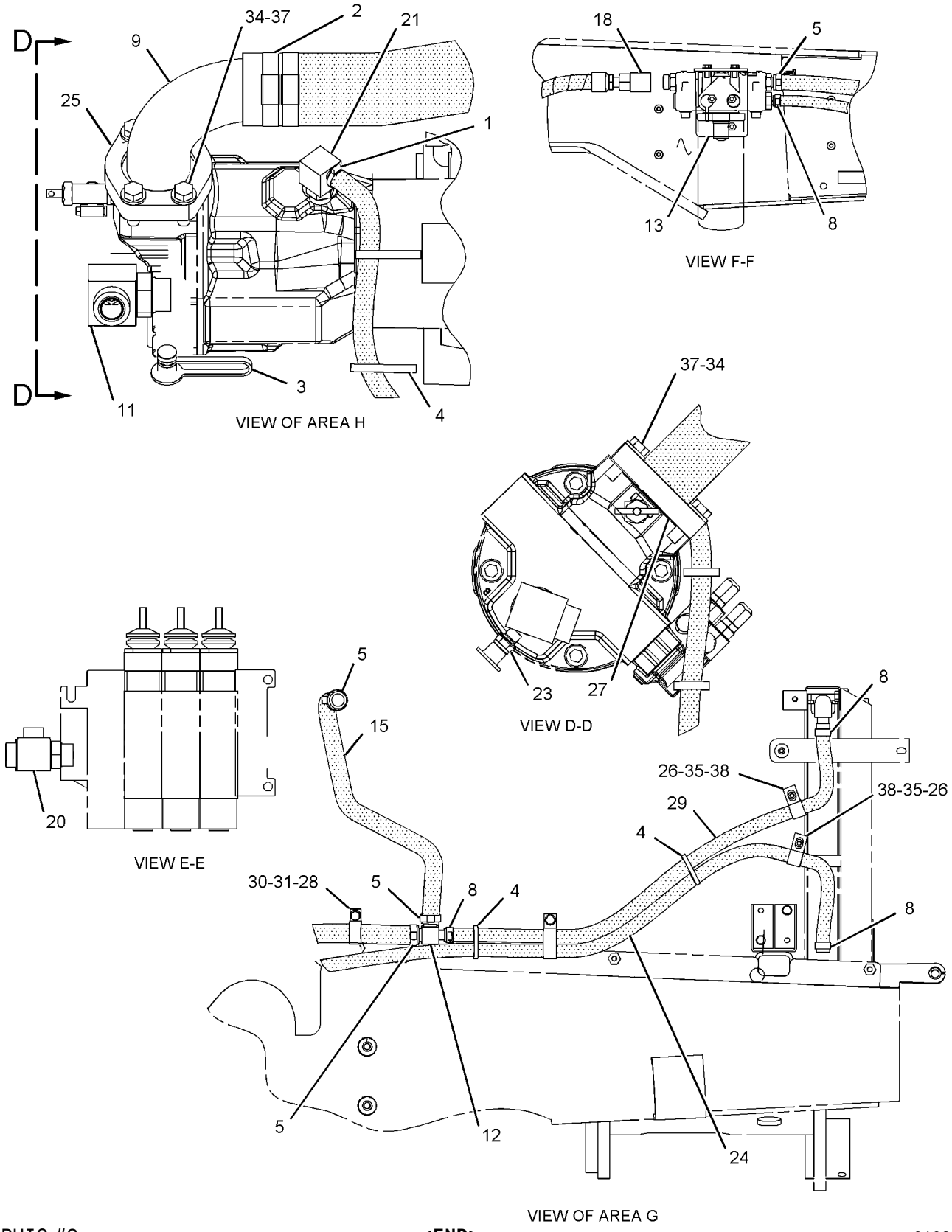

GRAPHIC #2 **<END>** g01035267

HYDRAULIC SYSTEM

235-5855 LINES GP-PUMP

S/N: BXC1-UP; DSX1-UP
PART OF 240-3183 VALVE AR-BANK 6
AN ATTACHMENT

SMCS-5057 **i01986721**

NOTE	REF NO	GRAPHIC REF	PART NUMBER	QTY	PART NAME 1 2 3 4 5 6 (PRODUCT LEVEL)	SEE PAGE
I	1	1	**190-4164**	1	HOSE AS	
I	2	1	**235-9777**	1	HOSE AS	
	3	1	*148-8335*	1	CONNECTOR AS	
		1	**5K-9090**	1	SEAL-O-RING	
		1	**6V-8635**	1	CONNECTOR	
		1	**7M-8485**	1	SEAL-O-RING	
	4	1	*148-8429*	1	TEE AS	
		1	**5K-9090**	2	SEAL-O-RING	
		1	**6V-9840**	1	TEE-SWIVEL	

I-REFER TO HYDRAULIC INFORMATION SYSTEM

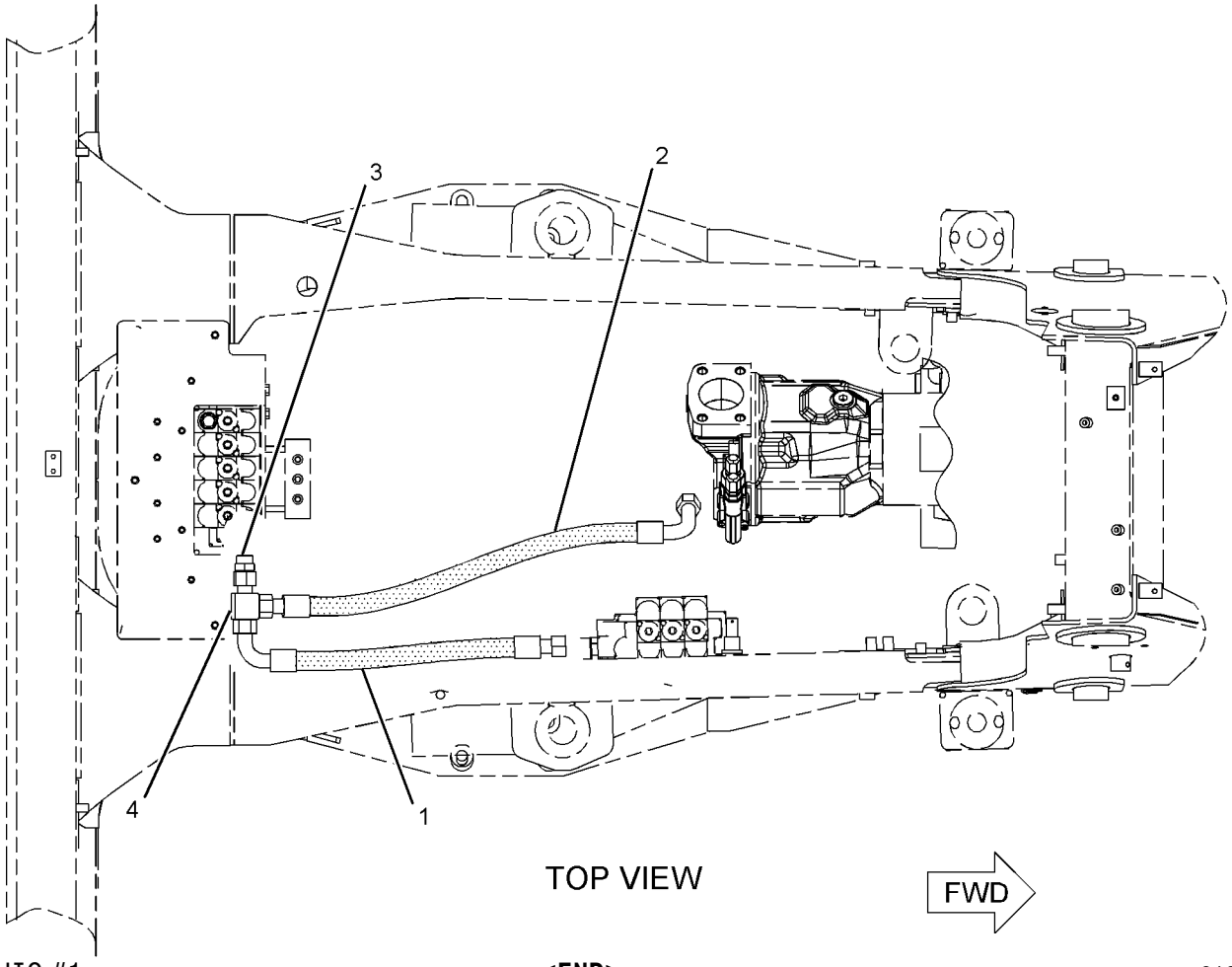

GRAPHIC #1 **<END>** g01035899

HYDRAULIC SYSTEM

235-5857 LINES GP-PUMP

S/N: BXC1-UP; DSX1-UP
PART OF 240-3184 VALVE AR-BANK 4, 240-3185 VALVE AR-BANK 5
AN ATTACHMENT

SMCS-5057 **i01986715**

NOTE	REF NO	GRAPHIC REF	PART NUMBER	QTY	PART NAME 1 2 3 4 5 6 (PRODUCT LEVEL)	SEE PAGE
I	1	1	**190-4164**	1	HOSE AS	
I	2	1	**235-9777**	1	HOSE AS	
	3	1	*148-8429*	1	TEE AS	
		1	**5K-9090**	2	SEAL-O-RING	
		1	**6V-9840**	1	TEE-SWIVEL	
	4	1	*164-5594*	1	CONNECTOR AS	
		1	**5K-9090**	1	SEAL-O-RING	
		1	**7M-8485**	1	SEAL-O-RING	
		1	**8C-5723**	1	CONNECTOR	

I-REFER TO HYDRAULIC INFORMATION SYSTEM

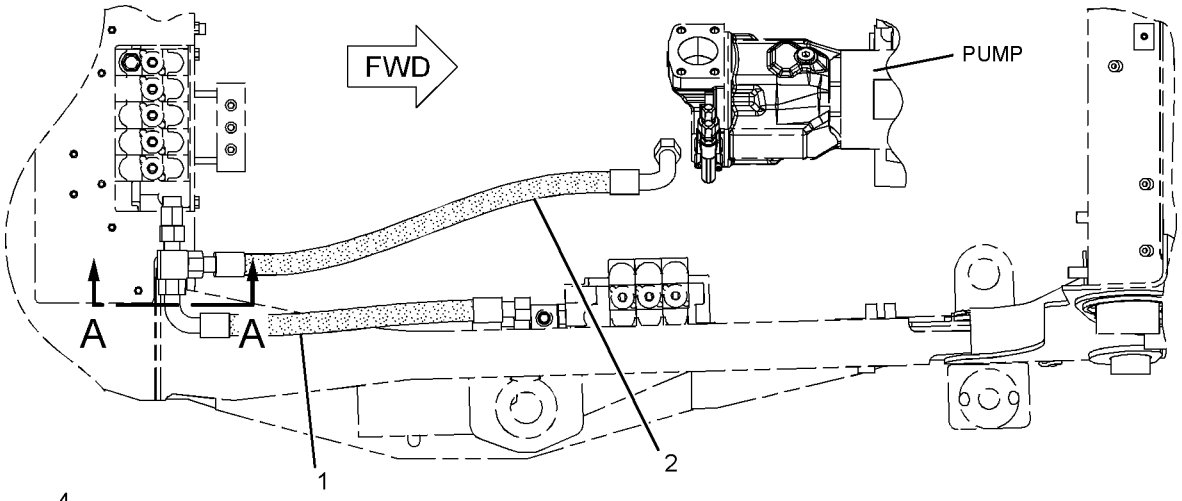

TOP VIEW

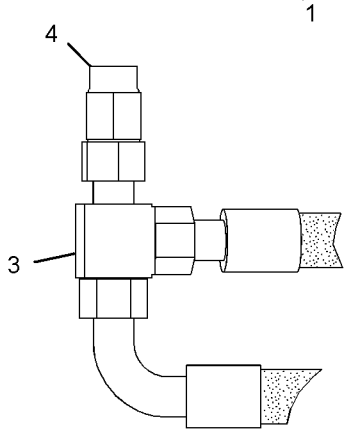

VIEW A-A

GRAPHIC #1 **<END>** g01035290

HYDRAULIC SYSTEM

235-5858 LINES GP-PUMP–6 BANK

S/N: BXC1-UP; DSX1-UP
PART OF 240-3186 VALVE AR-BANK 6
AN ATTACHMENT

SMCS-5057 **i01967447**

NOTE	REF NO	GRAPHIC REF	PART NUMBER	QTY	PART NAME 1 2 3 4 5 6 (PRODUCT LEVEL)	SEE PAGE
I	1	1	**190-4164**	1	HOSE AS	
I	2	1	**235-9777**	1	HOSE AS	
	3	1	*148-8431*	1	TEE GP	
		1	**5K-9090**	2	SEAL-O-RING	
		1	**6V-8785**	1	TEE	
		1	**7M-8485**	1	SEAL-O-RING	

I-REFER TO HYDRAULIC INFORMATION SYSTEM

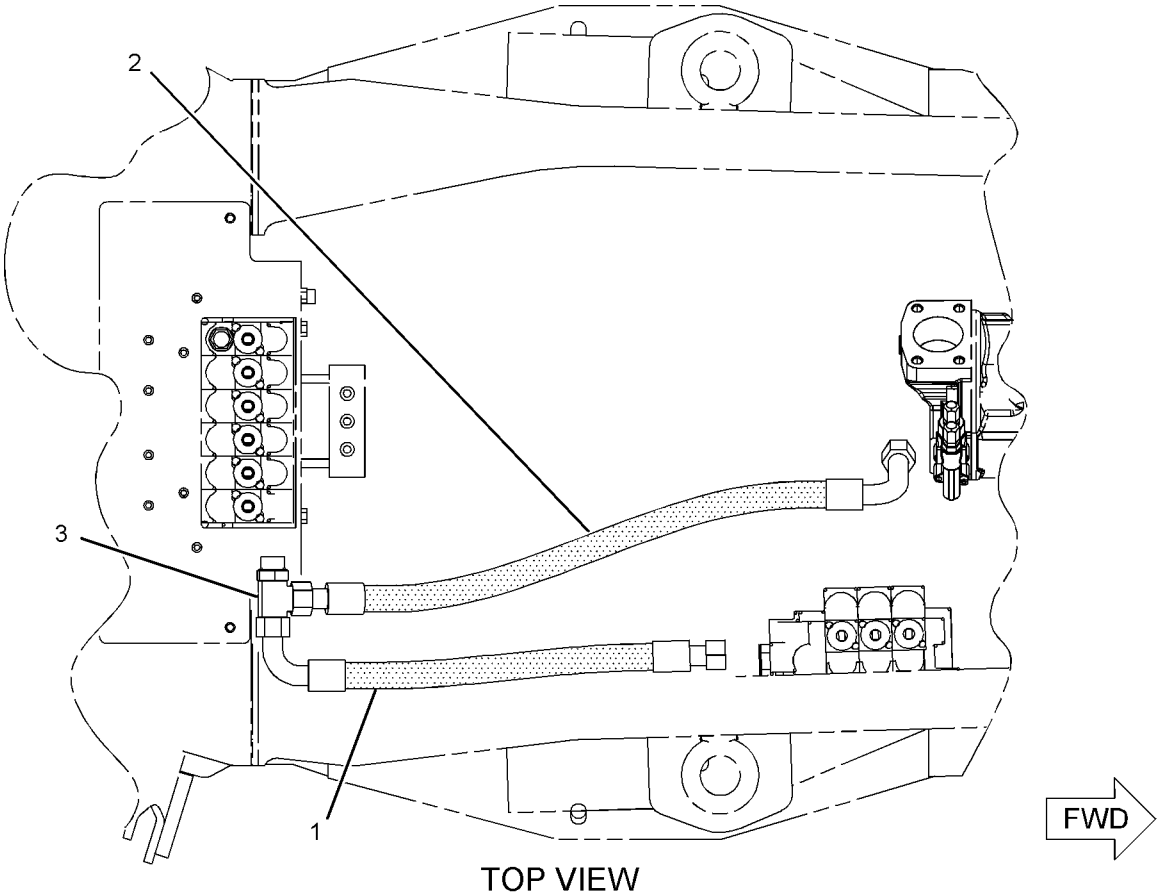

TOP VIEW

GRAPHIC #1

<END>

g01022720

HYDRAULIC SYSTEM

236-0695 LINES GP-PUMP

S/N: BXC1-UP; DSX1-UP
PART OF 240-3181 VALVE AR-BANK 4, 240-3182 VALVE AR-BANK 5
AN ATTACHMENT

SMCS-5057 **i01986649**

NOTE	REF NO	GRAPHIC REF	PART NUMBER	QTY	PART NAME 1 2 3 4 5 6 (PRODUCT LEVEL)	SEE PAGE
I	1	1	**190-4164**	1	HOSE AS	
	2	1	*197-0398*	1	CONNECTOR GP	
		1	**5K-9090**	1	SEAL-O-RING	
		1	**7M-8485**	1	SEAL-O-RING	
		1	**8C-3443**	1	CONNECTOR	
I	3	1	**235-9777**	1	HOSE AS	
	4	1	*148-8429*	1	TEE AS	
		1	**5K-9090**	2	SEAL-O-RING	
		1	**6V-9840**	1	TEE-SWIVEL	

I-REFER TO HYDRAULIC INFORMATION SYSTEM

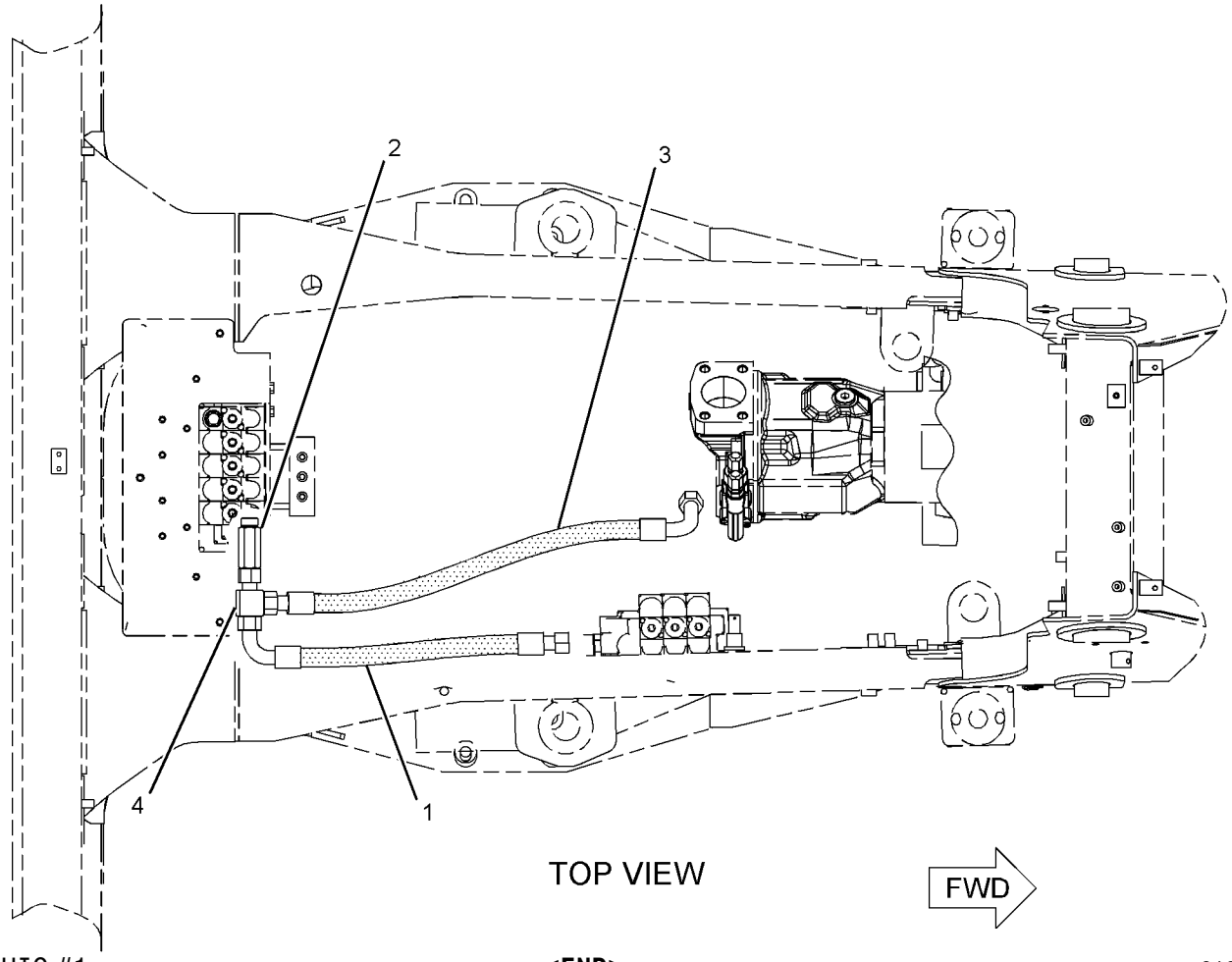

GRAPHIC #1 **<END>** g01035862

HYDRAULIC SYSTEM

235-4799 LINES GP-RETURN

S/N: BXC1-UP; DSX1-UP

PART OF 237-9297, 237-9298 HYDRAULIC AR

SMCS-5057 **i01980490**

NOTE	REF NO	GRAPHIC REF	PART NUMBER	QTY	PART NAME 1 2 3 4 5 6 (PRODUCT LEVEL)	SEE PAGE
I	1	1	**6R-3299**	1	HOSE AS	
	2	1	*215-4424*	1	TEE AS	
		1	**5K-9090**	1	SEAL-O-RING	
		1	**6V-9746**	1	SEAL-O-RING	
		1	**7M-8485**	1	SEAL-O-RING	
		1	**211-3468**	1	TEE	
	3	1	*148-8429*	1	TEE AS	
		1	**5K-9090**	2	SEAL-O-RING	
		1	**6V-9840**	1	TEE-SWIVEL	

I-REFER TO HYDRAULIC INFORMATION SYSTEM

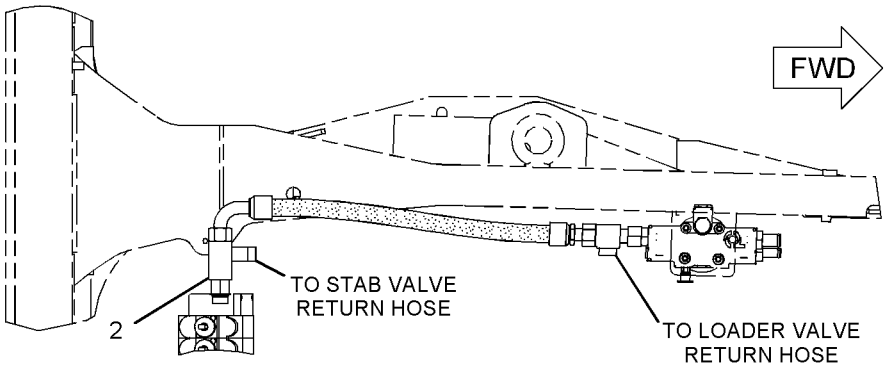

TOP VIEW

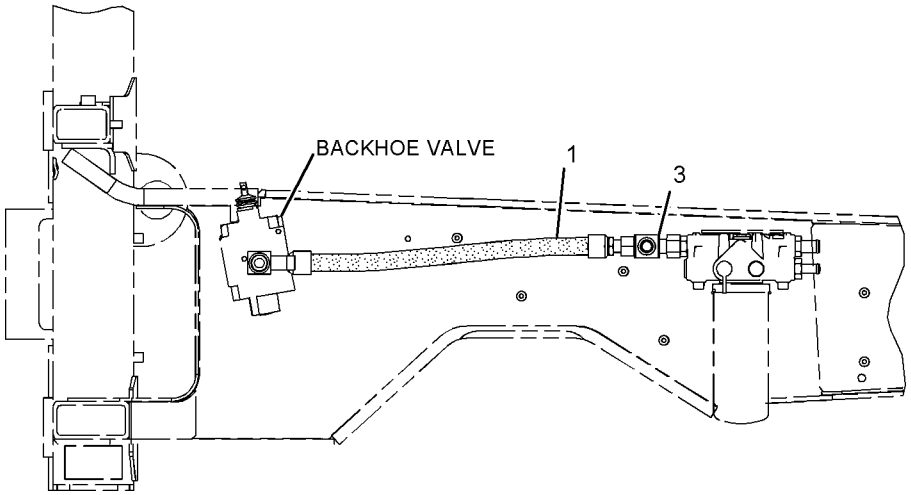

RIGHT SIDE VIEW

GRAPHIC #1

<END>

g01028144

235-5861 LINES GP-RIDE CONTROL

S/N: BXC1-UP; DSX1-UP

PART OF 239-9400, 239-9403, 239-9404, 239-9405, 239-9413 CONTROL AR-RIDE, 239-9410 KIT-RIDE CONTROL

AN ATTACHMENT

SMCS-5057, 5077 **i02000632**

NOTE	REF NO	GRAPHIC REF	PART NUMBER	QTY	PART NAME 1 2 3 4 5 6 (PRODUCT LEVEL)	SEE PAGE
	1	1	**3S-2093**	1	STRAP-CABLE	
	2	1	**7K-1181**	1	STRAP-CABLE	
Y	3	1	*162-3960*	1	ACCUMULATOR GP-RIDE CONTROL (CHARGED)	346
I	4	1	**167-7966**	1	HOSE AS	
I	5	1	**245-1728**	1	HOSE AS	
	6	1	**195-1289**	1	BRACKET AS	
	7	1	**195-1736**	1	TUBE AS	
	8	1	*222-1684*	1	VALVE GP-SOLENOID (RIDE CONTROL)	
	9	1	**224-0672**	1	FILM-WARNING (HIGH PRESSURE CYLINDER)	
	10	1	**231-7660**	1	HARNESS AS-RIDE CONTROL	
		1	**102-8802**	1	KIT-RECEPTACLE (2-PIN)	
		1	**155-2270**	1	KIT-CONNECTING PLUG (2-PIN)	
I	11	1	**237-0632**	1	HOSE AS	
	12	1	**109-1633**	2	CLIP (SLOT)	
	13	1	**109-1634**	2	CLIP (TAB)	
	14	1	*148-8346*	1	ELBOW GP	
		1	**8T-1686**	1	ELBOW	
		1	**3K-0360**	1	SEAL-O-RING	
		1	**6V-8398**	1	SEAL-O-RING	
	15	1	*148-8364*	1	ELBOW AS	
		1	**6V-8625**	1	ELBOW	
		1	**3K-0360**	1	SEAL-O-RING	
		1	**6V-8398**	1	SEAL-O-RING	
	16	1	*148-8390*	2	ELBOW GP	
					(EACH INCLUDES)	
		1	**6V-8626**	1	ELBOW	
		1	**2M-9780**	1	SEAL-O-RING	
		1	**7J-9108**	1	SEAL-O-RING	
	17	1	*150-4043*	1	CONNECTOR GP	
		1	**6V-9873**	1	CONNECTOR	
		1	**3J-1907**	1	SEAL-O-RING	
		1	**6V-8398**	1	SEAL-O-RING	
M	18	1	**5C-7261**	2	NUT (M8X1.25 THD)	
M	19	1	**7X-2538**	2	BOLT (M8X1.25X100MM)	
	20	1	**8T-4121**	3	WASHER-HARD (11X21X2.5MM THK)	
M	21	1	**8T-4137**	3	BOLT (M10X1.5X20MM)	
M	22	1	**8T-4139**	2	BOLT (M12X1.75X30MM)	
	23	1	**8T-4223**	2	WASHER-HARD (13.5X25.5X3MM THK)	
	24	1	**8T-4224**	4	WASHER-HARD (8.8X16X2MM THK)	

I-REFER TO HYDRAULIC INFORMATION SYSTEM
M-METRIC PART
Y-SEPARATE ILLUSTRATION

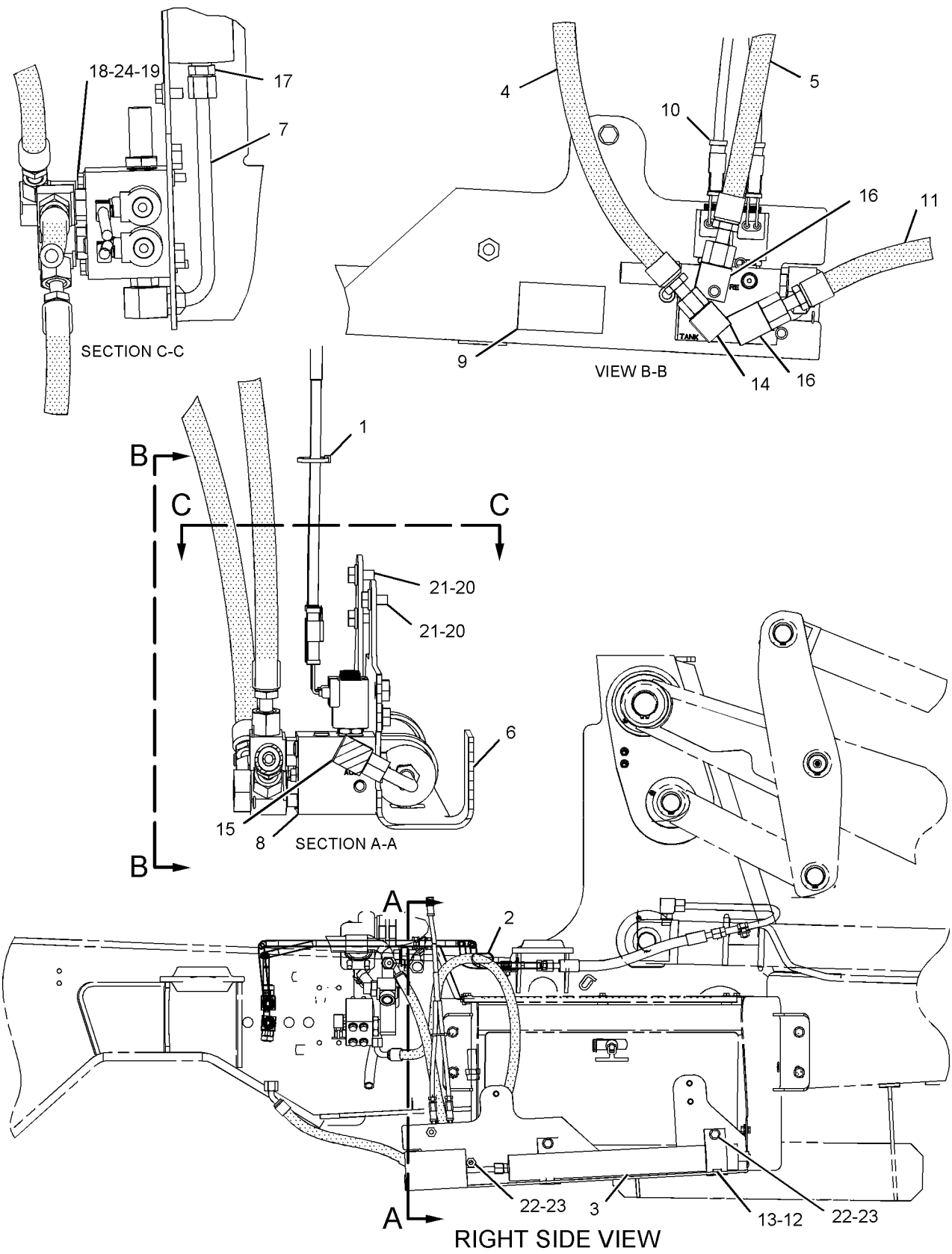

GRAPHIC #1

<END>

g01032075

175-7618 LINES GP-SIDESHIFT LOCK–STANDARD FRAME

S/N: BXC1-UP; DSX1-UP

PART OF 240-8490, 240-8491, 240-8492, 240-8493, 240-8689, 240-8690, 240-8691, 240-8692 BACKHOE AR-EXTENDABLE STICK, 240-8685, 240-8686, 240-8687, 240-8688 BACKHOE AR-STANDARD STICK

AN ATTACHMENT

SMCS-5057, 5484 **i01499364**

NOTE	REF NO	GRAPHIC REF	PART NUMBER	QTY	PART NAME 1 2 3 4 5 6 (PRODUCT LEVEL)	SEE PAGE
Y	1	1	**3E-8622**	1	VALVE GP-SOLENOID	584
	2	1	**9R-1975**	1	TUBE AS	
	3	1	**9R-1976**	1	TUBE AS	
	4	1	**9R-9208**	1	TUBE AS	
	5	1	**9R-9209**	1	TUBE AS	
	6	1	**107-6715**	1	TUBE AS	
	7	1	**168-8186**	1	HOSE AS	
	8	1	*148-8366*	1	ELBOW GP	
		1	**6V-8397**	2	SEAL-O-RING	
		1	**6V-8987**	1	ELBOW	
	9	1	*148-8378*	2	ELBOW GP	
					(EACH INCLUDES)	
		1	**3J-1907**	1	SEAL-O-RING	
		1	**6V-8397**	1	SEAL-O-RING	
		1	**6V-8724**	1	ELBOW	
	10	1	*148-8439*	2	TEE GP	
					(EACH INCLUDES)	
		1	**3J-1907**	1	SEAL-O-RING	
		1	**6V-8397**	2	SEAL-O-RING	
		1	**6V-8774**	1	TEE	
	11	1	*150-3056*	1	FITTING GP	
		1	**6V-8397**	3	SEAL-O-RING	
		1	**6V-8788**	1	TEE	
	12	1	*150-4044*	1	CONNECTOR GP	
		1	**3J-1907**	1	SEAL-O-RING	
		1	**6V-8397**	1	SEAL-O-RING	
		1	**8T-1779**	1	CONNECTOR	
	13	1	**6V-9168**	1	NUT (11/16-16 THD)	

Y-SEPARATE ILLUSTRATION

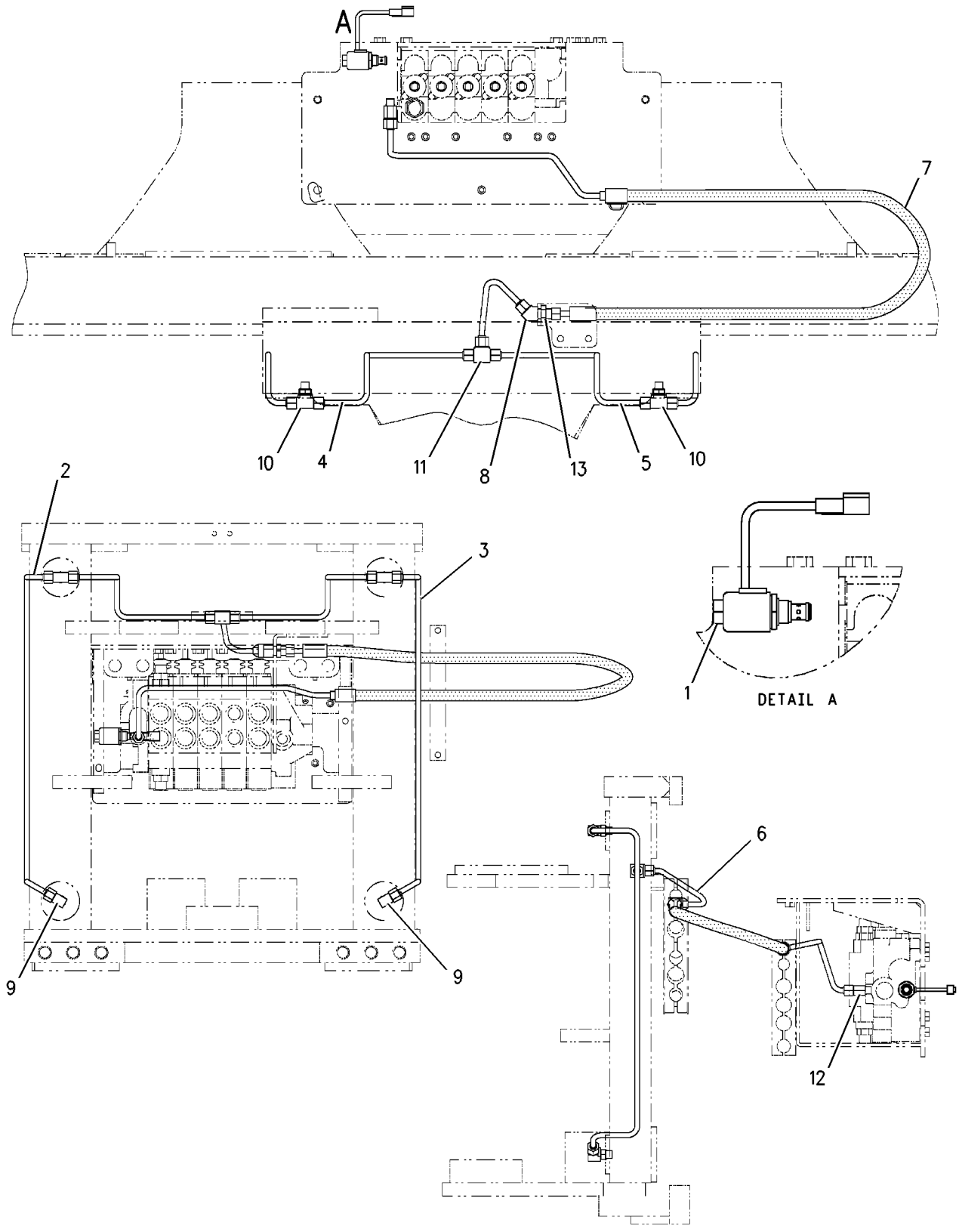

GRAPHIC #1 **<END>** g00726909

183-8523 LINES GP-SIDESHIFT LOCK–NARROW FRAME

S/N: BXC1-UP; DSX1-UP

PART OF 240-8504, 240-8505, 240-8506, 240-8507, 240-8699, 240-8700, 240-8701, 240-8702 BACKHOE AR-EXTENDABLE STICK, 240-8695, 240-8696, 240-8697, 240-8698 BACKHOE AR-STANDARD STICK

AN ATTACHMENT

SMCS-5057, 5484 **i01378999**

NOTE	REF NO	GRAPHIC REF	PART NUMBER	QTY	PART NAME 1 2 3 4 5 6 (PRODUCT LEVEL)	SEE PAGE
Y	1	1	**3E-8622**	1	VALVE GP-SOLENOID	584
	2	1	**9R-1975**	1	TUBE AS	
	3	1	**9R-1976**	1	TUBE AS	
	4	1	**9R-9208**	1	TUBE AS	
	5	1	**9R-9209**	1	TUBE AS	
	6	1	**107-6715**	1	TUBE AS	
	7	1	**183-8521**	1	HOSE AS	
	8	1	*148-8366*	1	ELBOW AS	
		1	**6V-8397**	2	SEAL-O-RING (9.27MM ID)	
		1	**6V-8987**	1	ELBOW-45 DEGREE	
	9	1	*148-8378*	2	ELBOW GP	
					(EACH INCLUDES)	
		1	**3J-1907**	1	SEAL-O-RING (11.89MM ID)	
		1	**6V-8397**	1	SEAL-O-RING (9.27MM ID)	
		1	**6V-8724**	1	ELBOW	
	10	1	*148-8439*	2	TEE AS-ORFS	
					(EACH INCLUDES)	
		1	**3J-1907**	1	SEAL-O-RING (11.89MM ID)	
		1	**6V-8397**	2	SEAL-O-RING (9.27MM ID)	
		1	**6V-8774**	1	TEE	
	11	1	*150-3056*	1	TEE AS	
		1	**6V-8397**	3	SEAL-O-RING (9.27MM ID)	
		1	**6V-8788**	1	TEE	
	12	1	*150-4044*	1	CONNECTOR AS	
		1	**3J-1907**	1	SEAL-O-RING (11.89MM ID)	
		1	**6V-8397**	1	SEAL-O-RING (9.27MM ID)	
		1	**8T-1779**	1	CONNECTOR	
	13	1	**6V-9168**	1	NUT (11/16-16 THD)	

Y-SEPARATE ILLUSTRATION

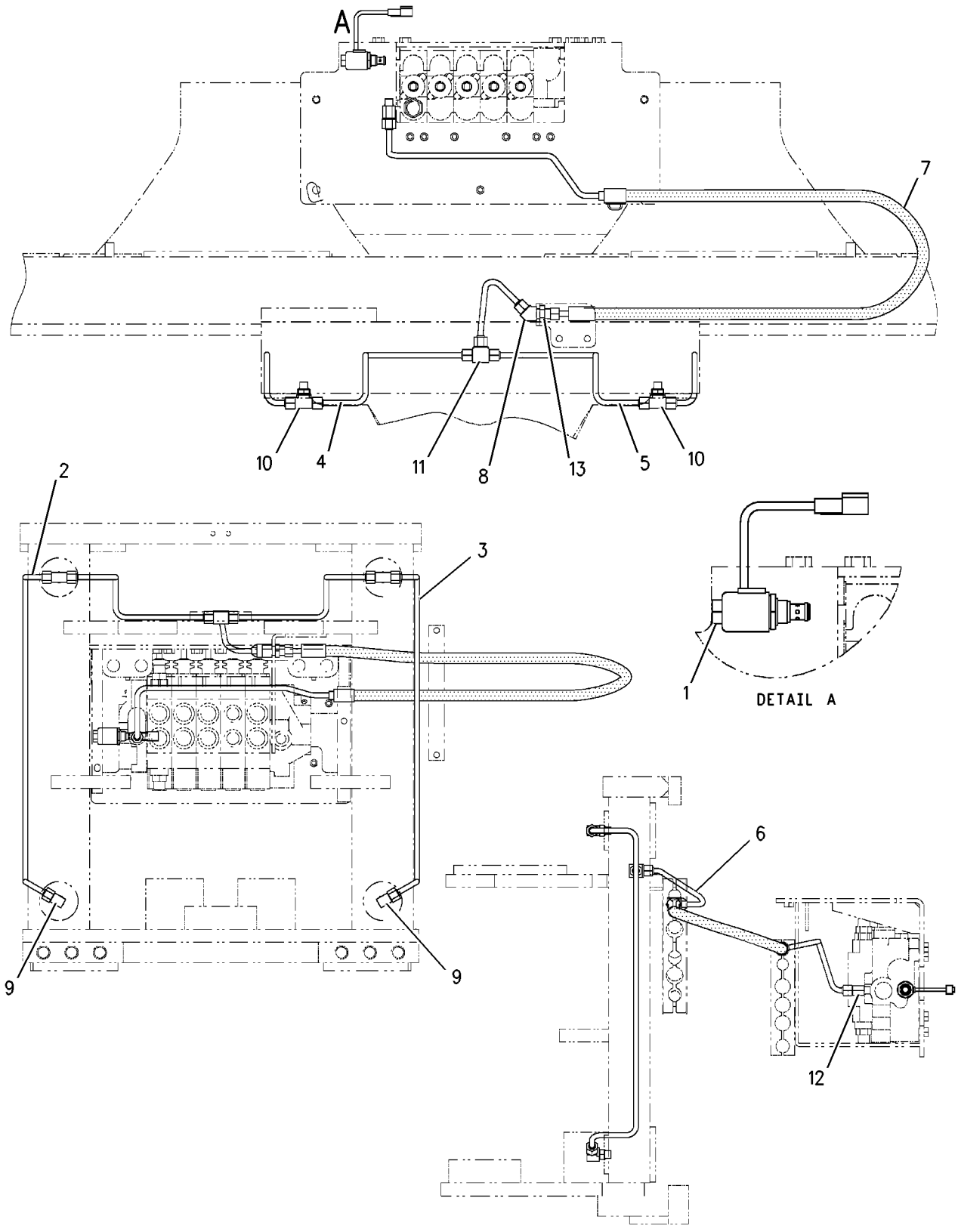

GRAPHIC #1 **<END>** g00726909

HYDRAULIC SYSTEM

183-8530 LINES GP-SIDESHIFT LOCK–STANDARD FRAME

S/N: BXC1-UP
4 BANK
PART OF 240-8683, 240-8684 BACKHOE AR-STANDARD STICK
AN ATTACHMENT

SMCS-5057, 5484 **i01376362**

NOTE	REF NO	GRAPHIC REF	PART NUMBER	QTY	PART NAME 1 2 3 4 5 6 (PRODUCT LEVEL)	SEE PAGE
Y	1	1	**3E-8622**	1	VALVE GP-SOLENOID	584
	2	1	**9R-1975**	1	TUBE AS	
	3	1	**9R-1976**	1	TUBE AS	
	4	1	**9R-9208**	1	TUBE AS	
	5	1	**9R-9209**	1	TUBE AS	
	6	1	**107-6715**	1	TUBE AS	
	7	1	**183-8529**	1	HOSE AS	
	8	1	*148-8366*	1	ELBOW AS	
		1	**6V-8397**	2	SEAL-O-RING (9.27MM ID)	
		1	**6V-8987**	1	ELBOW-45 DEGREE	
	9	1	*148-8378*	2	ELBOW GP	
					(EACH INCLUDES)	
		1	**3J-1907**	1	SEAL-O-RING (11.89MM ID)	
		1	**6V-8397**	1	SEAL-O-RING (9.27MM ID)	
		1	**6V-8724**	1	ELBOW	
	10	1	*148-8439*	2	TEE AS-ORFS	
					(EACH INCLUDES)	
		1	**3J-1907**	1	SEAL-O-RING (11.89MM ID)	
		1	**6V-8397**	2	SEAL-O-RING (9.27MM ID)	
		1	**6V-8774**	1	TEE	
	11	1	*150-3056*	1	TEE AS	
		1	**6V-8397**	3	SEAL-O-RING (9.27MM ID)	
		1	**6V-8788**	1	TEE	
	12	1	*150-4044*	1	CONNECTOR AS	
		1	**3J-1907**	1	SEAL-O-RING (11.89MM ID)	
		1	**6V-8397**	1	SEAL-O-RING (9.27MM ID)	
		1	**8T-1779**	1	CONNECTOR	
	13	1	**6V-9168**	1	NUT (11/16-16 THD)	

Y-SEPARATE ILLUSTRATION

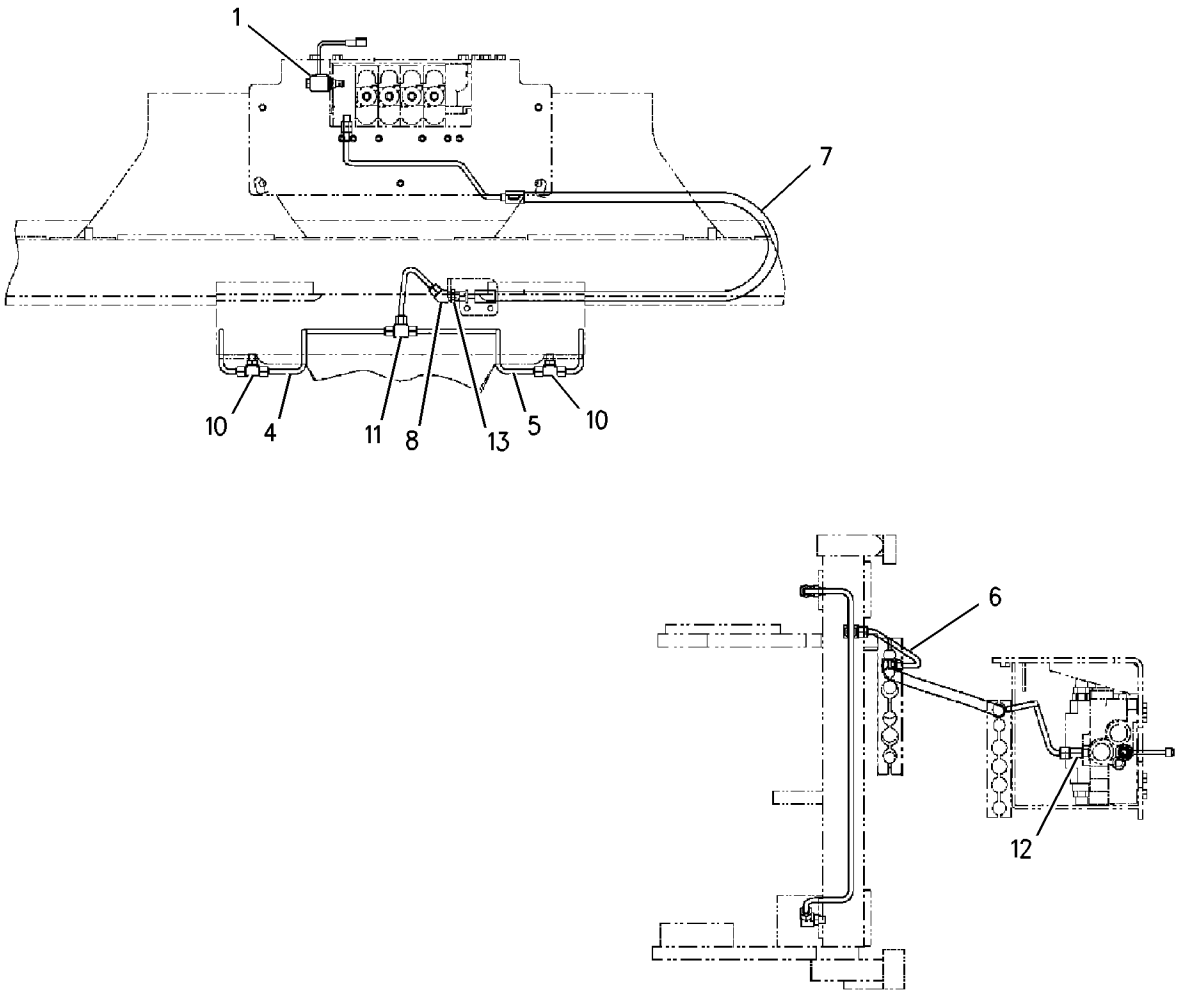

GRAPHIC #1 **<END>** g00727802

HYDRAULIC SYSTEM

183-8532 LINES GP-SIDESHIFT LOCK–NARROW FRAME

S/N: DSX1-UP

PART OF 240-8693, 240-8694 BACKHOE AR-STANDARD STICK AN ATTACHMENT

SMCS-5057, 5484 **i01379036**

NOTE	REF NO	GRAPHIC REF	PART NUMBER	QTY	PART NAME 1 2 3 4 5 6 (PRODUCT LEVEL)	SEE PAGE
Y	1	1	**3E-8622**	1	VALVE GP-SOLENOID	584
	2	1	**9R-1975**	1	TUBE AS	
	3	1	**9R-1976**	1	TUBE AS	
	4	1	**9R-9208**	1	TUBE AS	
	5	1	**9R-9209**	1	TUBE AS	
	6	1	**107-6715**	1	TUBE AS	
	7	1	**183-8531**	1	HOSE AS	
	8	1	*148-8366*	1	ELBOW AS	
		1	**6V-8397**	2	SEAL-O-RING (9.27MM ID)	
		1	**6V-8987**	1	ELBOW-45 DEGREE	
	9	1	*148-8378*	2	ELBOW GP	
					(EACH INCLUDES)	
		1	**3J-1907**	1	SEAL-O-RING (11.89MM ID)	
		1	**6V-8397**	1	SEAL-O-RING (9.27MM ID)	
		1	**6V-8724**	1	ELBOW	
	10	1	*148-8439*	2	TEE AS-ORFS	
					(EACH INCLUDES)	
		1	**3J-1907**	1	SEAL-O-RING (11.89MM ID)	
		1	**6V-8397**	2	SEAL-O-RING (9.27MM ID)	
		1	**6V-8774**	1	TEE	
	11	1	*150-3056*	1	TEE AS	
		1	**6V-8397**	3	SEAL-O-RING (9.27MM ID)	
		1	**6V-8788**	1	TEE	
	12	1	*150-4044*	1	CONNECTOR AS	
		1	**3J-1907**	1	SEAL-O-RING (11.89MM ID)	
		1	**6V-8397**	1	SEAL-O-RING (9.27MM ID)	
		1	**8T-1779**	1	CONNECTOR	
	13	1	**6V-9168**	1	NUT (11/16-16 THD)	

Y-SEPARATE ILLUSTRATION

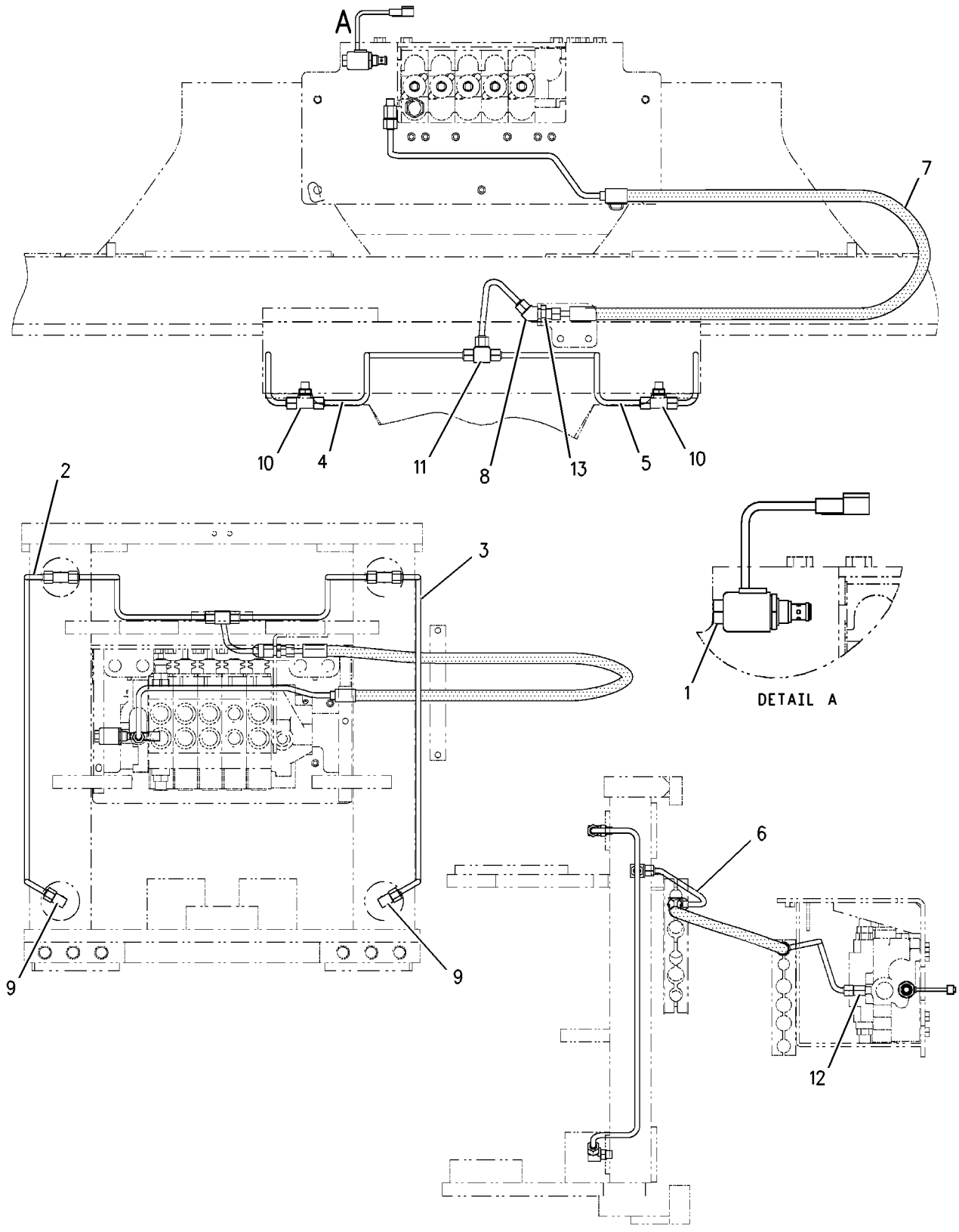

GRAPHIC #1 **<END>** g00726909

HYDRAULIC SYSTEM

185-3414 LINES GP-STABILIZER

S/N: BXC1-UP

PART OF 237-9297 HYDRAULIC AR

SMCS-5057, 5468 **i01703909**

NOTE	REF NO	GRAPHIC REF	PART NUMBER	QTY	PART NAME 1 2 3 4 5 6 (PRODUCT LEVEL)	SEE PAGE
	1	1	**8Y-8674**	1	TUBE AS	
	2	1	**8Y-8675**	1	TUBE AS	
	3	1	**9M-6738**	2	CLAMP-HOSE	
	4	1	**9R-2004**	2	BLOCK	
	5	1	**174-4028**	1	TUBE AS	
	6	1	**174-4029**	1	TUBE AS	
	7	1	**174-4030**	1	TUBE AS	
	8	1	**174-4031**	1	TUBE AS	
	9	1	**174-4032**	1	TUBE AS	
	10	1	**174-4033**	1	TUBE AS	
	11	1	**174-4034**	1	TUBE AS	
	12	1	**174-4035**	1	TUBE AS	
I	13	1	**177-7094**	1	HOSE AS	
	14	1	**195-0355**	1	TUBE AS	
	15	1	**195-0356**	1	TUBE AS	
	16	1	**195-0357**	1	TUBE AS	
	17	1	**195-0358**	1	TUBE AS	
I	18	1	**197-8444**	1	HOSE AS	
	19	1	*148-8327*	1	CONNECTOR GP	
		1	**3D-2824**	1	SEAL-O-RING	
		1	**6V-8637**	1	CONNECTOR-SEAL	
		1	**6V-9746**	1	SEAL-O-RING	
	20	1	*148-8336*	2	CONNECTOR GP	
					(EACH INCLUDES)	
		1	**3J-1907**	1	SEAL-O-RING	
		1	**6V-8397**	1	SEAL-O-RING	
		1	**6V-8636**	1	CONNECTOR	
	21	1	*148-8345*	6	CONNECTOR GP	
					(EACH INCLUDES)	
		1	**2M-9780**	1	SEAL-O-RING	
		1	**6V-8398**	1	SEAL-O-RING	
		1	**6V-8638**	1	CONNECTOR-SEAL	
	22	1	*148-8347*	1	ELBOW GP	
		1	**3D-2824**	1	SEAL-O-RING	
		1	**6V-9007**	1	ELBOW	
		1	**6V-9746**	1	SEAL-O-RING	
	23	1	**6V-0826**	4	GROMMET	
	24	1	**6V-8398**	10	SEAL-O-RING	
	25	1	**8T-1889**	4	CLIP (SLOT)	
	26	1	**8T-1890**	4	CLIP (TAB)	
	27	1	**8T-4121**	8	WASHER-HARD (11X21X2.5MM THK)	
M	28	1	**8T-4137**	8	BOLT (M10X1.5X20MM)	
	29	1	**9R-9289**	8	CLIP (SLOT)	
	30	1	**9R-9290**	4	CLIP (TAB)	

I-SEE HOSE FABRICATION GUIDE
M-METRIC PART

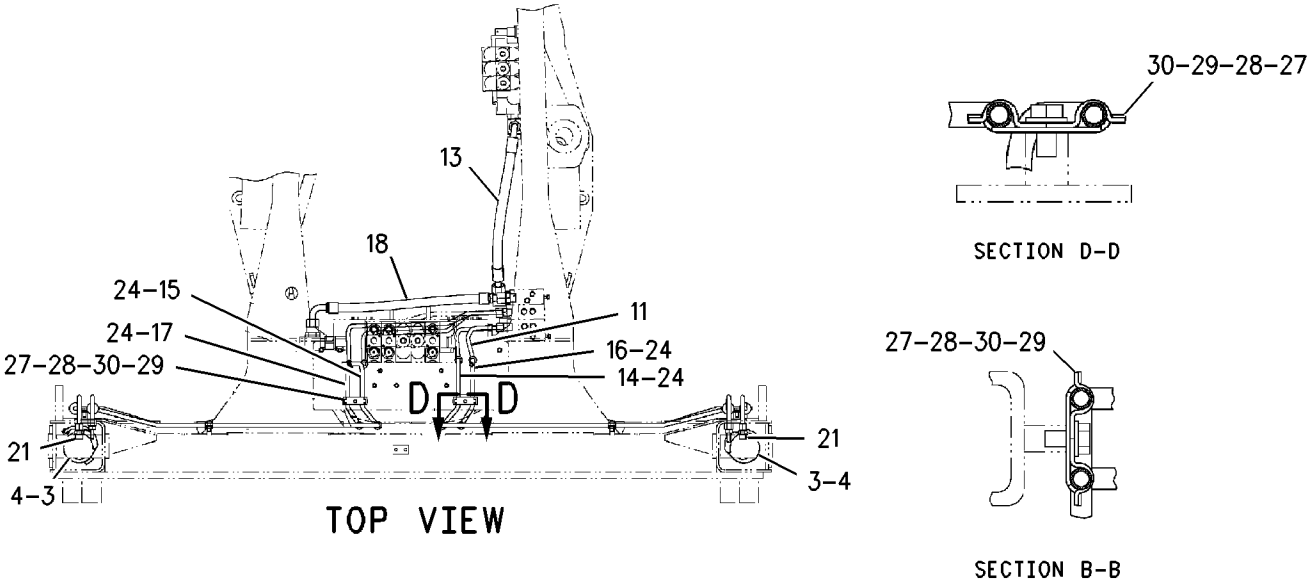

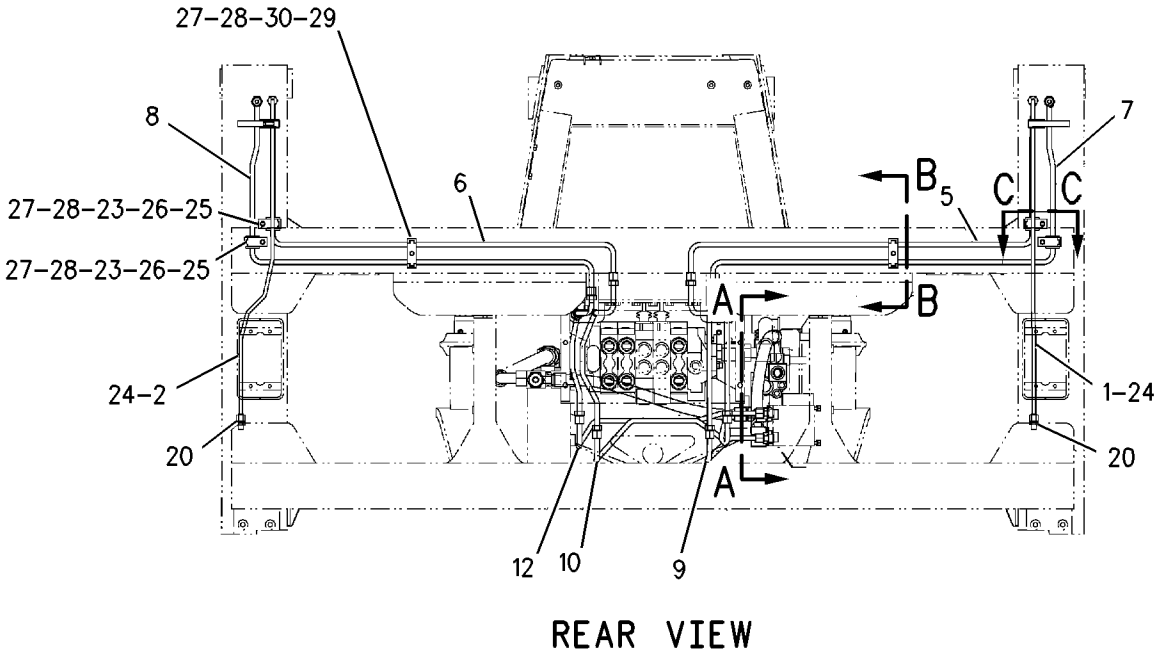

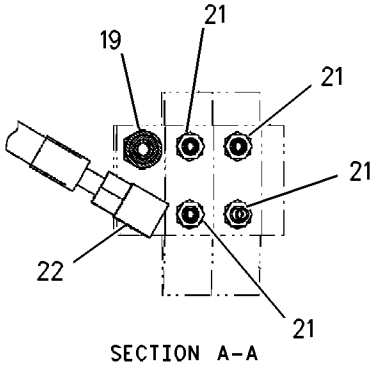

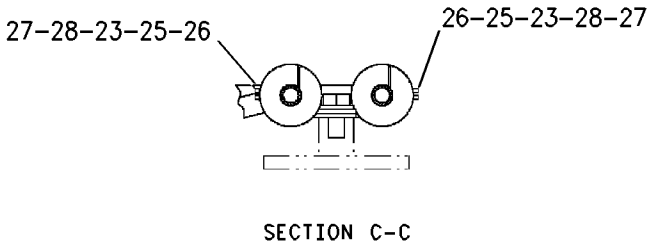

GRAPHIC #1 **<END>** g00877273

HYDRAULIC SYSTEM

185-9751 LINES GP-STABILIZER

S/N: DSX1-UP

PART OF 237-9298 HYDRAULIC AR

SMCS-5057, 5468 **i01987994**

NOTE	REF NO	GRAPHIC REF	PART NUMBER	QTY	PART NAME 1 2 3 4 5 6 (PRODUCT LEVEL)	SEE PAGE
	1	1	**8Y-8674**	1	TUBE AS	
	2	1	**8Y-8675**	1	TUBE AS	
	3	1	**9M-6738**	2	CLAMP-HOSE	
	4	1	**9R-2004**	2	BLOCK	
I	5	1	**177-7094**	1	HOSE AS	
	6	1	**185-2173**	1	TUBE AS	
	7	1	**185-2175**	1	TUBE AS	
	8	1	**185-2176**	1	TUBE AS	
	9	1	**185-2183**	1	TUBE AS	
	10	1	**195-0355**	1	TUBE AS	
	11	1	**195-0356**	1	TUBE AS	
	12	1	**195-0357**	1	TUBE AS	
	13	1	**195-0358**	1	TUBE AS	
I	14	1	**197-8444**	1	HOSE AS	
C	15	1	**234-1532**	1	TUBE AS	
C	16	1	**234-1533**	1	TUBE AS	
C	17	1	**234-1534**	1	TUBE AS	
C	18	1	**234-1535**	1	TUBE AS	
	19	1	*148-8327*	1	CONNECTOR AS	
		1	**3D-2824**	1	SEAL-O-RING	
		1	**6V-8637**	1	CONNECTOR	
		1	**6V-9746**	1	SEAL-O-RING	
	20	1	*148-8336*	2	CONNECTOR AS	
					(EACH INCLUDES)	
		1	**3J-1907**	1	SEAL-O-RING	
		1	**6V-8397**	1	SEAL-O-RING	
		1	**6V-8636**	1	CONNECTOR	
	21	1	*148-8345*	6	CONNECTOR GP	
					(EACH INCLUDES)	
		1	**2M-9780**	1	SEAL-O-RING	
		1	**6V-8398**	1	SEAL-O-RING	
		1	**6V-8638**	1	CONNECTOR	
	22	1	*148-8347*	1	ELBOW GP	
		1	**3D-2824**	1	SEAL-O-RING	
		1	**6V-9007**	1	ELBOW	
		1	**6V-9746**	1	SEAL-O-RING	
	23	1	**6V-0826**	4	GROMMET	
	24	1	**6V-8398**	10	SEAL-O-RING	
	25	1	**8T-1889**	4	CLIP (SLOT)	
	26	1	**8T-1890**	4	CLIP (TAB)	
	27	1	**8T-4121**	8	WASHER-HARD (11X21X2.5MM THK)	
M	28	1	**8T-4137**	8	BOLT (M10X1.5X20MM)	
	29	1	**9R-9289**	8	CLIP (SLOT)	
	30	1	**9R-9290**	4	CLIP (TAB)	

C-CHANGE FROM PREVIOUS TYPE
I-REFER TO HYDRAULIC INFORMATION SYSTEM
M-METRIC PART

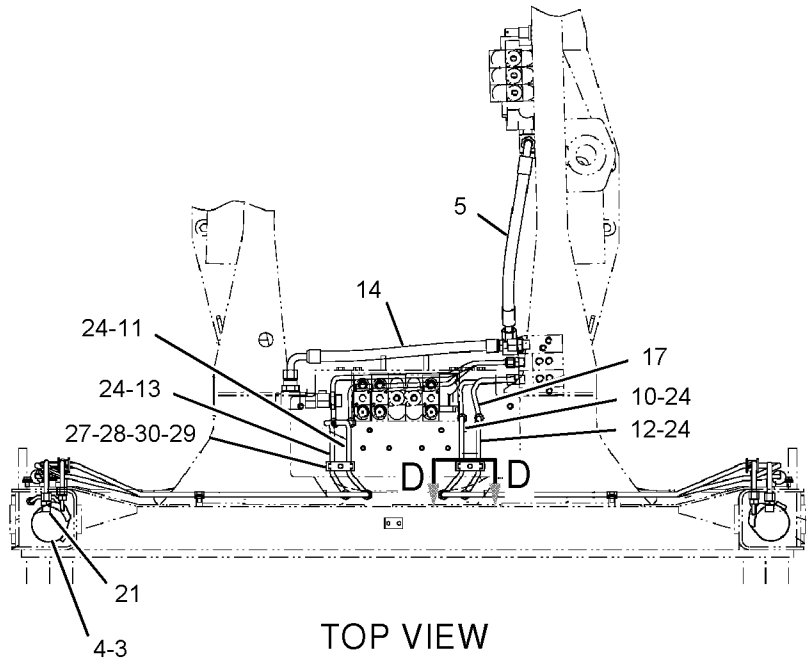

TOP VIEW

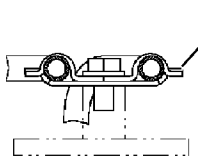

SECTION D-D

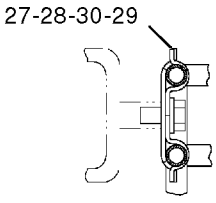

SECTION B-B

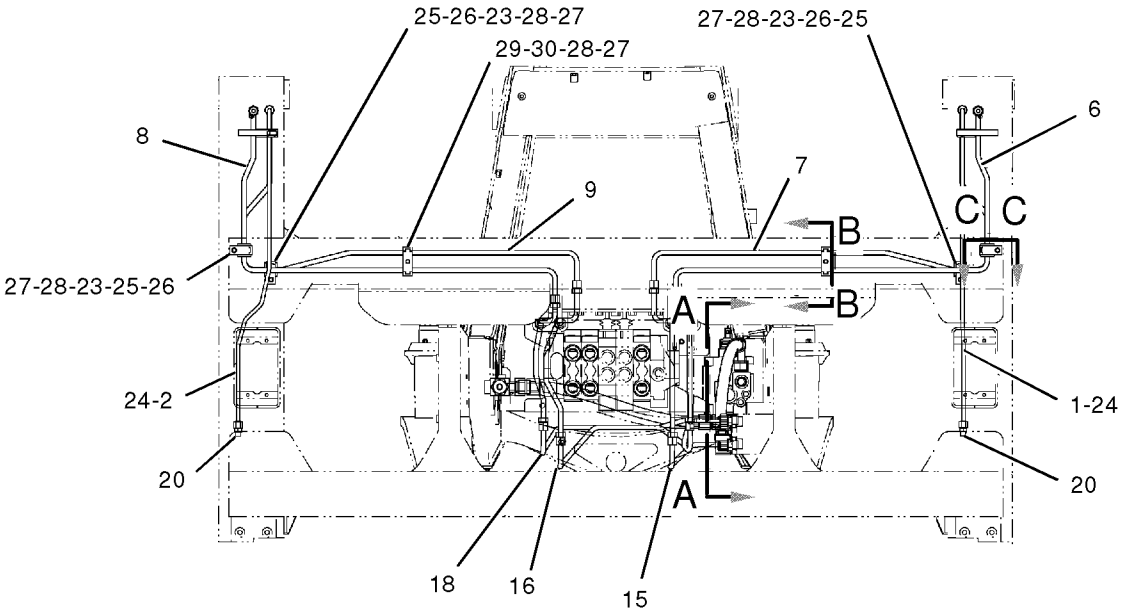

REAR VIEW

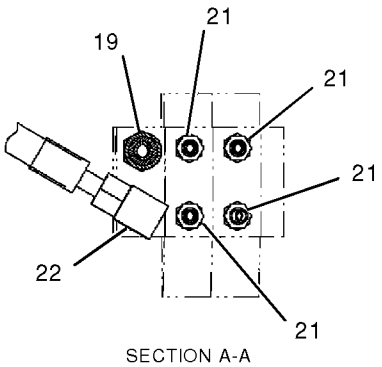

SECTION A-A

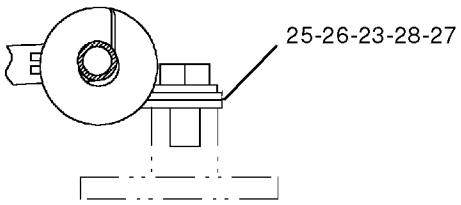

SECTION C-C

GRAPHIC #1 **<END>** g01029868

183-8544 LINES GP-STICK

S/N: BXC1-UP; DSX1-UP

PART OF 240-8490, 240-8492, 240-8504, 240-8505, 240-8689, 240-8691, 240-8699, 240-8701 BACKHOE AR-EXTENDABLE STICK, 240-8683, 240-8685, 240-8687, 240-8693, 240-8695, 240-8697 BACKHOE AR-STANDARD STICK

AN ATTACHMENT

SMCS-5057, 5458 **i01943283**

NOTE	REF NO	GRAPHIC REF	PART NUMBER	QTY	PART NAME 1 2 3 4 5 6 (PRODUCT LEVEL)	SEE PAGE
	1	1	**5P-0599**	1	CLAMP	
I	2	1	**9R-9210**	1	HOSE AS	
I	3	1	**9R-9211**	1	HOSE AS	
	4	1	**9R-5948**	1	BLOCK	
	5	1	*148-8341*	1	CONNECTOR GP	
		1	**3D-2824**	1	SEAL-O-RING	
		1	**6V-8713**	1	CONNECTOR	
		1	**7J-9108**	1	SEAL-O-RING	

I-SEE HOSE FABRICATION GUIDE

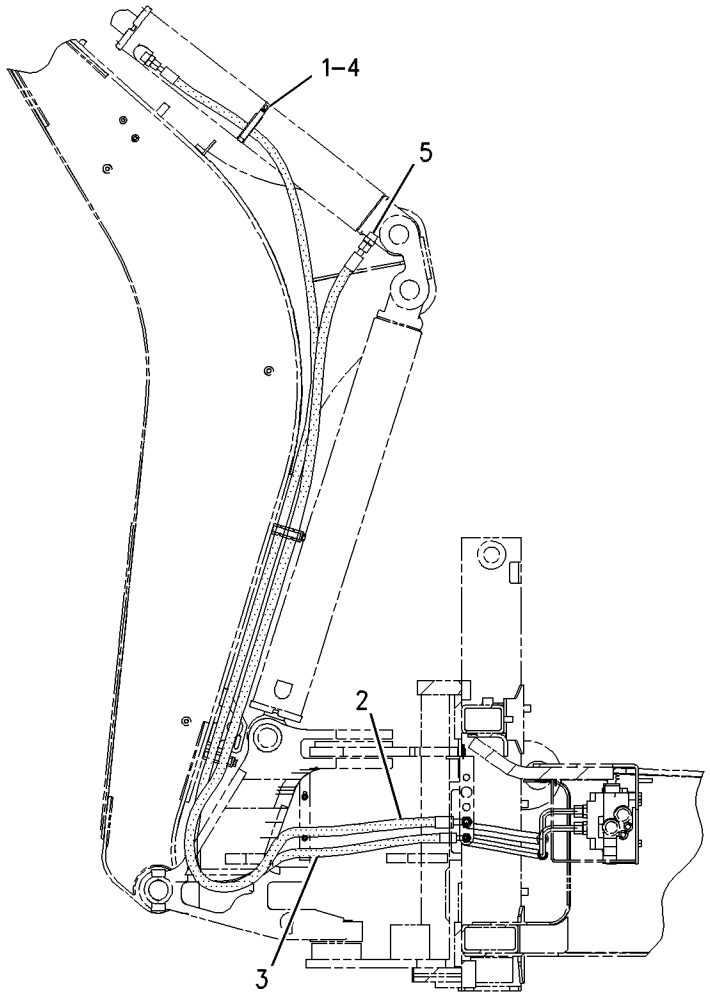

GRAPHIC #1 **<END>** g00842643

HYDRAULIC SYSTEM

183-8547 LINES GP-STICK—EXTENSION

S/N: BXC1-UP; DSX1-UP

PART OF 240-8492, 240-8493, 240-8505, 240-8507, 240-8691, 240-8692, 240-8701, 240-8702 BACKHOE AR-EXTENDABLE STICK

AN ATTACHMENT

SMCS-5057, 5458 **i01943280**

NOTE	REF NO	GRAPHIC REF	PART NUMBER	QTY	PART NAME 1 2 3 4 5 6 (PRODUCT LEVEL)	SEE PAGE
	1	1	**5P-0599**	1	CLAMP	
	2	1	**9R-5948**	1	BLOCK	
I	3	1	**9R-9218**	1	HOSE AS	
I	4	1	**9R-9221**	1	HOSE AS	
	5	2	**9R-9253**	1	PLATE	
I	6	1	**9R-9926**	1	HOSE AS	
	7	1,2	**101-0862**	2	PLATE-WARNING (E-STICK)	
	8	2	**106-0844**	1	TUBE AS	
	9	1	**162-2356**	2	TUBE AS	
I	10	1	**167-3896**	2	HOSE AS	
I	11	2	**173-9718**	1	HOSE AS	
I	12	1	**173-9719**	1	HOSE AS	
	13	2	**187-4333**	1	TUBE AS	
	14	2	**187-4344**	1	TUBE AS	
	15	1	*148-8347*	1	ELBOW GP	
		1	**3D-2824**	1	SEAL-O-RING	
		1	**6V-9007**	1	ELBOW	
		1	**6V-9746**	1	SEAL-O-RING	
	16	2	**2P-1293**	1	LOCKNUT	
	17	1,2	**5P-7464**	5	CLIP (SLOT)	
	18	1,2	**5P-7465**	5	CLIP (TAB)	
	19	2	**5P-7466**	2	CLIP (SLOT)	
	20	2	**5P-7467**	2	CLIP (TAB)	
	21	2	**5P-7468**	1	CLIP (SLOT)	
	22	2	**5P-7469**	1	CLIP (TAB)	
	23	2	**5P-8112**	2	GROMMET	
	24	1,2	**6V-1249**	5	GROMMET	
	25	1,2	**6V-8398**	6	SEAL-O-RING	
	26	2	**6V-9169**	1	NUT-BULKHEAD (13/16-16 THD)	
	27	2	**6V-9746**	2	SEAL-O-RING	
	28	1	**7J-9108**	2	SEAL-O-RING	
	29	2	**8T-1889**	1	CLIP (SLOT)	
	30	2	**8T-1890**	1	CLIP (TAB)	
	31	1,2	**8T-4121**	7	WASHER-HARD (11X21X2.5MM THK)	
M	32	1,2	**8T-4136**	3	BOLT (M10X1.5X25MM)	
M	33	1,2	**8T-4139**	4	BOLT (M12X1.75X30MM)	
M	34	1,2	**8T-4184**	2	BOLT (M12X1.75X45MM)	
M	35	1,2	**8T-4195**	4	BOLT (M10X1.5X30MM)	
	36	1,2	**8T-4223**	6	WASHER-HARD (13.5X25.5X3MM THK)	
	37	2	**8T-7087**	1	GROMMET	
	38	1,2	**9R-1004**	4	CLIP (TAB)	
	39	1,2	**9R-1005**	4	CLIP (SLOT)	
	40	2	**233-9454**	1	SET-LOCKWASHER	

I-SEE HOSE FABRICATION GUIDE
M-METRIC PART

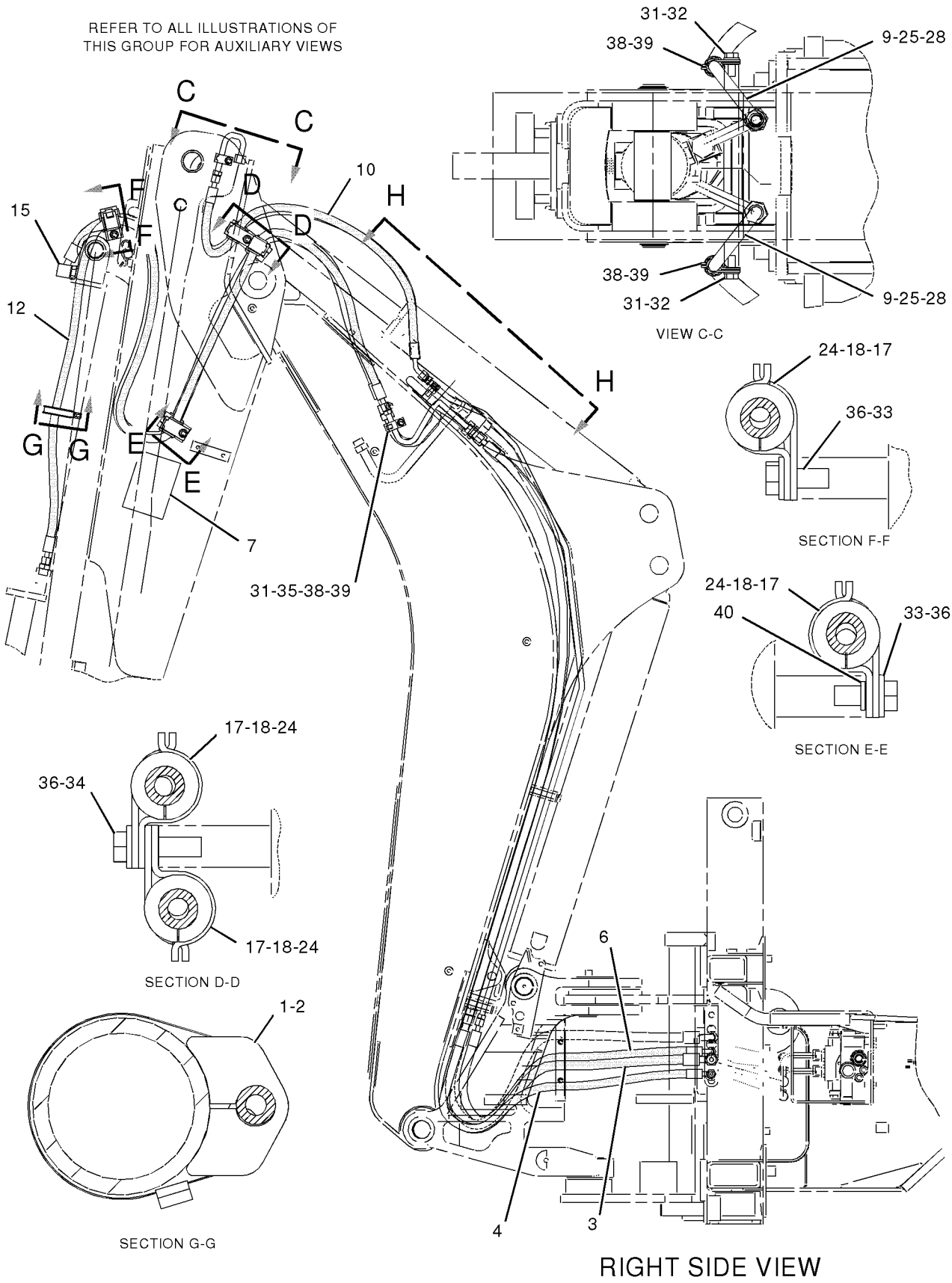

GRAPHIC #1

g01022274

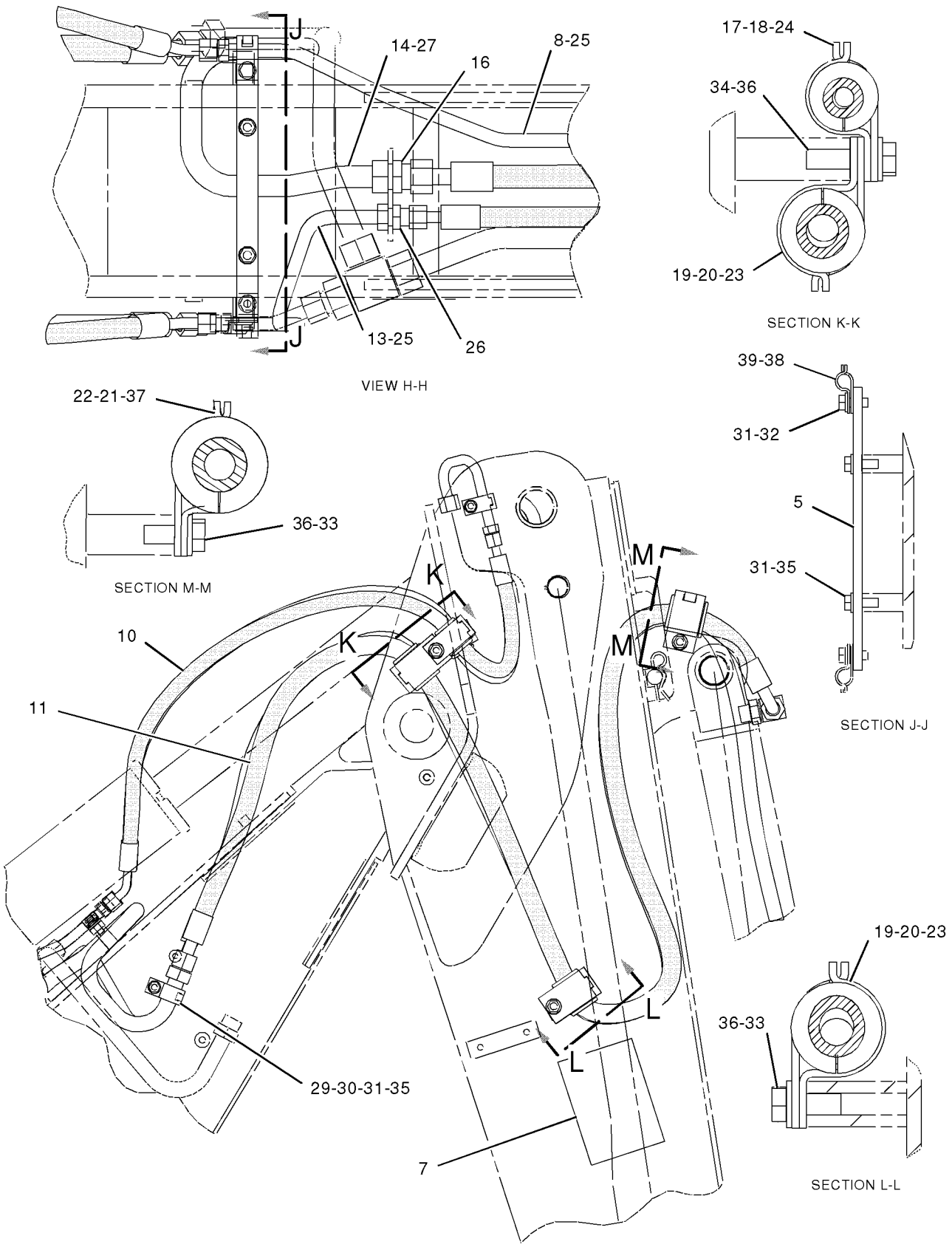

GRAPHIC #2

<END>

g01021039

HYDRAULIC SYSTEM

183-8548 LINES GP-STICK–EXTENSION

S/N: BXC1-UP; DSX1-UP

PART OF 240-8490, 240-8491, 240-8504, 240-8506, 240-8689, 240-8690, 240-8699, 240-8700 BACKHOE AR-EXTENDABLE STICK

AN ATTACHMENT

SMCS-5057, 5458 **i02000912**

NOTE	REF NO	GRAPHIC REF	PART NUMBER	QTY	PART NAME 1 2 3 4 5 6 (PRODUCT LEVEL)	SEE PAGE
	1	1	**5P-0599**	1	CLAMP	
	2	1	**9R-5948**	1	BLOCK	
I	3	1	**9R-9218**	1	HOSE AS	
I	4	1	**9R-9221**	1	HOSE AS	
	5	2	**9R-9253**	1	PLATE	
I	6	1	**9R-9926**	2	HOSE AS	
	7	1	**101-0862**	2	PLATE-WARNING (E-STICK)	
	8	2	**106-0844**	1	TUBE AS	
I	9	1	**107-6717**	1	HOSE AS	
	10	1	**107-6718**	1	TUBE AS	
	11	2	**107-6719**	1	TUBE AS	
	12	1,2	**162-2356**	2	TUBE AS	
I	13	1,2	**167-3896**	2	HOSE AS	
CI	14	2	**168-8497**	1	HOSE AS	
CI	15	1	**168-8644**	1	HOSE AS	
	16	2	**187-4333**	1	TUBE AS	
	17	2	**187-4344**	1	TUBE AS	
	18	1	*148-8347*	1	ELBOW GP	
		1	**3D-2824**	1	SEAL-O-RING	
		1	**6V-9007**	1	ELBOW	
		1	**6V-9746**	1	SEAL-O-RING	
	19	2	*150-3057*	1	TEE AS	
		2	**5K-9090**	3	SEAL-O-RING	
		2	**6V-8792**	1	TEE-FACE SEAL	
	20	2	*150-3071*	1	REDUCER AS	
		2	**6V-8945**	1	REDUCER-O-RING	
		2	**7J-9108**	1	SEAL-O-RING	
	21	2	**2P-1293**	1	LOCKNUT (1 3/16-12 THD)	
	22	1,2	**5P-7464**	5	CLIP (SLOT)	
	23	1,2	**5P-7465**	5	CLIP (TAB)	
	24	2	**5P-7466**	2	CLIP (SLOT)	
	25	2	**5P-7467**	2	CLIP (TAB)	
	26	2	**5P-7468**	1	CLIP (SLOT)	
	27	2	**5P-7469**	1	CLIP (TAB)	
	28	2	**5P-8112**	2	GROMMET	
	29	1,2	**6V-1249**	5	GROMMET	
	30	1,2	**6V-8398**	7	SEAL-O-RING	
	31	2	**6V-9169**	1	NUT-BULKHEAD (13/16-16 THD)	
	32	1,2	**6V-9746**	3	SEAL-O-RING	
	33	1,2	**6V-9833**	2	CAP AS	
	34	1,2	**7J-9108**	2	SEAL-O-RING	
	35	2	**8T-1889**	1	CLIP (SLOT)	
	36	2	**8T-1890**	1	CLIP (TAB)	
C	37	1,2	**8T-4121**	8	WASHER-HARD (11X21X2.5MM THK)	
CM	38	1,2	**8T-4136**	4	BOLT (M10X1.5X25MM)	
M	39	1,2	**8T-4139**	5	BOLT (M12X1.75X30MM)	
M	40	1	**8T-4184**	2	BOLT (M12X1.75X45MM)	
M	41	1,2	**8T-4195**	4	BOLT (M10X1.5X30MM)	
	42	1,2	**8T-4223**	8	WASHER-HARD (13.5X25.5X3MM THK)	
	43	2	**8T-7087**	1	GROMMET	
	44	1,2	**9R-1004**	5	CLIP (TAB)	
	45	1,2	**9R-1005**	5	CLIP (SLOT)	
	46	2	**9X-6579**	1	NUT-ORIFICE (7/16-12 THD)	

C-CHANGE FROM PREVIOUS TYPE
I-REFER TO HYDRAULIC INFORMATION SYSTEM
M-METRIC PART

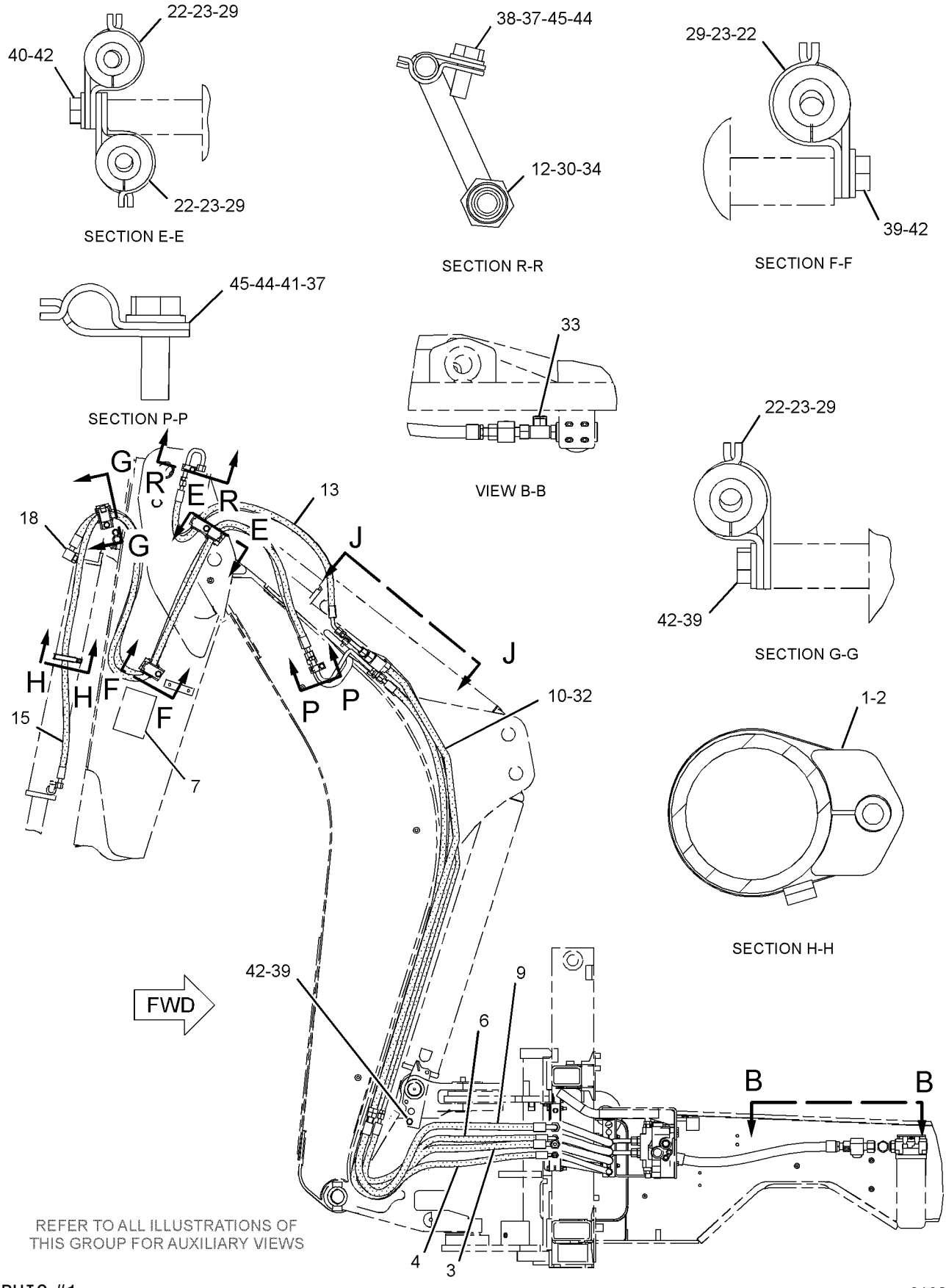

GRAPHIC #1 g01037166

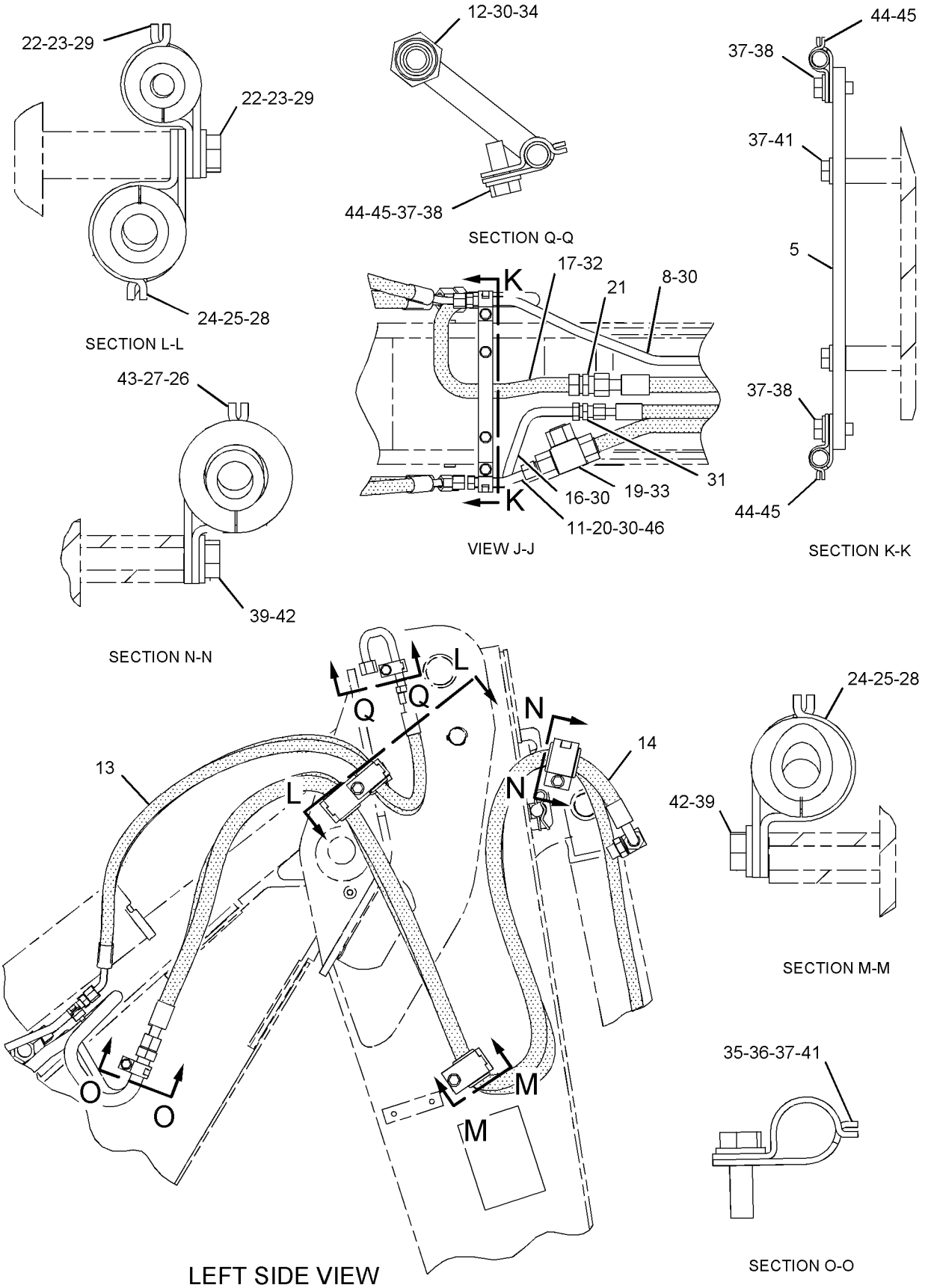

GRAPHIC #2

<END>

g01037167

HYDRAULIC SYSTEM

183-8505 LINES GP-SWING–STANDARD FRAME

S/N: BXC1-UP; DSX1-UP
PART OF 202-6122 HYDRAULIC AR
AN ATTACHMENT

SMCS-5057, 5105 **i01657696**

NOTE	REF NO	GRAPHIC REF	PART NUMBER	QTY	PART NAME 1 2 3 4 5 6 (PRODUCT LEVEL)	SEE PAGE
	1	1	**5P-0599**	2	CLAMP	
	2	1	**9R-2053**	2	BLOCK	
I	3	1	**107-6699**	2	HOSE AS	
	4	1	**109-1583**	1	TUBE AS	
	5	1	**176-0585**	1	TUBE AS	
	6	1	**183-8496**	1	HOSE AS	
	7	1	**183-8498**	1	HOSE AS	
I	8	1	**196-8438**	1	HOSE AS	
I	9	1	**196-8439**	1	HOSE AS	
	10	1	*148-8342*	2	CONNECTOR GP	
					(EACH INCLUDES)	
		1	**3K-0360**	1	SEAL-O-RING	
		1	**6V-8632**	1	CONNECTOR	
		1	**7J-9108**	1	SEAL-O-RING	
	11	1	*148-8354*	2	ELBOW GP	
					(EACH INCLUDES)	
		1	**3K-0360**	1	SEAL-O-RING	
		1	**6V-8398**	1	SEAL-O-RING	
		1	**6V-9002**	1	ELBOW	
	12	1	*148-8364*	2	ELBOW GP	
					(EACH INCLUDES)	
		1	**3K-0360**	1	SEAL-O-RING	
		1	**6V-8398**	1	SEAL-O-RING	
		1	**6V-8625**	1	ELBOW	
	13	1	*148-8411*	2	PLUG GP	
					(EACH INCLUDES)	
		1	**3K-0360**	1	SEAL-O-RING	
		1	**9S-4185**	1	PLUG	
	14	1	*148-8454*	2	TEE GP	
					(EACH INCLUDES)	
		1	**6V-8398**	3	SEAL-O-RING	
		1	**6V-8789**	1	TEE	
	15	1	**6V-8398**	2	SEAL-O-RING	
	16	1	**8T-1885**	4	CLIP (SLOT)	
	17	1	**8T-1886**	4	CLIP (TAB)	
	18	1	**8T-4121**	4	WASHER-HARD (11X21X2.5MM THK)	
M	19	1	**8T-4136**	2	BOLT (M10X1.5X25MM)	
M	20	1	**9X-2040**	2	SCREW-TRUSS HEAD (M10X1.5X25MM)	

I-SEE HOSE FABRICATION GUIDE
M-METRIC PART

183-8505 **LINES GP-SWING** *(contd.)* **i01657696**

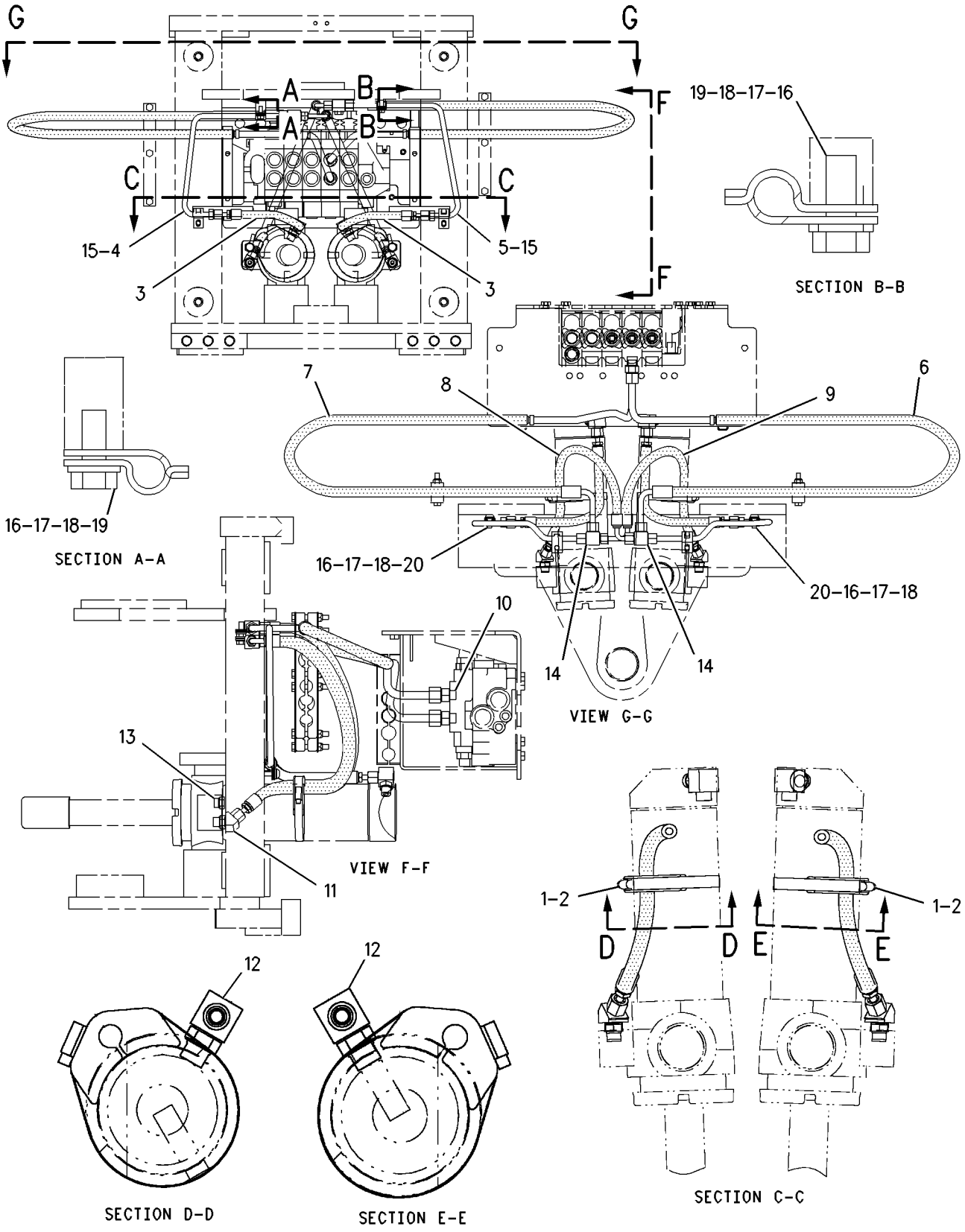

GRAPHIC #1 **<END>** g00731138

HYDRAULIC SYSTEM

183-8522 LINES GP-SWING—NARROW FRAME

S/N: BXC1-UP; DSX1-UP
PART OF 202-6124 HYDRAULIC AR
AN ATTACHMENT

SMCS-5057, 5105 **i01581916**

NOTE	REF NO	GRAPHIC REF	PART NUMBER	QTY	PART NAME 1 2 3 4 5 6 (PRODUCT LEVEL)	SEE PAGE
	1	1	**5P-0599**	2	CLAMP	
	2	1	**9R-2053**	2	BLOCK	
I	3	1	**107-6699**	2	HOSE AS	
	4	1	**109-1583**	1	TUBE AS	
	5	1	**176-0585**	1	TUBE AS	
	6	1	**183-8516**	1	HOSE AS	
	7	1	**183-8517**	1	HOSE AS	
I	8	1	**196-8438**	1	HOSE AS	
I	9	1	**196-8439**	1	HOSE AS	
	10	1	*148-8342*	2	CONNECTOR GP	
					(EACH INCLUDES)	
		1	**3K-0360**	1	SEAL-O-RING	
		1	**6V-8632**	1	CONNECTOR	
		1	**7J-9108**	1	SEAL-O-RING	
	11	1	*148-8354*	2	ELBOW GP	
					(EACH INCLUDES)	
		1	**3K-0360**	1	SEAL-O-RING	
		1	**6V-8398**	1	SEAL-O-RING	
		1	**6V-9002**	1	ELBOW	
	12	1	*148-8364*	2	ELBOW GP	
					(EACH INCLUDES)	
		1	**3K-0360**	1	SEAL-O-RING	
		1	**6V-8398**	1	SEAL-O-RING	
		1	**6V-8625**	1	ELBOW	
	13	1	*148-8411*	2	PLUG AS	
					(EACH INCLUDES)	
		1	**3K-0360**	1	SEAL-O-RING	
		1	**9S-4185**	1	PLUG-O-RING	
	14	1	*148-8454*	2	TEE GP	
					(EACH INCLUDES)	
		1	**6V-8398**	3	SEAL-O-RING	
		1	**6V-8789**	1	TEE	
	15	1	**6V-8398**	2	SEAL-O-RING	
	16	1	**8T-1885**	4	CLIP (SLOT)	
	17	1	**8T-1886**	4	CLIP (TAB)	
	18	1	**8T-4121**	4	WASHER-HARD (11X21X2.5MM THK)	
M	19	1	**8T-4136**	2	BOLT (M10X1.5X25MM)	
M	20	1	**9X-2040**	2	SCREW-TRUSS HEAD (M10X1.5X25MM)	

I-SEE HOSE FABRICATION GUIDE
M-METRIC PART

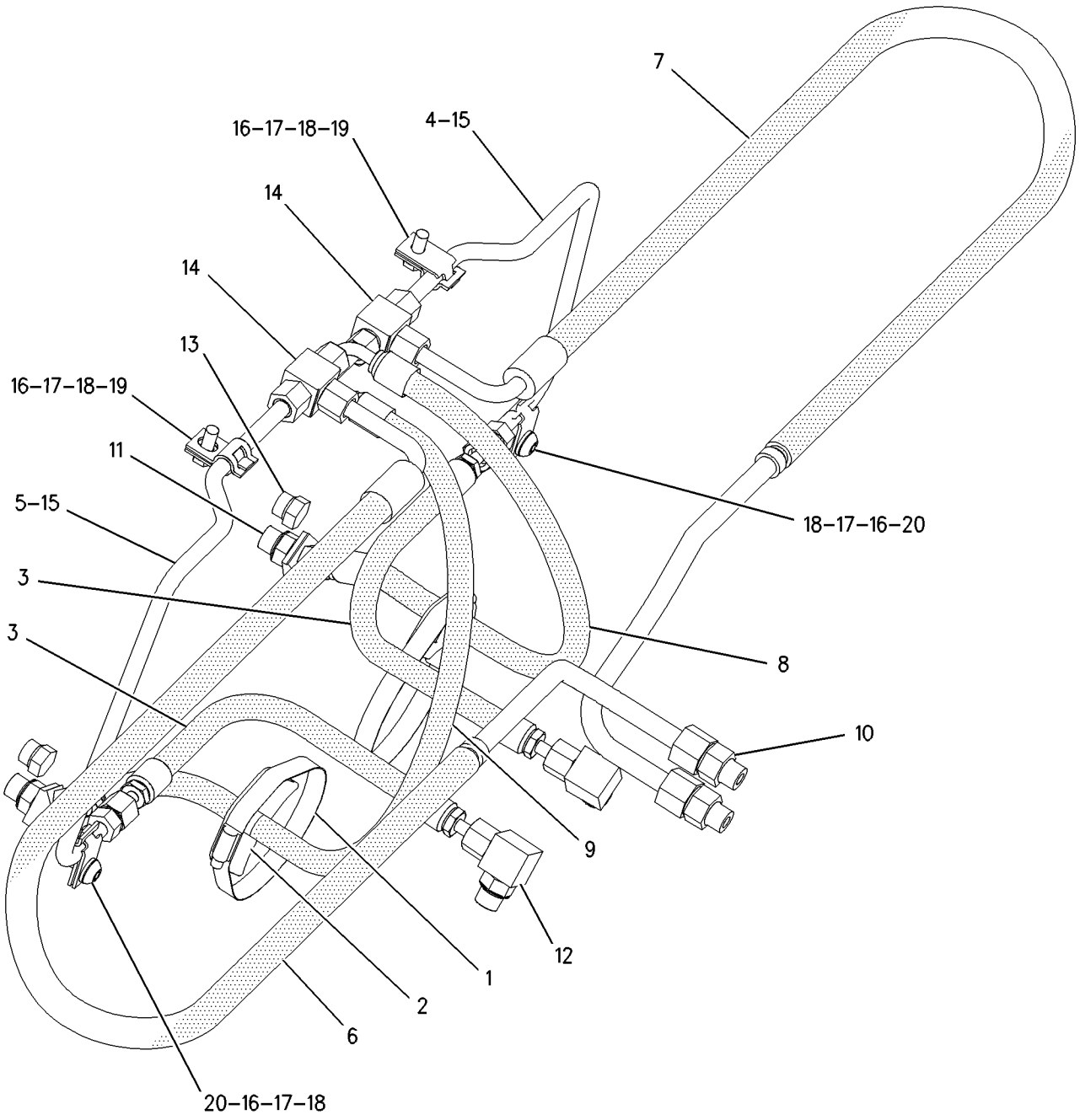

GRAPHIC #1 **<END>** g00820882

HYDRAULIC SYSTEM

202-6120 LINES GP-SWING—CUSHION—STANDARD FRAME

S/N: BXC1-UP; DSX1-UP
PART OF 202-6123 HYDRAULIC AR
AN ATTACHMENT

SMCS-5057, 5105 **i01807097**

NOTE	REF NO	GRAPHIC REF	PART NUMBER	QTY	PART NAME 1 2 3 4 5 6 (PRODUCT LEVEL)	SEE PAGE
	1	1	**5P-0599**	2	CLAMP	
	2	1	**9R-2053**	2	BLOCK	
I	3	1	**107-6699**	2	HOSE AS	
	4	1	**109-1583**	1	TUBE AS	
	5	1	**176-0585**	1	TUBE AS	
	6	1	**183-8496**	1	HOSE AS	
	7	1	**183-8498**	1	HOSE AS	
I	8	1	**196-8438**	1	HOSE AS	
I	9	1	**196-8439**	1	HOSE AS	
	10	1	**206-3685**	1	VALVE GP-CROSSOVER RELIEF	
I	11	1	**214-9348**	1	HOSE AS	
I	12	1	**214-9349**	1	HOSE AS	
	13	1	**220-0921**	1	BRACKET	
	14	1	**226-5634**	2	CONNECTOR AS	
					(EACH INCLUDES)	
		1	**3J-1907**	1	SEAL-O-RING	
		1	**4J-5477**	1	SEAL-O-RING	
		1	**167-0566**	1	CARTRIDGE	
		1	**226-5633**	1	CONNECTOR	
	15	1	*148-8342*	2	CONNECTOR GP	
					(EACH INCLUDES)	
		1	**3K-0360**	1	SEAL-O-RING	
		1	**6V-8632**	1	CONNECTOR	
		1	**7J-9108**	1	SEAL-O-RING	
	16	1	*148-8351*	2	ELBOW GP	
					(EACH INCLUDES)	
		1	**4J-5477**	1	SEAL-O-RING	
		1	**6V-9849**	1	ELBOW (SWIVEL)	
	17	1	**148-8354**	2	ELBOW GP	
					(EACH INCLUDES)	
		1	**3K-0360**	1	SEAL-O-RING	
		1	**6V-8398**	1	SEAL-O-RING	
		1	**6V-9002**	1	ELBOW	
	18	1	*148-8364*	2	ELBOW AS	
					(EACH INCLUDES)	
		1	**3K-0360**	1	SEAL-O-RING	
		1	**6V-8398**	1	SEAL-O-RING	
		1	**6V-8625**	1	ELBOW	
	19	1	*148-8411*	2	PLUG AS	
					(EACH INCLUDES)	
		1	**3K-0360**	1	SEAL-O-RING	
		1	**9S-4185**	1	PLUG	
	20	1	*217-2704*	2	CROSS AS	
					(EACH INCLUDES)	
		1	**4J-5477**	1	SEAL-O-RING	
		1	**6V-8398**	3	SEAL-O-RING	
		1	**216-7145**	1	CROSS	
M	21	1	**5C-7261**	2	NUT (M8X1.25 THD)	
	22	1	**6V-8398**	2	SEAL-O-RING	
	23	1	**8T-1885**	4	CLIP (SLOT)	
	24	1	**8T-1886**	4	CLIP (TAB)	
	25	1	**8T-4121**	6	WASHER-HARD (11X21X2.5MM THK)	
M	26	1	**8T-4136**	2	BOLT (M10X1.5X25MM)	
M	27	1	**8T-4137**	2	BOLT (M10X1.5X20MM)	
	28	1	**8T-4224**	4	WASHER-HARD (8.8X16X2MM THK)	

202-6120 **LINES GP-SWING** *(contd.)* **i01807097**

NOTE	REF NO	GRAPHIC REF	PART NUMBER	QTY	PART NAME 1 2 3 4 5 6 (PRODUCT LEVEL)	SEE PAGE
M	29	1	**8T-6869**	2	BOLT (M8X1.25X60MM)	
M	30	1	**9X-2040**	2	SCREW-TRUSS HEAD (M10X1.5X25MM)	

I-SEE HOSE FABRICATION GUIDE
M-METRIC PART

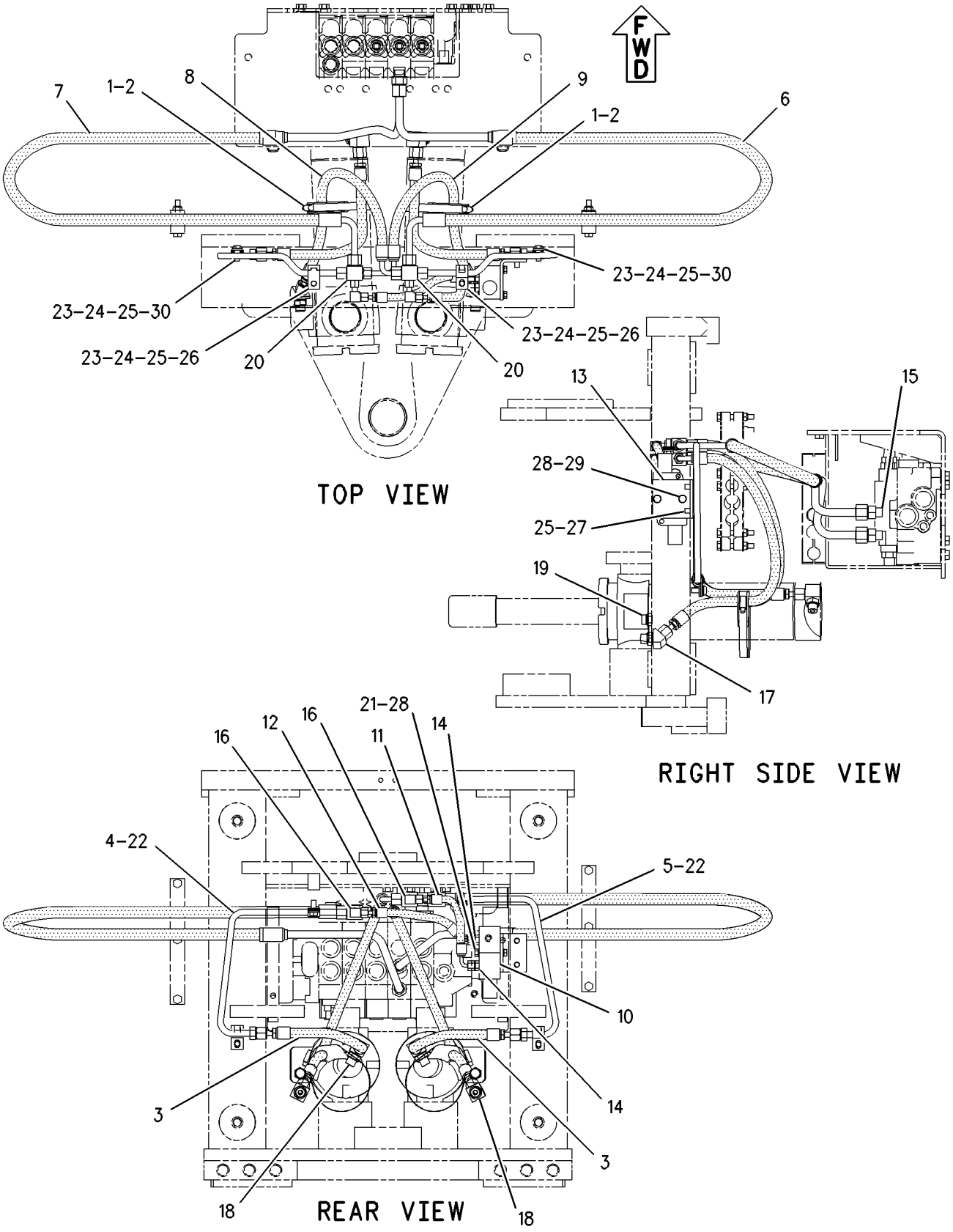

GRAPHIC #1

<END>

g00998672

HYDRAULIC SYSTEM

202-6121 LINES GP-SWING–CUSHION–NARROW FRAME

S/N: BXC1-UP; DSX1-UP
PART OF 202-6125 HYDRAULIC AR
AN ATTACHMENT

SMCS-5057, 5105 **i01807094**

NOTE	REF NO	GRAPHIC REF	PART NUMBER	QTY	PART NAME 1 2 3 4 5 6 (PRODUCT LEVEL)	SEE PAGE
	1	1	**5P-0599**	2	CLAMP	
	2	1	**9R-2053**	2	BLOCK	
I	3	1	**107-6699**	2	HOSE AS	
	4	1	**109-1583**	1	TUBE AS	
	5	1	**176-0585**	1	TUBE AS	
	6	1	**183-8516**	1	HOSE AS	
	7	1	**183-8517**	1	HOSE AS	
I	8	1	**196-8438**	1	HOSE AS	
I	9	1	**196-8439**	1	HOSE AS	
	10	1	**206-3685**	1	VALVE GP-CROSSOVER RELIEF	
I	11	1	**214-9348**	1	HOSE AS	
I	12	1	**214-9349**	1	HOSE AS	
	13	1	**220-0921**	1	BRACKET	
	14	1	**226-5634**	2	CONNECTOR AS	
					(EACH INCLUDES)	
		1	**3J-1907**	1	SEAL-O-RING	
		1	**4J-5477**	1	SEAL-O-RING	
		1	**167-0566**	1	CARTRIDGE	
		1	**226-5633**	1	CONNECTOR	
	15	1	*148-8342*	2	CONNECTOR GP	
					(EACH INCLUDES)	
		1	**3K-0360**	1	SEAL-O-RING	
		1	**6V-8632**	1	CONNECTOR	
		1	**7J-9108**	1	SEAL-O-RING	
	16	1	*148-8351*	2	ELBOW GP	
					(EACH INCLUDES)	
		1	**4J-5477**	1	SEAL-O-RING	
		1	**6V-9849**	1	ELBOW (SWIVEL)	
	17	1	**148-8354**	2	ELBOW GP	
					(EACH INCLUDES)	
		1	**3K-0360**	1	SEAL-O-RING	
		1	**6V-8398**	1	SEAL-O-RING	
		1	**6V-9002**	1	ELBOW	
	18	1	*148-8364*	2	ELBOW AS	
					(EACH INCLUDES)	
		1	**3K-0360**	1	SEAL-O-RING	
		1	**6V-8398**	1	SEAL-O-RING	
		1	**6V-8625**	1	ELBOW	
	19	1	*148-8411*	2	PLUG AS	
					(EACH INCLUDES)	
		1	**3K-0360**	1	SEAL-O-RING	
		1	**9S-4185**	1	PLUG	
	20	1	*217-2704*	2	CROSS AS	
					(EACH INCLUDES)	
		1	**4J-5477**	1	SEAL-O-RING	
		1	**6V-8398**	3	SEAL-O-RING	
		1	**216-7145**	1	CROSS	
M	21	1	**5C-7261**	2	NUT (M8X1.25 THD)	
	22	1	**6V-8398**	2	SEAL-O-RING	
	23	1	**8T-1885**	4	CLIP (SLOT)	
	24	1	**8T-1886**	4	CLIP (TAB)	
	25	1	**8T-4121**	6	WASHER-HARD (11X21X2.5MM THK)	
M	26	1	**8T-4136**	2	BOLT (M10X1.5X25MM)	
M	27	1	**8T-4137**	2	BOLT (M10X1.5X20MM)	
	28	1	**8T-4224**	4	WASHER-HARD (8.8X16X2MM THK)	

202-6121 **LINES GP-SWING** *(contd.)* **i01807094**

NOTE	REF NO	GRAPHIC REF	PART NUMBER	QTY	PART NAME 1 2 3 4 5 6 (PRODUCT LEVEL)	SEE PAGE
M	29	1	**8T-6869**	2	BOLT (M8X1.25X60MM)	
M	30	1	**9X-2040**	2	SCREW-TRUSS HEAD (M10X1.5X25MM)	

I-SEE HOSE FABRICATION GUIDE
M-METRIC PART

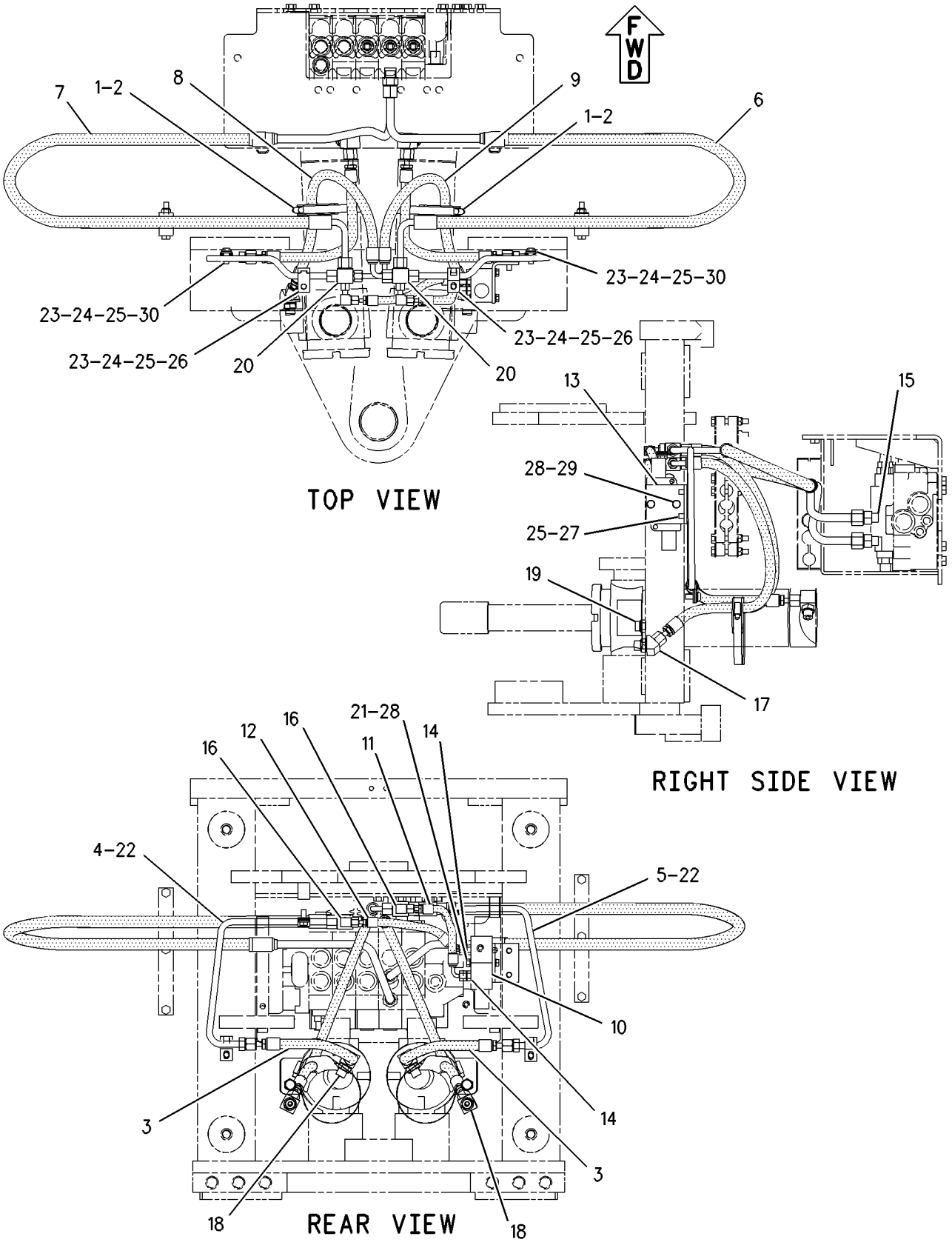

GRAPHIC #1

<END>

g00998692

HYDRAULIC SYSTEM

189-0551 LINES GP-TILT CYLINDER

S/N: BXC1-UP; DSX1-UP
PART OF 185-0060, 185-0062 HYDRAULIC AR
AN ATTACHMENT

SMCS-5057, 5104 **i01697155**

NOTE	REF NO	GRAPHIC REF	PART NUMBER	QTY	PART NAME 1 2 3 4 5 6 (PRODUCT LEVEL)	SEE PAGE
	1	1	**7K-1181**	2	STRAP-CABLE	
	2	1	**8T-6726**	4	CLAMP-HOSE	
	3	1	**9R-5948**	4	BLOCK	
	4	1	**112-5830**	1	TUBE AS	
	5	1	**112-5833**	1	TUBE AS	
I	6	1	**118-4637**	2	HOSE AS	
I	7	1	**118-4638**	2	HOSE AS	
	8	1	**122-4870**	1	BRACKET AS	
	9	1	**122-4871**	1	BRACKET AS	
	10	1	**158-3412**	8	CLIP (SLOT)	
	11	1	**187-4331**	1	TUBE AS	
	12	1	**187-4332**	1	TUBE AS	
	13	1	**215-4016**	1	PLATE AS	
	14	1	**216-0582**	1	PLATE AS	
	15	1	*148-8341*	2	CONNECTOR GP	
					(EACH INCLUDES)	
		1	**3D-2824**	1	SEAL-O-RING	
		1	**6V-8713**	1	CONNECTOR	
		1	**7J-9108**	1	SEAL-O-RING	
	16	1	*148-8364*	2	ELBOW GP	
					(EACH INCLUDES)	
		1	**3K-0360**	1	SEAL-O-RING	
		1	**6V-8398**	1	SEAL-O-RING	
		1	**6V-8625**	1	ELBOW	
	17	1	*148-8446*	2	TEE AS-SWIVEL	
					(EACH INCLUDES)	
		1	**6V-9838**	1	TEE-SWIVEL	
		1	**7J-9108**	2	SEAL-O-RING	
	18	1	**151-4841**	2	BLOCK	
	19	1	**6V-8398**	4	SEAL-O-RING	
	20	1	**8T-4121**	10	WASHER-HARD (11X21X2.5MM THK)	
M	21	1	**8T-4136**	4	BOLT (M10X1.5X25MM)	
M	22	1	**8T-4195**	2	BOLT (M10X1.5X30MM)	
M	23	1	**8T-4196**	4	BOLT (M10X1.5X35MM)	
	24	1	**9R-7803**	4	CLIP	

I-SEE HOSE FABRICATION GUIDE
M-METRIC PART

189-0551 **LINES GP-TILT CYLINDER** ***(contd.)*** **i01697155**

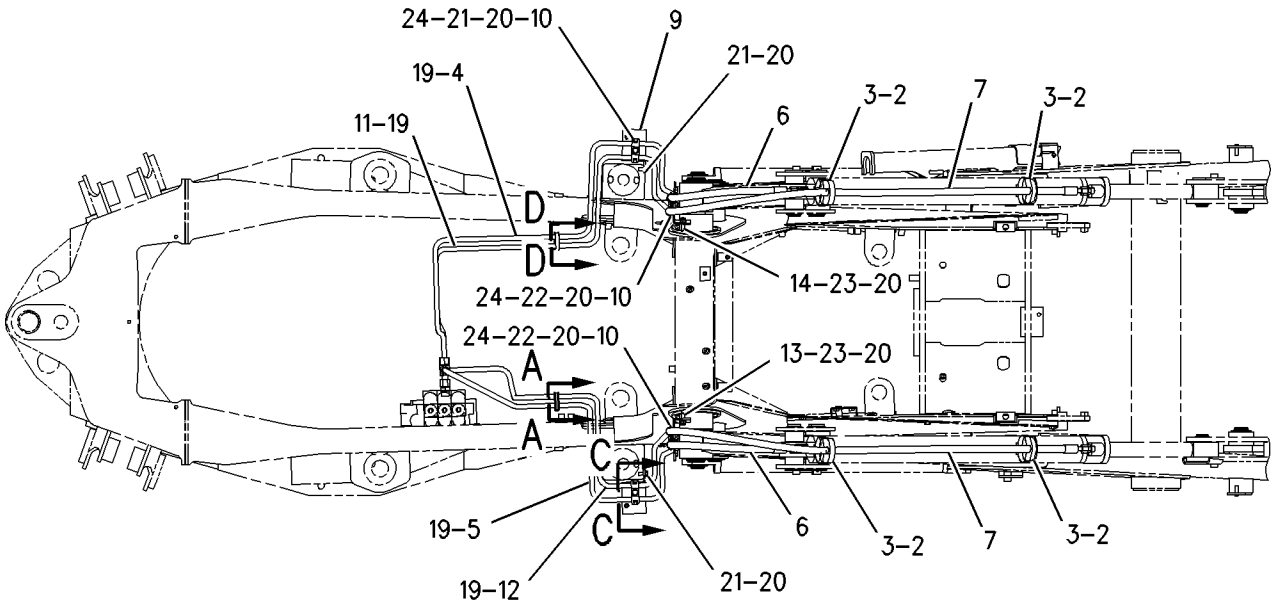

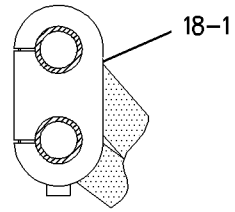

SECTION A-A

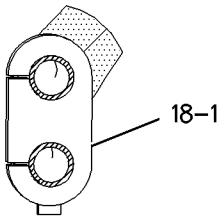

SECTION D-D

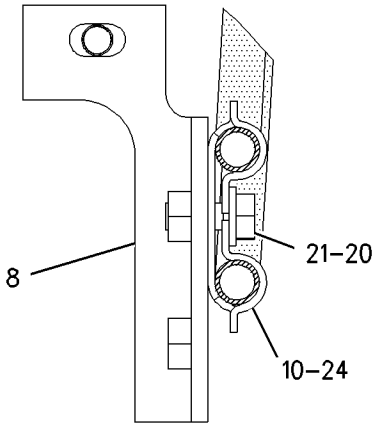

SECTION C-C

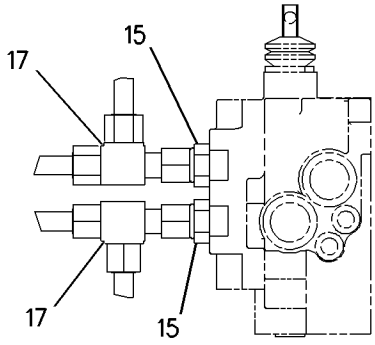

SECTION B-B

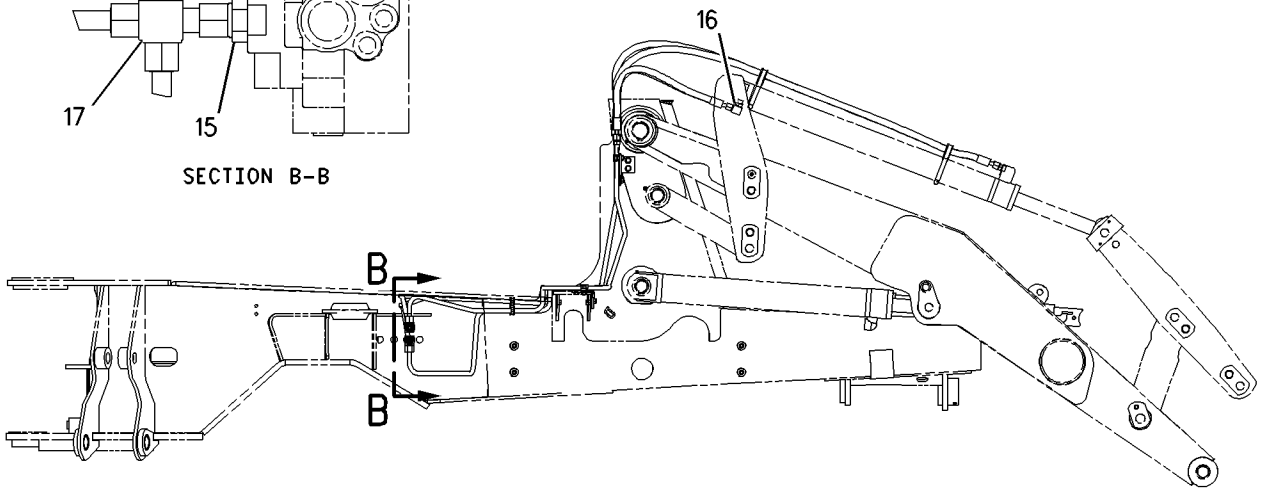

GRAPHIC #1 **<END>** g00873711

HYDRAULIC SYSTEM

189-0555 LINES GP-TILT CYLINDER

S/N: BXC1-UP; DSX1-UP
PART OF 186-5335, 186-5337 HYDRAULIC AR
AN ATTACHMENT

SMCS-5057, 5104 **i01678796**

NOTE	REF NO	GRAPHIC REF	PART NUMBER	QTY	PART NAME 1 2 3 4 5 6 (PRODUCT LEVEL)	SEE PAGE
	1	1	**7K-1181**	1	STRAP-CABLE	
I	2	1	**9R-1034**	2	HOSE AS	
I	3	1	**9R-9198**	2	HOSE AS	
	4	1	**9R-9316**	1	BRACKET AS	
	5	1	**122-5822**	1	BRACKET AS	
	6	1	**151-4841**	1	BLOCK	
	7	1	**156-3837**	4	CLIP (SLOT)	
	8	1	**156-3838**	2	CLIP (TAB)	
	9	1	**158-3412**	8	CLIP (SLOT)	
	10	1	**187-3162**	1	TUBE AS	
	11	1	**187-3163**	1	TUBE AS	
	12	1	**187-3164**	1	TUBE AS	
	13	1	**187-3166**	1	TUBE AS	
	14	1	**187-4329**	1	TUBE AS	
	15	1	**207-7581**	1	TUBE AS	
	16	1	*148-8341*	2	CONNECTOR GP	
					(EACH INCLUDES)	
		1	**3D-2824**	1	SEAL-O-RING	
		1	**6V-8713**	1	CONNECTOR	
		1	**7J-9108**	1	SEAL-O-RING	
	17	1	*148-8390*	1	ELBOW GP	
		1	**2M-9780**	1	SEAL-O-RING	
		1	**6V-8626**	1	ELBOW	
		1	**7J-9108**	1	SEAL-O-RING	
	18	1	*148-8393*	2	ELBOW GP	
					(EACH INCLUDES)	
		1	**6V-9852**	1	ELBOW-SWIVEL	
		1	**7J-9108**	1	SEAL-O-RING	
	19	1	**6V-8398**	8	SEAL-O-RING	
	20	1	**8T-4121**	10	WASHER-HARD (11X21X2.5MM THK)	
M	21	1	**8T-4136**	5	BOLT (M10X1.5X25MM)	
M	22	1	**8T-4137**	2	BOLT (M10X1.5X20MM)	
M	23	1	**8T-4195**	2	BOLT (M10X1.5X30MM)	
	24	1	**9R-7803**	4	CLIP	

I-SEE HOSE FABRICATION GUIDE
M-METRIC PART

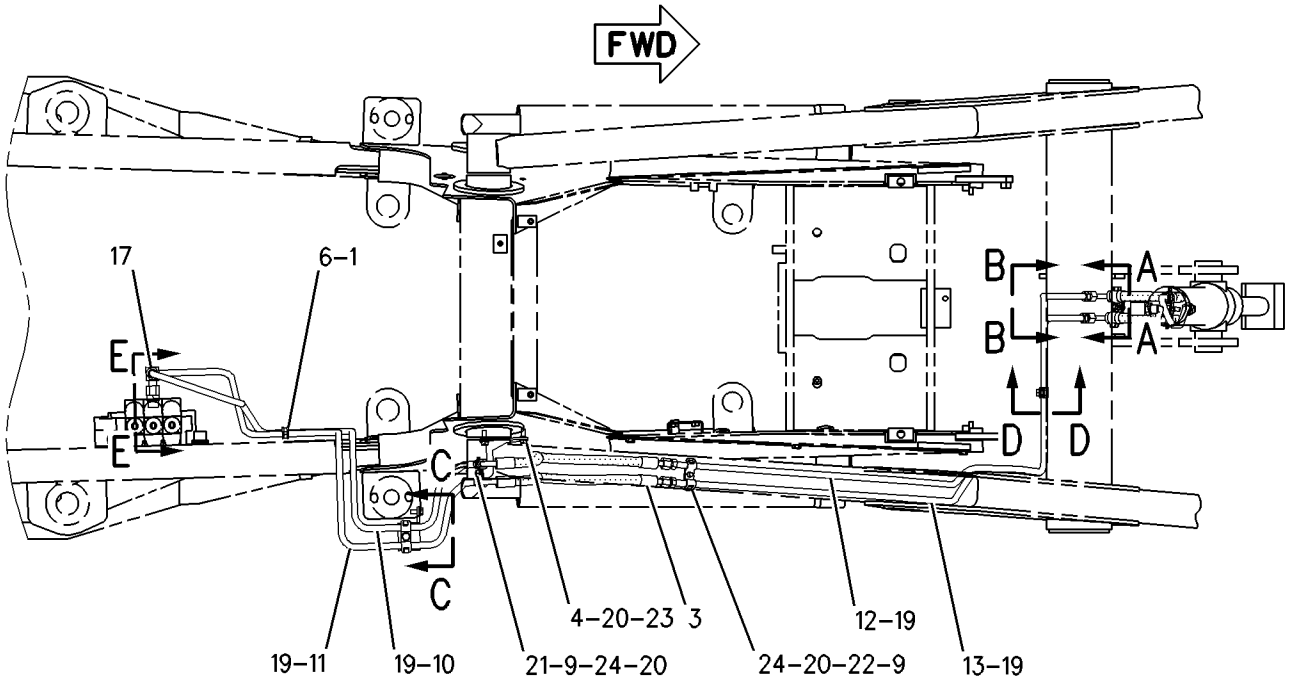

TOP VIEW

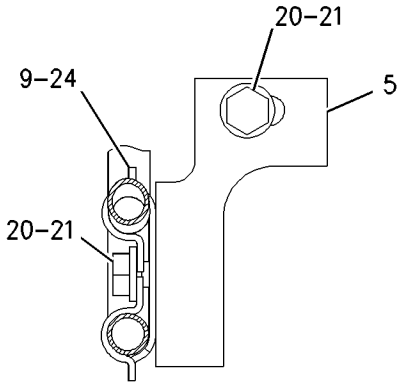

SECTION C-C

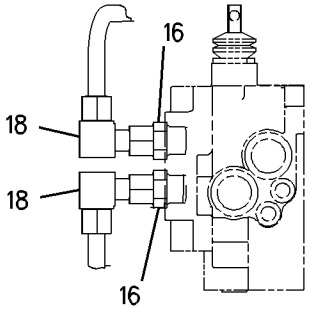

SECTION E-E

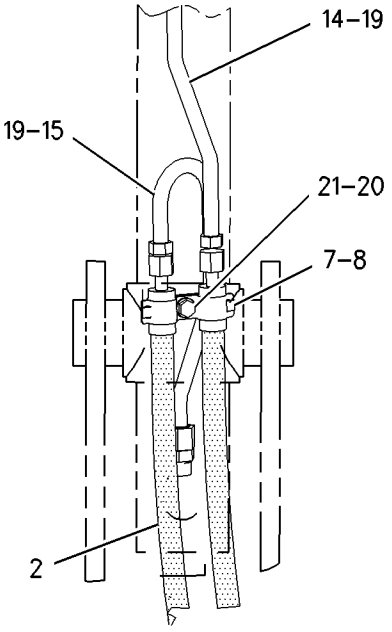

VIEW B-B

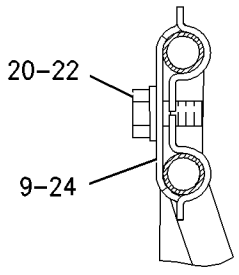

SECTION D-D

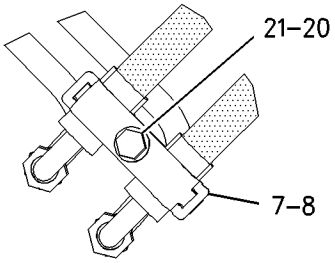

SECTION A-A

GRAPHIC #1 **<END>** g00866352

189-3823 LOCK GP-HYDRAULIC FOOT CONTROL

S/N: BXC1-UP; DSX1-UP
PART OF 190-2802 CONVERSION AR-CERTIFICATION
AN ATTACHMENT

SMCS-5001 **i01480432**

NOTE	REF NO	GRAPHIC REF	PART NUMBER	QTY	PART NAME 1 2 3 4 5 6 (PRODUCT LEVEL)	SEE PAGE
	1	1	**179-8235**	1	LOCKPIN	
	2	1	**184-5382**	1	PIN	

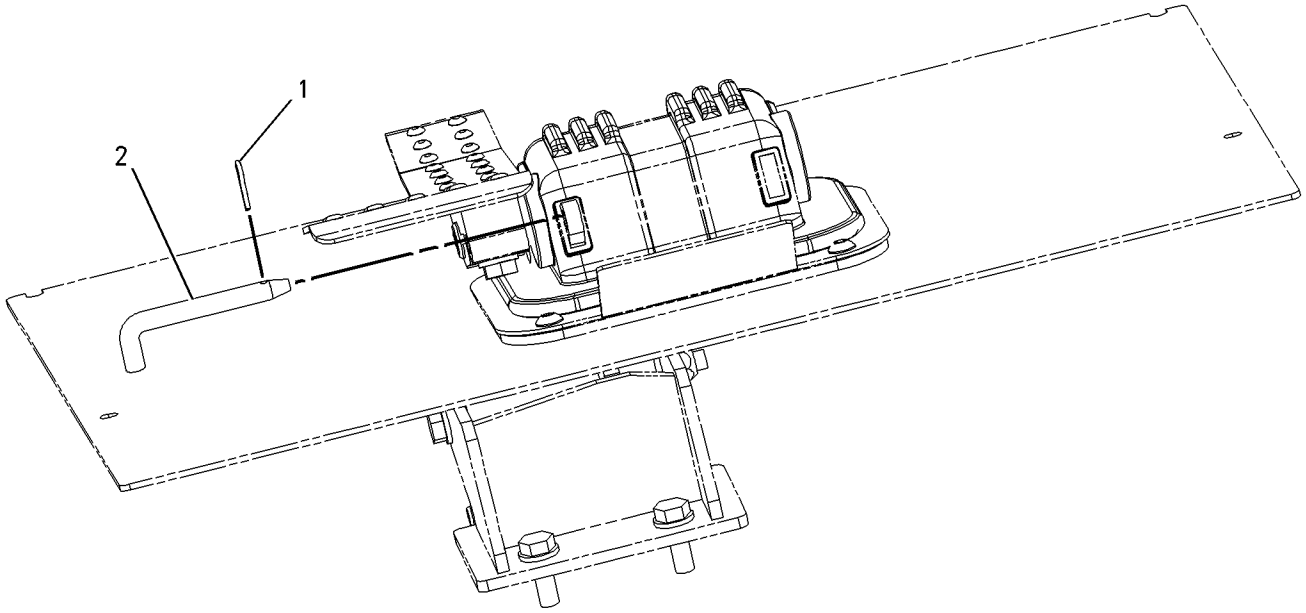

GRAPHIC #1 **<END>** g00770828

106-2404 LOCK GP-HYDRAULIC HAND CONTROL

S/N: BXC1-UP; DSX1-UP
PART OF 190-2802 CONVERSION AR-CERTIFICATION
AN ATTACHMENT

SMCS-5001 **i00535073**

NOTE	REF NO	GRAPHIC REF	PART NUMBER	QTY	PART NAME 1 2 3 4 5 6 (PRODUCT LEVEL)	SEE PAGE
	1	1	**106-2405**	1	PLATE AS	
	2	1	**106-2409**	1	PIN	
M	3	1	**8T-4136**	2	BOLT (M10X1.50X25MM)	
	4	1	**8T-4223**	2	WASHER-HARD (3MM THK)	

M-METRIC PART

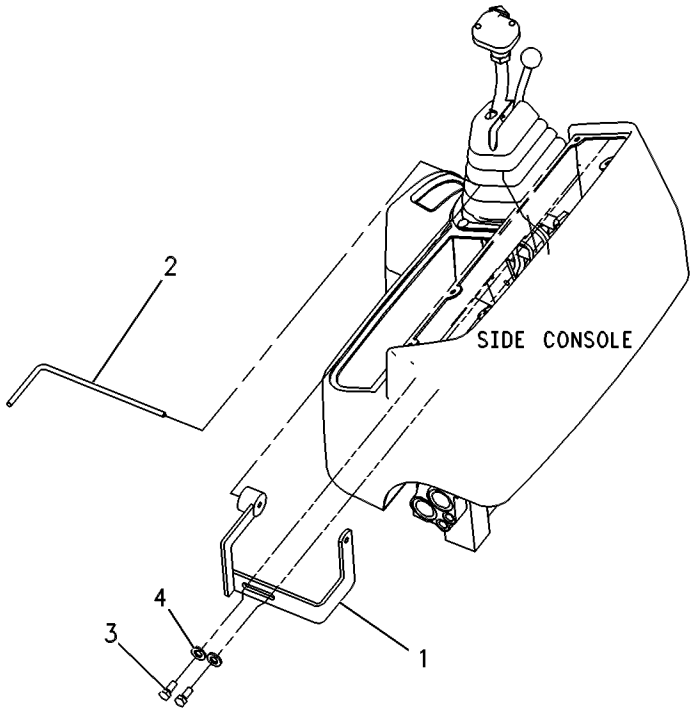

GRAPHIC #1 **<END>** g00131793

185-1598 MOUNTING GP-BANK VALVE–LOADER, MECHANICAL

S/N: BXC1-UP; DSX1-UP
PART OF 185-0060, 185-0061, 185-0062, 185-0063, 186-5335, 186-5336, 186-5337, 186-5338 HYDRAULIC AR
AN ATTACHMENT

SMCS-5051 **i01523519**

NOTE	REF NO	GRAPHIC REF	PART NUMBER	QTY	PART NAME 1 2 3 4 5 6 (PRODUCT LEVEL)	SEE PAGE
	1	1	**199-7854**	2	SPACER (11.8X20X45MM THK)	
M	2	1	**8T-0389**	2	LOCKNUT (M10X1.5 THD)	
	3	1	**8T-4121**	5	WASHER-HARD (11X21X2.5MM THK)	
M	4	1	**8T-4186**	1	BOLT (M10X1.5X40MM)	
M	5	1	**8T-4198**	2	BOLT (M10X1.5X100MM)	

M-METRIC PART

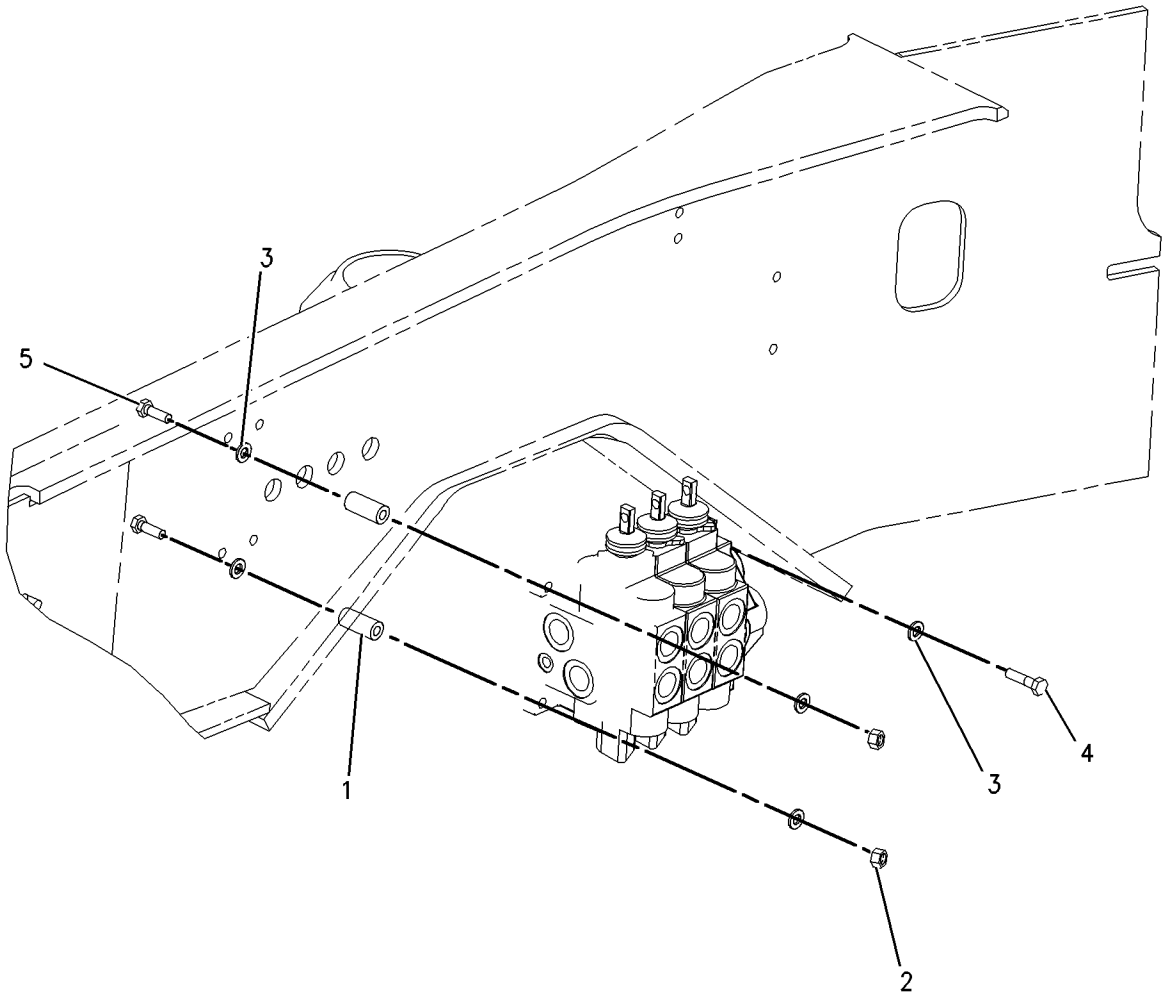

GRAPHIC #1 **<END>** g00791506

185-3167 MOUNTING GP-BANK VALVE–BACKHOE

S/N: BXC1-UP; DSX1-UP

PART OF 237-9297, 237-9298 HYDRAULIC AR

SMCS-5051 **i01668180**

NOTE	REF NO	GRAPHIC REF	PART NUMBER	QTY	PART NAME 1 2 3 4 5 6 (PRODUCT LEVEL)	SEE PAGE
	1	1	**203-5491**	1	BRACKET AS	
	2	1	**8T-4121**	5	WASHER-HARD (11X21X2.5MM THK)	
M	3	1	**8T-4183**	3	BOLT (M12X1.75X40MM)	
M	4	1	**8T-4185**	1	BOLT (M10X1.5X50MM)	
M	5	1	**8T-4186**	2	BOLT (M10X1.5X40MM)	
	6	1	**8T-4223**	3	WASHER-HARD (13.5X25.5X3MM THK)	

M-METRIC PART

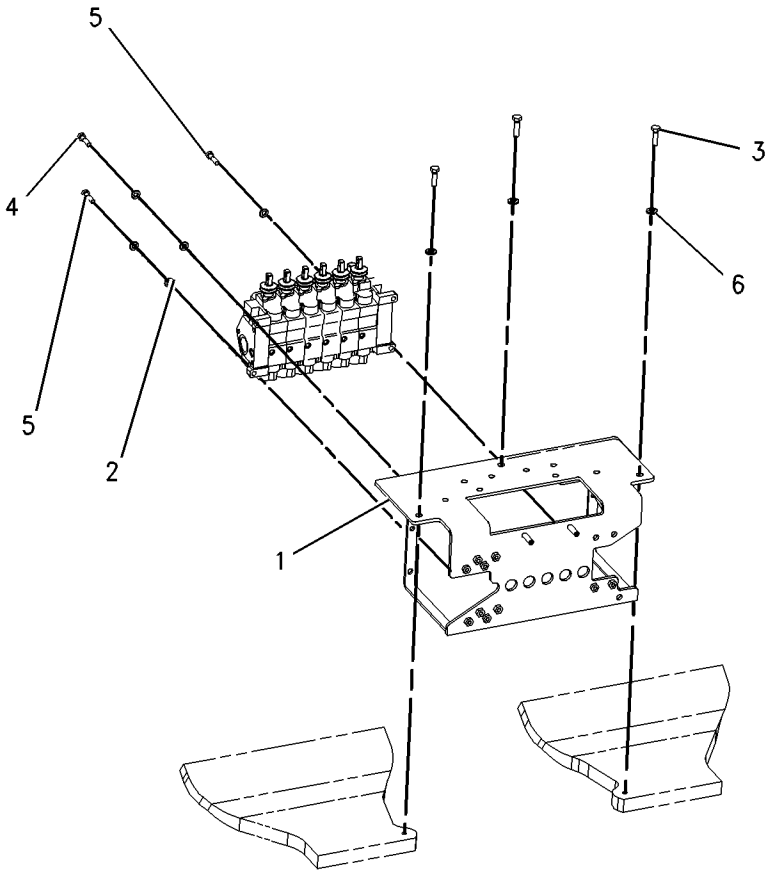

GRAPHIC #1 **<END>** g00861606

9R-4668 MOUNTING GP-CYLINDER—MULTIPURPOSE

S/N: BXC1-UP; DSX1-UP

PART OF 111-8634, 111-8635, 112-0938, 112-0939, 124-0486, 124-0487, 124-0488, 124-0489, 164-4659, 208-0827 BUCKET AR-MULTIPURPOSE

AN ATTACHMENT

SMCS-5102, 6068, 7562 **i00528574**

NOTE	REF NO	GRAPHIC REF	PART NUMBER	QTY	PART NAME 1 2 3 4 5 6 (PRODUCT LEVEL)	SEE PAGE
	1	1	**9R-4677**	2	PIN	
	2	1	**3B-5317**	4	COTTER	
	3	1	**9R-4678**	2	PIN	
	4	1	**3B-8489**	4	FITTING-GREASE (1/8-27 THD)	

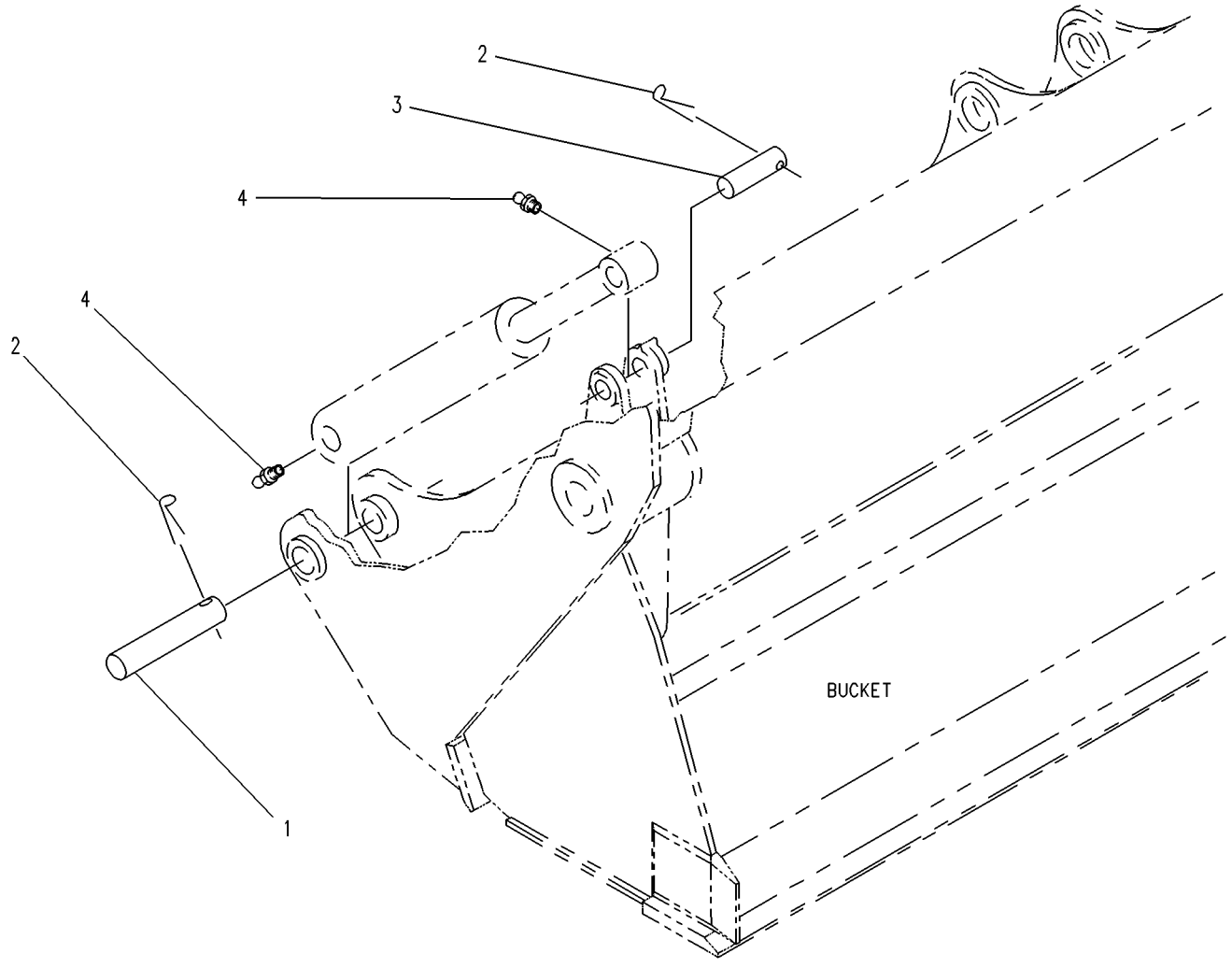

GRAPHIC #1 **<END>** g00219196

HYDRAULIC SYSTEM

112-1826 MOUNTING GP-HYDRAULIC PUMP

S/N: BXC1-UP; DSX1-UP

PART OF 237-9297, 237-9298 HYDRAULIC AR

SMCS-5070 **i00534530**

NOTE	REF NO	GRAPHIC REF	PART NUMBER	QTY	PART NAME 1 2 3 4 5 6 (PRODUCT LEVEL)	SEE PAGE
M	1	1	**8T-9405**	4	BOLT-SOCKET HEAD (M4X0.7X16MM)	
	2	1	**9U-8886**	1	RING-SEAL (44.95MM ID)	
	3	1	**115-1918**	1	PLATE	
	4	1	**117-3534**	1	ADAPTER	
	5	1	**117-3535**	1	HUB	
Y	6	1	**128-5596**	1	SHAFT GP-POWER TAKE-OFF	537
	7	1	**5F-3106**	1	SEAL-O-RING (126.59MM ID)	
	8	1	**8T-4122**	2	WASHER (3.5MM THK)	
M	9	1	**8T-7338**	2	BOLT (M16X2.0X45MM)	

M-METRIC PART
Y-SEPARATE ILLUSTRATION

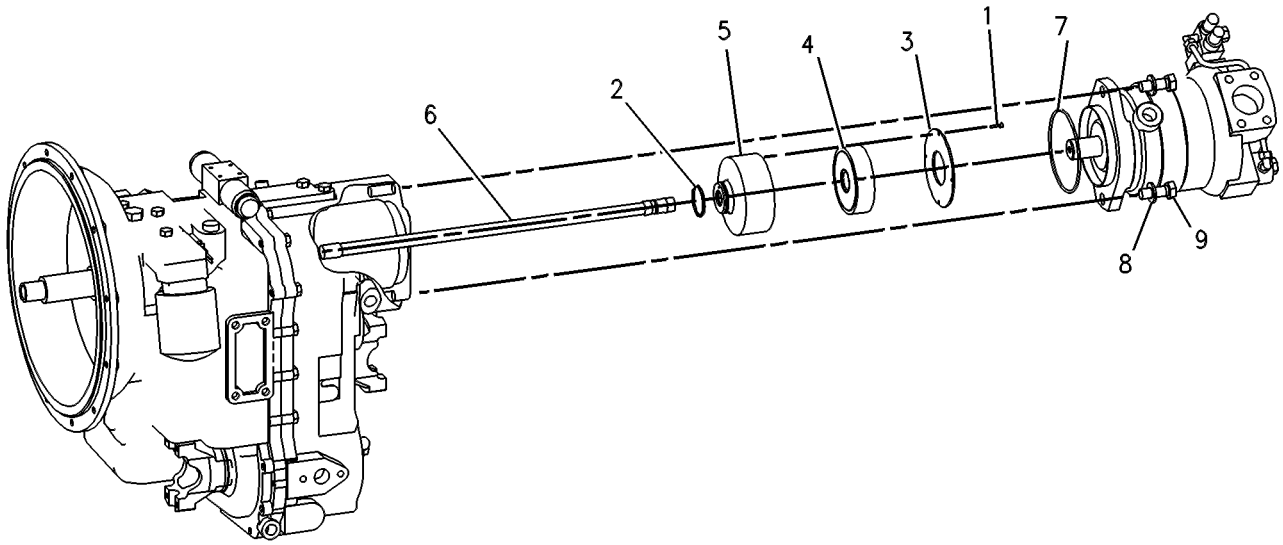

GRAPHIC #1 **<END>** g00131524

165-7769 MOUNTING GP-LINES

S/N: BXC1-UP
PART OF 240-8683 BACKHOE AR-STANDARD STICK
AN ATTACHMENT

SMCS-5057, 5456 **i01095868**

NOTE	REF NO	GRAPHIC REF	PART NUMBER	QTY	PART NAME 1 2 3 4 5 6 (PRODUCT LEVEL)	SEE PAGE
M	1	1	**6V-9189**	2	LOCKNUT (M8X1.25 THD)	
	2	1	**8T-4121**	4	WASHER (2.5MM THK)	
M	3	1	**8T-4136**	4	BOLT (M10X1.50X25MM)	
	4	1	**8T-4224**	4	WASHER-HARD (2MM THK)	
M	5	1	**8T-6870**	2	BOLT (M8X70MM)	
	6	1	**9R-8874**	2	PLATE	
	7	1	**9R-8875**	2	BLOCK	
	8	1	**109-1258**	2	BLOCK	
	9	1	**109-1259**	2	BLOCK	
	10	1	**119-9398**	1	BLOCK	
	11	1	**119-9399**	1	BLOCK	
	12	1	**120-4397**	1	PLATE	

M-METRIC PART

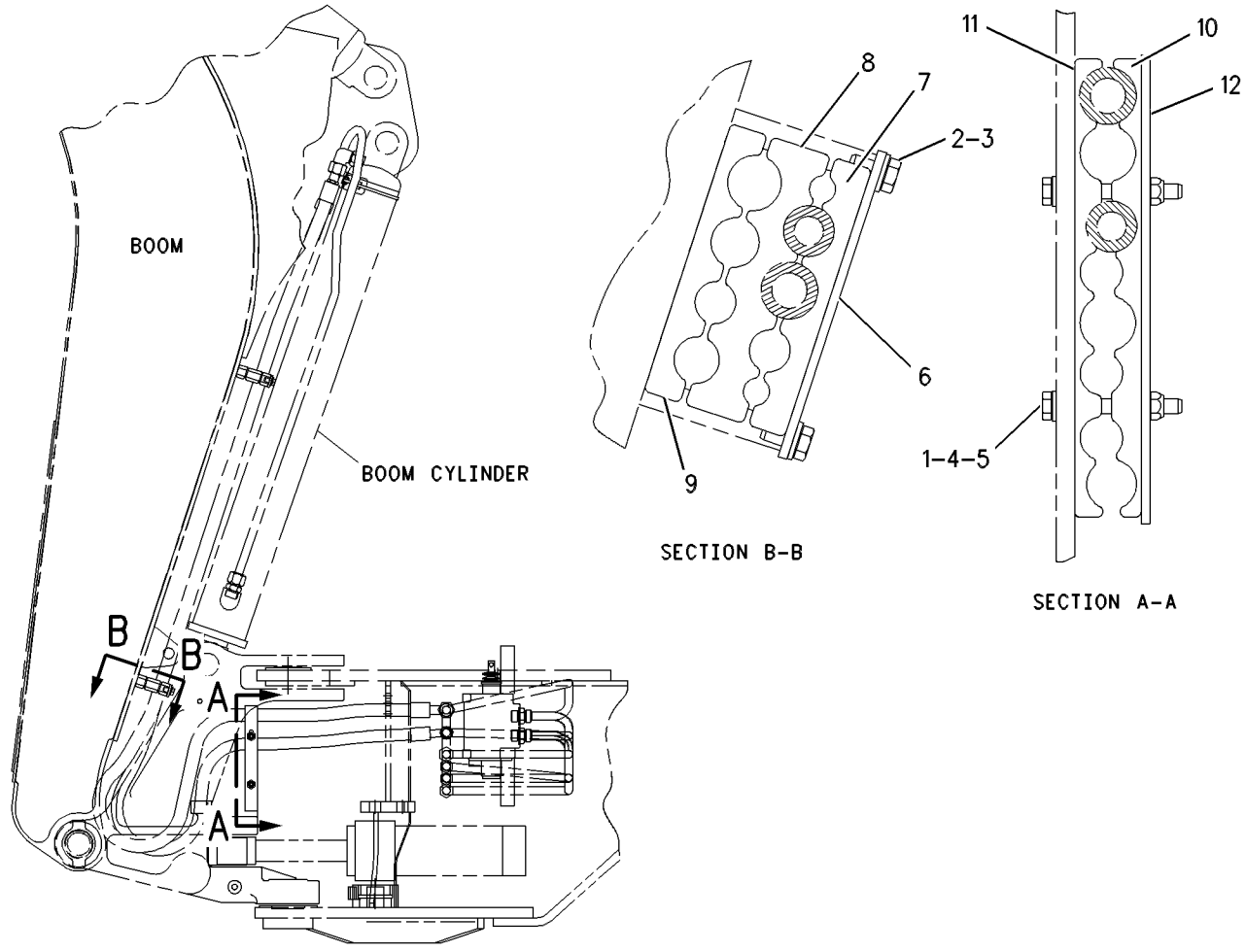

GRAPHIC #1 **<END>** g00533082

HYDRAULIC SYSTEM

172-8508 MOUNTING GP-LINES

S/N: BXC1-UP; DSX1-UP

PART OF 240-8687, 240-8688, 240-8697, 240-8698 BACKHOE AR-STANDARD STICK AN ATTACHMENT

SMCS-5057, 5456 **i01376524**

NOTE	REF NO	GRAPHIC REF	PART NUMBER	QTY	PART NAME 1 2 3 4 5 6 (PRODUCT LEVEL)	SEE PAGE
	1	1	**176-9153**	1	BRACKET-LH	
	2	1	**176-9155**	2	CLAMP-LH	
	3	1	*148-8408*	2	PLUG AS	
					(EACH INCLUDES)	
		1	**3D-2824**	1	SEAL-O-RING (23.47MM ID)	
		1	**9S-4183**	1	PLUG	
	4	1	**8T-4121**	2	WASHER-HARD (11X21X2.5MM THK)	
M	5	1	**8T-4136**	2	BOLT (M10X1.5X25MM)	

M-METRIC PART

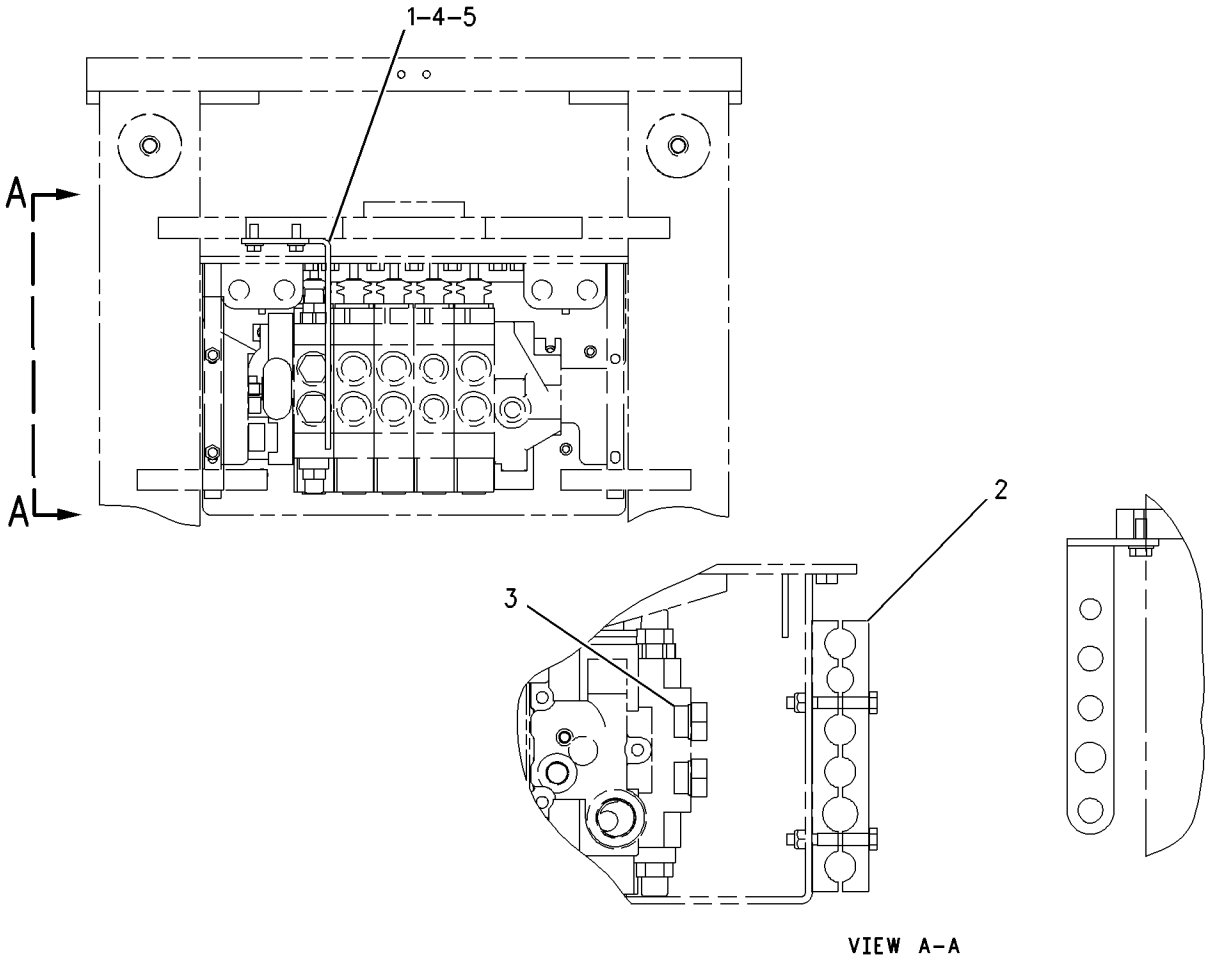

GRAPHIC #1 **<END>** g00729486

175-7620 MOUNTING GP-LINES

S/N: BXC1-UP; DSX1-UP
4 BANK VALVE
PART OF 240-8683, 240-8684, 240-8693, 240-8694 BACKHOE AR-STANDARD STICK
AN ATTACHMENT

SMCS-5057, 5456 **i01496305**

NOTE	REF NO	GRAPHIC REF	PART NUMBER	QTY	PART NAME 1 2 3 4 5 6 (PRODUCT LEVEL)	SEE PAGE
	1	1	**176-9152**	1	BRACKET-LH	
	2	1	**176-0145**	2	CLAMP	
	3	1	**8T-4121**	2	WASHER-HARD (11X21X2.5MM THK)	
M	4	1	**8T-4136**	2	BOLT (M10X1.5X25MM)	

M-METRIC PART

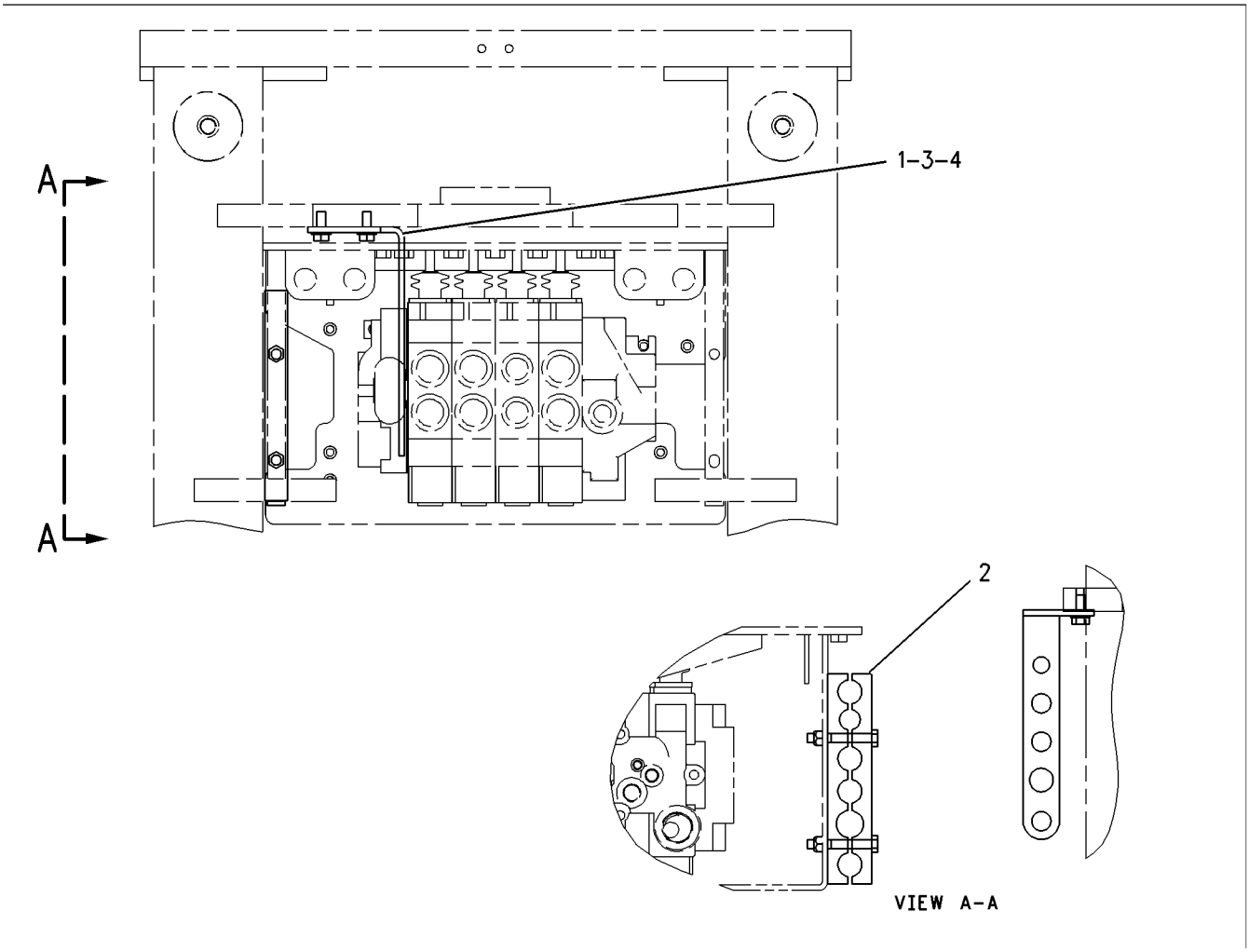

GRAPHIC #1 **<END>** g00727863

186-2950 MOUNTING GP-LINES

S/N: BXC1-UP; DSX1-UP

PART OF 240-8490, 240-8491, 240-8493, 240-8504, 240-8505, 240-8506, 240-8507, 240-8689, 240-8690, 240-8691, 240-8692, 240-8699, 240-8700, 240-8701, 240-8702 BACKHOE AR-EXTENDABLE STICK, 240-8684, 240-8685, 240-8686, 240-8687, 240-8688, 240-8693, 240-8694, 240-8695, 240-8696, 240-8697, 240-8698 BACKHOE AR-STANDARD STICK

AN ATTACHMENT

SMCS-5057, 5456 **i01497842**

NOTE	REF NO	GRAPHIC REF	PART NUMBER	QTY	PART NAME 1 2 3 4 5 6 (PRODUCT LEVEL)	SEE PAGE
	1	1	**9R-8875**	2	BLOCK	
	2	1	**109-1258**	2	BLOCK	
	3	1	**109-1259**	2	BLOCK	
	4	1	**119-9398**	1	BLOCK	
	5	1	**119-9399**	1	BLOCK	
	6	1	**120-4397**	1	PLATE	
M	7	1	**6V-9189**	2	LOCKNUT (M8X1.25 THD)	
	8	1	**8T-4121**	4	WASHER-HARD (11X21X2.5MM THK)	
M	9	1	**8T-4136**	4	BOLT (M10X1.5X25MM)	
	10	1	**8T-4224**	4	WASHER-HARD (8.8X16X2MM THK)	
M	11	1	**8T-6870**	2	BOLT (M8X1.25X70MM)	
	12	1	**9R-8874**	2	PLATE	

M-METRIC PART

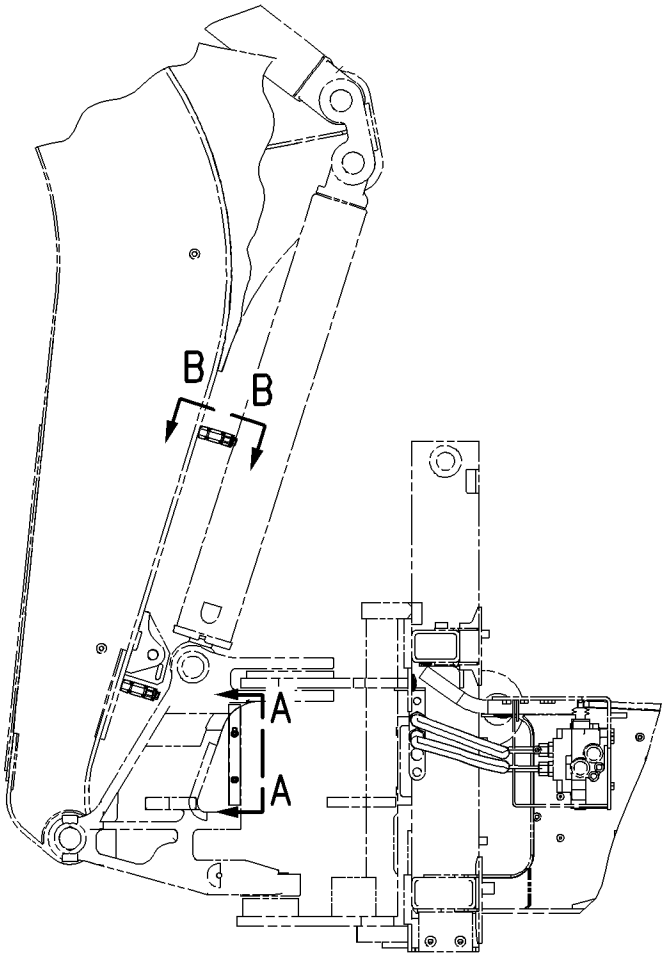

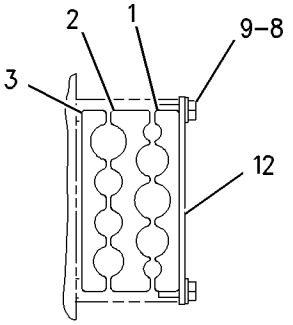

SECTION B-B

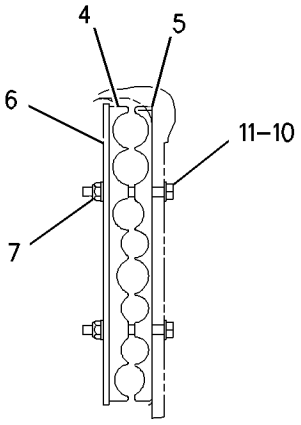

SECTION A-A

GRAPHIC #1 **<END>** g00778264

HYDRAULIC SYSTEM

235-4110 PUMP GP-PISTON

S/N: BXC1-UP; DSX1-UP

PART OF 237-9297, 237-9298 HYDRAULIC AR

SMCS-5070 **i01980507**

NOTE	REF NO	GRAPHIC REF	PART NUMBER	QTY	PART NAME 1 2 3 4 5 6 (PRODUCT LEVEL)	SEE PAGE
	1	2	**180-6213**	1	RING-RETAINING	
	2	2	**6E-4003**	2	BEARING	
	3	2	**173-0637**	1	HOUSING-PUMP	
Y	4	2	**120-5726**	1	ROTATING GP-PUMP	536
	5	2	**3E-6769**	4	SEAL-O-RING	
M	6	2	**095-9805**	4	BOLT-SOCKET HEAD (M14X2X40MM)	
	7	2	**1P-6872**	1	CUP-BEARING	
	8	2	**8C-7110**	1	CONE-BEARING	
	9	2	**103-5520**	1	CARRIER-PIN	
	10	1	**6E-4000**	1	SPACER (25.5X35X3MM THK)	
	11	2	**3E-6770**	1	SEAL-O-RING	
	12	1	**6E-6175**	1	CYLINDER	
	13	1	**6E-6176**	1	SPRING	
	14	1	**6E-6174**	1	PLUNGER	
	15	2	**9S-8006**	1	PLUG	
	16	2	**2M-9780**	1	SEAL-O-RING	
	17	2	**162-1604**	1	SHAFT-PUMP	
	18	1	**6V-2323**	1	CONE-BEARING	
	19	1	**3B-5790**	1	CUP-BEARING	
	20	1	**6E-4004**	2	SEAL-SHAFT	
	21	1	**173-0639**	1	SWASHPLATE AS	
	22	1	**120-5727**	1	PISTON-CONTROL	
	23	1	**120-5729**	1	GUIDE-PISTON	
	24	1	**136-8423**	1	PLUG-BREAK OFF	
	25	1	**083-4419**	1	PIN	
	26	2	**173-0641**	1	PLUG-FILTER	
	27	1	**173-0638**	1	HEAD-PUMP	
	28	1	**215-9219**	1	ADAPTER AS	
	29	1	**3J-7352**	2	CONNECTOR	
	30	1	**3J-7354**	3	SEAL-O-RING	
	31	1	**193-8648**	1	TUBE AS	
Y	32	1	**103-5519**	1	VALVE GP-PUMP CONTROL (POWER COMPENSATOR)	581
M	33	2	**6V-5683**	1	BOLT (M6X1X16MM)	
	34	2	**3C-8388**	1	PIN-ROLL	
Y	35	1	**213-9804**	1	VALVE GP-PUMP CONTROL (PRESSURE, FLOW COMPENSATOR)	582

M-METRIC PART
Y-SEPARATE ILLUSTRATION

235-4110 PUMP GP-PISTON *(contd.)* **i01980507**

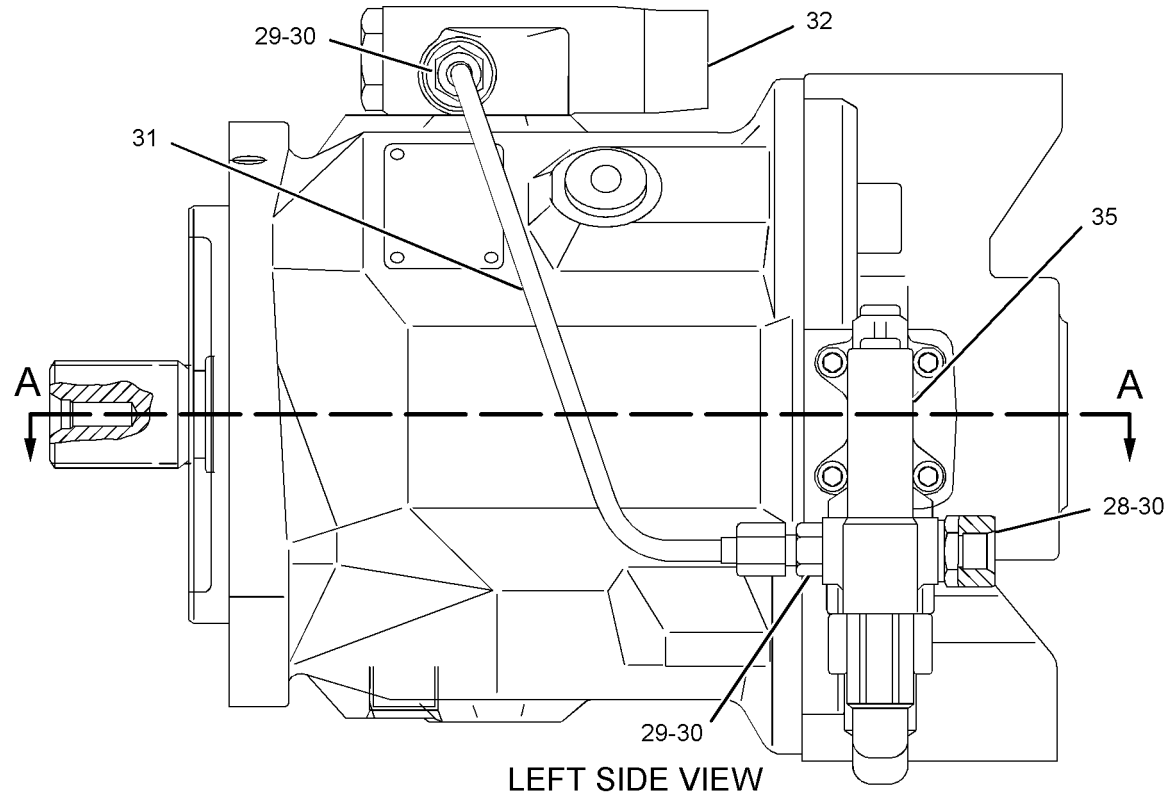

LEFT SIDE VIEW

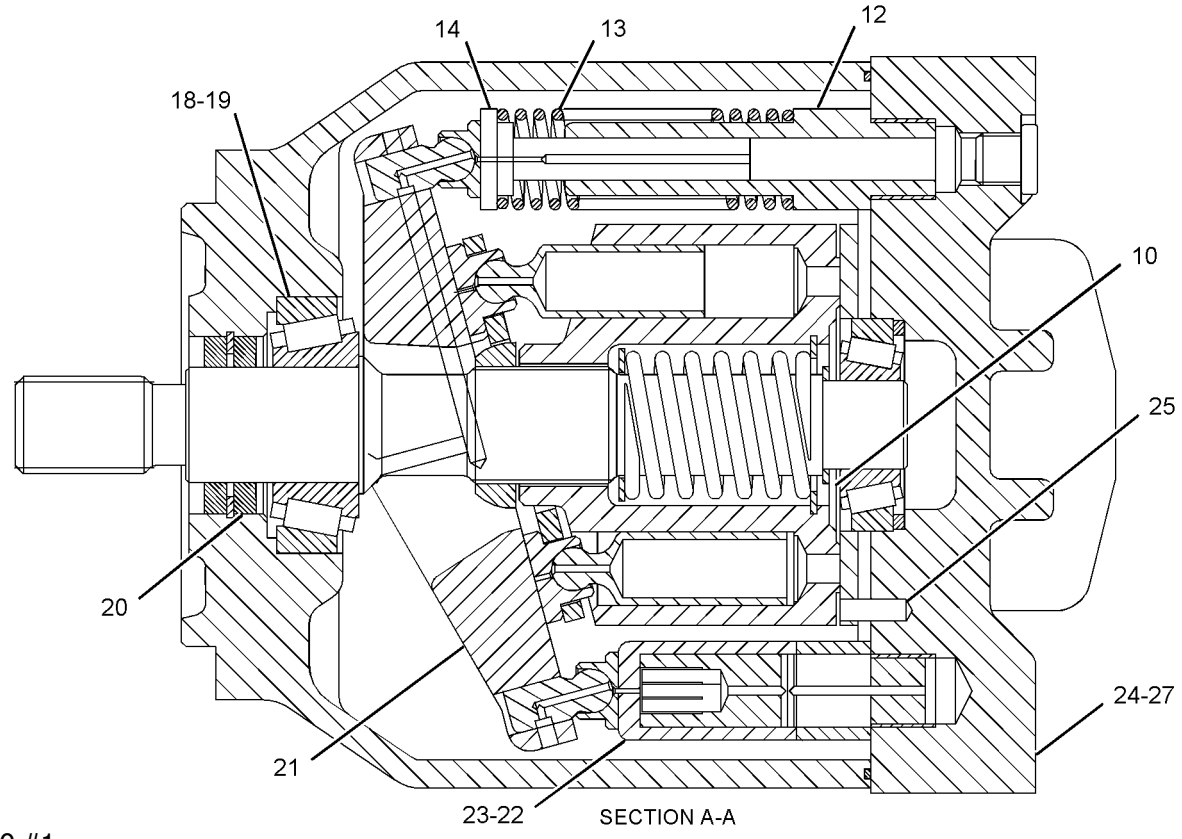

SECTION A-A

GRAPHIC #1

g01026676

235-4110 PUMP GP-PISTON ***(contd.)*** **i01980507**

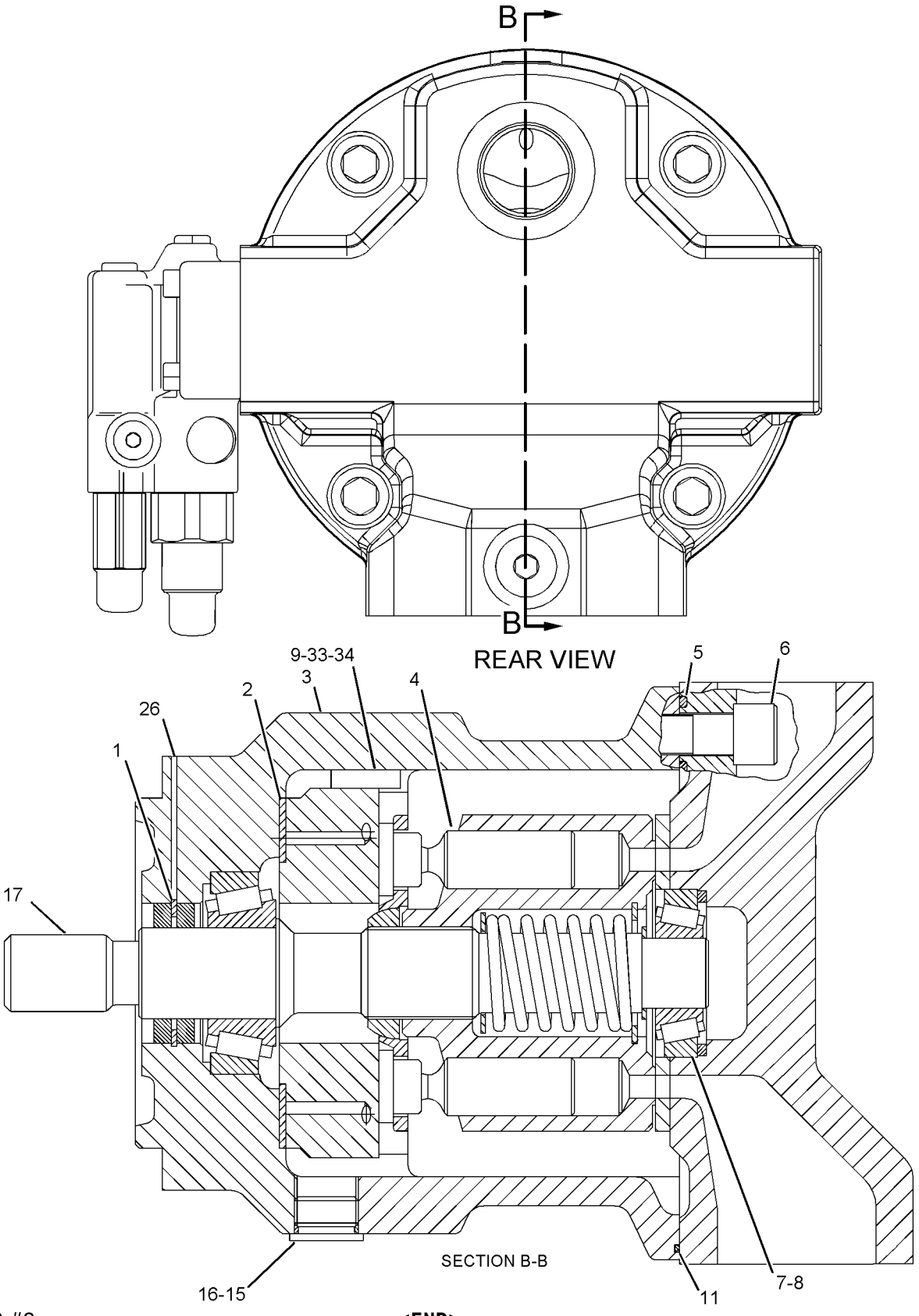

GRAPHIC #2 **<END>** g01026677

HYDRAULIC SYSTEM

120-5726 ROTATING GP-PUMP

S/N: BXC1-UP; DSX1-UP

PART OF 235-4110 PUMP GP-PISTON

SMCS-5070 **i00534731**

NOTE	REF NO	GRAPHIC REF	PART NUMBER	QTY	PART NAME 1 2 3 4 5 6 (PRODUCT LEVEL)	SEE PAGE
	1	1	**6E-6151**	9	PISTON AS	
	2	1	**6E-6154**	1	PLATE-RETRACTION	
	3	1	**6E-6155**	1	BEARING	
	4	1	**6E-4007**	1	BARREL	
	5	1	**6E-3341**	1	SEAT-SPRING	
	6	1	**6E-4009**	1	SPRING	
	7	1	**6E-6158**	1	RING	
	8	1	**120-5724**	1	PLATE-VALVE	
	9	1	**6E-6157**	3	PIN	

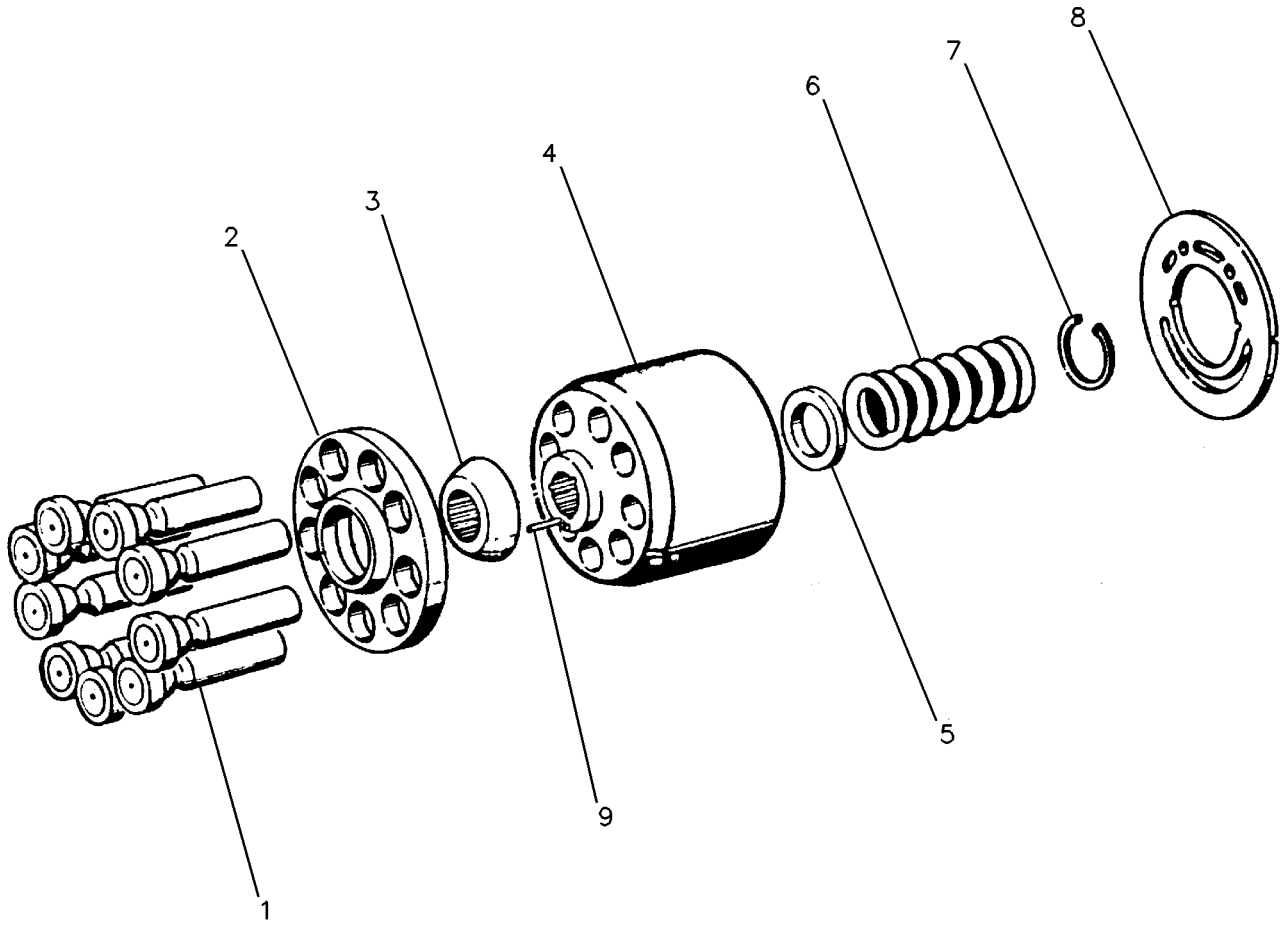

GRAPHIC #1 **<END>** g00119332

HYDRAULIC SYSTEM

128-5596 SHAFT GP-POWER TAKE-OFF

S/N: BXC1-UP; DSX1-UP

PART OF 112-1826 MOUNTING GP-HYDRAULIC PUMP

SMCS-3107 **i00535584**

NOTE	REF NO	GRAPHIC REF	PART NUMBER	QTY	PART NAME 1 2 3 4 5 6 (PRODUCT LEVEL)	SEE PAGE
	1	1	**130-8150**	1	RING-RETAINING	

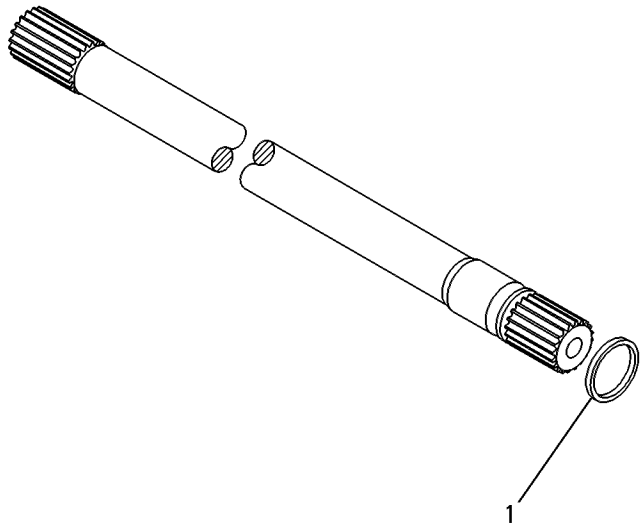

GRAPHIC #1 **<END>** g00131851

HYDRAULIC SYSTEM

210-8918 STABILIZER AR

S/N: BXC1-UP; DSX1-UP
AN ATTACHMENT

SMCS-1408, 5059, 7222 **i01854788**

NOTE	PART NUMBER	QTY	PART NAME 1 2 3 4 5 6 (PRODUCT LEVEL)	SEE PAGE
Y	*228-5730*	1	CONTROL GP-HYDRAULIC HAND	363
	190-5137	1	FILM (STABILIZER CONTROL)	
Y	*186-0307*	1	WIRING GP-STABILIZER ALARM	215
Y-SEPARATE ILLUSTRATION				

<END>

210-8919 STABILIZER AR

S/N: BXC1-UP; DSX1-UP
STANDARD
AN ATTACHMENT

SMCS-1408, 5059, 7222 **i01854898**

NOTE	PART NUMBER	QTY	PART NAME 1 2 3 4 5 6 (PRODUCT LEVEL)	SEE PAGE
Y	*228-5731*	1	CONTROL GP-HYDRAULIC HAND	364
	190-5137	1	FILM (STABILIZER CONTROL)	
Y-SEPARATE ILLUSTRATION				

<END>

HYDRAULIC SYSTEM

234-6926 TANK GP-HYDRAULIC

S/N: BXC1-UP; DSX1-UP

PART OF 237-9297, 237-9298 HYDRAULIC AR

SMCS-5056 **i02003777**

NOTE	REF NO	GRAPHIC REF	PART NUMBER	QTY	PART NAME 1 2 3 4 5 6 (PRODUCT LEVEL)	SEE PAGE
	1	1	**1P-4278**	1	CLAMP-HOSE	
	2	1	**5D-1026**	2	CLAMP-HOSE	
	3	1	**9M-0164**	2	CLAMP-HOSE	
	4	1	**9R-9925**	1	FILTER (HYDRAULIC TANK BREATHER)	
	5	1	**132-3056**	1	SEAL-O-RING	
	6	1	**222-4067**	6	BOLT-SOCKET HEAD (M5X.8X14MM)	
	7	1	**234-6927**	1	HOSE	
	8	1	**234-8815**	1	TUBE AS	
	9	1	**235-5843**	1	DIFFUSER AS	
	10	1	**237-3797**	1	CAP-FILL (HYDRAULIC TANK)	
	11	1	**240-9671**	1	BRACKET AS	
		1	**7T-1099**	3	LINK	
		1	**9G-9155**	1	CLIP	
	12	1	*240-9721*	1	TANK GP-HYDRAULIC	
		1	**240-9716**	1	TANK AS-HYDRAULIC	
		1	**170-1644**	1	GAUGE-SIGHT	
	13	1	*150-3027*	2	ELBOW AS	
					(EACH INCLUDES)	
		1	**2M-9780**	1	SEAL-O-RING	
		1	**6V-5653**	1	ELBOW (7/8-14 THD)	
	14	1	**6D-3479**	1	CLIP	
	15	1	**8T-4121**	6	WASHER-HARD (11X21X2.5MM THK)	
M	16	1	**8T-4136**	1	BOLT (M10X1.5X25MM)	
M	17	1	**8T-4137**	1	BOLT (M10X1.5X20MM)	
M	18	1	**8T-4139**	1	BOLT (M12X1.75X30MM)	
M	19	1	**8T-4179**	3	BOLT (M12X1.75X20MM)	
M	20	1	**8T-4191**	4	BOLT (M10X1.5X16MM)	
	21	1	**8T-4223**	4	WASHER-HARD (13.5X25.5X3MM THK)	
	22	1	**5P-1505**		HOSE (8CM)	
	23	1	**5P-1442**		HOSE (124CM)	

M-METRIC PART

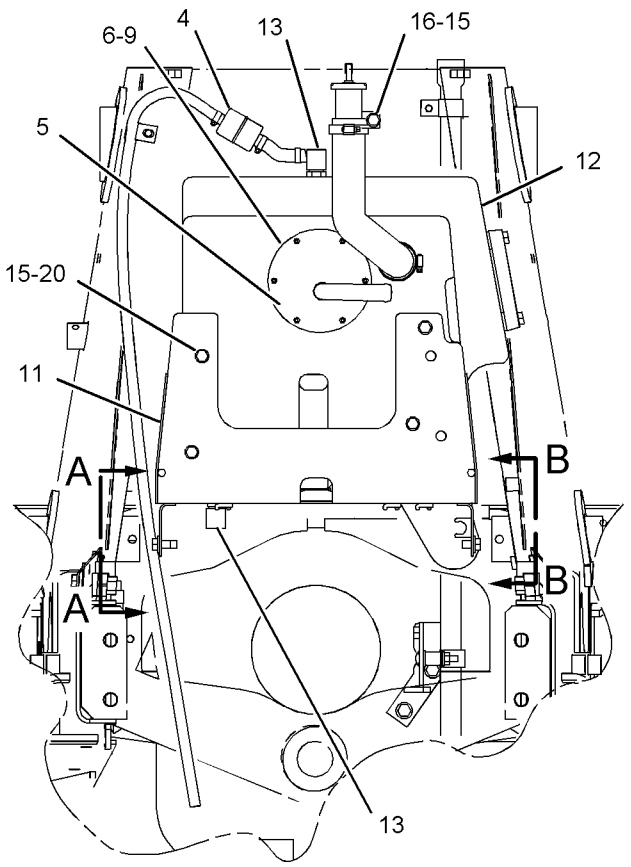

FRONT VIEW

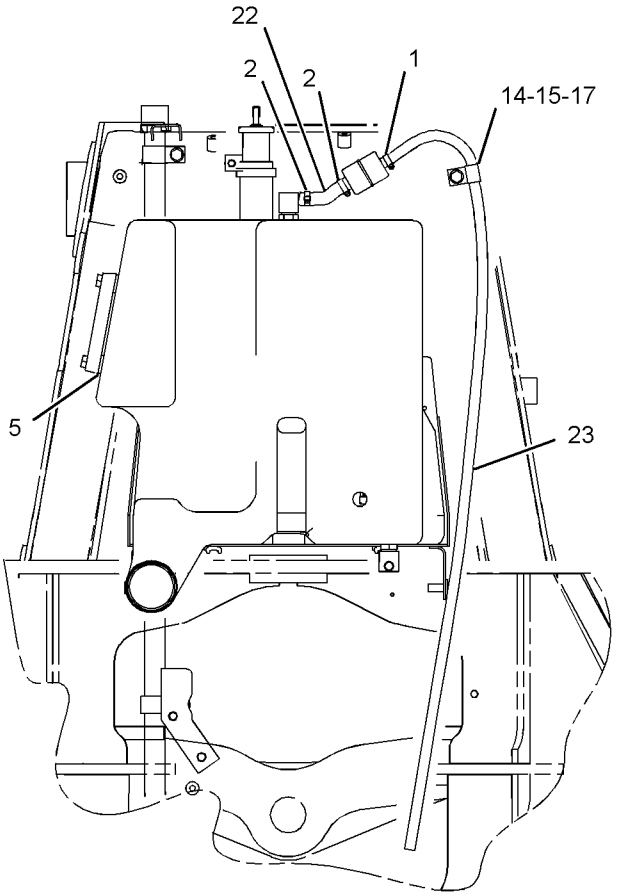

REAR VIEW

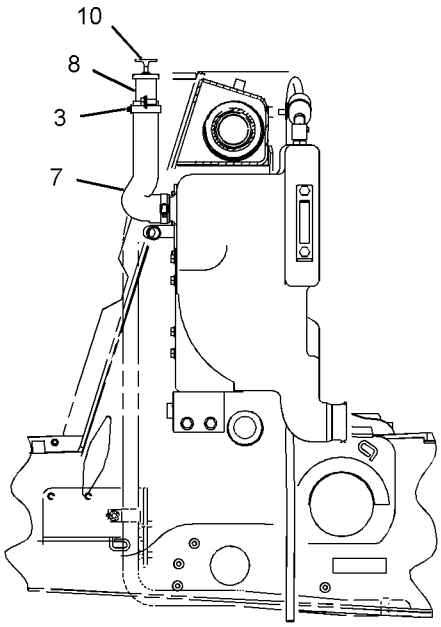

LEFT SIDE VIEW

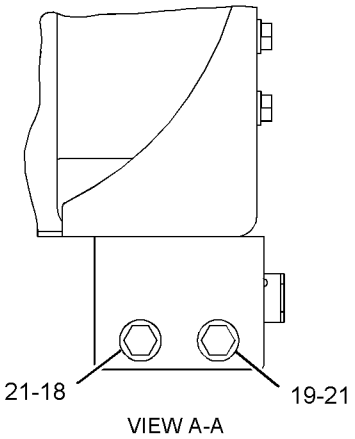

VIEW A-A

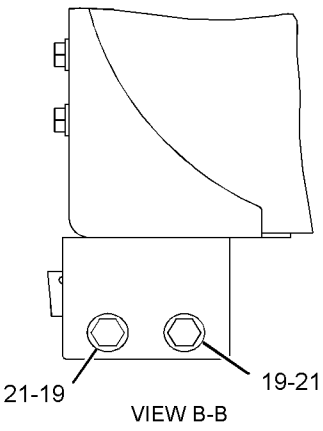

VIEW B-B

GRAPHIC #1 **<END>** g01026640

HYDRAULIC SYSTEM

185-9784 VALVE & MTG GP-BANK–STABILIZER

S/N: BXC1-UP; DSX1-UP

PART OF 237-9297, 237-9298 HYDRAULIC AR

SMCS-5051, 5057, 7265 **i01865667**

NOTE	REF NO	GRAPHIC REF	PART NUMBER	QTY	PART NAME 1 2 3 4 5 6 (PRODUCT LEVEL)	SEE PAGE
	1	1	**222-0364**	1	VALVE GP-BANK 2	
	2	1	**232-5849**	4	STUD-TAPERLOCK	
M	3	1	**5C-7261**	4	NUT (M8X1.25 THD)	
	4	1	**8T-4224**	4	WASHER-HARD (8.8X16X2MM THK)	

M-METRIC PART

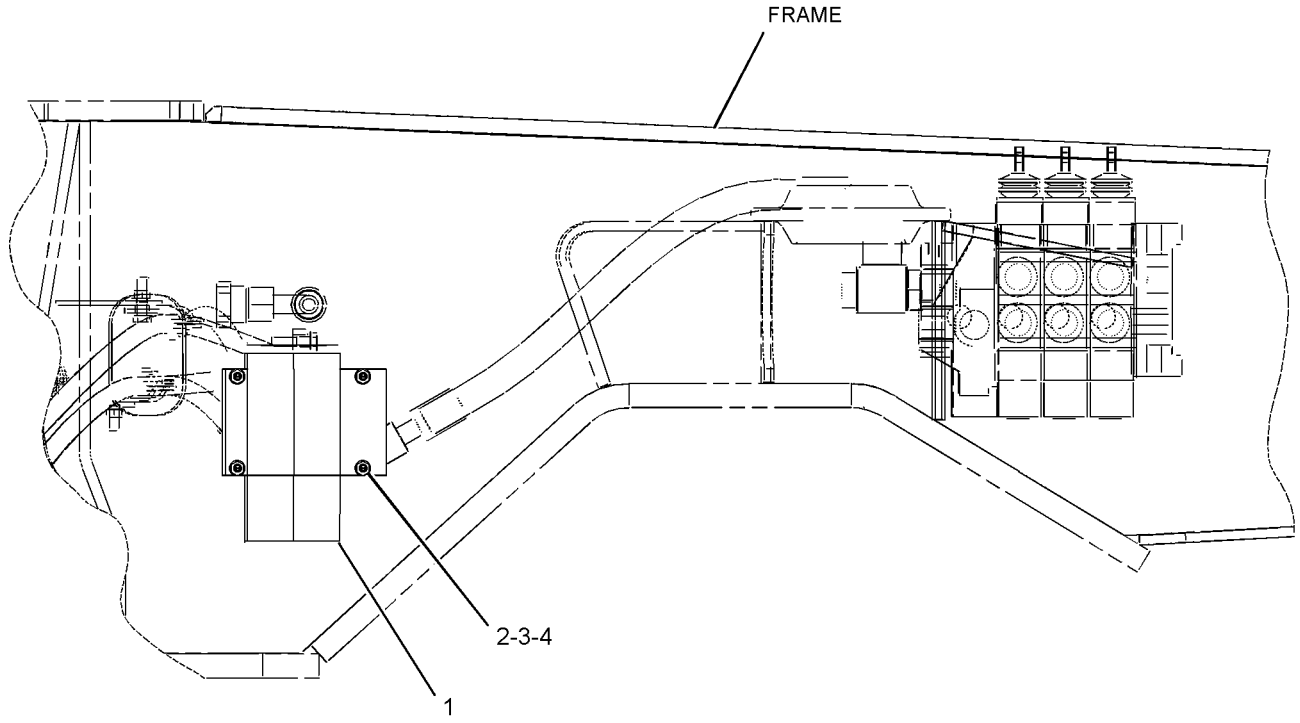

GRAPHIC #1 **<END>** g01008663

240-3181 VALVE AR-BANK 4

S/N: BXC1-UP; DSX1-UP
AN ATTACHMENT

SMCS-5051 **i01971591**

NOTE	PART NUMBER	QTY	PART NAME 1 2 3 4 5 6 (PRODUCT LEVEL)	SEE PAGE
Y	*236-0695*	1	LINES GP-PUMP	485
Y	**185-5908**	1	VALVE GP-BANK 4	551
Y-SEPARATE ILLUSTRATION				

<END>

240-3184 VALVE AR-BANK 4

S/N: BXC1-UP; DSX1-UP
AN ATTACHMENT

SMCS-5051 **i01971599**

NOTE	PART NUMBER	QTY	PART NAME 1 2 3 4 5 6 (PRODUCT LEVEL)	SEE PAGE
Y	*235-5857*	1	LINES GP-PUMP	483
	169-0599	1	SWITCH AS (HYDRAULIC SHUT OFF)	
	111-7899	1	GASKET	
Y	**203-5486**	1	VALVE GP-BANK 4	552
Y	**179-5593**	1	VALVE GP-SOLENOID	585
Y-SEPARATE ILLUSTRATION				

<END>

240-3182 VALVE AR-BANK 5

S/N: BXC1-UP; DSX1-UP
AN ATTACHMENT

SMCS-5051 **i02003569**

NOTE	PART NUMBER	QTY	PART NAME 1 2 3 4 5 6 (PRODUCT LEVEL)	SEE PAGE
Y	*164-1540*	1	CONTROL GP-HYDRAULIC PEDAL (EXTENDABLE STICK)	365
Y	*236-0695*	1	LINES GP-PUMP	485
Y	**185-5909**	1	VALVE GP-BANK 5 (SIDE SHIFT)	553
Y-SEPARATE ILLUSTRATION				

<END>

HYDRAULIC SYSTEM

240-3185 VALVE AR-BANK 5

S/N: BXC1-UP; DSX1-UP
AN ATTACHMENT

SMCS-5051 **i01971603**

NOTE	PART NUMBER	QTY	PART NAME 1 2 3 4 5 6 (PRODUCT LEVEL)	SEE PAGE
Y	*164-1540*	1	CONTROL GP-HYDRAULIC PEDAL	365
Y	*235-5857*	1	LINES GP-PUMP	483
	169-0599	1	SWITCH AS (HYDRAULIC SHUT OFF)	
	111-7899	1	GASKET	
Y	**203-5487**	1	VALVE GP-BANK 5	554
Y	**179-5593**	1	VALVE GP-SOLENOID	585
Y-SEPARATE ILLUSTRATION				

<END>

240-3183 VALVE AR-BANK 6

S/N: BXC1-UP; DSX1-UP
AN ATTACHMENT

SMCS-5051 **i02003571**

NOTE	PART NUMBER	QTY	PART NAME 1 2 3 4 5 6 (PRODUCT LEVEL)	SEE PAGE
Y	*164-1540*	1	CONTROL GP-HYDRAULIC PEDAL (EXTENDABLE STICK)	365
Y	*164-1550*	1	CONTROL GP-HYDRAULIC PEDAL (AUXILLIARY)	367
Y	*235-5855*	1	LINES GP-PUMP	482
	148-8408	2	PLUG AS	
			(EACH INCLUDES)	
	3D-2824	1	SEAL-O-RING	
	9S-4183	1	PLUG	
Y	**185-5910**	1	VALVE GP-BANK 6 (SIDE SHIFT)	556
Y-SEPARATE ILLUSTRATION				

<END>

240-3186 VALVE AR-BANK 6

S/N: BXC1-UP; DSX1-UP
AN ATTACHMENT

SMCS-5051 **i02003573**

NOTE	PART NUMBER	QTY	PART NAME 1 2 3 4 5 6 (PRODUCT LEVEL)	SEE PAGE
Y	*164-1540*	1	CONTROL GP-HYDRAULIC PEDAL (EXTENDABLE STICK)	365
Y	*164-1550*	1	CONTROL GP-HYDRAULIC PEDAL (AUXILIARY)	367
Y	*235-5858*	1	LINES GP-PUMP	484
	148-8408	2	PLUG AS	
			(EACH INCLUDES)	
	3D-2824	1	SEAL-O-RING	
	9S-4183	1	PLUG	
	169-0599	1	SWITCH AS (HYDRAULIC SHUT OFF)	
	111-7899	1	GASKET	
Y	**203-5488**	1	VALVE GP-BANK 6	557
Y	**179-5593**	1	VALVE GP-SOLENOID	585
Y-SEPARATE ILLUSTRATION				

<END>

204-9195 VALVE GP-AUXILIARY–KIT

S/N: BXC1-UP; DSX1-UP
FOUR TO FIVE BANK, STANDARD FRAME, WITH SHUTOFF (TUV)
AN ATTACHMENT

SMCS-5051 **i01670124**

NOTE	PART NUMBER	QTY	PART NAME 1 2 3 4 5 6 (PRODUCT LEVEL)	SEE PAGE
Y	*164-1540*	1	CONTROL GP-HYDRAULIC PEDAL	365
Y	**190-3450**	1	VALVE GP-CONTROL	565
	168-8186	1	HOSE AS	
	4D-9986	2	SEAL-O-RING	
	4J-5140	1	SEAL-O-RING	
	4J-5267	1	SEAL-O-RING	
B	**4T-2723**	3	SHIM (0.076MM THK)	
	118-2228	3	STUD	

B-USE AS REQUIRED
Y-SEPARATE ILLUSTRATION

<END>

204-9196 VALVE GP-AUXILIARY–KIT

S/N: BXC1-UP; DSX1-UP
FOUR TO FIVE BANK, NARROW FRAME, WITH SHUTOFF VALVE (TUV), KIT-AUXILIARY VALVE
AN ATTACHMENT

SMCS-5051 **i01502339**

NOTE	PART NUMBER	QTY	PART NAME 1 2 3 4 5 6 (PRODUCT LEVEL)	SEE PAGE
Y	*164-1540*	1	CONTROL GP-HYDRAULIC PEDAL	365
	183-8521	1	HOSE AS	
	4D-9986	2	SEAL-O-RING	
	4J-5140	1	SEAL-O-RING	
	4J-5267	1	SEAL-O-RING	
	4T-2723	3	SHIM (0.076MM THK)	
	118-2228	3	STUD	
Y	**190-3450**	1	VALVE GP-CONTROL	565

Y-SEPARATE ILLUSTRATION

<END>

204-9197 VALVE GP-AUXILIARY–KIT

S/N: BXC1-UP; DSX1-UP
FIVE TO SIX BANK, ALL FRAMES, WITH SHUTOFF (TUV)
AN ATTACHMENT

SMCS-5051 **i01670126**

NOTE	PART NUMBER	QTY	PART NAME 1 2 3 4 5 6 (PRODUCT LEVEL)	SEE PAGE
Y	*164-1550*	1	CONTROL GP-HYDRAULIC PEDAL	367
Y	**190-3450**	1	VALVE GP-CONTROL	565
	4D-9986	2	SEAL-O-RING	
	4J-5140	1	SEAL-O-RING	
	4J-5267	1	SEAL-O-RING	
B	**4T-2723**	3	SHIM (0.076MM THK)	
	9T-0637	3	STUD	
	148-8431	1	TEE GP	
	5K-9090	2	SEAL-O-RING	
	6V-8785	1	TEE	
	7M-8485	1	SEAL-O-RING	

B-USE AS REQUIRED
Y-SEPARATE ILLUSTRATION

<END>

204-9198 VALVE GP-AUXILIARY–KIT

S/N: BXC1-UP; DSX1-UP
FOUR TO FIVE BANK, WITHOUT SHUTOFF (TUV), STANDARD FRAME
AN ATTACHMENT

SMCS-5051 **i01670182**

NOTE	PART NUMBER	QTY	PART NAME 1 2 3 4 5 6 (PRODUCT LEVEL)	SEE PAGE
Y	*164-1540*	1	CONTROL GP-HYDRAULIC PEDAL	365
Y	**190-3450**	1	VALVE GP-CONTROL	565
	168-8186	1	HOSE AS	
	4D-9986	2	SEAL-O-RING	
	4J-5140	1	SEAL-O-RING	
	4J-5267	1	SEAL-O-RING	
B	**4T-2723**	3	SHIM (0.076MM THK)	
	107-8117	3	STUD	

B-USE AS REQUIRED
Y-SEPARATE ILLUSTRATION

<END>

204-9199 VALVE GP-AUXILIARY–KIT

S/N: BXC1-UP; DSX1-UP
FOUR TO FIVE BANK, NARROW FRAME, WITHOUT SHUTOFF VALVE (TUV), KIT-AUXILIARY VALVE
AN ATTACHMENT

SMCS-5051 **i01502299**

NOTE	PART NUMBER	QTY	PART NAME 1 2 3 4 5 6 (PRODUCT LEVEL)	SEE PAGE
Y	*164-1540*	1	CONTROL GP-HYDRAULIC PEDAL	365
	183-8521	1	HOSE AS	
	4D-9986	2	SEAL-O-RING	
	4J-5140	1	SEAL-O-RING	
	4J-5267	1	SEAL-O-RING	
	4T-2723	3	SHIM (0.076MM THK)	
	107-8117	3	STUD	
Y	**190-3450**	1	VALVE GP-CONTROL	565

Y-SEPARATE ILLUSTRATION

<END>

204-9200 VALVE GP-AUXILIARY–KIT

S/N: BXC1-UP; DSX1-UP
FIVE TO SIX BANK, ALL FRAMES, WITHOUT SHUTOFF (TUV)
AN ATTACHMENT

SMCS-5051 **i01670185**

NOTE	PART NUMBER	QTY	PART NAME 1 2 3 4 5 6 (PRODUCT LEVEL)	SEE PAGE
Y	*164-1550*	1	CONTROL GP-HYDRAULIC PEDAL	367
Y	**190-3450**	1	VALVE GP-CONTROL	565
	4D-9986	2	SEAL-O-RING	
	4J-5140	1	SEAL-O-RING	
	4J-5267	1	SEAL-O-RING	
B	**4T-2723**	3	SHIM (0.076MM THK)	
	116-1316	3	STUD	
	148-8431	1	TEE GP	
	5K-9090	2	SEAL-O-RING	
	6V-8785	1	TEE	
	7M-8485	1	SEAL-O-RING	

B-USE AS REQUIRED
Y-SEPARATE ILLUSTRATION

<END>

HYDRAULIC SYSTEM

185-5911 VALVE GP-BANK 2–LOADER

S/N: BXC1-UP; DSX1-UP
PART OF 186-5335, 186-5336 HYDRAULIC AR
AN ATTACHMENT

SMCS-5051 **i02003574**

NOTE	REF NO	GRAPHIC REF	PART NUMBER	QTY	PART NAME 1 2 3 4 5 6 (PRODUCT LEVEL)	SEE PAGE
Y	1	1	**188-7471**	1	VALVE GP-PRIORITY	305
	2	1	**191-4010**	1	COVER GP	
Y	3	1	**130-6520**	1	VALVE GP-CONTROL (LIFT)	561
Y	4	1	**191-4012**	1	VALVE GP-CONTROL (TILT) (TILT)	567
	5	1	**5M-2894**	3	WASHER-HARD (10.2X18.5X2.5MM THK)	
	6	1	**9S-8752**	3	NUT-FULL (3/8-16 THD)	
	7	1	**4T-4538**	3	STUD	
	8	1	**4D-9986**	6	SEAL-O-RING	
	9	1	**4J-5140**	3	SEAL-O-RING	
	10	1	**4J-5267**	3	SEAL-O-RING	
	11	1	**4T-2723**	9	SHIM (0.076MM THK)	

Y-SEPARATE ILLUSTRATION

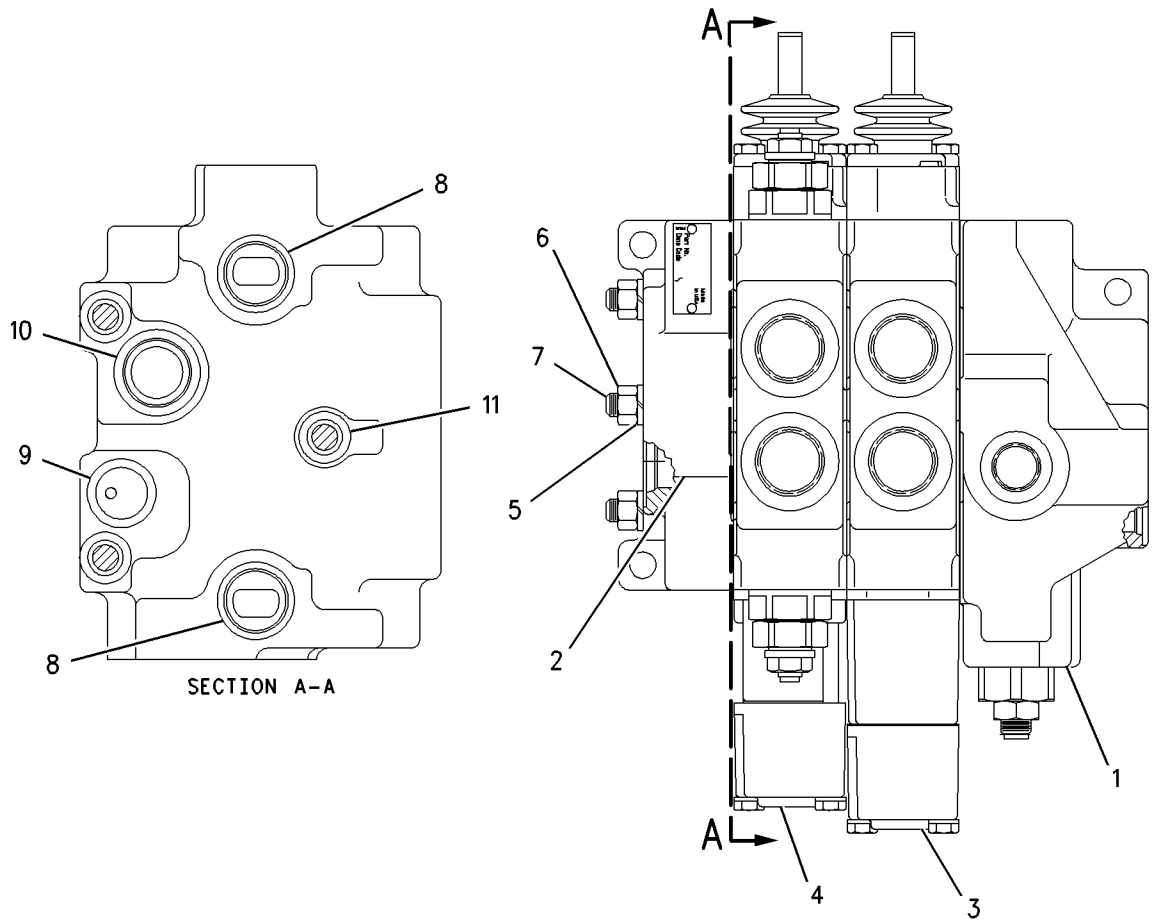

GRAPHIC #1 **<END>** g00738121

185-5913 VALVE GP-BANK 2–LOADER

S/N: BXC1-UP; DSX1-UP
PART OF 185-0060, 185-0061 HYDRAULIC AR
AN ATTACHMENT

SMCS-5051 **i02003576**

NOTE	REF NO	GRAPHIC REF	PART NUMBER	QTY	PART NAME 1 2 3 4 5 6 (PRODUCT LEVEL)	SEE PAGE
Y	1	1	**188-7471**	1	VALVE GP-PRIORITY	305
	2	1	**191-4010**	1	COVER GP	
Y	3	1	**130-6520**	1	VALVE GP-CONTROL (LIFT)	561
Y	4	1	**191-4032**	1	VALVE GP-CONTROL (TILT)	569
	5	1	**5M-2894**	3	WASHER-HARD (10.2X18.5X2.5MM THK)	
	6	1	**9S-8752**	3	NUT-FULL (3/8-16 THD)	
	7	1	**4T-4538**	3	STUD	
	8	1	**4D-9986**	6	SEAL-O-RING	
	9	1	**4J-5140**	3	SEAL-O-RING	
	10	1	**4J-5267**	3	SEAL-O-RING	
B	11	1	**4T-2723**	9	SHIM (0.076MM THK)	

B-USE AS REQUIRED
Y-SEPARATE ILLUSTRATION

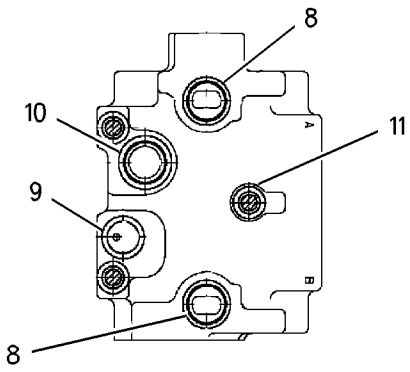

SECTION A-A

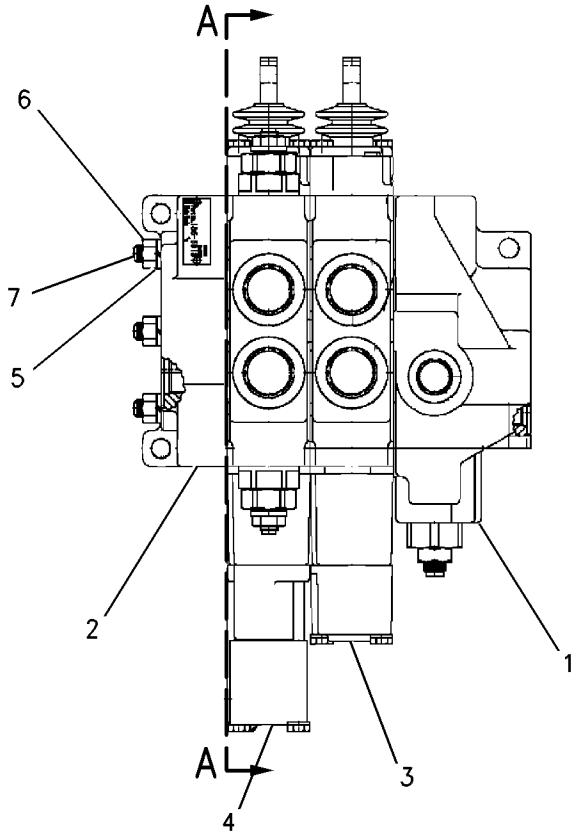

GRAPHIC #1 **<END>** g00739064

185-5912 VALVE GP-BANK 3–LOADER

S/N: BXC1-UP; DSX1-UP
PART OF 186-5337, 186-5338 HYDRAULIC AR
AN ATTACHMENT

SMCS-5051 **i02003577**

NOTE	REF NO	GRAPHIC REF	PART NUMBER	QTY	PART NAME 1 2 3 4 5 6 (PRODUCT LEVEL)	SEE PAGE
Y	1	1	**188-7471**	1	VALVE GP-PRIORITY	305
	2	1	**191-4010**	1	COVER GP	
Y	3	1	**130-6520**	1	VALVE GP-CONTROL (LIFT)	561
Y	4	1	**191-4012**	1	VALVE GP-CONTROL (TILT) (TILT)	567
Y	5	1	**124-8818**	1	VALVE GP-CONTROL (AUXILIARY)	559
	6	1	**5M-2894**	3	WASHER-HARD (10.2X18.5X2.5MM THK)	
	7	1	**9S-8752**	3	NUT-FULL (3/8-16 THD)	
	8	1	**4T-4518**	3	STUD	
	9	1	**4D-9986**	8	SEAL-O-RING	
	10	1	**4J-5140**	4	SEAL-O-RING	
	11	1	**4J-5267**	4	SEAL-O-RING	
B	12	1	**4T-2723**	12	SHIM (0.076MM THK)	

B-USE AS REQUIRED
Y-SEPARATE ILLUSTRATION

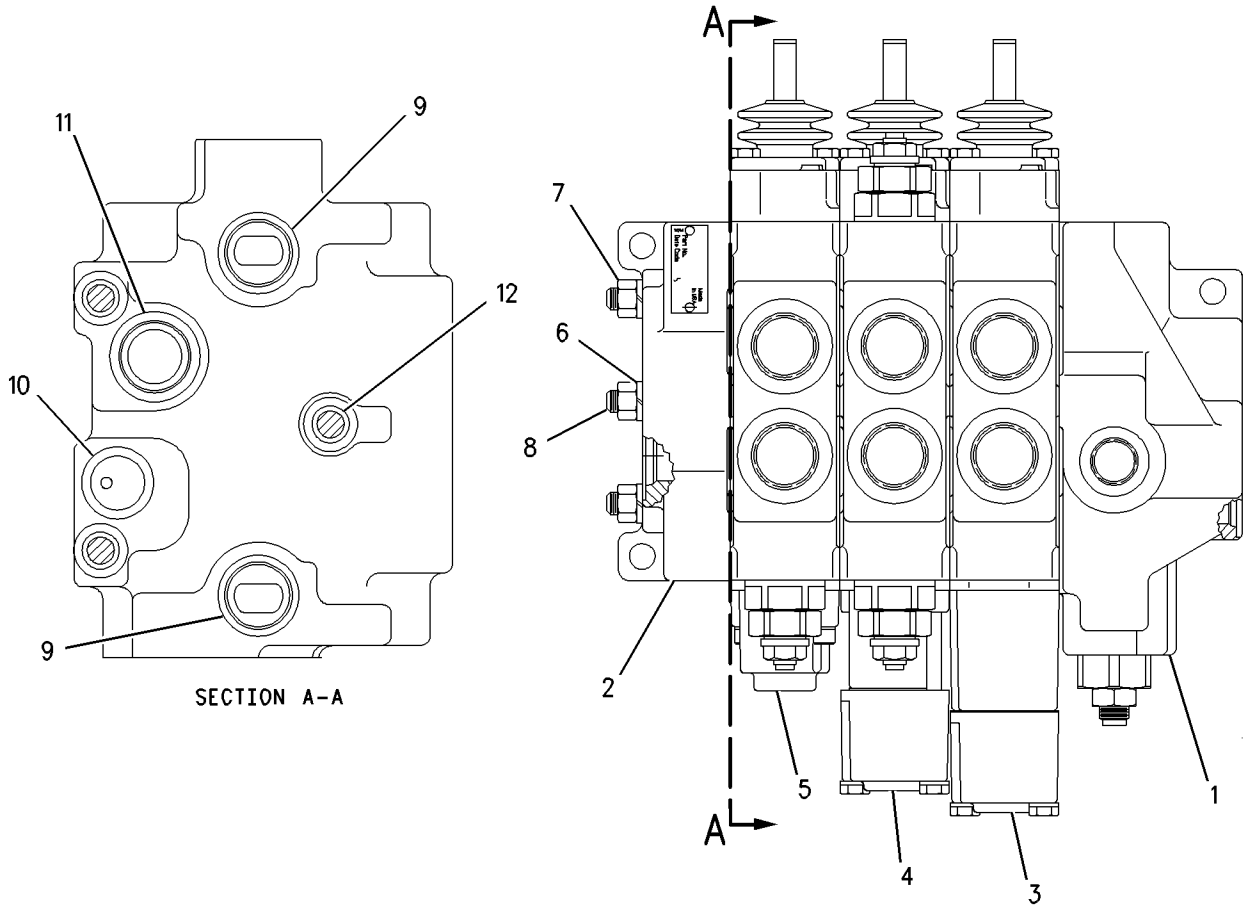

SECTION A-A

GRAPHIC #1 **<END>** g00738125

185-5914 VALVE GP-BANK 3–BACKHOE

S/N: BXC1-UP; DSX1-UP
PART OF 185-0062, 185-0063 HYDRAULIC AR
AN ATTACHMENT

SMCS-5051 **i02003578**

NOTE	REF NO	GRAPHIC REF	PART NUMBER	QTY	PART NAME 1 2 3 4 5 6 (PRODUCT LEVEL)	SEE PAGE
Y	1	1	**188-7471**	1	VALVE GP-PRIORITY	305
	2	1	**191-4010**	1	COVER GP	
Y	3	1	**130-6520**	1	VALVE GP-CONTROL (LIFT)	561
Y	4	1	**191-4032**	1	VALVE GP-CONTROL (TILT)	569
Y	5	1	**191-4035**	1	VALVE GP-CONTROL (LIFT)	571
	6	1	**5M-2894**	3	WASHER-HARD (10.2X18.5X2.5MM THK)	
	7	1	**9S-8752**	3	NUT-FULL (3/8-16 THD)	
	8	1	**4T-4518**	3	STUD	
	9	1	**4D-9986**	8	SEAL-O-RING	
	10	1	**4J-5140**	4	SEAL-O-RING	
	11	1	**4J-5267**	4	SEAL-O-RING	
	12	1	**4T-2723**	12	SHIM (0.076MM THK)	

Y-SEPARATE ILLUSTRATION

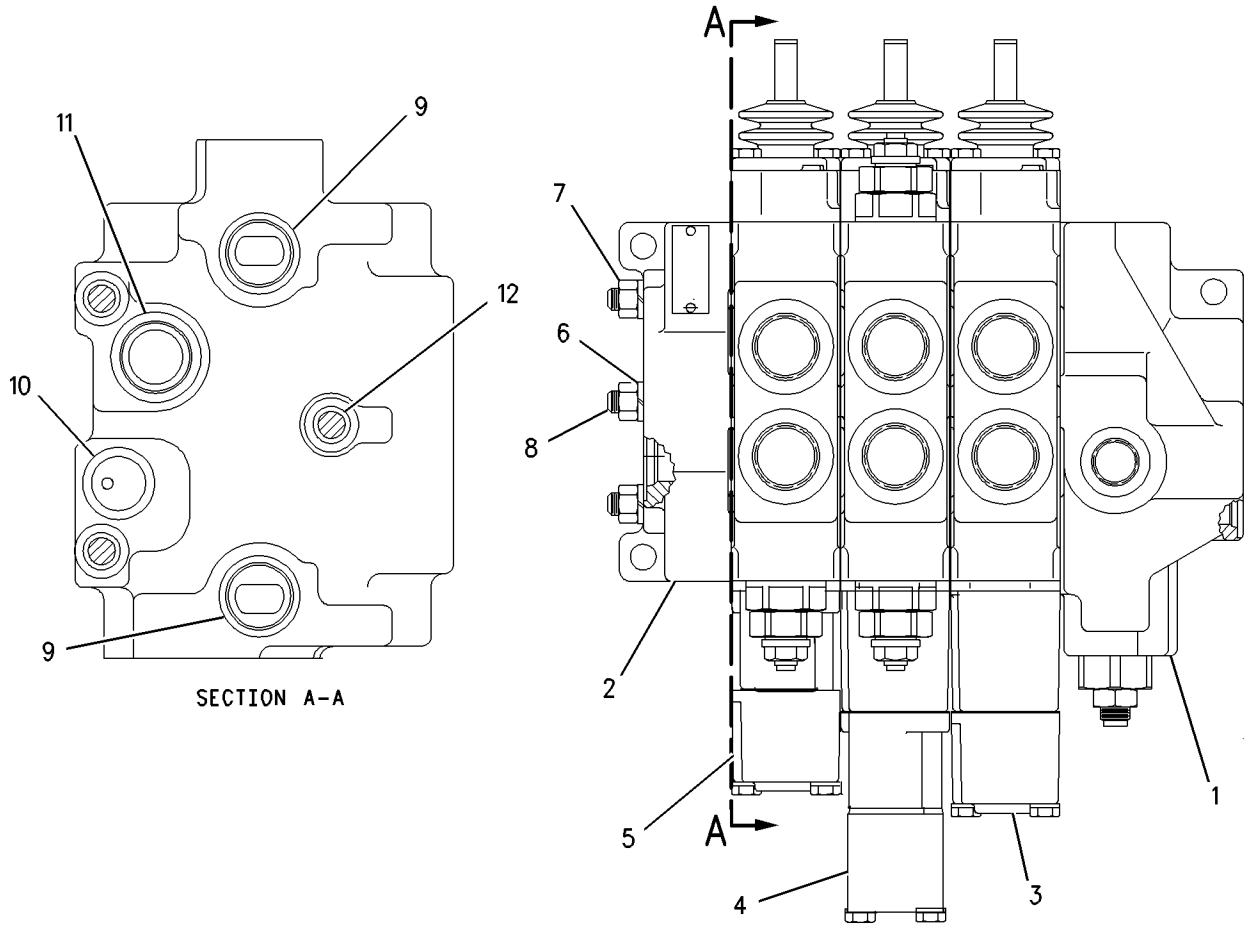

GRAPHIC #1 **<END>** g00844428

185-5908 VALVE GP-BANK 4—BACKHOE—SIDE SHIFT

S/N: BXC1-UP; DSX1-UP
PART OF 240-3181 VALVE AR-BANK 4
AN ATTACHMENT

SMCS-5051 **i02003582**

NOTE	REF NO	GRAPHIC REF	PART NUMBER	QTY	PART NAME 1 2 3 4 5 6 (PRODUCT LEVEL)	SEE PAGE
	1	1	**200-0161**	1	COVER	
	2	1	**193-9189**	1	COVER AS	
		1	**5B-9318**	1	BALL	
		1	**197-2969**	1	SEAT AS	
Y	3	1	**204-0532**	1	VALVE GP-CONTROL (BOOM)	575
Y	4	1	**166-7950**	1	VALVE GP-CONTROL (SWING)	563
Y	5	1	**193-3124**	1	VALVE GP-CONTROL (BUCKET)	573
Y	6	1	**204-0533**	1	VALVE GP-CONTROL (STICK)	577
	7	1	**5M-2894**	6	WASHER-HARD (10.2X18.5X2.5MM THK)	
	8	1	**9S-8752**	6	NUT-FULL (3/8-16 THD)	
	9	1	**4T-4218**	3	STUD	
	10	1	**4D-9986**	10	SEAL-O-RING	
	11	1	**4J-5140**	5	SEAL-O-RING	
	12	1	**4J-5267**	5	SEAL-O-RING	
B	13	1	**4T-2723**	15	SHIM (0.076MM THK)	

B-USE AS REQUIRED
Y-SEPARATE ILLUSTRATION

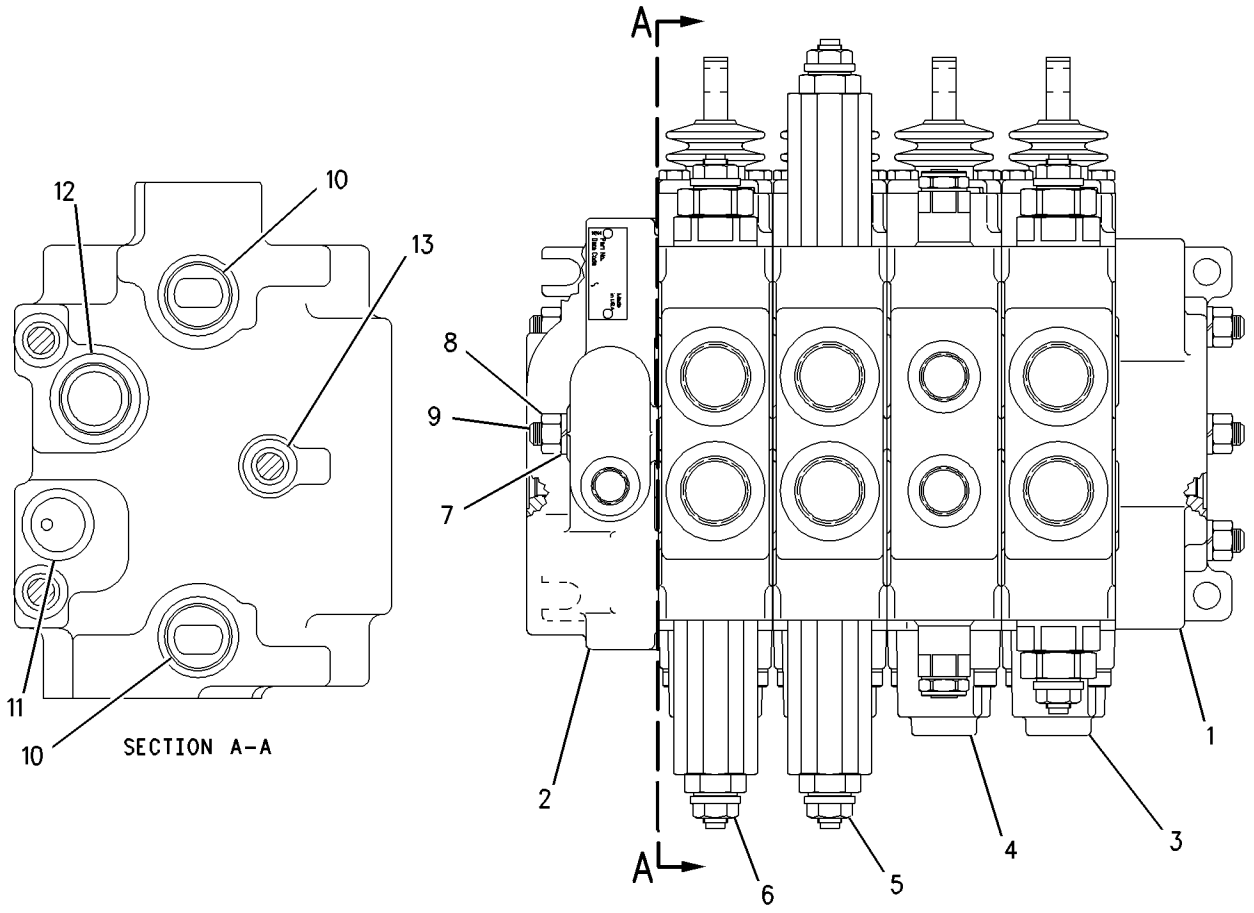

GRAPHIC #1 **<END>** g00754187

203-5486 VALVE GP-BANK 4—BACKHOE

S/N: BXC1-UP; DSX1-UP
PART OF 240-3184 VALVE AR-BANK 4
AN ATTACHMENT

SMCS-5051 **i02003592**

NOTE	REF NO	GRAPHIC REF	PART NUMBER	QTY	PART NAME 1 2 3 4 5 6 (PRODUCT LEVEL)	SEE PAGE
Y	1	1	**202-2236**	1	COVER & VALVE GP-BANK	371
	2	1	**193-9189**	1	COVER AS	
		1	**5B-9318**	1	BALL	
		1	**197-2969**	1	SEAT AS	
Y	3	1	**204-0532**	1	VALVE GP-CONTROL (BOOM)	575
Y	4	1	**166-7950**	1	VALVE GP-CONTROL (SWING)	563
Y	5	1	**193-3124**	1	VALVE GP-CONTROL (BUCKET)	573
Y	6	1	**204-0533**	1	VALVE GP-CONTROL (STICK)	577
	7	1	**5M-2894**	3	WASHER-HARD (10.2X18.5X2.5MM THK)	
	8	1	**9S-8752**	3	NUT-FULL (3/8-16 THD)	
	9	1	**4T-4517**	3	STUD	
	10	1	**4D-9986**	10	SEAL-O-RING	
	11	1	**4J-5140**	5	SEAL-O-RING	
	12	1	**4J-5267**	5	SEAL-O-RING	
	13	1	**4T-2723**	15	SHIM (0.076MM THK)	

Y-SEPARATE ILLUSTRATION

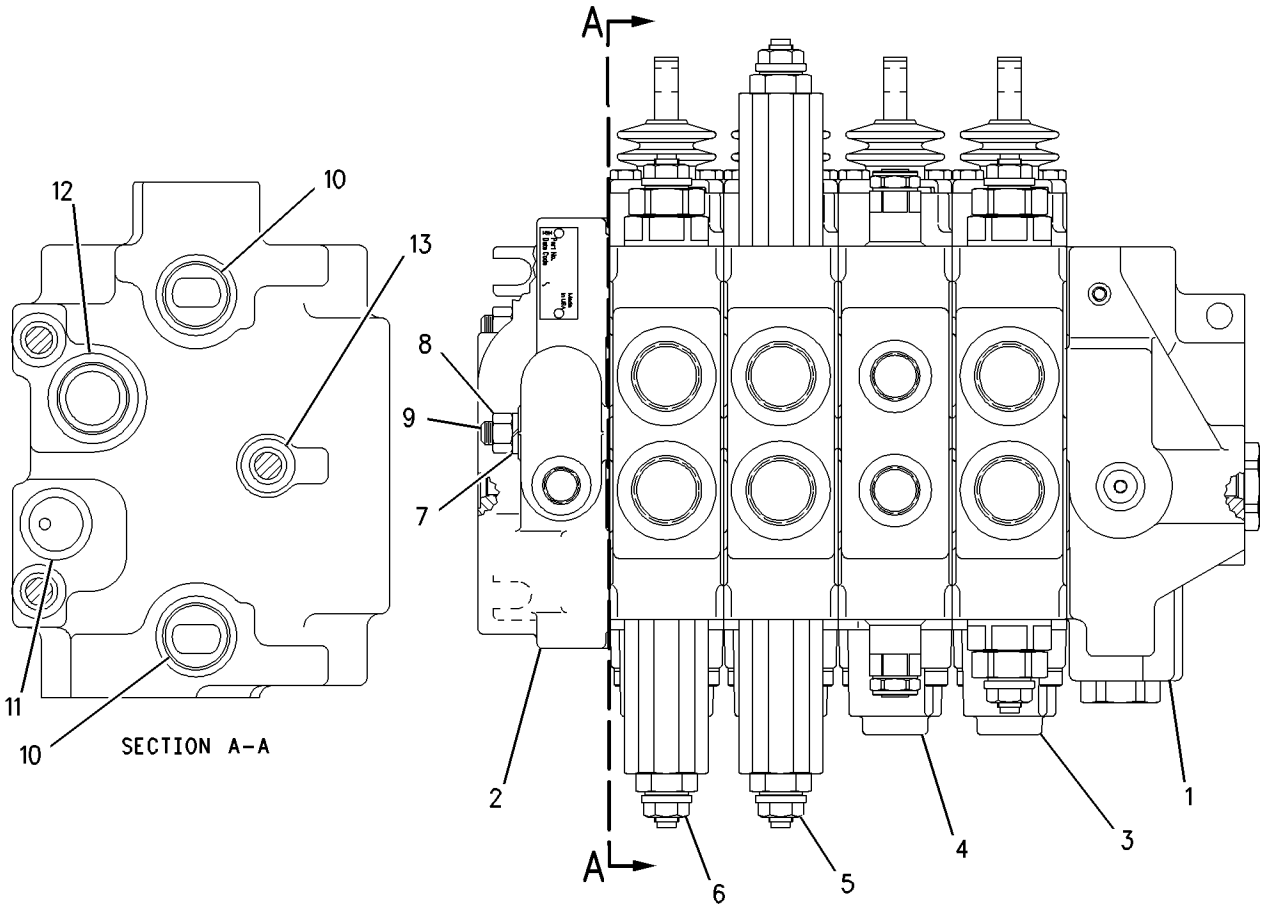

GRAPHIC #1 **<END>** g00754188

185-5909 VALVE GP-BANK 5—BACKHOE—SIDE SHIFT

S/N: BXC1-UP; DSX1-UP
PART OF 240-3182 VALVE AR-BANK 5
AN ATTACHMENT

SMCS-5051 **i02003593**

NOTE	REF NO	GRAPHIC REF	PART NUMBER	QTY	PART NAME 1 2 3 4 5 6 (PRODUCT LEVEL)	SEE PAGE
	1	1	**200-0161**	1	COVER	
	2	1	**193-9189**	1	COVER AS	
		1	**5B-9318**	1	BALL	
		1	**197-2969**	1	SEAT AS	
Y	3	1	**204-0532**	1	VALVE GP-CONTROL (BOOM)	575
Y	4	1	**166-7950**	1	VALVE GP-CONTROL (SWING)	563
Y	5	1	**193-3124**	2	VALVE GP-CONTROL (BUCKET)	573
Y	6	1	**204-0533**	1	VALVE GP-CONTROL (STICK)	577
Y	7	1	**190-3450**	1	VALVE GP-CONTROL (AUXILIARY)	565
	8	1	**5M-2894**	6	WASHER-HARD (10.2X18.5X2.5MM THK)	
	9	1	**9S-8752**	6	NUT-FULL (3/8-16 THD)	
	10	1	**107-8117**	3	STUD	
	11	1	**4D-9986**	12	SEAL-O-RING	
	12	1	**4J-5140**	6	SEAL-O-RING	
	13	1	**4J-5267**	6	SEAL-O-RING	
	14	1	**4T-2723**	18	SHIM (0.076MM THK)	

Y-SEPARATE ILLUSTRATION

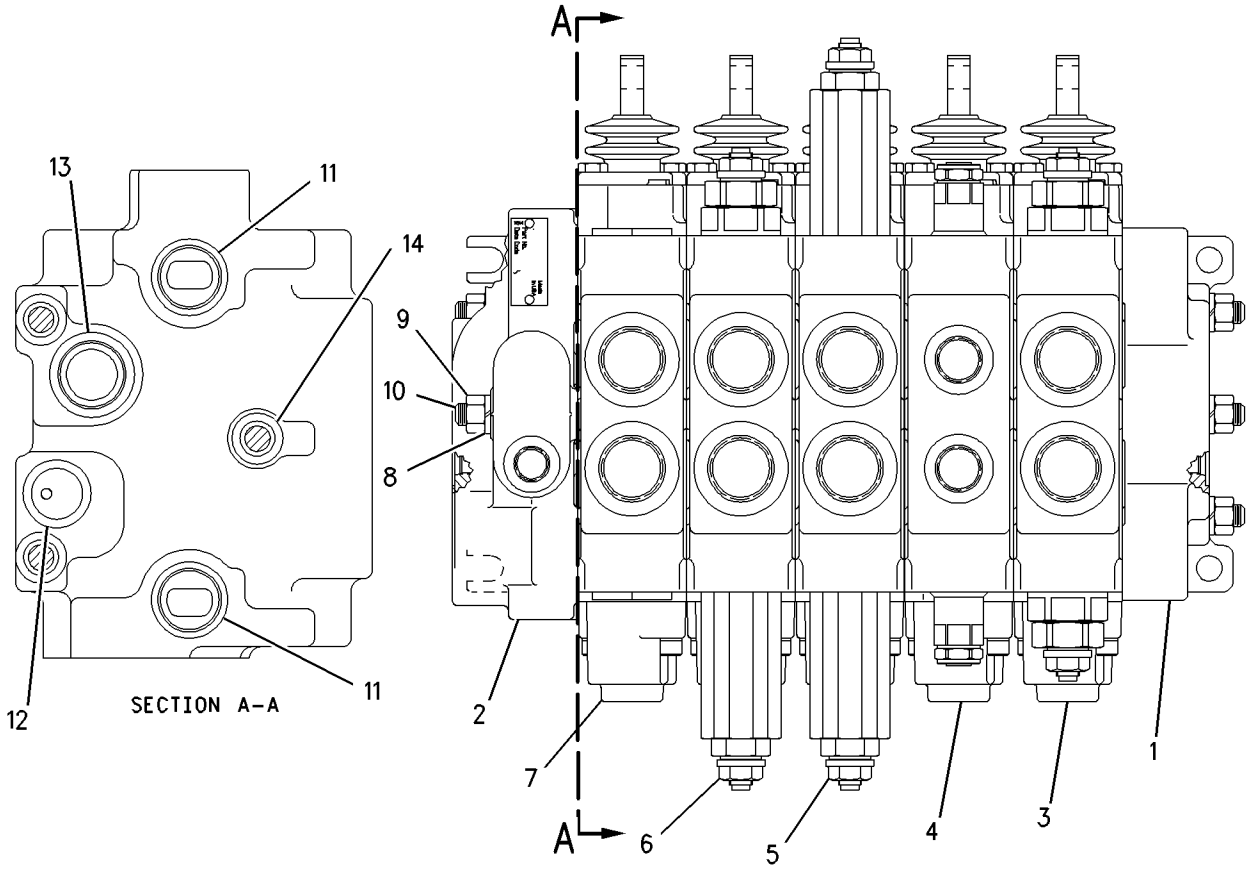

GRAPHIC #1 **<END>** g00750932

203-5487 VALVE GP-BANK 5—BACKHOE

S/N: BXC1-UP; DSX1-UP
PART OF 240-3185 VALVE AR-BANK 5
AN ATTACHMENT

SMCS-5051 **i02003596**

NOTE	REF NO	GRAPHIC REF	PART NUMBER	QTY	PART NAME 1 2 3 4 5 6 (PRODUCT LEVEL)	SEE PAGE
Y	1	1	**202-2236**	1	COVER & VALVE GP-BANK	371
	2	1	**193-9189**	1	COVER AS	
		1	**5B-9318**	1	BALL	
		1	**197-2969**	1	SEAT AS	
Y	3	1	**204-0532**	1	VALVE GP-CONTROL (BOOM)	575
Y	4	1	**166-7950**	1	VALVE GP-CONTROL (SWING)	563
Y	5	1	**193-3124**	2	VALVE GP-CONTROL (BUCKET)	573
Y	6	1	**204-0533**	1	VALVE GP-CONTROL (STICK)	577
Y	7	1	**190-3450**	1	VALVE GP-CONTROL (AUXILIARY)	565
	8	1	**5M-2894**	3	WASHER-HARD (10.2X18.5X2.5MM THK)	
	9	1	**9S-8752**	3	NUT-FULL (3/8-16 THD)	
	10	1	**118-2228**	3	STUD	
	11	1	**4D-9986**	12	SEAL-O-RING	
	12	1	**4J-5140**	6	SEAL-O-RING	
	13	1	**4J-5267**	6	SEAL-O-RING	
B	14	1	**4T-2723**	18	SHIM (0.076MM THK)	

B-USE AS REQUIRED
Y-SEPARATE ILLUSTRATION

203-5487 VALVE GP-BANK 5 ***(contd.)*** **i02003596**

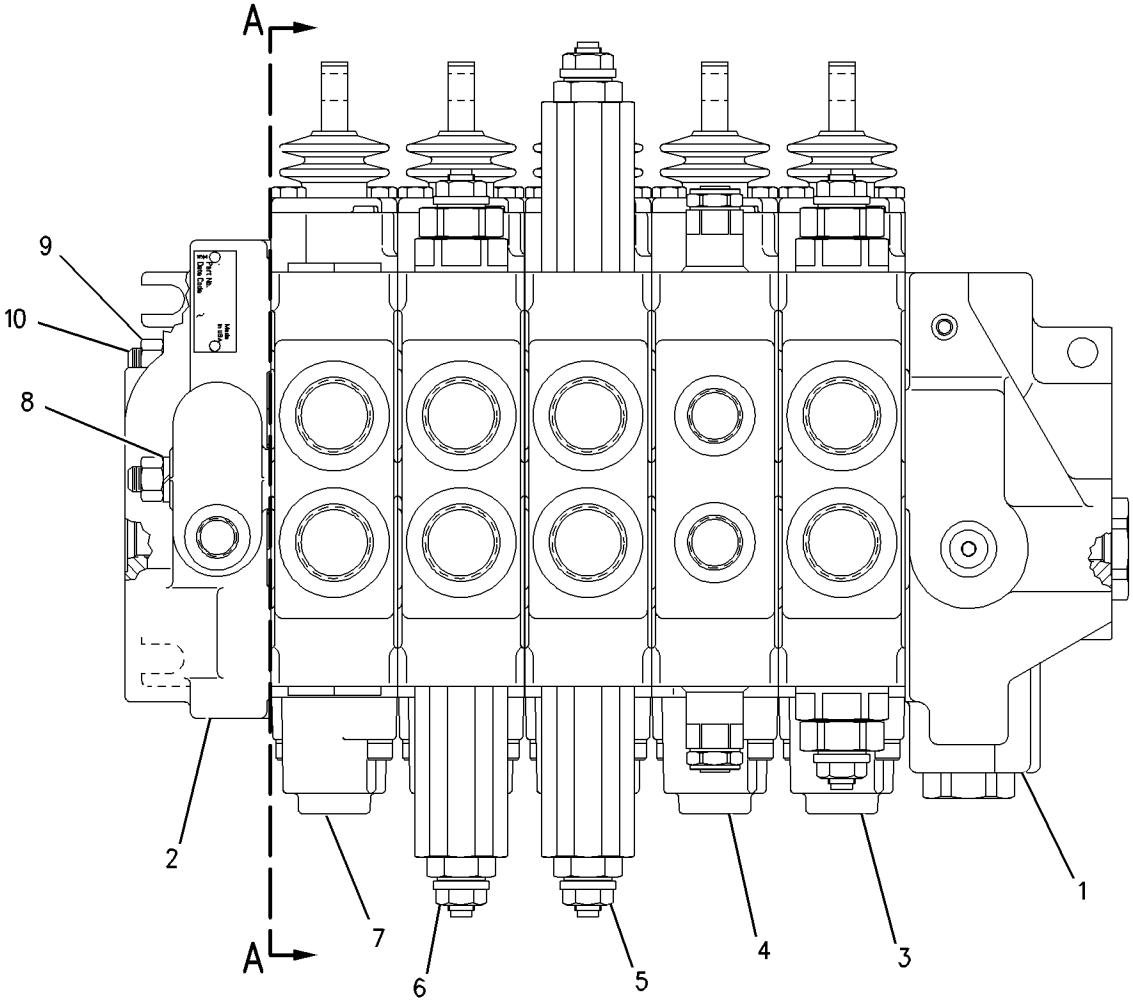

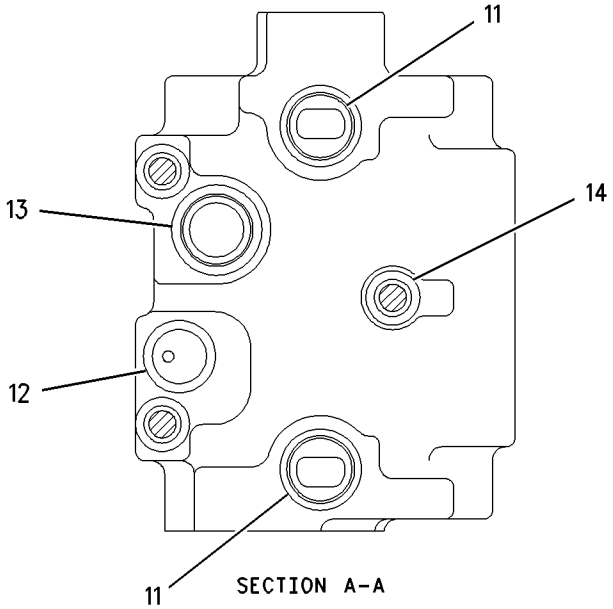

GRAPHIC #1 **<END>** g00751192

185-5910 VALVE GP-BANK 6—BACKHOE —SIDE SHIFT

S/N: BXC1-UP; DSX1-UP
PART OF 240-3183 VALVE AR-BANK 6
AN ATTACHMENT

SMCS-5051 **i02003598**

NOTE	REF NO	GRAPHIC REF	PART NUMBER	QTY	PART NAME 1 2 3 4 5 6 (PRODUCT LEVEL)	SEE PAGE
	1	1	**200-0161**	1	COVER	
	2	1	**193-9189**	1	COVER AS	
		1	**5B-9318**	1	BALL	
		1	**197-2969**	1	SEAT AS	
Y	3	1	**190-3450**	2	VALVE GP-CONTROL (AUXILIARY)	565
Y	4	1	**204-0532**	1	VALVE GP-CONTROL (BOOM)	575
Y	5	1	**166-7950**	1	VALVE GP-CONTROL (SWING)	563
Y	6	1	**193-3124**	1	VALVE GP-CONTROL (BUCKET)	573
Y	7	1	**204-0533**	1	VALVE GP-CONTROL (STICK)	577
	8	1	**5M-2894**	6	WASHER-HARD (10.2X18.5X2.5MM THK)	
	9	1	**9S-8752**	6	NUT-FULL (3/8-16 THD)	
	10	1	**116-1316**	3	STUD	
	11	1	**4D-9986**	14	SEAL-O-RING	
	12	1	**4J-5140**	7	SEAL-O-RING	
	13	1	**4J-5267**	7	SEAL-O-RING	
B	14	1	**4T-2723**	21	SHIM (0.076MM THK)	

B-USE AS REQUIRED
Y-SEPARATE ILLUSTRATION

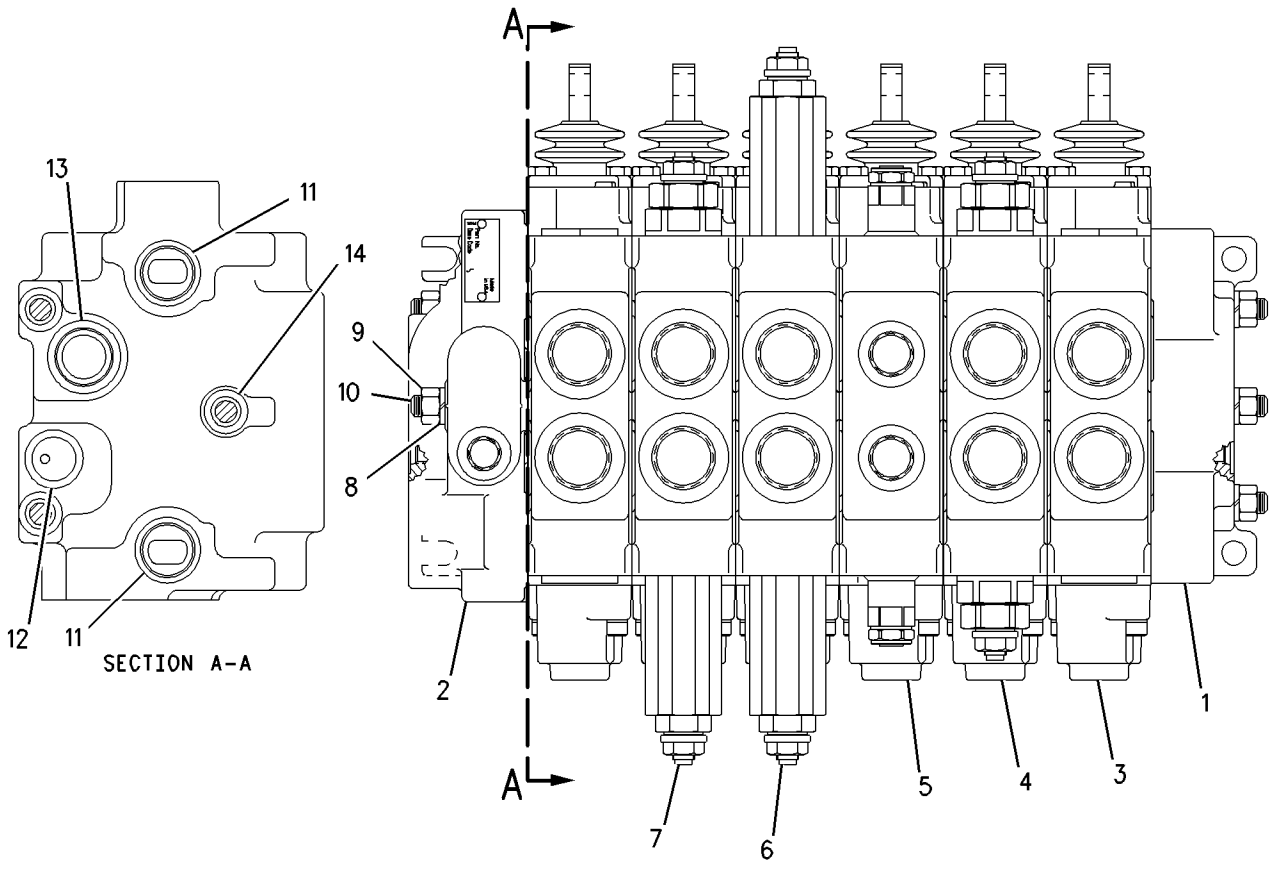

GRAPHIC #1 **<END>** g00754182

203-5488 VALVE GP-BANK 6–BACKHOE

S/N: BXC1-UP; DSX1-UP
PART OF 240-3186 VALVE AR-BANK 6
AN ATTACHMENT

SMCS-5051 **i02003600**

NOTE	REF NO	GRAPHIC REF	PART NUMBER	QTY	PART NAME 1 2 3 4 5 6 (PRODUCT LEVEL)	SEE PAGE
Y	1	1	**202-2236**	1	COVER & VALVE GP-BANK	371
	2	1	**193-9189**	1	COVER AS	
		1	**5B-9318**	1	BALL	
		1	**197-2969**	1	SEAT AS	
Y	3	1	**190-3450**	1	VALVE GP-CONTROL (AUXILIARY)	565
Y	4	1	**204-0532**	1	VALVE GP-CONTROL (BOOM)	575
Y	5	1	**166-7950**	1	VALVE GP-CONTROL (SWING)	563
Y	6	1	**193-3124**	1	VALVE GP-CONTROL (BUCKET)	573
Y	7	1	**204-0533**	1	VALVE GP-CONTROL (STICK)	577
Y	8	1	**190-3450**	1	VALVE GP-CONTROL (EXTENDABLE STICK)	565
	9	1	**5M-2894**	3	WASHER-HARD (10.2X18.5X2.5MM THK)	
	10	1	**9S-8752**	3	NUT-FULL (3/8-16 THD)	
	11	1	**9T-0637**	3	STUD	
	12	1	**4D-9986**	14	SEAL-O-RING	
	13	1	**4J-5140**	7	SEAL-O-RING	
	14	1	**4J-5267**	7	SEAL-O-RING	
B	15	1	**4T-2723**	21	SHIM (0.076MM THK)	

B-USE AS REQUIRED
Y-SEPARATE ILLUSTRATION

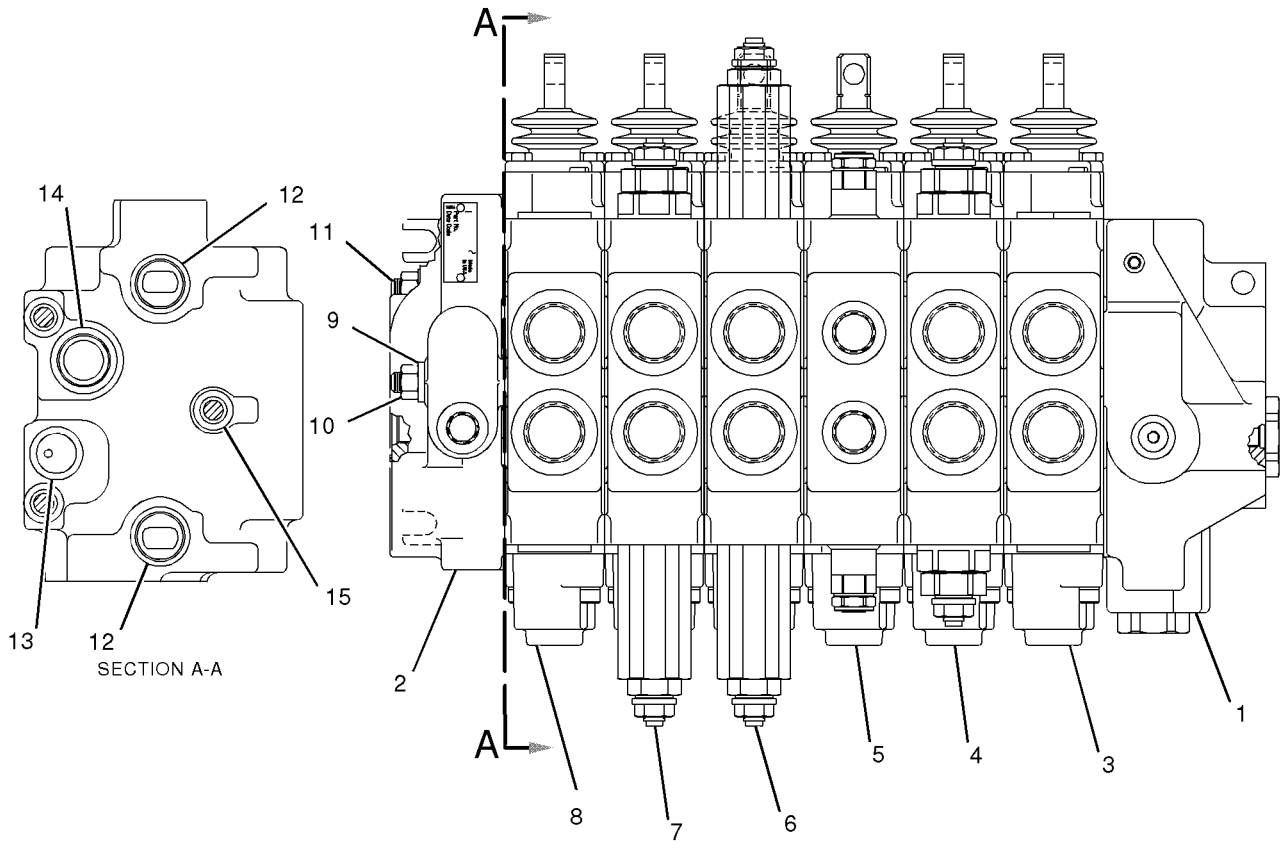

GRAPHIC #1 **<END>** g01037039

178-7481 VALVE GP-CHECK–BACK PRESSURE

S/N: BXC1-UP; DSX1-UP
PRE-INSTALLED O-RINGS
PART OF 199-9617 LINES GP-BACKHOE AUXILIARY
AN ATTACHMENT

SMCS-5067 **i01490055**

NOTE	REF NO	GRAPHIC REF	PART NUMBER	QTY	PART NAME 1 2 3 4 5 6 (PRODUCT LEVEL)	SEE PAGE
	1	1	**5K-9090**	2	SEAL-O-RING	
	2	1	**7M-8485**	1	SEAL-O-RING	

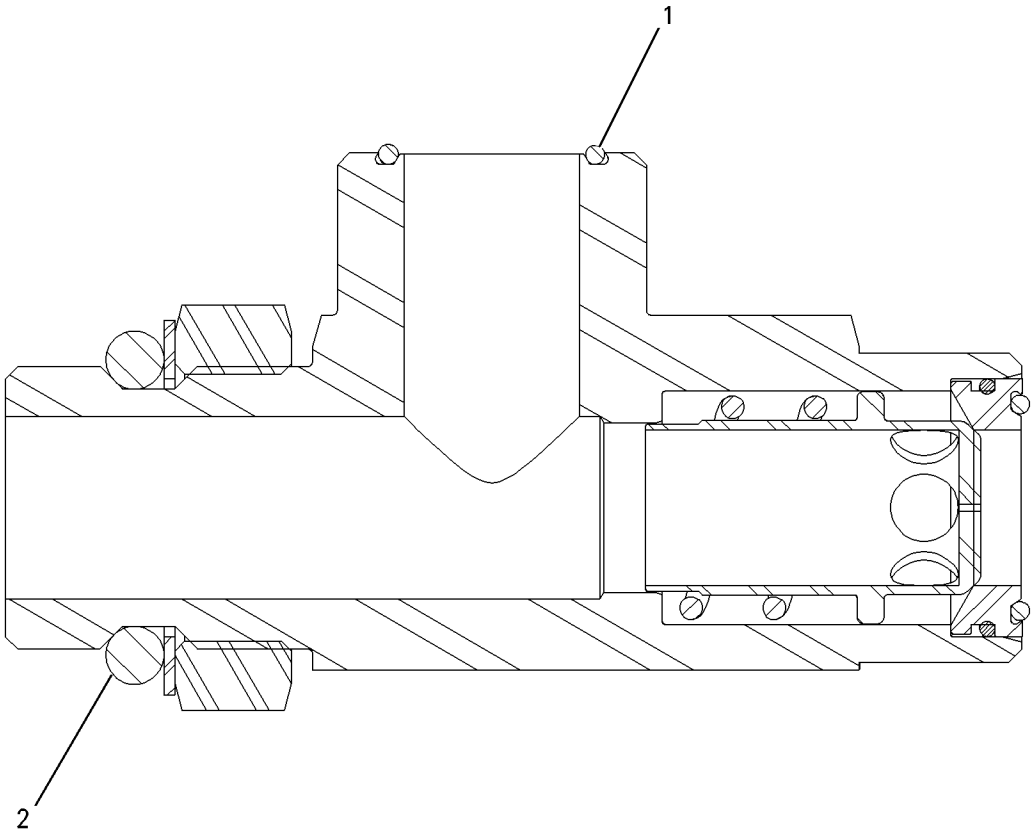

GRAPHIC #1 **<END>** g00774246

HYDRAULIC SYSTEM

124-8818 VALVE GP-CONTROL—AUXILIARY

S/N: BXC1-UP; DSX1-UP
PART OF 185-5912 VALVE GP-BANK 3
AN ATTACHMENT

SMCS-5051 **i01528677**

NOTE	REF NO	GRAPHIC REF	PART NUMBER	QTY	PART NAME 1 2 3 4 5 6 (PRODUCT LEVEL)	SEE PAGE
	1	1	**4T-4524**	1	GUARD-DUST	
	2	1	**031-0214**	2	BOLT-LOCKING (1/4-20X0.5 IN)	
	3	1	**9T-0704**	1	VALVE GP-RELIEF	
	3A	1	**4K-1388**	1	SEAL-O-RING	
	3B	1	**6E-0358**	1	RING-BACKUP	
	3C	1	**5K-9090**	1	SEAL-O-RING	
	4	1	**4T-4516**	1	SPRING	
	5	1	**031-5085**	1	BOLT-LOCKING (1/4-20X1.00 IN)	
	6	1	**167-6768**	1	HOUSING	
	7	1	**4T-4521**	2	RETAINER	
	8	1	**4T-4533**	1	SPACER	
	9	1	**195-2139**	2	SEAL-O-RING	
	10	1	**6E-4317**	1	SPRING	
	11	1	**2M-9780**	1	SEAL-O-RING	
	12	1	**9S-8006**	1	PLUG	
	13	1	**4T-4520**	1	FILTER	
	14	1	**4T-4528**	1	RETAINER	
	15	1	**126-5476**	1	SEAT AS-SHUTTLE	
	15A	1	**4T-7807**	1	RING-BACKUP	
	15B	1	**7J-0204**	1	SEAL-O-RING	
	15C	1	**8T-2360**	1	SEAL-O-RING	
	16	1	**5B-9318**	1	BALL	
	17	1	**155-9836**	1	HOUSING AS	
	17A	1	**1P-7363**	1	SEAL-O-RING	
	17B	1	**3J-7354**	1	SEAL-O-RING	
	17C	1	**8T-2361**	1	SEAL-O-RING	
	17D	1	**126-5984**	1	RING-BACKUP	
	17E	1	**126-5985**	1	RING-BACKUP	
	18	1	**8H-0707**	2	BOLT (1/4-20X1 IN)	

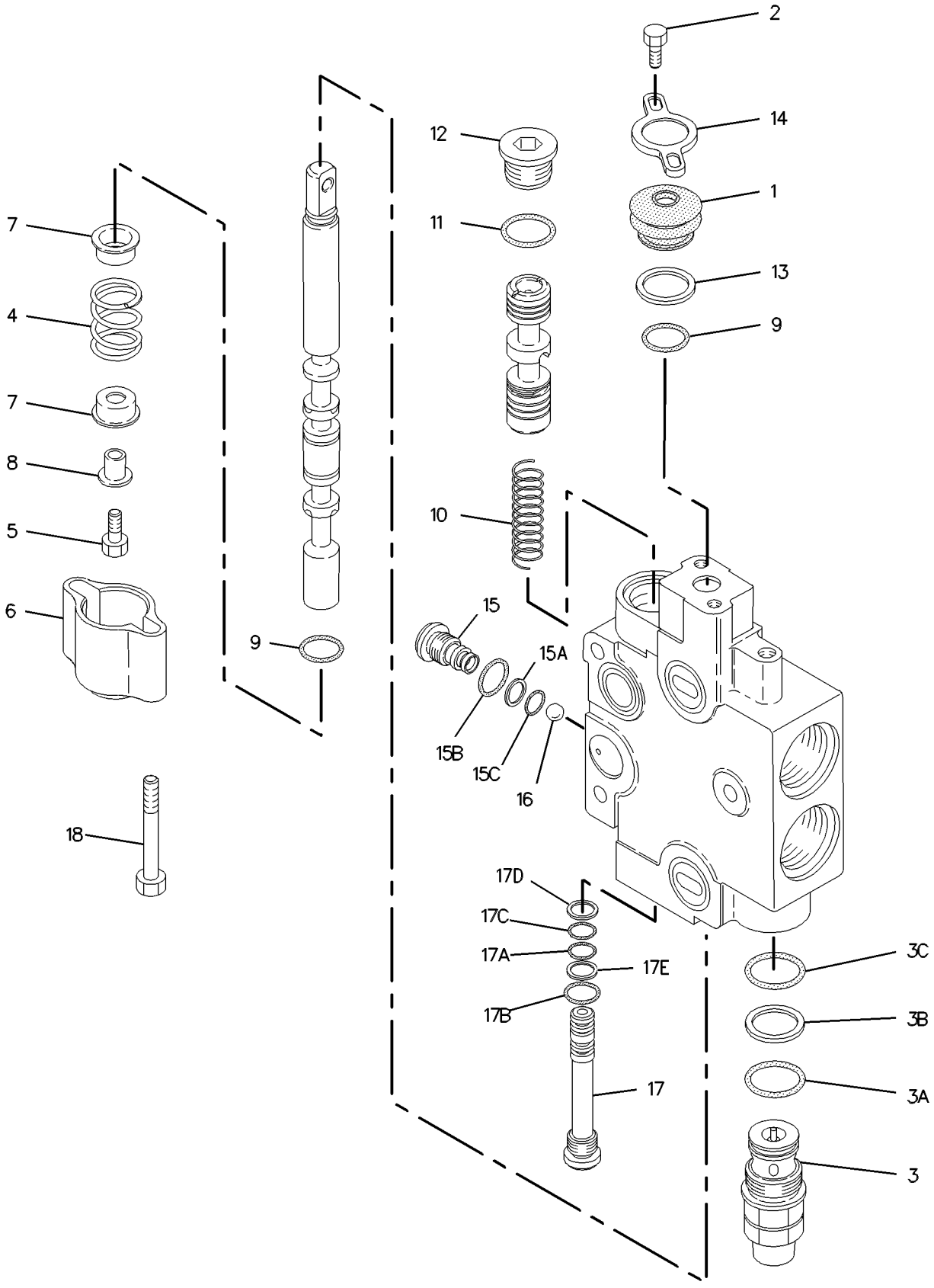

GRAPHIC #1 **<END>** g00538490

130-6520 VALVE GP-CONTROL–LIFT

S/N: BXC1-UP; DSX1-UP

PART OF 185-5911, 185-5913 VALVE GP-BANK 2, 185-5912, 185-5914 VALVE GP-BANK 3

AN ATTACHMENT

SMCS-5051 **i01672788**

NOTE	REF NO	GRAPHIC REF	PART NUMBER	QTY	PART NAME 1 2 3 4 5 6 (PRODUCT LEVEL)	SEE PAGE
	1	1	**4T-4524**	1	GUARD-DUST	
	2	1	**031-0214**	2	BOLT-LOCKING (1/4-20X0.5 IN)	
	3	1	**4T-4531**	1	PLUG	
	4	1	**4T-4513**	1	SPRING	
	5	1	**100-3567**	1	HOUSING-DETENT	
	6	1	**100-3566**	1	PISTON-DETENT	
	7	1	**4B-9782**	1	BALL	
	8	1	**4T-4532**	1	HOUSING	
	9	1	**144-4277**	1	SHAFT AS-DETENT	
	10	1	**8S-4710**	2	BOLT (1/4-20X4 IN)	
	11	1	**5P-0537**	2	WASHER-HARD (7.2X14.5X2MM THK)	
	12	1	**100-3564**	1	SPRING	
	13	1	**4T-4521**	2	RETAINER	
	14	1	**100-3563**	1	SPACER-DETENT	
	15	1	**8F-0212**	1	SEAL-O-RING	
	16	1	**6E-4317**	1	SPRING	
	17	1	**2M-9780**	1	SEAL-O-RING	
	18	1	**9S-8006**	1	PLUG	
	19	1	**4T-4520**	1	FILTER	
	20	1	**4T-4528**	1	RETAINER	
	21	1	**126-5476**	1	SEAT AS-SHUTTLE	
	21A	1	**4T-7807**	1	RING-BACKUP	
	21B	1	**7J-0204**	1	SEAL-O-RING	
	21C	1	**8T-2360**	1	SEAL-O-RING	
	22	1	**5B-9318**	7	BALL	
	23	1	**155-9836**	1	VALVE GP-RELIEF	
	23A	1	**1P-7363**	1	SEAL-O-RING	
	23B	1	**3J-7354**	1	SEAL-O-RING	
	23C	1	**8T-2361**	1	SEAL-O-RING	
	23D	1	**126-5984**	1	RING-BACKUP	
	23E	1	**126-5985**	1	RING-BACKUP	
	24	1	**4K-1388**	1	SEAL-O-RING	
	25	1	**6E-0358**	1	RING-BACKUP	
	26	1	**5K-9090**	1	SEAL-O-RING	
	27	1	**128-2776**	1	GASKET	
	28	1	**195-2139**	1	SEAL-O-RING	

130-6520 VALVE GP-CONTROL *(contd.)* i01672788

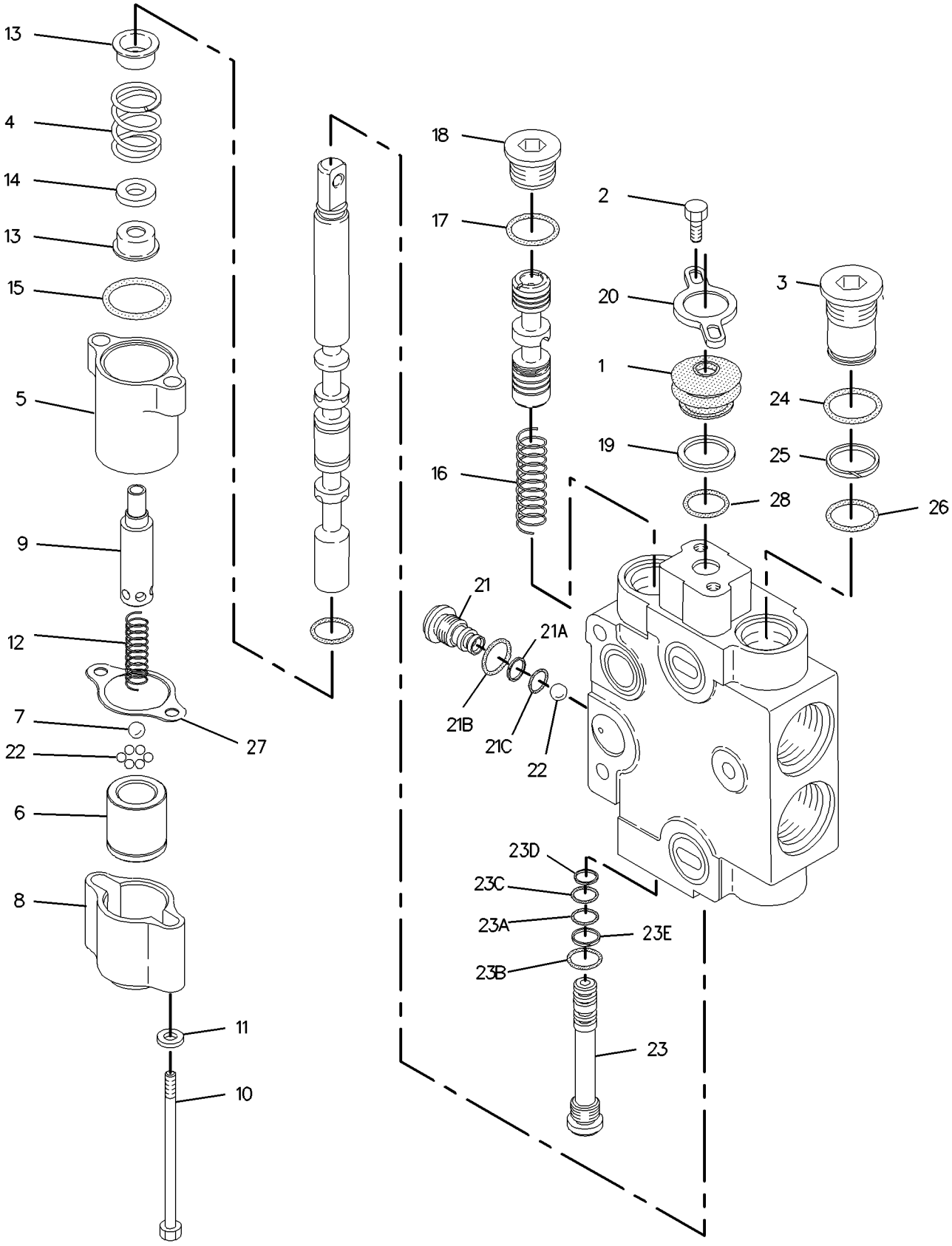

GRAPHIC #1 **<END>** g00864249

166-7950 VALVE GP-CONTROL–SWING

S/N: BXC1-UP; DSX1-UP

PART OF 185-5908, 203-5486 VALVE GP-BANK 4, 185-5909, 203-5487 VALVE GP-BANK 5, 185-5910, 203-5488 VALVE GP-BANK 6

AN ATTACHMENT

SMCS-5051 **i01601679**

NOTE	REF NO	GRAPHIC REF	PART NUMBER	QTY	PART NAME 1 2 3 4 5 6 (PRODUCT LEVEL)	SEE PAGE
	1	1	**4T-4524**	1	GUARD-DUST	
	2	1	**031-0214**	2	BOLT-LOCKING (1/4-20X0.5 IN)	
	3	1	**137-9466**	2	VALVE GP-RELIEF	
		1	**147-1659**	1	KIT-SEAL	
	4	1	**195-2406**	1	SPRING	
	5	1	**0S-1614**	1	BOLT (1/4-20X0.5 IN)	
	6	1	**167-6768**	1	HOUSING	
	7	1	**4T-4521**	2	RETAINER	
	8	1	**9X-2027**	1	WASHER (11X18X2MM THK)	
	9	1	**195-2139**	2	SEAL-O-RING	
	10	1	**6E-4317**	1	SPRING	
	11	1	**126-5796**	1	HOUSING GP	
		1	**1P-7363**	1	SEAL-O-RING	
		1	**3J-7354**	1	SEAL-O-RING	
		1	**8T-2361**	1	SEAL-O-RING	
		1	**126-5984**	1	RING-BACKUP	
		1	**126-5985**	1	RING-BACKUP	
	12	1	**2M-9780**	1	SEAL-O-RING	
	13	1	**9S-8006**	1	PLUG	
	14	1	**4T-4520**	1	FILTER	
	15	1	**4T-4528**	1	RETAINER	
	16	1	**126-5476**	1	SEAT AS-SHUTTLE	
		1	**4T-7807**	1	RING-BACKUP	
		1	**7J-0204**	1	SEAL-O-RING	
		1	**8T-2360**	1	SEAL-O-RING	
	17	1	**5B-9318**	1	BALL	
	18	1	**8H-0707**	2	BOLT (1/4-20X1 IN)	
	19	1	**5P-0537**	1	WASHER-HARD (7.2X14.5X2MM THK)	

166-7950 VALVE GP-CONTROL *(contd.)* i01601679

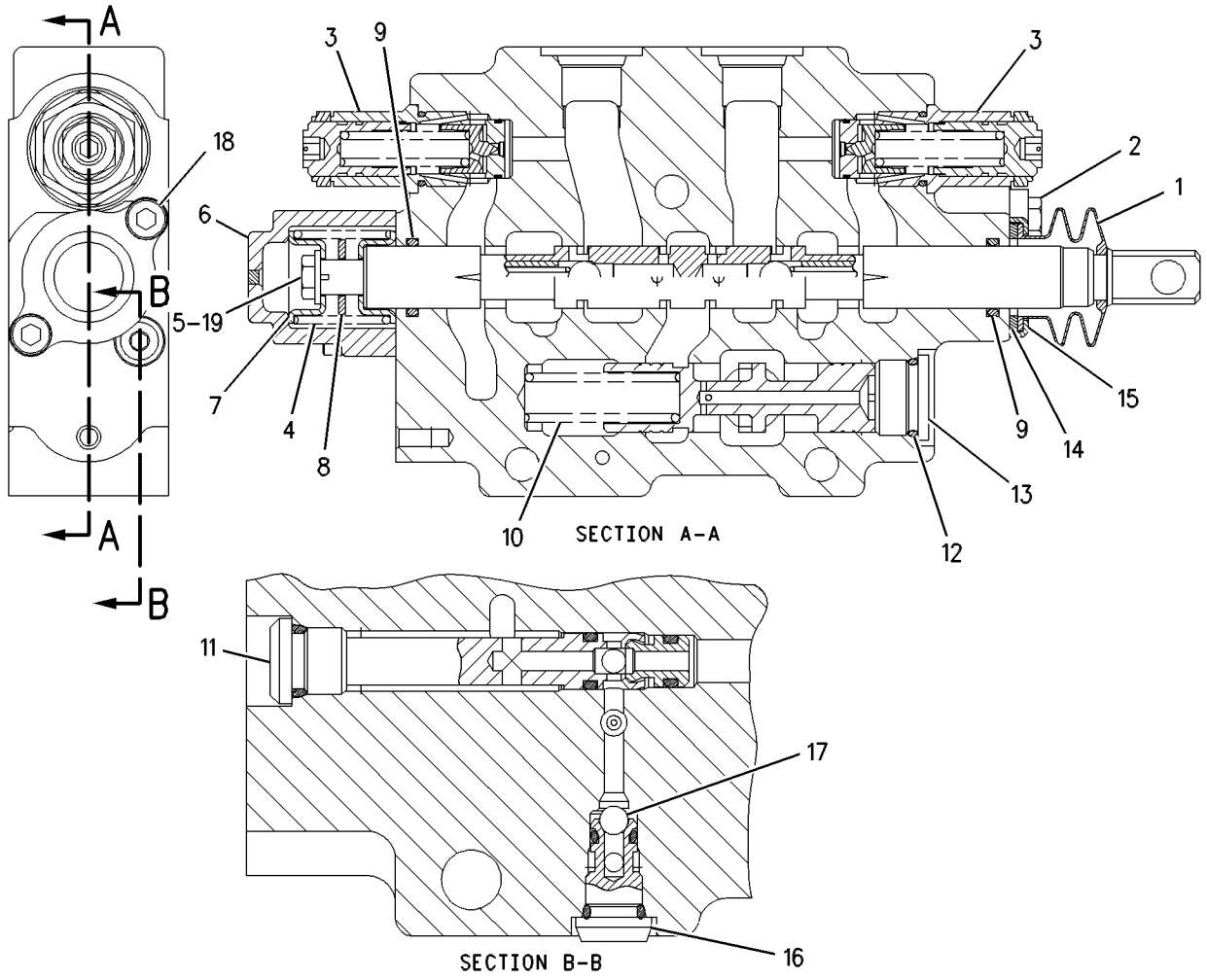

GRAPHIC #1 **<END>** g00535913

190-3450 VALVE GP-CONTROL–EXTENDABLE STICK;AUXILIARY

S/N: BXC1-UP; DSX1-UP

PART OF 204-9195, 204-9196, 204-9197, 204-9198, 204-9199, 204-9200 VALVE GP-AUXILIARY, 185-5909, 203-5487 VALVE GP-BANK 5, 185-5910, 203-5488 VALVE GP-BANK 6

AN ATTACHMENT

SMCS-5051 **i01668269**

NOTE	REF NO	GRAPHIC REF	PART NUMBER	QTY	PART NAME 1 2 3 4 5 6 (PRODUCT LEVEL)	SEE PAGE
	1	1	**195-2139**	2	SEAL-O-RING	
	2	1	**9S-8009**	1	PLUG	
	3	1	**197-2709**	1	SPRING	
	4	1	**155-9836**	1	VALVE GP-RELIEF	
	4A	1	**1P-7363**	1	SEAL-O-RING	
	4B	1	**3J-7354**	1	SEAL-O-RING	
	4C	1	**8T-2361**	1	SEAL-O-RING	
	4D	1	**126-5984**	1	RING-BACKUP	
	4E	1	**126-5985**	1	RING-BACKUP	
	5	1	**5B-9318**	1	BALL	
	6	1	**126-5476**	1	SEAT AS-SHUTTLE	
	6A	1	**4T-7807**	1	RING-BACKUP	
	6B	1	**7J-0204**	1	SEAL-O-RING	
	6C	1	**8T-2360**	1	SEAL-O-RING	
	7	1	**4T-4516**	1	SPRING	
	8	1	**8H-0707**	2	BOLT (1/4-20X1 IN)	
	9	1	**4T-4533**	1	SPACER (7.1X10.2X17.3MM DIA)	
	10	1	**167-6768**	1	HOUSING	
	11	1	**031-5085**	1	BOLT-LOCKING (1/4-20X1.00 IN)	
	12	1	**4T-4521**	2	RETAINER	
	13	1	**6E-0131**	2	WASHER	
	14	1	**4T-4531**	2	PLUG	
	15	1	**031-0214**	2	BOLT-LOCKING (1/4-20X0.5 IN)	
	16	1	**4T-4524**	1	GUARD-DUST	
	17	1	**4T-4528**	1	RETAINER	
	18	1	**4T-4520**	1	FILTER	
	19	1	**2M-9780**	1	SEAL-O-RING	
	20	1	**4K-1388**	2	SEAL-O-RING	
	21	1	**5K-9090**	2	SEAL-O-RING	
	22	1	**6E-0358**	2	RING-BACKUP	

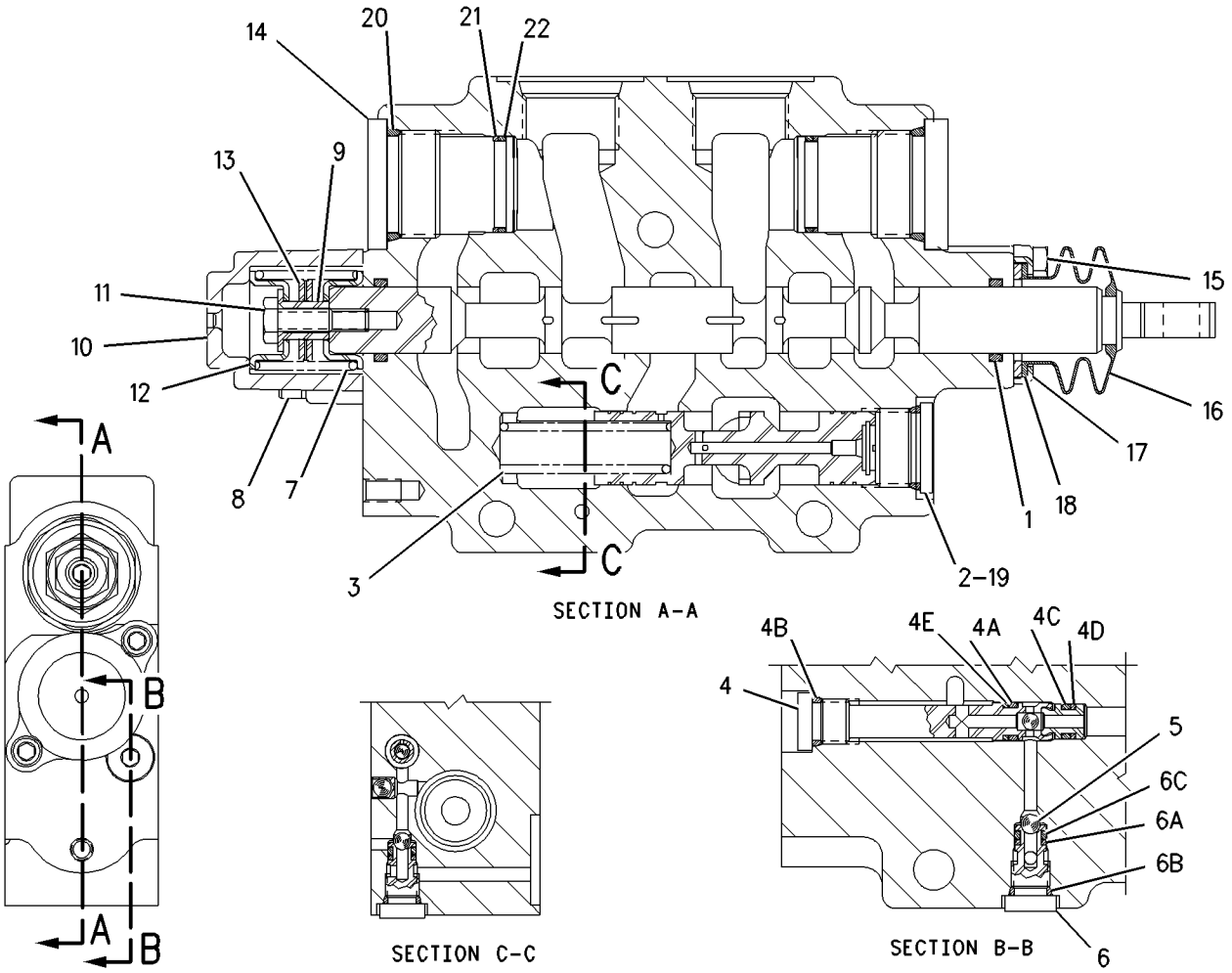

GRAPHIC #1 **<END>** g00861676

HYDRAULIC SYSTEM

191-4012 VALVE GP-CONTROL–TILT

S/N: BXC1-UP; DSX1-UP
PART OF 185-5911 VALVE GP-BANK 2, 185-5912 VALVE GP-BANK 3
AN ATTACHMENT

SMCS-5051 **i01668186**

NOTE	REF NO	GRAPHIC REF	PART NUMBER	QTY	PART NAME 1 2 3 4 5 6 (PRODUCT LEVEL)	SEE PAGE
	1	1	**195-2139**	2	SEAL-O-RING	
	2	1	**9S-8009**	1	PLUG	
	3	1	**6E-4317**	1	SPRING	
	4	1	**155-9836**	1	VALVE GP-RELIEF	
		1	**1P-7363**	1	SEAL-O-RING	
		1	**3J-7354**	1	SEAL-O-RING	
		1	**8T-2361**	1	SEAL-O-RING	
		1	**126-5984**	1	RING-BACKUP	
		1	**126-5985**	1	RING-BACKUP	
	5	1	**5B-9318**	1	BALL	
	6	1	**126-5476**	1	SEAT AS-SHUTTLE	
		1	**4T-7807**	1	RING-BACKUP	
		1	**7J-0204**	1	SEAL-O-RING	
		1	**8T-2360**	1	SEAL-O-RING	
	7	1	**197-3698**	1	SEAL-O-RING	
	8	1	**8F-0212**	1	SEAL-O-RING	
	9	1	**4T-4516**	1	SPRING	
	10	1	**3E-8620**	1	COIL AS-SOLENOID	
		1	**1S-9593**	2	STRAP-CABLE	
		1	**102-8802**	1	KIT-RECEPTACLE (2 PIN)	
					(KIT SERVICES RECEPTACLE AS. AND WEDGE)	
		1	**3E-3365**	1	WEDGE-RECEPTACLE LOCK (2 PIN)	
		1	**8T-8729**	2	PIN-CONNECTOR	
	11	1	**9T-7309**	1	PLATE	
	12	1	**5P-0537**	2	WASHER-HARD (7.2X14.5X2MM THK)	
	13	1	**8F-6302**	2	BOLT (1/4-20X3.75IN)	
	14	1	**9T-0642**	1	COUPLING	
	15	1	**5L-9023**	1	RING-RETAINING	
	16	1	**4T-4532**	1	HOUSING	
	17	1	**9T-0644**	1	SPRING	
	18	1	**128-2776**	1	GASKET	
	19	1	**4T-4521**	2	RETAINER	
	20	1	**187-0530**	2	VALVE GP-RELIEF	
	21	1	**031-0214**	2	BOLT-LOCKING (1/4-20X0.5 IN)	
	22	1	**4T-4524**	1	GUARD-DUST	
	23	1	**4T-4528**	1	RETAINER	
	24	1	**4T-4520**	1	FILTER	
	25	1	**197-3121**	1	RING-GUIDE	
	26	1	**2M-9780**	1	SEAL-O-RING	

191-4012 VALVE GP-CONTROL *(contd.)* i01668186

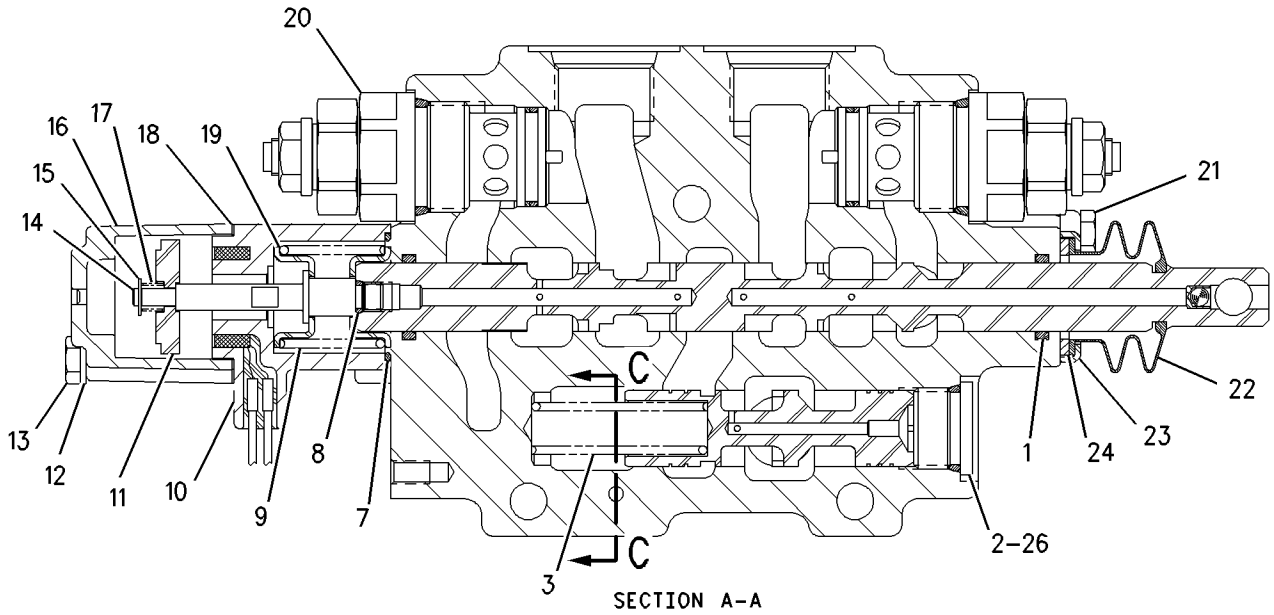

SECTION A-A

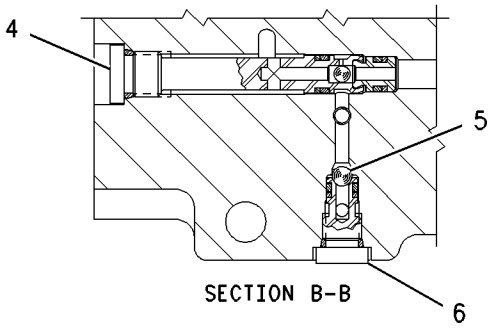

SECTION B-B

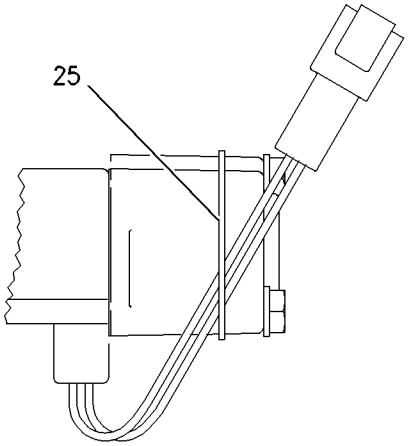

VIEW D-D

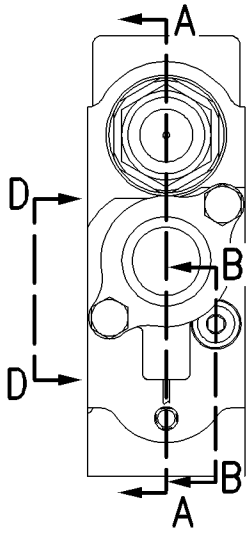

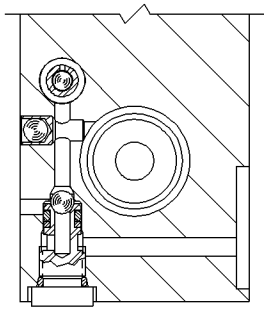

SECTION C-C

GRAPHIC #1 **<END>** g00861612

191-4032 VALVE GP-CONTROL–TILT

S/N: BXC1-UP; DSX1-UP
PART OF 185-5913 VALVE GP-BANK 2, 185-5914 VALVE GP-BANK 3
AN ATTACHMENT

SMCS-5051 **i01743438**

NOTE	REF NO	GRAPHIC REF	PART NUMBER	QTY	PART NAME 1 2 3 4 5 6 (PRODUCT LEVEL)	SEE PAGE
	1	1	**195-2139**	2	SEAL-O-RING	
	2	1	**9S-8009**	1	PLUG	
	3	1	**6E-4317**	1	SPRING	
	4	1	**155-9836**	1	VALVE GP-RELIEF	
		1	**1P-7363**	1	SEAL-O-RING	
		1	**3J-7354**	1	SEAL-O-RING	
		1	**8T-2361**	1	SEAL-O-RING	
		1	**126-5984**	1	RING-BACKUP	
		1	**126-5985**	1	RING-BACKUP	
	5	1	**5B-9318**	1	BALL	
	6	1	**126-5476**	1	SEAT AS-SHUTTLE	
		1	**4T-7807**	1	RING-BACKUP	
		1	**7J-0204**	1	SEAL-O-RING	
		1	**8T-2360**	1	SEAL-O-RING	
	7	1	**2M-9780**	1	SEAL-O-RING	
	8	1	**197-3698**	2	SEAL-O-RING	
	9	1	**197-3126**	1	SPACER	
	10	1	**4T-4521**	3	RETAINER	
	11	1	**133-8690**	1	COUPLING AS	
	12	1	**3E-8620**	1	COIL AS-SOLENOID	
		1	**1S-9593**	2	STRAP-CABLE	
		1	**102-8802**	1	KIT-RECEPTACLE (2 PIN)	
					(KIT SERVICES RECEPTACLE AS AND WEDGE)	
		1	**186-3735**	2	PIN-CONNECTOR	
	13	1	**9T-7309**	1	PLATE	
	14	1	**5P-0537**	2	WASHER-HARD (7.2X14.5X2MM THK)	
	15	1	**1B-2718**	2	BOLT (1/4-20X6IN)	
	16	1	**5L-9023**	1	RING-RETAINING	
	17	1	**133-8689**	1	HOUSING	
	18	1	**9T-0644**	1	SPRING	
	19	1	**128-2776**	1	GASKET	
	20	1	**133-8688**	1	SPRING	
	21	1	**100-3567**	1	HOUSING-DETENT	
	22	1	**4T-4513**	1	SPRING	
C	23	1	**187-0532**	1	VALVE GP-RELIEF	
	24	1	**197-3124**	1	VALVE GP-RELIEF	
	25	1	**031-0214**	2	BOLT-LOCKING (1/4-20X0.5 IN)	
	26	1	**4T-4524**	1	GUARD-DUST	
	27	1	**4T-4528**	1	RETAINER	
	28	1	**4T-4520**	1	FILTER	
	29	1	**197-3121**	1	RING-GUIDE	

C-CHANGE FROM PREVIOUS TYPE

191-4032 VALVE GP-CONTROL *(contd.)* **i01743438**

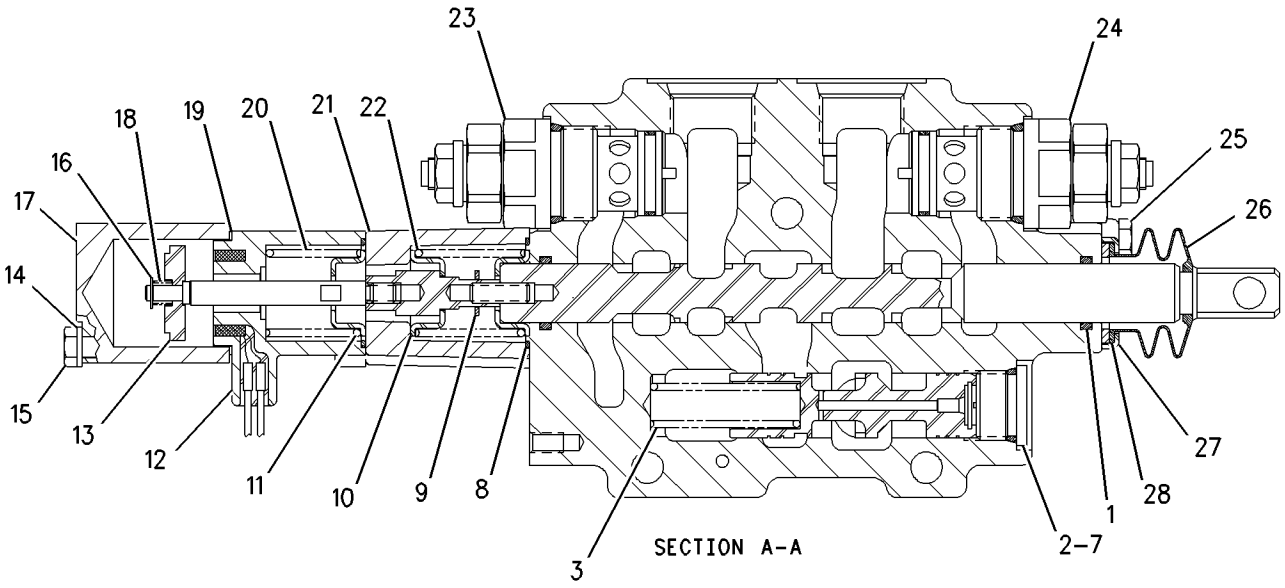

SECTION A-A

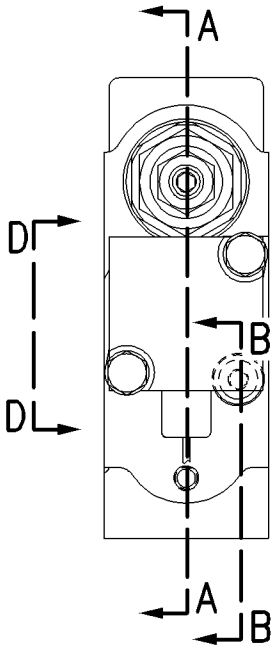

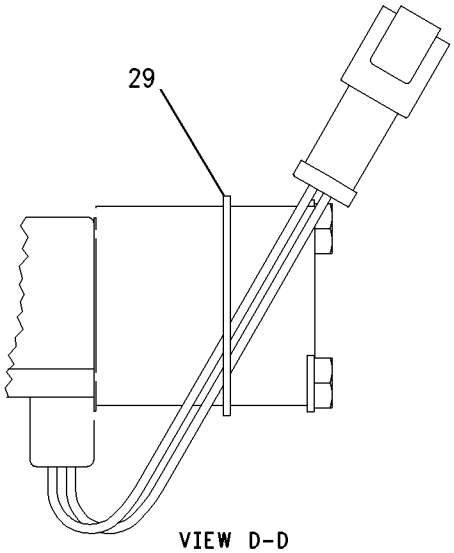

VIEW D-D

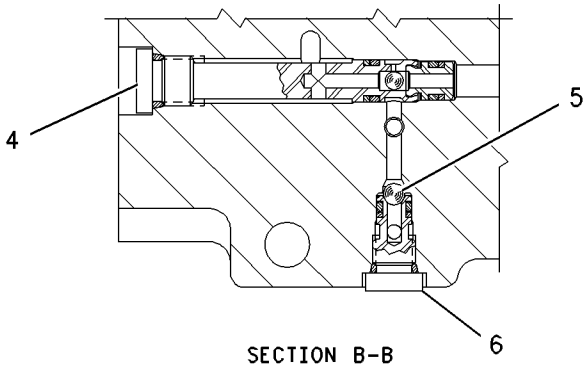

SECTION B-B

GRAPHIC #1 **<END>** g00826787

HYDRAULIC SYSTEM

191-4035 VALVE GP-CONTROL–CLAM

S/N: BXC1-UP; DSX1-UP
PART OF 185-5914 VALVE GP-BANK 3
AN ATTACHMENT

SMCS-5051 **i01738074**

NOTE	REF NO	GRAPHIC REF	PART NUMBER	QTY	PART NAME 1 2 3 4 5 6 (PRODUCT LEVEL)	SEE PAGE
	1	1	**195-2139**	2	SEAL-O-RING	
	2	1	**9S-8009**	1	PLUG	
	3	1	**6E-4317**	1	SPRING	
	4	1	**155-9836**	1	VALVE GP-RELIEF	
		1	**1P-7363**	1	SEAL-O-RING	
		1	**3J-7354**	1	SEAL-O-RING	
		1	**8T-2361**	1	SEAL-O-RING	
		1	**126-5984**	1	RING-BACKUP	
		1	**126-5985**	1	RING-BACKUP	
	5	1	**5B-9318**	1	BALL	
	6	1	**126-5476**	1	SEAT AS-SHUTTLE	
		1	**4T-7807**	1	RING-BACKUP	
		1	**7J-0204**	1	SEAL-O-RING	
		1	**8T-2360**	1	SEAL-O-RING	
	7	1	**197-3698**	1	SEAL-O-RING	
	8	1	**4T-4516**	1	SPRING	
	9	1	**4T-4521**	2	RETAINER	
	10	1	**9T-7309**	1	PLATE	
	11	1	**9T-0644**	1	SPRING	
	12	1	**5P-0537**	2	WASHER-HARD (7.2X14.5X2MM THK)	
	13	1	**8B-2377**	2	BOLT (1/4-20X2 IN)	
	14	1	**5L-9023**	1	RING-RETAINING	
	15	1	**4T-4532**	1	HOUSING	
	16	1	**9T-0642**	1	COUPLING	
	17	1	**128-2776**	1	GASKET	
	18	1	**3E-8620**	1	COIL AS-SOLENOID	
		1	**1S-9593**	2	STRAP-CABLE	
		1	**102-8802**	1	KIT-RECEPTACLE (2 PIN)	
					(KIT SERVICES RECEPTACLE AS. AND WEDGE)	
		1	**3E-3365**	1	WEDGE-RECEPTACLE LOCK (2 PIN)	
		1	**186-3735**	2	PIN-CONNECTOR	
C	19	1	**9T-0704**	1	VALVE GP-RELIEF	
		1	**4K-1388**	1	SEAL-O-RING	
		1	**5K-9090**	1	SEAL-O-RING	
		1	**6E-0358**	1	RING-BACKUP	
	20	1	**031-0214**	2	BOLT-LOCKING (1/4-20X0.5 IN)	
	21	1	**4T-4524**	1	GUARD-DUST	
	22	1	**4T-4528**	1	RETAINER	
	23	1	**4T-4520**	1	FILTER	
	24	1	**197-3121**	1	RING-GUIDE	
	25	1	**2M-9780**	1	SEAL-O-RING (19.18MM ID)	

C-CHANGE FROM PREVIOUS TYPE

191-4035 VALVE GP-CONTROL *(contd.)* i01738074

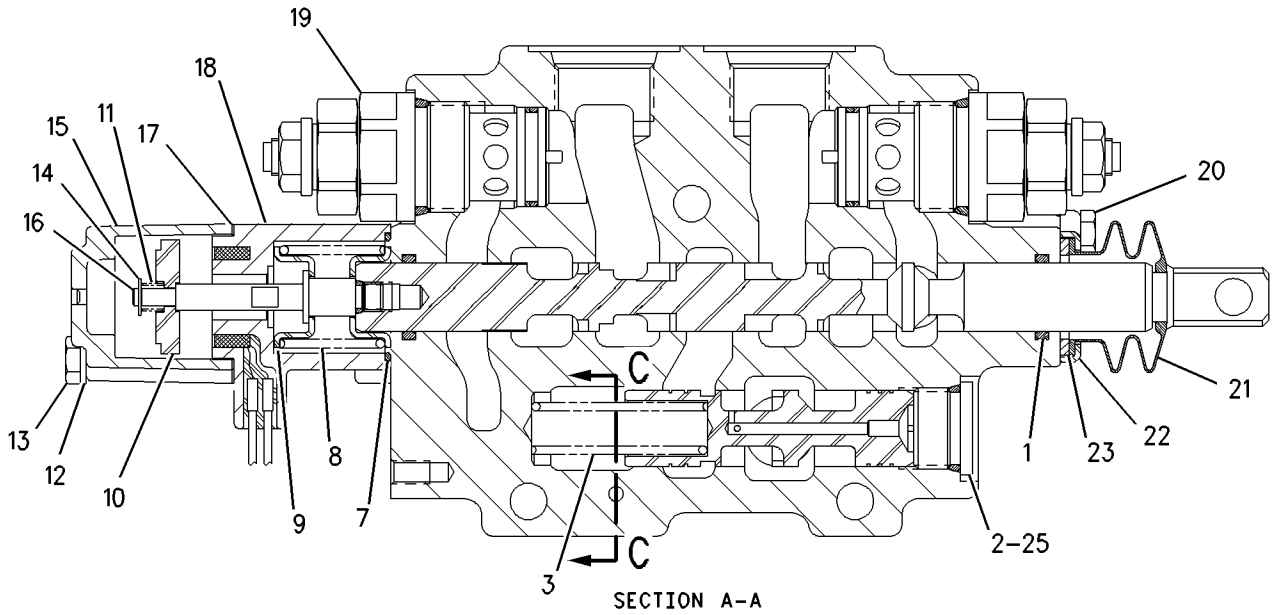

SECTION A-A

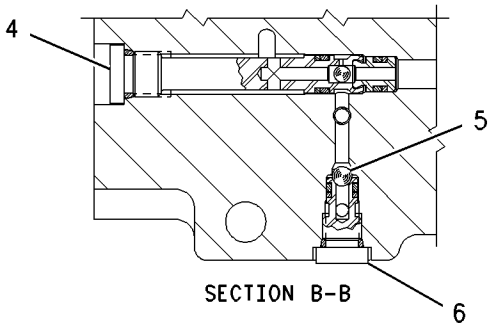

SECTION B-B

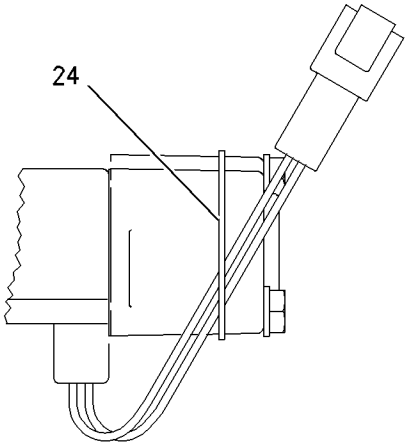

VIEW D-D

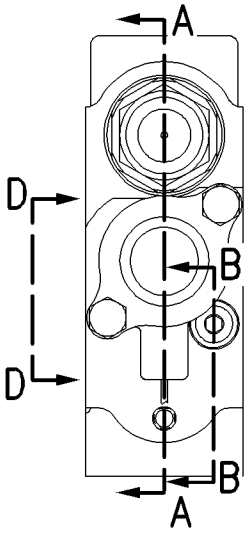

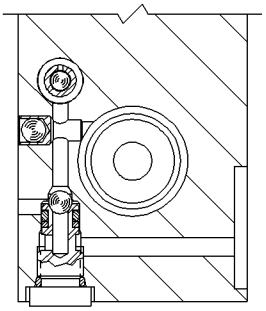

SECTION C-C

GRAPHIC #1 **<END>** g00826820

HYDRAULIC SYSTEM

193-3124 VALVE GP-CONTROL–BUCKET

S/N: BXC1-UP; DSX1-UP

PART OF 185-5908, 203-5486 VALVE GP-BANK 4, 185-5909, 203-5487 VALVE GP-BANK 5, 185-5910, 203-5488 VALVE GP-BANK 6

AN ATTACHMENT

SMCS-5051 **i01735786**

NOTE	REF NO	GRAPHIC REF	PART NUMBER	QTY	PART NAME 1 2 3 4 5 6 (PRODUCT LEVEL)	SEE PAGE
	1	1	**195-2139**	2	SEAL-O-RING	
	2	1	**9S-8009**	1	PLUG	
	3	1	**197-2709**	1	SPRING	
	4	1	**126-5796**	1	HOUSING GP	
		1	**1P-7363**	1	SEAL-O-RING	
		1	**3J-7354**	1	SEAL-O-RING	
		1	**8T-2361**	1	SEAL-O-RING	
		1	**126-5984**	1	RING-BACKUP	
		1	**126-5985**	1	RING-BACKUP	
	5	1	**5B-9318**	1	BALL	
	6	1	**126-5476**	1	SEAT AS-SHUTTLE	
		1	**4T-7807**	1	RING-BACKUP	
		1	**7J-0204**	1	SEAL-O-RING	
		1	**8T-2360**	1	SEAL-O-RING	
	7	1	**195-2406**	1	SPRING	
	8	1	**8H-0707**	2	BOLT (1/4-20X1 IN)	
	9	1	**4T-4533**	1	SPACER	
	10	1	**4T-4521**	2	RETAINER	
	11	1	**167-6768**	1	HOUSING	
	12	1	**031-5085**	1	BOLT-LOCKING (1/4-20X1.00 IN)	
	13	1	**187-0527**	1	VALVE GP-RELIEF	
		1	**3K-0360**	1	SEAL-O-RING	
		1	**4K-1388**	1	SEAL-O-RING	
		1	**5K-9090**	1	SEAL-O-RING	
		1	**6E-0358**	1	RING-BACKUP	
	14	1	**187-0524**	1	VALVE GP-RELIEF	
		1	**3K-0360**	1	SEAL-O-RING	
		1	**4K-1388**	1	SEAL-O-RING	
		1	**5K-9090**	1	SEAL-O-RING	
		1	**6E-0358**	1	RING-BACKUP	
	15	1	**031-0214**	2	BOLT-LOCKING (1/4-20X0.5 IN)	
	16	1	**4T-4524**	1	GUARD-DUST	
	17	1	**4T-4528**	1	RETAINER	
	18	1	**4T-4520**	1	FILTER	
	19	1	**2M-9780**	1	SEAL-O-RING	

193-3124 VALVE GP-CONTROL *(contd.)* i01735786

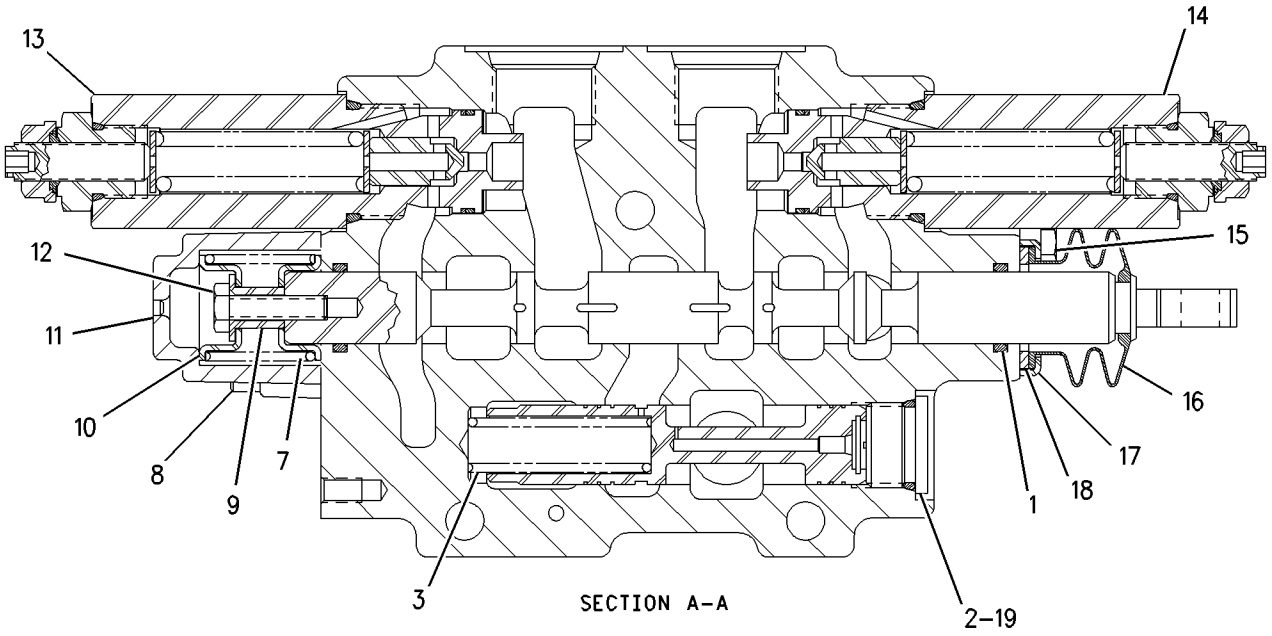

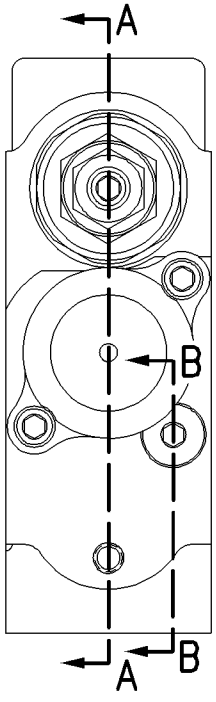

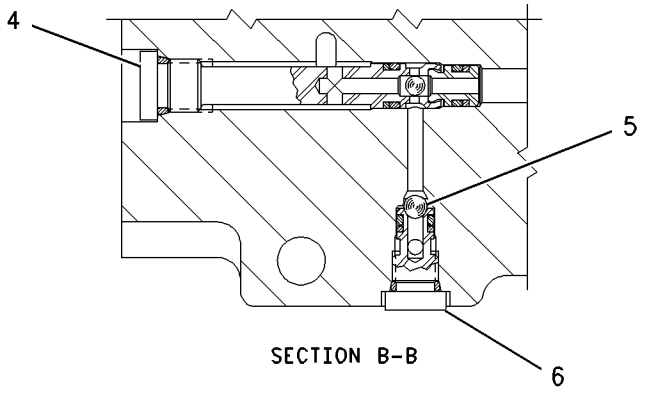

GRAPHIC #1 **<END>** g00748282

HYDRAULIC SYSTEM

204-0532 VALVE GP-CONTROL–BOOM

S/N: BXC1-UP; DSX1-UP

PART OF 185-5908, 203-5486 VALVE GP-BANK 4, 185-5909, 203-5487 VALVE GP-BANK 5, 185-5910, 203-5488 VALVE GP-BANK 6

AN ATTACHMENT

SMCS-5051 **i01666538**

NOTE	REF NO	GRAPHIC REF	PART NUMBER	QTY	PART NAME 1 2 3 4 5 6 (PRODUCT LEVEL)	SEE PAGE
	1	1	**195-2139**	2	SEAL-O-RING	
	2	1	**9S-8009**	1	PLUG	
	3	1	**197-2709**	1	SPRING	
	4	1	**126-5796**	1	HOUSING GP	
	4A	1	**1P-7363**	1	SEAL-O-RING	
	4B	1	**3J-7354**	1	SEAL-O-RING	
	4C	1	**8T-2361**	1	SEAL-O-RING	
	4D	1	**126-5984**	1	RING-BACKUP	
	4E	1	**126-5985**	1	RING-BACKUP	
	5	1	**5B-9318**	1	BALL	
	6	1	**126-5476**	1	SEAT AS-SHUTTLE	
	6A	1	**4T-7807**	1	RING-BACKUP	
	6B	1	**7J-0204**	1	SEAL-O-RING	
	6C	1	**8T-2360**	1	SEAL-O-RING	
	7	1	**109-9685**	1	SEAL-O-RING	
	8	1	**8H-0707**	2	BOLT (1/4-20X1 IN)	
	9	1	**195-2406**	1	SPRING	
	10	1	**167-6768**	1	HOUSING	
	11	1	**4T-4533**	1	SPACER	
	12	1	**4T-4521**	2	RETAINER	
	13	1	**187-0523**	1	VALVE GP-RELIEF	
		1	**4K-1388**	1	SEAL-O-RING	
		1	**5K-9090**	1	SEAL-O-RING	
		1	**6E-0358**	1	RING-BACKUP	
	14	1	**6E-6285**	1	VALVE GP-RELIEF	
		1	**4K-1388**	1	SEAL-O-RING	
		1	**5K-9090**	1	SEAL-O-RING	
		1	**6E-0358**	1	RING-BACKUP	
	15	1	**031-0214**	2	BOLT-LOCKING (1/4-20X0.5 IN)	
	16	1	**4T-4524**	1	GUARD-DUST	
	17	1	**4T-4528**	1	RETAINER	
	18	1	**4T-4520**	1	FILTER	
	19	1	**2M-9780**	1	SEAL-O-RING	
	20	1	**031-5085**	1	BOLT-LOCKING (1/4-20X1.00 IN)	

204-0532 VALVE GP-CONTROL *(contd.)* i01666538

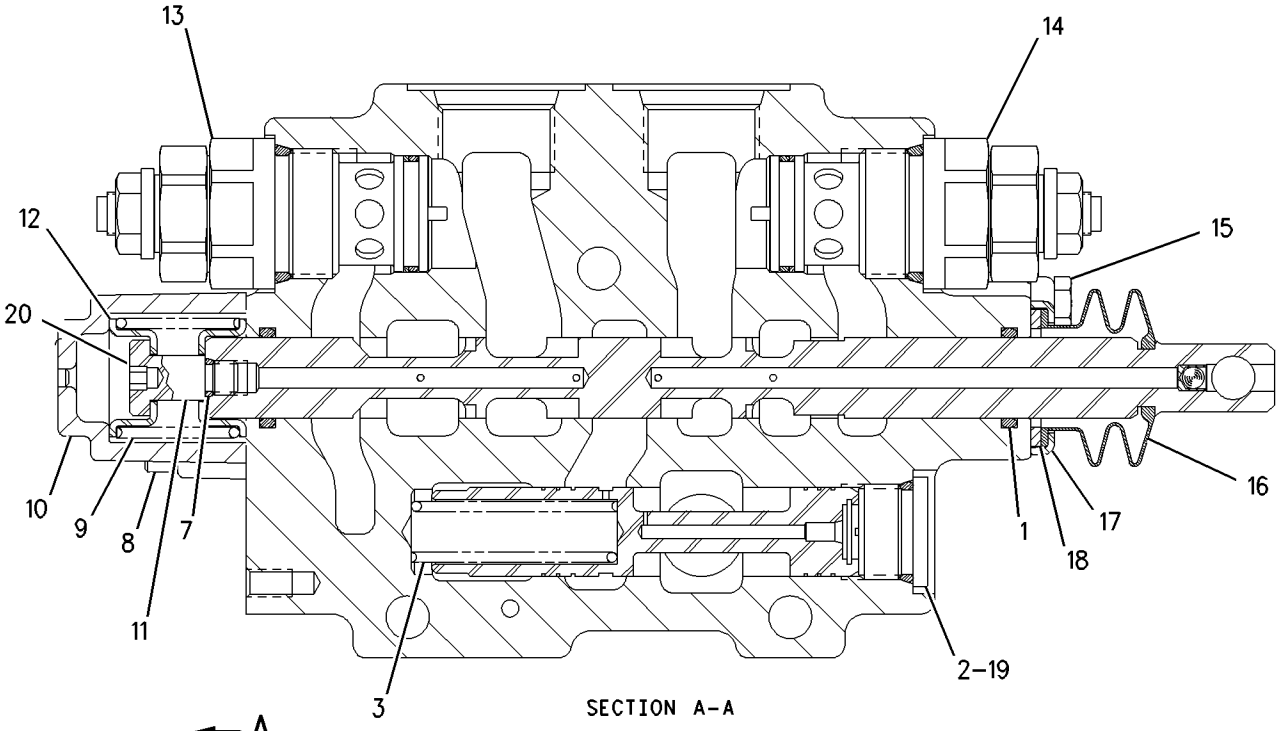

SECTION A-A

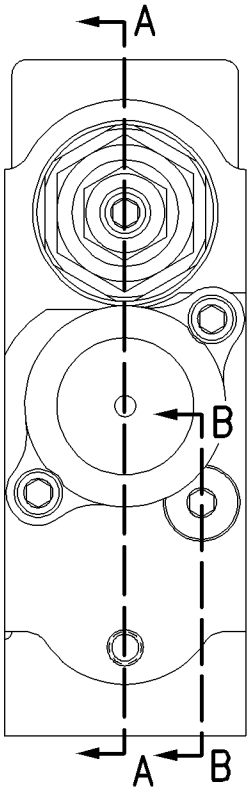

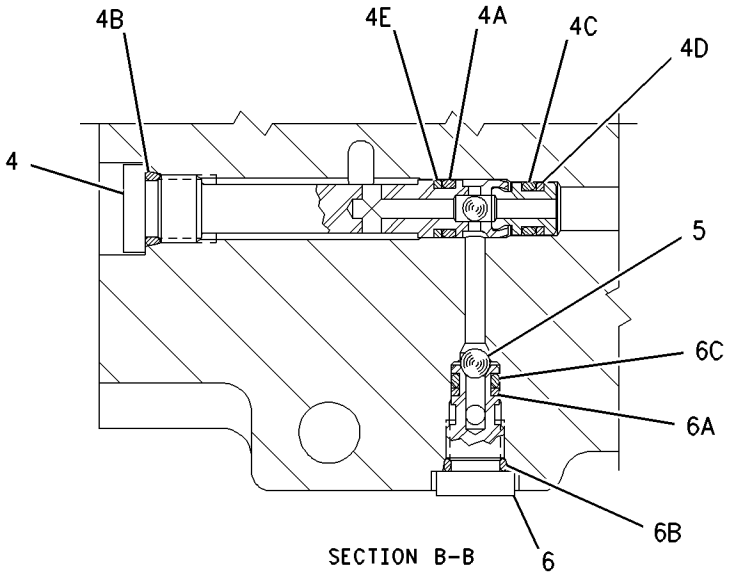

SECTION B-B

GRAPHIC #1 **<END>** g00817378

204-0533 VALVE GP-CONTROL–STICK

S/N: BXC1-UP; DSX1-UP

PART OF 185-5908, 203-5486 VALVE GP-BANK 4, 185-5909, 203-5487 VALVE GP-BANK 5, 185-5910, 203-5488 VALVE GP-BANK 6

AN ATTACHMENT

SMCS-5051 **i01666553**

NOTE	REF NO	GRAPHIC REF	PART NUMBER	QTY	PART NAME 1 2 3 4 5 6 (PRODUCT LEVEL)	SEE PAGE
	1	1	**195-2139**	2	SEAL-O-RING	
	2	1	**9S-8009**	1	PLUG	
	3	1	**197-2709**	1	SPRING	
	4	1	**126-5796**	1	HOUSING GP	
	4A	1	**1P-7363**	1	SEAL-O-RING	
	4B	1	**3J-7354**	1	SEAL-O-RING	
	4C	1	**8T-2361**	1	SEAL-O-RING	
	4D	1	**126-5984**	1	RING-BACKUP	
	4E	1	**126-5985**	1	RING-BACKUP	
	5	1	**5B-9318**	1	BALL	
	6	1	**126-5476**	1	SEAT AS-SHUTTLE	
	6A	1	**4T-7807**	1	RING-BACKUP	
	6B	1	**7J-0204**	1	SEAL-O-RING	
	6C	1	**8T-2360**	1	SEAL-O-RING	
	7	1	**109-9685**	1	SEAL-O-RING	
	8	1	**8H-0707**	2	BOLT (1/4-20X1 IN)	
	9	1	**195-2406**	1	SPRING	
	10	1	**4T-4521**	2	RETAINER	
	11	1	**167-6768**	1	HOUSING	
	12	1	**4T-4533**	1	SPACER	
	13	1	**187-0529**	1	VALVE GP-RELIEF	
		1	**4K-1388**	1	SEAL-O-RING	
		1	**5K-9090**	1	SEAL-O-RING	
		1	**6E-0358**	1	RING-BACKUP	
	14	1	**187-0528**	1	VALVE GP-RELIEF	
	15	1	**031-0214**	2	BOLT-LOCKING (1/4-20X0.5 IN)	
	16	1	**4T-4524**	1	GUARD-DUST	
	17	1	**4T-4528**	1	RETAINER	
	18	1	**4T-4520**	1	FILTER	
	19	1	**2M-9780**	1	SEAL-O-RING	
	20	1	**031-5085**	1	BOLT-LOCKING (1/4-20X1.00 IN)	

204-0533 VALVE GP-CONTROL *(contd.)* i01666553

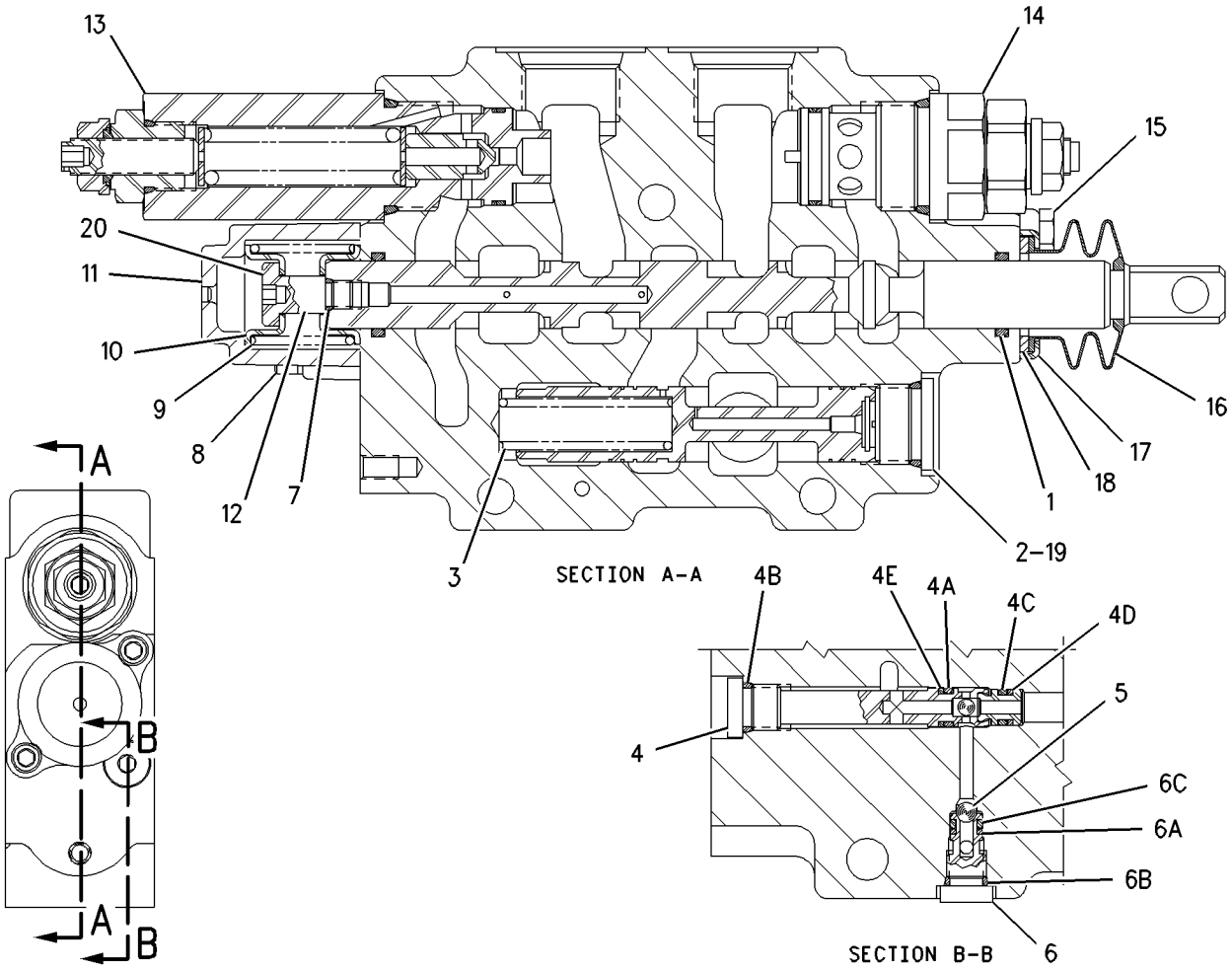

GRAPHIC #1 **<END>** g00817385

HYDRAULIC SYSTEM

9T-5455 VALVE GP-LOAD CONTROL–TILT

S/N: BXC1-UP; DSX1-UP
PART OF 183-8559 LINES GP-LOAD CONTROL VALVE
AN ATTACHMENT

SMCS-5811 **i02010027**

NOTE	REF NO	GRAPHIC REF	PART NUMBER	QTY	PART NAME 1 2 3 4 5 6 (PRODUCT LEVEL)	SEE PAGE
	1	1	**106-9427**	1	VALVE GP-SEQUENCE	
		1	**6E-5759**	1	KIT-SEAL	
	2	1	**9S-8002**	4	PLUG	
	3	1	**3J-7354**	4	SEAL-O-RING	
	4	1	**106-9430**	1	VALVE GP-CHECK	
J		1	**2M-9780**	1	SEAL-O-RING	
J		1	**4M-6582**	1	SEAL-O-RING	
J		1	**5P-2199**	1	RING-BACKUP	
C	5	1	**150-5150**	1	VALVE GP-LOAD CONTROL	
		1	**6E-5760**	1	KIT-SEAL	
	6	1	**9S-8007**	2	PLUG	
	7	1	**7J-0204**	2	SEAL-O-RING	
	8	1	**4J-9780**	1	PLUG-ORIFICE (1/16-27 THD)	
	9	1	**7Y-4224**	1	ORIFICE	
	10	1	**9S-8004**	2	PLUG	
	11	1	**3J-1907**	2	SEAL-O-RING	
					AVAILABLE REPAIR KIT(S):	
J			**6E-3583**	1	KIT-SEAL	

C-CHANGE FROM PREVIOUS TYPE
J-KIT MARKED J INCLUDES PARTS MARKED J

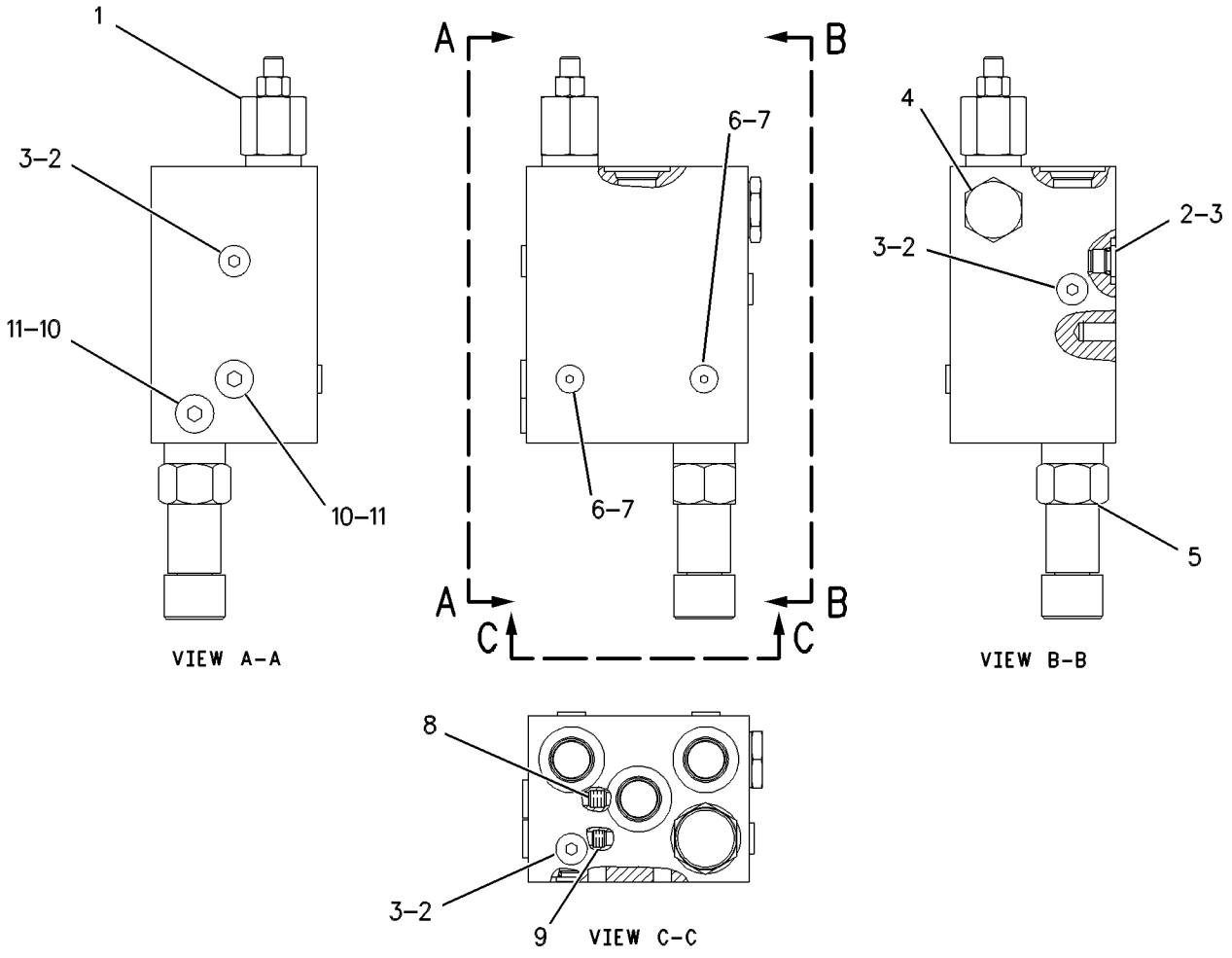

GRAPHIC #1

<END>

g00324416

HYDRAULIC SYSTEM

103-5519 VALVE GP-PUMP CONTROL

S/N: BXC1-UP; DSX1-UP

PART OF 235-4110 PUMP GP-PISTON

SMCS-5455 **i01739168**

NOTE	REF NO	GRAPHIC REF	PART NUMBER	QTY	PART NAME 1 2 3 4 5 6 (PRODUCT LEVEL)	SEE PAGE
	1	1	**105-1434**	1	PLUG	
	2	1	**5P-5599**	1	SEAL-O-RING	
	3	1	**105-1435**	1	SPRING	
	4	1	**105-1436**	1	RETAINER-SPRING	
	5	1	**214-0592**	1	GASKET	
	6	1	**6V-8236**	1	PIN-SPRING	
	7	1	**6E-6528**	1	SEAL	
M	8	1	**3T-0849**	2	BOLT-SOCKET HEAD (M6X1X25MM)	
	9	1	**105-1437**	1	RETAINER-SPRING	
	10	1	**105-1438**	1	SPRING	
	11	1	**033-6044**	1	SEAL-O-RING	
	12	1	**105-1439**	1	ADJUSTER	
	13	1	**105-1440**	1	CAP	
	14	1	**105-1441**	1	PLUG	

M-METRIC PART

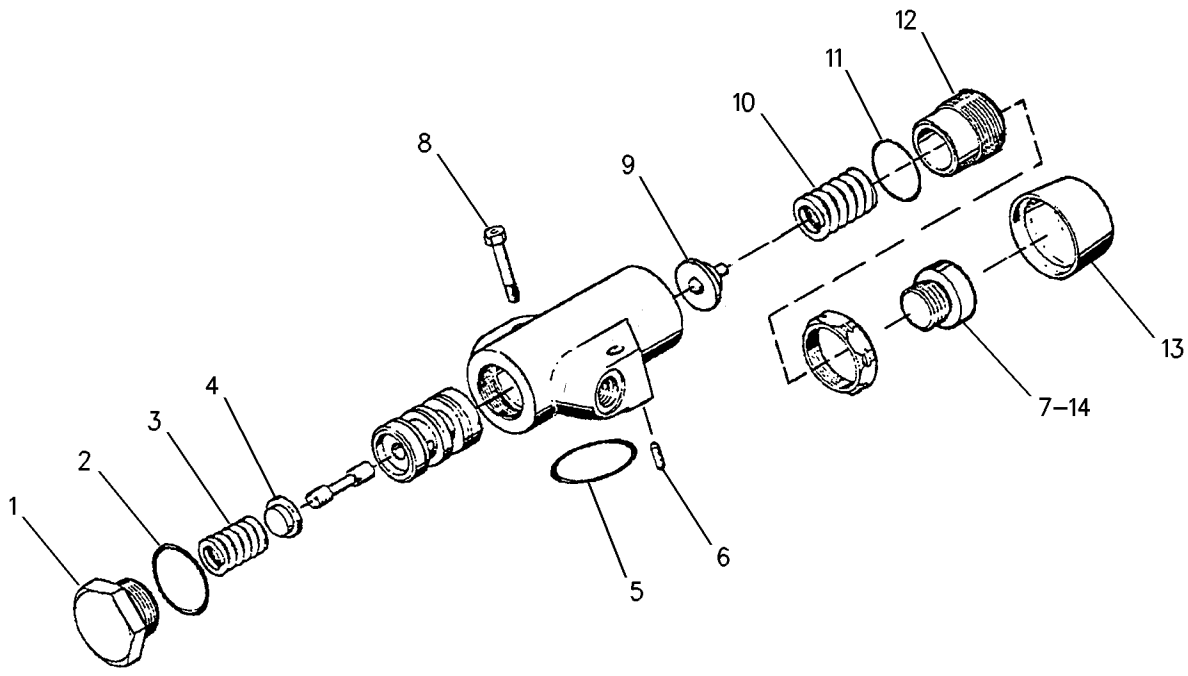

GRAPHIC #1 **<END>** g00890786

HYDRAULIC SYSTEM

213-9804 VALVE GP-PUMP CONTROL

S/N: BXC1-UP; DSX1-UP

PART OF 235-4110 PUMP GP-PISTON

SMCS-5455 **i01817581**

NOTE	REF NO	GRAPHIC REF	PART NUMBER	QTY	PART NAME 1 2 3 4 5 6 (PRODUCT LEVEL)	SEE PAGE
	1	1	**6E-3268**	1	RETAINER-SPRING	
	2	1	**6E-3269**	1	RETAINER-SPRING	
	3	1	**200-5359**	1	HOUSING	
	4	1	**200-5360**	1	HOUSING	
	5	1	**6E-3272**	1	SEAT	
	6	1	**6E-3273**	1	SEAT	
	7	1	**6E-3274**	1	SPRING	
	8	1	**6E-3275**	1	SPRING	
	9	1	**6E-3276**	1	SPRING	
	10	1	**105-2145**	1	VALVE-ORIFICE	
	11	1	**202-7503**	2	RETAINER	
	12	1	**6E-6527**	2	PLUG	
	13	1	**193-1036**	1	SPRING	
	14	1	**033-6043**	1	SEAL-O-RING	
	15	1	**6V-8352**	1	SEAL-O-RING	
	16	1	**6E-6528**	2	SEAL	
	17	1	**5P-9262**	1	SEAL-O-RING	
	18	1	**200-5361**	2	NUT	
	19	1	**200-5362**	2	SEAL-O-RING	
	20	1	**200-5363**	2	RING-THRUST	
	21	1	**200-5364**	2	CAP	
	22	1	**213-9803**	1	PLUG-ORIFICE	

213-9804 VALVE GP-PUMP CONTROL *(contd.)* i01817581

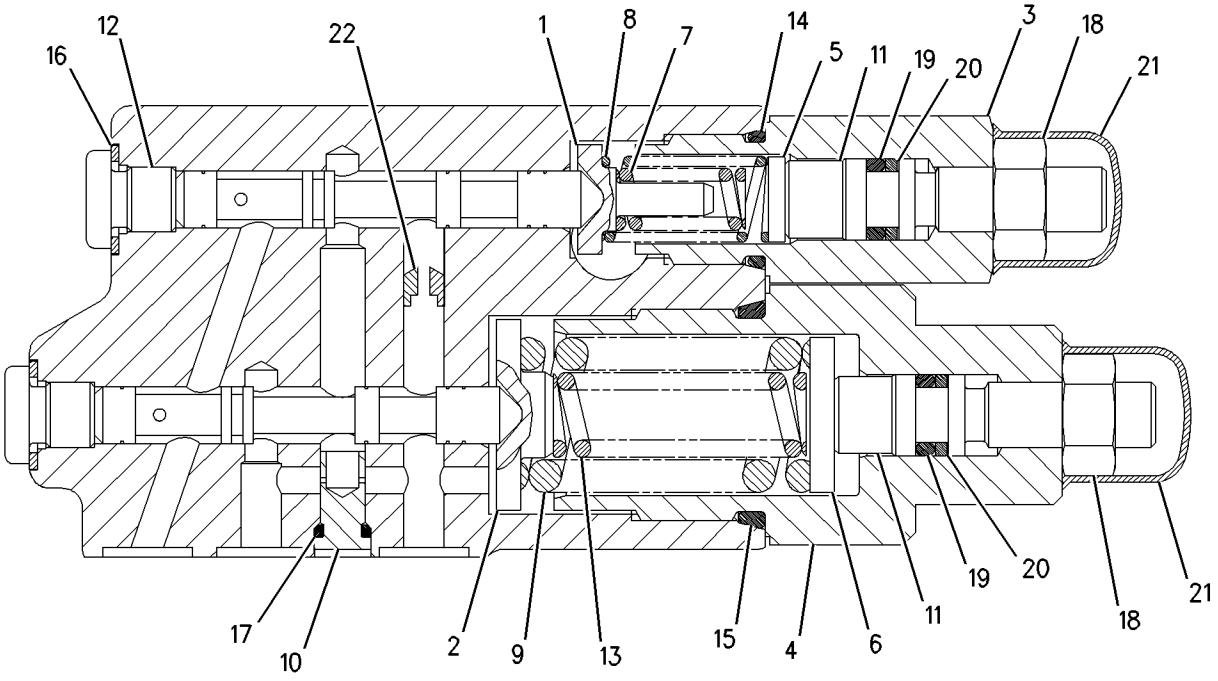

GRAPHIC #1 **<END>** g00844524

3E-8622 VALVE GP-SOLENOID

S/N: BXC1-UP; DSX1-UP

PART OF 175-7618, 183-8523, 183-8530, 183-8532 LINES GP-SIDESHIFT LOCK AN ATTACHMENT

SMCS-5132, 5479 **i01734427**

NOTE	REF NO	GRAPHIC REF	PART NUMBER	QTY	PART NAME 1 2 3 4 5 6 (PRODUCT LEVEL)	SEE PAGE
	1	1	**3J-9196**	1	NUT-JAM (1/2-20 THD)	
	2	1	**107-2066**	1	CARTRIDGE AS	
		1	**7T-1342**	1	KIT-HARDWARE	
					(INCLUDES SEALS, WASHER, NUT & RING)	
	3	1	**3E-8621**	1	COIL AS	
		1	**3E-3365**	1	WEDGE-RECEPTACLE LOCK (2 PIN)	
		1	**102-8802**	1	KIT-RECEPTACLE (2 PIN)	
					(KIT SERVICES RECEPTACLE AS AND WEDGE)	
		1	**186-3735**	2	PIN-CONNECTOR	
	4	1	**1S-9593**	2	STRAP-CABLE	

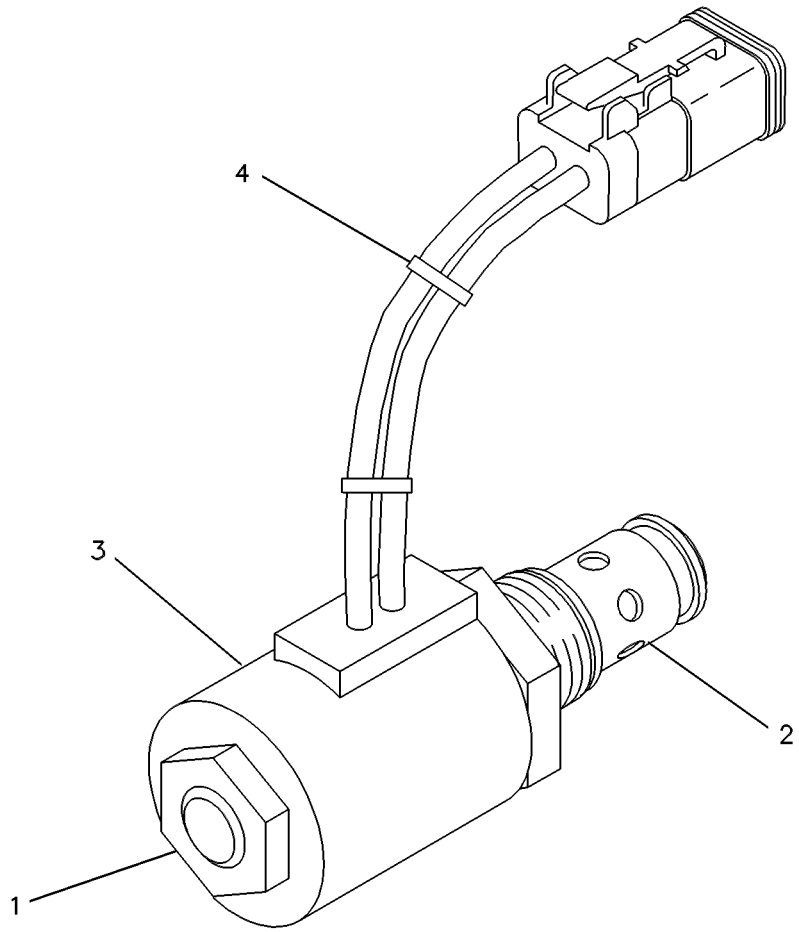

GRAPHIC #1 **<END>** g00131580

179-5593 VALVE GP-SOLENOID

S/N: BXC1-UP; DSX1-UP
12 VDC
PART OF 240-3184 VALVE AR-BANK 4, 240-3185 VALVE AR-BANK 5, 240-3186 VALVE AR-BANK 6
AN ATTACHMENT

SMCS-5132, 5479 **i01581738**

NOTE	REF NO	GRAPHIC REF	PART NUMBER	QTY	PART NAME 1 2 3 4 5 6 (PRODUCT LEVEL)	SEE PAGE
	1	1	**156-5970**	1	NUT (1/2-20-2B THD)	
	2	1	**3E-8621**	1	COIL AS	
		1	**186-3735**	2	PIN-CONNECTOR	
		1	**1S-9593**	1	STRAP-CABLE	
		1	**3E-3365**	1	WEDGE-RECEPTACLE LOCK (2 PIN)	
		1	**102-8802**	1	KIT-RECEPTACLE (2 PIN)	
					(KIT SERVICES RECEPTACLE AS. AND WEDGE)	
	3	1	**179-5592**	1	VALVE AS	
		1	**156-5970**	1	NUT (1/2-20-2B THD)	
					AVAILABLE REPAIR KIT(S):	
			189-2102	1	KIT-SEAL	

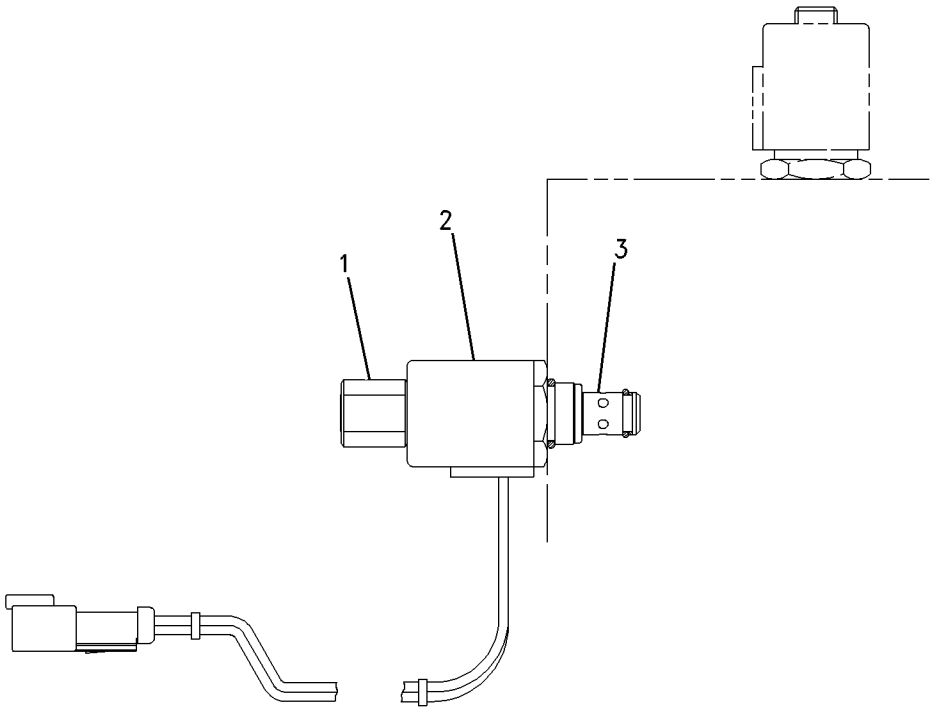

GRAPHIC #1 **<END>** g00751659

IMPLEMENTS

111-0339 ARM GP-LIFT

S/N: BXC1-UP; DSX1-UP
PART OF 112-1827 LOADER AR

SMCS-6118, 6119 **i01876854**

NOTE	REF NO	GRAPHIC REF	PART NUMBER	QTY	PART NAME 1 2 3 4 5 6 (PRODUCT LEVEL)	SEE PAGE
	1	1	**3B-8488**	8	FITTING-GREASE (1/8-27 THD)	
	2	1	**3B-8489**	14	FITTING-GREASE	
	3	1	**6V-3213**	18	RING-RETAINING	
	4	1	**6V-8144**	15	RING	
	5	1	**9R-0109**	16	WASHER (41X64X3MM THK)	
	6	1	**9R-0158**	18	WASHER (46X69X3MM THK)	
B	7	1	**9R-4066**	4	WASHER (61X98X4MM THK)	
	8	1	**9R-5301**	1	PIN-COTTER	
B	9	1	**9R-8390**	6	SPACER (61X98X1MM THK) (1MM THK)	
	10	1	**111-4331**	2	LINK AS	
		1	**116-4825**	4	BEARING-SLEEVE	
	11	1	**111-4332**	4	PLATE	
	12	1	**111-4333**	2	SPACER (46X63.5X37.1MM THK) (37.1MM THK)	
	13	1	**111-4334**	2	PIN	
	14	1	**111-4335**	2	SPACER (46X63.5X27.1MM THK) (27.1MM THK)	
	15	1	**111-4336**	1	LINK AS	
		1	**9R-1496**	2	BEARING-SLEEVE (40.196MM ID)	
		1	**116-4825**	2	BEARING-SLEEVE (45.198MM ID)	
B	16	1	**111-4337**	14	WASHER (46X70X1MM THK) (1MM THK)	
	17	1	**111-4338**	1	LINK	
B	18	1	**128-7903**	2	SPACER (61X114.3X3MM THK)	
	19	1	**111-4340**	1	PIN	
	20	1	**111-4341**	2	PIN	
	21	1	**111-4342**	4	PIN	
	22	1	**111-4343**	5	PIN	
	23	1	**112-0943**	1	ARM AS-LIFT	
M	23A	1	**8T-3851**	4	BOSS-WELD (M10X1.5MM)	
	23B	1	**9R-0111**	4	BEARING-SLEEVE (40.288MM ID)	
	23C	1	**9R-0119**	2	BOSS (53MM ID)	
	23D	1	**9R-0411**	4	BEARING-SLEEVE (45.295MM ID)	
	23E	1	**9R-2821**	2	BOSS (M10X15MM) (8.7MM ID)	
	23F	1	**9R-6690**	4	BEARING-SLEEVE	
	23G	1	**124-5246**	1	PLATE AS	
	23H	1	**126-1448**	1	PLATE AS	
	23I	1	**126-9091**	1	PLATE	
	24	1	**112-0950**	1	BRACE AS	
	25	1	**114-3836**	2	PIN	
	26	1	**118-1348**	1	PIN	
B	27	1	**119-4594**	8	WASHER (41X64X1MM THK)	
	28	1	**122-4954**	1	PIN AS	
	29	1	**125-1037**	2	PIN AS	
	30	1	**127-8987**	2	RING-RETAINING	
	31	1	**130-5451**	2	PIN	
M	32	1	**6V-7687**	4	LOCKNUT	
M	33	1	**8T-4176**	4	BOLT (M12X1.75X90MM)	
B	34	1	**128-7905**	2	SPACER (61X114.3X1MM THK)	

B-USE AS REQUIRED
M-METRIC PART

111-0339 **ARM GP-LIFT** ***(contd.)*** **i01876854**

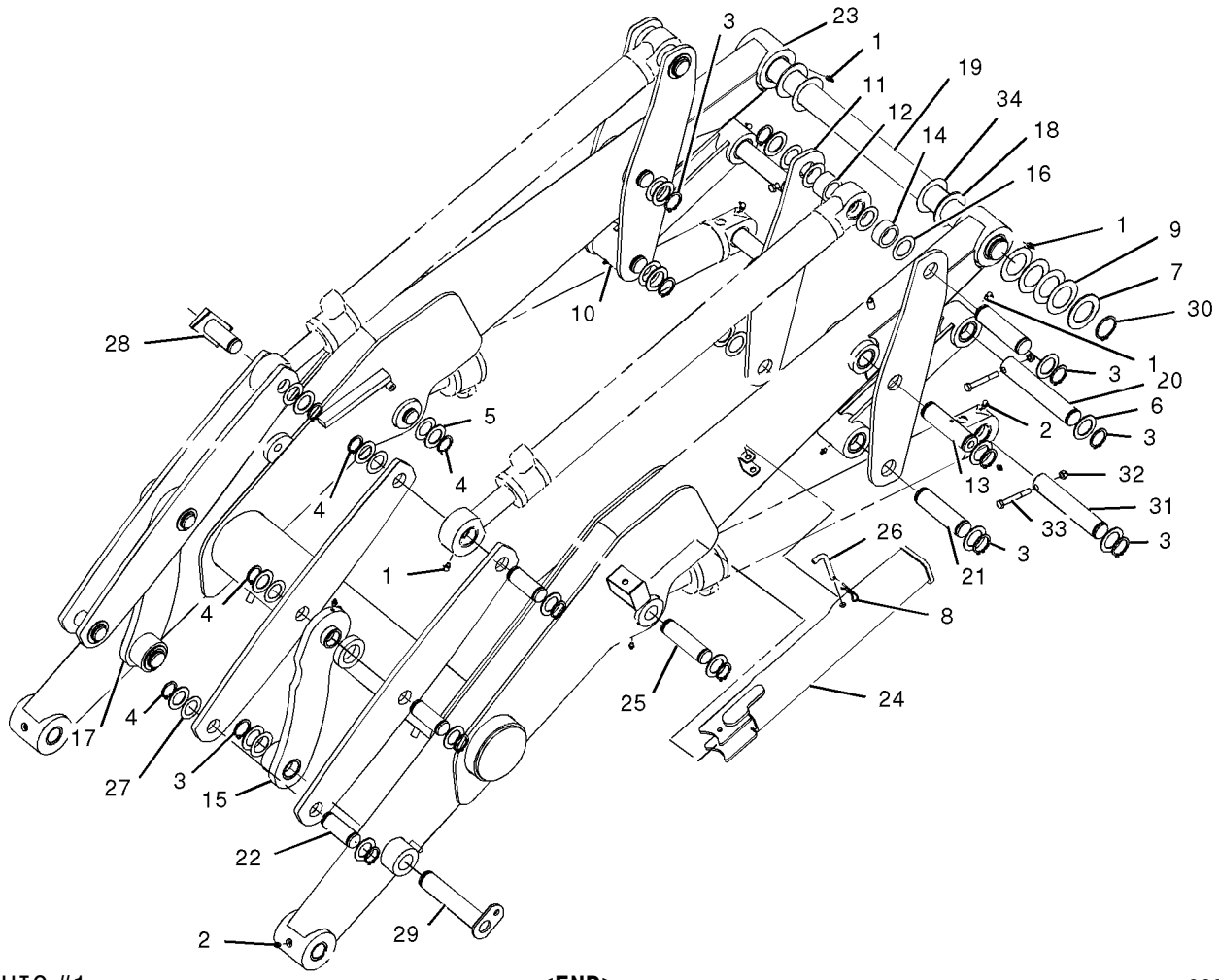

GRAPHIC #1 **<END>** g00955581

IMPLEMENTS

185-1927 BOOM GP

S/N: BXC1-UP; DSX1-UP
PART OF 185-1932 BOOM GP

SMCS-6501 **i02003681**

NOTE	REF NO	GRAPHIC REF	PART NUMBER	QTY	PART NAME 1 2 3 4 5 6 (PRODUCT LEVEL)	SEE PAGE
	1	1	**244-1989**	1	BOOM AS	
	1A	1	**8Y-4489**	4	BOSS (M10X35MM)	
	1B	1	**9R-8523**	2	PIN	
	1C	1	**106-0421**	3	BOSS	
	1D	1	**111-0483**	2	BOSS (M10X1.5MM)	
	1E	1	**174-6812**	2	BOSS	
	2	1	**3B-8488**	3	FITTING-GREASE	
	3	1	**9R-9812**	2	PIN	
M	4	1	**8T-5001**	2	BOLT (M12X1.75X130MM)	
M	5	1	**6V-7687**	2	LOCKNUT (M12X1.75THD)	
	6	1	**3B-8489**	1	FITTING-GREASE	
	7	1	**179-9961**	1	PLUG-PROTECTIVE	

M-METRIC PART

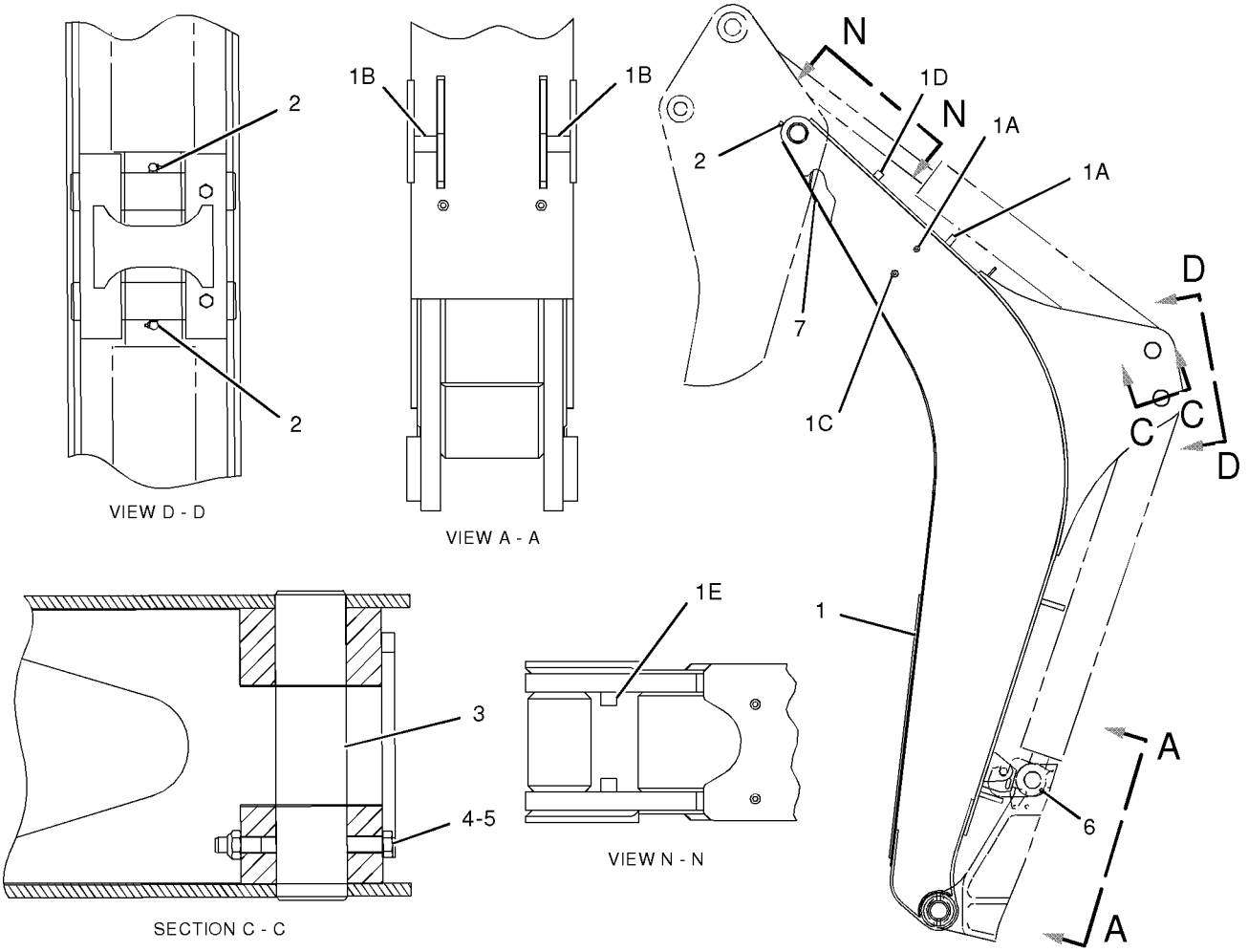

GRAPHIC #1 **<END>** g01036322

IMPLEMENTS

185-1932 BOOM GP

S/N: BXC1-UP; DSX1-UP

PART OF 214-6993, 214-6994 COMMON AR

SMCS-6501 **i01340517**

NOTE	PART NUMBER	QTY	PART NAME 1 2 3 4 5 6 (PRODUCT LEVEL)	SEE PAGE
Y	*185-1927*	1	BOOM GP	588

Y-SEPARATE ILLUSTRATION

<END>

120-9289 BRACKET GP-TRANSPORT

S/N: BXC1-UP; DSX1-UP
PART OF 119-1530 SHIPPING AR-BUCKET
AN ATTACHMENT

SMCS-7505 **i01500844**

NOTE	REF NO	GRAPHIC REF	PART NUMBER	QTY	PART NAME 1 2 3 4 5 6 (PRODUCT LEVEL)	SEE PAGE
	1	1	**3B-5322**	2	PIN-COTTER	
	2	1	**9R-0109**	2	WASHER (3MM THK)	
B	3	1	**9R-4066**	6	WASHER (4MM THK)	
	4	1	**9R-6014**	4	TUBE	
	5	1	**034-1432**	2	STRAP-CABLE	
	6	1	**120-9332**	2	BLOCK	
	7	1	**120-9333**	1	TUBE	

B-USE AS REQUIRED

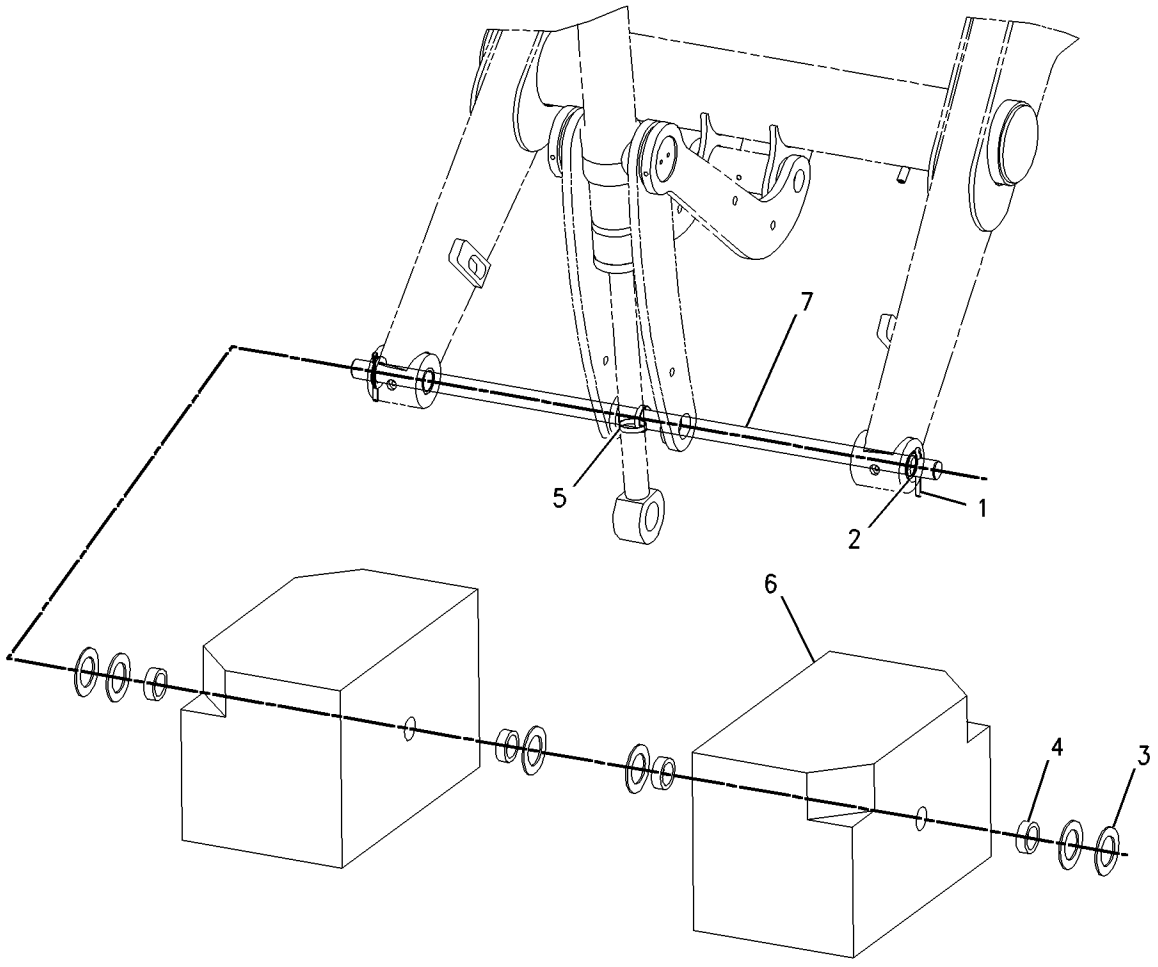

GRAPHIC #1 **<END>** g00778759

124-5525 BRACKET GP-TRANSPORT

S/N: BXC1-UP; DSX1-UP
AN ATTACHMENT

SMCS-7505 **i01520566**

NOTE	REF NO	GRAPHIC REF	PART NUMBER	QTY	PART NAME 1 2 3 4 5 6 (PRODUCT LEVEL)	SEE PAGE
	1	1	**3B-5322**	2	PIN-COTTER	
B	2	1	**9R-4066**	4	WASHER (4MM THK)	
	3	1	**120-9332**	2	BLOCK	
	4	1	**120-9333**	1	TUBE	
	5	1	**125-4594**	2	PLATE AS	
	6	1	**111-4335**	4	SPACER (25MM THK)	

B-USE AS REQUIRED

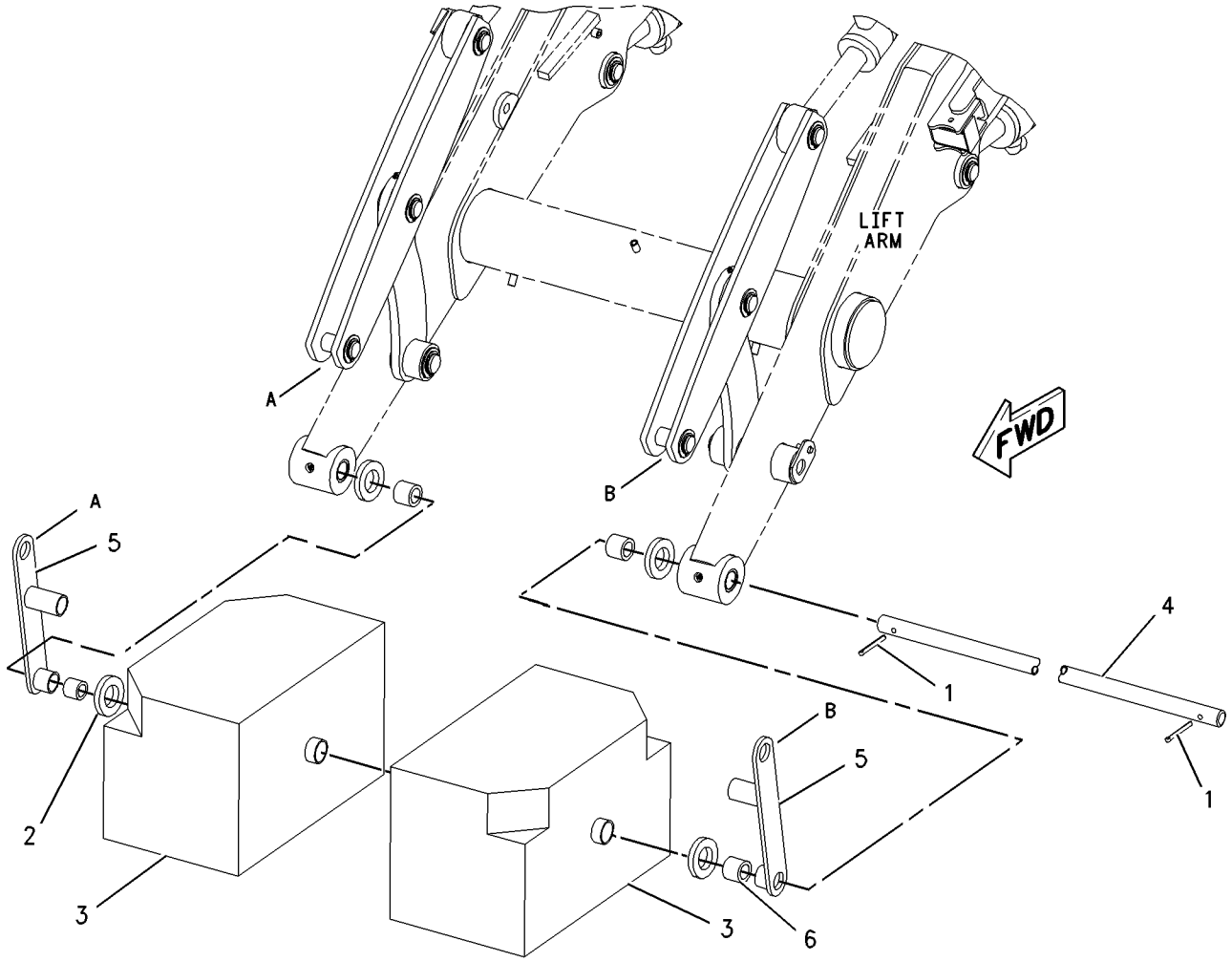

GRAPHIC #1 **<END>** g00763114

184-6784 HOUSING AS-EXTENDABLE STICK

S/N: BXC1-UP; DSX1-UP
PART OF 184-6786, 184-9754 STICK GP-EXTENDABLE
AN ATTACHMENT

SMCS-6502 **i01391837**

NOTE	REF NO	GRAPHIC REF	PART NUMBER	QTY	PART NAME 1 2 3 4 5 6 (PRODUCT LEVEL)	SEE PAGE
	1	1	**9R-9254**	2	BOSS	
	2	1	**9R-0139**	2	BEARING-SLEEVE	
	3	1	**8Y-4489**	2	BOSS	
	4	1	**107-6711**	2	BLOCK	
	5	1	**188-9954**	2	STOP	
	6	1	**187-0576**	2	BLOCK	
	7	1	**9R-9187**	2	GUSSET	
	8	1	**158-8778**	2	BOSS	

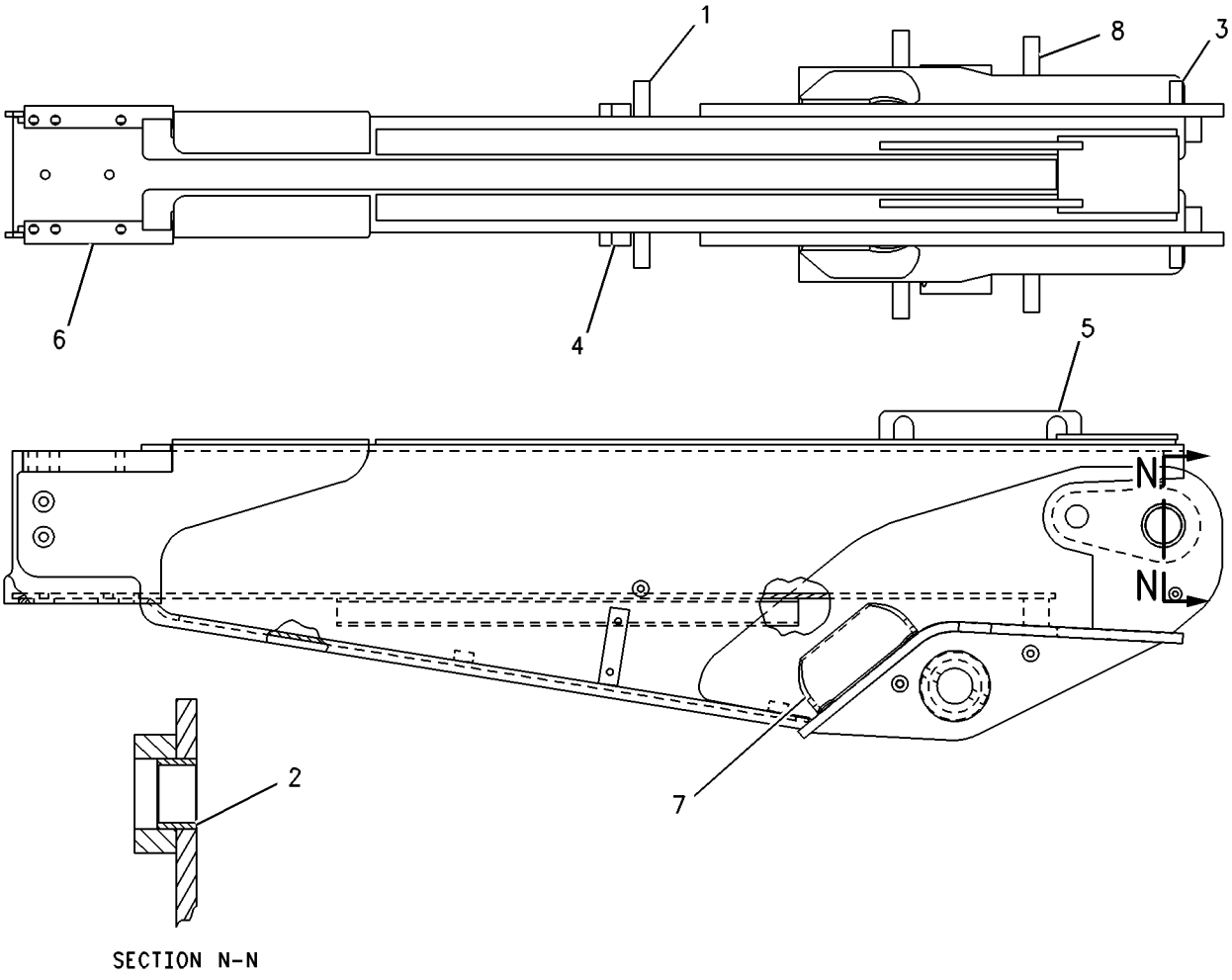

GRAPHIC #1 **<END>** g00706322

175-7877 LINK GP-SHIPPING

S/N: BXC1-UP; DSX1-UP

PART OF 240-8689, 240-8690, 240-8691, 240-8692, 240-8699, 240-8700, 240-8701, 240-8702 BACKHOE AR-EXTENDABLE STICK, 240-8683, 240-8684, 240-8685, 240-8686, 240-8687, 240-8688, 240-8693, 240-8694, 240-8695, 240-8696, 240-8697, 240-8698 BACKHOE AR-STANDARD STICK

AN ATTACHMENT

SMCS-6513 **i01190768**

NOTE	PART NUMBER	QTY	PART NAME 1 2 3 4 5 6 (PRODUCT LEVEL)	SEE PAGE
	120-9286	1	PLATE	

<END>

151-7928 LINKAGE GP-BACKHOE BUCKET

S/N: BXC1-UP; DSX1-UP

PART OF 240-8689, 240-8690, 240-8691, 240-8692, 240-8699, 240-8700, 240-8701, 240-8702 BACKHOE AR-EXTENDABLE STICK, 240-8683, 240-8684, 240-8685, 240-8686, 240-8687, 240-8688, 240-8693, 240-8694, 240-8695, 240-8696, 240-8697, 240-8698 BACKHOE AR-STANDARD STICK

AN ATTACHMENT

SMCS-6513 **i01994397**

NOTE	REF NO	GRAPHIC REF	PART NUMBER	QTY	PART NAME 1 2 3 4 5 6 (PRODUCT LEVEL)	SEE PAGE
	1	1	**9R-0158**	10	WASHER (46X69X3MM THK)	
	2	1	**9R-1510**	13	WASHER (51X82X4MM THK)	
	3	1	**6V-4364**	4	RING-RETAINING	
	4	1	**145-8337**	1	GUIDE AS-RH	
		1	**9R-0162**	1	BEARING	
		1	**9R-0411**	1	BEARING-SLEEVE	
	5	1	**145-8344**	1	GUIDE AS-LH	
		1	**9R-0162**	2	BEARING	
		1	**9R-0411**	1	BEARING-SLEEVE	
	6	1	**154-5265**	1	LINK AS	
		1	**9R-3092**	2	BEARING-SLEEVE	
		1	**9R-0147**	2	BEARING	
	7	1	**154-5277**	1	PIN	
	8	1	**154-5278**	2	PIN	
	9	1	**154-5279**	1	PIN	
	10	1	**154-5280**	1	PIN	
	11	1	**239-9435**	1	FILM-INSTRUCTION	
	12	1	**3B-5319**	4	PIN-COTTER	
	13	1	**3B-8489**	5	FITTING-GREASE	
	14	1	**6V-3213**	2	RING-RETAINING	

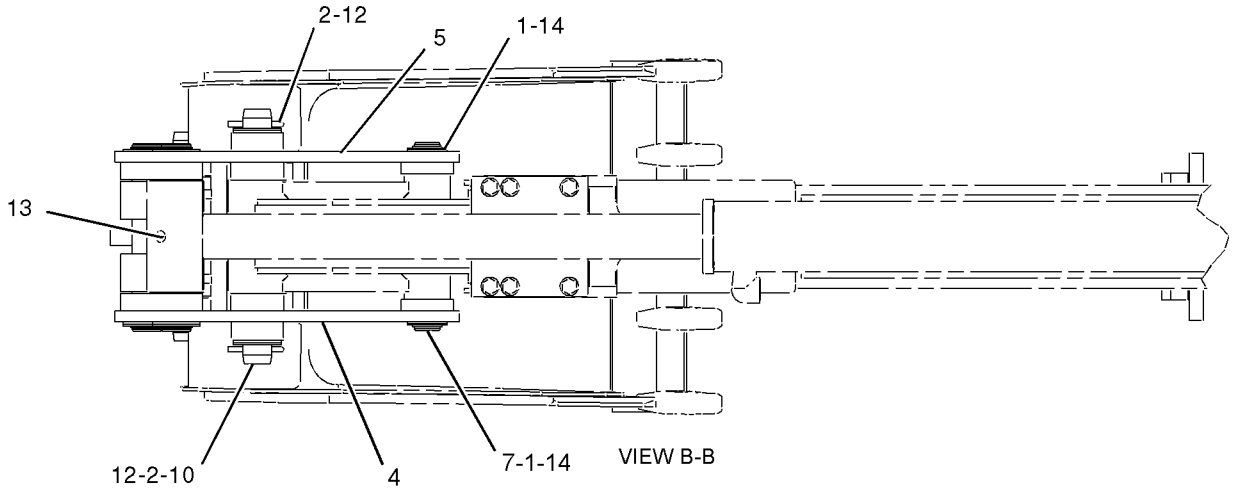

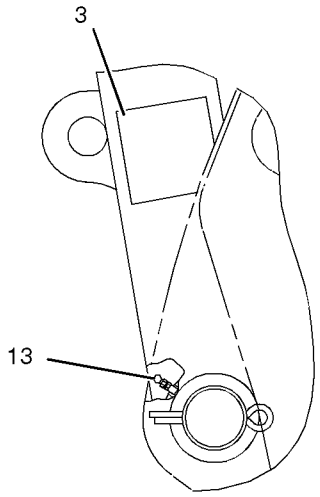

VIEW OF AREA A

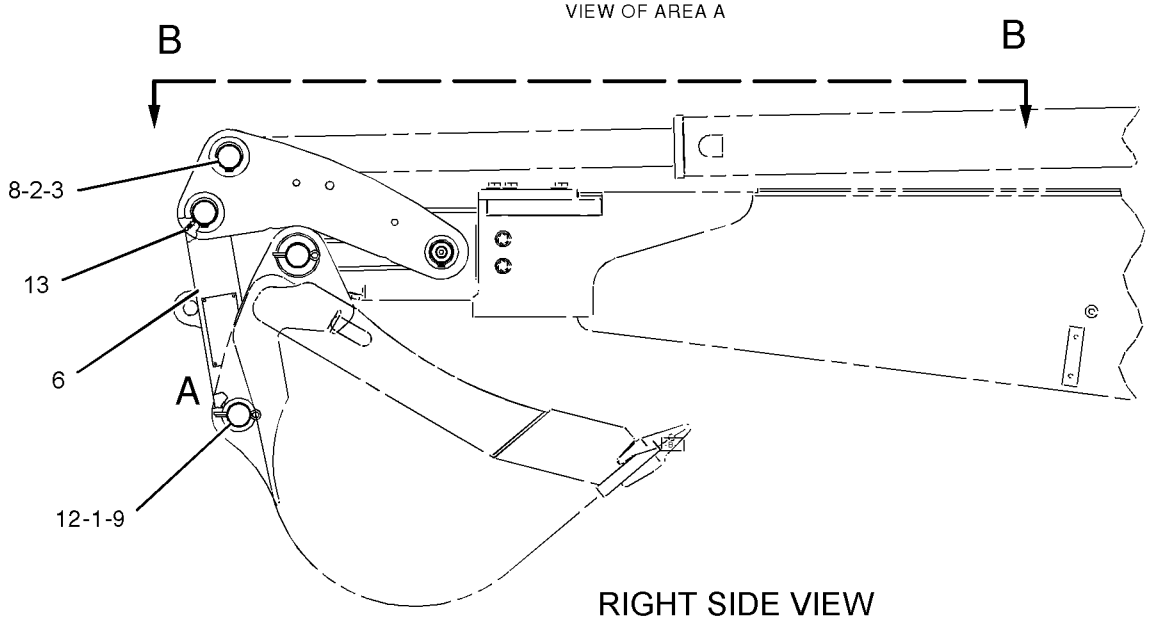

RIGHT SIDE VIEW

GRAPHIC #1 **<END>** g01032311

167-8330 LINKAGE GP-BACKHOE BUCKET

S/N: BXC1-UP; DSX1-UP

PART OF 240-8490, 240-8491, 240-8492, 240-8493, 240-8504, 240-8505, 240-8506, 240-8507 BACKHOE AR-EXTENDABLE STICK

AN ATTACHMENT

SMCS-6513 **i01498017**

NOTE	REF NO	GRAPHIC REF	PART NUMBER	QTY	PART NAME 1 2 3 4 5 6 (PRODUCT LEVEL)	SEE PAGE
	1	1	**9R-0158**	7	WASHER	
	2	1	**9R-1510**	8	WASHER (4MM THK)	
	3	1	**9R-9105**	2	PIN AS	
	4	1	**154-5277**	1	PIN	
	5	1	**154-5278**	2	PIN	
	6	1	**172-4823**	1	LINK AS	
	7	1	**191-5011**	1	GUIDE AS	
		1	**9R-0162**	2	BEARING	
		1	**9R-0411**	1	BEARING-SLEEVE	
	8	1	**191-5012**	1	GUIDE AS	
		1	**9R-0162**	2	BEARING	
		1	**9R-0411**	1	BEARING-SLEEVE	
	9	1	**3B-5319**	2	COTTER	
	10	1	**3B-8489**	5	FITTING-GREASE	
	11	1	**6V-3213**	2	RING-RETAINING	
	12	1	**6V-4364**	4	RING-RETAINING	

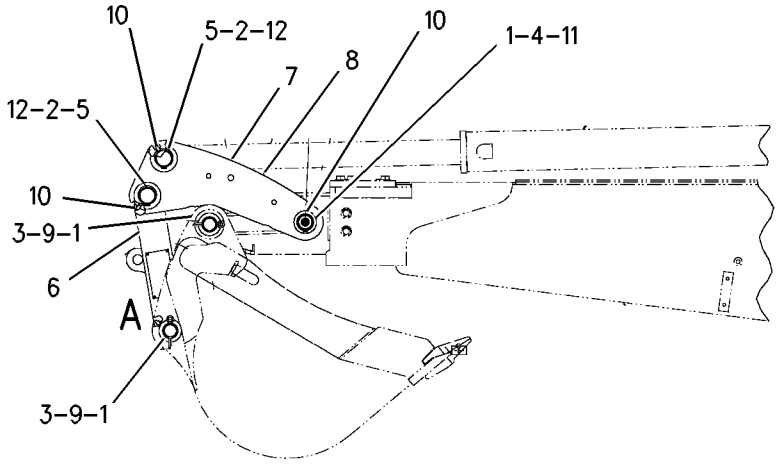

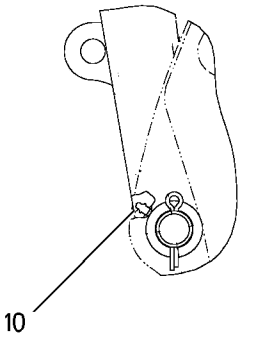

VIEW OF AREA A

GRAPHIC #1 **<END>** g00719753

IMPLEMENTS

112-1827 LOADER AR

S/N: BXC1-UP; DSX1-UP

PART OF 214-6993, 214-6994 COMMON AR

SMCS-6100 **i00796702**

NOTE	PART NUMBER	QTY	PART NAME 1 2 3 4 5 6 (PRODUCT LEVEL)	SEE PAGE
Y	*111-0339*	1	ARM GP-LIFT	586
Y	*122-1644*	1	WIRING GP-KICKOUT & POSITIONER	195

Y-SEPARATE ILLUSTRATION

<END>

113-0081 LOCK GP-STABILIZER LEG

S/N: BXC1-UP; DSX1-UP
EUROPEAN COMMUNITY
PART OF 190-2802 CONVERSION AR-CERTIFICATION
AN ATTACHMENT

SMCS-7222 **i01781045**

NOTE	REF NO	GRAPHIC REF	PART NUMBER	QTY	PART NAME 1 2 3 4 5 6 (PRODUCT LEVEL)	SEE PAGE
	1	1	**115-1858**	2	BRACKET	
	2	1	**221-7170**	2	SLING AS	
	3	1	**8T-4122**	2	WASHER-HARD (17X32X3.5MM THK)	
M	4	1	**8T-4132**	2	NUT (M16X2 THD)	
M	5	1	**8T-4193**	2	BOLT (M16X2X50MM)	

M-METRIC PART

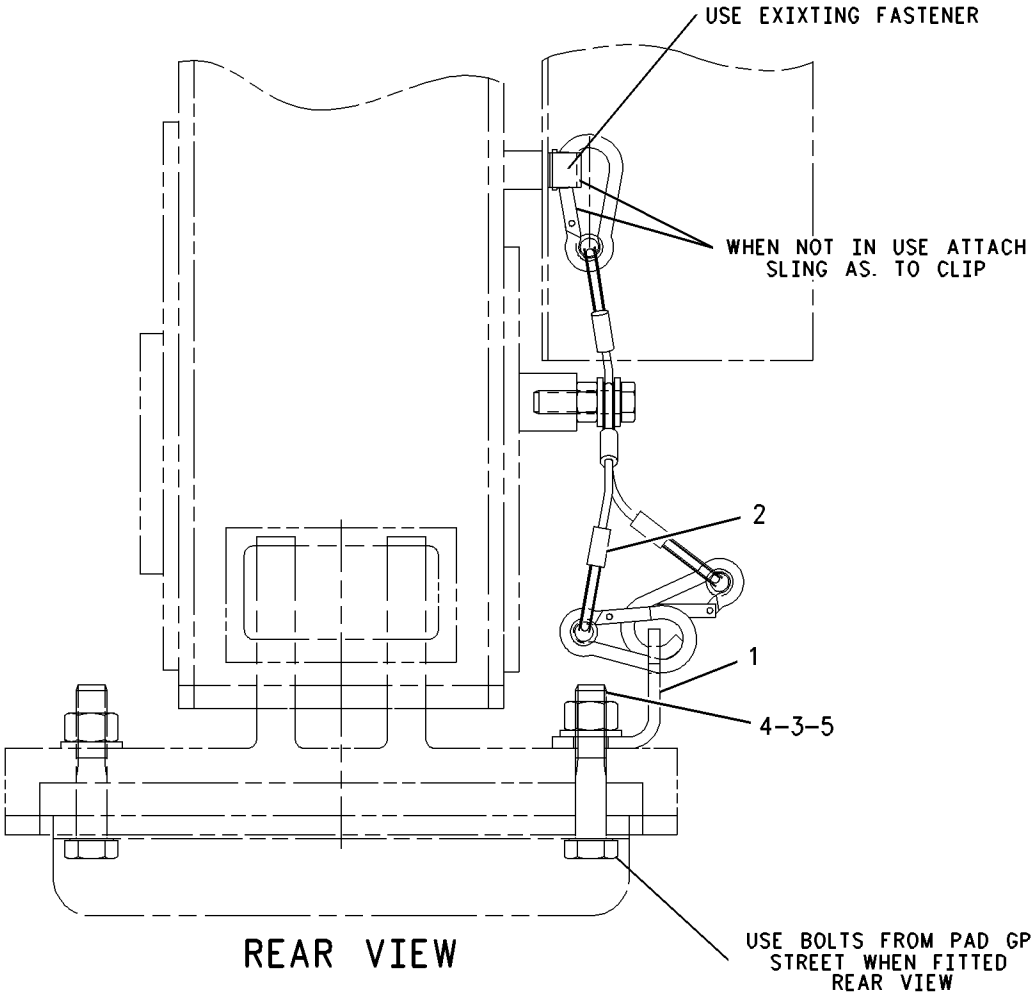

GRAPHIC #1 **<END>** g00910751

121-9797 LOCK GP-TRANSPORT—LOADER

S/N: BXC1-UP; DSX1-UP
PART OF 190-2803, 190-6413 CONVERSION AR-CERTIFICATION
AN ATTACHMENT

SMCS-7505 **i00534753**

NOTE	REF NO	GRAPHIC REF	PART NUMBER	QTY	PART NAME 1 2 3 4 5 6 (PRODUCT LEVEL)	SEE PAGE
	1	1	**5P-0370**	1	LOCKPIN	
	2	1	**113-8087**	1	BRACE AS	
	3	1	**118-1348**	1	PIN	
	4	1	**126-4974**	1	PLATE AS	
	5	1	**134-4807**	1	PIN	
	6	1	**9R-5301**	1	PIN-COTTER	

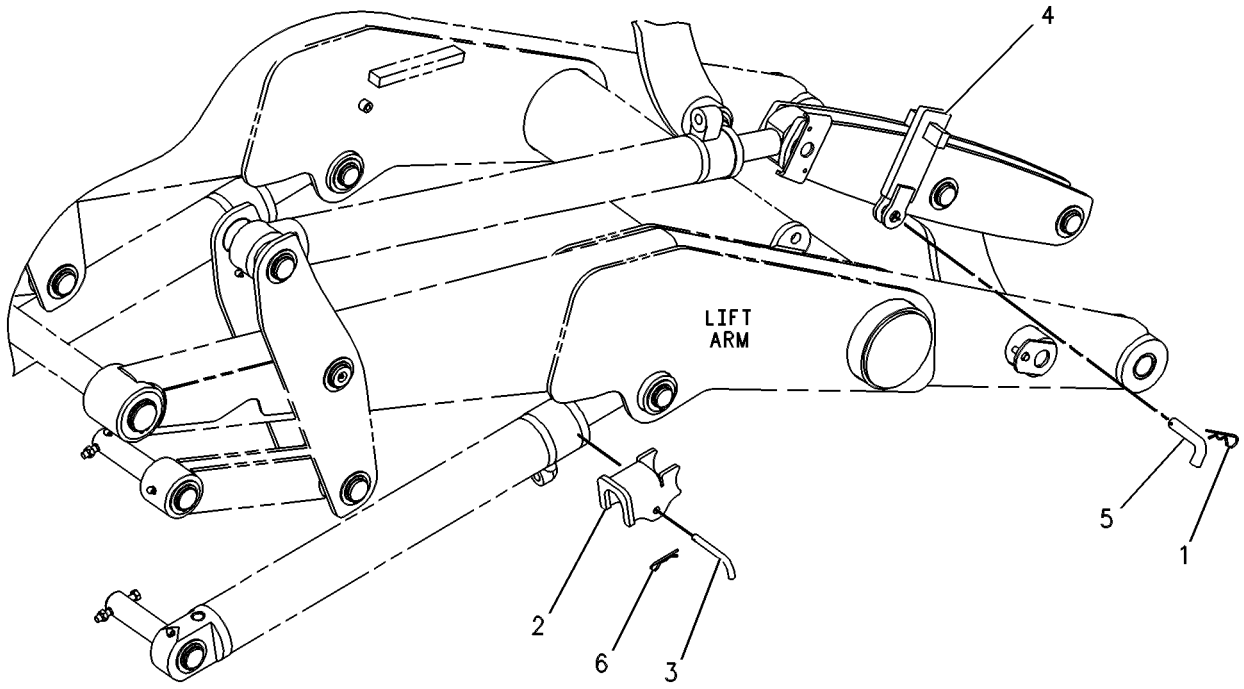

GRAPHIC #1 **<END>** g00258876

122-8037 LOCK GP-TRANSPORT–LOADER

S/N: BXC1-UP; DSX1-UP

AN ATTACHMENT

SMCS-7505 **i00999876**

NOTE	REF NO	GRAPHIC REF	PART NUMBER	QTY	PART NAME 1 2 3 4 5 6 (PRODUCT LEVEL)	SEE PAGE
	1	1	**122-8032**	1	BRACE AS	
	2	1	**113-9090**	1	PIN AS	
	3	1	**9R-5301**	1	PIN-COTTER	
	4	1	**9R-6140**	1	LINK	
	5	1	**9S-1315**	1	PIN-CLEVIS	
	6	1	**6S-6646**	1	PIN	

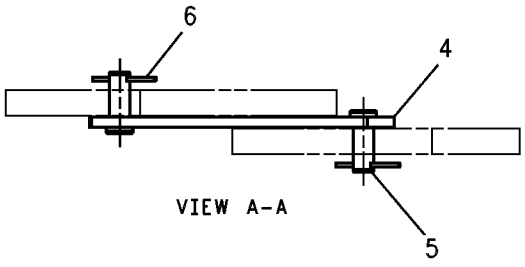

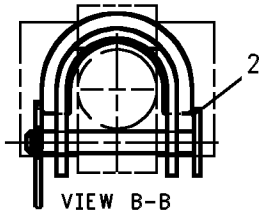

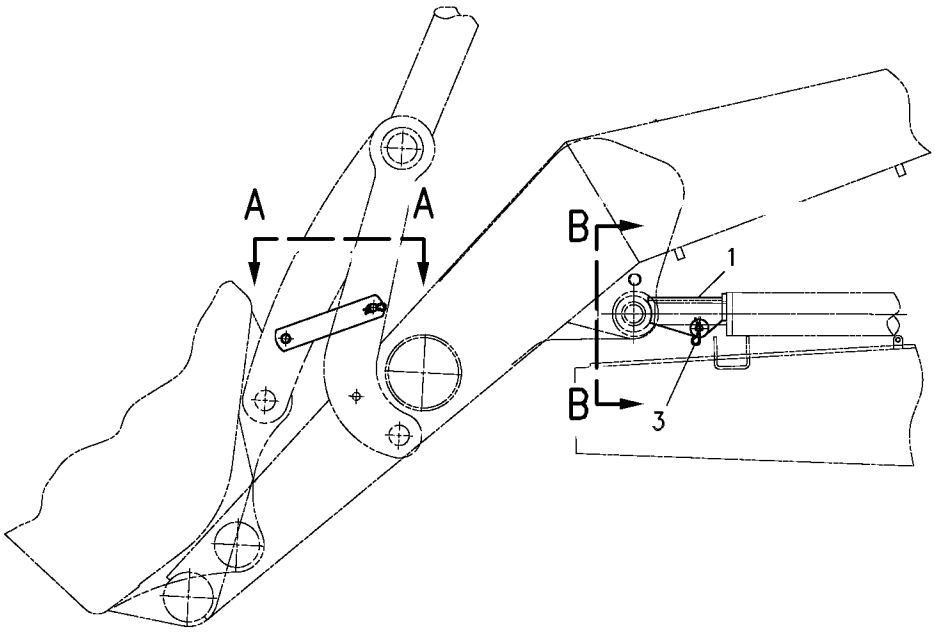

GRAPHIC #1 **<END>** g00511968

177-4726 LOCK GP-TRANSPORT–EXTENDABLE STICK

S/N: BXC1-UP; DSX1-UP
HIGH ROTATION BUCKET
PART OF 190-6413 CONVERSION AR-CERTIFICATION
AN ATTACHMENT

SMCS-7505 **i01494468**

NOTE	REF NO	GRAPHIC REF	PART NUMBER	QTY	PART NAME 1 2 3 4 5 6 (PRODUCT LEVEL)	SEE PAGE
	1	1	**177-4729**	1	CABLE AS	
	2	1	**9R-5301**	2	PIN-COTTER	
	3	1	**9R-9028**	1	PIN	

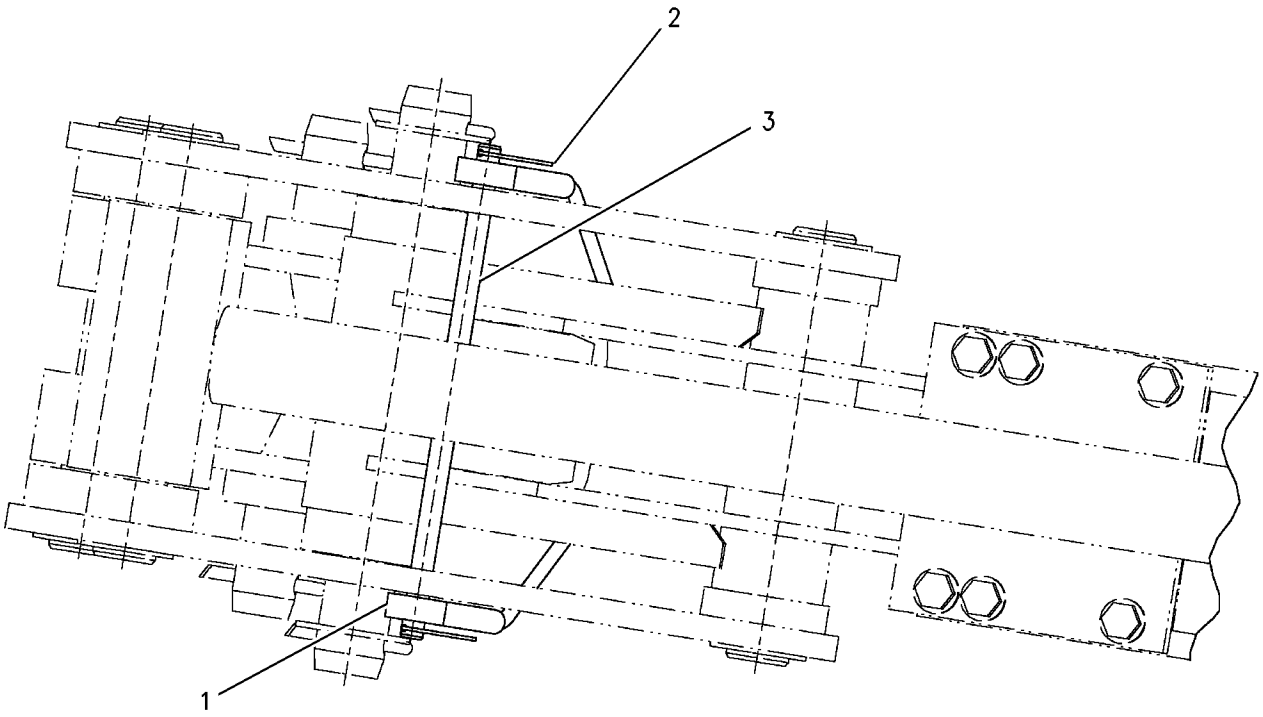

GRAPHIC #1 **<END>** g00778915

177-4727 LOCK GP-TRANSPORT–STANDARD STICK

S/N: BXC1-UP; DSX1-UP
HIGH ROTATION BUCKET
PART OF 190-2803 CONVERSION AR-CERTIFICATION
AN ATTACHMENT

SMCS-7505 **i01494471**

NOTE	REF NO	GRAPHIC REF	PART NUMBER	QTY	PART NAME 1 2 3 4 5 6 (PRODUCT LEVEL)	SEE PAGE
	1	1	**177-4733**	1	CABLE AS	
	2	1	**9R-5301**	2	PIN-COTTER	
	3	1	**9R-9028**	1	PIN	

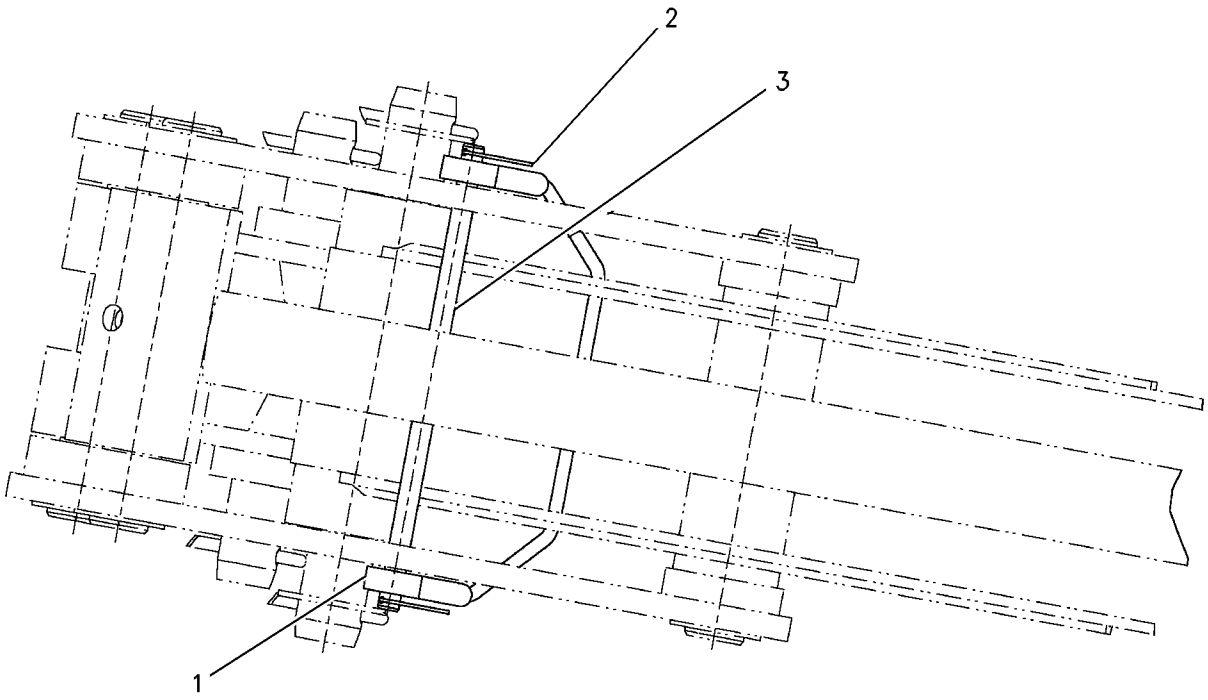

GRAPHIC #1 **<END>** g00778911

183-6076 LOCK GP-TRANSPORT–STABILIZER

S/N: BXC1-UP; DSX1-UP

PART OF 237-9288, 237-9289 CHASSIS AR

SMCS-7505 **i01854784**

NOTE	REF NO	GRAPHIC REF	PART NUMBER	QTY	PART NAME 1 2 3 4 5 6 (PRODUCT LEVEL)	SEE PAGE
	1	1	**8D-5294**	1	RING	
M	2	1	**108-2989**	2	BOLT (M8X1.25X130MM)	
	3	1	**110-5602**	1	KNOB	
	4	1	**183-6081**	1	BOLT	
	5	1	**183-6084**	1	BEARING	
	6	1	**183-6085**	2	BEARING	
	7	1	**210-8911**	1	BRACKET AS	
M		1	**8T-3490**	1	NUT-WELD (M10X1.5 THD)	
M		1	**8T-3612**	2	NUT-WELD (M8X1.25 THD)	
	8	1	**210-8913**	1	LEVER AS	
	9	1	**5P-4116**	2	WASHER-HARD (8.8X20.5X2MM THK)	

M-METRIC PART

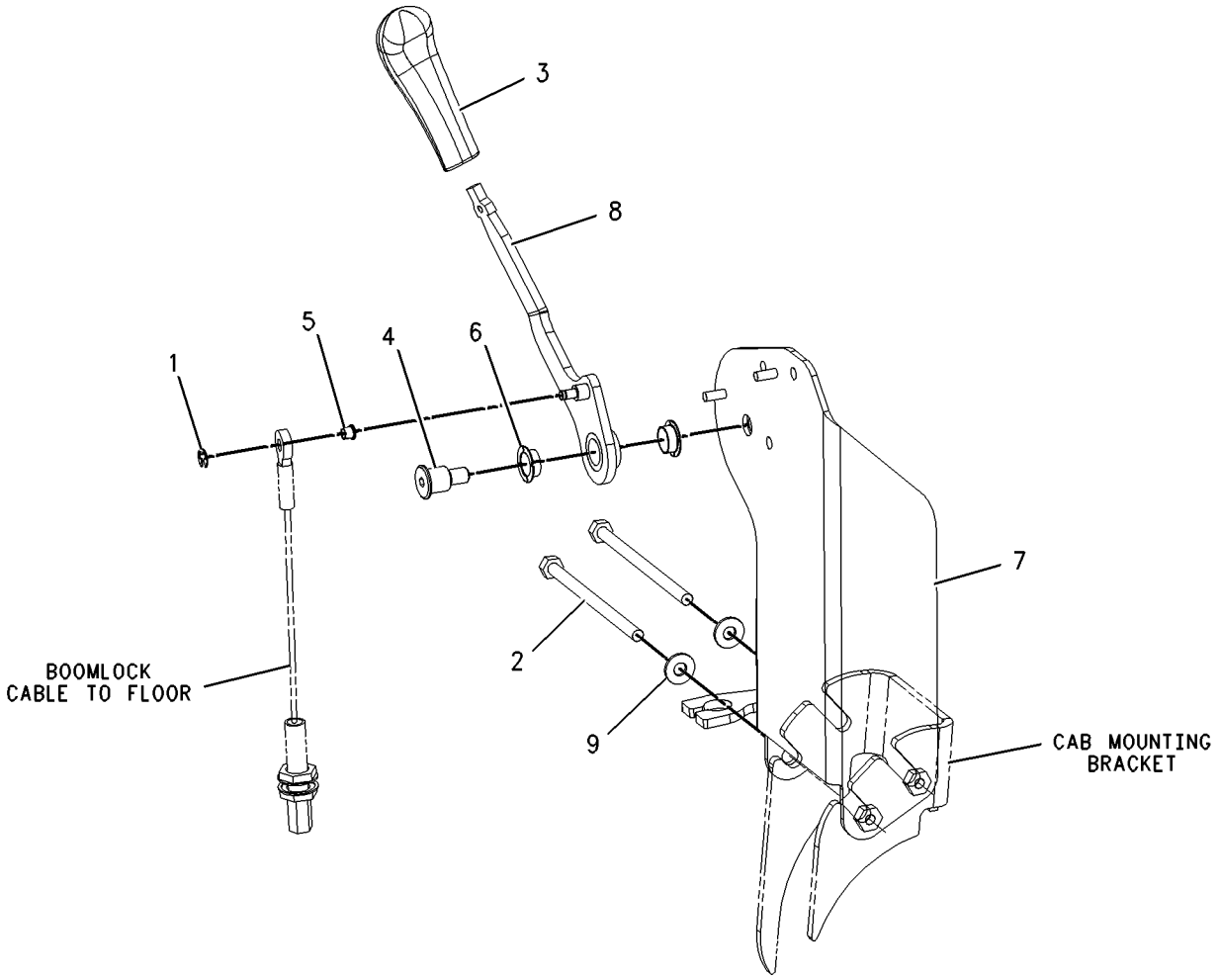

GRAPHIC #1 **<END>** g00949987

184-9950 MOUNTING GP-STICK

S/N: BXC1-UP; DSX1-UP

PART OF 240-8490, 240-8491, 240-8492, 240-8493, 240-8504, 240-8505, 240-8506, 240-8507, 240-8689, 240-8690, 240-8691, 240-8692, 240-8699, 240-8700, 240-8701, 240-8702 BACKHOE AR-EXTENDABLE STICK

AN ATTACHMENT

SMCS-6502 **i01498835**

NOTE	REF NO	GRAPHIC REF	PART NUMBER	QTY	PART NAME 1 2 3 4 5 6 (PRODUCT LEVEL)	SEE PAGE
B	1	1	**9R-1502**	4	WASHER (4MM THK)	
	2	1	**9R-6163**	1	PIN	
	3	1	**184-9956**	1	PIN	
	4	1	**2K-3549**	1	PIN-SPRING	
	5	1	**3B-8489**	2	FITTING-GREASE	
M	6	1	**6V-7687**	1	LOCKNUT (M12X1.75 THD)	
	7	1	**6V-8344**	2	RING	
M	8	1	**8T-5001**	1	BOLT (M12X1.75X130MM)	
	9	1	**159-0961**	1	PIN	
B	10	1	**124-0360**	3	WASHER-THRUST	

B-USE AS REQUIRED
M-METRIC PART

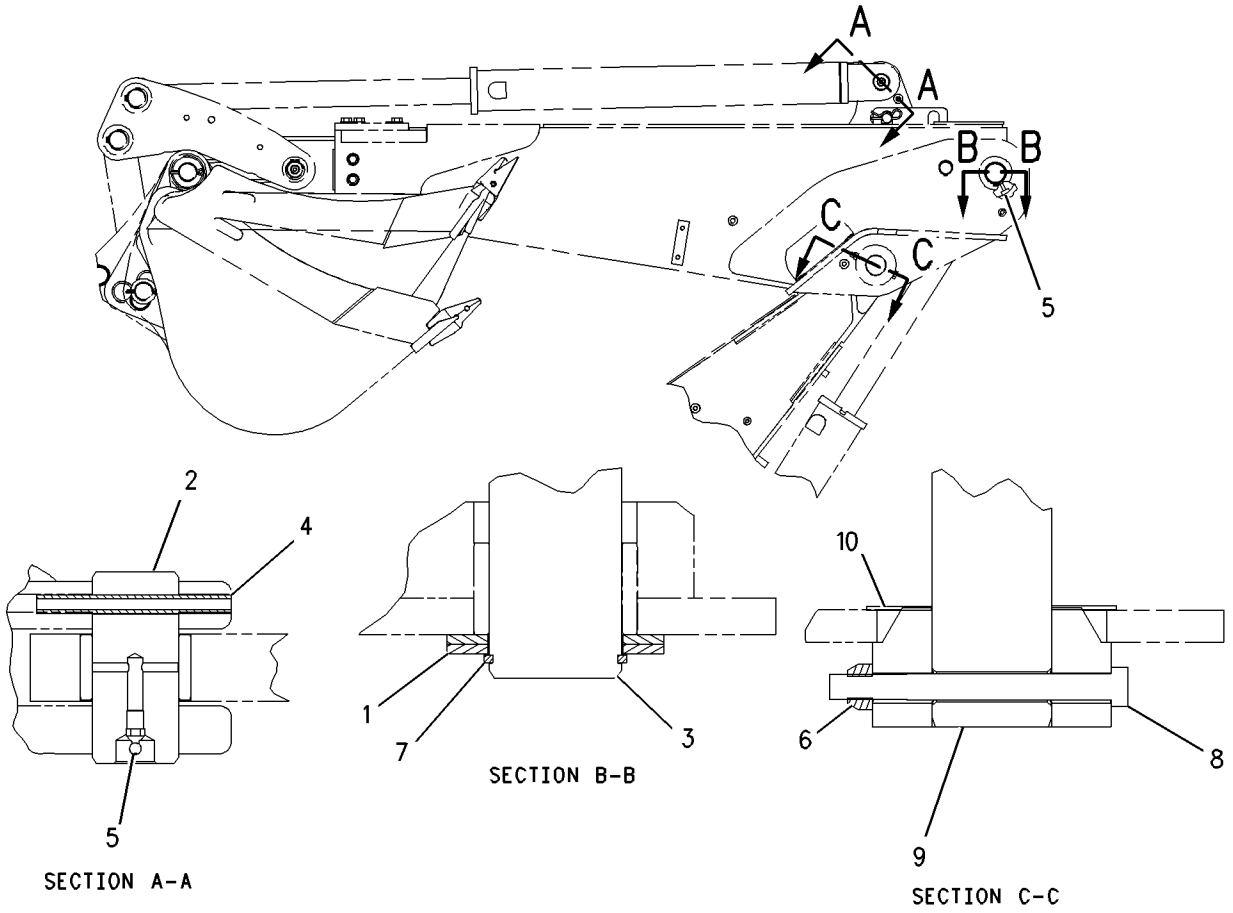

GRAPHIC #1 **<END>** g00777793

IMPLEMENTS

9R-0868 PAD GP-STABILIZER

S/N: BXC1-UP; DSX1-UP
FOR USE WITH 9R-1259 STABILIZER GP-SIDESHIFT
AN ATTACHMENT

SMCS-7222 **i01238045**

NOTE	REF NO	GRAPHIC REF	PART NUMBER	QTY	PART NAME 1 2 3 4 5 6 (PRODUCT LEVEL)	SEE PAGE
	1	1	**166-7870**	4	PAD AS-STREET	
M	2	1	**8T-4193**	12	BOLT (M16X2.0X50MM)	
	3	1	**9X-8257**	12	WASHER (3.50MM THK)	

M-METRIC PART

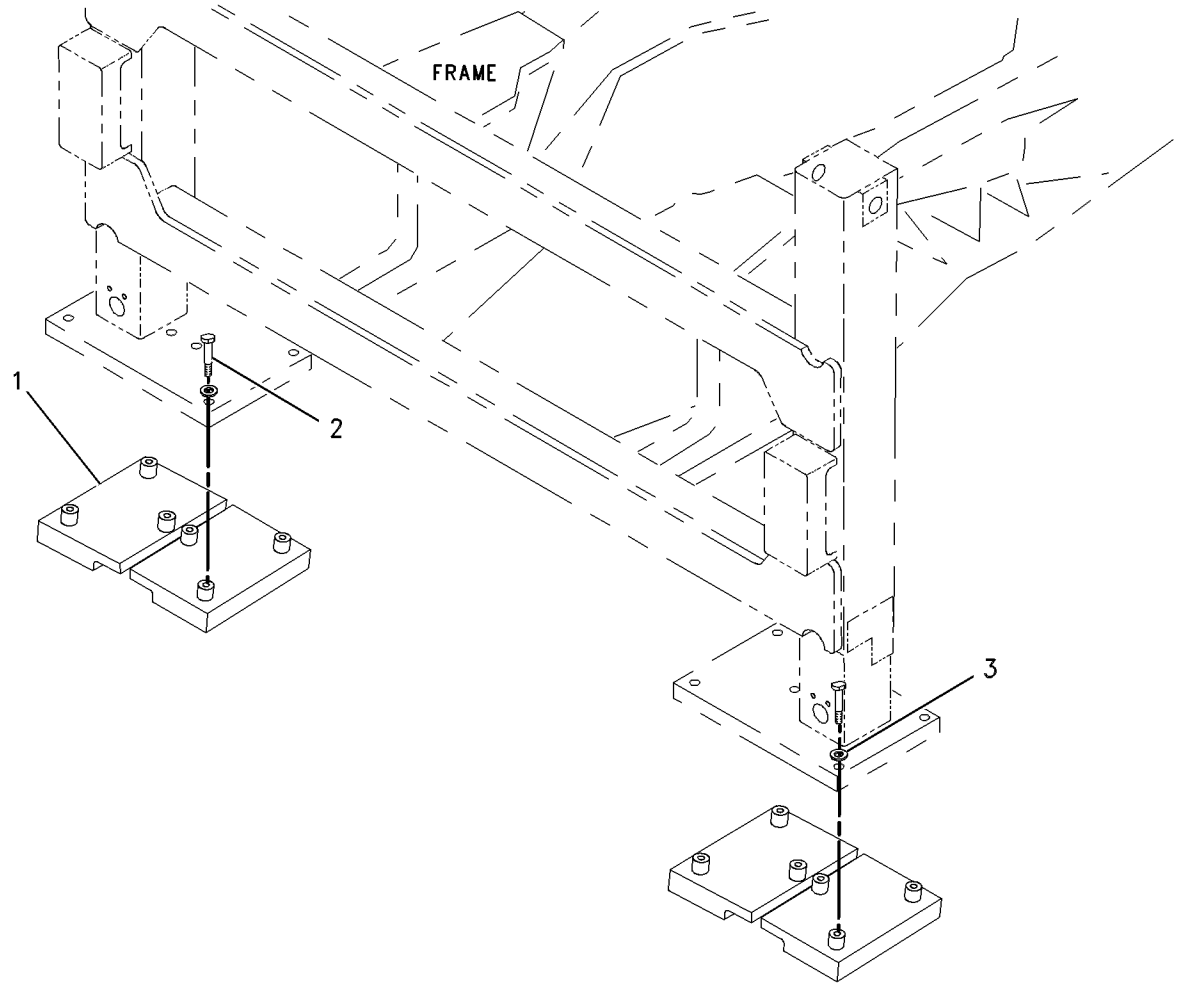

GRAPHIC #1 **<END>** g00661392

IMPLEMENTS

126-5707 STABILIZER GP-BACKHOE

S/N: BXC1-UP; DSX1-UP

PART OF 237-9288, 237-9289 CHASSIS AR

SMCS-7222 **i01590104**

NOTE	REF NO	GRAPHIC REF	PART NUMBER	QTY	PART NAME 1 2 3 4 5 6 (PRODUCT LEVEL)	SEE PAGE
	1	1	**9R-6785**	2	PIN	
	2	1	**136-0437**	2	PAD-STABILIZER	
	3	1	**184-1413**	2	PIN AS	
B	4	1	**185-5734**	2	SHIM	
B	5	1	**185-5735**	2	SHIM	
	6	1	**6V-3213**	6	RING-RETAINING	

B-USE AS REQUIRED

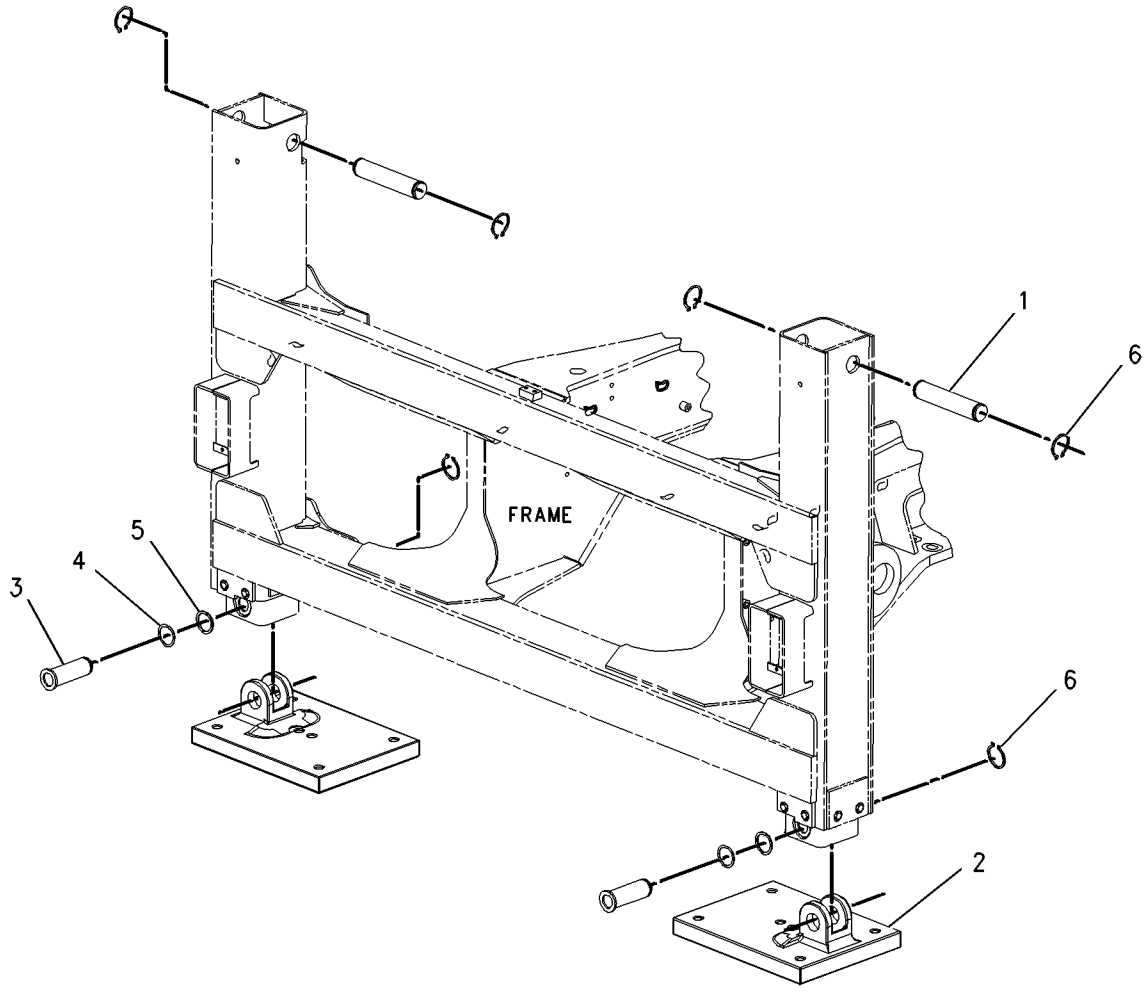

GRAPHIC #1 **<END>** g00824441

239-0225 STABILIZER GP-BACKHOE–STANDARD LEG

S/N: BXC1-UP; DSX1-UP
AN ATTACHMENT

SMCS-7222 **i01946191**

NOTE	REF NO	GRAPHIC REF	PART NUMBER	QTY	PART NAME 1 2 3 4 5 6 (PRODUCT LEVEL)	SEE PAGE
	1	1	**126-5693**	2	TUBE AS	

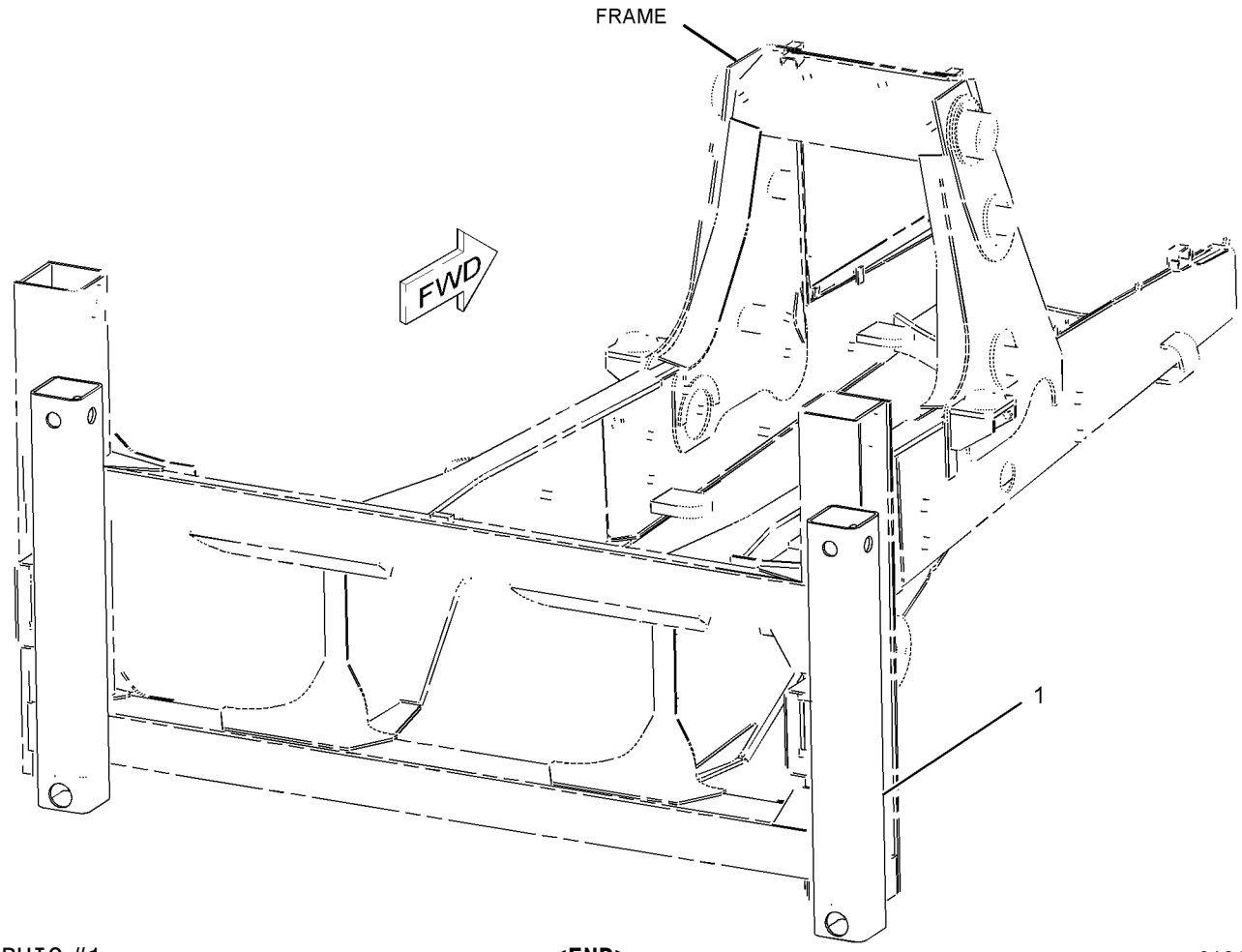

GRAPHIC #1 **<END>** g01013113

239-0226 STABILIZER GP-BACKHOE—SLOTTED LEG

S/N: BXC1-UP; DSX1-UP

AN ATTACHMENT

SMCS-7222 **i01946195**

NOTE	REF NO	GRAPHIC REF	PART NUMBER	QTY	PART NAME 1 2 3 4 5 6 (PRODUCT LEVEL)	SEE PAGE
	1	1	**215-5643**	2	TUBE AS	

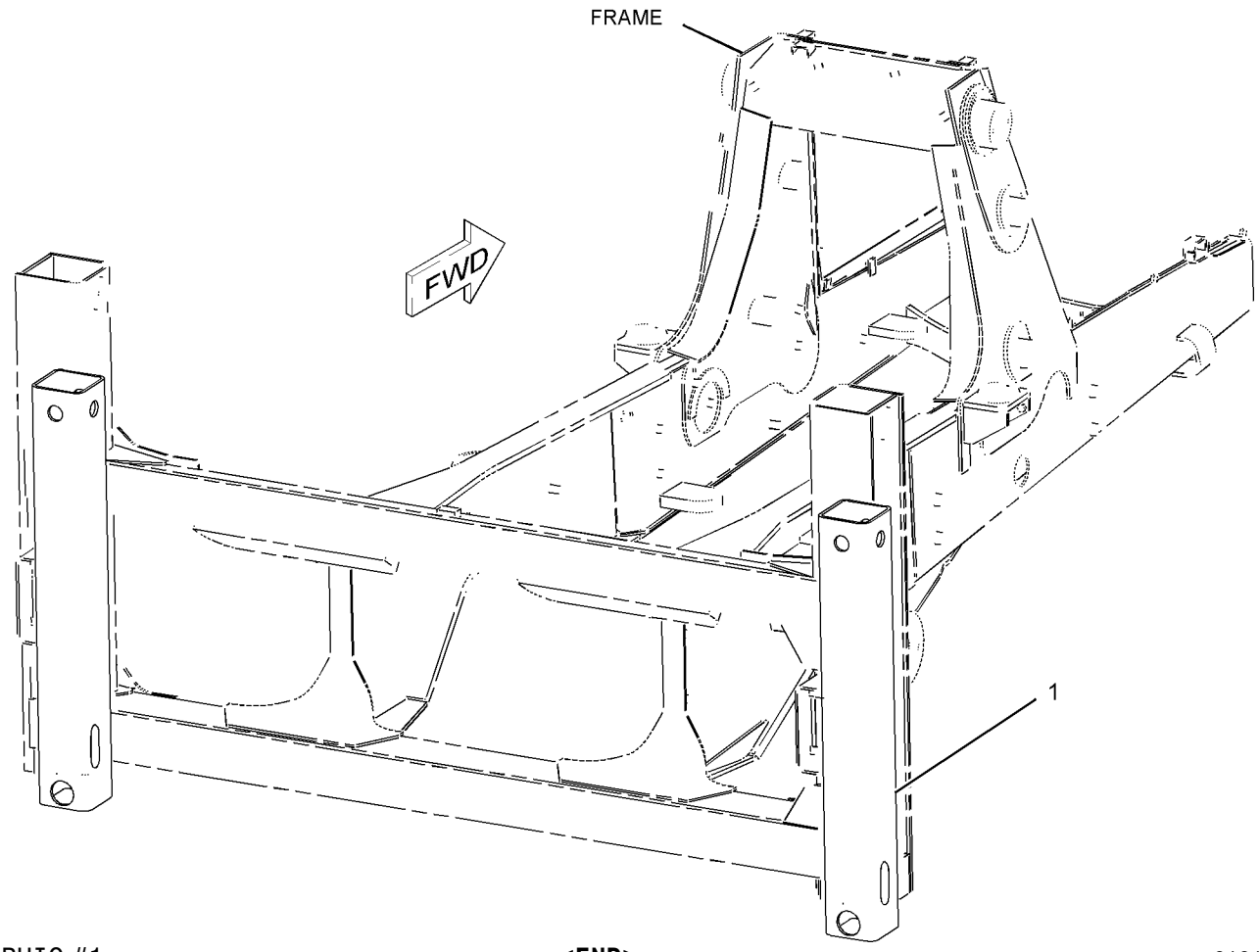

GRAPHIC #1 **<END>** g01013121

IMPLEMENTS

184-6786 STICK GP-EXTENDABLE

S/N: BXC1-UP; DSX1-UP

PART OF 240-8689, 240-8690, 240-8691, 240-8692, 240-8699, 240-8700, 240-8701, 240-8702 BACKHOE AR-EXTENDABLE STICK

AN ATTACHMENT

SMCS-6533 **i01843847**

NOTE	REF NO	GRAPHIC REF	PART NUMBER	QTY	PART NAME 1 2 3 4 5 6 (PRODUCT LEVEL)	SEE PAGE
	1	1	**9R-2958**	1	PIN	
	2	1	**9R-2959**	2	CLIP	
B	3	1	**117-0754**	4	SHIM (1MM THK)	
Y	4	1	*155-6586*	1	CYLINDER GP-EXTENDABLE STICK	378
B	5	1	**157-3364**	6	SHIM (1MM THK)	
B	6	1	**157-3365**	12	SHIM (1MM THK)	
B	7	1	**157-3366**	4	SHIM (0.5MM THK)	
B	8	1	**157-3367**	4	SHIM (0.5MM THK)	
	9	1	**173-2769**	1	PIN	
	10	1	**173-7758**	1	PIN	
B	11	1	**183-3757**	3	SHIM (1MM THK)	
B	12	1	**183-3758**	2	SHIM (0.5MM THK)	
Y	13	1	**184-6784**	1	HOUSING AS-EXTENDABLE STICK	592
	14	1	**184-6785**	1	EXTENSION AS	
	14A	1	**9R-0162**	2	BEARING	
	14B	1	**9R-0411**	3	BEARING-SLEEVE	
	15	1	**187-3825**	1	PAD AS	
	16	1	**187-3826**	4	PAD AS	
	17	1	**187-3827**	2	PAD AS	
	18	1	**187-3828**	1	PAD AS	
B	19	1	**187-3830**	3	SHIM (1MM THK)	
B	20	1	**187-3831**	2	SHIM (0.5MM THK)	
	21	1	**187-4052**	1	PLATE	
	22	1	**1J-6474**	2	RING-RETAINING	
	23	1	**1L-3768**	2	RING-RETAINING	
	24	1	**3B-8489**	1	FITTING-GREASE (1/8-27 THD)	
	25	1	**8T-4122**	6	WASHER-HARD (17X32X3.5MM THK)	
M	26	1	**8T-4179**	4	BOLT (M12X1.75X20MM)	
M	27	1	**8T-4184**	2	BOLT (M12X1.75X45MM)	
M	28	1	**8T-4192**	10	BOLT (M12X1.75X25MM)	
	29	1	**8T-4223**	6	WASHER-HARD (13.5X25.5X3MM THK)	
M	30	1	**8T-7338**	6	BOLT (M16X2.0X45MM)	
	31	1	**8T-7971**	8	WASHER-HARD (13.5X25.5X5MM THK)	

B-USE AS REQUIRED
M-METRIC PART
Y-SEPARATE ILLUSTRATION

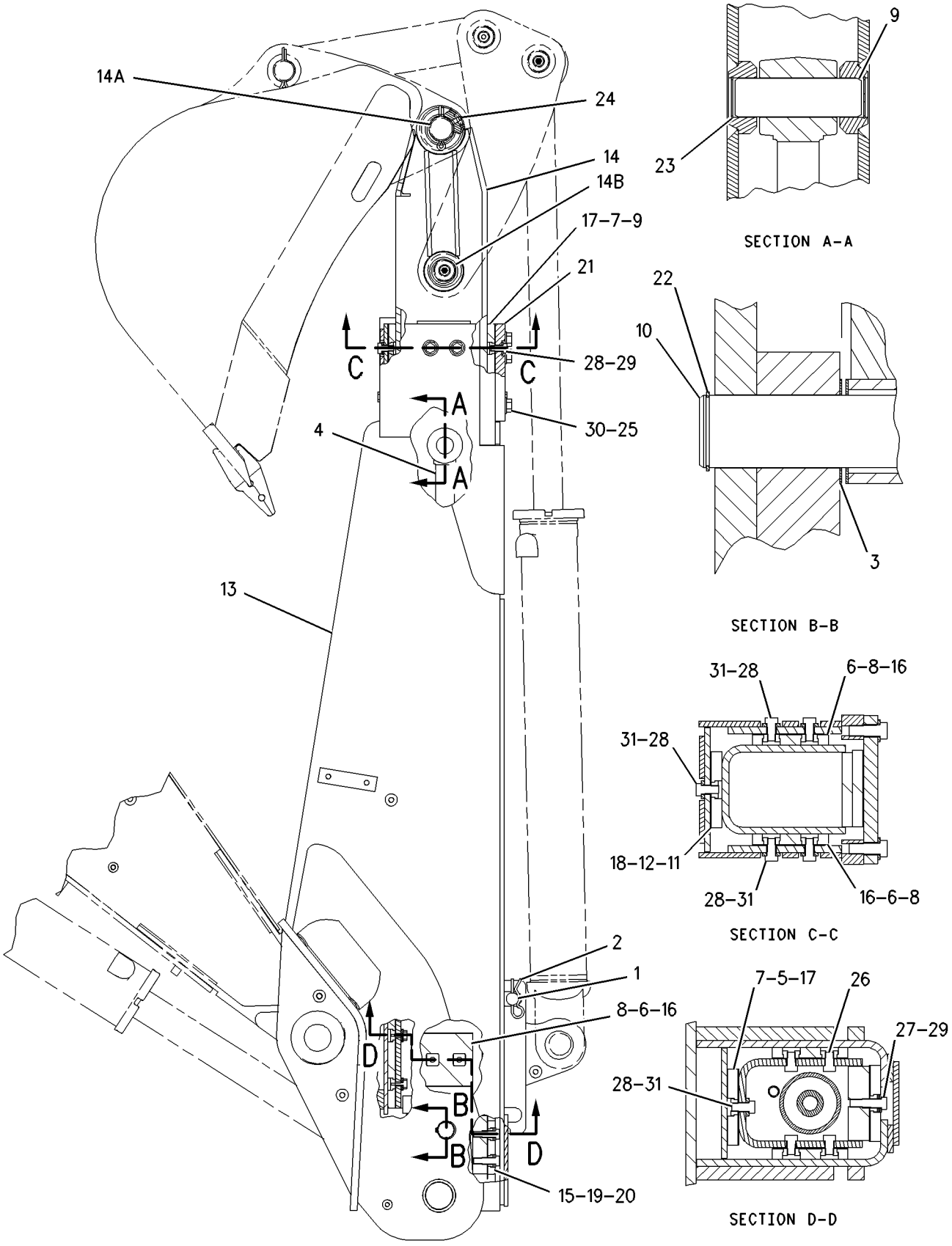

GRAPHIC #1 **<END>** g00782864

IMPLEMENTS

184-9754 STICK GP-EXTENDABLE

S/N: BXC1-UP; DSX1-UP

PART OF 240-8490, 240-8491, 240-8492, 240-8493, 240-8504, 240-8505, 240-8506, 240-8507 BACKHOE AR-EXTENDABLE STICK

AN ATTACHMENT

SMCS-6533 **i01843856**

NOTE	REF NO	GRAPHIC REF	PART NUMBER	QTY	PART NAME 1 2 3 4 5 6 (PRODUCT LEVEL)	SEE PAGE
	1	1	**9R-2958**	1	PIN	
	2	1	**9R-2959**	2	CLIP	
B	3	1	**117-0754**	4	SHIM (1MM THK)	
Y	4	1	*155-6586*	1	CYLINDER GP-EXTENDABLE STICK	378
B	5	1	**187-3834**	6	SHIM (1MM THK)	
B	6	1	**187-3832**	12	SHIM (1MM THK)	
B	7	1	**187-3835**	4	SHIM (0.5MM THK)	
B	8	1	**187-3833**	4	SHIM (0.5MM THK)	
	9	1	**173-2769**	1	PIN	
	10	1	**173-7758**	1	PIN	
B	11	1	**187-3836**	3	SHIM (1MM THK)	
B	12	1	**187-3837**	2	SHIM (0.5MM THK)	
Y	13	1	**184-6784**	1	HOUSING AS-EXTENDABLE STICK	592
	14	1	**184-9992**	1	EXTENSION AS	
	14A	1	**9R-7891**	2	BEARING-SLEEVE	
	14B	1	**9R-0411**	3	BEARING-SLEEVE	
		1	**9R-9254**	2	BOSS	
	15	1	**187-3825**	1	PAD AS	
	16	1	**187-3826**	4	PAD AS	
	17	1	**187-3827**	2	PAD AS	
	18	1	**187-3828**	1	PAD AS	
B	19	1	**198-0014**	3	SHIM (1MM THK)	
B	20	1	**198-0015**	2	SHIM (0.5MM THK)	
	21	1	**187-4052**	1	PLATE	
	22	1	**1J-6474**	2	RING-RETAINING	
	23	1	**1L-3768**	2	RING-RETAINING	
	24	1	**3B-8489**	1	FITTING-GREASE (1/8-27 THD)	
	25	1	**8T-4122**	6	WASHER-HARD (17X32X3.5MM THK)	
M	26	1	**8T-4179**	4	BOLT (M12X1.75X20MM)	
M	27	1	**8T-4184**	2	BOLT (M12X1.75X45MM)	
M	28	1	**8T-4192**	10	BOLT (M12X1.75X25MM)	
	29	1	**8T-4223**	6	WASHER-HARD (13.5X25.5X3MM THK)	
M	30	1	**8T-7338**	6	BOLT (M16X2.0X45MM)	
	31	1	**8T-7971**	8	WASHER-HARD (13.5X25.5X5MM THK)	

B-USE AS REQUIRED
M-METRIC PART
Y-SEPARATE ILLUSTRATION

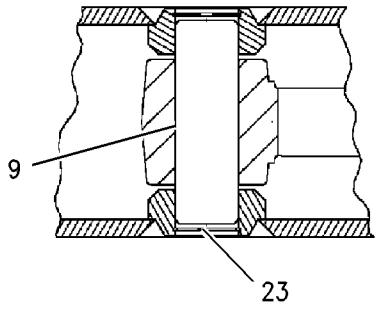

SECTION A-A

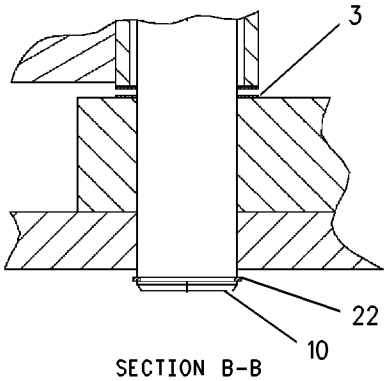

SECTION B-B

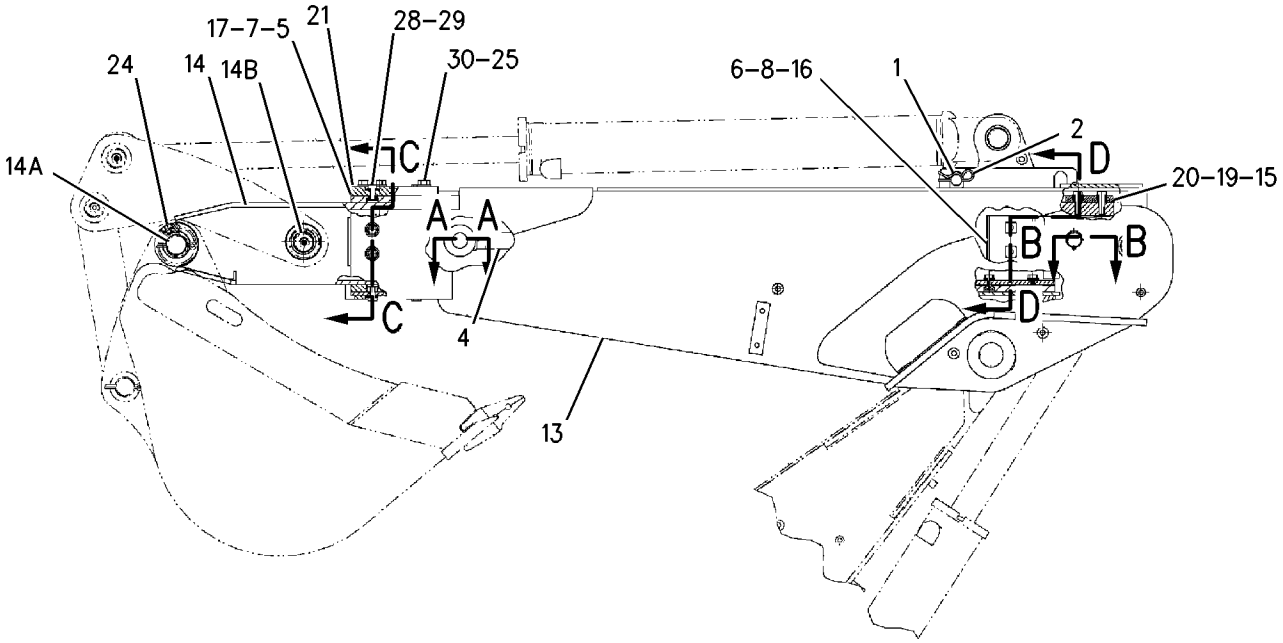

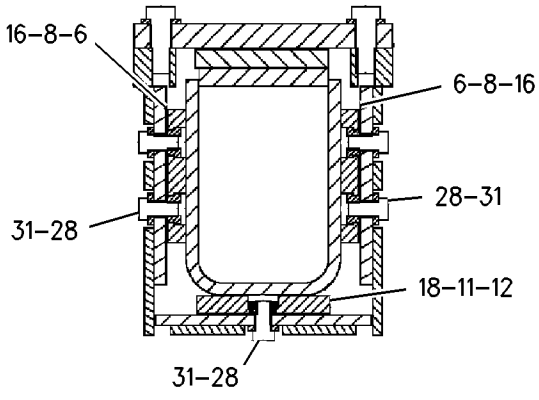

SECTION C-C

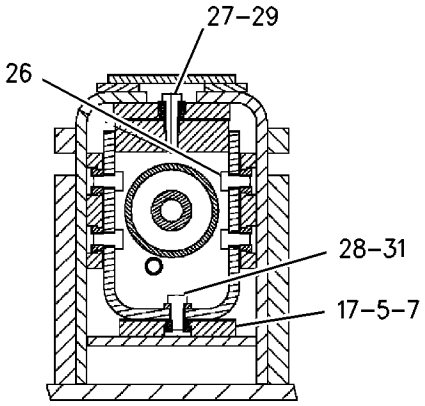

SECTION D-D

GRAPHIC #1 **<END>** g00788133

184-6178 STICK GP-HOE

S/N: BXC1-UP; DSX1-UP

PART OF 240-8683, 240-8684, 240-8685, 240-8686, 240-8687, 240-8688, 240-8693, 240-8694, 240-8695, 240-8696, 240-8697, 240-8698 BACKHOE AR-STANDARD STICK AN ATTACHMENT

SMCS-6502 **i01671172**

NOTE	REF NO	GRAPHIC REF	PART NUMBER	QTY	PART NAME 1 2 3 4 5 6 (PRODUCT LEVEL)	SEE PAGE
	1	1	**3B-8488**	1	FITTING-GREASE (1/8-27 THD)	
B	2	1	**9R-1502**	4	WASHER (4MM THK)	
B	3	1	**9R-1510**	4	WASHER (4MM THK)	
	4	1	**9R-8663**	1	PIN	
B	5	1	**124-0360**	3	WASHER-THRUST	
	6	1	**179-9961**	1	PLUG-PROTECTIVE	
	7	1	**184-1307**	1	STICK AS	
	7A	1	**9R-0139**	2	BEARING-SLEEVE	
	7B	1	**9R-0162**	4	BEARING	
	7C	1	**9R-0411**	2	BEARING-SLEEVE	
	7D	1	**107-6711**	2	BLOCK	
	7E	1	**172-9992**	2	BOSS	
	8	1	**174-5696**	1	PIN	
	9	1	**3B-8489**	2	FITTING-GREASE (1/8-27 THD)	
	10	1	**6V-4364**	2	RING-RETAINING	
M	11	1	**6V-7687**	1	LOCKNUT (M12X1.75 THD)	
	12	1	**6V-8344**	2	RING	
M	13	1	**8T-5001**	1	BOLT (M12X1.75X130MM)	
	14	1	**159-0961**	1	PIN	

B-USE AS REQUIRED
M-METRIC PART

184-6178 **STICK GP-HOE** *(contd.)* **i01671172**

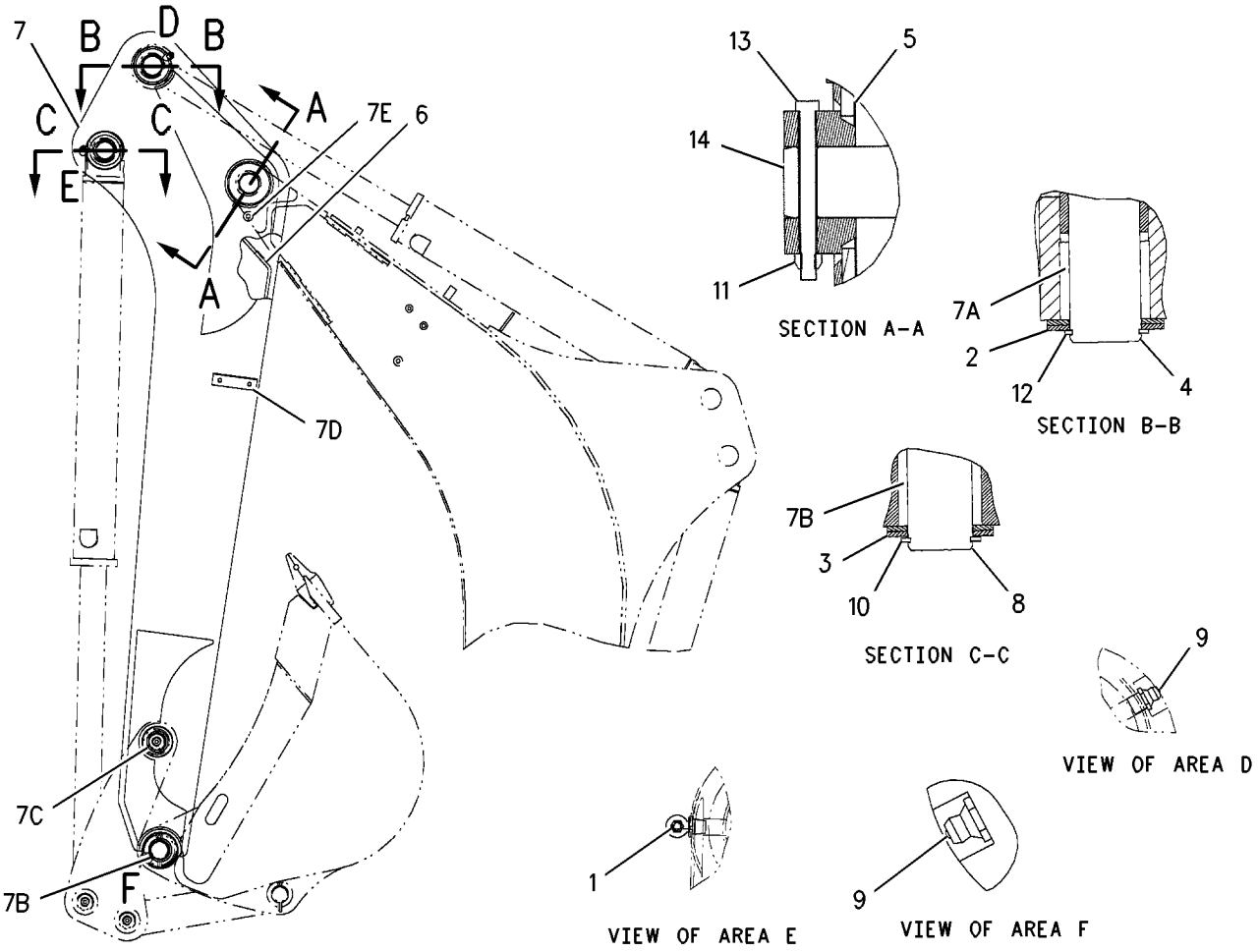

GRAPHIC #1 **<END>** g00863585

WORK TOOLS

111-8634 BUCKET AR-MULTIPURPOSE

S/N: BXC1-UP; DSX1-UP
1.03 CU M (1.35 CU YD)
PART OF 111-8636 BUCKET AR-MULTIPURPOSE
AN ATTACHMENT

SMCS-6104 **i01422432**

NOTE	PART NUMBER	QTY	PART NAME 1 2 3 4 5 6 (PRODUCT LEVEL)	SEE PAGE
Y	**104-3965**	1	BUCKET GP-MULTIPURPOSE	667
Y	**185-1839**	2	CYLINDER GP-MULTIPURPOSE BUKT	382
Y	*9R-5788*	1	LINES GP-MULTIPURPOSE BUCKET	468
Y	*9R-4668*	1	MOUNTING GP-CYLINDER	527
Y-SEPARATE ILLUSTRATION				

<END>

111-8635 BUCKET AR-MULTIPURPOSE

S/N: BXC1-UP; DSX1-UP
1.03 CU M (1.35 CU YD). WITH FORKS
PART OF 111-8637 BUCKET AR-MULTIPURPOSE
AN ATTACHMENT

SMCS-6104 **i01422960**

NOTE	PART NUMBER	QTY	PART NAME 1 2 3 4 5 6 (PRODUCT LEVEL)	SEE PAGE
Y	**104-3964**	1	BUCKET GP-MULTIPURPOSE	666
Y	**185-1839**	2	CYLINDER GP-MULTIPURPOSE BUKT	382
Y	*104-6310*	1	FORK GP	686
Y	*9R-5788*	1	LINES GP-MULTIPURPOSE BUCKET	468
Y	*9R-4668*	1	MOUNTING GP-CYLINDER	527
Y-SEPARATE ILLUSTRATION				

<END>

111-8636 BUCKET AR-MULTIPURPOSE

S/N: BXC1-UP; DSX1-UP
1.03 CU M (1.35 CU YD)
AN ATTACHMENT

SMCS-6104 **i01975040**

NOTE	PART NUMBER	QTY	PART NAME 1 2 3 4 5 6 (PRODUCT LEVEL)	SEE PAGE
Y	**111-8634**	1	BUCKET AR-MULTIPURPOSE	615
	106-9387	1	FILM-INDICATOR (BUCKET LEVEL) (BUCKET)	
Y-SEPARATE ILLUSTRATION				

<END>

WORK TOOLS

111-8637 BUCKET AR-MULTIPURPOSE

S/N: BXC1-UP; DSX1-UP
1.03 CU M (1.35 CU YD). WITH FORKS
AN ATTACHMENT

SMCS-6104 **i01658032**

NOTE	PART NUMBER	QTY	PART NAME 1 2 3 4 5 6 (PRODUCT LEVEL)	SEE PAGE
Y	**111-8635**	1	BUCKET AR-MULTIPURPOSE	615
	106-9387	1	FILM-INDICATOR (BUCKET)	

Y-SEPARATE ILLUSTRATION

<END>

112-0938 BUCKET AR-MULTIPURPOSE

S/N: BXC1-UP; DSX1-UP
0.95 CU M (1.25 CU YD)
PART OF 112-0940 BUCKET AR-MULTIPURPOSE
AN ATTACHMENT

SMCS-6104 **i01422429**

NOTE	PART NUMBER	QTY	PART NAME 1 2 3 4 5 6 (PRODUCT LEVEL)	SEE PAGE
Y	**108-3036**	1	BUCKET GP-MULTIPURPOSE	668
Y	**185-1839**	2	CYLINDER GP-MULTIPURPOSE BUKT	382
Y	*9R-3712*	1	LINES GP-MULTIPURPOSE BUCKET	466
Y	*9R-4668*	1	MOUNTING GP-CYLINDER	527

Y-SEPARATE ILLUSTRATION

<END>

112-0939 BUCKET AR-MULTIPURPOSE

S/N: BXC1-UP; DSX1-UP
0.65 CU M (0.85 CU YD). WITH FORKS
PART OF 112-0941 BUCKET AR-MULTIPURPOSE
AN ATTACHMENT

SMCS-6104 **i01448675**

NOTE	PART NUMBER	QTY	PART NAME 1 2 3 4 5 6 (PRODUCT LEVEL)	SEE PAGE
Y	**185-1839**	2	CYLINDER GP-MULTIPURPOSE BUKT	382
Y	**112-1778**	1	BUCKET GP-MULTIPURPOSE	669
Y	*104-6310*	1	FORK GP	686
Y	*9R-3712*	1	LINES GP-MULTIPURPOSE BUCKET	466
Y	*9R-4668*	1	MOUNTING GP-CYLINDER	527

Y-SEPARATE ILLUSTRATION

<END>

WORK TOOLS

112-0940 BUCKET AR-MULTIPURPOSE

S/N: BXC1-UP; DSX1-UP
0.95 CU M (1.25 CU YD)
AN ATTACHMENT

SMCS-6104 **i01658067**

NOTE	PART NUMBER	QTY	PART NAME 1 2 3 4 5 6 (PRODUCT LEVEL)	SEE PAGE
Y	**112-0938**	1	BUCKET AR-MULTIPURPOSE	616
	106-9387	1	FILM-INDICATOR (BUCKET)	

Y-SEPARATE ILLUSTRATION

<END>

112-0941 BUCKET AR-MULTIPURPOSE

S/N: BXC1-UP; DSX1-UP
0.95 CU M (1.25 CU YD). WITH FORKS
AN ATTACHMENT

SMCS-6104 **i01658068**

NOTE	PART NUMBER	QTY	PART NAME 1 2 3 4 5 6 (PRODUCT LEVEL)	SEE PAGE
Y	**112-0939**	1	BUCKET AR-MULTIPURPOSE	616
	106-9387	1	FILM-INDICATOR (BUCKET)	

Y-SEPARATE ILLUSTRATION

<END>

112-1920 BUCKET AR-MULTIPURPOSE

S/N: BXC1-UP; DSX1-UP
1.01 CU M (1.25 CU YD). WITH FORKS
AN ATTACHMENT

SMCS-6104 **i00817769**

NOTE	PART NUMBER	QTY	PART NAME 1 2 3 4 5 6 (PRODUCT LEVEL)	SEE PAGE
Y	*124-0487*	1	BUCKET AR-MULTIPURPOSE	619
	106-9387	1	FILM-INDICATOR	

Y-SEPARATE ILLUSTRATION

<END>

112-1937 BUCKET AR-MULTIPURPOSE

S/N: BXC1-UP; DSX1-UP
1.01 CU M (1.25 CU YD). WITHOUT FORKS
AN ATTACHMENT

SMCS-6104 **i00817770**

NOTE	PART NUMBER	QTY	PART NAME 1 2 3 4 5 6 (PRODUCT LEVEL)	SEE PAGE
Y	*124-0488*	1	BUCKET AR-MULTIPURPOSE	619
	106-9387	1	FILM-INDICATOR	

Y-SEPARATE ILLUSTRATION

<END>

WORK TOOLS

112-1940 BUCKET AR-MULTIPURPOSE

S/N: BXC1-UP; DSX1-UP
1.03 CU M (1.35 CU YD). WITHOUT FORKS
AN ATTACHMENT

SMCS-6104 **i00796712**

NOTE	PART NUMBER	QTY	PART NAME 1 2 3 4 5 6 (PRODUCT LEVEL)	SEE PAGE
Y	*124-0486*	1	BUCKET AR-MULTIPURPOSE	618
	106-9387	1	FILM-INDICATOR	

Y-SEPARATE ILLUSTRATION

<END>

112-1941 BUCKET AR-MULTIPURPOSE

S/N: BXC1-UP; DSX1-UP
1.03 CU M (1.35 CU YD). WITH FORKS
AN ATTACHMENT

SMCS-6104 **i00796717**

NOTE	PART NUMBER	QTY	PART NAME 1 2 3 4 5 6 (PRODUCT LEVEL)	SEE PAGE
Y	*124-0489*	1	BUCKET AR-MULTIPURPOSE	619
	106-9387	1	FILM-INDICATOR	

Y-SEPARATE ILLUSTRATION

<END>

124-0486 BUCKET AR-MULTIPURPOSE

S/N: BXC1-UP; DSX1-UP
1.03 CU M (1.35 CU YD). WITHOUT FORKS
PART OF 112-1940 BUCKET AR-MULTIPURPOSE
AN ATTACHMENT

SMCS-6104 **i01422974**

NOTE	PART NUMBER	QTY	PART NAME 1 2 3 4 5 6 (PRODUCT LEVEL)	SEE PAGE
Y	*112-1924*	1	BUCKET GP-MULTIPURPOSE	674
Y	**185-1839**	2	CYLINDER GP-MULTIPURPOSE BUKT	382
Y	*119-4112*	1	LINES GP-MULTIPURPOSE BUCKET	472
Y	*9R-4668*	1	MOUNTING GP-CYLINDER	527

Y-SEPARATE ILLUSTRATION

<END>

124-0487 BUCKET AR-MULTIPURPOSE

S/N: BXC1-UP; DSX1-UP
0.65 CU M (1.25 CU YD). WITH FORKS
PART OF 112-1920 BUCKET AR-MULTIPURPOSE
AN ATTACHMENT

SMCS-6104 **i01422991**

NOTE	PART NUMBER	QTY	PART NAME 1 2 3 4 5 6 (PRODUCT LEVEL)	SEE PAGE
Y	*112-1922*	1	BUCKET GP-MULTIPURPOSE	672
Y	**185-1839**	2	CYLINDER GP-MULTIPURPOSE BUKT	382
Y	*104-6310*	1	FORK GP	686
Y	*118-4930*	1	LINES GP-MULTIPURPOSE BUCKET	470
Y	*9R-4668*	1	MOUNTING GP-CYLINDER	527

Y-SEPARATE ILLUSTRATION

<END>

124-0488 BUCKET AR-MULTIPURPOSE

S/N: BXC1-UP; DSX1-UP
0.65 CU M (1.25 CU YD). WITHOUT FORKS
PART OF 112-1937 BUCKET AR-MULTIPURPOSE
AN ATTACHMENT

SMCS-6104 **i01422998**

NOTE	PART NUMBER	QTY	PART NAME 1 2 3 4 5 6 (PRODUCT LEVEL)	SEE PAGE
Y	*112-1918*	1	BUCKET GP-MULTIPURPOSE	670
Y	**185-1839**	2	CYLINDER GP-MULTIPURPOSE BUKT	382
Y	*118-4930*	1	LINES GP-MULTIPURPOSE BUCKET	470
Y	*9R-4668*	1	MOUNTING GP-CYLINDER	527

Y-SEPARATE ILLUSTRATION

<END>

124-0489 BUCKET AR-MULTIPURPOSE

S/N: BXC1-UP; DSX1-UP
1.03 CU M (1.35 CU YD). WITH FORKS
PART OF 112-1941 BUCKET AR-MULTIPURPOSE
AN ATTACHMENT

SMCS-6104 **i01446537**

NOTE	PART NUMBER	QTY	PART NAME 1 2 3 4 5 6 (PRODUCT LEVEL)	SEE PAGE
Y	**185-1839**	2	CYLINDER GP-MULTIPURPOSE BUKT	382
Y	*112-1926*	1	BUCKET GP-MULTIPURPOSE	675
Y	*104-6310*	1	FORK GP	686
Y	*119-4112*	1	LINES GP-MULTIPURPOSE BUCKET	472
Y	*9R-4668*	1	MOUNTING GP-CYLINDER	527

Y-SEPARATE ILLUSTRATION

<END>

WORK TOOLS

164-4659 BUCKET AR-MULTIPURPOSE

S/N: BXC1-UP; DSX1-UP
1.03 CU M(1.35 CU YD). WITHOUT FORKS
AN ATTACHMENT

SMCS-6104 **i01573481**

NOTE	PART NUMBER	QTY	PART NAME 1 2 3 4 5 6 (PRODUCT LEVEL)	SEE PAGE
Y	*112-1926*	1	BUCKET GP-MULTIPURPOSE	675
Y	**185-1839**	2	CYLINDER GP-MULTIPURPOSE BUKT	382
Y	*119-4112*	1	LINES GP-MULTIPURPOSE BUCKET	472
Y	*9R-4668*	1	MOUNTING GP-CYLINDER	527
	106-9387	1	FILM-INDICATOR	

Y-SEPARATE ILLUSTRATION

<END>

208-0827 BUCKET AR-MULTIPURPOSE

S/N: BXC1-UP; DSX1-UP
0.95 CU M(1.25 CU YD)
AN ATTACHMENT

SMCS-6104 **i01601933**

NOTE	PART NUMBER	QTY	PART NAME 1 2 3 4 5 6 (PRODUCT LEVEL)	SEE PAGE
Y	*112-1922*	1	BUCKET GP-MULTIPURPOSE	672
Y	**185-1839**	2	CYLINDER GP-MULTIPURPOSE BUKT	382
Y	*118-4930*	1	LINES GP-MULTIPURPOSE BUCKET	470
Y	*9R-4668*	1	MOUNTING GP-CYLINDER	527
	106-9387	1	FILM-INDICATOR	

Y-SEPARATE ILLUSTRATION

<END>

WORK TOOLS

9R-5202 BUCKET AS-GENERAL PURPOSE

S/N: BXC1-UP; DSX1-UP
1.0 CU M (1.31 CU YD)
FOR USE WITH ALL WHEEL STEER
AN ATTACHMENT

SMCS-6101 **i01953282**

NOTE	REF NO	GRAPHIC REF	PART NUMBER	QTY	PART NAME 1 2 3 4 5 6 (PRODUCT LEVEL)	SEE PAGE
	1	1	**9R-5206**	1	EDGE-RH	
	2	1	**9R-5205**	1	EDGE-LH	
	3	1	**9R-5832**	2	EDGE	
	4	1	**9R-5313**	1	EDGE	
	5	1	**9R-0336**	2	BRACKET AS-LIFT (RH)	
					(EACH INCLUDES)	
	5A	1	**9R-0111**	1	BEARING-SLEEVE	
	6	1	**9R-0343**	2	BRACKET AS-LIFT (LH)	
					(EACH INCLUDES)	
	6A	1	**9R-0111**	1	BEARING-SLEEVE	
	7	1	**9R-0371**	1	BRACKET AS-TILT (RH)	
	7A	1	**9R-4485**	1	BOSS	
	7B	1	**9R-4486**	1	BOSS	
	8	1	**9R-0372**	1	BRACKET AS-TILT (LH)	
	8A	1	**9R-4485**	1	BOSS	
	8B	1	**9R-4486**	1	BOSS	

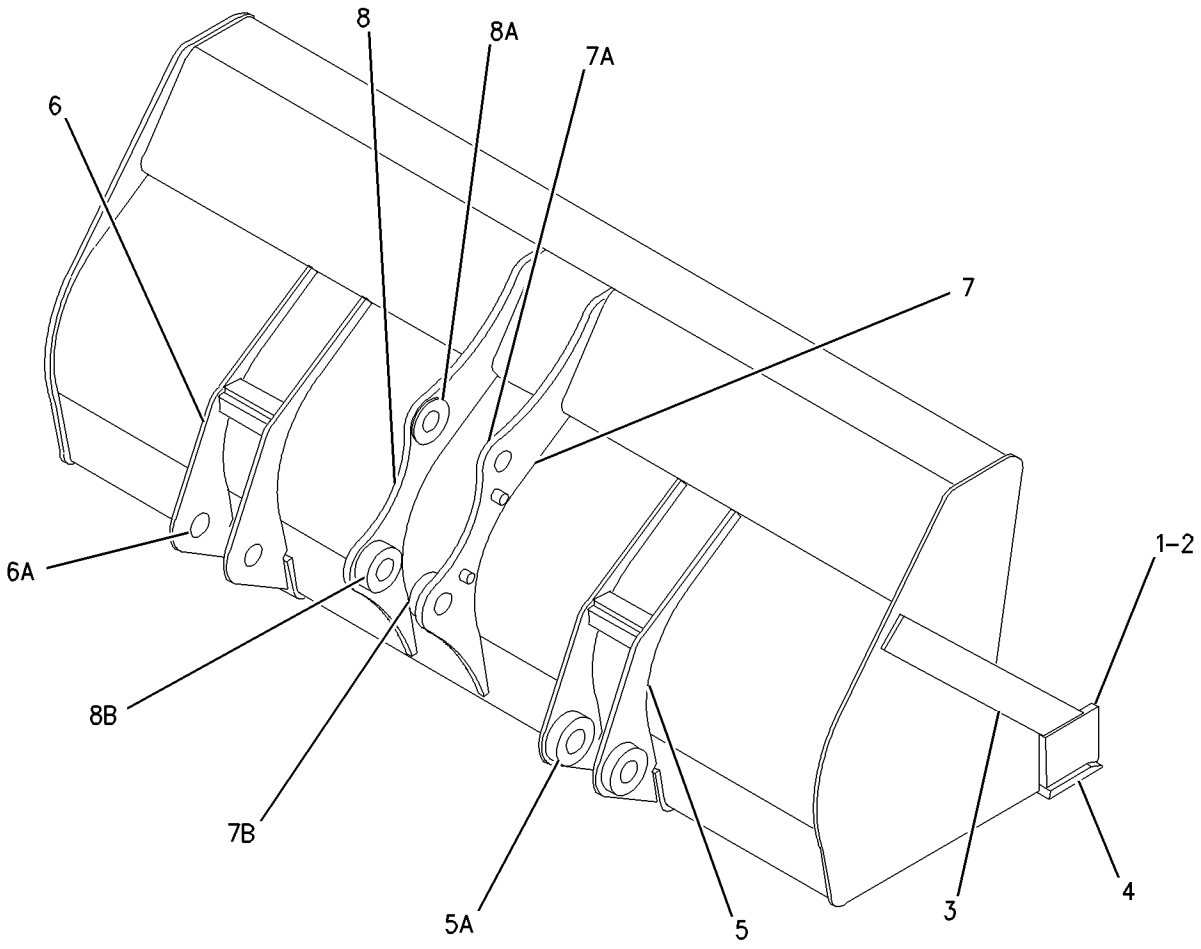

GRAPHIC #1 **<END>** g01006050

9R-5989 BUCKET AS-GENERAL PURPOSE

S/N: BXC1-UP; DSX1-UP
0.96 CU M (1.25 CU YD)
AN ATTACHMENT

SMCS-6101 **i01953281**

NOTE	REF NO	GRAPHIC REF	PART NUMBER	QTY	PART NAME 1 2 3 4 5 6 (PRODUCT LEVEL)	SEE PAGE
	1	1	**9R-5205**	1	EDGE-LH	
	2	1	**9R-5206**	1	EDGE-RH	
	3	1	**9R-0376**	2	EDGE	
	4	1	**9R-4672**	1	EDGE	
	5	1	*9R-0336*	2	BRACKET AS-LIFT (RH)	
	5A	1	**9R-0111**	2	BEARING-SLEEVE	
	6	1	*9R-0343*	2	BRACKET AS-LIFT (LH)	
	6A	1	**9R-0111**	2	BEARING-SLEEVE	
	7	1	*9R-0371*	1	BRACKET AS-TILT (RH)	
	7A	1	**9R-4485**	1	BOSS	
	7B	1	**9R-4486**	1	BOSS	
	8	1	*9R-0372*	1	BRACKET AS-TILT (LH)	
	8A	1	**9R-4485**	1	BOSS	
	8B	1	**9R-4486**	1	BOSS	

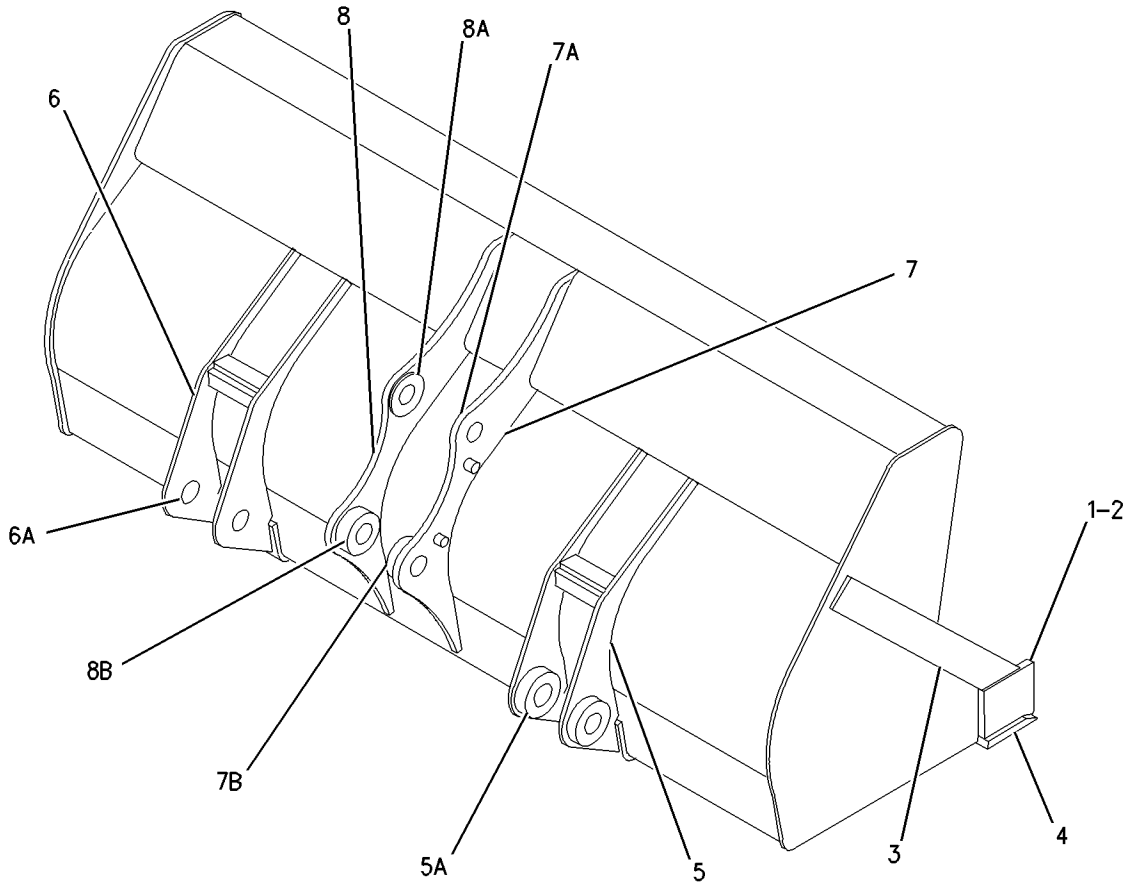

GRAPHIC #1 **<END>** g01006074

WORK TOOLS

112-1931 BUCKET AS-GENERAL PURPOSE

S/N: BXC1-UP; DSX1-UP
1.0 CU M (1.31 CU YD)
AN ATTACHMENT

SMCS-6101 **i01953274**

NOTE	REF NO	GRAPHIC REF	PART NUMBER	QTY	PART NAME 1 2 3 4 5 6 (PRODUCT LEVEL)	SEE PAGE
	1	1	**9R-5205**	1	EDGE-LH	
	2	1	**9R-5206**	1	EDGE-RH	
	3	1	**9R-5832**	2	EDGE	
	4	1	**9R-5313**	1	EDGE	
	5	1	*113-9083*	1	BRACKET AS-RH	
	5A	1	**9R-1496**	2	BEARING-SLEEVE (40.196MM ID)	
	6	1	*113-9084*	1	BRACKET AS-LH	
	6A	1	**9R-1496**	2	BEARING-SLEEVE (40.196MM ID)	

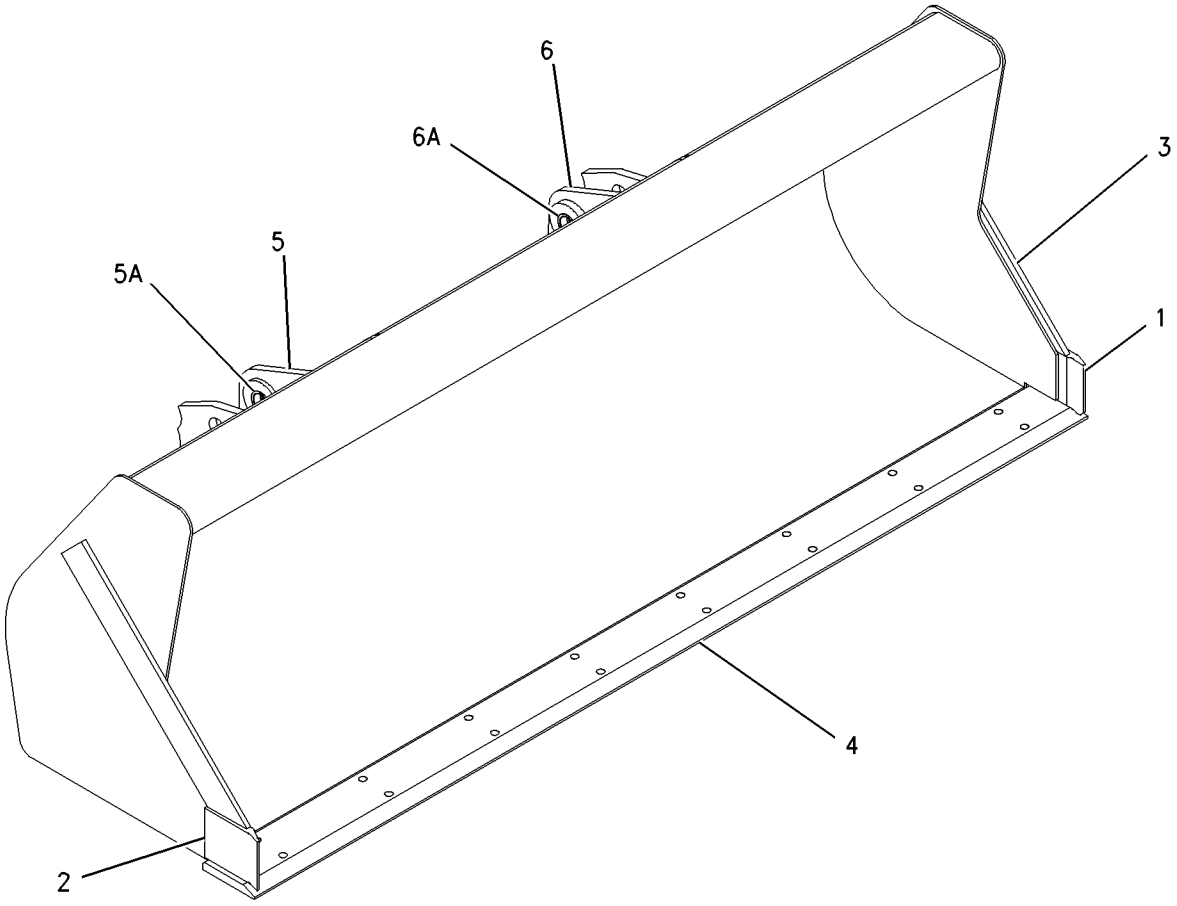

GRAPHIC #1 **<END>** g01006349

WORK TOOLS

112-1933 BUCKET AS-GENERAL PURPOSE

S/N: BXC1-UP; DSX1-UP
.95 CU M (1.25 CU YD)
AN ATTACHMENT

SMCS-6101 **i01953273**

NOTE	REF NO	GRAPHIC REF	PART NUMBER	QTY	PART NAME 1 2 3 4 5 6 (PRODUCT LEVEL)	SEE PAGE
	1	1	**9R-5205**	1	EDGE-LH	
	2	1	**9R-5206**	1	EDGE-RH	
	3	1	**9R-0376**	2	EDGE	
	4	1	**9R-4672**	1	EDGE	
	5	1	*113-9083*	1	BRACKET AS-RH	
	5A	1	**9R-1496**	2	BEARING-SLEEVE (40.196MM ID)	
	6	1	*113-9084*	1	BRACKET AS-LH	
	6A	1	**9R-1496**	2	BEARING-SLEEVE (40.196MM ID)	

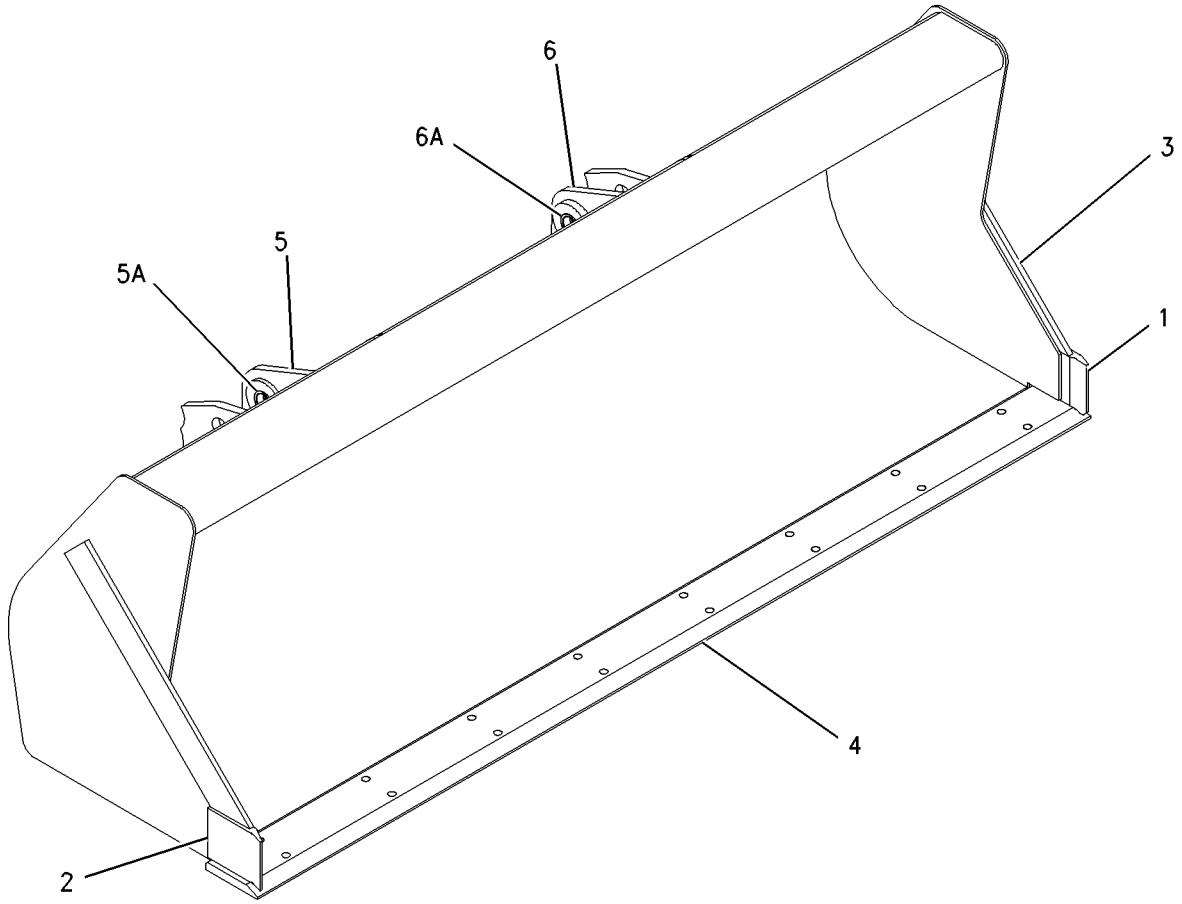

GRAPHIC #1 **<END>** g01006349

WORK TOOLS

151-7866 BUCKET GP-HOE—STANDARD DUTY

S/N: BXC1-UP; DSX1-UP
(305MM) 12 INCH
PART OF 174-6362 BUCKET GP-HOE
AN ATTACHMENT

SMCS-6503 **i01953627**

NOTE	REF NO	GRAPHIC REF	PART NUMBER	QTY	PART NAME 1 2 3 4 5 6 (PRODUCT LEVEL)	SEE PAGE
C	1	1	*135-8206*	3	TOOTH GP-UNI	
					(EACH INCLUDES)	
	1A	1	**4F-3657**	2	BOLT-PLOW (5/8-11X2.75 IN)	
	1B	1	**4K-0367**	2	NUT-FULL (5/8-11 THD)	
	1C	1	**135-8203**	1	TOOTH-UNI	
	2	1	**154-5255**	1	EDGE	
	3	1	*151-7929*	1	BRACKET AS-LH	
	3A	1	**9R-0320**	1	BEARING	
	3B	1	**154-5257**	1	BEARING	
	4	1	*151-7930*	1	BRACKET AS-RH	
	4A	1	**9R-0320**	1	BEARING	
	4B	1	**154-5257**	1	BEARING	

C-CHANGE FROM PREVIOUS TYPE

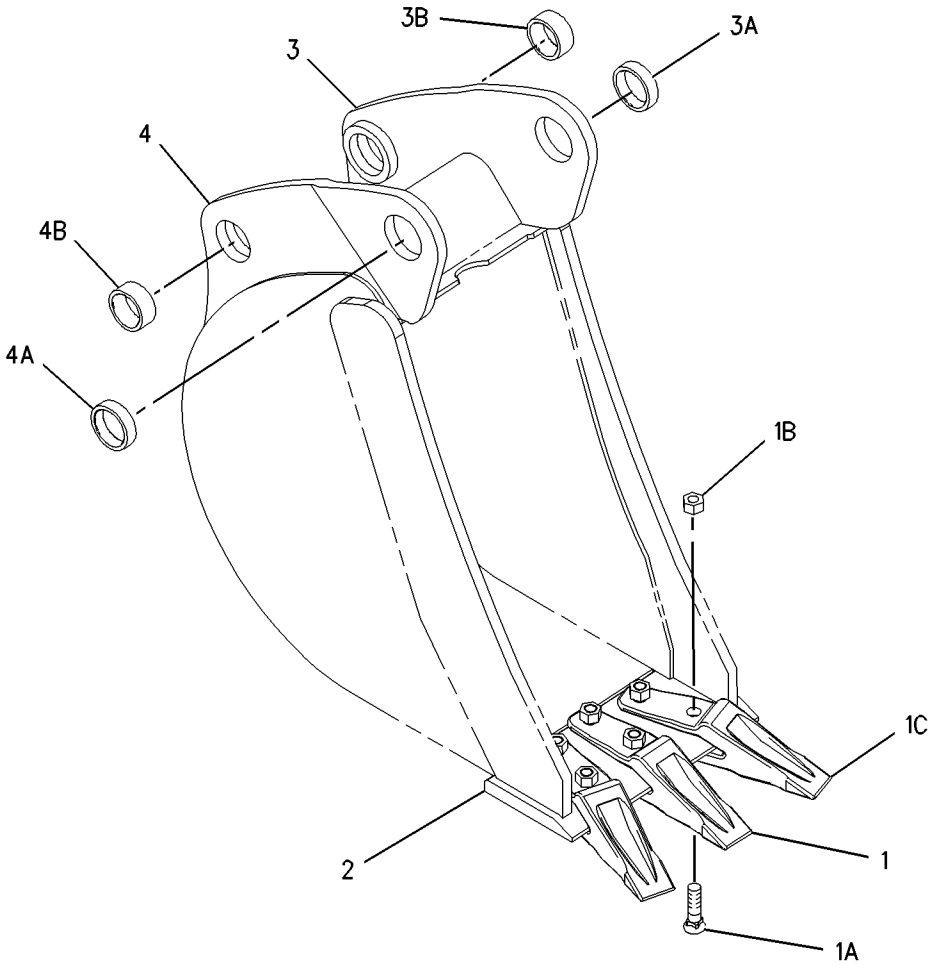

GRAPHIC #1 **<END>** g01001382

WORK TOOLS

151-7867 BUCKET GP-HOE—STANDARD DUTY

S/N: BXC1-UP; DSX1-UP
(458MM) 18 INCH
AN ATTACHMENT

SMCS-6503 **i02005043**

NOTE	REF NO	GRAPHIC REF	PART NUMBER	QTY	PART NAME 1 2 3 4 5 6 (PRODUCT LEVEL)	SEE PAGE
C	1	1	*135-8206*	3	TOOTH GP-UNI	
					(EACH INCLUDES)	
C	1A	1	**4F-3657**	2	BOLT-PLOW (5/8-11X2.75 IN)	
	1B	1	**4K-0367**	2	NUT-FULL (5/8-11 THD)	
	1C	1	**135-8203**	1	TOOTH-UNI	
	2	1	**128-3778**	1	EDGE	
	3	1	*151-7902*	1	BRACKET AS	
	3A	1	**9R-0162**	1	BEARING	
	3B	1	**168-0480**	1	BEARING-SLEEVE	
	4	1	*151-7903*	1	BRACKET AS	
	4A	1	**9R-0162**	1	BEARING	
	4B	1	**168-0480**	1	BEARING-SLEEVE	

C-CHANGE FROM PREVIOUS TYPE

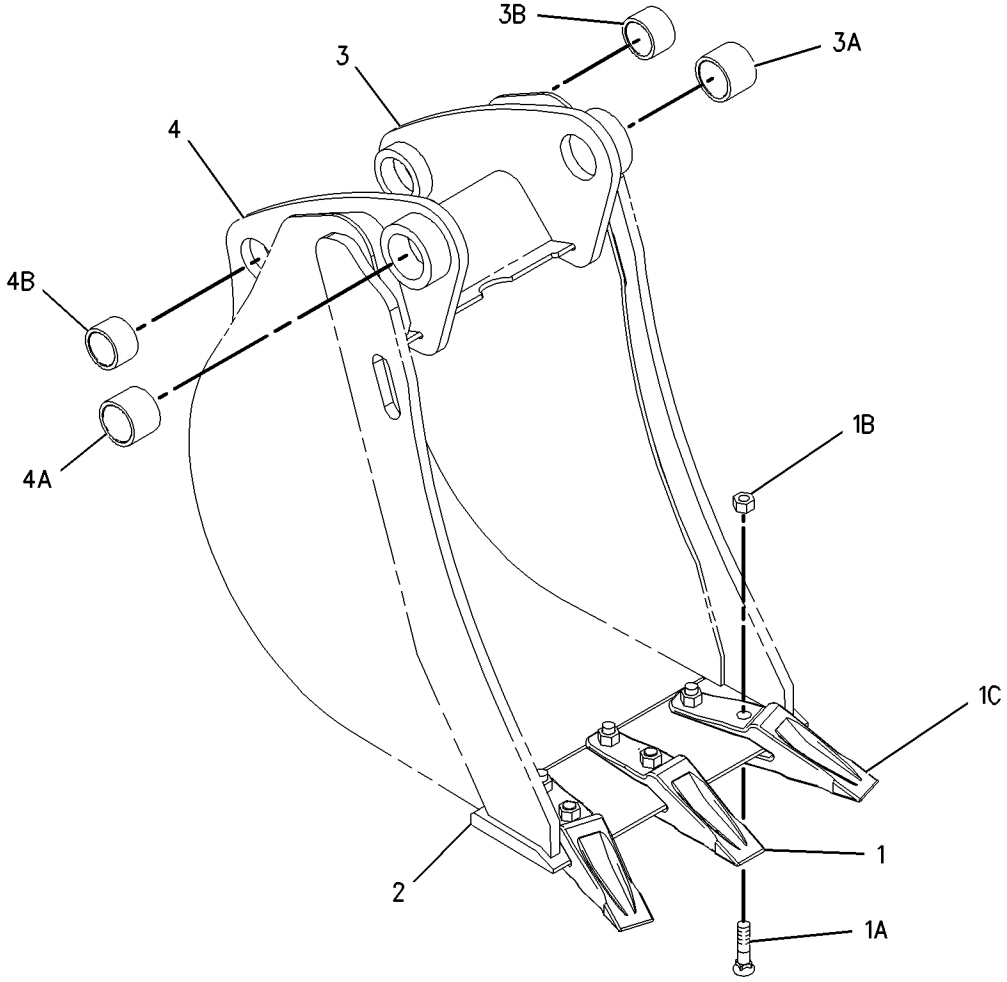

GRAPHIC #1 **<END>** g01001275

151-7868 BUCKET GP-HOE—STANDARD DUTY

S/N: BXC1-UP; DSX1-UP
(610MM) 24 INCH
AN ATTACHMENT

SMCS-6503 **i02005045**

NOTE	REF NO	GRAPHIC REF	PART NUMBER	QTY	PART NAME 1 2 3 4 5 6 (PRODUCT LEVEL)	SEE PAGE
C	1	1	*135-8206*	4	TOOTH GP-UNI	
					(EACH INCLUDES)	
C	1A	1	**4F-3657**	2	BOLT-PLOW (5/8-11X2.75 IN)	
	1B	1	**4K-0367**	2	NUT-FULL (5/8-11 THD)	
	1C	1	**135-8203**	1	TOOTH-UNI	
	2	1	**128-3094**	1	EDGE	
	3	1	*151-7902*	1	BRACKET AS	
	3A	1	**9R-0162**	1	BEARING	
	3B	1	**168-0480**	1	BEARING-SLEEVE	
	4	1	*151-7903*	1	BRACKET AS	
	4A	1	**9R-0162**	1	BEARING	
	4B	1	**168-0480**	1	BEARING-SLEEVE	

C-CHANGE FROM PREVIOUS TYPE

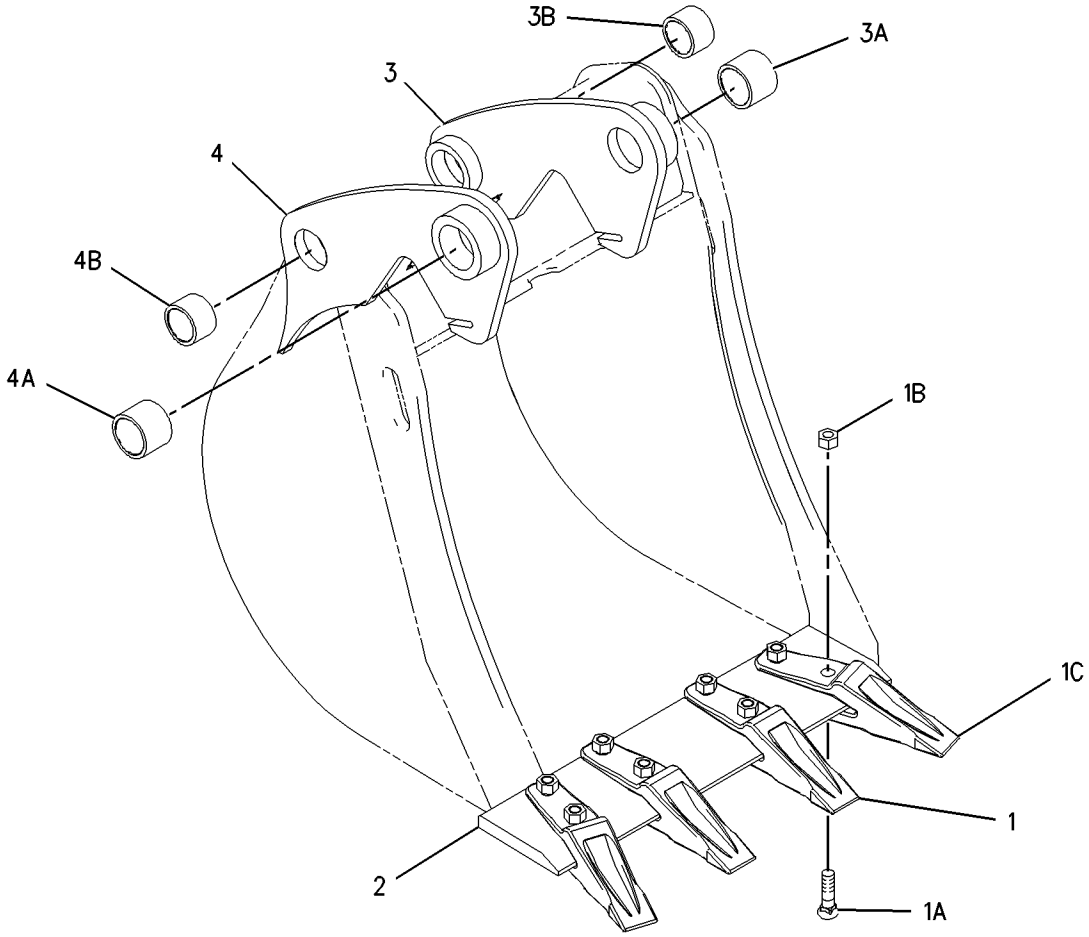

GRAPHIC #1 **<END>** g01001343

WORK TOOLS

151-7869 BUCKET GP-HOE–STANDARD DUTY

S/N: BXC1-UP; DSX1-UP
(762MM) 30 INCH
AN ATTACHMENT

SMCS-6503 **i02005046**

NOTE	REF NO	GRAPHIC REF	PART NUMBER	QTY	PART NAME 1 2 3 4 5 6 (PRODUCT LEVEL)	SEE PAGE
C	1	1	*135-8206*	5	TOOTH GP-UNI	
					(EACH INCLUDES)	
C	1A	1	**4F-3657**	2	BOLT-PLOW (5/8-11X2.75 IN)	
	1B	1	**4K-0367**	2	NUT-FULL (5/8-11 THD)	
	1C	1	**135-8203**	1	TOOTH-UNI	
	2	1	**131-2117**	1	EDGE	
	3	1	*151-7902*	1	BRACKET AS	
	3A	1	**9R-0162**	1	BEARING	
	3B	1	**168-0480**	1	BEARING-SLEEVE	
	4	1	*151-7903*	1	BRACKET AS	
	4A	1	**9R-0162**	1	BEARING	
	4B	1	**168-0480**	1	BEARING-SLEEVE	

C-CHANGE FROM PREVIOUS TYPE

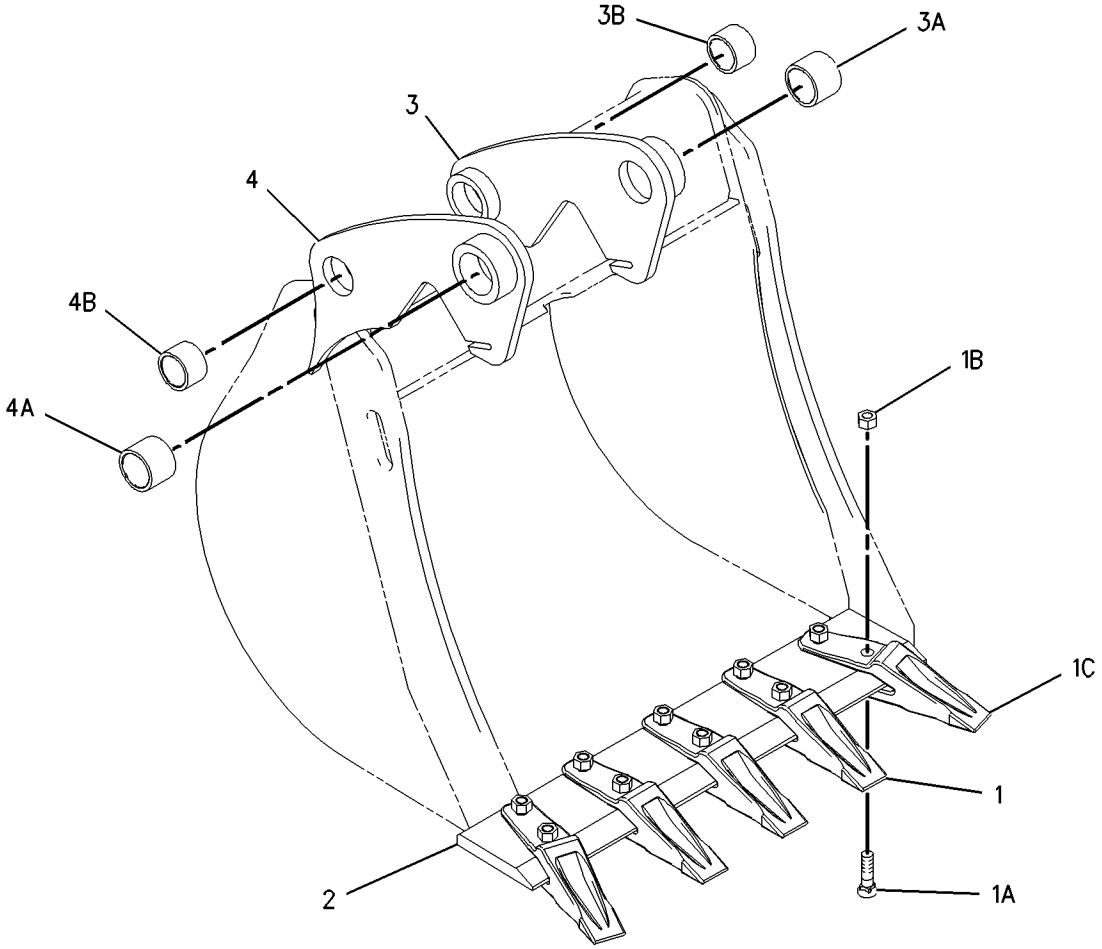

GRAPHIC #1 **<END>** g01001319

WORK TOOLS

151-7870 BUCKET GP-HOE—STANDARD DUTY

S/N: BXC1-UP; DSX1-UP
(914MM) 36 INCH
AN ATTACHMENT

SMCS-6503 **i02005050**

NOTE	REF NO	GRAPHIC REF	PART NUMBER	QTY	PART NAME 1 2 3 4 5 6 (PRODUCT LEVEL)	SEE PAGE
C	1	1	*135-8206*	6	TOOTH GP-UNI	
					(EACH INCLUDES)	
C	1A	1	**4F-3657**	2	BOLT-PLOW (5/8-11X2.75 IN)	
	1B	1	**4K-0367**	2	NUT-FULL (5/8-11 THD)	
	1C	1	**135-8203**	1	TOOTH-UNI	
	2	1	**130-2057**	1	EDGE	
	3	1	*151-7902*	1	BRACKET AS	
	3A	1	**9R-0162**	1	BEARING	
	3B	1	**168-0480**	1	BEARING-SLEEVE	
	4	1	*151-7903*	1	BRACKET AS	
	4A	1	**9R-0162**	1	BEARING	
	4B	1	**168-0480**	1	BEARING-SLEEVE	

C-CHANGE FROM PREVIOUS TYPE

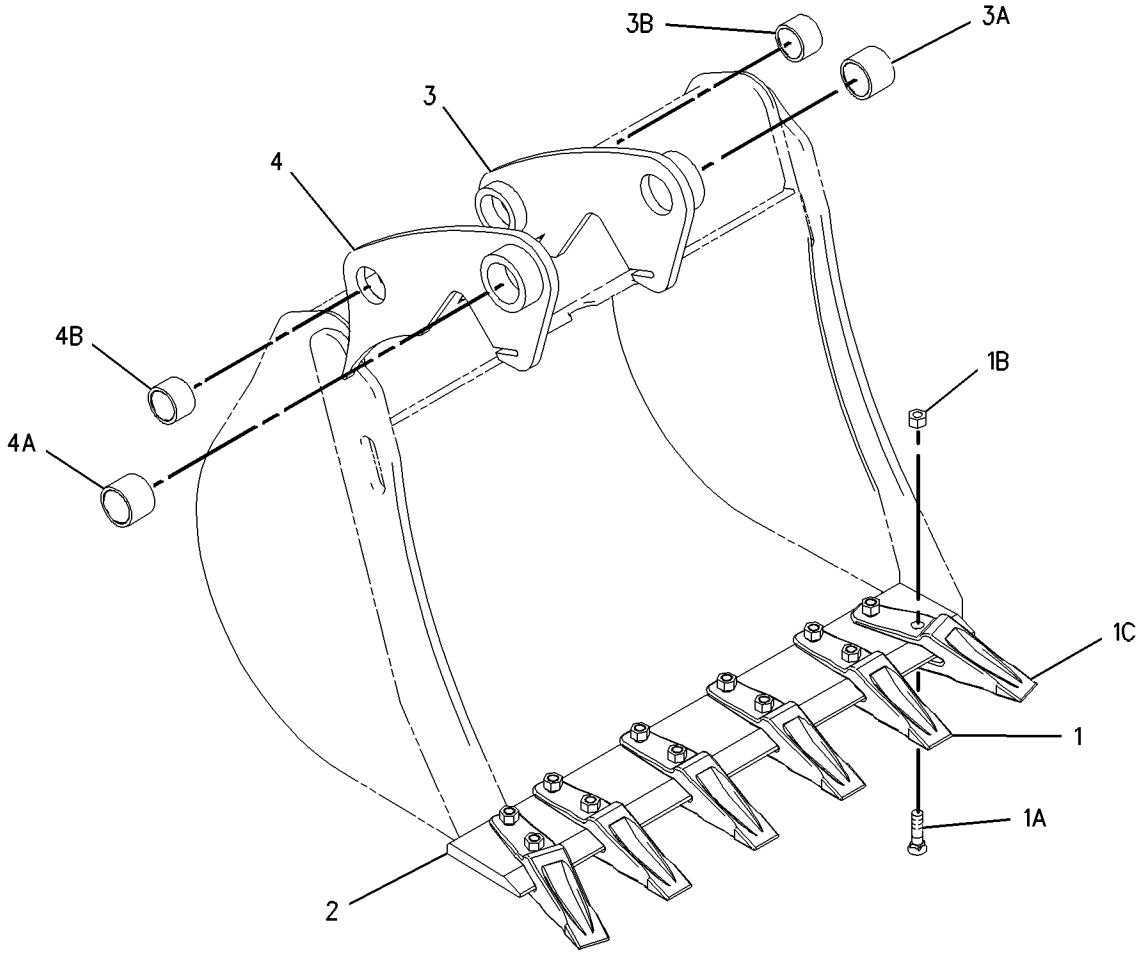

GRAPHIC #1 **<END>** g01001290

151-7877 BUCKET GP-HOE–HEAVY DUTY

S/N: BXC1-UP; DSX1-UP
(305MM) 12 INCH
PART OF 174-6365 BUCKET GP-HOE
AN ATTACHMENT

SMCS-6503 **i01953630**

NOTE	REF NO	GRAPHIC REF	PART NUMBER	QTY	PART NAME 1 2 3 4 5 6 (PRODUCT LEVEL)	SEE PAGE
C	1	1	*135-8206*	3	TOOTH GP-UNI	
					(EACH INCLUDES)	
	1A	1	**4F-3657**	1	BOLT-PLOW (5/8-11X2.75 IN)	
	1B	1	**4K-0367**	1	NUT-FULL (5/8-11 THD)	
	1C	1	**135-8203**	1	TOOTH-UNI	
	2	1	**9R-8987**	1	EDGE-LH	
	3	1	**9R-8988**	1	EDGE-RH	
	4	1	*151-7929*	1	BRACKET AS-LH	
	4A	1	**9R-0320**	1	BEARING	
	4B	1	**154-5257**	1	BEARING	
	5	1	*151-7930*	1	BRACKET AS-RH	
	5A	1	**9R-0320**	1	BEARING	
	5B	1	**154-5257**	1	BEARING	
	6	1	**154-5255**	1	EDGE	
	7	1	**151-7927**	2	PLATE	

C-CHANGE FROM PREVIOUS TYPE

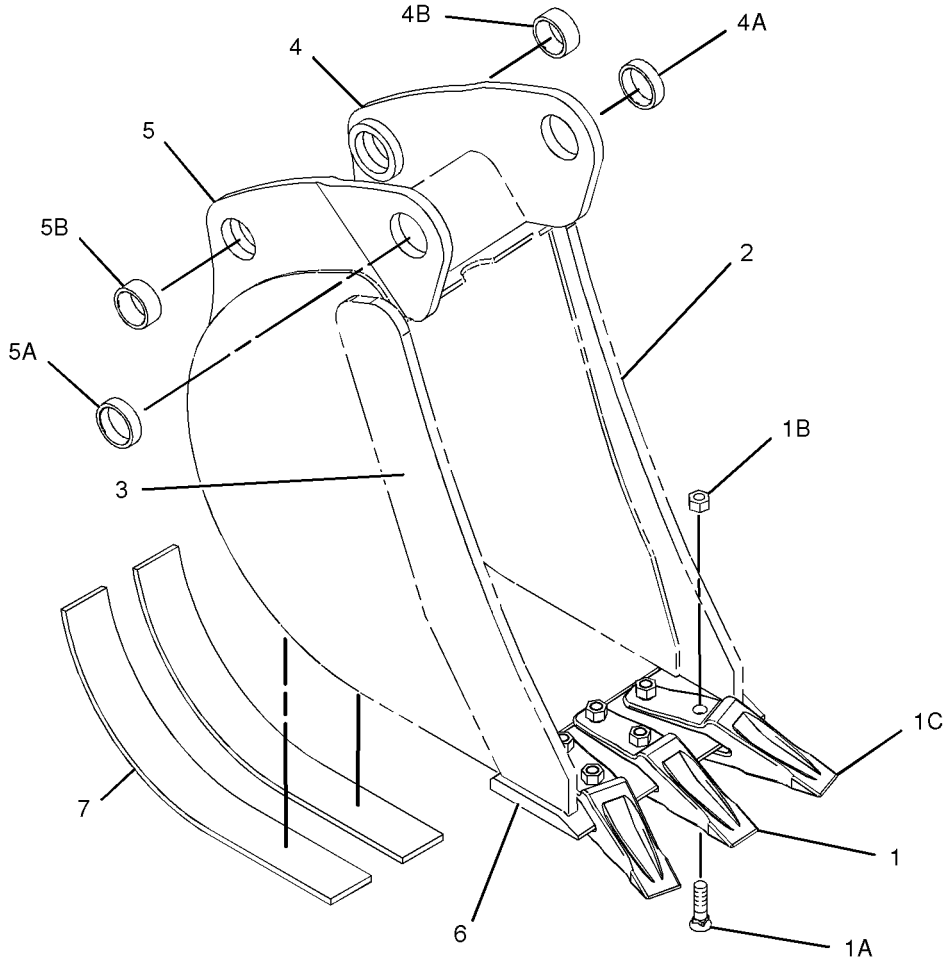

GRAPHIC #1 **<END>** g01015081

WORK TOOLS

151-7879 BUCKET GP-HOE—HEAVY DUTY

S/N: BXC1-UP; DSX1-UP
(458MM) 18 INCH
AN ATTACHMENT

SMCS-6503 **i02005056**

NOTE	REF NO	GRAPHIC REF	PART NUMBER	QTY	PART NAME 1 2 3 4 5 6 (PRODUCT LEVEL)	SEE PAGE
C	1	1	*135-8206*	3	TOOTH GP-UNI	
					(EACH INCLUDES)	
C	1A	1	**4F-3657**	2	BOLT-PLOW (5/8-11X2.75 IN)	
	1B	1	**4K-0367**	2	NUT-FULL (5/8-11 THD)	
	1C	1	**135-8203**	1	TOOTH-UNI	
	2	1	**9R-8987**	1	EDGE-LH	
	3	1	**9R-8988**	1	EDGE-RH	
	4	1	**128-3778**	1	EDGE	
	5	1	**151-7927**	3	PLATE	
	6	1	*151-7902*	1	BRACKET AS	
	6A	1	**9R-0162**	1	BEARING	
	6B	1	**168-0480**	1	BEARING-SLEEVE	
	7	1	*151-7903*	1	BRACKET AS	
	7A	1	**9R-0162**	1	BEARING	
	7B	1	**168-0480**	1	BEARING-SLEEVE	

C-CHANGE FROM PREVIOUS TYPE

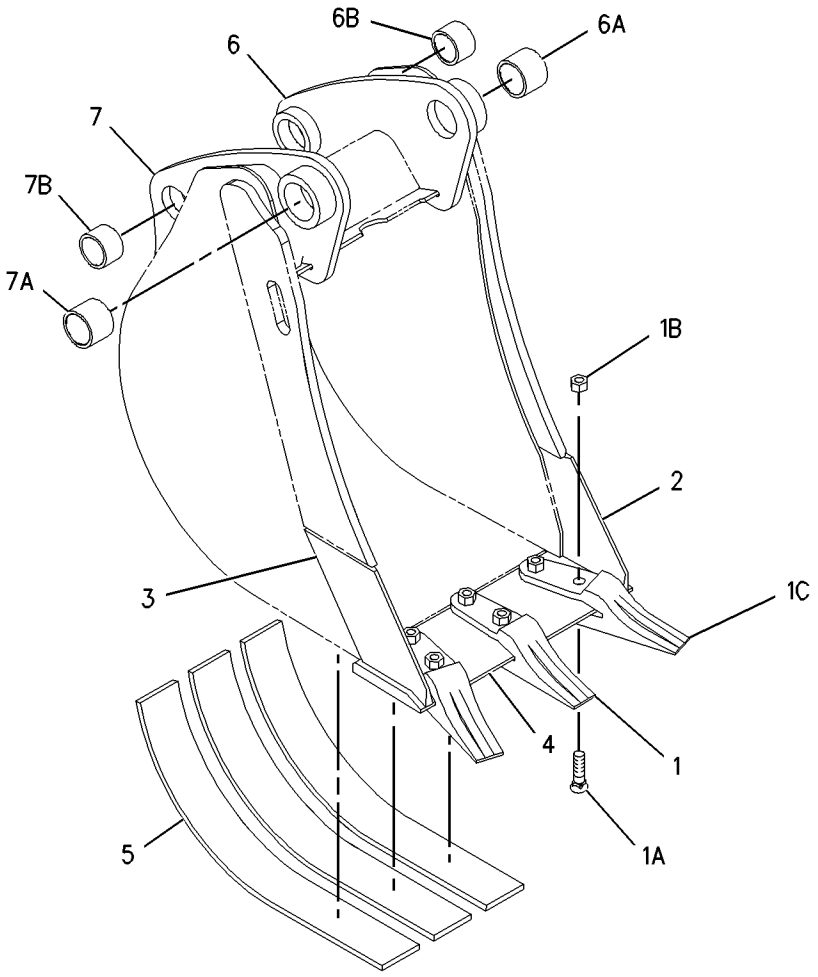

GRAPHIC #1 **<END>** g01003002

WORK TOOLS

151-7880 BUCKET GP-HOE–HEAVY DUTY

S/N: BXC1-UP; DSX1-UP
(610MM) 24 INCH
AN ATTACHMENT

SMCS-6503 **i02005068**

NOTE	REF NO	GRAPHIC REF	PART NUMBER	QTY	PART NAME 1 2 3 4 5 6 (PRODUCT LEVEL)	SEE PAGE
C	1	1	*135-8206*	4	TOOTH GP-UNI	
					(EACH INCLUDES)	
C	1A	1	**4F-3657**	2	BOLT-PLOW (5/8-11X2.75 IN)	
	1B	1	**4K-0367**	2	NUT-FULL (5/8-11 THD)	
	1C	1	**135-8203**	1	TOOTH-UNI	
	2	1	**9R-8987**	1	EDGE-LH	
	3	1	**9R-8988**	1	EDGE-RH	
	4	1	**128-3094**	1	EDGE	
	5	1	**151-7927**	4	PLATE	
	6	1	*151-7902*	1	BRACKET AS	
	6A	1	**9R-0162**	1	BEARING	
	6B	1	**168-0480**	1	BEARING-SLEEVE	
	7	1	*151-7903*	1	BRACKET AS	
	7A	1	**9R-0162**	1	BEARING	
	7B	1	**168-0480**	1	BEARING-SLEEVE	

C-CHANGE FROM PREVIOUS TYPE

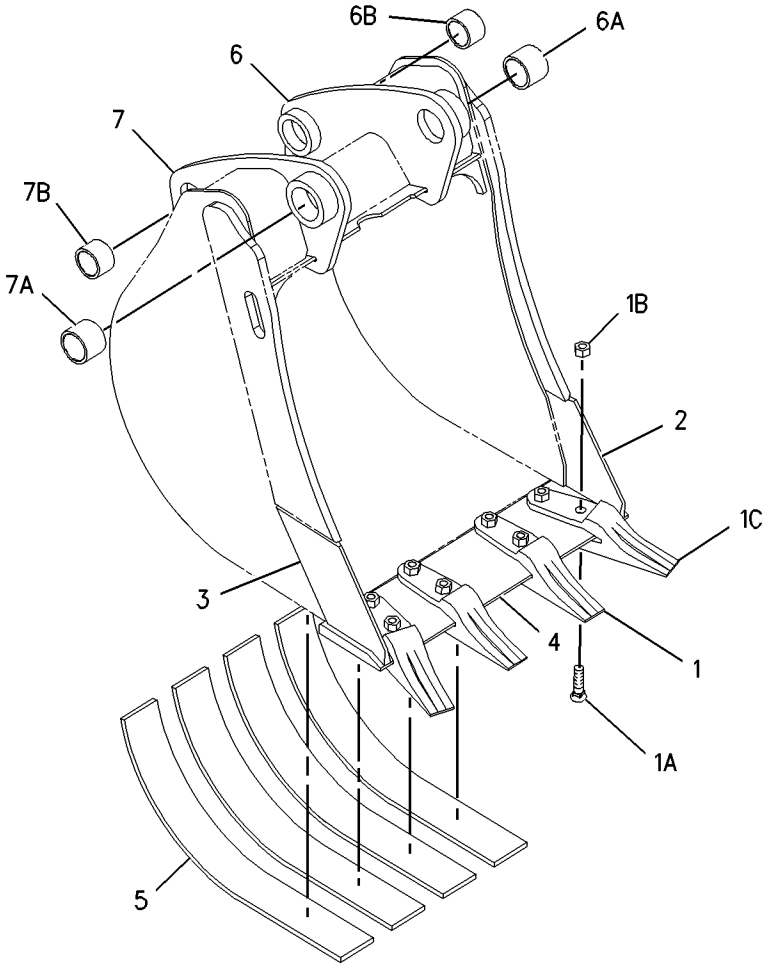

GRAPHIC #1 **<END>** g01003040

151-7881 BUCKET GP-HOE–HEAVY DUTY

S/N: BXC1-UP; DSX1-UP
(762MM) 30 INCH
AN ATTACHMENT

SMCS-6503 **i02005069**

NOTE	REF NO	GRAPHIC REF	PART NUMBER	QTY	PART NAME 1 2 3 4 5 6 (PRODUCT LEVEL)	SEE PAGE
C	1	1	*135-8206*	5	TOOTH GP-UNI	
					(EACH INCLUDES)	
C	1A	1	**4F-3657**	2	BOLT-PLOW (5/8-11X2.75 IN)	
	1B	1	**4K-0367**	2	NUT-FULL (5/8-11 THD)	
	1C	1	**135-8203**	1	TOOTH-UNI	
	2	1	**9R-8987**	1	EDGE-LH	
	3	1	**9R-8988**	1	EDGE-RH	
	4	1	**131-2117**	1	EDGE	
	5	1	**151-7927**	4	PLATE	
	6	1	*151-7902*	1	BRACKET AS	
	6A	1	**9R-0162**	1	BEARING	
	6B	1	**168-0480**	1	BEARING-SLEEVE	
	7	1	*151-7903*	1	BRACKET AS	
	7A	1	**9R-0162**	1	BEARING	
	7B	1	**168-0480**	1	BEARING-SLEEVE	

C-CHANGE FROM PREVIOUS TYPE

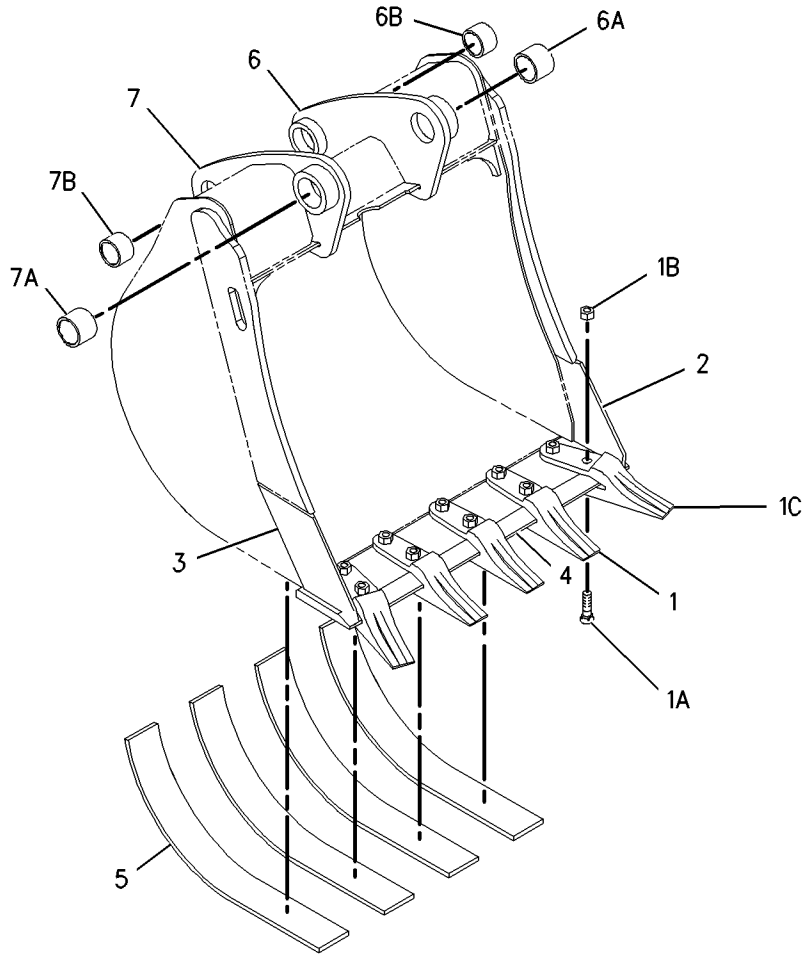

GRAPHIC #1 **<END>** g01003077

WORK TOOLS

151-7882 BUCKET GP-HOE–HEAVY DUTY

S/N: BXC1-UP; DSX1-UP
(914MM) 36 INCH
AN ATTACHMENT

SMCS-6503 **i02005075**

NOTE	REF NO	GRAPHIC REF	PART NUMBER	QTY	PART NAME 1 2 3 4 5 6 (PRODUCT LEVEL)	SEE PAGE
C	1	1	*135-8206*	6	TOOTH GP-UNI	
					(EACH INCLUDES)	
C	1A	1	**4F-3657**	2	BOLT-PLOW (5/8-11X2.75 IN)	
	1B	1	**4K-0367**	2	NUT-FULL (5/8-11 THD)	
	1C	1	**135-8203**	1	TOOTH-UNI	
	2	1	**9R-8987**	1	EDGE-LH	
	3	1	**9R-8988**	1	EDGE-RH	
	4	1	**130-2057**	1	EDGE	
	5	1	**151-7927**	5	PLATE	
	6	1	*151-7902*	1	BRACKET AS	
	6A	1	**9R-0162**	1	BEARING	
	6B	1	**168-0480**	1	BEARING-SLEEVE	
	7	1	*151-7903*	1	BRACKET AS	
	7A	1	**9R-0162**	1	BEARING	
	7B	1	**168-0480**	1	BEARING-SLEEVE	

C-CHANGE FROM PREVIOUS TYPE

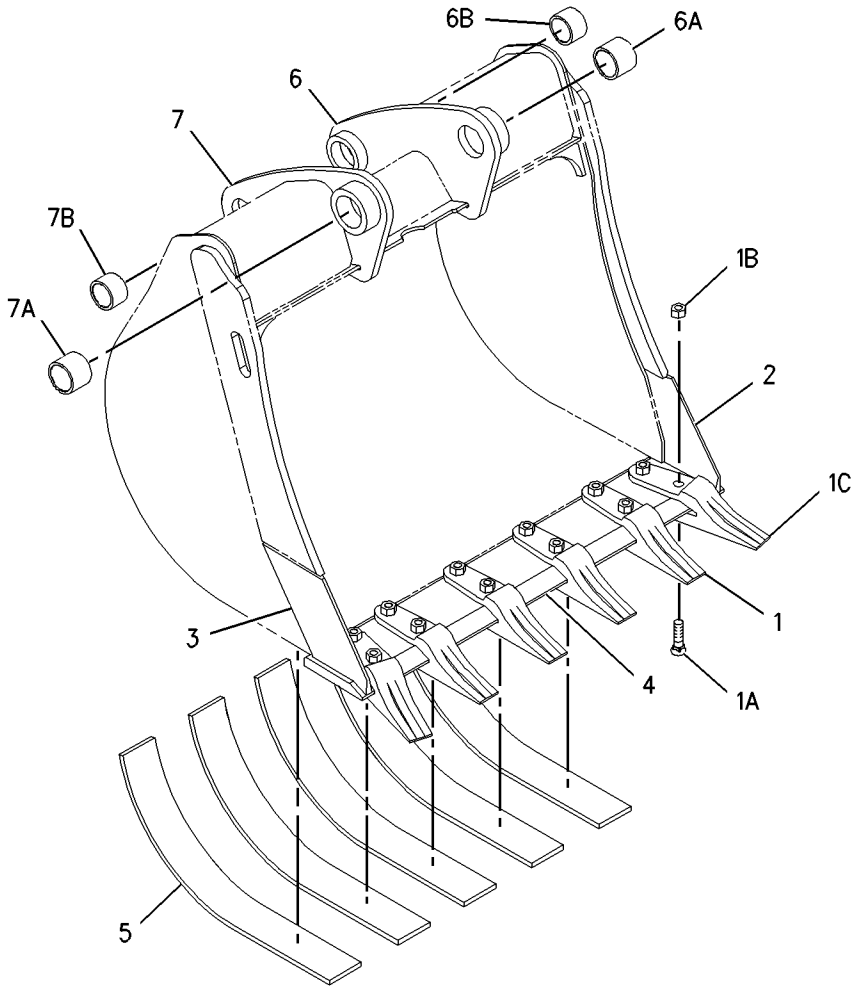

GRAPHIC #1 **<END>** g01003216

151-7887 BUCKET GP-HOE—HIGH CAPACITY

S/N: BXC1-UP; DSX1-UP
(458MM) 18 INCH
AN ATTACHMENT

SMCS-6503 **i02005078**

NOTE	REF NO	GRAPHIC REF	PART NUMBER	QTY	PART NAME 1 2 3 4 5 6 (PRODUCT LEVEL)	SEE PAGE
C	1	1	*135-8206*	3	TOOTH GP-UNI	
					(EACH INCLUDES)	
C	1A	1	**4F-3657**	2	BOLT-PLOW (5/8-11X2.75 IN)	
	1B	1	**4K-0367**	2	NUT-FULL (5/8-11 THD)	
	1C	1	**135-8203**	1	TOOTH-UNI	
	2	1	**9R-8987**	1	EDGE-LH	
	3	1	**9R-8988**	1	EDGE-RH	
	4	1	**128-3778**	1	EDGE	
	5	1	*151-7902*	1	BRACKET AS	
	5A	1	**9R-0162**	1	BEARING	
	5B	1	**168-0480**	1	BEARING-SLEEVE	
	6	1	*151-7903*	1	BRACKET AS	
	6A	1	**9R-0162**	1	BEARING	
	6B	1	**168-0480**	1	BEARING-SLEEVE	

C-CHANGE FROM PREVIOUS TYPE

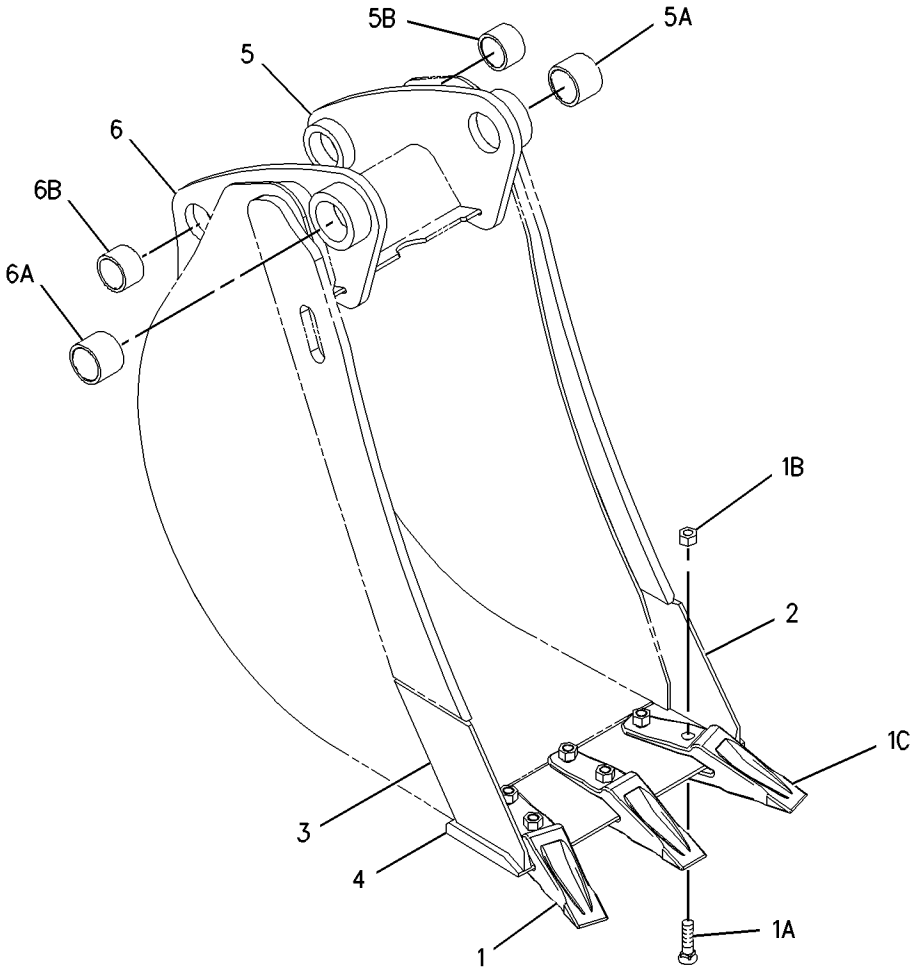

GRAPHIC #1 **<END>** g01002170

WORK TOOLS

151-7888 BUCKET GP-HOE—HIGH CAPACITY

S/N: BXC1-UP; DSX1-UP
(610MM) 24 INCH
AN ATTACHMENT

SMCS-6503 **i02005092**

NOTE	REF NO	GRAPHIC REF	PART NUMBER	QTY	PART NAME 1 2 3 4 5 6 (PRODUCT LEVEL)	SEE PAGE
C	1	1	*135-8206*	4	TOOTH GP-UNI	
					(EACH INCLUDES)	
C	1A	1	**4F-3657**	2	BOLT-PLOW (5/8-11X2.75 IN)	
	1B	1	**4K-0367**	2	NUT-FULL (5/8-11 THD)	
	1C	1	**135-8203**	1	TOOTH-UNI	
	2	1	**9R-8987**	1	EDGE-LH	
	3	1	**9R-8988**	1	EDGE-RH	
	4	1	**128-3094**	1	EDGE	
	5	1	*151-7902*	1	BRACKET AS	
	5A	1	**9R-0162**	1	BEARING	
	5B	1	**168-0480**	1	BEARING-SLEEVE	
	6	1	*151-7903*	1	BRACKET AS	
	6A	1	**9R-0162**	1	BEARING	
	6B	1	**168-0480**	1	BEARING-SLEEVE	

C-CHANGE FROM PREVIOUS TYPE

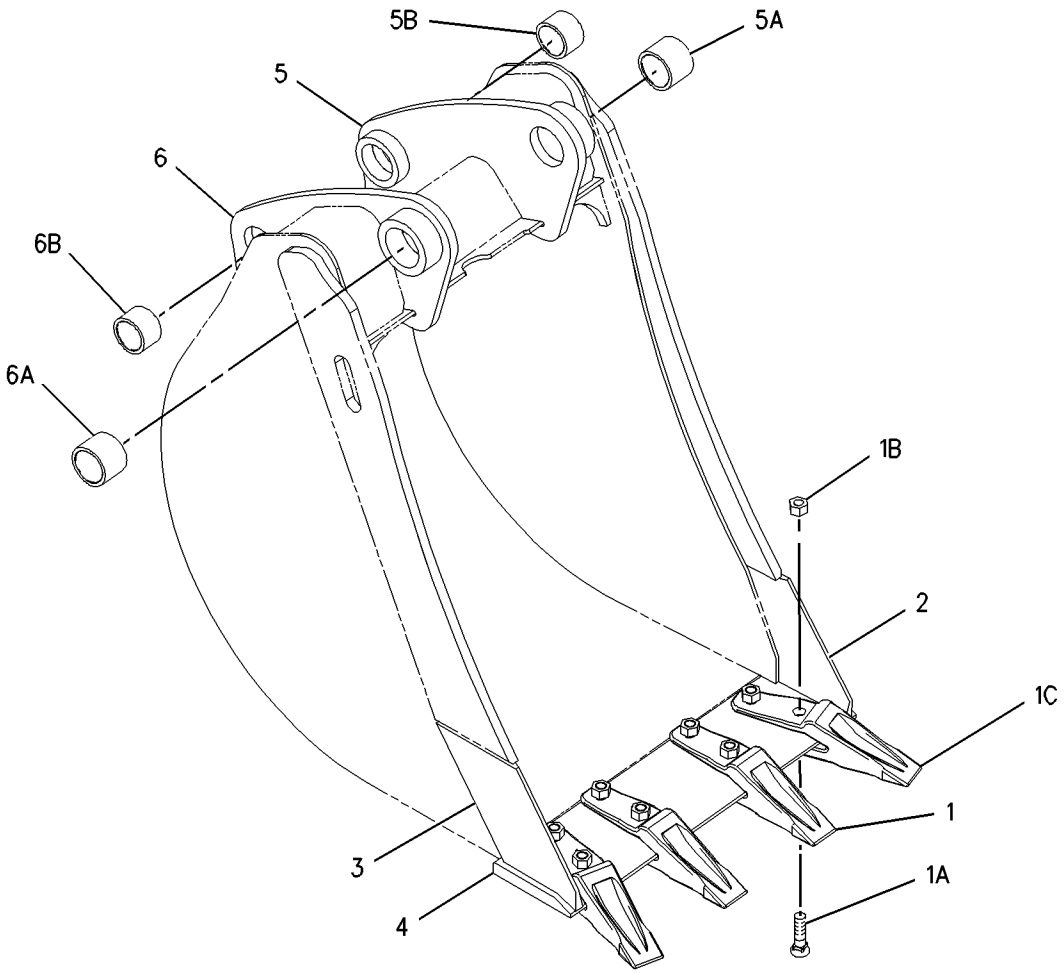

GRAPHIC #1 **<END>** g01002185

151-7889 BUCKET GP-HOE—HIGH CAPACITY

S/N: BXC1-UP; DSX1-UP
(762MM) 30INCH
AN ATTACHMENT

SMCS-6503 **i02005096**

NOTE	REF NO	GRAPHIC REF	PART NUMBER	QTY	PART NAME 1 2 3 4 5 6 (PRODUCT LEVEL)	SEE PAGE
C	1	1	*135-8206*	5	TOOTH GP-UNI	
					(EACH INCLUDES)	
C	1A	1	**4F-3657**	2	BOLT-PLOW (5/8-11X2.75 IN)	
	1B	1	**4K-0367**	2	NUT-FULL (5/8-11 THD)	
	1C	1	**135-8203**	2	TOOTH-UNI	
	2	1	**9R-8987**	1	EDGE-LH	
	3	1	**9R-8988**	1	EDGE-RH	
	4	1	**131-2117**	1	EDGE	
	5	1	*151-7902*	1	BRACKET AS	
	5A	1	**9R-0162**	1	BEARING	
	5B	1	**168-0480**	1	BEARING-SLEEVE	
	6	1	*151-7903*	1	BRACKET AS	
	6A	1	**9R-0162**	1	BEARING	
	6B	1	**168-0480**	1	BEARING-SLEEVE	

C-CHANGE FROM PREVIOUS TYPE

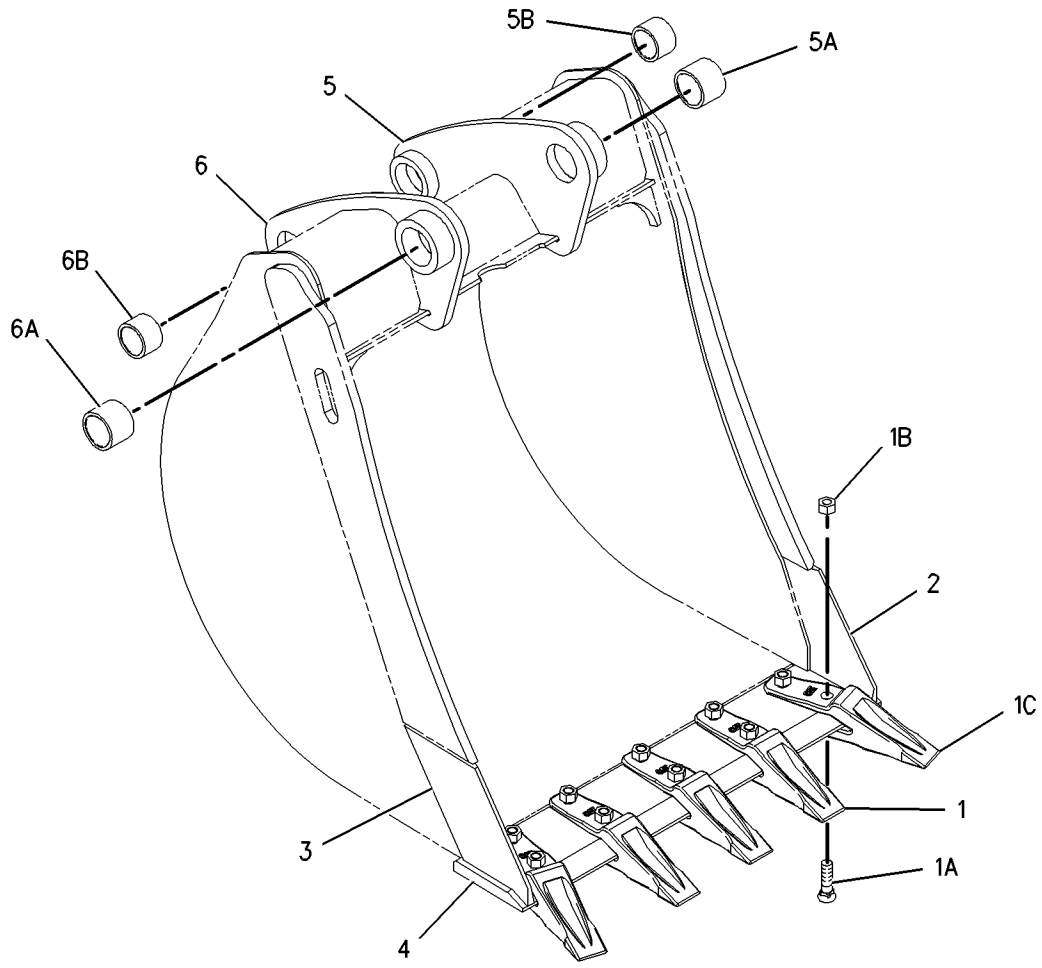

GRAPHIC #1 **<END>** g01002194

WORK TOOLS

151-7890 BUCKET GP-HOE—HIGH CAPACITY

S/N: BXC1-UP; DSX1-UP
(914MM) 36 INCH
AN ATTACHMENT

SMCS-6503 **i01953231**

NOTE	REF NO	GRAPHIC REF	PART NUMBER	QTY	PART NAME 1 2 3 4 5 6 (PRODUCT LEVEL)	SEE PAGE
	1	1	*9W-1880*	6	TOOTH GP-UNI	
					(EACH INCLUDES)	
	1A	1	**4F-3656**	2	BOLT-PLOW (5/8-11X2.5IN)	
	1B	1	**4K-0367**	2	NUT-FULL (5/8-11 THD)	
	1C	1	**135-8203**	1	TOOTH-UNI	
	2	1	**9R-8987**	1	EDGE-LH	
	3	1	**9R-8988**	1	EDGE-RH	
	4	1	**130-2057**	1	EDGE	
	5	1	*151-7902*	1	BRACKET AS-LH	
	5A	1	**9R-0162**	1	BEARING	
	5B	1	**168-0480**	1	BEARING-SLEEVE	
	6	1	*151-7903*	1	BRACKET AS-RH	
	6A	1	**9R-0162**	1	BEARING	
	6B	1	**168-0480**	1	BEARING-SLEEVE	

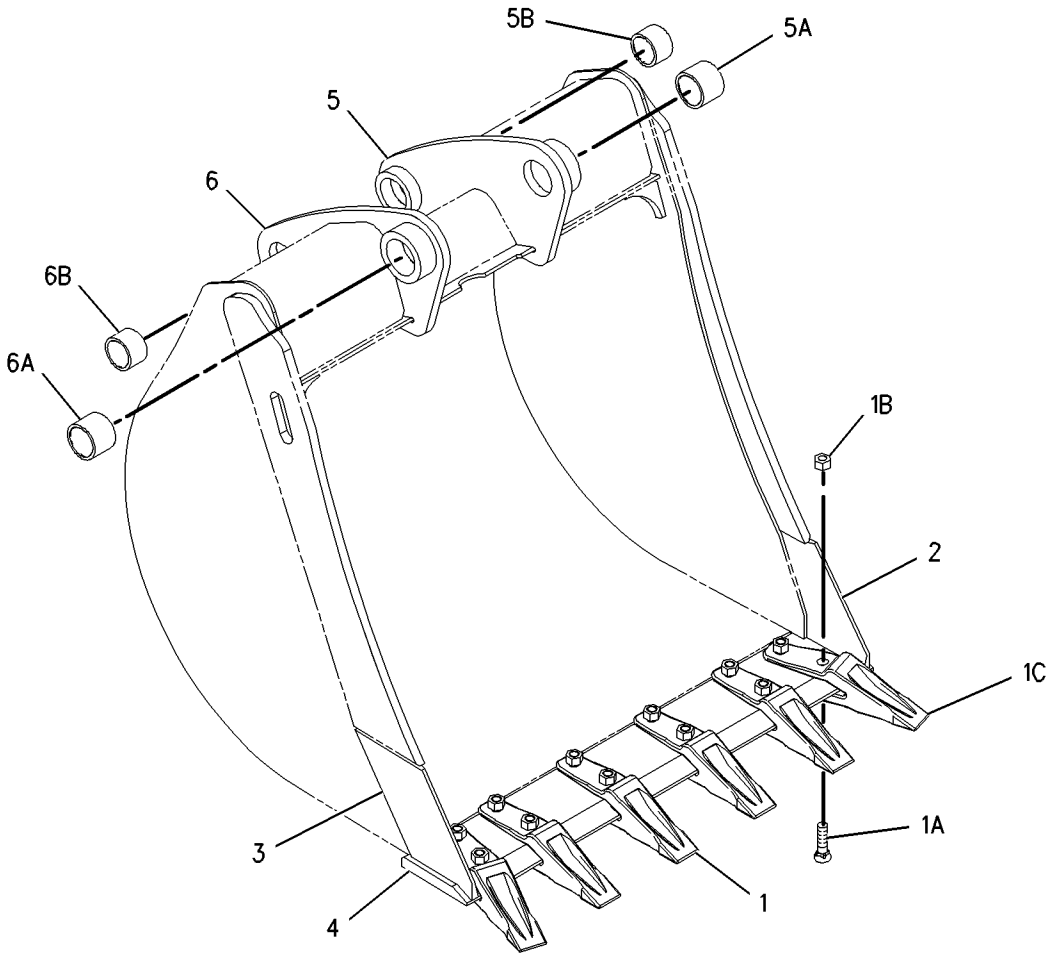

GRAPHIC #1 **<END>** g01002309

174-6362 BUCKET GP-HOE—STANDARD DUTY

S/N: BXC1-UP; DSX1-UP
305MM (12 IN)
AN ATTACHMENT

SMCS-6503 **i01953228**

NOTE	REF NO	GRAPHIC REF	PART NUMBER	QTY	PART NAME 1 2 3 4 5 6 (PRODUCT LEVEL)	SEE PAGE
	1	1	**9R-0158**	5	WASHER (46X69X3MM THK)	
	2	1	**9R-1510**	3	WASHER (51X82X4MM THK)	
Y	3	1	**151-7866**	1	BUCKET GP-HOE	625
	4	1	**168-0443**	1	PIN	
	5	1	**168-0444**	1	PIN	
	6	1	**6V-3213**	2	RING-RETAINING	
	7	1	**6V-4364**	2	RING-RETAINING	

Y-SEPARATE ILLUSTRATION

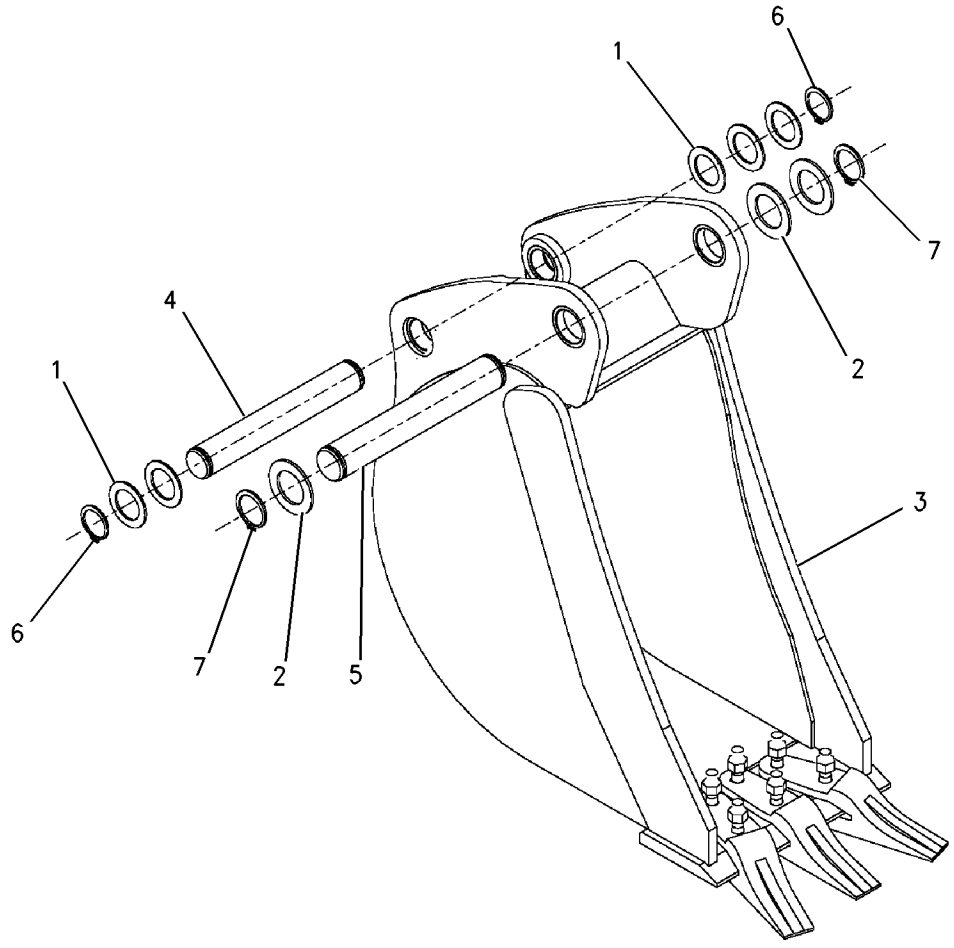

GRAPHIC #1 **<END>** g00713100

174-6365 BUCKET GP-HOE–HEAVY DUTY

S/N: BXC1-UP; DSX1-UP
305MM (12 IN)
AN ATTACHMENT

SMCS-6503 **i01953226**

NOTE	REF NO	GRAPHIC REF	PART NUMBER	QTY	PART NAME 1 2 3 4 5 6 (PRODUCT LEVEL)	SEE PAGE
	1	1	**9R-0158**	5	WASHER (46X69X3MM THK)	
	2	1	**9R-1510**	3	WASHER (51X82X4MM THK)	
Y	3	1	**151-7877**	1	BUCKET GP-HOE	630
	4	1	**168-0443**	1	PIN	
	5	1	**168-0444**	1	PIN	
	6	1	**6V-3213**	2	RING-RETAINING	
	7	1	**6V-4364**	2	RING-RETAINING	

Y-SEPARATE ILLUSTRATION

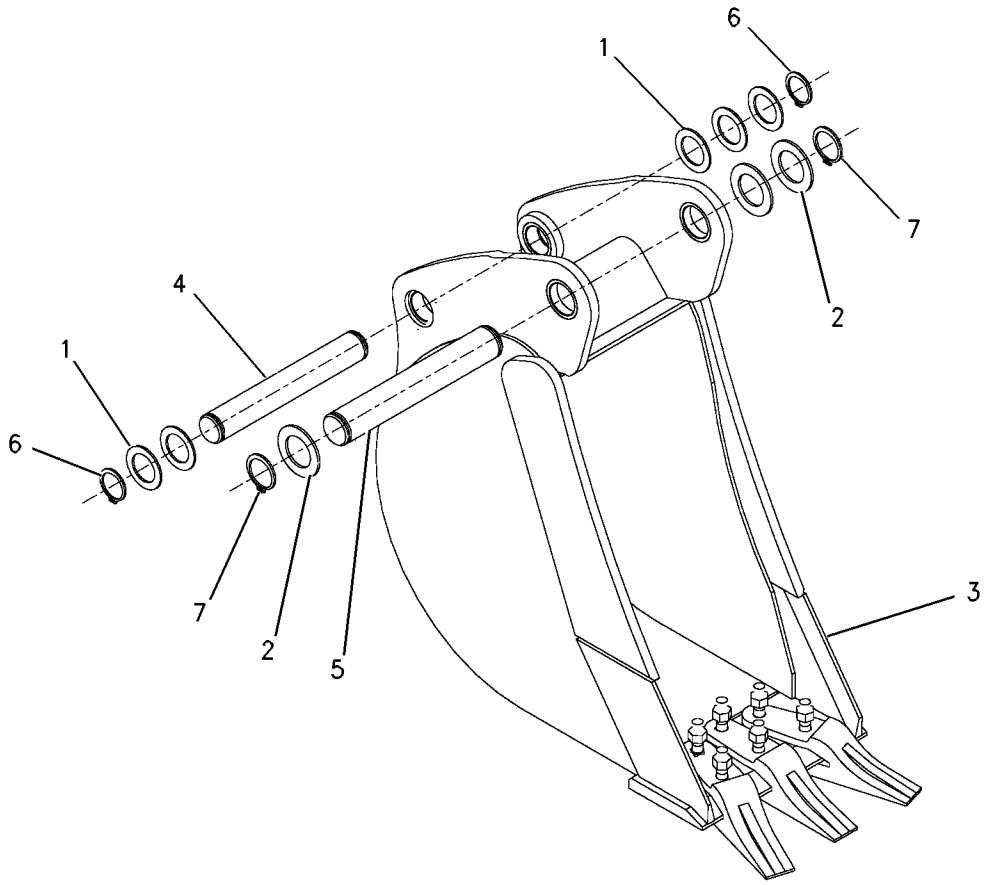

GRAPHIC #1 **<END>** g00713078

199-5970 BUCKET GP-HOE—HEAVY DUTY

S/N: BXC1-UP; DSX1-UP
305MM (12 IN)
PART OF 199-5971 BUCKET GP-HOE
AN ATTACHMENT

SMCS-6503 **i02005659**

NOTE	REF NO	GRAPHIC REF	PART NUMBER	QTY	PART NAME 1 2 3 4 5 6 (PRODUCT LEVEL)	SEE PAGE
	1	1	*135-8206*	3	TOOTH GP-UNI	
					(EACH INCLUDES)	
	1A	1	**4F-3656**	2	BOLT-PLOW (5/8-11X2.5IN)	
	1B	1	**4K-0367**	2	NUT-FULL (5/8-11 THD)	
	1C	1	**135-8203**	1	TOOTH-UNI	
	2	1	**124-4913**	1	EDGE (RH)	
	3	1	**128-7749**	1	EDGE (LH)	
	4	1	**151-7927**	2	PLATE	
	5	1	**154-5255**	1	EDGE	
	6	1	*151-7929*	1	BRACKET AS	
	6A	1	**9R-0320**	1	BEARING	
	6B	1	**154-5257**	1	BEARING	
	7	1	*151-7930*	1	BRACKET AS	
	7A	1	**9R-0320**	1	BEARING	
	7B	1	**154-5257**	1	BEARING	

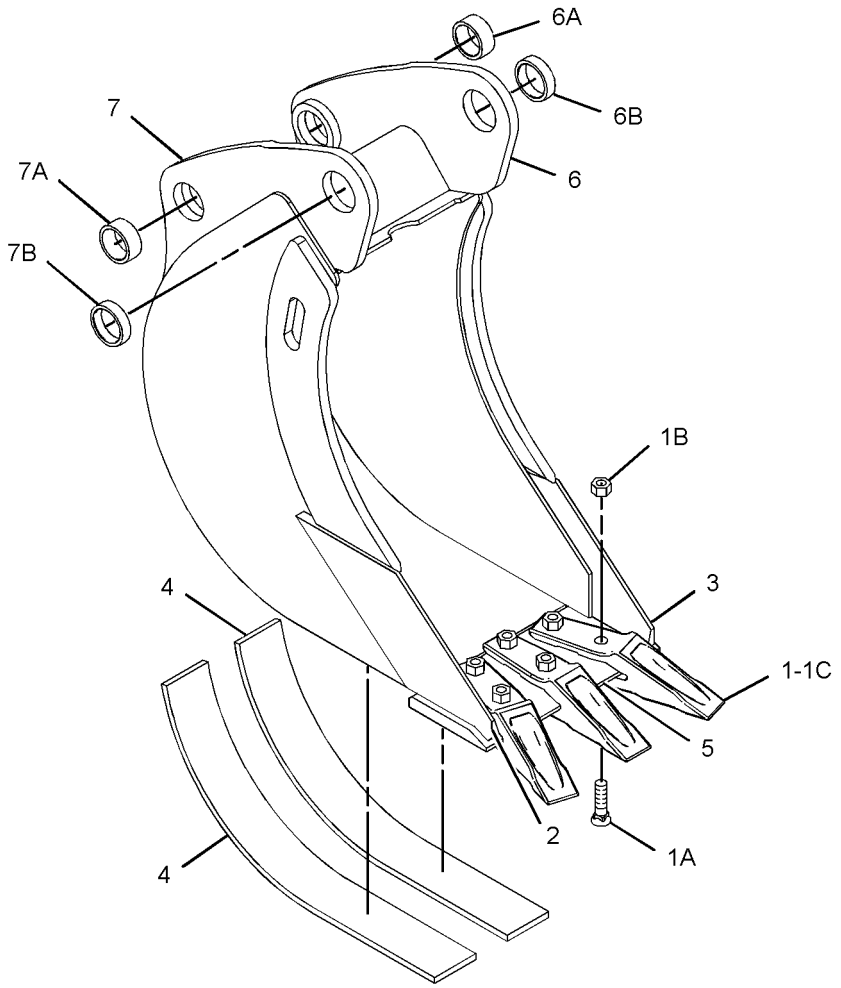

GRAPHIC #1 **<END>** g01017205

199-5971 BUCKET GP-HOE–HEAVY DUTY

S/N: BXC1-UP; DSX1-UP
305MM (12IN)
AN ATTACHMENT

SMCS-6503 **i01431550**

NOTE	REF NO	GRAPHIC REF	PART NUMBER	QTY	PART NAME 1 2 3 4 5 6 (PRODUCT LEVEL)	SEE PAGE
	1	1	**6V-3213**	2	RING-RETAINING	
	2	1	**6V-4364**	2	RING-RETAINING	
	3	1	**9R-0158**	5	WASHER (3MM THK)	
	4	1	**9R-1510**	3	WASHER (4MM THK)	
	5	1	**168-0443**	1	PIN	
	6	1	**168-0444**	1	PIN	
Y	7	1	**199-5970**	1	BUCKET GP-HOE	641

Y-SEPARATE ILLUSTRATION

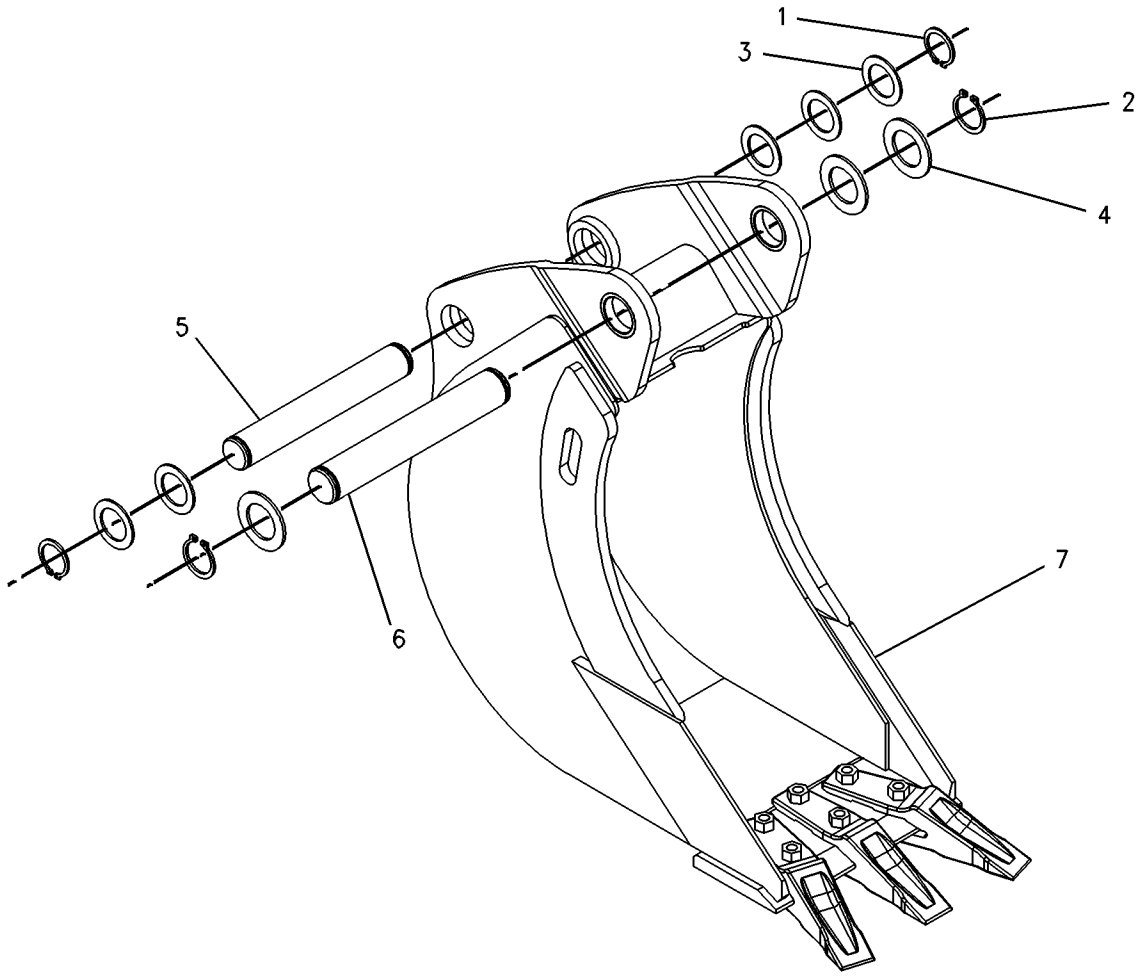

GRAPHIC #1 **<END>** g00750627

219-3379 BUCKET GP-HOE—STANDARD DUTY

S/N: BXC1-UP; DSX1-UP
305MM (12 IN)
PART OF 219-3410 BUCKET GP-HOE
AN ATTACHMENT

SMCS-6503 **i01941824**

NOTE	REF NO	GRAPHIC REF	PART NUMBER	QTY	PART NAME 1 2 3 4 5 6 (PRODUCT LEVEL)	SEE PAGE
	1	1	*208-5245*	3	TIP GP-PENETRATION	
					(EACH INCLUDES)	
	1A	1	**201-1238**	1	PIN	
	1B	1	**201-1239**	1	RETAINER AS	
	1C	1	**208-5235**	1	TIP-PENETRATION	
	2	1	*151-7929*	1	BRACKET AS-LH	
	2A	1	**9R-0320**	1	BEARING	
	2B	1	**154-5257**	1	BEARING	
	3	1	*151-7930*	1	BRACKET AS-RH	
	3A	1	**9R-0320**	1	BEARING	
	3B	1	**154-5257**	1	BEARING	

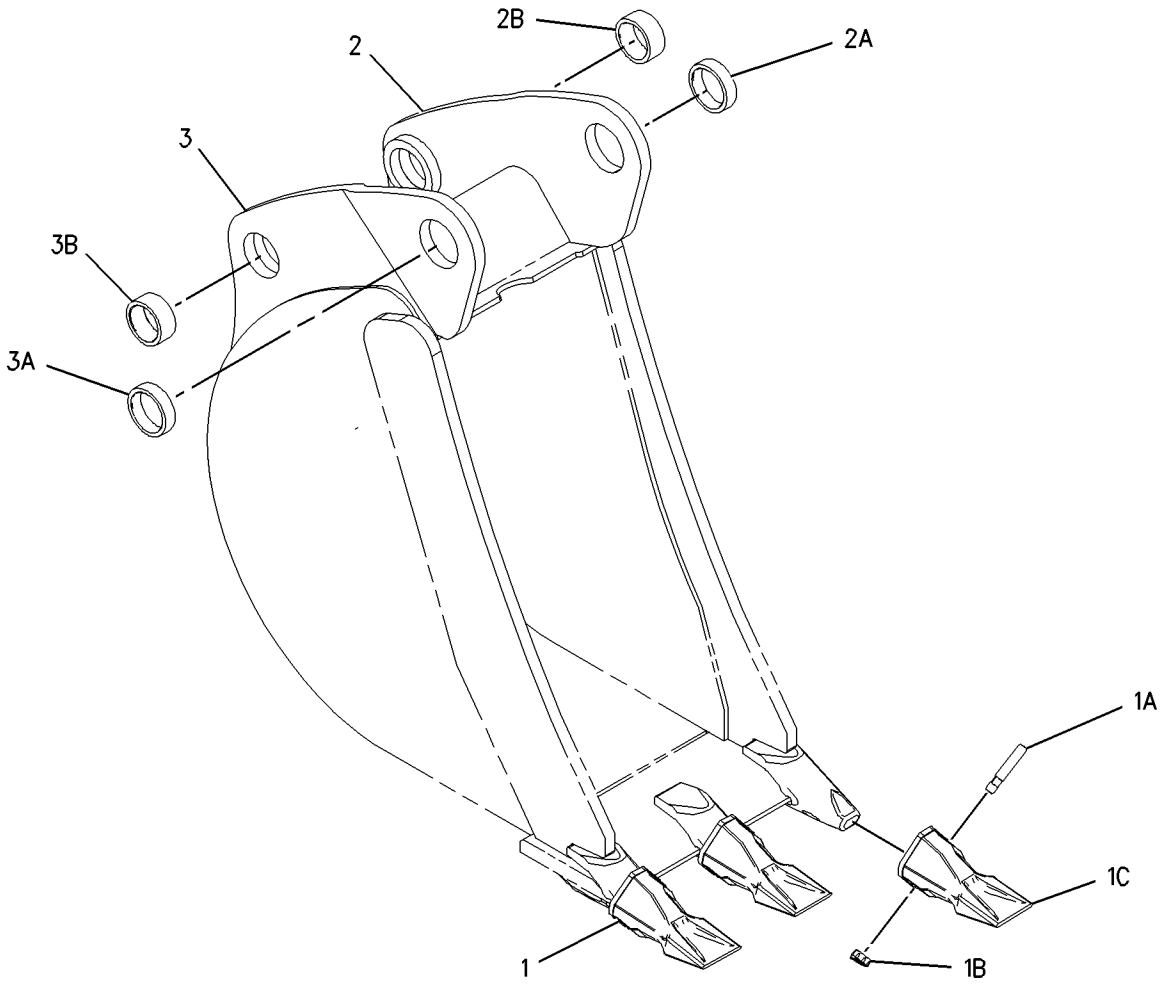

GRAPHIC #1 **<END>** g01001647

219-3380 BUCKET GP-H0E—STANDARD DUTY

S/N: BXC1-UP; DSX1-UP
458MM (18 IN)
AN ATTACHMENT

SMCS-6503 **i01941827**

NOTE	REF NO	GRAPHIC REF	PART NUMBER	QTY	PART NAME 1 2 3 4 5 6 (PRODUCT LEVEL)	SEE PAGE
	1	1	*208-5245*	4	TIP GP-PENETRATION	
					(EACH INCLUDES)	
	1A	1	**201-1238**	1	PIN	
	1B	1	**201-1239**	1	RETAINER AS	
	1C	1	**208-5235**	1	TIP-PENETRATION	
	2	1	*151-7902*	1	BRACKET AS-LH	
	2A	1	**9R-0162**	1	BEARING	
	2B	1	**168-0480**	1	BEARING-SLEEVE	
	3	1	*151-7903*	1	BRACKET AS-RH	
	3A	1	**9R-0162**	1	BEARING	
	3B	1	**168-0480**	1	BEARING-SLEEVE	

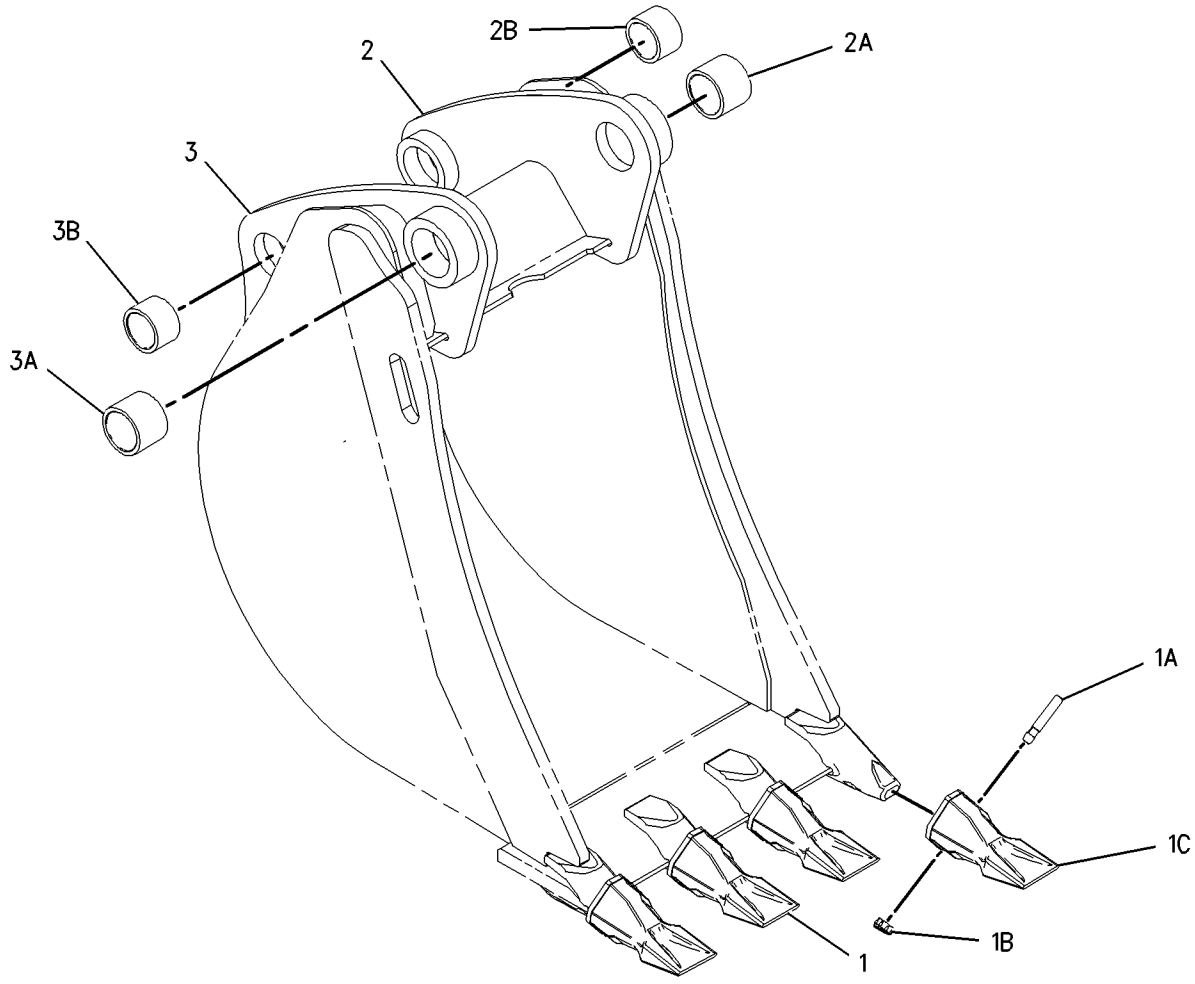

GRAPHIC #1 **<END>** g01001636

WORK TOOLS

219-3381 BUCKET GP-HOE—STANDARD DUTY

S/N: BXC1-UP; DSX1-UP
610MM (24 IN)
AN ATTACHMENT

SMCS-6503 **i01941828**

NOTE	REF NO	GRAPHIC REF	PART NUMBER	QTY	PART NAME 1 2 3 4 5 6 (PRODUCT LEVEL)	SEE PAGE
	1	1	*208-5245*	5	TIP GP-PENETRATION	
					(EACH INCLUDES)	
	1A	1	**201-1238**	1	PIN	
	1B	1	**201-1239**	1	RETAINER AS	
	1C	1	**208-5235**	1	TIP-PENETRATION	
	2	1	*151-7902*	1	BRACKET AS-LH	
	2A	1	**9R-0162**	1	BEARING	
	2B	1	**168-0480**	1	BEARING-SLEEVE	
	3	1	*151-7903*	1	BRACKET AS-RH	
	3A	1	**9R-0162**	1	BEARING	
	3B	1	**168-0480**	1	BEARING-SLEEVE	

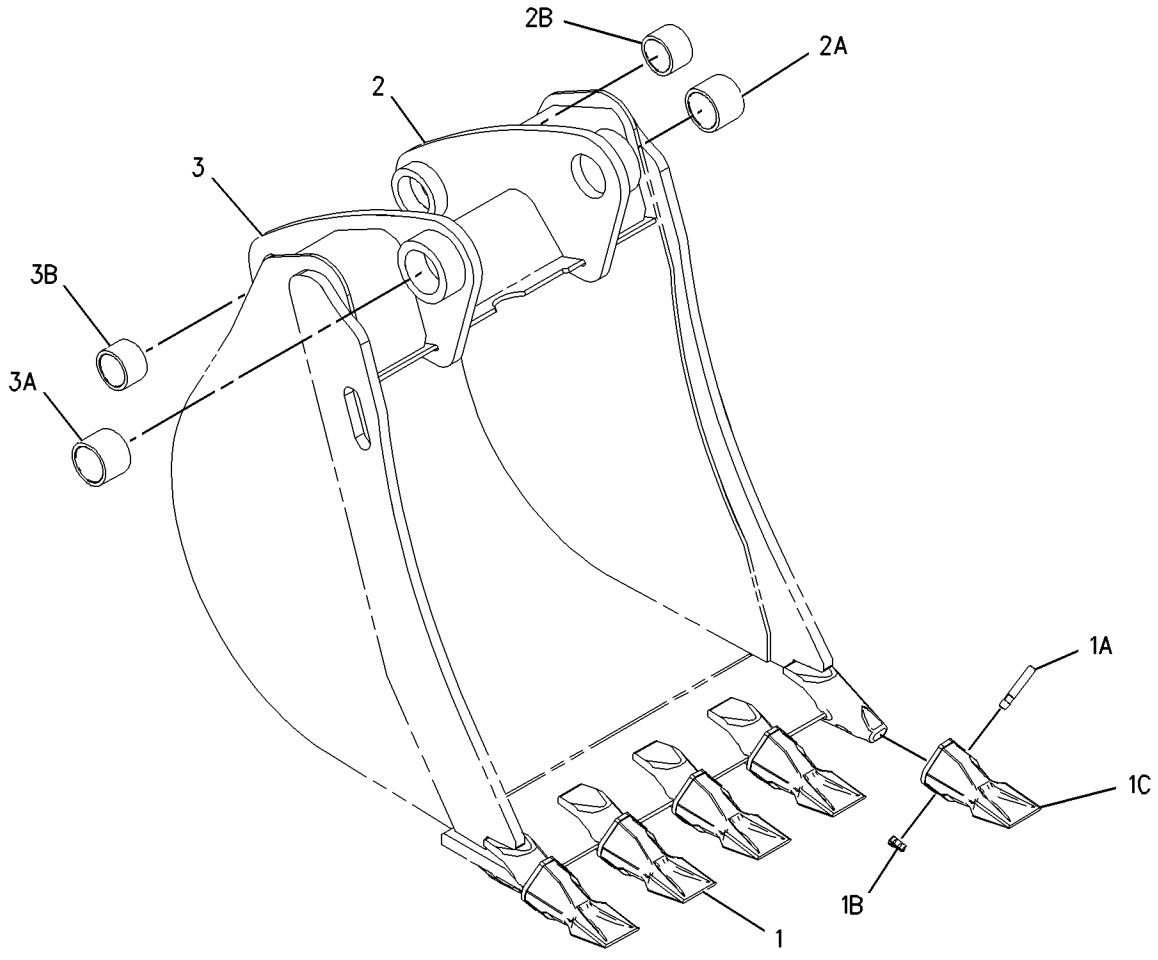

GRAPHIC #1 **<END>** g01001619

WORK TOOLS

219-3382 BUCKET GP-H0E–STANDARD DUTY

S/N: BXC1-UP; DSX1-UP
762MM (30 IN)
AN ATTACHMENT

SMCS-6503 **i01941829**

NOTE	REF NO	GRAPHIC REF	PART NUMBER	QTY	PART NAME 1 2 3 4 5 6 (PRODUCT LEVEL)	SEE PAGE
	1	1	*208-5245*	5	TIP GP-PENETRATION	
					(EACH INCLUDES)	
	1A	1	**201-1238**	1	PIN	
	1B	1	**201-1239**	1	RETAINER AS	
	1C	1	**208-5235**	1	TIP-PENETRATION	
	2	1	*151-7902*	1	BRACKET AS-LH	
	2A	1	**9R-0162**	1	BEARING	
	2B	1	**168-0480**	1	BEARING-SLEEVE	
	3	1	*151-7903*	1	BRACKET AS-RH	
	3A	1	**9R-0162**	1	BEARING	
	3B	1	**168-0480**	1	BEARING-SLEEVE	

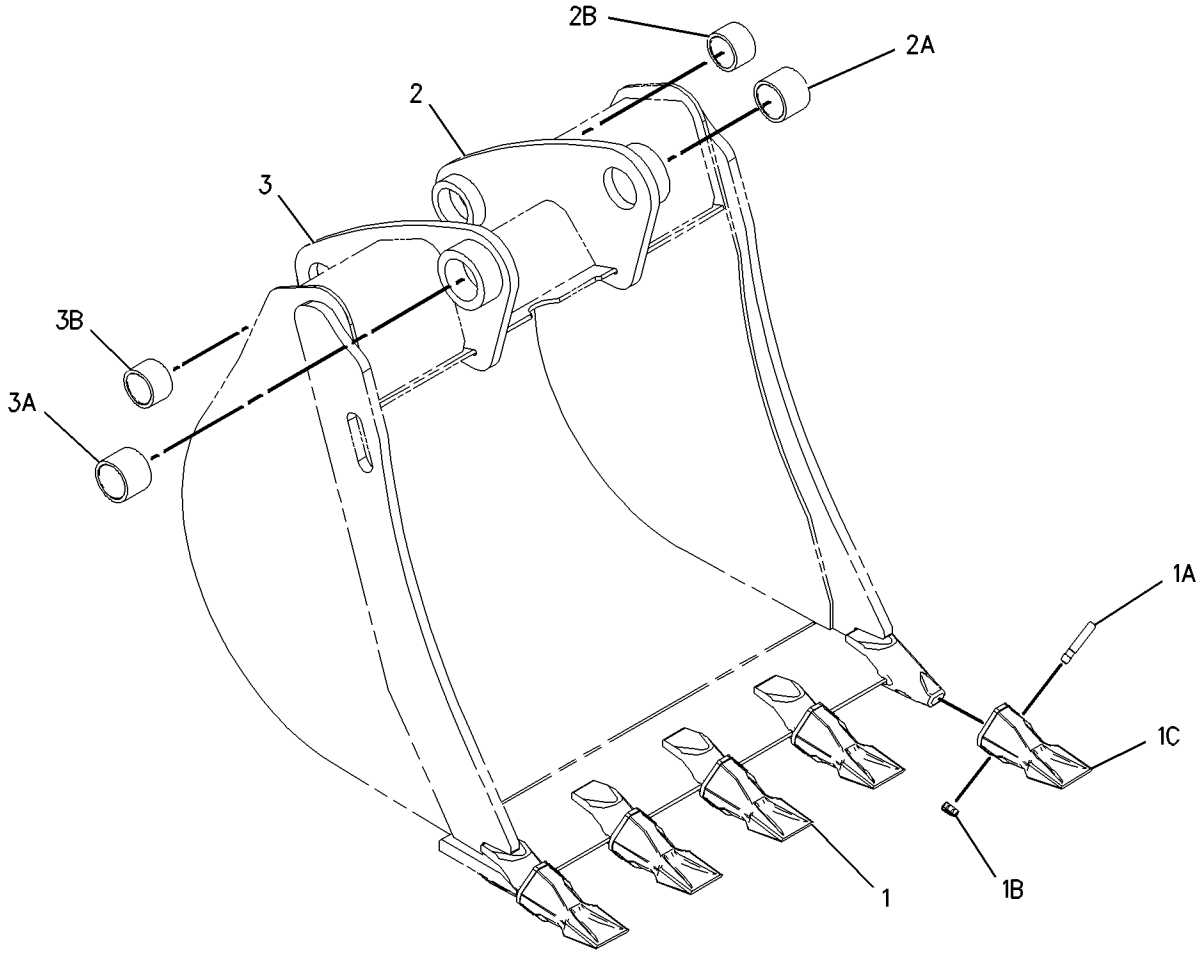

GRAPHIC #1 **<END>** g01001590

WORK TOOLS

219-3383 BUCKET GP-HOE—STANDARD DUTY

S/N: BXC1-UP; DSX1-UP
914MM (36 IN)
AN ATTACHMENT

SMCS-6503 **i01941833**

NOTE	REF NO	GRAPHIC REF	PART NUMBER	QTY	PART NAME 1 2 3 4 5 6 (PRODUCT LEVEL)	SEE PAGE
	1	1	*208-5245*	6	TIP GP-PENETRATION	
					(EACH INCLUDES)	
	1A	1	**201-1238**	1	PIN	
	1B	1	**201-1239**	1	RETAINER AS	
	1C	1	**208-5235**	1	TIP-PENETRATION	
	2	1	*151-7902*	1	BRACKET AS-LH	
	2A	1	**9R-0162**	1	BEARING	
	2B	1	**168-0480**	1	BEARING-SLEEVE	
	3	1	*151-7903*	1	BRACKET AS-RH	
	3A	1	**9R-0162**	1	BEARING	
	3B	1	**168-0480**	1	BEARING-SLEEVE	

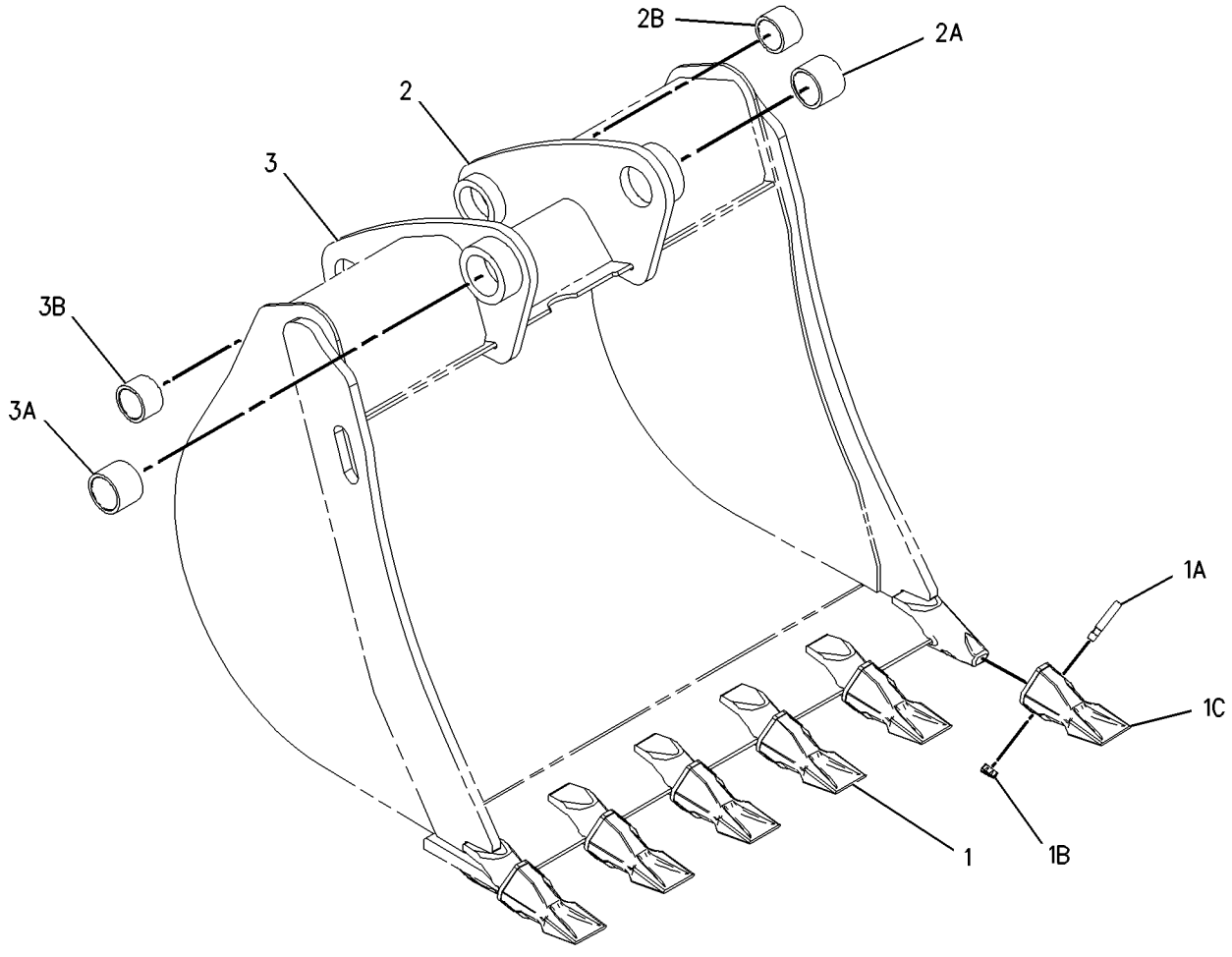

GRAPHIC #1 **<END>** g01001601

219-3384 BUCKET GP-HOE–HEAVY DUTY

S/N: BXC1-UP; DSX1-UP
305MM (12 IN)
PART OF 219-3411 BUCKET GP-HOE
AN ATTACHMENT

SMCS-6503 **i01941834**

NOTE	REF NO	GRAPHIC REF	PART NUMBER	QTY	PART NAME 1 2 3 4 5 6 (PRODUCT LEVEL)	SEE PAGE
	1	1	*208-5245*	3	TIP GP-PENETRATION	
					(EACH INCLUDES)	
	1A	1	**201-1238**	1	PIN	
	1B	1	**201-1239**	1	RETAINER AS	
	1C	1	**208-5235**	1	TIP-PENETRATION	
	2	1	*151-7929*	1	BRACKET AS-LH	
	2A	1	**9R-0320**	1	BEARING	
	2B	1	**154-5257**	1	BEARING	
	3	1	*151-7930*	1	BRACKET AS-RH	
	3A	1	**9R-0320**	1	BEARING	
	3B	1	**154-5257**	1	BEARING	

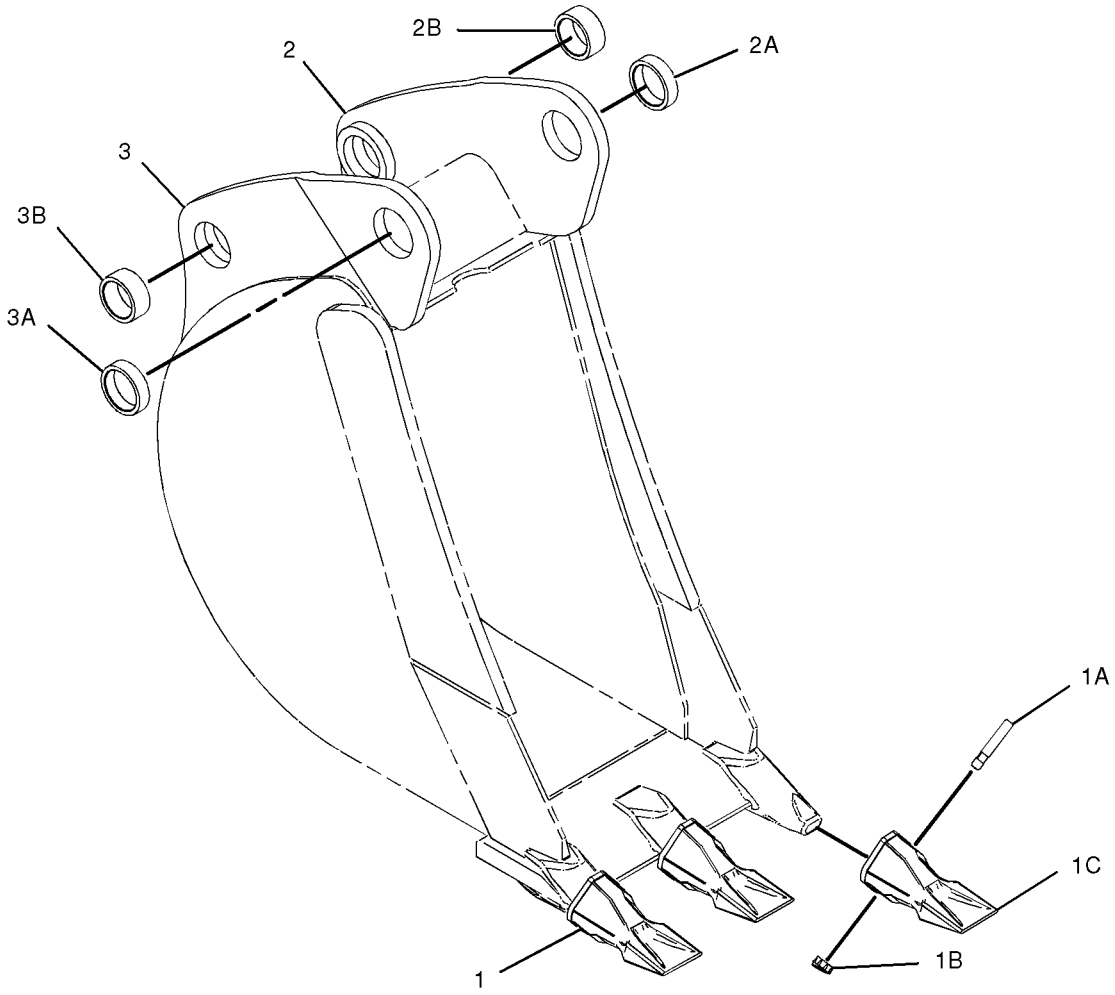

GRAPHIC #1 **<END>** g01011317

219-3385 BUCKET GP-HOE–HEAVY DUTY

S/N: BXC1-UP; DSX1-UP
407MM (16 IN)
AN ATTACHMENT

SMCS-6503 **i01941835**

NOTE	REF NO	GRAPHIC REF	PART NUMBER	QTY	PART NAME 1 2 3 4 5 6 (PRODUCT LEVEL)	SEE PAGE
	1	1	*208-5245*	3	TIP GP-PENETRATION	
					(EACH INCLUDES)	
	1A	1	**201-1238**	1	PIN	
	1B	1	**201-1239**	1	RETAINER AS	
	1C	1	**208-5235**	1	TIP-PENETRATION	
	2	1	*151-7902*	1	BRACKET AS-LH	
	2A	1	**9R-0162**	1	BEARING	
	2B	1	**168-0480**	1	BEARING-SLEEVE	
	3	1	*151-7903*	1	BRACKET AS-RH	
	3A	1	**9R-0162**	1	BEARING	
	3B	1	**168-0480**	1	BEARING-SLEEVE	

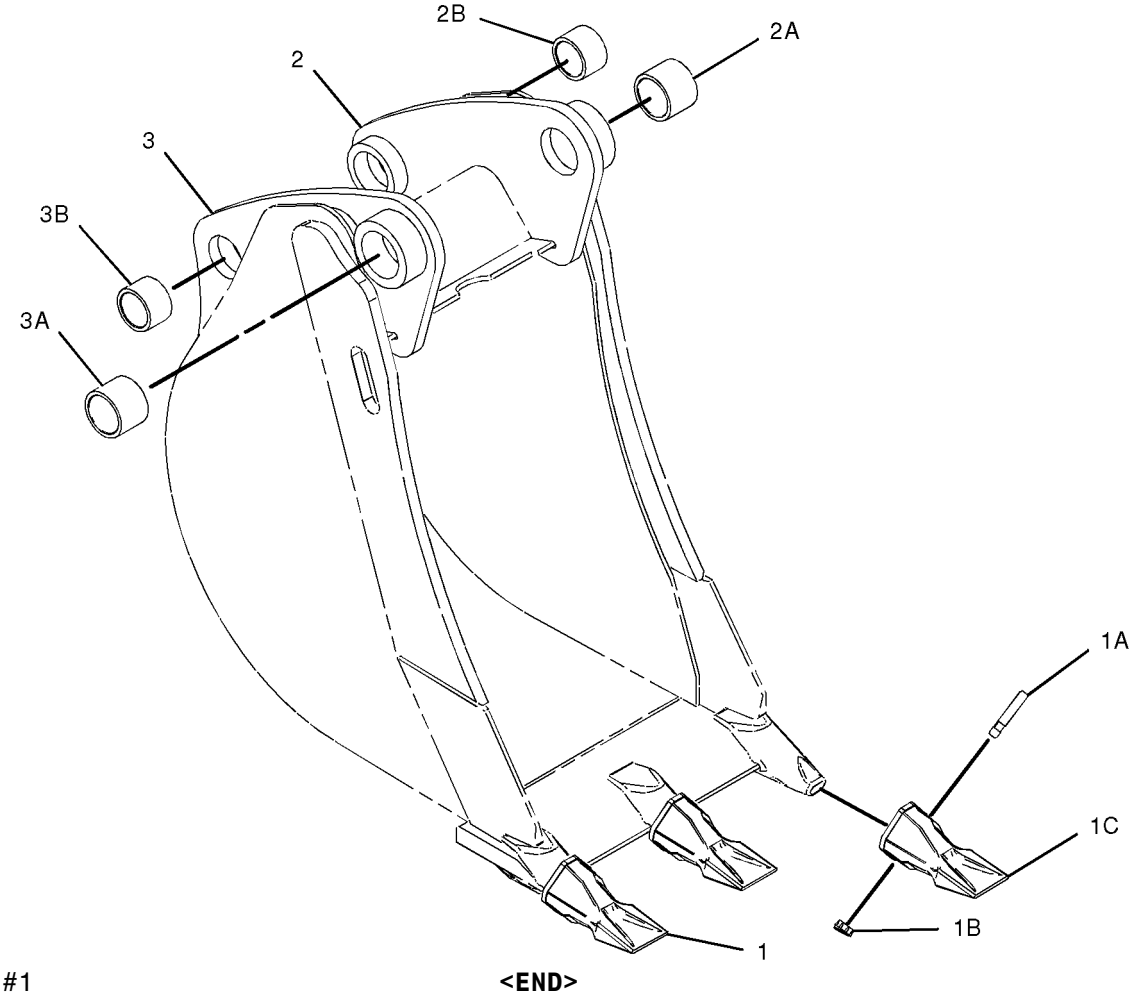

GRAPHIC #1 **<END>** g01011326

WORK TOOLS

219-3386 BUCKET GP-HOE–HEAVY DUTY

S/N: BXC1-UP; DSX1-UP
458MM (18 IN)
AN ATTACHMENT

SMCS-6503 **i01941838**

NOTE	REF NO	GRAPHIC REF	PART NUMBER	QTY	PART NAME 1 2 3 4 5 6 (PRODUCT LEVEL)	SEE PAGE
	1	1	*208-5245*	4	TIP GP-PENETRATION	
					(EACH INCLUDES)	
	1A	1	**201-1238**	1	PIN	
	1B	1	**201-1239**	1	RETAINER AS	
	1C	1	**208-5235**	1	TIP-PENETRATION	
	2	1	*151-7902*	1	BRACKET AS-LH	
	2A	1	**9R-0162**	1	BEARING	
	2B	1	**168-0480**	1	BEARING-SLEEVE	
	3	1	*151-7903*	1	BRACKET AS-RH	
	3A	1	**9R-0162**	1	BEARING	
	3B	1	**168-0480**	1	BEARING-SLEEVE	

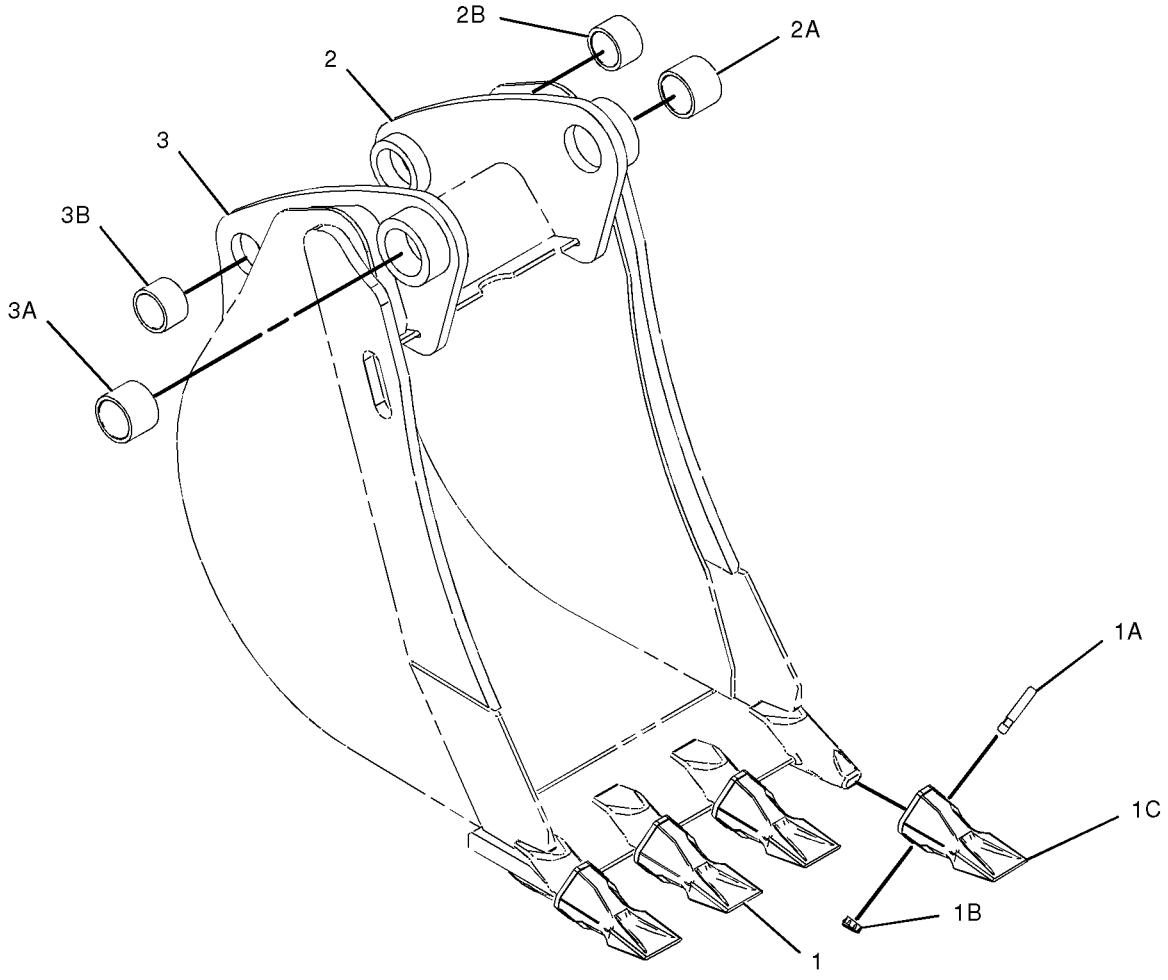

GRAPHIC #1 **<END>** g01011354

219-3387 BUCKET GP-HOE–HEAVY DUTY

S/N: BXC1-UP; DSX1-UP
610MM (24 IN)
AN ATTACHMENT

SMCS-6503 **i01941942**

NOTE	REF NO	GRAPHIC REF	PART NUMBER	QTY	PART NAME 1 2 3 4 5 6 (PRODUCT LEVEL)	SEE PAGE
	1	1	*208-5245*	5	TIP GP-PENETRATION	
					(EACH INCLUDES)	
	1A	1	**201-1238**	1	PIN	
	1B	1	**201-1239**	1	RETAINER AS	
	1C	1	**208-5235**	1	TIP-PENETRATION	
	2	1	*151-7902*	1	BRACKET AS-LH	
	2A	1	**9R-0162**	1	BEARING	
	2B	1	**168-0480**	1	BEARING-SLEEVE	
	3	1	*151-7903*	1	BRACKET AS-RH	
	3A	1	**9R-0162**	1	BEARING	
	3B	1	**168-0480**	1	BEARING-SLEEVE	

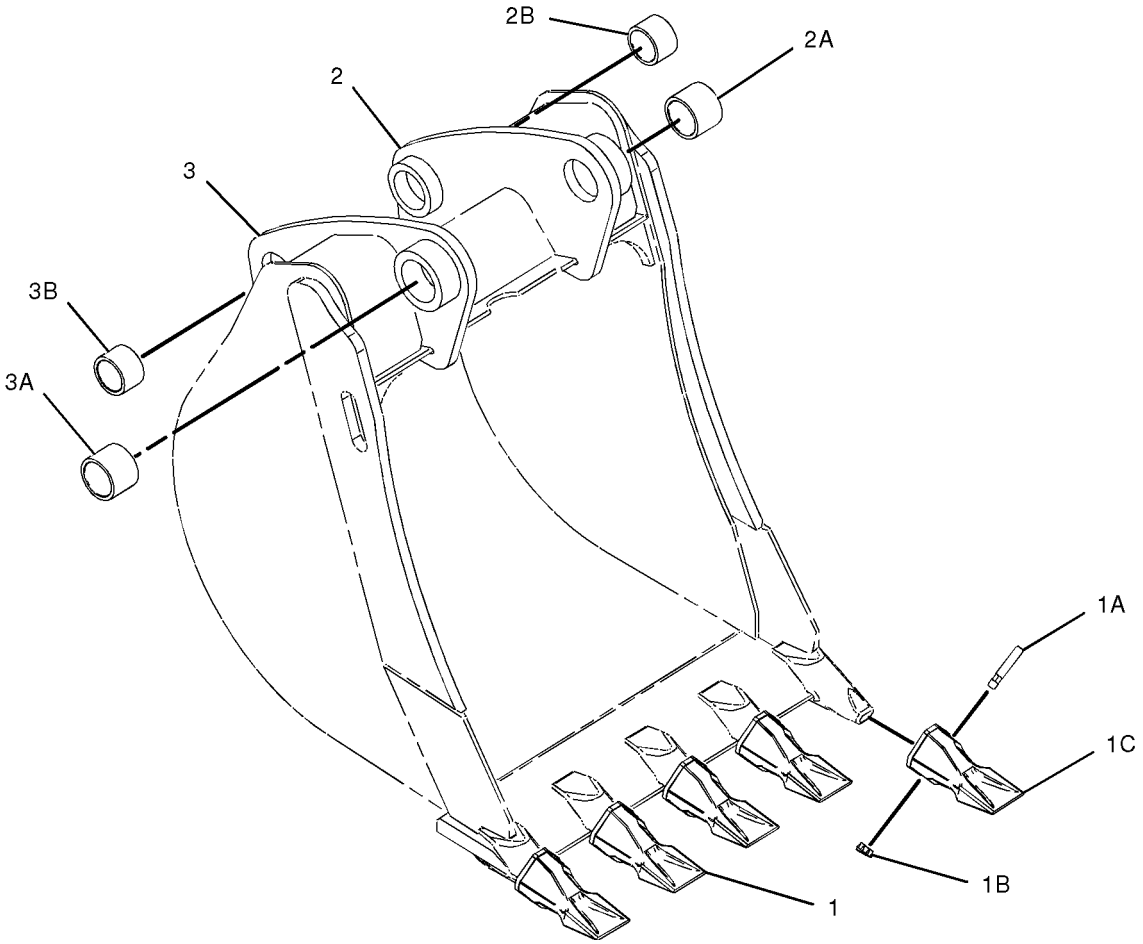

GRAPHIC #1 **<END>** g01011361

WORK TOOLS

219-3388 BUCKET GP-HOE—HEAVY DUTY

S/N: BXC1-UP; DSX1-UP
762MM (30 IN)
AN ATTACHMENT

SMCS-6503 **i01941958**

NOTE	REF NO	GRAPHIC REF	PART NUMBER	QTY	PART NAME 1 2 3 4 5 6 (PRODUCT LEVEL)	SEE PAGE
	1	1	*208-5245*	6	TIP GP-PENETRATION	
					(EACH INCLUDES)	
	1A	1	**201-1238**	1	PIN	
	1B	1	**201-1239**	1	RETAINER AS	
	1C	1	**208-5235**	1	TIP-PENETRATION	
	2	1	*151-7902*	1	BRACKET AS-LH	
	2A	1	**9R-0162**	1	BEARING	
	2B	1	**168-0480**	1	BEARING-SLEEVE	
	3	1	*151-7903*	1	BRACKET AS-RH	
	3A	1	**9R-0162**	1	BEARING	
	3B	1	**168-0480**	1	BEARING-SLEEVE	

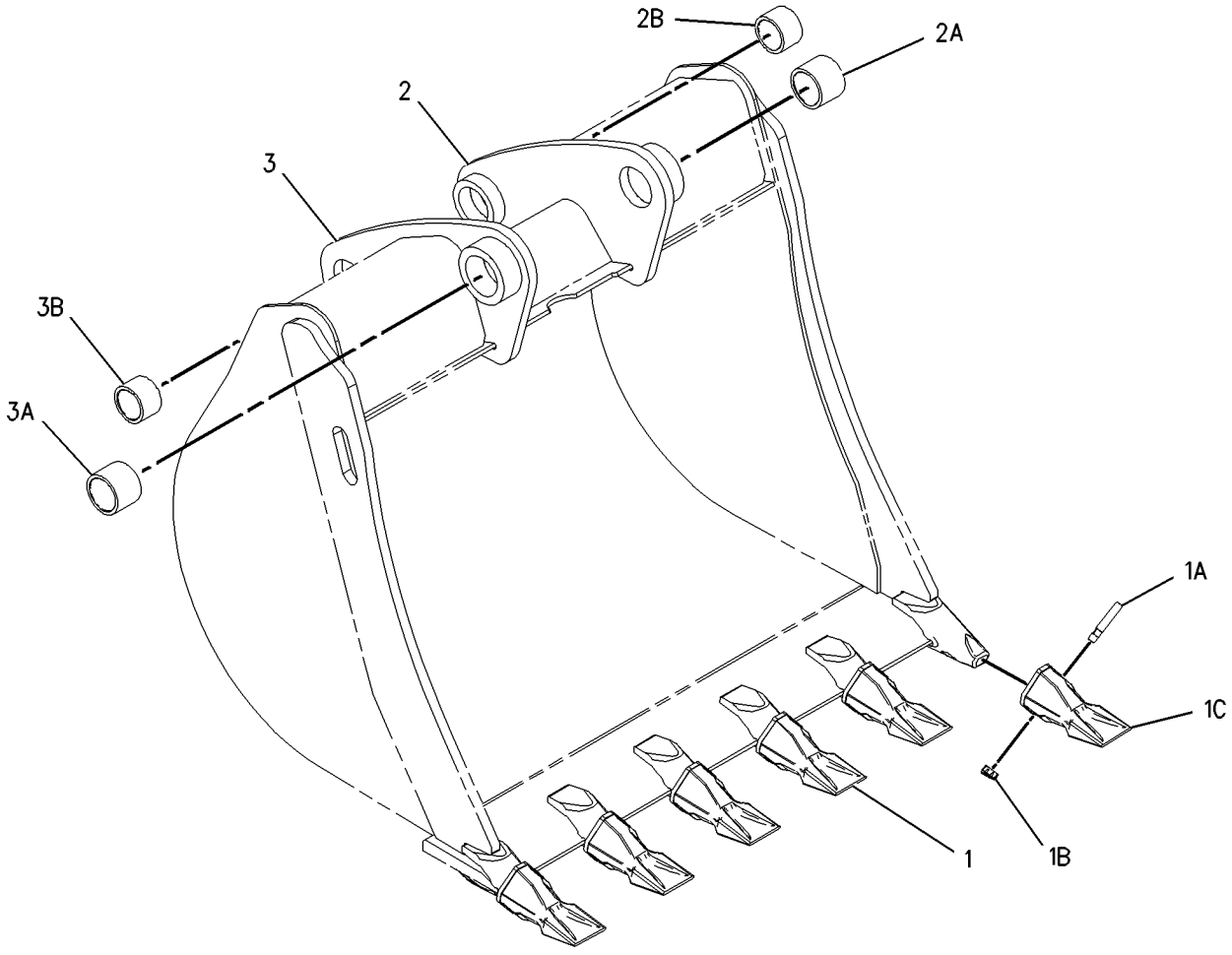

GRAPHIC #1 **<END>** g01001601

WORK TOOLS

219-3389 BUCKET GP-HOE—HEAVY DUTY

S/N: BXC1-UP; DSX1-UP
914MM (36 IN)
AN ATTACHMENT

SMCS-6503 **i01941960**

NOTE	REF NO	GRAPHIC REF	PART NUMBER	QTY	PART NAME 1 2 3 4 5 6 (PRODUCT LEVEL)	SEE PAGE
	1	1	*208-5245*	6	TIP GP-PENETRATION	
					(EACH INCLUDES)	
	1A	1	**201-1238**	1	PIN	
	1B	1	**201-1239**	1	RETAINER AS	
	1C	1	**208-5235**	1	TIP-PENETRATION	
	2	1	*151-7902*	1	BRACKET AS-LH	
	2A	1	**9R-0162**	1	BEARING	
	2B	1	**168-0480**	1	BEARING-SLEEVE	
	3	1	*151-7903*	1	BRACKET AS-RH	
	3A	1	**9R-0162**	1	BEARING	
	3B	1	**168-0480**	1	BEARING-SLEEVE	

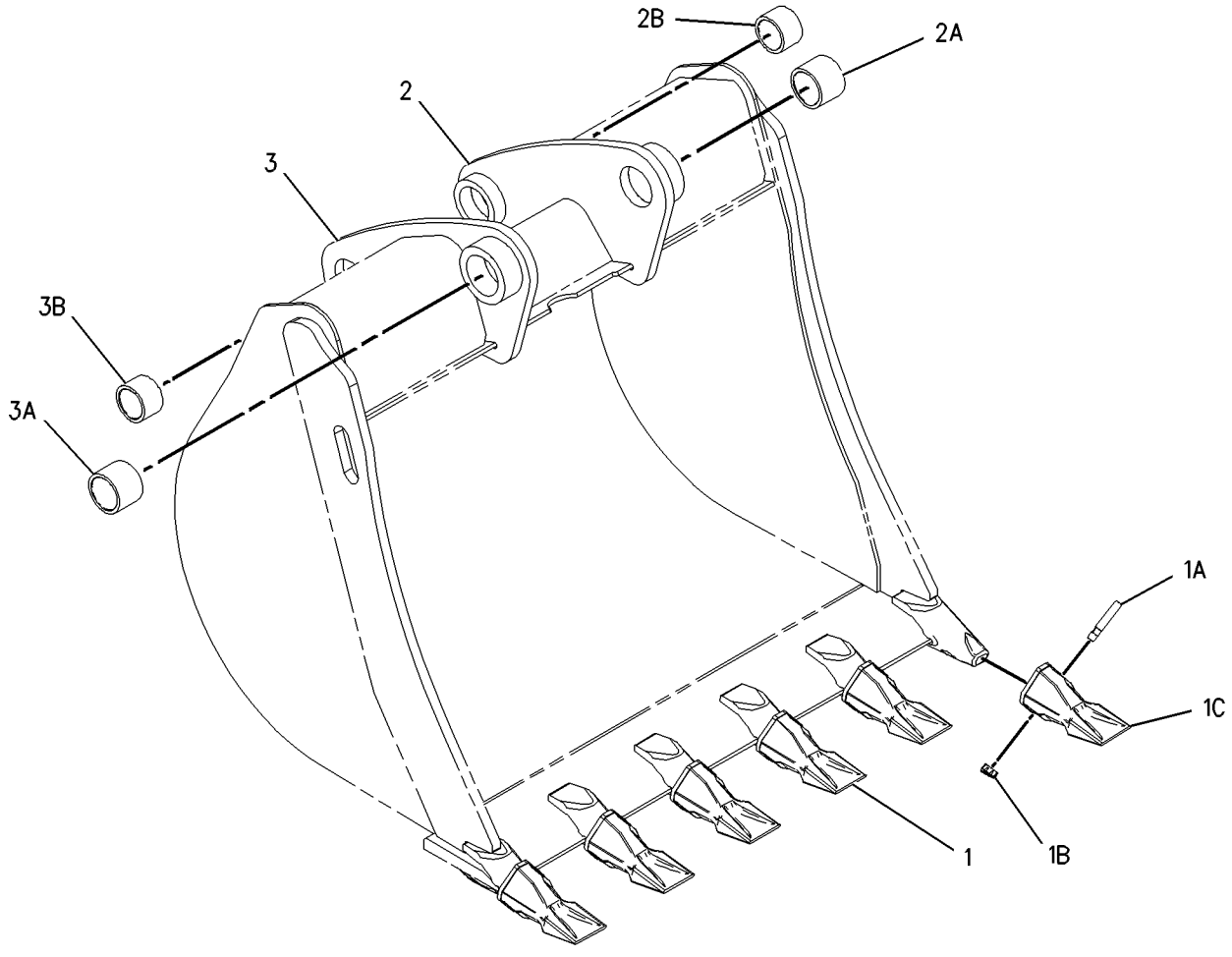

GRAPHIC #1 **<END>** g01001601

219-3390 BUCKET GP-HOE—HIGH CAPACITY

S/N: BXC1-UP; DSX1-UP
458MM (18 IN)
AN ATTACHMENT

SMCS-6503 **i01941961**

NOTE	REF NO	GRAPHIC REF	PART NUMBER	QTY	PART NAME 1 2 3 4 5 6 (PRODUCT LEVEL)	SEE PAGE
	1	1	*208-5245*	4	TIP GP-PENETRATION	
					(EACH INCLUDES)	
	1A	1	**201-1238**	1	PIN	
	1B	1	**201-1239**	1	RETAINER AS	
	1C	1	**208-5235**	1	TIP-PENETRATION	
	2	1	*151-7902*	1	BRACKET AS-LH	
	2A	1	**9R-0162**	1	BEARING	
	2B	1	**168-0480**	1	BEARING-SLEEVE	
	3	1	*151-7903*	1	BRACKET AS-RH	
	3A	1	**9R-0162**	1	BEARING	
	3B	1	**168-0480**	1	BEARING-SLEEVE	

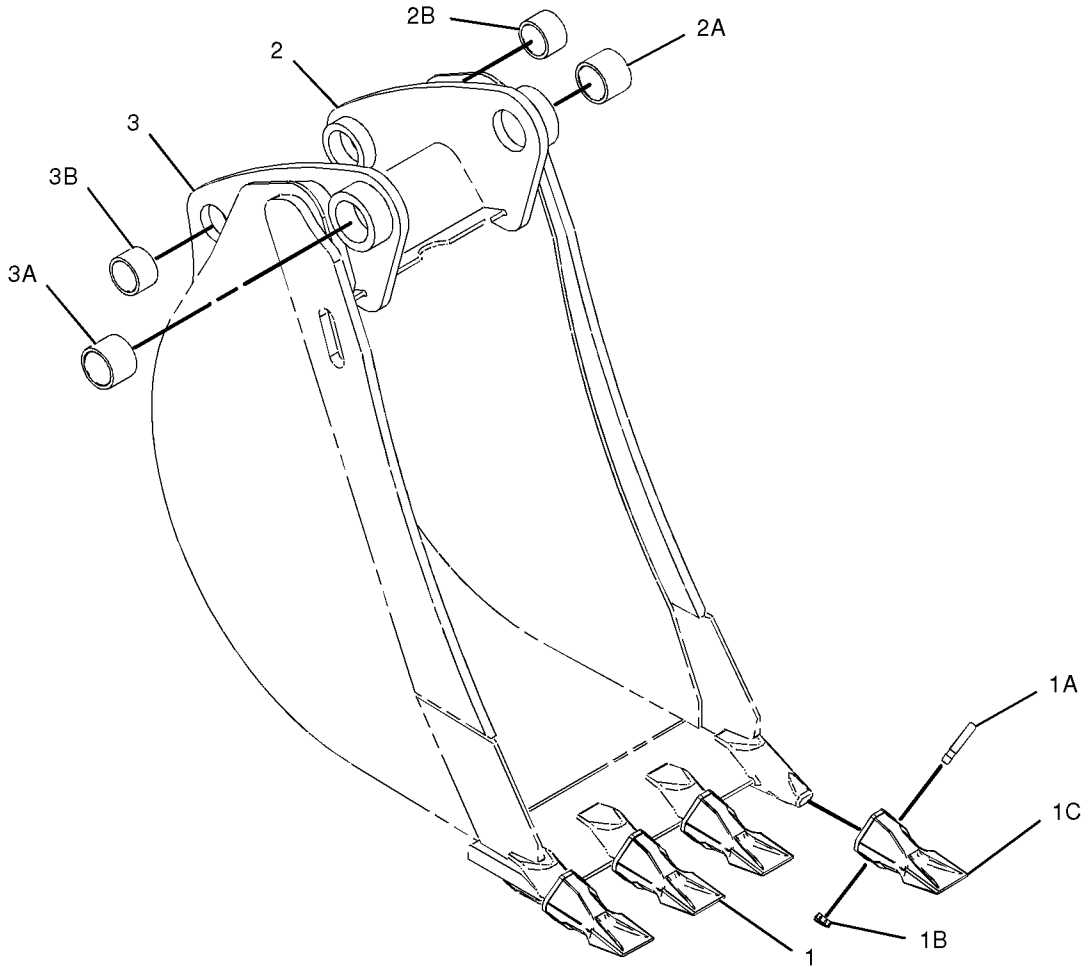

GRAPHIC #1 **<END>** g01011371

219-3391 BUCKET GP-HOE—HIGH CAPACITY

S/N: BXC1-UP; DSX1-UP
610MM (24 IN)
AN ATTACHMENT

SMCS-6503 **i01942133**

NOTE	REF NO	GRAPHIC REF	PART NUMBER	QTY	PART NAME 1 2 3 4 5 6 (PRODUCT LEVEL)	SEE PAGE
	1	1	*208-5245*	5	TIP GP-PENETRATION	
					(EACH INCLUDES)	
	1A	1	**201-1238**	1	PIN	
	1B	1	**201-1239**	1	RETAINER AS	
	1C	1	**208-5235**	1	TIP-PENETRATION	
	2	1	*151-7902*	1	BRACKET AS-LH	
	2A	1	**9R-0162**	1	BEARING	
	2B	1	**168-0480**	1	BEARING-SLEEVE	
	3	1	**151-7903**	1	BRACKET AS-RH	
	3A	1	**9R-0162**	1	BEARING	
	3B	1	**168-0480**	1	BEARING-SLEEVE	

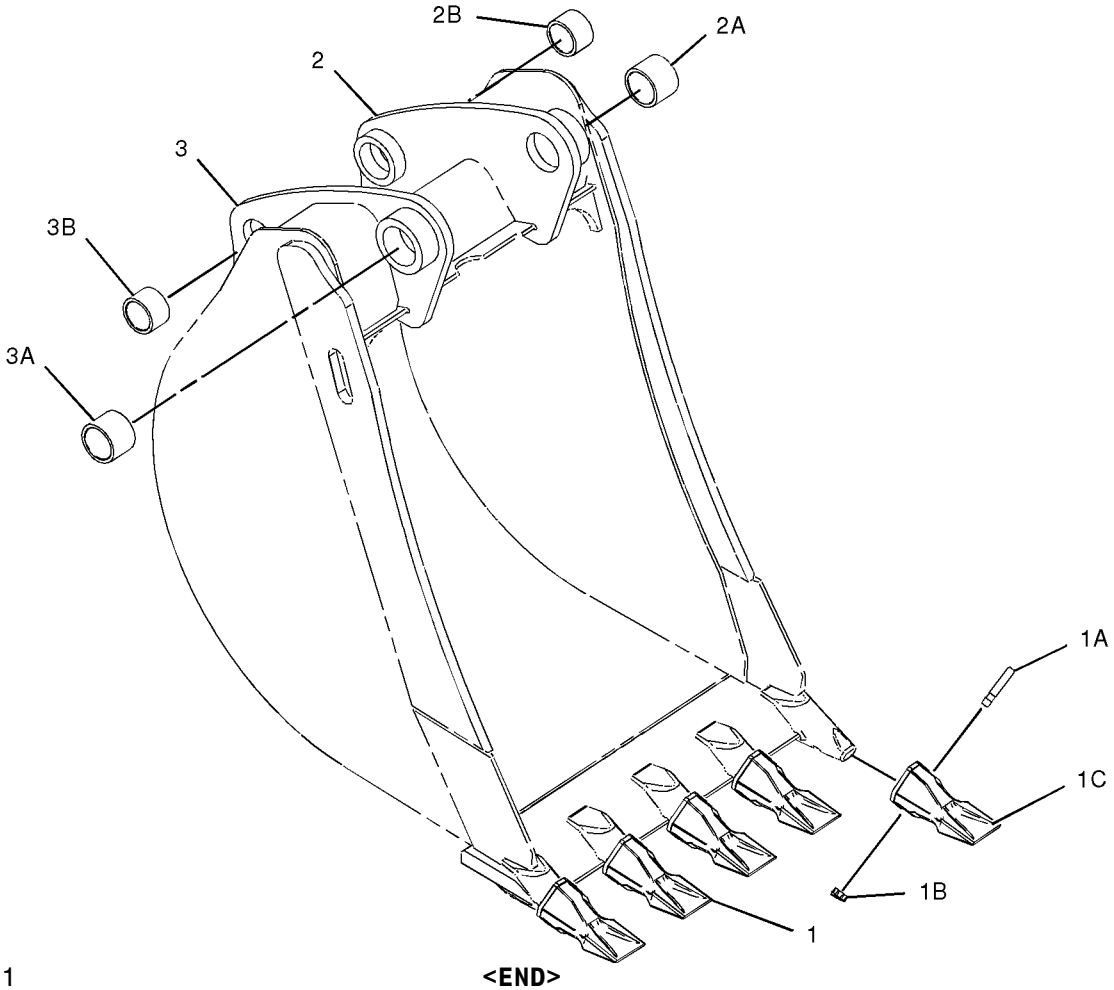

GRAPHIC #1 **<END>** g01011383

219-3392 BUCKET GP-HOE—HIGH CAPACITY

S/N: BXC1-UP; DSX1-UP
762MM (30 IN)
AN ATTACHMENT

SMCS-6503 **i01942134**

NOTE	REF NO	GRAPHIC REF	PART NUMBER	QTY	PART NAME 1 2 3 4 5 6 (PRODUCT LEVEL)	SEE PAGE
	1	1	*208-5245*	5	TIP GP-PENETRATION	
					(EACH INCLUDES)	
	1A	1	**201-1238**	1	PIN	
	1B	1	**201-1239**	1	RETAINER AS	
	1C	1	**208-5235**	1	TIP-PENETRATION	
	2	1	*151-7902*	1	BRACKET AS-LH	
	2A	1	**9R-0162**	1	BEARING	
	2B	1	**168-0480**	1	BEARING-SLEEVE	
	3	1	*151-7903*	1	BRACKET AS-RH	
	3A	1	**9R-0162**	1	BEARING	
	3B	1	**168-0480**	1	BEARING-SLEEVE	

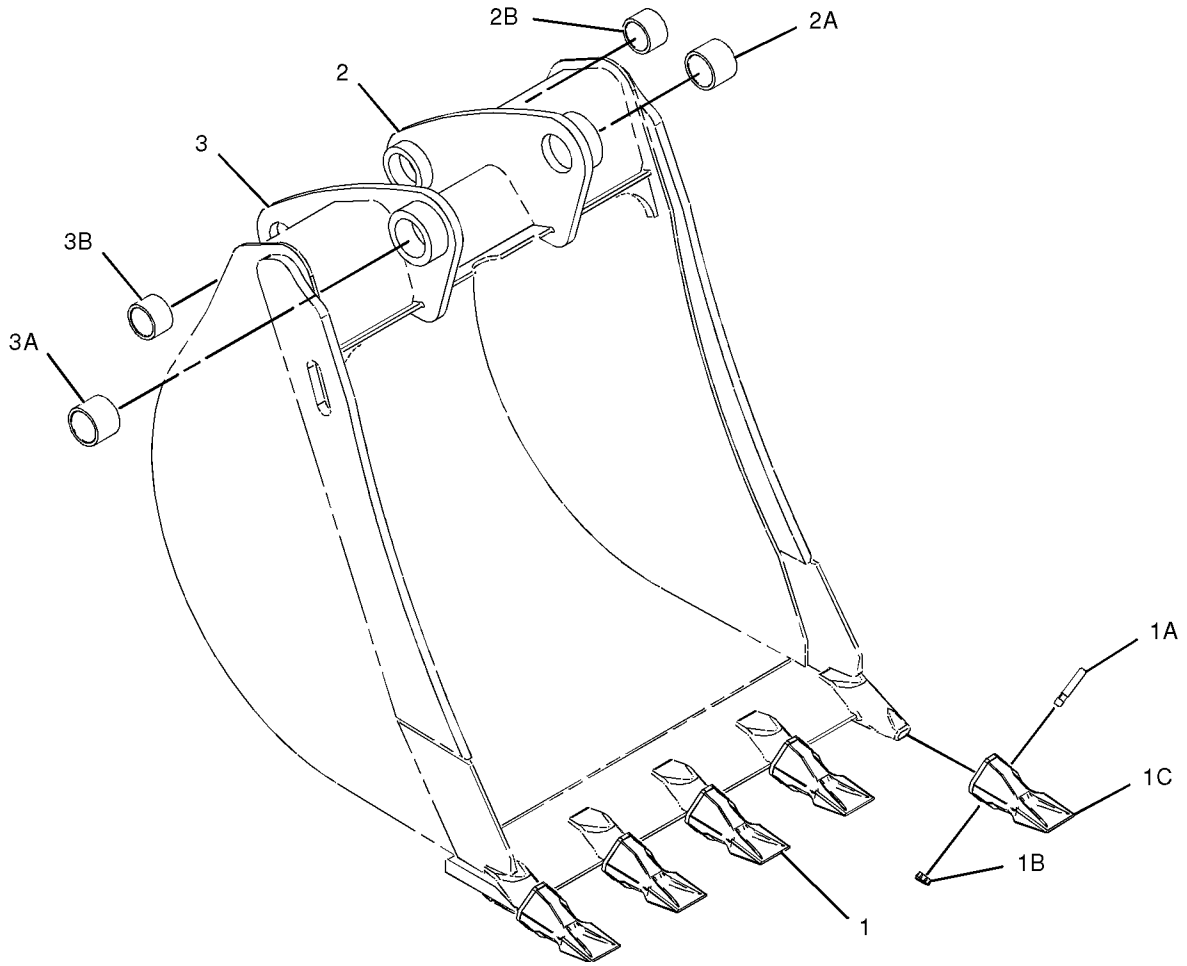

GRAPHIC #1 **<END>** g01011386

WORK TOOLS

219-3393 BUCKET GP-HOE—HIGH CAPACITY

S/N: BXC1-UP; DSX1-UP
914MM (36 IN)
AN ATTACHMENT

SMCS-6503 **i01942136**

NOTE	REF NO	GRAPHIC REF	PART NUMBER	QTY	PART NAME 1 2 3 4 5 6 (PRODUCT LEVEL)	SEE PAGE
	1	1	*208-5245*	6	TIP GP-PENETRATION	
					(EACH INCLUDES)	
	1A	1	**201-1238**	1	PIN	
	1B	1	**201-1239**	1	RETAINER AS	
	1C	1	**208-5235**	1	TIP-PENETRATION	
	2	1	*151-7902*	1	BRACKET AS-LH	
	2A	1	**9R-0162**	1	BEARING	
	2B	1	**168-0480**	1	BEARING-SLEEVE	
	3	1	*151-7903*	1	BRACKET AS-RH	
	3A	1	**9R-0162**	1	BEARING	
	3B	1	**168-0480**	1	BEARING-SLEEVE	

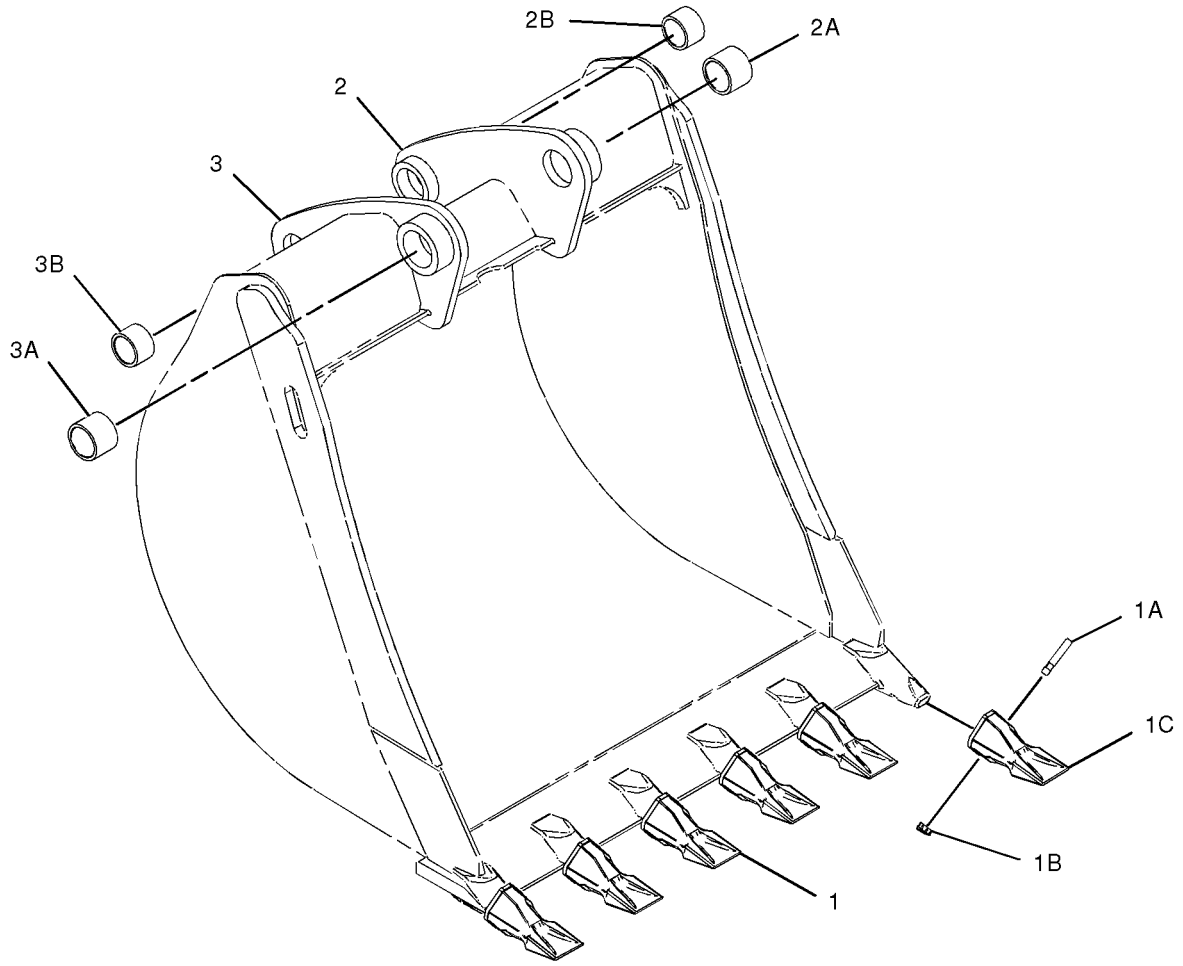

GRAPHIC #1 **<END>** g01011418

219-3394 BUCKET GP-HOE–ROCK

S/N: BXC1-UP; DSX1-UP
305MM (12 IN)
PART OF 219-3412 BUCKET GP-HOE
AN ATTACHMENT

SMCS-6503 **i01942137**

NOTE	REF NO	GRAPHIC REF	PART NUMBER	QTY	PART NAME 1 2 3 4 5 6 (PRODUCT LEVEL)	SEE PAGE
	1	1	*208-5245*	3	TIP GP-PENETRATION	
					(EACH INCLUDES)	
	1A	1	**201-1238**	1	PIN	
	1B	1	**201-1239**	1	RETAINER AS	
	1C	1	**208-5235**	1	TIP-PENETRATION	
	2	1	*151-7929*	1	BRACKET AS-LH	
	2A	1	**9R-0320**	1	BEARING	
	2B	1	**154-5257**	1	BEARING	
	3	1	*151-7930*	1	BRACKET AS-RH	
	3A	1	**9R-0320**	1	BEARING	
	3B	1	**154-5257**	1	BEARING	

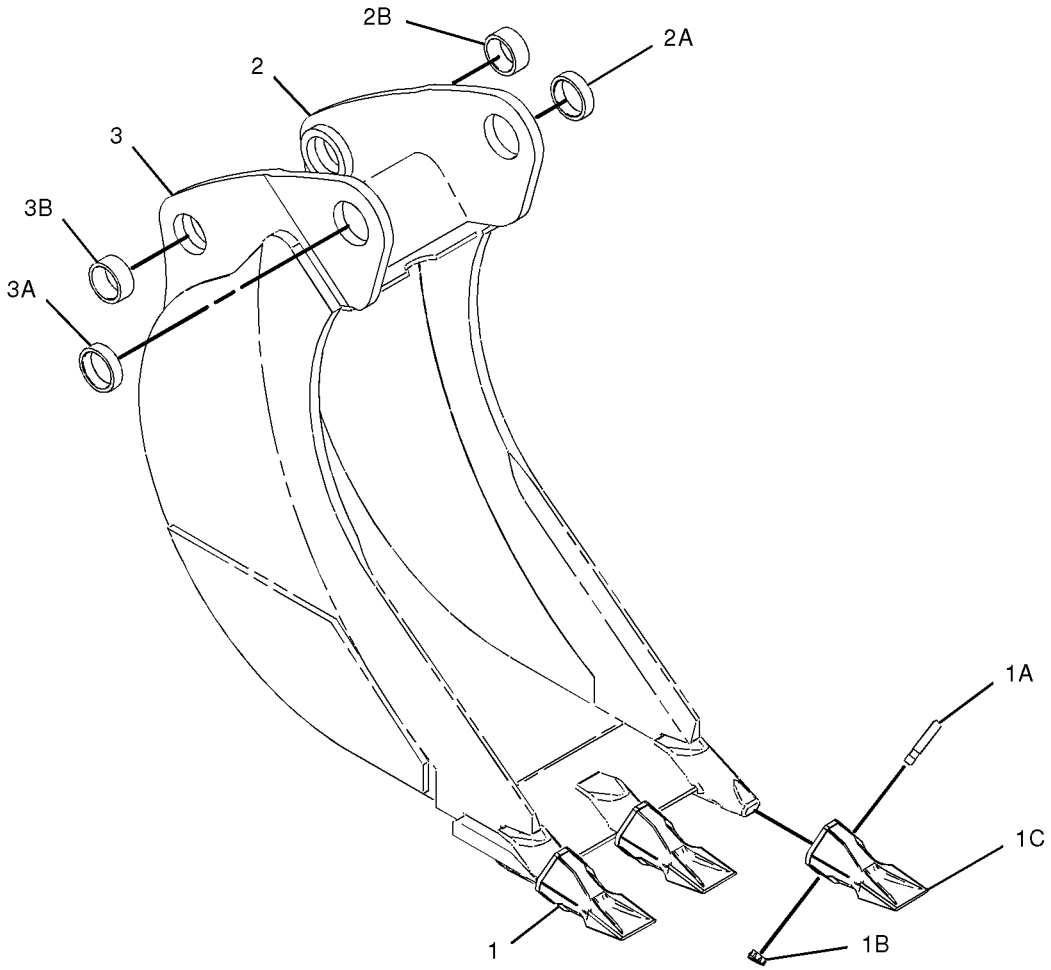

GRAPHIC #1 **<END>** g01011427

219-3395 BUCKET GP-HOE–ROCK

S/N: BXC1-UP; DSX1-UP
458MM (18 IN)
AN ATTACHMENT

SMCS-6503 **i01942138**

NOTE	REF NO	GRAPHIC REF	PART NUMBER	QTY	PART NAME 1 2 3 4 5 6 (PRODUCT LEVEL)	SEE PAGE
	1	1	*208-5245*	4	TIP GP-PENETRATION	
					(EACH INCLUDES)	
	1A	1	**201-1238**	1	PIN	
	1B	1	**201-1239**	1	RETAINER AS	
	1C	1	**208-5235**	1	TIP-PENETRATION	
	2	1	*151-7902*	1	BRACKET AS-LH	
	2A	1	**9R-0162**	1	BEARING	
	2B	1	**168-0480**	1	BEARING-SLEEVE	
	3	1	*151-7903*	1	BRACKET AS-RH	
	3A	1	**9R-0162**	1	BEARING	
	3B	1	**168-0480**	1	BEARING-SLEEVE	

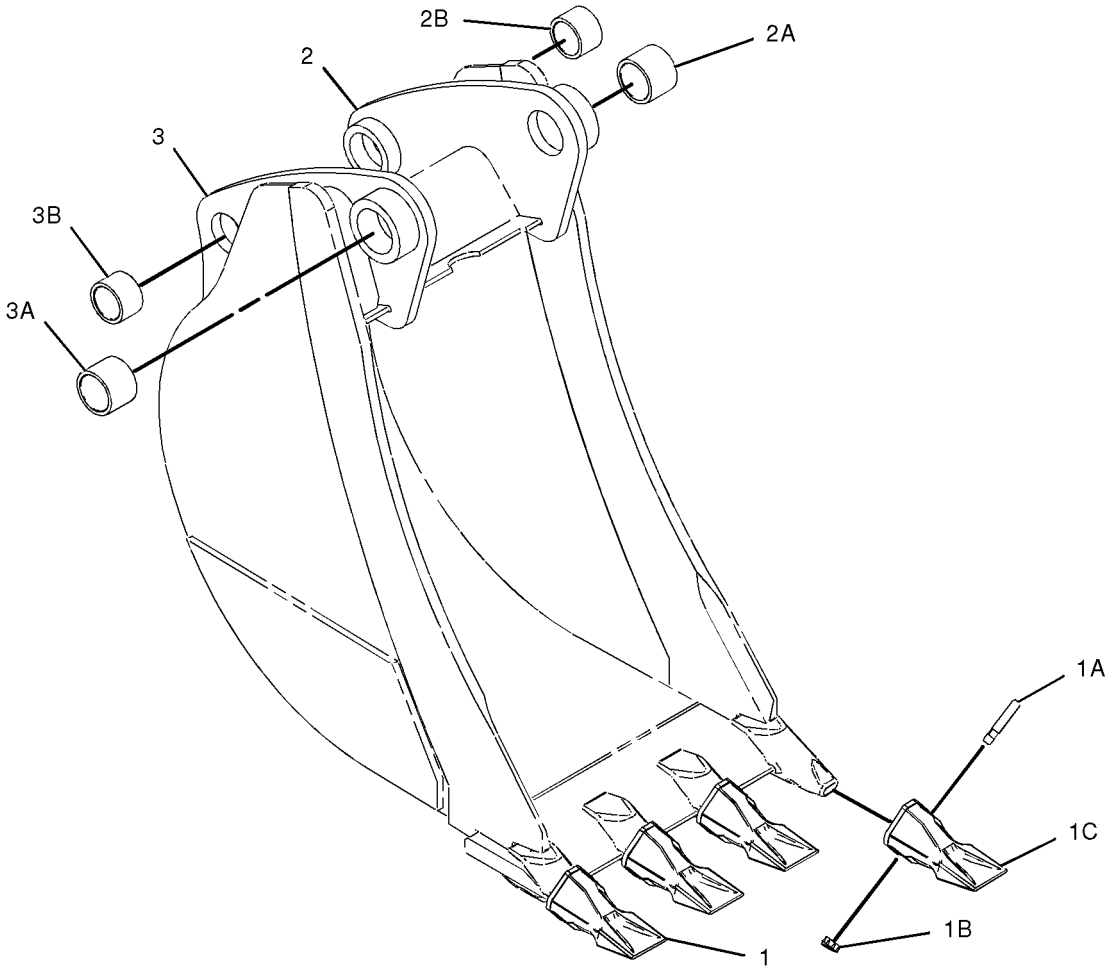

GRAPHIC #1 **<END>** g01011436

WORK TOOLS

219-3396 BUCKET GP-H0E–ROCK

S/N: BXC1-UP; DSX1-UP
610MM (24 IN)
AN ATTACHMENT

SMCS-6503 **i01942139**

NOTE	REF NO	GRAPHIC REF	PART NUMBER	QTY	PART NAME 1 2 3 4 5 6 (PRODUCT LEVEL)	SEE PAGE
	1	1	*208-5245*	5	TIP GP-PENETRATION	
					(EACH INCLUDES)	
	1A	1	**201-1238**	1	PIN	
	1B	1	**201-1239**	1	RETAINER AS	
	1C	1	**208-5235**	1	TIP-PENETRATION	
	2	1	*151-7902*	1	BRACKET AS-LH	
	2A	1	**9R-0162**	1	BEARING	
	2B	1	**168-0480**	1	BEARING-SLEEVE	
	3	1	*151-7903*	1	BRACKET AS-RH	
	3A	1	**9R-0162**	1	BEARING	
	3B	1	**168-0480**	1	BEARING-SLEEVE	

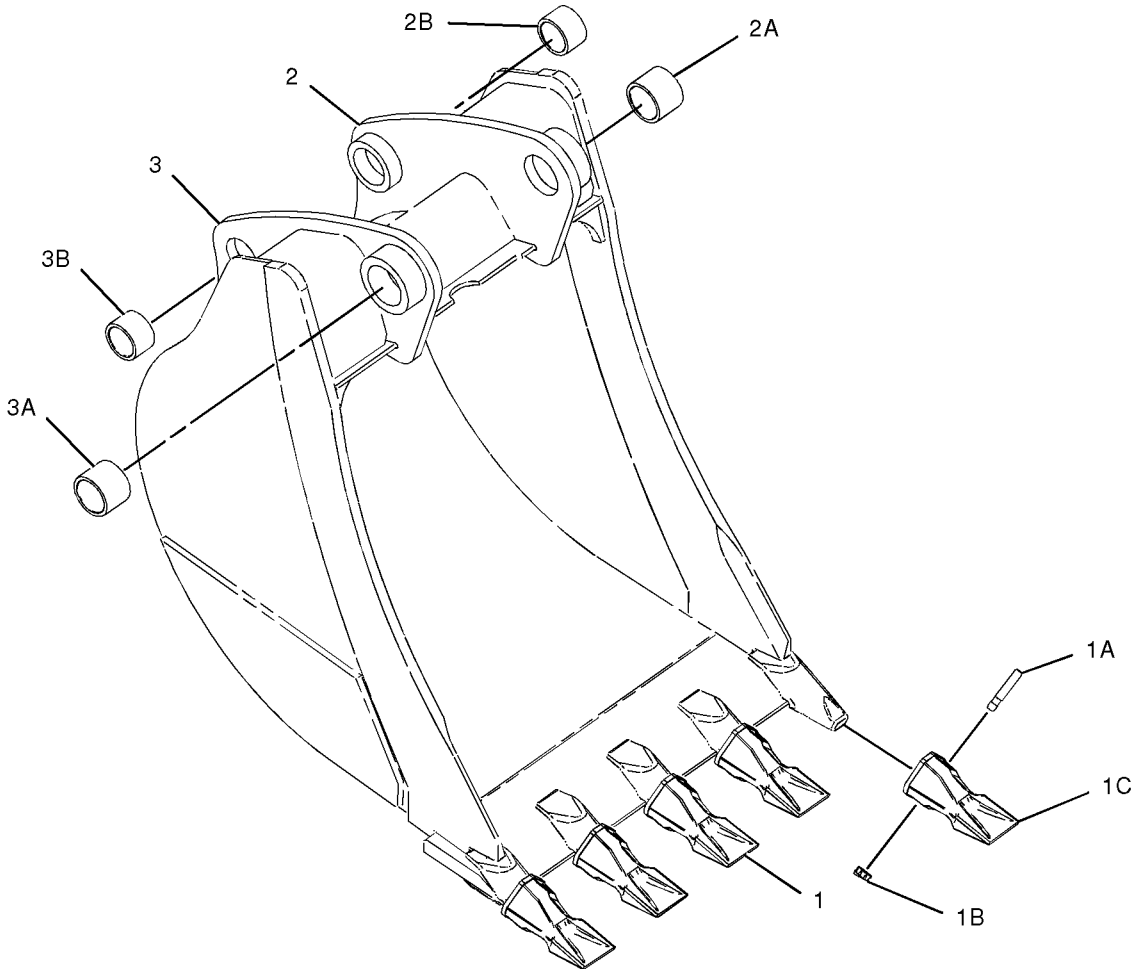

GRAPHIC #1 **<END>** g01011439

WORK TOOLS

219-3397 BUCKET GP-HOE–ROCK

S/N: BXC1-UP; DSX1-UP
762MM (30 IN)
AN ATTACHMENT

SMCS-6503 **i01942140**

NOTE	REF NO	GRAPHIC REF	PART NUMBER	QTY	PART NAME 1 2 3 4 5 6 (PRODUCT LEVEL)	SEE PAGE
	1	1	*208-5245*	5	TIP GP-PENETRATION	
					(EACH INCLUDES)	
	1A	1	**201-1238**	1	PIN	
	1B	1	**201-1239**	1	RETAINER AS	
	1C	1	**208-5235**	1	TIP-PENETRATION	
	2	1	*151-7902*	1	BRACKET AS-LH	
	2A	1	**9R-0162**	1	BEARING	
	2B	1	**168-0480**	1	BEARING-SLEEVE	
	3	1	*151-7903*	1	BRACKET AS-RH	
	3A	1	**9R-0162**	1	BEARING	
	3B	1	**168-0480**	1	BEARING-SLEEVE	

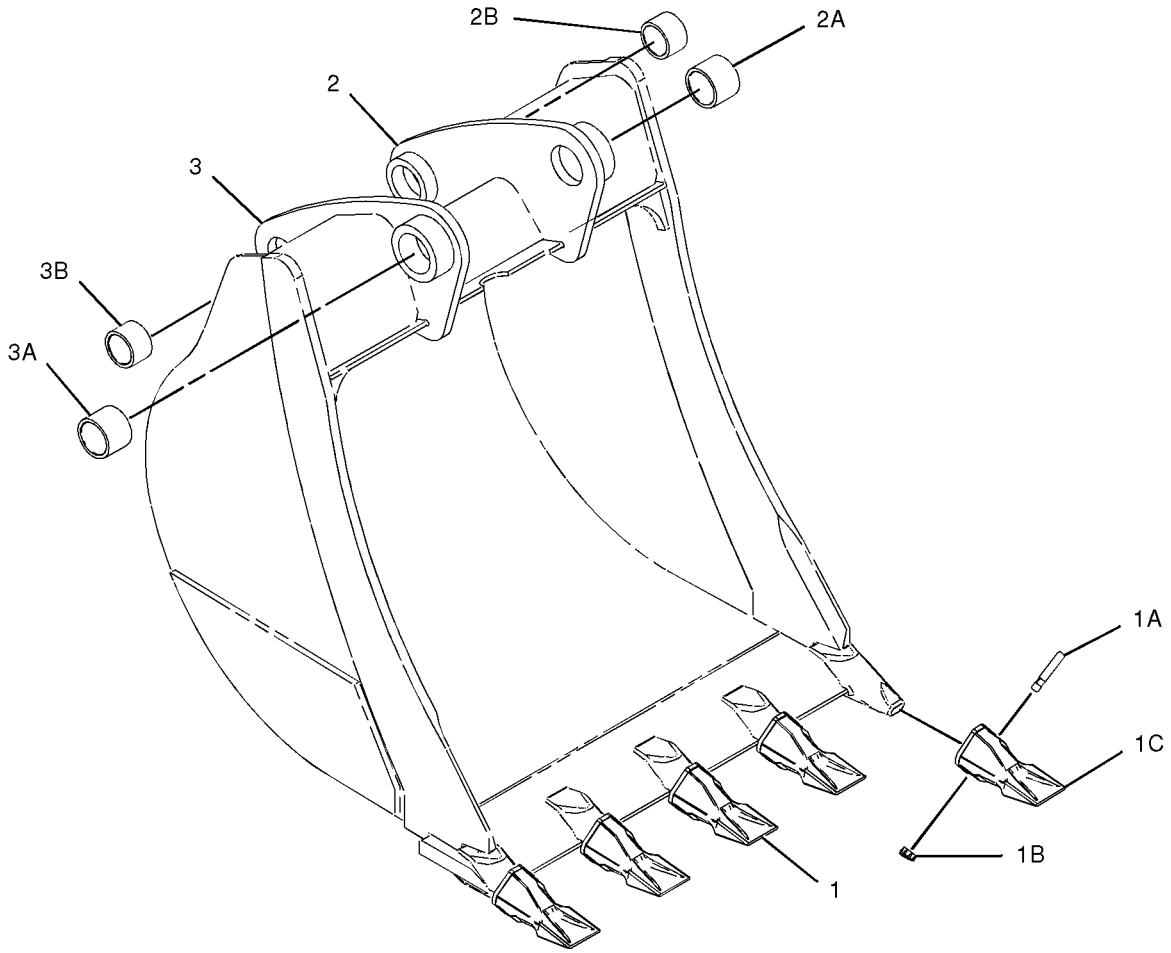

GRAPHIC #1 **<END>** g01011446

219-3398 BUCKET GP-HOE–ROCK

S/N: BXC1-UP; DSX1-UP
914MM (36 IN)
AN ATTACHMENT

SMCS-6503 **i01942141**

NOTE	REF NO	GRAPHIC REF	PART NUMBER	QTY	PART NAME 1 2 3 4 5 6 (PRODUCT LEVEL)	SEE PAGE
	1	1	*208-5245*	6	TIP GP-PENETRATION	
					(EACH INCLUDES)	
	1A	1	**201-1238**	1	PIN	
	1B	1	**201-1239**	1	RETAINER AS	
	1C	1	**208-5235**	1	TIP-PENETRATION	
	2	1	*151-7902*	1	BRACKET AS-LH	
	2A	1	**9R-7902**	1	COVER AS	
	2B	1	**168-0480**	1	BEARING-SLEEVE	
	3	1	*151-7903*	1	BRACKET AS-RH	
	3A	1	**9R-0162**	1	BEARING	
	3B	1	**168-0480**	1	BEARING-SLEEVE	
	4	1	**219-9486**	1	EDGE	

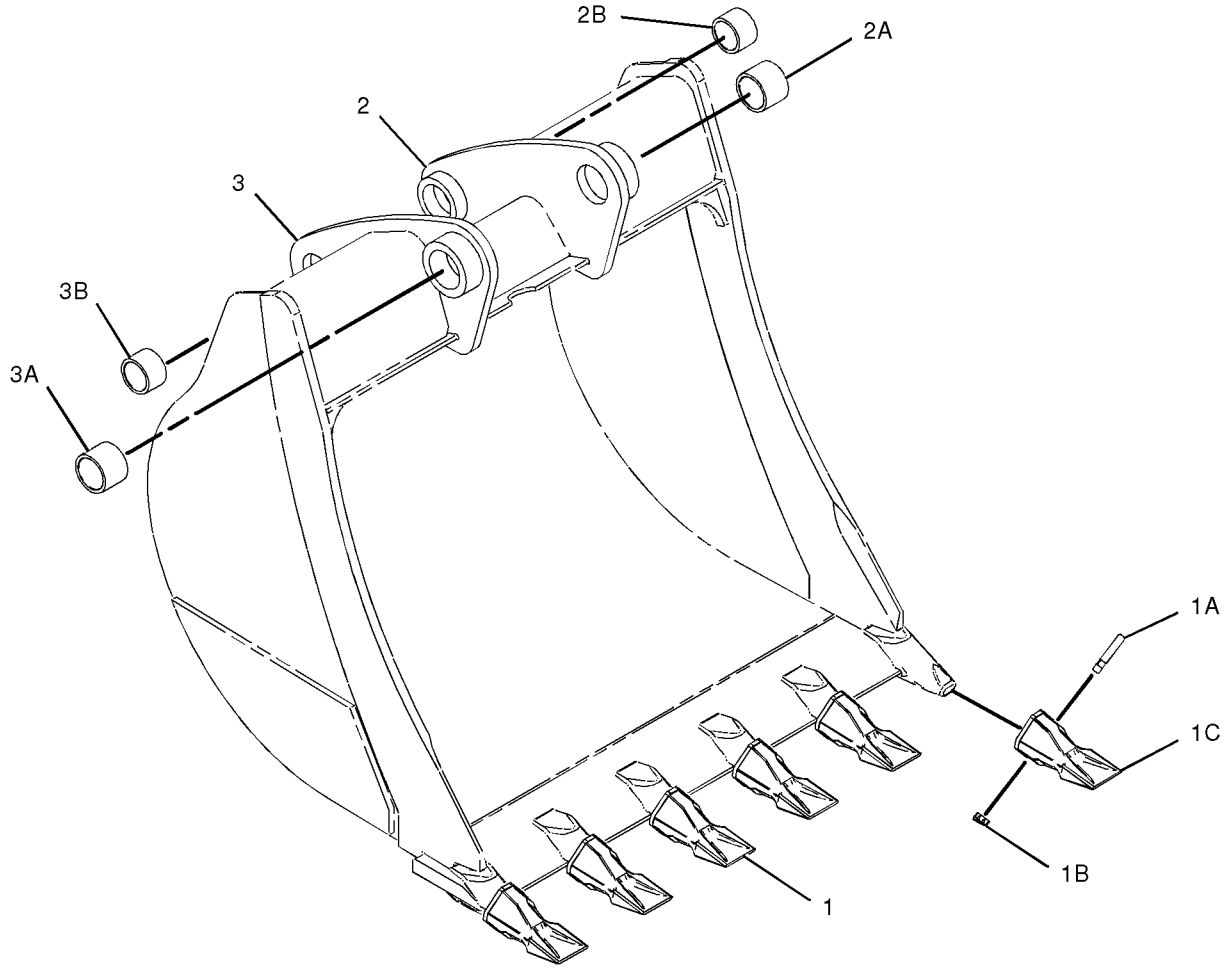

GRAPHIC #1 **<END>** g01011450

WORK TOOLS

219-3410 BUCKET GP-HOE—STANDARD DUTY

S/N: BXC1-UP; DSX1-UP
305MM (12 IN)
AN ATTACHMENT

SMCS-6503 **i01942147**

NOTE	REF NO	GRAPHIC REF	PART NUMBER	QTY	PART NAME 1 2 3 4 5 6 (PRODUCT LEVEL)	SEE PAGE
	1	1	**6V-3213**	2	RING-RETAINING	
	2	1	**6V-4364**	2	RING-RETAINING	
	3	1	**9R-0158**	5	WASHER (46X69X3MM THK)	
	4	1	**9R-1510**	3	WASHER (51X82X4MM THK)	
	5	1	**168-0443**	1	PIN	
	6	1	**168-0444**	1	PIN	
Y	7	1	**219-3379**	1	BUCKET GP-HOE	643

Y-SEPARATE ILLUSTRATION

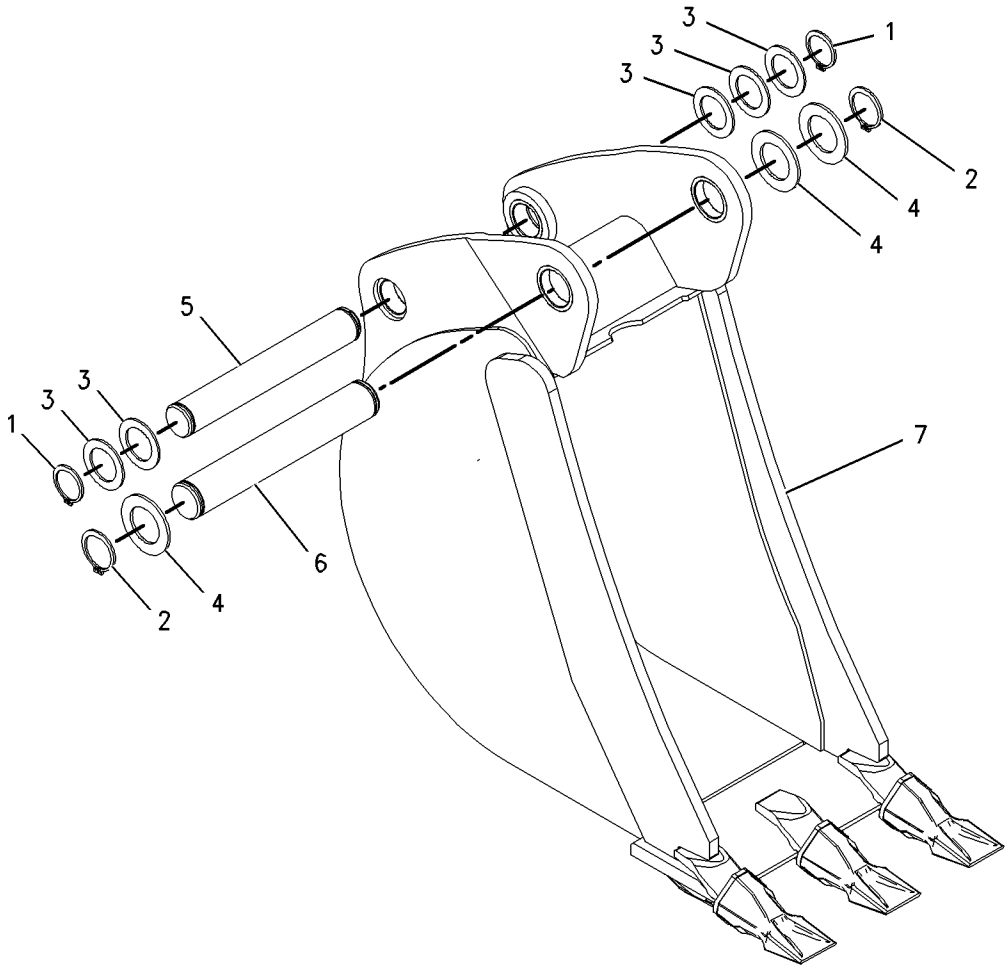

GRAPHIC #1 **<END>** g01001892

219-3411 BUCKET GP-HOE–HEAVY DUTY

S/N: BXC1-UP; DSX1-UP
305MM (12 IN)
AN ATTACHMENT

SMCS-6503 **i01942150**

NOTE	REF NO	GRAPHIC REF	PART NUMBER	QTY	PART NAME 1 2 3 4 5 6 (PRODUCT LEVEL)	SEE PAGE
	1	1	**6V-3213**	2	RING-RETAINING	
	2	1	**6V-4364**	2	RING-RETAINING	
	3	1	**9R-0158**	5	WASHER (46X69X3MM THK)	
	4	1	**9R-1510**	3	WASHER (51X82X4MM THK)	
	5	1	**168-0443**	1	PIN	
	6	1	**168-0444**	1	PIN	
Y	7	1	**219-3384**	1	BUCKET GP-HOE	648

Y-SEPARATE ILLUSTRATION

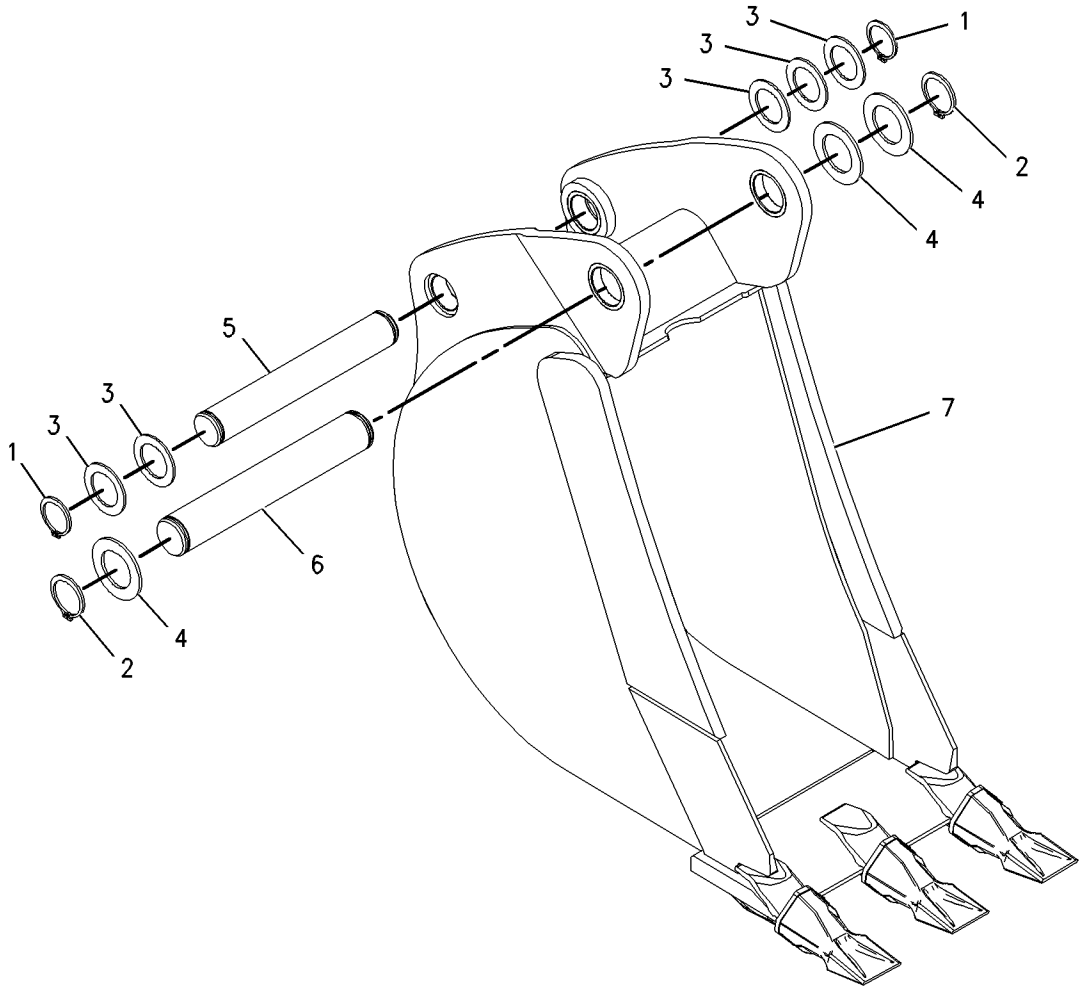

GRAPHIC #1 **<END>** g01001906

219-3412 BUCKET GP-HOE–ROCK

S/N: BXC1-UP; DSX1-UP
305MM (12 IN)
AN ATTACHMENT

SMCS-6503 **i01942151**

NOTE	REF NO	GRAPHIC REF	PART NUMBER	QTY	PART NAME 1 2 3 4 5 6 (PRODUCT LEVEL)	SEE PAGE
	1	1	**6V-3213**	2	RING-RETAINING	
	2	1	**6V-4364**	2	RING-RETAINING	
	3	1	**9R-0158**	4	WASHER (46X69X3MM THK)	
	4	1	**9R-1510**	3	WASHER (51X82X4MM THK)	
	5	1	**168-0443**	1	PIN	
	6	1	**168-0444**	1	PIN	
Y	7	1	**219-3394**	1	BUCKET GP-HOE	658

Y-SEPARATE ILLUSTRATION

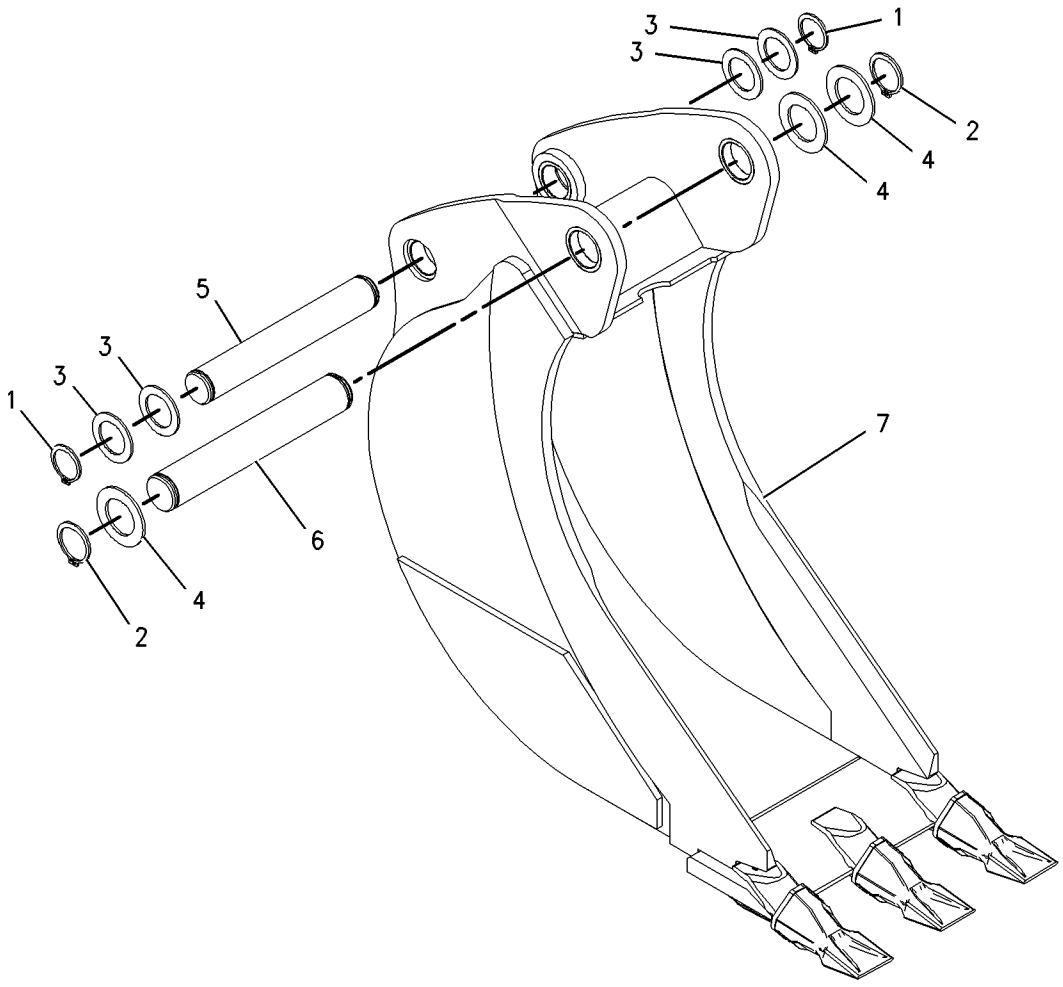

GRAPHIC #1 **<END>** g01001913

WORK TOOLS

104-3964 BUCKET GP-MULTIPURPOSE

S/N: BXC1-UP; DSX1-UP
1.03 CU M (1.35 CU YD)
PART OF 111-8635 BUCKET AR-MULTIPURPOSE
AN ATTACHMENT

SMCS-6104 **i01674364**

NOTE	REF NO	GRAPHIC REF	PART NUMBER	QTY	PART NAME 1 2 3 4 5 6 (PRODUCT LEVEL)	SEE PAGE
	1	1	**104-3966**	1	BULLDOZER AS	
	2	1	**104-6314**	2	BRACKET	
	3	1	**104-6313**	1	BRACKET AS	
	4	1	**106-9388**	1	BRACKET	
	5	1	**104-3967**	1	BULLDOZER AS	
	6	1	**9R-5786**	1	EDGE	
	7	1	**9R-0111**	2	BEARING-SLEEVE	
	8	1	**110-2861**	4	BRACKET	
	9	1	**126-4225**	1	CLAM AS	
	10	1	**9R-4675**	2	BUSHING-TERMINAL	
	11	1	**9R-5313**	1	EDGE	
	12	1	**9R-5294**	2	HINGE	
	13	1	**4J-1888**	2	PIN-COTTER	
	14	1	**3B-8489**	2	FITTING-GREASE (1/8-27 THD)	
	15	1	**9R-4676**	2	PIN	

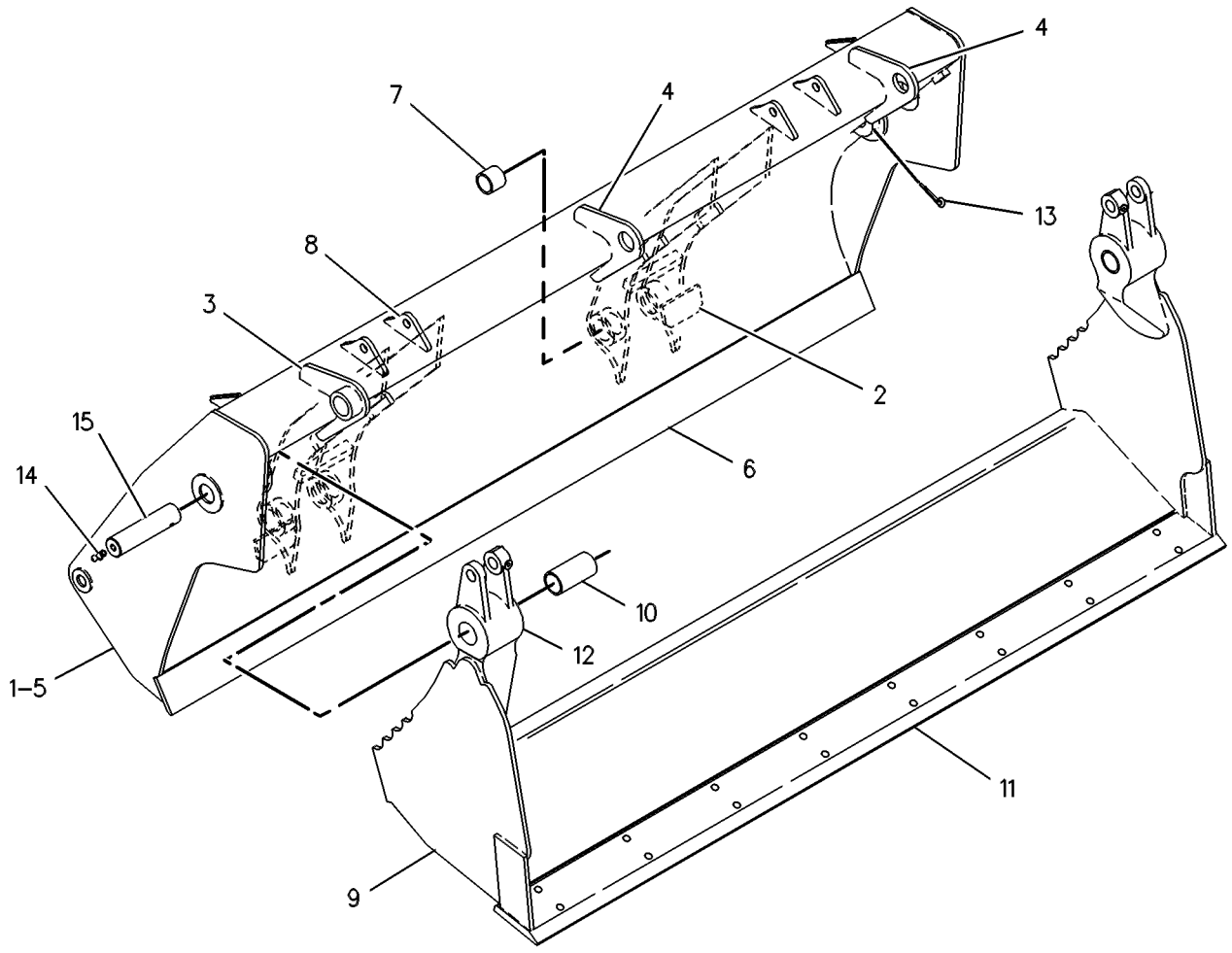

GRAPHIC #1 **<END>** g00131436

WORK TOOLS

104-3965 BUCKET GP-MULTIPURPOSE

S/N: BXC1-UP; DSX1-UP
1.03 CU M (1.35 CU YD)
PART OF 111-8634 BUCKET AR-MULTIPURPOSE
AN ATTACHMENT

SMCS-6104 **i01125138**

NOTE	REF NO	GRAPHIC REF	PART NUMBER	QTY	PART NAME 1 2 3 4 5 6 (PRODUCT LEVEL)	SEE PAGE
	1	1	**104-3967**	1	BULLDOZER AS	
	2	1	**9R-5786**	1	EDGE	
	3	1	**9R-0111**	2	BEARING-SLEEVE	
	4	1	**126-4225**	1	CLAM AS	
	5	1	**9R-4675**	2	BUSHING-TERMINAL	
	6	1	**9R-5313**	1	EDGE	
	7	1	**9R-5294**	2	HINGE	
	8	1	**4J-1888**	2	COTTER	
	9	1	**3B-8489**	2	FITTING-GREASE (1/8-27 THD)	
	10	1	**9R-4676**	2	PIN	

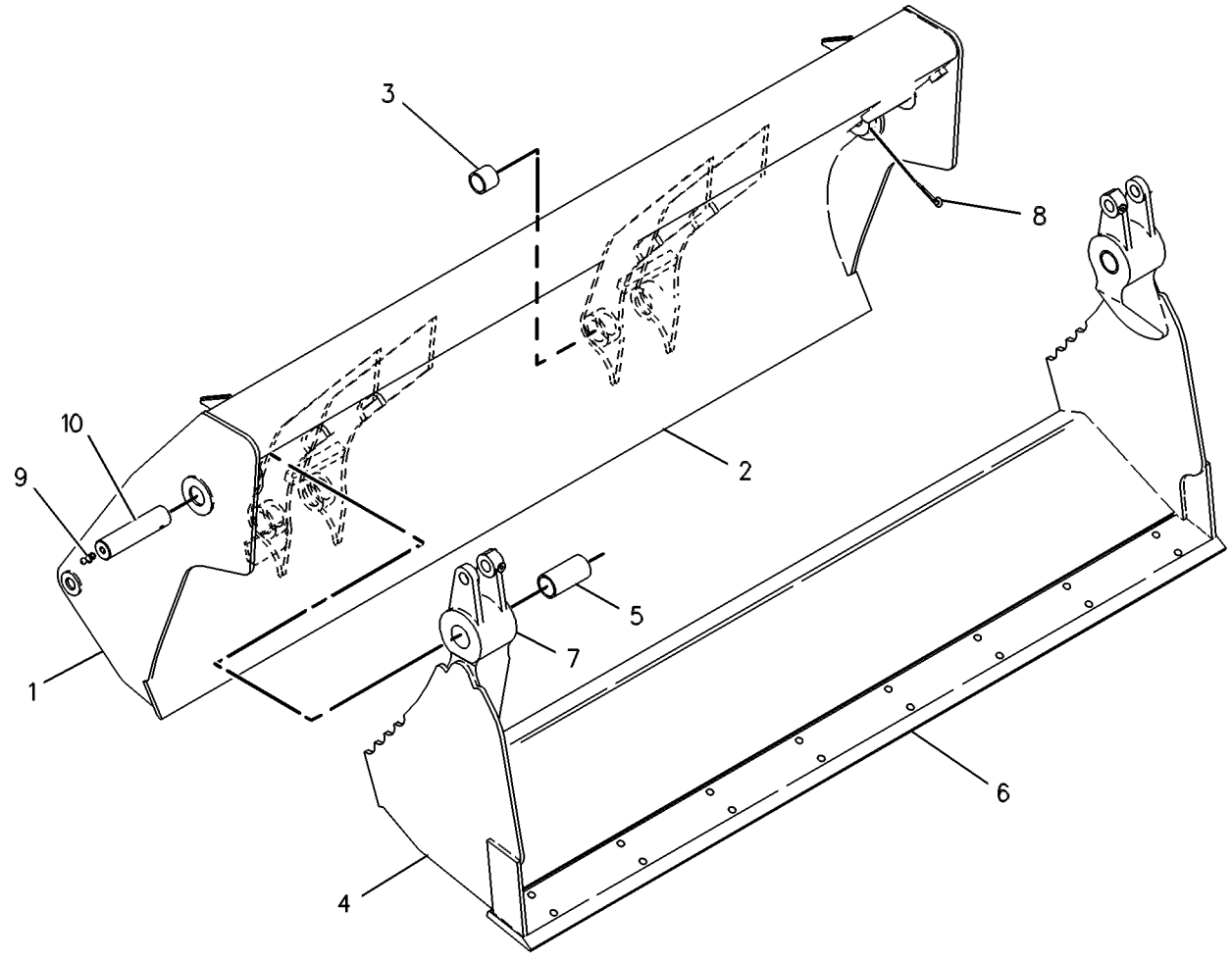

GRAPHIC #1 **<END>** g00131434

WORK TOOLS

108-3036 BUCKET GP-MULTIPURPOSE

S/N: BXC1-UP; DSX1-UP
0.76 CU M (1.0 CU YD)
PART OF 112-0938 BUCKET AR-MULTIPURPOSE
AN ATTACHMENT

SMCS-6104 **i01531720**

NOTE	REF NO	GRAPHIC REF	PART NUMBER	QTY	PART NAME 1 2 3 4 5 6 (PRODUCT LEVEL)	SEE PAGE
	1	1	**108-3037**	1	BULLDOZER AS	
	2	1	**9R-4670**	1	EDGE	
	3	1	**9R-0111**	2	BEARING-SLEEVE	
	4	1	**126-4224**	1	CLAM AS	
	5	1	**9R-4675**	2	BUSHING-TERMINAL	
	6	1	**9R-4672**	1	EDGE	
	7	1	**9R-5294**	2	HINGE	
	8	1	**125-7116**	1	EDGE	
	9	1	**4J-1888**	2	COTTER	
	10	1	**3B-8489**	2	FITTING-GREASE	
	11	1	**9R-4676**	2	PIN	

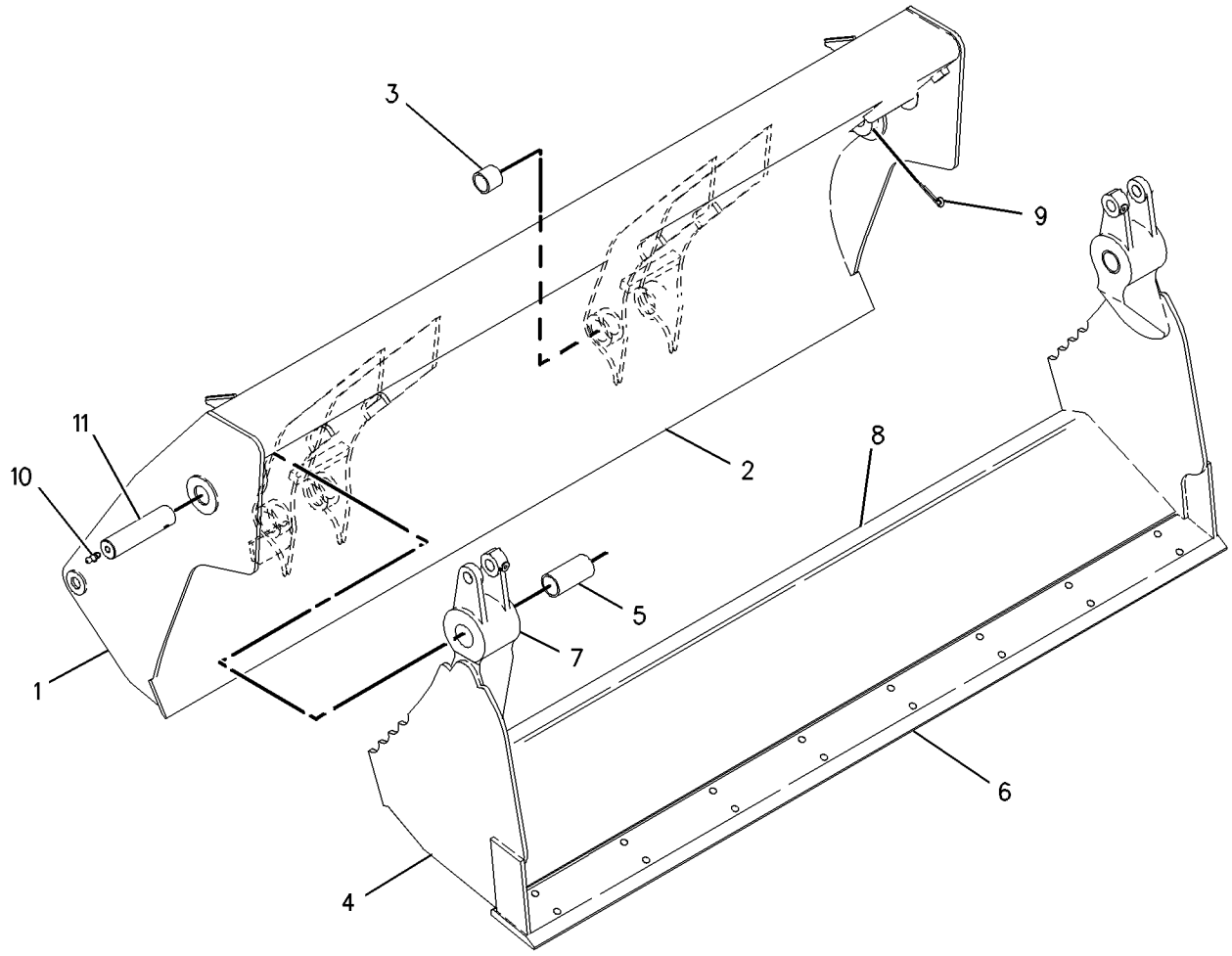

GRAPHIC #1 **<END>** g00795245

WORK TOOLS

112-1778 BUCKET GP-MULTIPURPOSE

S/N: BXC1-UP; DSX1-UP
0.65 CU M (0.85 CU YD)
PART OF 112-0939 BUCKET AR-MULTIPURPOSE
AN ATTACHMENT

SMCS-6104 **i01674369**

NOTE	REF NO	GRAPHIC REF	PART NUMBER	QTY	PART NAME 1 2 3 4 5 6 (PRODUCT LEVEL)	SEE PAGE
	1	1	**112-1777**	1	BULLDOZER AS	
	2	1	**104-6314**	2	BRACKET	
	3	1	**104-6313**	1	BRACKET AS	
	4	1	**106-9388**	1	BRACKET	
	5	1	**108-3037**	1	BULLDOZER AS	
	6	1	**9R-4670**	1	EDGE	
	7	1	**9R-0111**	2	BEARING-SLEEVE	
	8	1	**110-2861**	4	BRACKET	
	9	1	**126-4224**	1	CLAM AS	
	10	1	**9R-4675**	2	BUSHING-TERMINAL	
	11	1	**9R-4672**	1	EDGE	
	12	1	**9R-5294**	2	HINGE	
	13	1	**4J-1888**	2	PIN-COTTER	
	14	1	**3B-8489**	2	FITTING-GREASE (1/8-27 THD)	
	15	1	**9R-4676**	2	PIN	

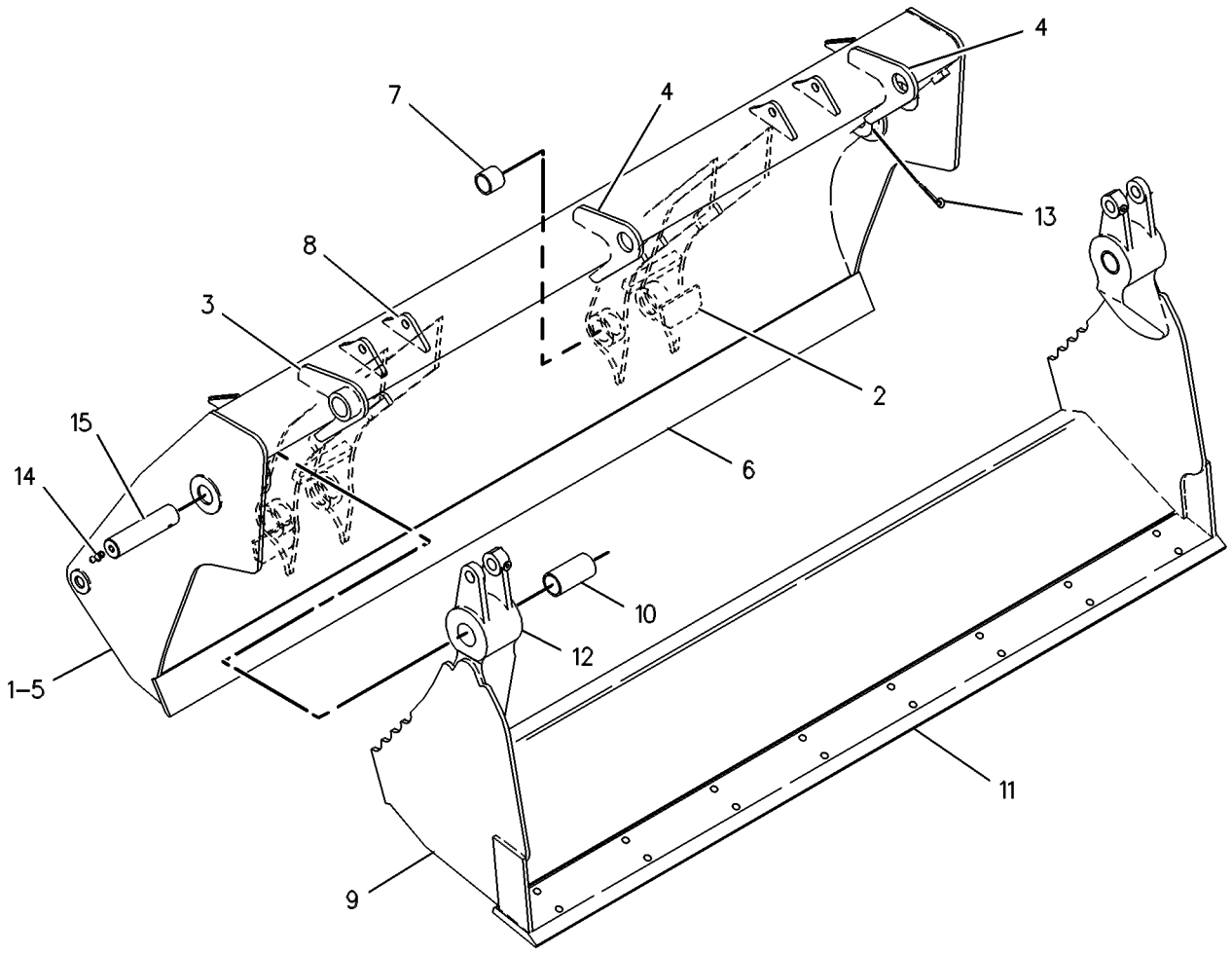

GRAPHIC #1 **<END>** g00131436

112-1918 BUCKET GP-MULTIPURPOSE

S/N: BXC1-UP; DSX1-UP
0.96 CU M (1.25 CU YD). WITH FORKS
PART OF 124-0488 BUCKET AR-MULTIPURPOSE
AN ATTACHMENT

SMCS-6104 **i01953279**

NOTE	REF NO	GRAPHIC REF	PART NUMBER	QTY	PART NAME 1 2 3 4 5 6 (PRODUCT LEVEL)	SEE PAGE
	1	1	**3B-8489**	2	FITTING-GREASE	
	2	1	**4J-1888**	2	PIN-COTTER	
	3	1	**9R-4676**	2	PIN	
	4	1	**126-4224**	1	CLAM AS	
	4A	1	**9R-5294**	2	HINGE	
	4B	1	**9R-4675**	2	BUSHING-TERMINAL	
	4C	1	**9R-4672**	2	EDGE	
	4D	1	**125-7116**	1	EDGE	
	5	1	**118-1345**	1	DOZER AS	
	5A	1	**104-6313**	1	BRACKET AS	
	5B	1	**106-9388**	2	BRACKET	
	5C	1	**104-6314**	2	BRACKET	
	5D	1	**110-2861**	4	BRACKET	
	5E	1	**112-1775**	2	PLATE AS	
	5F	1	**9R-4670**	1	EDGE	
F		1	**9R-5271**	2	BOSS	
F		1	**9R-1496**	4	BEARING-SLEEVE (40.196MM ID)	

F-NOT SHOWN

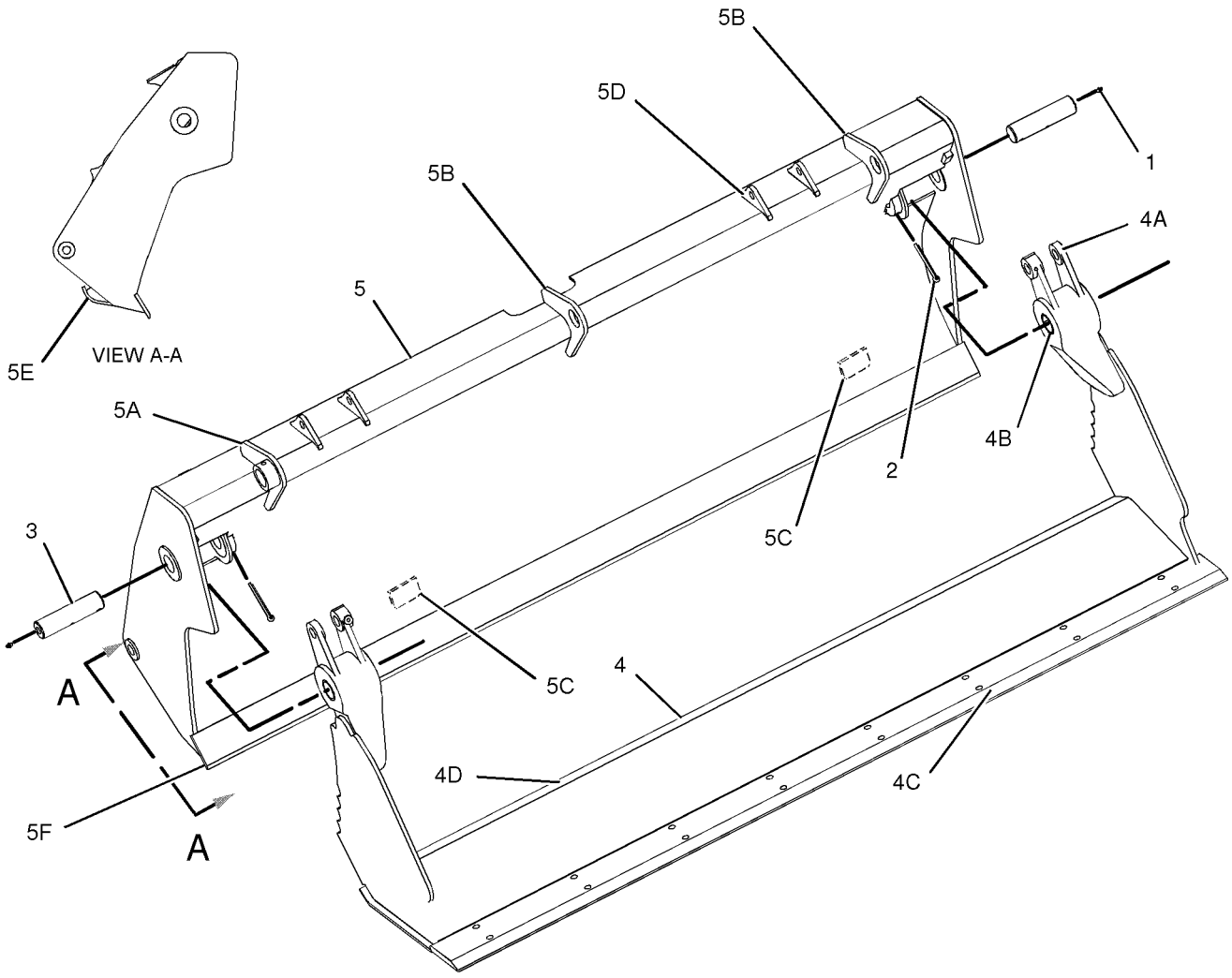

GRAPHIC #1 **<END>** g01015938

112-1922 BUCKET GP-MULTIPURPOSE

S/N: BXC1-UP; DSX1-UP
0.96 CU M (1.25 CU YD). WITH FORKS
PART OF 124-0487, 208-0827 BUCKET AR-MULTIPURPOSE
AN ATTACHMENT

SMCS-6104 **i01953276**

NOTE	REF NO	GRAPHIC REF	PART NUMBER	QTY	PART NAME 1 2 3 4 5 6 (PRODUCT LEVEL)	SEE PAGE
	1	1	**3B-8489**	2	FITTING-GREASE	
	2	1	**4J-1888**	2	PIN-COTTER	
	3	1	**9R-4676**	2	PIN	
	4	1	**126-4224**	1	CLAM AS	
	4A	1	**9R-4675**	2	BUSHING-TERMINAL	
	4B	1	**9R-5294**	2	HINGE	
	4C	1	**9R-4672**	2	EDGE	
	4D	1	**125-7116**	1	EDGE	
	5	1	**118-1345**	1	DOZER AS	
	5A	1	**104-6313**	1	BRACKET AS	
	5B	1	**106-9388**	2	BRACKET	
	5C	1	**104-6314**	2	BRACKET	
	5D	1	**110-2861**	4	BRACKET	
	5E	1	**112-1775**	2	PLATE AS	
	5F	1	**9R-4670**	1	EDGE	
F		1	**9R-5271**	2	BOSS	
F		1	**9R-1496**	4	BEARING-SLEEVE (40.196MM ID)	

F-NOT SHOWN

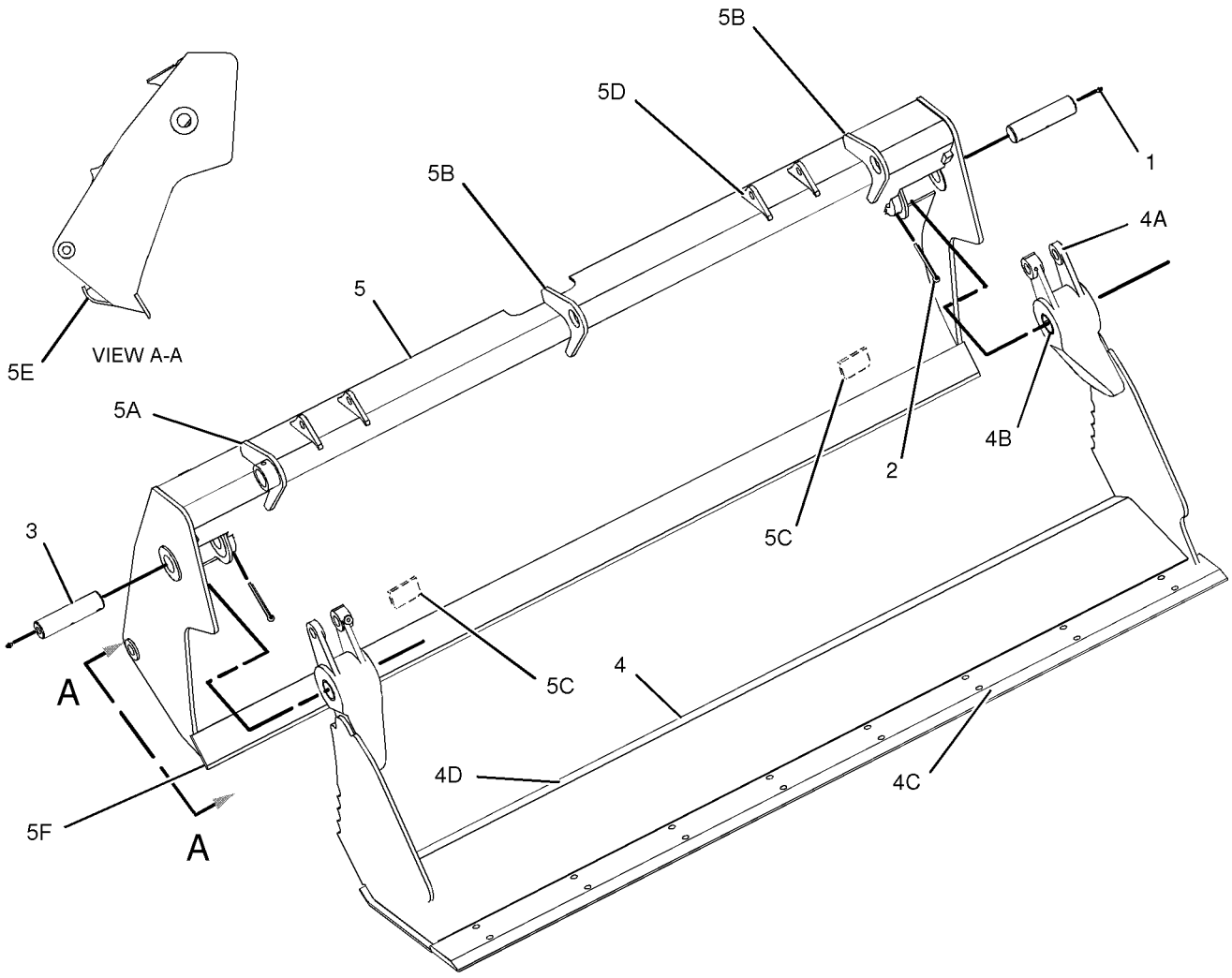

GRAPHIC #1 **<END>** g01015938

112-1924 BUCKET GP-MULTIPURPOSE

S/N: BXC1-UP; DSX1-UP
1.03 CU M (1.35 CU YD). WITHOUT FORKS
PART OF 124-0486 BUCKET AR-MULTIPURPOSE
AN ATTACHMENT

SMCS-6104 **i01506067**

NOTE	REF NO	GRAPHIC REF	PART NUMBER	QTY	PART NAME 1 2 3 4 5 6 (PRODUCT LEVEL)	SEE PAGE
	1	1	**3B-8489**	2	FITTING-GREASE	
	2	1	**4J-1888**	2	COTTER	
	3	1	**9R-4676**	2	PIN	
	4	1	**114-3826**	1	BULLDOZER AS	
F		1	**9R-5271**	2	BOSS (M10X1.5X25MM)	
	5	1	**9R-5786**	1	EDGE	
	6	1	**112-1775**	1	PLATE AS	
F		1	**9R-1496**	4	BEARING-SLEEVE (40.196MM ID)	
	7	1	**126-4225**	1	CLAM AS	
	8	1	**9R-5313**	1	EDGE	
	9	1	**125-7117**	1	EDGE	
	10	1	**9R-4675**	2	BUSHING-TERMINAL	
	11	1	**9R-5294**	2	HINGE	

F-NOT SHOWN

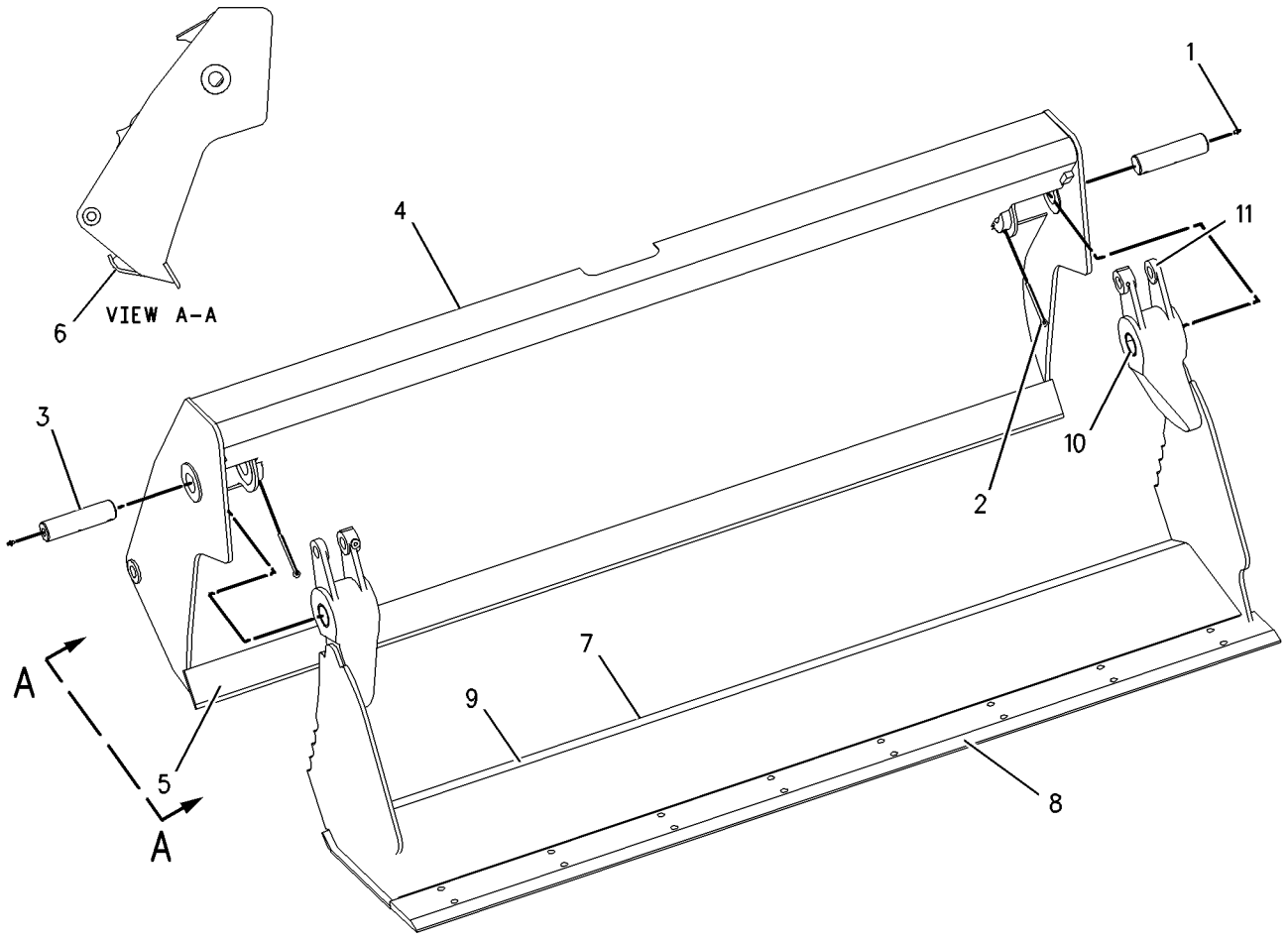

GRAPHIC #1 **<END>** g00781608

WORK TOOLS

112-1926 BUCKET GP-MULTIPURPOSE

S/N: BXC1-UP; DSX1-UP
1.03 CU M (1.35 CU YD). WITH FORKS
PART OF 124-0489, 164-4659 BUCKET AR-MULTIPURPOSE
AN ATTACHMENT

SMCS-6104 **i01506130**

NOTE	REF NO	GRAPHIC REF	PART NUMBER	QTY	PART NAME 1 2 3 4 5 6 (PRODUCT LEVEL)	SEE PAGE
	1	1	**3B-8489**	2	FITTING-GREASE	
	2	1	**4J-1888**	2	COTTER	
	3	1	**9R-4676**	2	PIN	
	4	1	**114-9262**	1	BULLDOZER AS	
	5	1	**104-6313**	1	BRACKET AS	
	6	1	**106-9388**	2	BRACKET	
	7	1	**104-6314**	2	BRACKET	
	8	1	**110-2861**	4	BRACKET	
	9	1	**114-3826**	1	BULLDOZER AS	
F		1	**9R-5271**	2	BOSS (M10X1.5X25MM)	
	10	1	**9R-5786**	1	EDGE	
	11	1	**112-1775**	2	PLATE AS	
F		1	**9R-1496**	4	BEARING-SLEEVE (40.196MM ID)	
	12	1	**126-4225**	1	CLAM AS	
	13	1	**9R-5313**	1	EDGE	
	14	1	**125-7117**	1	EDGE	
	15	1	**9R-4675**	2	BUSHING-TERMINAL	
	16	1	**9R-5294**	2	HINGE	

F-NOT SHOWN

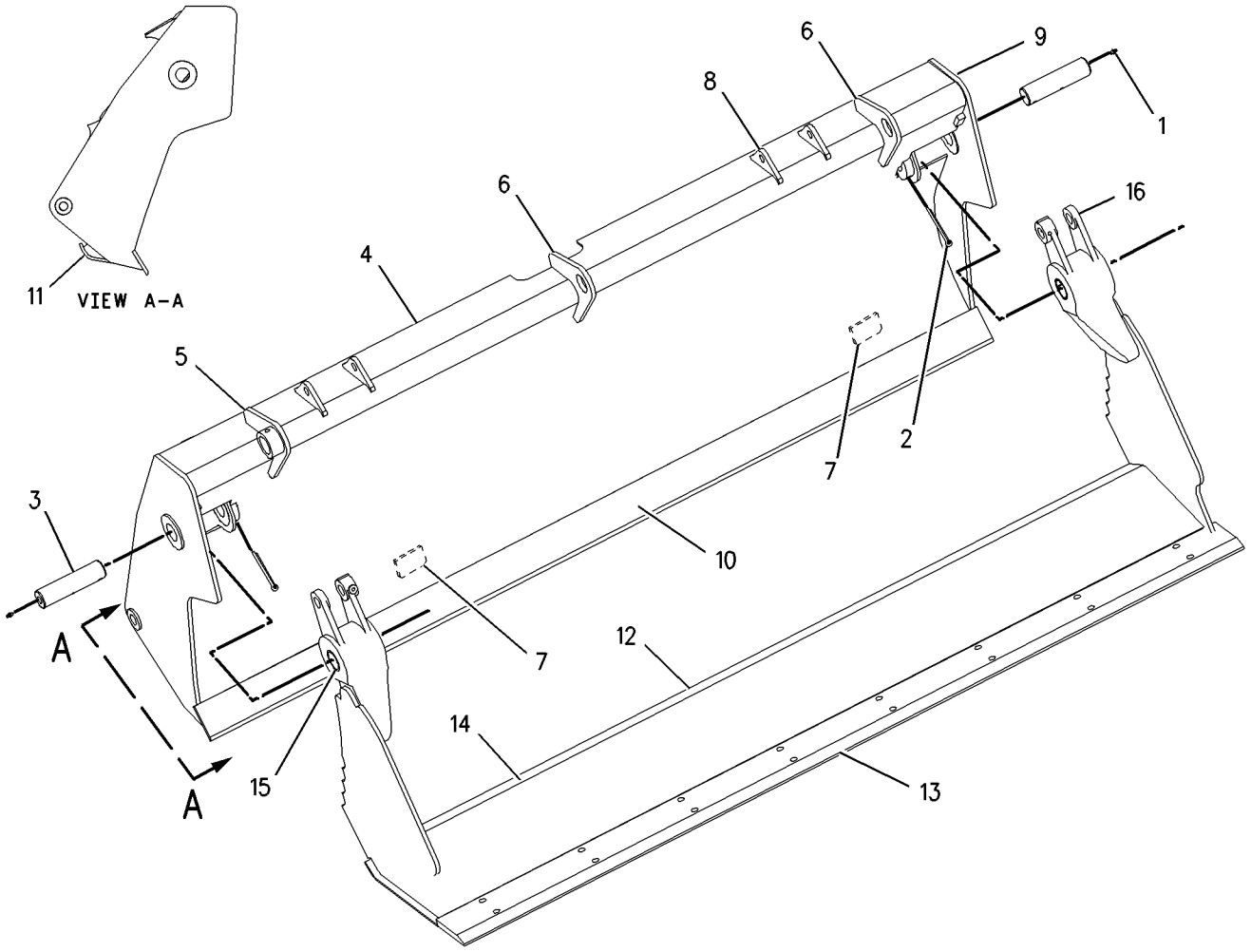

GRAPHIC #1 **<END>** g00781764

WORK TOOLS

176-6247 COUPLER GP-QUICK

S/N: BXC1-UP; DSX1-UP
PART OF 178-8849 COUPLER GP-QUICK
AN ATTACHMENT

SMCS-6129 **i01984111**

NOTE	REF NO	GRAPHIC REF	PART NUMBER	QTY	PART NAME 1 2 3 4 5 6 (PRODUCT LEVEL)	SEE PAGE
	1	1	**176-6248**	1	COUPLER	
	2	1	**200-5921**	1	HOOK	
	3	1	**132-3725**	1	SPRING	
	4	1	**132-3721**	1	PIN AS (HOOK)	
	5	1	**132-3723**	1	LOCK PIN	
	6	1	**8T-0144**	1	PIN-SPRING	
	7	1	**091-5928**	1	FITTING	
F			**132-3821**	1	LEVER-ACTUATING	

F-NOT SHOWN

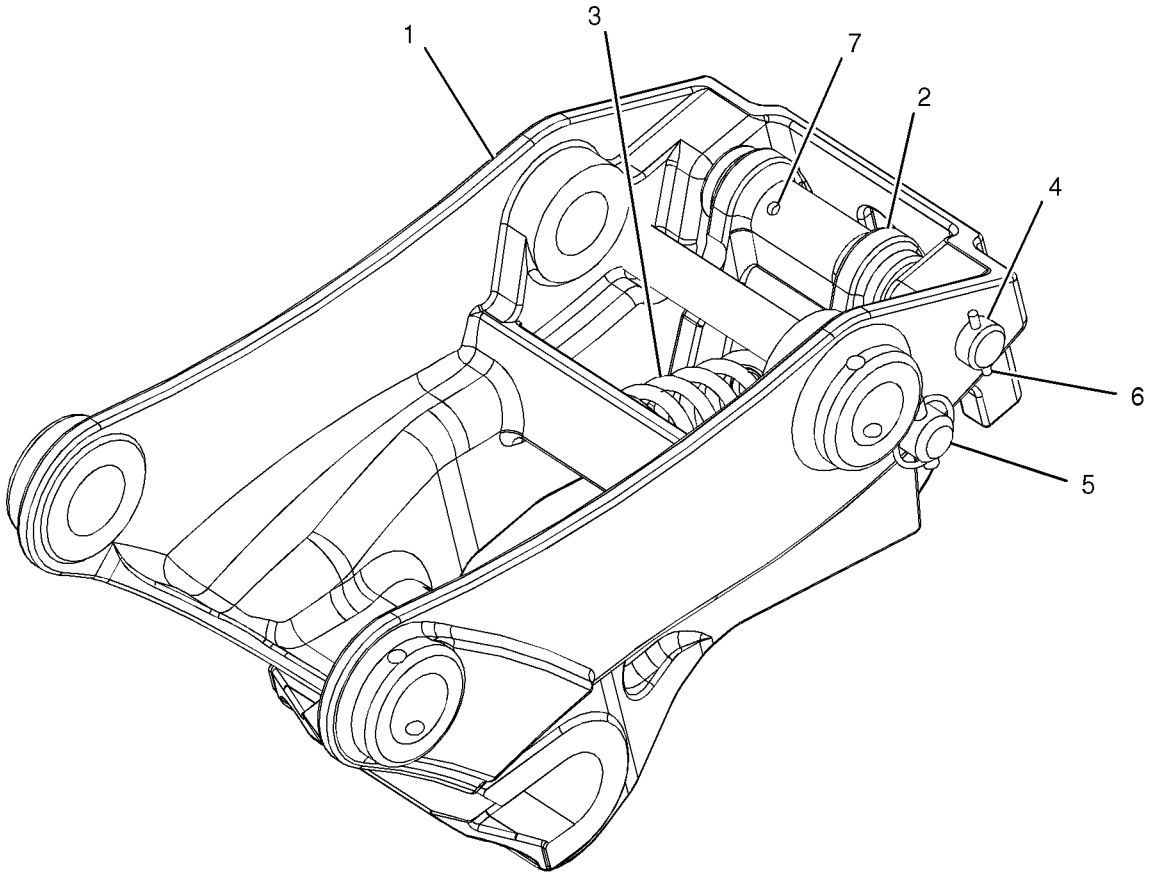

GRAPHIC #1 **<END>** g01028364

WORK TOOLS

176-6251 COUPLER GP-QUICK

S/N: BXC1-UP; DSX1-UP
PART OF 178-8850 COUPLER GP-QUICK
AN ATTACHMENT

SMCS-6129 **i01957304**

NOTE	REF NO	GRAPHIC REF	PART NUMBER	QTY	PART NAME 1 2 3 4 5 6 (PRODUCT LEVEL)	SEE PAGE
	1	1	**176-6252**	1	COUPLER	
	2	1	**200-5921**	1	HOOK	
	3	1	**132-3725**	1	SPRING	
	4	1	**132-3721**	1	PIN AS (HOOK)	
	5	1	**132-3723**	1	LOCK PIN	
	6	1	**8B-7121**	1	FITTING-HYDRAULIC	
	7	1	**8T-0144**	1	PIN-SPRING	
F			**132-3821**	1	LEVER-ACTUATING	

F-NOT SHOWN

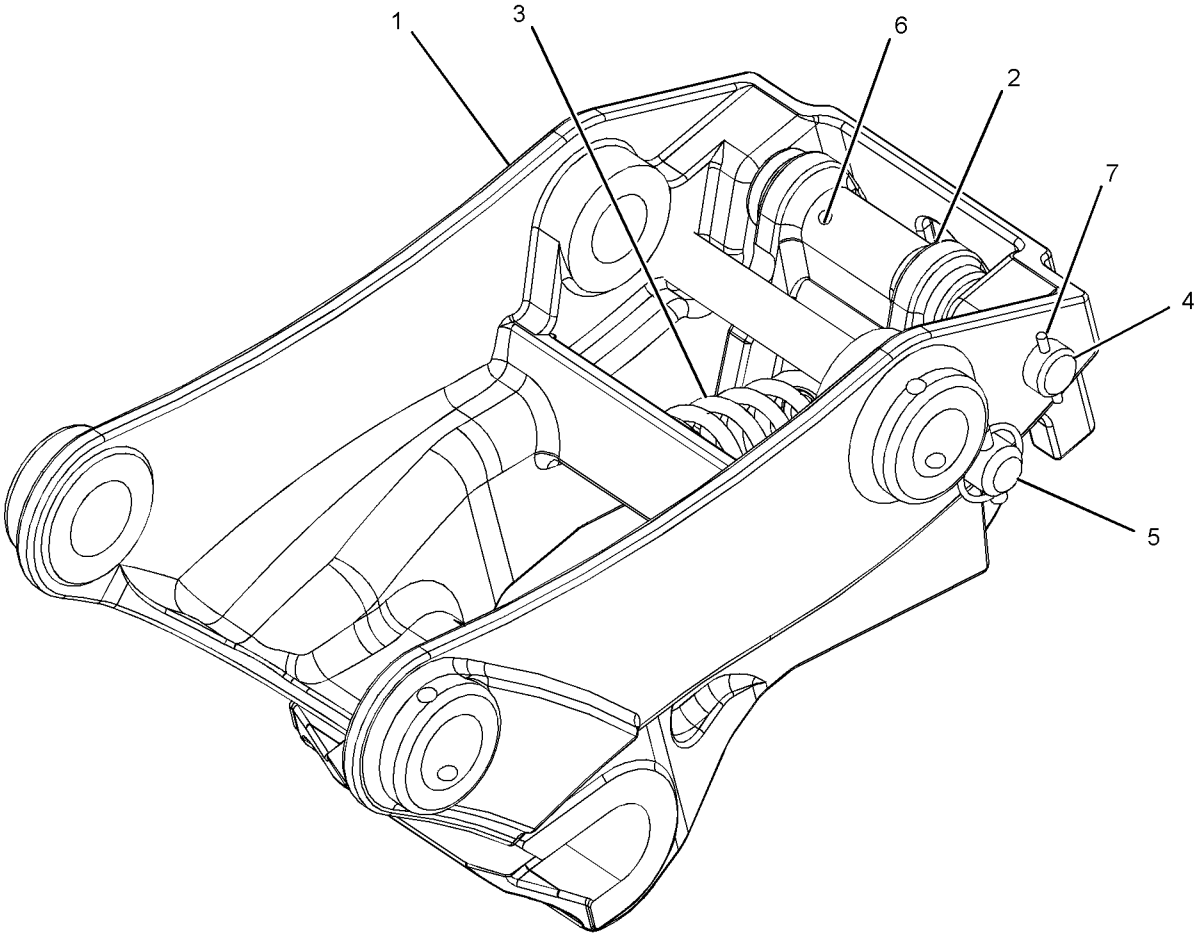

GRAPHIC #1 **<END>** g01017414

WORK TOOLS

178-8849 COUPLER GP-QUICK

S/N: BXC1-UP; DSX1-UP
AN ATTACHMENT

SMCS-6129 **i01674458**

NOTE	REF NO	GRAPHIC REF	PART NUMBER	QTY	PART NAME 1 2 3 4 5 6 (PRODUCT LEVEL)	SEE PAGE
	1	1	**4J-1888**	2	PIN-COTTER	
	2	1	**132-3777**	1	PIN	
	3	1	**132-3778**	1	PIN	
Y	4	1	**176-6247**	1	COUPLER GP-QUICK	677

Y-SEPARATE ILLUSTRATION

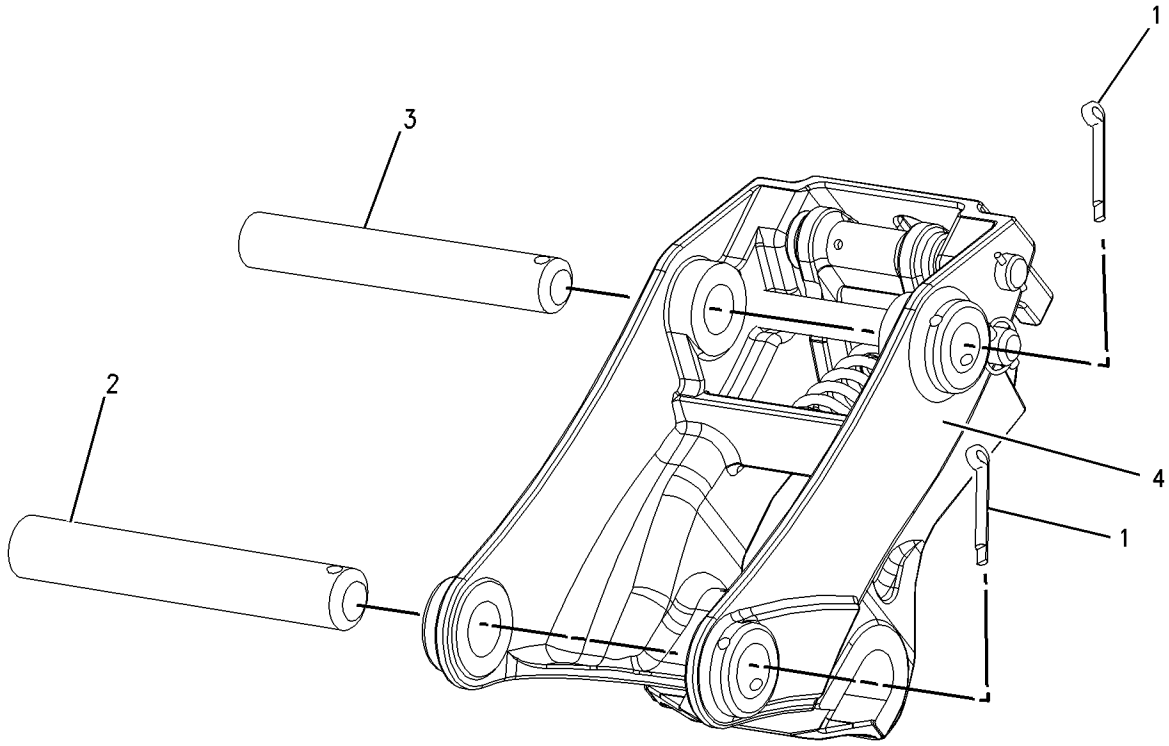

GRAPHIC #1 **<END>** g00864958

WORK TOOLS

178-8850 COUPLER GP-QUICK

S/N: BXC1-UP; DSX1-UP
AN ATTACHMENT

SMCS-6129 **i02003781**

NOTE	REF NO	GRAPHIC REF	PART NUMBER	QTY	PART NAME 1 2 3 4 5 6 (PRODUCT LEVEL)	SEE PAGE
	1	1	**4J-1888**	2	PIN-COTTER	
	2	1	**132-3777**	1	PIN (345MM)	
	3	1	**132-3778**	1	PIN (330MM)	
Y	4	1	**176-6251**	1	COUPLER GP-QUICK	678

Y-SEPARATE ILLUSTRATION

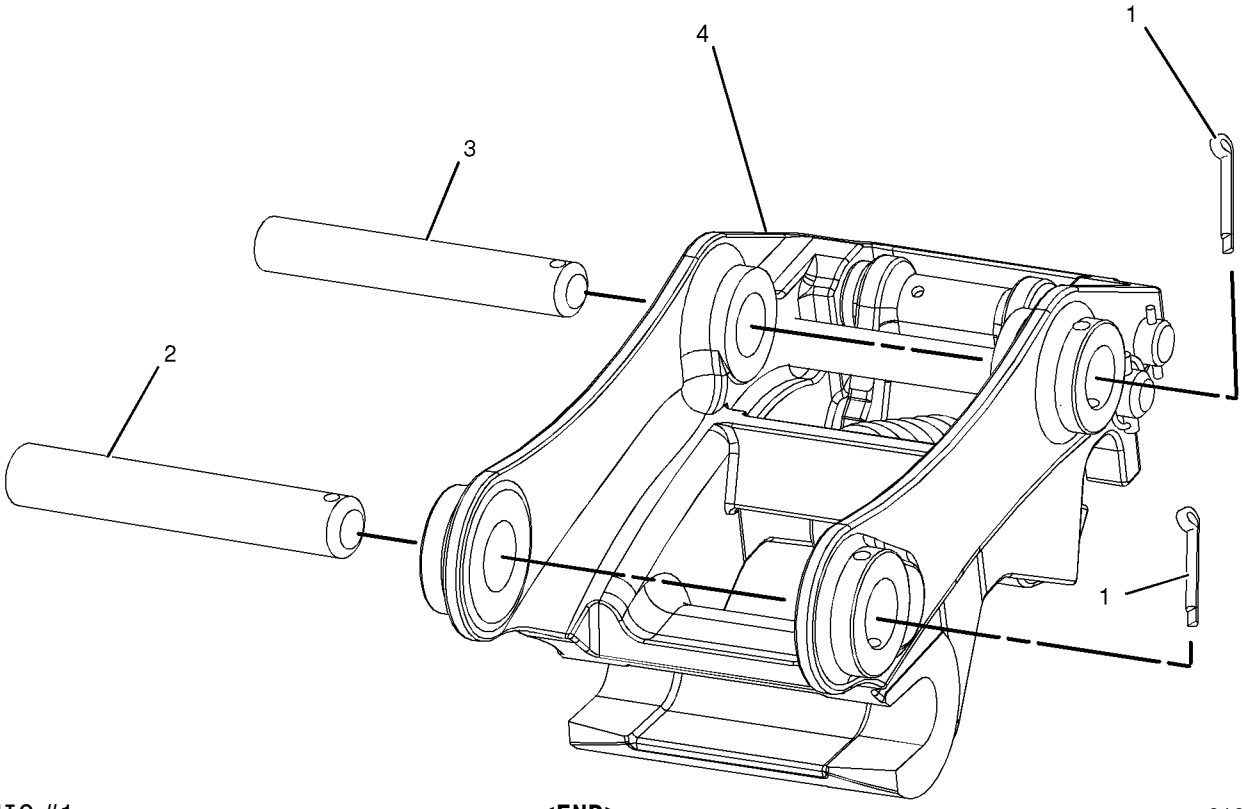

GRAPHIC #1 **<END>** g01036330

WORK TOOLS

213-8000 COUPLER GP-QUICK

S/N: BXC1-UP; DSX1-UP
AN ATTACHMENT

SMCS-6129 **i01670207**

NOTE	REF NO	GRAPHIC REF	PART NUMBER	QTY	PART NAME 1 2 3 4 5 6 (PRODUCT LEVEL)	SEE PAGE
Y	1	1	**213-8008**	1	COUPLER GP-QUICK	682
	2	1	**216-7374**	2	PIN	
	3	1	**4J-1888**	2	PIN-COTTER	

Y-SEPARATE ILLUSTRATION

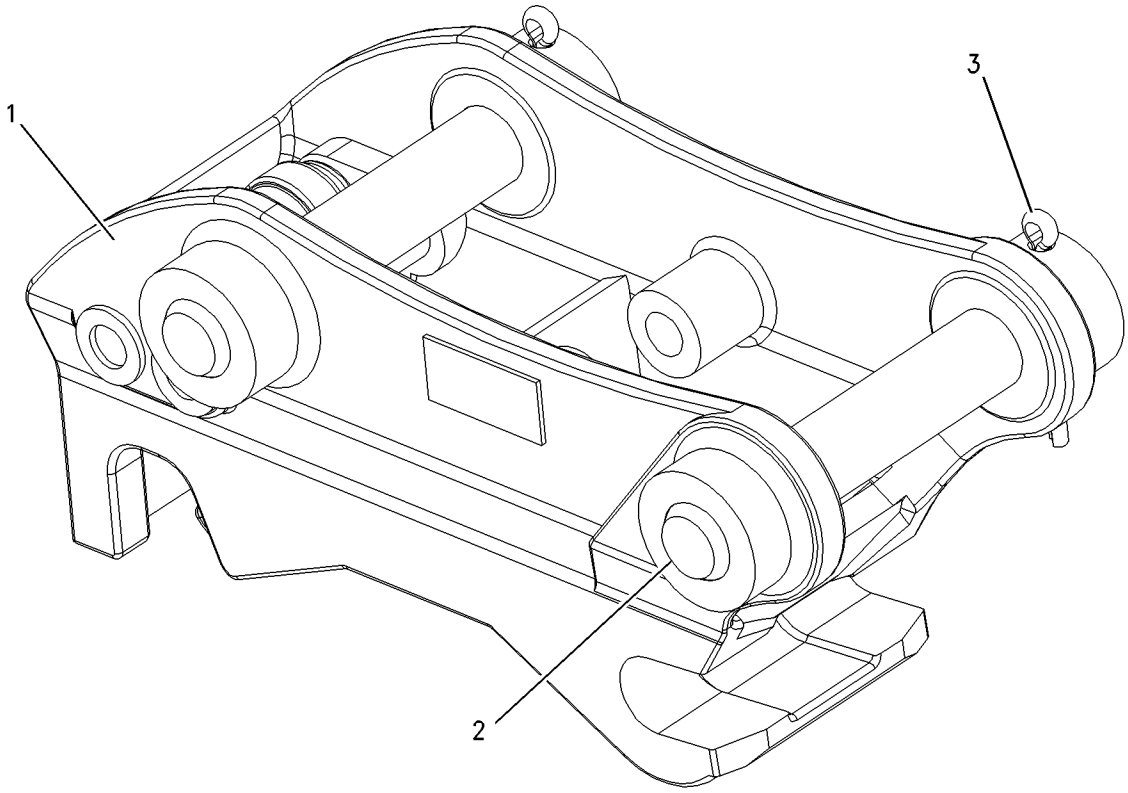

GRAPHIC #1 **<END>** g00863381

WORK TOOLS

213-8008 COUPLER GP-QUICK

S/N: BXC1-UP; DSX1-UP
PART OF 213-8000 COUPLER GP-QUICK
AN ATTACHMENT

SMCS-6129 **i01739273**

NOTE	REF NO	GRAPHIC REF	PART NUMBER	QTY	PART NAME 1 2 3 4 5 6 (PRODUCT LEVEL)	SEE PAGE
	1	1	**091-5928**	1	FITTING	
	2	1	**216-7377**	1	SPRING	
	3	1	**215-1216**	1	COUPLER	
	4	1	**215-1217**	1	HOOK	
	5	1	**216-7375**	1	PIN AS	
	6	1	**216-7376**	1	PIN AS	
F		1	**132-3821**	1	LEVER-ACTUATING	

F-NOT SHOWN

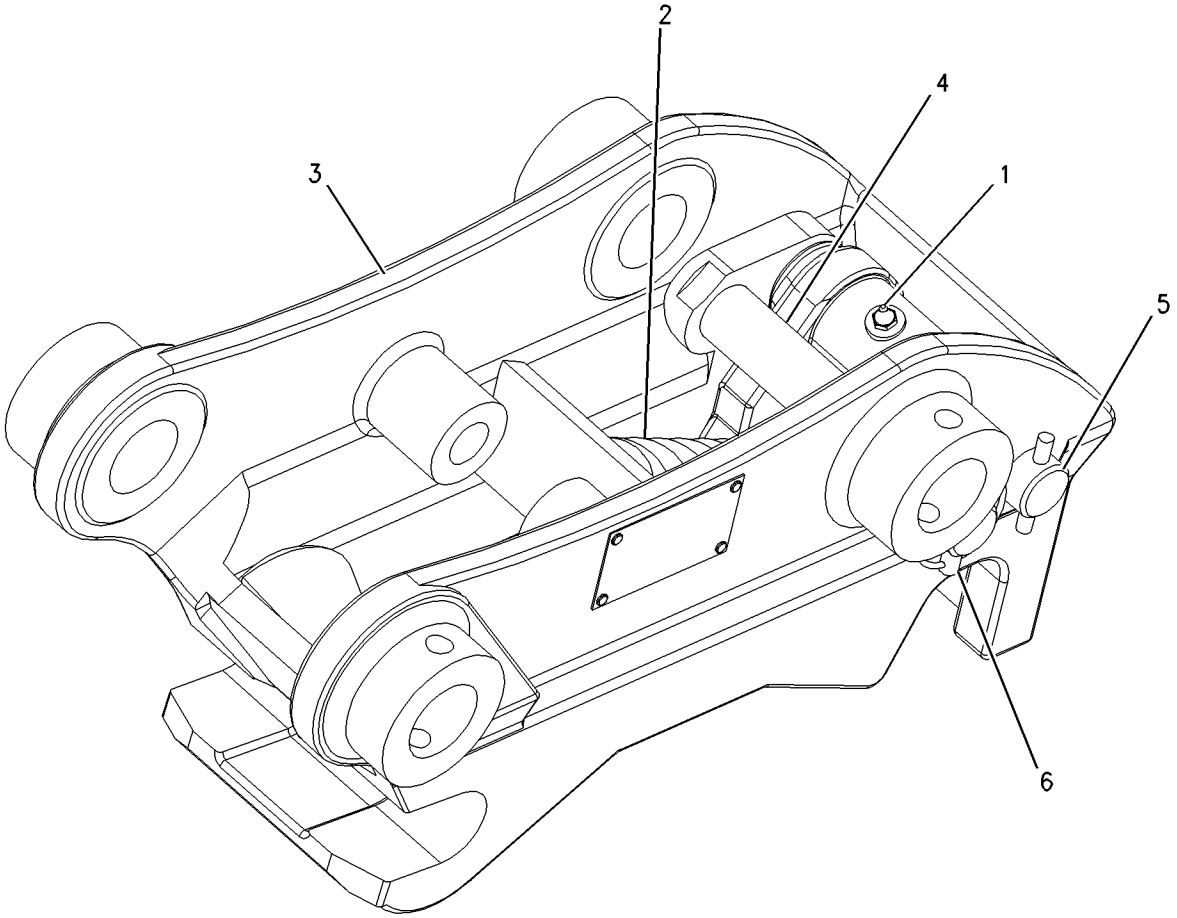

GRAPHIC #1 **<END>** g00890825

9R-5320 EDGE GP-CUTTING

S/N: BXC1-UP; DSX1-UP
AN ATTACHMENT

SMCS-6801 **i00530080**

NOTE	REF NO	GRAPHIC REF	PART NUMBER	QTY	PART NAME 1 2 3 4 5 6 (PRODUCT LEVEL)	SEE PAGE
	1	1	**118-7110**	2	EDGE-CUTTING	
	2	1	**4F-3657**	8	BOLT-PLOW	
	3	1	**4K-0367**	8	NUT (5/8-11 THD)	
	4	1	**8T-4122**	8	WASHER (3.5MM THK)	

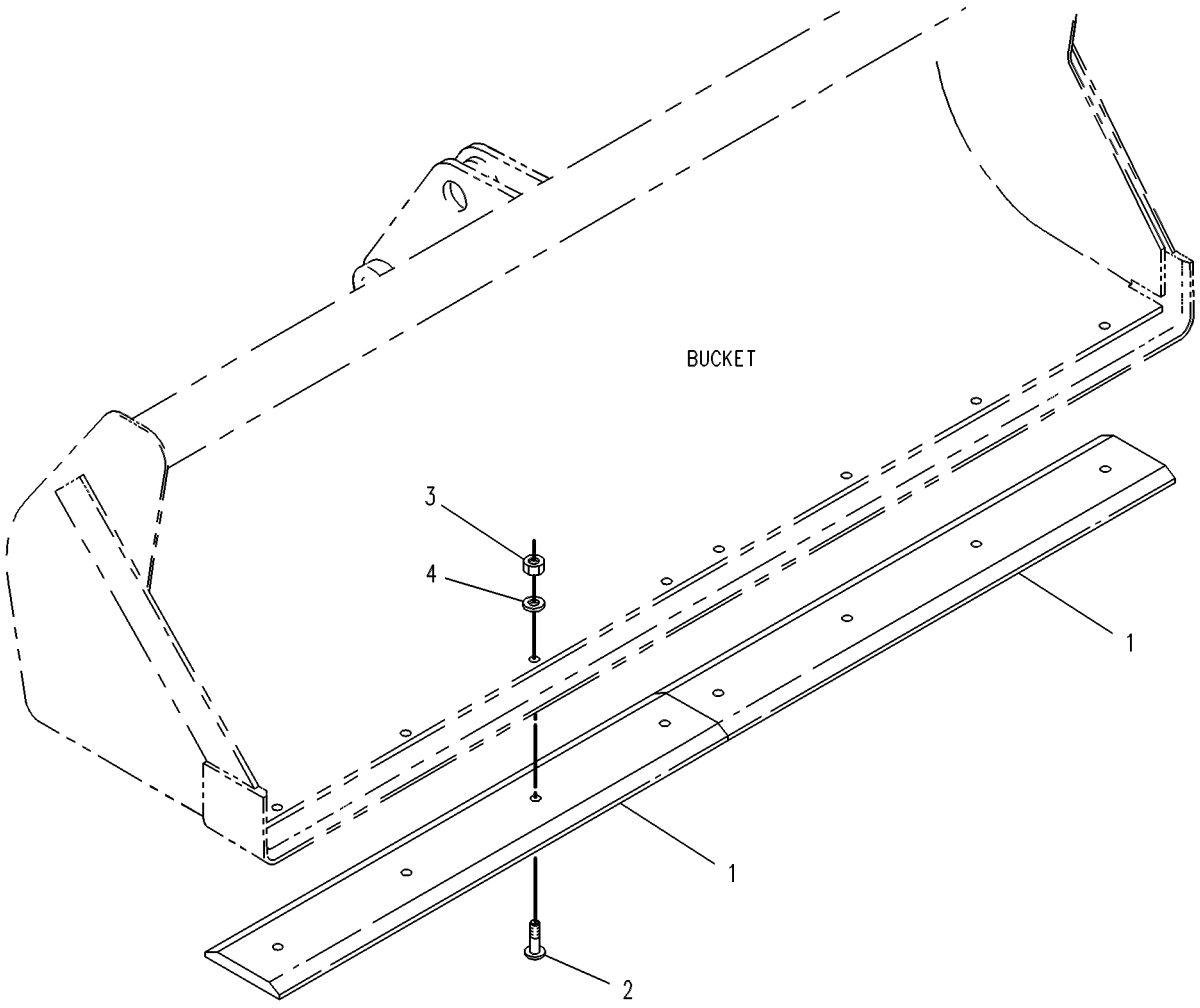

GRAPHIC #1 **<END>** g00131376

WORK TOOLS

9R-5321 EDGE GP-CUTTING

S/N: BXC1-UP; DSX1-UP
AN ATTACHMENT

SMCS-6801 **i00530701**

NOTE	REF NO	GRAPHIC REF	PART NUMBER	QTY	PART NAME 1 2 3 4 5 6 (PRODUCT LEVEL)	SEE PAGE
	1	1	**9W-8215**	2	EDGE-CUTTING	
	2	1	**3F-5108**	8	BOLT-PLOW	
	3	1	**4K-0367**	8	NUT (5/8-11 THD)	
	4	1	**8T-4122**	8	WASHER (3.5MM THK)	

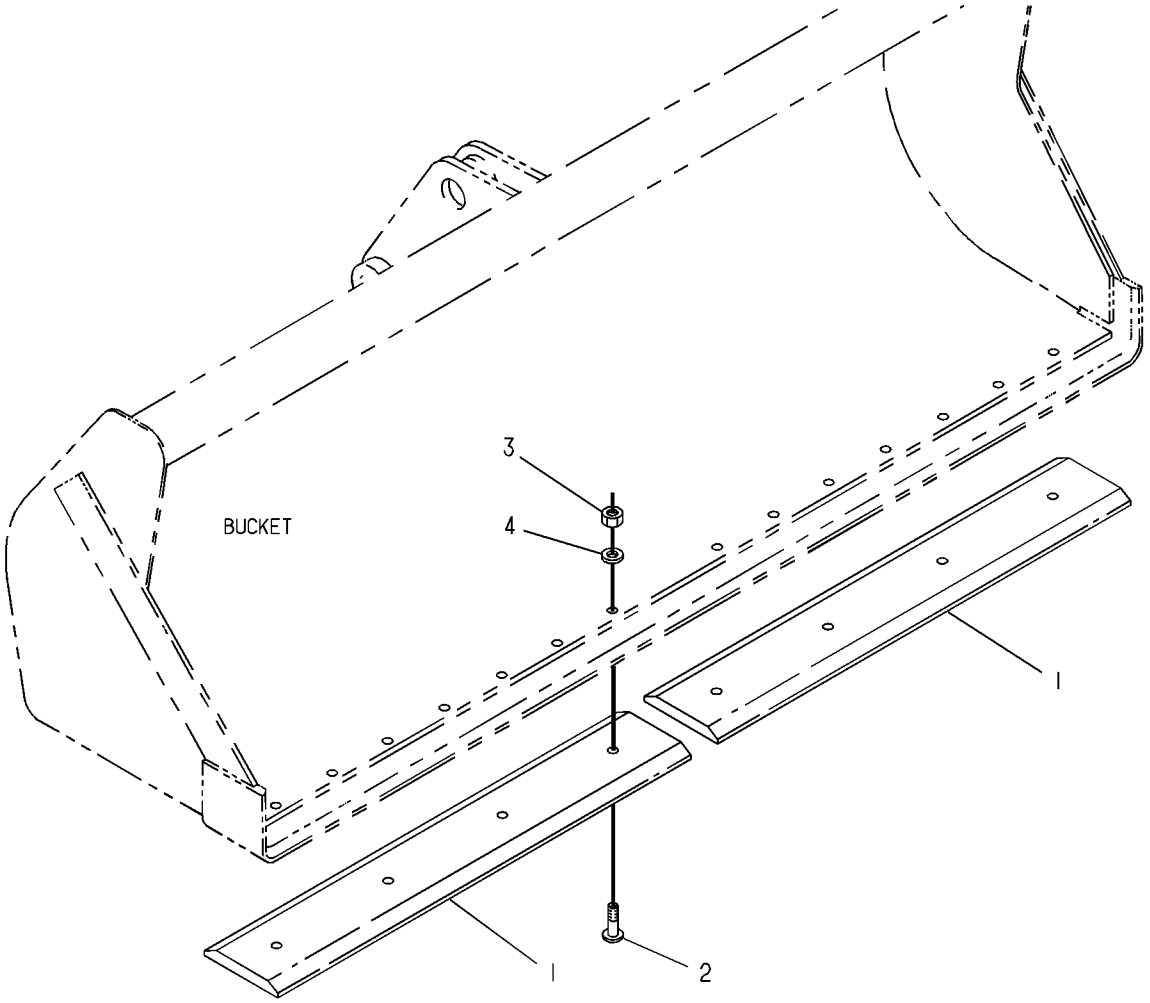

GRAPHIC #1 **<END>** g00130834

WORK TOOLS

112-0942 F0RK AR

S/N: BXC1-UP; DSX1-UP
AN ATTACHMENT

SMCS-6405 **i00755995**

NOTE	PART NUMBER	QTY	PART NAME 1 2 3 4 5 6 (PRODUCT LEVEL)	SEE PAGE
Y	*104-6310*	1	FORK GP	686
Y	*108-1587*	1	MOUNTING GP-FORK	693

Y-SEPARATE ILLUSTRATION

<END>

WORK TOOLS

104-6310 FORK GP

S/N: BXC1-UP; DSX1-UP

PART OF 111-8635, 112-0939, 124-0487, 124-0489 BUCKET AR-MULTIPURPOSE, 112-0942 FORK AR

AN ATTACHMENT

SMCS-6405 **i01114480**

NOTE	REF NO	GRAPHIC REF	PART NUMBER	QTY	PART NAME 1 2 3 4 5 6 (PRODUCT LEVEL)	SEE PAGE
	1	1	**104-6311**	2	BRACKET AS	
	2	1	**104-6312**	2	FORK AS	
	3	1	**104-6316**	1	PIN	
	4	1	**104-6317**	2	PIN	
	5	1	**4J-1888**	1	COTTER	
	6	1	**9R-0109**	4	WASHER (3MM THK)	
	7	1	**112-1776**	2	PIN AS	
	8	1	**6V-8144**	4	RING	
	9	1	**5D-8159**	2	PIN AS	

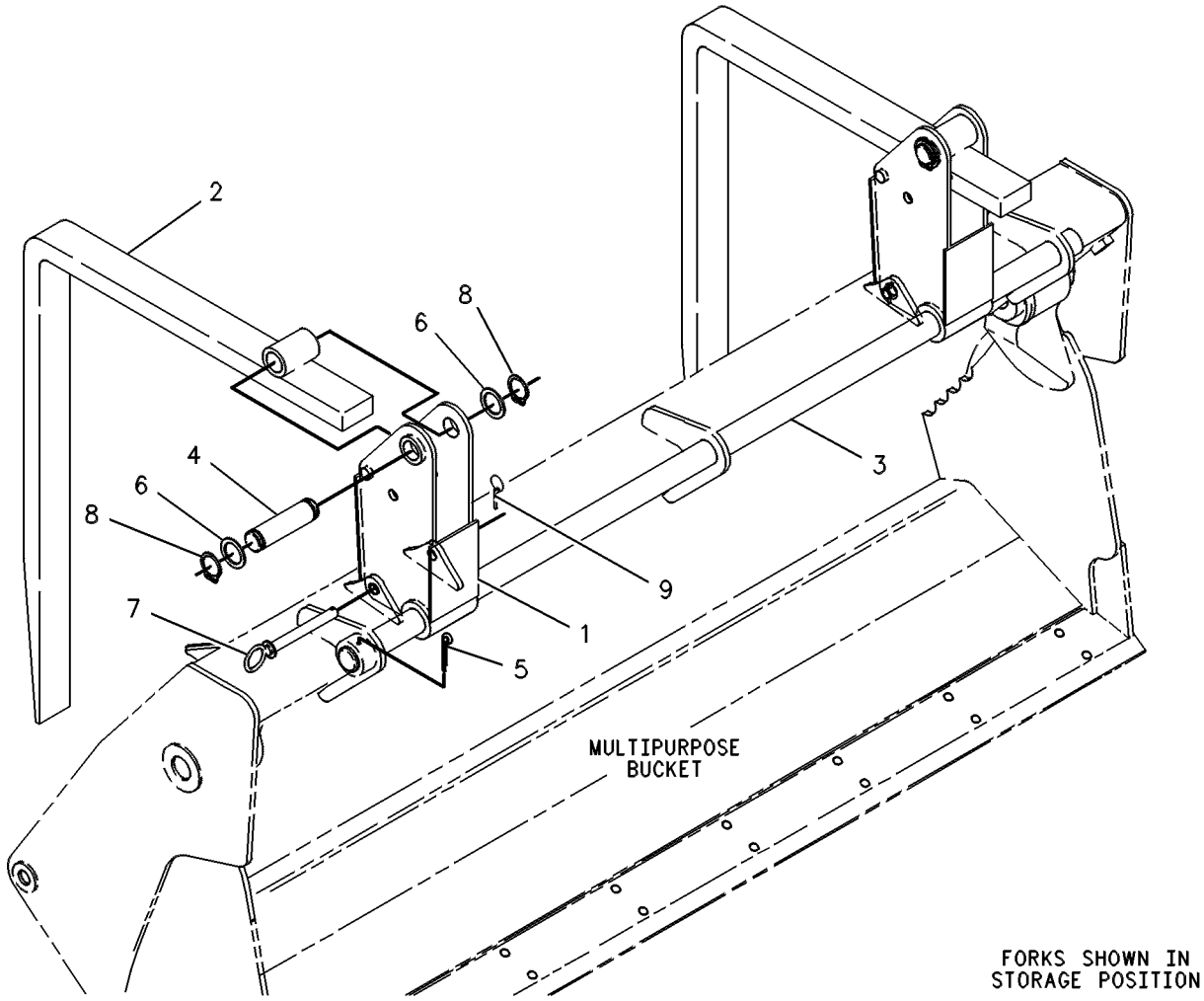

GRAPHIC #1 **<END>** g00131084

WORK TOOLS

204-5261 GUARD GP-BUCKET—FRONT

S/N: BXC1-UP; DSX1-UP

PART OF 206-3409, 206-4924 CONVERSION AR-CERTIFICATION, 206-3407 GUARD GP-BUCKET AN ATTACHMENT

SMCS-6001, 6800, 6805 **i01618702**

NOTE	REF NO	GRAPHIC REF	PART NUMBER	QTY	PART NAME 1 2 3 4 5 6 (PRODUCT LEVEL)	SEE PAGE
	1	1	**101-4411**	2	RETAINER AS	
					(EACH INCLUDES)	
		1	**101-4412**	1	CHAIN	
		1	**101-4413**	1	SPRING	
		1	**101-4414**	1	HOOK AS	
	2	1	**204-5258**	1	PLATE AS	
	3	1	**204-5259**	1	PLATE AS	
	4	1	**204-5260**	1	PLATE	
	5	1	**5P-4115**	4	WASHER-HARD (7.2X19X2MM THK)	
M	6	1	**8T-4171**	4	BOLT (M6X1X12MM)	

M-METRIC PART

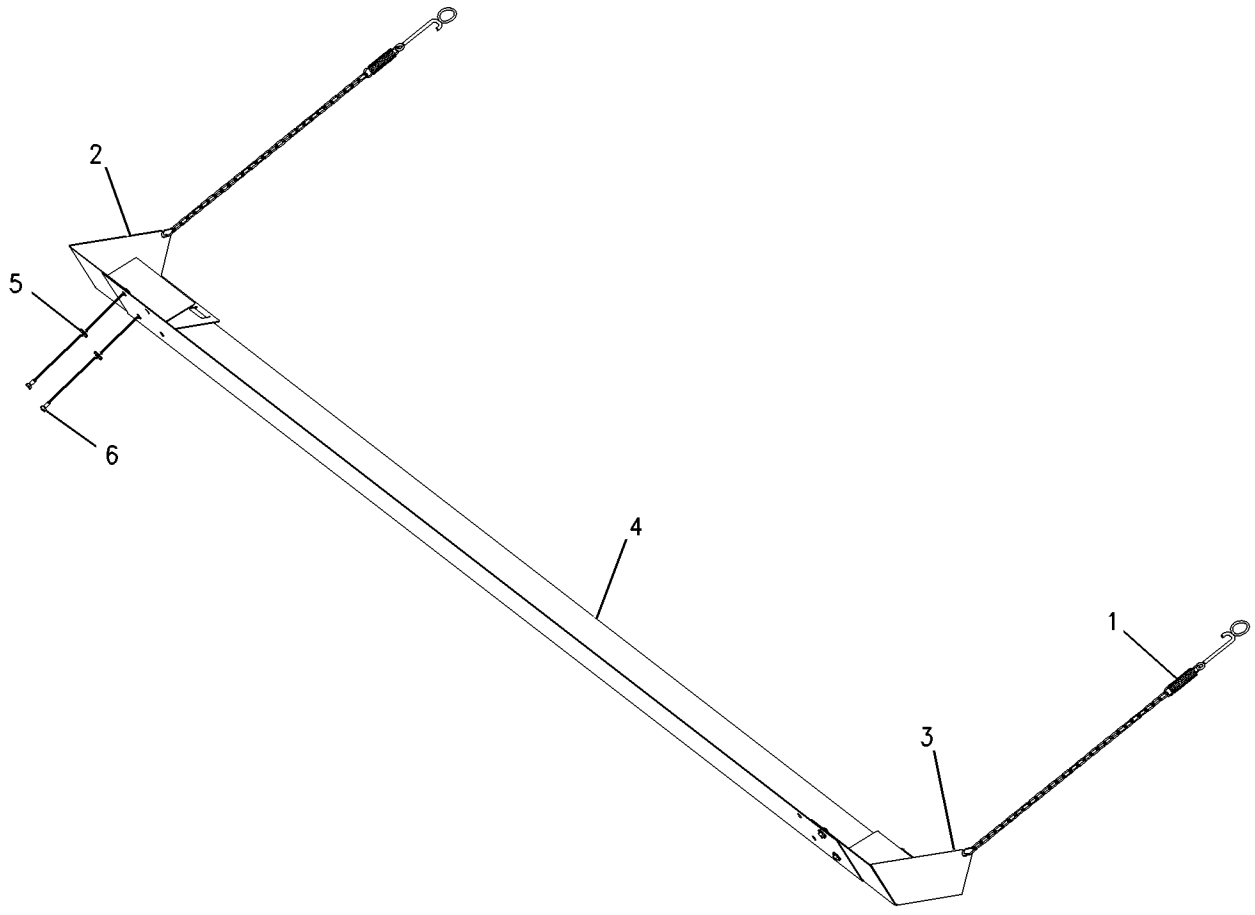

GRAPHIC #1 **<END>** g00837989

WORK TOOLS

206-3407 GUARD GP-BUCKET–FRONT

S/N: BXC1-UP; DSX1-UP
PART OF 190-2803, 190-6413 CONVERSION AR-CERTIFICATION
AN ATTACHMENT

SMCS-6001, 6800, 6805 **i01614336**

NOTE	REF NO	GRAPHIC REF	PART NUMBER	QTY	PART NAME 1 2 3 4 5 6 (PRODUCT LEVEL)	SEE PAGE
	1	1	**101-4415**	1	REFLECTOR	
Y	2	1	*204-5261*	1	GUARD GP-BUCKET	687

Y-SEPARATE ILLUSTRATION

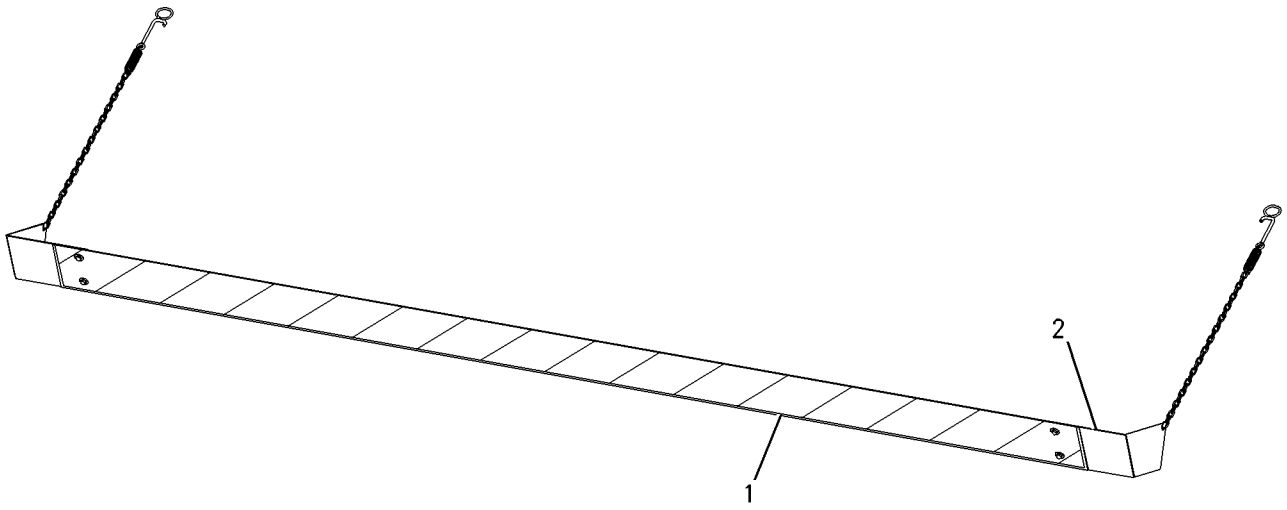

GRAPHIC #1 **<END>** g00837957

119-4595 MOUNTING GP-BUCKET–LOADER

S/N: BXC1-UP; DSX1-UP
PART OF 185-0060, 185-0061, 185-0062, 185-0063 HYDRAULIC AR
AN ATTACHMENT

SMCS-6101 **i00723819**

NOTE	REF NO	GRAPHIC REF	PART NUMBER	QTY	PART NAME 1 2 3 4 5 6 (PRODUCT LEVEL)	SEE PAGE
	1	1	**3B-8489**	2	FITTING-GREASE (1/8-27 THD)	
	2	1	**6V-8144**	2	RING	
	3	1	**9R-0109**	8	WASHER (3MM THK)	
	4	1	**119-4594**	4	WASHER (1MM THK)	
	5	1	**130-1918**	2	PIN AS	
	6	1	**111-4339**	4	LINK	

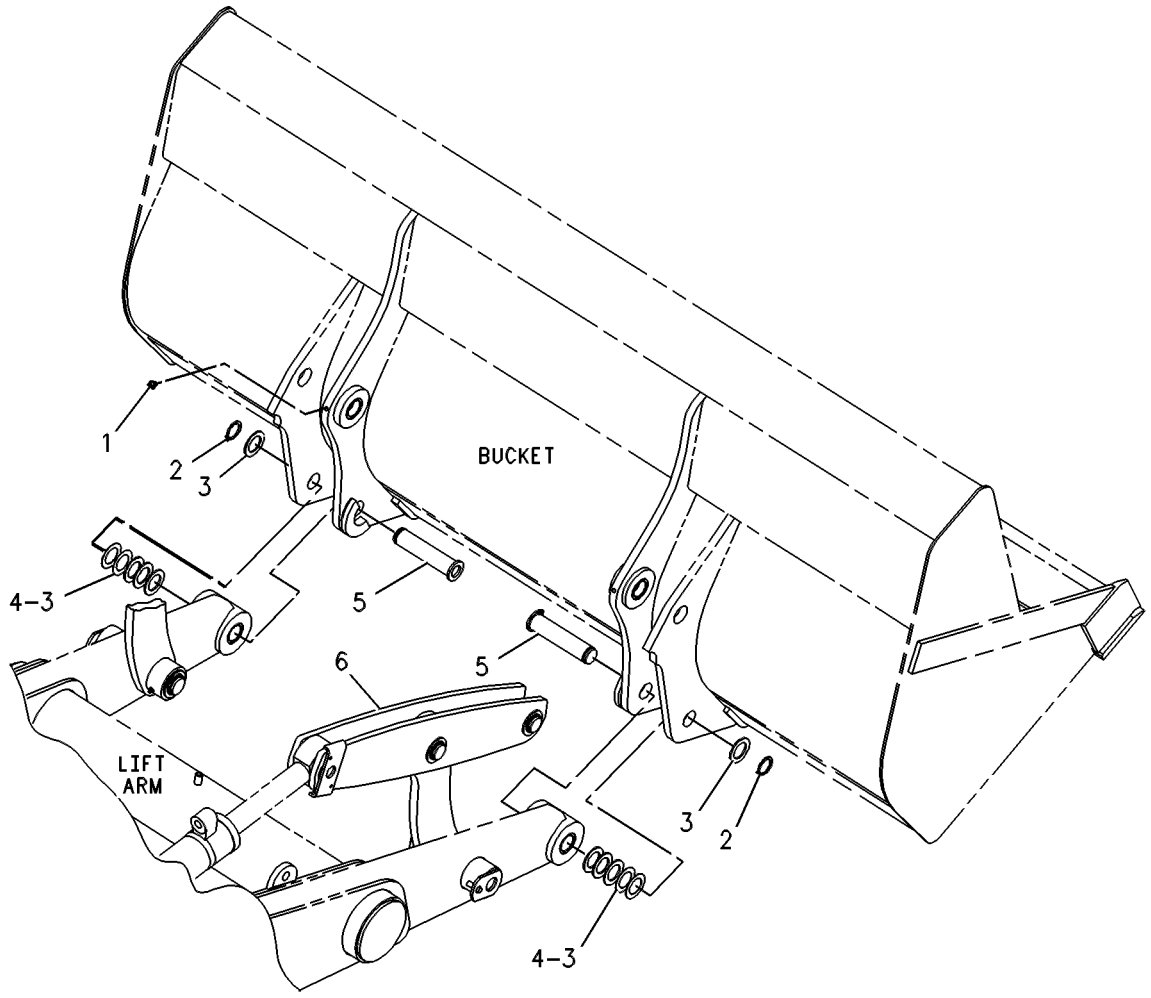

GRAPHIC #1 **<END>** g00287865

137-3848 MOUNTING GP-BUCKET—BACKHOE—QUICK COUPLER

S/N: BXC1-UP; DSX1-UP

AN ATTACHMENT

SMCS-6101 **i01179524**

NOTE	REF NO	GRAPHIC REF	PART NUMBER	QTY	PART NAME 1 2 3 4 5 6 (PRODUCT LEVEL)	SEE PAGE
	1	1	**9R-0158**	5	WASHER (3MM THK)	
	2	1	**3B-5319**	4	COTTER	
	3	1	**9R-6162**	1	PIN	
	4	1	**9R-1510**	2	WASHER (4MM THK)	
	5	1	**154-5279**	1	PIN	

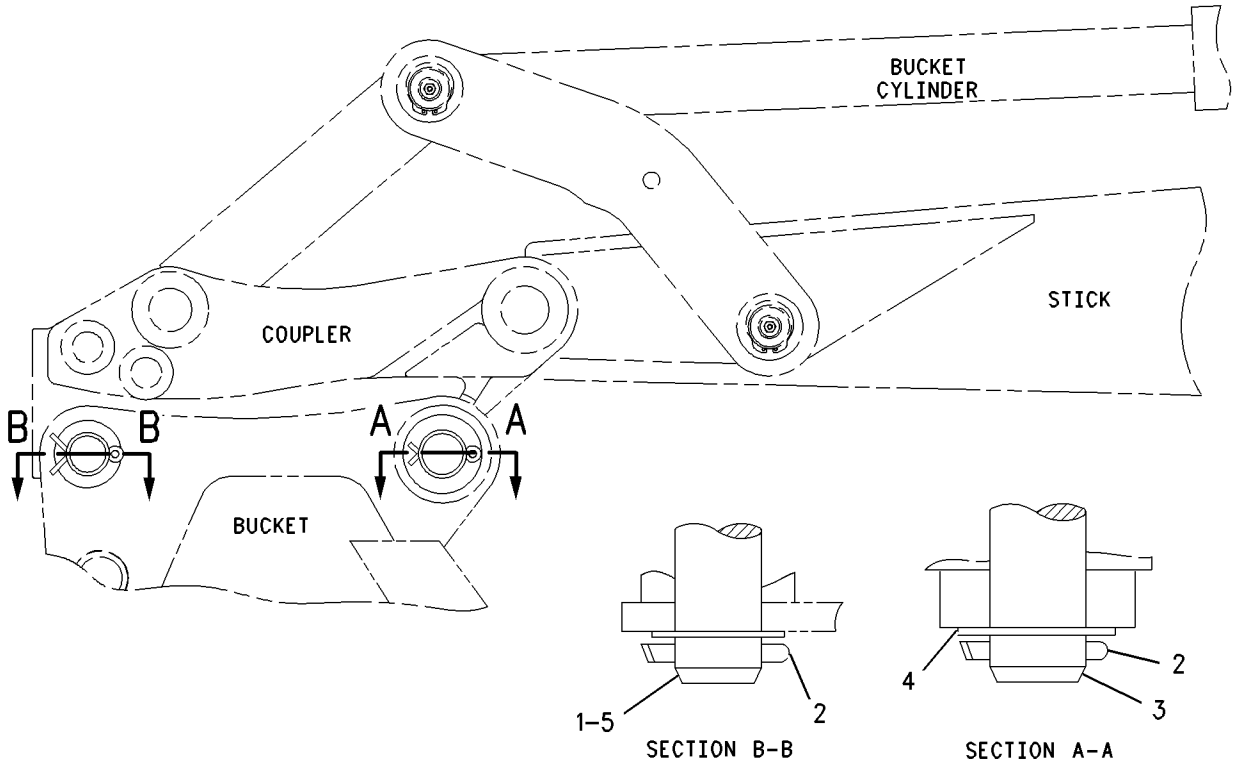

GRAPHIC #1 **<END>** g00631428

WORK TOOLS

178-3593 MOUNTING GP-BUCKET—BACKHOE—QUICK COUPLER

S/N: BXC1-UP; DSX1-UP
FOR USE WITH ALL BUCKETS EXCEPT 12 INCH
AN ATTACHMENT

SMCS-6101 **i01179790**

NOTE	PART NUMBER	QTY	PART NAME 1 2 3 4 5 6 (PRODUCT LEVEL)	SEE PAGE
	3B-5319	4	COTTER	
	154-5279	1	PIN	
	154-5280	1	PIN	
	9R-0158	5	WASHER (3MM THK)	
	9R-1510	5	WASHER (4MM THK)	

<END>

WORK TOOLS

223-1882 MOUNTING GP-BUCKET—BACKHOE

S/N: BXC1-UP; DSX1-UP
AN ATTACHMENT

SMCS-6101 **i01801870**

NOTE	REF NO	GRAPHIC REF	PART NUMBER	QTY	PART NAME 1 2 3 4 5 6 (PRODUCT LEVEL)	SEE PAGE
	1	1	**9R-0158**	2	WASHER (46X69X3MM THK)	
	2	1	**9R-9105**	2	PIN AS	
	3	1	**3B-5319**	2	PIN-COTTER	

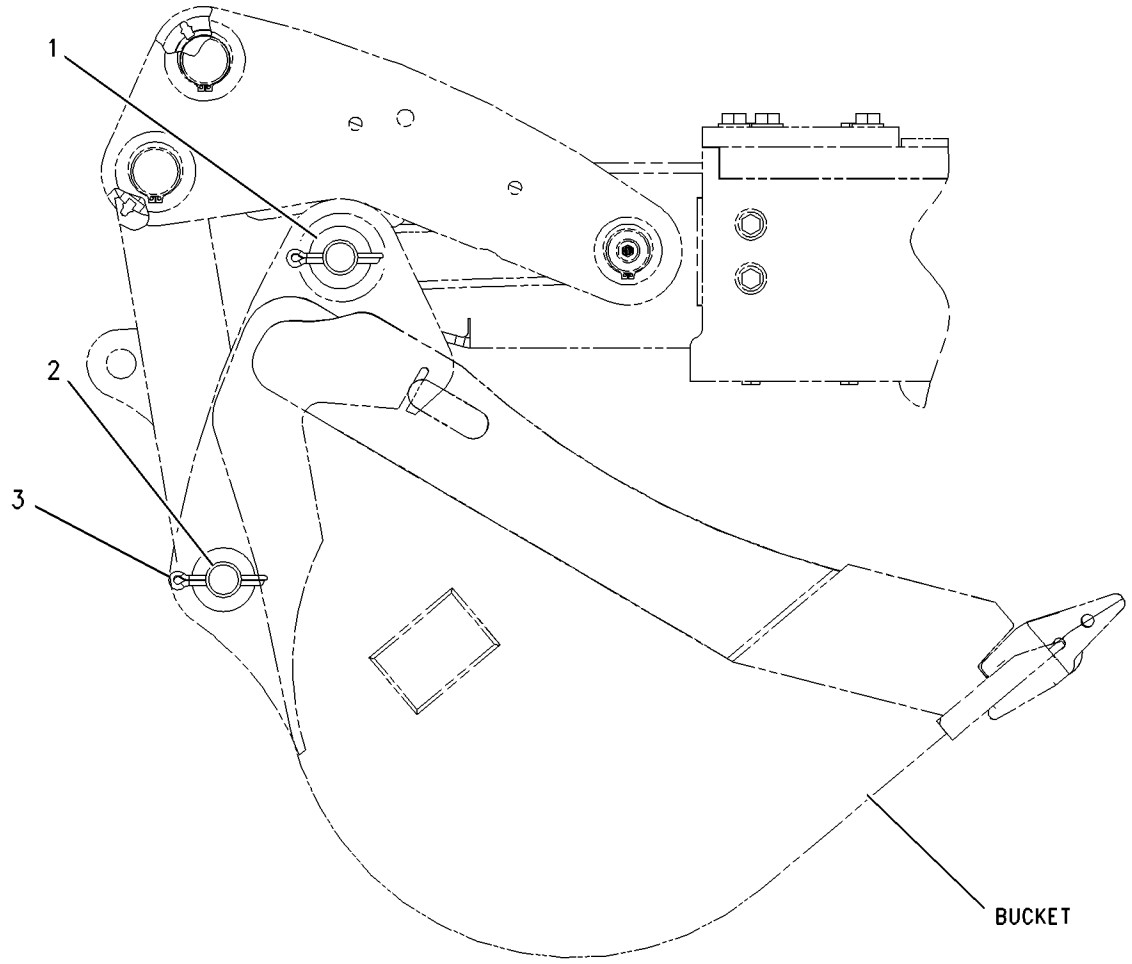

GRAPHIC #1 **<END>** g00925340

108-1587 MOUNTING GP-FORK

S/N: BXC1-UP; DSX1-UP
PART OF 112-0942 FORK AR
AN ATTACHMENT

SMCS-6405 **i00530466**

NOTE	REF NO	GRAPHIC REF	PART NUMBER	QTY	PART NAME 1 2 3 4 5 6 (PRODUCT LEVEL)	SEE PAGE
	1	1	**110-2861**	4	BRACKET	
	2	1	**104-6313**	1	BRACKET AS	
	3	1	**104-6314**	2	BRACKET	
	4	1	**106-9388**	2	BRACKET	

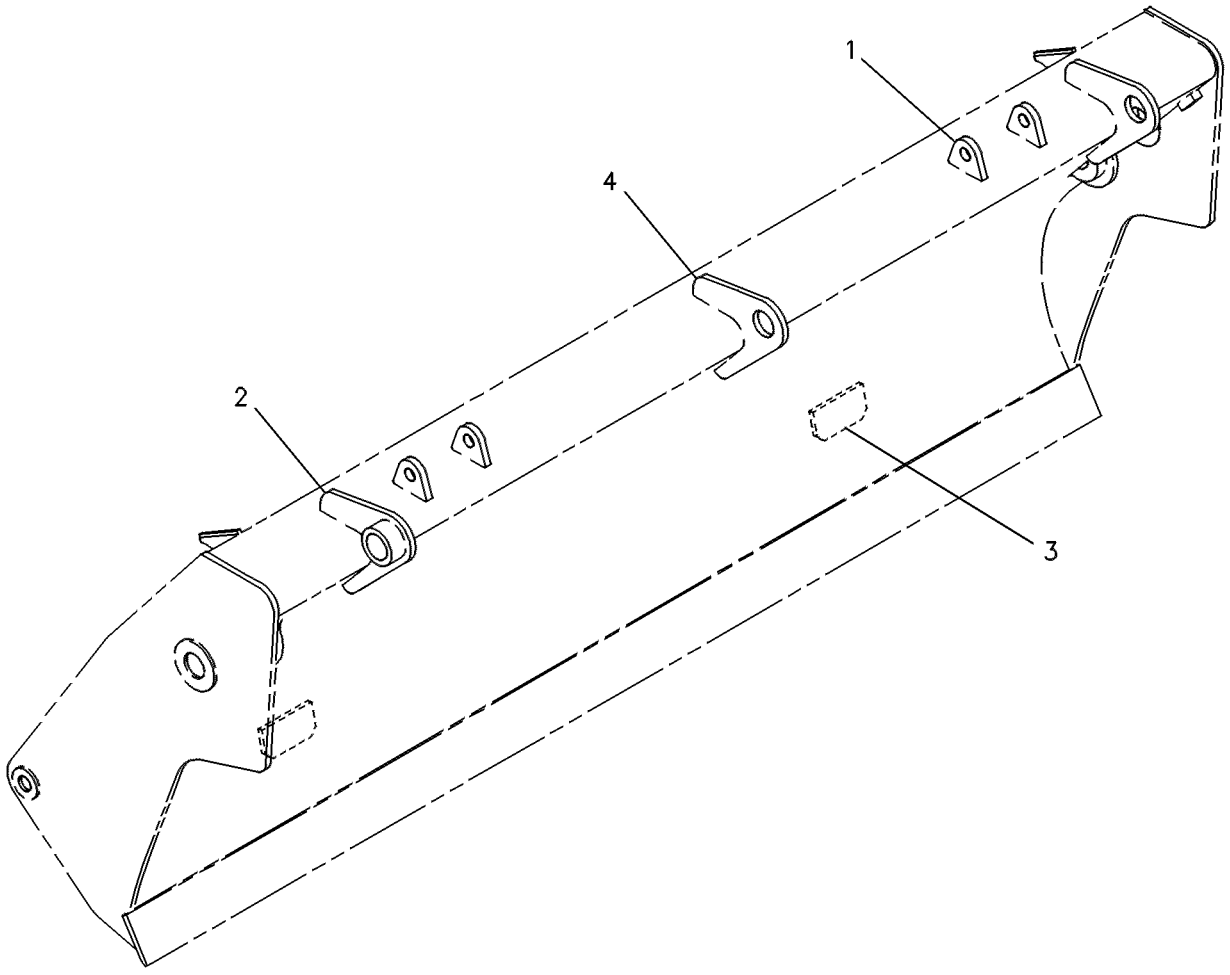

GRAPHIC #1 **<END>** g00131197

WORK TOOLS

119-1530 SHIPPING AR-BUCKET

S/N: BXC1-UP; DSX1-UP
TRANSPORT (NO BUCKET OPTION)
AN ATTACHMENT

SMCS-7505 **i00756016**

NOTE	PART NUMBER	QTY	PART NAME 1 2 3 4 5 6 (PRODUCT LEVEL)	SEE PAGE
Y	*120-9289*	1	BRACKET GP-TRANSPORT	590

Y-SEPARATE ILLUSTRATION

<END>

WORK TOOLS

177-4903 STOP GP-BUCKET—BACKHOE

S/N: BXC1-UP; DSX1-UP

AN ATTACHMENT

SMCS-6001 **i01876870**

NOTE	REF NO	GRAPHIC REF	PART NUMBER	QTY	PART NAME 1 2 3 4 5 6 (PRODUCT LEVEL)	SEE PAGE
	1	1	**178-4200**	1	STOP AS	
	2	1	**180-3773**	1	STOP AS	
	3	1	**7X-7729**	4	WASHER (11X25X3MM THK)	
M	4	1	**8T-0389**	4	LOCKNUT (M10X1.5 THD)	
M	5	1	**8T-4182**	4	BOLT (M10X1.5X45MM)	

M-METRIC PART

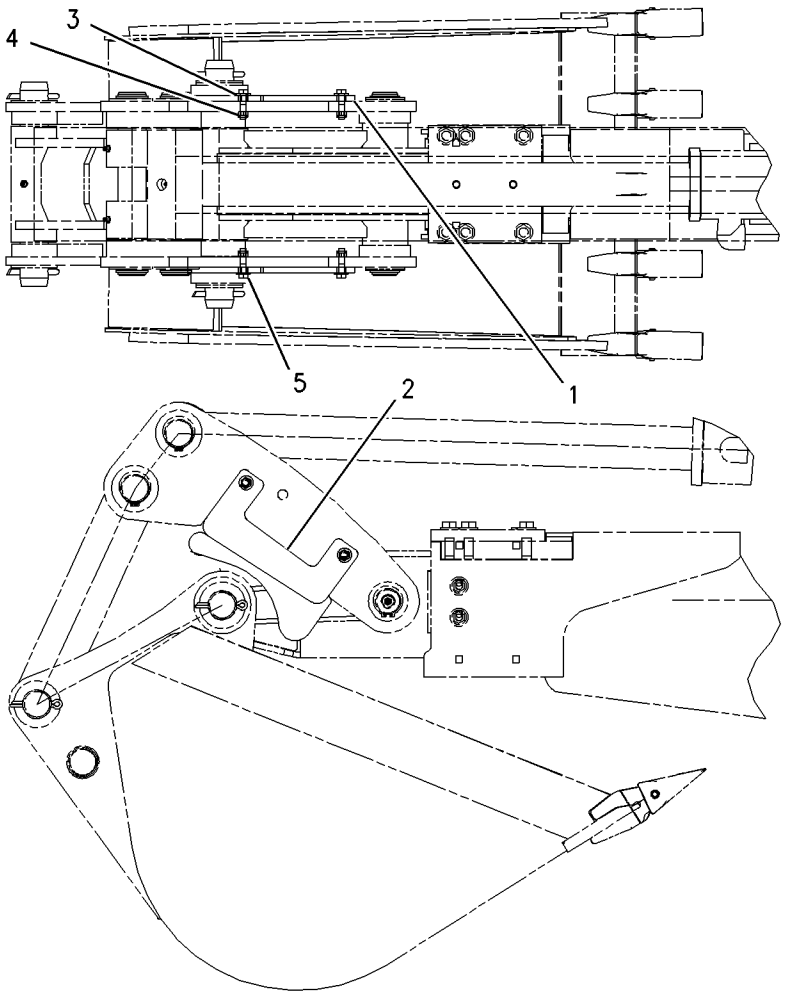

GRAPHIC #1 **<END>** g00954944

WORK TOOLS

177-4904 STOP GP-BUCKET—BACKHOE

S/N: BXC1-UP; DSX1-UP

AN ATTACHMENT

SMCS-6001 **i01211361**

NOTE	REF NO	GRAPHIC REF	PART NUMBER	QTY	PART NAME 1 2 3 4 5 6 (PRODUCT LEVEL)	SEE PAGE
	1	1	**178-4201**	1	STOP AS	
	2	1	**180-3774**	1	STOP AS	
	3	1	**7X-7729**	4	WASHER (3MM THK)	
M	4	1	**8T-0389**	4	LOCKNUT (M10X1.5 THD)	
M	5	1	**8T-4182**	4	BOLT (M10X1.5X45MM)	

M-METRIC PART

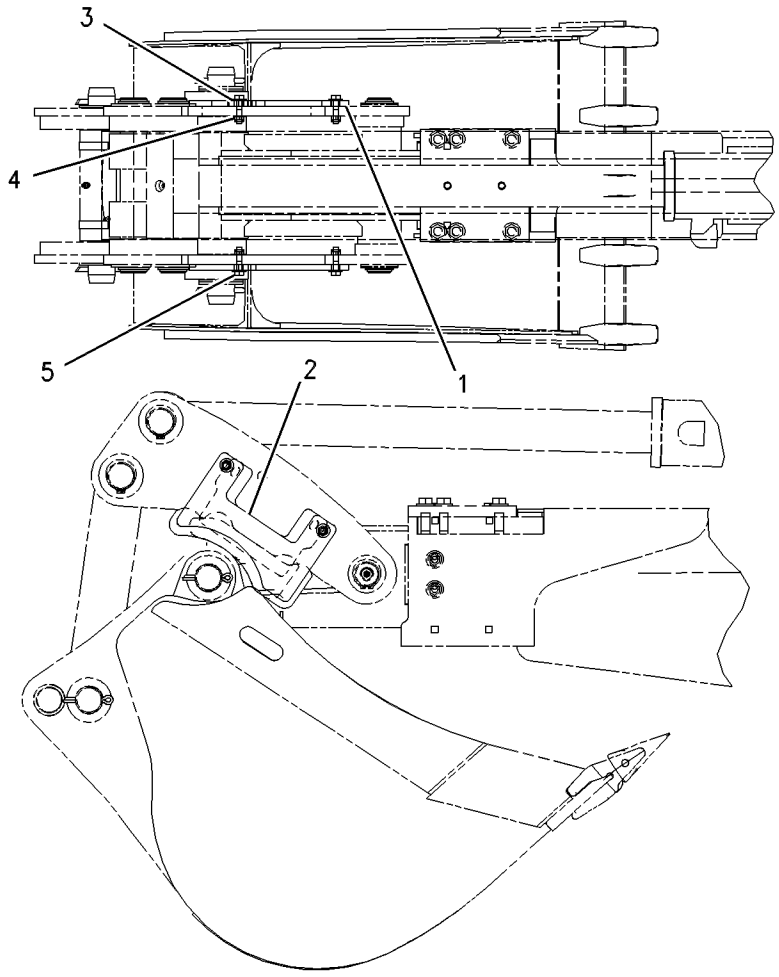

GRAPHIC #1 **<END>** g00655903

WORK TOOLS

9R-5866 TOOTH GP-UNI

S/N: BXC1-UP; DSX1-UP
FOR USE WITH LOADER BUCKETS
AN ATTACHMENT

SMCS-6822 **i01789850**

NOTE	REF NO	GRAPHIC REF	PART NUMBER	QTY	PART NAME 1 2 3 4 5 6 (PRODUCT LEVEL)	SEE PAGE
	1	1	**135-8203**	8	TOOTH-UNI	
	2	1	**4F-3657**	16	BOLT-PLOW (5/8-11X2.75 IN)	
	3	1	**4K-0367**	16	NUT-FULL (5/8-11 THD)	

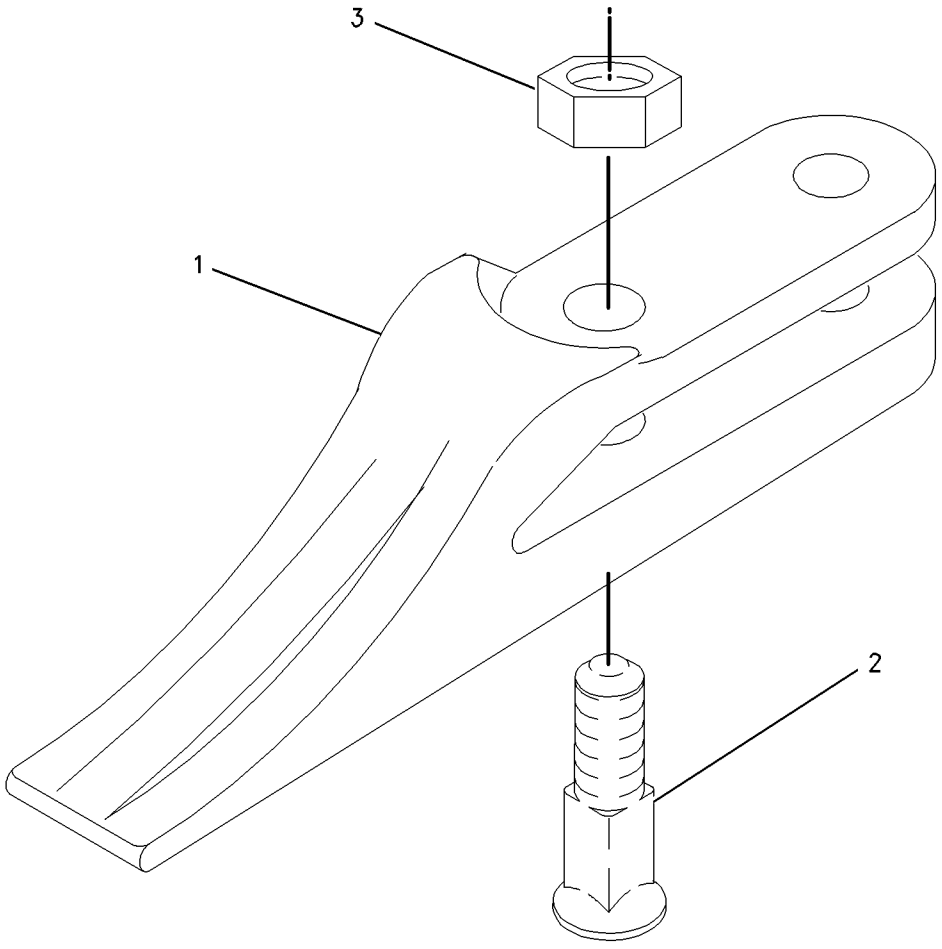

GRAPHIC #1 **<END>** g00915931

OPERATOR STATION

164-1032 AIR CONDITIONER & MOUNTING GP

S/N: BXC1-UP; DSX1-UP
PART OF 214-7007 CAB AR, 214-7009 CAB AR-ENCLOSED ROPS
AN ATTACHMENT

SMCS-7320 **i01981929**

NOTE	REF NO	GRAPHIC REF	PART NUMBER	QTY	PART NAME 1 2 3 4 5 6 (PRODUCT LEVEL)	SEE PAGE
	1	1	**6L-4725**	2	CLAMP-HOSE	
	2	1	**8Y-5737**	1	CLAMP	
	3	1	**8Y-6967**	1	LOUVER AS	
	4	1	**9M-7959**	1	CLAMP (HOSE)	
	5	1	**9R-9901**	5	FASTENER (CLIP)	
	6	1	**110-6109**	1	KNOB-CONTROL	
	7	1	**130-4832**	2	SCREW (8-18X.39 IN)	
	8	1	**164-1042**	1	DUCT-OUTLET	
	9	1	**164-1196**	1	CABLE AS	
		1	**143-8874**	1	BOOT	
Y	10	1	**170-0075**	1	AIR CONDITIONER GP	700
	11	1	**184-6560**	1	BRACKET	
	12	1	**184-6561**	1	HOSE-AIR	
	13	1	**184-6564**	1	GASKET	
	14	1	**184-6567**	1	GASKET	
	15	1	**184-6572**	1	INSULATION	
	16	1	**184-6573**	1	INSULATION	
	17	1	**184-6574**	1	INSULATION	
	18	1	**190-5132**	1	FILM-CONTROL (AIR CONDITIONER)	
	19	1	**194-5622**	1	VALVE AS (WATER)	
		1	**6V-6717**	1	SCREW-WASHER HEAD (8-32X.375 IN)	
		1	**124-0312**	2	SCREW-PAN HEAD (8-16X.32 IN)	
	20	1	**206-7512**	1	COVER	
	21	1	**206-7513**	2	BRACKET	
	22	1	**206-7514**	1	FILTER	
E	23	1	**5P-3915**		HOSE (30CM)	
	24	1	**228-0297**	1	PLATE AS	
M		1	**6V-9632**	1	NUT-WELD (M6X1 THD)	
	25	1	**228-0298**	1	DUCT-AIR	
	26	1	**228-0560**	1	SEAL	
	27	1	**228-4284**	1	DUCT GP-AIR	
		1	**104-2091**	8	SCREW-FLAT HEAD (6-20X0.5 IN)	
		1	**164-8473**	2	LOUVER AS	
	28	1	**2H-3920**	1	LOCKWASHER	
	29	1	**5P-4115**	1	WASHER-HARD (7.2X19X2MM THK)	
M	30	1	**9X-2042**	3	SCREW-TRUSS HEAD (M6X1X12MM)	
M	31	1	**9X-2044**	2	SCREW-TRUSS HEAD (M6X1X16MM)	
M	32	1	**9X-2045**	2	SCREW-TRUSS HEAD (M6X1X20MM)	
E	33	1	**6V-6813**		HOSE (40CM)	

E-ORDER BY THE CENTIMETER
M-METRIC PART
Y-SEPARATE ILLUSTRATION

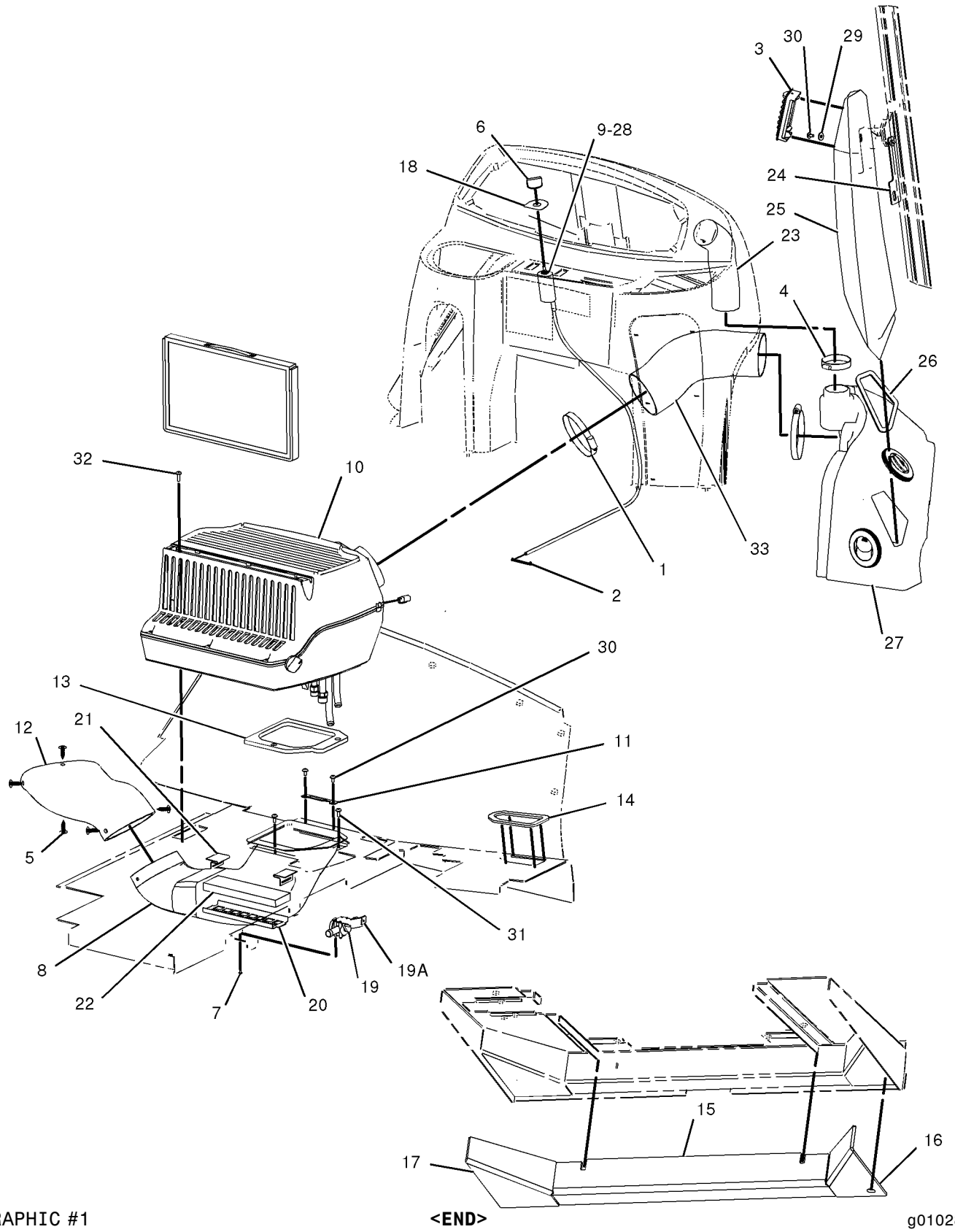

GRAPHIC #1

<END>

g01028109

OPERATOR STATION

170-0075 AIR CONDITIONER GP

S/N: BXC1-UP; DSX1-UP
PART OF 164-1032 AIR CONDITIONER & MOUNTING GP
AN ATTACHMENT

SMCS-1807, 7320, 7322 **i01870980**

NOTE	REF NO	GRAPHIC REF	PART NUMBER	QTY	PART NAME 1 2 3 4 5 6 (PRODUCT LEVEL)	SEE PAGE
	1	1	**119-9631**	1	SWITCH-THERMOSTAT	
	2	1	**164-4139**	1	COIL AS	
		1	**7X-2049**	1	TUBE AS-REFRIGERANT ORIFICE	
		1	**201-1635**	1	GASKET	
		1	**201-1636**	1	GASKET	
	3	1	**168-2313**	1	FAN AS	
		1	**7T-0093**	2	PIN-CONNECTOR	
	4	1	**170-7269**	1	COVER	
	5	1	**170-7270**	1	CASE AS	
		1	**6C-3680**	4	RIVET-POP	
M		1	**129-3178**	4	LOCKNUT (M6X1 THD)	
		1	**188-2711**	1	GUARD AS	
	6	1	**170-7271**	1	COVER	
	7	1	**170-7272**	1	FILTER-AIR (CAB AIR)	
	8	1	**170-7274**	1	HARNESS AS-HEATER & AIR COND	
		1	**155-2270**	1	KIT-CONNECTING PLUG (2 PIN)	
	9	1	**170-7281**	1	GASKET	
	10	1	**170-7282**	1	GASKET	
	11	1	**185-4015**	4	CLIP	
	12	1	**188-2706**	2	GASKET	
	13	1	**188-2708**	1	GASKET	
	14	1	**188-2709**	1	GASKET	
	15	1	**188-2710**	1	GASKET	
	16	1	**188-2712**	2	FITTING	
	17	1	**191-6034**	1	GROMMET	
	18	1	**199-3729**	1	DOOR AS	
		1	**191-6033**	1	CONTROL AS	
		1	**191-6035**	1	RETAINER	
		1	**201-1634**	1	LINK	
	19	1	**204-9921**	1	RESISTOR AS	
	20	1	**206-7398**	1	KNOB-CONTROL	
	21	1	**213-9270**	1	FILM (AIR RECIRCULATION)	
	22	1	**2S-3745**	6	SCREW-TAPPING (10-16X.5 IN)	
	23	1	**5P-7921**	3	SCREW-WASHER HEAD (1/4-20X3/4 IN)	
	24	1	**6V-6717**	2	SCREW-WASHER HEAD (8-32X.375 IN)	
M	25	1	**6V-7357**	4	BOLT (M6X1.0X25MM)	
	26	1	**8T-4205**	4	WASHER-HARD (7.2X14.5X2MM THK)	
D	27	1	**5P-6011**		TUBE (0.0381M)	

D-ORDER BY THE METER
M-METRIC PART

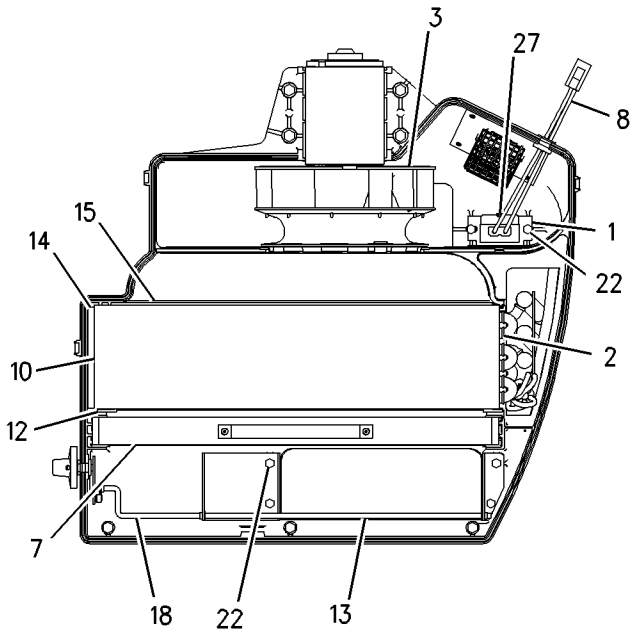

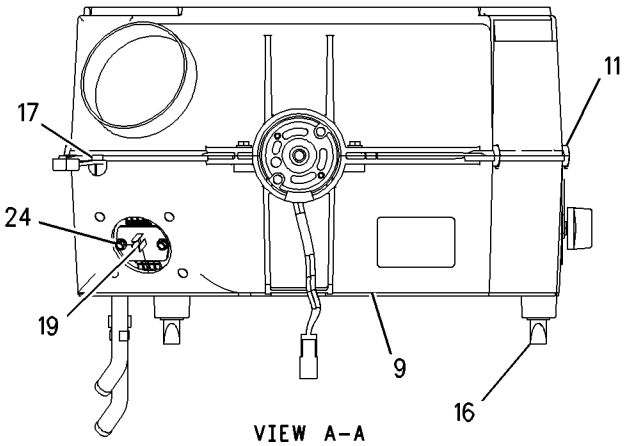

VIEW A-A

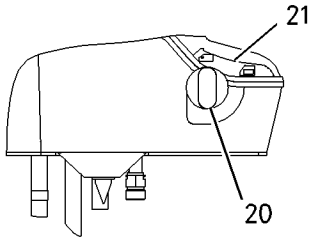

VIEW D-D

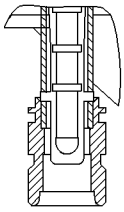

VIEW OF AREA C

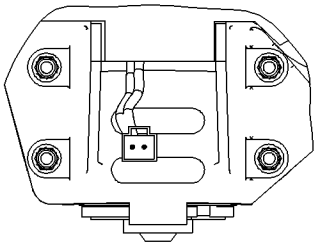

VIEW B-B

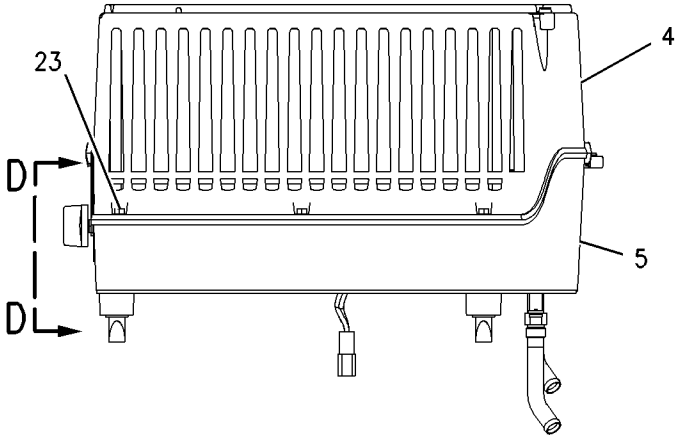

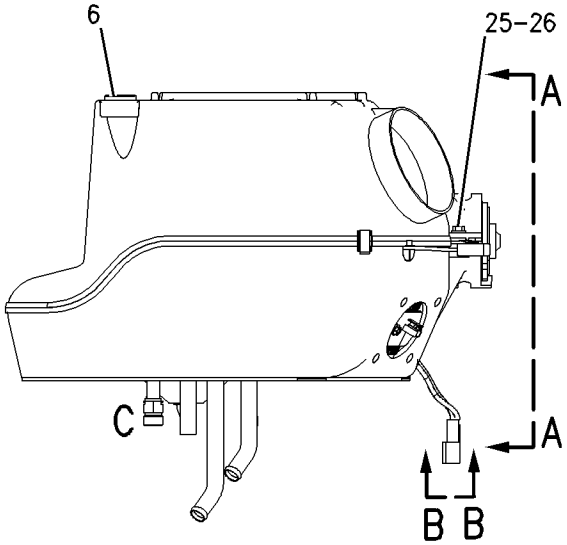

GRAPHIC #1 **<END>** g00952723

OPERATOR STATION

8Y-5904 ARMREST GP

S/N: BXC1-UP; DSX1-UP
PART OF 164-1209, 164-1210, 164-1213 SEAT GP
AN ATTACHMENT

SMCS-7307, 7312 **i01097001**

NOTE	REF NO	GRAPHIC REF	PART NUMBER	QTY	PART NAME 1 2 3 4 5 6 (PRODUCT LEVEL)	SEE PAGE
	1	1	**8Y-5906**	1	BASE-ARMREST	
L	2	1	**8S-7803**	1	RING-RETAINING	
J	3	1	**6V-2687**	4	SCREW-PAN HEAD (10-24X1IN)	
L	4	1	**8T-8641**	1	WASHER (M9.8X16.0X0.8MM THK)	
L	5	1	**3E-4312**	1	NUT-SQUARE	
					AVAILABLE REPAIR KIT(S):	
J			**8Y-5988**	1	KIT-CUSHION	
L			**8Y-6028**	1	KIT-ADJUSTER	

J-KIT MARKED J INCLUDES PART MARKED J
L-KIT MARKED L INCLUDES PARTS MARKED L

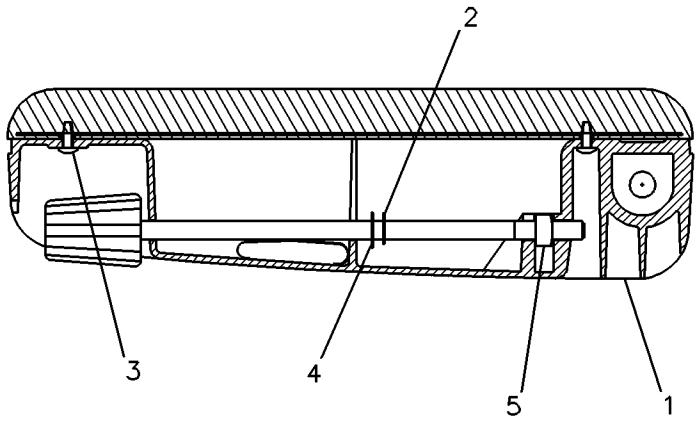

GRAPHIC #1 **<END>** g00083048

OPERATOR STATION

214-7006 CAB AR

S/N: BXC1-UP; DSX1-UP

AN ATTACHMENT

SMCS-7301, 7325, 7335 **i01989630**

NOTE	PART NUMBER	QTY	PART NAME 1 2 3 4 5 6 (PRODUCT LEVEL)	SEE PAGE
Y	**226-9095**	1	CAB GP	709
Y	**200-2676**	1	COMPARTMENT GP-LITERATURE	713
Y	*164-1389*	1	CONSOLE GP-OPERATOR	719
Y	*185-3524*	1	CONSOLE GP-OPERATOR	720
Y	*186-0252*	1	COVER GP-FIREWALL (LOWER)	728
Y	*145-6713*	1	FAN GP-SUCTION	56
Y	*164-1149*	1	FENDER GP-REAR	319
	3E-8211		FILM-STRIPE (400CM)	
Y	*198-9723*	1	FITTING GP-HEATER & AIR COND	58
Y	*180-5765*	1	FLOOR MAT GP	740
Y	*164-1030*	1	HEATER & MTG GP-CAB	741
Y	*238-9828*	1	INDICATOR GP-AIR FILTER CHANGE	78
Y	*236-6657*	1	LINES GP-HEATER	747
Y	*164-1165*	1	SUPPRESSION GP-SOUND	776
Y	*239-1081*	1	TACHOMETER GP-ELECTRIC	782
Y	*164-1370*	1	TRIM GP-CAB	783
	5L-3308	1	V-BELT SET (INCLUDES 2 BELTS)	
Y	*167-8187*	1	WASHER GP-WINDOW	785
Y	*174-2024*	1	WIPER GP-WINDOW	797
Y	*185-8801*	1	WIRING GP-CAB	178
Y	*238-1166*	1	WIRING GP-CONSOLE	185
Y	*186-2731*	1	WIRING GP-HEATER	193

Y-SEPARATE ILLUSTRATION

<END>

OPERATOR STATION

214-7007 CAB AR

S/N: BXC1-UP; DSX1-UP

AN ATTACHMENT

SMCS-7301, 7325, 7335 **i01989659**

NOTE	PART NUMBER	QTY	PART NAME 1 2 3 4 5 6 (PRODUCT LEVEL)	SEE PAGE
Y	*164-1032*	1	AIR CONDITIONER & MOUNTING GP	698
Y	**226-9095**	1	CAB GP	709
Y	**200-2676**	1	COMPARTMENT GP-LITERATURE	713
Y	*234-8601*	1	COMPRESSOR GP-REFRIGERANT	715
Y	*144-2222*	1	CONDENSER & MTG GP-REFRIGERANT	716
Y	*185-3524*	1	CONSOLE GP-OPERATOR	720
Y	*164-1388*	1	CONSOLE GP-SIDE (LH)	723
Y	*186-0252*	1	COVER GP-FIREWALL (LOWER)	728
Y	*147-1559*	1	FAN GP-SUCTION	57
Y	*164-1149*	1	FENDER GP-REAR	319
	3E-8211		FILM-STRIPE (400CM)	
Y	*198-9723*	1	FITTING GP-HEATER & AIR COND	58
Y	*180-5760*	1	FLOOR MAT GP	739
Y	*238-9828*	1	INDICATOR GP-AIR FILTER CHANGE	78
Y	*234-2617*	1	LINES GP-HEATER & AIR COND	749
Y	*164-1165*	1	SUPPRESSION GP-SOUND	776
Y	*239-1080*	1	TACHOMETER GP-ELECTRIC	781
Y	*164-1370*	1	TRIM GP-CAB	783
	3N-1491	1	V-BELT SET (INCLUDES 2 BELTS)	
Y	*167-8187*	1	WASHER GP-WINDOW	785
Y	*174-2024*	1	WIPER GP-WINDOW	797
Y	**238-1811**	1	WIRING GP-AIR CONDITIONER	173
Y	*185-8801*	1	WIRING GP-CAB	178
Y	*238-1166*	1	WIRING GP-CONSOLE	185

Y-SEPARATE ILLUSTRATION

<END>

OPERATOR STATION

214-7008 CAB AR-ENCLOSED ROPS

S/N: BXC1-UP; DSX1-UP

AN ATTACHMENT

SMCS-7301, 7325 **i01989662**

NOTE	PART NUMBER	QTY	PART NAME 1 2 3 4 5 6 (PRODUCT LEVEL)	SEE PAGE
Y	**164-1100**	1	CAB GP	707
Y	**200-2676**	1	COMPARTMENT GP-LITERATURE	713
Y	*185-3524*	1	CONSOLE GP-OPERATOR	720
Y	*164-1388*	1	CONSOLE GP-SIDE (LH)	723
Y	*183-4897*	1	CONTROL GP-STEERING	297
Y	*186-0252*	1	COVER GP-FIREWALL (LOWER)	728
Y	*145-6713*	1	FAN GP-SUCTION	56
Y	*164-1149*	1	FENDER GP-REAR	319
	110-0037	1	FILM (CATERPILLAR)	
	3E-8211		FILM-STRIPE (400CM)	
Y	*198-9723*	1	FITTING GP-HEATER & AIR COND	58
Y	*180-5760*	1	FLOOR MAT GP	739
Y	*164-1030*	1	HEATER & MTG GP-CAB	741
Y	*239-6996*	1	INDICATOR GP-AIR FILTER CHANGE	79
Y	*185-8815*	1	LIGHTING GP-FLOOD	133
Y	*236-6657*	1	LINES GP-HEATER	747
Y	*202-5724*	1	MOUNTING GP-INSTRUMENT PANEL	758
Y	*180-5772*	1	SEAT GP-SUSPENSION	775
Y	*164-1165*	1	SUPPRESSION GP-SOUND	776
Y	*239-1081*	1	TACHOMETER GP-ELECTRIC	782
Y	*164-1370*	1	TRIM GP-CAB	783
	5L-3308	1	V-BELT SET (INCLUDES 2 BELTS)	
Y	*108-8251*	1	VISOR GP-CAB	784
Y	*167-8187*	1	WASHER GP-WINDOW	785
Y	*174-2024*	1	WIPER GP-WINDOW	797
Y	*185-8801*	1	WIRING GP-CAB	178
Y	*238-1167*	1	WIRING GP-CONSOLE	187
Y	*186-2731*	1	WIRING GP-HEATER	193
Y	*190-7557*	1	WIRING GP-POWER RECEPTACLE	202

Y-SEPARATE ILLUSTRATION

<END>

OPERATOR STATION

214-7009 CAB AR-ENCLOSED ROPS

S/N: BXC1-UP; DSX1-UP

AN ATTACHMENT

SMCS-7301, 7325 **i01989663**

NOTE	PART NUMBER	QTY	PART NAME 1 2 3 4 5 6 (PRODUCT LEVEL)	SEE PAGE
Y	*164-1032*	1	AIR CONDITIONER & MOUNTING GP	698
Y	**164-1100**	1	CAB GP	707
Y	**200-2676**	1	COMPARTMENT GP-LITERATURE	713
Y	*234-8601*	1	COMPRESSOR GP-REFRIGERANT	715
Y	*144-2222*	1	CONDENSER & MTG GP-REFRIGERANT	716
Y	*185-3524*	1	CONSOLE GP-OPERATOR	720
Y	*164-1388*	1	CONSOLE GP-SIDE (LH)	723
Y	*183-4897*	1	CONTROL GP-STEERING	297
Y	*186-0252*	1	COVER GP-FIREWALL (LOWER)	728
Y	*147-1559*	1	FAN GP-SUCTION	57
Y	*164-1149*	1	FENDER GP-REAR	319
	110-0037	1	FILM (CATERPILLAR)	
	3E-8211		FILM-STRIPE (400CM)	
Y	*198-9723*	1	FITTING GP-HEATER & AIR COND	58
Y	*180-5760*	1	FLOOR MAT GP	739
Y	*239-6996*	1	INDICATOR GP-AIR FILTER CHANGE	79
Y	*185-8815*	1	LIGHTING GP-FLOOD	133
Y	*234-2617*	1	LINES GP-HEATER & AIR COND	749
Y	*202-5724*	1	MOUNTING GP-INSTRUMENT PANEL	758
Y	*180-5772*	1	SEAT GP-SUSPENSION	775
Y	*164-1165*	1	SUPPRESSION GP-SOUND	776
Y	*239-1080*	1	TACHOMETER GP-ELECTRIC	781
Y	*164-1370*	1	TRIM GP-CAB	783
	3N-1491	1	V-BELT SET (INCLUDES 2 BELTS)	
Y	*108-8251*	1	VISOR GP-CAB	784
Y	*167-8187*	1	WASHER GP-WINDOW	785
Y	*174-2024*	1	WIPER GP-WINDOW	797
Y	*238-1811*	1	WIRING GP-AIR CONDITIONER	173
Y	*185-8801*	1	WIRING GP-CAB	178
Y	*238-1167*	1	WIRING GP-CONSOLE	187
Y	*190-7557*	1	WIRING GP-POWER RECEPTACLE	202

Y-SEPARATE ILLUSTRATION

<END>

OPERATOR STATION

164-1100 CAB GP

S/N: BXC1-UP; DSX1-UP
SIDESHIFT
PART OF 214-7008, 214-7009 CAB AR-ENCLOSED ROPS
AN ATTACHMENT

SMCS-7301, 7325, 7335 **i02003931**

NOTE	REF NO	GRAPHIC REF	PART NUMBER	QTY	PART NAME 1 2 3 4 5 6 (PRODUCT LEVEL)	SEE PAGE
	1	1	**134-3059**	1	GUARD-STRIKER	
	2	1	**134-3060**	1	PLATE	
	3	1	**134-3061**	1	PLATE	
	4	1	**134-3062**	2	STRIKER	
	5	1	**134-3503**	1	GUARD-STRIKER	
	6	1	**163-7939**	1	PLATE AS	
Y	7	1	**164-1059**	1	WINDOW GP-CAB (RH)	787
Y	8	1	**164-1060**	1	WINDOW GP-CAB (LH)	789
Y	9	1	**164-1061**	1	DOOR GP-RH	733
Y	10	1	**164-1062**	1	DOOR GP-LH	731
	11	1	**164-1068**	1	GLASS-RH	
	12	1	**164-1069**	1	GLASS-LH	
	13	1	**164-1070**	1	GLASS (FRONT)	
	14	1	**164-1071**	1	GLASS (RH)	
	15	1	**164-1072**	1	GLASS (LH)	
Y	16	1	**164-1300**	1	WINDOW GP-CAB (LOWER REAR)	791
	17	1	**167-3710**	1	HARNESS AS-CAB (LIGHTS)	
		1	**155-2265**	1	KIT-CONNECTING PLUG (8-PIN)	
					(KIT SERVICES PLUG AS AND WEDGE)	
B	18	1	**177-4877**	2	SHIM (1.00MM THK)	
	19	1	**218-2153**	1	CAB AS	
	20	1	**108-4311**	2	SCREW-MACHINE	
	21	1	**117-7414**	2	PIN	
	22	1	**129-5256**	12	BUSHING	
	23	1	**129-5257**	8	BUSHING	
M	24	1	**131-3987**	8	SCREW (M4X0.7X12MM)	
	25	1	**159-4945**	2	KEEPER-REAR (LH)	
	26	1	**159-4946**	2	KEEPER-REAR (RH)	
M	27	1	**5C-7261**	2	NUT (M8X1.25 THD)	
	28	1	**5P-4116**	11	WASHER-HARD (8.8X20.5X2MM THK)	
	29	1	**8S-7803**	8	RING-RETAINING	
M	30	1	**8T-4189**	5	BOLT (M8X1.25X20MM)	
M	31	1	**8T-4200**	4	BOLT (M8X1.25X16MM)	
	32	1	**8Y-7444**	2	PIN	
	33	1	**9R-5616**	2	PLUG	
E	34	1	**144-0195**	2	HOSE (410CM)	
	35	1	**3S-2093**	7	STRAP-CABLE	

B-USE AS REQUIRED
E-ORDER BY THE CENTIMETER
M-METRIC PART
Y-SEPARATE ILLUSTRATION

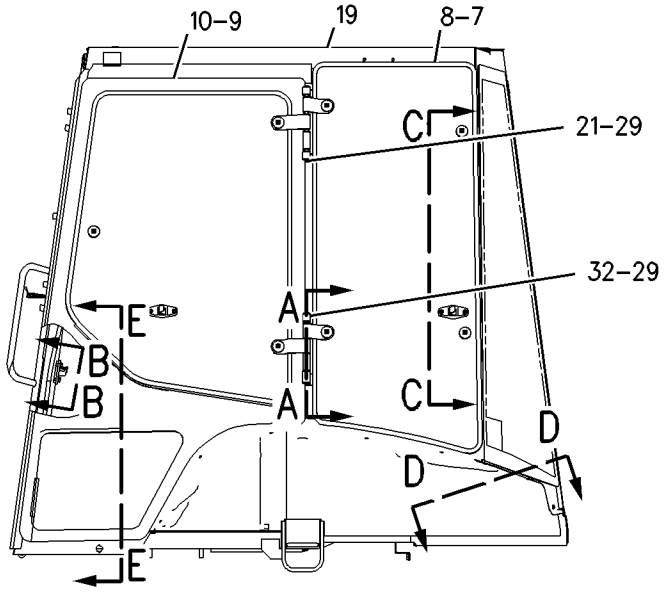

LEFT SIDE VIEW

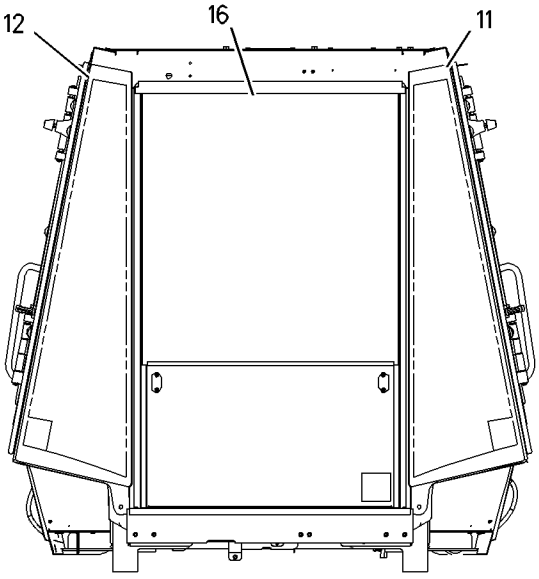

REAR VIEW

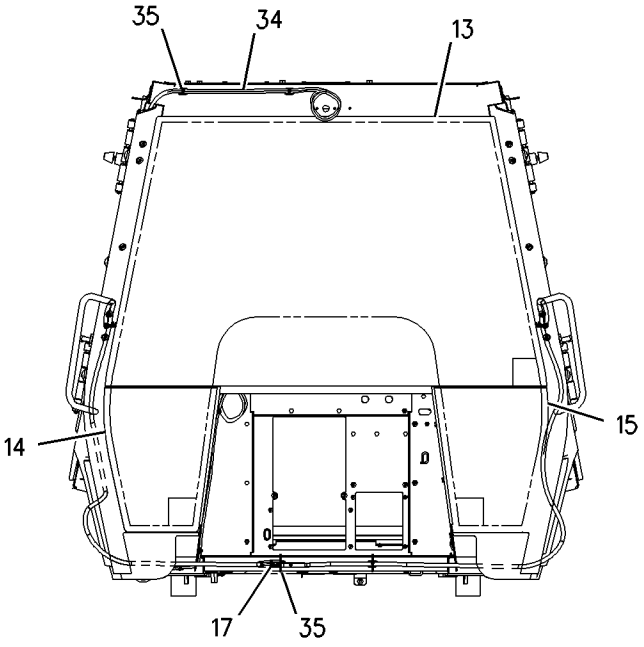

FRONT VIEW

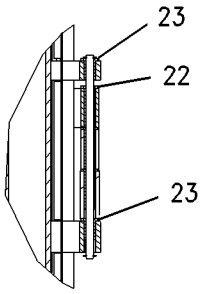

SECTION A-A

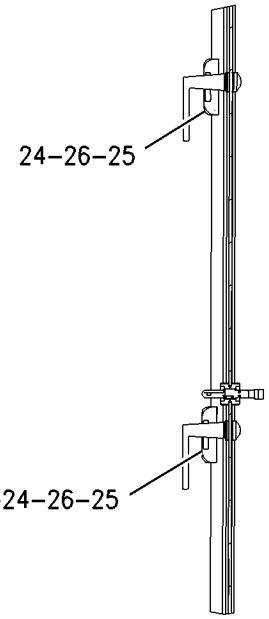

SECTION C-C

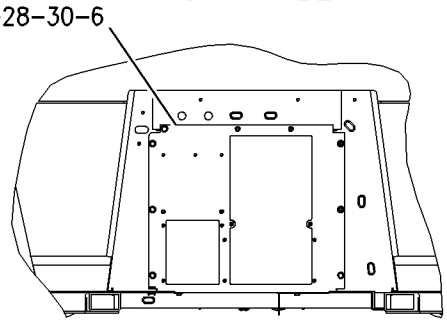

SECTION E-E

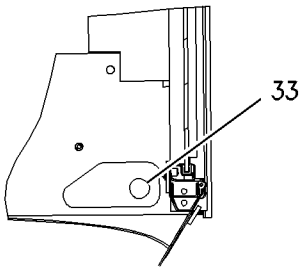

SECTION D-D

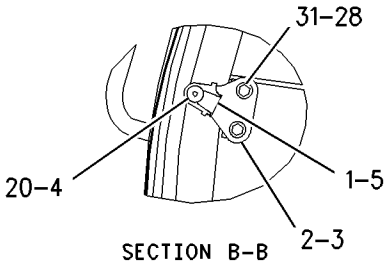

SECTION B-B

GRAPHIC #1 **<END>** g00880262

OPERATOR STATION

226-9095 CAB GP

S/N: BXC1-UP; DSX1-UP
SIDESHIFT, STANDARD
PART OF 214-7006, 214-7007 CAB AR
AN ATTACHMENT

SMCS-7301, 7325, 7335 **i01792617**

NOTE	REF NO	GRAPHIC REF	PART NUMBER	QTY	PART NAME 1 2 3 4 5 6 (PRODUCT LEVEL)	SEE PAGE
	1	1	**4W-4065**	4	SPACER (50.8MM THK)	
	2	1	**8Y-7309**	2	RETAINER	
	3	1	**134-3059**	1	GUARD-STRIKER	
	4	1	**134-3060**	1	PLATE	
	5	1	**134-3061**	1	PLATE	
	6	1	**134-3062**	2	STRIKER	
	7	1	**134-3503**	1	GUARD-STRIKER	
	8	1	**143-2830**	2	LATCH AS	
					(EACH INCLUDES)	
M		1	**6V-7743**	2	LOCKNUT (M6X1 THD)	
M		1	**9X-2045**	2	SCREW-TRUSS HEAD (M6X1X20MM)	
		1	**143-2827**	1	SPRING	
	9	1	**163-7939**	1	PLATE AS	
Y	10	1	**164-1061**	1	DOOR GP-RH	733
Y	11	1	**164-1062**	1	DOOR GP-LH	731
	12	1	**164-1068**	1	GLASS-RH	
	13	1	**164-1069**	1	GLASS-LH	
	14	1	**164-1070**	1	GLASS (FRONT)	
	15	1	**164-1071**	1	GLASS-RH	
	16	1	**164-1072**	1	GLASS-LH	
Y	17	1	*164-1300*	1	WINDOW GP-CAB (LOWER REAR)	791
	18	1	**167-3710**	1	HARNESS AS (ROAD)	
		1	**155-2265**	1	KIT-CONNECTING PLUG (8 PIN)	
	19	1	**218-2154**	1	CAB AS	
	20	1	**226-7811**	1	GLASS (LH)	
	21	1	**226-7812**	1	GLASS (RH)	
	22	1	**108-4311**	2	SCREW-MACHINE	
	23	1	**117-7414**	2	PIN	
	24	1	**129-5256**	8	BUSHING	
	25	1	**129-5257**	8	BUSHING	
M	26	1	**5C-7261**	4	NUT (M8X1.25 THD)	
	27	1	**5P-4116**	11	WASHER-HARD (8.8X20.5X2MM THK)	
	28	1	**7X-2393**	2	BUMPER-CONICAL	
	29	1	**8S-7803**	8	RING-RETAINING	
M	30	1	**8T-4189**	5	BOLT (M8X1.25X20MM)	
M	31	1	**8T-4200**	4	BOLT (M8X1.25X16MM)	
	32	1	**8Y-7444**	2	PIN	
	33	1	**9R-5616**	2	PLUG	
	34	1	**144-0195**		HOSE (820CM)	
	35	1	**3S-2093**	7	STRAP-CABLE	

M-METRIC PART
Y-SEPARATE ILLUSTRATION

226-9095 CAB GP *(contd.)* **i01792617**

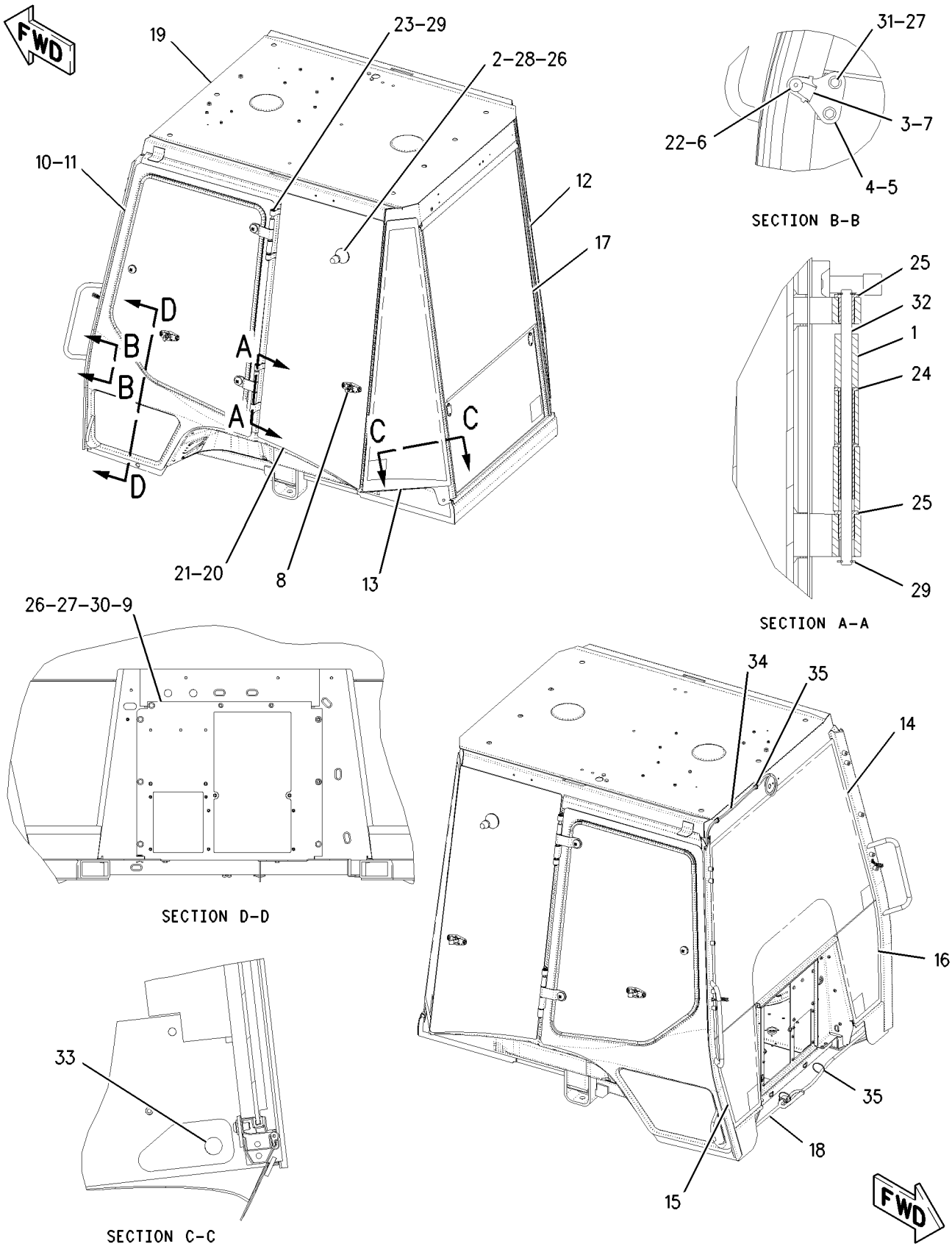

GRAPHIC #1 **<END>** g00946779

OPERATOR STATION

214-7004 CANOPY AR

S/N: BXC1-UP; DSX1-UP
AN ATTACHMENT

SMCS-7302 **i01969764**

NOTE	PART NUMBER	QTY	PART NAME 1 2 3 4 5 6 (PRODUCT LEVEL)	SEE PAGE
Y	*164-1175*	1	CANOPY GP-OPEN ROPS	712
Y	*164-1389*	1	CONSOLE GP-OPERATOR	719
Y	*185-3530*	1	CONSOLE GP-SIDE	726
Y	*186-0252*	1	COVER GP-FIREWALL (LOWER)	728
Y	*198-0104*	1	COVER GP-FIREWALL (UPPER)	729
Y	**197-7564**	1	COVER GP-POST (RH)	730
Y	*145-6713*	1	FAN GP-SUCTION	56
Y	*164-1149*	1	FENDER GP-REAR	319
Y	*180-5765*	1	FLOOR MAT GP	740
Y	*238-9828*	1	INDICATOR GP-AIR FILTER CHANGE	78
	203-4158	1	PLUG GP	
	9J-1874	1	PLUG	
	187-1644	2	PLUG	
Y	*239-1081*	1	TACHOMETER GP-ELECTRIC	782
Y	*164-1370*	1	TRIM GP-CAB	783
	5L-3308	1	V-BELT SET (INCLUDES 2 BELTS)	
Y	*185-8802*	1	WIRING GP-CAB	180
Y	*238-1166*	1	WIRING GP-CONSOLE	185

Y-SEPARATE ILLUSTRATION

<END>

OPERATOR STATION

164-1175 CANOPY GP-OPEN ROPS

S/N: BXC1-UP; DSX1-UP
MECHANICAL BACKHOE CONTROLS
PART OF 214-7004 CANOPY AR
AN ATTACHMENT

SMCS-7302, 7323 **i02005623**

NOTE	REF NO	GRAPHIC REF	PART NUMBER	QTY	PART NAME 1 2 3 4 5 6 (PRODUCT LEVEL)	SEE PAGE
	1	1	**163-7939**	1	PLATE AS	
	2	1	**164-1071**	1	GLASS (RH)	
	3	1	**164-1072**	1	GLASS (LH)	
	4	1	**167-3710**	1	HARNESS AS-CAB (LIGHTS)	
		1	**155-2265**	1	KIT-CONNECTING PLUG (8-PIN)	
					(KIT SERVICES PLUG AS AND WEDGE)	
	5	1	**218-2152**	1	CANOPY AS	
	6	1	**3S-2093**	2	STRAP-CABLE	
M	7	1	**5C-7261**	2	NUT (M8X1.25 THD)	
	8	1	**5P-4116**	7	WASHER-HARD (8.8X20.5X2MM THK)	
M	9	1	**8T-4189**	5	BOLT (M8X1.25X20MM)	
E	10	1	**9X-2092**	2	STRIP-EDGE (40CM)	

E-ORDER BY THE CENTIMETER
M-METRIC PART

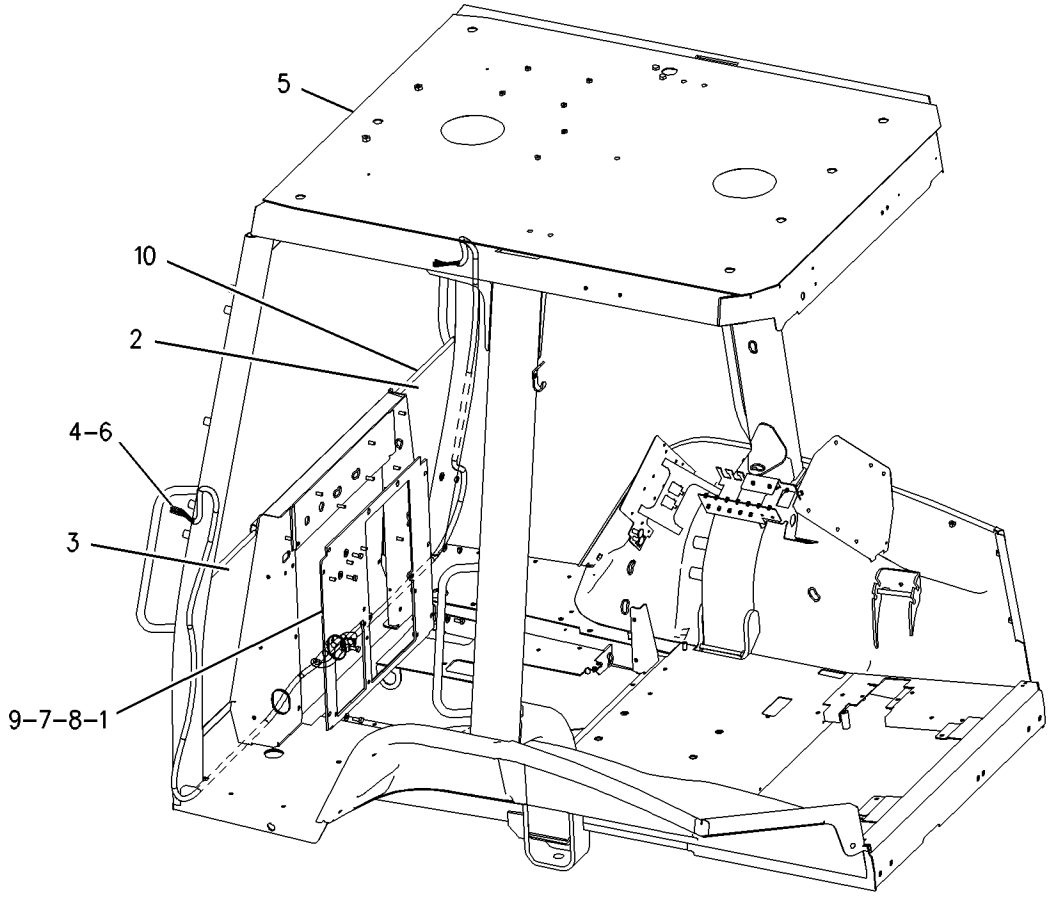

GRAPHIC #1 **<END>** g00880133

OPERATOR STATION

200-2676 COMPARTMENT GP-LITERATURE

S/N: BXC1-UP; DSX1-UP

PART OF 214-7006, 214-7007 CAB AR, 214-7008, 214-7009 CAB AR-ENCLOSED ROPS AN ATTACHMENT

SMCS-7268 **i01986839**

NOTE	REF NO	GRAPHIC REF	PART NUMBER	QTY	PART NAME 1 2 3 4 5 6 (PRODUCT LEVEL)	SEE PAGE
	1	1	**5P-7957**	1	LANYARD	
	2	1	**5P-7958**	1	SLEEVE-CABLE SPLICE	
	3	1	**5P-8500**	2	KEY	
B	4	1	**7F-3400**	2	BAG-POLYETHYLENE	

B-USE AS REQUIRED

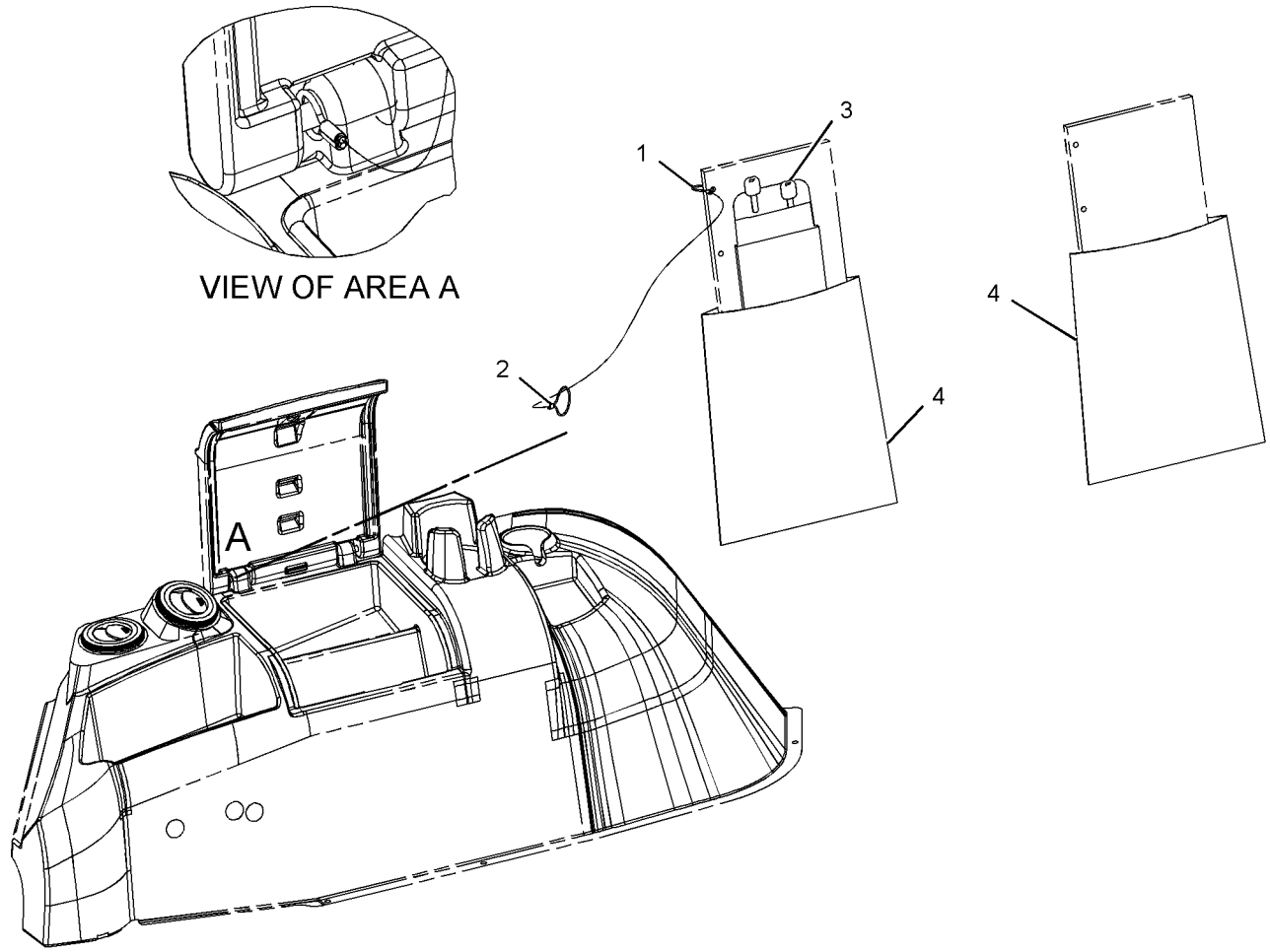

GRAPHIC #1 **<END>** g01035330

OPERATOR STATION

3E-1908 COMPRESSOR GP-REFRIGERANT

S/N: BXC1-UP; DSX1-UP
PART OF 234-8601 COMPRESSOR GP-REFRIGERANT
AN ATTACHMENT

SMCS-1802 **i01234316**

NOTE	REF NO	GRAPHIC REF	PART NUMBER	QTY	PART NAME 1 2 3 4 5 6 (PRODUCT LEVEL)	SEE PAGE
	1	1	*3E-3658*	1	COMPRESSOR AS	
	2	1	**7T-4532**	1	PLUG AS	
	3	1	**9X-7385**	2	SEAL-O-RING (20.22MM ID)	

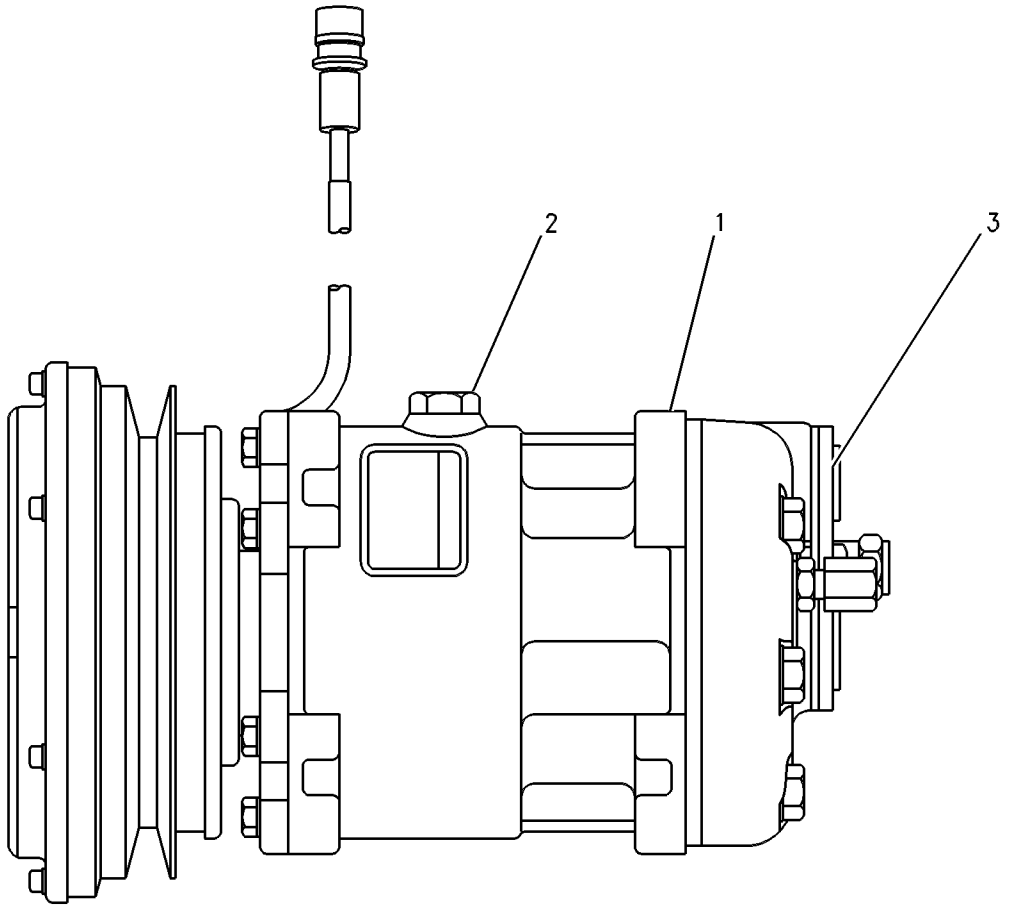

GRAPHIC #1 **<END>** g00660126

OPERATOR STATION

234-8601 COMPRESSOR GP-REFRIGERANT

S/N: BXC1-UP; DSX1-UP
PART OF 214-7007 CAB AR, 214-7009 CAB AR-ENCLOSED ROPS
AN ATTACHMENT

SMCS-1802 **i02008912**

NOTE	REF NO	GRAPHIC REF	PART NUMBER	QTY	PART NAME 1 2 3 4 5 6 (PRODUCT LEVEL)	SEE PAGE
	1	1	**1W-2934**	1	V-BELT (AIR CONDITIONING COMPRESSOR)	
Y	2	1	**3E-1908**	1	COMPRESSOR GP-REFRIGERANT	714
	3	1	**124-6524**	1	SPACER (11X25X10.5MM THK)	
	4	1	**130-3881**	1	PULLEY-FAN	
	5	1	**234-9430**	1	PLATE AS	
	6	1	**234-9554**	1	PLATE	
	7	1	**235-1056**	1	PLATE	
	8	1	**239-0602**	1	PLATE	
	9	1	**244-2104**	1	PLATE	
	10	1	**8T-4121**	12	WASHER-HARD (11X21X2.5MM THK)	
M	11	1	**8T-4133**	5	NUT (M10X1.5 THD)	
M	12	1	**8T-4185**	1	BOLT (M10X1.5X50MM)	
M	13	1	**8T-4186**	5	BOLT (M10X1.5X40MM)	
M	14	1	**8T-4195**	1	BOLT (M10X1.5X30MM)	
	15	1	**8T-4223**	2	WASHER-HARD (13.5X25.5X3MM THK)	
	16	1	**8T-4224**	4	WASHER-HARD (8.8X16X2MM THK)	
M	17	1	**8T-4244**	1	NUT (M12X1.75 THD)	
M	18	1	**8T-4908**	4	BOLT (M8X1.25X25MM)	
M	19	1	**8T-5001**	1	BOLT (M12X1.75X130MM)	

M-METRIC PART
Y-SEPARATE ILLUSTRATION

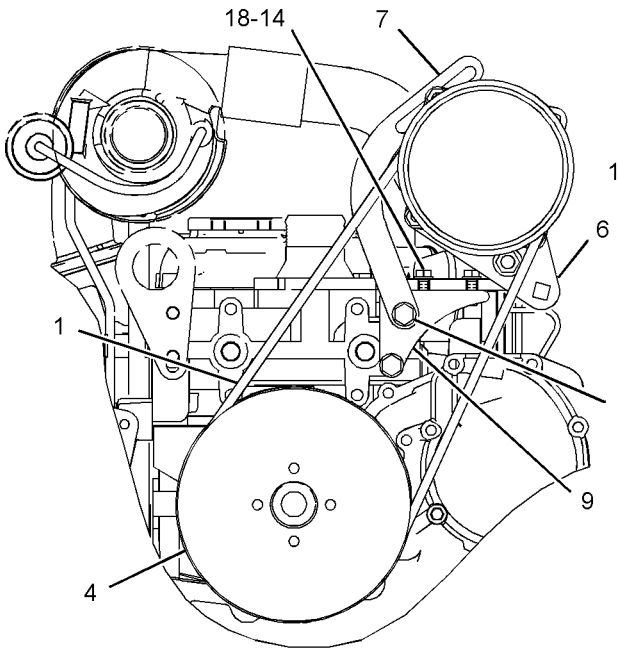

FRONT VIEW

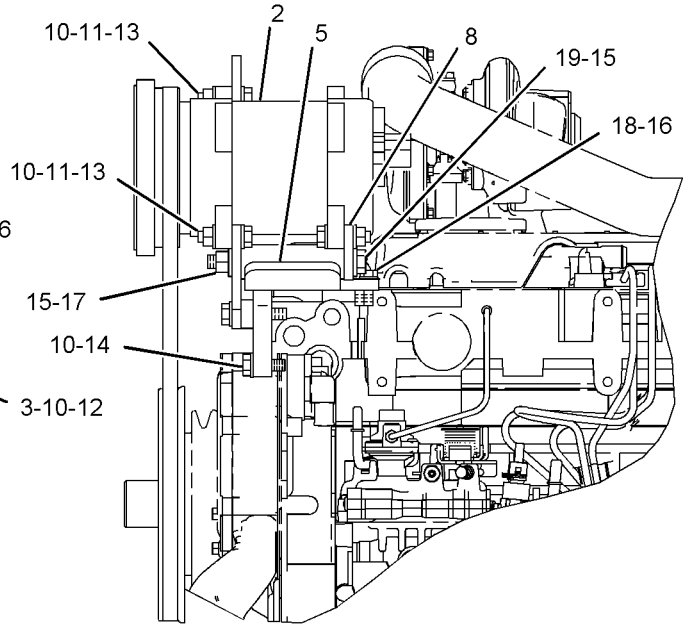

LEFT SIDE VIEW

GRAPHIC #1 **<END>** g01038724

OPERATOR STATION

144-2222 CONDENSER & MTG GP-REFRIGERANT

S/N: BXC1-UP; DSX1-UP
PART OF 214-7007 CAB AR, 214-7009 CAB AR-ENCLOSED ROPS
AN ATTACHMENT

SMCS-1805 **i01988316**

NOTE	REF NO	GRAPHIC REF	PART NUMBER	QTY	PART NAME 1 2 3 4 5 6 (PRODUCT LEVEL)	SEE PAGE
	1	1	**7X-0579**	7	WASHER-HARD (8.8X25.5X2MM THK)	
	2	1	**166-2861**	1	CORE AS	
C	3	1	**240-2614**	2	SPACER (10X19.5X60MM THK)	
M	4	1	**153-3061**	1	BOLT (M8X1.25X130MM)	
M	5	1	**8T-3647**	1	BOLT (M8X1.25X80MM)	
M	6	1	**8T-4200**	4	BOLT (M8X1.25X16MM)	

C-CHANGE FROM PREVIOUS TYPE
M-METRIC PART

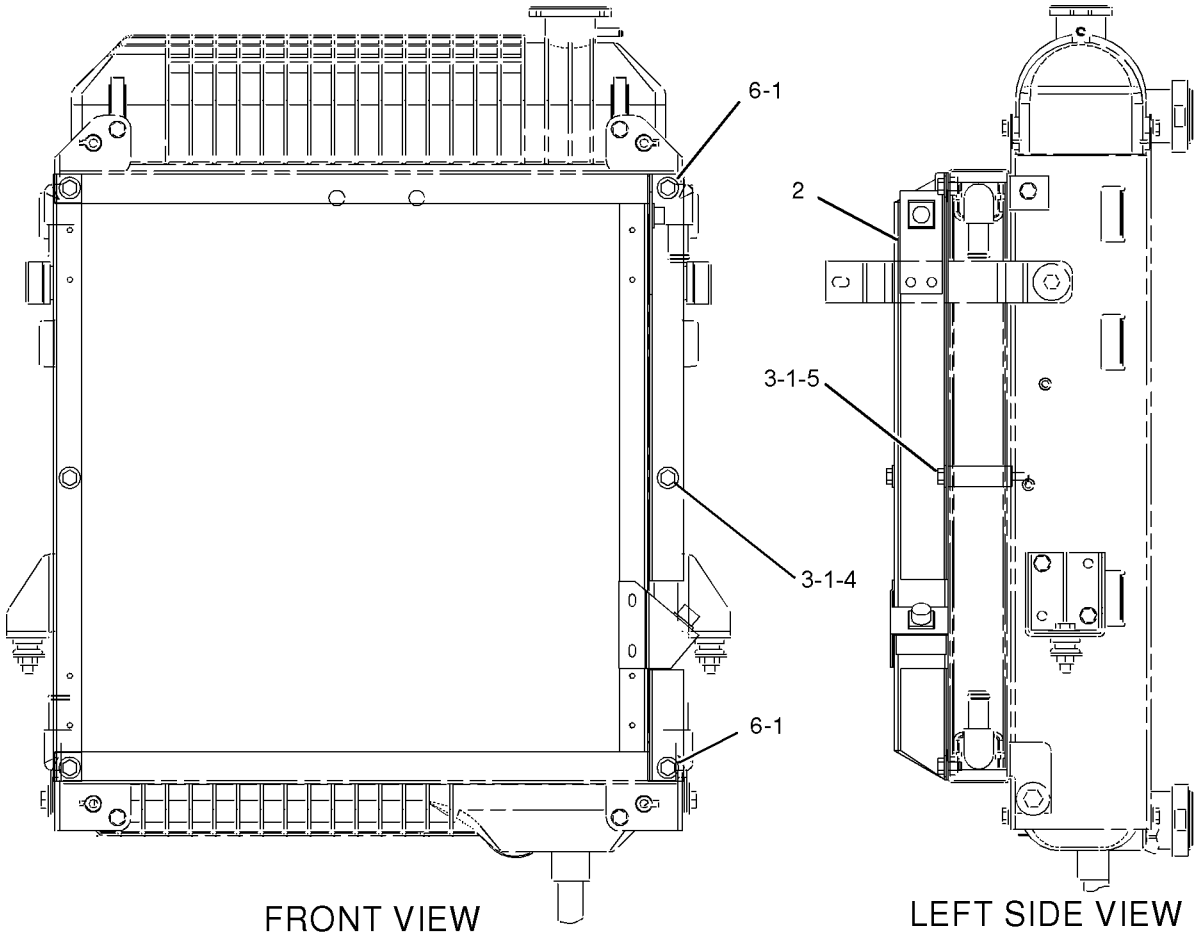

GRAPHIC #1 **<END>** g01029783

OPERATOR STATION

237-9541 CONSOLE GP-FRONT

S/N: BXC1-UP; DSX1-UP
PART OF 214-7014 POWER TRAIN AR
AN ATTACHMENT

SMCS-5258 **i01994471**

NOTE	REF NO	GRAPHIC REF	PART NUMBER	QTY	PART NAME 1 2 3 4 5 6 (PRODUCT LEVEL)	SEE PAGE
	1	1	**8Y-6388**	1	LOUVER AS	
	2	1	**164-8473**	5	LOUVER AS	
	3	1	**237-7161**	1	CONSOLE-FRONT	
	4	1	**104-2091**	22	SCREW-FLAT HEAD (6-20X0.5 IN)	

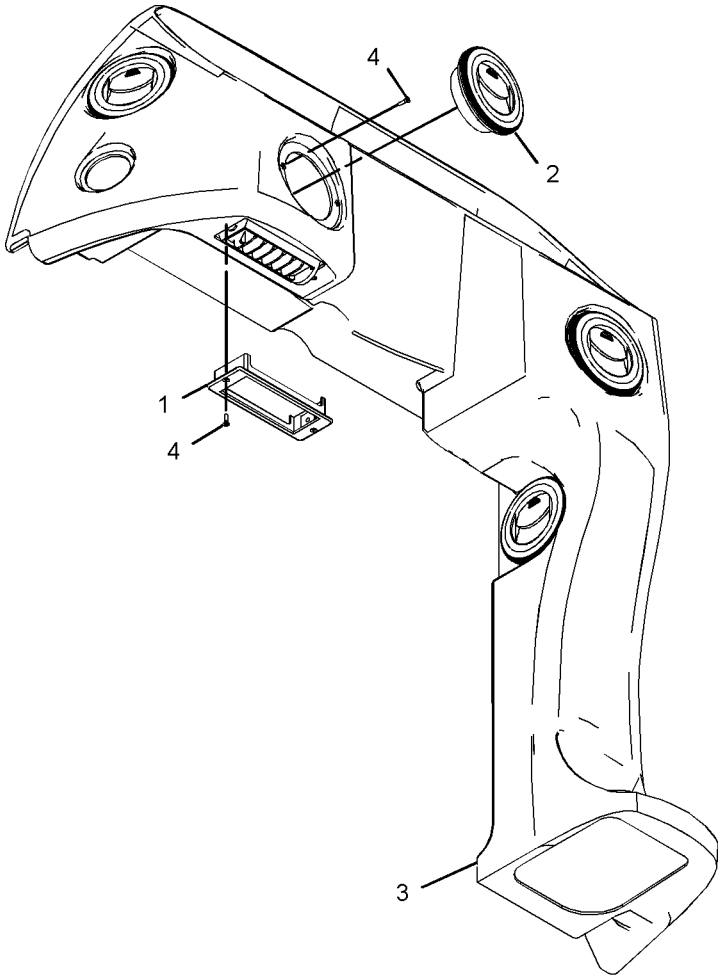

GRAPHIC #1 **<END>** g01033313

OPERATOR STATION

237-9542 CONSOLE GP-FRONT

S/N: BXC1-UP; DSX1-UP
PART OF 214-7015 POWER TRAIN AR
AN ATTACHMENT

SMCS-5258 **i01994483**

NOTE	REF NO	GRAPHIC REF	PART NUMBER	QTY	PART NAME 1 2 3 4 5 6 (PRODUCT LEVEL)	SEE PAGE
	1	1	**8Y-6388**	1	LOUVER AS	
	2	1	**164-8473**	5	LOUVER AS	
	3	1	**237-7162**	1	CONSOLE-FRONT	
	4	1	**104-2091**	22	SCREW-FLAT HEAD (6-20X0.5 IN)	

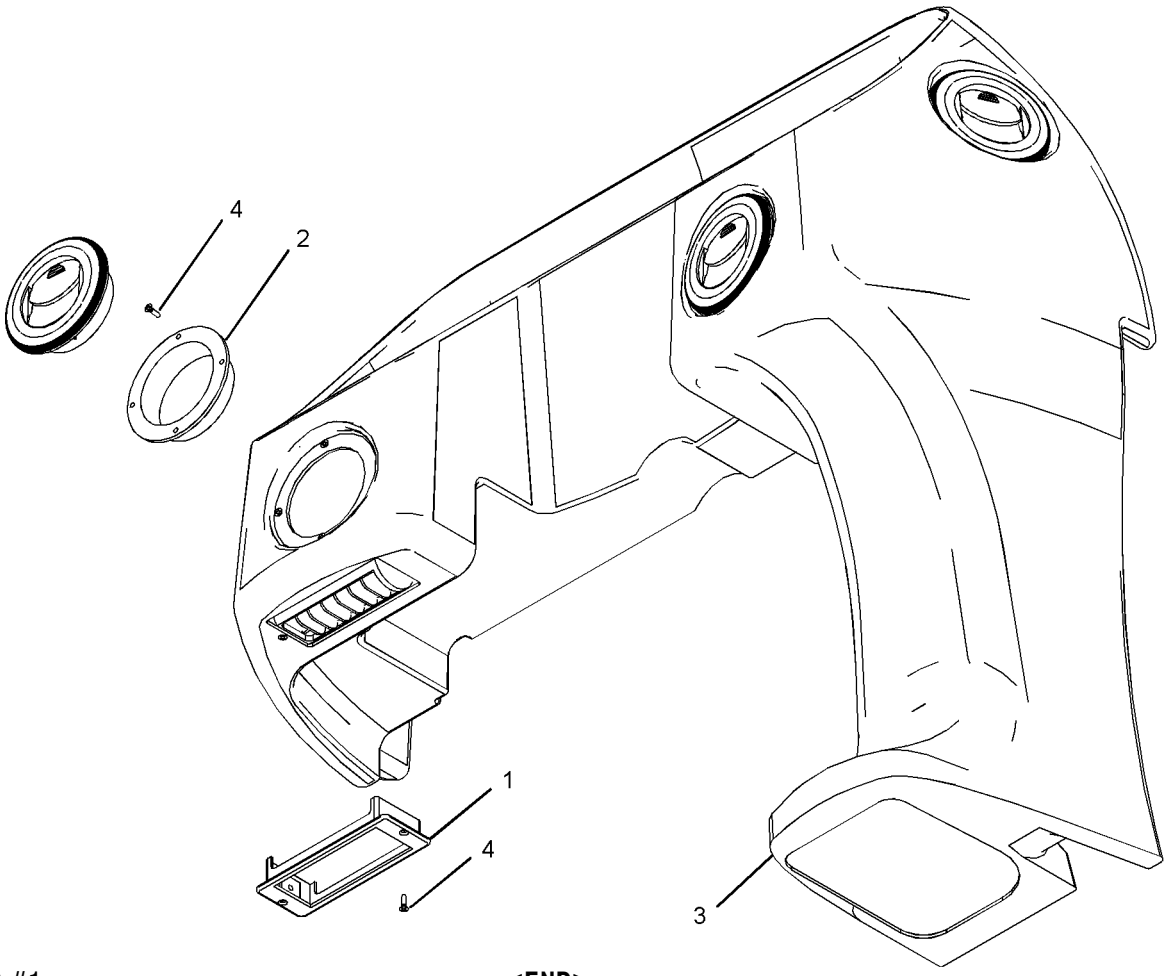

GRAPHIC #1 **<END>** g01033546

OPERATOR STATION

164-1389 CONSOLE GP-OPERATOR–LH

S/N: BXC1-UP; DSX1-UP
PART OF 214-7006 CAB AR, 214-7004 CANOPY AR
AN ATTACHMENT

SMCS-5258, 7451 **i01665858**

NOTE	REF NO	GRAPHIC REF	PART NUMBER	QTY	PART NAME 1 2 3 4 5 6 (PRODUCT LEVEL)	SEE PAGE
B	1	1	**9P-6571**	3	PLUG	
Y	2	1	*164-1132*	1	CONSOLE GP-SIDE (LH)	722
M	3	1	**178-9983**	3	LOCKNUT	
M	4	1	**8T-3998**	3	BOLT (M4X0.7X12MM)	
	5	1	**9X-2038**	4	WASHER (7X19X2MM THK)	
M	6	1	**9X-2044**	4	SCREW-TRUSS HEAD (M6X1X16MM)	

B-USE AS REQUIRED
M-METRIC PART
Y-SEPARATE ILLUSTRATION

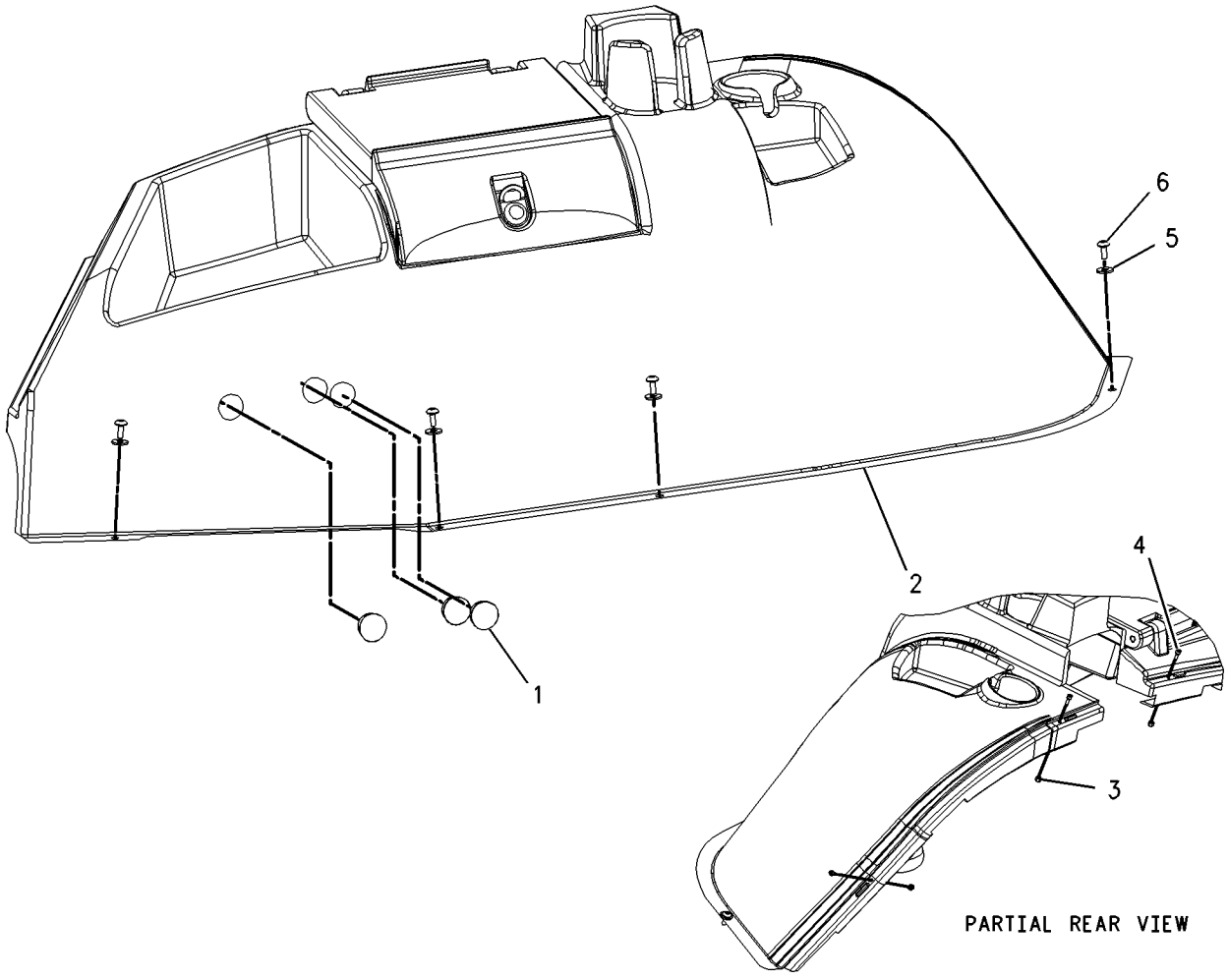

GRAPHIC #1 **<END>** g00861135

OPERATOR STATION

185-3524 CONSOLE GP-OPERATOR–RH

S/N: BXC1-UP; DSX1-UP

PART OF 214-7006, 214-7007 CAB AR, 214-7008, 214-7009 CAB AR-ENCLOSED ROPS

AN ATTACHMENT

SMCS-5258, 7451 **i01555553**

NOTE	REF NO	GRAPHIC REF	PART NUMBER	QTY	PART NAME 1 2 3 4 5 6 (PRODUCT LEVEL)	SEE PAGE
BC	1	1	**9P-6571**	1	PLUG	
M	2	1	**178-9983**	4	LOCKNUT	
Y	3	1	*183-4998*	1	CONSOLE GP-SIDE (RH)	725
	4	1	**205-9980**	4	SCREW-TRUSS HEAD	
CM	5	1	**8T-3998**	4	BOLT (M4X0.7X12MM)	
M	6	1	**9X-2044**	5	SCREW-TRUSS HEAD (M6X1X16MM)	

B-USE AS REQUIRED
C-CHANGE FROM PREVIOUS TYPE
M-METRIC PART
Y-SEPARATE ILLUSTRATION

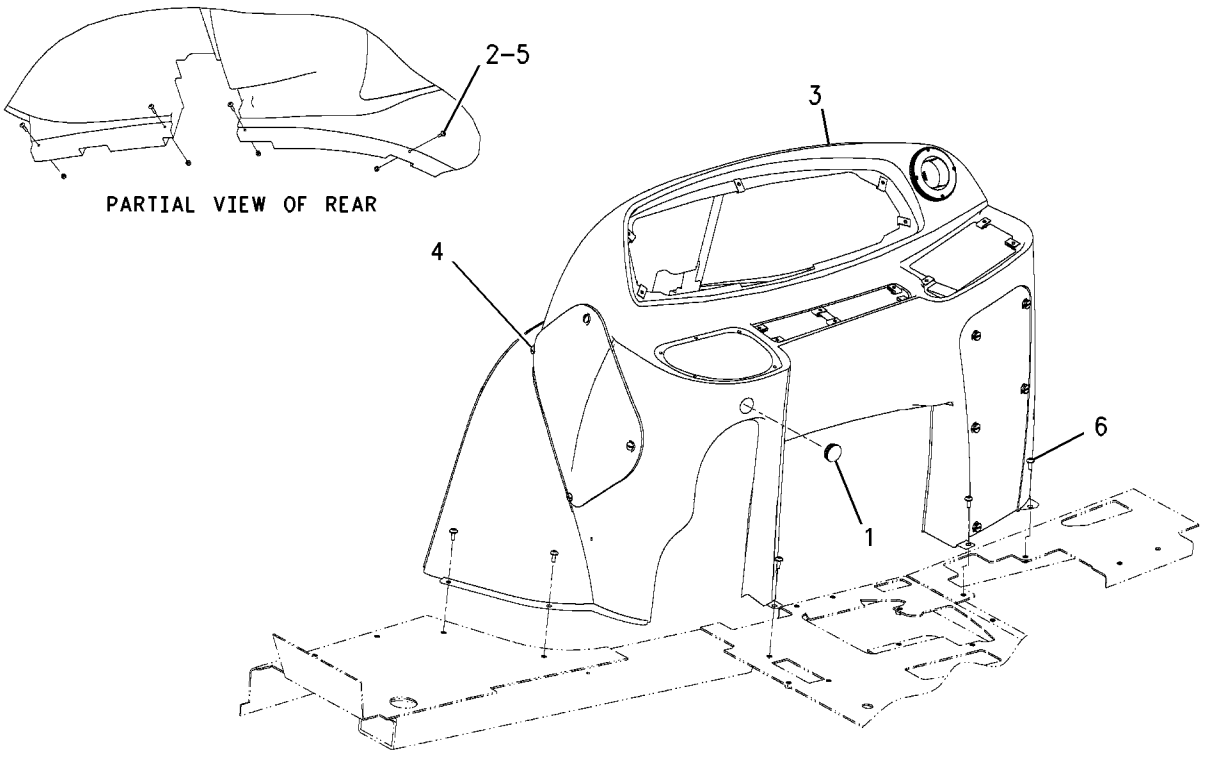

GRAPHIC #1 **<END>** g00808569

OPERATOR STATION

164-1131 CONSOLE GP-SIDE—LH—AIR CONDITIONING

S/N: BXC1-UP; DSX1-UP
PART OF 164-1388 CONSOLE GP-SIDE
AN ATTACHMENT

SMCS-7451 **i01488091**

NOTE	REF NO	GRAPHIC REF	PART NUMBER	QTY	PART NAME 1 2 3 4 5 6 (PRODUCT LEVEL)	SEE PAGE
J	1	1	**5P-9000**	1	LOCK AS-CYLINDER	
	2	1	**118-5503**	2	LOUVER AS	
	3	1	**200-2673**	1	PLATE	
	4	1	**164-1133**	1	COVER	
	5	1	**164-1134**	1	PIN	
	6	1	**167-8252**	1	CONSOLE-LH	
	7	1	**188-7760**	1	PLATE	
	8	1	**104-2091**	8	SCREW-FLAT HEAD (6-20X0.5 IN)	

J-REQUIRES 5P8500 KEY

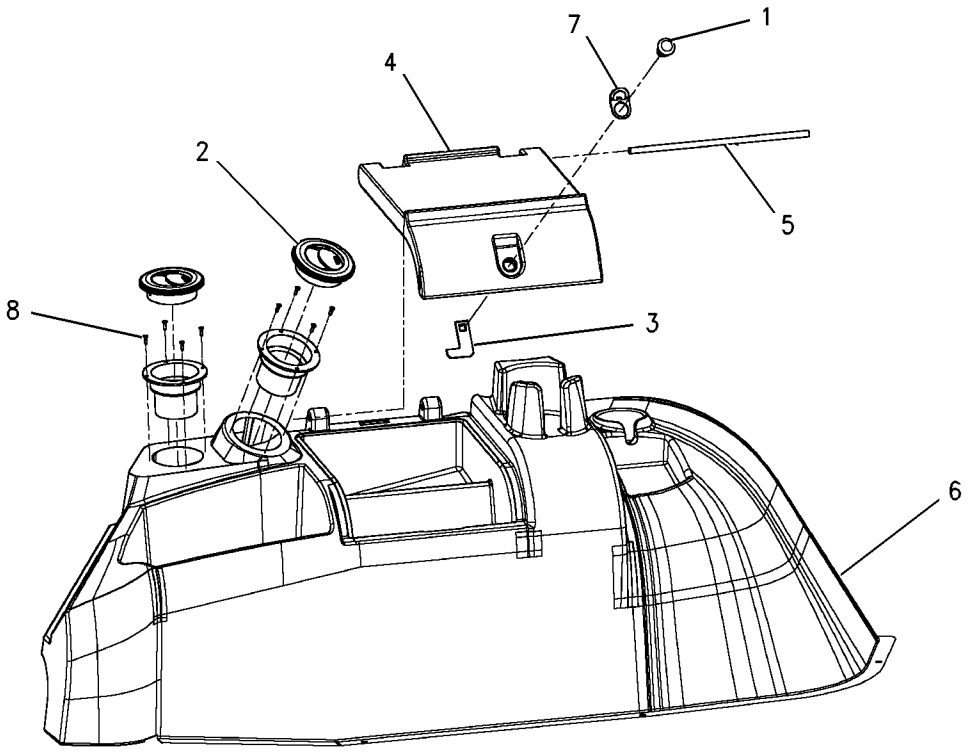

EXPLODED VIEW

GRAPHIC #1 **<END>** g00755839

OPERATOR STATION

164-1132 CONSOLE GP-SIDE—LH

S/N: BXC1-UP; DSX1-UP
PART OF 164-1389 CONSOLE GP-OPERATOR
AN ATTACHMENT

SMCS-7451 **i01596469**

NOTE	REF NO	GRAPHIC REF	PART NUMBER	QTY	PART NAME 1 2 3 4 5 6 (PRODUCT LEVEL)	SEE PAGE
J	1	1	**5P-9000**	1	LOCK AS-CYLINDER	
	2	1	**164-1133**	1	COVER	
	3	1	**164-1134**	1	PIN	
	4	1	**183-4899**	1	CONSOLE-LH	
	5	1	**188-7760**	1	PLATE	
	6	1	**200-2673**	1	PLATE	

J-REQUIRES A 5P-8500 KEY

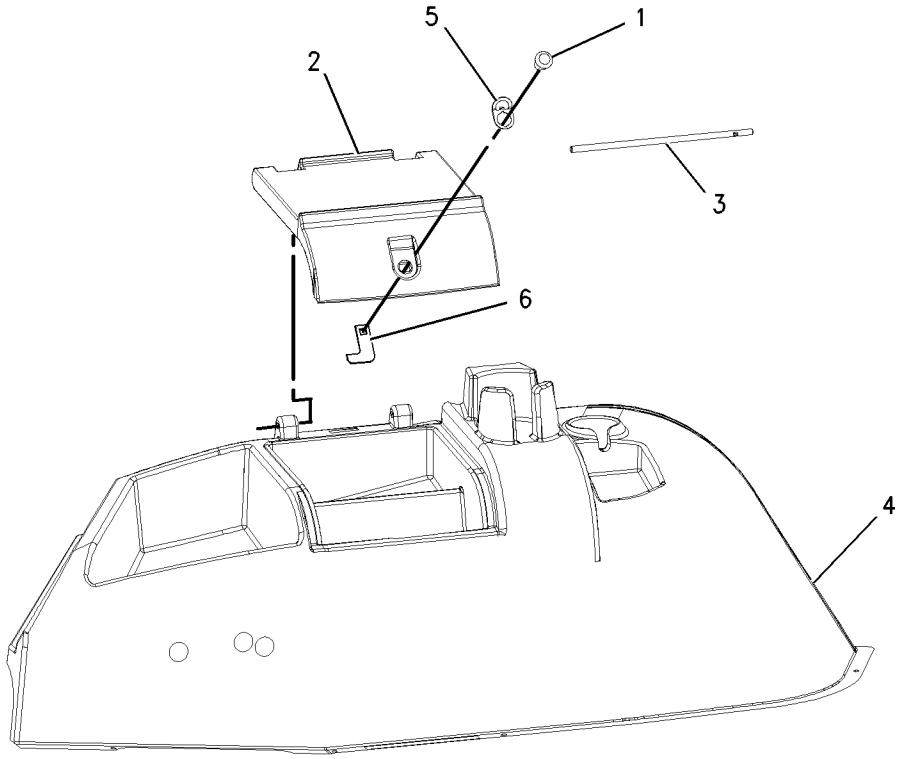

GRAPHIC #1 **<END>** g00828680

OPERATOR STATION

164-1388 CONSOLE GP-SIDE—LH—AIR CONDITIONING

S/N: BXC1-UP; DSX1-UP

PART OF 214-7007 CAB AR, 214-7008, 214-7009 CAB AR-ENCLOSED ROPS AN ATTACHMENT

SMCS-7451 **i01665832**

NOTE	REF NO	GRAPHIC REF	PART NUMBER	QTY	PART NAME 1 2 3 4 5 6 (PRODUCT LEVEL)	SEE PAGE
B	1	1	**9P-6571**	3	PLUG	
Y	2	1	*164-1131*	1	CONSOLE GP-SIDE	721
M	3	1	**178-9983**	3	LOCKNUT	
	4	1	**184-6558**	1	HOSE	
	5	1	**184-6566**	1	GASKET	
	6	1	**198-6886**	1	PLATE	
M	7	1	**8T-3998**	3	BOLT (M4X0.7X12MM)	
	8	1	**9X-2038**	3	WASHER (7X19X2MM THK)	
M	9	1	**9X-2044**	4	SCREW-TRUSS HEAD (M6X1X16MM)	

B-USE AS REQUIRED
M-METRIC PART
Y-SEPARATE ILLUSTRATION

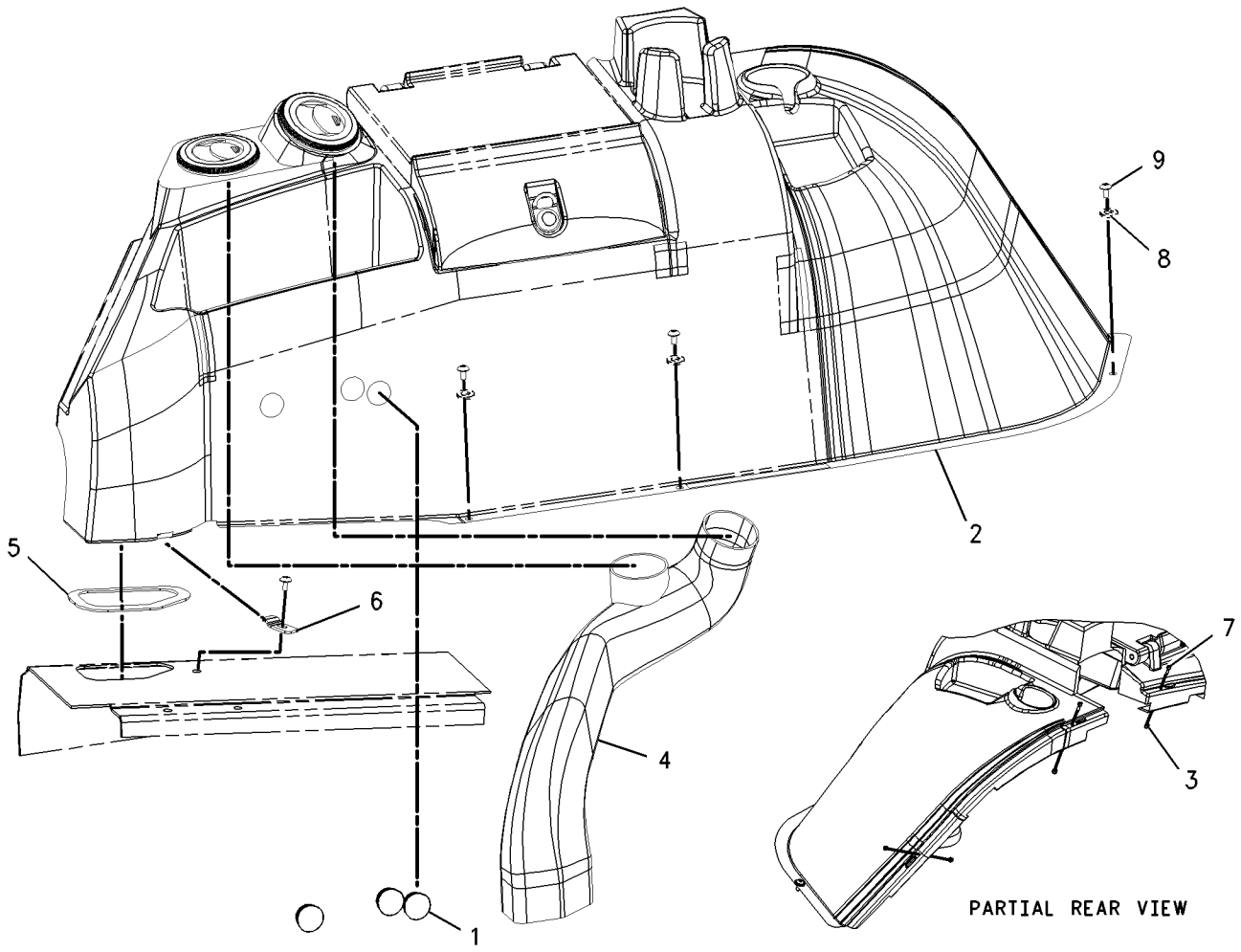

GRAPHIC #1 **<END>** g00860220

OPERATOR STATION

183-4997 CONSOLE GP-SIDE

S/N: BXC1-UP; DSX1-UP
PART OF 185-3530 CONSOLE GP-SIDE
AN ATTACHMENT

SMCS-7451 **i01660383**

NOTE	REF NO	GRAPHIC REF	PART NUMBER	QTY	PART NAME 1 2 3 4 5 6 (PRODUCT LEVEL)	SEE PAGE
	1	1	**164-1178**	5	CLIP	
	2	1	**172-8591**	16	NUT-SPRING	
Y	3	1	*183-4991*	1	COVER GP-CONSOLE	727
	4	1	**202-6141**	1	CONSOLE	
	5	1	**204-7341**	1	COVER-FUSE	

Y-SEPARATE ILLUSTRATION

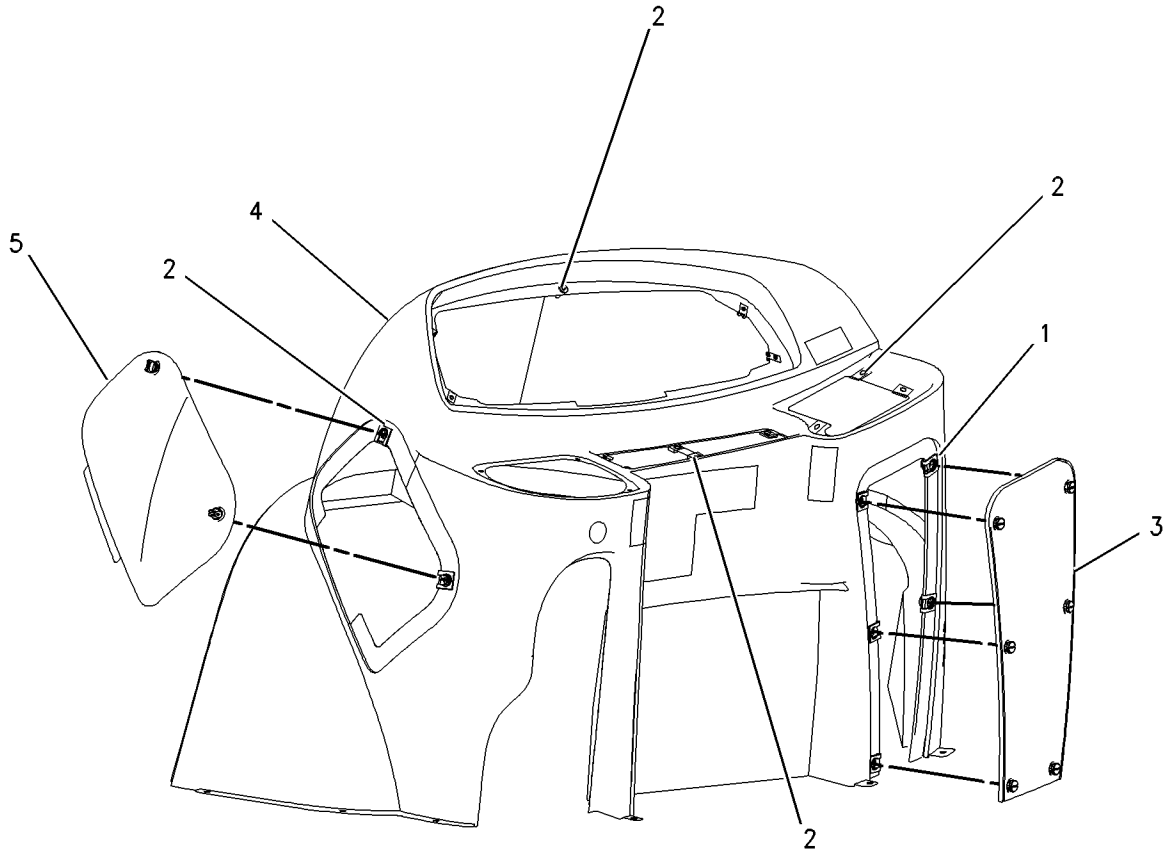

GRAPHIC #1 **<END>** g00857012

OPERATOR STATION

183-4998 CONSOLE GP-SIDE

S/N: BXC1-UP; DSX1-UP
PART OF 185-3524 CONSOLE GP-OPERATOR
AN ATTACHMENT

SMCS-7451 **i01663889**

NOTE	REF NO	GRAPHIC REF	PART NUMBER	QTY	PART NAME 1 2 3 4 5 6 (PRODUCT LEVEL)	SEE PAGE
	1	1	**118-5503**	1	LOUVER AS	
C	2	1	**164-1178**	5	CLIP	
C	3	1	**172-8591**	16	NUT-SPRING	
Y	4	1	*183-4991*	1	COVER GP-CONSOLE	727
C	5	1	**202-6142**	1	CONSOLE-SIDE	
	6	1	**204-7341**	1	COVER-FUSE	
	7	1	**104-2091**	4	SCREW-FLAT HEAD (6-20X0.5 IN)	

C-CHANGE FROM PREVIOUS TYPE
Y-SEPARATE ILLUSTRATION

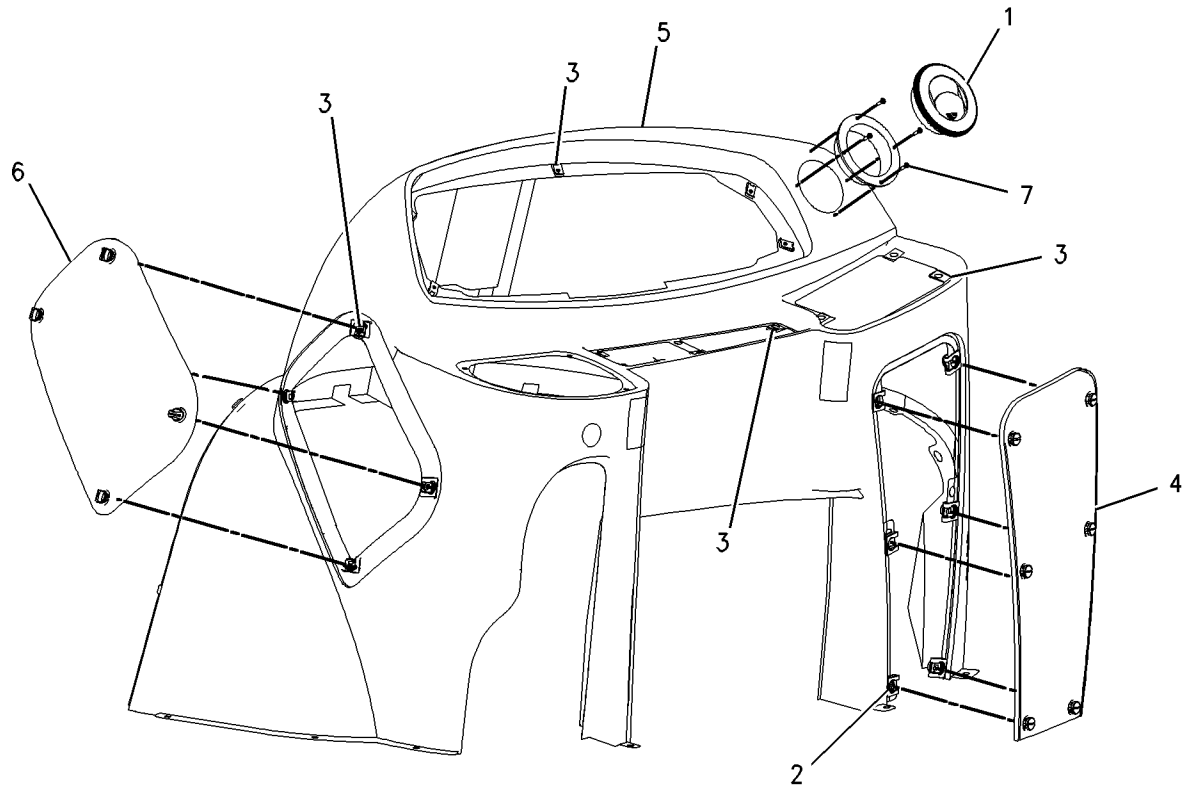

GRAPHIC #1 **<END>** g00859080

OPERATOR STATION

185-3530 CONSOLE GP-SIDE

S/N: BXC1-UP; DSX1-UP
PART OF 214-7004 CANOPY AR
AN ATTACHMENT

SMCS-7451 **i01968303**

NOTE	REF NO	GRAPHIC REF	PART NUMBER	QTY	PART NAME 1 2 3 4 5 6 (PRODUCT LEVEL)	SEE PAGE
B	1	1	**9P-6571**	1	PLUG	
	2	1	**164-1107**	1	CONSOLE-STORAGE	
M	3	1	**178-9983**	4	LOCKNUT (M4X0.7 THD)	
Y	4	1	*183-4997*	1	CONSOLE GP-SIDE	724
	5	1	**184-6557**	1	CONSOLE	
	6	1	**205-9980**	4	SCREW-TRUSS HEAD	
M	7	1	**8T-3998**	4	BOLT (M4X0.7X12MM)	
	8	1	**9X-2038**	2	WASHER (7X19X2MM THK)	
M	9	1	**9X-2044**	5	SCREW-TRUSS HEAD (M6X1X16MM)	
M	10	1	**121-9870**	2	SCREW-MACHINE (M6X1X40MM)	

B-USE AS REQUIRED
M-METRIC PART
Y-SEPARATE ILLUSTRATION

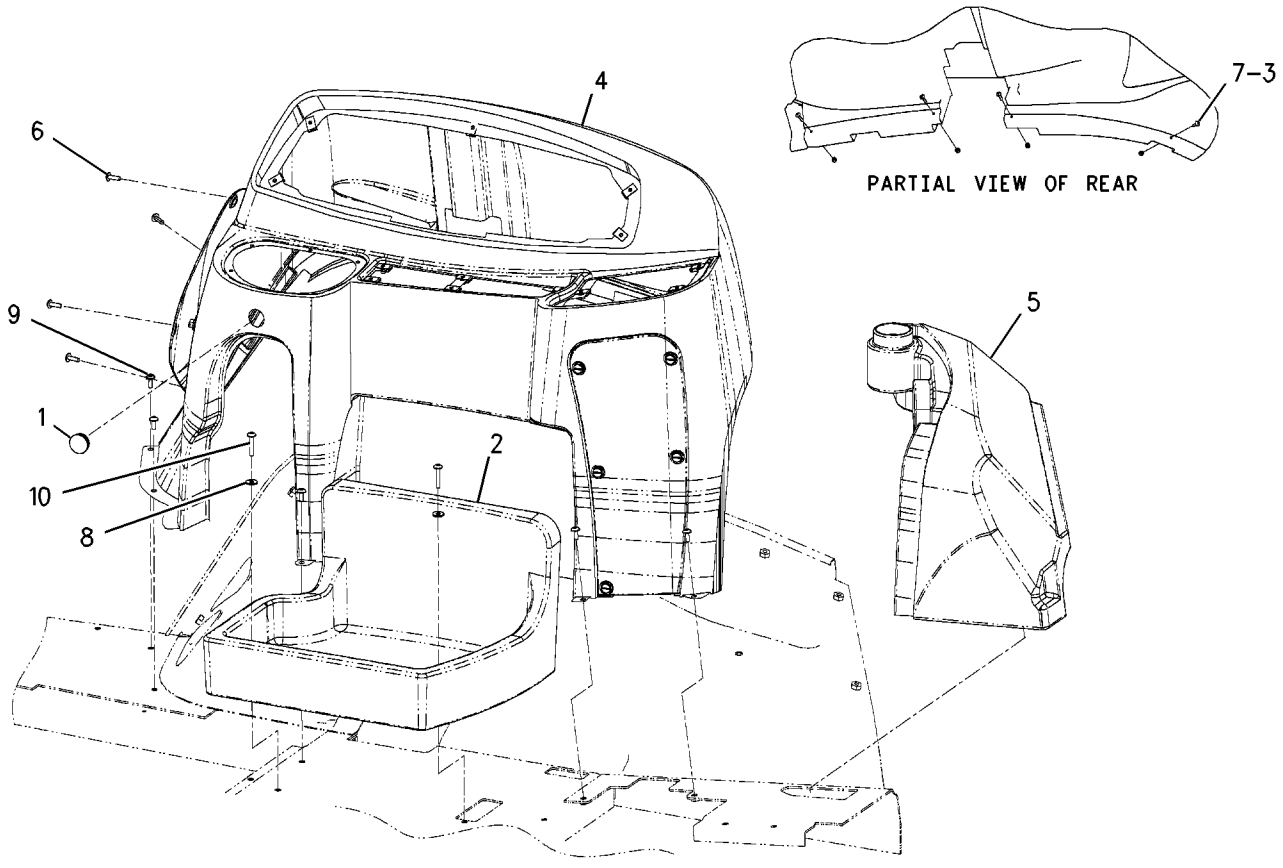

GRAPHIC #1 **<END>** g00808588

OPERATOR STATION

183-4991 COVER GP-CONSOLE

S/N: BXC1-UP; DSX1-UP
BOOM LOCK
PART OF 183-4997, 183-4998 CONSOLE GP-SIDE
AN ATTACHMENT

SMCS-5258 **i01482398**

NOTE	REF NO	GRAPHIC REF	PART NUMBER	QTY	PART NAME 1 2 3 4 5 6 (PRODUCT LEVEL)	SEE PAGE
	1	1	**117-3789**	5	RETAINER-STUD	
	2	1	**164-1108**	1	COVER	
	3	1	**167-8251**	5	STUD	

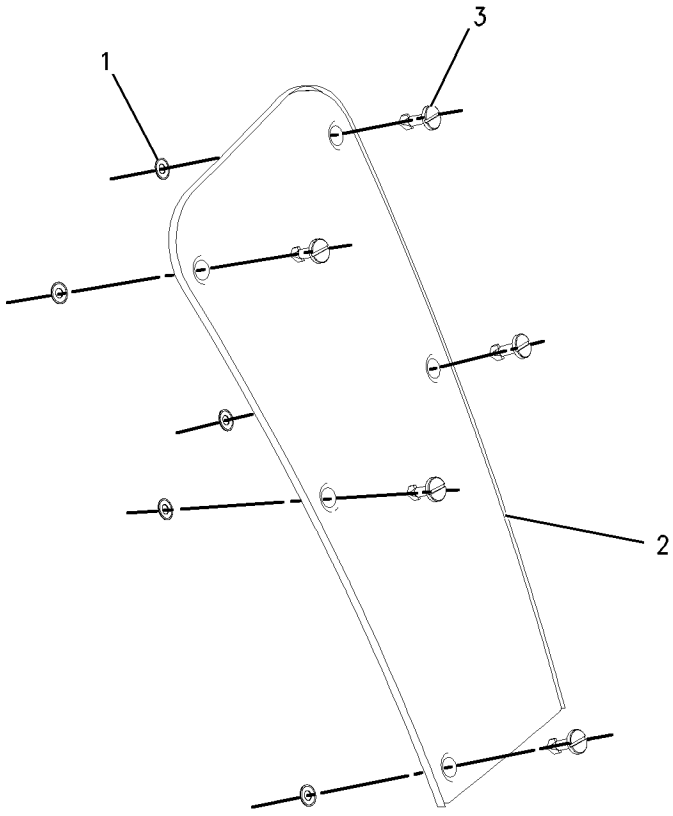

GRAPHIC #1 **<END>** g00744971

OPERATOR STATION

186-0252 COVER GP-FIREWALL

S/N: BXC1-UP; DSX1-UP
PART OF 214-7006, 214-7007 CAB AR, 214-7008, 214-7009 CAB AR-ENCLOSED ROPS, 214-7004 CANOPY AR
AN ATTACHMENT

SMCS-7262 **i01668212**

NOTE	REF NO	GRAPHIC REF	PART NUMBER	QTY	PART NAME 1 2 3 4 5 6 (PRODUCT LEVEL)	SEE PAGE
	1	1	**164-1137**	1	COVER-FIREWALL	
	2	1	**9X-2038**	12	WASHER (7X19X2MM THK)	
M	3	1	**9X-2045**	12	SCREW-TRUSS HEAD (M6X1X20MM)	

M-METRIC PART

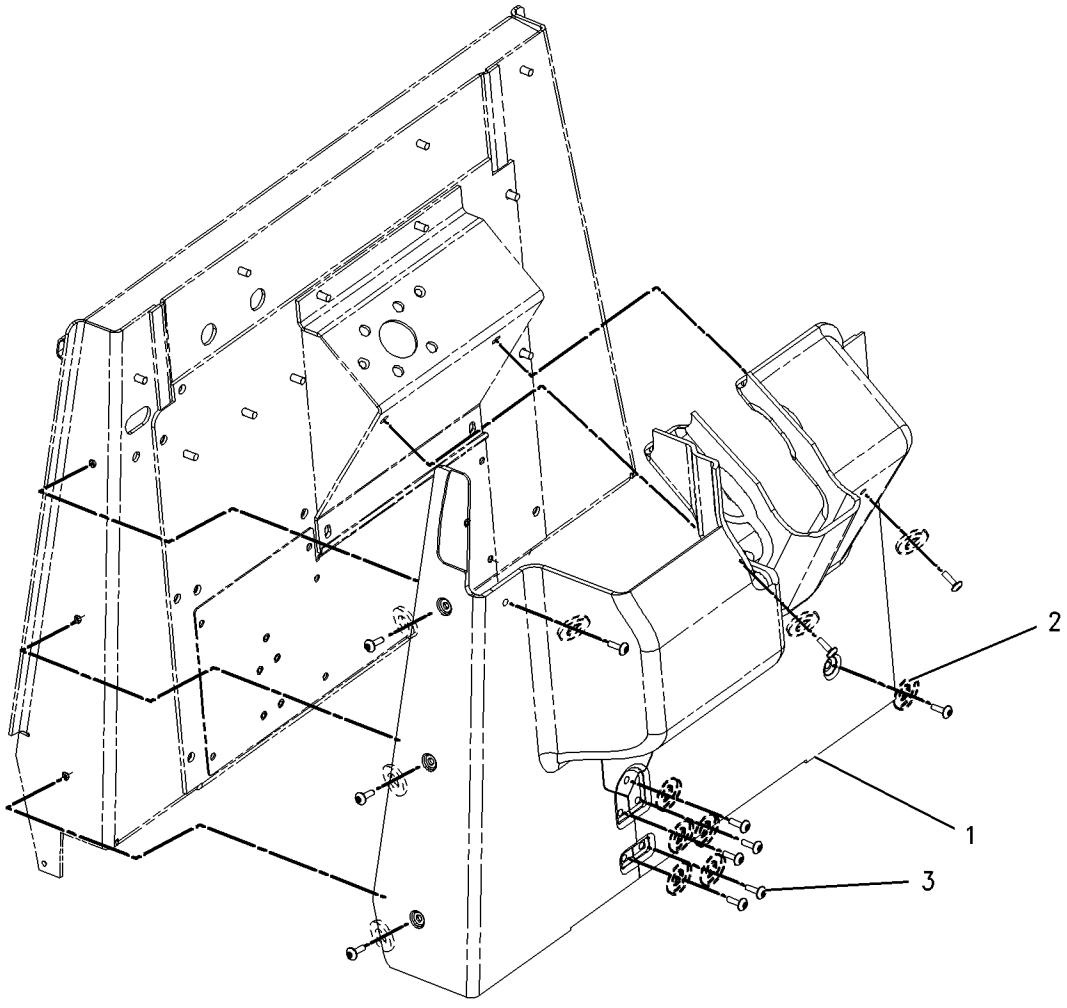

GRAPHIC #1 **<END>** g00861665

OPERATOR STATION

198-0104 COVER GP-FIREWALL

S/N: BXC1-UP; DSX1-UP
PART OF 214-7004 CANOPY AR
AN ATTACHMENT

SMCS-7262 **i01535906**

NOTE	REF NO	GRAPHIC REF	PART NUMBER	QTY	PART NAME 1 2 3 4 5 6 (PRODUCT LEVEL)	SEE PAGE
E	1	1	**126-8472**		SEAL (84CM)	
	2	1	**198-0103**	1	PLATE	
	3	1	**8T-4121**	1	WASHER-HARD (11X21X2.5MM THK)	
M	4	1	**8T-4137**	1	BOLT (M10X1.5X20MM)	

E-ORDER BY THE CENTIMETER
M-METRIC PART

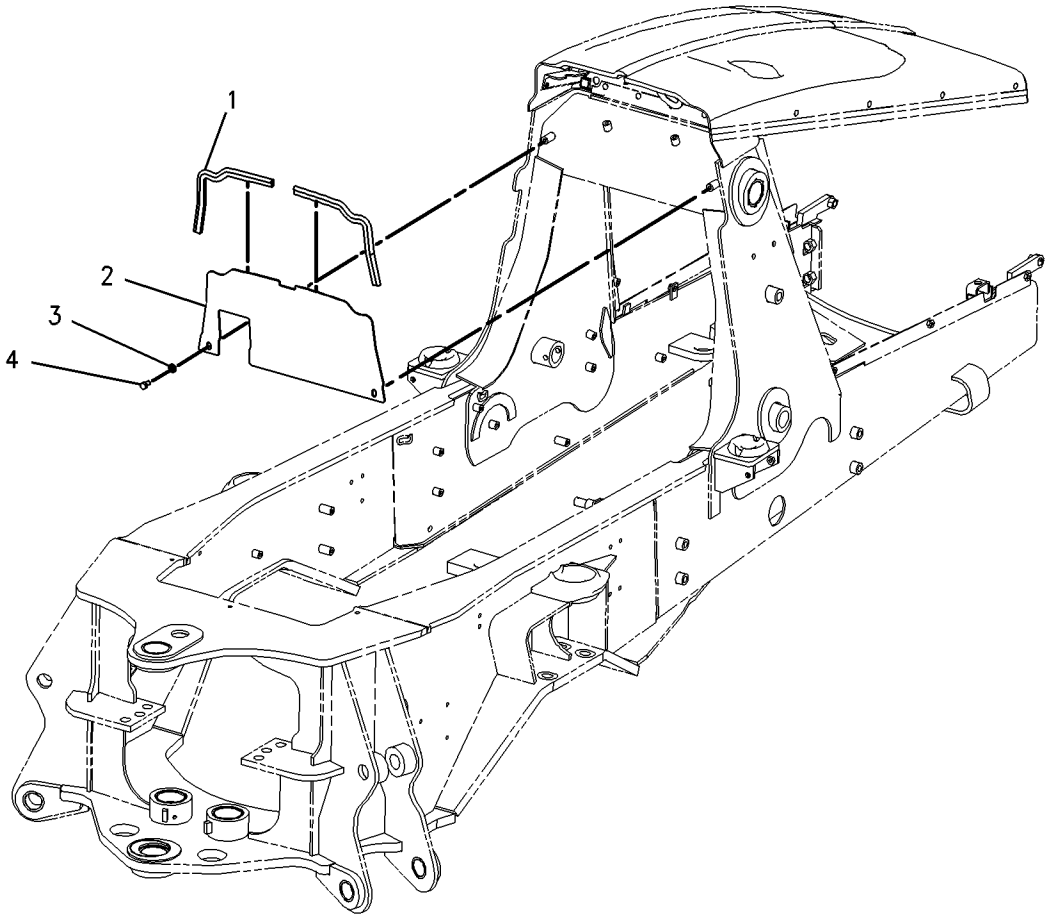

GRAPHIC #1 **<END>** g00797673

OPERATOR STATION

197-7564 COVER GP-POST

S/N: BXC1-UP; DSX1-UP
RH
PART OF 214-7004 CANOPY AR
AN ATTACHMENT

SMCS-7329 **i01987995**

NOTE	REF NO	GRAPHIC REF	PART NUMBER	QTY	PART NAME 1 2 3 4 5 6 (PRODUCT LEVEL)	SEE PAGE
E	1	1	**129-1854**	5	FASTENER-LOOP (18CM EA)	
E	2	1	**129-1855**	5	FASTENER-HOOK (18CM EA)	
	3	1	**197-7230**	1	COVER-POST	
	4	1	**9X-2038**	2	WASHER (7X19X2MM THK)	
M	5	1	**9X-2042**	2	SCREW-TRUSS HEAD (M6X1X12MM)	
E	6	1	**129-1854**		FASTENER-LOOP (10CM)	
E	7	1	**129-1855**		FASTENER-HOOK (10CM)	
E	8	1	**129-1854**		FASTENER-LOOP (8CM)	
E	9	1	**129-1855**		FASTENER-HOOK (8CM)	

E-ORDER BY THE CENTIMETER
M-METRIC PART

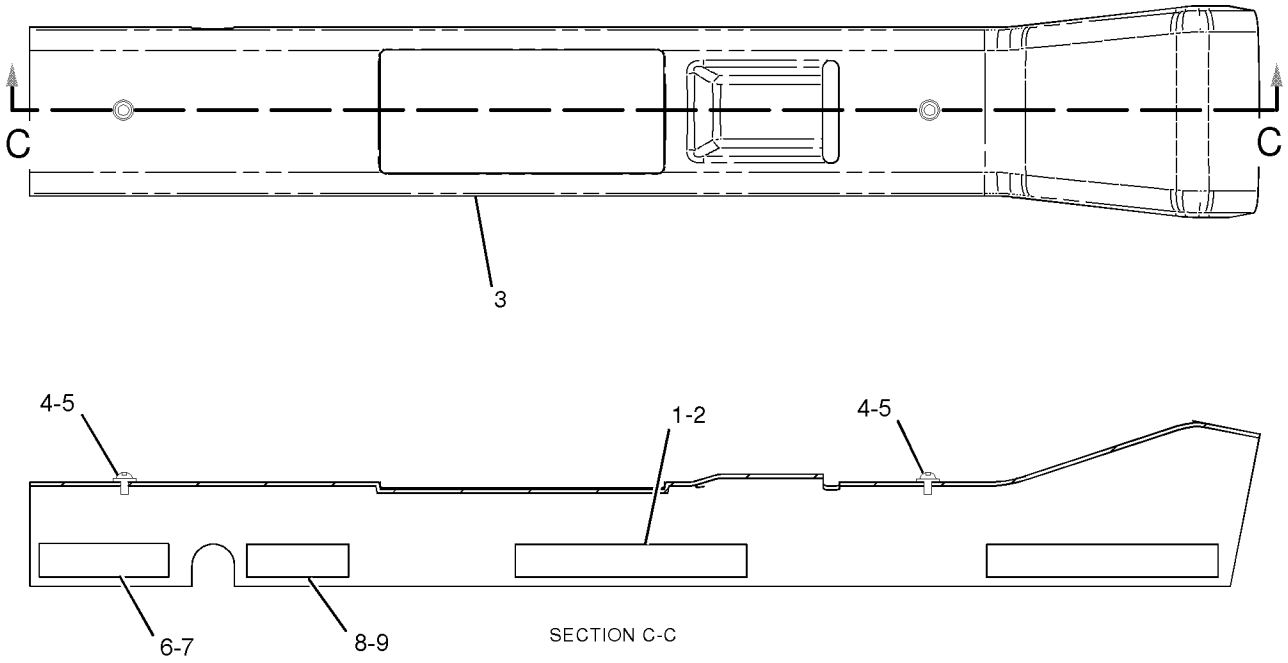

GRAPHIC #1

<END>

g01028944

OPERATOR STATION

164-1062 DOOR GP-LH

S/N: BXC1-UP; DSX1-UP
PART OF 164-1100, 226-9095 CAB GP
AN ATTACHMENT

SMCS-7308 **i01374549**

NOTE	REF NO	GRAPHIC REF	PART NUMBER	QTY	PART NAME 1 2 3 4 5 6 (PRODUCT LEVEL)	SEE PAGE
	1	1	**159-4269**	1	SPRING AS-GAS	
		1	**161-9044**	1	KIT-FITTING	
E	2	1	**148-5355**		SEAL (478CM)	
	3	1	**5P-4116**	2	WASHER (8.8X20.5X2MM THK)	
M	4	1	**8T-4171**	1	BOLT (M6X1.0X12MM)	
	5	1	**7X-2497**	1	HANDLE-DOOR	
	6	1	**159-4953**	1	DOOR AS-LH	
M		1	**8T-3612**	1	NUT-WELD (M8X1.25 THD)	
		1	**8Y-7310**	2	HINGE AS-LH	
Y	7	1	*164-1074*	1	WINDOW GP-DOOR	795
	8	1	**8Y-7264**	1	GLASS	
M	9	1	**8T-4180**	4	SCREW-MACHINE (M5X0.8X20MM)	
	10	1	**8Y-6386**	1	SEAL-HANDLE	
	11	1	**148-7319**	1	HANDLE AS-PADDLE	
	12	1	**147-3019**	2	BRACKET	
	13	1	**8Y-7306**	1	COVER	
M	14	1	**131-3987**	6	SCREW (M4X0.7X12MM)	
	15	1	**148-7311**	1	LATCH AS-ROTARY	
M	16	1	**8T-4181**	4	BOLT (M6X1X20MM)	
	17	1	**159-4946**	1	KEEPER-REAR	

E-ORDER BY THE CENTIMETER
M-METRIC PART
Y-SEPARATE ILLUSTRATION

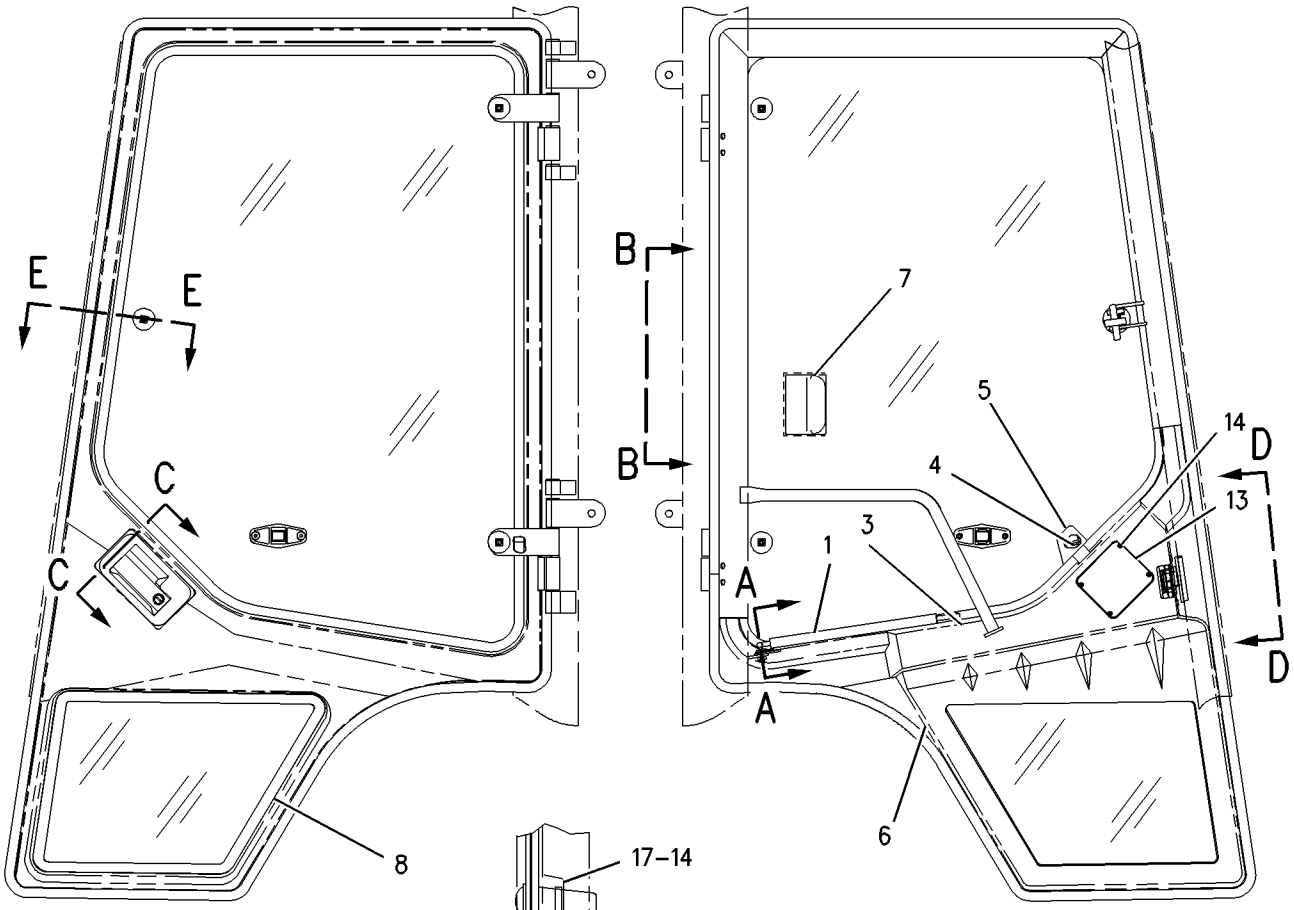

LEFT SIDE VIEW

RIGHT SIDE VIEW

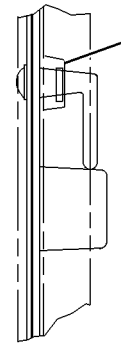

VIEW B-B

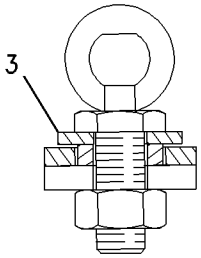

SECTION A-A

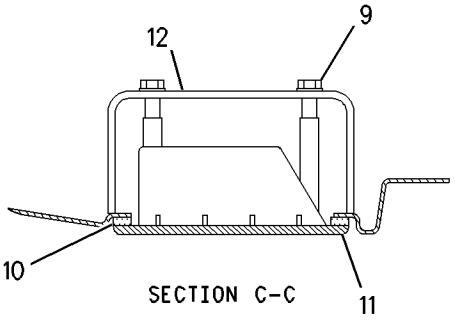

SECTION C-C

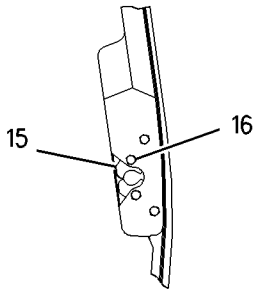

SECTION D-D

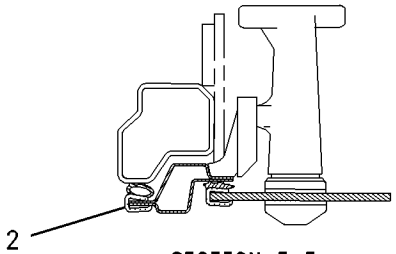

SECTION E-E

GRAPHIC #1 **<END>** g00725879

OPERATOR STATION

164-1061 DOOR GP-RH

S/N: BXC1-UP; DSX1-UP
PART OF 164-1100, 226-9095 CAB GP
AN ATTACHMENT

SMCS-7308 **i01380267**

NOTE	REF NO	GRAPHIC REF	PART NUMBER	QTY	PART NAME 1 2 3 4 5 6 (PRODUCT LEVEL)	SEE PAGE
J	1	1	**159-4269**	1	SPRING AS-GAS	
E	2	1	**148-5355**		SEAL (478CM)	
	3	1	**5P-4116**	2	WASHER (8.8X20.5X2MM THK)	
M	4	1	**8T-4171**	1	BOLT (M6X1.0X12MM)	
	5	1	**7X-2497**	1	HANDLE-DOOR	
	6	1	**159-4954**	1	DOOR AS-RH	
M		1	**8T-3612**	1	NUT-WELD (M8X1.25 THD)	
		1	**8Y-7310**	2	HINGE AS-LH	
Y	7	1	**164-1073**	1	WINDOW GP-DOOR	793
	8	1	**8Y-7263**	1	GLASS	
M	9	1	**8T-4180**	4	SCREW-MACHINE (M5X0.8X20MM)	
	10	1	**8Y-6386**	1	SEAL-HANDLE	
L	11	1	**148-7318**	1	HANDLE AS-PADDLE	
	12	1	**147-3019**	2	BRACKET	
	13	1	**8Y-7306**	1	COVER	
M	14	1	**131-3987**	6	SCREW (M4X0.7X12MM)	
	15	1	**148-7310**	1	LATCH AS-ROTARY	
M	16	1	**8T-4181**	4	BOLT (M6X1X20MM)	
	17	1	**159-4945**	1	KEEPER-REAR	
					AVAILABLE REPAIR KIT(S):	
J			**161-9044**	1	KIT-FITTING	

E-ORDER BY THE CENTIMETER
J-REPAIR KIT MARKED J AVAILABLE FOR PART MARKED J
L-REQUIRES A 5P-8500 KEY
M-METRIC PART
Y-SEPARATE ILLUSTRATION

164-1061 DOOR GP-RH *(contd.)*

i01380267

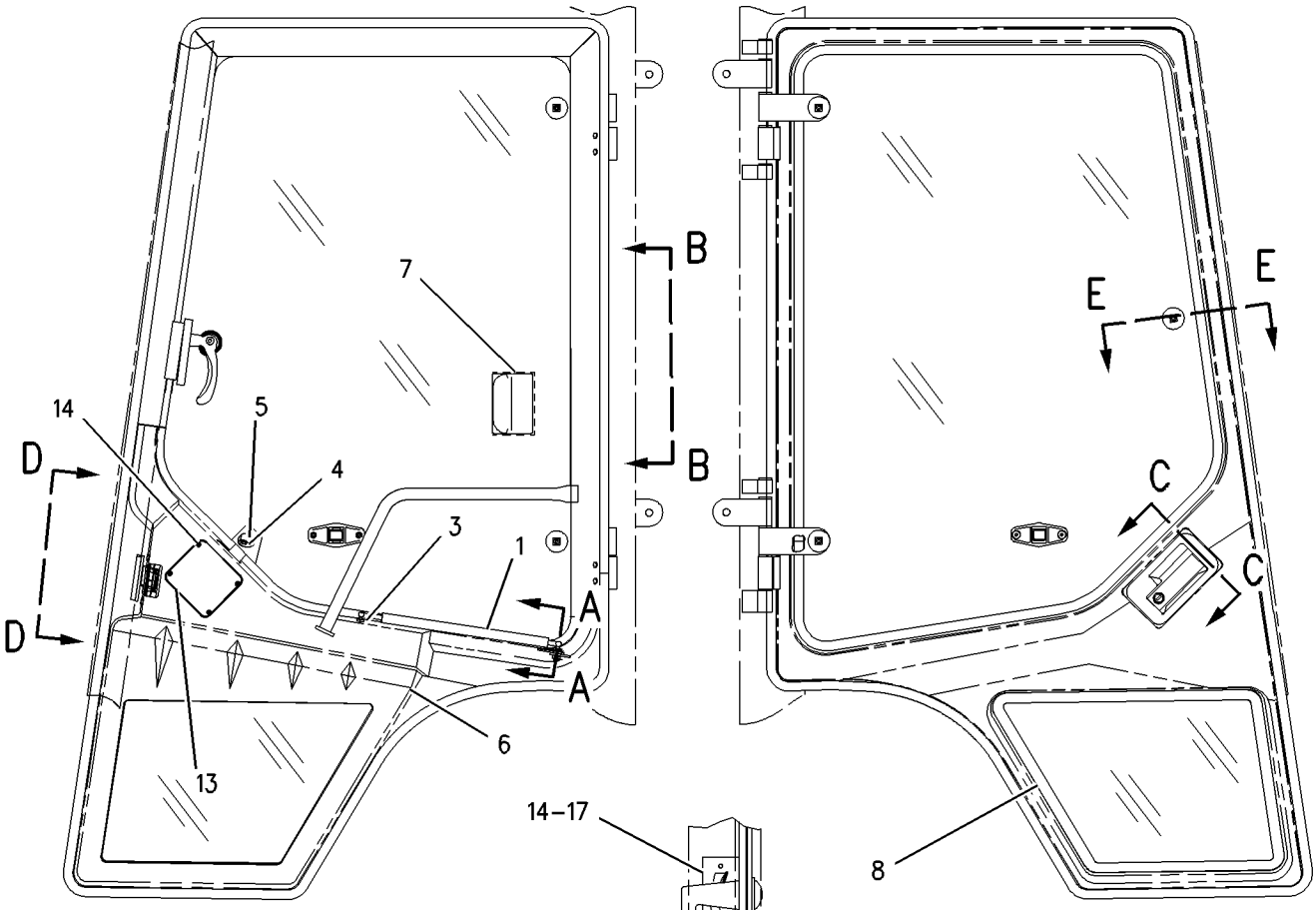

LEFT SIDE VIEW

RIGHT SIDE VIEW

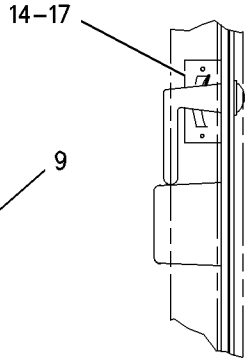

VIEW B-B

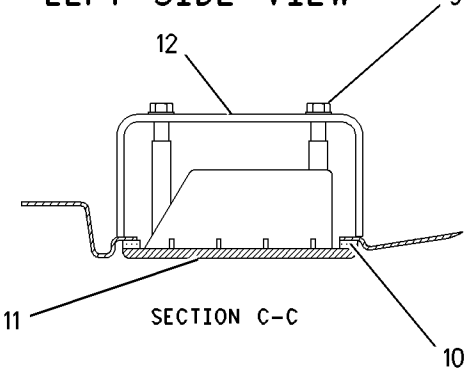

SECTION C-C

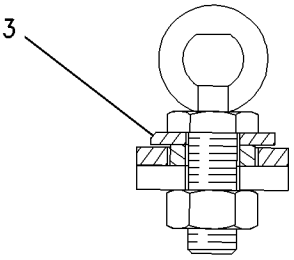

SECTION A-A

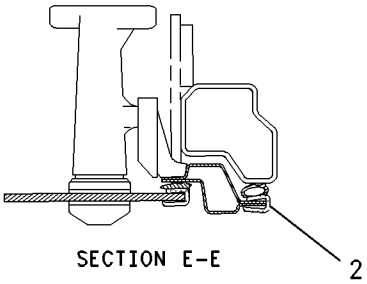

SECTION E-E

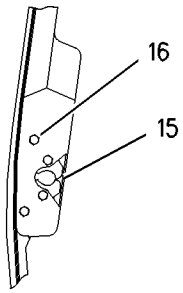

VIEW D-D

GRAPHIC #1

<END>

g00728856

OPERATOR STATION

164-1141 DUCT GP-AIR—STANDARD SHIFT

S/N: BXC1-UP; DSX1-UP
PART OF 214-7014 POWER TRAIN AR
AN ATTACHMENT

SMCS-734D **i01410806**

NOTE	REF NO	GRAPHIC REF	PART NUMBER	QTY	PART NAME 1 2 3 4 5 6 (PRODUCT LEVEL)	SEE PAGE
	1	1	**164-1043**	1	DUCT AS-FRONT	
	2	1	**164-1198**	1	BOOT	
	3	1	**164-1368**	4	CLIP	
	4	1	**184-6562**	1	PLATE	
	5	1	**184-6563**	1	GASKET	
	6	1	**185-3528**	1	SEAL	
M	7	1	**9X-2042**	2	SCREW-TRUSS HEAD (M6X1.0X12MM)	

M-METRIC PART

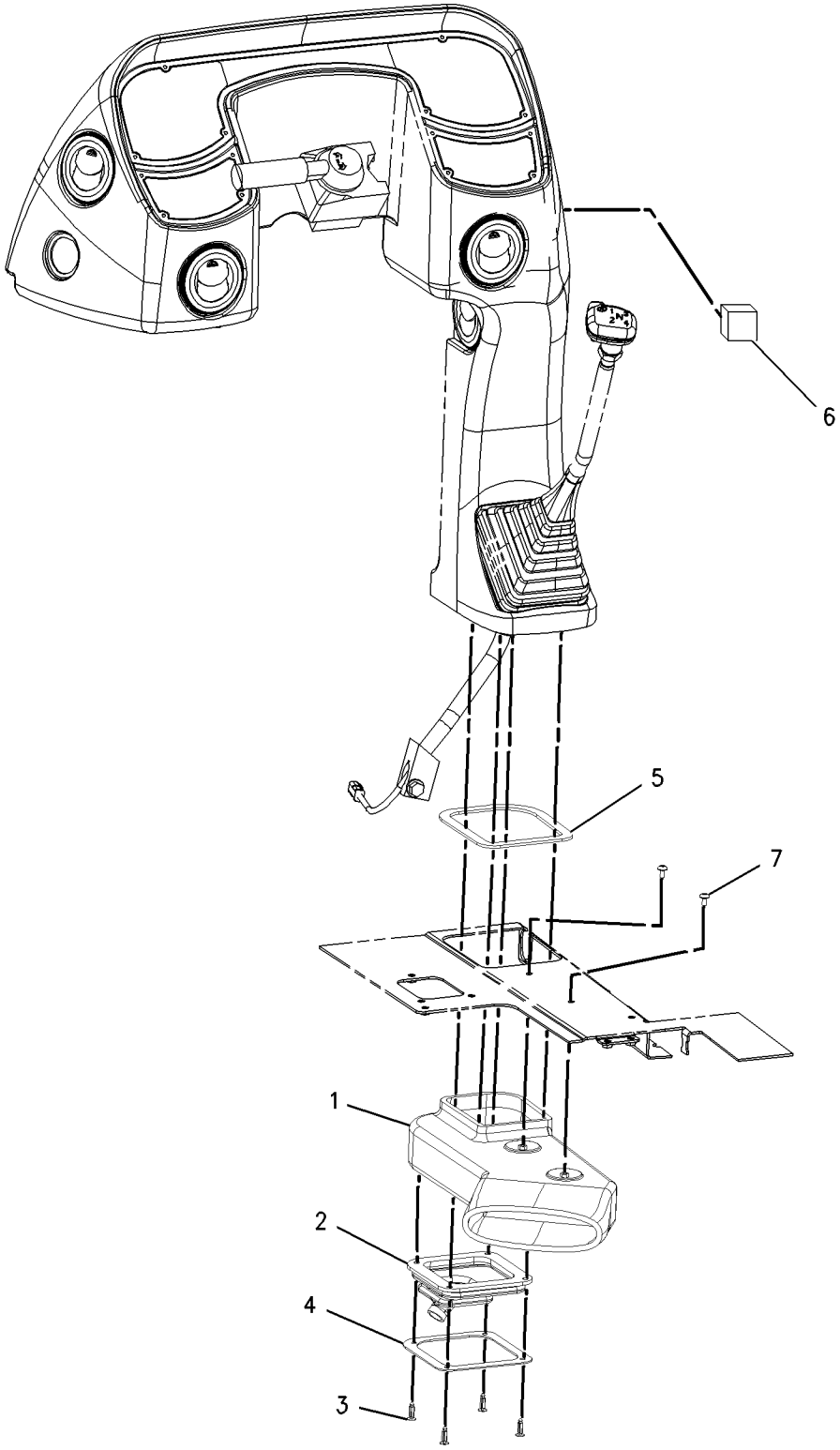

GRAPHIC #1 **<END>** g00742705

OPERATOR STATION

164-1142 DUCT GP-AIR—POWERSHIFT

S/N: BXC1-UP; DSX1-UP
PART OF 214-7015 POWER TRAIN AR
AN ATTACHMENT

SMCS-734D **i01430394**

NOTE	REF NO	GRAPHIC REF	PART NUMBER	QTY	PART NAME 1 2 3 4 5 6 (PRODUCT LEVEL)	SEE PAGE
	1	1	**164-1044**	1	DUCT AS	
	2	1	**184-6563**	1	GASKET	
	3	1	**185-3528**	1	SEAL	
M	4	1	**9X-2042**	2	SCREW-TRUSS HEAD (M6X1X12MM)	

M-METRIC PART

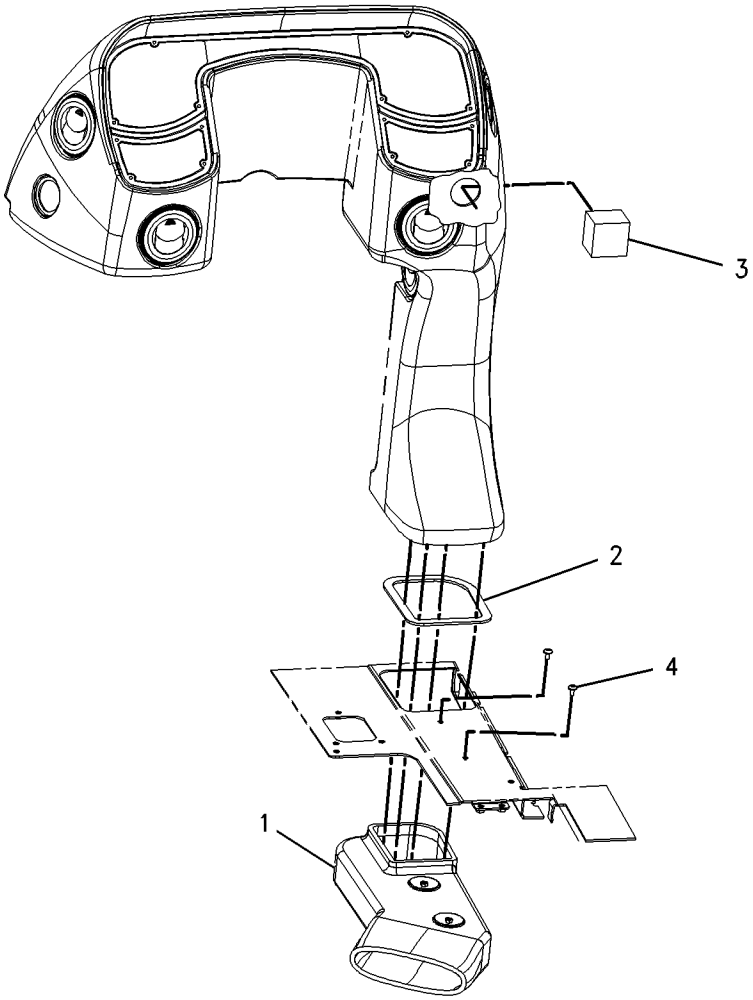

GRAPHIC #1 **<END>** g00750274

OPERATOR STATION

184-6575 DUCT GP-AIR–HEATER

S/N: BXC1-UP; DSX1-UP
PART OF 164-1030 HEATER & MTG GP-CAB
AN ATTACHMENT

SMCS-734D **i01385588**

NOTE	REF NO	GRAPHIC REF	PART NUMBER	QTY	PART NAME 1 2 3 4 5 6 (PRODUCT LEVEL)	SEE PAGE
	1	1	**151-5715**	1	LOUVER AS	
	2	1	**164-8473**	2	LOUVER AS	
	3	1	**184-6555**	1	DUCT-AIR	
	4	1	**104-2091**	8	SCREW-FLAT HEAD (NO.6-20X0.5IN)	
	5	1	**148-3626**	2	SCREW-FLAT HEAD	

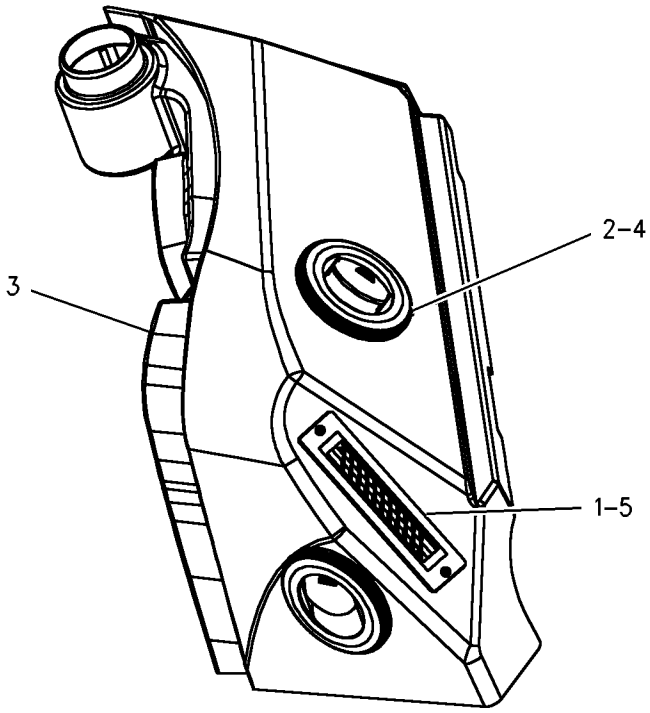

GRAPHIC #1 **<END>** g00732839

OPERATOR STATION

180-5760 FLOOR MAT GP

S/N: BXC1-UP; DSX1-UP
PART OF 214-7007 CAB AR, 214-7008, 214-7009 CAB AR-ENCLOSED ROPS
AN ATTACHMENT

SMCS-7265 **i01374884**

NOTE	REF NO	GRAPHIC REF	PART NUMBER	QTY	PART NAME 1 2 3 4 5 6 (PRODUCT LEVEL)	SEE PAGE
	1	1	**180-5750**	1	FLOOR MAT	
	2	1	**180-5754**	2	PLATE	
	3	1	**1H-3244**	4	LOCKWASHER	
M	4	1	**9X-2045**	4	SCREW-TRUSS HEAD (M6X1X20MM)	

M-METRIC PART

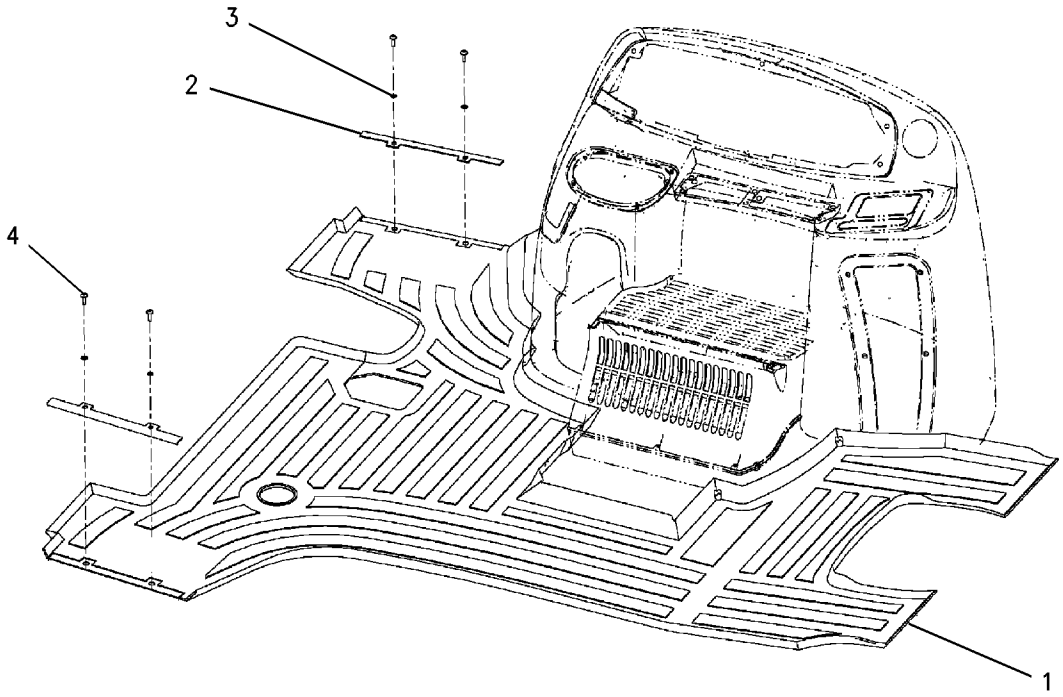

GRAPHIC #1 **<END>** g00727717

OPERATOR STATION

180-5765 FLOOR MAT GP

S/N: BXC1-UP; DSX1-UP
MECHANICAL CONTROLS, CANOPY
PART OF 214-7006 CAB AR, 214-7004 CANOPY AR
AN ATTACHMENT

SMCS-7265 **i01378923**

NOTE	REF NO	GRAPHIC REF	PART NUMBER	QTY	PART NAME 1 2 3 4 5 6 (PRODUCT LEVEL)	SEE PAGE
	1	1	**180-5754**	2	PLATE	
	2	1	**180-5755**	1	FLOOR MAT	
	3	1	**1H-3244**	4	LOCKWASHER	
M	4	1	**9X-2045**	4	SCREW-TRUSS HEAD (M6X1X20MM)	

M-METRIC PART

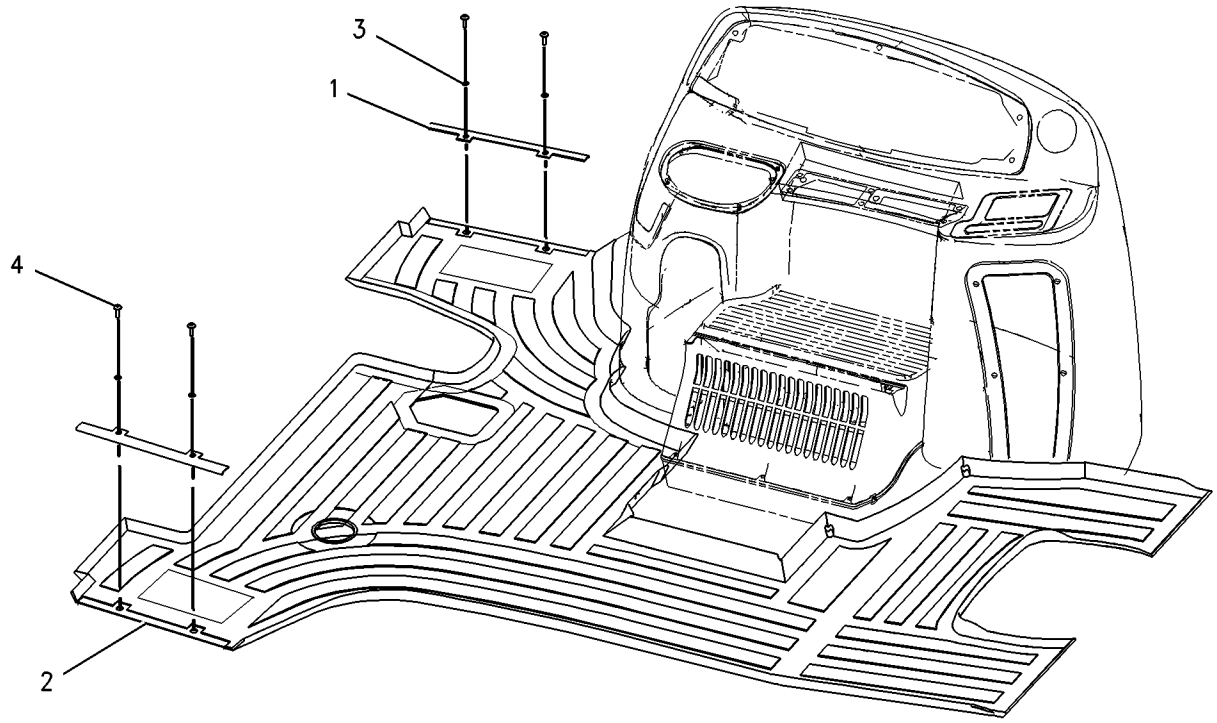

GRAPHIC #1 **<END>** g00728702

OPERATOR STATION

164-1030 HEATER & MTG GP-CAB

S/N: BXC1-UP; DSX1-UP
PART OF 214-7006 CAB AR, 214-7008 CAB AR-ENCLOSED ROPS
AN ATTACHMENT

SMCS-7304 **i01983571**

NOTE	REF NO	GRAPHIC REF	PART NUMBER	QTY	PART NAME 1 2 3 4 5 6 (PRODUCT LEVEL)	SEE PAGE
	1	1	**6L-4725**	2	CLAMP-HOSE	
	2	1	**8Y-5737**	1	CLAMP	
	3	1	**9M-7959**	1	CLAMP (HOSE)	
	4	1	**9R-9901**	5	FASTENER (CLIP)	
	5	1	**110-6109**	1	KNOB-CONTROL	
	6	1	**130-4832**	2	SCREW (8-18X.39 IN)	
	7	1	**164-1037**	1	DUCT	
	8	1	**164-1196**	1	CABLE AS	
		1	**143-8874**	1	BOOT	
Y	9	1	**170-0076**	1	HEATER GP-CAB	743
	10	1	**184-6560**	1	BRACKET	
	11	1	**184-6561**	1	HOSE-AIR	
	12	1	**184-6564**	1	GASKET	
	13	1	**184-6567**	1	GASKET	
	14	1	**184-6572**	1	INSULATION	
	15	1	**184-6573**	1	INSULATION	
	16	1	**184-6574**	1	INSULATION	
Y	17	1	*184-6575*	1	DUCT GP-AIR	738
	18	1	**190-5132**	1	FILM-CONTROL (AIR CONDITIONER)	
	19	1	**194-5622**	1	VALVE AS (WATER)	
	19A	1	**6V-6717**	1	SCREW-WASHER HEAD (8-32X.375 IN)	
		1	**124-0312**	2	SCREW-PAN HEAD (8-16X.32 IN)	
	20	1	**206-7512**	1	COVER	
	21	1	**206-7513**	2	BRACKET	
	22	1	**206-7514**	1	FILTER	
E	23	1	**221-2420**	1	HOSE-AIR	
	24	1	**2H-3920**	1	LOCKWASHER	
M	25	1	**9X-2042**	2	SCREW-TRUSS HEAD (M6X1X12MM)	
M	26	1	**9X-2044**	2	SCREW-TRUSS HEAD (M6X1X16MM)	
M	27	1	**9X-2045**	2	SCREW-TRUSS HEAD (M6X1X20MM)	
E	28	1	**6V-6813**		HOSE (40CM)	

E-ORDER BY THE CENTIMETER
M-METRIC PART
Y-SEPARATE ILLUSTRATION

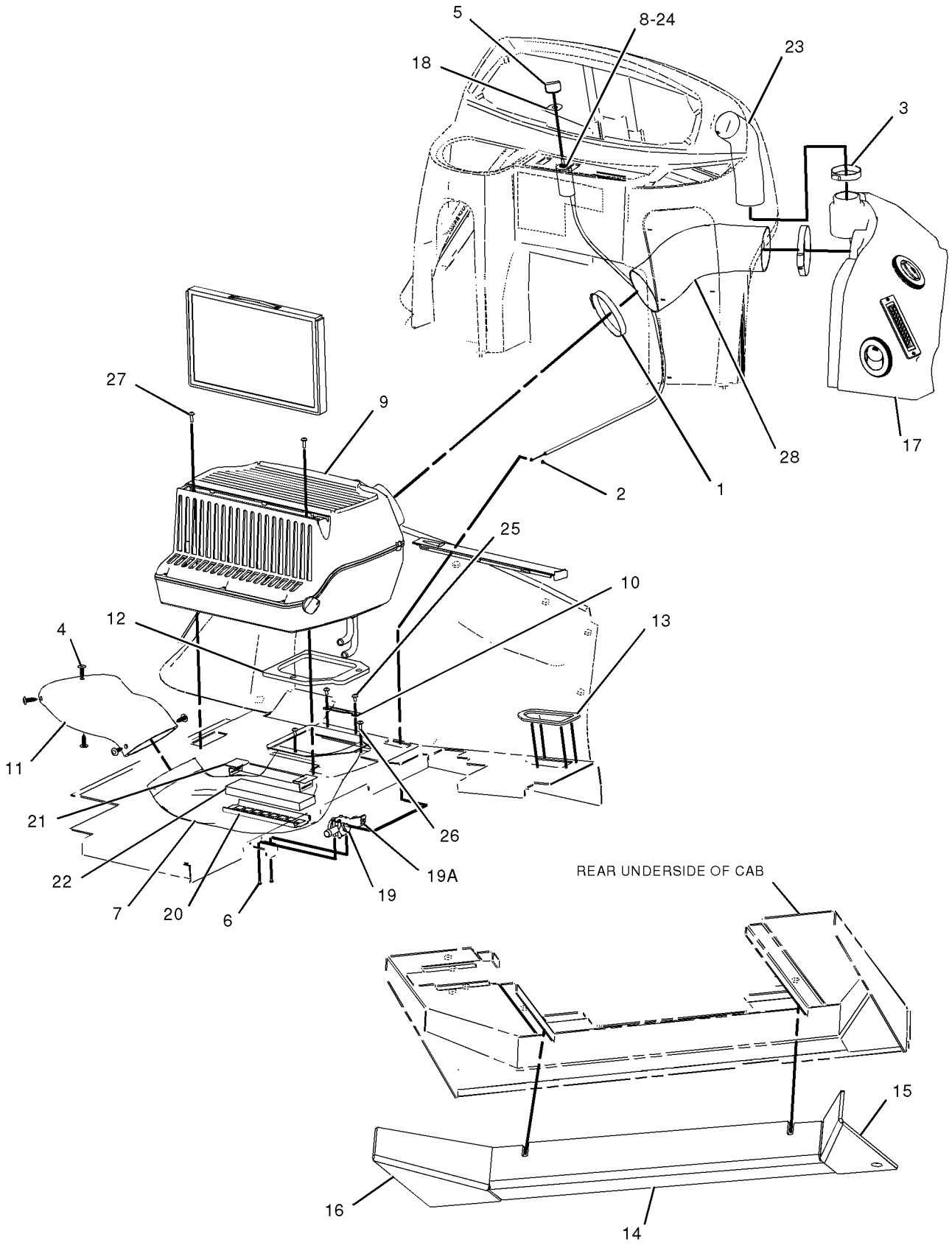

GRAPHIC #1 **<END>** g01028046

OPERATOR STATION

170-0076 HEATER GP-CAB

S/N: BXC1-UP; DSX1-UP
PART OF 164-1030 HEATER & MTG GP-CAB
AN ATTACHMENT

SMCS-7304 **i01871148**

NOTE	REF NO	GRAPHIC REF	PART NUMBER	QTY	PART NAME 1 2 3 4 5 6 (PRODUCT LEVEL)	SEE PAGE
	1	1	**164-6613**	1	COIL AS-HEATER	
		1	**201-1637**	1	GASKET	
		1	**201-1638**	1	GASKET	
	2	1	**168-2313**	1	FAN AS	
		1	**7T-0093**	2	PIN-CONNECTOR	
	3	1	**170-7269**	1	COVER	
	4	1	**170-7270**	1	CASE AS	
		1	**6C-3680**	4	RIVET-POP	
M		1	**129-3178**	4	LOCKNUT (M6X1 THD)	
		1	**188-2711**	1	GUARD AS	
	5	1	**170-7271**	1	COVER	
	6	1	**170-7272**	1	FILTER-AIR	
	7	1	**170-7281**	1	GASKET	
	8	1	**170-7282**	1	GASKET	
	9	1	**185-4015**	4	CLIP	
	10	1	**188-2704**	1	GASKET	
	11	1	**188-2706**	4	GASKET	
	12	1	**188-2708**	1	GASKET	
	13	1	**188-2715**	1	BRACKET	
	14	1	**199-3729**	1	DOOR AS	
		1	**191-6033**	1	CONTROL AS	
		1	**191-6035**	1	RETAINER	
		1	**201-1634**	1	LINK	
	15	1	**204-9921**	1	RESISTOR AS	
	16	1	**206-7398**	1	KNOB-CONTROL	
	17	1	**213-9270**	1	FILM	
	18	1	**2S-3745**	4	SCREW-TAPPING (10-16X.5 IN)	
	19	1	**5P-7921**	3	SCREW-WASHER HEAD (1/4-20X3/4 IN)	
	20	1	**6V-6717**	2	SCREW-WASHER HEAD (8-32X.375 IN)	
M	21	1	**6V-7357**	4	BOLT (M6X1.0X25MM)	
	22	1	**8T-4205**	4	WASHER-HARD (7.2X14.5X2MM THK)	

M-METRIC PART

170-0076 HEATER GP-CAB *(contd.)* i01871148

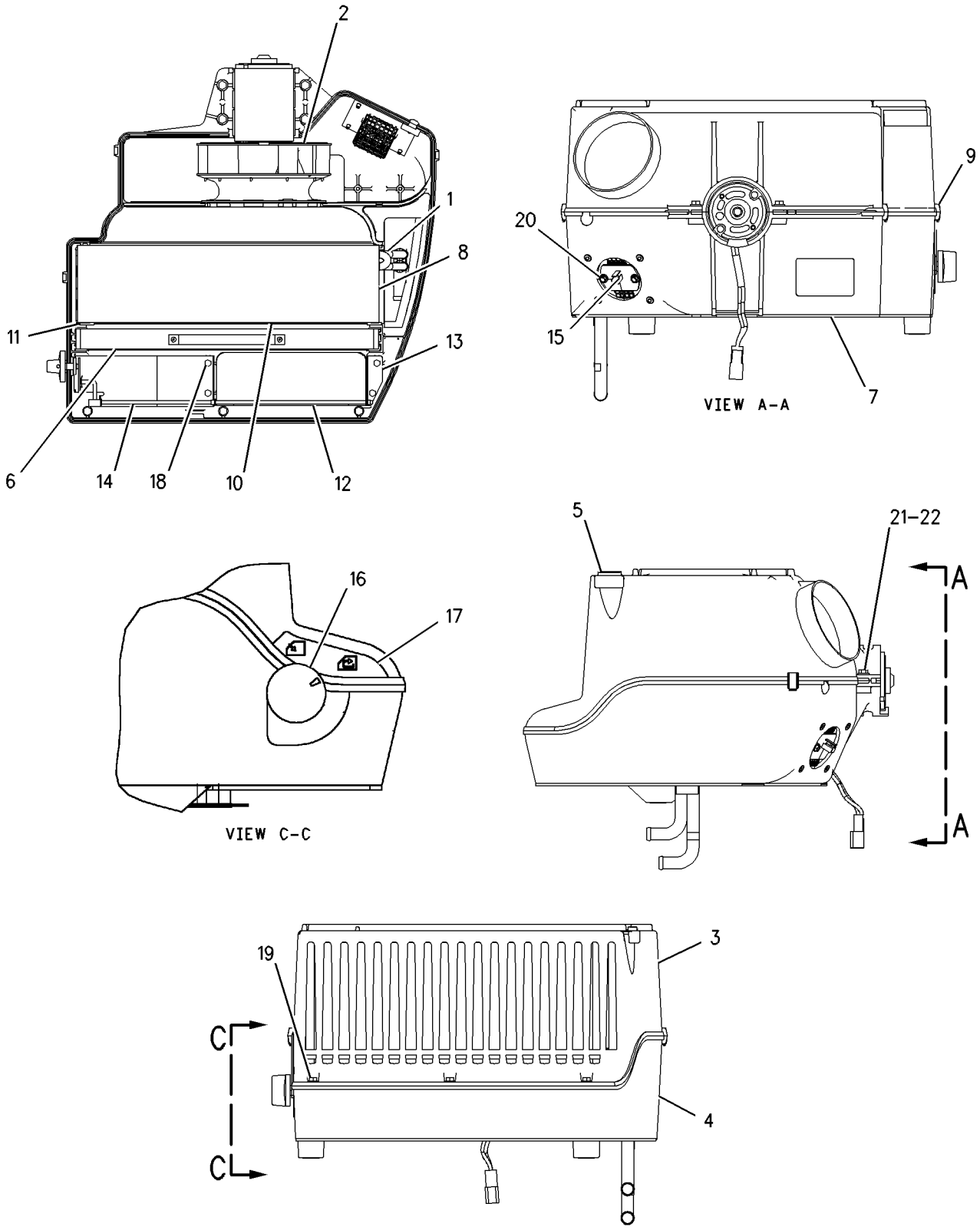

GRAPHIC #1 **<END>** g00952802

OPERATOR STATION

193-2342 HORN GP-ELECTRIC—REAR

S/N: BXC1-UP; DSX1-UP
PART OF 190-2802 CONVERSION AR-CERTIFICATION
AN ATTACHMENT

SMCS-7402 **i01674513**

NOTE	REF NO	GRAPHIC REF	PART NUMBER	QTY	PART NAME 1 2 3 4 5 6 (PRODUCT LEVEL)	SEE PAGE
B	1	1	**3S-2093**	1	STRAP-CABLE	
	2	1	**164-9425**	1	HORN AS	
	3	1	**169-0587**	1	SWITCH AS (HORN)	
		1	**111-7899**	1	GASKET	
	4	1	**096-4415**	1	LOCKWASHER	
B	5	1	**4P-8134**	1	CLIP	
M	6	1	**8T-4133**	1	NUT (M10X1.5 THD)	
M	7	1	**8T-4195**	1	BOLT (M10X1.5X30MM)	

B-USE AS REQUIRED
M-METRIC PART

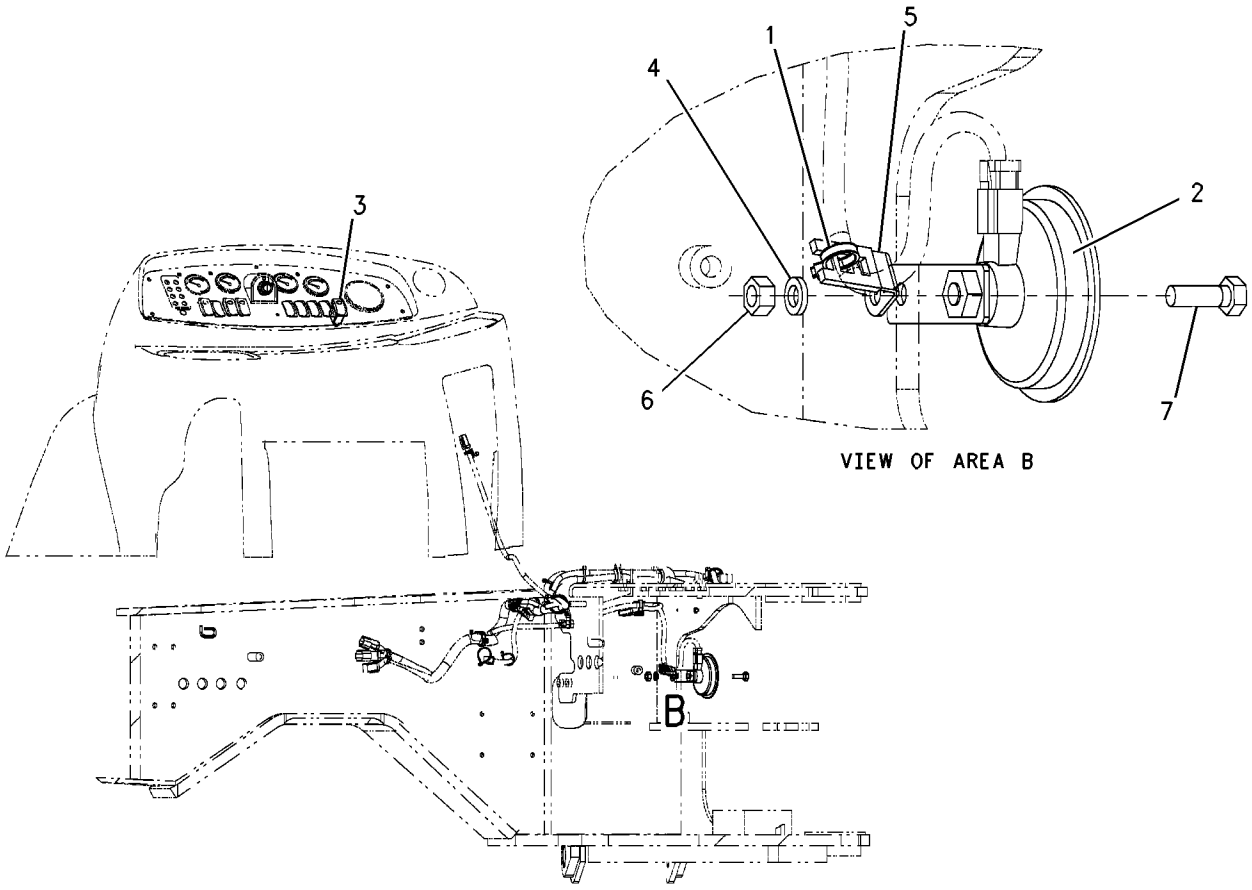

GRAPHIC #1 **<END>** g00823261

OPERATOR STATION

183-3887 LEVER GP-GOVERNOR CONTROL

S/N: BXC1-UP; DSX1-UP

PART OF 234-8892 CONTROL GP-GOV & ACCELERATOR

SMCS-1265 **i01483331**

NOTE	REF NO	GRAPHIC REF	PART NUMBER	QTY	PART NAME 1 2 3 4 5 6 (PRODUCT LEVEL)	SEE PAGE
	1	1	**8T-4742**	1	END-YOKE ROD	
	2	1	**8T-4744**	1	PIN AS-SPRING	
	3	1	**164-1079**	1	CABLE AS	
	4	1	**164-1083**	1	LEVER AS	
M	5	1	**8T-4971**	1	BOLT (M6X1X30MM)	
M	6	1	**129-3178**	1	LOCKNUT (M6X1 THD)	

M-METRIC PART

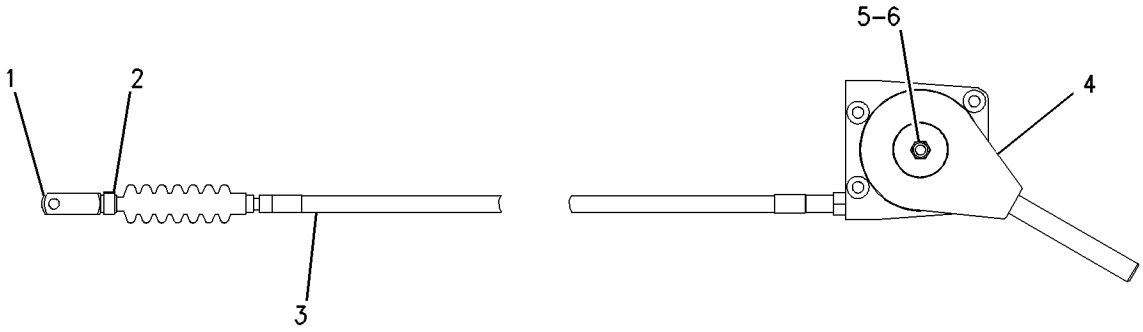

GRAPHIC #1 **<END>** g00743371

OPERATOR STATION

236-6657 LINES GP-HEATER

S/N: BXC1-UP; DSX1-UP
PART OF 214-7006 CAB AR, 214-7008 CAB AR-ENCLOSED ROPS
AN ATTACHMENT

SMCS-7304 **i02003683**

NOTE	REF NO	GRAPHIC REF	PART NUMBER	QTY	PART NAME 1 2 3 4 5 6 (PRODUCT LEVEL)	SEE PAGE
	1	1	**5D-1026**	8	CLAMP-HOSE	
	2	1	**9M-8406**	1	CLIP	
	3	1	**6P-8855**	1	SPACER (.56X.625X3MM THK)	
	4	1	**9M-4814**	1	CONNECTOR-HOSE	
	5	1	**3E-4321**	5	CLIP	
	6	1	**8T-4121**	6	WASHER-HARD (11X21X2.5MM THK)	
M	7	1	**8T-4137**	5	BOLT (M10X1.5X20MM)	
M	8	1	**8T-4189**	1	BOLT (M8X1.25X20MM)	
	9	1	**5P-0767**		HOSE (275CM)	
	10	1	**5P-0767**		HOSE (295CM)	
	11	1	**5P-0767**	2	HOSE (42.5CM)	
	12	1	**134-3856**	1	ELBOW	

M-METRIC PART

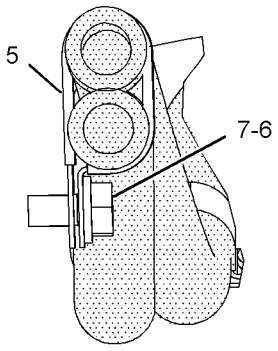

SECTION E-E

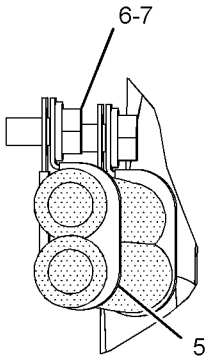

SECTION C-C

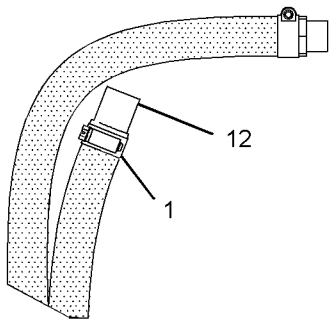

VIEW G-G

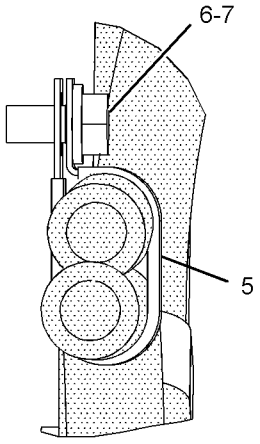

SECTION D-D

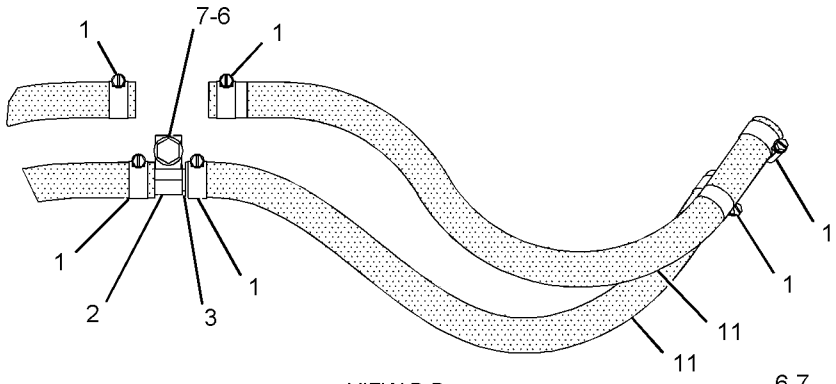

VIEW B-B

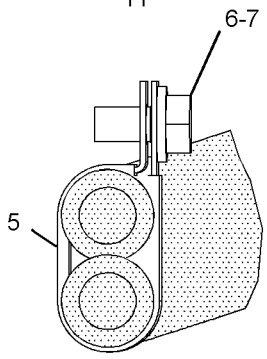

SECTION A-A

LEFT SIDE VIEW

GRAPHIC #1

<END>

g01036311

OPERATOR STATION

234-2617 LINES GP-HEATER & AIR COND

S/N: BXC1-UP; DSX1-UP

PART OF 214-7007 CAB AR, 214-7009 CAB AR-ENCLOSED ROPS

AN ATTACHMENT

SMCS-1380, 1808, 7304 **i01986743**

NOTE	REF NO	GRAPHIC REF	PART NUMBER	QTY	PART NAME 1 2 3 4 5 6 (PRODUCT LEVEL)	SEE PAGE
	1	1	**3S-2093**	3	STRAP-CABLE	
	2	1	**5D-1026**	8	CLAMP-HOSE	
E	3	1	**5P-0767**		HOSE (295CM)	
	4	1	**6P-8855**	1	SPACER (.56X.625X3MM THK)	
G	5	1	**160-2245**		SLEEVE-ABRASION (11IN)	
	6	1	**9M-4814**	1	CONNECTOR-HOSE	
	7	1	**105-9411**	1	SUPPORT	
I	8	1	**125-3416**	1	HOSE AS	
	9	1	**152-8417**	1	STRAP	
I	10	1	**164-1040**	1	HOSE AS	
I	11	1	**164-1041**	1	HOSE AS	
	12	1	**184-6565**	1	BRACKET AS	
M		1	**8T-3490**	3	NUT-WELD (M10X1.5 THD)	
	13	1	**176-3900**	1	ACCUMULATOR GP-REFRIGERANT	
	14	1	**199-6243**	1	PLATE (INSTRUCTION)	
	15	1	**234-2484**	1	HOSE AS	
	16	1	**234-2485**	1	HOSE AS	
	17	1	**3E-4321**	5	CLIP	
	18	1	**5P-7854**	1	CLIP	
	19	1	**6D-4246**	1	CLIP	
	20	1	**7F-6998**	1	LOCKWASHER	
	21	1	**8T-4121**	18	WASHER-HARD (11X21X2.5MM THK)	
M	22	1	**8T-4133**	1	NUT (M10X1.5 THD)	
M	23	1	**8T-4136**	5	BOLT (M10X1.5X25MM)	
M	24	1	**8T-4137**	8	BOLT (M10X1.5X20MM)	
M	25	1	**8T-4189**	1	BOLT (M8X1.25X20MM)	
M	26	1	**8T-4195**	3	BOLT (M10X1.5X30MM)	
	27	1	**9M-4972**	5	CLIP	
	28	1	**9M-8406**	6	CLIP	
	29	1	**9X-7380**	2	SEAL-O-RING	
	30	1	**9X-7381**	2	SEAL-O-RING	
	31	1	**9X-7382**	1	SEAL-O-RING	
	32	1	**9X-7383**	2	SEAL-O-RING	
D	33	1	**5P-5924**		SEAL (.03M)	
E	34	1	**5P-0767**		HOSE (275CM)	
E	35	1	**5P-0767**	2	HOSE (42.5CM EA)	

D-ORDER BY THE METER
E-ORDER BY THE CENTIMETER
G-ORDER BY THE INCH
I-REFER TO HYDRAULIC INFORMATION SYSTEM
M-METRIC PART

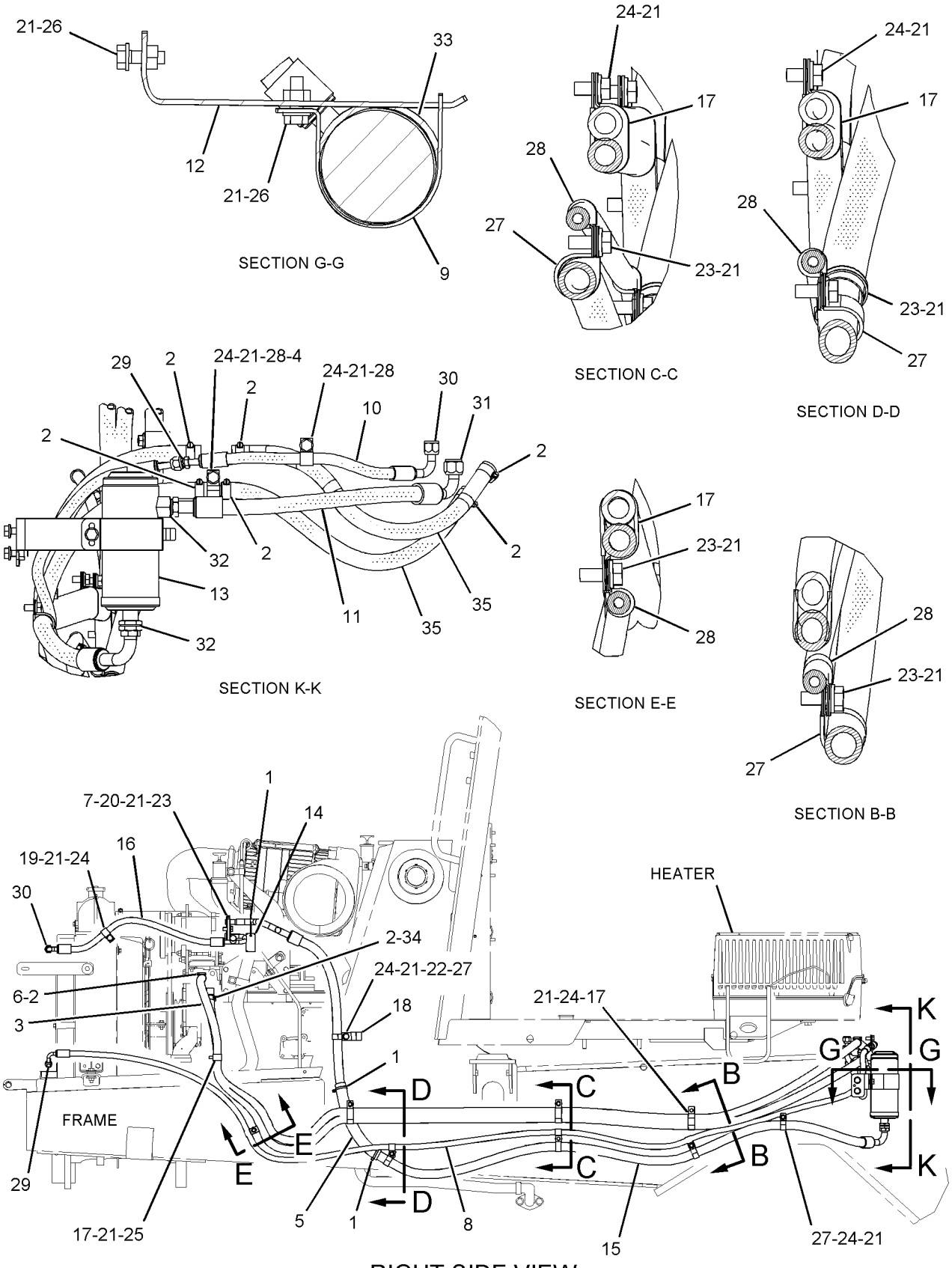

RIGHT SIDE VIEW

GRAPHIC #1

<END>

g01034184

OPERATOR STATION

122-2054 MIRROR GP-REAR VIEW

S/N: BXC1-UP; DSX1-UP
AN ATTACHMENT

SMCS-7319 **i01345327**

NOTE	REF NO	GRAPHIC REF	PART NUMBER	QTY	PART NAME 1 2 3 4 5 6 (PRODUCT LEVEL)	SEE PAGE
	1	1	**122-2051**	2	BRACKET	
	2	1	**122-2053**	1	MIRROR AS (LH)	
	3	1	**122-2052**	1	MIRROR AS (RH)	
M	4	1	**8T-4137**	4	BOLT (M10X1.50X20MM)	
	5	1	**8T-4121**	4	WASHER-HARD (2.5MM THK)	

M-METRIC PART

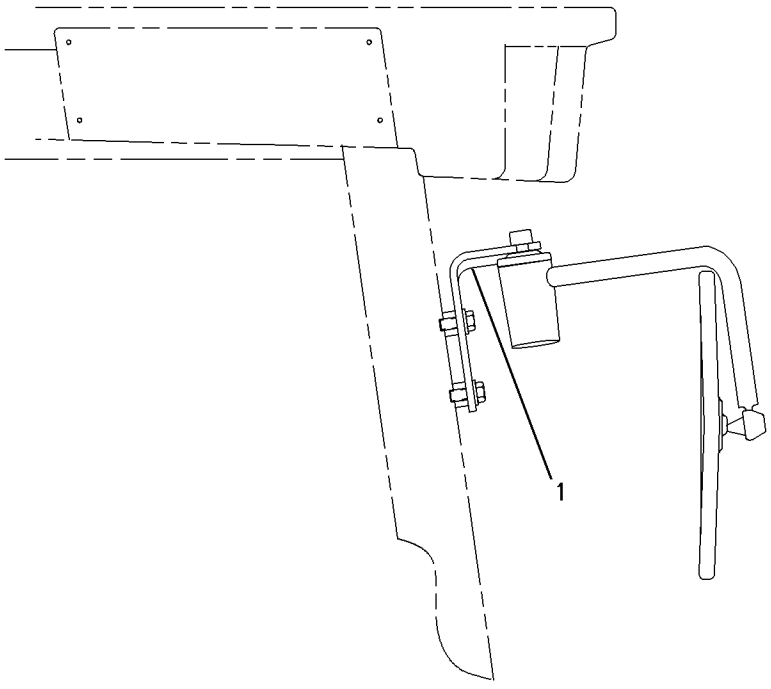

RIGHT SIDE VIEW

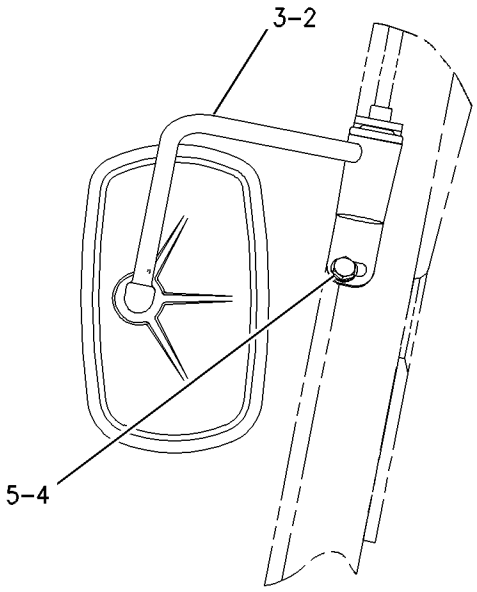

FRONT VIEW

GRAPHIC #1 **<END>** g00710492

OPERATOR STATION

164-1055 MIRROR GP-REAR VIEW

S/N: BXC1-UP; DSX1-UP
AN ATTACHMENT

SMCS-7319 **i01969157**

NOTE	REF NO	GRAPHIC REF	PART NUMBER	QTY	PART NAME 1 2 3 4 5 6 (PRODUCT LEVEL)	SEE PAGE
	1	1	**123-6620**	2	MIRROR AS	
	2	1	**159-7104**	2	BRACKET AS	
	3	1	**159-7105**	1	BRACKET & MOUNTING AS (LH)	
	4	1	**159-7106**	1	BRACKET & MOUNTING AS (RH)	
	5	1	**8T-4121**	4	WASHER-HARD (11X21X2.5MM THK)	
M	6	1	**8T-4137**	4	BOLT (M10X1.5X20MM)	
M	7	1	**8T-4189**	4	BOLT (M8X1.25X20MM)	
	8	1	**8T-4224**	4	WASHER-HARD (8.8X16X2MM THK)	

M-METRIC PART

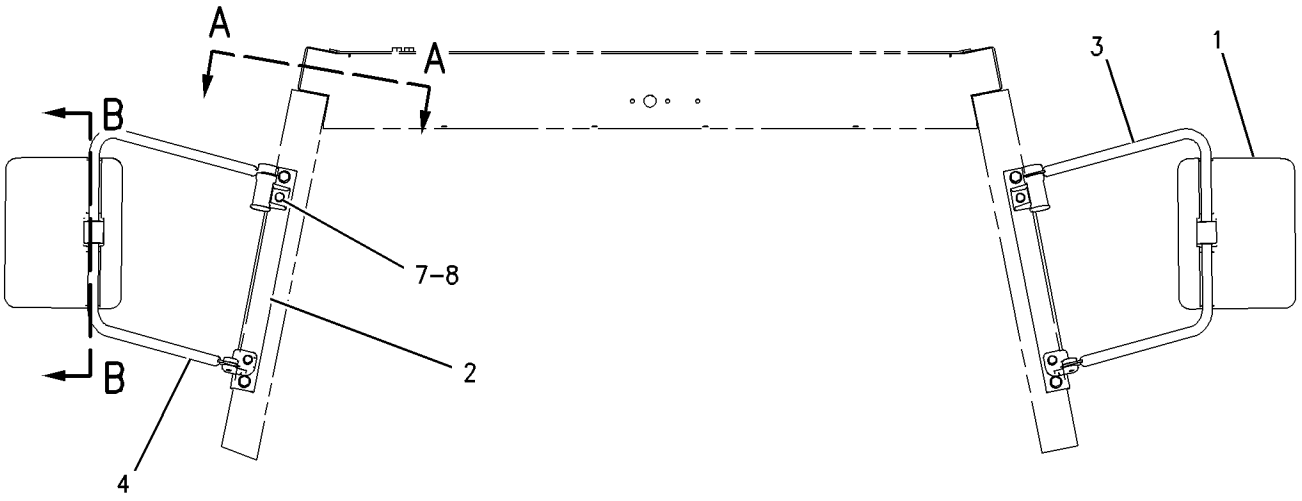

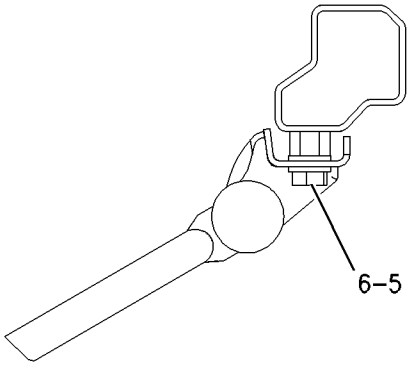

VIEW A–A

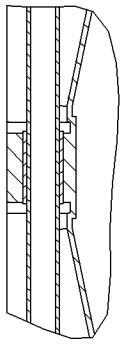

SECTION B–B

GRAPHIC #1 **<END>** g00860365

OPERATOR STATION

144-9931 MODULE GP-WARNING INDICATOR

S/N: BXC1-UP; DSX1-UP
WITHOUT ALARM
PART OF 238-1165 WIRING GP-CONSOLE

SMCS-7407, 7431 **i01946519**

NOTE	REF NO	GRAPHIC REF	PART NUMBER	QTY	PART NAME 1 2 3 4 5 6 (PRODUCT LEVEL)	SEE PAGE
	1	1	**102-8806**	1	KIT-RECEPTACLE (8 PIN)	
	2	1	**144-9934**	1	GASKET	
	3	1	**189-3610**	1	LAMP (12 VOLT) (MINIATURE)	

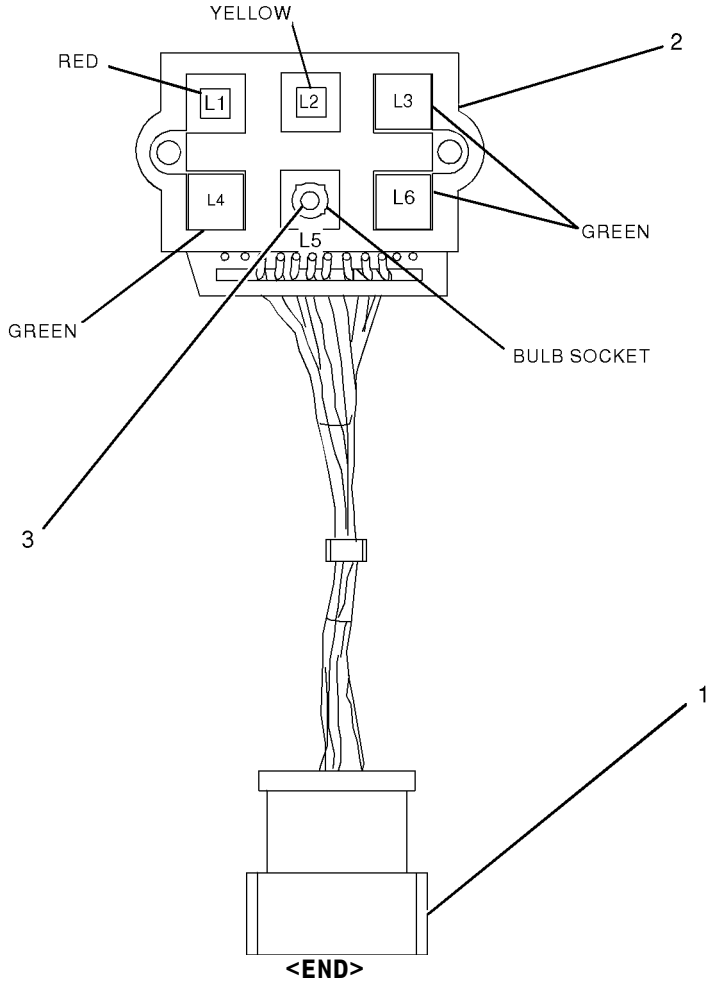

GRAPHIC #1

<END>

g01013281

OPERATOR STATION

223-6539 MODULE GP-WARNING INDICATOR

S/N: BXC1-UP; DSX1-UP
PART OF 238-1166 WIRING GP-CONSOLE
AN ATTACHMENT

SMCS-7407, 7431 **i01967501**

NOTE	REF NO	GRAPHIC REF	PART NUMBER	QTY	PART NAME 1 2 3 4 5 6 (PRODUCT LEVEL)	SEE PAGE
	1	1	**102-8801**	1	KIT-RECEPTACLE (12 PIN)	
	2	1	**232-4706**	1	GASKET	
	3	1	**3E-5180**	1	WEDGE-RECEPTACLE LOCK (12 PIN)	
	4	1	**186-3735**	9	PIN-CONNECTOR	
	5	1	**8T-8737**	1	PLUG-SEAL	

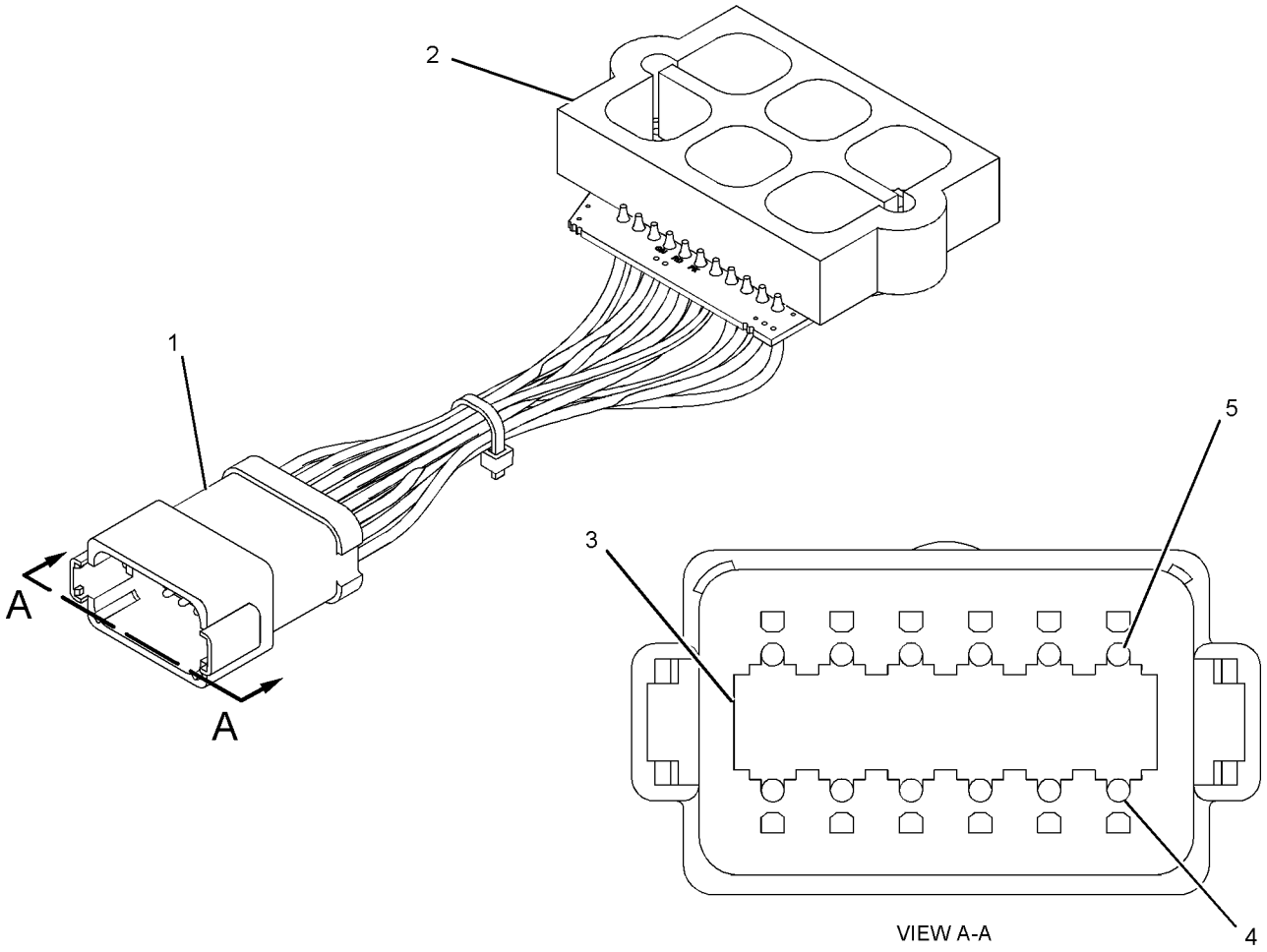

GRAPHIC #1 **<END>** g01022158

OPERATOR STATION

186-2589 MOTOR GP-WINDOW WIPER

S/N: BXC1-UP; DSX1-UP
PART OF 174-2024 WIPER GP-WINDOW
AN ATTACHMENT

SMCS-7305 **i01373564**

NOTE	REF NO	GRAPHIC REF	PART NUMBER	QTY	PART NAME 1 2 3 4 5 6 (PRODUCT LEVEL)	SEE PAGE
M	1	1	**5C-7261**	1	NUT (M8X1.25 THD)	
	2	1	**3F-9556**	1	LOCKWASHER (8.4MM ID)	
	3	1	**102-8805**	1	KIT-RECEPTACLE (6 PIN)	
	4	1	**9G-3695**	1	PLUG-SEALING (GROMMET)	
	5	1	**186-3735**	5	PIN-CONNECTOR	

M-METRIC PART

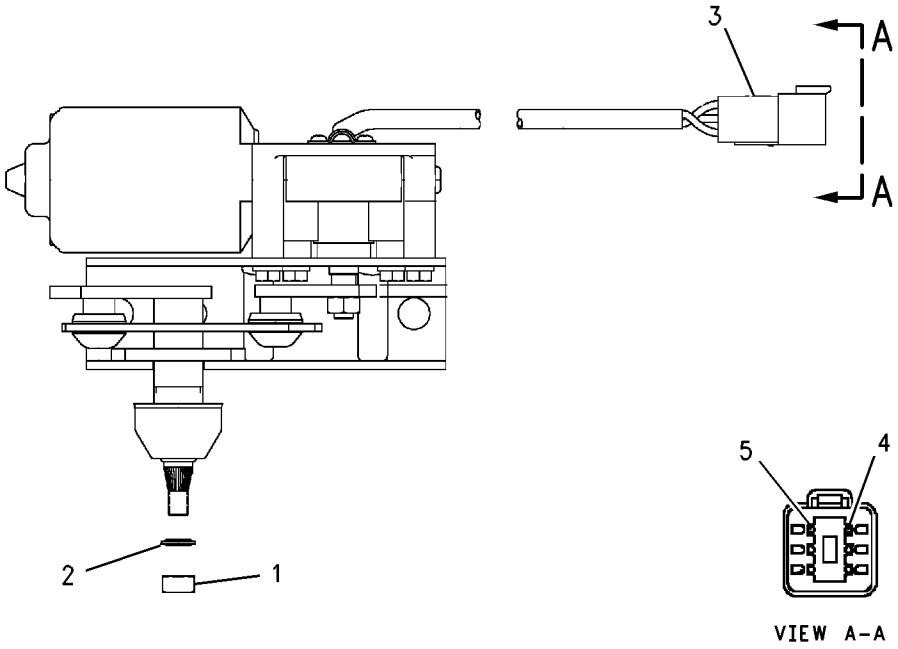

GRAPHIC #1 **<END>** g00726408

184-7898 MOUNTING GP-INSTRUMENT PANEL–FRONT CONSOLE

S/N: BXC1-UP; DSX1-UP
TWO WHEEL STEER
PART OF 184-7970 POWER TRAIN AR

SMCS-7451 **i01439939**

NOTE	REF NO	GRAPHIC REF	PART NUMBER	QTY	PART NAME 1 2 3 4 5 6 (PRODUCT LEVEL)	SEE PAGE
	1	1	**167-8278**	2	PLATE	
	2	1	**167-8279**	1	PANEL AS	
M	3	1	**9X-1046**	14	SCREW (M4X0.7X18MM)	

M-METRIC PART

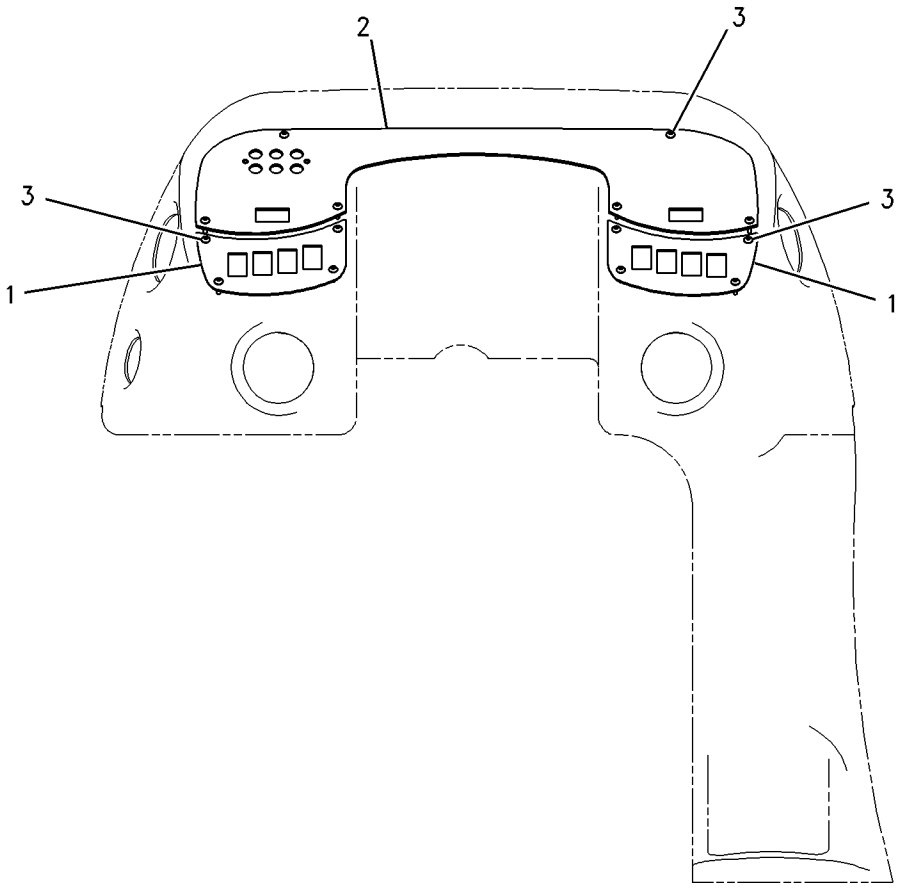

GRAPHIC #1 **<END>** g00754349

OPERATOR STATION

185-3525 MOUNTING GP-INSTRUMENT PANEL–FRONT CONSOLE

S/N: BXC1-UP; DSX1-UP

PART OF 214-7012, 214-7013, 214-7014, 214-7015 POWER TRAIN AR

AN ATTACHMENT

SMCS-7451 **i01444394**

NOTE	REF NO	GRAPHIC REF	PART NUMBER	QTY	PART NAME 1 2 3 4 5 6 (PRODUCT LEVEL)	SEE PAGE
	1	1	**5P-4116**	4	WASHER-HARD (8.8X20.5X2MM THK)	
M	2	1	**6V-9189**	4	LOCKNUT	

M-METRIC PART

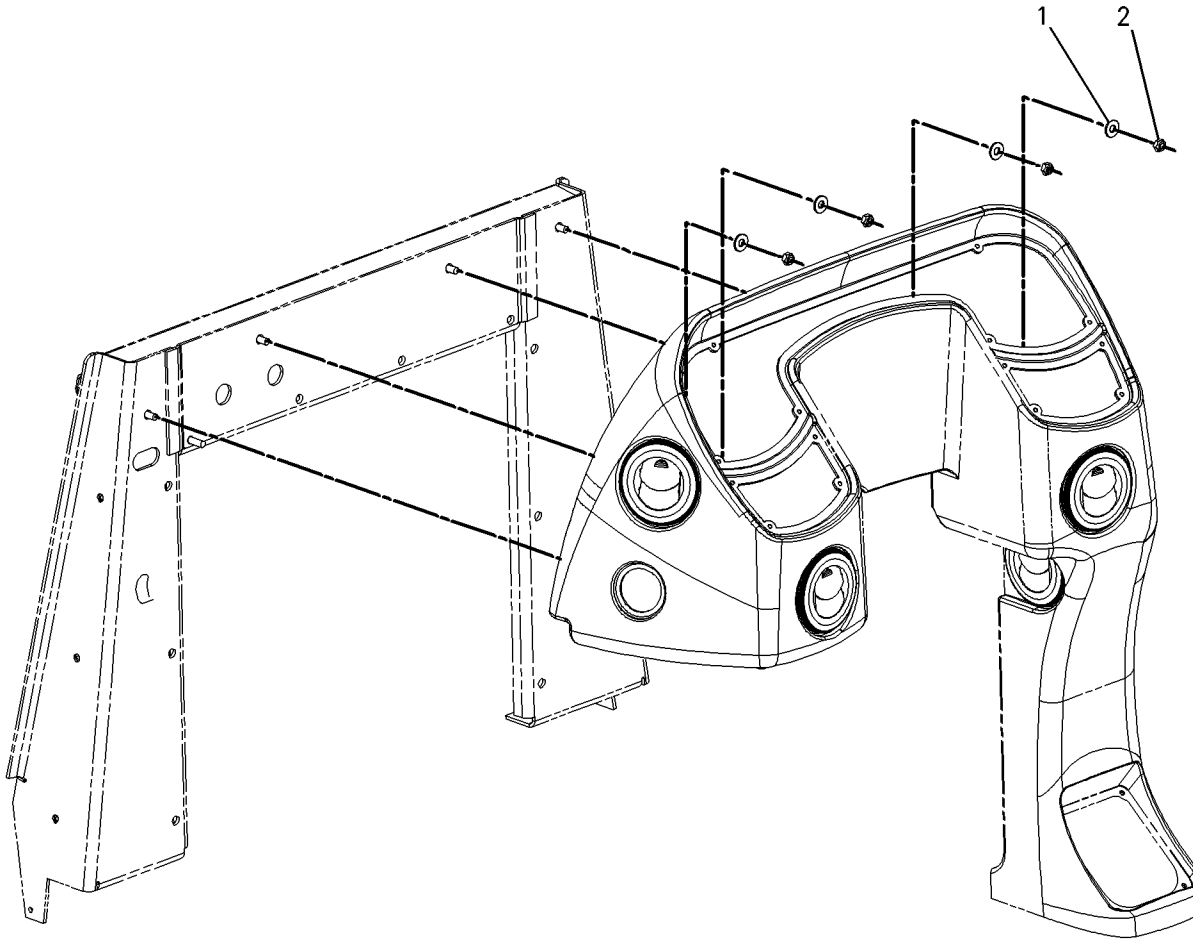

GRAPHIC #1 **<END>** g00756122

OPERATOR STATION

202-5724 MOUNTING GP-INSTRUMENT PANEL—SIDE

S/N: BXC1-UP; DSX1-UP
ROTATING VANDALISM GUARD
PART OF 214-7008, 214-7009 CAB AR-ENCLOSED ROPS
AN ATTACHMENT

SMCS-7451 **i02005668**

NOTE	REF NO	GRAPHIC REF	PART NUMBER	QTY	PART NAME 1 2 3 4 5 6 (PRODUCT LEVEL)	SEE PAGE
J	1	1	**5P-9000**	1	LOCK AS-CYLINDER	
	2	1	**164-1122**	1	BODY	
	3	1	**164-1123**	1	BEZEL	
	4	1	**164-1177**	2	CAP-END	
	5	1	**168-4609**	1	SWITCH AS-START	
		1	**7T-6799**	1	NUT-MOUNTING (1-32 THD)	
	6	1	**185-9777**	1	PLATE	
	7	1	**191-5104**	4	MOUNT	
	8	1	**192-7355**	2	PLATE	
	9	1	**194-4250**	2	PIN	
	10	1	**197-7499**	2	BOLT (M4X.7X25MM)	
	11	1	**202-5979**	1	HANDLE	
	12	1	**202-6063**	1	FILM (START SWITCH)	
M	13	1	**131-3540**	2	LOCKNUT (M8X1.25 THD)	
	15	1	**214-9035**	8	BOLT (M4X0.7X16MM)	
	16	1	**4B-4863**	2	WASHER (4.7X11X1.2MM THK)	
M	17	1	**8T-2659**	8	LOCKNUT (M4X6H THD)	
	18	1	**8T-4224**	4	WASHER-HARD (8.8X16X2MM THK)	
M	19	1	**8T-4908**	2	BOLT (M8X1.25X25MM)	
M	20	1	**9X-2045**	5	SCREW-TRUSS HEAD (M6X1X20MM)	

J-REQUIRES 5P8500 KEY
M-METRIC PART

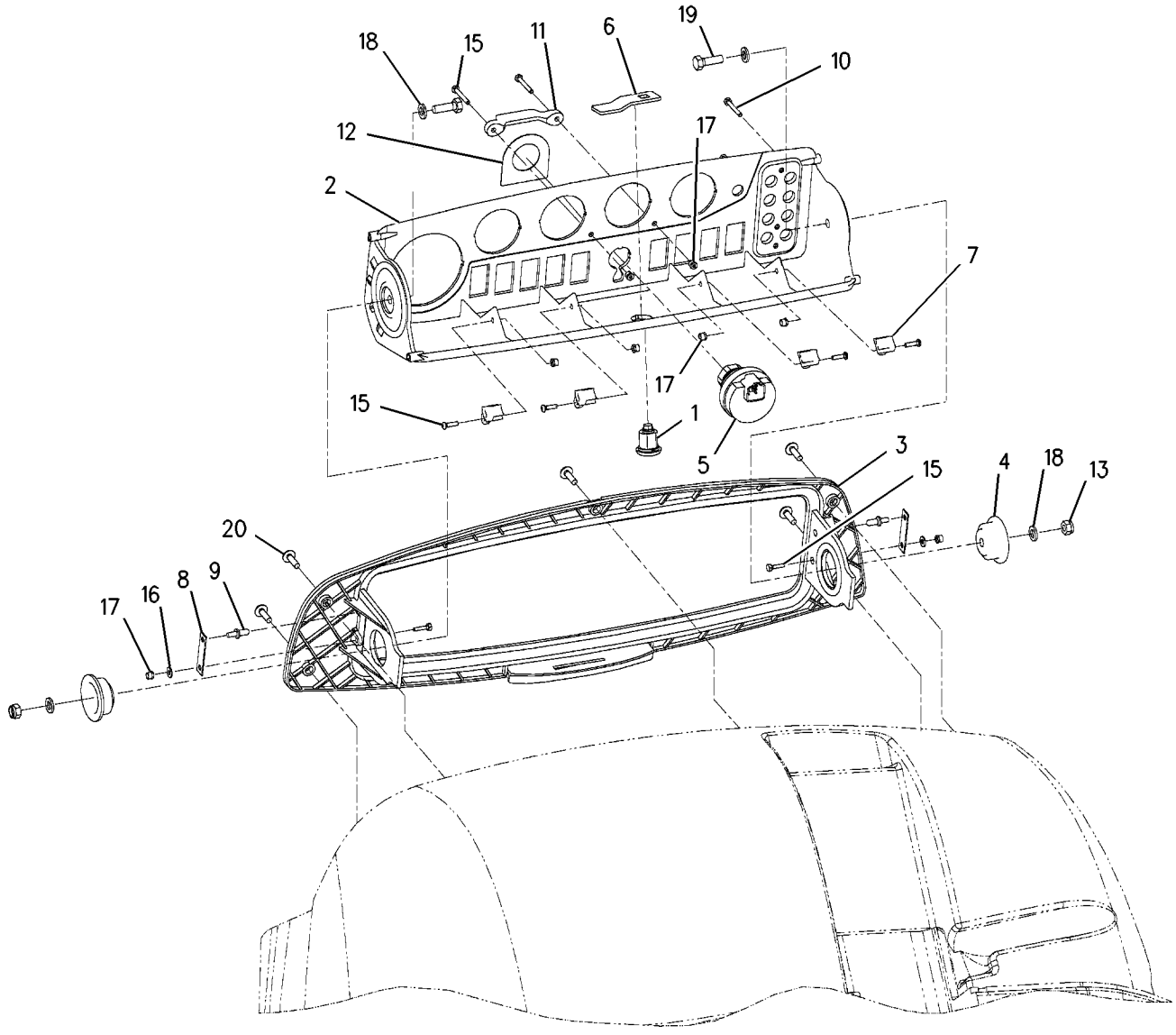

GRAPHIC #1 **<END>** g00864598

OPERATOR STATION

202-5812 PANEL GP-INSTRUMENT–SIDE

S/N: BXC1-UP; DSX1-UP
FLAT GAUGE PANEL
AN ATTACHMENT

SMCS-1435, 7450, 7451, 7453, 7462, 7463, 7477, 7481 **i01843912**

NOTE	REF NO	GRAPHIC REF	PART NUMBER	QTY	PART NAME 1 2 3 4 5 6 (PRODUCT LEVEL)	SEE PAGE
J	1	1	**142-8858**	1	SWITCH AS-KEY START	
	2	1	**167-8283**	1	PANEL AS-INSTRUMENT	
	3	1	**193-1509**	1	WIRE AS	
	4	1	**191-9104**	1	FILM (START SWITCH)	
M	5	1	**9X-2045**	10	SCREW-TRUSS HEAD (M6X1X20MM)	

J-REQUIRES 5P8500 KEY
M-METRIC PART

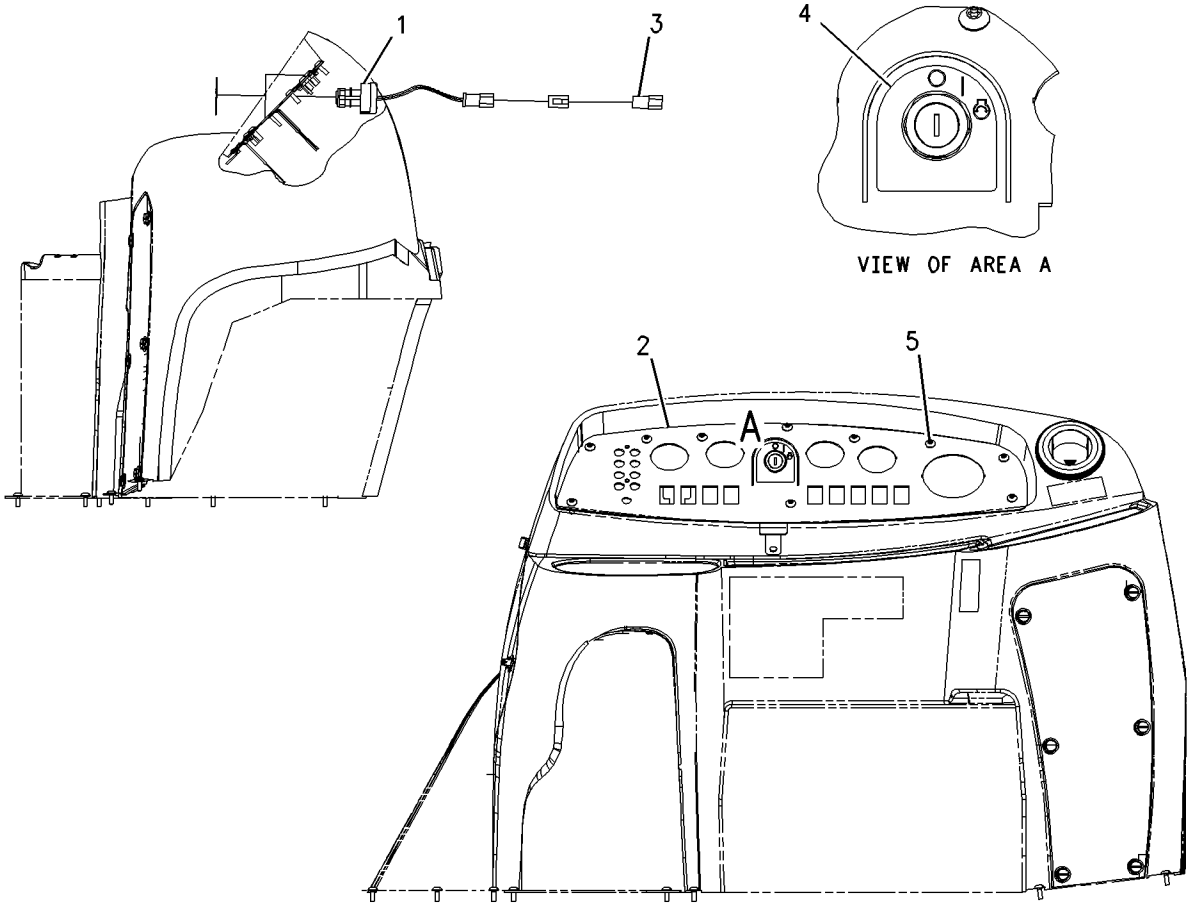

GRAPHIC #1 **<END>** g00844991

OPERATOR STATION

164-1078 PEDAL GP-GOVERNOR

S/N: BXC1-UP; DSX1-UP

PART OF 234-8892 CONTROL GP-GOV & ACCELERATOR

SMCS-1265 **i01943271**

NOTE	REF NO	GRAPHIC REF	PART NUMBER	QTY	PART NAME 1 2 3 4 5 6 (PRODUCT LEVEL)	SEE PAGE
M	1	1	**129-3178**	1	LOCKNUT (M6X1 THD)	
M	2	1	**5C-7261**	1	NUT (M8X1.25 THD)	
M	3	1	**5C-9553**	1	BOLT (M6X1X16MM)	
	4	1	**8T-4205**	1	WASHER-HARD (7.2X14.5X2MM THK)	
	5	1	**8T-6902**	3	CLIP	
	6	1	**3F-9556**	2	LOCKWASHER	
M	7	1	**095-0641**	4	BOLT-SOCKET HEAD (M4X0.7X10MM)	
	8	1	**6V-8186**	2	NUT-FULL (5/16-24 THD)	
M	9	1	**9X-2842**	1	BOLT (M8X1.25 THD)	
					AVAILABLE REPAIR KIT(S):	
			164-1154	1	KIT-SERVICE	

M-METRIC PART

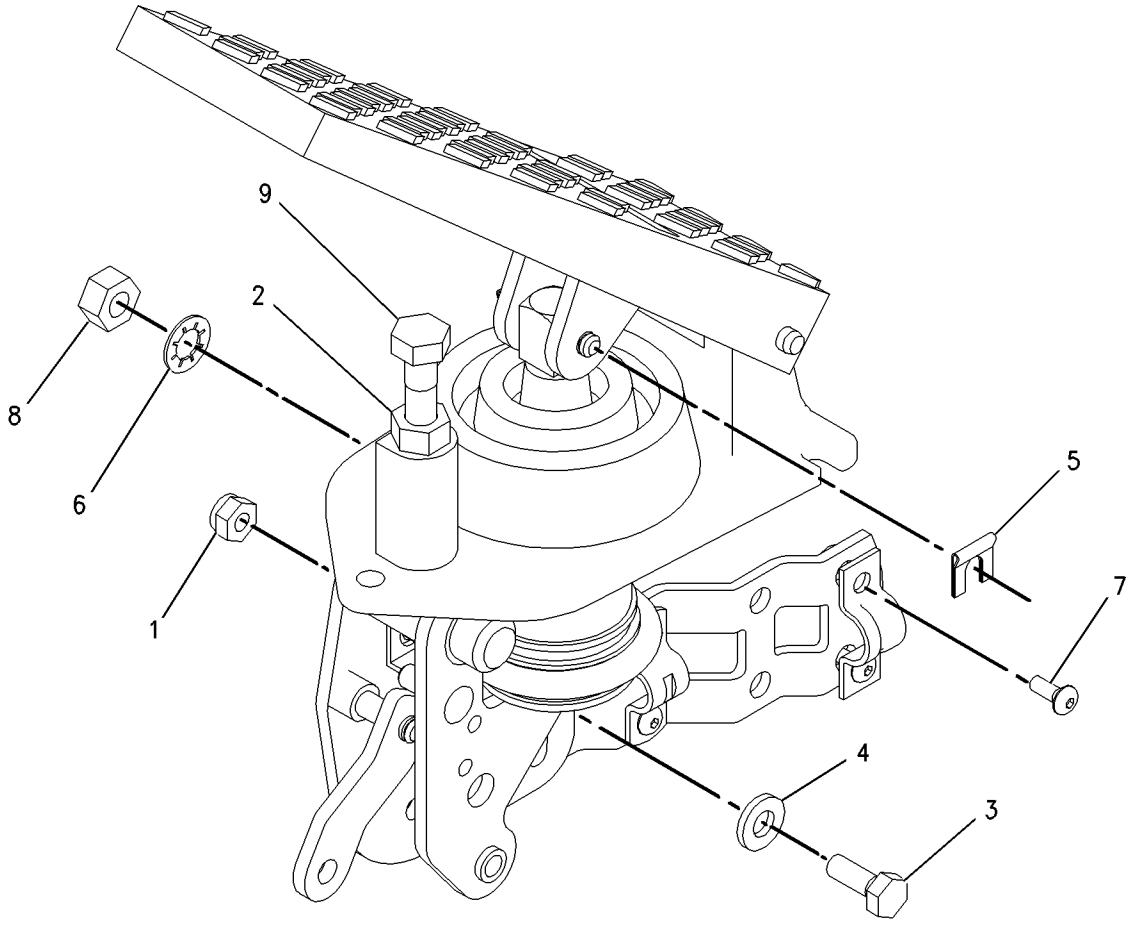

GRAPHIC #1 **<END>** g00832396

OPERATOR STATION

220-2639 SEAT BELT GP

S/N: BXC1-UP; DSX1-UP

AN ATTACHMENT

SMCS-7327 **i01709174**

NOTE	PART NUMBER	QTY	PART NAME 1 2 3 4 5 6 (PRODUCT LEVEL)	SEE PAGE
M	**8C-8992**	2	BOLT-LOCKING (M12X1.75X30MM)	
	7X-0546	3	WASHER-HARD	

M-METRIC PART

<END>

220-2640 SEAT BELT GP

S/N: BXC1-UP; DSX1-UP

AN ATTACHMENT

SMCS-7327 **i01738688**

NOTE	PART NUMBER	QTY	PART NAME 1 2 3 4 5 6 (PRODUCT LEVEL)	SEE PAGE
M	**8C-8992**	2	BOLT-LOCKING (M12X1.75X30MM)	
	7X-0546	3	WASHER-HARD	

M-METRIC PART

<END>

OPERATOR STATION

164-1209 SEAT GP

S/N: BXC1-UP; DSX1-UP
FABRIC
PART OF 164-1201 SEAT GP-SUSPENSION
AN ATTACHMENT

SMCS-7312, 7321, 7324, 7336 **i02005730**

NOTE	REF NO	GRAPHIC REF	PART NUMBER	QTY	PART NAME 1 2 3 4 5 6 (PRODUCT LEVEL)	SEE PAGE
Y	1	1	**8Y-5904**	2	ARMREST GP	702
M	2	1	**105-3481**	2	BOLT-HEX SOCKET (M8X1.25X20MM)	
	3	1	**164-1214**	4	KNOB	
	4	1	**164-1244**	1	CUSHION AS	
	5	1	**164-1247**	1	BRACKET AS	
	6	1	**164-1248**	1	PAN	
	7	1	**164-1249**	1	LEVER AS	
	8	1	**164-1250**	1	HANDLE	
	9	1	**164-1251**	1	SPRING	
	10	1	**164-1252**	1	SPRING	
	11	1	**4B-5271**	4	WASHER (25.5X11.2X2MM THK)	
	12	1	**5P-8245**	4	WASHER-HARD (13.5X25.5X3MM THK)	
M	13	1	**8T-4200**	2	BOLT (M8X1.25X16MM)	
	14	1	**164-1256**	2	SPACER (19.0X25.4X12.5MM THK)	
	15	1	**164-1258**	1	BRACKET AS	
	16	1	**164-1259**	1	BRACKET AS	
	17	1	**164-1261**	1	BRACKET AS	
	18	1	**164-1265**	4	BOLT (3/8-16X1.10IN)	
	19	1	**8T-9501**	2	SCREW (10-16X.75 IN)	
	20	1	**9X-8873**	2	BOLT (1/2-13X2.25 IN)	
	21	1	**180-5796**	1	CUSHION AS-SEAT	
	22	1	**180-5797**	1	PAN AS	
	23	1	**195-9223**	2	SCREW-PAN HEAD	
M	24	1	**129-3180**	2	LOCKNUT (M12X1.75 THD)	
M	25	1	**131-3540**	8	LOCKNUT (M8X1.25 THD)	
	26	1	**1K-6872**	2	LOCKNUT (1/2-13 THD)	

M-METRIC PART
Y-SEPARATE ILLUSTRATION

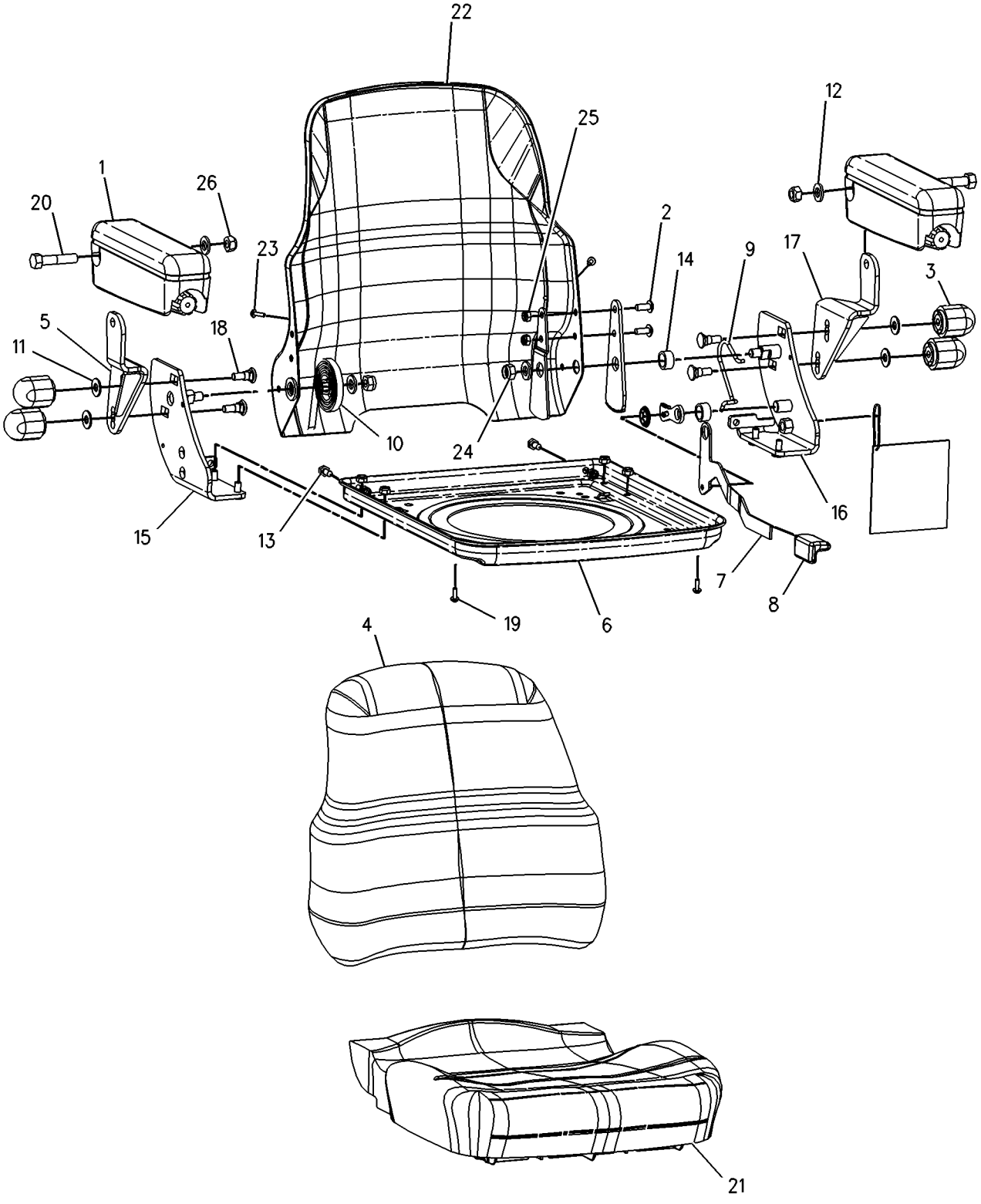

GRAPHIC #1 **<END>** g00890836

OPERATOR STATION

164-1210 SEAT GP

S/N: BXC1-UP; DSX1-UP
VINYL
PART OF 164-1202 SEAT GP-SUSPENSION
AN ATTACHMENT

SMCS-7312, 7321, 7324, 7336 **i01739283**

NOTE	REF NO	GRAPHIC REF	PART NUMBER	QTY	PART NAME 1 2 3 4 5 6 (PRODUCT LEVEL)	SEE PAGE
Y	1	1	**8Y-5904**	2	ARMREST GP	702
M	2	1	**105-3481**	2	BOLT-HEX SOCKET (M8X1.25X20MM)	
	3	1	**164-1214**	4	KNOB	
	4	1	**164-1247**	1	BRACKET AS	
	5	1	**164-1248**	1	PAN	
	6	1	**164-1249**	1	LEVER AS	
	7	1	**164-1250**	1	HANDLE	
	8	1	**164-1251**	1	SPRING	
	9	1	**164-1252**	1	SPRING	
	10	1	**4B-5271**	4	WASHER (25.5X11.2X2MM THK)	
	11	1	**5P-8245**	4	WASHER-HARD (13.5X25.5X3MM THK)	
M	12	1	**8T-4200**	2	BOLT (M8X1.25X16MM)	
	13	1	**164-1256**	2	SPACER (12.5MM THK)	
	14	1	**164-1258**	1	BRACKET AS	
	15	1	**164-1259**	1	BRACKET AS	
	16	1	**164-1261**	1	BRACKET AS	
	17	1	**164-1265**	4	BOLT	
	18	1	**164-1266**	1	CUSHION AS-BACK	
	19	1	**8T-9501**	2	SCREW (10-16X.75 IN)	
	20	1	**9X-8873**	2	BOLT (1/2-13X2.25 IN)	
	21	1	**180-5795**	1	CUSHION AS-SEAT	
	22	1	**180-5797**	1	PAN AS	
	23	1	**195-9223**	2	SCREW-PAN HEAD	
M	24	1	**129-3180**	2	LOCKNUT (M12X1.75 THD)	
M	25	1	**131-3540**	8	LOCKNUT	
	26	1	**1K-6872**	2	LOCKNUT (1/2-13 THD)	

M-METRIC PART
Y-SEPARATE ILLUSTRATION

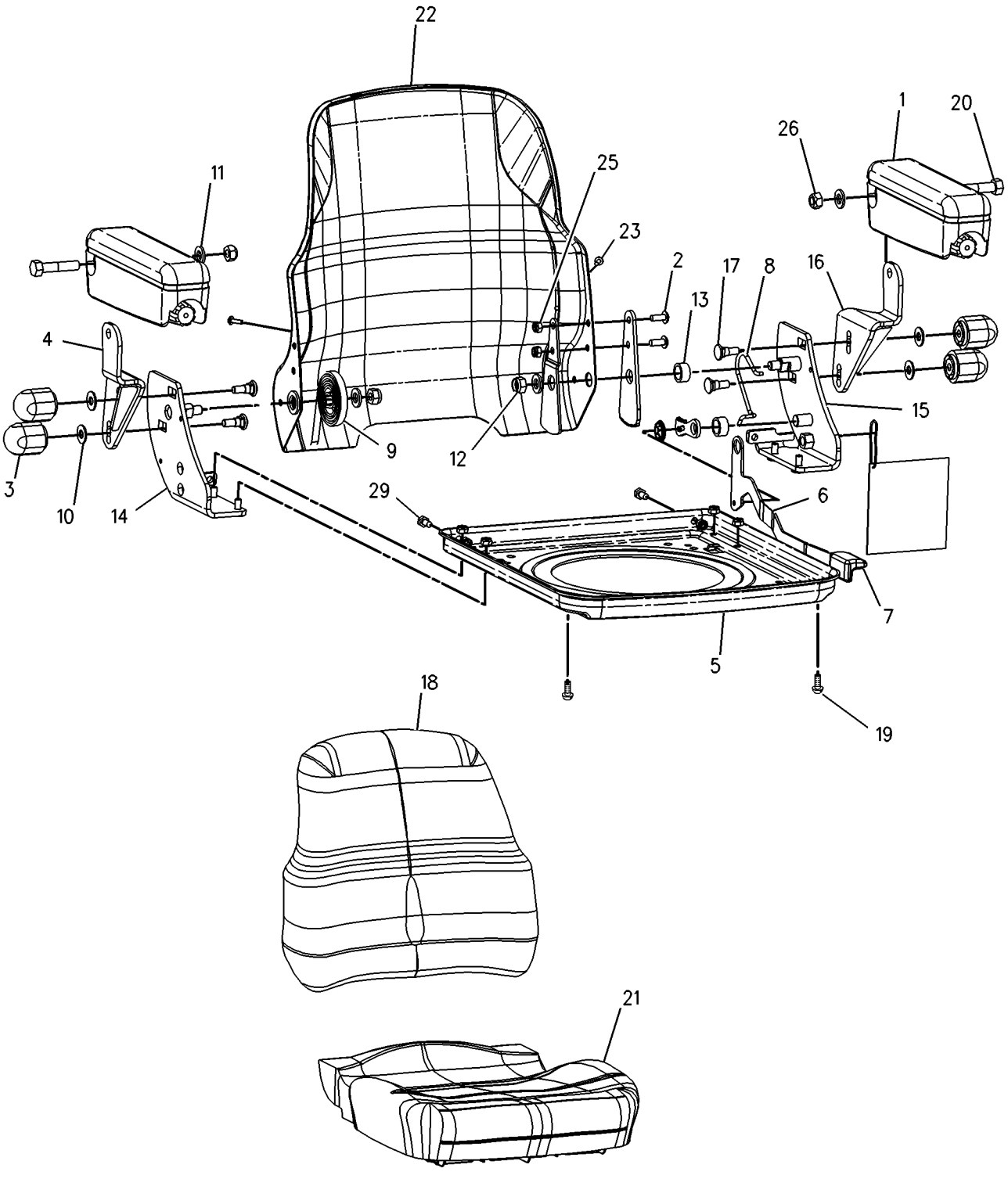

GRAPHIC #1 **<END>** g00890837

OPERATOR STATION

164-1213 SEAT GP

S/N: BXC1-UP; DSX1-UP
DELUXE
PART OF 164-1203 SEAT GP-SUSPENSION
AN ATTACHMENT

SMCS-7312, 7321, 7324, 7336 **i01926986**

NOTE	REF NO	GRAPHIC REF	PART NUMBER	QTY	PART NAME 1 2 3 4 5 6 (PRODUCT LEVEL)	SEE PAGE
	1	1	**2M-7819**	1	RING-RETAINING	
	2	1	**4B-4278**	4	WASHER (10.2X20.5X1.6MM THK)	
	3	1	**6C-3677**	2	RIVET-POP	
	4	1	**8S-7803**	2	RING-RETAINING	
Y	5	1	**8Y-5904**	2	ARMREST GP	702
	6	1	**031-4155**	4	LOCKNUT (5/16-18 THD)	
	7	1	**095-0878**	2	PIN-SPRING	
M	8	1	**105-3481**	2	BOLT-HEX SOCKET (M8X1.25X20MM)	
	9	1	**123-6077**	1	SHAFT-PIVOT	
	10	1	**132-9240**	1	LATCH AS	
	11	1	**135-1706**	1	SPRING	
	12	1	**154-8278**	1	SPRING-RETURN	
	13	1	**154-8280**	1	SPRING-RETURN	
	14	1	**154-8284**	1	TUBE	
	15	1	**161-9290**	1	WASHER (11.9X20.7X2.3MM THK)	
	16	1	**164-1211**	1	LEVER	
	17	1	**164-1212**	1	LEVER	
	18	1	**164-1214**	4	KNOB	
	19	1	**164-1245**	1	CUSHION GP-SEAT	
		1	**164-1269**	1	BOOT	
		1	**164-1270**	3	FASTENER	
		1	**164-1272**	1	ROD AS	
		1	**164-1273**	2	SPRING-EXTENSION	
	20	1	**164-1246**	1	CUSHION AS	
	21	1	**164-1247**	1	BRACKET AS	
	22	1	**164-1249**	1	LEVER AS	
	23	1	**164-1250**	1	HANDLE	
	24	1	**164-1251**	1	SPRING	
	25	1	**164-1252**	1	SPRING	
	29	1	**164-1256**	2	SPACER (19.0X25.4X12.5MM THK) (12.5MM THK)	
	30	1	**164-1257**	1	SPACER (19.4X25.4X15.9MM THK) (15.9MM THK)	
	31	1	**164-1258**	1	BRACKET AS	
	32	1	**164-1259**	1	BRACKET AS	
	33	1	**164-1261**	1	BRACKET AS	
	34	1	**164-1262**	1	PAN AS	
	35	1	**164-1263**	1	PAN AS	
	36	1	**164-1264**	1	PAN AS	
	37	1	**164-1265**	4	BOLT (3/8-16X1.10IN)	
	38	1	**164-1271**	2	SPRING	
	39	1	**164-1274**	2	BLOCK	
	40	1	**164-1275**	1	BACKREST AS	
M		1	**2W-9499**	2	BOLT (M6X1.0X40MM)	
		1	**8C-0572**	2	WASHER (8.8X25.5X2MM THK)	
	41	1	**164-1276**	2	TUBE	
	42	1	**164-1277**	2	CLIP-SPRING	
	43	1	**164-1295**	1	PLATE AS-SLIDE	
	44	1	**180-5780**	1	LEVER	
	45	1	**180-5781**	1	ROD	
	46	1	**180-5782**	1	SPRING	
	47	1	**180-5783**	1	FOLLOWER	
	48	1	**180-5784**	1	LATCH AS	
	49	1	**180-5785**	1	SPRING	
	51	1	**180-5787**	1	KNOB	
	52	1	**180-5788**	1	BLOCK	

164-1213 SEAT GP *(contd.)*

i01926986

NOTE	REF NO	GRAPHIC REF	PART NUMBER	QTY	PART NAME 1 2 3 4 5 6 (PRODUCT LEVEL)	SEE PAGE
	55	1	**180-5791**	1	SUPPORT AS-SEAT (LUMBAR)	
	56	1	**195-7055**	8	WASHER-HARD (9.9X28.5X3.2MM THK)	
	57	1	**195-9223**	4	SCREW-PAN HEAD	
M	58	1	**129-3180**	2	LOCKNUT (M12X1.75 THD)	
M	59	1	**131-3540**	12	LOCKNUT	
	60	1	**1K-6872**	2	LOCKNUT (1/2-13 THD)	
	61	1	**2K-4973**	4	LOCKNUT (3/8-16 THD)	
	62	1	**2P-7864**	2	SCREW-TAPPING	
	63	1	**3B-4505**	4	LOCKWASHER	
	64	1	**4B-5271**	4	WASHER (25.5X11.2X2MM THK)	
	65	1	**4H-1641**	2	PIN-SPRING	
	66	1	**4M-0061**	4	BOLT (5/16-18X.750 IN)	
	67	1	**5P-8245**	4	WASHER-HARD (13.5X25.5X3MM THK)	
	68	1	**5S-7379**	4	BOLT (3/8-16X0.875 IN)	
M	69	1	**8T-4200**	2	BOLT (M8X1.25X16MM)	
	70	1	**8T-7566**	1	PIN-SPRING	
	71	1	**9X-8873**	2	BOLT (1/2-13X2.25 IN)	

M-METRIC PART
Y-SEPARATE ILLUSTRATION

164-1213 SEAT GP *(contd.)*

i01926986

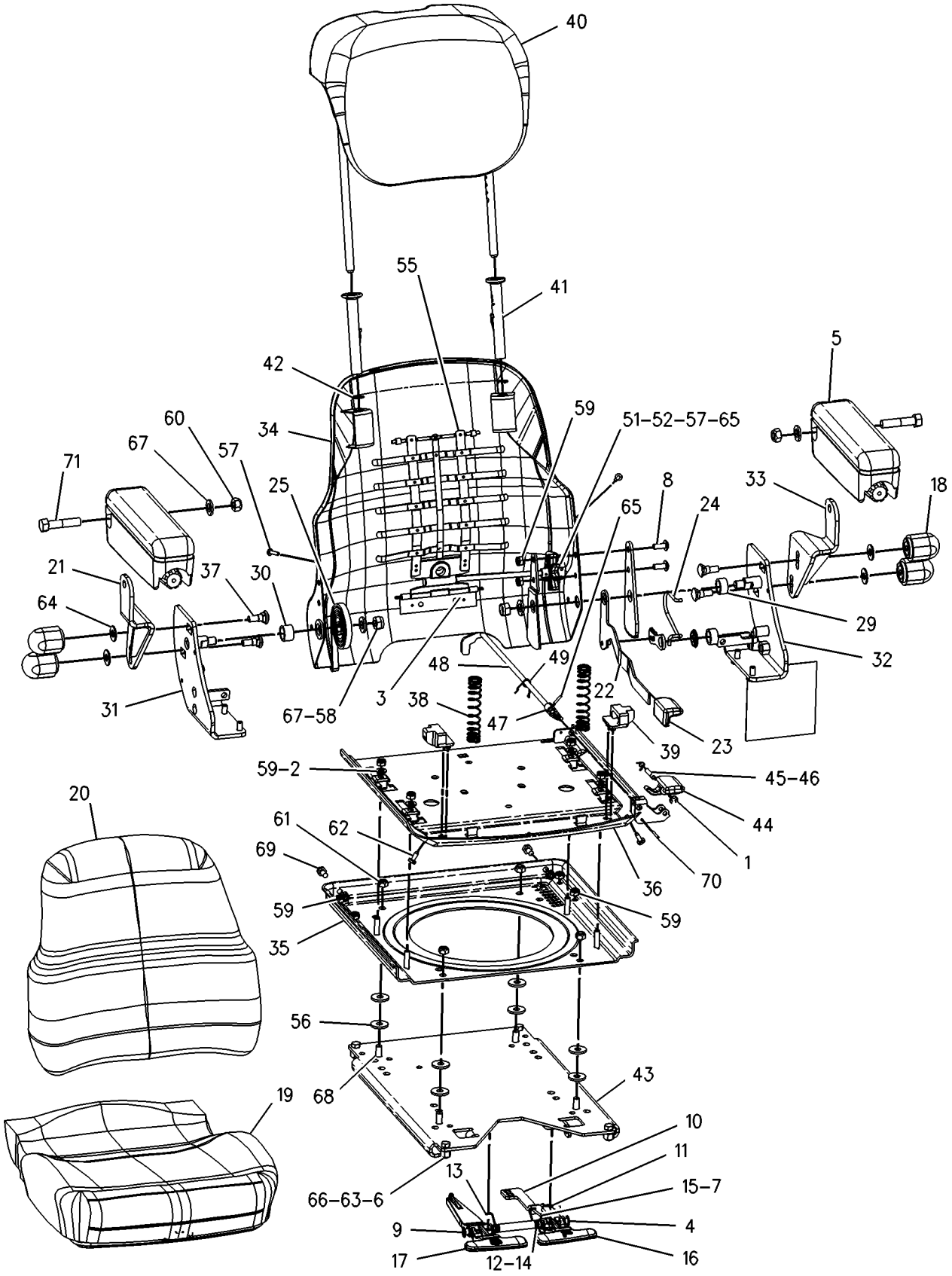

GRAPHIC #1

<END>

g01002674

OPERATOR STATION

164-1201 SEAT GP-SUSPENSION

S/N: BXC1-UP; DSX1-UP
PART OF 180-5770 SEAT GP-SUSPENSION
AN ATTACHMENT

SMCS-7324, 7336 **i01507905**

NOTE	REF NO	GRAPHIC REF	PART NUMBER	QTY	PART NAME 1 2 3 4 5 6 (PRODUCT LEVEL)	SEE PAGE
	1	1	**8S-7803**	2	RING-RETAINING	
	2	1	**095-0878**	2	PIN-SPRING	
	3	1	**123-6077**	1	SHAFT-PIVOT	
	4	1	**132-9240**	1	LATCH AS	
	5	1	**135-1706**	1	SPRING	
	6	1	**149-4745**	2	KIT-SLIDER BLOCK	
	7	1	**154-8278**	1	SPRING-RETURN	
	8	1	**154-8280**	1	SPRING-RETURN	
	9	1	**154-8284**	1	TUBE	
	10	1	**161-9289**	2	BLOCK-SLIDER	
	11	1	**161-9290**	1	WASHER (11.9X20.7X2.3MM THK)	
Y	12	1	**164-1207**	1	SUSPENSION GP-SEAT	778
Y	13	1	**164-1209**	1	SEAT GP	763
	14	1	**164-1211**	1	LEVER	
	15	1	**164-1212**	1	LEVER	
	16	1	**164-1295**	1	PLATE AS-SLIDE	
	17	1	**173-5787**	2	SETSCREW	
	18	1	**195-7055**	4	WASHER-HARD (3.2MM THK)	
	19	1	**031-4155**	4	LOCKNUT	
	20	1	**2K-4973**	4	LOCKNUT (3/8-16 THD)	
	21	1	**3B-4505**	4	LOCKWASHER	
	22	1	**4L-6454**	4	BOLT (3/8-16X1 IN)	
	23	1	**4M-0061**	4	BOLT (5/16-18X0.750 IN)	

Y-SEPARATE ILLUSTRATION

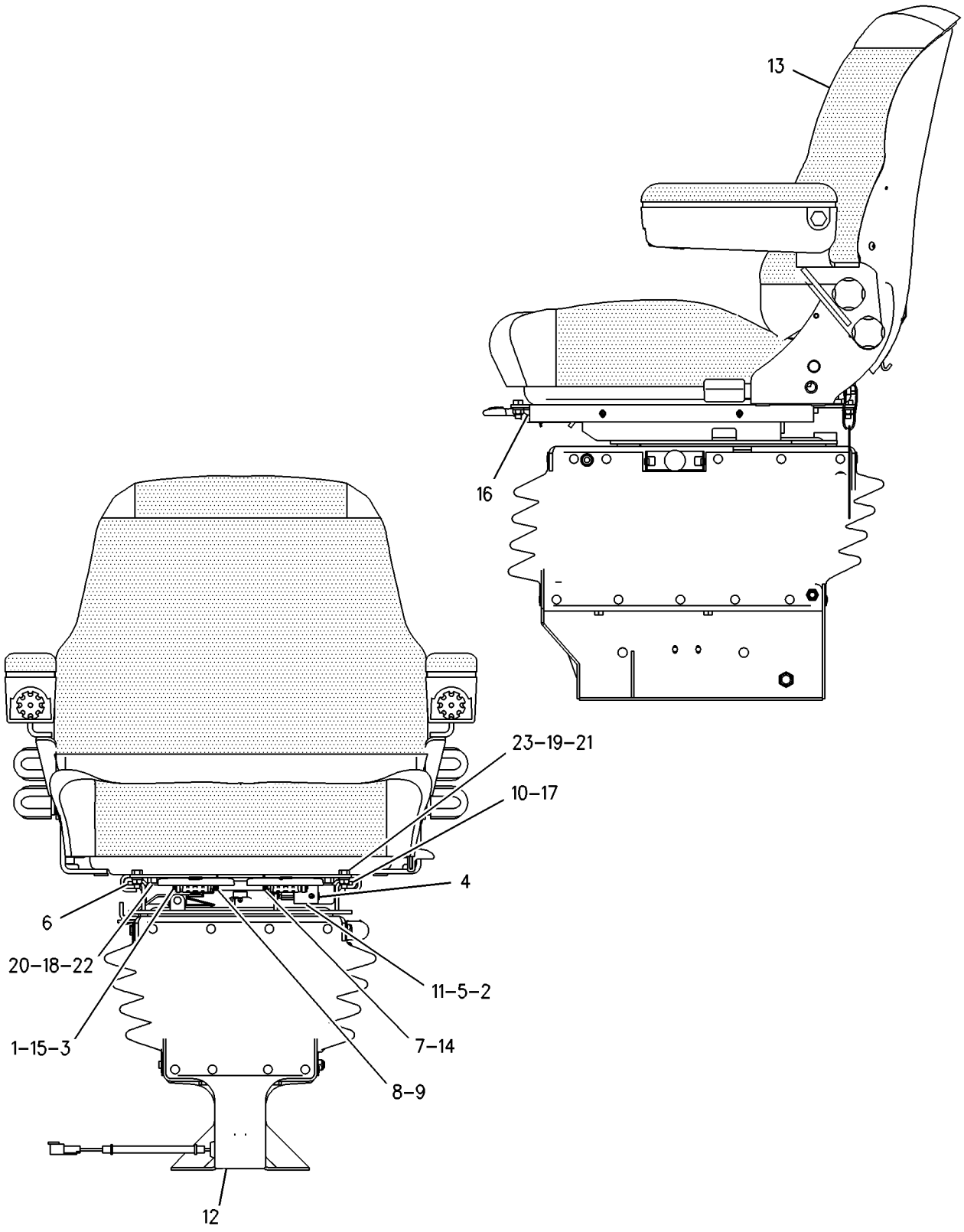

GRAPHIC #1 **<END>** g00759727

OPERATOR STATION

164-1202 SEAT GP-SUSPENSION

S/N: BXC1-UP; DSX1-UP
PART OF 180-5771 SEAT GP-SUSPENSION
AN ATTACHMENT

SMCS-7324, 7336 **i01507909**

NOTE	REF NO	GRAPHIC REF	PART NUMBER	QTY	PART NAME 1 2 3 4 5 6 (PRODUCT LEVEL)	SEE PAGE
	1	1	**8S-7803**	2	RING-RETAINING	
	2	1	**123-6077**	1	SHAFT-PIVOT	
	3	1	**132-9240**	1	LATCH AS	
	4	1	**135-1706**	1	SPRING	
	5	1	**149-4745**	2	KIT-SLIDER BLOCK	
	6	1	**154-8278**	1	SPRING-RETURN	
	7	1	**154-8280**	1	SPRING-RETURN	
	8	1	**154-8284**	1	TUBE	
	9	1	**161-9289**	2	BLOCK-SLIDER	
	10	1	**161-9290**	1	WASHER (11.9X20.7X2.3MM THK)	
Y	11	1	**164-1207**	1	SUSPENSION GP-SEAT	778
Y	12	1	**164-1210**	1	SEAT GP	765
	13	1	**164-1211**	1	LEVER	
	14	1	**164-1212**	1	LEVER	
	15	1	**164-1295**	1	PLATE AS-SLIDE	
	16	1	**173-5787**	2	SETSCREW	
	17	1	**195-7055**	4	WASHER-HARD (3.2MM THK)	
	18	1	**031-4155**	4	LOCKNUT	
	19	1	**095-0878**	2	PIN-SPRING	
	20	1	**2K-4973**	4	LOCKNUT (3/8-16 THD)	
	21	1	**3B-4505**	4	LOCKWASHER	
	22	1	**4L-6454**	4	BOLT (3/8-16X1 IN)	
	23	1	**4M-0061**	4	BOLT (5/16-18X0.750 IN)	
					AVAILABLE REPAIR KIT(S):	
			161-9744	1	KIT-SLIDER BLOCK	

Y-SEPARATE ILLUSTRATION

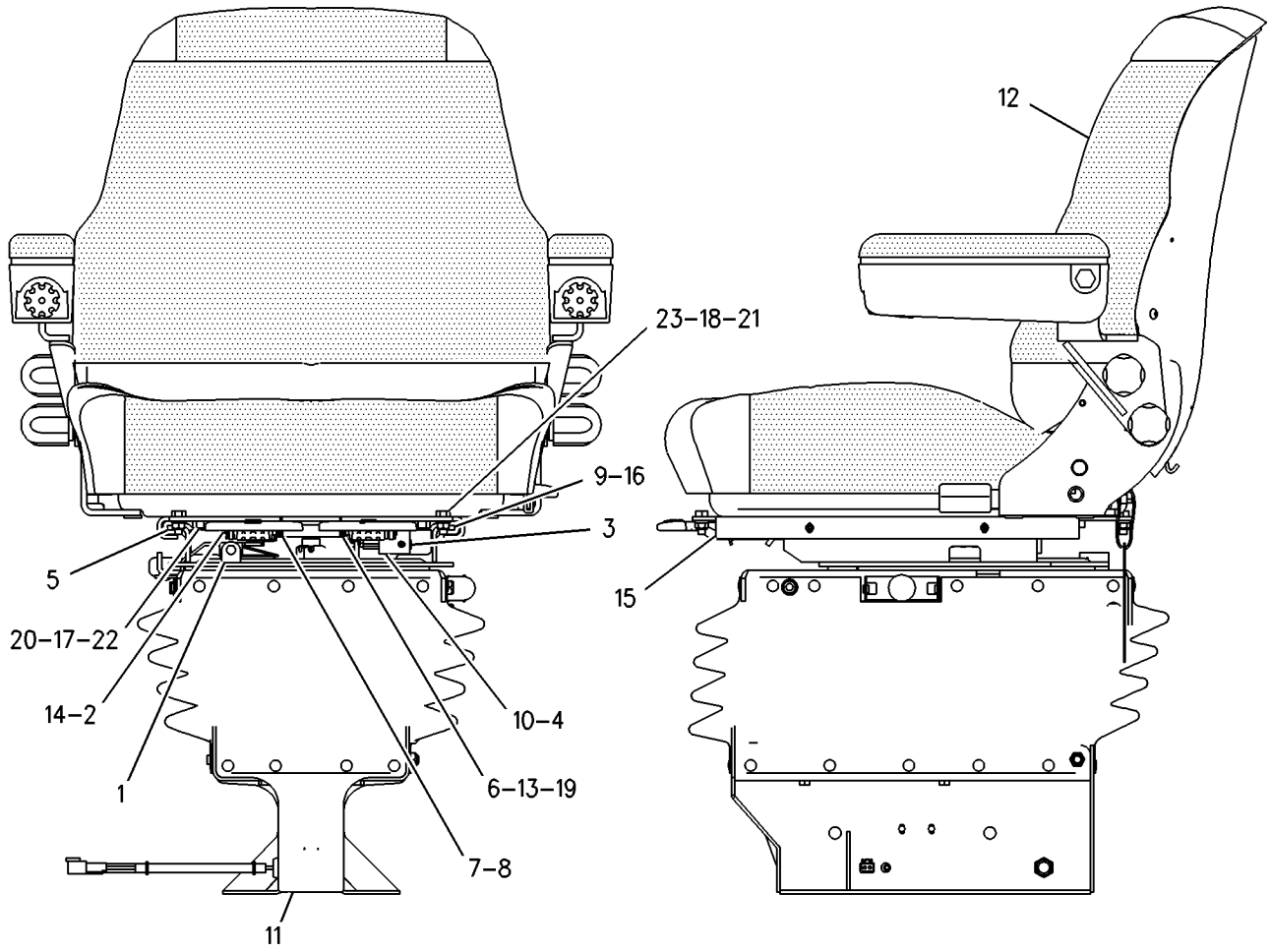

GRAPHIC #1 **<END>** g00759725

164-1203 SEAT GP-SUSPENSION

S/N: BXC1-UP; DSX1-UP
FABRIC
PART OF 180-5772 SEAT GP-SUSPENSION
AN ATTACHMENT

SMCS-7324, 7336 **i01498189**

NOTE	REF NO	GRAPHIC REF	PART NUMBER	QTY	PART NAME 1 2 3 4 5 6 (PRODUCT LEVEL)	SEE PAGE
	1	1	**149-4745**	2	KIT-SLIDER BLOCK	
	2	1	**161-9289**	2	BLOCK-SLIDER	
Y	3	1	**164-1207**	1	SUSPENSION GP-SEAT	778
Y	4	1	**164-1213**	1	SEAT GP	767
	5	1	**173-5787**	2	SETSCREW	
					AVAILABLE REPAIR KIT(S):	
			161-9744	1	KIT-SLIDER BLOCK	

Y-SEPARATE ILLUSTRATION

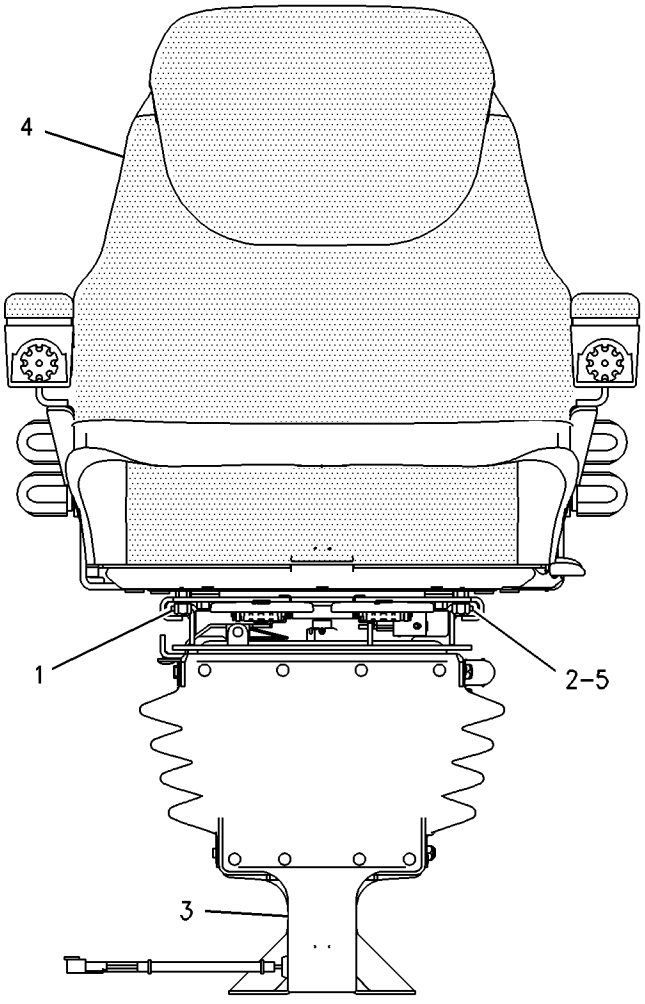

GRAPHIC #1

<END>

g00759724

OPERATOR STATION

180-5770 SEAT GP-SUSPENSION

S/N: BXC1-UP; DSX1-UP
FABRIC, STANDARD
AN ATTACHMENT

SMCS-7324, 7336 **i01670244**

NOTE	PART NUMBER	QTY	PART NAME 1 2 3 4 5 6 (PRODUCT LEVEL)	SEE PAGE
Y	**164-1201**	1	SEAT GP-SUSPENSION	770
M	**8T-4139**	4	BOLT (M12X1.75X30MM)	
	3S-2093	1	STRAP-CABLE	
	8T-4223	4	WASHER-HARD (13.5X25.5X3MM THK)	

M-METRIC PART
Y-SEPARATE ILLUSTRATION

<END>

180-5771 SEAT GP-SUSPENSION

S/N: BXC1-UP; DSX1-UP
VINYL, STANDARD
AN ATTACHMENT

SMCS-7324, 7336 **i01670246**

NOTE	PART NUMBER	QTY	PART NAME 1 2 3 4 5 6 (PRODUCT LEVEL)	SEE PAGE
Y	**164-1202**	1	SEAT GP-SUSPENSION	772
M	**8T-4139**	4	BOLT (M12X1.75X30MM)	
	3S-2093	1	STRAP-CABLE	
	8T-4223	4	WASHER-HARD (13.5X25.5X3MM THK)	

M-METRIC PART
Y-SEPARATE ILLUSTRATION

<END>

180-5772 SEAT GP-SUSPENSION

S/N: BXC1-UP; DSX1-UP
FABRIC, DELUXE
PART OF 214-7008, 214-7009 CAB AR-ENCLOSED ROPS
AN ATTACHMENT

SMCS-7324, 7336 **i01670247**

NOTE	PART NUMBER	QTY	PART NAME 1 2 3 4 5 6 (PRODUCT LEVEL)	SEE PAGE
Y	**164-1203**	1	SEAT GP-SUSPENSION	774
M	**8T-4139**	4	BOLT (M12X1.75X30MM)	
	3S-2093	1	STRAP-CABLE	
	8T-4223	4	WASHER-HARD (13.5X25.5X3MM THK)	

M-METRIC PART
Y-SEPARATE ILLUSTRATION

<END>

OPERATOR STATION

164-1165 SUPPRESSION GP-SOUND

S/N: BXC1-UP; DSX1-UP

PART OF 214-7006, 214-7007 CAB AR, 214-7008, 214-7009 CAB AR-ENCLOSED ROPS

AN ATTACHMENT

SMCS-7329, 7330 **i02003837**

NOTE	REF NO	GRAPHIC REF	PART NUMBER	QTY	PART NAME 1 2 3 4 5 6 (PRODUCT LEVEL)	SEE PAGE
	1	1	**229-6051**	8	SPACER (4.5X8X10MM THK)	
	2	1	**4V-2264**	8	NUT-PUSH	
	3	1	**9U-8263**	1	COVER	
	4	1	**084-4277**	1	LAMP GP-DOME	
		1	**6R-7490**	1	LAMP (12 VOLT, 10 WATT)	
M	5	1	**113-0920**	8	BOLT-HEX SOCKET (M4X0.7X35MM)	
	6	1	**130-8432**	1	PLATE-FACE	
	7	1	**164-1152**	1	BRACKET AS	
M		1	**6V-9632**	4	NUT-WELD (M6X1 THD)	
		1	**7T-1099**	2	LINK	
	8	1	**164-1156**	1	COVER	
	9	1	**164-1157**	1	COVER	
	10	1	**164-1166**	1	LINER-CAB	
	11	1	**169-7290**	2	SPEAKER	
	12	1	**169-7291**	2	COVER-SPEAKER	
	13	1	**197-8973**	6	FASTENER-PANEL	
	14	1	**200-5356**	1	PLATE AS	
	15	1	**229-6052**	6	SPACER (9.7X12.7X7.5MM THK)	
M	16	1	**131-3985**	2	SCREW (M6X1 THD)	
	17	1	**200-3004**	2	SCREW-TRUSS HEAD (M6X1X45MM)	
	18	1	**6V-2410**	8	SCREW-WASHER HEAD	
	19	1	**8T-4121**	2	WASHER-HARD (11X21X2.5MM THK)	
M	20	1	**8T-4137**	2	BOLT (M10X1.5X20MM)	
	21	1	**8T-4205**	2	WASHER-HARD (7.2X14.5X2MM THK)	
M	22	1	**9X-2041**	4	SCREW-TRUSS HEAD (M10X1.5X20MM)	
M	23	1	**9X-2045**	4	SCREW-TRUSS HEAD (M6X1X20MM)	
E	24	1	**129-1855**		FASTENER-HOOK (18CM EACH)	
E	25	1	**129-1854**		FASTENER-LOOP (18CM EACH)	
E	26	1	**129-1855**		FASTENER-HOOK (16CM)	
E	27	1	**129-1854**		FASTENER-LOOP (16CM)	

E-ORDER BY THE CENTIMETER
M-METRIC PART

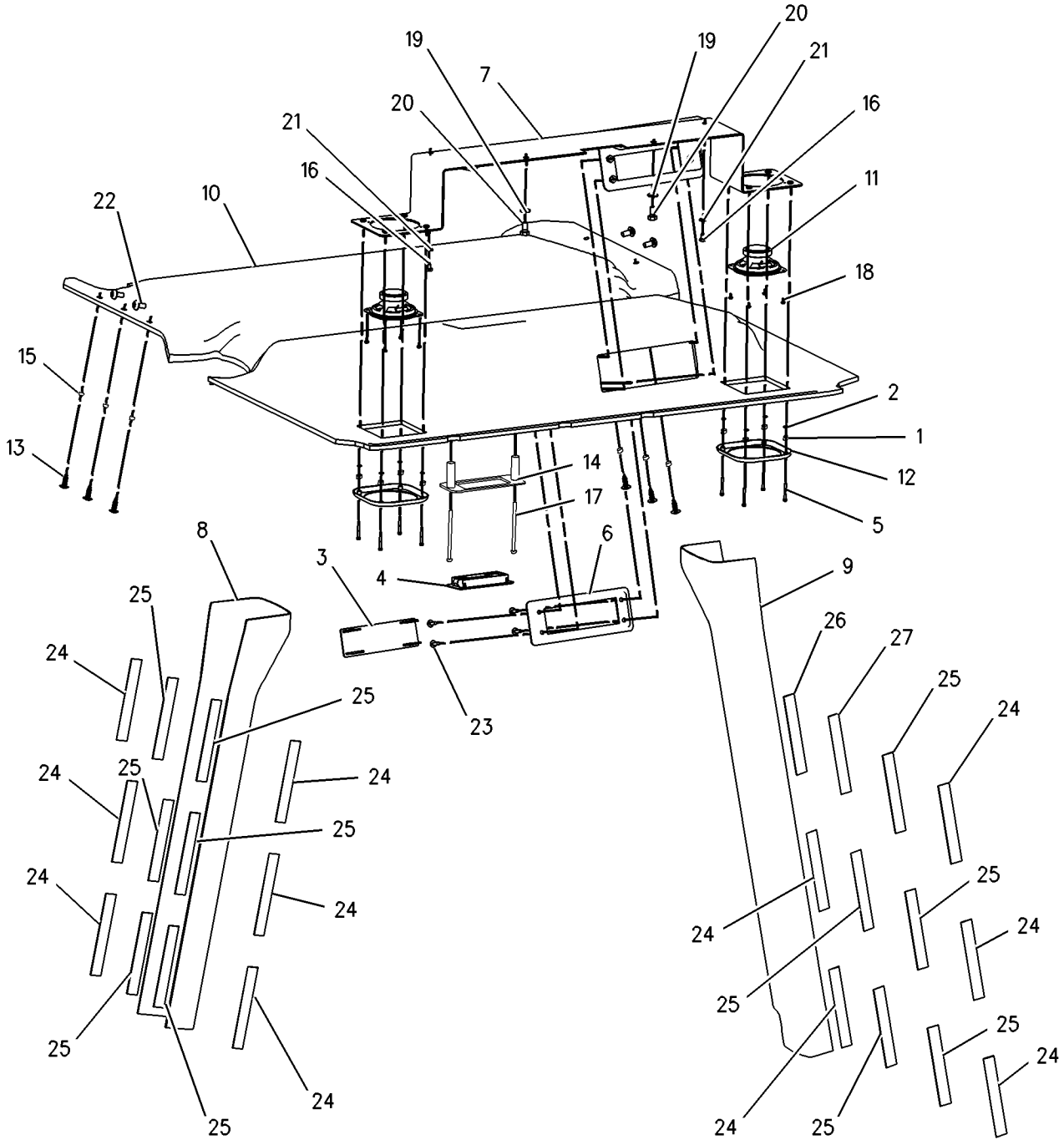

GRAPHIC #1 **<END>** g00892547

OPERATOR STATION

164-1207 SUSPENSION GP-SEAT—AIR

S/N: BXC1-UP; DSX1-UP
SWIVEL
PART OF 164-1201, 164-1202, 164-1203 SEAT GP-SUSPENSION
AN ATTACHMENT

SMCS-7312, 7324 **i01739920**

NOTE	REF NO	GRAPHIC REF	PART NUMBER	QTY	PART NAME 1 2 3 4 5 6 (PRODUCT LEVEL)	SEE PAGE
	1	1	**111-5042**	34	FASTENER	
M	2	1	**129-3180**	1	LOCKNUT (M12X1.75 THD)	
	3	1	**130-8343**	1	SCREW-BUTTON HEAD	
	4	1	**161-9282**	1	BOLT (3/4-10 X1.5)	
	5	1	**161-9283**	1	WASHER (1.6MM THK)	
	6	1	**161-9285**	1	NUT (3/4-10 THD)	
	7	1	**163-1135**	1	SPRING	
	8	1	**163-1139**	1	BRACKET	
	9	1	**3B-4631**	1	PIN-COTTER	
	10	1	**164-1215**	1	ABSORBER AS-SHOCK	
	11	1	**164-1216**	1	BASE AS	
	12	1	**164-1217**	1	ARM AS-SUSPENSION	
	13	1	**164-1218**	2	ARM AS-SUSPENSION	
	14	1	**164-1219**	1	BRACKET AS	
	15	1	**164-1220**	1	BRACKET AS	
	16	1	**164-1221**	1	AIR COMPRESSOR GP	
	17	1	**164-1224**	2	SHAFT AS	
	18	1	**164-1225**	2	SHAFT AS	
	19	1	**164-1226**	2	SHAFT	
	20	1	**164-1228**	1	HARNESS AS	
	21	1	**164-1229**	4	BUMPER	
	22	1	**164-1230**	12	BEARING	
	23	1	**164-1231**	2	BEARING	
	24	1	**164-1232**	1	PLATE	
	25	1	**164-1233**	2	SPACER (13X25.4X20.5MM THK)	
	26	1	**164-1234**	1	PLATE	
	27	1	**164-1237**	1	BUSHING	
	28	1	**164-1238**	1	SPACER (12.8X22.2X3.1MM THK)	
	29	1	**164-1239**	2	SPACER (13.5X19X61.9MM THK)	
	30	1	**164-1240**	1	BOOT	
	31	1	**185-3890**	2	SCREW-PAN HEAD	
	32	1	**175-5050**	1	VALVE AS	
	33	1	**180-5793**	1	RING	
	34	1	**197-6657**	1	BOLT-ROUND HEAD	
	35	1	**1K-6872**	1	LOCKNUT (1/2-13 THD)	
	36	1	**2K-4973**	8	LOCKNUT (3/8-16 THD)	
	37	1	**3S-2093**	2	STRAP-CABLE	
	38	1	**4B-9784**	8	BALL	
	39	1	**4K-0499**	2	LOCKWASHER	
	40	1	**5M-3062**	1	BOLT (3/8-16X0.75 IN)	
	41	1	**6V-8185**	8	NUT (1/4-20 THD)	
	42	1	**7X-0481**	1	BOLT (203.2MM)	
	43	1	**7X-0622**	2	WASHER (13X24X2.5MM THK)	
	44	1	**8T-9364**	4	BOLT (1/4-20X0.625 IN)	
	45	1	**1H-3337**	2	BOLT (1/4-20X0.875 IN)	
	46	1	**164-1236**	2	PLATE AS	
	47	1	**180-5794**	2	PLATE	
	48	1	**197-6658**	1	WASHER	
	49	1	**164-1208**	1	PLATE AS	
	50	1	**8S-7803**	1	RING-RETAINING	
	51	1	**161-9286**	1	SPRING-LATCH	
	52	1	**161-9288**	1	SHAFT-PIVOT	
	53	1	**164-1294**	1	LATCH GP-SEAT SWIVEL	
		1	**9C-4457**	1	FASTENER	

M-METRIC PART

164-1207 SUSPENSION GP-SEAT *(contd.)* i01739920

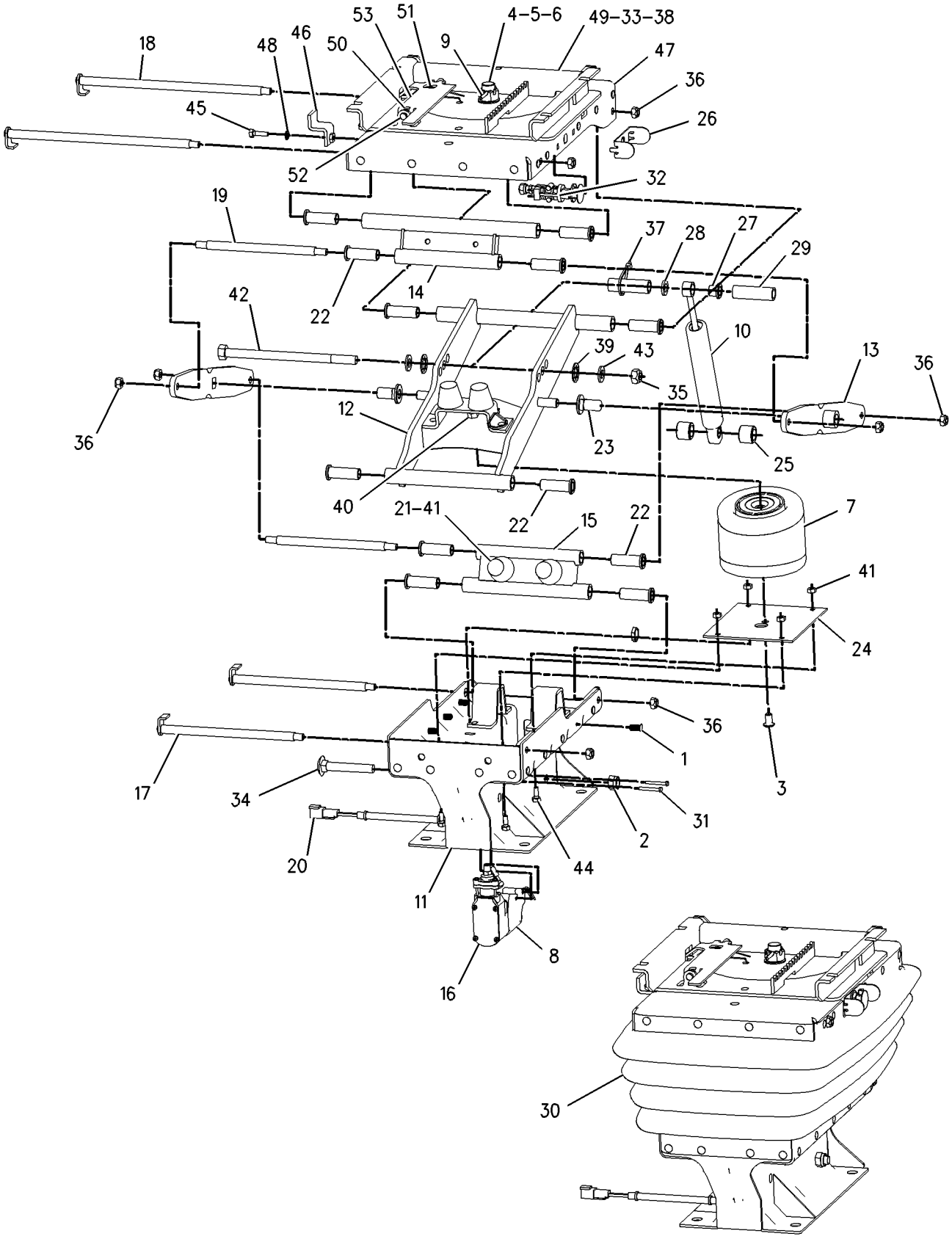

GRAPHIC #1 **<END>** g00760151

OPERATOR STATION

239-1080 TACHOMETER GP-ELECTRIC

S/N: BXC1-UP; DSX1-UP
PART OF 214-7007 CAB AR, 214-7009 CAB AR-ENCLOSED ROPS
AN ATTACHMENT

SMCS-7462 **i01986579**

NOTE	REF NO	GRAPHIC REF	PART NUMBER	QTY	PART NAME 1 2 3 4 5 6 (PRODUCT LEVEL)	SEE PAGE
	1	1	**4B-2043**	7	NUT (8-32 THD)	
	2	1	**9B-7233**	7	LOCKWASHER	
	3	1	**122-7137**	1	LAMP (12 VOLT)	
	4	1	**131-1424**	1	SEAL	

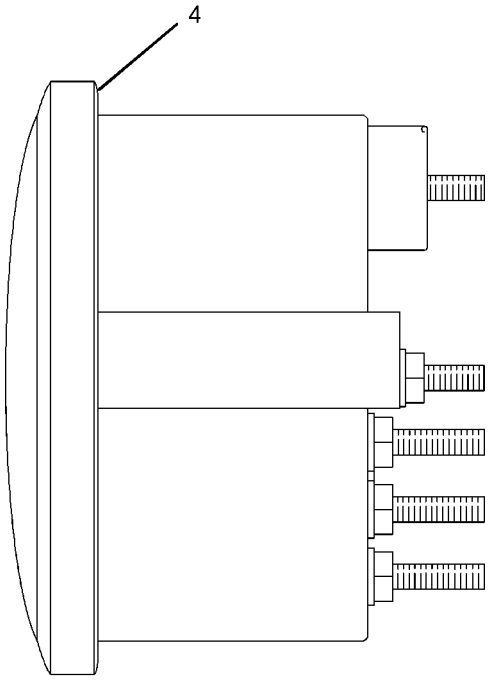

LEFT SIDE VIEW

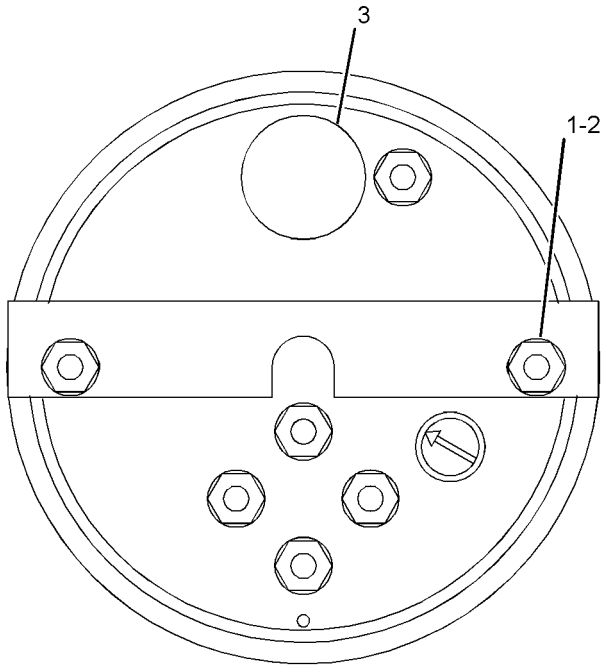

REAR VIEW

GRAPHIC #1 **<END>** g01030656

OPERATOR STATION

239-1081 TACHOMETER GP-ELECTRIC

S/N: BXC1-UP; DSX1-UP

PART OF 214-7006 CAB AR, 214-7008 CAB AR-ENCLOSED ROPS, 214-7004 CANOPY AR

AN ATTACHMENT

SMCS-7462 **i01986560**

NOTE	REF NO	GRAPHIC REF	PART NUMBER	QTY	PART NAME 1 2 3 4 5 6 (PRODUCT LEVEL)	SEE PAGE
	1	1	**4B-2043**	6	NUT (8-32 THD)	
	2	1	**9B-7233**	6	LOCKWASHER	
	3	1	**122-7137**	1	LAMP (12 VOLT)	
	4	1	**131-1424**	1	SEAL	

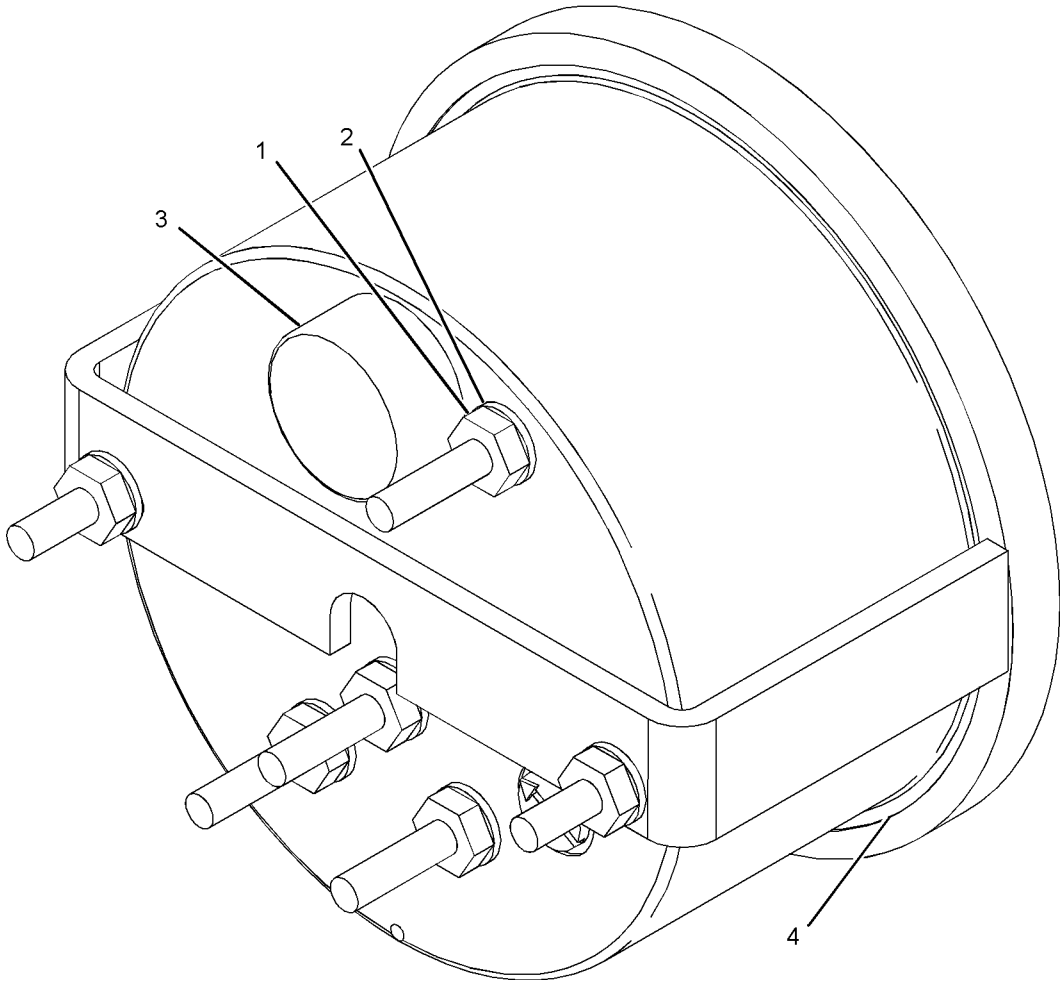

GRAPHIC #1

<END>

g01029996

OPERATOR STATION

164-1370 TRIM GP-CAB

S/N: BXC1-UP; DSX1-UP
BRUSH SEALS
PART OF 214-7006, 214-7007 CAB AR, 214-7008, 214-7009 CAB AR-ENCLOSED ROPS, 214-7004 CANOPY AR
AN ATTACHMENT

SMCS-7329, 7451 **i01854069**

NOTE	REF NO	GRAPHIC REF	PART NUMBER	QTY	PART NAME 1 2 3 4 5 6 (PRODUCT LEVEL)	SEE PAGE
	1	1	**9R-1948**	4	RIVET	
	2	1	**164-1110**	1	COVER (PARK BRAKE)	
	3	1	**164-1366**	1	BRUSH AS	
M	4	1	**9X-2044**	2	SCREW-TRUSS HEAD (M6X1X16MM)	

M-METRIC PART

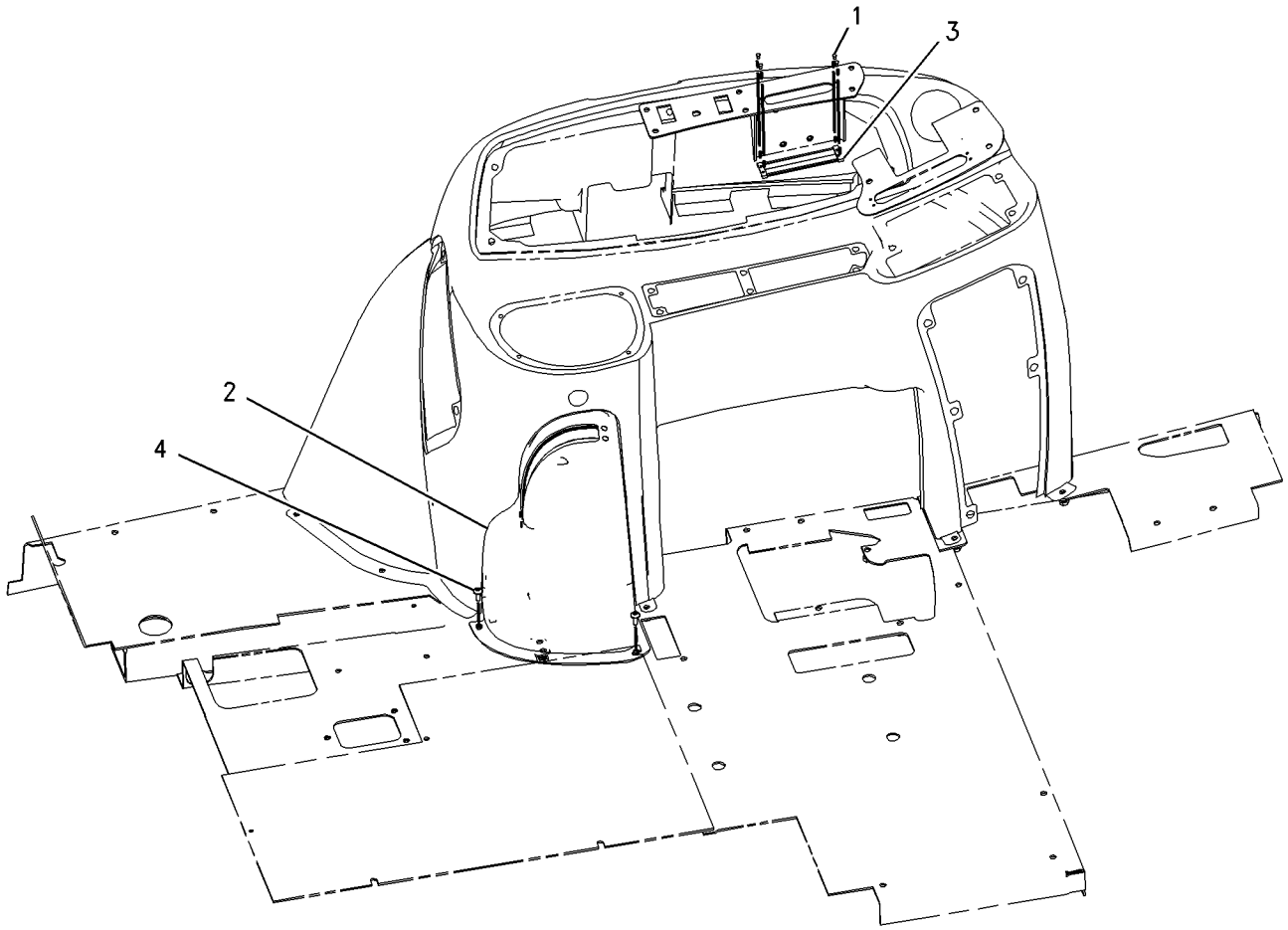

GRAPHIC #1 **<END>** g00945196

OPERATOR STATION

108-8251 VISOR GP-CAB

S/N: BXC1-UP; DSX1-UP
PART OF 214-7008, 214-7009 CAB AR-ENCLOSED ROPS
AN ATTACHMENT

SMCS-7301, 7325, 7335 **i01496043**

NOTE	REF NO	GRAPHIC REF	PART NUMBER	QTY	PART NAME 1 2 3 4 5 6 (PRODUCT LEVEL)	SEE PAGE
	1	1	**9R-3205**	1	VISOR AS	
	2	1	**9R-3204**	1	PLATE AS	
M	3	1	**8T-4171**	4	BOLT (M6X1X12MM)	
	4	1	**9R-3203**	2	PLATE	

M-METRIC PART

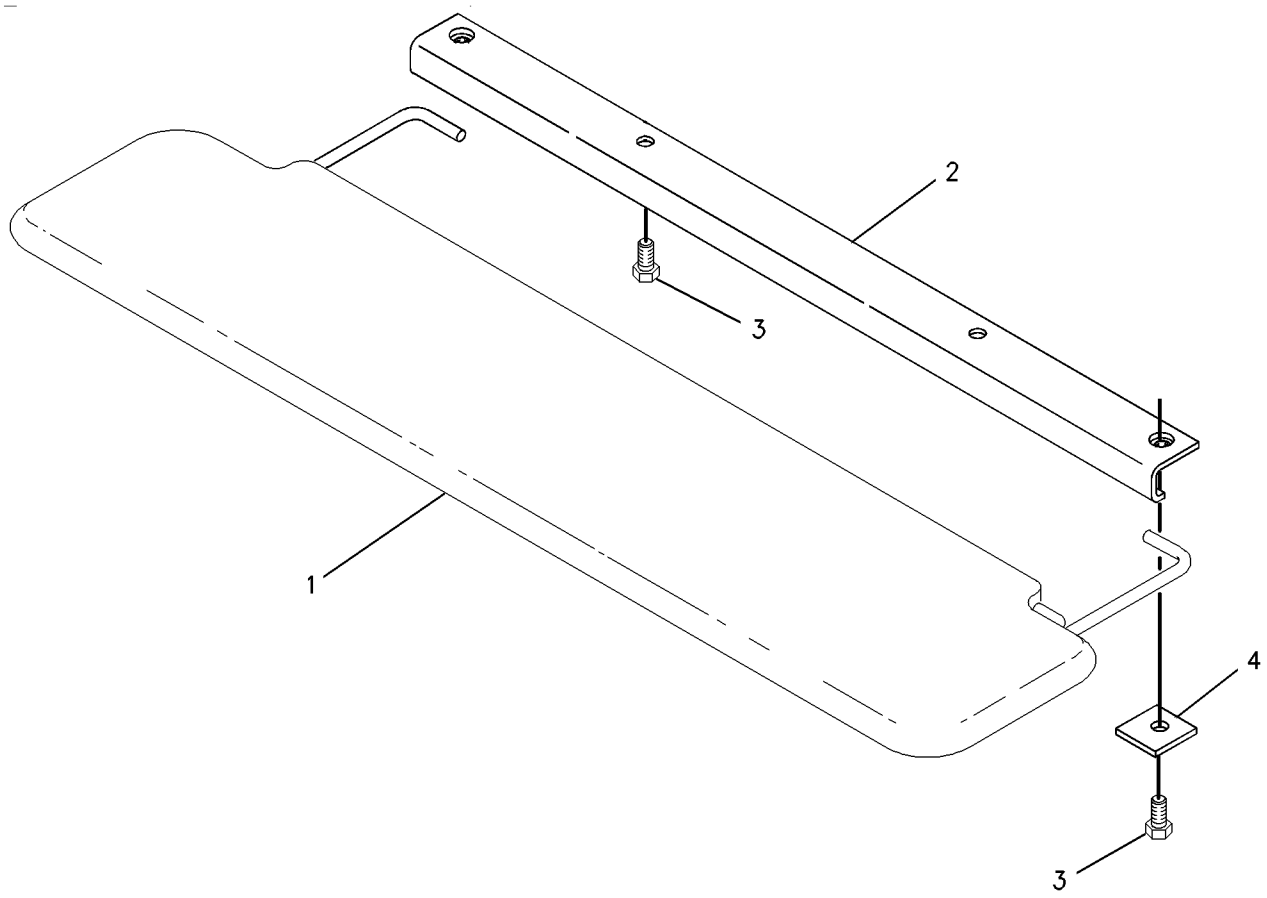

GRAPHIC #1 **<END>** g00776555

OPERATOR STATION

167-8187 WASHER GP-WINDOW

S/N: BXC1-UP; DSX1-UP

PART OF 214-7006, 214-7007 CAB AR, 214-7008, 214-7009 CAB AR-ENCLOSED ROPS AN ATTACHMENT

SMCS-7306 **i02003671**

NOTE	REF NO	GRAPHIC REF	PART NUMBER	QTY	PART NAME 1 2 3 4 5 6 (PRODUCT LEVEL)	SEE PAGE
	1	1	**3S-2093**	2	STRAP-CABLE	
	2	1	**112-9450**	1	PLATE	
	3	1	**9R-3469**	2	DIAPHRAGM	
	4	1	**121-6936**	2	CONNECTOR	
	5	1	**123-8670**	1	TANK AS	
	6	1	**131-1368**	1	HARNESS AS-WINDOW WIPER	
		1	**102-8803**	1	KIT-RECEPTACLE (3-PIN)	
					(KIT SERVICES RECEPTACLE AS AND WEDGE)	
	7	1	**168-9906**	1	BRACKET	
	8	1	**186-0817**	1	WASHER-HARD (7X19X2MM THK) (7X19X2MM THK)	
M	9	1	**129-3178**	1	LOCKNUT (M6X1 THD)	
B	10	1	**8T-4121**	2	WASHER-HARD (11X21X2.5MM THK)	
	11	1	**7X-7729**	1	WASHER (11X25X3MM THK)	
M	12	1	**8T-4201**	2	BOLT-LOCKING (M10X1.5X20MM)	
	13	1	**8T-4205**	1	WASHER-HARD (7.2X14.5X2MM THK)	
M	14	1	**8T-4971**	1	BOLT (M6X1X30MM)	
E	16	1	**144-0195**		HOSE (226CM)	
E	17	1	**144-0195**	2	HOSE (15CM)	
	18	1	**8T-0789**	1	CLIP-HOSE	
	19	1	**8T-1118**	1	NOZZLE AS	

B-USE AS REQUIRED
E-ORDER BY THE CENTIMETER
M-METRIC PART

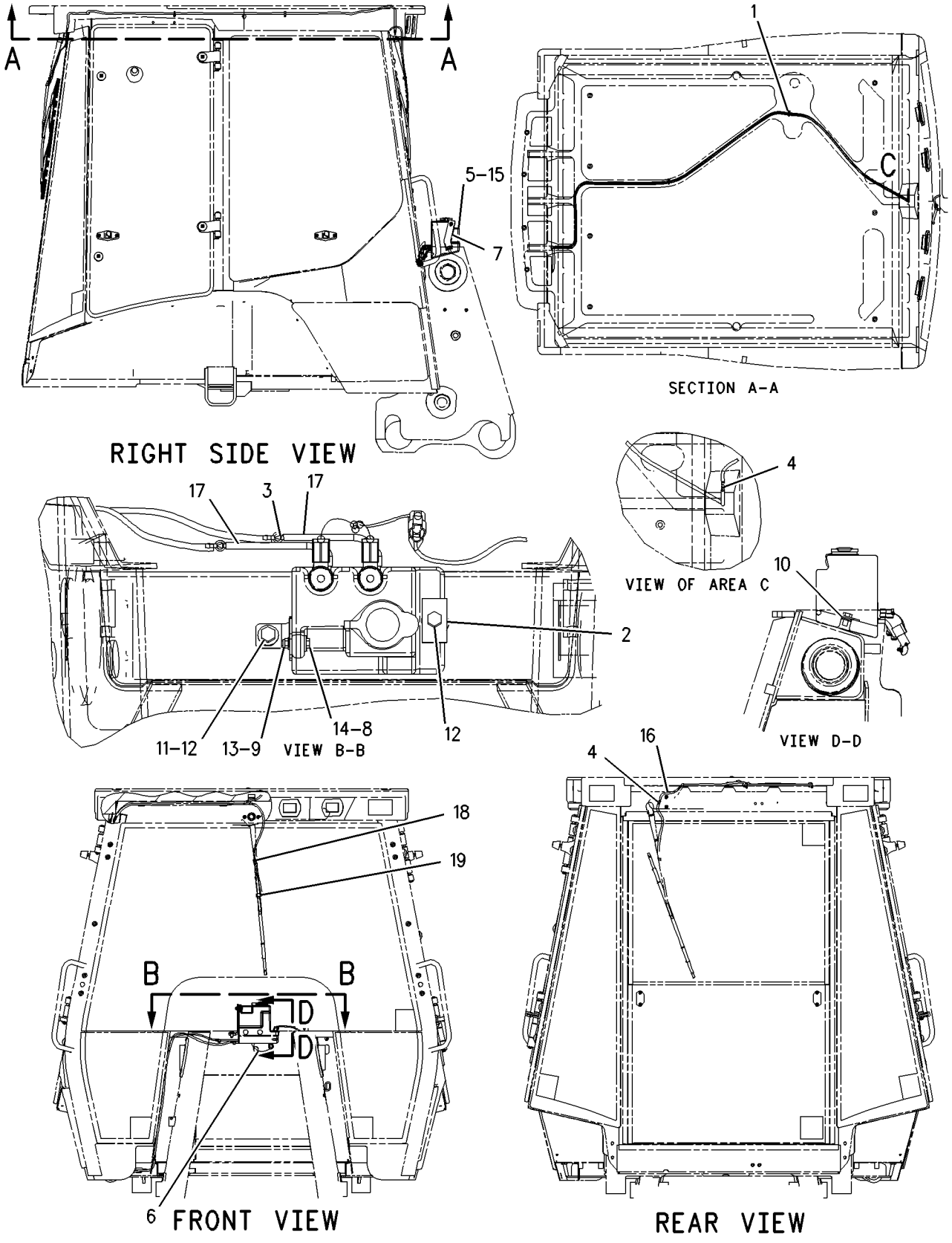

GRAPHIC #1 **<END>** g00776687

OPERATOR STATION

164-1059 WINDOW GP-CAB–RH

S/N: BXC1-UP; DSX1-UP
PART OF 164-1100 CAB GP
AN ATTACHMENT

SMCS-7310 **i02005731**

NOTE	REF NO	GRAPHIC REF	PART NUMBER	QTY	PART NAME 1 2 3 4 5 6 (PRODUCT LEVEL)	SEE PAGE
	1	1	**7X-2393**	1	BUMPER-CONICAL	
	2	1	**8Y-7309**	1	RETAINER	
	3	1	**100-7608**	1	HANDLE	
	4	1	**129-8542**	6	RETAINER	
	5	1	**129-8545**	8	WASHER (13X40X3MM THK)	
M	6	1	**136-4192**	4	BOLT (M6X1.0X35MM)	
	7	1	**143-2830**	1	LATCH AS	
M		1	**6V-7743**	2	LOCKNUT (M6X1 THD)	
M		1	**9X-2045**	2	SCREW-TRUSS HEAD (M6X1X20MM)	
		1	**143-2827**	1	SPRING	
	8	1	**154-5423**	2	SPACER (6.6X12.7X17MM THK)	
	9	1	**154-5424**	2	HINGE	
	10	1	**159-4951**	2	LATCH AS	
M		1	**5C-2874**	2	NUT (M5X.8 THD)	
M		1	**161-6984**	2	SCREW-TRUSS HEAD (M5X0.8X20MM)	
		1	**161-6987**	2	WASHER-HARD (5.2X16X1.5MM THK)	
		1	**161-9294**	2	SPRING-FLAT WIRE	
M		1	**162-6556**	2	LOCKNUT	
	11	1	**164-1064**	1	GLASS-RH	
M	12	1	**5C-7261**	1	NUT (M8X1.25 THD)	
M	13	1	**6V-7743**	2	LOCKNUT (M6X1 THD)	
E	14	1	**148-5353**		SEAL (378CM)	

E-ORDER BY THE CENTIMETER
M-METRIC PART

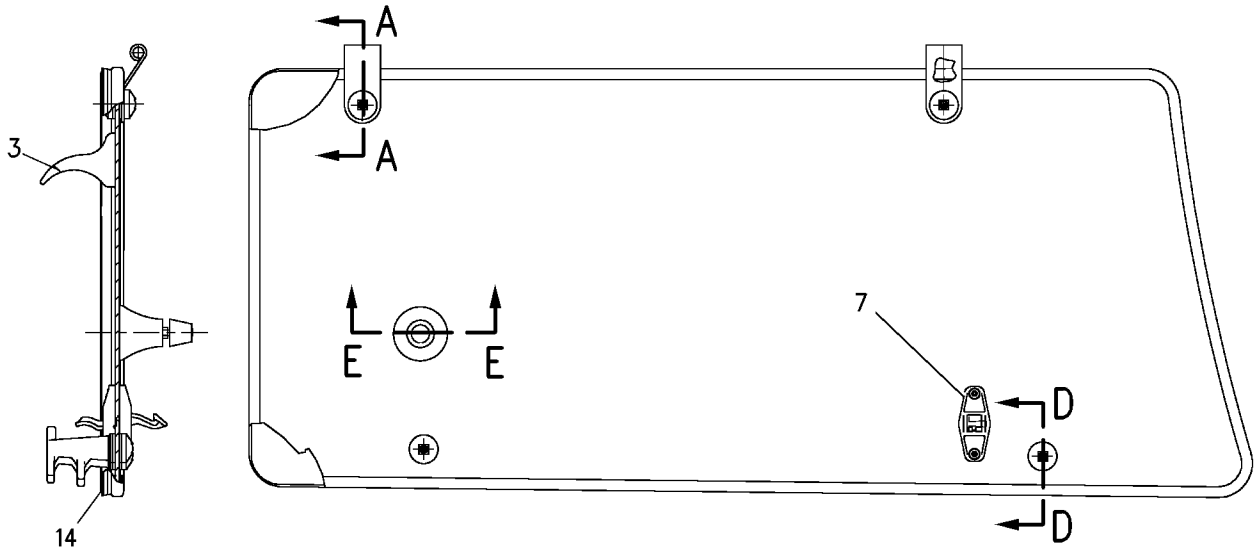

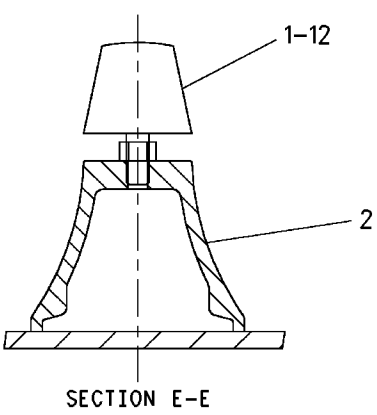

SECTION E-E

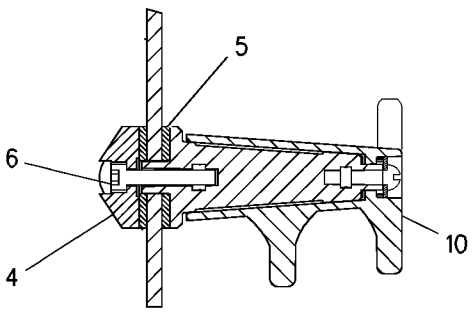

SECTION D-D

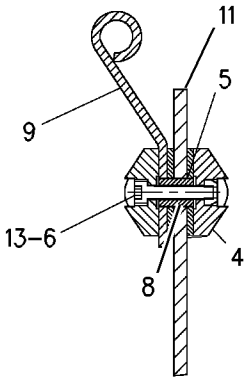

SECTION A-A

GRAPHIC #1 **<END>** g00725900

OPERATOR STATION

164-1060 WINDOW GP-CAB—LH

S/N: BXC1-UP; DSX1-UP
PART OF 164-1100 CAB GP
AN ATTACHMENT

SMCS-7310 **i02005732**

NOTE	REF NO	GRAPHIC REF	PART NUMBER	QTY	PART NAME 1 2 3 4 5 6 (PRODUCT LEVEL)	SEE PAGE
	1	1	**7X-2393**	1	BUMPER-CONICAL	
	2	1	**8Y-7309**	1	RETAINER	
	3	1	**100-7608**	1	HANDLE	
	4	1	**129-8542**	6	RETAINER	
	5	1	**129-8545**	8	WASHER (13X40X3MM THK)	
M	6	1	**136-4192**	4	BOLT (M6X1.0X35MM)	
	7	1	**143-2830**	1	LATCH AS	
M		1	**6V-7743**	2	LOCKNUT (M6X1 THD)	
M		1	**9X-2045**	2	SCREW-TRUSS HEAD (M6X1X20MM)	
		1	**143-2827**	1	SPRING	
	8	1	**154-5423**	2	SPACER (6.6X12.7X17MM THK)	
	9	1	**154-5424**	2	HINGE	
	10	1	**159-4950**	2	LATCH AS	
M		1	**5C-2874**	2	NUT (M5X.8 THD)	
M		1	**161-6984**	2	SCREW-TRUSS HEAD (M5X0.8X20MM)	
		1	**161-6987**	2	WASHER-HARD (5.2X16X1.5MM THK)	
		1	**161-9294**	2	SPRING-FLAT WIRE	
M		1	**162-6556**	2	LOCKNUT	
	11	1	**164-1065**	1	GLASS-LH	
M	12	1	**5C-7261**	1	NUT (M8X1.25 THD)	
M	13	1	**6V-7743**	2	LOCKNUT (M6X1 THD)	
E	14	1	**148-5353**		SEAL (378CM)	

E-ORDER BY THE CENTIMETER
M-METRIC PART

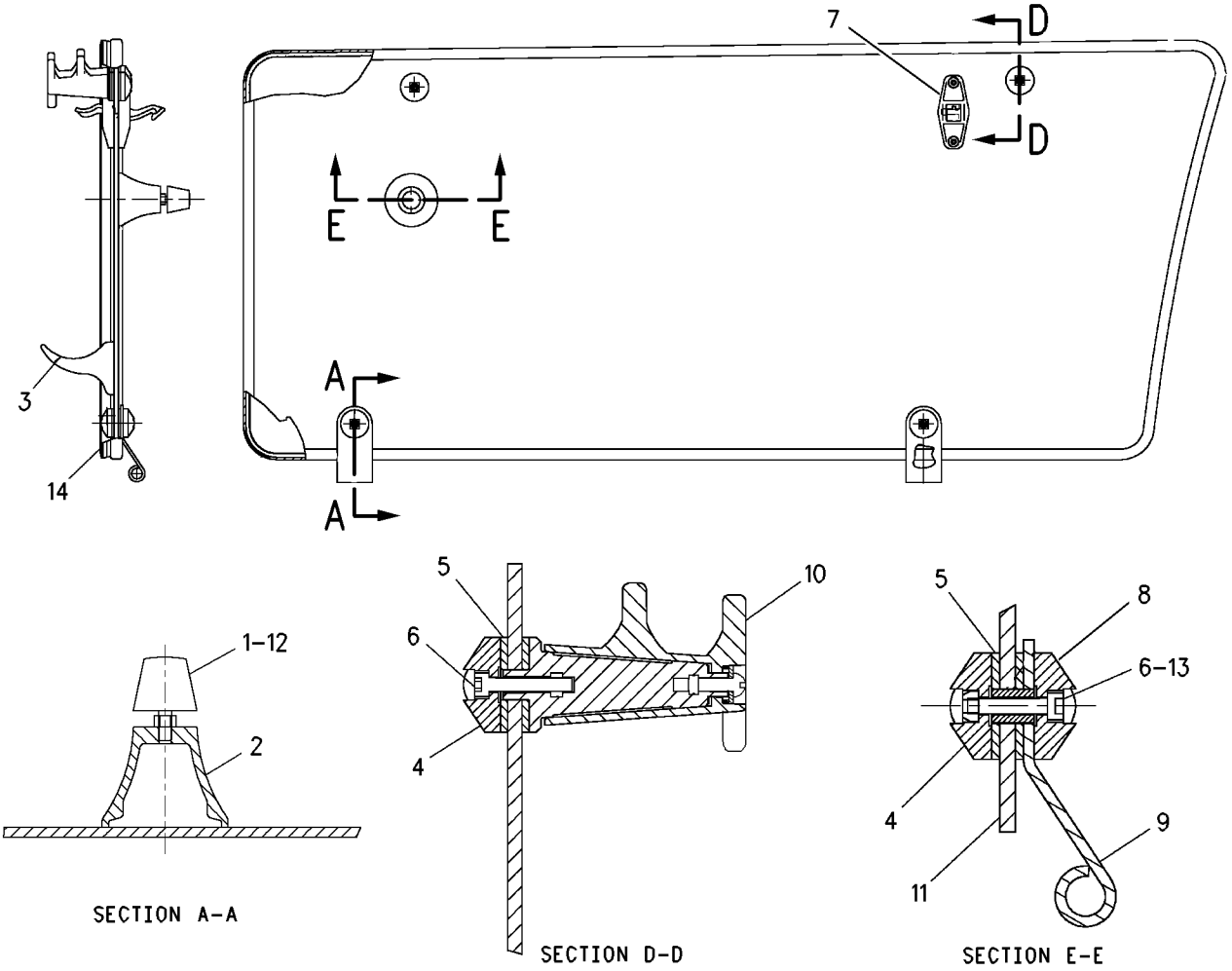

GRAPHIC #1 **<END>** g00725887

OPERATOR STATION

164-1300 WINDOW GP-CAB–REAR

S/N: BXC1-UP; DSX1-UP
PART OF 164-1100, 226-9095 CAB GP
AN ATTACHMENT

SMCS-7310 **i01596125**

NOTE	REF NO	GRAPHIC REF	PART NUMBER	QTY	PART NAME 1 2 3 4 5 6 (PRODUCT LEVEL)	SEE PAGE
	1	1	**110-5602**	2	KNOB	
M	2	1	**131-8203**	4	SCREW-FLAT HEAD	
	3	1	**140-9921**	2	INSERT-THREADED	
	4	1	**146-7744**	1	KIT-LATCH (RH)	
	5	1	**146-7745**	1	KIT-LATCH (LH)	
	6	1	**150-8015**	2	GASKET	
	7	1	**164-1304**	1	GLASS	
	8	1	**164-1308**	2	ROLLER	
	9	1	**164-1311**	1	LINKAGE AS	
	10	1	**164-1317**	1	FRAME AS	
		1	**140-9921**	4	INSERT-THREADED	
	11	1	**164-1328**	2	SPRING AS-GAS	
	12	1	**164-1342**	4	BOLT	
	13	1	**164-1343**	4	WASHER-THRUST	
	14	1	**164-1344**	4	WASHER-THRUST	
	15	1	**164-1345**	4	BEARING	
	16	1	**164-1346**	4	STRIKER	
	17	1	**164-1348**	1	WINDOW AS	
		1	**164-1303**	1	GLASS	
		1	**164-1316**	1	FRAME AS	
	18	1	**164-1351**	2	PIN	
	19	1	**164-1352**	1	LATCH AS	
	20	1	**164-1353**	1	LATCH AS	
	21	1	**167-8182**	2	BUMPER	
	22	1	**171-2870**	2	SPACER	
B	23	1	**201-9465**	4	SHIM	
	24	1	**205-7536**	1	BRACKET AS-LH	
	25	1	**205-7538**	1	BRACKET AS-RH	
	26	1	**119-8349**	2	CAP	
	27	1	**121-9743**	1	SEAL	
M	28	1	**129-3180**	4	LOCKNUT (M12X1.75 THD)	
	29	1	**5P-4115**	6	WASHER-HARD (7.2X19X2MM THK)	
	30	1	**5P-4116**	4	WASHER-HARD (8.8X20.5X2MM THK)	
M	31	1	**8T-4138**	2	BOLT (M6X1X20MM)	
M	32	1	**8T-4200**	4	BOLT (M8X1.25X16MM)	
	33	1	**8T-4223**	4	WASHER-HARD (13.5X25.5X3MM THK)	
M	34	1	**9X-2044**	4	SCREW-TRUSS HEAD (M6X1X16MM)	
	35	1	**9X-2132**	4	RETAINER	
E	36	1	**164-1354**		CHANNEL-WINDOW (86.6CM)	
D	37	1	**5P-5637**		SEAL (0.85M)	
E	38	1	**9X-6383**		SEAL (85CM)	
E	39	1	**164-1314**	2	SEAL-LAMP (148.5CM)	
E	40	1	**164-1354**	2	CHANNEL-WINDOW (95.4CM)	
E	41	1	**164-1354**	2	CHANNEL-WINDOW (50.9CM)	

B-USE AS REQUIRED
D-ORDER BY THE METER
E-ORDER BY THE CENTIMETER
M-METRIC PART

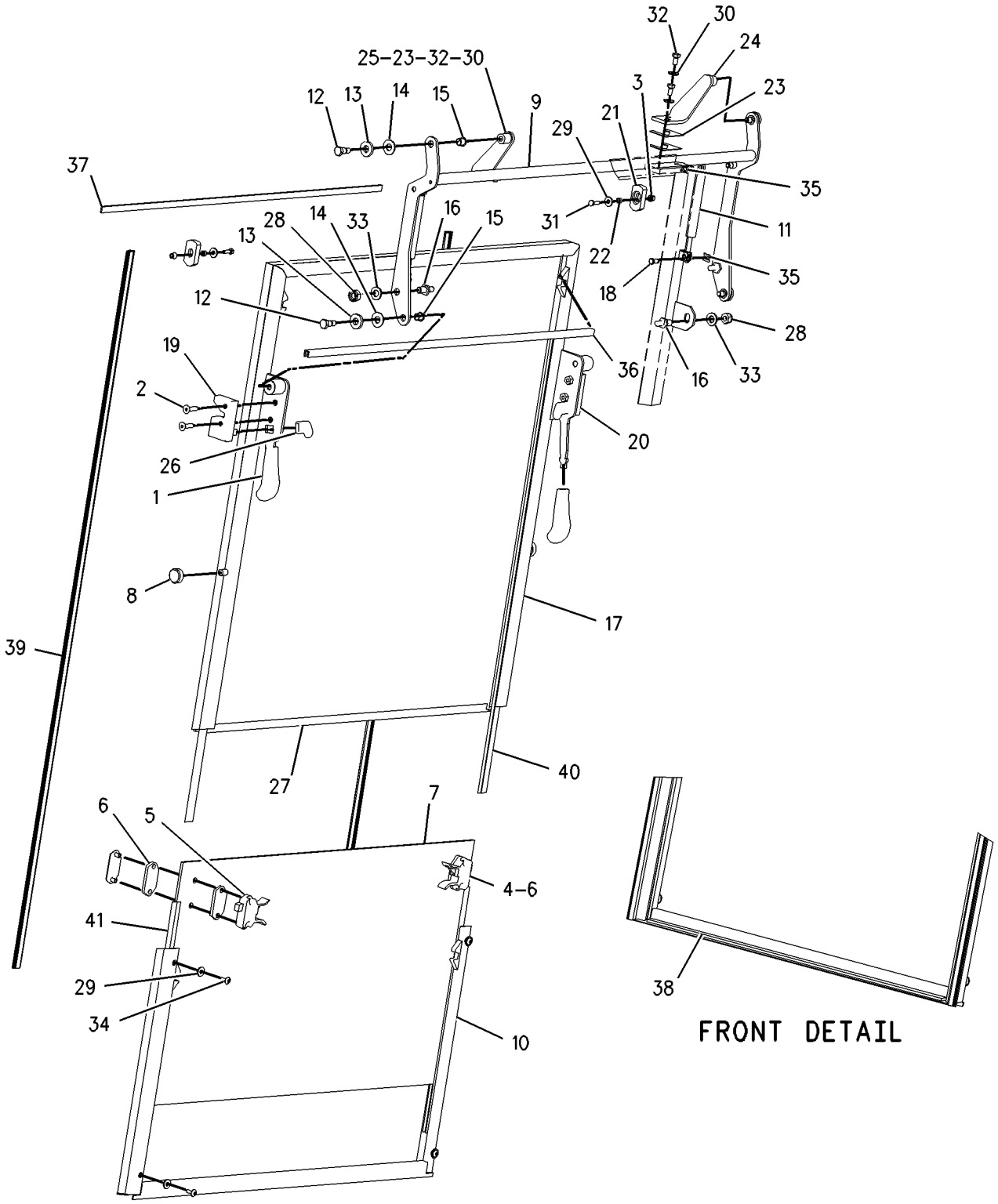

GRAPHIC #1 **<END>** g00827257

OPERATOR STATION

164-1073 WINDOW GP-DOOR–RH

S/N: BXC1-UP; DSX1-UP
PART OF 164-1061 DOOR GP-RH
AN ATTACHMENT

SMCS-7308, 7310 **i01706405**

NOTE	REF NO	GRAPHIC REF	PART NUMBER	QTY	PART NAME 1 2 3 4 5 6 (PRODUCT LEVEL)	SEE PAGE
	1	1	**8Y-7287**	2	HINGE	
	2	1	**100-7608**	1	HANDLE	
	3	1	**129-8542**	5	RETAINER	
	4	1	**129-8543**	2	SPACER (16MM THK)	
	5	1	**129-8545**	6	WASHER (3MM THK)	
M	6	1	**136-4192**	3	BOLT (M6X1.0X35MM)	
	7	1	**143-2830**	1	LATCH AS	
M		1	**6V-7743**	2	LOCKNUT (M6X1 THD)	
M		1	**9X-2045**	2	SCREW-TRUSS HEAD (M6X1X20MM)	
		1	**143-2827**	1	SPRING	
	8	1	**159-4950**	1	LATCH AS	
M		1	**5C-2874**	1	NUT (M5X.8 THD)	
M		1	**161-6984**	1	SCREW-TRUSS HEAD (M5X0.8X20MM)	
		1	**161-6987**	1	WASHER-HARD	
		1	**161-9294**	1	SPRING-FLAT WIRE	
M		1	**162-6556**	1	LOCKNUT	
	9	1	**164-1066**	1	GLASS	
M	10	1	**6V-7743**	2	LOCKNUT (M6X1 THD)	
E	11	1	**148-5353**		SEAL (342CM)	

E-ORDER BY THE CENTIMETER
M-METRIC PART

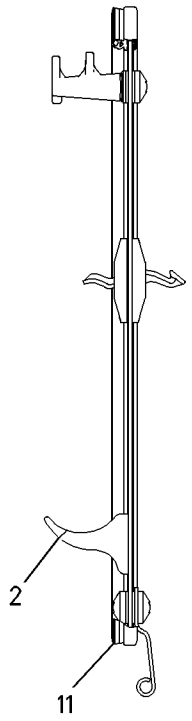

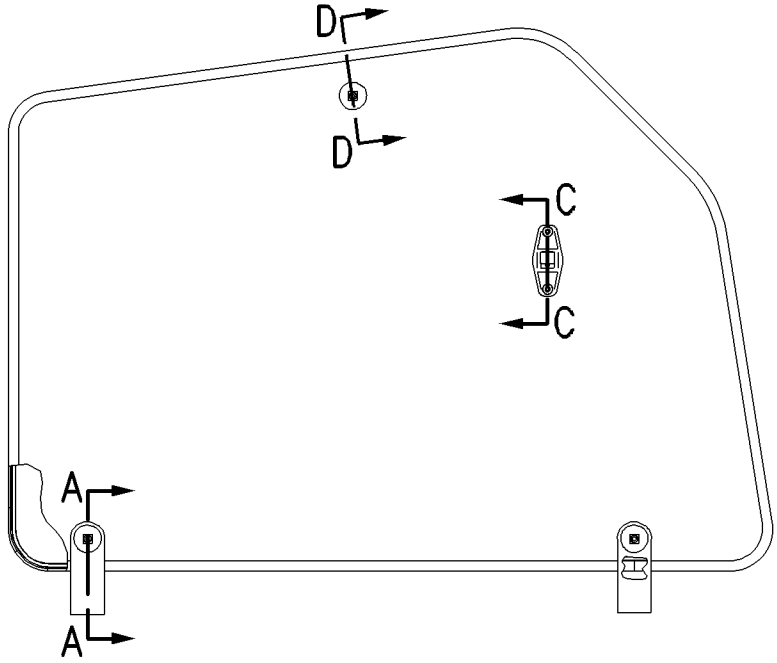

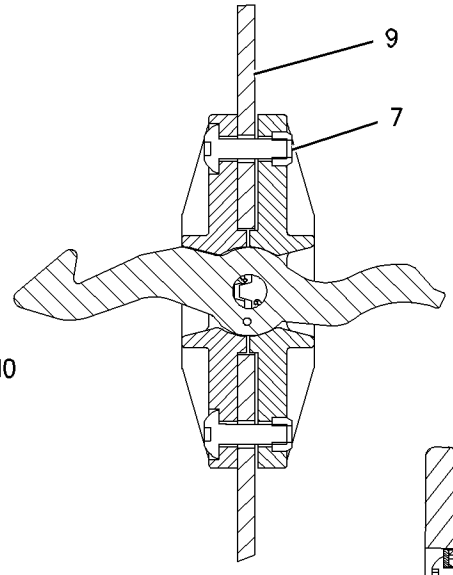

SECTION C-C

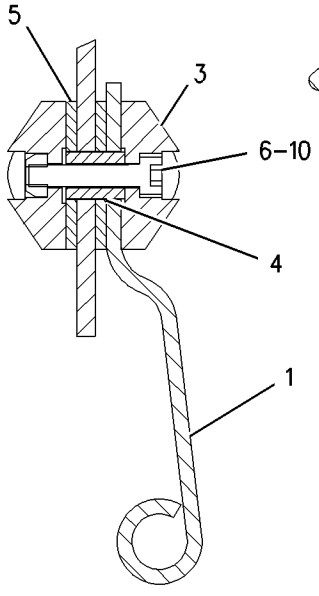

SECTION A-A

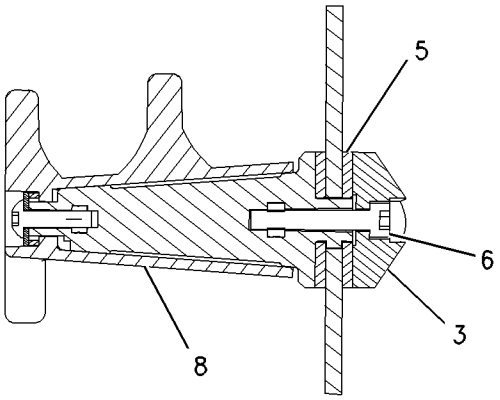

SECTION D-D

GRAPHIC #1 **<END>** g00878022

164-1074 WINDOW GP-DOOR—LH

S/N: BXC1-UP; DSX1-UP
LEFT HAND
PART OF 164-1062 DOOR GP-LH
AN ATTACHMENT

SMCS-7308, 7310 **i01706420**

NOTE	REF NO	GRAPHIC REF	PART NUMBER	QTY	PART NAME 1 2 3 4 5 6 (PRODUCT LEVEL)	SEE PAGE
	1	1	**8Y-7287**	2	HINGE	
	2	1	**100-7608**	1	HANDLE	
	3	1	**129-8542**	5	RETAINER	
	4	1	**129-8543**	2	SPACER (16MM THK)	
	5	1	**129-8545**	6	WASHER (3MM THK)	
M	6	1	**136-4192**	3	BOLT (M6X1.0X35MM)	
	7	1	**143-2830**	1	LATCH AS	
M		1	**6V-7743**	2	LOCKNUT (M6X1 THD)	
M		1	**9X-2045**	2	SCREW-TRUSS HEAD (M6X1X20MM)	
		1	**143-2827**	1	SPRING	
	8	1	**159-4951**	1	LATCH AS	
M		1	**5C-2874**	1	NUT (M5X.8 THD)	
M		1	**161-6984**	1	SCREW-TRUSS HEAD (M5X0.8X20MM)	
		1	**161-6987**	1	WASHER-HARD	
		1	**161-9294**	1	SPRING-FLAT WIRE	
M		1	**162-6556**	1	LOCKNUT	
	9	1	**164-1067**	1	GLASS	
M	10	1	**6V-7743**	2	LOCKNUT (M6X1 THD)	
E	11	1	**148-5353**		SEAL (342CM)	

E-ORDER BY THE CENTIMETER
M-METRIC PART

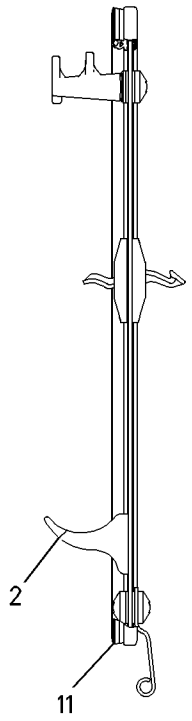

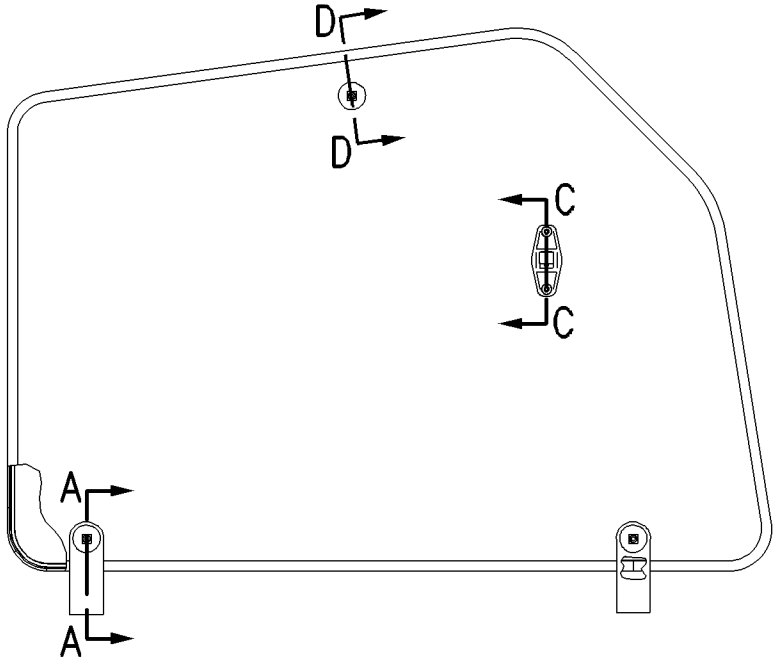

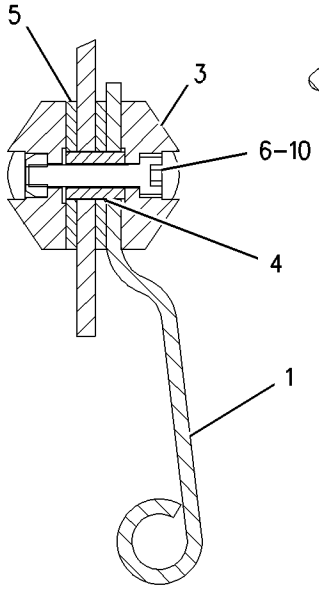

SECTION A-A

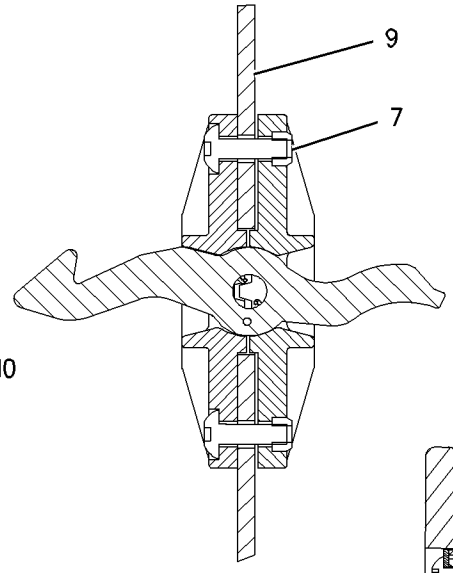

SECTION C-C

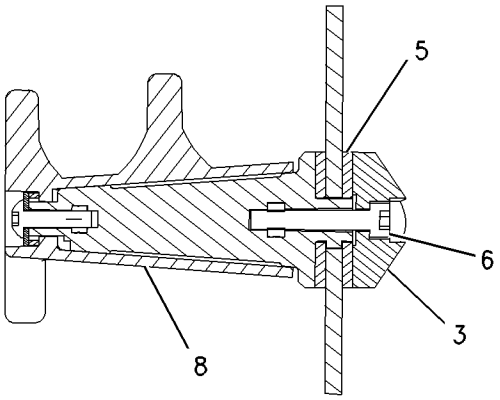

SECTION D-D

GRAPHIC #1 **<END>** g00878022

OPERATOR STATION

174-2024 WIPER GP-WINDOW

S/N: BXC1-UP; DSX1-UP

PART OF 214-7006, 214-7007 CAB AR, 214-7008, 214-7009 CAB AR-ENCLOSED ROPS AN ATTACHMENT

SMCS-7305 **i01674631**

NOTE	REF NO	GRAPHIC REF	PART NUMBER	QTY	PART NAME 1 2 3 4 5 6 (PRODUCT LEVEL)	SEE PAGE
	1	1	**6K-0806**	1	STRAP-CABLE	
M	2	1	**8T-4970**	5	BOLT (M6X1X14MM)	
	3	1	**102-2940**	2	BLADE AS	
		1	**5C-8813**	1	BLADE-WIPER	
		1	**101-0745**	1	BLADE	
	4	1	**132-2249**	2	SPACER (24.0MM THK)	
	5	1	**132-2250**	1	SPACER (10.0MM THK)	
	6	1	**154-5410**	1	ARM AS-WIPER	
	7	1	**174-2025**	1	MOTOR GP-WINDOW WIPER	
		1	**102-8805**	1	KIT-RECEPTACLE (6 PIN)	
					(KIT SERVICES RECEPTACLE AS. AND WEDGE)	
		1	**186-3735**	4	PIN-CONNECTOR	
	8	1	**174-2026**	1	ARM AS	
		1	**163-4759**	1	KIT-REPAIR	
E		1	**194-5171**		HOSE (33CM)	
	9	1	**174-5456**	1	PLATE	
Y	10	1	**186-2589**	1	MOTOR GP-WINDOW WIPER	755
M	11	1	**8C-8451**	2	BOLT (M6X1X40MM)	
	12	1	**8T-4205**	7	WASHER-HARD (7.2X14.5X2MM THK)	

E-ORDER BY THE CENTIMETER
M-METRIC PART
Y-SEPARATE ILLUSTRATION

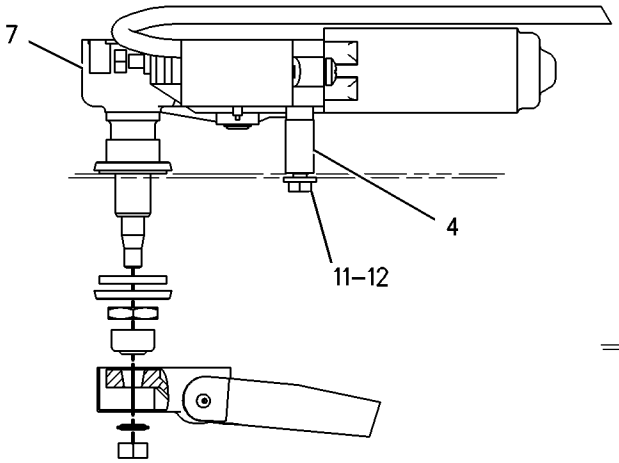

VIEW A-A

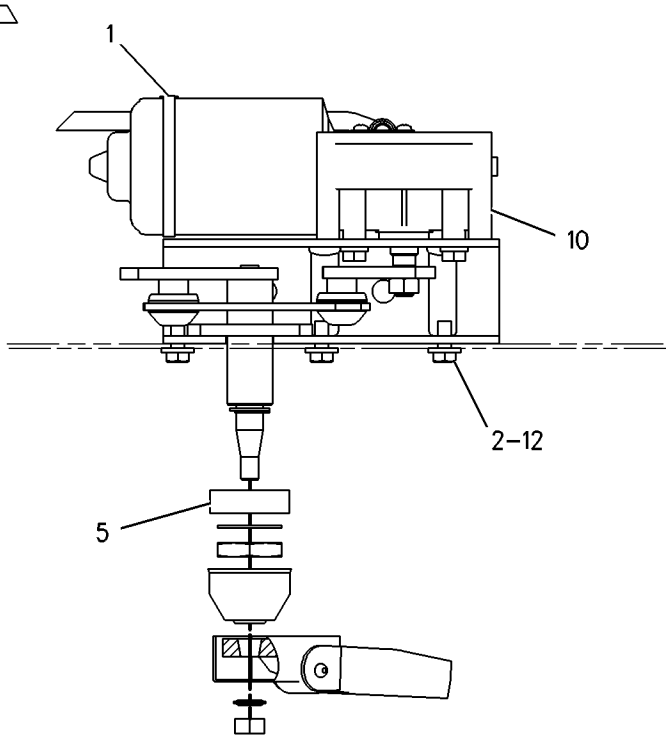

VIEW B-B

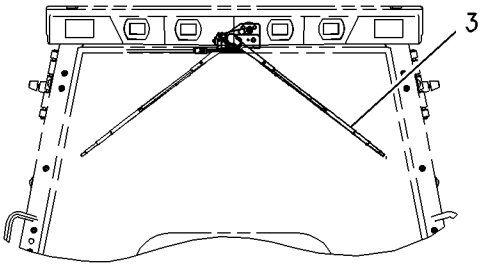

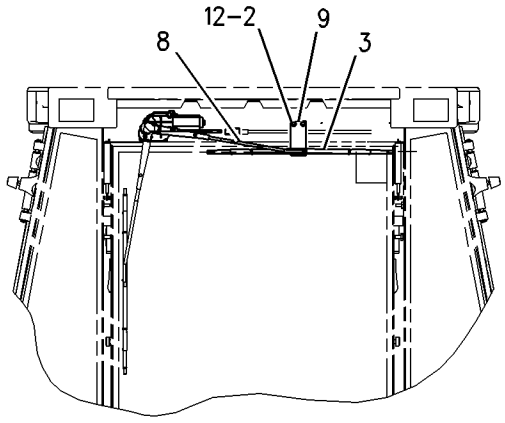

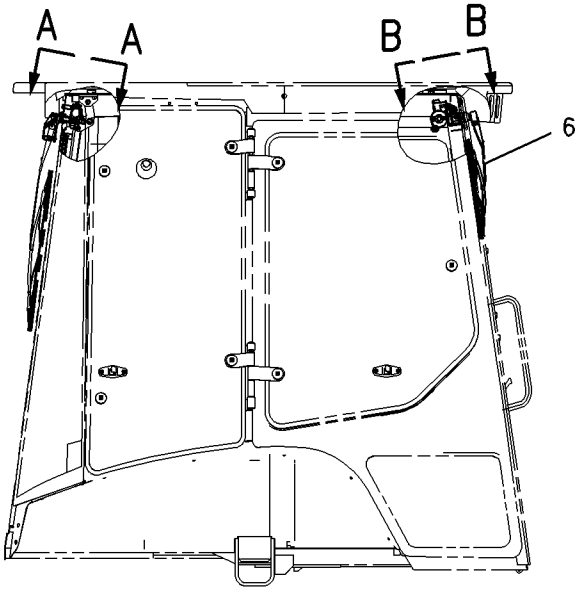

GRAPHIC #1 **<END>** g00726930

SERVICE EQUIPMENT AND SUPPLIES

186-6375 FILM GP

S/N: BXC1-UP; DSX1-UP

PART OF 185-7741, 185-7754 PLATE & FILM GP

SMCS-7405, 7557 **i02003690**

NOTE	REF NO	GRAPHIC REF	PART NUMBER	QTY	PART NAME 1 2 3 4 5 6 (PRODUCT LEVEL)	SEE PAGE
	1	1	**186-5273**	1	FILM (428D) (RH)	
	2	1	**101-0003**	8	FASTENER	
	3	1	**3E-8123**	1	FILM-STRIPE (CAT-RH)	
	4	1	**3E-8124**	1	FILM-STRIPE (CAT-LH)	
	5	1	**186-5274**	1	FILM (428D) (LH)	
AF		1	**177-9600**	2	FILM (PREMIER)	

A-NOT PART OF THIS GROUP
F-NOT SHOWN

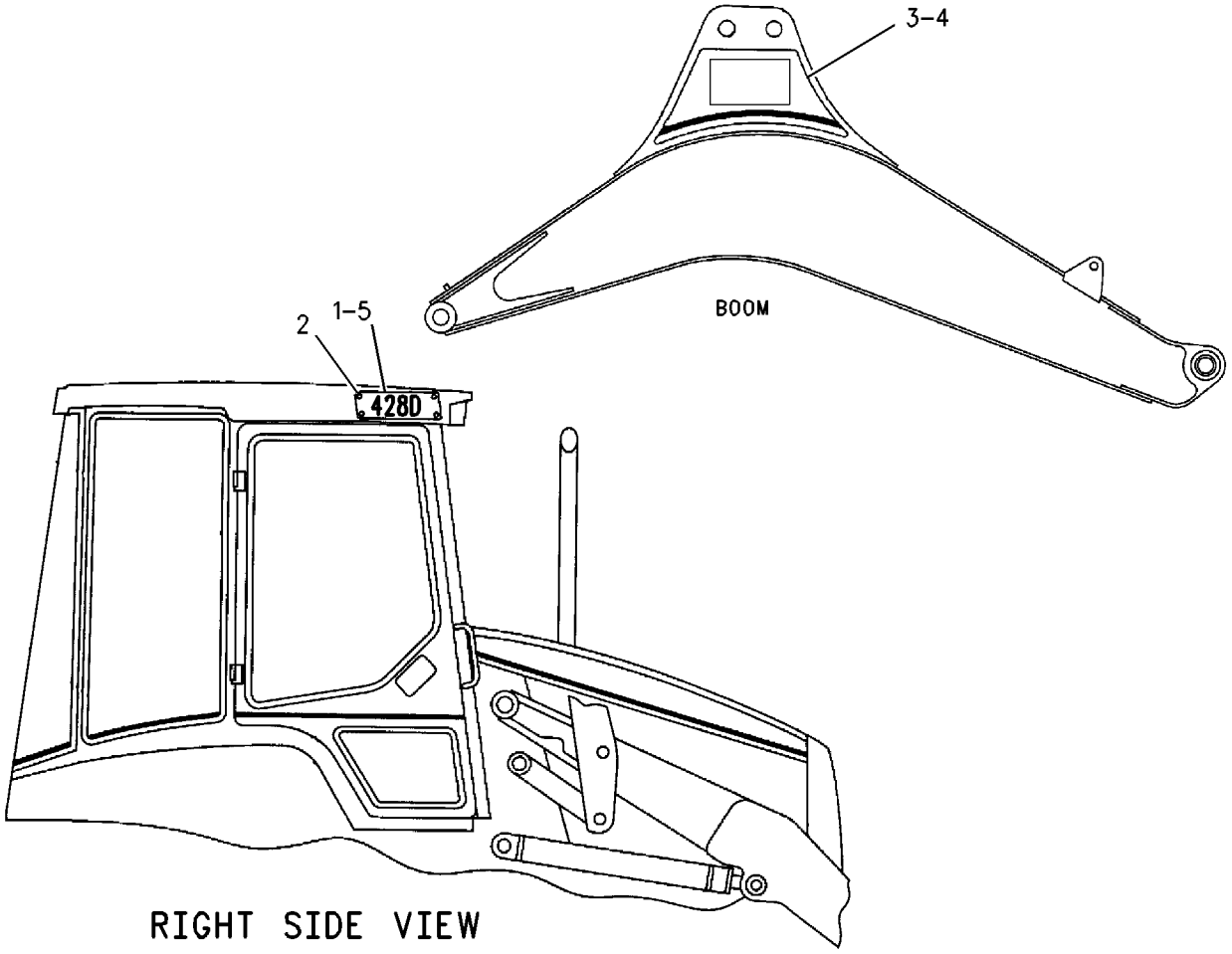

RIGHT SIDE VIEW

GRAPHIC #1 **<END>** g00770054

SERVICE EQUIPMENT AND SUPPLIES

217-6835 FILM GP

S/N: BXC1-UP; DSX1-UP
CANNOT BE USED WITH CANOPY OR DELUX CAB
AN ATTACHMENT

SMCS-7405, 7557 **i01868095**

NOTE	PART NUMBER	QTY	PART NAME 1 2 3 4 5 6 (PRODUCT LEVEL)	SEE PAGE
	110-0037	1	FILM (CATERPILLAR)	

<END>

SERVICE EQUIPMENT AND SUPPLIES

113-0018 INSTALLATION AR-WHEEL CHOCK

S/N: BXC1-UP; DSX1-UP
PART OF 206-3409, 206-4924 CONVERSION AR-CERTIFICATION
AN ATTACHMENT

SMCS-7000 **i01127632**

NOTE	REF NO	GRAPHIC REF	PART NUMBER	QTY	PART NAME 1 2 3 4 5 6 (PRODUCT LEVEL)	SEE PAGE
	1	1	**114-9342**	2	CHOCK-WHEEL	
	2	1	**130-7452**	2	PLATE	

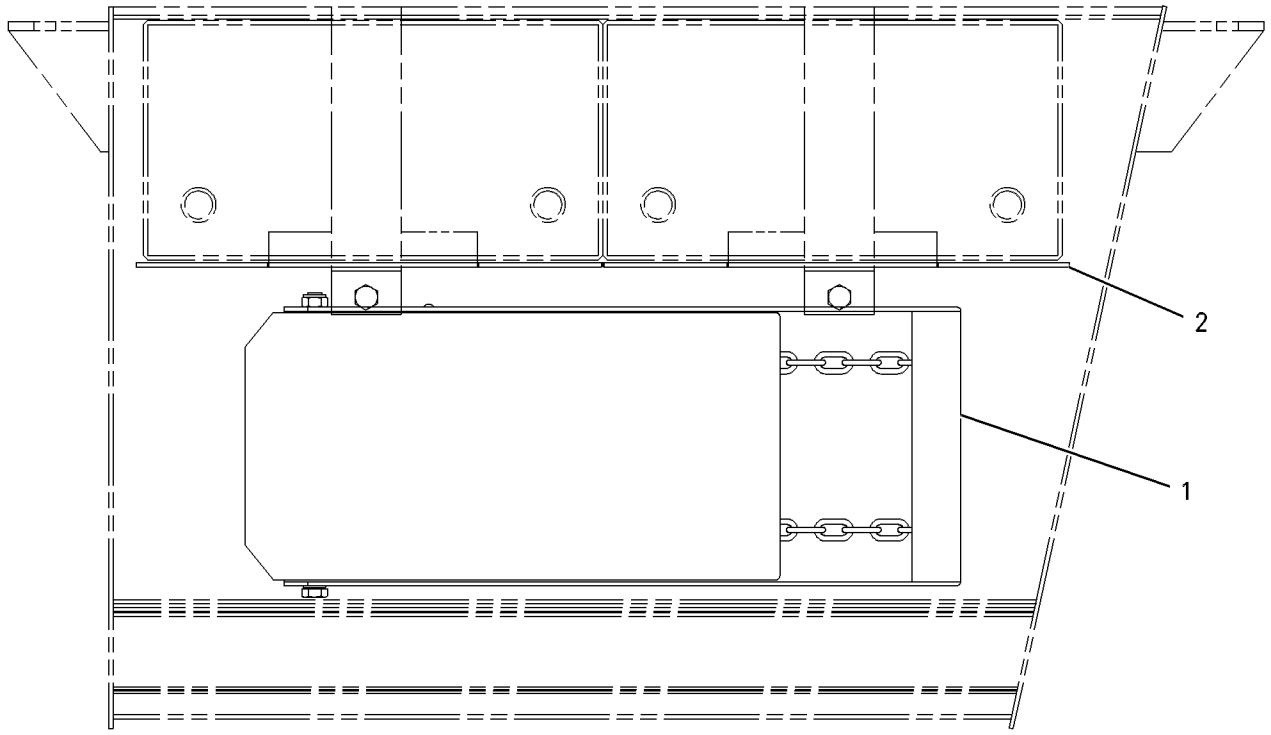

GRAPHIC #1 **<END>** g00307295

SERVICE EQUIPMENT AND SUPPLIES

134-8204 LOCK GP-VANDALISM

S/N: BXC1-UP; DSX1-UP
SINGLE TILT
AN ATTACHMENT

SMCS-7315 **i01810680**

NOTE	REF NO	GRAPHIC REF	PART NUMBER	QTY	PART NAME 1 2 3 4 5 6 (PRODUCT LEVEL)	SEE PAGE
	1	1	**5P-8502**	2	PADLOCK GP	
					(EACH INCLUDES)	
		1	**5P-8500**	1	KEY	
		1	**8Y-6364**	1	SLEEVE	

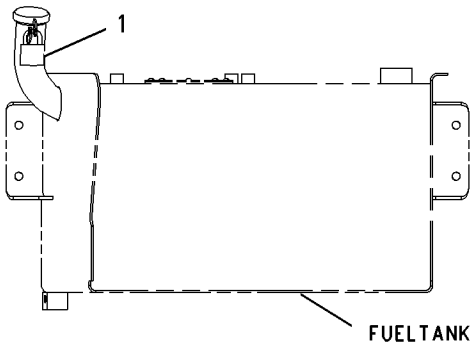

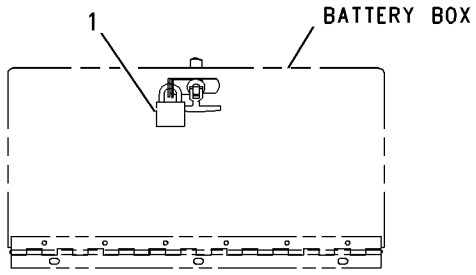

GRAPHIC #1 **<END>** g00925642

SERVICE EQUIPMENT AND SUPPLIES

135-2567 LOCK GP-VANDALISM—PARALLEL LIFT

S/N: BXC1-UP; DSX1-UP
AN ATTACHMENT

SMCS-7315 **i01810926**

NOTE	REF NO	GRAPHIC REF	PART NUMBER	QTY	PART NAME 1 2 3 4 5 6 (PRODUCT LEVEL)	SEE PAGE
	1	1	**5P-8502**	3	PADLOCK GP	
					(EACH INCLUDES)	
		1	**5P-8500**	1	KEY	
		1	**8Y-6364**	1	SLEEVE	

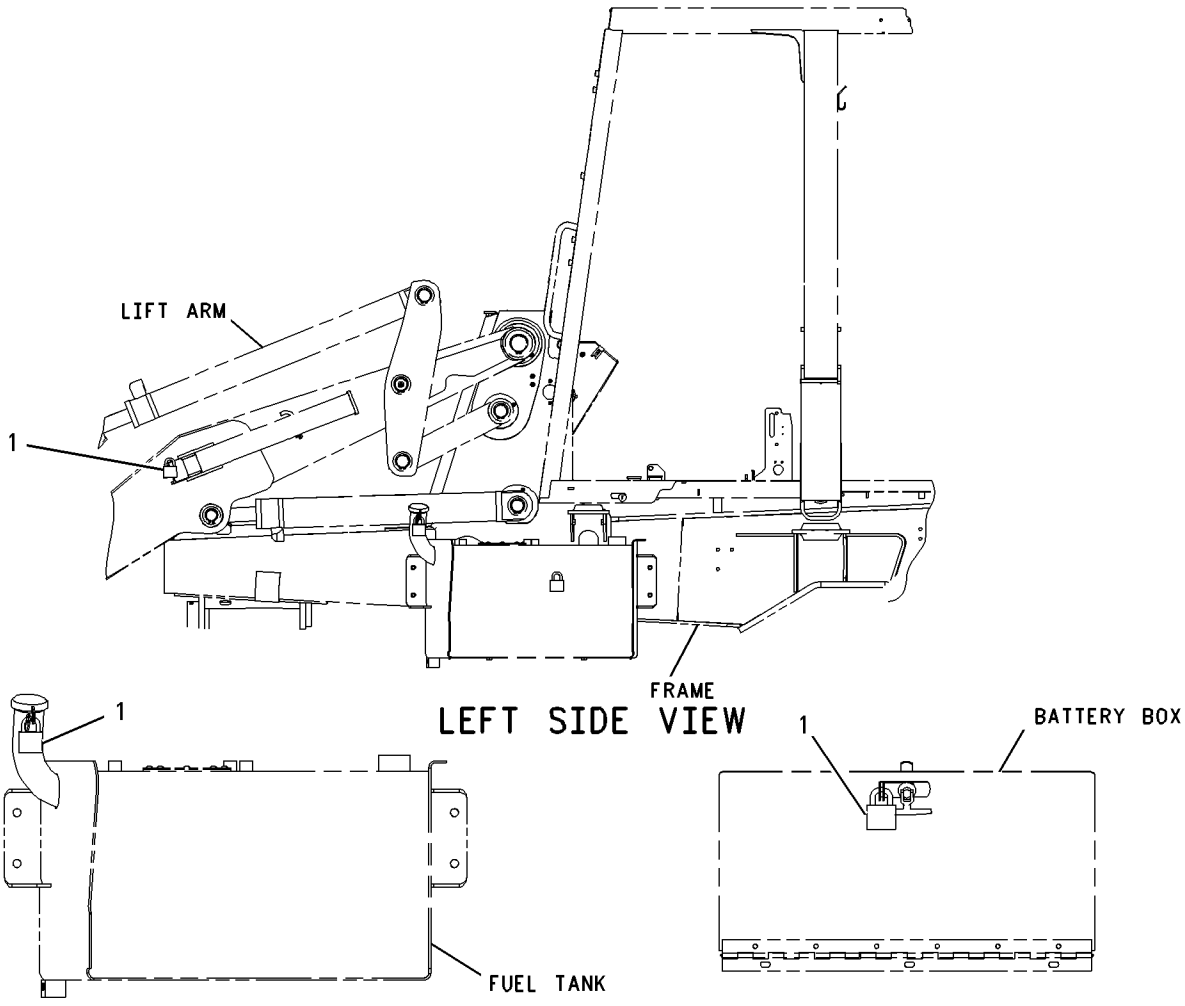

GRAPHIC #1 **<END>** g00925648

132-3391 PLATE & FILM GP

S/N: BXC1-UP; DSX1-UP
EEC
AN ATTACHMENT

SMCS-7405 **i00987087**

NOTE	PART NUMBER	QTY	PART NAME 1 2 3 4 5 6 (PRODUCT LEVEL)	SEE PAGE
	132-3392	1	FORM-CERTIFICATION	
	103-2532	1	PLATE GP-CERTIFICATION (MACHINE)	
	4B-4158	1	SCREW-DRIVE	
	082-2817	4	TACK	
	9X-6562	4	TACK-FASTENER	

<END>

185-7741 PLATE & FILM GP

S/N: BXC1-UP
PARALLEL LIFT, ALL WHEEL DRIVE
PART OF 237-9288 CHASSIS AR

SMCS-7405 **i01397724**

NOTE	PART NUMBER	QTY	PART NAME 1 2 3 4 5 6 (PRODUCT LEVEL)	SEE PAGE
Y	*186-6375*	1	FILM GP	799
	1P-2807	2	FILM-LIFT	
			(LOCATE ON FRONT SIDE OF FRONT AXLE)	
	7X-3229	2	FILM-LIFT & TIE DOWN	
			(LOCATE ON TIEDOWN/SLING EYE BRACKET)	
	7X-7644	2	FILM-TIE DOWN	
			(LOCATE ON FRONT AXLE SUPPORT PLATE)	
	130-5581	1	FILM-WARNING	
			(LOCATE ON LH LOADER ARM)	
	126-5704	4	SHIM (1MM THK)	
			(LOCATED IN BAG IN SIDE CONSOLE)	

Y-SEPARATE ILLUSTRATION

<END>

SERVICE EQUIPMENT AND SUPPLIES

185-7754 PLATE & FILM GP

S/N: DSX1-UP
ALL WHEEL DRIVE, NARROW FRAME, PARALLEL LIFT
PART OF 237-9289 CHASSIS AR

SMCS-7405 **i01454241**

NOTE	PART NUMBER	QTY	PART NAME 1 2 3 4 5 6 (PRODUCT LEVEL)	SEE PAGE
Y	*186-6375*	1	FILM GP	799
	1P-2807	2	FILM (LIFT EYE LOCATION)	
			(LOCATE ON FRONT SIDE OF FRONT AXLE)	
	7X-3229	2	FILM-LIFT & TIE DOWN	
			(LOCATE ON TIEDOWN/SLING EYE BRACKET)	
	7X-7644	2	FILM-TIE DOWN	
			(LOCATE ON FRONT AXLE SUPPORT PLATE)	
	130-5581	1	FILM-WARNING	
			(LOCATE ON LH LOADER ARM)	
	126-5704	4	SHIM (1MM THK)	
			(LOCATED IN BAG IN SIDE CONSOLE)	
Y-SEPARATE ILLUSTRATION				

<END>

238-6700 PLATE & FILM GP

S/N: BXC1-UP; DSX1-UP
PART OF 237-9288, 237-9289 CHASSIS AR

SMCS-7405 **i01994380**

NOTE	PART NUMBER	QTY	PART NAME 1 2 3 4 5 6 (PRODUCT LEVEL)	SEE PAGE
	1P-2807	4	FILM (LIFT EYE LOCATION)	
			ON THE FRONT SIDE OF THE FRONT AXLE BETWEEN CHASSIS & WHEEL AS. ON LH & RH SIDE OF MACHINE.	
	7X-7644	4	FILM (TIE DOWN)	
			ON EACH SIDE OF THE MACHINE ON THE MAIN FRAME NEAR FRONT AXIL SUPPORT NEXT TO THE TIE DOWN HOLES.	
	199-6245	1	FILM (SEPARATOR)	
			ON SIDE OF FUEL TANK 4CM FROM BOTTOM EDGE AND 2CM FROM BACK EDGE.	
	224-9855	1	FILM (STARTING AID)	
			ON RIGHT HAND B-POST IN THE FOLLOWING ORDER; UNIVERSAL, SEAT BELT, QUICK COUPLER (IF EQUIPTED), & COLD START.	
			DECALS MUST BE ALIGNED AND EVENLY SPACED.	
	190-5134	1	FILM (STD CROSS PATTERN)	
			IN CONTROL GP - VALVE ON REAR CONSOLE FOR MECHANICAL STANDARD/CROSS BACKHOE CONTROLS.	
	190-5136	1	FILM (CTR PIVOT/BOOM LOCK)	
			IN MTG GP - VALVE OR STABILIZER AR. FOR CENTER PIVOT MACHINES. PLACE NEXT TO STABILIZER CONTROLES.	
	190-5137	1	FILM (SISHF/BOOM LOCK)	
			IN STABILIZER AR. FOR SIDE SHIFT MACHINES ON TOE RIGHT SIDE CONSOLE NEXT TO STABILIZER CONTROLE LEVERS.	
	191-9104	1	FILM (START SWITCH)	
			IN MTG GP, AROUND KEY SWITCH.	
	190-5139	1	FILM (VARIABLE SPEED)	
			IN CONTROL GP - GOV.	
	190-5128	1	FILM (BUCKET CONTROL)	
			IN CONTROL GP - VALVE, ON REAR CONSOLE FOR MECHANICAL EXCAVATOR BACKHOE CONTROLES.	
	186-5300	1	FILM (CONTROL PLATE)	
			ON B-POST CENTERED ABOVE RIGHT HAND CONSOLE.	

NOTE	PART NUMBER	QTY	PART NAME 1 2 3 4 5 6 (PRODUCT LEVEL)	SEE PAGE
	190-5129	1	FILM (BUCKET CONTROL)	
			IN CONTROLE GP - VALVE, ON REAR CONSOLE FOR MECHANICAL CASE STYLE BACKHOE CONTROLS.	
	188-0861	1	FILM (INST)	
			ON LOADER CONTROL FILM CENTERED IN UPPER RH CORNER.	
	198-0102	1	FILM (MULTIPURPOSE BUCKET)	
			ON HYD AR WHICH ARE MECHANICAL LOADER CONTROLS.	
D	**9X-2334**		FILM (BULK) (.095M)	
			ON UPPER RH LOADER ARM BOSS ALIGNED WITH BUCKET INDICATOR POITER WITH BUCKET ON LEVEL GROUND.	
	190-5133	1	FILM (ALL WHEEL STEER)	
			ON LOADER CONTROL FILM NEXT TO FRONT VIEW OF LOADER HANDLE. (AWS PILOT CONTROLS ONLY)	
	191-9107	1	FILM (ALL WHEEL STEER)	
			IN WIRING GP - STER - A.	
	238-4441	1	FILM (LUBRICANTS)	
			IN HOOD GP - ENG.	
	238-6847	1	FILM (STABILIZER CONTROL)	
			IN STABILIZER AR. FOR SIDE SHIFT MACHINES ON TOE RIGHT SIDE CONSOLE NEXT TO STABILIZER CONTROLE LEVERS.	
	130-6662	1	FILM-AWS	
			IN WIRING GP - STER.	
	190-5132	1	FILM-CONTROL (AIR CONDITIONER)	
			IN CONDITIONER GP OR HEATER GP ON THE RH CONSOLE AROUND THE TEMPERATURE CONTROL KNOB.	
	101-0333	1	FILM-IDENTIFICATION (HYDRAULIC OIL)	
			ON BRAKE FLUID RESERVOIR CAP.	
	159-8033	1	FILM-IDENTIFICATION (12 VOLTS)	
			ON INSIDE OF BATTERY BOX DOOR CENTERED ABOVE JUMP START WARNING.	
	202-5710	1	FILM-IDENTIFICATION (FUSE PANEL)	
			INSIDE RH CONSOLE ACCESS PANEL.	
	231-9352	1	FILM-IDENTIFICATION (FUSE PANEL)	
			INSIDE RH CONSOLE ACCESS PANEL.	
	8C-4447	1	FILM-INDICATOR	
			IN BRACE GP - LFT CYL.	
	172-6224	1	FILM-INDICATOR	
			IN WIRING GP - CSL.	
	188-0863	1	FILM-INDICATOR (416D)	
			IN WIRING GP - CSL ON RH CONSOLE.	
	222-5794	1	FILM-INDICATOR	
			IN WIRING GP - STANDARD.	
	239-9438	1	FILM-INFORMATION (CONTROL PATTERN)	
			IN LINES GP - PILOT, ON THE LH B-POST 53CM UP FROM FLANGE PLATE.	
	124-2456	1	FILM-INSTRUCTION (NO STEP)	
			INSIDE OF BATTERY BOX DOOR WITH BOTTOM EDGE OF DECAL 9 CM FROM TOP EDGE OF COVER & AND 7.5CM FROM RIGHT SIDE OF BOX.	
	190-5130	1	FILM-INSTRUCTION	
			IN CONTROL GP - VALVE ON REAR CONSOLE FOR MECHANICAL BACKHOE STANDARD CONTROLS.	
	101-0863	1	FILM-INSTRUCTION (RETURN FLOW)	
			IN LINES GP - AUX HYD.	
	239-9435	1	FILM-INSTRUCTION (LINK)	
			IN LINKAGE GP BUCKET.	
	101-2788	1	FILM-INSTRUCTION (EXTENDABLE STICK)	
			IN CONTROL GP - VALVE.	
	133-8916	1	FILM-INSTRUCTION (EXTENDABLE STICK)	

238-6700 **PLATE & FILM GP** ***(contd.)*** **i01994380**

NOTE	PART NUMBER	QTY	PART NAME 1 2 3 4 5 6 (PRODUCT LEVEL)	SEE PAGE
			PART OF CONTROL GP. ON HORIZONTAL SMOOTH SPOT ON RH SIDE OF REAR CONSOLE.	
	186-5298	1	FILM-INSTRUCTION (BUCKET CONTROL)	
			ON B-POST CENTERED ABOVE RH CONSOLE.	
	7X-3229	2	FILM-LIFT & TIE DOWN	
			ON TIE DOWN / SLING EYE BRACKET ON OUTSIDE OF EACH STABILIZER LEG IMMEDIATELY ABOVE TIE DOWN / SLING BRACKET.	
	239-9427	1	FILM-NOTICE (STICK)	
			IN LINES GP ON THE STICK.	
	219-0305	1	FILM-WARNING (NO WELD/NO DRILL)	
			ON THE UPPER REAR SHEET METAL PANEL OF CAB STRUCTURE.	
	225-0312	1	FILM-WARNING (JUMP START)	
			INSIDE OF BATTERY BOX DOOR WITH LOWER EDGE 7.5CM FROM TOP OF DOOR & 26CM FROM RIGHT EDGE OF DOOR.	
			ORIENT SO THAT IT CAN BE READ WHEN STANDING ON GROUND FACING BATTERY BOX.	
	226-1240	1	FILM-WARNING (STAY BACK)	
			ON BOOM 70CM UP FROM CENTER LINE OF SWING & BOOM LOWER FT-PIN, 10CM OVER FROM REAR EDGE OF BOOM WRAPPER PLATE.	
	239-9430	1	FILM-WARNING (ARM BRACE)	
			FOR SINGLE TILT MACHINES, ON LH SIDE OF MACHINE CENTERED ABOVE LIFT ARM SAFTY BRACE 2.5CM FROM BOTTOM EDGE OF LIFT ARM.	
			DECAL TOP MUST BE PARALLEL WITH LIFT ARM TOP EDGE.	
			FOR PARALLEL LIFT MACHINES, ON LH SIDE OF THE MACHINE ON LIFT ARM FORWARD FROM LIFT ARM SAFTY BRACE 5CM.	
	240-7095	2	FILM-WARNING (NO ENTRANCE/EXIT)	
			FOR CENTER PIVOT MACHINES, ON THE CAB STRUCTURE IN THE REAR 2CM FROM BOTTOM EDGE AND 19CM FROM OUTER EDGE FOR EACH.	
			FOR SIDESHIFT MACHINES, ON EACH POST ON THE SLIDEFRAME, CENTRALISED & 2.5CM DOWN FROM TOP HITCH PLATE.	
	221-8045	1	FILM-WARNING (SEAT BELT)	
			ON RIGHT HAND B-POST IN THE FOLLOWING ORDER; UNIVERSAL, SEAT BELT, QUICK COUPLER (IF EQUIPTED), & COLD START.	
			DECALS MUST BE ALIGNED AND EVENLY SPACED.	
	240-7957	1	FILM-WARNING (UNIVERSAL)	
			ON RIGHT HAND B-POST IN THE FOLLOWING ORDER; UNIVERSAL, SEAT BELT, QUICK COUPLER (IF EQUIPTED), & COLD START.	
			DECALS MUST BE ALIGNED AND EVENLY SPACED.	
	225-4257	2	FILM-WARNING (HOT FLUID)	
			ON BOTH SIDES, OF FRONT LH SIDE BAFFLE PLATE, 2CM FROM BOTTOM OF BAFFLE PLATE AND .5CM FROM SIDE FRAME RAIL.	
	224-8946	1	FILM-WARNING (ETHER)	
			IN HOOD GP - ENG.	
	224-0672	1	FILM-WARNING (HIGH PRESSURE CYLINDER)	
			IN LINES GP - RIDE CONTROL.	
	225-4150	1	PLATE (SERVICE INFORMATION)	
			CENTERED ON UPPER LH SIDE FRAME RAIL, USE FASTENER-TACKS TO ASSEMBLE.	
	239-6989	1	PLATE (PIN)	
			CENTERED ON UPPER RH SIDE FRAME RAIL, USE FASTENER-TACKS TO ASSEMBLE.	
	199-6243	1	PLATE (INSTRUCTION)	

238-6700 **PLATE & FILM GP** ***(contd.)*** **i01994380**

NOTE	PART NUMBER	QTY	PART NAME 1 2 3 4 5 6 (PRODUCT LEVEL)	SEE PAGE
			IN A/C LINES GP.	
	239-9434	1	PLATE-WARNING (QUICK COUPLER)	
			ON RIGHT HAND B-POST IN THE FOLLOWING ORDER; UNIVERSAL, SEAT BELT, QUICK COUPLER (IF EQUIPTED), & COLD START.	
			DECALS MUST BE ALIGNED AND EVENLY SPACED.	
	239-9436	1	PLATE-WARNING (ALTERNATE CONTROL PATTERN)	
			IN CONTROL GP - VALVE ON REAR CONSOLE FOR MECHANICAL STANDARD/CROSS BACKHOE CONTROLS.	
B	**193-5914**	16	PLUG	
B	**193-5915**	6	PLUG	
B	**193-5916**	4	PLUG	
A	**4P-6236**	1	PLATE-SERIAL NUMBER (ENGINE)	
			ON MOUNTING PAD ON LH SIDE OF ENGINE BLOCK.	
A	**4P-6396**	1	PLATE-CAT	
			ON TOP OF VALVE COVER READABLE FROM LH SIDE OF ENGINE.	
AB	**8T-6656**	1	FILM-IDENTIFICATION (OIL FILTER)	
			ON SPIN ON OIL FILTER.	
A	**4P-6422**	1	FILM-WARNING (NO ETHER/AIR INTAKE)	
			ON SIDE OF VALVE COVER IN VISIBLE LOCATION.	
A	**4P-6423**	1	PLATE-IDENTIFICATION	
			ON LOWER LH SIDE OF BLOCK TOWARDS REAR OF ENGINE MOUNTING PAD.	
			PLATE MAY BE INSTALLED ON RH SIDE IF OBSCURED BY STARTER.	

A-NOT PART OF THIS GROUP
B-USE AS REQUIRED
D-ORDER BY THE METER

<END>

101-4419 PLATE AS-SIDE REFLECTIVE

S/N: BXC1-UP; DSX1-UP
PART OF 190-6413 CONVERSION AR-CERTIFICATION
AN ATTACHMENT

SMCS-7405 **i00534481**

NOTE	REF NO	GRAPHIC REF	PART NUMBER	QTY	PART NAME 1 2 3 4 5 6 (PRODUCT LEVEL)	SEE PAGE
	1	1	**101-4420**	1	PLATE	
	2	1	**101-4421**	1	BRACKET AS	
M		1	**5C-7261**	1	NUT (M8X1.25 THD)	
M		1	**8T-4244**	1	NUT (M12X1.75 THD)	
	3	1	**101-4422**	1	MAGNET AS	
	4	1	**101-4423**	1	REFLECTOR	
M	5	1	**8T-4179**	1	BOLT (M12X1.75X20MM)	
	6	1	**8T-4223**	1	WASHER-HARD (3MM THK)	
M	7	1	**101-4424**	1	THUMBSCREW	
M	8	1	**8T-0287**	1	BOLT (M5X.8X10MM)	
	9	1	**8F-1434**	1	LOCKWASHER (5MM ID)	
	10	1	**4B-4274**	1	WASHER (1.2MM THK)	
	11	1	**5P-1076**	1	WASHER-HARD (4MM THK)	

M-METRIC PART

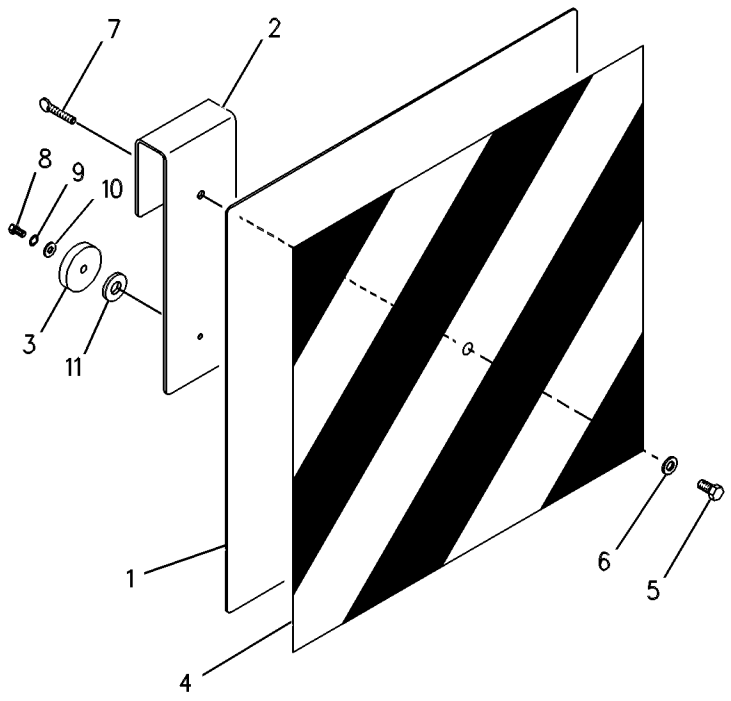

GRAPHIC #1 **<END>** g00260486

MEMORANDA

PART NUMBER INDEX

Part	Page
0	
0S-0550	90
0S-1603	35
0S-1614	563
0T-0318	222
1	
1A-0621	292
1A-5350	292
1B-2718	569
1B-8736	24
	27
	37
1H-1200	292
1H-3244	739
	740
1H-3337	778
1H-3338	117
1H-7339	381
	382
	388
1H-9721	249
1J-6474	609
	611
1K-0502	359
	361
	362
1K-6872	763
	765
	768
	778
1K-7082	237
1L-3768	609
	611
1L-6377	320
1M-6119	104
	106
	108
	110
1M-6120	104
	106
	108
	110
1P-2807	804
	805
1P-4278	90
	539
1P-4584	479
1P-6872	533
1P-7009	90
1P-7363	559
	561
	563
	565
	567
	569
	571
	573
	575
	577
1R-1804	88
1S-7251	104
	106
	108
	198
1S-7252	104
	106
	108
	110
1S-8947	305
1S-9593	261
	262
	263
	264
	265
	567
	569
	571
	584
	585
1U-8846	250
	254
1V-6341	256
1V-9385	298
1W-2934	715
2	
2A-4576	221
2B-0858	32
	47
2D-2628	266
	267
2D-2629	266
	267
2D-2630	266
	267
2D-2631	266
	267
2D-2633	266
	267
2D-6392	69
	72
2H-3920	698
	741
2H-3922	214
2H-3931	372
	374
2H-4145	372
	374
2H-6338	381
2J-3961	376
2K-3549	604
2K-4973	768
	770
	772
	778
2K-6830	386
	387
2L-6267	221
2M-2570	221
2M-7819	767
2M-9780	371
	445
	448
	450
	451
	452
	454
	455
	458
	459
	474
	479
	487
	497
	499
	521
	533
	539
	559
	561
	563
	565
	567
	569
	571
	573
	575
	577
	579
2P-1279	292
2P-1293	398
	400
	402
	404
	405
	407
	408
	412
	416
	420
	424
	428
	432
	436
	441
	502
	505
2P-7864	768
2P-8104	166
2R-0364	359
	361
	362
2S-0479	221
2S-0480	221
	234
	235
2S-3745	700
	743
2W-9499	767
2W-9710	67
	70
2Y-5821	386
	387
3	
3B-4505	768
	770
	772
3B-4509	221
3B-4610	295
3B-4631	778
3B-5302	221
3B-5317	527
3B-5319	594
	596
	690
	691
	692
3B-5322	590
	591
3B-5790	533
3B-8488	324
	586
	588
	613
3B-8489	324
	326
	329
	527
	586
	588
	594
	596
	604
	609
	611
	613
	666
	667
	668
	669
	670
	672
	674
	675
	689
3C-3681	130
3C-3682	130
3C-4883	130
3C-6516	130
3C-8388	533
3D-2824	61
	305
	398
	400
	402
	404
	405
	407
	408
	416
	440
	441
	446
	448
	451
	452
	454
	455
	458
	459
	462

► **PRIMARY REFERENCE**

PART NUMBER INDEX

Part	Page
	464
	479
	497
	499
	501
	502
	505
	519
	521
	530
	543
3E-1908	▶714
	715
3E-2333	300
3E-3362	261
3E-3365	101
	181
	206
	210
	217
	226
	256
	262
	263
	264
	265
	359
	567
	571
	584
	585
3E-3371	115
	206
	210
	263
	264
	265
	391
3E-3383	120
	122
	124
	126
3E-3658	714
3E-4075	61
3E-4312	702
3E-4321	747
	749
3E-4892	41
	42
3E-4924	41
	42
3E-5153	166
3E-5154	166
3E-5180	754
3E-6600	336
3E-6769	533
3E-6770	533
3E-6922	133
	136
	138
	140
	142
3E-7584	▶120
	149
	158
3E-7585	▶122
	146
	155
3E-7843	▶112
	195
3E-8123	799
3E-8124	799
3E-8211	338
	703
	704
	705
	706
3E-8620	567
	569
	571
3E-8621	584
	585
3E-8622	489
	491
	493
	495
	▶584
3E-8679	176
3E-9362	133
	136
	138
	140
	142
	173
	176
	181
	193
	206
	208
	210
	212
3E-9382	▶124
	152
3F-5108	684
3F-9556	755
	761
3G-6927	250
	256
3J-1907	99
	102
	189
	206
	208
	210
	212
	236
	248
	256
	292
	347
	451
	455
	459
	466
	468
	470
	472
	474
	479
	487
	489
	491
	493
	495
	497
	499
	513
	516
	579
3J-7352	533
3J-7354	102
	300
	347
	371
	477
	533
	559
	561
	563
	565
	567
	569
	571
	573
	575
	577
	579
3J-9196	261
	584
3K-0360	254
	300
	390
	452
	455
	458
	459
	487
	509
	511
	513
	516
	519
	573
3K-3379	221
3K-8782	131
	132
3N-1491	704
	706
3N-5739	386
	387
3N-6408	220
3S-2093	86
	99
	104
	106
	114
	133
	136
	138
	140
	142
	144
	146
	149
	152
	155
	158
	173
	176
	178
	181
	183
	185
	187
	189
	193
	195
	196
	199
	202
	203
	206
	208
	210
	212
	214
	215
	217
	250
	292
	359
	452
	455
	459
	487
	707
	709
	712
	745
	749
	775
	778
	785
3S-6049	104
	106
	108
	110
3S-6050	104
	106
	108
	110
3S-6162	376
3T-0849	581
3T-0850	459
3T-3349	104
3T-5760	104
	106
	108
4	
4B-2043	185
	187
	781
	782
4B-2049	189
4B-4158	804
4B-4274	338
	809

▶ **PRIMARY REFERENCE**

PART NUMBER INDEX

Part	Page	Part	Page	Part	Page	Part	Page
4B-4278	767	4J-0522	232		633		565
4B-4863	133		233		634		567
	136	4J-1888	666		635		571
	138		667		636	4T-4517	552
	140		668		637	4T-4518	549
	142		669		638		550
	173		670		641	4T-4520	559
	176		672		683		561
	181		674		684		563
	193		675		697		565
	199		679	4K-0499	778		567
	206		680	4K-1388	371		569
	208		681		559		571
	210		686		561		573
	212	4J-3745	385		565		575
	758	4J-5140	544		571		577
4B-5271	763		545		573	4T-4521	559
	765		546		575		561
	768		547		577		563
4B-9782	561		548	4K-5843	220		565
4B-9784	778		549	4L-6454	770		567
4D-7794	326		550		772		569
	329		551	4M-0061	768		571
4D-8123	78		552		770		573
	79		553		772		575
4D-9986	544		554	4M-0189	385		577
	545		556	4M-6582	579	4T-4524	559
	546		557	4P-6236	808		561
	547	4J-5267	544	4P-6396	808		563
	548		545	4P-6422	808		565
	549		546	4P-6423	808		567
	550		547	4P-7428	203		569
	551		548	4P-7429	176		571
	552		549	4P-7581	144		573
	553		550		189		575
	554		551		203		577
	556		552	4P-8134	104	4T-4528	559
	557		553		106		561
4E-8619	292		554		173		563
	▶296		556		178		565
4F-3656	638		557		185		567
	641	4J-5477	292		189		569
4F-3657	625		300		206		571
	626		347		208		573
	627		451		210		575
	628		452		212		577
	629		455		745	4T-4531	561
	630		459	4S-1988	117		565
	631		474	4T-2723	544	4T-4532	561
	632		477		545		567
	633		513		546		571
	634		516		547	4T-4533	559
	635	4J-9220	385		548		565
	636	4J-9224	372		549		573
	637		374		550		575
	683	4J-9225	384		551		577
	697	4J-9780	579		552	4T-4538	547
4F-7952	250	4K-0367	625		553		548
	254		626		554	4T-5613	381
4H-1641	768		627		556		386
4H-2558	104		628		557		387
	106		629	4T-4218	551		388
	108		630	4T-4513	561	4T-6780	379
4I-3038	196		631		569		382
4J-0520	227		632	4T-4516	559	4T-6907	384

▶ **PRIMARY REFERENCE**

PART NUMBER INDEX

Part	Page	Part	Page	Part	Page	Part	Page
4T-7807	305		474		483	5P-0767	747
	559		487		484		749
	561		513		485	5P-1042	452
	563		516		486	5P-1076	809
	565		541		505	5P-1420	90
	567		707		545	5P-1442	90
	569		709		546		293
	571		712		558		539
	573		755		559	5P-1505	300
	575		761		561		474
	577		787		565		479
4T-8054	372		789		571		539
	374		809		573	5P-1506	479
4T-8588	376	5C-8813	797		575	5P-2199	579
4V-2264	776	5C-9553	176		577	5P-3915	698
4V-5091	338		363	5L-3308	703	5P-4115	336
4W-4065	709		364		705		363
4W-9972	189		474		711		364
			761	5L-9018	221		474
		5D-1026	25	5L-9023	567		687
5			300		569		698
			443		571		791
5B-9079	50		444	5L-9656	221	5P-4116	56
5B-9318	305		474	5M-2894	547		57
	551		479		548		59
	552		539		549		61
	553		747		550		100
	554		749		551		108
	556	5D-4822	338		552		306
	557	5D-8159	686		553		307
	559	5F-3106	528		554		479
	561	5F-5434	237		556		603
	563	5F-9144	69		557		707
	565		72	5M-3062	778		709
	567	5G-3244	117	5P-0078	90		712
	569		120	5P-0370	599		731
	571		122	5P-0372	225		733
	573		124	5P-0537	561		757
	575		126		563		791
	577	5G-7820	195		567	5P-4295	300
5B-9385	384	5G-8108	292		569	5P-4868	73
5C-2874	128	5H-3193	359		571		80
	189	5H-8848	379	5P-0540	222		81
	787	5J-4986	385	5P-0598	445		82
	789	5J-5402	386	5P-0599	440		479
	793		387		441	5P-5599	581
	795	5J-7010	384		451	5P-5637	791
5C-2890	86	5J-7878	385		458	5P-5923	198
	117	5J-8156	372		501	5P-5924	749
	131		374		502	5P-6011	700
	171	5K-0906	477		505	5P-6129	67
	189	5K-5338	300		509		70
	333	5K-9090	371		511	5P-6718	43
	338		408		513		250
	350		409		516		256
	351		412	5P-0600	73	5P-7462	300
	363		416	5P-0743	390	5P-7463	300
	364		420	5P-0747	104	5P-7464	441
5C-7261	115		424		106		466
	199		428		108		468
	292		432		110		470
	297		436	5P-0761	104		472
	298		441		106		502
	299		479		108		505
	338		482		110	5P-7465	441

PART NUMBER INDEX

Part	Page	Part	Page	Part	Page	Part	Page
	466		428	6E-0122	382		96
	468		432	6E-0131	565	6I-0363	43
	470		436	6E-0358	371	6I-0364	168
	472		441		559	6I-0423	36
	502		502		561	6I-0454	103
	505		505		565	6I-0501	49
5P-7466	408	5P-8245	35		571	6I-0502	49
	412		763		573	6I-0563	83
	416		765		575		84
	420		768		577	6I-0572	29
	424	5P-8250	382	6E-1478	386		43
	428		384		387		54
	432	5P-8444	408	6E-3268	582		76
	436		412	6E-3269	582		84
	441		417	6E-3272	582	6I-0594	103
	502		420	6E-3273	582		168
	505		424	6E-3274	582	6I-0645	37
5P-7467	408		428	6E-3275	582		54
	412		432	6E-3276	582	6I-0789	37
	416		436	6E-3341	536	6I-0846	25
	420	5P-8500	713	6E-3583	579	6I-0847	36
	424		802	6E-4000	533	6I-0917	25
	428		803	6E-4003	533	6I-1418	115
	432	5P-8502	802	6E-4004	533	6I-1497	51
	436		803	6E-4007	536	6I-4374	54
	441	5P-9000	338	6E-4009	536	6J-1972	379
	502		721	6E-4317	371		382
	505		722		559	6J-2420	388
5P-7468	408		758		561	6J-2680	479
	412	5P-9262	582		563	6J-2797	386
	416	5S-7379	768		567		387
	420	5V-2545	241		569	6J-5731	379
	424		242		571	6J-5733	379
	428		243	6E-5759	579		382
	432		244	6E-5760	579	6K-0806	115
	436	5W-9411	78	6E-6151	536		176
	502		79	6E-6154	536		185
	505			6E-6155	536		187
5P-7469	408			6E-6157	536		189
	412	**6**		6E-6158	536		198
	417			6E-6174	533		249
	420	6B-0933	103	6E-6175	533		326
	424	6B-4661	58	6E-6176	533		329
	428	6C-3677	767	6E-6285	575		797
	432	6C-3680	700	6E-6527	582	6K-8178	90
	436		743	6E-6528	581		477
	502	6D-0337	►266		582	6L-4725	698
	505		267	6F-7037	382		741
5P-7657	198		272	6H-3616	40	6L-6208	376
5P-7854	232		273	6I-0217	37	6N-6984	67
	233		274		43		70
	749		275		63	6P-8855	747
5P-7921	700		281		84		749
	743		282		93	6R-3299	486
5P-7957	713		285		96	6R-7490	776
5P-7958	326		286	6I-0254	63	6S-6646	600
	329		287	6I-0260	25	6S-8620	292
	713		288		43	6T-9142	249
5P-8066	250	6D-0443	266		53	6T-9143	249
	254		267		54	6T-9144	249
5P-8112	408	6D-3479	539		93	6T-9145	249
	412	6D-4246	300		96	6T-9146	249
	417		474		103	6T-9147	249
	420		749	6I-0289	43	6T-9160	248
	424	6D-7573	90	6I-0291	93	6T-9163	249

► **PRIMARY REFERENCE**

PART NUMBER INDEX

Part	Page	Part	Page	Part	Page	Part	Page
	254		741		455		448
6T-9164	249		743		459		450
	254	6V-6813	698		466		459
6T-9165	249		741		468		487
	254	6V-7238	390		470		521
6T-9166	249	6V-7357	189		472	6V-8627	292
	254		700		489		451
6T-9194	248		743		491		455
	255	6V-7420	452		493		459
6T-9196	248		455		495	6V-8628	300
	255	6V-7687	326		497		477
6T-9202	254		329		499	6V-8632	458
6V-0683	300		586	6V-8398	300		509
6V-0826	497		588		372		511
	499		604		374		513
6V-0852	347		613		379		516
	474	6V-7731	248		385	6V-8634	300
	479	6V-7743	316		388	6V-8635	409
6V-1249	441		709		398		412
	466		787		400		416
	468		789		402		420
	470		793		405		424
	472		795		428		428
	502	6V-7744	317		436		432
	505		318		441		436
6V-1363	78		352		446		482
	79		354		448	6V-8636	451
6V-2323	533		356		450		466
6V-2410	776		359		451		468
6V-2687	702		365		454		470
6V-2722	104		367		455		472
	106		398		458		497
	108		400		459		499
6V-3213	586		408		462	6V-8637	440
	594		417		464		452
	596		452		466		497
	606	6V-8097	249		468		499
	639		254		470	6V-8638	451
	640	6V-8144	586		472		454
	642		686		487		497
	663		689		497		499
	664	6V-8185	778		499	6V-8639	458
	665	6V-8186	761		502	6V-8640	451
6V-3582	73	6V-8210	249		505	6V-8641	292
6V-3965	347		255		509		451
	474	6V-8227	298		511		474
	479	6V-8236	581		513	6V-8642	454
6V-4364	594	6V-8237	379		516		458
	596		388		519	6V-8647	300
	613	6V-8335	248		521		347
	639		256	6V-8455	231		477
	640		365	6V-8500	248	6V-8713	398
	642		367	6V-8553	90		400
	663	6V-8344	604	6V-8555	452		402
	664		613		455		404
	665	6V-8352	582		459		405
6V-4589	248	6V-8363	214	6V-8556	452		407
	254	6V-8370	214	6V-8560	90		408
6V-5100	250	6V-8378	173	6V-8625	487		416
	255		193		509		446
6V-5653	479	6V-8397	102		511		448
	539		300		513		451
6V-5683	533		443		516		454
6V-6717	698		444		519		458
	700		451	6V-8626	445		462

► **PRIMARY REFERENCE**

PART NUMBER INDEX

Part	Page
	464
	501
	519
	521
6V-8716	59
	61
6V-8724	489
	491
	493
	495
6V-8757	249
	255
6V-8759	290
6V-8774	489
	491
	493
	495
6V-8781	451
6V-8785	484
	545
	546
6V-8788	489
	491
	493
	495
6V-8789	509
	511
6V-8792	428
	436
	505
6V-8837	117
6V-8932	354
6V-8937	452
6V-8938	455
	459
6V-8941	451
6V-8945	428
	436
	505
6V-8987	489
	491
	493
	495
6V-8995	441
6V-8997	441
6V-9002	509
	511
	513
	516
6V-9007	497
	499
	502
	505
6V-9168	443
	444
	489
	491
	493
	495
6V-9169	398
	400
	402
	405
	441
	502
	505
6V-9170	398
	400
6V-9172	408
	412
	417
	420
	424
	428
	432
	436
6V-9178	248
	260
6V-9182	59
	61
6V-9189	291
	529
	532
	757
6V-9632	86
	298
	336
	698
	776
6V-9649	408
	416
	424
	432
6V-9746	59
	61
	376
	398
	400
	402
	404
	405
	407
	408
	412
	416
	417
	420
	424
	428
	432
	436
	440
	441
	451
	452
	479
	486
	497
	502
	505
6V-9807	443
	444
6V-9828	474
6V-9830	462
	464
6V-9831	446
	448
	455
	459
6V-9833	505
6V-9838	446
	448
	452
	455
	459
	519
6V-9839	452
6V-9840	482
	483
	485
	486
6V-9849	477
	513
	516
6V-9850	300
6V-9852	459
	521
6V-9854	408
	412
	416
	420
	479
6V-9872	102
6V-9873	487
6Y-1192	255
6Y-1341	250
6Y-1896	250
	256
6Y-2035	248
6Y-2326	248
6Y-2736	249
6Y-2737	249
6Y-7652	220
6Y-7929	255
6Y-7957	248
	256
6Y-9915	41
	42

7

Part	Page
7C-0351	43
7C-1224	43
7C-1281	25
7C-4616	37
7D-7233	51
	474
	479
7E-3870	77
7F-3400	713
7F-6998	749
7G-1060	198
7I-5486	468
7J-0204	305
	559
	561
	563
	565
	567
	569
	571
	573
	575
7J-9108	381
	398
	400
	402
	404
	405
	407
	408
	416
	428
	436
	440
	445
	446
	448
	450
	451
	452
	454
	455
	458
	459
	462
	464
	487
	501
	502
	505
	509
	511
	513
	516
	519
	521
7J-9885	372
	374
7K-1181	59
	61
	86
	104
	106
	108
	176
	185
	187
	189
	203
	300
	446
	448
	454
	458
	462
	464
	479
	487
	519
	521
7K-9205	324
7M-0242	291
7M-8485	59
	61
	305

► **PRIMARY REFERENCE**

PART NUMBER INDEX

Part	Page
	408
	409
	412
	416
	420
	424
	428
	432
	436
	479
	482
	483
	484
	485
	486
	545
	546
	558
7N-5274	104
	106
	108
	110
7N-7779	296
7N-7780	296
7N-9737	296
7R-8239	295
7S-3916	408
	412
	417
	420
	424
	428
	432
	436
7S-3919	408
	412
	417
	420
	424
	428
	432
	436
7T-0093	700
	743
7T-0525	338
7T-1099	298
	308
	539
	776
7T-1342	584
7T-2646	249
	254
7T-2651	250
	254
7T-3017	248
7T-3018	248
7T-3021	248
7T-3022	248
7T-3034	249
7T-3051	249
7T-3109	250
7T-3111	249
7T-3119	249
7T-3195	249
	254
7T-3249	250
7T-3251	249
	256
7T-3253	250
	256
7T-4532	714
7T-4848	198
7T-6087	166
7T-6088	166
7T-6090	166
7T-6092	166
7T-6093	166
7T-6099	166
7T-6652	220
7T-6653	221
7T-6654	221
7T-6655	255
7T-6799	758
7T-7621	221
7T-8895	307
	308
7T-9987	104
	110
7W-1176	36
7W-2326	51
7W-2632	103
7W-3556	254
7W-4634	49
7W-4642	36
7X-0465	363
	364
7X-0481	778
7X-0546	762
7X-0572	311
7X-0578	308
7X-0579	65
	66
	338
	716
7X-0603	67
	70
7X-0622	778
7X-0818	115
7X-2049	700
7X-2393	709
	787
	789
7X-2444	474
7X-2465	324
7X-2497	731
	733
7X-2538	487
7X-2553	245
	246
7X-2554	336
7X-2568	311
7X-2570	237
7X-3164	451
	454
7X-3166	451
7X-3229	804
	805
	807
7X-4741	250
	254
7X-4744	248
	260
7X-7644	804
	805
7X-7729	51
	61
	104
	106
	110
	199
	326
	329
	336
	352
	354
	695
	696
	785
7X-9065	185
	187
7Y-3883	198
7Y-4224	579
	8
8B-1419	225
8B-2377	571
8B-6127	90
8B-7121	678
8C-0572	69
	72
	767
8C-3056	189
8C-3291	320
8C-3443	485
8C-4447	806
8C-4987	225
	352
	356
	359
	361
	362
	365
	367
8C-5457	166
8C-5723	483
8C-5748	248
	254
8C-7110	533
8C-8418	236
8C-8451	797
8C-8478	312
	313
	314
	315
8C-8522	316
8C-8545	254
8C-8992	762
8C-9778	166
8C-9783	166
8D-2707	266
	267
8D-5294	603
8E-1118	178
8E-3081	466
8E-5707	248
	255
8F-0212	561
	567
8F-1434	128
	166
	173
	189
	193
	214
	809
8F-6302	567
8F-6711	324
8F-8151	58
8F-8882	388
8H-0707	559
	563
	565
	573
	575
	577
8H-1607	221
8H-7521	386
	387
8I-4721	117
8J-0112	384
8J-2574	381
	382
8J-4455	166
8L-2746	248
	254
8L-2779	262
	263
	264
	265
8L-8413	101
	110
	133
8M-2770	320
8M-2773	452
8M-3175	365
	367
8M-8157	221
8N-0869	104
	106
	108
	110
8N-2694	78
8Q-4396	144
8R-0768	108
8R-2916	304
8R-6111	178
8R-6263	296
8S-0023	232
	233
8S-0024	232
	233
8S-3020	110
8S-4710	561
8S-4734	291
8S-4740	221
8S-7803	702
	707
	709

► **PRIMARY REFERENCE**

PART NUMBER INDEX

Part	Page
	767
	770
	772
	778
8S-8158	236
8S-9151	220
8T-0144	677
	678
8T-0154	390
8T-0271	254
8T-0276	291
8T-0287	809
8T-0328	173
	189
	193
	363
	364
8T-0352	155
	158
	178
8T-0389	120
	122
	124
	126
	525
	695
	696
8T-0404	464
8T-0643	256
8T-0785	372
	374
	385
8T-0789	785
8T-0799	241
8T-1118	785
8T-1159	90
8T-1580	249
	254
8T-1581	249
	254
8T-1605	372
	374
8T-1683	300
8T-1686	300
	487
8T-1779	489
	491
	493
	495
8T-1885	509
	511
	513
	516
8T-1886	509
	511
	513
	516
8T-1887	440
	452
	472
8T-1888	440
	452
	472
8T-1889	408
	412
	417
	420
	424
	428
	432
	436
	441
	497
	499
	502
	505
8T-1890	409
	412
	417
	420
	424
	428
	432
	436
	441
	497
	499
	502
	505
8T-1891	459
	466
	468
	470
8T-1892	459
	466
	468
	470
8T-2193	254
8T-2360	305
	559
	561
	563
	565
	567
	569
	571
	573
	575
	577
8T-2361	559
	561
	563
	565
	567
	569
	571
	573
	575
	577
8T-2530	459
8T-2563	73
8T-2658	196
8T-2659	183
	185
	187
	203
	758
8T-2910	306
8T-3001	455
8T-3444	466
	468
	470
	472
8T-3490	51
	83
	308
	336
	338
	408
	416
	454
	462
	479
	603
	749
8T-3612	86
	100
	308
	336
	603
	731
	733
8T-3647	716
8T-3652	326
	329
8T-3851	586
8T-3998	719
	720
	723
	726
8T-4001	313
	314
	315
	320
	324
8T-4121	41
	42
	59
	77
	83
	90
	99
	106
	146
	149
	152
	155
	158
	166
	173
	178
	189
	199
	203
	232
	233
	297
	298
	300
	308
	317
	318
	320
	326
	329
	334
	335
	336
	342
	343
	352
	354
	356
	359
	361
	362
	365
	367
	398
	400
	402
	404
	405
	407
	409
	412
	417
	420
	424
	428
	432
	436
	440
	446
	448
	450
	452
	455
	459
	462
	464
	466
	468
	470
	472
	474
	477
	479
	487
	497
	499
	502
	505
	509
	511
	513
	516
	519
	521
	525
	526
	529
	530
	531
	532
	539
	715
	729
	747

► **PRIMARY REFERENCE**

PART NUMBER INDEX

Part	Page
	749
	751
	752
	776
	785
8T-4122	317
	318
	320
	528
	598
	609
	611
	683
	684
8T-4123	312
	313
	314
	315
8T-4131	237
8T-4132	41
	42
	320
	598
8T-4133	51
	67
	70
	83
	104
	106
	110
	118
	119
	133
	136
	138
	166
	173
	178
	185
	199
	203
	225
	292
	316
	326
	329
	336
	352
	354
	356
	359
	361
	362
	365
	367
	409
	412
	417
	420
	424
	428
	432
	436
	446
	448
	455
	459
	474
	715
	745
	749
8T-4136	51
	59
	61
	77
	83
	99
	189
	199
	232
	233
	297
	298
	300
	308
	326
	329
	336
	342
	343
	398
	400
	402
	404
	405
	407
	409
	412
	417
	420
	424
	428
	432
	436
	446
	448
	450
	455
	459
	462
	464
	466
	468
	470
	472
	479
	502
	505
	509
	511
	513
	516
	519
	521
	524
	529
	530
	531
	532
	539
	749
8T-4137	59
	61
	104
	106
	110
	146
	149
	152
	155
	158
	189
	203
	320
	334
	335
	336
	409
	412
	417
	420
	440
	441
	446
	448
	452
	455
	459
	462
	464
	477
	479
	487
	497
	499
	513
	516
	521
	539
	729
	747
	749
	751
	752
	776
8T-4138	78
	79
	86
	144
	161
	189
	214
	292
	333
	336
	352
	354
	791
8T-4139	326
	329
	409
	412
	417
	420
	424
	429
	432
	437
	441
	487
	502
	505
	539
	775
8T-4167	313
	314
	315
	320
	324
8T-4171	199
	687
	731
	733
	784
8T-4172	352
	354
8T-4174	41
	42
	320
8T-4176	586
8T-4179	90
	176
	199
	539
	609
	611
	809
8T-4180	731
	733
8T-4181	731
	733
8T-4182	336
	479
	695
	696
8T-4183	100
	306
	307
	308
	331
	479
	526
8T-4184	412
	420
	424
	429
	432
	437
	502
	505
	609
	611
8T-4185	526
	715
8T-4186	67
	70
	365
	367
	525
	526

► **PRIMARY REFERENCE**

PART NUMBER INDEX

Part	Page
	715
8T-4189	59
	61
	73
	100
	189
	292
	297
	298
	306
	307
	319
	338
	474
	479
	707
	709
	712
	747
	749
	752
8T-4191	185
	322
	323
	336
	539
8T-4192	59
	61
	466
	468
	470
	472
	609
	611
8T-4193	598
	605
8T-4195	51
	83
	173
	203
	317
	318
	326
	329
	352
	354
	356
	359
	365
	367
	409
	412
	417
	420
	424
	429
	432
	437
	455
	459
	462
	474
	479
	502
	505
	519
	521
	715
	745
	749
8T-4196	41
	42
	99
	336
	455
	519
8T-4198	525
8T-4199	195
8T-4200	65
	66
	69
	72
	100
	231
	292
	306
	307
	707
	709
	716
	763
	765
	768
	791
8T-4201	785
8T-4205	78
	79
	86
	131
	161
	164
	189
	199
	214
	292
	316
	333
	338
	363
	364
	700
	743
	761
	776
	785
	797
8T-4222	67
	70
	317
	318
	336
8T-4223	59
	61
	90
	100
	104
	106
	176
	199
	226
	232
	233
	241
	245
	246
	306
	307
	308
	331
	359
	409
	412
	417
	420
	424
	429
	432
	437
	441
	466
	468
	470
	472
	479
	487
	502
	505
	524
	526
	539
	609
	611
	715
	775
	791
	809
8T-4224	56
	57
	69
	72
	73
	86
	100
	144
	189
	195
	199
	231
	291
	292
	295
	297
	298
	299
	306
	307
	326
	329
	336
	338
	356
	452
	474
	477
	487
8T-4244	225
	409
	412
	417
	420
	424
	429
	432
	437
	715
	809
8T-4649	320
8T-4742	86
	350
	351
	746
8T-4744	86
	350
	351
	746
8T-4753	128
8T-4773	352
	354
	356
	359
	361
	362
8T-4778	318
8T-4779	317
8T-4815	225
	352
	354
	356
	359
	361
	362
	365
	367
8T-4821	326
	329
8T-4837	326
	329
8T-4908	56
	57
	67
	70
	86
	195
	326
	329
	715
	758
8T-4956	226
	232
	233
	245
	246

► **PRIMARY REFERENCE**

PART NUMBER INDEX

Part	Page
	425
	429
	433
	437
8T-4970	797
8T-4971	746
	785
8T-4985	195
8T-5001	588
	604
	613
	715
8T-5005	104
	106
	110
	120
	122
	124
	126
	398
	400
8T-5027	161
8T-5041	237
8T-5063	225
8T-5091	338
8T-5092	326
	329
8T-5093	133
	136
	138
	140
	142
8T-5439	237
	276
	277
	278
	280
	283
	284
8T-6356	479
8T-6431	365
	367
8T-6451	451
8T-6466	61
	352
	354
	452
8T-6656	808
8T-6684	441
	479
8T-6696	455
8T-6726	80
	81
	82
	448
	450
	454
	458
	519
8T-6760	221
8T-6868	232
	233
8T-6869	299
	514
	517
8T-6870	529
	532
8T-6902	338
	761
8T-6904	338
8T-6912	455
	459
8T-7087	502
	505
8T-7329	452
8T-7338	528
	609
	611
8T-7529	59
	61
	479
8T-7547	73
	292
	336
	356
8T-7566	768
8T-7876	54
8T-7963	108
	306
	307
	452
	455
	459
8T-7971	609
	611
8T-8390	376
8T-8549	237
8T-8641	702
8T-8729	217
	264
	391
	567
8T-8730	112
8T-8737	120
	122
	124
	126
	133
	136
	138
	146
	149
	152
	155
	158
	165
	189
	198
	203
	263
	264
	265
	754
8T-8799	189
8T-8894	297
	298
	326
	329
8T-9364	778
8T-9402	80
	82
8T-9405	528
8T-9501	226
	338
	359
	763
	765
8T-9530	17
	18
	19
8T-9655	115
8U-6970	329
8W-4002	458
8X-5489	86
8X-5561	454
8Y-4489	588
	592
8Y-5737	698
	741
8Y-5904	►702
	763
	765
	767
8Y-5906	702
8Y-5988	702
8Y-6028	702
8Y-6364	802
	803
8Y-6386	731
	733
8Y-6388	717
	718
8Y-6967	698
8Y-7203	326
	329
8Y-7204	326
	329
8Y-7263	733
8Y-7264	731
8Y-7287	793
	795
8Y-7306	731
	733
8Y-7309	709
	787
	789
8Y-7310	731
	733
8Y-7444	707
	709
8Y-7833	173
	176
8Y-8081	104
	106
	108
	110
8Y-8674	497
	499
8Y-8675	497
	499
9B-7233	185
	187
	781
	782
9C-4457	778
9C-8895	324
9F-2167	220
9F-2247	96
9G-3695	755
9G-8909	110
9G-9155	539
9J-1874	711
9K-5635	298
9M-0164	539
9M-1974	248
9M-2307	128
9M-4814	747
	749
9M-4972	749
9M-6738	454
	497
	499
9M-7958	51
9M-7959	698
	741
9M-8406	300
	474
	477
	747
	749
9N-0869	115
9P-1872	232
	233
9P-6571	719
	720
	723
	726
9P-9150	248
	254
9R-0109	586
	590
	686
	689
9R-0111	586
	621
	622
	666
	667
	668
	669
9R-0119	586
9R-0139	376
	385
	592
	613
9R-0147	594
9R-0153	381
	388
9R-0158	586
	594
	596
	639
	640
	642
	663
	664

9

► PRIMARY REFERENCE

PART NUMBER INDEX

Part	Page	Part	Page	Part	Page	Part	Page
	665		609	9R-2053	509	9R-2490	221
	690		611		511	9R-2491	221
	691		613		513	9R-2492	221
	692	9R-0413	324		516	9R-2493	221
9R-0162	372	9R-0418	466	9R-2385	▶129	9R-2494	221
	374		468		146	9R-2495	221
	594	9R-0481	324		149	9R-2496	221
	596	9R-0823	220		152	9R-2497	221
	609	9R-0868	▶605		155	9R-2498	221
	613	9R-0883	220		158	9R-2499	221
	626	9R-1004	429	9R-2404	344	9R-2501	221
	627		437	9R-2407	220	9R-2502	221
	628		464	9R-2417	220	9R-2503	221
	629		502	9R-2418	220	9R-2504	221
	631		505	9R-2419	220	9R-2505	221
	632	9R-1005	429	9R-2420	220	9R-2506	221
	633		437	9R-2421	220	9R-2507	221
	634		464	9R-2424	221	9R-2508	221
	635		502	9R-2425	220	9R-2512	221
	636		505	9R-2426	222	9R-2672	408
	637	9R-1034	521	9R-2427	220		416
	638	9R-1233	▶331	9R-2428	220	9R-2806	225
	644	9R-1496	586	9R-2429	220		291
	645		623	9R-2430	220		354
	646		624	9R-2431	220	9R-2807	225
	647		670	9R-2432	220		291
	649		672	9R-2433	220		292
	650		674	9R-2434	220		354
	651		675	9R-2435	222	9R-2821	586
	652	9R-1499	146	9R-2436	222	9R-2958	609
	653		149	9R-2437	222		611
	654		152	9R-2438	222	9R-2959	609
	655		155	9R-2439	222		611
	656		158	9R-2440	222	9R-3051	225
	657	9R-1502	604	9R-2441	222	9R-3092	594
	659		613	9R-2442	222	9R-3203	784
	660	9R-1510	594	9R-2443	222	9R-3204	784
	661		596	9R-2444	222	9R-3205	784
	662		613	9R-2445	222	9R-3469	785
9R-0320	625		639	9R-2446	220	9R-3712	▶466
	630		640	9R-2447	220		616
	641		642	9R-2448	220	9R-4066	586
	643		663	9R-2449	220		590
	648		664	9R-2450	220		591
	658		665	9R-2451	220	9R-4110	324
9R-0321	381		690	9R-2452	220	9R-4485	621
	388		691	9R-2453	220		622
9R-0336	621	9R-1581	225	9R-2454	220	9R-4486	621
	622	9R-1765	359	9R-2455	220		622
9R-0343	621	9R-1766	226	9R-2456	220	9R-4619	440
	622		359	9R-2457	220		451
9R-0366	324	9R-1767	226	9R-2458	220	9R-4668	▶527
	326		359	9R-2459	220		615
	329	9R-1948	783	9R-2460	221		616
9R-0371	621	9R-1975	489	9R-2466	222		618
	622		491	9R-2474	221		619
9R-0372	621		493	9R-2480	221		620
	622		495	9R-2482	221	9R-4670	668
9R-0376	622	9R-1976	489	9R-2483	221		669
	624		491	9R-2484	221		670
9R-0393	320		493	9R-2485	221		672
9R-0394	320		495	9R-2486	221	9R-4672	622
9R-0411	586	9R-2004	445	9R-2487	222		624
	594		497	9R-2488	221		668
	596		499	9R-2489	221		669

▶ **PRIMARY REFERENCE**

PART NUMBER INDEX

Part	Page	Part	Page	Part	Page	Part	Page
	670		667	9R-8663	613	9R-9403	221
	672		674	9R-8760	326	9R-9408	220
9R-4675	666		675		329	9R-9409	220
	667	9R-5788	▶468	9R-8874	529	9R-9410	220
	668		615		532	9R-9505	386
	669	9R-5832	621	9R-8875	529		387
	670		623		532	9R-9568	129
	672	9R-5866	▶697	9R-8987	630	9R-9702	237
	674	9R-5948	441		631	9R-9812	588
	675		451		632	9R-9868	226
9R-4676	666		454		633		359
	667		501		634	9R-9869	320
	668		502		635	9R-9901	352
	669		505		636		354
	670		519		637		356
	672	9R-5971	466		638		698
	674	9R-5989	▶622	9R-8988	630		741
	675	9R-6014	590		631	9R-9925	539
9R-4677	527	9R-6140	600		632	9R-9926	502
9R-4678	527	9R-6162	690		633		505
9R-5202	▶621	9R-6163	604		634	9R-9997	334
9R-5205	621	9R-6247	136		635	9R-9998	334
	622		138		636	9R-9999	15
	623		140		637		▶334
	624		142		638	9S-1315	600
9R-5206	621		146	9R-9028	601	9S-4183	404
	622		149		602		407
	623		152	9R-9105	596		530
	624		155		692		543
9R-5219	220		158	9R-9187	592	9S-4185	254
9R-5271	670	9R-6481	277	9R-9198	458		509
	672	9R-6602	222		462		511
	674	9R-6671	221		521		513
	675	9R-6690	586	9R-9208	489		516
9R-5294	666	9R-6785	606		491	9S-4191	99
	667	9R-7069	458		493		102
	668	9R-7070	450		495		248
	669	9R-7071	450	9R-9209	489		255
	670	9R-7092	324		491		474
	672	9R-7138	292		493	9S-8002	371
	674	9R-7215	384		495		579
	675	9R-7240	101	9R-9210	501	9S-8004	371
9R-5301	586	9R-7701	324	9R-9211	501		579
	599	9R-7803	446	9R-9218	441	9S-8006	305
	600		448		502		371
	601		450		505		533
	602		455	9R-9221	441		559
9R-5313	621		459		502		561
	623		462		505		563
	666		519	9R-9253	502	9S-8007	579
	667		521		505	9S-8009	565
	674	9R-7882	326	9R-9254	592		567
	675		329		611		569
9R-5320	▶683	9R-7891	611	9R-9285	451		571
9R-5321	▶684	9R-7902	662	9R-9289	497		573
9R-5386	324	9R-7960	372		499		575
9R-5387	324	9R-8189	292	9R-9290	497		577
9R-5429	326	9R-8291	326		499	9S-8752	547
	329		329	9R-9316	458		548
9R-5437	326	9R-8390	586		521		549
	329	9R-8523	588	9R-9319	462		550
9R-5567	225	9R-8594	326	9R-9334	292		551
9R-5616	707		329	9R-9375	458		552
	709	9R-8599	326	9R-9398	221		553
9R-5786	666		329	9R-9401	221		554

▶ **PRIMARY REFERENCE**

PART NUMBER INDEX

Part	Page
	556
	557
9S-9334	305
9T-0637	545
	557
9T-0642	567
	571
9T-0644	567
	569
	571
9T-0655	305
9T-0656	305
9T-0704	559
	571
9T-0805	384
9T-2212	379
	382
9T-2883	386
	387
9T-4007	382
9T-4008	382
9T-4009	382
9T-5444	376
9T-5455	458
	►579
9T-7309	567
	569
	571
9U-2277	171
	203
9U-8263	776
9U-8875	255
9U-8886	248
	255
	528
9W-0607	118
	119
	133
	136
	138
	140
	142
9W-0717	254
	255
	256
9W-1880	638
9W-3324	120
	122
	124
	126
9W-4363	470
9W-5460	250
	254
9W-8215	684
9W-9953	41
	42
9X-0199	214
9X-1046	756
9X-1054	189
9X-1386	256
9X-1813	115
9X-2027	563
9X-2036	166
9X-2038	352
	354
	356
	719
9X-2040	509
	511
	514
	517
9X-2041	776
9X-2042	292
	320
	698
	730
	735
	737
	741
9X-2043	291
	363
	364
9X-2044	86
	171
	297
	298
	338
	698
	719
	720
	723
	726
	741
	783
	791
9X-2045	352
	354
	356
	698
	709
	728
	739
	740
	741
	758
	760
	776
	787
	789
	793
	795
9X-2065	361
9X-2092	712
9X-2132	791
9X-2334	806
9X-2842	761
9X-3401	138
	226
9X-3965	443
	444
9X-4244	118
	119
	120
	122
	124
	126
9X-4611	386
	387
9X-5617	112
9X-6165	171
9X-6383	791
9X-6562	804
9X-6579	429
	437
	505
9X-6615	250
	256
9X-6772	199
9X-7260	376
9X-7380	749
9X-7381	749
9X-7382	749
9X-7383	749
9X-7385	714
9X-8118	131
	132
9X-8121	131
	132
9X-8139	131
	132
9X-8256	176
	352
	354
9X-8257	41
	42
	245
	246
	336
	605
9X-8399	381
9X-8873	763
	765
	768
9X-8880	221
9X-8883	221
9X-9865	120
	122
	124
	126
9Y-5015	32
0	
004-6557	58
004-6810	58
005-0469	249
005-0471	249
009-2062	255
014-5645	250
030-1957	221
030-3239	324
031-0214	559
	561
	563
	565
	567
	569
	571
	573
	575
031-4155	577
	767
	770
	772
031-5085	559
	565
	573
	575
	577
032-1557	298
032-8487	61
032-9090	27
032-9091	27
033-6043	582
033-6044	581
033-6783	61
033-7687	35
034-1432	19
	590
034-3679	300
035-8017	93
035-8068	29
038-9317	104
	106
	110
039-9133	295
061-8639	262
	263
	264
	265
067-6002	29
067-6006	29
	32
067-6043	29
067-6095	50
067-6123	36
067-6179	37
067-6213	43
067-6264	93
067-6265	93
067-6366	103
067-6873	27
067-6874	27
067-6897	37
067-6899	37
067-6900	37
067-6999	93
069-4080	99
069-4707	218
081-6352	455
	459
082-2817	804
083-4419	533
084-4277	776
090-5725	474
091-5928	677
	682
092-2992	129
	►130
092-3635	300
092-6279	130
095-0641	761
095-0733	198
095-0741	183
	185

► **PRIMARY REFERENCE**

PART NUMBER INDEX

Part	Page
	187
095-0756	176
095-0878	767
	770
	772
095-0924	238
095-0927	248
	255
095-0928	255
095-9805	533
096-4415	203
	745
099-0492	183
099-3649	338
1	
100-3246	120
	122
	124
	126
100-3247	120
	122
100-3248	120
	124
	126
100-3249	122
100-3250	120
	122
	124
	126
100-3251	120
	122
	124
	126
100-3253	120
	122
	124
	126
100-3254	120
	122
	124
	126
100-3255	120
	122
	124
	126
100-3320	189
100-3563	561
100-3564	561
100-3566	561
100-3567	561
	569
100-3685	166
100-3751	37
	63
100-4112	166
100-4113	166
100-4115	166
100-4118	166
100-4119	166
100-4461	52
100-4830	39
	93
	96
100-4841	25
	29
100-7442	466
100-7443	468
100-7444	468
100-7608	787
	789
	793
	795
100-8451	103
101-0003	799
101-0333	806
101-0745	797
101-0862	502
	505
101-0863	408
	412
	416
	420
	424
	428
	432
	436
	806
101-1787	347
101-2788	806
101-2987	40
101-3617	36
101-3771	43
101-3895	54
101-4015	326
	329
101-4016	326
	329
101-4020	326
101-4411	687
101-4412	687
101-4413	687
101-4414	687
101-4415	18
	688
101-4416	332
101-4419	18
	▶809
101-4420	809
101-4421	809
101-4422	809
101-4423	809
101-4424	809
101-4447	17
	18
	▶342
101-4448	▶128
	342
	343
101-4449	342
	343
101-4456	342
102-1940	326
	329
102-2940	797
102-3582	386
	387
102-4176	108
102-4560	324
102-8801	176
	180
	198
	754
102-8802	101
	115
	140
	142
	144
	171
	173
	176
	181
	189
	193
	196
	198
	203
	206
	208
	210
	212
	215
	217
	226
	256
	262
	263
	264
	265
	359
	487
	567
	569
	571
	584
	585
102-8803	115
	144
	165
	185
	187
	189
	195
	198
	203
	206
	208
	210
	212
	214
	263
	264
	265
	391
	392
	785
102-8804	115
	129
	133
	136
	138
	173
	176
102-8805	120
	122
	124
	126
	133
	136
	138
	140
	142
	176
	181
	183
	198
	206
	208
	210
	212
	755
	797
102-8806	178
	198
	203
	753
102-8807	261
103-2532	804
103-4754	305
103-4867	225
103-5519	533
	▶581
103-5520	533
104-2091	698
	717
	718
	721
	725
	738
104-3288	248
	255
104-3964	615
	▶666
104-3965	615
	▶667
104-3966	666
104-3967	666
	667
104-5255	▶126
	152
104-6310	615
	616
	619
	685
	▶686
104-6311	686
104-6312	686
104-6313	666
	669

▶ **PRIMARY REFERENCE**

PART NUMBER INDEX

Part	Page
	670
	672
	675
	693
104-6314	666
	669
	670
	672
	675
	693
104-6316	686
104-6317	686
104-9502	▶163
104-9504	163
105-1434	581
105-1435	581
105-1436	581
105-1437	581
105-1438	581
105-1439	581
105-1440	581
105-1441	581
105-2145	582
105-3481	763
	765
	767
105-8034	292
105-8069	133
	136
	138
	140
	142
105-9411	749
106-0401	370
106-0406	370
106-0409	408
	412
	416
	420
	424
	428
	432
	436
106-0421	588
106-0827	18
	19
106-0844	502
	505
106-1251	372
	374
106-2404	17
	▶524
106-2405	524
106-2409	524
106-5813	398
	400
106-5814	398
	400
106-5876	394
	▶462
106-5878	▶312
106-5879	▶313
106-5880	▶314
106-5881	▶315
106-8020	102
106-8704	173
	176
	181
	206
	208
	210
	212
	217
106-8835	93
106-8916	84
106-9387	615
	616
	617
	618
	620
106-9388	666
	669
	670
	672
	675
	693
106-9427	579
106-9430	579
106-9586	248
	260
106-9861	249
	254
107-2066	584
107-5591	226
	359
107-5605	214
107-6696	408
	412
	416
	420
	424
	428
	432
	436
107-6697	329
	408
	416
107-6698	408
	412
	416
	420
	424
	428
	432
	436
107-6699	509
	511
	513
	516
107-6701	408
	412
	416
	420
	424
	428
	432
	436
107-6707	408
	412
	416
	420
	424
	428
	432
	436
107-6708	408
	412
	416
	420
	424
	428
	432
	436
107-6709	408
	412
	416
	420
	424
	428
	432
	436
107-6711	592
	613
107-6715	489
	491
	493
	495
107-6717	408
	416
	424
	428
	432
	436
	505
107-6718	408
	416
	424
	428
	432
	436
	505
107-6719	428
	436
	505
107-6826	241
	242
	243
	244
107-8117	545
	546
	553
108-1587	685
	▶693
108-2989	603
108-3036	616
	▶668
108-3037	668
	669
108-3872	408
	412
	416
	420
	424
	428
	432
	436
108-4311	707
	709
108-8251	705
	706
	▶784
109-0533	365
	367
109-1258	529
	532
109-1259	529
	532
109-1260	408
	412
	416
	420
	424
	428
	432
	436
109-1583	509
	511
	513
	516
109-1633	487
109-1634	487
109-9685	575
	577
110-0037	705
	706
	800
110-2445	73
	479
110-2861	666
	669
	670
	672
	675
	693
110-5602	603
	791
110-6017	16
	▶343
110-6109	698
	741
111-0339	▶586
	597
111-0394	343
111-0483	588
111-0859	34
111-1374	474
111-3422	93
	96
111-3423	93
	96
111-3798	398
	400
111-4331	586
111-4332	586
111-4333	586
111-4334	586
111-4335	586
	591
111-4336	586
111-4337	586

▶ **PRIMARY REFERENCE**

PART NUMBER INDEX

Part	Page
111-4338	586
111-4339	689
111-4340	586
111-4341	586
111-4342	586
111-4343	586
111-4627	171
111-5042	778
111-6795	133
111-6816	133
111-7899	133
	136
	138
	140
	142
	144
	146
	149
	152
	155
	158
	173
	176
	178
	180
	181
	183
	185
	187
	193
	203
	206
	208
	210
	212
	217
	349
	397
	542
	543
	745
111-7906	231
111-7907	▶231
	247
111-8634	▶615
111-8635	▶615
	616
111-8636	▶615
111-8637	▶616
112-0938	▶616
	617
112-0939	▶616
	617
112-0940	▶617
112-0941	▶617
112-0942	▶685
112-0943	586
112-0950	586
112-1773	386
	387
112-1775	670
	672
	674
	675
112-1776	686
112-1777	669
112-1778	616
	▶669
112-1809	▶311
112-1826	396
	397
	▶528
112-1827	16
	▶597
112-1918	619
	▶670
112-1920	▶617
112-1922	619
	620
	▶672
112-1924	618
	▶674
112-1926	619
	620
	▶675
112-1931	▶623
112-1933	▶624
112-1937	▶617
112-1940	▶618
112-1941	▶618
112-4415	336
112-4416	336
112-4417	312
	313
	314
	315
112-4418	313
	314
	315
112-5823	446
	448
	454
	458
112-5827	446
	448
	454
	458
112-5830	454
	519
112-5833	454
	519
112-5841	464
112-5842	464
112-5844	448
112-5847	448
112-6403	392
	▶464
112-9450	785
112-9629	237
113-0018	18
	19
	▶801
113-0020	17
	18
	▶332
113-0081	17
	▶598
113-0920	776
113-1147	221
113-1150	241
113-1151	239
	▶241
113-2662	315
113-4495	311
113-5049	292
113-6349	103
113-7905	314
113-7906	313
113-8087	599
113-8129	63
113-8490	133
	138
	142
	173
	181
	202
	206
	208
	210
	212
113-8491	133
	136
	138
	140
	142
113-8492	178
113-9083	623
	624
113-9084	623
	624
113-9090	600
113-9221	245
	246
114-2579	76
114-3421	17
	18
114-3826	674
	675
114-3836	586
114-4363	36
114-4916	161
	164
114-4917	332
114-6099	324
114-8972	338
114-9262	675
114-9342	801
115-1162	76
115-1615	115
	189
115-1858	598
115-1918	528
116-1316	546
	556
116-4616	462
116-4617	462
116-4825	586
116-7491	183
	185
	187
117-0754	609
	611
117-2911	262
	263
	264
	265
117-3242	300
117-3534	528
117-3535	528
117-3789	727
117-4650	248
117-7414	707
	709
117-7520	466
117-9713	231
117-9887	241
	242
	243
	244
118-1345	670
	672
118-1348	586
	599
118-2228	544
	554
118-2990	320
118-4637	519
118-4638	519
118-4930	▶470
	619
	620
118-5503	721
	725
118-5837	220
118-5839	221
118-6842	306
	307
	▶316
118-6854	306
	307
118-7110	683
118-7286	59
	61
118-7790	214
118-8118	98
118-9039	448
	454
118-9117	221
118-9145	54
119-1530	▶694
119-2110	381
119-3662	189
119-4112	▶472
	618
	619
	620
119-4594	586
	689
119-4595	391
	392
	▶689
119-4740	247
119-5025	86
119-6723	78
	79
119-7771	▶272
	273
119-7772	▶272
	273
119-7773	268

▶ **PRIMARY REFERENCE**

PART NUMBER INDEX

Part	Page
	▶273
119-7776	272
	274
	275
	282
	285
	287
	288
119-7782	268
	269
	▶273
119-7783	▶273
119-7784	273
	▶274
119-7785	273
	274
	281
	286
	288
119-8016	▶104
	309
	310
119-8349	791
119-9398	529
	532
119-9399	529
	532
119-9631	700
120-0147	416
	420
	432
	436
120-1324	446
120-4397	529
	532
120-4553	470
120-4604	477
120-5724	536
120-5726	533
	▶536
120-5727	533
120-5729	533
120-6872	88
120-8413	450
120-8414	450
120-9286	593
120-9289	▶590
	694
120-9332	590
	591
120-9333	590
	591
120-9762	249
	254
120-9763	236
120-9809	446
	448
	455
	459
121-0694	249
	255
121-0697	248
121-0714	248
121-0883	36
121-0885	248
121-0904	248
121-1251	248
121-1253	248
121-2059	248
	255
121-2060	248
	255
121-2061	248
	255
121-2062	249
121-2500	249
	255
121-2511	249
121-2537	249
121-2545	249
121-2603	249
121-2604	249
121-4036	250
	254
	▶261
121-6936	785
121-7385	250
	254
121-7389	250
121-7390	250
121-7391	249
121-7396	248
	254
121-7398	250
	254
121-7399	250
	254
121-7400	250
	254
121-7401	250
	254
121-7402	250
	254
121-7403	250
121-7404	250
121-7405	248
121-9743	791
121-9797	17
	18
	▶599
121-9870	726
121-9875	249
122-0536	408
	412
	416
	420
	424
	428
	432
	436
122-0668	470
122-0669	470
122-1113	474
122-1135	261
122-1644	▶195
	597
122-1645	▶214
122-1647	195
122-1648	195
122-1672	261
122-1876	250
122-1877	248
	255
122-1878	248
	254
122-1879	248
	255
122-1880	249
122-1881	249
122-1882	249
122-1883	249
	256
122-1884	250
	255
122-1885	249
122-1886	250
	255
122-2050	161
122-2051	751
122-2052	751
122-2053	751
122-2054	▶751
122-3649	249
122-3652	248
122-4870	454
	519
122-4871	454
	519
122-4872	446
	448
	454
	458
122-4873	446
	448
	454
	458
122-4954	586
122-5822	458
	521
122-5823	462
122-5865	▶106
	309
122-5923	338
122-6785	250
122-6787	249
	254
122-7137	781
	782
122-8032	600
122-8037	▶600
123-0275	78
	79
123-0428	336
123-0714	249
123-1377	249
	254
123-2918	250
123-2919	250
123-2920	249
	255
123-4065	65
	66
	69
	72
	336
	338
123-4202	▶16
123-4950	102
123-6077	767
	770
	772
123-6620	752
123-7034	326
	329
123-7637	408
	412
	416
	420
	424
	428
	432
	436
123-8670	785
123-8905	248
	254
123-8906	248
	254
123-8907	250
	255
123-8908	250
	255
123-8909	249
	255
123-8910	249
	255
123-8912	248
	255
123-8913	249
	255
124-0312	698
	741
124-0360	604
	613
124-0486	618
124-0487	617
	▶619
124-0488	617
	▶619
124-0489	618
	▶619
124-2456	806
124-3536	45
124-3815	37
	96
124-4913	641
124-5246	586
124-5525	▶591
124-6524	715
124-6612	254
124-8818	549
	▶559
124-9464	289
125-1037	586
125-2632	17
	18
125-3298	180
125-3416	749
125-4594	591
125-7116	668

▶ **PRIMARY REFERENCE**

PART NUMBER INDEX

Part	Page
	670
	672
125-7117	674
	675
125-7894	386
	387
126-1448	586
126-1817	396
	397
126-4224	668
	669
	670
	672
126-4225	666
	667
	674
	675
126-4974	599
126-5476	559
	561
	563
	565
	567
	569
	571
	573
	575
	577
126-5693	322
	607
126-5701	322
	323
126-5704	804
	805
126-5707	15
	▶606
126-5796	563
	573
	575
	577
126-5984	559
	561
	563
	565
	567
	569
	571
	573
	575
	577
126-5985	559
	561
	563
	565
	567
	569
	571
	573
	575
	577
126-6951	384
126-6953	384
126-8472	338
	729
126-9091	586
127-3017	250
127-4471	51
	73
127-5469	236
127-6980	56
127-8987	586
128-2776	561
	567
	569
	571
128-3094	627
	632
	636
128-3778	626
	631
	635
128-4249	198
128-5596	528
	▶537
128-7749	641
128-7903	586
128-7905	586
129-0138	▶289
	291
129-1854	730
	776
129-1855	730
	776
129-3178	115
	363
	364
	700
	743
	746
	761
	785
129-3180	763
	765
	768
	778
	791
129-4741	316
129-5256	707
	709
129-5257	707
	709
129-8542	787
	789
	793
	795
129-8543	793
	795
129-8545	787
	789
	793
	795
130-0013	261
130-0484	326
	329
130-0912	263
	264
	265
130-1918	689
130-2057	629
	634
	638
130-2758	391
	392
	393
	394
130-2759	391
	392
	393
	394
130-3879	57
130-3880	56
130-3881	715
130-4832	698
	741
130-5451	586
130-5581	804
	805
130-6520	547
	548
	549
	550
	▶561
130-6662	806
130-7282	289
130-7452	801
130-8149	19
	▶236
130-8150	537
130-8292	106
130-8293	104
130-8343	778
130-8432	776
130-9984	59
	61
	479
131-0232	101
131-0379	391
	392
	393
	394
131-0827	338
131-0828	338
131-1368	785
131-1424	781
	782
131-2117	628
	633
	637
131-2127	468
131-3201	173
	193
131-3540	758
	763
	765
	768
131-3985	776
131-3987	707
	731
	733
131-6010	18
	19
131-8203	791
131-8775	326
	329
131-9203	206
	208
	210
	212
132-0111	164
132-2249	797
132-2250	797
132-3056	539
132-3391	▶804
132-3392	804
132-3721	677
	678
132-3723	677
	678
132-3725	677
	678
132-3777	679
	680
132-3778	679
	680
132-3821	677
	678
	682
132-8769	▶370
132-9240	767
	770
	772
133-1011	37
133-3413	114
133-6517	114
133-7332	462
133-7333	462
133-8688	569
133-8689	569
133-8690	569
133-8877	18
	19
133-8916	365
	806
134-0143	326
	329
134-0404	187
134-0453	361
134-1374	363
	364
134-2305	185
	187
134-3014	396
	397
134-3059	707
	709
134-3060	707
	709
134-3061	707
	709
134-3062	707
	709
134-3503	707
	709
134-3856	747
134-4807	599
134-8204	▶802
135-1706	767
	770
	772
135-2567	▶803

▶ **PRIMARY REFERENCE**

PART NUMBER INDEX

Part	Page
135-5893	273
	274
135-7242	163
135-8203	625
	626
	627
	628
	629
	630
	631
	632
	633
	634
	635
	636
	637
	638
	641
	697
135-8206	625
	626
	627
	628
	629
	630
	631
	632
	633
	634
	635
	636
	637
	641
136-0155	363
	364
136-0437	606
136-1955	61
	479
136-3845	126
136-3846	124
136-3848	124
	126
136-4192	787
	789
	793
	795
136-5185	215
136-5308	79
136-7808	227
136-8423	533
137-1821	▶333
137-1822	333
137-3848	▶690
137-6215	155
	158
137-6216	155
	158
137-9466	563
138-2053	50
138-4559	239
	▶242
138-4560	242
138-4894	180
138-6904	59
138-6913	59
138-6914	61
138-7137	245
138-7138	246
138-8454	133
	136
	138
	140
	142
	173
	176
	181
	193
	198
	206
	208
	210
	212
139-3562	306
139-3785	338
140-2358	69
	72
140-3634	69
	72
140-3635	69
140-3639	69
140-3640	67
	70
140-7393	247
140-8714	93
	96
140-8718	93
	96
140-8783	103
140-9921	791
141-0711	381
141-0924	133
	136
	138
	140
	142
141-1656	106
141-1658	104
141-1667	84
141-2759	178
	217
141-7221	267
	271
	272
	273
	274
	281
	282
	285
	286
141-7512	65
	66
141-7514	336
141-7515	338
141-8292	▶164
142-0724	69
142-3388	56
	57
142-3391	56
	57
142-5789	133
	136
	138
	140
	142
142-6132	326
	329
142-7405	354
142-8858	760
142-9117	144
143-0539	▶166
	168
143-0777	448
143-0779	448
143-0782	▶41
	239
	240
143-0786	▶59
	239
	240
143-0788	▶42
	239
	240
143-0789	▶61
	239
	240
143-1344	166
143-2827	709
	787
	789
	793
	795
143-2830	709
	787
	789
	793
	795
143-4655	262
	263
	264
	265
143-6227	265
143-8874	698
	741
143-8918	388
144-0195	707
	709
	785
144-0367	479
144-2222	704
	706
	▶716
144-4277	561
144-6734	229
144-9931	183
	▶753
144-9934	753
145-4476	336
145-6005	69
	72
145-6713	▶56
	703
	705
	711
145-8337	594
145-8344	594
145-9291	304
146-0218	164
146-6729	166
146-7744	791
146-7745	791
146-8319	272
146-9439	133
	136
	138
	140
	142
	178
	217
147-0201	254
147-0202	255
147-0203	255
147-0205	255
147-0207	255
147-0209	254
	▶260
147-0210	255
147-0211	256
147-0212	255
147-0215	255
147-0216	255
147-0218	254
147-0224	255
147-0226	256
147-0227	256
147-0228	255
147-0234	254
147-0236	255
147-0238	255
147-0242	255
147-0248	255
147-0253	254
147-0256	256
147-0257	255
147-0258	255
147-0259	255
147-0260	255
147-0261	255
147-0262	256
147-0264	255
147-0266	256
147-0268	256
147-0270	256
147-0385	51
147-1559	▶57
	704
	706
147-1659	563
147-1979	32
147-3019	731
	733
147-4502	115
147-5553	83
148-3626	738
148-5353	787
	789
	793
	795
148-5355	731
	733
148-7310	733

▶ **PRIMARY REFERENCE**

PART NUMBER INDEX

Part	Page	Part	Page	Part	Page	Part	Page
148-7311	731	148-8346	300	148-8422	479		472
148-7318	733		487	148-8426	455	150-3062	347
148-7319	731	148-8347	497	148-8429	482	150-3063	446
148-7868	308		499		483		448
148-8315	454		502		485		455
	458		505		486		459
148-8316	300	148-8351	477	148-8431	484	150-3068	408
	347		513		545		416
	477		516		546		424
148-8318	300	148-8352	408	148-8435	451		432
148-8322	451		412	148-8439	489	150-3071	428
148-8325	292		416		491		436
	451		420		493		505
	474		479		495	150-3370	61
148-8326	102	148-8354	509	148-8446	446	150-3374	61
148-8327	440		511		448	150-3757	255
	452		513		452	150-4043	487
	497		516		455	150-4044	489
	499	148-8357	479		459		491
148-8335	409	148-8360	59		519		493
	412		61	148-8449	452		495
	416	148-8362	441	148-8454	509	150-4086	203
	420		479		511	150-4932	262
	424	148-8364	487	148-8455	441		263
	428		509	148-8457	441	150-5150	579
	432		511	148-8458	443	150-7732	25
	436		513		444		254
	482		516	148-8986	254	150-8015	791
148-8336	451		519		▶262	151-2963	316
	466	148-8366	489	148-8988	254	151-4841	86
	468		491		▶263		446
	470		493	149-4236	84		448
	472		495	149-4745	770		455
	497	148-8367	300		772		459
	499	148-8368	292		774		462
148-8339	59		451	149-9954	98		464
	61		454	150-3027	479		519
148-8340	458		459		539		521
148-8341	398	148-8369	300	150-3037	459	151-5349	384
	400		477	150-3052	408	151-5715	738
	402	148-8378	489		412	151-7866	▶625
	404		491		416		639
	405		493		420	151-7867	▶626
	407		495		424	151-7868	▶627
	408	148-8382	464		428	151-7869	▶628
	416	148-8383	300		432	151-7870	▶629
	446	148-8390	445		436	151-7877	▶630
	448		448	150-3053	408		640
	451		450		412	151-7879	▶631
	454		459		416	151-7880	▶632
	458		487		420	151-7881	▶633
	462		521		424	151-7882	▶634
	464	148-8393	459		428	151-7887	▶635
	501		521		432	151-7888	▶636
	519	148-8407	102		436	151-7889	▶637
	521		474	150-3056	489	151-7890	▶638
148-8342	458	148-8408	404		491	151-7902	626
	509		407		493		627
	511		530		495		628
	513		543	150-3057	428		629
	516	148-8411	509		436		631
148-8345	451		511		505		632
	454		513	150-3060	466		633
	497		516		468		634
	499	148-8417	451		470		635

▶ **PRIMARY REFERENCE**

PART NUMBER INDEX

Part	Page	Part	Page	Part	Page	Part	Page
	636		▶594		770		178
	637	151-7929	625		772		181
	638		630	154-8284	767		185
	644		641		770		198
	645		643		772		203
	646		648	155-2255	176		210
	647		658		183		212
	649	151-7930	625		185		215
	650		630		187	155-2274	133
	651		641		198		136
	652		643	155-2256	176		138
	653		648	155-2260	112		140
	654		658		115		142
	655	151-8752	69		144		146
	656		72		176		149
	657	152-0184	17		178		152
	659		▶344		181		155
	660	152-3968	92		185		158
	661	152-6144	218		187		178
	662		227		189		181
151-7903	626	152-8417	749		198		185
	627	153-3061	56		206		187
	628		57		208		198
	629		716		210		203
	631	153-3761	61		212		206
	632	153-7368	304	155-2263	146		208
	633	153-7369	▶299		149		210
	634	153-9580	297		152		212
	635		▶304		155	155-6457	133
	636	153-9909	61		158		136
	637	153-9910	61	155-2265	178		138
	638	153-9911	61		183		140
	644	154-0875	61		198		142
	645	154-5255	625		707	155-6586	▶378
	646		630		709		609
	647		641		712		611
	649	154-5257	625	155-2270	115	155-8154	292
	650		630		133	155-8522	176
	651		641		136		189
	652		643		138		203
	653		648		140	155-9836	559
	654		658		142		561
	655	154-5265	594		144		565
	656	154-5277	594		173		567
	657		596		176		569
	659	154-5278	594		181		571
	660		596		185	156-0283	133
	661	154-5279	594		187		136
	662		690		189		138
151-7927	630		691		193		140
	631	154-5280	594		198		142
	632		691		203		319
	633	154-5404	218		206	156-1928	220
	634	154-5410	797		208	156-1929	220
	641	154-5416	291		210	156-1930	220
151-7928	5	154-5423	787		212	156-1933	222
	6		789		215	156-1934	221
	7	154-5424	787		291	156-2571	220
	8		789		487	156-2572	220
	9	154-5428	171		700	156-2573	222
	10	154-8051	376	155-2271	115	156-2857	▶220
	11	154-8278	767		133		230
	12		770		136	156-3691	455
	13		772		138		459
	14	154-8280	767		176	156-3837	458

▶ **PRIMARY REFERENCE**

PART NUMBER INDEX

Part	Page
	521
156-3838	458
	521
156-5970	585
156-9275	248
156-9370	454
156-9371	454
157-1669	99
157-1997	183
	185
	187
157-2088	255
157-2090	255
157-3364	609
157-3365	609
157-3366	609
157-3367	609
158-2306	346
158-3412	446
	448
	450
	454
	458
	462
	519
	521
158-8778	592
159-0186	59
	61
	479
159-0738	458
159-0739	458
159-0783	458
159-0784	458
159-0959	329
	408
	416
159-0960	326
159-0961	604
	613
159-0974	458
159-0975	458
159-4269	731
	733
159-4945	707
	733
159-4946	707
	731
159-4950	789
	793
159-4951	787
	795
159-4953	731
159-4954	733
159-5848	376
159-7104	752
159-7105	752
159-7106	752
159-7342	17
	18
	19
159-7907	296
159-8033	806
160-0496	346
160-2245	749
160-2248	300
160-7197	88
160-8282	451
160-8283	451
160-9777	451
161-3249	248
	254
161-3981	454
	458
161-4057	454
161-4059	454
161-6209	454
161-6984	787
	789
	793
	795
161-6987	787
	789
	793
	795
161-9044	731
	733
161-9282	778
161-9283	778
161-9285	778
161-9286	778
161-9288	778
161-9289	770
	772
	774
161-9290	767
	770
	772
161-9294	787
	789
	793
	795
161-9744	772
	774
161-9916	452
162-1565	25
162-1604	533
162-2351	378
	▶445
162-2353	445
162-2356	502
	505
162-3960	▶346
	487
162-3996	▶317
162-3998	317
162-3999	317
162-4004	317
	318
162-6556	787
	789
	793
	795
163-0753	290
	▶295
163-0754	▶290
	291
163-0755	290
163-1135	778
163-1139	778
163-4759	797
163-6290	195
163-7939	707
	709
	712
163-7940	297
	298
163-9091	254
163-9371	393
	394
	▶446
164-1030	703
	705
	▶741
164-1032	▶698
	704
	706
164-1037	741
164-1040	749
164-1041	749
164-1042	698
164-1043	735
164-1044	737
164-1055	▶752
164-1056	198
164-1059	707
	▶787
164-1060	707
	▶789
164-1061	707
	709
	▶733
164-1062	707
	709
	▶731
164-1064	787
164-1065	789
164-1066	793
164-1067	795
164-1068	707
	709
164-1069	707
	709
164-1070	707
	709
164-1071	707
	709
	712
164-1072	707
	709
	712
164-1073	733
	▶793
164-1074	731
	▶795
164-1077	86
164-1078	86
	▶761
164-1079	746
164-1083	746
164-1096	146
	149
	152
164-1097	146
	149
	152
164-1100	705
	706
	▶707
164-1102	320
164-1103	320
164-1105	239
164-1107	726
164-1108	727
164-1110	783
164-1113	226
164-1122	758
164-1123	758
164-1130	▶226
	239
	240
164-1131	▶721
	723
164-1132	719
	▶722
164-1133	721
	722
164-1134	721
	722
164-1137	728
164-1141	240
	▶735
164-1142	240
	▶737
164-1146	239
164-1149	▶319
	703
	704
	705
	706
	711
164-1152	776
164-1153	226
164-1154	761
164-1156	776
164-1157	776
164-1165	703
	704
	705
	706
	▶776
164-1166	776
164-1175	711
	▶712
164-1177	758
164-1178	724
	725
164-1196	698
	741
164-1197	226
164-1198	735
164-1201	▶770
	775
164-1202	▶772
	775
164-1203	▶774
	775
164-1207	770
	772
	774

▶ **PRIMARY REFERENCE**

PART NUMBER INDEX

Part	Page
	▶778
164-1208	778
164-1209	▶763
	770
164-1210	▶765
	772
164-1211	767
	770
	772
164-1212	767
	770
	772
164-1213	▶767
	774
164-1214	763
	765
	767
164-1215	778
164-1216	778
164-1217	778
164-1218	778
164-1219	778
164-1220	778
164-1221	778
164-1224	778
164-1225	778
164-1226	778
164-1228	778
164-1229	778
164-1230	778
164-1231	778
164-1232	778
164-1233	778
164-1234	778
164-1236	778
164-1237	778
164-1238	778
164-1239	778
164-1240	778
164-1244	763
164-1245	767
164-1246	767
164-1247	763
	765
	767
164-1248	763
	765
164-1249	763
	765
	767
164-1250	763
	765
	767
164-1251	763
	765
	767
164-1252	763
	765
	767
164-1256	763
	765
	767
164-1257	767
164-1258	763
	765
	767
164-1259	763
	765
	767
164-1261	763
	765
	767
164-1262	767
164-1263	767
164-1264	767
164-1265	763
	765
	767
164-1266	765
164-1269	767
164-1270	767
164-1271	767
164-1272	767
164-1273	767
164-1274	767
164-1275	767
164-1276	767
164-1277	767
164-1294	778
164-1295	767
	770
	772
164-1300	707
	709
	▶791
164-1303	791
164-1304	791
164-1308	791
164-1311	791
164-1314	791
164-1316	791
164-1317	791
164-1328	791
164-1342	791
164-1343	791
164-1344	791
164-1345	791
164-1346	791
164-1348	791
164-1351	791
164-1352	791
164-1353	791
164-1354	791
164-1361	352
	354
	356
164-1363	391
	393
164-1364	392
	394
164-1365	226
164-1366	783
164-1368	226
	359
	735
164-1369	359
164-1370	703
	704
	705
	706
	711
	▶783
164-1371	352
	354
	356
164-1388	704
	705
	706
	▶723
164-1389	703
	711
	▶719
164-1395	86
	361
	362
164-1399	352
	354
	356
164-1400	▶352
164-1402	352
	354
164-1404	352
	354
164-1406	352
	356
164-1409	352
	354
164-1411	352
	354
164-1420	▶354
	369
164-1421	354
164-1422	354
164-1425	354
164-1427	354
164-1429	354
164-1430	▶369
164-1435	352
	354
164-1438	354
164-1440	▶356
	358
164-1441	354
	356
164-1447	356
164-1450	▶358
164-1451	356
164-1452	356
164-1455	356
164-1540	▶365
	542
	543
	544
	545
	546
164-1541	365
164-1544	365
	367
164-1547	365
	367
164-1549	365
	367
164-1550	▶367
	543
	545
	546
164-1551	367
164-1560	352
	354
164-1565	356
164-1601	180
164-3876	100
	306
	307
164-4139	700
164-4659	▶620
164-5544	300
164-5561	452
164-5567	347
	474
	479
164-5594	483
164-6613	743
164-7176	379
164-7556	118
	119
164-8473	698
	717
	718
	738
164-9425	189
	745
164-9598	295
164-9599	295
165-2273	390
165-5655	115
165-6585	292
165-6595	292
165-6599	292
165-6601	292
165-6602	292
165-6603	292
165-6918	239
	▶292
165-6982	451
165-7769	9
	▶529
165-7951	99
165-8996	237
166-1579	474
166-2033	474
166-2861	716
166-7870	605
166-7950	551
	552
	553
	554
	556
	557
	▶563
166-9413	289
167-0566	513
	516
167-2186	379
	382
167-2191	384
167-2195	381
	386
	387
	388

▶ **PRIMARY REFERENCE**

PART NUMBER INDEX

Part	Page
167-2201	372
	374
	385
167-2202	376
167-2294	379
	382
167-2300	384
167-2304	381
	386
	387
	388
167-2310	376
167-2312	372
	374
	385
167-3693	189
167-3700	198
167-3701	183
167-3707	203
167-3710	707
	709
	712
167-3896	502
	505
167-6768	559
	563
	565
	573
	575
	577
167-7966	487
167-8160	292
167-8161	292
167-8164	292
167-8182	791
167-8187	703
	704
	705
	706
	▶785
167-8248	352
	354
	356
167-8251	727
167-8252	721
167-8278	756
167-8279	756
167-8283	760
167-8285	319
167-8286	319
167-8330	1
	2
	3
	4
	▶596
168-0443	639
	640
	642
	663
	664
	665
168-0444	639
	640
	642
	663
	664
	665
168-0480	626
	627
	628
	629
	631
	632
	633
	634
	635
	636
	637
	638
	644
	645
	646
	647
	649
	650
	651
	652
	653
	654
	655
	656
	657
	659
	660
	661
	662
168-2313	700
	743
168-4609	758
168-8186	489
	544
	545
168-8192	408
	412
	416
	420
168-8193	408
	412
	416
	420
	424
	428
	432
	436
168-8493	408
	412
	416
	420
	424
	428
	432
	436
168-8497	505
168-8644	505
168-9906	785
169-0586	185
	187
169-0587	183
	745
169-0588	183
169-0590	136
	140
169-0591	133
	138
	142
169-0592	136
	140
169-0593	133
	138
	142
169-0594	146
	149
	152
	155
	158
169-0595	133
	136
	138
	140
	142
169-0596	178
169-0597	203
169-0598	217
169-0599	542
	543
169-0604	176
169-0605	173
	193
169-0606	173
169-0607	206
	210
	349
	397
169-0608	208
	212
169-0611	144
169-6947	386
	387
169-7290	776
169-7291	776
170-0075	698
	▶700
170-0076	741
	▶743
170-0503	346
170-1644	539
170-2237	173
	193
170-3492	17
	18
170-6305	185
	187
170-6309	187
170-6312	352
	354
170-6542	185
	187
170-7269	700
	743
170-7270	700
	743
170-7271	700
	743
170-7272	700
	743
170-7274	700
170-7281	700
	743
170-7282	700
	743
170-9066	376
171-2870	791
171-5349	256
171-6725	451
171-8623	292
172-4823	596
172-5317	249
	255
172-6050	248
	255
172-6224	187
	806
172-6743	255
172-8508	11
	14
	▶530
172-8591	724
	725
172-9200	185
	187
	215
172-9992	613
173-0332	254
173-0637	533
173-0638	533
173-0639	533
173-0641	533
173-2769	609
	611
173-3175	136
	138
	140
	142
	146
	149
	152
	155
	158
173-4514	349
	397
173-4565	▶384
	396
	397
173-5787	770
	772
	774
173-7758	609
	611
173-9683	381
173-9718	502
173-9719	502
173-9779	379
	388
174-2024	703
	704
	705
	706
	▶797
174-2025	797
174-2026	797

▶ **PRIMARY REFERENCE**

PART NUMBER INDEX

Part	Page
174-4028	497
174-4029	497
174-4030	497
174-4031	497
174-4032	497
174-4033	497
174-4034	497
174-4035	497
174-4643	218
174-4671	218
174-5456	797
174-5696	613
174-6362	▶639
174-6365	▶640
174-6395	206
	208
174-6398	206
	208
	210
	212
174-6411	176
174-6415	176
174-6640	226
174-6649	176
174-6740	474
174-6812	588
174-7820	292
174-9638	84
174-9711	248
175-0054	248
175-5050	778
175-6916	454
	458
175-6917	454
175-6918	451
175-6919	451
175-7618	1
	2
	5
	6
	10
	11
	▶489
175-7620	9
	12
	▶531
175-7877	5
	6
	7
	8
	9
	10
	11
	12
	13
	14
	▶593
175-7895	384
175-7896	379
175-7902	376
	385
175-7903	376
176-0145	402
	404
	405
	407
	531
176-0311	133
	136
	138
176-0312	133
	138
176-0346	133
	136
	138
176-0585	509
	511
	513
	516
176-3900	749
176-6219	92
176-6247	▶677
	679
176-6248	677
176-6251	▶678
	680
176-6252	678
176-8121	451
176-8122	451
176-8123	444
176-8127	443
176-9152	402
	404
	405
	407
176-9153	530
176-9154	398
	400
176-9155	530
176-9294	408
	416
177-4726	18
	▶601
177-4727	17
	▶602
177-4729	601
177-4733	602
177-4877	707
177-4903	▶695
177-4904	▶696
177-7094	497
	499
177-9600	799
177-9645	173
	189
	193
177-9648	173
	193
	198
178-1304	276
	277
178-3593	▶691
178-4200	695
178-4201	696
178-7227	267
	▶274
178-7228	▶274
178-7229	274
	▶275
178-7230	274
	275
178-7481	408
	416
	▶558
178-7539	133
	136
	138
	140
	142
	202
178-8132	249
178-8133	250
178-8134	249
178-8200	249
178-8465	189
178-8608	234
	235
178-8849	▶679
178-8850	▶680
178-9242	104
	106
178-9566	248
	254
178-9983	719
	720
	723
	726
179-1215	178
179-5434	131
	132
179-5435	133
	136
	138
	140
	142
179-5571	336
179-5592	585
179-5593	542
	543
	▶585
179-7135	454
179-7136	454
179-8235	352
	356
	359
	361
	362
	365
	367
	523
179-9961	588
	613
180-2441	65
	66
180-2531	464
180-3663	▶131
	161
	164
180-3664	▶132
	163
180-3730	102
180-3773	695
180-3774	696
180-4194	454
	458
180-5750	739
180-5754	739
	740
180-5755	740
180-5760	704
	705
	706
	▶739
180-5765	703
	711
	▶740
180-5770	▶775
180-5771	▶775
180-5772	705
	706
	▶775
180-5780	767
180-5781	767
180-5782	767
180-5783	767
180-5784	767
180-5785	767
180-5787	767
180-5788	767
180-5791	768
180-5793	778
180-5794	778
180-5795	765
180-5796	763
180-5797	763
	765
180-6110	374
180-6111	374
180-6213	533
180-6603	372
	374
180-7245	291
180-8170	298
180-9157	305
183-1276	15
	▶335
183-1277	335
183-1278	335
183-3121	359
183-3122	359
183-3125	359
	362
183-3127	359
183-3130	15
	▶359
183-3135	359
183-3136	361
183-3137	359
183-3150	▶361
	394
183-3151	361
	362
183-3153	361
183-3156	361
183-3159	▶362
	392
183-3757	609
183-3758	609
183-3887	86

▶ **PRIMARY REFERENCE**

PART NUMBER INDEX

Part	Page
	▶746
183-4492	180
183-4843	440
183-4897	▶297
	705
	706
183-4898	▶298
183-4899	722
183-4991	724
	725
	▶727
183-4997	▶724
	726
183-4998	720
	▶725
183-6058	9
	11
	12
	14
	▶326
183-6059	1
	2
	3
	4
	5
	6
	7
	8
	10
	13
	▶329
183-6076	15
	▶603
183-6081	603
183-6084	603
183-6085	603
183-7581	196
183-8484	402
	404
	416
183-8486	402
183-8488	398
183-8490	398
183-8492	398
183-8494	398
183-8496	509
	513
183-8498	509
	513
183-8500	398
183-8502	398
183-8505	394
	▶509
183-8506	1
	2
	5
	6
	9
	10
	11
	▶398
183-8508	1
	2
	5
	6
	▶402
183-8509	10
	▶404
183-8510	405
	407
	408
183-8511	405
183-8512	400
183-8513	400
183-8514	400
183-8515	400
183-8516	511
	516
183-8517	511
	516
183-8518	400
183-8519	400
183-8521	491
	544
	546
183-8522	395
	▶511
183-8523	3
	4
	7
	8
	13
	14
	▶491
183-8524	3
	4
	7
	8
	12
	13
	14
	▶400
183-8526	3
	4
	7
	8
	▶405
183-8527	13
	▶407
183-8529	493
183-8530	9
	▶493
183-8531	495
183-8532	12
	▶495
183-8543	1
	2
	3
	5
	6
	7
	8
	9
	10
	11
	12
	13
	14
	▶440
183-8544	1
	2
	3
	4
	5
	6
	7
	8
	9
	10
	11
	12
	13
	14
	▶501
183-8547	2
	3
	4
	6
	8
	▶502
183-8548	1
	3
	4
	5
	7
	▶505
183-8549	1
	2
	4
	5
	6
	7
	8
	9
	10
	11
	12
	13
	14
	▶451
183-8552	391
	392
	▶454
183-8559	393
	394
	▶458
184-1307	613
184-1413	606
184-1580	388
184-1687	381
184-2365	388
184-2409	388
184-2422	193
184-5293	185
	187
184-5382	523
184-6178	9
	10
	11
	12
	13
	14
	▶613
184-6430	198
184-6436	320
184-6555	738
184-6557	726
184-6558	723
184-6560	698
	741
184-6561	698
	741
184-6562	735
184-6563	735
	737
184-6564	698
	741
184-6565	749
184-6566	723
184-6567	698
	741
184-6570	239
	▶291
184-6572	698
	741
184-6573	698
	741
184-6574	698
	741
184-6575	▶738
	741
184-6581	292
184-6784	▶592
	609
	611
184-6785	609
184-6786	5
	6
	7
	8
	▶609
184-7898	239
	▶756
184-7970	16
	▶239
184-9754	1
	2
	3
	4
	▶611
184-9950	1
	2
	3
	4
	5
	6
	7
	8
	▶604
184-9956	604
184-9992	611
185-0060	▶391
185-0061	▶391
185-0062	▶392
185-0063	▶392
185-0080	15
	▶320
185-0882	32
185-0884	29
185-1502	381
185-1546	50

▶ **PRIMARY REFERENCE**

PART NUMBER INDEX

Part	Page
185-1598	391
	392
	393
	394
	▶525
185-1839	▶382
	615
	616
	618
	619
	620
185-1927	▶588
	589
185-1932	16
	▶589
185-2173	499
185-2175	499
185-2176	499
185-2183	499
185-3167	396
	397
	▶526
185-3414	396
	▶497
185-3524	703
	704
	705
	706
	▶720
185-3525	239
	240
	▶757
185-3528	735
	737
185-3529	297
	298
185-3530	711
	▶726
185-3890	778
185-4015	700
	743
185-5734	606
185-5735	606
185-5908	542
	▶551
185-5909	542
	▶553
185-5910	543
	▶556
185-5911	393
	▶547
185-5912	394
	▶549
185-5913	391
	▶548
185-5914	392
	▶550
185-7015	131
185-7016	132
185-7586	239
	240
	▶247
185-7587	239
	240
	▶247
185-7741	15
	▶804
185-7754	15
	▶805
185-8801	▶178
	703
	704
	705
	706
185-8802	▶180
	711
185-8807	15
	▶203
185-8811	▶144
185-8815	▶133
	705
	706
185-8857	15
	▶324
185-9751	397
	▶499
185-9777	758
185-9784	396
	397
	▶541
186-0252	703
	704
	705
	706
	711
	▶728
186-0304	115
	▶196
186-0307	▶215
	538
186-0309	▶217
	230
186-0310	▶115
186-0311	▶206
	348
186-0312	▶208
	348
	397
186-0314	▶146
186-0315	▶149
186-0316	▶152
186-0320	215
186-0817	785
186-1593	4
	7
	8
	12
	13
	14
186-1594	1
	2
	4
	5
	6
	9
	10
	11
	▶444
186-2589	▶755
	797
186-2731	▶193
	703
	705
186-2737	17
	18
	▶161
186-2950	1
	2
	3
	4
	5
	6
	7
	8
	9
	10
	11
	12
	13
	14
	▶532
186-3735	101
	115
	120
	122
	124
	126
	133
	173
	176
	181
	189
	206
	208
	210
	212
	256
	262
	263
	265
	359
	392
	569
	571
	584
	585
	754
	755
	797
186-3736	261
186-4117	220
186-4118	220
186-5273	799
186-5274	799
186-5298	391
	392
	393
	394
	807
186-5300	805
186-5335	▶393
186-5336	▶393
186-5337	▶394
186-5338	▶394
186-6375	▶799
	804
	805
187-0523	575
187-0524	573
187-0527	573
187-0528	577
187-0529	577
187-0530	567
187-0532	569
187-0576	592
187-1644	183
	185
	187
	711
187-3162	458
	521
187-3163	458
	521
187-3164	458
	521
187-3166	458
	521
187-3510	372
	374
187-3825	609
	611
187-3826	609
	611
187-3827	609
	611
187-3828	609
	611
187-3830	609
187-3831	609
187-3832	611
187-3833	611
187-3834	611
187-3835	611
187-3836	611
187-3837	611
187-4052	609
	611
187-4329	521
187-4331	454
	519
187-4332	454
	519
187-4333	502
	505
187-4343	441
187-4344	502
	505
187-6075	278
	279
187-8093	136
	140
187-8094	133
	138
	142
187-8936	101
188-0857	307
188-0858	306
188-0859	▶306
	309

▶ **PRIMARY REFERENCE**

PART NUMBER INDEX

Part	Page
	310
188-0860	▶307
	309
188-0861	392
	806
188-0862	336
188-0863	183
	806
188-0865	336
188-2704	743
188-2706	700
	743
188-2708	700
	743
188-2709	700
188-2710	700
188-2711	700
	743
188-2712	700
188-2715	743
188-7471	▶305
	547
	548
	549
	550
188-7760	721
	722
188-9097	15
	▶474
188-9954	592
189-0148	187
189-0551	391
	392
	▶519
189-0555	393
	394
	▶521
189-2102	585
189-3610	753
189-3823	17
	▶523
189-5746	256
189-6561	144
189-6562	144
189-6563	144
189-8797	391
	392
	▶448
190-1288	17
	18
190-1289	18
	19
190-2802	▶17
190-2803	▶17
190-3450	544
	545
	546
	553
	554
	556
	557
	▶565
190-4164	482
	483
	484
	485
190-5122	306
	307
190-5123	100
190-5128	354
	805
190-5129	806
	806
190-5130	352
	806
190-5131	356
190-5132	698
	741
	806
190-5133	806
190-5134	356
	805
190-5136	805
190-5137	538
	805
190-5139	86
	805
190-6413	▶18
190-7557	17
	▶202
	705
	706
190-8954	230
	▶477
190-8956	477
190-8957	347
190-9767	248
190-9838	90
191-4010	547
	548
	549
	550
191-4012	547
	549
	▶567
191-4032	548
	550
	▶569
191-4035	550
	▶571
191-5011	596
191-5012	596
191-5104	758
191-6033	700
	743
191-6034	700
191-6035	700
	743
191-6149	388
191-6159	379
191-6550	▶155
191-6551	▶158
191-6558	376
191-6577	386
	387
191-7725	378
	▶379
191-7727	379
191-7734	386
191-7735	▶386
	396
	397
191-7738	387
191-8161	▶387
	396
	397
191-9104	760
	805
191-9107	806
191-9110	338
191-9111	338
191-9113	225
191-9114	▶225
	239
192-0845	248
192-0849	246
	▶254
192-0850	256
192-3791	▶381
	396
	397
192-3792	381
192-3849	381
192-3884	▶388
	396
	397
192-3886	388
192-7355	758
192-7877	98
192-8775	458
193-0161	92
193-0618	98
193-0703	9
	10
	11
	12
	13
	14
	▶441
193-1036	582
193-1509	760
193-1681	322
	323
193-1683	322
	323
193-1684	322
	323
193-1685	322
	323
193-1686	322
	323
193-1687	322
	323
193-1688	322
	323
193-1689	322
	323
193-2342	17
	▶745
193-2343	▶171
193-3124	551
	552
	553
	554
	556
	557
193-5914	▶573
193-5915	808
193-5916	808
193-8639	808
193-8648	181
193-9189	533
	551
	552
	553
	554
	556
	557
194-0832	276
194-1937	181
	210
	212
194-1938	181
	210
	212
194-1940	181
194-1941	181
	210
	212
194-1947	▶210
	348
194-1948	▶212
	348
	349
194-1950	▶181
194-4250	758
194-5171	797
194-5390	84
194-5622	698
	741
195-0268	441
195-0355	497
	499
195-0356	497
	499
195-0357	497
	499
195-0358	497
	499
195-1289	487
195-1736	487
195-2037	300
195-2132	40
195-2134	40
195-2136	40
195-2139	559
	561
	563
	565
	567
	569
	571
	573
	575
	577
195-2221	40
195-2406	563
	573
	575
	577
195-5830	292

▶ **PRIMARY REFERENCE**

PART NUMBER INDEX

Part	Page
195-6329	275
195-6330	267
	▶275
195-6331	267
	▶275
195-6332	▶267
	270
195-6339	277
	280
195-6523	338
195-7055	768
	770
	772
195-9223	763
	765
	768
195-9712	128
196-2966	185
196-4096	16
196-8438	509
	511
	513
	516
196-8439	509
	511
	513
	516
197-0398	485
197-0573	441
197-2709	565
	573
	575
	577
197-2969	551
	552
	553
	554
	556
	557
197-3121	567
	569
	571
197-3124	569
197-3126	569
197-3698	567
	569
	571
197-3709	371
197-4938	371
197-6415	371
197-6657	778
197-6658	778
197-7230	730
197-7499	758
197-7564	711
	▶730
197-8444	497
	499
197-8973	776
197-9155	218
198-0014	611
198-0015	611
198-0098	365
198-0102	392
	394
198-0103	729
198-0104	711
	▶729
198-5389	115
198-6886	723
198-7336	448
198-7337	448
198-7814	234
	235
198-7823	218
198-7825	218
198-7838	218
198-7841	218
198-7842	218
198-7843	218
198-8352	450
198-8353	450
198-8645	25
198-9723	▶58
	703
	704
	705
	706
199-0639	218
199-0648	234
	235
199-0683	218
199-0695	227
199-0783	318
199-0858	227
199-3117	256
	▶264
199-3729	700
	743
199-5970	▶641
	642
199-5971	▶642
199-6243	749
	807
199-6245	805
199-7854	525
199-8927	440
	451
199-9267	54
199-9617	▶408
199-9618	▶412
199-9695	▶416
199-9696	▶420
199-9751	32
	170
200-0161	551
	553
	556
200-0648	133
	136
	138
	140
	142
200-2673	721
	722
200-2676	703
	704
	705
	706
	▶713
200-2996	206
	208
	210
	212
200-3004	776
200-3946	347
200-3947	347
200-4153	393
	394
	▶450
200-5356	776
200-5359	582
200-5360	582
200-5361	582
200-5362	582
200-5363	582
200-5364	582
200-5921	677
	678
201-0330	102
201-0582	324
201-1238	643
	644
	645
	646
	647
	648
	649
	650
	651
	652
	653
	654
	655
	656
	657
	658
	659
	660
	661
	662
201-1239	643
	644
	645
	646
	647
	648
	649
	650
	651
	652
	653
	654
	655
	656
	657
	659
	660
	661
201-1634	700
	705
201-1635	700
201-1636	700
201-1637	743
201-1638	743
201-1835	102
201-1837	100
201-1868	270
	▶276
201-1869	▶276
201-1870	276
201-1874	267
	268
	▶277
201-1875	▶277
201-1876	277
201-1879	279
201-1880	288
201-1915	276
	277
	278
	280
	283
	284
201-1919	278
	280
	283
	284
201-1920	▶267
	276
	277
	278
	279
	280
	283
	284
201-1929	280
201-1949	270
	▶278
201-1955	270
	271
	▶278
201-1956	▶278
201-1957	278
	▶279
201-1960	278
	▶279
201-1961	278
	▶279
201-1962	269
	▶280
201-1963	280
201-1964	▶280
201-1974	287
	288
201-1975	287
201-2157	292
201-3954	▶318
201-4822	320
201-8069	359
201-8562	245
	▶248
201-9465	791

2

▶ **PRIMARY REFERENCE**

PART NUMBER INDEX

Part	Page
202-0040	262
	263
	264
	265
202-2236	▶371
	552
	554
	557
202-5705	133
	136
	138
202-5707	▶136
202-5708	▶138
202-5710	230
	806
202-5711	230
	▶300
202-5724	705
	706
	▶758
202-5732	240
	▶243
202-5733	239
	240
	▶244
202-5812	▶760
202-5979	758
202-6008	▶245
	247
202-6018	409
	412
	416
	420
	424
	428
	432
	436
202-6063	758
202-6113	86
202-6120	395
	▶513
202-6121	395
	▶516
202-6122	▶394
202-6123	▶395
202-6124	▶395
202-6125	▶395
202-6139	▶347
	396
	397
202-6141	724
202-6142	725
202-6186	276
	278
	279
	280
	283
	284
202-6199	230
	▶237
202-6611	119
202-6614	118
202-7432	▶246
	247
202-7503	582
202-7874	244
202-7875	243
203-4158	711
203-5486	542
	▶552
203-5487	543
	▶554
203-5488	543
	▶557
203-5491	526
203-9048	445
204-0317	300
204-0532	551
	552
	553
	554
	556
	557
	▶575
204-0533	551
	552
	553
	554
	556
	557
	▶577
204-5258	687
204-5259	687
204-5260	687
204-5261	18
	19
	▶687
	688
204-7341	724
	725
204-9195	▶544
204-9196	▶544
204-9197	▶545
204-9198	▶545
204-9199	▶546
204-9200	▶546
204-9204	408
	412
	424
	428
204-9921	700
	743
205-0826	115
205-3759	292
205-3760	292
205-3761	292
205-4286	185
	187
205-7536	791
205-7538	791
205-7700	183
205-8257	115
205-9244	256
205-9980	720
	726
206-0513	372
206-0514	9
	10
	11
	12
	13
	14
	▶372
206-0517	374
206-0518	1
	2
	3
	4
	5
	6
	7
	8
	▶374
206-1486	214
206-3407	17
	18
	▶688
206-3409	▶18
206-3411	17
	18
206-3629	376
206-3630	▶376
	396
	397
206-3685	513
	516
206-4924	▶19
206-5162	115
206-6974	297
206-7398	700
	743
206-7512	698
	741
206-7513	698
	741
206-7514	698
	741
207-4254	218
207-4258	218
207-5262	115
207-5477	440
207-7581	521
207-8593	458
207-8594	458
207-8595	458
207-8596	454
207-8597	454
207-8598	451
208-0321	218
208-0322	227
208-0827	▶620
208-5235	643
	644
	645
	646
	647
	648
	649
	650
	651
	652
	653
	654
	655
	656
208-5245	643
	644
	645
	646
	647
	648
	649
	650
	651
	652
	653
	654
	655
	656
	657
	658
	659
	660
	661
	662
208-8240	250
208-8658	▶390
209-1925	176
209-1947	176
209-6188	324
209-7454	227
209-7456	218
209-7460	234
	235
209-7462	227
209-7463	227
209-7464	218
209-7465	234
	235
209-7466	238
209-7472	227
209-7473	227
209-9219	31
209-9241	372
209-9875	218
209-9883	218
209-9884	218
	▶234
209-9885	218
	▶235
209-9886	218
209-9887	218
210-1706	326
	329
210-1707	326
	329
210-5924	218
	▶238
210-5931	238
210-5934	238
210-5937	218
210-5942	218
210-5946	218
210-5947	218

▶ **PRIMARY REFERENCE**

PART NUMBER INDEX

Part	Page	Part	Page	Part	Page	Part	Page
210-6243	396	214-7008	▶705		▶283	220-0921	513
	397	214-7009	▶706	216-9148	283		516
210-7029	388	214-7012	▶239	216-9149	283	220-2639	▶762
210-7465	300	214-7013	▶239	216-9498	227	220-2640	▶762
210-7466	300	214-7014	▶240		▶229	220-8631	36
210-8911	603	214-7015	▶240	217-2704	513	220-8698	▶117
210-8913	603	214-7457	67		516		144
210-8914	363		70	217-2877	234	221-0965	338
	364	214-7458	67	217-2878	235	221-0966	338
210-8916	474		70	217-2879	234	221-0968	338
210-8917	363	214-9035	758		235	221-0972	338
	364	214-9348	513	217-2880	227	221-0973	338
210-8918	▶538		516	217-2883	218	221-0974	338
210-8919	▶538	214-9349	513	217-2884	218	221-0976	338
210-8922	338		516	217-2885	218	221-2420	741
211-0052	198	215-1216	682	217-3383	363	221-7170	598
211-1813	115	215-1217	682		364	221-8045	807
211-3372	391	215-1383	464	217-6835	▶800	221-8444	338
	392	215-1384	464	218-2152	712	222-0364	541
	393	215-2023	218	218-2153	707	222-0365	▶350
	394	215-3191	452	218-2154	709		363
211-3468	486	215-4016	454	218-3597	264	222-0841	326
211-4348	479		519	219-0305	807		329
211-6735	218	215-4424	486	219-3271	114	222-1684	487
211-6758	248	215-5643	608	219-3379	▶643	222-1801	318
211-6759	249	215-9219	533		663	222-1802	318
212-3518	292	215-9508	88	219-3380	▶644	222-2690	86
212-6215	247	215-9509	88	219-3381	▶645	222-3870	115
212-9338	441	215-9513	90	219-3382	▶646	222-4067	539
213-6091	110	215-9632	479	219-3383	▶647	222-5794	185
213-6092	110	216-0582	454	219-3384	▶648		806
213-6094	189		519		664	222-9436	▶351
213-6097	198	216-2267	250	219-3385	▶649		364
213-7315	173	216-4457	227	219-3386	▶650	223-1882	▶692
	193	216-4458	227	219-3387	▶651	223-5623	108
213-8000	▶681	216-4461	227	219-3388	▶652	223-5624	108
213-8008	681	216-4464	227	219-3389	▶653	223-6178	▶308
	▶682	216-4465	227	219-3390	▶654		309
213-8479	155	216-5515	227	219-3391	▶655	223-6181	▶108
	158	216-7145	513	219-3392	▶656		309
	178		516	219-3393	▶657	223-6539	185
213-8481	331	216-7374	681	219-3394	▶658		▶754
213-9270	700	216-7375	682		665	223-8181	250
	743	216-7376	682	219-3395	▶659		▶265
213-9803	582	216-7377	682	219-3396	▶660	224-0672	487
213-9804	533	216-7473	218	219-3397	▶661		807
	▶582	216-7660	454	219-3398	▶662	224-3385	115
214-0592	581	216-8314	27	219-3410	▶663	224-6193	196
214-1669	308	216-8633	37	219-3411	▶664	224-8945	338
214-1670	308	216-8634	37	219-3412	▶665	224-8946	807
214-3159	300	216-8687	229	219-6314	115	224-9855	805
214-3520	66	216-8689	229	219-8656	▶165	225-0312	807
214-5097	218	216-8700	229	219-8751	227	225-3145	103
214-6891	▶20	216-9111	283	219-8752	227	225-3281	385
214-6893	▶21	216-9112	281	219-8753	227	225-4150	807
214-6908	15	216-9113	282	219-8754	227	225-4257	807
	▶100	216-9117	268	219-8755	227	225-4317	22
214-6948	102		▶281	219-8756	227		23
214-6949	100	216-9118	281	219-8757	227		▶47
	▶101	216-9119	281	219-8758	227	225-5436	45
214-6993	▶16	216-9123	268	219-8759	227	225-5437	45
214-6994	▶16		▶282	219-8783	238	225-5438	45
214-7004	▶711	216-9124	▶282	219-8798	218	225-5439	45
214-7006	▶703	216-9125	282	219-9486	662	225-5441	45
214-7007	▶704	216-9147	268	220-0248	477	225-5451	45

▶ **PRIMARY REFERENCE**

PART NUMBER INDEX

Part	Page	Part	Page	Part	Page	Part	Page
225-5453	45	226-4366	234		193	231-0700	234
225-5454	45		235	229-8413	173		235
225-5458	45	226-4370	234		193	231-0703	234
225-5459	45		235	229-9382	381		235
225-5493	32	226-5633	513		386	231-0705	▶218
225-5494	32		516		387		230
225-5495	32	226-5634	513		388	231-3057	114
225-5496	32		516	229-9862	144	231-3058	114
225-5497	32	226-7164	185	230-3809	289	231-3539	384
225-5498	32		187	230-3810	289	231-3540	376
225-5499	32	226-7811	709	230-3811	289	231-7660	487
225-5501	33	226-7812	709	230-4017	221	231-9352	230
225-5502	33	226-8202	379	230-6368	110		806
225-5625	50		382	230-7300	22	232-0252	479
225-5629	50	226-9095	703		23	232-1115	88
225-5634	50		704		▶35	232-1322	32
225-5638	50		▶709	230-7353	22	232-1323	93
225-5640	50	227-4376	69		23		96
225-5959	50		72		▶49	232-1328	93
225-5960	50	227-4709	303	230-7355	22		96
225-5961	50	227-7447	75		23	232-1793	96
225-5962	50	227-7448	75		▶63	232-1794	93
225-5963	50	227-7449	75	230-7569	22		96
225-5967	24	228-0297	698		23	232-2725	93
225-6004	43	228-0298	698		▶48		96
225-6005	43	228-0560	698	230-7578	22	232-2726	93
225-6041	43	228-4284	698		23		96
225-6455	25	228-4587	▶309		▶52	232-3126	88
225-6517	25	228-4588	▶309	230-7649	446		96
225-6522	25	228-4589	▶309		448	232-3149	93
225-6817	54	228-4590	▶309		454		96
225-6818	54	228-4591	▶310		458	232-3157	93
225-6820	54	228-4592	350	230-7650	446		96
225-6908	53		351		448	232-3158	93
225-6909	53	228-4593	350		455	232-3274	93
225-7738	63		351		459		96
225-7739	63	228-4594	350	230-7651	446	232-3657	37
225-7741	63		351		448	232-3666	37
225-7772	27	228-4595	350		454	232-3670	22
225-7781	27	228-4596	350		458		23
225-7941	54		351	230-7886	93		▶37
225-7944	29	228-4597	350	230-8065	34	232-3722	54
	54		351	230-8094	43	232-3751	29
225-8016	63	228-5730	▶363	230-8279	54		54
225-8019	63		538	230-8989	93	232-3861	54
225-8278	37	228-5731	▶364		96	232-4706	754
225-8280	37		538	230-8995	93	232-5849	541
225-8281	37	228-6331	443		96	232-6177	22
225-8282	37		444	230-8996	93		23
225-8329	52	228-9129	▶98		96		▶54
225-8524	84		99	230-8997	93	232-6661	22
225-8526	84	228-9130	98		96		23
225-8530	84	228-9132	98	230-8998	93		▶113
225-8533	84	229-1203	363		96	232-6662	113
225-8534	84		364	230-9127	25	232-7400	27
225-8536	84	229-4896	25	230-9144	25	232-7439	22
225-8848	39	229-5085	234	231-0030	53		23
225-8858	29		235	231-0033	22		▶27
225-9303	78	229-5092	234		23	232-7440	29
	79		235		▶53	232-7442	22
226-1240	807	229-5093	229	231-0046	48		23
226-4346	234	229-6051	776	231-0149	22		▶45
	235	229-6052	776		23	232-7449	31
226-4365	234	229-8182	183		▶76	232-7454	29
	235	229-8377	173	231-0676	234	232-7519	▶32

▶ **PRIMARY REFERENCE**

PART NUMBER INDEX

Part	Page
	33
232-7524	22
	23
	▶33
232-7526	22
	23
	▶50
232-7528	22
	23
	▶24
232-7596	29
232-7597	29
232-7599	29
232-7600	29
232-7603	29
232-7604	▶29
	31
232-7606	22
	23
	▶31
232-9737	115
232-9758	88
232-9759	88
233-2138	452
233-3784	27
233-3785	27
233-3786	27
233-3788	27
233-3789	27
233-3790	27
233-7432	22
	23
	▶39
233-9417	23
	▶88
233-9454	502
233-9530	103
233-9531	103
233-9532	103
234-1532	499
234-1533	499
234-1534	499
234-1535	499
234-1710	▶114
234-1979	20
	21
	▶73
234-1981	73
	▶75
234-1991	20
	21
	▶189
234-1992	189
234-2484	749
234-2485	749
234-2617	704
	706
	▶749
234-2622	73
234-2842	284
234-2846	269
	▶284
234-2847	284
234-2848	284
234-2849	285
234-2850	269
	▶285
234-2851	285
234-2852	▶285
234-2856	286
234-2857	269
	▶286
234-2858	▶286
234-2859	286
234-3029	84
234-3030	84
234-3059	20
	▶22
234-3061	21
	▶23
234-4328	▶118
	140
	142
234-4329	▶119
	142
234-5121	73
	81
234-6926	396
	397
	▶539
234-6927	539
234-7509	51
234-7510	20
	21
	▶51
234-7527	▶232
	239
	240
234-7528	▶233
	239
	240
234-7730	118
	119
234-7731	118
	119
234-7834	▶65
	67
234-7836	▶67
234-7954	51
234-8601	704
	706
	▶715
234-8815	51
	539
234-8892	15
	▶86
234-9066	336
234-9430	715
234-9554	715
234-9613	232
235-0128	86
235-0354	382
235-0973	376
235-1056	715
235-1790	93
	96
235-1966	67
	70
235-1967	67
	70
235-1974	65
	▶69
235-1975	72
235-2491	51
235-2545	▶341
	345
235-2612	▶345
235-2854	▶110
235-2972	20
	21
	▶90
235-3170	20
	21
	▶99
235-3420	20
	21
	▶83
235-3556	22
	23
235-4110	396
	397
	▶533
235-4551	396
	397
	▶479
235-4553	479
235-4799	396
	397
	▶486
235-5306	479
235-5363	83
235-5843	539
235-5855	▶482
	543
235-5857	▶483
	542
	543
235-5858	▶484
	543
235-5861	348
	349
	397
	▶487
235-5862	13
	▶424
235-5864	3
	4
	8
	▶428
235-5865	10
	▶432
235-5867	2
	6
	▶436
235-6017	472
235-6018	472
235-6019	472
235-6020	472
235-7091	479
235-8528	479
235-8747	170
235-8749	22
	23
	▶170
235-9777	482
	483
	484
	485
235-9831	▶385
	396
	397
235-9832	385
235-9833	385
235-9835	385
236-0695	▶485
	542
236-1673	93
	96
236-1674	93
	96
236-2064	322
236-2066	323
236-2070	15
	▶322
236-2072	15
	▶323
236-2486	20
	21
	▶77
236-2507	83
236-5606	341
236-5607	341
236-5608	341
236-5681	341
236-5807	▶70
236-5808	▶66
	70
236-5809	66
	▶72
236-5860	77
236-6651	51
236-6652	51
236-6657	703
	705
	▶747
236-6923	173
236-6954	326
	329
236-7295	232
	233
236-7528	451
236-7661	451
236-8228	▶92
	93
236-8229	23
	▶93
236-8238	22
	23
	▶36
236-8241	22
	23
	▶34
236-9900	409
	412
	416
	420
	424
	428
	432
	436

▶ **PRIMARY REFERENCE**

PART NUMBER INDEX

Part	Page
236-9980	409
	412
	416
	420
	424
	428
	432
	436
237-0024	22
	23
	▶168
237-0025	22
	23
	▶43
237-0027	22
	23
	▶103
237-0284	88
237-0285	88
237-0286	88
237-0632	487
237-0769	25
237-0803	326
	329
237-0975	83
237-0976	83
237-2197	99
237-2527	96
237-2528	22
	▶96
237-2799	84
237-3655	176
237-3658	22
	23
	▶40
237-3786	84
237-3791	84
237-3794	84
237-3797	539
237-3921	84
237-3922	84
237-3923	84
237-3924	22
	23
	▶84
237-4157	75
237-4894	169
237-4896	22
	23
	▶169
237-5330	326
	329
237-6463	16
	▶230
237-7161	717
237-7162	718
237-8037	▶176
	239
	240
237-9288	▶15
	16
237-9289	▶15
	16
237-9297	16
	▶396
237-9298	16
	▶397
237-9541	240
	▶717
237-9542	240
	▶718
238-1165	15
	▶183
238-1166	▶185
	703
	704
	711
238-1167	▶187
	705
	706
238-1811	▶173
	704
	706
238-1830	90
238-4441	338
	806
238-5257	227
238-5258	218
	▶227
238-6700	15
	▶805
238-6847	806
238-6955	▶267
238-6956	▶268
238-6957	▶268
238-6959	▶268
238-6960	▶268
238-6963	▶269
238-6964	▶269
238-6965	▶269
238-6966	▶269
238-6967	▶270
238-6970	▶270
238-6971	▶270
238-6973	▶270
238-6974	▶271
238-7492	173
238-8550	230
	▶303
238-8671	96
238-8864	88
238-9192	73
238-9397	189
238-9672	269
	▶271
238-9673	271
	▶287
238-9674	271
	▶287
238-9675	270
	▶271
238-9676	271
	▶287
238-9677	271
	▶288
238-9678	270
	271
	▶272
238-9679	272
	▶288
238-9680	272
	▶288
238-9828	20
	▶78
	703
	704
	711
239-0225	▶607
239-0226	▶608
239-0602	715
239-1080	704
	706
	▶781
239-1081	703
	705
	711
	▶782
239-1434	86
239-1435	86
239-2270	77
239-3683	51
239-5761	▶80
	82
239-5763	80
	82
239-5766	80
	82
239-6989	807
239-6996	▶79
	705
	706
239-9400	▶348
239-9403	▶348
239-9404	▶348
239-9405	▶348
239-9410	▶397
239-9413	▶349
239-9427	807
239-9430	807
239-9434	808
239-9435	594
	806
239-9436	808
239-9438	806
239-9897	22
	23
240-0017	315
240-0018	314
240-0019	313
240-0541	198
240-0542	198
240-2568	79
240-2569	78
240-2614	716
240-3181	▶542
240-3182	▶542
240-3183	▶543
240-3184	▶542
240-3185	▶543
240-3186	▶543
240-3478	336
	▶338
240-3479	338
240-4639	110
240-5571	96
240-7095	807
240-7194	33
240-7957	807
240-8490	▶1
240-8491	▶1
240-8492	▶2
240-8493	▶2
240-8504	▶3
240-8505	▶3
240-8506	▶4
240-8507	▶4
240-8683	▶9
240-8684	▶9
240-8685	▶10
240-8686	▶10
240-8687	▶11
240-8688	▶11
240-8689	▶5
240-8690	▶5
240-8691	▶6
240-8692	▶6
240-8693	▶12
240-8694	▶12
240-8695	▶13
240-8696	▶13
240-8697	▶14
240-8698	▶14
240-8699	▶7
240-8700	▶7
240-8701	▶8
240-8702	▶8
240-9671	539
240-9716	539
240-9721	539
240-9756	88
241-0022	90
241-0093	140
	142
241-0095	▶140
241-0096	▶142
241-0168	▶345
241-3406	15
	▶336
241-4275	90
242-1529	▶81
242-1920	73
242-8521	15
	▶198
242-9751	57
242-9947	▶82
243-5027	189
244-1989	588
244-2104	715
244-2603	101
	▶102
244-3106	189
244-3316	113
244-6869	385
245-1728	487
245-9828	35
246-1163	25
246-2582	22
	23
	▶25

▶ **PRIMARY REFERENCE**



© 2003 Caterpillar
All Rights Reserved

Printed in U.S.A.