CATERPILLAR®

SEBP5075
October 2009

RUTHZIL TRATOR COMERCIAL DE PEÇAS LTDA 11 97083-6812 ROLANDO

Parts Manual

SIS

See “General Information” for New Parts Manual Features.

428E Backhoe Loader

DPH1-Up (Machine)
C4Z1-Up (Engine)
CRS1-Up (Engine)

Powered By C4.4 Engine, 3054C Engine

This Parts Manual is also available in .pdf Format on Compact Disc (CD - ROM) Caterpillar Form No. SERP5075.

Product and Dealer Information

Note: For product identification plate locations, see the section “Product Identification Information” in the Operation and Maintenance Manual.

Delivery Date: _____

Product Information

Model: _____

Product Identification Number: _____

Engine Serial Number: _____

Transmission Serial Number: _____

Generator Serial Number: _____

Attachment Serial Numbers: _____

Attachment Information: _____

Customer Equipment Number: _____

Dealer Equipment Number: _____

Dealer Information

Name: _____ Branch: _____

Address: _____

_____

_____

	Dealer Contact	Phone Number	Hours
Sales:	_____	_____	_____
Parts:	_____	_____	_____
Service:	_____	_____	_____

MEMORANDA

TABLE OF CONTENTS

Name	Page
GENERAL INFORMATION	A4
REPAIR ALTERNATIVES	A7
SUPPLEMENTAL COOLANT ADDITIVES	A8
MAINTENANCE PARTS	A9
INDEX	A12
MACHINE ARRANGEMENT	1
BACKHOE AR-EXTENDABLE STICK	1
BACKHOE AR-STANDARD STICK	4
CHASSIS AR	5
COMMON AR	5
CONVERSION AR-ROADING	5
DRIVE AR-BACKHOE LOADER	6
LOADER AR	6
ENGINE ARRANGEMENT	7
ENGINE AR	7
ENGINE AR-PRIMARY	15
BASIC ENGINE	19
CAMSHAFT GP	19
COVER GP-VALVE MECHANISM	21
CRANKSHAFT GP	25
CYLINDER BLOCK GP	29
CYLINDER HEAD GP	35
DRIVE GP-AUXILIARY	39
DRIVE GP-FAN	41
FLYWHEEL GP	43
HOUSING GP-FLYWHEEL	45
HOUSING GP-FRONT	47
LIFTING GP-ENGINE	51
MOUNTING GP-ENGINE	53
MOUNTING GP-ENGINE & XMSN	55
PAN GP-OIL	56
PISTON & ROD GP	60
PLUG GP-CYLINDER HEAD	63
PLUG GP-ENGINE	64
ROCKER ARM GP	69
VALVE MECHANISM GP	71
LUBRICATION SYSTEM	73
BREATHER GP	73
FILLER GP-ENGINE OIL	74
GAUGE GP-OIL LEVEL & FILLER	75
PUMP GP-ENGINE OIL	76
COOLING SYSTEM	78
CONNECTION GP-WATER	78
COOLER GP-ENGINE OIL	80
COOLER GP-FLTR BASE & ENG OIL	82
FAN GP-SUCTION	83
LINES GP-POWER TRAIN COOLER	86
LINES GP-RADIATOR	88
PUMP GP-WATER	90
RADIATOR & HYD OIL COOLER GP	94
TANK & LINES GP-COOLANT	98
AIR INLET AND EXHAUST SYSTEM	100
AIR CLEANER GP	100
COVER GP-INLET MANIFOLD	105
EXTENSION GP-EXHAUST	108
LINES GP-AIR	109
MUFFLER GP	110
TURBOCHARGER GP	111
FUEL SYSTEM	117
CONTROL GP-GOVERNOR	117
FILTER GP-WATER SEP & FUEL	119
LINES GP-FUEL	121
LINES GP-FUEL FILTER	127
PUMP GP-FUEL INJECTION	128
PUMP GP-FUEL PRM & PRIM FILTER	143
TANK GP-FUEL	146
ELECTRICAL AND STARTING SYSTEM	148
ALTERNATOR GP-CHARGING	148
BATTERY & WIRING GP	150
GLOW PLUG GP	154
HEATER GP-JACKET WATER	156
INSTALLATION GP-SECURITY	158
LAMP GP-FLOOD	165
LAMP GP-HEAD & SIGNAL	167
LAMP GP-REGISTRATION PLATE	171
LAMP GP-WARNING BEACON	173
LIGHTING GP-FLOOD	174
LIGHTING GP-ROADING	175
LIGHTING GP-WARNING BEACON	180
RELAY GP	181
STARTING MOTOR GP-ELECTRIC	185
SWITCH GP-ALL WHEEL DRIVE	189
SWITCH GP-DIFFERENTIAL LOCK	190
SWITCH GP-DISCONNECT	191
SWITCH GP-PRESSURE	192
WARNING GP-BACKUP	194
WIRING GP-AIR CONDITIONER	195
WIRING GP-CAB	198
WIRING GP-CONSOLE	202
WIRING GP-ENGINE	204
WIRING GP-HEATER	207
WIRING GP-KICKOUT & POSITIONER	209
WIRING GP-LOAD CONTROL	211
WIRING GP-MACHINE	213
WIRING GP-PLATFORM	215
WIRING GP-REAR	220
WIRING GP-RIDE CONTROL	222
WIRING GP-SENSOR	224

TABLE OF CONTENTS

Name	Page
WIRING GP-WIPER	227
POWER TRAIN	229
AXLE GP-DRIVE & STEERING	229
AXLE GP-REAR	231
CASE AS-TRANSMISSION	234
DIFFERENTIAL & BEVEL GEAR GP	237
DIFFERENTIAL GP	241
DRIVE GP-FLEXIBLE COUPLING	243
FILLER GP-POWER TRAIN OIL	244
FLANGE GP-WHEEL	245
HOUSING & FLANGE GP-AXLE	246
HOUSING GP-AXLE	249
LINES GP-POWER TRAIN OIL	250
MOUNTING GP-AXLE	251
MOUNTING GP-TRANSMISSION	252
PLANETARY GP-FINAL DRIVE	253
POWER TRAIN AR	255
SHAFT GP-DRIVE	255
SHAFT GP-INPUT	257
SHAFT GP-OUTPUT	259
STOP GP-STEERING	261
TRANSMISSION AR-DIRECT DRIVE	262
TRANSMISSION GP-DIRECT DRIVE	263
VALVE GP-RELIEF	268
VALVE GP-TIRE	269
WHEEL & TIRE AR	270
WHEEL & TIRE GP	274
BRAKING SYSTEM	295
CONTROL GP-PARKING BRAKE	295
CONTROL GP-SERVICE BRAKE	297
CYLINDER GP-BRAKE	300
LEVER GP-HAND CONTROL	302
RESERVOIR GP-BRAKE	303
STEERING SYSTEM	305
LINES GP-STEERING	305
STEERING COLUMN GP	307
FRAME AND BODY	308
BOX GP-BATTERY	308
COUNTERWEIGHT GP	310
FENDER GP-FRONT	313
FENDER GP-REAR	315
FLOORPLATE GP	317
FRAME AR-LOADER	320
FRAME GP-LOADER	321
FRAME GP-SLIDING	325
FRAME GP-SWING	327
GUARD GP-DRIVE SHAFT	328
GUARD GP-LIGHTING	329
GUARD GP-RADIATOR	330
HOOD & GUARD GP	331
HOOD GP-ENGINE	333
LINER GP-SOUND SUPPRESSION	336
SUPPRESSION AR-SOUND	337
HYDRAULIC SYSTEM	338
ACCUMULATOR GP-RIDE CONTROL	338
CONTROL AR-BACKHOE	340
CONTROL AR-RIDE	340
COOLER GP-HYD & XMSN OIL	341
CYLINDER GP-BACKHOE BUCKET	343
CYLINDER GP-BOOM	344
CYLINDER GP-HYDRAULIC	345
CYLINDER GP-LIFT	347
CYLINDER GP-MULTIPURPOSE BUKT	349
CYLINDER GP-STABILIZER	350
CYLINDER GP-STICK	351
CYLINDER GP-TILT	354
DRIVE & MTG GP-PUMP	355
FILTER GP-OIL	356
FITTING GP-HYDRAULIC	357
HYDRAULIC AR	358
LINES GP-AUXILIARY HYDRAULIC	359
LINES GP-BACKHOE	366
LINES GP-BACKHOE AUXILIARY	368
LINES GP-BOOM	371
LINES GP-BUCKET	372
LINES GP-BUCKET CYLINDER	376
LINES GP-DRAIN	378
LINES GP-LIFT & TILT	379
LINES GP-LIFT CYLINDER	381
LINES GP-LOAD CONTROL VALVE	385
LINES GP-MULTIPURPOSE BUCKET	388
LINES GP-PILOT	390
LINES GP-PUMP	392
LINES GP-RETURN	394
LINES GP-RIDE CONTROL	396
LINES GP-SIDESHIFT LOCK	398
LINES GP-STABILIZER	399
LINES GP-STICK	401
LINES GP-SWING	402
MANIFOLD GP-CONTROL	404
MANIFOLD GP-RIDE CONTROL	407
MOUNTING GP-CYLINDER	408
MOUNTING GP-LINES	409
PUMP GP-PISTON	410
SHAFT GP-PUMP DRIVE	411
TANK & MTG GP-HYDRAULIC	412
TANK GP-HYDRAULIC	414
VALVE & MTG GP-BANK	415
VALVE AR-BANK 3	417
VALVE GP-BANK 3	418
VALVE GP-BANK 7	419
VALVE GP-CONTROL	420
VALVE GP-LOAD CONTROL	429

TABLE OF CONTENTS

Name	Page
IMPLEMENTS	430
ARM GP-LIFT	430
BOOM GP	433
BRACE GP-LIFT CYLINDER	435
LINKAGE GP-BACKHOE BUCKET	436
LOCK GP-TRANSPORT	443
PAD GP-STABILIZER	447
STABILIZER GP-BACKHOE	448
STICK GP	449
STICK GP-EXTENDABLE	451
WORK TOOLS	455
BUCKET AR-MULTIPURPOSE	455
BUCKET AS-GENERAL PURPOSE	463
BUCKET AS-HOE	464
BUCKET GP-HOE	487
BUCKET GP-MULTIPURPOSE	512
BULLDOZER AS	515
CLAM AS-MULTIPURPOSE BUCKET	519
COUPLER GP-QUICK	521
EDGE GP-CUTTING	526
FORK GP	528
GUARD GP-BUCKET	531
MOUNTING GP-BUCKET	533
MOUNTING GP-FORK	537
TOOTH GP-UNI	539
OPERATOR STATION	540
CAB AR	540
CAB GP	542
CANOPY AR-OPEN ROPS	544
CANOPY GP-OPEN ROPS	546
COMPRESSOR GP-REFRIGERANT	548
CONDENSER & MTG GP-REFRIGERANT	550
CONSOLE GP-OPERATOR	551
CONTROL GP-HYDRAULIC HAND	557
CONTROL GP-HYDRAULIC PEDAL	565
CONTROL GP-STABILIZER	566
CONTROL GP-STEERING	568
CONTROL GP-TRANSMISSION	570
COVER GP-WIPER MOTOR	572
DOOR GP-CAB	573
FLOOR MAT GP	577
HEATER & MTG GP-CAB	578
HEATER GP-CAB	583
HORN GP-ELECTRIC	587
INSTALLATION GP-RADIO	588
KIT-SEAT FRAME	589
KIT-SEAT SUSPENSION	590
LATCH GP-CAB DOOR & WINDOW	592
LEVER GP-GOVERNOR	594
LINER GP-CAB	595
LINES GP-HEATER	597
LINES GP-HEATER & AIR COND	598
MIRROR GP-REAR VIEW	600
MOTOR GP-WINDOW WIPER	602
MOUNTING GP-CAB	604
PAN GP-SEAT	605
PEDAL GP-GOVERNOR	606
ROOF GP-CAB	607
SEAT GP	608
SEAT GP-SUSPENSION	612
SUSPENSION GP-SEAT	618
SWIVEL GP-SEAT	622
TRIM GP-CAB	624
VISOR GP-CAB	626
WASHER GP-WINDOW	627
WINDOW GP-CAB	629
WINDOW GP-DOOR	631
WIPER & WASHER GP-WINDOW	633
WIPER GP-WINDOW	635
SERVICE EQUIPMENT AND SUPPLIES	636
FILM GP	636
LOCK GP-VANDALISM	637
PLATE & FILM GP	638
PROTECTION GP-VANDALISM	639
SERVICE GP-FILTER	640
PART NUMBER INDEX	B1

GENERAL INFORMATION

1. MACHINE IDENTIFICATION

Caterpillar machines are identified by Product Identification Numbers (PIN). Some components included in a machine may be identified by Serial Numbers (S/N). Typical components that will be serialized include engines, transmissions, bulldozers, and rippers. The machine and engine are further identified by arrangement numbers and in some cases modification numbers. These numbers are shown on the product identification plate(s) and on the master plate in the operator's compartment.

Caterpillar dealers need all of these numbers to determine accurate parts identification.

SIS *New Feature*

Effective First Quarter 2001 the Caterpillar Product Identification Number (PIN) changed from 8 to 17 characters. In an effort to provide uniform equipment identification, Caterpillar and other construction equipment manufacturers are moving to comply with the latest version of the product identification numbering standard. Non-road machine PINs are defined by ISO 10261. The new PIN format will apply to all Caterpillar machines and generator sets. The PIN plates and frame marking will display the 17 character PIN. The new format will look like the following:

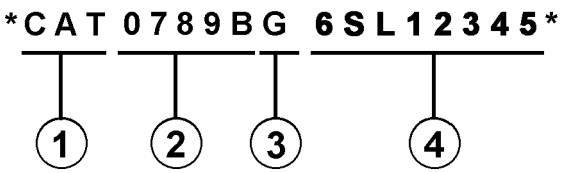

Where:

1. Caterpillar's World Manufacturing Code (characters 1-3)

2. Machine Descriptor (characters 4-8)

3. Check Character (character 9)

4. Machine Indicator Section (MIS) or Product Sequence Number (characters 10-17). These were previously referred to as the Serial Number.

Machines and generator sets produced before First Quarter 2001 will maintain their 8 character PIN format.

Components such as engines, transmissions, axles, etc. and work tools will continue to use an 8 character Serial Number (S/N).

2. ORDERING PARTS

⚠ WARNING

When replacement parts are required for this product Caterpillar recommends using Caterpillar replacement parts or parts with equivalent specifications including, but not limited to, physical dimensions, type, strength and material.

Failure to heed this warning can lead to premature failures, product damage, personal injury or death.

Quality Caterpillar replacement parts are available from Caterpillar dealers throughout the world. Their parts inventories are up to date and include all parts normally required to protect your investment in Caterpillar machines. Dealers may offer repair kits or remanufactured parts to allow selection of the most effective repair alternative for a particular situation. When ordering parts, your order should specify the quantity, part number, part name, and the serial number/product identification number of the machine for which the parts are needed.

3. PARTS MANUAL ORGANIZATION

Product information in this manual is presented as "information elements" that represent all of the components for the specific model. Engine Arrangement and Seat Group are examples of information elements. The information elements are organized alphabetically by part name and secondarily by part number within each major section of the manual.

4. TABLE OF CONTENTS

A table of contents (TOC) is found at the beginning of the manual. The TOC lists each section of the manual with a complete list of all information elements organized as they appear in the manual. Page numbers are provided for quick reference to detailed parts identification illustrations and serviceable consist lists.

5. MAINTENANCE PARTS INDEX

The Maintenance Parts Index, located near the beginning of the manual, references most frequently used maintenance part numbers, providing description, quantity, usage and page number. This information is organized alphabetically by part description.

6. INDEX

The index located near the front of the manual is an alphabetical listing of all information elements included in the manual. Page numbers are provided for quick reference to detailed parts identification illustrations and serviceable consist lists.

7. PART NUMBER INDEX

A numerical index listing all part numbers and the corresponding page number(s) appears at the back of the manual.

8. CAPTIONS

Captions located at the beginning of each information element identify the part number and part name along with additional descriptive information. PIN and S/N information found in each caption should be used to select correct information for a specific machine. Field replacement options, identification of optional attachment components, and where used ("part of") information is also provided.

The first line of a caption is shown in larger type font to indicate the beginning of an information element. Captions for additional pages that may be required to illustrate an information element will be shown in standard type font and will include the term *(contd.)* .

9. NON-SERVICED PARTS

In some instances it is necessary to display non-serviced parts that are a link to a lower level serviceable consist lists. These non-serviced part numbers are shown in *italic* type indicating that they are not available.

10. PARTS LIST REFERENCE NUMBERS

Numbers shown in the Ref No column correspond to numbers used in the associated graphic(s). An alphabetic suffix may be added to a reference number to identify lower level consist items. Numbers shown in the Graphic Ref column refer to the graphic number identifier displayed in the lower left corner of each illustration. The Graphic Ref number may be used in combination with the item Ref No to determine the correct part number. There may be intentional omission of a Ref No in a consist list as information is updated to reflect the latest serviceable part numbers.

11. INDENTED PART NAMES

When a part name is indented in a parts list, it is part of (included in) the group or assembly under which it is indented.

12. ILLUSTRATION REFERENCE LETTERS

When necessary, illustrations contain reference letters (A, B, C etc.) that are intended to track lines and harnesses from one point to another. They are also used to show where to reconnect illustrations that have been separated.

13. ABBREVIATIONS AND SYMBOLS

O.D. – Outside Diameter
I.D. – Inside Diameter
A – Not Part Of This Group
B – Use As Required
C – Change From Previous Type
D – Order By The Meter
E – Order By The Centimeter
F – Not Shown
G – Order By The Inch
I – Refer To Hydraulic Information System
M – Metric Part
R – Remfg Part May Be Available
Y – Separate Illustration
Z – Not Serviced Separately

SIS *New Feature*

14. DESCRIPTION OF TYPE CHANGES

Type - A type is defined as any configuration change that requires an additional Information Element for an Arrangement, Group, or Assembly. If serial number breaks for types are not available, a type # (Type 1, Type 2, etc.) will be displayed in the caption. These "type" changes are identified with a "C" note (change from previous type) in the Parts List. Only the "types" that apply to this Parts Manual will be included. Additional types may exist causing "C" notes to appear on an Information Element when no other types are shown.

15.<END>

This symbol indicates the end of an information element.

NOTE:

Continuing improvement and advancement of product design may cause changes to your machine which may not be included in this publication. Whenever a question arises regarding your Caterpillar product or this publication, please consult your Caterpillar dealer for the latest available information.

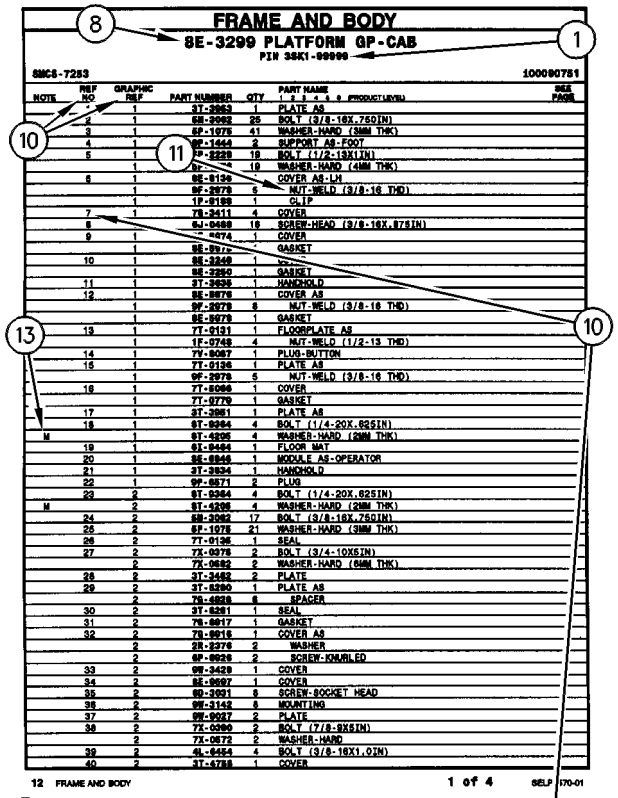
FRAME AND BODY
8E-3299 PLATFORM GP-CAB
PIN 3SK1-99999
SMCS-7283
100090751
12 FRAME AND BODY
1 of 4
SELP4570-01

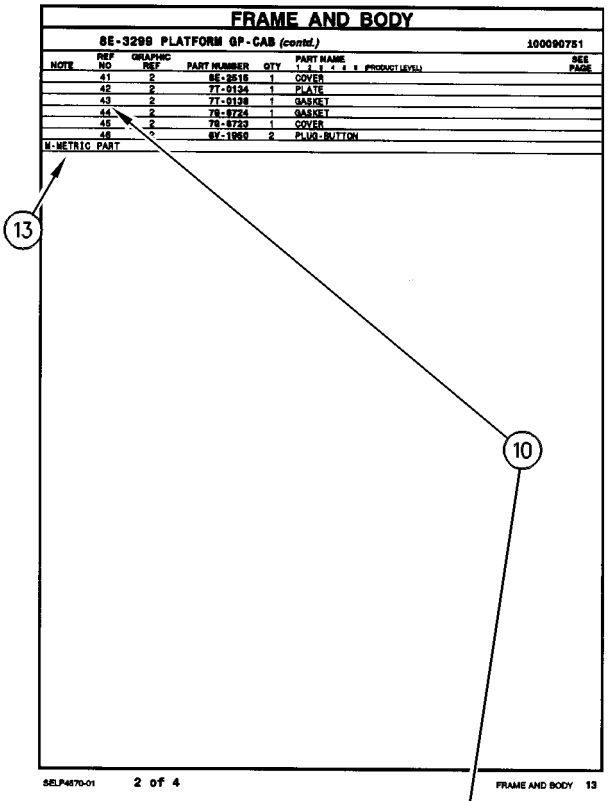
FRAME AND BODY
8E-3299 PLATFORM GP-CAB (contd.)
100090751
M-METRIC PART
SELP4570-01
2 of 4
FRAME AND BODY 13

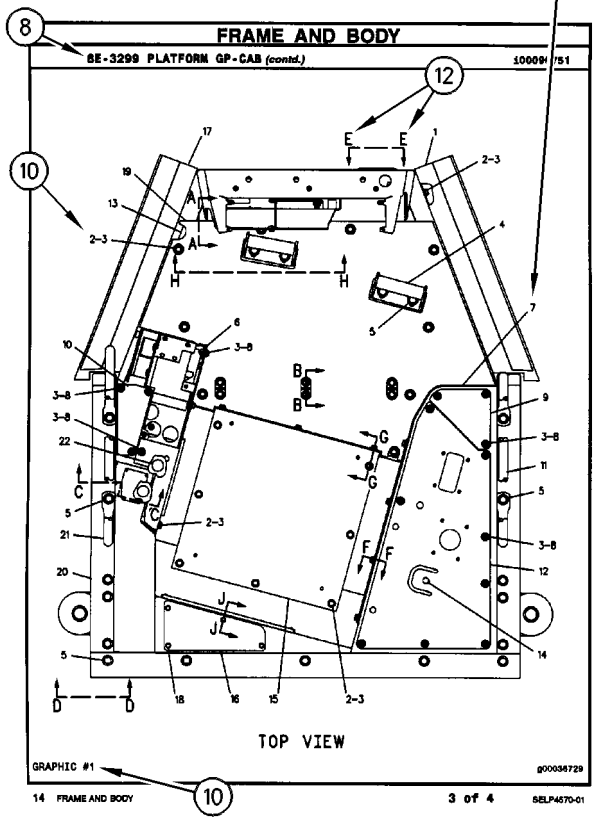
FRAME AND BODY
8E-3299 PLATFORM GP-CAB (contd.)
TOP VIEW
GRAPHIC #1
g00036729
14 FRAME AND BODY
3 of 4
SELP4570-01

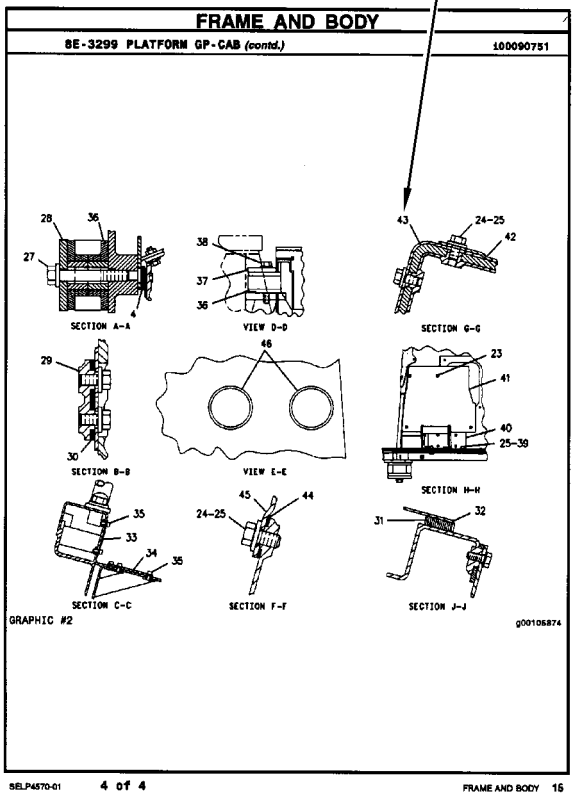
FRAME AND BODY
8E-3299 PLATFORM GP-CAB (contd.)
100090751
SECTION A-A
VIEW D-D
SECTION G-G
SECTION B-B
VIEW E-E
SECTION H-H
SECTION C-C
SECTION F-F
SECTION J-J
GRAPHIC #2
g00105874
SELP4570-01
4 of 4
FRAME AND BODY 15

REPAIR ALTERNATIVES

REMANUFACTURED COMPONENTS

As an option when making repairs consider Caterpillar Remanufactured Components. Components that are available through the Caterpillar Remanufactured Program are identified three ways in the parts book:

- with the letter R in the note field of the parts list
- with an R* at the beginning of the first line of the caption
- with an *R at the end of the first line of the caption

Typical components included in the Remanufacturing Program include:

ALTERNATORS
CONNECTING RODS
CRANKSHAFTS - UNDERSIZE
CRANKSHAFTS - UPGRADE TO NEW
CYLINDER HEADS
ELECTRONIC CONTROL MODULES (ECM)
ELECTRONIC SENSORS
FUEL INJECTORS
FUEL NOZZLES
FUEL PUMPS
GOVERNORS
OIL PUMPS
PISTONS
SHORT BLOCKS
STARTERS
TURBOCHARGERS - COMPLETE
TURBOCHARGER CARTRIDGES
WATER PUMPS

Caterpillar Remanufactured engines for many engine arrangements are also available.

SUPPLEMENTAL COOLANT ADDITIVES

CUSTOMER BENEFITS:

Protects against cavitation, foam, erosion, corrosion, and scale buildup in cooling systems.

- Provides measured coolant conditioner.

DESCRIPTION:

Additives deplete from the coolant with normal operation. For this reason, Supplemental Coolant Additives (SCA) must be added to all heavy duty coolants at regular intervals. In addition, when not using a fully formulated, pre-charged antifreeze, like Caterpillar's DEAC, an initial charge of SCA must be added to the cooling system. The amount of SCA added to the system is dependent on the capacity of the system.

The SCA for initial fill is provided as a liquid. SCA's for maintenance intervals are available in liquid form and as a spin-on element. (No Spin-on available for 3600 Family of Engines)

NOTE:

The amount of SCA added at initial fill is not the same as the amount added at maintenance intervals.

The coolant additive elements can be used with any ethylene or propylene glycol type antifreeze which meets ASTM D4985 or ASTM D5345 Specifications.

NOTE:

For use with standard heavy duty coolant only, not for use with Extended Life Coolant.

PARTS NEEDED:

Cooling System Capacity		Liquid SCA at Initial Fill	Liquid SCA at Maintenance*	Spin-on SCA Maintenance Element*
Liters	Gallons			
22-30	(6-8)	3P-2044 (1)	6V-3542 (1)	111-2370 (1)
30-38	(8-10)	3P-2044 (1) 6V-3542 (1)	111-2372 (1)	111-2369 (1)
38-49	(10-13)	3P-2044 (1) 8T-1589 (1)	111-2372 (1)	111-2369 (1)
49-64	(13-17)	3P-2044 (2)	8T-1589 (1)	9N-3368 (1)
64-83	(17-22)	3P-2044 (2) 8T-1589 (1)	111-2372 (1) 6V-3542 (1)	111-2371 (1)
83-114	(22-30)	3P-2044 (3) 8T-1589 (1)	3P-2044 (1)	9N-3718 (1)
114-163	(30-43)	3P-2044 (5)	3P-2044 (1) 6V-3542 (1)	111-2371 (2)
163-242	(43-64)	3P-2044 (8)	3P-2044 (2)	9N-3718 (2)

** Normal maintenance period is 250 hrs. See your Operation and Maintenance Manual for complete coolant maintenance instructions.*

( ) Indicates quantity required.

MAINTENANCE PARTS

DESCRIPTION	PART NUMBER	QTY	WHERE USED	PAGE
AIR INLET AND EXHAUST SYSTEM				
FILTER ELEMENT-AIR (PRIMARY)	293-4053	1	AIR CLEANER GP	100
FILTER ELEMENT-AIR (SECONDARY)	227-7449	1	AIR CLEANER GP	100
BASIC ENGINE				
GASKET (VALVE COVER)	225-6451	1	COVER GP-VALVE MECHANISM	21
		1	COVER GP-VALVE MECHANISM	23
PLUG-DRAIN (ENGINE OIL)	7C-0351	2	PAN GP-OIL	56
		2	PAN GP-OIL	58
COOLING SYSTEM				
BELT-SERPENTINE	212-9353	1	FAN GP-SUCTION	83
		1	FAN GP-SUCTION	85
	324-3408	1	FAN GP-SUCTION	84
CAP AS-COOLANT TANK	251-3227	1	LINES GP-RADIATOR	88
		1	TANK & LINES GP-COOLANT	98
HOSE-RADIATOR (LOWER)	210-6139	1	TANK & LINES GP-COOLANT	98
HOSE-RADIATOR (UPPER)	325-5855	1	LINES GP-RADIATOR	88
		1	TANK & LINES GP-COOLANT	98
REGULATOR GP-TEMPERATURE (INCLUDES CONNECTOR)	254-2267	1	CONNECTION GP-WATER	78
REGULATOR GP-TEMPERATURE (INCLUDES CONNECTOR) (WATER)	254-2267	1	CONNECTION GP-WATER	79

MAINTENANCE PARTS

DESCRIPTION	PART NUMBER	QTY	WHERE USED	PAGE
ELECTRICAL AND STARTING SYSTEM				
BATTERY (12-VOLT, MAINTENANCE FREE, WET)	3T-5760	1	BATTERY & WIRING GP	150
		1	BATTERY & WIRING GP	152
BELT-DRIVE (WARNING BEACON)	9X-8139	1	LAMP GP-WARNING BEACON	173
CAP AS-FILLER (BATTERY)	123-1373	6	BATTERY & WIRING GP	152
FLASHER AS (12-VOLT)	7T-4848	1	WIRING GP-PLATFORM	217
FUSE (10-AMPERE)	113-8490	9	WIRING GP-PLATFORM	216
FUSE (15-AMPERE)	113-8491	10	WIRING GP-PLATFORM	216
FUSE (20-AMPERE)	113-8492	6	WIRING GP-PLATFORM	216
FUSE (30-AMPERE)	274-9872	1	RELAY GP	184
		1	WIRING GP-PLATFORM	215
FUSE (40-AMPERE)	278-6377	1	RELAY GP	181
		1	RELAY GP	184
		1	WIRING GP-PLATFORM	215
FUSE (60-AMPERE)	267-2701	2	RELAY GP	182
		1	RELAY GP	183
		1	WIRING GP-PLATFORM	215
GLOW PLUG (12-VOLT)	232-6662	4	GLOW PLUG GP	154
		4	GLOW PLUG GP	155
LAMP (12-VOLT, 10-WATT)	195-9712	1	LAMP GP-REGISTRATION PLATE	171
LAMP (12-VOLT, 21-WATT) (AMBER)	226-4560	1	LAMP GP-HEAD & SIGNAL	167
		1	LAMP GP-HEAD & SIGNAL	168
		1	LAMP GP-HEAD & SIGNAL	169
		1	LAMP GP-HEAD & SIGNAL	170
LAMP (12-VOLT, 21-WATT) (ROADING LIGHTS)	9W-3326	1	LIGHTING GP-ROADING	175
LAMP (12-VOLT, 5-WATT) (CLEAR)	226-4561	1	LAMP GP-HEAD & SIGNAL	167
		1	LAMP GP-HEAD & SIGNAL	168
		1	LAMP GP-HEAD & SIGNAL	169
		1	LAMP GP-HEAD & SIGNAL	170
LAMP (12-VOLT, 55-WATT) (FLOODLIGHT)	9W-0607	1	LAMP GP-FLOOD	165
		1	LAMP GP-FLOOD	166
LAMP (12-VOLT, 55-WATT) (WARNING BEACON)	9X-8118	1	LAMP GP-WARNING BEACON	173
LAMP GP-SIGNAL (12-VOLT) (STOP, TAIL, TURN)	336-9096	2	LIGHTING GP-ROADING	177
		2	LIGHTING GP-ROADING	179
LAMP-HEAD (12-VOLT, 60/55-WATT) (CLEAR)	9W-3324	1	LAMP GP-HEAD & SIGNAL	167
		1	LAMP GP-HEAD & SIGNAL	168
		1	LAMP GP-HEAD & SIGNAL	169
		1	LAMP GP-HEAD & SIGNAL	170
FUEL SYSTEM				
CAP-FUEL (LOCKABLE, VENTED)	284-9039	1	TANK GP-FUEL	146
DRAIN AS	149-9954	1	PUMP GP-FUEL PRM & PRIM FILTER	143
FILTER AS-WATER SEP & FUEL	228-9130	1	PUMP GP-FUEL PRM & PRIM FILTER	143
FILTER ELEMENT-FUEL (WATER SEPARATOR)	131-1812	1	FILTER GP-WATER SEP & FUEL	119
STRAINER (FUEL TANK)	311-6886	1	TANK GP-FUEL	146
STRAINER-FUEL (FILLER NECK SCREEN)	180-3730	1	TANK GP-FUEL	146

MAINTENANCE PARTS

DESCRIPTION	PART NUMBER	QTY	WHERE USED	PAGE
HYDRAULIC SYSTEM				
CAP-FILL (HYDRAULIC OIL)	237-3797	1	TANK & MTG GP-HYDRAULIC	412
FILTER ELEMENT-BREATHER (HYDRAULIC TANK)	9R-9925	1	TANK & MTG GP-HYDRAULIC	412
FILTER-OIL (FLOW REGULATOR)	227-1197	1	MANIFOLD GP-CONTROL	405
FILTER-OIL (ULTRA HIGH EFFICIENCY)	126-1817	1	FILTER GP-OIL	356
LUBRICATION SYSTEM				
FILTER AS-ENGINE OIL	7W-2326	1	GAUGE GP-OIL LEVEL & FILLER	75
OPERATOR STATION				
BLADE AS (WIPER, REAR)	315-1316	1	WIPER GP-WINDOW	635
BLADE AS-WIPER (600-MM) (CAB DOOR)	101-0745	1	WIPER & WASHER GP-WINDOW	633
BLADE AS-WIPER (600-MM) (FRONT)	101-0745	1	WASHER GP-WINDOW	627
FILTER ELEMENT AS-AIR (CAB HEATER)	211-2661	1	HEATER & MTG GP-CAB	578
		1	HEATER & MTG GP-CAB	580
FILTER ELEMENT-AIR (CAB HEATER, AIR CONDITIONER)	211-2660	1	HEATER GP-CAB	585
FILTER ELEMENT-AIR (RECIRCULATION)	211-2660	1	HEATER GP-CAB	583
LAMP (12-VOLT)	210-8754	1	LINER GP-CAB	595
POWER TRAIN				
BREATHER (AXLE)	197-9155	1	AXLE GP-REAR	231
BREATHER (FRONT AXLE)	253-5024	1	AXLE GP-DRIVE & STEERING	229
BREATHER (TRANSMISSION)	7T-3251	1	TRANSMISSION GP-DIRECT DRIVE	264
BREATHER AS (SIDE)	293-2147	1	TRANSMISSION GP-DIRECT DRIVE	263
FILTER-OIL (STANDARD EFFICIENCY)	119-4740	1	POWER TRAIN AR	255
PLUG AS-DRAIN (MAGNETIC)	152-6144	4	AXLE GP-DRIVE & STEERING	229
		4	AXLE GP-REAR	231
		1	DIFFERENTIAL & BEVEL GEAR GP	237
STRAINER (SUCTION)	7T-2651	1	CASE AS-TRANSMISSION	234
SERVICE EQUIPMENT AND SUPPLIES				
FILTER AS-ENGINE OIL	7W-2326	1	SERVICE GP-FILTER	640
FILTER AS-WATER SEP & FUEL	228-9130	1	SERVICE GP-FILTER	640
FILTER-OIL (STANDARD EFFICIENCY) (HYDRAULIC)	119-4740	1	SERVICE GP-FILTER	640
FILTER-OIL (ULTRA HIGH EFFICIENCY)	126-1817	1	SERVICE GP-FILTER	640

INDEX

Name	Page
A	
ACCUMULATOR GP-RIDE CONTROL–CHARGED	338
ACCUMULATOR GP-RIDE CONTROL–UNCHARGED	339
ACCUMULATOR-REFRIGERANT (AIR CONDITIONER)	598
AFTERCOOLER GP-AIR	95
AIR CLEANER GP–BASIC	100
AIR CLEANER GP–TURBO	101
	103
ALTERNATOR GP-CHARGING	148
	149
ARM GP-LIFT	430
ARM GP-WINDOW WIPER (REAR)	635
AXLE GP-DRIVE & STEERING–FRONT	229
AXLE GP-REAR	231
B	
BACKHOE AR-EXTENDABLE STICK	1
	2
	3
BACKHOE AR-STANDARD STICK–LIFT	4
BACKHOE AR-STANDARD STICK–NO OBJECT HANDLING	4
BATTERY & WIRING GP–HEAVY-DUTY	150
BATTERY & WIRING GP–STANDARD	152
BATTERY (12-VOLT, MAINTENANCE FREE, WET)	150
	152
BELT-DRIVE (WARNING BEACON)	173
BELT-SERPENTINE	83
	84
	85
BLADE AS (WIPER, REAR)	635
BLADE AS-WIPER (600-MM) (CAB DOOR)	633
BLADE AS-WIPER (600-MM) (FRONT)	627
BLOWER GP-CAB (HEATER)	583
	585
BOOM GP	433
BOX GP-BATTERY	308
BRACE GP-LIFT CYLINDER	435
BRAKE GP-HYDRAULIC CALIPER	232
BREATHER (AXLE)	231
BREATHER (FRONT AXLE)	229
BREATHER (TRANSMISSION)	264
BREATHER AS (SIDE)	263
BREATHER GP–ENGINE	73
BUCKET AR-MULTIPURPOSE	455
	456
	457
	458
	459
	460
	461
	462
BUCKET AS-GENERAL PURPOSE	463
BUCKET AS-HOE	481
	482
	483
	484
	486
BUCKET AS-HOE–HEAVY-DUTY	472
	473
	474
	475
	476
	477
	478
	479
	480
	485
BUCKET AS-HOE–HIGH CAPACITY	464
	465
	466
	467
	468
	469
	470
	471
BUCKET GP-HOE	504
	505
	506
	507
	510
	511
BUCKET GP-HOE–HEAVY-DUTY	495
	496
	497
	498
	499
	500
	501
	502
	503
	508
	509
BUCKET GP-HOE–HIGH CAPACITY	487
	488
	489
	490
	491
	492
	493
	494
BUCKET GP-MULTIPURPOSE	512
	513
	514

INDEX

Name	Page
BULLDOZER AS	515 516
BULLDOZER AS–MULTIPURPOSE BUCKET	517 518

C

Name	Page
CAB AR–MECH, AIR CONDITIONER	541
CAB AR–MECH, NON-AC	540
CAB GP–STANDARD	542
CAMSHAFT GP	19 20
CANOPY AR-OPEN ROPS–FABRIC	545
CANOPY AR-OPEN ROPS–VINYL	544
CANOPY GP-OPEN ROPS	546
CAP AS-COOLANT TANK	88 98
CAP AS-FILLER (BATTERY)	152
CAP-FILL (HYDRAULIC OIL)	412
CAP-FUEL (LOCKABLE, VENTED)	146
CASE AS-TRANSMISSION–FRONT	234
CASE AS-TRANSMISSION–REAR	235
CHASSIS AR	5
CLAM AS-MULTIPURPOSE BUCKET	519 520
COMMON AR	5
COMPRESSOR GP-REFRIGERANT	548 549
CONDENSER & MTG GP-REFRIGERANT	550
CONNECTION GP-WATER	78 79
CONSOLE GP-OPERATOR–FRONT	553
CONSOLE GP-OPERATOR–LH	551
CONSOLE GP-OPERATOR–RH	555
CONTROL AR-BACKHOE	340
CONTROL AR-RIDE	340
CONTROL GP-ELECTRONIC	202
CONTROL GP-GOVERNOR	117
CONTROL GP-HYDRAULIC HAND	566
CONTROL GP-HYDRAULIC HAND–4-FUNCTION, STANDARD	559
CONTROL GP-HYDRAULIC HAND–EXCAVATOR PATTERN	563
CONTROL GP-HYDRAULIC HAND–LOADER	557 561
CONTROL GP-HYDRAULIC PEDAL–AUXILIARY, EXTENDABLE STICK	565
CONTROL GP-PARKING BRAKE	295 296
CONTROL GP-SERVICE BRAKE	297
CONTROL GP-STABILIZER–WITH ALARM	566
CONTROL GP-STEERING–TILT	568
CONTROL GP-TRANSMISSION	570
CONVERSION AR-ROADING–UNITED KINGDOM	5
COOLER GP-ENGINE OIL	80 81
COOLER GP-FLTR BASE & ENG OIL	82
COOLER GP-HYD & XMSN OIL	341 342
CORE AS-OIL COOLER (11 PLATE)	342
CORE AS-OIL COOLER (12 PLATE)	341
CORE AS-OIL COOLER (19 PLATE)	341
CORE AS-OIL COOLER (HYDRAULIC) (18 PLATE)	342
COUNTERWEIGHT GP	310 311 312
COUPLER GP-QUICK	524 525
COUPLER GP-QUICK–BACKHOE	521 522 525
COUPLER GP-QUICK–JCB	523
COVER GP (OUTLET)	418
COVER GP-INLET MANIFOLD	105 106
COVER GP-VALVE MECHANISM	21 23
COVER GP-WIPER MOTOR	572
COWLING AS	331
CRANKSHAFT GP	25 27 28
CYLINDER BLOCK GP	29 31 32 33
CYLINDER GP-BACKHOE BUCKET	343
CYLINDER GP-BOOM	344
CYLINDER GP-BRAKE–LH	301
CYLINDER GP-BRAKE–RH	300
CYLINDER GP-HYDRAULIC	345 346
CYLINDER GP-LIFT–LH	348
CYLINDER GP-LIFT–RH	347
CYLINDER GP-MULTIPURPOSE BUKT	349
CYLINDER GP-STABILIZER	350
CYLINDER GP-STEERING	229
CYLINDER GP-STICK	351 353
CYLINDER GP-TILT	354
CYLINDER HEAD GP	35 36 37 38

D

Name	Page
DIFFERENTIAL & BEVEL GEAR GP	239

INDEX

Name	Page
DIFFERENTIAL & BEVEL GEAR GP–FRONT	237
DIFFERENTIAL GP–AXLE	242
DIFFERENTIAL GP–FRONT	241
DOOR GP-CAB–LH	575
DOOR GP-CAB–RH	573
DRAIN AS	143
DRIVE & MTG GP-PUMP	355
DRIVE AR-BACKHOE LOADER– ALL WHEEL DRIVE, 2-WHEEL STEER	6
DRIVE GP-AUXILIARY	39
	40
DRIVE GP-FAN	41
	42
DRIVE GP-FLEXIBLE COUPLING	243
E	
EDGE GP-CUTTING	526
	527
ENGINE AR	7
	8
	9
	10
	11
	12
	13
	14
ENGINE AR-PRIMARY	15
	16
	17
	18
EXTENSION GP-EXHAUST	108
F	
FAN GP-SUCTION–WITH AIR CONDITIONER	83
	85
FAN GP-SUCTION– WITHOUT AIR CONDITIONER	84
FENDER GP-FRONT	313
	314
FENDER GP-REAR	315
FILLER GP-ENGINE OIL	74
FILLER GP-POWER TRAIN OIL– ALL WHEEL DRIVE, STANDARD SHIFT	244
FILM (REFLECTOR)	531
FILM (SEAL)	215
FILM (START SW, READ OMM, SECURITY)	162
FILM (STD CROSS PATTERN)	559
FILM (TEMPERATURE CONTROL)	578
	580
FILM GP	636
FILM-CERTIFICATION (OPS, READ OMM)	542
	546
FILM-COVER (PROTECT)	308
FILM-IDENTIFICATION (12-VOLT)	308
FILM-IDENTIFICATION (CAT)	333
FILM-IDENTIFICATION (CATERPILLAR)	540
	541
	544
	545
FILM-IDENTIFICATION (FUSE PANEL)	555
FILM-IDENTIFICATION (FUSE, RELAY)	555
FILM-IDENTIFICATION (GROUP NO., SEQUENCE NO.)	583
	585
FILM-IDENTIFICATION (HYDRAULIC OIL)	297
FILM-IDENTIFICATION (START SWITCH, READ OMM)	158
FILM-IDENTIFICATION (WATER SEPARATOR)	321
	323
FILM-INFORMATION (HYDO ADVANCED 10)	412
FILM-INFORMATION (LIFT EYE, TIE-DOWN LOCATION)	321
	323
FILM-INFORMATION (TIE-DOWN)	321
	323
FILM-INSTRUCTION (AUXILIARY)	565
FILM-INSTRUCTION (BOOM LOCK)	555
FILM-INSTRUCTION (BUCKET CONTROL)	340
	417
FILM-INSTRUCTION (EXCAVATOR CONTROL)	563
FILM-INSTRUCTION (EXTENDABLE STICK PIN, READ OMM)	451
	453
FILM-INSTRUCTION (EXTENDABLE STICK)	565
FILM-INSTRUCTION (FORWARD, NEUTRAL, REVERSE)	553
FILM-INSTRUCTION (MACHINE SECURITY, READ OMM)	158
	162
FILM-INSTRUCTION (NO STEP)	308
FILM-INSTRUCTION (OIL FLOW DIRECTION)	360
	364
FILM-INSTRUCTION (RELAY CONNECTION)	204
FILM-INSTRUCTION (STABILIZER, SIDESHIFT)	566
FILM-INSTRUCTION (START SWITCH)	555
FILM-INSTRUCTION (UNLOCK)	335
FILM-INSTRUCTION (VARIABLE SPEED)	555
FILM-INSTRUCTION (WASHER FILL)	627
	633
FILM-NOTICE (BATTERY CABLES DISCONNECT)	308
FILM-NOTICE (ROADING HEIGHT)	5
FILM-STRIPE (YELLOW)	331
	333
FILM-WARNING (ARM BRACE, READ OMM)	435

INDEX

Name	Page
FILM-WARNING (CRUSH HAZARD, STAY BACK, INTL)	433
FILM-WARNING (HIGH PRESS CYLINDER, READ OMM)	396
FILM-WARNING (HIGH PRESSURE, READ OMM)	338 339
FILM-WARNING (HYD PRESS, READ OMM, INTL)	360 364
FILM-WARNING (JUMP START, READ OMM)	308
FILM-WARNING (NO WELD, NO DRILL, READ OMM)	542 546
FILM-WARNING (READ OMM)	555
FILM-WARNING (SEAT BELT)	555
FILM-WARNING (TIPPING HAZARD, READ OMM)	224
FILTER AS-ENGINE OIL	75 640
FILTER AS-WATER SEP & FUEL	143 640
FILTER BASE & ENG OIL COOLER	82
FILTER ELEMENT AS-AIR (CAB HEATER)	578 580
FILTER ELEMENT-AIR (CAB HEATER, AIR CONDITIONER)	585
FILTER ELEMENT-AIR (PRIMARY)	100
FILTER ELEMENT-AIR (RECIRCULATION)	583
FILTER ELEMENT-AIR (SECONDARY)	100
FILTER ELEMENT-BREATHER (HYDRAULIC TANK)	412
FILTER ELEMENT-FUEL (WATER SEPARATOR)	119
FILTER GP-OIL	356
FILTER GP-WATER SEP & FUEL	119 120
FILTER-OIL (FLOW REGULATOR)	405
FILTER-OIL (STANDARD EFFICIENCY)	255
FILTER-OIL (STANDARD EFFICIENCY) (HYDRAULIC)	640
FILTER-OIL (ULTRA HIGH EFFICIENCY)	356 640
FITTING & MTG GP-HYDRAULIC	366
FITTING GP-HYDRAULIC–QUICK DISCONNECT	357
FLANGE GP-WHEEL	245
FLASHER AS (12-VOLT)	217
FLOOR MAT	577
FLOOR MAT GP	577
FLOORPLATE GP	317 318
FLYWHEEL GP	43 44
FORK GP	528
FRAME AR-LOADER	320
FRAME AR-LOADER–NARROW	320
FRAME GP-LOADER–NARROW	321
FRAME GP-LOADER–STANDARD	323
FRAME GP-SLIDING	325
FRAME GP-SWING	327
FUSE (10-AMPERE)	216
FUSE (15-AMPERE)	216
FUSE (20-AMPERE)	216
FUSE (30-AMPERE)	184 215
FUSE (40-AMPERE)	181 184 215
FUSE (60-AMPERE)	182 183 215

G

Name	Page
GASKET (VALVE COVER)	21 23
GAUGE GP-OIL LEVEL & FILLER–ENGINE	75
GAUGE-OIL LEVEL (DIPSTICK) (ENGINE)	75 244
GAUGE-SIGHT (HYDRAULIC OIL LEVEL)	414
GEAR GP-RING	231 246 248
GLOW PLUG (12-VOLT)	154 155
GLOW PLUG GP	154 155
GUARD GP-BUCKET	531 532
GUARD GP-DRIVE SHAFT	328
GUARD GP-LIGHTING	329
GUARD GP-RADIATOR	330

H

Name	Page
HANDLE GP-DOOR (LH)	629
HANDLE GP-DOOR (RH)	629
HARNESS AS-CHASSIS	198 200
HARNESS AS-CHASSIS (LOAD CONTROL)	211
HARNESS AS-CONSOLE	202 224
HARNESS AS-CONTROL (MACHINE SECURITY SYSTEM)	162 213
HARNESS AS-CONTROL (PLATFORM)	162 213
HARNESS AS-ENGINE	204

INDEX

Name	Page
HARNESS AS-FUEL TANK (FUEL SHUTOFF)	7, 8, 9, 10, 11, 12, 13, 14
HARNESS AS-HEATER	585
HARNESS AS-HEATER & AIR COND	207, 583
HARNESS AS-HEATER & AIR COND (COMPRESSOR)	195
HARNESS AS-HEATER & AIR COND (POWER)	195
HARNESS AS-HEATER & AIR COND (VENT)	195
HARNESS AS-LIGHTING (REGISTRATION PLATE)	172
HARNESS AS-LIGHTING (ROADING)	542, 546
HARNESS AS-PLATFORM	215
HARNESS AS-RADIO	588
HARNESS AS-REAR	220
HARNESS AS-REAR LIGHTING	175
HARNESS AS-RIDE CONTROL	222
HARNESS AS-SWITCH (CAB)	224
HARNESS AS-SWITCH (HOE)	224
HARNESS AS-SWITCH (REAR)	224
HARNESS AS-VALVE (SEAT AIR COMPRESSOR)	590
HARNESS AS-WINDOW WIPER	227
HARNESS AS-WIRING (KICKOUT, POSITIONER)	209
HARNESS AS-WIRING (SEAT AIR COMPRESSOR)	590
HEATER & MTG GP-CAB	578, 580
HEATER GP-CAB	578, 583, 585
HEATER GP-JACKET WATER	156, 157
HOOD & GUARD GP	331
HOOD GP-ENGINE	333, 335
HORN GP-ELECTRIC–REAR	587
HOSE-RADIATOR (LOWER)	98
HOSE-RADIATOR (UPPER)	88, 98
HOUSING & FLANGE GP-AXLE–LH	248
HOUSING & FLANGE GP-AXLE–RH	246
HOUSING GP-AXLE–LH	249
HOUSING GP-FLYWHEEL	45, 46
HOUSING GP-FRONT	47, 49
HYDRAULIC AR	358

I

Name	Page
INDICATOR AS	303
INDICATOR AS (HIGH BEAM, TURN SIGNAL RH)	215
INDICATOR AS (TURN SIGNAL LH, PARKING BRAKE)	215
INDICATOR GP-AIR FILTER CHANGE	101, 103
INSTALLATION GP-RADIO	588
INSTALLATION GP-SECURITY	158, 160
INSTALLATION GP-SECURITY–TURBO	162

K

Name	Page
KIT-SEAT FRAME	589
KIT-SEAT SUSPENSION–AIR	590

L

Name	Page
LAMP (12-VOLT)	595
LAMP (12-VOLT, 10-WATT)	171
LAMP (12-VOLT, 21-WATT) (AMBER)	167, 168, 169, 170
LAMP (12-VOLT, 21-WATT) (ROADING LIGHTS)	175
LAMP (12-VOLT, 5-WATT) (CLEAR)	167, 168, 169, 170
LAMP (12-VOLT, 55-WATT) (FLOODLIGHT)	165, 166
LAMP (12-VOLT, 55-WATT) (WARNING BEACON)	173
LAMP GP-DOME (12-VOLT)	595
LAMP GP-FLOOD	165, 166
LAMP GP-HEAD & SIGNAL–LH– HIGH, LOW BEAM	168, 170
LAMP GP-HEAD & SIGNAL–RH– HIGH, LOW BEAM	167, 169
LAMP GP-REGISTRATION PLATE	171, 172
LAMP GP-ROADING (FOG; RED, REAR)	175
LAMP GP-SIGNAL (12-VOLT) (STOP, TAIL, TURN)	177, 179

INDEX

Name	Page
LAMP GP-WARNING BEACON–12-VOLT, AMBER	173
LAMP-HEAD (12-VOLT, 60/55-WATT) (CLEAR)	167, 168, 169, 170
LATCH GP-CAB DOOR & WINDOW	592, 593
LEVER GP-GOVERNOR (HANDHELD)	117
LEVER GP-GOVERNOR–HANDHELD	594
LEVER GP-HAND CONTROL–PARKING BRAKE	302
LIFTING GP-ENGINE	51, 52
LIGHTING GP-FLOOD–FRONT, REAR, COSA	174
LIGHTING GP-ROADING–DIPPED, LH	179
LIGHTING GP-ROADING–DIPPED, RH	177
LIGHTING GP-ROADING–FOG	175
LIGHTING GP-WARNING BEACON–AMBER, MAGNETIC MOUNT, ROTATING	180
LINER GP-CAB	595
LINER GP-SOUND SUPPRESSION	336
LINES GP-AIR	109
LINES GP-AUXILIARY HYDRAULIC	362
LINES GP-AUXILIARY HYDRAULIC–EXTENDABLE STICK	360
LINES GP-AUXILIARY HYDRAULIC–SIDESHIFT	359
LINES GP-AUXILIARY HYDRAULIC–STANDARD STICK, 1-WAY	364
LINES GP-BACKHOE	366
LINES GP-BACKHOE AUXILIARY–EXTENDABLE STICK, 1-WAY	370
LINES GP-BACKHOE AUXILIARY–EXTENDABLE STICK, 2-WAY	368
LINES GP-BACKHOE AUXILIARY–STANDARD STICK, 1-WAY	370
LINES GP-BOOM	371
LINES GP-BUCKET	372
LINES GP-BUCKET CYLINDER–STANDARD STICK	376
LINES GP-BUCKET–EXTENDABLE STICK	374
LINES GP-DRAIN	378
LINES GP-FUEL	121, 123, 125
LINES GP-FUEL FILTER	127
LINES GP-HEATER	597
LINES GP-HEATER & AIR COND	598
LINES GP-LIFT & TILT	379
LINES GP-LIFT CYLINDER–PARALLEL LIFT	381, 382
LINES GP-LOAD CONTROL VALVE	385
LINES GP-MULTIPURPOSE BUCKET	388
LINES GP-PILOT–SIGNAL	390
LINES GP-POWER TRAIN COOLER	86
LINES GP-POWER TRAIN OIL–DIFFERENTIAL LOCK	250
LINES GP-PUMP	392
LINES GP-RADIATOR	88
LINES GP-RETURN	394
LINES GP-RIDE CONTROL	396
LINES GP-SIDESHIFT LOCK	398
LINES GP-STABILIZER	399
LINES GP-STEERING–ALL WHEEL DRIVE, 2-WHEEL STEER	305
LINES GP-STICK	401
LINES GP-SWING	402
LINK GP-SHIPPING	5
LINKAGE GP-BACKHOE BUCKET	441
LINKAGE GP-BACKHOE BUCKET–LIFTING	436
LINKAGE GP-BACKHOE BUCKET–WITH LIFTING EYE	438
LINKAGE GP-BACKHOE BUCKET–WITHOUT LIFTING EYE	440
LINKAGE GP-BUCKET	441
LOADER AR	6
LOCK GP-TRANSPORT–BACKHOE BUCKET	444
LOCK GP-TRANSPORT–BOOM	445
LOCK GP-TRANSPORT–LOADER	443
LOCK GP-VANDALISM	637

M

MANIFOLD GP-CONTROL–INLET	405, 406
MANIFOLD GP-CONTROL–OUTLET	404
MANIFOLD GP-RIDE CONTROL	407
MIRROR GP-REAR VIEW–EXTERIOR	601
MIRROR GP-REAR VIEW–INTERIOR	600
MOTOR GP-WINDOW WIPER–12-VOLT	602
MOTOR GP-WINDOW WIPER–REAR	603
MOUNTING GP-AXLE	251
MOUNTING GP-BUCKET–BACKHOE	534
MOUNTING GP-BUCKET–BACKHOE, QUICK COUPLER	533, 535
MOUNTING GP-BUCKET–PARALLEL LIFT	536
MOUNTING GP-CAB	604
MOUNTING GP-CYLINDER–MULTIPURPOSE BUCKET	408
MOUNTING GP-ENGINE	53, 54
MOUNTING GP-ENGINE & XMSN	55
MOUNTING GP-FORK	538
MOUNTING GP-FORK–MULTIPURPOSE BUCKET	537
MOUNTING GP-LINES	409
MOUNTING GP-TRANSMISSION	252

INDEX

Name	Page
MOUNTING GP-WHEEL (FRONT)	274, 275, 276, 284, 287, 288, 291, 293, 294
MOUNTING GP-WHEEL (REAR)	279, 280, 281, 285, 287, 291
MUFFLER GP	110
PAD GP-STABILIZER–STREET	447
PADLOCK GP	637
PAN GP-OIL	56, 58
PAN GP-SEAT	605
PEDAL GP-GOVERNOR	606
PISTON & ROD GP	60, 61
PLANETARY GP-FINAL DRIVE	253
PLANETARY GP-FINAL DRIVE–AXLE	254
PLATE & FILM GP	638
PLATE GP-COVER	321, 323
PLATE-IDENTIFICATION (CAT)	468, 469, 470, 471
PLATE-IDENTIFICATION (WORK TOOL)	456, 458, 459, 460, 462, 491, 492, 493, 494, 495, 496, 497, 498, 501
PLUG AS-DRAIN (MAGNETIC)	229, 231, 237
PLUG GP-CONTROL MANIFOLD	406
PLUG GP-CONTROL VALVE	426
PLUG GP-CYLINDER HEAD	63
PLUG GP-ENGINE	64, 65, 66, 67, 68
PLUG-DRAIN (ENGINE OIL)	56, 58
POWER TRAIN AR–ALL WHEEL DRIVE, 2-WHEEL STEER, STD SHIFT	255
PROTECTION GP-VANDALISM–ROTATING GUARD	639
PULLEY GP-ENGINE	39, 40
PUMP GP-ENGINE OIL	76, 77
PUMP GP-FUEL INJECTION	128, 129, 132, 135, 136, 139, 140
PUMP GP-FUEL PRM & PRIM FILTER–WITH MOUNTING	144
PUMP GP-FUEL PRM & PRIM FILTER–WITH WATER SEPARATOR	143
PUMP GP-METERING (STEERING LINES)	305
PUMP GP-PISTON	410
PUMP GP-TRANSMISSION	263
PUMP GP-WATER	90, 92
RADIATOR & HYD OIL COOLER GP	94, 96, 97
RADIATOR & HYD OIL COOLER GP–INCLUDES AFTCLR, XMSN COOLER	95
RADIATOR GP	94, 95
REGULATOR GP-TEMPERATURE (INCLUDES CONNECTOR)	78
REGULATOR GP-TEMPERATURE (INCLUDES CONNECTOR) (WATER)	79
RELAY AS (12-VOLT) (AIR CONDITIONER)	207
RELAY AS (12-VOLT) (ALL WHEEL DRIVE)	189
RELAY AS (12-VOLT) (BACKUP ALARM)	194
RELAY AS (12-VOLT) (DISABLE START)	162, 213
RELAY AS (12-VOLT) (ENGINE)	211
RELAY AS (12-VOLT) (FRONT HORN)	215
RELAY AS (12-VOLT) (FUEL PUMP)	215
RELAY AS (12-VOLT) (FUEL SHUTOFF)	162

P

R

INDEX

Name	Page
	213
RELAY AS (12-VOLT) (HIGH SPEED)	196
RELAY AS (12-VOLT) (LOW SIDE)	215
RELAY AS (12-VOLT) (NEUTRAL LOCK ALARM)	215
RELAY AS (12-VOLT) (NEUTRAL START)	215
RELAY AS (12-VOLT) (NEUTRALIZER)	215
RELAY AS (12-VOLT) (PARKING BRAKE ALARM)	215
RELAY AS (12-VOLT) (REAR HORN)	215
RELAY AS (12-VOLT) (RIDE CONTROL)	222
RELAY AS (12-VOLT) (SHUTOFF)	195
RELAY AS (12-VOLT) (STARTING MOTOR)	204
RELAY GP–POWER DISTRIBUTION	181
RELAY GP–POWER, 1	182
RELAY GP–POWER, 2	183
RELAY GP–STARTING MOTOR	184
RESERVOIR GP-BRAKE	303
	304
ROCKER ARM GP	69
	70
ROOF GP-CAB	607

S

Name	Page
SEAT GP	608
	609
	610
SEAT GP-SUSPENSION–CLOTH	613
	615
	617
SEAT GP-SUSPENSION–VINYL	612
	617
SENDER AS-FUEL LEVEL	146
SENDER AS-TEMPERATURE (12-VOLT) (TORQUE CONVERTER OIL)	264
SENDER AS-TEMPERATURE (ENGINE COOLANT)	204
SENSOR AS (KEY READER)	162
	213
SENSOR AS-POSITION (BUCKET)	209
SENSOR GP-MOISTURE (WATER SEPARATOR)	143
SERVICE GP-FILTER–KIT	640
SHAFT GP-AXLE	229
SHAFT GP-COUNTER (TRANSMISSION)	263
SHAFT GP-DRIVE–FRONT	256
SHAFT GP-DRIVE–REAR	255
SHAFT GP-IDLER (TRANSMISSION)	263
SHAFT GP-INPUT	257
SHAFT GP-OUTPUT–FRONT	260
SHAFT GP-OUTPUT–REAR	259
SHAFT GP-PUMP DRIVE	411
SPRING AS-GAS	335
SPRING AS-GAS (LOCKABLE)	335
SPRING GP-GAS (CAB DOOR)	573
	575
SPRING GP-GAS (STEERING COLUMN)	307
STABILIZER GP-BACKHOE	448
STARTING MOTOR GP-ELECTRIC–12-VOLT	185
	187
	188
STEERING COLUMN GP–TILT	307
STICK GP	449
STICK GP-EXTENDABLE	451
	453
STOP GP-STEERING	261
	272
STRAINER (FUEL TANK)	146
STRAINER (SUCTION)	234
STRAINER-FUEL (FILLER NECK SCREEN)	146
SUN VISOR	626
SUPPRESSION AR-SOUND	337
SUSPENSION GP-SEAT	618
	620
SWITCH AS (PARKING BRAKE)	295
SWITCH AS (PUSH BUTTON)	561
SWITCH AS (STABILIZER UP ALARM)	566
SWITCH AS (STARTING MOTOR, 12-VOLT)	185
SWITCH AS-FOOT (DIFFERENTIAL LOCK ON, OFF)	190
SWITCH AS-LIMIT (LOAD CONTROL)	191
SWITCH AS-LIMIT (SERVICE BRAKE)	297
SWITCH AS-MULTIFUNCTION (HD LIGHT, TURN SIG, WDO WIPER)	215
SWITCH AS-PRESSURE (ENGINE OIL)	192
	193
SWITCH AS-PRESSURE (REFRIGERANT COMPR, HIGH SIDE)	195
SWITCH AS-PRESSURE (RIDE CONTROL)	222
SWITCH AS-PUSH BUTTON (BUCKET POSITIONER)	209
SWITCH AS-ROCKER (AIR CONDITIONER, HEATER SELECT)	195
SWITCH AS-ROCKER (ALL WHEEL DRIVE)	189
SWITCH AS-ROCKER (BLOWER FAN SPEED)	195
	207
SWITCH AS-ROCKER (FLOODLIGHTS, FRONT)	174
	198
	200
SWITCH AS-ROCKER (FLOODLIGHTS, REAR)	174
	198
	200
SWITCH AS-ROCKER (FOG LIGHT, REAR)	175
SWITCH AS-ROCKER (HAZARD WARNING LIGHTS)	215
SWITCH AS-ROCKER (HEATER)	207

INDEX

Name	Page
SWITCH AS-ROCKER (HORN)	587
SWITCH AS-ROCKER (LOAD CONTROL)	211
SWITCH AS-ROCKER (LOAD STABILITY, BUCKET)	224
SWITCH AS-ROCKER (RIDE CONTROL)	222
SWITCH AS-ROCKER (ROADING LIGHTS)	177
	179
SWITCH AS-ROCKER (SIDESHIFT, LOCK-UNLOCK)	220
SWITCH AS-ROCKER (STARTING AID)	202
SWITCH AS-ROCKER (TRANSMISSION NEUTRAL LOCK)	215
SWITCH AS-ROCKER (WARNING BEACON)	202
SWITCH AS-ROCKER (WIPER, WASHER, REAR)	627
SWITCH AS-START (KEY)	202
SWITCH GP-ALL WHEEL DRIVE–INCLUDES RELAY	189
SWITCH GP-DIFFERENTIAL LOCK	190
SWITCH GP-DISCONNECT–QUICK DROP	191
SWITCH GP-PRESSURE	192
SWITCH GP-PRESSURE–ENGINE OIL	193
SWITCH GP-PUSH BUTTON (NEUTRALIZER, DOWNSHIFT)	557
	561
	570
SWITCH-TEMPERATURE (AIR CONDITIONER)	583
SWITCH-TEMPERATURE (FUEL)	136
	140
SWITCH-TEMPERATURE (TIMING ADVANCE)	129
	132
SWITCH-TOGGLE (SUSPENSION SEAT)	620
SWIVEL GP-SEAT	622
SYNCHRONIZER GP	259

T

Name	Page
TANK & LINES GP-COOLANT–EXPANSION, RADIATOR	98
TANK & MTG GP-HYDRAULIC	412
TANK GP-EXPANSION (COOLANT)	88
	98
TANK GP-FUEL	146
	147
TANK GP-HYDRAULIC	414
TANK GP-WINDOW WASHER	627
	633
TIE ROD GP	229
TIP GP-PENETRATION	491
	492
	493
	494
	495
	496
	497
	498
	501
TOOTH GP-UNI	487
	488
	489
	490
	499
	500
	502
	503
	504
	505
	506
	507
	509
	511
	539
TRANSMISSION AR-DIRECT DRIVE–ALL WHEEL DRIVE, STANDARD SHIFT	262
TRANSMISSION GP-DIRECT DRIVE	263
TRIM GP-CAB–OPEN ROPS	624
TURBOCHARGER GP	111
	113
	115

V

Name	Page
VALVE & MTG GP-BANK	415
VALVE & MTG GP-BANK–MECHANICAL CONTROL	416
VALVE AR-BANK 3	417
VALVE AS-PRESSURE RELIEF (REFRIGERANT COMPRESSOR)	548
VALVE GP-BANK 3–MECHANICAL CONTROL	418
VALVE GP-BANK 7–MECHANICAL	419
VALVE GP-BRAKE CONTROL	297
VALVE GP-CHECK (BOOM CONTROL VALVE)	421
VALVE GP-CHECK (PILOT CONTROL)	382
VALVE GP-CHECK (STABILIZER CONTROL)	420
VALVE GP-CONTROL–AUXILIARY	428
VALVE GP-CONTROL–BOOM	421
VALVE GP-CONTROL–BUCKET	423
VALVE GP-CONTROL–EXTENDABLE STICK	425
VALVE GP-CONTROL–LIFT	426
VALVE GP-CONTROL–STABILIZER	420
VALVE GP-CONTROL–STICK	424
VALVE GP-CONTROL–SWING	422
VALVE GP-CONTROL–TILT	427
VALVE GP-FLOW CONTROL (AUXILIARY, INLET)	405
VALVE GP-LOAD CONTROL (BOOM)	385
VALVE GP-LOAD CONTROL (LIFT & TILT)	382

INDEX

Name	Page
VALVE GP-LOAD CONTROL (STICK)	385
VALVE GP-LOAD CONTROL–STABILIZER	429
VALVE GP-PRESSURE CONTROL (290-BAR)	402
VALVE GP-RADIATOR DRAIN	94
	95
VALVE GP-RELIEF (160-BAR)	427
VALVE GP-RELIEF (165-BAR)	421
VALVE GP-RELIEF (240-BAR)	428
VALVE GP-RELIEF (270-BAR)	422
	424
	425
VALVE GP-RELIEF (290-BAR)	424
VALVE GP-RELIEF (300-BAR)	421
	427
VALVE GP-RELIEF (BUCKET CONTROL)	423
VALVE GP-RELIEF (LOAD SENSING SIGNAL)	405
VALVE GP-RELIEF (TORQUE CONVERTER INLET)	263
VALVE GP-RELIEF–PRESSURE REGULATOR	268
VALVE GP-SHUTOFF (HYDRAULIC TANK DRAIN)	378
VALVE GP-SOLENOID (12-VDC)	263
VALVE GP-SOLENOID (ACCUMULATOR)	407
VALVE GP-SOLENOID (FORWARD, REVERSE)	263
VALVE GP-SOLENOID (RIDE CONTROL, SWITCH)	407
VALVE GP-TIRE	269
	270
VALVE MECHANISM GP	71
	72
VISOR GP-CAB	626

W

Name	Page
WARNING GP-BACKUP	194
WASHER GP-WINDOW	627
WHEEL & TIRE AR–ALL WHEEL DRIVE	270
	271
	272
	273
WHEEL & TIRE AR–ALL WHEEL DRIVE, BIAS	273
WHEEL & TIRE GP–FRONT	274
	275
	276
	284
	287
	288
	291
	293
	294
WHEEL & TIRE GP–FRONT, LH	274
	275
	276
	284
	288
	290
	291
	293
	294
WHEEL & TIRE GP–FRONT, RH	274
	275
	276
	284
	288
	290
	291
	293
	294
WHEEL & TIRE GP–REAR	279
	280
	281
	285
	287
	291
WHEEL & TIRE GP–REAR, LH	277
	278
	279
	282
	283
	285
	286
	289
	292
WHEEL & TIRE GP–REAR, RH	277
	278
	279
	282
	283
	286
	289
	290
	292
WINDOW GP-CAB–REAR	629
WINDOW GP-DOOR–LH	631
WINDOW GP-DOOR–RH	632
WIPER & WASHER GP-WINDOW	633
WIPER GP-WINDOW–REAR	635
WIRING GP-AIR CONDITIONER	195
WIRING GP-CAB–CANOPY ROOF	200
WIRING GP-CAB–ROOF	198
WIRING GP-CONSOLE–SIDE	202
WIRING GP-ENGINE–MECHANICAL	204
WIRING GP-HEATER	207
WIRING GP-KICKOUT & POSITIONER	209
WIRING GP-LOAD CONTROL	211
WIRING GP-MACHINE–MACHINE SECURITY SYSTEM	213
WIRING GP-PLATFORM	215

INDEX

Name	Page	Name	Page
WIRING GP-REAR–SIDESHIFT	220		
WIRING GP-RIDE CONTROL	222		
WIRING GP-SENSOR–OBJECT HANDLING	224		
WIRING GP-WIPER–REAR	227		

MACHINE ARRANGEMENT

334-0682 BACKHOE AR-EXTENDABLE STICK

S/N: DPH1-UP

FOR USE WITH 344-1303—PAGE 370, 321-7183—PAGE 368, 338-0444—PAGE 385. CANNOT BE USED WITH 344-1301—PAGE 370

AN ATTACHMENT

SMCS-6504, 6533 **i03694880**

NOTE	PART NUMBER	QTY	PART NAME 1 2 3 4 5 6 (PRODUCT LEVEL)	SEE PAGE
Y	*324-0548*	1	BOOM GP	433
Y	*331-4345*	1	CONTROL GP-HYDRAULIC PEDAL (AUXILIARY, EXTENDABLE STICK)	565
Y	**320-5936**	1	CYLINDER GP-BOOM	344
Y	**320-5937**	1	CYLINDER GP-BACKHOE BUCKET	343
Y	**320-5932**	1	CYLINDER GP-STICK	351
Y	*321-7178*	1	LINES GP-BOOM	371
Y	*321-7179*	1	LINES GP-BUCKET (EXTENDABLE STICK)	374
Y	*321-7192*	1	LINES GP-STICK	401
Y	*334-0751*	1	LINKAGE GP-BACKHOE BUCKET	436
Y	*323-2096*	1	MOUNTING GP-LINES	409
Y	*324-0550*	1	STICK GP-EXTENDABLE	451

Y-SEPARATE ILLUSTRATION

<END>

334-0683 BACKHOE AR-EXTENDABLE STICK

S/N: DPH1-UP

FOR USE WITH 338-0444—PAGE 385, 344-1303—PAGE 370, 321-7183—PAGE 368. CANNOT BE USED WITH 344-1301—PAGE 370

AN ATTACHMENT

SMCS-6504, 6533 **i03695620**

NOTE	PART NUMBER	QTY	PART NAME 1 2 3 4 5 6 (PRODUCT LEVEL)	SEE PAGE
Y	*324-0548*	1	BOOM GP	433
Y	*331-4345*	1	CONTROL GP-HYDRAULIC PEDAL (AUXILIARY, EXTENDABLE STICK)	565
Y	**320-5936**	1	CYLINDER GP-BOOM	344
Y	**320-5937**	1	CYLINDER GP-BACKHOE BUCKET	343
Y	**320-5932**	1	CYLINDER GP-STICK	351
Y	*321-7178*	1	LINES GP-BOOM	371
Y	*321-7179*	1	LINES GP-BUCKET (EXTENDABLE STICK)	374
Y	*321-7192*	1	LINES GP-STICK	401
Y	*334-0752*	1	LINKAGE GP-BACKHOE BUCKET	438
Y	*323-2096*	1	MOUNTING GP-LINES	409
Y	*329-9749*	1	STICK GP-EXTENDABLE	453

Y-SEPARATE ILLUSTRATION

<END>

MACHINE ARRANGEMENT

350-6931 BACKHOE AR-EXTENDABLE STICK

S/N: DPH1-UP

FOR USE WITH 338-0444—PAGE 385, 344-1303—PAGE 370, 321-7183—PAGE 368. CANNOT BE USED WITH 344-1301—PAGE 370

AN ATTACHMENT

SMCS-6504, 6533 **i03693920**

NOTE	PART NUMBER	QTY	PART NAME 1 2 3 4 5 6 (PRODUCT LEVEL)	SEE PAGE
Y	*324-0548*	1	BOOM GP	433
Y	*331-4345*	1	CONTROL GP-HYDRAULIC PEDAL (AUXILIARY, EXTENDABLE STICK)	565
Y	**320-5936**	1	CYLINDER GP-BOOM	344
Y	**320-5937**	1	CYLINDER GP-BACKHOE BUCKET	343
Y	**320-5932**	1	CYLINDER GP-STICK	351
Y	*321-7178*	1	LINES GP-BOOM	371
Y	*321-7179*	1	LINES GP-BUCKET (EXTENDABLE STICK)	374
Y	*321-7192*	1	LINES GP-STICK	401
Y	*348-5465*	1	LINKAGE GP-BACKHOE BUCKET	441
Y	*323-2096*	1	MOUNTING GP-LINES	409
Y	*324-0550*	1	STICK GP-EXTENDABLE	451

Y-SEPARATE ILLUSTRATION

<END>

350-6932 BACKHOE AR-EXTENDABLE STICK

S/N: DPH1-UP

FOR USE WITH 338-0444—PAGE 385, 344-1303—PAGE 370, 321-7183—PAGE 368. CANNOT BE USED WITH 344-1301—PAGE 370

AN ATTACHMENT

SMCS-6504, 6533 **i03693942**

NOTE	PART NUMBER	QTY	PART NAME 1 2 3 4 5 6 (PRODUCT LEVEL)	SEE PAGE
Y	*324-0548*	1	BOOM GP	433
Y	*331-4345*	1	CONTROL GP-HYDRAULIC PEDAL (AUXILIARY, EXTENDABLE STICK)	565
Y	**320-5936**	1	CYLINDER GP-BOOM	344
Y	**320-5937**	1	CYLINDER GP-BACKHOE BUCKET	343
Y	**320-5932**	1	CYLINDER GP-STICK	351
Y	*321-7178*	1	LINES GP-BOOM	371
Y	*321-7179*	1	LINES GP-BUCKET (EXTENDABLE STICK)	374
Y	*321-7192*	1	LINES GP-STICK	401
Y	*348-5464*	1	LINKAGE GP-BACKHOE BUCKET (WITHOUT LIFTING EYE)	440
Y	*323-2096*	1	MOUNTING GP-LINES	409
Y	*329-9749*	1	STICK GP-EXTENDABLE	453

Y-SEPARATE ILLUSTRATION

<END>

MACHINE ARRANGEMENT

350-6941 BACKHOE AR-EXTENDABLE STICK

S/N: DPH1-UP

FOR USE WITH 327-0110—PAGE 320, 327-0111—PAGE 320, 338-0444—PAGE 385, 344-1303—PAGE 370, 321-7183—PAGE 368. CANNOT BE USED WITH 112-1931—PAGE 463, 344-1301—PAGE 370

AN ATTACHMENT

SMCS-6504, 6533 **i03694962**

NOTE	PART NUMBER	QTY	PART NAME 1 2 3 4 5 6 (PRODUCT LEVEL)	SEE PAGE
Y	*324-0548*	1	BOOM GP	433
Y	*331-4345*	1	CONTROL GP-HYDRAULIC PEDAL (AUXILIARY, EXTENDABLE STICK)	565
Y	**320-5936**	1	CYLINDER GP-BOOM	344
Y	**320-5937**	1	CYLINDER GP-BACKHOE BUCKET	343
Y	**320-5932**	1	CYLINDER GP-STICK	351
Y	*321-7178*	1	LINES GP-BOOM	371
Y	*321-7179*	1	LINES GP-BUCKET (EXTENDABLE STICK)	374
Y	*338-0444*	1	LINES GP-LOAD CONTROL VALVE	385
Y	*321-7192*	1	LINES GP-STICK	401
Y	*334-0751*	1	LINKAGE GP-BACKHOE BUCKET	436
Y	*323-2096*	1	MOUNTING GP-LINES	409
Y	*324-0550*	1	STICK GP-EXTENDABLE	451
Y	*349-1101*	1	WIRING GP-SENSOR	224

Y-SEPARATE ILLUSTRATION

<END>

350-6942 BACKHOE AR-EXTENDABLE STICK

S/N: DPH1-UP

FOR USE WITH 327-0111—PAGE 320, 338-0444—PAGE 385, 344-1303—PAGE 370, 321-7183—PAGE 368. CANNOT BE USED WITH 112-1931—PAGE 463, 344-1301—PAGE 370

AN ATTACHMENT

SMCS-6504, 6533 **i03726360**

NOTE	PART NUMBER	QTY	PART NAME 1 2 3 4 5 6 (PRODUCT LEVEL)	SEE PAGE
Y	*324-0548*	1	BOOM GP	433
Y	*331-4345*	1	CONTROL GP-HYDRAULIC PEDAL (AUXILIARY, EXTENDABLE STICK)	565
Y	**320-5937**	1	CYLINDER GP-BACKHOE BUCKET	343
Y	**320-5936**	1	CYLINDER GP-BOOM	344
Y	**320-5932**	1	CYLINDER GP-STICK	351
Y	*321-7178*	1	LINES GP-BOOM	371
Y	*321-7179*	1	LINES GP-BUCKET (EXTENDABLE STICK)	374
Y	*338-0444*	1	LINES GP-LOAD CONTROL VALVE	385
Y	*321-7192*	1	LINES GP-STICK	401
Y	*334-0752*	1	LINKAGE GP-BACKHOE BUCKET (WITH LIFTING EYE)	438
Y	*323-2096*	1	MOUNTING GP-LINES	409
Y	*324-0550*	1	STICK GP-EXTENDABLE	451
Y	*349-1101*	1	WIRING GP-SENSOR	224

Y-SEPARATE ILLUSTRATION

<END>

MACHINE ARRANGEMENT

334-0681 BACKHOE AR-STANDARD STICK–LIFT

S/N: DPH1-UP

FOR USE WITH 344-1301–PAGE 370, 338-0444–PAGE 385. CANNOT BE USED WITH 344-1303–PAGE 370, 321-7183–PAGE 368

AN ATTACHMENT

SMCS-6502, 6504 **i03726368**

NOTE	PART NUMBER	QTY	PART NAME 1 2 3 4 5 6 (PRODUCT LEVEL)	SEE PAGE
Y	*324-0548*	1	BOOM GP	433
Y	**320-5937**	1	CYLINDER GP-BACKHOE BUCKET	343
Y	**320-5936**	1	CYLINDER GP-BOOM	344
Y	**320-5932**	1	CYLINDER GP-STICK	351
Y	*321-7178*	1	LINES GP-BOOM	371
Y	*323-2023*	1	LINES GP-BUCKET CYLINDER (STANDARD STICK)	376
Y	*321-7192*	1	LINES GP-STICK	401
Y	*334-0751*	1	LINKAGE GP-BACKHOE BUCKET	436
Y	*323-2096*	1	MOUNTING GP-LINES	409
Y	*324-0552*	1	STICK GP	449

Y-SEPARATE ILLUSTRATION

<END>

350-6930 BACKHOE AR-STANDARD STICK–

NO OBJECT HANDLING

S/N: DPH1-UP

FOR USE WITH 344-1301–PAGE 370, 338-0444–PAGE 385. CANNOT BE USED WITH 344-1303–PAGE 370, 321-7183–PAGE 368

AN ATTACHMENT

SMCS-6502, 6504 **i03726381**

NOTE	PART NUMBER	QTY	PART NAME 1 2 3 4 5 6 (PRODUCT LEVEL)	SEE PAGE
Y	*324-0548*	1	BOOM GP	433
Y	**320-5937**	1	CYLINDER GP-BACKHOE BUCKET	343
Y	**320-5936**	1	CYLINDER GP-BOOM	344
Y	**320-5932**	1	CYLINDER GP-STICK	351
Y	*321-7178*	1	LINES GP-BOOM	371
Y	*323-2023*	1	LINES GP-BUCKET CYLINDER (STANDARD STICK)	376
Y	*321-7192*	1	LINES GP-STICK	401
Y	*348-5465*	1	LINKAGE GP-BACKHOE BUCKET	441
Y	*323-2096*	1	MOUNTING GP-LINES	409
Y	*324-0552*	1	STICK GP	449

Y-SEPARATE ILLUSTRATION

<END>

MACHINE ARRANGEMENT

329-0293 CHASSIS AR

S/N: DPH1-UP

PART OF 329-0078 COMMON AR

SMCS-7000 **i03657442**

NOTE	PART NUMBER	QTY	PART NAME 1 2 3 4 5 6 (PRODUCT LEVEL)	SEE PAGE
Y	*313-3380*	1	BATTERY & WIRING GP (STANDARD)	152
Y	*341-0695*	1	BOX GP-BATTERY	308
Y	*343-7808*	1	FILM GP	636
Y	*320-5933*	1	FRAME GP-SLIDING	325
Y	*322-3764*	1	FRAME GP-SWING	327
Y	*311-8062*	1	HOOD & GUARD GP	331
Y	*329-1322*	1	LOCK GP-TRANSPORT	445
Y	*204-4248*	1	MOUNTING GP-CAB	604
Y	*342-8061*	1	PLATE & FILM GP	638
Y	*341-0696*	1	TANK GP-FUEL	147
Y	*338-5734*	1	WIRING GP-ENGINE	204
Y	*328-1944*	1	WIRING GP-REAR (SIDESHIFT)	220
	175-7877	1	LINK GP-SHIPPING	
	120-9286	1	PLATE	

Y-SEPARATE ILLUSTRATION

<END>

329-0078 COMMON AR

S/N: DPH1-UP

SMCS-7000 **i03694706**

NOTE	PART NUMBER	QTY	PART NAME 1 2 3 4 5 6 (PRODUCT LEVEL)	SEE PAGE
Y	*329-0293*	1	CHASSIS AR	5
Y	*329-0123*	1	HYDRAULIC AR	358
Y	*325-1021*	1	LOADER AR	6

Y-SEPARATE ILLUSTRATION

<END>

343-0656 CONVERSION AR-ROADING—UNITED KINGDOM

S/N: DPH1-UP

AN ATTACHMENT

SMCS-7000 **i03690262**

NOTE	PART NUMBER	QTY	PART NAME 1 2 3 4 5 6 (PRODUCT LEVEL)	SEE PAGE
	349-3644	1	FILM-NOTICE (ROADING HEIGHT)	
			(INSIDE OF THE FRONT WINDSCREEN IN THE TOP LH CORNER, BELOW THE SUN-VISOR)	
	160-7599	2	RESTRAINER-BUCKET	

<END>

MACHINE ARRANGEMENT

329-0319 DRIVE AR-BACKHOE LOADER–
ALL WHEEL DRIVE, 2-WHEEL STEER
S/N: DPH1-UP
PART OF 329-0304 POWER TRAIN AR
AN ATTACHMENT

SMCS-3268, 3278, 3282, 4304, 4313, 4334 **i03648051**

NOTE	PART NUMBER	QTY	PART NAME 1 2 3 4 5 6 (PRODUCT LEVEL)	SEE PAGE
Y	**230-5743**	1	AXLE GP-DRIVE & STEERING (FRONT)	229
Y	**230-5738**	1	AXLE GP-REAR	231
Y	*340-7030*	1	LINES GP-STEERING (ALL WHEEL DRIVE, 2-WHEEL STEER)	305
Y	*221-0811*	1	MOUNTING GP-AXLE	251
Y	*216-4475*	1	SHAFT GP-DRIVE (REAR)	255
Y	*305-3295*	1	SWITCH GP-ALL WHEEL DRIVE (INCLUDES RELAY)	189

Y-SEPARATE ILLUSTRATION

<END>

325-1021 LOADER AR
S/N: DPH1-UP
PART OF 329-0078 COMMON AR

SMCS-6100 **i03694708**

NOTE	PART NUMBER	QTY	PART NAME 1 2 3 4 5 6 (PRODUCT LEVEL)	SEE PAGE
Y	*321-4060*	1	ARM GP-LIFT	430
Y	*325-1034*	1	BRACE GP-LIFT CYLINDER	435
Y	**320-5934**	1	CYLINDER GP-LIFT (RH)	347
Y	**351-9352**	1	CYLINDER GP-LIFT (LH)	348
Y	**333-5427**	2	CYLINDER GP-TILT	354
Y	*329-0058*	1	WIRING GP-KICKOUT & POSITIONER	209

Y-SEPARATE ILLUSTRATION

<END>

ENGINE ARRANGEMENT

339-4986 ENGINE AR

S/N: DPH1-UP

CANNOT BE USED WITH 335-3050—PAGE 541

AN ATTACHMENT

SMCS-1000 **i03726280**

NOTE	PART NUMBER	QTY	PART NAME 1 2 3 4 5 6 (PRODUCT LEVEL)	SEE PAGE
Y	*310-2644*	1	AIR CLEANER GP (TURBO)	101
Y	*206-1640*	1	CONTROL GP-GOVERNOR	117
Y	**322-1923**	1	ENGINE AR-PRIMARY	17
Y	*210-6807*	1	EXTENSION GP-EXHAUST	108
Y	*299-4729*	1	FAN GP-SUCTION (WITHOUT AIR CONDITIONER)	84
Y	*307-2033*	1	GAUGE GP-OIL LEVEL & FILLER (ENGINE)	75
Y	*345-7477*	1	LINES GP-FUEL	123
Y	*334-7152*	1	MOUNTING GP-ENGINE & XMSN	55
Y	*325-3036*	1	MUFFLER GP	110
Y	*314-6700*	1	PUMP GP-FUEL PRM & PRIM FILTER	144
Y	*309-9105*	1	RADIATOR & HYD OIL COOLER GP	96
Y	*324-6213*	1	TANK & LINES GP-COOLANT (EXPANSION, RADIATOR)	98
	178-8465	1	HARNESS AS-FUEL TANK (FUEL SHUTOFF)	
	9X-3401	2	PIN-CONNECTOR (16-GA TO 18-GA)	
	176-1477	1	PLUG AS (2-PIN)	
	102-8802	1	KIT-RECEPTACLE (2-PIN) (INCLUDES RECEPTACLE AS & WEDGE)	
	185-1861	1	SEAL-WIRE	
	8L-8413	2	STRAP-CABLE	
	176-1521	2	TERMINAL	

Y-SEPARATE ILLUSTRATION

ENGINE ARRANGEMENT

339-4987 ENGINE AR

S/N: DPH1-UP

CANNOT BE USED WITH 335-3050—PAGE 541

AN ATTACHMENT

SMCS-1000 **i03726440**

NOTE	PART NUMBER	QTY	PART NAME 1 2 3 4 5 6 (PRODUCT LEVEL)	SEE PAGE
Y	*310-2644*	1	AIR CLEANER GP (TURBO)	101
Y	*206-1640*	1	CONTROL GP-GOVERNOR	117
Y	**322-1924**	1	ENGINE AR-PRIMARY	18
Y	*210-6807*	1	EXTENSION GP-EXHAUST	108
Y	*299-4729*	1	FAN GP-SUCTION (WITHOUT AIR CONDITIONER)	84
Y	*307-2033*	1	GAUGE GP-OIL LEVEL & FILLER (ENGINE)	75
Y	*345-7477*	1	LINES GP-FUEL	123
Y	*334-7152*	1	MOUNTING GP-ENGINE & XMSN	55
Y	*325-3036*	1	MUFFLER GP	110
Y	*314-6700*	1	PUMP GP-FUEL PRM & PRIM FILTER	144
Y	*309-9105*	1	RADIATOR & HYD OIL COOLER GP	96
Y	*324-6213*	1	TANK & LINES GP-COOLANT (EXPANSION, RADIATOR)	98
	178-8465	1	HARNESS AS-FUEL TANK (FUEL SHUTOFF)	
	9X-3401	2	PIN-CONNECTOR (16-GA TO 18-GA)	
	176-1477	1	PLUG AS (2-PIN)	
	102-8802	1	KIT-RECEPTACLE (2-PIN)	
			(INCLUDES RECEPTACEL AS & WEDGE)	
	185-1861	1	SEAL-WIRE	
	8L-8413	2	STRAP-CABLE	
	176-1521	2	TERMINAL	

Y-SEPARATE ILLUSTRATION

ENGINE ARRANGEMENT

339-4988 ENGINE AR

S/N: DPH1-UP

CANNOT BE USED WITH 335-3050—PAGE 541

AN ATTACHMENT

SMCS-1000 **i03726441**

NOTE	PART NUMBER	QTY	PART NAME 1 2 3 4 5 6 (PRODUCT LEVEL)	SEE PAGE
Y	*332-6587*	1	AIR CLEANER GP (TURBO)	103
Y	*323-9307*	1	BREATHER GP (ENGINE)	73
Y	*206-1640*	1	CONTROL GP-GOVERNOR	117
Y	**321-7704**	1	ENGINE AR-PRIMARY	15
Y	*210-6807*	1	EXTENSION GP-EXHAUST	108
Y	*299-4729*	1	FAN GP-SUCTION (WITHOUT AIR CONDITIONER)	84
Y	*307-2033*	1	GAUGE GP-OIL LEVEL & FILLER (ENGINE)	75
Y	*304-3920*	1	LINES GP-AIR	109
Y	*345-7478*	1	LINES GP-FUEL	125
Y	*304-4022*	1	LINES GP-RADIATOR	88
Y	*334-7152*	1	MOUNTING GP-ENGINE & XMSN	55
Y	*325-3036*	1	MUFFLER GP	110
Y	*314-6700*	1	PUMP GP-FUEL PRM & PRIM FILTER	144
Y	*309-9106*	1	RADIATOR & HYD OIL COOLER GP	97
	178-8465	1	HARNESS AS-FUEL TANK (FUEL SHUTOFF)	
	9X-3401	2	PIN-CONNECTOR (16-GA TO 18-GA)	
	176-1477	1	PLUG AS (2-PIN)	
	102-8802	1	KIT-RECEPTACLE (2-PIN)	
			(INCLUDES RECEPTACEL AS & WEDGE)	
	185-1861	1	SEAL-WIRE	
	8L-8413	2	STRAP-CABLE	
	176-1521	2	TERMINAL	

Y-SEPARATE ILLUSTRATION

ENGINE ARRANGEMENT

339-4989 ENGINE AR

S/N: DPH1-UP

CANNOT BE USED WITH 335-3050—PAGE 541

AN ATTACHMENT

SMCS-1000 **i03726442**

NOTE	PART NUMBER	QTY	PART NAME 1 2 3 4 5 6 (PRODUCT LEVEL)	SEE PAGE
Y	*332-6587*	1	AIR CLEANER GP (TURBO)	103
Y	*323-9307*	1	BREATHER GP (ENGINE)	73
Y	*206-1640*	1	CONTROL GP-GOVERNOR	117
Y	**321-7705**	1	ENGINE AR-PRIMARY	16
Y	*210-6807*	1	EXTENSION GP-EXHAUST	108
Y	*299-4729*	1	FAN GP-SUCTION (WITHOUT AIR CONDITIONER)	84
Y	*307-2033*	1	GAUGE GP-OIL LEVEL & FILLER (ENGINE)	75
Y	*304-3920*	1	LINES GP-AIR	109
Y	*345-7478*	1	LINES GP-FUEL	125
Y	*304-4022*	1	LINES GP-RADIATOR	88
Y	*334-7152*	1	MOUNTING GP-ENGINE & XMSN	55
Y	*325-3036*	1	MUFFLER GP	110
Y	*314-6700*	1	PUMP GP-FUEL PRM & PRIM FILTER	144
Y	*309-9106*	1	RADIATOR & HYD OIL COOLER GP	97
	178-8465	1	HARNESS AS-FUEL TANK (FUEL SHUTOFF)	
	9X-3401	2	PIN-CONNECTOR (16-GA TO 18-GA)	
	176-1477	1	PLUG AS (2-PIN)	
	102-8802	1	KIT-RECEPTACLE (2-PIN)	
			(INCLUDES RECEPTACEL AS & WEDGE)	
	185-1861	1	SEAL-WIRE	
	8L-8413	2	STRAP-CABLE	
	176-1521	2	TERMINAL	

Y-SEPARATE ILLUSTRATION

ENGINE ARRANGEMENT

339-4990 ENGINE AR

S/N: DPH1-UP

CANNOT BE USED WITH 335-3047—PAGE 544, 335-3048—PAGE 545, 335-3049—PAGE 540

AN ATTACHMENT

SMCS-1000 **i03726451**

NOTE	PART NUMBER	QTY	PART NAME 1 2 3 4 5 6 (PRODUCT LEVEL)	SEE PAGE
Y	*310-2644*	1	AIR CLEANER GP (TURBO)	101
Y	*206-1640*	1	CONTROL GP-GOVERNOR	117
Y	**322-1923**	1	ENGINE AR-PRIMARY	17
Y	*210-6807*	1	EXTENSION GP-EXHAUST	108
Y	*299-4716*	1	FAN GP-SUCTION (WITH AIR CONDITIONER)	83
Y	*307-2033*	1	GAUGE GP-OIL LEVEL & FILLER (ENGINE)	75
Y	*345-7477*	1	LINES GP-FUEL	123
Y	*334-7152*	1	MOUNTING GP-ENGINE & XMSN	55
Y	*325-3036*	1	MUFFLER GP	110
Y	*314-6700*	1	PUMP GP-FUEL PRM & PRIM FILTER	144
Y	*309-9105*	1	RADIATOR & HYD OIL COOLER GP	96
Y	*324-6213*	1	TANK & LINES GP-COOLANT (EXPANSION, RADIATOR)	98
	178-8465	1	HARNESS AS-FUEL TANK (FUEL SHUTOFF)	
	9X-3401	2	PIN-CONNECTOR (16-GA TO 18-GA)	
	176-1477	1	PLUG AS (2-PIN)	
	102-8802	1	KIT-RECEPTACLE (2-PIN)	
			(INCLUDES RECEPTACEL AS & WEDGE)	
	185-1861	1	SEAL-WIRE	
	8L-8413	2	STRAP-CABLE	
	176-1521	2	TERMINAL	

Y-SEPARATE ILLUSTRATION

ENGINE ARRANGEMENT

339-4991 ENGINE AR

S/N: DPH1-UP

CANNOT BE USED WITH 335-3047—PAGE 544, 335-3048—PAGE 545, 335-3049—PAGE 540
AN ATTACHMENT

SMCS-1000 **i03726452**

NOTE	PART NUMBER	QTY	PART NAME 1 2 3 4 5 6 (PRODUCT LEVEL)	SEE PAGE
Y	*310-2644*	1	AIR CLEANER GP (TURBO)	101
Y	*206-1640*	1	CONTROL GP-GOVERNOR	117
Y	**322-1924**	1	ENGINE AR-PRIMARY	18
Y	*210-6807*	1	EXTENSION GP-EXHAUST	108
Y	*299-4716*	1	FAN GP-SUCTION (WITH AIR CONDITIONER)	83
Y	*307-2033*	1	GAUGE GP-OIL LEVEL & FILLER (ENGINE)	75
Y	*345-7477*	1	LINES GP-FUEL	123
Y	*334-7152*	1	MOUNTING GP-ENGINE & XMSN	55
Y	*325-3036*	1	MUFFLER GP	110
Y	*314-6700*	1	PUMP GP-FUEL PRM & PRIM FILTER	144
Y	*309-9105*	1	RADIATOR & HYD OIL COOLER GP	96
Y	*324-6213*	1	TANK & LINES GP-COOLANT (EXPANSION, RADIATOR)	98
	178-8465	1	HARNESS AS-FUEL TANK (FUEL SHUTOFF)	
	9X-3401	2	PIN-CONNECTOR (16-GA TO 18-GA)	
	176-1477	1	PLUG AS (2-PIN)	
	102-8802	1	KIT-RECEPTACLE (2-PIN)	
			(INCLUDES RECEPTACEL AS & WEDGE)	
	185-1861	1	SEAL-WIRE	
	8L-8413	2	STRAP-CABLE	
	176-1521	2	TERMINAL	

Y-SEPARATE ILLUSTRATION

ENGINE ARRANGEMENT

339-4992 ENGINE AR

S/N: DPH1-UP

CANNOT BE USED WITH 335-3047—PAGE 544, 335-3048—PAGE 545, 335-3049—PAGE 540

AN ATTACHMENT

SMCS-1000 **i03726453**

NOTE	PART NUMBER	QTY	PART NAME 1 2 3 4 5 6 (PRODUCT LEVEL)	SEE PAGE
Y	*332-6587*	1	AIR CLEANER GP (TURBO)	103
Y	*323-9307*	1	BREATHER GP (ENGINE)	73
Y	*206-1640*	1	CONTROL GP-GOVERNOR	117
Y	**321-7704**	1	ENGINE AR-PRIMARY	15
Y	*210-6807*	1	EXTENSION GP-EXHAUST	108
Y	*299-4716*	1	FAN GP-SUCTION (WITH AIR CONDITIONER)	83
Y	*307-2033*	1	GAUGE GP-OIL LEVEL & FILLER (ENGINE)	75
Y	*304-3920*	1	LINES GP-AIR	109
Y	*345-7478*	1	LINES GP-FUEL	125
Y	*304-4022*	1	LINES GP-RADIATOR	88
Y	*334-7152*	1	MOUNTING GP-ENGINE & XMSN	55
Y	*325-3036*	1	MUFFLER GP	110
Y	*314-6700*	1	PUMP GP-FUEL PRM & PRIM FILTER	144
Y	*309-9106*	1	RADIATOR & HYD OIL COOLER GP	97
	178-8465	1	HARNESS AS-FUEL TANK (FUEL SHUTOFF)	
	9X-3401	2	PIN-CONNECTOR (16-GA TO 18-GA)	
	176-1477	1	PLUG AS (2-PIN)	
	102-8802	1	KIT-RECEPTACLE (2-PIN)	
			(INCLUDES RECEPTACEL AS & WEDGE)	
	185-1861	1	SEAL-WIRE	
	8L-8413	2	STRAP-CABLE	
	176-1521	2	TERMINAL	

Y-SEPARATE ILLUSTRATION

ENGINE ARRANGEMENT

339-4993 ENGINE AR

S/N: DPH1-UP

CANNOT BE USED WITH 335-3047—PAGE 544, 335-3048—PAGE 545, 335-3049—PAGE 540 AN ATTACHMENT

SMCS-1000 **i03726460**

NOTE	PART NUMBER	QTY	PART NAME 1 2 3 4 5 6 (PRODUCT LEVEL)	SEE PAGE
Y	*332-6587*	1	AIR CLEANER GP (TURBO)	103
Y	*323-9307*	1	BREATHER GP (ENGINE)	73
Y	*206-1640*	1	CONTROL GP-GOVERNOR	117
Y	**321-7705**	1	ENGINE AR-PRIMARY	16
Y	*210-6807*	1	EXTENSION GP-EXHAUST	108
Y	*321-3113*	1	FAN GP-SUCTION (WITH AIR CONDITIONER)	85
Y	*307-2033*	1	GAUGE GP-OIL LEVEL & FILLER (ENGINE)	75
Y	*304-3920*	1	LINES GP-AIR	109
Y	*345-7478*	1	LINES GP-FUEL	125
Y	*304-4022*	1	LINES GP-RADIATOR	88
Y	*334-7152*	1	MOUNTING GP-ENGINE & XMSN	55
Y	*325-3036*	1	MUFFLER GP	110
Y	*314-6700*	1	PUMP GP-FUEL PRM & PRIM FILTER	144
Y	*309-9106*	1	RADIATOR & HYD OIL COOLER GP	97
	178-8465	1	HARNESS AS-FUEL TANK (FUEL SHUTOFF)	
	9X-3401	2	PIN-CONNECTOR (16-GA TO 18-GA)	
	176-1477	1	PLUG AS (2-PIN)	
	102-8802	1	KIT-RECEPTACLE (2-PIN)	
			(INCLUDES RECEPTACEL AS & WEDGE)	
	185-1861	1	SEAL-WIRE	
	8L-8413	2	STRAP-CABLE	
	176-1521	2	TERMINAL	

Y-SEPARATE ILLUSTRATION

ENGINE ARRANGEMENT

321-7704 ENGINE AR-PRIMARY

S/N: C4Z1-UP
70 BRAKE KW (94 BHP) AT 2200 RPM
PART OF 339-4988, 339-4992 ENGINE AR
AN ATTACHMENT

SMCS-1000 **i03427300**

NOTE	PART NUMBER	QTY	PART NAME 1 2 3 4 5 6 (PRODUCT LEVEL)	SEE PAGE
Y	*317-9776*	1	ALTERNATOR GP-CHARGING	148
Y	*326-9005*	1	CAMSHAFT GP	19
Y	*316-6941*	1	CONNECTION GP-WATER	79
Y	*316-6899*	1	COOLER GP-ENGINE OIL	81
Y	*329-0129*	1	COVER GP-INLET MANIFOLD	106
Y	*326-9008*	1	COVER GP-VALVE MECHANISM	21
Y	*326-9000*	1	CRANKSHAFT GP	27
Y	*326-8999*	1	CYLINDER BLOCK GP	31
Y	*326-9003*	1	CYLINDER HEAD GP	37
Y	*326-9009*	1	DRIVE GP-AUXILIARY	39
Y	*303-5770*	1	DRIVE GP-FAN	41
Y	*309-7555*	1	FILLER GP-ENGINE OIL	74
Y	*303-5768*	1	FLYWHEEL GP	44
Y	*315-3418*	1	GLOW PLUG GP	155
Y	*303-5767*	1	HOUSING GP-FLYWHEEL	46
Y	*304-8760*	1	HOUSING GP-FRONT	47
Y	*326-9013*	1	LIFTING GP-ENGINE	52
Y	*326-9012*	1	LINES GP-FUEL	121
Y	*303-5778*	1	MOUNTING GP-ENGINE	54
Y	*322-9476*	1	PAN GP-OIL	56
Y	*326-9002*	1	PISTON & ROD GP	60
Y	*298-5129*	1	PLUG GP-CYLINDER HEAD	63
Y	*298-5131*	1	PLUG GP-ENGINE (THREADED)	67
Y	*304-8761*	1	PLUG GP-ENGINE	68
Y	*298-5112*	1	PUMP GP-ENGINE OIL	77
Y	*326-9006*	1	PUMP GP-FUEL INJECTION	136
Y	*315-3411*	1	PUMP GP-WATER	92
Y	*303-5769*	1	STARTING MOTOR GP-ELECTRIC	188
Y	*316-6925*	1	SWITCH GP-PRESSURE	193
Y	*326-9010*	1	TURBOCHARGER GP	113
Y	*326-9004*	1	VALVE MECHANISM GP	71
	321-7782		CYLINDER BLOCK GP-SHORT	

Y-SEPARATE ILLUSTRATION

ENGINE ARRANGEMENT

321-7705 ENGINE AR-PRIMARY

S/N: C4Z1-UP
75 BRAKE KW (100 BHP) AT 2200 RPM
PART OF 339-4989, 339-4993 ENGINE AR
AN ATTACHMENT

SMCS-1000 **i03427301**

NOTE	PART NUMBER	QTY	PART NAME 1 2 3 4 5 6 (PRODUCT LEVEL)	SEE PAGE
Y	*317-9776*	1	ALTERNATOR GP-CHARGING	148
Y	*326-9005*	1	CAMSHAFT GP	19
Y	*316-6941*	1	CONNECTION GP-WATER	79
Y	*316-6899*	1	COOLER GP-ENGINE OIL	81
Y	*329-0129*	1	COVER GP-INLET MANIFOLD	106
Y	*326-9008*	1	COVER GP-VALVE MECHANISM	21
Y	*326-9000*	1	CRANKSHAFT GP	27
Y	*326-8999*	1	CYLINDER BLOCK GP	31
Y	*326-9003*	1	CYLINDER HEAD GP	37
Y	*326-9009*	1	DRIVE GP-AUXILIARY	39
Y	*303-5770*	1	DRIVE GP-FAN	41
Y	*309-7555*	1	FILLER GP-ENGINE OIL	74
Y	*303-5768*	1	FLYWHEEL GP	44
Y	*315-3418*	1	GLOW PLUG GP	155
Y	*303-5767*	1	HOUSING GP-FLYWHEEL	46
Y	*304-8760*	1	HOUSING GP-FRONT	47
Y	*326-9013*	1	LIFTING GP-ENGINE	52
Y	*326-9012*	1	LINES GP-FUEL	121
Y	*303-5778*	1	MOUNTING GP-ENGINE	54
Y	*322-9476*	1	PAN GP-OIL	56
Y	*326-9002*	1	PISTON & ROD GP	60
Y	*298-5129*	1	PLUG GP-CYLINDER HEAD	63
Y	*298-5131*	1	PLUG GP-ENGINE (THREADED)	67
Y	*304-8761*	1	PLUG GP-ENGINE	68
Y	*298-5112*	1	PUMP GP-ENGINE OIL	77
Y	*326-9149*	1	PUMP GP-FUEL INJECTION	140
Y	*315-3411*	1	PUMP GP-WATER	92
Y	*303-5769*	1	STARTING MOTOR GP-ELECTRIC	188
Y	*316-6925*	1	SWITCH GP-PRESSURE	193
Y	*326-9156*	1	TURBOCHARGER GP	115
Y	*326-9004*	1	VALVE MECHANISM GP	71
	321-7782	1	CYLINDER BLOCK GP-SHORT	

Y-SEPARATE ILLUSTRATION

ENGINE ARRANGEMENT

322-1923 ENGINE AR-PRIMARY

S/N: CRS1-UP
69 BRAKE KW (92 BHP) AT 2200 RPM
PART OF 339-4986, 339-4990 ENGINE AR
AN ATTACHMENT

SMCS-1000 **i03235956**

NOTE	PART NUMBER	QTY	PART NAME 1 2 3 4 5 6 (PRODUCT LEVEL)	SEE PAGE
Y	*334-3756*	1	ALTERNATOR GP-CHARGING	149
Y	*334-4208*	1	CAMSHAFT GP	20
Y	*231-0033*	1	CONNECTION GP-WATER	78
Y	*238-2799*	1	COOLER GP-FLTR BASE & ENG OIL	82
Y	*231-0149*	1	COVER GP-INLET MANIFOLD	105
Y	*335-9798*	1	COVER GP-VALVE MECHANISM	23
Y	*334-4203*	1	CRANKSHAFT GP	28
Y	*334-4202*	1	CYLINDER BLOCK GP	32
Y	*334-4205*	1	CYLINDER HEAD GP	38
Y	*334-3755*	1	DRIVE GP-AUXILIARY	40
Y	*334-3754*	1	DRIVE GP-FAN	42
Y	*230-7300*	1	FLYWHEEL GP	43
Y	*232-6661*	1	GLOW PLUG GP	154
Y	*236-8238*	1	HOUSING GP-FLYWHEEL	45
Y	*334-3757*	1	HOUSING GP-FRONT	49
Y	*233-7432*	1	LIFTING GP-ENGINE	51
Y	*247-4885*	1	LINES GP-FUEL FILTER	127
Y	*237-3658*	1	MOUNTING GP-ENGINE	53
Y	*335-9799*	1	PAN GP-OIL	58
Y	*334-4204*	1	PISTON & ROD GP	61
Y	*225-4317*	1	PLUG GP-ENGINE	64
Y	*230-7569*	1	PLUG GP-ENGINE	65
Y	*232-6204*	1	PLUG GP-ENGINE	66
Y	*230-7578*	1	PUMP GP-ENGINE OIL	76
Y	*237-5214*	1	PUMP GP-FUEL INJECTION	132
Y	*230-7355*	1	PUMP GP-WATER	90
Y	*237-0024*	1	STARTING MOTOR GP-ELECTRIC	187
Y	*237-4896*	1	SWITCH GP-PRESSURE	192
Y	*237-3924*	1	TURBOCHARGER GP	111
Y	*334-4207*	1	VALVE MECHANISM GP	72
	268-0867	1	CYLINDER BLOCK GP-SHORT	
			AVAILABLE GASKET KIT(S):	
	272-2232	1	KIT-GASKET (BOTTOM)	
	277-5156	1	KIT-GASKET (TOP)	

Y-SEPARATE ILLUSTRATION

ENGINE ARRANGEMENT

322-1924 ENGINE AR-PRIMARY

S/N: CRS1-UP
75 BRAKE KW (100 BHP) AT 2200 RPM
PART OF 339-4987, 339-4991 ENGINE AR
AN ATTACHMENT

SMCS-1000 **i03235801**

NOTE	PART NUMBER	QTY	PART NAME 1 2 3 4 5 6 (PRODUCT LEVEL)	SEE PAGE
Y	*334-3756*	1	ALTERNATOR GP-CHARGING	149
Y	*334-4208*	1	CAMSHAFT GP	20
Y	*231-0033*	1	CONNECTION GP-WATER	78
Y	*238-2799*	1	COOLER GP-FLTR BASE & ENG OIL	82
Y	*231-0149*	1	COVER GP-INLET MANIFOLD	105
Y	*335-9798*	1	COVER GP-VALVE MECHANISM	23
Y	*334-4203*	1	CRANKSHAFT GP	28
Y	*334-4202*	1	CYLINDER BLOCK GP	32
Y	*334-4205*	1	CYLINDER HEAD GP	38
Y	*334-3755*	1	DRIVE GP-AUXILIARY	40
Y	*334-3754*	1	DRIVE GP-FAN	42
Y	*230-7300*	1	FLYWHEEL GP	43
Y	*232-6661*	1	GLOW PLUG GP	154
Y	*236-8238*	1	HOUSING GP-FLYWHEEL	45
Y	*334-3757*	1	HOUSING GP-FRONT	49
Y	*233-7432*	1	LIFTING GP-ENGINE	51
Y	*247-4885*	1	LINES GP-FUEL FILTER	127
Y	*237-3658*	1	MOUNTING GP-ENGINE	53
Y	*335-9799*	1	PAN GP-OIL	58
Y	*334-4204*	1	PISTON & ROD GP	61
Y	*225-4317*	1	PLUG GP-ENGINE	64
Y	*230-7569*	1	PLUG GP-ENGINE	65
Y	*232-6204*	1	PLUG GP-ENGINE	66
Y	*230-7578*	1	PUMP GP-ENGINE OIL	76
Y	*236-8229*	1	PUMP GP-FUEL INJECTION	129
Y	*230-7355*	1	PUMP GP-WATER	90
Y	*237-0024*	1	STARTING MOTOR GP-ELECTRIC	187
Y	*237-4896*	1	SWITCH GP-PRESSURE	192
Y	*237-3924*	1	TURBOCHARGER GP	111
Y	*334-4207*	1	VALVE MECHANISM GP	72
	268-0867	1	CYLINDER BLOCK GP-SHORT	
			AVAILABLE GASKET KIT(S):	
	272-2232	1	KIT-GASKET (BOTTOM)	
	277-5156	1	KIT-GASKET (TOP)	

Y-SEPARATE ILLUSTRATION

326-9005 CAMSHAFT GP

S/N: C4Z1-UP
PART OF 321-7704, 321-7705 ENGINE AR-PRIMARY
AN ATTACHMENT

SMCS-1210, 1211, 1212 **i03127790**

NOTE	REF NO	GRAPHIC REF	PART NUMBER	QTY	PART NAME 1 2 3 4 5 6 (PRODUCT LEVEL)	SEE PAGE
	1	1	**278-5126**	8	PUSHROD	
	2	1	**315-3384**	8	TAPPET	
	3	1	**326-8992**	1	CAMSHAFT	
	3A	1	**1B-8736**	1	KEY-WOODRUFF	

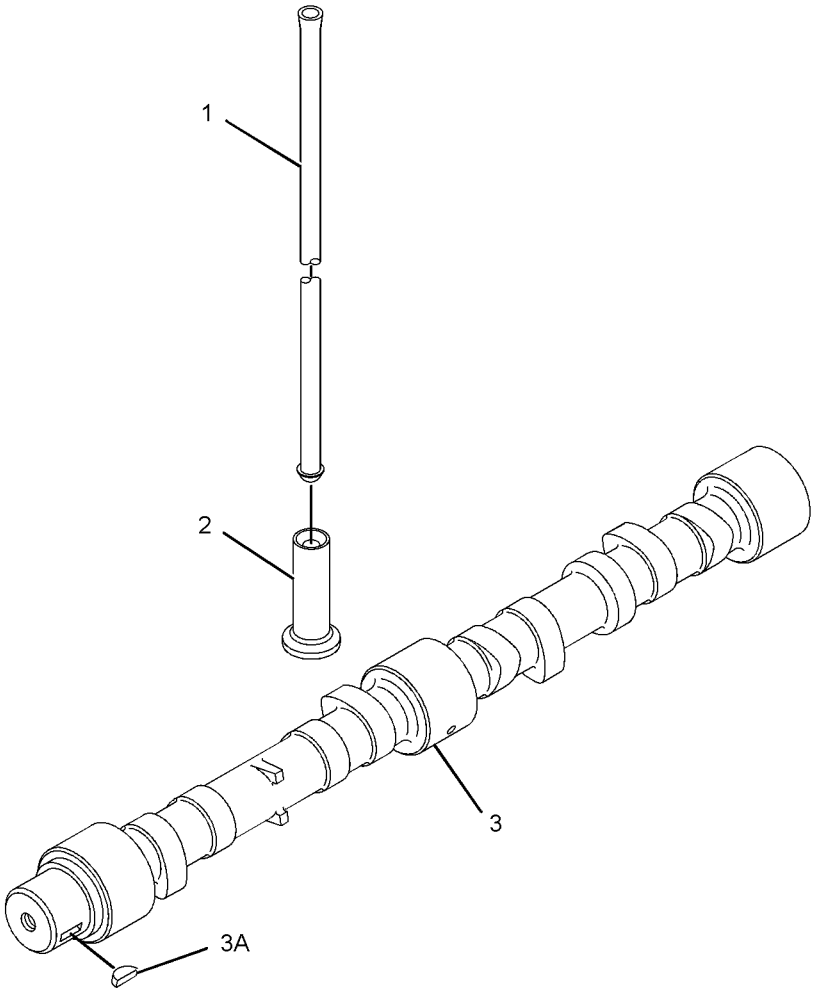

GRAPHIC #1 **<END>** g01611455

BASIC ENGINE

334-4208 CAMSHAFT GP

S/N: CRS1-UP

PART OF 322-1923, 322-1924 ENGINE AR-PRIMARY

AN ATTACHMENT

SMCS-1210, 1211, 1212 **i03653916**

NOTE	REF NO	GRAPHIC REF	PART NUMBER	QTY	PART NAME 1 2 3 4 5 6 (PRODUCT LEVEL)	SEE PAGE
	1	1	**067-6095**	8	ROD	
	2	1	**138-2053**	8	TAPPET	
	3	1	**350-2374**	1	CAMSHAFT AS	
	3A	1	**1B-8736**	1	KEY-WOODRUFF	

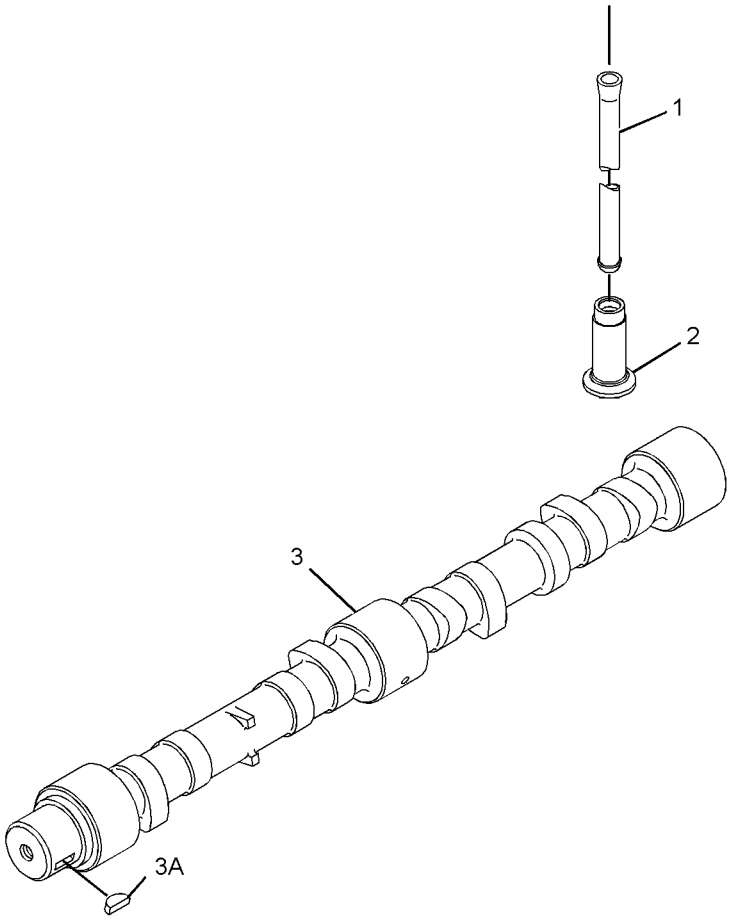

GRAPHIC #1 **<END>** g01964670

326-9008 COVER GP-VALVE MECHANISM

S/N: C4Z1-UP

PART OF 321-7704, 321-7705 ENGINE AR-PRIMARY

AN ATTACHMENT

SMCS-1107, 1120 **i03127792**

NOTE	REF NO	GRAPHIC REF	PART NUMBER	QTY	PART NAME 1 2 3 4 5 6 (PRODUCT LEVEL)	SEE PAGE
	1	1	**6I-0846**	3	BOLT (M6X1X14-MM)	
	2	1	**6I-0917**	1	BOLT (M6X1X25-MM)	
	3	1	**100-4838**	2	BOLT (M6X20-MM)	
M	4	1	**100-4841**	2	BOLT (M6X1X10-MM)	
	5	1	**230-9127**	1	COVER	
	6	1	**237-0769**	1	SHIELD-HEAT	
	7	1	**287-8573**	1	PIPE-BREATHER	
	8	1	**308-1792**	1	COVER GP-VALVE MECHANISM	
	8A	1	**225-6451**	1	GASKET (VALVE COVER)	
	8B	1	**225-6456**	1	SPRING	
	8C	1	**225-6461**	1	CAP	
	8D	1	**225-6464**	1	DIAPHRAGM (CRANKCASE PRESSURE CONTACTOR)	
	8E	1	**225-6477**	1	PLATE	
	8F	1	**225-6478**	4	SCREW-MACHINE	
	8G	1	**225-6479**	1	CAP	

M-METRIC PART

326-9008 **COVER GP-VALVE MECHANISM** *(contd.)* **i03127792**

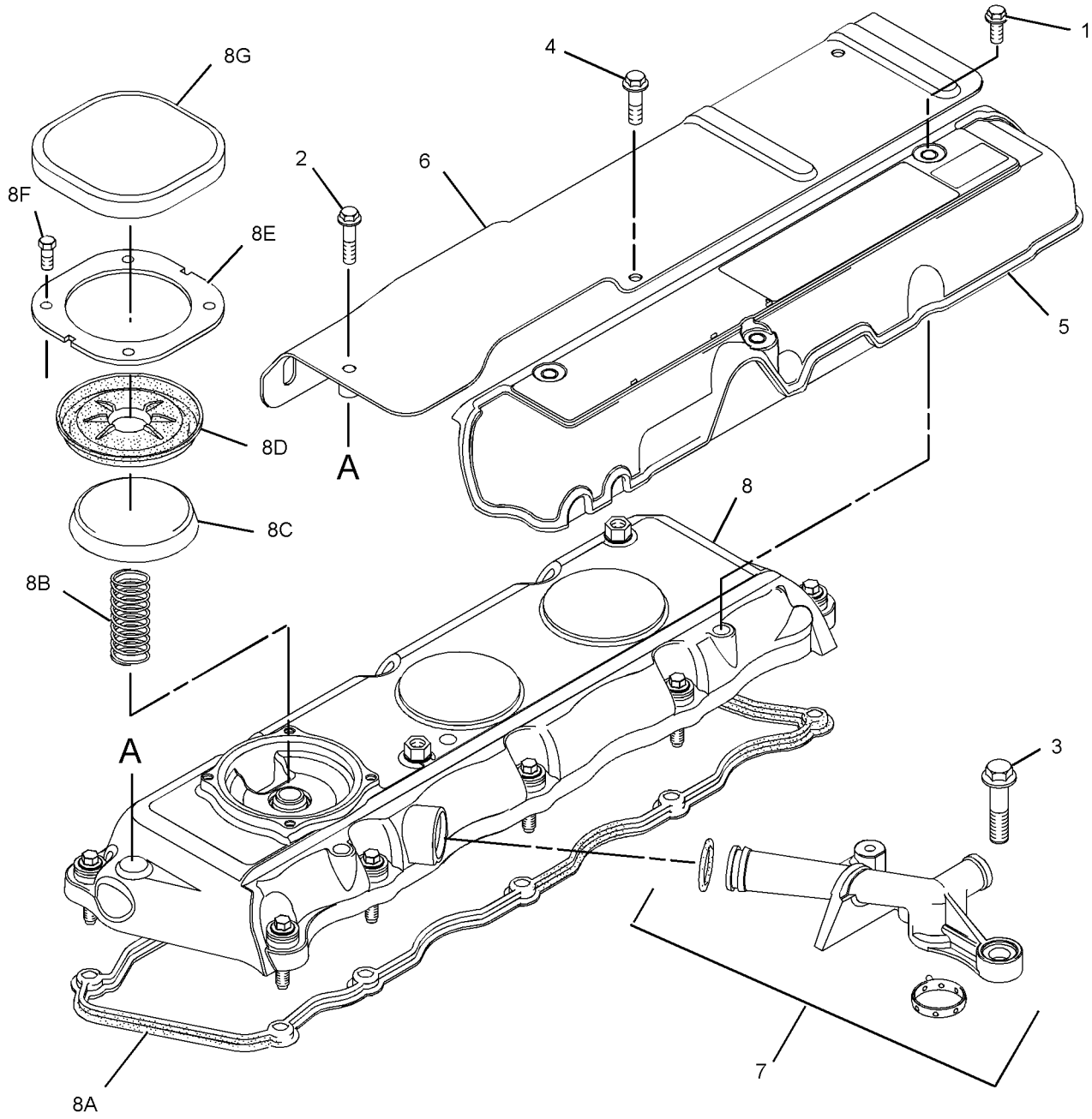

GRAPHIC #1 **<END>** g01615434

335-9798 COVER GP-VALVE MECHANISM

S/N: CRS1-UP

PART OF 322-1923, 322-1924 ENGINE AR-PRIMARY

AN ATTACHMENT

SMCS-1107, 1120 **i03325025**

NOTE	REF NO	GRAPHIC REF	PART NUMBER	QTY	PART NAME 1 2 3 4 5 6 (PRODUCT LEVEL)	SEE PAGE
M	1	1	**6I-0260**	2	BOLT (M8X1.25X25-MM)	
	2	1	**6I-0846**	3	BOLT (M6X1X14-MM)	
	3	1	**6I-0917**	1	BOLT (M6X1X25-MM)	
	4	1	**100-4838**	2	BOLT (M6X20-MM)	
M	5	1	**100-4841**	2	BOLT (M6X1X10-MM)	
	6	1	**225-6522**	1	PLUG-CUP	
	7	1	**230-9127**	1	COVER	
	8	1	**237-0769**	1	SHIELD-HEAT	
	9	1	**246-1163**	1	FILLER AS-OIL	
	9A	1	**229-4896**	1	SEAL-O-RING	
	10	1	**287-8573**	1	PIPE-BREATHER	
	11	1	**308-1792**	1	COVER GP-VALVE MECHANISM	
	11A	1	**225-6451**	1	GASKET (VALVE COVER)	
	11B	1	**225-6456**	1	SPRING	
	11C	1	**225-6461**	1	CAP (VALVE COVER)	
	11D	1	**225-6464**	1	DIAPHRAGM (CRANKCASE PRESSURE CONTACTOR)	
	11E	1	**225-6477**	1	PLATE	
	11F	1	**225-6478**	4	SCREW-MACHINE	
	11G	1	**225-6479**	1	CAP (VALVE COVER)	

M-METRIC PART

335-9798 **COVER GP-VALVE MECHANISM** *(contd.)* **i03325025**

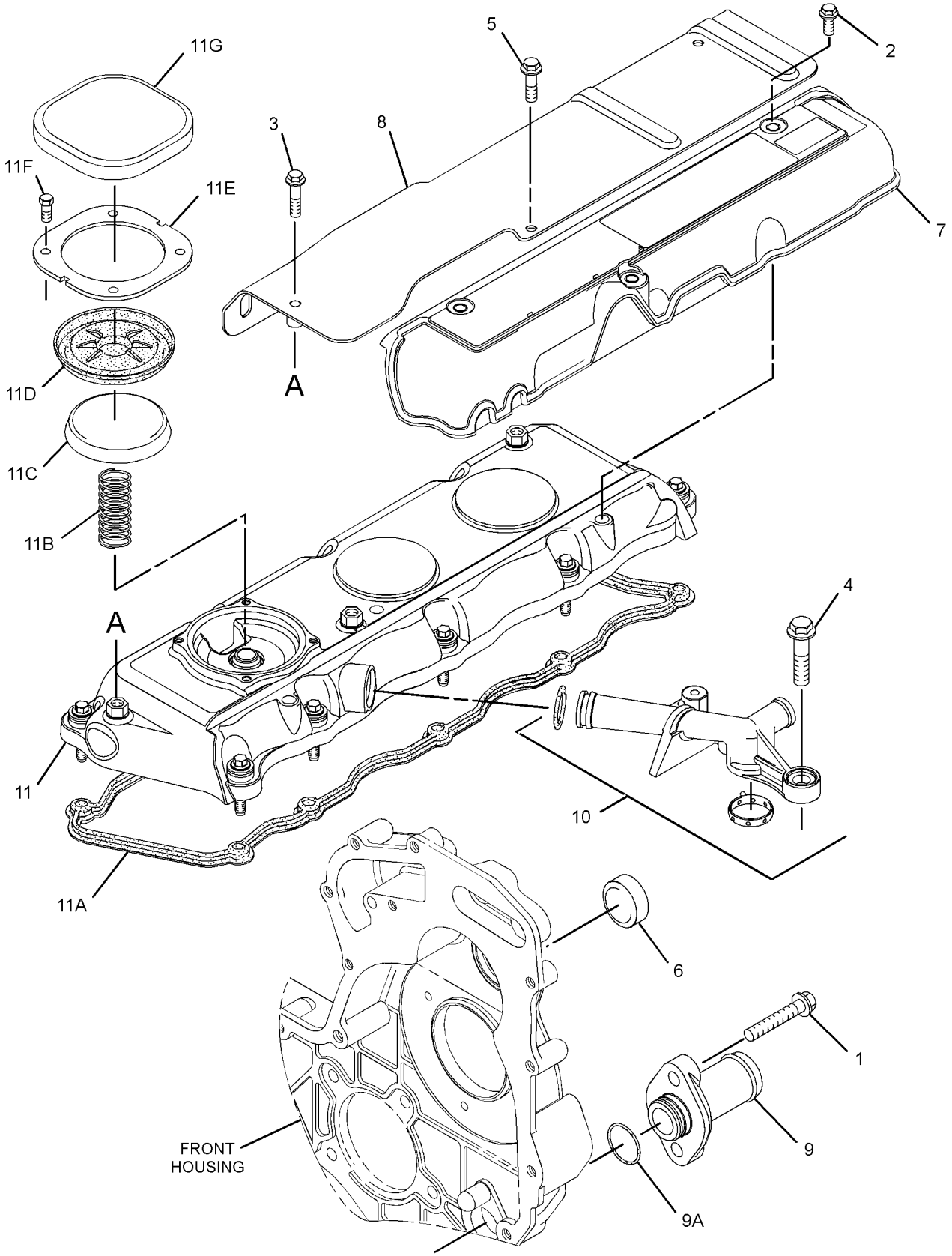

GRAPHIC #1 **<END>** g01651288

232-7400 CRANKSHAFT GP

S/N: CRS1-UP; C4Z1-UP

PART OF 326-9000, 334-4203 CRANKSHAFT GP

AN ATTACHMENT

SMCS-1202, 1203, 1204, 1230, 1231, 1232 **i03331702**

NOTE	REF NO	GRAPHIC REF	PART NUMBER	QTY	PART NAME 1 2 3 4 5 6 (PRODUCT LEVEL)	SEE PAGE
	1	1	**1B-8736**	1	KEY-WOODRUFF	
	2	1	**225-7772**	1	BEARING SET-MAIN (STANDARD)	
AB		1	**233-3785**		KIT-CRANKSHAFT BEARING (0.020-IN US ID)	
AB		1	**233-3784**		KIT-CRANKSHAFT BEARING (0.010-IN US ID)	
AB		1	**233-3786**		KIT-CRANKSHAFT BEARING (0.030-IN US ID)	
	3	1	**032-9090**	2	WASHER-THRUST (STANDARD-UPPER)	
AB		1	**067-6873**		WASHER-THRUST (0.18-MM OS)	
	4	1	**032-9091**	2	WASHER-THRUST (STANDARD-LOWER)	
AB		1	**067-6874**		WASHER-THRUST (0.18-MM OS)	
	5	1	**298-4524**	1	KIT-BEARING	
AB		1	**315-3396**		KIT-BEARING (0.25-MM OS)	
AB		1	**315-3397**		KIT-BEARING (0.5-MM OS)	
AB		1	**315-3398**		KIT-BEARING (0.75-MM OS)	

A-NOT PART OF THIS GROUP
B-USE AS REQUIRED

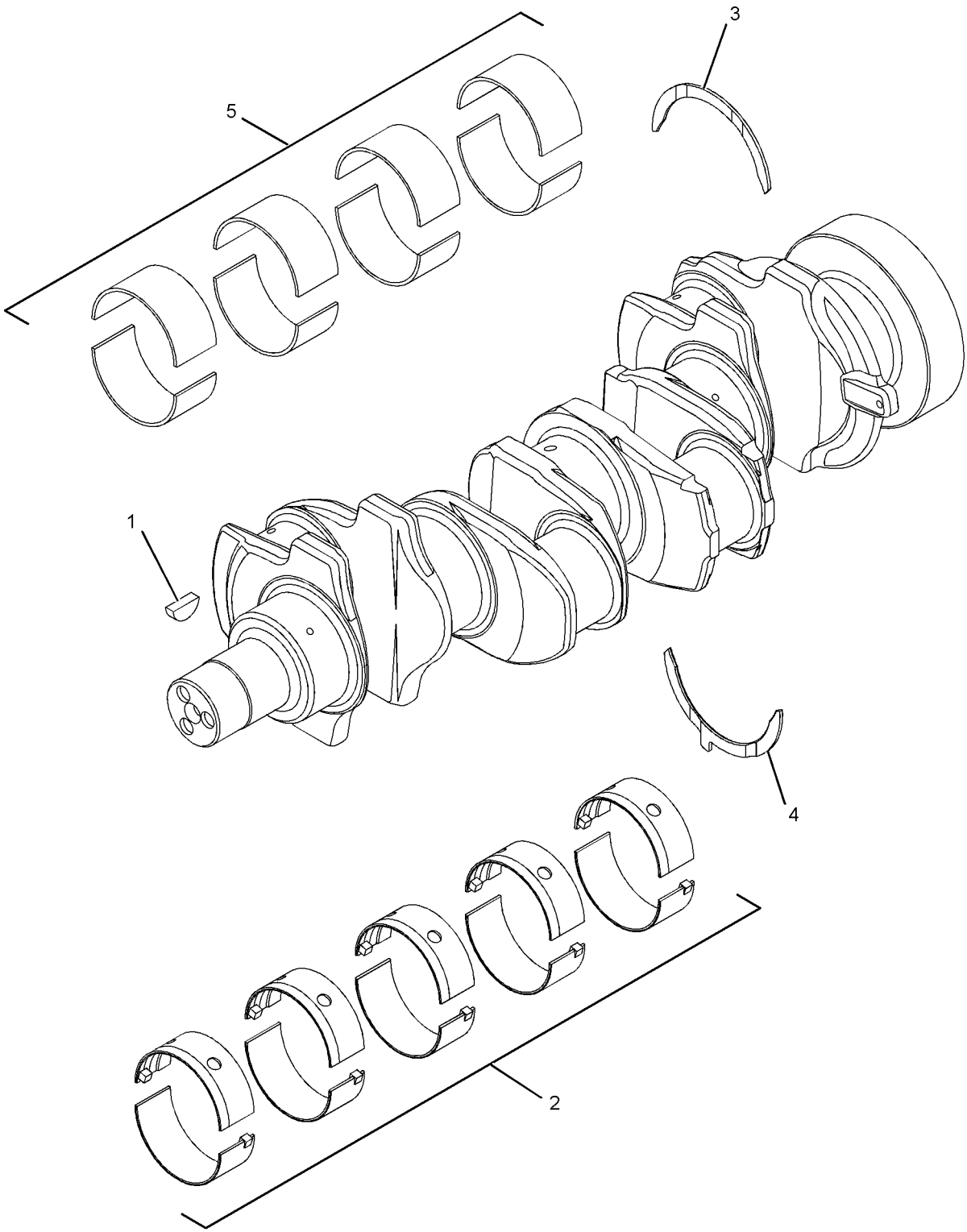

GRAPHIC #1 **<END>** g01369317

BASIC ENGINE

326-9000 CRANKSHAFT GP

S/N: C4Z1-UP

PART OF 321-7704, 321-7705 ENGINE AR-PRIMARY

AN ATTACHMENT

SMCS-1202, 1203, 1204, 1230, 1231, 1232 **i03631869**

NOTE	REF NO	GRAPHIC REF	PART NUMBER	QTY	PART NAME 1 2 3 4 5 6 (PRODUCT LEVEL)	SEE PAGE
	1	1	**216-8314**	1	GEAR-CRANKSHAFT (34-TEETH)	
Y	2	1	**232-7400**	1	CRANKSHAFT GP	25
					AVAILABLE REPAIR KIT(S):	
			274-4716	1	KIT-CRANKSHAFT	

Y-SEPARATE ILLUSTRATION

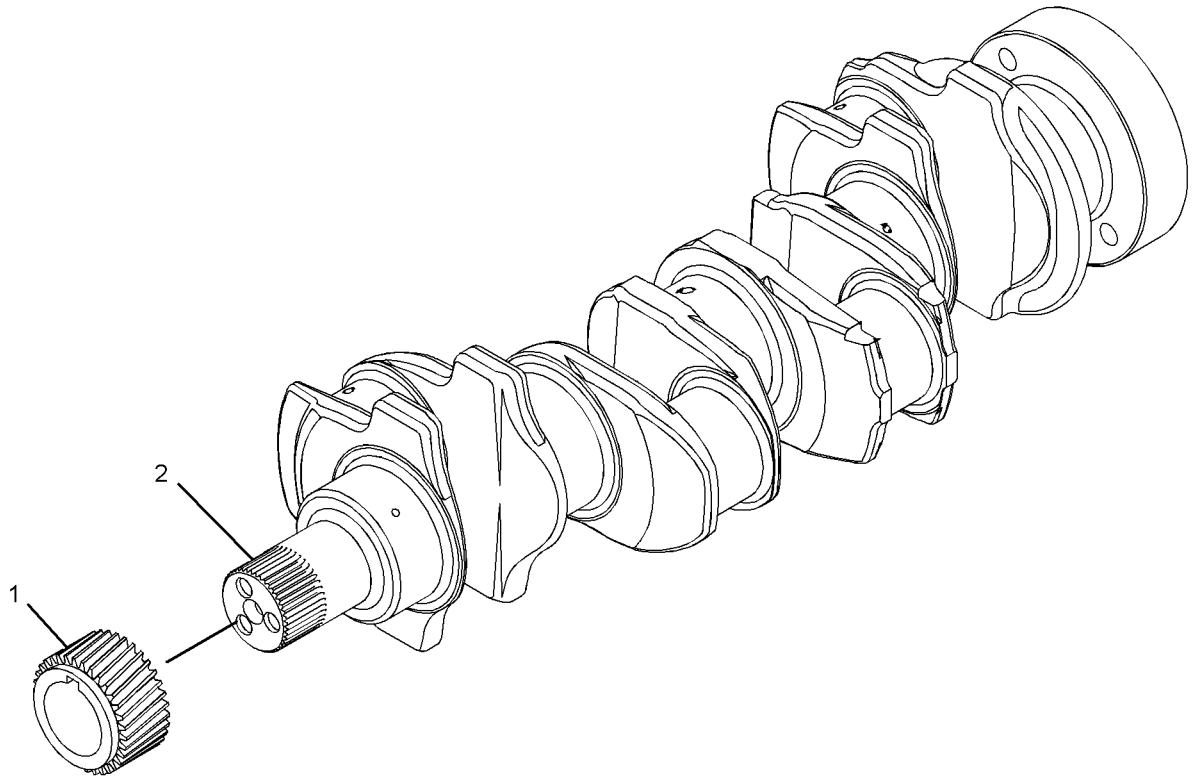

GRAPHIC #1 **<END>** g01420823

BASIC ENGINE

334-4203 CRANKSHAFT GP

S/N: CRS1-UP

PART OF 322-1923, 322-1924 ENGINE AR-PRIMARY

AN ATTACHMENT

SMCS-1202, 1203, 1204, 1230, 1231, 1232 **i03143142**

NOTE	REF NO	GRAPHIC REF	PART NUMBER	QTY	PART NAME 1 2 3 4 5 6 (PRODUCT LEVEL)	SEE PAGE
	1	1	**216-8314**	1	GEAR-CRANKSHAFT (34-TEETH)	
Y	2	1	**232-7400**	1	CRANKSHAFT GP	25

Y-SEPARATE ILLUSTRATION

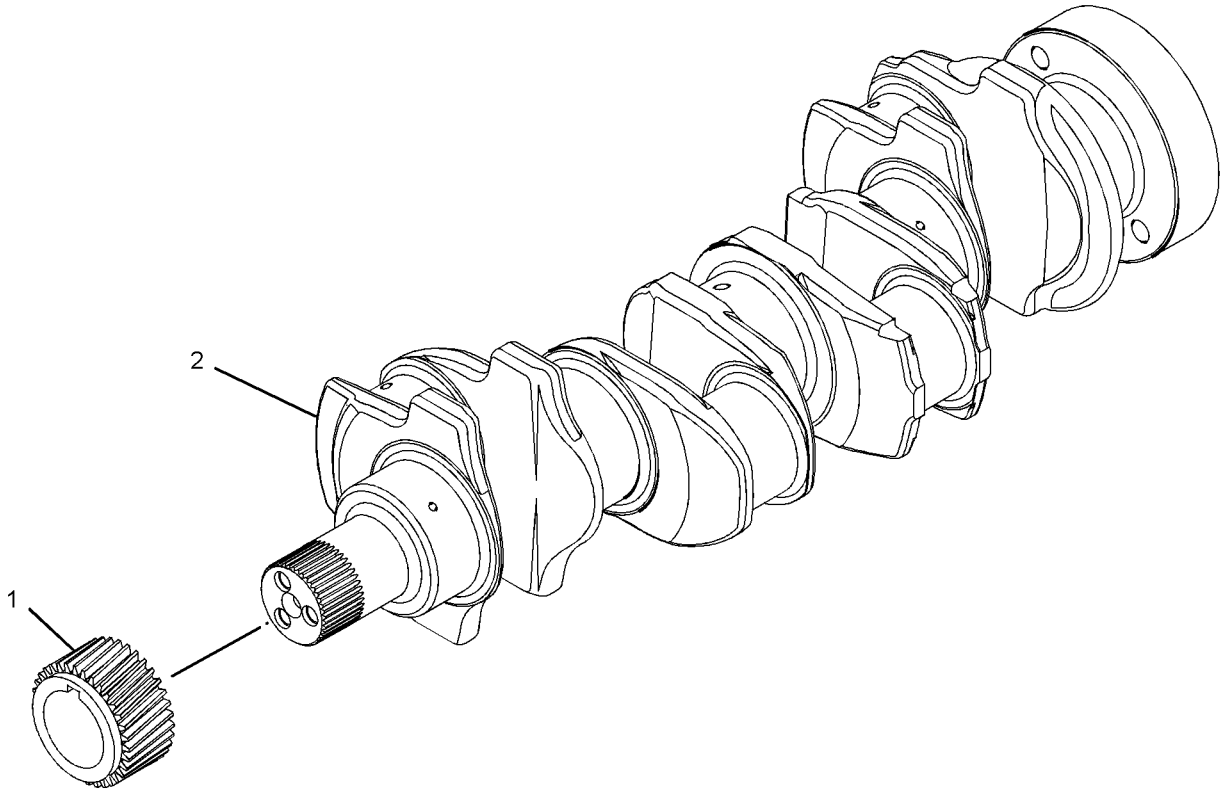

GRAPHIC #1 **<END>** g01402486

232-7604 CYLINDER BLOCK GP

S/N: CRS1-UP

PART OF 334-4202 CYLINDER BLOCK GP

AN ATTACHMENT

SMCS-1201 **i03251707**

NOTE	REF NO	GRAPHIC REF	PART NUMBER	QTY	PART NAME 1 2 3 4 5 6 (PRODUCT LEVEL)	SEE PAGE
	1	1	**6I-0572**	4	BOLT (M8X1.25X20-MM)	
	2	1	**035-8068**	10	BOLT (5/8-18X3.75-IN)	
	3	1	**067-6002**	10	DOWEL	
	4	1	**067-6006**	1	PLUG	
	5	1	**067-6043**	1	PLUG-SIDE	
M	6	1	**100-4841**	4	BOLT (M6X1X10-MM)	
	7	1	**185-0884**	2	DOWEL	
	8	1	**225-7944**	1	GASKET (ENGINE OIL FILTER BASE)	
	9	1	**225-8858**	2	PLUG	
	10	1	**232-3751**	1	PLATE	
	11	1	**232-7440**	1	BEARING	
	12	1	**276-5605**	4	JET AS-PISTON COOLING	
	13	1	**232-7596**	1	PLUG	
	14	1	**232-7597**	2	PLUG	
	15	1	**232-7599**	1	PLUG	
	16	1	**232-7600**	1	PLUG-CUP	
	17	1	**232-7603**	1	PLUG	

M-METRIC PART

232-7604 CYLINDER BLOCK GP *(contd.)* i03251707

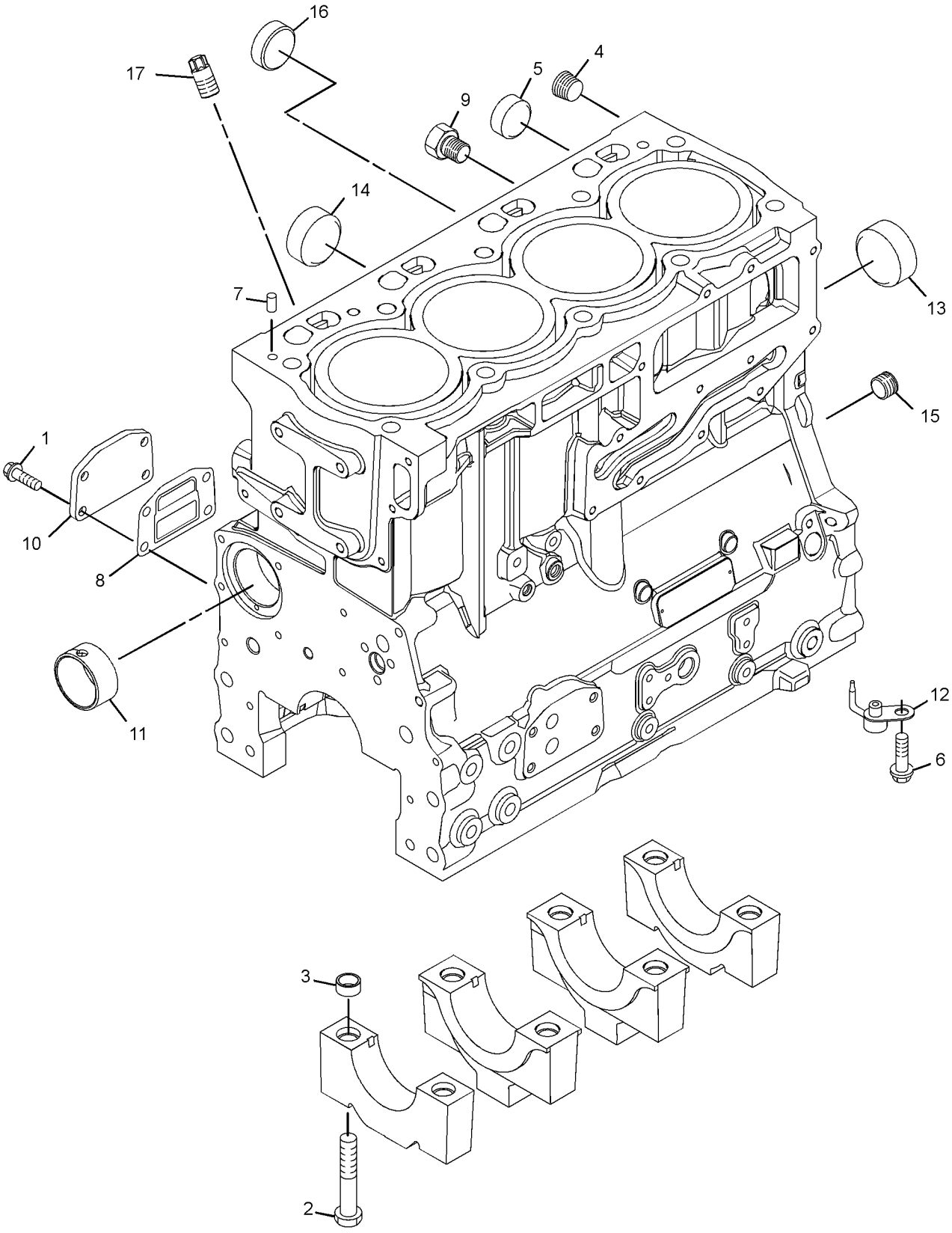

GRAPHIC #1 **<END>** g01652625

326-8999 CYLINDER BLOCK GP

S/N: C4Z1-UP

PART OF 321-7704, 321-7705 ENGINE AR-PRIMARY

AN ATTACHMENT

SMCS-1201 **i03410100**

NOTE	REF NO	GRAPHIC REF	PART NUMBER	QTY	PART NAME 1 2 3 4 5 6 (PRODUCT LEVEL)	SEE PAGE
M	1	1	**209-9219**	10	BOLT (M8X1.25X16-MM)	
	2	1	**232-7449**	1	HOUSING AS	
Y	3	1	**335-1584**	1	CYLINDER BLOCK GP	33

M-METRIC PART
Y-SEPARATE ILLUSTRATION

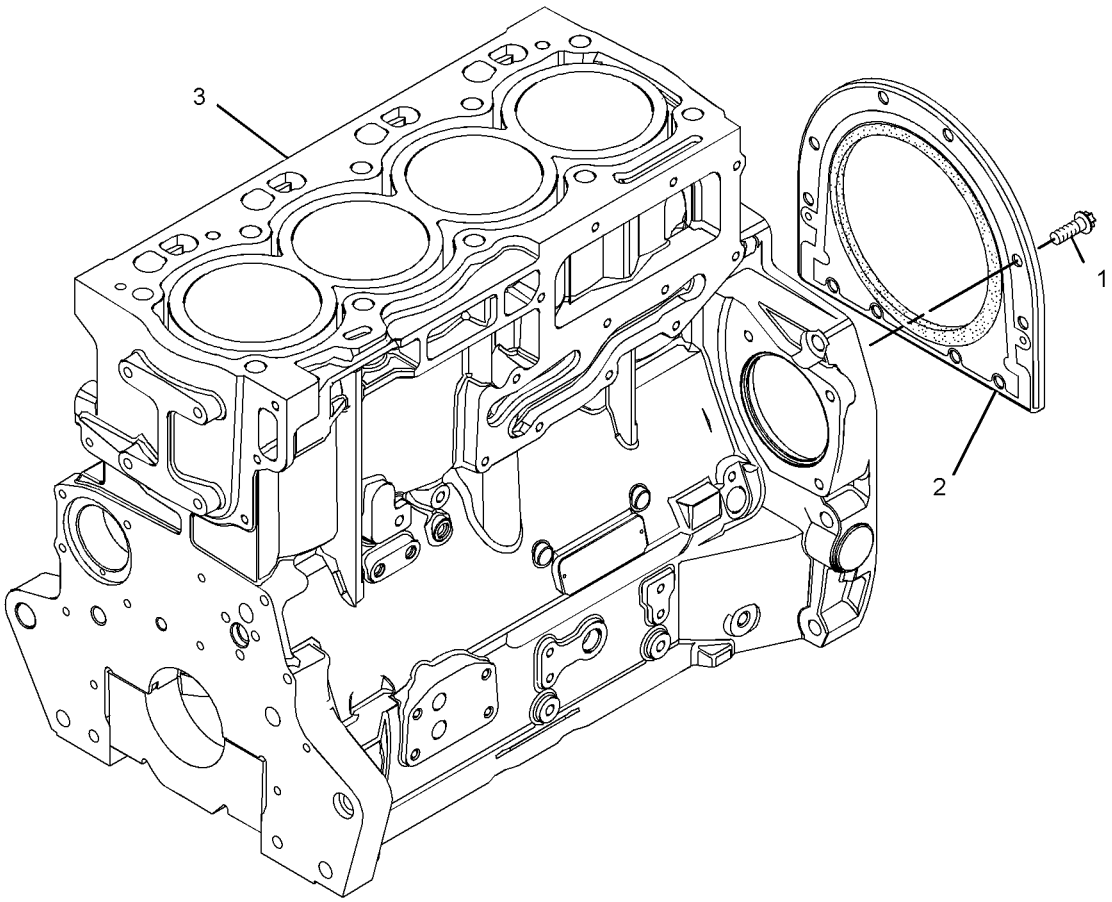

GRAPHIC #1 **<END>** g01770793

334-4202 CYLINDER BLOCK GP

S/N: CRS1-UP
PART OF 322-1923, 322-1924 ENGINE AR-PRIMARY
AN ATTACHMENT

SMCS-1201 **i03235927**

NOTE	REF NO	GRAPHIC REF	PART NUMBER	QTY	PART NAME 1 2 3 4 5 6 (PRODUCT LEVEL)	SEE PAGE
M	1	1	**209-9219**	10	BOLT (M8X1.25X16-MM)	
	2	1	**232-7449**	1	HOUSING AS	
Y	3	1	**232-7604**	1	CYLINDER BLOCK GP	29

M-METRIC PART
Y-SEPARATE ILLUSTRATION

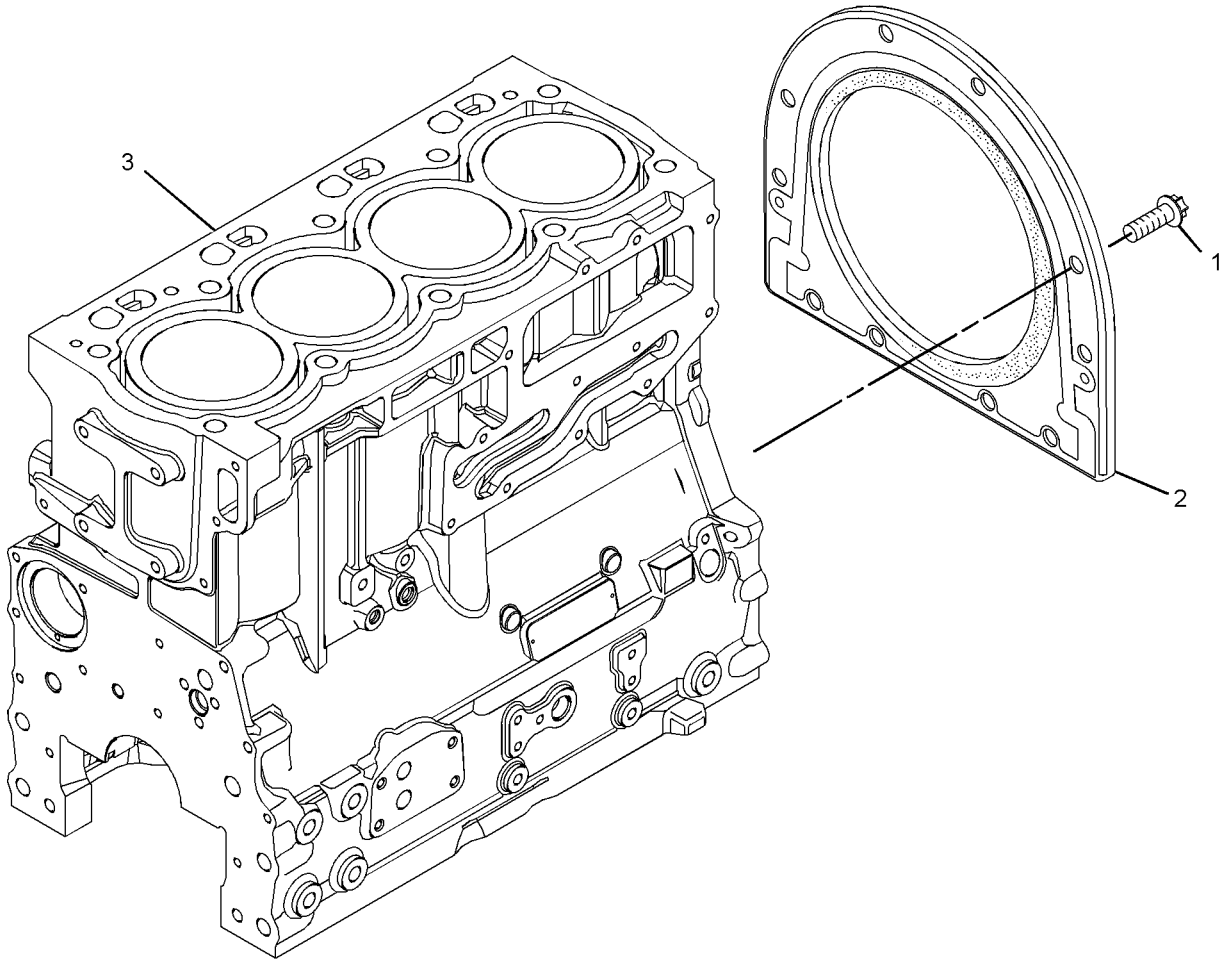

GRAPHIC #1 **<END>** g01652474

335-1584 CYLINDER BLOCK GP

S/N: C4Z1-UP

PART OF 326-8999 CYLINDER BLOCK GP

AN ATTACHMENT

SMCS-1201 **i03411464**

NOTE	REF NO	GRAPHIC REF	PART NUMBER	QTY	PART NAME 1 2 3 4 5 6 (PRODUCT LEVEL)	SEE PAGE
	1	1	**6I-0572**	4	BOLT (M8X1.25X20-MM)	
	2	1	**6I-0646**	1	BOLT (M10X1.5X14-MM)	
	3	1	**035-8063**	1	PLUG	
	4	1	**035-8068**	10	BOLT (5/8-18X3.75-IN)	
	5	1	**067-6002**	10	DOWEL	
	6	1	**067-6006**	1	PLUG	
	7	1	**067-6043**	1	PLUG-SIDE	
M	8	1	**100-4841**	4	BOLT (M6X1X10-MM)	
	9	1	**185-0884**	2	DOWEL	
	10	1	**214-3203**	1	WASHER (SEALING)	
	11	1	**225-7944**	1	GASKET	
	12	1	**225-8858**	2	PLUG	
	13	1	**232-3751**	1	PLATE	
	14	1	**232-7440**	1	BEARING	
	15	1	**232-7596**	1	PLUG	
	16	1	**232-7597**	2	PLUG	
	17	1	**232-7599**	1	PLUG	
	18	1	**276-5605**	4	JET AS-PISTON COOLING	

M-METRIC PART

335-1584 CYLINDER BLOCK GP *(contd.)* i03411464

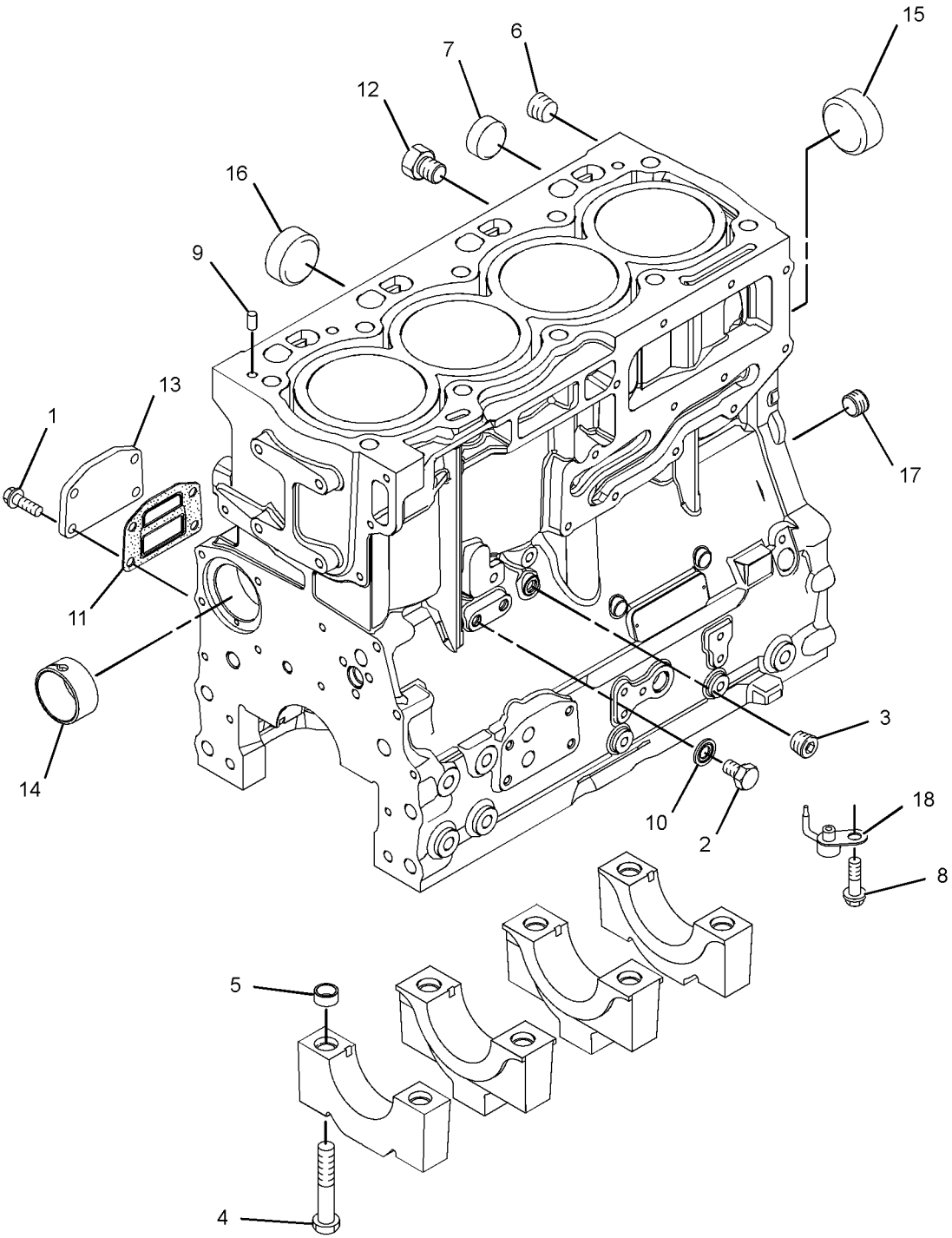

GRAPHIC #1 **<END>** g01769514

247-4868 CYLINDER HEAD GP

S/N: CRS1-UP
PART OF 334-4205 CYLINDER HEAD GP
AN ATTACHMENT

SMCS-1100, 1101, 1103, 1104, 1105, 1106, 1108, 1109, 1115, 1117, 1121, 1124, 1125

i03304183

NOTE	REF NO	GRAPHIC REF	PART NUMBER	QTY	PART NAME 1 2 3 4 5 6 (PRODUCT LEVEL)	SEE PAGE
	1	1	**2B-0858**	1	PLUG-PIPE	
	2	1	**9Y-5015**	2	PLUG-FREEZE	
	3	1	**067-6006**	4	PLUG	
	4	1	**147-1979**	16	RETAINER-VALVE SPRING	
	5	1	**185-0882**	8	GUIDE-VALVE (INTAKE)	
	6	1	**199-9751**	1	SEAL-O-RING	
	7	1	**329-6655**	4	INSERT-VALVE SEAT	
	8	1	**322-9663**	4	INSERT-VALVE SEAT (EXHAUST)	
	9	1	**225-5495**	8	VALVE-INLET	
	10	1	**225-5496**	8	SPRING-VALVE	
	11	1	**225-5498**	8	CAP	
	12	1	**225-5499**	4	VALVE-EXHAUST	
	13	1	**232-1322**	1	PLUG	
	14	1	**252-6438**	4	SEAL-INLET VALVE	
	15	1	**254-3954**	4	SEAL-EXHAUST VALVE	

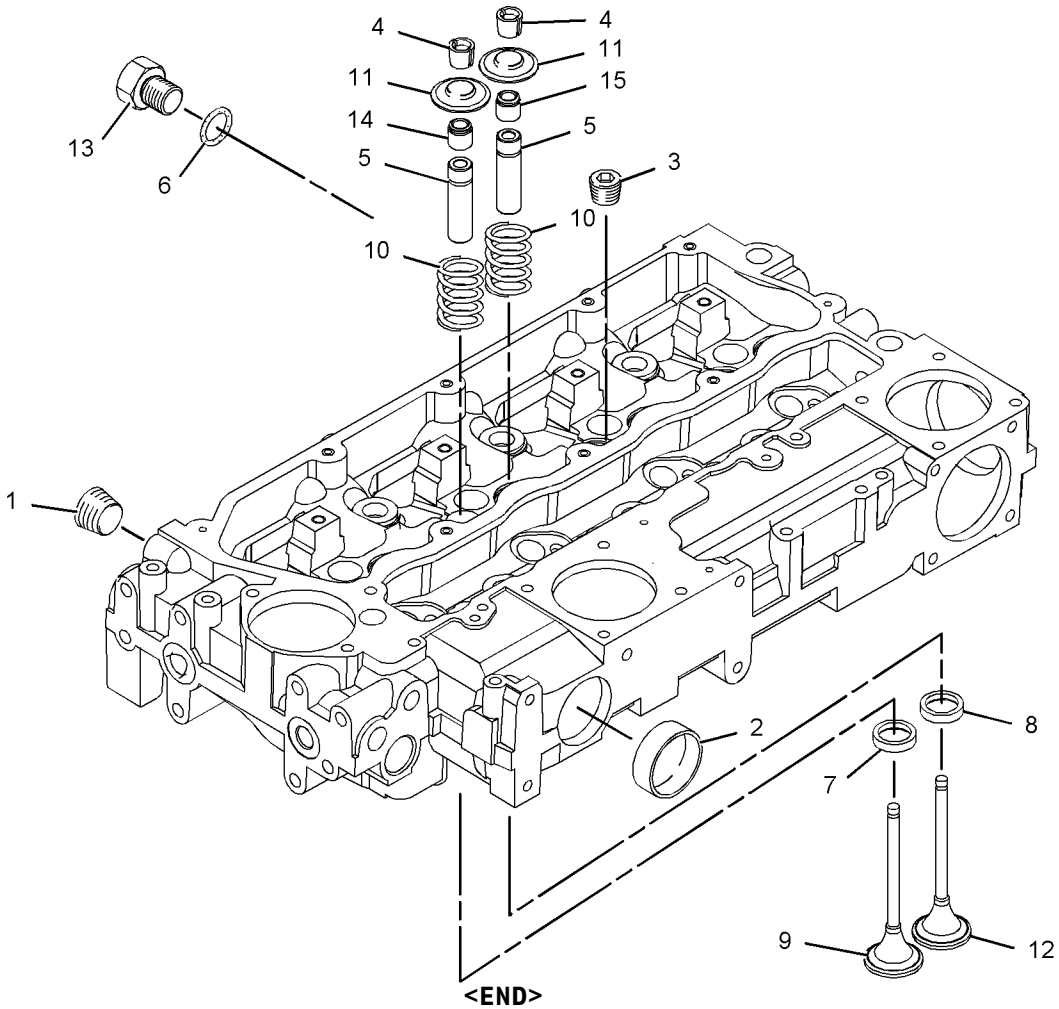

GRAPHIC #1

<END>

g01078948

316-7896 CYLINDER HEAD GP

S/N: C4Z1-UP
PART OF 326-9003 CYLINDER HEAD GP
AN ATTACHMENT

SMCS-1100, 1101, 1103, 1104, 1105, 1106, 1108, 1109, 1115, 1117, 1121, 1124, 1125 **i03131134**

NOTE	REF NO	GRAPHIC REF	PART NUMBER	QTY	PART NAME 1 2 3 4 5 6 (PRODUCT LEVEL)	SEE PAGE
	1	1	**2B-0858**	2	PLUG-PIPE	
	2	1	**9Y-5015**	2	PLUG-FREEZE	
	3	1	**067-6006**	4	PLUG	
	4	1	**185-0882**	8	GUIDE-VALVE (INTAKE)	
	5	1	**199-9751**	1	SEAL-O-RING	
	6	1	**232-1322**	1	PLUG	
	7	1	**315-3390**	4	VALVE-INLET	
	8	1	**315-3391**	8	SPRING	
	9	1	**315-3392**	8	CAP	
	10	1	**315-3393**	16	COLLET	
	11	1	**315-3394**	4	VALVE-EXHAUST	
	12	1	**252-6438**	4	SEAL-INLET VALVE (GREEN)	
	13	1	**254-3954**	4	SEAL-EXHAUST VALVE (BROWN)	
	14	1	**322-9663**	4	INSERT-VALVE SEAT	
	15	1	**322-9664**	4	SEAT-VALVE	

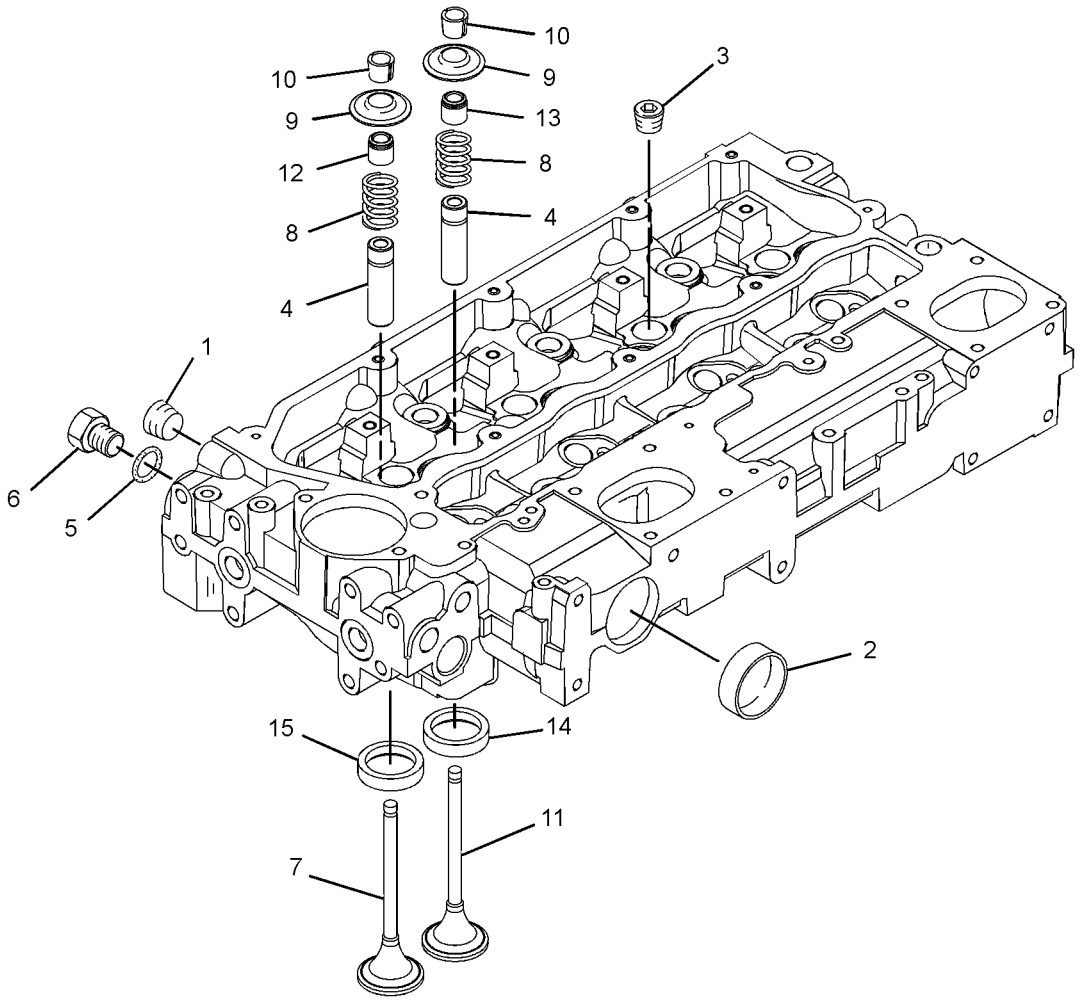

GRAPHIC #1 **<END>** g01542313

326-9003 CYLINDER HEAD GP

S/N: C4Z1-UP

PART OF 321-7704, 321-7705 ENGINE AR-PRIMARY

AN ATTACHMENT

SMCS-1100, 1101, 1103, 1104, 1105, 1106, 1108, 1109, 1115, 1117, 1121, 1124, 1125

i03127782

NOTE	REF NO	GRAPHIC REF	PART NUMBER	QTY	PART NAME 1 2 3 4 5 6 (PRODUCT LEVEL)	SEE PAGE
	1	1	**225-5501**	7	BOLT (M15X1.5X137-MM)	
	2	1	**225-5502**	3	BOLT (M15X1.5X162-MM)	
	3	1	**258-4946**	1	GASKET-HEAD	
Y	4	1	**316-7896**	1	CYLINDER HEAD GP	36

Y-SEPARATE ILLUSTRATION

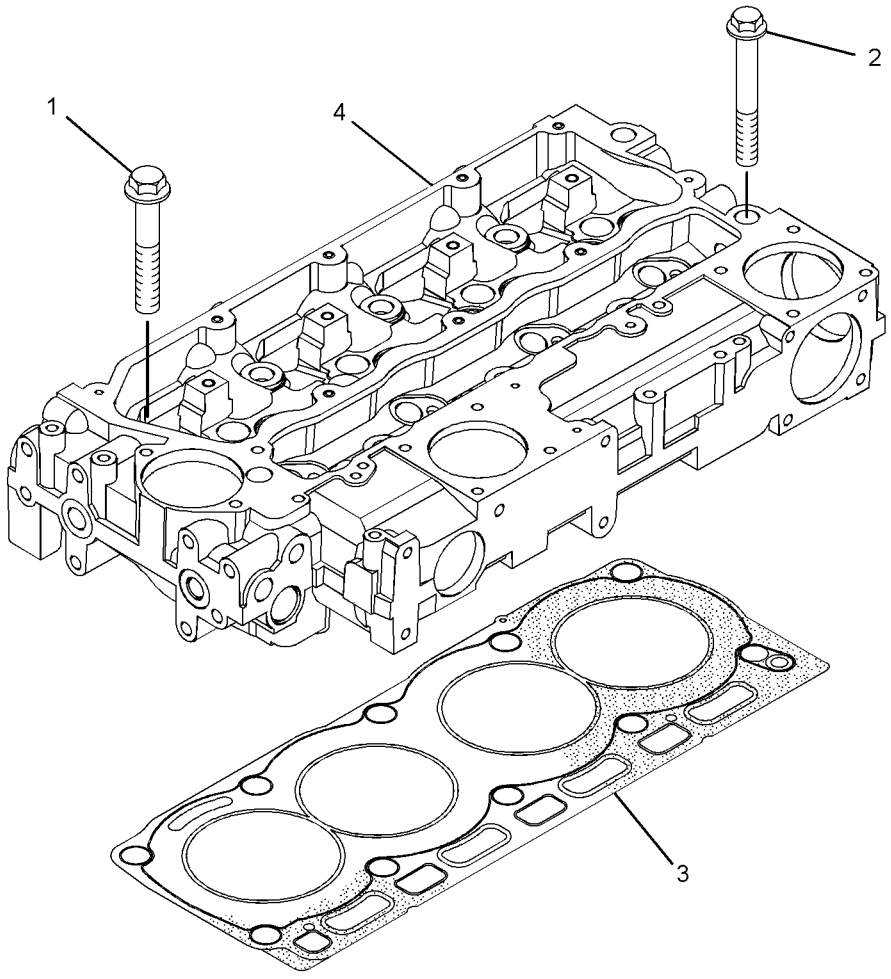

GRAPHIC #1

<END>

g01523242

334-4205 CYLINDER HEAD GP

S/N: CRS1-UP

PART OF 322-1923, 322-1924 ENGINE AR-PRIMARY

AN ATTACHMENT

SMCS-1100, 1101, 1103, 1104, 1105, 1106, 1108, 1109, 1115, 1117, 1121, 1124, 1125

i03143144

NOTE	REF NO	GRAPHIC REF	PART NUMBER	QTY	PART NAME 1 2 3 4 5 6 (PRODUCT LEVEL)	SEE PAGE
	1	1	**225-5501**	7	BOLT (M15X1.5X137-MM)	
	2	1	**225-5502**	3	BOLT (M15X1.5X162-MM)	
Y	3	1	**247-4868**	1	CYLINDER HEAD GP	35
	4	1	**258-4946**	1	GASKET-HEAD	

Y-SEPARATE ILLUSTRATION

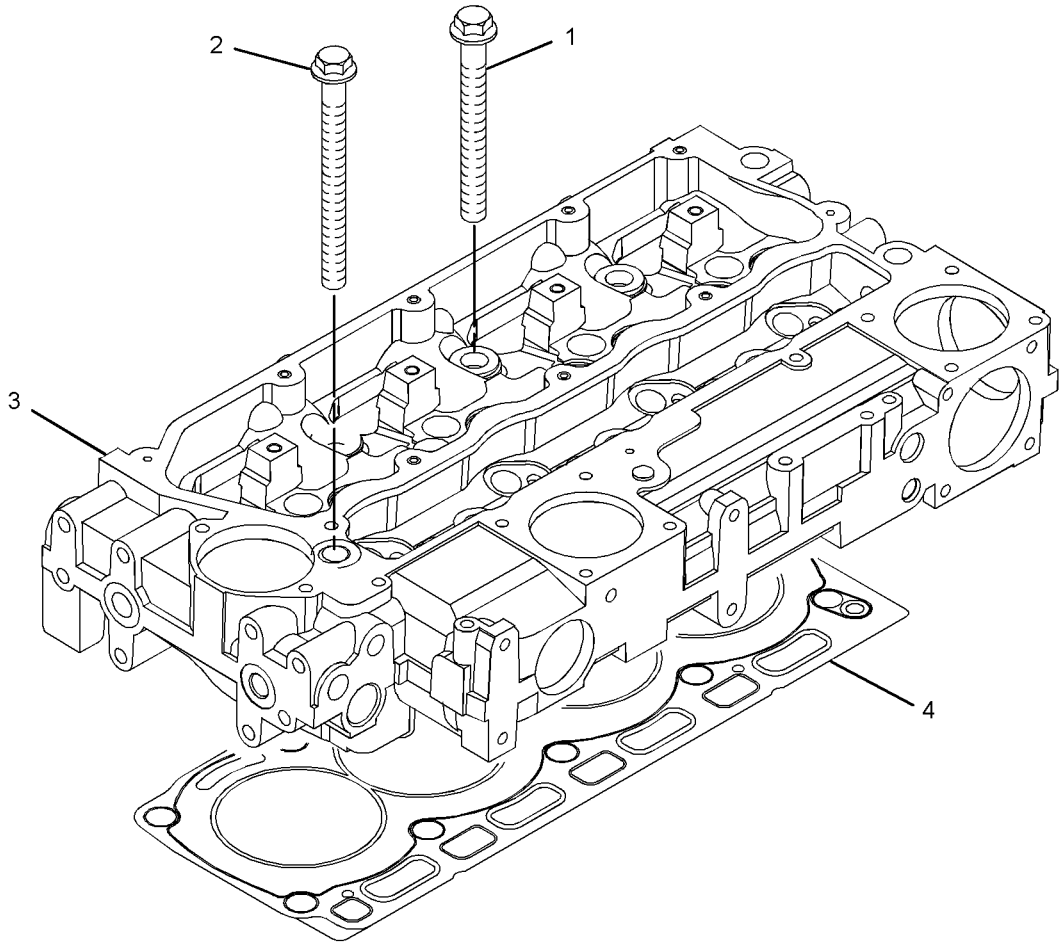

GRAPHIC #1

<END>

g01619771

326-9009 DRIVE GP-AUXILIARY

S/N: C4Z1-UP

PART OF 321-7704, 321-7705 ENGINE AR-PRIMARY

AN ATTACHMENT

SMCS-1207 **i03127787**

NOTE	REF NO	GRAPHIC REF	PART NUMBER	QTY	PART NAME 1 2 3 4 5 6 (PRODUCT LEVEL)	SEE PAGE
	1	1	**6I-0501**	1	BLOCK	
	2	1	**7W-4634**	3	BOLT (7/16-20X1.5-IN)	
M	3	1	**102-9941**	3	BOLT (M12X1.75X25-MM)	
	4	1	**286-7848**	1	PULLEY GP-ENGINE	
	5	1	**306-8857**	1	HUB	

M-METRIC PART

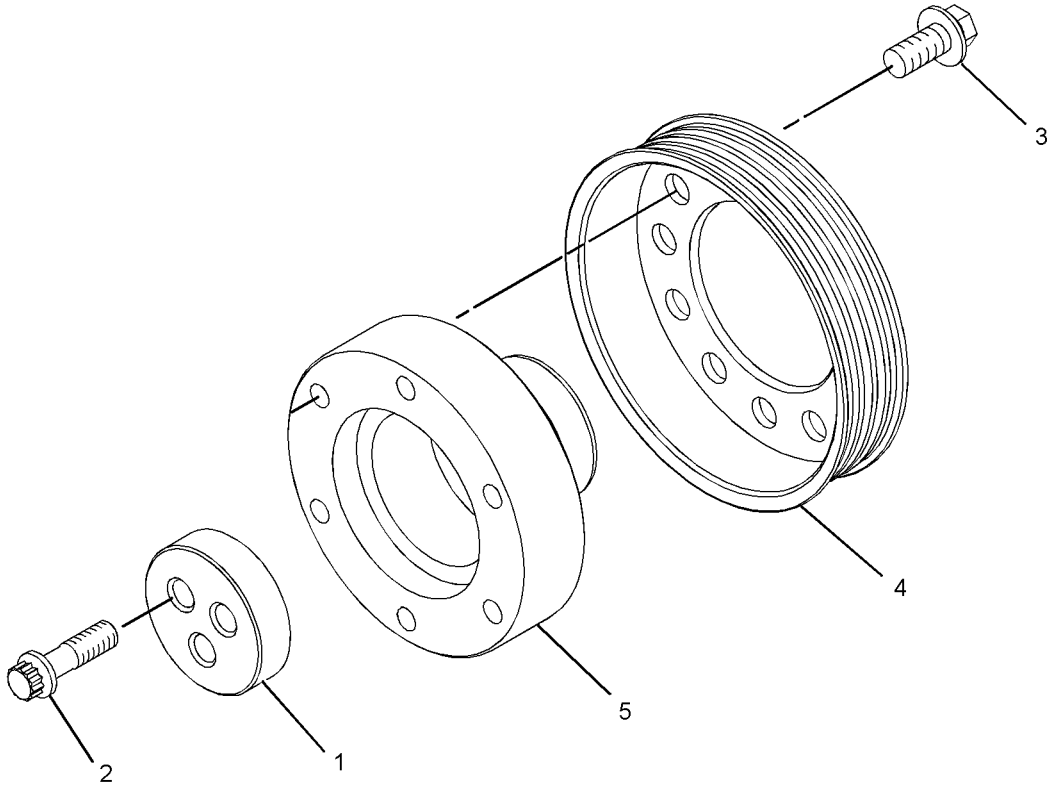

GRAPHIC #1 **<END>** g01615550

BASIC ENGINE

334-3755 DRIVE GP-AUXILIARY

S/N: CRS1-UP

PART OF 322-1923, 322-1924 ENGINE AR-PRIMARY

AN ATTACHMENT

SMCS-1207 **i03143104**

NOTE	REF NO	GRAPHIC REF	PART NUMBER	QTY	PART NAME 1 2 3 4 5 6 (PRODUCT LEVEL)	SEE PAGE
	1	1	**6I-0501**	1	BLOCK	
	2	1	**7W-4634**	3	BOLT (7/16-20X1.5-IN)	
M	3	1	**102-9941**	3	BOLT (M12X1.75X25-MM)	
	4	1	**286-7848**	1	PULLEY GP-ENGINE	
	5	1	**306-8857**	1	HUB	

M-METRIC PART

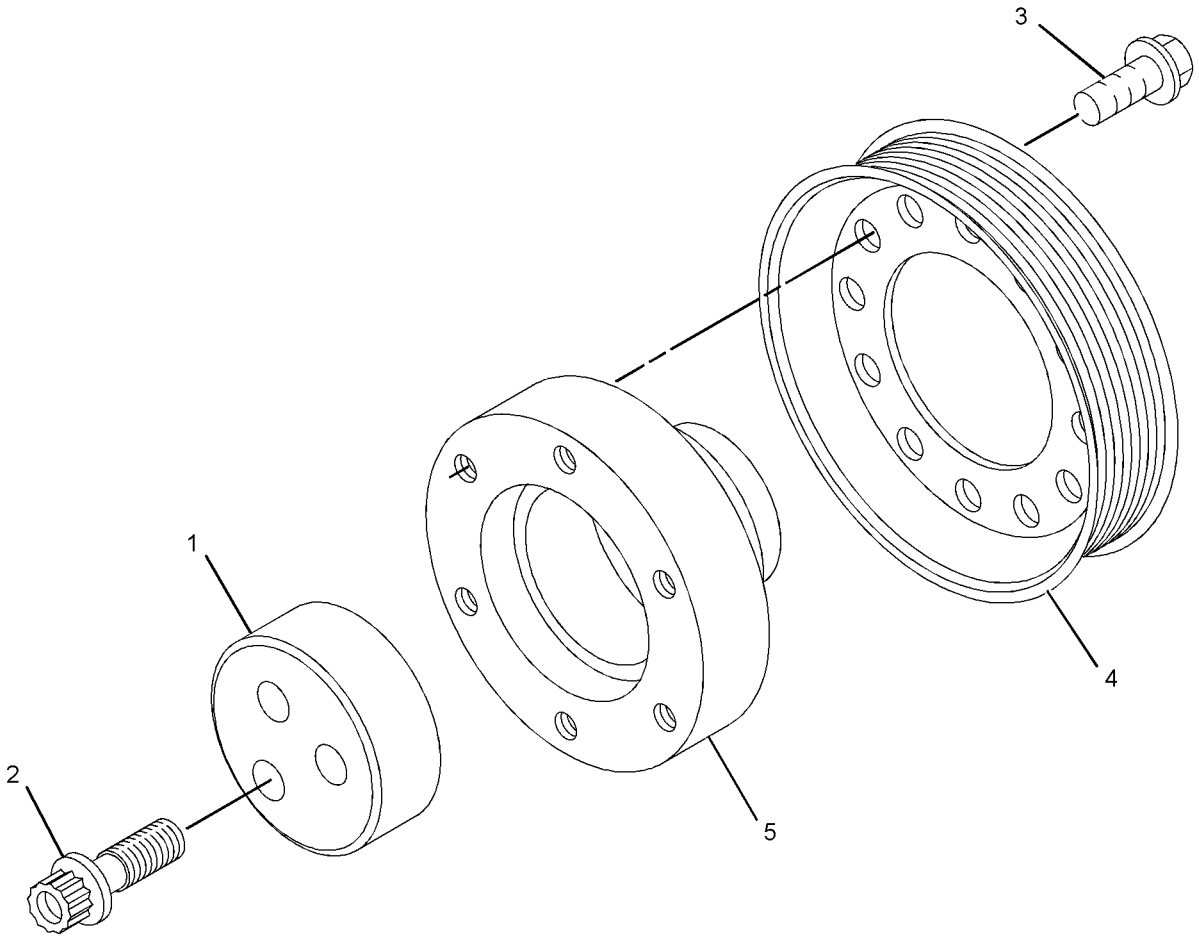

GRAPHIC #1 **<END>** g01619099

303-5770 DRIVE GP-FAN

S/N: C4Z1-UP
PART OF 321-7704, 321-7705 ENGINE AR-PRIMARY
AN ATTACHMENT

SMCS-1357, 1358, 1359, 1390 **i03128283**

NOTE	REF NO	GRAPHIC REF	PART NUMBER	QTY	PART NAME 1 2 3 4 5 6 (PRODUCT LEVEL)	SEE PAGE
	1	1	**326-1880**	1	HOUSING-FAN DRIVE	
	2	1	**251-2437**	1	PLATE	
	3	1	**111-0859**	8	BOLT (M10X1.5X35-MM)	

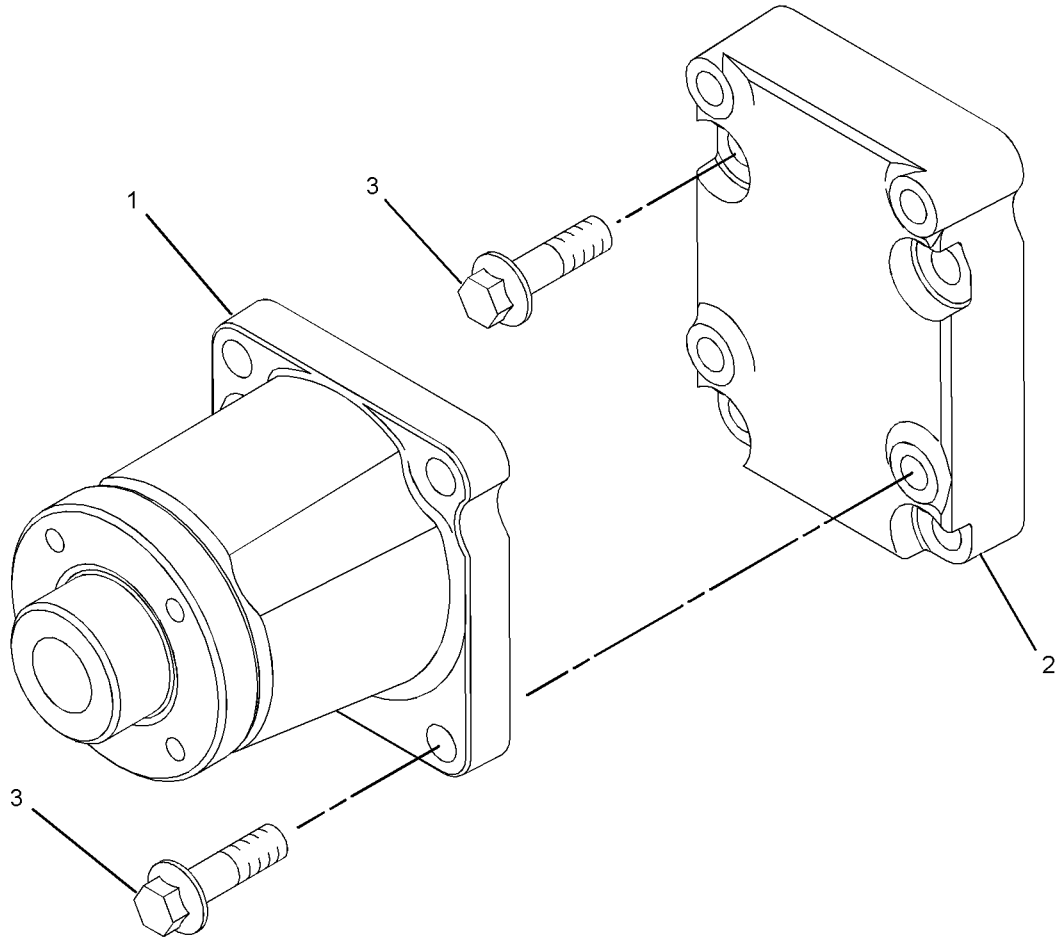

GRAPHIC #1 **<END>** g01340877

BASIC ENGINE

334-3754 DRIVE GP-FAN

S/N: CRS1-UP
PART OF 322-1923, 322-1924 ENGINE AR-PRIMARY
AN ATTACHMENT

SMCS-1357, 1358, 1359, 1390 **i03143103**

NOTE	REF NO	GRAPHIC REF	PART NUMBER	QTY	PART NAME 1 2 3 4 5 6 (PRODUCT LEVEL)	SEE PAGE
	1	1	**111-0859**	8	BOLT (M10X1.5X35-MM)	
	2	1	**251-2437**	1	PLATE	
	3	1	**326-1880**	1	HOUSING-FAN DRIVE	

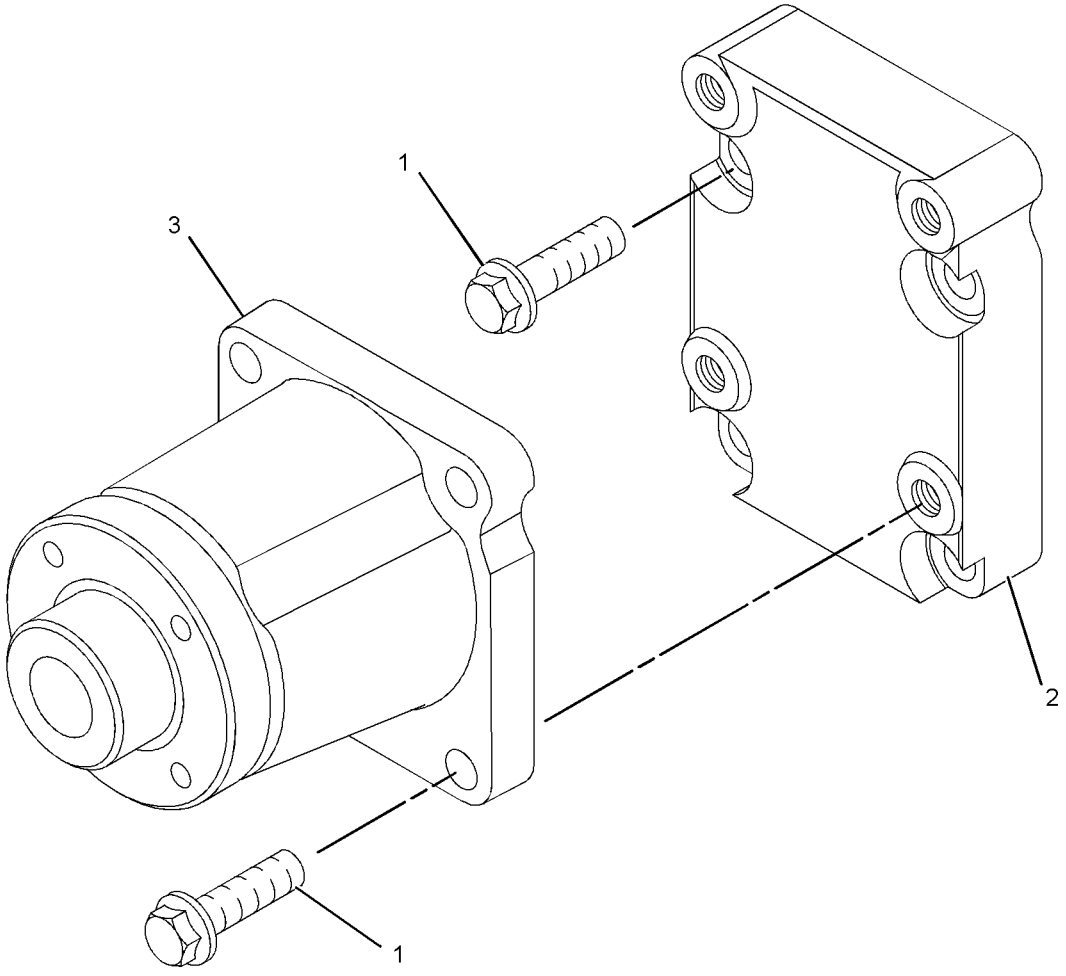

GRAPHIC #1 **<END>** g01619123

230-7300 FLYWHEEL GP

S/N: CRS1-UP
PART OF 322-1923, 322-1924 ENGINE AR-PRIMARY
AN ATTACHMENT

SMCS-1156, 1158 **i02004994**

NOTE	REF NO	GRAPHIC REF	PART NUMBER	QTY	PART NAME 1 2 3 4 5 6 (PRODUCT LEVEL)	SEE PAGE
	1	1	**0S-1603**	6	BOLT (1/2-20X1.5-IN)	
	2	1	**5P-8245**	6	WASHER-HARD (13.5X25.5X3-MM THK)	
	3	1	**245-9828**	1	FLYWHEEL AS	
	4	1	**033-7687**	1	RING-STARTING MOTOR (126-TEETH)	

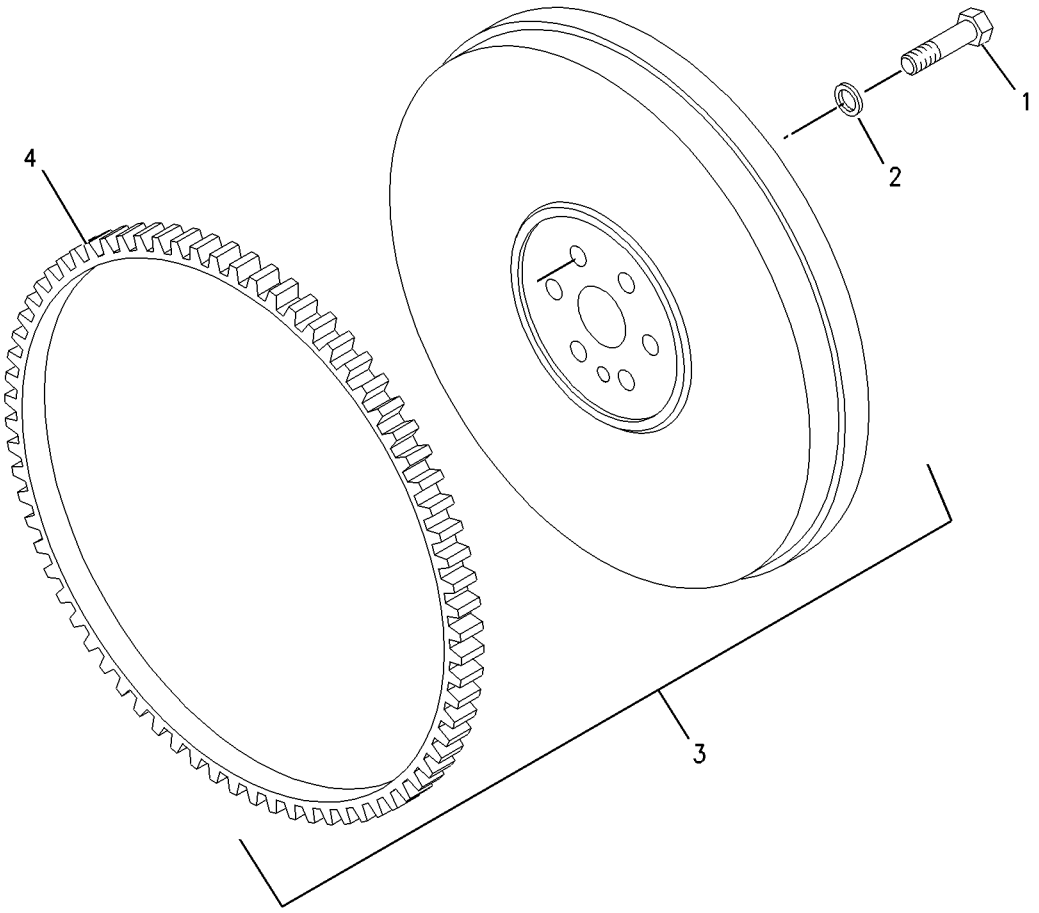

GRAPHIC #1 **<END>** g00955555

303-5768 FLYWHEEL GP

S/N: C4Z1-UP
PART OF 321-7704, 321-7705 ENGINE AR-PRIMARY
AN ATTACHMENT

SMCS-1156, 1158 **i03128301**

NOTE	REF NO	GRAPHIC REF	PART NUMBER	QTY	PART NAME 1 2 3 4 5 6 (PRODUCT LEVEL)	SEE PAGE
	1	1	**245-9828**	1	FLYWHEEL AS	
	1A	1	**033-7687**	1	RING-STARTING MOTOR (126-TEETH)	
	2	1	**0S-1603**	10	BOLT (1/2-20X1.5-IN)	
	3	1	**5P-8245**	10	WASHER-HARD (13.5X25.5X3-MM THK)	

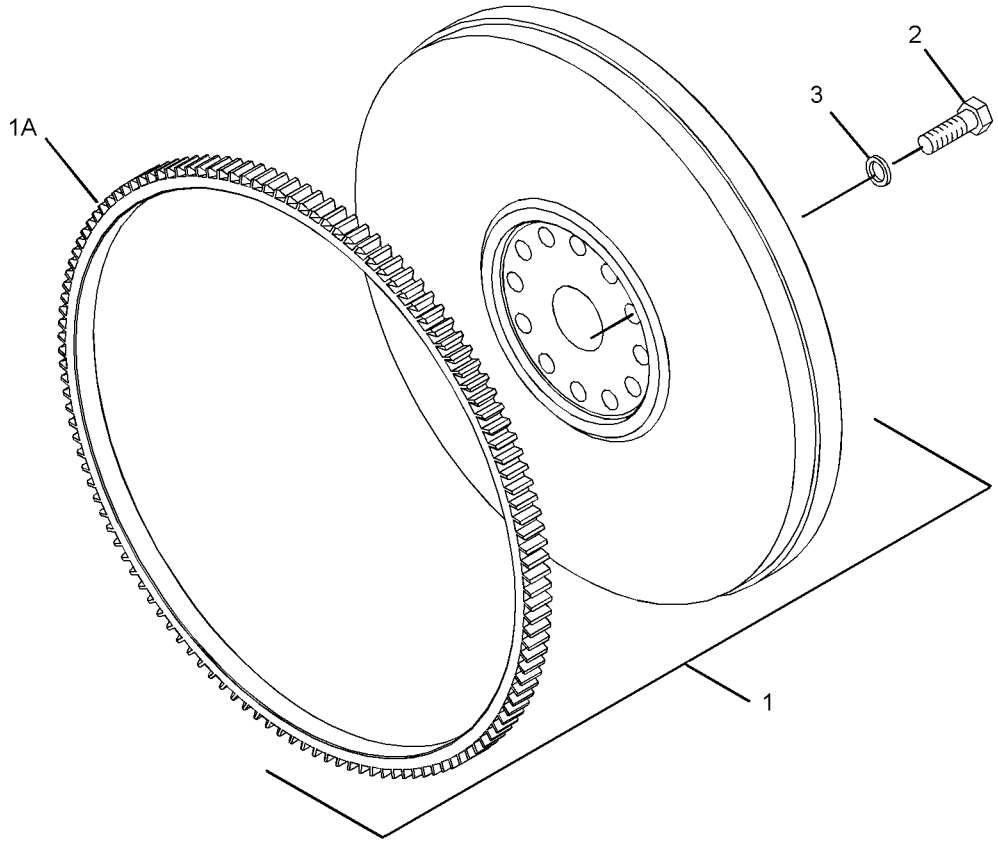

GRAPHIC #1 **<END>** g01372699

236-8238 HOUSING GP-FLYWHEEL

S/N: CRS1-UP

PART OF 322-1923, 322-1924 ENGINE AR-PRIMARY

AN ATTACHMENT

SMCS-1157 **i02527247**

NOTE	REF NO	GRAPHIC REF	PART NUMBER	QTY	PART NAME 1 2 3 4 5 6 (PRODUCT LEVEL)	SEE PAGE
M	1	1	**6I-0423**	2	BOLT (M12X1.75X30-MM)	
	2	1	**6I-0847**	2	PLUG	
	3	1	**7W-1176**	1	PLATE-COVER	
	4	1	**7W-4642**	1	SHIELD-DUST	
	5	1	**287-8597**	2	DOWEL	
	6	1	**114-4363**	2	BOLT (M8X1.25X12-MM)	
	7	1	**101-3617**	3	PLUG	
M	8	1	**121-0883**	6	BOLT (M10X1.5X30-MM)	
	9	1	**220-8631**	1	HOUSING-FLYWHEEL	

M-METRIC PART

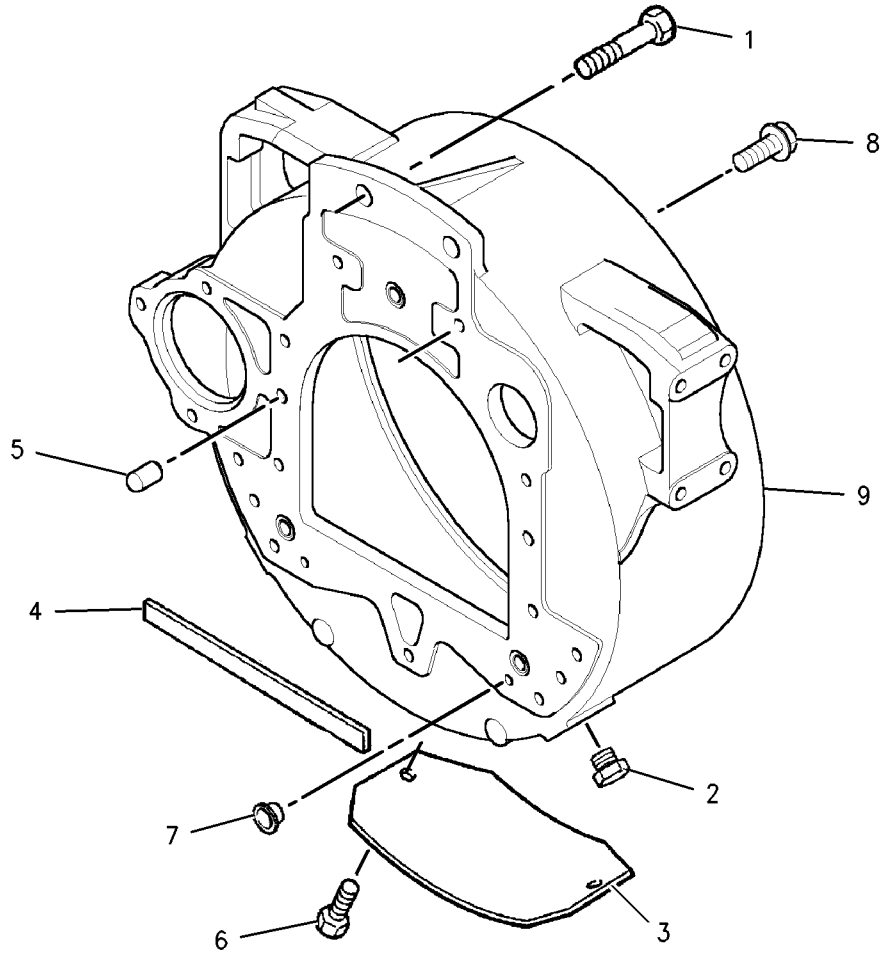

GRAPHIC #1 **<END>** g00902549

303-5767 HOUSING GP-FLYWHEEL

S/N: C4Z1-UP
PART OF 321-7704, 321-7705 ENGINE AR-PRIMARY
AN ATTACHMENT

SMCS-1157 **i03128293**

NOTE	REF NO	GRAPHIC REF	PART NUMBER	QTY	PART NAME 1 2 3 4 5 6 (PRODUCT LEVEL)	SEE PAGE
M	1	1	**6I-0423**	2	BOLT (M12X1.75X30-MM)	
	2	1	**6I-0847**	2	PLUG	
	3	1	**7W-1176**	1	PLATE-COVER	
	4	1	**7W-4642**	1	SHIELD-DUST	
	5	1	**287-8597**	2	DOWEL	
	6	1	**114-4363**	2	BOLT (M8X1.25X12-MM)	
	7	1	**4H-0408**	3	PLUG-PROTECTION	
M	8	1	**121-0883**	6	BOLT (M10X1.5X30-MM)	
	9	1	**220-8631**	1	HOUSING-FLYWHEEL	

M-METRIC PART

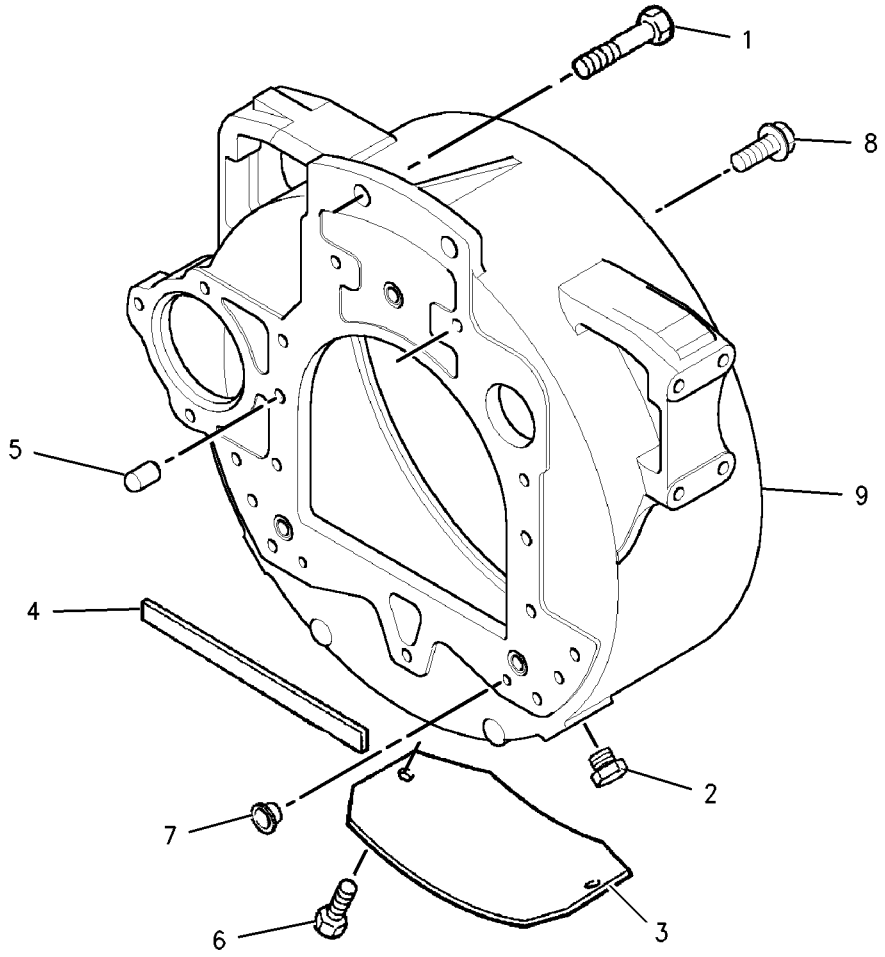

GRAPHIC #1 **<END>** g00902549

BASIC ENGINE

304-8760 HOUSING GP-FRONT

S/N: C4Z1-UP

PART OF 321-7704, 321-7705 ENGINE AR-PRIMARY

AN ATTACHMENT

SMCS-1151, 1162, 1166, 1206 **i03569721**

NOTE	REF NO	GRAPHIC REF	PART NUMBER	QTY	PART NAME 1 2 3 4 5 6 (PRODUCT LEVEL)	SEE PAGE
	1	1	**294-0288**	1	HOUSING-FRONT	
	2	1	**277-3012**	1	GASKET-COVER	
	3	1	**288-0422**	1	SEAL-OIL (FRONT)	
M	4	1	**6I-0217**	6	BOLT (M8X1.25X20-MM)	
M	5	1	**101-3895**	2	BOLT (M8X1.25X35-MM)	
M	6	1	**6I-0645**	4	BOLT (M8X1.25X25-MM)	
CJ	7	1	**346-0407**	1	GEAR-IDLER (73-TEETH)	
	8	1	**324-0444**	1	HUB-IDLER GEAR	
C	9	1	**346-0408**	1	PLATE	
M	10	1	**6I-0650**	3	BOLT (M10X1.5X65-MM)	
	11	1	**216-8634**	1	GEAR-CAMSHAFT (68-TEETH)	
	12	1	**133-1011**	1	WASHER	
	13	1	**067-6179**	1	DOWEL	
	14	1	**232-3666**	1	WASHER-THRUST	
	15	1	**7C-4616**	1	BOLT (M12X1.75X45-MM)	
	16	1	**232-3657**	1	COVER AS-FRONT	
	16A	1	**225-8287**	1	GASKET	
M	17	1	**124-3815**	10	BOLT (M8X16X1.25-MM)	
M	18	1	**100-3751**	5	BOLT (M8X1.25X65-MM)	

C-CHANGE FROM PREVIOUS TYPE
J-CAN ONLY BE USED IN CONJUNCTION WITH 346-0408 & 324-0444
M-METRIC PART

304-8760 **HOUSING GP-FRONT** *(contd.)* **i03569721**

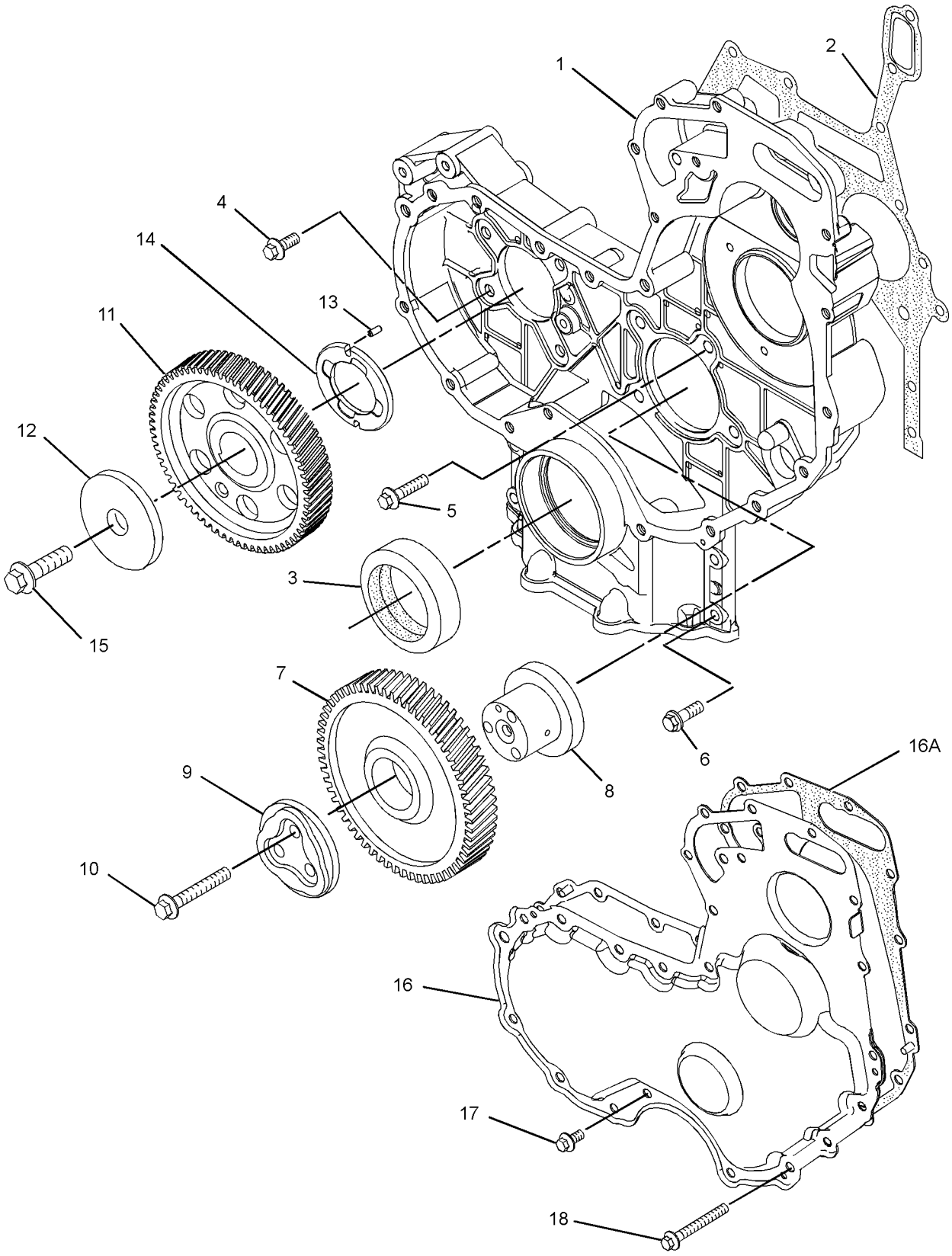

GRAPHIC #1 **<END>** g01900827

334-3757 HOUSING GP-FRONT

S/N: CRS1-UP

PART OF 322-1923, 322-1924 ENGINE AR-PRIMARY

AN ATTACHMENT

SMCS-1151, 1162, 1166, 1206 **i03570220**

NOTE	REF NO	GRAPHIC REF	PART NUMBER	QTY	PART NAME 1 2 3 4 5 6 (PRODUCT LEVEL)	SEE PAGE
	1	1	**1B-8736**	1	KEY-WOODRUFF	
M	2	1	**6I-0217**	6	BOLT (M8X1.25X20-MM)	
M	3	1	**6I-0645**	4	BOLT (M8X1.25X25-MM)	
M	4	1	**6I-0650**	3	BOLT (M10X1.5X65-MM)	
	5	1	**7C-4616**	1	BOLT (M12X1.75X45-MM)	
	6	1	**067-6179**	1	DOWEL	
M	7	1	**100-3751**	5	BOLT (M8X1.25X65-MM)	
M	8	1	**101-3895**	2	BOLT (M8X1.25X35-MM)	
M	9	1	**124-3815**	10	BOLT (M8X16X1.25-MM)	
	10	1	**133-1011**	1	WASHER	
	11	1	**216-8634**	1	GEAR-CAMSHAFT (68-TEETH)	
	12	1	**232-3657**	1	COVER AS-FRONT	
	12A	1	**225-8287**	1	GASKET	
	13	1	**232-3666**	1	WASHER-THRUST	
C	14	1	**346-0407**	1	GEAR-IDLER (73-TEETH)	
	15	1	**277-3012**	1	GASKET-COVER	
	16	1	**288-0422**	1	SEAL-OIL	
	17	1	**294-0288**	1	HOUSING-FRONT	
C	18	1	**346-0408**	1	PLATE	
	19	1	**324-0444**	1	HUB-IDLER GEAR	

C-CHANGE FROM PREVIOUS TYPE
M-METRIC PART

334-3757 **HOUSING GP-FRONT** *(contd.)* **i03570220**

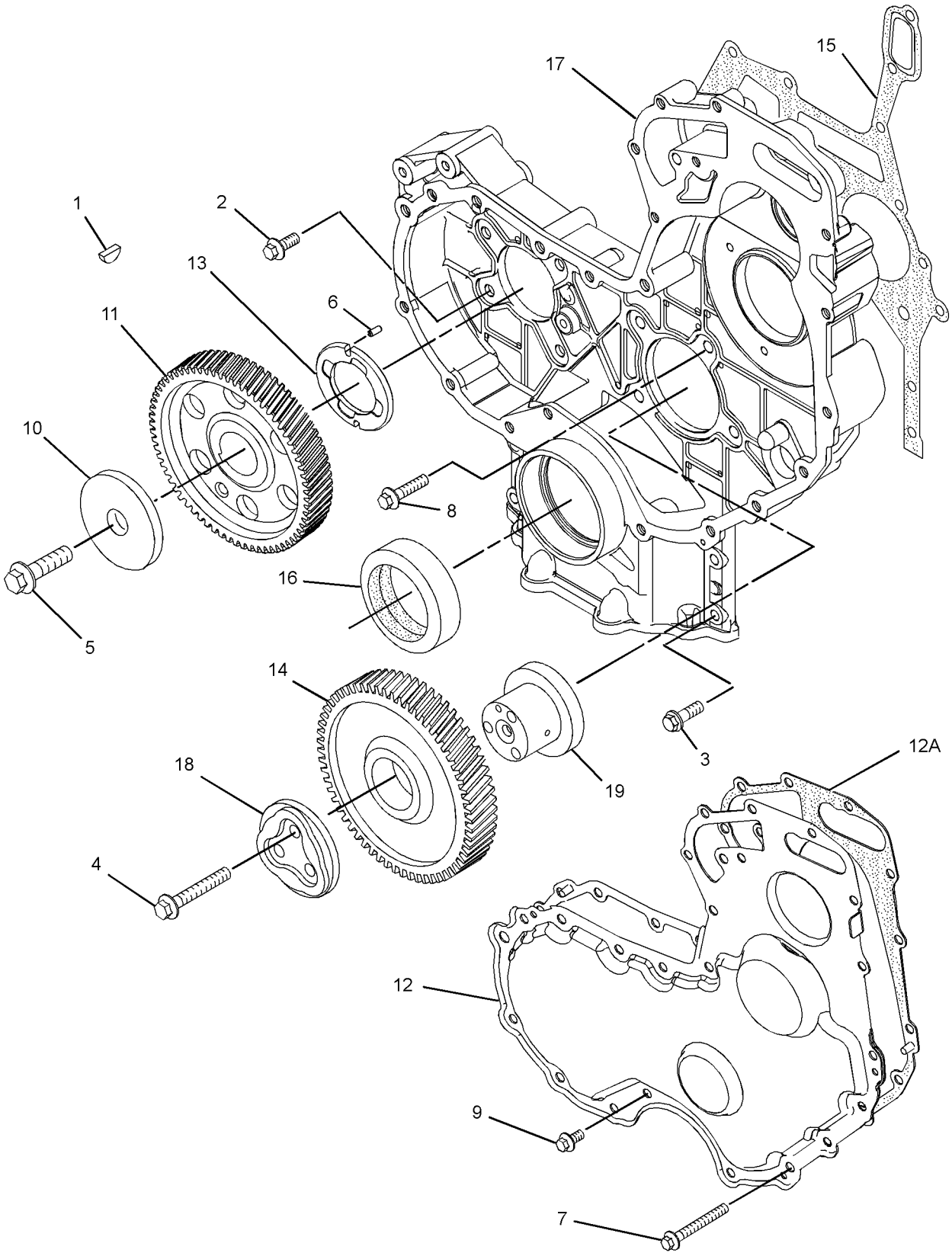

GRAPHIC #1 **<END>** g01932637

233-7432 LIFTING GP-ENGINE

S/N: CRS1-UP
PART OF 322-1923, 322-1924 ENGINE AR-PRIMARY
AN ATTACHMENT

SMCS-1122 **i01998680**

NOTE	REF NO	GRAPHIC REF	PART NUMBER	QTY	PART NAME 1 2 3 4 5 6 (PRODUCT LEVEL)	SEE PAGE
M	1	1	**100-4830**	4	BOLT (M10X1.5X20-MM)	
	2	1	**225-8848**	2	PLATE-LIFTING	

M-METRIC PART

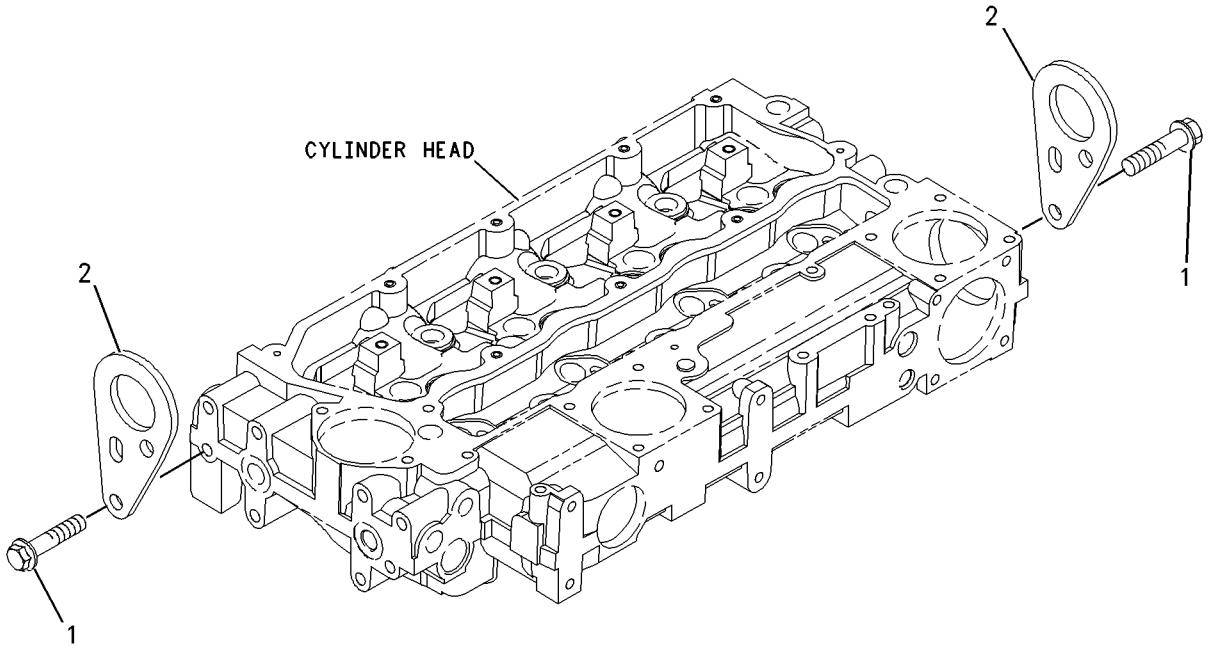

GRAPHIC #1 **<END>** g00955299

BASIC ENGINE

326-9013 LIFTING GP-ENGINE

S/N: C4Z1-UP
PART OF 321-7704, 321-7705 ENGINE AR-PRIMARY
AN ATTACHMENT

SMCS-1122 **i03124517**

NOTE	REF NO	GRAPHIC REF	PART NUMBER	QTY	PART NAME 1 2 3 4 5 6 (PRODUCT LEVEL)	SEE PAGE
M	1	1	**100-4830**	4	BOLT (M10X1.5X20-MM)	
	2	1	**225-8848**	2	PLATE-LIFTING	

M-METRIC PART

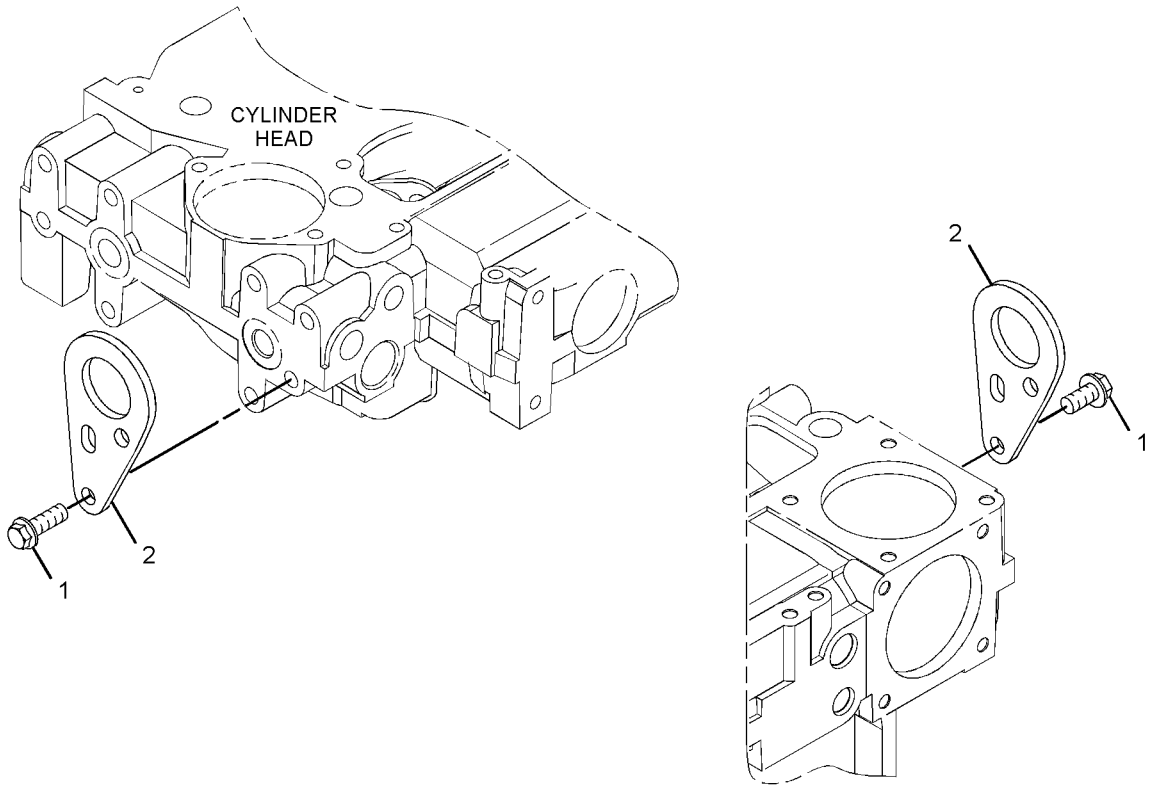

GRAPHIC #1 **<END>** g01636462

237-3658 MOUNTING GP-ENGINE

S/N: CRS1-UP

PART OF 322-1923, 322-1924 ENGINE AR-PRIMARY

AN ATTACHMENT

SMCS-1152, 1153, 1154 **i01998683**

NOTE	REF NO	GRAPHIC REF	PART NUMBER	QTY	PART NAME 1 2 3 4 5 6 (PRODUCT LEVEL)	SEE PAGE
	1	1	**101-2987**	6	PLUG	
	2	1	**6H-3616**	3	PLUG-PROTECTION	
	3	1	**195-2132**	1	SUPPORT-FRONT	
	4	1	**195-2134**	1	SUPPORT-FRONT	
	5	1	**195-2136**	8	STUD	
	6	1	**195-2221**	8	NUT	

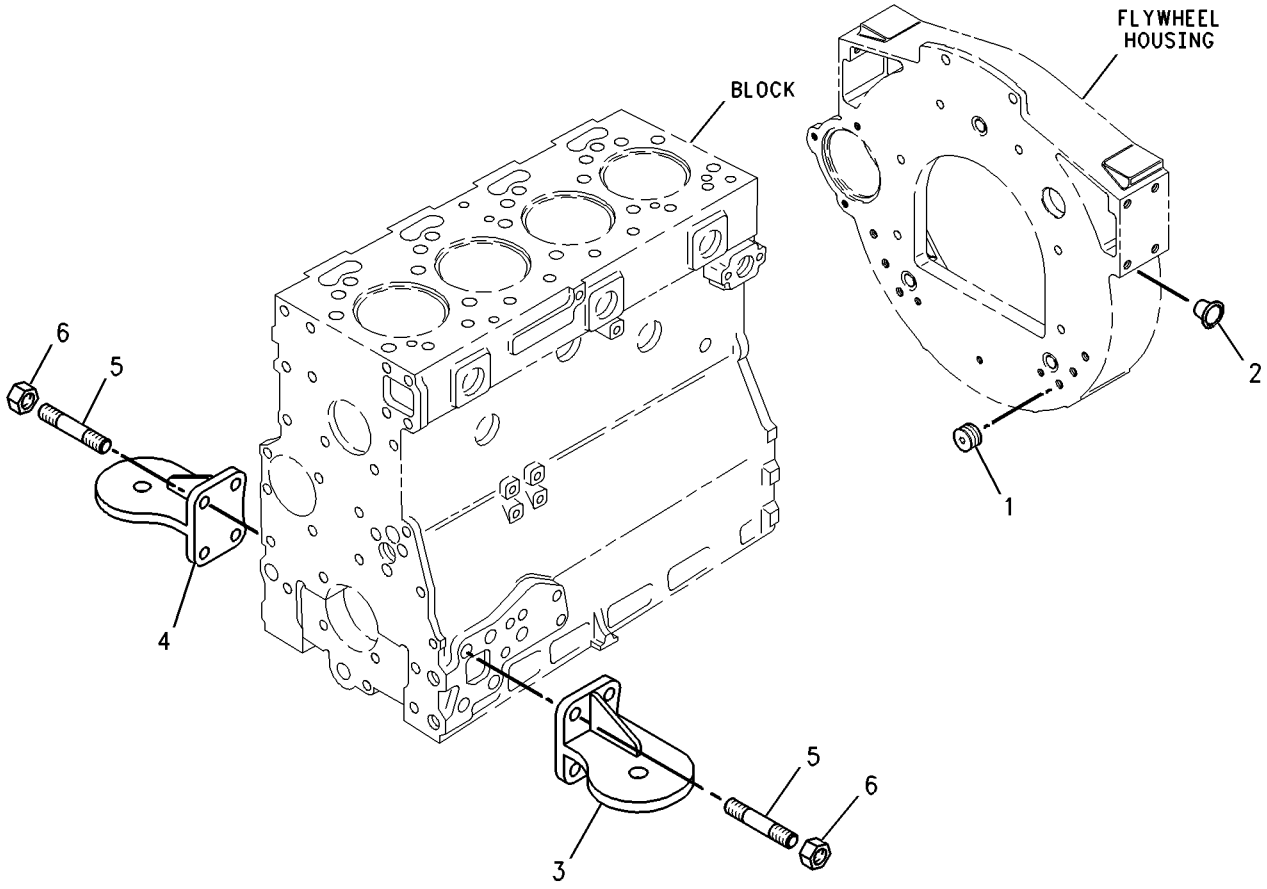

GRAPHIC #1 **<END>** g00738284

BASIC ENGINE

303-5778 MOUNTING GP-ENGINE

S/N: C4Z1-UP
PART OF 321-7704, 321-7705 ENGINE AR-PRIMARY
AN ATTACHMENT

SMCS-1152, 1153, 1154 **i03128292**

NOTE	REF NO	GRAPHIC REF	PART NUMBER	QTY	PART NAME 1 2 3 4 5 6 (PRODUCT LEVEL)	SEE PAGE
	1	1	**6H-3616**	3	PLUG-PROTECTION	
	2	1	**101-2987**	6	PLUG	
	3	1	**195-2132**	1	SUPPORT-FRONT	
	4	1	**195-2134**	1	SUPPORT-FRONT	
	5	1	**195-2136**	8	STUD	
	6	1	**195-2221**	8	NUT (M12X1.75-THD)	

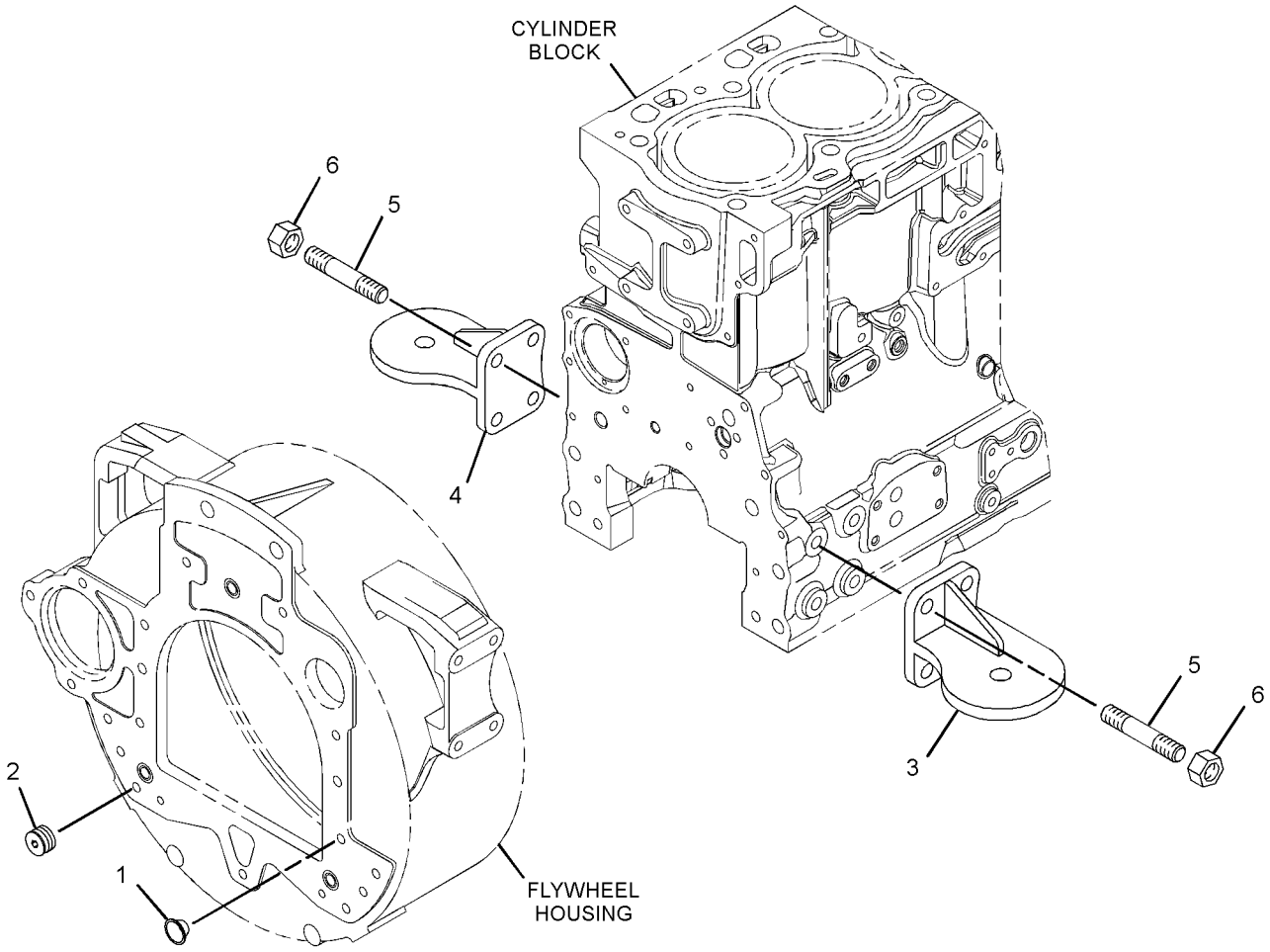

GRAPHIC #1 **<END>** g01378883

334-7152 MOUNTING GP-ENGINE & XMSN

S/N: DPH1-UP

PART OF 339-4986, 339-4987, 339-4988, 339-4989, 339-4990, 339-4991, 339-4992, 339-4993 ENGINE AR

AN ATTACHMENT

SMCS-1152, 1153, 1154 **i03288365**

NOTE	REF NO	GRAPHIC REF	PART NUMBER	QTY	PART NAME 1 2 3 4 5 6 (PRODUCT LEVEL)	SEE PAGE
	1	1	**9W-9910**	2	MOUNT AS	
	2	1	**9W-9915**	2	MOUNT AS	
	3	1	**9W-9952**	4	WASHER (16.75X86X8-MM THK)	
	4	1	**9W-9953**	4	SLEEVE	
	5	1	**335-1836**	4	BOLT	
	6	1	**8T-4121**	12	WASHER-HARD (11X21X2.5-MM THK)	
	7	1	**8T-4122**	8	WASHER-HARD (17X32X3.5-MM THK)	
M	8	1	**8T-4132**	4	NUT (M16X2-THD)	
M	9	1	**8T-4196**	12	BOLT (M10X1.5X35-MM)	

M-METRIC PART

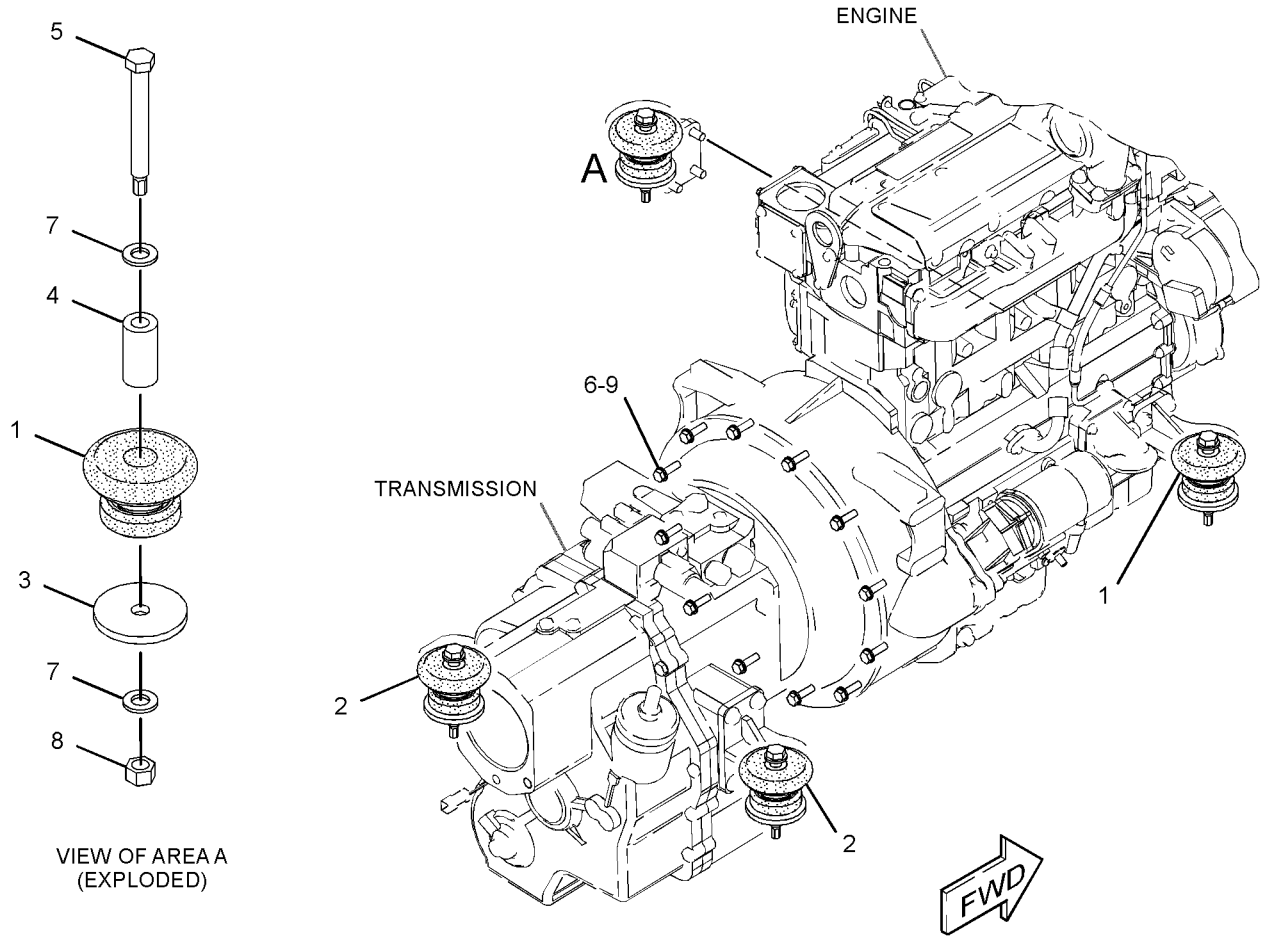

GRAPHIC #1 **<END>** g01682213

322-9476 PAN GP-OIL

S/N: C4Z1-UP

PART OF 321-7704, 321-7705 ENGINE AR-PRIMARY

AN ATTACHMENT

SMCS-1302 **i03728724**

NOTE	REF NO	GRAPHIC REF	PART NUMBER	QTY	PART NAME 1 2 3 4 5 6 (PRODUCT LEVEL)	SEE PAGE
M	1	1	**6I-0217**	14	BOLT (M8X1.25X20-MM)	
M	2	1	**6I-0260**	2	BOLT (M8X1.25X25-MM)	
	3	1	**6I-0289**	2	PLUG	
M	4	1	**6I-0363**	2	BOLT (M6X1X20-MM)	
	5	1	**6I-0572**	2	BOLT (M8X1.25X20-MM)	
	6	1	**7C-0351**	2	PLUG-DRAIN (ENGINE OIL)	
	7	1	**067-6213**	1	GASKET	
	8	1	**101-3771**	4	BOLT	
	9	1	**225-6005**	1	GASKET	
	10	1	**225-6041**	1	TUBE	
	11	1	**230-8094**	1	BRIDGE	
	12	1	**275-9883**	2	SEAL (DRAIN PLUG)	
	13	1	**304-8764**	1	PAN AS-OIL (ENGINE)	
	13A	1	**7C-1224**	2	INSERT	

M-METRIC PART

322-9476 **PAN GP-OIL** *(contd.)* **i03728724**

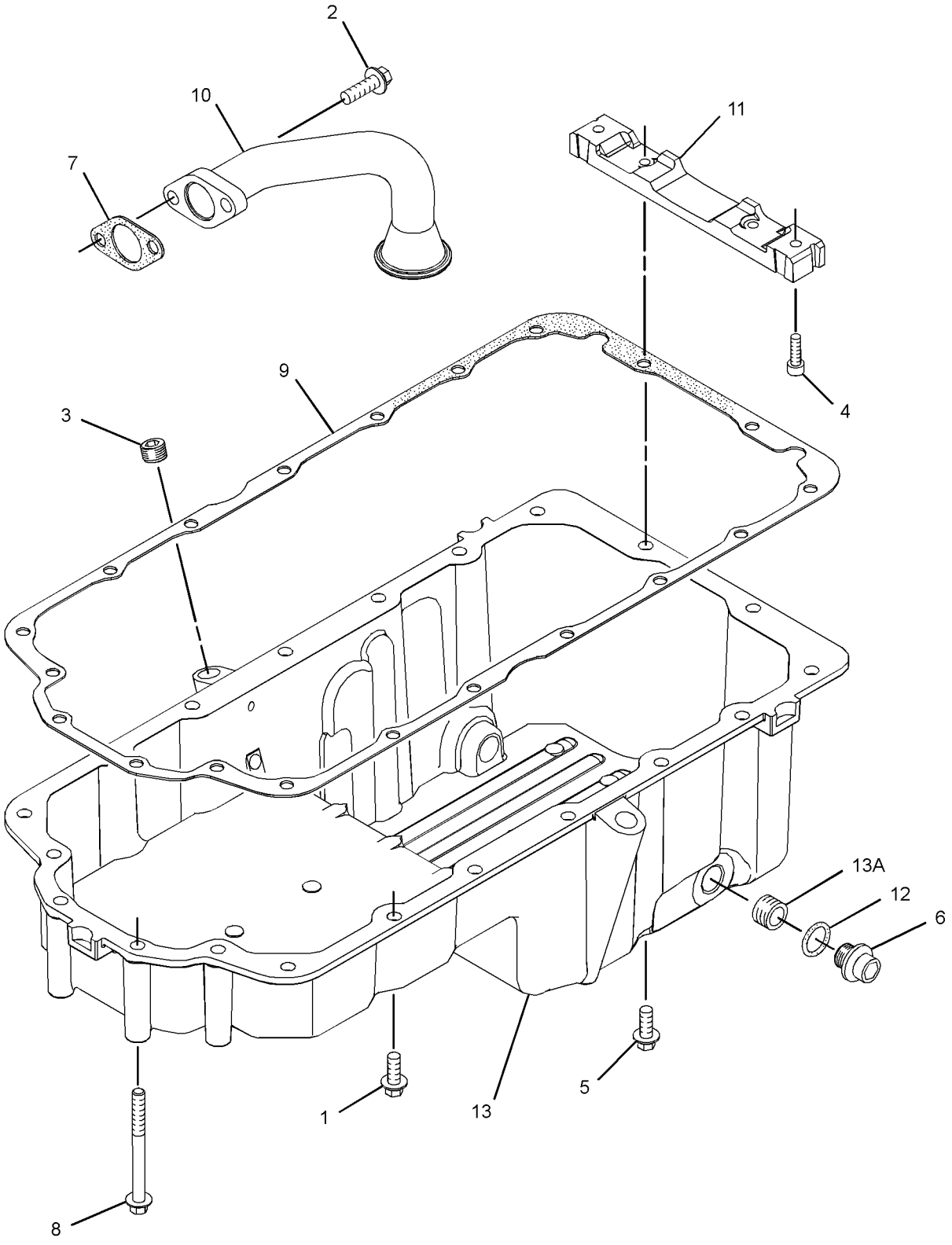

GRAPHIC #1 **<END>** g01442277

BASIC ENGINE

335-9799 PAN GP-OIL

S/N: CRS1-UP

PART OF 322-1923, 322-1924 ENGINE AR-PRIMARY

AN ATTACHMENT

SMCS-1302 **i03235802**

NOTE	REF NO	GRAPHIC REF	PART NUMBER	QTY	PART NAME 1 2 3 4 5 6 (PRODUCT LEVEL)	SEE PAGE
M	1	1	**6I-0217**	14	BOLT (M8X1.25X20-MM)	
M	2	1	**6I-0260**	2	BOLT (M8X1.25X25-MM)	
	3	1	**6I-0289**	2	PLUG	
M	4	1	**6I-0363**	2	BOLT (M6X1X20-MM)	
	5	1	**6I-0572**	2	BOLT (M8X1.25X20-MM)	
	6	1	**7C-0351**	2	PLUG-DRAIN (ENGINE OIL)	
	7	1	**067-6213**	1	GASKET	
	8	1	**101-3771**	4	BOLT	
	9	1	**225-6005**	1	GASKET	
	10	1	**225-6041**	1	TUBE	
	11	1	**230-8094**	1	BRIDGE	
	12	1	**275-9883**	2	SEAL (DRAIN PLUG)	
	13	1	**304-8764**	1	PAN AS-OIL (ENGINE)	
	13A	1	**7C-1224**	2	INSERT	

M-METRIC PART

335-9799 **PAN GP-OIL** *(contd.)* **i03235802**

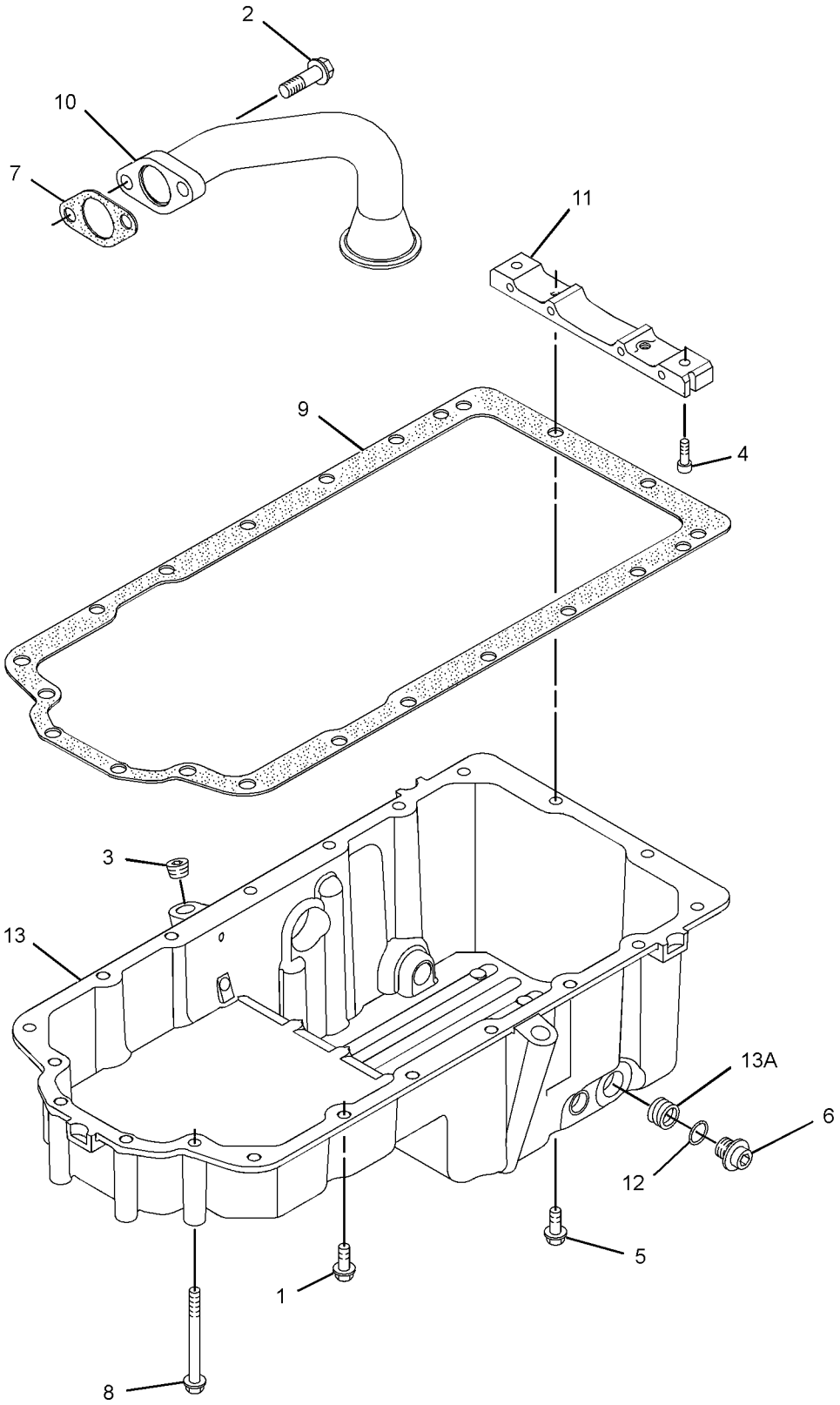

GRAPHIC #1 **<END>** g01653214

BASIC ENGINE

326-9002 PISTON & ROD GP

S/N: C4Z1-UP
PART OF 321-7704, 321-7705 ENGINE AR-PRIMARY
AN ATTACHMENT

SMCS-1213, 1214, 1215, 1218, 1219, 1225, 1239 **i03127789**

NOTE	REF NO	GRAPHIC REF	PART NUMBER	QTY	PART NAME 1 2 3 4 5 6 (PRODUCT LEVEL)	SEE PAGE
	1	1	**315-3395**	4	PISTON AS	
					(EACH INCLUDES)	
	1A	1	**124-3536**	2	RING-RETAINING	
	1B	1	**276-7476**	1	KIT-PISTON RING	
BJ	2	1	**225-5441**	1	ROD AS-CONNECTING (LENGTH L)	
					—OR—	
BJ		1	**225-5451**	4	ROD AS-CONNECTING (LENGTH K)	
					—OR—	
BJ		1	**225-5453**	4	ROD AS-CONNECTING (LENGTH J)	
					—OR—	
BJ		1	**225-5454**	4	ROD AS-CONNECTING (LENGTH H)	
					—OR—	
BJ		1	**225-5458**	4	ROD AS-CONNECTING (LENGTH G)	
					—OR—	
BJ		1	**225-5459**	4	ROD AS-CONNECTING (LENGTH F)	
					(EACH INCLUDES)	
	2A	1	**225-5438**	1	BUSHING	
	2B	1	**225-5439**	2	BOLT-SPECIAL (CONNECTING ROD)	

B-USE AS REQUIRED
J-ENSURE THAT CORRECT ROD LENGTH IS FITTED

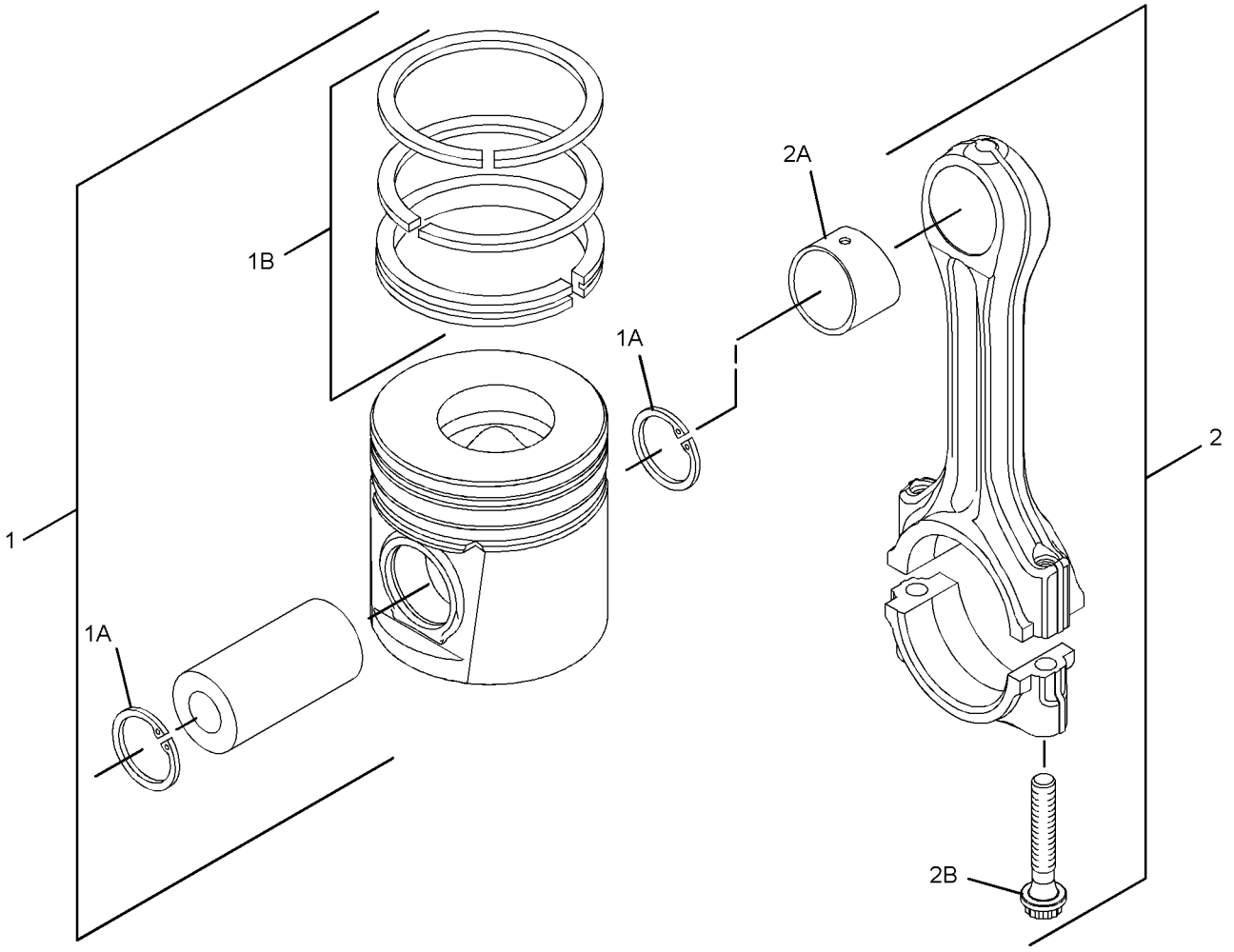

GRAPHIC #1 **<END>** g01523198

334-4204 PISTON & ROD GP

S/N: CRS1-UP
PART OF 322-1923, 322-1924 ENGINE AR-PRIMARY
AN ATTACHMENT

SMCS-1213, 1214, 1215, 1218, 1219, 1225, 1239 **i03143143**

NOTE	REF NO	GRAPHIC REF	PART NUMBER	QTY	PART NAME 1 2 3 4 5 6 (PRODUCT LEVEL)	SEE PAGE
	1	1	**225-5437**	4	PISTON AS	
					(EACH INCLUDES)	
AB		1	**288-1394**	1	PISTON AS (0.5-MM OS)	
AB		1	**288-1395**	1	PISTON AS (1.0-MM OS)	
	1A	1	**124-3536**	2	RING-RETAINING	
	1B	1	**225-5436**	1	KIT-PISTON RING	
AB		1	**334-2318**	1	KIT-PISTON RING (1.0-MM OS)	
AB		1	**334-2319**	1	KIT-PISTON RING (0.5-MM OS)	
BJ	2	1	**225-5441**	4	ROD AS-CONNECTING (LENGTH L)	
					—OR—	
BJ		1	**225-5451**	4	ROD AS-CONNECTING (LENGTH K)	
					—OR—	
BJ		1	**225-5453**	4	ROD AS-CONNECTING (LENGTH J)	
					—OR—	
BJ		1	**225-5454**	4	ROD AS-CONNECTING (LENGTH H)	
					—OR—	
BJ		1	**225-5458**	4	ROD AS-CONNECTING (LENGTH G)	
					—OR—	
BJ		1	**225-5459**	4	ROD AS-CONNECTING (LENGTH F)	
					(EACH ROD ASSEMBLY INCLUDES)	
	2A	1	**225-5438**	1	BUSHING	
	2B	1	**225-5439**	2	BOLT-SPECIAL (CONNECTING ROD)	

A-NOT PART OF THIS GROUP
B-USE AS REQUIRED
J-INSURE CORRECT ROD LENGTH IS FITTED

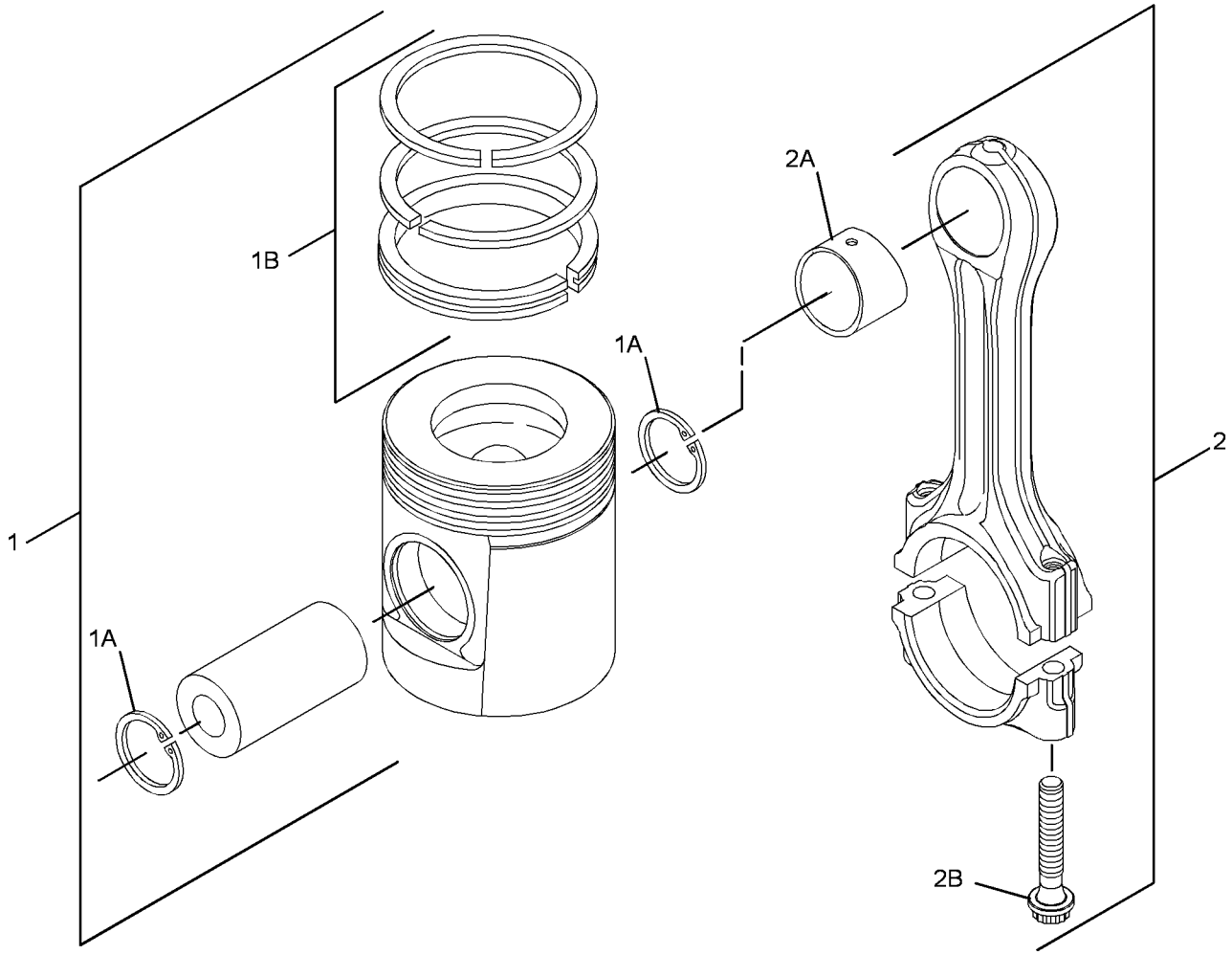

GRAPHIC #1 **<END>** g01374535

298-5129 PLUG GP-CYLINDER HEAD

S/N: C4Z1-UP

PART OF 321-7704, 321-7705 ENGINE AR-PRIMARY

AN ATTACHMENT

SMCS-1100 **i03128287**

NOTE	REF NO	GRAPHIC REF	PART NUMBER	QTY	PART NAME 1 2 3 4 5 6 (PRODUCT LEVEL)	SEE PAGE
	1	1	**232-1322**	1	PLUG	
	2	1	**199-9751**	1	SEAL-O-RING	

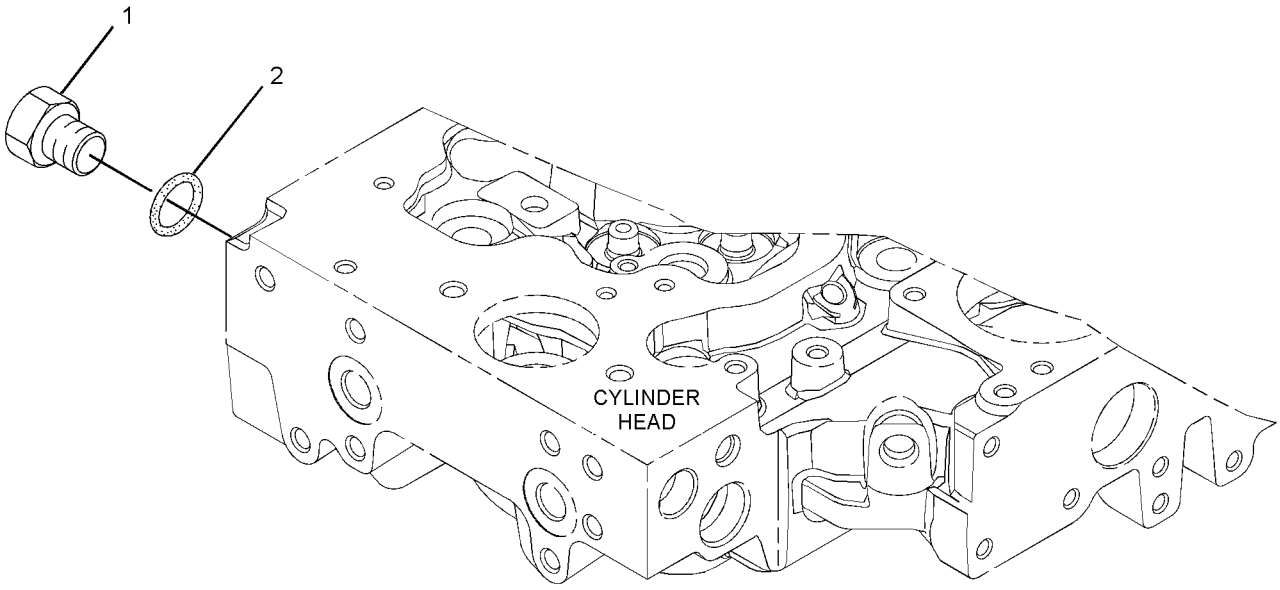

GRAPHIC #1 **<END>** g01305536

225-4317 PLUG GP-ENGINE

S/N: CRS1-UP
FRONT HOUSING, CYLINDER HEAD
PART OF 322-1923, 322-1924 ENGINE AR-PRIMARY
AN ATTACHMENT

SMCS-1000 **i01772005**

NOTE	REF NO	GRAPHIC REF	PART NUMBER	QTY	PART NAME 1 2 3 4 5 6 (PRODUCT LEVEL)	SEE PAGE
	1	1	**2B-0858**	3	PLUG-PIPE	

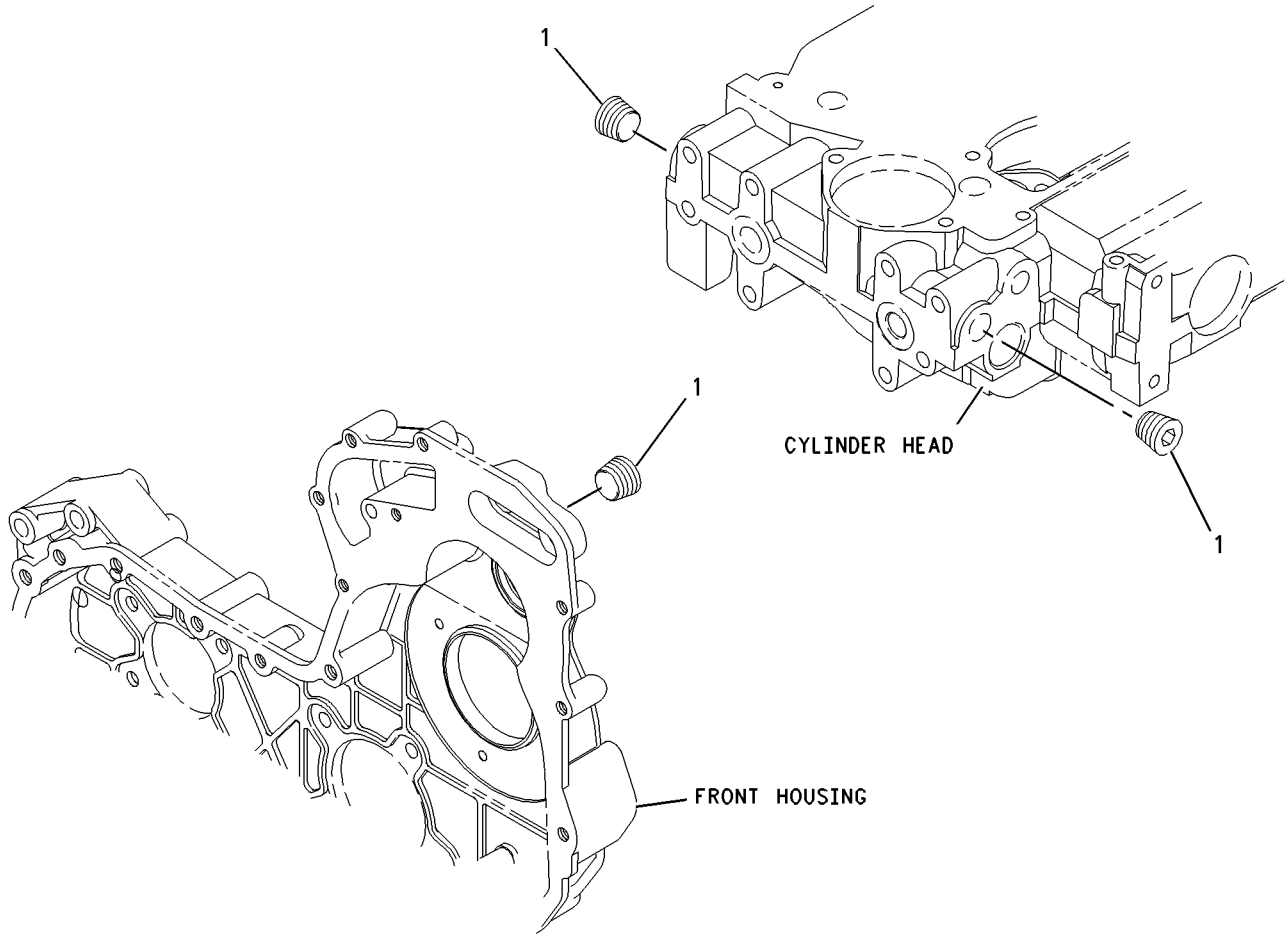

GRAPHIC #1 **<END>** g00911937

230-7569 PLUG GP-ENGINE

S/N: CRS1-UP
PART OF 322-1923, 322-1924 ENGINE AR-PRIMARY
AN ATTACHMENT

SMCS-1000 **i01896487**

NOTE	REF NO	GRAPHIC REF	PART NUMBER	QTY	PART NAME 1 2 3 4 5 6 (PRODUCT LEVEL)	SEE PAGE
	1	1	**231-0046**	1	PLUG	

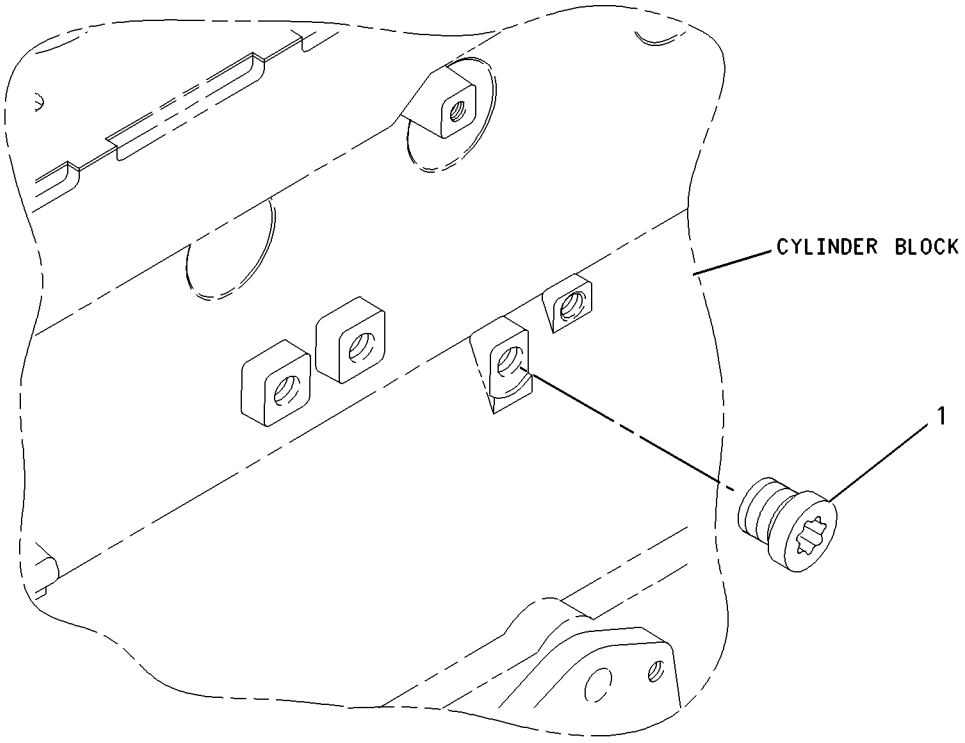

GRAPHIC #1 **<END>** g00911955

232-6204 PLUG GP-ENGINE

S/N: CRS1-UP
PART OF 322-1923, 322-1924 ENGINE AR-PRIMARY
AN ATTACHMENT

SMCS-1000 **i02160472**

NOTE	REF NO	GRAPHIC REF	PART NUMBER	QTY	PART NAME 1 2 3 4 5 6 (PRODUCT LEVEL)	SEE PAGE
	1	1	**199-9751**	1	SEAL-O-RING	
	2	1	**232-1322**	1	PLUG	

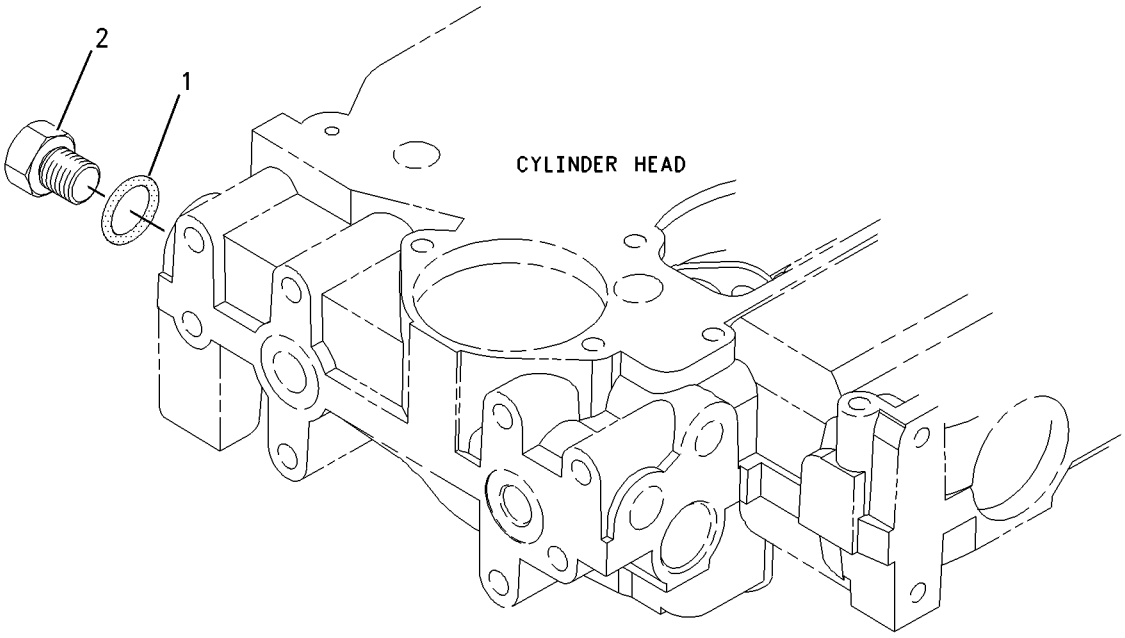

GRAPHIC #1 **<END>** g00950934

298-5131 PLUG GP-ENGINE

S/N: C4Z1-UP
PART OF 321-7704, 321-7705 ENGINE AR-PRIMARY
AN ATTACHMENT

SMCS-1000 **i03128286**

NOTE	REF NO	GRAPHIC REF	PART NUMBER	QTY	PART NAME 1 2 3 4 5 6 (PRODUCT LEVEL)	SEE PAGE
	1	1	**2B-0858**	3	PLUG-PIPE	

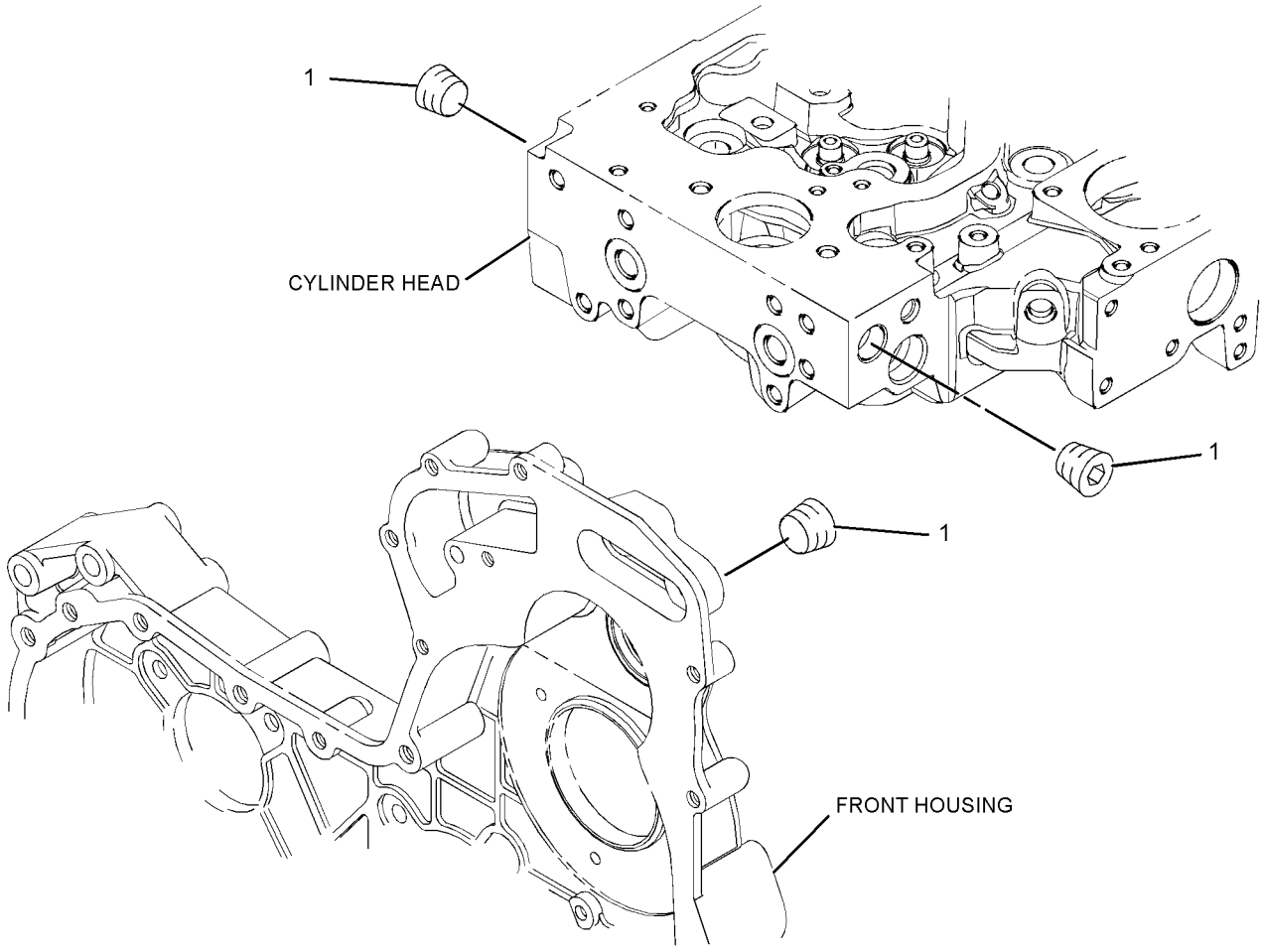

GRAPHIC #1 **<END>** g01305448

304-8761 PLUG GP-ENGINE

S/N: C4Z1-UP
PART OF 321-7704, 321-7705 ENGINE AR-PRIMARY
AN ATTACHMENT

SMCS-1000 **i03128290**

NOTE	REF NO	GRAPHIC REF	PART NUMBER	QTY	PART NAME 1 2 3 4 5 6 (PRODUCT LEVEL)	SEE PAGE
	1	1	**6I-0646**	1	BOLT (M10X1.5X14-MM)	
	2	1	**214-3203**	1	WASHER (SEALING)	

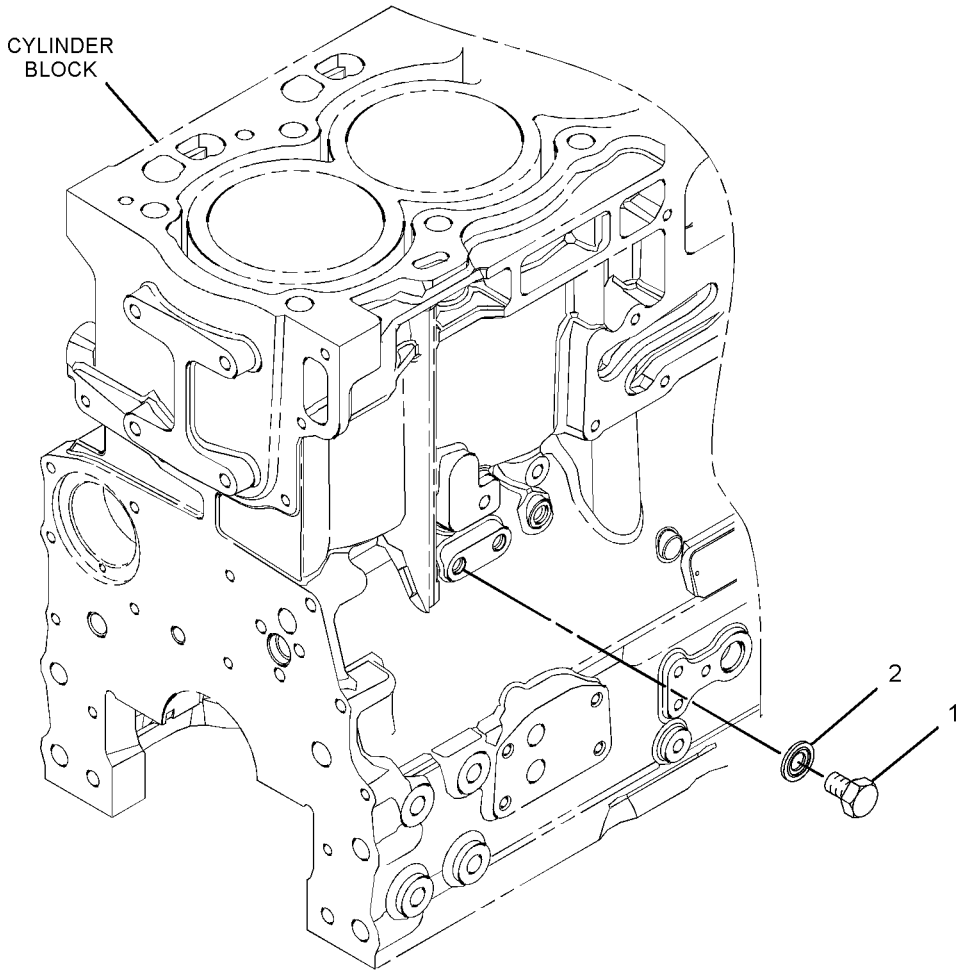

GRAPHIC #1 **<END>** g01373022

225-5963 ROCKER ARM GP

S/N: CRS1-UP

PART OF 334-4207 VALVE MECHANISM GP

AN ATTACHMENT

SMCS-1102, 1123 **i03304187**

NOTE	REF NO	GRAPHIC REF	PART NUMBER	QTY	PART NAME 1 2 3 4 5 6 (PRODUCT LEVEL)	SEE PAGE
	1	1	**225-5625**	4	LEVER AS	
					(EACH INCLUDES)	
	1A	1	**5B-9079**	1	NUT-JAM (3/8-24-THD)	
	1B	1	**185-1546**	1	SCREW	
	2	1	**225-5634**	1	SHAFT AS	
	2A	1	**225-5629**	2	PLUG	
	3	1	**225-5638**	3	SPRING	
	4	1	**225-5640**	4	LEVER AS	
					(EACH INCLUDES)	
	4A	1	**5B-9079**	1	NUT-JAM (3/8-24-THD)	
	4B	1	**185-1546**	1	SCREW	
	5	1	**225-5959**	2	CLIP	
	6	1	**225-5960**	1	BOLT (M8X1.25X60-MM)	
	7	1	**225-5961**	2	WASHER (26.7X34.32X0.38-MM THK)	
	8	1	**225-5962**	3	BOLT (M8X1.25X30-MM)	

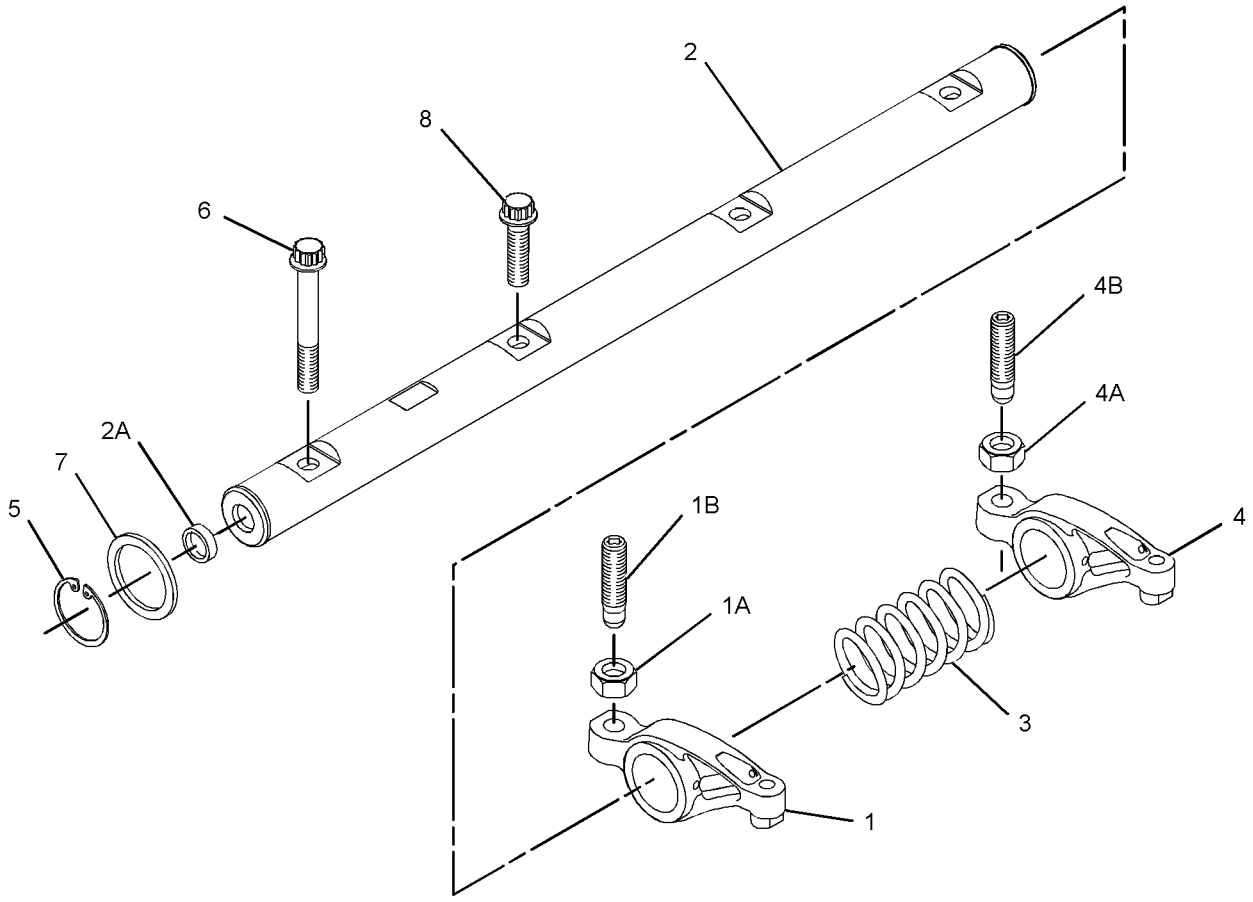

GRAPHIC #1 **<END>** g01368510

BASIC ENGINE

315-3385 ROCKER ARM GP

S/N: C4Z1-UP

PART OF 326-9004 VALVE MECHANISM GP

AN ATTACHMENT

SMCS-1102, 1123 **i03131135**

NOTE	REF NO	GRAPHIC REF	PART NUMBER	QTY	PART NAME 1 2 3 4 5 6 (PRODUCT LEVEL)	SEE PAGE
	1	1	**225-5634**	1	SHAFT AS	
	1A	1	**225-5629**	2	PLUG	
	2	1	**225-5638**	3	SPRING	
	3	1	**225-5959**	2	CLIP	
	4	1	**225-5960**	1	BOLT (M8X1.25X60-MM)	
	5	1	**225-5961**	2	WASHER (26.7X34.32X0.38-MM THK)	
	6	1	**225-5962**	3	BOLT (M8X1.25X30-MM)	
	7	1	**315-3386**	4	ROCKER ARM AS	
					(EACH INCLUDES)	
	7A	1	**278-5113**	1	ADJUSTING SCREW (TORX)	
	7B	1	**315-3387**	1	NUT	
	8	1	**315-3388**	4	ROCKER ARM AS	
					(EACH INCLUDES)	
	8A	1	**278-5113**	1	ADJUSTING SCREW (TORX)	
	8B	1	**315-3387**	1	NUT	

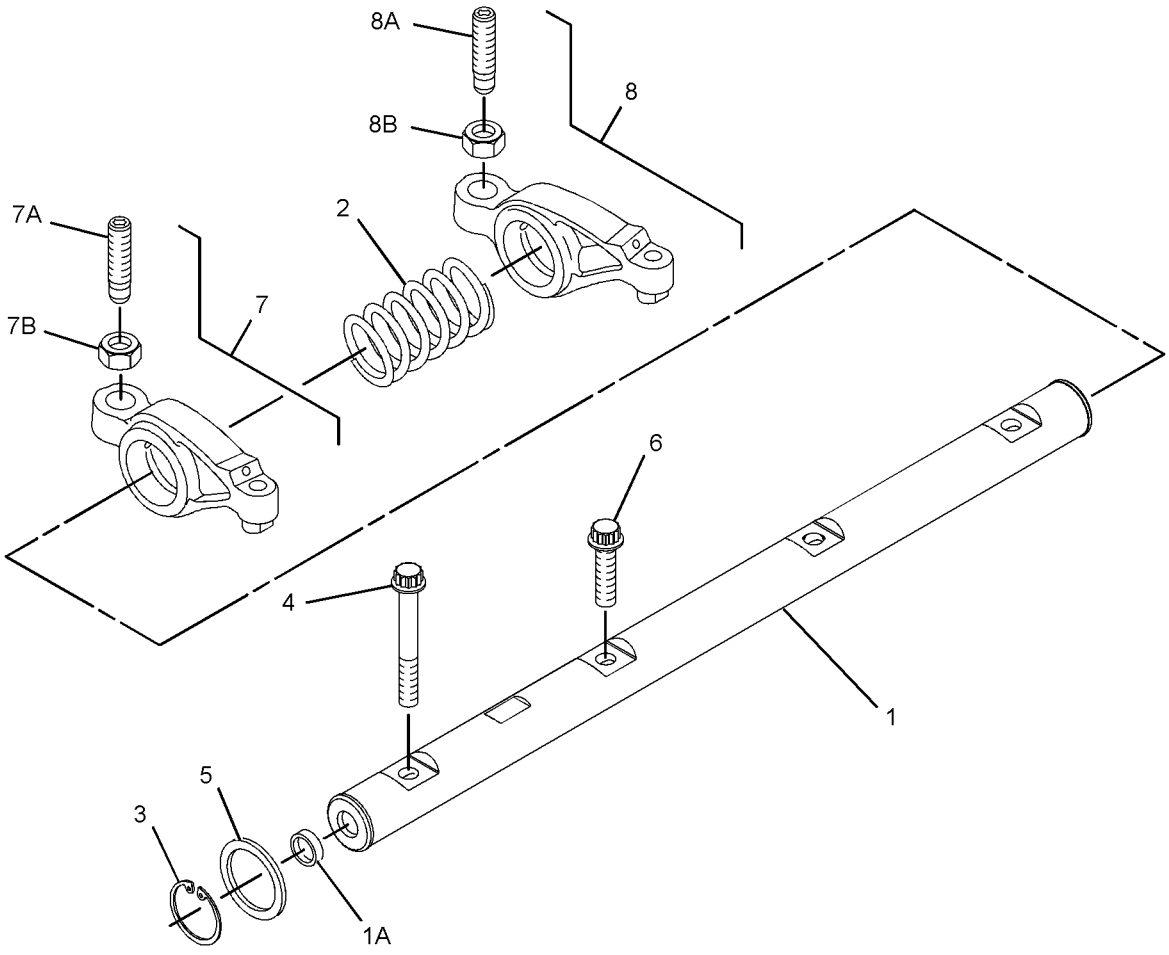

GRAPHIC #1 **<END>** g01399975

326-9004 VALVE MECHANISM GP

S/N: C4Z1-UP

PART OF 321-7704, 321-7705 ENGINE AR-PRIMARY

AN ATTACHMENT

SMCS-1102, 1112, 1121, 1123, 1208, 1209 **i03127783**

NOTE	REF NO	GRAPHIC REF	PART NUMBER	QTY	PART NAME 1 2 3 4 5 6 (PRODUCT LEVEL)	SEE PAGE
Y	1	1	**315-3385**	1	ROCKER ARM GP	70

Y-SEPARATE ILLUSTRATION

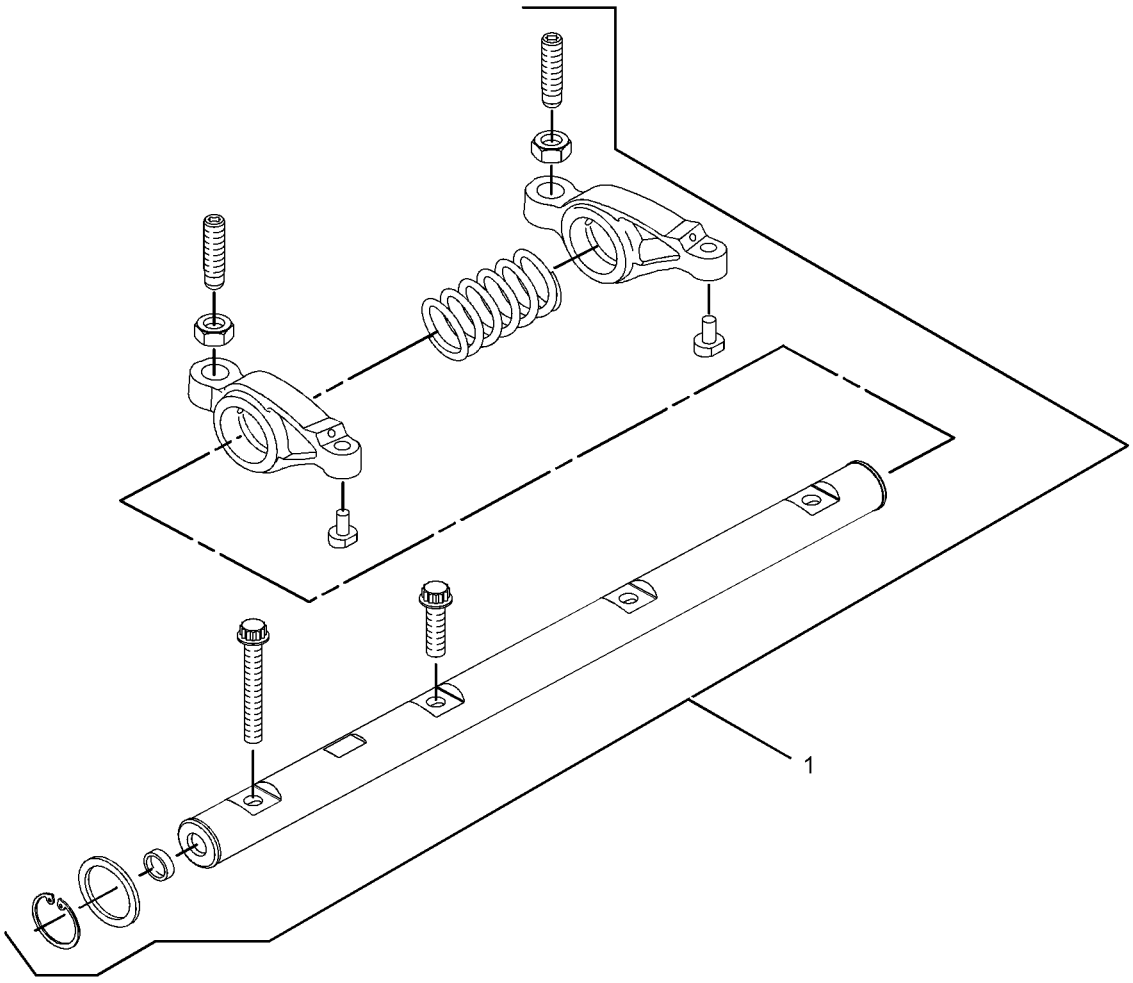

GRAPHIC #1 **<END>** g01611483

334-4207 VALVE MECHANISM GP

S/N: CRS1-UP

PART OF 322-1923, 322-1924 ENGINE AR-PRIMARY

AN ATTACHMENT

SMCS-1102, 1112, 1121, 1123, 1208, 1209 **i03143145**

NOTE	REF NO	GRAPHIC REF	PART NUMBER	QTY	PART NAME 1 2 3 4 5 6 (PRODUCT LEVEL)	SEE PAGE
Y	1	1	**225-5963**	1	ROCKER ARM GP	69

Y-SEPARATE ILLUSTRATION

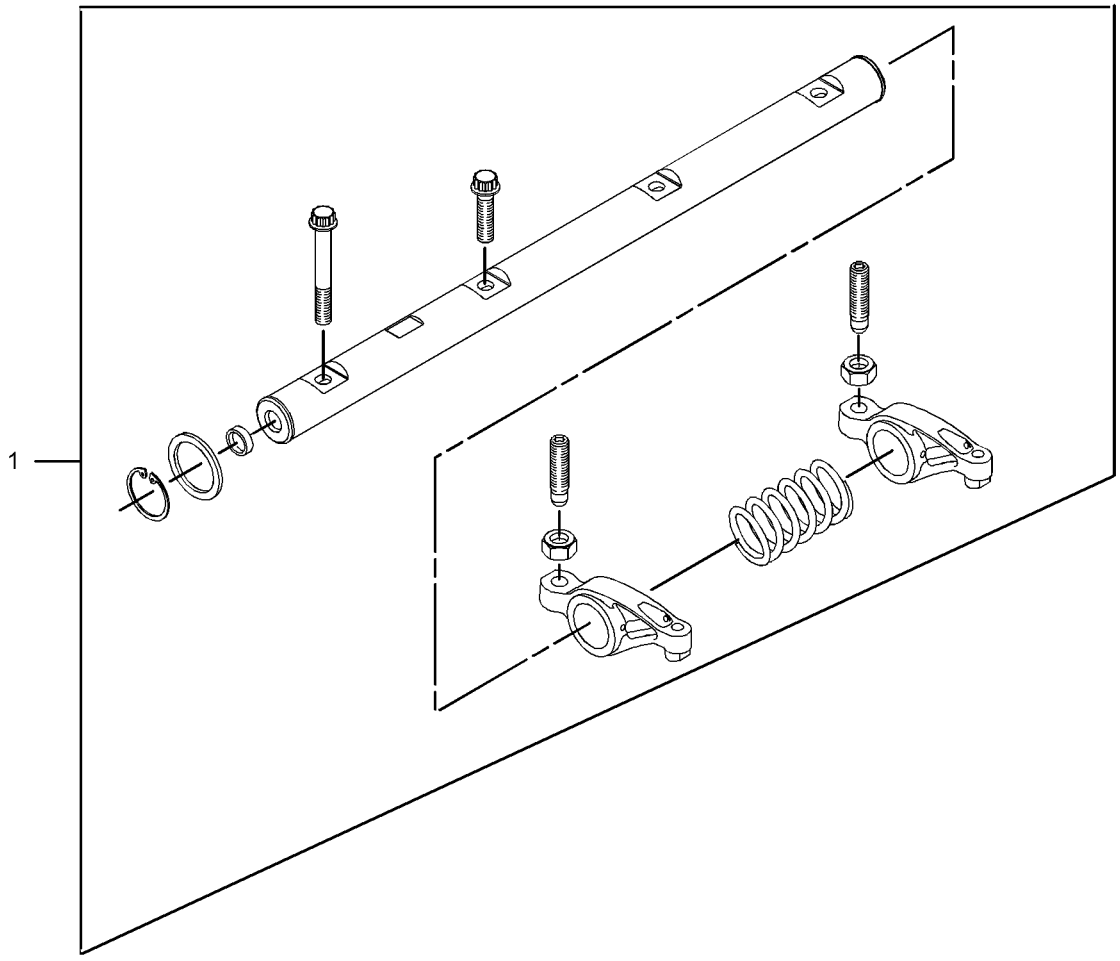

GRAPHIC #1 **<END>** g01619790

323-9307 BREATHER GP–ENGINE

S/N: DPH1-UP

PART OF 339-4988, 339-4989, 339-4992, 339-4993 ENGINE AR

AN ATTACHMENT

SMCS-1317 **i03564702**

NOTE	REF NO	GRAPHIC REF	PART NUMBER	QTY	PART NAME 1 2 3 4 5 6 (PRODUCT LEVEL)	SEE PAGE
	1	1	**6I-1497**	1	SEAL	
	2	1	**8T-9402**	3	CLAMP-HOSE	
	3	1	**165-4021**	1	CANISTER AS-BREATHER (CRANKCASE)	
		1	**185-6643**	1	SEAL (BREATHER)	
	4	1	**202-5909**	1	TUBE AS-OIL	
	5	1	**254-4418**	1	HOSE	
	6	1	**311-6094**	1	PLATE AS	
	7	1	**315-5496**	1	HOSE	
	8	1	**5D-1026**	2	CLAMP-BAND	
	9	1	**5P-4116**	2	WASHER-HARD (8.8X20.5X2-MM THK)	
M	10	1	**8C-3798**	2	BOLT-LOCKING (M6X1X30-MM)	
M	11	1	**8T-4138**	2	BOLT (M6X1X20-MM)	
M	12	1	**8T-4189**	2	BOLT (M8X1.25X20-MM)	
	13	1	**8T-4205**	4	WASHER-HARD (7.2X14.5X2-MM THK)	
	14	1	**8T-7529**	2	CLIP	
E	15	1	**136-1955**		HOSE (82-CM)	

E-ORDER BY THE CENTIMETER
M-METRIC PART

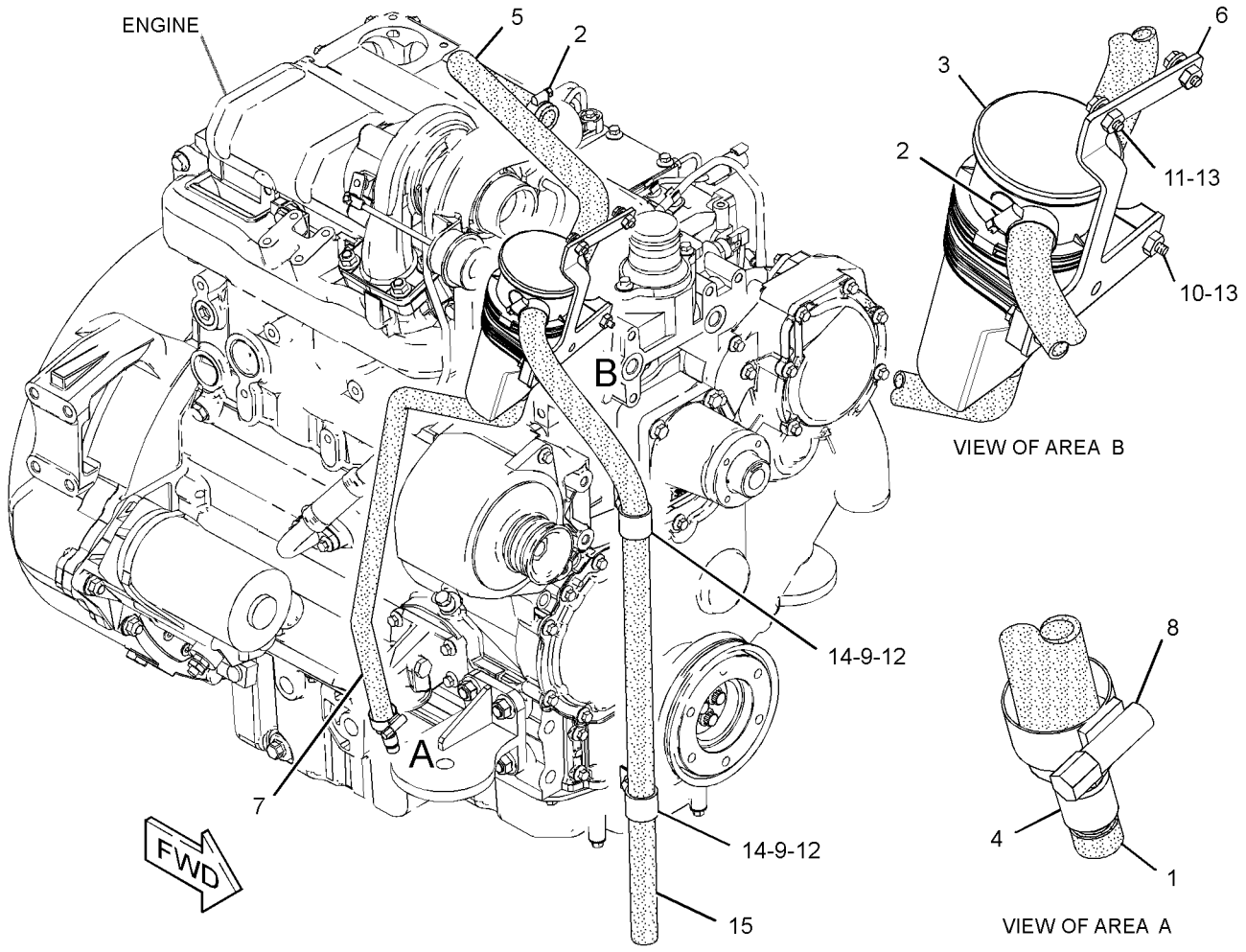

GRAPHIC #1 **<END>** g01890134

309-7555 FILLER GP-ENGINE OIL

S/N: C4Z1-UP
PART OF 321-7704, 321-7705 ENGINE AR-PRIMARY
AN ATTACHMENT

SMCS-1316 **i03128307**

NOTE	REF NO	GRAPHIC REF	PART NUMBER	QTY	PART NAME 1 2 3 4 5 6 (PRODUCT LEVEL)	SEE PAGE
M	1	1	**6I-0260**	2	BOLT (M8X1.25X25-MM)	
	2	1	**225-6522**	1	PLUG-CUP	
	3	1	**317-3769**	1	FILLER GP-ENGINE OIL	
	3A	1	**317-3778**	1	SEAL-O-RING	

M-METRIC PART

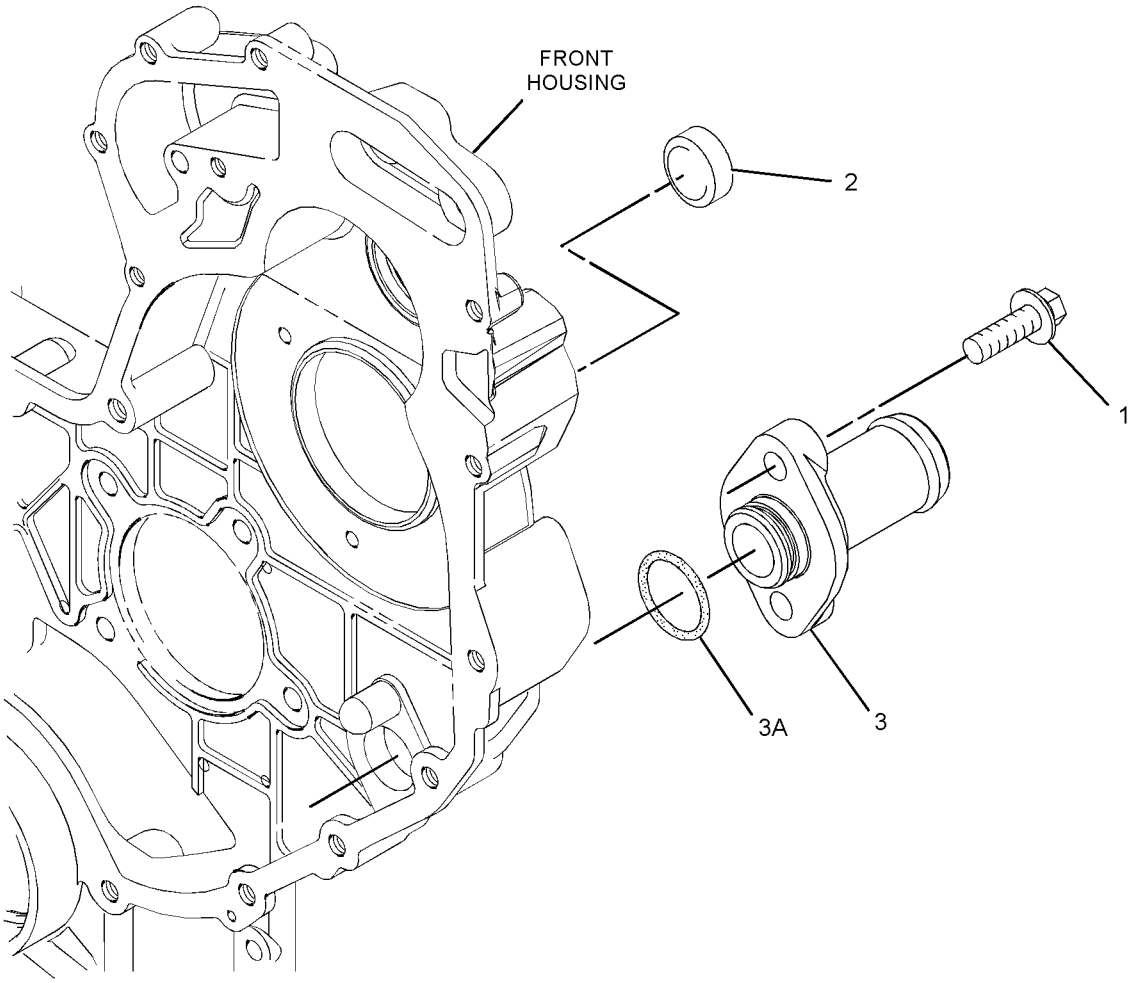

GRAPHIC #1 **<END>** g01378834

307-2033 GAUGE GP-OIL LEVEL & FILLER–ENGINE

S/N: DPH1-UP

PART OF 339-4986, 339-4987, 339-4988, 339-4989, 339-4990, 339-4991, 339-4992, 339-4993 ENGINE AR

AN ATTACHMENT

SMCS-1316, 1326 **i03577106**

NOTE	REF NO	GRAPHIC REF	PART NUMBER	QTY	PART NAME 1 2 3 4 5 6 (PRODUCT LEVEL)	SEE PAGE
	1	1	**6I-1497**	1	SEAL	
	2	1	**9M-7958**	1	CLAMP-HOSE	
	3	1	**127-4471**	1	CLAMP-HOSE	
	4	1	**236-6651**	1	CAP AS (ENGINE OIL FILLER)	
	5	1	**293-4671**	1	TUBE AS	
	6	1	**299-4684**	1	TUBE AS	
	7	1	**299-4687**	1	GAUGE-OIL LEVEL (DIPSTICK) (ENGINE)	
	8	1	**304-9457**	1	BRACKET AS	
M		1	**8T-3490**	1	NUT-WELD (M10X1.5-THD)	
	9	1	**321-7031**	1	HOSE (OIL FILLER)	
	10	1	**119-5708**	1	CLIP	
	11	1	**7D-7233**	1	CLIP	
	12	1	**7W-2326**	1	FILTER AS-ENGINE OIL	
	13	1	**8T-4121**	3	WASHER-HARD (11X21X2.5-MM THK)	
M	14	1	**8T-4136**	3	BOLT (M10X1.5X25-MM)	
M	15	1	**8T-4970**	2	BOLT (M6X1X14-MM)	
	16	1	**9X-8256**	2	WASHER (6.6X12X2-MM THK)	

M-METRIC PART

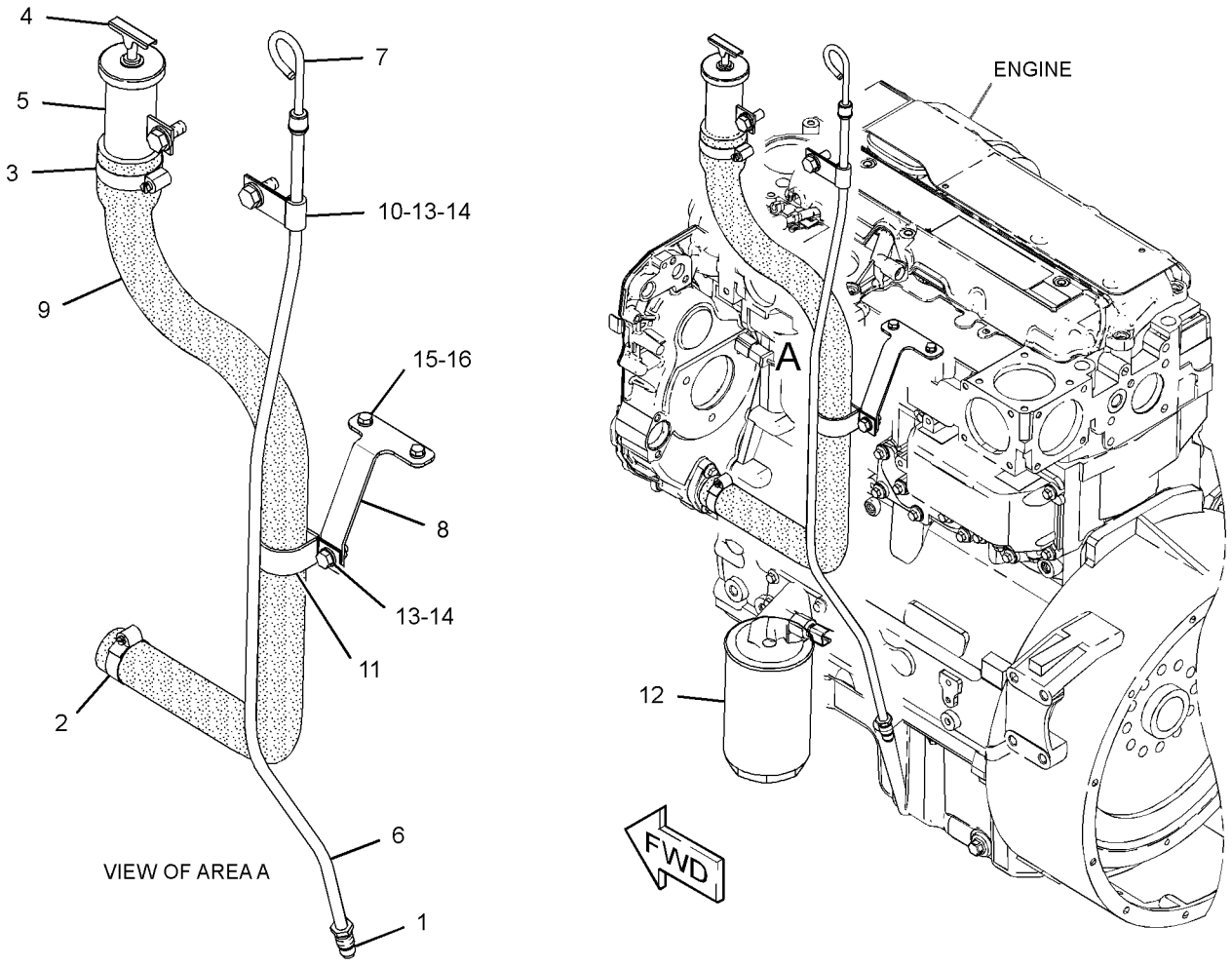

GRAPHIC #1 **<END>** g01607355

LUBRICATION SYSTEM

230-7578 PUMP GP-ENGINE OIL

S/N: CRS1-UP
PART OF 322-1923, 322-1924 ENGINE AR-PRIMARY
AN ATTACHMENT

SMCS-1304, 1315 **i01896485**

NOTE	REF NO	GRAPHIC REF	PART NUMBER	QTY	PART NAME 1 2 3 4 5 6 (PRODUCT LEVEL)	SEE PAGE
M	1	1	**100-4461**	5	BOLT (M10X1.50X50-MM)	
	2	1	**225-8329**	1	PUMP AS-ENGINE OIL	

M-METRIC PART

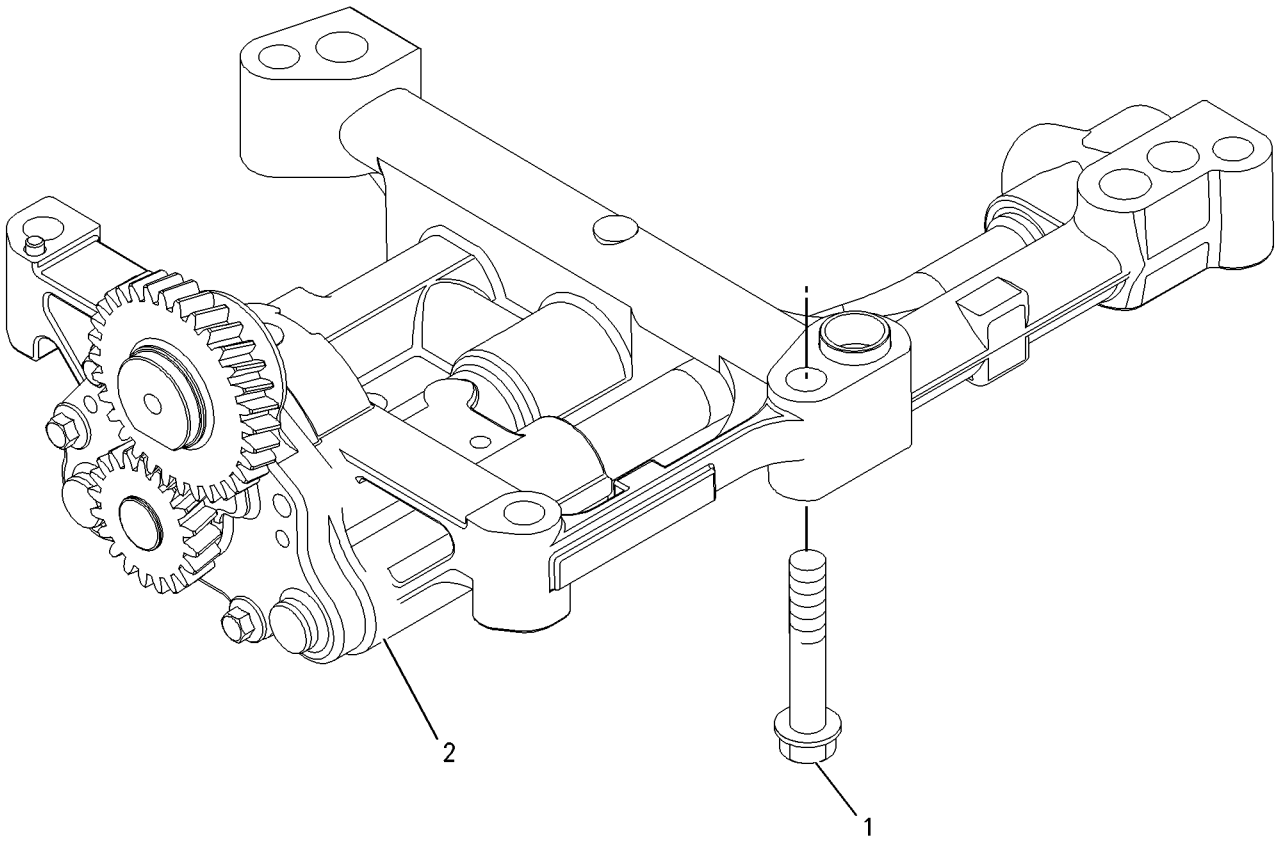

GRAPHIC #1 **<END>** g00911993

298-5112 PUMP GP-ENGINE OIL

S/N: C4Z1-UP

PART OF 321-7704, 321-7705 ENGINE AR-PRIMARY

AN ATTACHMENT

SMCS-1304, 1315 **i03128291**

NOTE	REF NO	GRAPHIC REF	PART NUMBER	QTY	PART NAME 1 2 3 4 5 6 (PRODUCT LEVEL)	SEE PAGE
	1	1	**225-8329**	1	PUMP AS-ENGINE OIL	
M	2	1	**100-4461**	5	BOLT (M10X1.50X50-MM)	

M-METRIC PART

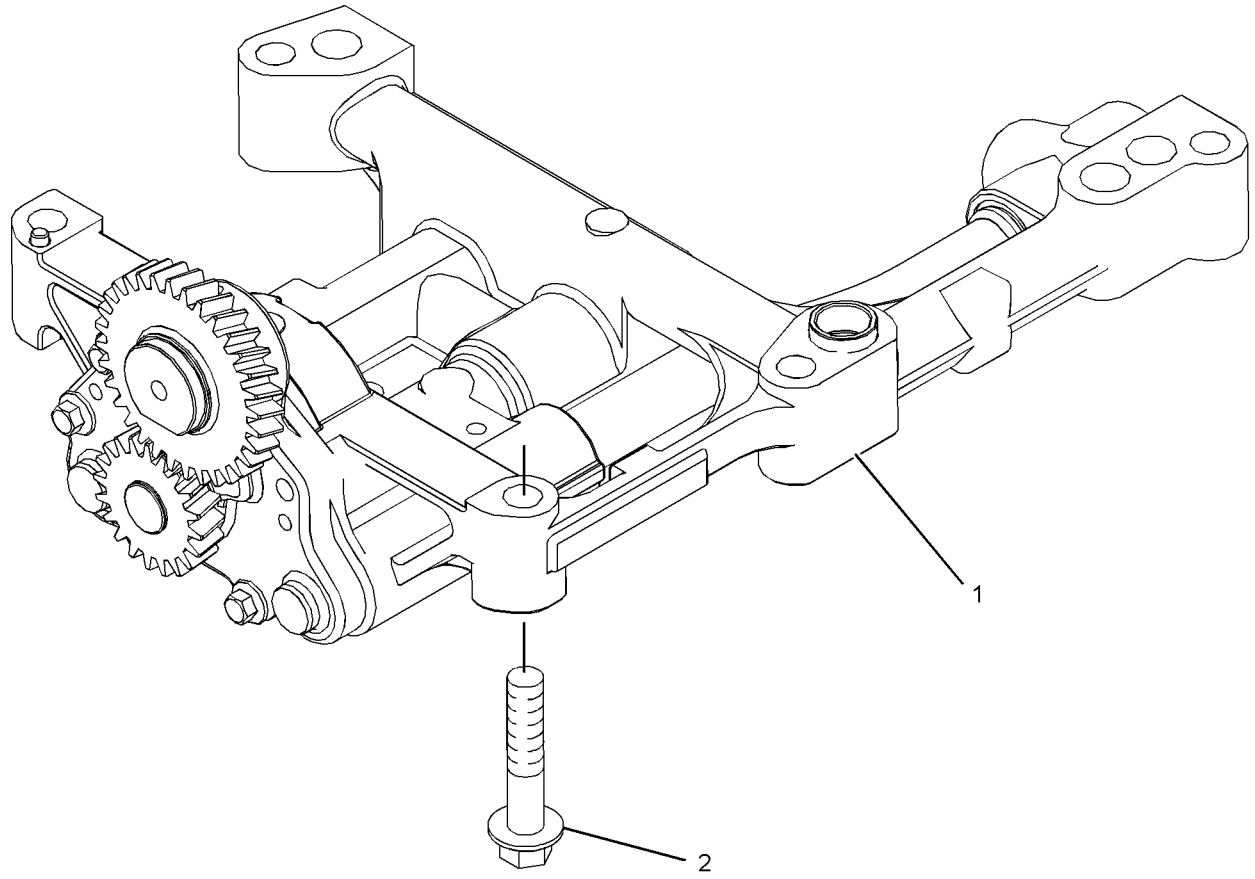

GRAPHIC #1 **<END>** g01304952

231-0033 CONNECTION GP-WATER

S/N: CRS1-UP
PART OF 322-1923, 322-1924 ENGINE AR-PRIMARY
AN ATTACHMENT

SMCS-1380 **i03304223**

NOTE	REF NO	GRAPHIC REF	PART NUMBER	QTY	PART NAME 1 2 3 4 5 6 (PRODUCT LEVEL)	SEE PAGE
M	1	1	**6I-0260**	2	BOLT (M8X1.25X25-MM)	
	2	1	**254-2267**	1	REGULATOR GP-TEMPERATURE (INCLUDES CONNECTOR)	
	2A	1	**254-2270**	1	SEAL-O-RING (WATER TEMPERATURE REGULATOR)	

M-METRIC PART

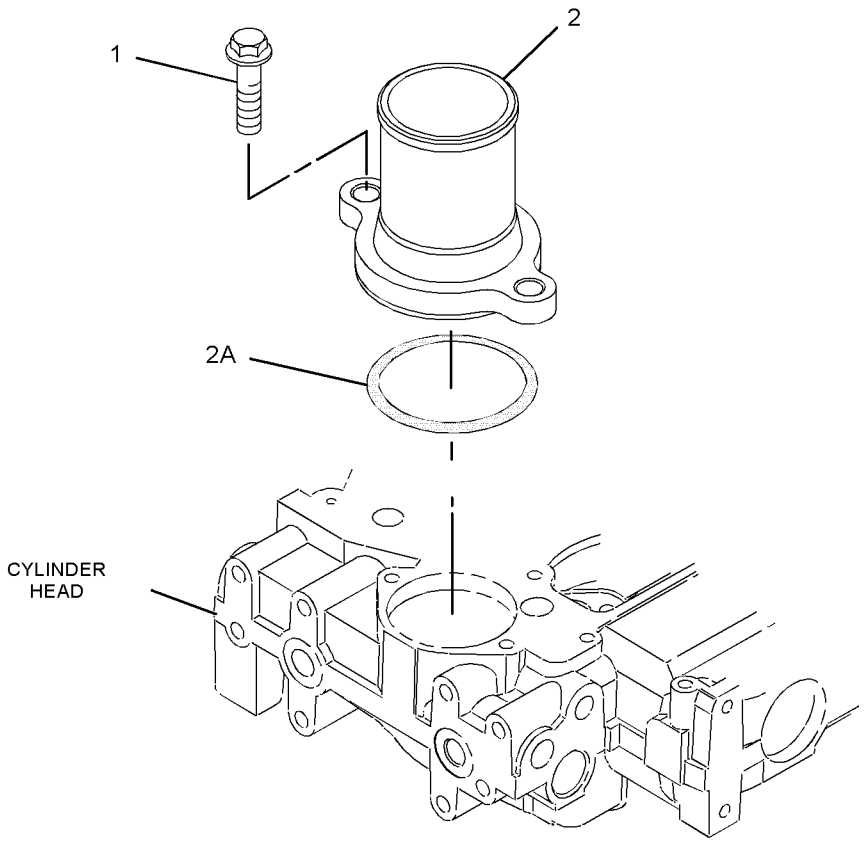

GRAPHIC #1 **<END>** g01081626

316-6941 CONNECTION GP-WATER

S/N: C4Z1-UP

PART OF 321-7704, 321-7705 ENGINE AR-PRIMARY

AN ATTACHMENT

SMCS-1380 **i03128305**

NOTE	REF NO	GRAPHIC REF	PART NUMBER	QTY	PART NAME 1 2 3 4 5 6 (PRODUCT LEVEL)	SEE PAGE
	1	1	**254-2267**	1	REGULATOR GP-TEMPERATURE (INCLUDES CONNECTOR) (WATER)	
	1A	1	**254-2270**	1	SEAL-O-RING	
M	2	1	**6I-0260**	2	BOLT (M8X1.25X25-MM)	

M-METRIC PART

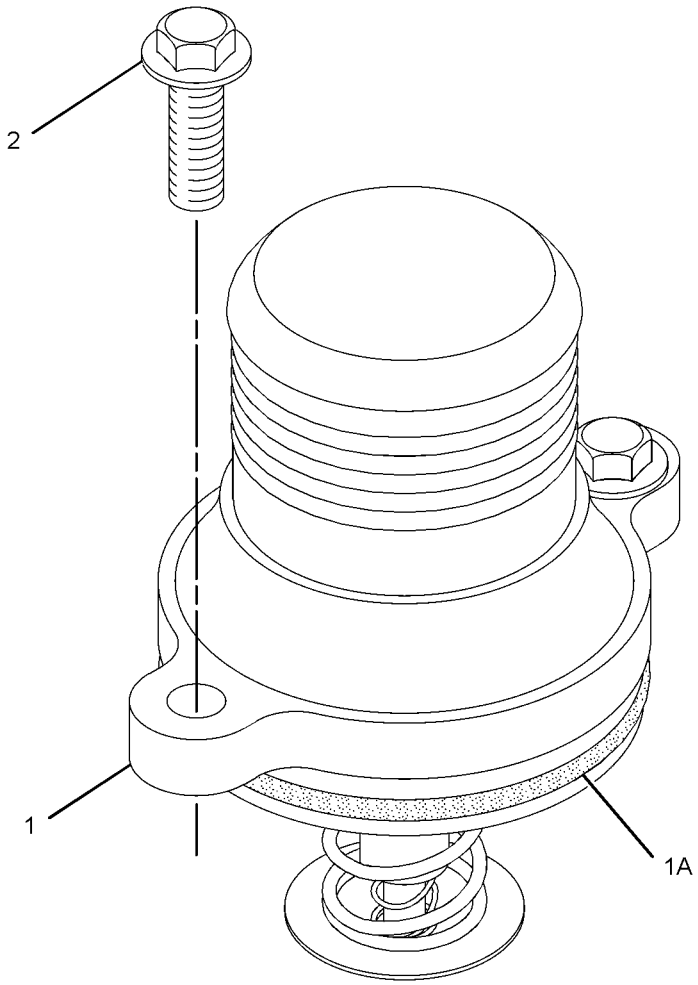

GRAPHIC #1 **<END>** g01319398

296-5616 COOLER GP-ENGINE OIL

S/N: CRS1-UP; C4Z1-UP
PART OF 316-6899 COOLER GP-ENGINE OIL, 238-2799 COOLER GP-FLTR BASE & ENG OIL
AN ATTACHMENT

SMCS-1378 **i02626881**

NOTE	REF NO	GRAPHIC REF	PART NUMBER	QTY	PART NAME 1 2 3 4 5 6 (PRODUCT LEVEL)	SEE PAGE
	1	1	**6I-0218**	2	BOLT (M8X1.25X25-MM)	
M	2	1	**6I-0260**	8	BOLT (M8X1.25X25-MM)	
	3	1	**6I-4374**	3	BOLT (M8X1.25X60-MM)	
M	4	1	**101-3895**	4	BOLT (M8X1.25X35-MM)	
	5	1	**225-6817**	1	COOLER-OIL (ENGINE)	
	6	1	**225-6818**	2	SEAL	
	7	1	**272-2265**	1	SEAL	

M-METRIC PART

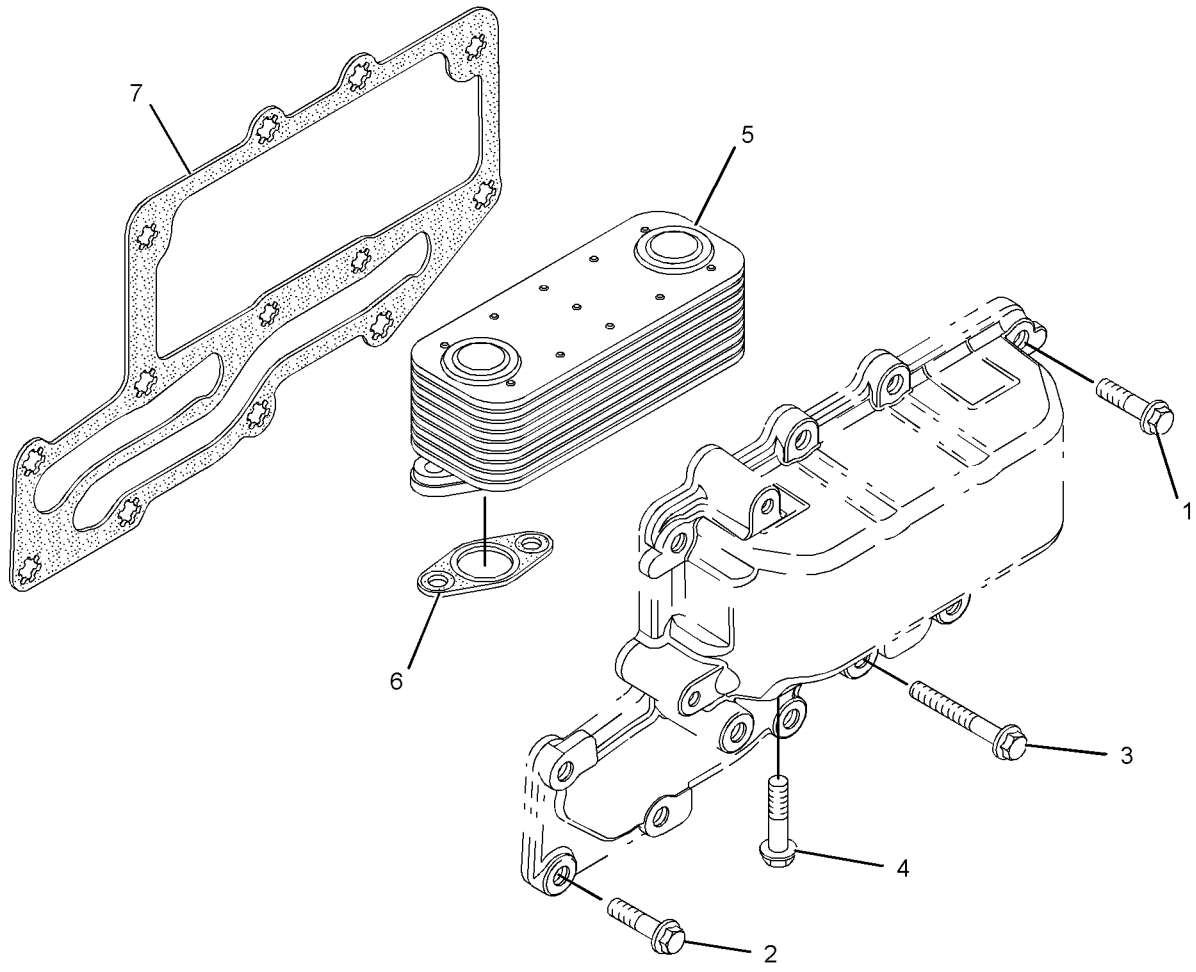

GRAPHIC #1 **<END>** g01204996

316-6899 COOLER GP-ENGINE OIL

S/N: C4Z1-UP

PART OF 321-7704, 321-7705 ENGINE AR-PRIMARY

AN ATTACHMENT

SMCS-1378 **i03332452**

NOTE	REF NO	GRAPHIC REF	PART NUMBER	QTY	PART NAME 1 2 3 4 5 6 (PRODUCT LEVEL)	SEE PAGE
	1	1	**6I-0572**	4	BOLT (M8X1.25X20-MM)	
M	2	1	**6I-0645**	4	BOLT (M8X1.25X25-MM)	
	3	1	**225-7944**	2	GASKET (ENGINE OIL FILTER BASE)	
	4	1	**232-3751**	1	PLATE	
	5	1	**249-0974**	1	HEAD AS-OIL FILTER	
Y	6	1	**296-5616**	1	COOLER GP-ENGINE OIL	80

M-METRIC PART
Y-SEPARATE ILLUSTRATION

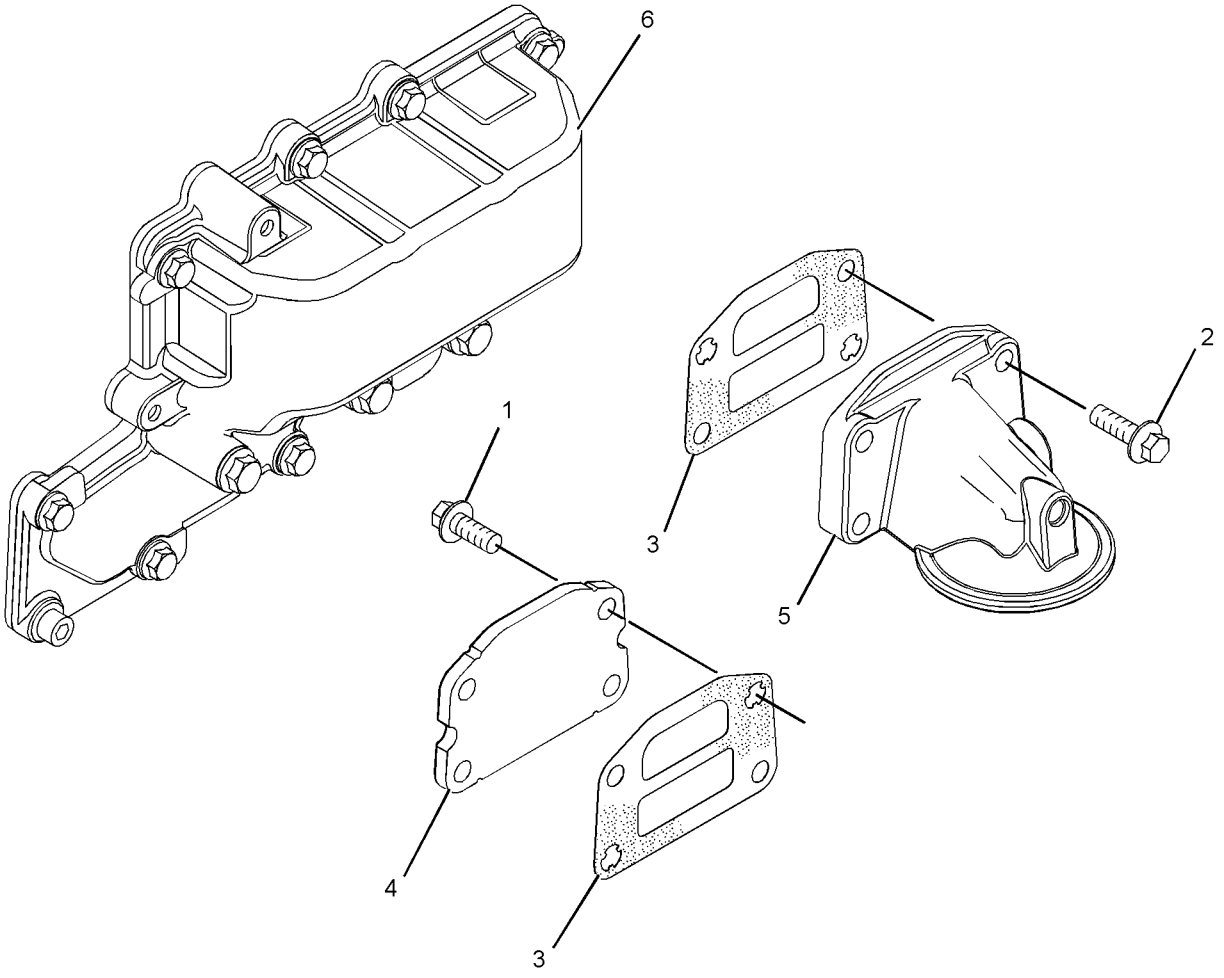

GRAPHIC #1 **<END>** g01400153

238-2799 COOLER GP-FLTR BASE & ENG OIL

S/N: CRS1-UP

PART OF 322-1923, 322-1924 ENGINE AR-PRIMARY

AN ATTACHMENT

SMCS-1306, 1378 **i03145903**

NOTE	REF NO	GRAPHIC REF	PART NUMBER	QTY	PART NAME 1 2 3 4 5 6 (PRODUCT LEVEL)	SEE PAGE
	1	1	**6I-0572**	4	BOLT (M8X1.25X20-MM)	
M	2	1	**6I-0645**	4	BOLT (M8X1.25X25-MM)	
	3	1	**8T-7876**	1	SEAL-O-RING	
	4	1	**225-7941**	1	PLUG	
	5	1	**225-7944**	2	GASKET	
	6	1	**249-0974**	1	HEAD AS-OIL FILTER	
Y	7	1	**296-5616**	1	COOLER GP-ENGINE OIL	80
	8	1	**232-3751**	1	PLATE	

M-METRIC PART
Y-SEPARATE ILLUSTRATION

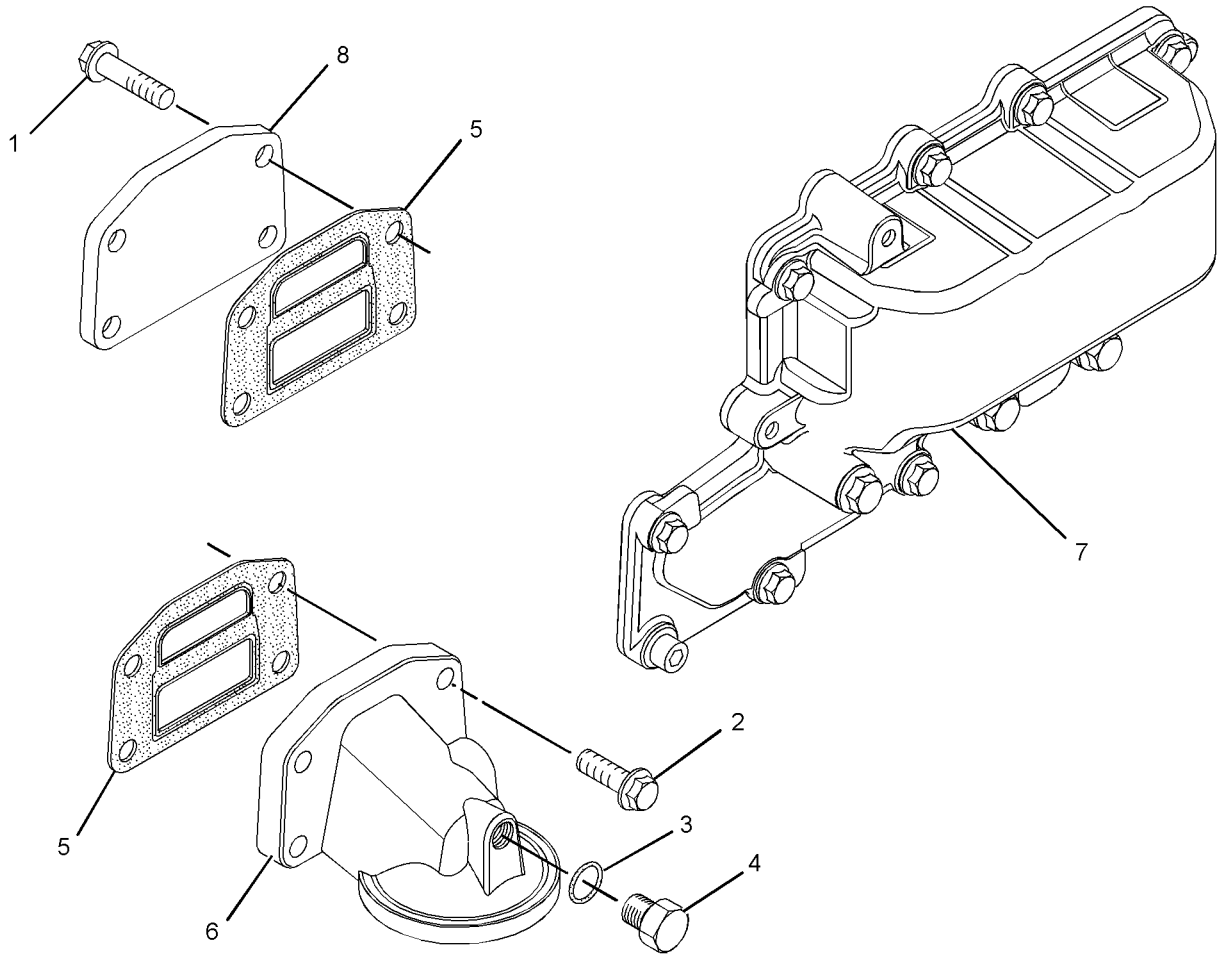

GRAPHIC #1 **<END>** g01621027

299-4716 FAN GP-SUCTION—WITH AIR CONDITIONER

S/N: DPH1-UP

PART OF 339-4990, 339-4991, 339-4992 ENGINE AR

AN ATTACHMENT

SMCS-1356, 1360 **i03035584**

NOTE	REF NO	GRAPHIC REF	PART NUMBER	QTY	PART NAME 1 2 3 4 5 6 (PRODUCT LEVEL)	SEE PAGE
	1	1	**130-7881**	1	SPACER	
	2	1	**142-3391**	1	SPIDER AS (9-BLADE)	
	3	1	**212-9353**	1	BELT-SERPENTINE	
	4	1	**242-9751**	1	GUARD AS (FAN)	
	5	1	**261-0376**	1	BELT TENSIONER	
	6	1	**261-0423**	1	PLATE	
	7	1	**261-0428**	1	PULLEY AS-IDLER	
M		1	**307-2242**	1	BOLT (M10X1.5X45-MM)	
	8	1	**299-4732**	1	PULLEY	
	9	1	**5P-4116**	4	WASHER-HARD (8.8X20.5X2-MM THK)	
M	10	1	**7X-2540**	4	BOLT (M8X1.25X120-MM)	
	11	1	**7X-7729**	1	WASHER (11X25X3-MM THK)	
	12	1	**8T-4121**	3	WASHER-HARD (11X21X2.5-MM THK)	
M	13	1	**8T-4172**	1	BOLT (M10X1.5X80-MM)	
M	14	1	**8T-4196**	3	BOLT (M10X1.5X35-MM)	
	15	1	**8T-4224**	4	WASHER-HARD (8.8X16X2-MM THK)	
M	16	1	**8T-4908**	4	BOLT (M8X1.25X25-MM)	

M-METRIC PART

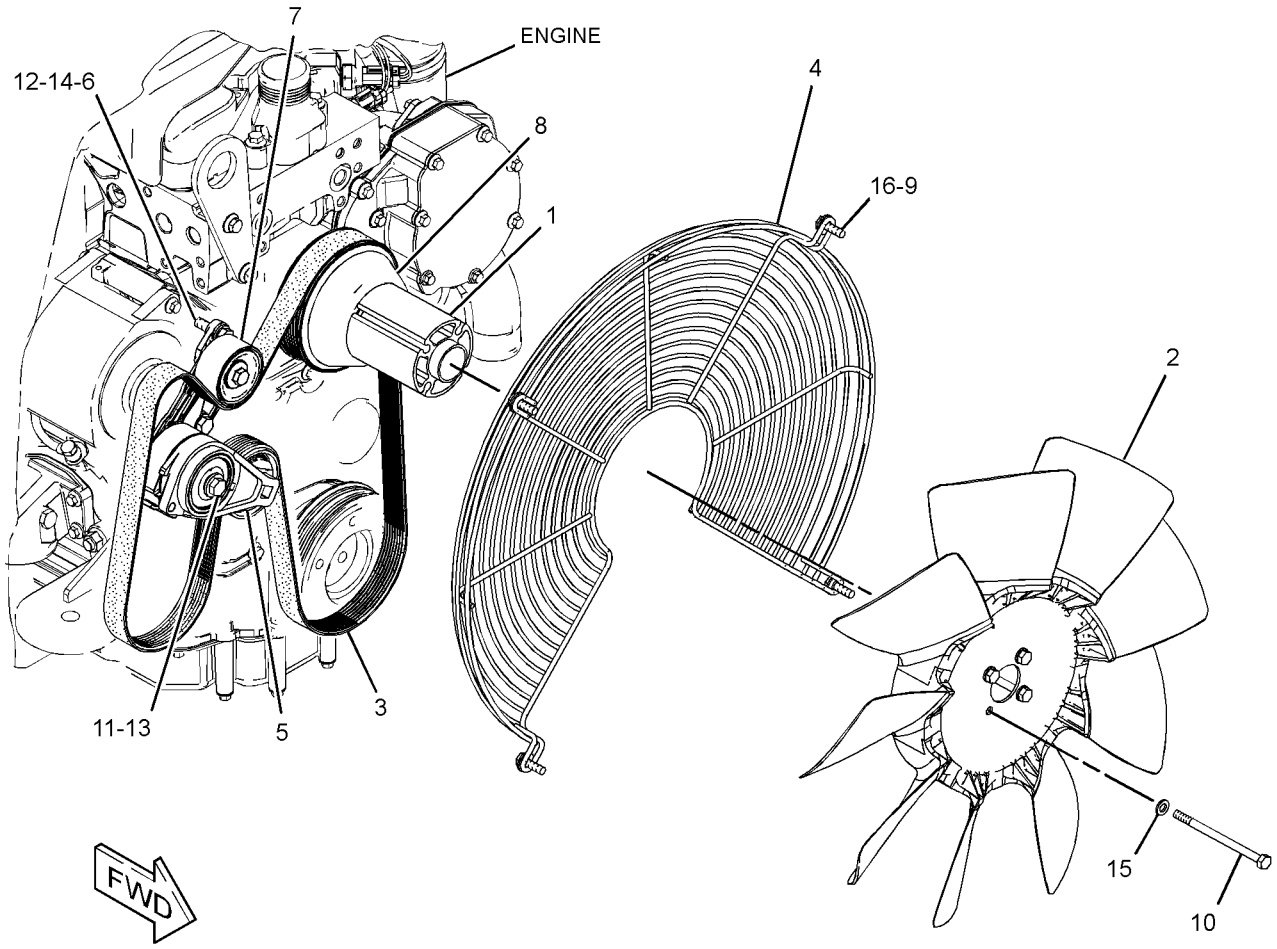

GRAPHIC #1 **<END>** g01520651

COOLING SYSTEM

299-4729 FAN GP-SUCTION—WITHOUT AIR CONDITIONER

S/N: DPH1-UP

PART OF 339-4986, 339-4987, 339-4988, 339-4989 ENGINE AR

AN ATTACHMENT

SMCS-1356, 1360 **i03527872**

NOTE	REF NO	GRAPHIC REF	PART NUMBER	QTY	PART NAME 1 2 3 4 5 6 (PRODUCT LEVEL)	SEE PAGE
	1	1	**130-7881**	1	SPACER	
	2	1	**142-3391**	1	SPIDER AS (9-BLADE)	
	3	1	**242-9751**	1	GUARD AS (FAN)	
	4	1	**261-0371**	1	PLATE	
	5	1	**261-0406**	1	BELT TENSIONER	
	6	1	**299-4732**	1	PULLEY	
	7	1	**324-3408**	1	BELT-SERPENTINE	
	8	1	**5P-4116**	4	WASHER-HARD (8.8X20.5X2-MM THK)	
M	9	1	**7X-2540**	4	BOLT (M8X1.25X120-MM)	
	10	1	**7X-7729**	1	WASHER (11X25X3-MM THK)	
	11	1	**8T-4121**	3	WASHER-HARD (11X21X2.5-MM THK)	
M	12	1	**8T-4172**	1	BOLT (M10X1.5X80-MM)	
M	13	1	**8T-4196**	3	BOLT (M10X1.5X35-MM)	
	14	1	**8T-4224**	4	WASHER-HARD (8.8X16X2-MM THK)	
M	15	1	**8T-4908**	4	BOLT (M8X1.25X25-MM)	

M-METRIC PART

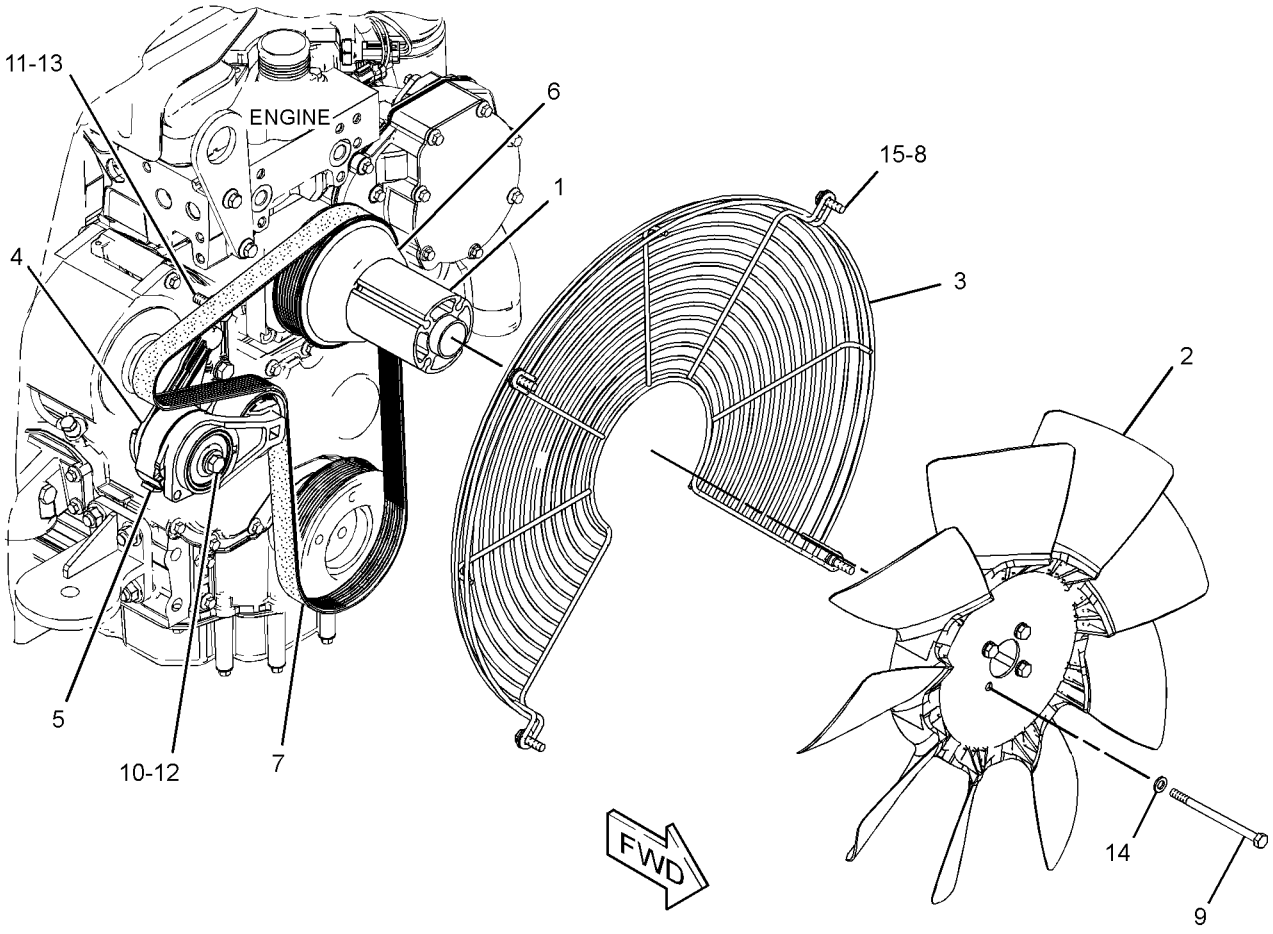

GRAPHIC #1 **<END>** g01520127

321-3113 FAN GP-SUCTION—WITH AIR CONDITIONER

S/N: DPH1-UP
PART OF 339-4993 ENGINE AR
AN ATTACHMENT

SMCS-1356, 1360 **i03728745**

NOTE	REF NO	GRAPHIC REF	PART NUMBER	QTY	PART NAME 1 2 3 4 5 6 (PRODUCT LEVEL)	SEE PAGE
	1	1	**130-7881**	1	SPACER	
	2	1	**142-3391**	1	SPIDER AS (9-BLADE)	
	3	1	**212-9353**	1	BELT-SERPENTINE	
	4	1	**242-9751**	1	GUARD AS (FAN)	
	5	1	**261-0376**	1	BELT TENSIONER	
	6	1	**261-0423**	1	PLATE	
	7	1	**261-0428**	1	PULLEY AS-IDLER	
M		1	**307-2242**	1	BOLT (M10X1.5X45-MM)	
	8	1	**304-6673**	1	PULLEY	
	9	1	**5P-4116**	4	WASHER-HARD (8.8X20.5X2-MM THK)	
M	10	1	**7X-2540**	4	BOLT (M8X1.25X120-MM)	
	11	1	**7X-7729**	1	WASHER (11X25X3-MM THK)	
	12	1	**8T-4121**	3	WASHER-HARD (11X21X2.5-MM THK)	
M	13	1	**8T-4172**	1	BOLT (M10X1.5X80-MM)	
M	14	1	**8T-4196**	3	BOLT (M10X1.5X35-MM)	
	15	1	**8T-4224**	4	WASHER-HARD (8.8X16X2-MM THK)	
M	16	1	**8T-4908**	4	BOLT (M8X1.25X25-MM)	

M-METRIC PART

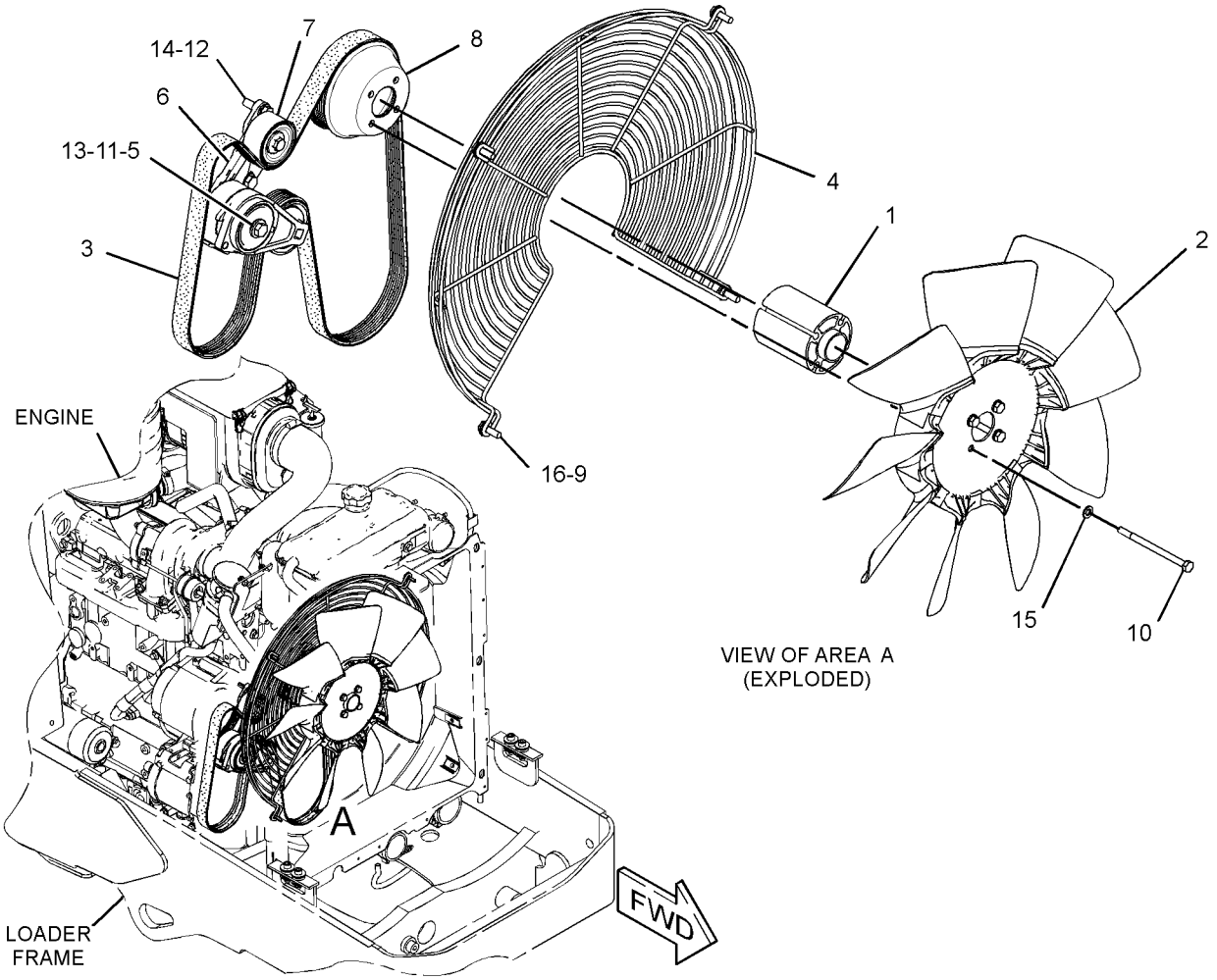

GRAPHIC #1 **<END>** g01592056

COOLING SYSTEM

315-1369 LINES GP-POWER TRAIN COOLER

S/N: DPH1-UP
PART OF 329-0304 POWER TRAIN AR
AN ATTACHMENT

SMCS-1375, 3016 **i03627134**

NOTE	REF NO	GRAPHIC REF	PART NUMBER	QTY	PART NAME 1 2 3 4 5 6 (PRODUCT LEVEL)	SEE PAGE
	1	1	**118-7286**	1	BRACKET AS	
M		1	**8T-3490**	1	NUT-WELD (M10X1.5-THD)	
	2	1	**130-9984**	1	CLIP	
	3	1	**332-7541**	1	HOSE AS	
	4	1	**332-7542**	1	HOSE AS	
	5	1	**315-5401**	1	TUBE AS	
	6	1	*148-8339*	1	CONNECTOR AS	
		1	**6V-8716**	1	CONNECTOR	
		1	**6V-9746**	1	SEAL-O-RING	
		1	**7M-8485**	1	SEAL-O-RING	
	7	1	*148-8360*	1	ELBOW AS	
		1	**6V-9182**	1	ELBOW	
		1	**6V-9746**	1	SEAL-O-RING	
		1	**7M-8485**	1	SEAL-O-RING	
	8	1	**159-1503**	6	CLAMP-HOSE	
	9	1	**8T-4121**	2	WASHER-HARD (11X21X2.5-MM THK)	
M	10	1	**5C-7261**	2	NUT (M8X1.25-THD)	
M	11	1	**8T-4136**	2	BOLT (M10X1.5X25-MM)	
M	12	1	**8T-4192**	2	BOLT (M12X1.75X25-MM)	
	13	1	**8T-4223**	2	WASHER-HARD (13.5X25.5X3-MM THK)	
	14	1	**8T-7529**	3	CLIP	
E	15	1	**262-8088**		HOSE (80-CM)	
E	15A	1	**262-8088**		HOSE (70-CM)	
	16	1	**5P-4116**	2	WASHER-HARD (8.8X20.5X2-MM THK)	

E-ORDER BY THE CENTIMETER
M-METRIC PART

315-1369 **LINES GP-POWER TRAIN COOLER** *(contd.)* **i03627134**

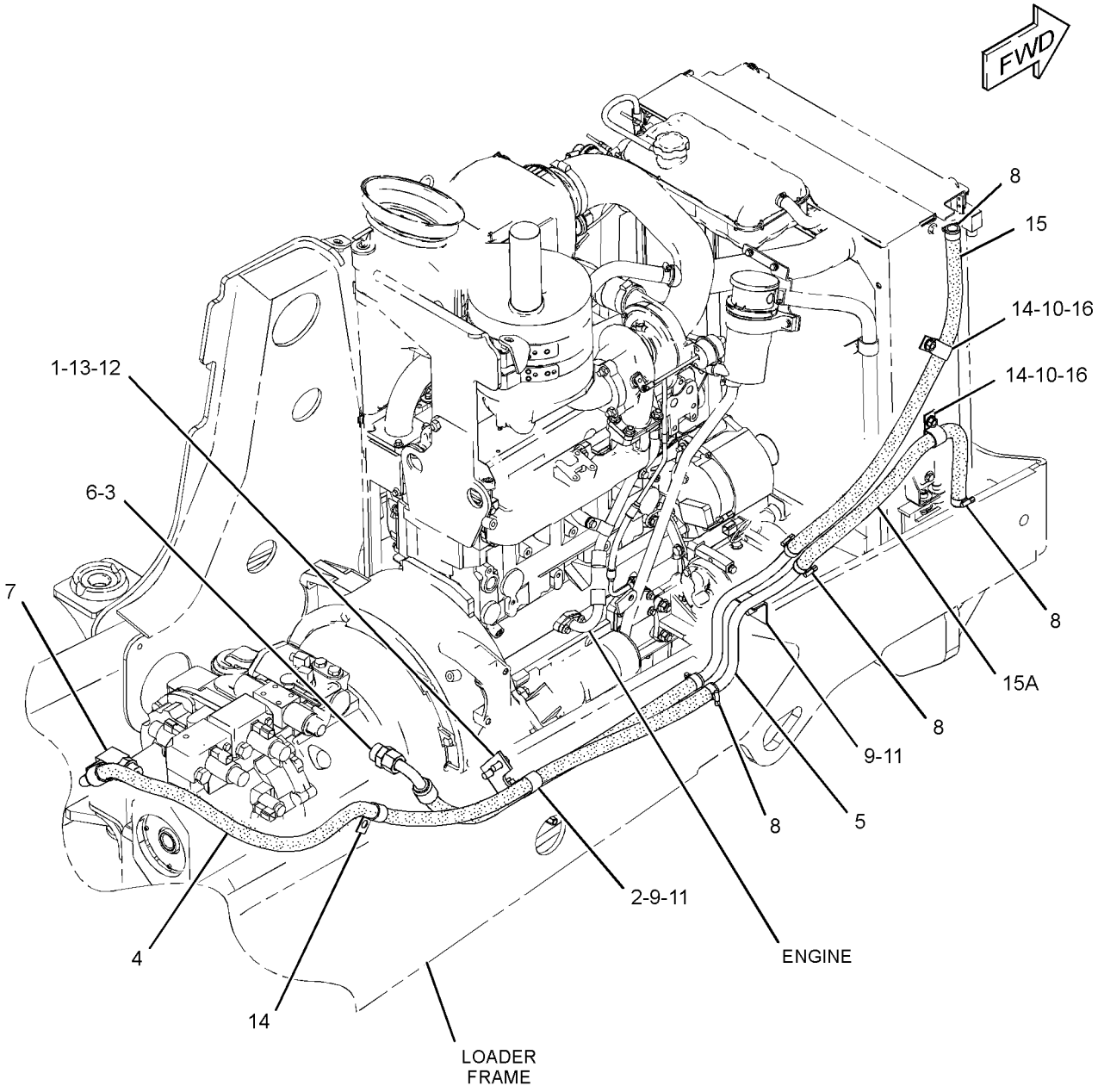

GRAPHIC #1 **<END>** g01636336

COOLING SYSTEM

304-4022 LINES GP-RADIATOR

S/N: DPH1-UP

PART OF 339-4988, 339-4989, 339-4992, 339-4993 ENGINE AR

AN ATTACHMENT

SMCS-1353, 1380 **i03728762**

NOTE	REF NO	GRAPHIC REF	PART NUMBER	QTY	PART NAME 1 2 3 4 5 6 (PRODUCT LEVEL)	SEE PAGE
	1	1	**2W-9710**	4	MOUNT AS	
	2	1	**5D-1026**	2	CLAMP-BAND	
	3	1	**6N-6984**	2	MOUNT-RUBBER	
	4	1	**9M-7958**	1	CLAMP-HOSE	
	5	1	**031-5644**	2	CLIP	
	6	1	**140-3640**	2	PLATE	
	7	1	**247-1385**	1	TANK GP-EXPANSION (COOLANT)	
		1	**251-3227**	1	CAP AS-COOLANT TANK	
	8	1	**250-2314**	1	BRACKET AS	
M		1	**8T-3612**	2	NUT-WELD (M8X1.25-THD)	
	9	1	**304-7848**	1	HOSE AS	
	10	1	**325-5855**	1	HOSE-RADIATOR (UPPER)	
	11	1	**329-5700**	1	HOSE	
	12	1	**4D-7388**	1	CLIP	
M	13	1	**5C-7261**	2	NUT (M8X1.25-THD)	
	14	1	**7X-0579**	7	WASHER-HARD (8.8X25.5X2-MM THK)	
	15	1	**7X-0603**	4	WASHER-HARD (9.9X35X2.5-MM THK)	
M	16	1	**8T-2223**	4	BOLT-SOCKET HEAD (M10X1.5X45-MM)	
M	17	1	**8T-4133**	4	NUT (M10X1.5-THD)	
M	18	1	**8T-4189**	2	BOLT (M8X1.25X20-MM)	
M	19	1	**8T-4200**	4	BOLT (M8X1.25X16-MM)	
	20	1	**8T-4222**	8	WASHER-PLATED (11X32X2.5-MM THK)	
	21	1	**8T-4984**	3	CLAMP-HOSE	
	22	1	**8T-6703**	1	CLAMP-HOSE	
M	23	1	**8T-7547**	2	BOLT (M8X1.25X30-MM)	
E	24	1	**8C-3681**		HOSE (110.5-CM)	
E	24A	1	**8C-3681**		HOSE (30.2-CM)	
M	25	1	**8T-4908**	1	BOLT (M8X1.25X25-MM)	

E-ORDER BY THE CENTIMETER
M-METRIC PART

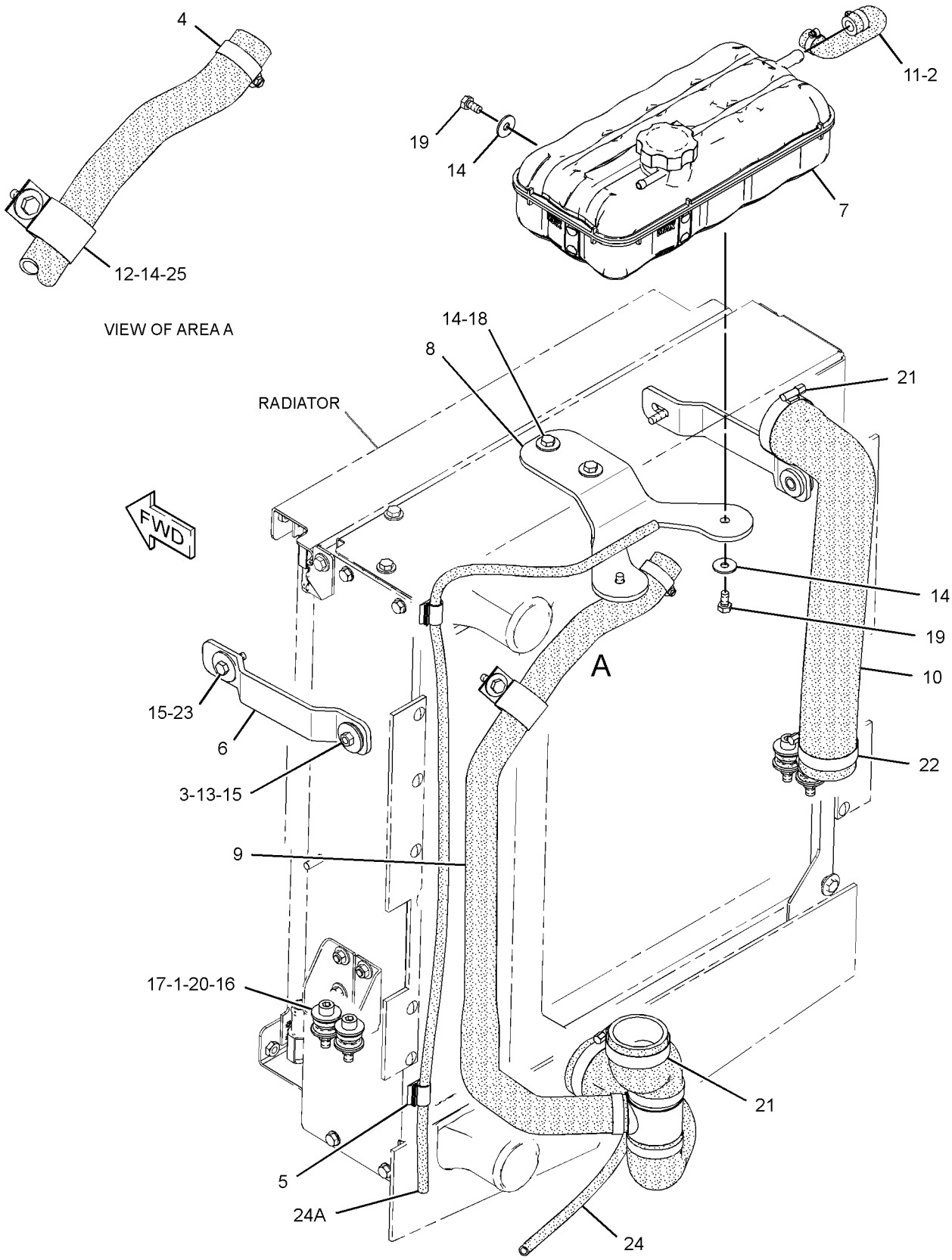

GRAPHIC #1

<END>

g01869628

COOLING SYSTEM

230-7355 PUMP GP-WATER

S/N: CRS1-UP

PART OF 322-1923, 322-1924 ENGINE AR-PRIMARY

AN ATTACHMENT

SMCS-1361 **i03568520**

NOTE	REF NO	GRAPHIC REF	PART NUMBER	QTY	PART NAME 1 2 3 4 5 6 (PRODUCT LEVEL)	SEE PAGE
M	1	1	**6I-0217**	2	BOLT (M8X1.25X20-MM)	
M	2	1	**6I-0254**	2	BOLT (M8X1.25X30-MM)	
M	3	1	**100-3751**	5	BOLT (M8X1.25X65-MM)	
	4	1	**113-8129**	2	BOLT (M8X1.25X75-MM)	
	5	1	**225-7741**	1	CONNECTION AS	
	6	1	**225-7738**	1	SEAL-O-RING	
	7	1	**225-7739**	1	SEAL-O-RING	
	8	1	**225-8016**	1	PUMP GP-WATER	
	8A	1	**225-8019**	1	GASKET	
	8B	1	**286-3592**	1	GEAR-WATER PUMP	
					AVAILABLE REPAIR KIT(S):	
			247-0144	1	KIT-WATER PUMP	
					(INCLUDES 2 DIFFERENT GASKETS)	

M-METRIC PART

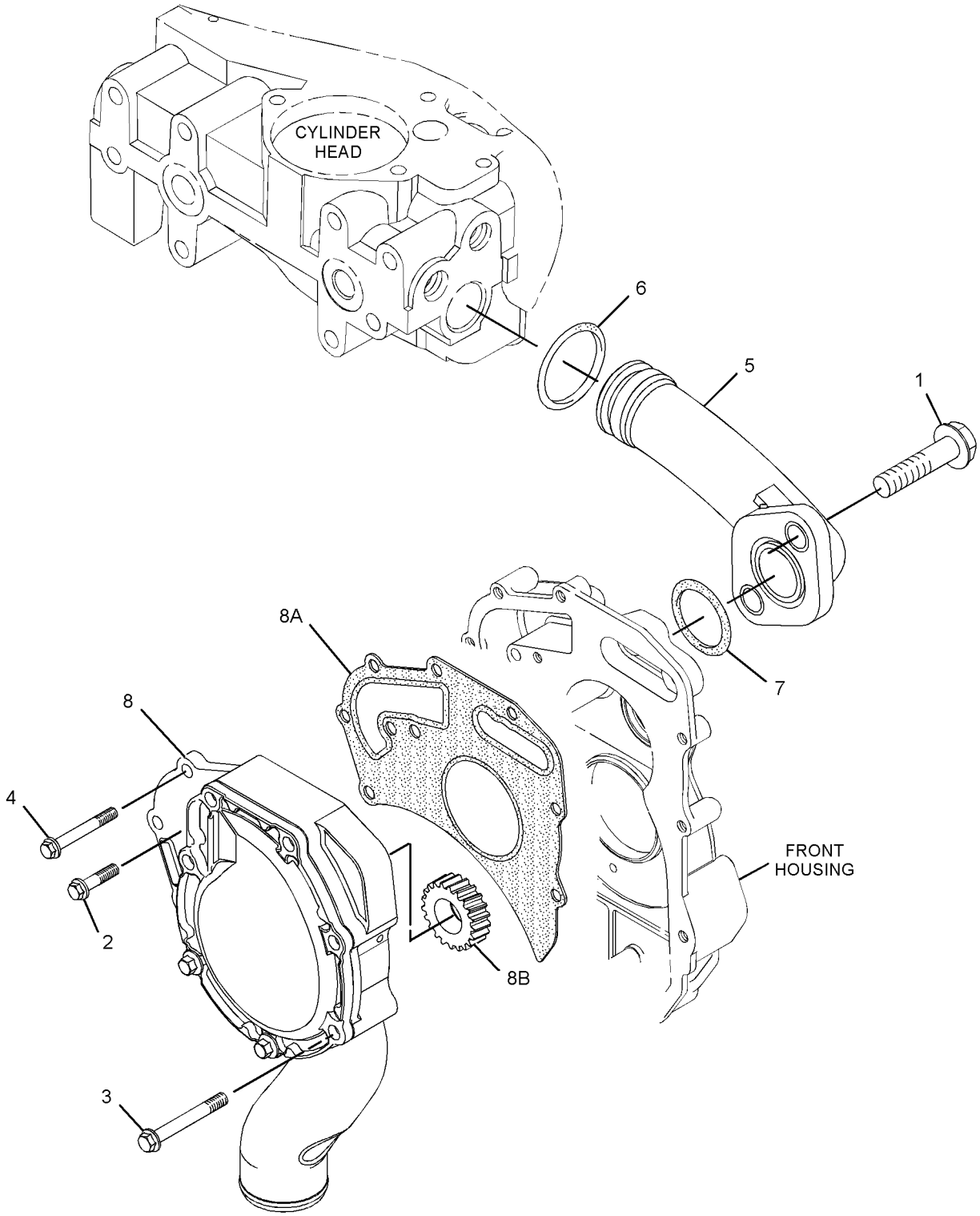

GRAPHIC #1 **<END>** g01897273

COOLING SYSTEM

315-3411 PUMP GP-WATER

S/N: C4Z1-UP

PART OF 321-7704, 321-7705 ENGINE AR-PRIMARY

AN ATTACHMENT

SMCS-1361 **i03128294**

NOTE	REF NO	GRAPHIC REF	PART NUMBER	QTY	PART NAME 1 2 3 4 5 6 (PRODUCT LEVEL)	SEE PAGE
M	1	1	**6I-0217**	2	BOLT (M8X1.25X20-MM)	
M	2	1	**6I-0254**	2	BOLT (M8X1.25X30-MM)	
M	3	1	**100-3751**	5	BOLT (M8X1.25X65-MM)	
	4	1	**113-8129**	2	BOLT (M8X75-MM)	
	5	1	**225-7741**	1	CONNECTION AS	
	5A	1	**225-7738**	1	SEAL-O-RING	
	5B	1	**225-7739**	1	SEAL-O-RING	
	6	1	**315-3379**	1	PUMP AS-WATER	
	6A	1	**225-8019**	1	GASKET	
	6B	1	**267-8321**	1	GASKET-COVER	

M-METRIC PART

315-3411 **PUMP GP-WATER** *(contd.)* **i03128294**

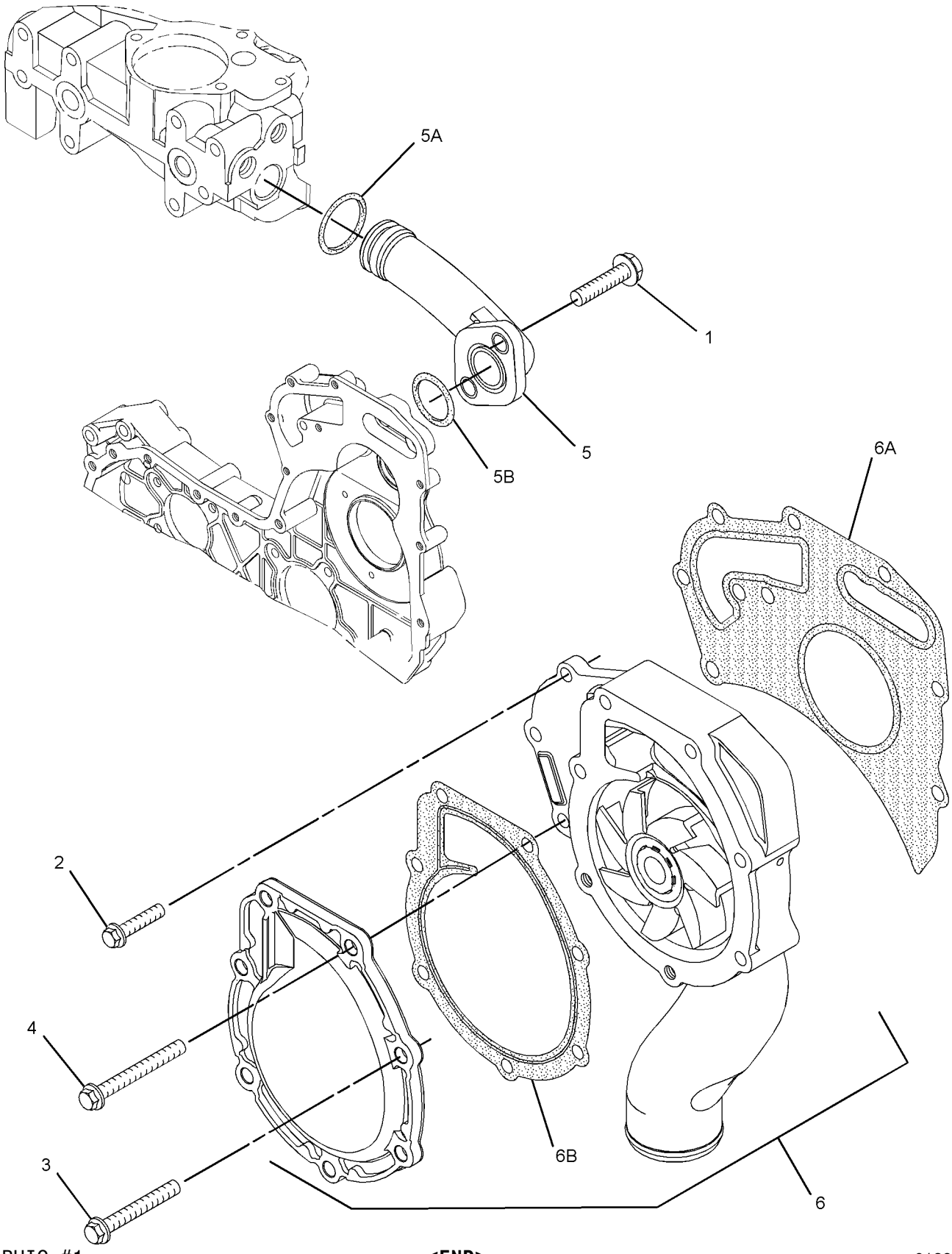

GRAPHIC #1 **<END>** g01399392

297-3233 RADIATOR & HYD OIL COOLER GP

S/N: DPH1-UP
PART OF 309-9105 RADIATOR & HYD OIL COOLER GP
AN ATTACHMENT

SMCS-1353, 1374 **i03330902**

NOTE	REF NO	GRAPHIC REF	PART NUMBER	QTY	PART NAME 1 2 3 4 5 6 (PRODUCT LEVEL)	SEE PAGE
Y	1	1	**299-4246**	1	COOLER GP-HYD & XMSN OIL	341
	2	1	**301-9672**	1	RADIATOR GP	
		1	**315-5667**	2	GASKET	
		1	**225-4287**	1	VALVE GP-RADIATOR DRAIN	
	3	1	**5P-4116**	2	WASHER-HARD (8.8X20.5X2-MM THK)	
M	4	1	**8T-4200**	2	BOLT (M8X1.25X16-MM)	

M-METRIC PART
Y-SEPARATE ILLUSTRATION

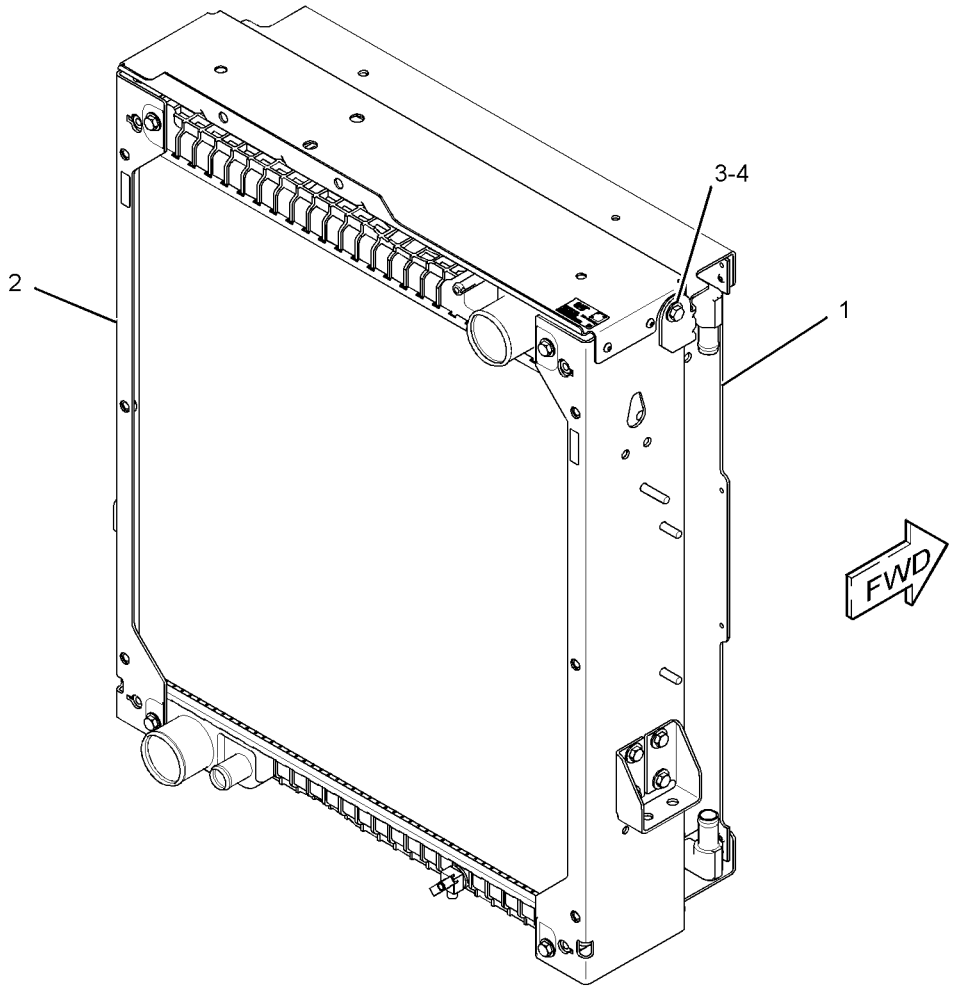

GRAPHIC #1 **<END>** g01514076

304-4023 RADIATOR & HYD OIL COOLER GP–

INCLUDES AFTCLR, XMSN COOLER

S/N: DPH1-UP

PART OF 309-9106 RADIATOR & HYD OIL COOLER GP

AN ATTACHMENT

SMCS-1353, 1374 **i03110260**

NOTE	REF NO	GRAPHIC REF	PART NUMBER	QTY	PART NAME 1 2 3 4 5 6 (PRODUCT LEVEL)	SEE PAGE
Y	1	1	**304-7847**	1	COOLER GP-HYD & XMSN OIL	342
	2	1	**304-7850**	1	AFTERCOOLER GP-AIR	
	3	1	**304-7851**	1	RADIATOR GP	
		1	**225-4287**	1	VALVE GP-RADIATOR DRAIN	
		1	**315-0033**	2	GASKET	
	4	1	**310-7304**	1	PLATE	
M	5	1	**5C-7261**	4	NUT (M8X1.25-THD)	
	6	1	**5P-4116**	6	WASHER-HARD (8.8X20.5X2-MM THK)	
M	7	1	**8T-4189**	2	BOLT (M8X1.25X20-MM)	
M	8	1	**8T-4200**	4	BOLT (M8X1.25X16-MM)	
	9	1	**8T-4224**	4	WASHER-HARD (8.8X16X2-MM THK)	
E	10	1	**145-2350**		SEAL (68-CM)	

E-ORDER BY THE CENTIMETER
M-METRIC PART
Y-SEPARATE ILLUSTRATION

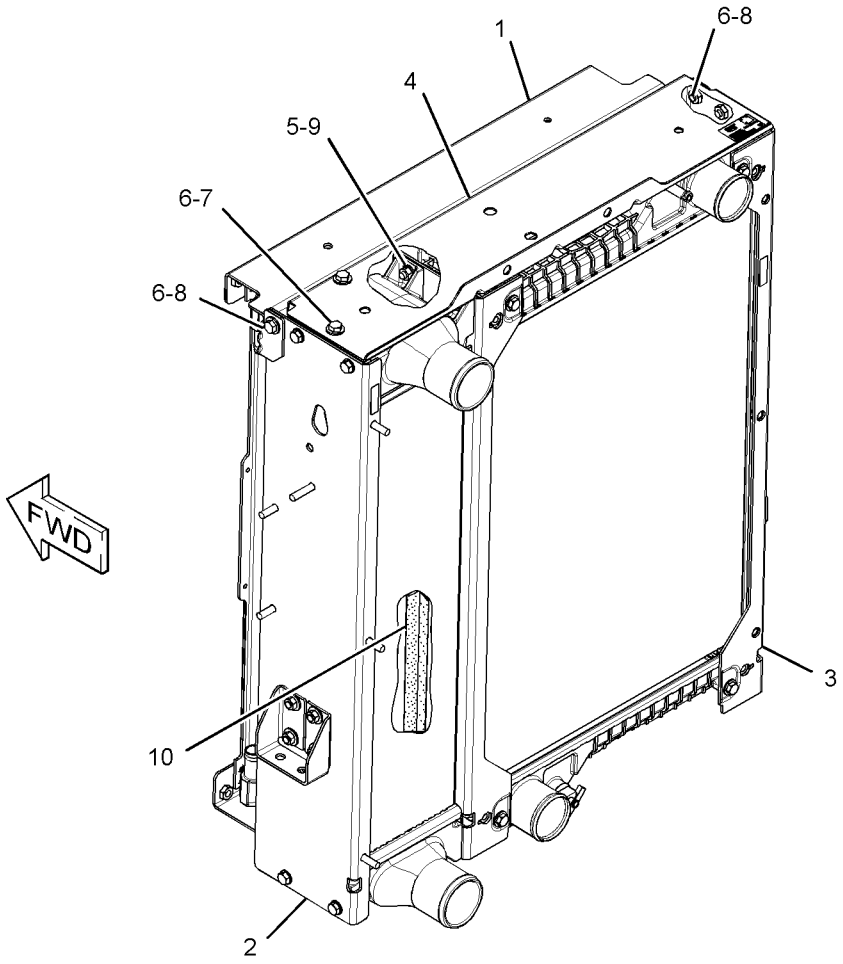

GRAPHIC #1 **<END>** g01618115

COOLING SYSTEM

309-9105 RADIATOR & HYD OIL COOLER GP

S/N: DPH1-UP
PART OF 339-4986, 339-4987, 339-4990, 339-4991 ENGINE AR
AN ATTACHMENT

SMCS-1353, 1374 **i03627135**

NOTE	REF NO	GRAPHIC REF	PART NUMBER	QTY	PART NAME 1 2 3 4 5 6 (PRODUCT LEVEL)	SEE PAGE
	1	1	**322-9761**	1	SHROUD AS-RADIATOR	
Y	2	1	**297-3233**	1	RADIATOR & HYD OIL COOLER GP	94
	3	1	**324-3851**	2	SKIRT	
	4	1	**214-3647**	1	BAFFLE (LOWER)	
	5	1	**123-4065**	16	RIVET-POP	
	6	1	**7X-0579**	6	WASHER-HARD (8.8X25.5X2-MM THK)	
M	7	1	**8T-4189**	6	BOLT (M8X1.25X20-MM)	

M-METRIC PART
Y-SEPARATE ILLUSTRATION

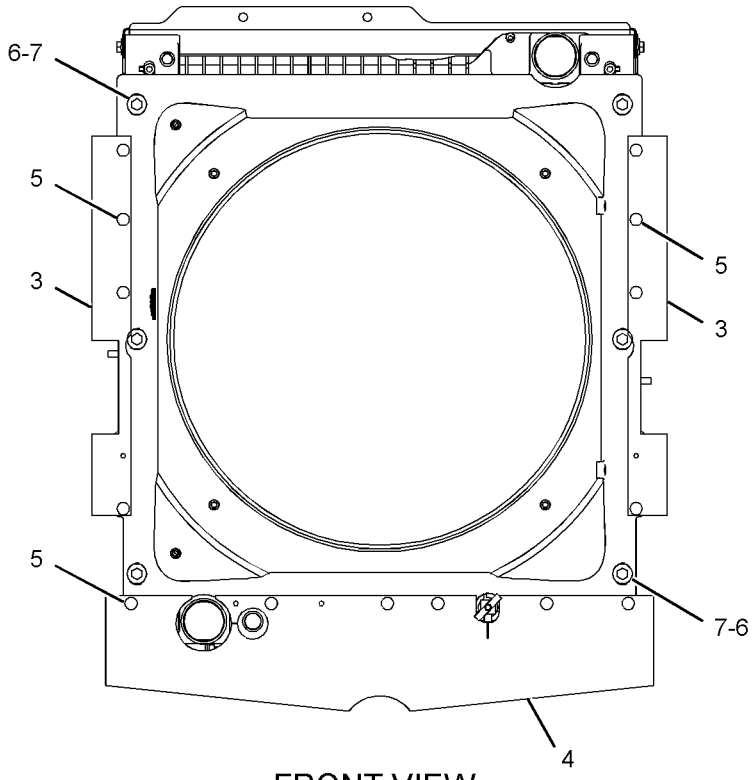

FRONT VIEW

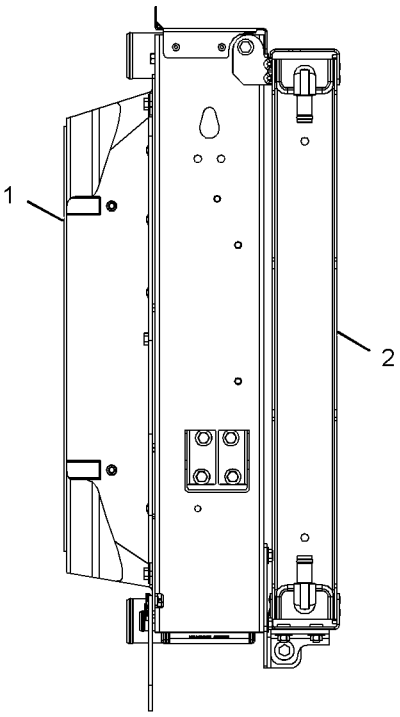

RIGHT SIDE VIEW

GRAPHIC #1 **<END>** g01572923

309-9106 RADIATOR & HYD OIL COOLER GP

S/N: DPH1-UP

PART OF 339-4988, 339-4989, 339-4992, 339-4993 ENGINE AR

AN ATTACHMENT

SMCS-1353, 1374 **i03712189**

NOTE	REF NO	GRAPHIC REF	PART NUMBER	QTY	PART NAME 1 2 3 4 5 6 (PRODUCT LEVEL)	SEE PAGE
Y	1	1	**304-4023**	1	RADIATOR & HYD OIL COOLER GP	95
	2	1	**305-6918**	1	BAFFLE (LOWER)	
	3	1	**322-9761**	1	SHROUD AS-RADIATOR	
	4	1	**324-3851**	2	SKIRT	
	5	1	**123-4065**	16	RIVET-POP	
M	6	1	**5C-7261**	3	NUT (M8X1.25-THD)	
	7	1	**7X-0579**	6	WASHER-HARD (8.8X25.5X2-MM THK)	
M	8	1	**8T-4189**	3	BOLT (M8X1.25X20-MM)	

M-METRIC PART
Y-SEPARATE ILLUSTRATION

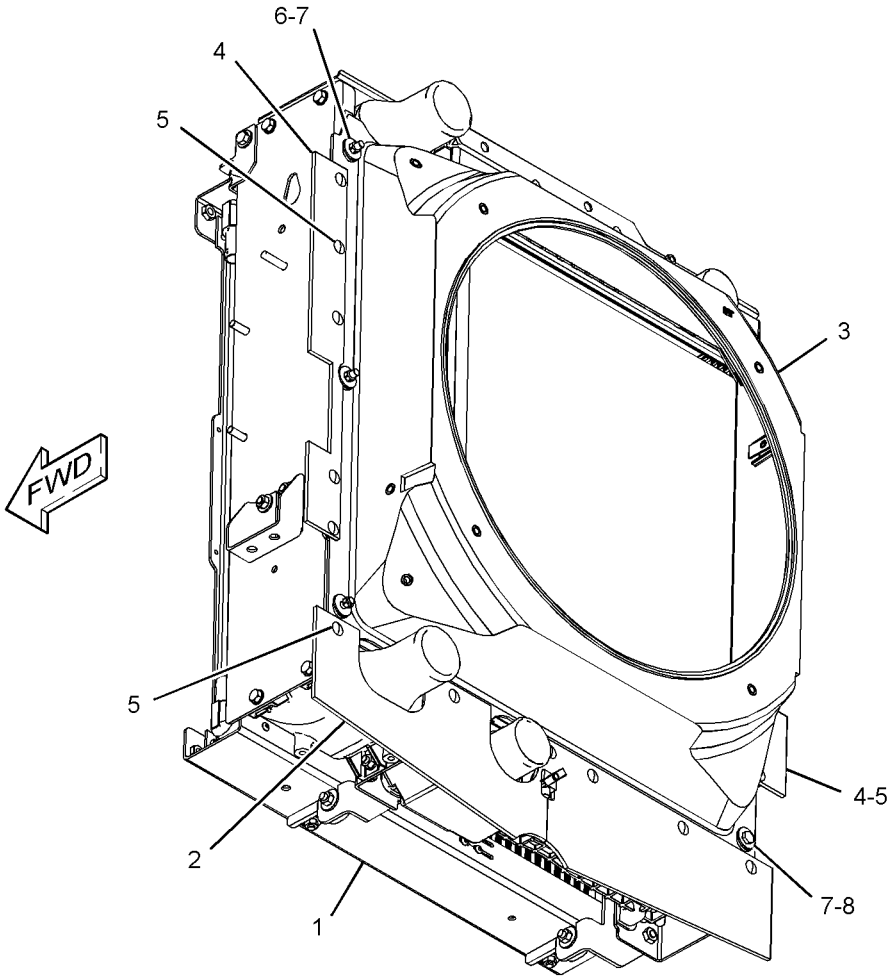

GRAPHIC #1 **<END>** g01599896

COOLING SYSTEM

324-6213 TANK & LINES GP-COOLANT–EXPANSION, RADIATOR

S/N: DPH1-UP

PART OF 339-4986, 339-4987, 339-4990, 339-4991 ENGINE AR

AN ATTACHMENT

SMCS-1354, 1380 **i03726220**

NOTE	REF NO	GRAPHIC REF	PART NUMBER	QTY	PART NAME 1 2 3 4 5 6 (PRODUCT LEVEL)	SEE PAGE
	1	1	**2W-9710**	4	MOUNT AS	
	2	1	**5D-1026**	2	CLAMP-BAND	
	3	1	**6N-6984**	2	MOUNT-RUBBER	
	4	1	**9M-7958**	2	CLAMP-HOSE	
	5	1	**031-5644**	2	CLIP	
	6	1	**140-3640**	2	PLATE	
	7	1	**210-6139**	1	HOSE-RADIATOR (LOWER)	
	8	1	**247-1385**	1	TANK GP-EXPANSION (COOLANT)	
		1	**251-3227**	1	CAP AS-COOLANT TANK	
	9	1	**250-2314**	1	BRACKET AS	
M		1	**8T-3612**	2	NUT-WELD (M8X1.25-THD)	
	10	1	**259-8417**	1	HOSE	
	11	1	**325-5855**	1	HOSE-RADIATOR (UPPER)	
	12	1	**329-5699**	1	HOSE	
	13	1	**4D-7388**	2	CLIP	
M	14	1	**5C-7261**	2	NUT (M8X1.25-THD)	
	15	1	**7X-0579**	8	WASHER-HARD (8.8X25.5X2-MM THK)	
	16	1	**7X-0603**	4	WASHER-HARD (9.9X35X2.5-MM THK)	
M	17	1	**8T-2223**	4	BOLT-SOCKET HEAD (M10X1.5X45-MM)	
M	18	1	**8T-4133**	4	NUT (M10X1.5-THD)	
M	19	1	**8T-4189**	2	BOLT (M8X1.25X20-MM)	
M	20	1	**8T-4200**	4	BOLT (M8X1.25X16-MM)	
	21	1	**8T-4222**	8	WASHER-PLATED (11X32X2.5-MM THK)	
	22	1	**8T-4984**	3	CLAMP-HOSE	
	23	1	**8T-6703**	1	CLAMP-HOSE	
M	24	1	**8T-7547**	2	BOLT (M8X1.25X30-MM)	
E	25	1	**8C-3681**		HOSE (111-CM)	
E	25A	1	**8C-3681**		HOSE (30-CM)	
M	26	1	**8T-4908**	2	BOLT (M8X1.25X25-MM)	

E-ORDER BY THE CENTIMETER
M-METRIC PART

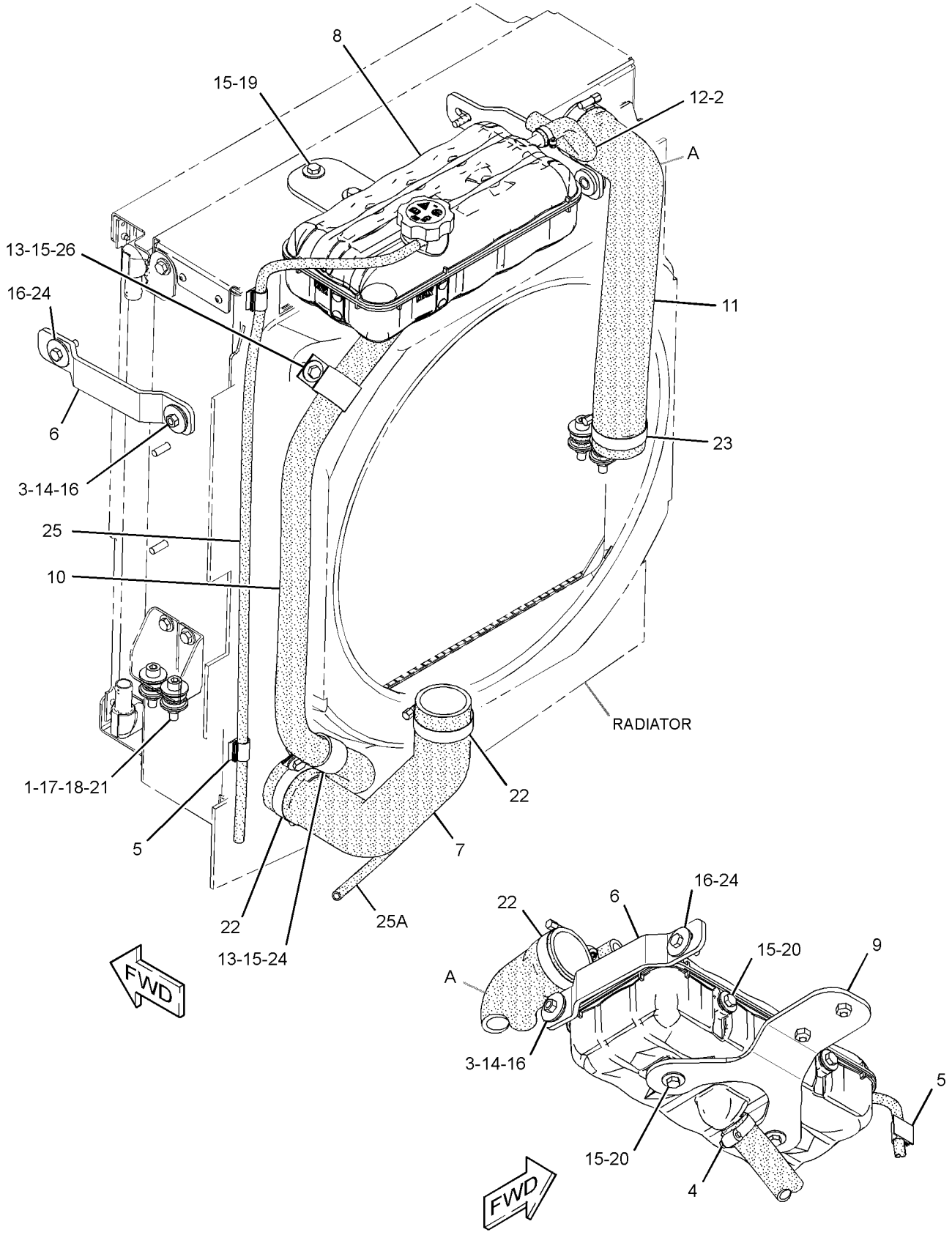

GRAPHIC #1 **<END>** g01872458

AIR INLET AND EXHAUST SYSTEM

234-1981 AIR CLEANER GP–BASIC

S/N: DPH1-UP

PART OF 310-2644, 332-6587 AIR CLEANER GP

AN ATTACHMENT

SMCS-1051, 1054 **i03126100**

NOTE	REF NO	GRAPHIC REF	PART NUMBER	QTY	PART NAME 1 2 3 4 5 6 (PRODUCT LEVEL)	SEE PAGE
	1	1	**227-7449**	1	FILTER ELEMENT-AIR (SECONDARY)	
	2	1	**237-4157**	1	COVER	
	3	1	**262-9786**	1	FRAME (ELEMENT)	
	4	1	**293-4053**	1	FILTER ELEMENT-AIR (PRIMARY)	

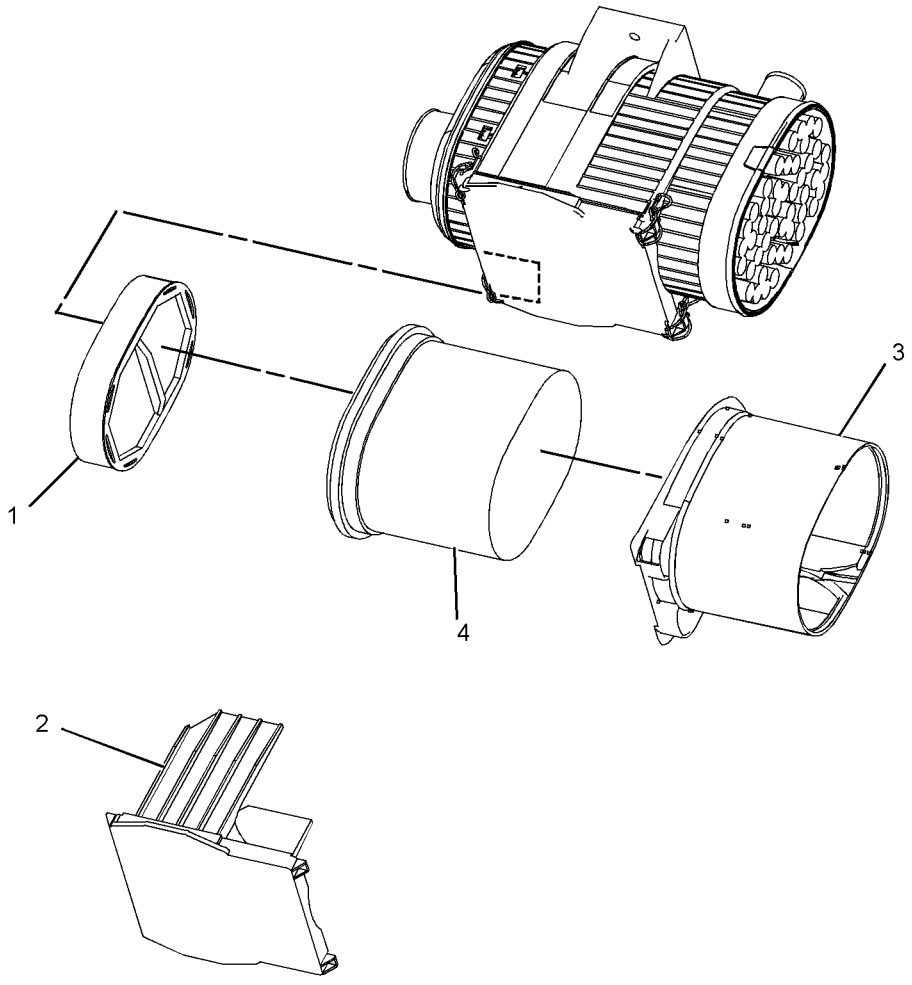

GRAPHIC #1 **<END>** g01601293

AIR INLET AND EXHAUST SYSTEM

310-2644 AIR CLEANER GP–TURBO

S/N: DPH1-UP

PART OF 339-4986, 339-4987, 339-4990, 339-4991 ENGINE AR

AN ATTACHMENT

SMCS-1051, 1054 **i03627136**

NOTE	REF NO	GRAPHIC REF	PART NUMBER	QTY	PART NAME 1 2 3 4 5 6 (PRODUCT LEVEL)	SEE PAGE
	1	1	**8T-6726**	1	CLAMP-HOSE	
	2	1	**8T-9402**	2	CLAMP-HOSE	
	3	1	**110-2445**	1	CLAMP-HOSE	
	4	1	**124-6259**	3	CLAMP-HOSE	
Y	5	1	**234-1981**	1	AIR CLEANER GP (BASIC)	100
	6	1	**247-9730**	1	VALVE AS-CHECK (AIR CLEANER)	
	7	1	**248-3231**	1	DUCT-AIR	
	8	1	**249-5512**	1	SEAL	
E	9	1	**253-4137**	1	SEAL	
	10	1	**253-4138**	1	STUD	
	11	1	**255-4692**	1	CONNECTOR-FILTER	
	12	1	**260-0634**	1	TUBE	
	13	1	**260-1393**	1	HOSE	
	14	1	**284-2917**	1	HOSE AS	
	15	1	**284-5165**	1	HOSE	
	16	1	**293-5352**	1	HOSE-AIR	
	17	1	**298-5901**	1	PLATE AS	
	18	1	**332-7333**	1	INDICATOR GP-AIR FILTER CHANGE	
		1	**205-1627**	1	BRACKET	
M	19	1	**129-3178**	1	LOCKNUT (M6X1-THD)	
	20	1	**226-0449**	1	CLAMP-HOSE	
	21	1	**4B-4863**	4	WASHER (4.7X11X1.2-MM THK)	
M	22	1	**5C-8312**	2	NUT (M4X0.7-THD)	
	23	1	**5P-4116**	6	WASHER-HARD (8.8X20.5X2-MM THK)	
	24	1	**7X-0586**	2	WASHER-HARD (7.2X32X2-MM THK)	
M	25	1	**8T-4189**	2	BOLT (M8X1.25X20-MM)	
M	26	1	**8T-4908**	4	BOLT (M8X1.25X25-MM)	
M	27	1	**8T-9405**	2	BOLT-SOCKET HEAD (M4X0.7X16-MM)	
D	28	1	**6V-1363**		HOSE (0.3-M)	

D-ORDER BY THE METER
E-ORDER BY THE CENTIMETER
M-METRIC PART
Y-SEPARATE ILLUSTRATION

310-2644 **AIR CLEANER GP** *(contd.)* **i03627136**

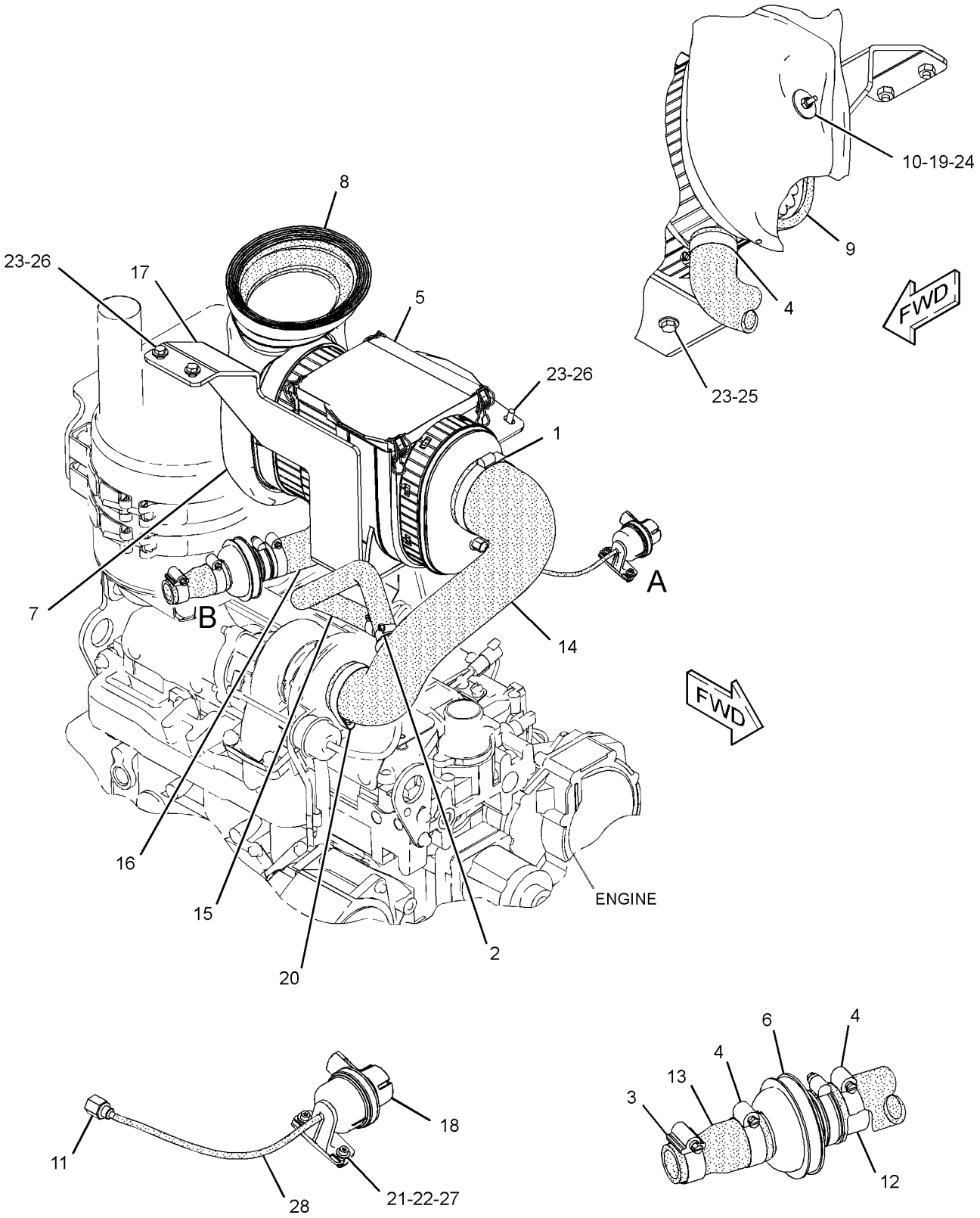

GRAPHIC #1 **<END>** g01625250

AIR INLET AND EXHAUST SYSTEM

332-6587 AIR CLEANER GP–TURBO

S/N: DPH1-UP

PART OF 339-4988, 339-4989, 339-4992, 339-4993 ENGINE AR

AN ATTACHMENT

SMCS-1051, 1054 **i03627137**

NOTE	REF NO	GRAPHIC REF	PART NUMBER	QTY	PART NAME 1 2 3 4 5 6 (PRODUCT LEVEL)	SEE PAGE
	1	1	**8T-6726**	1	CLAMP-HOSE	
	2	1	**110-2445**	1	CLAMP-HOSE	
	3	1	**124-6259**	3	CLAMP-HOSE	
Y	4	1	**234-1981**	1	AIR CLEANER GP (BASIC)	100
	5	1	**247-9730**	1	VALVE AS-CHECK (AIR CLEANER)	
	6	1	**248-3231**	1	DUCT-AIR	
	7	1	**249-5512**	1	SEAL	
	8	1	**253-4137**	1	SEAL	
	9	1	**253-4138**	1	STUD	
	10	1	**255-4692**	1	CONNECTOR-FILTER	
	11	1	**260-0634**	1	TUBE	
	12	1	**260-1393**	1	HOSE	
	13	1	**293-5352**	1	HOSE-AIR	
	14	1	**298-5901**	1	PLATE AS	
	15	1	**330-6734**	1	HOSE	
	16	1	**332-7333**	1	INDICATOR GP-AIR FILTER CHANGE	
		1	**205-1627**	1	BRACKET	
M	17	1	**129-3178**	1	LOCKNUT (M6X1-THD)	
	18	1	**295-5550**	1	CLAMP-BAND (CONSTANT TENSION)	
	19	1	**4B-4863**	4	WASHER (4.7X11X1.2-MM THK)	
M	20	1	**5C-8312**	2	NUT (M4X0.7-THD)	
	21	1	**5P-4116**	6	WASHER-HARD (8.8X20.5X2-MM THK)	
	22	1	**7X-0586**	2	WASHER-HARD (7.2X32X2-MM THK)	
M	23	1	**8T-4189**	2	BOLT (M8X1.25X20-MM)	
M	24	1	**8T-4908**	4	BOLT (M8X1.25X25-MM)	
M	25	1	**8T-9405**	2	BOLT-SOCKET HEAD (M4X0.7X16-MM)	
D	26	1	**6V-1363**		HOSE (0.3-M)	

D-ORDER BY THE METER
M-METRIC PART
Y-SEPARATE ILLUSTRATION

332-6587 **AIR CLEANER GP** ***(contd.)*** **i03627137**

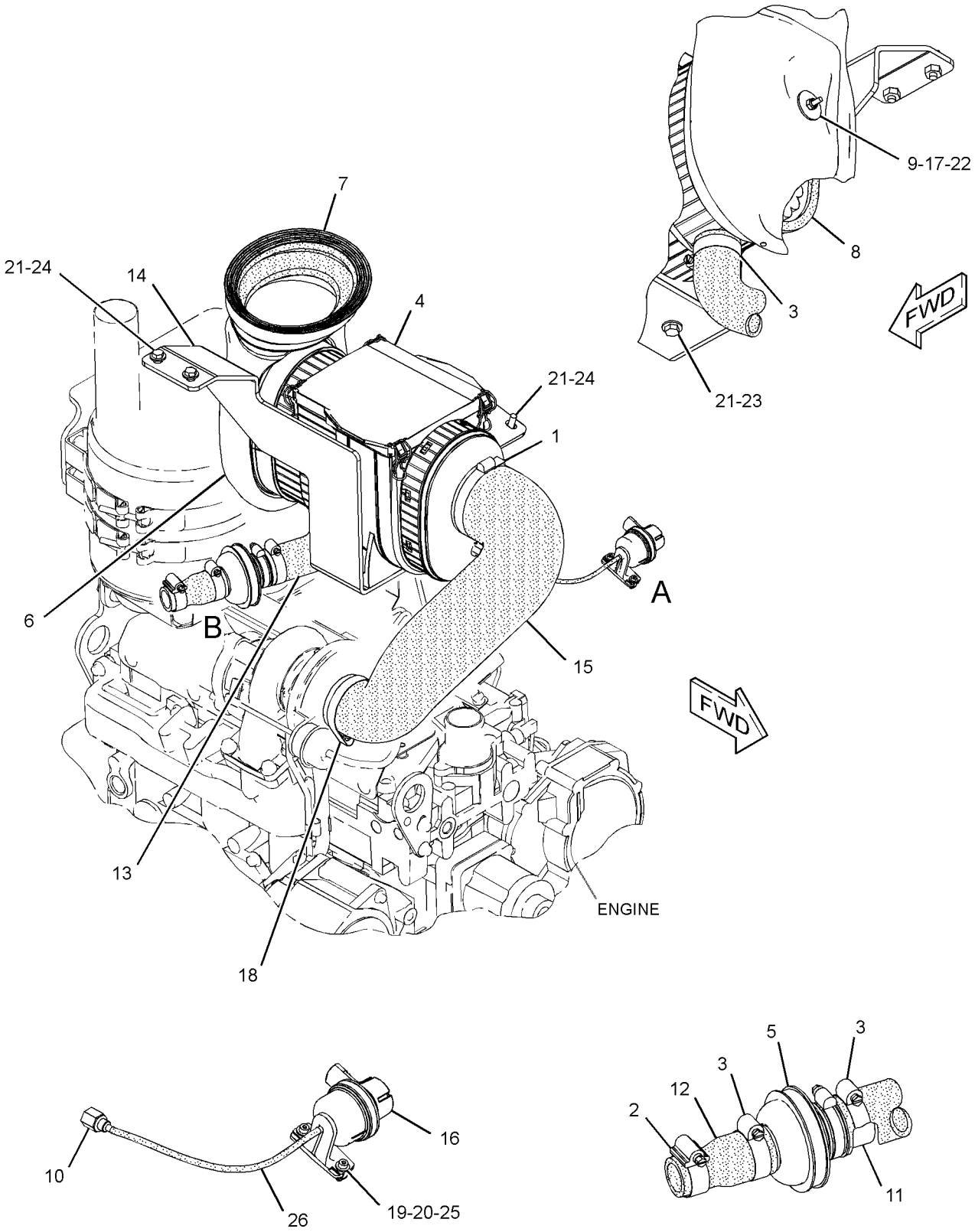

GRAPHIC #1 **<END>** g01625273

231-0149 COVER GP-INLET MANIFOLD

S/N: CRS1-UP
PART OF 322-1923, 322-1924 ENGINE AR-PRIMARY
AN ATTACHMENT

SMCS-1058 **i01892308**

NOTE	REF NO	GRAPHIC REF	PART NUMBER	QTY	PART NAME 1 2 3 4 5 6 (PRODUCT LEVEL)	SEE PAGE
	1	1	**6I-0572**	12	BOLT (M8X1.25X20-MM)	
	2	1	**114-2579**	3	GASKET	
	3	1	**115-1162**	3	PLATE	

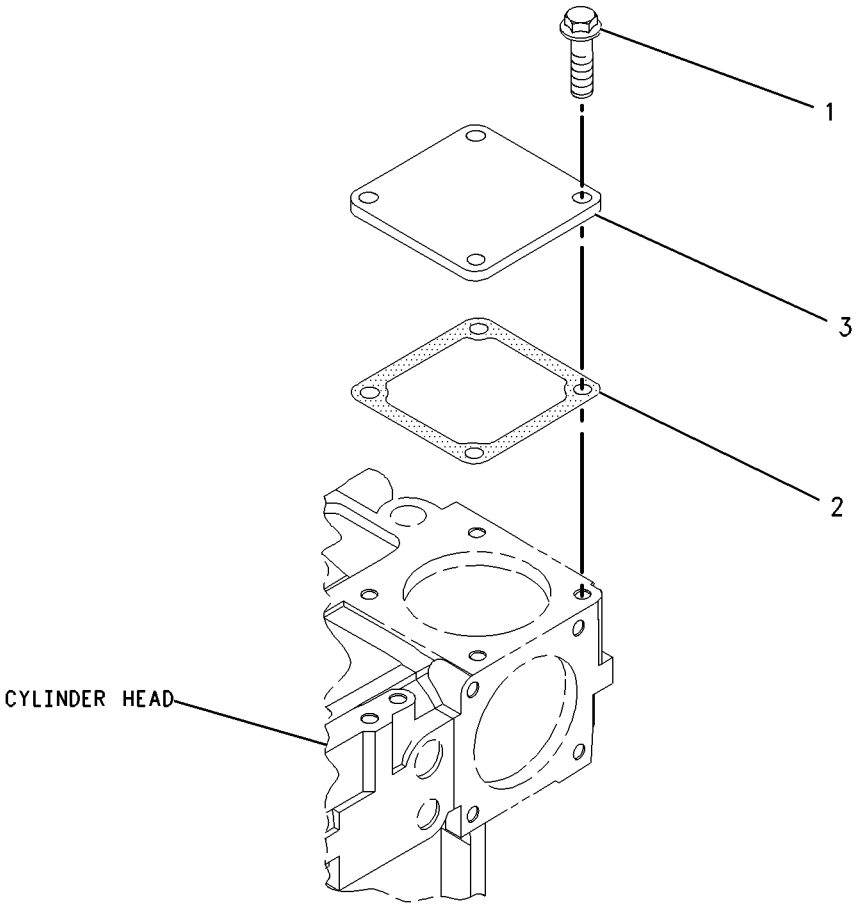

GRAPHIC #1 **<END>** g00986215

AIR INLET AND EXHAUST SYSTEM

329-0129 COVER GP-INLET MANIFOLD

S/N: C4Z1-UP

PART OF 321-7704, 321-7705 ENGINE AR-PRIMARY

AN ATTACHMENT

SMCS-1058 **i03130574**

NOTE	REF NO	GRAPHIC REF	PART NUMBER	QTY	PART NAME 1 2 3 4 5 6 (PRODUCT LEVEL)	SEE PAGE
	1	1	**111-8222**	4	BOLT (M8X16-MM)	
	2	1	**114-2579**	3	GASKET	
M	3	1	**124-3815**	8	BOLT (M8X16X1.25-MM)	
	4	1	**185-6627**	3	PLATE	

M-METRIC PART

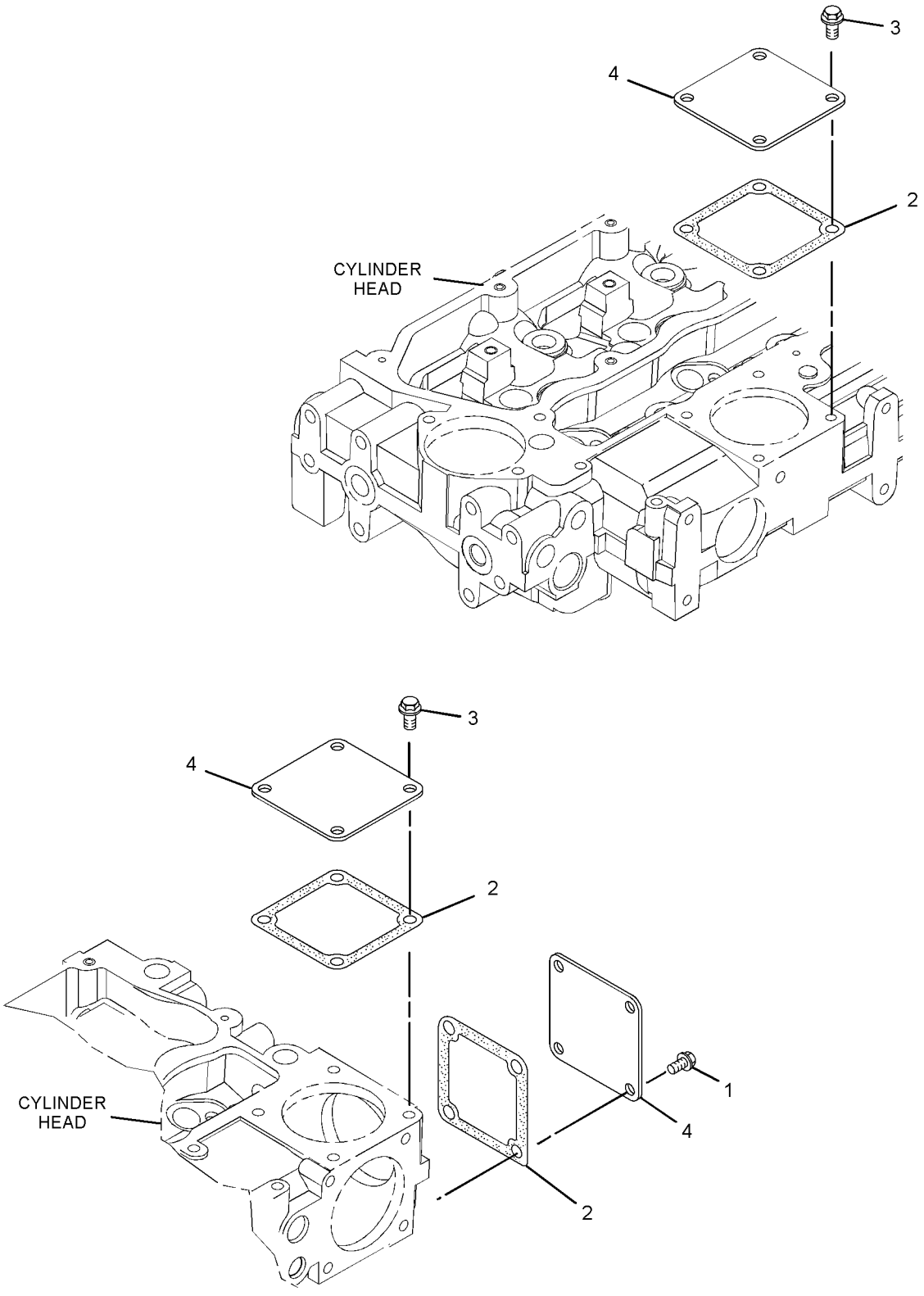

GRAPHIC #1 **<END>** g01619466

AIR INLET AND EXHAUST SYSTEM

210-6807 EXTENSION GP-EXHAUST

S/N: DPH1-UP

PART OF 339-4986, 339-4987, 339-4988, 339-4989, 339-4990, 339-4991, 339-4992, 339-4993 ENGINE AR

AN ATTACHMENT

SMCS-1061 **i02159788**

NOTE	REF NO	GRAPHIC REF	PART NUMBER	QTY	PART NAME 1 2 3 4 5 6 (PRODUCT LEVEL)	SEE PAGE
	1	1	**7E-3870**	1	CLAMP-MUFFLER	
	2	1	**239-2270**	1	PIPE-EXTENSION	

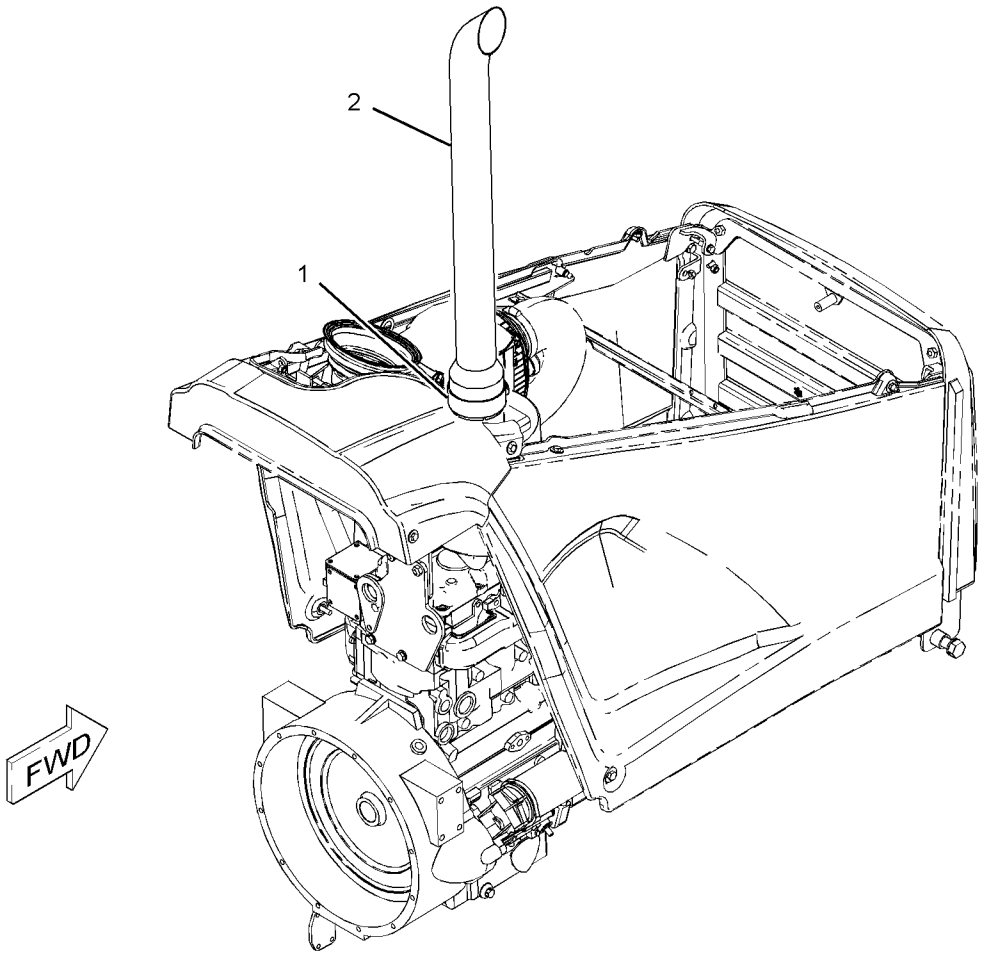

GRAPHIC #1 **<END>** g01098165

304-3920 LINES GP-AIR

S/N: DPH1-UP

PART OF 339-4988, 339-4989, 339-4992, 339-4993 ENGINE AR

AN ATTACHMENT

SMCS-1071 **i03035045**

NOTE	REF NO	GRAPHIC REF	PART NUMBER	QTY	PART NAME 1 2 3 4 5 6 (PRODUCT LEVEL)	SEE PAGE
	1	1	**141-1667**	2	CLAMP-HOSE	
	2	1	**234-3030**	1	GASKET	
	3	1	**263-5376**	1	HOSE	
	4	1	**301-9765**	1	TUBE	
	5	1	**301-9766**	1	HOSE	
	6	1	**304-3922**	1	TUBE	
	7	1	**305-6917**	1	TUBE AS	
	8	1	**311-2768**	1	HOSE	
	9	1	**317-5502**	1	HOSE	
	10	1	**208-9281**	5	BOLT-FLANGE HEAD (M8X1.25X20-MM)	
	11	1	**209-4573**	2	CLAMP-V BAND	
	12	1	**212-6934**	2	CLAMP	
	13	1	**215-4012**	1	CLAMP	
	14	1	**216-4983**	1	CLAMP	

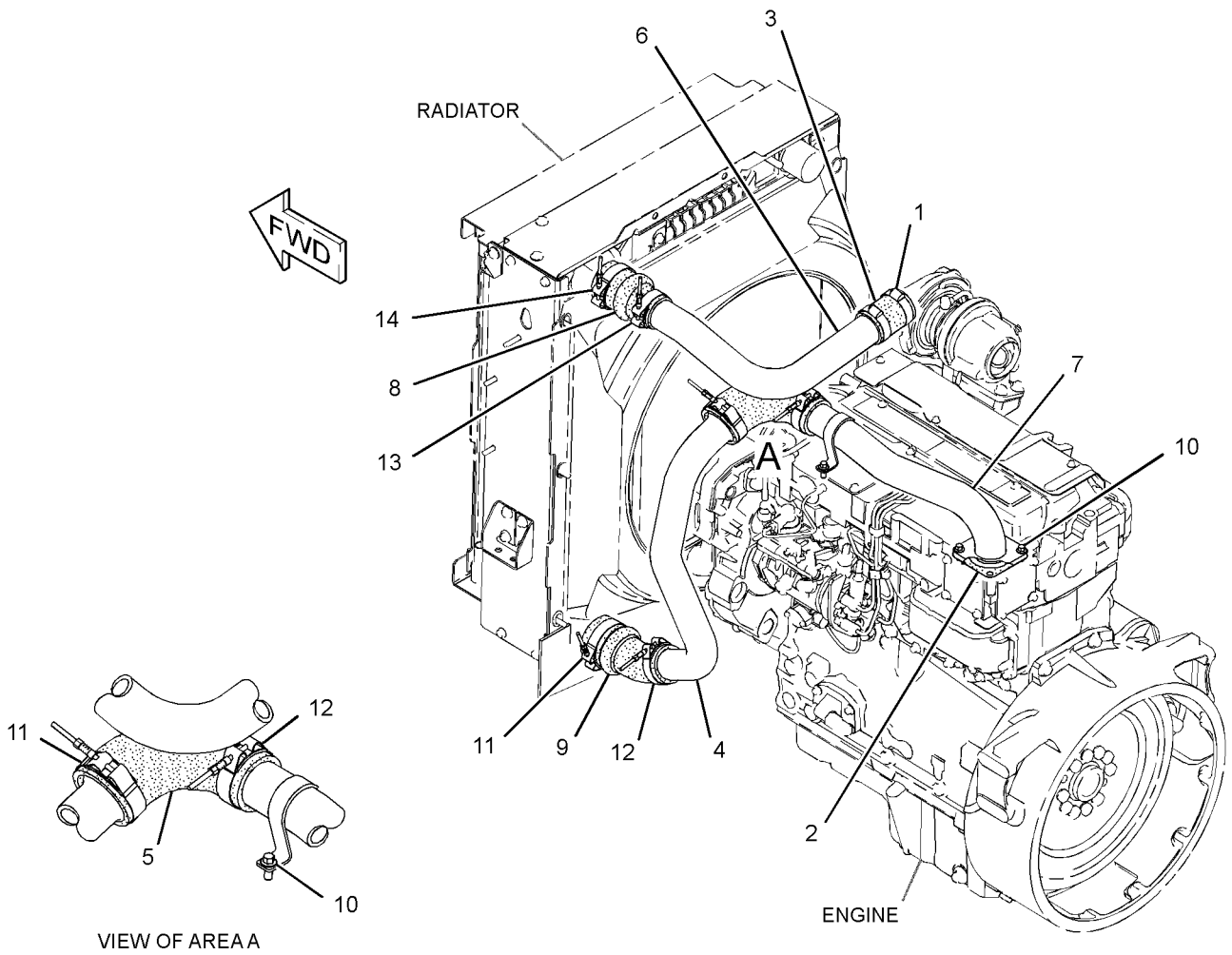

GRAPHIC #1 **<END>** g01574854

AIR INLET AND EXHAUST SYSTEM

325-3036 MUFFLER GP

S/N: DPH1-UP
PART OF 339-4986, 339-4987, 339-4988, 339-4989, 339-4990, 339-4991, 339-4992, 339-4993 ENGINE AR
AN ATTACHMENT

SMCS-1062 **i03105226**

NOTE	REF NO	GRAPHIC REF	PART NUMBER	QTY	PART NAME 1 2 3 4 5 6 (PRODUCT LEVEL)	SEE PAGE
	1	1	**6I-0364**	3	STUD (M10X1.5X30-MM)	
	2	1	**6I-0563**	3	NUT (M10X1.5-THD)	
	3	1	**237-0975**	1	PLATE AS	
M		1	**8T-3490**	4	NUT-WELD (M10X1.5-THD)	
	4	1	**247-4001**	1	PLATE AS	
	5	1	**254-2187**	2	CLAMP AS	
	6	1	**325-3495**	1	MUFFLER AS	
	7	1	**8T-4121**	16	WASHER-HARD (11X21X2.5-MM THK)	
M	8	1	**8T-4133**	4	NUT (M10X1.5-THD)	
M	9	1	**8T-4136**	4	BOLT (M10X1.5X25-MM)	
M	10	1	**8T-4195**	8	BOLT (M10X1.5X30-MM)	

M-METRIC PART

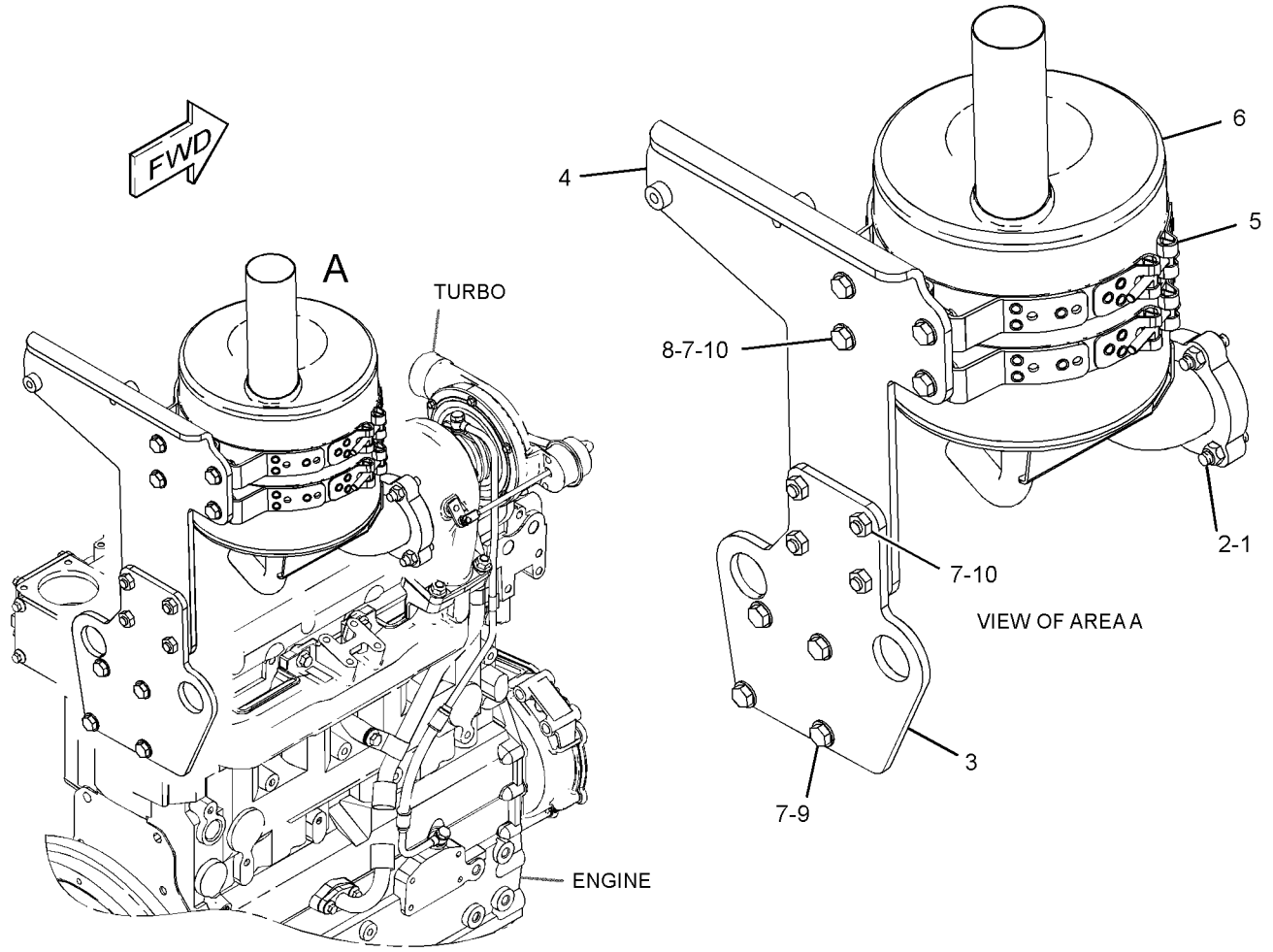

GRAPHIC #1 **<END>** g01592347

AIR INLET AND EXHAUST SYSTEM

237-3924 TURBOCHARGER GP

S/N: CRS1-UP

PART OF 322-1923, 322-1924 ENGINE AR-PRIMARY

AN ATTACHMENT

SMCS-1052, 1053 **i02903001**

NOTE	REF NO	GRAPHIC REF	PART NUMBER	QTY	PART NAME 1 2 3 4 5 6 (PRODUCT LEVEL)	SEE PAGE
M	1	1	**6I-0217**	2	BOLT (M8X1.25X20-MM)	
	2	1	**6I-0563**	4	NUT (M10X1.5-THD)	
	3	1	**6I-0572**	4	BOLT (M8X1.25X20-MM)	
	4	1	**106-8916**	2	BOLT (M6X16-MM)	
	5	1	**141-1667**	2	CLAMP-HOSE	
	6	1	**149-4236**	4	STUD	
	7	1	**174-9638**	8	BOLT	
	8	1	**194-5390**	1	GASKET-MANIFOLD	
	10	1	**225-8533**	1	GASKET (TURBOCHARGER)	
	11	1	**225-8534**	1	GASKET (TURBOCHARGER)	
	12	1	**225-8536**	1	GASKET (MANIFOLD)	
	13	1	**263-5376**	1	HOSE	
	14	1	**234-3030**	1	GASKET	
	15	1	**322-9616**	1	TUBE AS-TURBOCHARGER	
	15A	1	**225-8524**	2	BOLT-SPECIAL (BANJO)	
	15B	1	**225-8526**	4	WASHER (10.4X13.75X1.37-MM THK)	
	16	1	**237-3786**	1	TURBOCHARGER GP	
	17	1	**322-9615**	1	TUBE-TURBOCHARGER	
	18	1	**237-3794**	1	BOLT	
	19	1	**237-3921**	1	CLIP	
	20	1	**237-3922**	1	TUBE	
	21	1	**255-3447**	1	MANIFOLD-EXHAUST	

M-METRIC PART

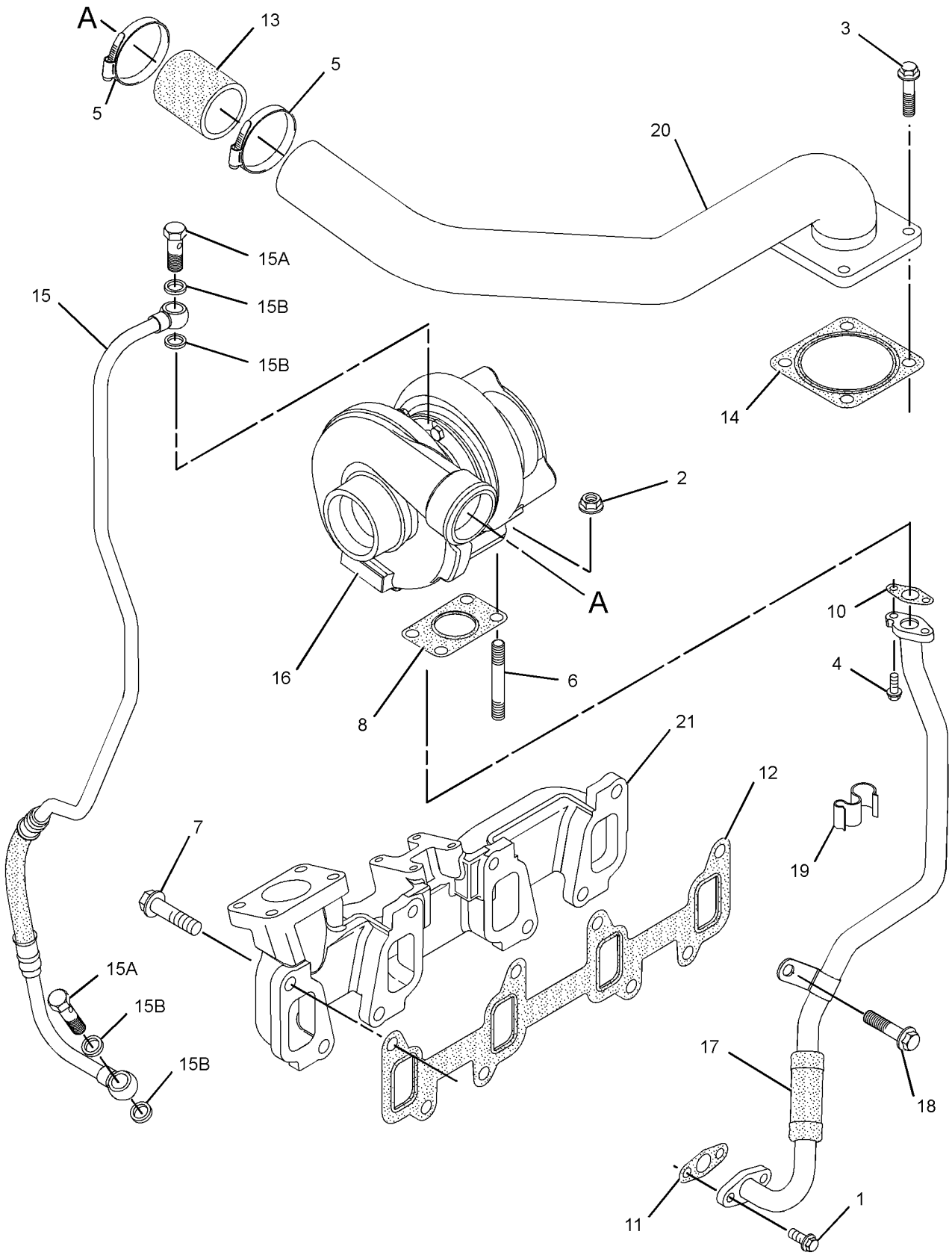

GRAPHIC #1 **<END>** g01450826

AIR INLET AND EXHAUST SYSTEM

326-9010 TURBOCHARGER GP

S/N: C4Z1-UP

PART OF 321-7704 ENGINE AR-PRIMARY

AN ATTACHMENT

SMCS-1052, 1053 **i03127785**

NOTE	REF NO	GRAPHIC REF	PART NUMBER	QTY	PART NAME 1 2 3 4 5 6 (PRODUCT LEVEL)	SEE PAGE
M	1	1	**6I-0217**	2	BOLT (M8X1.25X20-MM)	
	2	1	**6I-0563**	4	NUT (M10X1.5-THD)	
	3	1	**106-8916**	2	BOLT (M6X16-MM)	
	4	1	**147-5553**	4	STUD	
	5	1	**174-9638**	8	BOLT	
	6	1	**194-5390**	1	GASKET-MANIFOLD	
	7	1	**225-8533**	1	GASKET	
	8	1	**225-8534**	1	GASKET	
	9	1	**225-8536**	1	GASKET	
	10	1	**237-3794**	1	BOLT	
	11	1	**237-3921**	1	CLIP	
	12	1	**255-3447**	1	MANIFOLD-EXHAUST	
	13	1	**315-9721**	1	TURBOCHARGER	
	14	1	**322-9615**	1	TUBE-TURBOCHARGER	
	15	1	**322-9616**	1	TUBE AS-TURBOCHARGER	
	15A	1	**225-8524**	2	BOLT-SPECIAL (BANJO)	
	15B	1	**225-8526**	4	WASHER (10.4X13.75X1.37-MM THK)	

M-METRIC PART

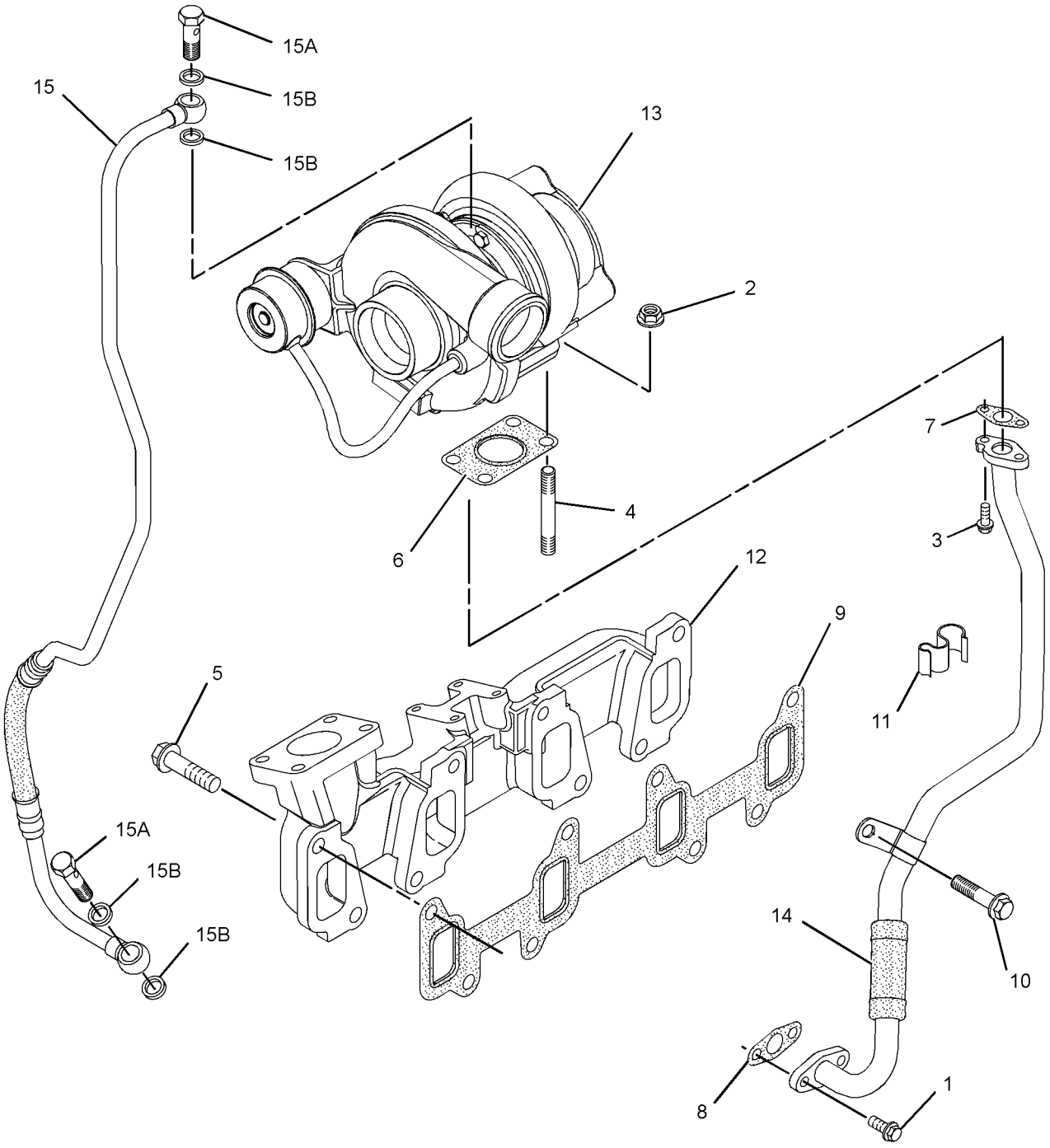

GRAPHIC #1 **<END>** g01615204

AIR INLET AND EXHAUST SYSTEM

326-9156 TURBOCHARGER GP

S/N: C4Z1-UP
PART OF 321-7705 ENGINE AR-PRIMARY
AN ATTACHMENT

SMCS-1052, 1053 **i03128316**

NOTE	REF NO	GRAPHIC REF	PART NUMBER	QTY	PART NAME 1 2 3 4 5 6 (PRODUCT LEVEL)	SEE PAGE
M	1	1	**6I-0217**	2	BOLT (M8X1.25X20-MM)	
	2	1	**6I-0563**	4	NUT (M10X1.5-THD)	
	3	1	**106-8916**	2	BOLT (M6X16-MM)	
	4	1	**147-5553**	4	STUD	
	5	1	**174-9638**	8	BOLT	
	6	1	**194-5390**	1	GASKET-MANIFOLD	
	7	1	**225-8533**	1	GASKET	
	8	1	**225-8534**	1	GASKET	
	9	1	**225-8536**	1	GASKET	
	10	1	**237-3794**	1	BOLT	
	11	1	**237-3921**	1	CLIP	
	12	1	**255-3447**	1	MANIFOLD-EXHAUST	
	13	1	**322-9615**	1	TUBE-TURBOCHARGER	
	14	1	**322-9616**	1	TUBE AS-TURBOCHARGER	
	14A	1	**225-8524**	2	BOLT-SPECIAL (BANJO)	
	14B	1	**225-8526**	4	WASHER (10.4X13.75X1.37-MM THK)	
	15	1	**326-9153**	1	TURBOCHARGER	

M-METRIC PART

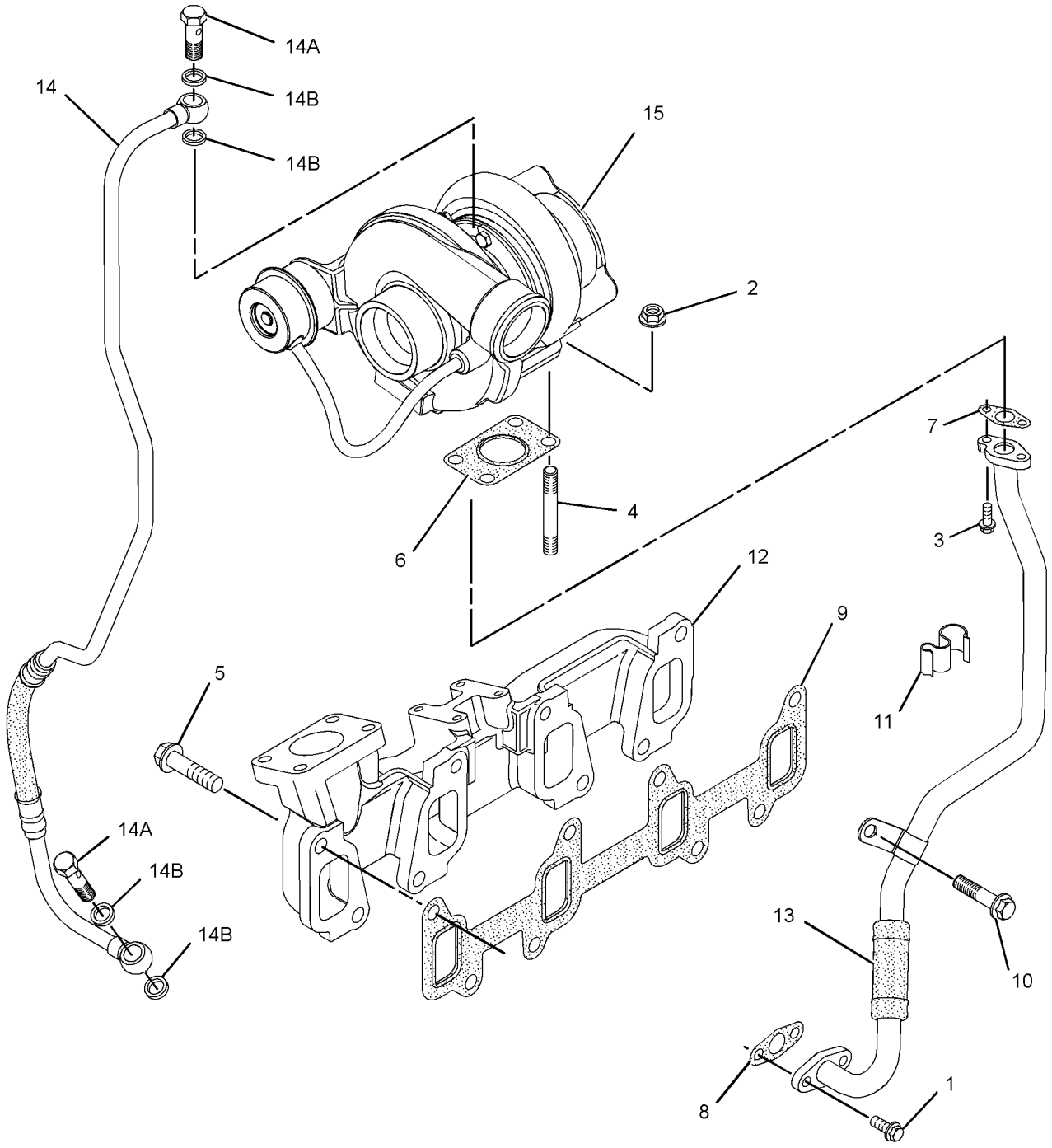

GRAPHIC #1 **<END>** g01615034

206-1640 CONTROL GP-GOVERNOR

S/N: DPH1-UP

PART OF 339-4986, 339-4987, 339-4988, 339-4989, 339-4990, 339-4991, 339-4992, 339-4993 ENGINE AR

AN ATTACHMENT

SMCS-1265 **i03627139**

NOTE	REF NO	GRAPHIC REF	PART NUMBER	QTY	PART NAME 1 2 3 4 5 6 (PRODUCT LEVEL)	SEE PAGE
	1	1	**151-4841**	3	BLOCK	
Y	2	1	**209-3378**	1	PEDAL GP-GOVERNOR (MECHANICAL)	606
	3	1	**235-0128**	1	CABLE AS	
	4	1	**239-1434**	1	PLATE	
C	5	1	**300-1702**	1	BRACKET AS	
		1	**6T-5017**	1	SPACER (2.11X12.7X24-MM THK)	
M		1	**8T-3612**	2	NUT-WELD (M8X1.25-THD)	
	6	1	**248-2707**	1	GROMMET	
M	7	1	**119-5025**	3	SCREW-FLAT HEAD (M6X1X25-MM)	
	8	1	**164-1395**	1	KNOB (GOVERNOR CONTROL)	
Y	9	1	**209-3367**	1	LEVER GP-GOVERNOR (HANDHELD)	594
C	11	1	**7K-1181**	4	STRAP-CABLE	
M	12	1	**8T-4138**	3	BOLT (M6X1X20-MM)	
	13	1	**8T-4205**	3	WASHER-HARD (7.2X14.5X2-MM THK)	
	14	1	**8T-4224**	4	WASHER-HARD (8.8X16X2-MM THK)	
CM	15	1	**8T-4908**	3	BOLT (M8X1.25X25-MM)	
CM	16	1	**7X-0818**	1	BOLT (M8X1.25X45-MM)	

C-CHANGE FROM PREVIOUS TYPE
M-METRIC PART
Y-SEPARATE ILLUSTRATION

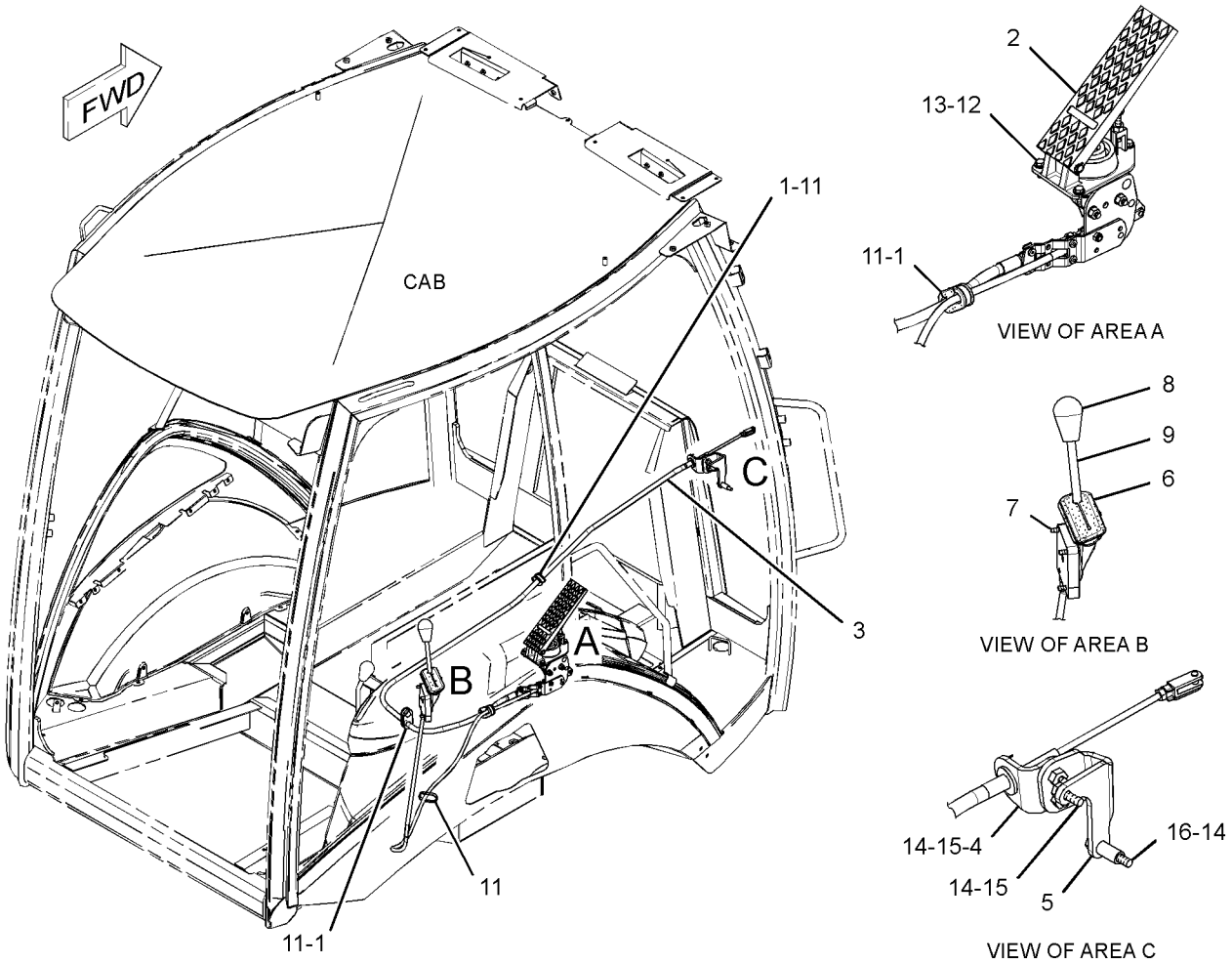

GRAPHIC #1 **<END>** g01347506

130-7092 FILTER GP-WATER SEP & FUEL

S/N: DPH1-UP

PART OF 287-3923 FILTER GP-WATER SEP & FUEL

AN ATTACHMENT

SMCS-1261, 1263 **i03527870**

NOTE	REF NO	GRAPHIC REF	PART NUMBER	QTY	PART NAME 1 2 3 4 5 6 (PRODUCT LEVEL)	SEE PAGE
	1	1	**118-8118**	1	RING-RETAINING	
	2	1	**118-8119**	1	NUT	
	3	1	**131-1812**	1	FILTER ELEMENT-FUEL (WATER SEPARATOR)	
					AVAILABLE REPAIR KIT(S):	
			121-4480	1	KIT-WATER BASE (WATER SEPARATOR)	
					(INCLUDES NUT, CAP, SEALS, PLUGS & RING)	

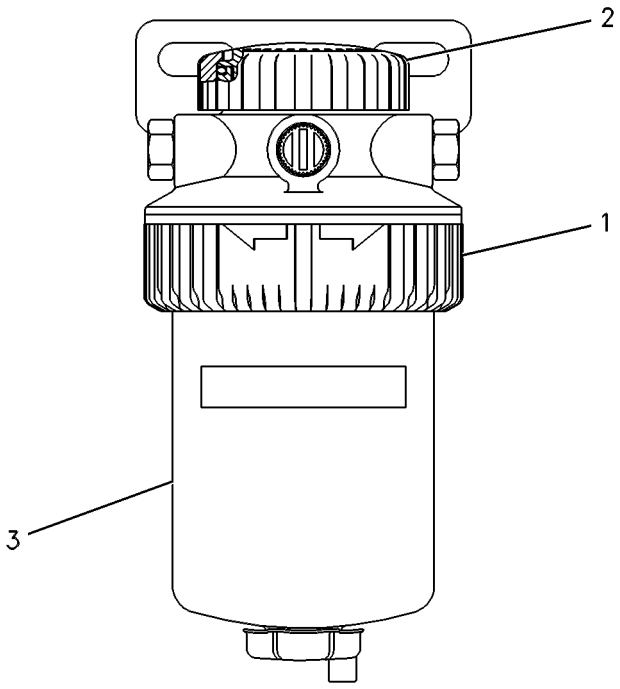

GRAPHIC #1 **<END>** g00259641

FUEL SYSTEM

287-3923 FILTER GP-WATER SEP & FUEL

S/N: DPH1-UP

AN ATTACHMENT

SMCS-1261, 1263 **i03500480**

NOTE	REF NO	GRAPHIC REF	PART NUMBER	QTY	PART NAME 1 2 3 4 5 6 (PRODUCT LEVEL)	SEE PAGE
	1	1	**1P-4278**	2	CLAMP-HOSE	
	2	1	**6V-3305**	1	ADAPTER-O-RING	
Y	3	1	**130-7092**	1	FILTER GP-WATER SEP & FUEL	119
	4	1	**151-1975**	2	CONNECTOR	
	5	1	**266-2275**	1	BRACKET AS	
M		1	**8T-3490**	4	NUT-WELD (M10X1.5-THD)	
	6	1	*169-5861*	2	PLUG AS	
					(EACH INCLUDES)	
		1	**3K-8460**	1	PLUG	
		1	**5P-7814**	1	SEAL-O-RING	
	7	1	**5P-7814**	3	SEAL-O-RING	
	8	1	**8T-4121**	2	WASHER-HARD (11X21X2.5-MM THK)	
M	9	1	**8T-4195**	2	BOLT (M10X1.5X30-MM)	
E	10	1	**5P-1420**		HOSE (23-CM)	

E-ORDER BY THE CENTIMETER
M-METRIC PART
Y-SEPARATE ILLUSTRATION

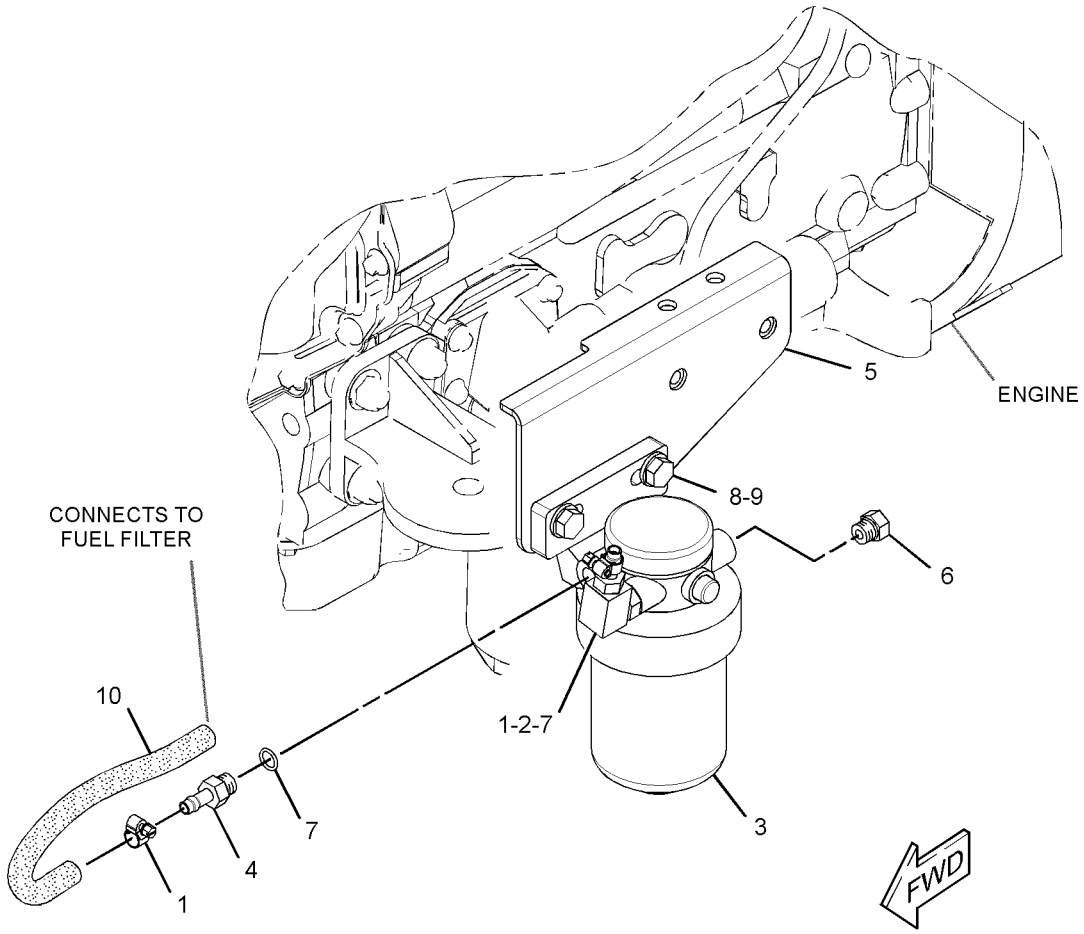

GRAPHIC #1 **<END>** g01817393

FUEL SYSTEM

326-9012 LINES GP-FUEL

S/N: C4Z1-UP

PART OF 321-7704, 321-7705 ENGINE AR-PRIMARY

AN ATTACHMENT

SMCS-1274 **i03127784**

NOTE	REF NO	GRAPHIC REF	PART NUMBER	QTY	PART NAME 1 2 3 4 5 6 (PRODUCT LEVEL)	SEE PAGE
	1	1	**8T-7876**	1	SEAL-O-RING	
	2	1	**035-8017**	1	UNION	
	3	1	**067-6264**	1	FITTING-FLARED	
	4	1	**067-6265**	1	FITTING-BRASS	
	5	1	**232-3126**	1	CLIP	
	6	1	**236-2144**	1	TUBE AS	
	6A	1	**067-6999**	1	FERRULE	
	7	1	**247-4884**	1	TUBE AS	
	8	1	**320-9213**	1	CONNECTION	

326-9012 **LINES GP-FUEL** *(contd.)* **i03127784**

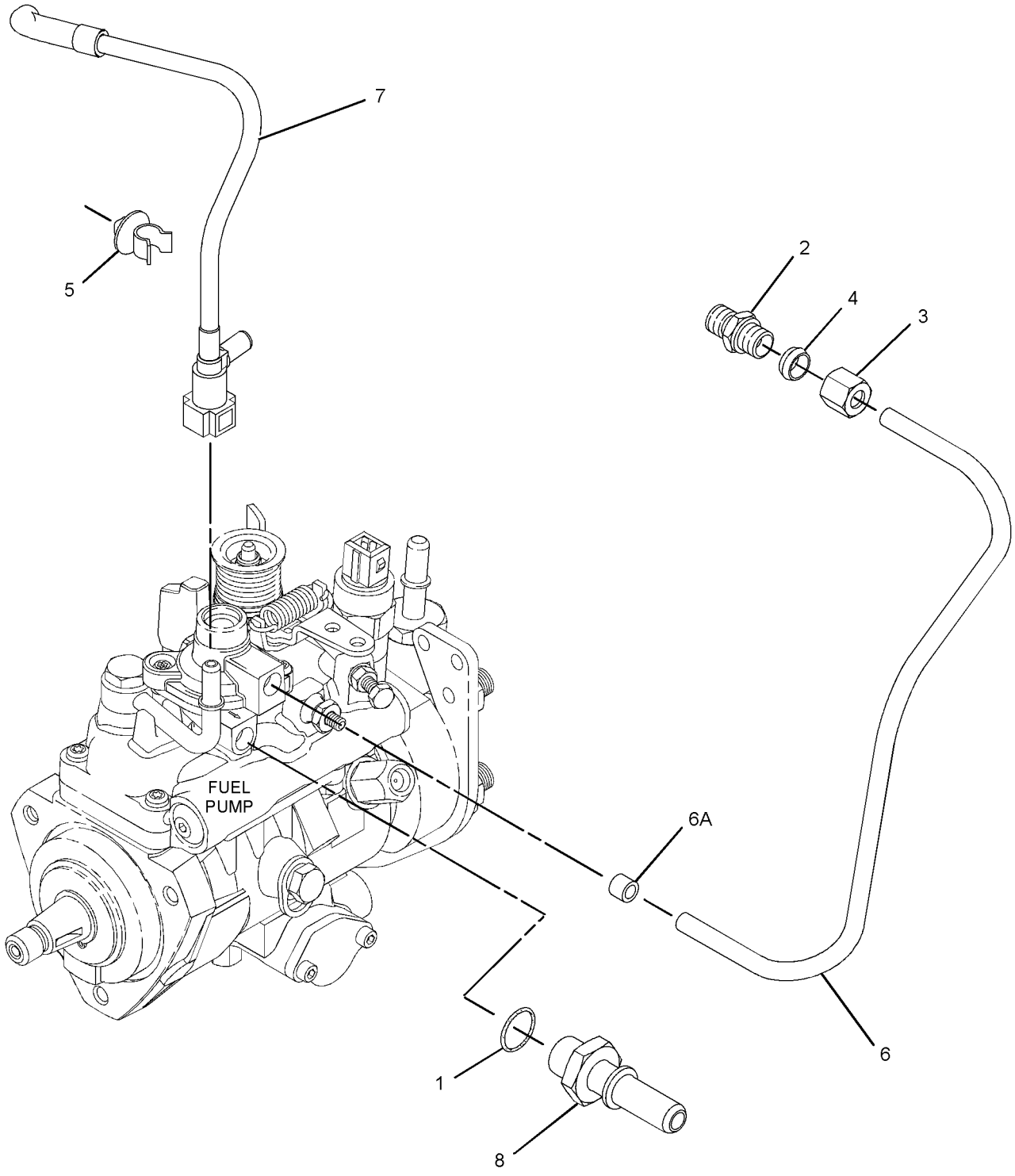

GRAPHIC #1 **<END>** g01613613

FUEL SYSTEM

345-7477 LINES GP-FUEL

S/N: DPH1-UP

PART OF 339-4986, 339-4987, 339-4990, 339-4991 ENGINE AR

AN ATTACHMENT

SMCS-1274 **i03663340**

NOTE	REF NO	GRAPHIC REF	PART NUMBER	QTY	PART NAME 1 2 3 4 5 6 (PRODUCT LEVEL)	SEE PAGE
B	1	1	**1P-4278**	10	CLAMP-HOSE	
	2	1	**7K-1181**	1	STRAP-CABLE	
	3	1	**151-4841**	1	BLOCK	
	4	1	**215-9515**	1	CONNECTOR-HOSE (QUICK DISCONNECT)	
	5	1	**222-3518**	1	TEE	
	6	1	**224-5917**	1	CONNECTOR-SPECIAL	
	7	1	**6K-8178**	1	CLIP	
	8	1	**7C-4354**	1	CLIP	
	9	1	**7S-1912**	1	CLIP	
	10	1	**8M-2773**	3	CLIP	
	11	1	**8T-4121**	2	WASHER-HARD (11X21X2.5-MM THK)	
M	12	1	**8T-4133**	1	NUT (M10X1.5-THD)	
M	13	1	**8T-4136**	1	BOLT (M10X1.5X25-MM)	
M	14	1	**8T-4179**	1	BOLT (M12X1.75X20-MM)	
M	15	1	**8T-4189**	1	BOLT (M8X1.25X20-MM)	
	16	1	**8T-4223**	1	WASHER-HARD (13.5X25.5X3-MM THK)	
	17	1	**8T-4224**	1	WASHER-HARD (8.8X16X2-MM THK)	
	18	1	**9M-8406**	1	CLIP	
E	19	1	**5P-1442**		HOSE (117.5-CM)	
E	20	1	**5P-1420**		HOSE (118-CM)	
E	20A	1	**5P-1420**		HOSE (13.5-CM)	
E	20B	1	**5P-1420**		HOSE (55-CM)	
E	20C	1	**5P-1420**		HOSE (59-CM)	

B-USE AS REQUIRED
E-ORDER BY THE CENTIMETER
M-METRIC PART

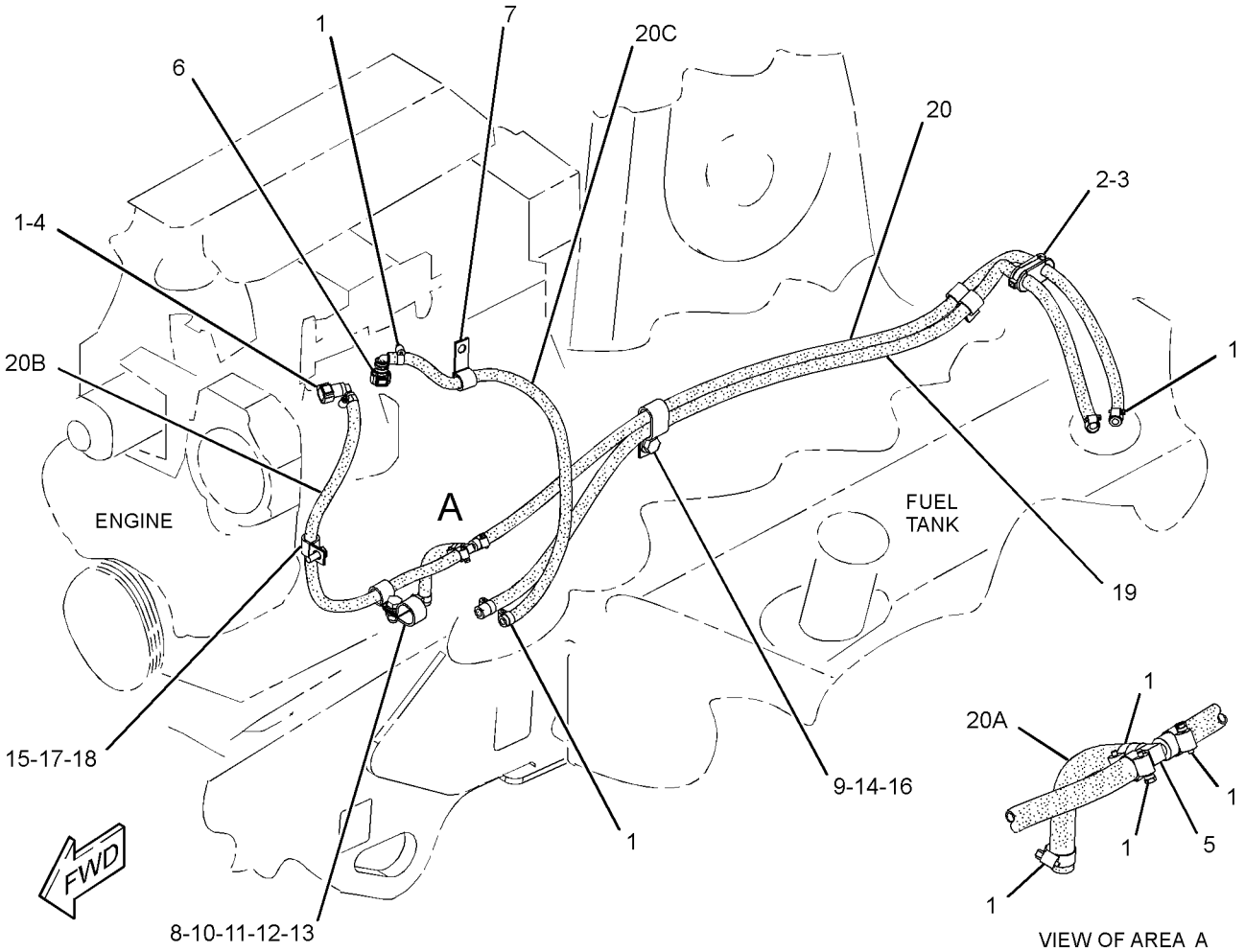

GRAPHIC #1 **<END>** g01967182

345-7478 LINES GP-FUEL

S/N: DPH1-UP
PART OF 339-4988, 339-4989, 339-4992, 339-4993 ENGINE AR
AN ATTACHMENT

SMCS-1274 **i03664242**

NOTE	REF NO	GRAPHIC REF	PART NUMBER	QTY	PART NAME 1 2 3 4 5 6 (PRODUCT LEVEL)	SEE PAGE
B	1	1	**1P-4278**	14	CLAMP-HOSE	
	2	1	**7K-1181**	2	STRAP-CABLE	
	3	1	**151-4841**	1	BLOCK	
	4	1	**215-9515**	2	CONNECTOR-HOSE (QUICK DISCONNECT)	
	5	1	**222-3518**	2	TEE	
	6	1	**224-5917**	1	CONNECTOR-SPECIAL	
	7	1	**6K-8178**	1	CLIP	
	8	1	**7C-4354**	1	CLIP	
	9	1	**7S-1912**	1	CLIP	
	10	1	**8M-2773**	2	CLIP	
	11	1	**8T-4121**	2	WASHER-HARD (11X21X2.5-MM THK)	
M	12	1	**8T-4133**	1	NUT (M10X1.5-THD)	
M	13	1	**8T-4136**	1	BOLT (M10X1.5X25-MM)	
M	14	1	**8T-4179**	1	BOLT (M12X1.75X20-MM)	
M	15	1	**8T-4189**	1	BOLT (M8X1.25X20-MM)	
	16	1	**8T-4223**	1	WASHER-HARD (13.5X25.5X3-MM THK)	
	17	1	**8T-4224**	1	WASHER-HARD (8.8X16X2-MM THK)	
	18	1	**9M-8406**	2	CLIP	
E	19	1	**5P-1442**		HOSE (118-CM)	
E	20	1	**5P-1420**		HOSE (118-CM)	
E	20A	1	**5P-1420**		HOSE (59-CM)	
E	20B	1	**5P-1420**		HOSE (32-CM)	
E	20C	1	**5P-1420**		HOSE (8.5-CM)	
E	20D	1	**5P-1420**		HOSE (45-CM)	
E	20E	1	**5P-1420**		HOSE (13.5-CM)	

B-USE AS REQUIRED
E-ORDER BY THE CENTIMETER
M-METRIC PART

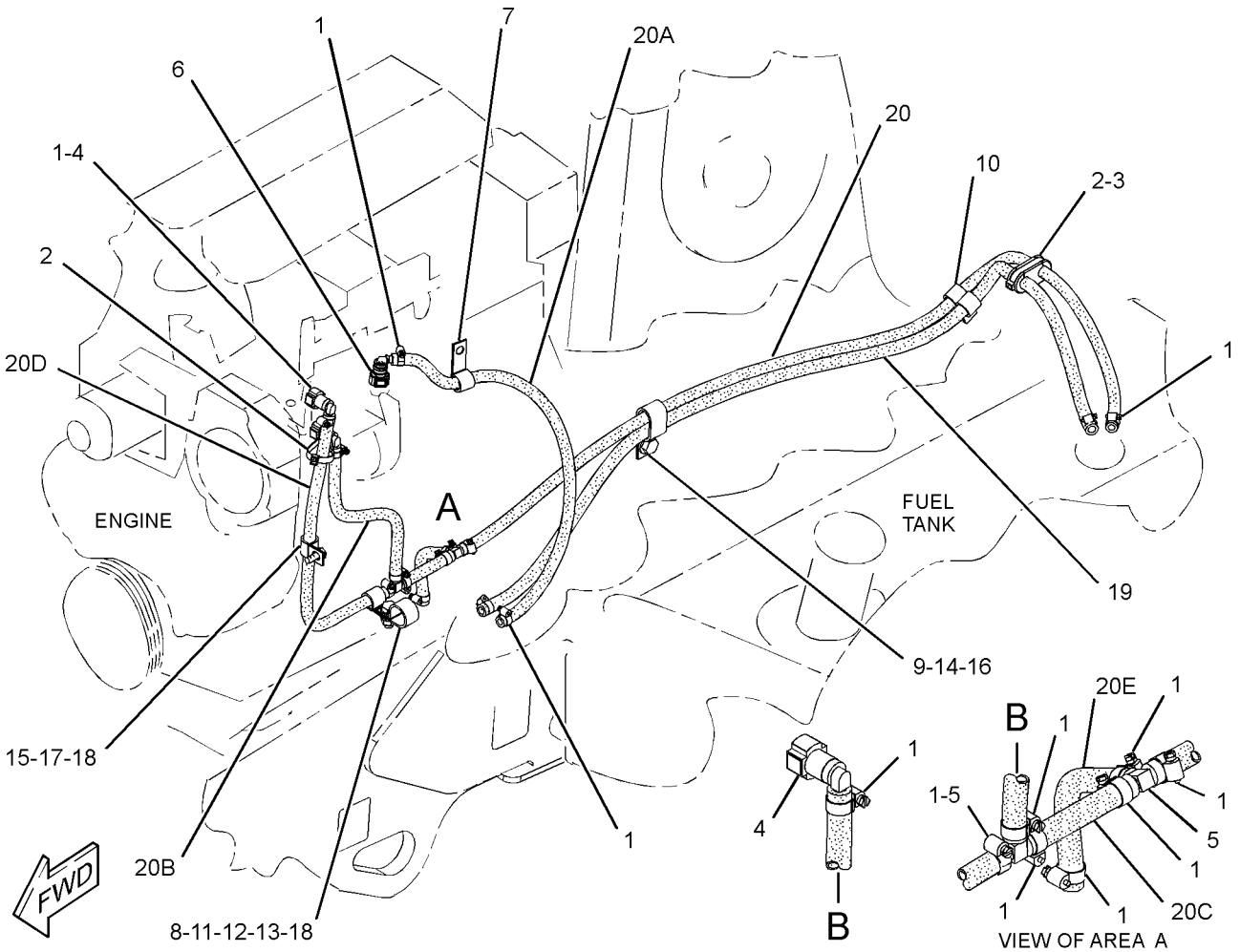

GRAPHIC #1

<END>

g01967298

FUEL SYSTEM

247-4885 LINES GP-FUEL FILTER

S/N: CRS1-UP

PART OF 322-1923, 322-1924 ENGINE AR-PRIMARY

AN ATTACHMENT

SMCS-1261, 1274 **i02225714**

NOTE	REF NO	GRAPHIC REF	PART NUMBER	QTY	PART NAME 1 2 3 4 5 6 (PRODUCT LEVEL)	SEE PAGE
	1	1	**247-4884**	1	TUBE AS	
	2	1	**232-3126**	1	CLIP	

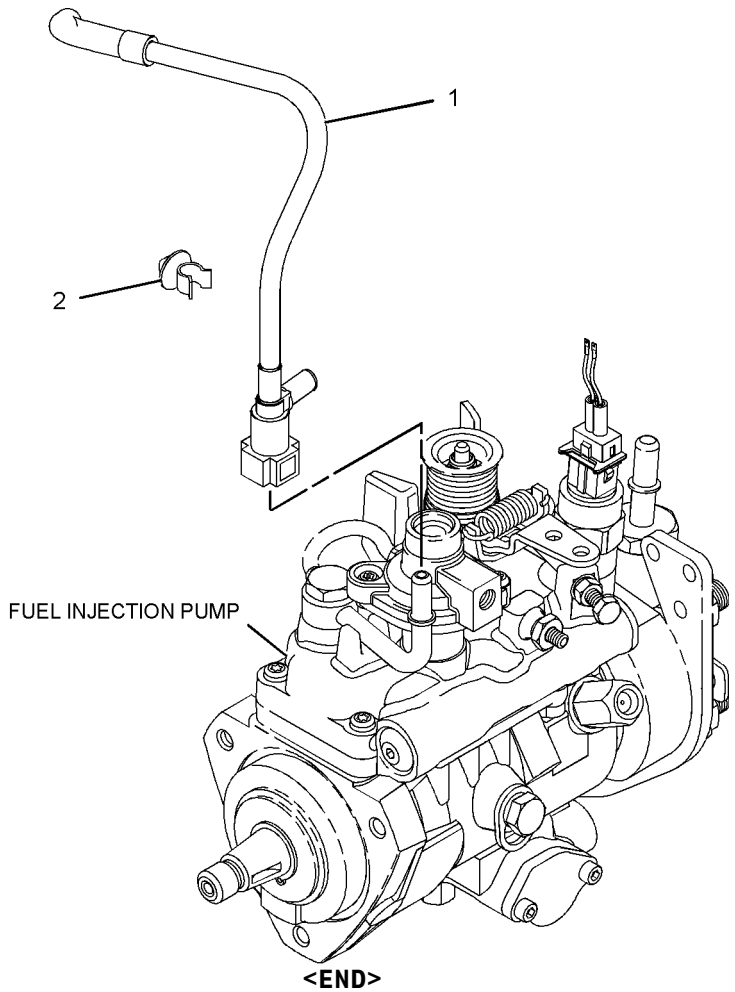

GRAPHIC #1 **<END>** g01123693

236-8228 PUMP GP-FUEL INJECTION

S/N: CRS1-UP
PART OF 236-8229 PUMP GP-FUEL INJECTION
AN ATTACHMENT

SMCS-1251, 1290 **i01999156**

NOTE	REF NO	GRAPHIC REF	PART NUMBER	QTY	PART NAME 1 2 3 4 5 6 (PRODUCT LEVEL)	SEE PAGE
	1	1	**152-3968**	1	SEAL-O-RING	
	2	1	**176-6219**	1	VALVE GP-SOLENOID (12-VOLT) (AIR FUEL RATIO CONTROL)	
	3	1	**193-0161**	1	CABLE AS-ADAPTER	

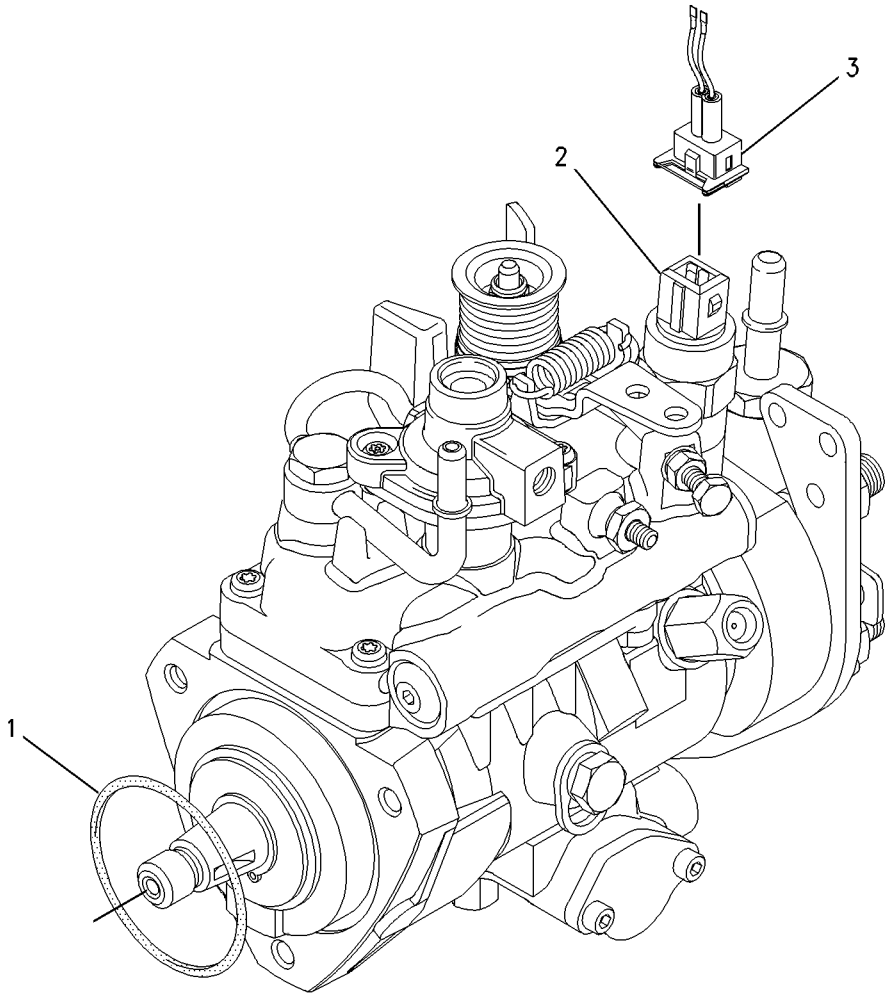

GRAPHIC #1 **<END>** g01006440

236-8229 PUMP GP-FUEL INJECTION

S/N: CRS1-UP
PART OF 322-1924 ENGINE AR-PRIMARY
AN ATTACHMENT

SMCS-1251, 1290 **i03601387**

NOTE	REF NO	GRAPHIC REF	PART NUMBER	QTY	PART NAME 1 2 3 4 5 6 (PRODUCT LEVEL)	SEE PAGE
M	1	1	**6I-0217**	1	BOLT (M8X1.25X20-MM)	
M	2	1	**6I-0260**	3	BOLT (M8X1.25X25-MM)	
	3	1	**6I-0291**	1	NUT (M8X1.25-THD)	
	4	1	**035-8017**	1	UNION	
	5	1	**067-6264**	1	FITTING-FLARED	
	6	1	**067-6265**	1	FITTING-BRASS	
M	7	1	**100-4830**	1	BOLT (M10X1.5X20-MM)	
	8	1	**111-3422**	1	NUT	
	9	1	**111-3423**	1	WASHER	
	10	1	**140-8714**	1	CLIP	
	11	1	**230-7886**	1	TUBE AS	
	11A	1	**067-6999**	1	FERRULE	
	11B	1	**106-8835**	1	NUT	
	12	1	**230-8989**	1	GEAR-FUEL PUMP (68-TEETH)	
	13	1	**230-8995**	1	TUBE AS (CYL NO.1)	
	14	1	**230-8996**	1	TUBE AS (CYL NO.2)	
	15	1	**230-8997**	1	TUBE AS (CYL NO.3)	
	16	1	**230-8998**	1	TUBE AS (CYL NO.4)	
	17	2	**232-1323**	1	PLUG-CUP	
	18	1	**232-1328**	1	CAP (FUEL INJECTOR)	
	19	1	**232-1794**	3	HOSE	
	20	1	**232-2725**	2	CLIP	
	21	1	**232-2726**	1	CLIP	
	22	1	**232-3149**	1	WASHER (8.35X16.85X1.55-MM THK) (SEALING)	
	23	1	**232-3157**	1	BRACKET	
	24	1	**238-8671**	4	CLAMP-INJECTOR	
	25	1	**232-3274**	4	BOLT (M8X1.25X48.1-MM)	
	26	2	**235-1790**	1	SWITCH-TEMPERATURE (TIMING ADVANCE)	
	27	1	**236-1674**	4	INJECTOR AS-FUEL	
					(EACH INCLUDES)	
	27A	1	**236-1673**	1	NOZZLE	
	27B	1	**140-8718**	1	WASHER	
	27C	1	**275-1038**	1	SEAL-O-RING	
Y	28	1	**236-8228**	1	PUMP GP-FUEL INJECTION	128
	29	1	**318-2365**	1	CLIP	

M-METRIC PART
Y-SEPARATE ILLUSTRATION

236-8229 **PUMP GP-FUEL INJECTION** *(contd.)* **i03601387**

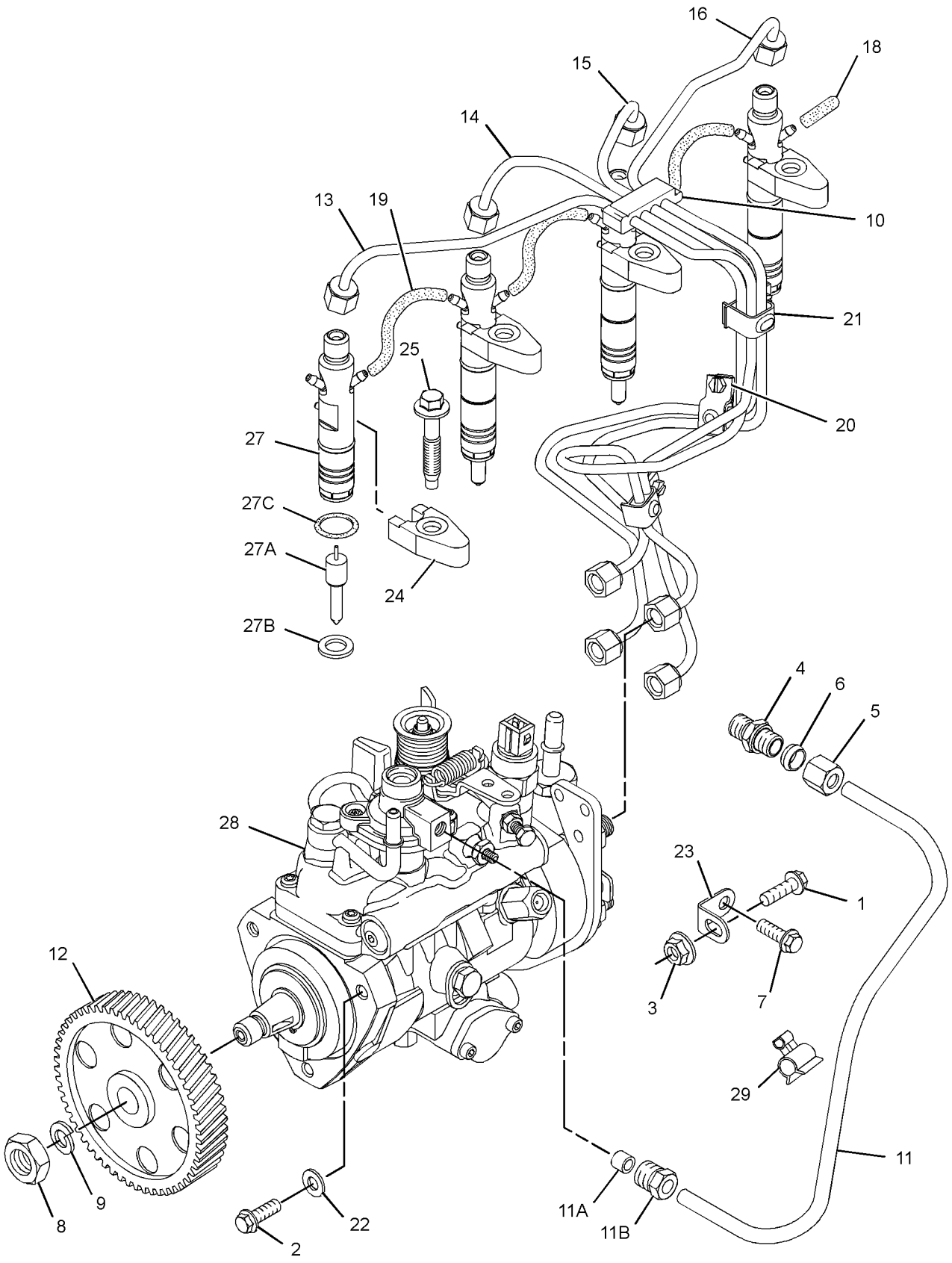

GRAPHIC #1 g01619129

236-8229 **PUMP GP-FUEL INJECTION** *(contd.)* **i03601387**

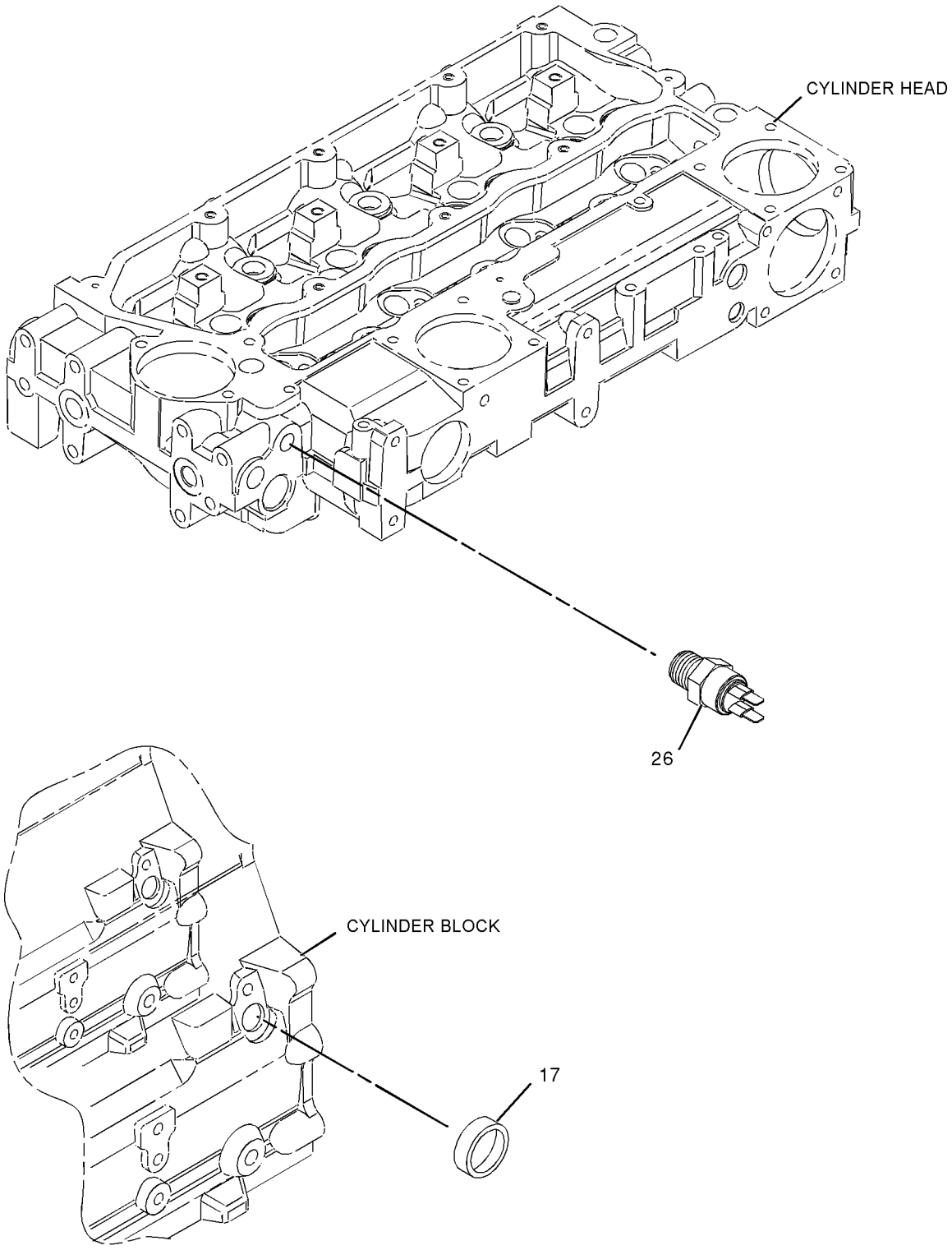

GRAPHIC #2 **<END>** g01022785

FUEL SYSTEM

237-5214 PUMP GP-FUEL INJECTION

S/N: CRS1-UP
PART OF 322-1923 ENGINE AR-PRIMARY
AN ATTACHMENT

SMCS-1251, 1290 **i03145140**

NOTE	REF NO	GRAPHIC REF	PART NUMBER	QTY	PART NAME 1 2 3 4 5 6 (PRODUCT LEVEL)	SEE PAGE
M	1	1	**6I-0217**	1	BOLT (M8X1.25X20-MM)	
M	2	1	**6I-0260**	3	BOLT (M8X1.25X25-MM)	
	3	1	**6I-0291**	1	NUT (M8X1.25-THD)	
C	4	1	**035-8017**	1	UNION	
C	5	1	**067-6264**	1	FITTING-FLARED	
C	6	1	**067-6265**	1	FITTING-BRASS	
M	7	1	**100-4830**	1	BOLT (M10X1.5X20-MM)	
	8	1	**111-3422**	1	NUT	
	9	1	**111-3423**	1	WASHER	
M	10	1	**124-3815**	1	BOLT (M8X16X1.25-MM)	
	11	1	**140-8714**	1	CLIP	
C	12	1	**318-2365**	1	CLIP	
	13	1	**230-8989**	1	GEAR-FUEL PUMP (68-TEETH)	
	14	1	**230-8995**	1	TUBE AS (CYL NO.1)	
	15	1	**230-8996**	1	TUBE AS (CYL NO.2)	
	16	1	**230-8997**	1	TUBE AS (CYL NO.3)	
	17	1	**230-8998**	1	TUBE AS (CYL NO.4)	
	18	2	**232-1323**	1	PLUG-CUP	
	19	1	**232-1328**	1	CAP	
	20	2	**232-1793**	1	CABLE	
	21	1	**232-1794**	3	HOSE	
	22	1	**232-2725**	1	CLIP	
	23	1	**232-2726**	1	CLIP	
	25	1	**232-3149**	3	WASHER (8.35X16.85X1.55-MM THK)	
	26	1	**232-3157**	1	BRACKET	
	27	1	**232-3274**	4	BOLT (M8X1.25X48.1-MM)	
	28	2	**235-1790**	1	SWITCH-TEMPERATURE (TIMING ADVANCE)	
	29	1	**236-1674**	4	INJECTOR AS-FUEL	
					(EACH INCLUDES)	
		1	**236-1673**	1	NOZZLE	
		1	**275-1038**	1	SEAL-O-RING	
	29A	1	**140-8718**	1	WASHER	
C	30	1	**236-2144**	1	TUBE AS	
	30A	1	**067-6999**	1	FERRULE	
C	31	1	**238-8671**	4	CLAMP-INJECTOR	
	32	1	**240-5571**	1	BRACKET	
C	33	1	**249-9226**	1	PUMP GP-FUEL INJECTION	
	33A	1	**152-3968**	1	SEAL-O-RING	
	33B	1	**176-6219**	1	VALVE GP-SOLENOID (12-VOLT)	

C-CHANGE FROM PREVIOUS TYPE
M-METRIC PART

237-5214 **PUMP GP-FUEL INJECTION** *(contd.)* **i03145140**

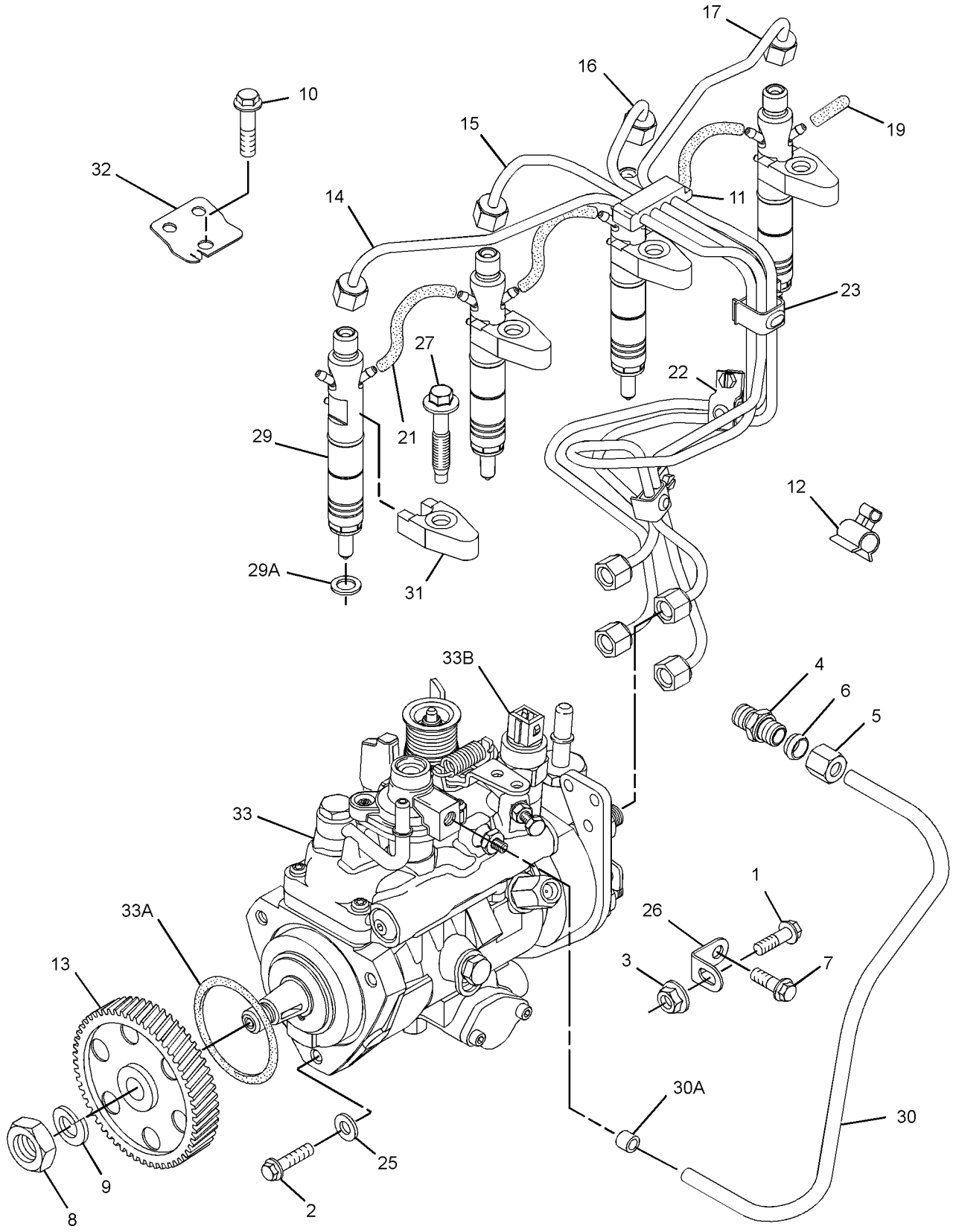

GRAPHIC #1 g01621304

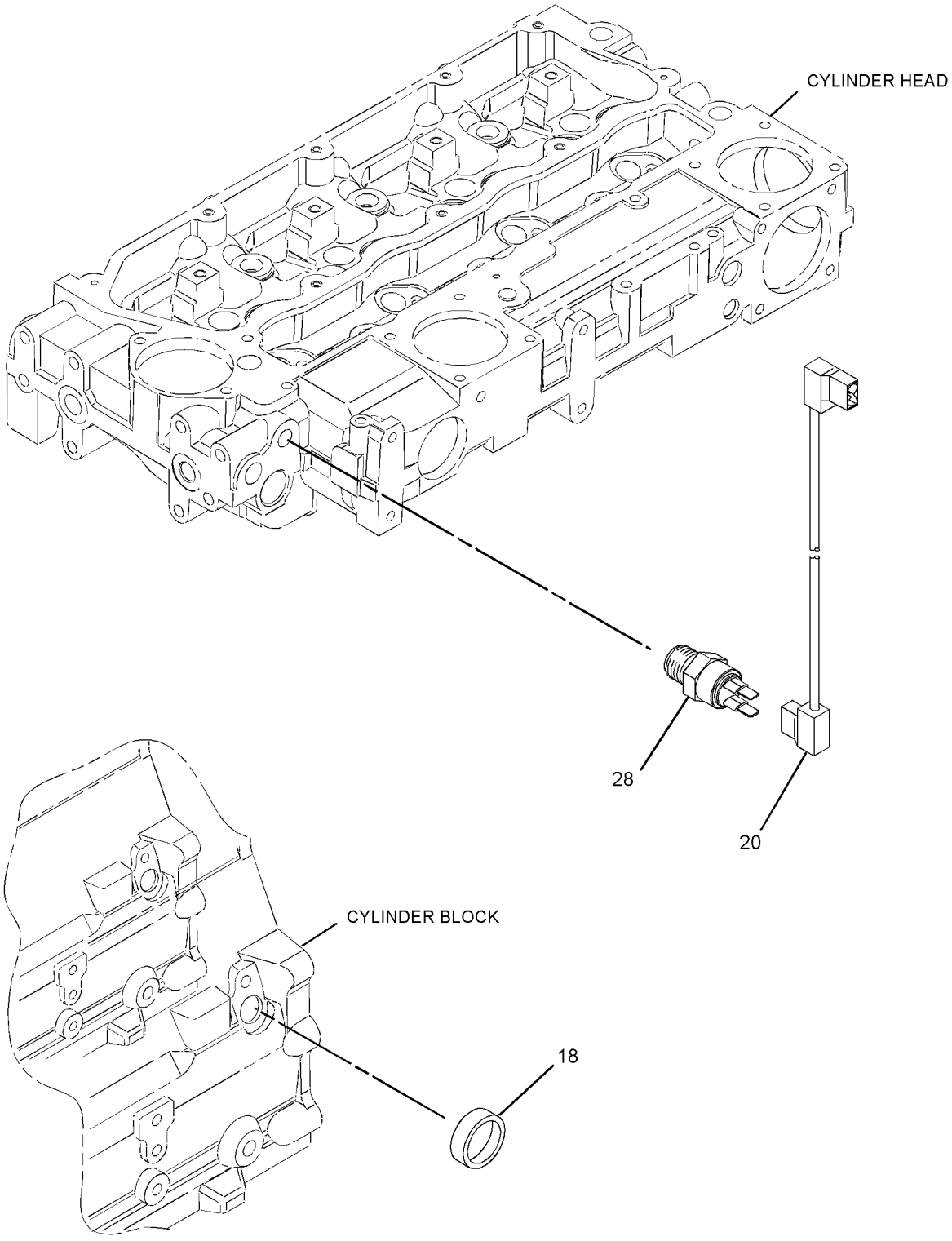

GRAPHIC #2 **<END>** g01347408

326-8993 PUMP GP-FUEL INJECTION

S/N: C4Z1-UP
PART OF 326-9006 PUMP GP-FUEL INJECTION
AN ATTACHMENT

SMCS-1251, 1290 **i03138002**

NOTE	REF NO	GRAPHIC REF	PART NUMBER	QTY	PART NAME 1 2 3 4 5 6 (PRODUCT LEVEL)	SEE PAGE
	1	1	**111-3422**	1	NUT	
	2	1	**111-3423**	1	WASHER	
	3	1	**152-3968**	1	SEAL-O-RING	
	4	1	**176-6219**	1	VALVE GP-SOLENOID (12-VOLT)	

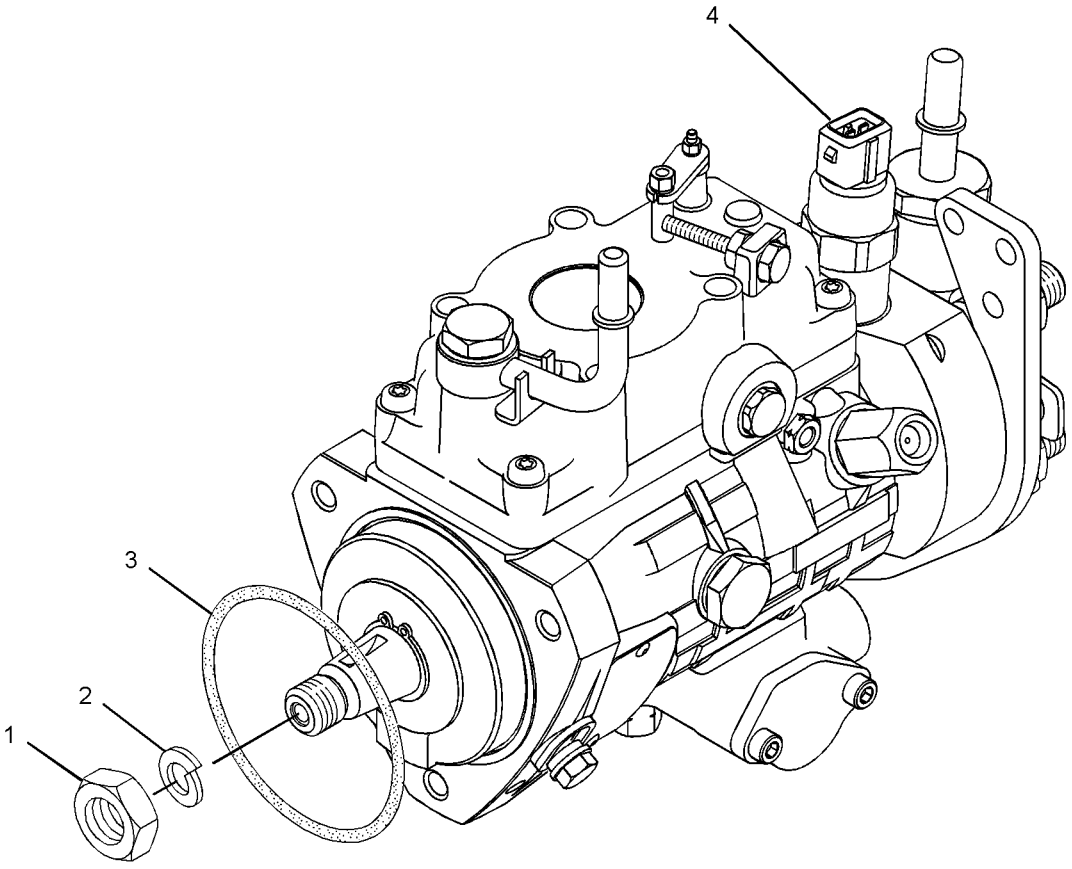

GRAPHIC #1 **<END>** g01615399

FUEL SYSTEM

326-9006 PUMP GP-FUEL INJECTION

S/N: C4Z1-UP
PART OF 321-7704 ENGINE AR-PRIMARY
AN ATTACHMENT

SMCS-1251, 1290 **i03313780**

NOTE	REF NO	GRAPHIC REF	PART NUMBER	QTY	PART NAME 1 2 3 4 5 6 (PRODUCT LEVEL)	SEE PAGE
M	1	1	**6I-0217**	1	BOLT (M8X1.25X20-MM)	
M	2	1	**6I-0260**	3	BOLT (M8X1.25X25-MM)	
	3	1	**6I-0291**	1	NUT (M8X1.25-THD)	
M	4	1	**100-4830**	1	BOLT (M10X1.5X20-MM)	
M	5	1	**124-3815**	1	BOLT (M8X16X1.25-MM)	
	6	1	**140-8714**	1	CLIP	
	7	2	**169-5326**	1	SWITCH-TEMPERATURE (FUEL)	
	8	1	**230-8989**	1	GEAR-FUEL PUMP (68-TEETH)	
	9	1	**230-8995**	1	TUBE AS (CYL NO.1)	
	10	1	**230-8996**	1	TUBE AS (CYL NO.2)	
	11	1	**230-8997**	1	TUBE AS (CYL NO.3)	
	12	1	**230-8998**	1	TUBE AS (CYL NO.4)	
	13	2	**232-1323**	1	PLUG-CUP	
	14	1	**232-1328**	1	CAP	
	15	2	**232-1793**	1	CABLE	
	16	1	**232-1794**	3	HOSE	
	17	1	**232-2725**	2	CLIP	
	18	1	**232-2726**	1	CLIP	
	19	1	**232-3126**	1	CLIP	
	20	1	**232-3149**	3	WASHER (8.35X16.85X1.55-MM THK)	
	21	1	**232-3157**	1	BRACKET	
	22	1	**232-3274**	4	BOLT (M8X1.25X48.1-MM)	
	23	1	**238-8671**	4	CLAMP-INJECTOR	
	24	1	**240-5571**	1	BRACKET	
	25	1	**315-3381**	4	ATOMIZER AS	
					(EACH INCLUDES)	
	25A	1	**140-8718**	1	WASHER	
	25B	1	**275-1038**	1	SEAL-O-RING	
Y	26	1	**326-8993**	1	PUMP GP-FUEL INJECTION	135

M-METRIC PART
Y-SEPARATE ILLUSTRATION

326-9006 **PUMP GP-FUEL INJECTION** *(contd.)* **i03313780**

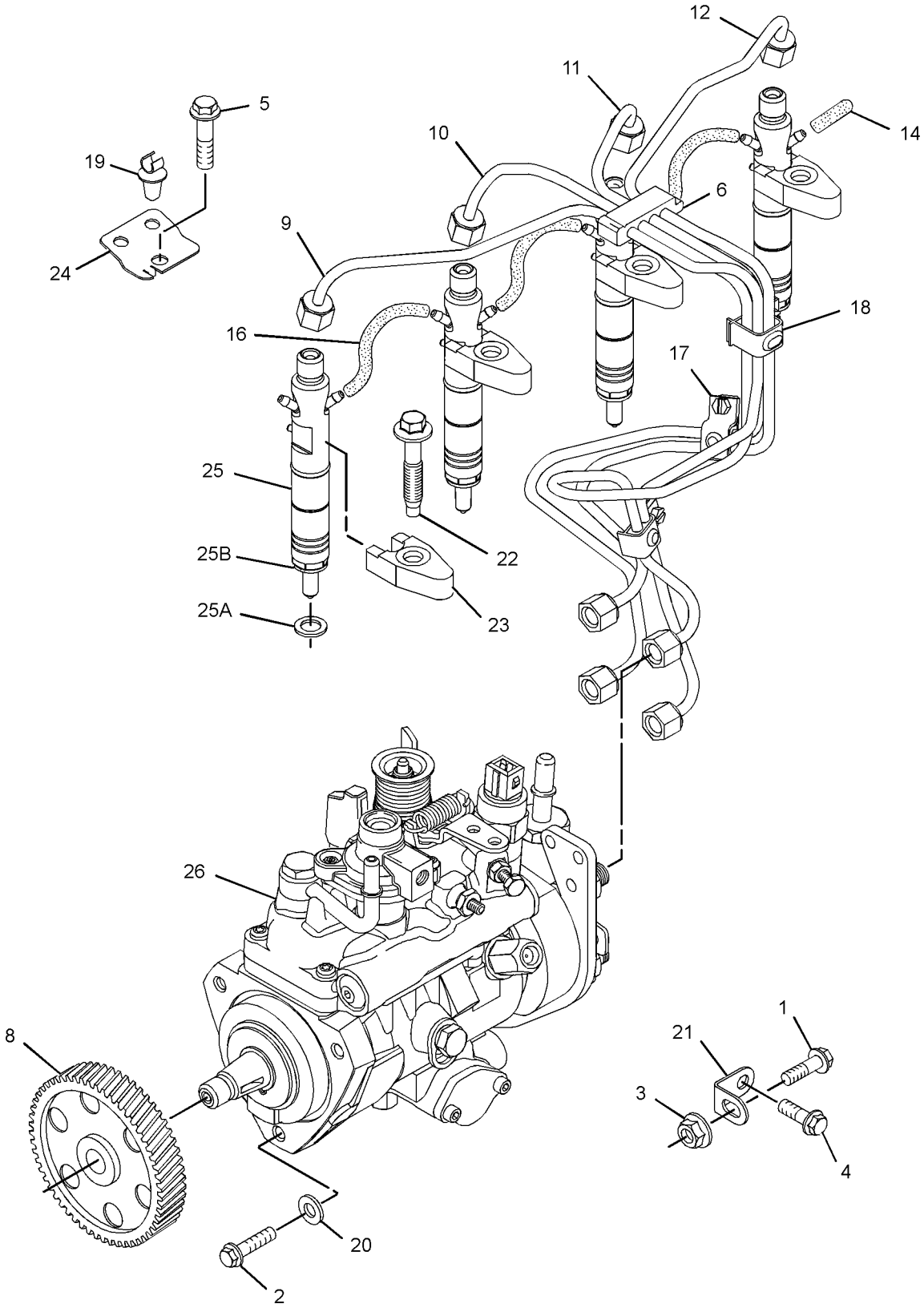

GRAPHIC #1 g01613834

326-9006 **PUMP GP-FUEL INJECTION** *(contd.)* **i03313780**

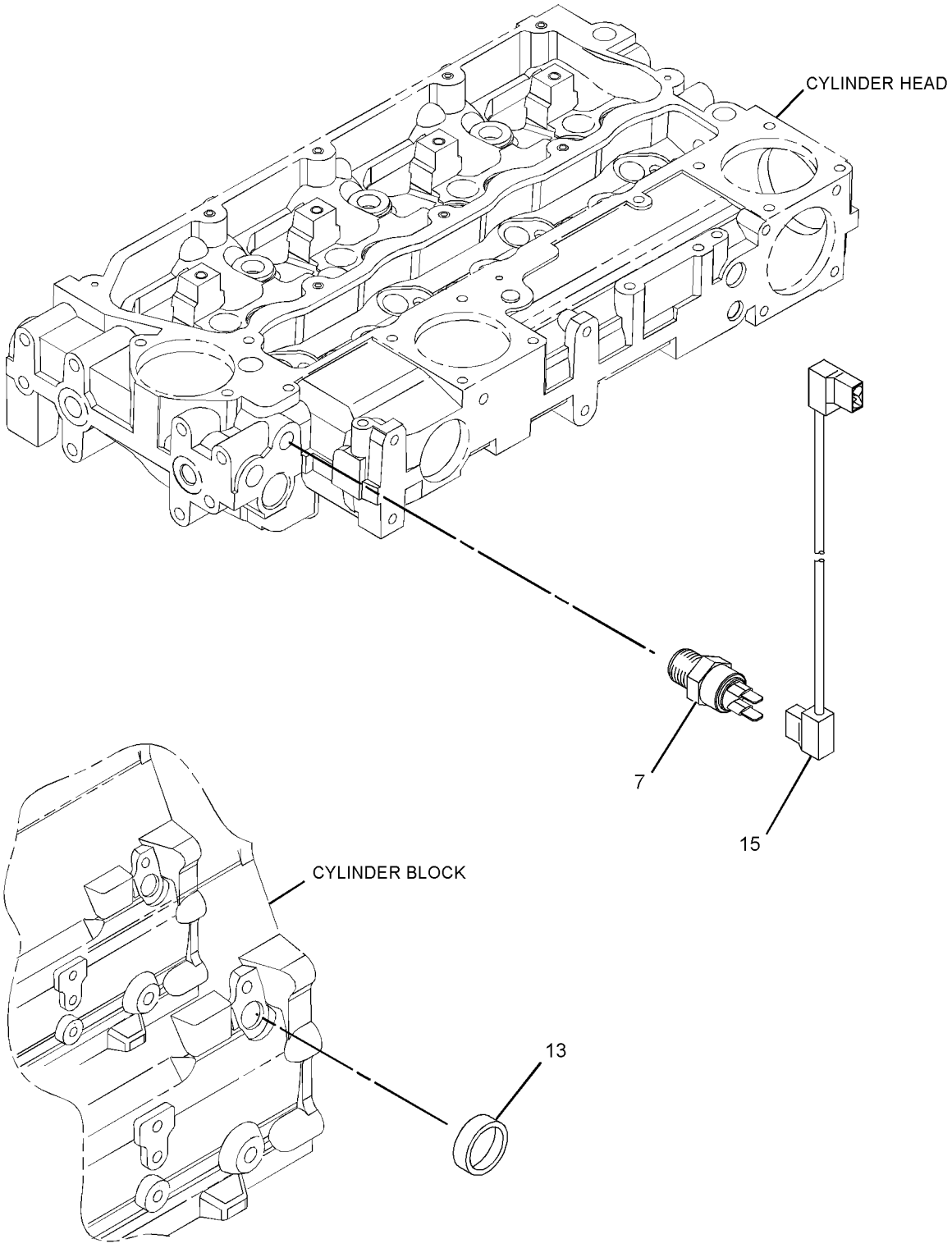

GRAPHIC #2 **<END>** g01611701

326-9147 PUMP GP-FUEL INJECTION

S/N: C4Z1-UP

PART OF 326-9149 PUMP GP-FUEL INJECTION

AN ATTACHMENT

SMCS-1251, 1290 **i03718046**

NOTE	REF NO	GRAPHIC REF	PART NUMBER	QTY	PART NAME 1 2 3 4 5 6 (PRODUCT LEVEL)	SEE PAGE
	1	1	**111-3422**	1	NUT	
	2	1	**111-3423**	1	WASHER	
	3	1	**152-3968**	1	SEAL-O-RING	
	4	1	**176-6219**	1	VALVE GP-SOLENOID (12-VOLT) (FUEL SHUTOFF)	

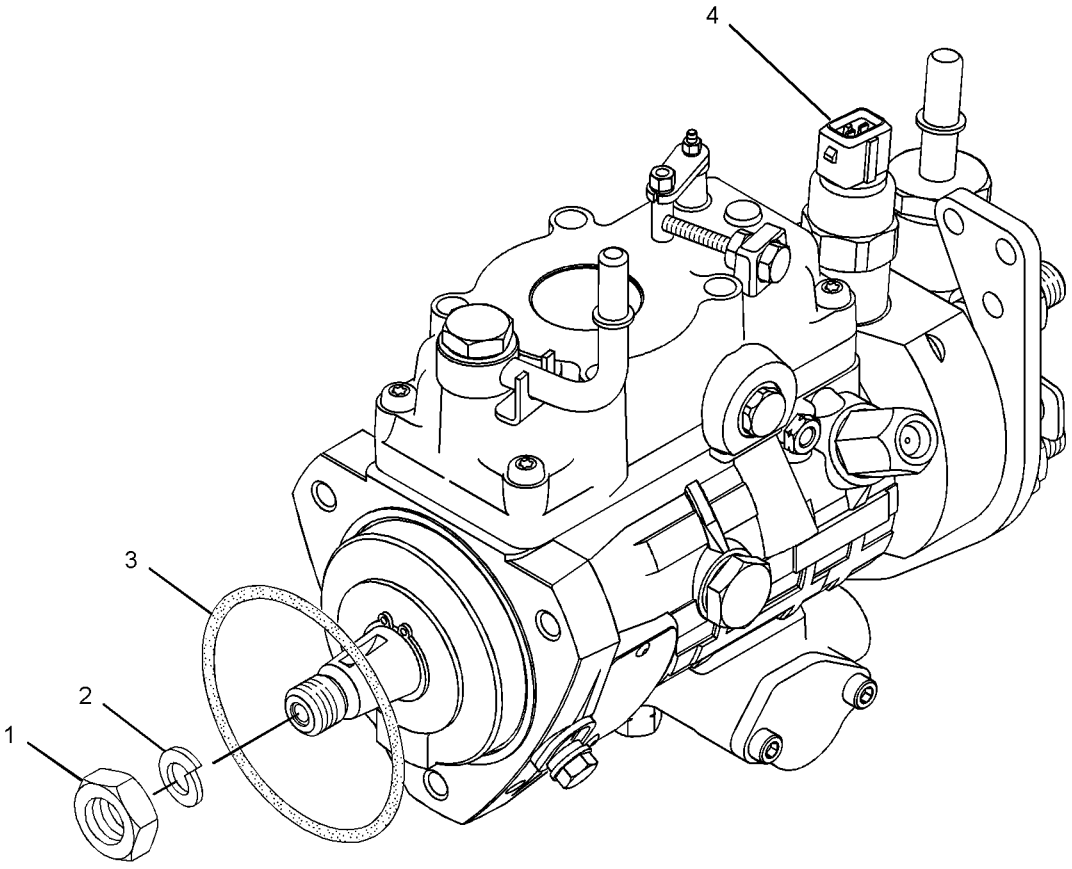

GRAPHIC #1 **<END>** g01615399

FUEL SYSTEM

326-9149 PUMP GP-FUEL INJECTION

S/N: C4Z1-UP
PART OF 321-7705 ENGINE AR-PRIMARY
AN ATTACHMENT

SMCS-1251, 1290 **i03313740**

NOTE	REF NO	GRAPHIC REF	PART NUMBER	QTY	PART NAME 1 2 3 4 5 6 (PRODUCT LEVEL)	SEE PAGE
M	1	1	**6I-0217**	1	BOLT (M8X1.25X20-MM)	
M	2	1	**6I-0260**	3	BOLT (M8X1.25X25-MM)	
	3	1	**6I-0291**	1	NUT (M8X1.25-THD)	
M	4	1	**100-4830**	1	BOLT (M10X1.5X20-MM)	
M	5	1	**124-3815**	1	BOLT (M8X16X1.25-MM)	
	6	1	**140-8714**	1	CLIP	
	7	2	**169-5326**	1	SWITCH-TEMPERATURE (FUEL)	
	8	1	**230-8989**	1	GEAR-FUEL PUMP (68-TEETH)	
	9	1	**230-8995**	1	TUBE AS (CYL NO.1)	
	10	1	**230-8996**	1	TUBE AS (CYL NO.2)	
	11	1	**230-8997**	1	TUBE AS (CYL NO.3)	
	12	1	**230-8998**	1	TUBE AS (CYL NO.4)	
	13	2	**232-1323**	1	PLUG-CUP	
	14	1	**232-1328**	1	CAP	
	15	2	**232-1793**	1	CABLE	
	16	1	**232-1794**	3	HOSE	
	17	1	**232-2725**	2	CLIP	
	18	1	**232-2726**	1	CLIP	
	19	1	**232-3126**	1	CLIP	
	20	1	**232-3149**	3	WASHER (8.35X16.85X1.55-MM THK)	
	21	1	**232-3157**	1	BRACKET	
	22	1	**232-3274**	4	BOLT (M8X1.25X48.1-MM)	
	23	1	**238-8671**	4	CLAMP-INJECTOR	
	24	1	**240-5571**	1	BRACKET	
	25	1	**315-3381**	4	ATOMIZER AS	
					(EACH INCLUDES)	
	25A	1	**140-8718**	1	WASHER	
	25B	1	**275-1038**	1	SEAL-O-RING	
Y	26	1	**326-9147**	1	PUMP GP-FUEL INJECTION	139

M-METRIC PART
Y-SEPARATE ILLUSTRATION

326-9149 **PUMP GP-FUEL INJECTION** *(contd.)* **i03313740**

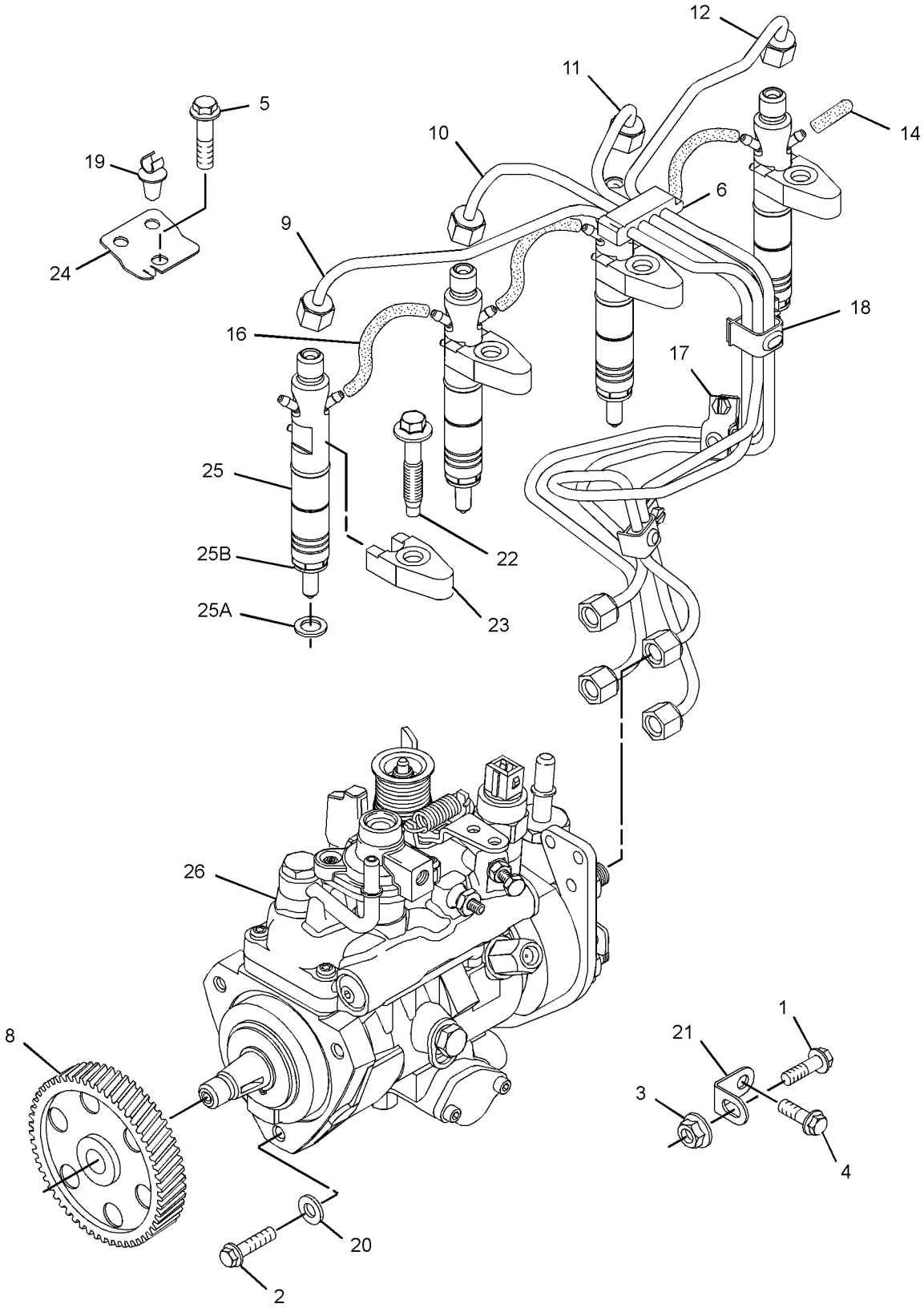

GRAPHIC #1 g01613834

326-9149 **PUMP GP-FUEL INJECTION** *(contd.)* **i03313740**

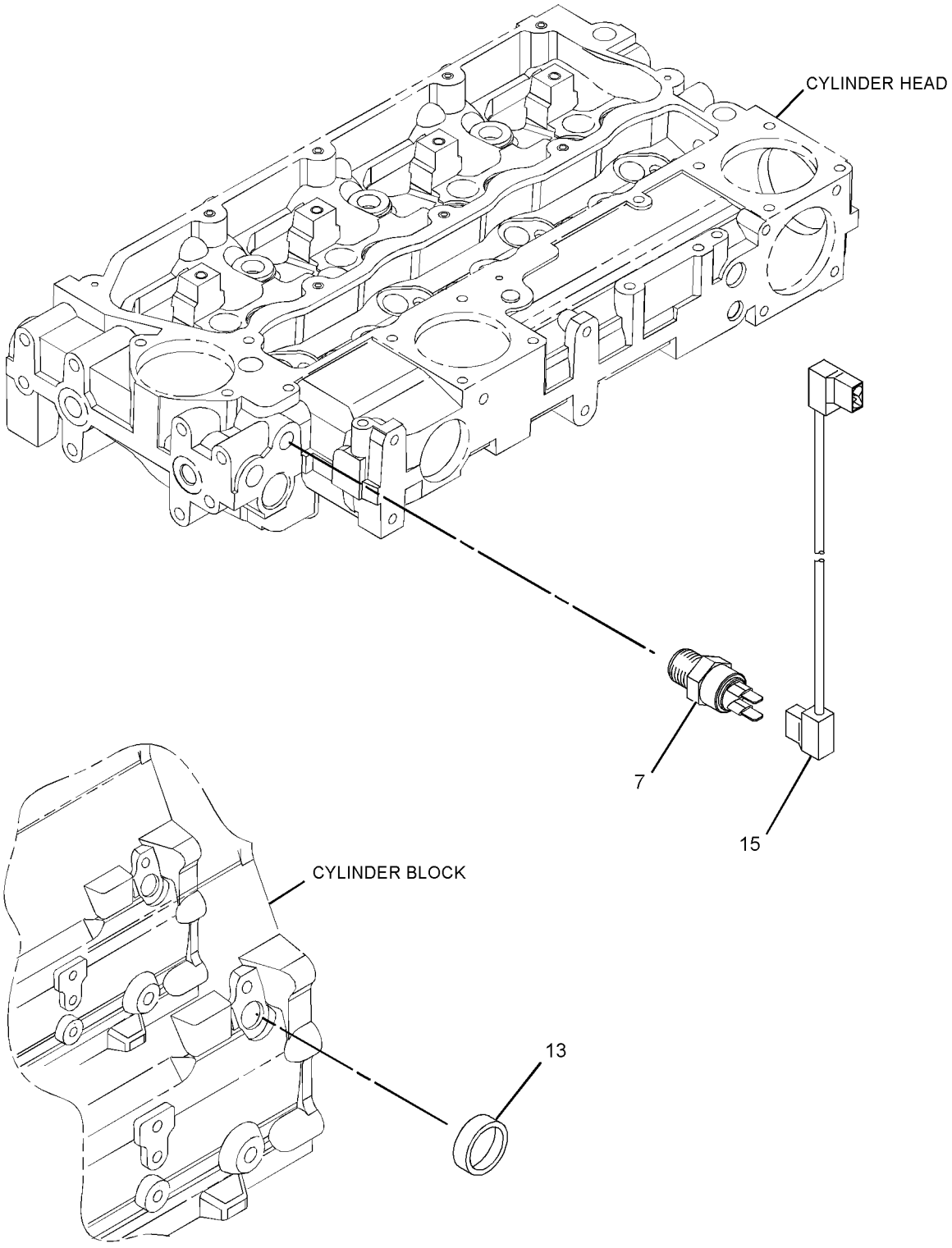

GRAPHIC #2 **<END>** g01611701

249-7669 PUMP GP-FUEL PRM & PRIM FILTER–

WITH WATER SEPARATOR

S/N: DPH1-UP

PART OF 314-6700 PUMP GP-FUEL PRM & PRIM FILTER

AN ATTACHMENT

SMCS-1258, 1260, 1261 **i03728842**

NOTE	REF NO	GRAPHIC REF	PART NUMBER	QTY	PART NAME 1 2 3 4 5 6 (PRODUCT LEVEL)	SEE PAGE
	1	1	**118-8118**	1	RING-RETAINING	
	2	1	**149-9954**	1	DRAIN AS	
	3	1	**193-0618**	1	SENSOR GP-MOISTURE (WATER SEPARATOR)	
		1	**192-7876**	1	SCREW-MOUNTING	
	4	1	**228-9130**	1	FILTER AS-WATER SEP & FUEL	
	5	1	**228-9132**	1	FITTING (FUEL PUMP)	

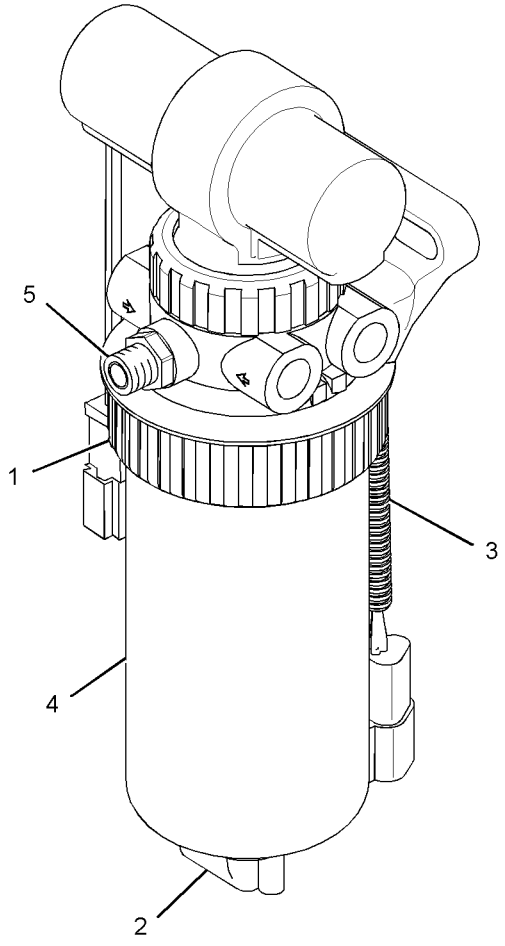

GRAPHIC #1 **<END>** g01825141

314-6700 PUMP GP-FUEL PRM & PRIM FILTER–

WITH MOUNTING

S/N: DPH1-UP

PART OF 339-4986, 339-4987, 339-4988, 339-4989, 339-4990, 339-4991, 339-4992, 339-4993 ENGINE AR

AN ATTACHMENT

SMCS-1258, 1260, 1261 **i03295970**

NOTE	REF NO	GRAPHIC REF	PART NUMBER	QTY	PART NAME 1 2 3 4 5 6 (PRODUCT LEVEL)	SEE PAGE
	1	1	**3S-2093**	1	STRAP-CABLE	
	2	1	**069-4080**	1	FITTING	
	3	1	*165-7951*	1	CONNECTOR AS	
		1	**3J-1907**	1	SEAL-O-RING	
		1	**157-1669**	1	CONNECTOR	
	4	1	*184-6581*	1	CONNECTOR AS	
		1	**3J-1907**	1	SEAL-O-RING	
		1	**195-5830**	1	CONNECTOR	
Y	5	1	**249-7669**	1	PUMP GP-FUEL PRM & PRIM FILTER (WITH WATER SEPARATOR)	143
	6	1	**253-0354**	1	BRACKET AS	
M	7	1	**101-7404**	2	BOLT-SOCKET HEAD (M10X1.5X30-MM)	
	8	1	*148-8407*	2	PLUG AS	
					(EACH INCLUDES)	
		1	**3J-1907**	1	SEAL-O-RING	
		1	**9S-4191**	1	PLUG-O-RING	
	9	1	**8T-4121**	4	WASHER-HARD (11X21X2.5-MM THK)	
M	10	1	**8T-8894**	2	BOLT-SOCKET HEAD (M10X1.5X20-MM)	

M-METRIC PART
Y-SEPARATE ILLUSTRATION

314-6700 **PUMP GP-FUEL PRM & PRIM FILTER** *(contd.)* **i03295970**

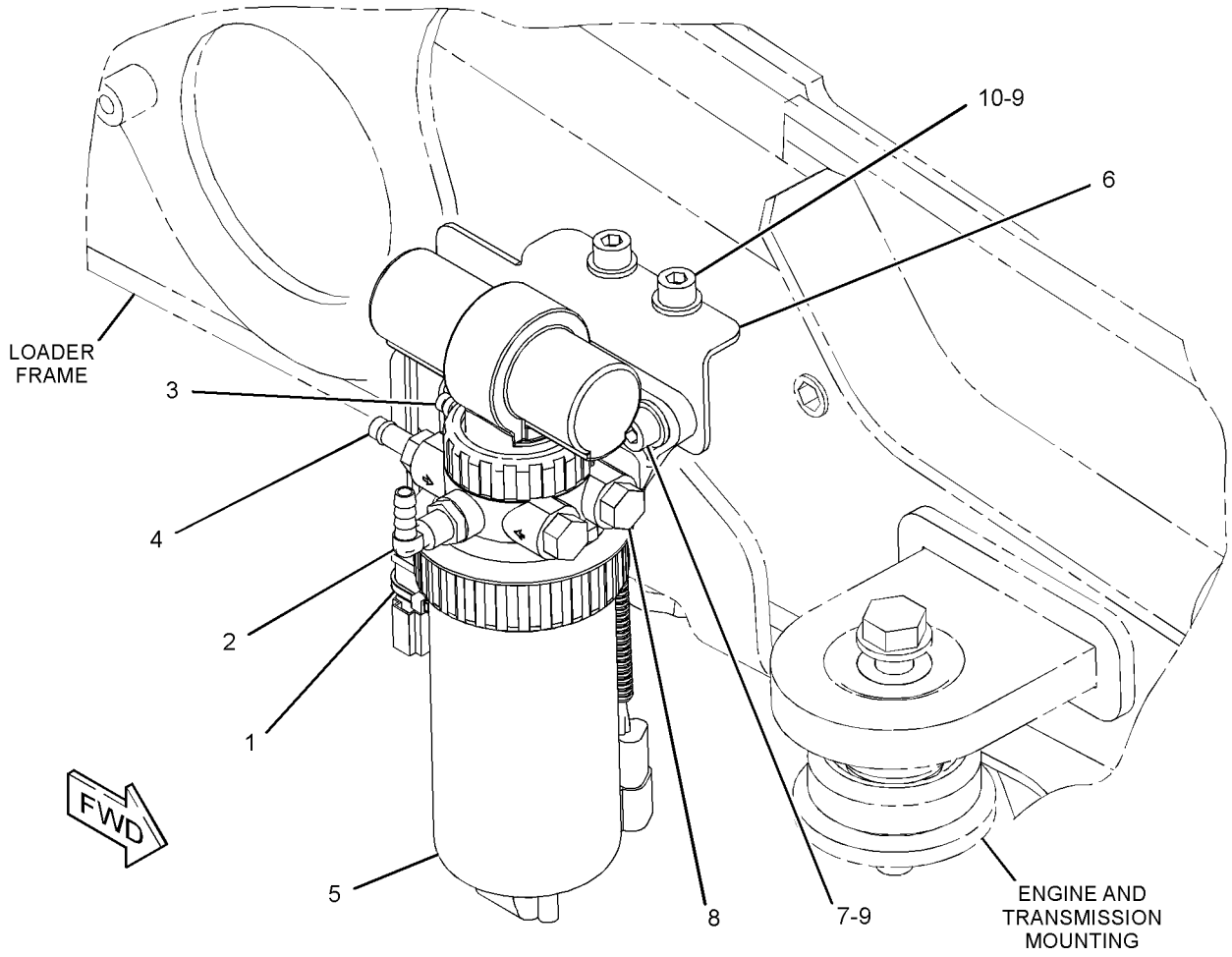

GRAPHIC #1 **<END>** g01679983

FUEL SYSTEM

338-9358 TANK GP-FUEL

S/N: DPH1-UP

PART OF 341-0696 TANK GP-FUEL

SMCS-1273 **i03638355**

NOTE	REF NO	GRAPHIC REF	PART NUMBER	QTY	PART NAME 1 2 3 4 5 6 (PRODUCT LEVEL)	SEE PAGE
	1	1	**272-0537**	1	PLUG AS	
		1	**190-7634**	1	SEAL-O-RING	
	2	1	**284-9039**	1	CAP-FUEL (LOCKABLE, VENTED)	
	3	1	**303-2933**	1	SENDER AS-FUEL LEVEL	
		1	**9R-7240**	1	GASKET	
		1	**102-8802**	1	KIT-RECEPTACLE (2-PIN)	
					(INCLUDES RECEPTACLE AS & WEDGE)	
		1	**186-3735**	1	PIN-CONNECTOR (16-GA TO 18-GA)	
		1	**311-6886**	1	STRAINER (FUEL TANK)	
	4	1	**321-5657**	1	TUBE AS	
	5	1	**338-9357**	1	TANK AS	
	6	1	**106-8020**	1	GASKET	
M	7	1	**184-0982**	13	SCREW-PAN HEAD (M6X1X16-MM)	
F			**180-3730**	1	STRAINER-FUEL (FILLER NECK SCREEN)	

F-NOT SHOWN
M-METRIC PART

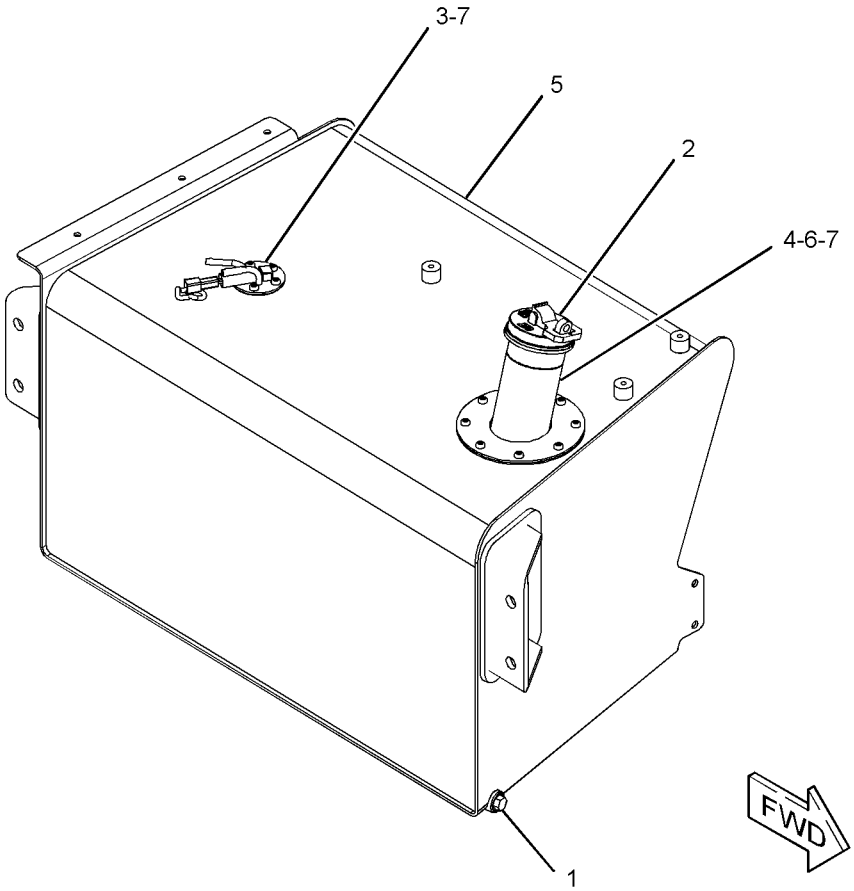

GRAPHIC #1 **<END>** g01999773

341-0696 TANK GP-FUEL

S/N: DPH1-UP
160-LITERS (42.5-US GAL)
PART OF 329-0293 CHASSIS AR

SMCS-1273 **i03638346**

NOTE	REF NO	GRAPHIC REF	PART NUMBER	QTY	PART NAME 1 2 3 4 5 6 (PRODUCT LEVEL)	SEE PAGE
	1	1	**245-6103**	1	STEP AS	
	2	1	**317-2017**	1	PLATE AS	
	3	1	**317-3059**	1	TREAD	
Y	4	1	*338-9358*	1	TANK GP-FUEL	146
	5	1	**5P-4116**	10	WASHER-HARD (8.8X20.5X2-MM THK)	
M	6	1	**8T-4189**	10	BOLT (M8X1.25X20-MM)	
M	7	1	**8T-4193**	4	BOLT (M16X2X50-MM)	
	8	1	**9X-8257**	4	WASHER (17.5X30X3.5-MM THK)	

M-METRIC PART
Y-SEPARATE ILLUSTRATION

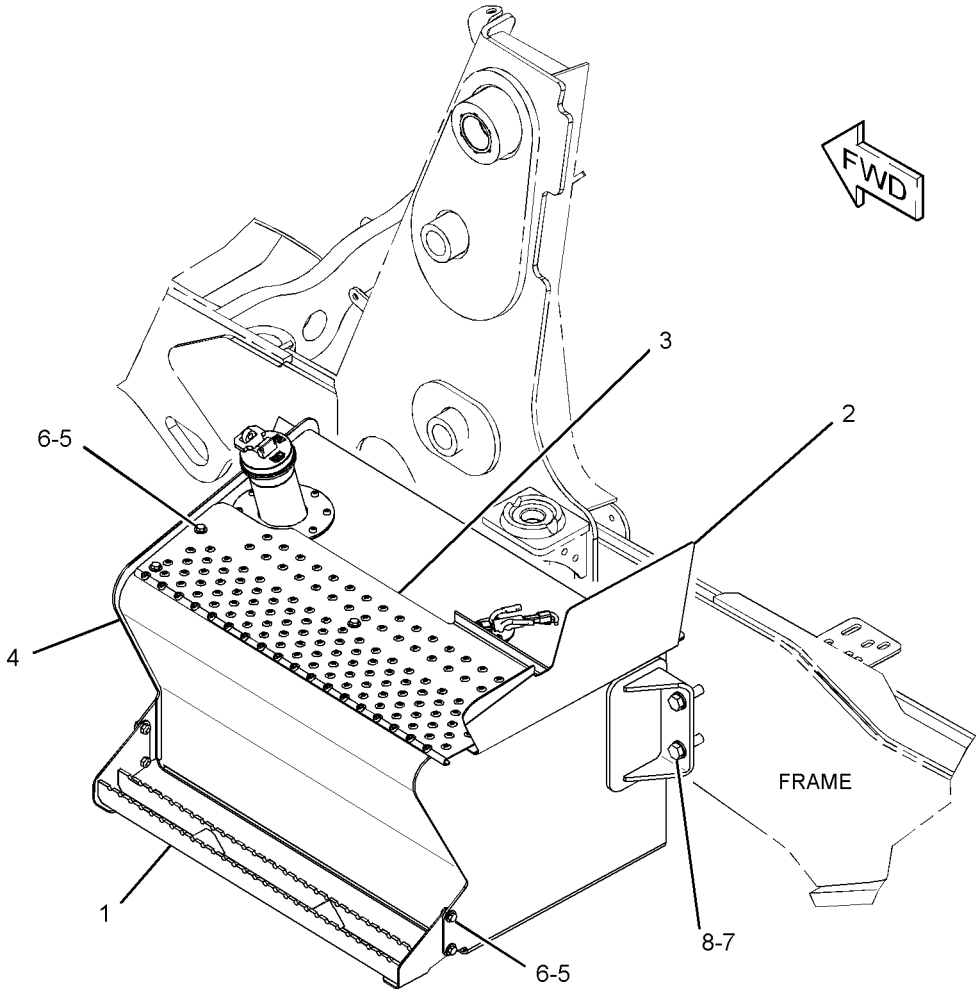

GRAPHIC #1 **<END>** g02000078

ELECTRICAL AND STARTING SYSTEM

317-9776 ALTERNATOR GP-CHARGING

S/N: C4Z1-UP
12 VOLT 120 AMPERE
PART OF 321-7704, 321-7705 ENGINE AR-PRIMARY
AN ATTACHMENT

SMCS-1405, 1425 **i03635370**

NOTE	REF NO	GRAPHIC REF	PART NUMBER	QTY	PART NAME 1 2 3 4 5 6 (PRODUCT LEVEL)	SEE PAGE
M	1	1	**6I-0260**	1	BOLT (M8X1.25X25-MM)	
M	2	1	**6I-0650**	1	BOLT (M10X1.5X65-MM)	
	3	1	**100-8451**	1	BOLT (M8X1.25X130-MM)	
	4	1	**113-6349**	1	NUT (M12X1.75X93-MM)	
M	5	1	**140-8783**	2	BOLT (M10X1.5X45-MM)	
	7	1	**346-9825**	1	ALTERNATOR GP-CHARGING	
	8	1	**284-3425**	1	PULLEY-ALTERNATOR	
	9	1	**305-7881**	1	BRACKET AS-ALTERNATOR	
	9A	1	**161-9820**	1	PIN	

M-METRIC PART

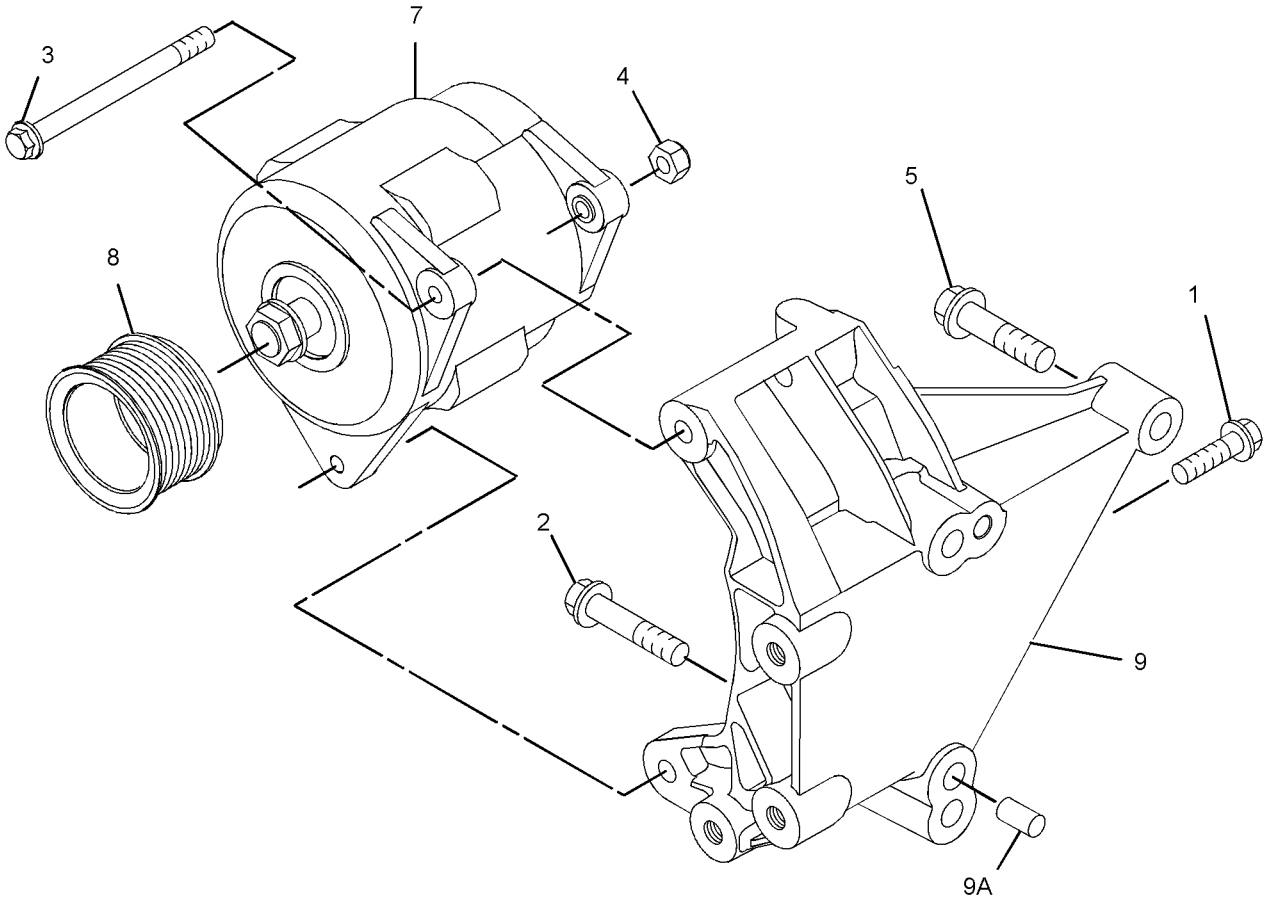

GRAPHIC #1 **<END>** g01953021

334-3756 ALTERNATOR GP-CHARGING

S/N: CRS1-UP
12 VOLT 120 AMPERE
PART OF 322-1923, 322-1924 ENGINE AR-PRIMARY
AN ATTACHMENT

SMCS-1405, 1425 **i03635529**

NOTE	REF NO	GRAPHIC REF	PART NUMBER	QTY	PART NAME 1 2 3 4 5 6 (PRODUCT LEVEL)	SEE PAGE
M	1	1	**6I-0260**	1	BOLT (M8X1.25X25-MM)	
M	2	1	**6I-0650**	1	BOLT (M10X1.5X65-MM)	
	3	1	**100-8451**	1	BOLT (M8X1.25X130-MM)	
	4	1	**113-6349**	1	NUT (M12X1.75X93-MM)	
M	5	1	**140-8783**	2	BOLT (M10X1.5X45-MM)	
	6	1	**346-9825**	1	ALTERNATOR GP-CHARGING	
	7	1	**284-3425**	1	PULLEY-ALTERNATOR	
	8	1	**305-7881**	1	BRACKET AS-ALTERNATOR	
	8A	1	**161-9820**	2	PIN	

M-METRIC PART

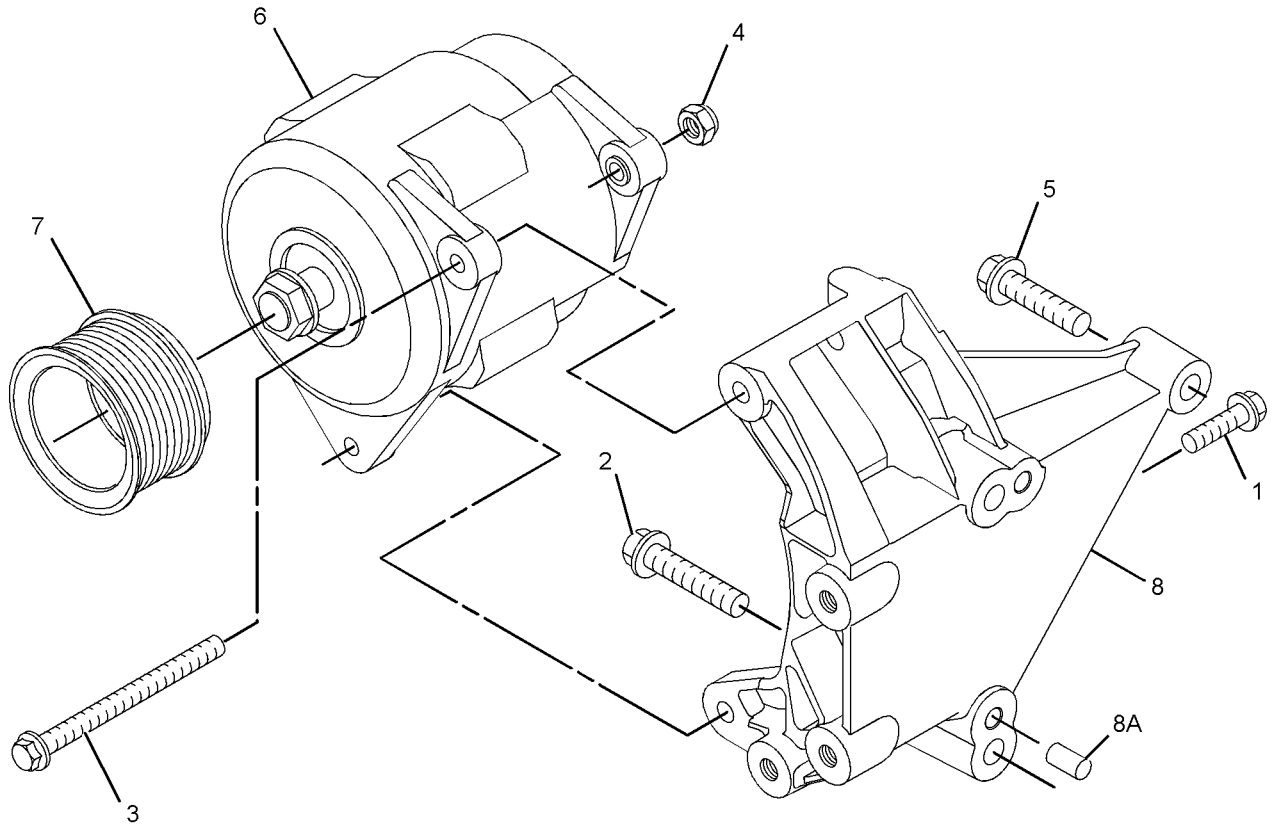

GRAPHIC #1 **<END>** g01953881

ELECTRICAL AND STARTING SYSTEM

242-3197 BATTERY & WIRING GP–HEAVY-DUTY

S/N: DPH1-UP

AN ATTACHMENT

SMCS-1401, 1402, 1408, 1411 **i03579022**

NOTE	REF NO	GRAPHIC REF	PART NUMBER	QTY	PART NAME 1 2 3 4 5 6 (PRODUCT LEVEL)	SEE PAGE
	1	1	**038-9317**	1	TREAD-NONSKID	
	2	1	**178-9242**	1	BRACKET AS	
	3	1	**213-6091**	1	CABLE AS-BATTERY (POSITIVE)	
		1	**3S-2093**	1	STRAP-CABLE	
E		1	**5P-0761**		CABLE (00-GA, RED) (36-CM)	
		1	**7T-9987**	1	COVER-TERMINAL (RED)	
		1	**8S-3020**	1	TERMINAL-CABLE (00-GA, 3/8-IN BOLT)	
E		1	**8Y-8081**		TUBE-CONVOLUTED (36-CM)	
		1	**3S-6049**	1	TERMINAL AS-BATTERY (POSITIVE)	
		1	**1M-6119**	1	BOLT (5/16-18X1.375-IN)	
		1	**1M-6120**	1	NUT (5/16-18-THD)	
	4	1	**213-6092**	1	CABLE AS-BATTERY (NEGATIVE)	
		1	**1S-7252**	1	TERMINAL-CABLE (00-GA, 3/8-IN BOLT)	
E		1	**5P-0747**		CABLE (00-GA, BLACK) (44-CM)	
		1	**7N-5274**	1	COVER-TERMINAL (BLACK)	
		1	**3S-6050**	1	TERMINAL AS-BATTERY (NEGATIVE)	
		1	**1M-6119**	1	BOLT (5/16-18X1.375-IN)	
		1	**1M-6120**	1	NUT (5/16-18-THD)	
	5	1	**3T-5760**	1	BATTERY (12-VOLT, MAINTENANCE FREE, WET)	
	6	1	**7X-7729**	2	WASHER (11X25X3-MM THK)	
M	7	1	**8T-4133**	1	NUT (M10X1.5-THD)	
M	8	1	**8T-4137**	1	BOLT (M10X1.5X20-MM)	
M	9	1	**8T-5005**	1	BOLT (M10X1.5X70-MM)	
	10	1	**8T-4224**	1	WASHER-HARD (8.8X16X2-MM THK)	

E-ORDER BY THE CENTIMETER
M-METRIC PART

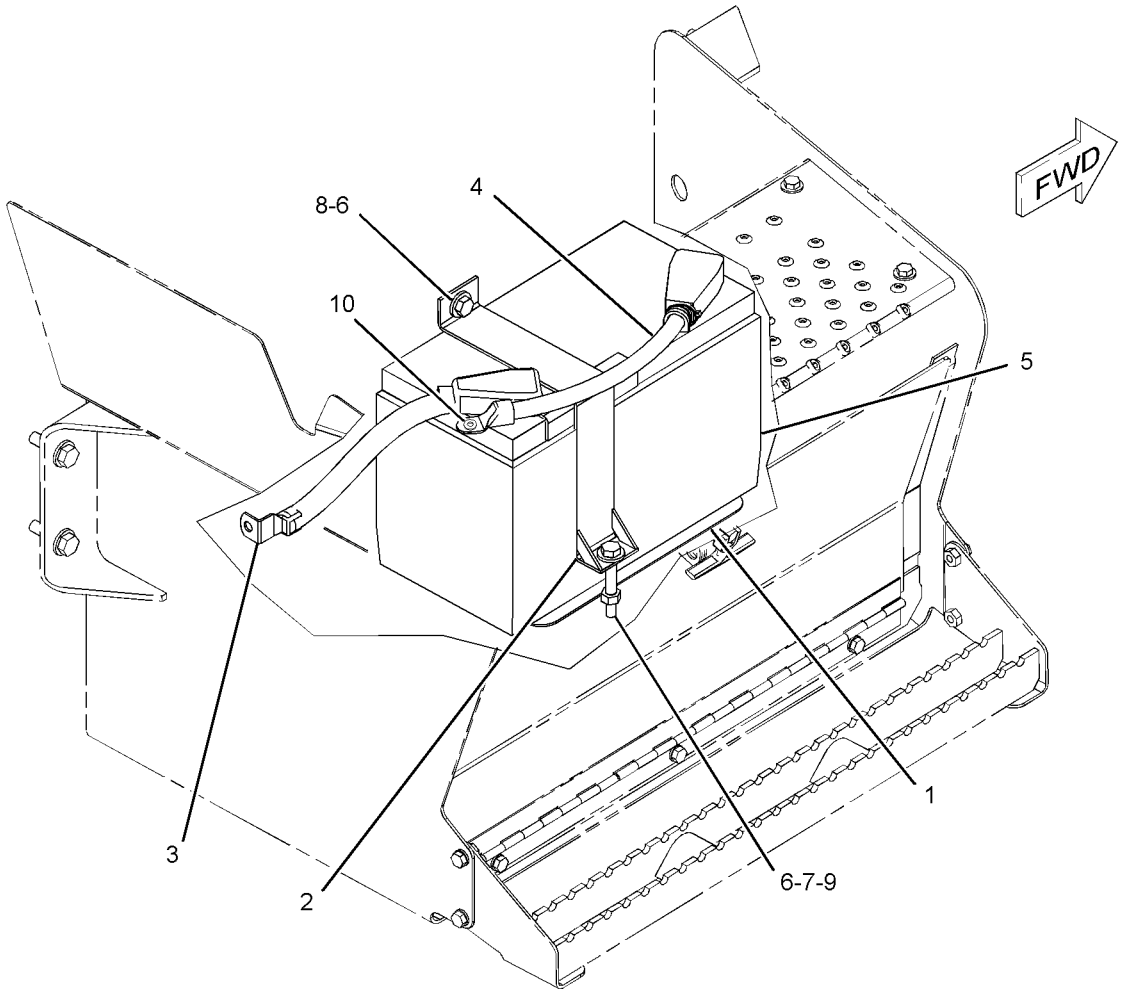

GRAPHIC #1 **<END>** g01337782

ELECTRICAL AND STARTING SYSTEM

313-3380 BATTERY & WIRING GP–STANDARD

S/N: DPH1-UP

PART OF 329-0293 CHASSIS AR

SMCS-1401, 1402, 1408, 1411 **i03648320**

NOTE	REF NO	GRAPHIC REF	PART NUMBER	QTY	PART NAME 1 2 3 4 5 6 (PRODUCT LEVEL)	SEE PAGE
	1	1	**6T-0465**	1	COVER-TERMINAL (BLACK)	
	2	1	**7K-1181**	7	STRAP-CABLE	
	3	1	**038-9317**	1	TREAD-NONSKID	
	4	1	**178-1781**	1	CLIP	
	5	1	**178-9242**	1	BRACKET AS	
	6	1	**213-6089**	1	CABLE AS-POWER	
B		1	**1P-0810**		TAPE-ELECTRICAL	
		1	*278-1439*	1	TERMINAL AS-RING	
		1	**278-1438**	1	TERMINAL-RING	
E		1	**125-7876**		TUBE-HEAT SHRINK (17.78-MM DIA) (4-CM)	
E		1	**319-0755**		TUBE-CONVOLUTED (225-CM)	
E		1	**135-5009**		TUBE-HEAT SHRINK (32-MM DIA) (5-CM)	
		1	**6T-5598**	1	TERMINAL-RING (1-GA TO 2-GA, 5/16-IN SCREW)	
		1	**8T-8799**	1	BOOT	
E		1	**8C-3056**		CABLE (2-GA, RED) (230-CM)	
	7	1	**228-5089**	1	CABLE AS	
		1	**229-9855**	1	TERMINAL AS-BATTERY (NEGATIVE)	
		1	**1S-7251**	1	TERMINAL-CABLE (00-GA, 1/2-IN SCREW)	
E		1	**5P-0747**		CABLE (00-GA, BLACK) (58-CM)	
	8	1	**243-5027**	1	NUT AS (M6X1-THD)	
	9	1	**246-8053**	1	CABLE AS-BATTERY (POSITIVE)	
		1	**1S-7251**	1	TERMINAL-CABLE (00-GA, 1/2-IN SCREW)	
		1	**8N-0869**	1	COVER-TERMINAL (RED)	
		1	**3S-2093**	2	STRAP-CABLE	
E		1	**5P-0761**		CABLE (00-GA, RED) (110-CM)	
E		1	**8Y-8081**		TUBE-CONVOLUTED (105-CM)	
		1	*235-8634*	1	TERMINAL AS-BATTERY (POSITIVE)	
		1	**1M-6119**	1	BOLT (5/16-18X1.375-IN)	
		1	**1M-6120**	1	NUT (5/16-18-THD)	
		1	**6V-8801**	2	NUT (3/8-16-THD)	
	10	1	**246-8058**	1	CABLE AS (ALTERNATOR)	
E		1	**125-7876**		TUBE-HEAT SHRINK (17.78-MM DIA) (7-CM)	
	11	1	**091-9035**	2	SPACER (11X25X20-MM THK)	
	12	1	**132-5789**	1	CLIP	
	13	1	**3T-5760**	1	BATTERY (12-VOLT, MAINTENANCE FREE, WET)	
		1	**123-1373**	6	CAP AS-FILLER (BATTERY)	
	14	1	**4D-6466**	2	CLIP	
	15	1	**7X-7729**	2	WASHER (11X25X3-MM THK)	
	16	1	**8T-4121**	4	WASHER-HARD (11X21X2.5-MM THK)	
M	17	1	**8T-4133**	1	NUT (M10X1.5-THD)	
M	18	1	**8T-4137**	2	BOLT (M10X1.5X20-MM)	
M	19	1	**8T-5005**	1	BOLT (M10X1.5X70-MM)	
M	20	1	**8T-6466**	2	BOLT (M10X1.5X60-MM)	
	21	1	**3S-2093**	2	STRAP-CABLE	
	22	1	**206-2423**	1	SADDLE	

B-USE AS REQUIRED
E-ORDER BY THE CENTIMETER
M-METRIC PART

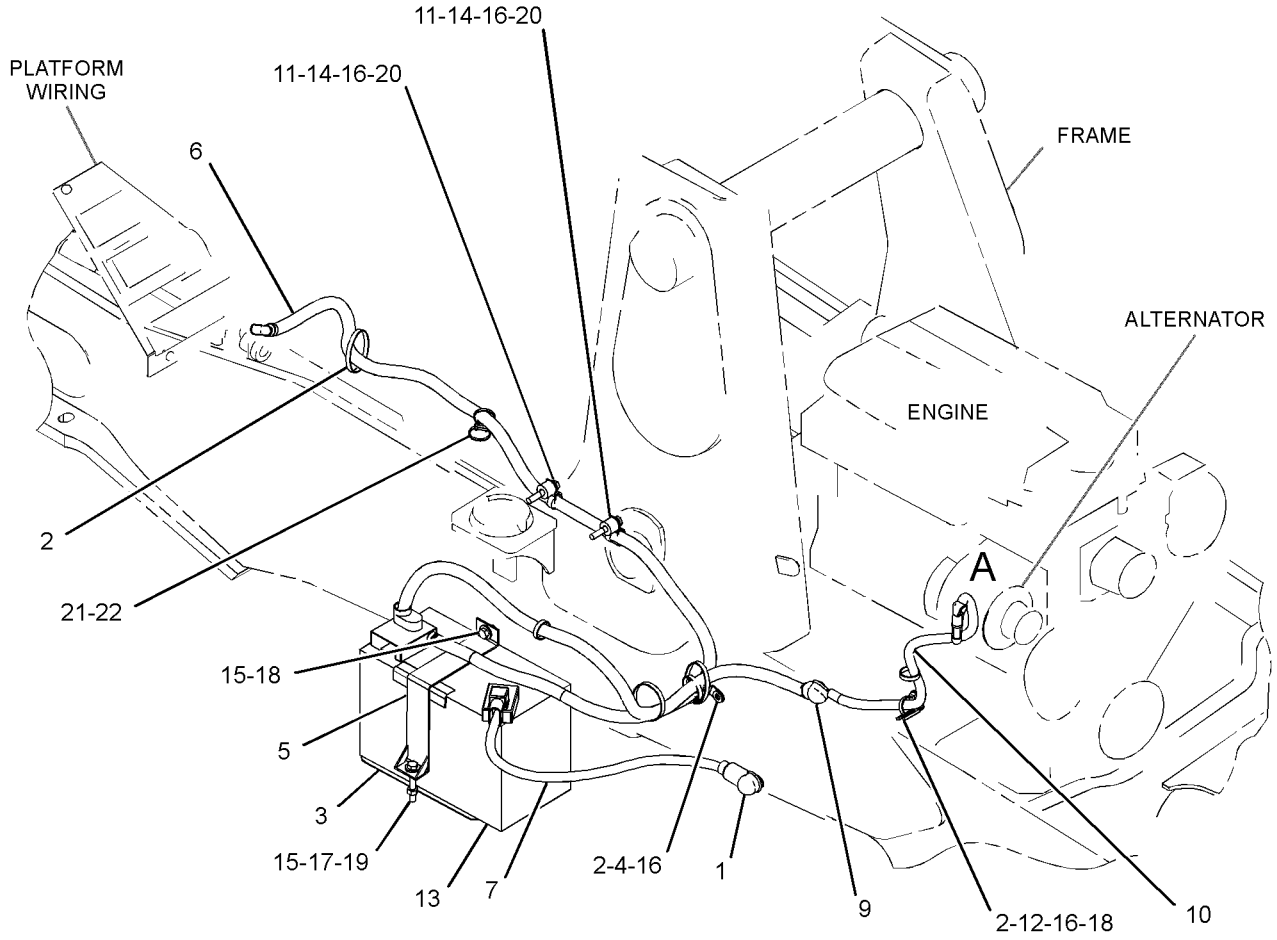

VIEW OF AREA A

GRAPHIC #1 **<END>** g02000795

232-6661 GLOW PLUG GP

S/N: CRS1-UP
PART OF 322-1923, 322-1924 ENGINE AR-PRIMARY
AN ATTACHMENT

SMCS-1412 **i02757127**

NOTE	REF NO	GRAPHIC REF	PART NUMBER	QTY	PART NAME 1 2 3 4 5 6 (PRODUCT LEVEL)	SEE PAGE
	1	1	**286-4880**	1	BUS BAR AS	
	2	1	**232-6662**	4	GLOW PLUG (12-VOLT)	
	3	1	**232-3126**	1	CLIP	

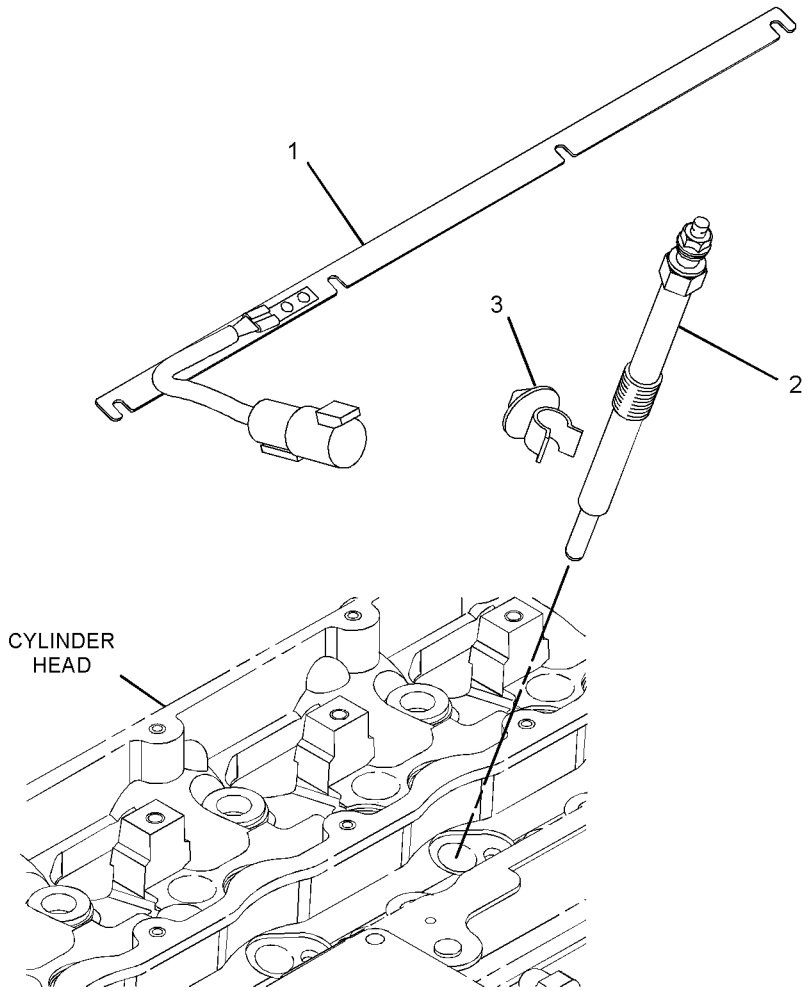

GRAPHIC #1 **<END>** g01392990

315-3418 GLOW PLUG GP

S/N: C4Z1-UP

PART OF 321-7704, 321-7705 ENGINE AR-PRIMARY

AN ATTACHMENT

SMCS-1412 **i03128300**

NOTE	REF NO	GRAPHIC REF	PART NUMBER	QTY	PART NAME 1 2 3 4 5 6 (PRODUCT LEVEL)	SEE PAGE
	1	1	**286-4880**	1	BUS BAR AS	
	2	1	**232-6662**	4	GLOW PLUG (12-VOLT)	

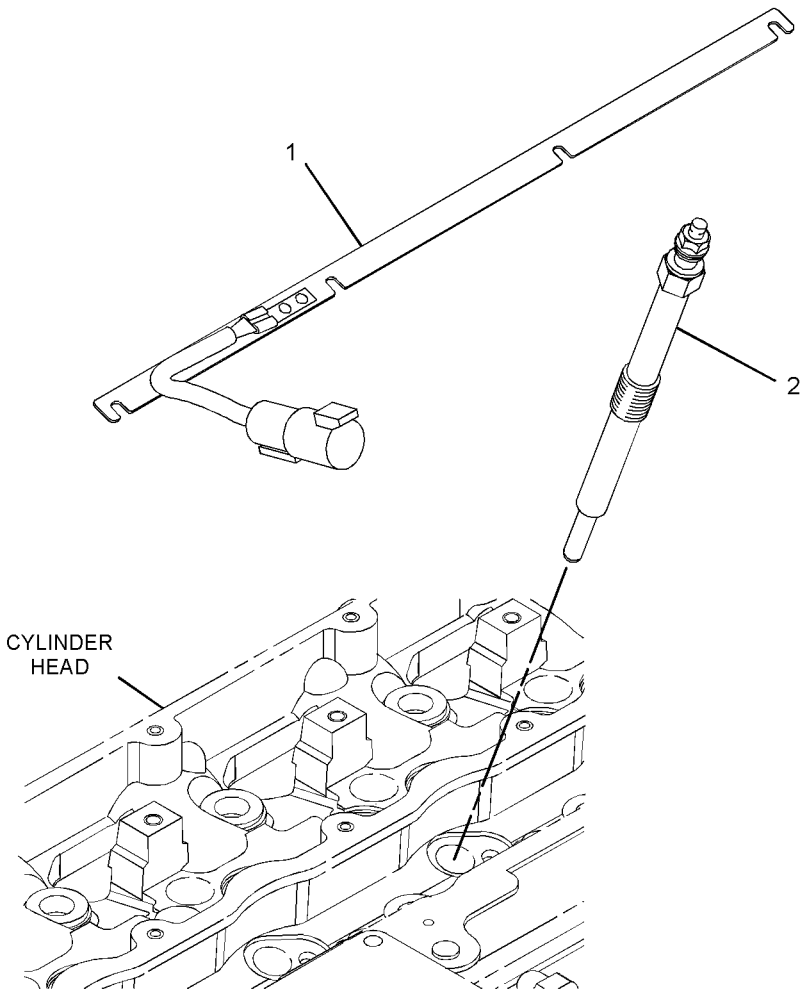

GRAPHIC #1 **<END>** g01398213

231-3058 HEATER GP-JACKET WATER

S/N: DPH1-UP
PART OF 248-2215 HEATER GP-JACKET WATER
AN ATTACHMENT

SMCS-1383 **i03496460**

NOTE	REF NO	GRAPHIC REF	PART NUMBER	QTY	PART NAME 1 2 3 4 5 6 (PRODUCT LEVEL)	SEE PAGE
	1	1	**219-3271**	1	ELEMENT AS-JACKET WATER HEATER (240-VOLT, 1000-WATT)	
		1	**133-3413**	1	KIT-SEAL	
					(INCLUDES SEAL, SPACER & RINGS)	
		1	**133-6517**	1	CAP AS-DUST	
	2	1	**231-3057**	1	CORD AS-HEATER	

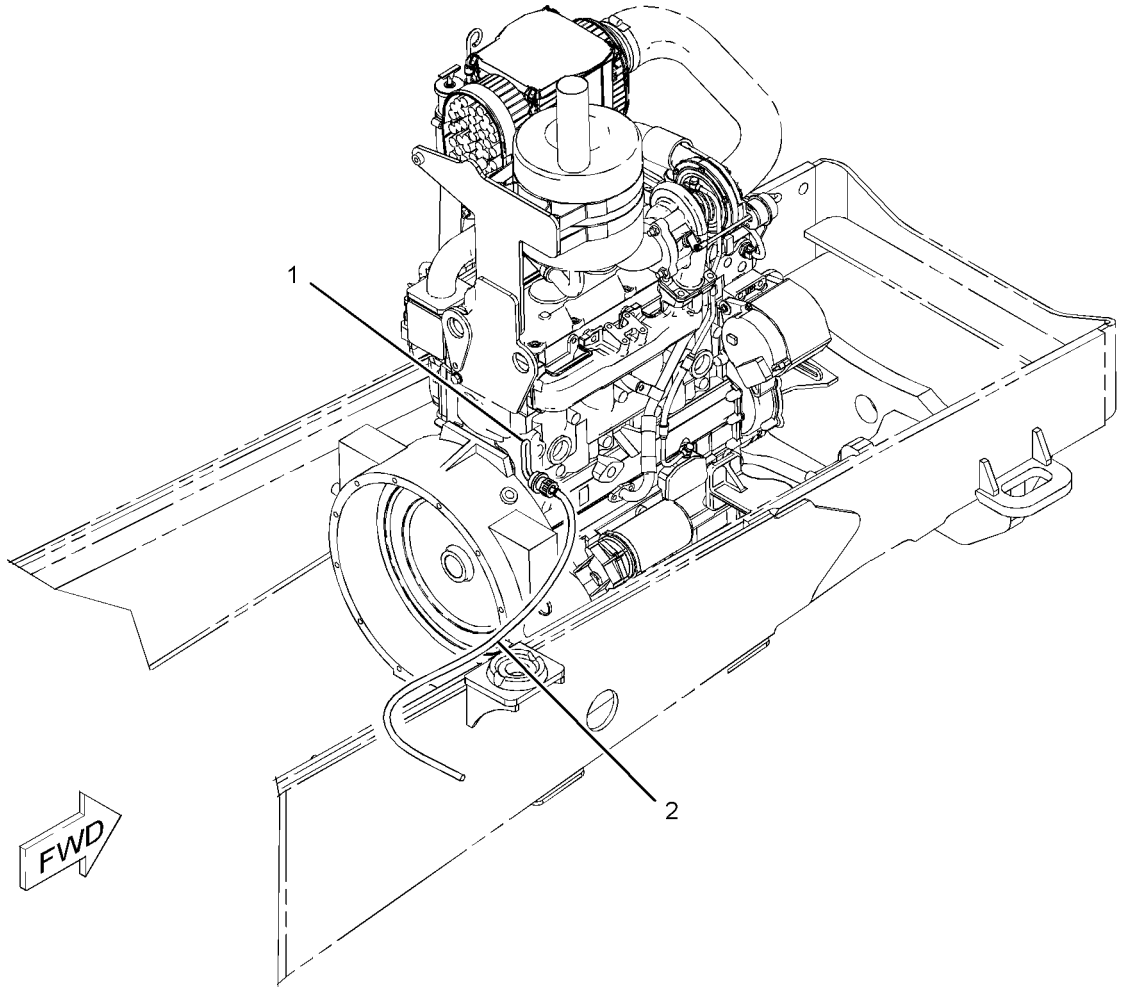

GRAPHIC #1 **<END>** g01105988

248-2215 HEATER GP-JACKET WATER

S/N: DPH1-UP
AN ATTACHMENT

SMCS-1383 **i02174455**

NOTE	REF NO	GRAPHIC REF	PART NUMBER	QTY	PART NAME 1 2 3 4 5 6 (PRODUCT LEVEL)	SEE PAGE
	1	1	**3S-2093**	2	STRAP-CABLE	
Y	2	1	*231-3058*	1	HEATER GP-JACKET WATER	156

Y-SEPARATE ILLUSTRATION

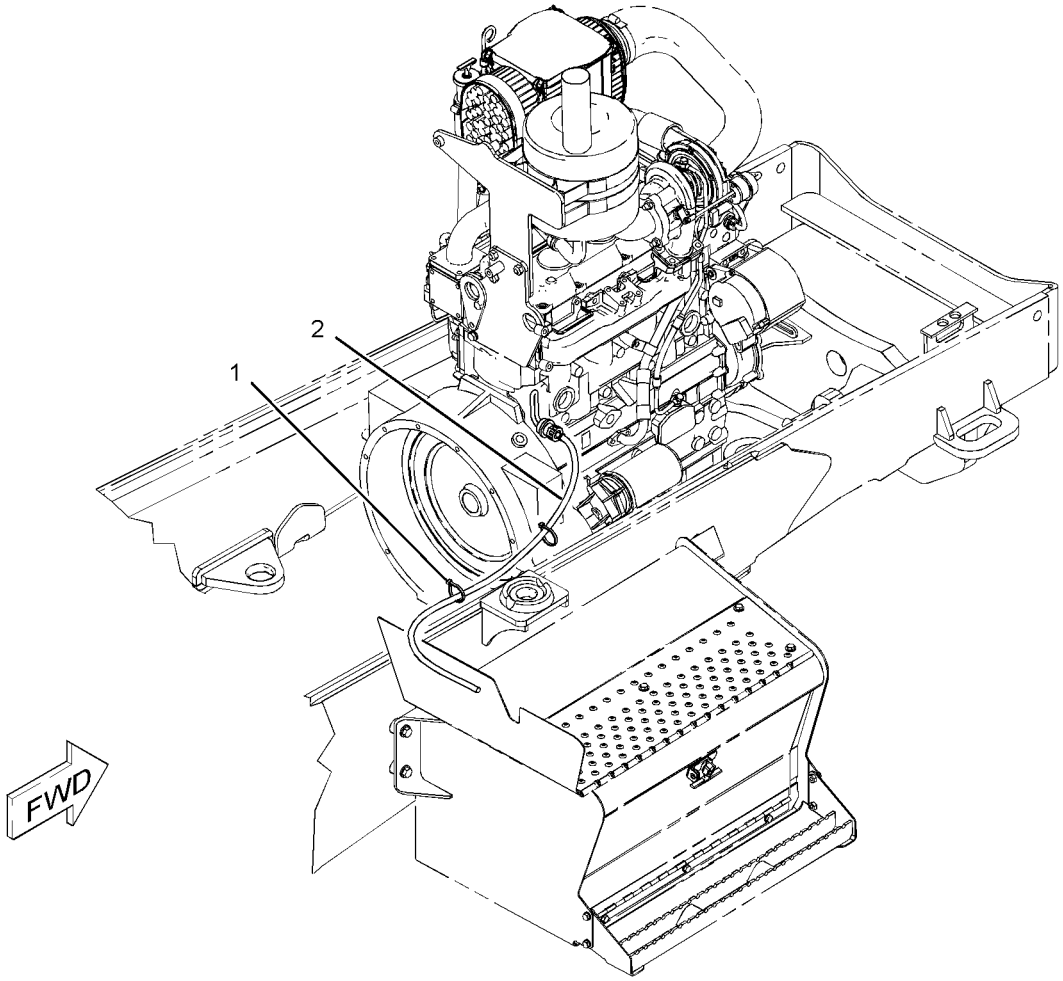

GRAPHIC #1 **<END>** g01104597

ELECTRICAL AND STARTING SYSTEM

322-3037 INSTALLATION GP-SECURITY

S/N: DPH1-UP

AN ATTACHMENT

SMCS-7631 **i03633298**

NOTE	REF NO	GRAPHIC REF	PART NUMBER	QTY	PART NAME 1 2 3 4 5 6 (PRODUCT LEVEL)	SEE PAGE
	1	1	**206-1345**	2	STRAP-CABLE	
	2	1	**225-5927**	2	FILM-INSTRUCTION (MACHINE SECURITY, READ OMM)	
	3	1	**337-5352**	1	FILM-IDENTIFICATION (START SWITCH, READ OMM)	
	4	1	**262-3705**	1	BRACKET AS	
M	5	1	**262-4341**	3	BOLT-SPECIAL	
	6	1	**322-3040**	1	GUARD AS	
Y	7	1	*326-7959*	1	INSTALLATION GP-SECURITY	160
M	8	1	**5C-7261**	1	NUT (M8X1.25-THD)	
M	9	1	**8T-4138**	2	BOLT (M6X1X20-MM)	
M	10	1	**8T-4189**	1	BOLT (M8X1.25X20-MM)	
M	11	1	**8T-4200**	4	BOLT (M8X1.25X16-MM)	
	12	1	**8T-4205**	2	WASHER-HARD (7.2X14.5X2-MM THK)	
	13	1	**8T-4224**	9	WASHER-HARD (8.8X16X2-MM THK)	
	14	1	**9M-8406**	1	CLIP	

M-METRIC PART
Y-SEPARATE ILLUSTRATION

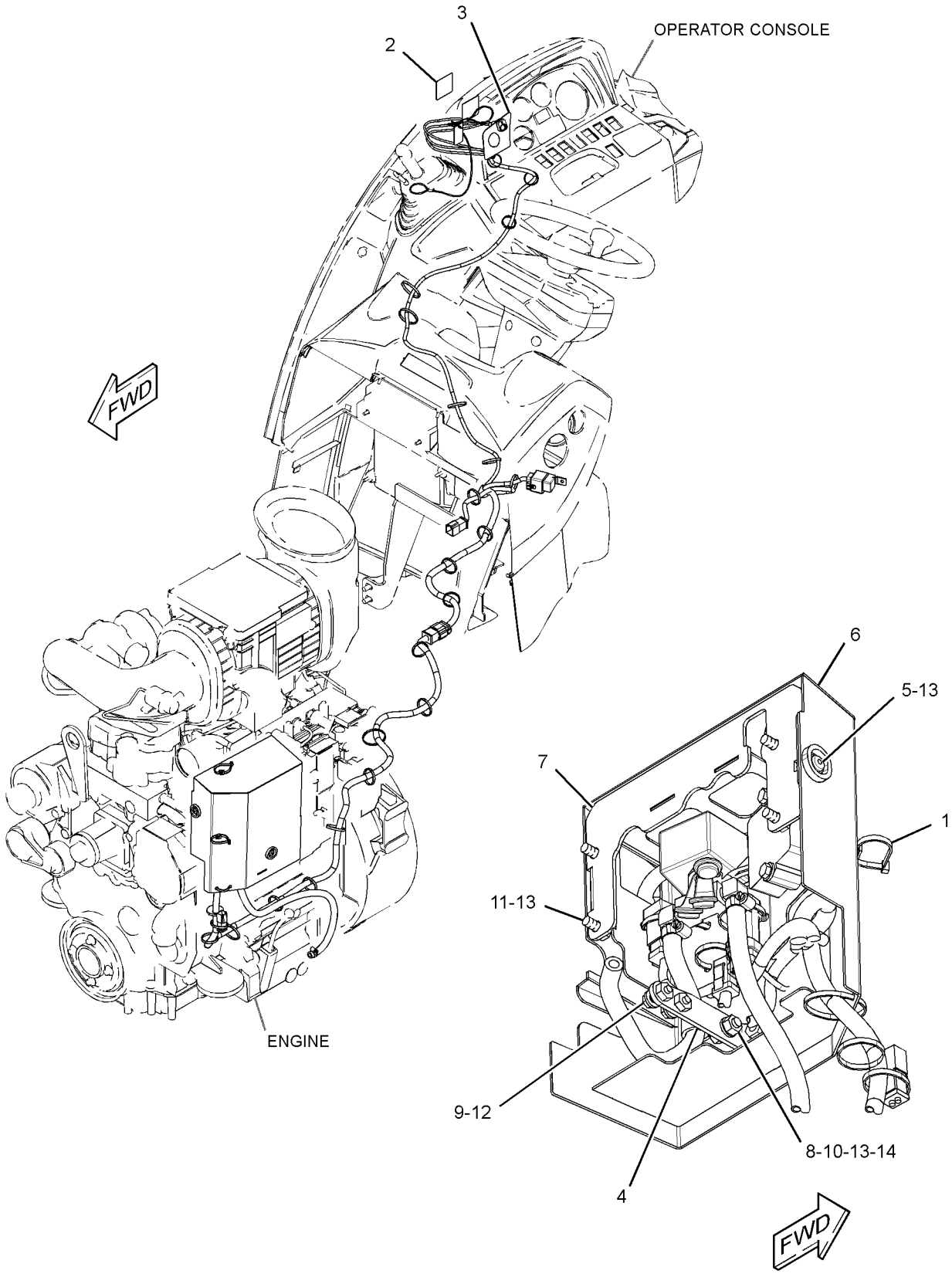

GRAPHIC #1 **<END>** g01626843

326-7959 INSTALLATION GP-SECURITY

S/N: DPH1-UP

PART OF 322-3037 INSTALLATION GP-SECURITY

AN ATTACHMENT

SMCS-7631 **i03628895**

NOTE	REF NO	GRAPHIC REF	PART NUMBER	QTY	PART NAME 1 2 3 4 5 6 (PRODUCT LEVEL)	SEE PAGE
	1	1	**1P-4278**	3	CLAMP-HOSE	
	2	1	**269-0986**	2	FITTING-COUPLING	
Y	3	1	*328-1485*	1	WIRING GP-MACHINE	213
	4	1	**328-1907**	1	BRACKET AS	
M	5	1	**138-8454**	4	SCREW-TRUSS HEAD (M4X0.7X10-MM)	
M	6	1	**7X-2533**	2	BOLT (M6X1X35-MM)	
	7	1	**8T-4205**	2	WASHER-HARD (7.2X14.5X2-MM THK)	
E	8	1	**5P-1420**		HOSE (27.5-CM)	
E	8A	1	**5P-1420**		HOSE (76-CM)	

E-ORDER BY THE CENTIMETER
M-METRIC PART
Y-SEPARATE ILLUSTRATION

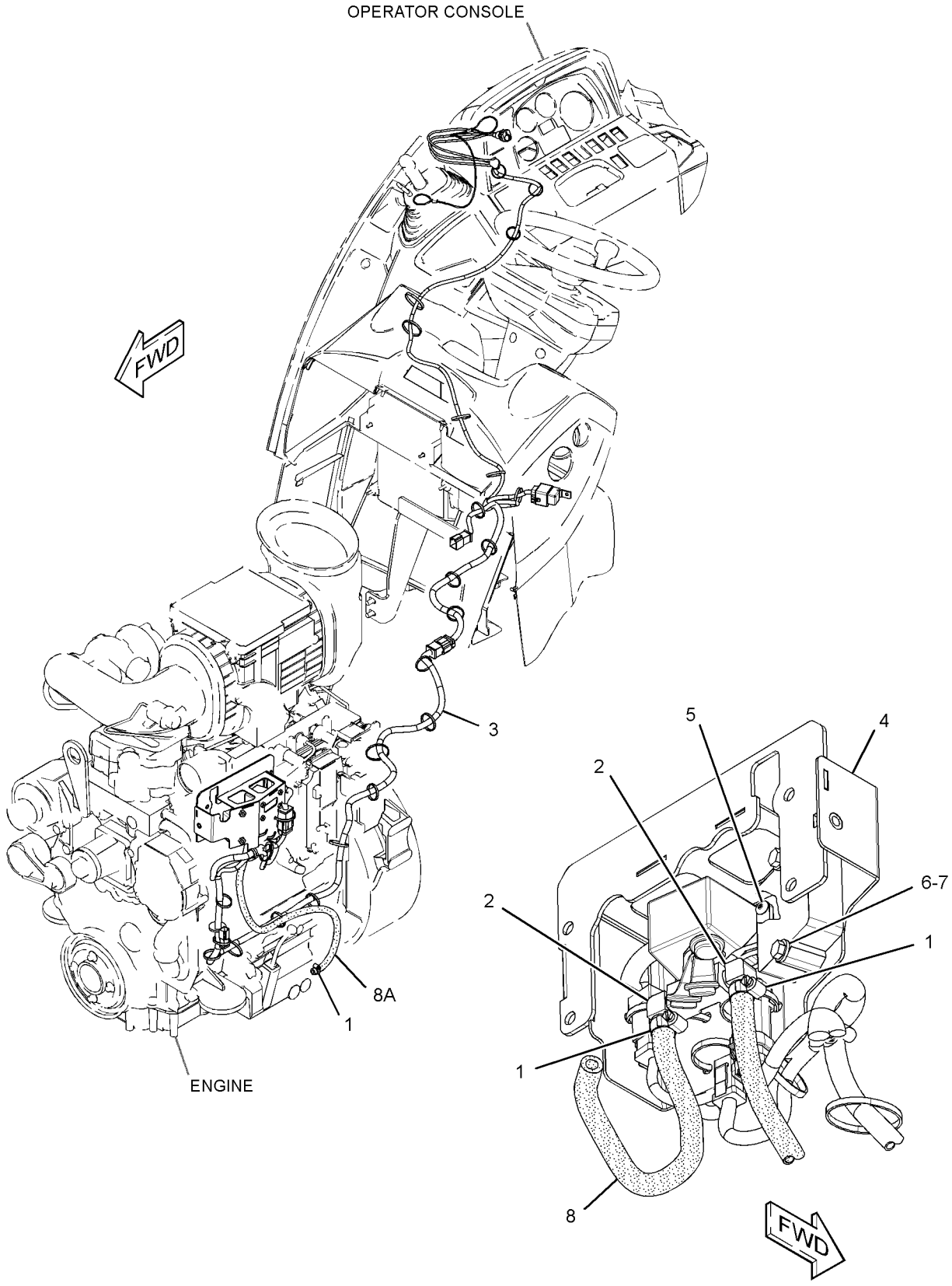

GRAPHIC #1 **<END>** g01626895

ELECTRICAL AND STARTING SYSTEM

328-2481 INSTALLATION GP-SECURITY–TURBO

S/N: DPH1-UP

AN ATTACHMENT

SMCS-7631 **i03579027**

NOTE	REF NO	GRAPHIC REF	PART NUMBER	QTY	PART NAME 1 2 3 4 5 6 (PRODUCT LEVEL)	SEE PAGE
	1	1	**1P-4278**	4	CLAMP-HOSE	
	3	1	**5P-7958**	2	SLEEVE-CABLE SPLICE	
	4	1	**8T-8737**	2	PLUG-SEAL	
	5	1	**123-6758**	1	LANYARD	
	6	1	**200-1898**	1	SUPPRESSOR-ARC	
	7	1	**206-1345**	2	STRAP-CABLE	
	8	1	**219-6314**	1	KEY RING (IDENTIFICATION)	
	9	1	**225-5927**	2	FILM-INSTRUCTION (MACHINE SECURITY, READ OMM)	
	10	1	**257-7211**	1	VALVE AS-SOLENOID (FUEL SHUTOFF)	
		1	**9X-3401**	8	PIN-CONNECTOR (16-GA TO 18-GA)	
		1	**160-3518**	1	KIT-RECEPTACLE (8-PIN)	
					(INCLUDES RECEPTACLE AS & WEDGE)	
		1	**263-8850**	1	KEY AS-ELECTRONIC (BLACK)	
	11	1	**257-7212**	1	SENSOR AS (KEY READER)	
		1	**186-3735**	3	PIN-CONNECTOR (16-GA TO 18-GA)	
		1	**286-1072**	1	SENSOR AS (KEY READER)	
	12	1	**257-7214**	1	HARNESS AS-CONTROL (PLATFORM)	
		1	**102-8806**	1	KIT-RECEPTACLE (8-PIN)	
					(INCLUDES RECEPTACLE AS & WEDGE)	
		1	**8L-8413**	4	STRAP-CABLE	
E		1	**8T-8737**	1	PLUG-SEAL	
		1	**125-7874**		TUBE-HEAT SHRINK (5.72-MM DIA) (15-CM)	
		1	**126-1766**	4	SOCKET-CONNECTOR (14-GA TO 18-GA)	
		1	**155-2270**	1	KIT-CONNECTING PLUG (2-PIN)	
		1	**155-2265**	1	KIT-CONNECTING PLUG (8-PIN)	
					(EACH INCLUDES PLUG AS, WEDGE & INTERFACE SEAL)	
		1	**180-9339**	8	PIN-CONNECTOR (14-GA TO 18-GA)	
		1	**180-9340**	13	SOCKET-CONNECTOR (14-GA TO 18-GA)	
		1	**230-5008**	1	PLUG AS-CONNECTOR (4-PIN)	
		1	**264-7031**	1	SEAL-CONNECTOR	
	13	1	**261-7694**	1	FILM (START SW, READ OMM, SECURITY)	
	14	1	**262-3705**	1	BRACKET AS	
M	15	1	**262-4341**	3	BOLT-SPECIAL	
	16	1	**269-0986**	2	FITTING-COUPLING	
	17	1	**276-5450**	1	RELAY AS (12-VOLT) (FUEL SHUTOFF)	
		1	**186-3735**	4	PIN-CONNECTOR (16-GA TO 18-GA)	
		1	**230-5009**	1	RECEPTACLE AS-CONNECTOR (4-PIN)	
	18	1	**295-5893**	1	HARNESS AS-CONTROL (MACHINE SECURITY SYSTEM)	
		1	**180-9339**	6	PIN-CONNECTOR (14-GA TO 18-GA)	
		1	**180-9340**	11	SOCKET-CONNECTOR (14-GA TO 18-GA)	
		1	**102-8805**	1	KIT-RECEPTACLE (6-PIN)	
					(INCLUDES RECEPTACLE AS & WEDGE)	
E		1	**125-7874**		TUBE-HEAT SHRINK (5.72-MM DIA) (5-CM)	
E		1	**141-8061**		TAPE (2-M)	
		1	**155-2265**	1	KIT-CONNECTING PLUG (8-PIN)	
		1	**155-2260**	1	KIT-CONNECTING PLUG (3-PIN)	
					(EACH INCLUDES PLUG AS, WEDGE & INTERFACE SEAL)	
	19	1	**322-3040**	1	GUARD AS	
	20	1	**328-1907**	1	BRACKET AS	
	21	1	**115-1615**	1	RELAY AS (12-VOLT) (DISABLE START)	
M	22	1	**138-8454**	4	SCREW-TRUSS HEAD (M4X0.7X10-MM)	
	23	1	**102-8802**	1	KIT-RECEPTACLE (2-PIN)	
					(INCLUDES RECEPTACLE AS & WEDGE)	

328-2481 **INSTALLATION GP-SECURITY** *(contd.)* **i03579027**

NOTE	REF NO	GRAPHIC REF	PART NUMBER	QTY	PART NAME 1 2 3 4 5 6 (PRODUCT LEVEL)	SEE PAGE
	24	1	**102-8803**	1	KIT-RECEPTACLE (3-PIN)	
					(INCLUDES RECEPTACLE AS & WEDGE)	
	25	1	**3S-2093**	30	STRAP-CABLE	
M	26	1	**5C-7261**	1	NUT (M8X1.25-THD)	
M	27	1	**7X-2533**	2	BOLT (M6X1X35-MM)	
M	28	1	**8T-4138**	2	BOLT (M6X1X20-MM)	
M	29	1	**8T-4189**	1	BOLT (M8X1.25X20-MM)	
M	30	1	**8T-4200**	4	BOLT (M8X1.25X16-MM)	
	31	1	**8T-4205**	4	WASHER-HARD (7.2X14.5X2-MM THK)	
	32	1	**8T-4224**	9	WASHER-HARD (8.8X16X2-MM THK)	
	33	1	**9M-8406**	1	CLIP	
E	34	1	**5P-1420**		HOSE (76-CM)	
E	34A	1	**5P-1420**		HOSE (27.5-CM)	

E-ORDER BY THE CENTIMETER
M-METRIC PART

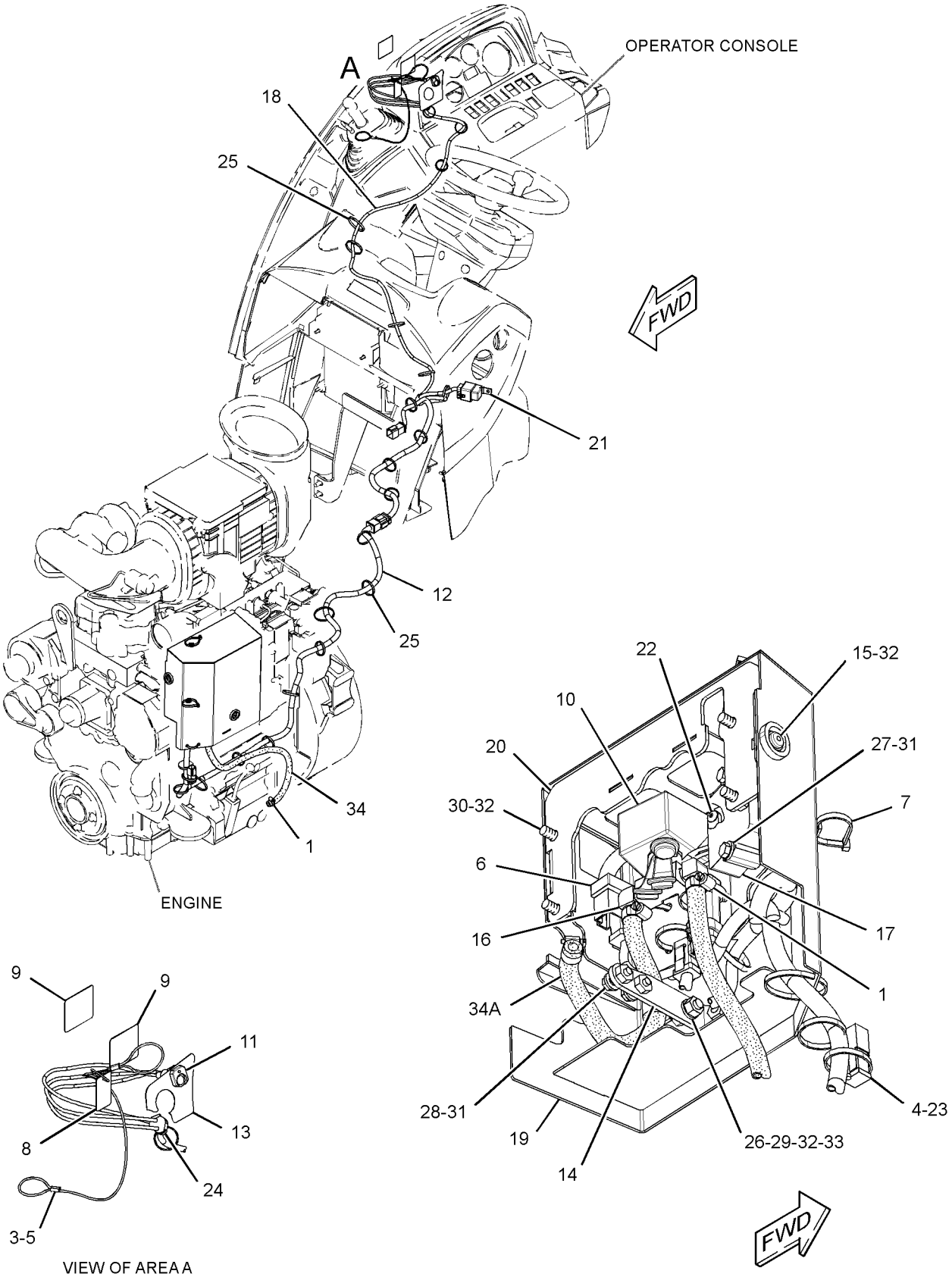

GRAPHIC #1 **<END>** g01636341

214-2968 LAMP GP-FLOOD

S/N: DPH1-UP
12-VOLT
PART OF 340-3552, 340-6912 WIRING GP-CAB
AN ATTACHMENT

SMCS-1429, 1434 **i03712363**

NOTE	REF NO	GRAPHIC REF	PART NUMBER	QTY	PART NAME 1 2 3 4 5 6 (PRODUCT LEVEL)	SEE PAGE
	1	1	**9W-0607**	1	LAMP (12-VOLT, 55-WATT) (FLOODLIGHT)	
M	2	1	**6V-2317**	1	BOLT (M8X1.25X30-MM)	
M	3	1	**5C-7261**	1	NUT (M8X1.25-THD)	
	4	1	**8T-4224**	2	WASHER-HARD (8.8X16X2-MM THK)	
	5	1	**9X-4244**	2	SCREW-SPECIAL (M4X1.79X25-MM)	
	6	1	**202-6614**	1	LENS AS (FLOODLIGHT)	
	7	1	**175-4292**	1	BODY AS	
	8	1	**164-7556**	1	BRACKET (LAMP RETAINING)	
	9	1	**175-4291**	1	BRACKET AS	

M-METRIC PART

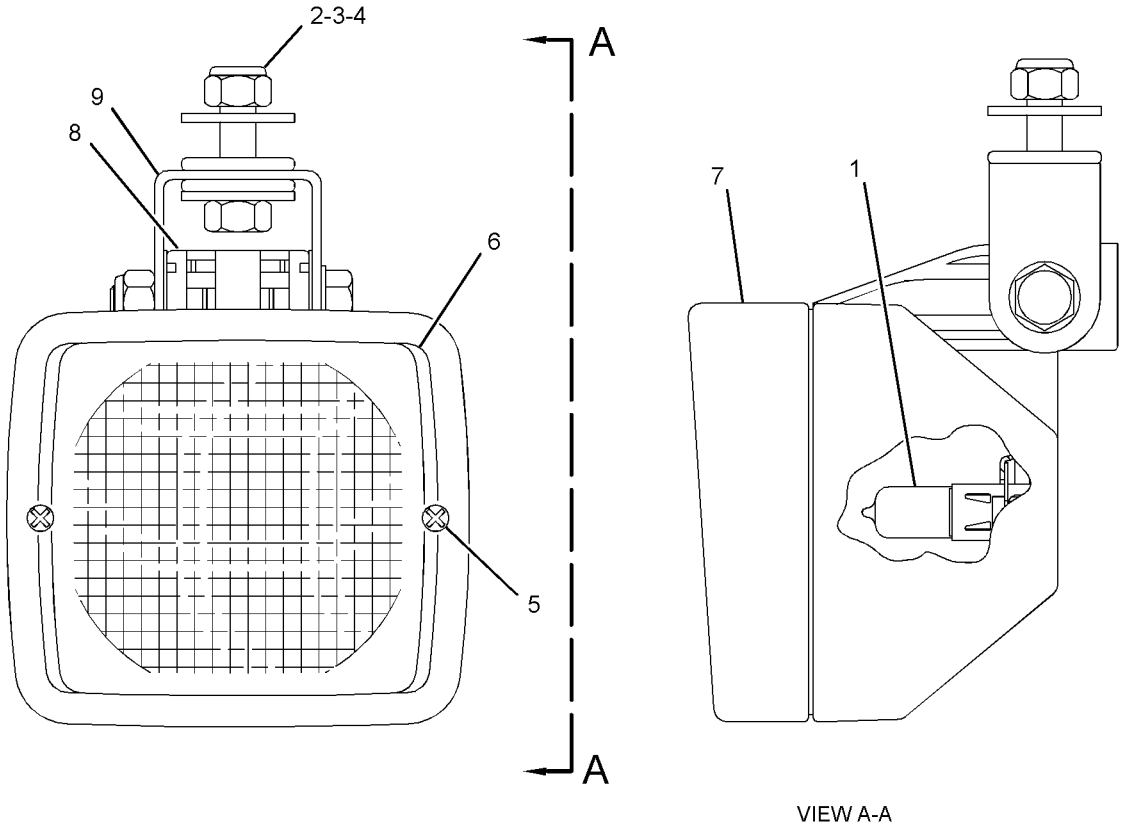

VIEW A-A

GRAPHIC #1 **<END>** g01181714

214-2969 LAMP GP-FLOOD

S/N: DPH1-UP
12-VOLT
PART OF 340-6918 LIGHTING GP-FLOOD
AN ATTACHMENT

SMCS-1429, 1434 **i03712370**

NOTE	REF NO	GRAPHIC REF	PART NUMBER	QTY	PART NAME 1 2 3 4 5 6 (PRODUCT LEVEL)	SEE PAGE
	1	1	**9W-0607**	1	LAMP (12-VOLT, 55-WATT) (FLOODLIGHT)	
M	2	1	**6V-2317**	1	BOLT (M8X1.25X30-MM)	
M	3	1	**5C-7261**	1	NUT (M8X1.25-THD)	
	4	1	**8T-4224**	2	WASHER-HARD (8.8X16X2-MM THK)	
	5	1	**9X-4244**	2	SCREW-SPECIAL (M4X1.79X25-MM)	
	6	1	**202-6611**	1	LENS AS (FLOODLIGHT)	
	7	1	**175-4292**	1	BODY AS	
	8	1	**164-7556**	1	BRACKET (LAMP RETAINING)	
	9	1	**175-4291**	1	BRACKET AS	

M-METRIC PART

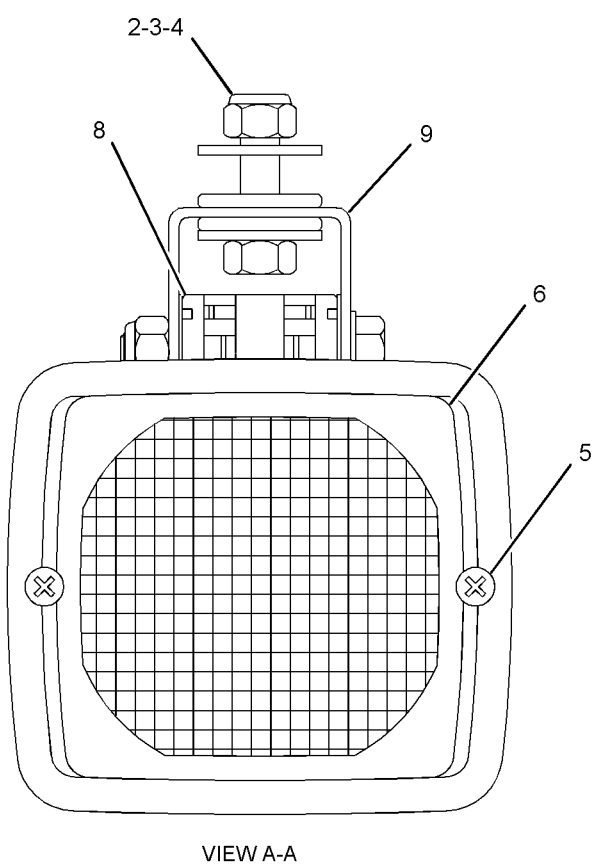

VIEW A-A

GRAPHIC #1 **<END>** g01971255

195-0189 LAMP GP-HEAD & SIGNAL–RH–HIGH, LOW BEAM

S/N: DPH1-UP

PART OF 329-7496 LIGHTING GP-ROADING

AN ATTACHMENT

SMCS-1429 **i03631003**

NOTE	REF NO	GRAPHIC REF	PART NUMBER	QTY	PART NAME 1 2 3 4 5 6 (PRODUCT LEVEL)	SEE PAGE
	1	1	**228-6053**	1	BODY AS	
	2	1	**228-6054**	1	BEZEL	
	3	1	**228-6051**	1	LENS AS (HEADLIGHT)	
	4	1	**228-6052**	1	LENS AS (TURN SIGNAL)	
	5	1	**228-6056**	6	SCREW (4-32X1.26-IN)	
	6	1	**9W-3324**	1	LAMP-HEAD (12-VOLT, 60/55-WATT) (CLEAR)	
	7	1	**226-4560**	1	LAMP (12-VOLT, 21-WATT) (AMBER)	
	8	1	**226-4561**	1	LAMP (12-VOLT, 5-WATT) (CLEAR)	
M	9	1	**8T-0389**	1	LOCKNUT (M10X1.5-THD)	
	10	1	**100-3253**	1	SPACER	
	11	1	**100-3254**	1	SPACER	
	12	1	**100-3255**	1	WASHER (SPHERICAL)	
	13	1	**102-8805**	1	KIT-RECEPTACLE (6-PIN)	
					(INCLUDES RECEPTACLE AS & WEDGE)	
	14	1	**186-3735**	5	PIN-CONNECTOR (16-GA TO 18-GA)	
	15	1	**8T-8737**	1	PLUG-SEAL	

M-METRIC PART

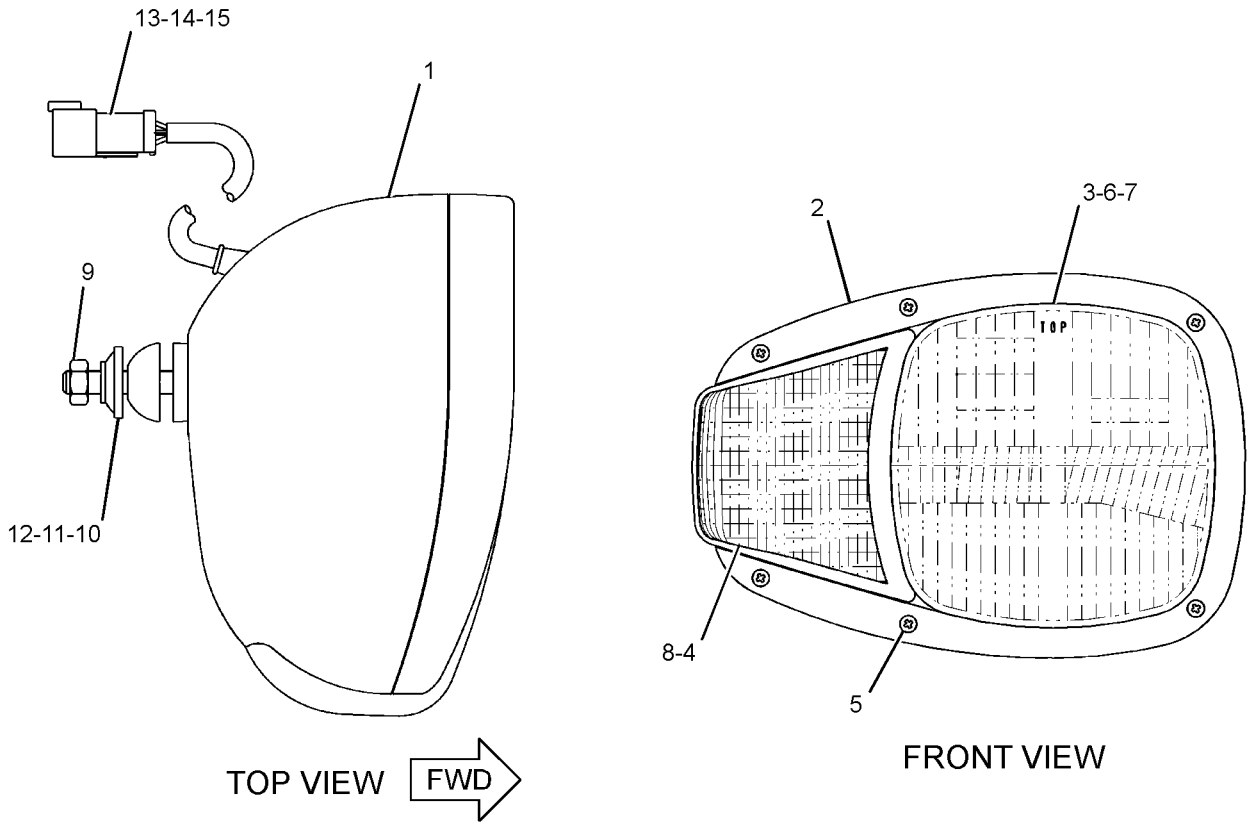

GRAPHIC #1 **<END>** g01313421

195-0190 LAMP GP-HEAD & SIGNAL–LH–HIGH, LOW BEAM

S/N: DPH1-UP
PART OF 329-7496 LIGHTING GP-ROADING
AN ATTACHMENT

SMCS-1429 **i03630995**

NOTE	REF NO	GRAPHIC REF	PART NUMBER	QTY	PART NAME 1 2 3 4 5 6 (PRODUCT LEVEL)	SEE PAGE
	1	1	**228-6053**	1	BODY AS	
	2	1	**228-6054**	1	BEZEL	
	3	1	**228-6051**	1	LENS AS (HEADLIGHT)	
	4	1	**228-6052**	1	LENS AS (TURN SIGNAL)	
	5	1	**228-6056**	6	SCREW (4-32X1.26-IN)	
	6	1	**9W-3324**	1	LAMP-HEAD (12-VOLT, 60/55-WATT) (CLEAR)	
	7	1	**226-4560**	1	LAMP (12-VOLT, 21-WATT) (AMBER)	
	8	1	**226-4561**	1	LAMP (12-VOLT, 5-WATT) (CLEAR)	
M	9	1	**8T-0389**	1	LOCKNUT (M10X1.5-THD)	
	10	1	**100-3253**	1	SPACER	
	11	1	**100-3254**	1	SPACER	
	12	1	**100-3255**	1	WASHER (SPHERICAL)	
	13	1	**102-8805**	1	KIT-RECEPTACLE (6-PIN)	
					(INCLUDES RECEPTACLE AS & WEDGE)	
	14	1	**186-3735**	5	PIN-CONNECTOR (16-GA TO 18-GA)	
	15	1	**8T-8737**	1	PLUG-SEAL	

M-METRIC PART

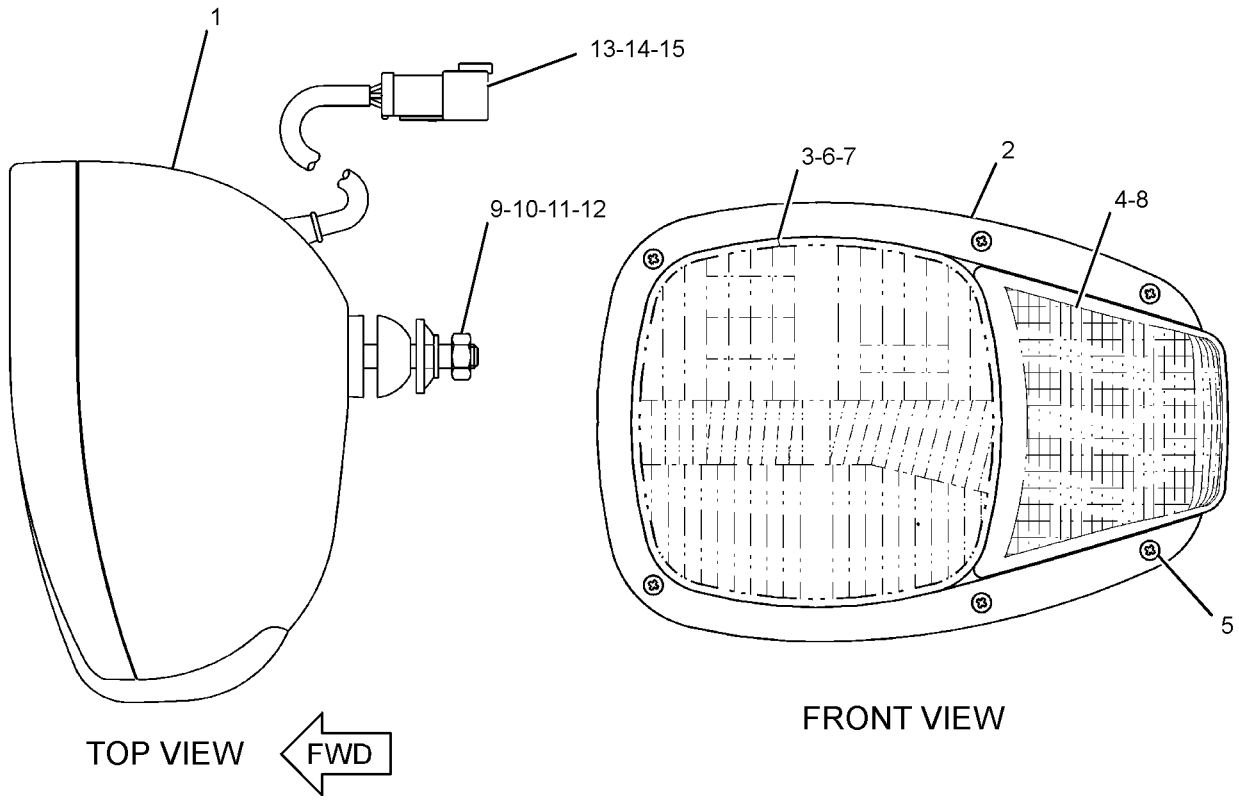

GRAPHIC #1 **<END>** g01313362

195-0191 LAMP GP-HEAD & SIGNAL–RH–HIGH, LOW BEAM

S/N: DPH1-UP
PART OF 329-7497 LIGHTING GP-ROADING
AN ATTACHMENT

SMCS-1429 **i03630988**

NOTE	REF NO	GRAPHIC REF	PART NUMBER	QTY	PART NAME 1 2 3 4 5 6 (PRODUCT LEVEL)	SEE PAGE
	1	1	**228-6053**	1	BODY AS	
	2	1	**228-6054**	1	BEZEL	
	3	1	**228-6050**	1	LENS AS (HEADLIGHT)	
	4	1	**228-6052**	1	LENS AS (TURN SIGNAL)	
	5	1	**228-6056**	6	SCREW (4-32X1.26-IN)	
	6	1	**9W-3324**	1	LAMP-HEAD (12-VOLT, 60/55-WATT) (CLEAR)	
	7	1	**226-4560**	1	LAMP (12-VOLT, 21-WATT) (AMBER)	
	8	1	**226-4561**	1	LAMP (12-VOLT, 5-WATT) (CLEAR)	
M	9	1	**8T-0389**	1	LOCKNUT (M10X1.5-THD)	
	10	1	**100-3253**	1	SPACER	
	11	1	**100-3254**	1	SPACER	
	12	1	**100-3255**	1	WASHER (SPHERICAL)	
	13	1	**102-8805**	1	KIT-RECEPTACLE (6-PIN)	
					(INCLUDES RECEPTACLE AS & WEDGE)	
	14	1	**186-3735**	5	PIN-CONNECTOR (16-GA TO 18-GA)	
	15	1	**8T-8737**	1	PLUG-SEAL	

M-METRIC PART

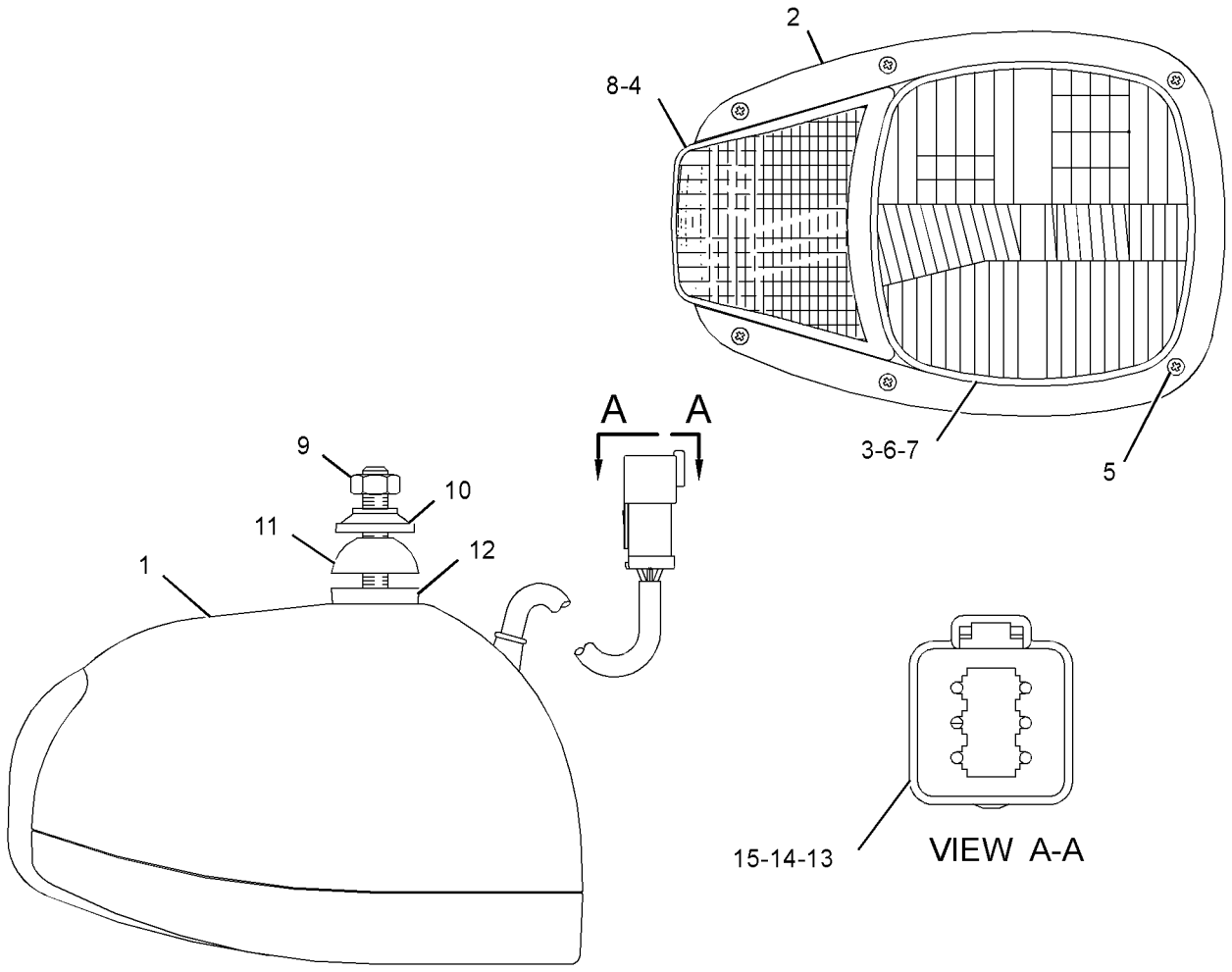

GRAPHIC #1 **<END>** g01948222

195-0192 LAMP GP-HEAD & SIGNAL–LH–HIGH, LOW BEAM

S/N: DPH1-UP
PART OF 329-7497 LIGHTING GP-ROADING
AN ATTACHMENT

SMCS-1429 **i03631761**

NOTE	REF NO	GRAPHIC REF	PART NUMBER	QTY	PART NAME 1 2 3 4 5 6 (PRODUCT LEVEL)	SEE PAGE
	1	1	**228-6053**	1	BODY AS	
	2	1	**228-6054**	1	BEZEL	
	3	1	**228-6050**	1	LENS AS (HEADLIGHT)	
	4	1	**228-6052**	1	LENS AS (TURN SIGNAL)	
	5	1	**228-6056**	6	SCREW (4-32X1.26-IN)	
	6	1	**9W-3324**	1	LAMP-HEAD (12-VOLT, 60/55-WATT) (CLEAR)	
	7	1	**226-4560**	1	LAMP (12-VOLT, 21-WATT) (AMBER)	
	8	1	**226-4561**	1	LAMP (12-VOLT, 5-WATT) (CLEAR)	
M	9	1	**8T-0389**	1	LOCKNUT (M10X1.5-THD)	
	10	1	**100-3253**	1	SPACER	
	11	1	**100-3254**	1	SPACER	
	12	1	**100-3255**	1	WASHER (SPHERICAL)	
	13	1	**102-8805**	1	KIT-RECEPTACLE (6-PIN) (INCLUDES RECEPTACLE AS & WEDGE)	
	14	1	**186-3735**	5	PIN-CONNECTOR (16-GA TO 18-GA)	
	15	1	**8T-8737**	1	PLUG-SEAL	

M-METRIC PART

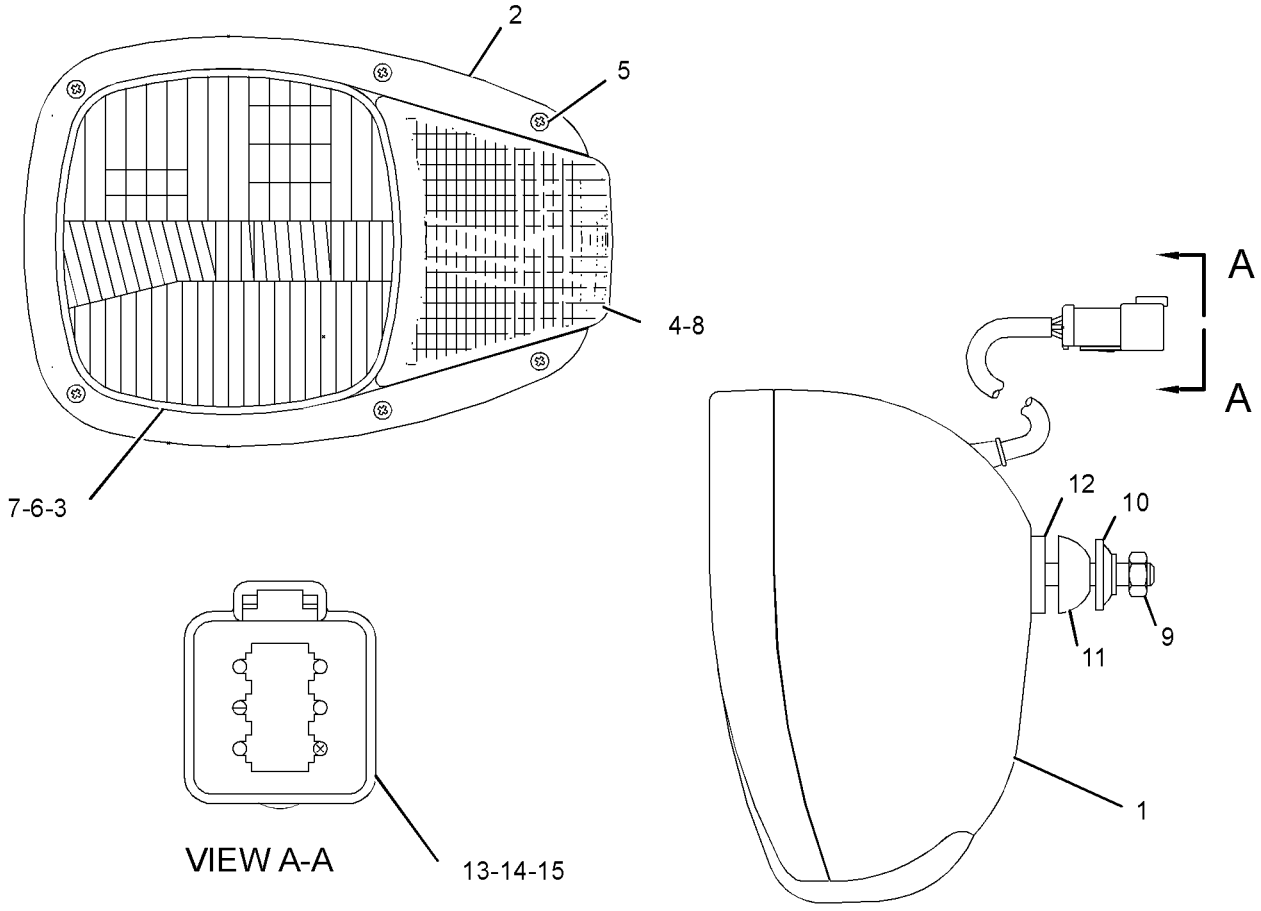

GRAPHIC #1 **<END>** g01948223

196-0030 LAMP GP-REGISTRATION PLATE

S/N: DPH1-UP
12-VOLT
PART OF 328-1953 LAMP GP-REGISTRATION PLATE, 328-1950 LIGHTING GP-ROADING AN ATTACHMENT

SMCS-1429 **i02224900**

NOTE	REF NO	GRAPHIC REF	PART NUMBER	QTY	PART NAME 1 2 3 4 5 6 (PRODUCT LEVEL)	SEE PAGE
	1	1	**195-9712**	1	LAMP (12-VOLT, 10-WATT)	
M	2	1	**5C-2874**	2	NUT (M5X0.8-THD)	
	3	1	**8F-1434**	2	LOCKWASHER	
M	4	1	**8T-4753**	2	SCREW (M5X0.8X20-MM)	
	5	1	**9M-2307**	2	WASHER (5.2X19X2-MM THK)	
	6	1	**102-8802**	1	KIT-RECEPTACLE (2-PIN)	
					(INCLUDES RECEPTACLE AS & WEDGE)	
	7	1	**186-3735**	2	PIN-CONNECTOR (16-GA TO 18-GA)	

M-METRIC PART

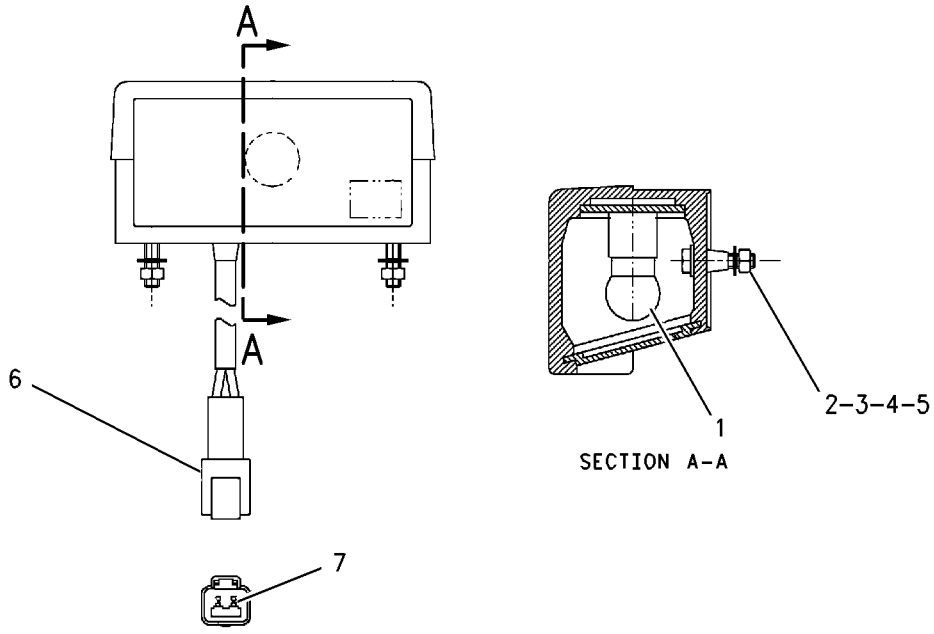

GRAPHIC #1 **<END>** g00890511

328-1953 LAMP GP-REGISTRATION PLATE

S/N: DPH1-UP

AN ATTACHMENT

SMCS-1429 **i03713821**

NOTE	REF NO	GRAPHIC REF	PART NUMBER	QTY	PART NAME 1 2 3 4 5 6 (PRODUCT LEVEL)	SEE PAGE
	1	1	**7K-1181**	3	STRAP-CABLE	
Y	2	1	**196-0030**	1	LAMP GP-REGISTRATION PLATE (12-VOLT)	171
	3	1	**205-9920**	1	STRAP-CABLE	
	4	1	**328-7020**	1	HARNESS AS-LIGHTING (REGISTRATION PLATE)	
		1	**1S-9593**	1	STRAP-CABLE	
		1	**102-8803**	1	KIT-RECEPTACLE (3-PIN)	
					(INCLUDES RECEPTACLE AS & WEDGE)	
		1	**8T-8737**	1	PLUG-SEAL	
		1	**155-2270**	1	KIT-CONNECTING PLUG (2-PIN)	
					(INCLUDES PLUG AS, WEDGE & INTERFACE SEAL)	
		1	**9X-3401**	2	PIN-CONNECTOR (16-GA TO 18-GA)	
		1	**180-9340**	2	SOCKET-CONNECTOR (14-GA TO 18-GA)	
		1	**266-4157**	1	SLEEVE-BRAIDED	
	5	1	**330-7612**	1	PLATE	
	6	1	**3S-2093**	4	STRAP-CABLE	
M	7	1	**5C-7261**	2	NUT (M8X1.25-THD)	
	8	1	**5P-4116**	4	WASHER-HARD (8.8X20.5X2-MM THK)	
M	9	1	**8T-7547**	2	BOLT (M8X1.25X30-MM)	

M-METRIC PART
Y-SEPARATE ILLUSTRATION

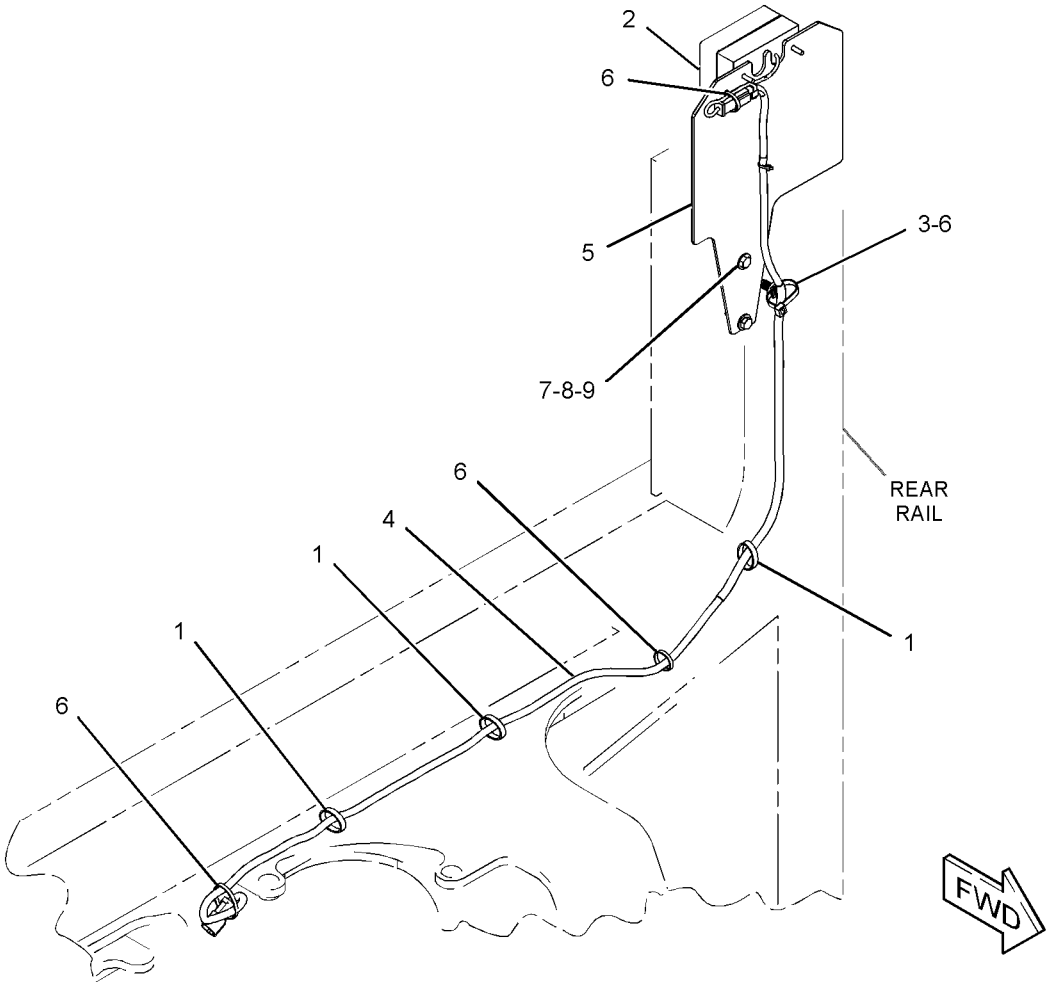

GRAPHIC #1 **<END>** g01963520

309-1325 LAMP GP-WARNING BEACON–12-VOLT, AMBER

S/N: DPH1-UP

PART OF 211-4291 LIGHTING GP-WARNING BEACON

AN ATTACHMENT

SMCS-1431 **i03631017**

NOTE	REF NO	GRAPHIC REF	PART NUMBER	QTY	PART NAME 1 2 3 4 5 6 (PRODUCT LEVEL)	SEE PAGE
	1	1	**272-9800**	1	LENS (AMBER)	
	2	1	**9X-8118**	1	LAMP (12-VOLT, 55-WATT) (WARNING BEACON)	
	3	1	**9X-8139**	1	BELT-DRIVE (WARNING BEACON)	
	4	1	**9R-7958**	1	CORD AS	
	4A	1	**9R-7942**	1	PLUG AS	

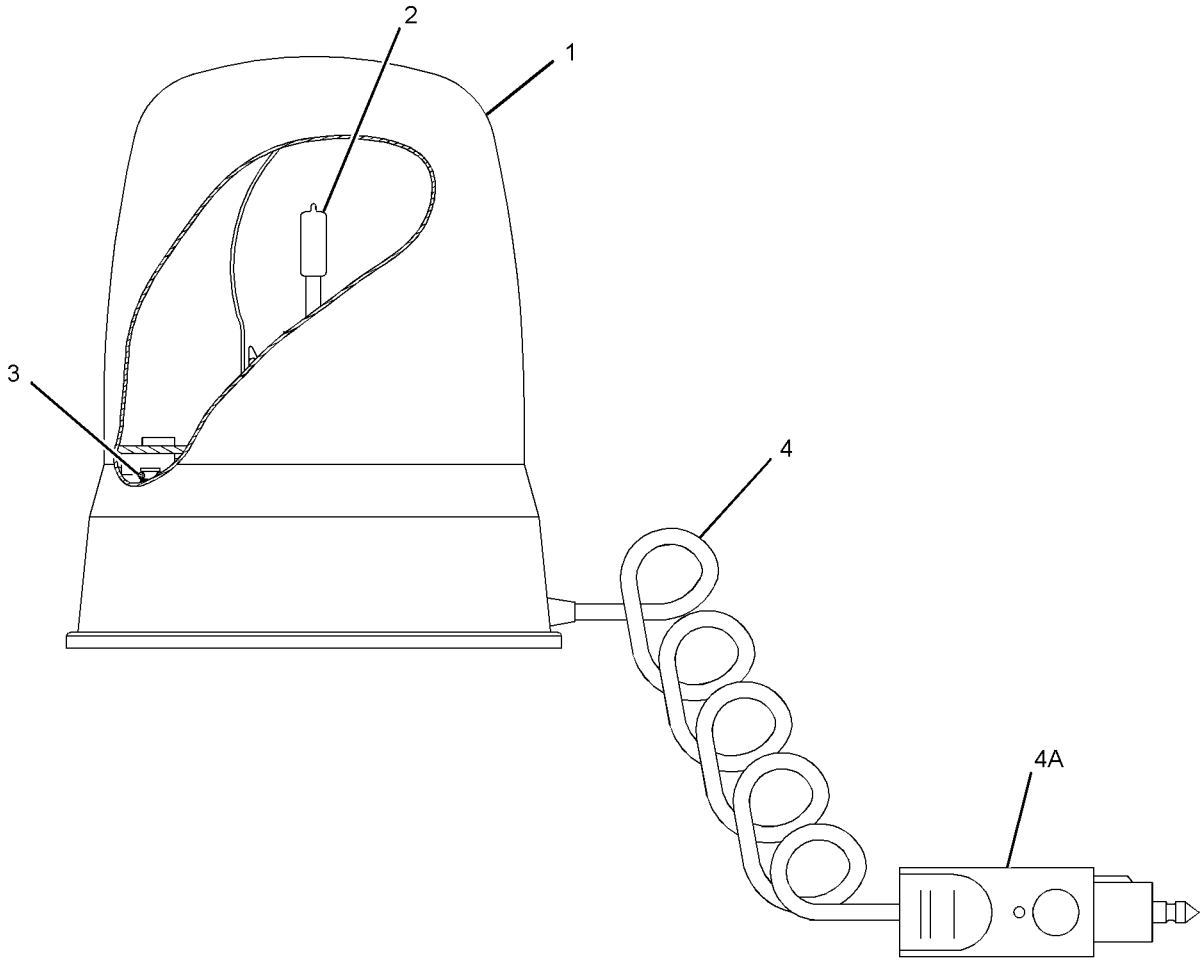

GRAPHIC #1 **<END>** g01382357

340-6918 LIGHTING GP-FLOOD—FRONT, REAR, COSA

S/N: DPH1-UP

PART OF 335-3049, 335-3050 CAB AR, 335-3047, 335-3048 CANOPY AR-OPEN ROPS AN ATTACHMENT

SMCS-1434 **i03642562**

NOTE	REF NO	GRAPHIC REF	PART NUMBER	QTY	PART NAME 1 2 3 4 5 6 (PRODUCT LEVEL)	SEE PAGE
Y	1	1	*214-2969*	4	LAMP GP-FLOOD	166
	2	1	**214-4698**	1	SWITCH AS-ROCKER (FLOODLIGHTS, FRONT)	
	3	1	**214-4700**	1	SWITCH AS-ROCKER (FLOODLIGHTS, REAR)	
					(EACH SWITCH AS-ROCKER INCLUDES)	
		1	**111-7899**	1	GASKET	
	4	1	**3S-2093**	4	STRAP-CABLE	

Y-SEPARATE ILLUSTRATION

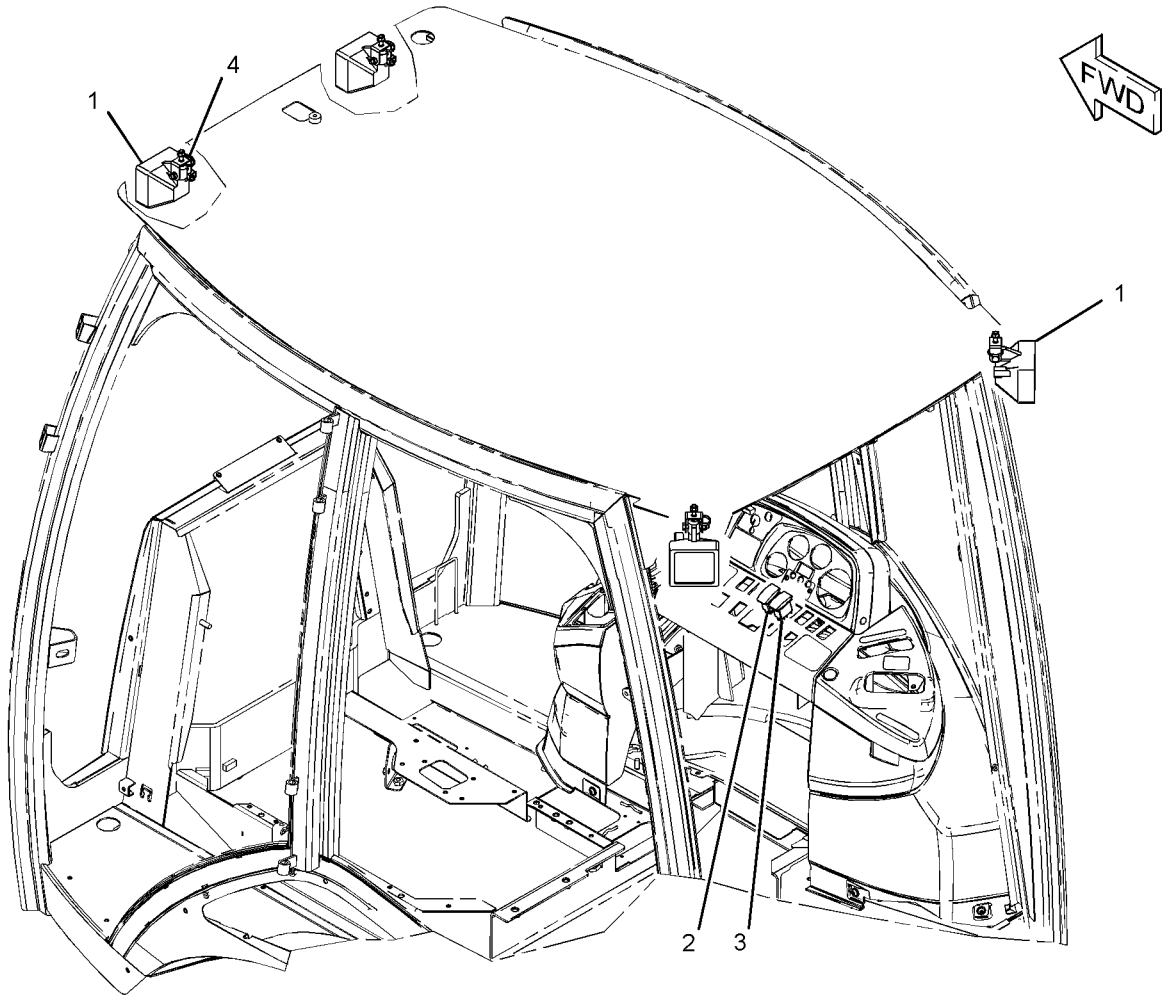

GRAPHIC #1 **<END>** g01970873

328-1950 LIGHTING GP-ROADING—FOG

S/N: DPH1-UP

AN ATTACHMENT

SMCS-1429 **i03652409**

NOTE	REF NO	GRAPHIC REF	PART NUMBER	QTY	PART NAME 1 2 3 4 5 6 (PRODUCT LEVEL)	SEE PAGE
	1	1	**7K-1181**	3	STRAP-CABLE	
Y	2	1	**196-0030**	1	LAMP GP-REGISTRATION PLATE	171
	3	1	**205-9920**	1	STRAP-CABLE	
	4	1	**214-4721**	1	SWITCH AS-ROCKER (FOG LIGHT, REAR)	
		1	**111-7899**	1	GASKET	
	5	1	**262-4727**	1	LAMP GP-ROADING (FOG; RED, REAR)	
		1	**9W-3326**	1	LAMP (12-VOLT, 21-WATT) (ROADING LIGHTS)	
		1	**344-7954**	1	LENS	
	6	1	**327-4172**	1	HARNESS AS-REAR LIGHTING	
		1	**266-4157**	2	SLEEVE-BRAIDED	
		1	**230-4011**	1	PLUG AS-CONNECTOR (2-PIN)	
		1	**264-7029**	1	SEAL-CONNECTOR	
		1	**180-9340**	2	SOCKET-CONNECTOR (14-GA TO 18-GA)	
		1	**1S-9593**	2	STRAP-CABLE	
		1	**102-8803**	1	KIT-RECEPTACLE (3-PIN) (INCLUDES RECEPTACLE AS & WEDGE)	
		1	**155-2270**	1	KIT-CONNECTING PLUG (2-PIN) (INCLUDES PLUG AS, WEDGE & INTERFACE SEAL)	
E		1	**125-7874**		TUBE-HEAT SHRINK (5.72-MM DIA) (5-CM)	
		1	**9X-3402**	2	SOCKET-CONNECTOR (16-GA TO 18-GA)	
		1	**9X-3401**	3	PIN-CONNECTOR (16-GA TO 18-GA)	
	7	1	**330-7612**	1	PLATE	
	8	1	**330-7613**	1	PLATE	
	9	1	**3S-2093**	4	STRAP-CABLE	
M	10	1	**5C-2890**	2	NUT (M6X1-THD)	
M	11	1	**5C-7261**	2	NUT (M8X1.25-THD)	
	12	1	**5P-4116**	4	WASHER-HARD (8.8X20.5X2-MM THK)	
	13	1	**8T-4205**	2	WASHER-HARD (7.2X14.5X2-MM THK)	
M	14	1	**8T-7547**	2	BOLT (M8X1.25X30-MM)	

E-ORDER BY THE CENTIMETER
M-METRIC PART
Y-SEPARATE ILLUSTRATION

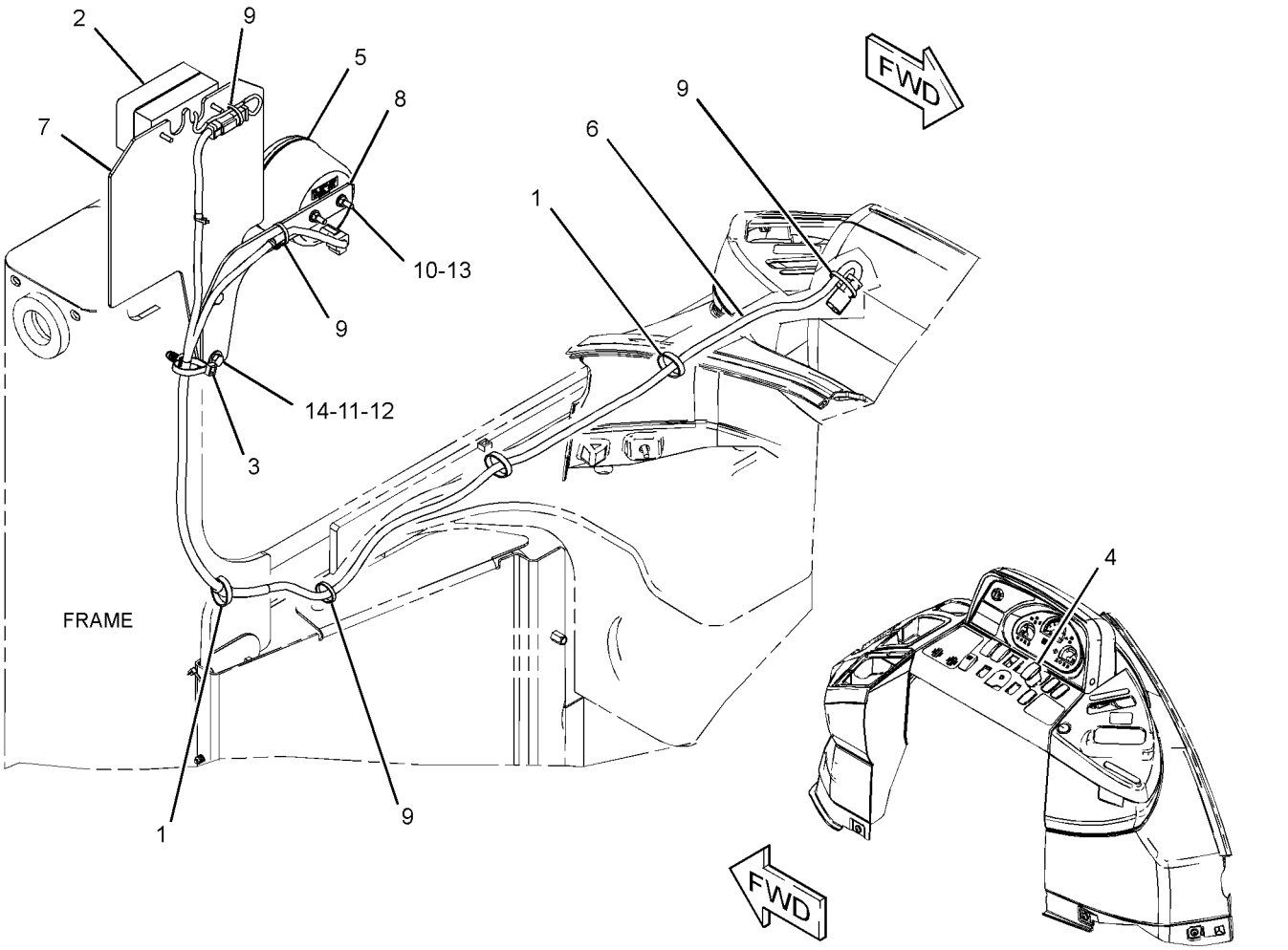

GRAPHIC #1 **<END>** g01963213

329-7496 LIGHTING GP-ROADING—DIPPED, RH

S/N: DPH1-UP

AN ATTACHMENT

SMCS-1429 **i03690297**

NOTE	REF NO	GRAPHIC REF	PART NUMBER	QTY	PART NAME 1 2 3 4 5 6 (PRODUCT LEVEL)	SEE PAGE
	1	1	**9R-1499**	2	REFLECTOR	
Y	2	1	**195-0189**	1	LAMP GP-HEAD & SIGNAL (RH)	167
Y	3	1	**195-0190**	1	LAMP GP-HEAD & SIGNAL (LH)	168
	4	1	**214-4711**	1	SWITCH AS-ROCKER (ROADING LIGHTS)	
		1	**111-7899**	1	GASKET	
	5	1	**336-9096**	2	LAMP GP-SIGNAL (12-VOLT) (STOP, TAIL, TURN)	
	6	1	**337-7029**	2	BRACKET AS	
	7	1	**3S-2093**	2	STRAP-CABLE	
M	8	1	**8T-4189**	2	BOLT (M8X1.25X20-MM)	
	9	1	**8T-4224**	4	WASHER-HARD (8.8X16X2-MM THK)	
M	10	1	**8T-4908**	2	BOLT (M8X1.25X25-MM)	

M-METRIC PART
Y-SEPARATE ILLUSTRATION

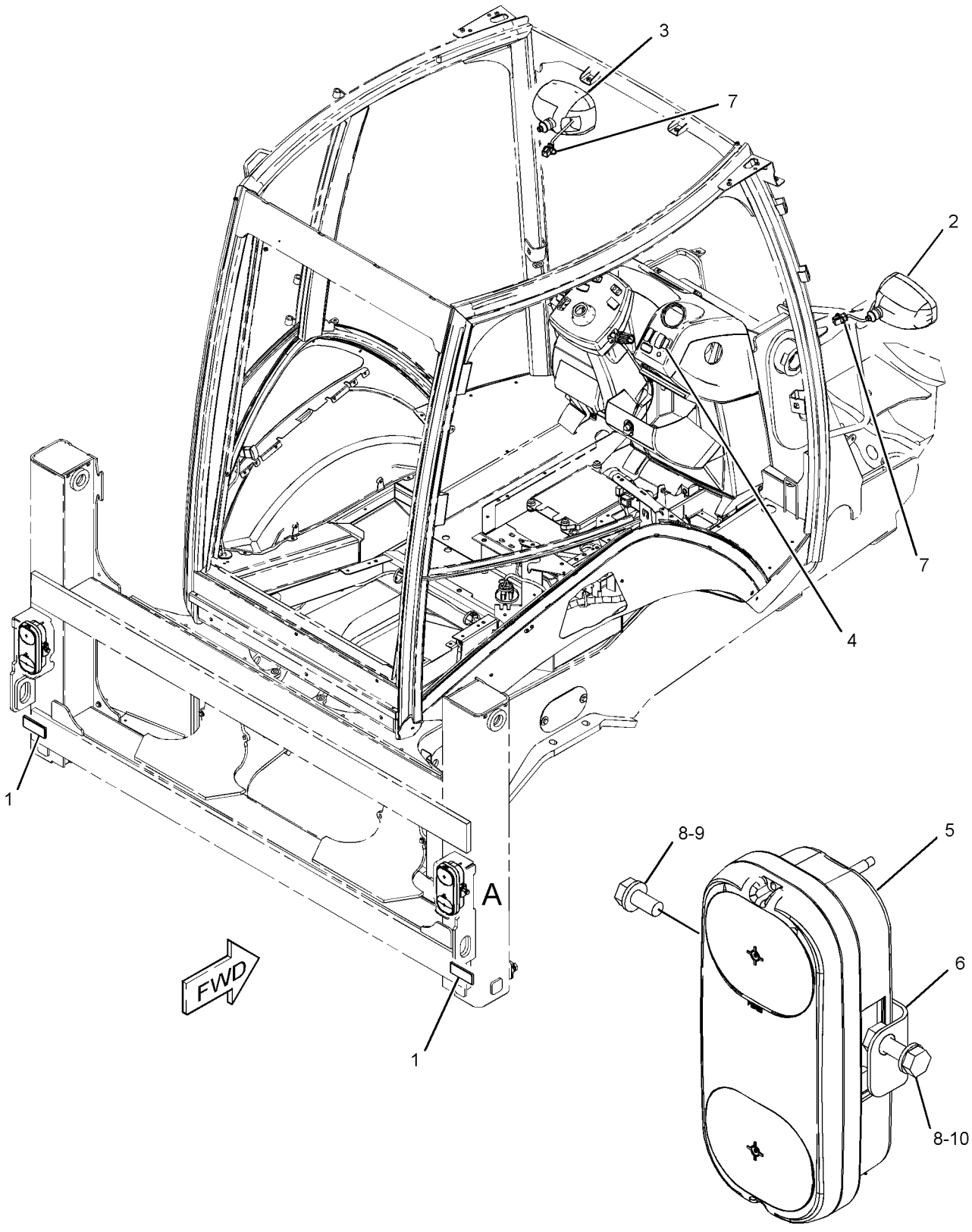

VIEW OF AREA A

GRAPHIC #1 **<END>** g01990054

329-7497 LIGHTING GP-ROADING—DIPPED, LH

S/N: DPH1-UP

AN ATTACHMENT

SMCS-1429 **i03690303**

NOTE	REF NO	GRAPHIC REF	PART NUMBER	QTY	PART NAME 1 2 3 4 5 6 (PRODUCT LEVEL)	SEE PAGE
	1	1	**9R-1499**	2	REFLECTOR	
Y	2	1	**195-0191**	1	LAMP GP-HEAD & SIGNAL (RH)	169
Y	3	1	**195-0192**	1	LAMP GP-HEAD & SIGNAL (LH)	170
	4	1	**214-4711**	1	SWITCH AS-ROCKER (ROADING LIGHTS)	
		1	**111-7899**	1	GASKET	
	5	1	**336-9096**	2	LAMP GP-SIGNAL (12-VOLT) (STOP, TAIL, TURN)	
	6	1	**337-7029**	2	BRACKET AS	
	7	1	**3S-2093**	2	STRAP-CABLE	
M	8	1	**8T-4189**	2	BOLT (M8X1.25X20-MM)	
	9	1	**8T-4224**	4	WASHER-HARD (8.8X16X2-MM THK)	
M	10	1	**8T-4908**	2	BOLT (M8X1.25X25-MM)	

M-METRIC PART
Y-SEPARATE ILLUSTRATION

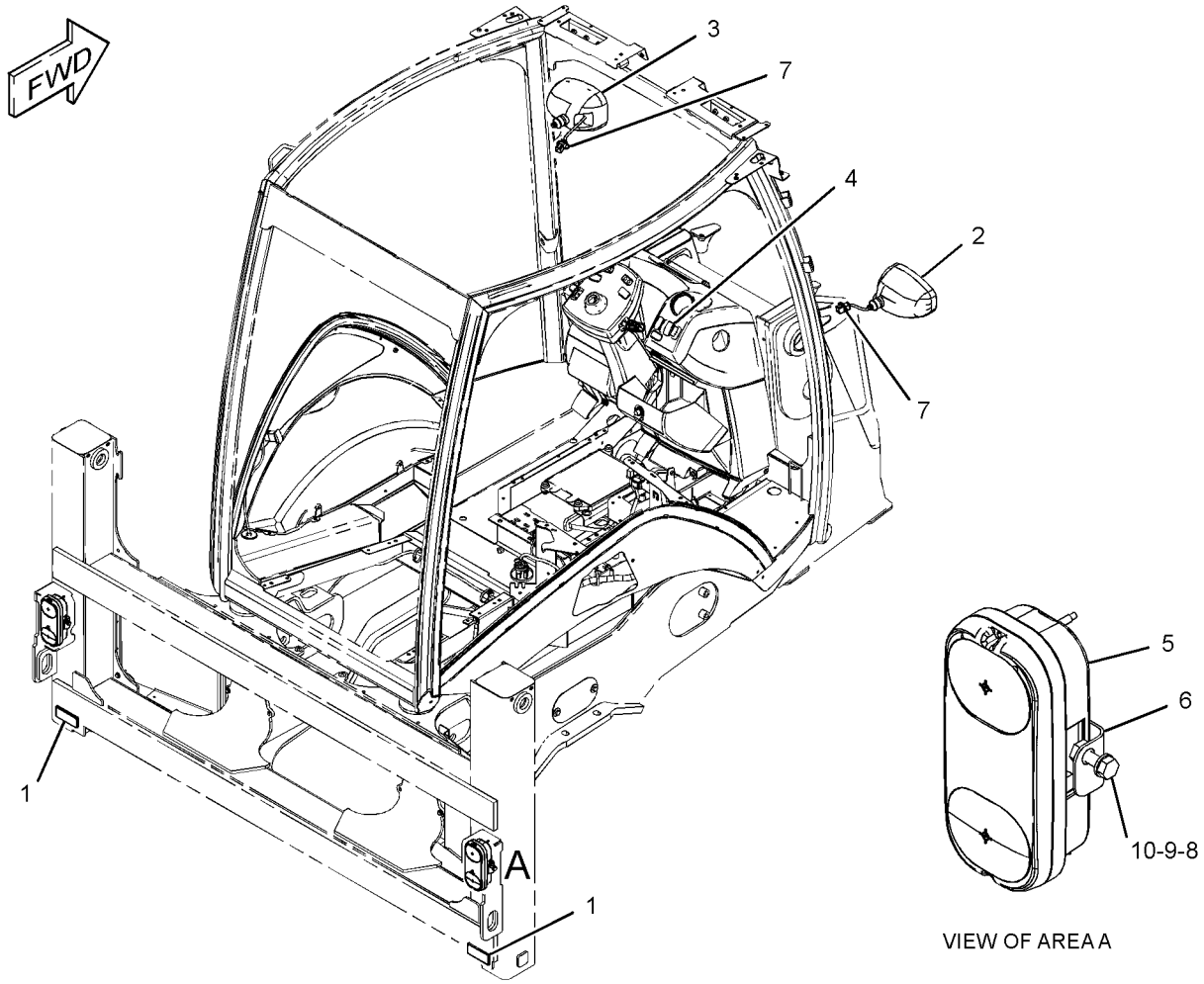

VIEW OF AREA A

GRAPHIC #1 **<END>** g01986742

211-4291 LIGHTING GP-WARNING BEACON–
AMBER, MAGNETIC MOUNT, ROTATING
S/N: DPH1-UP
AN ATTACHMENT

SMCS-1431 **i03628950**

NOTE	REF NO	GRAPHIC REF	PART NUMBER	QTY	PART NAME 1 2 3 4 5 6 (PRODUCT LEVEL)	SEE PAGE
Y	1	1	**309-1325**	1	LAMP GP-WARNING BEACON	173
	2	1	**031-5644**	2	CLIP	

Y-SEPARATE ILLUSTRATION

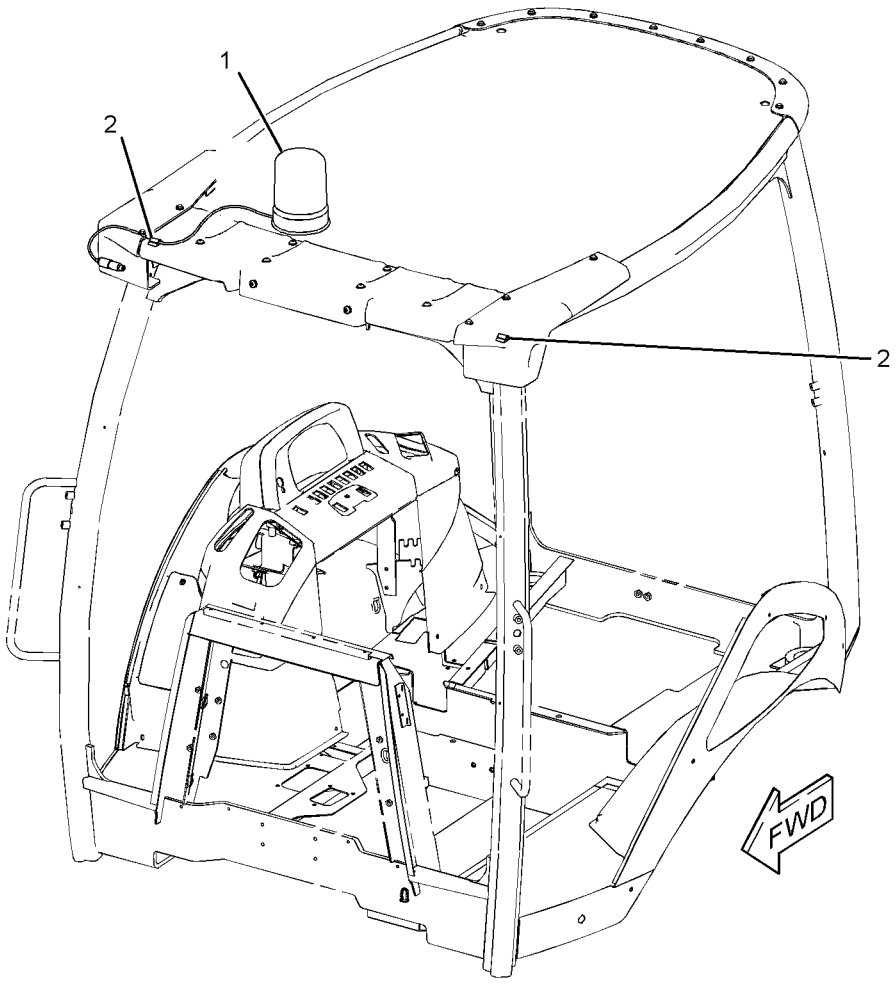

GRAPHIC #1 **<END>** g01228059

276-7287 RELAY GP—POWER DISTRIBUTION

S/N: DPH1-UP
12-VOLT
PART OF 338-5733 WIRING GP-AIR CONDITIONER, 310-5613 WIRING GP-HEATER AN ATTACHMENT

SMCS-1422, 4493 **i03325084**

NOTE	REF NO	GRAPHIC REF	PART NUMBER	QTY	PART NAME 1 2 3 4 5 6 (PRODUCT LEVEL)	SEE PAGE
M	1	1	**5C-2890**	2	NUT (M6X1-THD)	
	2	1	**8T-4205**	2	WASHER-HARD (7.2X14.5X2-MM THK)	
	3	1	**1H-3244**	2	LOCKWASHER	
M	4	1	**5C-7261**	1	NUT (M8X1.25-THD)	
	5	1	**8T-4224**	1	WASHER-HARD (8.8X16X2-MM THK)	
	6	1	**267-5213**	1	COVER	
	7	1	**267-5211**	1	SEAL	
	8	1	**278-6377**	1	FUSE (40-AMPERE)	

M-METRIC PART

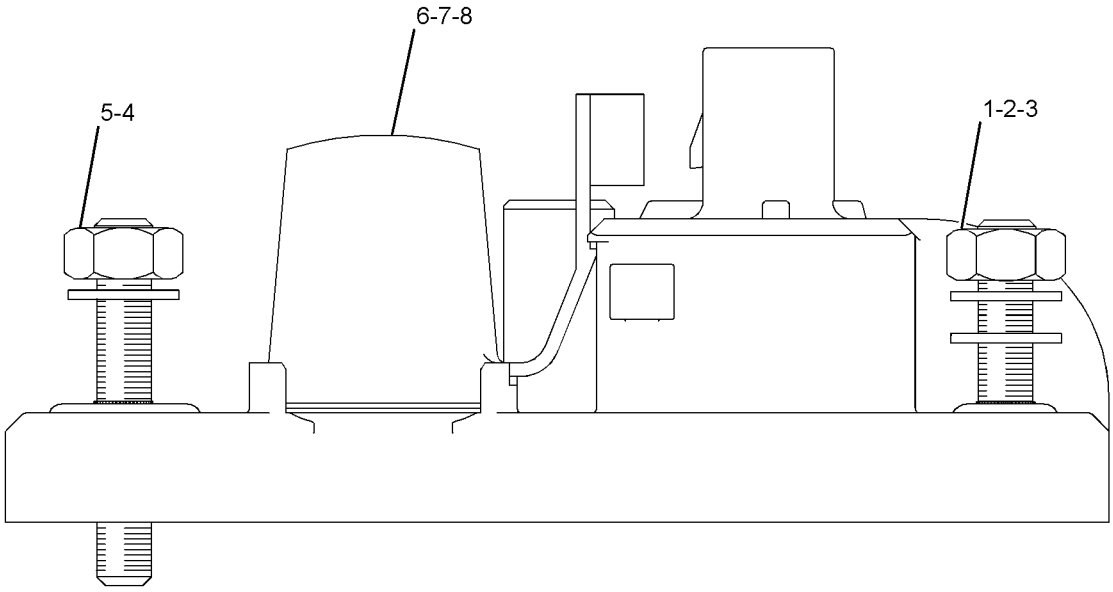

GRAPHIC #1 **<END>** g01290616

276-7290 RELAY GP–POWER, 1

S/N: DPH1-UP
12-VOLT
PART OF 340-3213 WIRING GP-PLATFORM
AN ATTACHMENT

SMCS-1422, 4493 **i03325122**

NOTE	REF NO	GRAPHIC REF	PART NUMBER	QTY	PART NAME 1 2 3 4 5 6 (PRODUCT LEVEL)	SEE PAGE
M	1	1	**5C-2890**	2	NUT (M6X1-THD)	
	2	1	**8T-4205**	2	WASHER-HARD (7.2X14.5X2-MM THK)	
	3	1	**1H-3244**	2	LOCKWASHER	
M	4	1	**5C-7261**	1	NUT (M8X1.25-THD)	
	5	1	**8T-4224**	1	WASHER-HARD (8.8X16X2-MM THK)	
	6	1	**267-5213**	1	COVER	
	7	1	**267-5211**	1	SEAL	
	8	1	**267-2701**	2	FUSE (60-AMPERE)	

M-METRIC PART

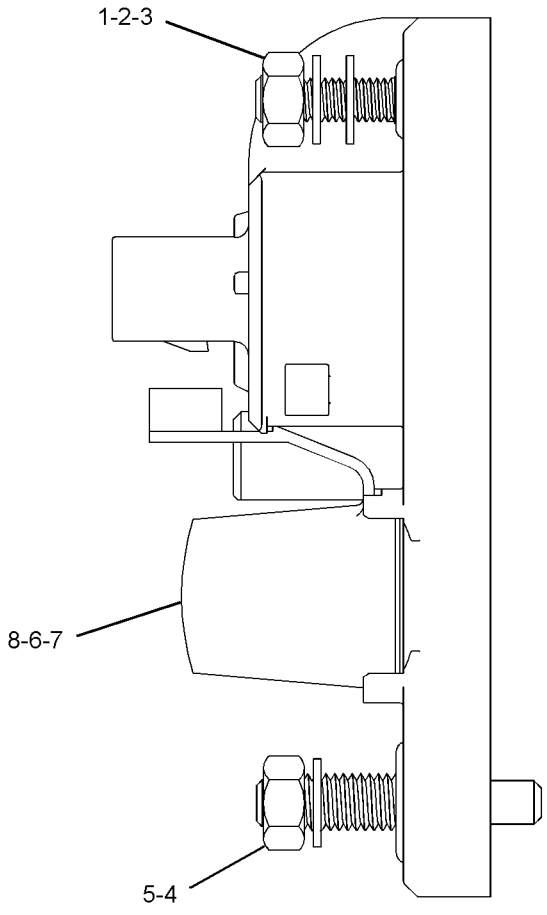

GRAPHIC #1 **<END>** g01278211

276-7291 RELAY GP–POWER, 2

S/N: DPH1-UP
12-VOLT
PART OF 340-3213 WIRING GP-PLATFORM
AN ATTACHMENT

SMCS-1422, 4493 **i03325141**

NOTE	REF NO	GRAPHIC REF	PART NUMBER	QTY	PART NAME 1 2 3 4 5 6 (PRODUCT LEVEL)	SEE PAGE
M	1	1	**5C-2890**	2	NUT (M6X1-THD)	
	2	1	**8T-4205**	2	WASHER-HARD (7.2X14.5X2-MM THK)	
	3	1	**1H-3244**	2	LOCKWASHER	
M	4	1	**5C-7261**	1	NUT (M8X1.25-THD)	
	5	1	**8T-4224**	1	WASHER-HARD (8.8X16X2-MM THK)	
	6	1	**267-5213**	1	COVER	
	7	1	**267-5211**	1	SEAL	
	8	1	**267-2701**	1	FUSE (60-AMPERE)	

M-METRIC PART

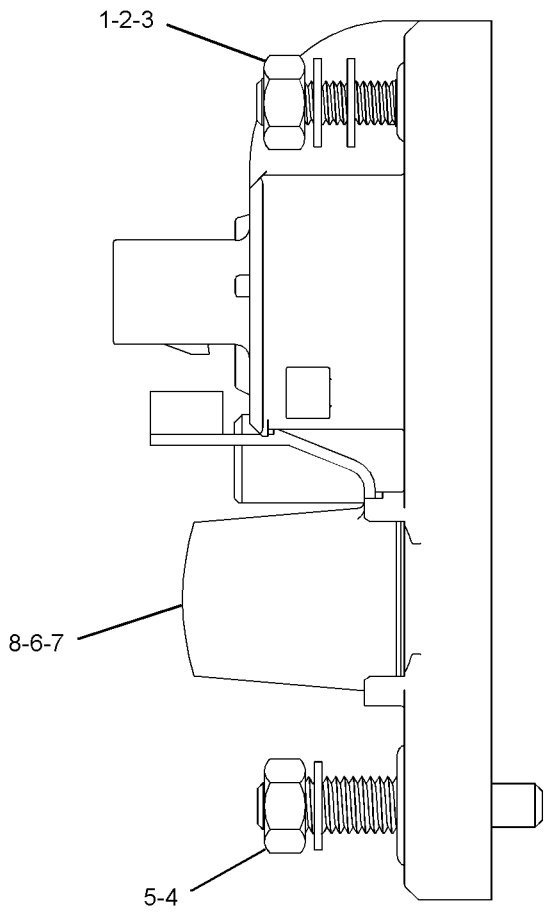

GRAPHIC #1 **<END>** g01278256

322-6827 RELAY GP—STARTING MOTOR

S/N: DPH1-UP
12-VOLT
PART OF 338-5734 WIRING GP-ENGINE

SMCS-1422, 4493 **i03498280**

NOTE	REF NO	GRAPHIC REF	PART NUMBER	QTY	PART NAME 1 2 3 4 5 6 (PRODUCT LEVEL)	SEE PAGE
	1	1	**274-9872**	1	FUSE (30-AMPERE)	
	2	1	**278-6377**	1	FUSE (40-AMPERE)	
	3	1	**267-5213**	1	COVER (FUSE)	
	4	1	**267-5211**	1	SEAL	
M	5	1	**5C-2890**	2	NUT (M6X1-THD)	
	6	1	**8T-4205**	2	WASHER-HARD (7.2X14.5X2-MM THK)	
	7	1	**1H-3244**	2	LOCKWASHER	
M	8	1	**5C-7261**	1	NUT (M8X1.25-THD)	
	9	1	**8T-4224**	1	WASHER-HARD (8.8X16X2-MM THK)	
	10	1	**9F-5644**	1	LOCKWASHER	

M-METRIC PART

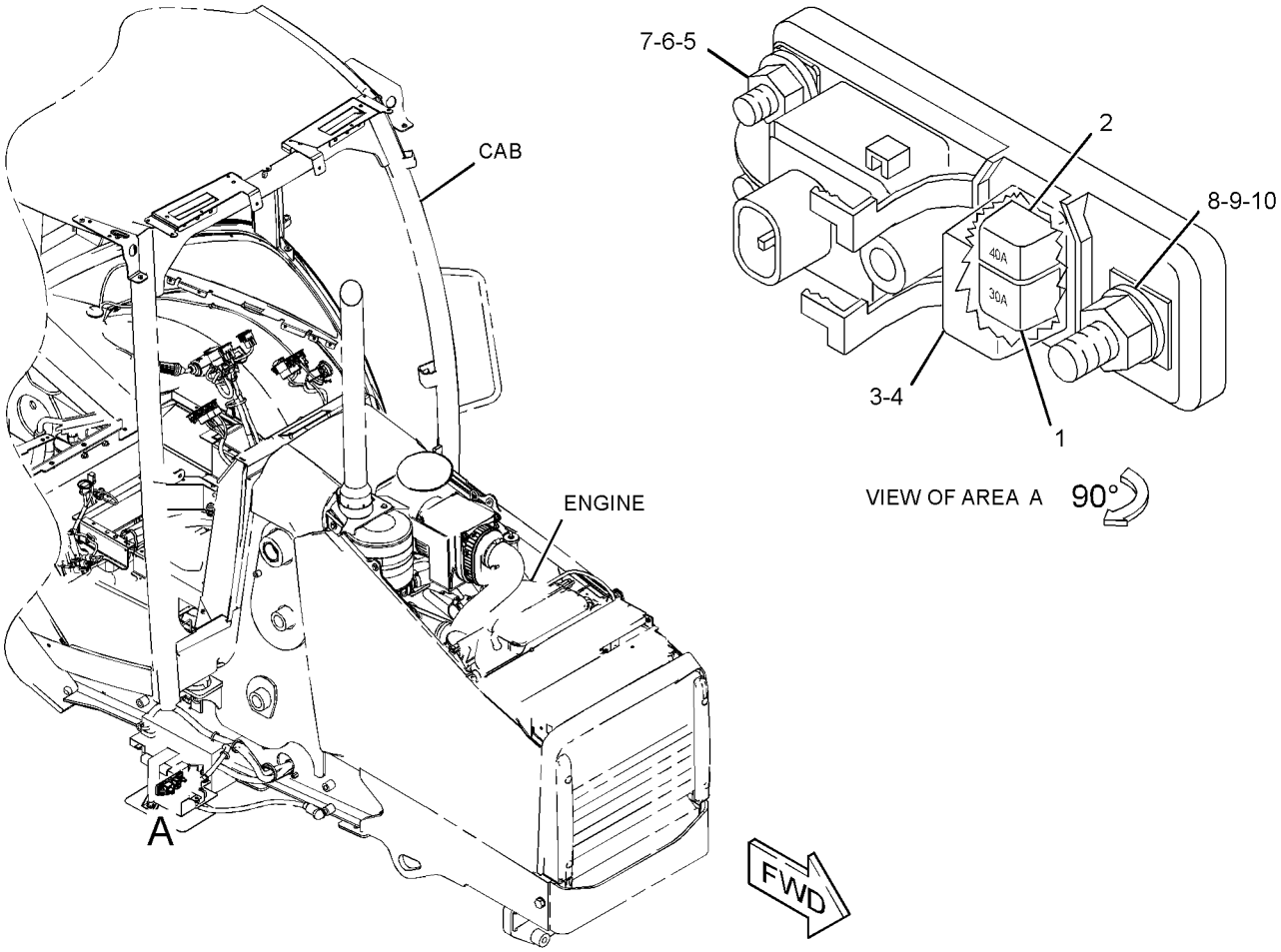

GRAPHIC #1 **<END>** g01571033

143-0539 STARTING MOTOR GP-ELECTRIC–12-VOLT*R

S/N: CRS1-UP

PART OF 237-0024 STARTING MOTOR GP-ELECTRIC

AN ATTACHMENT

SMCS-1453 **i02603749**

NOTE	REF NO	GRAPHIC REF	PART NUMBER	QTY	PART NAME 1 2 3 4 5 6 (PRODUCT LEVEL)	SEE PAGE
	1	1	**8C-9778**	1	PLUNGER AS	
	2	1	**8C-9783**	1	GASKET	
	3	1	**2P-8104**	1	BEARING	
	4	1	**7T-6092**	1	HOLDER AS-BRUSH	
M	5	1	**8T-4133**	2	NUT (M10X1.5-THD)	
	6	1	**7T-6088**	1	BEARING AS	
	7	1	**7T-6087**	1	WASHER (15.2X40X0.5-MM THK)	
	8	1	**7T-6093**	1	CLUTCH AS	
	9	1	**8J-4455**	1	BALL	
	10	1	**7T-6090**	1	SPRING	
	11	1	**8T-4121**	2	WASHER-HARD (11X21X2.5-MM THK)	
	12	1	**3E-5153**	1	COVER-STARTING MOTOR	
M	13	1	**9X-2036**	1	SCREW-PAN HEAD	
	14	1	**8F-1434**	1	LOCKWASHER	
	15	1	**100-4113**	1	SWITCH AS (STARTING MOTOR, 12-VOLT)	
	16	1	**100-4119**	1	ARMATURE AS	
	17	1	**100-4118**	1	CASE AS-STARTING MOTOR	
	18	1	**100-4115**	1	HOUSING-STARTING MOTOR	
	19	1	**143-1344**	1	FRAME-STARTER	
	20	1	**100-3685**	1	CAP	
	21	1	**3E-5154**	1	BUSHING-STARTING MOTOR	
					AVAILABLE REPAIR KIT(S):	
			7T-6099	1	KIT-GEAR (STARTING MOTOR)	
					(INCLUDES RETAINER, PINION & ROLLERS)	
			8C-5457	1	KIT-CONTACT (STARTING MOTOR)	
					(INCLUDES NUT, WASHER, PLATE, BUSHINGS, & BOLT)	
			146-6729	1	KIT-HARDWARE (STARTING MOTOR)	
					(INCLUDES BOLTS, SCREWS, SCREW ASSEMBLIES & PLATE)	
			100-4112	1	KIT-CONTACT (STARTING MOTOR)	
					(INCLUDES NUT, WASHERS, SEAL, BUSHINGS, PLATE & BOLT)	

M-METRIC PART

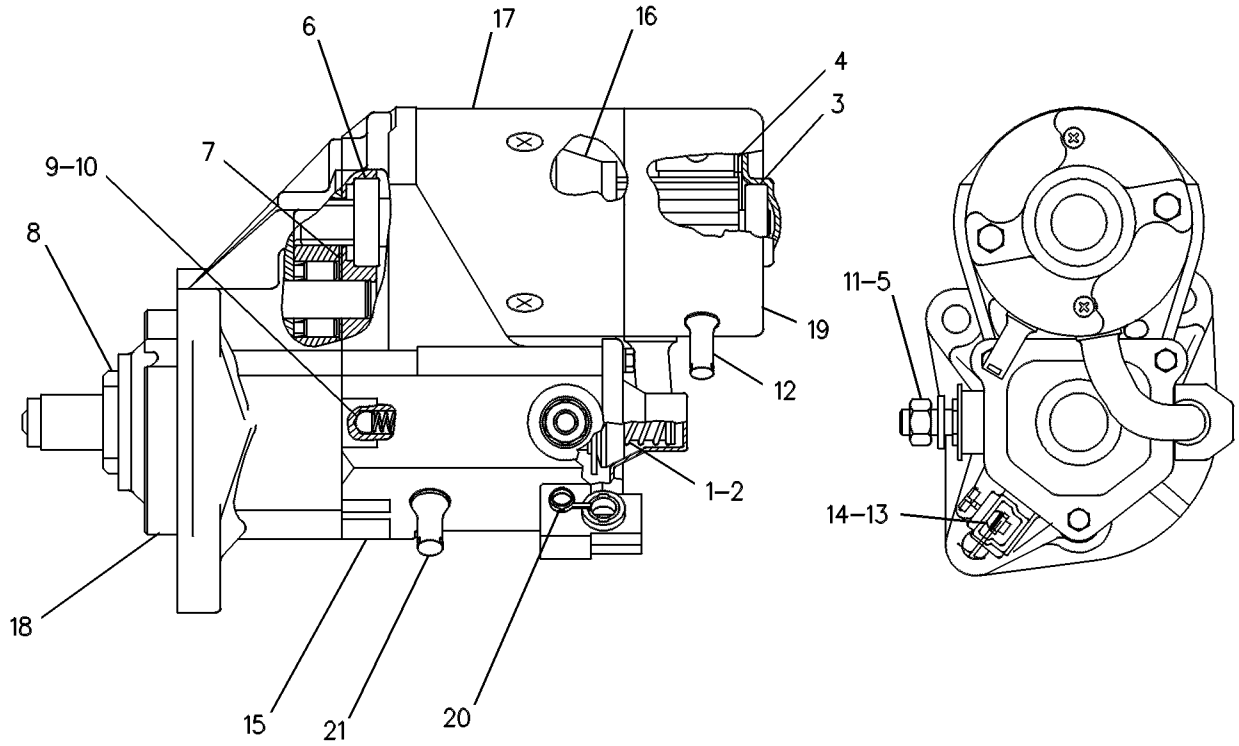

GRAPHIC #1 **<END>** g00131126

237-0024 STARTING MOTOR GP-ELECTRIC–12-VOLT

S/N: CRS1-UP

PART OF 322-1923, 322-1924 ENGINE AR-PRIMARY

AN ATTACHMENT

SMCS-1453 **i03331920**

NOTE	REF NO	GRAPHIC REF	PART NUMBER	QTY	PART NAME 1 2 3 4 5 6 (PRODUCT LEVEL)	SEE PAGE
	1	1	**6I-0364**	3	STUD (M10X1.5X30-MM)	
	2	1	**6I-0594**	3	NUT (M10X1.5-THD)	
YR	3	1	**143-0539**	1	STARTING MOTOR GP-ELECTRIC (12-VOLT)	185

R-REMFG PART MAY BE AVAILABLE
Y-SEPARATE ILLUSTRATION

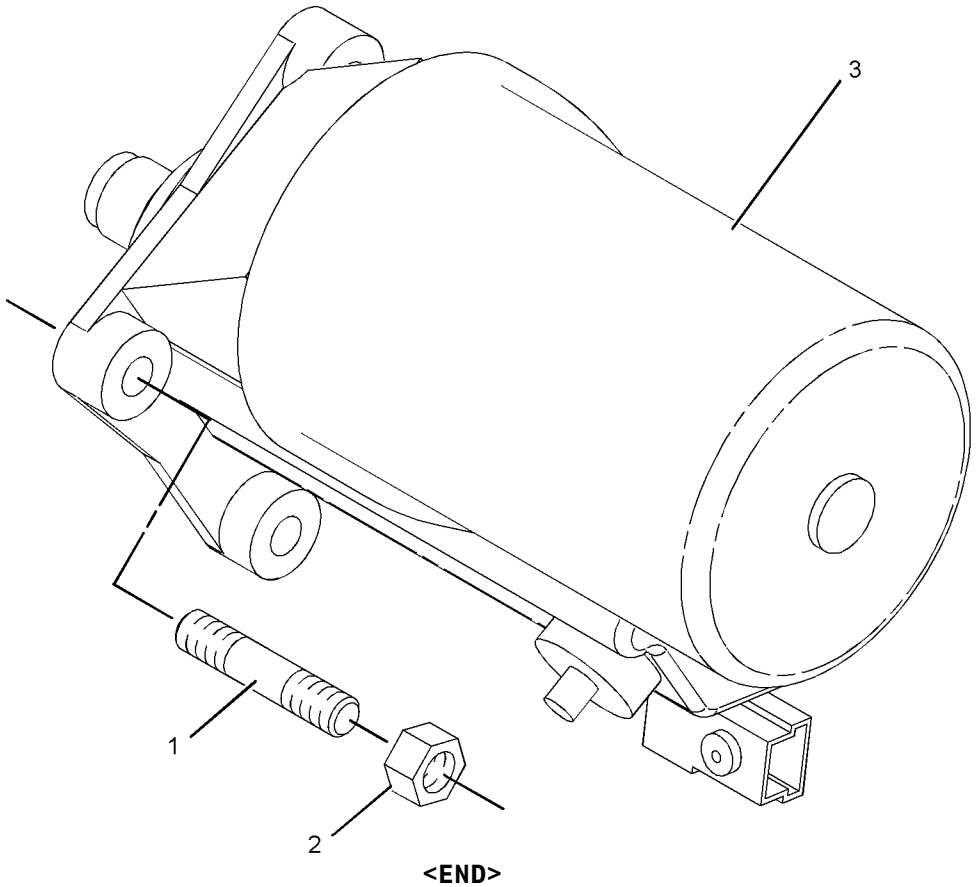

GRAPHIC #1 **<END>** g01039910

303-5769 STARTING MOTOR GP-ELECTRIC–12-VOLT

S/N: C4Z1-UP
PART OF 321-7704, 321-7705 ENGINE AR-PRIMARY
AN ATTACHMENT

SMCS-1453 **i03128303**

NOTE	REF NO	GRAPHIC REF	PART NUMBER	QTY	PART NAME 1 2 3 4 5 6 (PRODUCT LEVEL)	SEE PAGE
	1	1	**6I-0364**	3	STUD (M10X1.5X30-MM)	
	2	1	**6I-0594**	3	NUT (M10X1.5-THD)	
	3	1	**303-5795**	1	STARTING MOTOR-ELECTRIC	

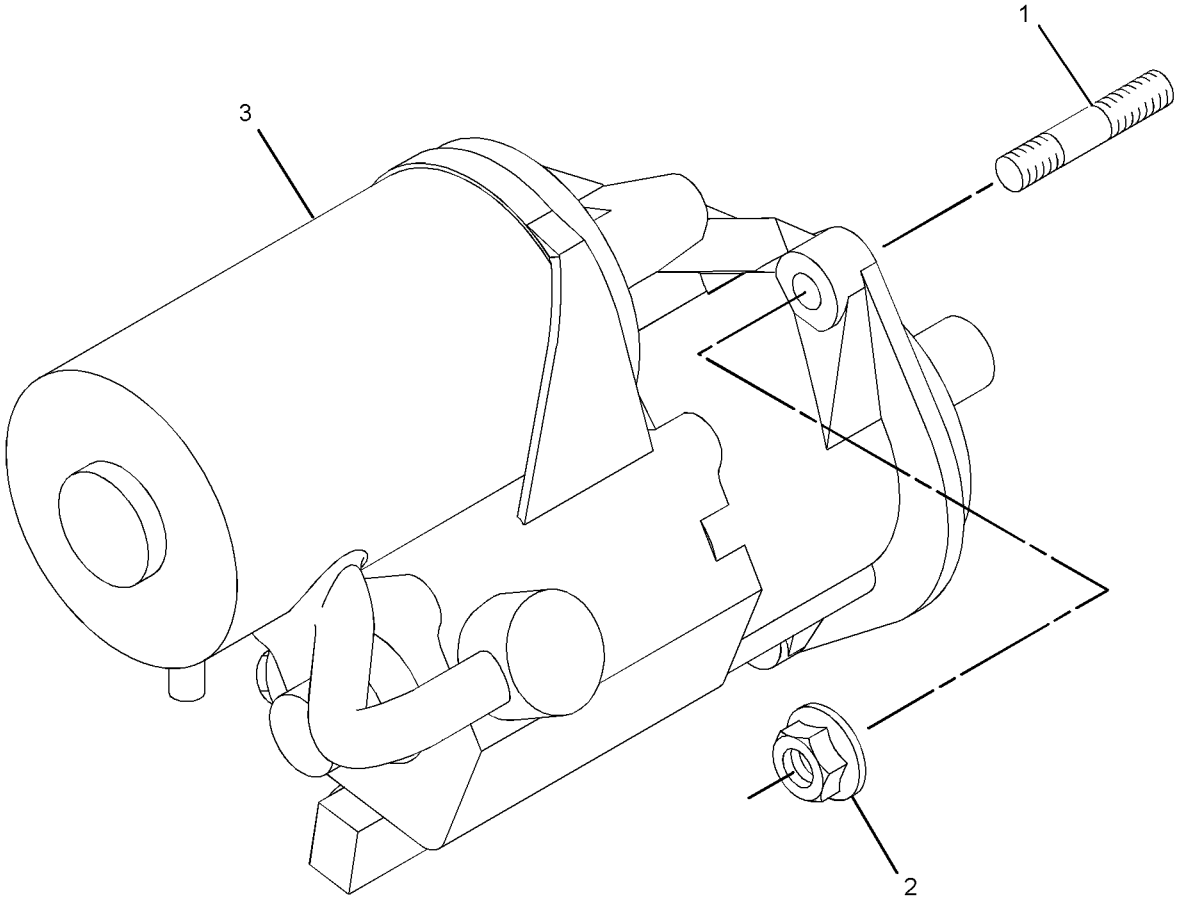

GRAPHIC #1 **<END>** g01376189

305-3295 SWITCH GP-ALL WHEEL DRIVE–INCLUDES RELAY

S/N: DPH1-UP

PART OF 329-0319 DRIVE AR-BACKHOE LOADER

AN ATTACHMENT

SMCS-1435, 4493 **i03726604**

NOTE	REF NO	GRAPHIC REF	PART NUMBER	QTY	PART NAME 1 2 3 4 5 6 (PRODUCT LEVEL)	SEE PAGE
	1	1	**146-9439**	1	RELAY AS (12-VOLT) (ALL WHEEL DRIVE)	
	2	1	**214-4692**	1	SWITCH AS-ROCKER (ALL WHEEL DRIVE)	
		1	**111-7899**	1	GASKET	

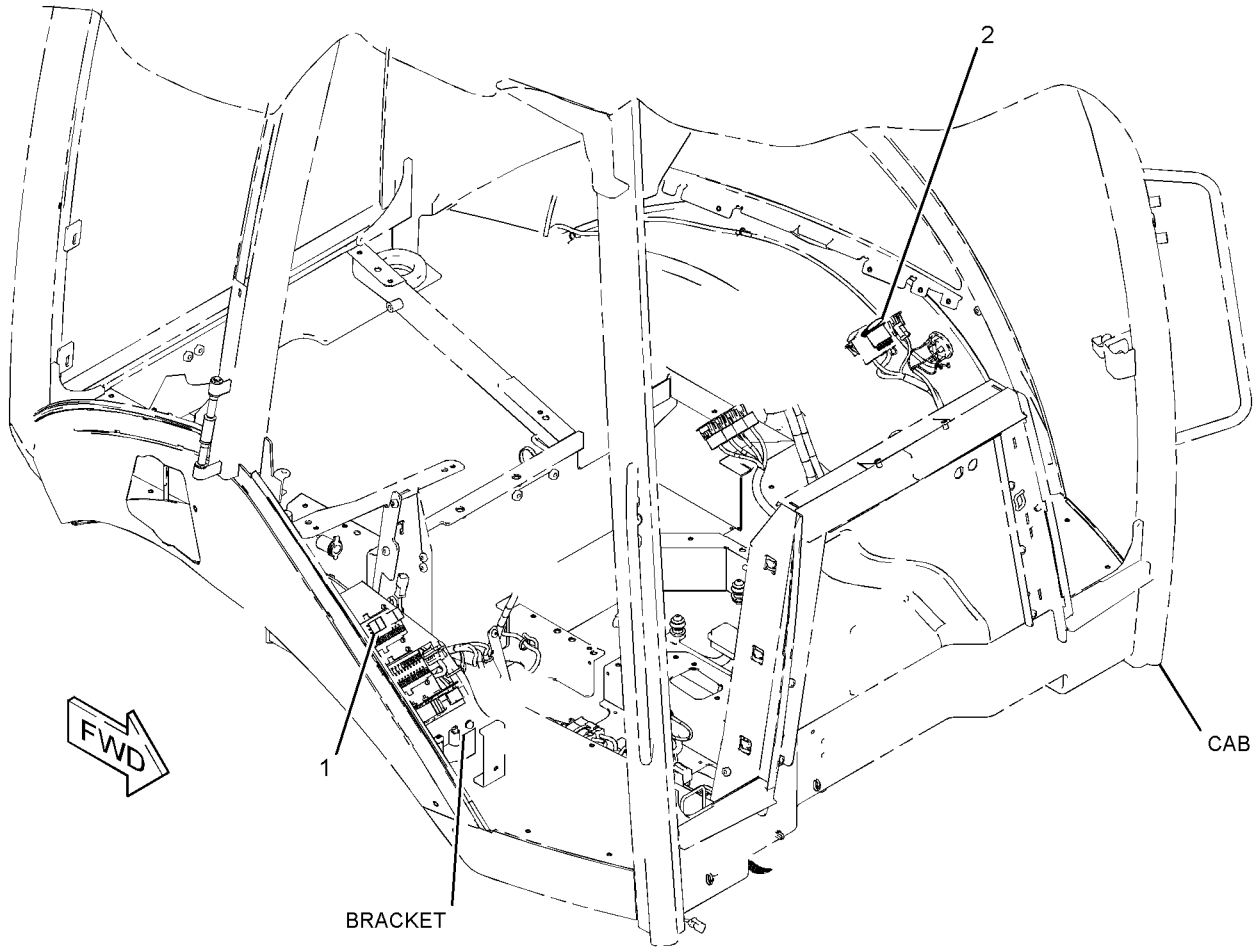

GRAPHIC #1 **<END>** g01391236

308-9973 SWITCH GP-DIFFERENTIAL LOCK

S/N: DPH1-UP
PART OF 329-0304 POWER TRAIN AR
AN ATTACHMENT

SMCS-1435, 3264 **i03726480**

NOTE	REF NO	GRAPHIC REF	PART NUMBER	QTY	PART NAME 1 2 3 4 5 6 (PRODUCT LEVEL)	SEE PAGE
	1	1	**201-9459**	1	BOOT	
	2	1	**202-6017**	1	BRACKET AS	
M		1	**6V-9632**	3	NUT-WELD (M6X1-THD)	
	3	1	**204-0775**	1	SWITCH AS-FOOT (DIFFERENTIAL LOCK ON, OFF)	
	4	1	**205-6298**	1	ACTUATOR (DIFFERENTIAL LOCK CONTROL)	
M	5	1	**9X-2042**	3	SCREW-TRUSS HEAD (M6X1X12-MM)	

M-METRIC PART

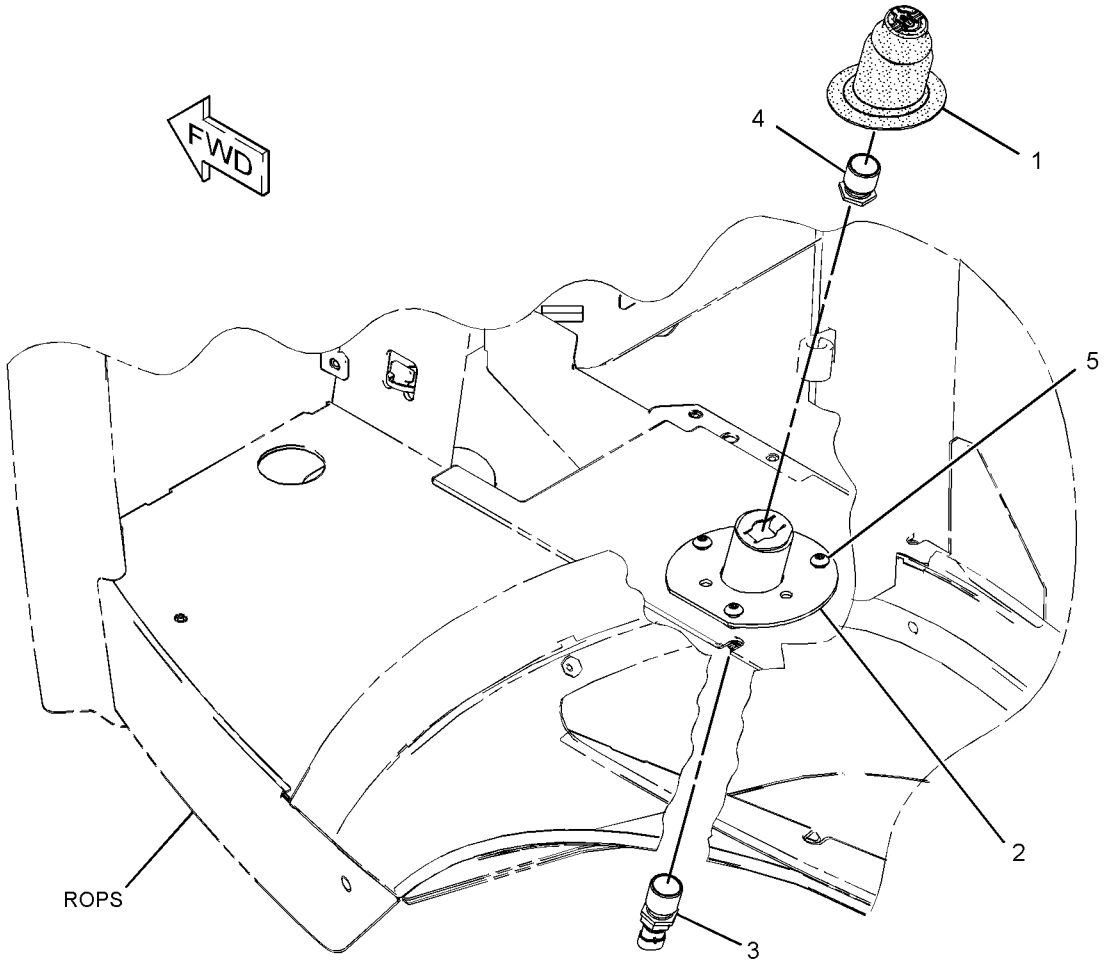

GRAPHIC #1 **<END>** g01390521

346-7487 SWITCH GP-DISCONNECT–QUICK DROP

S/N: DPH1-UP
PART OF 332-7958 VALVE AR-BANK 3
AN ATTACHMENT

SMCS-1411 **i03654242**

NOTE	REF NO	GRAPHIC REF	PART NUMBER	QTY	PART NAME 1 2 3 4 5 6 (PRODUCT LEVEL)	SEE PAGE
	1	1	**229-8757**	1	SWITCH AS-LIMIT (LOAD CONTROL)	
		1	**102-8803**	1	KIT-RECEPTACLE (3-PIN)	
					(INCLUDES RECEPTACLE AS & WEDGE)	
		1	**186-3735**	3	PIN-CONNECTOR (16-GA TO 18-GA)	
	2	1	**346-5518**	1	BRACKET	
M	3	1	**5C-7261**	2	NUT (M8X1.25-THD)	
M	4	1	**8T-4189**	2	BOLT (M8X1.25X20-MM)	
	5	1	**8T-4224**	2	WASHER-HARD (8.8X16X2-MM THK)	

M-METRIC PART

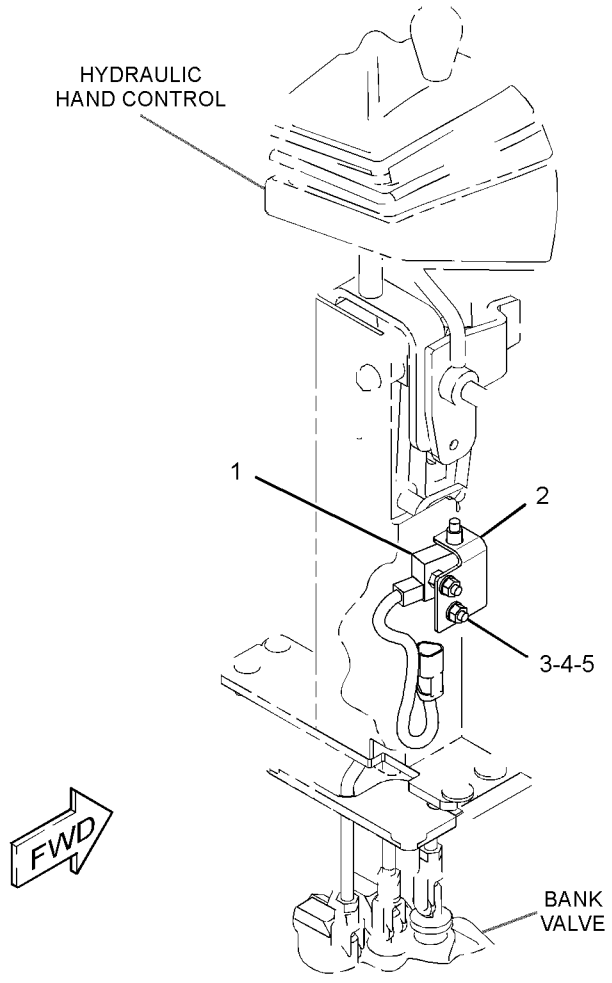

GRAPHIC #1 **<END>** g01965057

237-4896 SWITCH GP-PRESSURE

S/N: CRS1-UP
PART OF 322-1923, 322-1924 ENGINE AR-PRIMARY
AN ATTACHMENT

SMCS-1435 **i02270981**

NOTE	REF NO	GRAPHIC REF	PART NUMBER	QTY	PART NAME 1 2 3 4 5 6 (PRODUCT LEVEL)	SEE PAGE
	1	1	**237-4894**	1	SWITCH AS-PRESSURE (ENGINE OIL)	
	2	1	**199-9267**	1	SEAL-O-RING	

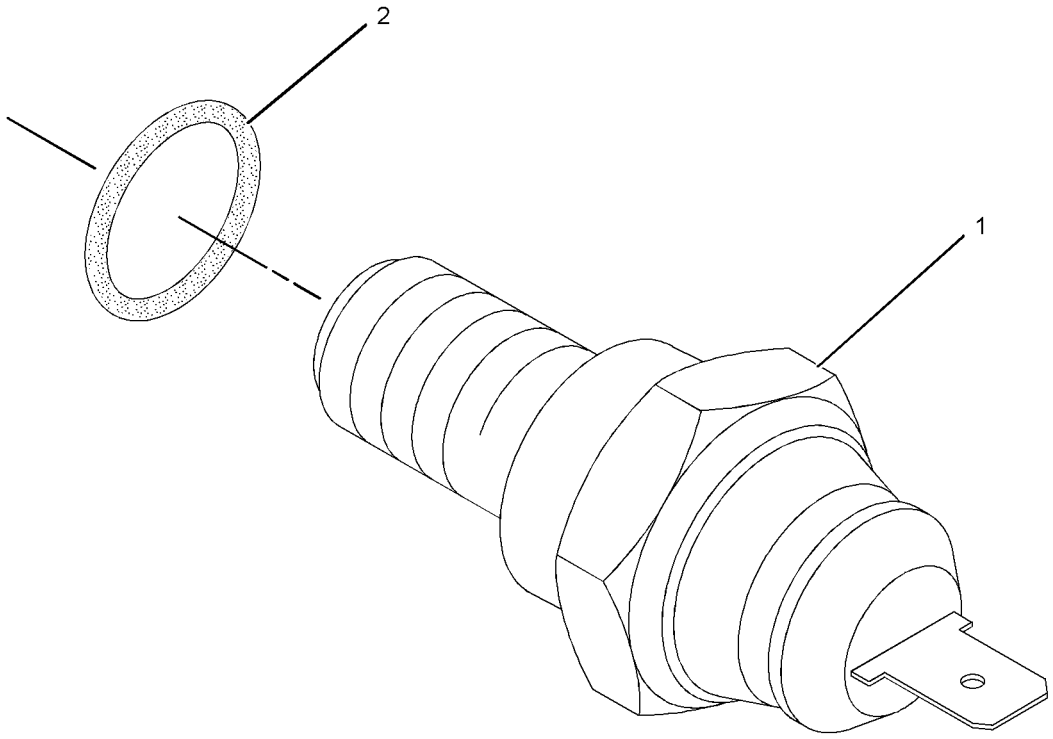

GRAPHIC #1 **<END>** g01138232

316-6925 SWITCH GP-PRESSURE–ENGINE OIL

S/N: C4Z1-UP

PART OF 321-7704, 321-7705 ENGINE AR-PRIMARY

AN ATTACHMENT

SMCS-1435 **i03128304**

NOTE	REF NO	GRAPHIC REF	PART NUMBER	QTY	PART NAME 1 2 3 4 5 6 (PRODUCT LEVEL)	SEE PAGE
	1	1	**035-8063**	1	PLUG	
	2	1	**199-9267**	1	SEAL-O-RING	
	3	1	**225-7941**	1	PLUG	
	4	1	**237-4894**	1	SWITCH AS-PRESSURE (ENGINE OIL)	

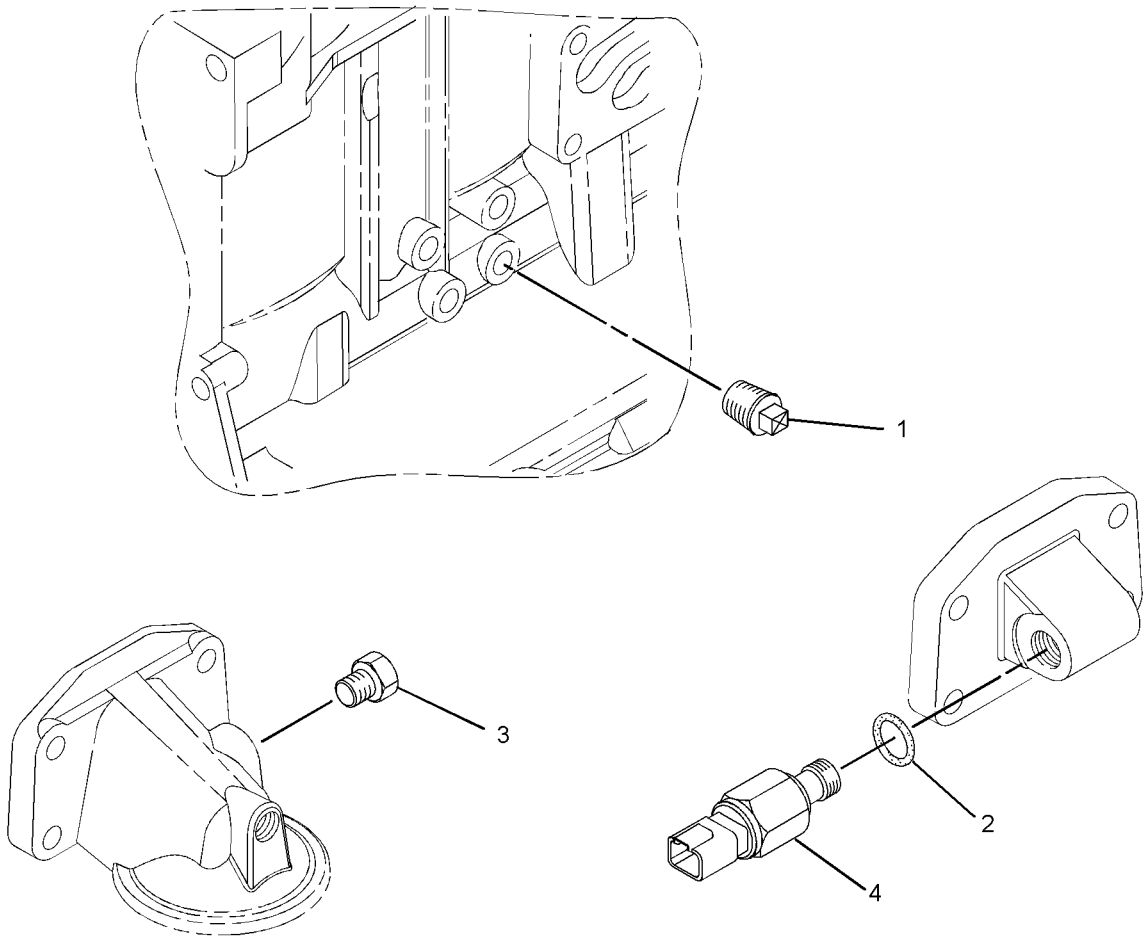

GRAPHIC #1 **<END>** g01400195

328-1954 WARNING GP-BACKUP

S/N: DPH1-UP
EAME MARKET
AN ATTACHMENT

SMCS-7406 **i03713781**

NOTE	REF NO	GRAPHIC REF	PART NUMBER	QTY	PART NAME 1 2 3 4 5 6 (PRODUCT LEVEL)	SEE PAGE
B	1	1	**146-9439**	1	RELAY AS (12-VOLT) (BACKUP ALARM)	
	2	1	**170-0950**	1	ALARM AS (BACKUP)	
		1	**4B-2043**	2	NUT (8-32-THD)	
	3	1	**206-1345**	3	STRAP-CABLE	
	4	1	**332-2577**	1	BRACKET AS	
M	5	1	**5C-2890**	2	NUT (M6X1-THD)	
	6	1	**8T-4121**	2	WASHER-HARD (11X21X2.5-MM THK)	
M	7	1	**8T-4196**	2	BOLT (M10X1.5X35-MM)	
M	8	1	**9X-2045**	2	SCREW-TRUSS HEAD (M6X1X20-MM)	
	9	1	**9X-6165**	4	WASHER (6.5X22X2.5-MM THK)	

B-USE AS REQUIRED
M-METRIC PART

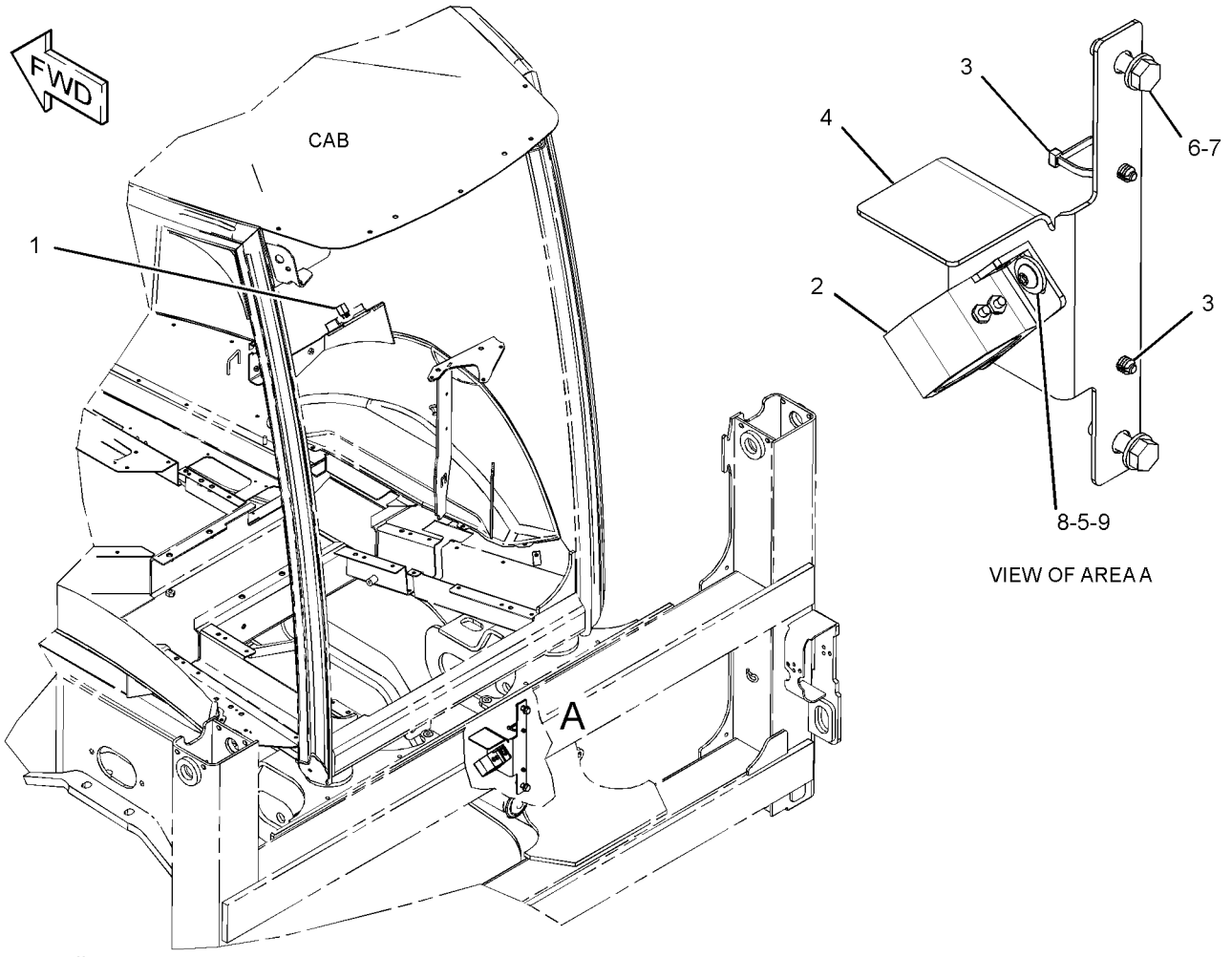

GRAPHIC #1 **<END>** g01986502

338-5733 WIRING GP-AIR CONDITIONER

S/N: DPH1-UP
PART OF 335-3050 CAB AR
AN ATTACHMENT

SMCS-1408, 7320 **i03726340**

NOTE	REF NO	GRAPHIC REF	PART NUMBER	QTY	PART NAME 1 2 3 4 5 6 (PRODUCT LEVEL)	SEE PAGE
	1	1	**3E-9362**	1	RELAY AS (12-VOLT) (SHUTOFF)	
	2	1	**6K-0806**	7	STRAP-CABLE	
	3	1	**8T-8799**	1	BOOT	
	4	1	**189-3158**	1	SUPPRESSOR-ARC	
	5	1	**206-1345**	4	STRAP-CABLE	
	6	1	**213-6055**	1	HARNESS AS-HEATER & AIR COND (VENT)	
		1	**228-5856**	2	CONNECTOR	
		1	**213-0139**	5	PIN	
		1	**9X-3401**	5	PIN-CONNECTOR (16-GA TO 18-GA)	
		1	**155-2270**	1	KIT-CONNECTING PLUG (2-PIN)	
		1	**177-9648**	1	KIT-CONNECTING PLUG (2-PIN)	
		1	**177-9656**	1	KIT-CONNECTING PLUG (4-PIN)	
					(EACH PLUG KIT INCLUDES PLUG AS, WEDGE & INTERFACE SEAL)	
		1	**9X-1054**	1	PLUG AS-CONNECTOR (4-PIN)	
		1	**8T-8737**	1	PLUG-SEAL	
		1	**102-8802**	1	KIT-RECEPTACLE (2-PIN)	
		1	**102-8803**	1	KIT-RECEPTACLE (3-PIN)	
					(EACH RECEPTACLE KIT INCLUDES RECEPTACLE AS & WEDGE)	
		1	**180-9340**	2	SOCKET-CONNECTOR (14-GA TO 18-GA)	
		1	**8L-8413**	29	STRAP-CABLE	
		1	**122-4401**	1	TERMINAL	
		1	**2L-8069**	1	TERMINAL-RING (2-GA TO 10-GA, 3/8-IN SCREW)	
		1	**2L-8067**	1	TERMINAL-RING (10-GA TO 12-GA, 1/4-IN SCREW)	
		1	**091-2436**	7	TERMINAL-BLADE (18-GA TO 22-GA)	
		1	**104-1995**	11	TERMINAL-BLADE (14-GA TO 18-GA)	
		1	**9X-1055**	2	TERMINAL-RECEPTACLE (12-GA)	
		1	**100-5041**	2	TERMINAL-RECEPTACLE (18-GA TO 20-GA)	
E		1	**119-3662**		TUBE-HEAT SHRINK (10.85-MM DIA) (20-CM)	
E		1	**125-7874**		TUBE-HEAT SHRINK (5.72-MM DIA) (10-CM)	
	7	1	**214-4695**	1	SWITCH AS-ROCKER (BLOWER FAN SPEED)	
	8	1	**214-4718**	1	SWITCH AS-ROCKER (AIR CONDITIONER, HEATER SELECT)	
					(EACH SWITCH AS-ROCKER INCLUDES)	
		1	**111-7899**	1	GASKET	
	9	1	**236-6923**	1	SWITCH AS-PRESSURE (REFRIGERANT COMPR, HIGH SIDE)	
	10	1	**238-7492**	1	HARNESS AS-HEATER & AIR COND (COMPRESSOR)	
		1	**9X-3401**	2	PIN-CONNECTOR (16-GA TO 18-GA)	
		1	**155-2270**	2	KIT-CONNECTING PLUG (2-PIN)	
					(EACH INCLUDES PLUG AS, WEDGE & INTERFACE SEAL)	
		1	**102-8802**	1	KIT-RECEPTACLE (2-PIN)	
					(INCLUDES RECEPTACLE AS & WEDGE)	
		1	**100-6674**	2	SEAL-CONNECTOR	
		1	**180-9340**	4	SOCKET-CONNECTOR (14-GA TO 18-GA)	
		1	**124-5640**	2	TERMINAL-SOCKET	
		1	**8L-8413**	1	STRAP-CABLE	
E		1	**125-7874**		TUBE-HEAT SHRINK (5.72-MM DIA) (10-CM)	
	11	1	**275-0570**	1	BAR-BUS	
	12	1	**319-6385**	1	BRACKET	
	13	1	**338-5731**	1	HARNESS AS-HEATER & AIR COND (POWER)	
		1	**111-6795**	1	HOUSING-RELAY (STARTING AID)	
		1	**111-6816**	1	LOCK	

338-5733 **WIRING GP-AIR CONDITIONER** *(contd.)* **i03726340**

NOTE	REF NO	GRAPHIC REF	PART NUMBER	QTY	PART NAME 1 2 3 4 5 6 (PRODUCT LEVEL)	SEE PAGE
		1	**186-3735**	4	PIN-CONNECTOR (16-GA TO 18-GA)	
		1	**102-8802**	2	KIT-RECEPTACLE (2-PIN)	
					(EACH INCLUDES RECEPTACLE AS & WEDGE)	
		1	**111-6792**	4	TERMINAL-RECEPTACLE (18-GA TO 20-GA)	
	14	1	**115-1615**	1	RELAY AS (12-VOLT) (HIGH SPEED)	
Y	15	1	**276-7287**	1	RELAY GP (12-VOLT) (POWER DISTRIBUTION)	181
	16	1	**3S-2093**	5	STRAP-CABLE	
M	17	1	**5C-2890**	1	NUT (M6X1-THD)	
M	18	1	**5C-7261**	1	NUT (M8X1.25-THD)	
M	19	1	**7X-2534**	1	BOLT (M6X1X50-MM)	
M	20	1	**8T-4171**	1	BOLT (M6X1X12-MM)	
	21	1	**8T-4205**	2	WASHER-HARD (7.2X14.5X2-MM THK)	
	22	1	**8T-4224**	1	WASHER-HARD (8.8X16X2-MM THK)	
	23	1	**9X-7378**	1	SEAL-O-RING	

E-ORDER BY THE CENTIMETER
M-METRIC PART
Y-SEPARATE ILLUSTRATION

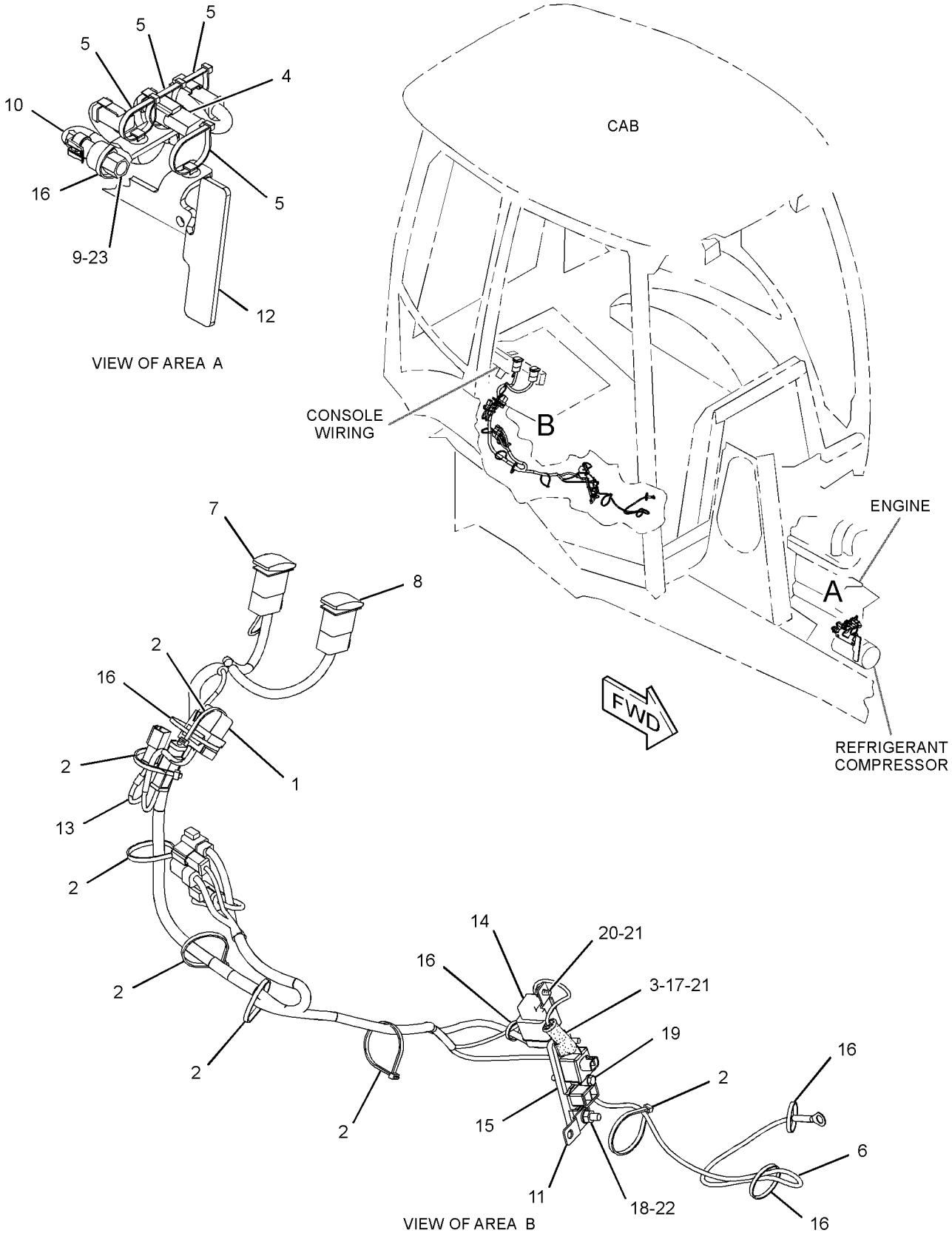

GRAPHIC #1

<END>

g01971656

340-3552 WIRING GP-CAB–ROOF

S/N: DPH1-UP
PART OF 335-3049, 335-3050 CAB AR
AN ATTACHMENT

SMCS-1408, 7301 **i03642943**

NOTE	REF NO	GRAPHIC REF	PART NUMBER	QTY	PART NAME 1 2 3 4 5 6 (PRODUCT LEVEL)	SEE PAGE
	1	1	**9R-7941**	2	SOCKET AS	
					(EACH INCLUDES)	
		1	**9R-7980**	1	COVER	
	2	1	**206-1345**	9	STRAP-CABLE	
Y	3	1	**214-2968**	4	LAMP GP-FLOOD (12-VOLT)	165
B	4	1	**214-4697**	1	SWITCH AS-ROCKER (FLOODLIGHTS, FRONT)	
B	5	1	**214-4699**	1	SWITCH AS-ROCKER (FLOODLIGHTS, REAR)	
					(EACH SWITCH AS-ROCKER INCLUDES)	
		1	**111-7899**	1	GASKET	
	6	1	**282-7833**	1	GROMMET	
	7	1	**282-7835**	1	PLATE	
	8	1	**340-3551**	1	HARNESS AS-CHASSIS	
		1	**123-7615**	2	CONNECTOR	
		1	**9W-0852**	2	PIN-CONNECTOR (14-GA)	
		1	**9X-3401**	14	PIN-CONNECTOR (16-GA TO 18-GA)	
		1	**155-2265**	2	KIT-CONNECTING PLUG (8-PIN)	
		1	**155-2270**	8	KIT-CONNECTING PLUG (2-PIN)	
		1	**155-2271**	1	KIT-CONNECTING PLUG (4-PIN)	
					(EACH PLUG KIT INCLUDES PLUG AS, WEDGE & INTERFACE SEAL)	
		1	**8T-8737**	4	PLUG-SEAL	
		1	**102-8805**	1	KIT-RECEPTACLE (6-PIN)	
		1	**102-8801**	1	KIT-RECEPTACLE (12-PIN)	
					(EACH RECEPTACLE KIT INCLUDES RECEPTACLE AS & WEDGE)	
		1	**9W-0844**	4	SOCKET-CONNECTOR (14-GA)	
		1	**180-9340**	30	SOCKET-CONNECTOR (14-GA TO 18-GA)	
		1	**097-7234**	2	TERMINAL (18-GA TO 22-GA)	
		1	*128-4170*	1	TERMINAL AS	
		1	**6H-3587**	1	TERMINAL-RING (6-GA TO 8-GA, 3/8-IN SCREW)	
E		1	**6V-9023**		TUBE-HEAT SHRINK (12.7-MM DIA) (4-CM)	
		1	**5P-4571**	2	TERMINAL-BLADE (14-GA TO 16-GA)	
		1	**091-2436**	4	TERMINAL-BLADE (18-GA TO 22-GA)	
E		1	**119-3662**		TUBE-HEAT SHRINK (10.85-MM DIA) (13-CM)	
E		1	**125-7874**		TUBE-HEAT SHRINK (5.72-MM DIA) (30-CM)	
E		1	**125-7875**		TUBE-HEAT SHRINK (7.44-MM DIA) (5-CM)	
	9	1	**3S-2093**	20	STRAP-CABLE	
M	10	1	**8C-3798**	2	BOLT-LOCKING (M6X1X30-MM)	
	11	1	**8F-3590**	1	LOCKWASHER	
	12	1	**8T-4121**	2	WASHER-HARD (11X21X2.5-MM THK)	
M	13	1	**8T-4133**	1	NUT (M10X1.5-THD)	
	14	1	**9X-8256**	2	WASHER (6.6X12X2-MM THK)	

B-USE AS REQUIRED
E-ORDER BY THE CENTIMETER
M-METRIC PART
Y-SEPARATE ILLUSTRATION

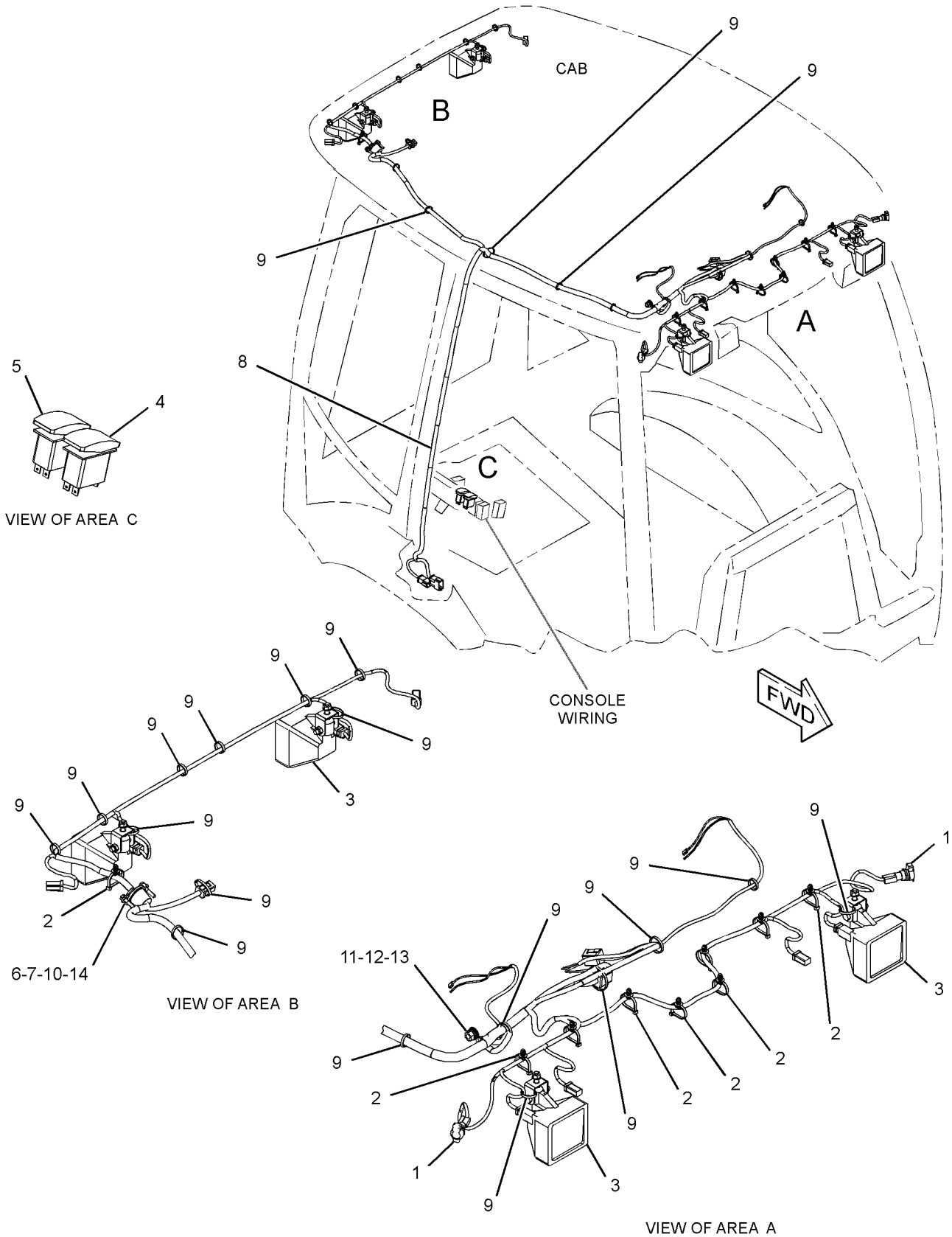

GRAPHIC #1 **<END>** g01971597

ELECTRICAL AND STARTING SYSTEM

340-6912 WIRING GP-CAB–CANOPY ROOF

S/N: DPH1-UP

PART OF 335-3047, 335-3048 CANOPY AR-OPEN ROPS

AN ATTACHMENT

SMCS-1408, 7301 **i03642937**

NOTE	REF NO	GRAPHIC REF	PART NUMBER	QTY	PART NAME 1 2 3 4 5 6 (PRODUCT LEVEL)	SEE PAGE
	1	1	**8T-8737**	16	PLUG-SEAL	
	2	1	**9R-7941**	2	SOCKET AS	
					(EACH INCLUDES)	
		1	**9R-7980**	1	COVER	
B	3	1	**141-8061**		TAPE	
	4	1	**206-1345**	9	STRAP-CABLE	
Y	5	1	**214-2968**	4	LAMP GP-FLOOD (12-VOLT)	165
B	6	1	**214-4697**	1	SWITCH AS-ROCKER (FLOODLIGHTS, FRONT)	
B	7	1	**214-4699**	1	SWITCH AS-ROCKER (FLOODLIGHTS, REAR)	
					(EACH SWITCH AS-ROCKER INCLUDES)	
		1	**111-7899**	1	GASKET	
	8	1	**282-7833**	1	GROMMET	
	9	1	**282-7835**	1	PLATE	
	10	1	**340-3551**	1	HARNESS AS-CHASSIS	
		1	**123-7615**	2	CONNECTOR	
		1	**9W-0852**	2	PIN-CONNECTOR (14-GA)	
		1	**9X-3401**	14	PIN-CONNECTOR (16-GA TO 18-GA)	
		1	**155-2265**	2	KIT-CONNECTING PLUG (8-PIN)	
		1	**155-2270**	8	KIT-CONNECTING PLUG (2-PIN)	
		1	**155-2271**	1	KIT-CONNECTING PLUG (4-PIN)	
					(EACH PLUG KIT INCLUDES PLUG AS, WEDGE & INTERFACE SEAL)	
		1	**8T-8737**	4	PLUG-SEAL	
		1	**102-8805**	1	KIT-RECEPTACLE (6-PIN)	
		1	**102-8801**	1	KIT-RECEPTACLE (12-PIN)	
					(EACH RECEPTACLE KIT INCLUDES RECEPTACLE AS & WEDGE)	
		1	**9W-0844**	4	SOCKET-CONNECTOR (14-GA)	
		1	**180-9340**	30	SOCKET-CONNECTOR (14-GA TO 18-GA)	
		1	**097-7234**	2	TERMINAL (18-GA TO 22-GA)	
		1	*128-4170*	1	TERMINAL AS	
		1	**6H-3587**	1	TERMINAL-RING (6-GA TO 8-GA, 3/8-IN SCREW)	
E		1	**6V-9023**		TUBE-HEAT SHRINK (12.7-MM DIA) (4-CM)	
		1	**5P-4571**	2	TERMINAL-BLADE (14-GA TO 16-GA)	
		1	**091-2436**	4	TERMINAL-BLADE (18-GA TO 22-GA)	
E		1	**119-3662**		TUBE-HEAT SHRINK (10.85-MM DIA) (13-CM)	
E		1	**125-7874**		TUBE-HEAT SHRINK (5.72-MM DIA) (30-CM)	
E		1	**125-7875**		TUBE-HEAT SHRINK (7.44-MM DIA) (5-CM)	
	11	1	**102-8806**	2	KIT-RECEPTACLE (8-PIN)	
					(EACH INCLUDES RECEPTACLE AS & WEDGE)	
	12	1	**3S-2093**	22	STRAP-CABLE	
M	13	1	**8C-3798**	2	BOLT-LOCKING (M6X1X30-MM)	
	14	1	**8F-3590**	1	LOCKWASHER	
	15	1	**8T-4121**	2	WASHER-HARD (11X21X2.5-MM THK)	
M	16	1	**8T-4133**	1	NUT (M10X1.5-THD)	
	17	1	**9X-8256**	2	WASHER (6.6X12X2-MM THK)	

B-USE AS REQUIRED
E-ORDER BY THE CENTIMETER
M-METRIC PART
Y-SEPARATE ILLUSTRATION

340-6912 **WIRING GP-CAB** ***(contd.)*** **i03642937**

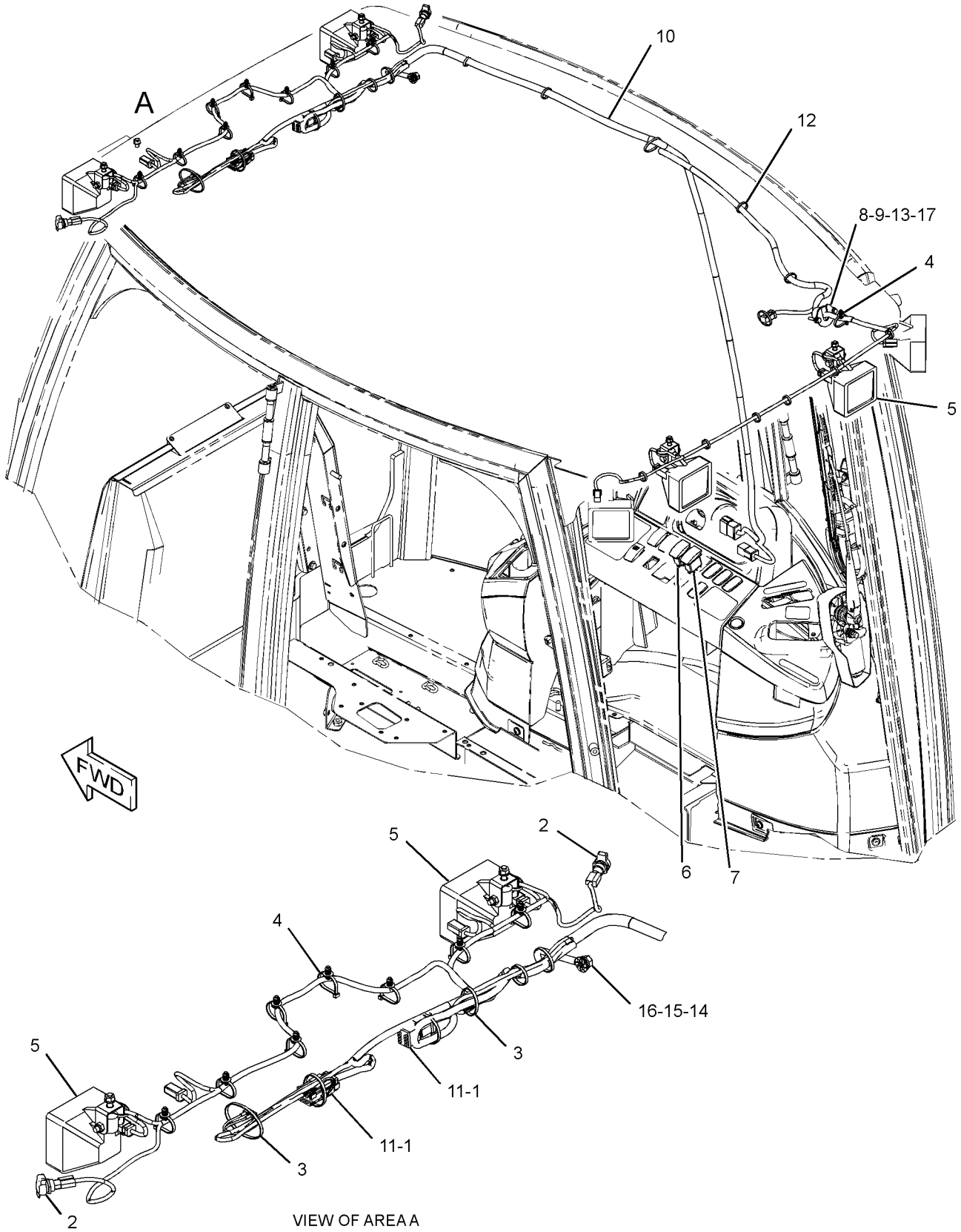

VIEW OF AREA A

GRAPHIC #1 **<END>** g01971053

ELECTRICAL AND STARTING SYSTEM

338-5743 WIRING GP-CONSOLE–SIDE

S/N: DPH1-UP

PART OF 335-3049, 335-3050 CAB AR, 335-3047, 335-3048 CANOPY AR-OPEN ROPS AN ATTACHMENT

SMCS-1408 **i03663102**

NOTE	REF NO	GRAPHIC REF	PART NUMBER	QTY	PART NAME 1 2 3 4 5 6 (PRODUCT LEVEL)	SEE PAGE
J	1	1	**110-7887**	1	SWITCH AS-START (KEY)	
		1	**7T-6799**	1	NUT-MOUNTING (1-32-THD)	
		1	**102-8804**	1	KIT-RECEPTACLE (4-PIN)	
					(INCLUDES RECEPTACLE AS & WEDGE)	
		1	**186-3735**	4	PIN-CONNECTOR (16-GA TO 18-GA)	
	2	1	**165-0312**	1	WIRE AS	
	3	1	**206-1345**	3	STRAP-CABLE	
	4	1	**214-4693**	1	SWITCH AS-ROCKER (WARNING BEACON)	
	5	1	**214-4722**	1	SWITCH AS-ROCKER (STARTING AID)	
					(EACH SWITCH AS-ROCKER INCLUDES)	
		1	**111-7899**	1	GASKET	
B	6	1	**227-1057**	6	PLUG-HOLE	
	7	1	**338-5723**	1	HARNESS AS-CONSOLE	
		1	**228-5856**	10	CONNECTOR	
		1	**126-1767**	2	PIN-CONNECTOR (14-GA)	
		1	**176-2947**	1	PLUG KIT-CONN	
					(INCLUDES PLUG AS, WEDGE & INTERFACE SEAL)	
		1	**261-0524**	1	PLUG AS-CONNECTOR (4-PIN)	
		1	**264-7031**	1	SEAL-CONNECTOR	
		1	**245-8026**	1	PLUG AS	
		1	**8T-8737**	2	PLUG-SEAL	
		1	**151-9272**	1	KIT-RECEPTACLE (2-PIN)	
					(INCLUDES RECEPTACLE AS & WEDGE)	
		1	**126-1768**	4	SOCKET-CONNECTOR (14-GA)	
		1	**180-9340**	53	SOCKET-CONNECTOR (14-GA TO 18-GA)	
		1	**7N-7221**	2	TERMINAL-BLADE (18-GA TO 22-GA)	
E		1	**119-3662**		TUBE-HEAT SHRINK (10.85-MM DIA) (13-CM)	
E		1	**125-7874**		TUBE-HEAT SHRINK (5.72-MM DIA) (50-CM)	
	8	1	**339-3067**	1	CONTROL GP-ELECTRONIC	
	9	1	**343-4355**	1	HORN	
	10	1	**3S-2093**	5	STRAP-CABLE	

B-USE AS REQUIRED
E-ORDER BY THE CENTIMETER
J-REQUIRES CORPORATE KEY

338-5743 **WIRING GP-CONSOLE** *(contd.)* **i03663102**

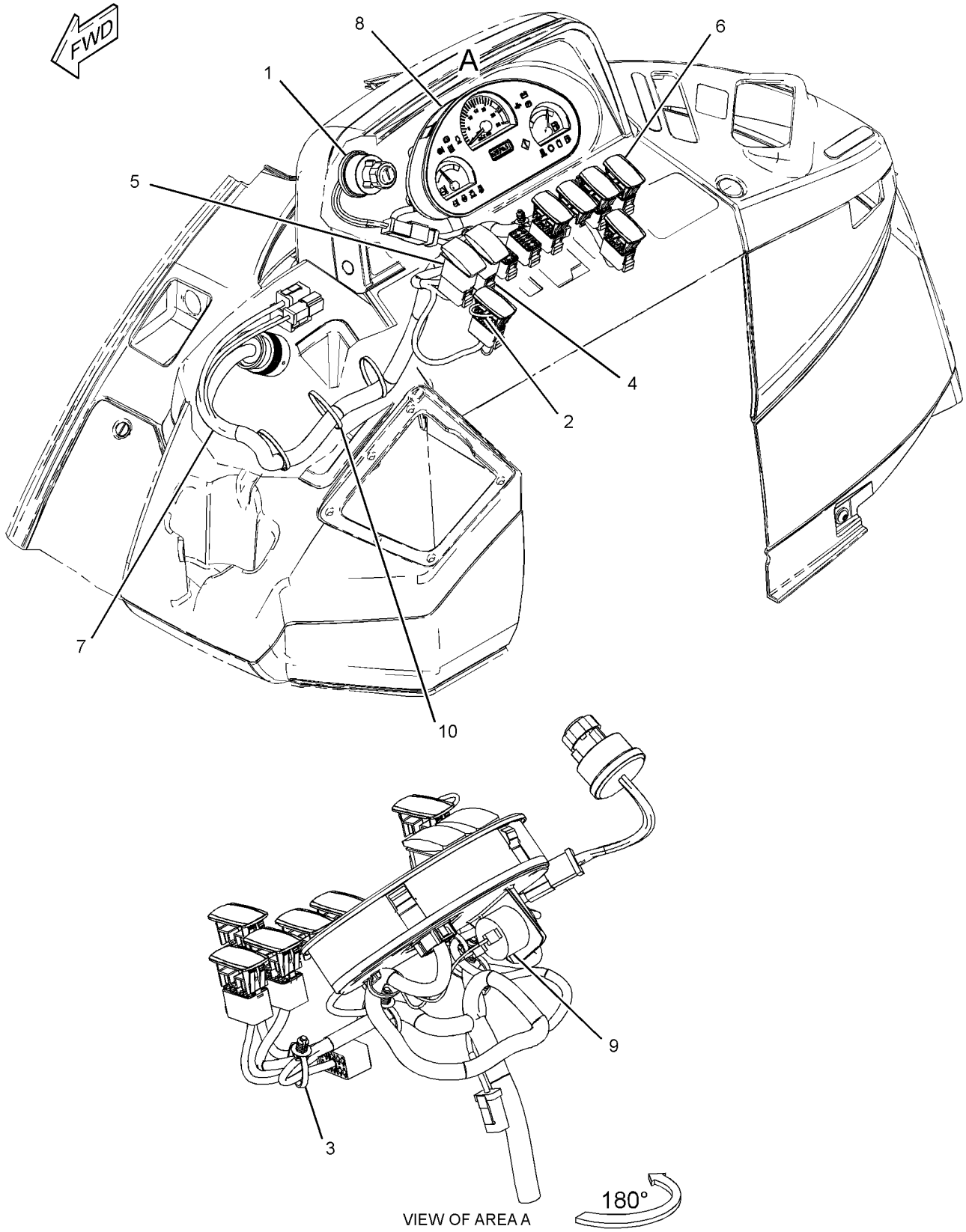

VIEW OF AREA A

GRAPHIC #1 **<END>** g01970793

ELECTRICAL AND STARTING SYSTEM

338-5734 WIRING GP-ENGINE—MECHANICAL

S/N: DPH1-UP

PART OF 329-0293 CHASSIS AR

SMCS-1408 **i03657448**

NOTE	REF NO	GRAPHIC REF	PART NUMBER	QTY	PART NAME 1 2 3 4 5 6 (PRODUCT LEVEL)	SEE PAGE
	1	1	**7K-1181**	6	STRAP-CABLE	
	2	1	**7Y-3883**	1	CABLE AS	
		1	**1S-7251**	2	TERMINAL-CABLE (00-GA, 1/2-IN SCREW)	
E		1	**5P-0747**		CABLE (00-GA, BLACK) (40-CM)	
	3	1	**8T-8799**	3	BOOT	
	4	1	**189-3158**	1	SUPPRESSOR-ARC	
	5	1	**205-9920**	6	STRAP-CABLE	
	6	1	**206-1345**	7	STRAP-CABLE	
	7	1	**244-3106**	1	SENDER AS-TEMPERATURE (ENGINE COOLANT)	
		1	**102-8802**	1	KIT-RECEPTACLE (2-PIN)	
					(INCLUDES RECEPTACLE AS & WEDGE)	
		1	**186-3735**	2	PIN-CONNECTOR (16-GA TO 18-GA)	
	8	1	**274-3774**	3	CAP-CONNECTOR	
	9	1	**310-2333**	1	HARNESS AS-ENGINE	
		1	**123-7615**	2	CONNECTOR	
		1	**7N-9738**	1	HOUSING-RECEPTACLE (14-GA TO 18-GA)	
		1	**7N-7780**	1	PIN-CONNECTOR (14-GA TO 18-GA)	
		1	**9X-1054**	1	PLUG AS-CONNECTOR (4-PIN)	
		1	**155-2260**	1	KIT-CONNECTING PLUG (3-PIN)	
		1	**155-2270**	14	KIT-CONNECTING PLUG (2-PIN)	
					(EACH PLUG KIT INCLUDES PLUG AS, WEDGE & INTERFACE SEAL)	
		1	**230-4011**	1	PLUG AS-CONNECTOR (2-PIN)	
		1	**264-7029**	1	SEAL-CONNECTOR	
		1	**167-3693**	1	PLUG AS-CONNECTOR (31-PIN)	
		1	**8T-8737**	6	PLUG-SEAL	
		1	**100-6674**	2	SEAL-CONNECTOR	
		1	**7N-7779**	1	SOCKET-CONNECTOR (14-GA TO 18-GA)	
		1	**9X-3402**	2	SOCKET-CONNECTOR (16-GA TO 18-GA)	
		1	**180-9340**	56	SOCKET-CONNECTOR (14-GA TO 18-GA)	
		1	**124-5640**	2	TERMINAL-SOCKET	
		1	**8L-8413**	10	STRAP-CABLE	
B		1	**141-8061**		TAPE	
		1	**128-4172**	1	TERMINAL AS-RING (6-GA TO 8-GA)	
E		1	**6V-9023**		TUBE-HEAT SHRINK (12.7-MM DIA) (4-CM)	
		1	**128-4168**	1	TERMINAL AS	
E		1	**6V-9023**		TUBE-HEAT SHRINK (12.7-MM DIA) (4-CM)	
		1	**2L-8067**	2	TERMINAL-RING (10-GA TO 12-GA, 1/4-IN SCREW)	
		1	**2L-8079**	1	TERMINAL-RING (14-GA TO 16-GA, 3/8-IN SCREW)	
		1	**7N-7221**	1	TERMINAL-BLADE (18-GA TO 22-GA)	
		1	**091-2436**	4	TERMINAL-BLADE (18-GA TO 22-GA)	
		1	**9X-1055**	2	TERMINAL-RECEPTACLE (12-GA)	
		1	**100-5041**	2	TERMINAL-RECEPTACLE (18-GA TO 20-GA)	
		1	**2L-8066**	1	TERMINAL-RING (10-GA TO 12-GA, NO. 10 SCREW)	
		1	**7N-9017**	3	TERMINAL-RING (18-GA TO 22-GA, NO. 10 SCREW)	
E		1	**119-3662**		TUBE-HEAT SHRINK (10.85-MM DIA) (7-CM)	
E		1	**125-7874**		TUBE-HEAT SHRINK (5.72-MM DIA) (18-CM)	
E		1	**125-7875**		TUBE-HEAT SHRINK (7.44-MM DIA) (15-CM)	
D		1	**5P-6006**		TUBE-HEAT SHRINK (9.52-MM DIA) (0.1-M)	
	10	1	**315-3371**	1	PLATE AS	
Y	11	1	**322-6827**	1	RELAY GP (12-VOLT) (STARTING MOTOR)	184
	12	1	**325-8341**	1	FILM-INSTRUCTION (RELAY CONNECTION)	
	13	1	**115-1615**	1	RELAY AS (12-VOLT) (STARTING MOTOR)	

338-5734 **WIRING GP-ENGINE** ***(contd.)*** **i03657448**

NOTE	REF NO	GRAPHIC REF	PART NUMBER	QTY	PART NAME 1 2 3 4 5 6 (PRODUCT LEVEL)	SEE PAGE
	14	1	**132-5789**	1	CLIP	
	15	1	**164-9425**	1	HORN AS (24-VOLT, LOW TONE)	
	16	1	**3F-9556**	1	LOCKWASHER	
	17	1	**3J-4818**	1	LOCKWASHER	
	18	1	**3S-2093**	19	STRAP-CABLE	
	19	1	**4P-7428**	1	CLIP	
	20	1	**4P-7581**	5	CLIP	
	21	1	**4P-8134**	6	CLIP	
M	22	1	**5C-2874**	2	NUT (M5X0.8-THD)	
M	23	1	**5C-2890**	2	NUT (M6X1-THD)	
M	24	1	**5C-7261**	1	NUT (M8X1.25-THD)	
	25	1	**8C-3398**	2	LOCKWASHER	
	26	1	**8F-1434**	2	LOCKWASHER	
	27	1	**8F-3590**	1	LOCKWASHER	
	28	1	**8T-0328**	2	WASHER-HARD (5.5X10X1-MM THK)	
	29	1	**8T-4121**	9	WASHER-HARD (11X21X2.5-MM THK)	
M	30	1	**8T-4133**	2	NUT (M10X1.5-THD)	
M	31	1	**8T-4137**	7	BOLT (M10X1.5X20-MM)	
M	32	1	**8T-4171**	1	BOLT (M6X1X12-MM)	
M	33	1	**8T-4179**	2	BOLT (M12X1.75X20-MM)	
M	34	1	**8T-4189**	3	BOLT (M8X1.25X20-MM)	
	35	1	**8T-4205**	3	WASHER-HARD (7.2X14.5X2-MM THK)	
	36	1	**8T-4223**	2	WASHER-HARD (13.5X25.5X3-MM THK)	
	37	1	**8T-4224**	4	WASHER-HARD (8.8X16X2-MM THK)	
M	38	1	**9X-2480**	1	BOLT (M6X1X45-MM)	

B-USE AS REQUIRED
D-ORDER BY THE METER
E-ORDER BY THE CENTIMETER
M-METRIC PART
Y-SEPARATE ILLUSTRATION

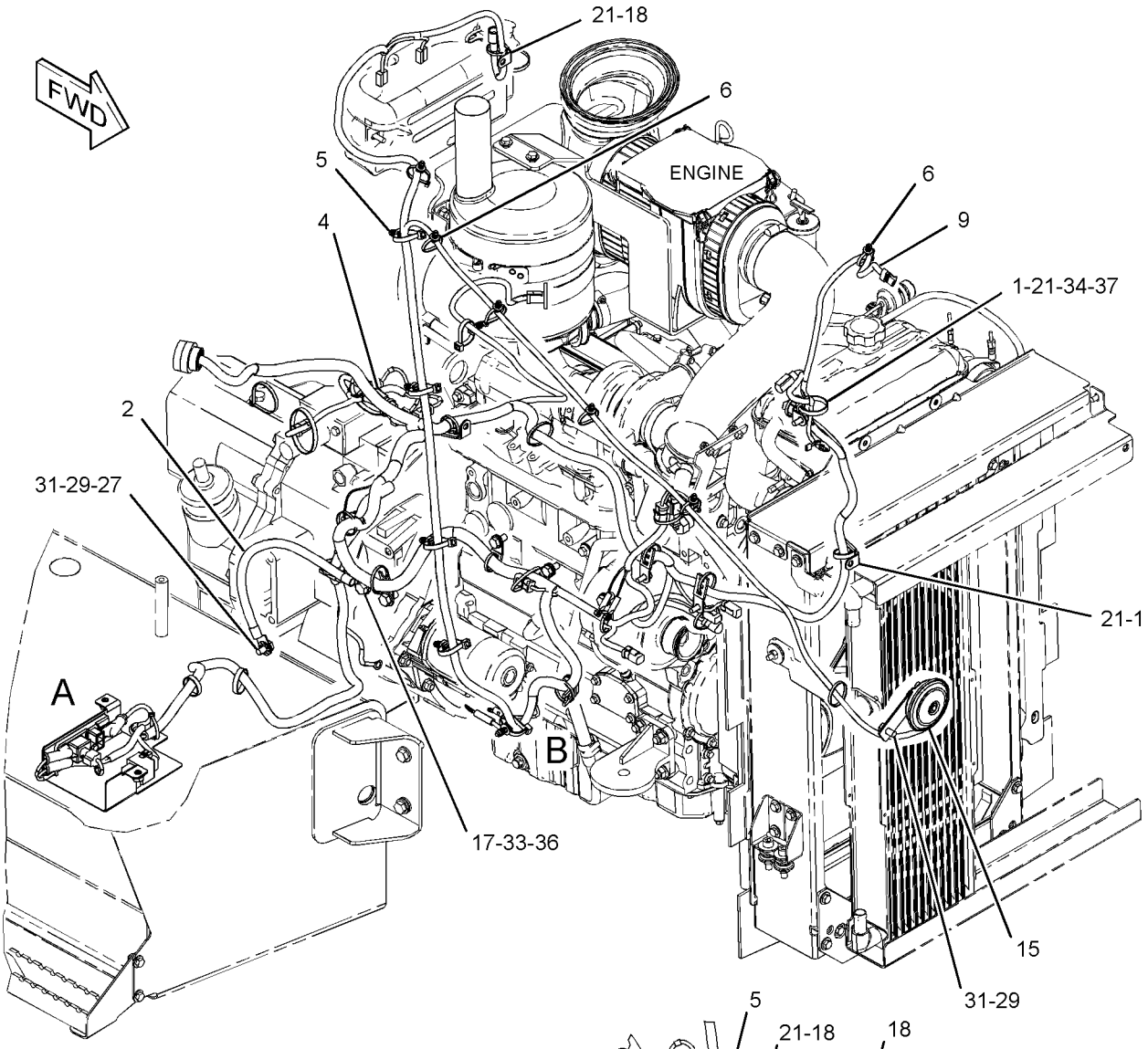

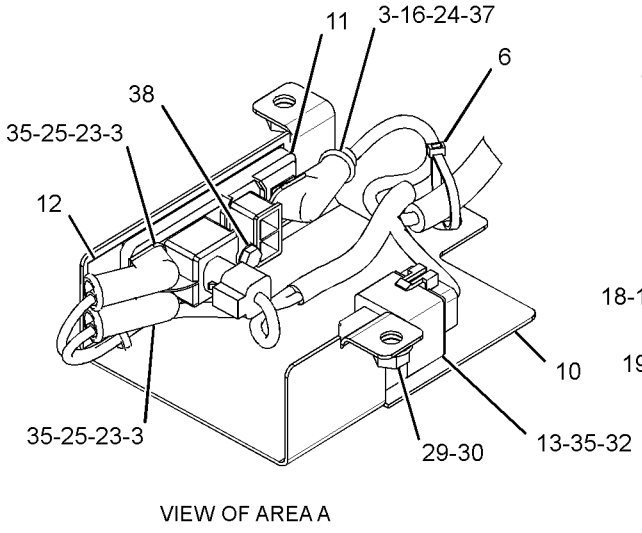

VIEW OF AREA A

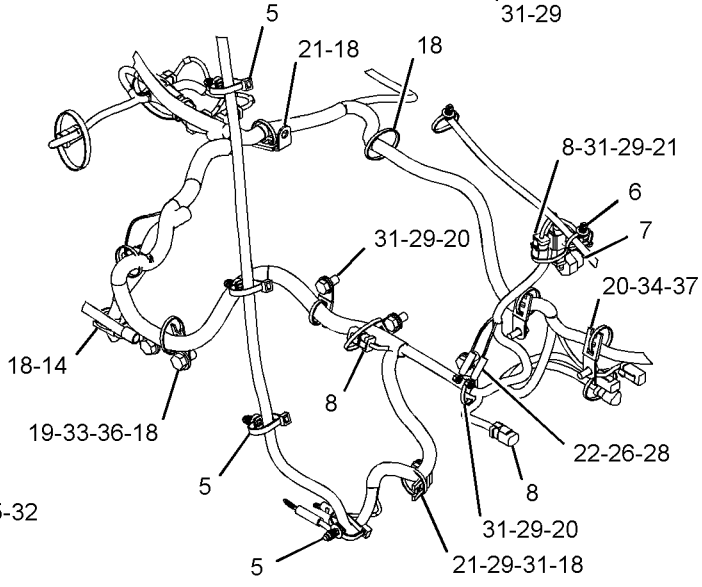

VIEW OF AREA B

GRAPHIC #1 **<END>** g02000619

310-5613 WIRING GP-HEATER

S/N: DPH1-UP
PART OF 335-3049 CAB AR
AN ATTACHMENT

SMCS-1408, 7304 **i03579082**

NOTE	REF NO	GRAPHIC REF	PART NUMBER	QTY	PART NAME 1 2 3 4 5 6 (PRODUCT LEVEL)	SEE PAGE
M	1	1	**8T-4171**	1	BOLT (M6X1X12-MM)	
	2	1	**8T-8799**	1	BOOT	
	3	1	**213-6055**	1	HARNESS AS-HEATER & AIR COND	
		1	**228-5856**	2	CONNECTOR	
		1	**213-0139**	5	PIN	
		1	**180-9339**	5	PIN-CONNECTOR (14-GA TO 18-GA)	
		1	**9X-1054**	1	PLUG AS-CONNECTOR (4-PIN)	
		1	**155-2270**	1	KIT-CONNECTING PLUG (2-PIN)	
		1	**177-9648**	1	KIT-CONNECTING PLUG (2-PIN)	
		1	**177-9656**	1	KIT-CONNECTING PLUG (4-PIN)	
					(EACH PLUG KIT INCLUDES PLUG AS, WEDGE & INTERFACE SEAL)	
		1	**8T-8737**	1	PLUG-SEAL	
		1	**102-8802**	1	KIT-RECEPTACLE (2-PIN)	
		1	**102-8803**	1	KIT-RECEPTACLE (3-PIN)	
					(EACH RECEPTACLE KIT INCLUDES RECEPTACLE AS & WEDGE)	
		1	**180-9340**	2	SOCKET-CONNECTOR (14-GA TO 18-GA)	
		1	**8L-8413**	29	STRAP-CABLE	
E		1	**125-7874**		TUBE-HEAT SHRINK (5.72-MM DIA) (10-CM)	
E		1	**119-3662**		TUBE-HEAT SHRINK (10.85-MM DIA) (20-CM)	
	4	1	**214-4695**	1	SWITCH AS-ROCKER (BLOWER FAN SPEED)	
	5	1	**214-4703**	1	SWITCH AS-ROCKER (HEATER)	
					(EACH SWITCH AS-ROCKER INCLUDES)	
		1	**111-7899**	1	GASKET	
	6	1	**275-0570**	1	BAR-BUS	
Y	7	1	**276-7287**	1	RELAY GP (12-VOLT) (POWER DISTRIBUTION)	181
	8	1	**115-1615**	1	RELAY AS (12-VOLT) (AIR CONDITIONER)	
	9	1	**3S-2093**	4	STRAP-CABLE	
M	10	1	**5C-2890**	1	NUT (M6X1-THD)	
M	11	1	**5C-7261**	1	NUT (M8X1.25-THD)	
M	12	1	**7X-2534**	1	BOLT (M6X1X50-MM)	
	13	1	**8T-4205**	2	WASHER-HARD (7.2X14.5X2-MM THK)	
	14	1	**8T-4224**	1	WASHER-HARD (8.8X16X2-MM THK)	
	15	1	**6K-0806**	5	STRAP-CABLE	

E-ORDER BY THE CENTIMETER
M-METRIC PART
Y-SEPARATE ILLUSTRATION

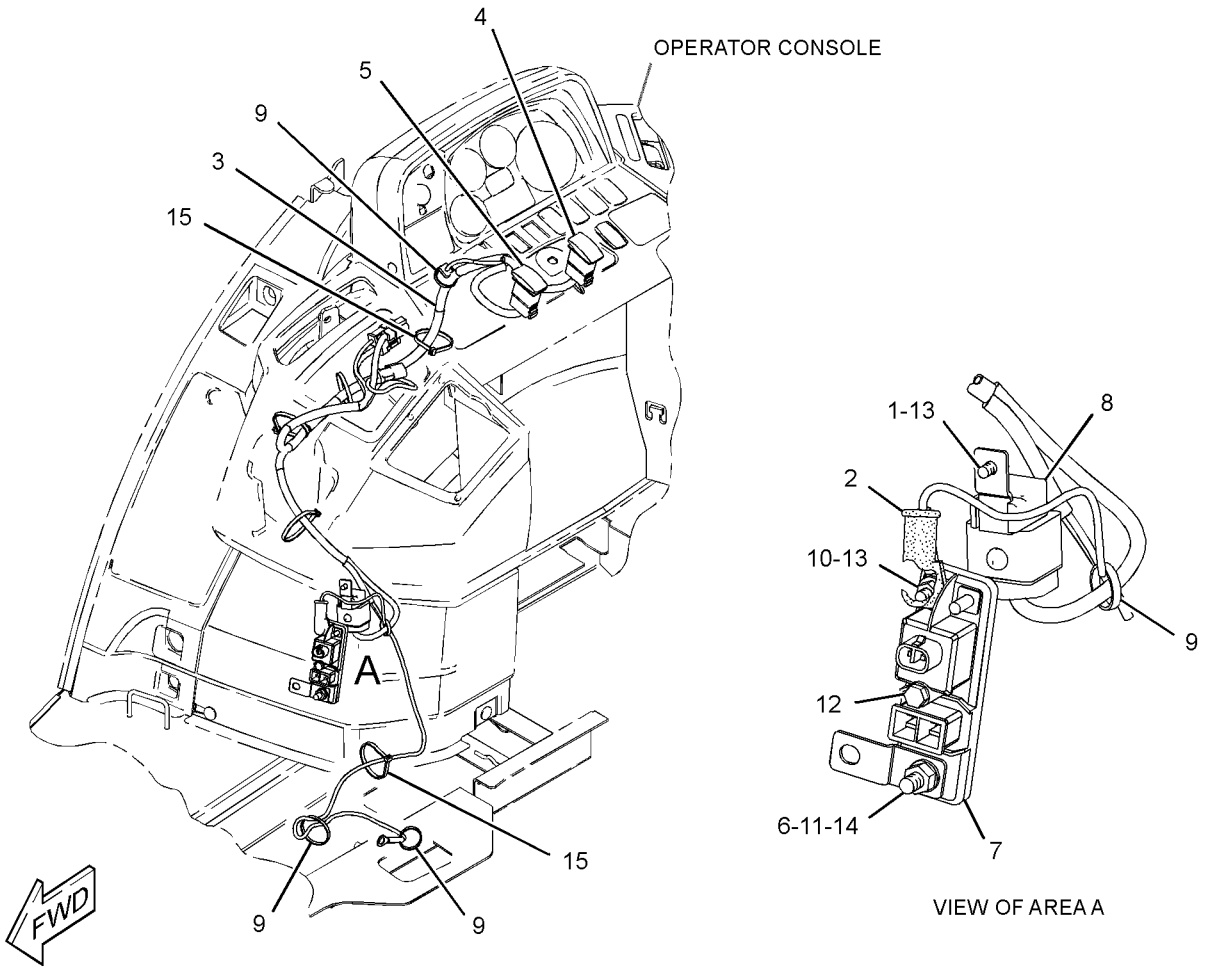

GRAPHIC #1 **<END>** g01869576

329-0058 WIRING GP-KICKOUT & POSITIONER

S/N: DPH1-UP

PART OF 325-1021 LOADER AR

SMCS-5109, 5112, 5734 **i03694780**

NOTE	REF NO	GRAPHIC REF	PART NUMBER	QTY	PART NAME 1 2 3 4 5 6 (PRODUCT LEVEL)	SEE PAGE
	1	1	**9M-6738**	2	CLAMP-HOSE	
	2	1	**9R-2053**	2	BLOCK	
	3	1	**317-4920**	1	SENSOR AS-POSITION (BUCKET)	
		1	**317-4921**	1	TUBE AS	
		1	**317-4922**	1	ROD AS	
		1	**284-0078**	1	SWITCH AS-PUSH BUTTON (BUCKET POSITIONER)	
		1	**295-8141**	1	CLIP	
		1	**295-8142**	2	SEAL-O-RING	
		1	**295-8143**	2	SEAL-O-RING	
	4	1	**328-8594**	1	HARNESS AS-WIRING (KICKOUT, POSITIONER)	
		1	**266-4157**	1	SLEEVE-BRAIDED	
		1	**3S-2093**	1	STRAP-CABLE	
		1	**102-8803**	1	KIT-RECEPTACLE (3-PIN)	
					(INCLUDES RECEPTACLE AS & WEDGE)	
E		1	**6V-8523**		HOSE (206-CM)	
E		1	**8T-6885**		TUBE-HEAT SHRINK (19.05-MM DIA) (10-CM)	
		1	**8T-8737**	1	PLUG-SEAL	
		1	**9X-3401**	2	PIN-CONNECTOR (16-GA TO 18-GA)	
		1	**222-8935**	1	PLUG	
	5	1	**3S-2093**	12	STRAP-CABLE	
G	6	1	**160-2246**		SLEEVE-ABRASION (11.8-IN)	

E-ORDER BY THE CENTIMETER
G-ORDER BY THE INCH

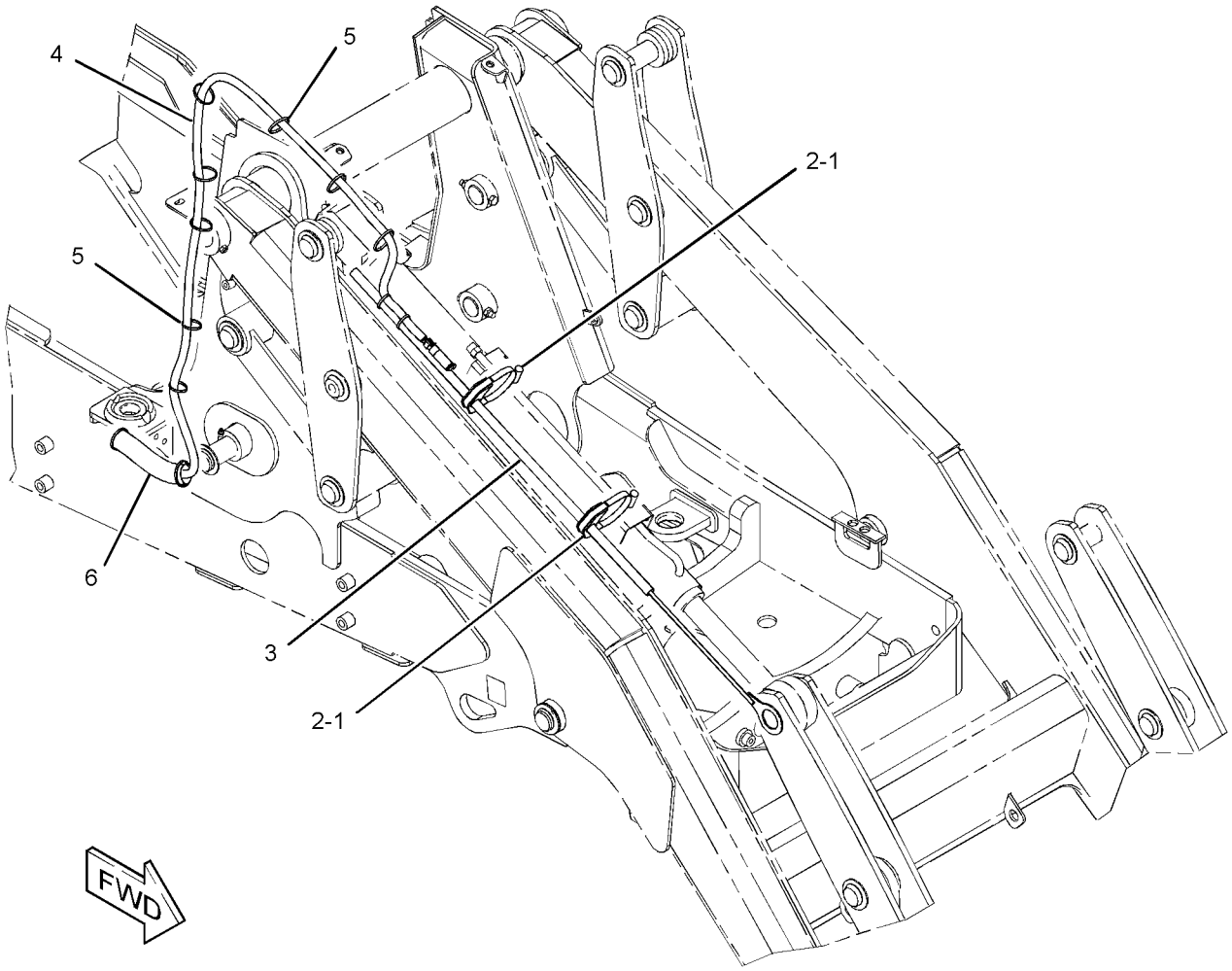

GRAPHIC #1 **<END>** g02002354

211-4265 WIRING GP-LOAD CONTROL

S/N: DPH1-UP
PART OF 332-7958 VALVE AR-BANK 3
AN ATTACHMENT

SMCS-1408 **i03592744**

NOTE	REF NO	GRAPHIC REF	PART NUMBER	QTY	PART NAME 1 2 3 4 5 6 (PRODUCT LEVEL)	SEE PAGE
	1	1	**106-8704**	2	SUPPRESSOR AS-ARC	
	2	1	**115-1615**	2	RELAY AS (12-VOLT) (ENGINE)	
	3	1	**213-6064**	1	HARNESS AS-CHASSIS (LOAD CONTROL)	
		1	**155-2270**	4	KIT-CONNECTING PLUG (2-PIN)	
		1	**155-2260**	1	KIT-CONNECTING PLUG (3-PIN)	
					(EACH INCLUDES PLUG AS, WEDGE & INTERFACE SEAL)	
		1	**102-8804**	1	KIT-RECEPTACLE (4-PIN)	
					(INCLUDES RECEPTACLE AS & WEDGE)	
		1	**8L-8413**	2	STRAP-CABLE	
		1	**9X-1054**	2	PLUG AS-CONNECTOR (4-PIN)	
		1	**9X-1055**	4	TERMINAL-RECEPTACLE	
		1	**100-5041**	4	TERMINAL-RECEPTACLE (18-GA TO 20-GA)	
		1	**9W-0844**	1	SOCKET-CONNECTOR (14-GA)	
		1	**119-3662**		TUBE-HEAT SHRINK (10.85-MM DIA) (20-CM)	
		1	**125-7874**		TUBE-HEAT SHRINK (5.72-MM DIA) (15-CM)	
		1	**180-9339**	4	PIN-CONNECTOR (14-GA TO 18-GA)	
		1	**180-9340**	10	SOCKET-CONNECTOR (14-GA TO 18-GA)	
	4	1	**253-9395**	1	SWITCH AS-ROCKER (LOAD CONTROL)	
		1	**111-7899**	1	GASKET	
	5	1	**3S-2093**	7	STRAP-CABLE	
	6	1	**7K-1181**	2	STRAP-CABLE	

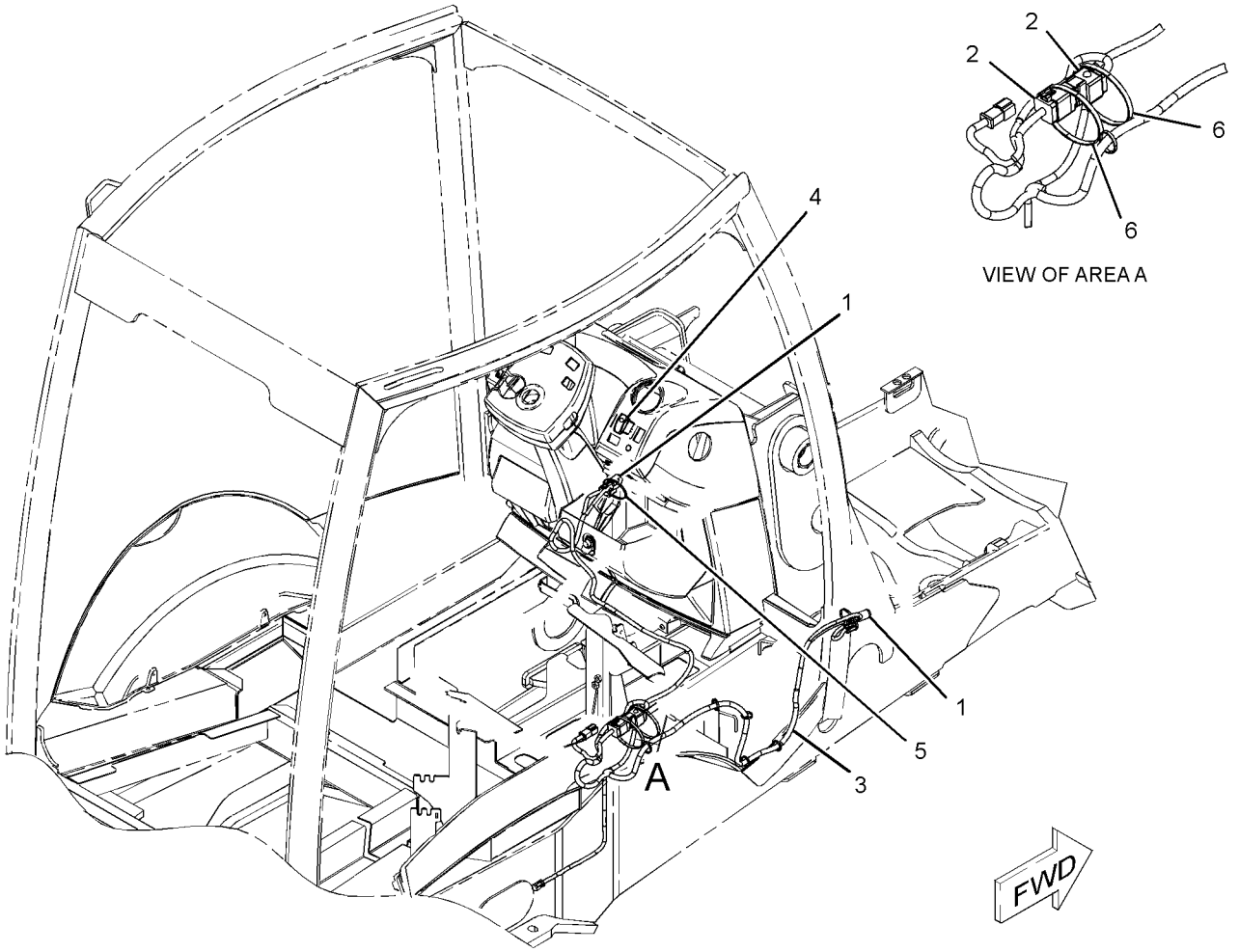

GRAPHIC #1 **<END>** g01215111

328-1485 WIRING GP-MACHINE—MACHINE SECURITY SYSTEM

S/N: DPH1-UP

PART OF 326-7959 INSTALLATION GP-SECURITY

AN ATTACHMENT

SMCS-1408 **i03579091**

NOTE	REF NO	GRAPHIC REF	PART NUMBER	QTY	PART NAME 1 2 3 4 5 6 (PRODUCT LEVEL)	SEE PAGE
	1	1	**3E-3371**	1	WEDGE-RECEPTACLE LOCK (3-PIN)	
	2	1	**5P-7958**	2	SLEEVE-CABLE SPLICE (LITERATURE LANYARD)	
	3	1	**8T-8737**	2	PLUG-SEAL	
	4	1	**123-6758**	1	LANYARD	
	5	1	**200-1898**	1	SUPPRESSOR-ARC	
	6	1	**219-6314**	1	KEY RING (IDENTIFICATION)	
	7	1	**257-7211**	1	VALVE AS-SOLENOID (FUEL SHUTOFF)	
		1	**9X-3401**	8	PIN-CONNECTOR (16-GA TO 18-GA)	
		1	**160-3518**	1	KIT-RECEPTACLE (8-PIN)	
					(INCLUDES RECEPTACLE AS & WEDGE)	
		1	**263-8850**	1	KEY AS-ELECTRONIC (BLACK)	
	8	1	**257-7212**	1	SENSOR AS (KEY READER)	
		1	**186-3735**	3	PIN-CONNECTOR (16-GA TO 18-GA)	
		1	**286-1072**	1	SENSOR AS (KEY READER)	
	9	1	**257-7214**	1	HARNESS AS-CONTROL (PLATFORM)	
		1	**102-8806**	1	KIT-RECEPTACLE (8-PIN)	
					(INCLUDES RECEPTACLE AS & WEDGE)	
		1	**8L-8413**	4	STRAP-CABLE	
		1	**8T-8737**	1	PLUG-SEAL	
E		1	**125-7874**		TUBE-HEAT SHRINK (5.72-MM DIA) (15-CM)	
		1	**126-1766**	4	SOCKET-CONNECTOR (14-GA TO 18-GA)	
		1	**155-2270**	1	KIT-CONNECTING PLUG (2-PIN)	
		1	**155-2271**	1	KIT-CONNECTING PLUG (4-PIN)	
					(EACH INCLUDES PLUG AS, WEDGE & INTERFACE SEAL)	
		1	**180-9339**	8	PIN-CONNECTOR (14-GA TO 18-GA)	
		1	**180-9340**	13	SOCKET-CONNECTOR (14-GA TO 18-GA)	
		1	**230-5008**	1	PLUG AS-CONNECTOR (4-PIN)	
		1	**264-7031**	1	SEAL-CONNECTOR	
	10	1	**276-5450**	1	RELAY AS (12-VOLT) (FUEL SHUTOFF)	
		1	**186-3735**	4	PIN-CONNECTOR (16-GA TO 18-GA)	
		1	**230-5009**	1	RECEPTACLE AS-CONNECTOR (4-PIN)	
	11	1	**295-5893**	1	HARNESS AS-CONTROL (MACHINE SECURITY SYSTEM)	
		1	**180-9339**	6	PIN-CONNECTOR (14-GA TO 18-GA)	
		1	**180-9340**	11	SOCKET-CONNECTOR (14-GA TO 18-GA)	
		1	**102-8805**	1	KIT-RECEPTACLE (6-PIN)	
					(INCLUDES RECEPTACLE AS & WEDGE)	
E		1	**125-7874**		TUBE-HEAT SHRINK (5.72-MM DIA) (5-CM)	
D		1	**141-8061**		TAPE (2-M)	
		1	**155-2265**	1	KIT-CONNECTING PLUG (8-PIN)	
		1	**155-2260**	1	KIT-CONNECTING PLUG (3-PIN)	
					(EACH INCLUDES PLUG AS, WEDGE & INTERFACE SEAL)	
	12	1	**115-1615**	1	RELAY AS (12-VOLT) (DISABLE START)	
	13	1	**102-8802**	1	KIT-RECEPTACLE (2-PIN)	
					(INCLUDES RECEPTACLE AS & WEDGE)	
	14	1	**102-8803**	1	KIT-RECEPTACLE (3-PIN)	
					(INCLUDES RECEPTACLE AS & WEDGE)	
	15	1	**3S-2093**	30	STRAP-CABLE	

D-ORDER BY THE METER
E-ORDER BY THE CENTIMETER

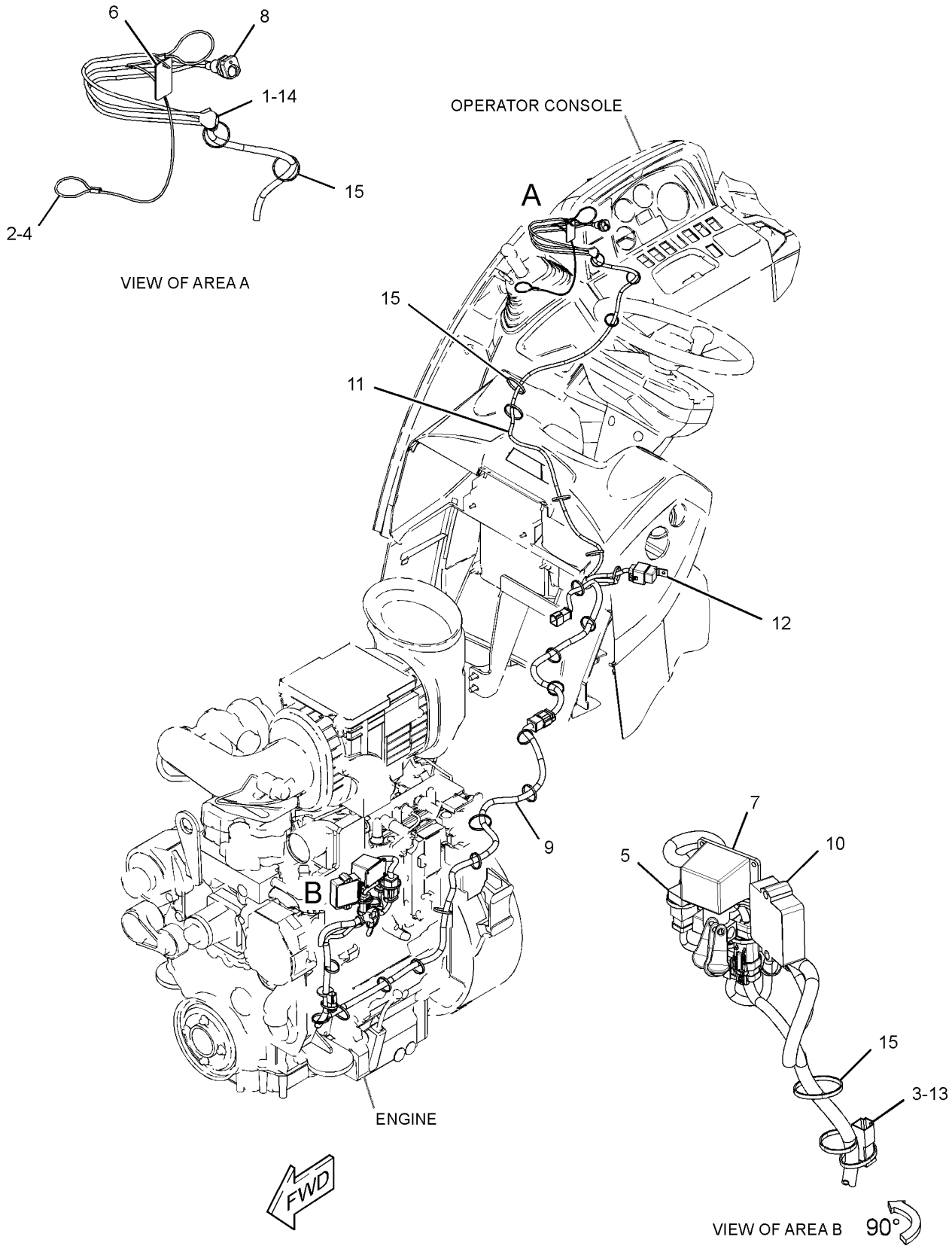

GRAPHIC #1 **<END>** g01626177

340-3213 WIRING GP-PLATFORM

S/N: DPH1-UP

PART OF 335-3049, 335-3050 CAB AR, 335-3047, 335-3048 CANOPY AR-OPEN ROPS AN ATTACHMENT

SMCS-1408 **i03663104**

NOTE	REF NO	GRAPHIC REF	PART NUMBER	QTY	PART NAME 1 2 3 4 5 6 (PRODUCT LEVEL)	SEE PAGE
E	1	1,2	**3E-8299**		SEAL (3-CM EACH)	
E	1A	1	**3E-8299**		SEAL (7-CM)	
	2	1	**6K-0806**	3	STRAP-CABLE	
	3	2	**7K-1181**	21	STRAP-CABLE	
	4	2	**8T-8799**	3	BOOT	
	5	1	**8X-9618**	1	STRAP AS-GROUND	
	6	2	**116-7471**	1	PULLER-MINIFUSE	
	7	2	**140-9378**	1	RELAY AS (12-VOLT) (LOW SIDE)	
	7A	2	**140-9378**	1	RELAY AS (12-VOLT) (NEUTRALIZER)	
	7B	2	**140-9378**	1	RELAY AS (12-VOLT) (NEUTRAL LOCK ALARM)	
	7C	2	**140-9378**	1	RELAY AS (12-VOLT) (PARKING BRAKE ALARM)	
	7D	2	**140-9378**	1	RELAY AS (12-VOLT) (FUEL PUMP)	
	7E	2	**140-9378**	1	RELAY AS (12-VOLT) (NEUTRAL START)	
	8	2	**146-9439**	1	RELAY AS (12-VOLT) (REAR HORN)	
	8A	2	**146-9439**	1	RELAY AS (12-VOLT) (FRONT HORN)	
	9	2	**178-7539**	1	RECEPTACLE AS (POWER SUPPLY)	
	10	2	**189-3158**	2	SUPPRESSOR-ARC	
	11	2	**201-1024**	1	BRACKET	
	12	1	**214-4716**	1	SWITCH AS-ROCKER (TRANSMISSION NEUTRAL LOCK)	
		1	**111-7899**	1	GASKET	
	13	1	**214-4717**	1	INDICATOR AS (TURN SIGNAL LH, PARKING BRAKE)	
	14	1	**214-4723**	1	INDICATOR AS (HIGH BEAM, TURN SIGNAL RH)	
					(EACH INDICATOR AS INCLUDES)	
		1	**111-7899**	1	GASKET	
B	15	1	**227-1057**	11	PLUG-HOLE	
	16	2	**267-2701**	1	FUSE (60-AMPERE)	
	17	1	**273-9190**	1	SWITCH AS-MULTIFUNCTION (HD LIGHT, TURN SIG, WDO WIPER)	
		1	**8T-8737**	1	PLUG-SEAL	
		1	**151-9275**	1	KIT-RECEPTACLE (6-PIN)	
		1	**160-3518**	1	KIT-RECEPTACLE (8-PIN)	
					(EACH RECEPTACLE KIT INCLUDES RECEPTACLE AS & WEDGE)	
		1	**186-3735**	13	PIN-CONNECTOR (16-GA TO 18-GA)	
	18	2	**274-9872**	1	FUSE (30-AMPERE)	
	19	2	**275-0553**	1	BAR-BUS	
Y	20	2	**276-7290**	1	RELAY GP (12-VOLT) (POWER, 1)	182
Y	21	2	**276-7291**	1	RELAY GP (12-VOLT) (POWER, 2)	183
	22	2	**278-6377**	1	FUSE (40-AMPERE)	
	23	2	**299-4996**	1	BRACKET AS	
	24	1	**300-6575**	1	FILM (SEAL)	
	25	1	**306-7346**	1	SWITCH AS-ROCKER (HAZARD WARNING LIGHTS)	
		1	**111-7899**	1	GASKET	
	26	2	**311-8070**	1	BRACKET AS	
	27	2	**312-3083**	1	BRACKET AS	
	28	1	**340-3214**	1	HARNESS AS-PLATFORM	
		1	**275-7877**	1	BLOCK AS-FUSE	
M		1	**5C-2890**	2	NUT (M6X1-THD)	
		1	**8C-3398**	2	LOCKWASHER	
		1	**8T-4205**	2	WASHER-HARD (7.2X14.5X2-MM THK)	
		1	**306-0348**	1	COVER-FUSE	
		1	**306-0351**	1	SEAL-COVER	
		1	**292-9784**	1	BLOCK AS-FUSE	
		1	**8T-8799**	2	BOOT	
		1	**110-0203**	10	CONNECTOR AS	

340-3213 **WIRING GP-PLATFORM** *(contd.)* **i03663104**

NOTE	REF NO	GRAPHIC REF	PART NUMBER	QTY	PART NAME 1 2 3 4 5 6 (PRODUCT LEVEL)	SEE PAGE
		1	**228-5856**	4	CONNECTOR	
		1	**113-8490**	9	FUSE (10-AMPERE)	
		1	**113-8491**	10	FUSE (15-AMPERE)	
		1	**113-8492**	6	FUSE (20-AMPERE)	
		1	**111-6795**	1	HOUSING-RELAY	
		1	**111-6816**	1	LOCK	
		1	**211-0052**	2	NUT (1-11/16-18-THD)	
		1	**9X-3401**	79	PIN-CONNECTOR (16-GA TO 18-GA)	
		1	**155-2255**	2	KIT-CONNECTING PLUG (12-PIN)	
		1	**155-2265**	2	KIT-CONNECTING PLUG (8-PIN)	
		1	**155-2260**	2	KIT-CONNECTING PLUG (3-PIN)	
		1	**155-2270**	7	KIT-CONNECTING PLUG (2-PIN)	
		1	**155-2271**	5	KIT-CONNECTING PLUG (4-PIN)	
		1	**155-2274**	4	KIT-CONNECTING PLUG (6-PIN)	
					(EACH PLUG KIT INCLUDES PLUG AS, WEDGE & INTERFACE SEAL)	
		1	**230-4011**	3	PLUG AS-CONNECTOR (2-PIN)	
					(EACH INCLUDES)	
		1	**264-7029**	1	SEAL-CONNECTOR	
		1	**205-9362**	1	PLUG AS	
		1	**7R-2751**	23	PLUG-CONNECTOR	
		1	**8T-8737**	31	PLUG-SEAL	
		1	**102-8802**	4	KIT-RECEPTACLE (2-PIN)	
		1	**102-8804**	3	KIT-RECEPTACLE (4-PIN)	
		1	**102-8805**	2	KIT-RECEPTACLE (6-PIN)	
		1	**102-8801**	1	KIT-RECEPTACLE (12-PIN)	
					(EACH RECEPTACLE KIT INCLUDES RECEPTACLE AS & WEDGE)	
		1	**167-3692**	2	RECEPTACLE AS-CONNECTOR (31-PIN)	
		1	**100-6674**	2	SEAL-CONNECTOR	
		1	**9W-0844**	11	SOCKET-CONNECTOR (14-GA)	
		1	**9X-3402**	6	SOCKET-CONNECTOR (16-GA TO 18-GA)	
		1	**180-9340**	89	SOCKET-CONNECTOR (14-GA TO 18-GA)	
		1	**8L-8413**	2	STRAP-CABLE	
		1	**122-4401**	1	TERMINAL	
		1	*128-4190*	5	TERMINAL AS	
		1	*128-4170*	1	TERMINAL AS	
					(EACH TERMINAL AS INCLUDES)	
		1	**6H-3587**	1	TERMINAL-RING (6-GA TO 8-GA, 3/8-IN SCREW)	
E		1	**6V-9023**		TUBE-HEAT SHRINK (12.7-MM DIA) (4-CM)	
		1	**2L-8069**	1	TERMINAL-RING (2-GA TO 10-GA, 3/8-IN SCREW)	
		1	**7N-7221**	2	TERMINAL-BLADE (18-GA TO 22-GA)	
		1	**091-2436**	32	TERMINAL-BLADE (18-GA TO 22-GA)	
		1	**104-1995**	6	TERMINAL-BLADE (14-GA TO 18-GA)	
		1	**111-6792**	2	TERMINAL-RECEPTACLE (18-GA TO 20-GA)	
		1	**111-6793**	1	TERMINAL-RECEPTACLE	
E		1	**119-3662**		TUBE-HEAT SHRINK (10.85-MM DIA) (52-CM)	
E		1	**125-7874**		TUBE-HEAT SHRINK (5.72-MM DIA) (135-CM)	
E		1	**125-7875**		TUBE-HEAT SHRINK (7.44-MM DIA) (30-CM)	
		1	**128-4249**	2	LOCKWASHER	
	29	2	**096-6166**	4	WASHER-HARD (4.5X9X1-MM THK)	
	30	1	**156-6175**	2	CLIP	
	31	1	**196-2966**	1	PLUG	
	32	1	**1L-6377**	1	BUTTON-PLUG	
	33	1	**3S-2093**	26	STRAP-CABLE	
	34	1,2	**4P-8134**	2	CLIP	
M	35	1,2	**5C-2890**	4	NUT (M6X1-THD)	
M	36	2	**5C-7261**	2	NUT (M8X1.25-THD)	
	37	2	**6V-5764**	8	SCREW-MACHINE (10-32X0.625-IN)	

340-3213 **WIRING GP-PLATFORM** *(contd.)* **i03663104**

NOTE	REF NO	GRAPHIC REF	PART NUMBER	QTY	PART NAME 1 2 3 4 5 6 (PRODUCT LEVEL)	SEE PAGE
	38	2	**7T-4848**	1	FLASHER AS (12-VOLT)	
M	39	2	**7X-2534**	2	BOLT (M6X1X50-MM)	
	40	1	**7X-7729**	3	WASHER (11X25X3-MM THK)	
	41	1	**8C-3398**	1	LOCKWASHER	
	42	1	**8F-3590**	4	LOCKWASHER	
M	43	2	**8T-0285**	4	SCREW-MACHINE (M4X0.7X12-MM)	
	44	2	**8T-0328**	8	WASHER-HARD (5.5X10X1-MM THK)	
	45	1	**8T-4121**	4	WASHER-HARD (11X21X2.5-MM THK)	
M	46	1	**8T-4133**	2	NUT (M10X1.5-THD)	
M	47	1	**8T-4136**	1	BOLT (M10X1.5X25-MM)	
M	48	1	**8T-4137**	2	BOLT (M10X1.5X20-MM)	
M	49	1,2	**8T-4138**	5	BOLT (M6X1X20-MM)	
M	50	2	**8T-4200**	5	BOLT (M8X1.25X16-MM)	
	51	1,2	**8T-4205**	8	WASHER-HARD (7.2X14.5X2-MM THK)	
	52	2	**8T-4224**	7	WASHER-HARD (8.8X16X2-MM THK)	
E	53	2	**103-2543**		SEAL (3-CM EACH)	

B-USE AS REQUIRED
E-ORDER BY THE CENTIMETER
M-METRIC PART
Y-SEPARATE ILLUSTRATION

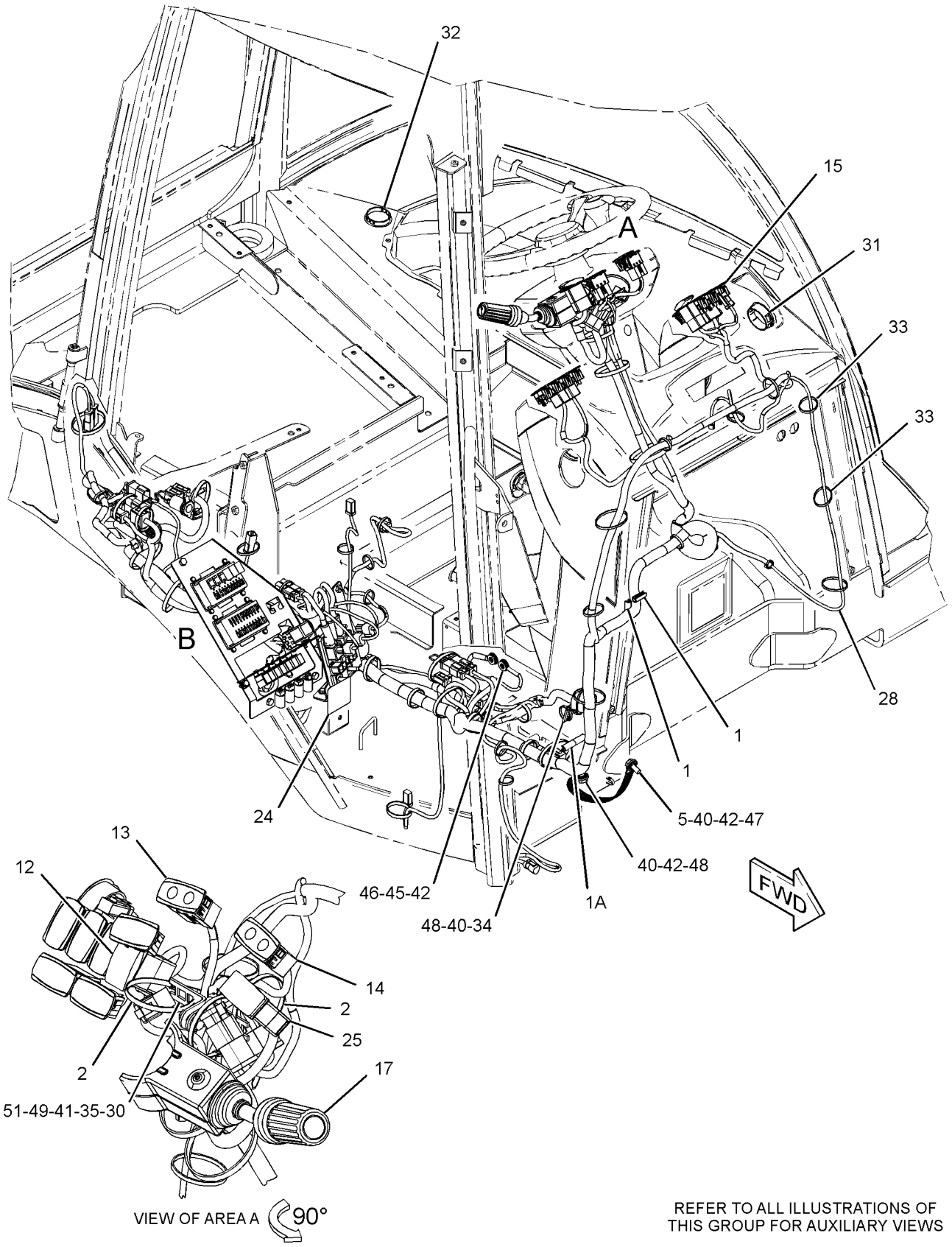

REFER TO ALL ILLUSTRATIONS OF THIS GROUP FOR AUXILIARY VIEWS

GRAPHIC #1

g01986054

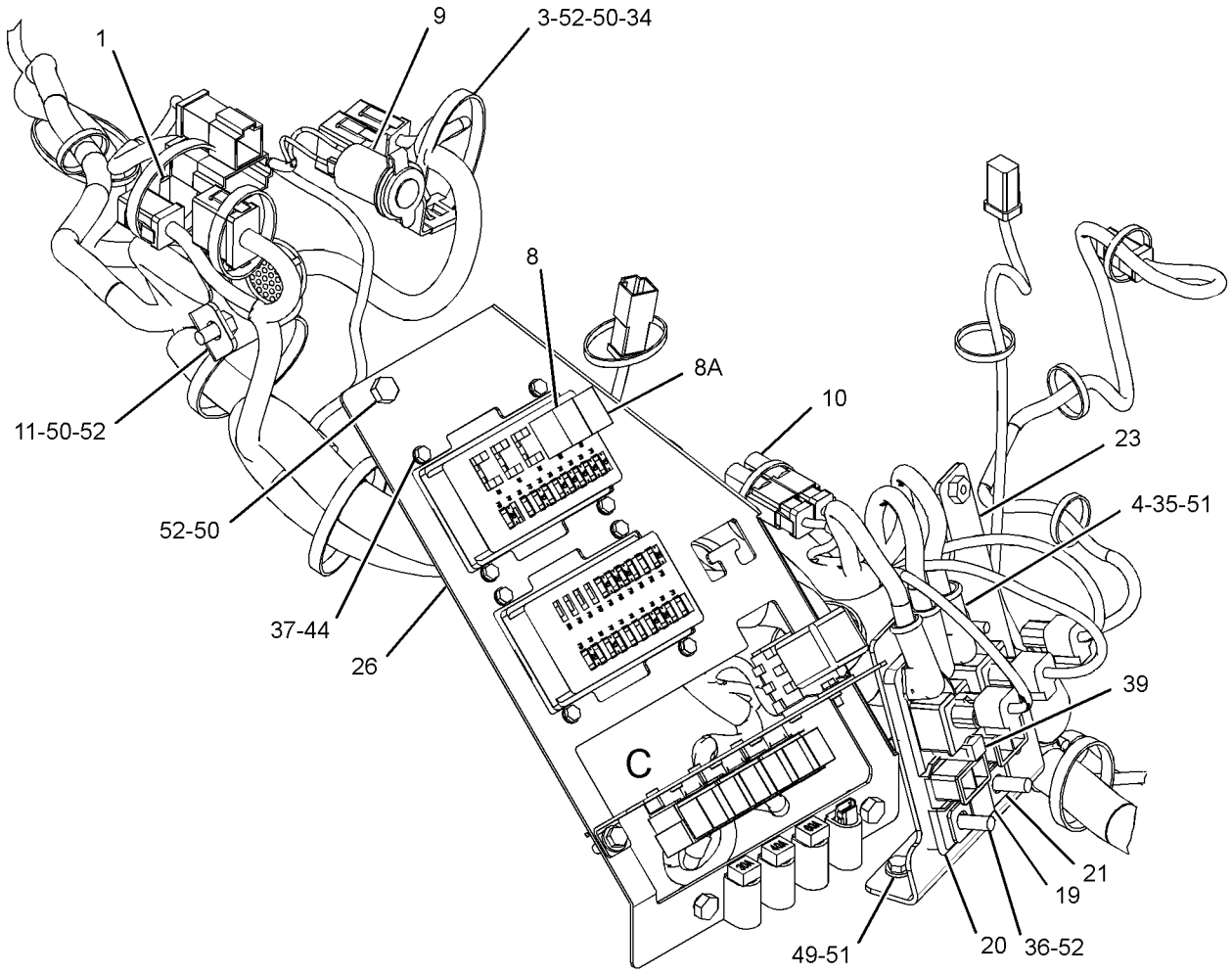

VIEW OF AREA B

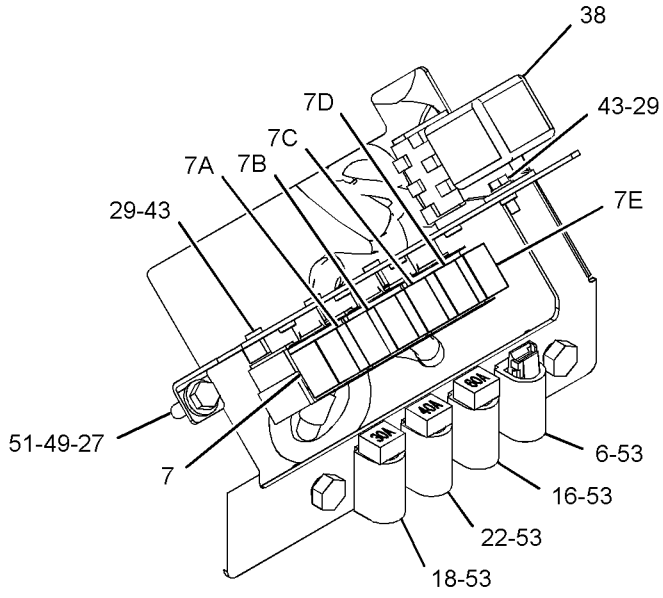

VIEW OF AREA C

GRAPHIC #2 **<END>** g01986055

328-1944 WIRING GP-REAR—SIDESHIFT

S/N: DPH1-UP

PART OF 329-0293 CHASSIS AR

SMCS-1408 **i03642981**

NOTE	REF NO	GRAPHIC REF	PART NUMBER	QTY	PART NAME 1 2 3 4 5 6 (PRODUCT LEVEL)	SEE PAGE
	1	1	**3S-2093**	9	STRAP-CABLE	
	2	1	**189-3158**	1	SUPPRESSOR-ARC	
	3	1	**205-9920**	10	STRAP-CABLE	
	4	1	**206-1345**	4	STRAP-CABLE	
	5	1	**214-4713**	1	SWITCH AS-ROCKER (SIDESHIFT, LOCK-UNLOCK)	
		1	**111-7899**	1	GASKET	
B	6	1	**274-3774**	1	CAP-CONNECTOR	
	7	1	**327-2272**	1	HARNESS AS-REAR	
		1	**274-3775**	1	CAP-CONNECTOR	
		1	**186-3735**	9	PIN-CONNECTOR (16-GA TO 18-GA)	
		1	**9W-0852**	1	PIN-CONNECTOR (14-GA)	
		1	**155-2270**	3	KIT-CONNECTING PLUG (2-PIN)	
		1	**155-2271**	2	KIT-CONNECTING PLUG (4-PIN)	
		1	**155-2260**	1	KIT-CONNECTING PLUG (3-PIN)	
					(EACH PLUG KIT INCLUDES PLUG AS, WEDGE & INTERFACE SEAL)	
		1	**8T-8737**	2	PLUG-SEAL	
		1	**102-8801**	1	KIT-RECEPTACLE (12-PIN)	
					(INCLUDES RECEPTACLE AS & WEDGE)	
		1	**180-9340**	17	SOCKET-CONNECTOR (14-GA TO 18-GA)	
		1	**2L-8075**	2	TERMINAL-RING (14-GA TO 16-GA, NO. 8 SCREW)	
E		1	**119-3662**		TUBE-HEAT SHRINK (10.85-MM DIA) (7-CM)	
E		1	**125-7874**		TUBE-HEAT SHRINK (5.72-MM DIA) (15-CM)	
	8	1	**4P-7428**	2	CLIP	
	9	1	**8T-4121**	4	WASHER-HARD (11X21X2.5-MM THK)	
M	10	1	**8T-4133**	2	NUT (M10X1.5-THD)	
M	11	1	**8T-4196**	2	BOLT (M10X1.5X35-MM)	

B-USE AS REQUIRED
E-ORDER BY THE CENTIMETER
M-METRIC PART

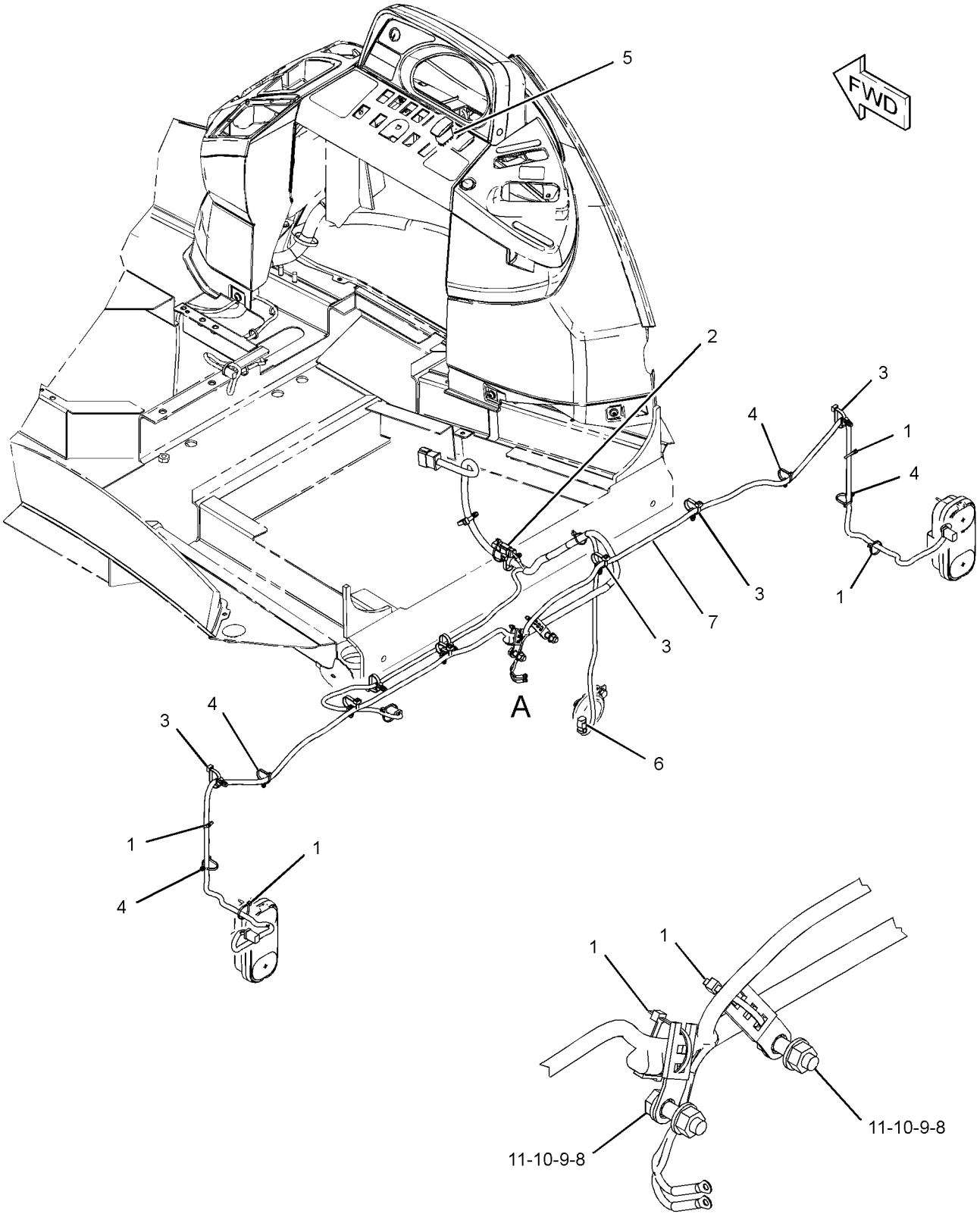

VIEW OF AREA A

GRAPHIC #1 **<END>** g01988255

323-0993 WIRING GP-RIDE CONTROL

S/N: DPH1-UP
PART OF 344-5289 CONTROL AR-RIDE
AN ATTACHMENT

SMCS-1408 **i03592747**

NOTE	REF NO	GRAPHIC REF	PART NUMBER	QTY	PART NAME 1 2 3 4 5 6 (PRODUCT LEVEL)	SEE PAGE
	1	1	**146-9439**	1	RELAY AS (12-VOLT) (RIDE CONTROL)	
	2	1	**189-3158**	1	SUPPRESSOR-ARC	
	3	1	**206-2423**	3	SADDLE	
	4	1	**214-4719**	1	SWITCH AS-ROCKER (RIDE CONTROL)	
		1	**111-7899**	1	GASKET	
	5	1	**246-8038**	1	HARNESS AS-RIDE CONTROL	
		1	**186-3735**	2	PIN-CONNECTOR (16-GA TO 18-GA)	
		1	**9X-3401**	2	PIN-CONNECTOR (16-GA TO 18-GA)	
					—OR—	
		1	**126-1767**	2	PIN-CONNECTOR (14-GA)	
		1	**155-2260**	1	KIT-CONNECTING PLUG (3-PIN)	
		1	**155-2270**	3	KIT-CONNECTING PLUG (2-PIN)	
					(EACH PLUG KIT INCLUDES PLUG AS, WEDGE & INTERFACE SEAL)	
		1	**8T-8737**	1	PLUG-SEAL	
		1	**102-8804**	1	KIT-RECEPTACLE (4-PIN)	
					(INCLUDES RECEPTACLE AS & WEDGE)	
		1	**186-3736**	8	SOCKET-CONNECTOR (16-GA TO 18-GA)	
		1	**8L-8413**	4	STRAP-CABLE	
E		1	**125-7874**		TUBE-HEAT SHRINK (5.72-MM DIA) (10-CM)	
	6	1	**304-5696**	1	SWITCH AS-PRESSURE (RIDE CONTROL)	
		1	**102-8803**	1	KIT-RECEPTACLE (3-PIN)	
					(INCLUDES RECEPTACLE AS & WEDGE)	
		1	**186-3735**	3	PIN-CONNECTOR (16-GA TO 18-GA)	
	7	1	**3J-1907**	1	SEAL-O-RING	
	8	1	**3S-2093**	7	STRAP-CABLE	

E-ORDER BY THE CENTIMETER

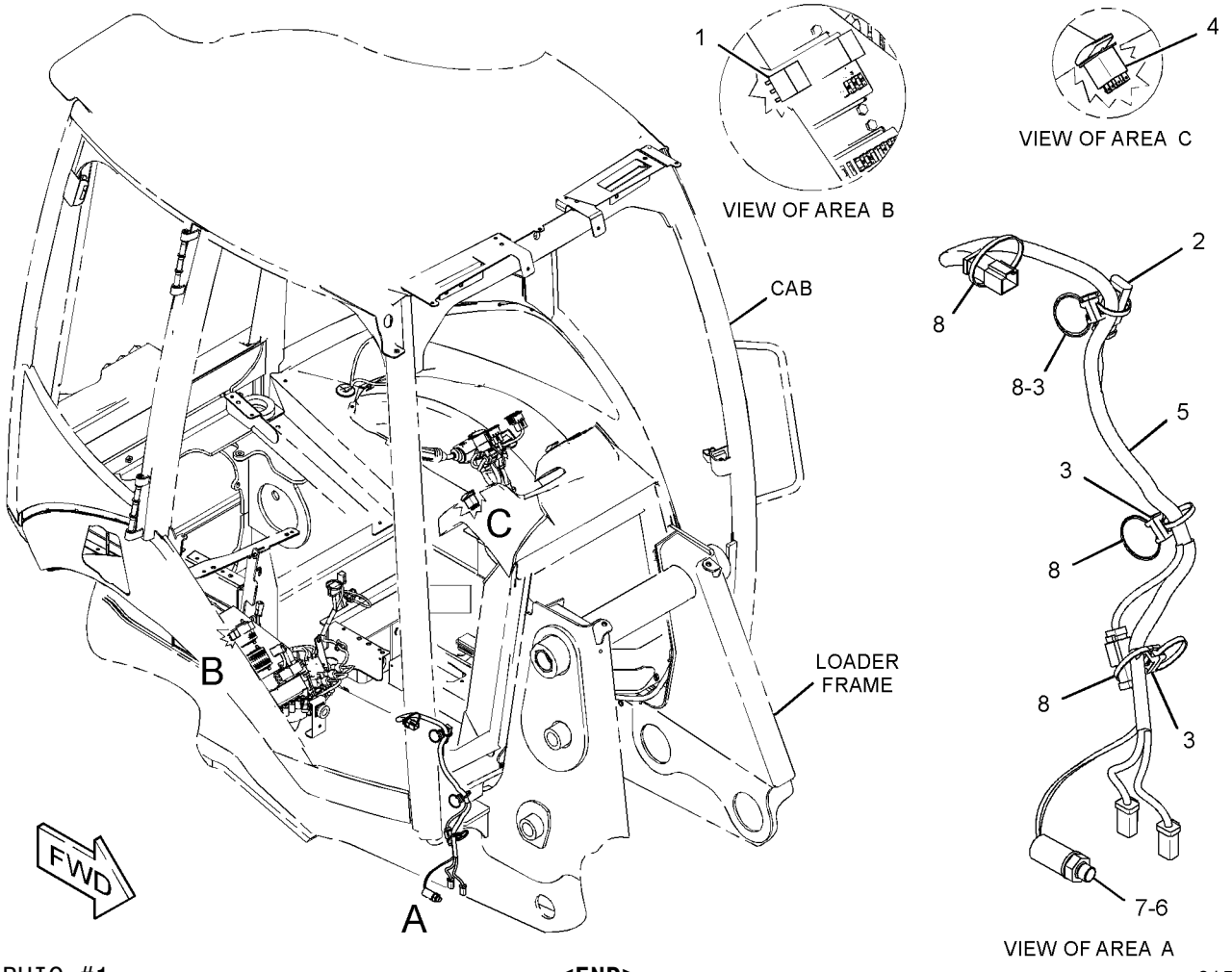

GRAPHIC #1

<END>

g01576122

ELECTRICAL AND STARTING SYSTEM

349-1101 WIRING GP-SENSOR—OBJECT HANDLING

S/N: DPH1-UP

PART OF 350-6941, 350-6942 BACKHOE AR-EXTENDABLE STICK AN ATTACHMENT

SMCS-1408 **i03694800**

NOTE	REF NO	GRAPHIC REF	PART NUMBER	QTY	PART NAME 1 2 3 4 5 6 (PRODUCT LEVEL)	SEE PAGE
	1	1	**7K-1181**	12	STRAP-CABLE	
	2	1	*148-8447*	1	TEE AS-SWIVEL	
		1	**7J-9108**	1	SEAL-O-RING	
		1	**7X-0872**	1	TEE-SWIVEL	
	3	1	*165-6365*	1	FITTING AS	
		1	**3J-1907**	1	SEAL-O-RING	
		1	**7W-7381**	1	FITTING-OUTLET	
	4	1	**206-2423**	1	SADDLE	
	5	1	*241-6215*	1	ELBOW AS	
		1	**3J-1907**	1	SEAL-O-RING	
		1	**6V-8076**	1	ELBOW	
	6	1	**349-1098**	1	HARNESS AS-SWITCH (CAB)	
		1	**230-4013**	1	PLUG AS-CONNECTOR (3-PIN)	
		1	**264-7030**	1	SEAL-CONNECTOR	
		1	**230-4014**	1	RECEPTACLE AS-CONNECTOR (3-PIN)	
		1	**9X-3401**	3	PIN-CONNECTOR (16-GA TO 18-GA)	
		1	**9X-3402**	3	SOCKET-CONNECTOR (16-GA TO 18-GA)	
	7	1	**349-1099**	1	HARNESS AS-SWITCH (REAR)	
		1	**230-4014**	1	RECEPTACLE AS-CONNECTOR (3-PIN)	
E		1	**188-4651**		HOSE-HYDRAULIC (131-CM)	
		1	**9X-3401**	3	PIN-CONNECTOR (16-GA TO 18-GA)	
		1	**230-4013**	1	PLUG AS-CONNECTOR (3-PIN)	
		1	**264-7030**	1	SEAL-CONNECTOR	
		1	**9X-3402**	3	SOCKET-CONNECTOR (16-GA TO 18-GA)	
D		1	**5P-5995**		TUBE (0.2-M)	
E		1	**125-7876**		TUBE-HEAT SHRINK (17.78-MM DIA) (5-CM)	
	8	1	**349-1100**	1	HARNESS AS-SWITCH (HOE)	
		1	**155-2271**	1	KIT-CONNECTING PLUG (4-PIN) (INCLUDES PLUG AS, WEDGE & INTERFACE SEAL)	
		1	**8T-8737**	1	PLUG-SEAL	
		1	**230-4014**	1	RECEPTACLE AS-CONNECTOR (3-PIN)	
E		1	**188-4651**		HOSE-HYDRAULIC (298-CM)	
		1	**9X-3401**	3	PIN-CONNECTOR (16-GA TO 18-GA)	
		1	**180-9340**	3	SOCKET-CONNECTOR (14-GA TO 18-GA)	
D		1	**5P-5995**		TUBE (0.3-M)	
E		1	**125-7876**		TUBE-HEAT SHRINK (17.78-MM DIA) (5-CM)	
	9	1	**349-2773**	1	FILM-WARNING (TIPPING HAZARD, READ OMM)	
	10	1	**350-1078**	1	SWITCH AS-ROCKER (LOAD STABILITY, BUCKET)	
		1	**111-7899**	1	GASKET	
	11	1	**350-1101**	1	HARNESS AS-CONSOLE	
		1	**228-5856**	1	CONNECTOR	
		1	**9X-3401**	4	PIN-CONNECTOR (16-GA TO 18-GA)	
		1	**230-4013**	1	PLUG AS-CONNECTOR (3-PIN)	
		1	**264-7030**	1	SEAL-CONNECTOR	
		1	**230-5009**	1	RECEPTACLE AS-CONNECTOR (4-PIN)	
		1	**9X-3402**	3	SOCKET-CONNECTOR (16-GA TO 18-GA)	
		1	**091-2436**	4	TERMINAL-BLADE (18-GA TO 22-GA)	
E		1	**125-7874**		TUBE-HEAT SHRINK (5.72-MM DIA) (5-CM)	
	12	1	**350-9471**	1	PLATE AS	
	13	1	**124-0174**	2	CLIP	
	14	1	**3S-2093**	27	STRAP-CABLE	
	15	1	**5P-4115**	1	WASHER-HARD (7.2X19X2-MM THK)	
	16	1	**7X-3165**	1	ADAPTER AS-SWIVEL	
	17	1	**8M-2770**	1	CLIP	

349-1101 **WIRING GP-SENSOR** *(contd.)* **i03694800**

NOTE	REF NO	GRAPHIC REF	PART NUMBER	QTY	PART NAME 1 2 3 4 5 6 (PRODUCT LEVEL)	SEE PAGE
	18	1	**8T-4121**	1	WASHER-HARD (11X21X2.5-MM THK)	
M	19	1	**8T-4137**	1	BOLT (M10X1.5X20-MM)	

D-ORDER BY THE METER
E-ORDER BY THE CENTIMETER
M-METRIC PART

349-1101 **WIRING GP-SENSOR** *(contd.)* **i03694800**

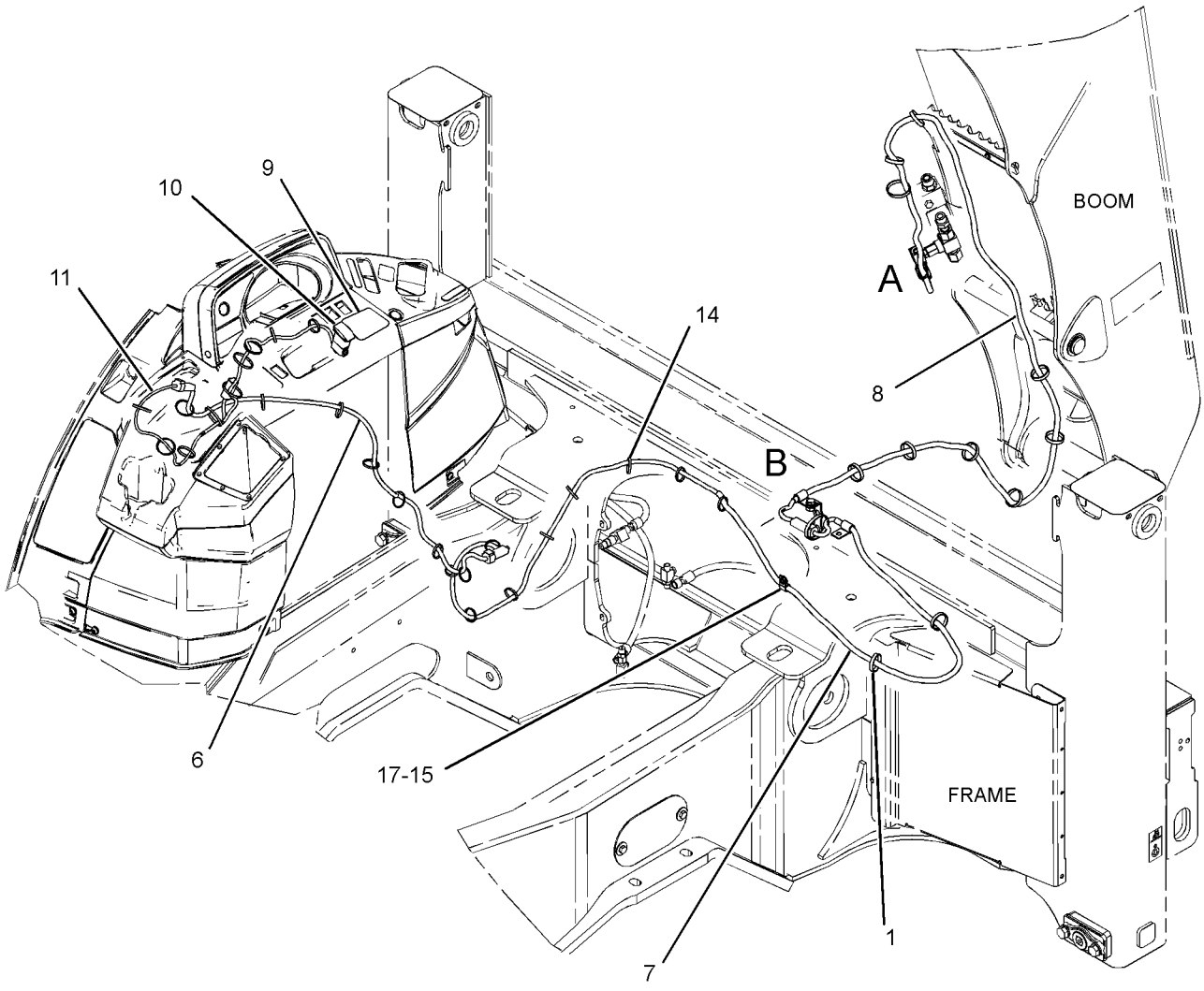

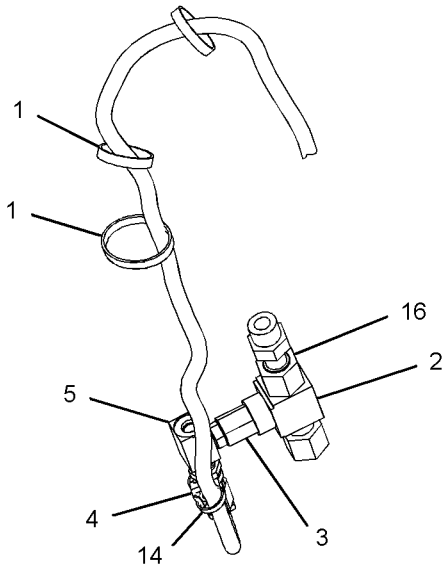

VIEW OF AREA A

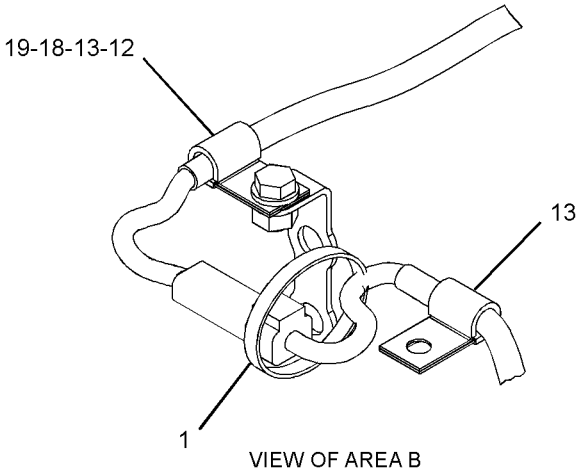

VIEW OF AREA B

GRAPHIC #1 **<END>** g01990794

311-3639 WIRING GP-WIPER–REAR

S/N: DPH1-UP
PART OF 315-1270 WINDOW GP-CAB
AN ATTACHMENT

SMCS-1408, 7305 **i03579181**

NOTE	REF NO	GRAPHIC REF	PART NUMBER	QTY	PART NAME 1 2 3 4 5 6 (PRODUCT LEVEL)	SEE PAGE
	1	1	**206-1345**	3	STRAP-CABLE	
	2	1	**311-1218**	1	HARNESS AS-WINDOW WIPER	
		1	**266-4157**	7	SLEEVE-BRAIDED	
E		1	**266-2814**		CONDUIT-FLEXIBLE (141-CM)	
		1	**9W-0852**	2	PIN-CONNECTOR (14-GA)	
		1	**180-9339**	2	PIN-CONNECTOR (14-GA TO 18-GA)	
		1	**155-2271**	1	KIT-CONNECTING PLUG (4-PIN)	
					(INCLUDES PLUG AS, WEDGE & INTERFACE SEAL)	
		1	**102-8804**	1	KIT-RECEPTACLE (4-PIN)	
					(INCLUDES RECEPTACLE AS & WEDGE)	
		1	**9W-0844**	2	SOCKET-CONNECTOR (14-GA)	
		1	**180-9340**	2	SOCKET-CONNECTOR (14-GA TO 18-GA)	
D		1	**141-8061**		TAPE (1-M)	
	3	1	**308-3074**	4	CLIP	
	4	1	**3S-2093**	2	STRAP-CABLE	
M	5	1	**8T-4171**	4	BOLT (M6X1X12-MM)	
	6	1	**8T-4205**	5	WASHER-HARD (7.2X14.5X2-MM THK)	

D-ORDER BY THE METER
E-ORDER BY THE CENTIMETER
M-METRIC PART

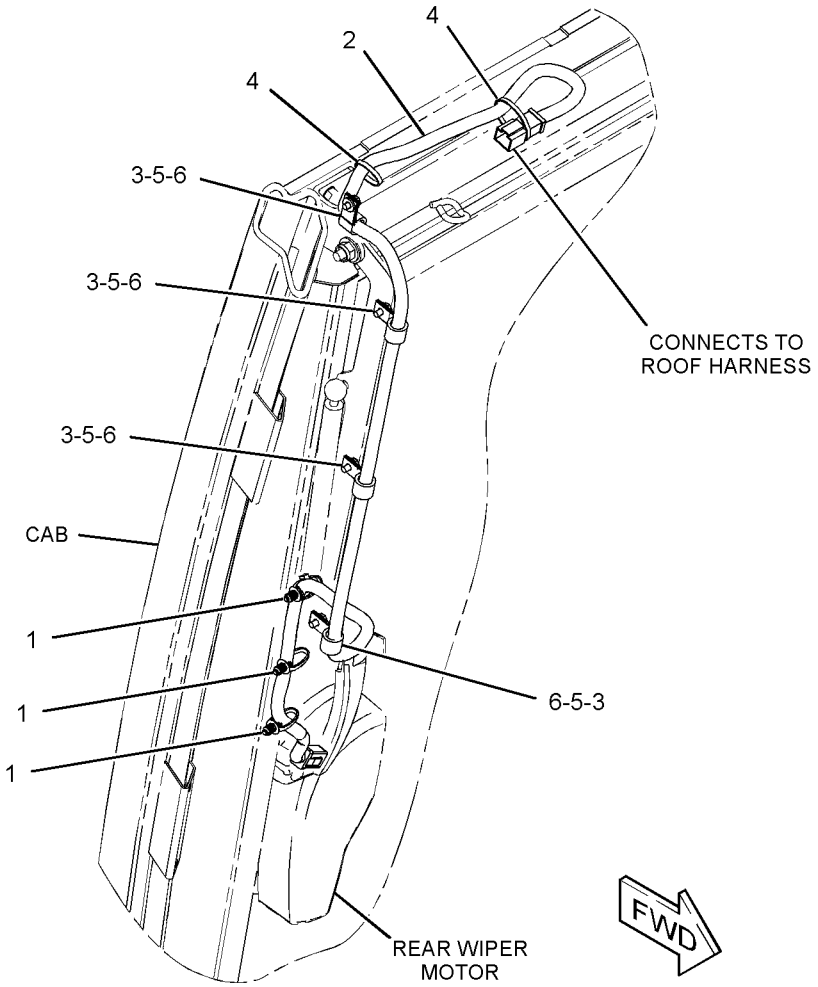

GRAPHIC #1

<END>

g01653654

230-5743 AXLE GP-DRIVE & STEERING–FRONT

S/N: DPH1-UP

PART OF 329-0319 DRIVE AR-BACKHOE LOADER

AN ATTACHMENT

SMCS-3020, 3250, 3258, 3259, 3260, 3264, 3278, 4050, 4303, 4313

i03627149

NOTE	REF NO	GRAPHIC REF	PART NUMBER	QTY	PART NAME 1 2 3 4 5 6 (PRODUCT LEVEL)	SEE PAGE
	1	1	**199-0639**	4	SCREW-FLAT HEAD (M8X1.25X20-MM)	
	2	1	**207-4254**	6	BOLT (STEERING CYLINDER)	
	3	1	**207-4258**	2	NUT (M20X1.5-THD)	
	4	1	**219-8798**	2	SEAL-LIP TYPE	
	5	1	**219-8795**	1	CAP	
	6	1	**209-9875**	2	DOWEL	
	7	1	**209-7456**	2	BUSHING	
	8	1	**152-6144**	4	PLUG AS-DRAIN (MAGNETIC)	
					(EACH INCLUDES)	
		1	**6V-6228**	1	SEAL-O-RING	
	9	1	**208-0321**	11	BOLT-FLANGE HEAD (M12X1.75X33-MM)	
	10	1	**209-7464**	2	SEAL	
M	11	1	**199-0683**	16	BOLT (M16X2X38-MM)	
	12	1	**210-5937**	2	WASHER (46X66X3-MM THK)	
Y	13	1	**209-9882**	1	DIFFERENTIAL & BEVEL GEAR GP	237
	14	1	**210-5942**	2	RING	
	15	1	**209-9883**	1	HOUSING	
J	16	1	**210-5946**	2	SHAFT GP-AXLE	
					(EACH INCLUDES)	
		1	**174-4671**	1	YOKE	
	17	1	**209-9886**	2	TIE ROD GP	
					(EACH INCLUDES)	
		1	**204-3080**	1	BALL JOINT	
		1	**217-2883**	1	TIE ROD	
		1	**217-2885**	1	NUT	
	18	1	**209-9887**	1	BUSHING	
	19	1	**210-5947**	2	WASHER-THRUST (44.6X58X7-MM THK)	
	20	1	*216-7473*	4	PIN AS (UPPER)	
					(EACH INCLUDES)	
		1	**198-7823**	1	BEARING AS	
		1	**198-7825**	1	SEAL	
		1	**198-7838**	1	PIN	
Y	21	1	**210-5924**	2	PLANETARY GP-FINAL DRIVE	253
Y	22	1	**209-9884**	1	HOUSING & FLANGE GP-AXLE (RH)	246
Y	23	1	**209-9885**	1	HOUSING & FLANGE GP-AXLE (LH)	248
	24	1	**211-6735**	2	SEAL-O-RING	
L	25	1	**214-5097**	1	CYLINDER GP-STEERING	
		1	**238-5254**	1	ROD	
		1	**238-5255**	2	CYLINDER HEAD	
	26	1	**253-5024**	1	BREATHER (FRONT AXLE)	
	27	1	**069-4707**	1	SEALANT (GASKET)	
	28	1	**154-5404**	2	BEARING	
B	29	1	**198-7841**	8	SHIM (0.15-MM THK)	
B	30	1	**198-7842**	4	SHIM (0.2-MM THK)	
B	31	1	**198-7843**	4	SHIM (0.5-MM THK)	
					AVAILABLE REPAIR KIT(S):	
J			**174-4643**	2	KIT-SPIDER	
					(EACH INCLUDES SPIDER & RINGS)	
L			**215-2023**	1	KIT-SEAL	
					(INCLUDES RINGS, SEALS & WASHERS)	

230-5743 AXLE GP-DRIVE & STEERING *(contd.)* i03627149

B-USE AS REQUIRED
J-KIT MARKED J SERVICES PART MARKED J
L-KIT MARKED L SERVICES PART MARKED L
M-METRIC PART
Y-SEPARATE ILLUSTRATION

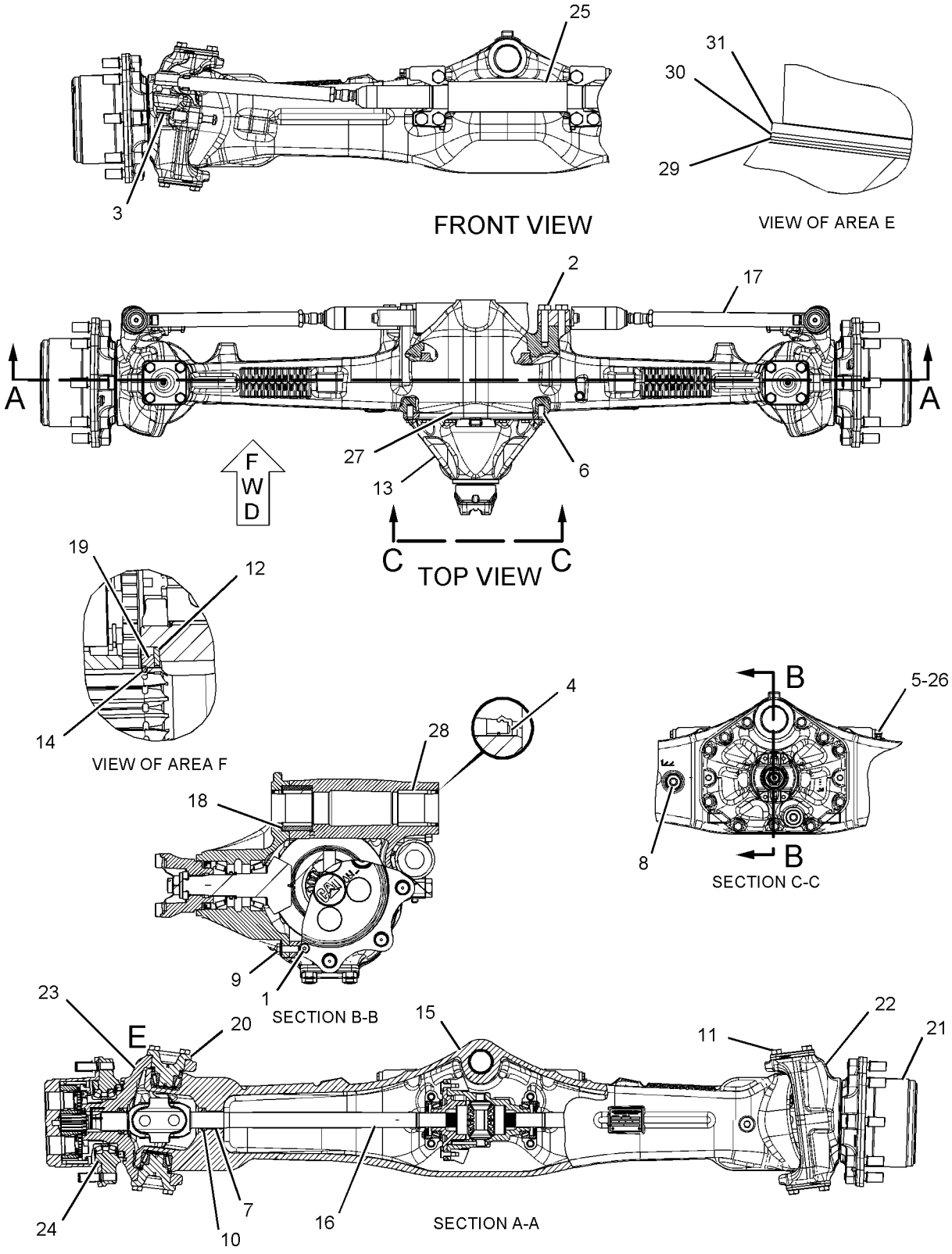

GRAPHIC #1 **<END>** g01094314

POWER TRAIN

230-5738 AXLE GP-REAR

S/N: DPH1-UP

PART OF 329-0319 DRIVE AR-BACKHOE LOADER

AN ATTACHMENT

SMCS-3278, 3282 **i03726660**

NOTE	REF NO	GRAPHIC REF	PART NUMBER	QTY	PART NAME 1 2 3 4 5 6 (PRODUCT LEVEL)	SEE PAGE
	1	1	**199-0639**	4	SCREW-FLAT HEAD (M8X1.25X20-MM)	
	2	1	**199-0641**	2	BOLT (DIFFERENTIAL LOCK)	
M	3	1	**8T-0292**	2	BOLT (M8X1.25X90-MM)	
	4	1	**199-0652**	2	CLIP-PIN	
	5	1	**210-3097**	2	CLIP	
	6	1	**210-3098**	2	SEAL	
	7	1	**199-0688**	2	SHIM (2.9-MM THK)	
	8	1	**197-9155**	1	BREATHER (AXLE)	
	9	1	**199-0670**	2	SCREW-PURGE	
	10	1	**198-7811**	2	DOWEL	
	11	1	**152-6144**	4	PLUG AS-DRAIN (MAGNETIC)	
					(EACH INCLUDES)	
		1	**6V-6228**	1	SEAL-O-RING	
	12	1	**199-0676**	2	SPRING	
M	13	1	**199-0679**	2	BOLT (M16X2X95-MM)	
	14	1	**210-3099**	2	SLEEVE	
	15	1	**210-3100**	2	BUSHING	
	16	1	**199-0706**	1	PISTON	
	17	1	**199-0786**	8	PLATE	
	18	1	**199-0787**	6	PIN	
	19	1	**210-7305**	2	SHAFT	
	20	1	**210-3106**	1	BRACKET	
	21	1	**212-5713**	2	PLUG	
	22	1	*216-1608*	2	GEAR GP-RING	
					(EACH INCLUDES)	
		1	**199-0778**	1	RING-SNAP	
		1	**210-7302**	1	GEAR-RING (81-TEETH)	
		1	**226-4364**	1	HUB	
Y	23	1	*216-1609*	2	FLANGE GP-WHEEL	245
Y	24	1	**216-1610**	2	PLANETARY GP-FINAL DRIVE (AXLE)	254
	25	1	**217-2914**	1	COVER (DIFFERENTIAL LOCK)	
	26	1	**231-0699**	1	COVER (DIFFERENTIAL LOCK)	
	27	1	**219-8839**	1	ROD	
	28	1	**174-4647**	1	BUSHING	
	29	1	**174-4650**	1	SPACER (20X32X8-MM THK)	
	30	1	**231-0698**	2	SHAFT-AXLE	
	31	1	**226-4366**	2	NUT-SPANNER	
	32	1	**226-4365**	2	WASHER-TAB	
	33	1	**226-4367**	2	SPACER (110X123X22.99-MM THK)	
	34	1	**226-4370**	6	BOLT-SELF-LOCKING	
	35	1	**238-5291**	6	DISC-BRAKE	
	36	1	**238-5292**	2	HUB-BRAKE	
	37	1	**238-5293**	1	HOUSING-AXLE (LH)	
	38	1	**238-5294**	1	HOUSING-AXLE (RH)	
Y	39	1	*238-5298*	1	DIFFERENTIAL & BEVEL GEAR GP	239
	40	1	**199-0658**	2	O-RING-CAP	
	41	1	**219-8799**	2	SEAL-O-RING	
	42	1	**199-0662**	2	SEAL-O-RING	
	43	1	**130-7282**	1	BRACKET	
M	44	1	**7X-2559**	26	BOLT (M16X2X160-MM)	
	45	1	**4L-6454**	2	BOLT (3/8-16X1-IN)	
	46	1	**3J-1907**	1	SEAL-O-RING	
	47	1	**9S-8004**	1	PLUG	
	48	1	**219-8795**	1	CAP	
	49	1	**069-4707**	1	SEALANT (GASKET)	

230-5738 AXLE GP-REAR *(contd.)* i03726660

NOTE	REF NO	GRAPHIC REF	PART NUMBER	QTY	PART NAME 1 2 3 4 5 6 (PRODUCT LEVEL)	SEE PAGE
J	50	1	**259-0127**	1	BRAKE GP-HYDRAULIC CALIPER	
					AVAILABLE REPAIR KIT(S):	
J			**166-9413**	1	KIT-CAM (COUNTERCLOCKWISE)	
					(INCLUDES CAMS, BEARINGS & RETAINER)	
J			**230-3810**	1	KIT-BRAKE LINING	
					(INCLUDES LINERS & SPRING)	
J			**230-3811**	1	KIT-BRAKE CALIPER	
					(INCLUDES SLEEVES, WASHERS, NUTS, BOLT, LININGS, BEARING, BOOT, SEAL, SPRING & O-RINGS)	

J-KITS MARKED J AVAILABLE FOR PART(S) MARKED J
M-METRIC PART
Y-SEPARATE ILLUSTRATION

230-5738 AXLE GP-REAR *(contd.)* **i03726660**

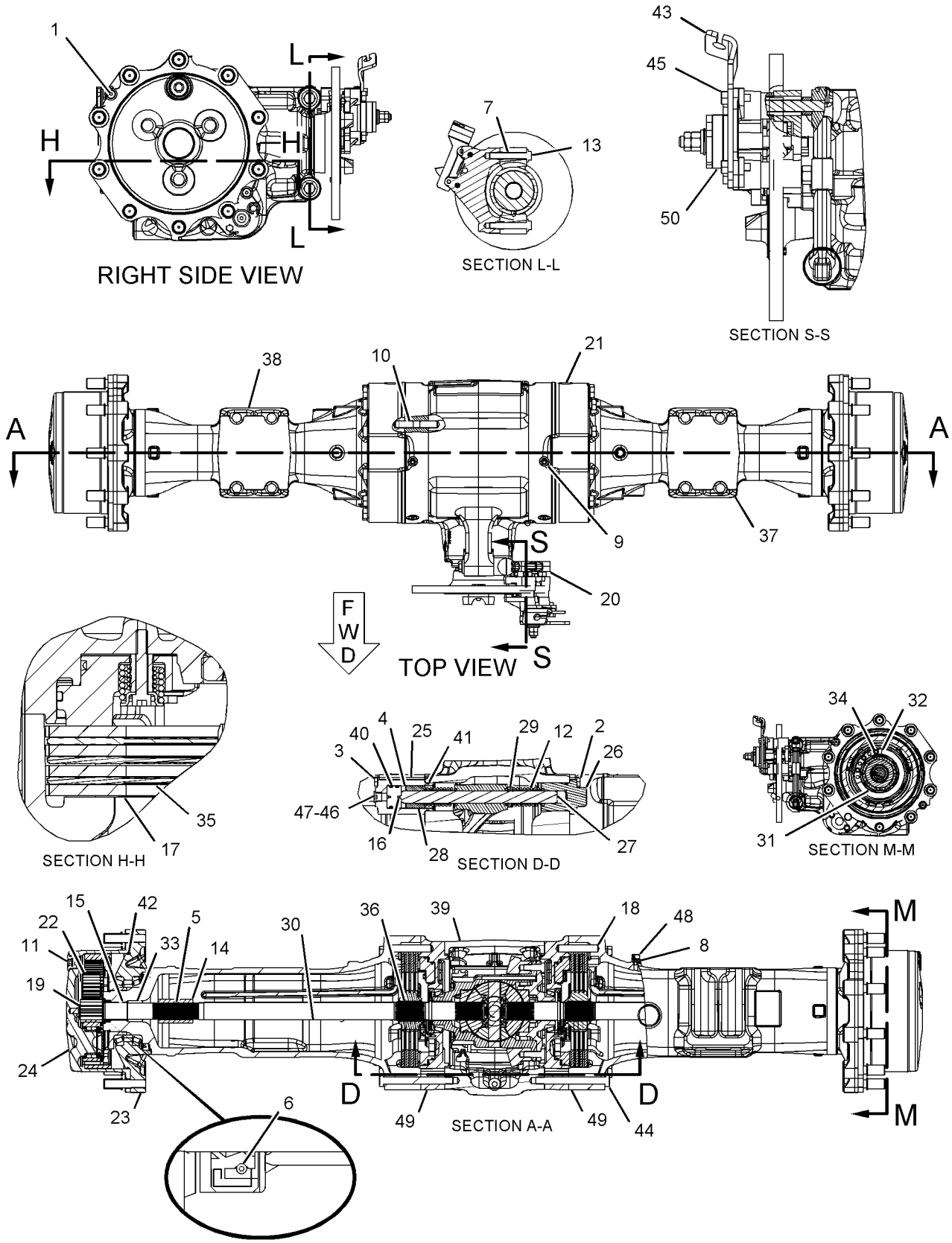

GRAPHIC #1 **<END>** g01093644

275-0468 CASE AS-TRANSMISSION–FRONT

S/N: DPH1-UP
PART OF 294-9815 TRANSMISSION GP-DIRECT DRIVE
AN ATTACHMENT

SMCS-3030, 3064 **i03260645**

NOTE	REF NO	GRAPHIC REF	PART NUMBER	QTY	PART NAME 1 2 3 4 5 6 (PRODUCT LEVEL)	SEE PAGE
	1	1	**120-9762**	4	SEAL-O-RING	
M	2	1	**6V-5215**	2	BOLT (M8X1.25X16-MM)	
	3	1	**7T-2651**	1	STRAINER (SUCTION)	
	4	1	**106-9861**	1	PLATE-COVER	
	5	1	**7T-3051**	1	PLUG	
	6	1	**005-0469**	1	CUP-BEARING	
	7	1	**8T-1580**	1	CUP	
	8	1	**6Y-2737**	1	CUP-BEARING	
	9	1	**123-8906**	2	CUP-TAPERED ROLLER	
	10	1	**9W-5460**	1	RING	
	11	1	**4J-0522**	1	SEAL-O-RING	
	12	1	**275-0469**	1	CASE AS-FRONT	
		1	**122-3652**	2	PLUG	
		1	**123-2920**	3	PLUG	
		1	**237-5188**	1	PLUG-EXPANSION	
	13	1	**7T-3253**	2	DOWEL	

M-METRIC PART

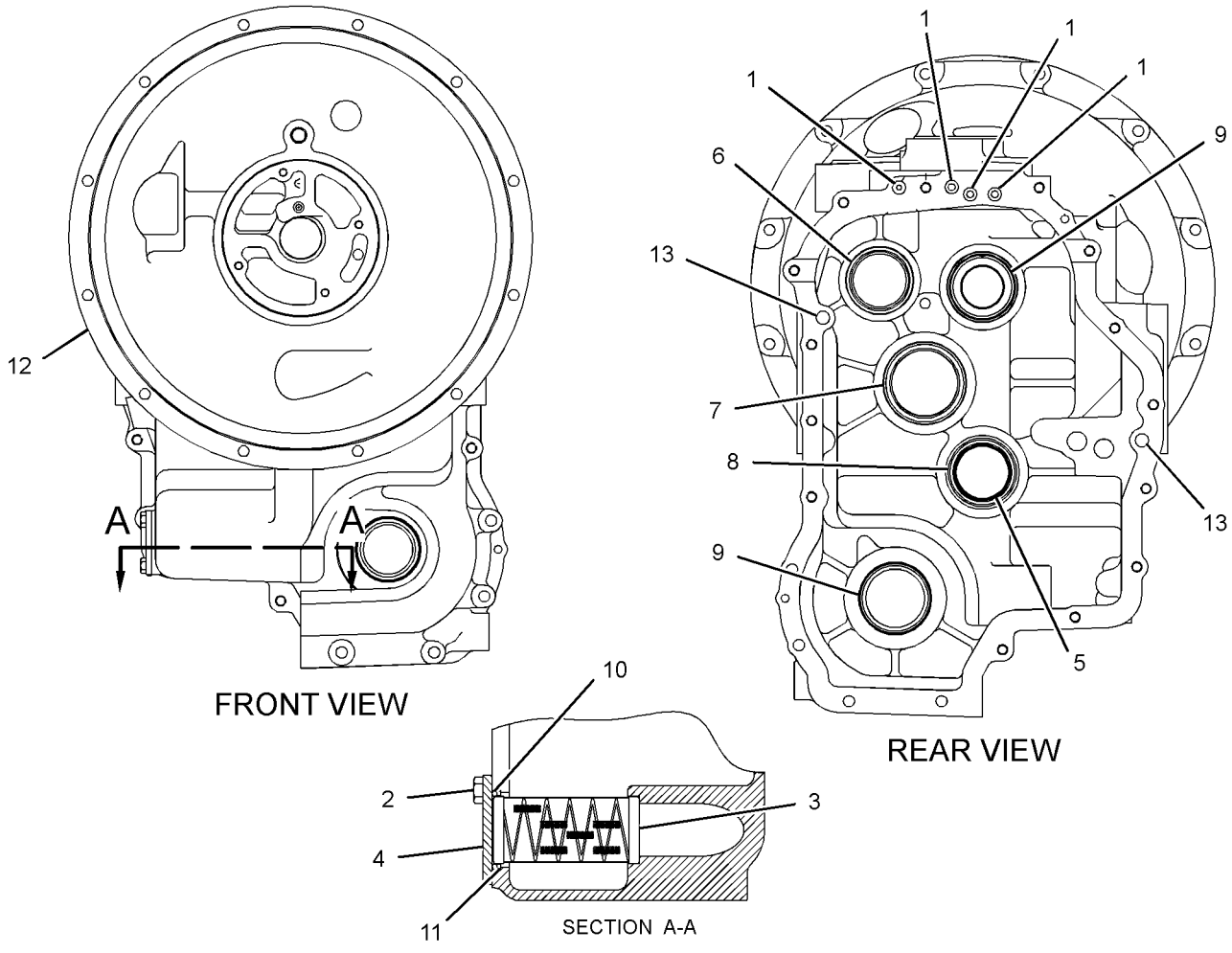

GRAPHIC #1 **<END>** g01220674

275-0470 CASE AS-TRANSMISSION–REAR

S/N: DPH1-UP
PART OF 294-9815 TRANSMISSION GP-DIRECT DRIVE
AN ATTACHMENT

SMCS-3030, 3064 **i02774042**

NOTE	REF NO	GRAPHIC REF	PART NUMBER	QTY	PART NAME 1 2 3 4 5 6 (PRODUCT LEVEL)	SEE PAGE
	1	1	**123-8906**	1	CUP-TAPERED ROLLER	
B	2	1	**6T-9144**	1	SHIM (0.051-MM THK)	
B	3	1	**6T-9147**	1	SHIM (0.076-MM THK)	
B	4	1	**6T-9146**	1	SHIM (0.127-MM THK)	
B	5	1	**6T-9145**	1	SHIM (0.178-MM THK)	
B	6	1	**6T-9143**	1	SHIM (0.381-MM THK)	
B	7	1	**6T-9142**	1	SHIM (0.508-MM THK)	
	8	1	**7T-3034**	1	SPACER (56.9X64.5X1.98-MM)	
	9	1	**7T-2646**	2	SPACER (66X79.5X2.02-MM THK)	
B	10	1	**6T-9166**	2	SHIM (0.051-MM THK)	
B	11	1	**6T-9165**	2	SHIM (0.076-MM THK)	
B	12	1	**6T-9164**	2	SHIM (0.178-MM THK)	
B	13	1	**6T-9163**	2	SHIM (0.599-MM THK)	
B	14	1	**121-7399**	1	SHIM (0.05-MM THK)	
B	15	1	**121-7400**	1	SHIM (0.08-MM THK)	
B	16	1	**121-7401**	1	SHIM (0.18-MM THK)	
B	17	1	**121-7402**	1	SHIM (0.6-MM THK)	
	18	1	**121-7398**	1	SPACER (70X79.5X2-MM THK)	
	19	1	**005-0469**	1	CUP-BEARING	
	20	1	**123-8908**	2	CUP-TAPERED ROLLER	
	21	1	**123-8910**	1	CUP-TAPERED ROLLER	
	22	1	**274-8630**	1	CASE-REAR	
	23	1	**122-1879**	1	SPACER (58X67.5X2-MM THK)	
B	24	1	**104-3288**	1	SHIM (0.05-MM THK)	
B	25	1	**121-2059**	1	SHIM (0.08-MM THK)	
B	26	1	**121-2060**	1	SHIM (0.18-MM THK)	
B	27	1	**121-2061**	1	SHIM (0.6-MM THK)	
	28	1	**216-2267**	1	SEAL-LIP TYPE	

B-USE AS REQUIRED

275-0470 CASE AS-TRANSMISSION *(contd.)* **i02774042**

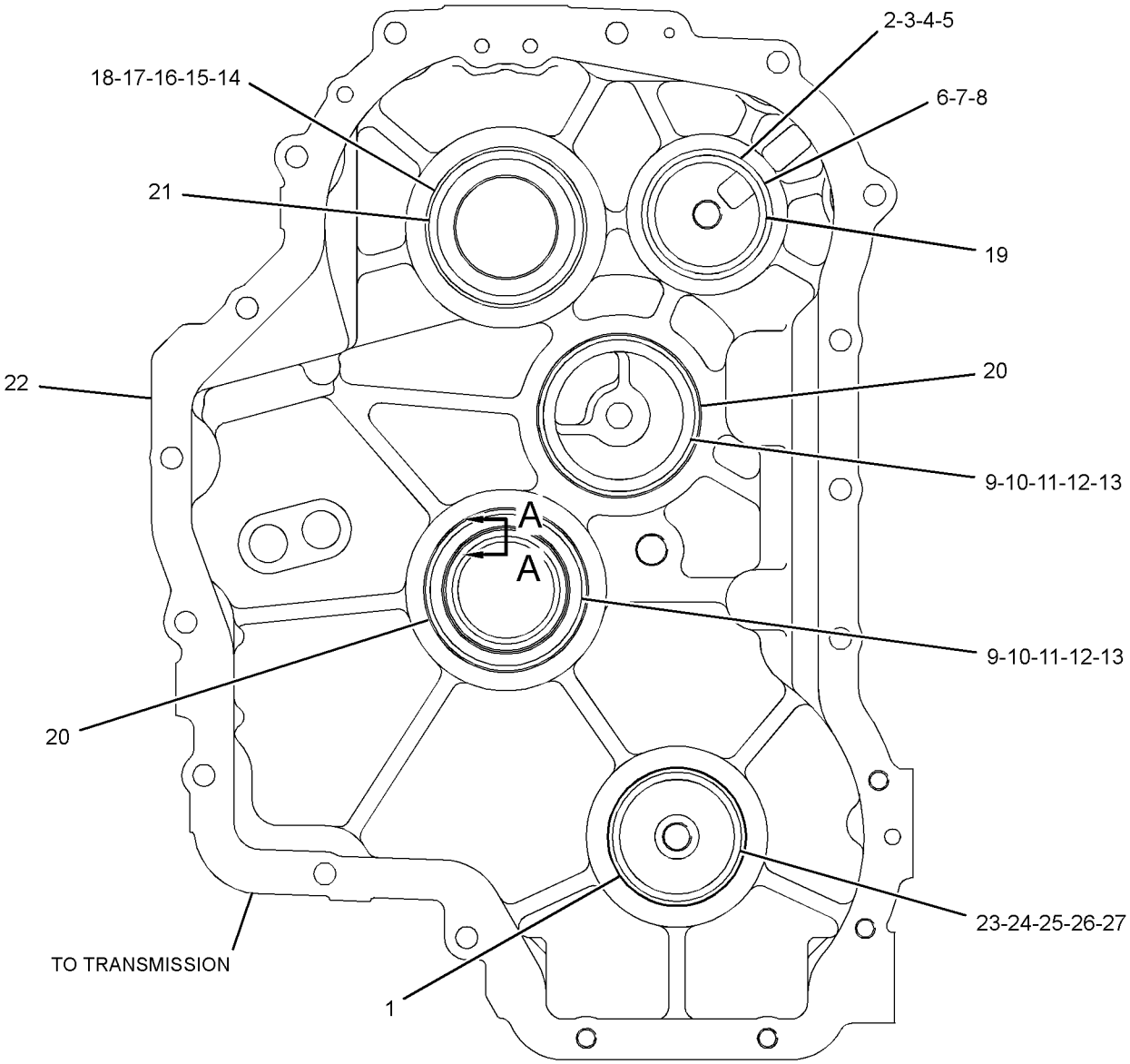

FRONT VIEW

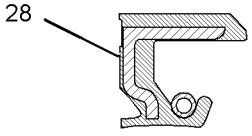

SECTION A-A

GRAPHIC #1 **<END>** g01388010

209-9882 DIFFERENTIAL & BEVEL GEAR GP–FRONT

S/N: DPH1-UP
PART OF 230-5743 AXLE GP-DRIVE & STEERING
AN ATTACHMENT

SMCS-3256, 3258, 3281, 3283, 3284 **i03727500**

NOTE	REF NO	GRAPHIC REF	PART NUMBER	QTY	PART NAME 1 2 3 4 5 6 (PRODUCT LEVEL)	SEE PAGE
	1	1	**4J-0520**	1	SEAL-O-RING	
	2	1	**216-4457**	1	SEAL	
	3	1	**216-4458**	2	BEARING	
	4	1	**136-7808**	1	BEARING AS-TAPERED ROLLER	
	5	1	**216-4461**	1	BEARING	
	6	1	**209-7454**	2	NUT (M94X2-THD)	
	7	1	**152-6144**	1	PLUG AS-DRAIN (MAGNETIC)	
		1	**6V-6228**	1	SEAL-O-RING	
	8	1	**209-7462**	2	WASHER (40X50X2-MM THK)	
	9	1	**209-7463**	1	SLEEVE	
M	10	1	**199-0695**	2	BOLT (M6X1X14-MM)	
M	11	1	**209-7472**	1	NUT (M24X1.5-THD)	
B	12	1	**209-7473**	1	SHIM (2.5-MM THK)	
B		1	**219-8751**	1	SHIM (2.6-MM THK)	
B		1	**219-8752**	1	SHIM (2.7-MM THK)	
B		1	**219-8753**	1	SHIM (2.8-MM THK)	
B		1	**219-8754**	1	SHIM (2.9-MM THK)	
B		1	**219-8755**	1	SHIM (3-MM THK)	
B		1	**219-8756**	1	SHIM (3.1-MM THK)	
B		1	**219-8757**	1	SHIM (3.2-MM THK)	
B		1	**219-8758**	1	SHIM (3.3-MM THK)	
B		1	**219-8759**	1	SHIM (3.4-MM THK)	
	13	1	**216-4465**	1	WASHER (24.5X52X10-MM THK)	
	14	1	**216-4464**	1	YOKE	
	15	1	**199-0858**	2	RETAINER	
	16	1	**216-4466**	1	KIT-BEVEL GEAR & PINION	
					(INCLUDES SPACER, NUT, WASHERS, SEAL-O-RING & BEVEL GEAR AS)	
Y	17	1	**216-9498**	1	DIFFERENTIAL GP	241
	18	1	**208-0322**	4	BOLT-FLANGE HEAD (M14X2X75-MM)	

B-USE AS REQUIRED
M-METRIC PART
Y-SEPARATE ILLUSTRATION

209-9882 DIFFERENTIAL & BEVEL GEAR GP *(contd.)* i03727500

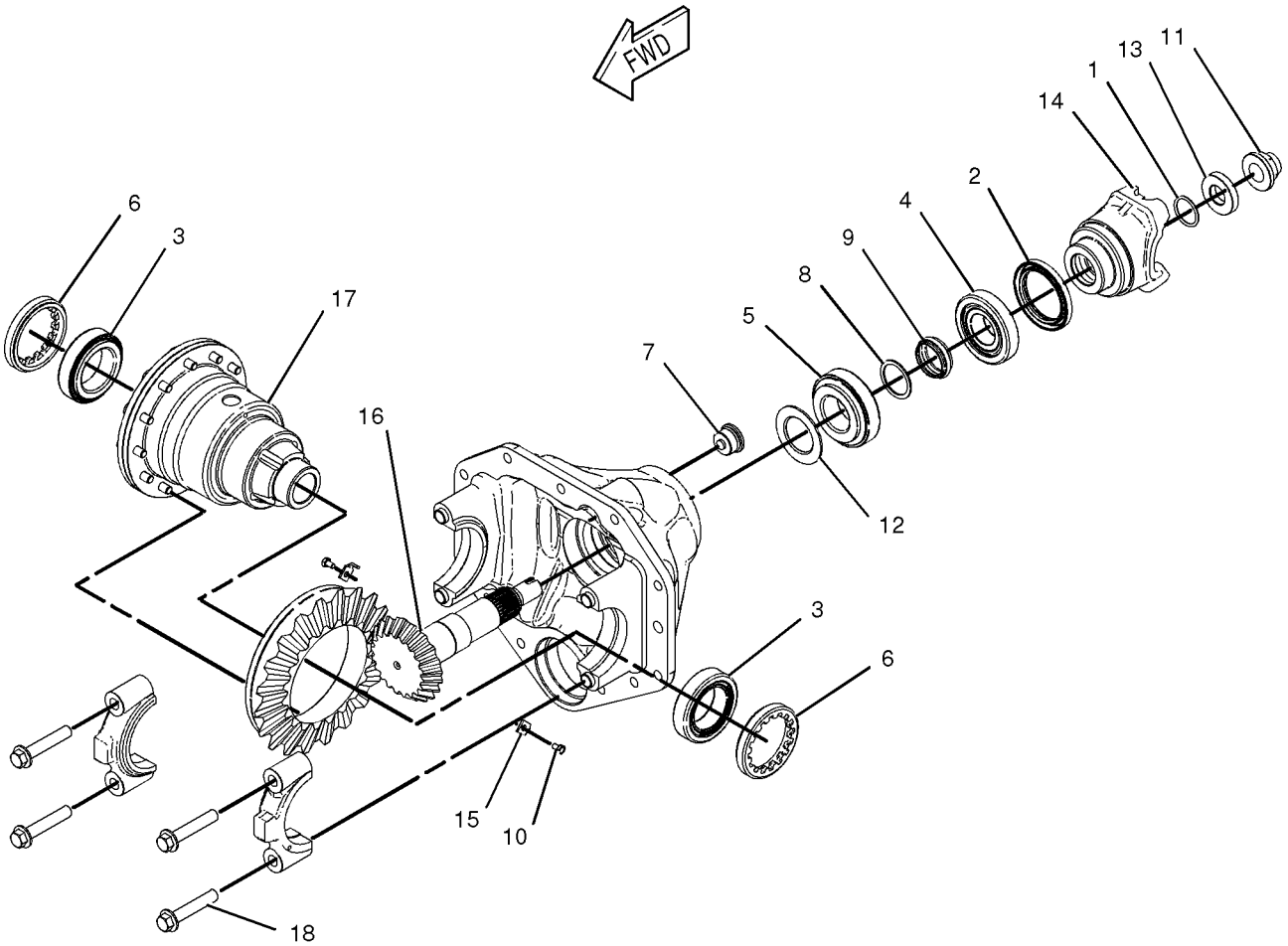

GRAPHIC #1 **<END>** g01028597

238-5298 DIFFERENTIAL & BEVEL GEAR GP

S/N: DPH1-UP
PART OF 230-5738 AXLE GP-REAR
AN ATTACHMENT

SMCS-3256, 3258, 3281, 3283, 3284 **i03627151**

NOTE	REF NO	GRAPHIC REF	PART NUMBER	QTY	PART NAME 1 2 3 4 5 6 (PRODUCT LEVEL)	SEE PAGE
	1	1	**199-0646**	4	BOLT	
	2	1	**199-0656**	2	BEARING	
L	3	1	**199-0663**	1	SEAL-O-RING	
	4	1	**198-7811**	2	DOWEL	
	5	1	**199-0675**	2	NUT (M104X2-THD)	
L	6	1	**199-0678**	2	WASHER (45.5X55X2-MM THK)	
L	7	1	**199-0680**	1	SPACER (47X50X19.2-MM THK)	
M	8	1	**199-0695**	2	BOLT (M6X1X14-MM)	
	9	1	**199-0697**	1	SEAL	
L	10	1	**199-0785**	1	WASHER (30.5X58X10-MM THK)	
L	11	1	**217-2346**	1	KIT-BEVEL GEAR & PINION	
					(INCLUDES BEVEL GEAR, PINION, WASHERS, SEAL, NUT & SPACERS)	
	12	1	**199-0858**	2	RETAINER	
L	13	1	**212-5702**	1	NUT (M30X2-THD)	
	14	1	**216-1600**	1	DISC-BRAKE	
	15	1	**095-1041**	1	BEARING AS	
	16	1	**093-8828**	1	BEARING AS	
Y	17	1	**216-1612**	1	CYLINDER GP-BRAKE (RH)	300
Y	18	1	**216-1613**	1	CYLINDER GP-BRAKE (LH)	301
	19	1	**219-8836**	1	FORK	
Y	20	1	**231-0692**	1	DIFFERENTIAL GP (AXLE)	242
	21	1	**238-5290**	1	HOUSING-CENTER	
	22	1	**069-4707**	1	SEALANT (GASKET)	
B	23	1	**199-0684**	1	SHIM (2.5-MM THK)	
B	24	1	**199-0685**	1	SHIM (2.6-MM THK)	
B	25	1	**199-0686**	1	SHIM (2.7-MM THK)	
B	26	1	**199-0687**	1	SHIM (2.8-MM THK)	
B	27	1	**199-0688**	1	SHIM (2.9-MM THK)	
B	28	1	**199-0689**	1	SHIM (3-MM THK)	
B	29	1	**199-0690**	1	SHIM (3.1-MM THK)	
B	30	1	**199-0691**	1	SHIM (3.2-MM THK)	
B	31	1	**199-0692**	1	SHIM (3.3-MM THK)	
B	32	1	**199-0693**	1	SHIM (3.4-MM THK)	
					AVAILABLE REPAIR KIT(S):	
			217-2345	1	KIT-DIFFERENTIAL	
					(INCLUDES PIN, GEAR & WASHERS)	

B-USE AS REQUIRED
L-KIT MARKED L SERVICES PARTS MARKED L
M-METRIC PART
Y-SEPARATE ILLUSTRATION

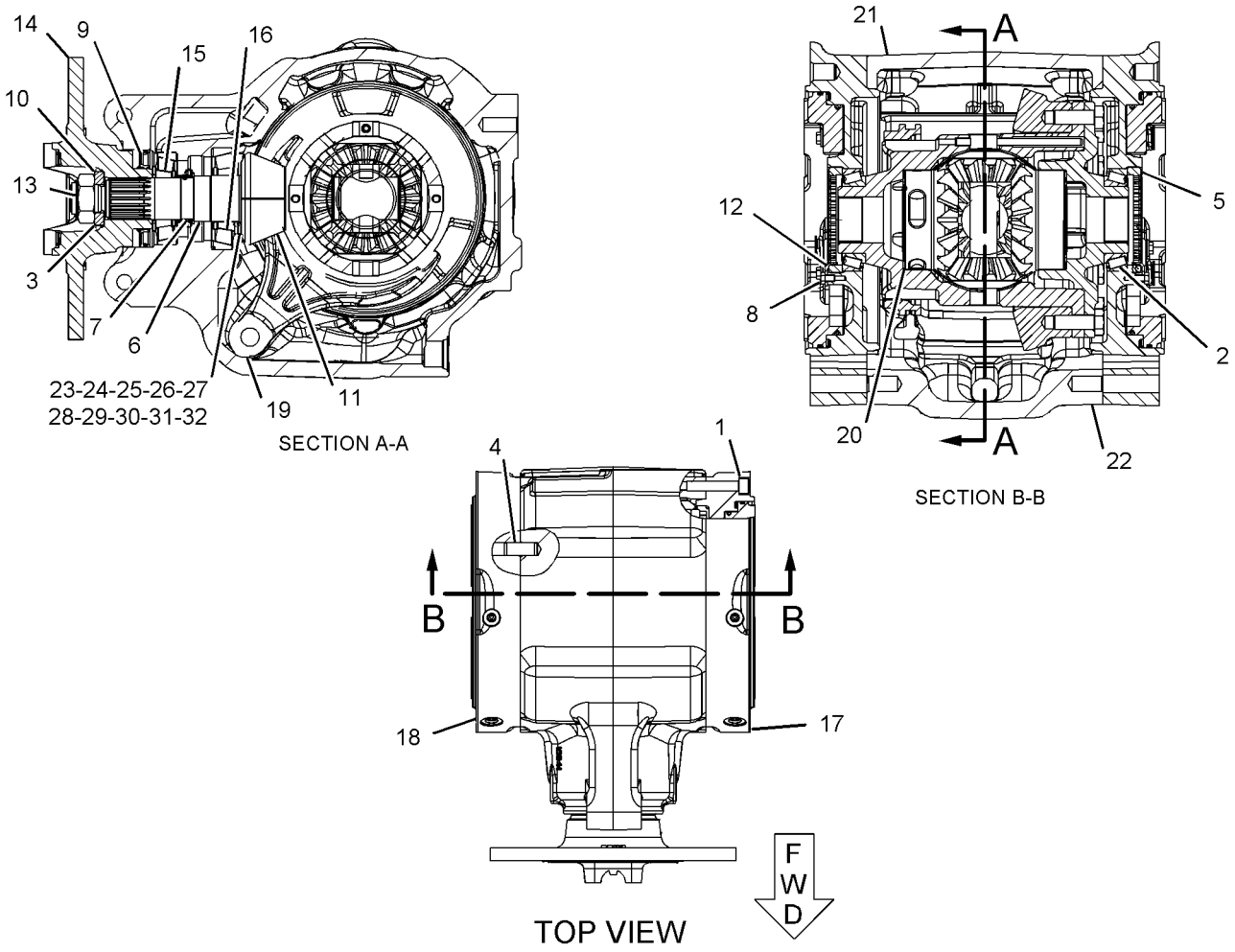

GRAPHIC #1

<END>

g01107896

216-9498 DIFFERENTIAL GP–FRONT

S/N: DPH1-UP

PART OF 209-9882 DIFFERENTIAL & BEVEL GEAR GP

AN ATTACHMENT

SMCS-3258 **i03726325**

NOTE	REF NO	GRAPHIC REF	PART NUMBER	QTY	PART NAME 1 2 3 4 5 6 (PRODUCT LEVEL)	SEE PAGE
	1	1	**216-8687**	1	COVER (DIFFERENTIAL CASE)	
	2	1	**216-8689**	1	HOUSING-DIFFERENTIAL	
	3	1	**229-5093**	2	WASHER-THRUST (49X72X1.5-MM THK)	
M	4	1	**144-6734**	12	BOLT (M10X1.5X30-MM)	
					AVAILABLE REPAIR KIT(S):	
			216-8700		KIT-DIFFERENTIAL (KIT)	
					(INCLUDES PINS,WASHERS,DISC & GEARS)	

M-METRIC PART

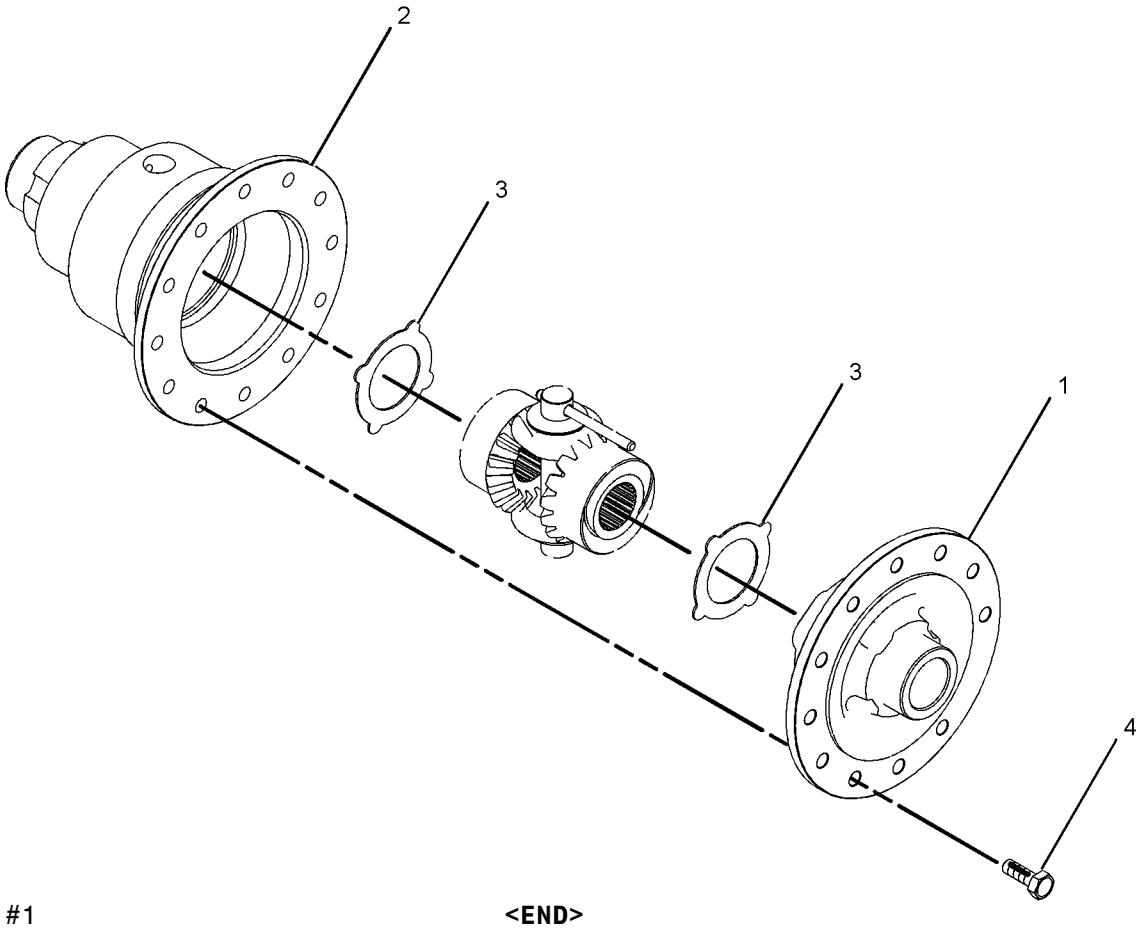

GRAPHIC #1 **<END>** g01008123

231-0692 DIFFERENTIAL GP–AXLE

S/N: DPH1-UP
PART OF 238-5298 DIFFERENTIAL & BEVEL GEAR GP
AN ATTACHMENT

SMCS-3258 **i02188622**

NOTE	REF NO	GRAPHIC REF	PART NUMBER	QTY	PART NAME 1 2 3 4 5 6 (PRODUCT LEVEL)	SEE PAGE
	1	1	**199-0673**	2	BUSHING	
	2	1	**199-0694**	12	BOLT (M14X2X40-MM)	
	3	1	**199-0756**	1	COLLAR	
	4	1	**199-0784**	1	COVER-DIFFERENTIAL	
	5	1	**199-0807**	4	PIN	
	6	1	**199-0808**	3	PIN	
	7	1	**231-0670**	1	SHAFT	
	8	1	**231-0671**	4	WASHER-THRUST	
	9	1	**231-0695**	2	WASHER-THRUST	
	10	1	**231-0693**	1	CASE-DIFFERENTIAL	
	11	1	**231-0696**	2	SHAFT	
	12	1	**231-0697**	1	RETAINER	
	13	1	**231-0694**	1	GEAR AS	
	14	1	**199-0659**	4	SEAL-PIN	

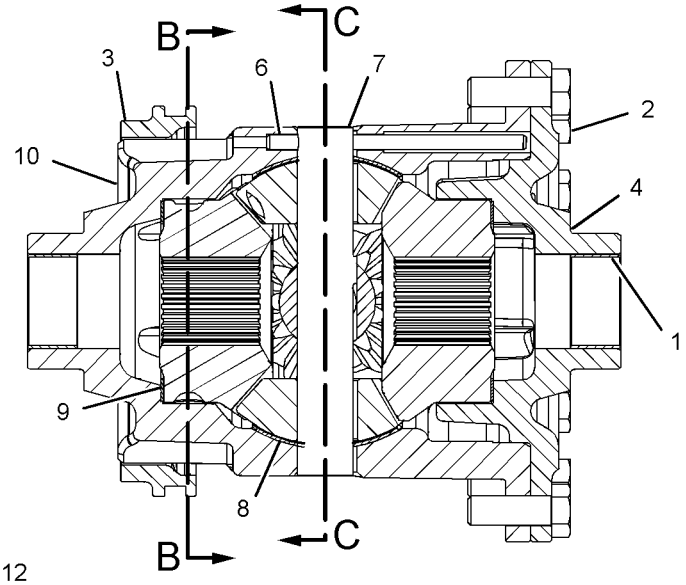

FRONT VIEW
(SECTIONED)

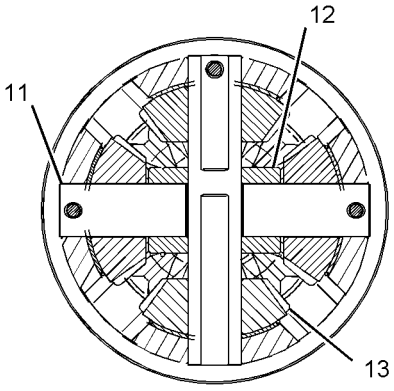

SECTION C-C

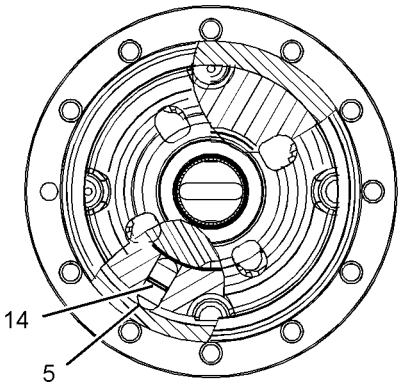

SECTION B-B

GRAPHIC #1 **<END>** g01107764

111-7907 DRIVE GP-FLEXIBLE COUPLING

S/N: DPH1-UP
PART OF 221-8119 TRANSMISSION AR-DIRECT DRIVE
AN ATTACHMENT

SMCS-3252 **i02594396**

NOTE	REF NO	GRAPHIC REF	PART NUMBER	QTY	PART NAME 1 2 3 4 5 6 (PRODUCT LEVEL)	SEE PAGE
M	1	1	**8T-4200**	8	BOLT (M8X1.25X16-MM)	
M	2	1	**6V-8455**	6	BOLT (M10X1.5X16-MM)	
	3	1	**117-9713**	1	PLATE-CONVERTER REINFORCEMENT	
	4	1	**8T-4224**	8	WASHER-HARD (8.8X16X2-MM THK)	
	5	1	**111-7906**	1	PLATE-CONVERTER DRIVE	

M-METRIC PART

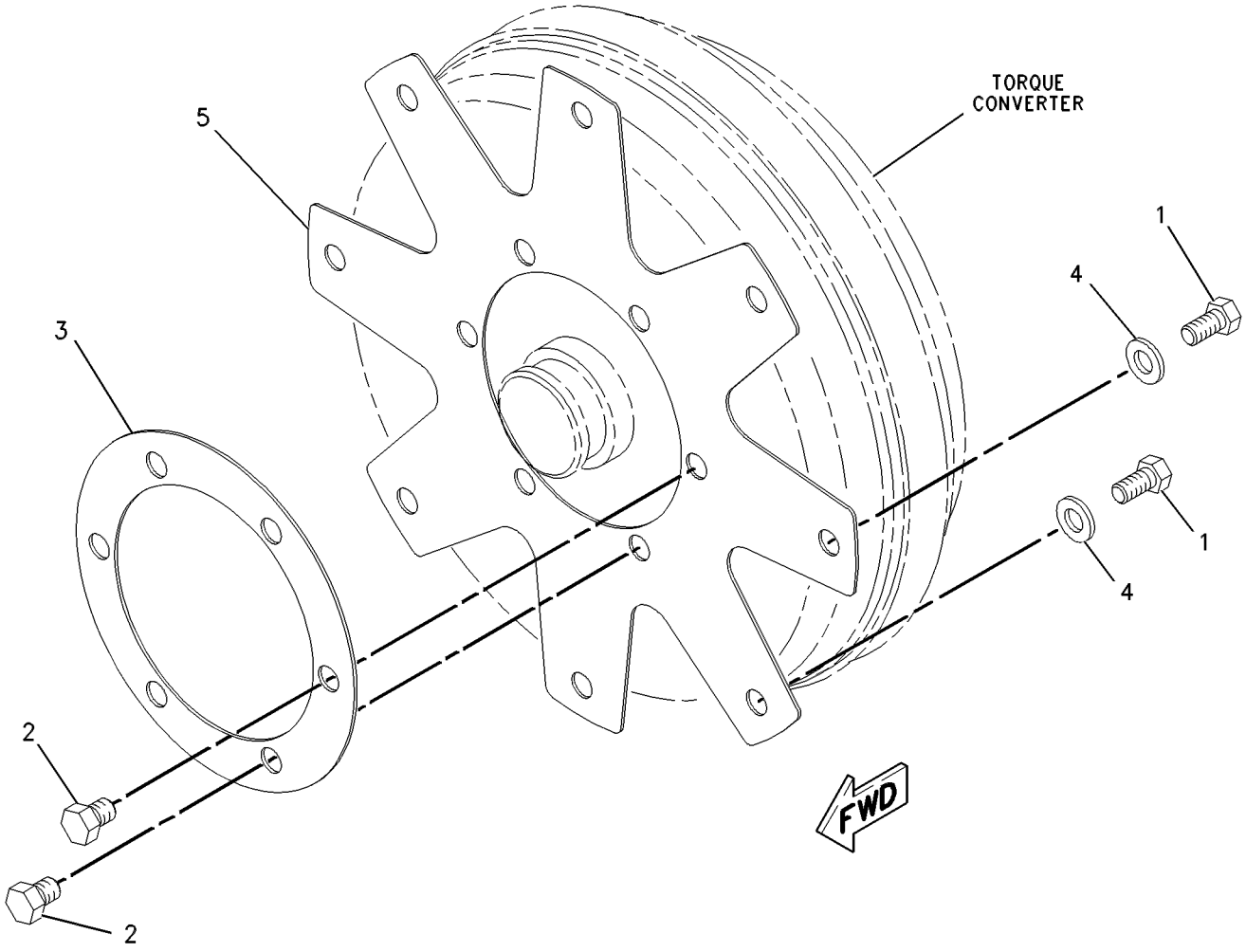

GRAPHIC #1 **<END>** g00547374

214-3740 FILLER GP-POWER TRAIN OIL–

ALL WHEEL DRIVE, STANDARD SHIFT

S/N: DPH1-UP

PART OF 329-0304 POWER TRAIN AR

AN ATTACHMENT

SMCS-3005, 3081 **i03532203**

NOTE	REF NO	GRAPHIC REF	PART NUMBER	QTY	PART NAME 1 2 3 4 5 6 (PRODUCT LEVEL)	SEE PAGE
B	1	1	**2B-0941**	1	SPACER (10.5X19X19-MM THK)	
B	2	1	**164-1404**	1	SPACER (10.67X16.95X23-MM THK)	
	3	1	**230-2610**	1	TUBE AS	
	4	1	**236-1583**	1	BOSS	
	5	1	**271-7167**	1	GAUGE-OIL LEVEL (DIPSTICK) (ENGINE)	
	6	1	**4J-0522**	1	SEAL-O-RING	
	7	1	**5P-4116**	1	WASHER-HARD (8.8X20.5X2-MM THK)	
M	8	1	**7X-0818**	1	BOLT (M8X1.25X45-MM)	
	9	1	**8S-0023**	3	CLIP (SLOT)	
	10	1	**8S-0024**	3	CLIP (TAB)	
	11	1	**8T-4121**	1	WASHER-HARD (11X21X2.5-MM THK)	
M	12	1	**8T-4136**	1	BOLT (M10X1.5X25-MM)	
M	13	1	**8T-4176**	1	BOLT (M12X1.75X90-MM)	
	14	1	**8T-4223**	3	WASHER-HARD (13.5X25.5X3-MM THK)	
M	15	1	**8T-4956**	2	BOLT (M12X1.75X35-MM)	

B-USE AS REQUIRED
M-METRIC PART

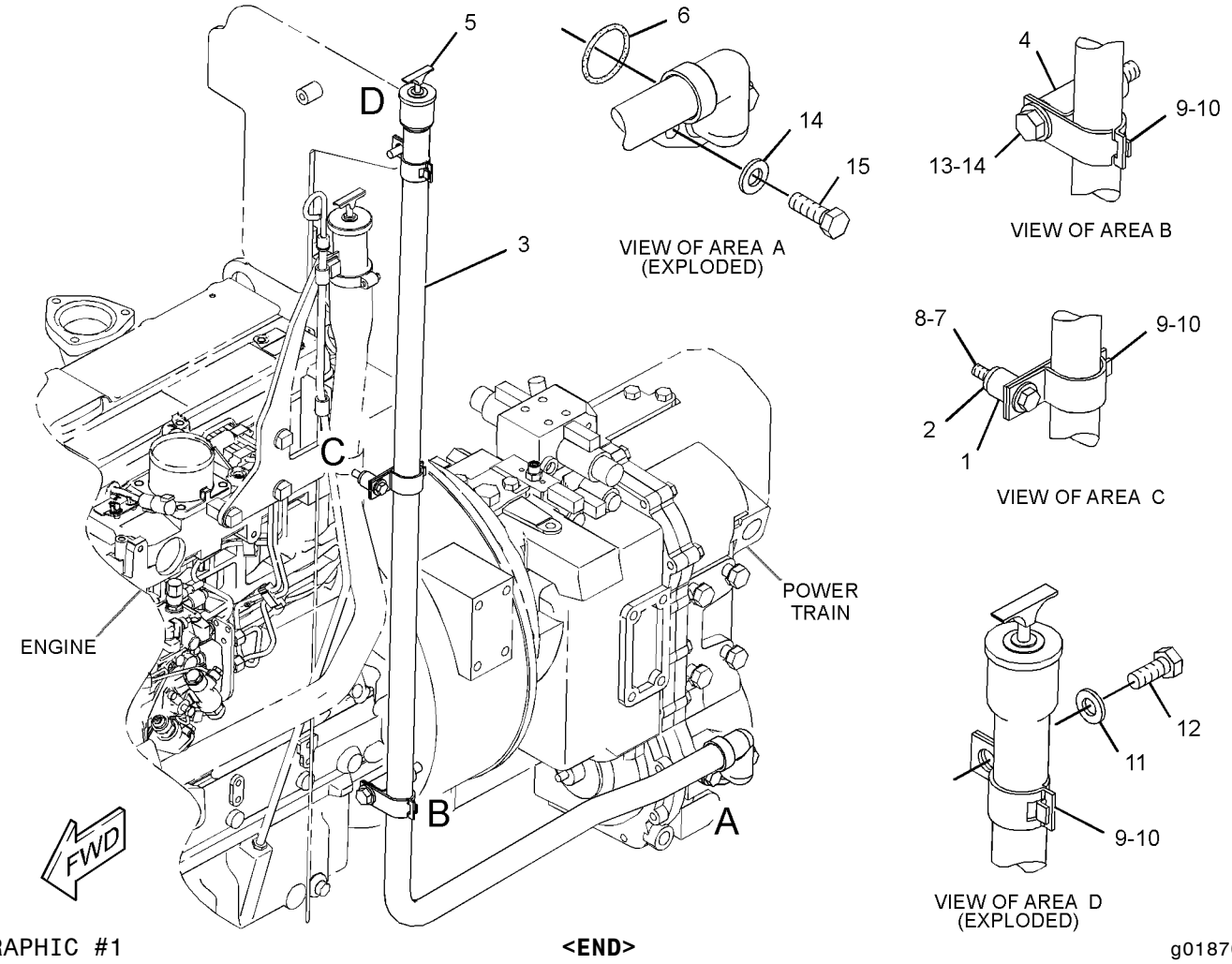

GRAPHIC #1 **<END>** g01870493

216-1609 FLANGE GP-WHEEL

S/N: DPH1-UP
PART OF 230-5738 AXLE GP-REAR
AN ATTACHMENT

SMCS-4057 **i02361154**

NOTE	REF NO	GRAPHIC REF	PART NUMBER	QTY	PART NAME 1 2 3 4 5 6 (PRODUCT LEVEL)	SEE PAGE
	1	1	**210-5932**	2	BEARING-WHEEL	
	2	1	**216-1602**	1	FLANGE	
	3	1	**226-4346**	10	STUD	
	4	1	**229-5092**	1	SEAL	

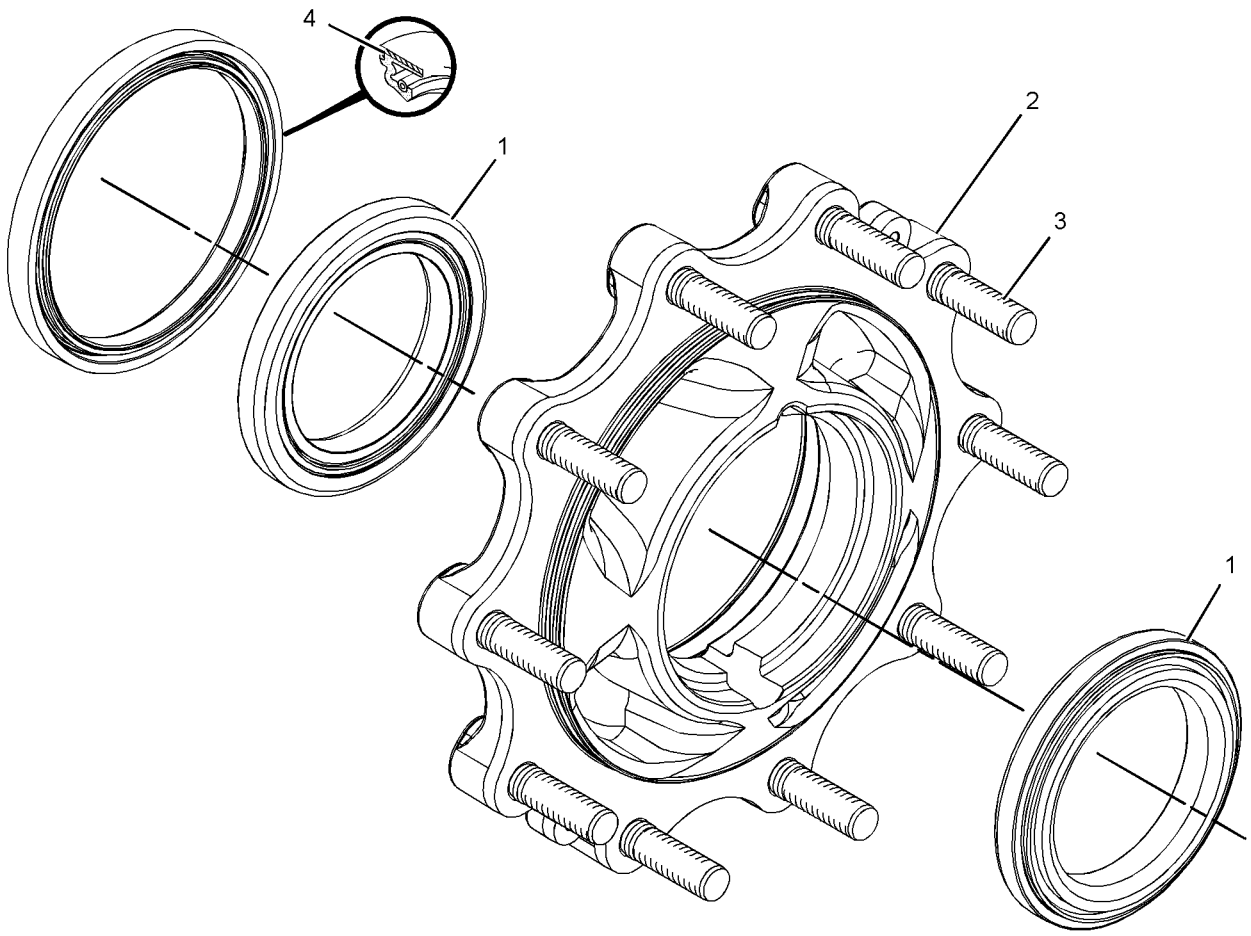

GRAPHIC #1 **<END>** g01180592

209-9884 HOUSING & FLANGE GP-AXLE—RH

S/N: DPH1-UP
PART OF 230-5743 AXLE GP-DRIVE & STEERING
AN ATTACHMENT

SMCS-4057, 4234 **i03656807**

NOTE	REF NO	GRAPHIC REF	PART NUMBER	QTY	PART NAME 1 2 3 4 5 6 (PRODUCT LEVEL)	SEE PAGE
	1	1	**217-2877**	1	HOUSING GP-AXLE (RH)	
M	1A	1	**098-5747**	1	NUT (M16X2-THD)	
	1B	1	**198-7814**	1	BOLT (M16X2X100-MM)	
	1C	1	**209-7460**	1	BUSHING	
	1D	1	**209-7465**	1	SEAL	
	1E	1	**231-0700**	1	HOUSING	
J	2	1	*231-0703*	1	FLANGE AS	
	2A	1	**210-5932**	2	BEARING-WHEEL	
	2B	1	**226-4346**	8	STUD	
	2C	1	**331-8538**	1	SEAL	
C	3	1	**226-4366**	1	NUT-SPANNER	
C	4	1	**226-4370**	1	BOLT-SELF-LOCKING	
	5	1	**229-5085**	1	SPACER (110X123X18.36-MM THK)	
C	6	1	**217-2879**	1	GEAR GP-RING	
C	7	1	**226-4365**	1	WASHER-TAB	
					AVAILABLE REPAIR KIT(S):	
J			**238-5256**	1	KIT-FLANGE (AXLE HOUSING)	
					(INCLUDES STUDS & WHEEL FLANGE)	

C-CHANGE FROM PREVIOUS TYPE
J-KIT MARKED J SERVICES PART MARKED J
M-METRIC PART

209-9884 HOUSING & FLANGE GP-AXLE *(contd.)* **i03656807**

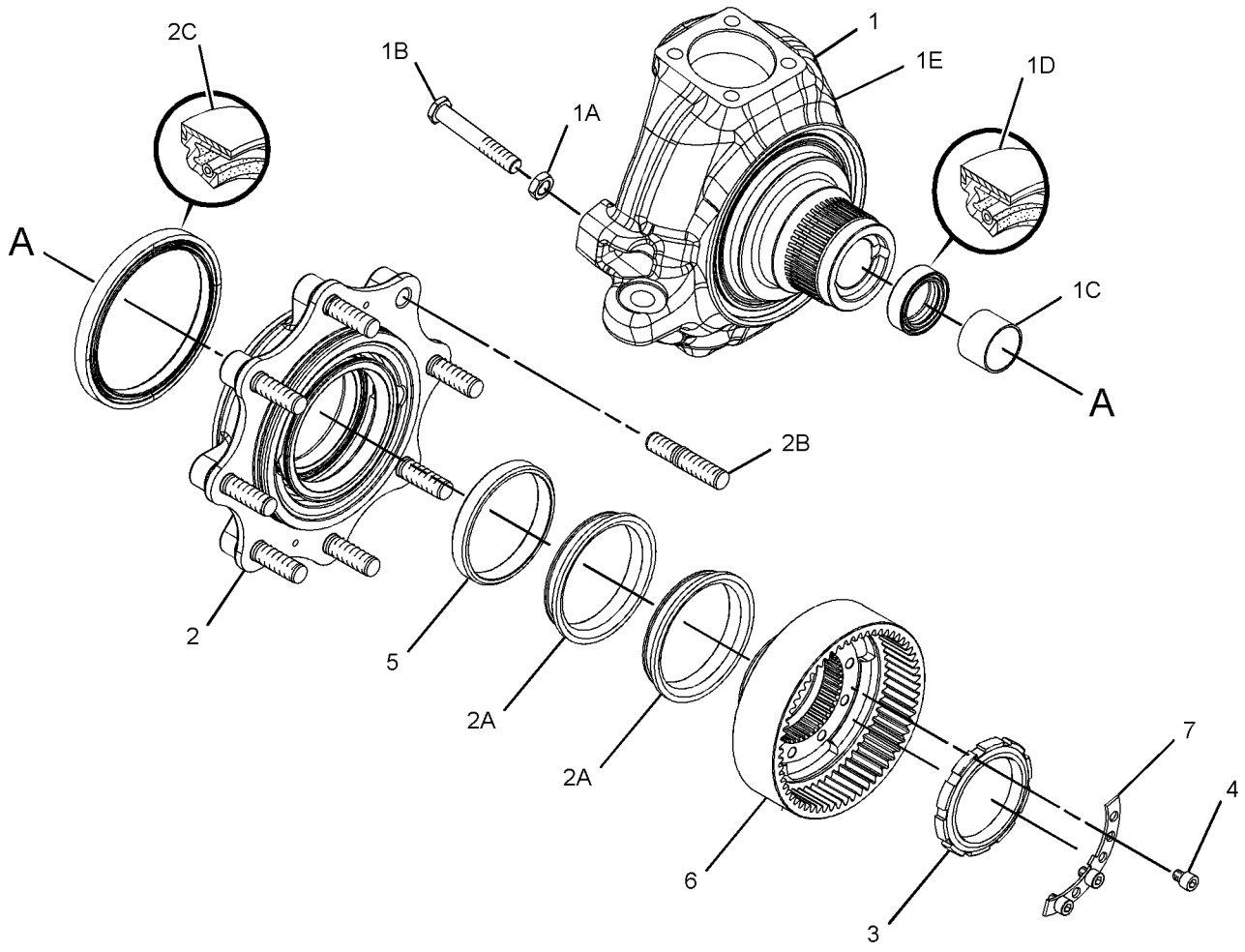

GRAPHIC #1 **<END>** g02003616

POWER TRAIN

209-9885 HOUSING & FLANGE GP-AXLE–LH

S/N: DPH1-UP
PART OF 230-5743 AXLE GP-DRIVE & STEERING
AN ATTACHMENT

SMCS-4057, 4234 **i03656817**

NOTE	REF NO	GRAPHIC REF	PART NUMBER	QTY	PART NAME 1 2 3 4 5 6 (PRODUCT LEVEL)	SEE PAGE
Y	1	1	**217-2878**	1	HOUSING GP-AXLE (LH)	249
J	2	1	**231-0703**	1	FLANGE AS (AXLE)	
	2A	1	**210-5932**	2	BEARING-WHEEL	
	2B	1	**226-4346**	8	STUD	
	2C	1	**331-8538**	1	SEAL	
	3	1	**226-4366**	1	NUT-SPANNER	
	4	1	**226-4370**	1	BOLT-SELF-LOCKING	
	5	1	**229-5085**	1	SPACER (110X123X18.36-MM THK)	
	6	1	**217-2879**	1	GEAR GP-RING	
		1	**209-7459**	1	RETAINER	
		1	**209-7461**	1	GEAR-RING	
		1	**231-0745**	1	HUB-RING GEAR	
	7	1	**226-4365**	1	WASHER-TAB	
					AVAILABLE REPAIR KIT(S):	
J			**238-5256**	1	KIT-FLANGE (AXLE HOUSING)	
					(INCLUDES WHEEL FLANGE & STUDS)	

J-KIT MARKED J SERVICES PART(S) MARKED J
Y-SEPARATE ILLUSTRATION

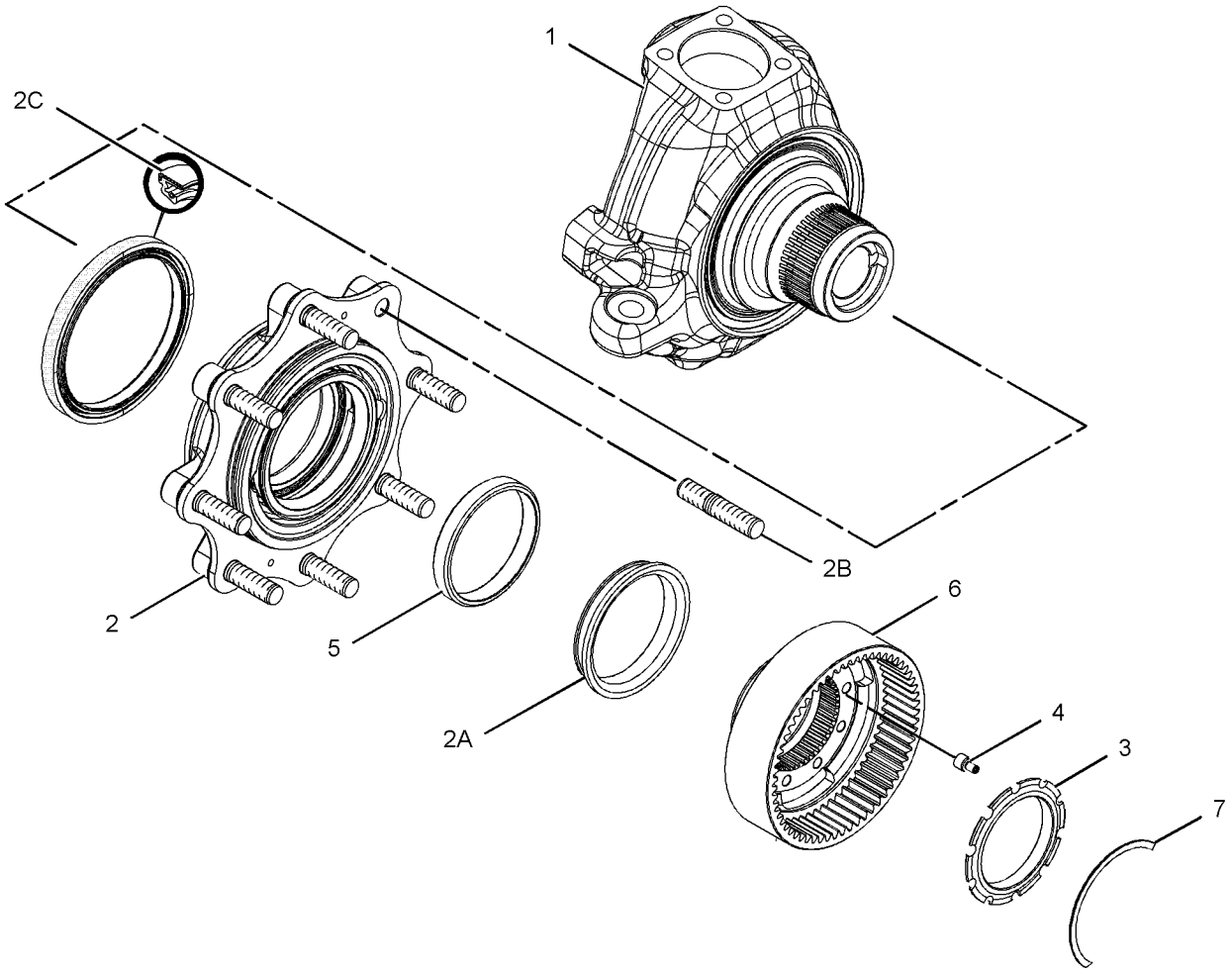

GRAPHIC #1 **<END>** g01180841

217-2878 HOUSING GP-AXLE–LH

S/N: DPH1-UP
PART OF 209-9885 HOUSING & FLANGE GP-AXLE
AN ATTACHMENT

SMCS-3256, 3258, 3260, 4251 **i02364974**

NOTE	REF NO	GRAPHIC REF	PART NUMBER	QTY	PART NAME 1 2 3 4 5 6 (PRODUCT LEVEL)	SEE PAGE
	1	1	**199-0648**	1	NUT-JAM (M16X2-THD)	
	2	1	**198-7814**	1	BOLT (M16X2X100-MM)	
	3	1	**209-7460**	1	BUSHING	
	4	1	**209-7465**	1	SEAL	
	5	1	**231-0701**	1	HOUSING	

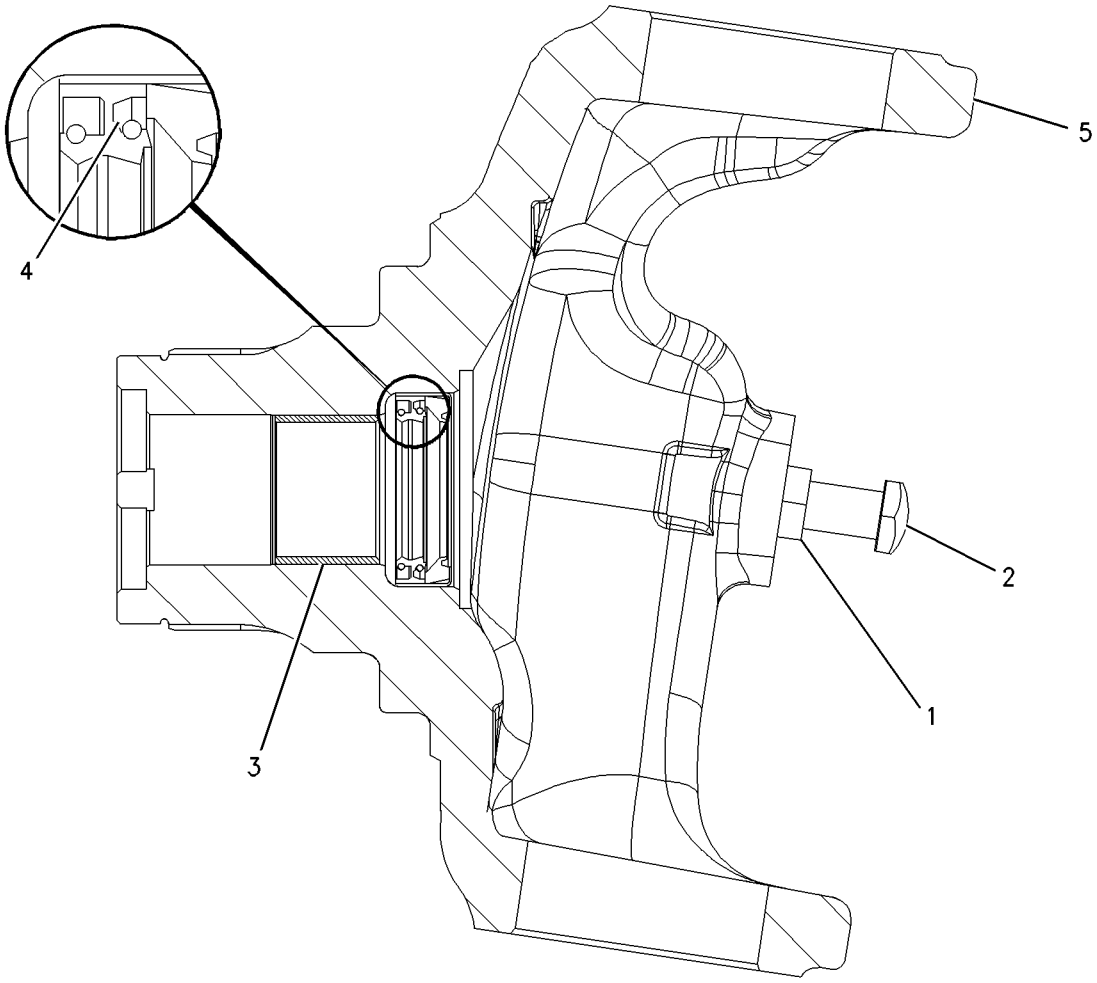

GRAPHIC #1 **<END>** g00926639

256-0546 LINES GP-POWER TRAIN OIL–DIFFERENTIAL LOCK

S/N: DPH1-UP
PART OF 329-0304 POWER TRAIN AR
AN ATTACHMENT

SMCS-3016, 3154 **i02285647**

NOTE	REF NO	GRAPHIC REF	PART NUMBER	QTY	PART NAME 1 2 3 4 5 6 (PRODUCT LEVEL)	SEE PAGE
	1	1	*148-8325*	1	CONNECTOR AS	
		1	**3J-1907**	2	SEAL-O-RING	
		1	**4J-5477**	2	SEAL-O-RING	
		1	**6V-8641**	2	CONNECTOR	
I	2	1	**256-0550**	1	HOSE AS	
	3	1	*148-8368*	1	ELBOW AS	
		1	**3J-1907**	1	SEAL-O-RING	
		1	**4J-5477**	1	SEAL-O-RING	
		1	**6V-8627**	1	ELBOW	
	4	1	**7K-1181**	1	STRAP-CABLE	
	5	1	**151-4841**	1	BLOCK	

I-REFER TO HYDRAULIC INFORMATION SYSTEM

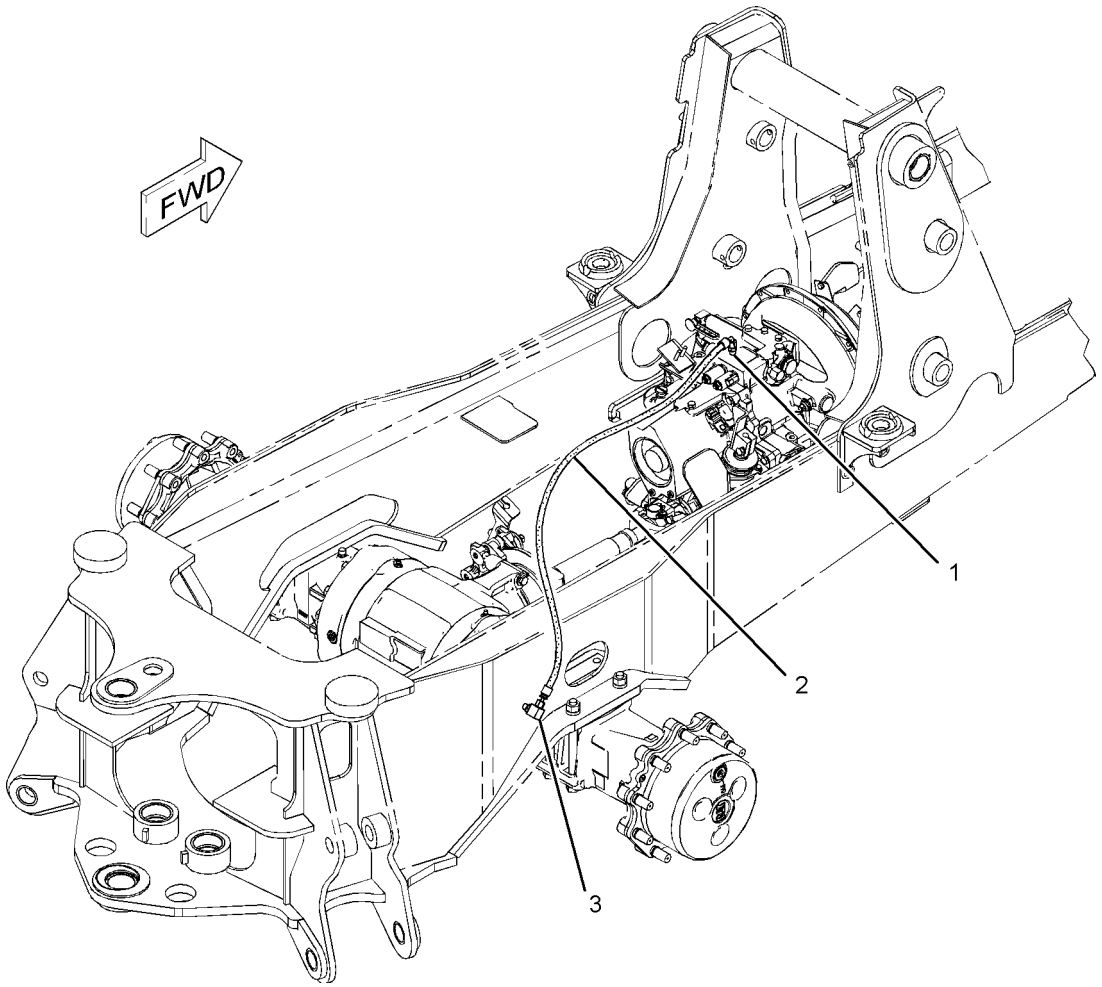

GRAPHIC #1 **<END>** g01083159

221-0811 MOUNTING GP-AXLE

S/N: DPH1-UP

PART OF 329-0319 DRIVE AR-BACKHOE LOADER

AN ATTACHMENT

SMCS-3268 **i02646529**

NOTE	REF NO	GRAPHIC REF	PART NUMBER	QTY	PART NAME 1 2 3 4 5 6 (PRODUCT LEVEL)	SEE PAGE
B	1	1	**1K-7082**	1	WASHER (2.266X4X0.031-IN THK)	
B	2	1	**9R-9702**	2	WASHER (56X100X1.6-MM THK)	
	3	1	**211-9286**	1	PIN AS	
	4	1	**293-9289**	4	BLOCK	
M	5	1	**089-7990**	8	BOLT (M20X2.5X250-MM)	
	6	1	**165-8996**	2	WASHER-THRUST (55.5X100.5X5-MM THK)	
	7	1	**7X-0618**	1	WASHER-HARD (13.5X40X5-MM THK)	
M	8	1	**8T-4192**	1	BOLT (M12X1.75X25-MM)	
	9	1	**8T-5439**	8	WASHER-HARD (21.5X45X6-MM THK)	

B-USE AS REQUIRED
M-METRIC PART

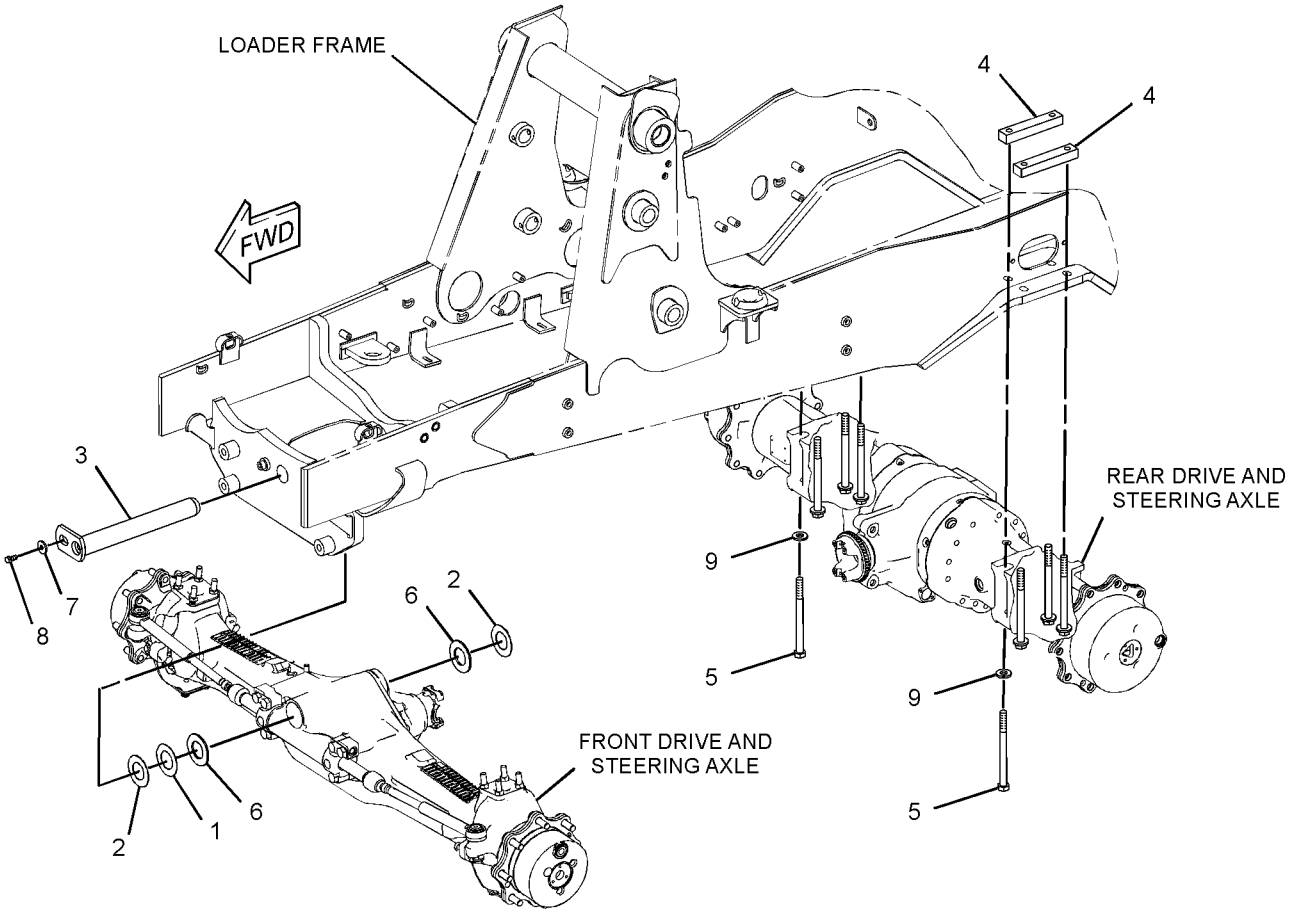

GRAPHIC #1 **<END>** g01343464

271-4487 MOUNTING GP-TRANSMISSION

S/N: DPH1-UP
PART OF 329-0304 POWER TRAIN AR
AN ATTACHMENT

SMCS-3082 **i02354756**

NOTE	REF NO	GRAPHIC REF	PART NUMBER	QTY	PART NAME 1 2 3 4 5 6 (PRODUCT LEVEL)	SEE PAGE
	1	1	**245-4827**	1	SUPPORT AS (RH)	
	2	1	**271-7309**	1	SUPPORT AS (LH)	
M	3	1	**7X-2553**	4	BOLT (M16X2X40-MM)	
	4	1	**8T-4223**	4	WASHER-HARD (13.5X25.5X3-MM THK)	
M	5	1	**8T-4956**	4	BOLT (M12X1.75X35-MM)	
	6	1	**9X-8257**	4	WASHER (17.5X30X3.5-MM THK)	

M-METRIC PART

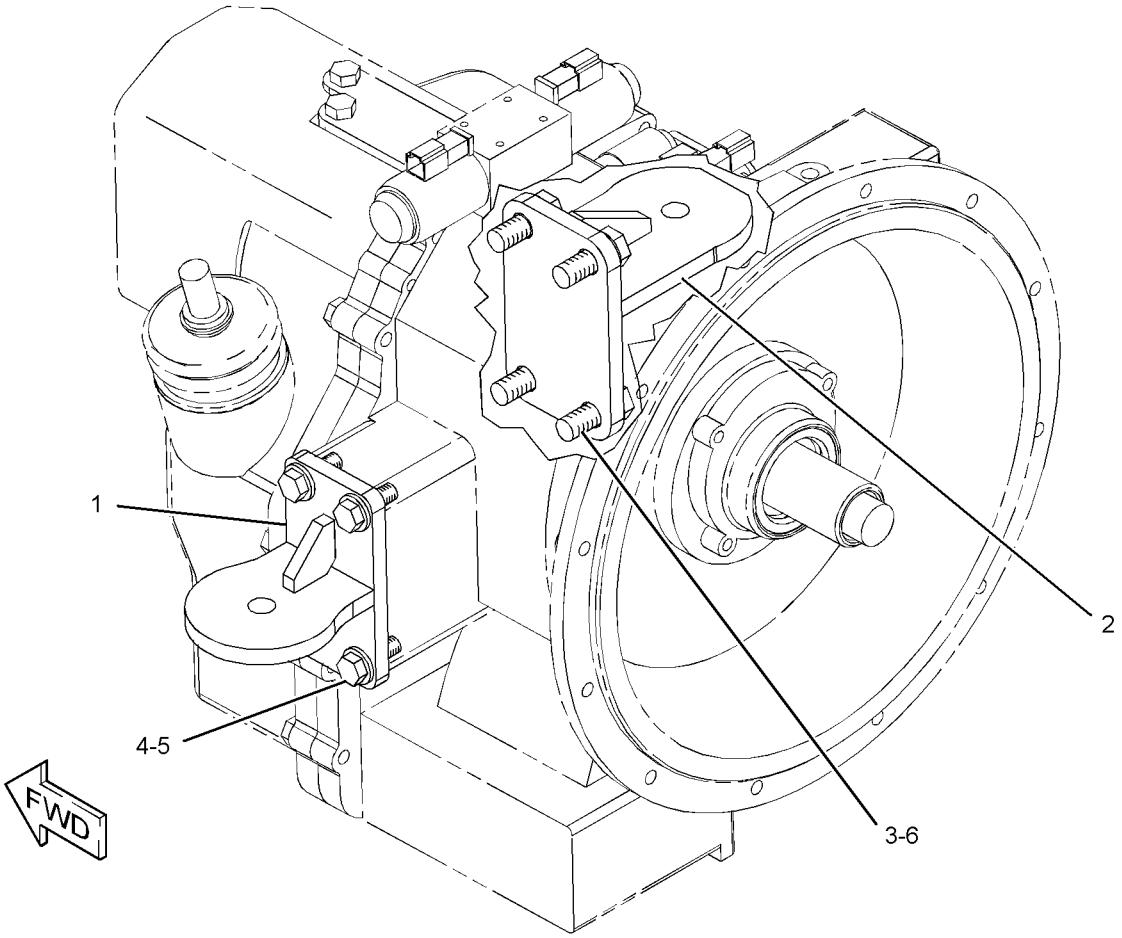

GRAPHIC #1 **<END>** g01202844

210-5924 PLANETARY GP-FINAL DRIVE

S/N: DPH1-UP

PART OF 230-5743 AXLE GP-DRIVE & STEERING

AN ATTACHMENT

SMCS-4050 **i03156043**

NOTE	REF NO	GRAPHIC REF	PART NUMBER	QTY	PART NAME 1 2 3 4 5 6 (PRODUCT LEVEL)	SEE PAGE
	1	1	**210-5931**	4	RETAINER	
	2	1	**209-4157**	4	GEAR (23-TEETH)	
	3	1	**095-0924**	4	RING-RETAINING	
					AVAILABLE REPAIR KIT(S):	
			209-7466	1	KIT-PLANETARY CARRIER	
					(INCLUDES THRUST PLUG, SUN GEAR SHAFT & PLANET CARRIER)	
			219-8783	23	KIT-ROLLER BEARING	
					(EACH INCLUDES 10 NEEDLES)	
					(SERVICED IN QUANITY OF 10, EACH GEAR REQUIRES 56 ROLLERS OR 6 KITS, EACH WHEEL END AS. REQUIRES 224 ROLLERS OR 23 KITS)	

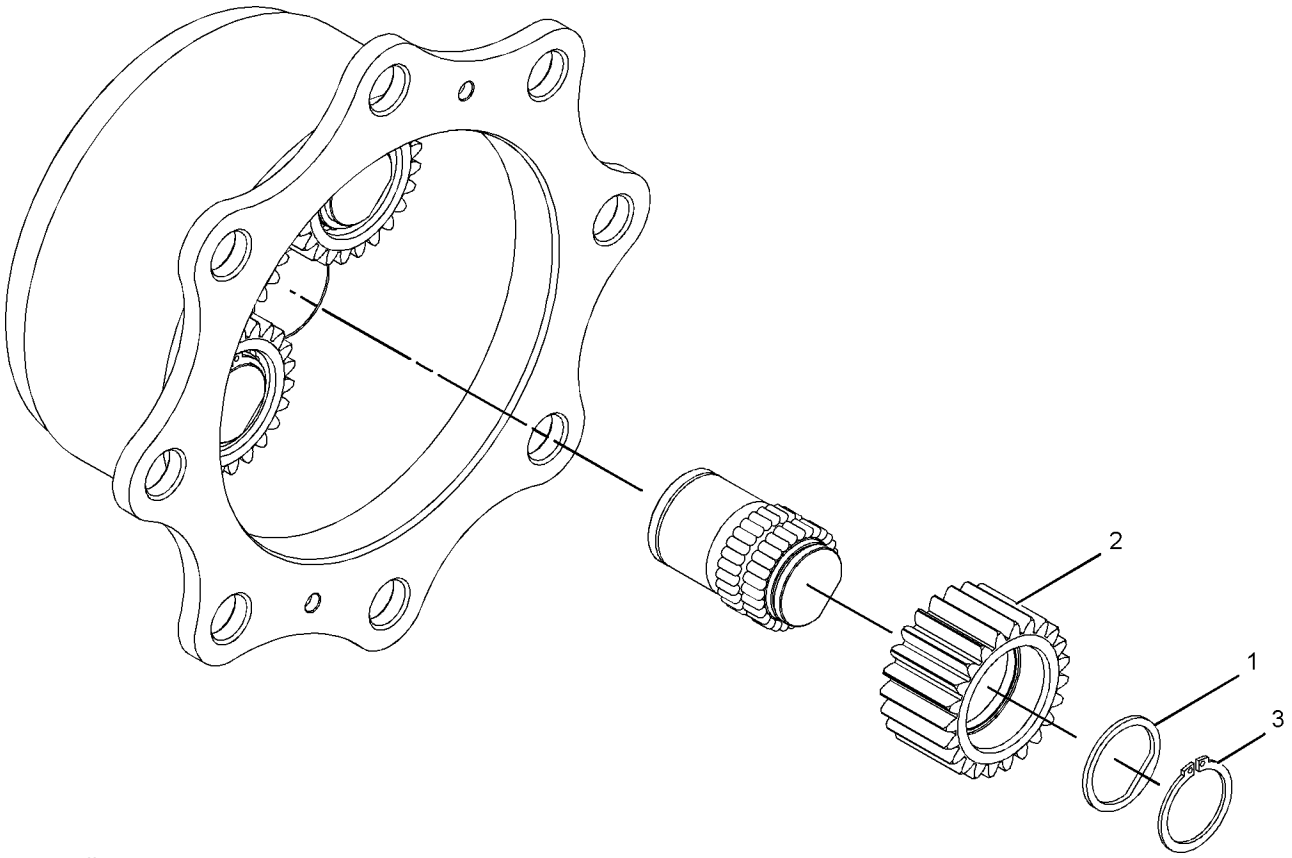

GRAPHIC #1 **<END>** g01132397

216-1610 PLANETARY GP-FINAL DRIVE–AXLE

S/N: DPH1-UP
PART OF 230-5738 AXLE GP-REAR
AN ATTACHMENT

SMCS-4050 **i02196607**

NOTE	REF NO	GRAPHIC REF	PART NUMBER	QTY	PART NAME 1 2 3 4 5 6 (PRODUCT LEVEL)	SEE PAGE
	1	1	**199-0653**	3	RING-RETAINING	
	2	1	**207-4257**	6	RING-RETAINER	
	4	1	**199-0760**	3	BEARING	
	5	1	**213-4222**	3	WASHER (50.1X61X2.5-MM THK)	
	6	1	**207-5962**	6	WASHER (145.1X179.5X8-MM THK)	
	7	1	**216-1606**	3	GEAR-PLANETARY (31-TEETH)	
	8	1	**216-1601**	1	CARRIER	

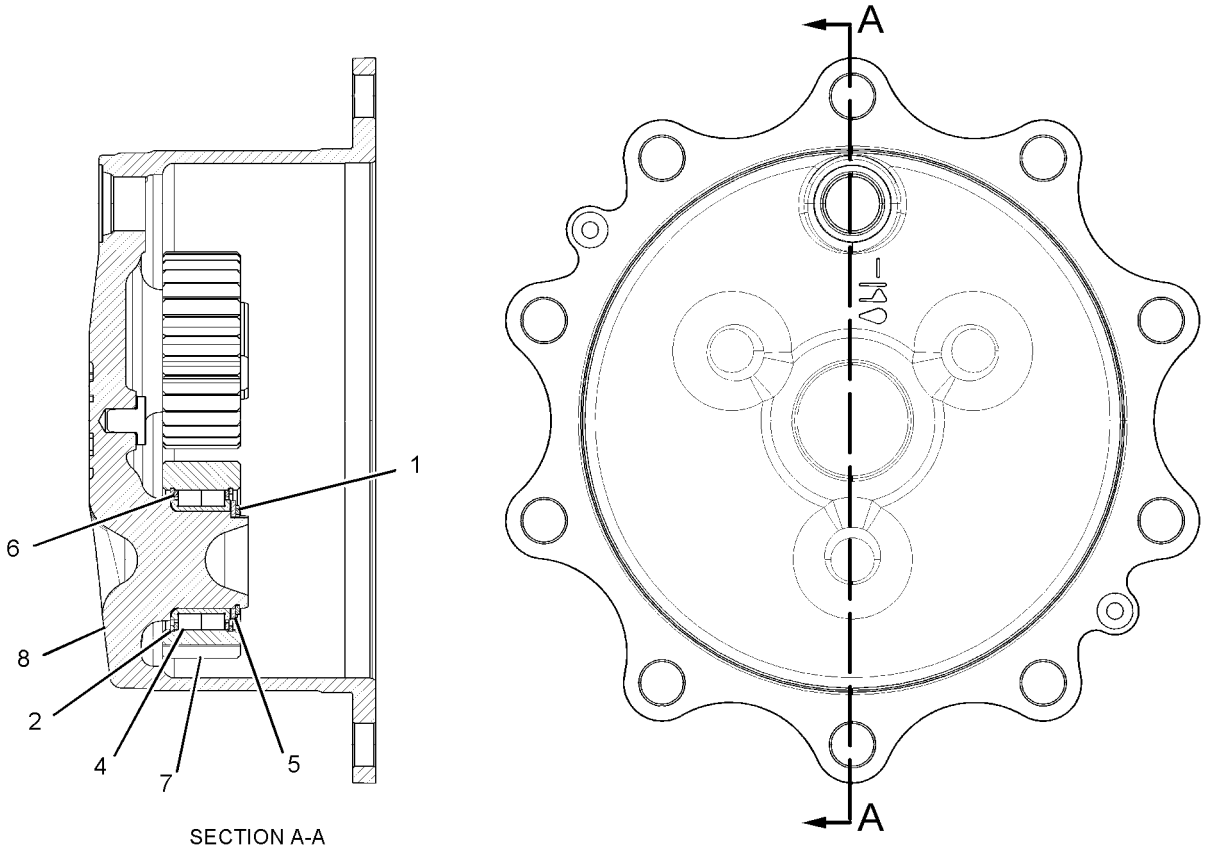

SECTION A-A

GRAPHIC #1 **<END>** g01113985

329-0304 POWER TRAIN AR–
ALL WHEEL DRIVE, 2-WHEEL STEER, STD SHIFT
S/N: DPH1-UP
AN ATTACHMENT

SMCS-3000, 4000 **i03727541**

NOTE	PART NUMBER	QTY	PART NAME 1 2 3 4 5 6 (PRODUCT LEVEL)	SEE PAGE
Y	*206-1642*	1	CONTROL GP-PARKING BRAKE	295
Y	*206-1638*	1	CONTROL GP-SERVICE BRAKE	297
Y	*311-3641*	1	CONTROL GP-TRANSMISSION	570
Y	*112-1826*	1	DRIVE & MTG GP-PUMP	355
Y	*329-0319*	1	DRIVE AR-BACKHOE LOADER (ALL WHEEL DRIVE, 2-WHEEL STEER)	6
Y	*214-3740*	1	FILLER GP-POWER TRAIN OIL (ALL WHEEL DRIVE, STD SHIFT)	244
Y	*315-1369*	1	LINES GP-POWER TRAIN COOLER	86
Y	*256-0546*	1	LINES GP-POWER TRAIN OIL (DIFFERENTIAL LOCK)	250
Y	*271-4487*	1	MOUNTING GP-TRANSMISSION	252
Y	*216-4476*	1	SHAFT GP-DRIVE (FRONT)	256
Y	*308-9973*	1	SWITCH GP-DIFFERENTIAL LOCK	190
Y	*221-8119*	1	TRANSMISSION AR-DIRECT DRIVE	262
	119-4740	1	FILTER-OIL (STANDARD EFFICIENCY)	

Y-SEPARATE ILLUSTRATION

<END>

216-4475 SHAFT GP-DRIVE–REAR
S/N: DPH1-UP
PART OF 329-0319 DRIVE AR-BACKHOE LOADER
AN ATTACHMENT

SMCS-3253 **i03498387**

NOTE	PART NUMBER	QTY	PART NAME 1 2 3 4 5 6 (PRODUCT LEVEL)	SEE PAGE
J	**304-3269**	1	SHAFT AS (REAR)	
M	**107-6826**	8	BOLT (M24X19.1-MM)	
	5V-2545	4	STRAP	
			AVAILABLE REPAIR KIT(S):	
J	**117-9887**	2	KIT-SPIDER & BEARING (DRIVE SHAFT)	
			(EACH INCLUDES SPIDER & RINGS)	

J-KITS MARKED J SERVICES PART MARKED J
M-METRIC PART

<END>

216-4476 SHAFT GP-DRIVE–FRONT

S/N: DPH1-UP
PART OF 329-0304 POWER TRAIN AR
AN ATTACHMENT

SMCS-3253 **i02858065**

NOTE	PART NUMBER	QTY	PART NAME 1 2 3 4 5 6 (PRODUCT LEVEL)	SEE PAGE
J	**304-3266**	1	SHAFT AS (FRONT)	
M	**107-6826**	8	BOLT (M24X19.1-MM)	
	5V-2545	4	STRAP	
			AVAILABLE REPAIR KIT(S):	
J	**117-9887**	2	KIT-SPIDER & BEARING (DRIVE SHAFT)	
			(EACH INCLUDES SPIDER & RINGS)	

J-KIT MARKED J SERVICES PART MARKED J
M-METRIC PART

<END>

305-3429 SHAFT GP-INPUT

S/N: DPH1-UP
PART OF 294-9815 TRANSMISSION GP-DIRECT DRIVE
AN ATTACHMENT

SMCS-3053, 3063 **i03043822**

NOTE	REF NO	GRAPHIC REF	PART NUMBER	QTY	PART NAME 1 2 3 4 5 6 (PRODUCT LEVEL)	SEE PAGE
	1	1	**9U-8875**	2	RING-RETAINING	
	2	1	**172-5317**	1	BEARING-SPECIAL	
	3	1	**172-6050**	1	BEARING-SPECIAL	
	4	1	**9U-8886**	4	RING-SEAL	
	5	1	**274-4553**	10	DISC-FRICTION	
	6	1	**122-1886**	1	RING-SEAL	
	7	1	**6V-8757**	3	RING-RETAINING	
	8	1	**121-2500**	2	WASHER-THRUST (50X70X4-MM THK)	
	9	1	**123-8905**	1	CUP-TAPERED ROLLER	
	10	1	**123-8909**	1	CONE-BEARING	
	11	1	**305-3431**	2	PISTON	
	12	1	**147-0238**	2	SPRING AS	
	13	1	**147-0203**	2	WASHER-THRUST (45.3X65X5-MM THK)	
	14	1	**6Y-7929**	10	DISC-FRICTION	
	15	1	**274-8616**	1	GEAR-FORWARD (24-TEETH)	
	16	1	**274-8617**	1	GEAR-REVERSE (27-TEETH)	
	17	1	**274-8628**	1	BEARING-NEEDLE	
	18	1	**274-8629**	1	BEARING-NEEDLE	
	19	1	**294-9821**	1	SPACER	
	20	1	**274-8636**	1	SHAFT AS	
		1	**123-0714**	2	BEARING	
		1	**123-2920**	3	PLUG	
	21	1	**8E-5707**	2	PLATE-END	
	22	1	**294-9812**	2	RETAINER-SPRING	

305-3429 SHAFT GP-INPUT *(contd.)* **i03043822**

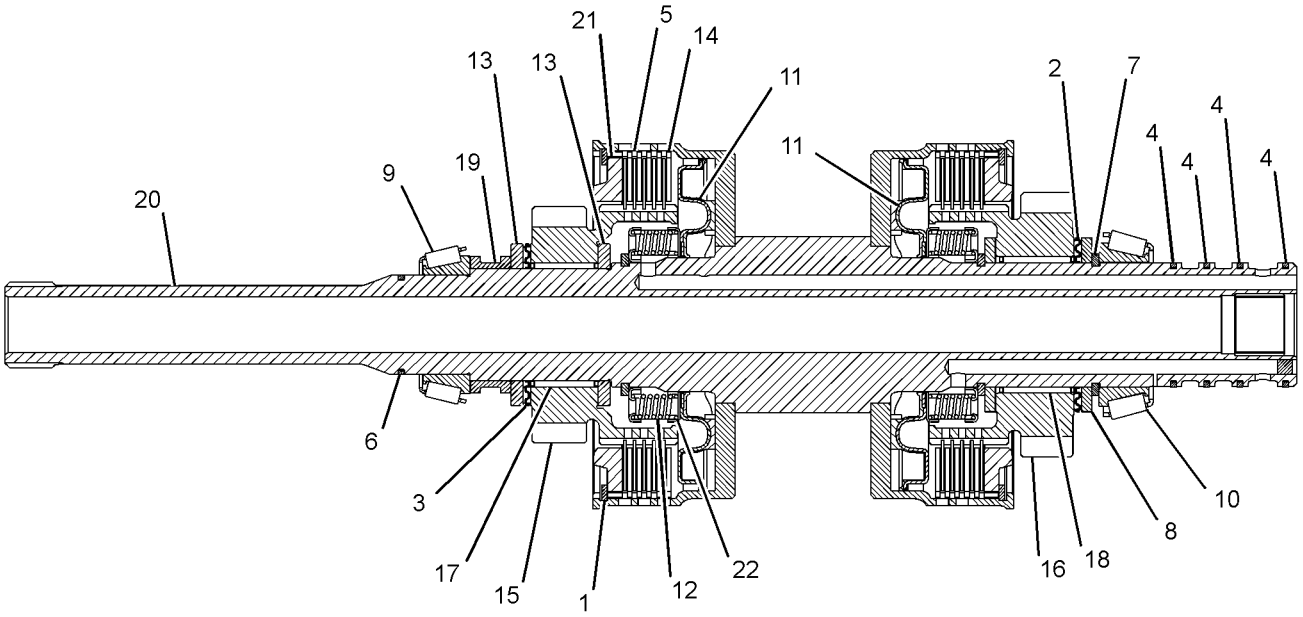

GRAPHIC #1 **<END>** g01383731

275-0478 SHAFT GP-OUTPUT–REAR

S/N: DPH1-UP
PART OF 294-9815 TRANSMISSION GP-DIRECT DRIVE
AN ATTACHMENT

SMCS-3053, 3063 **i02922492**

NOTE	REF NO	GRAPHIC REF	PART NUMBER	QTY	PART NAME 1 2 3 4 5 6 (PRODUCT LEVEL)	SEE PAGE
	1	1	**7T-3022**	2	SLEEVE	
	2	1	**6V-8500**	4	BEARING	
	3	1	**6T-9160**	1	GEAR (43-TEETH)	
	4	1	**7T-3017**	1	SPACER (52.5X59X9.6-MM THK)	
	5	1	**7T-3021**	2	SYNCHRONIZER GP	
	6	1	**096-5516**	1	RING-RETAINING	
	7	1	**259-1831**	1	GEAR (37-TEETH)	
	8	1	**6Y-2736**	1	CONE-BEARING	
	9	1	**123-8907**	1	CONE-BEARING	
	11	1	**274-8620**	1	GEAR-OUTPUT (37-TEETH)	
	12	1	**274-8621**	1	GEAR-OUTPUT (28-TEETH)	
	13	1	**274-8637**	1	SPACER-BEARING	
	14	1	**278-0215**	1	SHAFT-OUTPUT	
	15	1	**278-0216**	1	GEAR-OUTPUT (17-TEETH)	
	16	1	**278-0217**	1	BEARING-NEEDLE	
	17	1	**278-0218**	2	WASHER-THRUST	
	18	1	**178-8214**	1	CLIP	
	19	1	**7T-3018**	1	SLEEVE	
	20	1	**150-3757**	1	BEARING	
	21	1	**293-8761**	1	BEARING-NEEDLE	

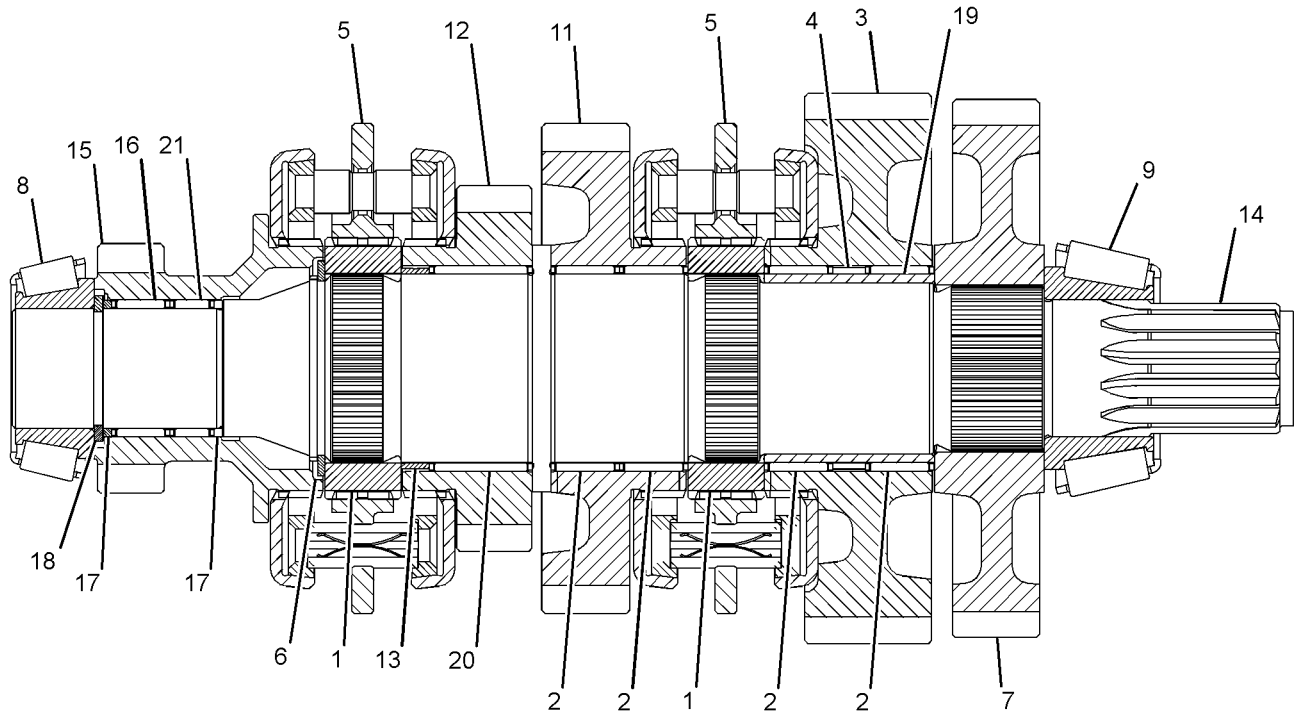

GRAPHIC #1 **<END>** g01508474

305-3427 SHAFT GP-OUTPUT–FRONT

S/N: DPH1-UP
PART OF 294-9815 TRANSMISSION GP-DIRECT DRIVE
AN ATTACHMENT

SMCS-3053, 3063 **i02755327**

NOTE	REF NO	GRAPHIC REF	PART NUMBER	QTY	PART NAME 1 2 3 4 5 6 (PRODUCT LEVEL)	SEE PAGE
	1	1	**6V-8757**	1	RING-RETAINING	
	2	1	**274-4553**	8	DISC-FRICTION	
	3	1	**6Y-7957**	8	DISC-FRICTION	
	4	1	**305-3424**	1	WASHER-THRUST	
	5	1	**172-6050**	2	BEARING-SPECIAL	
	6	1	**122-1878**	1	RING-SEAL	
	7	1	**122-1877**	1	WASHER-THRUST (40X65X4-MM THK)	
	8	1	**122-1884**	1	SPACER (45X49X8-MM THK)	
	9	1	**305-3431**	1	PISTON (CLUTCH)	
	10	1	**123-8905**	2	CUP-TAPERED ROLLER	
	11	1	**178-9566**	1	SPRING-PISTON	
	12	1	**161-3249**	1	RING-RETAINING	
	13	1	**123-8912**	2	BEARING-ROLLER	
	14	1	**305-3425**	1	SHAFT AS-OUTPUT	
	15	1	**121-0904**	1	GEAR AS (36-TEETH)	
	16	1	**8E-5707**	1	PLATE-END	
	17	1	**294-9812**	1	RETAINER-SPRING	

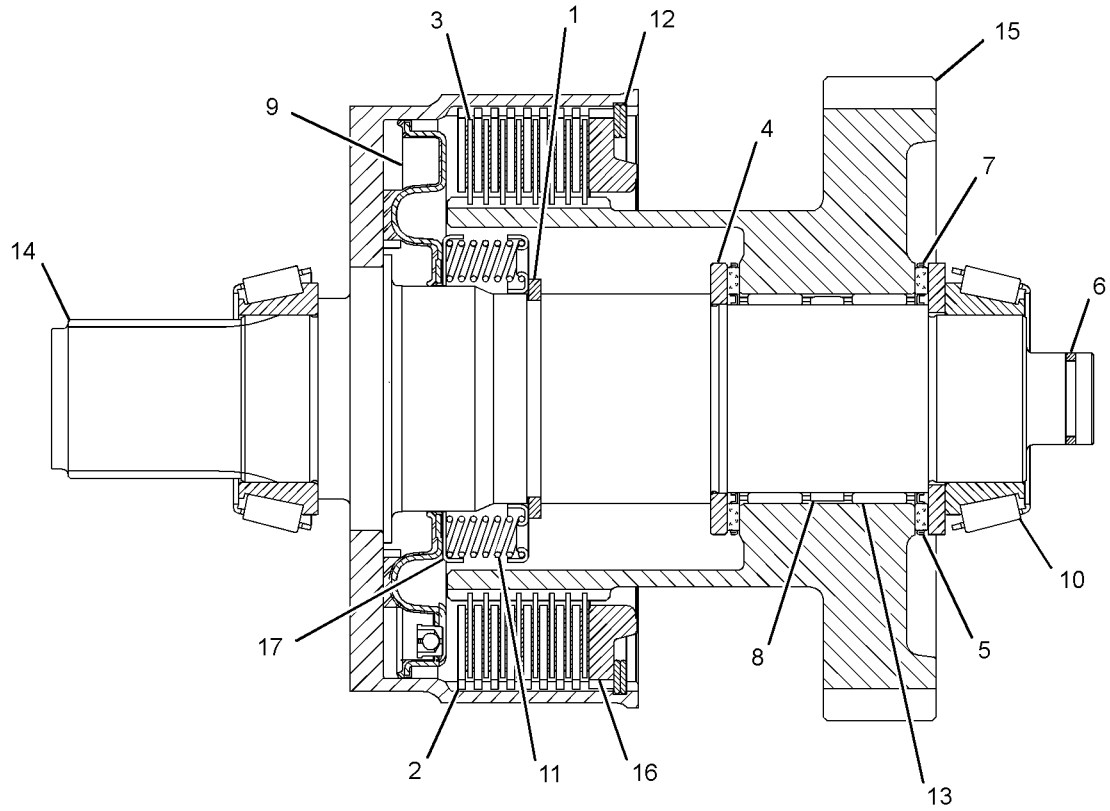

GRAPHIC #1 **<END>** g01382017

311-2230 STOP GP-STEERING

S/N: DPH1-UP
PART OF 303-0415, 319-6834, 341-0596 WHEEL & TIRE AR
FOR USE WITH 20 INCH TIRES LOCATED ON THE FRONT AXLE
AN ATTACHMENT

SMCS-7188 **i02992380**

NOTE	REF NO	GRAPHIC REF	PART NUMBER	QTY	PART NAME 1 2 3 4 5 6 (PRODUCT LEVEL)	SEE PAGE
	1	1	**224-6829**	2	SPACER (17X24.5X17-MM THK)	

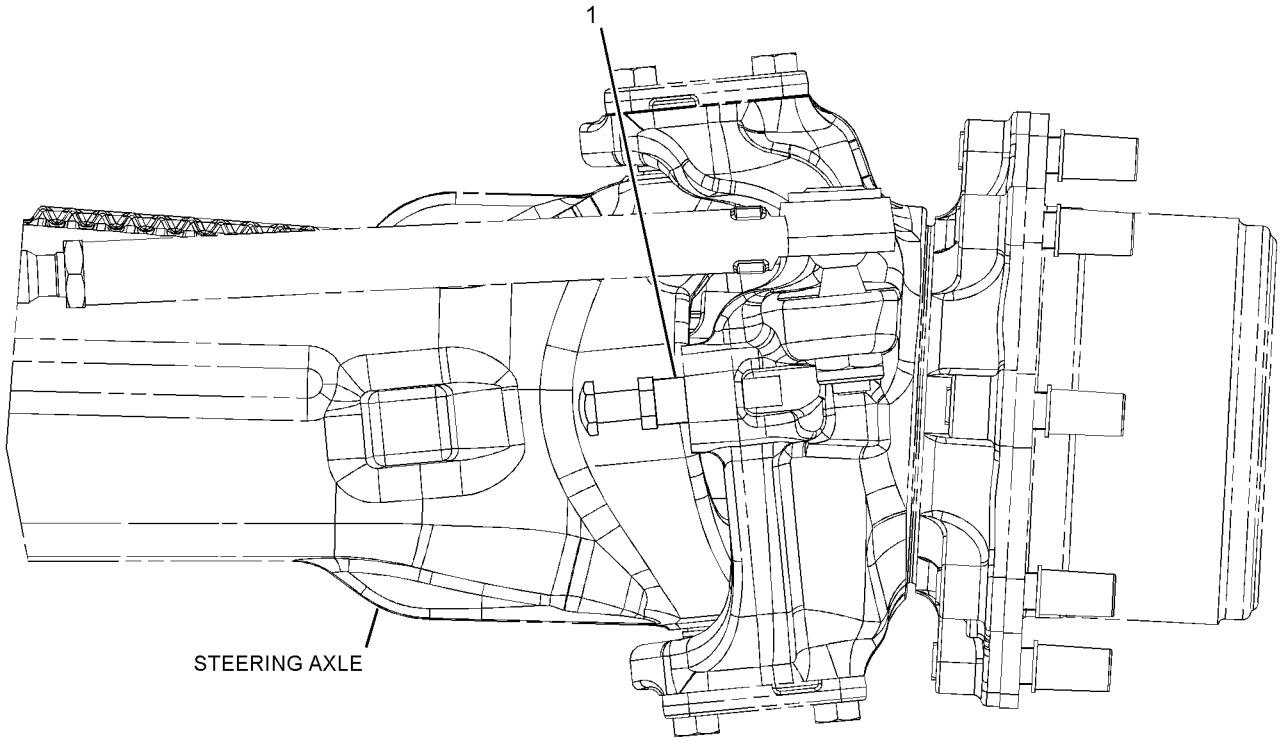

FRONT VIEW

GRAPHIC #1 **<END>** g01618844

221-8119 TRANSMISSION AR-DIRECT DRIVE–
ALL WHEEL DRIVE, STANDARD SHIFT
S/N: DPH1-UP
PART OF 329-0304 POWER TRAIN AR
AN ATTACHMENT

SMCS-3030 **i03592761**

NOTE	PART NUMBER	QTY	PART NAME 1 2 3 4 5 6 (PRODUCT LEVEL)	SEE PAGE
Y	*111-7907*	1	DRIVE GP-FLEXIBLE COUPLING	243
Y	*294-9815*	1	TRANSMISSION GP-DIRECT DRIVE	263
	293-4984	1	TORQUE CONVERTER AS	

Y-SEPARATE ILLUSTRATION

<END>

294-9815 TRANSMISSION GP-DIRECT DRIVE

S/N: DPH1-UP

PART OF 221-8119 TRANSMISSION AR-DIRECT DRIVE

AN ATTACHMENT

SMCS-3030 **i03592765**

NOTE	REF NO	GRAPHIC REF	PART NUMBER	QTY	PART NAME 1 2 3 4 5 6 (PRODUCT LEVEL)	SEE PAGE
Y	1	3	**275-0468**	1	CASE AS-TRANSMISSION (FRONT)	234
Y	2	3	**275-0470**	1	CASE AS-TRANSMISSION (REAR)	235
	3	3	**121-7385**	1	PUMP GP-TRANSMISSION	
		3	**208-8240**	1	SEAL-LIP TYPE	
	4	3	**302-8432**	2	SEAL-LIP TYPE	
M	5	2,3	**8C-5748**	7	BOLT (M8X1.25X55-MM)	
	6	3	**7X-4741**	1	SEAL	
	7	3	**9P-9150**	4	WASHER (8.25X18X0.84-MM THK)	
	8	3	**275-0475**	1	SHAFT GP-IDLER (TRANSMISSION)	
		3	**005-0471**	2	CONE-BEARING	
		3	**274-8623**	1	SHAFT-REVERSE	
	9	3	**275-0477**	1	SHAFT GP-COUNTER (TRANSMISSION)	
		3	**8T-1581**	1	CONE (TAPERED-ROLLER BEARING)	
		3	**123-8907**	1	CONE-BEARING	
		3	**274-8614**	1	GEAR-COUNTERSHAFT (37-TEETH)	
		3	**274-8625**	1	GEAR-COUNTERSHAFT (38-TEETH)	
Y	10	3	**275-0478**	1	SHAFT GP-OUTPUT (REAR)	259
Y	11	3	**305-3427**	1	SHAFT GP-OUTPUT (FRONT)	260
	12	1	**121-7403**	1	FORK-SHIFT (FIRST, SECOND)	
	13	1	**121-7404**	1	FORK-SHIFT (THIRD, FOURTH)	
	14	1	**121-7389**	1	ROD AS-GEARSHIFT (FIRST, SECOND)	
	15	1	**121-7390**	1	ROD AS-GEARSHIFT (THIRD, FOURTH)	
	16	1	**6Y-1341**	2	SPRING	
	17	1	**014-5645**	3	BALL	
	18	2	**9M-1974**	3	WASHER-HARD (8.8X16X2-MM THK)	
	19	2	**7T-3109**	1	PIN	
	20	1	**7T-3249**	2	SCREW (3/8-24X0.75-IN)	
	21	1,2	**9S-4191**	12	PLUG-O-RING	
	22	2	**127-3017**	1	SEAT AS (BALL)	
	23	2	**121-7391**	1	LEVER	
	24	2	**175-0054**	1	SEAL-O-RING	
	25	2	**174-9711**	1	GASKET	
C	27	2	**324-2578**	1	VALVE GP-SOLENOID (FORWARD, REVERSE)	
		2	**8L-2779**	4	SEAL-O-RING	
		2	**280-7009**	2	COIL AS (12-VOLT)	
		2	**280-7012**	2	TUBE AS	
M	28	2	**9X-6615**	4	BOLT (M5X0.8X30-MM)	
	29	2	**305-3423**	2	VALVE GP-SOLENOID (12-VDC)	
					(EACH INCLUDES)	
		2	**274-8034**	1	COIL AS (12-VOLT)	
	30	2	**121-7396**	1	VALVE GP-RELIEF (TORQUE CONVERTER INLET)	
		2	**6V-4589**	1	SEAL-O-RING	
		2	**8L-2746**	1	SEAL-O-RING	
Y	31	2	**147-0209**	1	VALVE GP-RELIEF (CLUTCH PRESSURE)	268
	32	2	**6K-0806**	1	STRAP-CABLE	
M	34	1	**6V-8335**	14	BOLT-SELF-LOCKING (M10X1.5X40-MM)	
M	35	1	**121-9875**	4	BOLT (M10X1.5X55-MM)	
M	36	2	**6V-7731**	2	BOLT (M10X1.5X70-MM)	
M	37	1	**6V-8097**	2	BOLT (M12X1.75X30-MM)	
	38	1	**293-2147**	1	BREATHER AS (SIDE)	
		1	**3J-1907**	1	SEAL-O-RING	
		1	**122-6785**	1	PLUG AS	
	39	2	**7T-3119**	1	HOUSING (FILTER)	
	41	3	**7T-3195**	2	WASHER (12.3X47X6.35-MM THK)	
	42	2	**6Y-2035**	1	GASKET	

294-9815 TRANSMISSION GP-DIRECT DRIVE *(contd.)* i03592765

NOTE	REF NO	GRAPHIC REF	PART NUMBER	QTY	PART NAME 1 2 3 4 5 6 (PRODUCT LEVEL)	SEE PAGE
	43	3	**5P-8066**	2	SEAL-O-RING	
	44	1	**294-9820**	1	TUBE	
	45	3	**122-1883**	1	SPACER (38X45X5-MM THK)	
	46	3	**122-6787**	2	YOKE AS	
					(EACH INCLUDES)	
		1	**123-1377**	1	GUARD	
	47	1	**6Y-1896**	1	PLUG AS (DRAIN)	
		1	**5P-6718**	1	SEAL-O-RING	
	48	2	**4W-9972**	1	SENDER AS-TEMPERATURE (12-VOLT) (TORQUE CONVERTER OIL)	
		2	**6V-8378**	1	NUT (10-32-THD)	
		2	**8F-1434**	1	LOCKWASHER	
		2	**8T-0328**	1	WASHER-HARD (5.5X10X1-MM THK)	
	49	1,2	**3J-1907**	14	SEAL-O-RING	
Y	50	3	**305-3429**	1	SHAFT GP-INPUT	257
	51	2	**7T-3111**	1	COVER	
	52	2	**3S-2093**	1	STRAP-CABLE	
	53	3	**208-8240**	1	SEAL-LIP TYPE	
	54	1	**123-2918**	2	SLEEVE	
	55	1	**123-2919**	2	NUT (M11X1-THD)	
	56	2	**7T-3251**	1	BREATHER (TRANSMISSION)	
	57	1	**6V-3965**	1	FITTING (QUICK DISCONNECT)	
	58	1	**6V-0852**	1	CAP-DUST	
	59	1	**222-9824**	1	PLUG	
	60	1	**205-9163**	1	WASHER (16X22X3-MM THK)	

C-CHANGE FROM PREVIOUS TYPE
M-METRIC PART
Y-SEPARATE ILLUSTRATION

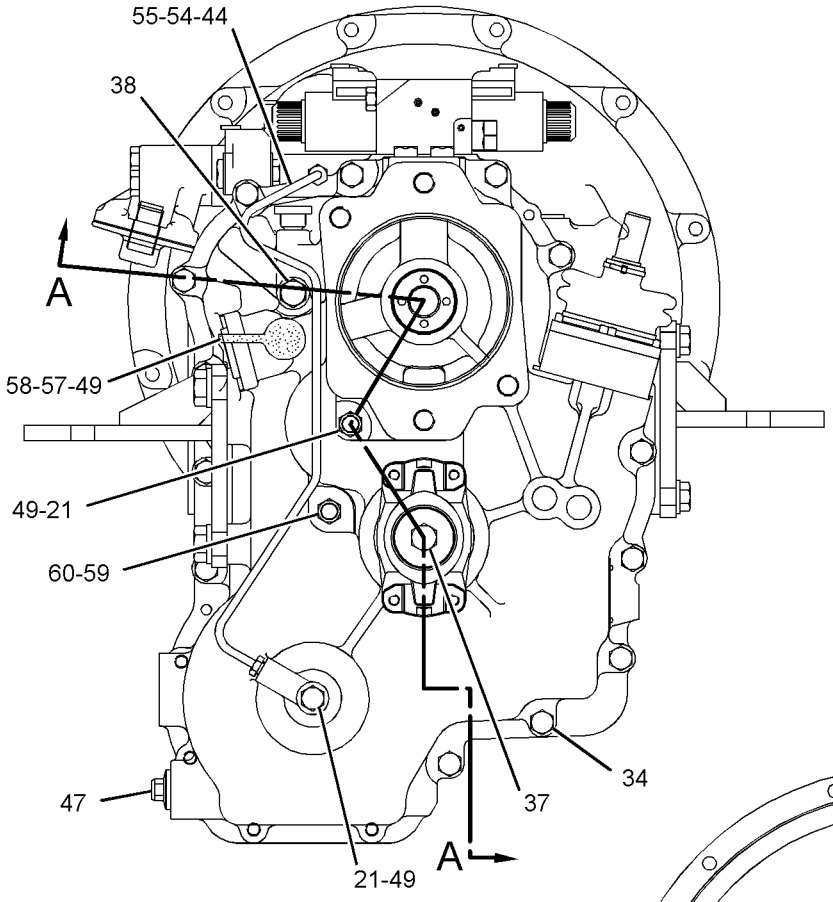

REFER TO ALL ILLUSTRATIONS OF THIS GROUP FOR AUXILIARY VIEWS

REAR VIEW

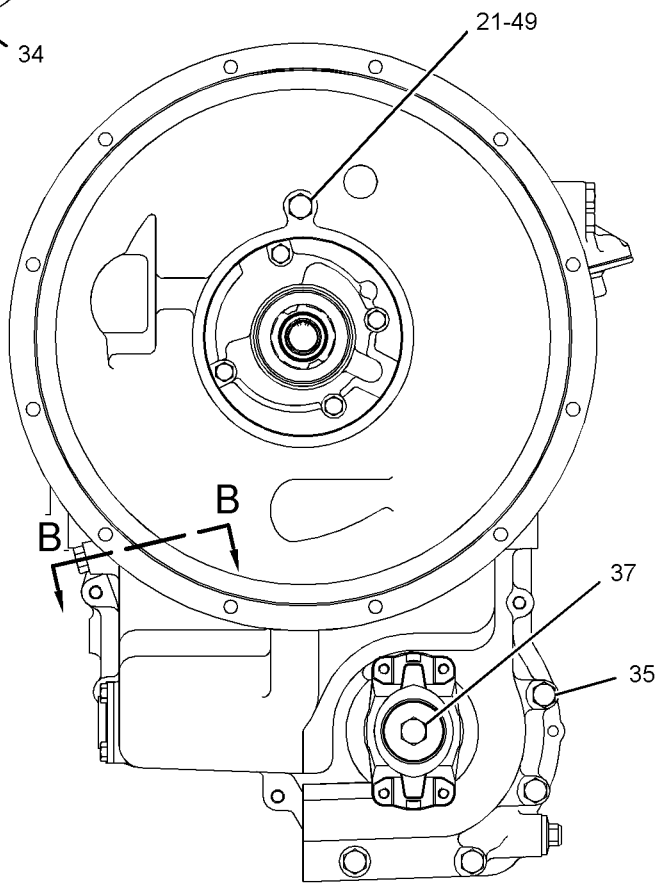

FRONT VIEW

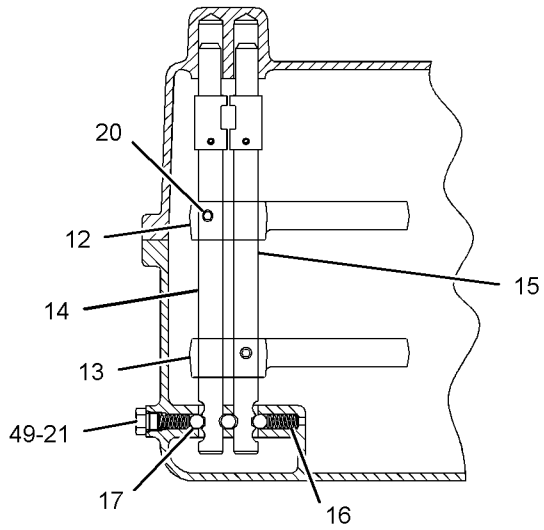

SECTION B-B

GRAPHIC #1

g01381848

REFER TO ALL ILLUSTRATIONS OF
THIS GROUP FOR AUXILIARY VIEWS

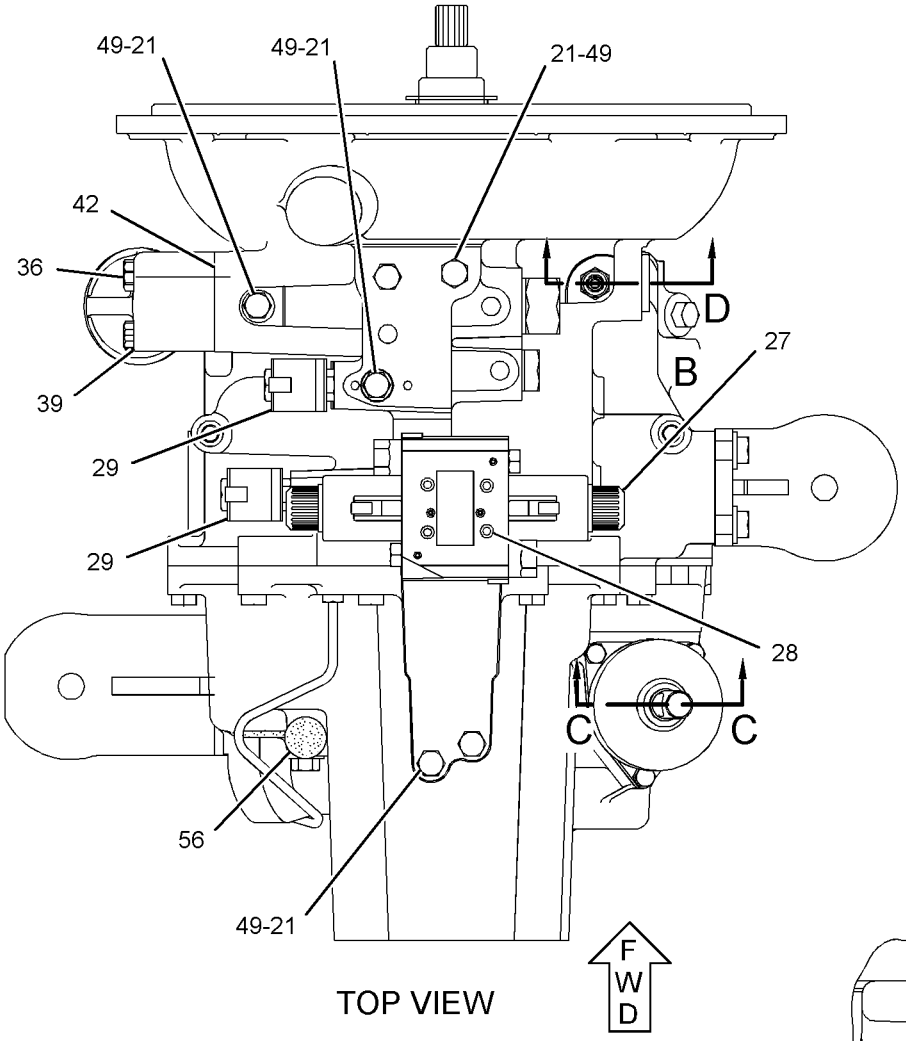

TOP VIEW

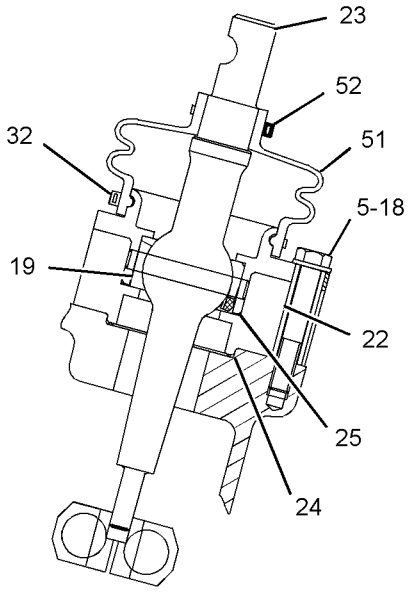

SECTION C-C

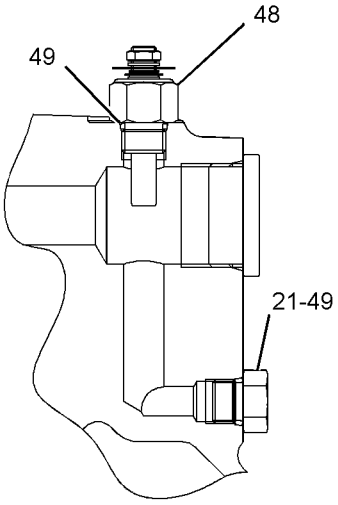

SECTION D

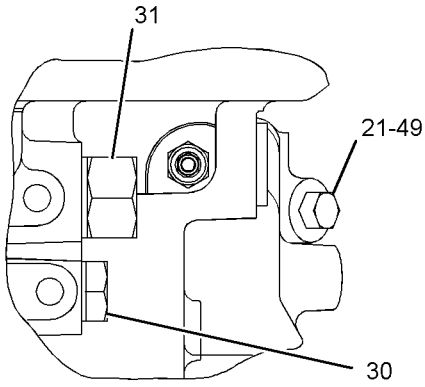

VIEW OF AREA B

GRAPHIC #2

g01381849

294-9815 TRANSMISSION GP-DIRECT DRIVE *(contd.)* **i03592765**

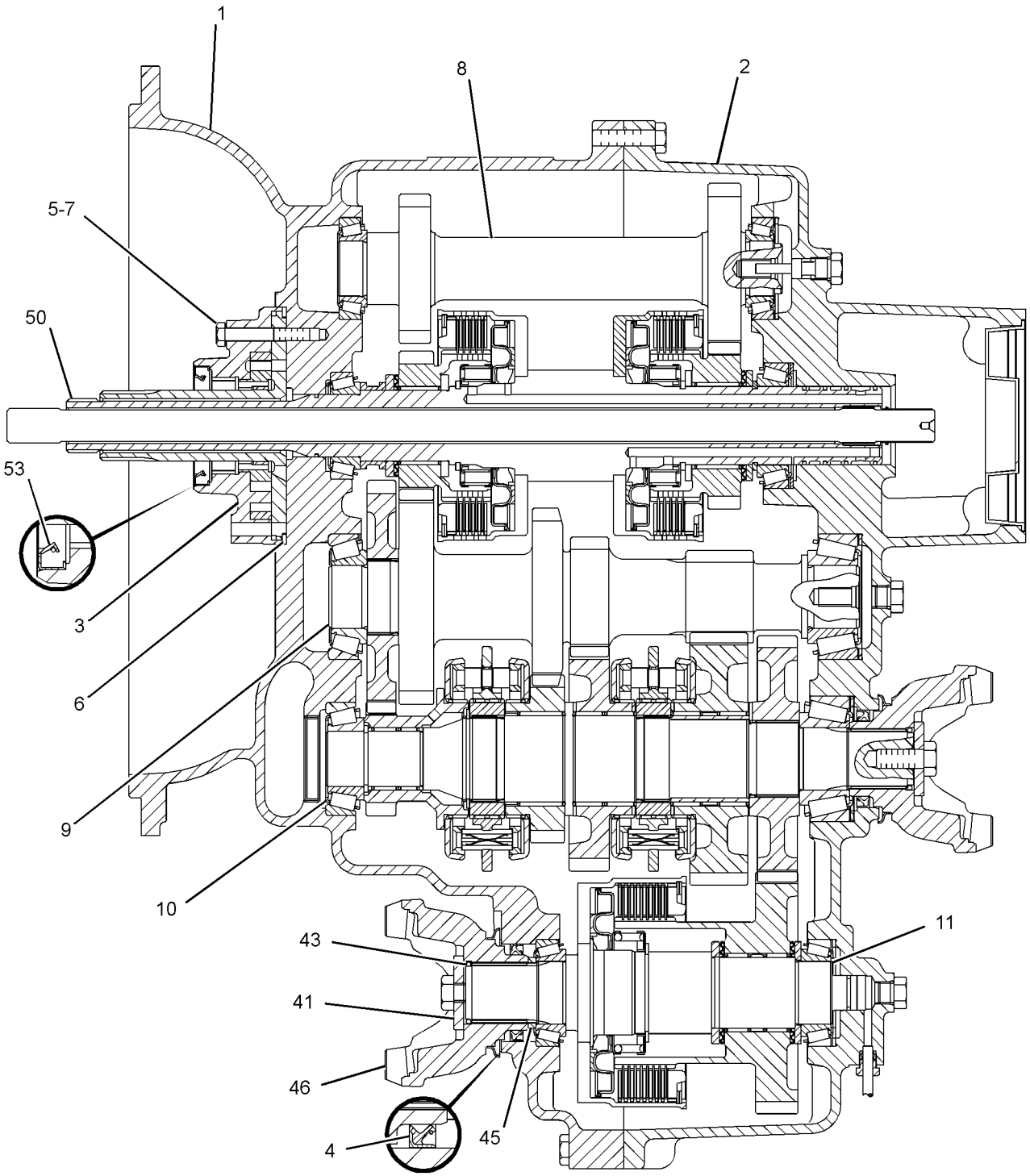

SECTION A-A

GRAPHIC #3 **<END>** g01381850

147-0209 VALVE GP-RELIEF–PRESSURE REGULATOR

S/N: DPH1-UP

PART OF 294-9815 TRANSMISSION GP-DIRECT DRIVE

AN ATTACHMENT

SMCS-3133, 3182, 3210, 3213 **i00724885**

NOTE	REF NO	GRAPHIC REF	PART NUMBER	QTY	PART NAME 1 2 3 4 5 6 (PRODUCT LEVEL)	SEE PAGE
	1	1	**7X-4744**	1	SEAL-O-RING	
	2	1	**6V-9178**	1	SEAL-O-RING	
	3	1	**106-9586**	1	SEAL-O-RING	

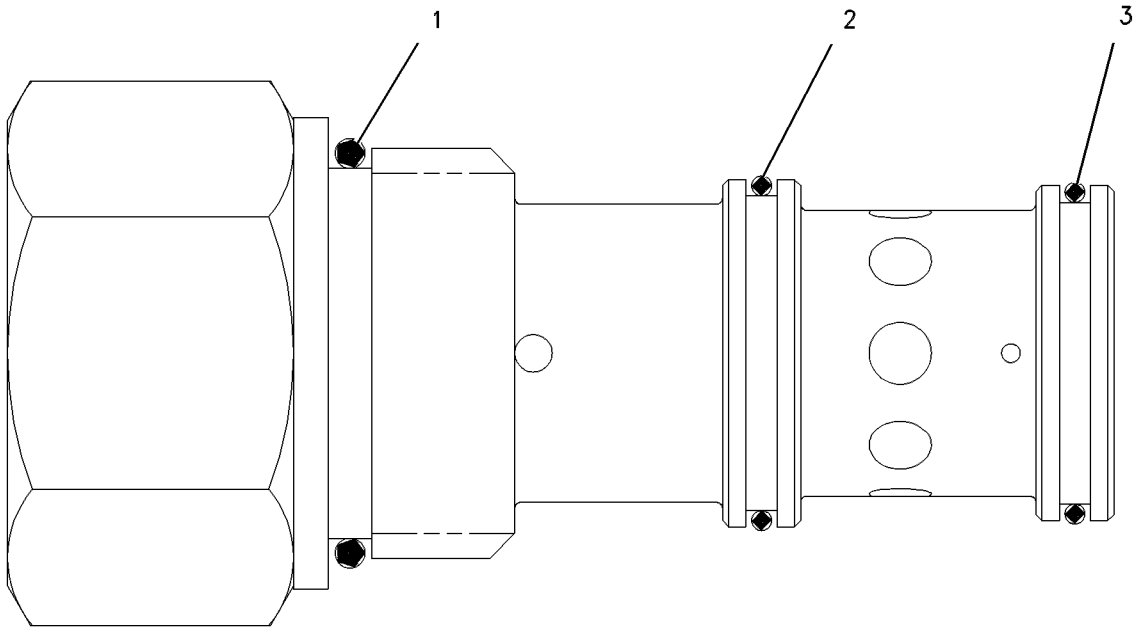

GRAPHIC #1 **<END>** g00304718

6D-0337 VALVE GP-TIRE

S/N: DPH1-UP
PART OF 201-1920 VALVE GP-TIRE
AN ATTACHMENT

SMCS-4203 **i03644348**

NOTE	REF NO	GRAPHIC REF	PART NUMBER	QTY	PART NAME 1 2 3 4 5 6 (PRODUCT LEVEL)	SEE PAGE
	1	1	**6D-0443**	1	HOUSING AS-CORE	
	1A	1	**2D-2628**	1	CORE-VALVE	
	1B	1	**2D-2633**	1	CAP (VALVE STEM)	
	2	1	**8D-2707**	1	SPUD AS	
	2A	1	**2D-2629**	1	GROMMET	
	2B	1	**2D-2630**	1	WASHER	
	2C	1	**2D-2631**	1	NUT (0.482-26-THD)	

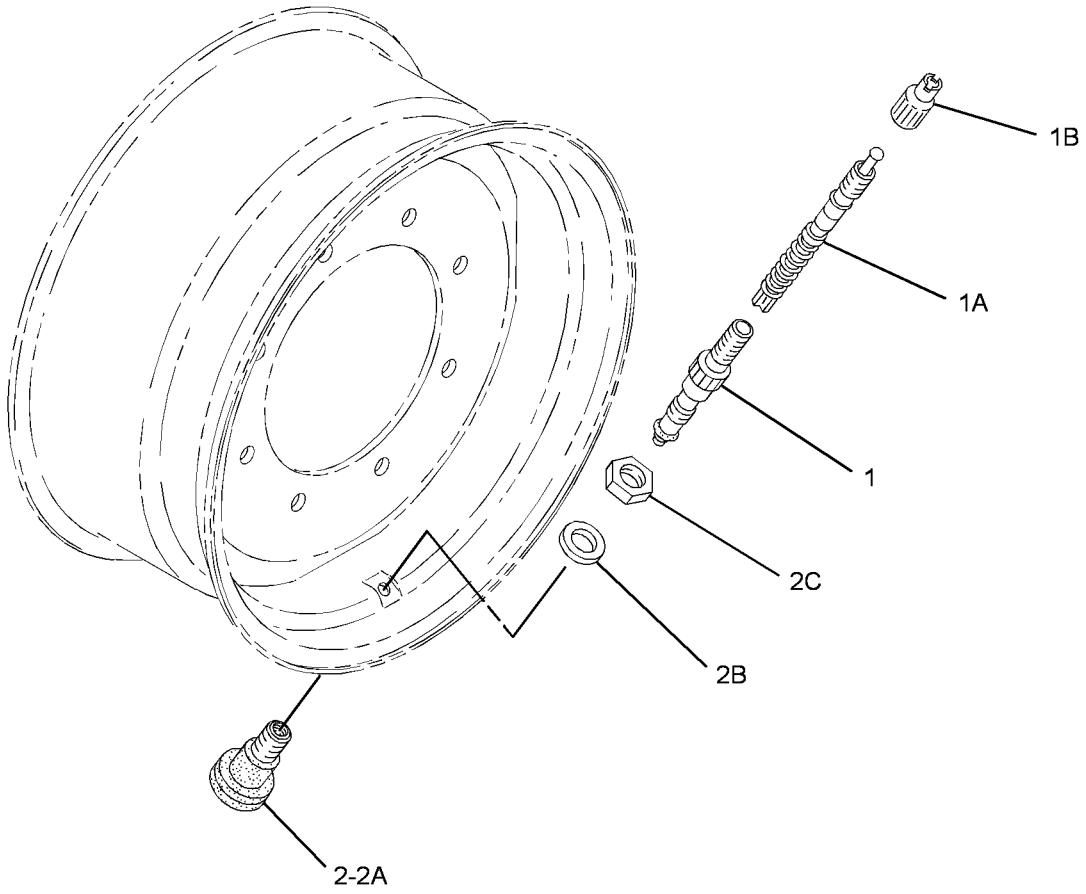

GRAPHIC #1 **<END>** g01955522

201-1920 VALVE GP-TIRE

S/N: DPH1-UP

PART OF 201-1869, 201-1870, 201-1963, 201-1964, 216-9148, 216-9149, 249-7562, 249-7563, 249-7565, 249-7566, 249-7568, 249-7569, 249-7571, 249-7572, 249-9407, 249-9408, 249-9409, 249-9410, 249-9411, 250-0230, 266-1555, 266-1556, 273-5093, 273-5094, 273-5095, 273-5096, 303-0428, 303-0429, 303-0430, 303-0431, 303-0434, 303-0435, 303-0438, 303-0439, 319-7186, 319-7187, 319-7191, 319-7192, 329-1355, 329-1919, 341-9203, 341-9204 WHEEL & TIRE GP

AN ATTACHMENT

SMCS-4203 **i03498408**

NOTE	PART NUMBER	QTY	PART NAME 1 2 3 4 5 6 (PRODUCT LEVEL)	SEE PAGE
Y	**6D-0337**	1	VALVE GP-TIRE	269

Y-SEPARATE ILLUSTRATION

<END>

249-9255 WHEEL & TIRE AR—ALL WHEEL DRIVE

S/N: DPH1-UP

AN ATTACHMENT

SMCS-4201, 4202, 4203, 4208, 4209 **i02213984**

NOTE	PART NUMBER	QTY	PART NAME 1 2 3 4 5 6 (PRODUCT LEVEL)	SEE PAGE
Y	*216-9147*	1	WHEEL & TIRE GP (FRONT)	276
Y	*249-9392*	1	WHEEL & TIRE GP (REAR)	281

Y-SEPARATE ILLUSTRATION

<END>

249-9256 WHEEL & TIRE AR—ALL WHEEL DRIVE

S/N: DPH1-UP

AN ATTACHMENT

SMCS-4201, 4202, 4203, 4208, 4209 **i02214100**

NOTE	PART NUMBER	QTY	PART NAME 1 2 3 4 5 6 (PRODUCT LEVEL)	SEE PAGE
Y	*216-9147*	1	WHEEL & TIRE GP (FRONT)	276
Y	*249-9387*	1	WHEEL & TIRE GP (REAR)	280

Y-SEPARATE ILLUSTRATION

<END>

249-9261 WHEEL & TIRE AR—ALL WHEEL DRIVE

S/N: DPH1-UP

AN ATTACHMENT

SMCS-4201, 4202, 4203, 4208, 4209 **i02177124**

NOTE	PART NUMBER	QTY	PART NAME 1 2 3 4 5 6 (PRODUCT LEVEL)	SEE PAGE
Y	*201-1962*	1	WHEEL & TIRE GP (FRONT)	275
Y	*249-9390*	1	WHEEL & TIRE GP (REAR)	280

Y-SEPARATE ILLUSTRATION

<END>

249-9262 WHEEL & TIRE AR—ALL WHEEL DRIVE

S/N: DPH1-UP
AN ATTACHMENT

SMCS-4201, 4202, 4203, 4208, 4209 **i02171207**

NOTE	PART NUMBER	QTY	PART NAME 1 2 3 4 5 6 (PRODUCT LEVEL)	SEE PAGE
Y	*201-1962*	1	WHEEL & TIRE GP (FRONT)	275
Y	*249-9399*	1	WHEEL & TIRE GP (REAR)	281

Y-SEPARATE ILLUSTRATION

<END>

249-9263 WHEEL & TIRE AR—ALL WHEEL DRIVE

S/N: DPH1-UP
AN ATTACHMENT

SMCS-4201, 4202, 4203, 4208, 4209 **i02214108**

NOTE	PART NUMBER	QTY	PART NAME 1 2 3 4 5 6 (PRODUCT LEVEL)	SEE PAGE
Y	*201-1868*	1	WHEEL & TIRE GP (FRONT)	274
Y	*249-9400*	1	WHEEL & TIRE GP (REAR)	281

Y-SEPARATE ILLUSTRATION

<END>

273-5077 WHEEL & TIRE AR—ALL WHEEL DRIVE

S/N: DPH1-UP
AN ATTACHMENT

SMCS-4201, 4202, 4203, 4208, 4209 **i02403925**

NOTE	PART NUMBER	QTY	PART NAME 1 2 3 4 5 6 (PRODUCT LEVEL)	SEE PAGE
Y	*266-1554*	1	WHEEL & TIRE GP (FRONT)	284
Y	*273-5081*	1	WHEEL & TIRE GP (REAR)	285

Y-SEPARATE ILLUSTRATION

<END>

273-5078 WHEEL & TIRE AR—ALL WHEEL DRIVE

S/N: DPH1-UP
AN ATTACHMENT

SMCS-4201, 4202, 4203, 4208, 4209 **i02404018**

NOTE	PART NUMBER	QTY	PART NAME 1 2 3 4 5 6 (PRODUCT LEVEL)	SEE PAGE
Y	*266-1554*	1	WHEEL & TIRE GP (FRONT)	284
Y	*273-5080*	1	WHEEL & TIRE GP (REAR)	285

Y-SEPARATE ILLUSTRATION

<END>

303-0413 WHEEL & TIRE AR—ALL WHEEL DRIVE

S/N: DPH1-UP
AN ATTACHMENT

SMCS-4201, 4202, 4203, 4208, 4209 **i02675636**

NOTE	PART NUMBER	QTY	PART NAME 1 2 3 4 5 6 (PRODUCT LEVEL)	SEE PAGE
Y	*303-0418*	1	WHEEL & TIRE GP (FRONT)	287
Y	*303-0419*	1	WHEEL & TIRE GP (REAR)	287

Y-SEPARATE ILLUSTRATION

<END>

303-0414 WHEEL & TIRE AR—ALL WHEEL DRIVE

S/N: DPH1-UP
AN ATTACHMENT

SMCS-4201, 4202, 4203, 4208, 4209 **i02675689**

NOTE	PART NUMBER	QTY	PART NAME 1 2 3 4 5 6 (PRODUCT LEVEL)	SEE PAGE
Y	*303-0418*	1	WHEEL & TIRE GP (FRONT)	287
Y	*303-0421*	1	WHEEL & TIRE GP (REAR)	287

Y-SEPARATE ILLUSTRATION

<END>

303-0415 WHEEL & TIRE AR—ALL WHEEL DRIVE

S/N: DPH1-UP
AN ATTACHMENT

SMCS-4201, 4202, 4203, 4208, 4209 **i03325570**

NOTE	PART NUMBER	QTY	PART NAME 1 2 3 4 5 6 (PRODUCT LEVEL)	SEE PAGE
Y	*311-2230*	1	STOP GP-STEERING	261
Y	*303-0421*	1	WHEEL & TIRE GP (REAR)	287
Y	*303-0423*	1	WHEEL & TIRE GP (FRONT)	288

Y-SEPARATE ILLUSTRATION

<END>

319-6834 WHEEL & TIRE AR—ALL WHEEL DRIVE

S/N: DPH1-UP
AN ATTACHMENT

SMCS-4201, 4202, 4203, 4208, 4209 **i03325572**

NOTE	PART NUMBER	QTY	PART NAME 1 2 3 4 5 6 (PRODUCT LEVEL)	SEE PAGE
Y	*311-2230*	1	STOP GP-STEERING	261
Y	*319-6835*	1	WHEEL & TIRE GP (FRONT)	291
Y	*319-6836*	1	WHEEL & TIRE GP (REAR)	291

Y-SEPARATE ILLUSTRATION

<END>

329-1350 WHEEL & TIRE AR—ALL WHEEL DRIVE, BIAS

S/N: DPH1-UP
AN ATTACHMENT

SMCS-4201, 4202, 4203, 4208, 4209 **i03097507**

NOTE	PART NUMBER	QTY	PART NAME 1 2 3 4 5 6 (PRODUCT LEVEL)	SEE PAGE
Y	*249-9388*	1	WHEEL & TIRE GP (REAR)	280
Y	*329-1354*	1	WHEEL & TIRE GP (FRONT)	293

Y-SEPARATE ILLUSTRATION

<END>

329-1351 WHEEL & TIRE AR—ALL WHEEL DRIVE, BIAS

S/N: DPH1-UP
AN ATTACHMENT

SMCS-4201, 4202, 4203, 4208, 4209 **i03099680**

NOTE	PART NUMBER	QTY	PART NAME 1 2 3 4 5 6 (PRODUCT LEVEL)	SEE PAGE
Y	*249-9271*	1	WHEEL & TIRE GP (REAR)	279
Y	*329-1354*	1	WHEEL & TIRE GP (FRONT)	293

Y-SEPARATE ILLUSTRATION

<END>

329-1352 WHEEL & TIRE AR—ALL WHEEL DRIVE, BIAS

S/N: DPH1-UP
AN ATTACHMENT

SMCS-4201, 4202, 4203, 4208, 4209 **i03091582**

NOTE	PART NUMBER	QTY	PART NAME 1 2 3 4 5 6 (PRODUCT LEVEL)	SEE PAGE
Y	*249-9390*	1	WHEEL & TIRE GP (REAR)	280
Y	*329-1354*	1	WHEEL & TIRE GP (FRONT)	293

Y-SEPARATE ILLUSTRATION

<END>

341-0596 WHEEL & TIRE AR—ALL WHEEL DRIVE

S/N: DPH1-UP
AN ATTACHMENT

SMCS-4201, 4202, 4203, 4208, 4209 **i03537760**

NOTE	PART NUMBER	QTY	PART NAME 1 2 3 4 5 6 (PRODUCT LEVEL)	SEE PAGE
Y	*311-2230*	1	STOP GP-STEERING	261
Y	*273-5080*	1	WHEEL & TIRE GP (REAR)	285
Y	*341-9202*	1	WHEEL & TIRE GP (FRONT)	294

Y-SEPARATE ILLUSTRATION

<END>

POWER TRAIN

201-1868 WHEEL & TIRE GP—FRONT

S/N: DPH1-UP
PART OF 249-9263 WHEEL & TIRE AR
AN ATTACHMENT

SMCS-4201, 4202, 4203, 4208, 4209 **i02469798**

NOTE	PART NUMBER	QTY	PART NAME 1 2 3 4 5 6 (PRODUCT LEVEL)	SEE PAGE
Y	*201-1869*	1	WHEEL & TIRE GP (LH)	274
Y	*201-1870*	1	WHEEL & TIRE GP (RH)	274
	201-1915	1	MOUNTING GP-WHEEL (FRONT)	
M	**178-1304**	8	NUT-HEX FLANGE (M20X1.5-THD)	
	8T-5439	8	WASHER-HARD (21.5X45X6-MM THK)	

M-METRIC PART
Y-SEPARATE ILLUSTRATION

<END>

201-1869 WHEEL & TIRE GP—FRONT, LH

S/N: DPH1-UP
PART OF 201-1868 WHEEL & TIRE GP
AN ATTACHMENT

SMCS-4201, 4202, 4203, 4208, 4209 **i03498413**

NOTE	PART NUMBER	QTY	PART NAME 1 2 3 4 5 6 (PRODUCT LEVEL)	SEE PAGE
Y	*201-1920*	1	VALVE GP-TIRE	270
	202-6186	1	WHEEL AS (FRONT)	
	194-0832	1	TIRE (340/80-R18)	

Y-SEPARATE ILLUSTRATION

<END>

201-1870 WHEEL & TIRE GP—FRONT, RH

S/N: DPH1-UP
PART OF 201-1868 WHEEL & TIRE GP
AN ATTACHMENT

SMCS-4201, 4202, 4203, 4208, 4209 **i03498414**

NOTE	PART NUMBER	QTY	PART NAME 1 2 3 4 5 6 (PRODUCT LEVEL)	SEE PAGE
Y	*201-1920*	1	VALVE GP-TIRE	270
	202-6186	1	WHEEL AS (FRONT)	
	194-0832	1	TIRE (340/80-R18)	

Y-SEPARATE ILLUSTRATION

<END>

201-1962 WHEEL & TIRE GP—FRONT

S/N: DPH1-UP
PART OF 249-9261, 249-9262 WHEEL & TIRE AR
AN ATTACHMENT

SMCS-4201, 4202, 4203, 4208, 4209 **i02469802**

NOTE	PART NUMBER	QTY	PART NAME 1 2 3 4 5 6 (PRODUCT LEVEL)	SEE PAGE
Y	*201-1963*	1	WHEEL & TIRE GP (LH)	275
Y	*201-1964*	1	WHEEL & TIRE GP (RH)	275
	201-1915	1	MOUNTING GP-WHEEL (FRONT)	
	8T-5439	16	WASHER-HARD (21.5X45X6-MM THK)	
M	**201-1919**	16	NUT (M20X1.5-THD)	

M-METRIC PART
Y-SEPARATE ILLUSTRATION

<END>

201-1963 WHEEL & TIRE GP—FRONT, LH

S/N: DPH1-UP
(10X18)
PART OF 201-1962 WHEEL & TIRE GP
AN ATTACHMENT

SMCS-4201, 4202, 4203, 4208, 4209 **i03498416**

NOTE	PART NUMBER	QTY	PART NAME 1 2 3 4 5 6 (PRODUCT LEVEL)	SEE PAGE
Y	*201-1920*	1	VALVE GP-TIRE	270
	202-6186	1	WHEEL AS (FRONT)	
	201-1929	1	TIRE (340/80-R18)	

Y-SEPARATE ILLUSTRATION

<END>

201-1964 WHEEL & TIRE GP—FRONT, RH

S/N: DPH1-UP
(10X18)
PART OF 201-1962 WHEEL & TIRE GP
AN ATTACHMENT

SMCS-4201, 4202, 4203, 4208, 4209 **i03592770**

NOTE	PART NUMBER	QTY	PART NAME 1 2 3 4 5 6 (PRODUCT LEVEL)	SEE PAGE
Y	*201-1920*	1	VALVE GP-TIRE	270
	202-6186	1	WHEEL AS (FRONT)	
	201-1929	1	TIRE (340/80-R18)	

Y-SEPARATE ILLUSTRATION

<END>

216-9147 WHEEL & TIRE GP—FRONT

S/N: DPH1-UP
PART OF 249-9255, 249-9256 WHEEL & TIRE AR
AN ATTACHMENT

SMCS-4201, 4202, 4203, 4208, 4209 **i03726385**

NOTE	PART NUMBER	QTY	PART NAME 1 2 3 4 5 6 (PRODUCT LEVEL)	SEE PAGE
Y	*216-9148*	1	WHEEL & TIRE GP (LH)	276
Y	*216-9149*	1	WHEEL & TIRE GP (RH)	276
	201-1915	1	MOUNTING GP-WHEEL (FRONT)	
	8T-5439	16	WASHER-HARD (21.5X45X6-MM THK)	
M	**201-1919**	16	NUT (M20X1.5-THD)	

M-METRIC PART
Y-SEPARATE ILLUSTRATION

<END>

216-9148 WHEEL & TIRE GP—FRONT, LH

S/N: DPH1-UP
(10X18)
PART OF 216-9147 WHEEL & TIRE GP
AN ATTACHMENT

SMCS-4201, 4202, 4203, 4208, 4209 **i03592782**

NOTE	PART NUMBER	QTY	PART NAME 1 2 3 4 5 6 (PRODUCT LEVEL)	SEE PAGE
Y	*201-1920*	1	VALVE GP-TIRE	270
	202-6186	1	WHEEL AS (FRONT)	
	216-9111	1	TIRE (12.5/80-18)	

Y-SEPARATE ILLUSTRATION

<END>

216-9149 WHEEL & TIRE GP—FRONT, RH

S/N: DPH1-UP
(10X18)
PART OF 216-9147 WHEEL & TIRE GP
AN ATTACHMENT

SMCS-4201, 4202, 4203, 4208, 4209 **i03577261**

NOTE	PART NUMBER	QTY	PART NAME 1 2 3 4 5 6 (PRODUCT LEVEL)	SEE PAGE
Y	*201-1920*	1	VALVE GP-TIRE	270
	202-6186	1	WHEEL AS (FRONT)	
	216-9111	1	TIRE (12.5/80-18)	

Y-SEPARATE ILLUSTRATION

<END>

249-7562 WHEEL & TIRE GP—REAR, LH

S/N: DPH1-UP
(15X28)
PART OF 249-9271 WHEEL & TIRE GP
AN ATTACHMENT

SMCS-4201, 4202, 4203, 4208, 4209 **i03592783**

NOTE	PART NUMBER	QTY	PART NAME 1 2 3 4 5 6 (PRODUCT LEVEL)	SEE PAGE
Y	*201-1920*	1	VALVE GP-TIRE	270
	195-6348	1	WHEEL AS (REAR, LH)	
	146-8319	1	TIRE (16.9-28)	

Y-SEPARATE ILLUSTRATION

<END>

249-7563 WHEEL & TIRE GP—REAR, RH

S/N: DPH1-UP
(15X28)
PART OF 249-9271 WHEEL & TIRE GP
AN ATTACHMENT

SMCS-4201, 4202, 4203, 4208, 4209 **i03592784**

NOTE	PART NUMBER	QTY	PART NAME 1 2 3 4 5 6 (PRODUCT LEVEL)	SEE PAGE
Y	*201-1920*	1	VALVE GP-TIRE	270
	195-6348	1	WHEEL AS (RH,REAR)	
	146-8319	1	TIRE (16.9-28)	

Y-SEPARATE ILLUSTRATION

<END>

249-7565 WHEEL & TIRE GP—REAR, LH

S/N: DPH1-UP
(15X28)
PART OF 249-9388 WHEEL & TIRE GP
AN ATTACHMENT

SMCS-4201, 4202, 4203, 4208, 4209 **i03592785**

NOTE	PART NUMBER	QTY	PART NAME 1 2 3 4 5 6 (PRODUCT LEVEL)	SEE PAGE
Y	*201-1920*	1	VALVE GP-TIRE	270
	195-6348	1	WHEEL AS (LH,REAR)	
	178-7230	1	TIRE (16.9-28)	

Y-SEPARATE ILLUSTRATION

<END>

249-7566 WHEEL & TIRE GP—REAR, RH

S/N: DPH1-UP
(15X28)
PART OF 249-9388 WHEEL & TIRE GP
AN ATTACHMENT

SMCS-4201, 4202, 4203, 4208, 4209 **i03592786**

NOTE	PART NUMBER	QTY	PART NAME 1 2 3 4 5 6 (PRODUCT LEVEL)	SEE PAGE
Y	*201-1920*	1	VALVE GP-TIRE	270
	195-6348	1	WHEEL AS (RH,REAR)	
	178-7230	1	TIRE (16.9-28)	

Y-SEPARATE ILLUSTRATION

<END>

249-7568 WHEEL & TIRE GP—REAR, LH

S/N: DPH1-UP
(15X28)
PART OF 249-9399 WHEEL & TIRE GP
AN ATTACHMENT

SMCS-4201, 4202, 4203, 4208, 4209 **i03592788**

NOTE	PART NUMBER	QTY	PART NAME 1 2 3 4 5 6 (PRODUCT LEVEL)	SEE PAGE
Y	*201-1920*	1	VALVE GP-TIRE	270
	195-6348	1	WHEEL AS (LH,REAR)	
	201-1975	1	TIRE (440/80-R28)	

Y-SEPARATE ILLUSTRATION

<END>

249-7569 WHEEL & TIRE GP—REAR, RH

S/N: DPH1-UP
(15X28)
PART OF 249-9399 WHEEL & TIRE GP
AN ATTACHMENT

SMCS-4201, 4202, 4203, 4208, 4209 **i03592789**

NOTE	PART NUMBER	QTY	PART NAME 1 2 3 4 5 6 (PRODUCT LEVEL)	SEE PAGE
Y	*201-1920*	1	VALVE GP-TIRE	270
	195-6348	1	WHEEL AS (RH,REAR)	
	201-1975	1	TIRE (440/80-R28)	

Y-SEPARATE ILLUSTRATION

<END>

249-7571 WHEEL & TIRE GP—REAR, LH

S/N: DPH1-UP
(15X28)
PART OF 249-9400 WHEEL & TIRE GP
AN ATTACHMENT

SMCS-4201, 4202, 4203, 4208, 4209 **i03592790**

NOTE	PART NUMBER	QTY	PART NAME 1 2 3 4 5 6 (PRODUCT LEVEL)	SEE PAGE
Y	*201-1920*	1	VALVE GP-TIRE	270
	195-6348	1	WHEEL AS (LH,REAR)	
	195-6329	1	TIRE (440/80-R28)	

Y-SEPARATE ILLUSTRATION

<END>

249-7572 WHEEL & TIRE GP—REAR, RH

S/N: DPH1-UP
(15X28)
PART OF 249-9400 WHEEL & TIRE GP
AN ATTACHMENT

SMCS-4201, 4202, 4203, 4208, 4209 **i03592801**

NOTE	PART NUMBER	QTY	PART NAME 1 2 3 4 5 6 (PRODUCT LEVEL)	SEE PAGE
Y	*201-1920*	1	VALVE GP-TIRE	270
	195-6348	1	WHEEL AS (RH,REAR)	
	195-6329	1	TIRE (440/80-R28)	

Y-SEPARATE ILLUSTRATION

<END>

249-9271 WHEEL & TIRE GP—REAR

S/N: DPH1-UP
PART OF 329-1351 WHEEL & TIRE AR
AN ATTACHMENT

SMCS-4201, 4202, 4203, 4208, 4209 **i02469807**

NOTE	PART NUMBER	QTY	PART NAME 1 2 3 4 5 6 (PRODUCT LEVEL)	SEE PAGE
Y	*249-7562*	1	WHEEL & TIRE GP (LH)	277
Y	*249-7563*	1	WHEEL & TIRE GP (RH)	277
	201-1916	1	MOUNTING GP-WHEEL (REAR)	
	8T-5439	20	WASHER-HARD (21.5X45X6-MM THK)	
M	**201-1919**	20	NUT (M20X1.5-THD)	

M-METRIC PART
Y-SEPARATE ILLUSTRATION

<END>

249-9387 WHEEL & TIRE GP–REAR

S/N: DPH1-UP
PART OF 249-9256 WHEEL & TIRE AR
AN ATTACHMENT

SMCS-4201, 4202, 4203, 4208, 4209 **i02469808**

NOTE	PART NUMBER	QTY	PART NAME 1 2 3 4 5 6 (PRODUCT LEVEL)	SEE PAGE
Y	*249-9407*	1	WHEEL & TIRE GP (LH)	282
Y	*249-9408*	1	WHEEL & TIRE GP (RH)	282
	201-1916	1	MOUNTING GP-WHEEL (REAR)	
	8T-5439	20	WASHER-HARD (21.5X45X6-MM THK)	
M	**201-1919**	20	NUT (M20X1.5-THD)	

M-METRIC PART
Y-SEPARATE ILLUSTRATION

<END>

249-9388 WHEEL & TIRE GP–REAR

S/N: DPH1-UP
PART OF 329-1350 WHEEL & TIRE AR
AN ATTACHMENT

SMCS-4201, 4202, 4203, 4208, 4209 **i02469809**

NOTE	PART NUMBER	QTY	PART NAME 1 2 3 4 5 6 (PRODUCT LEVEL)	SEE PAGE
Y	*249-7565*	1	WHEEL & TIRE GP (LH)	277
Y	*249-7566*	1	WHEEL & TIRE GP (RH)	278
	201-1916	1	MOUNTING GP-WHEEL (REAR)	
	8T-5439	20	WASHER-HARD (21.5X45X6-MM THK)	
M	**201-1919**	20	NUT (M20X1.5-THD)	

M-METRIC PART
Y-SEPARATE ILLUSTRATION

<END>

249-9390 WHEEL & TIRE GP–REAR

S/N: DPH1-UP
PART OF 249-9261, 329-1352 WHEEL & TIRE AR
AN ATTACHMENT

SMCS-4201, 4202, 4203, 4208, 4209 **i02469810**

NOTE	PART NUMBER	QTY	PART NAME 1 2 3 4 5 6 (PRODUCT LEVEL)	SEE PAGE
Y	*249-9409*	1	WHEEL & TIRE GP (LH)	282
Y	*249-9410*	1	WHEEL & TIRE GP (RH)	283
	201-1916	1	MOUNTING GP-WHEEL (REAR)	
	8T-5439	20	WASHER-HARD (21.5X45X6-MM THK)	
M	**201-1919**	20	NUT (M20X1.5-THD)	

M-METRIC PART
Y-SEPARATE ILLUSTRATION

<END>

249-9392 WHEEL & TIRE GP—REAR

S/N: DPH1-UP
PART OF 249-9255 WHEEL & TIRE AR
AN ATTACHMENT

SMCS-4201, 4202, 4203, 4208, 4209 **i02469811**

NOTE	PART NUMBER	QTY	PART NAME 1 2 3 4 5 6 (PRODUCT LEVEL)	SEE PAGE
Y	*249-9411*	1	WHEEL & TIRE GP (LH)	283
Y	*250-0230*	1	WHEEL & TIRE GP (RH)	283
	201-1916	1	MOUNTING GP-WHEEL (REAR)	
	8T-5439	20	WASHER-HARD (21.5X45X6-MM THK)	
M	**201-1919**	20	NUT (M20X1.5-THD)	

M-METRIC PART
Y-SEPARATE ILLUSTRATION

<END>

249-9399 WHEEL & TIRE GP—REAR

S/N: DPH1-UP
PART OF 249-9262 WHEEL & TIRE AR
AN ATTACHMENT

SMCS-4201, 4202, 4203, 4208, 4209 **i02233228**

NOTE	PART NUMBER	QTY	PART NAME 1 2 3 4 5 6 (PRODUCT LEVEL)	SEE PAGE
Y	*249-7568*	1	WHEEL & TIRE GP (LH)	278
Y	*249-7569*	1	WHEEL & TIRE GP (RH)	278
	201-1916	1	MOUNTING GP-WHEEL (REAR)	
	8T-5439	20	WASHER-HARD (21.5X45X6-MM THK)	
M	**201-1919**	20	NUT (M20X1.5-THD)	

M-METRIC PART
Y-SEPARATE ILLUSTRATION

<END>

249-9400 WHEEL & TIRE GP—REAR

S/N: DPH1-UP
PART OF 249-9263 WHEEL & TIRE AR
AN ATTACHMENT

SMCS-4201, 4202, 4203, 4208, 4209 **i02469925**

NOTE	PART NUMBER	QTY	PART NAME 1 2 3 4 5 6 (PRODUCT LEVEL)	SEE PAGE
Y	*249-7571*	1	WHEEL & TIRE GP (LH)	279
Y	*249-7572*	1	WHEEL & TIRE GP (RH)	279
	201-1916	1	MOUNTING GP-WHEEL (REAR)	
	8T-5439	20	WASHER-HARD (21.5X45X6-MM THK)	
M	**201-1919**	20	NUT (M20X1.5-THD)	

M-METRIC PART
Y-SEPARATE ILLUSTRATION

<END>

249-9407 WHEEL & TIRE GP—REAR, LH

S/N: DPH1-UP
(15X28)
PART OF 249-9387 WHEEL & TIRE GP
AN ATTACHMENT

SMCS-4201, 4202, 4203, 4208, 4209 **i03592802**

NOTE	PART NUMBER	QTY	PART NAME 1 2 3 4 5 6 (PRODUCT LEVEL)	SEE PAGE
Y	*201-1920*	1	VALVE GP-TIRE	270
	195-6348	1	WHEEL AS (LH, REAR)	
	216-9113	1	TIRE (16.9-28)	

Y-SEPARATE ILLUSTRATION

<END>

249-9408 WHEEL & TIRE GP—REAR, RH

S/N: DPH1-UP
(15X28)
PART OF 249-9387 WHEEL & TIRE GP
AN ATTACHMENT

SMCS-4201, 4202, 4203, 4208, 4209 **i03592804**

NOTE	PART NUMBER	QTY	PART NAME 1 2 3 4 5 6 (PRODUCT LEVEL)	SEE PAGE
Y	*201-1920*	1	VALVE GP-TIRE	270
	195-6348	1	WHEEL AS (RH, REAR)	
	216-9113	1	TIRE (16.9-28)	

Y-SEPARATE ILLUSTRATION

<END>

249-9409 WHEEL & TIRE GP—REAR, LH

S/N: DPH1-UP
(16X26)
PART OF 249-9390 WHEEL & TIRE GP
AN ATTACHMENT

SMCS-4201, 4202, 4203, 4208, 4209 **i03592805**

NOTE	PART NUMBER	QTY	PART NAME 1 2 3 4 5 6 (PRODUCT LEVEL)	SEE PAGE
Y	*201-1920*	1	VALVE GP-TIRE	270
	195-6345	1	WHEEL AS (REAR)	
	135-5893	1	TIRE (18.4/15-26)	

Y-SEPARATE ILLUSTRATION

<END>

249-9410 WHEEL & TIRE GP—REAR, RH

S/N: DPH1-UP
(16X26)
PART OF 249-9390 WHEEL & TIRE GP
AN ATTACHMENT

SMCS-4201, 4202, 4203, 4208, 4209 **i03592806**

NOTE	PART NUMBER	QTY	PART NAME 1 2 3 4 5 6 (PRODUCT LEVEL)	SEE PAGE
Y	*201-1920*	1	VALVE GP-TIRE	270
	195-6345	1	WHEEL AS (REAR)	
	135-5893	1	TIRE (18.4/15-26)	

Y-SEPARATE ILLUSTRATION

<END>

249-9411 WHEEL & TIRE GP—REAR, LH

S/N: DPH1-UP
(16X26)
PART OF 249-9392 WHEEL & TIRE GP
AN ATTACHMENT

SMCS-4201, 4202, 4203, 4208, 4209 **i03592808**

NOTE	PART NUMBER	QTY	PART NAME 1 2 3 4 5 6 (PRODUCT LEVEL)	SEE PAGE
Y	*201-1920*	1	VALVE GP-TIRE	270
	195-6345	1	WHEEL AS (REAR)	
	216-9112	1	TIRE (18.4-26)	

Y-SEPARATE ILLUSTRATION

<END>

250-0230 WHEEL & TIRE GP—REAR, RH

S/N: DPH1-UP
(16X26)
PART OF 249-9392 WHEEL & TIRE GP
AN ATTACHMENT

SMCS-4201, 4202, 4203, 4208, 4209 **i03592809**

NOTE	PART NUMBER	QTY	PART NAME 1 2 3 4 5 6 (PRODUCT LEVEL)	SEE PAGE
Y	*201-1920*	1	VALVE GP-TIRE	270
	195-6345	1	WHEEL AS (REAR)	
	216-9112	1	TIRE (18.4-26)	

Y-SEPARATE ILLUSTRATION

<END>

266-1554 WHEEL & TIRE GP—FRONT

S/N: DPH1-UP
PART OF 273-5077, 273-5078 WHEEL & TIRE AR
AN ATTACHMENT

SMCS-4201, 4202, 4203, 4208, 4209 **i02469929**

NOTE	PART NUMBER	QTY	PART NAME 1 2 3 4 5 6 (PRODUCT LEVEL)	SEE PAGE
Y	*266-1555*	1	WHEEL & TIRE GP (FRONT, LH)	284
Y	*266-1556*	1	WHEEL & TIRE GP (FRONT, RH)	284
	201-1915	1	MOUNTING GP-WHEEL (FRONT)	
	8T-5439	16	WASHER-HARD (21.5X45X6-MM THK)	
M	**201-1919**	16	NUT (M20X1.5-THD)	

M-METRIC PART
Y-SEPARATE ILLUSTRATION

<END>

266-1555 WHEEL & TIRE GP—FRONT, LH

S/N: DPH1-UP
(10X18)
PART OF 266-1554 WHEEL & TIRE GP
AN ATTACHMENT

SMCS-4201, 4202, 4203, 4208, 4209 **i03592812**

NOTE	PART NUMBER	QTY	PART NAME 1 2 3 4 5 6 (PRODUCT LEVEL)	SEE PAGE
Y	*201-1920*	1	VALVE GP-TIRE	270
	202-6186	1	WHEEL AS (FRONT)	
	266-1560	1	TIRE (12.5/80-18)	

Y-SEPARATE ILLUSTRATION

<END>

266-1556 WHEEL & TIRE GP—FRONT, RH

S/N: DPH1-UP
(10X18)
PART OF 266-1554 WHEEL & TIRE GP
AN ATTACHMENT

SMCS-4201, 4202, 4203, 4208, 4209 **i03592813**

NOTE	PART NUMBER	QTY	PART NAME 1 2 3 4 5 6 (PRODUCT LEVEL)	SEE PAGE
Y	*201-1920*	1	VALVE GP-TIRE	270
	202-6186	1	WHEEL AS (FRONT)	
	266-1560	1	TIRE (12.5/80-18)	

Y-SEPARATE ILLUSTRATION

<END>

273-5080 WHEEL & TIRE GP–REAR

S/N: DPH1-UP
PART OF 273-5078, 341-0596 WHEEL & TIRE AR
AN ATTACHMENT

SMCS-4201, 4202, 4203, 4208, 4209 **i02469931**

NOTE	PART NUMBER	QTY	PART NAME 1 2 3 4 5 6 (PRODUCT LEVEL)	SEE PAGE
Y	*273-5093*	1	WHEEL & TIRE GP (REAR, LH)	285
Y	*273-5094*	1	WHEEL & TIRE GP (REAR, RH)	286
	201-1916	1	MOUNTING GP-WHEEL (REAR)	
	8T-5439	20	WASHER-HARD (21.5X45X6-MM THK)	
M	**201-1919**	20	NUT (M20X1.5-THD)	

M-METRIC PART
Y-SEPARATE ILLUSTRATION

<END>

273-5081 WHEEL & TIRE GP–REAR

S/N: DPH1-UP
PART OF 273-5077 WHEEL & TIRE AR
AN ATTACHMENT

SMCS-4201, 4202, 4203, 4208, 4209 **i02469932**

NOTE	PART NUMBER	QTY	PART NAME 1 2 3 4 5 6 (PRODUCT LEVEL)	SEE PAGE
Y	*273-5095*	1	WHEEL & TIRE GP (REAR, LH)	286
Y	*273-5096*	1	WHEEL & TIRE GP (REAR, RH)	286
	201-1916	1	MOUNTING GP-WHEEL (REAR)	
	8T-5439	20	WASHER-HARD (21.5X45X6-MM THK)	
M	**201-1919**	20	NUT (M20X1.5-THD)	

M-METRIC PART
Y-SEPARATE ILLUSTRATION

<END>

273-5093 WHEEL & TIRE GP–REAR, LH

S/N: DPH1-UP
(16X26)
PART OF 273-5080 WHEEL & TIRE GP
AN ATTACHMENT

SMCS-4201, 4202, 4203, 4208, 4209 **i03592814**

NOTE	PART NUMBER	QTY	PART NAME 1 2 3 4 5 6 (PRODUCT LEVEL)	SEE PAGE
Y	*201-1920*	1	VALVE GP-TIRE	270
	195-6345	1	WHEEL AS (REAR)	
	267-8364	1	TIRE (480/80-R26)	

Y-SEPARATE ILLUSTRATION

<END>

273-5094 WHEEL & TIRE GP—REAR, RH

S/N: DPH1-UP
(16X26)
PART OF 273-5080 WHEEL & TIRE GP
AN ATTACHMENT

SMCS-4201, 4202, 4203, 4208, 4209 **i03592815**

NOTE	PART NUMBER	QTY	PART NAME 1 2 3 4 5 6 (PRODUCT LEVEL)	SEE PAGE
Y	*201-1920*	1	VALVE GP-TIRE	270
	195-6345	1	WHEEL AS (REAR)	
	267-8364	1	TIRE (480/80-R26)	

Y-SEPARATE ILLUSTRATION

<END>

273-5095 WHEEL & TIRE GP—REAR, LH

S/N: DPH1-UP
(15X28)
PART OF 273-5081 WHEEL & TIRE GP
AN ATTACHMENT

SMCS-4201, 4202, 4203, 4208, 4209 **i03592817**

NOTE	PART NUMBER	QTY	PART NAME 1 2 3 4 5 6 (PRODUCT LEVEL)	SEE PAGE
Y	*201-1920*	1	VALVE GP-TIRE	270
	195-6348	1	WHEEL AS (REAR)	
	267-8363	1	TIRE (440/80-R28)	

Y-SEPARATE ILLUSTRATION

<END>

273-5096 WHEEL & TIRE GP—REAR, RH

S/N: DPH1-UP
(15X28)
PART OF 273-5081 WHEEL & TIRE GP
AN ATTACHMENT

SMCS-4201, 4202, 4203, 4208, 4209 **i03592818**

NOTE	PART NUMBER	QTY	PART NAME 1 2 3 4 5 6 (PRODUCT LEVEL)	SEE PAGE
Y	*201-1920*	1	VALVE GP-TIRE	270
	195-6348	1	WHEEL AS (REAR)	
	267-8363	1	TIRE (440/80-R28)	

Y-SEPARATE ILLUSTRATION

<END>

303-0418 WHEEL & TIRE GP–FRONT

S/N: DPH1-UP
PART OF 303-0413, 303-0414 WHEEL & TIRE AR
AN ATTACHMENT

SMCS-4201, 4202, 4203, 4208, 4209 **i02675650**

NOTE	PART NUMBER	QTY	PART NAME 1 2 3 4 5 6 (PRODUCT LEVEL)	SEE PAGE
Y	*303-0428*	1	WHEEL & TIRE GP (FRONT, LH)	288
Y	*303-0429*	1	WHEEL & TIRE GP (FRONT, RH)	288
	201-1915	1	MOUNTING GP-WHEEL (FRONT)	
	5T-5439	16	PLATE	
M	**201-1919**	16	NUT (M20X1.5-THD)	

M-METRIC PART
Y-SEPARATE ILLUSTRATION

<END>

303-0419 WHEEL & TIRE GP–REAR

S/N: DPH1-UP
PART OF 303-0413 WHEEL & TIRE AR
AN ATTACHMENT

SMCS-4201, 4202, 4203, 4208, 4209 **i02675652**

NOTE	PART NUMBER	QTY	PART NAME 1 2 3 4 5 6 (PRODUCT LEVEL)	SEE PAGE
Y	*303-0430*	1	WHEEL & TIRE GP (REAR, LH)	289
Y	*303-0431*	1	WHEEL & TIRE GP (REAR, RH)	289
	201-1916	1	MOUNTING GP-WHEEL (REAR)	
	8T-5439	20	WASHER-HARD (21.5X45X6-MM THK)	
M	**201-1919**	20	NUT (M20X1.5-THD)	

M-METRIC PART
Y-SEPARATE ILLUSTRATION

<END>

303-0421 WHEEL & TIRE GP–REAR

S/N: DPH1-UP
PART OF 303-0414, 303-0415 WHEEL & TIRE AR
AN ATTACHMENT

SMCS-4201, 4202, 4203, 4208, 4209 **i02675691**

NOTE	PART NUMBER	QTY	PART NAME 1 2 3 4 5 6 (PRODUCT LEVEL)	SEE PAGE
Y	*303-0434*	1	WHEEL & TIRE GP (REAR, LH)	289
Y	*303-0435*	1	WHEEL & TIRE GP (REAR, RH)	290
	201-1916	1	MOUNTING GP-WHEEL (REAR)	
	8T-5439	20	WASHER-HARD (21.5X45X6-MM THK)	
M	**201-1919**	20	NUT (M20X1.5-THD)	

M-METRIC PART
Y-SEPARATE ILLUSTRATION

<END>

303-0423 WHEEL & TIRE GP—FRONT

S/N: DPH1-UP
PART OF 303-0415 WHEEL & TIRE AR
AN ATTACHMENT

SMCS-4201, 4202, 4203, 4208, 4209 **i02675702**

NOTE	PART NUMBER	QTY	PART NAME 1 2 3 4 5 6 (PRODUCT LEVEL)	SEE PAGE
Y	*303-0438*	1	WHEEL & TIRE GP (FRONT, LH)	290
Y	*303-0439*	1	WHEEL & TIRE GP (FRONT, RH)	290
	201-1915	1	MOUNTING GP-WHEEL (FRONT)	
	5T-5439	16	PLATE	
M	**201-1919**	16	NUT (M20X1.5-THD)	

M-METRIC PART
Y-SEPARATE ILLUSTRATION

<END>

303-0428 WHEEL & TIRE GP—FRONT, LH

S/N: DPH1-UP
(10X18)
PART OF 303-0418 WHEEL & TIRE GP
AN ATTACHMENT

SMCS-4201, 4202, 4203, 4208, 4209 **i03592819**

NOTE	PART NUMBER	QTY	PART NAME 1 2 3 4 5 6 (PRODUCT LEVEL)	SEE PAGE
Y	*201-1920*	1	VALVE GP-TIRE	270
	202-6186	1	WHEEL AS (FRONT)	
	259-2940	1	TIRE (340/80-R18)	

Y-SEPARATE ILLUSTRATION

<END>

303-0429 WHEEL & TIRE GP—FRONT, RH

S/N: DPH1-UP
(10X18)
PART OF 303-0418 WHEEL & TIRE GP
AN ATTACHMENT

SMCS-4201, 4202, 4203, 4208, 4209 **i03592820**

NOTE	PART NUMBER	QTY	PART NAME 1 2 3 4 5 6 (PRODUCT LEVEL)	SEE PAGE
Y	*201-1920*	1	VALVE GP-TIRE	270
	202-6186	1	WHEEL AS (FRONT)	
	259-2940	1	TIRE (340/80-R18)	

Y-SEPARATE ILLUSTRATION

<END>

303-0430 WHEEL & TIRE GP—REAR, LH

S/N: DPH1-UP
(15X28)
PART OF 303-0419 WHEEL & TIRE GP
AN ATTACHMENT

SMCS-4201, 4202, 4203, 4208, 4209 **i03592821**

NOTE	PART NUMBER	QTY	PART NAME 1 2 3 4 5 6 (PRODUCT LEVEL)	SEE PAGE
Y	*201-1920*	1	VALVE GP-TIRE	270
	195-6348	1	WHEEL AS (REAR)	
	303-0441	1	TIRE (16.9-R28)	

Y-SEPARATE ILLUSTRATION

<END>

303-0431 WHEEL & TIRE GP—REAR, RH

S/N: DPH1-UP
(15X28)
PART OF 303-0419 WHEEL & TIRE GP
AN ATTACHMENT

SMCS-4201, 4202, 4203, 4208, 4209 **i03592825**

NOTE	PART NUMBER	QTY	PART NAME 1 2 3 4 5 6 (PRODUCT LEVEL)	SEE PAGE
Y	*201-1920*	1	VALVE GP-TIRE	270
	195-6348	1	WHEEL AS (REAR)	
	303-0441	1	TIRE (16.9-R28)	

Y-SEPARATE ILLUSTRATION

<END>

303-0434 WHEEL & TIRE GP—REAR, LH

S/N: DPH1-UP
(16X26)
PART OF 303-0421 WHEEL & TIRE GP
AN ATTACHMENT

SMCS-4201, 4202, 4203, 4208, 4209 **i03592826**

NOTE	PART NUMBER	QTY	PART NAME 1 2 3 4 5 6 (PRODUCT LEVEL)	SEE PAGE
Y	*201-1920*	1	VALVE GP-TIRE	270
	195-6345	1	WHEEL AS (REAR)	
	303-0442	1	TIRE (480/80-R26)	

Y-SEPARATE ILLUSTRATION

<END>

303-0435 WHEEL & TIRE GP—REAR, RH

S/N: DPH1-UP
(16X26)
PART OF 303-0421 WHEEL & TIRE GP
AN ATTACHMENT

SMCS-4201, 4202, 4203, 4208, 4209 **i03592827**

NOTE	PART NUMBER	QTY	PART NAME 1 2 3 4 5 6 (PRODUCT LEVEL)	SEE PAGE
Y	*201-1920*	1	VALVE GP-TIRE	270
	195-6345	1	WHEEL AS (REAR)	
	303-0442	1	TIRE (480/80-R26)	

Y-SEPARATE ILLUSTRATION

<END>

303-0438 WHEEL & TIRE GP—FRONT, LH

S/N: DPH1-UP
(11X20)
PART OF 303-0423 WHEEL & TIRE GP
AN ATTACHMENT

SMCS-4201, 4202, 4203, 4208, 4209 **i03592828**

NOTE	PART NUMBER	QTY	PART NAME 1 2 3 4 5 6 (PRODUCT LEVEL)	SEE PAGE
Y	*201-1920*	1	VALVE GP-TIRE	270
	9R-3545	1	WHEEL AS (FRONT)	
	303-0443	1	TIRE (335/80-R20)	

Y-SEPARATE ILLUSTRATION

<END>

303-0439 WHEEL & TIRE GP—FRONT, RH

S/N: DPH1-UP
(11X20)
PART OF 303-0423 WHEEL & TIRE GP
AN ATTACHMENT

SMCS-4201, 4202, 4203, 4208, 4209 **i03592829**

NOTE	PART NUMBER	QTY	PART NAME 1 2 3 4 5 6 (PRODUCT LEVEL)	SEE PAGE
Y	*201-1920*	1	VALVE GP-TIRE	270
	9R-3545	1	WHEEL AS (FRONT)	
	303-0443	1	TIRE (335/80-R20)	

Y-SEPARATE ILLUSTRATION

<END>

319-6835 WHEEL & TIRE GP—FRONT

S/N: DPH1-UP
PART OF 319-6834 WHEEL & TIRE AR
AN ATTACHMENT

SMCS-4201, 4202, 4203, 4208, 4209 **i02884193**

NOTE	PART NUMBER	QTY	PART NAME 1 2 3 4 5 6 (PRODUCT LEVEL)	SEE PAGE
Y	*319-7186*	1	WHEEL & TIRE GP (FRONT, RH)	291
Y	*319-7187*	1	WHEEL & TIRE GP (FRONT, LH)	292
	201-1915	1	MOUNTING GP-WHEEL (FRONT)	
	8T-5439	16	WASHER-HARD (21.5X45X6-MM THK)	
M	**201-1919**	16	NUT (M20X1.5-THD)	

M-METRIC PART
Y-SEPARATE ILLUSTRATION

<END>

319-6836 WHEEL & TIRE GP—REAR

S/N: DPH1-UP
PART OF 319-6834 WHEEL & TIRE AR
AN ATTACHMENT

SMCS-4201, 4202, 4203, 4208, 4209 **i03308880**

NOTE	PART NUMBER	QTY	PART NAME 1 2 3 4 5 6 (PRODUCT LEVEL)	SEE PAGE
Y	*319-7191*	1	WHEEL & TIRE GP (REAR, LH)	292
Y	*319-7192*	1	WHEEL & TIRE GP (REAR, RH)	292
	201-1916	1	MOUNTING GP-WHEEL (REAR)	
	8T-5439	20	WASHER-HARD (21.5X45X6-MM THK)	
M	**201-1919**	20	NUT (M20X1.5-THD)	

M-METRIC PART
Y-SEPARATE ILLUSTRATION

<END>

319-7186 WHEEL & TIRE GP—FRONT, RH

S/N: DPH1-UP
(11X20)
PART OF 319-6835 WHEEL & TIRE GP
AN ATTACHMENT

SMCS-4201, 4202, 4203, 4208, 4209 **i03592830**

NOTE	PART NUMBER	QTY	PART NAME 1 2 3 4 5 6 (PRODUCT LEVEL)	SEE PAGE
Y	*201-1920*	1	VALVE GP-TIRE	270
	9R-3545	1	WHEEL AS (FRONT)	
	319-6837	1	TIRE (340/80-R20)	

Y-SEPARATE ILLUSTRATION

<END>

319-7187 WHEEL & TIRE GP—FRONT, LH

S/N: DPH1-UP
(11X20)
PART OF 319-6835 WHEEL & TIRE GP
AN ATTACHMENT

SMCS-4201, 4202, 4203, 4208, 4209 **i03592831**

NOTE	PART NUMBER	QTY	PART NAME 1 2 3 4 5 6 (PRODUCT LEVEL)	SEE PAGE
Y	*201-1920*	1	VALVE GP-TIRE	270
	9R-3545	1	WHEEL AS (FRONT)	
	319-6837	1	TIRE (340/80-R20)	

Y-SEPARATE ILLUSTRATION

<END>

319-7191 WHEEL & TIRE GP—REAR, LH

S/N: DPH1-UP
(16X26)
PART OF 319-6836 WHEEL & TIRE GP
AN ATTACHMENT

SMCS-4201, 4202, 4203, 4208, 4209 **i03592832**

NOTE	PART NUMBER	QTY	PART NAME 1 2 3 4 5 6 (PRODUCT LEVEL)	SEE PAGE
Y	*201-1920*	1	VALVE GP-TIRE	270
	195-6345	1	WHEEL AS (REAR)	
	319-6838	1	TIRE (480/80-R26)	

Y-SEPARATE ILLUSTRATION

<END>

319-7192 WHEEL & TIRE GP—REAR, RH

S/N: DPH1-UP
(16X26)
PART OF 319-6836 WHEEL & TIRE GP
AN ATTACHMENT

SMCS-4201, 4202, 4203, 4208, 4209 **i03592833**

NOTE	PART NUMBER	QTY	PART NAME 1 2 3 4 5 6 (PRODUCT LEVEL)	SEE PAGE
Y	*201-1920*	1	VALVE GP-TIRE	270
	195-6345	1	WHEEL AS (REAR)	
	319-6838	1	TIRE (480/80-R26)	

Y-SEPARATE ILLUSTRATION

<END>

329-1354 WHEEL & TIRE GP—FRONT

S/N: DPH1-UP
PART OF 329-1350, 329-1351, 329-1352 WHEEL & TIRE AR
AN ATTACHMENT

SMCS-4201, 4202, 4203, 4208, 4209 **i03091583**

NOTE	PART NUMBER	QTY	PART NAME 1 2 3 4 5 6 (PRODUCT LEVEL)	SEE PAGE
Y	*329-1355*	1	WHEEL & TIRE GP (FRONT, LH)	293
Y	*329-1919*	1	WHEEL & TIRE GP (FRONT, RH)	293
	201-1915	1	MOUNTING GP-WHEEL (FRONT)	
	8T-5439	16	WASHER-HARD (21.5X45X6-MM THK)	
M	**201-1919**	16	NUT (M20X1.5-THD)	

M-METRIC PART
Y-SEPARATE ILLUSTRATION

<END>

329-1355 WHEEL & TIRE GP—FRONT, LH

S/N: DPH1-UP
(10X18)
PART OF 329-1354 WHEEL & TIRE GP
AN ATTACHMENT

SMCS-4201, 4202, 4203, 4208, 4209 **i03592834**

NOTE	PART NUMBER	QTY	PART NAME 1 2 3 4 5 6 (PRODUCT LEVEL)	SEE PAGE
Y	*201-1920*	1	VALVE GP-TIRE	270
	202-6186	1	WHEEL AS (FRONT)	
	329-1348	1	TIRE (12.5/80-18)	

Y-SEPARATE ILLUSTRATION

<END>

329-1919 WHEEL & TIRE GP—FRONT, RH

S/N: DPH1-UP
(10X18)
PART OF 329-1354 WHEEL & TIRE GP
AN ATTACHMENT

SMCS-4201, 4202, 4203, 4208, 4209 **i03592835**

NOTE	PART NUMBER	QTY	PART NAME 1 2 3 4 5 6 (PRODUCT LEVEL)	SEE PAGE
Y	*201-1920*	1	VALVE GP-TIRE	270
	202-6186	1	WHEEL AS (FRONT)	
	329-1348	1	TIRE (12.5/80-18)	

Y-SEPARATE ILLUSTRATION

<END>

341-9202 WHEEL & TIRE GP—FRONT

S/N: DPH1-UP
PART OF 341-0596 WHEEL & TIRE AR
AN ATTACHMENT

SMCS-4201, 4202, 4203, 4208, 4209 **i03640953**

NOTE	PART NUMBER	QTY	PART NAME 1 2 3 4 5 6 (PRODUCT LEVEL)	SEE PAGE
Y	*341-9203*	1	WHEEL & TIRE GP (FRONT, LH)	294
Y	*341-9204*	1	WHEEL & TIRE GP (FRONT, RH)	294
	201-1915	1	MOUNTING GP-WHEEL (FRONT)	
	8T-5439	16	WASHER-HARD (21.5X45X6-MM THK)	
M	**201-1919**	16	NUT (M20X1.5-THD)	

M-METRIC PART
Y-SEPARATE ILLUSTRATION

<END>

341-9203 WHEEL & TIRE GP—FRONT, LH

S/N: DPH1-UP
(11X20)
PART OF 341-9202 WHEEL & TIRE GP
AN ATTACHMENT

SMCS-4201, 4202, 4203, 4208, 4209 **i03538521**

NOTE	PART NUMBER	QTY	PART NAME 1 2 3 4 5 6 (PRODUCT LEVEL)	SEE PAGE
Y	*201-1920*	1	VALVE GP-TIRE	270
	9R-3545	1	WHEEL AS (FRONT)	
	341-9201	1	TIRE (340/80-R20)	

Y-SEPARATE ILLUSTRATION

<END>

341-9204 WHEEL & TIRE GP—FRONT, RH

S/N: DPH1-UP
(11X20)
PART OF 341-9202 WHEEL & TIRE GP
AN ATTACHMENT

SMCS-4201, 4202, 4203, 4208, 4209 **i03538524**

NOTE	PART NUMBER	QTY	PART NAME 1 2 3 4 5 6 (PRODUCT LEVEL)	SEE PAGE
Y	*201-1920*	1	VALVE GP-TIRE	270
	9R-3545	1	WHEEL AS (FRONT)	
	341-9201	1	TIRE (340/80-R20)	

Y-SEPARATE ILLUSTRATION

<END>

206-1642 CONTROL GP-PARKING BRAKE

S/N: DPH1-UP
PART OF 329-0304 POWER TRAIN AR
AN ATTACHMENT

SMCS-4282, 4284 **i03577384**

NOTE	REF NO	GRAPHIC REF	PART NUMBER	QTY	PART NAME 1 2 3 4 5 6 (PRODUCT LEVEL)	SEE PAGE
	1	1	**7K-1181**	1	STRAP-CABLE	
	2	1	**9R-2806**	1	PIN	
	3	1	**9R-2807**	1	CLIP	
J	4	1	**154-5416**	1	SWITCH AS (PARKING BRAKE)	
Y	5	1	**261-5517**	1	CONTROL GP-PARKING BRAKE	296
	6	1	**261-9635**	1	BOOT (PARKING BRAKE)	
	7	1	**8T-4224**	2	WASHER-HARD (8.8X16X2-MM THK)	
M	8	1	**8T-6912**	2	BOLT (M8X1.25X50-MM)	
	9	1	**164-1368**	2	FASTENER-PANEL	
					AVAILABLE REPAIR KIT(S):	
J			**155-2270**	1	KIT-CONNECTING PLUG (2-PIN)	
					(INCLUDES PLUG AS, WEDGE & INTERFACE SEAL)	

J-KIT MARKED J SERVICES PARTS MARKED J
M-METRIC PART
Y-SEPARATE ILLUSTRATION

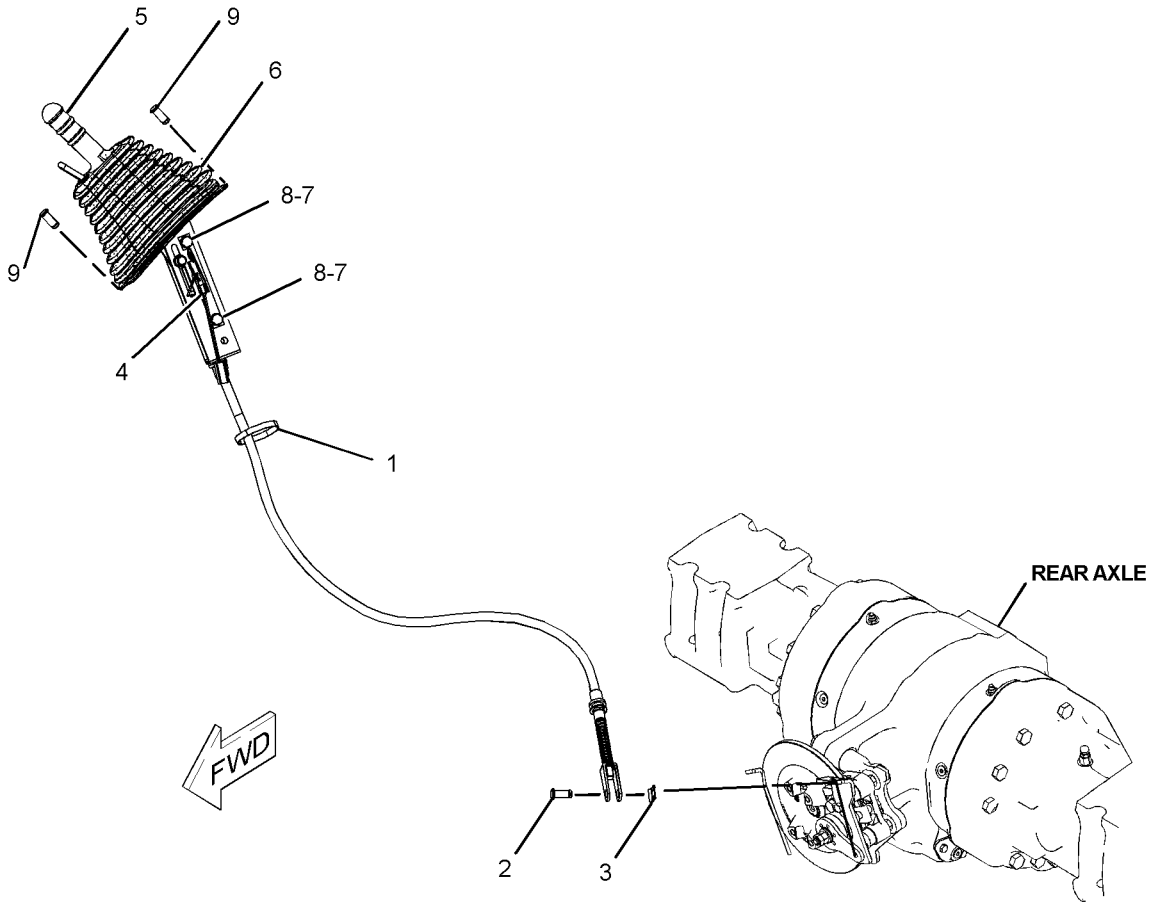

GRAPHIC #1 **<END>** g01228986

261-5517 CONTROL GP-PARKING BRAKE

S/N: DPH1-UP

PART OF 206-1642 CONTROL GP-PARKING BRAKE

AN ATTACHMENT

SMCS-4282, 4284 **i03712421**

NOTE	REF NO	GRAPHIC REF	PART NUMBER	QTY	PART NAME 1 2 3 4 5 6 (PRODUCT LEVEL)	SEE PAGE
Y	1	1	**163-0753**	1	LEVER GP-HAND CONTROL (PARKING BRAKE)	302
	2	1	**261-5519**	1	CABLE AS	
		1	**6V-8759**	1	RING-RETAINING	

Y-SEPARATE ILLUSTRATION

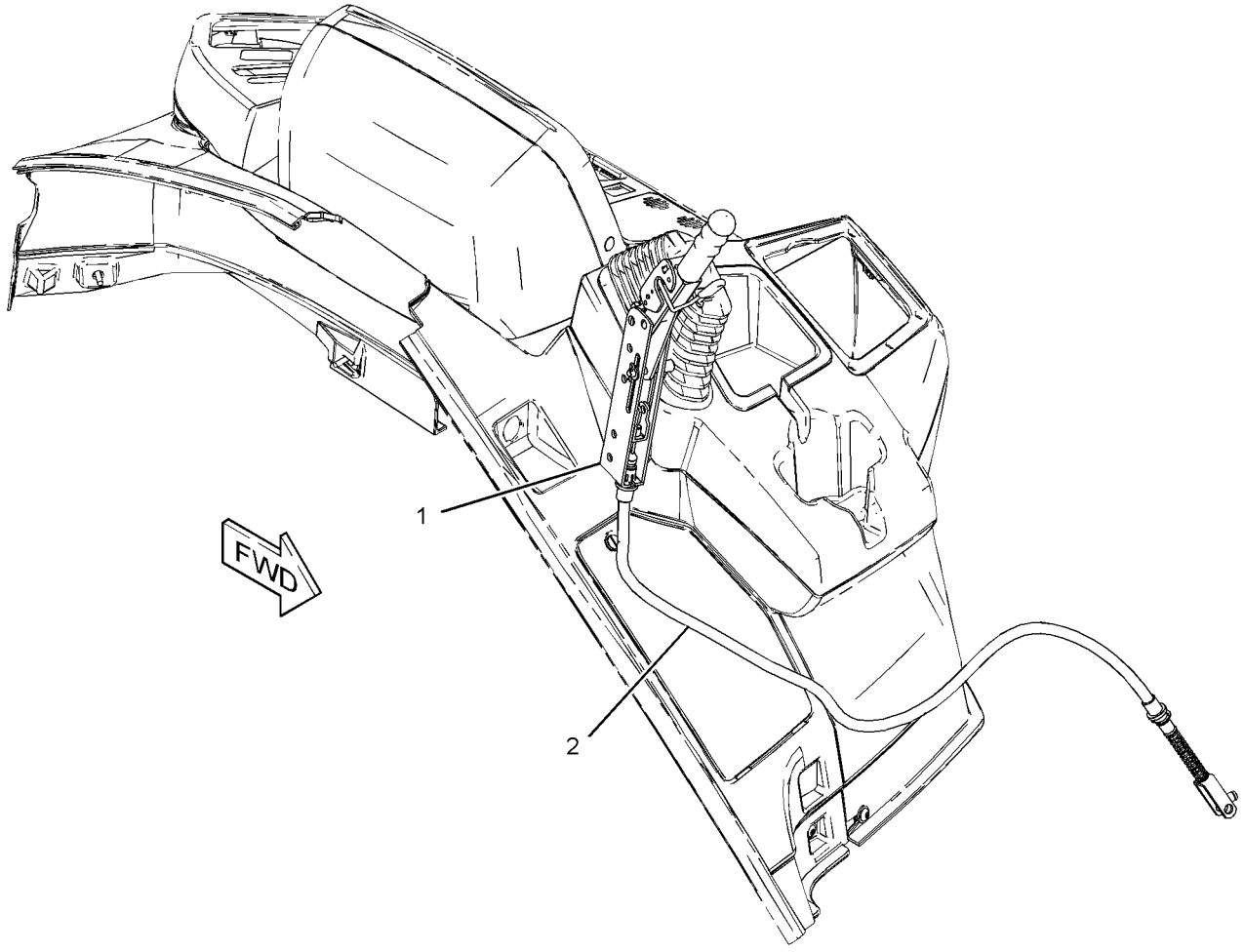

GRAPHIC #1 **<END>** g01210353

BRAKING SYSTEM

206-1638 CONTROL GP-SERVICE BRAKE

S/N: DPH1-UP
PART OF 329-0304 POWER TRAIN AR
AN ATTACHMENT

SMCS-4269 **i03498440**

NOTE	REF NO	GRAPHIC REF	PART NUMBER	QTY	PART NAME 1 2 3 4 5 6 (PRODUCT LEVEL)	SEE PAGE
	1	1	**1A-0621**	2	GROMMET	
	2	1	**2K-5986**	1	PIN-SPRING	
	3	1	**6S-8620**	4	CLAMP-HOSE	
M	4	1	**5C-2890**	1	NUT (M6X1-THD)	
M	5	1	**6V-7357**	1	BOLT (M6X1X25-MM)	
	6	1	**101-0333**	1	FILM-IDENTIFICATION (HYDRAULIC OIL)	
	7	1	**105-8034**	2	SWITCH AS-LIMIT (SERVICE BRAKE)	
	8	1	**151-4841**	1	BLOCK	
	9	1	**165-6595**	1	PIN AS	
	10	1	*169-5862*	2	ELBOW AS	
					(EACH INCLUDES)	
		1	**3J-1907**	1	SEAL-O-RING	
		1	**8C-6712**	1	ELBOW	
M	11	1	**9X-2045**	4	SCREW-TRUSS HEAD (M6X1X20-MM)	
	12	1	**290-3972**	1	PLATE	
	13	1	**202-5993**	1	PLATE	
	14	1	**206-1634**	1	PLATE AS (BRAKE)	
	15	1	**275-0652**	1	PEDAL AS (LH)	
		1	**202-6029**	2	BEARING-SLEEVE	
	16	1	**275-0653**	1	PEDAL AS (RH)	
		1	**202-6029**	2	BEARING-SLEEVE	
	17	1	**206-1760**	1	PLATE AS (BRAKE)	
	18	1	**206-1766**	2	PIN	
	19	1	**285-3583**	1	SPRING (LH)	
	20	1	**285-3584**	1	SPRING (RH)	
	21	1	**206-1769**	1	VALVE GP-BRAKE CONTROL	
		1	**262-4084**	2	BOOT	
	22	1	*215-7067*	2	ELBOW AS	
					(EACH INCLUDES)	
		1	**3J-1907**	1	SEAL-O-RING	
		1	**215-7066**	1	ELBOW	
Y	23	1	*217-9920*	1	RESERVOIR GP-BRAKE	304
	24	1	**253-1549**	2	HOSE AS	
	25	1	**291-8378**	1	COVER-BRAKE	
	26	1	**298-3599**	1	PLATE AS	
	27	1	**262-4080**	1	GROMMET	
	28	1	**262-4082**	2	END-YOKE ROD	
M	29	1	**142-0485**	2	NUT (M10X1.5-THD)	
	30	1	*150-3033*	2	ELBOW AS	
					(EACH INCLUDES)	
		1	**3J-1907**	1	SEAL-O-RING	
		1	**4J-5477**	1	SEAL-O-RING	
		1	**8T-0164**	1	ELBOW	
E	31	1	**5P-1442**		HOSE (84-CM EACH)	
M	32	1	**5C-7261**	6	NUT (M8X1.25-THD)	
	33	1	**5K-5338**	1	CLIP	
	34	1	**5P-4116**	4	WASHER-HARD (8.8X20.5X2-MM THK)	
	35	1	*148-8385*	2	ELBOW AS	
					(EACH INCLUDES)	
		1	**3J-7354**	1	SEAL-O-RING	
		1	**4J-5477**	1	SEAL-O-RING	
		1	**6V-9000**	1	ELBOW	
	36	1	**7K-1181**	2	STRAP-CABLE	
	37	1	**7X-7729**	6	WASHER (11X25X3-MM THK)	
	38	1	**8T-4121**	1	WASHER-HARD (11X21X2.5-MM THK)	

206-1638 **CONTROL GP-SERVICE BRAKE** *(contd.)* **i03498440**

NOTE	REF NO	GRAPHIC REF	PART NUMBER	QTY	PART NAME 1 2 3 4 5 6 (PRODUCT LEVEL)	SEE PAGE
M	39	1	**8T-4133**	2	NUT (M10X1.5-THD)	
M	40	1	**8T-4136**	5	BOLT (M10X1.5X25-MM)	
M	41	1	**8T-4138**	1	BOLT (M6X1X20-MM)	
	42	1	**8T-4205**	1	WASHER-HARD (7.2X14.5X2-MM THK)	
	43	1	**8T-4224**	4	WASHER-HARD (8.8X16X2-MM THK)	
M	44	1	**8T-4908**	1	BOLT (M8X1.25X25-MM)	
M	45	1	**8T-7547**	1	BOLT (M8X1.25X30-MM)	
	46	1	**9R-2807**	2	CLIP	
M	47	1	**9X-2044**	2	SCREW-TRUSS HEAD (M6X1X16-MM)	

E-ORDER BY THE CENTIMETER
M-METRIC PART
Y-SEPARATE ILLUSTRATION

206-1638 **CONTROL GP-SERVICE BRAKE** *(contd.)* **i03498440**

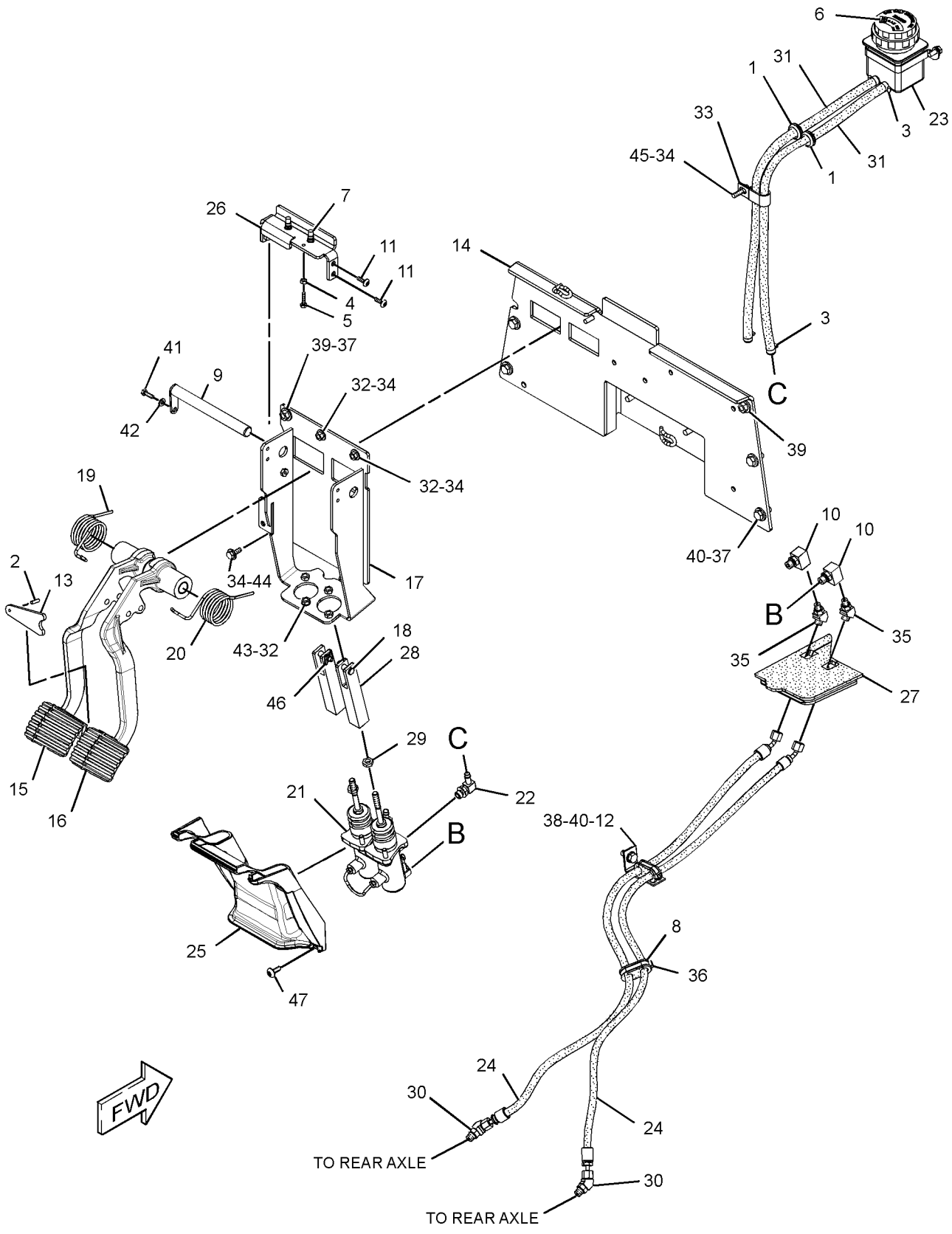

GRAPHIC #1 **<END>** g01346171

BRAKING SYSTEM

216-1612 CYLINDER GP-BRAKE–RH

S/N: DPH1-UP
PART OF 238-5298 DIFFERENTIAL & BEVEL GEAR GP
AN ATTACHMENT

SMCS-4262 **i03563407**

NOTE	REF NO	GRAPHIC REF	PART NUMBER	QTY	PART NAME 1 2 3 4 5 6 (PRODUCT LEVEL)	SEE PAGE
M	1	1	**6V-2315**	3	BOLT (M6X1X35-MM)	
JLM	2	1	**1R-5396**	3	BOLT (M6X1X35-MM)	
J	3	1	**199-0672**	3	SPACER-SPECIAL	
J	4	1	**199-0681**	3	WASHER (6.2X16.5X2-MM THK)	
L	5	1	**199-0701**	3	BRAKE-COVER	
L	6	1	**199-0702**	3	SPRING (INNER)	
L	7	1	**199-0703**	3	SPRING (OUTER)	
	8	1	**199-0752**	1	PISTON-BRAKE	
	9	1	**199-0759**	1	O-RING-INNER	
JL	10	1	**212-5712**	6	BUSHING	
	11	1	**219-8834**	1	CYLINDER-BRAKE	
	12	1	**199-0700**	1	O-RING-OUTER	
					AVAILABLE REPAIR KIT(S):	
J			**217-2347**	3	KIT-BRAKE CYLINDER (ADJUSTER)	
L			**217-2349**	3	KIT-BRAKE CYLINDER (SPRING RETENTION)	

J-KIT MARKED J SERVICES PARTS MARKED J
L-KIT MARKED L SERVICES PARTS MARKED L
M-METRIC PART

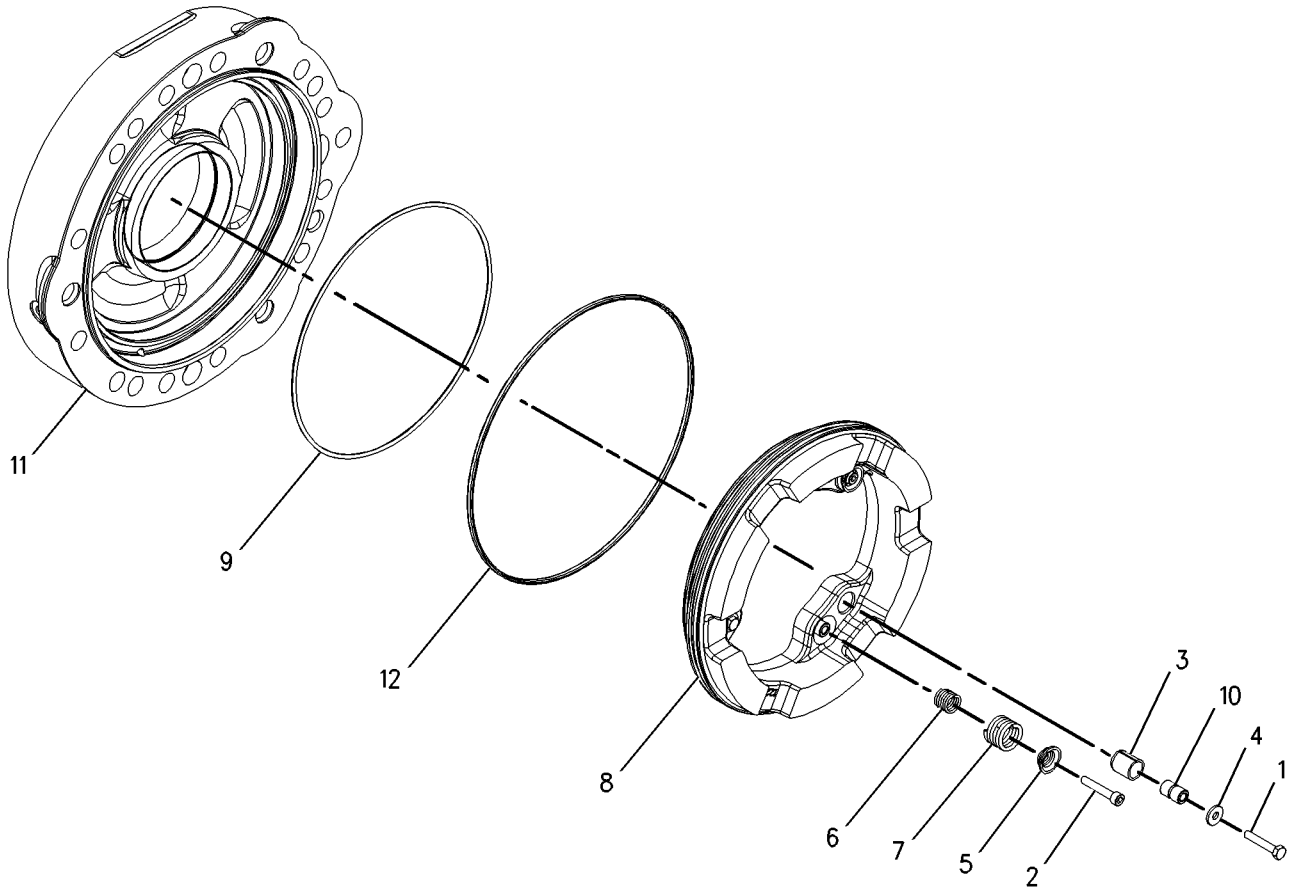

GRAPHIC #1 **<END>** g00953880

216-1613 CYLINDER GP-BRAKE–LH

S/N: DPH1-UP

PART OF 238-5298 DIFFERENTIAL & BEVEL GEAR GP

AN ATTACHMENT

SMCS-4262 **i03627160**

NOTE	REF NO	GRAPHIC REF	PART NUMBER	QTY	PART NAME 1 2 3 4 5 6 (PRODUCT LEVEL)	SEE PAGE
M	1	1	**6V-2315**	3	BOLT (M6X1X35-MM)	
JLM	2	1	**1R-5396**	3	BOLT (M6X1X35-MM)	
J	3	1	**199-0672**	3	SPACER-SPECIAL	
J	4	1	**199-0681**	3	WASHER (6.2X16.5X2-MM THK)	
L	5	1	**199-0701**	3	BRAKE-COVER	
L	6	1	**199-0702**	3	SPRING (INNER)	
L	7	1	**199-0703**	3	SPRING (OUTER)	
	8	1	**199-0752**	1	PISTON-BRAKE	
	9	1	**199-0759**	1	O-RING-INNER	
JL	10	1	**212-5712**	6	BUSHING	
	11	1	**219-8835**	1	CYLINDER-BRAKE	
	12	1	**199-0700**	1	O-RING-OUTER	
					AVAILABLE REPAIR KIT(S):	
J			**217-2347**	3	KIT-BRAKE CYLINDER (ADJUSTER)	
L			**217-2349**	3	KIT-BRAKE CYLINDER (SPRING RETENTION)	

J-KIT MARKED J SERVICES PARTS MARKED J
L-KIT MARKED L SERVICES PARTS MARKED L
M-METRIC PART

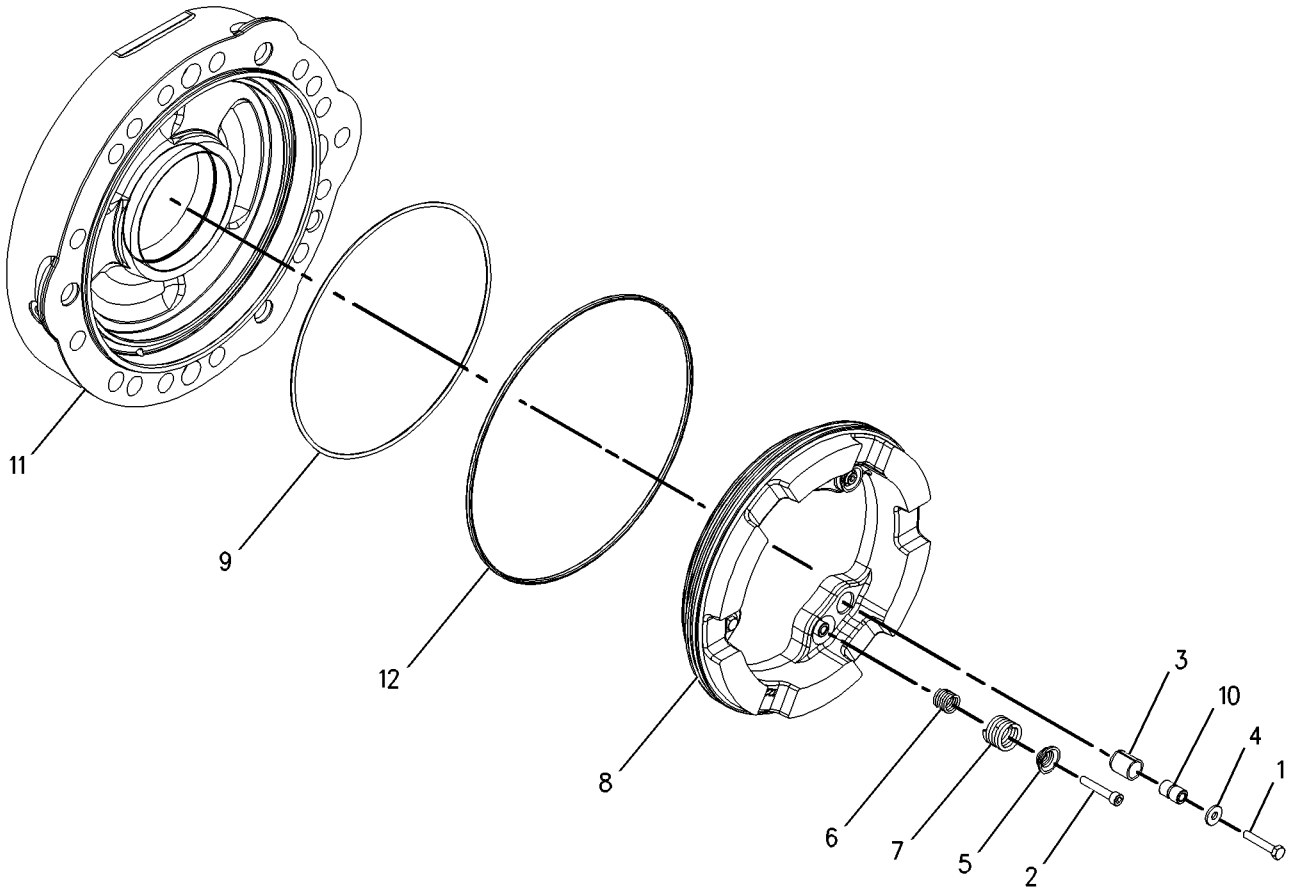

GRAPHIC #1 **<END>** g00995396

163-0753 LEVER GP-HAND CONTROL—PARKING BRAKE

S/N: DPH1-UP

PART OF 261-5517 CONTROL GP-PARKING BRAKE

AN ATTACHMENT

SMCS-4284 **i02156244**

NOTE	REF NO	GRAPHIC REF	PART NUMBER	QTY	PART NAME 1 2 3 4 5 6 (PRODUCT LEVEL)	SEE PAGE
	1	1	**7R-8239**	2	SPACER	
	2	1	**039-9133**	1	PIN	
	3	1	**164-9598**	1	GRIP	
	4	1	**164-9599**	1	COVER	
	5	1	**3B-4610**	1	PIN-COTTER	
	6	1	**8T-4224**	2	WASHER-HARD (8.8X16X2-MM THK)	

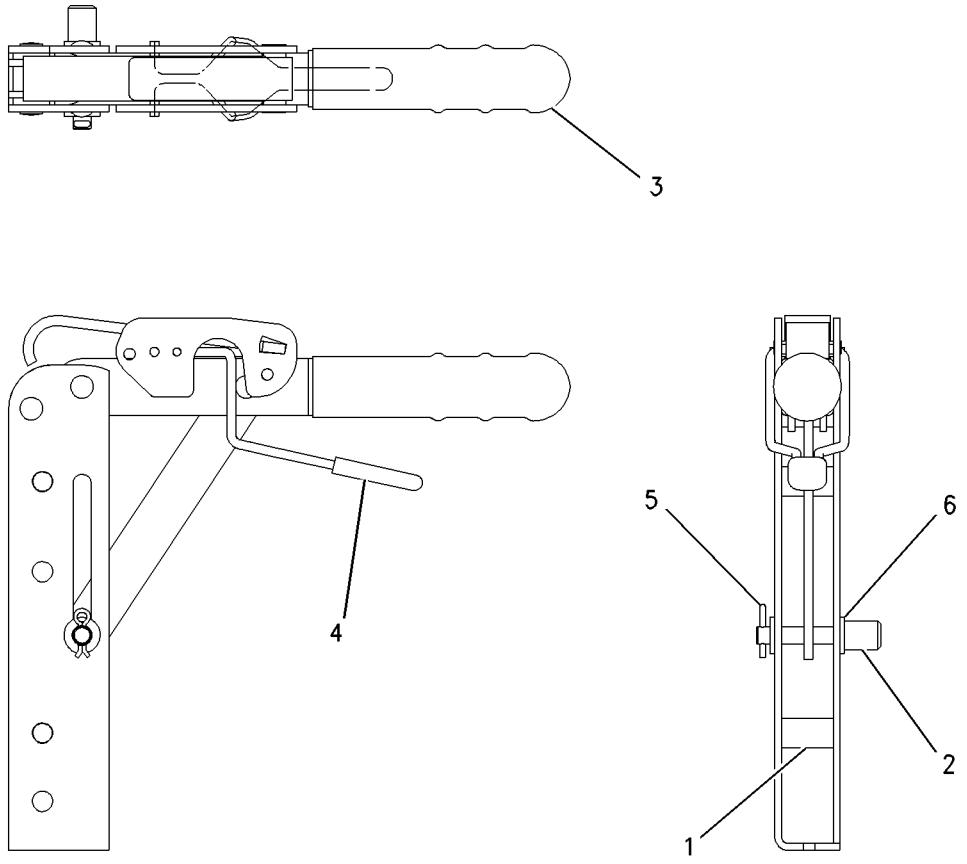

GRAPHIC #1 **<END>** g00729504

4E-8619 RESERVOIR GP-BRAKE

S/N: DPH1-UP

PART OF 217-9920 RESERVOIR GP-BRAKE

AN ATTACHMENT

SMCS-4291 **i03569266**

NOTE	REF NO	GRAPHIC REF	PART NUMBER	QTY	PART NAME 1 2 3 4 5 6 (PRODUCT LEVEL)	SEE PAGE
	1	1	**7N-7779**	1	SOCKET-CONNECTOR (14-GA TO 18-GA)	
	2	1	**7N-9737**	1	HOUSING-PLUG (14-GA TO 18-GA)	
	3	1	**7N-7780**	1	PIN-CONNECTOR (14-GA TO 18-GA)	
F			**8R-6263**	1	INDICATOR AS	
					AVAILABLE REPAIR KIT(S):	
			159-7907	1	KIT-BRAKE RESERVOIR	
					(INCLUDES CAP & DIAPHRAGM)	

F-NOT SHOWN

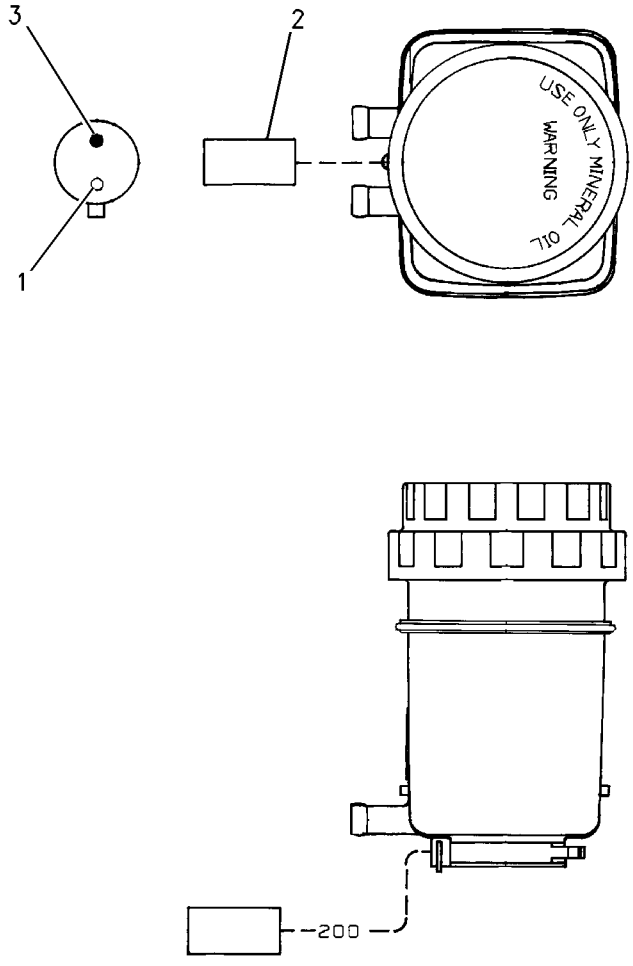

GRAPHIC #1 **<END>** g00862942

217-9920 RESERVOIR GP-BRAKE

S/N: DPH1-UP
PART OF 206-1638 CONTROL GP-SERVICE BRAKE
AN ATTACHMENT

SMCS-4291 **i03633344**

NOTE	REF NO	GRAPHIC REF	PART NUMBER	QTY	PART NAME 1 2 3 4 5 6 (PRODUCT LEVEL)	SEE PAGE
Y	1	1	**4E-8619**	1	RESERVOIR GP-BRAKE	303
	2	1	**254-5303**	1	BRACKET	
M	3	1	**8T-4189**	2	BOLT (M8X1.25X20-MM)	
	4	1	**8T-4224**	2	WASHER-HARD (8.8X16X2-MM THK)	
	5	1	**344-8938**	1	RING-SEAL	
	6	1	**344-8939**	1	RING-SUPPORT	

M-METRIC PART
Y-SEPARATE ILLUSTRATION

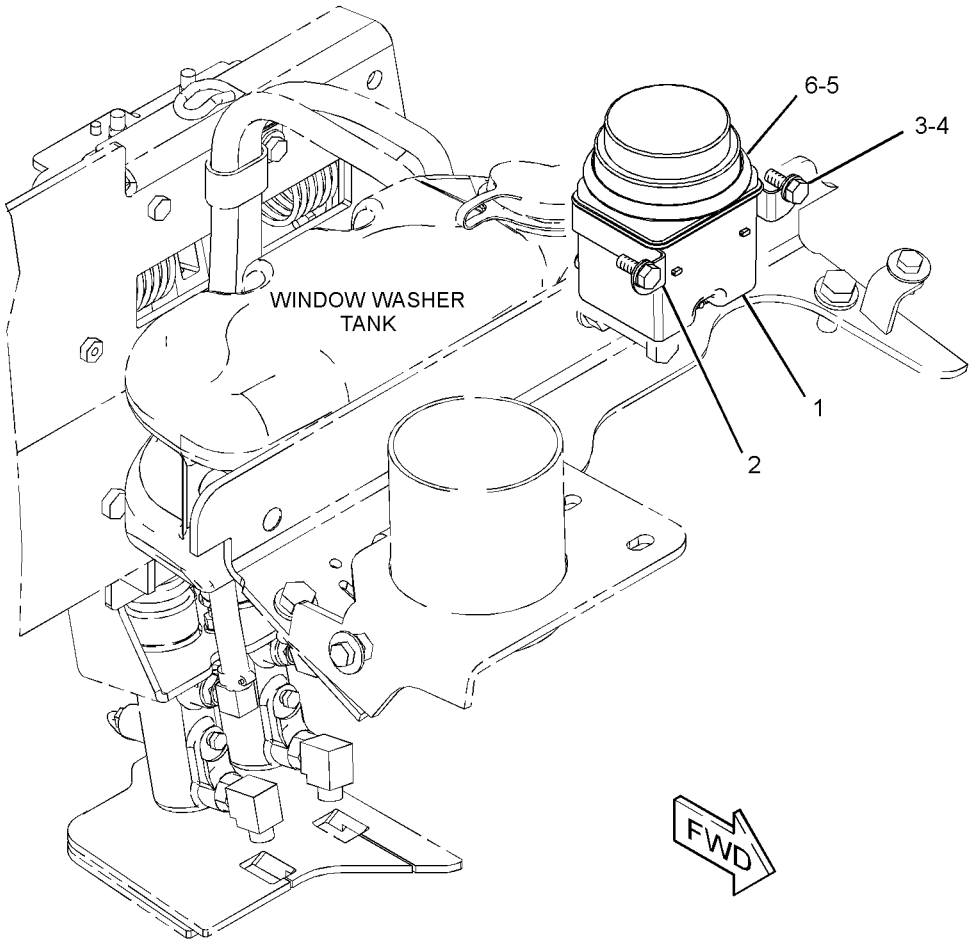

GRAPHIC #1 **<END>** g01960491

STEERING SYSTEM

340-7030 LINES GP-STEERING–
ALL WHEEL DRIVE, 2-WHEEL STEER
S/N: DPH1-UP
PART OF 329-0319 DRIVE AR-BACKHOE LOADER
AN ATTACHMENT

SMCS-4304 **i03648223**

NOTE	REF NO	GRAPHIC REF	PART NUMBER	QTY	PART NAME 1 2 3 4 5 6 (PRODUCT LEVEL)	SEE PAGE
	1	1	**5D-1026**	2	CLAMP-BAND	
I	2	1	**340-7025**	1	HOSE AS	
I	3	1	**340-7026**	1	HOSE AS	
I	4	1	**340-7125**	1	HOSE AS	
I	5	1	**342-0409**	1	HOSE AS	
	6	1	**091-9035**	2	SPACER (11X25X20-MM THK)	
	7	1	**100-4336**	3	CLIP	
	8	1	*148-8318*	2	CONNECTOR AS	
					(EACH INCLUDES)	
		1	**3K-0360**	1	SEAL-O-RING	
		1	**6V-8397**	1	SEAL-O-RING	
		1	**6V-8634**	1	CONNECTOR	
	9	1	*148-8325*	1	CONNECTOR AS	
		1	**3J-1907**	1	SEAL-O-RING	
		1	**4J-5477**	1	SEAL-O-RING	
		1	**6V-8641**	1	CONNECTOR	
	10	1	*148-8367*	3	ELBOW AS	
					(EACH INCLUDES)	
		1	**6V-8397**	1	SEAL-O-RING	
		1	**6V-9850**	1	ELBOW	
	11	1	*148-8369*	1	ELBOW AS	
		1	**3J-7354**	1	SEAL-O-RING	
		1	**4J-5477**	1	SEAL-O-RING	
		1	**6V-8628**	1	ELBOW	
	12	1	*148-8383*	2	ELBOW AS	
					(EACH INCLUDES)	
		1	**3K-0360**	1	SEAL-O-RING	
		1	**6V-8397**	1	SEAL-O-RING	
		1	**8T-1683**	1	ELBOW	
	13	1	*150-3026*	1	ELBOW AS	
		1	**3K-0360**	1	SEAL-O-RING	
		1	**6V-4292**	1	ELBOW	
	14	1	*164-5605*	1	CONNECTOR AS	
		1	**3K-0360**	1	SEAL-O-RING	
		1	**6V-8397**	1	SEAL-O-RING	
		1	**8T-0076**	1	CONNECTOR	
	15	1	*204-0317*	1	CONNECTOR AS	
		1	**3K-0360**	1	SEAL-O-RING	
		1	**6V-8397**	1	SEAL-O-RING	
		1	**092-3635**	1	CONNECTOR	
	16	1	**206-1652**	1	SEAL	
	17	1	**325-2011**	1	PUMP GP-METERING (STEERING LINES)	
	18	1	**7K-1181**	2	STRAP-CABLE	
	19	1	**8S-0948**	1	CLIP	
	20	1	**8T-4121**	4	WASHER-HARD (11X21X2.5-MM THK)	
M	21	1	**8T-4137**	1	BOLT (M10X1.5X20-MM)	
M	22	1	**8T-4172**	1	BOLT (M10X1.5X80-MM)	
M	23	1	**8T-5005**	2	BOLT (M10X1.5X70-MM)	
	24	1	**9R-3884**	1	SPACER (13X20X45-MM THK)	
E	25	1	**5P-1505**		HOSE (72-CM)	

E-ORDER BY THE CENTIMETER
I-REFER TO HYDRAULIC INFORMATION SYSTEM
M-METRIC PART

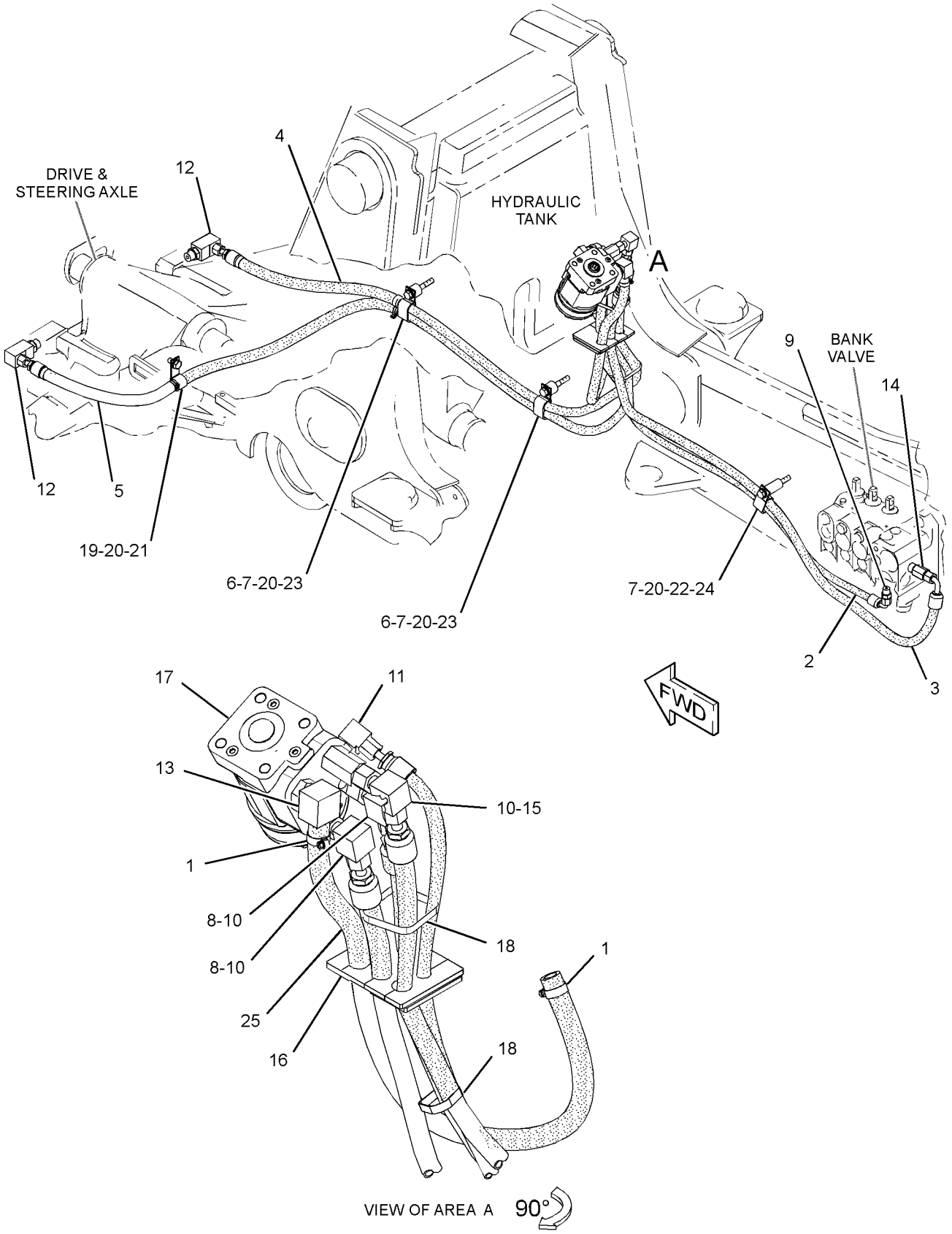

GRAPHIC #1

<END>

g01963496

310-6216 STEERING COLUMN GP–TILT

S/N: DPH1-UP

PART OF 317-5538 CONTROL GP-STEERING

AN ATTACHMENT

SMCS-4310, 4338 **i03642520**

NOTE	REF NO	GRAPHIC REF	PART NUMBER	QTY	PART NAME 1 2 3 4 5 6 (PRODUCT LEVEL)	SEE PAGE
M	1	1	**169-3261**	1	NUT (M18X1.5-THD)	
	2	1	**338-1508**	1	SPRING GP-GAS (STEERING COLUMN)	
		1	**146-6347**	2	RING-RETAINING	
	3	1	**254-9926**	1	KIT-TILT PEDAL	
					(INCLUDES BOLT, RING, NUT, SPRING & TILT LEVER)	
M	4	1	**5C-8312**	1	NUT (M4X0.7-THD)	
	5	1	**317-5544**	1	CAM	
M	6	1	**123-0708**	1	SCREW-HEX SOCKET (M4X0.7X30-MM)	

M-METRIC PART

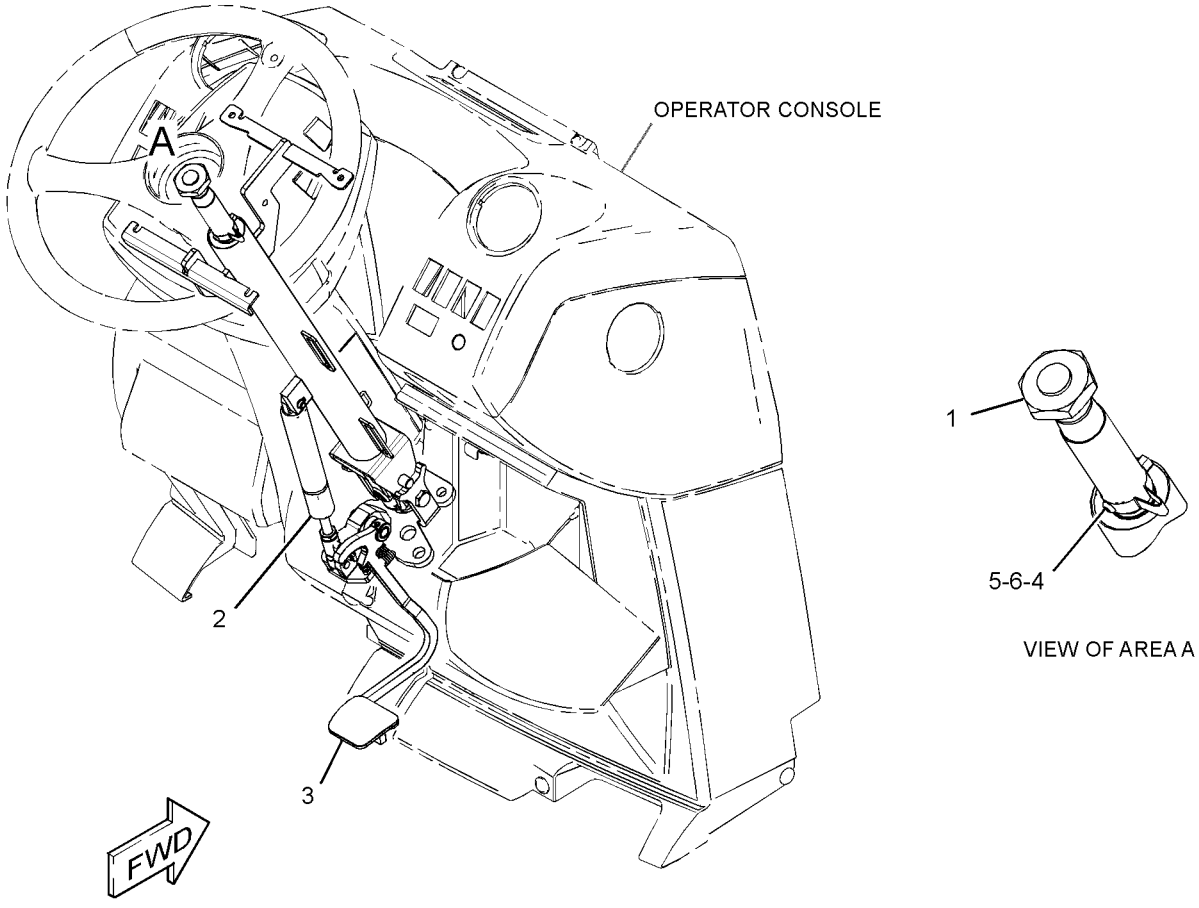

GRAPHIC #1 **<END>** g01960591

FRAME AND BODY

341-0695 BOX GP-BATTERY

S/N: DPH1-UP

PART OF 329-0293 CHASSIS AR

SMCS-7257 **i03642579**

NOTE	REF NO	GRAPHIC REF	PART NUMBER	QTY	PART NAME 1 2 3 4 5 6 (PRODUCT LEVEL)	SEE PAGE
	1	1	**8C-8522**	1	PAWL-LATCH	
	2	1	**118-6854**	1	TREAD	
	3	1	**124-2456**	1	FILM-INSTRUCTION (NO STEP)	
J	4	1	**129-4741**	1	LATCH AS-T-BAR	
	5	1	**159-8033**	1	FILM-IDENTIFICATION (12-VOLT)	
	6	1	**164-3876**	1	STEP AS	
M		1	**8T-3612**	4	NUT-WELD (M8X1.25-THD)	
	7	1	**225-0312**	1	FILM-WARNING (JUMP START, READ OMM)	
	8	1	**245-6109**	1	PLATE AS	
M		1	**8T-3612**	3	NUT-WELD (M8X1.25-THD)	
	9	1	**289-3412**	1	FILM-COVER (PROTECT)	
	10	1	**321-2559**	1	COVER AS-ACCESS	
	11	1	**336-7612**	1	FILM-NOTICE (BATTERY CABLES DISCONNECT)	
	12	1	**338-9362**	1	BOX AS-BATTERY	
M	13	1	**5C-7261**	3	NUT (M8X1.25-THD)	
	14	1	**5P-4116**	13	WASHER-HARD (8.8X20.5X2-MM THK)	
M	15	1	**6V-7743**	2	LOCKNUT (M6X1-THD)	
M	16	1	**8T-4133**	2	NUT (M10X1.5-THD)	
M	17	1	**8T-4183**	4	BOLT (M12X1.75X40-MM)	
M	18	1	**8T-4189**	10	BOLT (M8X1.25X20-MM)	
	19	1	**8T-4205**	2	WASHER-HARD (7.2X14.5X2-MM THK)	
	20	1	**8T-4223**	5	WASHER-HARD (13.5X25.5X3-MM THK)	

J-REQUIRES CORPORATE KEY
M-METRIC PART

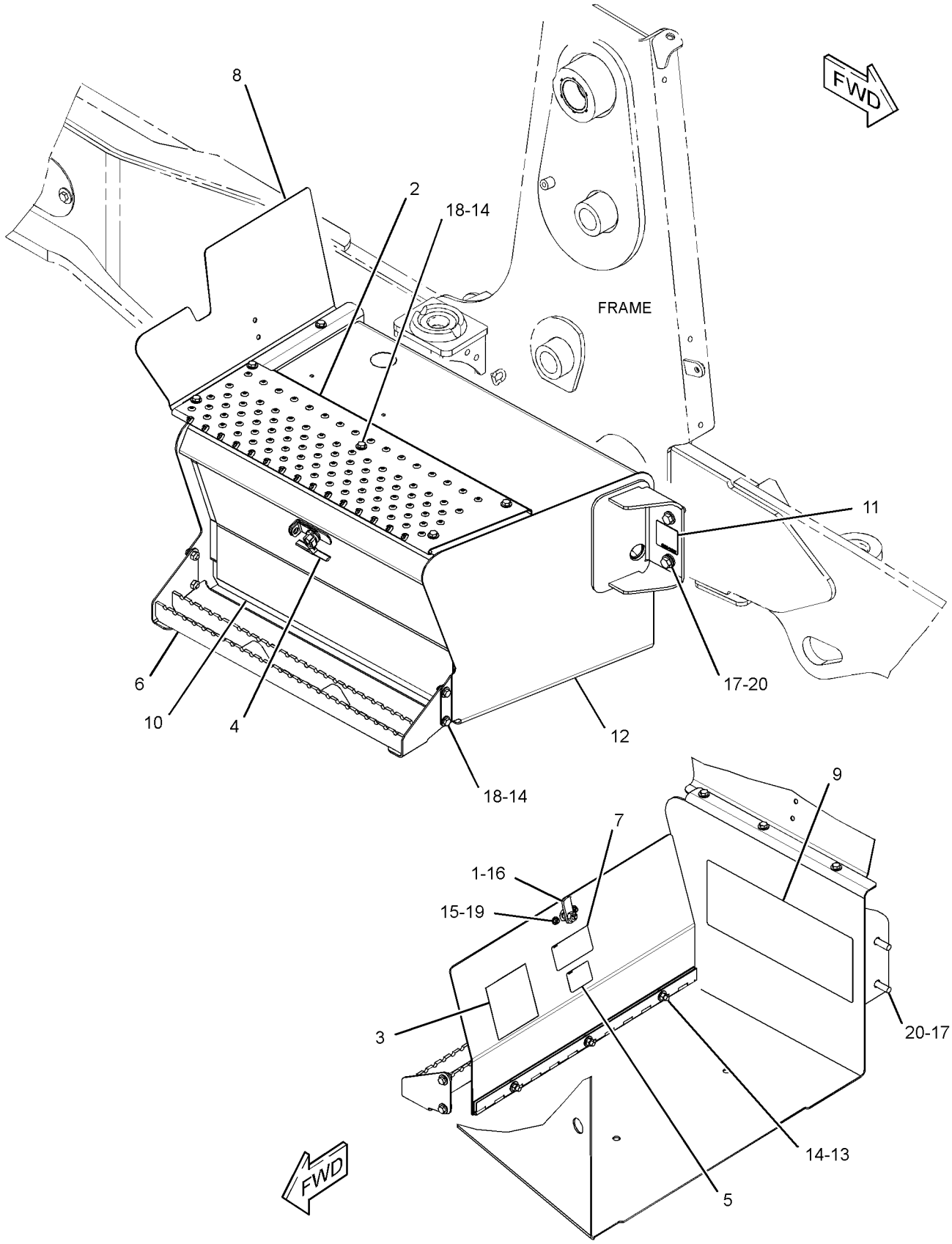

GRAPHIC #1 **<END>** g01999937

FRAME AND BODY

211-3649 COUNTERWEIGHT GP

S/N: DPH1-UP
115-KG (250-LB)
AN ATTACHMENT

SMCS-7056 **i03709642**

NOTE	REF NO	GRAPHIC REF	PART NUMBER	QTY	PART NAME 1 2 3 4 5 6 (PRODUCT LEVEL)	SEE PAGE
	1	1	**214-3254**	1	COUNTERWEIGHT (115-KG (250-LB))	
M	2	1	**8C-3290**	2	BOLT (M24X3X150-MM)	
	3	1	**8T-4167**	2	WASHER-HARD (26X44X4-MM THK)	

M-METRIC PART

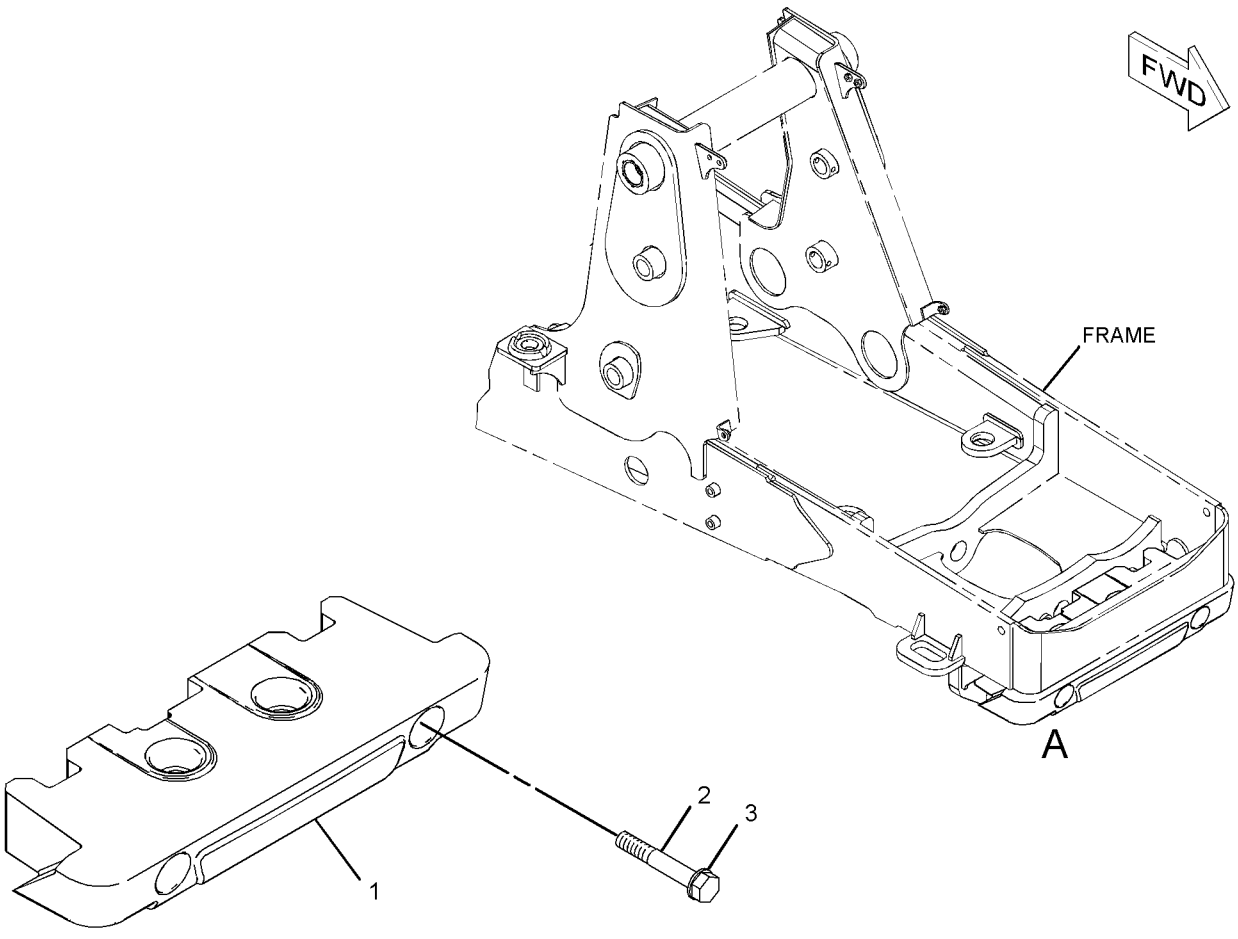

VIEW OF AREA A

GRAPHIC #1 **<END>** g01996882

FRAME AND BODY

211-3652 COUNTERWEIGHT GP

S/N: DPH1-UP
234-KG (515-LB)
AN ATTACHMENT

SMCS-7056 **i03470845**

NOTE	REF NO	GRAPHIC REF	PART NUMBER	QTY	PART NAME 1 2 3 4 5 6 (PRODUCT LEVEL)	SEE PAGE
	1	1	*252-9985*	1	COUNTERWEIGHT GP	
M		1	**7X-2476**	2	BOLT (M24X3X220-MM)	
M		1	**8T-4001**	2	NUT (M24X3-THD)	
		1	**8T-4167**	2	WASHER-HARD (26X44X4-MM THK)	
		1	**214-3254**	2	COUNTERWEIGHT (115-KG (250-LB))	
M	2	1	**8C-3290**	4	BOLT (M24X3X150-MM)	
	3	1	**8T-4167**	4	WASHER-HARD (26X44X4-MM THK)	

M-METRIC PART

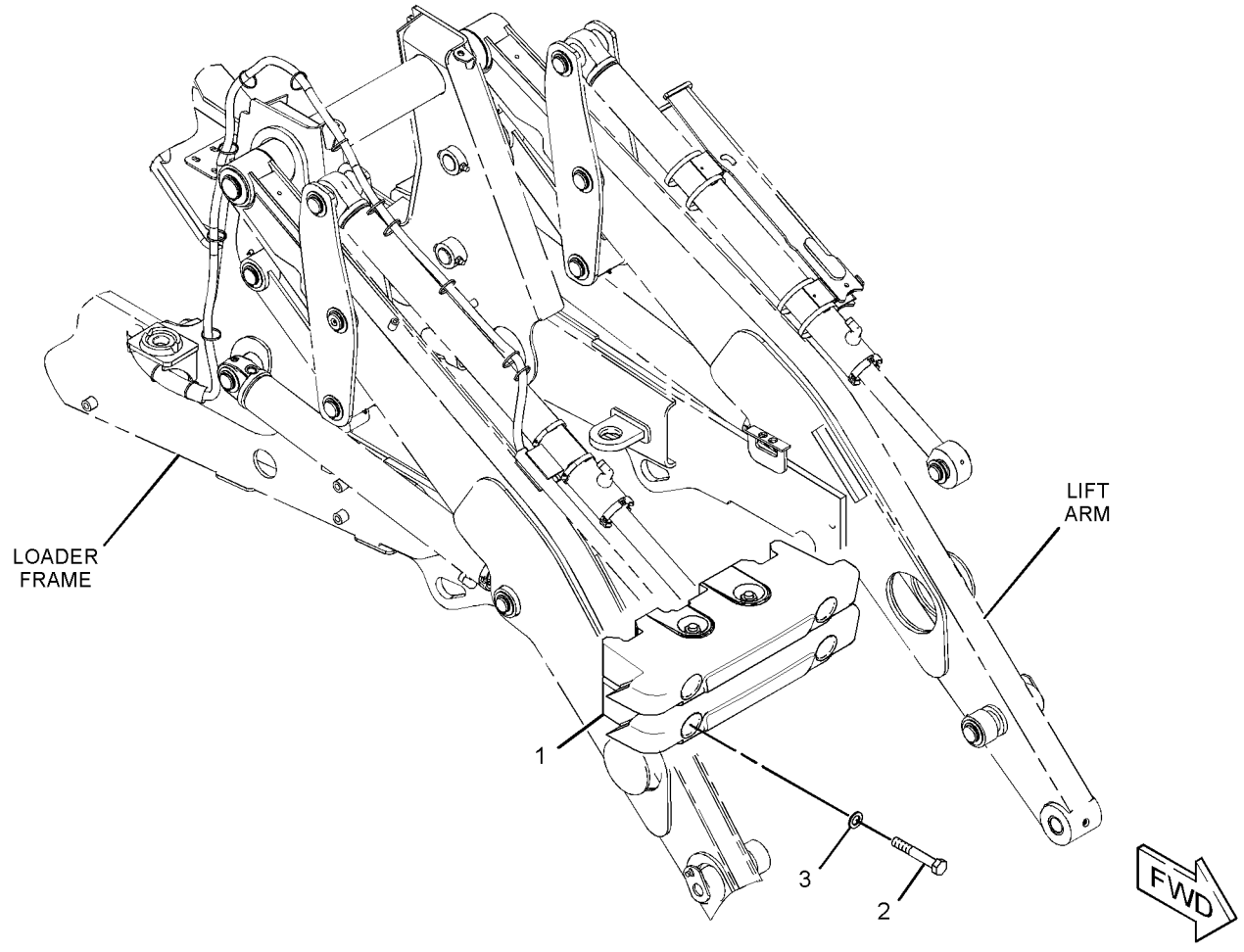

GRAPHIC #1 **<END>** g01825014

211-3653 COUNTERWEIGHT GP

S/N: DPH1-UP
485-KG (1070-LB)
AN ATTACHMENT

SMCS-7056 **i03470862**

NOTE	REF NO	GRAPHIC REF	PART NUMBER	QTY	PART NAME 1 2 3 4 5 6 (PRODUCT LEVEL)	SEE PAGE
	1	1	*252-9983*	1	COUNTERWEIGHT GP	
M		1	**127-4834**	2	BOLT (M24X3X340-MM)	
		1	**247-8222**	1	COUNTERWEIGHT (170-KG (375-LB))	
M		1	**8T-4001**	2	NUT (M24X3-THD)	
		1	**8T-4167**	2	WASHER-HARD (26X44X4-MM THK)	
		1	**214-3255**	2	COUNTERWEIGHT (320-KG (700-LB))	
M	2	1	**8C-3290**	4	BOLT (M24X3X150-MM)	
	3	1	**8T-4167**	4	WASHER-HARD (26X44X4-MM THK)	

M-METRIC PART

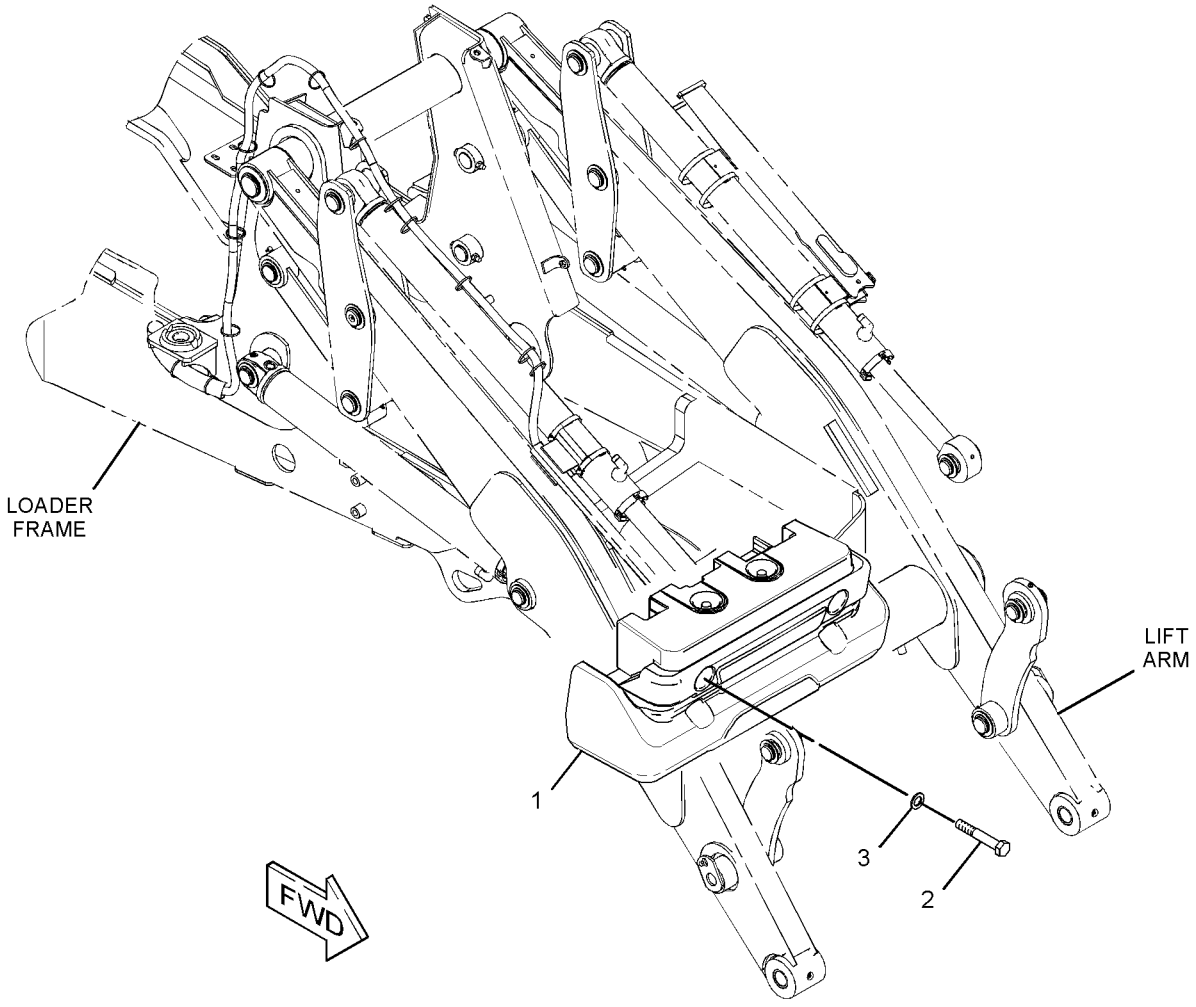

GRAPHIC #1 **<END>** g01824940

201-3954 FENDER GP-FRONT

S/N: DPH1-UP
AN ATTACHMENT

SMCS-7252 **i03498522**

NOTE	REF NO	GRAPHIC REF	PART NUMBER	QTY	PART NAME 1 2 3 4 5 6 (PRODUCT LEVEL)	SEE PAGE
	1	1	**162-4004**	2	FENDER	
M	2	1	**199-0783**	4	BOLT (M16X2X38-MM)	
	3	1	**222-1801**	1	BRACKET AS (LH)	
	4	1	**222-1802**	1	BRACKET AS (RH)	
M	5	1	**6V-7744**	4	LOCKNUT (M10X1.5-THD)	
	6	1	**8T-4121**	4	WASHER-HARD (11X21X2.5-MM THK)	
	7	1	**8T-4122**	12	WASHER-HARD (17X32X3.5-MM THK)	
M	8	1	**8T-4195**	4	BOLT (M10X1.5X30-MM)	
	9	1	**8T-4222**	4	WASHER-PLATED (11X32X2.5-MM THK)	
M	10	1	**8T-4778**	4	LOCKNUT (M16X2-THD)	

M-METRIC PART

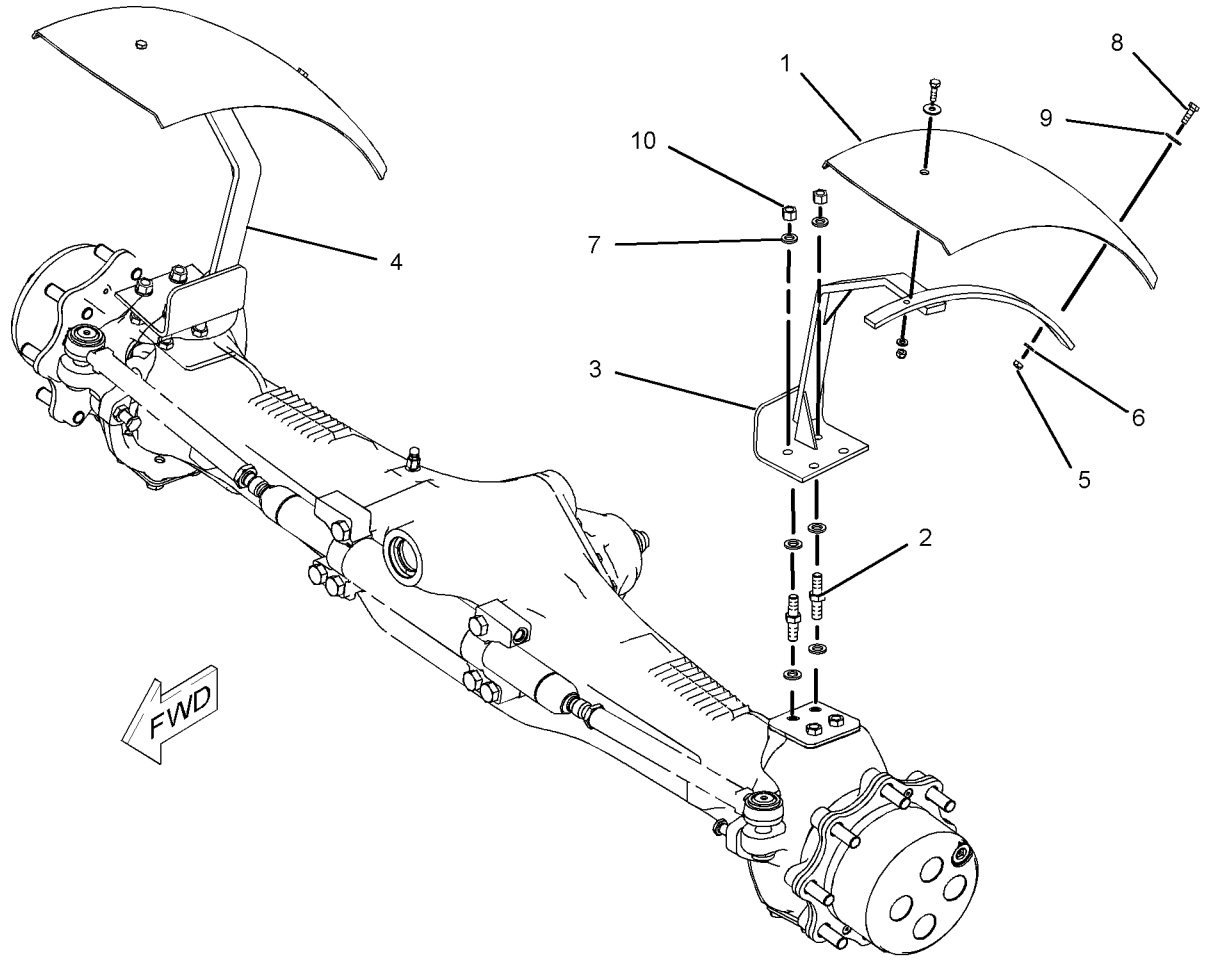

GRAPHIC #1 **<END>** g01027709

FRAME AND BODY

301-0988 FENDER GP-FRONT

S/N: DPH1-UP

AN ATTACHMENT

SMCS-7252 **i03458001**

NOTE	REF NO	GRAPHIC REF	PART NUMBER	QTY	PART NAME 1 2 3 4 5 6 (PRODUCT LEVEL)	SEE PAGE
	1	1	**162-4004**	2	FENDER	
M	2	1	**199-0783**	4	BOLT (M16X2X38-MM)	
	3	1	**222-1801**	1	BRACKET AS (LH)	
	4	1	**222-1802**	1	BRACKET AS (RH)	
M	5	1	**6V-7744**	4	LOCKNUT (M10X1.5-THD)	
	6	1	**8T-4121**	4	WASHER-HARD (11X21X2.5-MM THK)	
	7	1	**8T-4122**	12	WASHER-HARD (17X32X3.5-MM THK)	
M	8	1	**8T-4195**	4	BOLT (M10X1.5X30-MM)	
	9	1	**8T-4222**	4	WASHER-PLATED (11X32X2.5-MM THK)	
M	10	1	**8T-4778**	4	LOCKNUT (M16X2-THD)	

M-METRIC PART

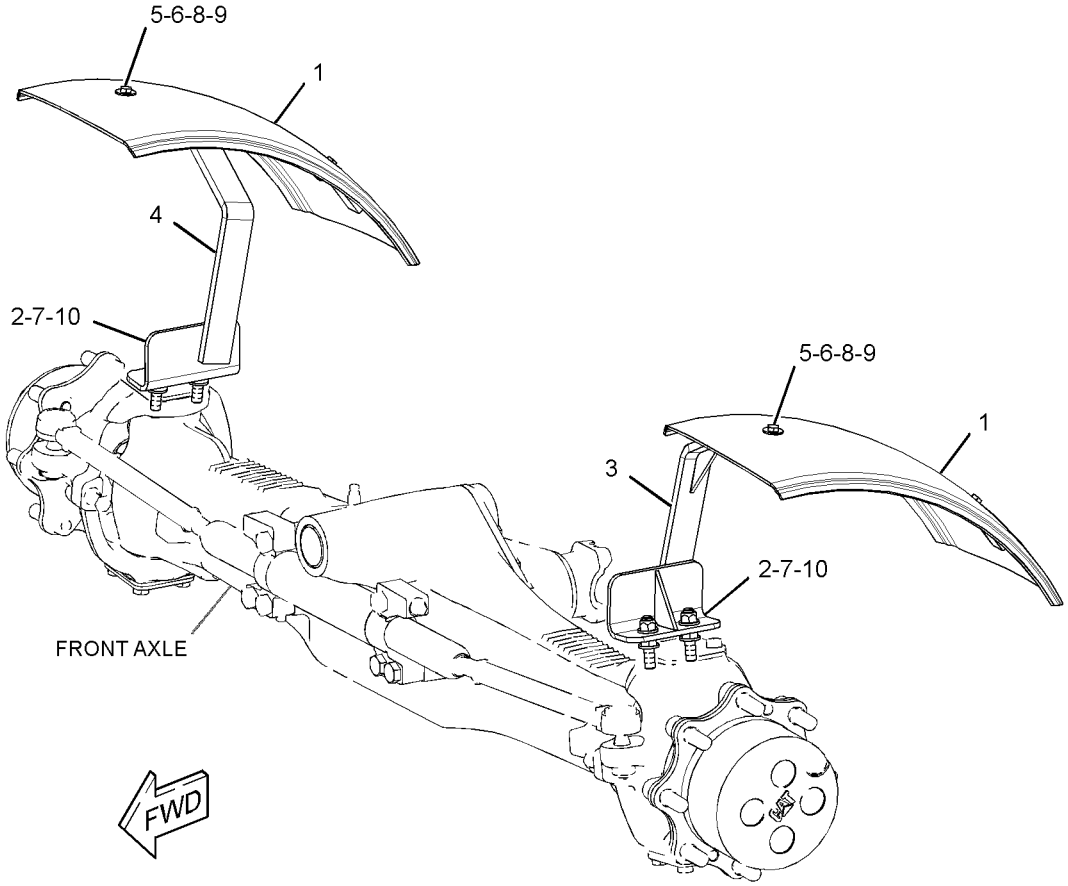

GRAPHIC #1 **<END>** g01805777

211-3782 FENDER GP-REAR

S/N: DPH1-UP

PART OF 335-3049, 335-3050 CAB AR, 335-3047, 335-3048 CANOPY AR-OPEN ROPS AN ATTACHMENT

SMCS-7252 **i03530382**

NOTE	REF NO	GRAPHIC REF	PART NUMBER	QTY	PART NAME 1 2 3 4 5 6 (PRODUCT LEVEL)	SEE PAGE
M	1	1	**8T-4908**	4	BOLT (M8X1.25X25-MM)	
E	2	1	**244-3113**		SEAL (211-CM EACH)	
	3	1	**116-5763**	1	CLIP-SPRING	
M	4	1	**193-9055**	2	SCREW-HEX FLANGE (M4X1.79X17-MM)	
	6	1	**213-1889**	1	PLATE	
J	7	1	**226-0291**	1	LOCK AS	
	8	1	**227-5556**	1	PLATE	
	9	1	**244-3111**	1	FENDER-REAR (LH)	
	11	1	**247-5557**	1	GUARD	
M	12	1	**127-2170**	1	SCREW-TRUSS HEAD (M8X1.25X20-MM)	
	13	1	**156-0283**	22	WASHER-HARD (8.4X35X2.5-MM THK)	
M	14	1	**6V-9189**	4	LOCKNUT (M8X1.25-THD)	
M	15	1	**8T-5093**	14	BOLT-LOCKING (M8X1.25X25-MM)	
E	16	1	**220-0738**		SEAL (118-CM)	
	18	1	*289-6410*	1	FENDER GP (RH)	
		1	**213-1887**	1	COVER-FENDER	
		1	**244-3112**	1	FENDER-REAR (RH)	
D	19	1	**5P-5927**		SEAL (0.8-M)	

D-ORDER BY THE METER
E-ORDER BY THE CENTIMETER
J-REQUIRES CORPORATE KEY
M-METRIC PART

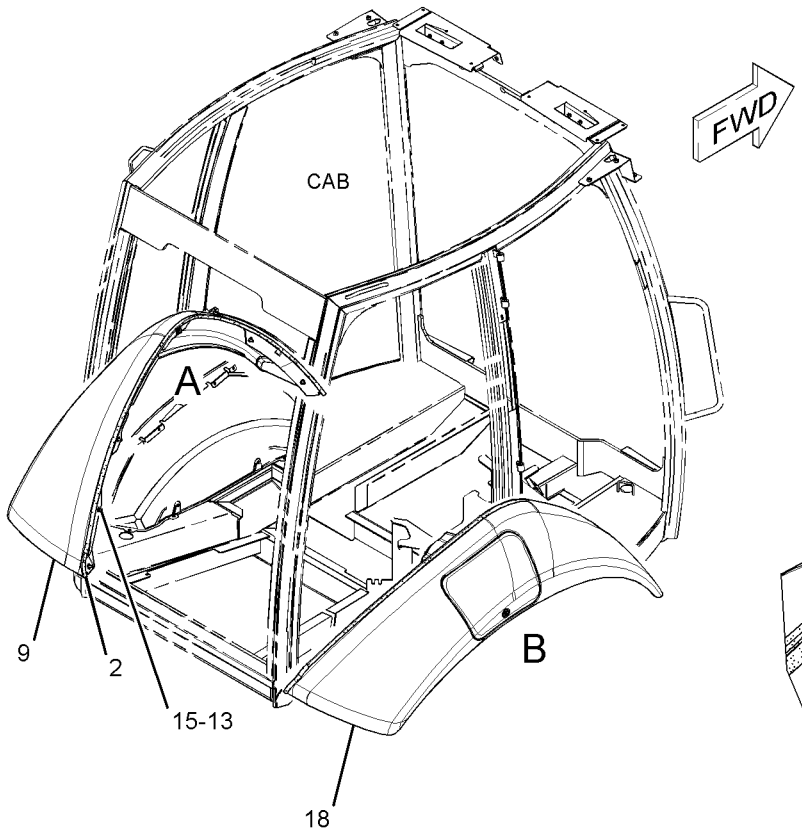

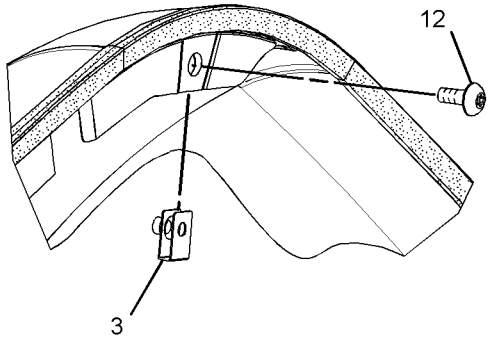

VIEW OF AREA A
(EXPLODED)

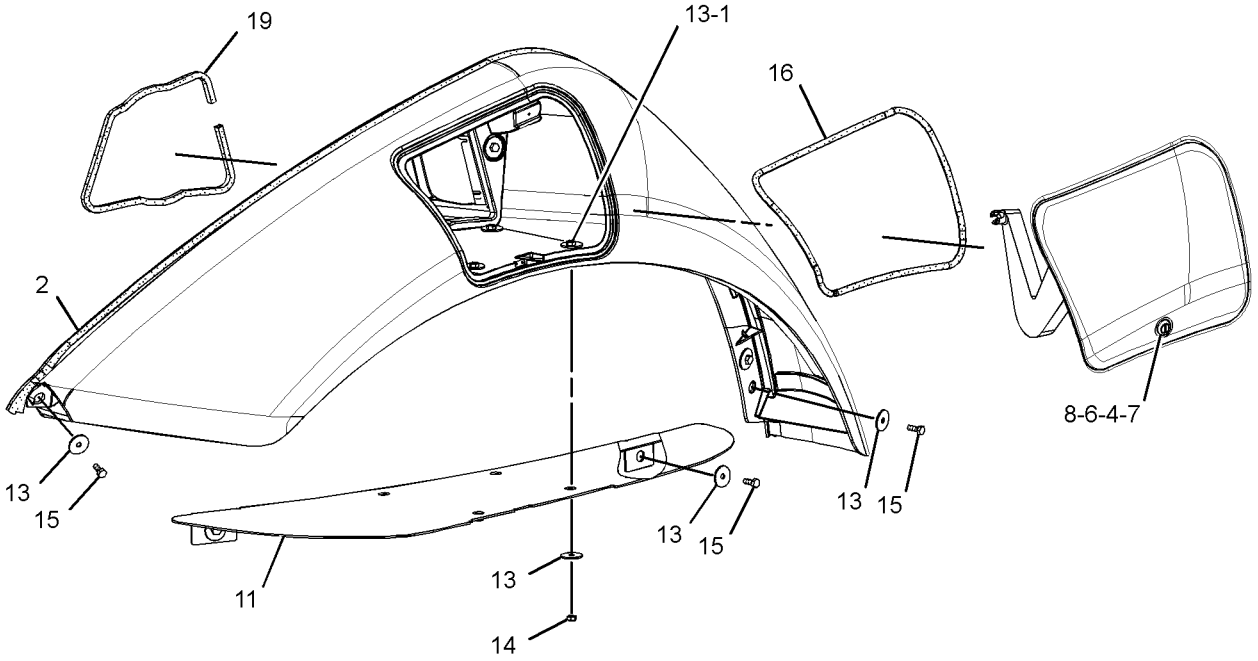

VIEW OF AREA B
(EXPLODED)

GRAPHIC #1 **<END>** g01367108

206-1840 FLOORPLATE GP

S/N: DPH1-UP
PART OF 335-3047, 335-3048 CANOPY AR-OPEN ROPS
AN ATTACHMENT

SMCS-7265 **i02686912**

NOTE	REF NO	GRAPHIC REF	PART NUMBER	QTY	PART NAME 1 2 3 4 5 6 (PRODUCT LEVEL)	SEE PAGE
	1	1	**289-9871**	1	PLATE AS	
	2	1	**206-1835**	1	PLATE AS	
	3	1	**206-1838**	1	PLATE	
	4	1	**289-9875**	1	PLATE AS	
	5	1	**289-9872**	1	PLATE AS	
	6	1	**223-8267**	1	PLATE AS	
	7	1	**232-2865**	1	PLATE AS	
	8	1	**232-2869**	1	PLATE AS	
	9	1	**232-2870**	1	PLATE AS	
	10	1	**9X-2038**	41	WASHER (7X19X2-MM THK)	
M	11	1	**9X-2043**	41	SCREW-TRUSS HEAD (M6X1X14-MM)	

M-METRIC PART

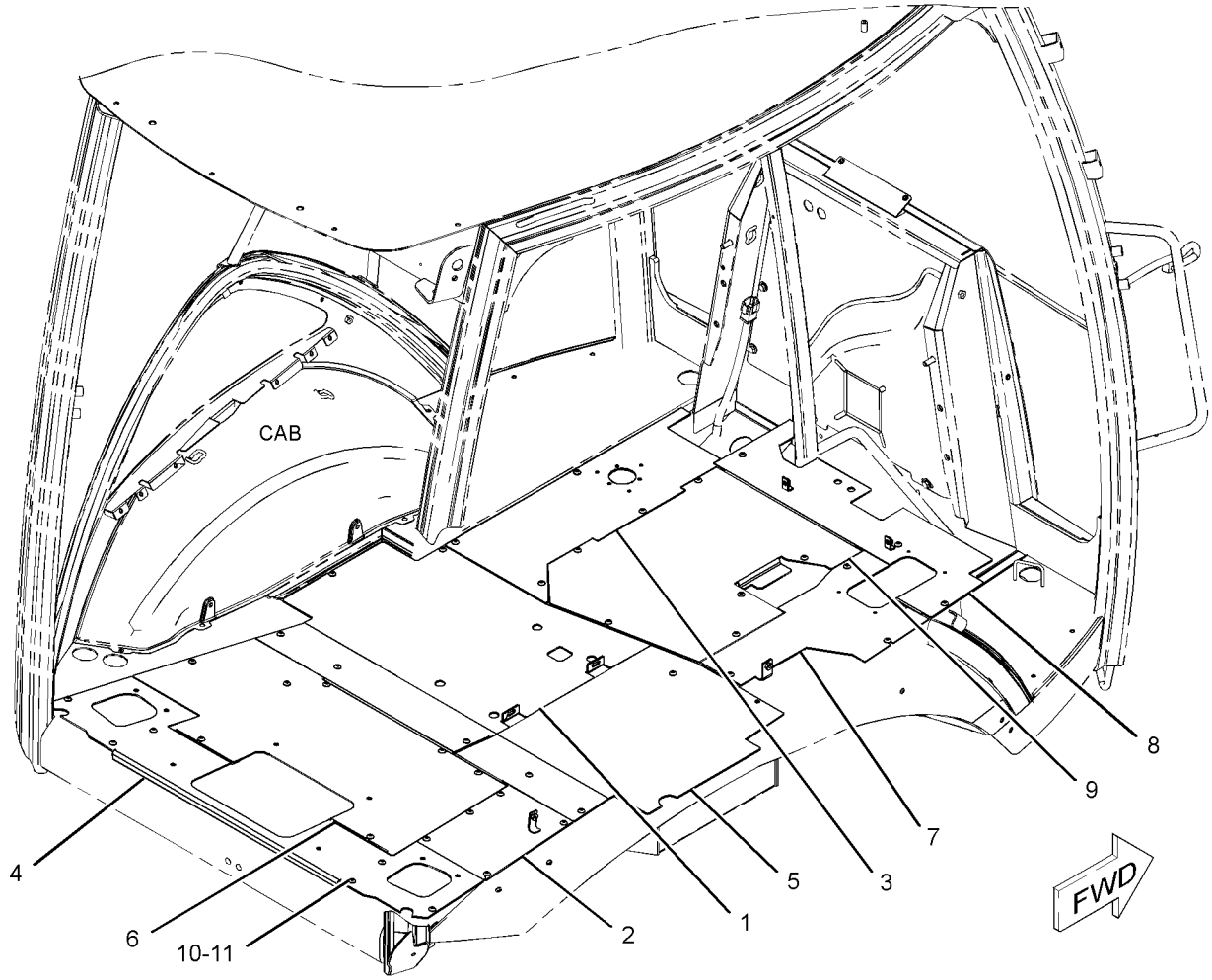

GRAPHIC #1 **<END>** g01265879

206-1841 FLOORPLATE GP

S/N: DPH1-UP
PART OF 335-3049, 335-3050 CAB AR
AN ATTACHMENT

SMCS-7265 **i02686913**

NOTE	REF NO	GRAPHIC REF	PART NUMBER	QTY	PART NAME 1 2 3 4 5 6 (PRODUCT LEVEL)	SEE PAGE
	1	1	**289-9871**	1	PLATE AS	
	2	1	**206-1835**	1	PLATE AS	
	3	1	**206-1838**	1	PLATE	
	4	1	**289-9875**	1	PLATE AS	
	5	1	**206-1850**	1	PLATE AS	
	6	1	**289-9873**	1	PLATE AS	
	7	1	**223-8267**	1	PLATE AS	
	8	1	**232-2865**	1	PLATE AS	
	9	1	**232-2869**	1	PLATE AS	
	10	1	**232-2870**	1	PLATE AS	
	11	1	**9X-2038**	41	WASHER (7X19X2-MM THK)	
M	12	1	**9X-2043**	45	SCREW-TRUSS HEAD (M6X1X14-MM)	

M-METRIC PART

206-1841 **FLOORPLATE GP** *(contd.)* **i02686913**

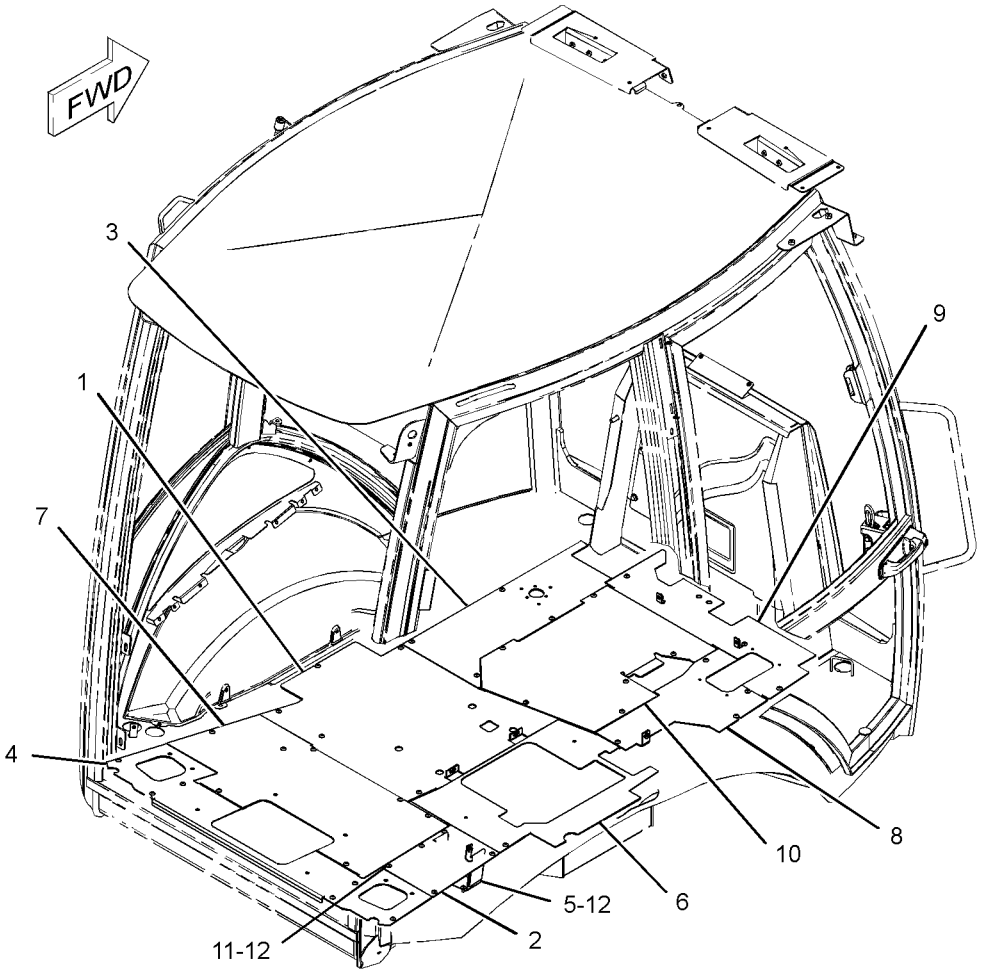

GRAPHIC #1 **<END>** g01229108

FRAME AND BODY

327-0110 FRAME AR-LOADER—NARROW

S/N: DPH1-UP

AN ATTACHMENT

SMCS-7054 **i03694644**

NOTE	PART NUMBER	QTY	PART NAME 1 2 3 4 5 6 (PRODUCT LEVEL)	SEE PAGE
Y	**320-5938**	2	CYLINDER GP-STABILIZER	350
Y	*327-0107*	1	FRAME GP-LOADER (NARROW)	321
Y	*326-1801*	1	LINES GP-STABILIZER	399
Y	*328-5964*	1	STABILIZER GP-BACKHOE	448

Y-SEPARATE ILLUSTRATION

<END>

327-0111 FRAME AR-LOADER

S/N: DPH1-UP

AN ATTACHMENT

SMCS-7054 **i03694855**

NOTE	PART NUMBER	QTY	PART NAME 1 2 3 4 5 6 (PRODUCT LEVEL)	SEE PAGE
Y	**320-5938**	2	CYLINDER GP-STABILIZER	350
Y	*327-0108*	1	FRAME GP-LOADER (STANDARD)	323
Y	*326-1801*	1	LINES GP-STABILIZER	399
Y	*328-5964*	1	STABILIZER GP-BACKHOE	448

Y-SEPARATE ILLUSTRATION

<END>

327-0107 FRAME GP-LOADER–NARROW

S/N: DPH1-UP
PART OF 327-0110 FRAME AR-LOADER
AN ATTACHMENT

SMCS-7054 **i03642540**

NOTE	REF NO	GRAPHIC REF	PART NUMBER	QTY	PART NAME 1 2 3 4 5 6 (PRODUCT LEVEL)	SEE PAGE
	1	1	**5T-9771**	1	HOSE AS	
	2	1	**082-2774**	1	CONNECTOR	
	3	1	**159-3590**	1	FILM-IDENTIFICATION (WATER SEPARATOR)	
B	4	1	**193-1681**	8	PAD	
B	5	1	**193-1683**	2	PAD	
B	6	1	**193-1684**	2	PAD	
M	7	1	**246-7854**	20	NUT-SPECIAL (M10X1.5-THD)	
	8	1	**248-5245**	2	FILM-INFORMATION (LIFT EYE, TIE-DOWN LOCATION)	
	9	1	**252-2157**	2	FILM-INFORMATION (TIE-DOWN)	
	10	1	**317-7120**	2	COVER	
	11	1	**327-0103**	1	FRAME AS	
	12	1	**330-0798**	2	TUBE AS	
	13	1	**331-2489**	4	WEAR PAD	
	14	1	**331-4365**	2	COVER	
	15	1	**333-7265**	2	GUARD AS	
	16	1	**340-9290**	4	PLATE GP-COVER	
	17	1	**3B-6552**	2	ELBOW-PIPE	
	18	1	**3B-8489**	1	FITTING-GREASE	
	19	1	**5P-4116**	6	WASHER-HARD (8.8X20.5X2-MM THK)	
M	20	1	**8T-4196**	4	BOLT (M10X1.5X35-MM)	
M	21	1	**8T-4197**	2	BOLT (M8X1.25X40-MM)	
	22	1	**8T-4222**	4	WASHER-PLATED (11X32X2.5-MM THK)	
M	23	1	**8T-7338**	8	BOLT (M16X2X45-MM)	
M	24	1	**8T-7547**	4	BOLT (M8X1.25X30-MM)	
	25	1	**9X-8257**	8	WASHER (17.5X30X3.5-MM THK)	

B-USE AS REQUIRED
M-METRIC PART

327-0107 **FRAME GP-LOADER** *(contd.)* **i03642540**

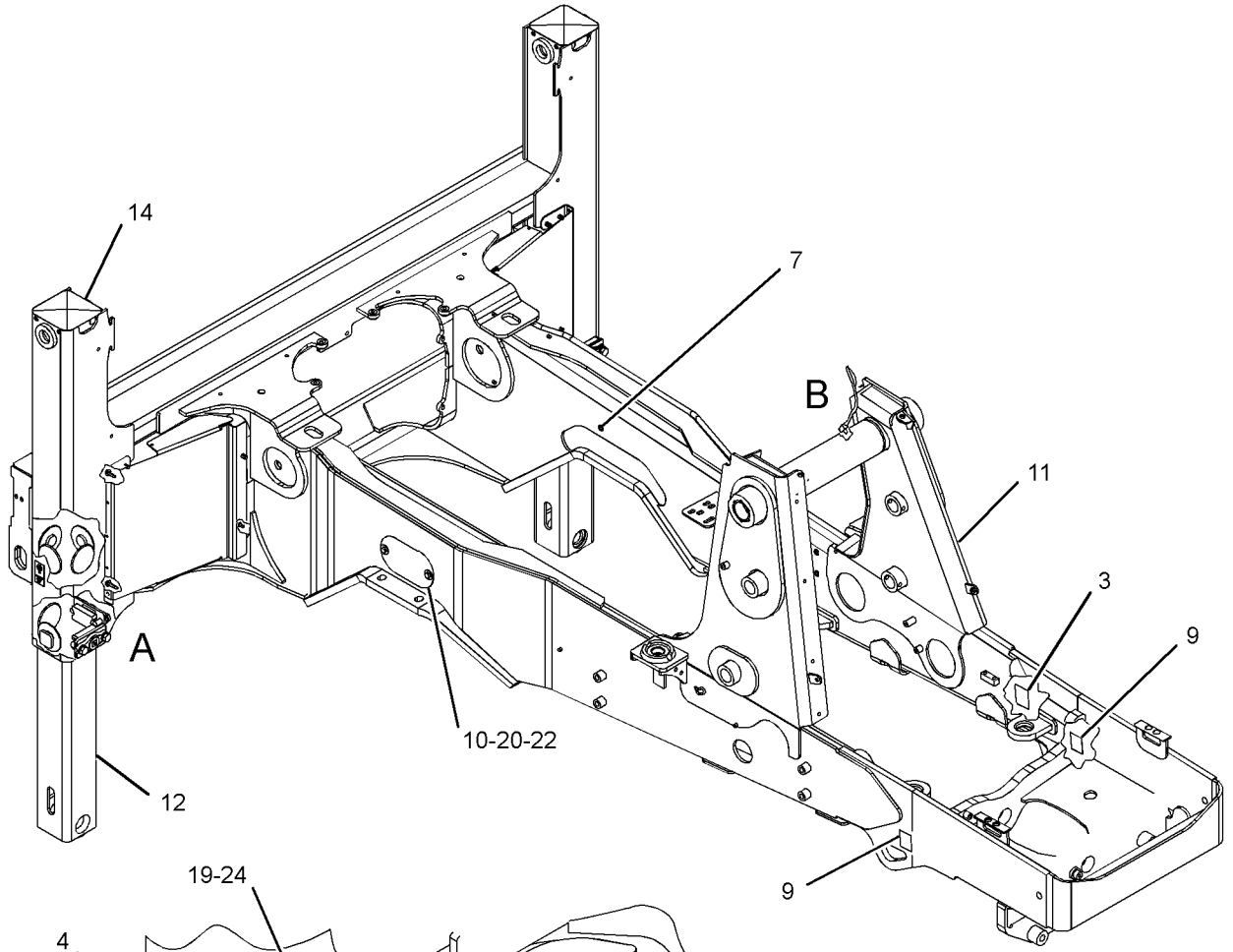

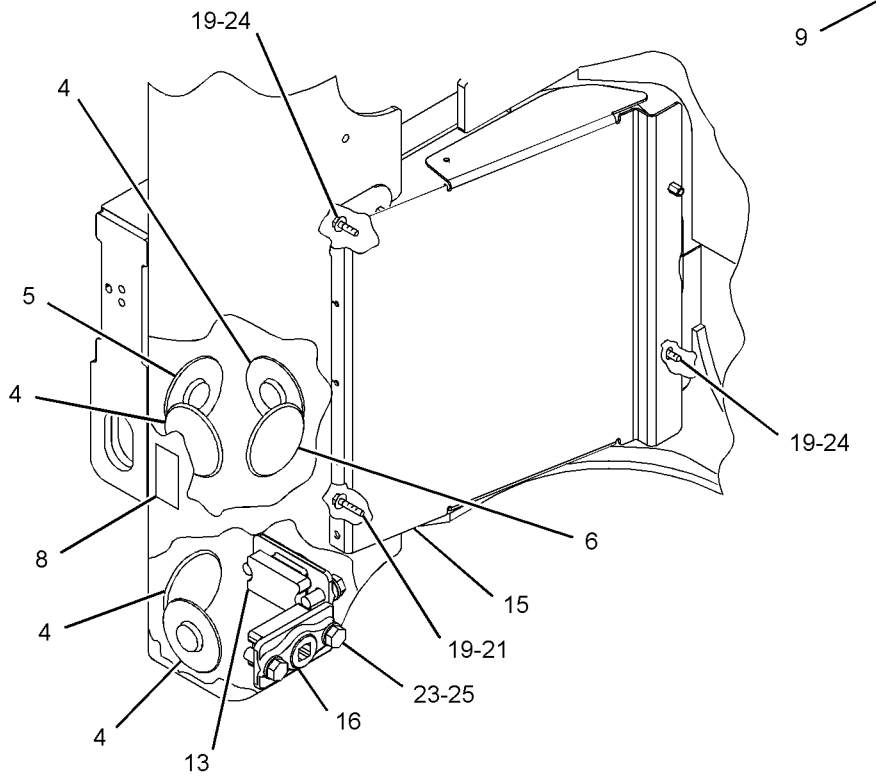

VIEW OF AREA A

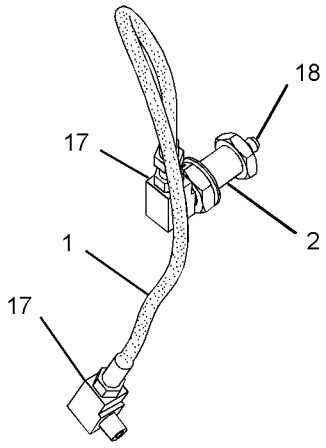

VIEW OF AREA B



GRAPHIC #1 **<END>** g02013694

327-0108 FRAME GP-LOADER–STANDARD

S/N: DPH1-UP
PART OF 327-0111 FRAME AR-LOADER
AN ATTACHMENT

SMCS-7054 **i03642968**

NOTE	REF NO	GRAPHIC REF	PART NUMBER	QTY	PART NAME 1 2 3 4 5 6 (PRODUCT LEVEL)	SEE PAGE
	1	1	**5T-9771**	1	HOSE AS	
	2	1	**082-2774**	1	CONNECTOR	
	3	1	**159-3590**	1	FILM-IDENTIFICATION (WATER SEPARATOR)	
B	4	1	**193-1681**	8	PAD	
B	5	1	**193-1683**	2	PAD	
B	6	1	**193-1684**	2	PAD	
M	7	1	**246-7854**	20	NUT-SPECIAL (M10X1.5-THD)	
	8	1	**248-5245**	2	FILM-INFORMATION (LIFT EYE, TIE-DOWN LOCATION)	
	9	1	**252-2157**	2	FILM-INFORMATION (TIE-DOWN)	
	10	1	**317-7120**	2	COVER	
	11	1	**327-0104**	1	FRAME AS	
	12	1	**330-0798**	2	TUBE AS	
	13	1	**331-2489**	4	WEAR PAD	
	14	1	**331-4365**	2	COVER	
	15	1	**333-7265**	2	GUARD AS	
	16	1	**340-9290**	4	PLATE GP-COVER	
	17	1	**3B-6552**	2	ELBOW-PIPE	
	18	1	**3B-8489**	1	FITTING-GREASE	
	19	1	**5P-4116**	6	WASHER-HARD (8.8X20.5X2-MM THK)	
M	20	1	**8T-4196**	4	BOLT (M10X1.5X35-MM)	
M	21	1	**8T-4197**	2	BOLT (M8X1.25X40-MM)	
	22	1	**8T-4222**	4	WASHER-PLATED (11X32X2.5-MM THK)	
M	23	1	**8T-7338**	8	BOLT (M16X2X45-MM)	
M	24	1	**8T-7547**	4	BOLT (M8X1.25X30-MM)	
	25	1	**9X-8257**	8	WASHER (17.5X30X3.5-MM THK)	

B-USE AS REQUIRED
M-METRIC PART

327-0108 **FRAME GP-LOADER** *(contd.)* **i03642968**

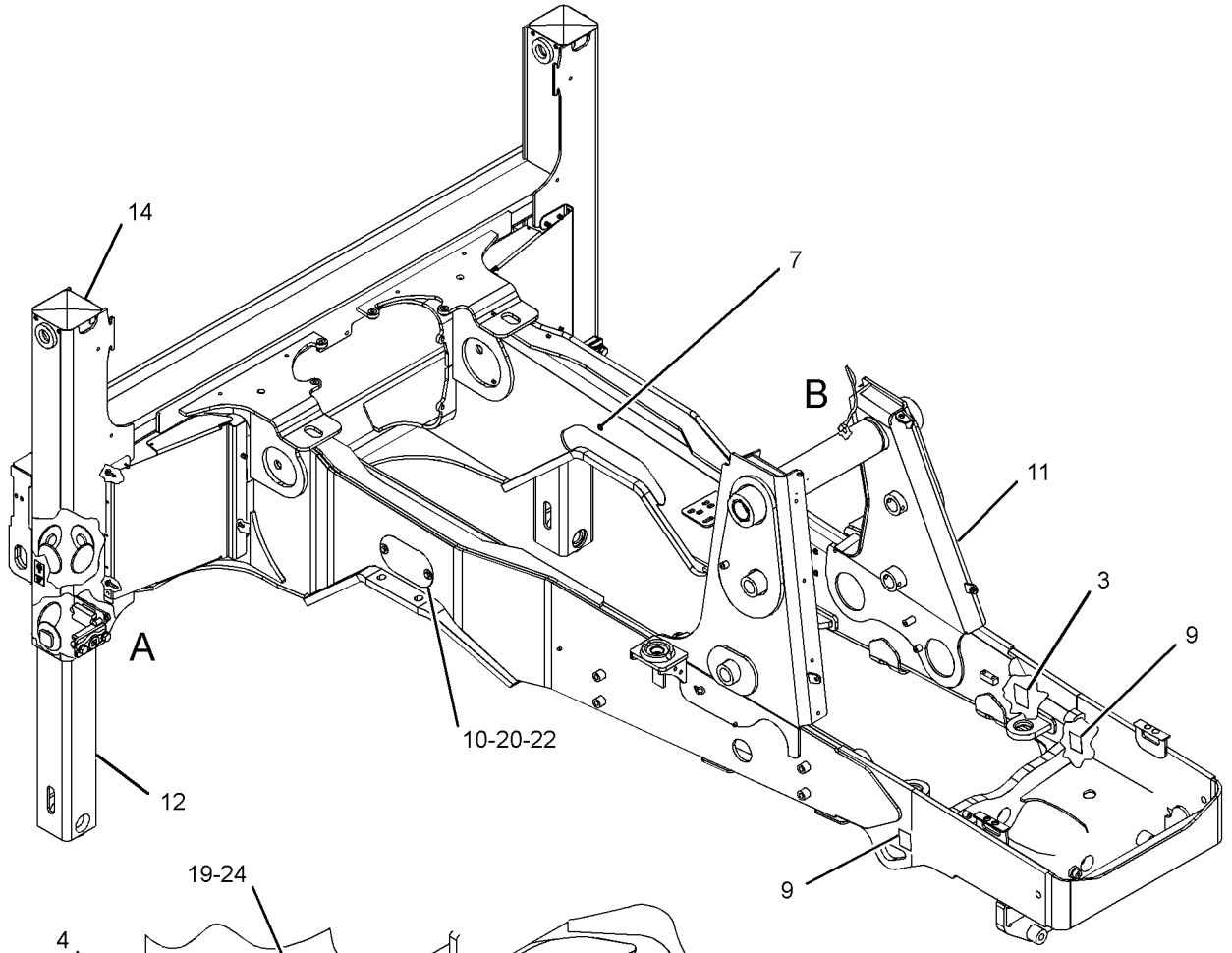

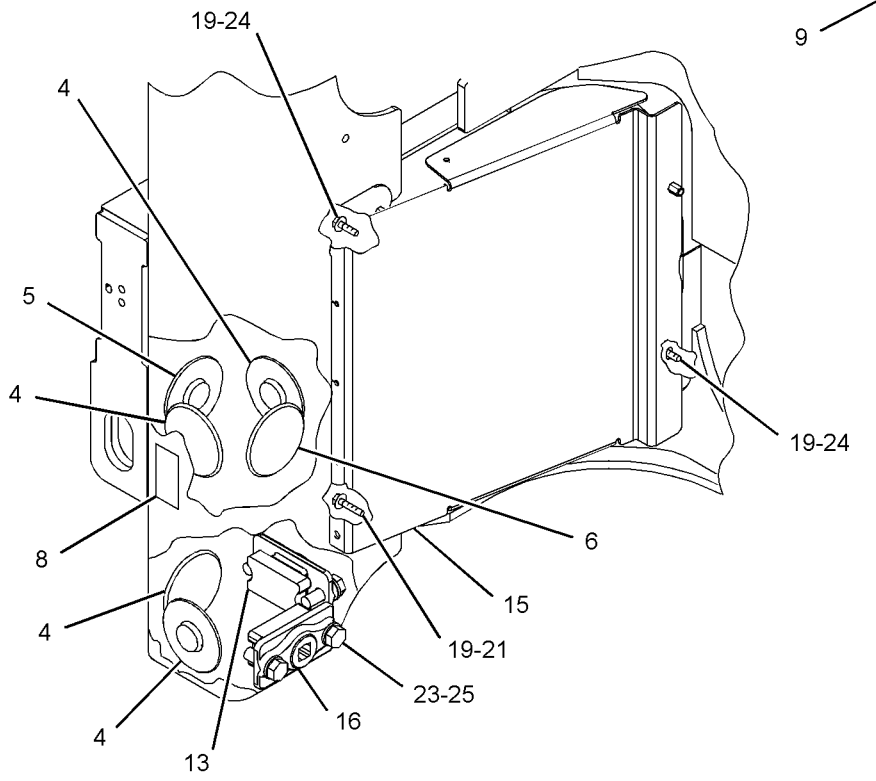

VIEW OF AREA A

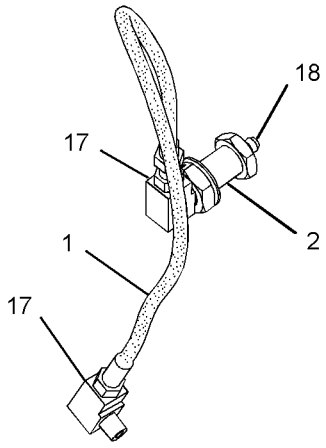

VIEW OF AREA B



GRAPHIC #1 **<END>** g02000374

FRAME AND BODY

320-5933 FRAME GP-SLIDING

S/N: DPH1-UP

PART OF 329-0293 CHASSIS AR

SMCS-5804, 6508 **i03656613**

NOTE	REF NO	GRAPHIC REF	PART NUMBER	QTY	PART NAME 1 2 3 4 5 6 (PRODUCT LEVEL)	SEE PAGE
	1	1	**9R-0481**	2	WASHER (71X110X4-MM THK)	
	2	1	**161-7145**	4	SEAL-PISTON	
Y	3	1	**269-0381**	1	CYLINDER GP-HYDRAULIC (RH)	345
Y	4	1	**279-5556**	1	CYLINDER GP-HYDRAULIC (LH)	346
	5	1	**316-4811**	1	WASHER (66.5X120X8-MM THK)	
	6	1	**320-2948**	4	CAP-CYLINDER END	
	7	1	**320-2949**	2	BAR	
	8	1	**320-3619**	4	PISTON	
	9	1	**320-3620**	2	PAD	
	10	1	**322-3768**	1	CAP & BEARING AS	
	10A	1	**9R-4110**	2	BEARING-SLEEVE	
	11	1	**322-3770**	1	FRAME AS-SLIDING	
	11A	1	**331-1521**	1	BEARING	
	11B	1	**331-1522**	1	BEARING	
	11C	1	**9R-4110**	2	BEARING-SLEEVE	
	12	1	**340-6272**	8	RING-WEAR	
	13	1	**341-4712**	2	BAR	
M	14	1	**112-1533**	12	BOLT (M24X3X160-MM)	
	15	1	**3B-8488**	2	FITTING-GREASE	
	16	1	**3B-8489**	2	FITTING-GREASE	
	17	1	**3P-0439**	4	SEAL-O-RING	
	18	1	**7K-9208**	4	SEAL-LIP TYPE	
	19	1	**8C-3347**	2	PIN-ROLL	
	20	1	**8T-1482**	6	WASHER-HARD (26X50X8-MM THK)	
	21	1	**8T-4121**	4	WASHER-HARD (11X21X2.5-MM THK)	
	22	1	**8T-4167**	6	WASHER-HARD (26X44X4-MM THK)	
M	23	1	**8T-4187**	4	BOLT (M20X2.5X80-MM)	
M	24	1	**8T-4648**	16	BOLT (M12X1.75X70-MM)	
M	25	1	**8T-5035**	4	BOLT (M10X1.5X65-MM)	
	26	1	**8T-5439**	4	WASHER-HARD (21.5X45X6-MM THK)	
	27	1	**8T-7971**	16	WASHER-HARD (13.5X25.5X5-MM THK)	
	28	1	**9M-4335**	2	DOWEL-REACTION	

M-METRIC PART
Y-SEPARATE ILLUSTRATION

320-5933 **FRAME GP-SLIDING** *(contd.)* **i03656613**

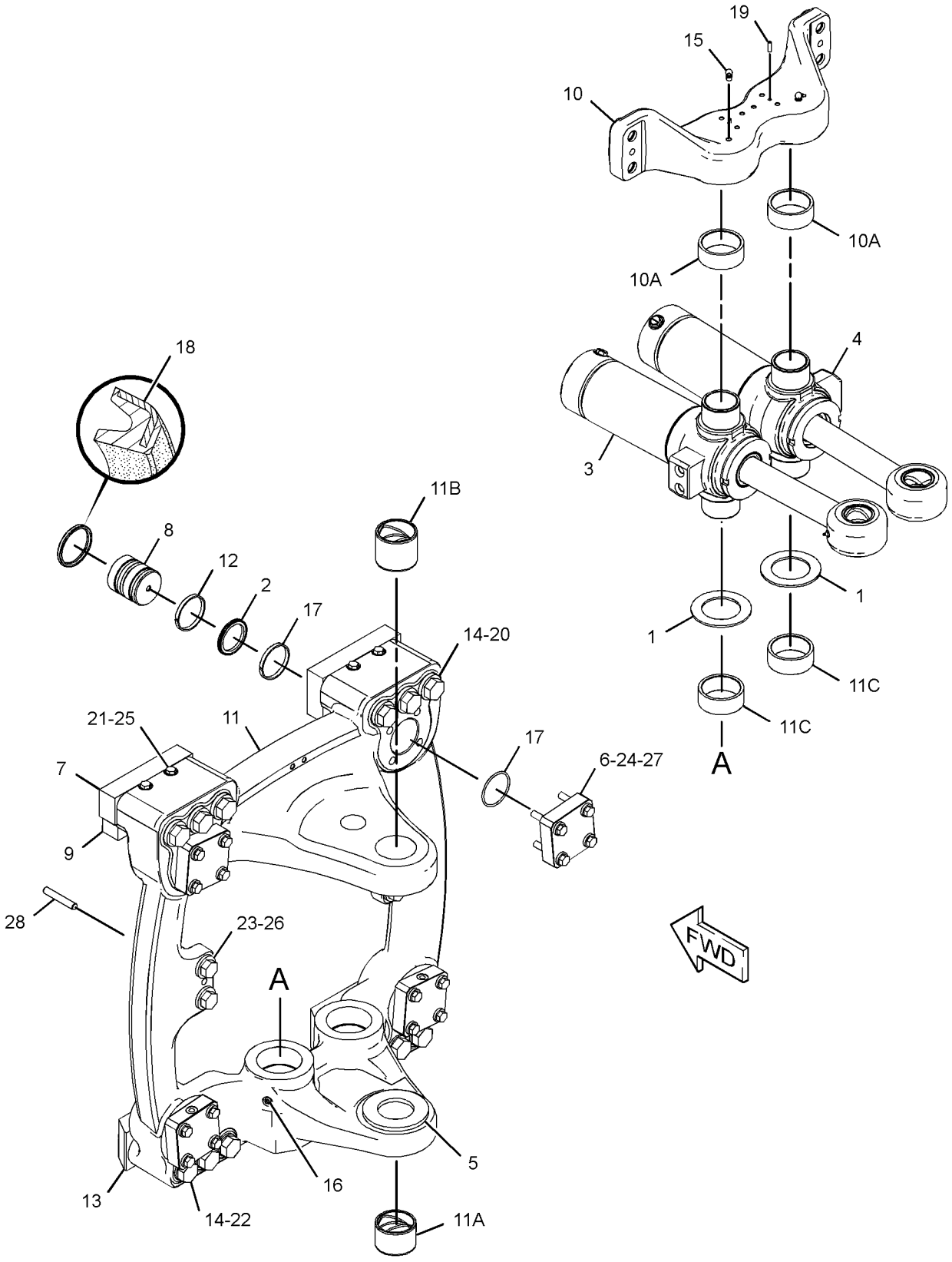

GRAPHIC #1 **<END>** g01988755

322-3764 FRAME GP-SWING

S/N: DPH1-UP

PART OF 329-0293 CHASSIS AR

SMCS-6506 **i03642530**

NOTE	REF NO	GRAPHIC REF	PART NUMBER	QTY	PART NAME 1 2 3 4 5 6 (PRODUCT LEVEL)	SEE PAGE
	1	1	**2U-9234**	1	BUSHING	
	2	1	**176-0626**	2	WASHER (67.5X120X3-MM THK)	
	3	1	**9R-8291**	2	SPACER (66X125X1-MM THK)	
	4	1	**310-0851**	2	PIN	
	5	1	**315-5384**	1	FRAME AS-SWING	
	5A	1	**213-6702**	4	BEARING-SLEEVE	
	5B	1	**331-1521**	2	BEARING	
	6	1	**316-6951**	1	PIN AS	
	7	1	**316-6952**	1	PIN AS	
	8	1	**326-0089**	1	PIN AS	
	9	1	**095-0929**	1	RING-RETAINING	
	10	1	**270-5290**	1	BOLT-SOCKET HEAD (M12X1.75X300-MM)	
	11	1	**3B-8489**	2	FITTING-GREASE	
	12	1	**5P-1076**	2	WASHER-HARD (13.5X30X4-MM THK)	
M	13	1	**6V-7687**	1	LOCKNUT (M12X1.75-THD)	
	14	1	**7X-0632**	2	WASHER-HARD (11X36X6-MM THK)	
M	15	1	**8T-4136**	1	BOLT (M10X1.5X25-MM)	
M	16	1	**8T-4196**	1	BOLT (M10X1.5X35-MM)	

M-METRIC PART

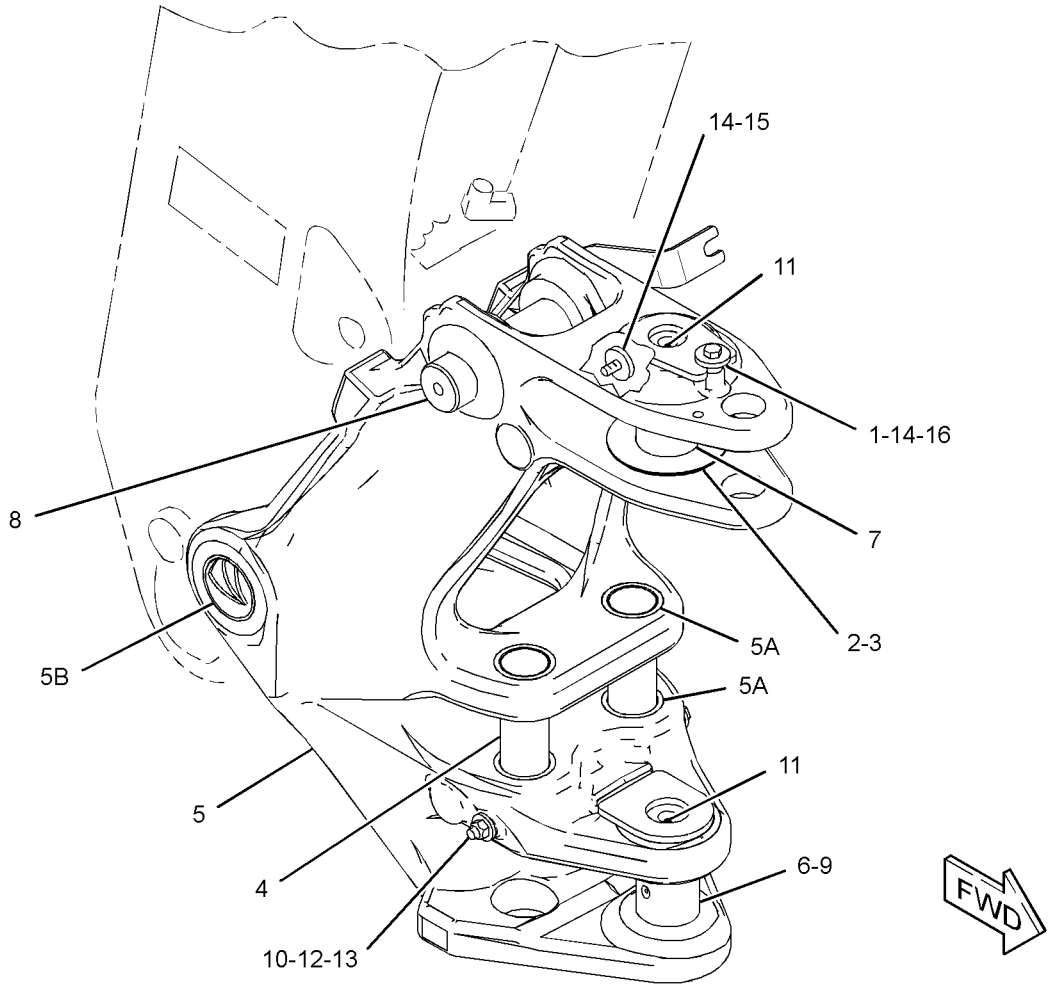

GRAPHIC #1 **<END>** g01996130

FRAME AND BODY

217-9672 GUARD GP-DRIVE SHAFT

S/N: DPH1-UP

AN ATTACHMENT

SMCS-7153 **i02531164**

NOTE	REF NO	GRAPHIC REF	PART NUMBER	QTY	PART NAME 1 2 3 4 5 6 (PRODUCT LEVEL)	SEE PAGE
	1	1	**216-5981**	1	GUARD AS	
M	2	1	**290-3347**	4	BOLT-CARRIAGE (M16X2X40-MM)	
	3	1	**8T-4122**	4	WASHER-HARD (17X32X3.5-MM THK)	
M	4	1	**8T-4132**	4	NUT (M16X2-THD)	

M-METRIC PART

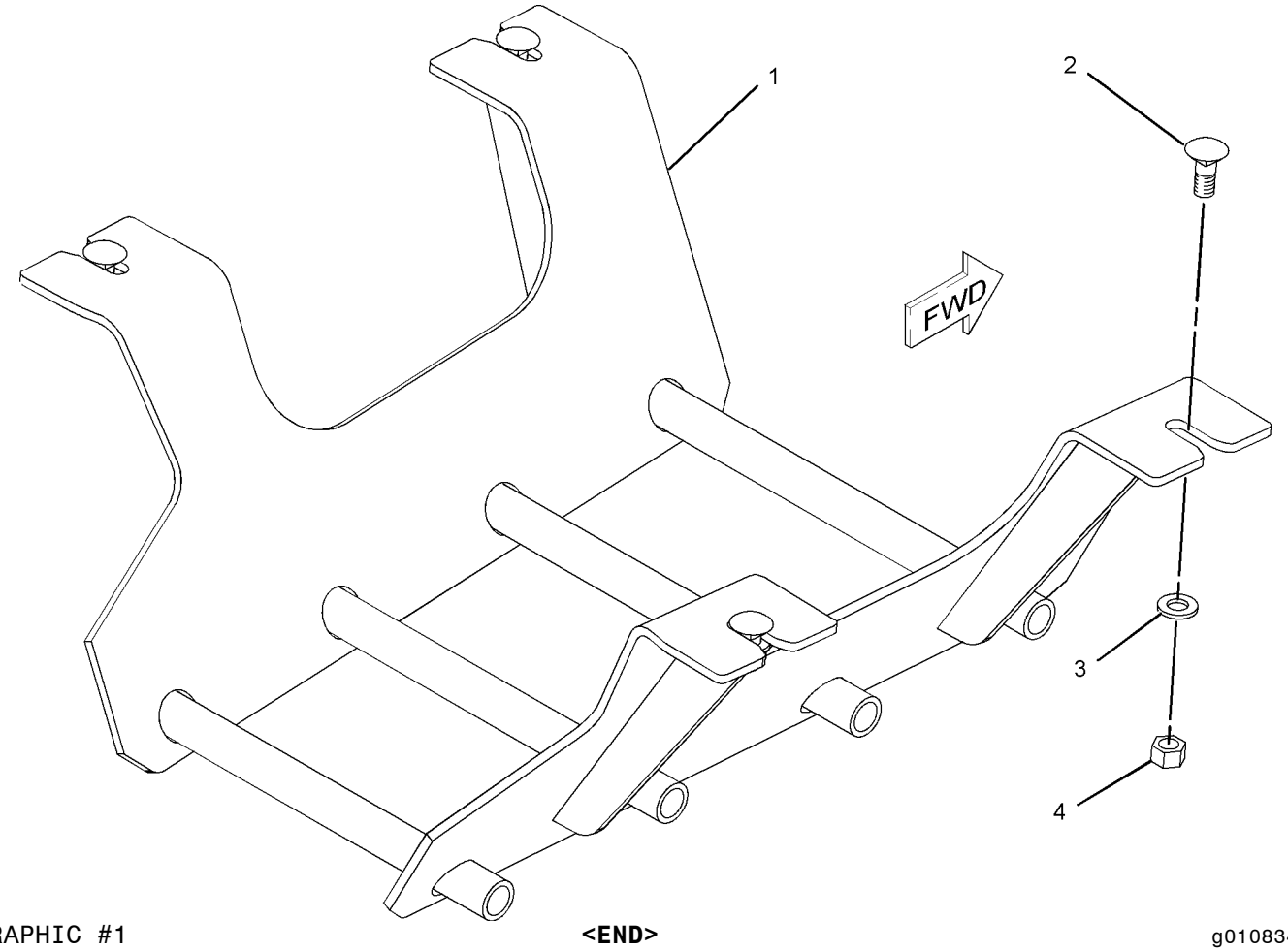

GRAPHIC #1 **<END>** g01083443

338-1421 GUARD GP-LIGHTING

S/N: DPH1-UP
AN ATTACHMENT

SMCS-715L **i03620562**

NOTE	REF NO	GRAPHIC REF	PART NUMBER	QTY	PART NAME 1 2 3 4 5 6 (PRODUCT LEVEL)	SEE PAGE
	1	1	**337-8655**	2	GUARD	
M	2	1	**8T-4200**	2	BOLT (M8X1.25X16-MM)	
	3	1	**8T-4224**	4	WASHER-HARD (8.8X16X2-MM THK)	
M	4	1	**8T-4908**	2	BOLT (M8X1.25X25-MM)	

M-METRIC PART

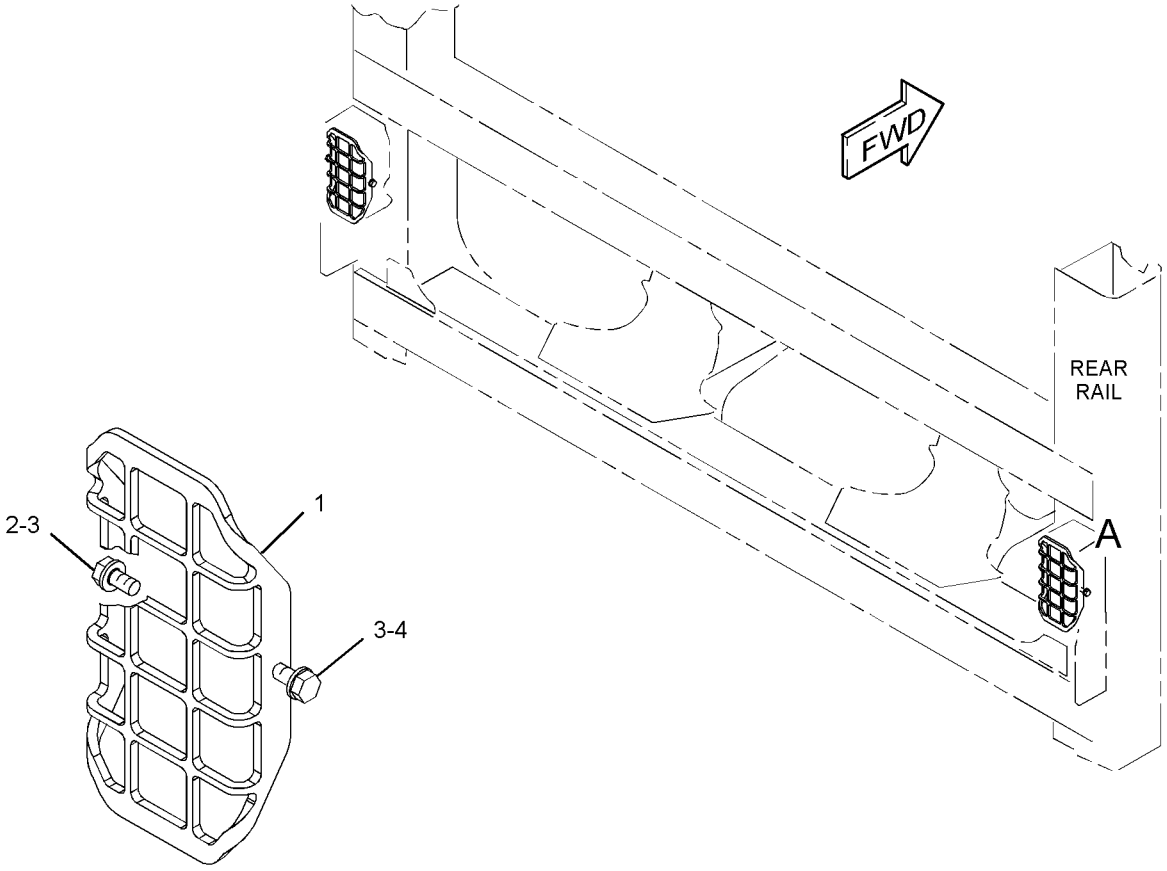

VIEW OF AREA A

GRAPHIC #1 **<END>** g01994458

256-0324 GUARD GP-RADIATOR

S/N: DPH1-UP

AN ATTACHMENT

SMCS-7155 **i02162026**

NOTE	REF NO	GRAPHIC REF	PART NUMBER	QTY	PART NAME 1 2 3 4 5 6 (PRODUCT LEVEL)	SEE PAGE
	1	1	**256-0323**	1	COVER	
M	2	1	**7X-2572**	2	BOLT (M24X3X35-MM)	
	3	1	**8T-4167**	2	WASHER-HARD (26X44X4-MM THK)	

M-METRIC PART

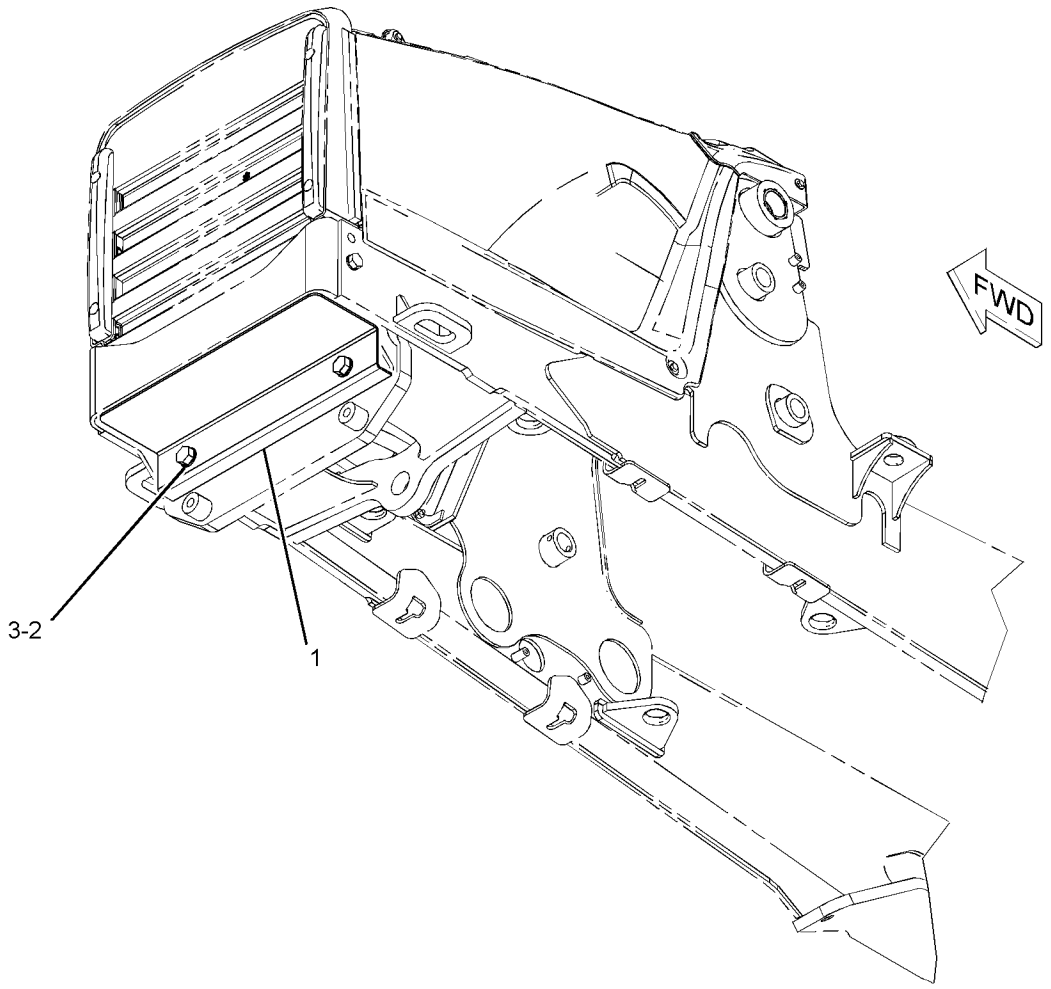

GRAPHIC #1 **<END>** g01096781

FRAME AND BODY

311-8062 HOOD & GUARD GP

S/N: DPH1-UP

PART OF 329-0293 CHASSIS AR

SMCS-7150, 7170, 7251, 7263 **i03318700**

NOTE	REF NO	GRAPHIC REF	PART NUMBER	QTY	PART NAME 1 2 3 4 5 6 (PRODUCT LEVEL)	SEE PAGE
	1	1	**9X-7114**	4	SPACER (8.5X10.15X5.6-MM THK)	
	2	1	**123-0428**	2	BAR	
	3	1	**247-1080**	2	BUMPER AS	
	4	1	*250-3344*	1	COWLING AS	
		1	**244-2041**	1	COWLING	
		1	**250-3331**	1	FILM-STRIPE (YELLOW)	
Y	5	1	*311-8055*	1	HOOD GP-ENGINE	335
	6	1	**317-7180**	1	ENCLOSURE (LH)	
	7	1	**317-7313**	1	ENCLOSURE AS (RH)	
		1	**329-2959**	1	INSULATION	
		1	**317-7181**	1	ENCLOSURE (RH)	
	8	1	**325-1969**	1	BRACE	
	9	1	**325-3639**	1	GUARD AS	
	10	1	**325-5483**	1	GRILL	
	11	1	**7X-0579**	10	WASHER-HARD (8.8X25.5X2-MM THK)	
	12	1	**8T-4121**	8	WASHER-HARD (11X21X2.5-MM THK)	
	13	1	**8T-4123**	2	WASHER (22X35X3.5-MM THK)	
M	14	1	**8T-4136**	2	BOLT (M10X1.5X25-MM)	
M	15	1	**8T-4137**	6	BOLT (M10X1.5X20-MM)	
M	16	1	**8T-4139**	2	BOLT (M12X1.75X30-MM)	
M	17	1	**8T-4141**	2	BOLT (M20X2.5X70-MM)	
M	18	1	**8T-4189**	12	BOLT (M8X1.25X20-MM)	
	19	1	**8T-4223**	2	WASHER-HARD (13.5X25.5X3-MM THK)	
	20	1	**8T-4224**	6	WASHER-HARD (8.8X16X2-MM THK)	
M	21	1	**8T-7547**	4	BOLT (M8X1.25X30-MM)	

M-METRIC PART
Y-SEPARATE ILLUSTRATION

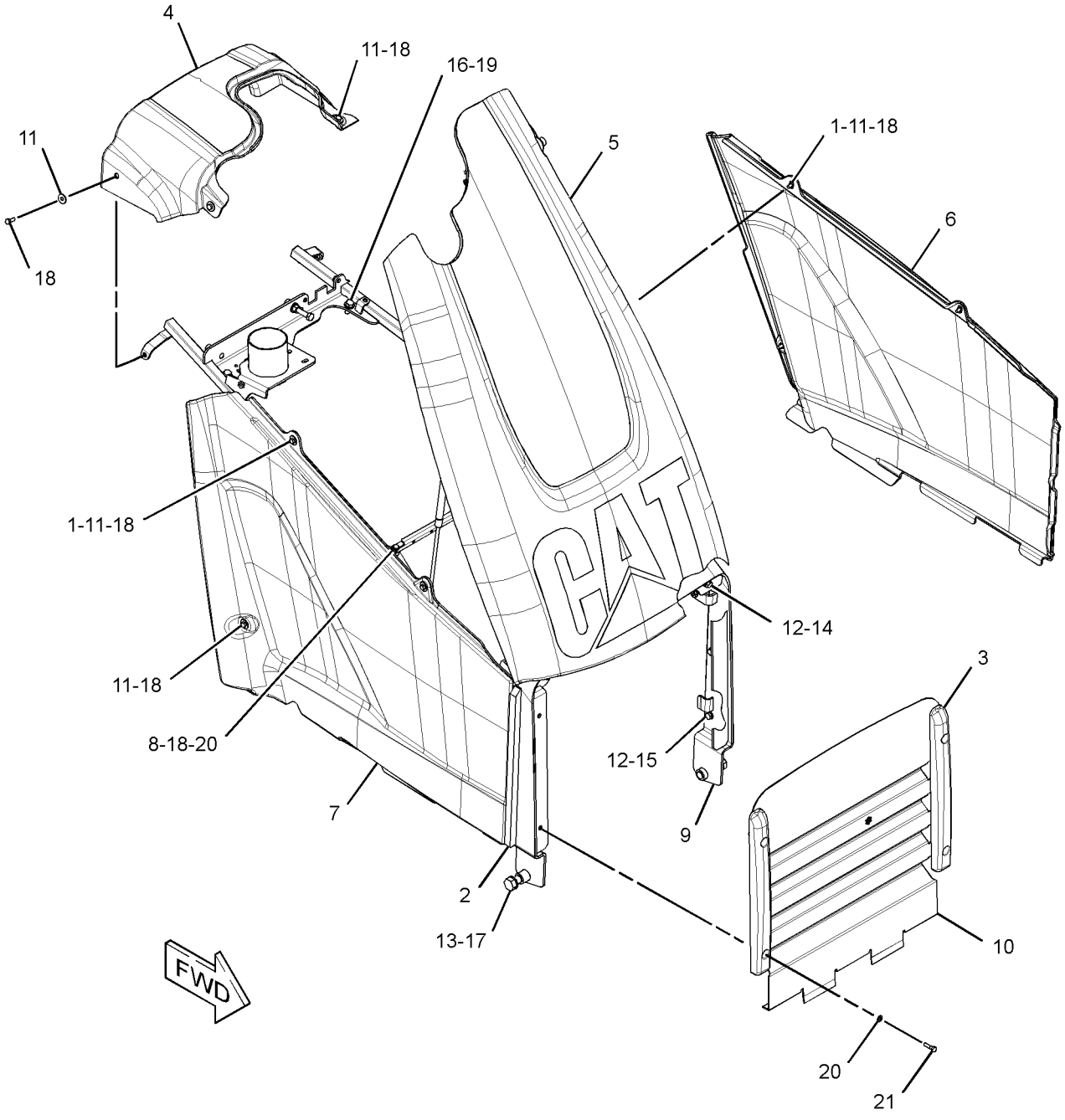

GRAPHIC #1 **<END>** g01620417

FRAME AND BODY

299-3141 HOOD GP-ENGINE

S/N: DPH1-UP

PART OF 311-8055 HOOD GP-ENGINE

SMCS-7251 **i03532120**

NOTE	REF NO	GRAPHIC REF	PART NUMBER	QTY	PART NAME 1 2 3 4 5 6 (PRODUCT LEVEL)	SEE PAGE
	1	1	**5E-8557**	1	CLIP	
E	2	1	**9X-8699**		SEAL (70-CM)	
	3	1	**316-1194**	1	HOOD AS	
	4	1	**341-9304**	1	BRACKET AS	
	5	1	**250-1878**	1	FILM-IDENTIFICATION (CAT)	
	6	1	**250-3330**	1	FILM-STRIPE (YELLOW)	
	7	1	**250-6850**	2	BRACKET AS	
	8	1	**250-6858**	1	LATCH AS (HOOD)	
	9	1	**313-7109**	1	LOCK AS	
	10	1	**251-4375**	1	ROD	
	11	1	**292-3995**	1	HINGE AS	
	12	1	**292-3996**	1	HINGE AS	
M	13	1	**7X-2537**	2	BOLT (M8X1.25X35-MM)	
M	14	1	**8T-4189**	10	BOLT (M8X1.25X20-MM)	
	15	1	**8T-4224**	12	WASHER-HARD (8.8X16X2-MM THK)	

E-ORDER BY THE CENTIMETER
M-METRIC PART

299-3141 **HOOD GP-ENGINE** *(contd.)* **i03532120**

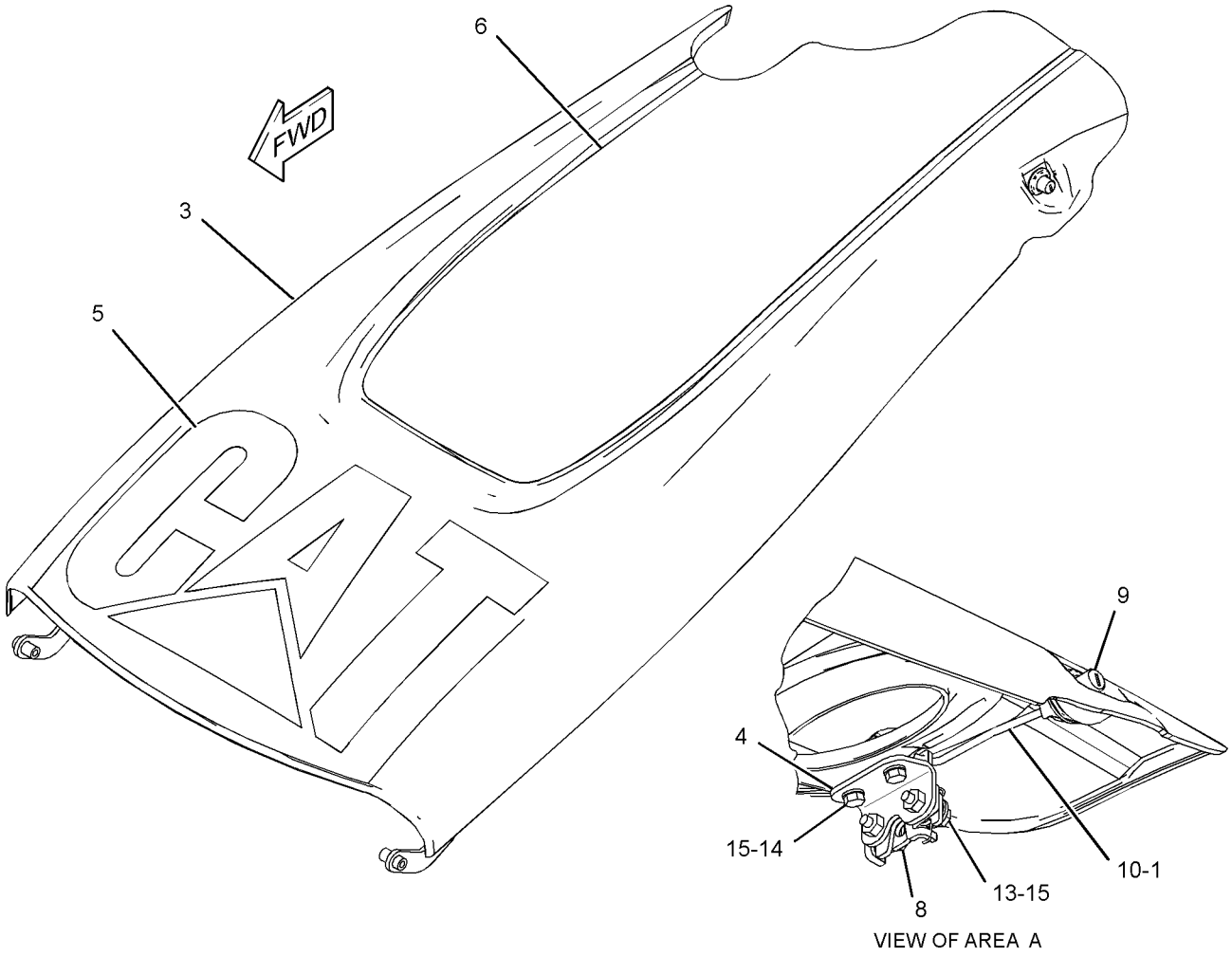

VIEW OF AREA A

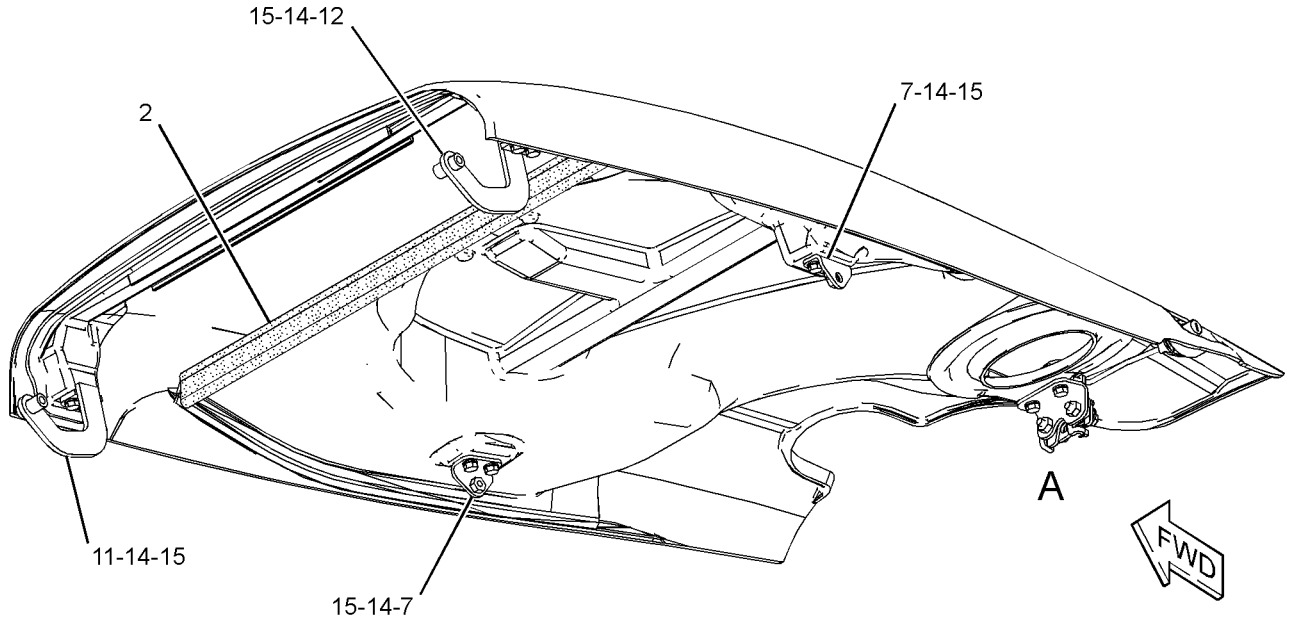

GRAPHIC #1 **<END>** g01355907

311-8055 HOOD GP-ENGINE

S/N: DPH1-UP

PART OF 311-8062 HOOD & GUARD GP

SMCS-7251 **i03018394**

NOTE	REF NO	GRAPHIC REF	PART NUMBER	QTY	PART NAME 1 2 3 4 5 6 (PRODUCT LEVEL)	SEE PAGE
J	1	1	**250-5881**	1	SPRING AS-GAS	
J	2	1	**254-9301**	1	SPRING AS-GAS (LOCKABLE)	
	3	1	**288-1157**	1	FILM-INSTRUCTION (UNLOCK)	
Y	4	1	*299-3141*	1	HOOD GP-ENGINE	333
	5	1	**311-8060**	1	FRAME AS-HOOD	
M		1	**8T-3490**	2	NUT-WELD (M10X1.5-THD)	
M		1	**8T-3612**	6	NUT-WELD (M8X1.25-THD)	
	6	1	**3B-4506**	2	LOCKWASHER	
	7	1	**8T-4223**	2	WASHER-HARD (13.5X25.5X3-MM THK)	
	8	1	**8T-4224**	4	WASHER-HARD (8.8X16X2-MM THK)	
M	9	1	**8T-4244**	2	NUT (M12X1.75-THD)	
M	10	1	**8T-4648**	1	BOLT (M12X1.75X70-MM)	
M	11	1	**8T-6869**	2	BOLT (M8X1.25X60-MM)	
					AVAILABLE REPAIR KIT(S):	
J			**275-0001**	1	KIT-GAS SPRING	
					(INCLUDES BALL STUDS AND CLIPS)	

J-KIT MARKED J SERVICES PART(S) MARKED J
M-METRIC PART
Y-SEPARATE ILLUSTRATION

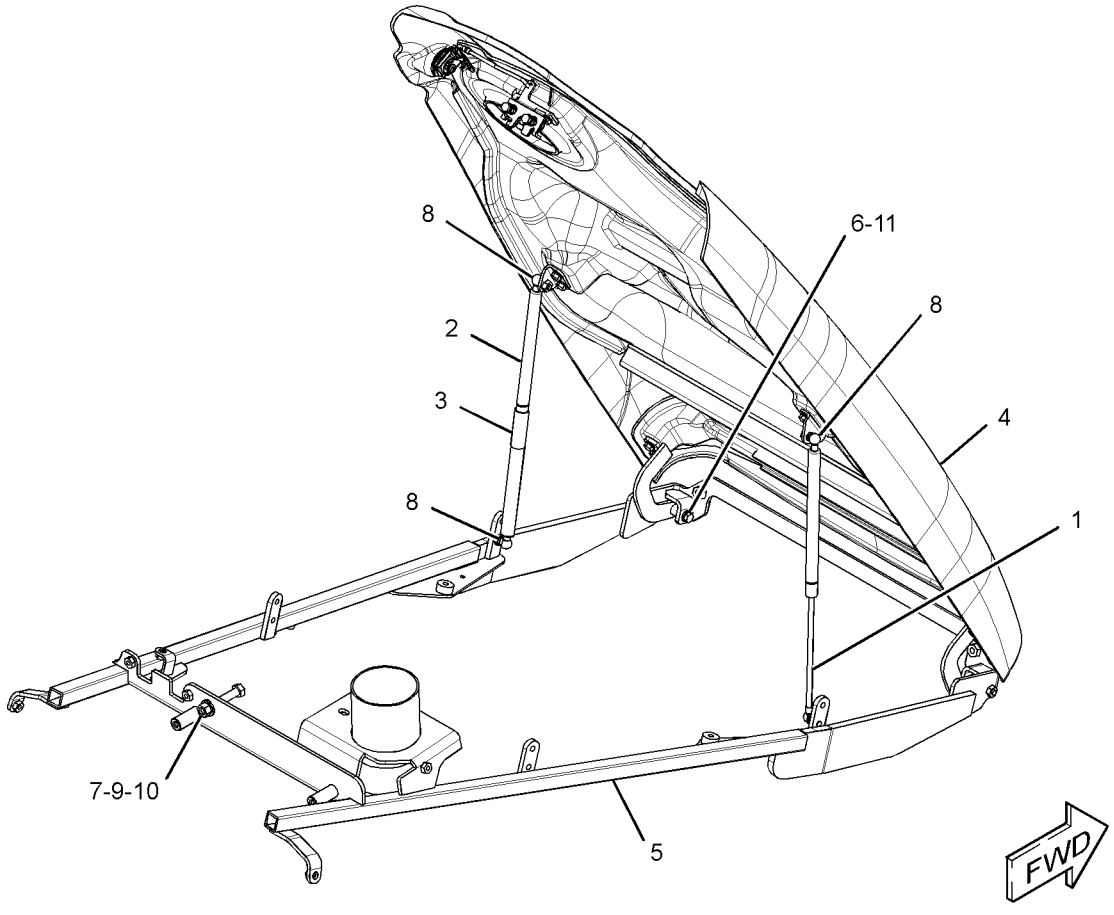

GRAPHIC #1 **<END>** g01601035

320-8639 LINER GP-SOUND SUPPRESSION

S/N: DPH1-UP
PART OF 323-0974, 323-0975 SUPPRESSION AR-SOUND
AN ATTACHMENT

SMCS-1801 **i03090582**

NOTE	REF NO	GRAPHIC REF	PART NUMBER	QTY	PART NAME 1 2 3 4 5 6 (PRODUCT LEVEL)	SEE PAGE
	1	1	**320-8641**	1	INSULATION (RH)	
	2	1	**320-8642**	1	INSULATION (LH)	

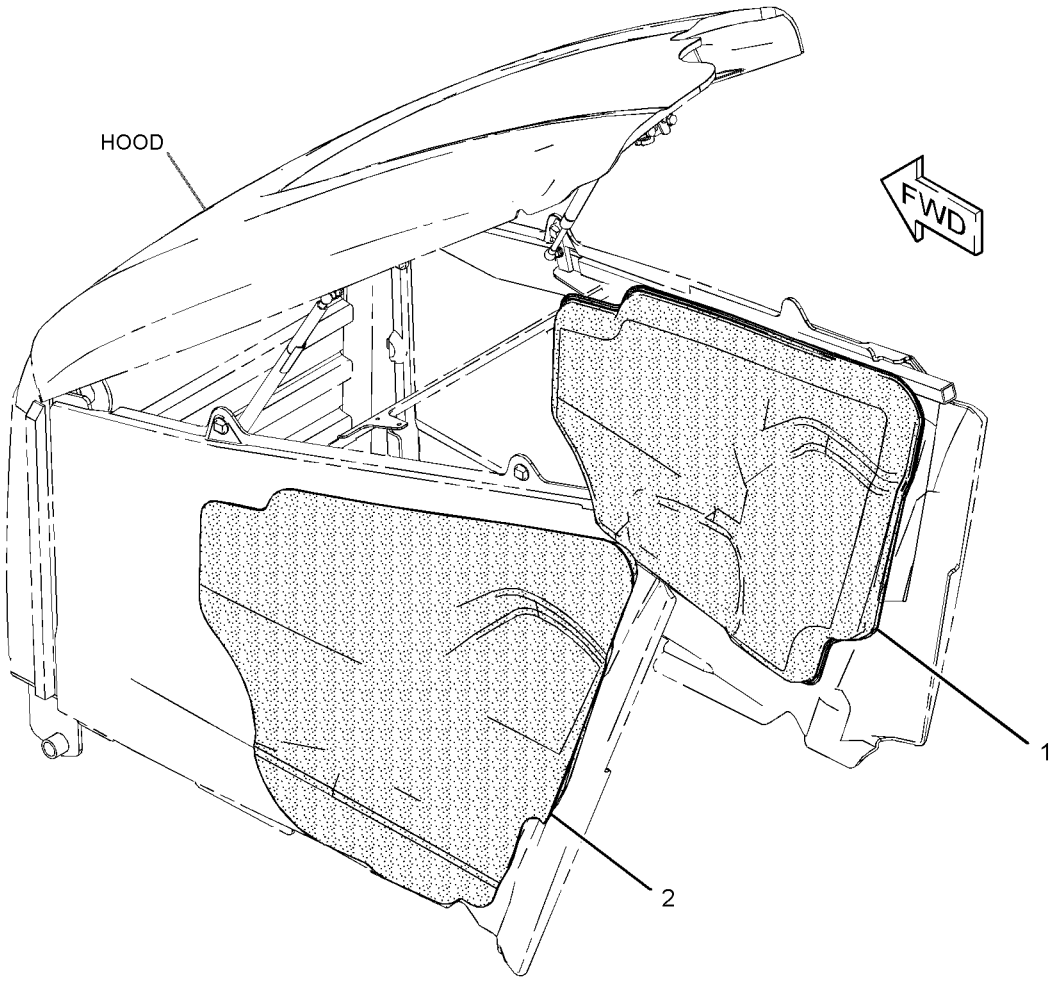

GRAPHIC #1 **<END>** g01592064

323-0974 SUPPRESSION AR-SOUND

S/N: DPH1-UP
AN ATTACHMENT

SMCS-7076, 7261 **i03090560**

NOTE	PART NUMBER	QTY	PART NAME 1 2 3 4 5 6 (PRODUCT LEVEL)	SEE PAGE
Y	*320-8639*	1	LINER GP-SOUND SUPPRESSION	336
Y-SEPARATE ILLUSTRATION				

<END>

323-0975 SUPPRESSION AR-SOUND

S/N: DPH1-UP
AN ATTACHMENT

SMCS-7076, 7261 **i03091705**

NOTE	PART NUMBER	QTY	PART NAME 1 2 3 4 5 6 (PRODUCT LEVEL)	SEE PAGE
Y	*320-8639*	1	LINER GP-SOUND SUPPRESSION	336
Y-SEPARATE ILLUSTRATION				

<END>

345-3672 ACCUMULATOR GP-RIDE CONTROL–CHARGED

S/N: DPH1-UP
PART OF 331-8676 LINES GP-RIDE CONTROL
FIELD REPLACEMENT ORDER 345-3674–PAGE 339
AN ATTACHMENT

SMCS-5077 **i03662271**

NOTE	REF NO	GRAPHIC REF	PART NUMBER	QTY	PART NAME 1 2 3 4 5 6 (PRODUCT LEVEL)	SEE PAGE
	1	1	**224-5132**	1	CAP (GAS VALVE)	
	2	1	**224-5152**	1	VALVE-GAS	
	3	1	**3J-7354**	1	SEAL-O-RING	
	4	1	**1J-9671**	1	SEAL-O-RING	
	5	1	**241-0037**	1	FILM-WARNING (HIGH PRESSURE, READ OMM)	

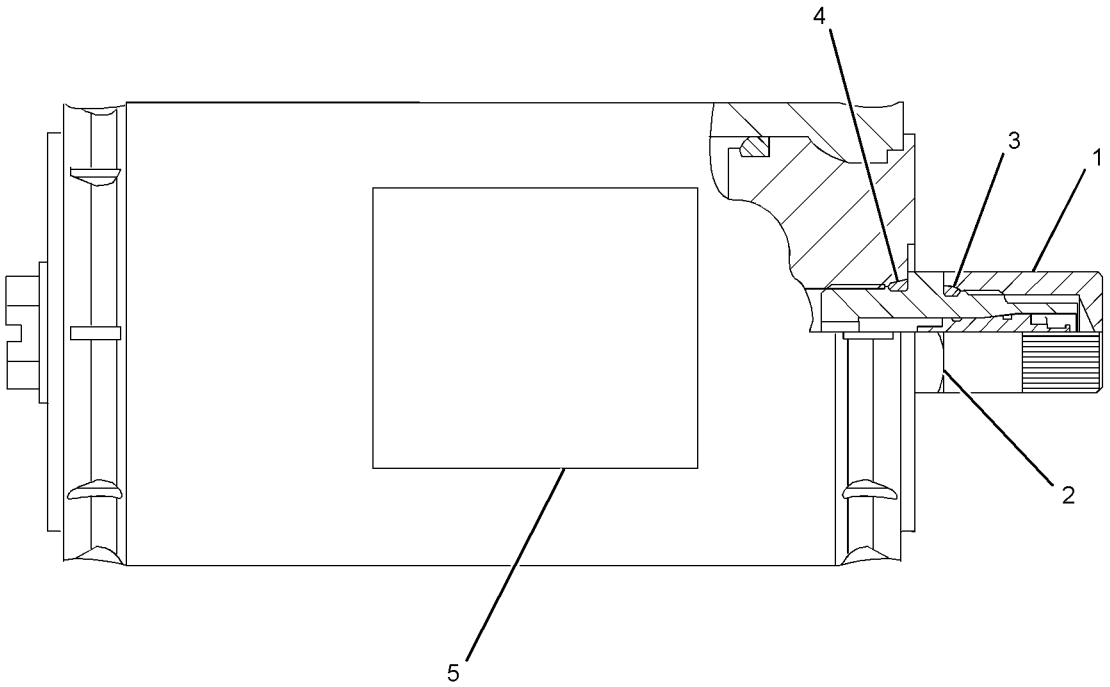

GRAPHIC #1 **<END>** g01965975

345-3674 ACCUMULATOR GP-RIDE CONTROL—UNCHARGED

S/N: DPH1-UP

FIELD REPLACEMENT FOR 345-3672—PAGE 338

SMCS-5077 **i03662277**

NOTE	REF NO	GRAPHIC REF	PART NUMBER	QTY	PART NAME 1 2 3 4 5 6 (PRODUCT LEVEL)	SEE PAGE
	1	1	**224-5132**	1	CAP (GAS VALVE)	
	2	1	**224-5152**	1	VALVE-GAS	
	3	1	**3J-7354**	1	SEAL-O-RING	
	4	1	**1J-9671**	1	SEAL-O-RING	
	5	1	**241-0037**	1	FILM-WARNING (HIGH PRESSURE, READ OMM)	

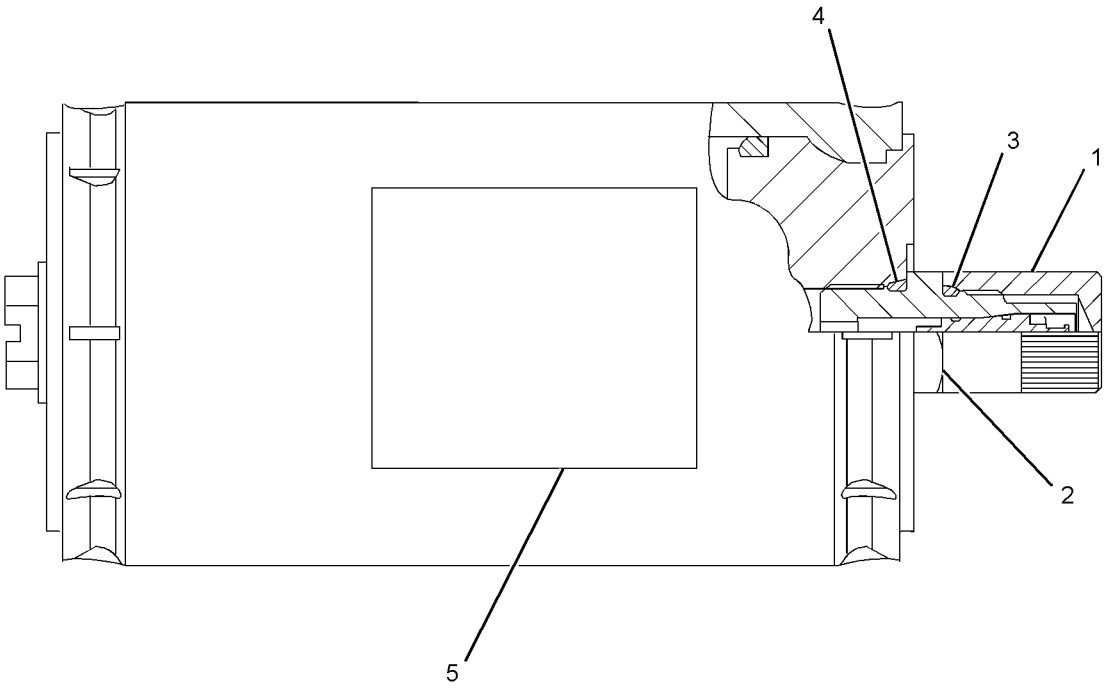

GRAPHIC #1 **<END>** g01966053

HYDRAULIC SYSTEM

332-7953 CONTROL AR-BACKHOE

S/N: DPH1-UP

AN ATTACHMENT

SMCS-5051, 5057, 5059, 5063, 5705, 7265 **i03651181**

NOTE	PART NUMBER	QTY	PART NAME 1 2 3 4 5 6 (PRODUCT LEVEL)	SEE PAGE
Y	*334-3569*	1	CONTROL GP-HYDRAULIC HAND (LOADER)	561
Y	*329-3600*	1	LINES GP-LIFT & TILT	379
Y	*329-3504*	1	LINES GP-LIFT CYLINDER (PARALLEL LIFT)	381
Y	*320-4769*	1	MOUNTING GP-BUCKET (PARALLEL LIFT)	536
Y	*332-9192*	1	VALVE & MTG GP-BANK	416
	251-5625	1	FILM-INSTRUCTION (BUCKET CONTROL)	
			(ON RH CONSOLE)	

Y-SEPARATE ILLUSTRATION

<END>

344-5289 CONTROL AR-RIDE

S/N: DPH1-UP

AN ATTACHMENT

SMCS-5004 **i03670378**

NOTE	PART NUMBER	QTY	PART NAME 1 2 3 4 5 6 (PRODUCT LEVEL)	SEE PAGE
Y	*331-8676*	1	LINES GP-RIDE CONTROL	396
Y	*323-0993*	1	WIRING GP-RIDE CONTROL	222

Y-SEPARATE ILLUSTRATION

<END>

HYDRAULIC SYSTEM

299-4246 COOLER GP-HYD & XMSN OIL

S/N: DPH1-UP

PART OF 297-3233 RADIATOR & HYD OIL COOLER GP

AN ATTACHMENT

SMCS-1374, 1375 **i03035121**

NOTE	REF NO	GRAPHIC REF	PART NUMBER	QTY	PART NAME 1 2 3 4 5 6 (PRODUCT LEVEL)	SEE PAGE
	1	1	**9M-5733**	24	RIVET-POP	
	2	1	**299-4247**	1	CORE AS-OIL COOLER (19 PLATE)	
	3	1	**299-4248**	1	CORE AS-OIL COOLER (12 PLATE)	
M	4	1	**5C-7261**	2	NUT (M8X1.25-THD)	
M	5	1	**8T-7547**	2	BOLT (M8X1.25X30-MM)	
	6	1	**9N-0869**	6	WASHER-HARD (8.8X25.5X2-MM THK)	
	7	1	**9W-4216**	2	SPACER (9X18X7-MM THK)	

M-METRIC PART

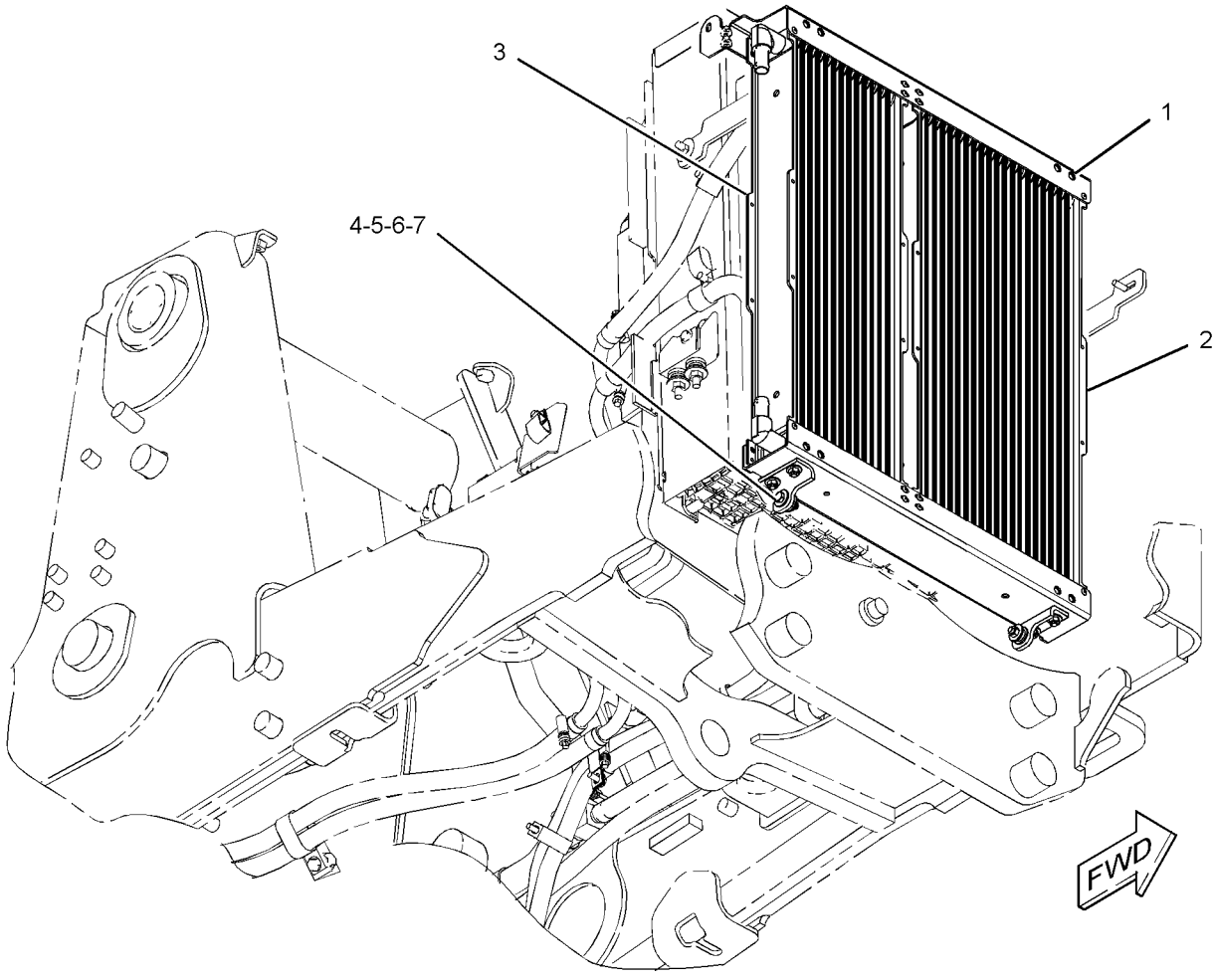

GRAPHIC #1 **<END>** g01522307

304-7847 COOLER GP-HYD & XMSN OIL

S/N: DPH1-UP
PART OF 304-4023 RADIATOR & HYD OIL COOLER GP
AN ATTACHMENT

SMCS-1374, 1375 **i03325889**

NOTE	REF NO	GRAPHIC REF	PART NUMBER	QTY	PART NAME 1 2 3 4 5 6 (PRODUCT LEVEL)	SEE PAGE
M	1	1	**8T-7547**	2	BOLT (M8X1.25X30-MM)	
	2	1	**9M-5733**	32	RIVET-POP	
	3	1	**214-4746**	1	CORE AS-OIL COOLER (HYDRAULIC) (18 PLATE)	
	4	1	**304-7849**	1	CORE AS-OIL COOLER (11 PLATE)	
M	5	1	**5C-7261**	2	NUT (M8X1.25-THD)	
	6	1	**9N-0869**	6	WASHER-HARD (8.8X25.5X2-MM THK)	
	7	1	**9W-4216**	2	SPACER (9X18X7-MM THK)	

M-METRIC PART

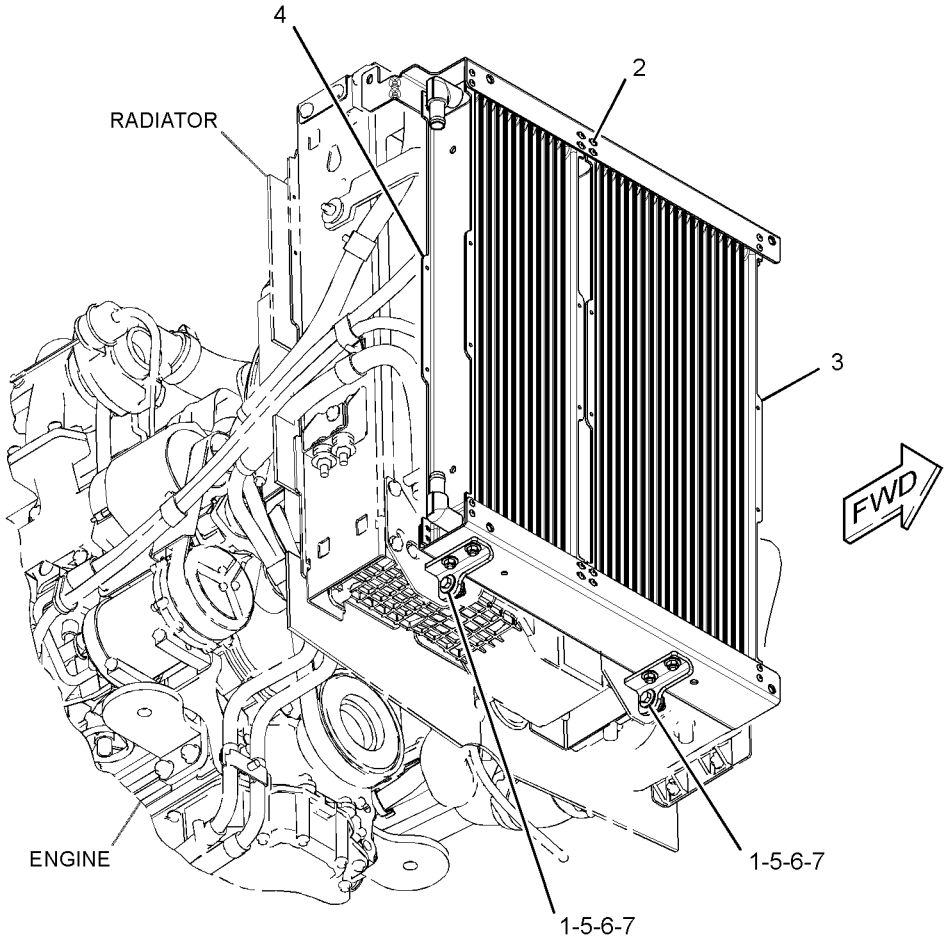

GRAPHIC #1 **<END>** g01597733

320-5937 CYLINDER GP-BACKHOE BUCKET

S/N: DPH1-UP
90-MM (3.54-IN) BORE X 852-MM (33.54-IN) STROKE
PART OF 334-0682, 334-0683, 350-6931, 350-6932, 350-6941, 350-6942 BACKHOE AR-EXTENDABLE STICK, 334-0681, 350-6930 BACKHOE AR-STANDARD STICK AN ATTACHMENT

SMCS-5457 **i03693864**

NOTE	REF NO	GRAPHIC REF	PART NUMBER	QTY	PART NAME 1 2 3 4 5 6 (PRODUCT LEVEL)	SEE PAGE
	1	1	**323-2424**	1	ROD AS	
	1A	1	**9R-3092**	2	BEARING-SLEEVE	
	2	1	**323-2431**	1	CYLINDER HEAD AS	
	2A	1	**323-2470**	1	BEARING	
		1	**338-2415**	1	SEAL-WIPER	
		1	**338-2445**	1	SEAL-U-CUP	
		1	**340-9325**	1	SEAL-O-RING	
	3	1	**323-2433**	1	PISTON AS	
		1	**144-5287**	1	SEAL-PISTON	
		1	**340-9308**	1	SEAL-O-RING	
		1	**343-8051**	2	RING-WEAR	
	4	1	**323-2435**	1	CYLINDER AS-HYDRAULIC	
	4A	1	**9R-3092**	2	BEARING-SLEEVE	
	5	1	**350-3842**	2	SET SCREW (M8X1.25X10-MM)	
	6	1	**7J-9108**	2	SEAL-O-RING	
					AVAILABLE REPAIR KIT(S):	
			324-0386	1	KIT-SEAL (BUCKET CYLINDER)	

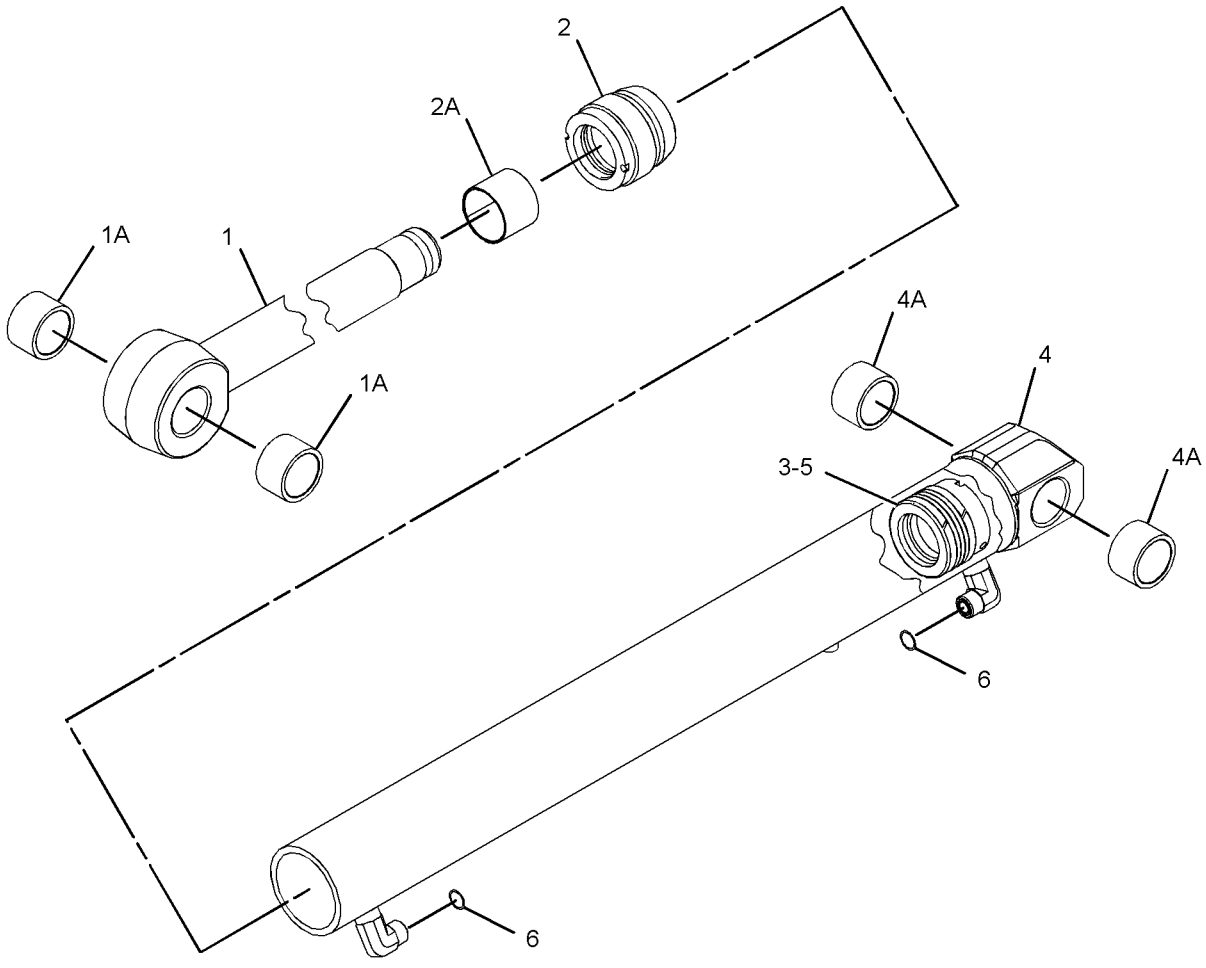

GRAPHIC #1 **<END>** g01993461

HYDRAULIC SYSTEM

320-5936 CYLINDER GP-BOOM

S/N: DPH1-UP
110-MM (4.33-IN) BORE X 942-MM (37-IN) STROKE
PART OF 334-0682, 334-0683, 350-6931, 350-6932, 350-6941, 350-6942 BACKHOE AR-EXTENDABLE STICK, 334-0681, 350-6930 BACKHOE AR-STANDARD STICK AN ATTACHMENT

SMCS-5456 **i03693880**

NOTE	REF NO	GRAPHIC REF	PART NUMBER	QTY	PART NAME 1 2 3 4 5 6 (PRODUCT LEVEL)	SEE PAGE
	1	1	**324-0345**	1	ROD AS	
	1A	1	**331-1520**	1	BEARING	
	2	1	**324-0352**	1	HEAD AS	
	2A	1	**323-2470**	1	BEARING	
		1	**338-2415**	1	SEAL-WIPER	
		1	**338-2445**	1	SEAL-U-CUP	
		1	**340-9313**	1	SEAL-O-RING	
	3	1	**324-0354**	1	PISTON AS	
		1	**340-6338**	1	SEAL-PISTON	
		1	**340-9308**	1	SEAL-O-RING	
		1	**343-8052**	2	RING-WEAR	
	4	1	**324-0357**	1	CYLINDER AS-HYDRAULIC	
	4A	1	**212-8960**	2	BEARING	
	5	1	**350-3842**	2	SET SCREW (M8X1.25X10-MM)	
	6	1	**7J-9108**	1	SEAL-O-RING	
					AVAILABLE REPAIR KIT(S):	
			324-0399	1	KIT-SEAL (BOOM CYLINDER)	

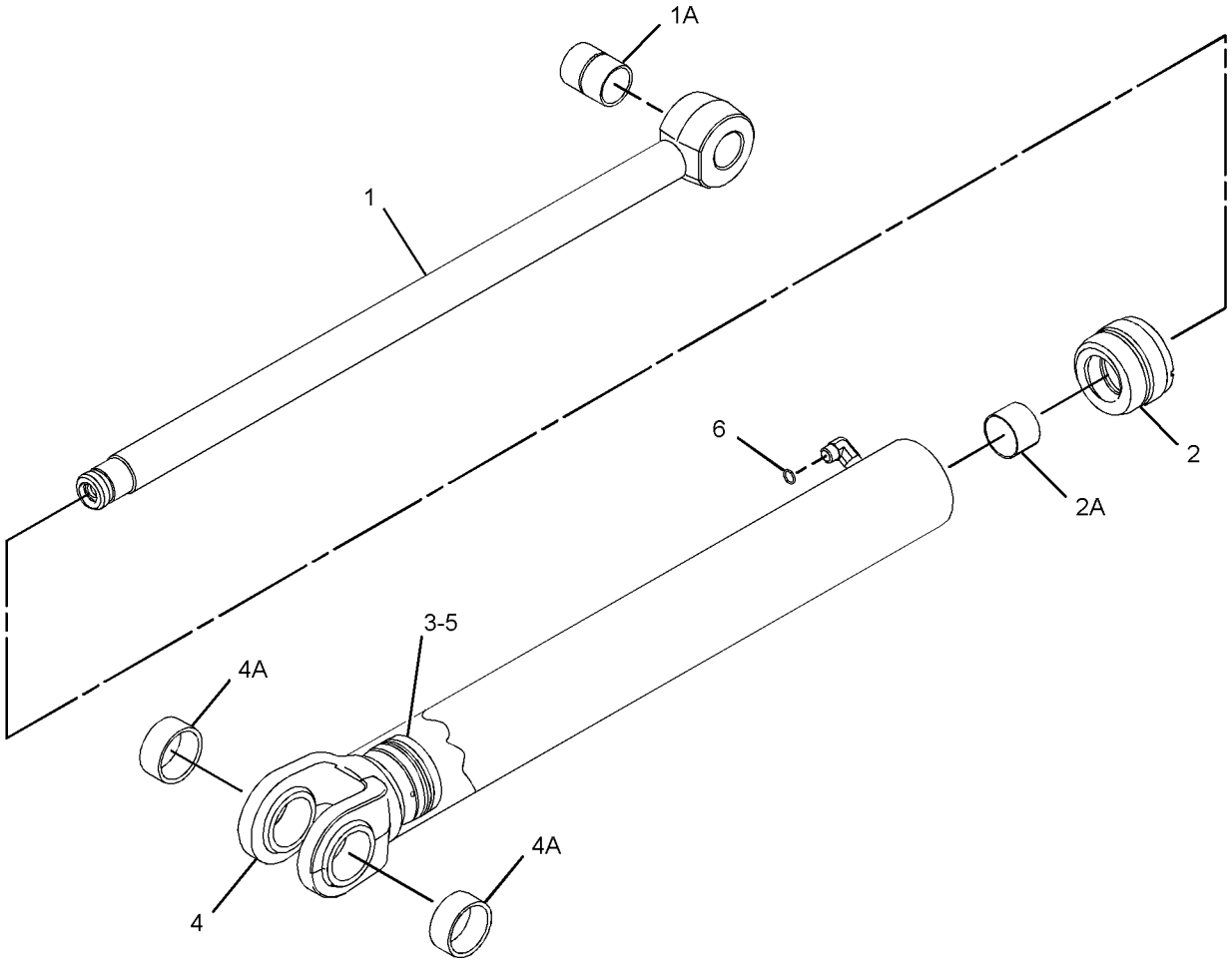

GRAPHIC #1 **<END>** g01993673

269-0381 CYLINDER GP-HYDRAULIC

S/N: DPH1-UP
100-MM (3.9-IN) BORE X 254-MM (10-IN) STROKE
PART OF 320-5933 FRAME GP-SLIDING

SMCS-7562 **i03656615**

NOTE	REF NO	GRAPHIC REF	PART NUMBER	QTY	PART NAME 1 2 3 4 5 6 (PRODUCT LEVEL)	SEE PAGE
	1	1	**3B-8489**	1	FITTING-GREASE	
	2	1	**3N-5739**	1	SPRING	
	3	1	**6E-1478**	1	PLUNGER	
	4	1	**102-3582**	1	WASHER (11X19.5X2.5-MM THK)	
	5	1	**233-0619**	1	SEAL-WIPER	
	6	1	**233-2589**	1	RING-WEAR	
	7	1	**233-2613**	1	BEARING	
	8	1	*269-0382*	1	CYLINDER AS-HYDRAULIC	
	8A	1	**9T-2883**	2	BEARING	
	9	1	*269-0386*	1	ROD AS	
	9A	1	**274-4274**	1	BEARING-SLEEVE	
	10	1	**9X-4611**	1	SEAL-O-RING	
M	11	1	**9X-6611**	1	SETSCREW-SOCKET (M10X1.5X16-MM)	
	12	1	**140-7649**	1	SEAL-PISTON	
	13	1	**167-2183**	1	SEAL AS-BUFFER	
	14	1	**167-2303**	1	SEAL-U-CUP	
	15	1	**2K-6830**	1	RING-BACKUP	
	16	1	**2Y-5821**	1	RING	
	17	1	**3E-6735**	1	SEAL-O-RING	

M-METRIC PART

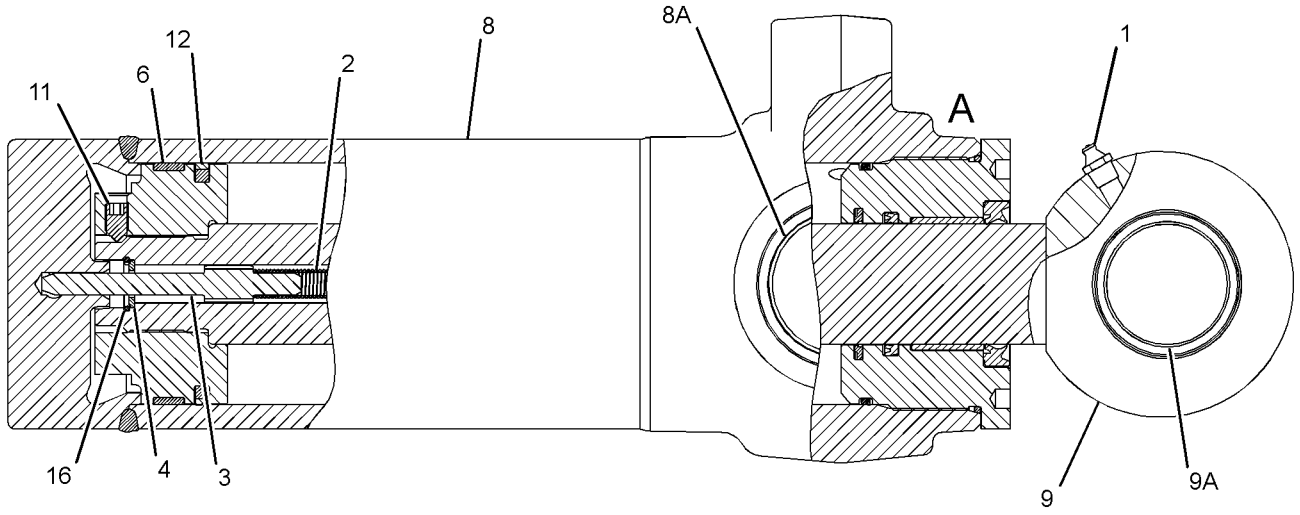

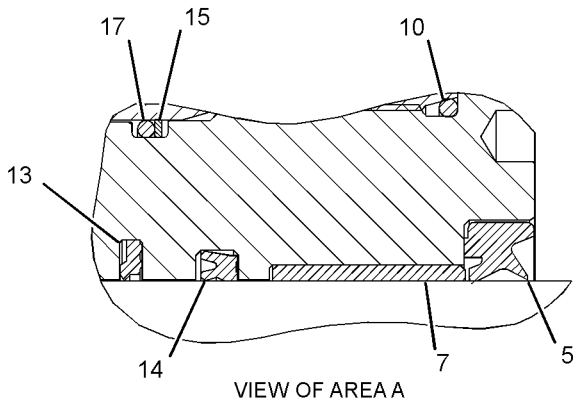

VIEW OF AREA A

GRAPHIC #1 **<END>** g01987994

HYDRAULIC SYSTEM

279-5556 CYLINDER GP-HYDRAULIC

S/N: DPH1-UP
100-MM (3.9-IN) BORE X 254-MM (10-IN) STROKE
PART OF 320-5933 FRAME GP-SLIDING

SMCS-7562 **i03656618**

NOTE	REF NO	GRAPHIC REF	PART NUMBER	QTY	PART NAME 1 2 3 4 5 6 (PRODUCT LEVEL)	SEE PAGE
	1	1	**3B-8489**	1	FITTING-GREASE	
	2	1	**3N-5739**	1	SPRING	
	3	1	**6E-1478**	1	PLUNGER	
	4	1	**102-3582**	1	WASHER (11X19.5X2.5-MM THK)	
	5	1	**233-0619**	1	SEAL-WIPER	
	6	1	**233-2589**	1	RING-WEAR	
	7	1	**233-2613**	1	BEARING	
	8	1	*269-0386*	1	ROD AS	
	8A	1	**274-4274**	1	BEARING-SLEEVE	
	9	1	**9X-4611**	1	SEAL-O-RING	
M	10	1	**9X-6611**	1	SETSCREW-SOCKET (M10X1.5X16-MM)	
	11	1	*279-5557*	1	CYLINDER AS-HYDRAULIC	
	11A	1	**9T-2883**	2	BEARING	
	12	1	**140-7649**	1	SEAL-PISTON	
	13	1	**167-2183**	1	SEAL AS-BUFFER	
	14	1	**167-2303**	1	SEAL-U-CUP	
	15	1	**2K-6830**	1	RING-BACKUP	
	16	1	**2Y-5821**	1	RING	
	17	1	**3E-6735**	1	SEAL-O-RING	

M-METRIC PART

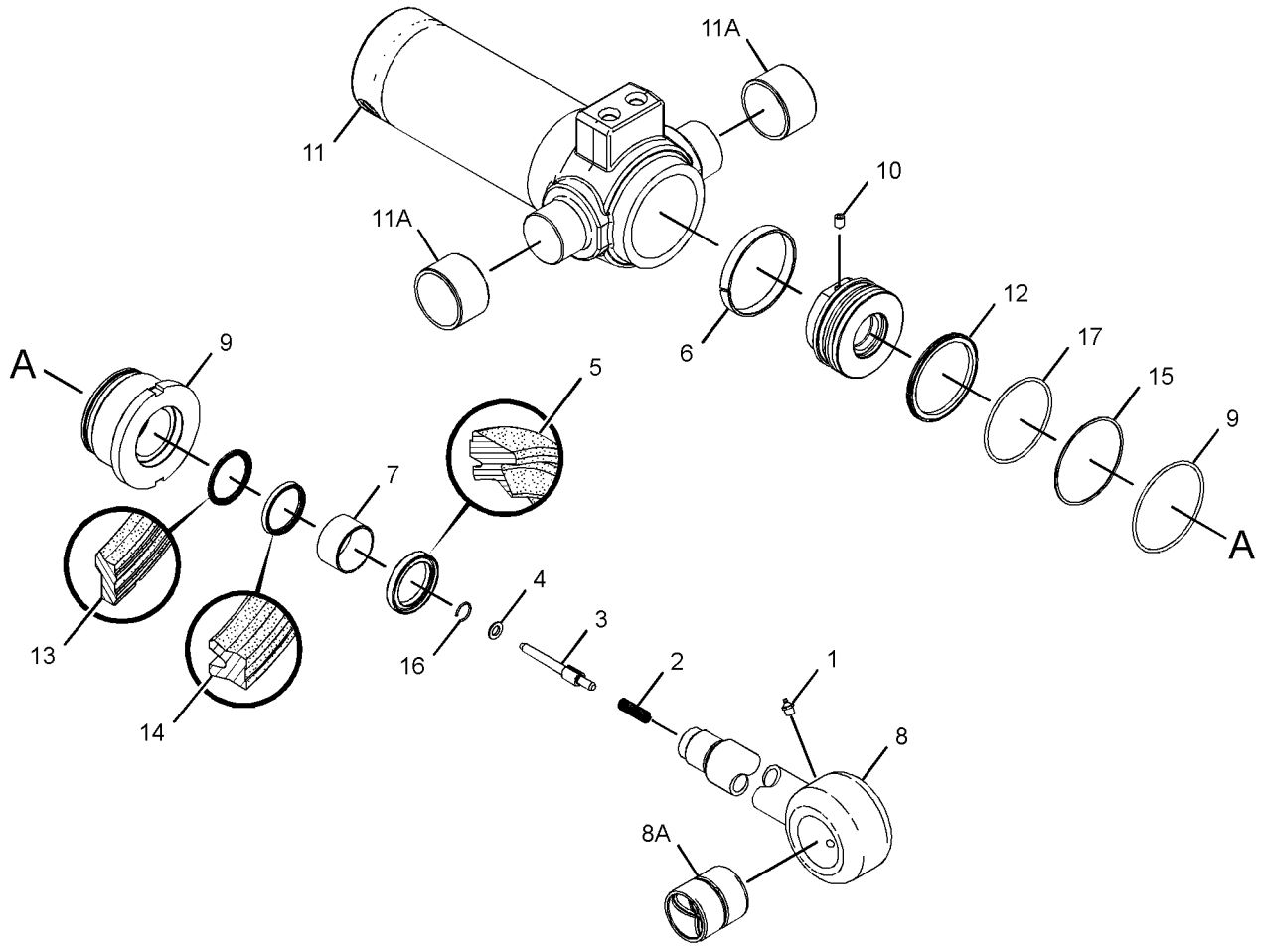

GRAPHIC #1 **<END>** g01987955

320-5934 CYLINDER GP-LIFT–RH

S/N: DPH1-UP
80-MM (3.15-IN) BORE X 704-MM (27.7-IN) STROKE
PART OF 325-1021 LOADER AR

SMCS-5102 **i03694774**

NOTE	REF NO	GRAPHIC REF	PART NUMBER	QTY	PART NAME 1 2 3 4 5 6 (PRODUCT LEVEL)	SEE PAGE
	1	1	**6V-8398**	2	SEAL-O-RING	
	2	1	**323-4212**	1	ROD AS	
	2A	1	**9R-0153**	2	BEARING-SLEEVE	
	3	1	**323-4219**	1	HEAD AS	
		1	**340-9315**	1	SEAL-O-RING	
	4	1	**323-4221**	1	PISTON AS	
		1	**161-7147**	1	SEAL-PISTON	
		1	**343-8050**	2	RING-WEAR	
	5	1	**323-4224**	1	CYLINDER AS-HYDRAULIC	
	5A	1	**9R-0153**	2	BEARING-SLEEVE	
	6	1	**350-3842**	2	SET SCREW (M8X1.25X10-MM)	
					AVAILABLE REPAIR KIT(S):	
			324-0356	1	KIT-SEAL (LIFT CYLINDER)	

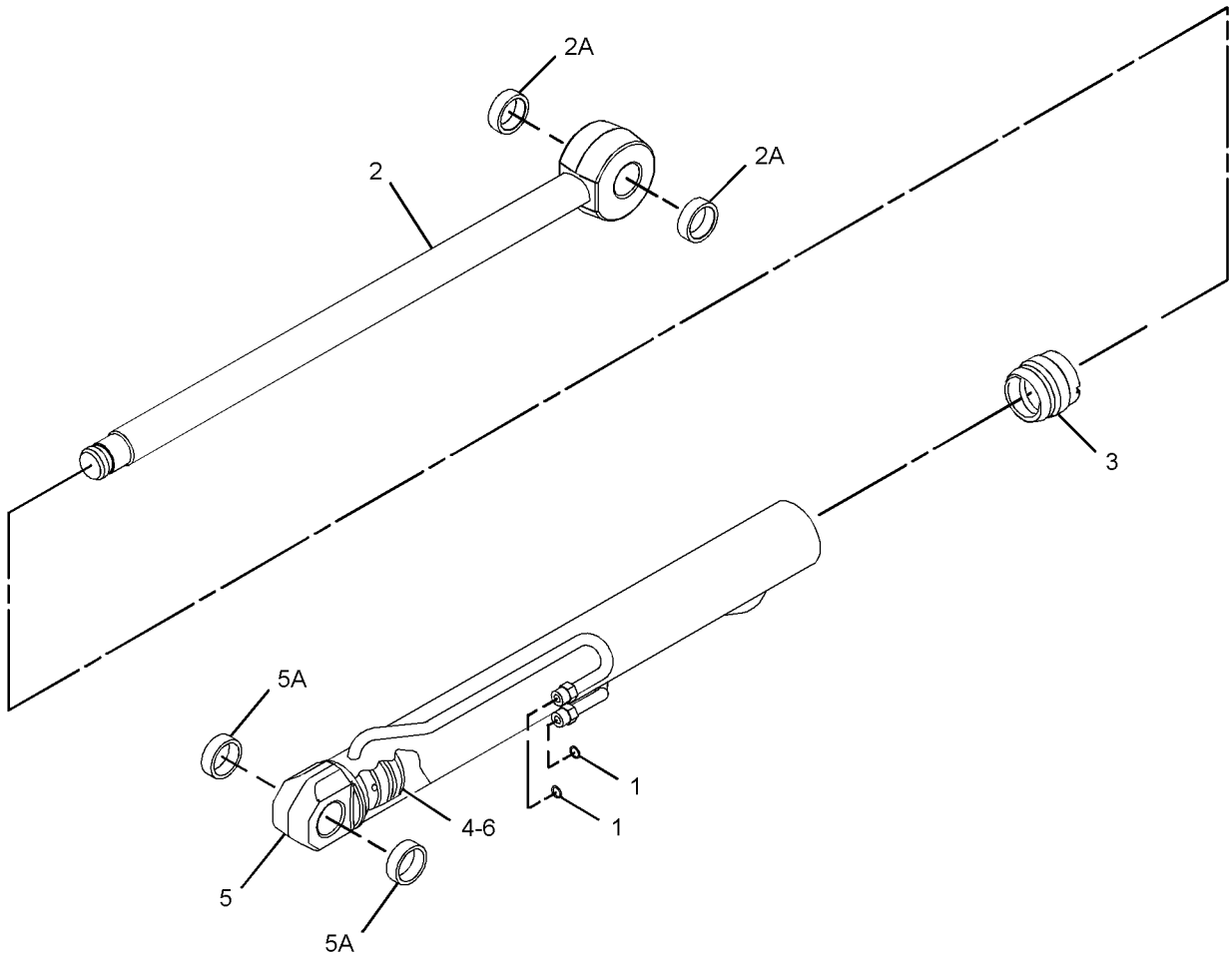

GRAPHIC #1 **<END>** g01995199

HYDRAULIC SYSTEM

351-9352 CYLINDER GP-LIFT–LH

S/N: DPH1-UP
80-MM (3.15-IN) BORE X 704-MM (27.7-IN) STROKE
PART OF 325-1021 LOADER AR

SMCS-5102 **i03695665**

NOTE	REF NO	GRAPHIC REF	PART NUMBER	QTY	PART NAME 1 2 3 4 5 6 (PRODUCT LEVEL)	SEE PAGE
	1	1	**6V-8398**	2	SEAL-O-RING	
	2	1	**323-4212**	1	ROD AS	
	2A	1	**9R-0153**	2	BEARING-SLEEVE	
	3	1	**323-4219**	1	HEAD AS	
		1	**340-9315**	1	SEAL-O-RING	
	4	1	**323-4221**	1	PISTON AS	
		1	**161-7147**	1	SEAL-PISTON	
		1	**343-8050**	2	RING-WEAR	
	5	1	**350-3842**	2	SET SCREW (M8X1.25X10-MM)	
	6	1	**351-9353**	1	CYLINDER AS-HYDRAULIC	
	6A	1	**9R-0153**	2	BEARING-SLEEVE	
					AVAILABLE REPAIR KIT(S):	
			324-0356	1	KIT-SEAL (LIFT CYLINDER)	

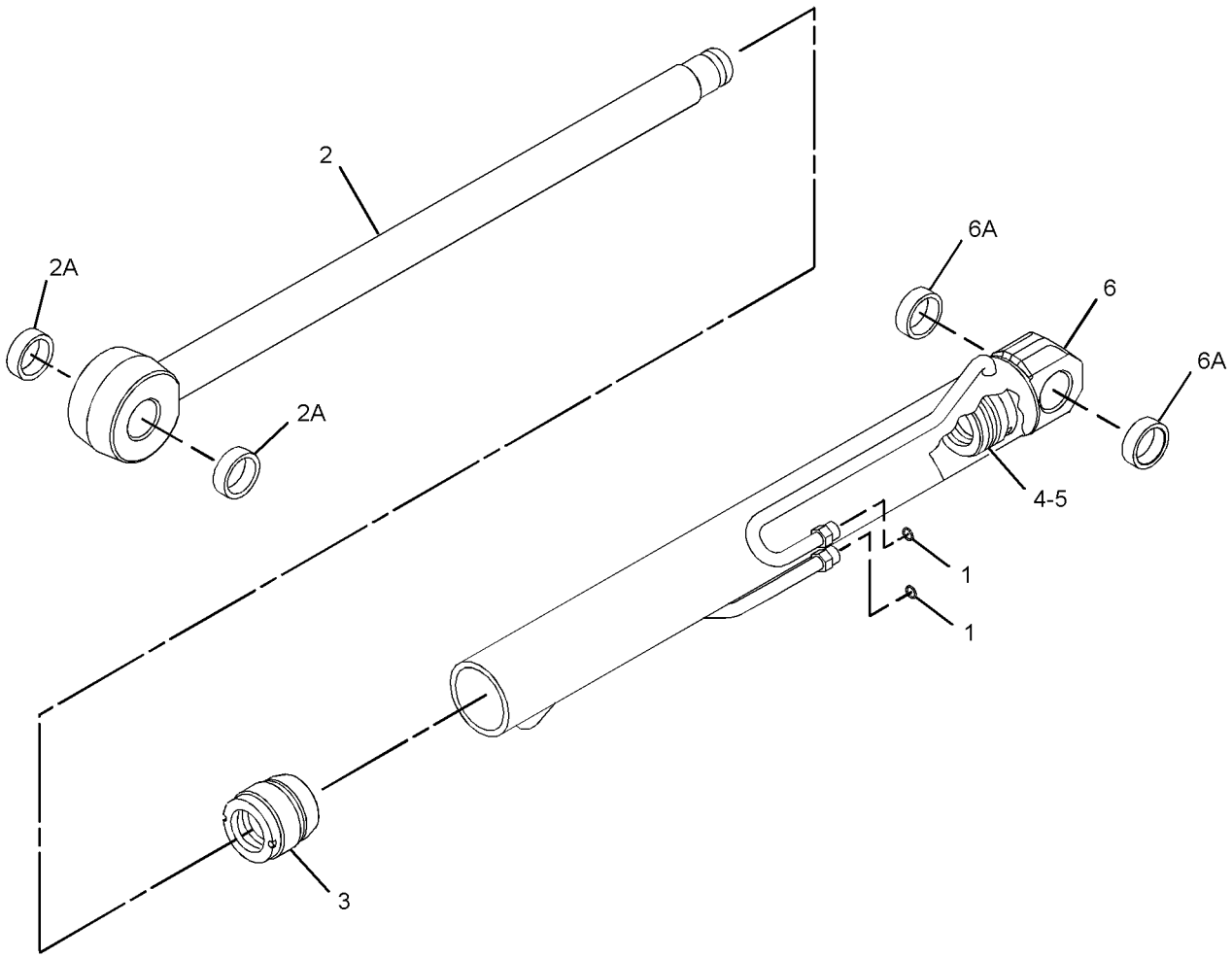

GRAPHIC #1 **<END>** g01995814

226-5540 CYLINDER GP-MULTIPURPOSE BUKT

S/N: DPH1-UP
76-MM (2.99-IN) BORE X 262-MM (10.31-IN) STROKE
PART OF 318-7246, 318-7247, 318-7248, 320-9948, 320-9950 BUCKET
AR-MULTIPURPOSE
AN ATTACHMENT

SMCS-5457 **i02983289**

NOTE	REF NO	GRAPHIC REF	PART NUMBER	QTY	PART NAME 1 2 3 4 5 6 (PRODUCT LEVEL)	SEE PAGE
	1	1	**3B-8489**	2	FITTING-GREASE	
	2	1	**9S-8004**	2	PLUG	
	3	1	**3J-1907**	2	SEAL-O-RING	
	4	1	**9T-4007**	2	BEARING	
					AVAILABLE REPAIR KIT(S):	
			230-9357	1	KIT-SEAL (BUCKET CYLINDER)	
					(INCLUDES WIPER SEAL, O-RINGS, MOISTURE EXCLUDER & POLYPAK)	

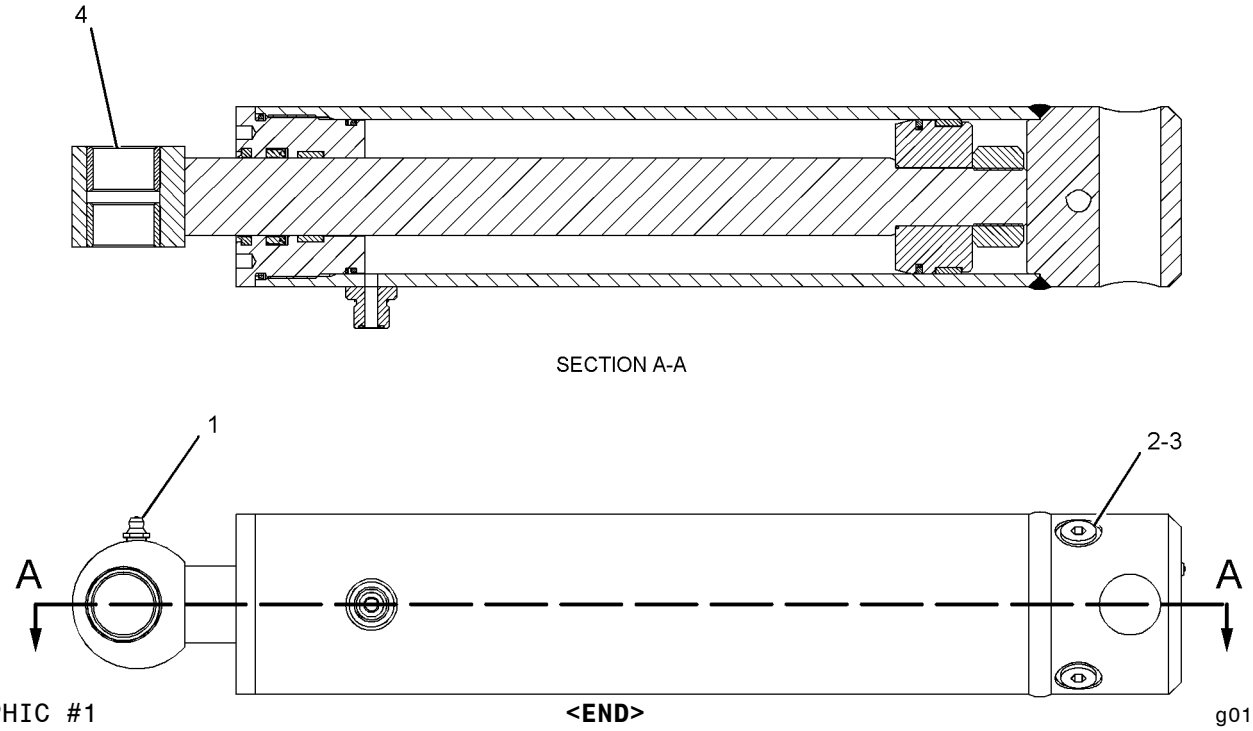

GRAPHIC #1 **<END>** g01086486

HYDRAULIC SYSTEM

320-5938 CYLINDER GP-STABILIZER

S/N: DPH1-UP
70-MM (2.75-IN) BORE X 700-MM (27.55-IN) STROKE
PART OF 327-0110, 327-0111 FRAME AR-LOADER
AN ATTACHMENT

SMCS-5468 **i03693801**

NOTE	REF NO	GRAPHIC REF	PART NUMBER	QTY	PART NAME 1 2 3 4 5 6 (PRODUCT LEVEL)	SEE PAGE
	1	1	**324-0496**	1	CYLINDER HEAD AS	
	1A	1	**323-2465**	1	BEARING-SLEEVE	
		1	**338-2412**	1	SEAL-WIPER	
		1	**338-2442**	1	SEAL-U-CUP	
		1	**340-9308**	1	SEAL-O-RING	
	2	1	**324-0498**	1	PISTON AS	
		1	**161-7145**	1	SEAL-PISTON	
		1	**340-6272**	2	RING-WEAR	
		1	**340-9311**	1	SEAL-O-RING	
	3	1	**324-0505**	1	ROD AS-HYDRAULIC CYLINDER	
	4	1	**324-0516**	1	CYLINDER AS-HYDRAULIC	
	5	1	**350-3842**	2	SET SCREW (M8X1.25X10-MM)	
	6	1	**6V-8397**	2	SEAL-O-RING	
					AVAILABLE REPAIR KIT(S):	
			324-0355	1	KIT-SEAL (STABILIZER CYLINDER)	

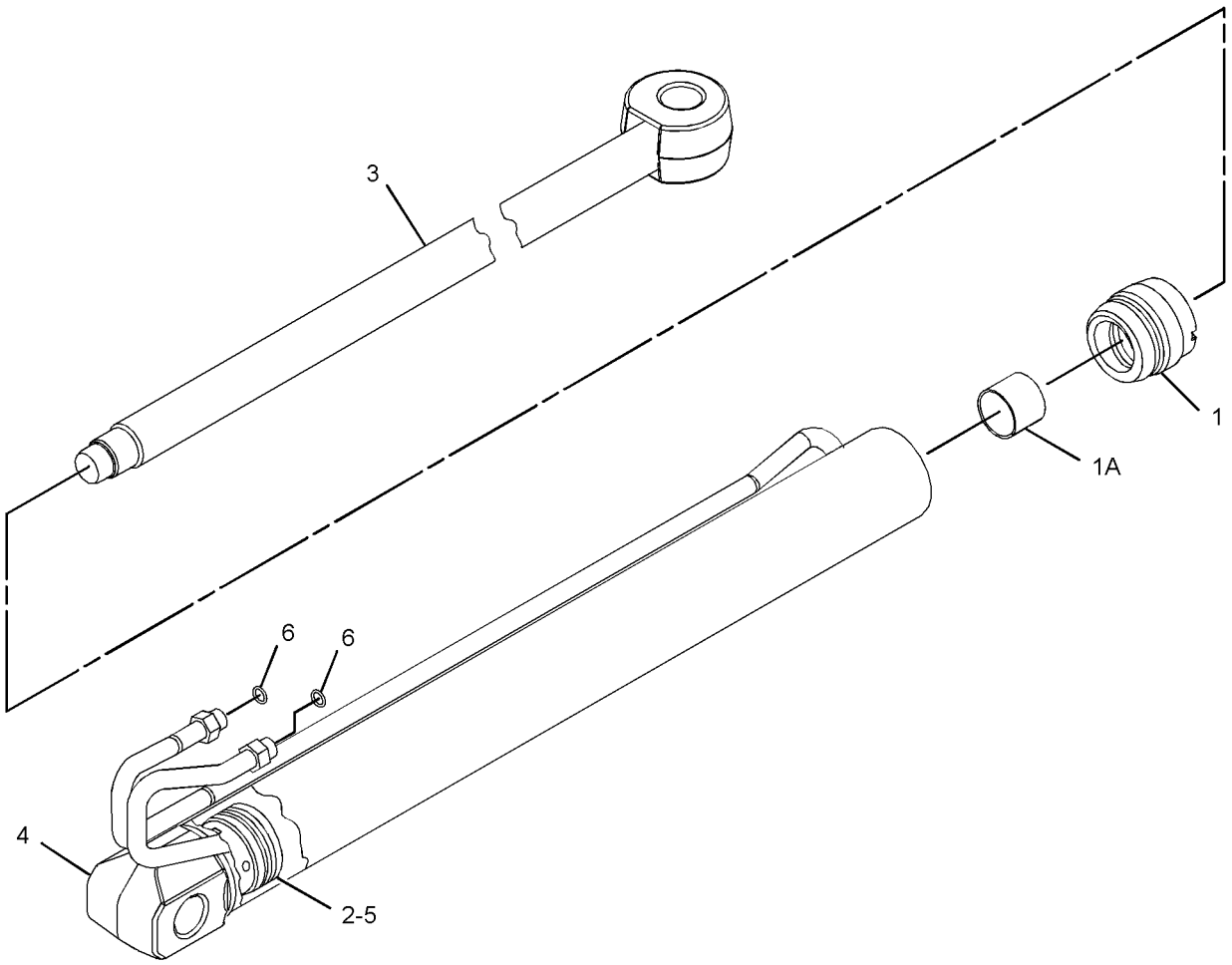

GRAPHIC #1 **<END>** g01993459

320-5932 CYLINDER GP-STICK

S/N: DPH1-UP
110-MM (4.3-IN) BORE X 677-MM (26.65-IN) STROKE
PART OF 334-0682, 334-0683, 350-6931, 350-6932, 350-6941, 350-6942 BACKHOE AR-EXTENDABLE STICK, 334-0681, 350-6930 BACKHOE AR-STANDARD STICK AN ATTACHMENT

SMCS-5458 **i03693866**

NOTE	REF NO	GRAPHIC REF	PART NUMBER	QTY	PART NAME 1 2 3 4 5 6 (PRODUCT LEVEL)	SEE PAGE
	1	1	**6V-8398**	1	SEAL-O-RING	
	2	1	**324-0352**	1	HEAD AS	
	2A	1	**323-2470**	1	BEARING	
		1	**340-9313**	1	SEAL-O-RING	
		1	**338-2415**	1	SEAL-WIPER	
		1	**338-2445**	1	SEAL-U-CUP	
	3	1	**324-0354**	1	PISTON AS	
		1	**340-6338**	1	SEAL-PISTON	
		1	**340-9308**	1	SEAL-O-RING	
		1	**343-8052**	2	RING-WEAR	
	4	1	**324-0391**	1	ROD AS	
	4A	1	**331-1520**	1	BEARING	
	5	1	**324-0402**	1	CYLINDER AS-HYDRAULIC	
	5A	1	**215-1906**	2	BEARING-SLEEVE	
	6	1	**350-3842**	2	SET SCREW (M8X1.25X10-MM)	
	7	1	**7J-9108**	1	SEAL-O-RING	
					AVAILABLE REPAIR KIT(S):	
			324-0399	1	KIT-SEAL (STICK CYLINDER)	

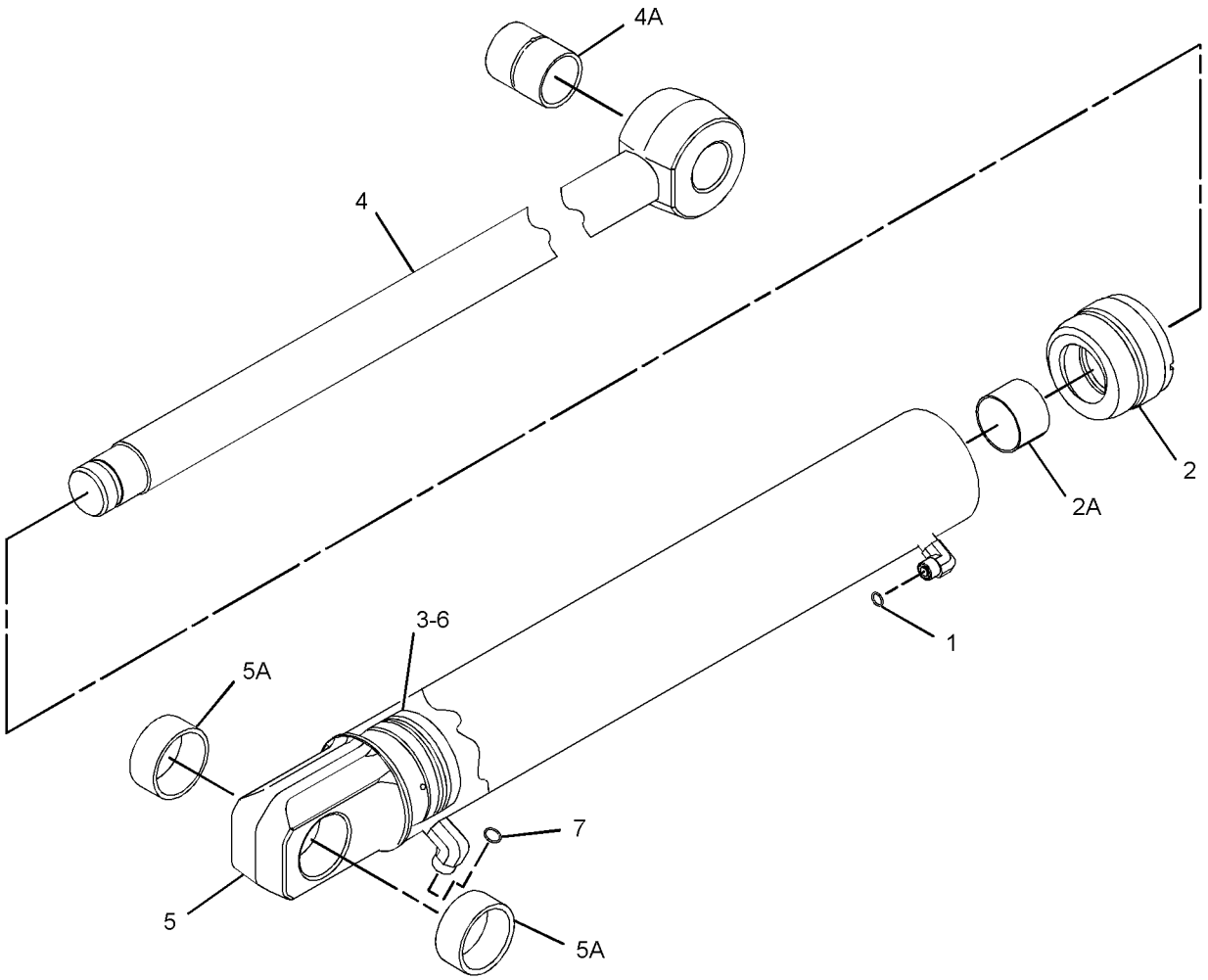

GRAPHIC #1 **<END>** g01994493

320-5935 CYLINDER GP-STICK

S/N: DPH1-UP
70-MM (2.75-IN) BORE X 1050-MM (41.35-IN) STROKE
PART OF 324-0550, 329-9749 STICK GP-EXTENDABLE
AN ATTACHMENT

SMCS-5458 **i03693945**

NOTE	REF NO	GRAPHIC REF	PART NUMBER	QTY	PART NAME 1 2 3 4 5 6 (PRODUCT LEVEL)	SEE PAGE
	1	1	**6V-8398**	1	SEAL-O-RING	
	2	1	**324-0436**	1	ROD AS	
	3	1	**324-0496**	1	CYLINDER HEAD AS	
	3A	1	**323-2465**	1	BEARING-SLEEVE	
		1	**338-2412**	1	SEAL-WIPER	
		1	**338-2442**	1	SEAL-U-CUP	
		1	**340-9308**	1	SEAL-O-RING	
	4	1	**324-0498**	1	PISTON AS	
		1	**161-7145**	1	SEAL-PISTON	
		1	**340-6272**	2	RING-WEAR	
		1	**340-9311**	1	SEAL-O-RING	
	5	1	**324-0501**	1	CYLINDER AS	
	6	1	**350-3842**	2	SET SCREW (M8X1.25X10-MM)	
					AVAILABLE REPAIR KIT(S):	
			324-0355	1	KIT-SEAL (EXTENDABLE STICK)	

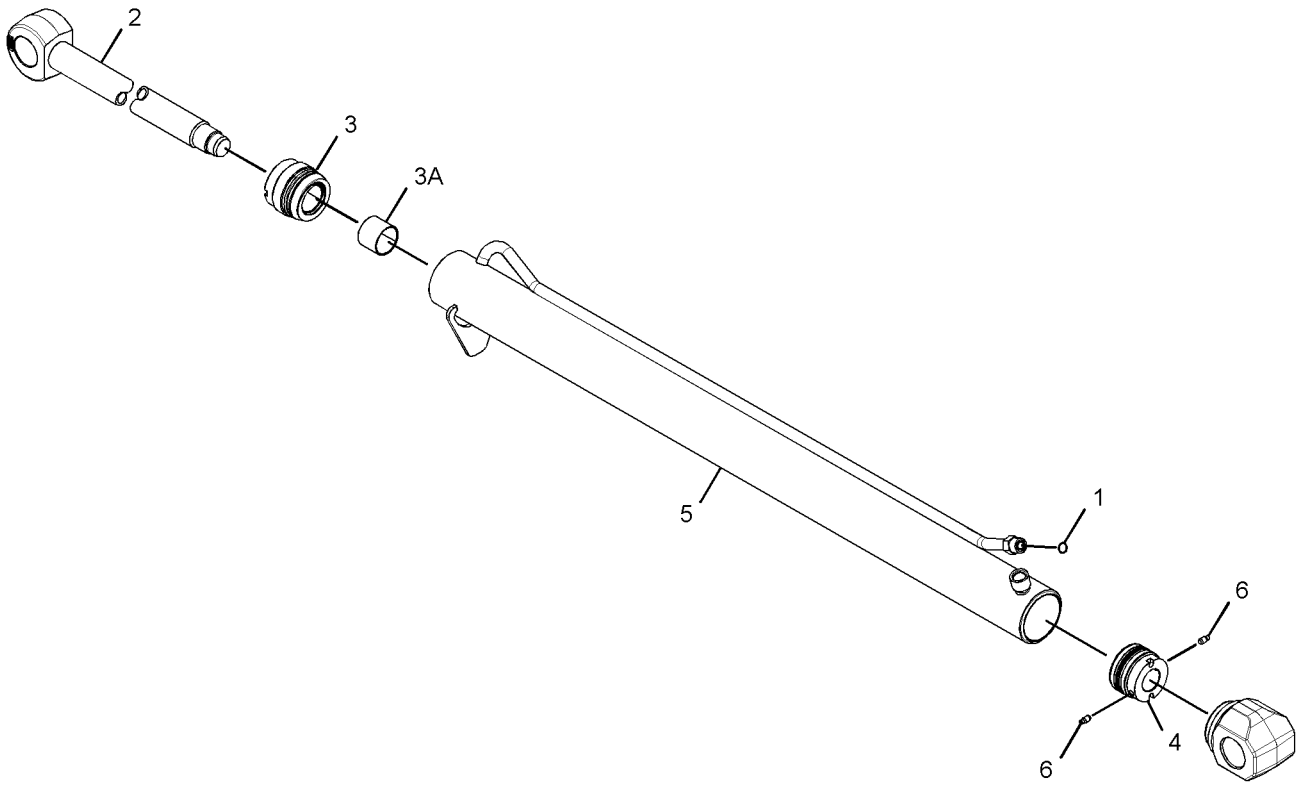

GRAPHIC #1 **<END>** g01991690

HYDRAULIC SYSTEM

333-5427 CYLINDER GP-TILT

S/N: DPH1-UP
70-MM (2.75-IN) BORE X 885-MM (34.84-IN) STROKE
PART OF 325-1021 LOADER AR

SMCS-5104 **i03694762**

NOTE	REF NO	GRAPHIC REF	PART NUMBER	QTY	PART NAME 1 2 3 4 5 6 (PRODUCT LEVEL)	SEE PAGE
	1	1	**6V-8398**	1	SEAL-O-RING	
	2	1	**324-0512**	1	HEAD AS	
	2A	1	**323-2466**	1	BEARING	
		1	**338-2413**	1	SEAL-WIPER	
		1	**338-2443**	1	SEAL-U-CUP	
		1	**340-9308**	1	SEAL-O-RING	
	3	1	**324-0519**	1	ROD AS	
	3A	1	**9R-0153**	2	BEARING-SLEEVE	
	4	1	**324-0525**	1	PISTON AS	
		1	**161-7145**	1	SEAL-PISTON	
		1	**340-6272**	2	RING-WEAR	
	5	1	**324-0530**	1	CYLINDER AS-HYDRAULIC	
	5A	1	**9R-0153**	2	BEARING-SLEEVE	
	6	1	**350-3842**	2	SET SCREW (M8X1.25X10-MM)	
					AVAILABLE REPAIR KIT(S):	
			324-0411	1	KIT-SEAL (TILT CYLINDER)	

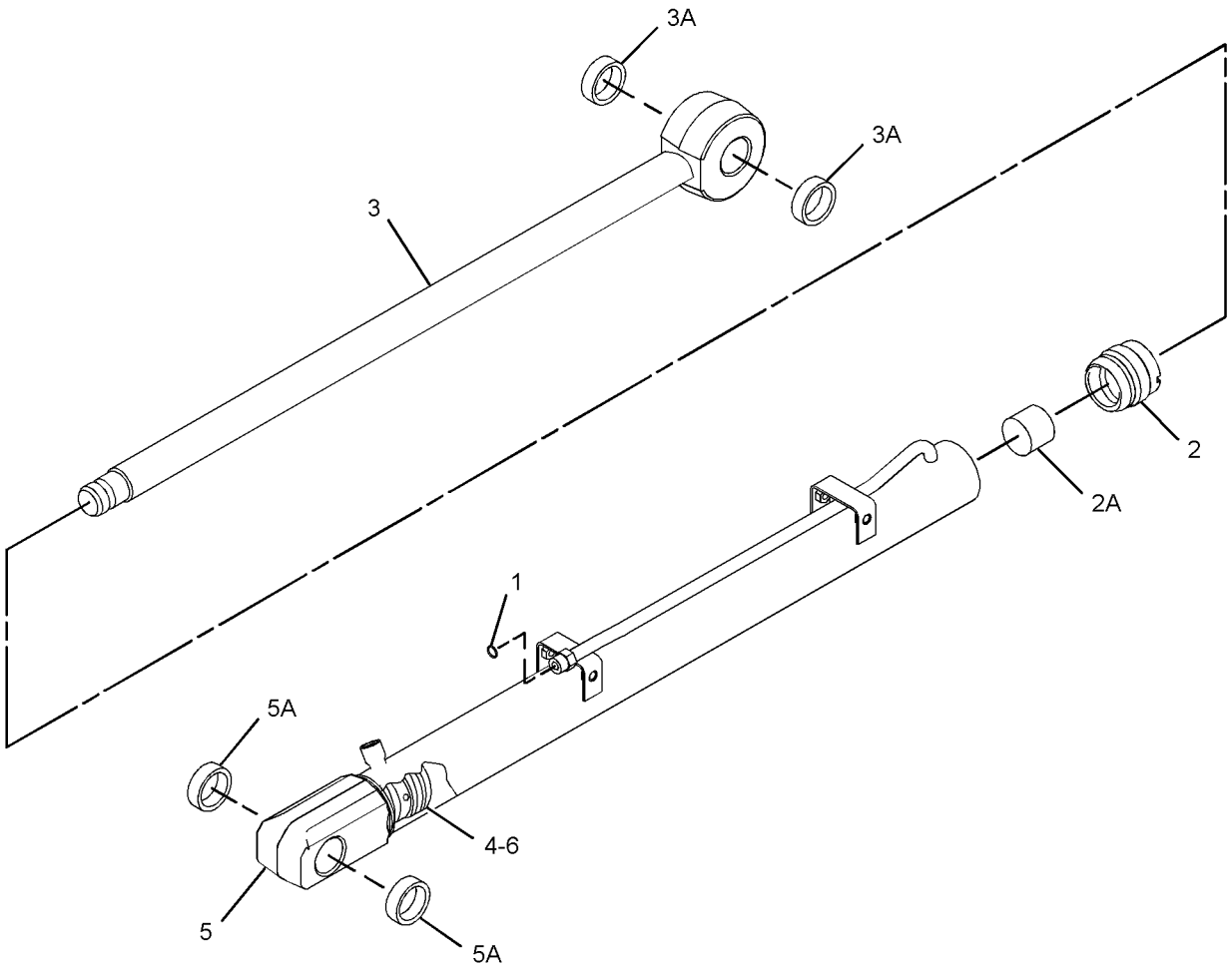

GRAPHIC #1 **<END>** g01994376

HYDRAULIC SYSTEM

112-1826 DRIVE & MTG GP-PUMP

S/N: DPH1-UP
PART OF 329-0304 POWER TRAIN AR
AN ATTACHMENT

SMCS-3108, 5070 **i03458260**

NOTE	REF NO	GRAPHIC REF	PART NUMBER	QTY	PART NAME 1 2 3 4 5 6 (PRODUCT LEVEL)	SEE PAGE
M	1	1	**8T-9405**	4	BOLT-SOCKET HEAD (M4X0.7X16-MM)	
	2	1	**9U-8886**	1	RING-SEAL	
	3	1	**115-1918**	1	PLATE	
	4	1	**117-3534**	1	ADAPTER	
	5	1	**274-4555**	1	HUB	
Y	6	1	**128-5596**	1	SHAFT GP-PUMP DRIVE	411
	7	1	**175-7904**	1	SEAL-O-RING	
	8	1	**8T-4122**	2	WASHER-HARD (17X32X3.5-MM THK)	
M	9	1	**8T-7338**	2	BOLT (M16X2X45-MM)	

M-METRIC PART
Y-SEPARATE ILLUSTRATION

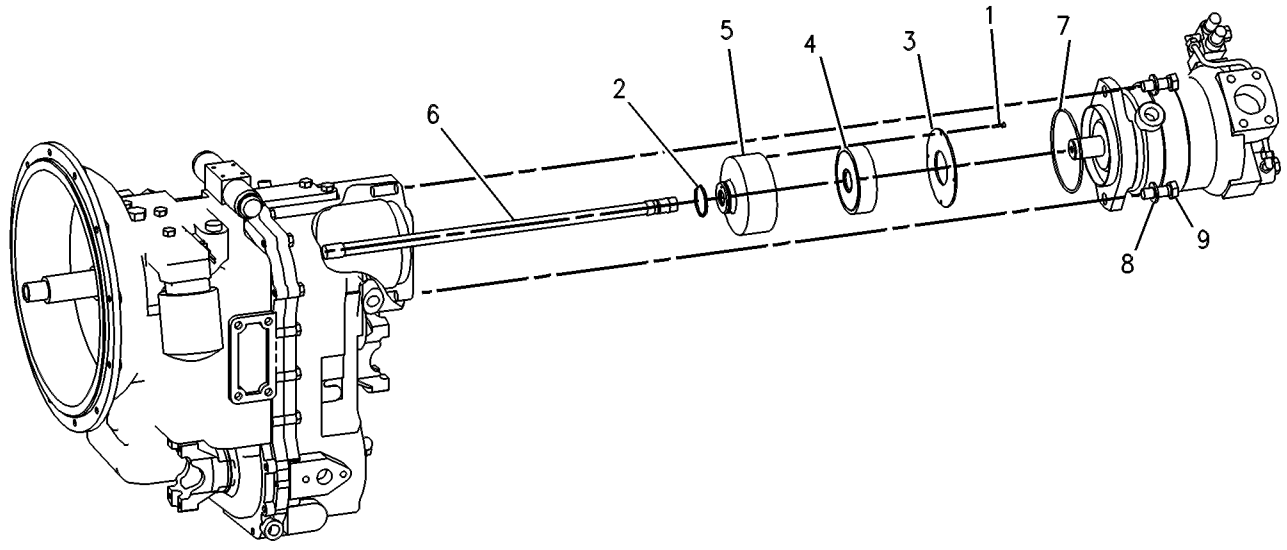

GRAPHIC #1 **<END>** g00131524

HYDRAULIC SYSTEM

325-6257 FILTER GP-OIL

S/N: DPH1-UP

PART OF 334-8021 LINES GP-RETURN

SMCS-5068 **i03038500**

NOTE	REF NO	GRAPHIC REF	PART NUMBER	QTY	PART NAME 1 2 3 4 5 6 (PRODUCT LEVEL)	SEE PAGE
	1	1	**308-3025**	1	BASE AS-FILTER	
	2	1	*148-8335*	1	CONNECTOR AS	
		1	**5K-9090**	1	SEAL-O-RING	
		1	**6V-8635**	1	CONNECTOR (SEAL)	
		1	**7M-8485**	1	SEAL-O-RING	
	3	1	*148-8407*	1	PLUG AS (STORAGE)	
		1	**3J-1907**	1	SEAL-O-RING	
		1	**9S-4191**	1	PLUG-O-RING	
	4	1	**6V-9830**	2	CAP AS	
	5	1	**6V-9833**	1	CAP AS (HYDRAULIC RETURN)	
	6	1	**8C-3451**	1	CAP-DUST	
	7	1	**126-1817**	1	FILTER-OIL (ULTRA HIGH EFFICIENCY)	
	8	1	**8C-3446**	1	VALVE-FLUID SAMPLING	

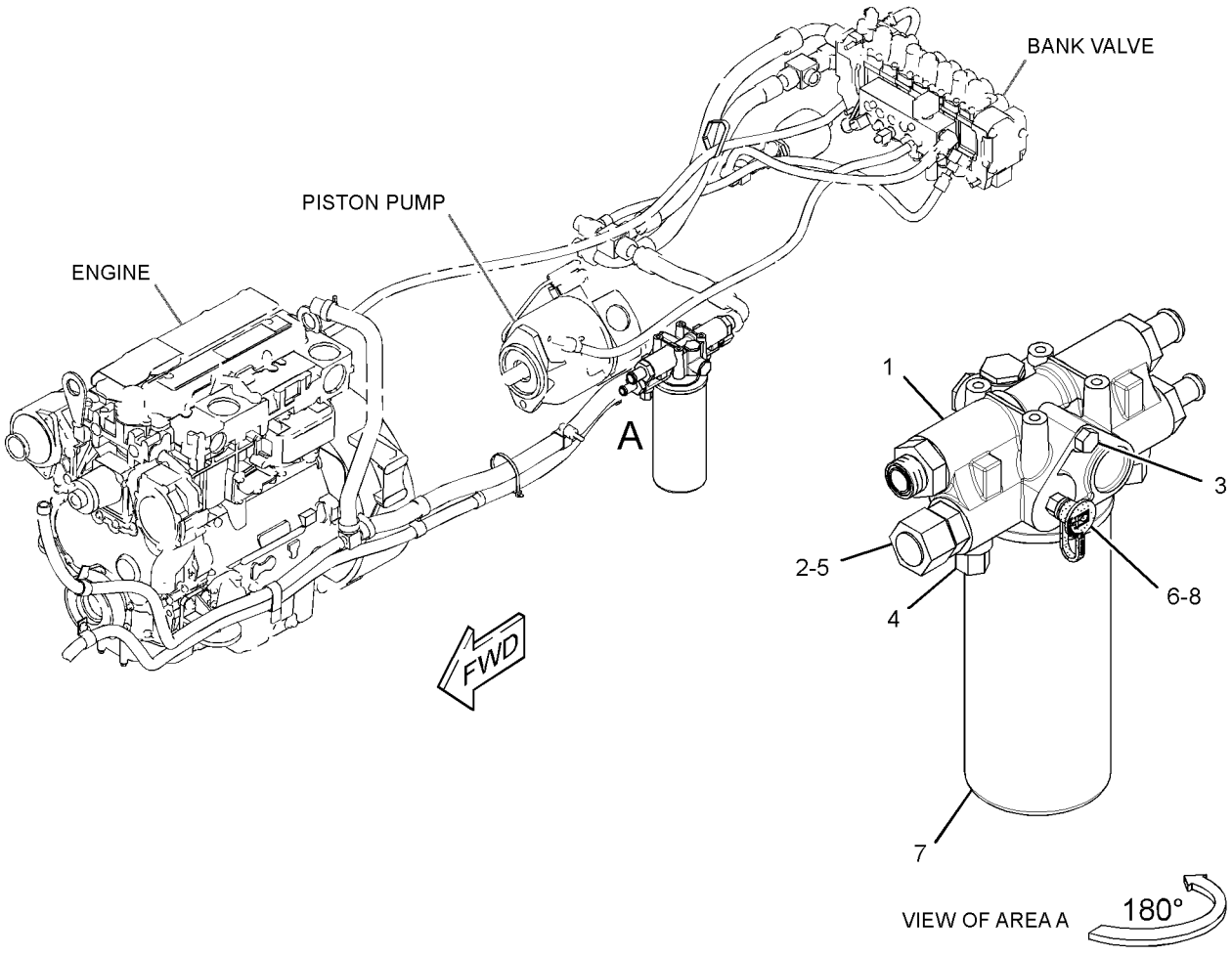

GRAPHIC #1 **<END>** g01573096

132-8769 FITTING GP-HYDRAULIC–QUICK DISCONNECT

S/N: DPH1-UP
AN ATTACHMENT

SMCS-5057 **i01499420**

NOTE	REF NO	GRAPHIC REF	PART NUMBER	QTY	PART NAME 1 2 3 4 5 6 (PRODUCT LEVEL)	SEE PAGE
	1	1	**106-0406**	1	FITTING (QUICK DISCONNECT, MALE)	
	2	1	**106-0401**	1	FITTING (QUICK DISCONNECT, FEMALE)	

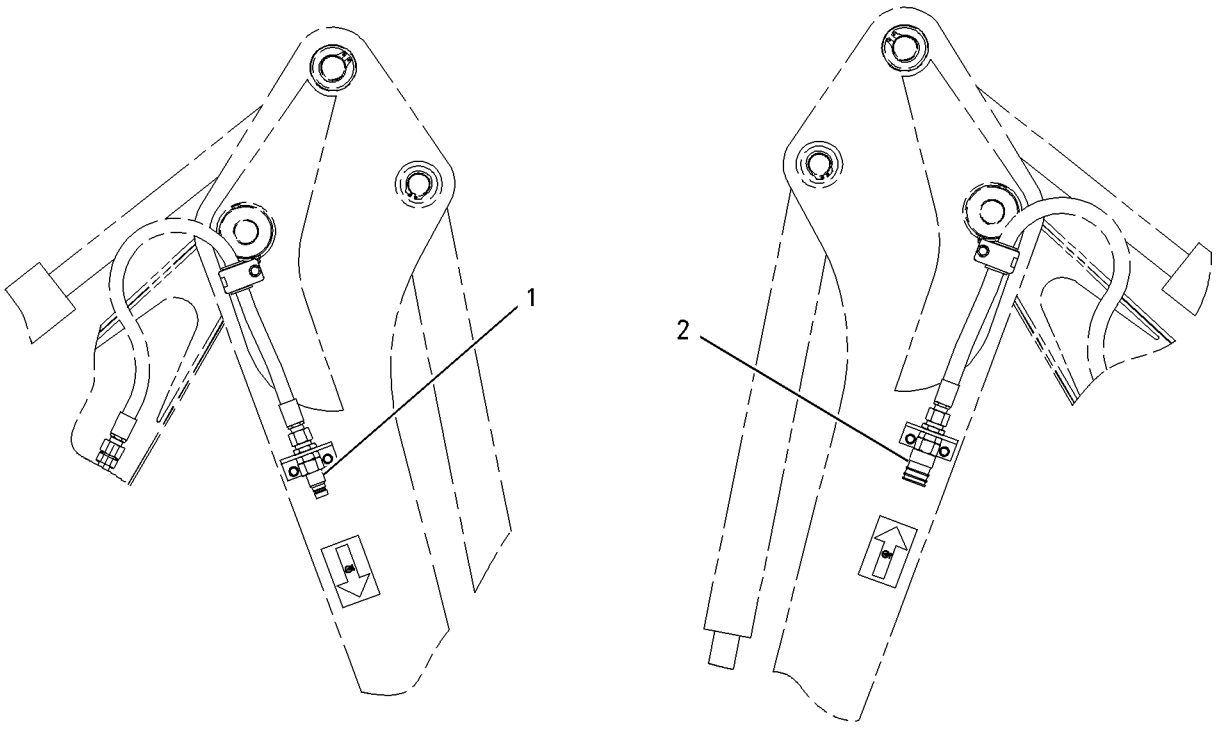

GRAPHIC #1 **<END>** g00778121

HYDRAULIC SYSTEM

329-0123 HYDRAULIC AR

S/N: DPH1-UP

PART OF 329-0078 COMMON AR

SMCS-5050 **i03662981**

NOTE	PART NUMBER	QTY	PART NAME 1 2 3 4 5 6 (PRODUCT LEVEL)	SEE PAGE
Y	*332-6410*	1	CONTROL GP-STABILIZER (WITH ALARM)	566
Y	*321-7231*	1	LINES GP-BACKHOE	366
Y	*339-4834*	1	LINES GP-PILOT (SIGNAL)	390
Y	*335-1692*	1	LINES GP-PUMP	392
Y	*334-8021*	1	LINES GP-RETURN	394
Y	*321-7205*	1	LINES GP-SIDESHIFT LOCK	398
Y	*326-1803*	1	LINES GP-SWING	402
Y	**350-0666**	1	PUMP GP-PISTON	410
Y	*324-5929*	1	TANK & MTG GP-HYDRAULIC	412
Y	*331-4339*	1	VALVE & MTG GP-BANK	415

Y-SEPARATE ILLUSTRATION

<END>

321-7246 LINES GP-AUXILIARY HYDRAULIC–SIDESHIFT

S/N: DPH1-UP

PART OF 344-1301, 344-1303 LINES GP-BACKHOE AUXILIARY

AN ATTACHMENT

SMCS-5057 **i03664543**

NOTE	REF NO	GRAPHIC REF	PART NUMBER	QTY	PART NAME 1 2 3 4 5 6 (PRODUCT LEVEL)	SEE PAGE
	1	1	*313-3477*	2	TEE AS	
					(EACH INCLUDES)	
		1	**5K-9090**	1	SEAL-O-RING	
		1	**7J-9108**	2	SEAL-O-RING	
		1	**313-3476**	1	TEE	
	2	1	**321-3096**	1	TUBE AS	
M	3	1	**8T-4908**	2	BOLT (M8X1.25X25-MM)	
I	4	1	**321-7303**	2	HOSE AS	
I	5	1	**334-4943**	1	HOSE AS	
	6	1	**2P-1293**	1	LOCKNUT (1-3/16-12-THD)	
	7	1	**6V-1249**	2	GROMMET	
	8	1	**8T-4224**	2	WASHER-HARD (8.8X16X2-MM THK)	

I-REFER TO HYDRAULIC INFORMATION SYSTEM
M-METRIC PART

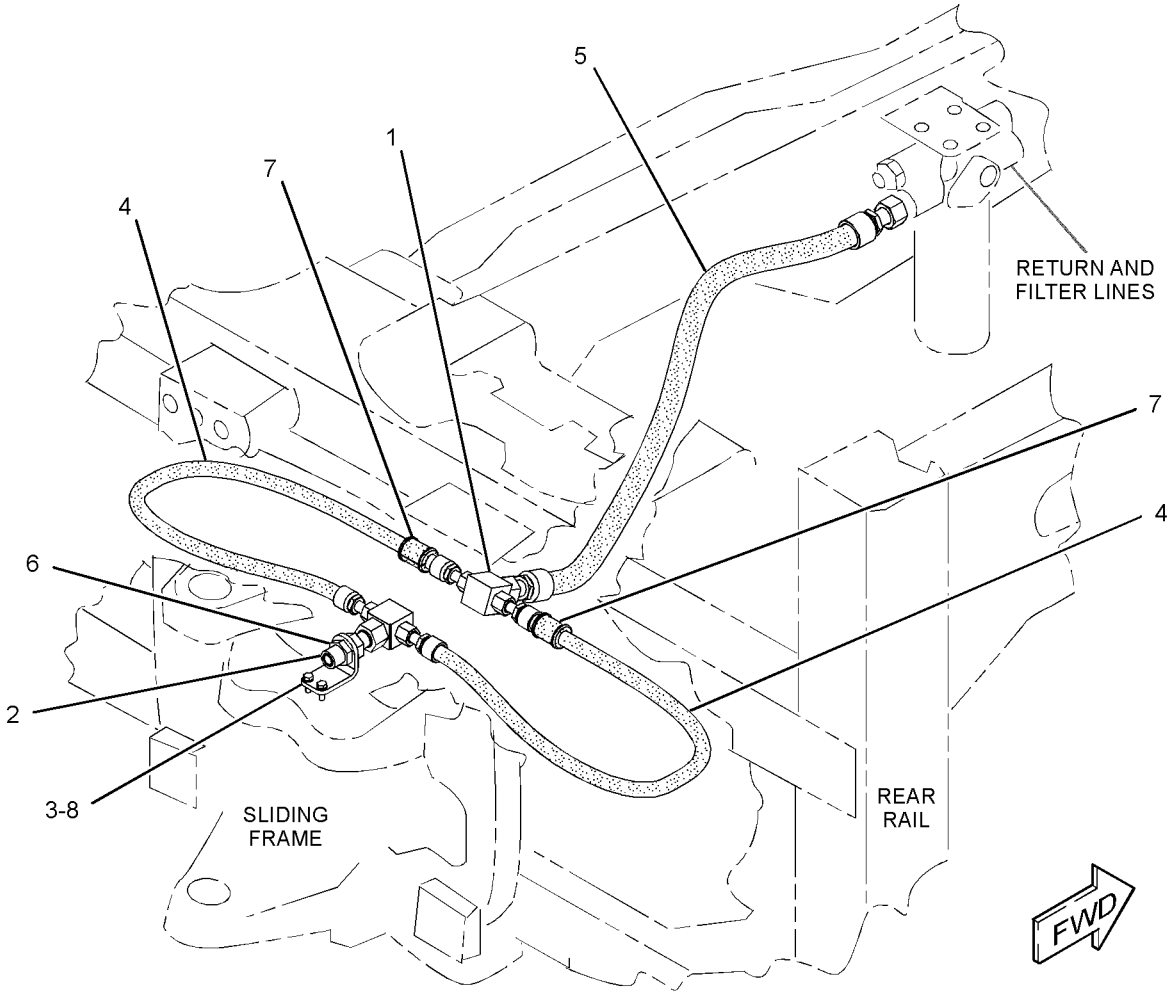

GRAPHIC #1 **<END>** g01970434

HYDRAULIC SYSTEM

327-6983 LINES GP-AUXILIARY HYDRAULIC–EXTENDABLE STICK

S/N: DPH1-UP

PART OF 344-1303 LINES GP-BACKHOE AUXILIARY AN ATTACHMENT

SMCS-5057 **i03664550**

NOTE	REF NO	GRAPHIC REF	PART NUMBER	QTY	PART NAME 1 2 3 4 5 6 (PRODUCT LEVEL)	SEE PAGE
	1	1	**123-7637**	2	CAP	
	2	1	**225-7733**	2	PLATE	
	3	1	*241-6226*	1	TEE AS	
		1	**6V-8398**	1	SEAL-O-RING	
		1	**6V-9746**	1	SEAL-O-RING	
		1	**7J-9108**	1	SEAL-O-RING	
		1	**241-6225**	1	TEE	
	4	1	**241-8450**	2	FILM-WARNING (HYD PRESS, READ OMM, INTL)	
	5	1	**281-4726**	2	FILM-INSTRUCTION (OIL FLOW DIRECTION)	
	6	1	**321-6387**	1	TUBE AS	
I	7	1	**324-7611**	1	HOSE AS	
	8	1	**327-8298**	1	TUBE AS	
	9	1	**329-0143**	1	TUBE AS	
	10	1	**331-3779**	1	PLATE	
I	11	1	**331-6299**	1	HOSE AS	
I	12	1	**331-7306**	1	HOSE AS	
	13	1	**332-1829**	1	PLATE	
	14	1	*150-3052*	1	CONNECTOR AS	
		1	**5K-9090**	1	SEAL-O-RING	
		1	**7M-8485**	1	SEAL-O-RING	
		1	**107-6709**	1	CONNECTOR	
	15	1	*150-3053*	1	CONNECTOR AS	
		1	**6V-9746**	1	SEAL-O-RING	
		1	**7M-8485**	1	SEAL-O-RING	
		1	**108-3872**	1	CONNECTOR	
	16	1	**2P-1293**	1	LOCKNUT (1-3/16-12-THD)	
	17	1	**6V-8398**	2	SEAL-O-RING	
	18	1	**6V-9170**	1	NUT-BULKHEAD (1-14-THD)	
	19	1	**6V-9172**	1	NUT (1-7/16-12-THD)	
	20	1	**6V-9746**	3	SEAL-O-RING	
	21	1	**8K-1117**	1	CLAMP	
	22	1	**8T-4121**	8	WASHER-HARD (11X21X2.5-MM THK)	
M	23	1	**8T-4133**	4	NUT (M10X1.5-THD)	
M	24	1	**8T-4136**	2	BOLT (M10X1.5X25-MM)	
M	25	1	**8T-4195**	2	BOLT (M10X1.5X30-MM)	

I-REFER TO HYDRAULIC INFORMATION SYSTEM
M-METRIC PART

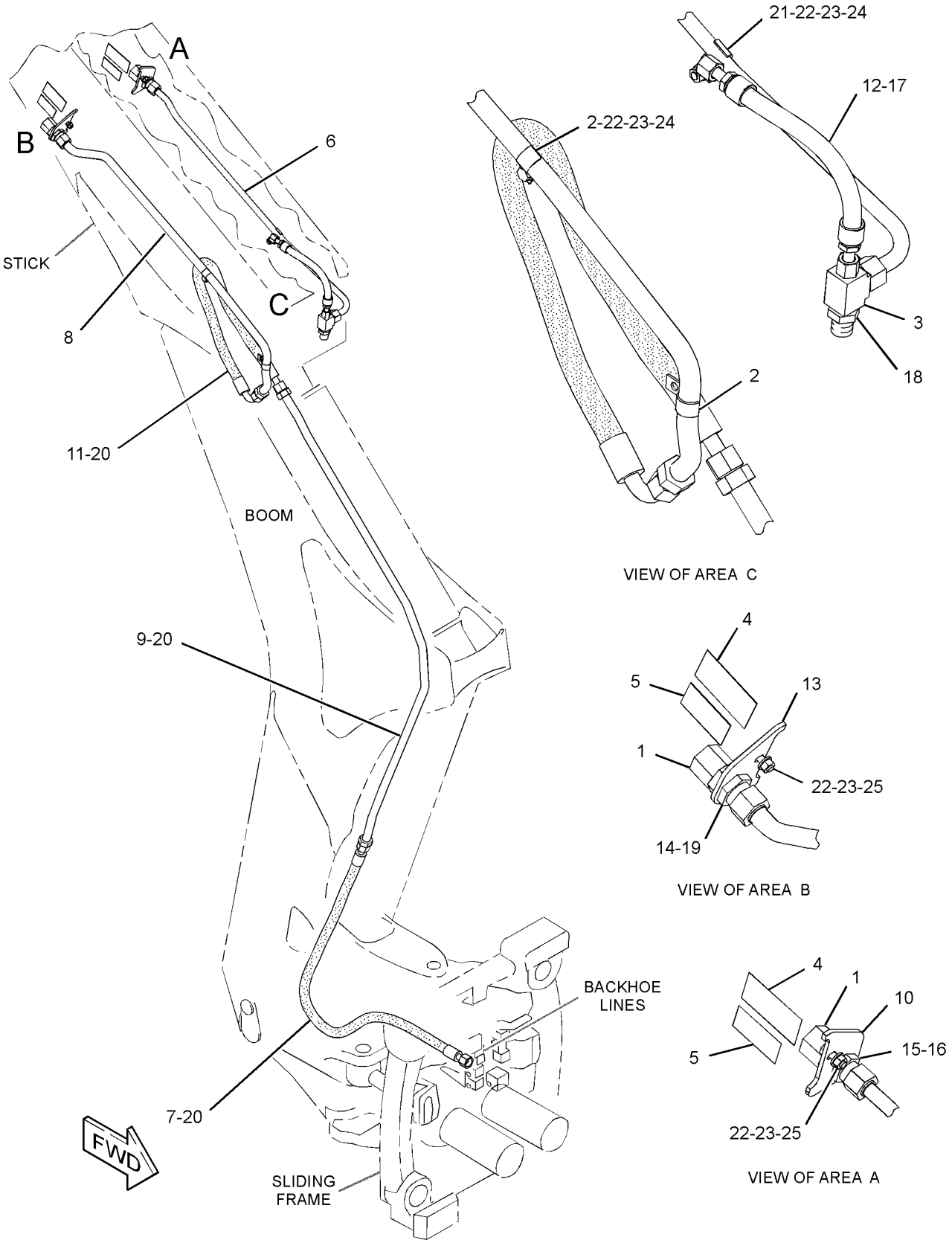

GRAPHIC #1

<END>

g01972359

HYDRAULIC SYSTEM

329-3503 LINES GP-AUXILIARY HYDRAULIC

S/N: DPH1-UP
PART OF 332-7955, 332-7958 VALVE AR-BANK 3
AN ATTACHMENT

SMCS-5057 **i03643009**

NOTE	REF NO	GRAPHIC REF	PART NUMBER	QTY	PART NAME 1 2 3 4 5 6 (PRODUCT LEVEL)	SEE PAGE
	1	1	*281-5969*	2	ELBOW AS	
					(EACH INCLUDES)	
		1	**6V-8398**	1	SEAL-O-RING	
		1	**6V-9796**	1	ELBOW	
		1	**7J-9108**	1	SEAL-O-RING	
	2	1	**329-3491**	1	TUBE AS	
	3	1	**329-3492**	1	TUBE AS	
I	4	1	**329-3494**	2	HOSE AS	
	5	1	**329-3597**	1	TUBE AS	
	6	1	**329-3598**	1	TUBE AS	
	7	1	*148-8341*	1	CONNECTOR AS	
		1	**3D-2824**	1	SEAL-O-RING	
		1	**6V-8713**	1	CONNECTOR	
		1	**7J-9108**	1	SEAL-O-RING	
	8	1	*148-8382*	1	ELBOW AS	
		1	**3D-2824**	1	SEAL-O-RING	
		1	**7J-9108**	1	SEAL-O-RING	
		1	**8T-0404**	1	ELBOW	
	9	1	**6V-8398**	4	SEAL-O-RING	
	10	1	**6V-9170**	2	NUT-BULKHEAD (1-14-THD)	
	11	1	**6V-9830**	2	CAP AS	
	12	1	**8T-4121**	12	WASHER-HARD (11X21X2.5-MM THK)	
M	13	1	**8T-4196**	6	BOLT (M10X1.5X35-MM)	
	14	1	**9R-1004**	6	CLIP (TAB)	
	15	1	**9R-1005**	6	CLIP (SLOT)	

I-REFER TO HYDRAULIC INFORMATION SYSTEM
M-METRIC PART

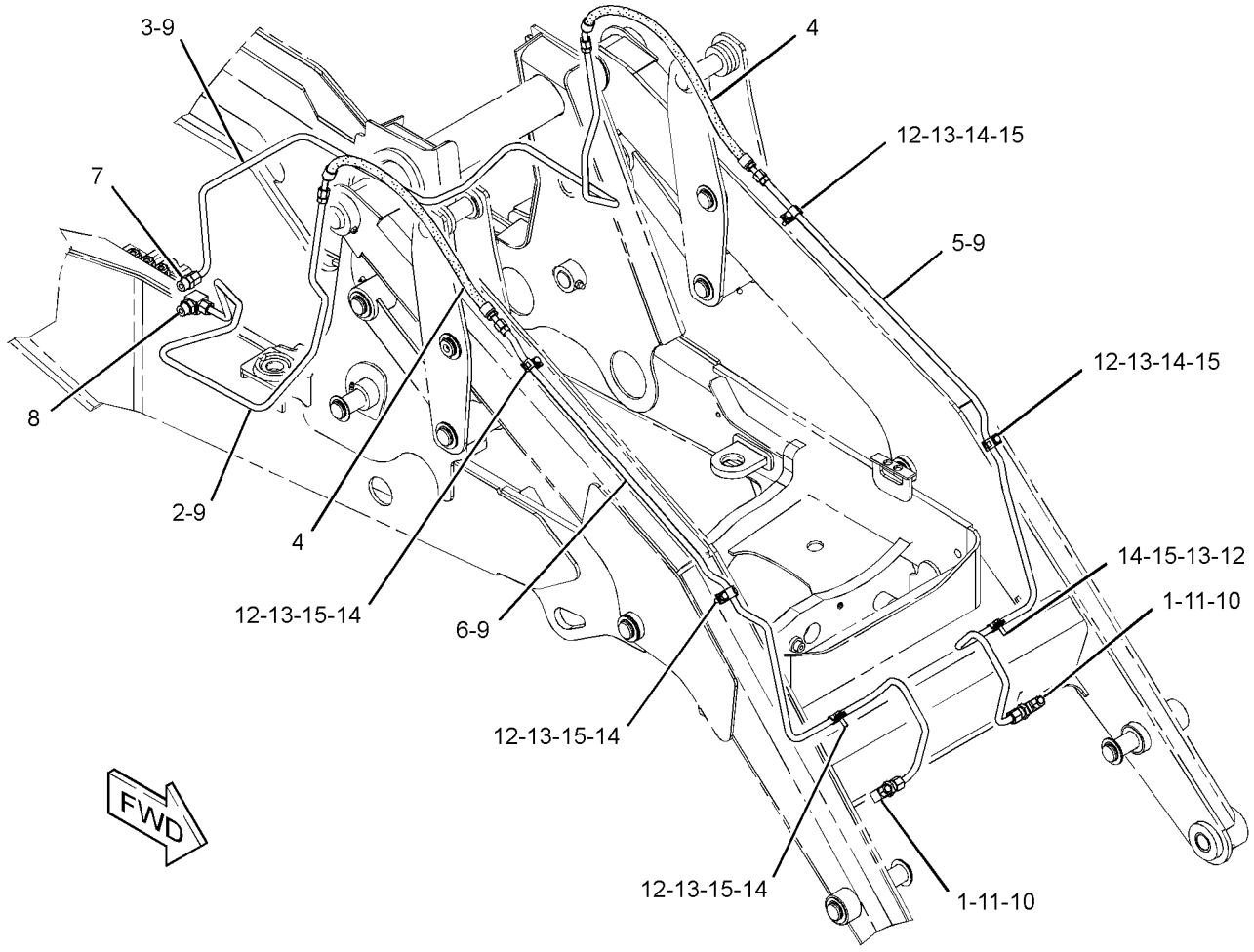

GRAPHIC #1 **<END>** g01963380

332-2691 LINES GP-AUXILIARY HYDRAULIC–

STANDARD STICK, 1-WAY

S/N: DPH1-UP

PART OF 344-1301 LINES GP-BACKHOE AUXILIARY

AN ATTACHMENT

SMCS-5057 **i03705788**

NOTE	REF NO	GRAPHIC REF	PART NUMBER	QTY	PART NAME 1 2 3 4 5 6 (PRODUCT LEVEL)	SEE PAGE
	1	1	**123-7637**	2	CAP	
	2	1	**225-7733**	2	PLATE	
	3	1	*241-6226*	1	TEE AS	
		1	**6V-8398**	1	SEAL-O-RING	
		1	**6V-9746**	1	SEAL-O-RING	
		1	**7J-9108**	1	SEAL-O-RING	
		1	**241-6225**	1	TEE	
	4	1	**241-8450**	2	FILM-WARNING (HYD PRESS, READ OMM, INTL)	
	5	1	**281-4726**	2	FILM-INSTRUCTION (OIL FLOW DIRECTION)	
	6	1	**321-6387**	1	TUBE AS	
I	7	1	**324-7599**	1	HOSE AS	
I	8	1	**324-7611**	1	HOSE AS	
	9	1	**327-8298**	1	TUBE AS	
	10	1	**329-0143**	1	TUBE AS	
I	11	1	**331-6299**	1	HOSE AS	
	12	1	**336-8184**	1	PLATE	
	13	1	**336-8185**	1	PLATE	
	14	1	*150-3052*	1	CONNECTOR AS	
		1	**5K-9090**	1	SEAL-O-RING	
		1	**7M-8485**	1	SEAL-O-RING	
		1	**107-6709**	1	CONNECTOR	
	15	1	*150-3053*	1	CONNECTOR AS	
		1	**6V-9746**	1	SEAL-O-RING	
		1	**7M-8485**	1	SEAL-O-RING	
		1	**108-3872**	1	CONNECTOR	
	16	1	**2P-1293**	1	LOCKNUT (1-3/16-12-THD)	
	17	1	**6V-8398**	1	SEAL-O-RING	
	18	1	**6V-9170**	1	NUT-BULKHEAD (1-14-THD)	
	19	1	**6V-9172**	1	NUT (1-7/16-12-THD)	
	20	1	**6V-9746**	3	SEAL-O-RING	
	21	1	**6V-9830**	1	CAP AS	
	22	1	**8K-1117**	1	CLAMP	
	23	1	**8T-4121**	8	WASHER-HARD (11X21X2.5-MM THK)	
M	24	1	**8T-4133**	4	NUT (M10X1.5-THD)	
M	25	1	**8T-4136**	2	BOLT (M10X1.5X25-MM)	
M	26	1	**8T-4195**	2	BOLT (M10X1.5X30-MM)	

I-REFER TO HYDRAULIC INFORMATION SYSTEM
M-METRIC PART

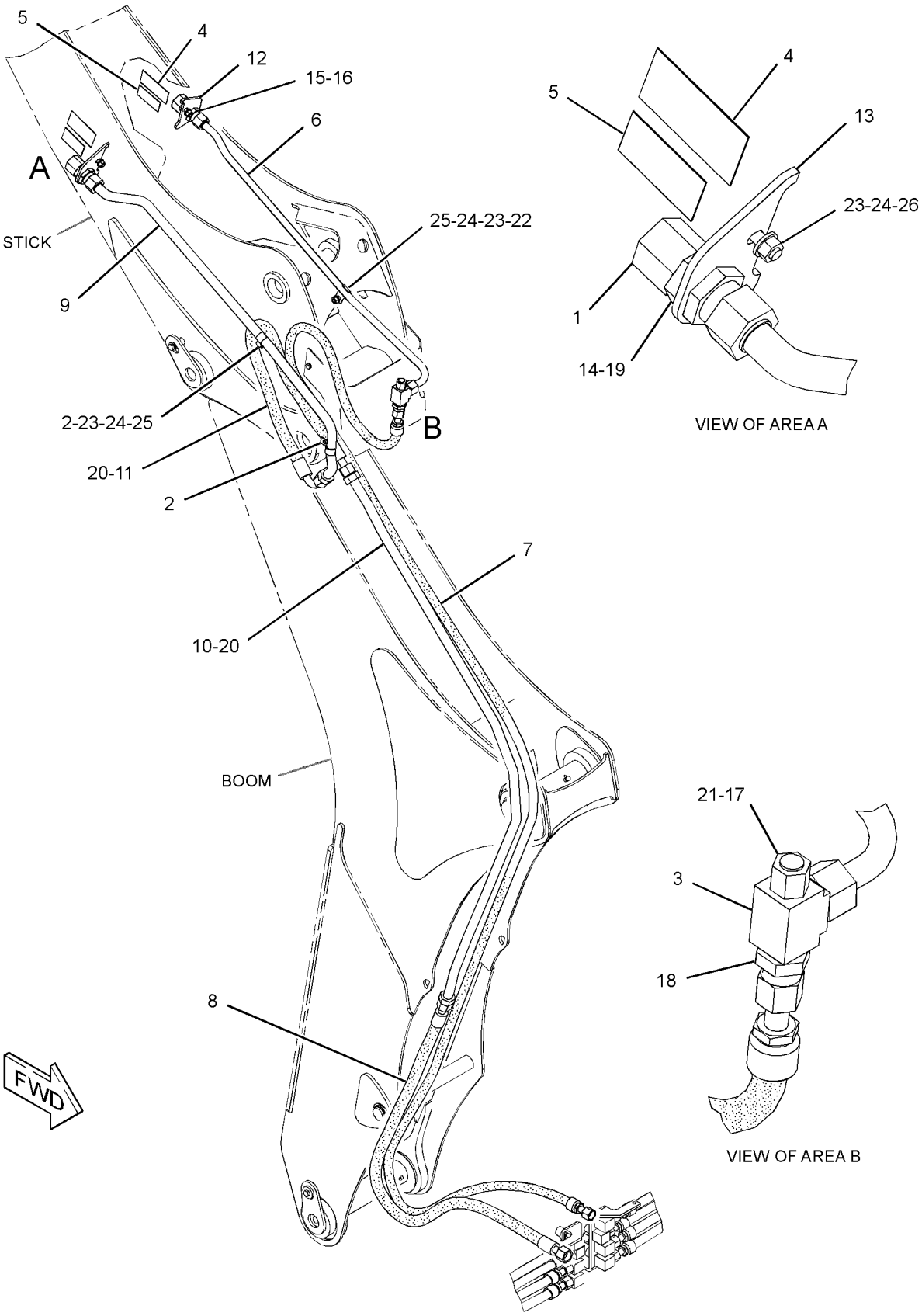

GRAPHIC #1 **<END>** g01969935

HYDRAULIC SYSTEM

321-7231 LINES GP-BACKHOE

S/N: DPH1-UP

PART OF 329-0123 HYDRAULIC AR

SMCS-5057 **i03658106**

NOTE	REF NO	GRAPHIC REF	PART NUMBER	QTY	PART NAME 1 2 3 4 5 6 (PRODUCT LEVEL)	SEE PAGE
	1	1	**5P-5148**	12	STRAP-TIE	
	2	1	*260-9214*	5	CONNECTOR AS	
					(EACH INCLUDES)	
		1	**3D-2824**	1	SEAL-O-RING	
		1	**7J-9108**	1	SEAL-O-RING	
		1	**260-9213**	1	CONNECTOR	
	3	1	**319-6906**	4	HOSE AS	
I	4	1	**319-6907**	2	HOSE AS	
	5	1	**319-6908**	2	HOSE AS	
	6	1	**320-8438**	4	CLAMP	
	7	1	**323-9083**	1	TUBE AS	
	8	1	**323-9084**	1	TUBE AS	
	9	1	**323-9085**	1	TUBE AS	
	10	1	**323-9086**	1	TUBE AS	
	11	1	**333-0739**	4	PLATE	
	12	1	*344-2170*	1	FITTING & MTG GP-HYDRAULIC	
		1	**6V-8398**	2	SEAL-O-RING	
		1	**7J-9108**	6	SEAL-O-RING	
		1	**327-0223**	1	FITTING & MTG GP-HYDRAULIC	
	13	1	*344-2171*	1	FITTING & MTG GP-HYDRAULIC	
		1	**6V-8398**	2	SEAL-O-RING	
		1	**7J-9108**	6	SEAL-O-RING	
		1	**327-0222**	1	FITTING & MTG GP-HYDRAULIC	
	14	1	*148-8328*	2	CONNECTOR AS	
					(EACH INCLUDES)	
		1	**3D-2824**	1	SEAL-O-RING	
		1	**6V-8398**	1	SEAL-O-RING	
		1	**6V-8633**	1	CONNECTOR	
	15	1	*148-8341*	1	CONNECTOR AS	
		1	**3D-2824**	1	SEAL-O-RING	
		1	**6V-8713**	1	CONNECTOR	
		1	**7J-9108**	1	SEAL-O-RING	
M	16	1	**5C-2890**	5	NUT (M6X1-THD)	
	17	1	**6V-8398**	2	SEAL-O-RING	
B	18	1	**6V-9831**	2	CAP AS	
	19	1	**7J-9108**	2	SEAL-O-RING	
M	20	1	**8T-3844**	6	BOLT (M6X1X70-MM)	
	21	1	**8T-4205**	12	WASHER-HARD (7.2X14.5X2-MM THK)	
	22	1	**8T-4224**	4	WASHER-HARD (8.8X16X2-MM THK)	
M	23	1	**8T-4908**	4	BOLT (M8X1.25X25-MM)	

B-USE AS REQUIRED
I-REFER TO HYDRAULIC INFORMATION SYSTEM
M-METRIC PART

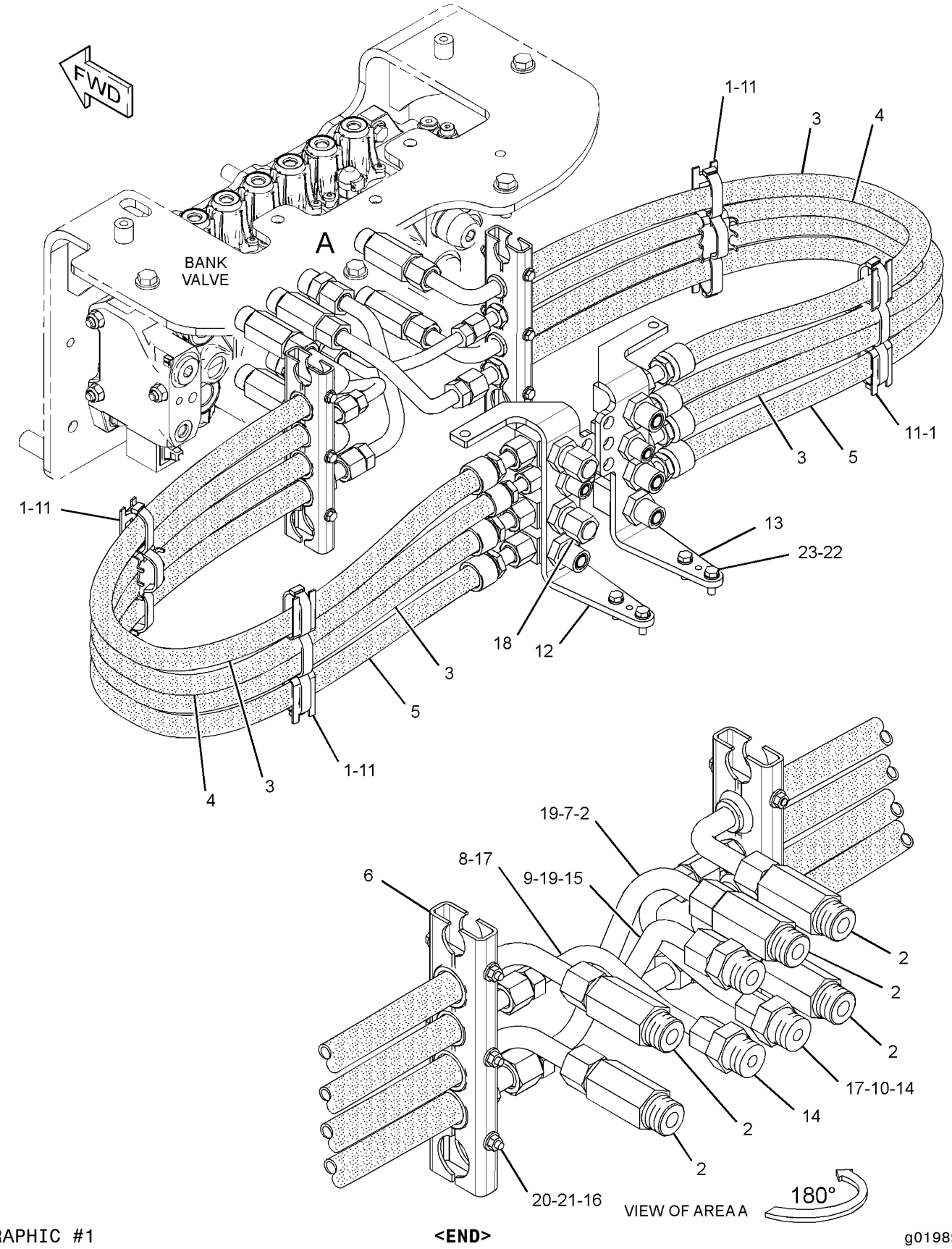

GRAPHIC #1

<END>

g01989253

HYDRAULIC SYSTEM

321-7183 LINES GP-BACKHOE AUXILIARY–EXTENDABLE STICK, 2-WAY

S/N: DPH1-UP

FOR USE WITH 327-6983–PAGE 360. CANNOT BE USED WITH 332-2691–PAGE 364, 132-8769–PAGE 357

AN ATTACHMENT

SMCS-5057 **i03648251**

NOTE	REF NO	GRAPHIC REF	PART NUMBER	QTY	PART NAME 1 2 3 4 5 6 (PRODUCT LEVEL)	SEE PAGE
	1	1	**123-7637**	1	CAP	
	2	1	**171-1357**	1	CONNECTOR AS	
		1	**3K-0360**	1	SEAL-O-RING	
		1	**7J-9108**	1	SEAL-O-RING	
		1	**160-5083**	1	CONNECTOR	
M	3	1	**8T-4195**	2	BOLT (M10X1.5X30-MM)	
	4	1	**321-6383**	1	TUBE AS	
I	5	1	**324-7612**	1	HOSE AS	
	6	1	**331-3770**	1	PLATE	
	7	1	**333-1320**	1	VALVE-MANUAL	
	8	1	*148-8311*	1	ADAPTER AS	
		1	**3K-0360**	1	SEAL-O-RING	
		1	**8T-1715**	1	ADAPTER	
	9	1	*148-8340*	1	CONNECTOR AS	
		1	**3K-0360**	1	SEAL-O-RING	
		1	**6V-8398**	1	SEAL-O-RING	
		1	**6V-8639**	1	CONNECTOR	
	10	1	*148-8359*	1	ELBOW AS	
		1	**3K-0360**	1	SEAL-O-RING	
		1	**6V-9746**	1	SEAL-O-RING	
		1	**6V-9877**	1	ELBOW	
	11	1	*150-3053*	1	CONNECTOR AS	
		1	**6V-9746**	1	SEAL-O-RING	
		1	**7M-8485**	1	SEAL-O-RING	
		1	**108-3872**	1	CONNECTOR	
	12	1	**2P-1293**	1	LOCKNUT (1-3/16-12-THD)	
	13	1	**6V-9170**	1	NUT-BULKHEAD (1-14-THD)	
	14	1	**8K-1117**	1	CLAMP	
	15	1	**8T-4121**	4	WASHER-HARD (11X21X2.5-MM THK)	
M	16	1	**8T-4133**	2	NUT (M10X1.5-THD)	

I-REFER TO HYDRAULIC INFORMATION SYSTEM
M-METRIC PART

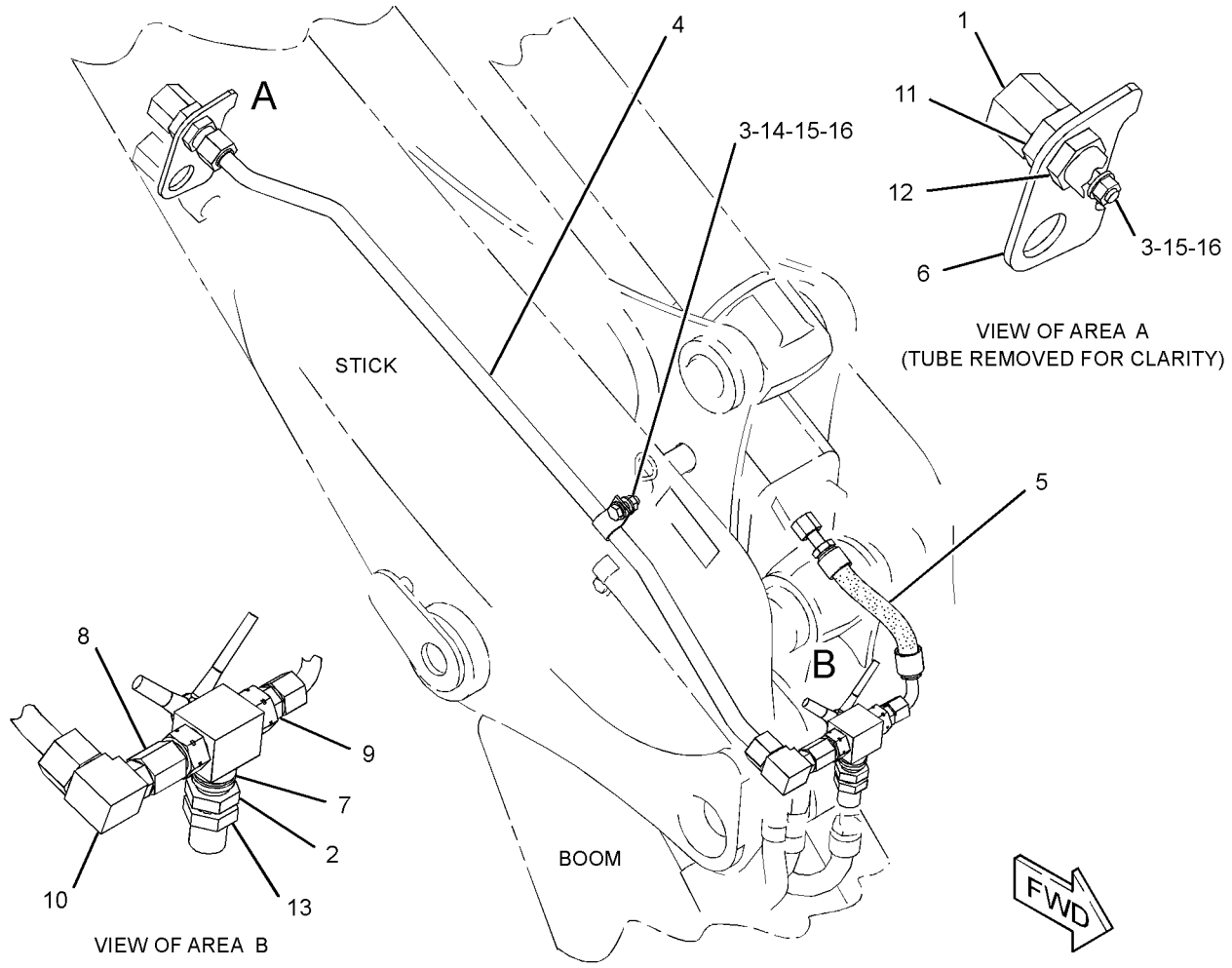

GRAPHIC #1

<END>

g01968173

344-1301 LINES GP-BACKHOE AUXILIARY–
STANDARD STICK, 1-WAY
S/N: DPH1-UP
FOR USE WITH 334-0681–PAGE 4. CANNOT BE USED WITH 334-0682–PAGE 1, 321-7183–PAGE 368, 132-8769–PAGE 357
AN ATTACHMENT

SMCS-5057 **i03664540**

NOTE	PART NUMBER	QTY	PART NAME 1 2 3 4 5 6 (PRODUCT LEVEL)	SEE PAGE
Y	*331-4345*	1	CONTROL GP-HYDRAULIC PEDAL (AUXILIARY, EXTENDABLE STICK)	565
Y	*321-7246*	1	LINES GP-AUXILIARY HYDRAULIC (SIDESHIFT)	359
Y	*332-2691*	1	LINES GP-AUXILIARY HYDRAULIC (STANDARD STICK, 1-WAY)	364

Y-SEPARATE ILLUSTRATION

<END>

344-1303 LINES GP-BACKHOE AUXILIARY–
EXTENDABLE STICK, 1-WAY
S/N: DPH1-UP
FOR USE WITH 334-0682–PAGE 1. CANNOT BE USED WITH 334-0681–PAGE 4, 132-8769–PAGE 357
AN ATTACHMENT

SMCS-5057 **i03664542**

NOTE	PART NUMBER	QTY	PART NAME 1 2 3 4 5 6 (PRODUCT LEVEL)	SEE PAGE
Y	*321-7246*	1	LINES GP-AUXILIARY HYDRAULIC (SIDESHIFT)	359
Y	*327-6983*	1	LINES GP-AUXILIARY HYDRAULIC (EXTENDABLE STICK)	360

Y-SEPARATE ILLUSTRATION

<END>

321-7178 LINES GP-BOOM

S/N: DPH1-UP

PART OF 334-0682, 334-0683, 350-6931, 350-6932, 350-6941, 350-6942 BACKHOE AR-EXTENDABLE STICK, 334-0681, 350-6930 BACKHOE AR-STANDARD STICK AN ATTACHMENT

SMCS-5057, 5456 **i03642521**

NOTE	REF NO	GRAPHIC REF	PART NUMBER	QTY	PART NAME 1 2 3 4 5 6 (PRODUCT LEVEL)	SEE PAGE
I	1	1	**324-7594**	1	HOSE AS	
I	2	1	**324-7597**	1	HOSE AS	
	3	1	*148-8390*	1	ELBOW AS	
		1	**2M-9780**	1	SEAL-O-RING	
		1	**6V-8626**	1	ELBOW	
		1	**7J-9108**	1	SEAL-O-RING	

I-REFER TO HYDRAULIC INFORMATION SYSTEM

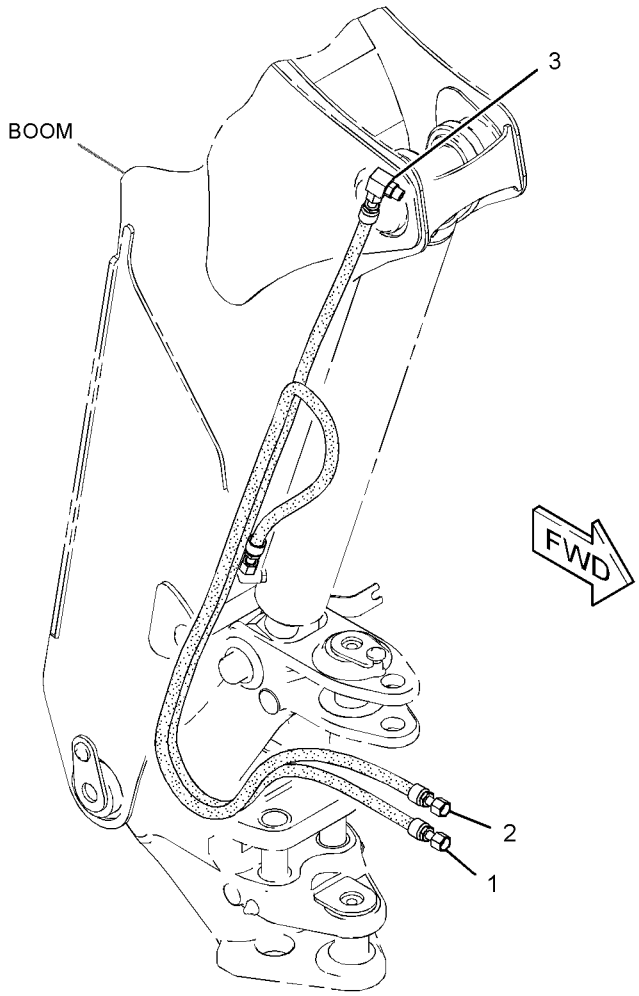

GRAPHIC #1 **<END>** g01990053

HYDRAULIC SYSTEM

320-9949 LINES GP-BUCKET

S/N: DPH1-UP

PART OF 320-9948, 320-9950 BUCKET AR-MULTIPURPOSE

AN ATTACHMENT

SMCS-5057, 5457 **i03486573**

NOTE	REF NO	GRAPHIC REF	PART NUMBER	QTY	PART NAME 1 2 3 4 5 6 (PRODUCT LEVEL)	SEE PAGE
	1	1	**8T-6726**	2	CLAMP-HOSE	
	2	1	**9R-8870**	2	BLOCK	
I	3	1	**9W-4363**	1	HOSE AS	
I	4	1	**120-4553**	1	HOSE AS	
I	5	1	**320-9943**	1	HOSE AS	
I	6	1	**320-9944**	1	HOSE AS	
I	7	1	**320-9945**	1	HOSE AS	
I	8	1	**320-9946**	1	HOSE AS	
	9	1	*148-8378*	2	ELBOW AS	
					(EACH INCLUDES)	
		1	**3J-1907**	1	SEAL-O-RING	
		1	**6V-8397**	1	SEAL-O-RING	
		1	**6V-8724**	1	ELBOW	
	10	1	*150-3060*	2	TEE AS	
					(EACH INCLUDES)	
		1	**6V-8397**	2	SEAL-O-RING	
		1	**6V-8398**	1	SEAL-O-RING	
		1	**8T-3444**	1	TEE-UNION	
	11	1	**5P-7464**	2	CLIP (SLOT)	
	12	1	**5P-7465**	2	CLIP (TAB)	
	13	1	**6V-1249**	2	GROMMET	
	14	1	**6V-8397**	2	SEAL-O-RING	
	15	1	**8T-1893**	4	CLIP (SLOT)	
	16	1	**8T-1894**	4	CLIP (TAB)	
	17	1	**8T-4121**	2	WASHER-HARD (11X21X2.5-MM THK)	
M	18	1	**8T-4136**	2	BOLT (M10X1.5X25-MM)	
M	19	1	**8T-4192**	2	BOLT (M12X1.75X25-MM)	
	20	1	**8T-4223**	2	WASHER-HARD (13.5X25.5X3-MM THK)	

I-REFER TO HYDRAULIC INFORMATION SYSTEM
M-METRIC PART

320-9949 **LINES GP-BUCKET** *(contd.)* **i03486573**

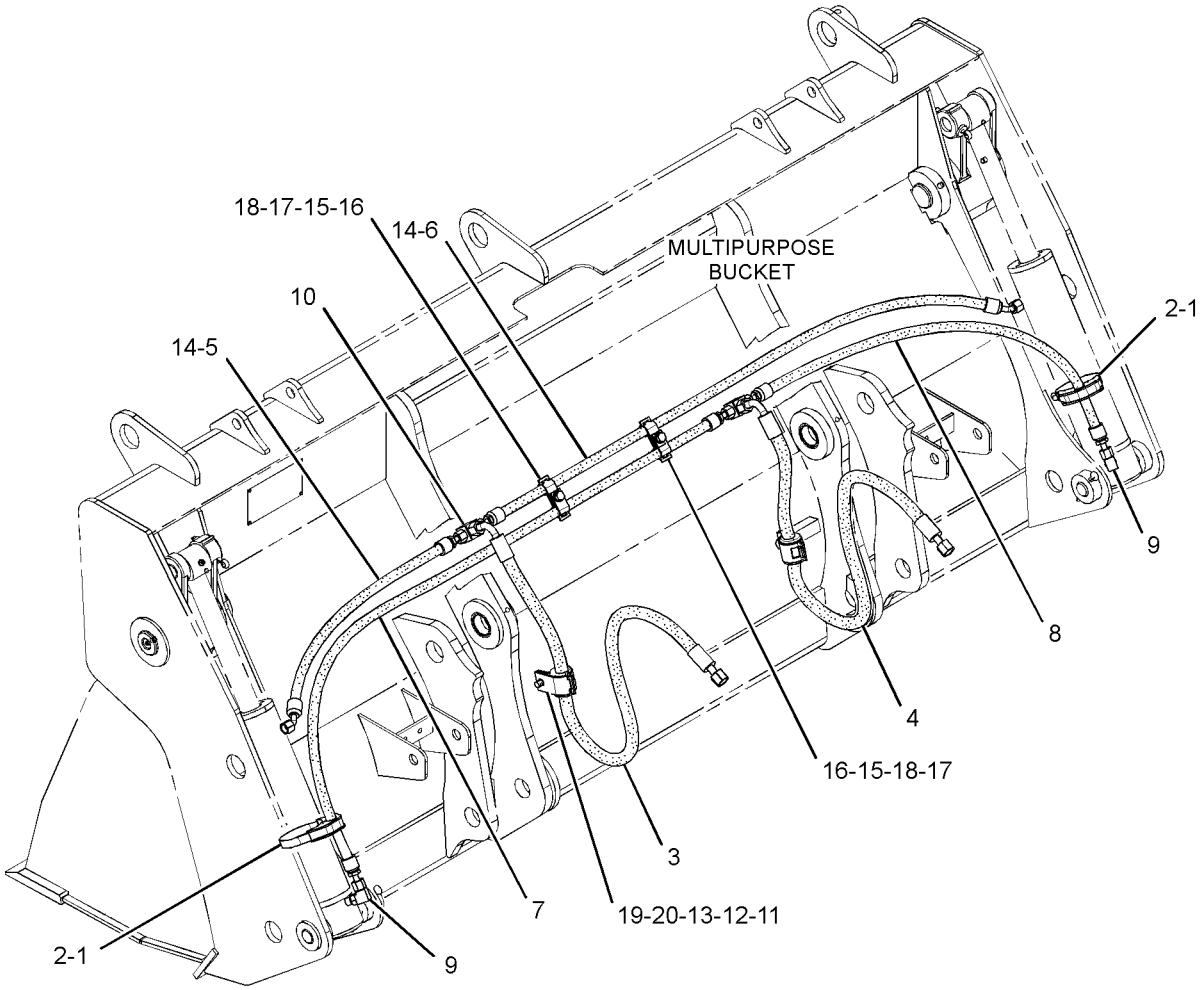

GRAPHIC #1 **<END>** g01515829

HYDRAULIC SYSTEM

321-7179 LINES GP-BUCKET—EXTENDABLE STICK

S/N: DPH1-UP

PART OF 334-0682, 334-0683, 350-6931, 350-6932, 350-6941, 350-6942 BACKHOE

AR-EXTENDABLE STICK

AN ATTACHMENT

SMCS-5057, 5457 **i03693921**

NOTE	REF NO	GRAPHIC REF	PART NUMBER	QTY	PART NAME 1 2 3 4 5 6 (PRODUCT LEVEL)	SEE PAGE
	1	1	**091-0081**	1	SPACER (10.5X20X10-MM THK)	
	2	1	*268-1548*	2	CONNECTOR AS	
					(EACH INCLUDES)	
		1	**6V-8398**	1	SEAL-O-RING	
		1	**7J-9108**	1	SEAL-O-RING	
		1	**268-1547**	1	CONNECTOR	
	3	1	**321-6111**	1	TUBE AS	
	4	1	**321-6341**	1	TUBE AS	
I	6	1	**324-7598**	1	HOSE AS	
I	7	1	**324-7599**	3	HOSE AS	
I	8	1	**324-7602**	1	HOSE AS	
I	9	1	**324-7603**	1	HOSE AS	
I	10	1	**324-7604**	1	HOSE AS	
I	11	1	**334-7931**	1	HOSE AS	
	12	1	**341-5752**	1	TUBE AS	
	13	1	*148-8364*	1	ELBOW AS	
		1	**3K-0360**	1	SEAL-O-RING	
		1	**6V-8398**	1	SEAL-O-RING	
		1	**6V-8625**	1	ELBOW	
M	14	1	**5C-7261**	2	NUT (M8X1.25-THD)	
	15	1	**5P-7464**	1	CLIP (SLOT)	
	16	1	**5P-7465**	1	CLIP (TAB)	
	17	1	**6V-7359**	1	GROMMET	
	18	1	**6V-8398**	1	SEAL-O-RING	
	19	1	**6V-9170**	4	NUT-BULKHEAD (1-14-THD)	
	20	1	**7J-9108**	7	SEAL-O-RING	
	21	1	**8K-1117**	2	CLAMP	
	22	1	**8T-4121**	6	WASHER-HARD (11X21X2.5-MM THK)	
M	23	1	**8T-4133**	3	NUT (M10X1.5-THD)	
M	24	1	**8T-4136**	2	BOLT (M10X1.5X25-MM)	
M	25	1	**8T-4191**	1	BOLT (M10X1.5X16-MM)	
	26	1	**8T-4224**	4	WASHER-HARD (8.8X16X2-MM THK)	
M	27	1	**8T-4908**	2	BOLT (M8X1.25X25-MM)	
	28	1	**9M-8406**	1	CLIP	
M	29	1	**9X-6418**	1	BOLT (M10X1.5X45-MM)	

I-REFER TO HYDRAULIC INFORMATION SYSTEM
M-METRIC PART

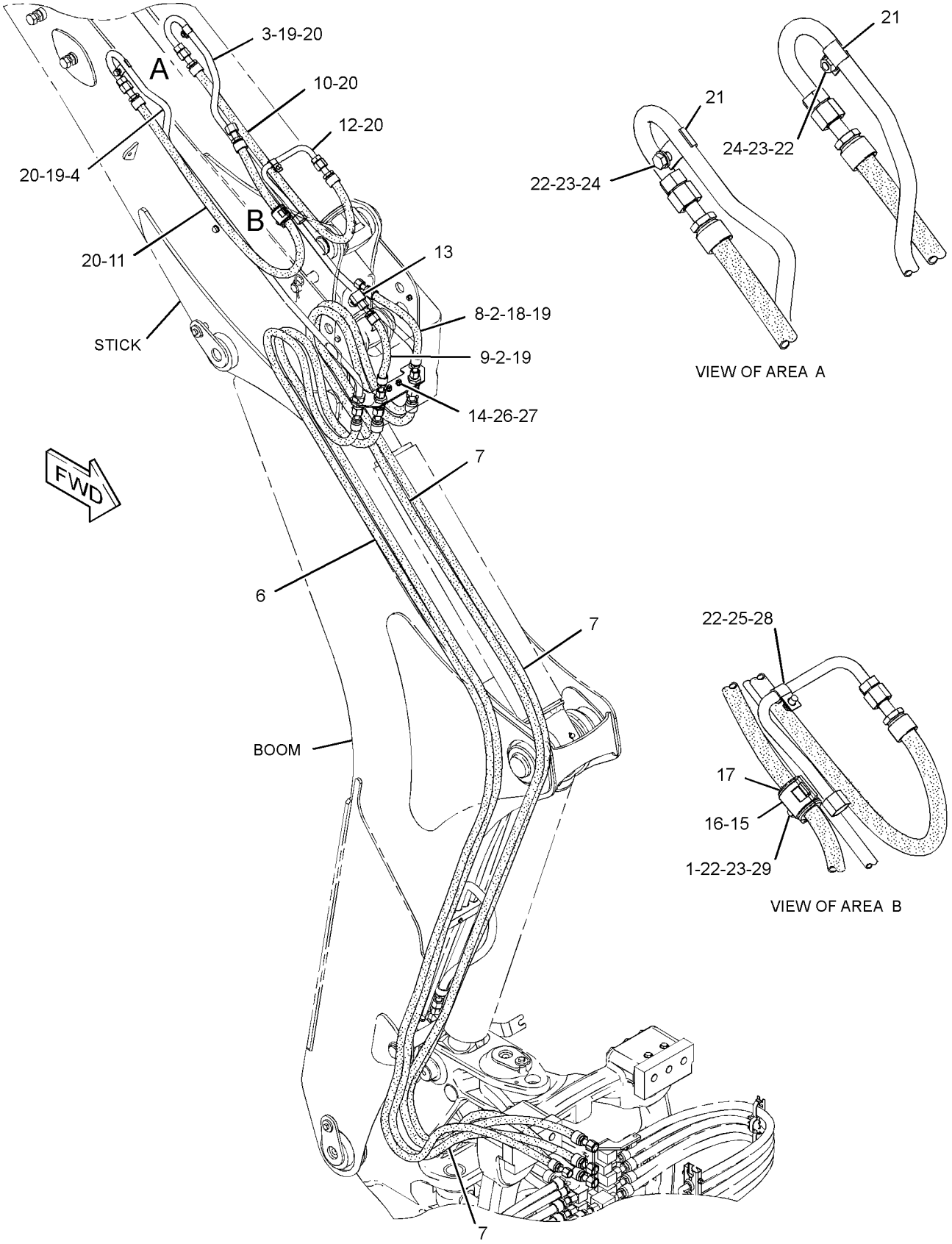

GRAPHIC #1

<END>

g01989636

HYDRAULIC SYSTEM

323-2023 LINES GP-BUCKET CYLINDER–STANDARD STICK

S/N: DPH1-UP

PART OF 334-0681, 350-6930 BACKHOE AR-STANDARD STICK AN ATTACHMENT

SMCS-5057, 5457 **i03690285**

NOTE	REF NO	GRAPHIC REF	PART NUMBER	QTY	PART NAME 1 2 3 4 5 6 (PRODUCT LEVEL)	SEE PAGE
	1	1	*281-5983*	1	ELBOW AS	
		1	**6V-8989**	1	ELBOW	
		1	**228-7091**	2	SEAL-O-RING	
	2	1	**323-2045**	1	PLATE	
I	3	1	**324-7598**	1	HOSE AS	
I	4	1	**324-7599**	1	HOSE AS	
I	5	1	**332-1025**	1	HOSE AS	
I	6	1	**334-7947**	1	HOSE AS	
	7	1	*148-8393*	1	ELBOW AS	
		1	**6V-9852**	1	ELBOW	
		1	**7J-9108**	1	SEAL-O-RING	
	8	1	*169-7409*	1	UNION AS	
		1	**6V-8996**	1	UNION	
		1	**7J-9108**	2	SEAL-O-RING	
M	9	1	**5C-7261**	2	NUT (M8X1.25-THD)	
	10	1	**6V-9170**	2	NUT-BULKHEAD (1-14-THD)	
	11	1	**7J-9108**	2	SEAL-O-RING	
	12	1	**8T-4224**	4	WASHER-HARD (8.8X16X2-MM THK)	
M	13	1	**8T-4908**	2	BOLT (M8X1.25X25-MM)	

I-REFER TO HYDRAULIC INFORMATION SYSTEM
M-METRIC PART

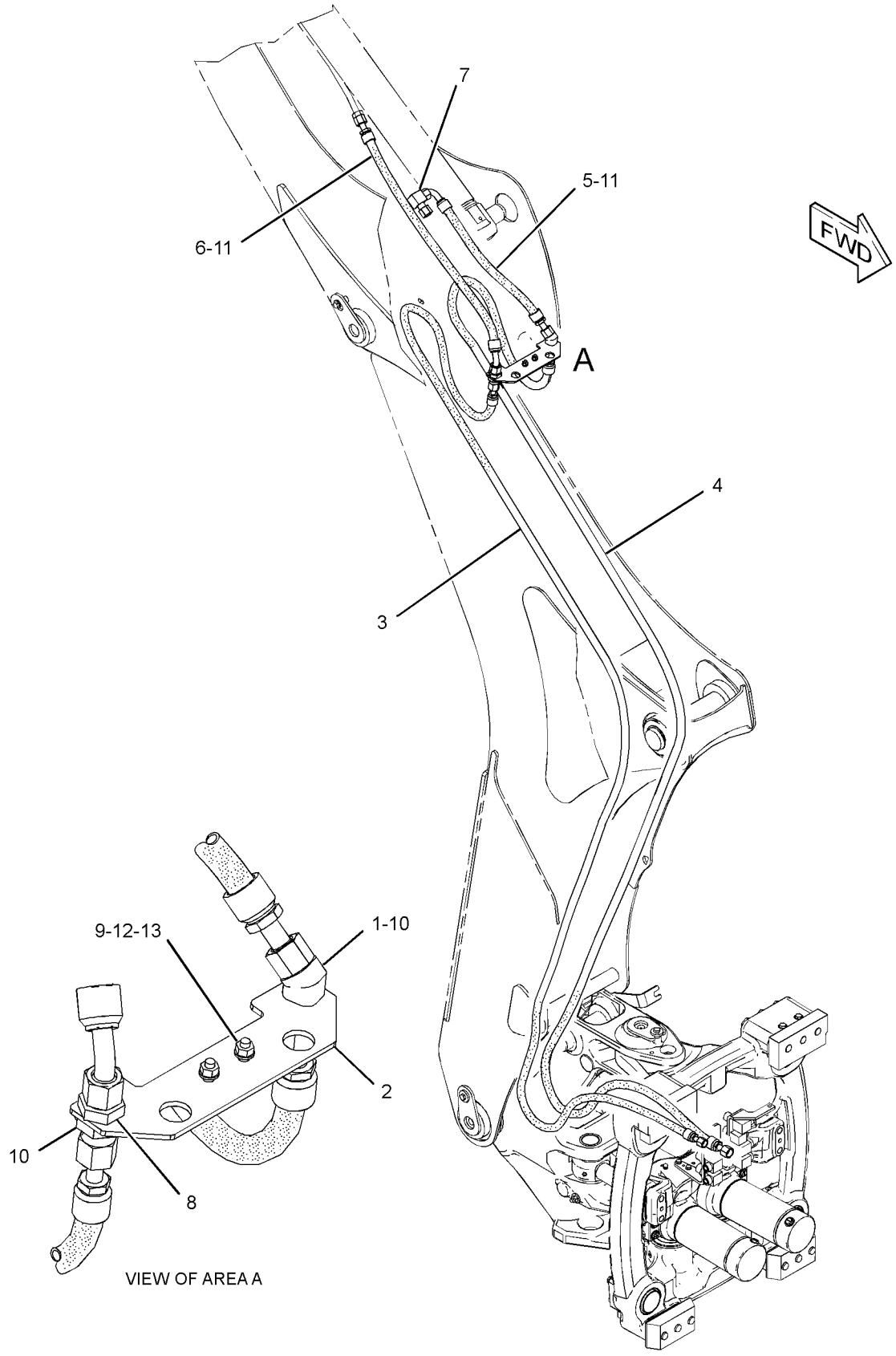

GRAPHIC #1 **<END>** g01989194

HYDRAULIC SYSTEM

216-5332 LINES GP-DRAIN

S/N: DPH1-UP

AN ATTACHMENT

SMCS-5057 **i03724300**

NOTE	REF NO	GRAPHIC REF	PART NUMBER	QTY	PART NAME 1 2 3 4 5 6 (PRODUCT LEVEL)	SEE PAGE
	1	1	**8T-0154**	1	CLAMP-HOSE	
	2	1	*165-2273*	1	VALVE GP-SHUTOFF (HYDRAULIC TANK DRAIN)	
		1	**3K-0360**	1	SEAL-O-RING	
		1	**6V-7238**	1	VALVE-SHUTOFF	
E	3	1	**5P-0743**		HOSE (35-CM)	

E-ORDER BY THE CENTIMETER

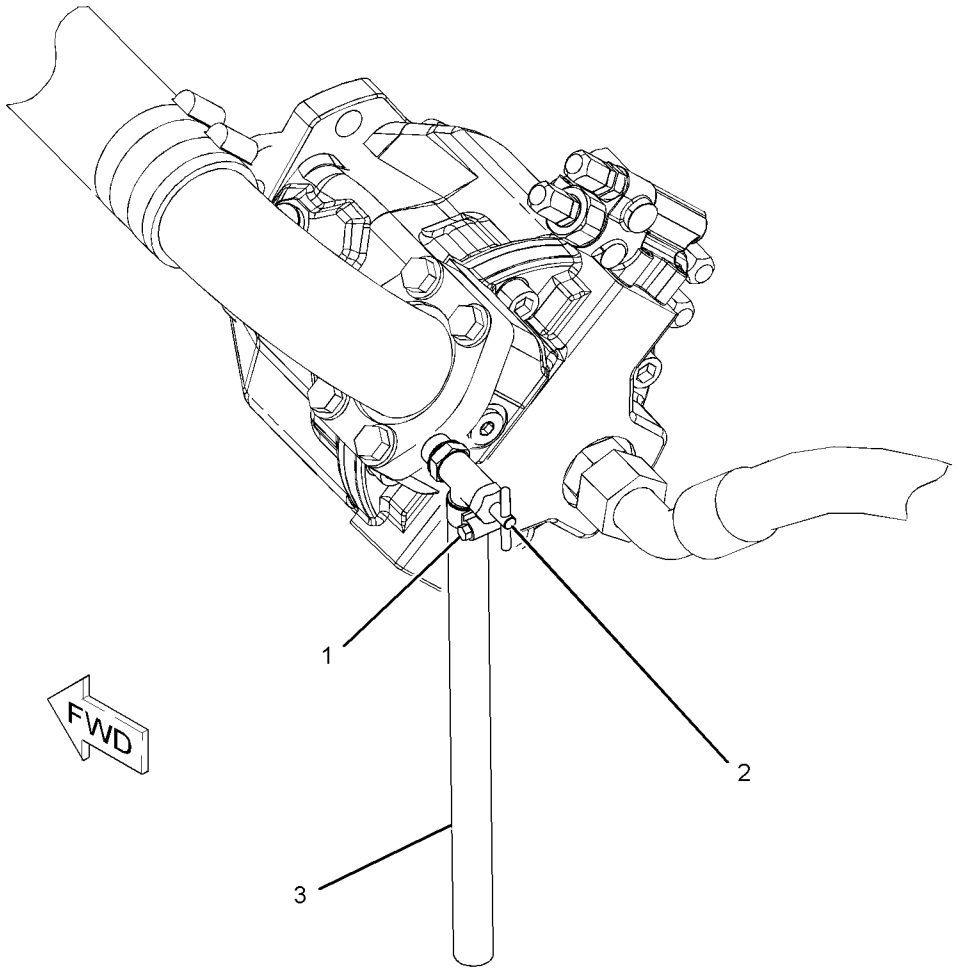

GRAPHIC #1 **<END>** g01087946

HYDRAULIC SYSTEM

329-3600 LINES GP-LIFT & TILT

S/N: DPH1-UP

PART OF 332-7953 CONTROL AR-BACKHOE, 332-7955, 332-7958 VALVE AR-BANK 3 AN ATTACHMENT

SMCS-5057 **i03651182**

NOTE	REF NO	GRAPHIC REF	PART NUMBER	QTY	PART NAME 1 2 3 4 5 6 (PRODUCT LEVEL)	SEE PAGE
	1	1	*260-9137*	2	UNION AS-CROSS	
					(EACH INCLUDES)	
		1	**7J-9108**	4	SEAL-O-RING	
		1	**260-9136**	1	CROSS-UNION	
	2	1	*287-7269*	1	CONNECTOR AS	
		1	**3D-2824**	1	SEAL-O-RING	
		1	**7J-9108**	1	SEAL-O-RING	
		1	**287-7268**	1	CONNECTOR	
	3	1	**329-3483**	1	TUBE AS	
	4	1	**329-3484**	1	TUBE AS	
	5	1	**329-3485**	1	TUBE AS	
	6	1	**329-3486**	1	TUBE AS	
	7	1	**329-3487**	1	TUBE AS	
	8	1	**329-3488**	1	TUBE AS	
	9	1	**329-3489**	1	TUBE AS	
	10	1	**329-3490**	1	TUBE AS	
	11	1	**329-3548**	1	PLATE AS	
	12	1	**329-3819**	2	PLATE	
	13	1	**329-3820**	4	CLAMP	
	14	1	**329-3821**	4	CLAMP	
	15	1	**329-5390**	4	CLAMP	
	16	1	*330-9752*	2	ELBOW AS	
					(EACH INCLUDES)	
		1	**3D-2824**	1	SEAL-O-RING	
		1	**330-9591**	1	ELBOW	
	17	1	**334-9386**	1	PLATE AS	
	18	1	*148-8341*	1	CONNECTOR AS	
		1	**3D-2824**	1	SEAL-O-RING	
		1	**6V-8713**	1	CONNECTOR	
		1	**7J-9108**	1	SEAL-O-RING	
	19	1	*148-8446*	1	TEE AS-SWIVEL	
		1	**6V-9838**	1	TEE-SWIVEL	
		1	**7J-9108**	2	SEAL-O-RING	
	20	1	*150-4031*	1	TEE AS	
		1	**6V-9845**	1	TEE-SWIVEL	
		1	**7J-9108**	2	SEAL-O-RING	
	21	1	**6V-8398**	8	SEAL-O-RING	
	22	1	**6V-9831**	2	CAP AS	
M	23	1	**7X-2543**	2	BOLT (M10X1.5X120-MM)	
	24	1	**8T-4121**	14	WASHER-HARD (11X21X2.5-MM THK)	
M	25	1	**8T-4133**	6	NUT (M10X1.5-THD)	
M	26	1	**8T-4137**	2	BOLT (M10X1.5X20-MM)	
M	27	1	**8T-4185**	4	BOLT (M10X1.5X50-MM)	
M	28	1	**8T-4195**	4	BOLT (M10X1.5X30-MM)	

M-METRIC PART

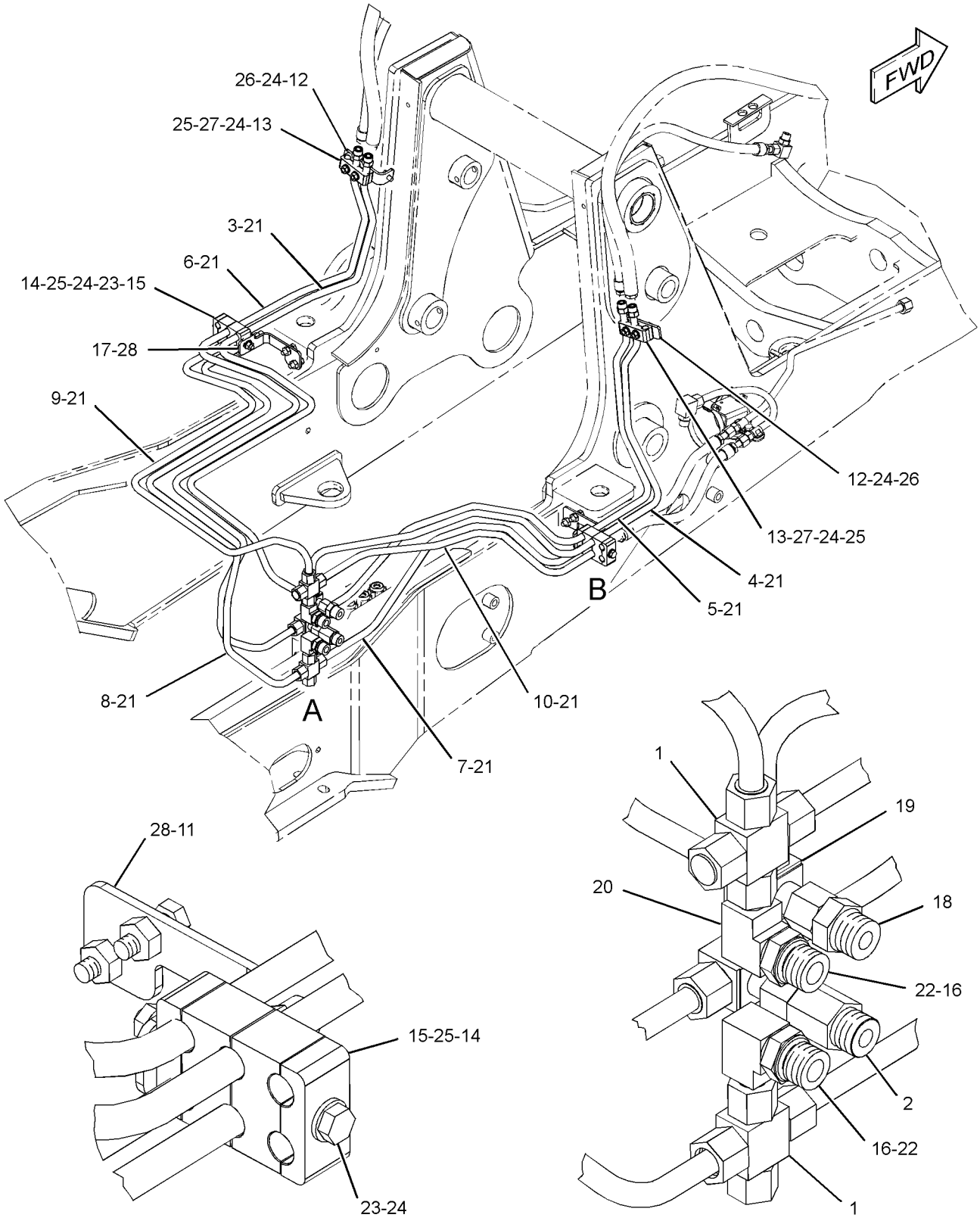

GRAPHIC #1 **<END>** g01963119

329-3504 LINES GP-LIFT CYLINDER—PARALLEL LIFT

S/N: DPH1-UP

PART OF 332-7953 CONTROL AR-BACKHOE, 332-7955 VALVE AR-BANK 3

AN ATTACHMENT

SMCS-5057, 5102 **i03643014**

NOTE	REF NO	GRAPHIC REF	PART NUMBER	QTY	PART NAME 1 2 3 4 5 6 (PRODUCT LEVEL)	SEE PAGE
	1	1	**7K-1181**	4	STRAP-CABLE	
I	2	1	**329-3493**	1	HOSE AS	
I	3	1	**329-3497**	3	HOSE AS	
I	4	1	**329-3546**	2	HOSE AS	
I	5	1	**331-8678**	2	HOSE AS	
	6	1	*148-8364*	2	ELBOW AS	
					(EACH INCLUDES)	
		1	**3K-0360**	1	SEAL-O-RING	
		1	**6V-8398**	1	SEAL-O-RING	
		1	**6V-8625**	1	ELBOW	

I-REFER TO HYDRAULIC INFORMATION SYSTEM

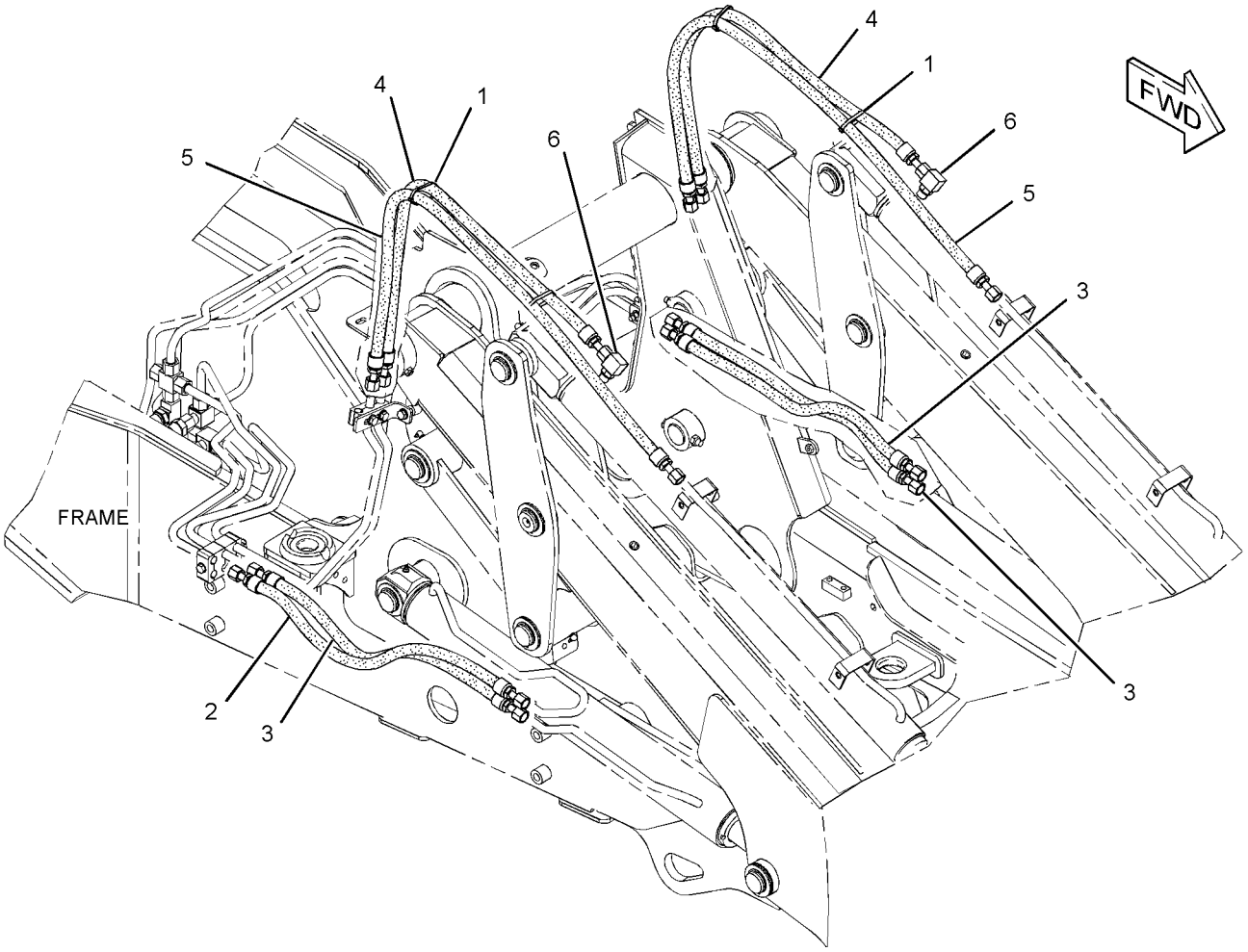

GRAPHIC #1 **<END>** g01963412

HYDRAULIC SYSTEM

329-3506 LINES GP-LIFT CYLINDER—PARALLEL LIFT

S/N: DPH1-UP
PART OF 332-7958 VALVE AR-BANK 3
AN ATTACHMENT

SMCS-5057, 5102 **i03724322**

NOTE	REF NO	GRAPHIC REF	PART NUMBER	QTY	PART NAME 1 2 3 4 5 6 (PRODUCT LEVEL)	SEE PAGE
	1	1	**7K-1181**	4	STRAP-CABLE	
	2	1	**8T-6726**	4	CLAMP-HOSE	
	3	1	**9M-6738**	4	CLAMP-HOSE	
	4	1	*161-9916*	2	ADAPTER AS	
					(EACH INCLUDES)	
		1	**2M-9780**	1	SEAL-O-RING	
		1	**6V-7420**	1	ADAPTER	
	5	1	*250-1440*	2	ADAPTER AS	
					(EACH INCLUDES)	
		1	**3K-0360**	1	SEAL-O-RING	
		1	**7X-3164**	1	ADAPTER-SWIVEL	
	6	1	*250-1471*	2	TEE AS	
					(EACH INCLUDES)	
		1	**3J-1907**	1	SEAL-O-RING	
		1	**6V-8398**	1	SEAL-O-RING	
		1	**7J-9108**	1	SEAL-O-RING	
		1	**250-1470**	1	TEE	
	7	1	*260-9219*	2	CONNECTOR AS	
					(EACH INCLUDES)	
		1	**6V-8638**	1	CONNECTOR	
		1	**228-7090**	1	SEAL-O-RING	
		1	**238-5081**	1	SEAL-O-RING	
	8	1	**262-7079**	2	VALVE GP-CHECK (PILOT CONTROL)	
	9	1	**262-7081**	2	VALVE GP-LOAD CONTROL (LIFT & TILT)	
	10	1	**279-4969**	2	BRACKET	
I	11	1	**329-3501**	2	HOSE AS	
I	12	1	**329-3502**	2	HOSE AS	
I	13	1	**329-3545**	2	HOSE AS	
I	14	1	**329-3546**	2	HOSE AS	
	15	1	**329-3547**	2	TUBE AS	
	16	1	**329-3596**	2	TUBE AS	
	17	1	**331-8679**	2	TUBE AS	
	18	1	**346-5517**	2	BRACKET	
	19	1	*148-8345*	2	CONNECTOR AS	
					(EACH INCLUDES)	
		1	**2M-9780**	1	SEAL-O-RING	
		1	**6V-8398**	1	SEAL-O-RING	
		1	**6V-8638**	1	CONNECTOR	
	20	1	*148-8372*	2	ELBOW AS	
					(EACH INCLUDES)	
		1	**2M-9780**	1	SEAL-O-RING	
		1	**6V-8398**	1	SEAL-O-RING	
		1	**6V-8721**	1	ELBOW	
	21	1	*148-8378*	2	ELBOW AS	
					(EACH INCLUDES)	
		1	**3J-1907**	1	SEAL-O-RING	
		1	**6V-8397**	1	SEAL-O-RING	
		1	**6V-8724**	1	ELBOW	
	22	1	*148-8426*	2	TEE AS	
					(EACH INCLUDES)	
		1	**3K-0360**	1	SEAL-O-RING	
		1	**6V-8397**	1	SEAL-O-RING	
		1	**6V-8398**	1	SEAL-O-RING	
		1	**8T-6696**	1	TEE-O-RING	
	23	1	**8T-4224**	16	WASHER-HARD (8.8X16X2-MM THK)	

329-3506 LINES GP-LIFT CYLINDER *(contd.)* i03724322

NOTE	REF NO	GRAPHIC REF	PART NUMBER	QTY	PART NAME 1 2 3 4 5 6 (PRODUCT LEVEL)	SEE PAGE
M	24	1	**8T-6912**	8	BOLT (M8X1.25X50-MM)	
M	25	1	**8T-7963**	8	LOCKNUT (M8X1.25-THD)	

I-REFER TO HYDRAULIC INFORMATION SYSTEM
M-METRIC PART

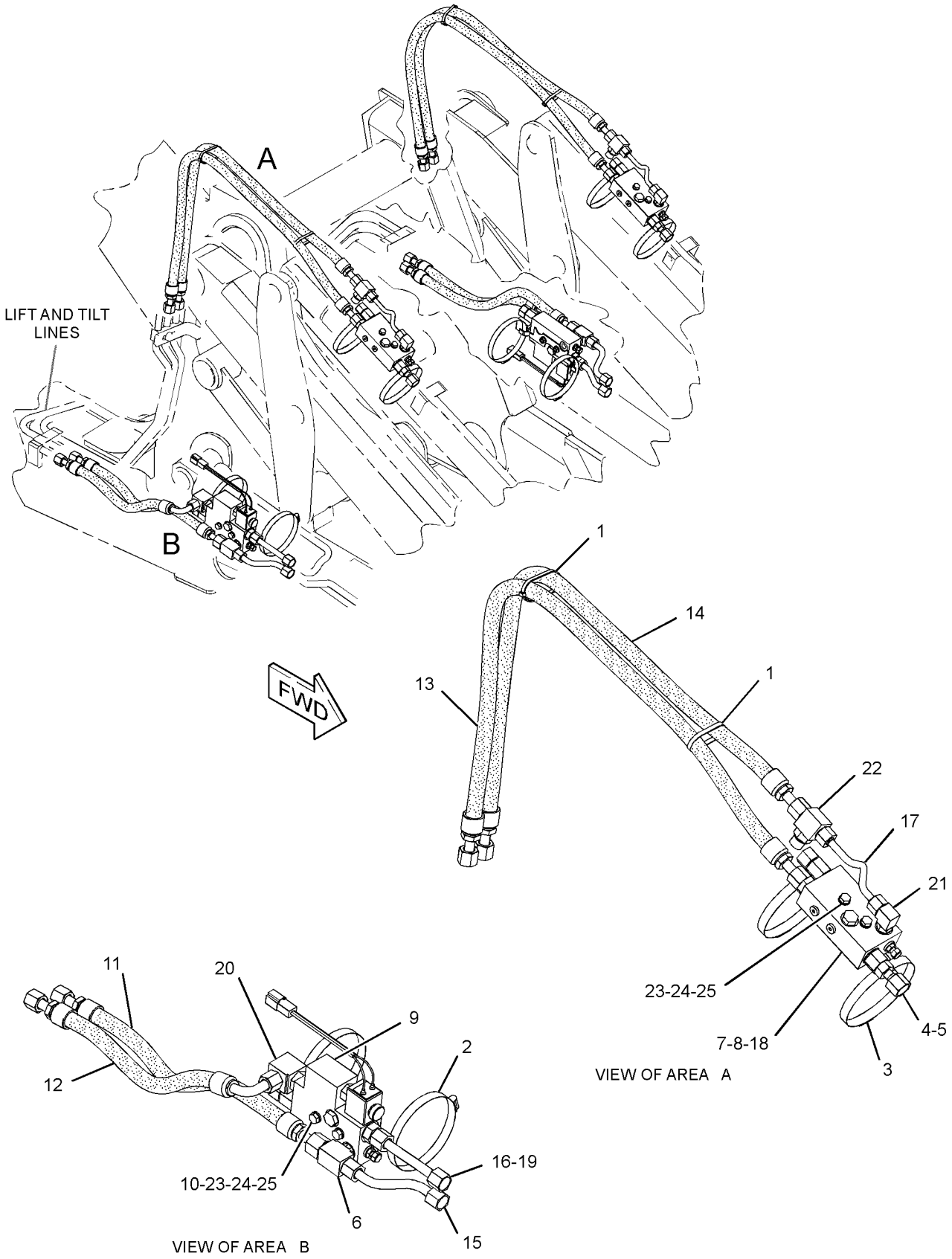

GRAPHIC #1 **<END>** g01963794

HYDRAULIC SYSTEM

338-0444 LINES GP-LOAD CONTROL VALVE

S/N: DPH1-UP

PART OF 350-6941, 350-6942 BACKHOE AR-EXTENDABLE STICK AN ATTACHMENT

SMCS-5057, 5811 **i03694941**

NOTE	REF NO	GRAPHIC REF	PART NUMBER	QTY	PART NAME 1 2 3 4 5 6 (PRODUCT LEVEL)	SEE PAGE
	1	1	*161-9916*	1	ADAPTER AS	
		1	**2M-9780**	1	SEAL-O-RING	
		1	**6V-7420**	1	ADAPTER	
	2	1	*166-2033*	1	TEE AS	
		1	**4J-5477**	1	SEAL-O-RING	
		1	**7X-2444**	1	TEE-SWIVEL	
	3	1	**205-7198**	1	TEE AS	
		1	**3J-1907**	1	SEAL-O-RING	
		1	**4J-5477**	2	SEAL-O-RING	
	4	1	*250-1440*	1	ADAPTER AS	
		1	**3K-0360**	1	SEAL-O-RING	
		1	**7X-3164**	1	ADAPTER-SWIVEL	
	5	1	**328-2477**	1	PLATE	
I	6	1	**329-4508**	1	HOSE AS	
I	7	1	**330-6124**	1	HOSE AS	
	8	1	*332-8572*	2	ADAPTER AS	
					(EACH INCLUDES)	
		1	**3D-2824**	1	SEAL-O-RING	
		1	**4J-5477**	1	SEAL-O-RING	
		1	**7J-9108**	1	SEAL-O-RING	
		1	**332-8571**	1	ADAPTER-TEE	
I	9	1	**339-0010**	1	HOSE AS	
I	10	1	**339-0089**	1	HOSE AS	
I	11	1	**339-2886**	1	HOSE AS	
I	12	1	**339-2935**	1	HOSE AS	
I	13	1	**339-3497**	1	HOSE AS	
I	14	1	**339-3498**	1	HOSE AS	
	15	1	**339-4287**	2	BRACKET	
	16	1	**347-1126**	1	VALVE GP-LOAD CONTROL (BOOM)	
	17	1	**347-1127**	1	VALVE GP-LOAD CONTROL (STICK)	
	18	1	*148-8315*	1	CONNECTOR AS	
		1	**2M-9780**	1	SEAL-O-RING	
		1	**6V-8642**	1	CONNECTOR	
		1	**7J-9108**	1	SEAL-O-RING	
	19	1	*148-8325*	3	CONNECTOR AS	
					(EACH INCLUDES)	
		1	**3J-1907**	1	SEAL-O-RING	
		1	**4J-5477**	1	SEAL-O-RING	
		1	**6V-8641**	1	CONNECTOR	
	20	1	*148-8345*	1	CONNECTOR AS	
		1	**2M-9780**	1	SEAL-O-RING	
		1	**6V-8398**	1	SEAL-O-RING	
		1	**6V-8638**	1	CONNECTOR	
	21	1	*148-8351*	2	ELBOW AS	
					(EACH INCLUDES)	
		1	**4J-5477**	1	SEAL-O-RING	
		1	**6V-9849**	1	ELBOW	
	22	1	*148-8368*	1	ELBOW AS	
		1	**3J-1907**	1	SEAL-O-RING	
		1	**4J-5477**	1	SEAL-O-RING	
		1	**6V-8627**	1	ELBOW	
	23	1	*150-4052*	3	UNION AS	
					(EACH INCLUDES)	
		1	**4J-5477**	2	SEAL-O-RING	
		1	**6V-8993**	1	UNION	

338-0444 LINES GP-LOAD CONTROL VALVE *(contd.)* i03694941

NOTE	REF NO	GRAPHIC REF	PART NUMBER	QTY	PART NAME 1 2 3 4 5 6 (PRODUCT LEVEL)	SEE PAGE
	24	1	**2M-9780**	1	SEAL-O-RING	
	25	1	**2P-1279**	3	LOCKNUT (9/16-18-THD)	
	26	1	**3S-2093**	1	STRAP-CABLE	
	27	1	**5P-0599**	4	CLAMP-BAND	
	28	1	**6V-9169**	1	NUT-BULKHEAD (13/16-16-THD)	
	29	1	**6V-9170**	1	NUT-BULKHEAD (1-14-THD)	
M	30	1	**6V-9189**	3	LOCKNUT (M8X1.25-THD)	
	31	1	**7X-3165**	1	ADAPTER AS-SWIVEL	
	32	1	**8T-4224**	3	WASHER-HARD (8.8X16X2-MM THK)	
M	33	1	**8T-6869**	3	BOLT (M8X1.25X60-MM)	

I-REFER TO HYDRAULIC INFORMATION SYSTEM
M-METRIC PART

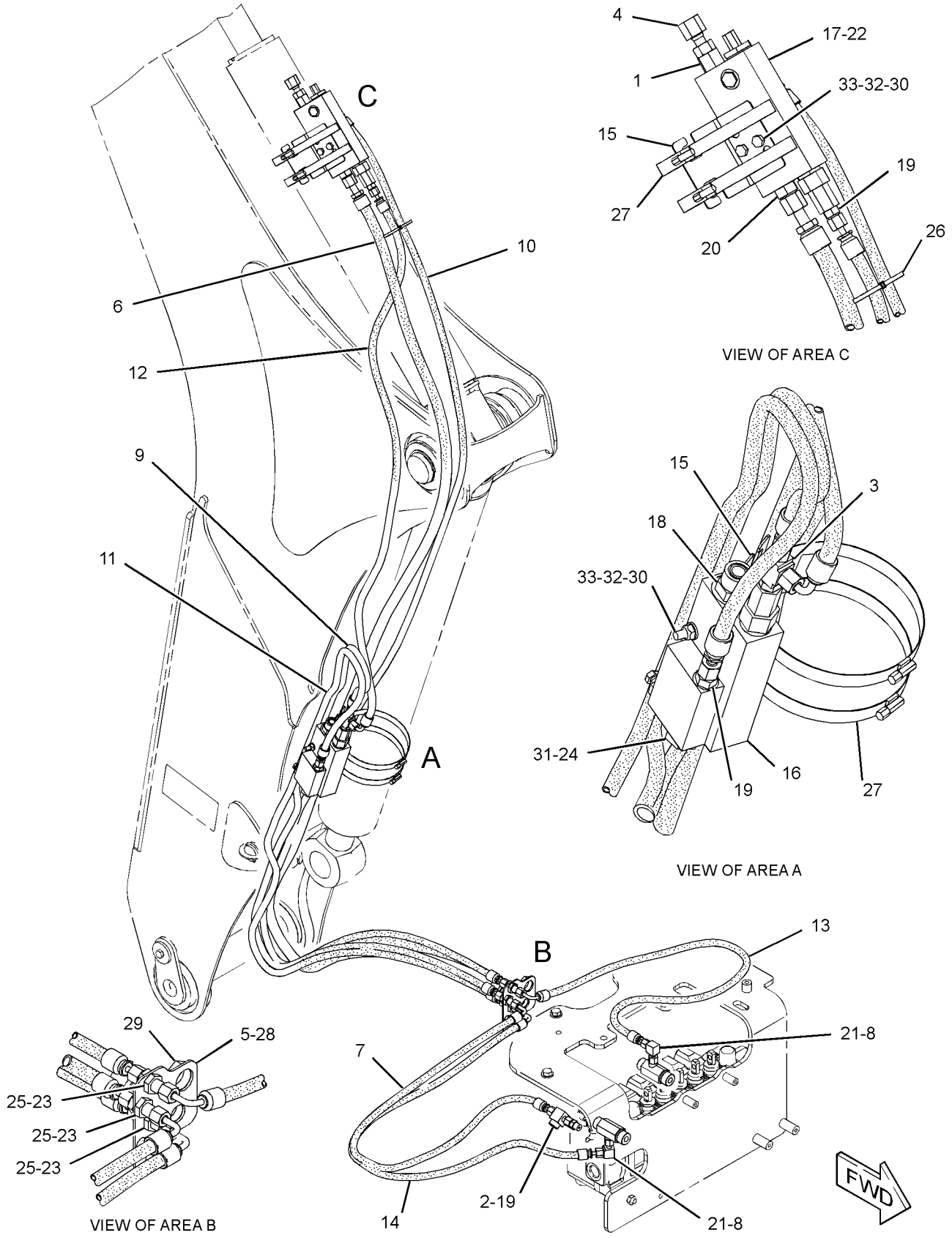

GRAPHIC #1

<END>

g02000928

HYDRAULIC SYSTEM

317-6270 LINES GP-MULTIPURPOSE BUCKET

S/N: DPH1-UP

PART OF 318-7246, 318-7247, 318-7248 BUCKET AR-MULTIPURPOSE AN ATTACHMENT

SMCS-5057 **i03481060**

NOTE	REF NO	GRAPHIC REF	PART NUMBER	QTY	PART NAME 1 2 3 4 5 6 (PRODUCT LEVEL)	SEE PAGE
	1	1	**8T-6726**	2	CLAMP-HOSE	
	2	1	**9R-8870**	2	BLOCK	
I	3	1	**317-2250**	1	HOSE AS	
I	4	1	**317-4367**	1	HOSE AS	
I	5	1	**317-6266**	1	HOSE AS	
I	6	1	**317-6267**	1	HOSE AS	
I	7	1	**317-6268**	1	HOSE AS	
I	8	1	**317-6269**	1	HOSE AS	
	9	1	*148-8378*	2	ELBOW AS	
					(EACH INCLUDES)	
		1	**3J-1907**	1	SEAL-O-RING	
		1	**6V-8397**	1	SEAL-O-RING	
		1	**6V-8724**	1	ELBOW	
	10	1	*150-3060*	2	TEE AS	
					(EACH INCLUDES)	
		1	**6V-8397**	2	SEAL-O-RING	
		1	**6V-8398**	1	SEAL-O-RING	
		1	**8T-3444**	1	TEE-UNION	
	11	1	**6V-8397**	2	SEAL-O-RING	
	12	1	**8T-1893**	4	CLIP (SLOT)	
	13	1	**8T-1894**	4	CLIP (TAB)	
	14	1	**5P-7464**	2	CLIP (SLOT)	
	15	1	**5P-7465**	2	CLIP (TAB)	
	16	1	**8T-4121**	2	WASHER-HARD (11X21X2.5-MM THK)	
M	17	1	**8T-4136**	2	BOLT (M10X1.5X25-MM)	
M	18	1	**8T-4192**	2	BOLT (M12X1.75X25-MM)	
	19	1	**8T-4223**	2	WASHER-HARD (13.5X25.5X3-MM THK)	
	20	1	**6V-1249**	2	GROMMET	

I-REFER TO HYDRAULIC INFORMATION SYSTEM
M-METRIC PART

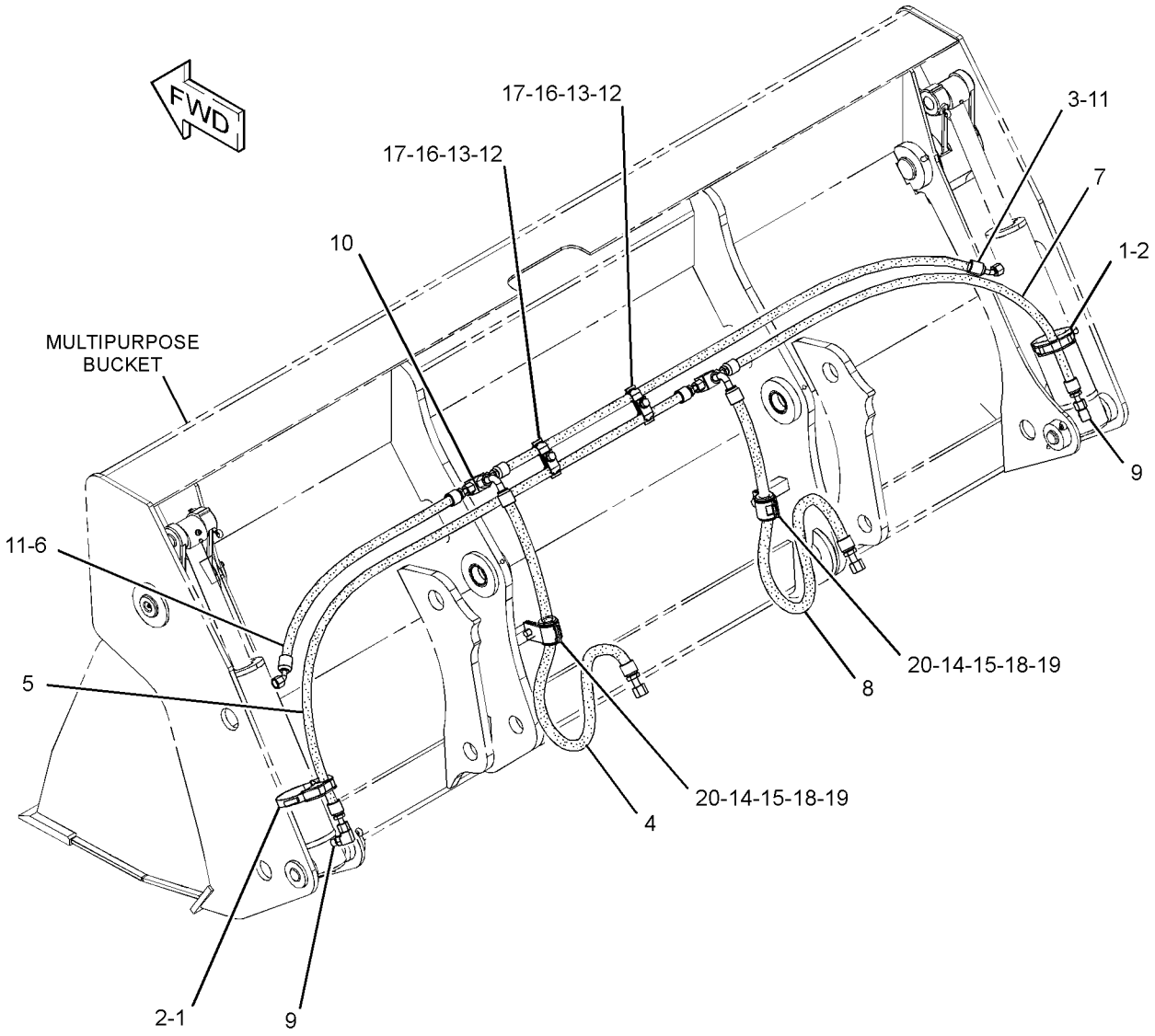

GRAPHIC #1 **<END>** g01858936

HYDRAULIC SYSTEM

339-4834 LINES GP-PILOT—SIGNAL

S/N: DPH1-UP

PART OF 329-0123 HYDRAULIC AR

SMCS-5057, 5059 **i03642523**

NOTE	REF NO	GRAPHIC REF	PART NUMBER	QTY	PART NAME 1 2 3 4 5 6 (PRODUCT LEVEL)	SEE PAGE
	1	1	**5D-1026**	4	CLAMP-BAND	
	2	1	**7K-1181**	1	STRAP-CABLE	
I	3	1	**208-3600**	1	HOSE AS	
	4	1	**297-7964**	1	CONNECTOR	
I	5	1	**308-5496**	1	HOSE AS	
	6	1	*351-0288*	1	TEE AS	
		1	**2M-9780**	1	SEAL-O-RING	
		1	**351-0287**	1	ADAPTER-TEE	
	7	1	*351-0289*	1	ELBOW AS	
		1	**2M-9780**	1	SEAL-O-RING	
		1	**6V-9208**	1	ELBOW	
	8	1	*351-0290*	1	ADAPTER AS	
		1	**3J-7354**	1	SEAL-O-RING	
		1	**4J-5477**	1	SEAL-O-RING	
		1	**308-9568**	1	ADAPTER-TEE	
	9	1	*148-8325*	2	CONNECTOR AS	
					(EACH INCLUDES)	
		1	**3J-1907**	1	SEAL-O-RING	
		1	**4J-5477**	1	SEAL-O-RING	
		1	**6V-8641**	1	CONNECTOR	
	10	1	*148-8411*	1	PLUG AS	
		1	**3K-0360**	1	SEAL-O-RING	
		1	**9S-4185**	1	PLUG-O-RING	
	11	1	*150-3027*	1	ELBOW AS	
		1	**2M-9780**	1	SEAL-O-RING	
		1	**6V-5653**	1	ELBOW	
	12	1	*150-5968*	2	TEE AS	
					(EACH INCLUDES)	
		1	**4J-5477**	2	SEAL-O-RING	
		1	**6V-9835**	1	TEE-SWIVEL	
	13	1	*164-5567*	2	COUPLER AS-QUICK DISCONNECT	
					(EACH INCLUDES)	
		1	**6V-3965**	1	FITTING (QUICK DISCONNECT)	
		1	**214-7568**	1	SEAL-O-RING	
	14	1	**178-3620**	1	STRAP-DUAL CLAMP	
	15	1	**3J-1907**	1	SEAL-O-RING	
	16	1	**6V-0852**	2	CAP-DUST	
	17	1	**6V-9828**	1	CAP AS	
E	18	1	**5P-0743**		HOSE (100-CM)	
E	19	1	**5P-1505**		HOSE (226-CM)	

E-ORDER BY THE CENTIMETER
I-REFER TO HYDRAULIC INFORMATION SYSTEM

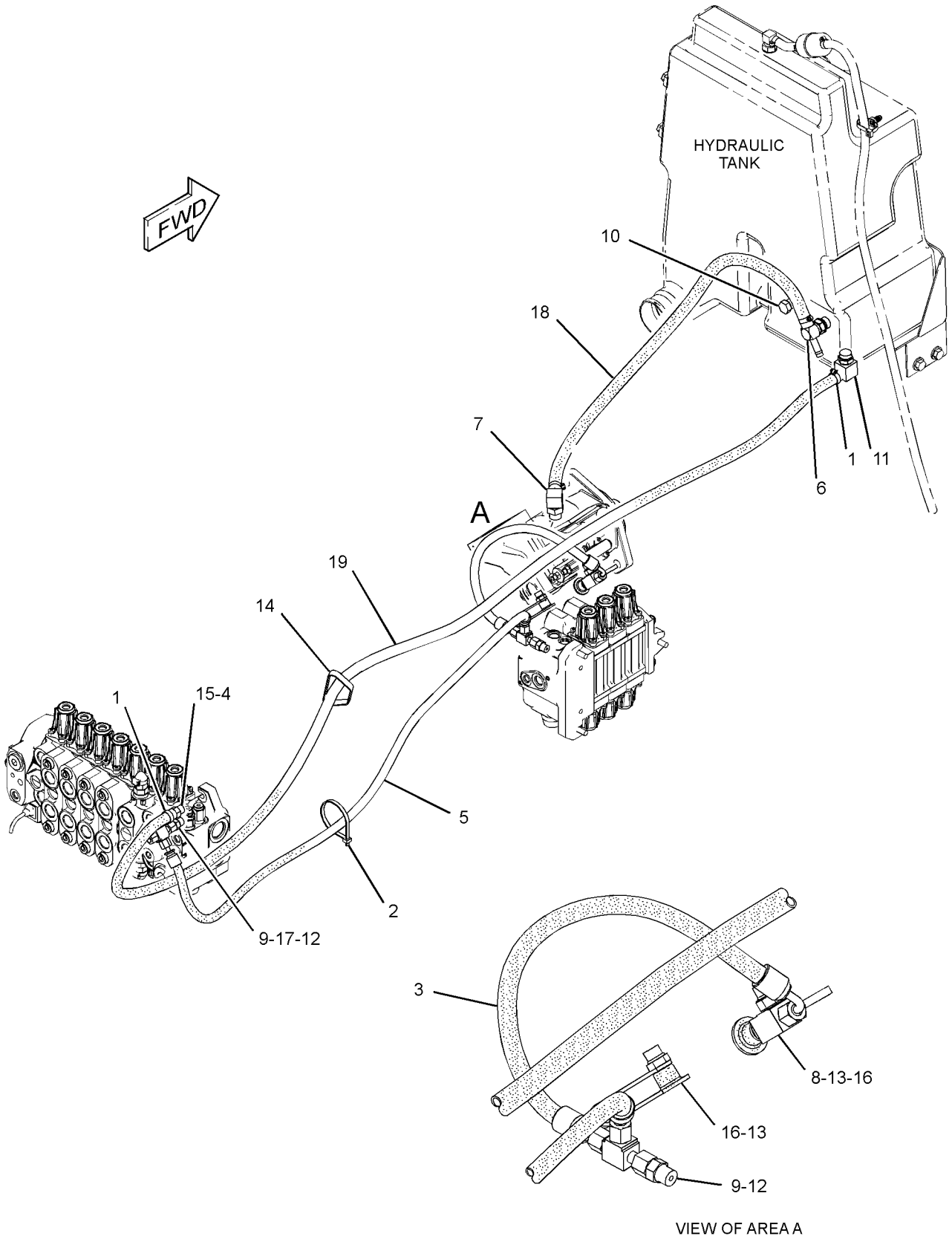

GRAPHIC #1 **<END>** g02002233

HYDRAULIC SYSTEM

335-1692 LINES GP-PUMP

S/N: DPH1-UP

PART OF 329-0123 HYDRAULIC AR

SMCS-5057 **i03663042**

NOTE	REF NO	GRAPHIC REF	PART NUMBER	QTY	PART NAME 1 2 3 4 5 6 (PRODUCT LEVEL)	SEE PAGE
	1	1	**144-0367**	1	CLAMP-HOSE	
	2	1	**211-4348**	1	ELBOW AS	
	3	1	**235-8528**	1	HOSE	
I	4	1	**298-5398**	1	HOSE AS	
I	5	1	**307-3488**	1	HOSE AS	
I	6	1	**338-0426**	1	HOSE AS	
I	7	1	**338-0427**	1	HOSE AS	
	8	1	*148-8317*	1	CONNECTOR AS	
		1	**3D-2824**	1	SEAL-O-RING	
		1	**5K-9090**	1	SEAL-O-RING	
		1	**6V-8714**	1	CONNECTOR	
	9	1	*148-8335*	2	CONNECTOR AS	
					(EACH INCLUDES)	
		1	**5K-9090**	1	SEAL-O-RING	
		1	**6V-8635**	1	CONNECTOR	
		1	**7M-8485**	1	SEAL-O-RING	
	10	1	*148-8352*	1	ELBOW AS	
		1	**5K-9090**	1	SEAL-O-RING	
		1	**6V-9854**	1	ELBOW	
	11	1	*148-8362*	1	ELBOW AS	
		1	**3D-2824**	1	SEAL-O-RING	
		1	**5K-9090**	1	SEAL-O-RING	
		1	**8T-6684**	1	ELBOW	
	12	1	*148-8429*	2	TEE AS	
					(EACH INCLUDES)	
		1	**5K-9090**	2	SEAL-O-RING	
		1	**6V-9840**	1	TEE-SWIVEL	
	13	1	**1P-4584**	2	FLANGE-HALF	
	14	1	*313-3490*	1	CONNECTOR AS	
		1	**5K-9090**	1	SEAL-O-RING	
		1	**7M-8485**	1	SEAL-O-RING	
		1	**313-3486**	1	CONNECTOR	
	15	1	**5P-4868**	2	CLAMP-HOSE	
	16	1	**6J-2680**	1	SEAL-O-RING	
M	17	1	**8T-4183**	4	BOLT (M12X1.75X40-MM)	
	18	1	**8T-4223**	4	WASHER-HARD (13.5X25.5X3-MM THK)	

I-REFER TO HYDRAULIC INFORMATION SYSTEM
M-METRIC PART

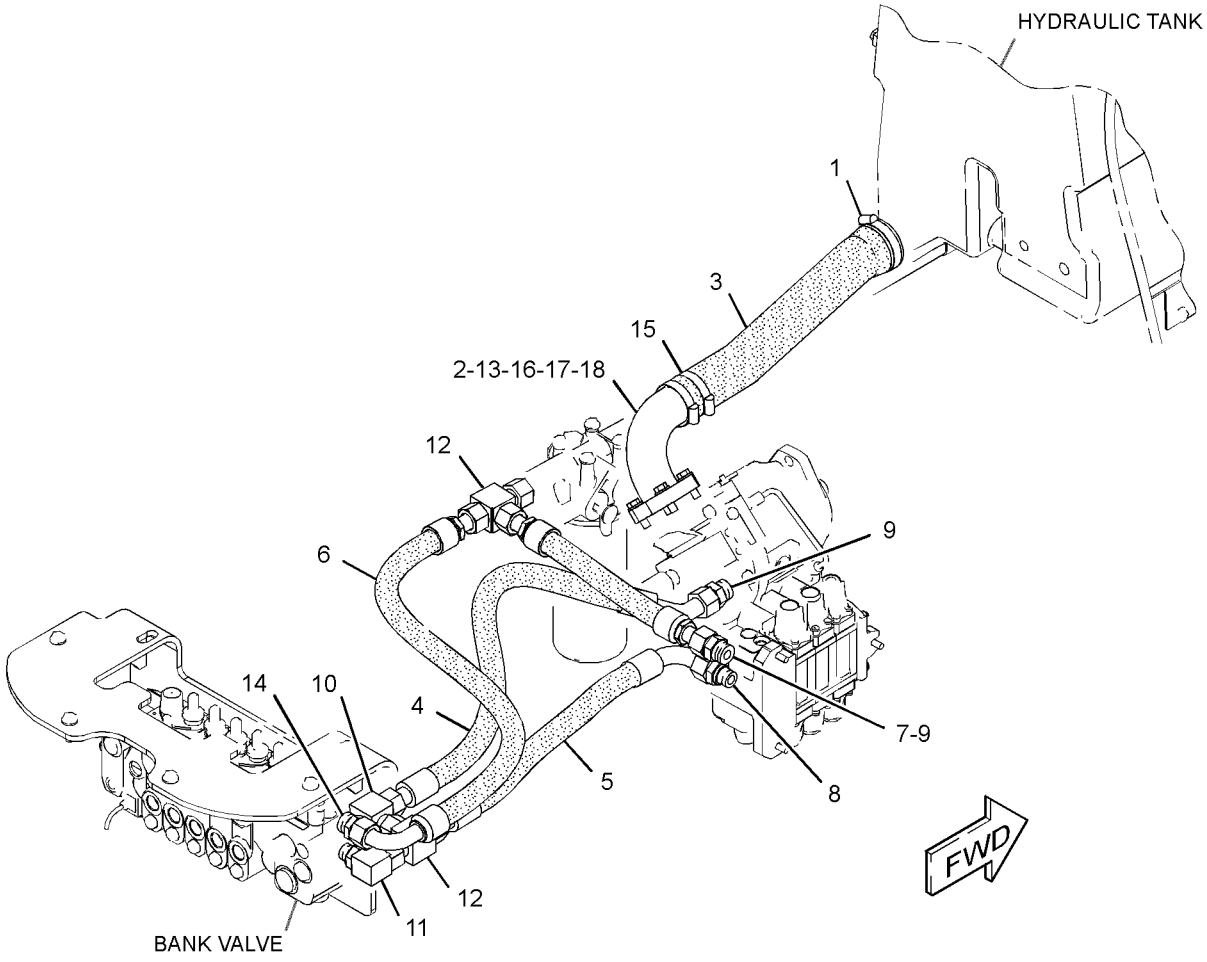

GRAPHIC #1 **<END>** g01988937

HYDRAULIC SYSTEM

334-8021 LINES GP-RETURN

S/N: DPH1-UP

PART OF 329-0123 HYDRAULIC AR

SMCS-5057 **i03642932**

NOTE	REF NO	GRAPHIC REF	PART NUMBER	QTY	PART NAME 1 2 3 4 5 6 (PRODUCT LEVEL)	SEE PAGE
	1	1	**7K-1181**	3	STRAP-CABLE	
	2	1	**130-9984**	1	CLIP	
	3	1	**159-1503**	4	CLAMP-HOSE	
	4	1	**232-0252**	1	TEE	
	5	1	**235-7091**	1	HOSE	
Y	6	1	*325-6257*	1	FILTER GP-OIL (HYDRAULIC)	356
	7	1	**091-9035**	2	SPACER (11X25X20-MM THK)	
M	8	1	**5C-7261**	2	NUT (M8X1.25-THD)	
	9	1	**5P-4116**	2	WASHER-HARD (8.8X20.5X2-MM THK)	
	10	1	**7D-7233**	2	CLIP	
	11	1	**7X-7729**	4	WASHER (11X25X3-MM THK)	
	12	1	**7X-7958**	4	CLAMP-HOSE	
	13	1	**8T-4121**	3	WASHER-HARD (11X21X2.5-MM THK)	
M	14	1	**8T-4136**	5	BOLT (M10X1.5X25-MM)	
M	15	1	**8T-5005**	2	BOLT (M10X1.5X70-MM)	
	16	1	**8T-7529**	3	CLIP	
E	17	1	**5P-1506**		HOSE (90-CM)	
E	18	1	**262-8088**		HOSE (130-CM)	
E	18A	1	**262-8088**		HOSE (222-CM)	
G	19	1	**160-2246**		SLEEVE-ABRASION (21-IN)	

E-ORDER BY THE CENTIMETER
G-ORDER BY THE INCH
M-METRIC PART
Y-SEPARATE ILLUSTRATION

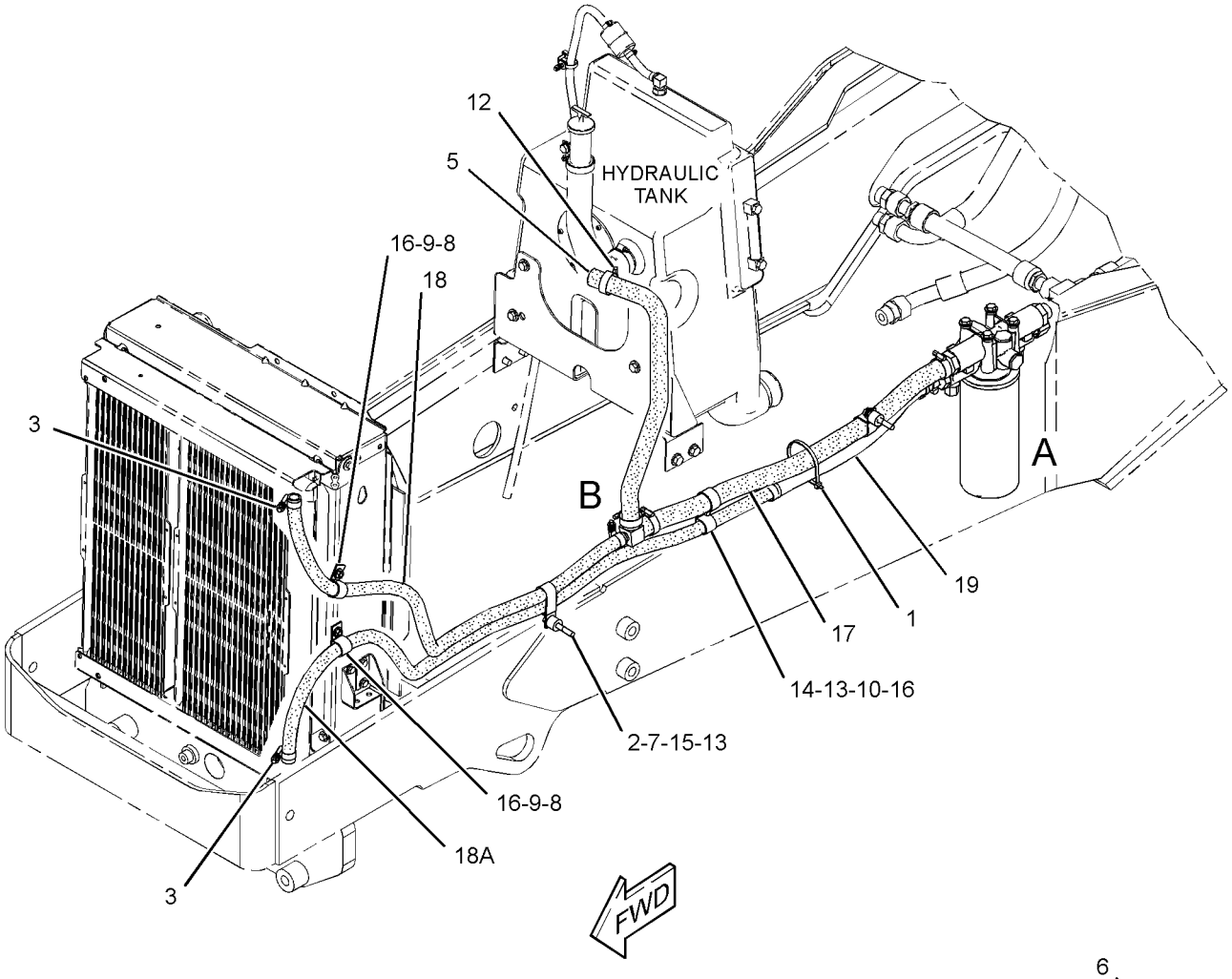

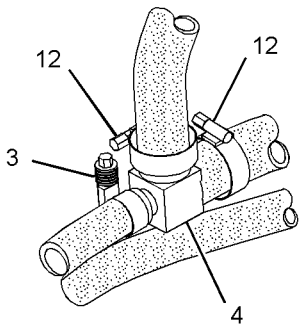

VIEW OF AREA B

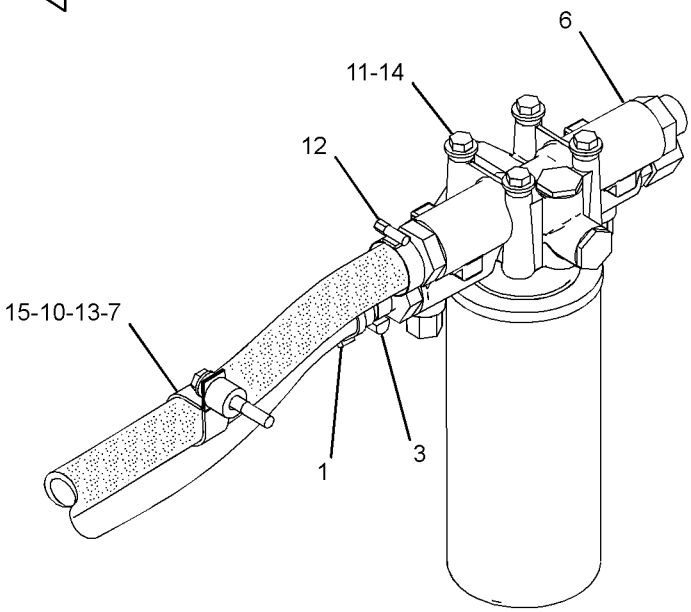

VIEW OF AREA A

GRAPHIC #1 **<END>** g01988835

HYDRAULIC SYSTEM

331-8676 LINES GP-RIDE CONTROL

S/N: DPH1-UP
PART OF 344-5289 CONTROL AR-RIDE
AN ATTACHMENT

SMCS-5057, 5077, 5264 **i03726365**

NOTE	REF NO	GRAPHIC REF	PART NUMBER	QTY	PART NAME 1 2 3 4 5 6 (PRODUCT LEVEL)	SEE PAGE
	1	1	**7K-1181**	1	STRAP-CABLE	
Y	2	1	**245-8780**	1	MANIFOLD GP-RIDE CONTROL	407
	3	1	**276-2334**	1	FILM-WARNING (HIGH PRESS CYLINDER, READ OMM)	
I	4	1	**307-3529**	1	HOSE AS	
I	5	1	**329-7293**	1	HOSE AS	
	6	1	**331-8675**	1	BRACKET AS	
I	7	1	**337-8684**	1	HOSE AS	
Y	8	1	*345-3672*	1	ACCUMULATOR GP-RIDE CONTROL (CHARGED)	338
	9	1	*148-8318*	1	CONNECTOR AS	
		1	**3K-0360**	1	SEAL-O-RING	
		1	**6V-8397**	1	SEAL-O-RING	
		1	**6V-8634**	1	CONNECTOR	
	10	1	*148-8340*	1	CONNECTOR AS	
		1	**3K-0360**	1	SEAL-O-RING	
		1	**6V-8398**	1	SEAL-O-RING	
		1	**6V-8639**	1	CONNECTOR	
	11	1	*148-8345*	1	CONNECTOR AS	
		1	**2M-9780**	1	SEAL-O-RING	
		1	**6V-8398**	1	SEAL-O-RING	
		1	**6V-8638**	1	CONNECTOR	
	12	1	*148-8370*	1	ELBOW AS	
		1	**6V-8398**	1	SEAL-O-RING	
		1	**6V-9851**	1	ELBOW	
	13	1	*148-8372*	1	ELBOW AS	
		1	**2M-9780**	1	SEAL-O-RING	
		1	**6V-8398**	1	SEAL-O-RING	
		1	**6V-8721**	1	ELBOW	
	14	1	*153-6241*	1	ELBOW AS	
		1	**6V-8398**	1	SEAL-O-RING	
		1	**8C-8989**	1	ELBOW	
	15	1	*164-5549*	1	COUPLING AS	
		1	**3J-1907**	1	SEAL-O-RING	
		1	**4I-6287**	1	COUPLING	
	16	1	**286-3018**	2	CLIP (SLOT)	
	17	1	**286-3019**	2	CLIP (TAB)	
	18	1	**7X-0605**	2	WASHER-HARD (13X28X1.6-MM THK)	
	19	1	**8A-8563**	2	SPACER (8.6X20X10-MM THK)	
	20	1	**8T-4121**	3	WASHER-HARD (11X21X2.5-MM THK)	
M	21	1	**8T-4137**	3	BOLT (M10X1.5X20-MM)	
M	22	1	**8T-4177**	2	BOLT (M8X1.25X90-MM)	
	23	1	**8T-4223**	2	WASHER-HARD (13.5X25.5X3-MM THK)	
	24	1	**8T-4224**	2	WASHER-HARD (8.8X16X2-MM THK)	
M	25	1	**8T-4956**	2	BOLT (M12X1.75X35-MM)	

I-REFER TO HYDRAULIC INFORMATION SYSTEM
M-METRIC PART
Y-SEPARATE ILLUSTRATION

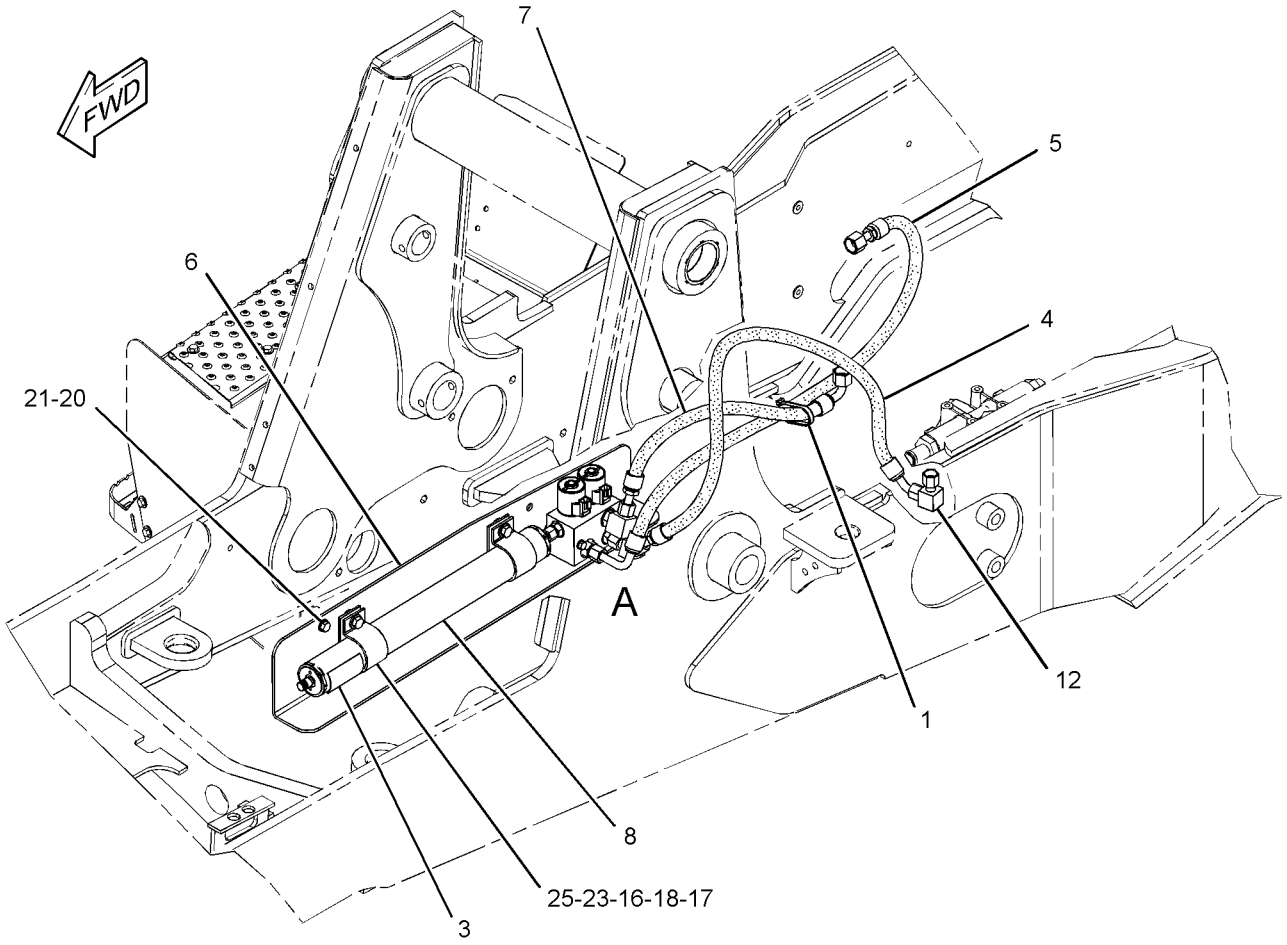

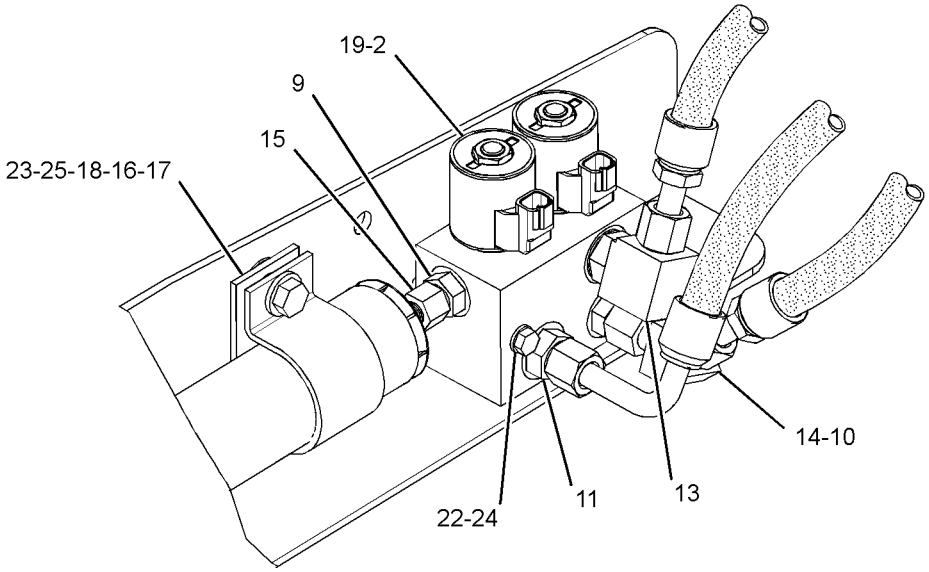

VIEW OF AREA A

GRAPHIC #1 **<END>** g01970213

HYDRAULIC SYSTEM

321-7205 LINES GP-SIDESHIFT LOCK

S/N: DPH1-UP

PART OF 329-0123 HYDRAULIC AR

SMCS-5057, 5484 **i03642525**

NOTE	REF NO	GRAPHIC REF	PART NUMBER	QTY	PART NAME 1 2 3 4 5 6 (PRODUCT LEVEL)	SEE PAGE
I	1	1	**324-7815**	1	HOSE AS	
I	2	1	**324-7816**	2	HOSE AS	
I	3	1	**324-7817**	1	HOSE AS	
	4	1	*148-8316*	2	CONNECTOR AS	
					(EACH INCLUDES)	
		1	**3J-7354**	1	SEAL-O-RING	
		1	**4J-5477**	1	SEAL-O-RING	
		1	**6V-8647**	1	CONNECTOR	
	5	1	*148-8325*	1	CONNECTOR AS	
		1	**3J-1907**	1	SEAL-O-RING	
		1	**4J-5477**	1	SEAL-O-RING	
		1	**6V-8641**	1	CONNECTOR	
	6	1	*150-4029*	2	TEE AS	
					(EACH INCLUDES)	
		1	**3J-7354**	1	SEAL-O-RING	
		1	**4J-5477**	2	SEAL-O-RING	
		1	**6V-8780**	1	TEE-FACE SEAL	
	7	1	*150-5968*	1	TEE AS	
		1	**4J-5477**	2	SEAL-O-RING	
		1	**6V-9835**	1	TEE-SWIVEL	

I-REFER TO HYDRAULIC INFORMATION SYSTEM

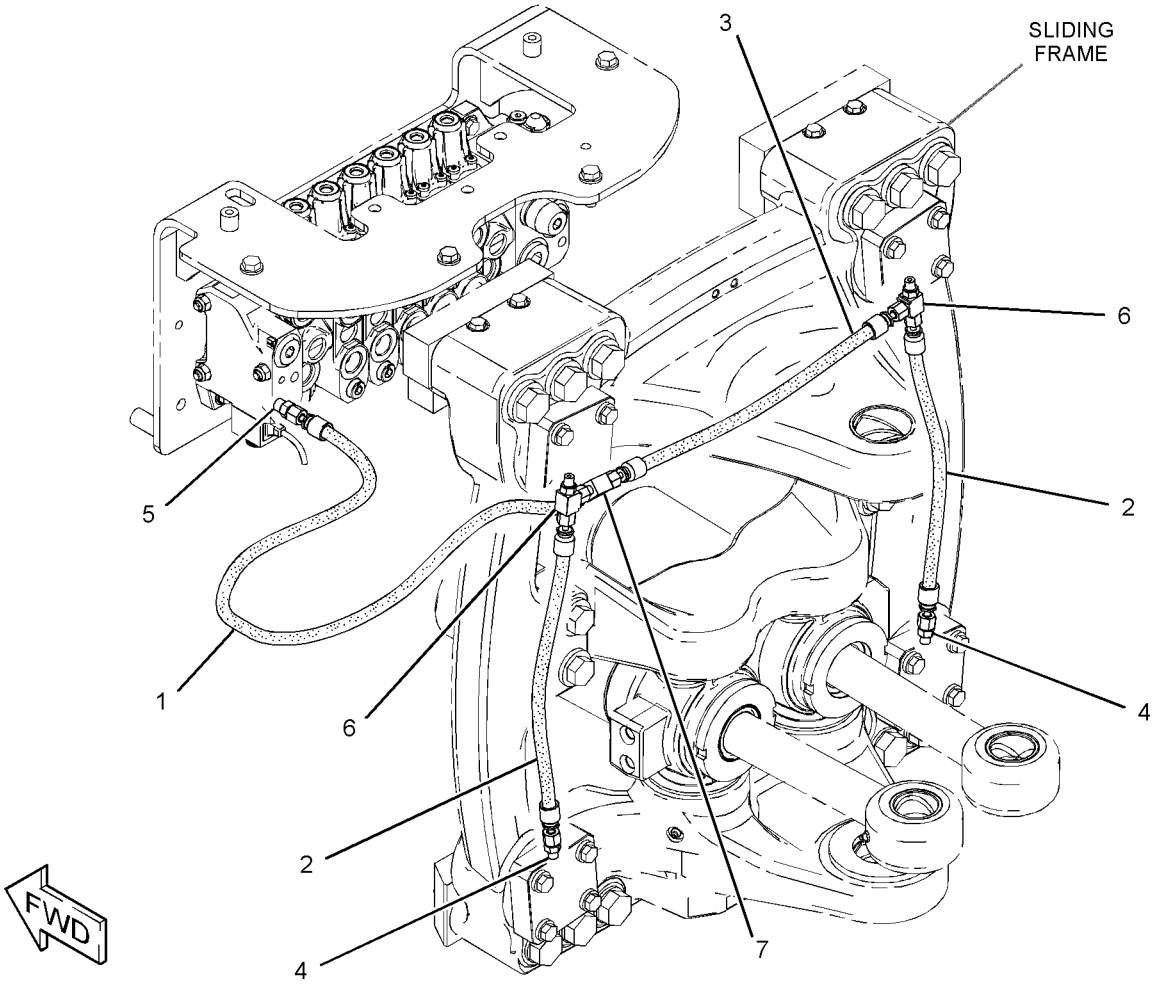

GRAPHIC #1 **<END>** g01985493

HYDRAULIC SYSTEM

326-1801 LINES GP-STABILIZER

S/N: DPH1-UP

PART OF 327-0110, 327-0111 FRAME AR-LOADER

AN ATTACHMENT

SMCS-5057, 5468 **i03642967**

NOTE	REF NO	GRAPHIC REF	PART NUMBER	QTY	PART NAME 1 2 3 4 5 6 (PRODUCT LEVEL)	SEE PAGE
	1	1	**3S-2093**	4	STRAP-CABLE	
	2	1	**154-2302**	2	SPACER (11X20X15-MM THK)	
	3	1	*205-2357*	4	CONNECTOR AS	
					(EACH INCLUDES)	
		1	**3D-2824**	1	SEAL-O-RING	
		1	**6V-8398**	1	SEAL-O-RING	
		1	**8T-7968**	1	CONNECTOR	
Y	4	1	**308-3437**	2	VALVE GP-LOAD CONTROL (STABILIZER)	429
I	5	1	**331-0797**	1	HOSE AS	
I	6	1	**331-0798**	3	HOSE AS	
	7	1	*148-8336*	4	CONNECTOR AS	
					(EACH INCLUDES)	
		1	**3J-1907**	1	SEAL-O-RING	
		1	**6V-8397**	1	SEAL-O-RING	
		1	**6V-8636**	1	CONNECTOR	
	8	1	*164-5549*	2	COUPLING AS	
					(EACH INCLUDES)	
		1	**3J-1907**	1	SEAL-O-RING	
		1	**4I-6287**	1	COUPLING	
	9	1	*340-1650*	2	ADAPTER AS	
					(EACH INCLUDES)	
		1	**3J-1907**	1	SEAL-O-RING	
		1	**341-0076**	1	ADAPTER	
	10	1	**5I-3978**	2	CLIP	
	11	1	**8T-4224**	2	WASHER-HARD (8.8X16X2-MM THK)	
M	12	1	**8T-6912**	2	BOLT (M8X1.25X50-MM)	

I-REFER TO HYDRAULIC INFORMATION SYSTEM
M-METRIC PART
Y-SEPARATE ILLUSTRATION

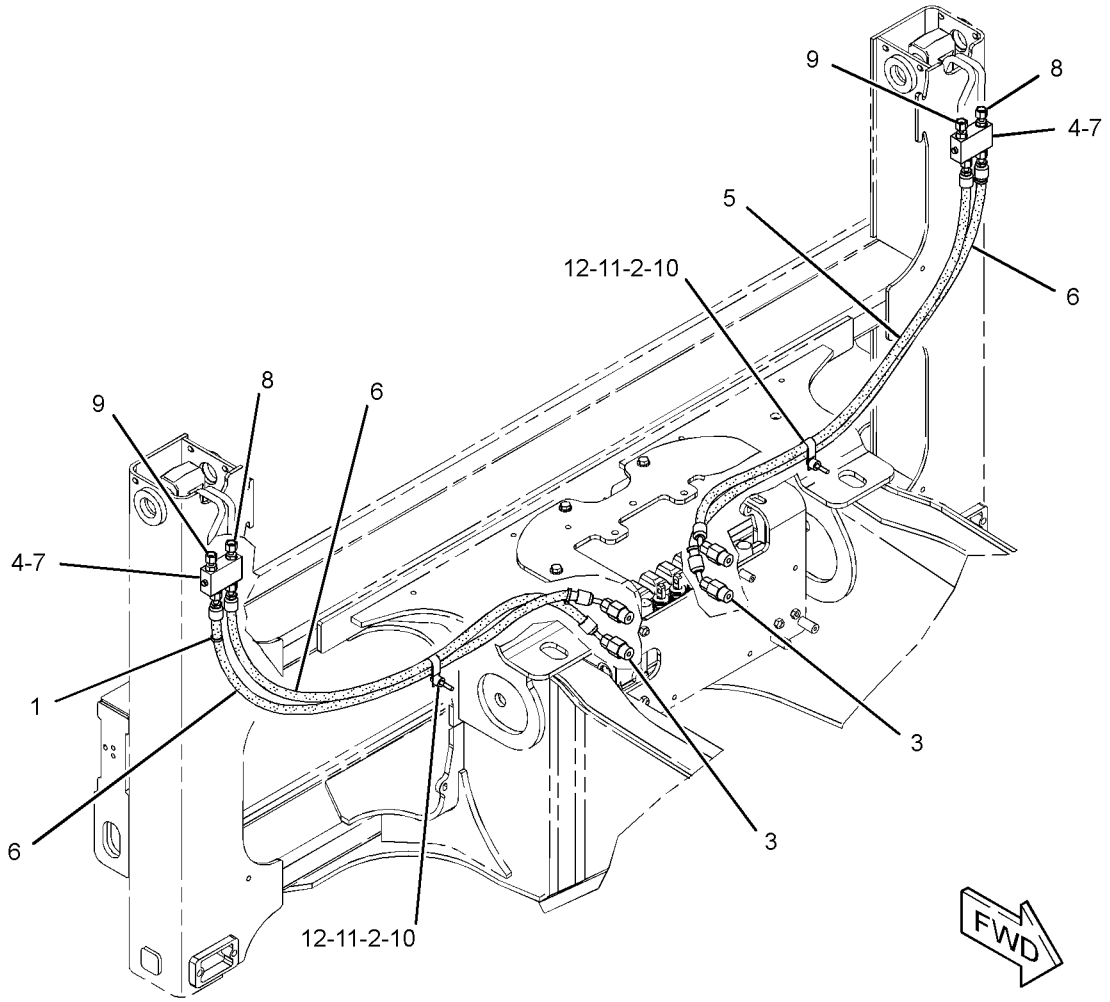

GRAPHIC #1 **<END>** g01986358

HYDRAULIC SYSTEM

321-7192 LINES GP-STICK

S/N: DPH1-UP

PART OF 334-0682, 334-0683, 350-6931, 350-6932, 350-6941, 350-6942 BACKHOE AR-EXTENDABLE STICK, 334-0681, 350-6930 BACKHOE AR-STANDARD STICK AN ATTACHMENT

SMCS-5057 **i03690282**

NOTE	REF NO	GRAPHIC REF	PART NUMBER	QTY	PART NAME 1 2 3 4 5 6 (PRODUCT LEVEL)	SEE PAGE
I	1	1	**324-7596**	1	HOSE AS	
	2	1	**343-4301**	1	HOSE AS	

I-REFER TO HYDRAULIC INFORMATION SYSTEM

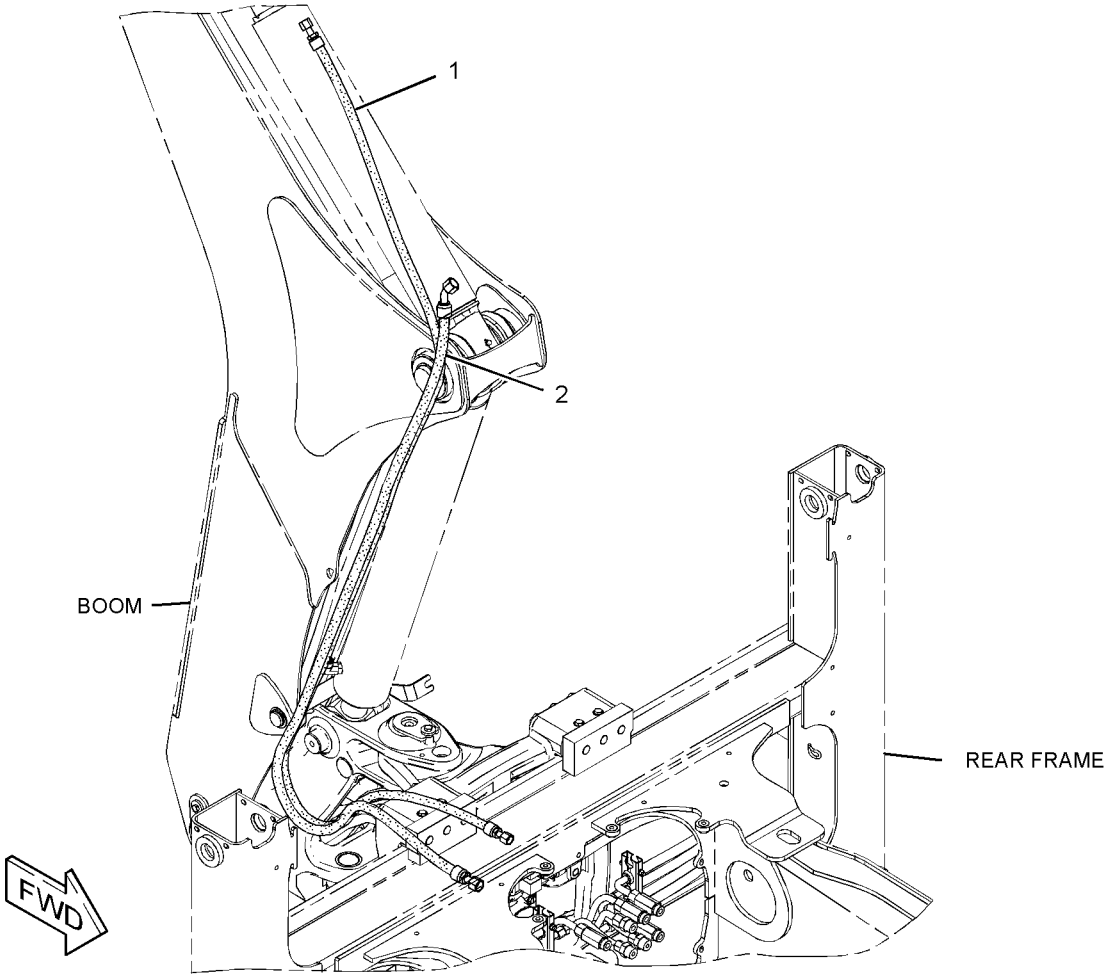

GRAPHIC #1 **<END>** g01989920

HYDRAULIC SYSTEM

326-1803 LINES GP-SWING

S/N: DPH1-UP

PART OF 329-0123 HYDRAULIC AR

SMCS-5057, 5105 **i03642535**

NOTE	REF NO	GRAPHIC REF	PART NUMBER	QTY	PART NAME 1 2 3 4 5 6 (PRODUCT LEVEL)	SEE PAGE
	1	1	**204-2281**	2	STRAP-TIE	
	2	1	*287-7252*	1	TEE AS	
		1	**3J-1907**	1	SEAL-O-RING	
		1	**6V-8398**	2	SEAL-O-RING	
		1	**287-7251**	1	TEE	
	3	1	**320-7812**	1	VALVE GP-PRESSURE CONTROL (290-BAR)	
I	4	1	**328-5333**	2	HOSE AS	
I	5	1	**328-5358**	2	HOSE AS	
	6	1	*341-0121*	1	TEE AS	
		1	**3D-2824**	1	SEAL-O-RING	
		1	**4J-5477**	1	SEAL-O-RING	
		1	**6V-8398**	1	SEAL-O-RING	
		1	**119-6346**	1	TEE-FACE SEAL	
	7	1	**344-8098**	1	TUBE AS	
I	8	1	**344-8154**	1	HOSE AS	
	9	1	**344-8163**	1	TUBE AS	
	10	1	*148-8325*	1	CONNECTOR AS	
		1	**3J-1907**	1	SEAL-O-RING	
		1	**4J-5477**	1	SEAL-O-RING	
		1	**6V-8641**	1	CONNECTOR	
	11	1	*148-8328*	1	CONNECTOR AS	
		1	**3D-2824**	1	SEAL-O-RING	
		1	**6V-8398**	1	SEAL-O-RING	
		1	**6V-8633**	1	CONNECTOR	
	12	1	*148-8340*	4	CONNECTOR AS	
					(EACH INCLUDES)	
		1	**3K-0360**	1	SEAL-O-RING	
		1	**6V-8398**	1	SEAL-O-RING	
		1	**6V-8639**	1	CONNECTOR	
	13	1	*148-8364*	2	ELBOW AS	
					(EACH INCLUDES)	
		1	**3K-0360**	1	SEAL-O-RING	
		1	**6V-8398**	1	SEAL-O-RING	
		1	**6V-8625**	1	ELBOW	
	14	1	**6V-1249**	2	GROMMET	
	15	1	**6V-8398**	1	SEAL-O-RING	
	16	1	**8T-1899**	2	CLIP (SLOT)	
	17	1	**8T-1900**	2	CLIP (TAB)	
	18	1	**8T-4121**	4	WASHER-HARD (11X21X2.5-MM THK)	
M	19	1	**8T-4133**	2	NUT (M10X1.5-THD)	
M	20	1	**8T-4195**	2	BOLT (M10X1.5X30-MM)	

I-REFER TO HYDRAULIC INFORMATION SYSTEM
M-METRIC PART

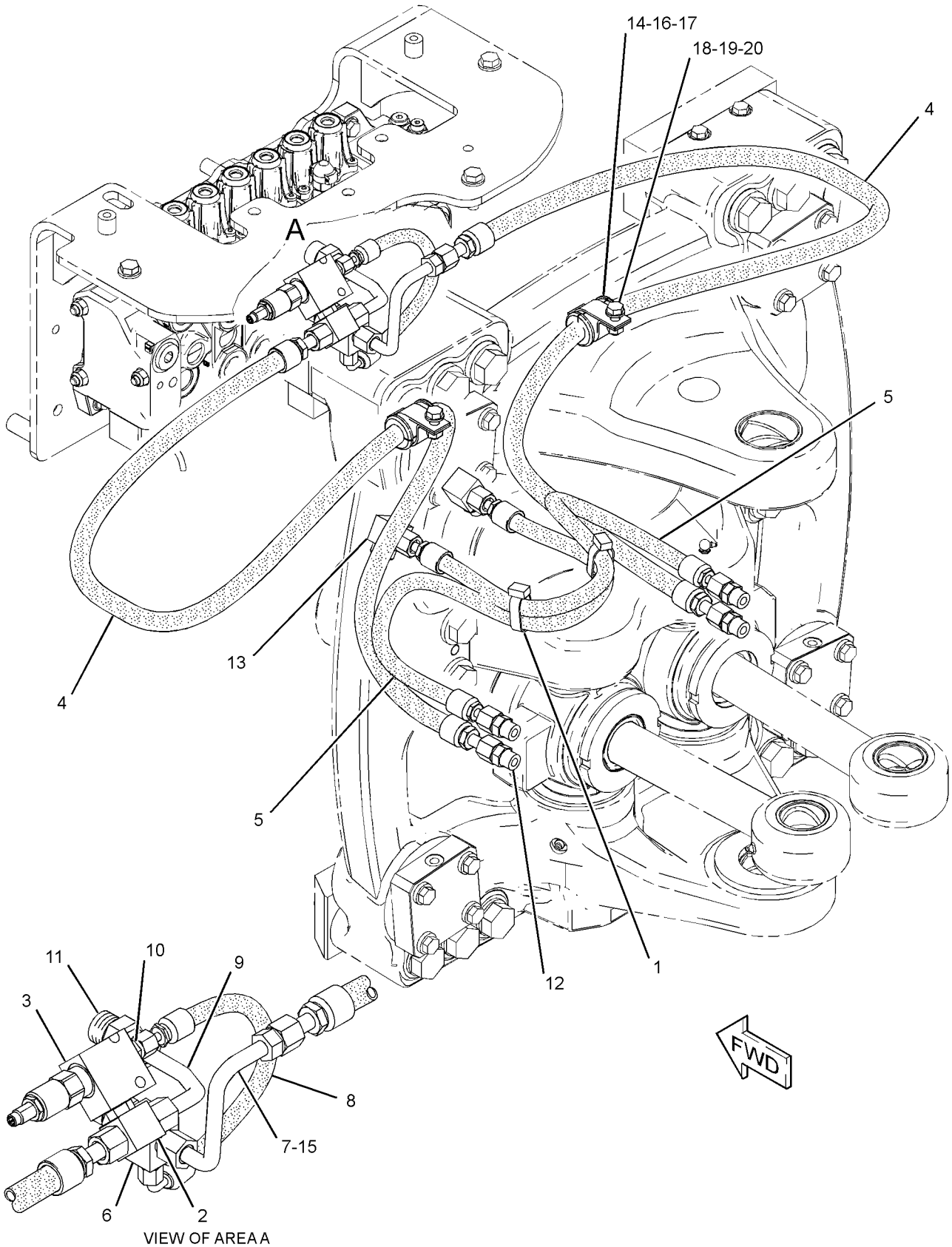

VIEW OF AREA A

GRAPHIC #1 **<END>** g01986077

HYDRAULIC SYSTEM

308-2154 MANIFOLD GP-CONTROL–OUTLET

S/N: DPH1-UP

PART OF 316-9782 VALVE GP-BANK 7

SMCS-5264 **i02766813**

NOTE	REF NO	GRAPHIC REF	PART NUMBER	QTY	PART NAME 1 2 3 4 5 6 (PRODUCT LEVEL)	SEE PAGE
	1	1	**9S-8004**	2	PLUG	
	2	1	**3J-1907**	2	SEAL-O-RING	
	3	1	**257-0477**	1	KIT-CARTRIDGE	
	4	1	**257-0478**	1	COIL AS	
	5	1	**9S-8008**	1	PLUG-O-RING	
	6	1	**308-2886**	1	KIT-VALVE (SHUTTLE)	
	7	1	**3D-2824**	1	SEAL-O-RING	

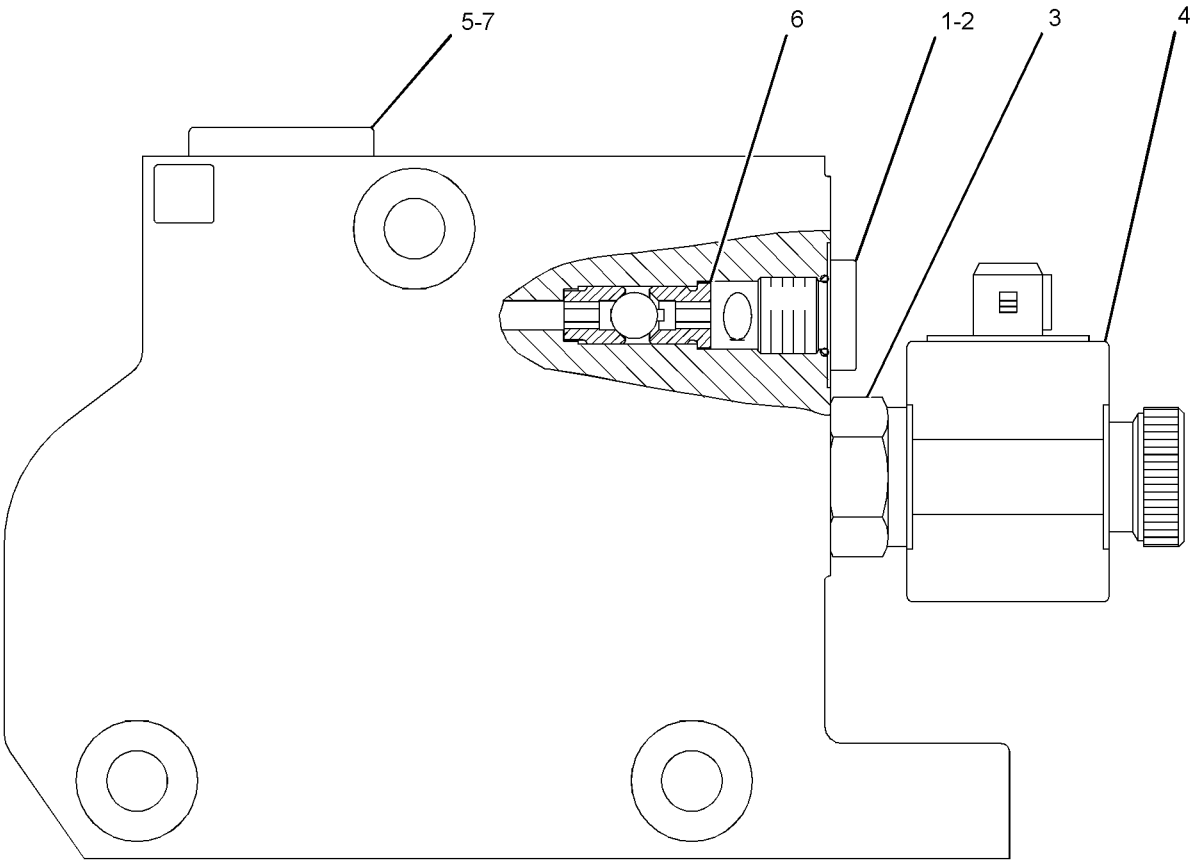

GRAPHIC #1 **<END>** g01388401

344-8250 MANIFOLD GP-CONTROL–INLET

S/N: DPH1-UP

PART OF 316-9782 VALVE GP-BANK 7

SMCS-5264 **i03693760**

NOTE	REF NO	GRAPHIC REF	PART NUMBER	QTY	PART NAME 1 2 3 4 5 6 (PRODUCT LEVEL)	SEE PAGE
	1	1	**227-1184**	1	VALVE GP-RELIEF (LOAD SENSING SIGNAL)	
	2	1	**227-1185**	1	VALVE GP-FLOW CONTROL (AUXILIARY, INLET)	
		1	**227-1198**	1	KIT-SEAL (FLOW CONTROL VALVE)	
					(INCLUDES SEAL-O-RINGS & BACKUP RING)	
	3	1	**3J-1907**	1	SEAL-O-RING	
	4	1	**9S-8004**	1	PLUG	
	5	1	**9S-9334**	1	PLUG-O-RING	
	6	1	**9S-8008**	1	PLUG-O-RING	
	7	1	**257-0468**	1	CAP-PROTECTION	
	8	1	**099-8232**	1	SEAL-O-RING	
	9	1	**227-1199**	1	KIT-SEAL (CONTROL MANIFOLD)	
					(INCLUDES SEAL-O-RINGS & BACKUP RING)	
	10	1	**227-1197**	1	FILTER-OIL (FLOW REGULATOR)	
	11	1	**7M-8485**	1	SEAL-O-RING	
	12	1	**3D-2824**	1	SEAL-O-RING	

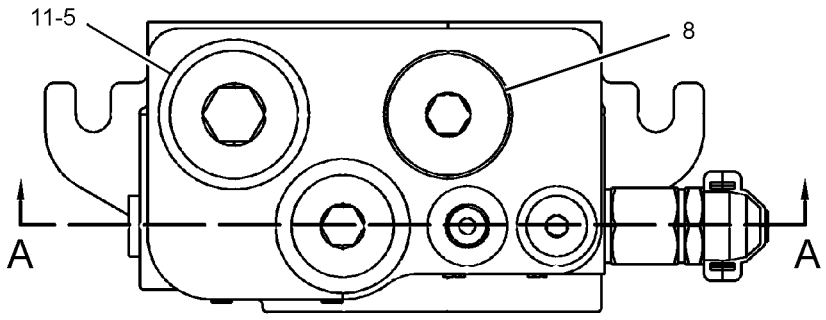

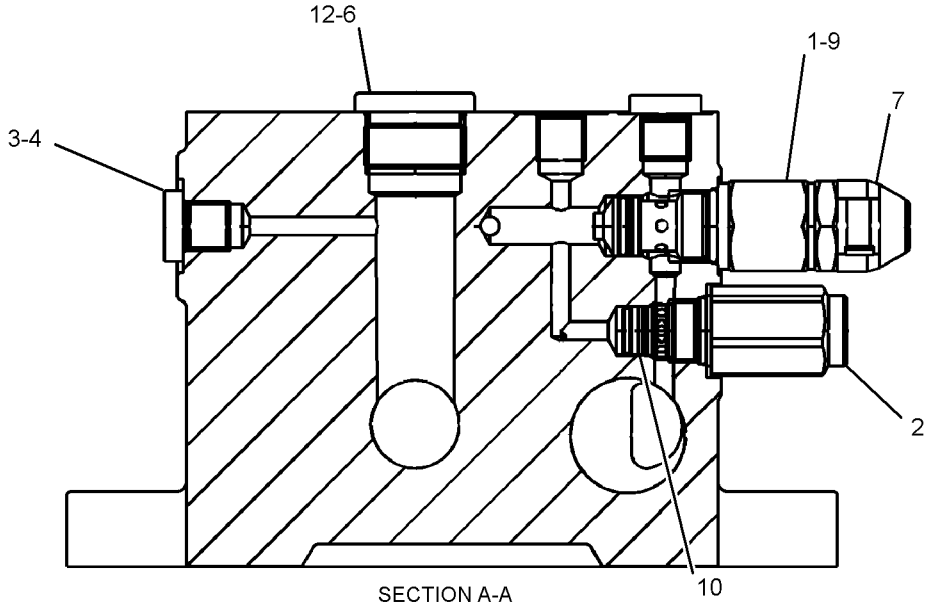

GRAPHIC #1 **<END>** g02002053

HYDRAULIC SYSTEM

350-5801 MANIFOLD GP-CONTROL–INLET

S/N: DPH1-UP
PART OF 316-9784 VALVE GP-BANK 3
AN ATTACHMENT

SMCS-5264 **i03661722**

NOTE	REF NO	GRAPHIC REF	PART NUMBER	QTY	PART NAME 1 2 3 4 5 6 (PRODUCT LEVEL)	SEE PAGE
	1	1	**308-2890**	1	KIT-VALVE (REGULATOR)	
					(INCLUDES SEAL-O-RING, CAP, SPACER, SPRING & SPRING RETAINER)	
	2	1	**308-2889**	1	KIT-VALVE (PRIORITY)	
					(INCLUDES RETAINERS, BALL, SPRING, SPOOL & FILTER)	
	3	1	**308-2888**	1	KIT-VALVE (SHUTTLE)	
	4	1	**308-2878**	1	PLUG GP-CONTROL MANIFOLD	
		1	**3K-0360**	1	SEAL-O-RING	
		1	**161-6149**	1	SEAL-O-RING	
	5	1	**227-1199**	1	KIT-SEAL	
					(INCLUDES SEAL-O-RINGS)	
	6	1	**308-2877**	1	PLUG GP-CONTROL MANIFOLD	
		1	**114-1042**	1	SEAL-O-RING	
		1	**122-9250**	1	SEAL-O-RING	
	7	1	**227-1198**	1	KIT-SEAL (FLOW CONTROL VALVE)	
					(INCLUDES SEAL-O-RINGS & RING BACK UP)	

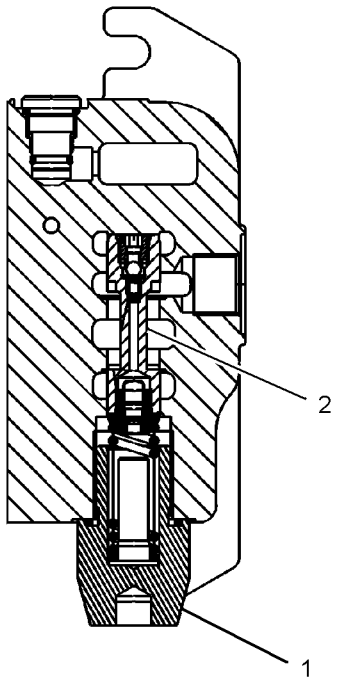

SECTION A-A

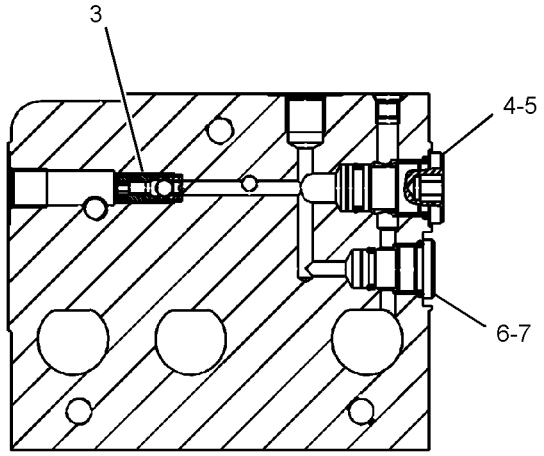

SECTION B-B

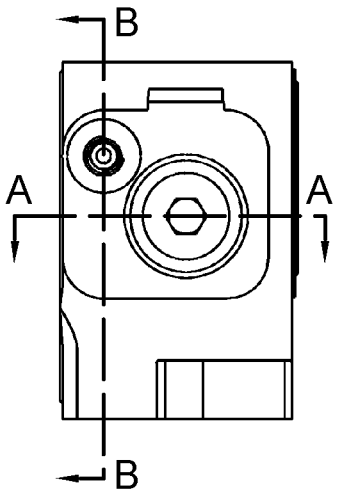

GRAPHIC #1 **<END>** g01970297

245-8780 MANIFOLD GP-RIDE CONTROL

S/N: DPH1-UP
PART OF 331-8676 LINES GP-RIDE CONTROL
AN ATTACHMENT

SMCS-5264 **i03628662**

NOTE	REF NO	GRAPHIC REF	PART NUMBER	QTY	PART NAME 1 2 3 4 5 6 (PRODUCT LEVEL)	SEE PAGE
J	1	1	**249-3124**	1	VALVE GP-SOLENOID (RIDE CONTROL, SWITCH)	
L	2	1	**249-3125**	1	VALVE GP-SOLENOID (ACCUMULATOR)	
	3	1	**238-4628**	1	COIL AS	
					AVAILABLE REPAIR KIT(S):	
J			**141-0888**	1	KIT-SEAL (RIDE CONTROL, SWITCH)	
L			**227-5509**	1	KIT-SEAL (ACCUMULATOR)	
					(EACH KIT-SEAL INCLUDES RING & SEALS)	

J-KIT MARKED J SERVICES PART MARKED J
L-KIT MARKED L SERVICES PART MARKED L

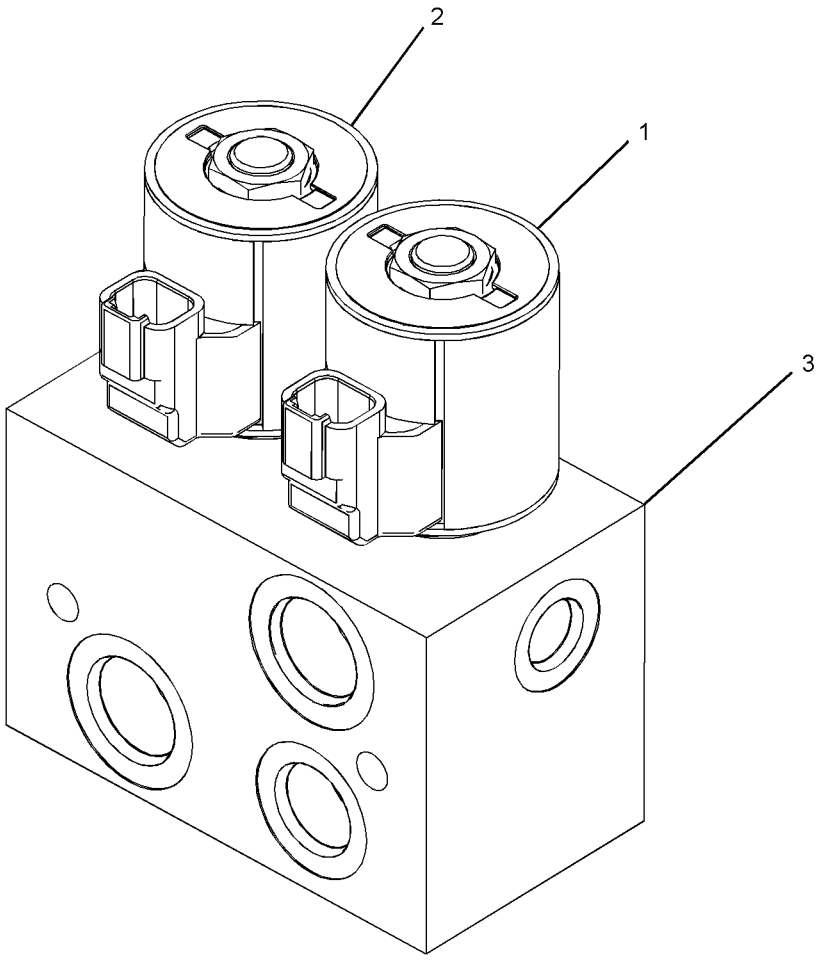

GRAPHIC #1 **<END>** g01646794

HYDRAULIC SYSTEM

9R-4668 MOUNTING GP-CYLINDER—MULTIPURPOSE BUCKET

S/N: DPH1-UP

PART OF 318-7246, 318-7247, 318-7248, 320-9948, 320-9950 BUCKET

AR-MULTIPURPOSE

AN ATTACHMENT

SMCS-5102, 6068, 7562 **i00528574**

NOTE	REF NO	GRAPHIC REF	PART NUMBER	QTY	PART NAME 1 2 3 4 5 6 (PRODUCT LEVEL)	SEE PAGE
	1	1	**9R-4677**	2	PIN	
	2	1	**3B-5317**	4	PIN-COTTER	
	3	1	**9R-4678**	2	PIN	
	4	1	**3B-8489**	4	FITTING-GREASE	

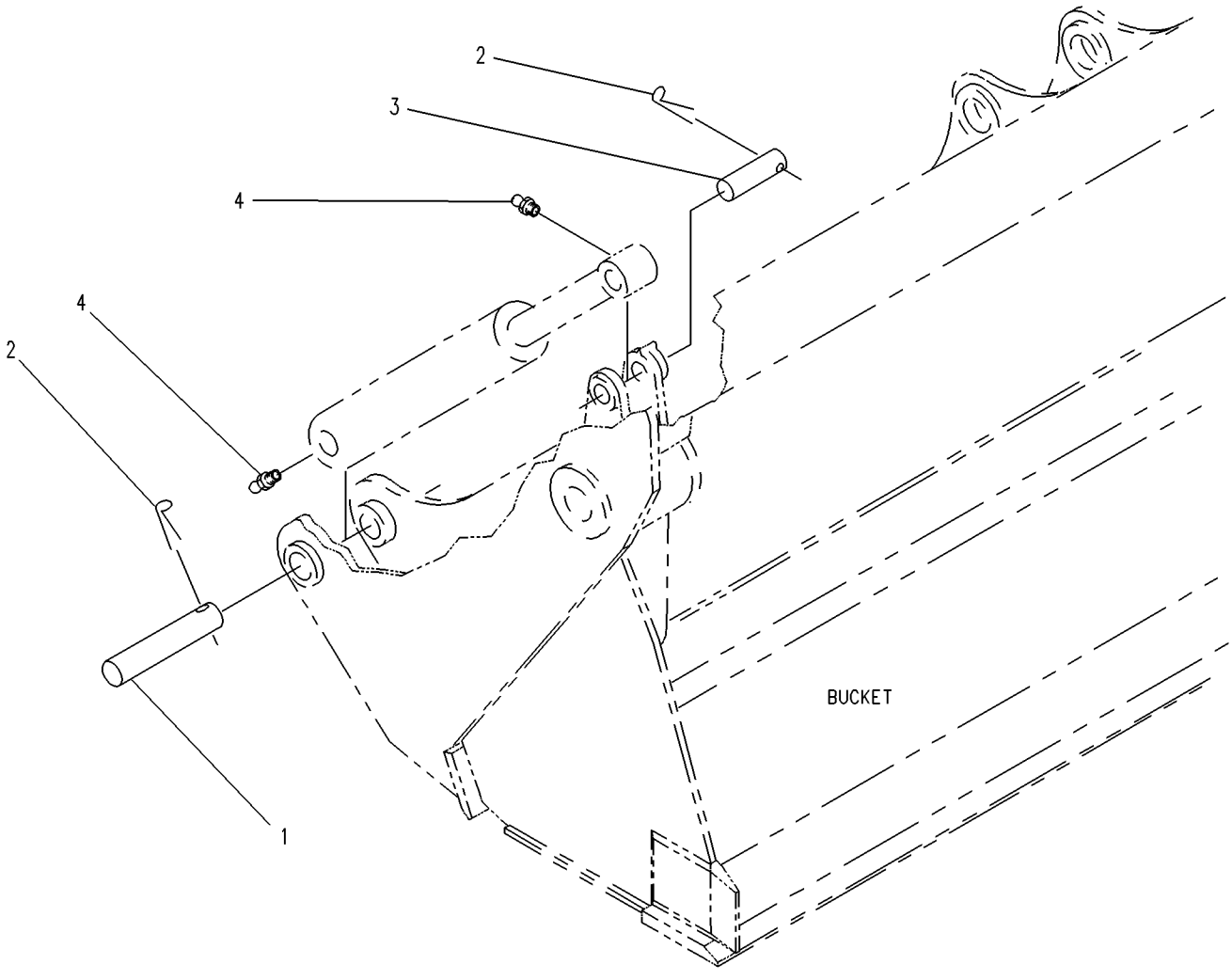

GRAPHIC #1 **<END>** g00219196

323-2096 MOUNTING GP-LINES

S/N: DPH1-UP

PART OF 334-0682, 334-0683, 350-6931, 350-6932, 350-6941, 350-6942 BACKHOE AR-EXTENDABLE STICK, 334-0681, 350-6930 BACKHOE AR-STANDARD STICK AN ATTACHMENT

SMCS-5057 **i03690287**

NOTE	REF NO	GRAPHIC REF	PART NUMBER	QTY	PART NAME 1 2 3 4 5 6 (PRODUCT LEVEL)	SEE PAGE
	1	1	**5P-5148**	3	STRAP-TIE	
	2	1	**315-7645**	1	CLAMP	
	3	1	**315-7646**	1	CLAMP	
	4	1	**315-7647**	1	CLAMP	
	5	1	**327-3753**	1	PLATE	
	6	1	**332-0092**	2	BLOCK	
	7	1	**343-7400**	1	CLAMP	
M	8	1	**5C-9553**	2	BOLT (M6X1X16-MM)	
	9	1	**8T-4205**	2	WASHER-HARD (7.2X14.5X2-MM THK)	
	10	1	**8T-4224**	4	WASHER-HARD (8.8X16X2-MM THK)	
M	11	1	**8T-6869**	2	BOLT (M8X1.25X60-MM)	
M	12	1	**8T-6912**	2	BOLT (M8X1.25X50-MM)	

M-METRIC PART

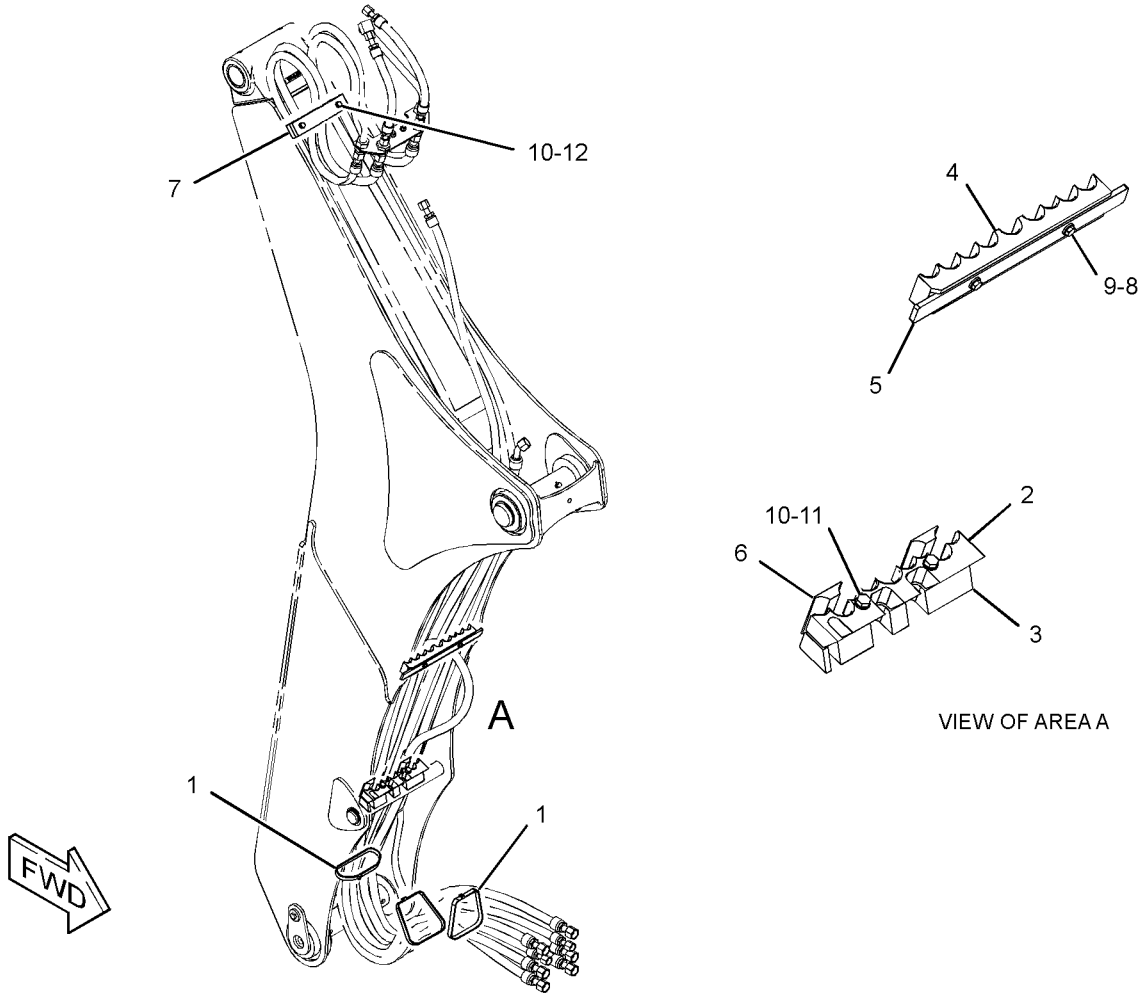

GRAPHIC #1 **<END>** g01989478

HYDRAULIC SYSTEM

350-0666 PUMP GP-PISTON

S/N: DPH1-UP

PART OF 329-0123 HYDRAULIC AR

SMCS-5070 **i03693740**

NOTE	REF NO	GRAPHIC REF	PART NUMBER	QTY	PART NAME 1 2 3 4 5 6 (PRODUCT LEVEL)	SEE PAGE
					(NO BREAKDOWN OF SERVICEABLE PARTS AVAILABLE AT TIME OF PUBLICATION)	

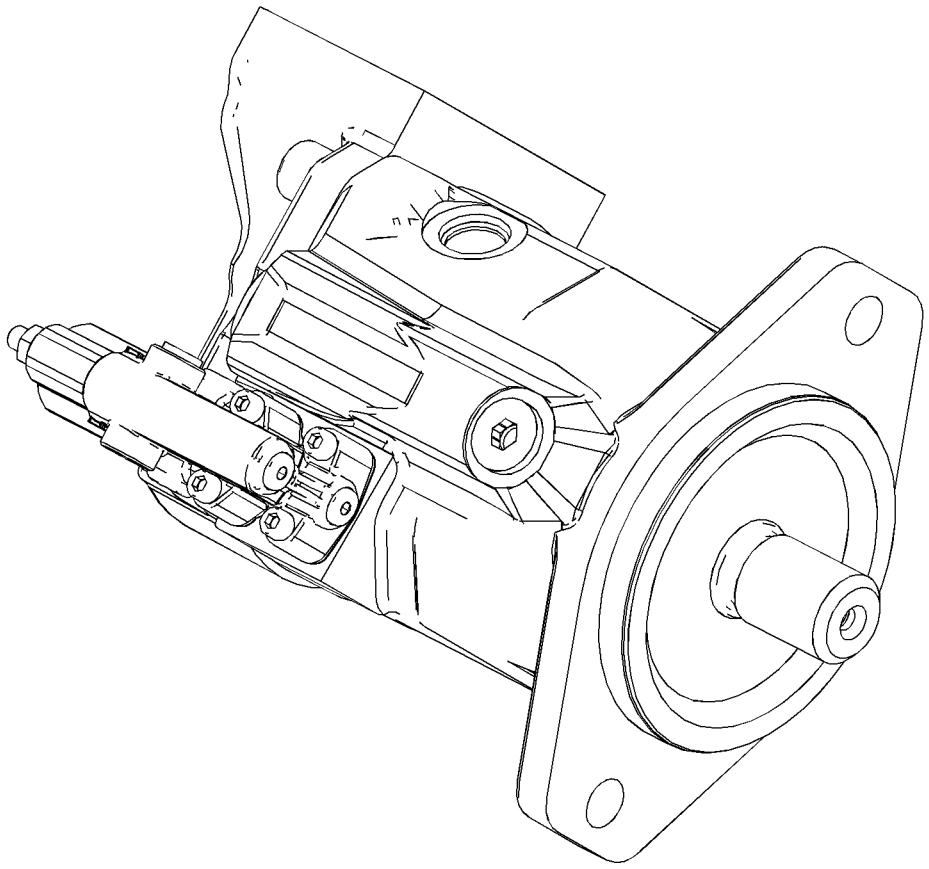

GRAPHIC #1 **<END>** g01990978

HYDRAULIC SYSTEM

128-5596 SHAFT GP-PUMP DRIVE

S/N: DPH1-UP
PART OF 112-1826 DRIVE & MTG GP-PUMP
AN ATTACHMENT

SMCS-3108 **i00535584**

NOTE	REF NO	GRAPHIC REF	PART NUMBER	QTY	PART NAME 1 2 3 4 5 6 (PRODUCT LEVEL)	SEE PAGE
	1	1	**130-8150**	1	RING-RETAINING	

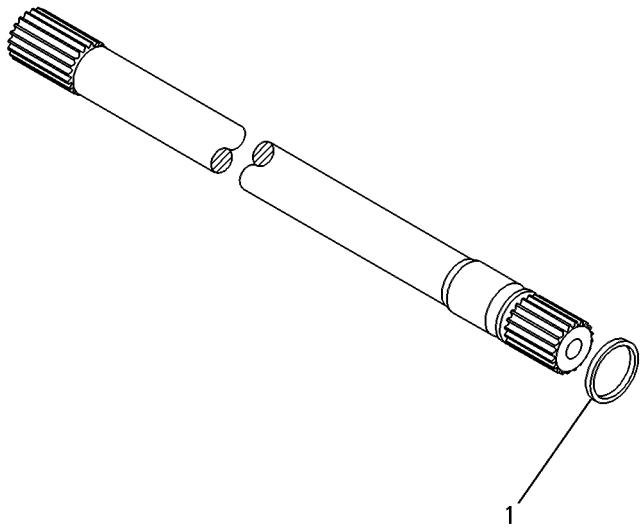

GRAPHIC #1 **<END>** g00131851

HYDRAULIC SYSTEM

324-5929 TANK & MTG GP-HYDRAULIC

S/N: DPH1-UP

PART OF 329-0123 HYDRAULIC AR

SMCS-5056 **i03628706**

NOTE	REF NO	GRAPHIC REF	PART NUMBER	QTY	PART NAME 1 2 3 4 5 6 (PRODUCT LEVEL)	SEE PAGE
	1	1	**1P-4278**	3	CLAMP-HOSE	
	2	1	**9M-0164**	1	CLAMP-HOSE	
	3	1	**9R-9925**	1	FILTER ELEMENT-BREATHER (HYDRAULIC TANK)	
	4	1	**127-4471**	1	CLAMP-HOSE	
	5	1	**132-3056**	1	SEAL-O-RING	
	6	1	**205-9920**	1	STRAP-CABLE	
	7	1	**210-7773**	1	BRACKET AS	
	8	1	*217-8185*	1	ELBOW AS	
		1	**3K-0360**	1	SEAL-O-RING	
		1	**9X-3982**	1	ELBOW	
	9	1	**222-4067**	6	BOLT-SOCKET HEAD (M5X0.8X14-MM)	
	10	1	**234-6927**	1	HOSE	
	11	1	**235-5843**	1	DIFFUSER AS	
	12	1	**237-3797**	1	CAP-FILL (HYDRAULIC OIL)	
Y	13	1	*245-8778*	1	TANK GP-HYDRAULIC	414
	14	1	**293-4671**	1	TUBE AS	
	15	1	**7X-7729**	4	WASHER (11X25X3-MM THK)	
	16	1	**8T-4121**	1	WASHER-HARD (11X21X2.5-MM THK)	
M	17	1	**8T-4137**	1	BOLT (M10X1.5X20-MM)	
M	19	1	**8T-4179**	4	BOLT (M12X1.75X20-MM)	
M	20	1	**8T-4191**	4	BOLT (M10X1.5X16-MM)	
	21	1	**8T-4223**	4	WASHER-HARD (13.5X25.5X3-MM THK)	
E	22	1	**5P-1442**		HOSE (124-CM)	
E	22A	1	**5P-1442**		HOSE (8-CM)	
	23	1	**334-4603**	1	FILM-INFORMATION (HYDO ADVANCED 10)	

E-ORDER BY THE CENTIMETER
M-METRIC PART
Y-SEPARATE ILLUSTRATION

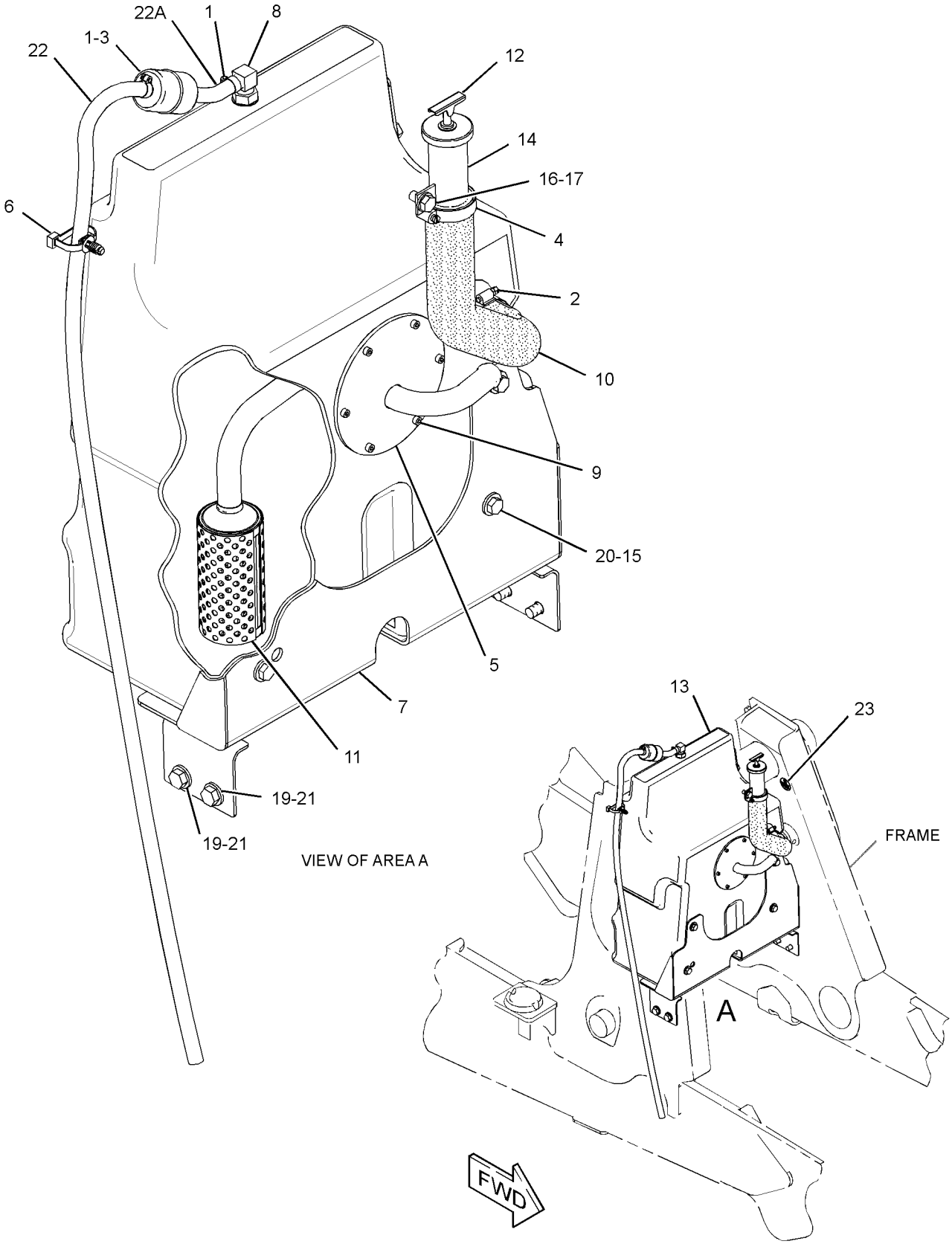

GRAPHIC #1 **<END>** g01818493

HYDRAULIC SYSTEM

245-8778 TANK GP-HYDRAULIC

S/N: DPH1-UP

PART OF 324-5929 TANK & MTG GP-HYDRAULIC

SMCS-5056 **i03712442**

NOTE	REF NO	GRAPHIC REF	PART NUMBER	QTY	PART NAME 1 2 3 4 5 6 (PRODUCT LEVEL)	SEE PAGE
	1	1	**253-8295**	1	GAUGE-SIGHT (HYDRAULIC OIL LEVEL)	

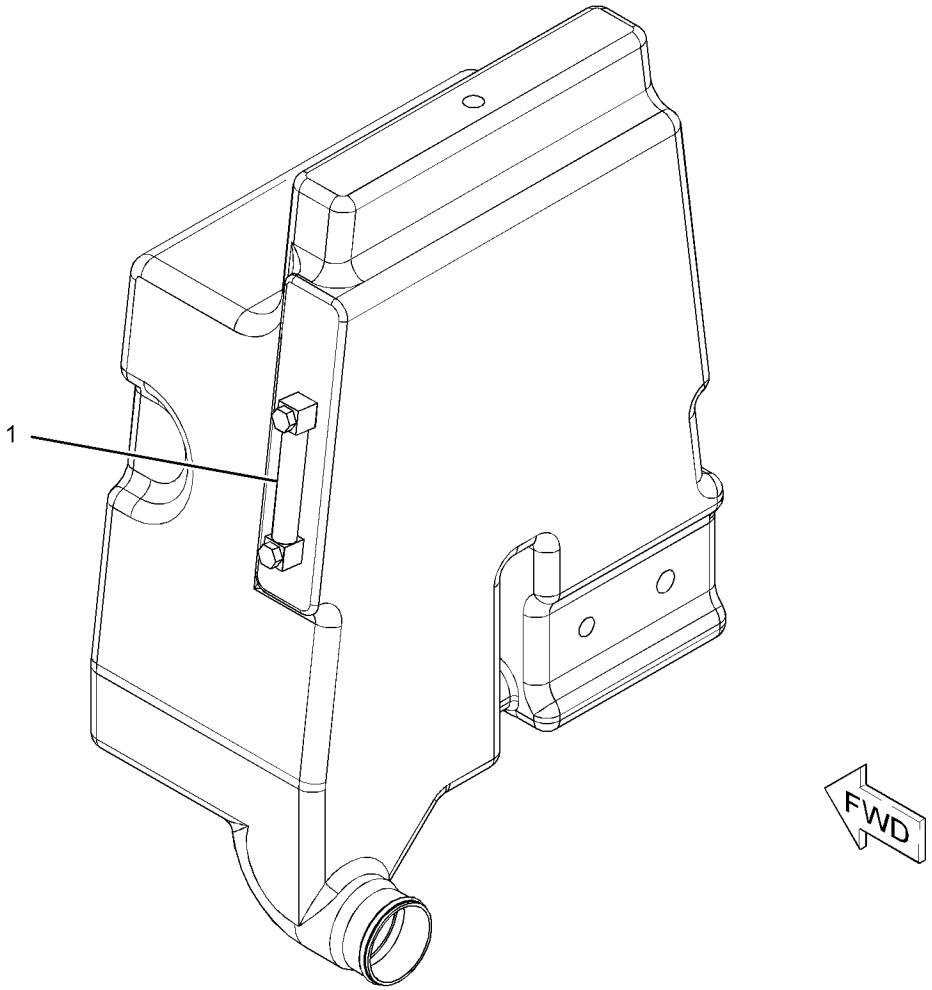

GRAPHIC #1 **<END>** g01087032

HYDRAULIC SYSTEM

331-4339 VALVE & MTG GP-BANK

S/N: DPH1-UP

PART OF 329-0123 HYDRAULIC AR

SMCS-5051, 5057, 7265 **i03637867**

NOTE	REF NO	GRAPHIC REF	PART NUMBER	QTY	PART NAME 1 2 3 4 5 6 (PRODUCT LEVEL)	SEE PAGE
Y	1	1	*316-9782*	1	VALVE GP-BANK 7 (MECHANICAL)	419
	2	1	**331-4340**	1	BRACKET AS	
	3	1	**8T-4121**	3	WASHER-HARD (11X21X2.5-MM THK)	
M	4	1	**8T-4182**	3	BOLT (M10X1.5X45-MM)	
M	5	1	**8T-4183**	4	BOLT (M12X1.75X40-MM)	
	6	1	**8T-4223**	4	WASHER-HARD (13.5X25.5X3-MM THK)	

M-METRIC PART
Y-SEPARATE ILLUSTRATION

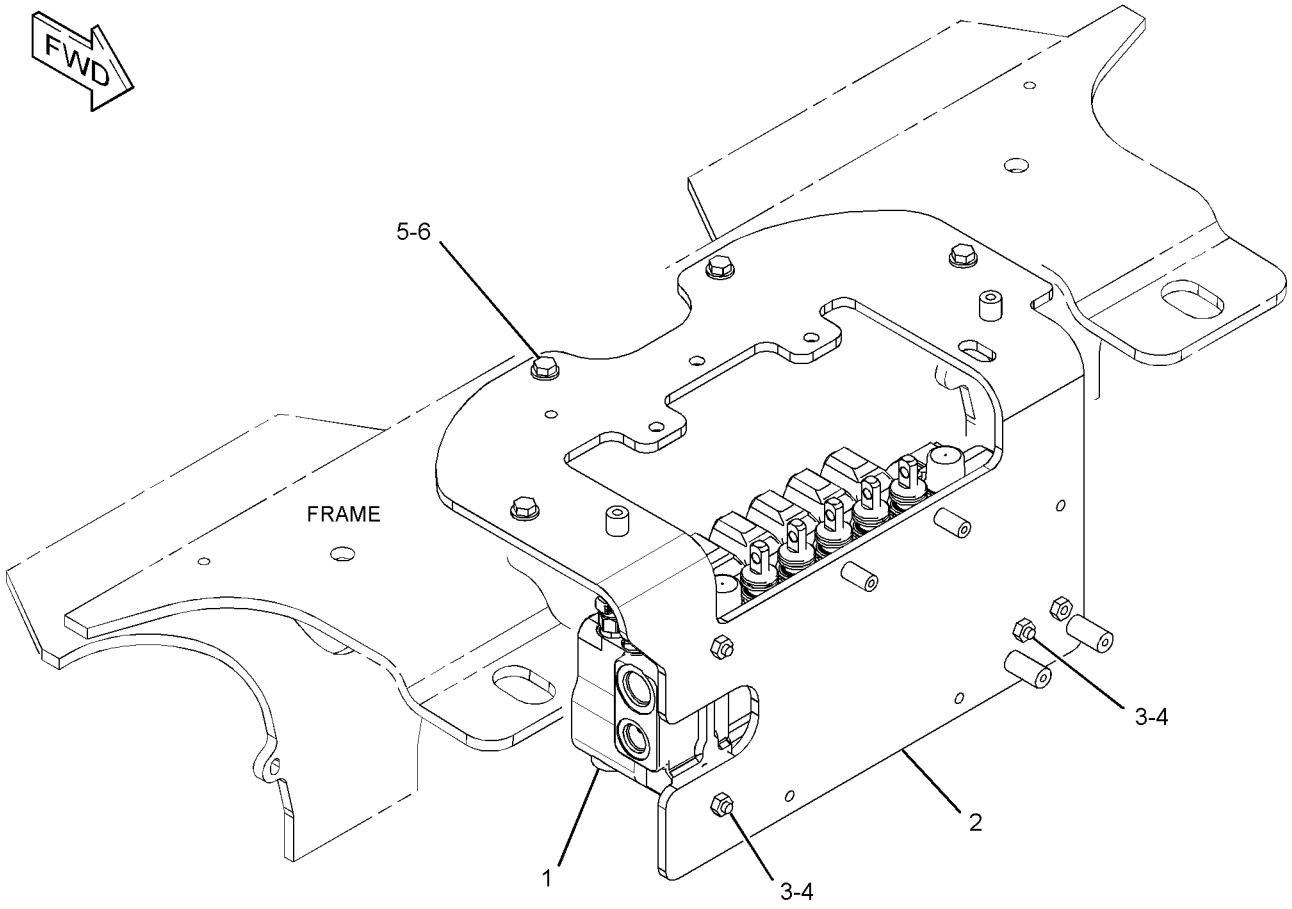

GRAPHIC #1 **<END>** g01987456

HYDRAULIC SYSTEM

332-9192 VALVE & MTG GP-BANK–MECHANICAL CONTROL

S/N: DPH1-UP

PART OF 332-7953 CONTROL AR-BACKHOE, 332-7955, 332-7958 VALVE AR-BANK 3 AN ATTACHMENT

SMCS-5051, 5057, 7265 **i03642959**

NOTE	REF NO	GRAPHIC REF	PART NUMBER	QTY	PART NAME 1 2 3 4 5 6 (PRODUCT LEVEL)	SEE PAGE
B	1	1	*148-8408*	2	PLUG AS	
					(EACH INCLUDES)	
		1	**3D-2824**	1	SEAL-O-RING	
		1	**9S-4183**	1	PLUG-O-RING	
Y	2	1	*316-9784*	1	VALVE GP-BANK 3 (MECHANICAL CONTROL)	418
	3	1	**8T-4121**	3	WASHER-HARD (11X21X2.5-MM THK)	
M	4	1	**8T-4186**	3	BOLT (M10X1.5X40-MM)	

B-USE AS REQUIRED
M-METRIC PART
Y-SEPARATE ILLUSTRATION

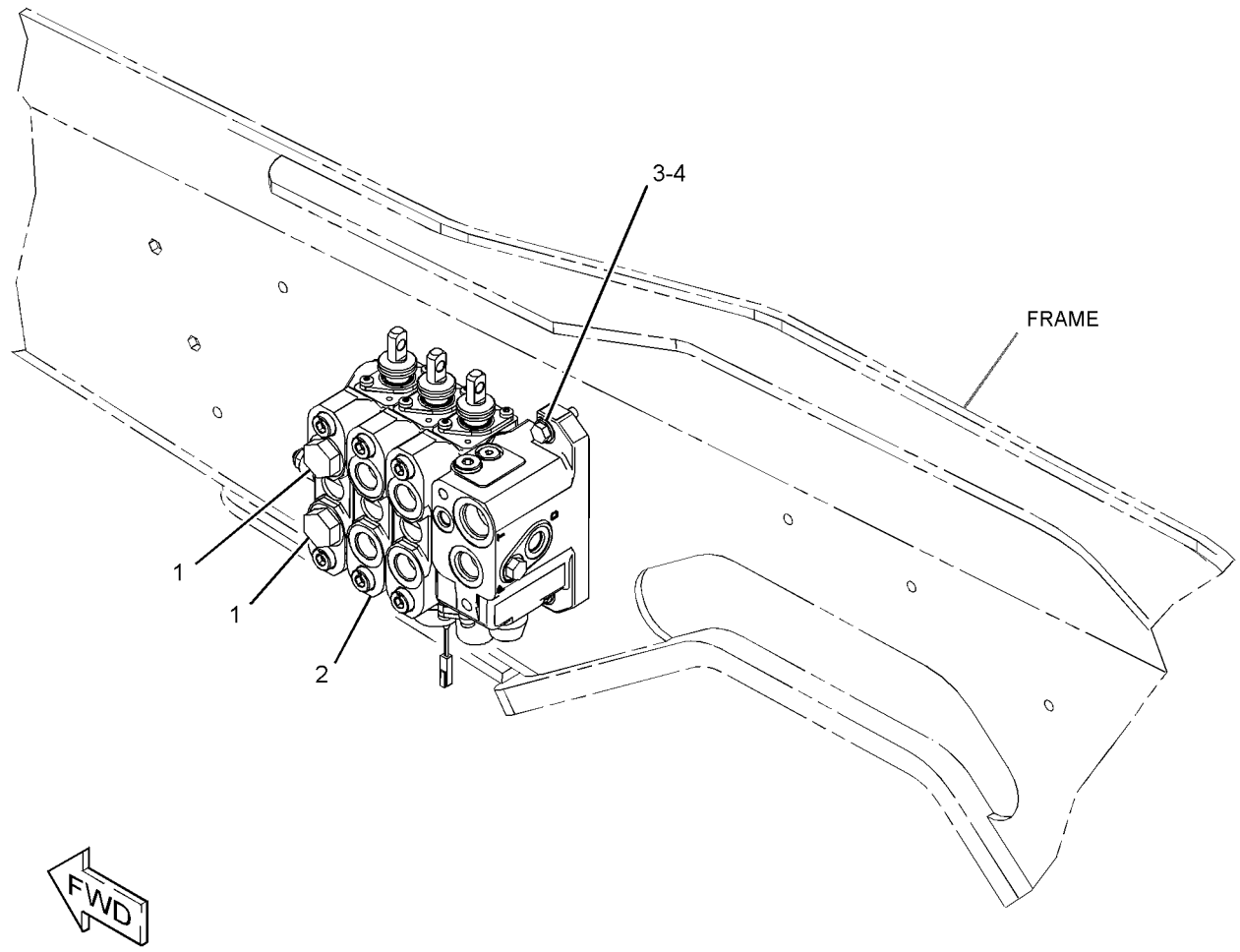

GRAPHIC #1 **<END>** g01963132

HYDRAULIC SYSTEM

332-7955 VALVE AR-BANK 3

S/N: DPH1-UP

AN ATTACHMENT

SMCS-5051 **i03654250**

NOTE	PART NUMBER	QTY	PART NAME 1 2 3 4 5 6 (PRODUCT LEVEL)	SEE PAGE
Y	*331-9945*	1	CONTROL GP-HYDRAULIC HAND (LOADER)	557
Y	*329-3503*	1	LINES GP-AUXILIARY HYDRAULIC	362
Y	*329-3600*	1	LINES GP-LIFT & TILT	379
Y	*329-3504*	1	LINES GP-LIFT CYLINDER	381
Y	*320-4769*	1	MOUNTING GP-BUCKET	536
Y	*332-9192*	1	VALVE & MTG GP-BANK	416
	251-5626	1	FILM-INSTRUCTION (BUCKET CONTROL)	
			(ON RIGHT HAND CONSOLE)	

Y-SEPARATE ILLUSTRATION

<END>

332-7958 VALVE AR-BANK 3

S/N: DPH1-UP

AN ATTACHMENT

SMCS-5051 **i03654988**

NOTE	PART NUMBER	QTY	PART NAME 1 2 3 4 5 6 (PRODUCT LEVEL)	SEE PAGE
Y	*331-9945*	1	CONTROL GP-HYDRAULIC HAND (LOADER)	557
Y	*329-3503*	1	LINES GP-AUXILIARY HYDRAULIC	362
Y	*329-3600*	1	LINES GP-LIFT & TILT	379
Y	*329-3506*	1	LINES GP-LIFT CYLINDER	382
Y	*320-4769*	1	MOUNTING GP-BUCKET	536
Y	*346-7487*	1	SWITCH GP-DISCONNECT	191
Y	*332-9192*	1	VALVE & MTG GP-BANK	416
Y	*211-4265*	1	WIRING GP-LOAD CONTROL	211
	251-5626	1	FILM-INSTRUCTION (BUCKET CONTROL)	
			(ON RIGHT HAND CONSOLE)	

Y-SEPARATE ILLUSTRATION

<END>

316-9784 VALVE GP-BANK 3—MECHANICAL CONTROL

S/N: DPH1-UP

PART OF 332-9192 VALVE & MTG GP-BANK

AN ATTACHMENT

SMCS-5051 **i03638328**

NOTE	REF NO	GRAPHIC REF	PART NUMBER	QTY	PART NAME 1 2 3 4 5 6 (PRODUCT LEVEL)	SEE PAGE
Y	1	1	**350-5801**	1	MANIFOLD GP-CONTROL (INLET)	406
Y	2	1	**344-8257**	1	VALVE GP-CONTROL (LIFT)	426
Y	3	1	**344-8258**	1	VALVE GP-CONTROL (TILT)	427
Y	4	1	**344-8259**	1	VALVE GP-CONTROL (AUXILIARY)	428
	5	1	**308-2160**	1	COVER GP (OUTLET)	
	6	1	**308-2161**	1	KIT-FASTENER	
					(INLCUDES TIERODS & LOCKNUTS)	
	7	1	**4J-9535**	4	SEAL-O-RING	
	8	1	**6V-8978**	12	SEAL-O-RING	

Y-SEPARATE ILLUSTRATION

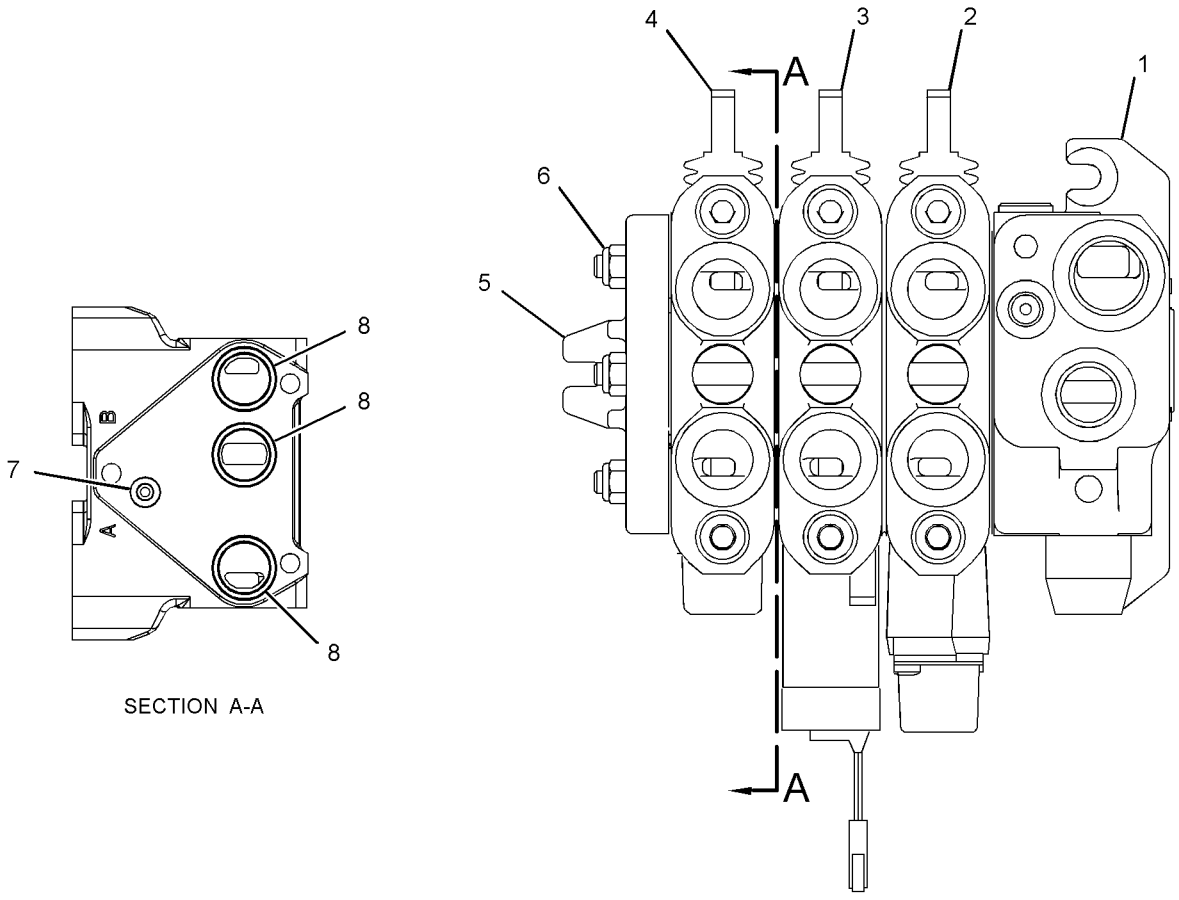

SECTION A-A

GRAPHIC #1 **<END>** g01967708

316-9782 VALVE GP-BANK 7—MECHANICAL

S/N: DPH1-UP

PART OF 331-4339 VALVE & MTG GP-BANK

SMCS-5051 **i03637868**

NOTE	REF NO	GRAPHIC REF	PART NUMBER	QTY	PART NAME 1 2 3 4 5 6 (PRODUCT LEVEL)	SEE PAGE
Y	1	1	**344-8250**	1	MANIFOLD GP-CONTROL (INLET)	405
Y	2	1	**344-8251**	2	VALVE GP-CONTROL (STABILIZER)	420
Y	3	1	**344-8252**	1	VALVE GP-CONTROL (BOOM)	421
Y	4	1	**344-8253**	1	VALVE GP-CONTROL (SWING)	422
Y	5	1	**344-8254**	1	VALVE GP-CONTROL (BUCKET)	423
Y	6	1	**344-8255**	1	VALVE GP-CONTROL (STICK)	424
Y	7	1	**344-8256**	1	VALVE GP-CONTROL (EXTENDABLE STICK)	425
Y	8	1	**308-2154**	1	MANIFOLD GP-CONTROL (OUTLET)	404
	9	1	**308-2155**	1	KIT-FASTENER	
					(INCLUDES LOCKNUTS & TIE RODS)	
	10	1	**4J-9535**	8	SEAL-O-RING	
	11	1	**6V-8978**	24	SEAL-O-RING	

Y-SEPARATE ILLUSTRATION

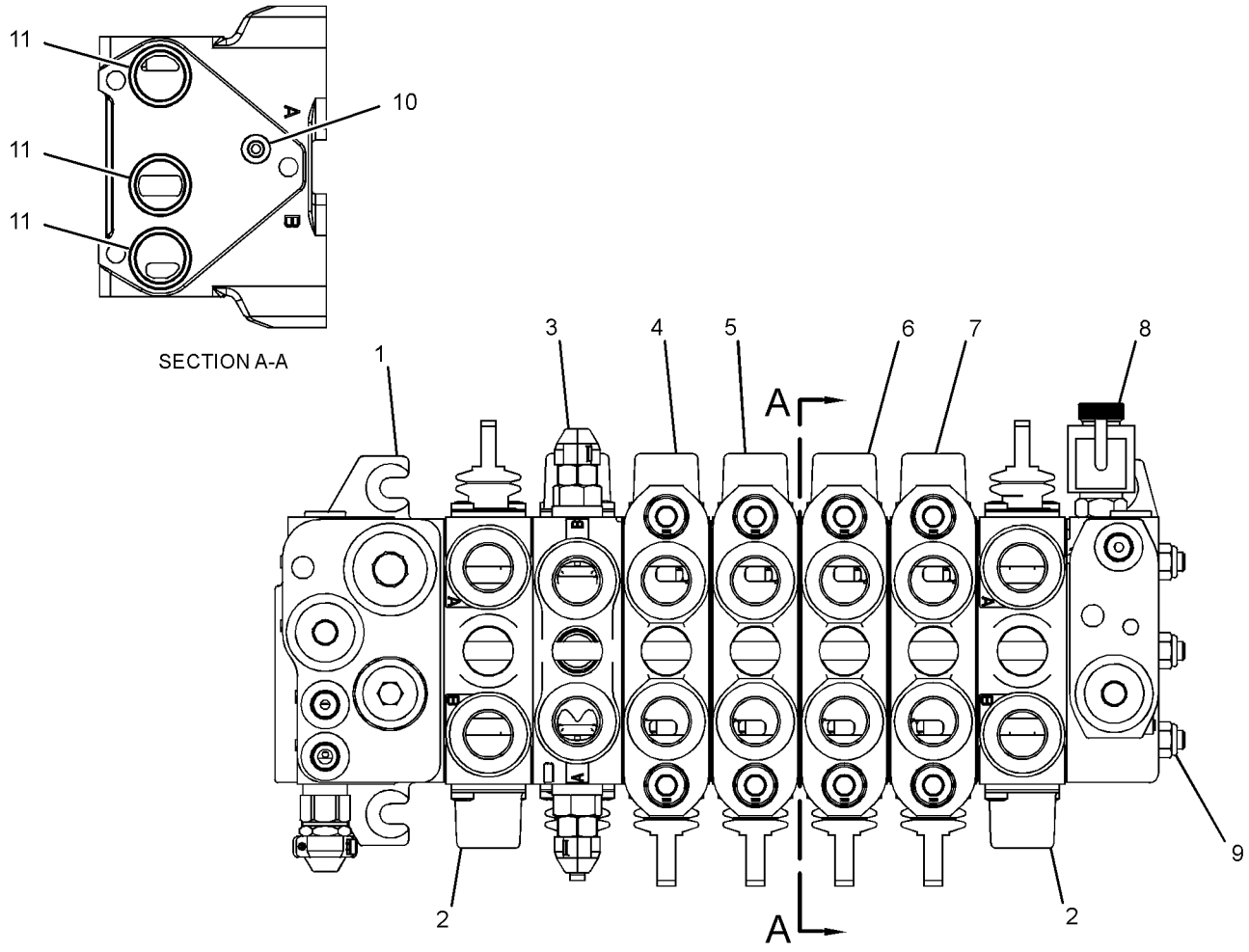

GRAPHIC #1 **<END>** g01995233

HYDRAULIC SYSTEM

344-8251 VALVE GP-CONTROL–STABILIZER

S/N: DPH1-UP

PART OF 316-9782 VALVE GP-BANK 7

SMCS-5051 **i03726392**

NOTE	REF NO	GRAPHIC REF	PART NUMBER	QTY	PART NAME 1 2 3 4 5 6 (PRODUCT LEVEL)	SEE PAGE
	1	1	**308-2872**	1	VALVE GP-CHECK (STABILIZER CONTROL)	
		1	**6V-7970**	1	SEAL-O-RING	
		1	**095-1751**	1	SEAL-O-RING	
	2	1	**350-8934**	1	KIT-COVER	
	3	1	**350-8866**	1	KIT-ACTUATOR (INCLUDES PLATE, SEAL, BOLTS, TANG & BOOT KIT)	

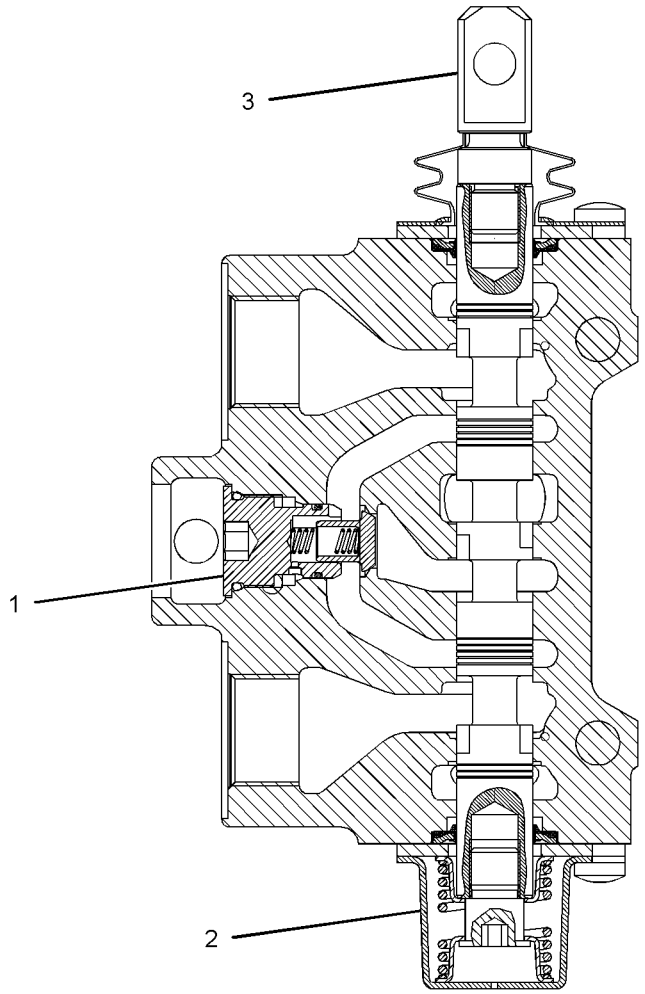

GRAPHIC #1 **<END>** g01987573

344-8252 VALVE GP-CONTROL–BOOM

S/N: DPH1-UP

PART OF 316-9782 VALVE GP-BANK 7

SMCS-5051 **i03726387**

NOTE	REF NO	GRAPHIC REF	PART NUMBER	QTY	PART NAME 1 2 3 4 5 6 (PRODUCT LEVEL)	SEE PAGE
	1	1	**257-7733**	2	VALVE GP-CHECK (BOOM CONTROL VALVE)	
					(EACH INCLUDES)	
		1	**122-9250**	1	SEAL-O-RING	
	2	1	**350-8934**	1	KIT-COVER	
	3	1	**266-2585**	1	VALVE GP-RELIEF (165-BAR)	
	4	1	**308-2879**	1	VALVE GP-RELIEF (300-BAR)	
					(EACH VALVE GP-RELIEF INCLUDES)	
		1	**8J-2413**	1	SEAL-O-RING	
		1	**095-1751**	1	SEAL-O-RING	
		1	**169-1616**	1	RING-BACKUP	
	5	1	**6V-7970**	1	SEAL-O-RING	
	6	1	**350-8866**	1	KIT-ACTUATOR	
					(INCLUDES PLATE, SEAL, BOLTS, TANG & BOOT KIT)	
	7	1	**257-0468**	2	CAP-PROTECTION	

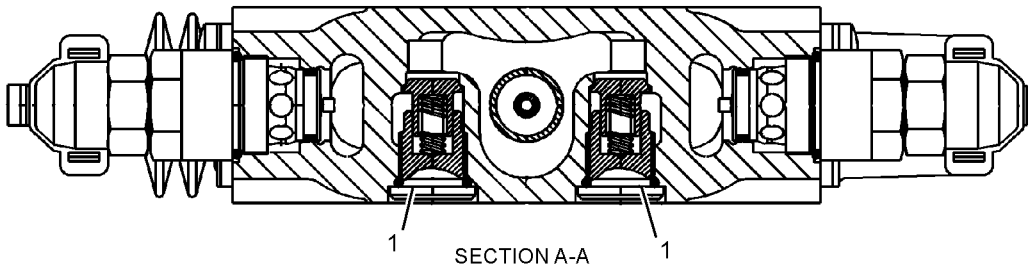

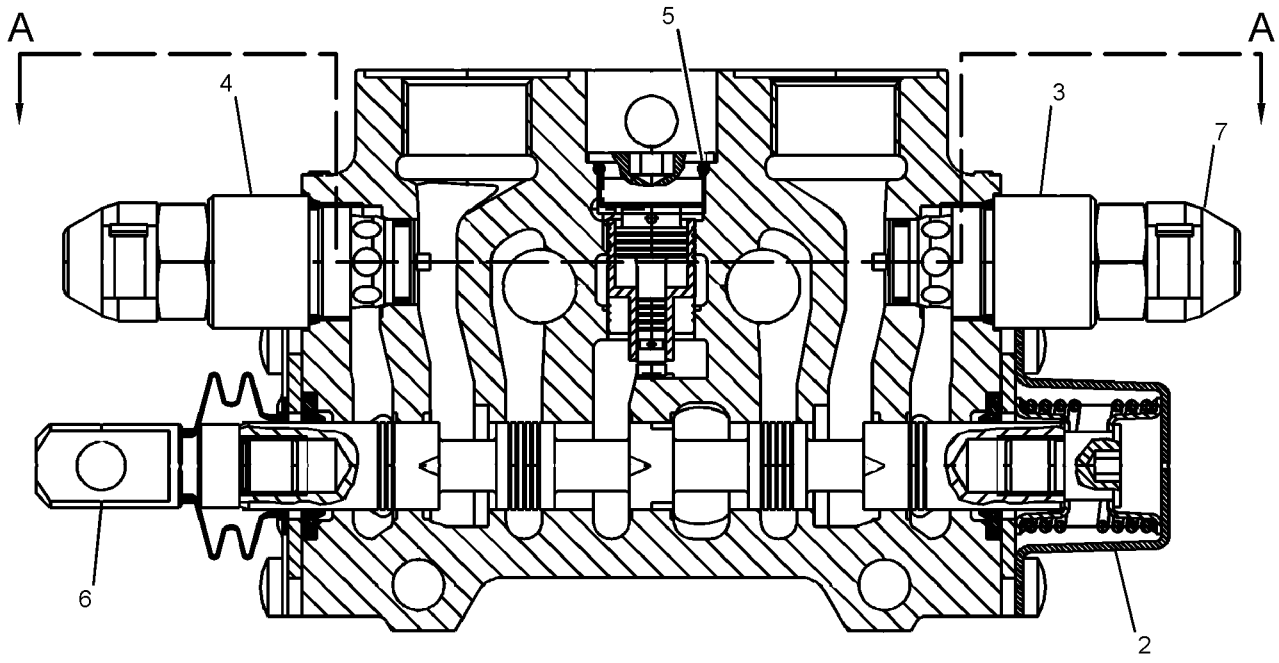

GRAPHIC #1 **<END>** g02001894

344-8253 VALVE GP-CONTROL–SWING

S/N: DPH1-UP

PART OF 316-9782 VALVE GP-BANK 7

SMCS-5051 **i03693763**

NOTE	REF NO	GRAPHIC REF	PART NUMBER	QTY	PART NAME 1 2 3 4 5 6 (PRODUCT LEVEL)	SEE PAGE
	1	1	**350-8841**	1	KIT-COMPENSATOR	
					(INCLUDES SEAL-O-RINGS)	
	2	1	**350-8934**	1	KIT-COVER	
	3	1	**350-8866**	1	KIT-ACTUATOR	
					(INCLUDES PLATE, SEAL, BOLTS, TANG & BOOT KIT)	
	4	1	**308-2882**	2	VALVE GP-RELIEF (270-BAR)	
					(EACH INCLUDES)	
		1	**4D-2297**	1	SEAL-O-RING	

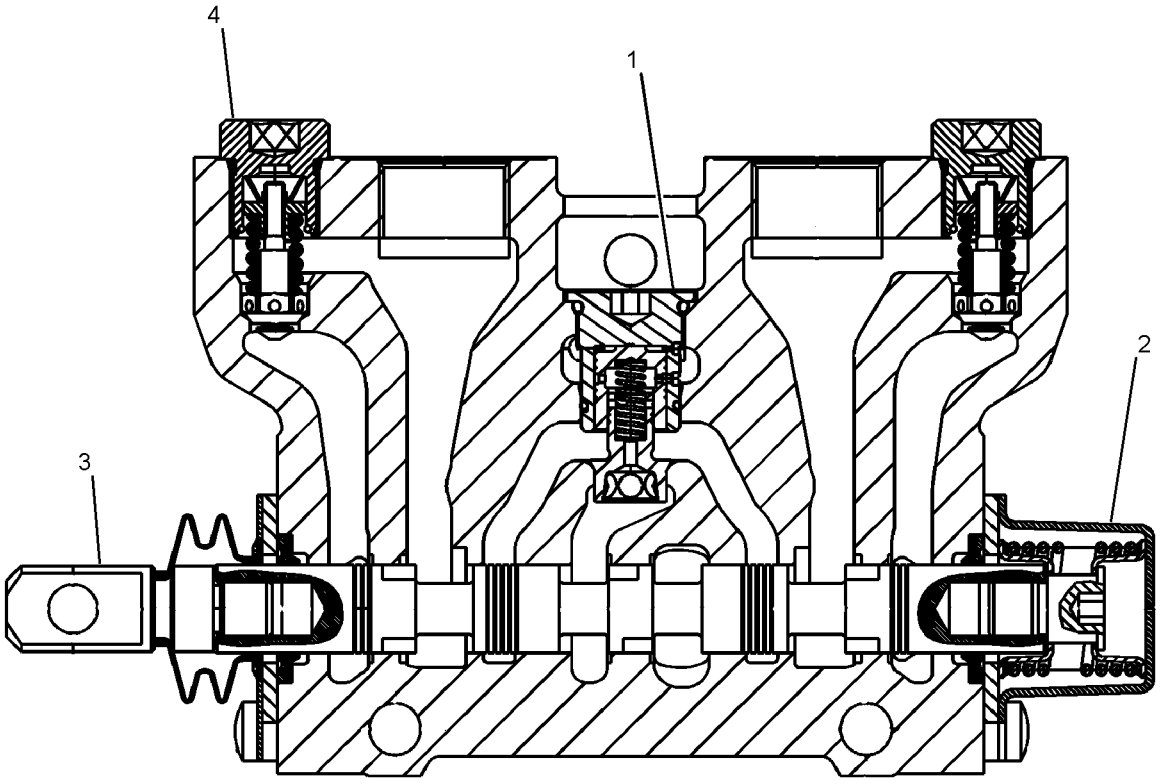

GRAPHIC #1 **<END>** g02001953

344-8254 VALVE GP-CONTROL–BUCKET

S/N: DPH1-UP

PART OF 316-9782 VALVE GP-BANK 7

SMCS-5051 **i03693764**

NOTE	REF NO	GRAPHIC REF	PART NUMBER	QTY	PART NAME 1 2 3 4 5 6 (PRODUCT LEVEL)	SEE PAGE
	1	1	**350-8841**	1	KIT-COMPENSATOR	
					(INCLUDES SEAL-O-RINGS)	
	2	1	**350-8934**	1	KIT-COVER	
	3	1	**350-8866**	1	KIT-ACTUATOR	
					(INCLUDES PLATE, SEAL, BOLTS, TANG & BOOT KIT)	
	4	1	**308-2884**	2	VALVE GP-RELIEF (BUCKET CONTROL)	
					(EACH INCLUDES)	
		1	**4D-2297**	1	SEAL-O-RING	

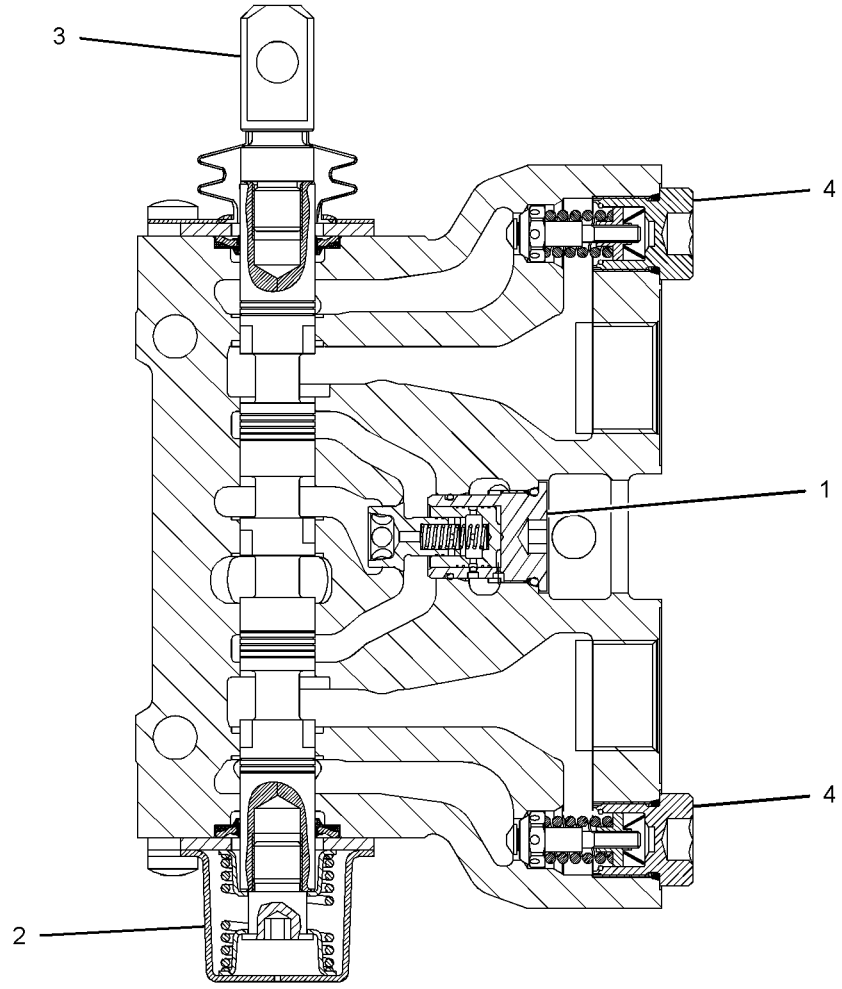

GRAPHIC #1 **<END>** g01987493

344-8255 VALVE GP-CONTROL–STICK

S/N: DPH1-UP

PART OF 316-9782 VALVE GP-BANK 7

SMCS-5051 **i03693765**

NOTE	REF NO	GRAPHIC REF	PART NUMBER	QTY	PART NAME 1 2 3 4 5 6 (PRODUCT LEVEL)	SEE PAGE
	1	1	**350-8841**	1	KIT-COMPENSATOR	
					(INCLUDES SEAL-O-RINGS)	
	2	1	**350-8934**	1	KIT-COVER	
	3	1	**350-8866**	1	KIT-ACTUATOR	
					(INCLUDES PLATE, SEAL, BOLTS, TANG & BOOT KIT)	
	4	1	**308-2882**	1	VALVE GP-RELIEF (270-BAR)	
	5	1	**308-2883**	1	VALVE GP-RELIEF (290-BAR)	
					(EACH VALVE GP-RELIEF INCLUDES)	
		1	**4D-2297**	1	SEAL-O-RING	

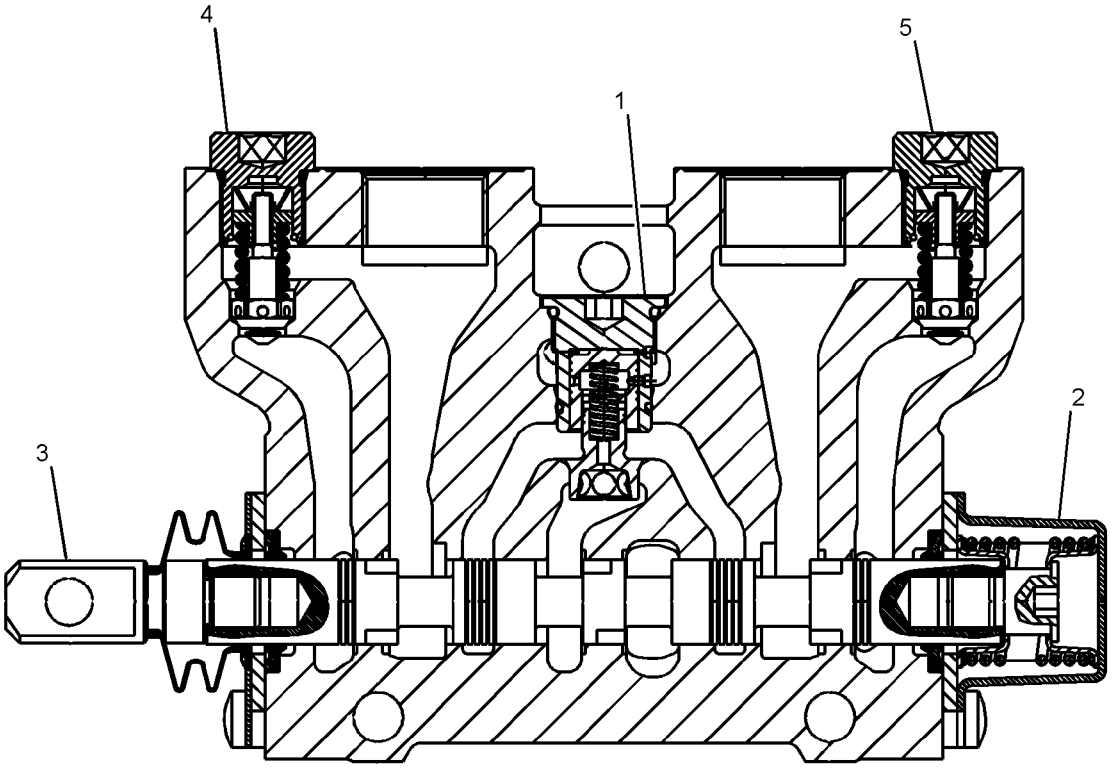

GRAPHIC #1 **<END>** g02002001

344-8256 VALVE GP-CONTROL–EXTENDABLE STICK

S/N: DPH1-UP

PART OF 316-9782 VALVE GP-BANK 7

SMCS-5051 **i03693780**

NOTE	REF NO	GRAPHIC REF	PART NUMBER	QTY	PART NAME 1 2 3 4 5 6 (PRODUCT LEVEL)	SEE PAGE
	1	1	**350-8841**	1	KIT-COMPENSATOR	
					(INCLUDES SEAL-O-RINGS)	
	2	1	**350-8934**	1	KIT-COVER	
	3	1	**350-8866**	1	KIT-ACTUATOR	
					(INCLUDES PLATE, SEAL, BOLTS, TANG & BOOT KIT)	
	4	1	**308-2882**	2	VALVE GP-RELIEF (270-BAR)	
					(EACH INCLUDES)	
		1	**4D-2297**	1	SEAL-O-RING	

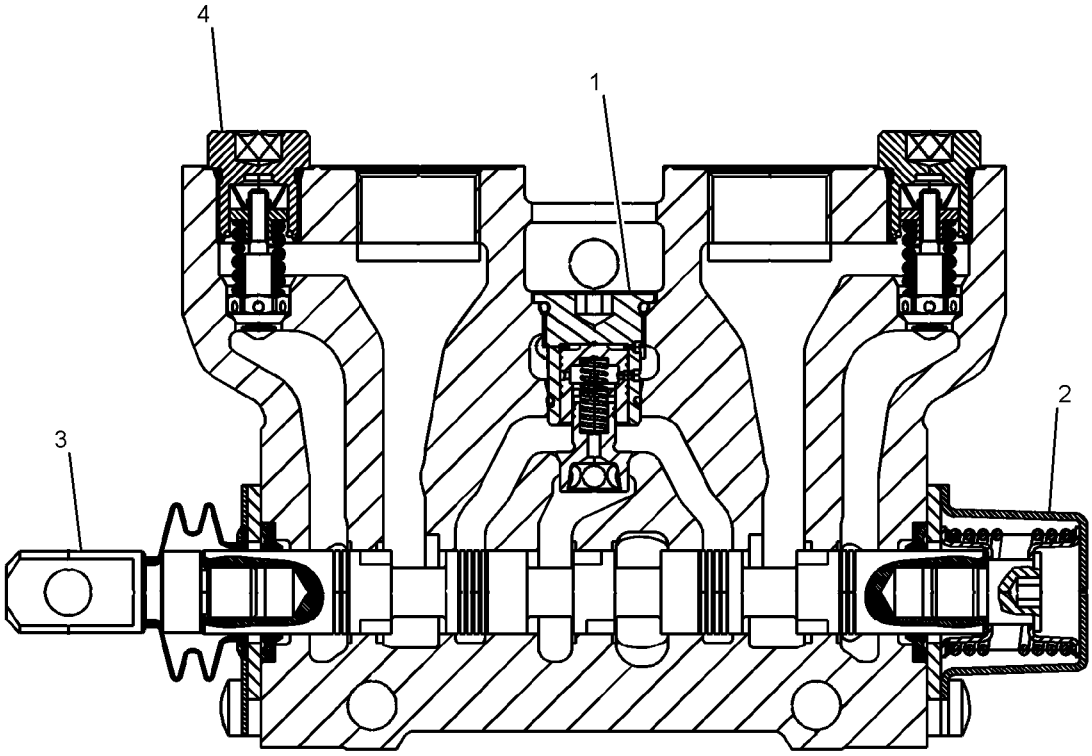

GRAPHIC #1 **<END>** g02002113

HYDRAULIC SYSTEM

344-8257 VALVE GP-CONTROL–LIFT

S/N: DPH1-UP
PART OF 316-9784 VALVE GP-BANK 3
AN ATTACHMENT

SMCS-5051 **i03664440**

NOTE	REF NO	GRAPHIC REF	PART NUMBER	QTY	PART NAME 1 2 3 4 5 6 (PRODUCT LEVEL)	SEE PAGE
	1	1	**350-8841**	1	KIT-COMPENSATOR	
					(INCLUDES SEAL-O-RINGS)	
	2	1	**350-8869**	1	KIT-DETENT	
	3	1	**350-8866**	1	KIT-ACTUATOR	
					(INCLUDES BOOT, RETAINER, PLATE, SEAL, BOLT & TANG)	
	4	1	**308-2885**	2	PLUG GP-CONTROL VALVE	
					(EACH INCLUDES)	
		1	**4D-2297**	1	SEAL-O-RING	

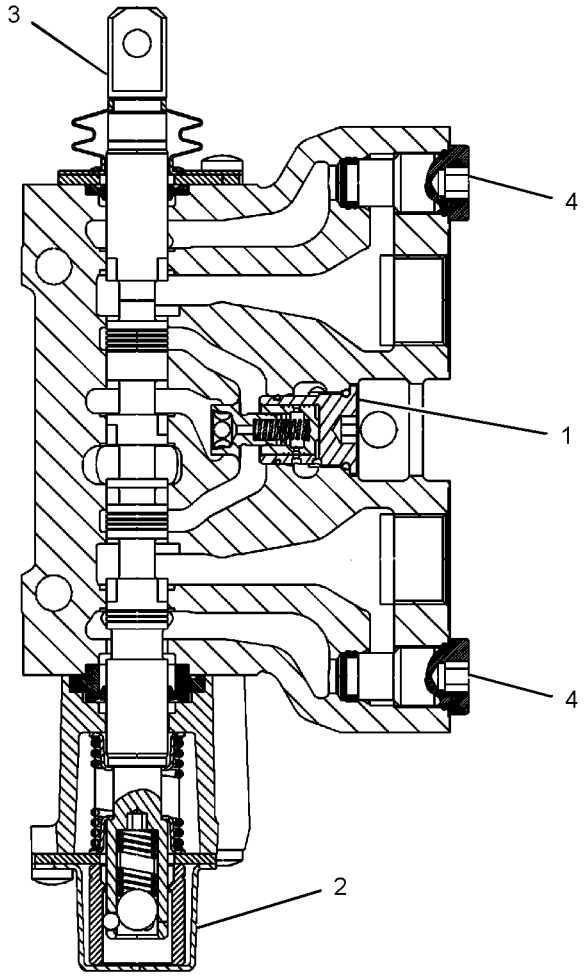

GRAPHIC #1 **<END>** g01967674

344-8258 VALVE GP-CONTROL–TILT

S/N: DPH1-UP
PART OF 316-9784 VALVE GP-BANK 3
AN ATTACHMENT

SMCS-5051 **i03661680**

NOTE	REF NO	GRAPHIC REF	PART NUMBER	QTY	PART NAME 1 2 3 4 5 6 (PRODUCT LEVEL)	SEE PAGE
	1	1	**350-8841**	1	KIT-COMPENSATOR	
					(INCLUDES SEAL-O-RINGS)	
	2	1	**350-8887**	1	KIT-DETENT	
					(INCLUDES SEAL-O-RING)	
	3	1	**350-8866**	1	KIT-ACTUATOR	
					(INCLUDE BOOT, RETAINER, PLATE, SEAL, BOLT & TANG)	
	4	1	**308-2884**	1	VALVE GP-RELIEF (300-BAR)	
		1	**4D-2297**	1	SEAL-O-RING	
	5	1	**350-8888**	1	VALVE GP-RELIEF (160-BAR)	
		1	**4D-2297**	1	SEAL-O-RING	

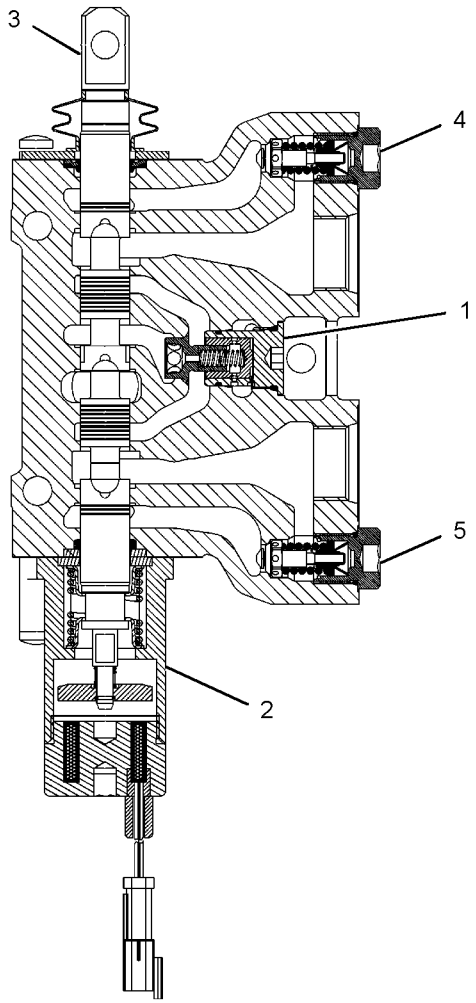

GRAPHIC #1 **<END>** g01970262

HYDRAULIC SYSTEM

344-8259 VALVE GP-CONTROL–AUXILIARY

S/N: DPH1-UP
PART OF 316-9784 VALVE GP-BANK 3
AN ATTACHMENT

SMCS-5051 **i03661726**

NOTE	REF NO	GRAPHIC REF	PART NUMBER	QTY	PART NAME 1 2 3 4 5 6 (PRODUCT LEVEL)	SEE PAGE
	1	1	**350-8841**	1	KIT-COMPENSATOR	
					(INCLUDES SEAL-O-RINGS)	
	2	1	**350-8897**	1	KIT-COVER	
	3	1	**350-8866**	1	KIT-ACTUATOR	
					(INCLUDES BOOT KIT, PLATE, SEAL, BOLTS & TANG)	
	4	1	**308-2885**	1	PLUG GP-CONTROL VALVE	
		1	**4D-2297**	1	SEAL-O-RING	
	5	1	**350-8898**	1	VALVE GP-RELIEF (240-BAR)	
		1	**4D-2297**	1	SEAL-O-RING	

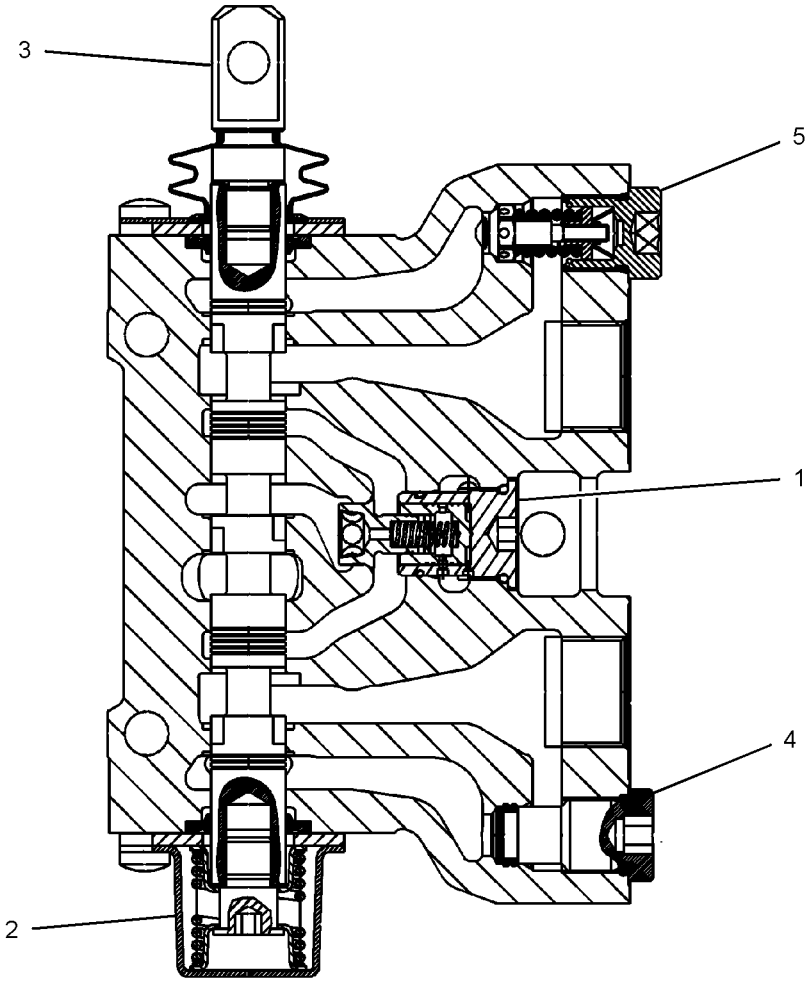

GRAPHIC #1 **<END>** g01967374

HYDRAULIC SYSTEM

308-3437 VALVE GP-LOAD CONTROL–STABILIZER

S/N: DPH1-UP

PART OF 326-1801 LINES GP-STABILIZER

AN ATTACHMENT

SMCS-5811 **i02843462**

NOTE	REF NO	GRAPHIC REF	PART NUMBER	QTY	PART NAME 1 2 3 4 5 6 (PRODUCT LEVEL)	SEE PAGE
					(NO SERVICED PARTS)	

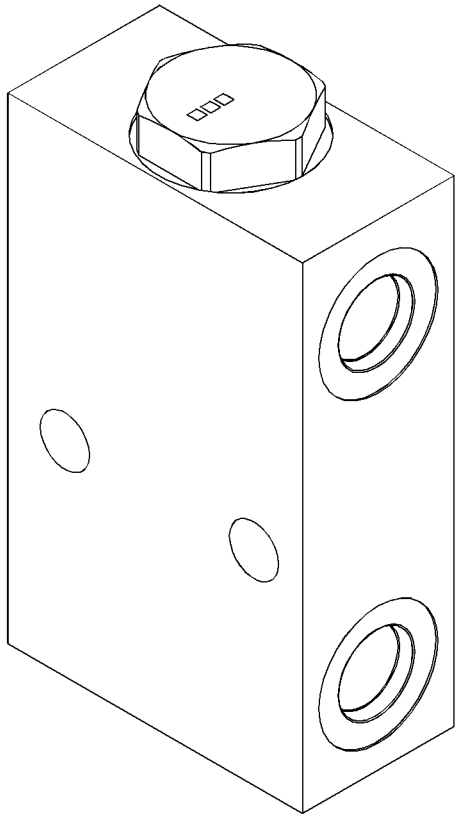

GRAPHIC #1 **<END>** g01444975

IMPLEMENTS

321-4060 ARM GP-LIFT

S/N: DPH1-UP

PART OF 325-1021 LOADER AR

SMCS-6118, 6119 **i03638344**

NOTE	REF NO	GRAPHIC REF	PART NUMBER	QTY	PART NAME 1 2 3 4 5 6 (PRODUCT LEVEL)	SEE PAGE
	1	1	**111-4332**	4	PLATE	
B	2	1,2	**111-4337**	18	WASHER (46X70X1-MM THK)	
B	3	1	**119-4594**	2	WASHER (41X64X1-MM THK)	
B	4	1	**128-7903**	2	SPACER (61X114.3X3-MM THK)	
B	5	1	**128-7905**	2	SPACER (61X114.3X1-MM THK)	
M	6	1,2	**246-7854**	6	NUT-SPECIAL (M10X1.5-THD)	
	7	1,2	**320-3614**	2	LINK AS	
					(EACH INCLUDES)	
	7A	2	**116-4825**	4	BEARING-SLEEVE	
	8	1	**320-4771**	4	LINK	
	9	1	**321-4059**	1	ARM & BEARING AS (PARALLEL LIFT)	
	9A	2	**9R-0111**	4	BEARING-SLEEVE	
	9B	2	**9R-0411**	4	BEARING-SLEEVE	
	10	1	**322-4583**	2	PIN	
	11	1	**322-4584**	2	PIN	
	12	1	**322-4585**	2	PIN	
	13	1	**322-4586**	2	PIN	
	14	1	**322-4587**	4	PIN	
	15	1	**322-4589**	2	PIN	
	16	1	**325-2009**	1	PIN	
	17	1,2	**326-0088**	4	PIN	
	18	1	**326-0093**	2	PIN	
	19	1	**342-2161**	1	LINK AS (RH)	
	19A	2	**116-4825**	4	BEARING-SLEEVE (RH)	
	20	1	**342-2162**	1	LINK AS (LH)	
	20A	2	**116-4825**	4	BEARING-SLEEVE (LH)	
	21	1	**342-2622**	8	SPACER (45.5X80X13-MM THK)	
	22	1	**3B-8488**	8	FITTING-GREASE	
	23	1,2	**3B-8489**	12	FITTING-GREASE	
	24	1	**6V-5201**	4	RING-RETAINING	
	25	1,2	**6V-5204**	32	RING-RETAINING	
M	26	2	**6V-7687**	4	LOCKNUT (M12X1.75-THD)	
M	27	1	**6V-7744**	2	LOCKNUT (M10X1.5-THD)	
M	28	2	**8T-4176**	4	BOLT (M12X1.75X90-MM)	
M	29	1	**8T-6685**	2	BOLT (M10X1.5X110-MM)	
B	30	1	**9R-0109**	6	WASHER (41X64X3-MM THK)	
B	31	1,2	**9R-0158**	43	WASHER (46X69X3-MM THK)	

B-USE AS REQUIRED
M-METRIC PART

321-4060 **ARM GP-LIFT** *(contd.)* **i03638344**

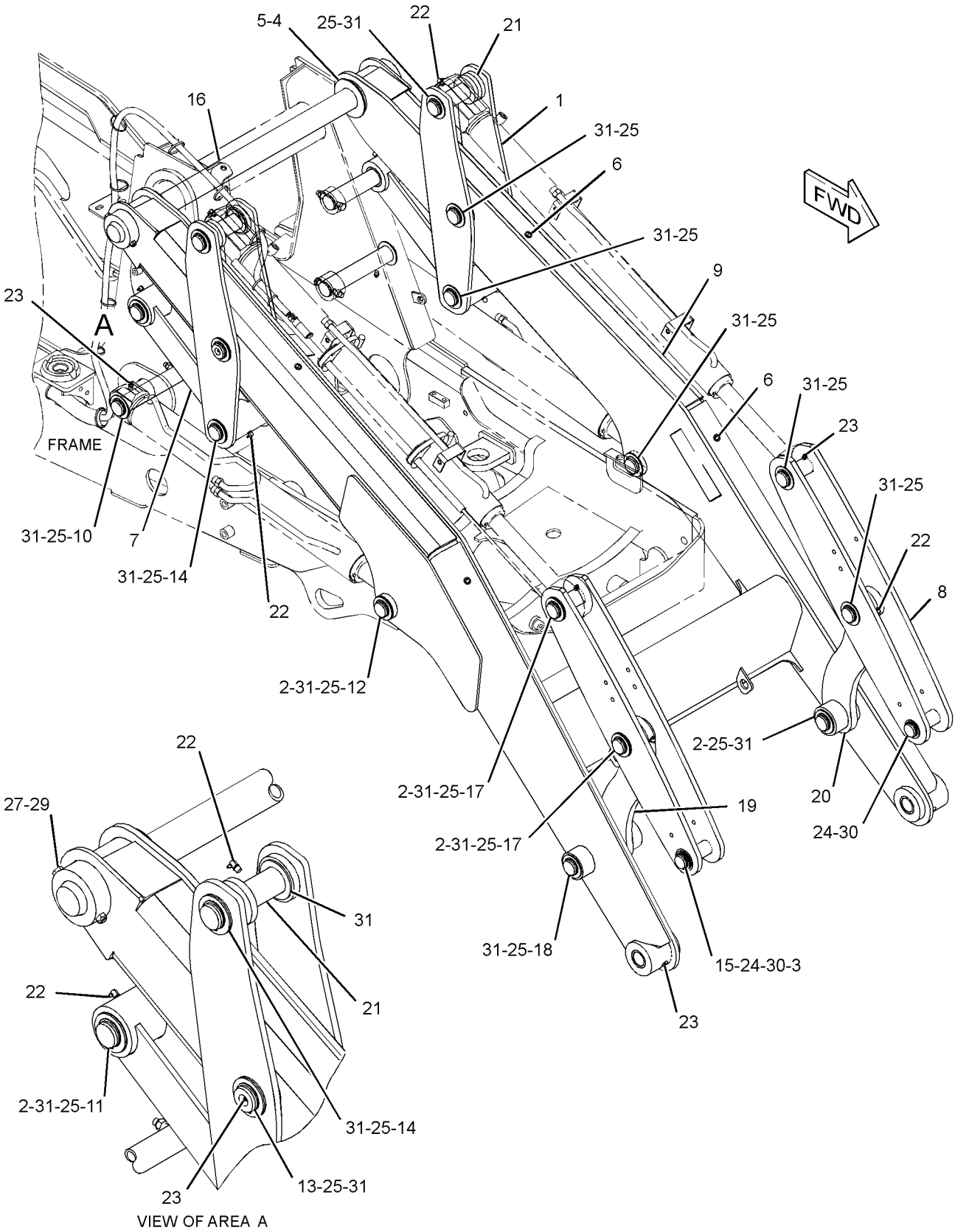

GRAPHIC #1 g01990696

321-4060 **ARM GP-LIFT** *(contd.)* **i03638344**

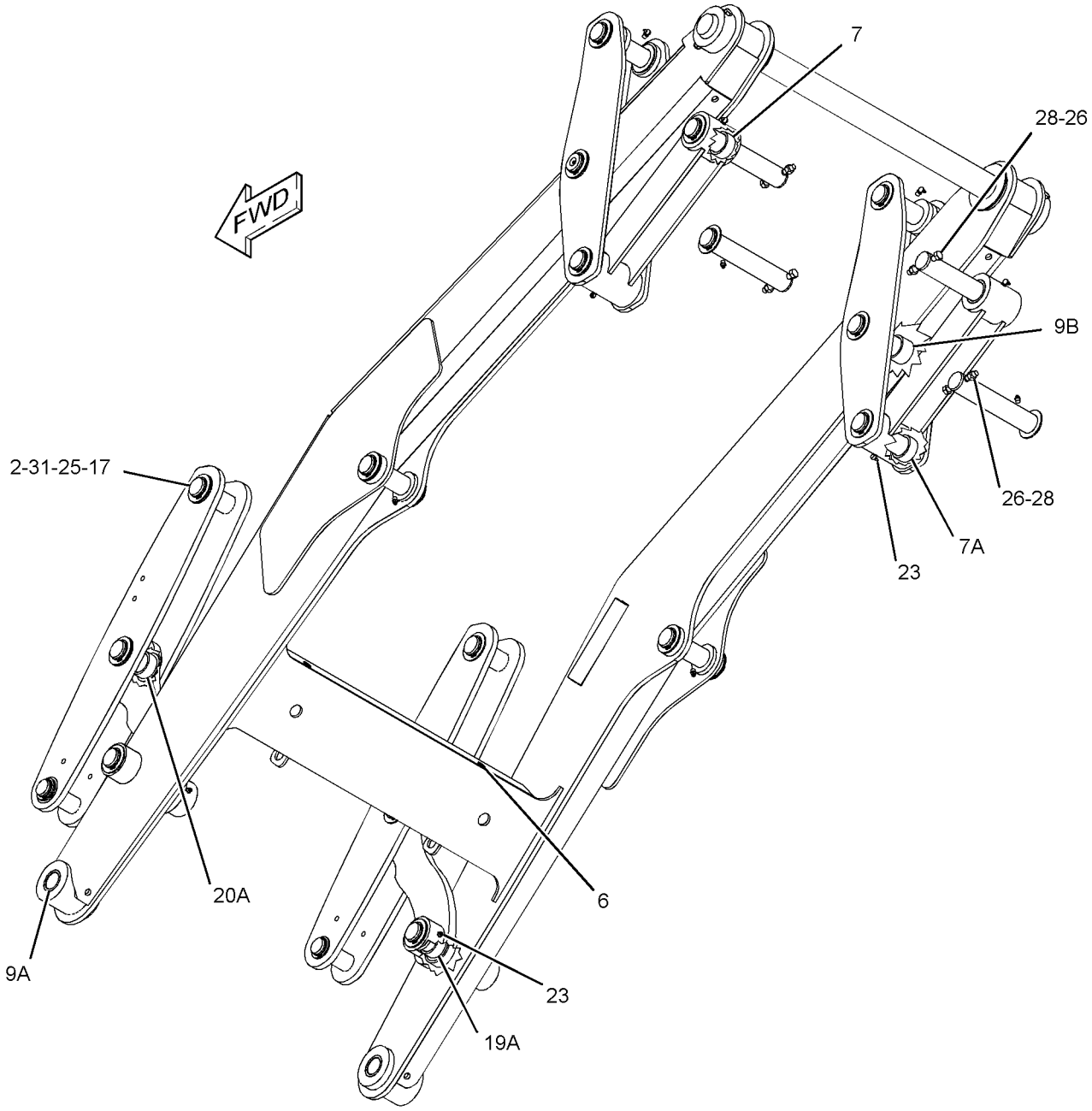

GRAPHIC #2 **<END>** g01990774

324-0548 BOOM GP

S/N: DPH1-UP

PART OF 334-0682, 334-0683, 350-6931, 350-6932, 350-6941, 350-6942 BACKHOE AR-EXTENDABLE STICK, 334-0681, 350-6930 BACKHOE AR-STANDARD STICK AN ATTACHMENT

SMCS-6501 **i03690289**

NOTE	REF NO	GRAPHIC REF	PART NUMBER	QTY	PART NAME 1 2 3 4 5 6 (PRODUCT LEVEL)	SEE PAGE
B	1	1	**9R-0481**	2	WASHER (71X110X4-MM THK)	
B	2	1	**9R-8291**	2	SPACER (66X125X1-MM THK)	
	3	1	**226-1240**	2	FILM-WARNING (CRUSH HAZARD, STAY BACK, INTL)	
M	4	1	**246-7853**	4	NUT-SPECIAL (M8X1.25-THD)	
	5	1	**316-4741**	1	BOOM AS	
	5A	1	**213-6683**	2	BEARING-SLEEVE	
	6	1	**316-6945**	1	PIN	
	7	1	**320-4725**	1	PIN AS	
	8	1	**322-3736**	1	PIN-BOOM LOCK	
	9	1	**095-7950**	2	RING-RETAINING	
	10	1	**115-6433**	1	WASHER (11X50X6-MM THK)	
	11	1	**3B-8488**	4	FITTING-GREASE	
	12	1	**3B-8489**	2	FITTING-GREASE	
	13	1	**6V-5201**	2	RING-RETAINING	
M	14	1	**8T-4136**	1	BOLT (M10X1.5X25-MM)	
	15	1	**9R-0109**	2	WASHER (41X64X3-MM THK)	

B-USE AS REQUIRED
M-METRIC PART

324-0548 **BOOM GP** ***(contd.)*** **i03690289**

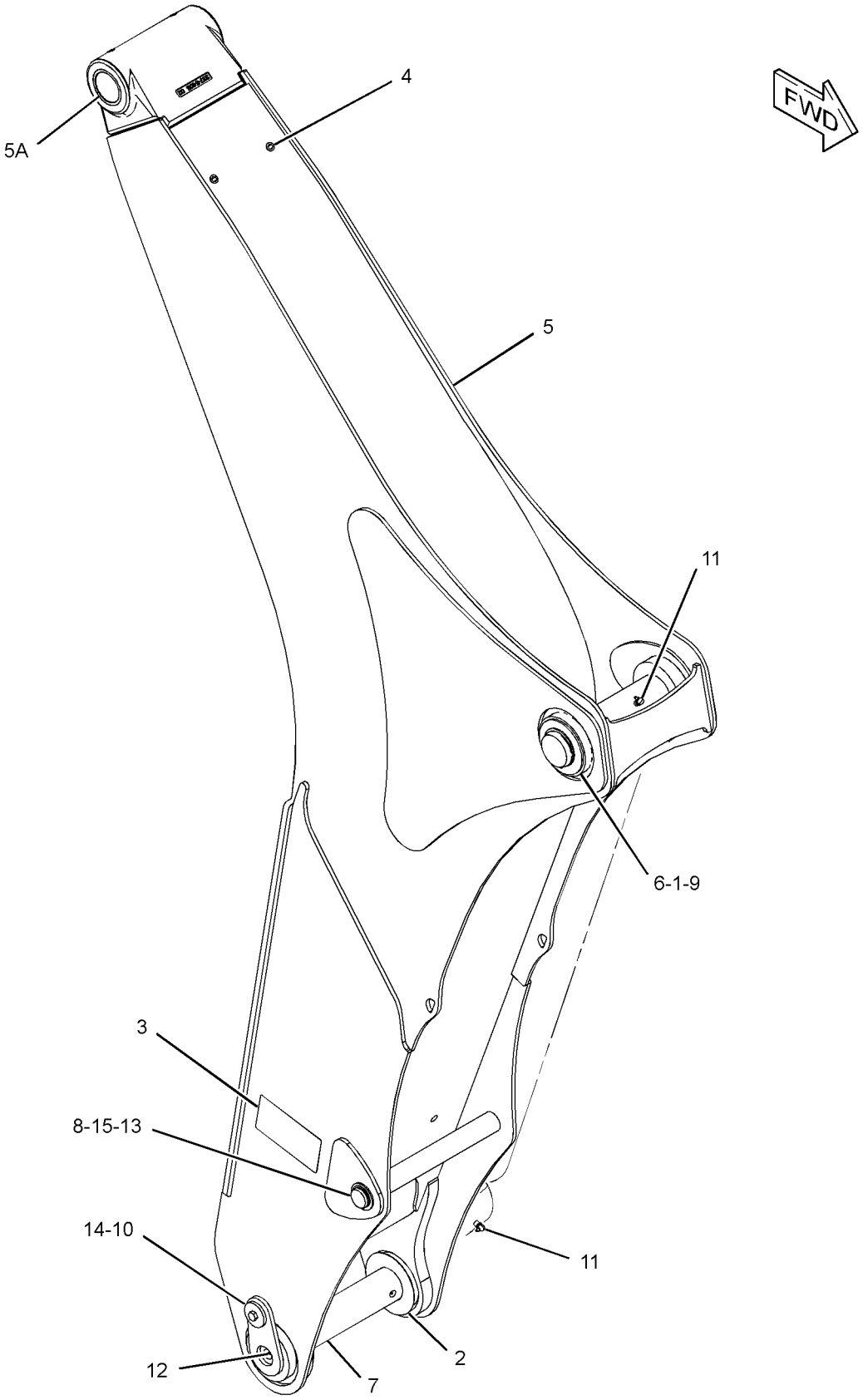

GRAPHIC #1 **<END>** g01990094

325-1034 BRACE GP-LIFT CYLINDER

S/N: DPH1-UP

PART OF 325-1021 LOADER AR

SMCS-7507 **i03642533**

NOTE	REF NO	GRAPHIC REF	PART NUMBER	QTY	PART NAME 1 2 3 4 5 6 (PRODUCT LEVEL)	SEE PAGE
	1	1	**118-1348**	2	PIN	
	2	1	**239-9430**	1	FILM-WARNING (ARM BRACE, READ OMM)	
	3	1	**320-3568**	1	BRACE	
	4	1	**343-2876**	2	PLATE	
	5	1	**8T-4121**	2	WASHER-HARD (11X21X2.5-MM THK)	
M	6	1	**8T-4137**	2	BOLT (M10X1.5X20-MM)	
	7	1	**9R-5301**	2	PIN-COTTER	

M-METRIC PART

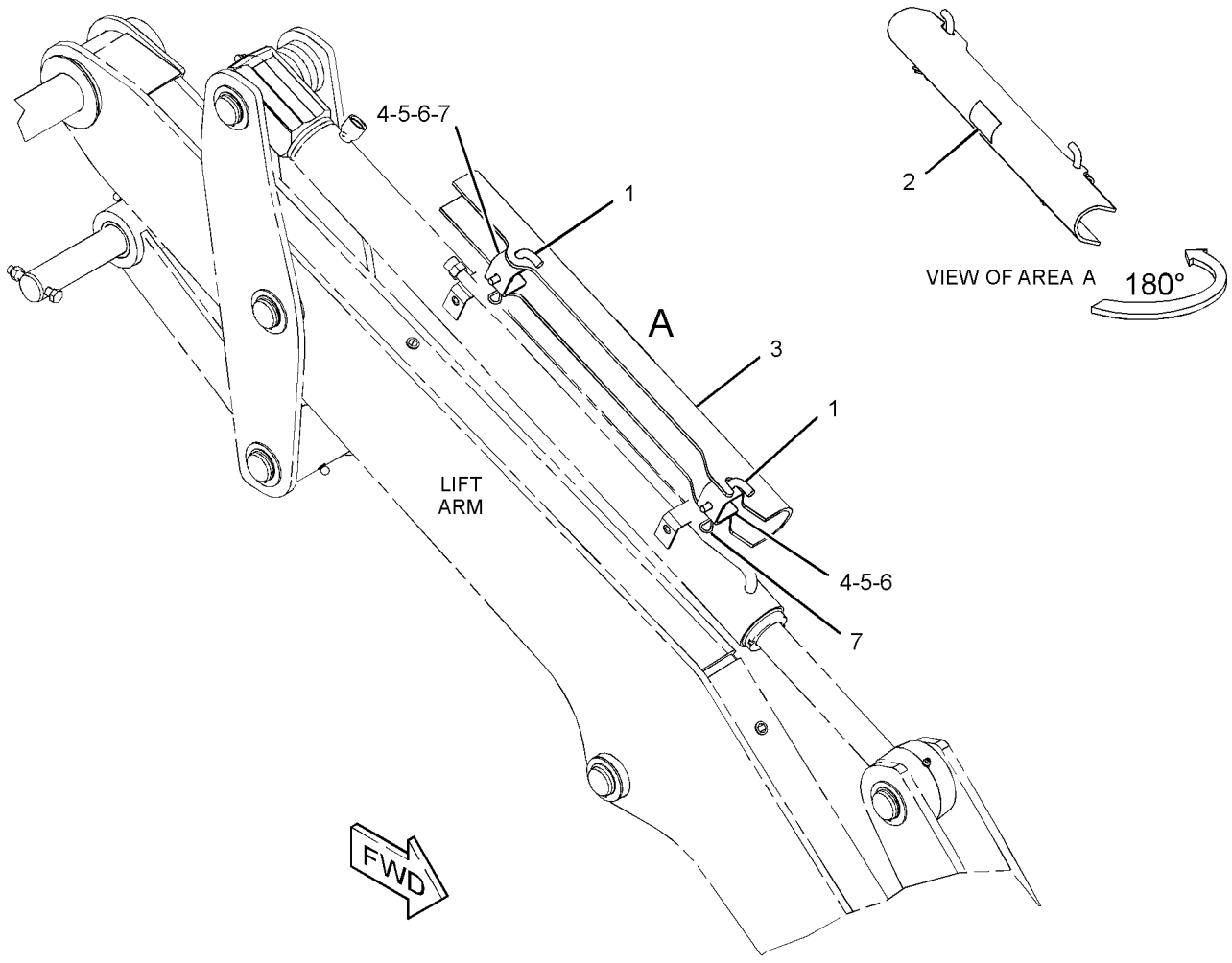

GRAPHIC #1 **<END>** g01990713

334-0751 LINKAGE GP-BACKHOE BUCKET—LIFTING

S/N: DPH1-UP

PART OF 334-0682, 350-6941 BACKHOE AR-EXTENDABLE STICK, 334-0681 BACKHOE AR-STANDARD STICK

AN ATTACHMENT

SMCS-6513 **i03694722**

NOTE	REF NO	GRAPHIC REF	PART NUMBER	QTY	PART NAME 1 2 3 4 5 6 (PRODUCT LEVEL)	SEE PAGE
	1	1	**9R-0158**	2	WASHER (46X69X3-MM THK)	
	2	1	**9R-1510**	2	WASHER (51X82X4-MM THK)	
B	3	1	**111-4337**	2	WASHER (46X70X1-MM THK)	
	4	1	**154-5280**	1	PIN	
B	5	1	**210-1707**	2	SHIM (1-MM THK)	
B	6	1	**220-7108**	6	WASHER (51X85X1-MM THK)	
	7	1	**320-9164**	1	PIN	
	8	1	**320-9241**	1	PIN	
	9	1	**328-5234**	1	PIN	
	10	1	**330-4926**	1	LINK AS	
	10A	1	**9R-0139**	2	BEARING-SLEEVE	
	10B	1	**213-6703**	2	BEARING	
	11	1	**330-5738**	1	LINK	
	12	1	**330-5739**	1	LINK	
	13	1	**096-5516**	2	RING-RETAINING	
	14	1	**154-5279**	1	PIN	
	15	1	**3B-5319**	4	PIN-COTTER	
	16	1	**3B-8489**	4	FITTING-GREASE	
	17	1	**8T-4241**	4	RING-RETAINING	

B-USE AS REQUIRED

334-0751 **LINKAGE GP-BACKHOE BUCKET** *(contd.)* **i03694722**

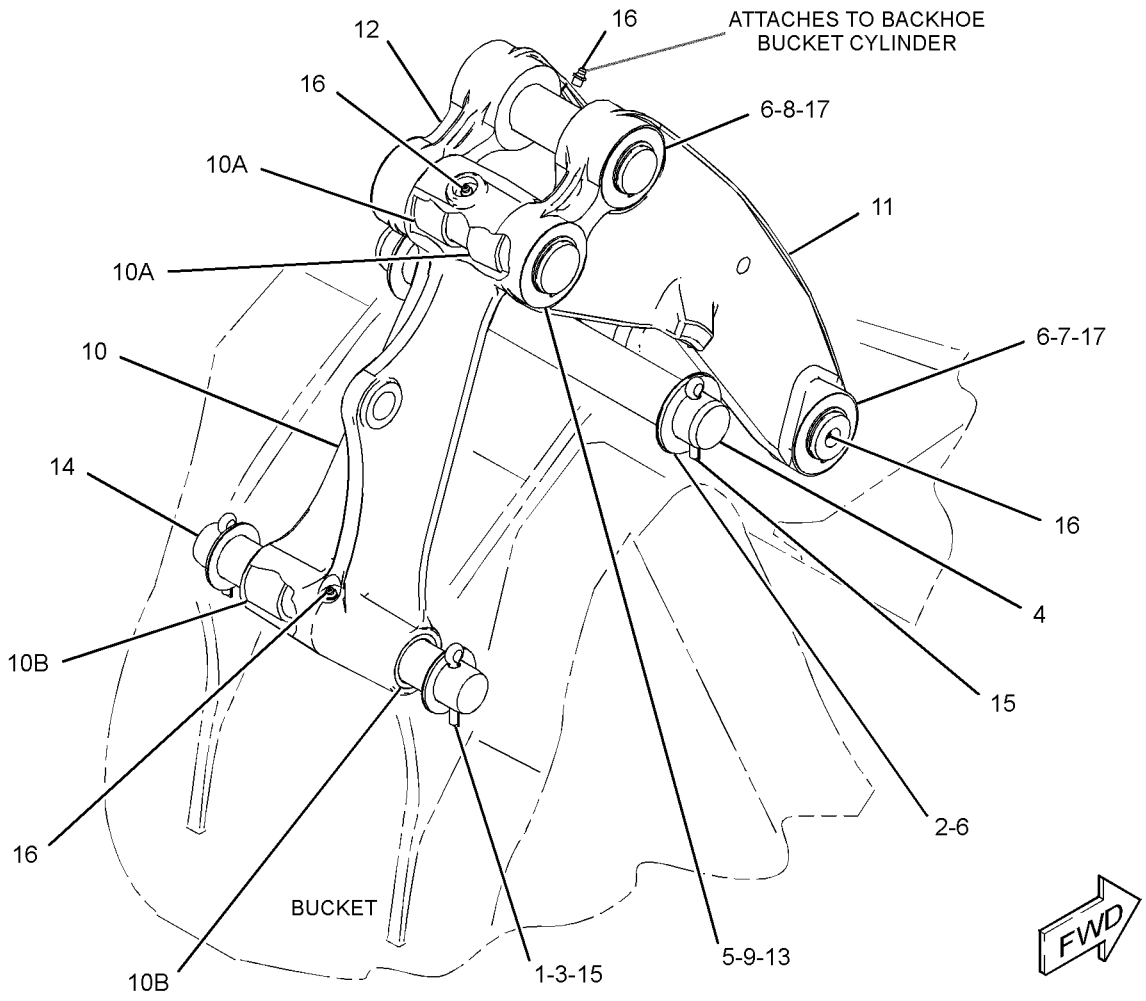

GRAPHIC #1 **<END>** g01994426

334-0752 LINKAGE GP-BACKHOE BUCKET—WITH LIFTING EYE

S/N: DPH1-UP

PART OF 334-0683, 350-6942 BACKHOE AR-EXTENDABLE STICK AN ATTACHMENT

SMCS-6513 **i03695663**

NOTE	REF NO	GRAPHIC REF	PART NUMBER	QTY	PART NAME 1 2 3 4 5 6 (PRODUCT LEVEL)	SEE PAGE
	1	1	**9R-0158**	2	WASHER (46X69X3-MM THK)	
	2	1	**9R-9105**	2	PIN AS	
B	3	1	**111-4337**	4	WASHER (46X70X1-MM THK)	
B	4	1	**210-1707**	2	SHIM (1-MM THK)	
B	5	1	**220-7108**	4	WASHER (51X85X1-MM THK)	
	6	1	**308-4315**	2	SPACER (51X115X51-MM THK)	
	7	1	**331-8037**	1	LINKAGE GP-BUCKET	
	7A	1	**9R-0147**	2	BEARING-SLEEVE	
	7B	1	**9R-0170**	2	BEARING-SLEEVE	
	8	1	**332-2578**	1	PLATE AS (LH)	
	9	1	**332-2579**	1	PLATE AS (RH)	
	10	1	**333-0790**	1	PIN	
	11	1	**333-0791**	1	PIN	
	12	1	**333-0792**	1	PIN	
	13	1	**096-5516**	2	RING-RETAINING	
	14	1	**3B-5319**	2	PIN-COTTER	
	15	1	**3B-8489**	4	FITTING-GREASE	
	16	1	**8T-4241**	4	RING-RETAINING	

B-USE AS REQUIRED

334-0752 **LINKAGE GP-BACKHOE BUCKET** *(contd.)* **i03695663**

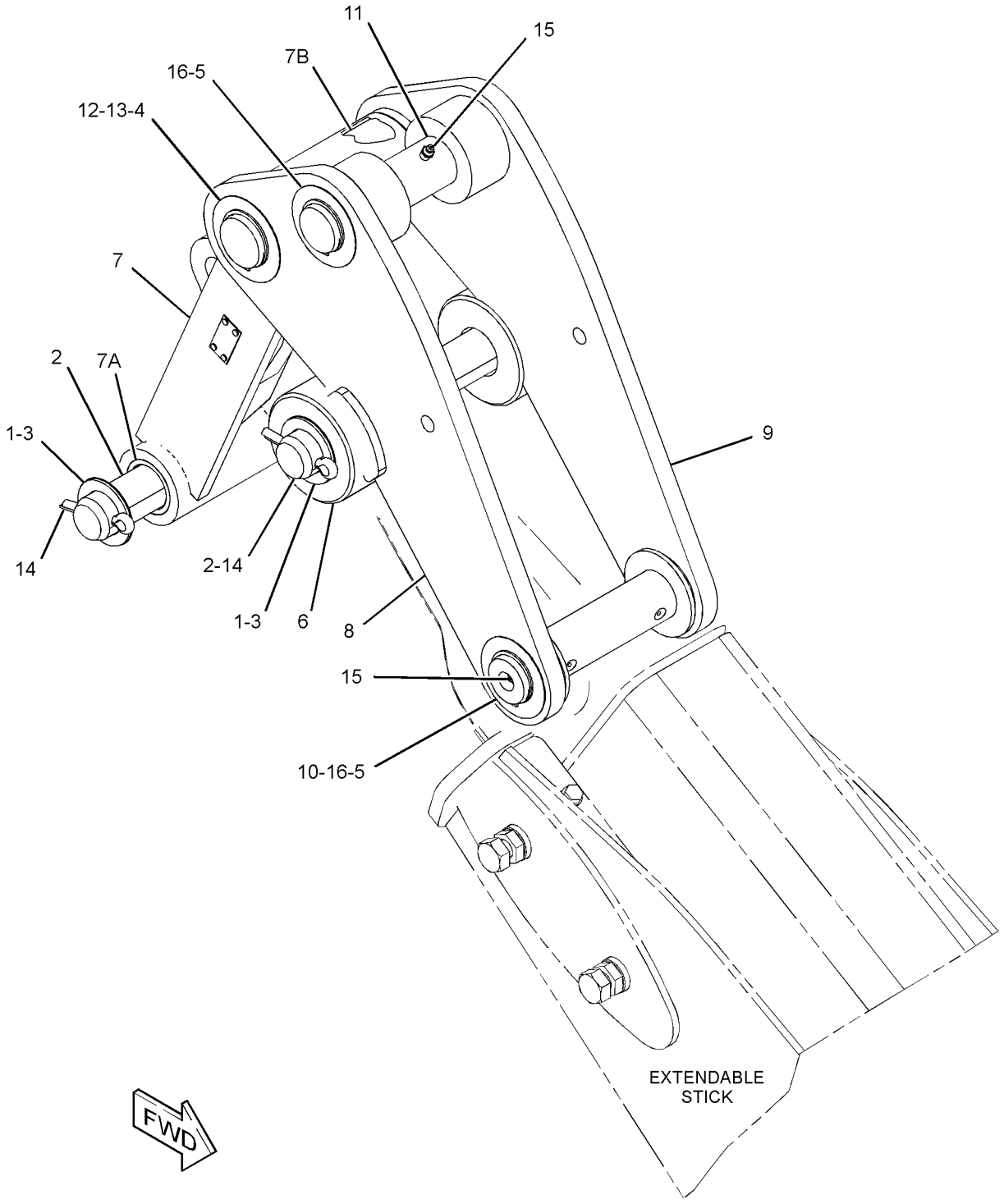

GRAPHIC #1 **<END>** g01993633

348-5464 LINKAGE GP-BACKHOE BUCKET–

WITHOUT LIFTING EYE

S/N: DPH1-UP

PART OF 350-6932 BACKHOE AR-EXTENDABLE STICK

AN ATTACHMENT

SMCS-6513 **i03693943**

NOTE	REF NO	GRAPHIC REF	PART NUMBER	QTY	PART NAME 1 2 3 4 5 6 (PRODUCT LEVEL)	SEE PAGE
	1	1	**9R-0158**	2	WASHER (46X69X3-MM THK)	
	2	1	**9R-9105**	2	PIN AS	
B	3	1	**111-4337**	4	WASHER (46X70X1-MM THK)	
B	4	1	**210-1707**	2	SHIM (1-MM THK)	
B	5	1	**220-7108**	4	WASHER (51X85X1-MM THK)	
	6	1	**308-4315**	2	SPACER (51X115X51-MM THK)	
	7	1	**332-2578**	1	PLATE AS (LH)	
	8	1	**332-2579**	1	PLATE AS (RH)	
	9	1	**333-0790**	1	PIN	
	10	1	**333-0791**	1	PIN	
	11	1	**333-0792**	1	PIN	
	12	1	**348-5460**	1	LINKAGE GP-BUCKET	
	12A	1	**9R-0147**	2	BEARING-SLEEVE	
	12B	1	**9R-0170**	2	BEARING-SLEEVE	
	13	1	**096-5516**	2	RING-RETAINING	
	14	1	**3B-5319**	2	PIN-COTTER	
	15	1	**3B-8489**	4	FITTING-GREASE	
	16	1	**8T-4241**	4	RING-RETAINING	

B-USE AS REQUIRED

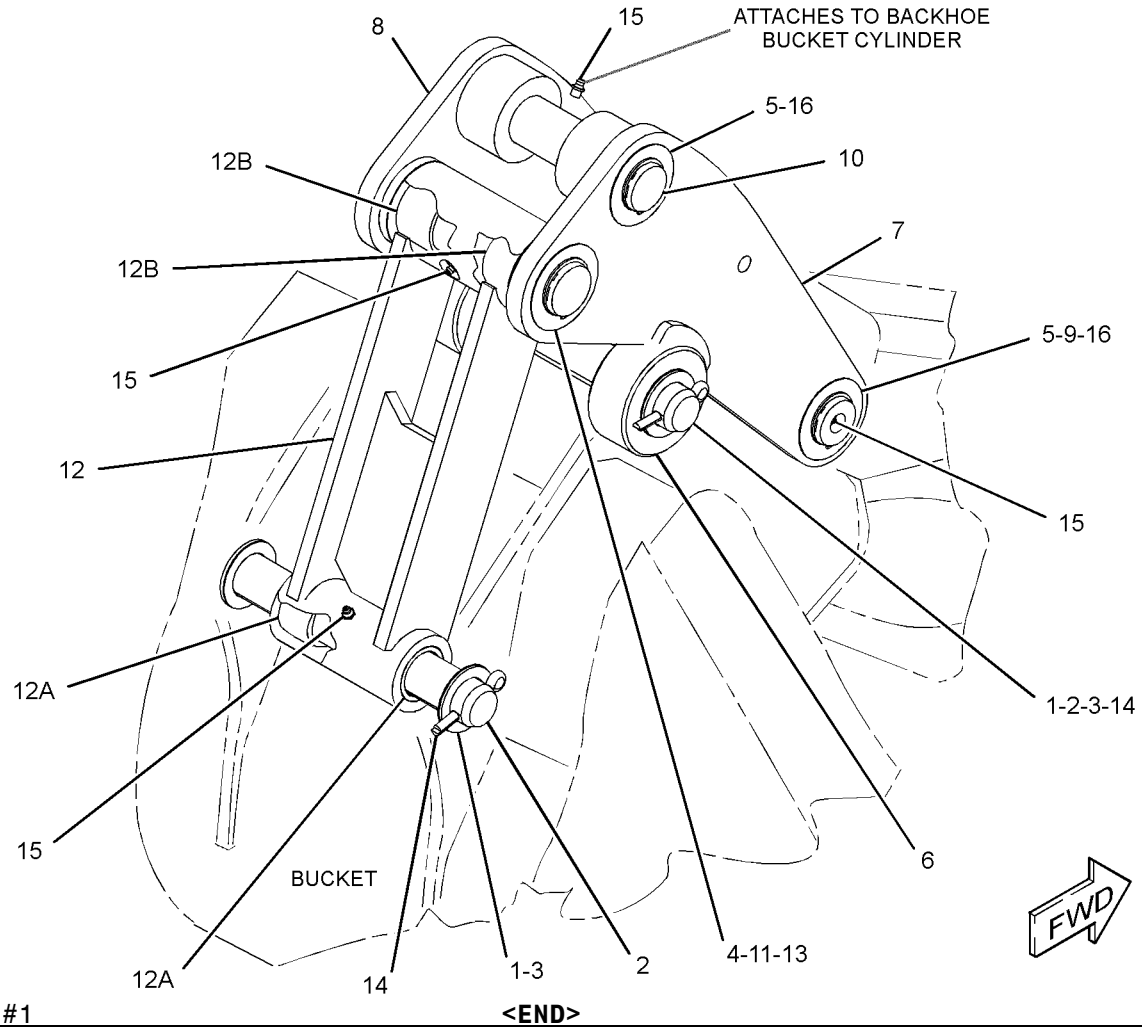

GRAPHIC #1 **<END>** g01994435

348-5465 LINKAGE GP-BACKHOE BUCKET

S/N: DPH1-UP

PART OF 350-6931 BACKHOE AR-EXTENDABLE STICK, 350-6930 BACKHOE AR-STANDARD STICK

AN ATTACHMENT

SMCS-6513 **i03690291**

NOTE	REF NO	GRAPHIC REF	PART NUMBER	QTY	PART NAME 1 2 3 4 5 6 (PRODUCT LEVEL)	SEE PAGE
	1	1	**9R-0158**	2	WASHER (46X69X3-MM THK)	
	2	1	**9R-1510**	2	WASHER (51X82X4-MM THK)	
B	3	1	**111-4337**	2	WASHER (46X70X1-MM THK)	
	4	1	**154-5280**	1	PIN	
B	5	1	**210-1707**	2	SHIM (1-MM THK)	
B	6	1	**220-7108**	6	WASHER (51X85X1-MM THK)	
	7	1	**320-9164**	1	PIN	
	8	1	**320-9241**	1	PIN	
	9	1	**328-5234**	1	PIN	
	10	1	**330-5738**	1	LINK	
	11	1	**330-5739**	1	LINK	
	12	1	**348-5463**	1	LINKAGE GP-BUCKET	
	12A	1	**9R-0139**	2	BEARING-SLEEVE	
	12B	1	**213-6703**	2	BEARING	
	13	1	**096-5516**	2	RING-RETAINING	
	14	1	**154-5279**	1	PIN	
	15	1	**3B-5319**	4	PIN-COTTER	
	16	1	**3B-8489**	4	FITTING-GREASE	
	17	1	**8T-4241**	4	RING-RETAINING	

B-USE AS REQUIRED

348-5465 **LINKAGE GP-BACKHOE BUCKET** *(contd.)* **i03690291**

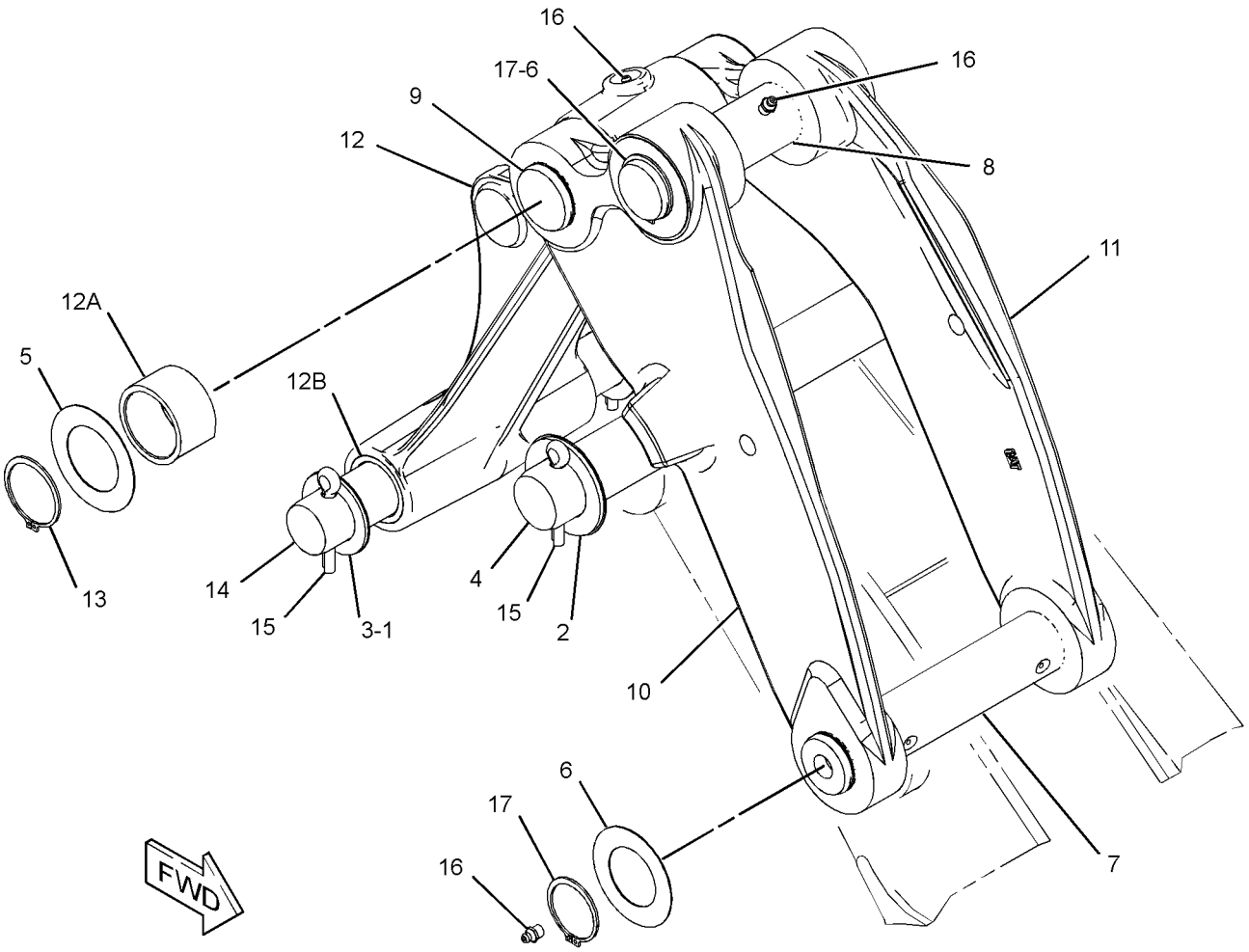

GRAPHIC #1 **<END>** g01986853

121-9797 LOCK GP-TRANSPORT–LOADER

S/N: DPH1-UP
AN ATTACHMENT

SMCS-7505 **i00534753**

NOTE	REF NO	GRAPHIC REF	PART NUMBER	QTY	PART NAME 1 2 3 4 5 6 (PRODUCT LEVEL)	SEE PAGE
	1	1	**5P-0370**	1	LOCKPIN	
	2	1	**113-8087**	1	BRACE AS	
	3	1	**118-1348**	1	PIN	
	4	1	**126-4974**	1	PLATE AS	
	5	1	**134-4807**	1	PIN	
	6	1	**9R-5301**	1	PIN-COTTER	

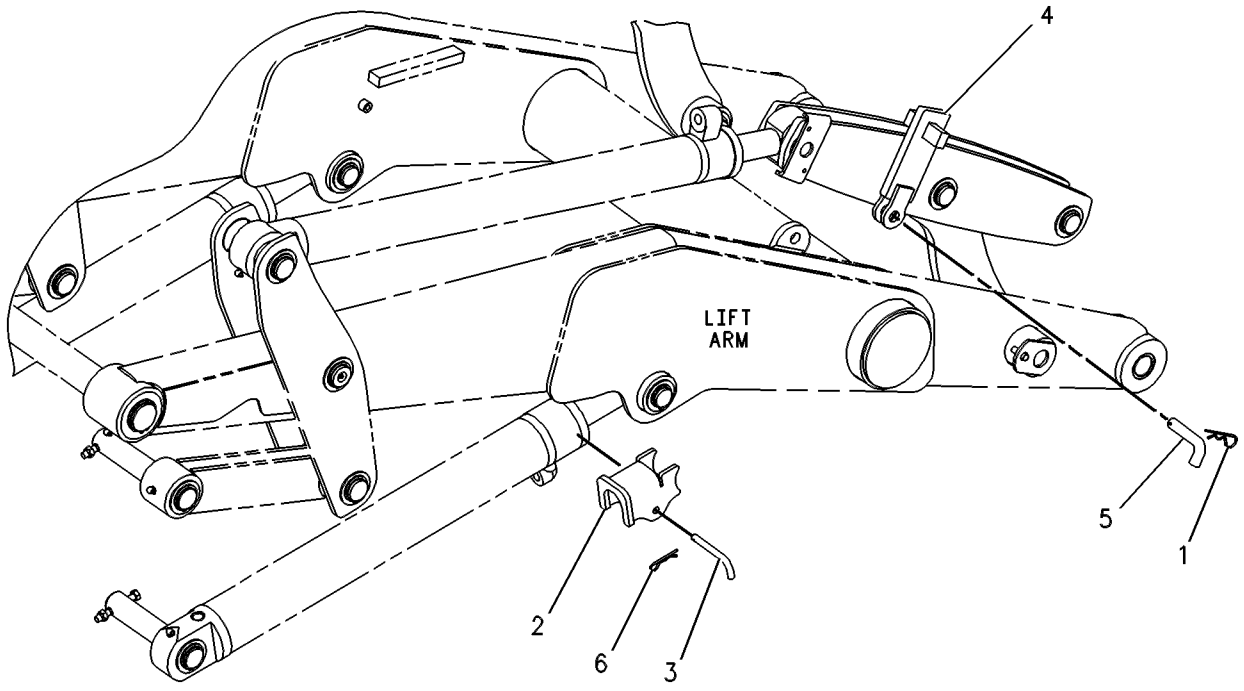

GRAPHIC #1 **<END>** g00258876

IMPLEMENTS

252-4660 LOCK GP-TRANSPORT—BACKHOE BUCKET

S/N: DPH1-UP

AN ATTACHMENT

SMCS-7505 **i02210128**

NOTE	REF NO	GRAPHIC REF	PART NUMBER	QTY	PART NAME 1 2 3 4 5 6 (PRODUCT LEVEL)	SEE PAGE
	1	1	**9R-9028**	1	PIN	
	2	1	**252-4659**	1	CABLE AS	
	3	1	**9R-5301**	2	PIN-COTTER	

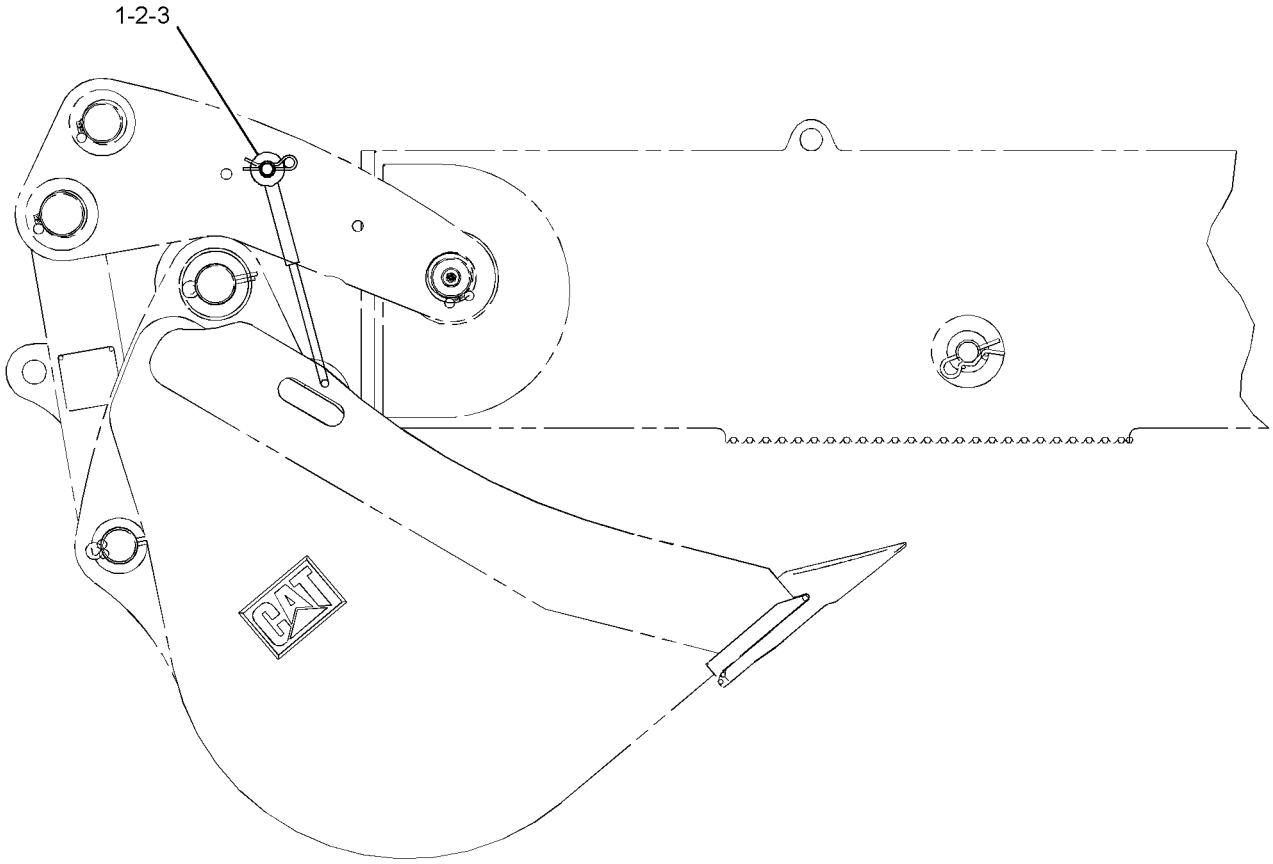

RIGHT SIDE VIEW

GRAPHIC #1 **<END>** g01116719

329-1322 LOCK GP-TRANSPORT–BOOM

S/N: DPH1-UP

PART OF 329-0293 CHASSIS AR

SMCS-7505 **i03642929**

NOTE	REF NO	GRAPHIC REF	PART NUMBER	QTY	PART NAME 1 2 3 4 5 6 (PRODUCT LEVEL)	SEE PAGE
	1	1	**5P-7958**	1	SLEEVE-CABLE SPLICE	
	2	1	**134-0143**	1	CABLE	
	3	1	**214-4285**	2	PAD AS	
	4	1	**214-7043**	1	SPACER (6.15X7.94X10-MM THK)	
	5	1	**310-3933**	1	CABLE AS	
		1	**2R-0364**	1	RING-RETAINING	
		1	**4D-9517**	1	CLIP	
		1	**5D-6523**	2	CLIP	
	6	1	**313-6572**	1	PLATE	
	7	1	**315-4533**	1	BRACKET AS	
	8	1	**317-4928**	1	PIN AS	
	9	1	**329-1329**	1	HOOK	
	10	1	**329-1330**	1	HOOK	
	11	1	**329-1331**	1	PIN	
M	12	1	**238-0251**	3	SCREW-BUTTON HEAD (M10X1.5X25-MM)	
	13	1	**3B-8489**	2	FITTING-GREASE	
M	14	1	**5A-3604**	2	BOLT-SOCKET HEAD (M8X1.25X25-MM)	
M	15	1	**5C-9553**	1	BOLT (M6X1X16-MM)	
	16	1	**6E-1135**	2	PIN	
	17	1	**7X-3383**	2	WASHER (22X50X3-MM THK)	
	18	1	**8T-4121**	7	WASHER-HARD (11X21X2.5-MM THK)	
M	19	1	**8T-4133**	1	NUT (M10X1.5-THD)	
M	20	1	**8T-4137**	1	BOLT (M10X1.5X20-MM)	
M	21	1	**8T-4195**	2	BOLT (M10X1.5X30-MM)	
	22	1	**8T-4224**	1	WASHER-HARD (8.8X16X2-MM THK)	
M	23	1	**8T-4908**	1	BOLT (M8X1.25X25-MM)	

M-METRIC PART

329-1322 **LOCK GP-TRANSPORT** *(contd.)* **i03642929**

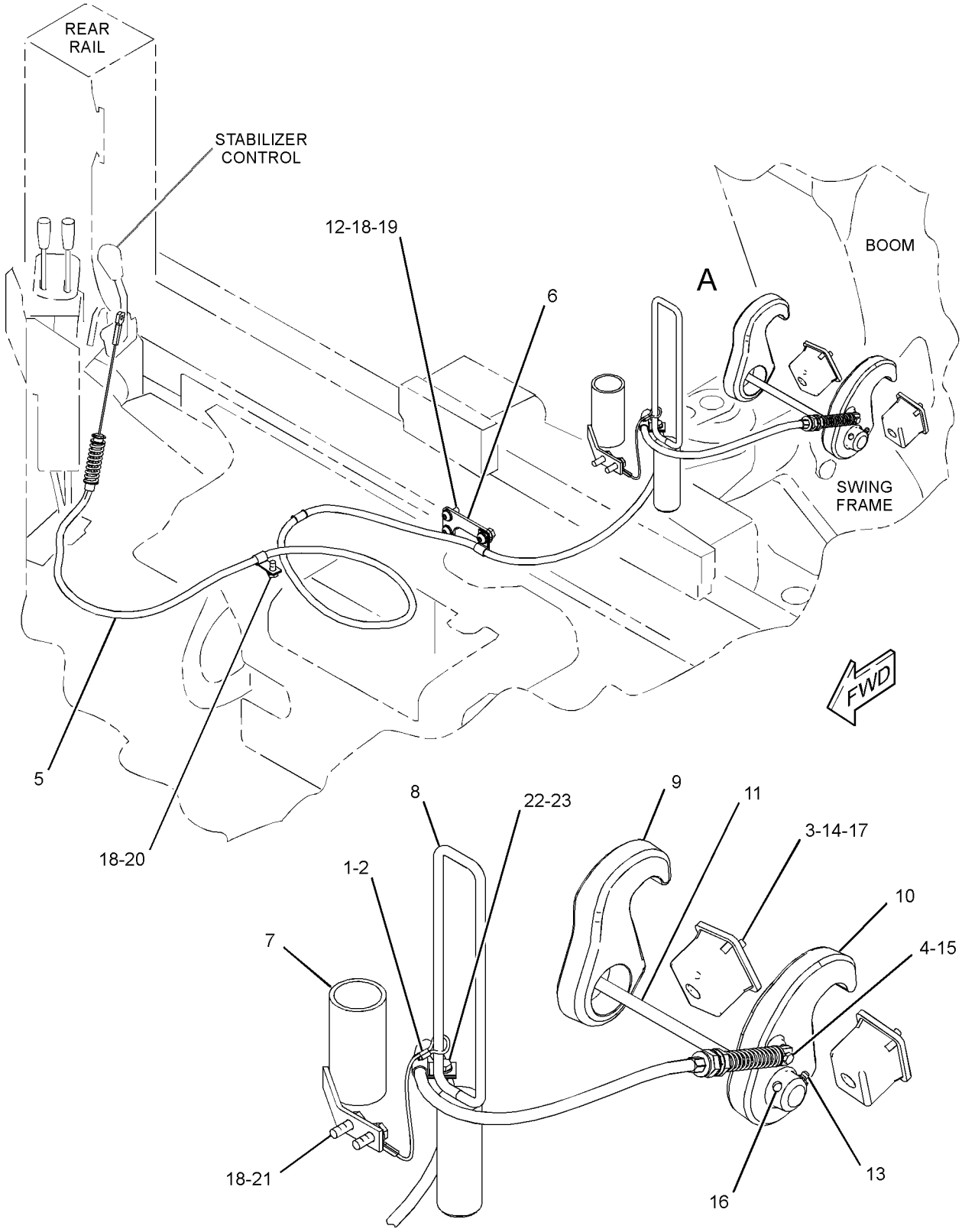

VIEW OF AREA A

GRAPHIC #1 **<END>** g01995013

9R-0868 PAD GP-STABILIZER—STREET

S/N: DPH1-UP

FOR USE WITH 9R-1259 STABILIZER GP-SIDESHIFT

AN ATTACHMENT

SMCS-7222 **i01238045**

NOTE	REF NO	GRAPHIC REF	PART NUMBER	QTY	PART NAME 1 2 3 4 5 6 (PRODUCT LEVEL)	SEE PAGE
	1	1	**166-7870**	4	PAD AS-STABILIZER (STREET)	
M	2	1	**8T-4193**	12	BOLT (M16X2X50-MM)	
	3	1	**9X-8257**	12	WASHER (17.5X30X3.5-MM THK)	

M-METRIC PART

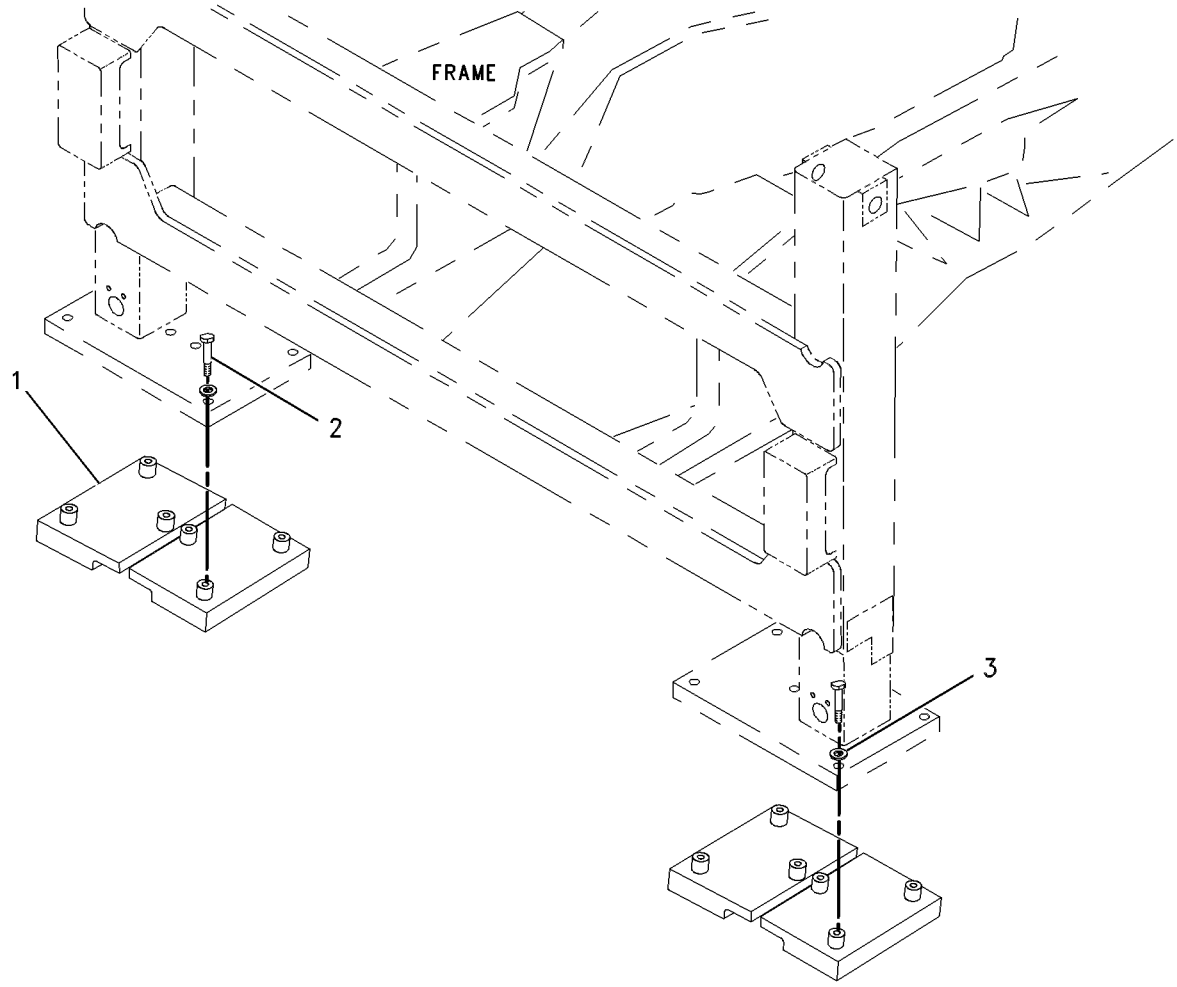

GRAPHIC #1 **<END>** g00661392

328-5964 STABILIZER GP-BACKHOE

S/N: DPH1-UP
PART OF 327-0110, 327-0111 FRAME AR-LOADER
AN ATTACHMENT

SMCS-7222 **i03642982**

NOTE	REF NO	GRAPHIC REF	PART NUMBER	QTY	PART NAME 1 2 3 4 5 6 (PRODUCT LEVEL)	SEE PAGE
	1	1	**325-7563**	4	SPACER (45.5X75X35-MM THK)	
	2	1	**328-5196**	2	PAD-STABILIZER	
	3	1	**330-9669**	2	PIN	
	4	1	**330-9670**	2	PIN AS	
	5	1	**6V-5204**	6	RING-RETAINING	

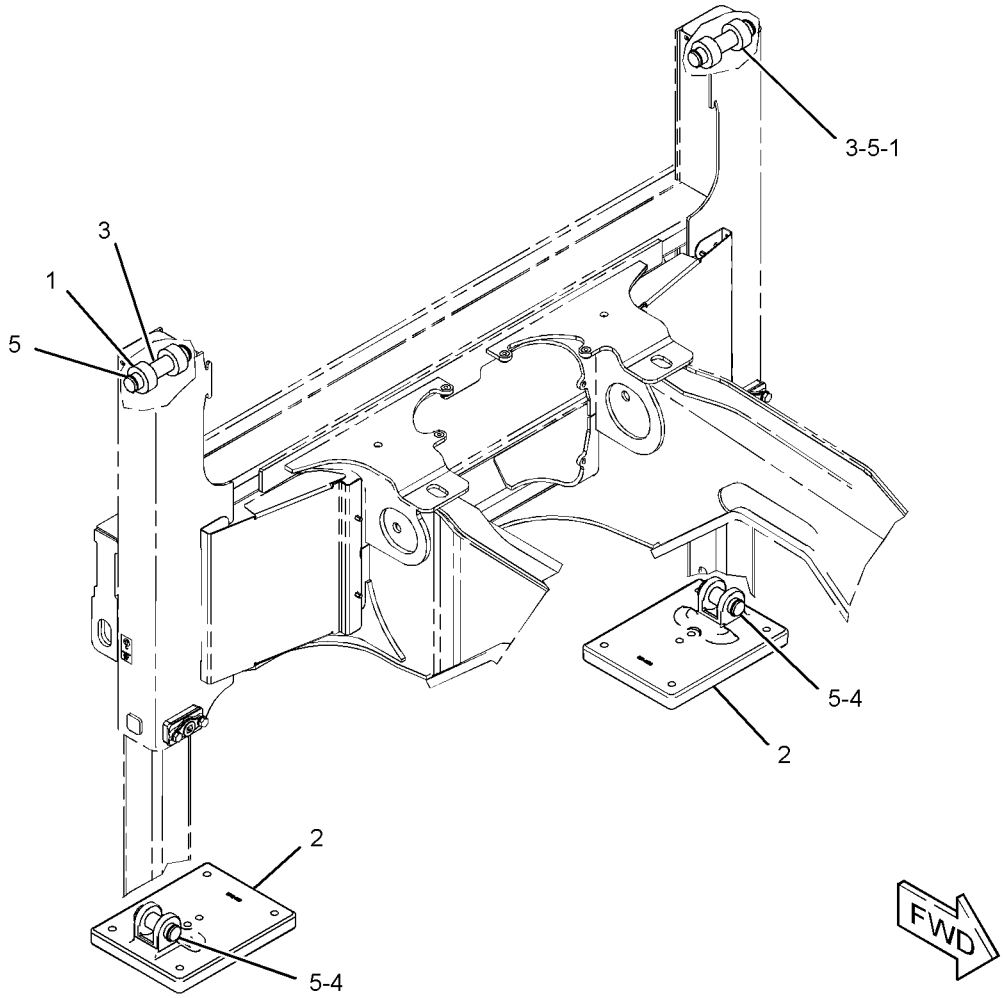

GRAPHIC #1 **<END>** g01986675

324-0552 STICK GP

S/N: DPH1-UP

PART OF 334-0681, 350-6930 BACKHOE AR-STANDARD STICK

AN ATTACHMENT

SMCS-6502 **i03642965**

NOTE	REF NO	GRAPHIC REF	PART NUMBER	QTY	PART NAME 1 2 3 4 5 6 (PRODUCT LEVEL)	SEE PAGE
B	1	1	**9R-8292**	2	SPACER (61X135X1-MM THK)	
	2	1	**316-6946**	1	PIN AS	
	3	1	**316-6947**	1	PIN	
	4	1	**319-4504**	1	STICK AS	
	4A	1	**9R-0162**	2	BEARING-SLEEVE	
	4B	1	**9R-3092**	2	BEARING-SLEEVE	
	5	1	**328-9650**	1	PIN	
	6	1	**344-2543**	1	PLATE	
	7	1	**3B-8488**	1	FITTING-GREASE	
	8	1	**3B-8489**	2	FITTING-GREASE	
	9	1	**7X-0632**	1	WASHER-HARD (11X36X6-MM THK)	
M	10	1	**7X-2543**	1	BOLT (M10X1.5X120-MM)	
	11	1	**7X-7729**	4	WASHER (11X25X3-MM THK)	
M	12	1	**8T-0389**	2	LOCKNUT (M10X1.5-THD)	
	13	1	**8T-4121**	3	WASHER-HARD (11X21X2.5-MM THK)	
M	14	1	**8T-4133**	4	NUT (M10X1.5-THD)	
M	15	1	**8T-4195**	1	BOLT (M10X1.5X30-MM)	
M	16	1	**8T-6685**	1	BOLT (M10X1.5X110-MM)	
M	17	1	**9X-2060**	4	BOLT (M10X1.5X30-MM)	

B-USE AS REQUIRED
M-METRIC PART

324-0552 **STICK GP** *(contd.)* **i03642965**

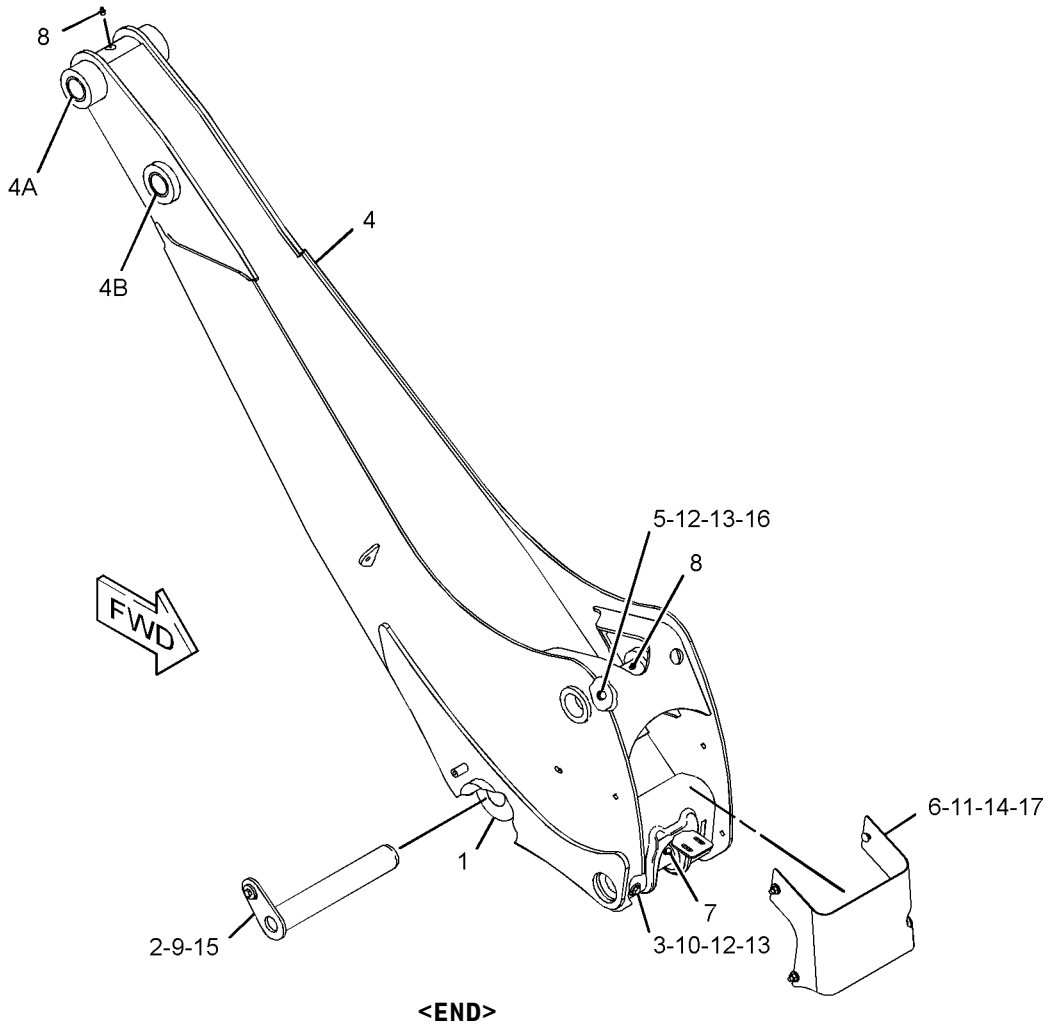

GRAPHIC #1 **<END>** g01992913

324-0550 STICK GP-EXTENDABLE

S/N: DPH1-UP

PART OF 334-0682, 350-6931, 350-6941, 350-6942 BACKHOE AR-EXTENDABLE STICK AN ATTACHMENT

SMCS-6533 **i03693940**

NOTE	REF NO	GRAPHIC REF	PART NUMBER	QTY	PART NAME 1 2 3 4 5 6 (PRODUCT LEVEL)	SEE PAGE
	1	1	**9R-0158**	2	WASHER (46X69X3-MM THK)	
	2	1	**9R-2959**	2	CLIP	
B	3	1	**9R-8292**	2	SPACER (61X135X1-MM THK)	
	4	1	**316-4742**	1	STICK AS	
	4A	1	**9R-0162**	2	BEARING-SLEEVE	
	4B	1	**9R-3092**	2	BEARING-SLEEVE	
	5	1	**316-4743**	1	STICK AS	
	6	1	**316-6946**	1	PIN AS	
	7	1	**316-6947**	1	PIN	
	8	1	**316-6948**	1	PIN	
	9	1	**316-6949**	2	PIN	
	10	1	**319-9667**	4	PAD AS	
	11	1	**319-9668**	4	PAD AS	
Y	12	1	**320-5935**	1	CYLINDER GP-STICK	353
	13	1	**334-4169**	1	LOCKPIN	
	14	1	**336-6396**	1	PLATE	
	15	1	**346-5631**	2	SPACER	
	16	1	**346-6559**	4	ADJUSTER	
	17	1	**346-6560**	4	ADJUSTER	
	18	1	**350-3733**	1	FILM-INSTRUCTION (EXTENDABLE STICK PIN, READ OMM)	
M	19	1	**098-6004**	8	LOCKNUT (M20X2.5-THD)	
	20	1	**3B-8488**	1	FITTING-GREASE	
	21	1	**3B-8489**	2	FITTING-GREASE	
	22	1	**6V-5204**	4	RING-RETAINING	
	23	1	**7X-0632**	1	WASHER-HARD (11X36X6-MM THK)	
M	24	1	**7X-2543**	1	BOLT (M10X1.5X120-MM)	
	25	1	**7X-7729**	5	WASHER (11X25X3-MM THK)	
M	26	1	**8T-0271**	2	BOLT-SOCKET HEAD (M10X1.5X35-MM)	
M	27	1	**8T-0389**	1	LOCKNUT (M10X1.5-THD)	
	28	1	**8T-4121**	10	WASHER-HARD (11X21X2.5-MM THK)	
M	29	1	**8T-4133**	6	NUT (M10X1.5-THD)	
M	30	1	**8T-4195**	1	BOLT (M10X1.5X30-MM)	
M	31	1	**8T-4196**	8	BOLT (M10X1.5X35-MM)	
	32	1	**8T-4241**	2	RING-RETAINING	
M	33	1	**9X-2060**	4	BOLT (M10X1.5X30-MM)	

B-USE AS REQUIRED
M-METRIC PART
Y-SEPARATE ILLUSTRATION

324-0550 **STICK GP-EXTENDABLE** *(contd.)* **i03693940**

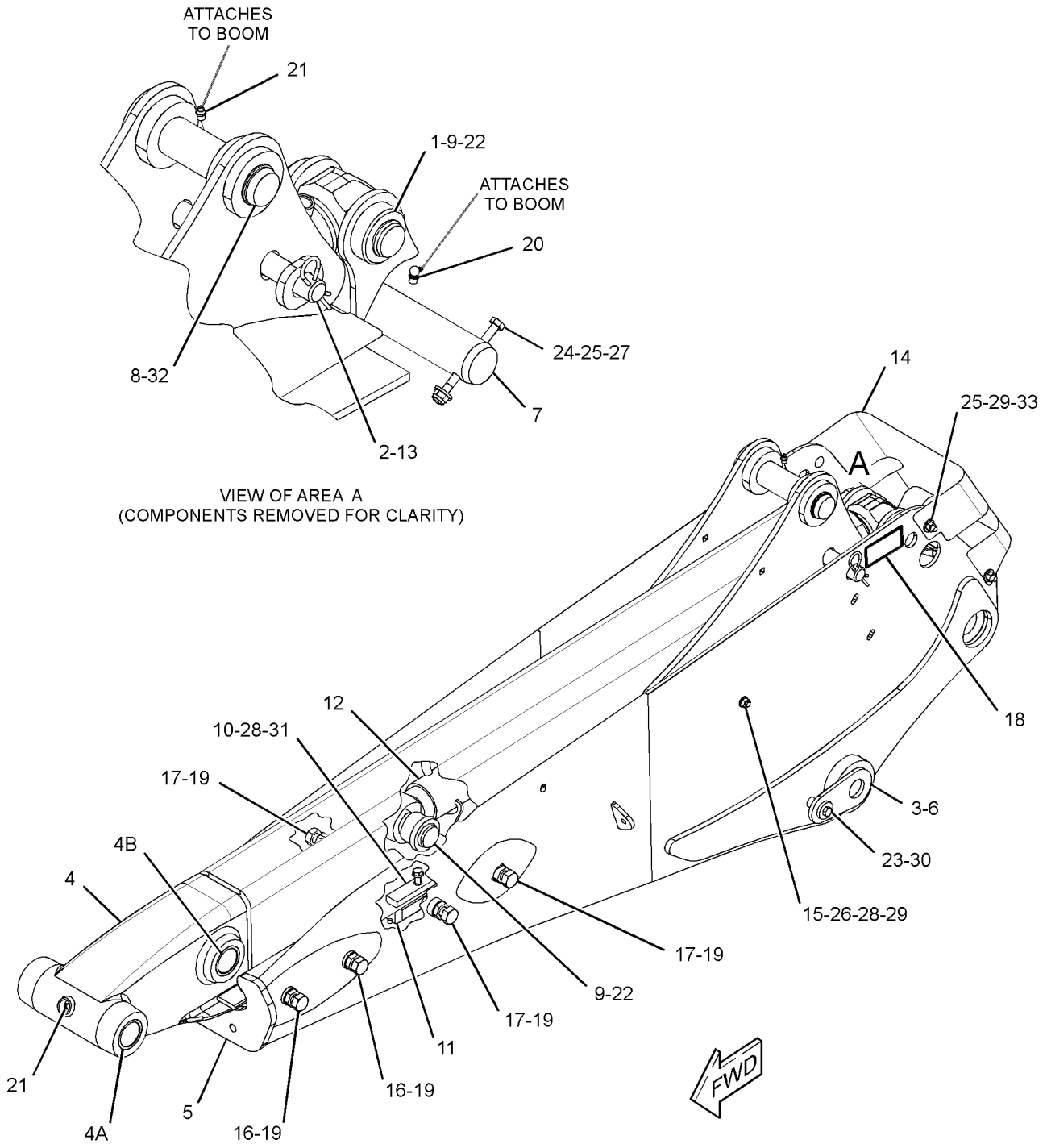

GRAPHIC #1 **<END>** g01994514

329-9749 STICK GP-EXTENDABLE

S/N: DPH1-UP

PART OF 334-0683, 350-6932 BACKHOE AR-EXTENDABLE STICK

AN ATTACHMENT

SMCS-6533 **i03693944**

NOTE	REF NO	GRAPHIC REF	PART NUMBER	QTY	PART NAME 1 2 3 4 5 6 (PRODUCT LEVEL)	SEE PAGE
	1	1	**9R-0158**	2	WASHER (46X69X3-MM THK)	
	2	1	**9R-2959**	2	CLIP	
B	3	1	**9R-8292**	2	SPACER (61X135X1-MM THK)	
	4	1	**316-4743**	1	STICK AS	
	5	1	**316-6946**	1	PIN AS	
	6	1	**316-6947**	1	PIN	
	7	1	**316-6948**	1	PIN	
	8	1	**316-6949**	2	PIN	
	9	1	**319-9667**	4	PAD AS	
	10	1	**319-9668**	4	PAD AS	
Y	11	1	**320-5935**	1	CYLINDER GP-STICK	353
	12	1	**329-9748**	1	STICK AS	
	12A	1	**9R-3092**	2	BEARING-SLEEVE	
	12B	1	**9R-7891**	2	BEARING-SLEEVE	
	13	1	**334-4169**	1	LOCKPIN	
	14	1	**336-6396**	1	PLATE	
	15	1	**346-5631**	2	SPACER	
	16	1	**346-6559**	4	ADJUSTER	
	17	1	**346-6560**	4	ADJUSTER	
	18	1	**350-3733**	1	FILM-INSTRUCTION (EXTENDABLE STICK PIN, READ OMM)	
M	19	1	**098-6004**	8	LOCKNUT (M20X2.5-THD)	
	20	1	**3B-8488**	1	FITTING-GREASE	
	21	1	**3B-8489**	2	FITTING-GREASE	
	22	1	**6V-5204**	4	RING-RETAINING	
	23	1	**7X-0632**	1	WASHER-HARD (11X36X6-MM THK)	
M	24	1	**7X-2543**	1	BOLT (M10X1.5X120-MM)	
	25	1	**7X-7729**	5	WASHER (11X25X3-MM THK)	
M	26	1	**8T-0271**	2	BOLT-SOCKET HEAD (M10X1.5X35-MM)	
M	27	1	**8T-0389**	1	LOCKNUT (M10X1.5-THD)	
	28	1	**8T-4121**	10	WASHER-HARD (11X21X2.5-MM THK)	
M	29	1	**8T-4133**	6	NUT (M10X1.5-THD)	
M	30	1	**8T-4195**	1	BOLT (M10X1.5X30-MM)	
M	31	1	**8T-4196**	8	BOLT (M10X1.5X35-MM)	
	32	1	**8T-4241**	2	RING-RETAINING	
M	33	1	**9X-2060**	4	BOLT (M10X1.5X30-MM)	

B-USE AS REQUIRED
M-METRIC PART
Y-SEPARATE ILLUSTRATION

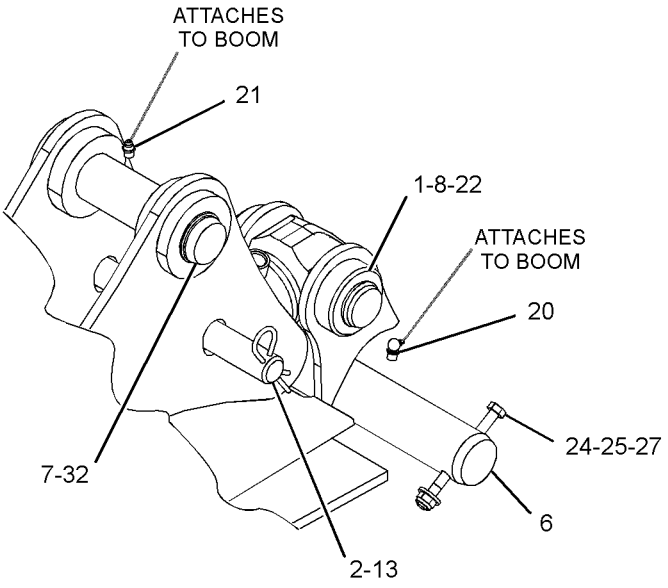

VIEW OF AREA A
(COMPONENTS REMOVED FOR CLARITY)

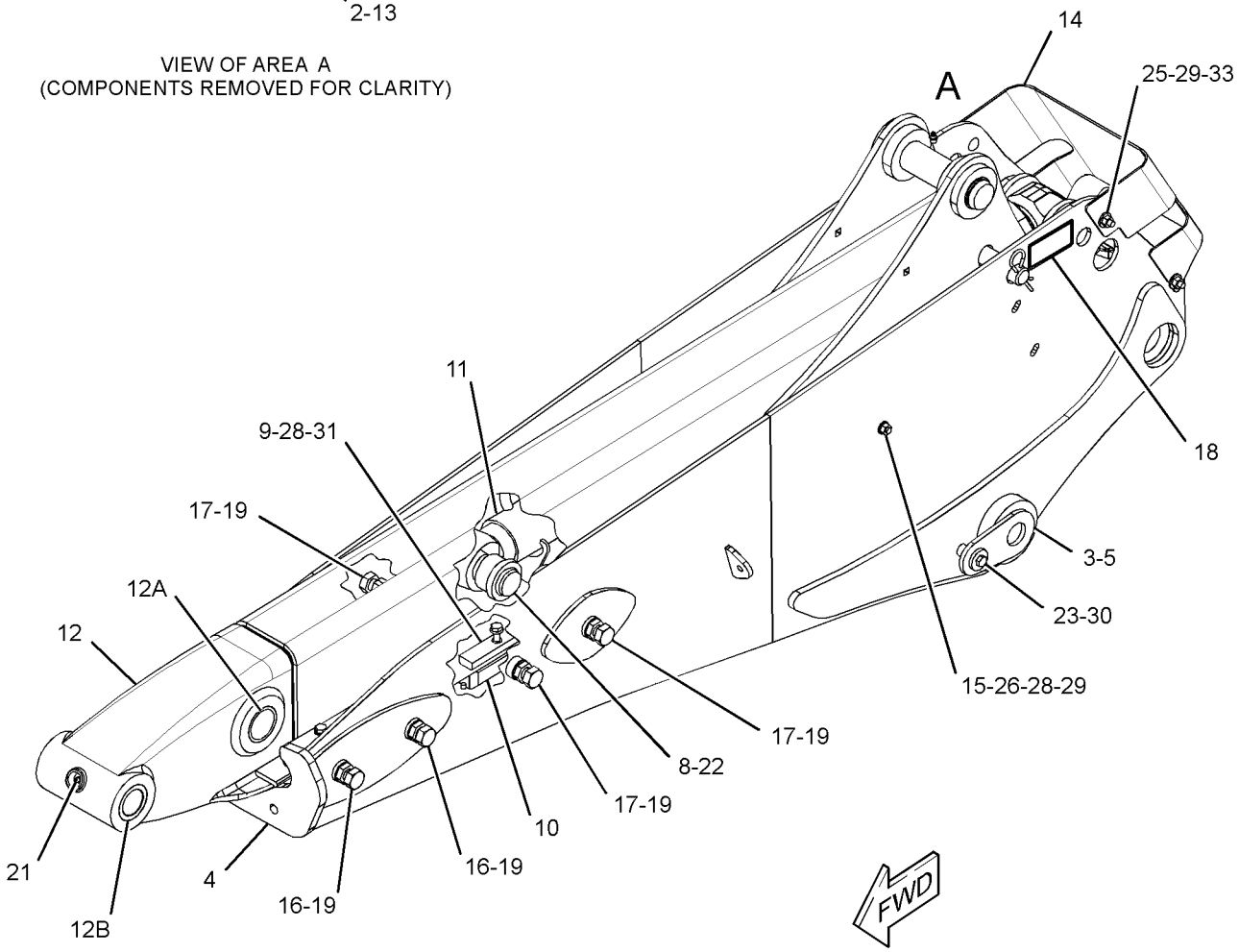

GRAPHIC #1 **<END>** g01993494

318-7246 BUCKET AR-MULTIPURPOSE

S/N: DPH1-UP
PART OF 318-7263 BUCKET AR-MULTIPURPOSE
AN ATTACHMENT

SMCS-6104 **i02988820**

NOTE	REF NO	GRAPHIC REF	PART NUMBER	QTY	PART NAME 1 2 3 4 5 6 (PRODUCT LEVEL)	SEE PAGE
Y	1	1	*9R-4668*	1	MOUNTING GP-CYLINDER (MULTIPURPOSE BUCKET)	408
Y	2	1	**226-5540**	2	CYLINDER GP-MULTIPURPOSE BUKT	349
Y	3	1	*252-9059*	1	BUCKET GP-MULTIPURPOSE	513
Y	4	1	*317-6270*	1	LINES GP-MULTIPURPOSE BUCKET	388
Y-SEPARATE ILLUSTRATION						

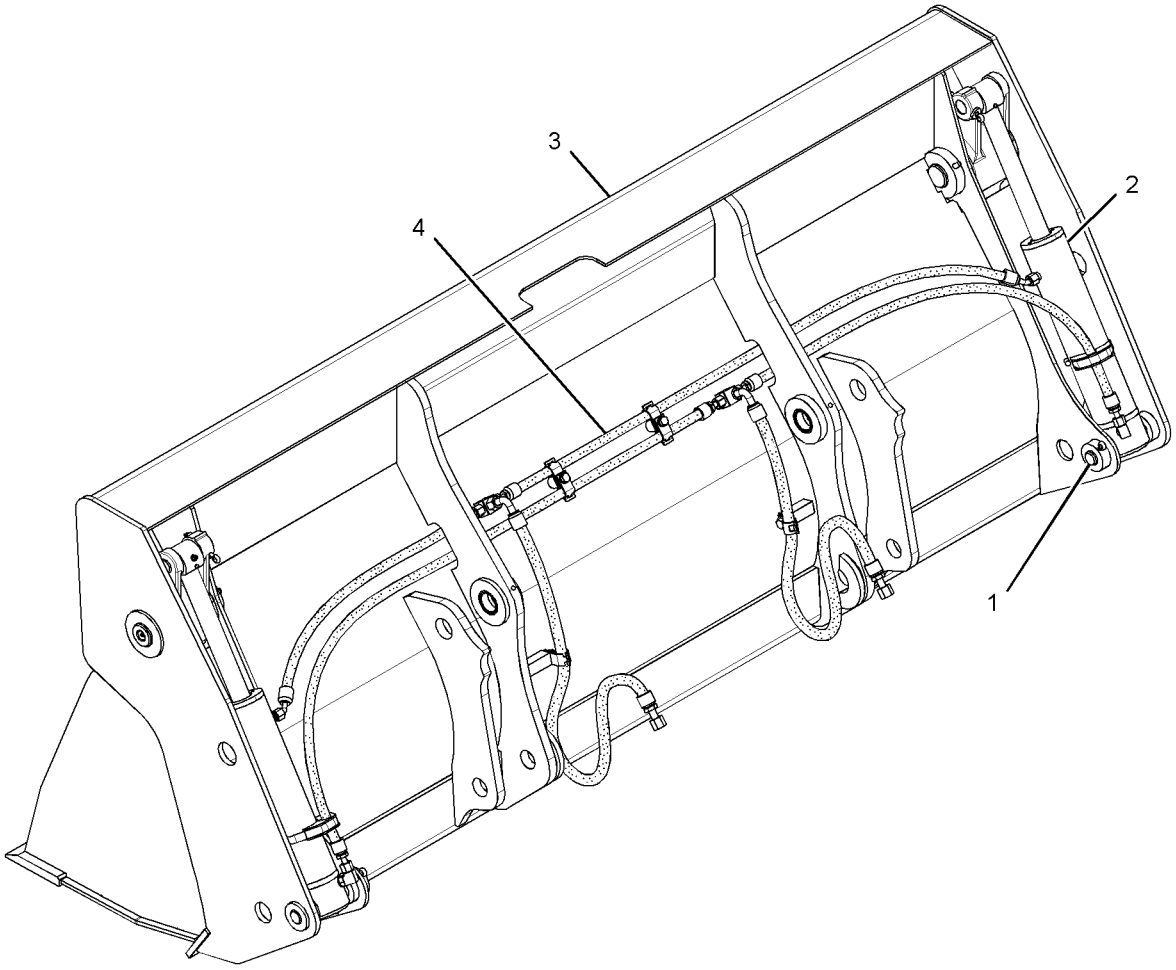

GRAPHIC #1 **<END>** g01516479

WORK TOOLS

318-7247 BUCKET AR-MULTIPURPOSE

S/N: DPH1-UP

AN ATTACHMENT

SMCS-6104 **i02988830**

NOTE	REF NO	GRAPHIC REF	PART NUMBER	QTY	PART NAME 1 2 3 4 5 6 (PRODUCT LEVEL)	SEE PAGE
Y	1	1	*9R-4668*	1	MOUNTING GP-CYLINDER (MULTIPURPOSE BUCKET)	408
	2	1	**137-4234**	1	PLATE-IDENTIFICATION (WORK TOOL)	
	3	1	**168-8389**	4	TACK-FASTENER	
Y	4	1	**226-5540**	2	CYLINDER GP-MULTIPURPOSE BUKT	349
Y	5	1	*252-9063*	1	BUCKET GP-MULTIPURPOSE	514
Y	6	1	*317-6270*	1	LINES GP-MULTIPURPOSE BUCKET	388

Y-SEPARATE ILLUSTRATION

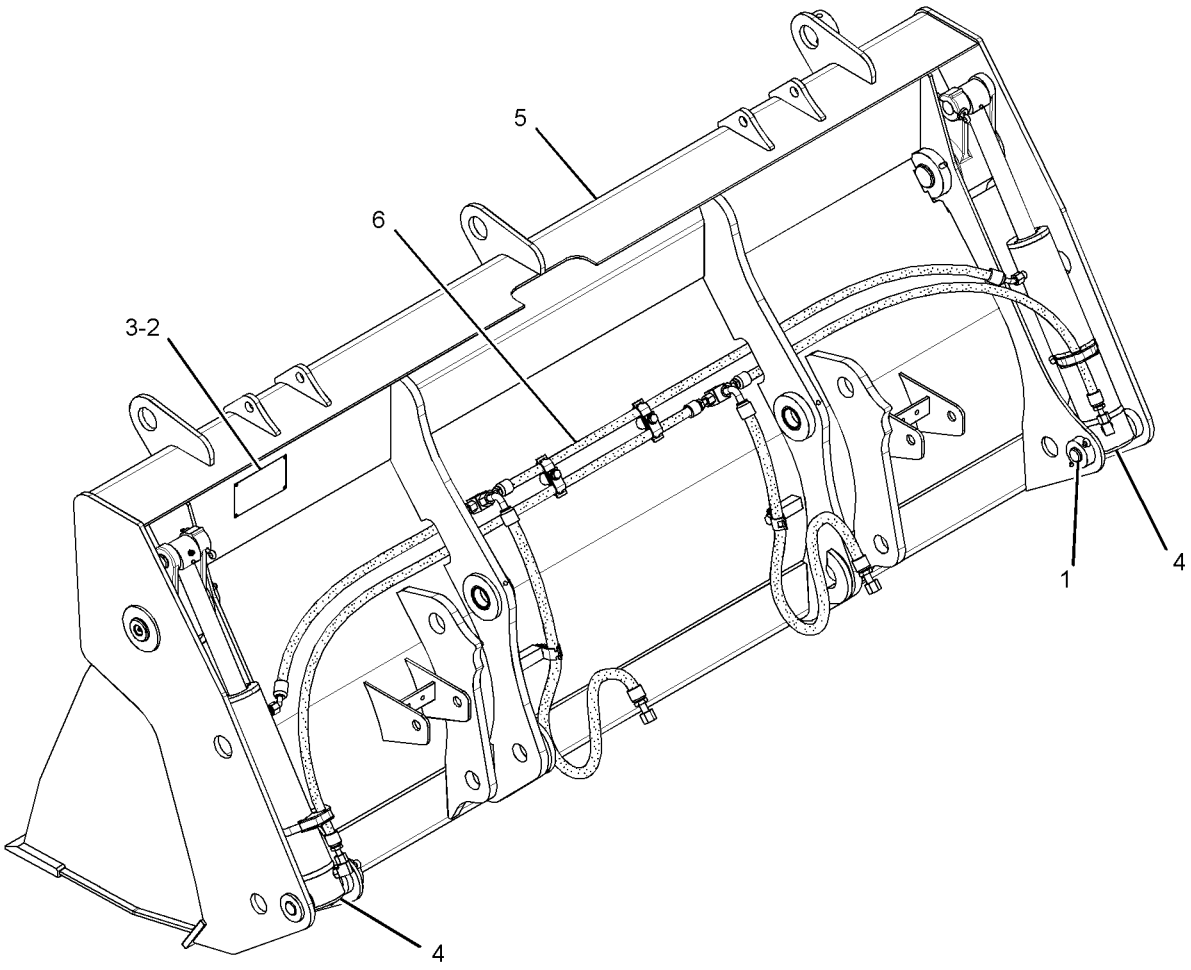

GRAPHIC #1 **<END>** g01566520

WORK TOOLS

318-7248 BUCKET AR-MULTIPURPOSE

S/N: DPH1-UP
PART OF 318-7264 BUCKET AR-MULTIPURPOSE
AN ATTACHMENT

SMCS-6104 **i03592844**

NOTE	REF NO	GRAPHIC REF	PART NUMBER	QTY	PART NAME 1 2 3 4 5 6 (PRODUCT LEVEL)	SEE PAGE
	1	1	**5D-8159**	2	PIN AS	
Y	2	1	*9R-4668*	1	MOUNTING GP-CYLINDER (MULTIPURPOSE BUCKET)	408
	3	1	**178-2593**	4	BUMPER	
Y	4	1	**226-5540**	2	CYLINDER GP-MULTIPURPOSE BUKT	349
	5	1	**250-1057**	2	PIN	
Y	6	1	*252-6005*	1	MOUNTING GP-FORK (MULTIPURPOSE BUCKET)	537
Y	7	1	*252-9063*	1	BUCKET GP-MULTIPURPOSE	514
Y	8	1	*317-6270*	1	LINES GP-MULTIPURPOSE BUCKET	388
M	9	1	**5C-7261**	4	NUT (M8X1.25-THD)	
	10	1	**8T-4224**	4	WASHER-HARD (8.8X16X2-MM THK)	

M-METRIC PART
Y-SEPARATE ILLUSTRATION

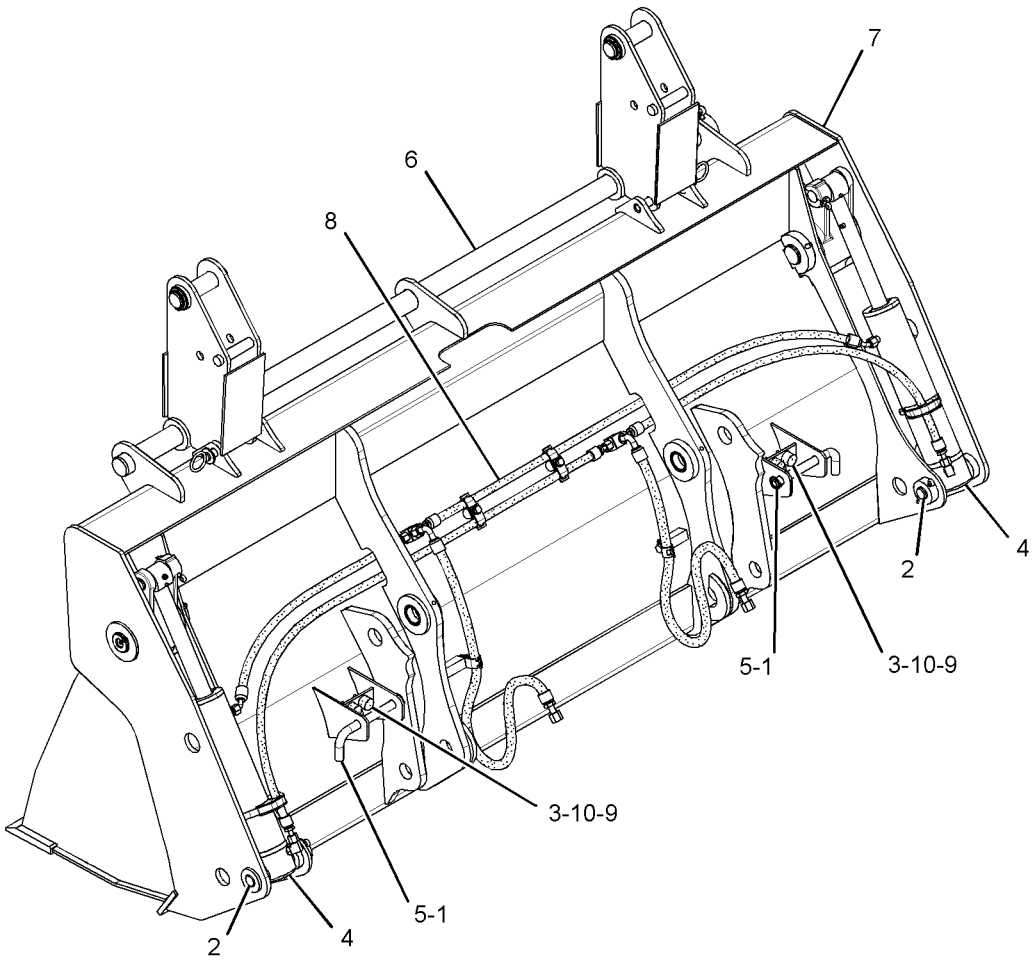

GRAPHIC #1 **<END>** g01563633

WORK TOOLS

318-7263 BUCKET AR-MULTIPURPOSE

S/N: DPH1-UP

AN ATTACHMENT

SMCS-6104 **i02988768**

NOTE	REF NO	GRAPHIC REF	PART NUMBER	QTY	PART NAME 1 2 3 4 5 6 (PRODUCT LEVEL)	SEE PAGE
	1	1	**137-4234**	1	PLATE-IDENTIFICATION (WORK TOOL)	
	2	1	**168-8389**	4	TACK-FASTENER	
Y	3	1	*318-7246*	1	BUCKET AR-MULTIPURPOSE	455

Y-SEPARATE ILLUSTRATION

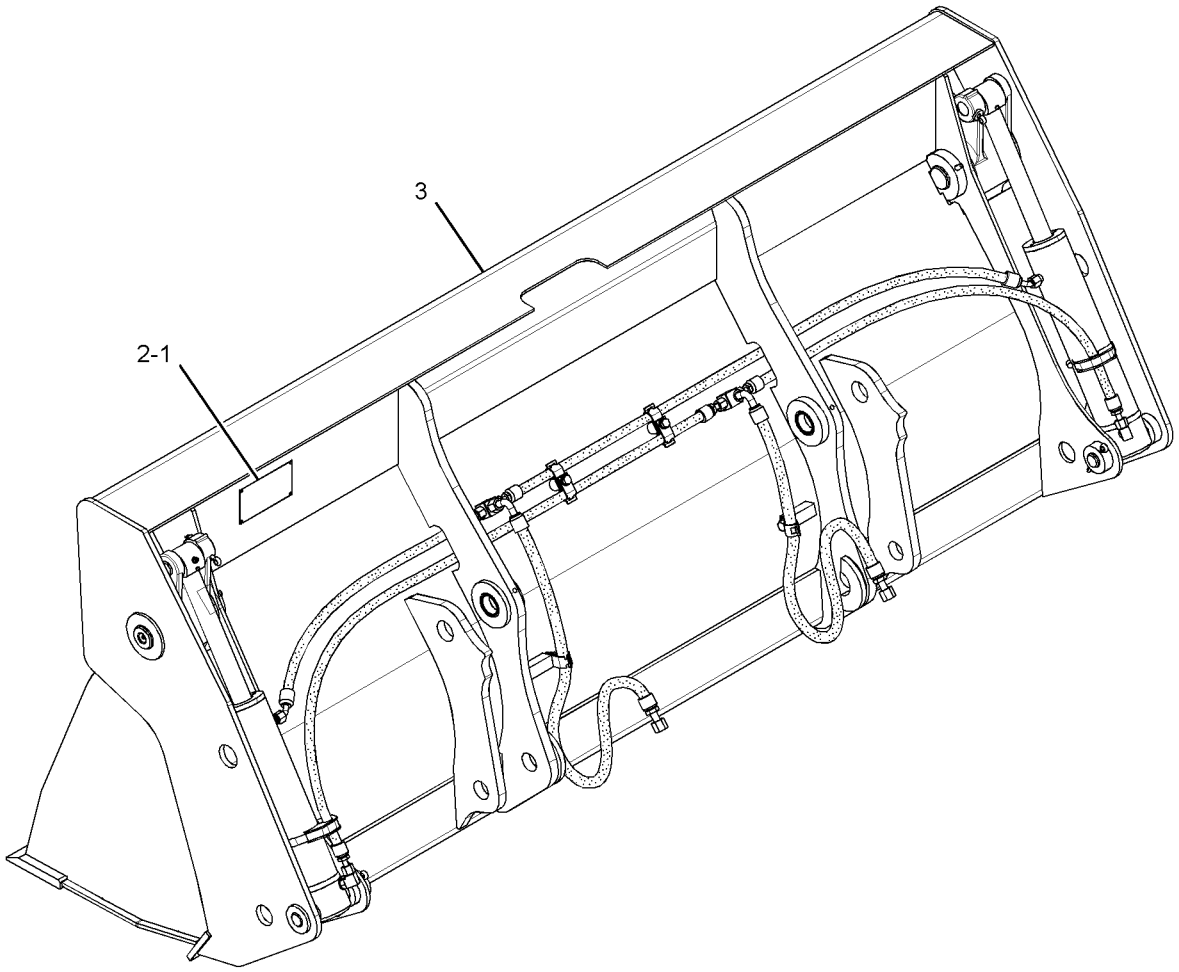

GRAPHIC #1 **<END>** g01517237

WORK TOOLS

318-7264 BUCKET AR-MULTIPURPOSE

S/N: DPH1-UP

AN ATTACHMENT

SMCS-6104 **i02988844**

NOTE	REF NO	GRAPHIC REF	PART NUMBER	QTY	PART NAME 1 2 3 4 5 6 (PRODUCT LEVEL)	SEE PAGE
	1	1	**104-6312**	2	FORK AS	
	2	1	**137-4234**	1	PLATE-IDENTIFICATION (WORK TOOL)	
	3	1	**168-8389**	4	TACK-FASTENER	
Y	4	1	*318-7248*	1	BUCKET AR-MULTIPURPOSE	457

Y-SEPARATE ILLUSTRATION

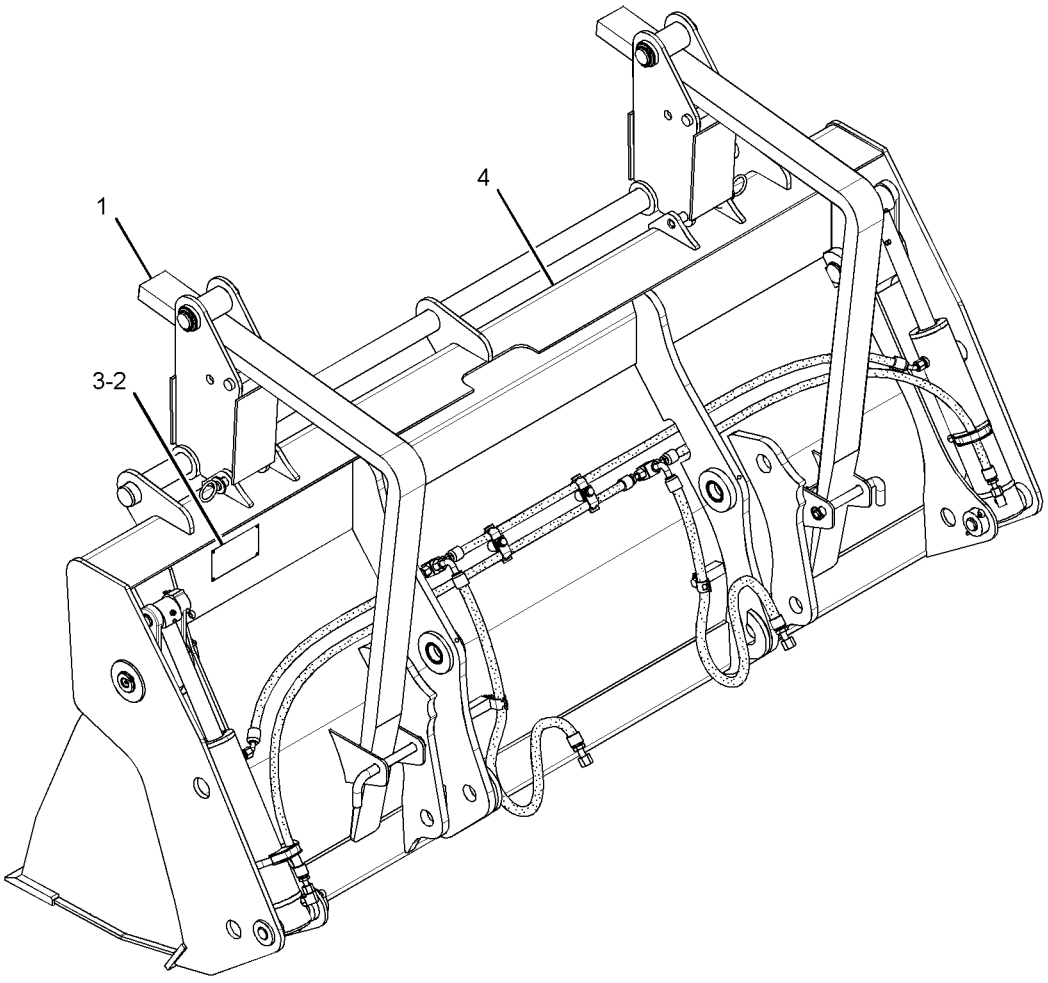

GRAPHIC #1 **<END>** g01569516

WORK TOOLS

320-9947 BUCKET AR-MULTIPURPOSE

S/N: DPH1-UP

AN ATTACHMENT

SMCS-6104 **i02989134**

NOTE	REF NO	GRAPHIC REF	PART NUMBER	QTY	PART NAME 1 2 3 4 5 6 (PRODUCT LEVEL)	SEE PAGE
	1	1	**104-6312**	2	FORK AS	
	2	1	**137-4234**	1	PLATE-IDENTIFICATION (WORK TOOL)	
	3	1	**168-8389**	4	TACK-FASTENER	
Y	4	1	*320-9948*	1	BUCKET AR-MULTIPURPOSE	461

Y-SEPARATE ILLUSTRATION

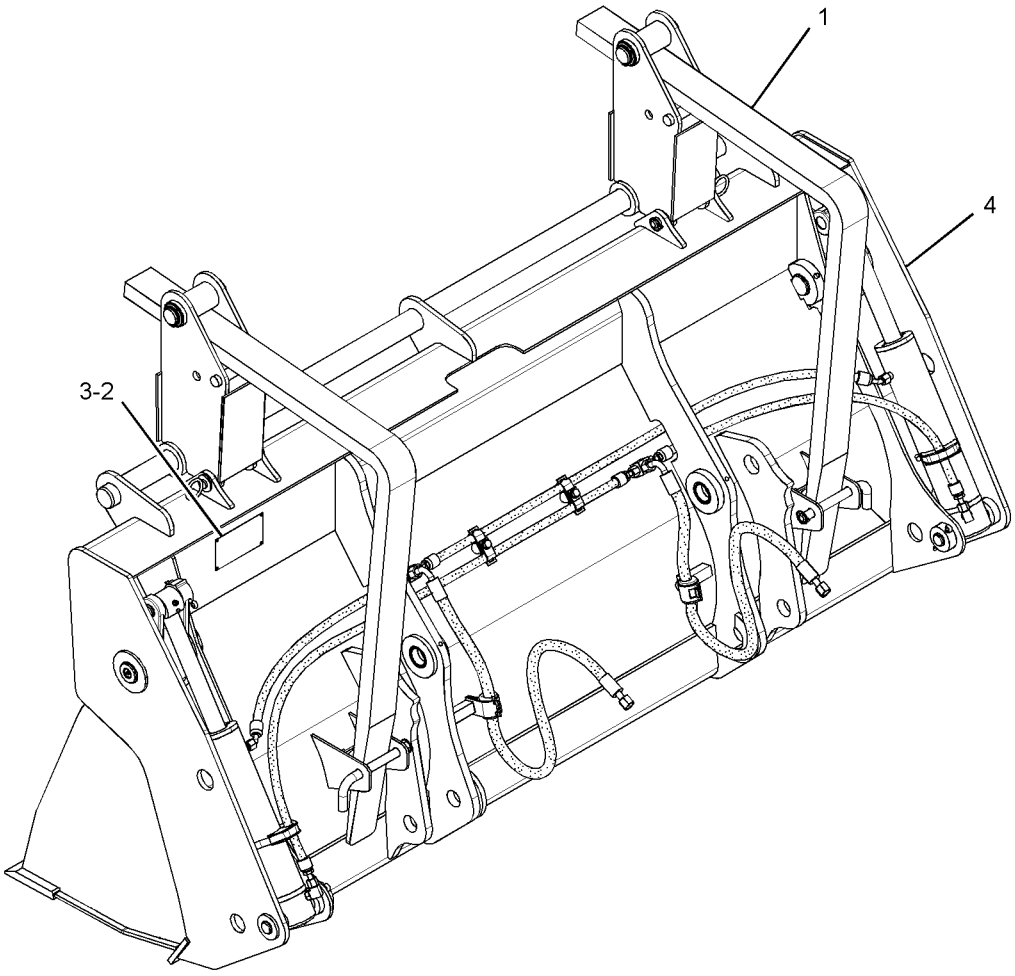

GRAPHIC #1 **<END>** g01515826

WORK TOOLS

320-9948 BUCKET AR-MULTIPURPOSE

S/N: DPH1-UP

PART OF 320-9947 BUCKET AR-MULTIPURPOSE

AN ATTACHMENT

SMCS-6104 **i03592848**

NOTE	REF NO	GRAPHIC REF	PART NUMBER	QTY	PART NAME 1 2 3 4 5 6 (PRODUCT LEVEL)	SEE PAGE
	1	1	**5D-8159**	2	PIN AS	
Y	2	1	*9R-4668*	1	MOUNTING GP-CYLINDER (MULTIPURPOSE BUCKET)	408
	3	1	**178-2593**	4	BUMPER	
Y	4	1	**226-5540**	2	CYLINDER GP-MULTIPURPOSE BUKT	349
	5	1	**250-1057**	2	PIN	
Y	6	1	*252-6005*	1	MOUNTING GP-FORK (MULTIPURPOSE BUCKET)	537
Y	7	1	*252-9043*	1	BUCKET GP-MULTIPURPOSE	512
Y	8	1	*320-9949*	1	LINES GP-BUCKET	372
M	9	1	**5C-7261**	4	NUT (M8X1.25-THD)	
	10	1	**8T-4224**	4	WASHER-HARD (8.8X16X2-MM THK)	

M-METRIC PART
Y-SEPARATE ILLUSTRATION

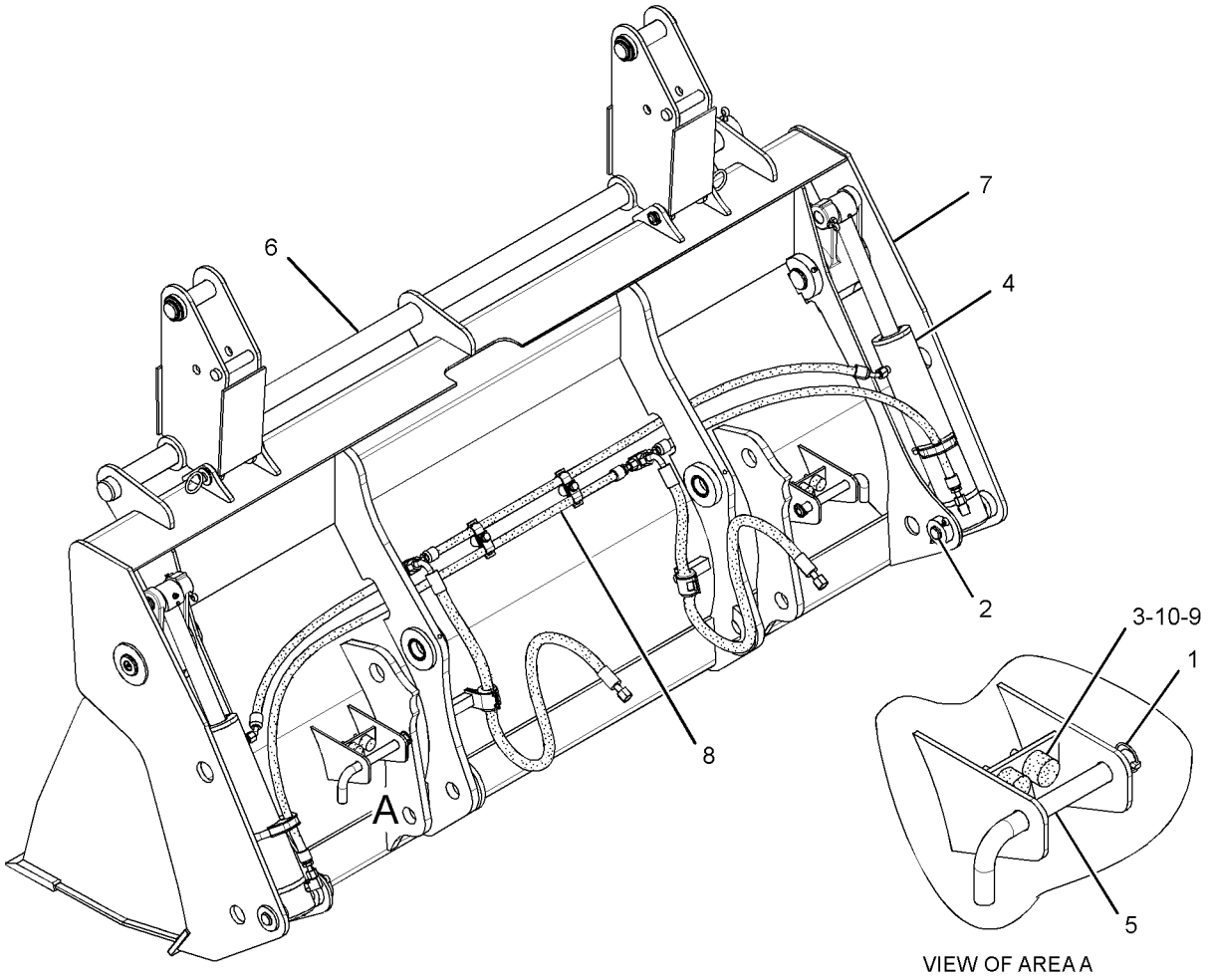

GRAPHIC #1 **<END>** g01515828

WORK TOOLS

320-9950 BUCKET AR-MULTIPURPOSE

S/N: DPH1-UP

AN ATTACHMENT

SMCS-6104 **i02989166**

NOTE	REF NO	GRAPHIC REF	PART NUMBER	QTY	PART NAME 1 2 3 4 5 6 (PRODUCT LEVEL)	SEE PAGE
Y	1	1	*9R-4668*	1	MOUNTING GP-CYLINDER (MULTIPURPOSE BUCKET)	408
	2	1	**137-4234**	1	PLATE-IDENTIFICATION (WORK TOOL)	
	3	1	**168-8389**	4	TACK-FASTENER	
Y	4	1	**226-5540**	2	CYLINDER GP-MULTIPURPOSE BUKT	349
Y	5	1	*252-9043*	1	BUCKET GP-MULTIPURPOSE	512
Y	6	1	*320-9949*	1	LINES GP-BUCKET	372

Y-SEPARATE ILLUSTRATION

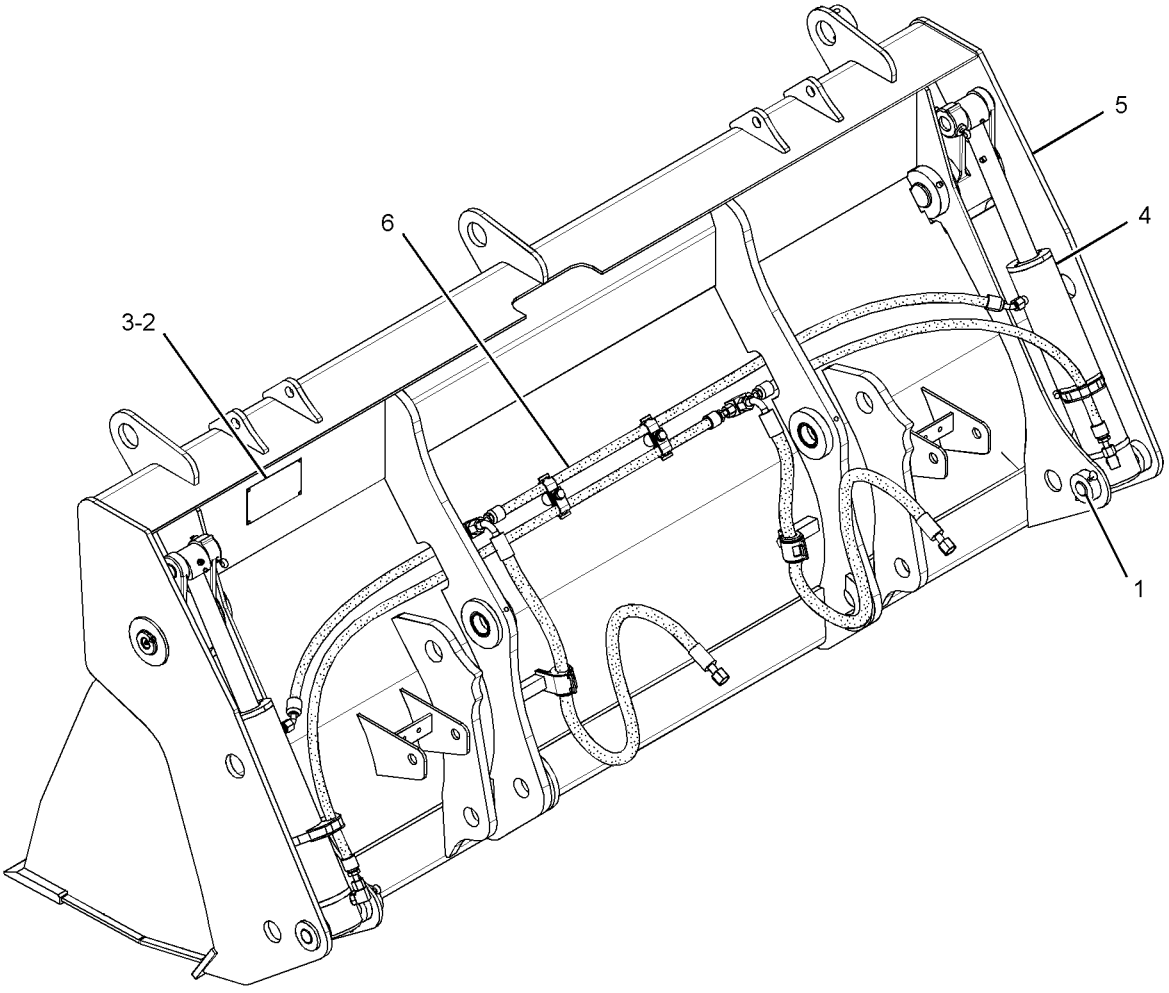

GRAPHIC #1 **<END>** g01515831

112-1931 BUCKET AS-GENERAL PURPOSE

S/N: DPH1-UP
1.0-CU M (1.31-CU YD)
AN ATTACHMENT

SMCS-6101 **i02469946**

NOTE	REF NO	GRAPHIC REF	PART NUMBER	QTY	PART NAME 1 2 3 4 5 6 (PRODUCT LEVEL)	SEE PAGE
	1	1	**9R-5205**	1	EDGE (LH)	
	2	1	**9R-5206**	1	EDGE (RH)	
	3	1	**9R-5832**	2	EDGE	
	4	1	**9R-5313**	1	EDGE	
	5	1	*113-9083*	1	BRACKET AS (RH)	
	5A	1	**9R-1496**	2	BEARING-SLEEVE	
	6	1	*113-9084*	1	BRACKET AS (LH)	
	6A	1	**9R-1496**	2	BEARING-SLEEVE	

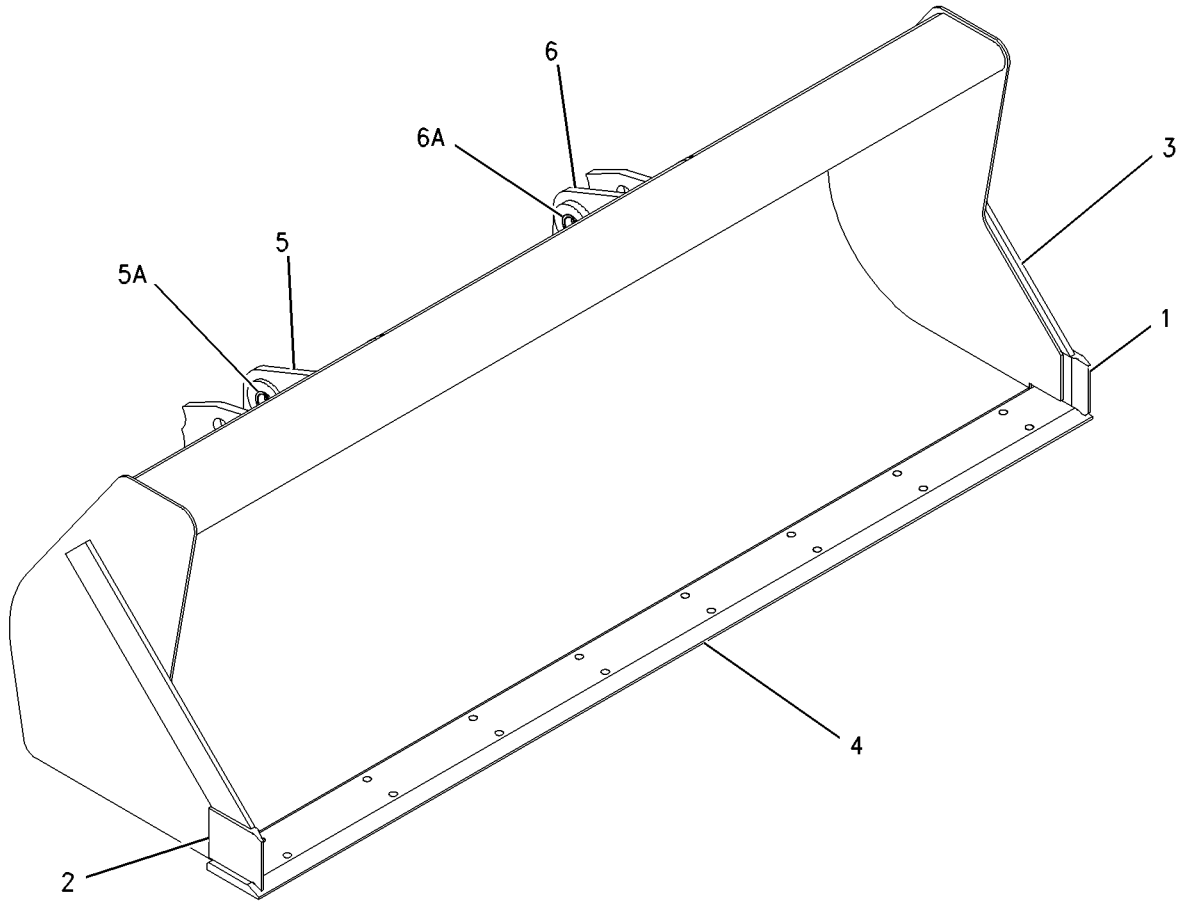

GRAPHIC #1 **<END>** g01006349

151-7829 BUCKET AS-HOE—HIGH CAPACITY

S/N: DPH1-UP
458-MM (18-IN)
PART OF 151-7887 BUCKET GP-HOE
AN ATTACHMENT

SMCS-6503 **i02686003**

NOTE	REF NO	GRAPHIC REF	PART NUMBER	QTY	PART NAME 1 2 3 4 5 6 (PRODUCT LEVEL)	SEE PAGE
	1	1	**128-3778**	1	EDGE	
	2	1	*151-7902*	1	BRACKET AS (LH)	
	2A	1	**9R-0162**	1	BEARING-SLEEVE	
	2B	1	**168-0480**	1	BEARING-SLEEVE	
	3	1	**9R-8987**	1	EDGE (LH)	
	4	1	**9R-8988**	1	EDGE (RH)	
	5	1	*151-7903*	1	BRACKET AS (RH)	
	5A	1	**9R-0162**	1	BEARING-SLEEVE	
	5B	1	**168-0480**	1	BEARING-SLEEVE	

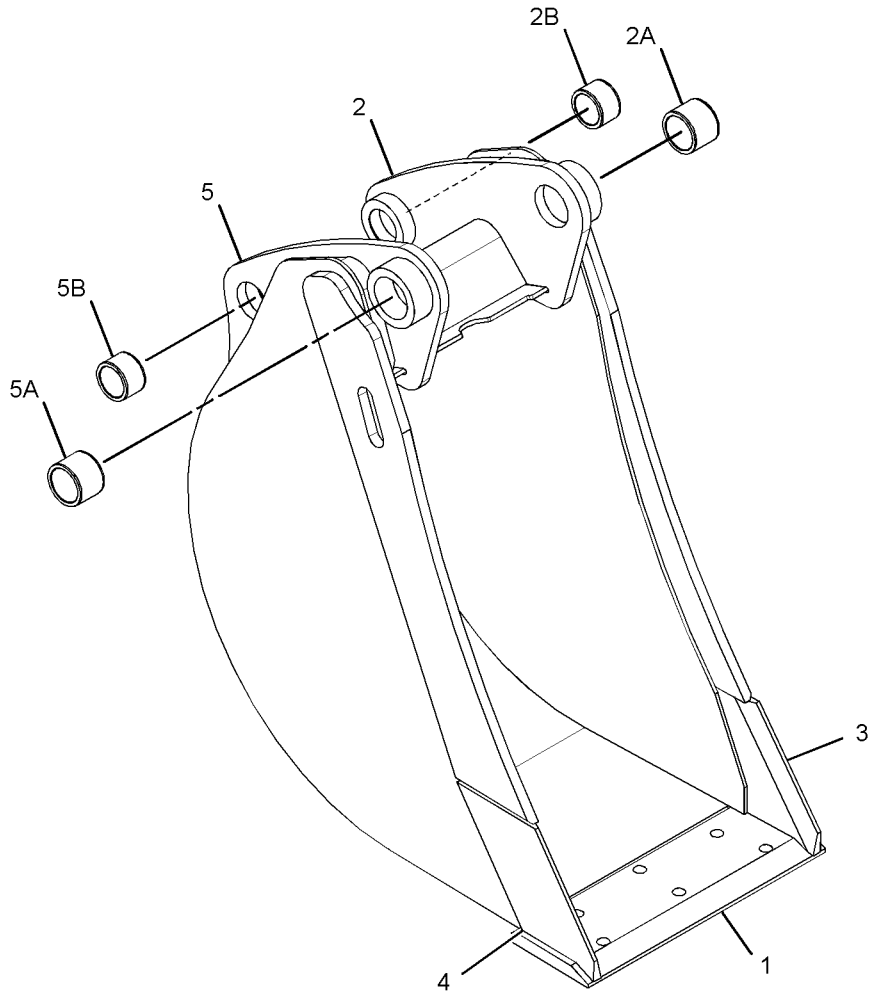

GRAPHIC #1 **<END>** g01424314

151-7830 BUCKET AS-HOE—HIGH CAPACITY

S/N: DPH1-UP
610-MM (24-IN)
PART OF 151-7888 BUCKET GP-HOE
AN ATTACHMENT

SMCS-6503 **i02685979**

NOTE	REF NO	GRAPHIC REF	PART NUMBER	QTY	PART NAME 1 2 3 4 5 6 (PRODUCT LEVEL)	SEE PAGE
	1	1	**9R-8987**	1	EDGE (LH)	
	2	1	**9R-8988**	1	EDGE (RH)	
	3	1	**128-3094**	1	EDGE	
	4	1	*151-7902*	1	BRACKET AS (LH)	
	4A	1	**168-0480**	1	BEARING-SLEEVE	
	4B	1	**9R-0162**	1	BEARING-SLEEVE	
	5	1	*151-7903*	1	BRACKET AS (RH)	
	5A	1	**168-0480**	1	BEARING-SLEEVE	
	5B	1	**9R-0162**	1	BEARING-SLEEVE	

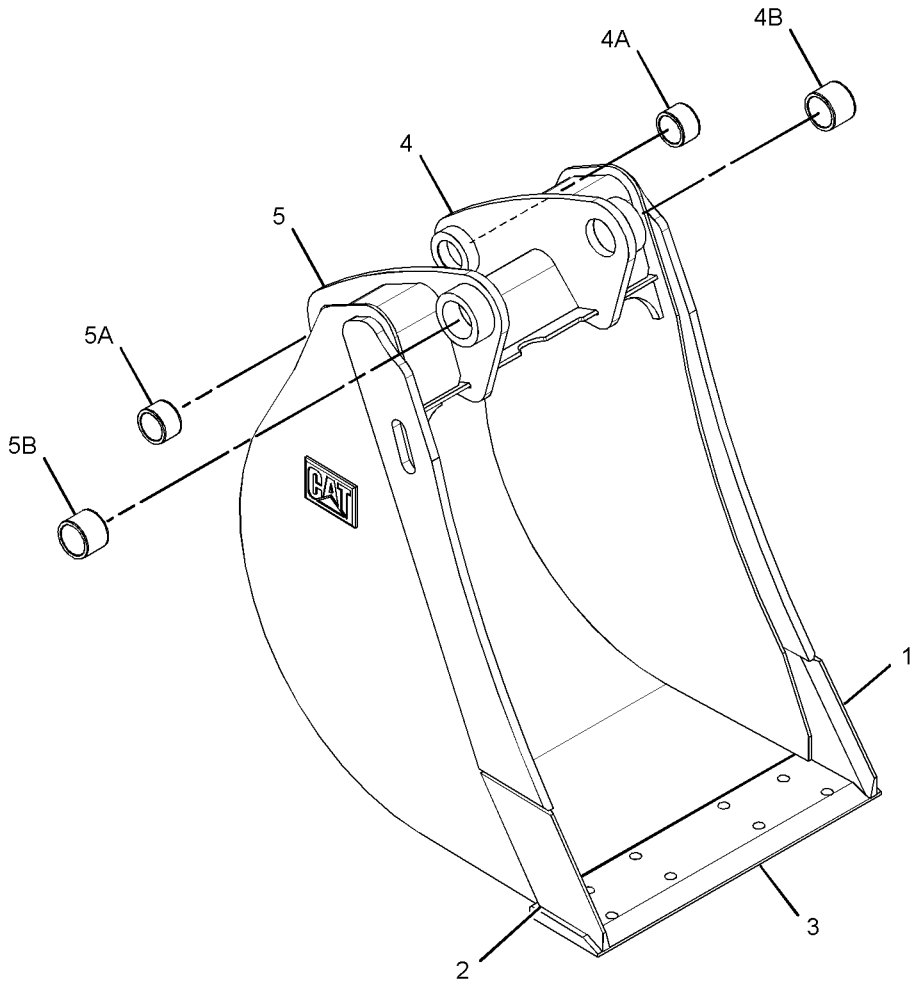

GRAPHIC #1 **<END>** g01398979

WORK TOOLS

151-7831 BUCKET AS-HOE—HIGH CAPACITY

S/N: DPH1-UP
762-MM (30-IN)
PART OF 151-7889 BUCKET GP-HOE
AN ATTACHMENT

SMCS-6503 **i02686105**

NOTE	REF NO	GRAPHIC REF	PART NUMBER	QTY	PART NAME 1 2 3 4 5 6 (PRODUCT LEVEL)	SEE PAGE
	1	1	*151-7902*	1	BRACKET AS (LH)	
	1A	1	**9R-0162**	1	BEARING-SLEEVE	
	1B	1	**168-0480**	1	BEARING-SLEEVE	
	2	1	**9R-8987**	1	EDGE (LH)	
	3	1	**9R-8988**	1	EDGE (RH)	
	4	1	**131-2117**	1	EDGE	
	5	1	*151-7903*	1	BRACKET AS (RH)	
	5A	1	**9R-0162**	1	BEARING-SLEEVE	
	5B	1	**168-0480**	1	BEARING-SLEEVE	

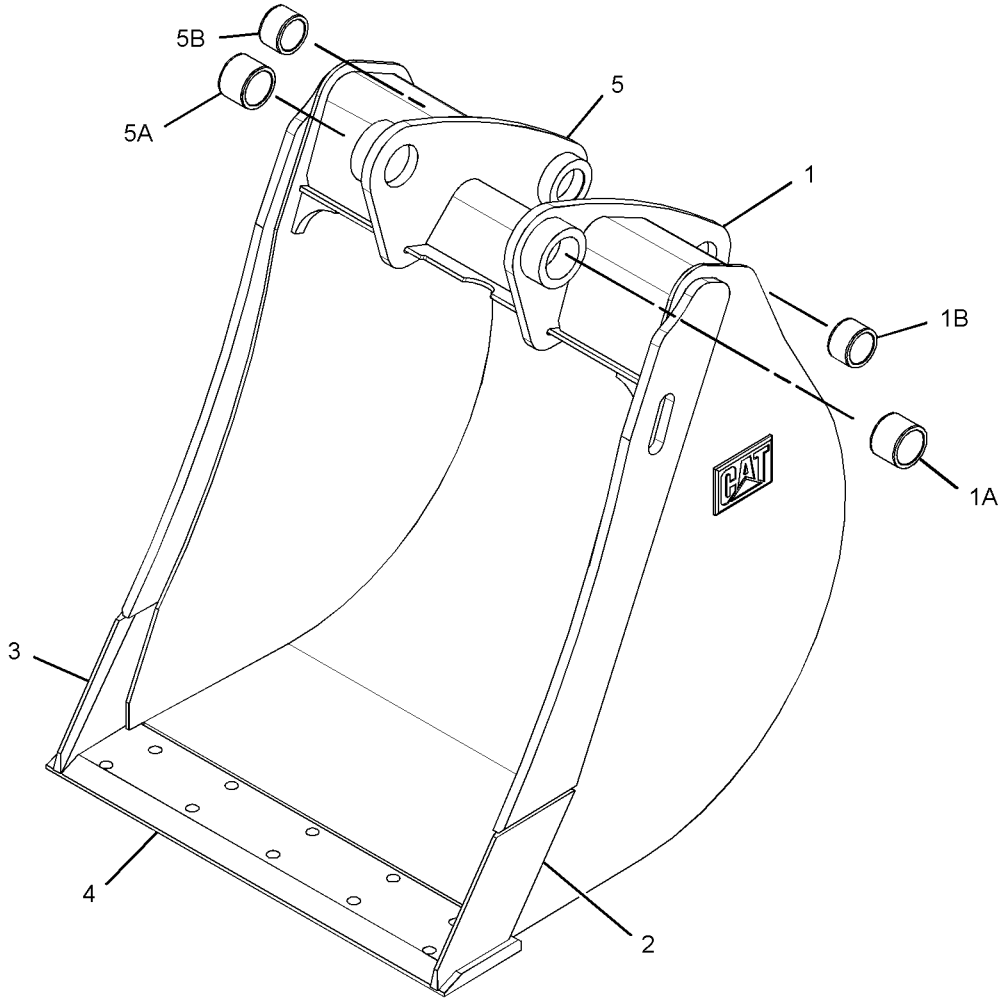

GRAPHIC #1 **<END>** g01359127

151-7832 BUCKET AS-HOE—HIGH CAPACITY

S/N: DPH1-UP
914-MM (36-IN)
PART OF 151-7890 BUCKET GP-HOE
AN ATTACHMENT

SMCS-6503 **i02686157**

NOTE	REF NO	GRAPHIC REF	PART NUMBER	QTY	PART NAME 1 2 3 4 5 6 (PRODUCT LEVEL)	SEE PAGE
	1	1	**9R-8987**	1	EDGE (LH)	
	2	1	**9R-8988**	1	EDGE (RH)	
	3	1	**130-2057**	1	EDGE	
	4	1	*151-7902*	1	BRACKET AS (LH)	
	4A	1	**9R-0162**	1	BEARING-SLEEVE	
	4B	1	**168-0480**	1	BEARING-SLEEVE	
	5	1	*151-7903*	1	BRACKET AS (RH)	
	5A	1	**9R-0162**	1	BEARING-SLEEVE	
	5B	1	**168-0480**	1	BEARING-SLEEVE	

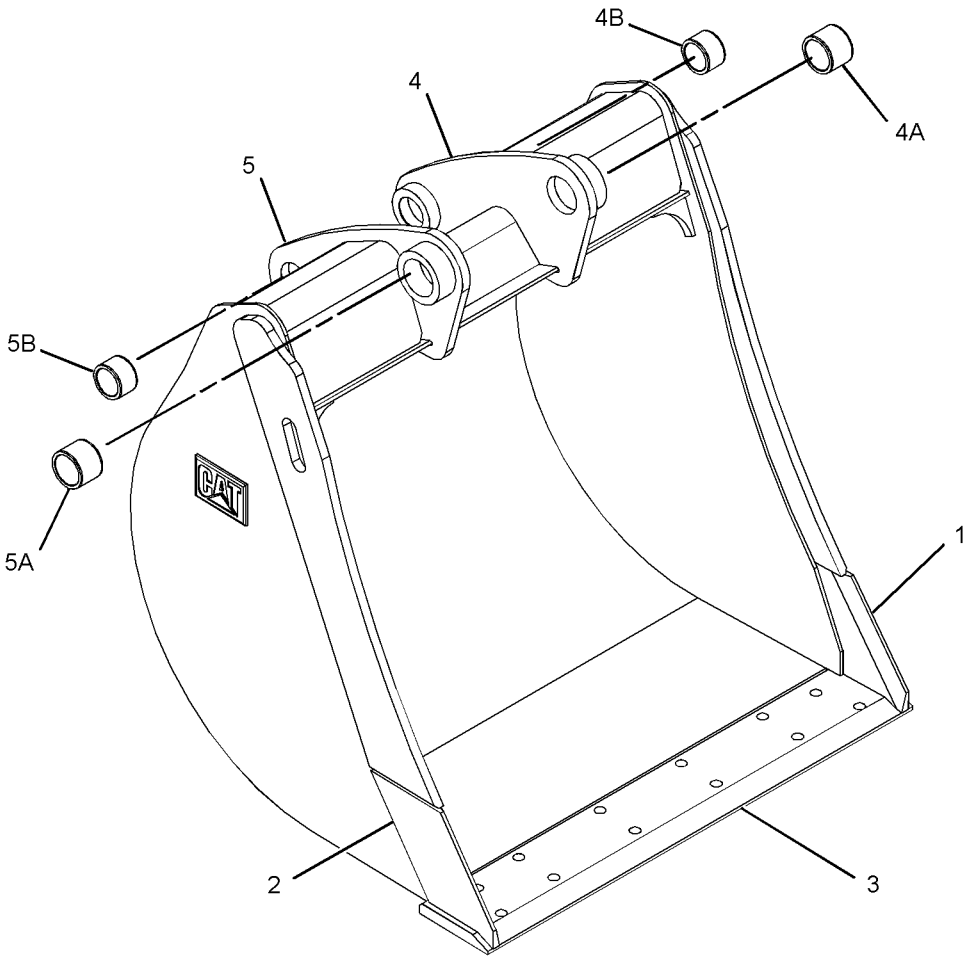

GRAPHIC #1 **<END>** g01356395

219-3366 BUCKET AS-HOE—HIGH CAPACITY

S/N: DPH1-UP
458-MM (18-IN)
PART OF 219-3390 BUCKET GP-HOE
AN ATTACHMENT

SMCS-6503 **i02651484**

NOTE	REF NO	GRAPHIC REF	PART NUMBER	QTY	PART NAME 1 2 3 4 5 6 (PRODUCT LEVEL)	SEE PAGE
	1	1	**134-5884**	1	EDGE (LH)	
	2	1	**134-5885**	1	EDGE (RH)	
	3	1	*151-7902*	1	BRACKET AS (LH)	
	3A	1	**9R-0162**	1	BEARING-SLEEVE	
	3B	1	**168-0480**	1	BEARING-SLEEVE	
	4	1	*151-7903*	1	BRACKET AS (RH)	
	4A	1	**9R-0162**	1	BEARING-SLEEVE	
	4B	1	**168-0480**	1	BEARING-SLEEVE	
	5	1	**161-4130**	2	PLATE-IDENTIFICATION (CAT)	
	6	1	**201-1234**	4	ADAPTER (2-STRAP)	
	7	1	**219-9483**	1	EDGE	

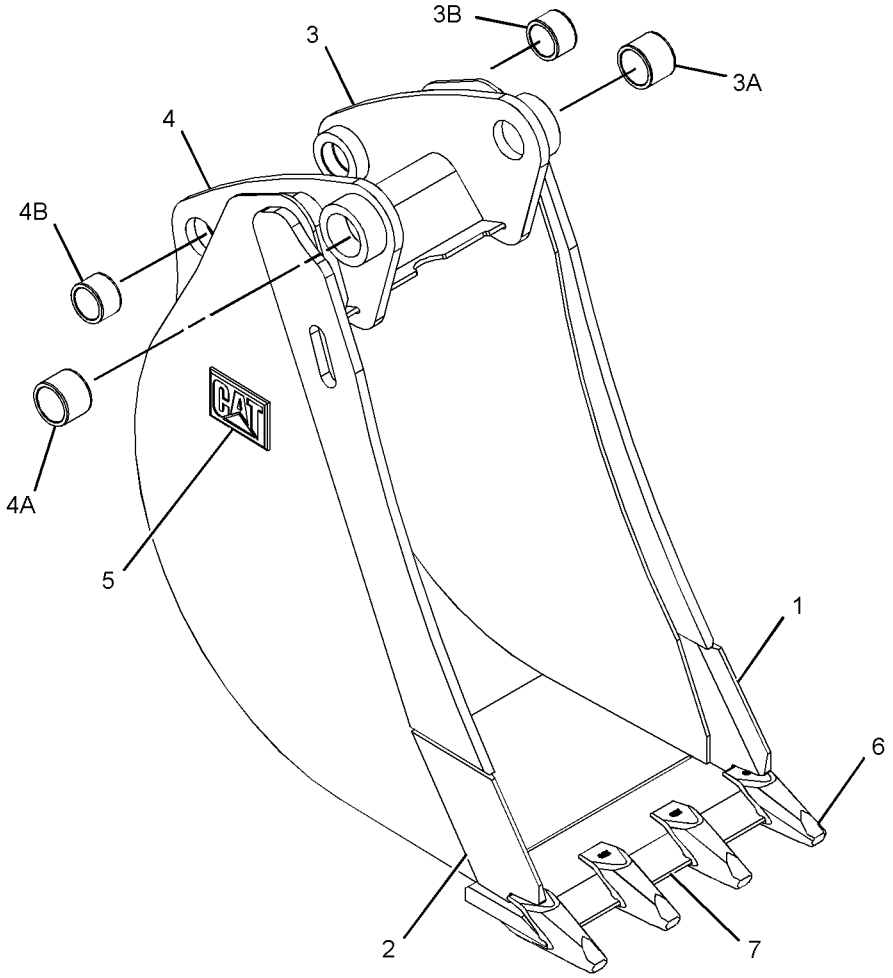

GRAPHIC #1 **<END>** g01334080

219-3367 BUCKET AS-HOE—HIGH CAPACITY

S/N: DPH1-UP
610-MM (24-IN)
PART OF 219-3391 BUCKET GP-HOE
AN ATTACHMENT

SMCS-6503 **i02651946**

NOTE	REF NO	GRAPHIC REF	PART NUMBER	QTY	PART NAME 1 2 3 4 5 6 (PRODUCT LEVEL)	SEE PAGE
	1	1	**134-5884**	1	EDGE (LH)	
	2	1	**134-5885**	1	EDGE (RH)	
	3	1	*151-7902*	1	BRACKET AS (LH)	
	3A	1	**9R-0162**	1	BEARING-SLEEVE	
	3B	1	**168-0480**	1	BEARING-SLEEVE	
	4	1	*151-7903*	1	BRACKET AS (RH)	
	4A	1	**9R-0162**	1	BEARING-SLEEVE	
	4B	1	**168-0480**	1	BEARING-SLEEVE	
	5	1	**151-7926**	2	PLATE	
	6	1	**161-4130**	2	PLATE-IDENTIFICATION (CAT)	
	7	1	**201-1234**	5	ADAPTER (2-STRAP)	
	8	1	**219-9486**	1	EDGE	

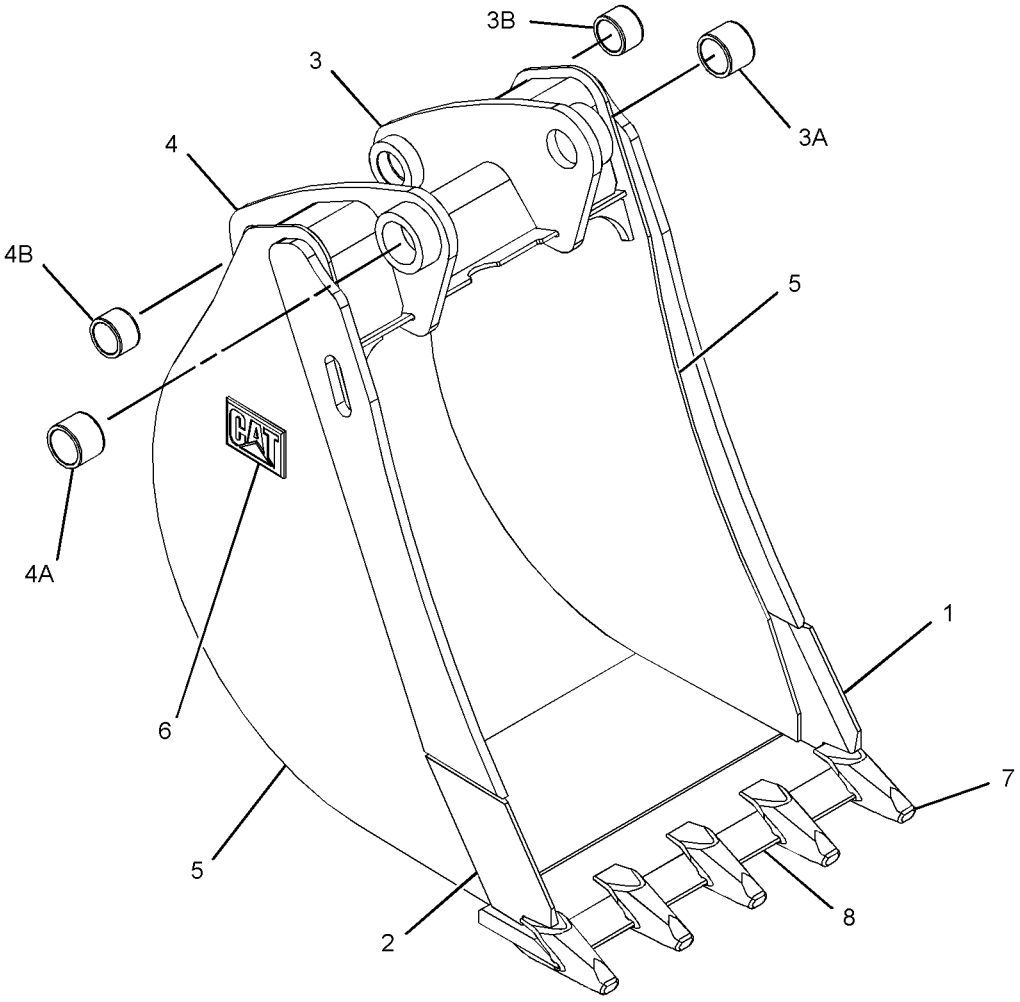

GRAPHIC #1 **<END>** g01342073

WORK TOOLS

219-3368 BUCKET AS-HOE—HIGH CAPACITY

S/N: DPH1-UP
762-MM (30-IN)
PART OF 219-3392 BUCKET GP-HOE
AN ATTACHMENT

SMCS-6503 **i02651971**

NOTE	REF NO	GRAPHIC REF	PART NUMBER	QTY	PART NAME 1 2 3 4 5 6 (PRODUCT LEVEL)	SEE PAGE
	1	1	**134-5884**	1	EDGE (LH)	
	2	1	**134-5885**	1	EDGE (RH)	
	3	1	*151-7902*	1	BRACKET AS (LH)	
	3A	1	**9R-0162**	1	BEARING-SLEEVE	
	3B	1	**168-0480**	1	BEARING-SLEEVE	
	4	1	*151-7903*	1	BRACKET AS (RH)	
	4A	1	**9R-0162**	1	BEARING-SLEEVE	
	4B	1	**168-0480**	1	BEARING-SLEEVE	
	5	1	**161-4130**	2	PLATE-IDENTIFICATION (CAT)	
	6	1	**201-1234**	5	ADAPTER (2-STRAP)	
	7	1	**219-9485**	1	EDGE	

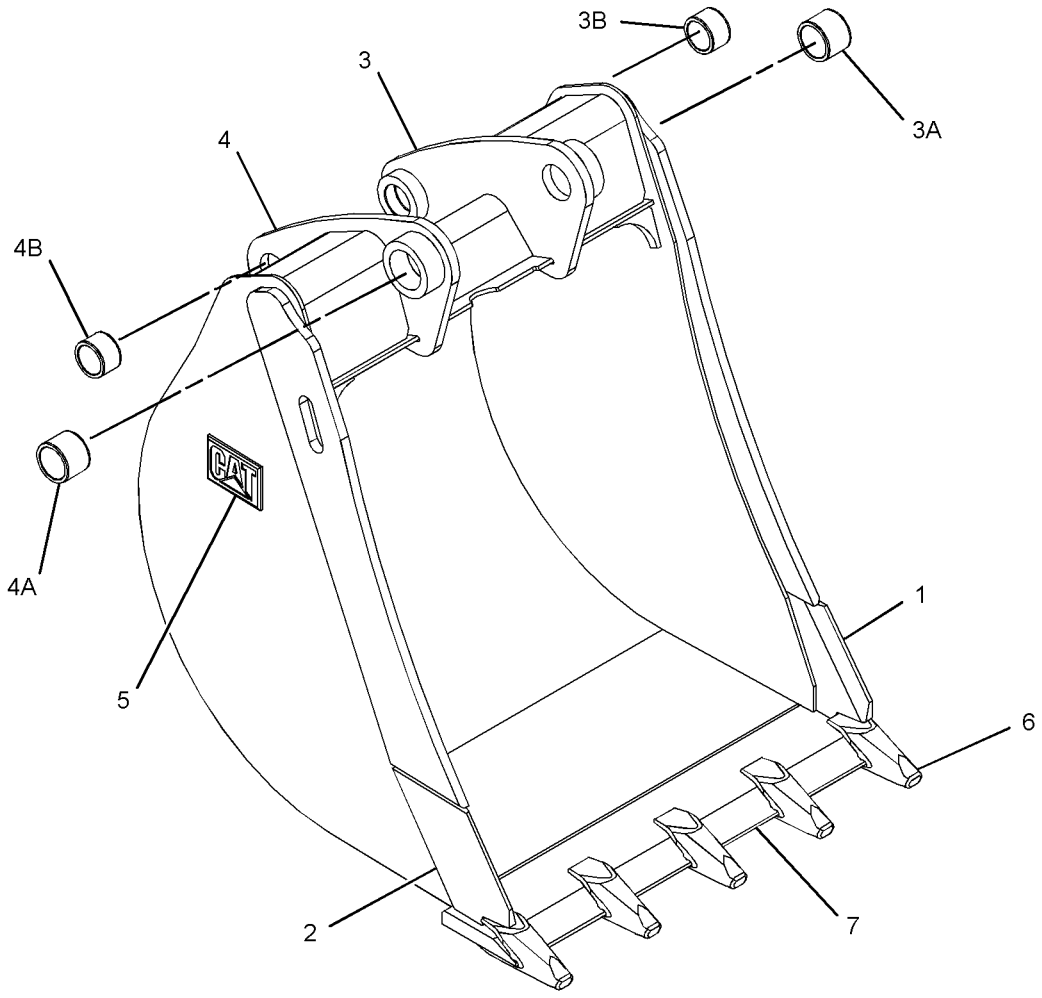

GRAPHIC #1 **<END>** g01341935

219-3369 BUCKET AS-HOE—HIGH CAPACITY

S/N: DPH1-UP
914-MM (36-IN)
PART OF 219-3393 BUCKET GP-HOE
AN ATTACHMENT

SMCS-6503 **i02651981**

NOTE	REF NO	GRAPHIC REF	PART NUMBER	QTY	PART NAME 1 2 3 4 5 6 (PRODUCT LEVEL)	SEE PAGE
	1	1	**134-5884**	1	EDGE (LH)	
	2	1	**134-5885**	1	EDGE (RH)	
	3	1	*151-7902*	1	BRACKET AS (LH)	
	3A	1	**9R-0162**	1	BEARING-SLEEVE	
	3B	1	**168-0480**	1	BEARING-SLEEVE	
	4	1	*151-7903*	1	BRACKET AS (RH)	
	4A	1	**9R-0162**	1	BEARING-SLEEVE	
	4B	1	**168-0480**	1	BEARING-SLEEVE	
	5	1	**161-4130**	2	PLATE-IDENTIFICATION (CAT)	
	6	1	**201-1234**	6	ADAPTER (2-STRAP)	
	7	1	**219-9486**	1	EDGE	

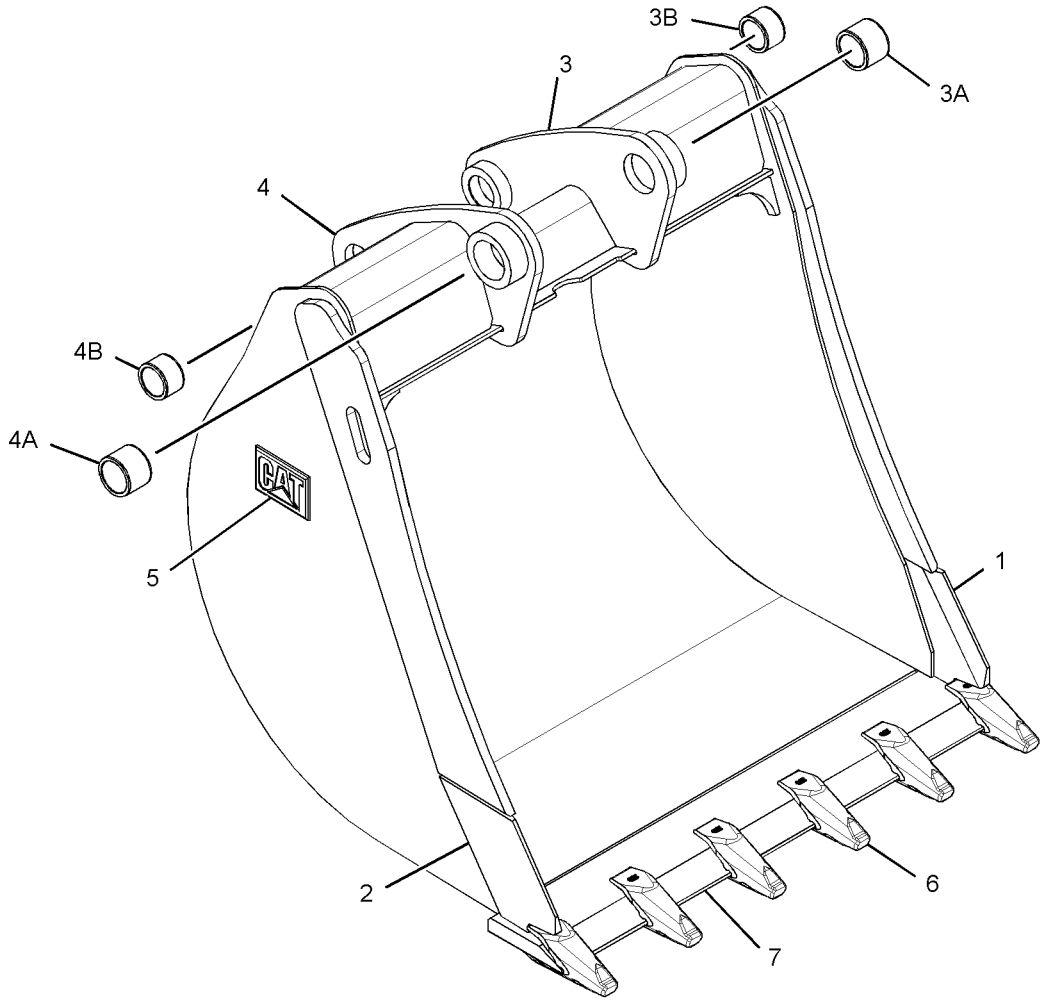

GRAPHIC #1 **<END>** g01335133

249-4220 BUCKET AS-HOE—HEAVY-DUTY

S/N: DPH1-UP
610-MM (24-IN)
PART OF 249-4221 BUCKET GP-HOE
AN ATTACHMENT

SMCS-6503 **i03726361**

NOTE	REF NO	GRAPHIC REF	PART NUMBER	QTY	PART NAME 1 2 3 4 5 6 (PRODUCT LEVEL)	SEE PAGE
	1	1	**201-1235**	5	ADAPTER (2-STRAP)	
	2	1	**219-9488**	1	EDGE	
	3	1	*249-4209*	1	PLATE AS (RH)	
		1	**249-4207**	1	EDGE (RH)	
	4	1	*249-4210*	1	PLATE AS (LH)	
		1	**273-3622**	1	EDGE (LH)	

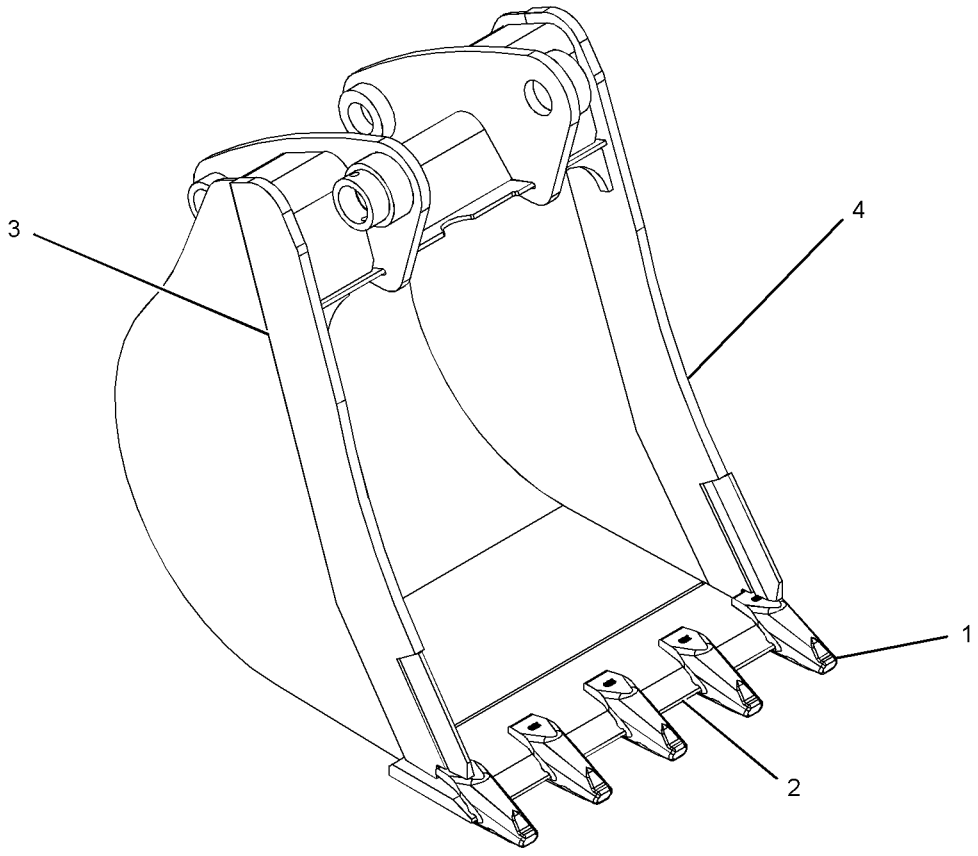

GRAPHIC #1 **<END>** g01226709

WORK TOOLS

272-6411 BUCKET AS-HOE—HEAVY-DUTY

S/N: DPH1-UP
458-MM (18-IN)
PART OF 272-6410 BUCKET GP-HOE
AN ATTACHMENT

SMCS-6503 **i03726342**

NOTE	REF NO	GRAPHIC REF	PART NUMBER	QTY	PART NAME 1 2 3 4 5 6 (PRODUCT LEVEL)	SEE PAGE
	1	1	**136-6887**	1	EDGE	
	2	1	**201-1235**	4	ADAPTER (2-STRAP)	
	3	1	*249-4209*	1	PLATE AS (RH)	
		1	**249-4207**	1	EDGE (RH)	
	4	1	*249-4210*	1	PLATE AS (LH)	
		1	**273-3622**	1	EDGE (LH)	
	5	1	**272-6369**	4	PLATE	

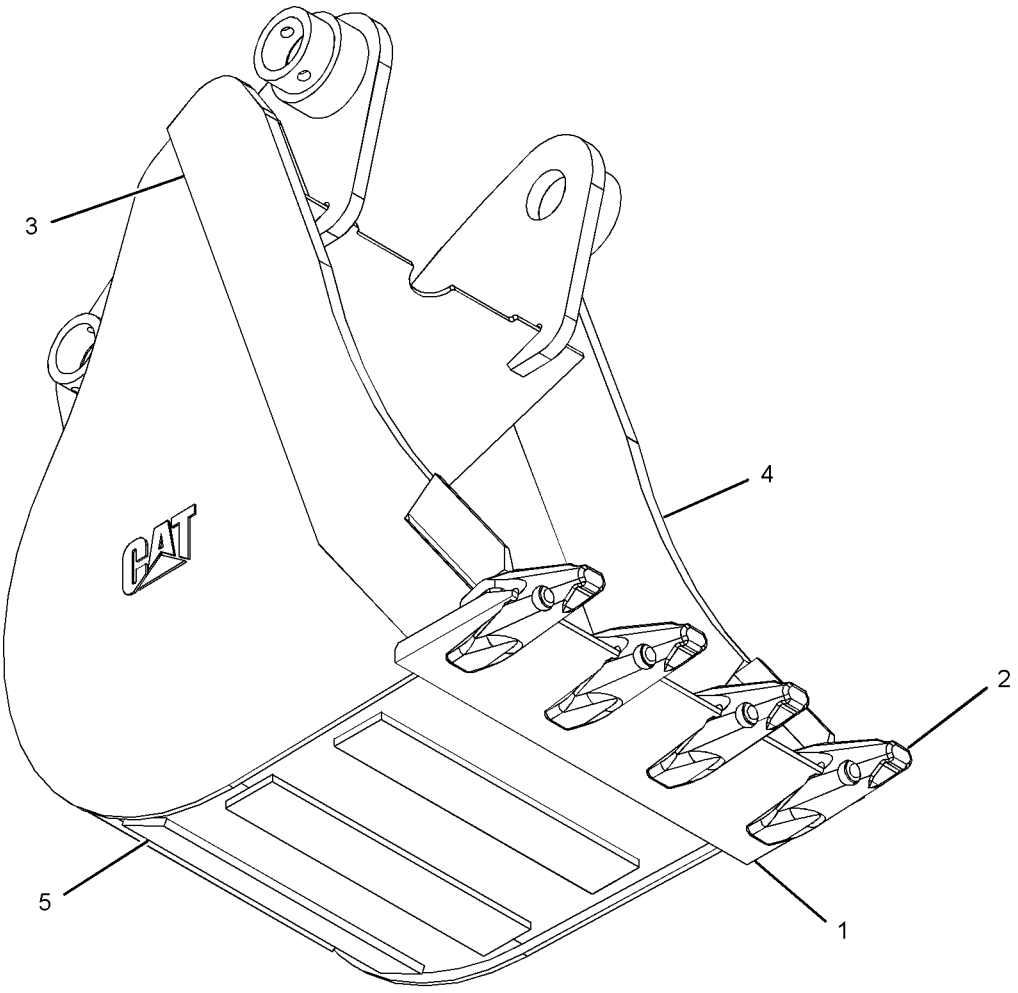

GRAPHIC #1 **<END>** g01214815

272-7873 BUCKET AS-HOE—HEAVY-DUTY

S/N: DPH1-UP
762-MM (30-IN)
PART OF 272-7872 BUCKET GP-HOE
AN ATTACHMENT

SMCS-6503 **i03726600**

NOTE	REF NO	GRAPHIC REF	PART NUMBER	QTY	PART NAME 1 2 3 4 5 6 (PRODUCT LEVEL)	SEE PAGE
	1	1	**136-6889**	1	EDGE	
	2	1	**201-1235**	5	ADAPTER (2-STRAP)	
	3	1	*249-4209*	1	PLATE AS (RH)	
		1	**249-4207**	1	EDGE (RH)	
	4	1	*249-4210*	1	PLATE AS (LH)	
		1	**273-3622**	1	EDGE (LH)	
	5	1	**272-7914**	4	PLATE	

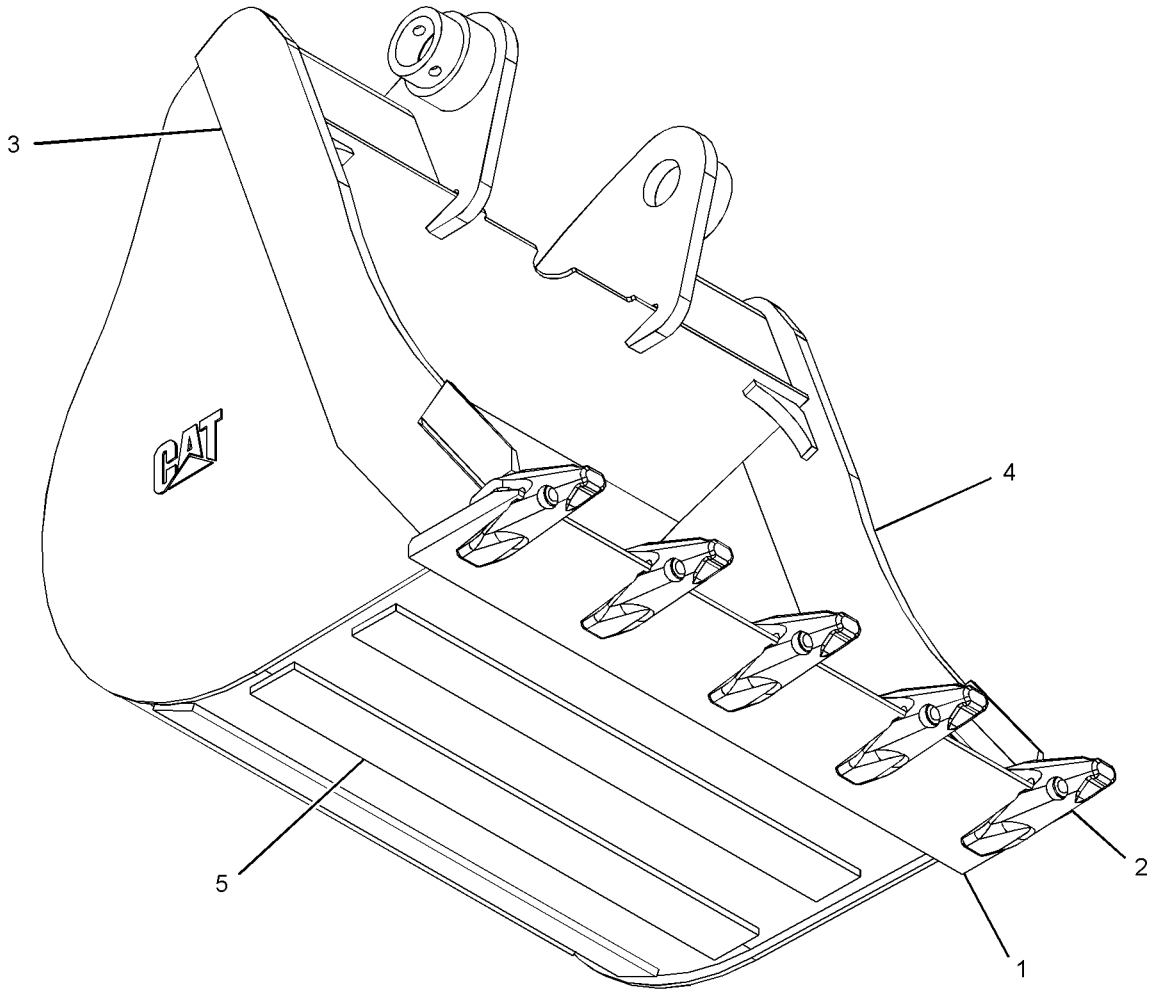

GRAPHIC #1 **<END>** g01215272

WORK TOOLS

272-9235 BUCKET AS-HOE—HEAVY-DUTY

S/N: DPH1-UP
914-MM (36-IN)
PART OF 272-9234 BUCKET GP-HOE
AN ATTACHMENT

SMCS-6503 **i03726364**

NOTE	REF NO	GRAPHIC REF	PART NUMBER	QTY	PART NAME 1 2 3 4 5 6 (PRODUCT LEVEL)	SEE PAGE
	1	1	**201-1235**	6	ADAPTER (2-STRAP)	
	2	1	*249-4209*	1	PLATE AS (RH)	
		1	**249-4207**	1	EDGE (RH)	
	3	1	*249-4210*	1	PLATE AS (LH)	
		1	**273-3622**	1	EDGE (LH)	
	4	1	**272-7916**	4	PLATE	
	5	1	**136-6890**	1	EDGE	

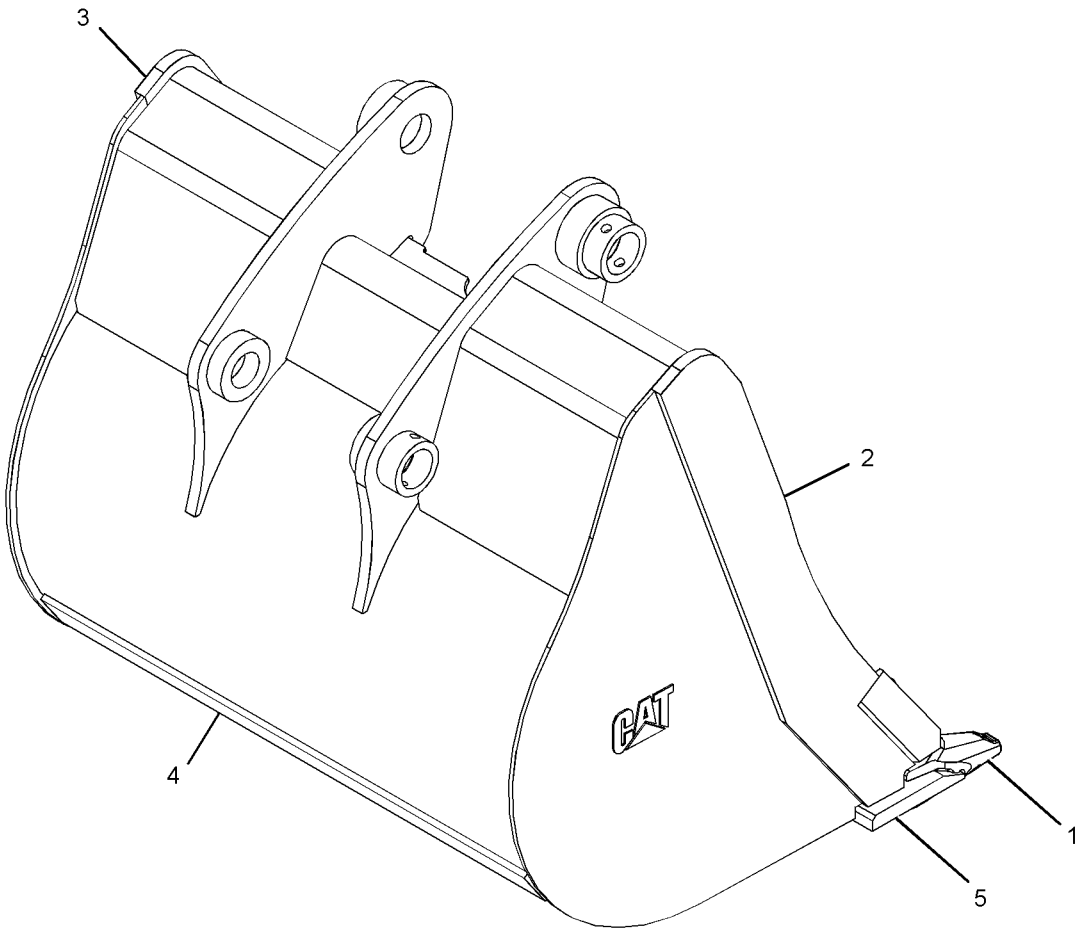

GRAPHIC #1 **<END>** g02009296

272-9609 BUCKET AS-HOE—HEAVY-DUTY

S/N: DPH1-UP
914-MM (36-IN)
PART OF 272-9608 BUCKET GP-HOE
AN ATTACHMENT

SMCS-6503 **i02425901**

NOTE	REF NO	GRAPHIC REF	PART NUMBER	QTY	PART NAME 1 2 3 4 5 6 (PRODUCT LEVEL)	SEE PAGE
	1	1	**272-7916**	4	PLATE	
	2	1	*272-7920*	1	PLATE AS (RH)	
		1	**272-7918**	1	EDGE (RH)	
	3	1	*272-7921*	1	PLATE AS (LH)	
		1	**272-7919**	1	EDGE (LH)	
	4	1	**273-1466**	1	EDGE	

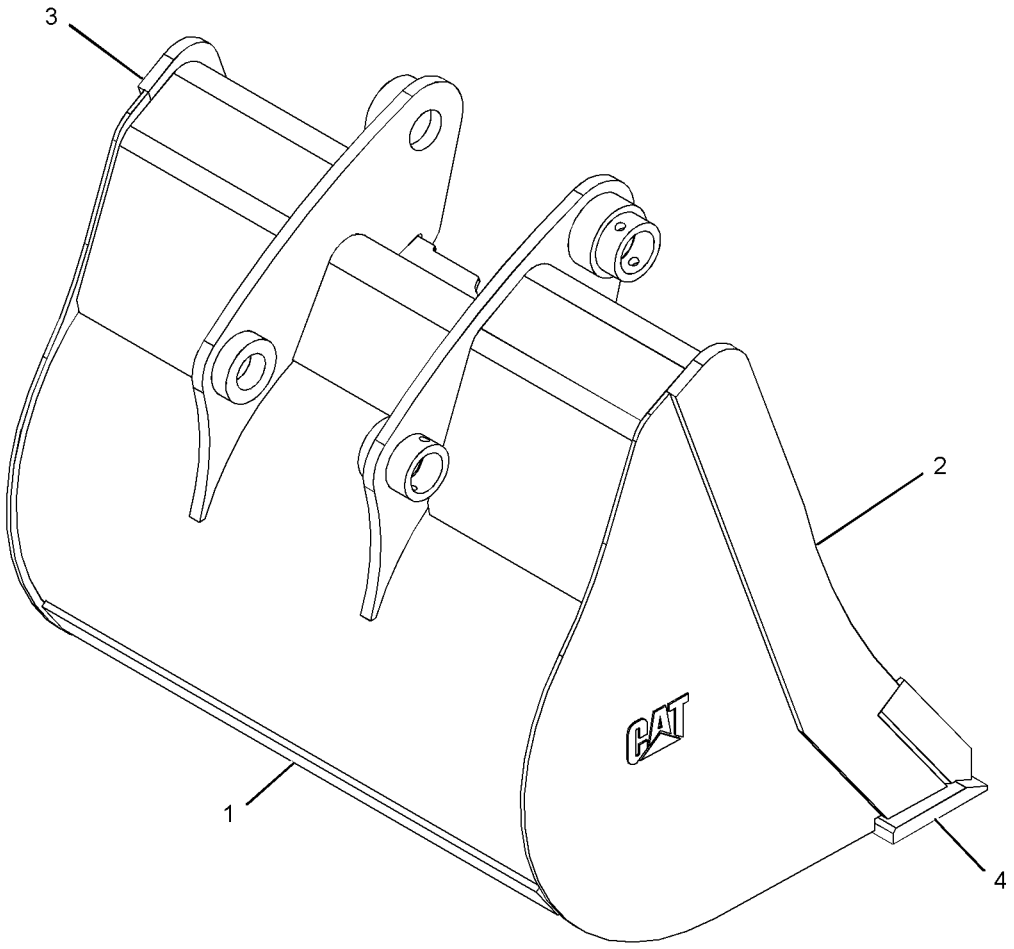

GRAPHIC #1 **<END>** g01226278

WORK TOOLS

273-0043 BUCKET AS-HOE—HEAVY-DUTY

S/N: DPH1-UP
762-MM (30-IN)
PART OF 273-0042 BUCKET GP-HOE
AN ATTACHMENT

SMCS-6503 **i02427539**

NOTE	REF NO	GRAPHIC REF	PART NUMBER	QTY	PART NAME 1 2 3 4 5 6 (PRODUCT LEVEL)	SEE PAGE
	1	1	**272-7914**	4	PLATE	
	2	1	*272-7920*	1	PLATE AS (RH)	
		1	**272-7918**	1	EDGE (RH)	
	3	1	*272-7921*	1	PLATE AS (LH)	
		1	**272-7919**	1	EDGE (LH)	
	4	1	**273-1465**	1	EDGE	

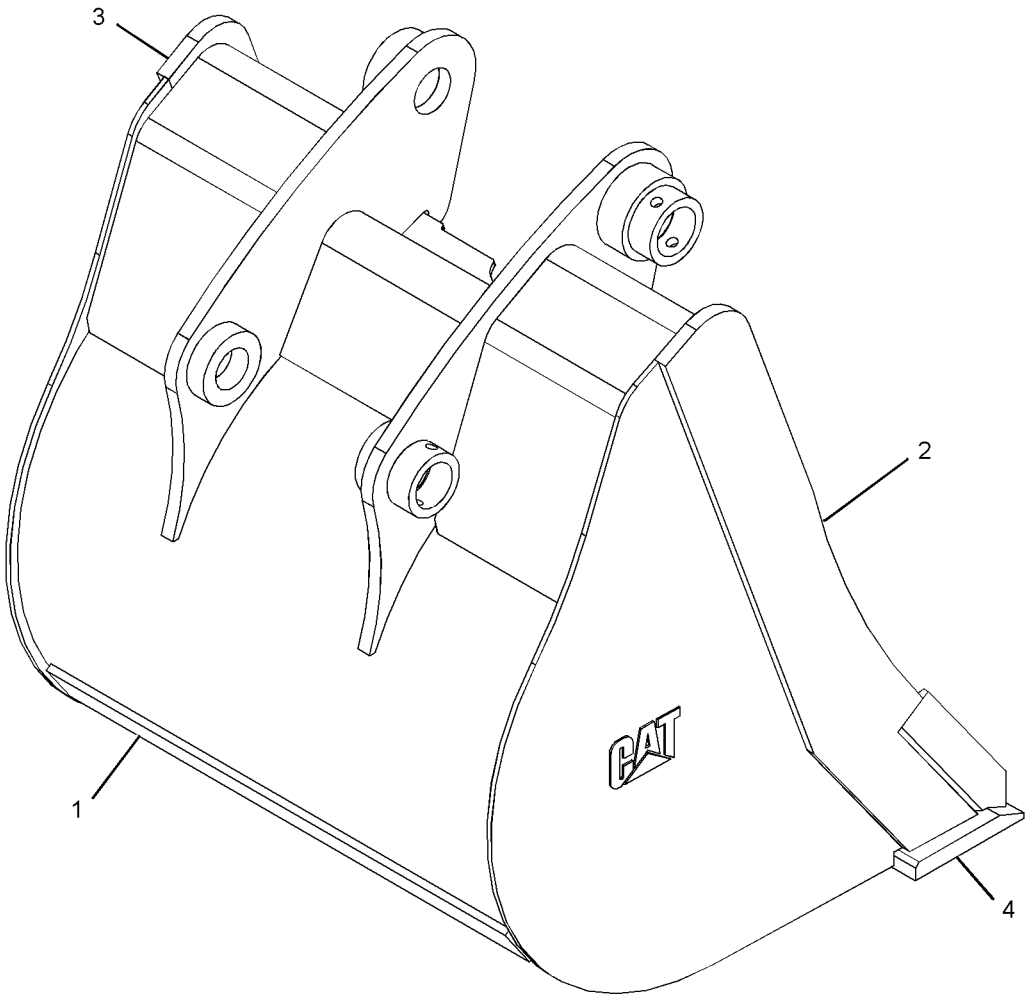

GRAPHIC #1 **<END>** g01214211

WORK TOOLS

273-0094 BUCKET AS-HOE—HEAVY-DUTY

S/N: DPH1-UP
408-MM (16-IN)
PART OF 273-0093 BUCKET GP-HOE
AN ATTACHMENT

SMCS-6503 **i03726561**

NOTE	REF NO	GRAPHIC REF	PART NUMBER	QTY	PART NAME 1 2 3 4 5 6 (PRODUCT LEVEL)	SEE PAGE
	1	1	**201-1235**	3	ADAPTER (2-STRAP)	
	2	1	*249-4209*	1	PLATE AS (RH)	
		1	**249-4207**	1	EDGE (RH)	
	3	1	*249-4210*	1	PLATE AS (LH)	
		1	**273-3622**	1	EDGE (LH)	
	4	1	**272-7922**	1	EDGE	
	5	1	**273-5532**	4	PLATE	

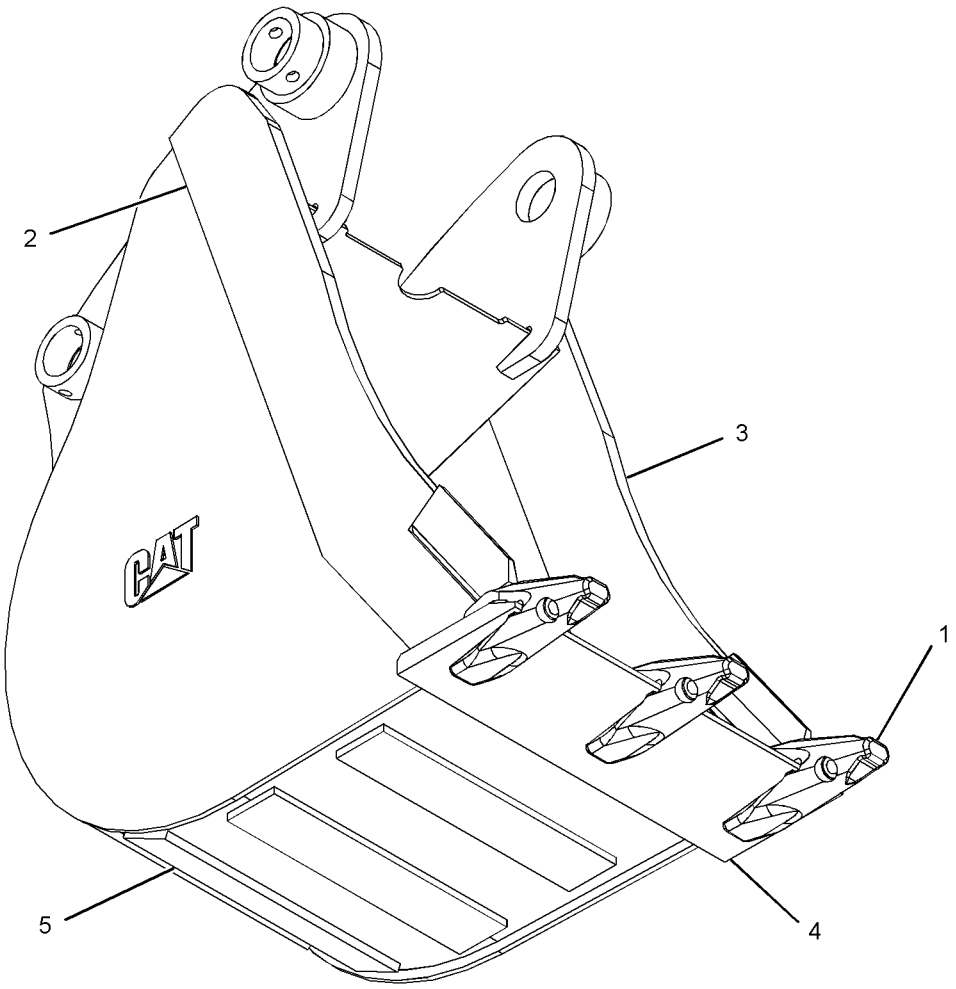

GRAPHIC #1 **<END>** g01214848

WORK TOOLS

273-0800 BUCKET AS-HOE—HEAVY-DUTY

S/N: DPH1-UP
610-MM (24-IN)
PART OF 273-0799 BUCKET GP-HOE
AN ATTACHMENT

SMCS-6503 **i02427585**

NOTE	REF NO	GRAPHIC REF	PART NUMBER	QTY	PART NAME 1 2 3 4 5 6 (PRODUCT LEVEL)	SEE PAGE
	1	1	**249-4211**	4	PLATE	
	2	1	*272-7920*	1	PLATE AS (RH)	
		1	**272-7918**	1	EDGE (RH)	
	3	1	*272-7921*	1	PLATE AS (LH)	
		1	**272-7919**	1	EDGE (LH)	
	4	1	**273-1463**	1	EDGE	

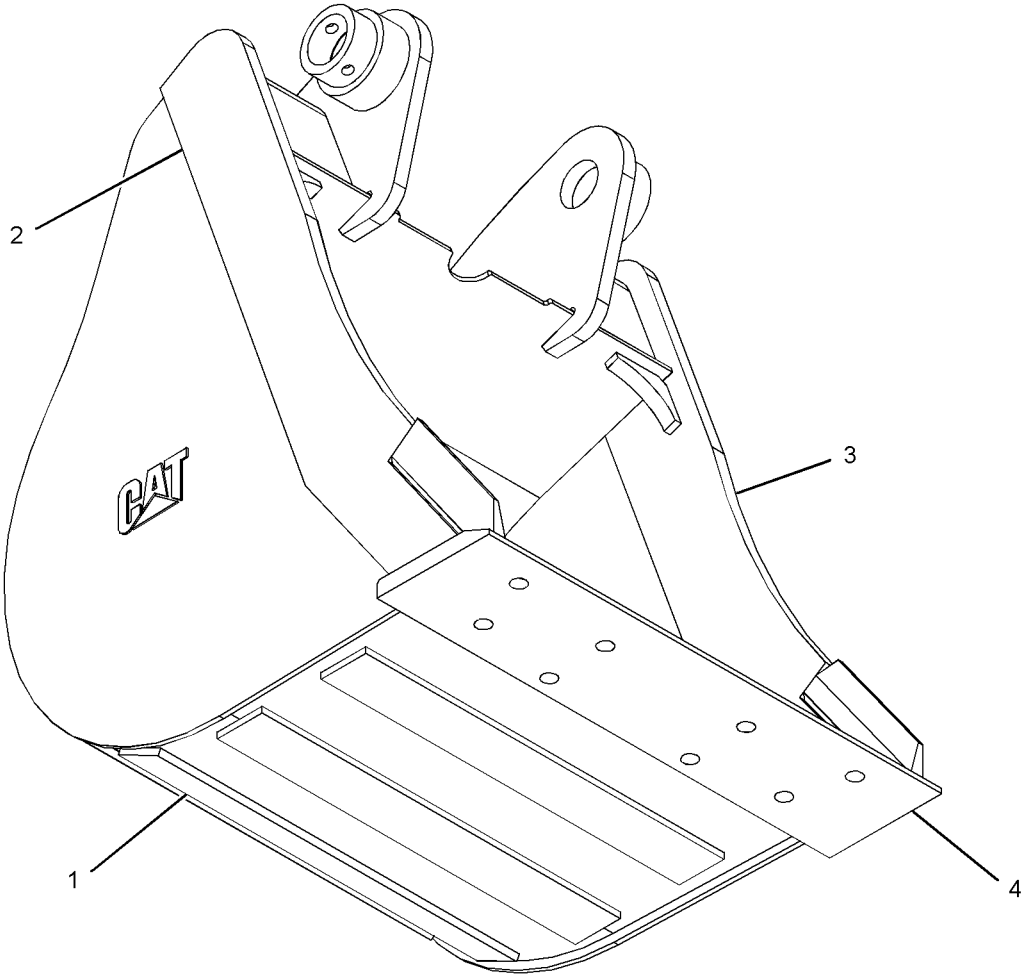

GRAPHIC #1 **<END>** g01214857

273-0863 BUCKET AS-HOE—HEAVY-DUTY

S/N: DPH1-UP
458-MM (18-IN)
PART OF 273-0862 BUCKET GP-HOE
AN ATTACHMENT

SMCS-6503 **i02427594**

NOTE	REF NO	GRAPHIC REF	PART NUMBER	QTY	PART NAME 1 2 3 4 5 6 (PRODUCT LEVEL)	SEE PAGE
	1	1	**272-6369**	4	PLATE	
	2	1	*272-7920*	1	PLATE AS (RH)	
		1	**272-7918**	1	EDGE (RH)	
	3	1	*272-7921*	1	PLATE AS (LH)	
		1	**272-7919**	1	EDGE (LH)	
	4	1	**273-1462**	1	EDGE	

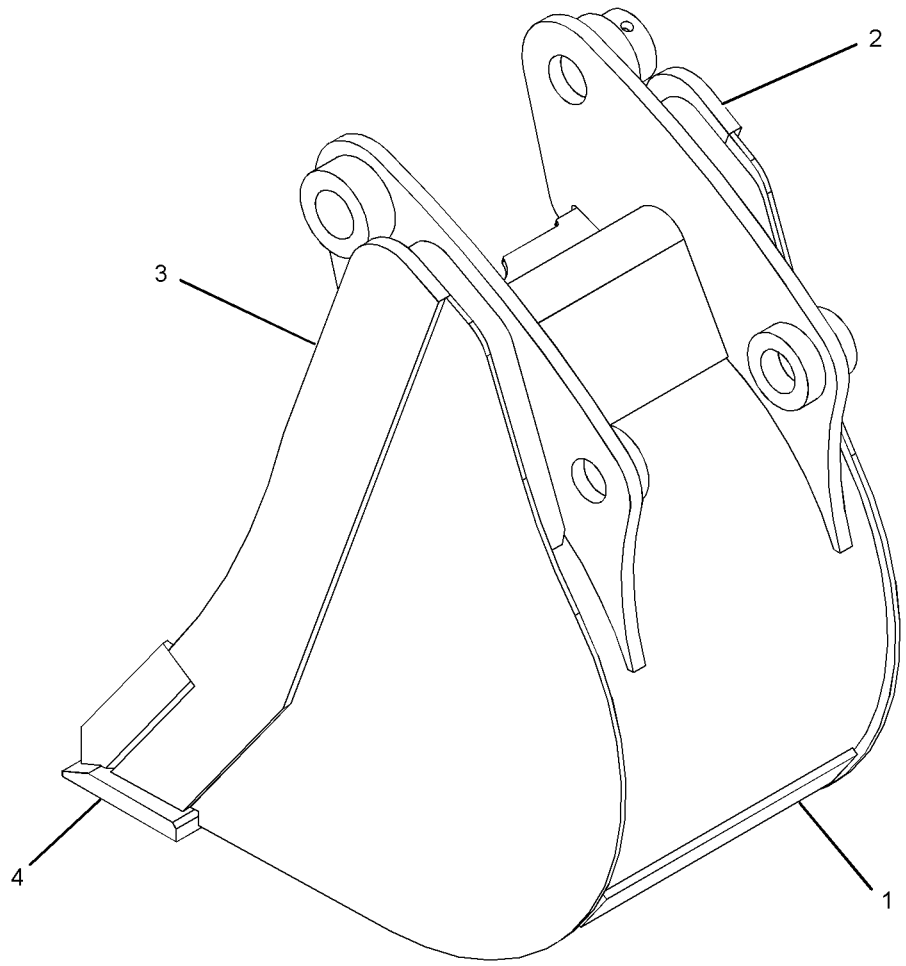

GRAPHIC #1 **<END>** g01215030

WORK TOOLS

273-1375 BUCKET AS-HOE

S/N: DPH1-UP
458-MM (18-IN)
PART OF 273-1374 BUCKET GP-HOE
AN ATTACHMENT

SMCS-6503 **i02427596**

NOTE	REF NO	GRAPHIC REF	PART NUMBER	QTY	PART NAME 1 2 3 4 5 6 (PRODUCT LEVEL)	SEE PAGE
	1	1	**273-1462**	1	EDGE	

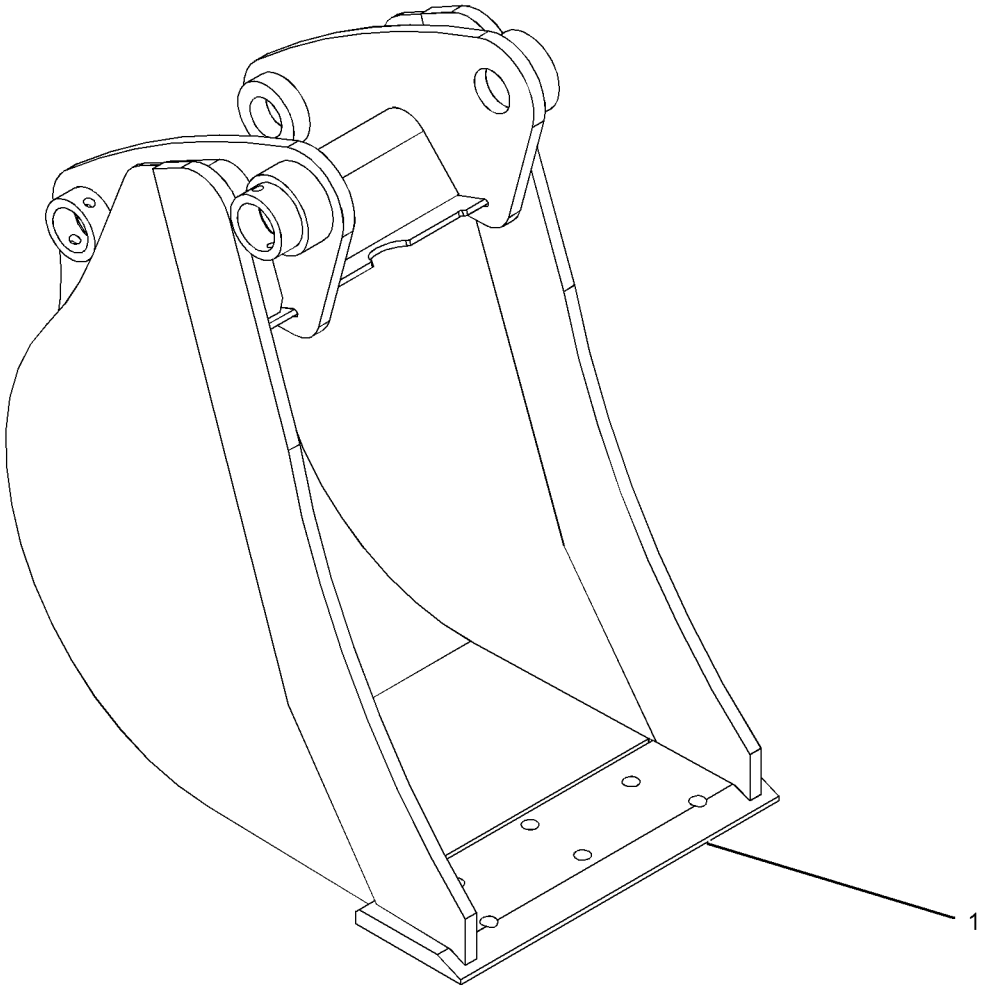

GRAPHIC #1 **<END>** g01215118

WORK TOOLS

273-1949 BUCKET AS-HOE

S/N: DPH1-UP
610-MM (24-IN)
PART OF 273-1948 BUCKET GP-HOE
AN ATTACHMENT

SMCS-6503 **i02427601**

NOTE	REF NO	GRAPHIC REF	PART NUMBER	QTY	PART NAME 1 2 3 4 5 6 (PRODUCT LEVEL)	SEE PAGE
	1	1	**273-1463**	1	EDGE	

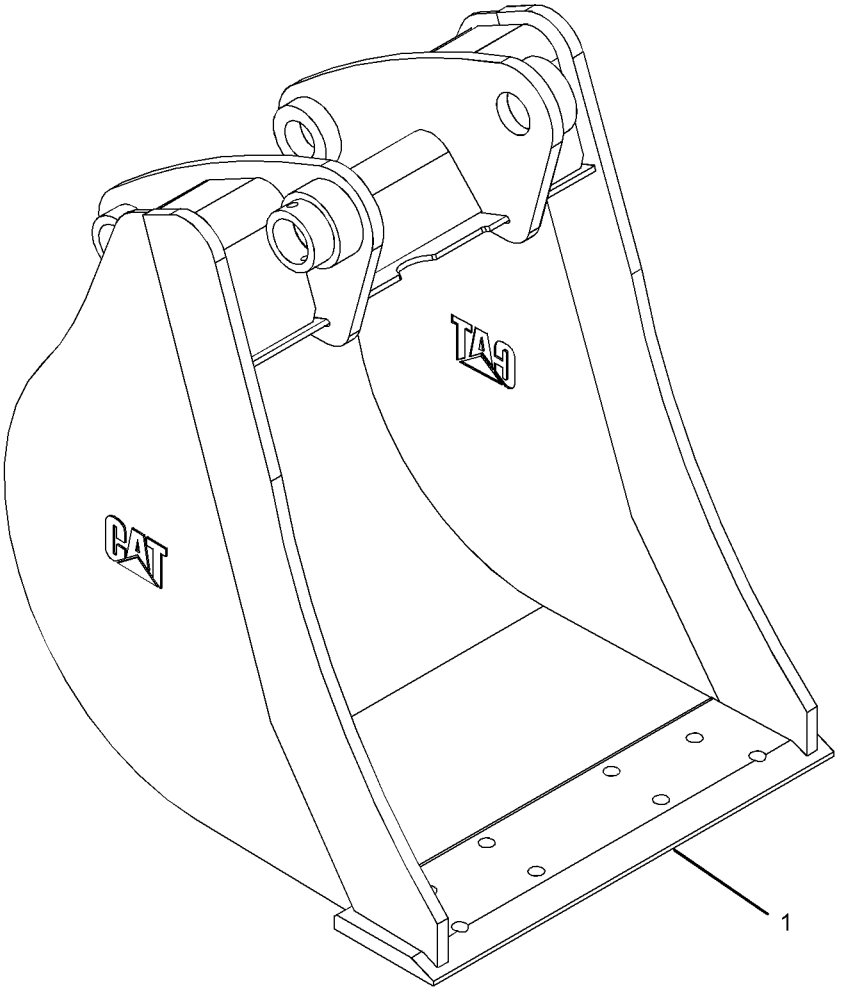

GRAPHIC #1 **<END>** g01215716

WORK TOOLS

273-1951 BUCKET AS-HOE

S/N: DPH1-UP
762-MM (30-IN)
PART OF 273-1950 BUCKET GP-HOE
AN ATTACHMENT

SMCS-6503 **i02427603**

NOTE	REF NO	GRAPHIC REF	PART NUMBER	QTY	PART NAME 1 2 3 4 5 6 (PRODUCT LEVEL)	SEE PAGE
	1	1	**273-1465**	1	EDGE	

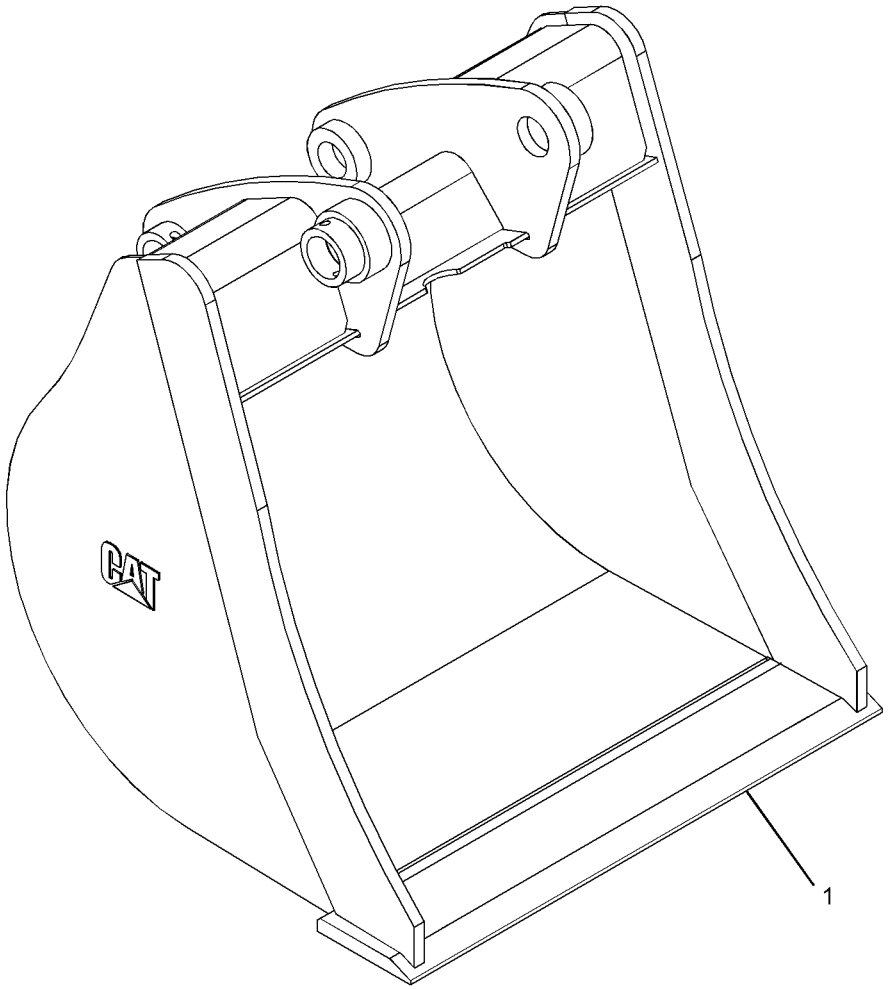

GRAPHIC #1 **<END>** g01215693

WORK TOOLS

273-1958 BUCKET AS-HOE

S/N: DPH1-UP
914-MM (36-IN)
PART OF 273-1957 BUCKET GP-HOE
AN ATTACHMENT

SMCS-6503 **i02427609**

NOTE	REF NO	GRAPHIC REF	PART NUMBER	QTY	PART NAME 1 2 3 4 5 6 (PRODUCT LEVEL)	SEE PAGE
	1	1	**273-1466**	1	EDGE	

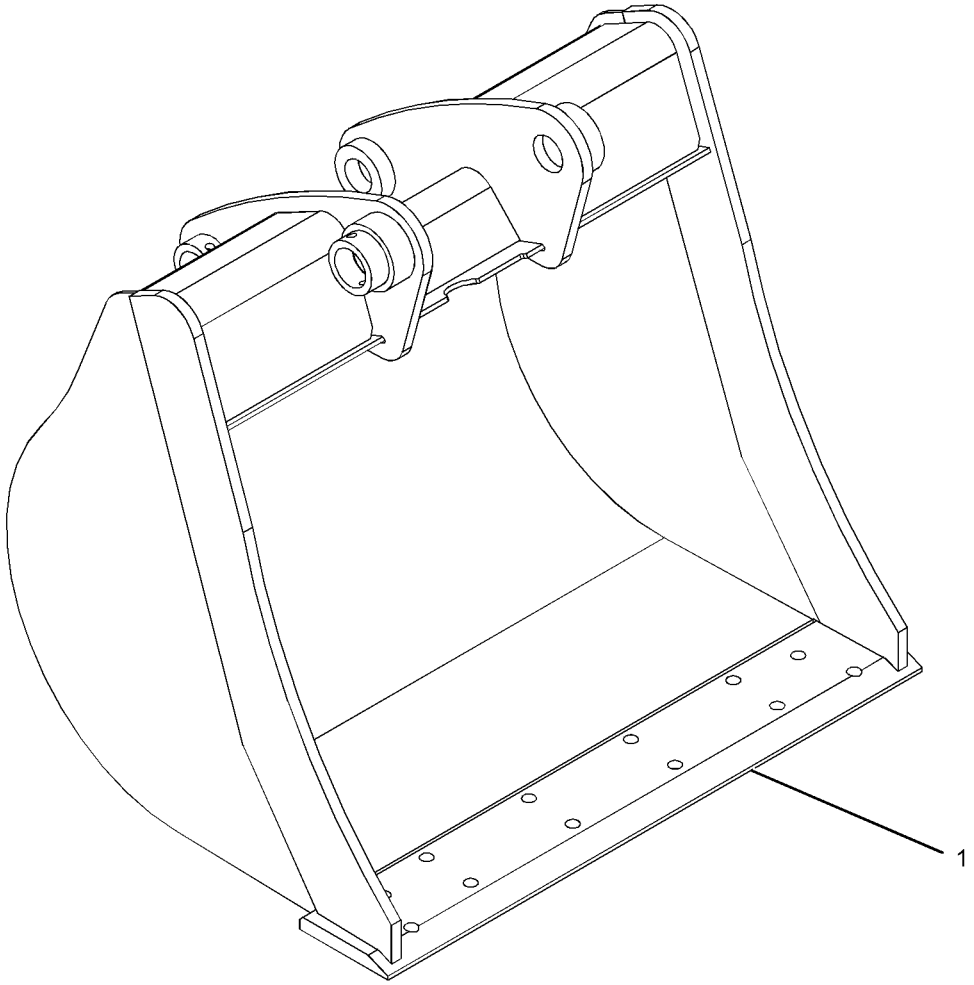

GRAPHIC #1 **<END>** g01215767

WORK TOOLS

273-3733 BUCKET AS-HOE—HEAVY-DUTY

S/N: DPH1-UP
305-MM (12-IN)
PART OF 273-3732 BUCKET GP-HOE
AN ATTACHMENT

SMCS-6503 **i02560416**

NOTE	REF NO	GRAPHIC REF	PART NUMBER	QTY	PART NAME 1 2 3 4 5 6 (PRODUCT LEVEL)	SEE PAGE
	1	1	*286-9340*	1	BRACKET AS (LH)	
		1	**9R-0320**	1	BEARING-SLEEVE	
		1	**154-5257**	1	BEARING-SLEEVE	
	2	1	*286-9338*	1	BRACKET AS (RH)	
		1	**9R-0320**	1	BEARING-SLEEVE	
		1	**154-5257**	1	BEARING-SLEEVE	
	3	1	**273-3599**	4	PLATE	
	4	1	**273-3730**	1	EDGE	
	5	1	*273-3755*	1	PLATE AS (RH)	
		1	**272-7918**	1	EDGE (RH)	
	6	1	*273-3756*	1	PLATE AS (LH)	
		1	**272-7919**	1	EDGE (LH)	

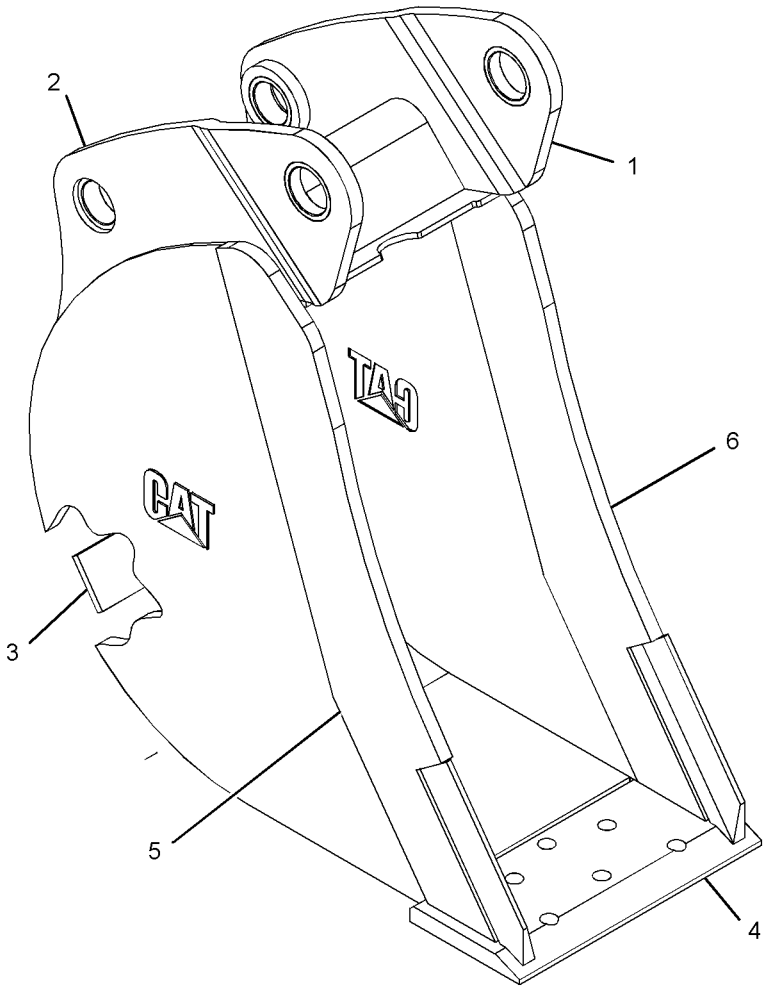

GRAPHIC #1 **<END>** g01215630

WORK TOOLS

273-3793 BUCKET AS-HOE

S/N: DPH1-UP
305-MM (12-IN)
PART OF 273-3792 BUCKET GP-HOE
AN ATTACHMENT

SMCS-6503 **i02523409**

NOTE	REF NO	GRAPHIC REF	PART NUMBER	QTY	PART NAME 1 2 3 4 5 6 (PRODUCT LEVEL)	SEE PAGE
	1	1	*286-9340*	1	BRACKET AS (LH)	
		1	**9R-0320**	1	BEARING-SLEEVE	
		1	**154-5257**	1	BEARING-SLEEVE	
	2	1	*286-9338*	1	BRACKET AS (RH)	
		1	**9R-0320**	1	BEARING-SLEEVE	
		1	**154-5257**	1	BEARING-SLEEVE	
	3	1	**273-3730**	1	EDGE	

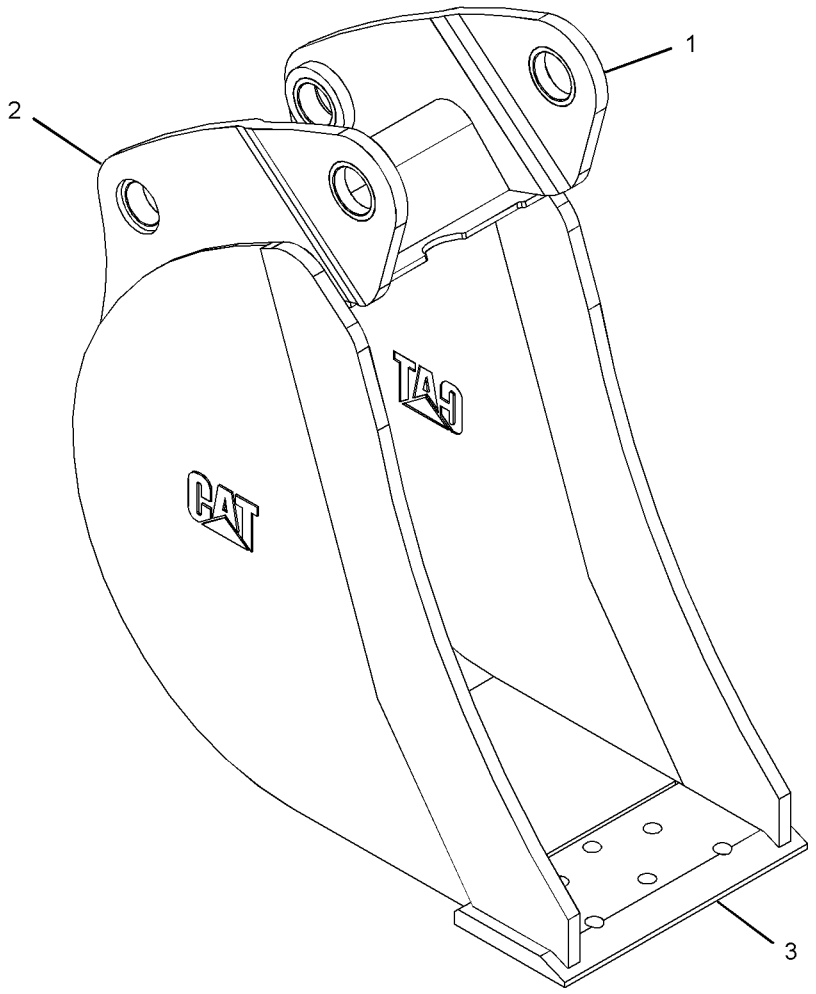

GRAPHIC #1 **<END>** g01215699

WORK TOOLS

151-7887 BUCKET GP-HOE—HIGH CAPACITY

S/N: DPH1-UP
AN ATTACHMENT

SMCS-6503 **i03595462**

NOTE	REF NO	GRAPHIC REF	PART NUMBER	QTY	PART NAME 1 2 3 4 5 6 (PRODUCT LEVEL)	SEE PAGE
C	1	1	*135-8206*	3	TOOTH GP-UNI	
					(EACH INCLUDES)	
		1	**4F-3657**	2	BOLT-PLOW (5/8-11X2.75-IN)	
		1	**4K-0367**	2	NUT-FULL (5/8-11-THD)	
		1	**135-8203**	1	TOOTH-UNI	
	2	1	**137-4234**	1	PLATE-IDENTIFICATION (WORK TOOL)	
Y	3	1	*151-7829*	1	BUCKET AS-HOE	464
C	4	1	**168-8389**	4	TACK-FASTENER	

C-CHANGE FROM PREVIOUS TYPE
Y-SEPARATE ILLUSTRATION

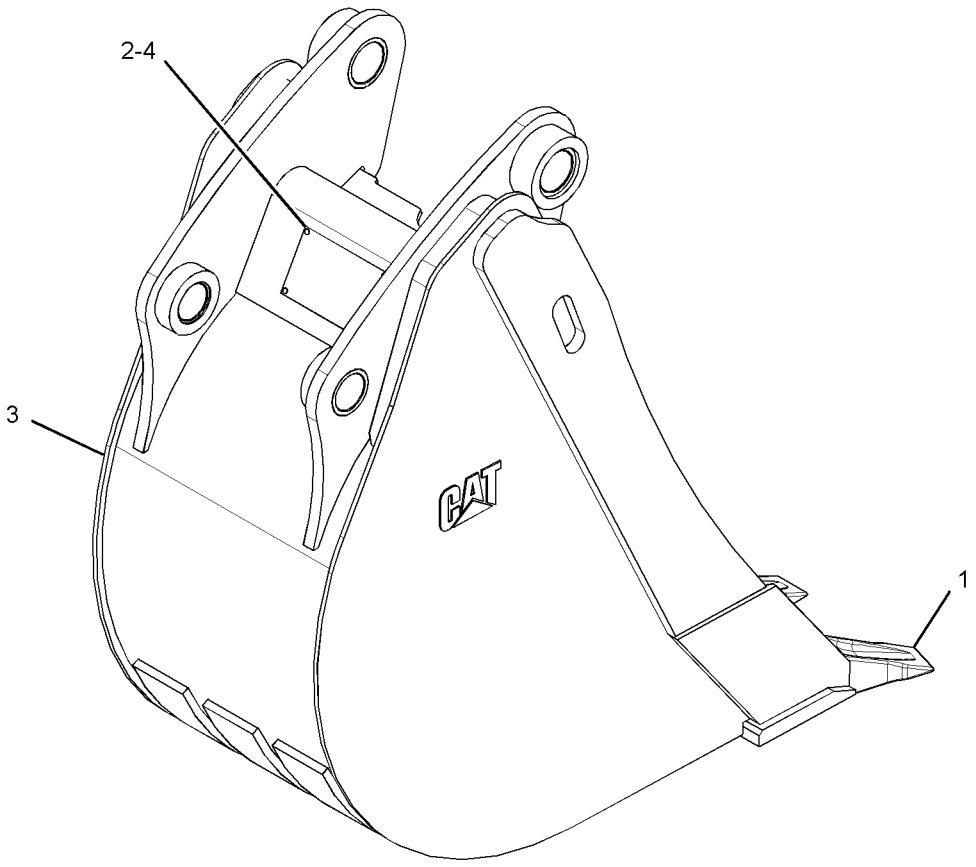

GRAPHIC #1 **<END>** g01398326

151-7888 BUCKET GP-HOE—HIGH CAPACITY

S/N: DPH1-UP
AN ATTACHMENT

SMCS-6503 **i03595481**

NOTE	REF NO	GRAPHIC REF	PART NUMBER	QTY	PART NAME 1 2 3 4 5 6 (PRODUCT LEVEL)	SEE PAGE
C	1	1	*135-8206*	4	TOOTH GP-UNI	
					(EACH INCLUDES)	
		1	**4F-3657**	2	BOLT-PLOW (5/8-11X2.75-IN)	
		1	**4K-0367**	2	NUT-FULL (5/8-11-THD)	
		1	**135-8203**	1	TOOTH-UNI	
	2	1	**137-4234**	1	PLATE-IDENTIFICATION (WORK TOOL)	
Y	3	1	*151-7830*	1	BUCKET AS-HOE	465
C	4	1	**168-8389**	4	TACK-FASTENER	

C-CHANGE FROM PREVIOUS TYPE
Y-SEPARATE ILLUSTRATION

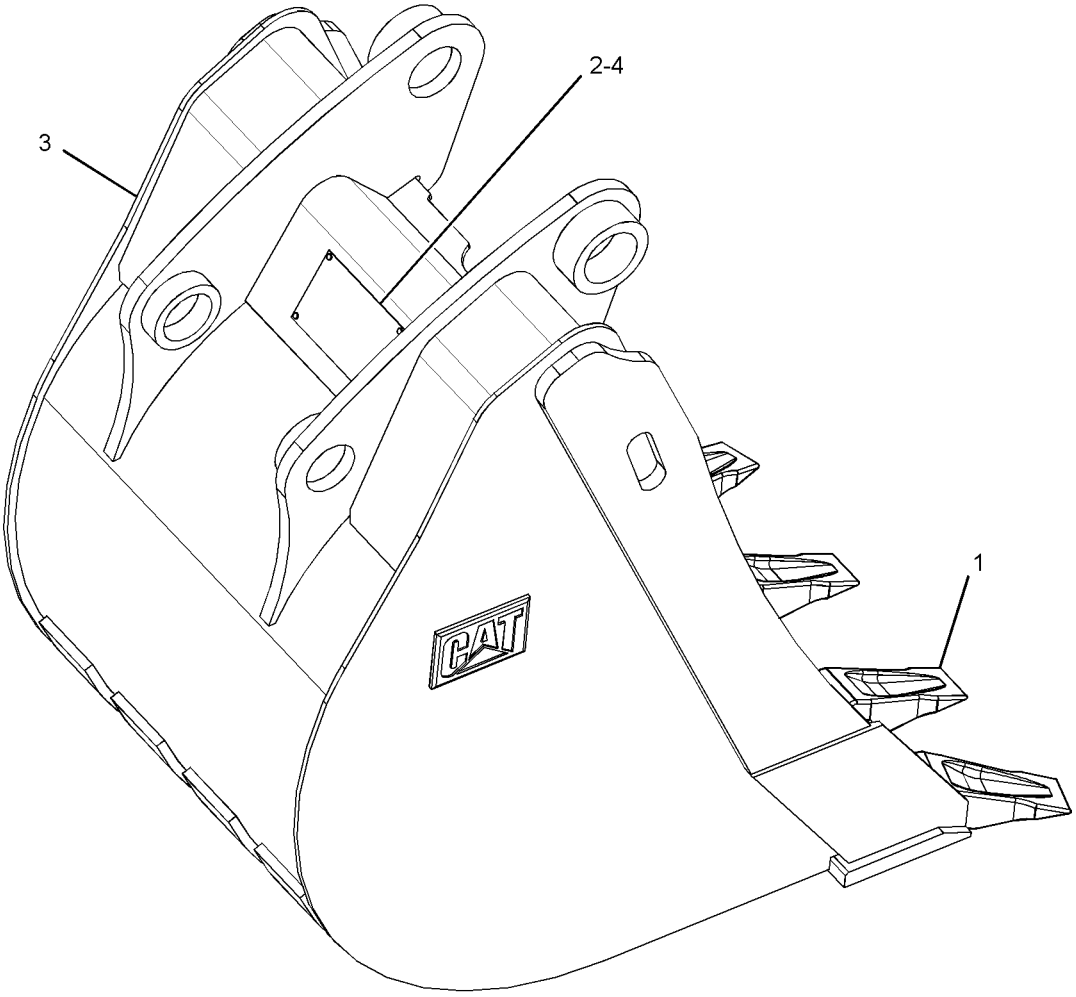

GRAPHIC #1 **<END>** g01398597

WORK TOOLS

151-7889 BUCKET GP-HOE—HIGH CAPACITY

S/N: DPH1-UP
AN ATTACHMENT

SMCS-6503 **i03595500**

NOTE	REF NO	GRAPHIC REF	PART NUMBER	QTY	PART NAME 1 2 3 4 5 6 (PRODUCT LEVEL)	SEE PAGE
C	1	1	*135-8206*	5	TOOTH GP-UNI	
					(EACH INCLUDES)	
		1	**4F-3657**	2	BOLT-PLOW (5/8-11X2.75-IN)	
		1	**4K-0367**	2	NUT-FULL (5/8-11-THD)	
		1	**135-8203**	1	TOOTH-UNI	
	2	1	**137-4234**	1	PLATE-IDENTIFICATION (WORK TOOL)	
Y	3	1	*151-7831*	1	BUCKET AS-HOE	466
C	4	1	**168-8389**	4	TACK-FASTENER	

C-CHANGE FROM PREVIOUS TYPE
Y-SEPARATE ILLUSTRATION

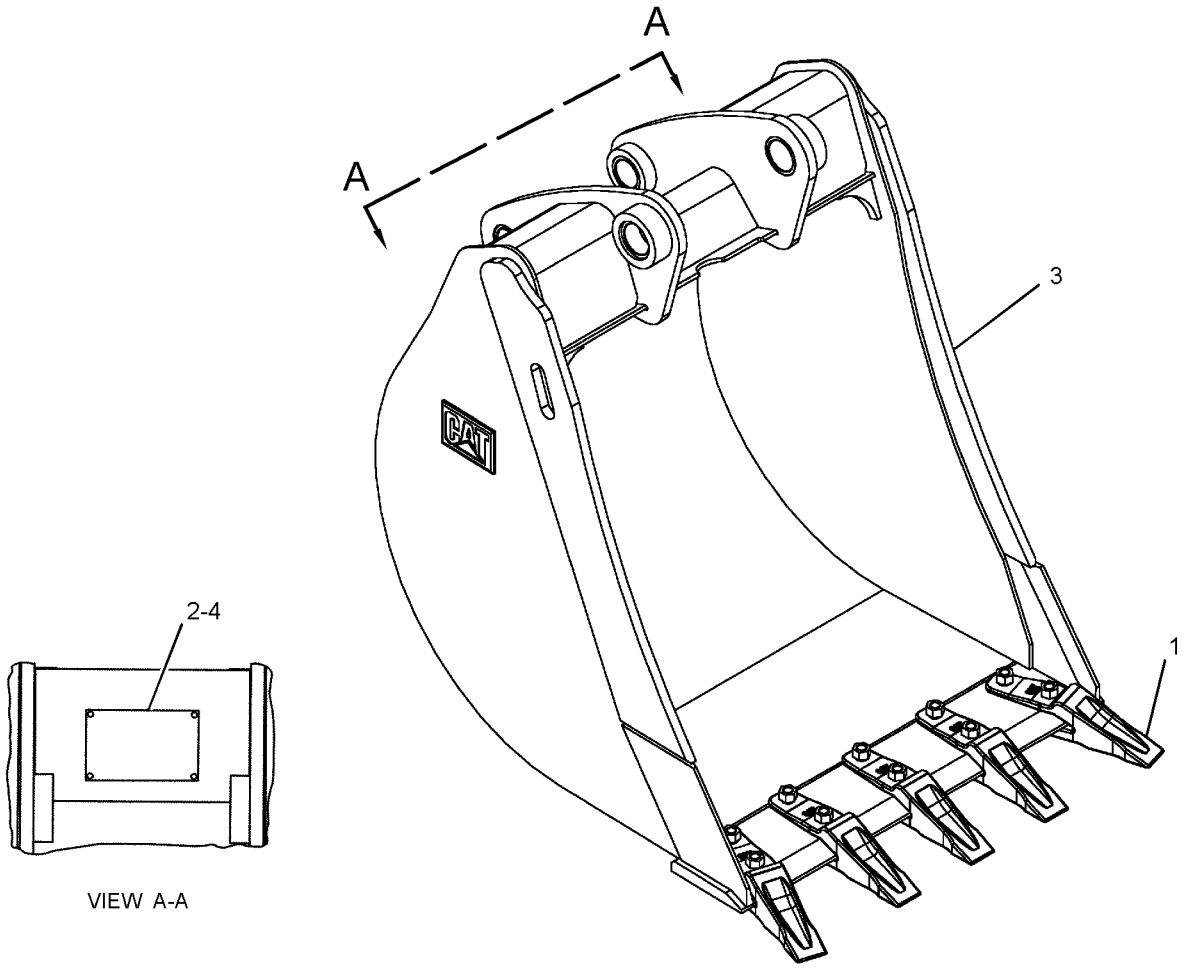

GRAPHIC #1 **<END>** g01356630

151-7890 BUCKET GP-HOE—HIGH CAPACITY

S/N: DPH1-UP
AN ATTACHMENT

SMCS-6503 **i03595501**

NOTE	REF NO	GRAPHIC REF	PART NUMBER	QTY	PART NAME 1 2 3 4 5 6 (PRODUCT LEVEL)	SEE PAGE
C	1	1	*135-8206*	6	TOOTH GP-UNI	
					(EACH INCLUDES)	
		1	**4F-3657**	2	BOLT-PLOW (5/8-11X2.75-IN)	
		1	**4K-0367**	2	NUT-FULL (5/8-11-THD)	
		1	**135-8203**	1	TOOTH-UNI	
Y	2	1	*151-7832*	1	BUCKET AS-HOE	467
	3	1	**137-4234**	1	PLATE-IDENTIFICATION (WORK TOOL)	
	4	1	**168-8389**	4	TACK-FASTENER	

C-CHANGE FROM PREVIOUS TYPE
Y-SEPARATE ILLUSTRATION

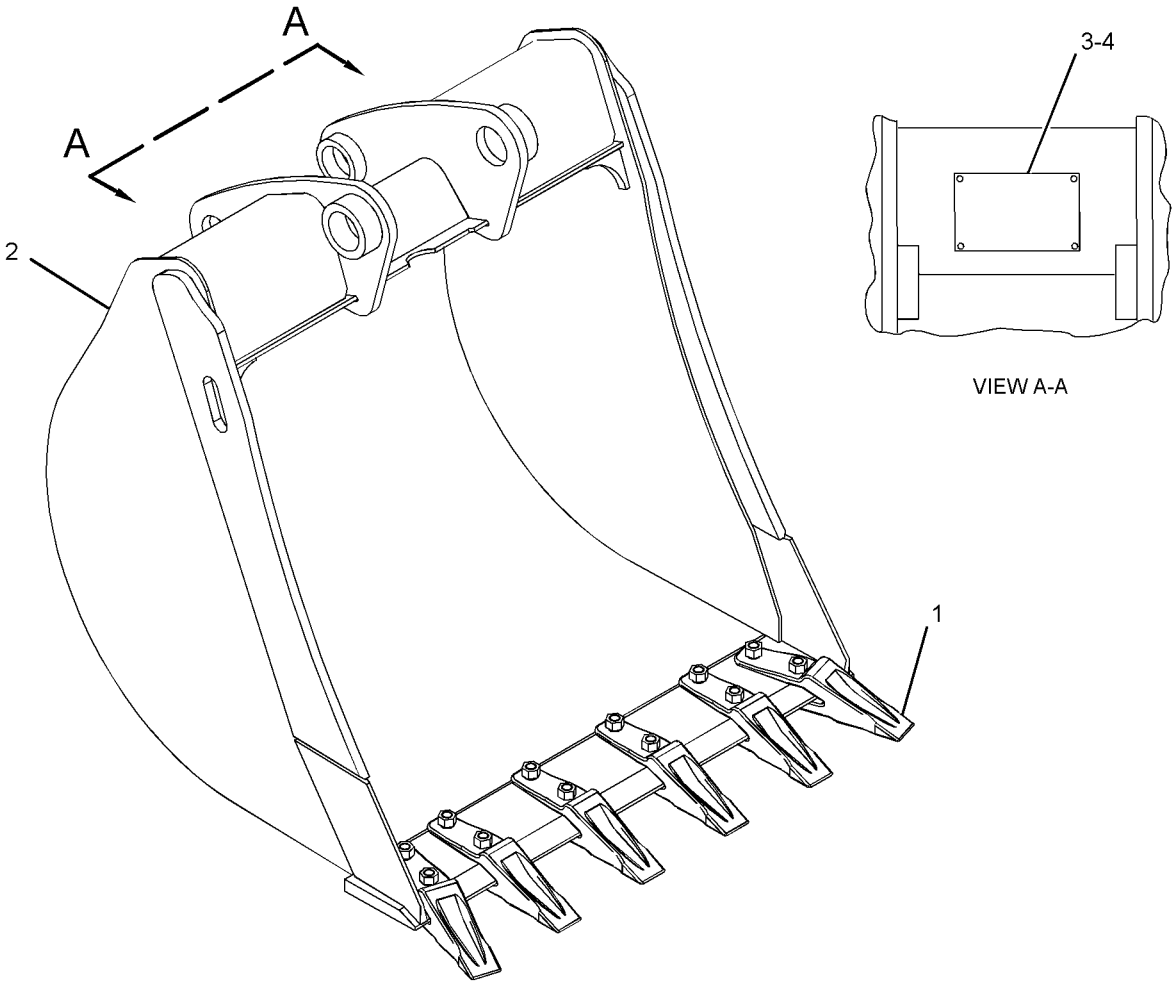

GRAPHIC #1 **<END>** g01925157

WORK TOOLS

219-3390 BUCKET GP-HOE—HIGH CAPACITY

S/N: DPH1-UP

AN ATTACHMENT

SMCS-6503 **i02651418**

NOTE	REF NO	GRAPHIC REF	PART NUMBER	QTY	PART NAME 1 2 3 4 5 6 (PRODUCT LEVEL)	SEE PAGE
	1	1	**137-4234**	1	PLATE-IDENTIFICATION (WORK TOOL)	
	2	1	**168-8389**	4	TACK-FASTENER	
	3		*208-5245*	4	TIP GP-PENETRATION	
					(EACH INCLUDES)	
		1	**201-1238**	1	PIN	
		1	**201-1239**	1	RETAINER AS	
		1	**208-5235**	1	TIP-PENETRATION	
Y	4	1	*219-3366*	1	BUCKET AS-HOE	468

Y-SEPARATE ILLUSTRATION

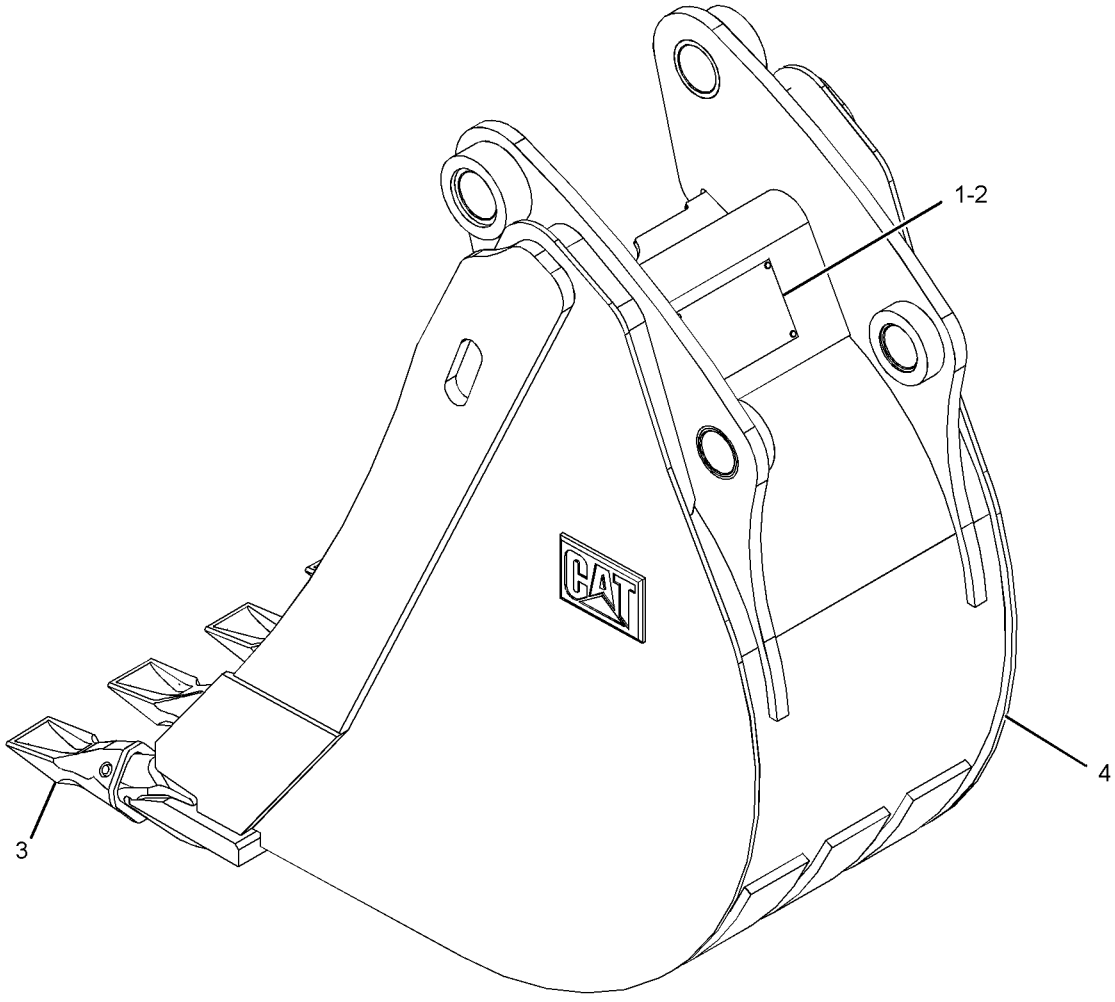

GRAPHIC #1 **<END>** g01337541

WORK TOOLS

219-3391 BUCKET GP-HOE—HIGH CAPACITY

S/N: DPH1-UP

AN ATTACHMENT

SMCS-6503 **i02651581**

NOTE	REF NO	GRAPHIC REF	PART NUMBER	QTY	PART NAME 1 2 3 4 5 6 (PRODUCT LEVEL)	SEE PAGE
	1	1	**137-4234**	1	PLATE-IDENTIFICATION (WORK TOOL)	
	2	1	**168-8389**	4	TACK-FASTENER	
	3	1	*208-5245*	5	TIP GP-PENETRATION	
					(EACH INCLUDES)	
		1	**201-1238**	1	PIN	
		1	**201-1239**	1	RETAINER AS	
		1	**208-5235**	1	TIP-PENETRATION	
Y	4	1	*219-3367*	1	BUCKET AS-HOE	469

Y-SEPARATE ILLUSTRATION

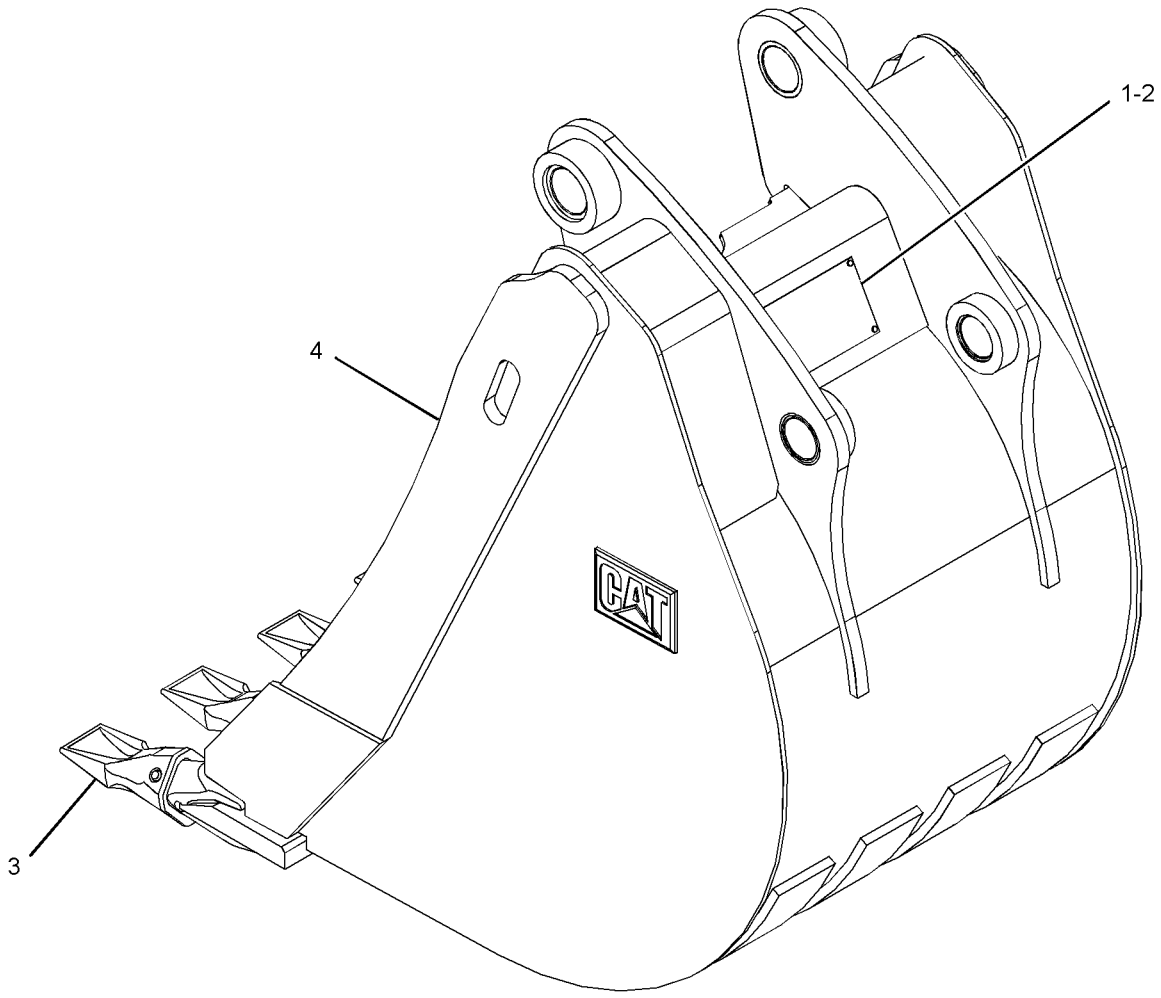

GRAPHIC #1 **<END>** g01341952

WORK TOOLS

219-3392 BUCKET GP-HOE—HIGH CAPACITY

S/N: DPH1-UP

AN ATTACHMENT

SMCS-6503 **i02651585**

NOTE	REF NO	GRAPHIC REF	PART NUMBER	QTY	PART NAME 1 2 3 4 5 6 (PRODUCT LEVEL)	SEE PAGE
	1	1	**137-4234**	1	PLATE-IDENTIFICATION (WORK TOOL)	
	2	1	**168-8389**	4	TACK-FASTENER	
	3	1	*208-5245*	5	TIP GP-PENETRATION	
					(EACH INCLUDES)	
		1	**201-1238**	1	PIN	
		1	**201-1239**	1	RETAINER AS	
		1	**208-5235**	1	TIP-PENETRATION	
Y	4	1	*219-3368*	1	BUCKET AS-HOE	470

Y-SEPARATE ILLUSTRATION

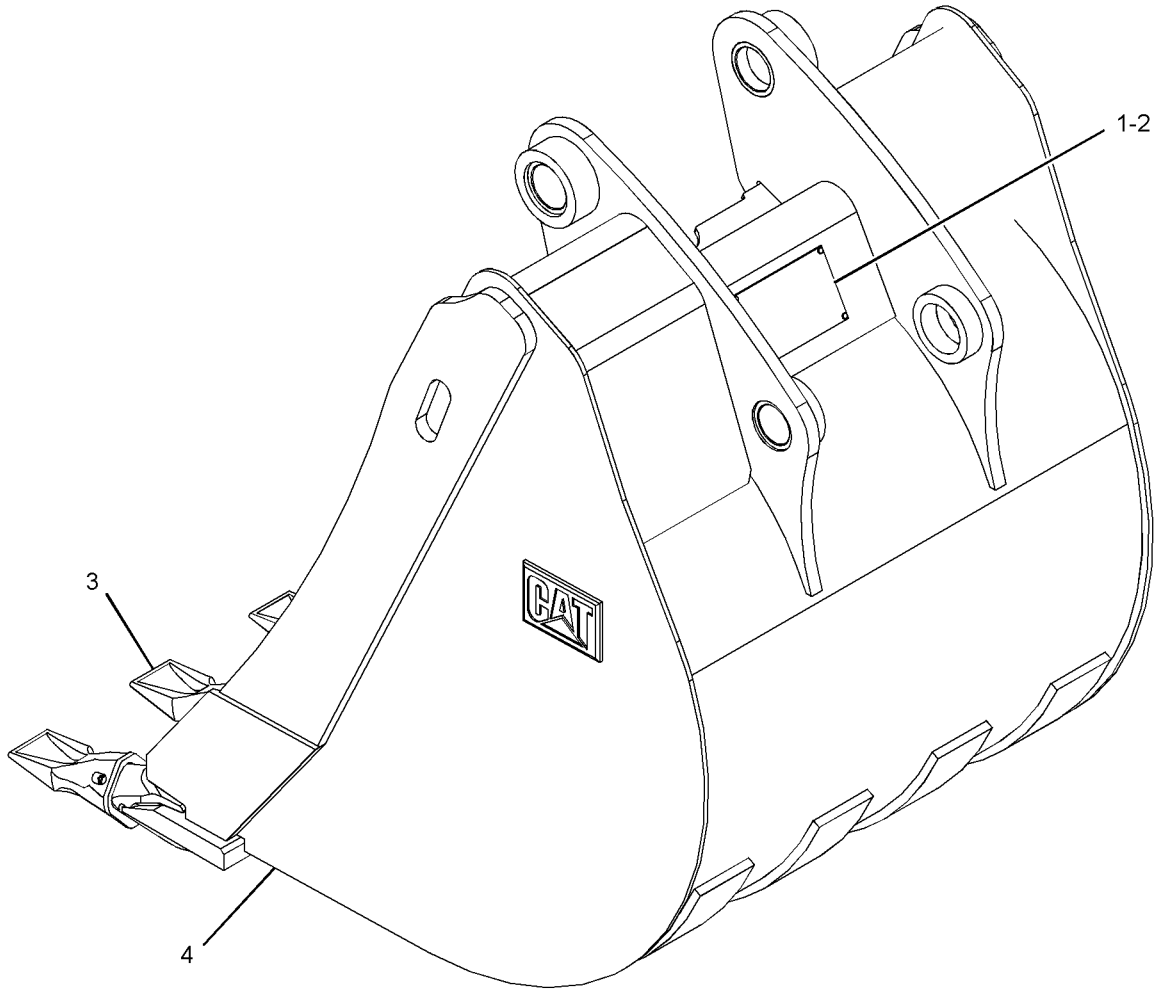

GRAPHIC #1 **<END>** g01341920

WORK TOOLS

219-3393 BUCKET GP-HOE—HIGH CAPACITY

S/N: DPH1-UP

AN ATTACHMENT

SMCS-6503 **i02651587**

NOTE	REF NO	GRAPHIC REF	PART NUMBER	QTY	PART NAME 1 2 3 4 5 6 (PRODUCT LEVEL)	SEE PAGE
	1	1	**137-4234**	1	PLATE-IDENTIFICATION (WORK TOOL)	
	2	1	**168-8389**	4	TACK-FASTENER	
	3		*208-5245*	6	TIP GP-PENETRATION	
					(EACH INCLUDES)	
		1	**201-1238**	1	PIN	
		1	**201-1239**	1	RETAINER AS	
		1	**208-5235**	1	TIP-PENETRATION	
Y	4	1	*219-3369*	1	BUCKET AS-HOE	471

Y-SEPARATE ILLUSTRATION

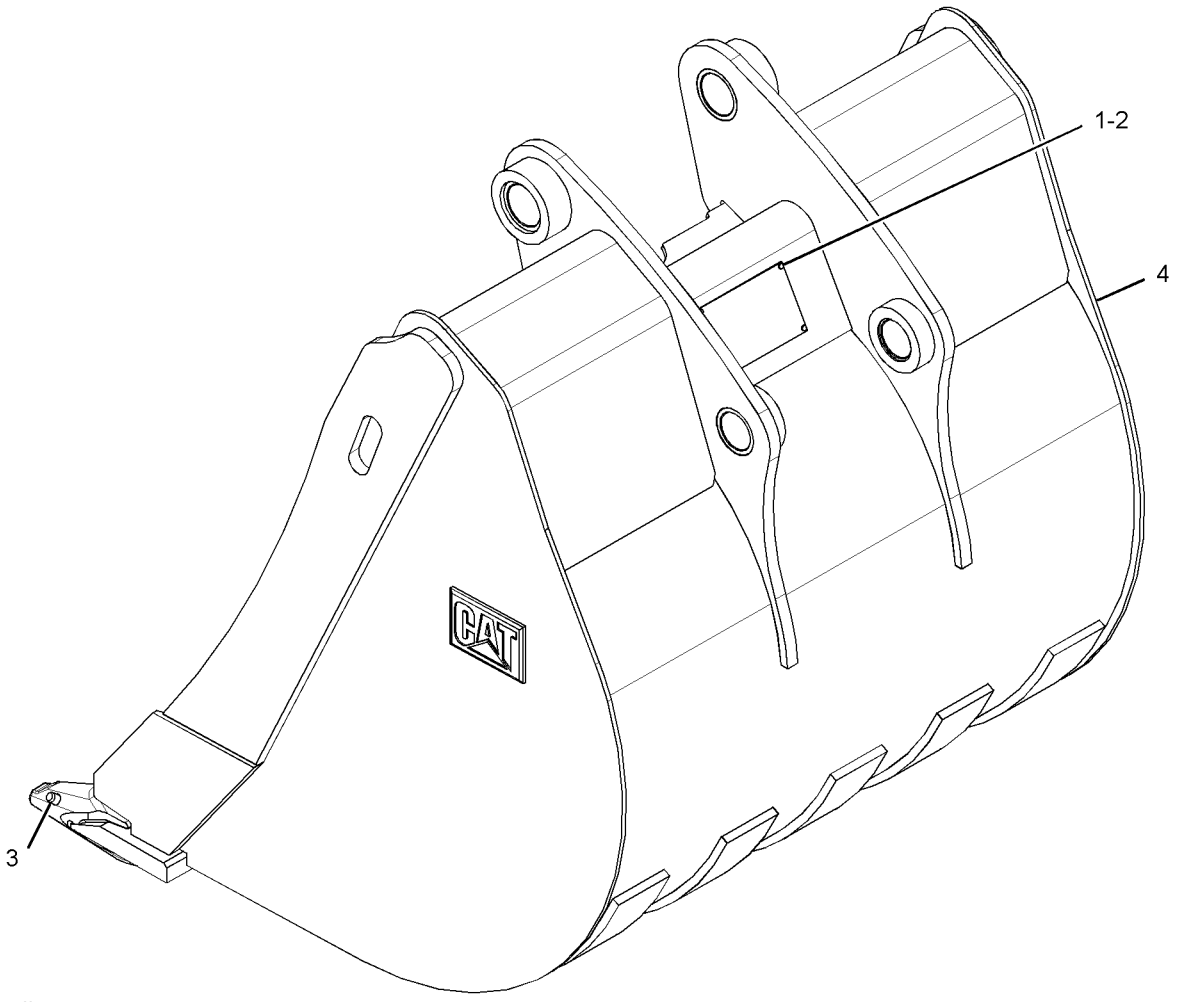

GRAPHIC #1 **<END>** g01336804

WORK TOOLS

249-4221 BUCKET GP-HOE—HEAVY-DUTY

S/N: DPH1-UP

AN ATTACHMENT

SMCS-6503 **i02399270**

NOTE	REF NO	GRAPHIC REF	PART NUMBER	QTY	PART NAME 1 2 3 4 5 6 (PRODUCT LEVEL)	SEE PAGE
	1	1	**137-4234**	1	PLATE-IDENTIFICATION (WORK TOOL)	
	2	1	**168-8389**	4	TACK-FASTENER	
	3	1	*208-5245*	5	TIP GP-PENETRATION	
					(EACH INCLUDES)	
		1	**201-1238**	1	PIN	
		1	**201-1239**	1	RETAINER AS	
		1	**208-5235**	1	TIP-PENETRATION	
Y	4	1	*249-4220*	1	BUCKET AS-HOE	472
M	5	1	**8T-4133**	4	NUT (M10X1.5-THD)	
M	6	1	**8T-4178**	2	BOLT (M10X1.5X90-MM)	

M-METRIC PART
Y-SEPARATE ILLUSTRATION

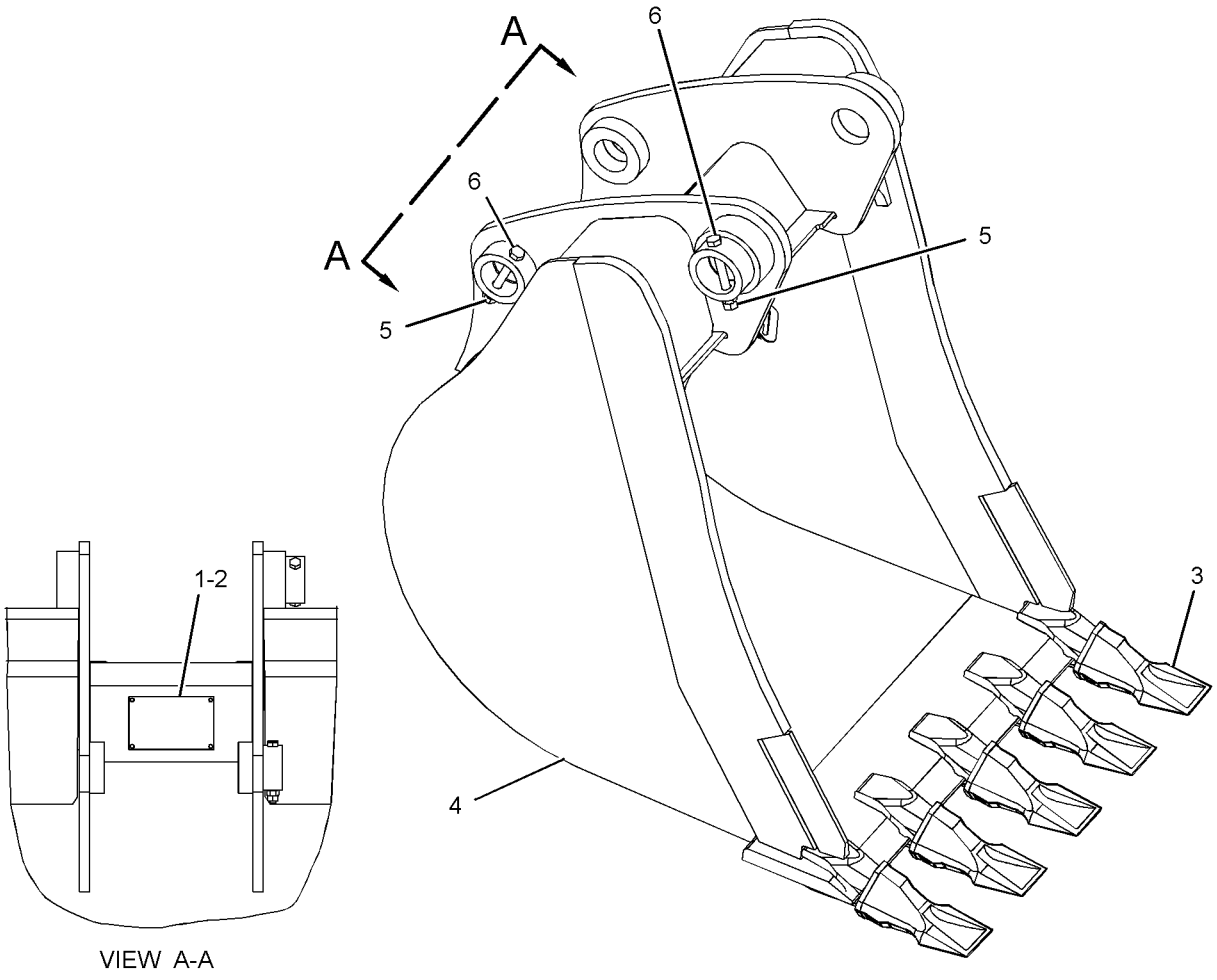

VIEW A-A

GRAPHIC #1 **<END>** g01200276

WORK TOOLS

272-6410 BUCKET GP-HOE—HEAVY-DUTY

S/N: DPH1-UP

AN ATTACHMENT

SMCS-6503 **i02425851**

NOTE	REF NO	GRAPHIC REF	PART NUMBER	QTY	PART NAME 1 2 3 4 5 6 (PRODUCT LEVEL)	SEE PAGE
	1	1	**137-4234**	1	PLATE-IDENTIFICATION (WORK TOOL)	
	2	1	**168-8389**	4	TACK-FASTENER	
	3	1	*208-5245*	4	TIP GP-PENETRATION	
					(EACH INCLUDES)	
		1	**201-1238**	1	PIN	
		1	**201-1239**	1	RETAINER AS	
		1	**208-5235**	1	TIP-PENETRATION	
Y	4	1	*272-6411*	1	BUCKET AS-HOE	473
M	5	1	**8T-4133**	4	NUT (M10X1.5-THD)	
M	6	1	**8T-4178**	2	BOLT (M10X1.5X90-MM)	

M-METRIC PART
Y-SEPARATE ILLUSTRATION

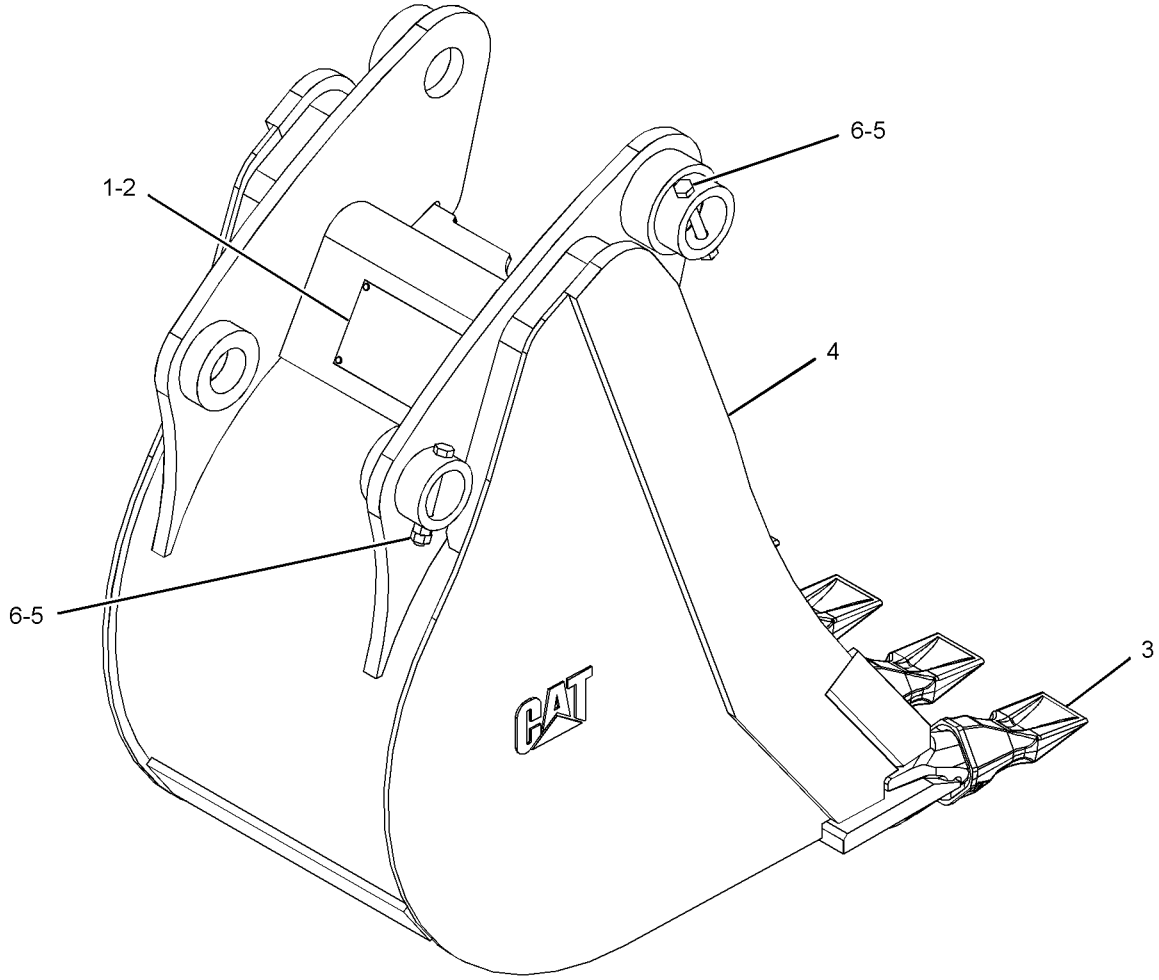

GRAPHIC #1 **<END>** g01214807

WORK TOOLS

272-7872 BUCKET GP-HOE—HEAVY-DUTY

S/N: DPH1-UP

AN ATTACHMENT

SMCS-6503 **i02425880**

NOTE	REF NO	GRAPHIC REF	PART NUMBER	QTY	PART NAME 1 2 3 4 5 6 (PRODUCT LEVEL)	SEE PAGE
	1	1	**137-4234**	1	PLATE-IDENTIFICATION (WORK TOOL)	
	2	1	**168-8389**	4	TACK-FASTENER	
	3	1	*208-5245*	5	TIP GP-PENETRATION	
					(EACH INCLUDES)	
		1	**201-1238**	1	PIN	
		1	**201-1239**	1	RETAINER AS	
		1	**208-5235**	1	TIP-PENETRATION	
Y	4	1	*272-7873*	1	BUCKET AS-HOE	474
M	5	1	**8T-4133**	4	NUT (M10X1.5-THD)	
M	6	1	**8T-4178**	2	BOLT (M10X1.5X90-MM)	

M-METRIC PART
Y-SEPARATE ILLUSTRATION

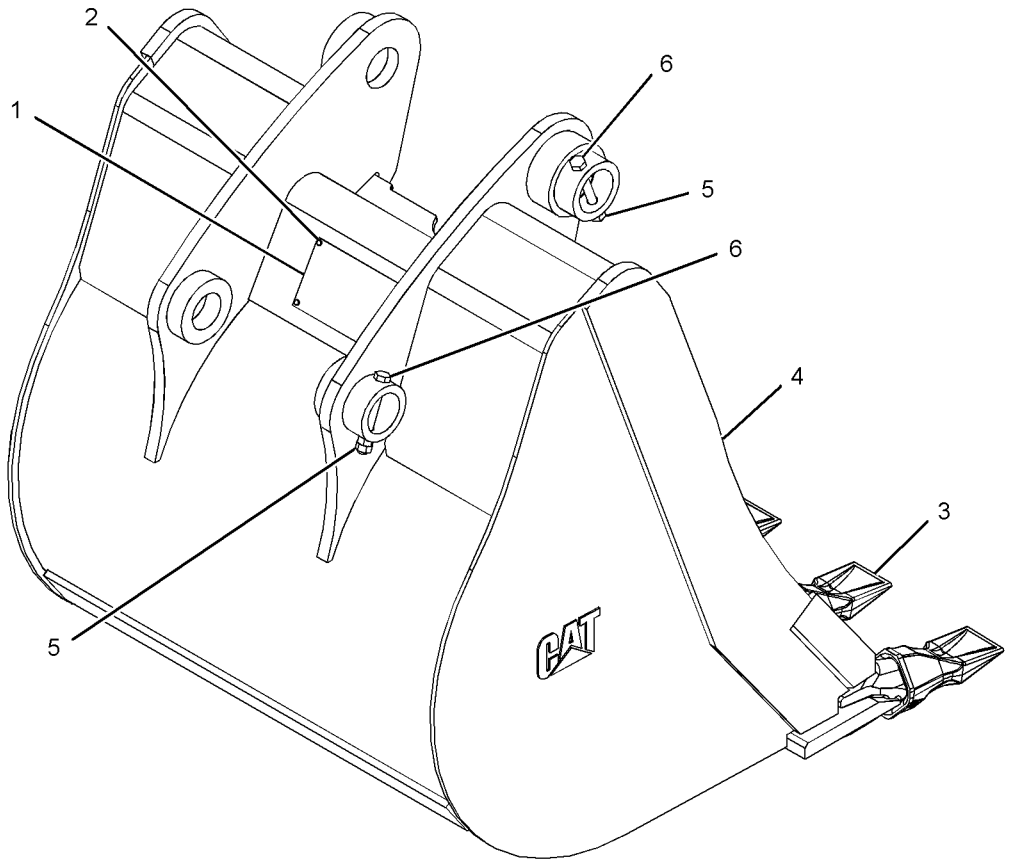

GRAPHIC #1 **<END>** g01215020

WORK TOOLS

272-9234 BUCKET GP-HOE—HEAVY-DUTY

S/N: DPH1-UP

AN ATTACHMENT

SMCS-6503 **i02427535**

NOTE	REF NO	GRAPHIC REF	PART NUMBER	QTY	PART NAME 1 2 3 4 5 6 (PRODUCT LEVEL)	SEE PAGE
	1	1	**137-4234**	1	PLATE-IDENTIFICATION (WORK TOOL)	
	2	1	**168-8389**	4	TACK-FASTENER	
	3	1	*208-5245*	6	TIP GP-PENETRATION	
					(EACH INCLUDES)	
		1	**201-1238**	1	PIN	
		1	**201-1239**	1	RETAINER AS	
		1	**208-5235**	1	TIP-PENETRATION	
Y	4	1	*272-9235*	1	BUCKET AS-HOE	475
M	5	1	**8T-4133**	4	NUT (M10X1.5-THD)	
M	6	1	**8T-4178**	2	BOLT (M10X1.5X90-MM)	

M-METRIC PART
Y-SEPARATE ILLUSTRATION

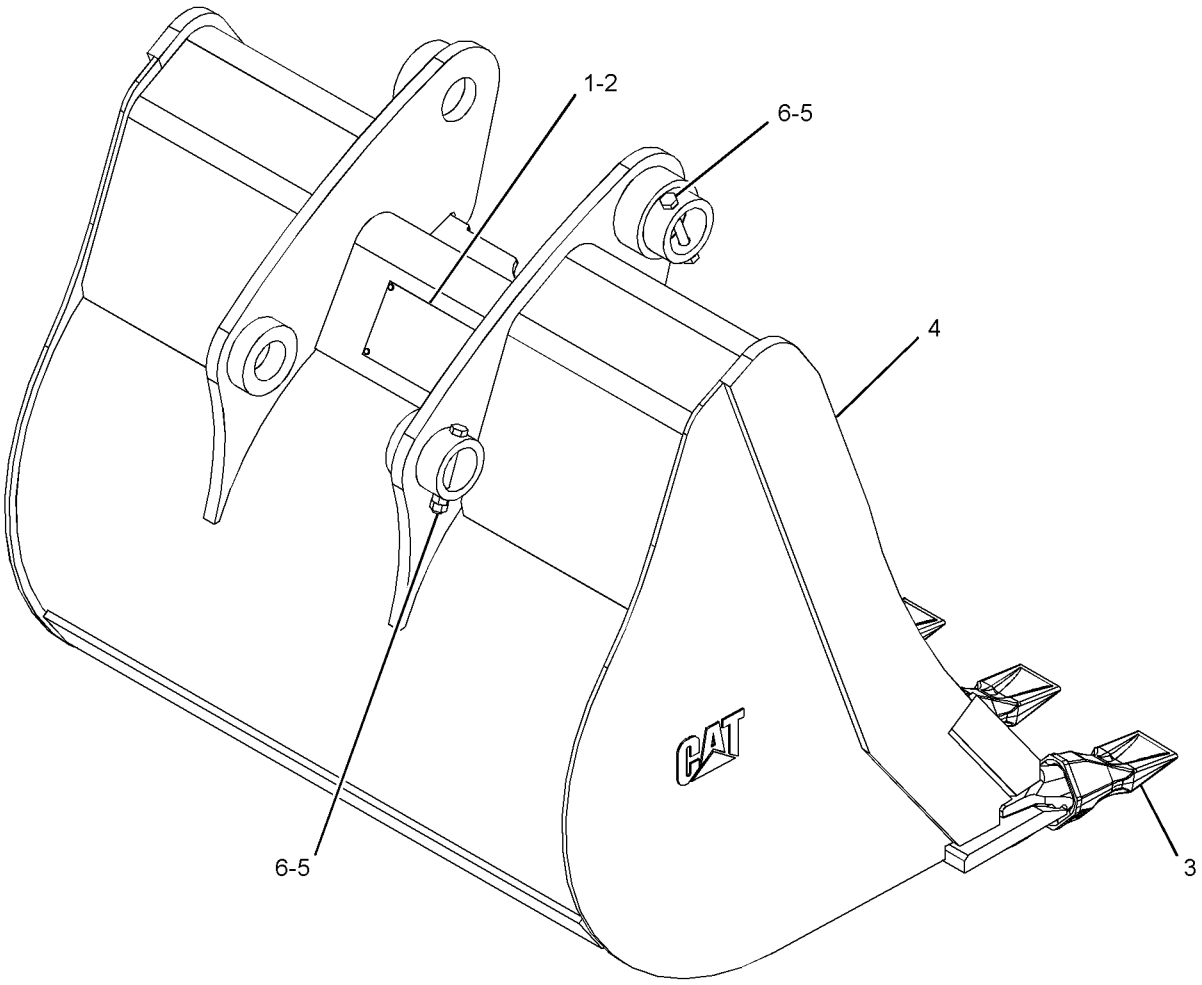

GRAPHIC #1 **<END>** g01214243

WORK TOOLS

272-9608 BUCKET GP-HOE—HEAVY-DUTY

S/N: DPH1-UP
AN ATTACHMENT

SMCS-6503 **i03599041**

NOTE	REF NO	GRAPHIC REF	PART NUMBER	QTY	PART NAME 1 2 3 4 5 6 (PRODUCT LEVEL)	SEE PAGE
	1	1	*135-8206*	6	TOOTH GP-UNI	
					(EACH INCLUDES)	
		1	**4F-3657**	2	BOLT-PLOW (5/8-11X2.75-IN)	
		1	**4K-0367**	2	NUT-FULL (5/8-11-THD)	
		1	**135-8203**	1	TOOTH-UNI	
	2	1	**137-4234**	1	PLATE-IDENTIFICATION (WORK TOOL)	
	3	1	**168-8389**	4	TACK-FASTENER	
Y	4	1	*272-9609*	1	BUCKET AS-HOE	476
M	5	1	**8T-4133**	4	NUT (M10X1.5-THD)	
M	6	1	**8T-4178**	2	BOLT (M10X1.5X90-MM)	

M-METRIC PART
Y-SEPARATE ILLUSTRATION

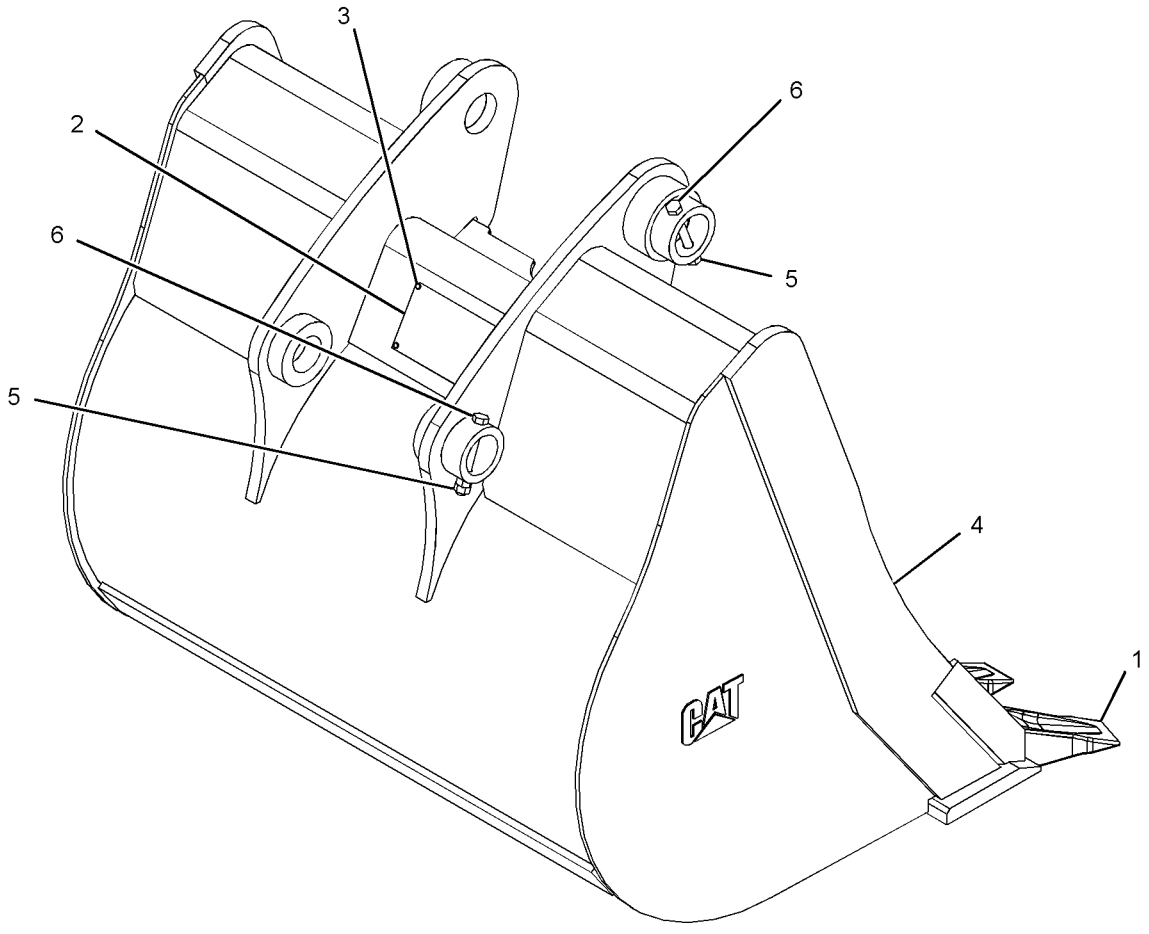

GRAPHIC #1 **<END>** g01215725

WORK TOOLS

273-0042 BUCKET GP-HOE—HEAVY-DUTY

S/N: DPH1-UP

AN ATTACHMENT

SMCS-6503 **i03599042**

NOTE	REF NO	GRAPHIC REF	PART NUMBER	QTY	PART NAME 1 2 3 4 5 6 (PRODUCT LEVEL)	SEE PAGE
	1	1	*135-8206*	5	TOOTH GP-UNI	
					(EACH INCLUDES)	
		1	**4F-3657**	2	BOLT-PLOW (5/8-11X2.75-IN)	
		1	**4K-0367**	2	NUT-FULL (5/8-11-THD)	
		1	**135-8203**	1	TOOTH-UNI	
	2	1	**137-4234**	1	PLATE-IDENTIFICATION (WORK TOOL)	
	3	1	**168-8389**	4	TACK-FASTENER	
Y	4	1	*273-0043*	1	BUCKET AS-HOE	477
M	5	1	**8T-4133**	4	NUT (M10X1.5-THD)	
M	6	1	**8T-4178**	2	BOLT (M10X1.5X90-MM)	

M-METRIC PART
Y-SEPARATE ILLUSTRATION

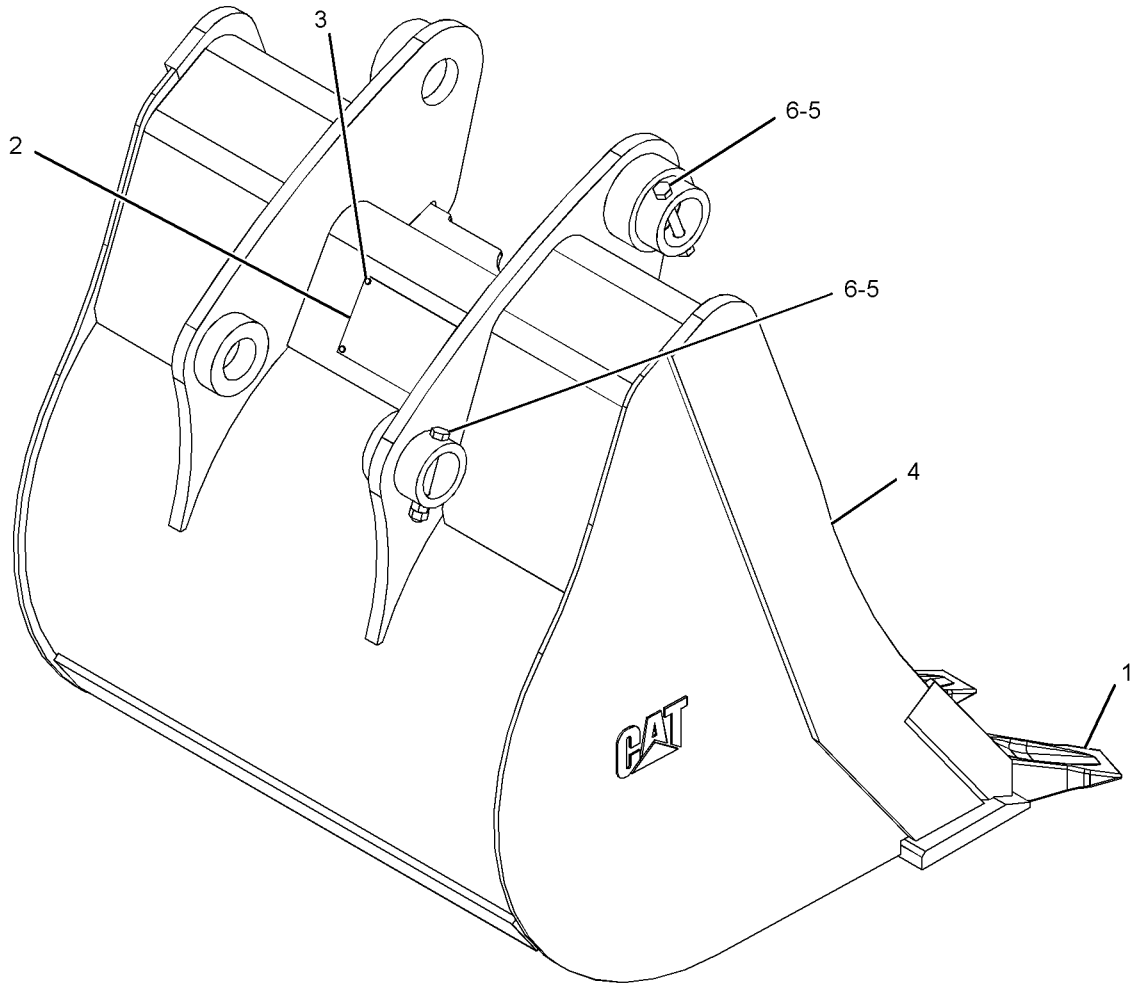

GRAPHIC #1 **<END>** g01214208

WORK TOOLS

273-0093 BUCKET GP-HOE—HEAVY-DUTY

S/N: DPH1-UP

AN ATTACHMENT

SMCS-6503 **i02427582**

NOTE	REF NO	GRAPHIC REF	PART NUMBER	QTY	PART NAME 1 2 3 4 5 6 (PRODUCT LEVEL)	SEE PAGE
	1	1	**137-4234**	1	PLATE-IDENTIFICATION (WORK TOOL)	
	2	1	**168-8389**	4	TACK-FASTENER	
	3	1	*208-5245*	3	TIP GP-PENETRATION	
					(EACH INCLUDES)	
		1	**201-1238**	1	PIN	
		1	**201-1239**	1	RETAINER AS	
		1	**208-5235**	1	TIP-PENETRATION	
Y	4	1	*273-0094*	1	BUCKET AS-HOE	478
M	5	1	**8T-4133**	4	NUT (M10X1.5-THD)	
M	6	1	**8T-4178**	2	BOLT (M10X1.5X90-MM)	

M-METRIC PART
Y-SEPARATE ILLUSTRATION

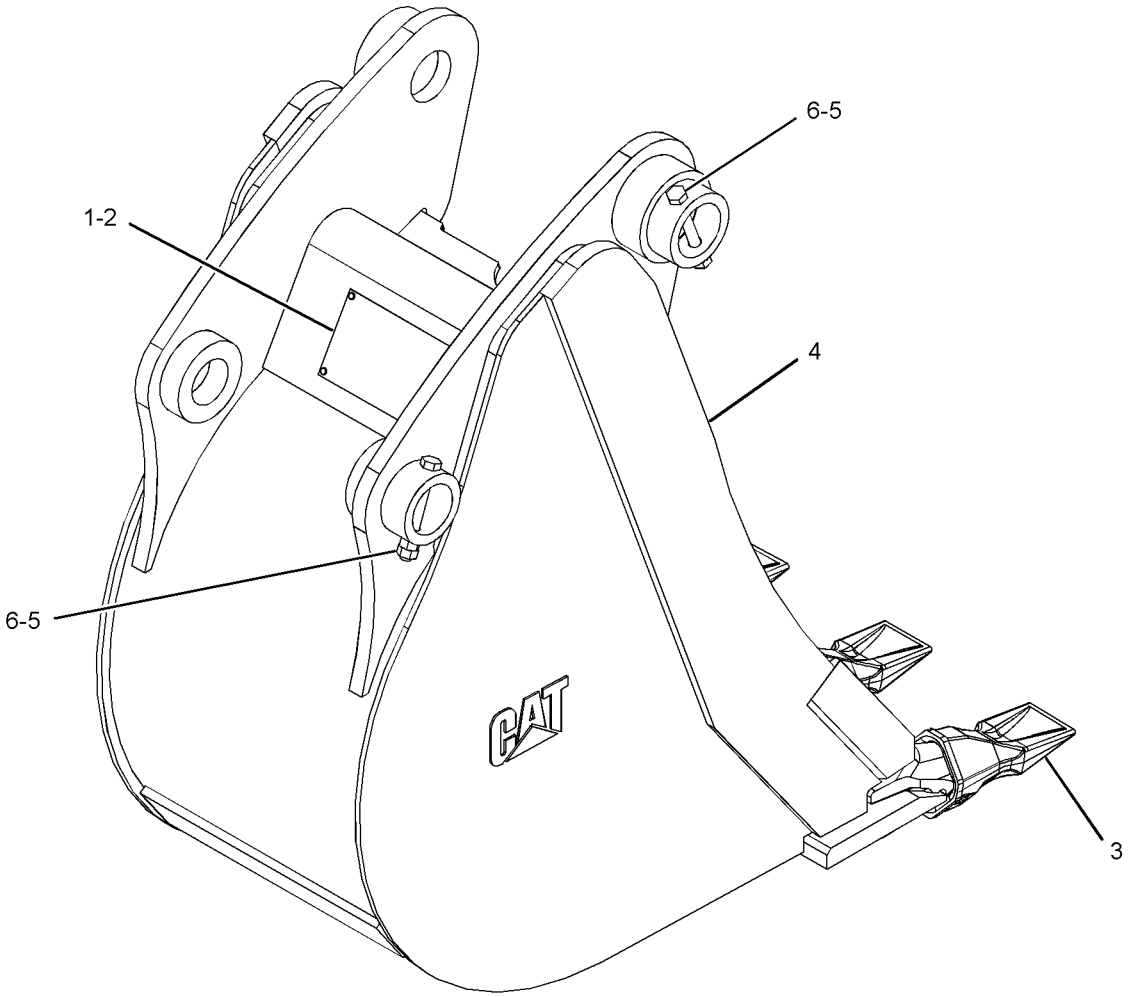

GRAPHIC #1 **<END>** g01214837

273-0799 BUCKET GP-HOE—HEAVY-DUTY

S/N: DPH1-UP
AN ATTACHMENT

SMCS-6503 **i03599045**

NOTE	REF NO	GRAPHIC REF	PART NUMBER	QTY	PART NAME 1 2 3 4 5 6 (PRODUCT LEVEL)	SEE PAGE
	1	1	*135-8206*	4	TOOTH GP-UNI	
					(EACH INCLUDES)	
		1	**4F-3657**	2	BOLT-PLOW (5/8-11X2.75-IN)	
		1	**4K-0367**	2	NUT-FULL (5/8-11-THD)	
		1	**135-8203**	1	TOOTH-UNI	
	2	1	**137-4234**	1	PLATE-IDENTIFICATION (WORK TOOL)	
	3	1	**168-8389**	4	TACK-FASTENER	
Y	4	1	*273-0800*	1	BUCKET AS-HOE	479
M	5	1	**8T-4133**	4	NUT (M10X1.5-THD)	
M	6	1	**8T-4178**	2	BOLT (M10X1.5X90-MM)	

M-METRIC PART
Y-SEPARATE ILLUSTRATION

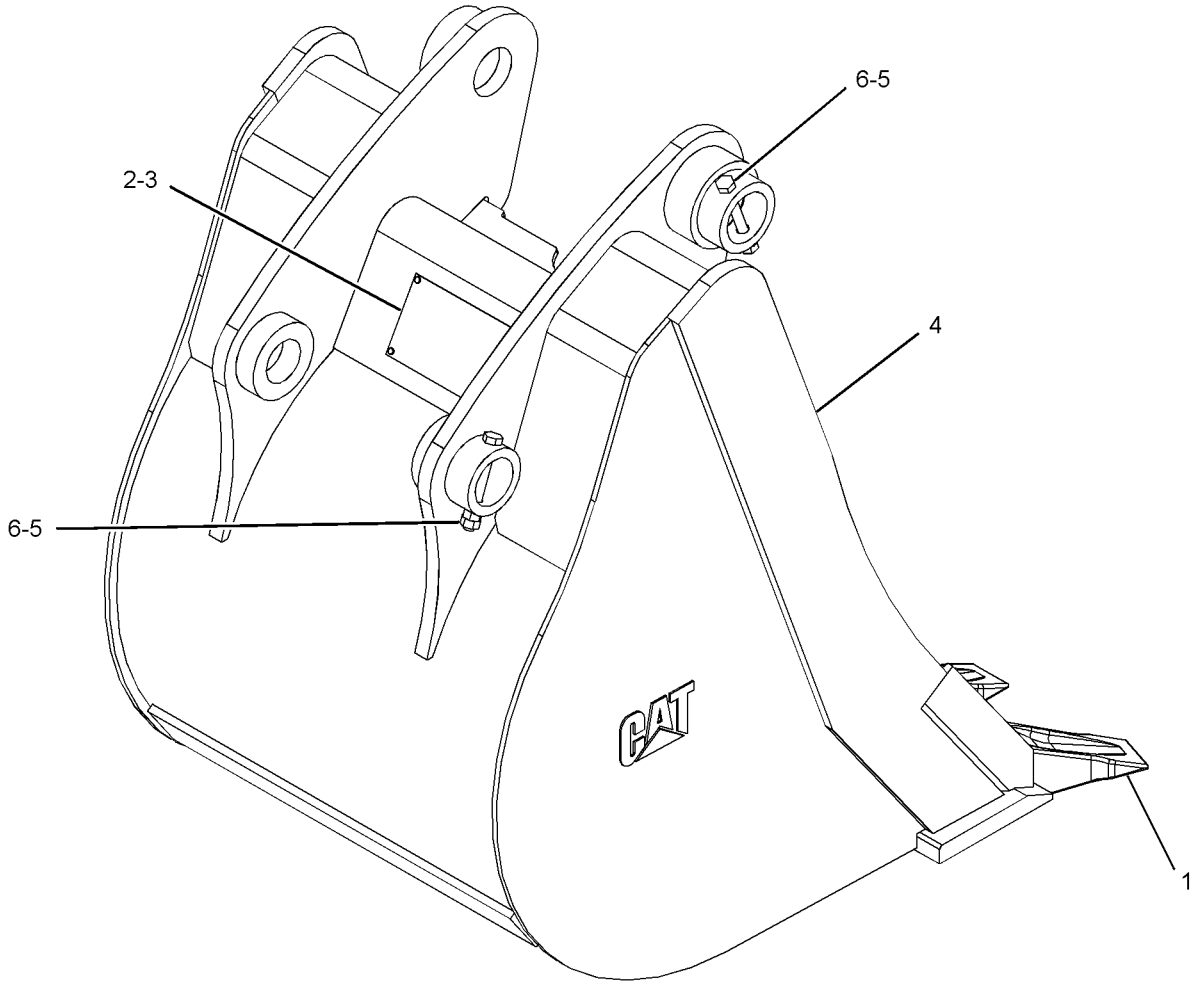

GRAPHIC #1 **<END>** g01214824

WORK TOOLS

273-0862 BUCKET GP-HOE—HEAVY-DUTY

S/N: DPH1-UP

AN ATTACHMENT

SMCS-6503 **i03599047**

NOTE	REF NO	GRAPHIC REF	PART NUMBER	QTY	PART NAME 1 2 3 4 5 6 (PRODUCT LEVEL)	SEE PAGE
	1	1	*135-8206*	3	TOOTH GP-UNI	
					(EACH INCLUDES)	
		1	**4F-3657**	2	BOLT-PLOW (5/8-11X2.75-IN)	
		1	**4K-0367**	2	NUT-FULL (5/8-11-THD)	
		1	**135-8203**	1	TOOTH-UNI	
	2	1	**137-4234**	1	PLATE-IDENTIFICATION (WORK TOOL)	
	3	1	**168-8389**	4	TACK-FASTENER	
Y	4	1	*273-0863*	1	BUCKET AS-HOE	480
M	5	1	**8T-4133**	4	NUT (M10X1.5-THD)	
M	6	1	**8T-4178**	2	BOLT (M10X1.5X90-MM)	

M-METRIC PART
Y-SEPARATE ILLUSTRATION

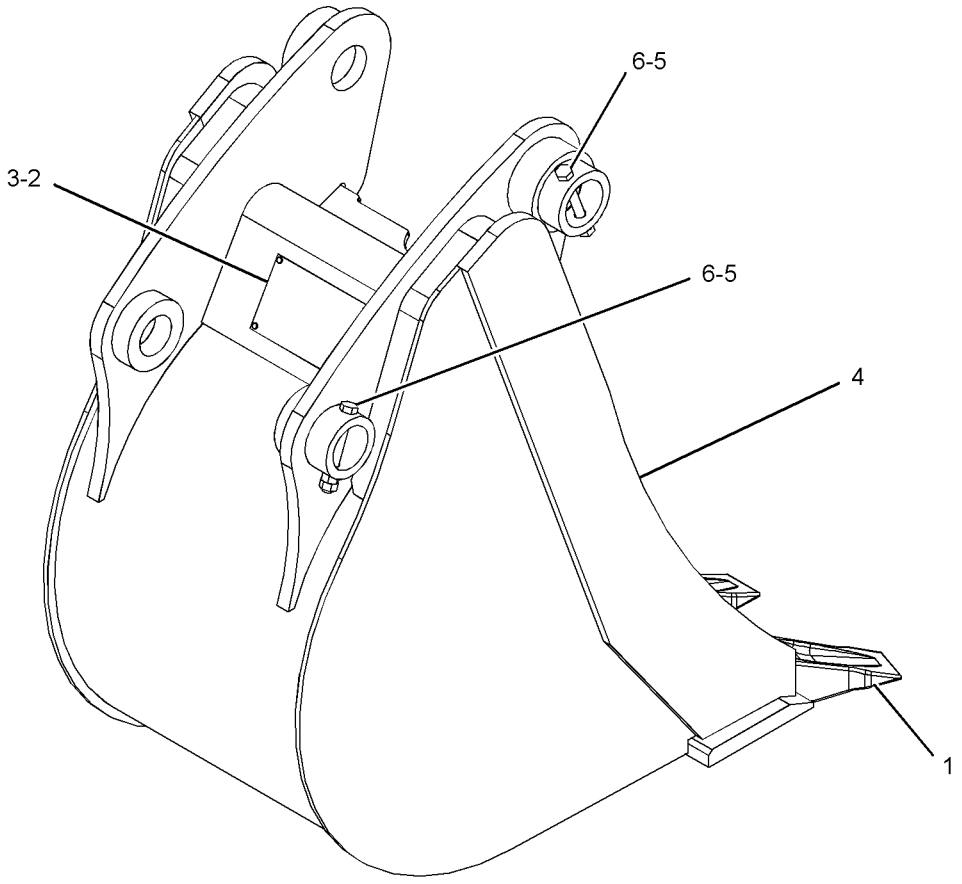

GRAPHIC #1 **<END>** g01220738

WORK TOOLS

273-1374 BUCKET GP-HOE

S/N: DPH1-UP

AN ATTACHMENT

SMCS-6503 **i03599056**

NOTE	REF NO	GRAPHIC REF	PART NUMBER	QTY	PART NAME 1 2 3 4 5 6 (PRODUCT LEVEL)	SEE PAGE
	1	1	*135-8206*	3	TOOTH GP-UNI	
					(EACH INCLUDES)	
		1	**4F-3657**	2	BOLT-PLOW (5/8-11X2.75-IN)	
		1	**4K-0367**	2	NUT-FULL (5/8-11-THD)	
		1	**135-8203**	1	TOOTH-UNI	
	2	1	**137-4234**	1	PLATE-IDENTIFICATION (WORK TOOL)	
	3	1	**168-8389**	4	TACK-FASTENER	
Y	4	1	*273-1375*	1	BUCKET AS-HOE	481
M	5	1	**8T-4133**	4	NUT (M10X1.5-THD)	
M	6	1	**8T-4178**	2	BOLT (M10X1.5X90-MM)	

M-METRIC PART
Y-SEPARATE ILLUSTRATION

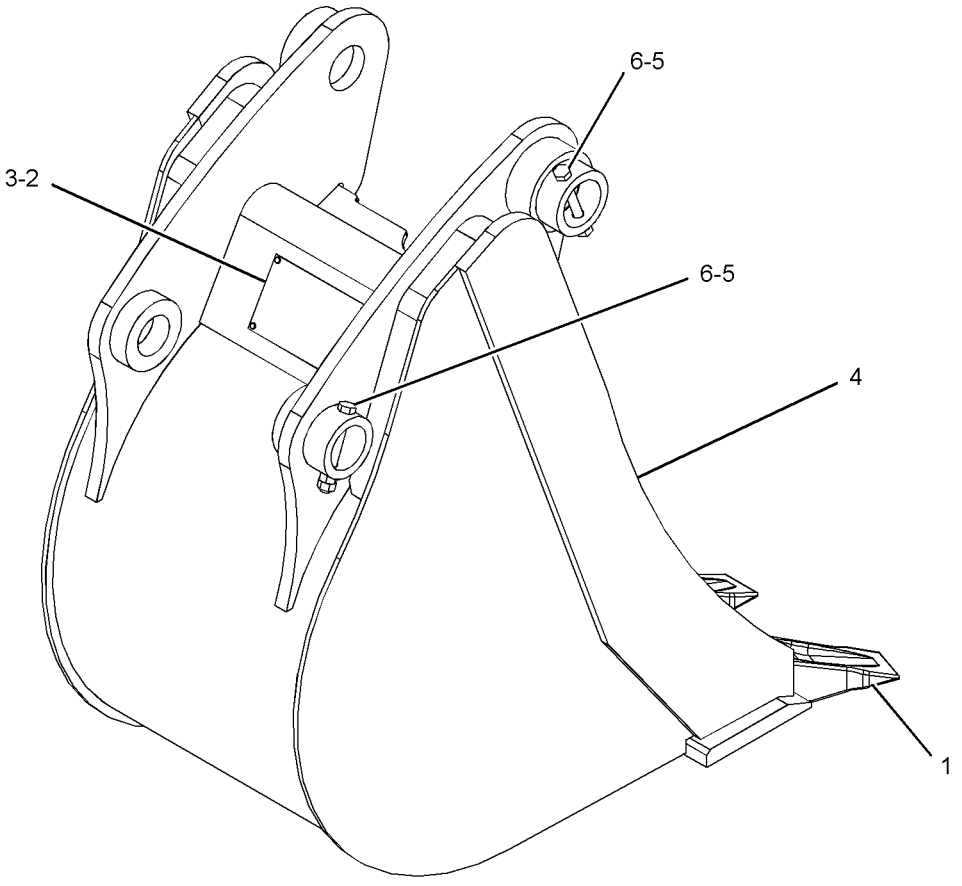

GRAPHIC #1 **<END>** g01220738

WORK TOOLS

273-1948 BUCKET GP-HOE

S/N: DPH1-UP
610-MM(24-IN)
AN ATTACHMENT

SMCS-6503 **i03599057**

NOTE	REF NO	GRAPHIC REF	PART NUMBER	QTY	PART NAME 1 2 3 4 5 6 (PRODUCT LEVEL)	SEE PAGE
	1	1	*135-8206*	4	TOOTH GP-UNI	
					(EACH INCLUDES)	
		1	**4F-3657**	2	BOLT-PLOW (5/8-11X2.75-IN)	
		1	**4K-0367**	2	NUT-FULL (5/8-11-THD)	
		1	**135-8203**	1	TOOTH-UNI	
	2	1	**137-4234**	1	PLATE-IDENTIFICATION (WORK TOOL)	
	3	1	**168-8389**	4	TACK-FASTENER	
Y	4	1	*273-1949*	1	BUCKET AS-HOE	482
M	5	1	**8T-4133**	4	NUT (M10X1.5-THD)	
M	6	1	**8T-4178**	2	BOLT (M10X1.5X90-MM)	

M-METRIC PART
Y-SEPARATE ILLUSTRATION

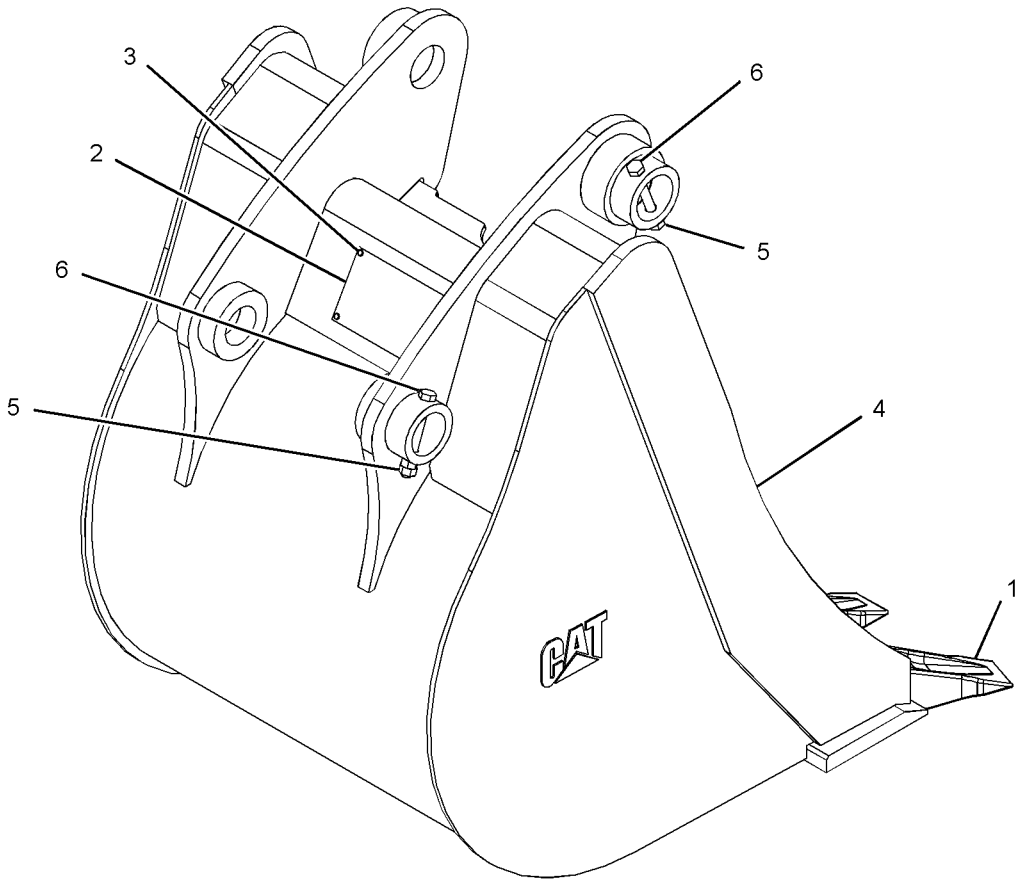

GRAPHIC #1 **<END>** g01215663

WORK TOOLS

273-1950 BUCKET GP-HOE

S/N: DPH1-UP

AN ATTACHMENT

SMCS-6503 **i03599058**

NOTE	REF NO	GRAPHIC REF	PART NUMBER	QTY	PART NAME 1 2 3 4 5 6 (PRODUCT LEVEL)	SEE PAGE
	1	1	*135-8206*	5	TOOTH GP-UNI	
					(EACH INCLUDES)	
		1	**4F-3657**	2	BOLT-PLOW (5/8-11X2.75-IN)	
		1	**4K-0367**	2	NUT-FULL (5/8-11-THD)	
		1	**135-8203**	1	TOOTH-UNI	
	2	1	**137-4234**	1	PLATE-IDENTIFICATION (WORK TOOL)	
	3	1	**168-8389**	4	TACK-FASTENER	
Y	4	1	*273-1951*	1	BUCKET AS-HOE	483
M	5	1	**8T-4133**	4	NUT (M10X1.5-THD)	
M	6	1	**8T-4178**	2	BOLT (M10X1.5X90-MM)	

M-METRIC PART
Y-SEPARATE ILLUSTRATION

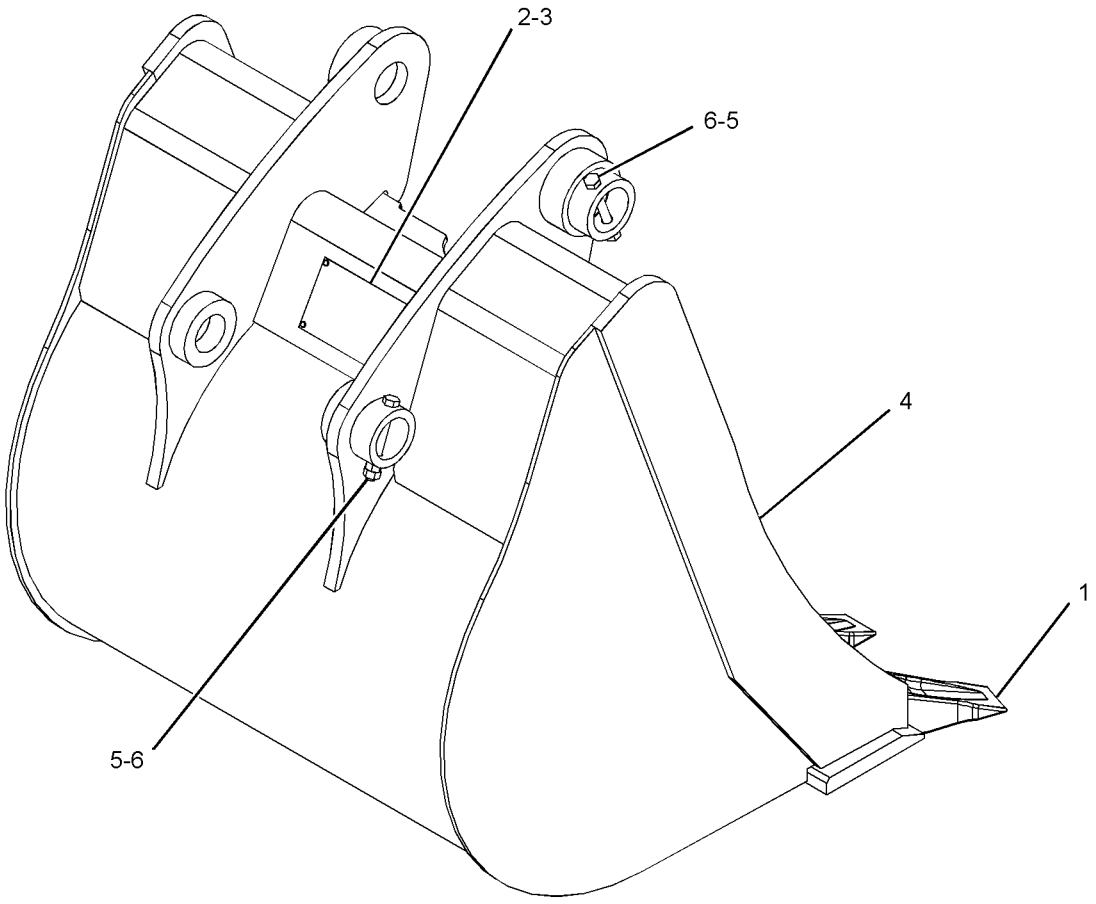

GRAPHIC #1 **<END>** g01215674

WORK TOOLS

273-1957 BUCKET GP-HOE

S/N: DPH1-UP
AN ATTACHMENT

SMCS-6503 **i03599053**

NOTE	REF NO	GRAPHIC REF	PART NUMBER	QTY	PART NAME 1 2 3 4 5 6 (PRODUCT LEVEL)	SEE PAGE
	1	1	*135-8206*	6	TOOTH GP-UNI	
					(EACH INCLUDES)	
		1	**4F-3657**	2	BOLT-PLOW (5/8-11X2.75-IN)	
		1	**4K-0367**	2	NUT-FULL (5/8-11-THD)	
		1	**135-8203**	1	TOOTH-UNI	
	2	1	**137-4234**	1	PLATE-IDENTIFICATION (WORK TOOL)	
	3	1	**168-8389**	4	TACK-FASTENER	
Y	4	1	*273-1958*	1	BUCKET AS-HOE	484
M	5	1	**8T-4133**	4	NUT (M10X1.5-THD)	
M	6	1	**8T-4178**	2	BOLT (M10X1.5X90-MM)	

M-METRIC PART
Y-SEPARATE ILLUSTRATION

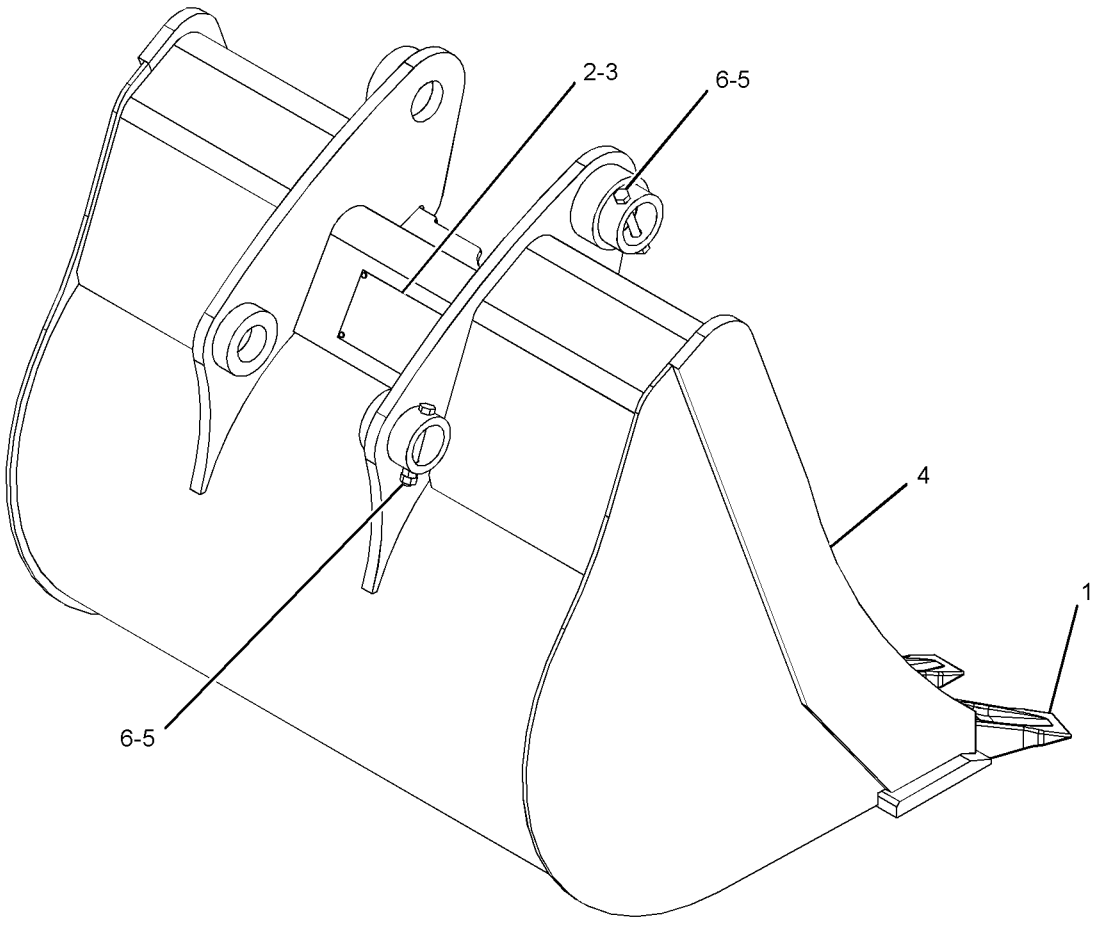

GRAPHIC #1 **<END>** g01215755

WORK TOOLS

273-3731 BUCKET GP-HOE—HEAVY-DUTY

S/N: DPH1-UP

AN ATTACHMENT

SMCS-6503 **i02427621**

NOTE	REF NO	GRAPHIC REF	PART NUMBER	QTY	PART NAME 1 2 3 4 5 6 (PRODUCT LEVEL)	SEE PAGE
	1	1	**9R-0158**	5	WASHER (46X69X3-MM THK)	
	2	1	**9R-1510**	3	WASHER (51X82X4-MM THK)	
	3	1	**168-0443**	1	PIN	
	4	1	**168-0444**	1	PIN	
Y	5	1	**273-3732**	1	BUCKET GP-HOE (HEAVY-DUTY)	509
	6	1	**6V-3213**	2	RING-RETAINING	
	7	1	**6V-4364**	2	RING-RETAINING	

Y-SEPARATE ILLUSTRATION

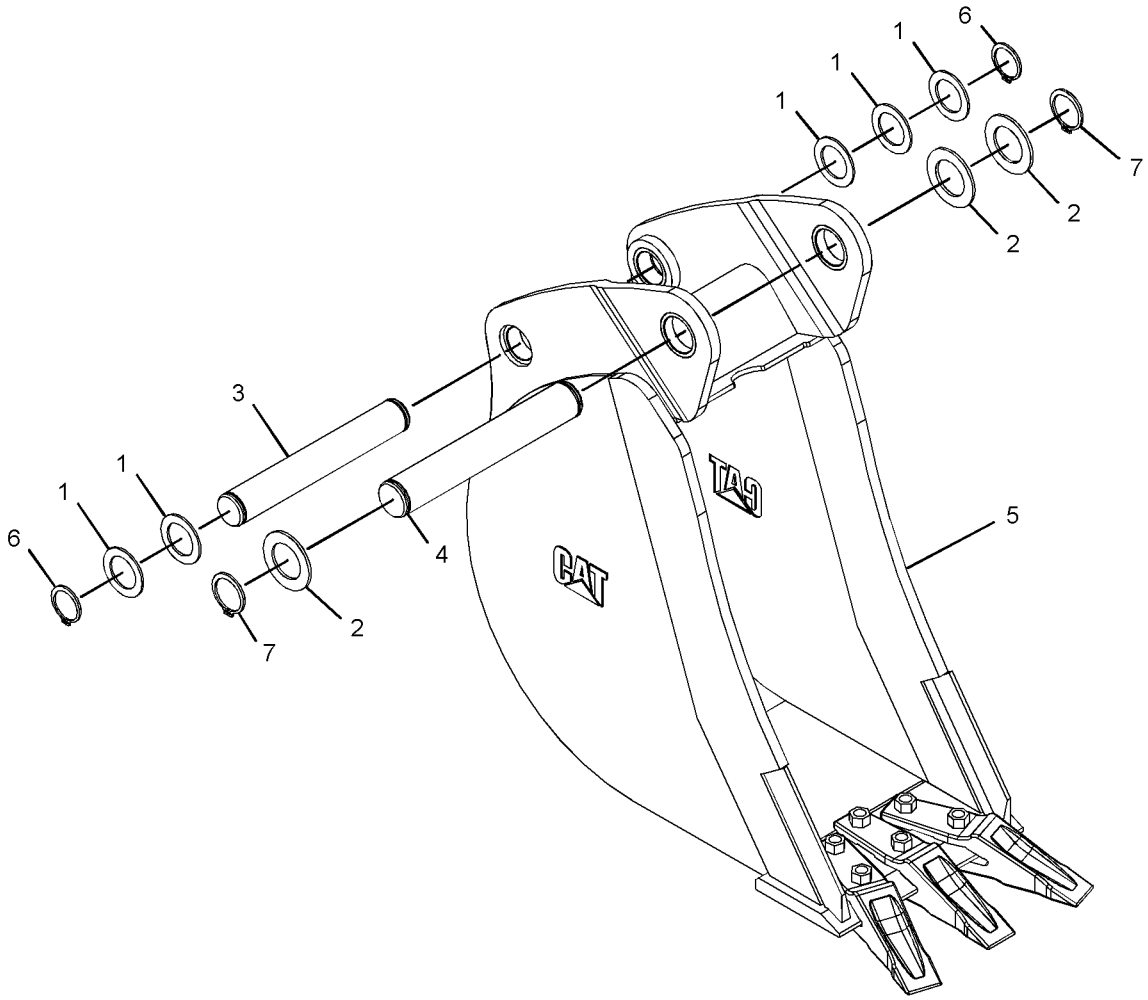

GRAPHIC #1 **<END>** g01215645

WORK TOOLS

273-3732 BUCKET GP-HOE—HEAVY-DUTY

S/N: DPH1-UP

PART OF 273-3731 BUCKET GP-HOE

AN ATTACHMENT

SMCS-6503 **i03599052**

NOTE	REF NO	GRAPHIC REF	PART NUMBER	QTY	PART NAME 1 2 3 4 5 6 (PRODUCT LEVEL)	SEE PAGE
	1	1	*135-8206*	3	TOOTH GP-UNI	
					(EACH INCLUDES)	
		1	**4F-3657**	2	BOLT-PLOW (5/8-11X2.75-IN)	
		1	**4K-0367**	2	NUT-FULL (5/8-11-THD)	
		1	**135-8203**	1	TOOTH-UNI	
	2	1	**137-4234**	1	PLATE-IDENTIFICATION (WORK TOOL)	
	3	1	**168-8389**	4	TACK-FASTENER	
Y	4	1	*273-3733*	1	BUCKET AS-HOE	485

Y-SEPARATE ILLUSTRATION

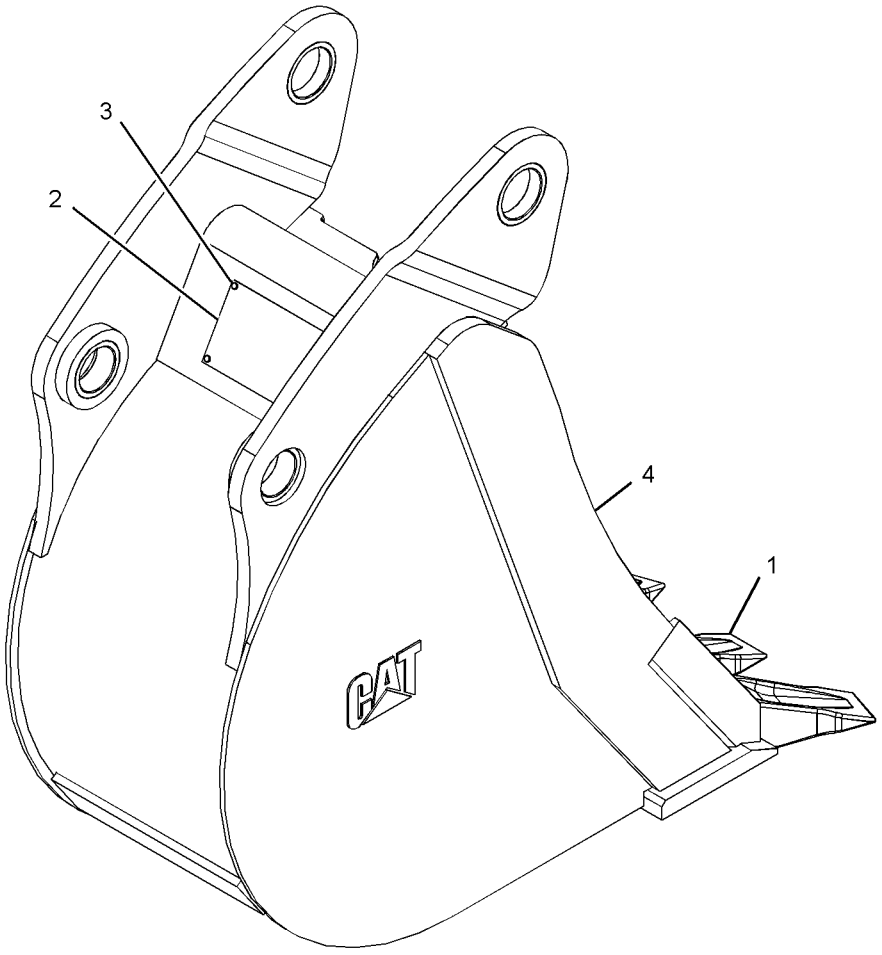

GRAPHIC #1 **<END>** g01228335

WORK TOOLS

273-3791 BUCKET GP-HOE

S/N: DPH1-UP
AN ATTACHMENT

SMCS-6503 **i02428435**

NOTE	REF NO	GRAPHIC REF	PART NUMBER	QTY	PART NAME 1 2 3 4 5 6 (PRODUCT LEVEL)	SEE PAGE
	1	1	**9R-0158**	5	WASHER (46X69X3-MM THK)	
	2	1	**9R-1510**	3	WASHER (51X82X4-MM THK)	
	3	1	**168-0443**	1	PIN	
	4	1	**168-0444**	1	PIN	
Y	5	1	**273-3792**	1	BUCKET GP-HOE	511
	6	1	**6V-3213**	2	RING-RETAINING	
	7	1	**6V-4364**	2	RING-RETAINING	

Y-SEPARATE ILLUSTRATION

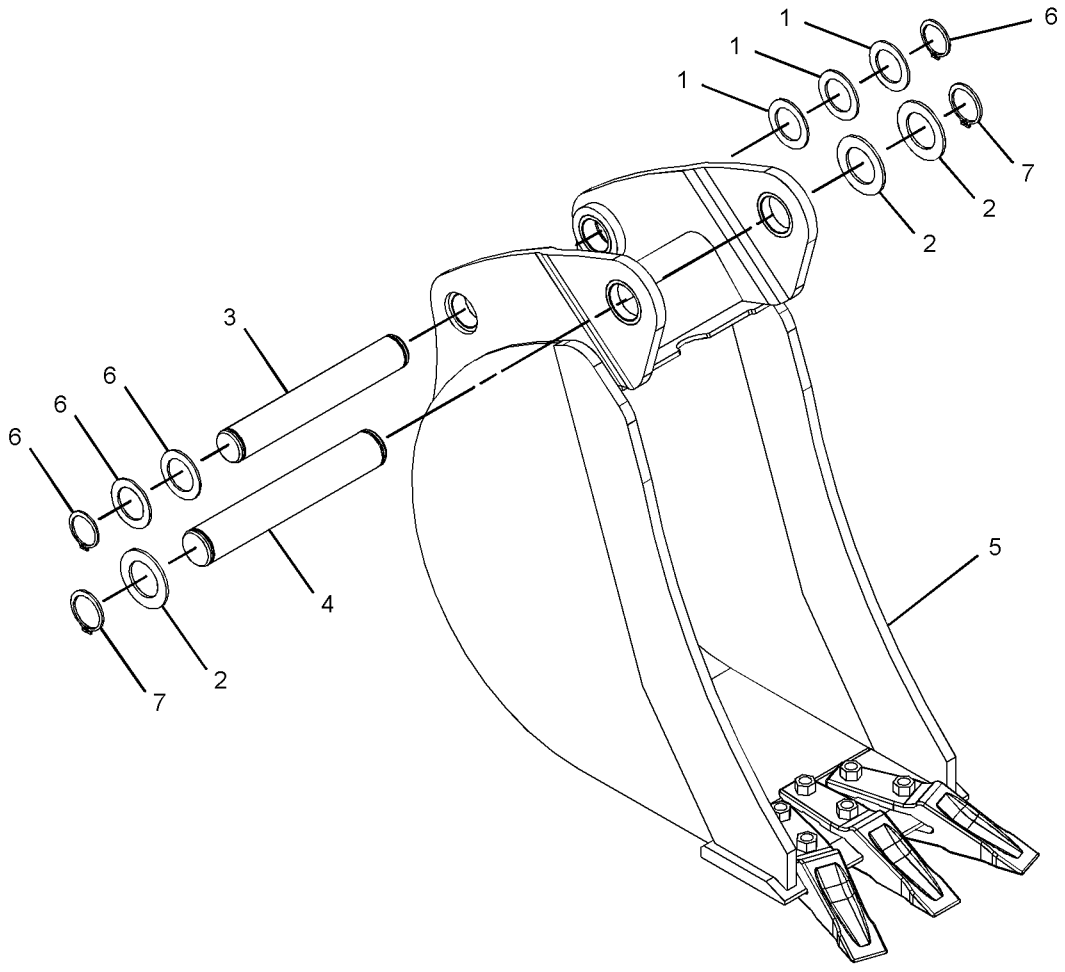

GRAPHIC #1 **<END>** g01215655

WORK TOOLS

273-3792 BUCKET GP-HOE

S/N: DPH1-UP
PART OF 273-3791 BUCKET GP-HOE
AN ATTACHMENT

SMCS-6503 **i03599051**

NOTE	REF NO	GRAPHIC REF	PART NUMBER	QTY	PART NAME 1 2 3 4 5 6 (PRODUCT LEVEL)	SEE PAGE
	1	1	*135-8206*	3	TOOTH GP-UNI	
					(EACH INCLUDES)	
		1	**4F-3657**	2	BOLT-PLOW (5/8-11X2.75-IN)	
		1	**4K-0367**	2	NUT-FULL (5/8-11-THD)	
		1	**135-8203**	1	TOOTH-UNI	
	2	1	**137-4234**	1	PLATE-IDENTIFICATION (WORK TOOL)	
	3	1	**168-8389**	4	TACK-FASTENER	
Y	4	1	*273-3793*	1	BUCKET AS-HOE	486

Y-SEPARATE ILLUSTRATION

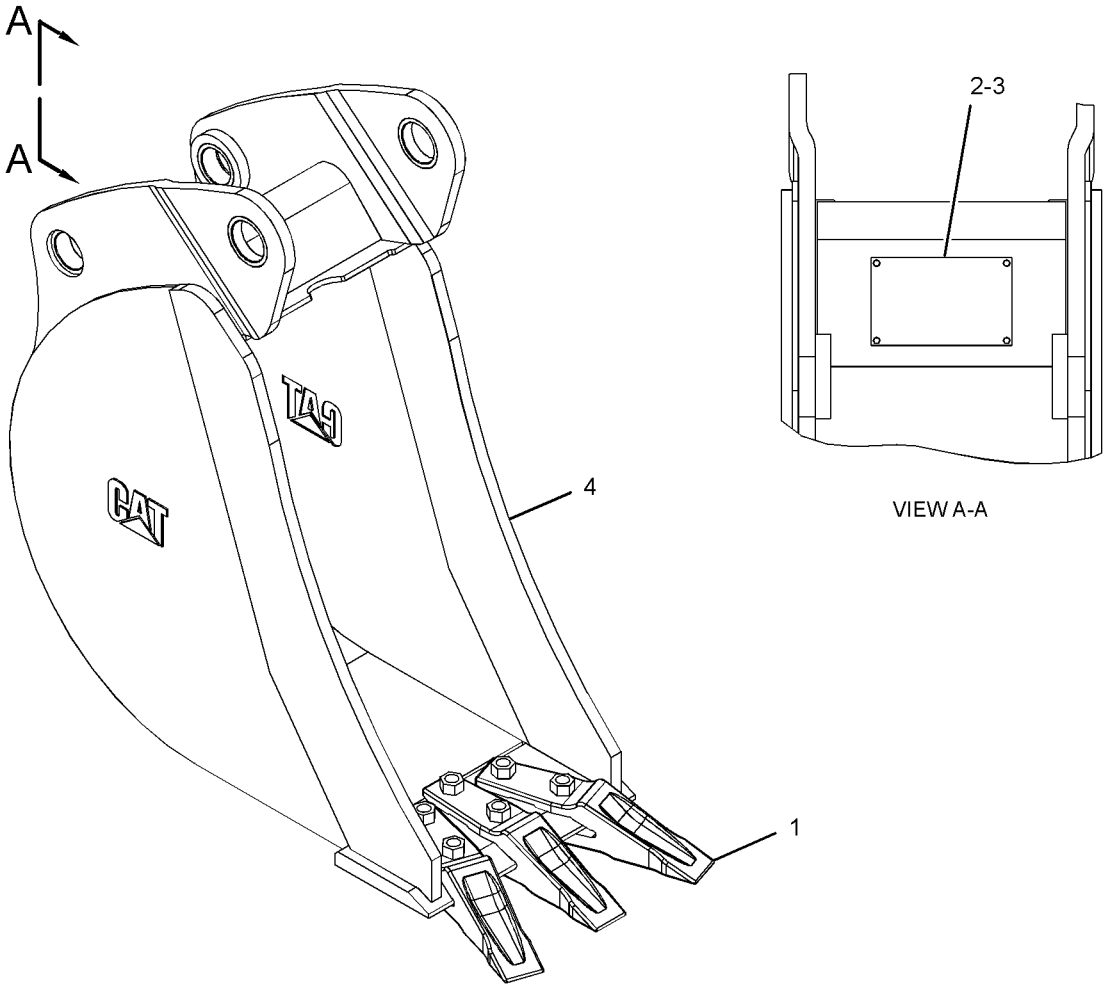

GRAPHIC #1 **<END>** g01226143

252-9043 BUCKET GP-MULTIPURPOSE

S/N: DPH1-UP
0.96-CU M(1.25-CU YD)
PART OF 320-9948, 320-9950 BUCKET AR-MULTIPURPOSE
AN ATTACHMENT

SMCS-6104 **i02215995**

NOTE	REF NO	GRAPHIC REF	PART NUMBER	QTY	PART NAME 1 2 3 4 5 6 (PRODUCT LEVEL)	SEE PAGE
	1	1	**9R-4676**	2	PIN	
Y	2	1	**252-9044**	1	BULLDOZER AS (MULTIPURPOSE BUCKET)	515
Y	3	1	**252-9046**	1	CLAM AS-MULTIPURPOSE BUCKET	519
	4	1	**3B-8489**	2	FITTING-GREASE	
	5	1	**4J-1888**	2	PIN-COTTER	

Y-SEPARATE ILLUSTRATION

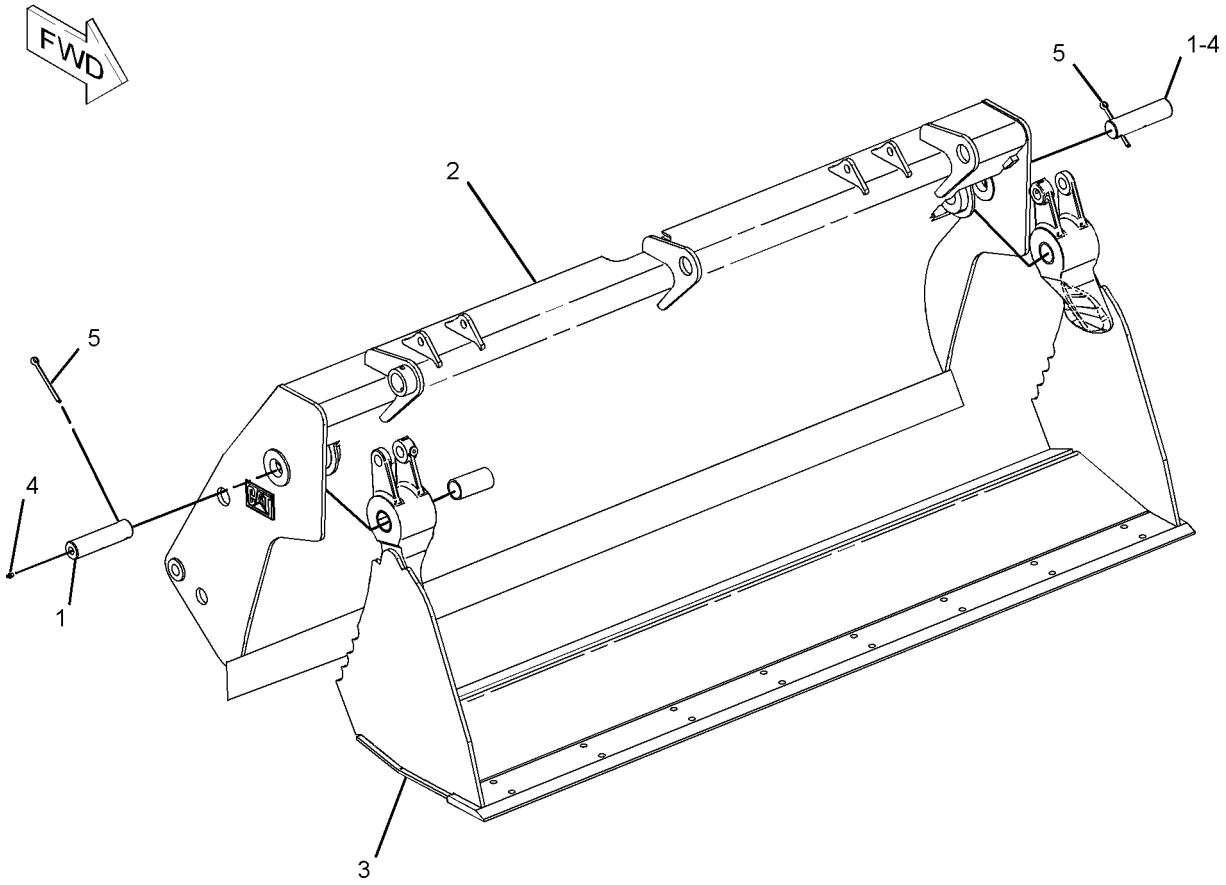

GRAPHIC #1 **<END>** g01121333

WORK TOOLS

252-9059 BUCKET GP-MULTIPURPOSE

S/N: DPH1-UP
1.03-CU M(1.35-CU YD)
PART OF 318-7246 BUCKET AR-MULTIPURPOSE
AN ATTACHMENT

SMCS-6104 **i02216970**

NOTE	REF NO	GRAPHIC REF	PART NUMBER	QTY	PART NAME 1 2 3 4 5 6 (PRODUCT LEVEL)	SEE PAGE
	1	1	**9R-4676**	2	PIN	
Y	2	1	**252-9051**	1	CLAM AS-MULTIPURPOSE BUCKET	520
Y	3	1	**252-9060**	1	BULLDOZER AS (MULTIPURPOSE BUCKET)	517
	4	1	**3B-8489**	2	FITTING-GREASE	
	5	1	**4J-1888**	2	PIN-COTTER	

Y-SEPARATE ILLUSTRATION

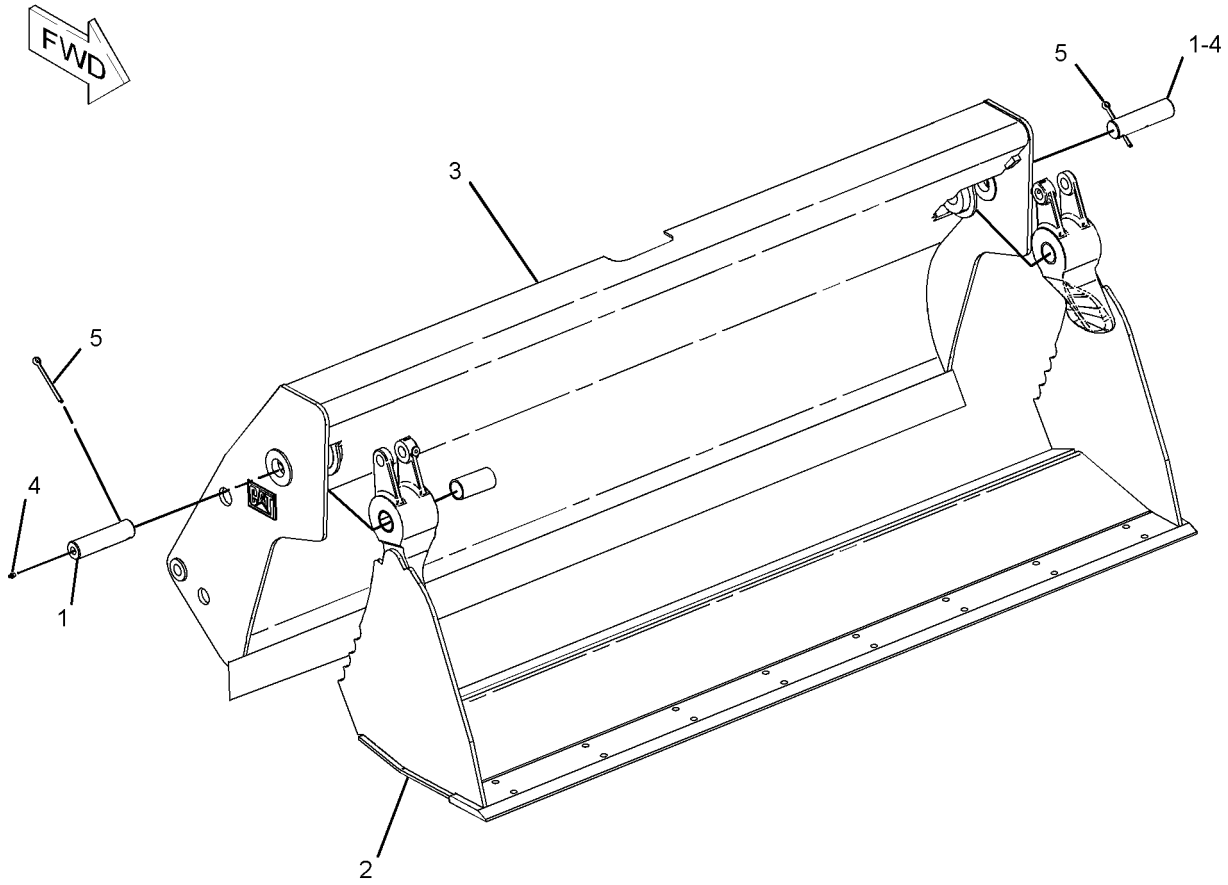

GRAPHIC #1 **<END>** g01121337

WORK TOOLS

252-9063 BUCKET GP-MULTIPURPOSE

S/N: DPH1-UP
1.03-CU M (1.35-CU YD)
PART OF 318-7247, 318-7248 BUCKET AR-MULTIPURPOSE
AN ATTACHMENT

SMCS-6104 **i02223579**

NOTE	REF NO	GRAPHIC REF	PART NUMBER	QTY	PART NAME 1 2 3 4 5 6 (PRODUCT LEVEL)	SEE PAGE
	1	1	**9R-4676**	2	PIN	
Y	2	1	**252-9051**	1	CLAM AS-MULTIPURPOSE BUCKET	520
Y	3	1	**252-9064**	1	BULLDOZER AS (MULTIPURPOSE BUCKET)	518
	4	1	**3B-8489**	2	FITTING-GREASE	
	5	1	**4J-1888**	2	PIN-COTTER	

Y-SEPARATE ILLUSTRATION

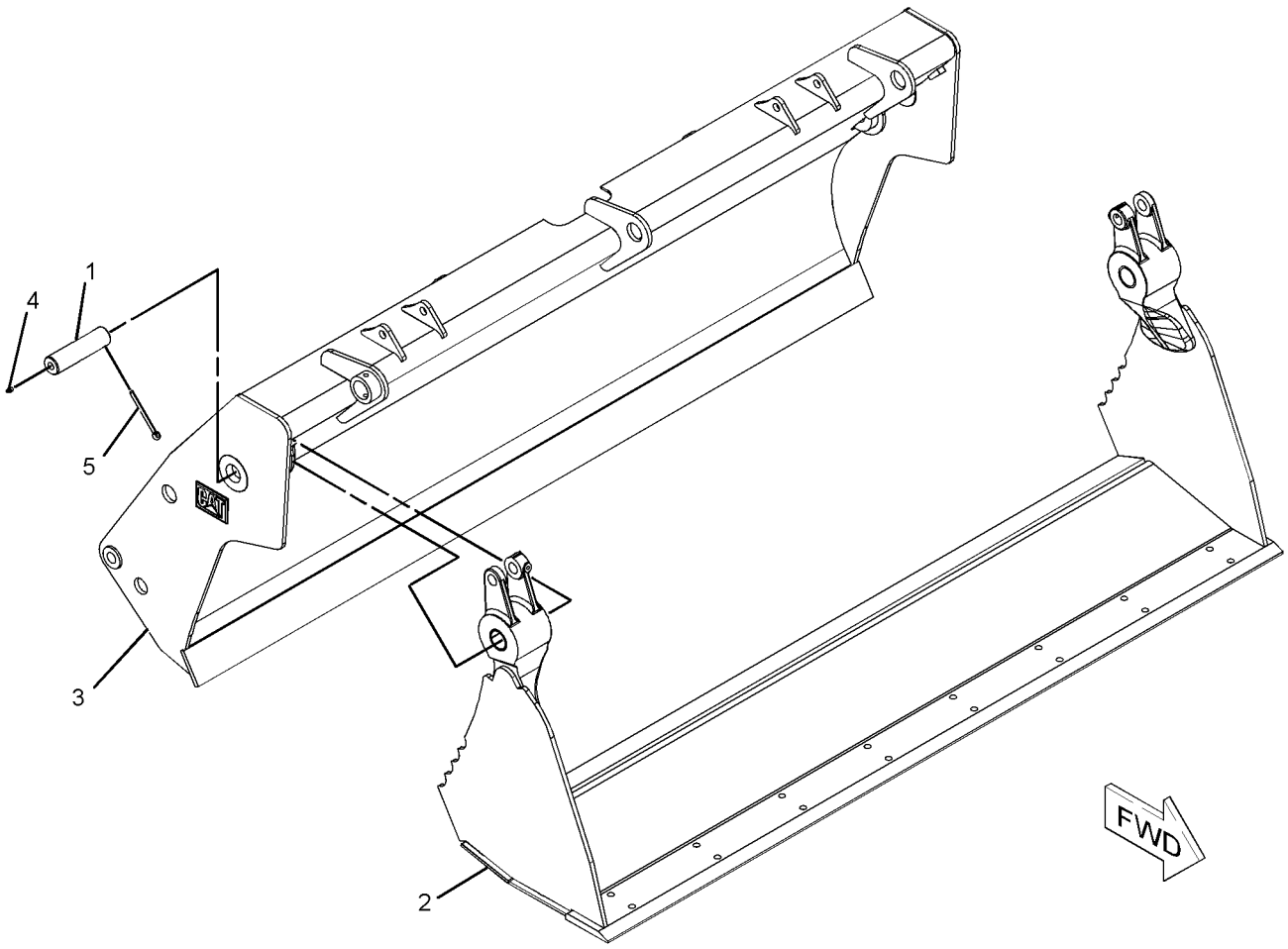

GRAPHIC #1 **<END>** g01114145

252-9044 BULLDOZER AS

S/N: DPH1-UP
0.96-CU M(1.26-CU YD)
PART OF 252-9043 BUCKET GP-MULTIPURPOSE
AN ATTACHMENT

SMCS-6050 **i02418023**

NOTE	REF NO	GRAPHIC REF	PART NUMBER	QTY	PART NAME 1 2 3 4 5 6 (PRODUCT LEVEL)	SEE PAGE
	1	1	**104-6313**	1	BRACKET AS	
		1	**106-9388**	1	BRACKET	
	2	1	**106-9388**	2	BRACKET	
	3	1	**110-2861**	4	BRACKET	
	4	1	**250-6587**	2	PLATE	
Y	5	1	*252-9045*	1	BULLDOZER AS	516
	6	1	**252-9095**	4	PLATE	

Y-SEPARATE ILLUSTRATION

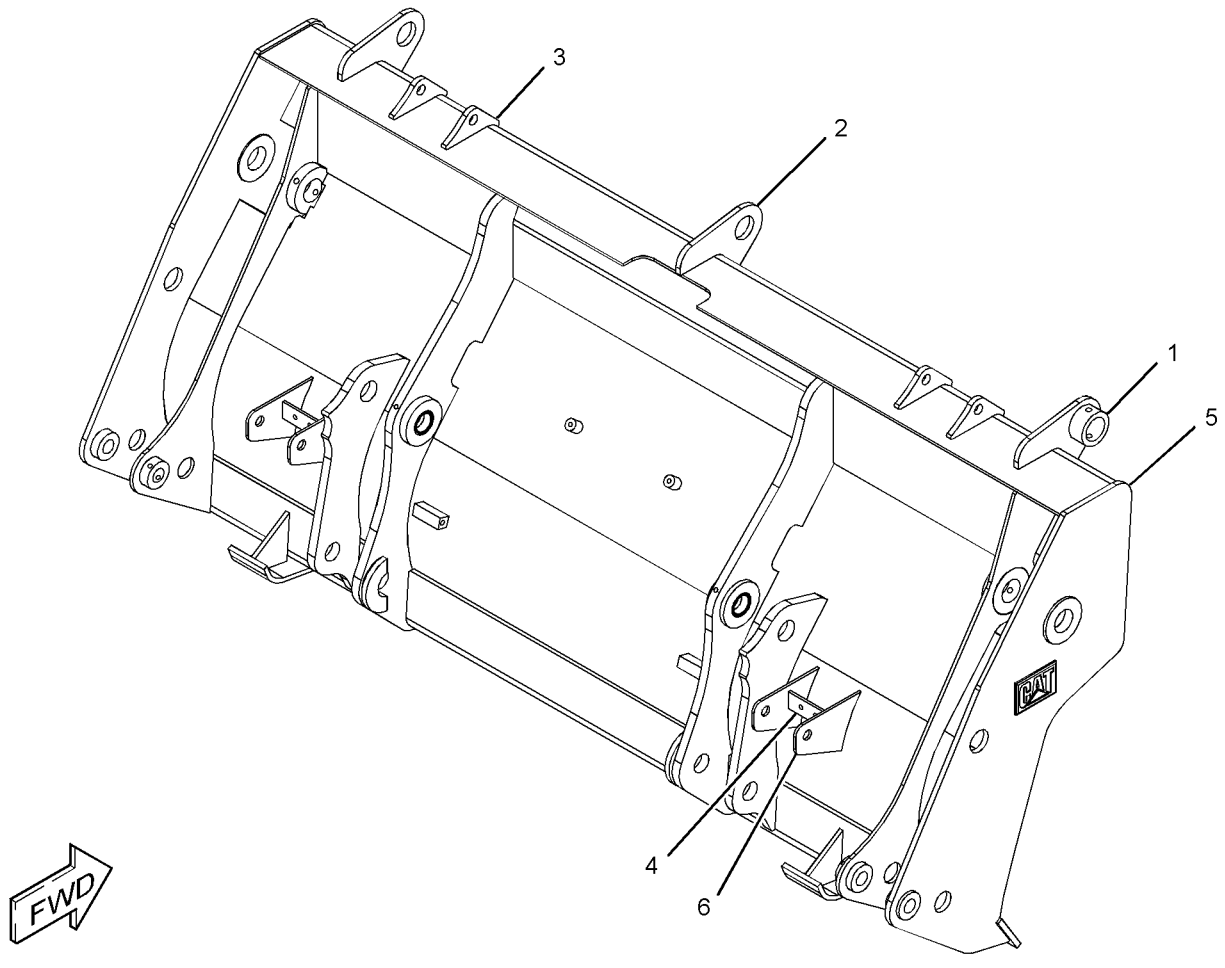

GRAPHIC #1 **<END>** g01211708

252-9045 BULLDOZER AS

S/N: DPH1-UP
0.96-CU M (1.26-CU YD) CAPACITY
PART OF 252-9044 BULLDOZER AS
AN ATTACHMENT

SMCS-6050 **i03028380**

NOTE	REF NO	GRAPHIC REF	PART NUMBER	QTY	PART NAME 1 2 3 4 5 6 (PRODUCT LEVEL)	SEE PAGE
	1	1	*114-3832*	1	BRACKET AS	
		1	**9R-1496**	2	BEARING-SLEEVE	
	2	1	*114-3833*	1	BRACKET AS	
		1	**9R-1496**	2	BEARING-SLEEVE	
	3	1	*252-9072*	1	BRACKET AS (LH)	
		1	**9R-5264**	1	BOSS	
	4	1	*252-9073*	1	BRACKET AS (RH)	
		1	**9R-5264**	1	BOSS	
	5	1	**252-9100**	1	EDGE	
M	6	1	**9R-5271**	2	BOSS (M10X1.5X25-MM)	

M-METRIC PART

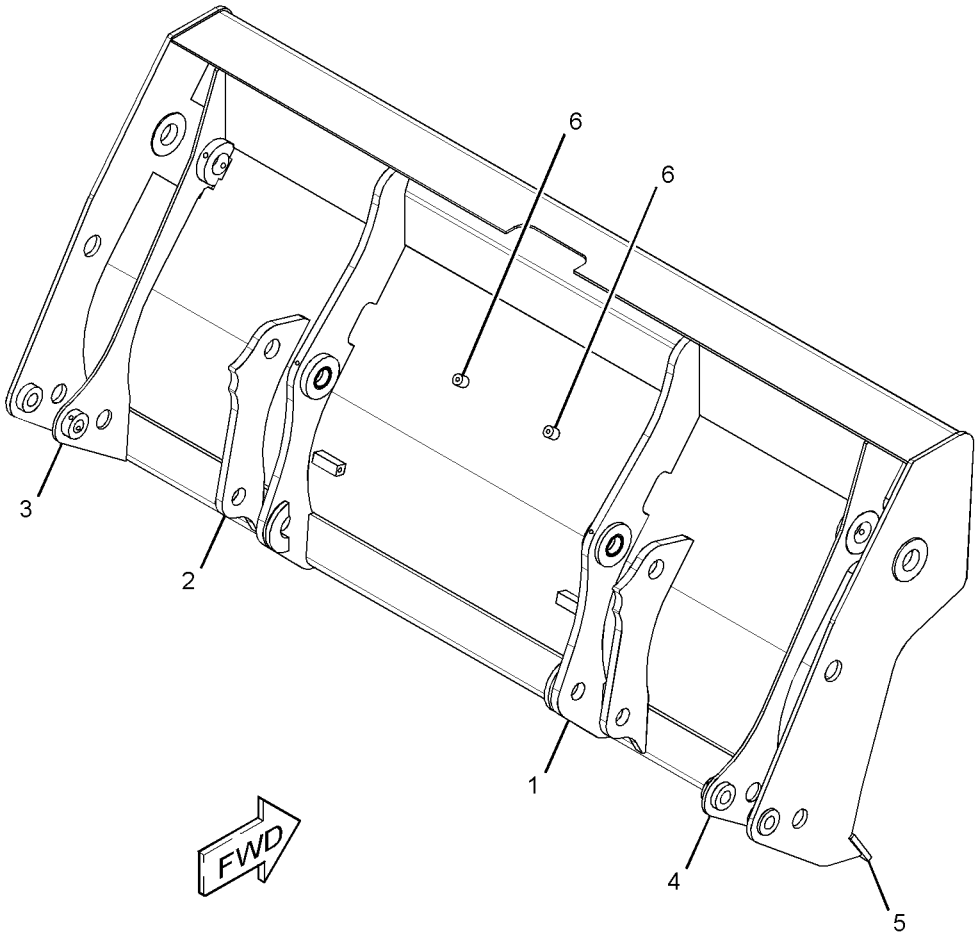

GRAPHIC #1 **<END>** g01613235

252-9060 BULLDOZER AS—MULTIPURPOSE BUCKET

S/N: DPH1-UP
1.03-CU M (1.35-CU YD)
PART OF 252-9059 BUCKET GP-MULTIPURPOSE, 252-9064 BULLDOZER AS
AN ATTACHMENT

SMCS-6050 **i02909230**

NOTE	REF NO	GRAPHIC REF	PART NUMBER	QTY	PART NAME 1 2 3 4 5 6 (PRODUCT LEVEL)	SEE PAGE
M	1	1	**9R-5271**	2	BOSS (M10X1.5X25-MM)	
	2	1	*114-3832*	1	BRACKET AS	
		1	**9R-1496**	2	BEARING-SLEEVE	
	3	1	*114-3833*	1	BRACKET AS	
		1	**9R-1496**	2	BEARING-SLEEVE	
	4	1	**256-9600**	1	EDGE	

M-METRIC PART

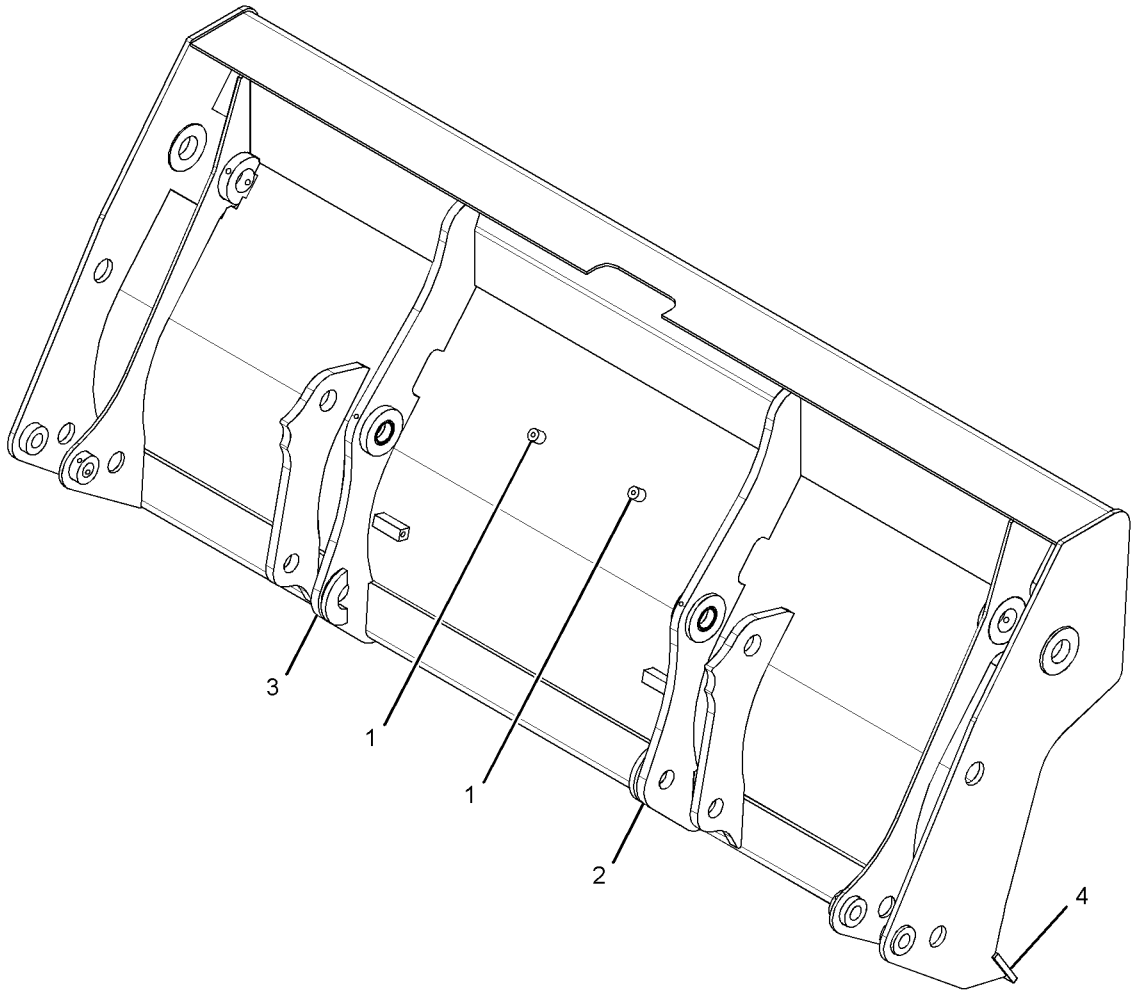

GRAPHIC #1 **<END>** g01456889

252-9064 BULLDOZER AS—MULTIPURPOSE BUCKET

S/N: DPH1-UP

PART OF 252-9063 BUCKET GP-MULTIPURPOSE

AN ATTACHMENT

SMCS-6050 **i02474508**

NOTE	REF NO	GRAPHIC REF	PART NUMBER	QTY	PART NAME 1 2 3 4 5 6 (PRODUCT LEVEL)	SEE PAGE
	1	1	**104-6313**	1	BRACKET AS	
		1	**106-9388**	1	BRACKET	
	2	1	**106-9388**	2	BRACKET	
	3	1	**110-2861**	4	BRACKET	
	4	1	**250-6587**	2	PLATE	
Y	5	1	**252-9060**	1	BULLDOZER AS (MULTIPURPOSE BUCKET)	517
	6	1	**252-9095**	4	PLATE	

Y-SEPARATE ILLUSTRATION

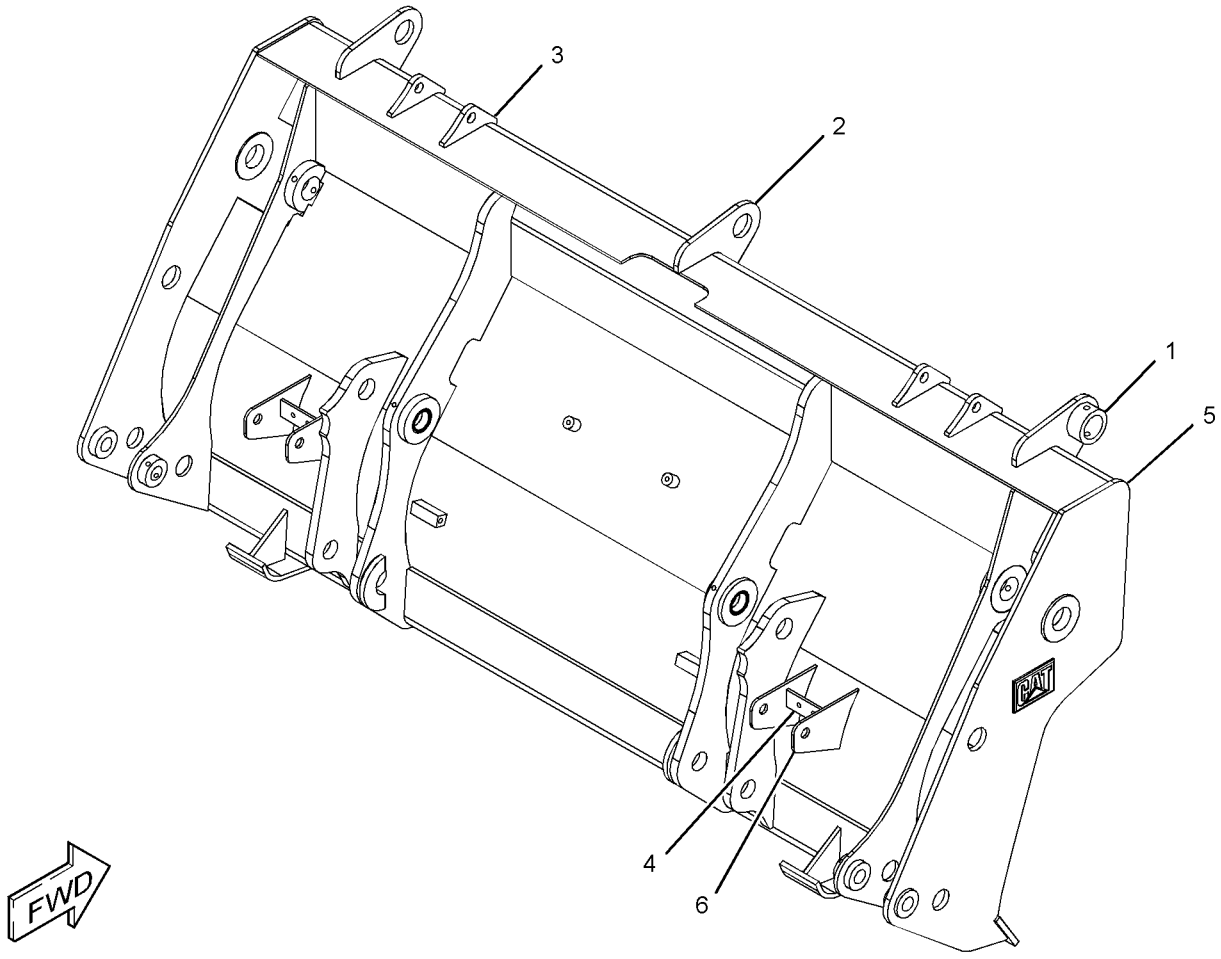

GRAPHIC #1 **<END>** g01211708

252-9046 CLAM AS-MULTIPURPOSE BUCKET

S/N: DPH1-UP
PART OF 252-9043 BUCKET GP-MULTIPURPOSE
AN ATTACHMENT

SMCS-6104 **i02223551**

NOTE	REF NO	GRAPHIC REF	PART NUMBER	QTY	PART NAME 1 2 3 4 5 6 (PRODUCT LEVEL)	SEE PAGE
	1	1	*252-9078*	1	PLATE AS (LH)	
	1A	1	**9R-4675**	1	BUSHING-TERMINAL	
	1B	1	**9R-5294**	1	HINGE	
	2	1	*252-9080*	1	PLATE AS (RH)	
	2A	1	**9R-4675**	1	BUSHING-TERMINAL	
	2B	1	**9R-5294**	1	HINGE	
	3	1	*252-9081*	1	PLATE AS	
	3A	1	**9R-4672**	1	EDGE	
	3B	1	**252-9087**	1	EDGE	

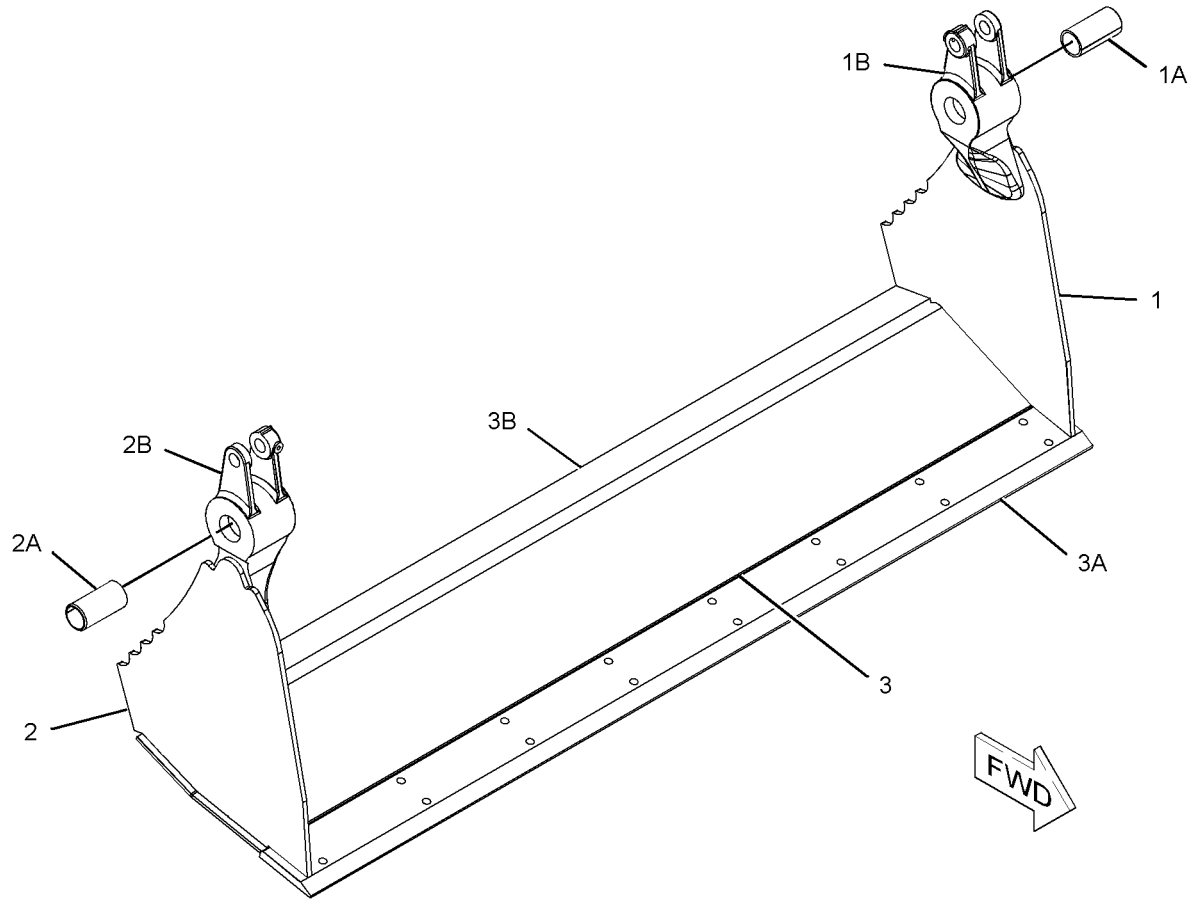

GRAPHIC #1 **<END>** g01121639

WORK TOOLS

252-9051 CLAM AS-MULTIPURPOSE BUCKET

S/N: DPH1-UP

PART OF 252-9059, 252-9063 BUCKET GP-MULTIPURPOSE

AN ATTACHMENT

SMCS-6104 **i02223563**

NOTE	REF NO	GRAPHIC REF	PART NUMBER	QTY	PART NAME 1 2 3 4 5 6 (PRODUCT LEVEL)	SEE PAGE
	1	1	*252-9078*	1	PLATE AS (LH)	
	1A	1	**9R-4675**	1	BUSHING-TERMINAL	
	1B	1	**9R-5294**	1	HINGE	
	2	1	*252-9080*	1	PLATE AS (RH)	
	2A	1	**9R-4675**	1	BUSHING-TERMINAL	
	2B	1	**9R-5294**	1	HINGE	
	3	1	*252-9084*	1	PLATE AS	
	3A	1	**9R-5313**	1	EDGE	
	3B	1	**252-9088**	1	EDGE	

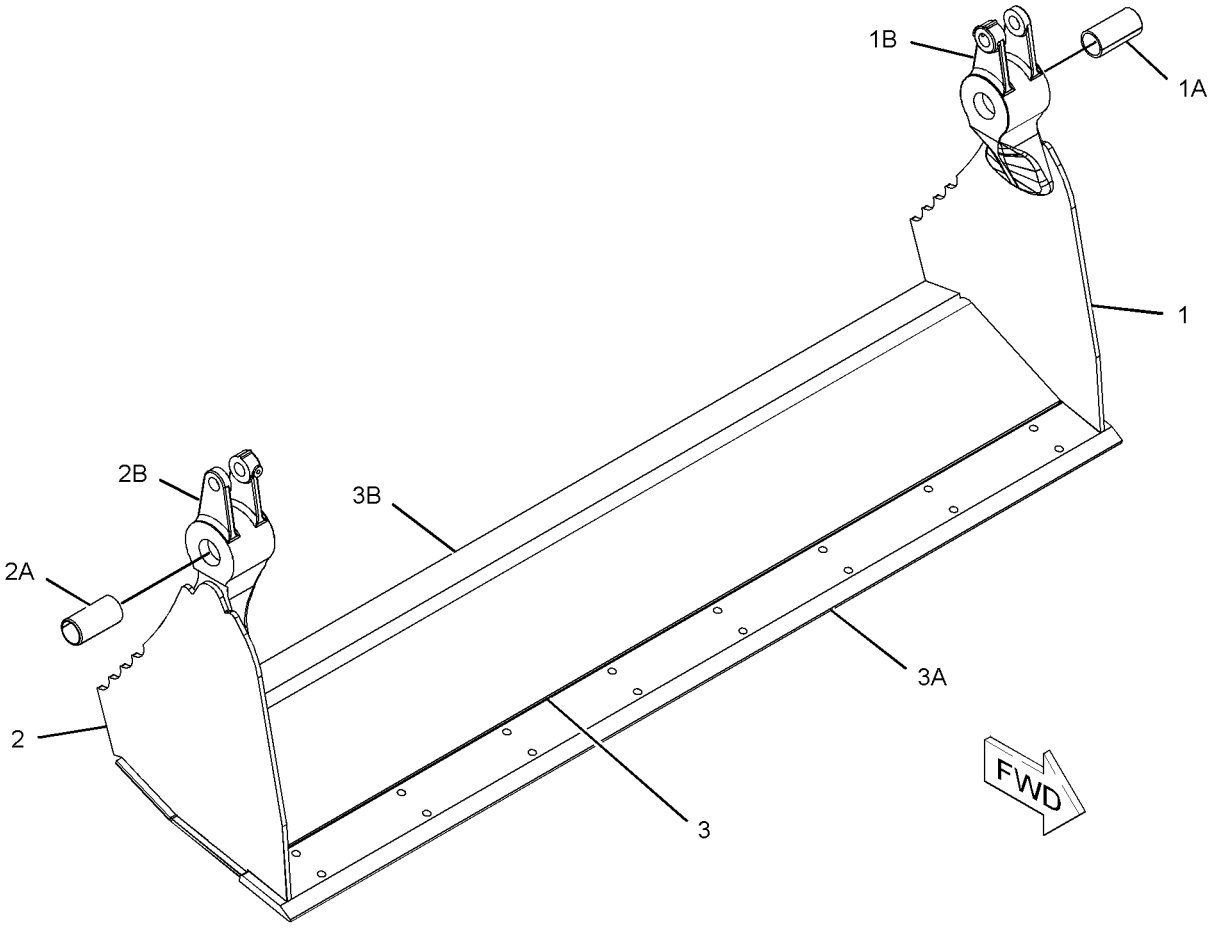

GRAPHIC #1 **<END>** g01121768

WORK TOOLS

176-6251 COUPLER GP-QUICK–BACKHOE

S/N: DPH1-UP

PART OF 178-8850, 318-9901 COUPLER GP-QUICK

AN ATTACHMENT

SMCS-6129 **i03505443**

NOTE	REF NO	GRAPHIC REF	PART NUMBER	QTY	PART NAME 1 2 3 4 5 6 (PRODUCT LEVEL)	SEE PAGE
	1	1	**176-6252**	1	COUPLER	
	2	1	**200-5921**	1	HOOK	
	3	1	**216-7377**	1	SPRING	
	4	1	**132-3721**	1	PIN AS (HOOK)	
	5	1	**132-3723**	1	LOCK PIN	
C	6	1	**091-5928**	1	FITTING-GREASE	
	7	1	**8T-0144**	1	PIN-SPRING	
F			**132-3821**	1	LEVER-ACTUATING	

C-CHANGE FROM PREVIOUS TYPE
F-NOT SHOWN

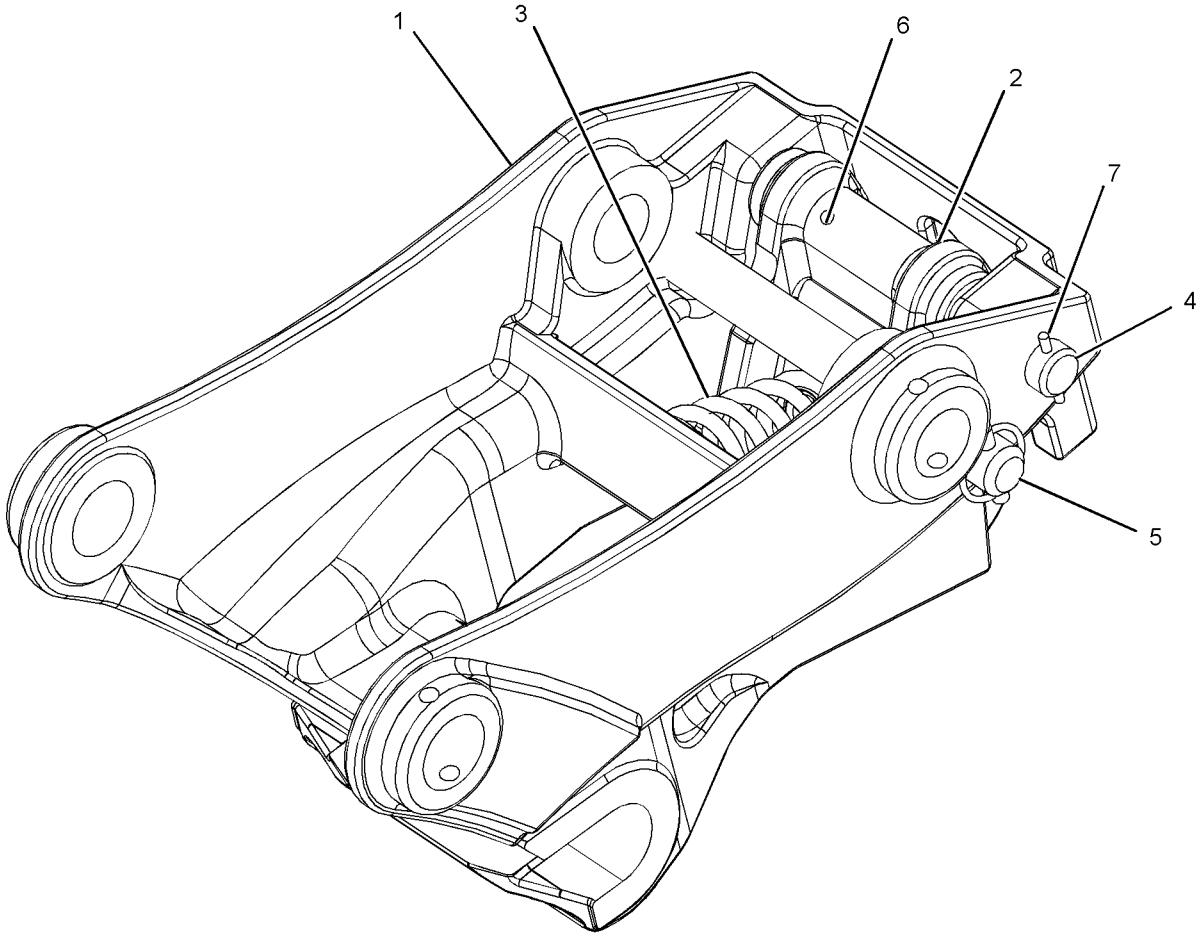

GRAPHIC #1 **<END>** g01017414

WORK TOOLS

178-8850 COUPLER GP-QUICK–BACKHOE

S/N: DPH1-UP

FOR USE WITH 178-3593–PAGE 533

AN ATTACHMENT

SMCS-6129 **i03332282**

NOTE	REF NO	GRAPHIC REF	PART NUMBER	QTY	PART NAME 1 2 3 4 5 6 (PRODUCT LEVEL)	SEE PAGE
	1	1	**4J-1888**	2	PIN-COTTER	
	2	1	**132-3777**	1	PIN	
	3	1	**132-3778**	1	PIN	
Y	4	1	**176-6251**	1	COUPLER GP-QUICK (BACKHOE)	521

Y-SEPARATE ILLUSTRATION

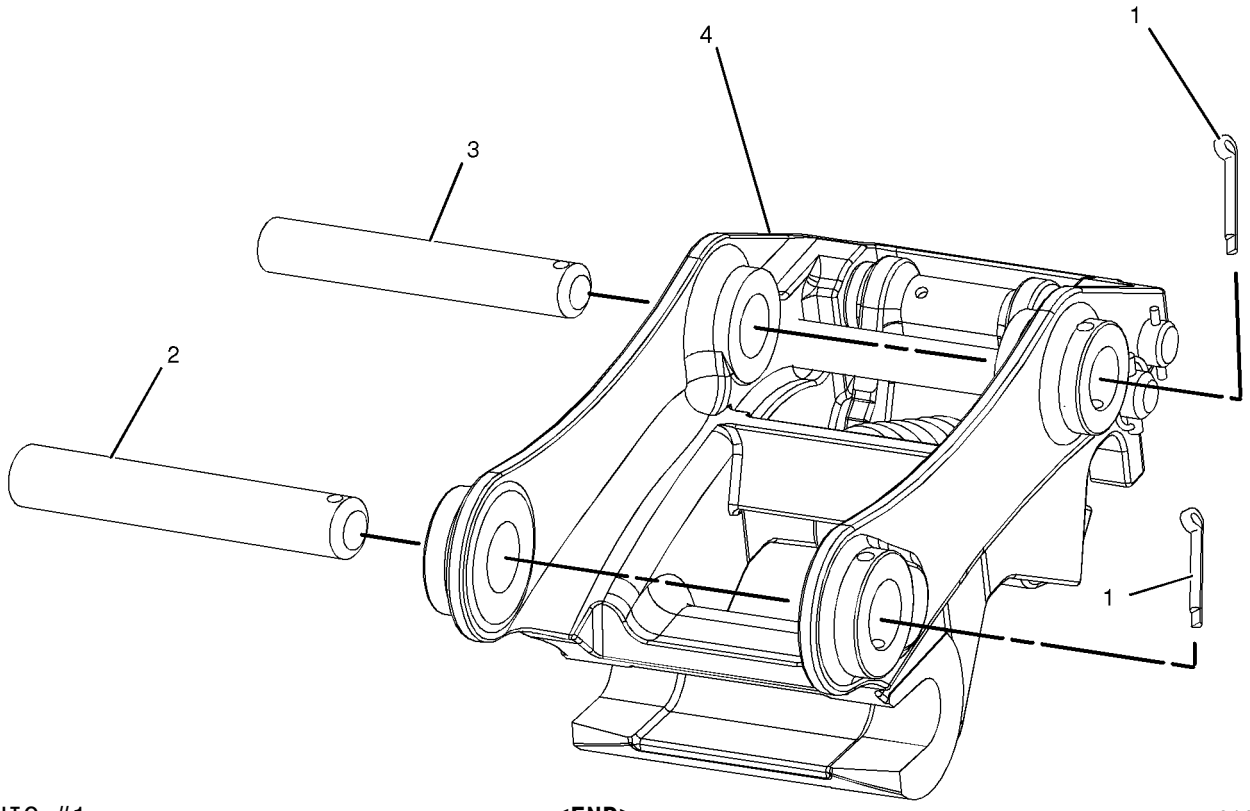

GRAPHIC #1 **<END>** g01036330

213-8000 COUPLER GP-QUICK–JCB

S/N: DPH1-UP

FOR USE WITH 223-1882–PAGE 534, JCB STYLE BUCKETS

AN ATTACHMENT

SMCS-6129 **i01670207**

NOTE	REF NO	GRAPHIC REF	PART NUMBER	QTY	PART NAME 1 2 3 4 5 6 (PRODUCT LEVEL)	SEE PAGE
Y	1	1	**213-8008**	1	COUPLER GP-QUICK	524
	2	1	**216-7374**	2	PIN	
	3	1	**4J-1888**	2	PIN-COTTER	

Y-SEPARATE ILLUSTRATION

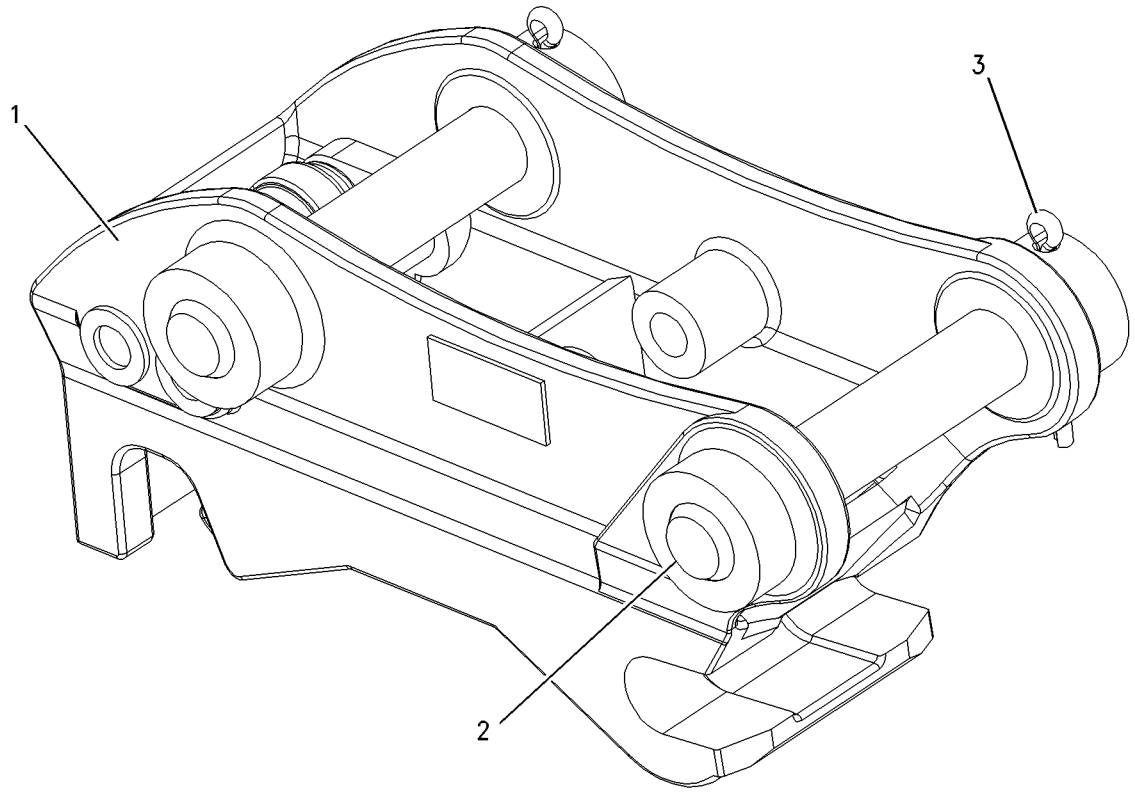

GRAPHIC #1 **<END>** g00863381

WORK TOOLS

213-8008 COUPLER GP-QUICK

S/N: DPH1-UP
PART OF 213-8000, 318-9903 COUPLER GP-QUICK
AN ATTACHMENT

SMCS-6129 **i01739273**

NOTE	REF NO	GRAPHIC REF	PART NUMBER	QTY	PART NAME 1 2 3 4 5 6 (PRODUCT LEVEL)	SEE PAGE
	1	1	**091-5928**	1	FITTING-GREASE	
	2	1	**216-7377**	1	SPRING	
	3	1	**215-1216**	1	COUPLER	
	4	1	**215-1217**	1	HOOK	
	5	1	**216-7375**	1	PIN AS	
	6	1	**216-7376**	1	PIN AS	
F		1	**132-3821**	1	LEVER-ACTUATING	

F-NOT SHOWN

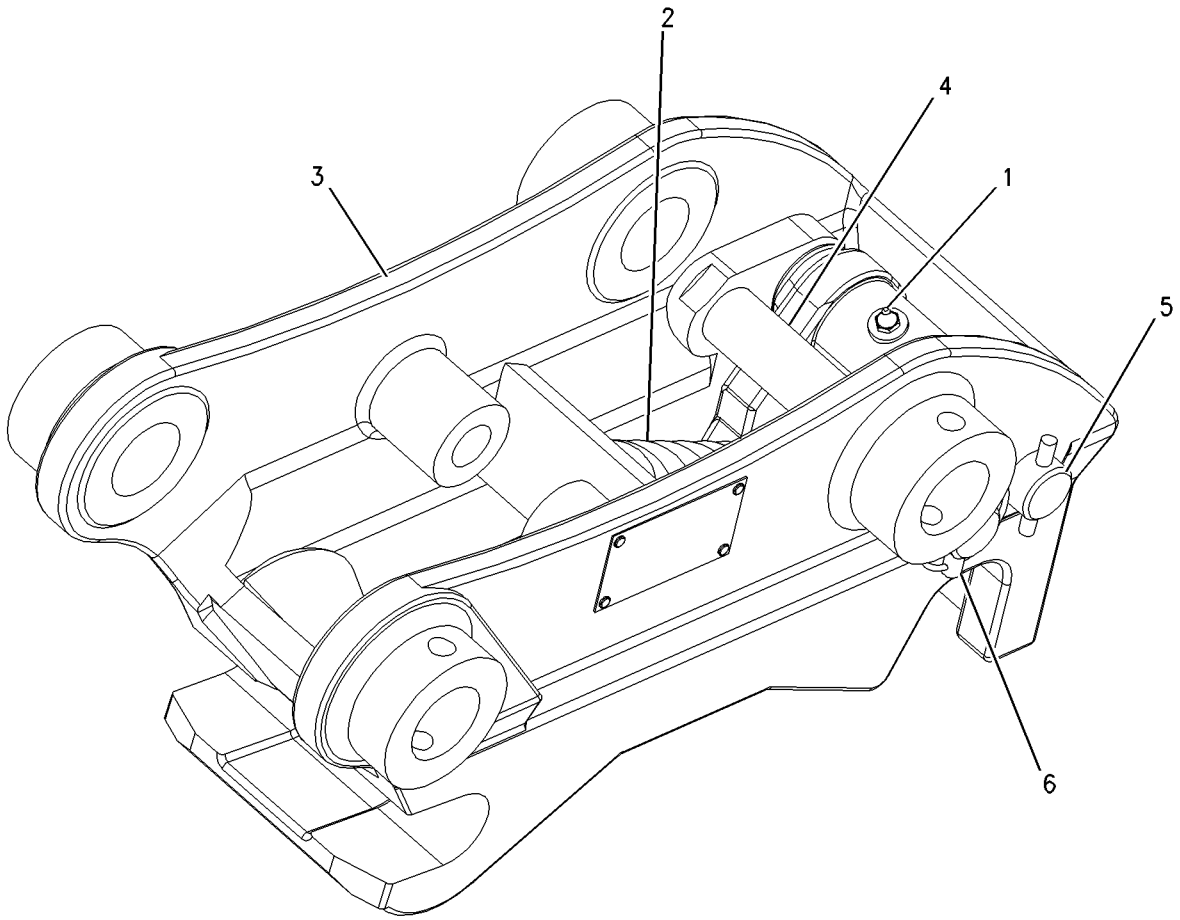

GRAPHIC #1 **<END>** g00890825

WORK TOOLS

318-9901 COUPLER GP-QUICK–BACKHOE

S/N: DPH1-UP
FOR USE WITH 318-9902–PAGE 535
AN ATTACHMENT

SMCS-6129 **i02990480**

NOTE	PART NUMBER	QTY	PART NAME 1 2 3 4 5 6 (PRODUCT LEVEL)	SEE PAGE
Y	**176-6251**	1	COUPLER GP-QUICK (BACKHOE)	521
	132-3777	1	PIN	
	132-3778	1	PIN	
	4J-1888	2	PIN-COTTER	
Y-SEPARATE ILLUSTRATION				

<END>

318-9903 COUPLER GP-QUICK

S/N: DPH1-UP
FOR USE WITH 318-9904–PAGE 535
AN ATTACHMENT

SMCS-6129 **i02977716**

NOTE	PART NUMBER	QTY	PART NAME 1 2 3 4 5 6 (PRODUCT LEVEL)	SEE PAGE
Y	**213-8008**	1	COUPLER GP-QUICK (JCB)	524
	216-7374	2	PIN	
	4J-1888	2	PIN-COTTER	
Y-SEPARATE ILLUSTRATION				

<END>

WORK TOOLS

9R-5320 EDGE GP-CUTTING

S/N: DPH1-UP

AN ATTACHMENT

SMCS-6801 **i00530080**

NOTE	REF NO	GRAPHIC REF	PART NUMBER	QTY	PART NAME 1 2 3 4 5 6 (PRODUCT LEVEL)	SEE PAGE
	1	1	**118-7110**	2	EDGE-CUTTING	
	2	1	**4F-3657**	8	BOLT-PLOW (5/8-11X2.75-IN)	
	3	1	**4K-0367**	8	NUT-FULL (5/8-11-THD)	
	4	1	**8T-4122**	8	WASHER-HARD (17X32X3.5-MM THK)	

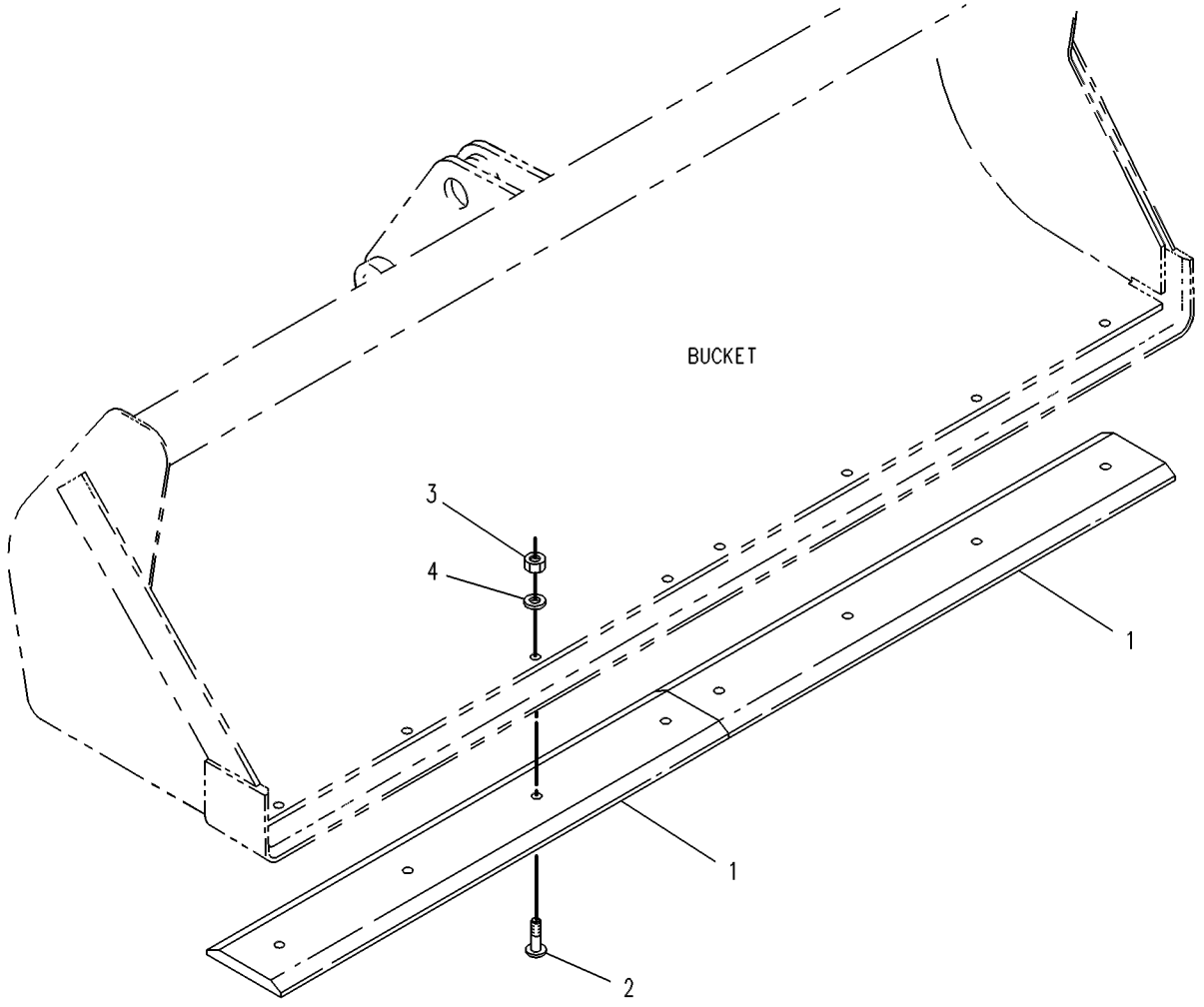

GRAPHIC #1 **<END>** g00131376

WORK TOOLS

9R-5321 EDGE GP-CUTTING

S/N: DPH1-UP

AN ATTACHMENT

SMCS-6801 **i00530701**

NOTE	REF NO	GRAPHIC REF	PART NUMBER	QTY	PART NAME 1 2 3 4 5 6 (PRODUCT LEVEL)	SEE PAGE
	1	1	**9W-8215**	2	EDGE-CUTTING	
	2	1	**3F-5108**	8	BOLT-PLOW (5/8-11X2.25-IN)	
	3	1	**4K-0367**	8	NUT-FULL (5/8-11-THD)	
	4	1	**8T-4122**	8	WASHER-HARD (17X32X3.5-MM THK)	

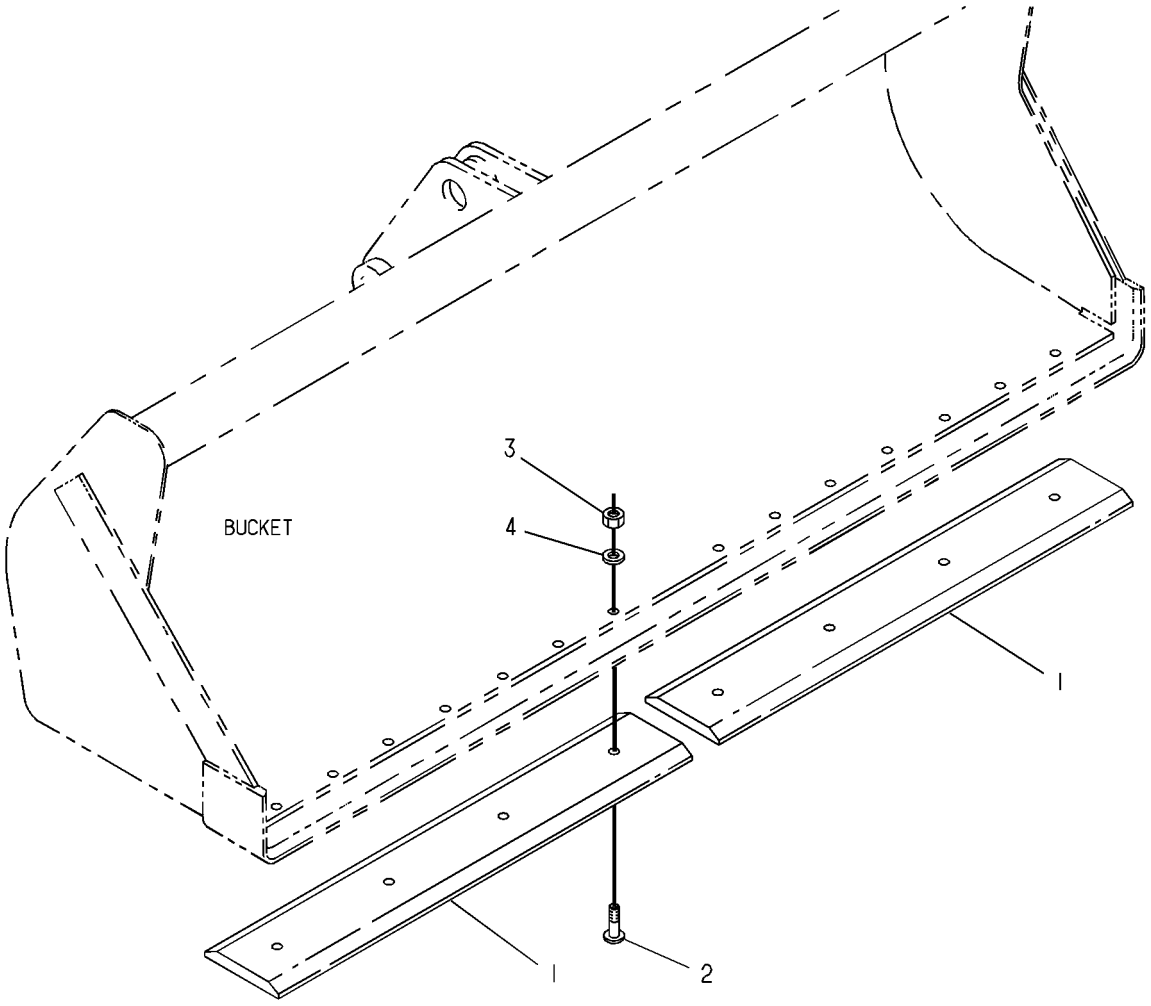

GRAPHIC #1 **<END>** g00130834

WORK TOOLS

104-6310 FORK GP

S/N: DPH1-UP
PART OF 255-9086 FORK GP
AN ATTACHMENT

SMCS-6405 **i01114480**

NOTE	REF NO	GRAPHIC REF	PART NUMBER	QTY	PART NAME 1 2 3 4 5 6 (PRODUCT LEVEL)	SEE PAGE
	1	1	**104-6311**	2	BRACKET AS	
	2	1	**104-6312**	2	FORK AS	
	3	1	**104-6316**	1	PIN	
	4	1	**104-6317**	2	PIN	
	5	1	**4J-1888**	1	PIN-COTTER	
	6	1	**9R-0109**	4	WASHER (41X64X3-MM THK)	
	7	1	**112-1776**	2	PIN AS	
	8	1	**6V-8144**	4	RING-RETAINING	
	9	1	**5D-8159**	2	PIN AS	

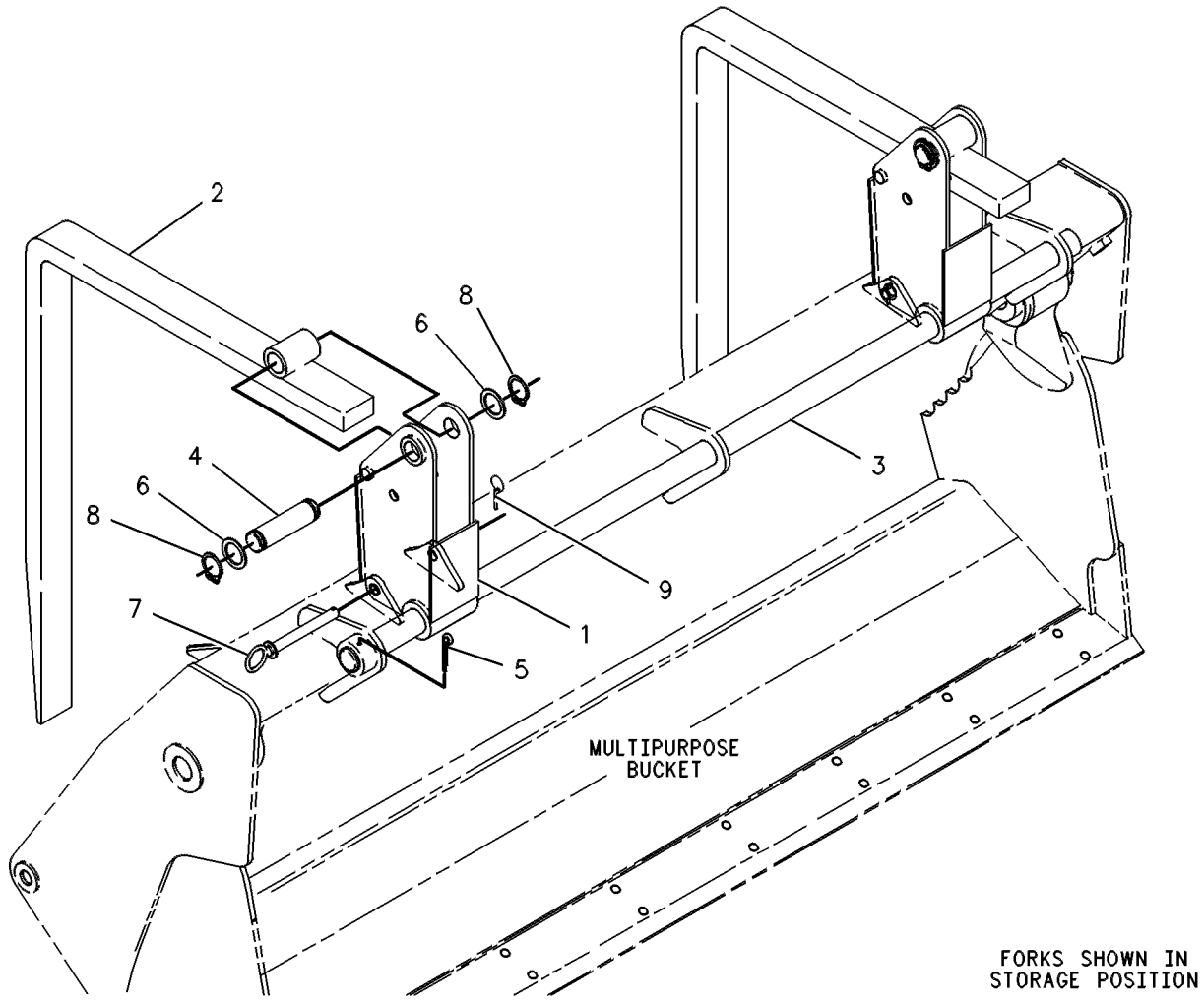

GRAPHIC #1 **<END>** g00131084

255-9086 FORK GP

S/N: DPH1-UP

AN ATTACHMENT

SMCS-6405 **i02402999**

NOTE	REF NO	GRAPHIC REF	PART NUMBER	QTY	PART NAME 1 2 3 4 5 6 (PRODUCT LEVEL)	SEE PAGE
	1	1	**5D-8159**	2	PIN AS	
Y	2	1	**104-6310**	1	FORK GP	528
	3	1	**178-2593**	4	BUMPER	
	4	1	**250-1057**	2	PIN	
Y	5	1	*255-9087*	1	MOUNTING GP-FORK	538
M	6	1	**5C-7261**	4	NUT (M8X1.25-THD)	
	7	1	**8T-4224**	4	WASHER-HARD (8.8X16X2-MM THK)	

M-METRIC PART
Y-SEPARATE ILLUSTRATION

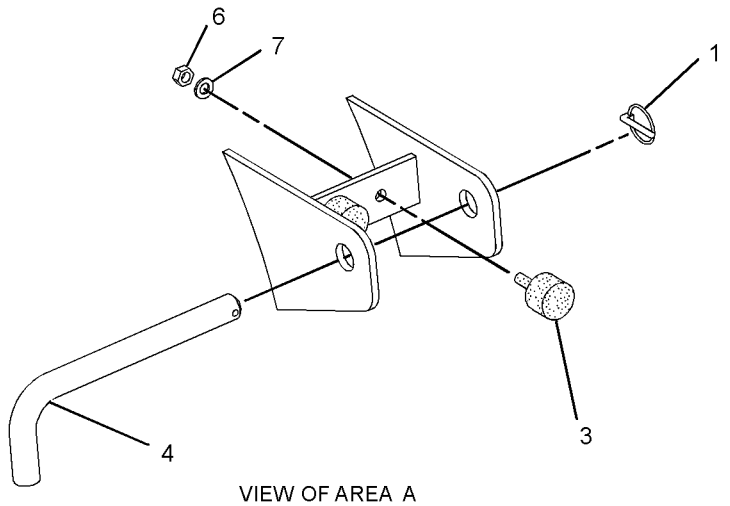

VIEW OF AREA A
(EXPLODED)

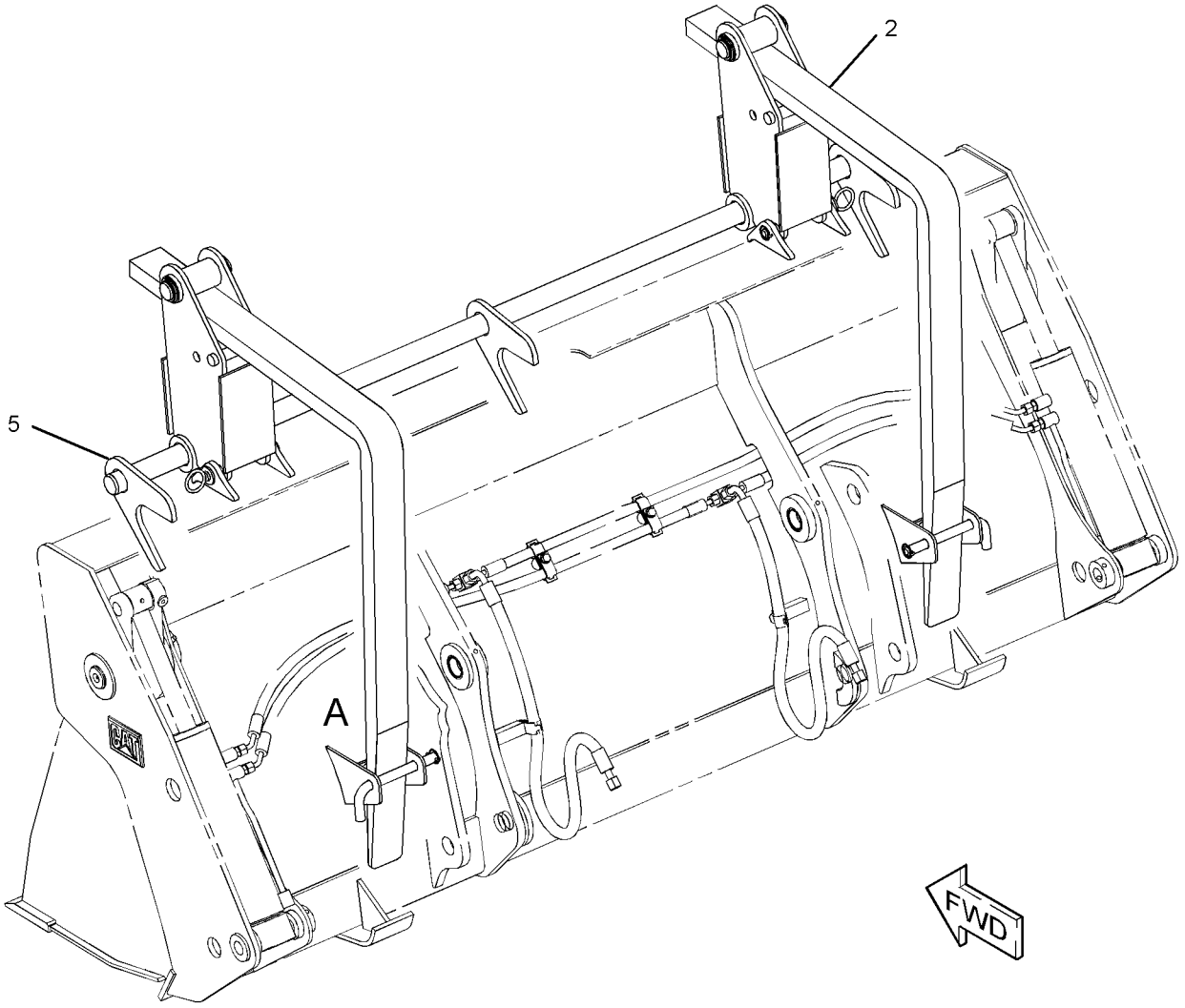

GRAPHIC #1 **<END>** g01202316

WORK TOOLS

214-7024 GUARD GP-BUCKET

S/N: DPH1-UP

AN ATTACHMENT

SMCS-6001, 6800, 6805 **i03310000**

NOTE	REF NO	GRAPHIC REF	PART NUMBER	QTY	PART NAME 1 2 3 4 5 6 (PRODUCT LEVEL)	SEE PAGE
	1	1	**101-4415**	1	FILM (REFLECTOR)	
Y	2	1	*214-7025*	1	GUARD GP-BUCKET	532

Y-SEPARATE ILLUSTRATION

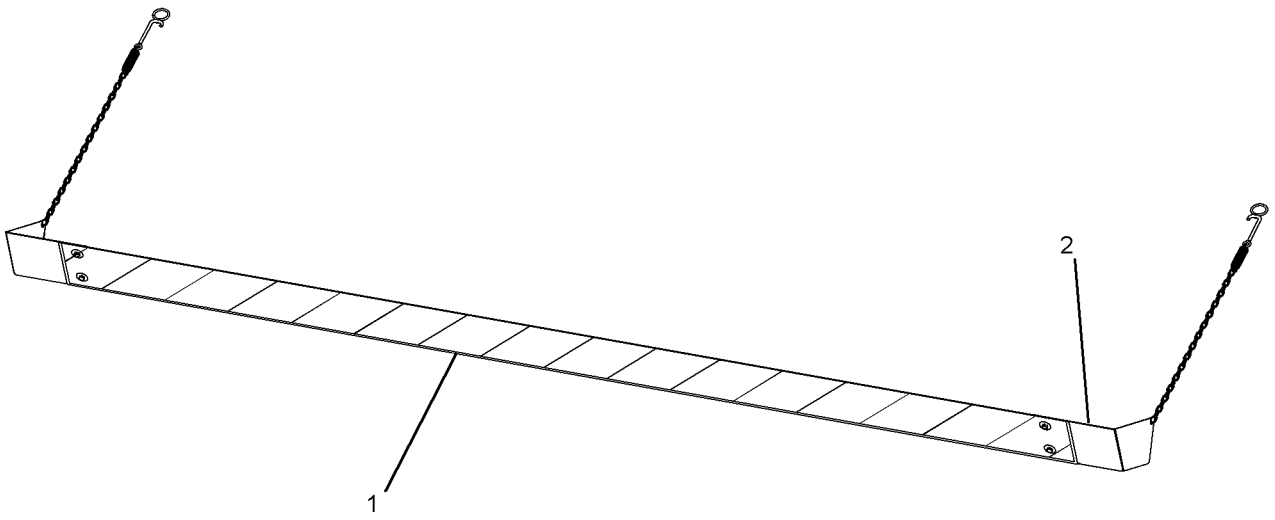

GRAPHIC #1 **<END>** g01120346

WORK TOOLS

214-7025 GUARD GP-BUCKET

S/N: DPH1-UP
PART OF 214-7024 GUARD GP-BUCKET
AN ATTACHMENT

SMCS-6001, 6800, 6805 **i02224089**

NOTE	REF NO	GRAPHIC REF	PART NUMBER	QTY	PART NAME 1 2 3 4 5 6 (PRODUCT LEVEL)	SEE PAGE
	1	1	**214-7026**	1	PLATE	
	2	1	**101-4411**	2	RETAINER AS	
					(EACH INCLUDES)	
	2A	1	**101-4412**	1	CHAIN	
	2B	1	**101-4413**	1	SPRING	
	2C	1	**101-4414**	1	HOOK AS	
	3	1	**204-5258**	1	PLATE AS	
M		1	**6V-9632**	2	NUT-WELD (M6X1-THD)	
	4	1	**204-5259**	1	PLATE AS	
M		1	**6V-9632**	2	NUT-WELD (M6X1-THD)	
	5	1	**6V-7646**	4	WASHER-HARD (7.2X25X2-MM THK)	
M	6	1	**8T-4171**	4	BOLT (M6X1X12-MM)	
	7	1	**034-1432**	9	STRAP-CABLE	

M-METRIC PART

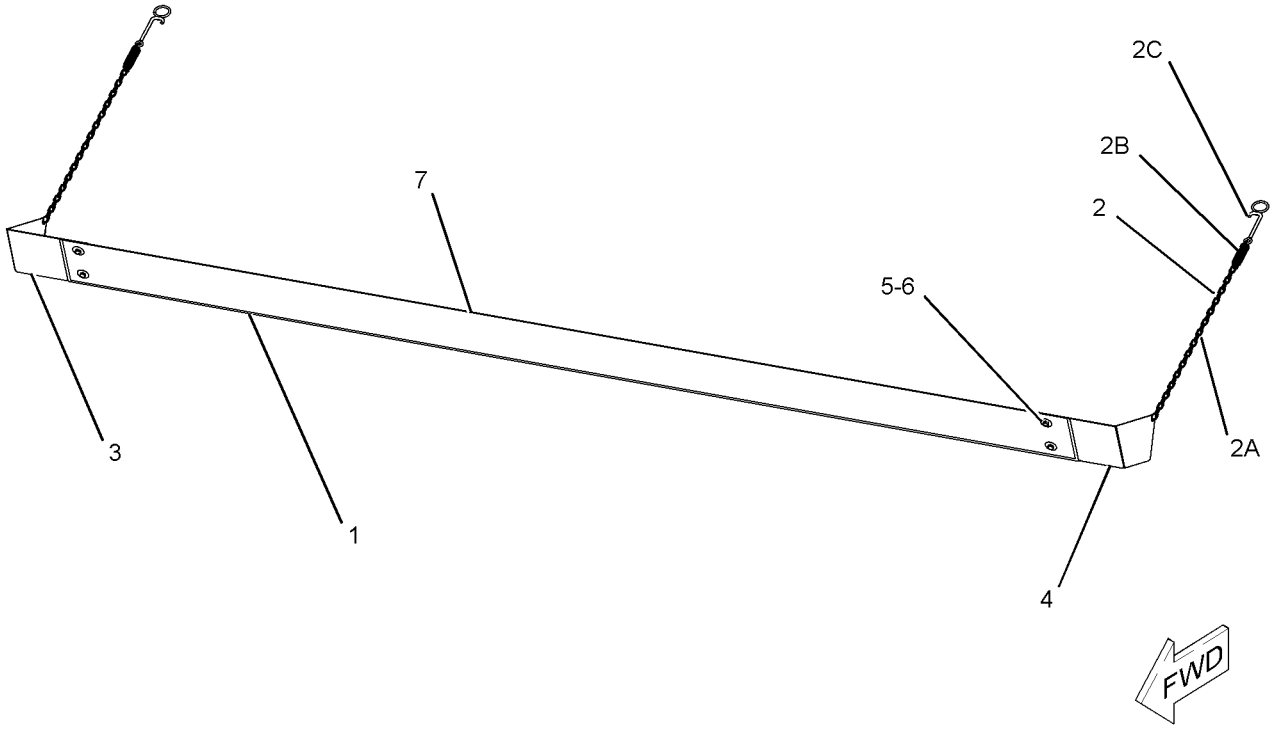

GRAPHIC #1 **<END>** g01121793

178-3593 MOUNTING GP-BUCKET—BACKHOE, QUICK COUPLER

S/N: DPH1-UP
FOR USE WITH 178-8850—PAGE 522
AN ATTACHMENT

SMCS-6101 **i01179790**

NOTE	PART NUMBER	QTY	PART NAME 1 2 3 4 5 6 (PRODUCT LEVEL)	SEE PAGE
	3B-5319	4	PIN-COTTER	
	154-5279	1	PIN	
	154-5280	1	PIN	
	9R-0158	5	WASHER (46X69X3-MM THK)	
	9R-1510	5	WASHER (51X82X4-MM THK)	

<END>

223-1882 MOUNTING GP-BUCKET—BACKHOE

S/N: DPH1-UP

FOR USE WITH 213-8000—PAGE 523

AN ATTACHMENT

SMCS-6101 **i01801870**

NOTE	REF NO	GRAPHIC REF	PART NUMBER	QTY	PART NAME 1 2 3 4 5 6 (PRODUCT LEVEL)	SEE PAGE
	1	1	**9R-0158**	2	WASHER (46X69X3MM THK)	
	2	1	**9R-9105**	2	PIN AS	
	3	1	**3B-5319**	2	PIN-COTTER	

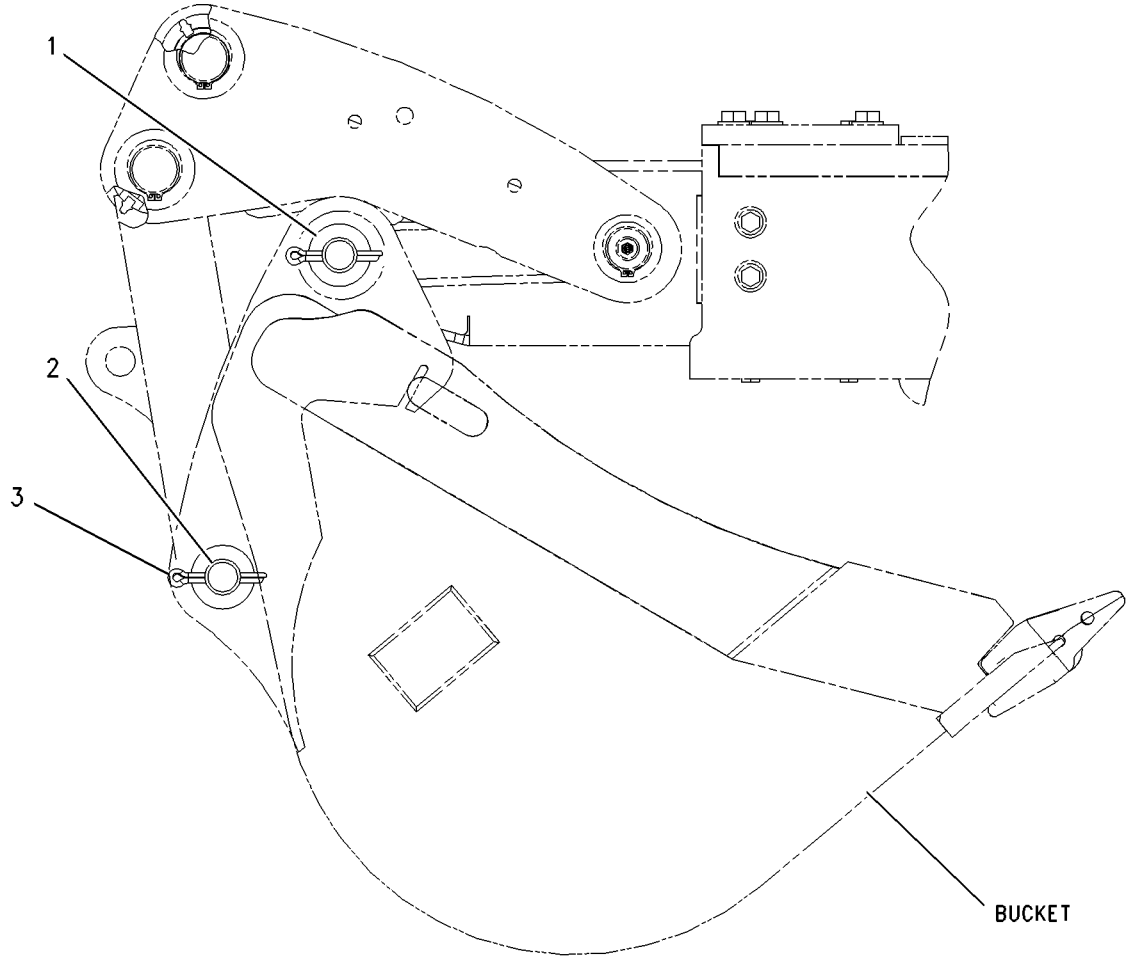

GRAPHIC #1 **<END>** g00925340

318-9902 MOUNTING GP-BUCKET—BACKHOE, QUICK COUPLER

S/N: DPH1-UP
FOR USE WITH 318-9901—PAGE 525
AN ATTACHMENT

SMCS-6101 **i02990524**

NOTE	PART NUMBER	QTY	PART NAME 1 2 3 4 5 6 (PRODUCT LEVEL)	SEE PAGE
	154-5279	1	PIN	
	154-5280	1	PIN	
	3B-5319	4	PIN-COTTER	
B	**9R-0158**	5	WASHER (46X69X3-MM THK)	
B	**9R-1510**	5	WASHER (51X82X4-MM THK)	

B-USE AS REQUIRED

<END>

318-9904 MOUNTING GP-BUCKET—BACKHOE, QUICK COUPLER

S/N: DPH1-UP
FOR USE WITH 318-9903—PAGE 525
AN ATTACHMENT

SMCS-6101 **i02977715**

NOTE	PART NUMBER	QTY	PART NAME 1 2 3 4 5 6 (PRODUCT LEVEL)	SEE PAGE
	9R-9105	2	PIN AS	
	3B-5319	2	PIN-COTTER	
	9R-0158	2	WASHER (46X69X3-MM THK)	

<END>

320-4769 MOUNTING GP-BUCKET–PARALLEL LIFT

S/N: DPH1-UP

PART OF 332-7953 CONTROL AR-BACKHOE, 332-7955, 332-7958 VALVE AR-BANK 3

AN ATTACHMENT

SMCS-6101 **i03638343**

NOTE	REF NO	GRAPHIC REF	PART NUMBER	QTY	PART NAME 1 2 3 4 5 6 (PRODUCT LEVEL)	SEE PAGE
B	1	1	**119-4594**	4	WASHER (41X64X1-MM THK)	
	2	1	**310-0843**	2	PIN AS	
	3	1	**3B-8489**	2	FITTING-GREASE	
	4	1	**6V-8144**	2	RING-RETAINING	
B	5	1	**9R-0109**	20	WASHER (41X64X3-MM THK)	

B-USE AS REQUIRED

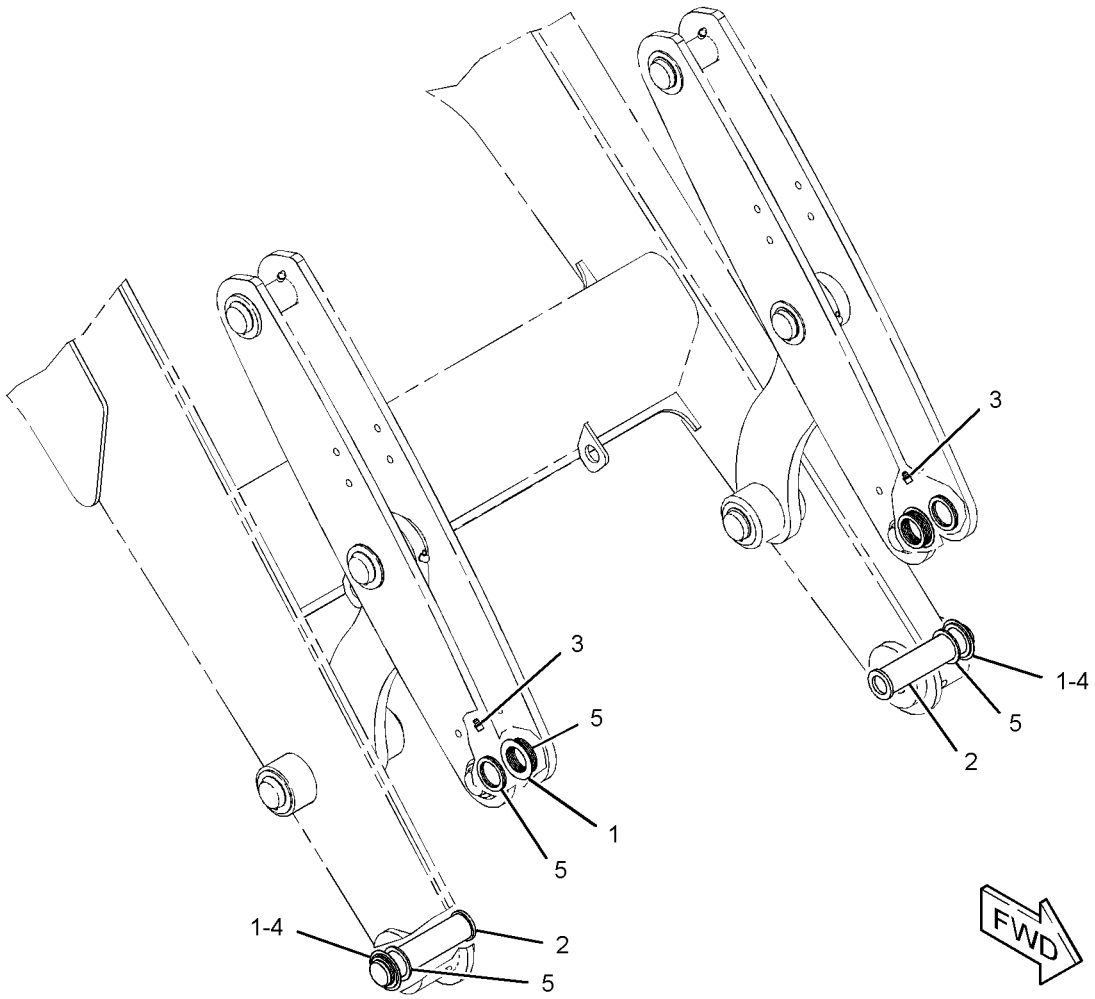

GRAPHIC #1 **<END>** g01963180

252-6005 MOUNTING GP-FORK–MULTIPURPOSE BUCKET

S/N: DPH1-UP

PART OF 318-7248, 320-9948 BUCKET AR-MULTIPURPOSE

AN ATTACHMENT

SMCS-6405 **i02164351**

NOTE	REF NO	GRAPHIC REF	PART NUMBER	QTY	PART NAME 1 2 3 4 5 6 (PRODUCT LEVEL)	SEE PAGE
	1	1	**5D-8159**	2	PIN AS	
	2	1	**104-6311**	2	BRACKET AS	
	3	1	**104-6316**	1	PIN	
	4	1	**104-6317**	2	PIN	
	5	1	**112-1776**	2	PIN AS	
	6	1	**4J-1888**	1	PIN-COTTER	
	7	1	**6V-8144**	4	RING-RETAINING	
	8	1	**9R-0109**	4	WASHER (41X64X3-MM THK)	

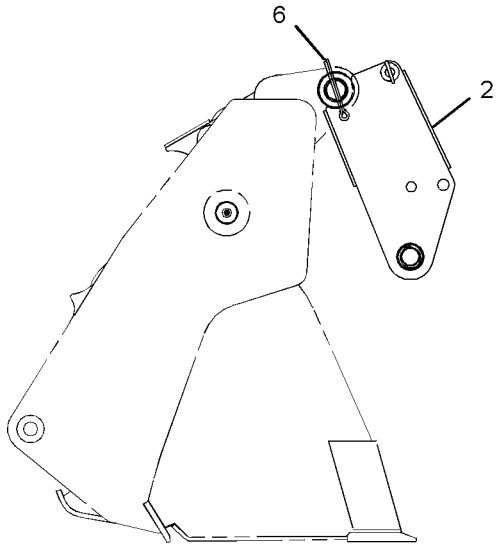

RIGHT SIDE VIEW

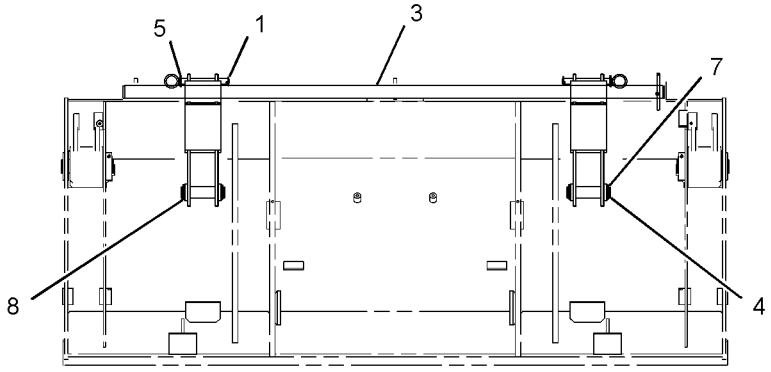

REAR VIEW

GRAPHIC #1 **<END>** g01097992

WORK TOOLS

255-9087 MOUNTING GP-FORK

S/N: DPH1-UP
PART OF 255-9086 FORK GP
AN ATTACHMENT

SMCS-6405 **i02403011**

NOTE	REF NO	GRAPHIC REF	PART NUMBER	QTY	PART NAME 1 2 3 4 5 6 (PRODUCT LEVEL)	SEE PAGE
	1	1	**104-6313**	1	BRACKET AS	
		1	**106-9388**	1	BRACKET	
	2	1	**106-9388**	2	BRACKET	
	3	1	**110-2861**	4	BRACKET	
	4	1	**250-6587**	2	PLATE	
	5	1	**252-9095**	4	PLATE	

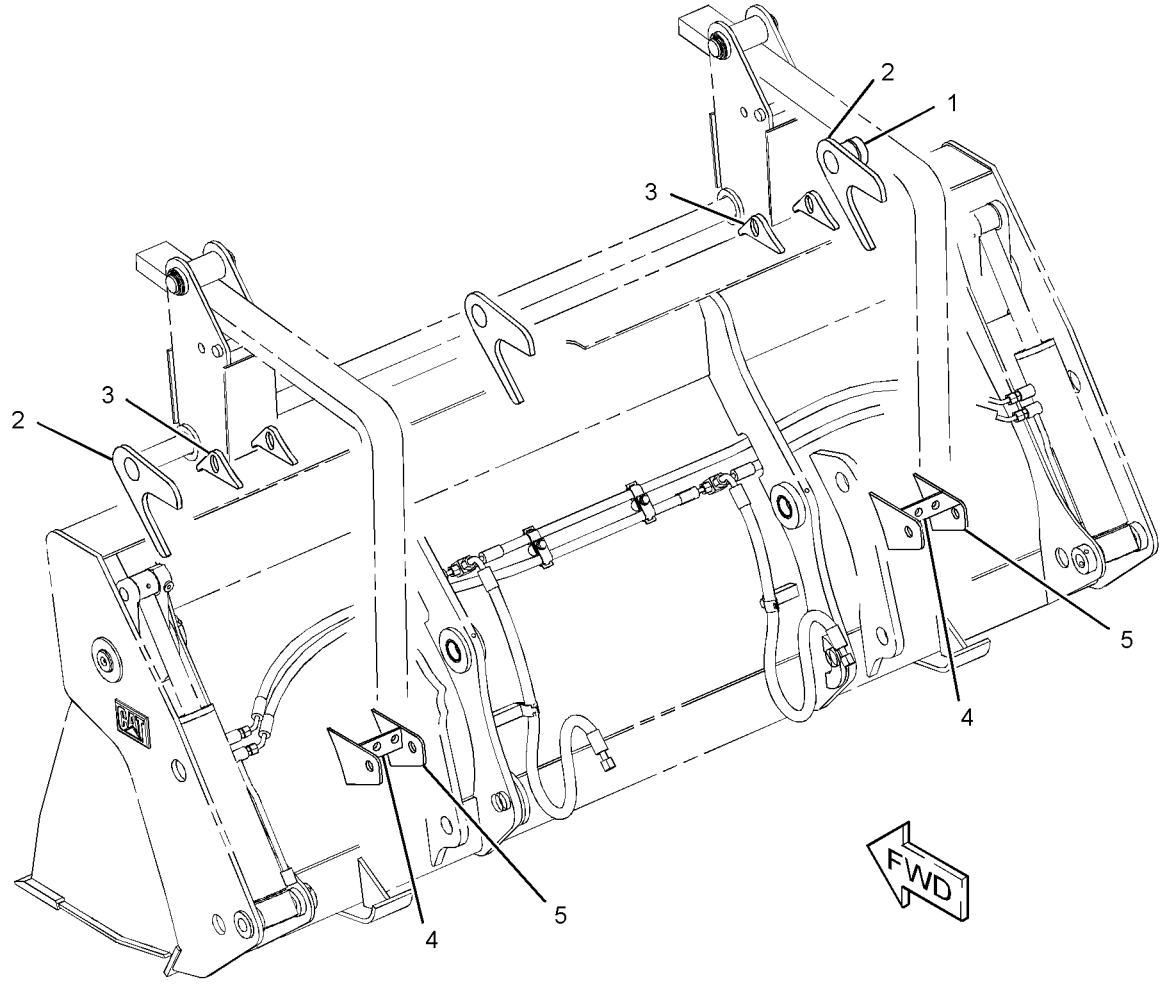

GRAPHIC #1 **<END>** g01202383

WORK TOOLS

9R-5866 TOOTH GP-UNI

S/N: DPH1-UP
FOR USE WITH LOADER BUCKETS
AN ATTACHMENT

SMCS-6822 **i01789850**

NOTE	REF NO	GRAPHIC REF	PART NUMBER	QTY	PART NAME 1 2 3 4 5 6 (PRODUCT LEVEL)	SEE PAGE
	1	1	**135-8203**	8	TOOTH-UNI	
	2	1	**4F-3657**	16	BOLT-PLOW (5/8-11X2.75 IN)	
	3	1	**4K-0367**	16	NUT-FULL (5/8-11 THD)	

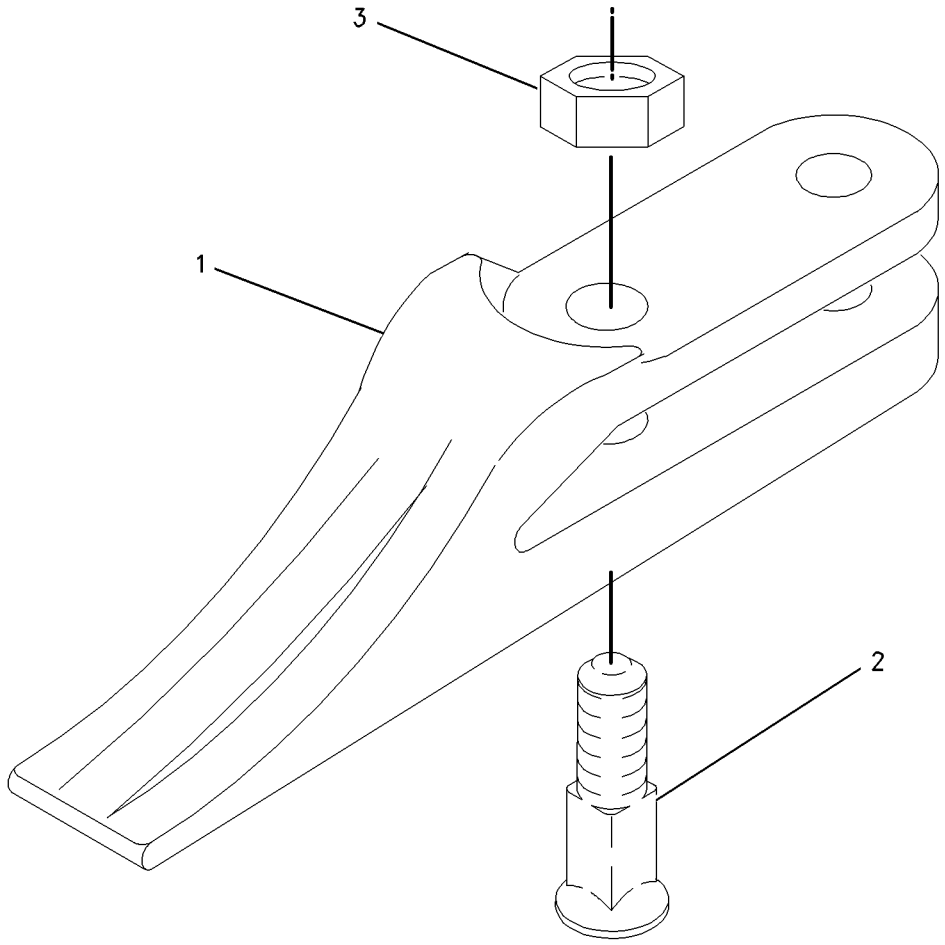

GRAPHIC #1 **<END>** g00915931

OPERATOR STATION

335-3049 CAB AR—MECH, NON-AC

S/N: DPH1-UP

CANNOT BE USED WITH 339-4990—PAGE 11, 339-4992—PAGE 13, 339-4991—PAGE 12, 339-4993—PAGE 14

AN ATTACHMENT

SMCS-7301, 7325 **i03726481**

NOTE	PART NUMBER	QTY	PART NAME 1 2 3 4 5 6 (PRODUCT LEVEL)	SEE PAGE
Y	**342-7147**	1	CAB GP	542
Y	*336-7545*	1	CONSOLE GP-OPERATOR (RH)	555
Y	*206-1702*	1	CONSOLE GP-OPERATOR (LH)	551
Y	*317-5539*	1	CONSOLE GP-OPERATOR (FRONT)	553
Y	*317-5538*	1	CONTROL GP-STEERING (TILT)	568
Y	*211-3782*	1	FENDER GP-REAR	315
Y	*206-1618*	1	FLOOR MAT GP	577
Y	*206-1841*	1	FLOORPLATE GP	318
Y	*316-7290*	1	HEATER & MTG GP-CAB	578
Y	*340-6918*	1	LIGHTING GP-FLOOD (FRONT, REAR, COSA)	174
Y	*317-5543*	1	LINER GP-CAB	595
Y	*315-2940*	1	LINES GP-HEATER	597
Y	*259-6276*	1	MIRROR GP-REAR VIEW (INTERIOR)	600
Y	*336-9168*	1	MIRROR GP-REAR VIEW (EXTERIOR)	601
Y	*206-1701*	1	PROTECTION GP-VANDALISM (ROTATING GUARD)	639
Y	*334-7225*	1	ROOF GP-CAB	607
Y	*315-9890*	1	SEAT GP-SUSPENSION (CLOTH)	617
Y	*206-1857*	1	VISOR GP-CAB	626
Y	*340-8276*	1	WASHER GP-WINDOW	627
Y	*340-3552*	1	WIRING GP-CAB	198
Y	*338-5743*	1	WIRING GP-CONSOLE	202
Y	*310-5613*	1	WIRING GP-HEATER	207
Y	*340-3213*	1	WIRING GP-PLATFORM	215
	256-5299	1	FILM-IDENTIFICATION (CATERPILLAR)	
			(ON THE FRONT OF THE ROOF CAP CENTERED HORIZONTALLY & VERTICALLY)	
	285-1207	1	MAT-PROTECTIVE	
	5P-9768	1	PLUG-HOLE	
	227-1057	1	PLUG-HOLE	

Y-SEPARATE ILLUSTRATION

<END>

OPERATOR STATION

335-3050 CAB AR—MECH, AIR CONDITIONER

S/N: DPH1-UP

CANNOT BE USED WITH 339-4986—PAGE 7, 339-4987—PAGE 8, 339-4988—PAGE 9, 339-4989—PAGE 10

AN ATTACHMENT

SMCS-7301, 7325 **i03726520**

NOTE	PART NUMBER	QTY	PART NAME 1 2 3 4 5 6 (PRODUCT LEVEL)	SEE PAGE
Y	**342-7147**	1	CAB GP	542
Y	*321-7038*	1	COMPRESSOR GP-REFRIGERANT	549
Y	*301-9725*	1	CONDENSER & MTG GP-REFRIGERANT	550
Y	*336-7545*	1	CONSOLE GP-OPERATOR (RH)	555
Y	*206-1702*	1	CONSOLE GP-OPERATOR (LH)	551
Y	*317-5539*	1	CONSOLE GP-OPERATOR (FRONT)	553
Y	*317-5538*	1	CONTROL GP-STEERING (TILT)	568
Y	*211-3782*	1	FENDER GP-REAR	315
Y	*206-1618*	1	FLOOR MAT GP	577
Y	*206-1841*	1	FLOORPLATE GP	318
Y	*316-7291*	1	HEATER & MTG GP-CAB	580
Y	*340-6918*	1	LIGHTING GP-FLOOD (FRONT, REAR, COSA)	174
Y	*317-5543*	1	LINER GP-CAB	595
Y	*315-2939*	1	LINES GP-HEATER & AIR COND	598
Y	*259-6276*	1	MIRROR GP-REAR VIEW (INTERIOR)	600
Y	*336-9168*	1	MIRROR GP-REAR VIEW (EXTERIOR)	601
Y	*206-1701*	1	PROTECTION GP-VANDALISM (ROTATING GUARD)	639
Y	*334-7225*	1	ROOF GP-CAB	607
Y	*315-9890*	1	SEAT GP-SUSPENSION (CLOTH)	617
Y	*206-1857*	1	VISOR GP-CAB	626
Y	*340-8276*	1	WASHER GP-WINDOW	627
Y	*338-5733*	1	WIRING GP-AIR CONDITIONER	195
Y	*340-3552*	1	WIRING GP-CAB	198
Y	*338-5743*	1	WIRING GP-CONSOLE	202
Y	*340-3213*	1	WIRING GP-PLATFORM	215
	256-5299	1	FILM-IDENTIFICATION (CATERPILLAR)	
			(ON THE FRONT OF THE ROOF CAP CENTERED HORIZONTALLY & VERTICALLY)	
	285-1207	1	MAT-PROTECTIVE	
	5P-9768	1	PLUG-HOLE	
	227-1057	1	PLUG-HOLE	

Y-SEPARATE ILLUSTRATION

<END>

OPERATOR STATION

342-7147 CAB GP–STANDARD

S/N: DPH1-UP
EAME MARKET
PART OF 335-3049, 335-3050 CAB AR
AN ATTACHMENT

SMCS-7301 **i03713880**

NOTE	REF NO	GRAPHIC REF	PART NUMBER	QTY	PART NAME 1 2 3 4 5 6 (PRODUCT LEVEL)	SEE PAGE
	1	1	**3S-2093**	6	STRAP-CABLE	
	2	1	**8Y-7309**	2	RETAINER	
	3	1	**129-3738**	2	GUARD-STRIKER	
	4	1	**129-5256**	12	BUSHING	
	5	1	**129-5257**	8	BUSHING	
	6	1	**205-9605**	1	GLASS (FRONT, LH)	
	7	1	**205-9606**	1	GLASS (FRONT, RH)	
	8	1	**205-9607**	1	GLASS (WINDSHIELD) (FRONT WINDOW)	
	9	1	**205-9608**	1	GLASS (REAR, RH)	
	10	1	**205-9609**	1	GLASS (REAR, LH)	
	11	1	**205-9629**	4	SPACER (15.9X21.4X50-MM THK)	
	12	1	**206-1590**	4	PIN	
	13	1	**206-1647**	1	PLATE	
	14	1	**210-6475**	2	PLATE	
	15	1	**213-6057**	1	HARNESS AS-LIGHTING (ROADING)	
		1	**115-1052**	2	PIN-CONNECTOR	
		1	**9X-3401**	1	PIN-CONNECTOR (16-GA TO 18-GA)	
		1	**155-2274**	2	KIT-CONNECTING PLUG (6-PIN)	
					(EACH PLUG KIT INCLUDES PLUG AS, WEDGE & INTERFACE SEAL)	
		1	**8T-8737**	3	PLUG-SEAL	
		1	**102-8806**	1	KIT-RECEPTACLE (8-PIN)	
					(INLUDES RECEPTACLE AS & WEDGE)	
		1	**9W-0844**	4	SOCKET-CONNECTOR (14-GA)	
		1	**180-9340**	6	SOCKET-CONNECTOR (14-GA TO 18-GA)	
E		1	**119-3662**		TUBE-HEAT SHRINK (10.85-MM DIA) (13-CM)	
E		1	**125-7875**		TUBE-HEAT SHRINK (7.44-MM DIA) (5-CM)	
	16	1	**215-2913**	1	GROMMET	
	17	1	**219-0302**	1	FILM-WARNING (NO WELD, NO DRILL, READ OMM)	
	18	1	**223-2030**	2	LATCH AS (HOLD OPEN)	
					(EACH INCLUDES)	
M		1	**6V-7743**	2	LOCKNUT (M6X1-THD)	
M		1	**9X-2045**	2	SCREW-TRUSS HEAD (M6X1X20-MM)	
		1	**143-2827**	2	SPRING	
Y	19	1	*315-1270*	1	WINDOW GP-CAB (REAR)	629
	20	1	**325-9310**	1	FILM-CERTIFICATION (OPS, READ OMM)	
Y	21	1	**329-1167**	1	DOOR GP-CAB (RH)	573
Y	22	1	**329-1168**	1	DOOR GP-CAB (LH) (LH)	575
	23	1	**338-3328**	2	BOLT-STRIKER	
	24	1	**342-7146**	1	CAB AS	
M	25	1	**5C-7261**	2	NUT (M8X1.25-THD)	
	26	1	**5P-4116**	11	WASHER-HARD (8.8X20.5X2-MM THK)	
	27	1	**5P-7648**	2	GROMMET	
	28	1	**7X-0618**	2	WASHER-HARD (13.5X40X5-MM THK)	
	29	1	**7X-2393**	2	BUMPER-CONICAL	
	30	1	**8S-7803**	8	RING-RETAINING	
M	31	1	**8T-4200**	11	BOLT (M8X1.25X16-MM)	
E	32	1	**322-8414**		SEAL-CAB (339-CM EACH)	

E-ORDER BY THE CENTIMETER
M-METRIC PART
Y-SEPARATE ILLUSTRATION

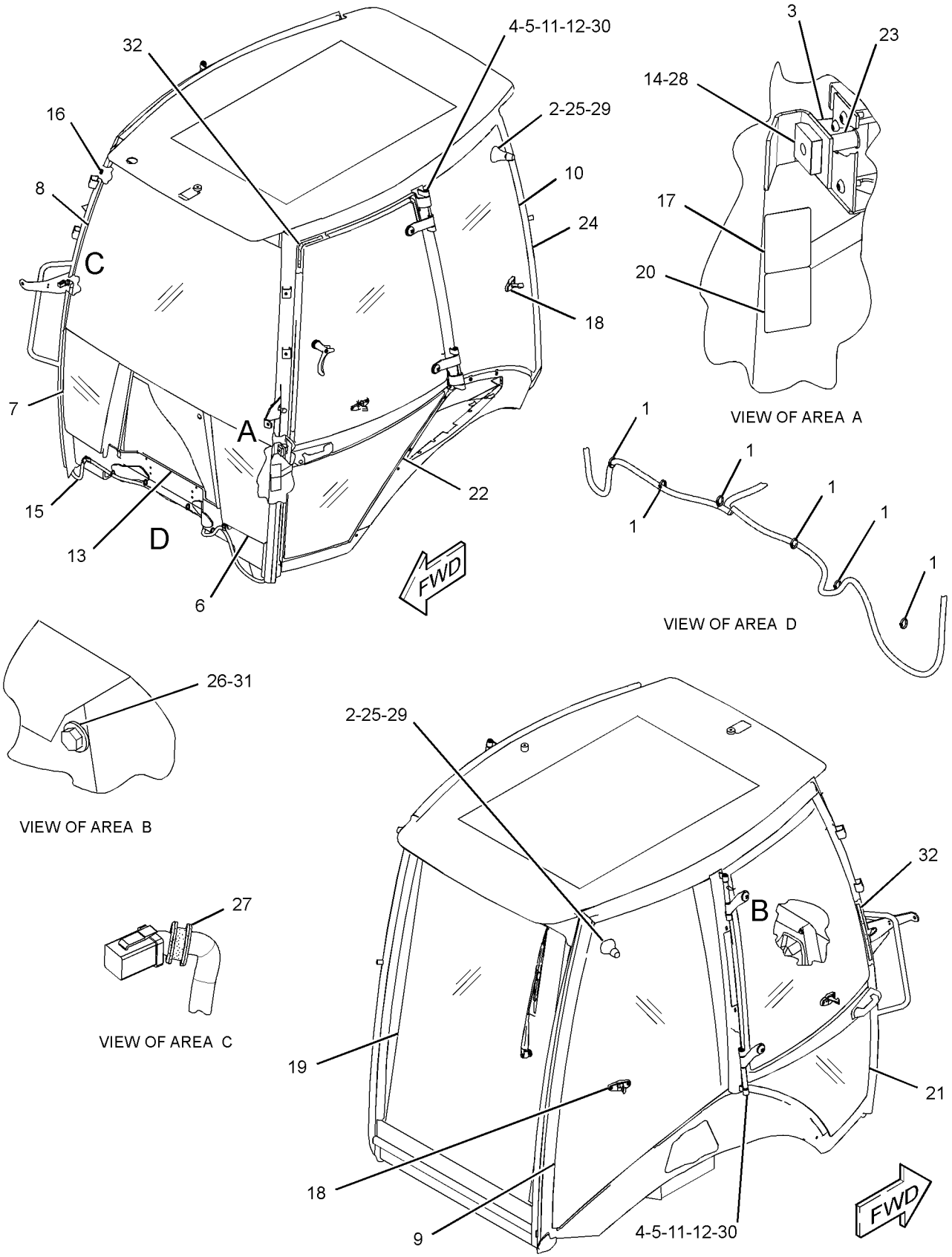

GRAPHIC #1

<END>

g01970834

OPERATOR STATION

335-3047 CANOPY AR-OPEN ROPS—VINYL

S/N: DPH1-UP

CANNOT BE USED WITH 339-4988—PAGE 9, 339-4990—PAGE 11, 339-4992—PAGE 13, 339-4989—PAGE 10, 339-4993—PAGE 14

AN ATTACHMENT

SMCS-7302, 7323 **i03663063**

NOTE	PART NUMBER	QTY	PART NAME 1 2 3 4 5 6 (PRODUCT LEVEL)	SEE PAGE
Y	**342-7143**	1	CANOPY GP-OPEN ROPS	546
Y	*206-1702*	1	CONSOLE GP-OPERATOR (LH)	551
Y	*317-5539*	1	CONSOLE GP-OPERATOR (FRONT)	553
Y	*336-7545*	1	CONSOLE GP-OPERATOR (RH)	555
Y	*317-5538*	1	CONTROL GP-STEERING (TILT)	568
Y	*220-3785*	1	COVER GP-WIPER MOTOR	572
Y	*211-3782*	1	FENDER GP-REAR	315
Y	*206-1618*	1	FLOOR MAT GP	577
Y	*206-1840*	1	FLOORPLATE GP	317
Y	*340-6918*	1	LIGHTING GP-FLOOD (FRONT, REAR, COSA)	174
Y	*259-6276*	1	MIRROR GP-REAR VIEW (INTERIOR)	600
Y	*336-9168*	1	MIRROR GP-REAR VIEW (EXTERIOR)	601
Y	*206-1701*	1	PROTECTION GP-VANDALISM (ROTATING GUARD)	639
Y	*334-7225*	1	ROOF GP-CAB	607
Y	*315-9888*	1	SEAT GP-SUSPENSION (VINYL)	617
Y	*206-1704*	1	TRIM GP-CAB (OPEN ROPS)	624
Y	*317-5547*	1	WIPER & WASHER GP-WINDOW	633
Y	*340-6912*	1	WIRING GP-CAB (CANOPY ROOF)	200
Y	*338-5743*	1	WIRING GP-CONSOLE	202
Y	*340-3213*	1	WIRING GP-PLATFORM	215
	256-5299	1	FILM-IDENTIFICATION (CATERPILLAR)	
			(ON THE FRONT OF THE ROOF CAP CENTERED HORIZONTALLY & VERTICALLY)	
B	**5P-9768**	1	PLUG-HOLE	
B	**227-1057**	1	PLUG-HOLE	
	273-1474	1	SEAL (CONSOLE, LH)	

B-USE AS REQUIRED
Y-SEPARATE ILLUSTRATION

<END>

OPERATOR STATION

335-3048 CANOPY AR-OPEN ROPS—FABRIC

S/N: DPH1-UP

CANNOT BE USED WITH 339-4988—PAGE 9, 339-4990—PAGE 11, 339-4992—PAGE 13, 339-4989—PAGE 10, 339-4993—PAGE 14

AN ATTACHMENT

SMCS-7302, 7323 **i03726483**

NOTE	PART NUMBER	QTY	PART NAME 1 2 3 4 5 6 (PRODUCT LEVEL)	SEE PAGE
Y	**342-7143**	1	CANOPY GP-OPEN ROPS	546
Y	*206-1702*	1	CONSOLE GP-OPERATOR (LH)	551
Y	*317-5539*	1	CONSOLE GP-OPERATOR (FRONT)	553
Y	*336-7545*	1	CONSOLE GP-OPERATOR (RH)	555
Y	*317-5538*	1	CONTROL GP-STEERING (TILT)	568
Y	*220-3785*	1	COVER GP-WIPER MOTOR	572
Y	*211-3782*	1	FENDER GP-REAR	315
Y	*206-1618*	1	FLOOR MAT GP	577
Y	*206-1840*	1	FLOORPLATE GP	317
Y	*340-6918*	1	LIGHTING GP-FLOOD (FRONT, REAR, COSA)	174
Y	*259-6276*	1	MIRROR GP-REAR VIEW (INTERIOR)	600
Y	*336-9168*	1	MIRROR GP-REAR VIEW (EXTERIOR)	601
Y	*206-1701*	1	PROTECTION GP-VANDALISM (ROTATING GUARD)	639
Y	*334-7225*	1	ROOF GP-CAB	607
Y	*315-9889*	1	SEAT GP-SUSPENSION (CLOTH)	617
Y	*206-1704*	1	TRIM GP-CAB (OPEN ROPS)	624
Y	*317-5547*	1	WIPER & WASHER GP-WINDOW	633
Y	*340-6912*	1	WIRING GP-CAB (CANOPY ROOF)	200
Y	*338-5743*	1	WIRING GP-CONSOLE	202
Y	*340-3213*	1	WIRING GP-PLATFORM	215
	256-5299	1	FILM-IDENTIFICATION (CATERPILLAR)	
			(ON THE FRONT OF THE ROOF CAP CENTERED VERTICALLY & HORIZONTALLY)	
	5P-9768	1	PLUG-HOLE	
	227-1057	1	PLUG-HOLE	
	273-1474	1	SEAL (CONSOLE, LH)	

Y-SEPARATE ILLUSTRATION

<END>

OPERATOR STATION

342-7143 CANOPY GP-OPEN ROPS

S/N: DPH1-UP
EUROPEAN MARKET
PART OF 335-3047, 335-3048 CANOPY AR-OPEN ROPS
AN ATTACHMENT

SMCS-7302, 7323 **i03726454**

NOTE	REF NO	GRAPHIC REF	PART NUMBER	QTY	PART NAME 1 2 3 4 5 6 (PRODUCT LEVEL)	SEE PAGE
	1	1	**205-9605**	1	GLASS (FRONT, LH)	
	2	1	**205-9606**	1	GLASS (FRONT, RH)	
	3	1	**205-9607**	1	GLASS (WINDSHIELD) (FRONT WINDOW)	
	4	1	**206-1647**	1	PLATE	
	5	1	**213-6057**	1	HARNESS AS-LIGHTING (ROADING)	
		1	**9W-0852**	2	PIN-CONNECTOR (14-GA)	
		1	**9X-3401**	5	PIN-CONNECTOR (16-GA TO 18-GA)	
		1	**155-2274**	2	KIT-CONNECTING PLUG (6-PIN)	
					(EACH INCLUDES PLUG AS, WEDGE & INTERFACE SEAL)	
		1	**8T-8737**	3	PLUG-SEAL	
		1	**102-8806**	1	KIT-RECEPTACLE (8-PIN)	
					(INCLUDES RECEPTACLE AS & WEDGE)	
		1	**9W-0844**	4	SOCKET-CONNECTOR (14-GA)	
		1	**180-9340**	6	SOCKET-CONNECTOR (14-GA TO 18-GA)	
E		1	**119-3662**		TUBE-HEAT SHRINK (10.85-MM DIA) (13-CM)	
E		1	**125-7875**		TUBE-HEAT SHRINK (7.44-MM DIA) (5-CM)	
	6	1	**215-2913**	1	GROMMET	
	7	1	**219-0302**	1	FILM-WARNING (NO WELD, NO DRILL, READ OMM)	
	8	1	**325-9310**	1	FILM-CERTIFICATION (OPS, READ OMM)	
	9	1	**342-7142**	1	CANOPY AS	
	10	1	**3S-2093**	6	STRAP-CABLE	
	11	1	**5P-4116**	11	WASHER-HARD (8.8X20.5X2-MM THK)	
	12	1	**5P-7648**	2	GROMMET	
M	13	1	**8T-4200**	11	BOLT (M8X1.25X16-MM)	

E-ORDER BY THE CENTIMETER
M-METRIC PART

342-7143 CANOPY GP-OPEN ROPS *(contd.)* **i03726454**

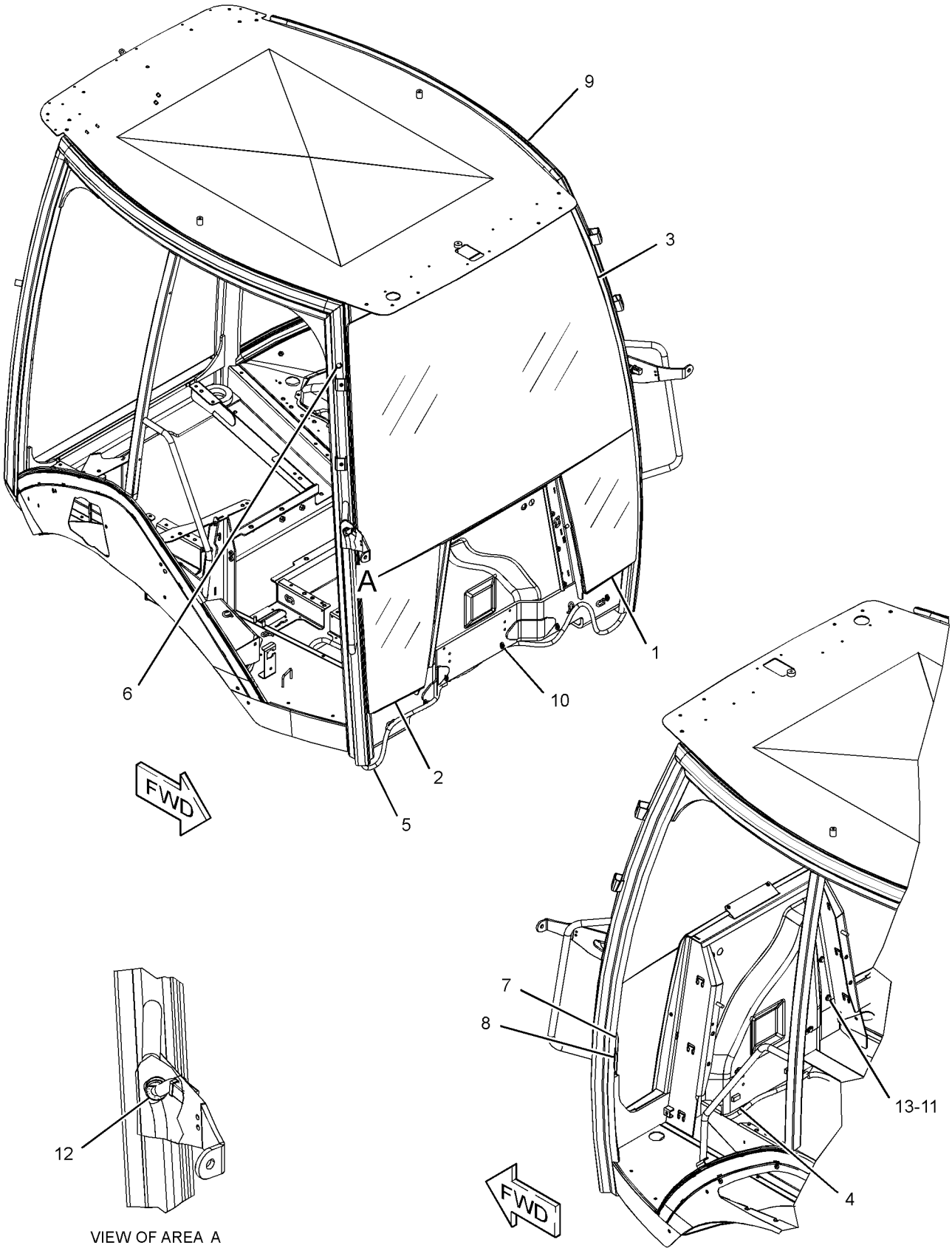

GRAPHIC #1 **<END>** g01970296

OPERATOR STATION

299-2212 COMPRESSOR GP-REFRIGERANT

S/N: DPH1-UP

PART OF 321-7038 COMPRESSOR GP-REFRIGERANT

AN ATTACHMENT

SMCS-1802 **i03729560**

NOTE	REF NO	GRAPHIC REF	PART NUMBER	QTY	PART NAME 1 2 3 4 5 6 (PRODUCT LEVEL)	SEE PAGE
	1	1	**126-1767**	2	PIN-CONNECTOR (14-GA)	
	2	1	**102-8802**	1	KIT-RECEPTACLE (2-PIN)	
					(INCLUDES RECEPTACLE AS & WEDGE)	
	3	1	**314-4018**	1	VALVE AS-PRESSURE RELIEF (REFRIGERANT COMPRESSOR)	
	4	1	**7T-4532**	1	PLUG AS	
	5	1	**9X-7385**	2	SEAL-O-RING	

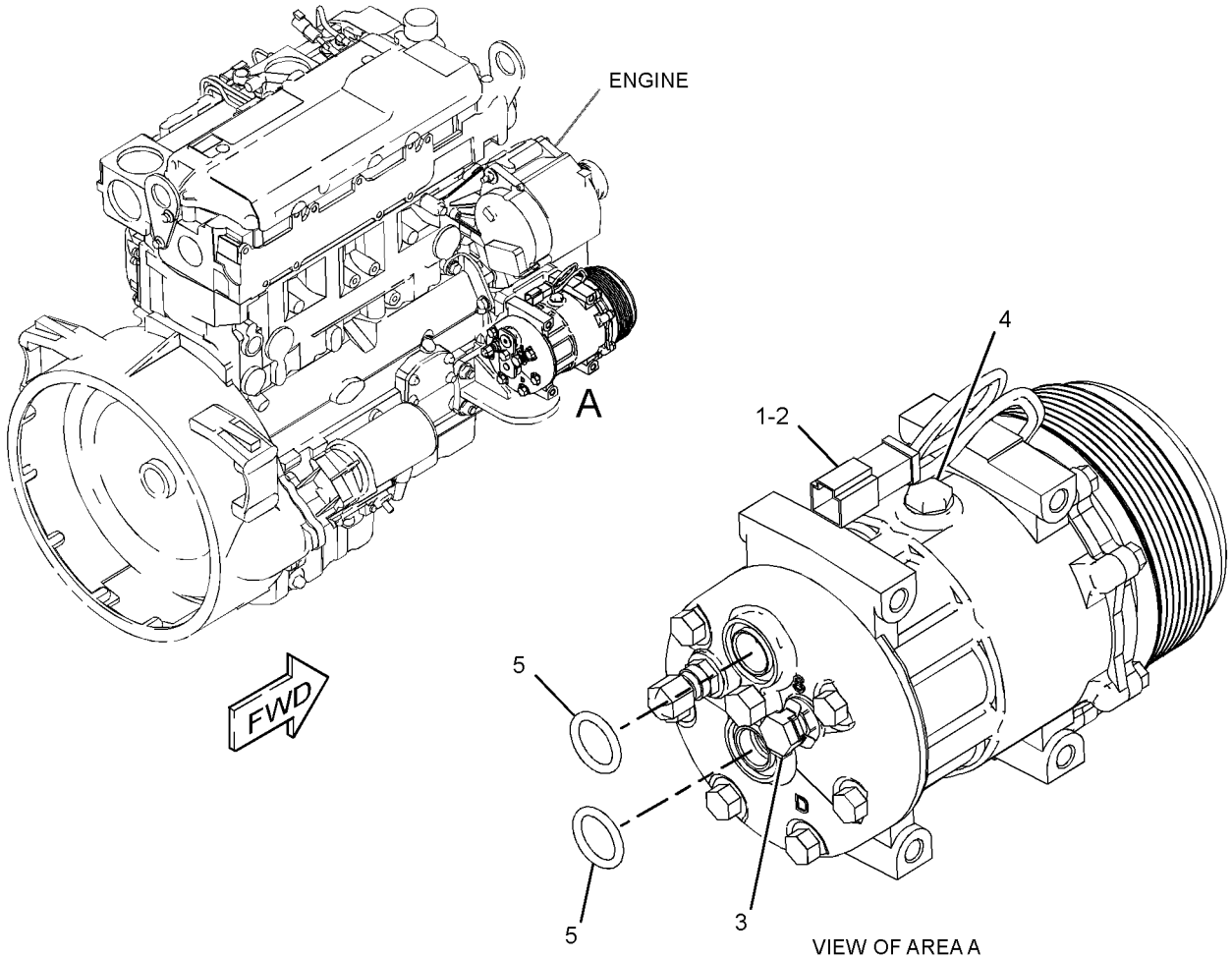

GRAPHIC #1 **<END>** g01513535

321-7038 COMPRESSOR GP-REFRIGERANT

S/N: DPH1-UP
PART OF 335-3050 CAB AR
AN ATTACHMENT

SMCS-1802 **i03035509**

NOTE	REF NO	GRAPHIC REF	PART NUMBER	QTY	PART NAME 1 2 3 4 5 6 (PRODUCT LEVEL)	SEE PAGE
	1	1	**288-9734**	1	BRACKET	
	2	1	**290-7831**	1	BRACKET	
Y	3	1	**299-2212**	1	COMPRESSOR GP-REFRIGERANT	548
M	4	1	**7X-2538**	4	BOLT (M8X1.25X100-MM)	
M	5	1	**7X-2553**	2	BOLT (M16X2X40-MM)	
	6	1	**8T-4121**	2	WASHER-HARD (11X21X2.5-MM THK)	
M	7	1	**8T-4136**	2	BOLT (M10X1.5X25-MM)	
	8	1	**8T-4224**	4	WASHER-HARD (8.8X16X2-MM THK)	
	9	1	**9X-8257**	2	WASHER (17.5X30X3.5-MM THK)	

M-METRIC PART
Y-SEPARATE ILLUSTRATION

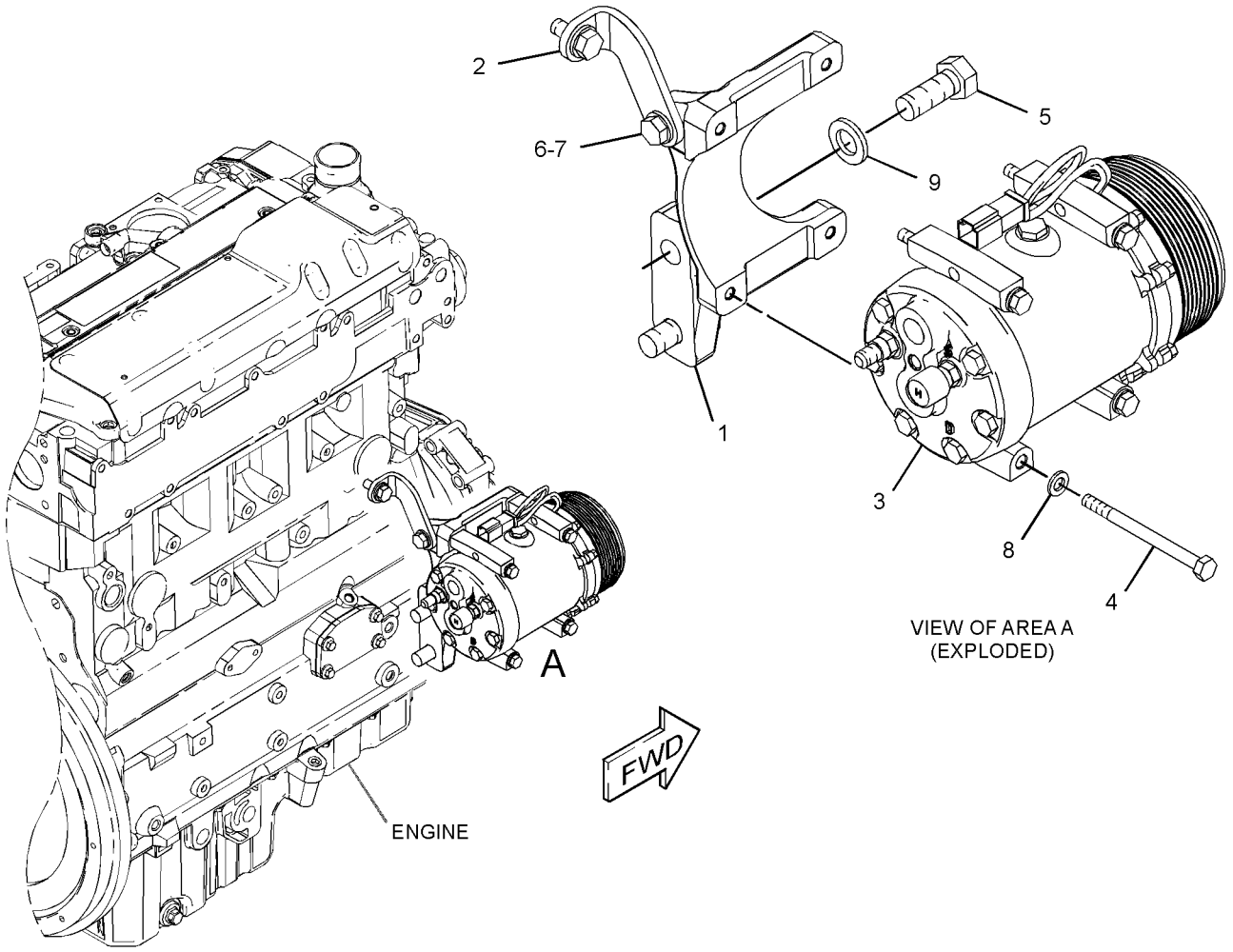

GRAPHIC #1 **<END>** g01570153

OPERATOR STATION

301-9725 CONDENSER & MTG GP-REFRIGERANT

S/N: DPH1-UP
PART OF 335-3050 CAB AR
AN ATTACHMENT

SMCS-1805 **i03028622**

NOTE	REF NO	GRAPHIC REF	PART NUMBER	QTY	PART NAME 1 2 3 4 5 6 (PRODUCT LEVEL)	SEE PAGE
	1	1	**8C-9987**	4	WASHER (8.3X28X2.5-MM THK)	
	2	1	**300-6792**	1	CORE AS-CONDENSER	
		1	**317-8141**	4	MOUNT	
M	3	1	**8T-4908**	4	BOLT (M8X1.25X25-MM)	

M-METRIC PART

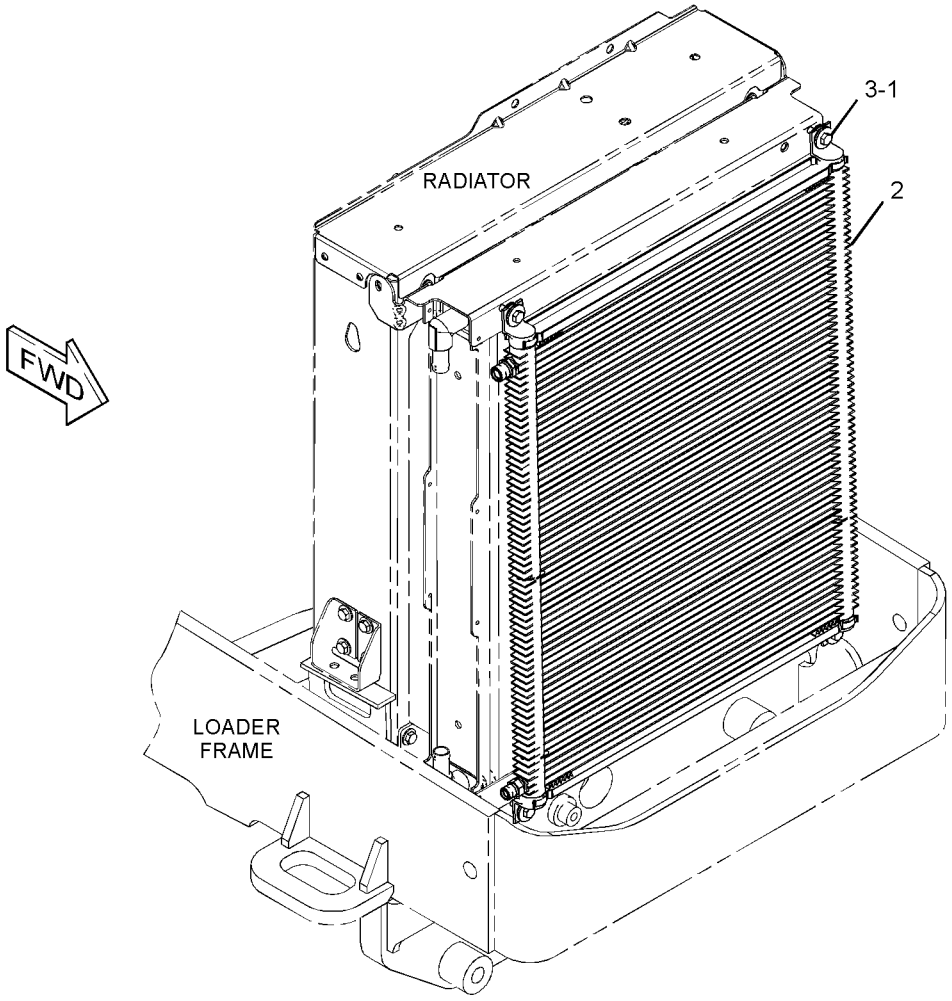

GRAPHIC #1 **<END>** g01410038

OPERATOR STATION

206-1702 CONSOLE GP-OPERATOR—LH

S/N: DPH1-UP

PART OF 335-3049, 335-3050 CAB AR, 335-3047, 335-3048 CANOPY AR-OPEN ROPS AN ATTACHMENT

SMCS-5258, 7451 **i03126124**

NOTE	REF NO	GRAPHIC REF	PART NUMBER	QTY	PART NAME 1 2 3 4 5 6 (PRODUCT LEVEL)	SEE PAGE
E	1	1	**3E-6600**		SEAL (34-CM)	
D	2	1	**5P-5927**		SEAL (1.7-M)	
	3	1	**206-1696**	1	CONSOLE AS (LH)	
	4	1	**206-1698**	1	DOOR-STORAGE	
	5	1	**206-1699**	1	CUP HOLDER (FRONT)	
	6	1	**206-1706**	1	BOX AS-STORAGE	
J	7	1	**206-1708**	1	LOCK AS	
	8	1	**206-1712**	1	HINGE-DOOR	
	9	1	**210-6491**	1	CUP HOLDER (REAR)	
	10	1	**249-2482**	1	PLATE	
	11	1	**261-9636**	1	BRACKET-SUPPORT	
	12	1	**261-9637**	2	BRACKET AS	
	13	1	**261-9639**	3	SCREW-PAN HEAD (12X0.5-IN)	
E	14	1	**293-1980**		SEAL (71-CM)	
E	14A	1	**293-1980**		SEAL (77-CM)	
M	15	1	**5C-2890**	3	NUT (M6X1-THD)	
	16	1	**8T-4205**	3	WASHER-HARD (7.2X14.5X2-MM THK)	
	17	1	**9X-2038**	6	WASHER (7X19X2-MM THK)	
M	18	1	**9X-2044**	19	SCREW-TRUSS HEAD (M6X1X16-MM)	

D-ORDER BY THE METER
E-ORDER BY THE CENTIMETER
J-REQUIRES CORPORATE KEY
M-METRIC PART

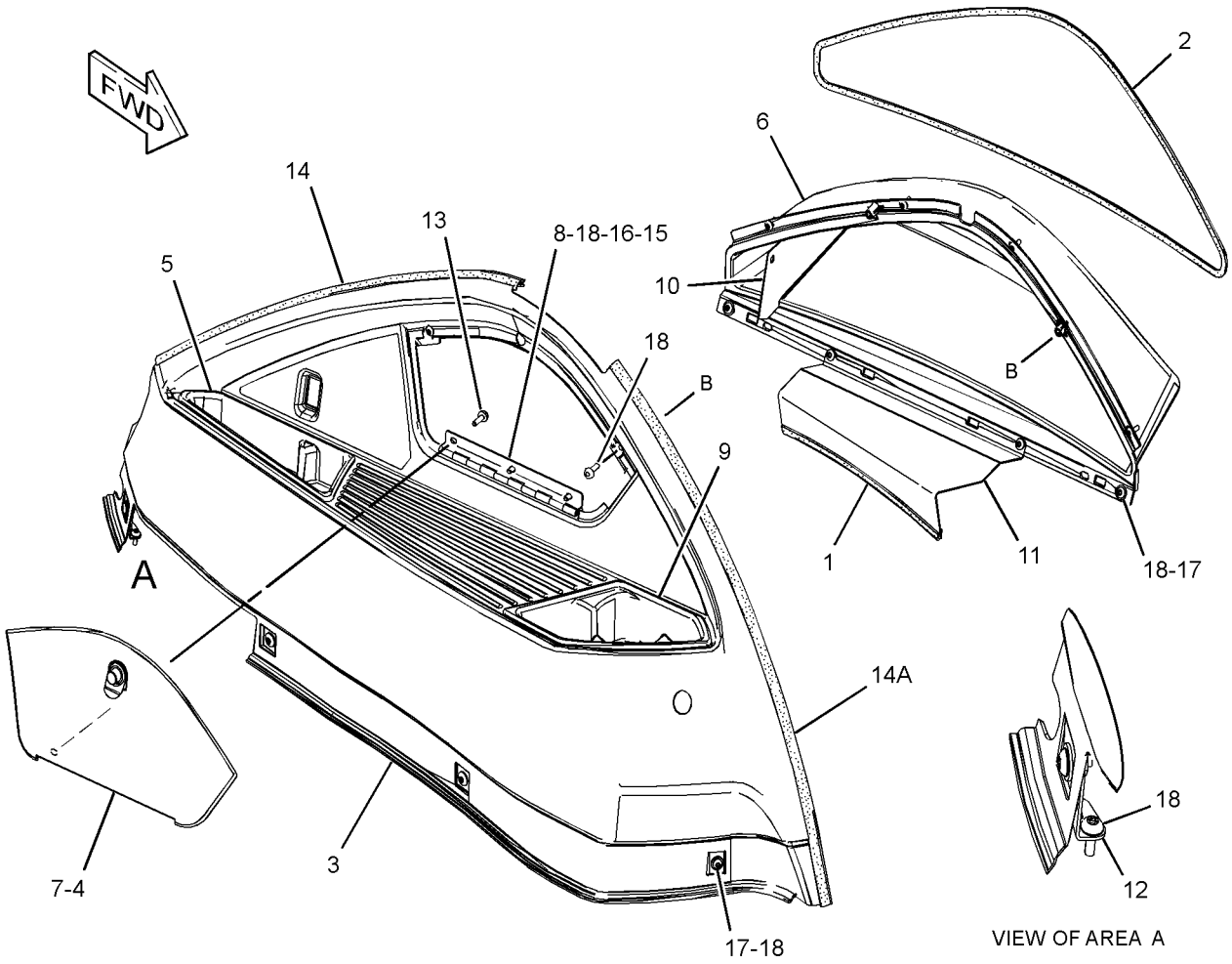

GRAPHIC #1 **<END>** g01520782

OPERATOR STATION

317-5539 CONSOLE GP-OPERATOR–FRONT

S/N: DPH1-UP

PART OF 335-3049, 335-3050 CAB AR, 335-3047, 335-3048 CANOPY AR-OPEN ROPS AN ATTACHMENT

SMCS-5258, 7451 **i03504003**

NOTE	REF NO	GRAPHIC REF	PART NUMBER	QTY	PART NAME 1 2 3 4 5 6 (PRODUCT LEVEL)	SEE PAGE
	1	1	**4I-3038**	2	WASHER (3.3X8X0.5-MM THK)	
B	2	1	**184-5293**	1	PLUG	
	3	1	**206-1659**	1	DOOR-STORAGE	
	4	1	**206-1662**	1	CONSOLE AS-FRONT (UPPER)	
		1	**206-1667**	8	CLIP	
	5	1	**206-1663**	1	CONSOLE-FRONT (MIDDLE)	
J	6	1	**206-1708**	1	LOCK AS	
	7	1	**224-2147**	1	CONSOLE AS-FRONT (LOWER, LH)	
	8	1	**224-2149**	1	CONSOLE AS-FRONT (LOWER, RH)	
	9	1	**233-5260**	2	LANYARD	
	10	1	**258-2354**	1	BRACKET-LATCH	
	11	1	**261-9639**	10	SCREW-PAN HEAD (NO 12X0.5-IN)	
	12	1	**313-6711**	1	COVER AS-STEERING COLUMN (UPPER)	
		1	**206-1667**	2	CLIP	
	13	1	**313-6712**	1	COVER AS-STEERING COLUMN (FRONT)	
	14	1	**313-6713**	1	COVER AS-STEERING COLUMN (REAR)	
					(EACH COVER AS-STEERING COLUMN INCLUDES)	
		1	**206-1667**	4	CLIP	
	15	1	**320-9835**	1	FILM-INSTRUCTION (FORWARD, NEUTRAL, REVERSE)	
M	16	1	**120-9027**	2	SCREW-PAN HEAD (M3X0.5X16-MM)	
	17	1	**206-1854**	1	HINGE	
M	18	1	**8T-2658**	2	LOCKNUT (M3X0.5-THD)	
	19	1	**9X-2038**	3	WASHER (7X19X2-MM THK)	
M	20	1	**9X-2044**	2	SCREW-TRUSS HEAD (M6X1X16-MM)	
M	21	1	**9X-2045**	16	SCREW-TRUSS HEAD (M6X1X20-MM)	
E	22	1	**220-0738**		SEAL (22-CM)	
D	23	1	**5P-7070**		INSULATION-STRIP (0.03-M EACH)	

B-USE AS REQUIRED
D-ORDER BY THE METER
E-ORDER BY THE CENTIMETER
J-REQUIRES CORPORATE KEY
M-METRIC PART

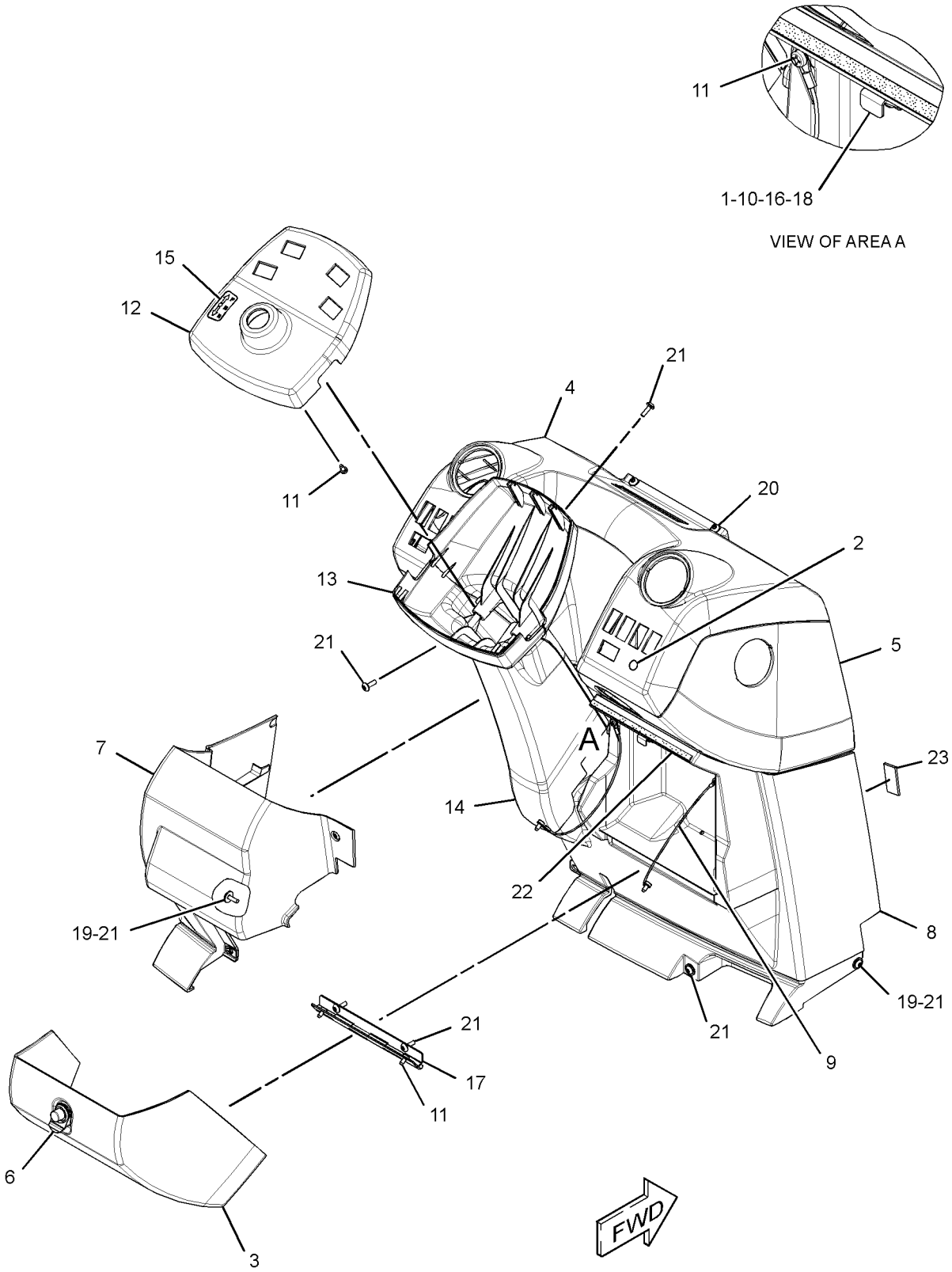

GRAPHIC #1 **<END>** g01841134

OPERATOR STATION

336-7545 CONSOLE GP-OPERATOR—RH

S/N: DPH1-UP

PART OF 335-3049, 335-3050 CAB AR, 335-3047, 335-3048 CANOPY AR-OPEN ROPS AN ATTACHMENT

SMCS-5258, 7451 **i03663181**

NOTE	REF NO	GRAPHIC REF	PART NUMBER	QTY	PART NAME 1 2 3 4 5 6 (PRODUCT LEVEL)	SEE PAGE
B	1	1	**2S-3163**	1	PLUG	
	2	1	**164-1178**	1	CLIP	
	3	1	**167-8251**	1	FASTENER	
	4	1	**206-1678**	1	HOUSING AS (UPPER)	
	5	1	**206-1681**	1	PANEL AS (LOWER)	
		1	**172-8591**	5	NUT-SPRING	
	6	1	**206-1687**	1	COVER-FUSE	
	7	1	**206-1690**	1	COVER (FENDER, REAR)	
	8	1	**206-1692**	1	COVER AS (CONTROLS, REAR)	
		1	**206-1667**	3	CLIP	
	9	1	**231-9361**	1	FILM-IDENTIFICATION (FUSE, RELAY)	
B	10	1	**248-2709**	2	PLUG	
	11	1	**250-7910**	1	FILM-INSTRUCTION (BOOM LOCK)	
	12	1	**250-7911**	1	FILM-INSTRUCTION (VARIABLE SPEED)	
	13	1	**255-0793**	1	FILM-WARNING (READ OMM)	
	14	1	**255-0794**	1	FILM-WARNING (SEAT BELT)	
	15	1	**261-9644**	1	COVER AS (CONTROLS, FRONT, LOWER)	
		1	**206-1667**	1	CLIP	
	16	1	**261-9645**	1	COVER AS (CONTROLS, FRONT, UPPER)	
		1	**206-1667**	4	CLIP	
	17	1	**269-9115**	1	COVER AS (FENDER, FRONT)	
		1	**172-8591**	1	NUT-SPRING	
E	18	1	**293-1980**		SEAL (73-CM)	
E	18A	1	**293-1980**		SEAL (77.5-CM)	
	19	1	**323-3324**	1	FILM-IDENTIFICATION (FUSE PANEL)	
	20	1	**336-7533**	1	PANEL AS-GAUGE	
		1	**206-1667**	2	CLIP	
	21	1	**337-5351**	1	FILM-INSTRUCTION (START SWITCH)	
	22	1	**9X-2038**	5	WASHER (7X19X2-MM THK)	
M	23	1	**9X-2045**	16	SCREW-TRUSS HEAD (M6X1X20-MM)	

B-USE AS REQUIRED
E-ORDER BY THE CENTIMETER
M-METRIC PART

336-7545 **CONSOLE GP-OPERATOR** *(contd.)* **i03663181**

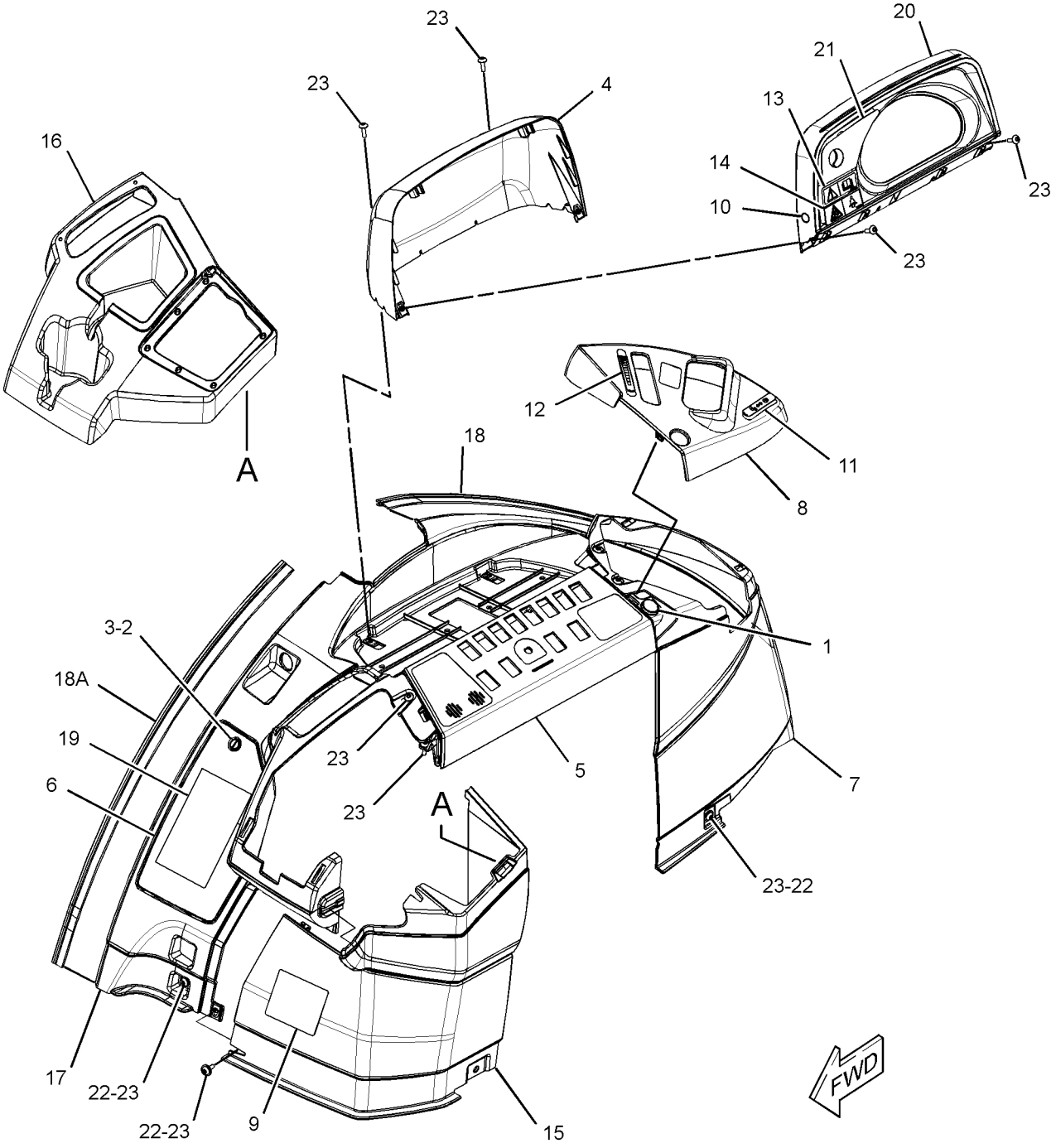

GRAPHIC #1 **<END>** g01983418

OPERATOR STATION

331-9945 CONTROL GP-HYDRAULIC HAND–LOADER

S/N: DPH1-UP

PART OF 332-7955, 332-7958 VALVE AR-BANK 3

AN ATTACHMENT

SMCS-5063 **i03642962**

NOTE	REF NO	GRAPHIC REF	PART NUMBER	QTY	PART NAME 1 2 3 4 5 6 (PRODUCT LEVEL)	SEE PAGE
	1	1	**3E-6600**	7	SEAL	
	2	1	**2R-0364**	6	RING-RETAINING	
	3	1	**102-8802**	1	KIT-RECEPTACLE (2-PIN)	
					(INCLUDES RECEPTACLE AS & WEDGE)	
	4	1	**3S-2093**	2	STRAP-CABLE	
	5	1	**8T-4743**	3	PIN	
	6	1	**8T-4773**	5	BALL JOINT	
	7	1	**9R-1765**	1	COVER-TOP	
	8	1	**9R-1766**	1	COVER-BOTTOM	
	9	1	**9R-1767**	1	BOOT	
	10	1	**9R-9868**	1	SWITCH GP-PUSH BUTTON (NEUTRALIZER, DOWNSHIFT)	
		1	**180-9339**		PIN-CONNECTOR (14-GA TO 18-GA)	
D		1	**5P-5677**		WIRE (18-GA, BLACK) (3-M)	
D		1	**6V-2689**		TUBE-HEAT SHRINK (6.35-MM DIA) (1-M)	
	11	1	**091-1745**	7	WASHER (16.6X24X1.2-MM THK)	
	12	1	**107-5591**	1	NUT-JAM (3/4-16-THD)	
	13	1	**119-4167**	1	ROD	
	14	1	**164-1368**	12	FASTENER-PANEL	
	15	1	**164-1395**	1	KNOB (GOVERNOR CONTROL)	
	16	1	**206-1668**	1	BOOT	
	17	1	**220-0269**	1	SHAFT	
	18	1	**270-2795**	1	PLATE	
	19	1	**291-5108**	1	GASKET	
	20	1	**330-6982**	1	BRACKET AS	
	21	1	**330-6987**	1	LEVER AS-VALVE	
	22	1	**330-6988**	1	PIN	
	23	1	**330-6990**	2	LEVER	
	24	1	**330-6991**	1	PIN	
	25	1	**330-6994**	1	ROD	
	26	1	**330-6996**	1	ROD	
	27	1	**330-7002**	1	LEVER AS-VALVE	
	28	1	**331-4360**	1	ROD	
	29	1	**333-7905**	1	PIN	
	30	1	**333-8324**	1	JOINT AS	
	31	1	**110-7595**	2	PIN-SPRING	
	33	1	**5H-3193**	1	PIN-SPRING	
M	34	1	**6V-7744**	7	LOCKNUT (M10X1.5-THD)	
	35	1	**7X-7729**	4	WASHER (11X25X3-MM THK)	
	36	1	**8T-4121**	6	WASHER-HARD (11X21X2.5-MM THK)	
M	37	1	**8T-4133**	8	NUT (M10X1.5-THD)	
M	38	1	**8T-4136**	1	BOLT (M10X1.5X25-MM)	
	39	1	**8T-4815**	3	ROD END	
	40	1	**8T-9501**	2	SCREW (10-16X0.75-IN)	
M	41	1	**9X-2040**	2	SCREW-TRUSS HEAD (M10X1.5X25-MM)	

D-ORDER BY THE METER
M-METRIC PART

331-9945 **CONTROL GP-HYDRAULIC HAND** *(contd.)* **i03642962**

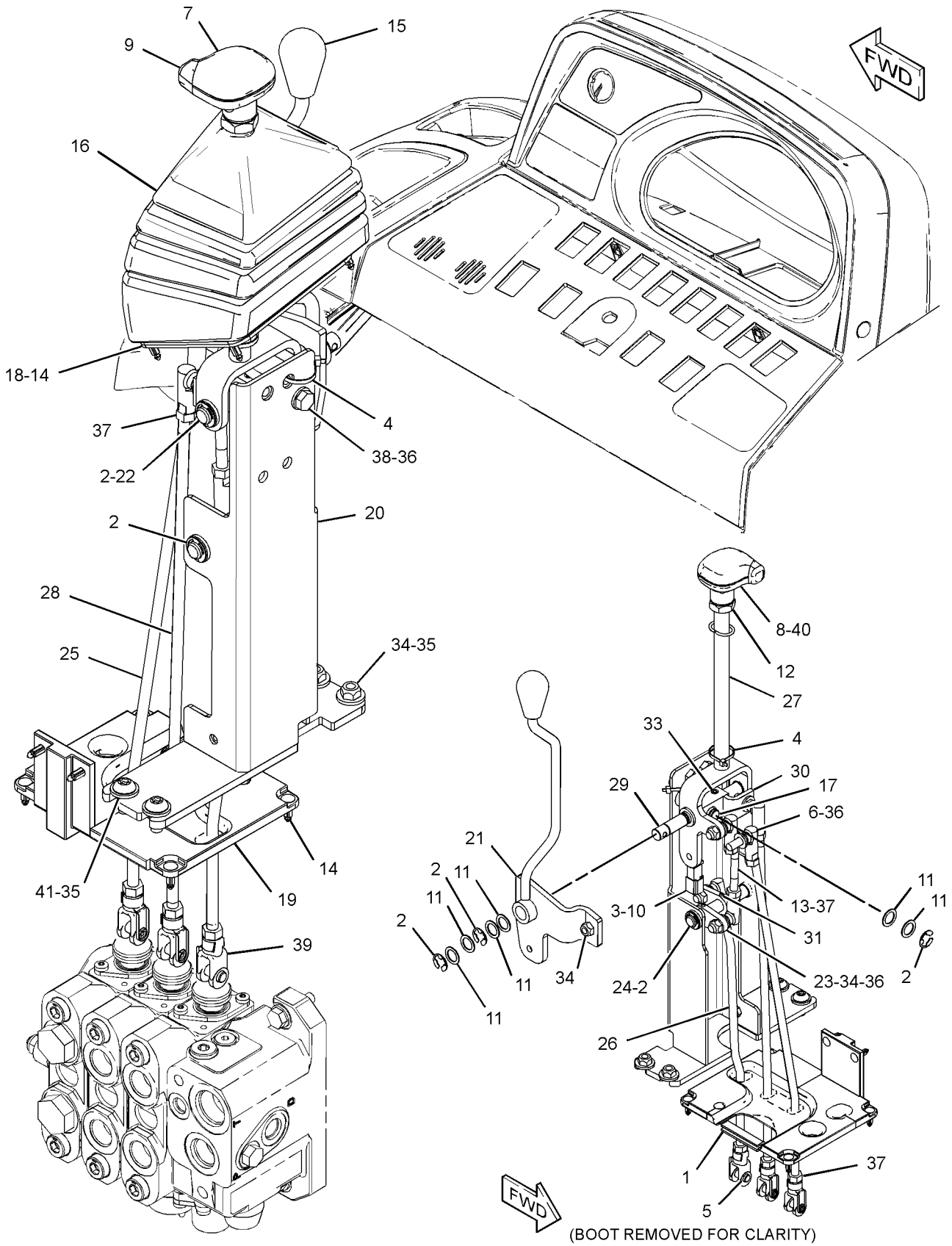

(BOOT REMOVED FOR CLARITY)

GRAPHIC #1 **<END>** g01989855

OPERATOR STATION

333-4391 CONTROL GP-HYDRAULIC HAND–

4-FUNCTION, STANDARD

S/N: DPH1-UP

AN ATTACHMENT

SMCS-5063 **i03726383**

NOTE	REF NO	GRAPHIC REF	PART NUMBER	QTY	PART NAME 1 2 3 4 5 6 (PRODUCT LEVEL)	SEE PAGE
	1	1	**8T-6431**	4	ROD END	
	2	1	**9R-9901**	6	FASTENER (CLIP)	
	3	1	**164-1361**	2	BOOT	
	4	1	**164-1371**	2	PLATE	
	5	1	**164-1399**	2	KNOB	
	6	1	**190-5134**	2	FILM (STD CROSS PATTERN)	
	7	1	**206-1672**	1	CONSOLE	
	8	1	**206-1673**	1	CONSOLE AS	
		1	**172-8591**	2	NUT-SPRING	
	10	1	**335-3820**	1	TOWER AS	
	11	1	**338-3578**	4	ROD	
	12	1	**338-9495**	4	BALL JOINT	
	13	1	**338-9496**	1	BRACKET AS (LH)	
	14	1	**338-9497**	1	BRACKET AS (RH)	
	15	1	**341-7143**	1	MAT	
	16	1	**343-4847**	1	LEVER AS (RH)	
	17	1	**343-4848**	1	LEVER AS (LH)	
M	18	1	**6V-7744**	4	LOCKNUT (M10X1.5-THD)	
	19	1	**8T-4121**	9	WASHER-HARD (11X21X2.5-MM THK)	
M	20	1	**8T-4133**	8	NUT (M10X1.5-THD)	
M	21	1	**8T-4195**	5	BOLT (M10X1.5X30-MM)	
M	22	1	**8T-4196**	4	BOLT (M10X1.5X35-MM)	
M	23	1	**8T-4200**	4	BOLT (M8X1.25X16-MM)	
	24	1	**8T-4224**	10	WASHER-HARD (8.8X16X2-MM THK)	
M	25	1	**8T-4908**	6	BOLT (M8X1.25X25-MM)	
	26	1	**9X-2038**	4	WASHER (7X19X2-MM THK)	
M	27	1	**9X-2045**	6	SCREW-TRUSS HEAD (M6X1X20-MM)	

M-METRIC PART

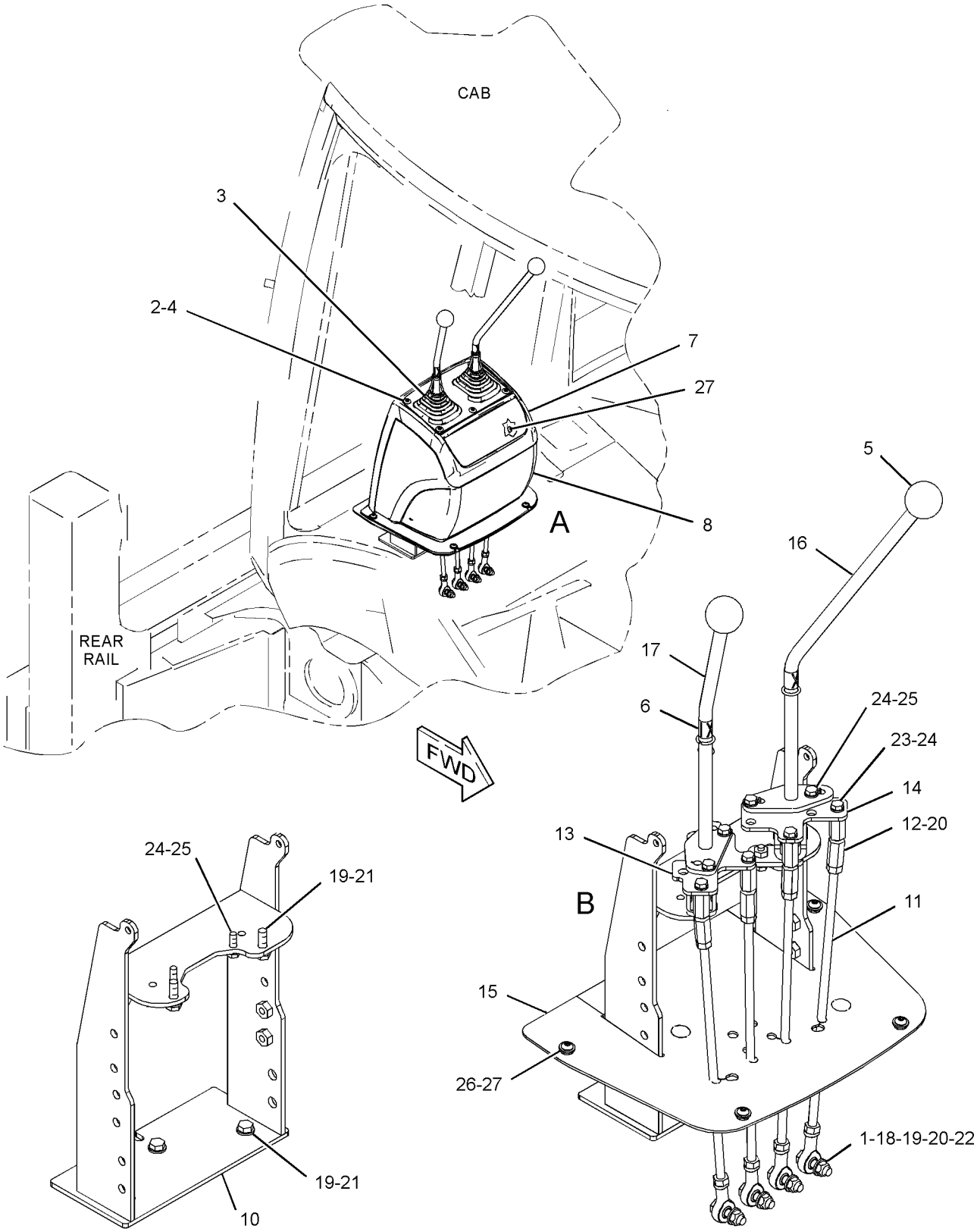

VIEW OF AREA B
(COMPONENTS REMOVED FOR CLARITY)

VIEW OF AREA A
(CONSOLE REMOVED FOR CLARITY)

GRAPHIC #1

<END>

g01965109

OPERATOR STATION

334-3569 CONTROL GP-HYDRAULIC HAND–LOADER

S/N: DPH1-UP
PART OF 332-7953 CONTROL AR-BACKHOE
AN ATTACHMENT

SMCS-5063 **i03651183**

NOTE	REF NO	GRAPHIC REF	PART NUMBER	QTY	PART NAME 1 2 3 4 5 6 (PRODUCT LEVEL)	SEE PAGE
E	1	1	**3E-6600**		SEAL (7-CM)	
	2	1	**2R-0364**	5	RING-RETAINING	
	4	1	**3S-2093**	2	STRAP-CABLE	
	5	1	**8T-4743**	2	PIN	
	6	1	**8T-4773**	4	BALL JOINT	
	7	1	**9R-1765**	1	COVER-TOP	
	8	1	**9R-1766**	1	COVER-BOTTOM	
	9	1	**9R-1767**	1	BOOT	
	10	1	**9R-9868**	1	SWITCH GP-PUSH BUTTON (NEUTRALIZER, DOWNSHIFT)	
D		1	**5P-5677**		WIRE (18-GA, BLACK) (2-M)	
D		1	**6V-2689**		TUBE-HEAT SHRINK (6.35-MM DIA) (1.1-M)	
		1	**9W-0625**	1	SWITCH AS (PUSH BUTTON)	
		1	**9X-3401**	2	PIN-CONNECTOR (16-GA TO 18-GA)	
	11	1	**091-1745**	5	WASHER (16.6X24X1.2-MM THK)	
	12	1	**107-5591**	1	NUT-JAM (3/4-16-THD)	
	13	1	**119-4167**	1	ROD	
	14	1	**164-1368**	12	FASTENER-PANEL	
	15	1	**206-1695**	1	BOOT	
	16	1	**220-0269**	1	SHAFT	
	17	1	**270-2795**	1	PLATE	
	18	1	**291-5108**	1	GASKET	
	19	1	**330-6982**	1	BRACKET AS	
	20	1	**330-6988**	1	PIN	
	21	1	**330-6990**	2	LEVER	
	22	1	**330-6991**	1	PIN	
	23	1	**330-6996**	1	ROD	
	24	1	**330-7002**	1	LEVER AS-VALVE	
	25	1	**331-4360**	1	ROD	
	26	1	**333-8324**	1	JOINT AS	
	27	1	**110-7595**	2	PIN-SPRING	
	28	1	**102-8802**	1	KIT-RECEPTACLE (2-PIN) (INCLUDES RECEPTACLE AS & WEDGE)	
	29	1	**5H-3193**	1	PIN-SPRING	
M	30	1	**6V-7744**	6	LOCKNUT (M10X1.5-THD)	
	31	1	**7X-7729**	4	WASHER (11X25X3-MM THK)	
	32	1	**8T-4121**	5	WASHER-HARD (11X21X2.5-MM THK)	
M	33	1	**8T-4133**	6	NUT (M10X1.5-THD)	
M	34	1	**8T-4136**	1	BOLT (M10X1.5X25-MM)	
	35	1	**8T-4815**	2	ROD END	
	36	1	**8T-9501**	2	SCREW (10-16X0.75-IN)	
M	37	1	**9X-2040**	2	SCREW-TRUSS HEAD (M10X1.5X25-MM)	

D-ORDER BY THE METER
E-ORDER BY THE CENTIMETER
M-METRIC PART

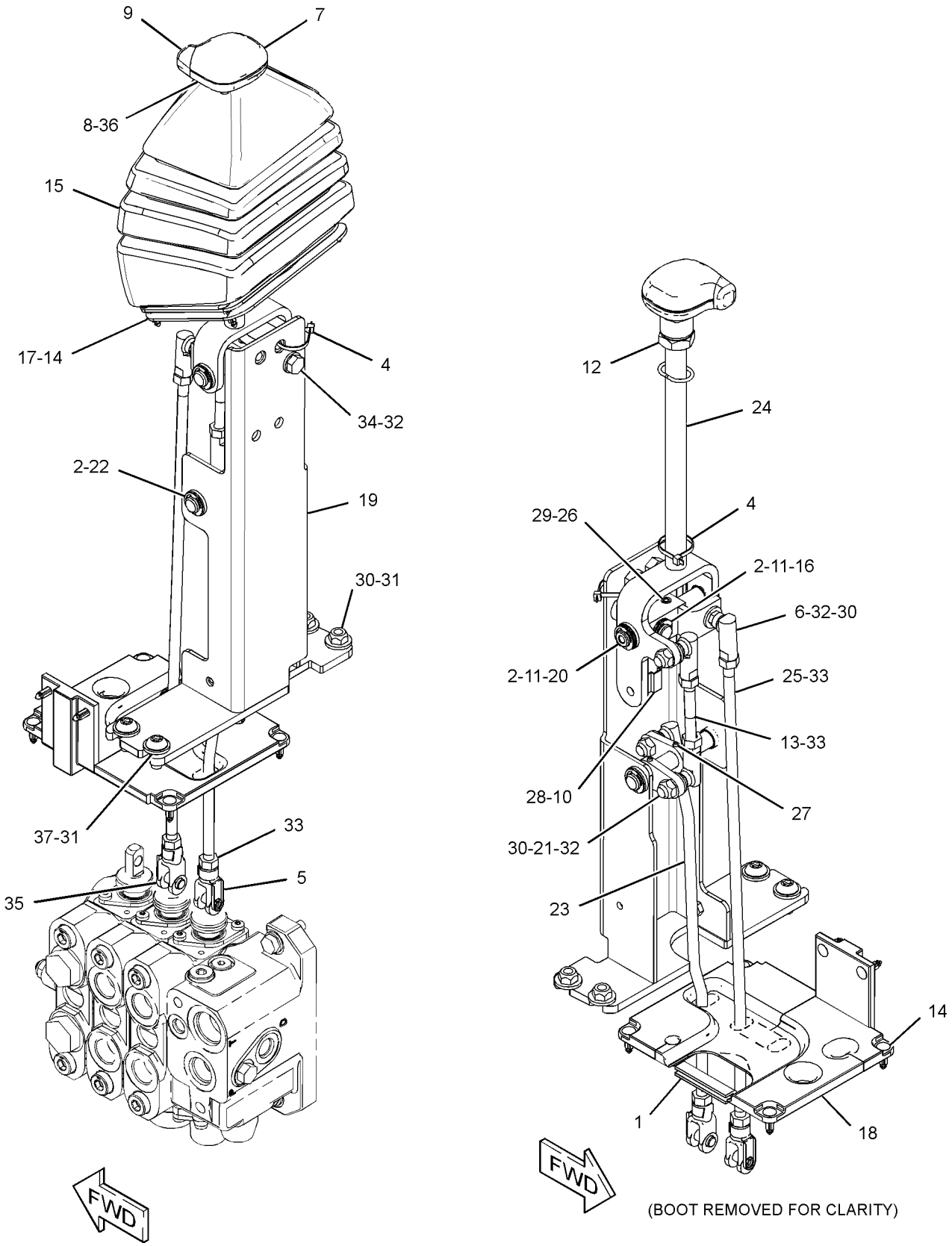

GRAPHIC #1 **<END>** g01963086

OPERATOR STATION

337-6256 CONTROL GP-HYDRAULIC HAND—EXCAVATOR PATTERN

S/N: DPH1-UP

AN ATTACHMENT

SMCS-5063 **i03670368**

NOTE	REF NO	GRAPHIC REF	PART NUMBER	QTY	PART NAME 1 2 3 4 5 6 (PRODUCT LEVEL)	SEE PAGE
	1	1	**8T-4743**	4	PIN	
	2	1	**8T-4773**	8	BALL JOINT	
	3	1	**9R-9901**	6	FASTENER (CLIP)	
	4	1	**142-7405**	2	COLLAR	
	5	1	**164-1361**	2	BOOT	
	6	1	**164-1371**	2	PLATE	
	7	1	**164-1399**	2	KNOB	
	8	1	**164-1421**	1	PLATE	
	9	1	**164-1422**	1	SHAFT AS	
	10	1	**164-1425**	1	COUPLER AS	
	11	1	**164-1429**	1	COUPLER AS	
	12	1	**164-1435**	2	PLATE	
	13	1	**164-1438**	2	ROD	
	14	1	**170-6312**	4	BEARING	
	15	1	**190-5128**	1	FILM-INSTRUCTION (EXCAVATOR CONTROL)	
	16	1	**206-1672**	1	CONSOLE	
	17	1	**206-1673**	1	CONSOLE AS	
		1	**172-8591**	2	NUT-SPRING	
	18	1	**231-2872**	1	LEVER AS (RH)	
	19	1	**231-2873**	1	LEVER AS (LH)	
	20	1	**331-4335**	1	TOWER AS	
	21	1	**337-6245**	1	ROD	
	22	1	**337-6246**	2	ROD	
	23	1	**337-6247**	1	ROD	
	24	1	**343-0528**	1	MAT	
	25	1	**164-1402**	2	SLEEVE	
	26	1	**164-1404**	2	SPACER (10.67X16.95X23-MM THK)	
M	27	1	**6V-7744**	12	LOCKNUT (M10X1.5-THD)	
M	28	1	**6V-8932**	2	SETSCREW-SOCKET (M6X1X10-MM)	
	29	1	**7X-7729**	8	WASHER (11X25X3-MM THK)	
	30	1	**8T-4121**	21	WASHER-HARD (11X21X2.5-MM THK)	
M	31	1	**8T-4133**	16	NUT (M10X1.5-THD)	
M	32	1	**8T-4138**	6	BOLT (M6X1X20-MM)	
M	33	1	**8T-4172**	2	BOLT (M10X1.5X80-MM)	
M	34	1	**8T-4195**	7	BOLT (M10X1.5X30-MM)	
	35	1	**8T-4815**	4	ROD END	
M	36	1	**8T-6466**	2	BOLT (M10X1.5X60-MM)	
	37	1	**9X-2038**	4	WASHER (7X19X2-MM THK)	
M	38	1	**9X-2045**	6	SCREW-TRUSS HEAD (M6X1X20-MM)	
	39	1	**9X-8256**	6	WASHER (6.6X12X2-MM THK)	

M-METRIC PART

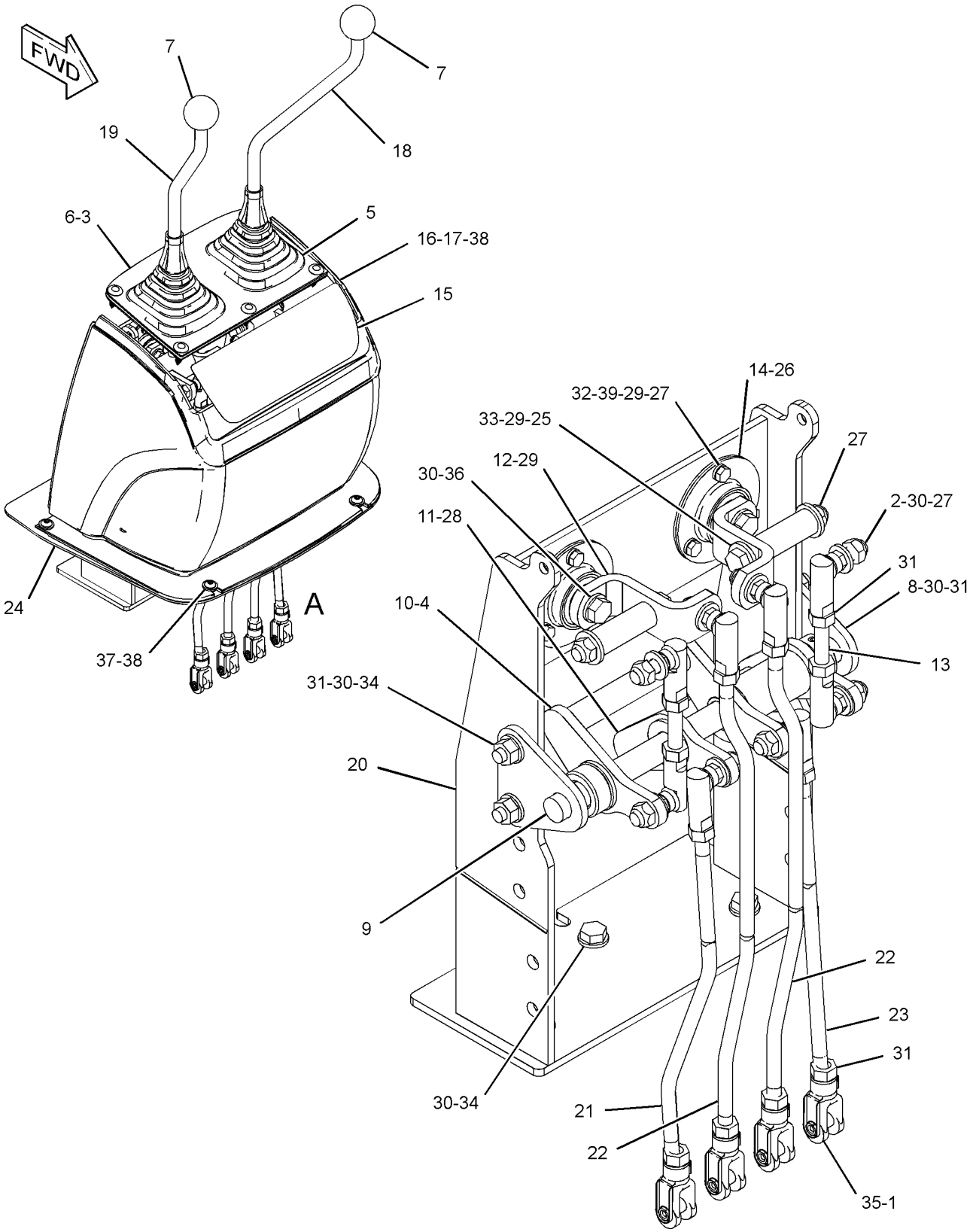

VIEW OF AREA A
(CONSOLE REMOVED FOR CLARITY)

GRAPHIC #1 **<END>** g01990598

331-4345 CONTROL GP-HYDRAULIC PEDAL–
AUXILIARY, EXTENDABLE STICK
S/N: DPH1-UP

PART OF 334-0682, 334-0683, 350-6931, 350-6932, 350-6941, 350-6942 BACKHOE AR-EXTENDABLE STICK, 344-1301 LINES GP-BACKHOE AUXILIARY AN ATTACHMENT

SMCS-5063 **i03664545**

NOTE	REF NO	GRAPHIC REF	PART NUMBER	QTY	PART NAME 1 2 3 4 5 6 (PRODUCT LEVEL)	SEE PAGE
	1	1	**8T-4743**	1	PIN	
	2	1	**8T-6431**	1	ROD END	
	3	1	**133-8916**	1	FILM-INSTRUCTION (EXTENDABLE STICK)	
	4	1	**198-0098**	1	FILM-INSTRUCTION (AUXILIARY)	
	5	1	**231-2875**	1	SUPPORT AS	
	6	1	**231-2876**	1	PEDAL AS (RH)	
	7	1	**232-1540**	1	SEAL	
	8	1	**330-9686**	1	ROD	
	9	1	**164-1547**	1	SHAFT AS	
M	10	1	**6V-7744**	1	LOCKNUT (M10X1.5-THD)	
M	11	1	**6V-8335**	1	BOLT-SELF-LOCKING (M10X1.5X40-MM)	
	12	1	**8T-4121**	4	WASHER-HARD (11X21X2.5-MM THK)	
M	13	1	**8T-4133**	2	NUT (M10X1.5-THD)	
M	14	1	**8T-4195**	2	BOLT (M10X1.5X30-MM)	
M	15	1	**8T-4196**	1	BOLT (M10X1.5X35-MM)	
	16	1	**8T-4815**	1	ROD END	

M-METRIC PART

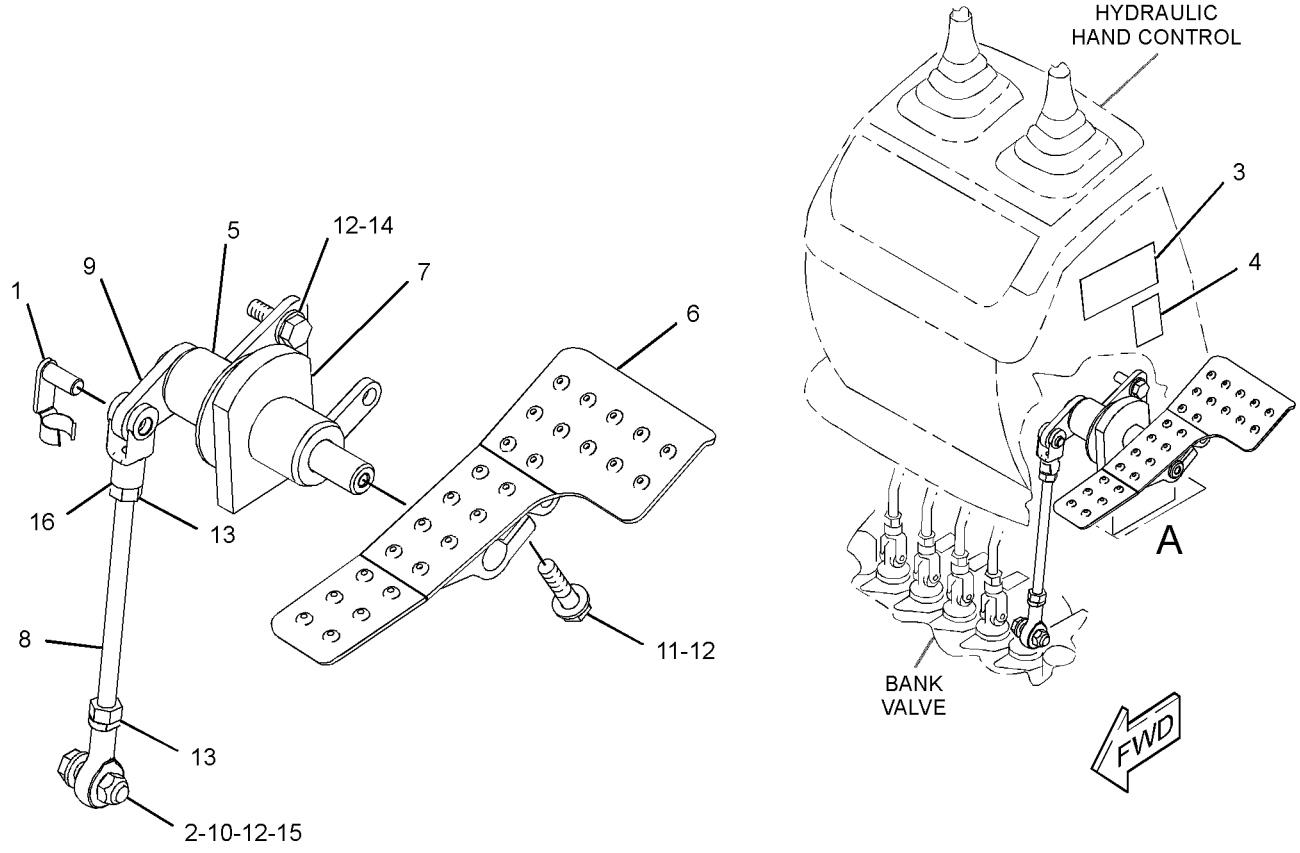

VIEW OF AREA A (EXPLODED)

GRAPHIC #1 **<END>** g01970394

OPERATOR STATION

332-6410 CONTROL GP-STABILIZER—WITH ALARM

S/N: DPH1-UP

PART OF 329-0123 HYDRAULIC AR

SMCS-7222 **i03663020**

NOTE	REF NO	GRAPHIC REF	PART NUMBER	QTY	PART NAME 1 2 3 4 5 6 (PRODUCT LEVEL)	SEE PAGE
	1	1	**9R-8165**	1	BEARING	
	2	1	**164-1395**	1	KNOB	
	3	1	**183-6084**	1	BEARING	
	4	1	**206-1874**	1	LEVER AS	
	5	1	**229-5280**	1	PLATE AS	
	6	1	**229-5745**	1	SPACER (8X15.875X11.6-MM THK)	
	7	1	**232-1542**	1	SEAL	
	8	1	**248-2708**	1	GROMMET	
	9	1	**248-2710**	1	GROMMET	
	10	1	**251-5627**	1	FILM-INSTRUCTION (STABILIZER, SIDESHIFT)	
	11	1	**331-4356**	2	CONTROL GP-HYDRAULIC HAND	
					(EACH INCLUDES)	
	11A	1	**228-4592**	1	KNOB	
	11B	1	**228-4593**	1	GAITER	
	11C	1	**228-4595**	1	SWITCH AS (STABILIZER UP ALARM)	
	11D	1	**331-4357**	1	CABLE AS	
	12	1	**344-2134**	2	SPACER	
	13	1	**344-6334**	2	PIN	
	14	1	**5P-4116**	6	WASHER-HARD (8.8X20.5X2-MM THK)	
B	15	1	**6E-5431**	1	SHIM (0.5-MM THK)	
M	16	1	**7X-0465**	3	BOLT (M6X1X100-MM)	
M	17	1	**8T-4138**	1	BOLT (M6X1X20-MM)	
M	18	1	**8T-4189**	4	BOLT (M8X1.25X20-MM)	
	19	1	**8T-6902**	1	CLIP	
M	20	1	**8T-7547**	1	BOLT (M8X1.25X30-MM)	
M	21	1	**9X-2045**	4	SCREW-TRUSS HEAD (M6X1X20-MM)	
	22	1	**9X-8256**	4	WASHER (6.6X12X2-MM THK)	

B-USE AS REQUIRED
M-METRIC PART

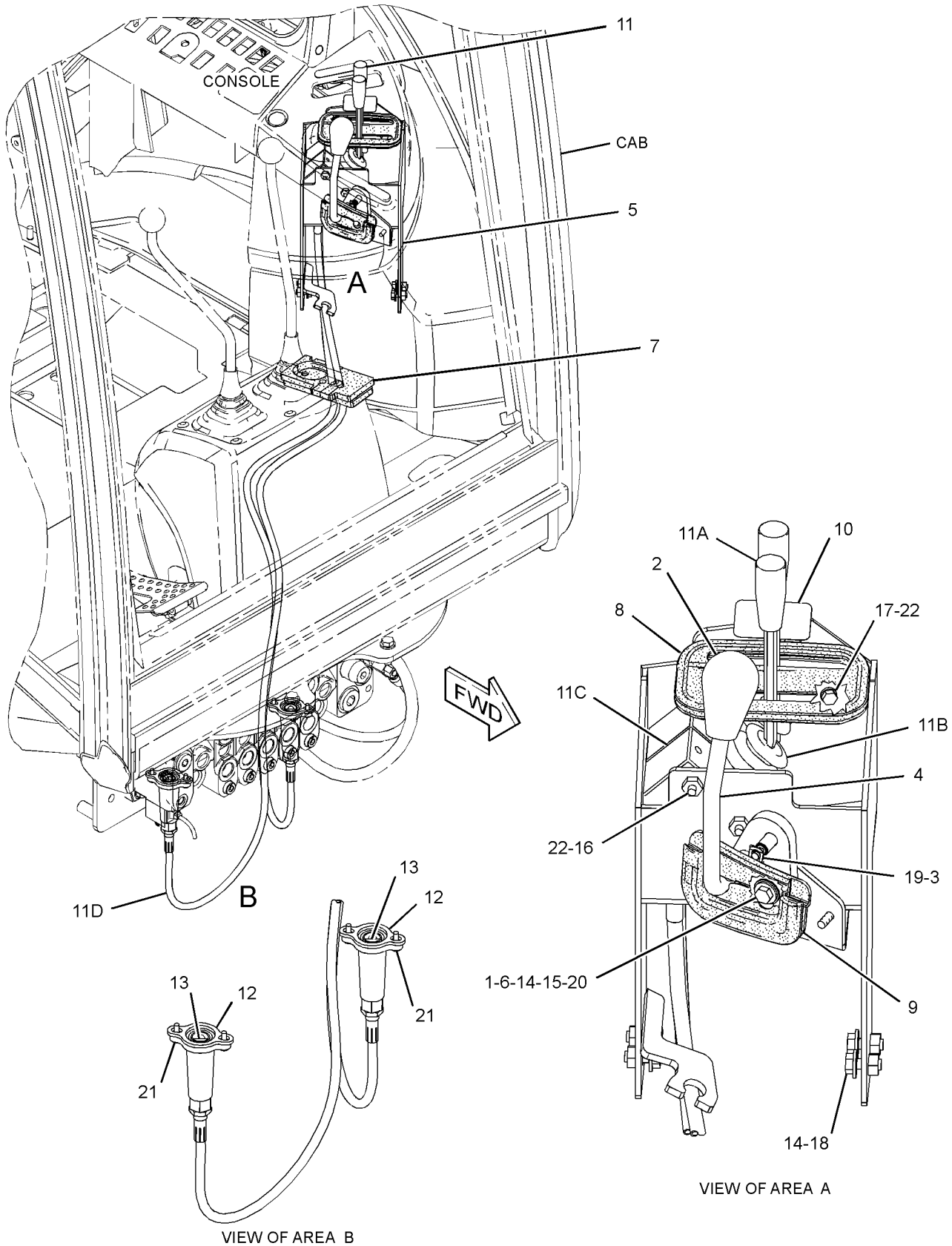

GRAPHIC #1 **<END>** g01995306

OPERATOR STATION

317-5538 CONTROL GP-STEERING–TILT

S/N: DPH1-UP

PART OF 335-3049, 335-3050 CAB AR, 335-3047, 335-3048 CANOPY AR-OPEN ROPS

AN ATTACHMENT

SMCS-4309, 4310, 4338 **i03332302**

NOTE	REF NO	GRAPHIC REF	PART NUMBER	QTY	PART NAME 1 2 3 4 5 6 (PRODUCT LEVEL)	SEE PAGE
	1	1	**206-1632**	1	PLATE AS	
	2	1	**255-2749**	1	PLUG	
Y	3	1	**310-6216**	1	STEERING COLUMN GP (TILT)	307
	4	1	**317-5541**	1	STEERING WHEEL	
	5	1	**325-9308**	1	KNOB AS	
	6	1	**7X-7729**	6	WASHER (11X25X3-MM THK)	
	7	1	**8R-2916**	1	COVER AS (CAT STEERING WHEEL)	
	8	1	**8T-4121**	4	WASHER-HARD (11X21X2.5-MM THK)	
M	9	1	**8T-4133**	2	NUT (M10X1.5-THD)	
M	10	1	**8T-4136**	4	BOLT (M10X1.5X25-MM)	
M	11	1	**8T-4195**	4	BOLT (M10X1.5X30-MM)	
M	12	1	**8T-8894**	1	BOLT-SOCKET HEAD (M10X1.5X20-MM)	

M-METRIC PART
Y-SEPARATE ILLUSTRATION

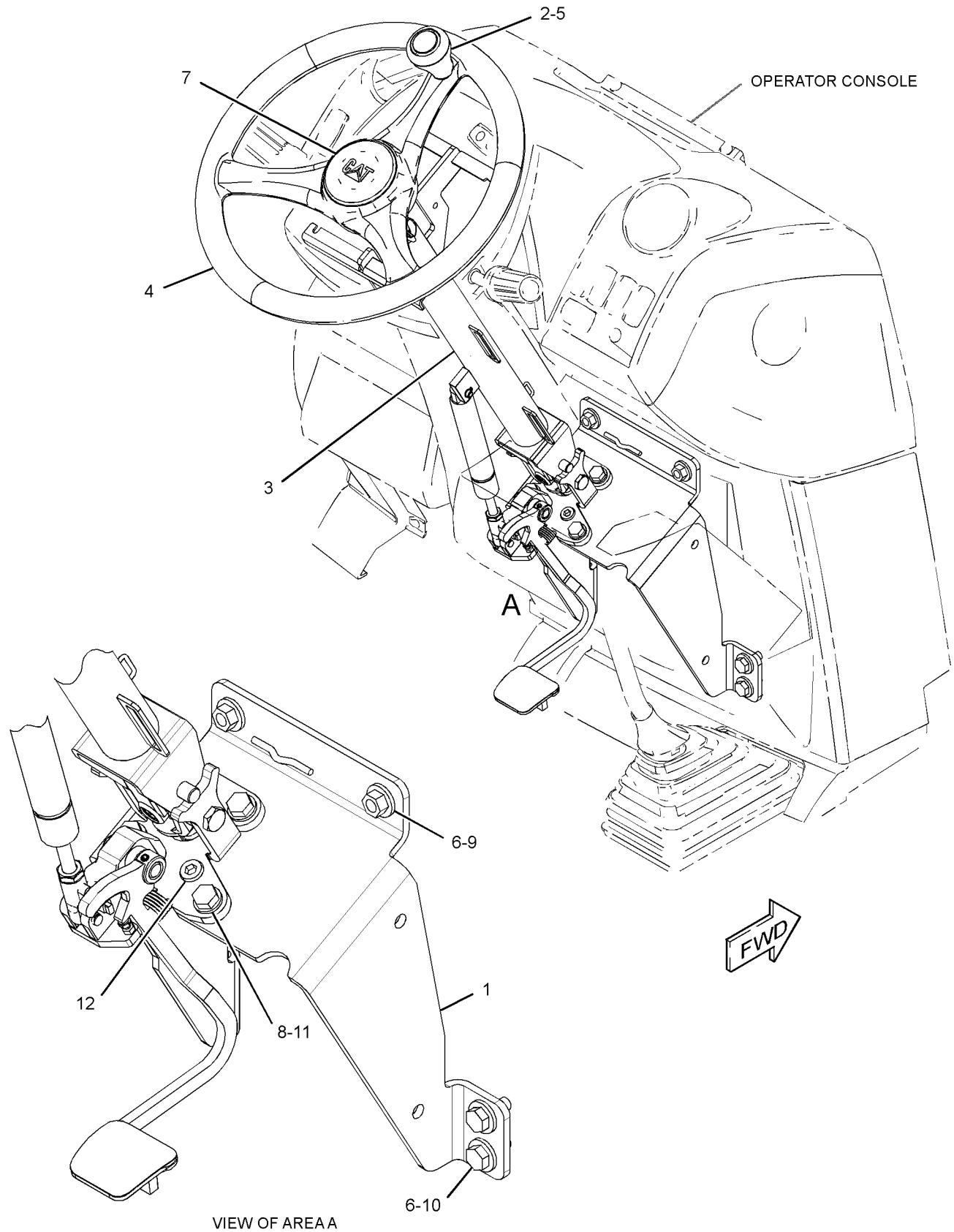

GRAPHIC #1 **<END>** g01576454

OPERATOR STATION

311-3641 CONTROL GP-TRANSMISSION

S/N: DPH1-UP
PART OF 329-0304 POWER TRAIN AR
AN ATTACHMENT

SMCS-3065, 3168 **i03500270**

NOTE	REF NO	GRAPHIC REF	PART NUMBER	QTY	PART NAME 1 2 3 4 5 6 (PRODUCT LEVEL)	SEE PAGE
	1	1	**102-8802**	1	KIT-RECEPTACLE (2-PIN)	
					(INCLUDES RECEPTACLE AS & WEDGE)	
	2	1	**9R-1766**	1	COVER-BOTTOM	
	3	1	**9R-1767**	1	BOOT	
	4	1	**107-5591**	1	NUT-JAM (3/4-16-THD)	
	5	1	**164-1153**	1	KNOB (UPPER)	
	6	1	**164-1368**	8	FASTENER-PANEL	
	7	1	**206-1669**	1	BOOT	
C	8	1	**328-3211**	1	ROD AS	
	9	1	**220-3470**	1	BOOT-SEAL	
	10	1	**230-2389**	1	PLATE	
	11	1	**230-2390**	1	PLATE	
	12	1	**263-7261**	1	SWITCH GP-PUSH BUTTON (NEUTRALIZER, DOWNSHIFT)	
	13	1	**310-9356**	1	CONTROL GP-TRANSMISSION	
		1	**151-9275**	1	KIT-RECEPTACLE (6-PIN)	
					(INCLUDES RECEPTACLE AS & WEDGE)	
M	14	1	**105-3480**	2	BOLT-SOCKET HEAD (M5X0.8X16-MM)	
	16	1	**8T-4223**	1	WASHER-HARD (13.5X25.5X3-MM THK)	
M	17	1	**8T-4956**	1	BOLT (M12X1.75X35-MM)	
	18	1	**8T-9501**	2	SCREW (10-16X0.75-IN)	
	19	1	**7X-0620**	1	WASHER-HARD (5.5X13X1.6-MM THK)	

C-CHANGE FROM PREVIOUS TYPE
M-METRIC PART

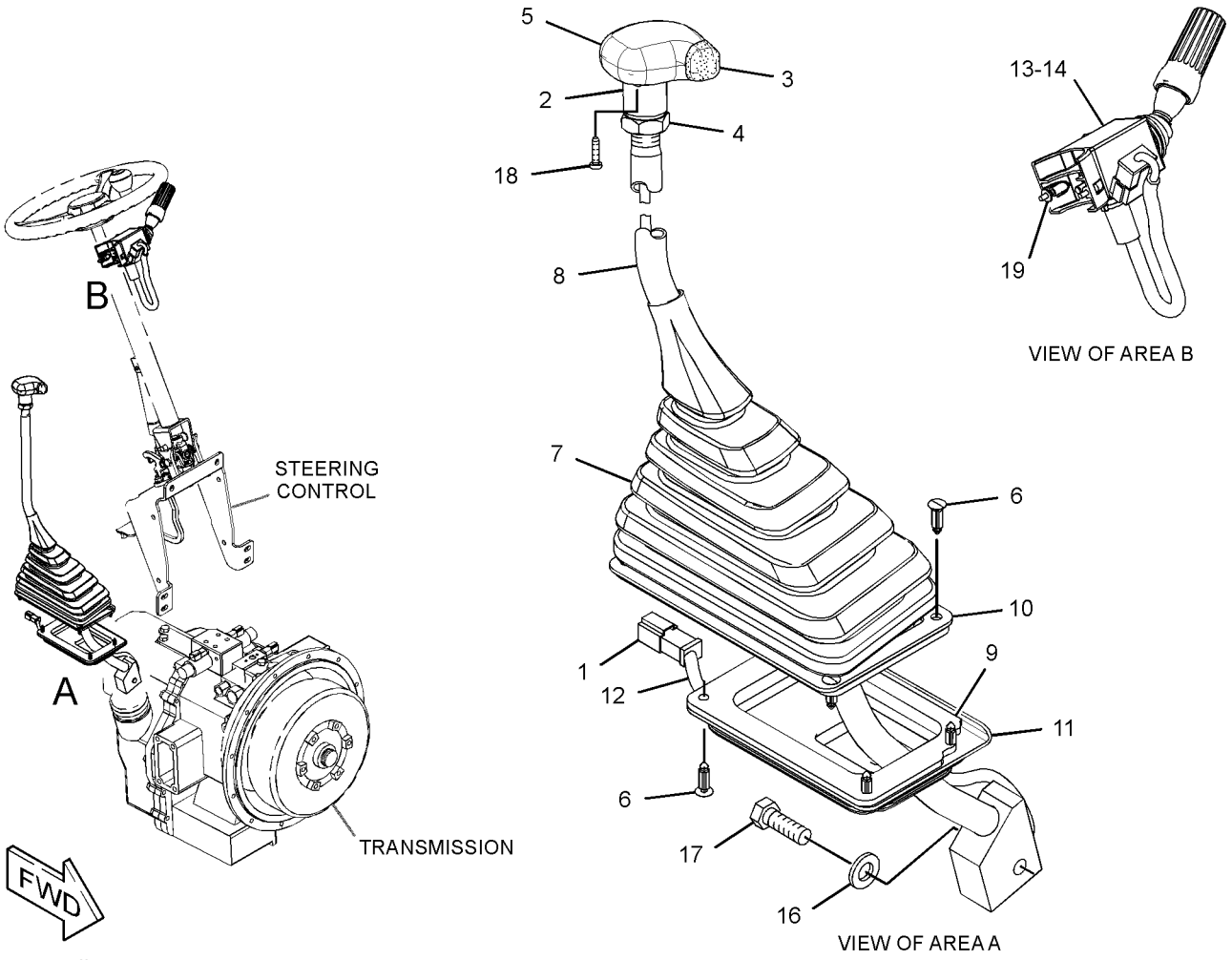

GRAPHIC #1

<END>

g01818285

OPERATOR STATION

220-3785 COVER GP-WIPER MOTOR

S/N: DPH1-UP
PART OF 335-3047, 335-3048 CANOPY AR-OPEN ROPS
AN ATTACHMENT

SMCS-7305 **i02532495**

NOTE	REF NO	GRAPHIC REF	PART NUMBER	QTY	PART NAME 1 2 3 4 5 6 (PRODUCT LEVEL)	SEE PAGE
	1	1	**226-5635**	1	COVER	
M	2	1	**9X-2043**	3	SCREW-TRUSS HEAD (M6X1X14-MM)	
	3	1	**282-7835**	1	PLATE	
M	4	1	**8C-3798**	2	BOLT-LOCKING (M6X1X30)	
	5	1	**282-7833**	1	GROMMET	
	6	1	**9X-8256**	2	WASHER (6.6X12X2-MM THK)	
	7	1	**9X-2038**	3	WASHER (7X19X2-MM THK)	

M-METRIC PART

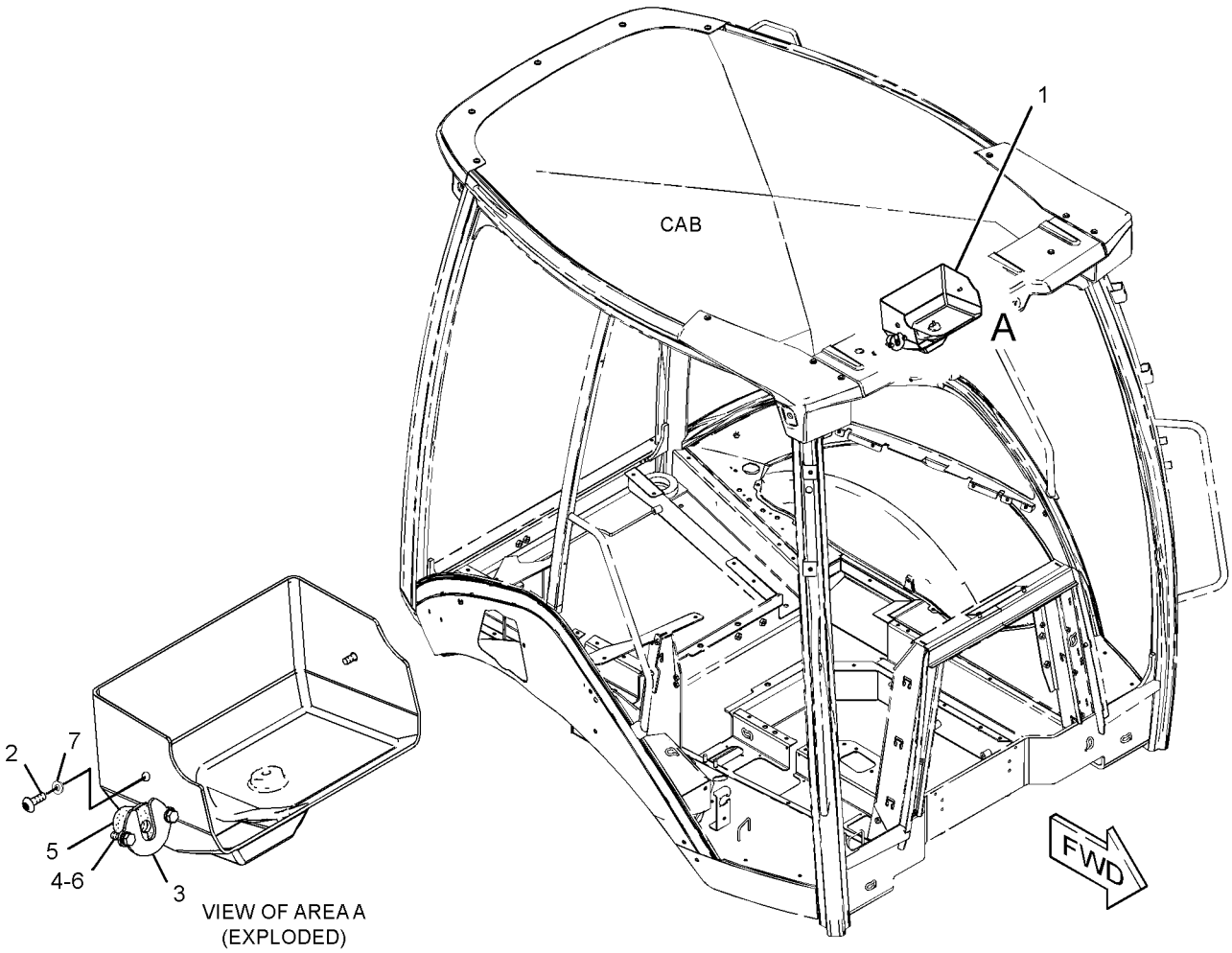

GRAPHIC #1 **<END>** g01328104

OPERATOR STATION

329-1167 DOOR GP-CAB–RH

S/N: DPH1-UP
PART OF 342-7147 CAB GP
AN ATTACHMENT

SMCS-7308 **i03628846**

NOTE	REF NO	GRAPHIC REF	PART NUMBER	QTY	PART NAME 1 2 3 4 5 6 (PRODUCT LEVEL)	SEE PAGE
	1	1	**132-2249**	2	SPACER (7.4X12.7X24-MM THK)	
J	2	1	**159-4269**	1	SPRING GP-GAS (CAB DOOR)	
	3	1	**159-4945**	1	KEEPER	
B	4	1	**177-4877**	1	SHIM (1-MM THK)	
	5	1	**205-9598**	1	GLASS (RH)	
	6	1	**248-2714**	2	NUT-ACORN	
N	7	1	**252-1862**	1	HANDLE AS (PULL)	
	8	1	**252-1863**	1	GASKET	
	9	1	**252-1865**	1	LATCH AS (RH)	
	10	1	**253-1817**	1	SPACER (6.5X14.5X12-MM THK)	
	11	1	**253-1857**	1	PLATE	
	12	1	**253-1858**	1	COVER (LATCH)	
	13	1	**254-1126**	1	PLATE	
	14	1	**254-1127**	1	PLATE	
	15	1	**258-3697**	2	WASHER-NYLON (7X20X2-MM THK)	
	16	1	**329-1169**	1	DOOR AS (RH)	
Y	17	1	*333-9902*	1	WINDOW GP-DOOR (RH)	632
	18	1	**223-2029**	1	SEAL AS (RH)	
M	19	1	**131-3987**	2	SCREW (M4X0.7X12-MM)	
	20	1	**197-5107**	2	SCREW-TRUSS HEAD (M6X1X60-MM)	
	21	1	**205-7048**	2	INSERT-THREADED (M6X1-THD)	
M	22	1	**5C-9553**	3	BOLT (M6X1X16-MM)	
M	23	1	**8T-6974**	1	BOLT (M6X1X80-MM)	
	24	1	**9X-2038**	4	WASHER (7X19X2-MM THK)	
M	25	1	**9X-2045**	4	SCREW-TRUSS HEAD (M6X1X20-MM)	
E	26	1	**322-8414**		SEAL-CAB (347-CM)	
					PARTS SHOWN IN GRAPHIC(S) WITHOUT A REFERENCE NUMBER ARE NOT SERVICED SEPARATELY	
					AVAILABLE REPAIR KIT(S):	
J			**161-9044**	1	KIT-FITTING	
					(INCLUDES FITTING AS & NUT)	

B-USE AS REQUIRED
E-ORDER BY THE CENTIMETER
J-KIT MARKED J SERVICES PART MARKED J
M-METRIC PART
N-REQUIRES CORPORATE KEY
Y-SEPARATE ILLUSTRATION

329-1167 DOOR GP-CAB *(contd.)* i03628846

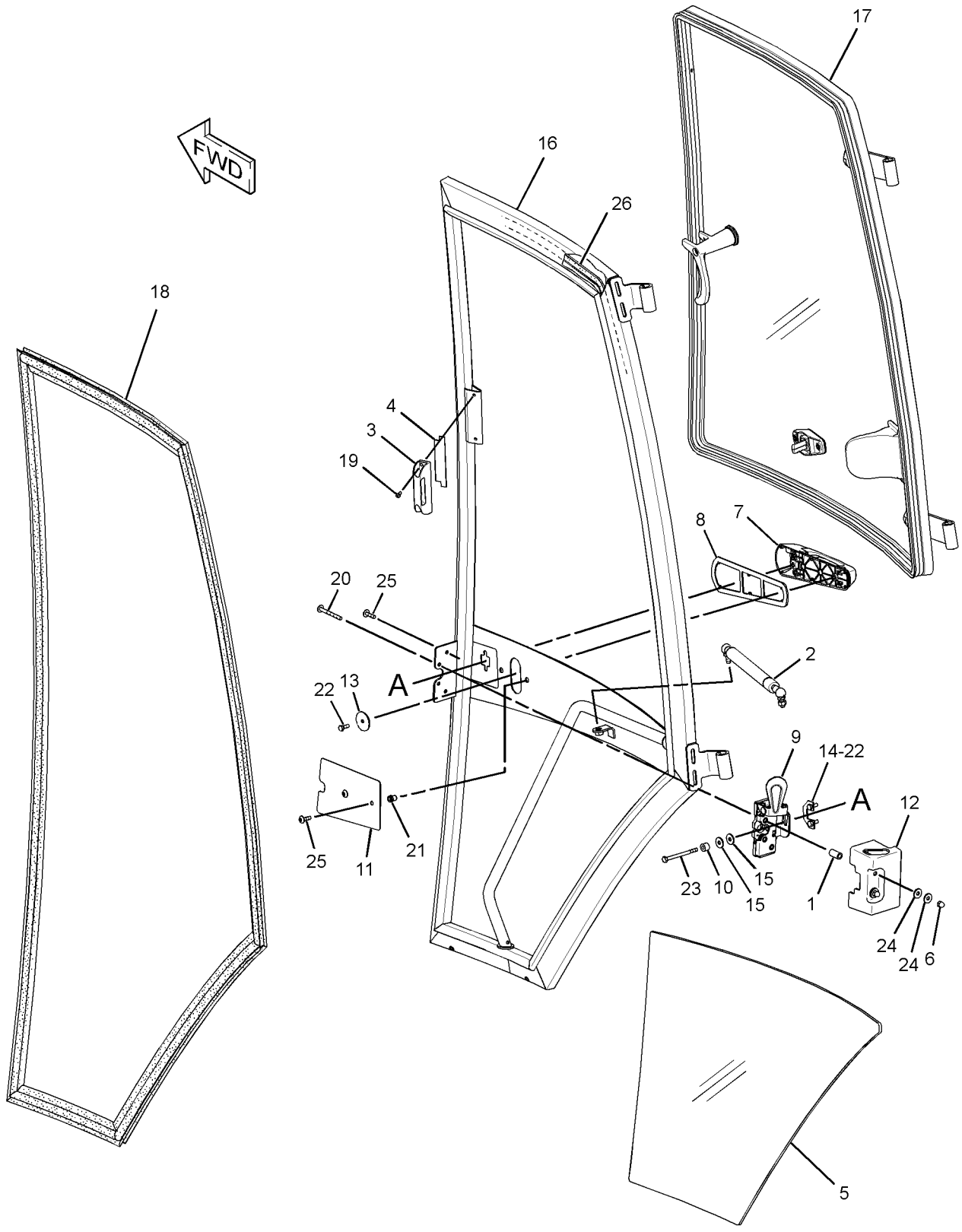

GRAPHIC #1 **<END>** g01819794

OPERATOR STATION

329-1168 DOOR GP-CAB—LH

S/N: DPH1-UP
PART OF 342-7147 CAB GP
AN ATTACHMENT

SMCS-7308 **i03628663**

NOTE	REF NO	GRAPHIC REF	PART NUMBER	QTY	PART NAME 1 2 3 4 5 6 (PRODUCT LEVEL)	SEE PAGE
	1	1	**132-2249**	2	SPACER (7.4X12.7X24-MM THK)	
J	2	1	**159-4269**	1	SPRING GP-GAS (CAB DOOR)	
B	3	1	**177-4877**	1	SHIM (1-MM THK)	
	4	1	**205-9588**	1	GLASS (LH)	
	5	1	**248-2714**	2	NUT-ACORN	
N	6	1	**252-1862**	1	HANDLE AS (PULL)	
	7	1	**252-1863**	1	GASKET	
	8	1	**252-1864**	1	LATCH AS (LH)	
	9	1	**253-1817**	1	SPACER (6.5X14.5X12-MM THK)	
	10	1	**253-1857**	1	PLATE	
	11	1	**253-1858**	1	COVER (LATCH)	
	12	1	**254-1126**	1	PLATE	
	13	1	**254-1127**	1	PLATE	
	14	1	**258-3697**	2	WASHER-NYLON (7X20X2-MM THK)	
	15	1	**329-1170**	1	DOOR AS (LH)	
Y	16	1	*333-9901*	1	WINDOW GP-DOOR (LH)	631
	17	1	**223-2028**	1	SEAL AS (LH)	
M	18	1	**131-3987**	2	SCREW (M4X0.7X12-MM)	
	19	1	**159-4946**	1	KEEPER	
	20	1	**197-5107**	2	SCREW-TRUSS HEAD (M6X1X60-MM)	
	21	1	**205-7048**	2	INSERT-THREADED (M6X1-THD)	
M	22	1	**5C-9553**	3	BOLT (M6X1X16-MM)	
M	23	1	**8T-6974**	1	BOLT (M6X1X80-MM)	
	24	1	**9X-2038**	4	WASHER (7X19X2-MM THK)	
M	25	1	**9X-2045**	4	SCREW-TRUSS HEAD (M6X1X20-MM)	
E	26	1	**322-8414**		SEAL-CAB (347-CM)	
					PARTS SHOWN IN GRAPHIC(S) WITHOUT A REFERENCE NUMBER ARE NOT SERVICED SEPARATELY	
					AVAILABLE REPAIR KIT(S):	
J			**161-9044**	1	KIT-FITTING	
					(INCLUDES NUT & FITTING AS)	

B-USE AS REQUIRED
E-ORDER BY THE CENTIMETER
J-KIT MARKED J SERVICES PART MARKED J
M-METRIC PART
N-REQUIRES CORPORATE KEY
Y-SEPARATE ILLUSTRATION

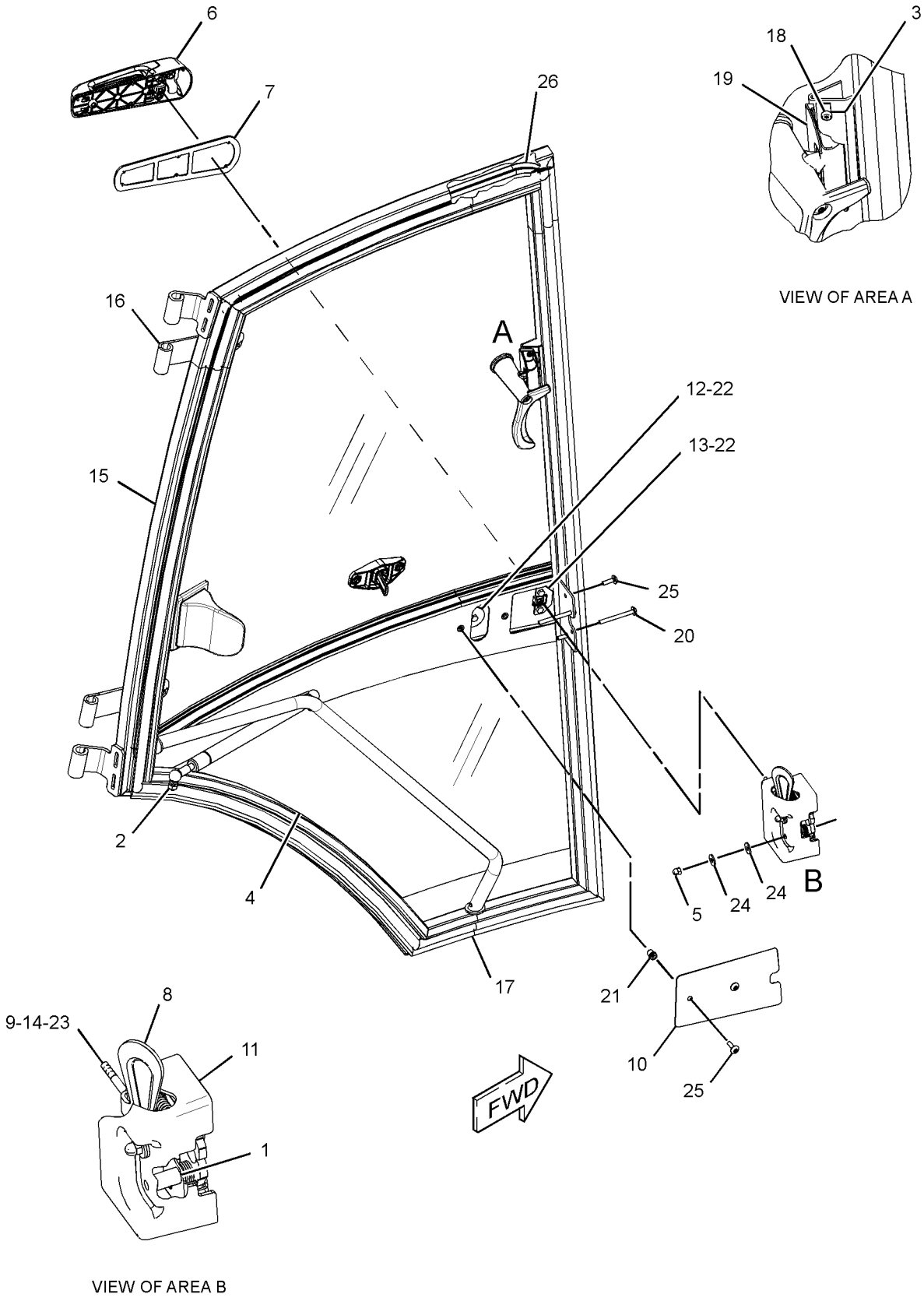

GRAPHIC #1 **<END>** g01811576

OPERATOR STATION

206-1618 FLOOR MAT GP

S/N: DPH1-UP

PART OF 335-3049, 335-3050 CAB AR, 335-3047, 335-3048 CANOPY AR-OPEN ROPS AN ATTACHMENT

SMCS-7265 **i02454744**

NOTE	REF NO	GRAPHIC REF	PART NUMBER	QTY	PART NAME 1 2 3 4 5 6 (PRODUCT LEVEL)	SEE PAGE
	1	1	**247-8179**	2	PLATE	
	2	1	**284-1602**	1	FLOOR MAT	
	3	1	**1H-3244**	4	LOCKWASHER	
M	4	1	**9X-2045**	4	SCREW-TRUSS HEAD (M6X1X20-MM)	

M-METRIC PART

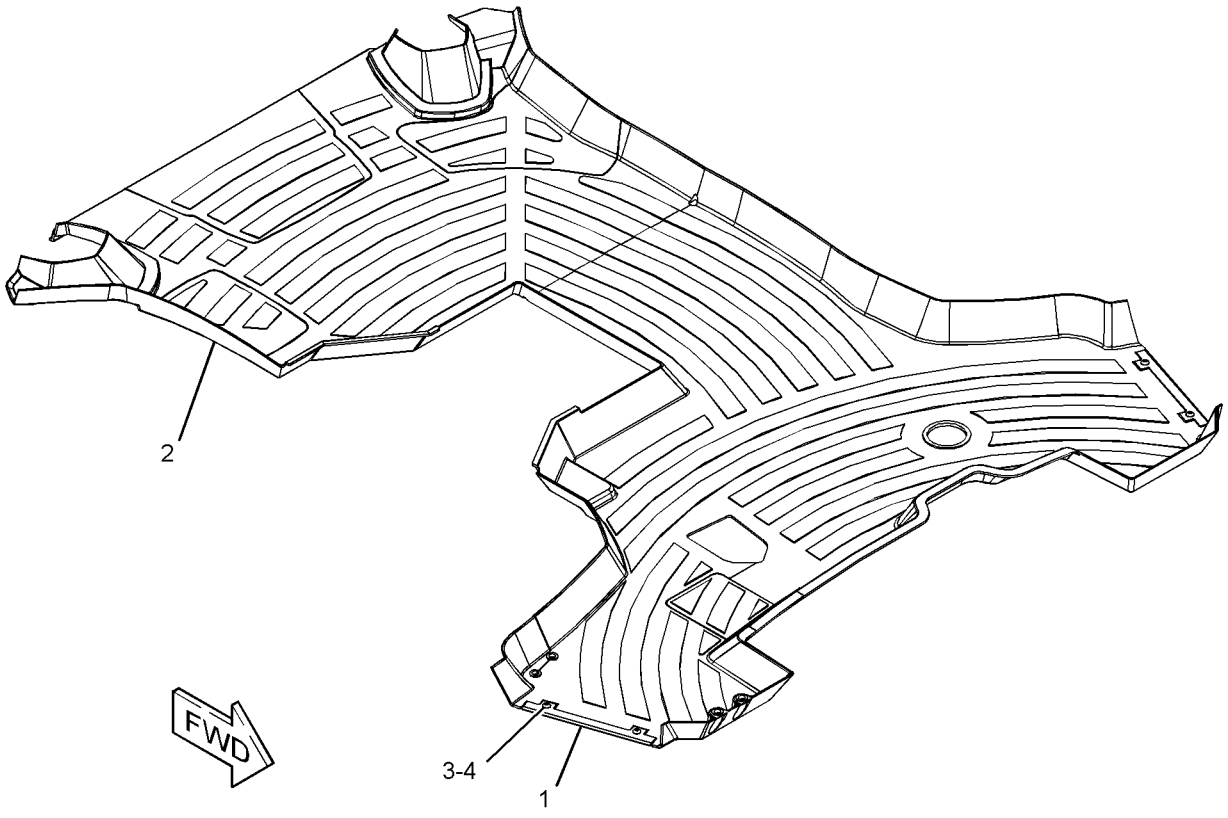

GRAPHIC #1 **<END>** g01228081

OPERATOR STATION

316-7290 HEATER & MTG GP-CAB

S/N: DPH1-UP
PART OF 335-3049 CAB AR
AN ATTACHMENT

SMCS-7304 **i03713801**

NOTE	REF NO	GRAPHIC REF	PART NUMBER	QTY	PART NAME 1 2 3 4 5 6 (PRODUCT LEVEL)	SEE PAGE
	1	1	**319-8524**	1	HOSE-AIR	
	2	1	**6L-4725**	2	CLAMP-HOSE	
	3	1	**8Y-5737**	1	CLAMP (COMPRESSION)	
	4	1	**8Y-6352**	1	LOUVER AS	
	5	1	**8Y-6967**	6	LOUVER AS-VENT	
	6	1	**9M-7959**	4	CLAMP-HOSE	
	7	1	**9N-2231**	1	GROMMET AS	
	8	1	**110-6109**	1	KNOB-CONTROL (HEATER)	
	9	1	**130-4832**	2	SCREW (8-18X10-MM)	
	10	1	**164-1368**	4	FASTENER-PANEL	
	11	1	**164-8474**	2	LOUVER AS-VENT	
	12	1	**189-0881**	1	CONTROL AS (PANEL)	
	13	1	**193-3356**	1	CABLE AS	
	14	1	**194-5622**	1	VALVE AS-WATER (AIR CONDITIONER)	
		1	**6V-6717**	1	SCREW-WASHER HEAD (8-32X9.52-MM)	
		1	**124-0312**	2	SCREW-PAN HEAD (8-16X0.32-IN)	
	15	1	**206-1648**	1	LOUVER	
	16	1	**206-1653**	4	GASKET	
	17	1	**206-1682**	1	PANEL-CONTROL	
	18	1	**206-1684**	1	COVER (CAB FILTER)	
	19	1	**206-1803**	2	GASKET	
	20	1	**206-1804**	1	GASKET	
	21	1	**206-1805**	1	GASKET	
	22	1	**206-1807**	1	GASKET	
	23	1	**206-1808**	1	PLATE	
	24	1	**206-1809**	1	ROD AS	
	25	1	**206-1810**	1	DUCT-AIR	
	26	1	**206-1815**	1	DUCT-AIR	
	27	1	**206-1816**	1	DUCT-AIR	
	28	1	**206-1817**	2	DUCT-AIR	
	29	1	**206-1818**	1	DUCT AS-AIR	
		1	**172-8591**	2	NUT-SPRING	
E		1	**144-0195**		HOSE (1110-CM)	
Y	30	1	**210-8364**	1	HEATER GP-CAB	585
	31	1	**211-2661**	1	FILTER ELEMENT AS-AIR (CAB HEATER)	
	32	1	**218-0666**	6	LOUVER AS	
	33	1	**221-2420**	2	HOSE-AIR	
	34	1	**255-0795**	1	FILM (TEMPERATURE CONTROL)	
	35	1	**313-6709**	1	DUCT-AIR	
	36	1	**313-6710**	1	DUCT-AIR	
M	37	1	**111-4627**	3	SCREW-MACHINE (M6X1X30-MM)	
	38	1	**5P-4116**	1	WASHER-HARD (8.8X20.5X2-MM THK)	
	39	1	**7X-0579**	1	WASHER-HARD (8.8X25.5X2-MM THK)	
M	40	1	**8T-4200**	1	BOLT (M8X1.25X16-MM)	
	41	1	**8T-4205**	4	WASHER-HARD (7.2X14.5X2-MM THK)	
	42	1	**9X-2038**	4	WASHER (7X19X2-MM THK)	
M	43	1	**9X-2045**	8	SCREW-TRUSS HEAD (M6X1X20-MM)	
E	44	1	**220-0738**		SEAL (87-CM)	

E-ORDER BY THE CENTIMETER
M-METRIC PART
Y-SEPARATE ILLUSTRATION

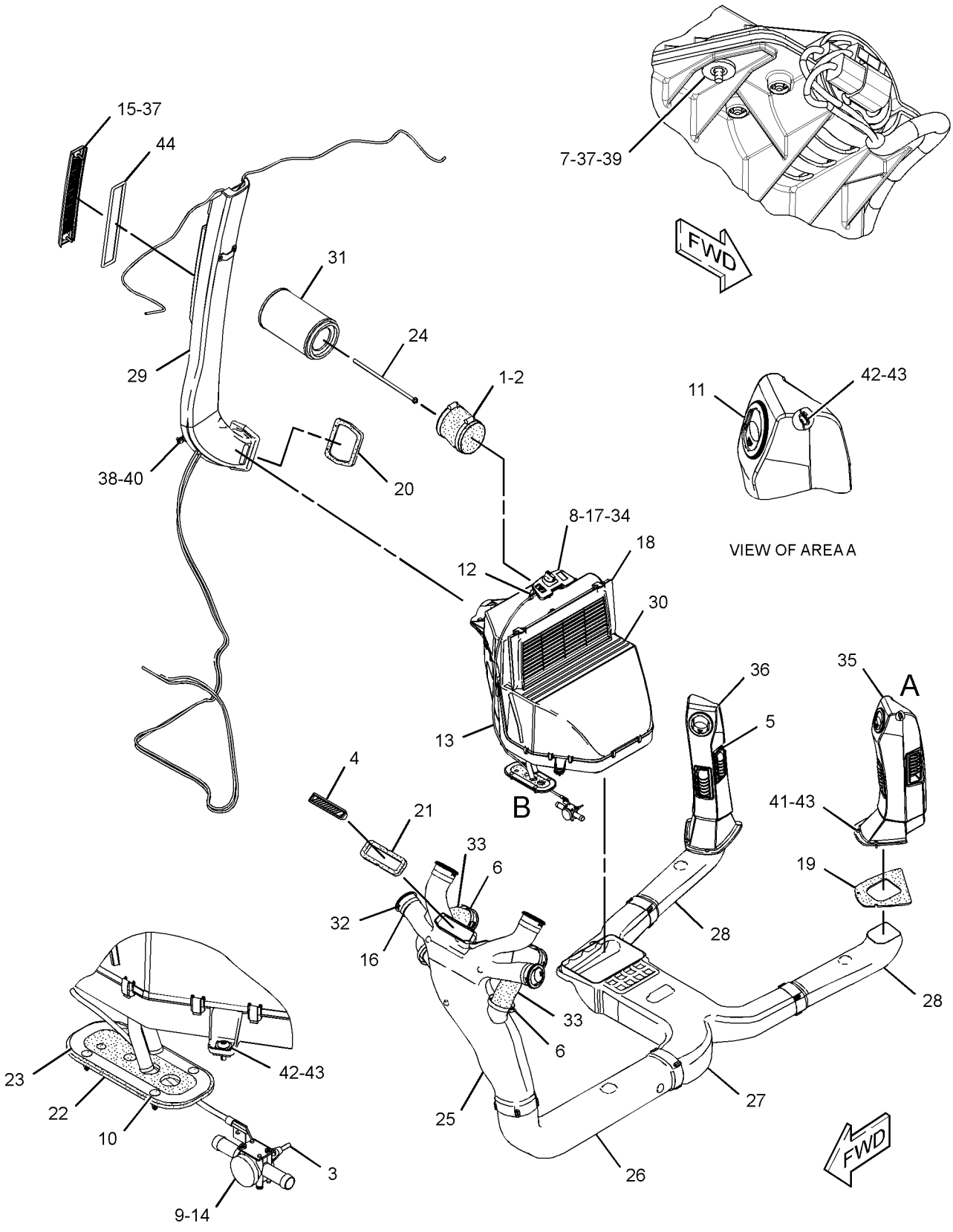

GRAPHIC #1 **<END>** g01578345

OPERATOR STATION

316-7291 HEATER & MTG GP-CAB

S/N: DPH1-UP
PART OF 335-3050 CAB AR
AN ATTACHMENT

SMCS-7304 **i03712361**

NOTE	REF NO	GRAPHIC REF	PART NUMBER	QTY	PART NAME 1 2 3 4 5 6 (PRODUCT LEVEL)	SEE PAGE
	1	1	**6L-4725**	2	CLAMP-HOSE	
	2	1	**8Y-5737**	1	CLAMP (COMPRESSION)	
	3	1	**8Y-6352**	1	LOUVER AS	
	4	1	**8Y-6967**	6	LOUVER AS-VENT	
	5	1	**9N-2231**	1	GROMMET AS	
	6	1	**110-6109**	1	KNOB-CONTROL (HEATER)	
	7	1	**130-4832**	2	SCREW (8-18X10-MM)	
	8	1	**164-1368**	4	FASTENER-PANEL	
	9	1	**164-8474**	2	LOUVER AS-VENT	
	10	1	**189-0881**	1	CONTROL AS (PANEL)	
	11	1	**193-3356**	1	CABLE AS	
	12	1	**194-5622**	1	VALVE AS-WATER (AIR CONDITIONER)	
		1	**6V-6717**	1	SCREW-WASHER HEAD (8-32X9.52-MM)	
		1	**124-0312**	2	SCREW-PAN HEAD (8-16X0.32-IN)	
	13	1	**206-1648**	1	LOUVER	
	14	1	**206-1653**	4	GASKET	
	15	1	**206-1682**	1	PANEL-CONTROL	
	16	1	**206-1684**	1	COVER (CAB FILTER)	
	17	1	**206-1803**	2	GASKET	
	18	1	**206-1804**	1	GASKET	
	19	1	**206-1805**	1	GASKET	
	20	1	**206-1807**	1	GASKET	
	21	1	**206-1808**	1	PLATE	
	22	1	**206-1809**	1	ROD AS	
	23	1	**206-1810**	1	DUCT-AIR	
	24	1	**206-1815**	1	DUCT-AIR	
	25	1	**206-1816**	1	DUCT-AIR	
	26	1	**206-1817**	2	DUCT-AIR	
	27	1	**206-1818**	1	DUCT AS-AIR	
		1	**172-8591**	2	NUT-SPRING	
E		1	**144-0195**		HOSE (1110-CM)	
	28	1	**206-1846**	1	INSULATION	
	29	1	**206-1847**	1	INSULATION	
Y	30	1	*210-8363*	1	HEATER GP-CAB	583
	31	1	**211-2661**	1	FILTER ELEMENT AS-AIR (CAB HEATER)	
	32	1	**218-0666**	6	LOUVER AS	
	33	1	**221-2420**	2	HOSE-AIR	
	34	1	**255-0795**	1	FILM (TEMPERATURE CONTROL)	
	35	1	**313-6709**	1	DUCT-AIR	
	36	1	**313-6710**	1	DUCT-AIR	
	37	1	**319-8524**	1	HOSE-AIR	
M	38	1	**111-4627**	3	SCREW-MACHINE (M6X1X30-MM)	
	39	1	**4H-2558**	2	GROMMET	
	40	1	**5P-4116**	1	WASHER-HARD (8.8X20.5X2-MM THK)	
	41	1	**7X-0579**	1	WASHER-HARD (8.8X25.5X2-MM THK)	
M	42	1	**8T-4200**	1	BOLT (M8X1.25X16-MM)	
	43	1	**8T-4205**	4	WASHER-HARD (7.2X14.5X2-MM THK)	
	44	1	**9M-7959**	4	CLAMP-HOSE	
	45	1	**9X-2038**	4	WASHER (7X19X2-MM THK)	
M	46	1	**9X-2045**	8	SCREW-TRUSS HEAD (M6X1X20-MM)	
E	47	1	**220-0738**		SEAL (87-CM)	
D	48	1	**5P-6129**		TUBE (0.4-M)	
D	48A	1	**5P-6129**		TUBE (0.4-M)	

D-ORDER BY THE METER
E-ORDER BY THE CENTIMETER
M-METRIC PART
Y-SEPARATE ILLUSTRATION

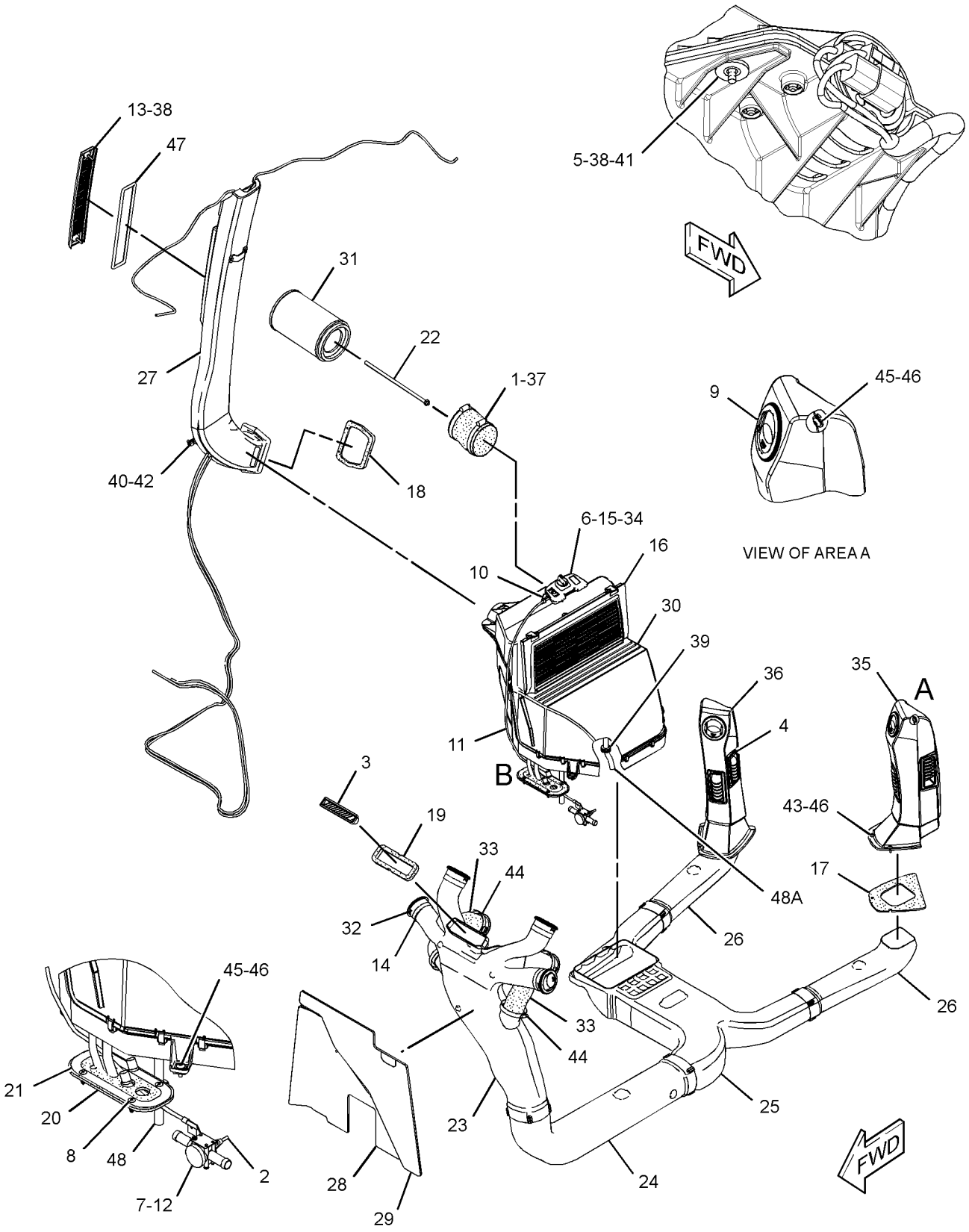

GRAPHIC #1 **<END>** g01578133

OPERATOR STATION

210-8363 HEATER GP-CAB

S/N: DPH1-UP

PART OF 316-7291 HEATER & MTG GP-CAB

AN ATTACHMENT

SMCS-7304 **i03726382**

NOTE	REF NO	GRAPHIC REF	PART NUMBER	QTY	PART NAME 1 2 3 4 5 6 (PRODUCT LEVEL)	SEE PAGE
	1	1	**8C-3756**	1	FILM-IDENTIFICATION (GROUP NO., SEQUENCE NO.)	
	2	1	**119-9631**	1	SWITCH-TEMPERATURE (AIR CONDITIONER)	
	3	1	**304-8965**	1	BLOWER GP-CAB (HEATER)	
		1	**177-9645**	1	KIT-RECEPTACLE (2-PIN)	
					(INCLUDES RECEPTACLE AS & WEDGE)	
		1	**7T-0093**	2	PIN-CONNECTOR (12-GA TO 14-GA)	
	4	1	**185-4015**	11	CLIP	
	5	1	**204-9921**	1	RESISTOR AS (HEATER)	
	6	1	**210-7665**	1	HOUSING-TOP	
	7	1	**210-7666**	1	BAFFLE	
	8	1	**210-8401**	1	COIL AS-EVAPORATOR	
J		1	**219-6288**	1	GASKET	
DJ		1	**5P-5688**		SEAL (1-M)	
	9	1	**211-2660**	1	FILTER ELEMENT-AIR (RECIRCULATION)	
	10	1	**212-3416**	3	SCREW-PAN HEAD (8-16X0.5-IN)	
	11	1	**219-6281**	1	COVER AS	
		1	**219-6283**	1	LATCH	
		1	**6C-3680**	1	RIVET-POP	
J	12	1	**219-6284**	2	GASKET	
J	13	1	**219-6285**	1	GASKET	
J	14	1	**219-6286**	1	GASKET	
J	15	1	**219-6287**	2	GASKET	
	16	1	**219-6292**	1	HOUSING AS	
		1	**7H-3937**	4	LOCKWASHER	
M		1	**129-3178**	4	LOCKNUT (M6X1-THD)	
	18	1	**220-3762**	1	HARNESS AS-HEATER & AIR COND	
		1	**192-2112**	5	SOCKET-TERMINAL	
		1	**128-7716**	1	CONNECTOR	
		1	**7T-6739**	1	HOUSING-PLUG	
		1	**7T-0093**	3	PIN-CONNECTOR (12-GA TO 14-GA)	
		1	**155-2270**	1	KIT-CONNECTING PLUG (2-PIN)	
					(INCLUDES PLUG AS, WEDGE & INTERFACE SEAL)	
		1	**8T-8737**	1	PLUG-SEAL	
		1	**177-9653**	1	KIT-RECEPTACLE (4-PIN)	
					(INCLUDES RECEPTACLE AS & WEDGE)	
		1	**186-3736**	2	SOCKET-CONNECTOR (16-GA TO 18-GA)	
	19	1	**253-9510**	1	GUARD	
	20	1	**2S-3745**	4	SCREW-TAPPING (10-16X0.5-IN)	
M	21	1	**6V-7357**	4	BOLT (M6X1X25-MM)	
	22	1	**8T-4205**	5	WASHER-HARD (7.2X14.5X2-MM THK)	
D	23	1	**5P-5655**		SEAL (0.5-M)	
DJ	24	1	**5P-5637**		SEAL (0.8-M)	
EJ	25	1	**8C-7524**		SEAL (35-CM)	
					AVAILABLE REPAIR KIT(S):	
J			**285-9109**	1	KIT-SEAL (HVAC)	

D-ORDER BY THE METER
E-ORDER BY THE CENTIMETER
J-KIT MARKED J SERVICES PARTS MARKED J
M-METRIC PART

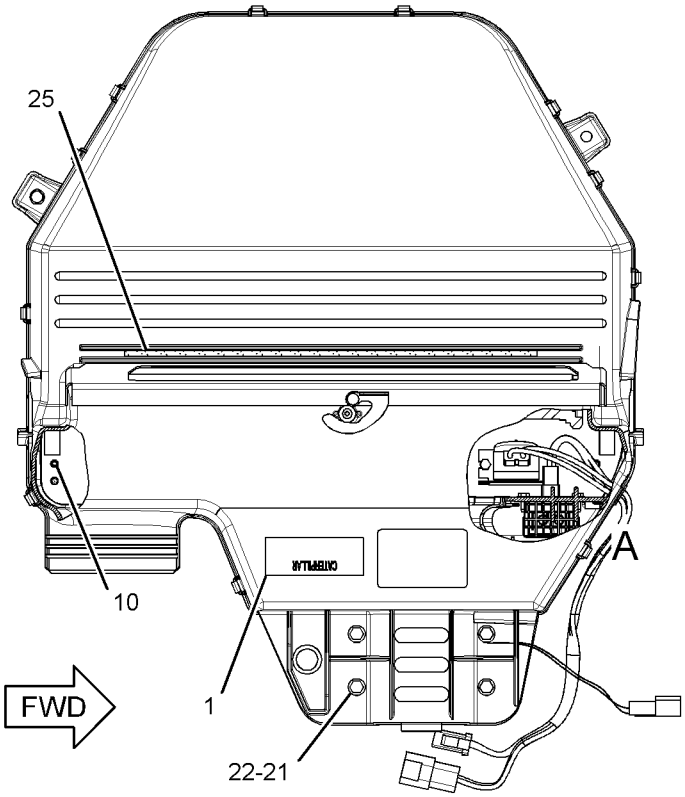

TOP VIEW

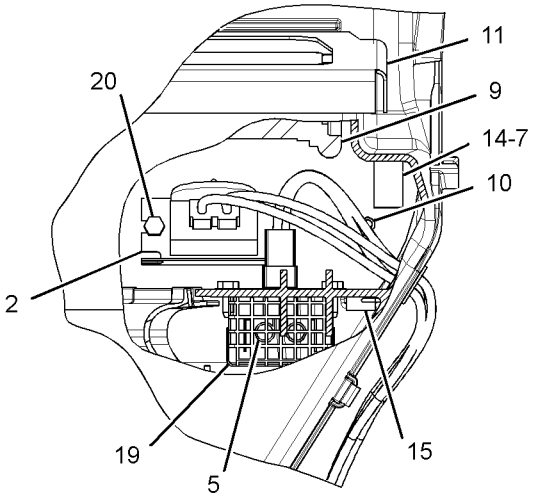

VIEW OF AREA A

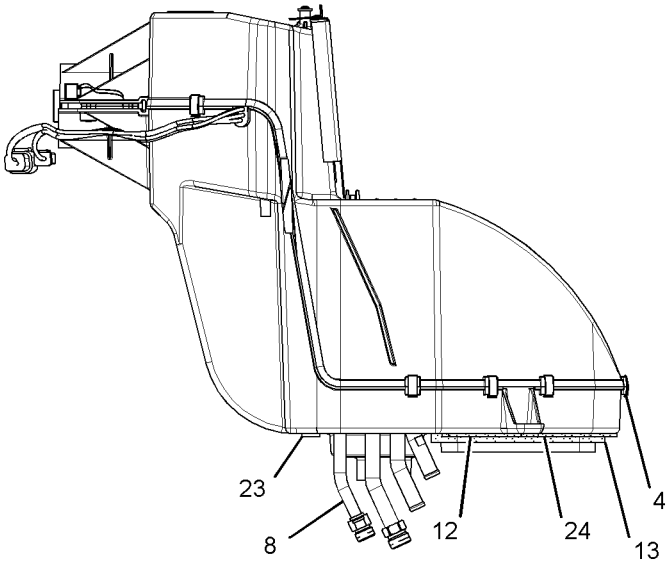

FRONT VIEW

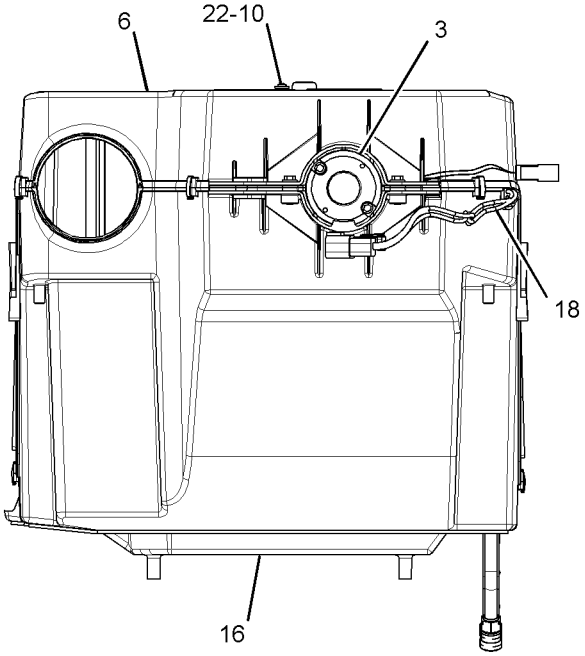

RIGHT SIDE VIEW

GRAPHIC #1 **<END>** g01460871

OPERATOR STATION

210-8364 HEATER GP-CAB

S/N: DPH1-UP
PART OF 316-7290 HEATER & MTG GP-CAB
AN ATTACHMENT

SMCS-7304 **i03726581**

NOTE	REF NO	GRAPHIC REF	PART NUMBER	QTY	PART NAME 1 2 3 4 5 6 (PRODUCT LEVEL)	SEE PAGE
	1	1	**8C-3756**	1	FILM-IDENTIFICATION (GROUP NO., SEQUENCE NO.)	
	2	1	**304-8965**	1	BLOWER GP-CAB (HEATER)	
		1	**177-9645**	1	KIT-RECEPTACLE (2-PIN)	
					(INCLUDES RECEPTACLE AS & WEDGE)	
		1	**7T-0093**	2	PIN-CONNECTOR (12-GA TO 14-GA)	
	3	1	**185-4015**	11	CLIP	
	4	1	**204-9921**	1	RESISTOR AS (HEATER)	
	5	1	**210-7665**	1	HOUSING-TOP	
	6	1	**210-7666**	1	BAFFLE	
	7	1	**210-8402**	1	COIL AS-HEATER	
DJ		1	**5P-5688**		SEAL (1-M)	
J		1	**219-6288**	1	GASKET	
	8	1	**211-2660**	1	FILTER ELEMENT-AIR (CAB HEATER, AIR CONDITIONER)	
	9	1	**212-3416**	3	SCREW-PAN HEAD (8-16XO.5-IN)	
	10	1	**219-6281**	1	COVER AS	
		1	**219-6283**	1	LATCH	
		1	**6C-3680**	1	RIVET-POP	
J	11	1	**219-6284**	2	GASKET	
J	12	1	**219-6285**	1	GASKET	
J	13	1	**219-6286**	1	GASKET	
J	14	1	**219-6287**	2	GASKET	
	15	1	**219-6292**	1	HOUSING AS	
		1	**7H-3937**	4	LOCKWASHER	
M		1	**129-3178**	4	LOCKNUT (M6X1-THD)	
	17	1	**253-2470**	1	HARNESS AS-HEATER	
		1	**192-2112**	3	SOCKET-TERMINAL	
		1	**128-7716**	1	CONNECTOR	
		1	**220-5725**	1	GROMMET	
		1	**7T-0093**	3	PIN-CONNECTOR (12-GA TO 14-GA)	
		1	**8T-8737**	1	PLUG-SEAL	
		1	**177-9653**	1	KIT-RECEPTACLE (4-PIN)	
					(INCLUDES RECEPTACLE AS & WEDGE)	
	18	1	**253-9510**	1	GUARD	
	19	1	**2S-3745**	2	SCREW-TAPPING (10-16XO.5-IN)	
M	20	1	**6V-7357**	4	BOLT (M6X1X25-MM)	
	21	1	**8T-4205**	5	WASHER-HARD (7.2X14.5X2-MM THK)	
D	22	1	**5P-5655**		SEAL (O.5-M)	
DJ	23	1	**5P-5637**		SEAL (O.8-M)	
EJ	24	1	**8C-7524**		SEAL (35-CM)	
					AVAILABLE REPAIR KIT(S):	
J			**285-9109**	1	KIT-SEAL (HVAC)	

D-ORDER BY THE METER
E-ORDER BY THE CENTIMETER
J-KIT MARKED J SERVICES PARTS MARKED J
M-METRIC PART

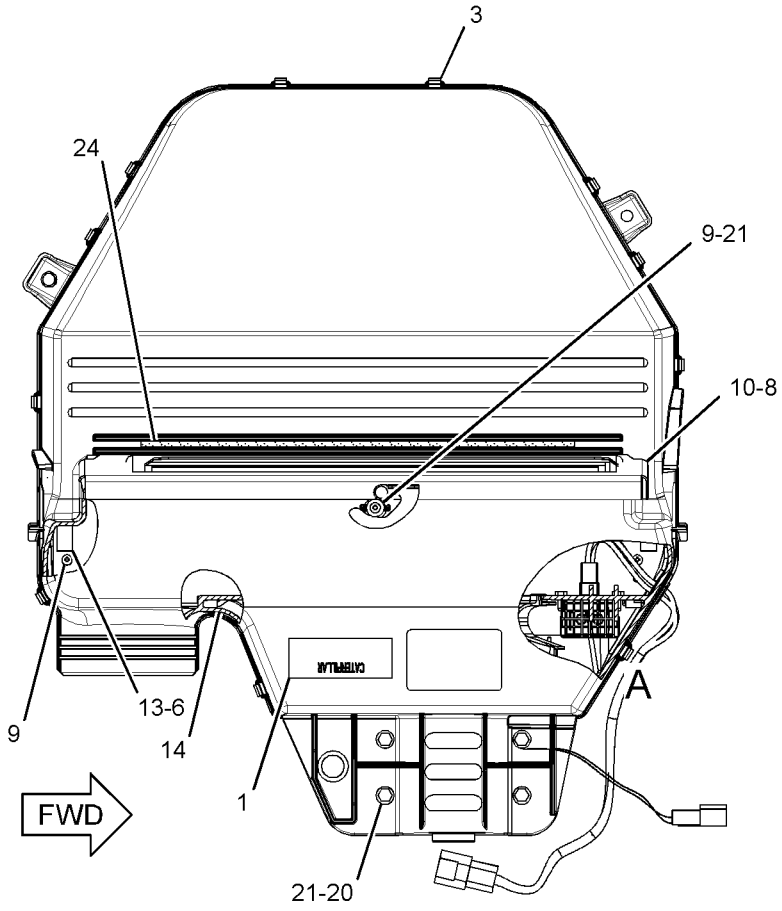

TOP VIEW

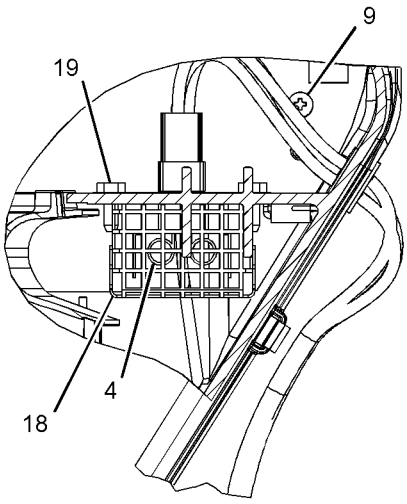

VIEW OF AREA A

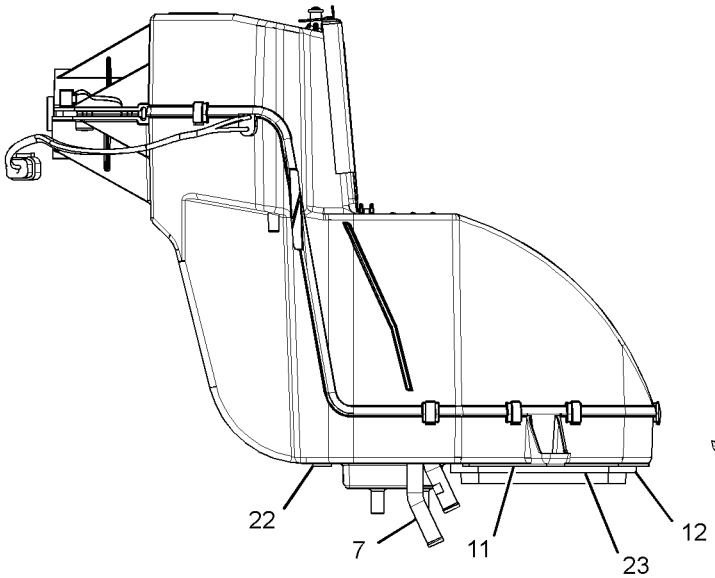

FRONT VIEW

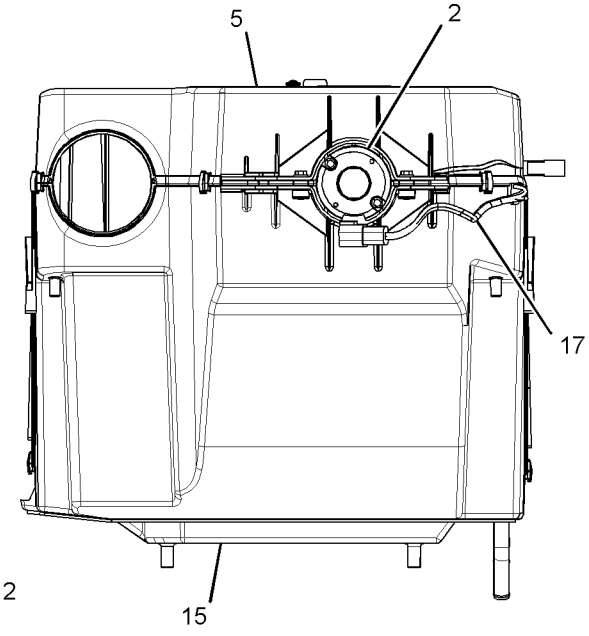

RIGHT SIDE VIEW

GRAPHIC #1 **<END>** g01460989

OPERATOR STATION

329-7495 HORN GP-ELECTRIC—REAR

S/N: DPH1-UP

AN ATTACHMENT

SMCS-7402 **i03620564**

NOTE	REF NO	GRAPHIC REF	PART NUMBER	QTY	PART NAME 1 2 3 4 5 6 (PRODUCT LEVEL)	SEE PAGE
	1	1	**3S-2093**	1	STRAP-CABLE	
	2	1	**164-9425**	1	HORN AS (24-VOLT, LOW TONE)	
	3	1	**214-4701**	1	SWITCH AS-ROCKER (HORN)	
		1	**111-7899**	1	GASKET	
C	4	1	**8T-4121**	2	WASHER-HARD (11X21X2.5-MM THK)	
CM	5	1	**8T-4133**	1	NUT (M10X1.5-THD)	
CM	6	1	**8T-4196**	1	BOLT (M10X1.5X35-MM)	

C-CHANGE FROM PREVIOUS TYPE
M-METRIC PART

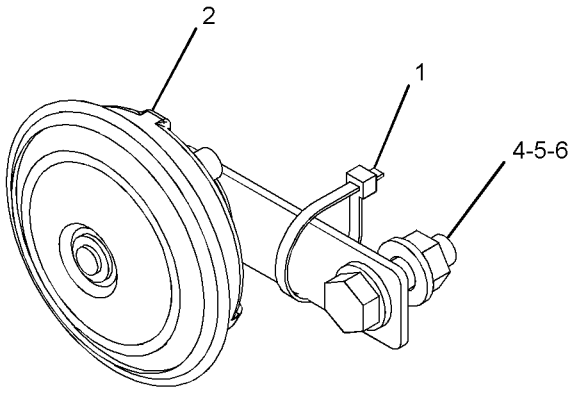

VIEW OF AREA A

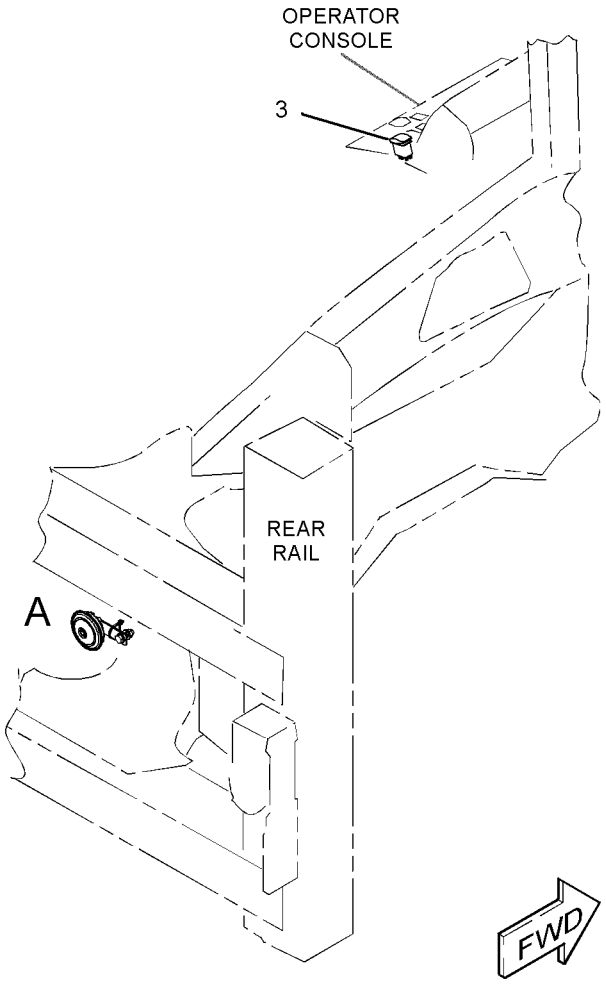

GRAPHIC #1 **<END>** g02001118

OPERATOR STATION

270-3217 INSTALLATION GP-RADIO

S/N: DPH1-UP

AN ATTACHMENT

SMCS-1408, 7338 **i03592841**

NOTE	PART NUMBER	QTY	PART NAME 1 2 3 4 5 6 (PRODUCT LEVEL)	SEE PAGE
	200-5728	1	HARNESS AS-RADIO	
	172-8039	11	TERMINAL (RADIO)	
	8T-8737	1	PLUG-SEAL	
	160-3518	1	KIT-RECEPTACLE (8-PIN)	
			(INCLUDES RECEPTACLE AS & WEDGE)	
	172-8037	1	CONNECTOR (RADIO)	
	186-3735	7	PIN-CONNECTOR (16-GA TO 18-GA)	
	262-2781	1	RADIO	
	6K-0806	1	STRAP-CABLE	

<END>

OPERATOR STATION

324-2897 KIT-SEAT FRAME

S/N: DPH1-UP
PART OF 324-2896 SEAT GP
AN ATTACHMENT

SMCS-7321 **i03121860**

NOTE	REF NO	GRAPHIC REF	PART NUMBER	QTY	PART NAME 1 2 3 4 5 6 (PRODUCT LEVEL)	SEE PAGE
	1	1	**164-1255**	1	SECTOR	
	2	1	**164-1256**	2	SPACER (19X25.4X12.5-MM THK)	
	3	1	**161-9283**	1	WASHER (19.8X31.8X1.6-MM THK)	
	4	1	**164-1249**	1	LEVER AS (RECLINER CONTROL)	
	5	1	**164-1251**	1	SPRING (RECLINER)	
	6	1	**164-1252**	1	SPRING (SEAT RECLINER)	
	7	1	**164-1253**	1	PLATE	
	8	1	**164-1254**	1	SECTOR	
					PARTS SHOWN IN GRAPHIC(S) WITHOUT A REFERENCE NUMBER ARE NOT SERVICED SEPARATELY	

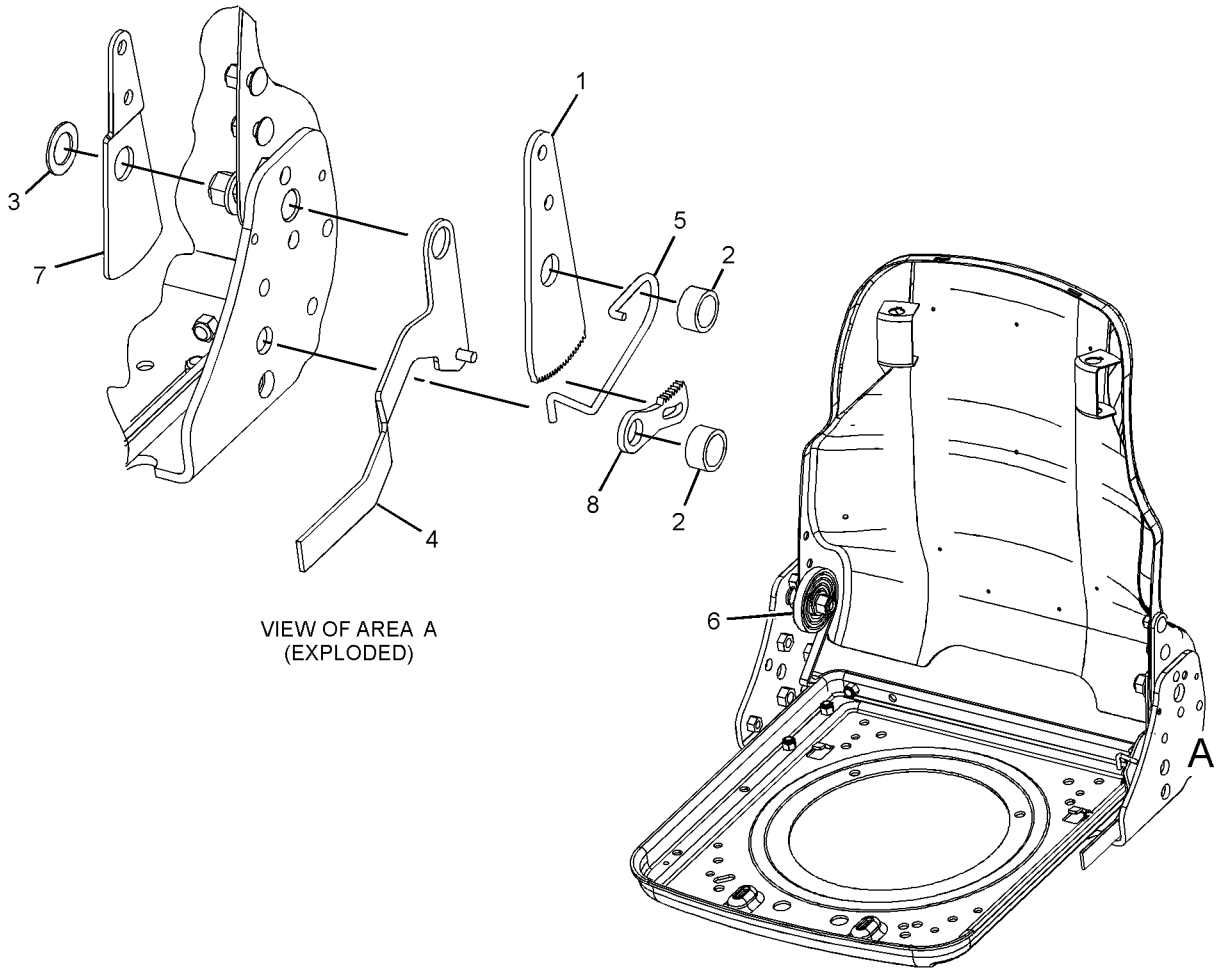

VIEW OF AREA A
(EXPLODED)

GRAPHIC #1 **<END>** g01626962

OPERATOR STATION

324-2894 KIT-SEAT SUSPENSION–AIR

S/N: DPH1-UP
PART OF 324-2890 SUSPENSION GP-SEAT
AN ATTACHMENT

SMCS-7312, 7324 **i03724323**

NOTE	REF NO	GRAPHIC REF	PART NUMBER	QTY	PART NAME 1 2 3 4 5 6 (PRODUCT LEVEL)	SEE PAGE
	1	1	**163-1135**	1	SPRING	
	2	1	**186-5110**	2	BOLT-SHOULDER	
	3	1	**192-7805**	1	HARNESS AS-VALVE (SEAT AIR COMPRESSOR)	
		1	**5P-4571**	2	TERMINAL-BLADE (14-GA TO 16-GA)	
		1	**102-8802**	1	KIT-RECEPTACLE (2-PIN)	
					(INCLUDES RECEPTACLE AS & WEDGE)	
		1	**186-3735**	2	PIN-CONNECTOR (16-GA TO 18-GA)	
E		1	**211-5358**		CONDUIT-FLEXIBLE (64-CM)	
	4	1	**237-3943**	1	BRACKET	
	5	1	**4F-4879**	1	BOLT (3/8-16X0.5-IN)	
	6	1	**328-7749**	1	HARNESS AS-WIRING (SEAT AIR COMPRESSOR)	
	7	1	**328-7750**	1	TEE	
	8	1	**328-7751**	1	ELBOW	
	9	1	**328-7752**	1	ELBOW	
	10	1	**330-9687**	1	TUBE	
	11	1	**331-7798**	1	TUBE	
	12	1	**331-7799**	1	TUBE	
	13	1	**108-4311**	1	SCREW-MACHINE (3/8-16X0.75-IN)	
	14	1	**3E-4337**	1	RIVET-POP	
	15	1	**4V-2264**	1	NUT-PUSH	
	16	1	**216-4554**	2	SHIM (1.4-MM THK)	
	17	1	**338-9831**	1	CLIP	

E-ORDER BY THE CENTIMETER

324-2894 KIT-SEAT SUSPENSION *(contd.)* **i03724323**

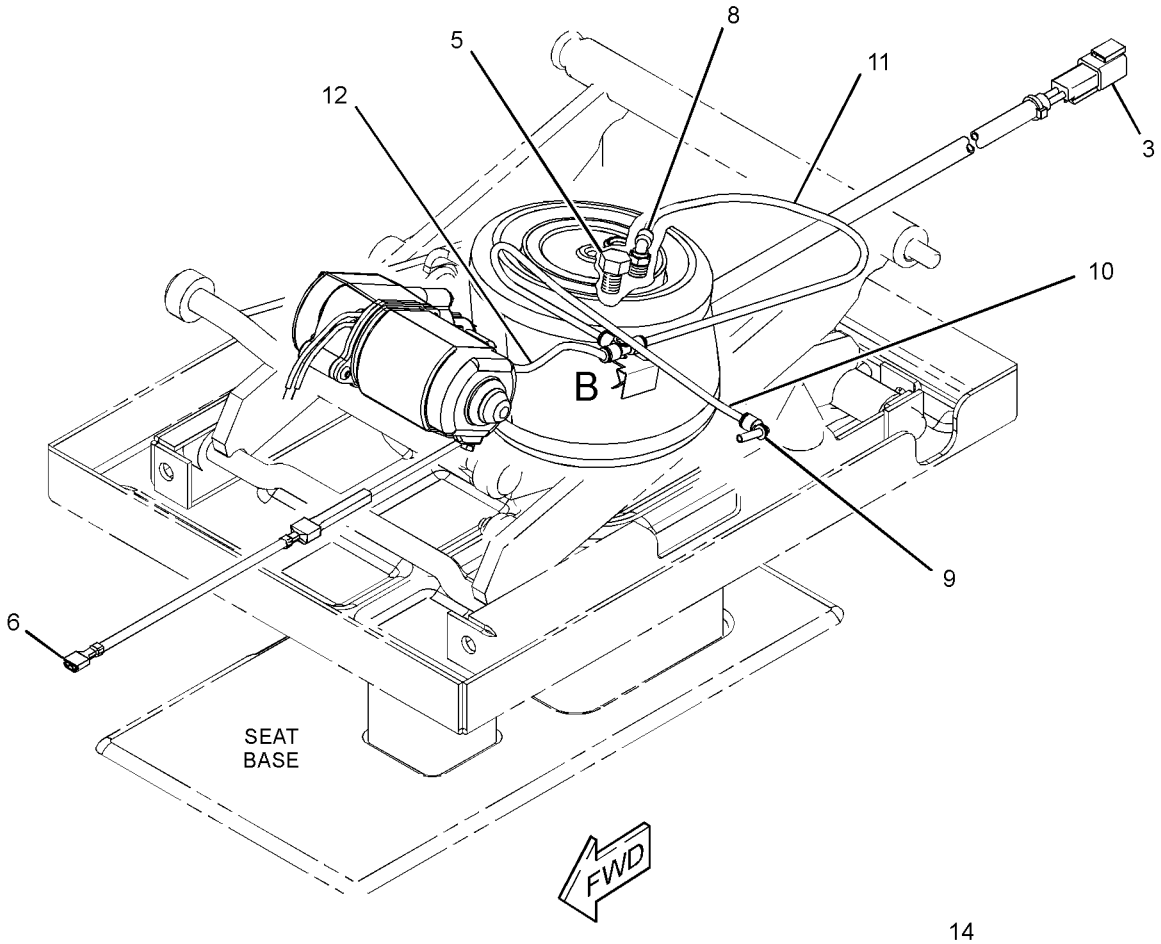

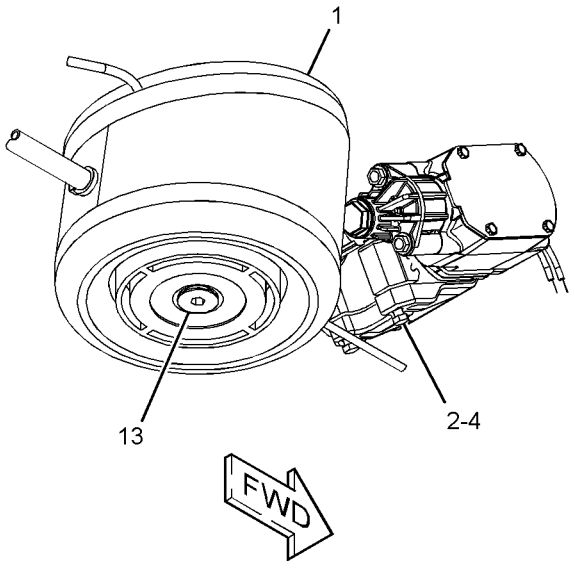

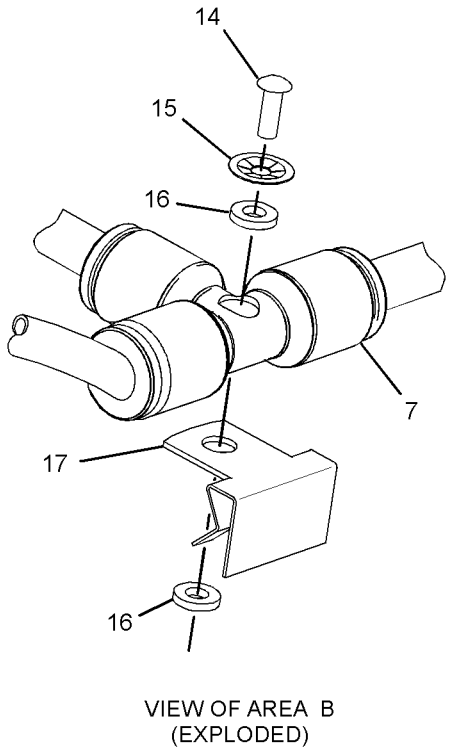

VIEW OF AREA B
(EXPLODED)

GRAPHIC #1 **<END>** g01783376

OPERATOR STATION

299-6985 LATCH GP-CAB DOOR & WINDOW

S/N: DPH1-UP
PART OF 333-9902 WINDOW GP-DOOR
AN ATTACHMENT

SMCS-7308, 7310 **i02693060**

NOTE	REF NO	GRAPHIC REF	PART NUMBER	QTY	PART NAME 1 2 3 4 5 6 (PRODUCT LEVEL)	SEE PAGE
M	1	1	**161-6984**	1	SCREW-TRUSS HEAD (M5X0.8X20-MM)	
	2	1	**161-6987**	1	WASHER-HARD (5.2X16X1.5-MM THK)	
	3	1	**161-9294**	1	SPRING-FLAT WIRE	
M	4	1	**162-6556**	1	LOCKNUT (M6X1-THD)	
M	5	1	**5C-2874**	1	NUT (M5X0.8-THD)	

M-METRIC PART

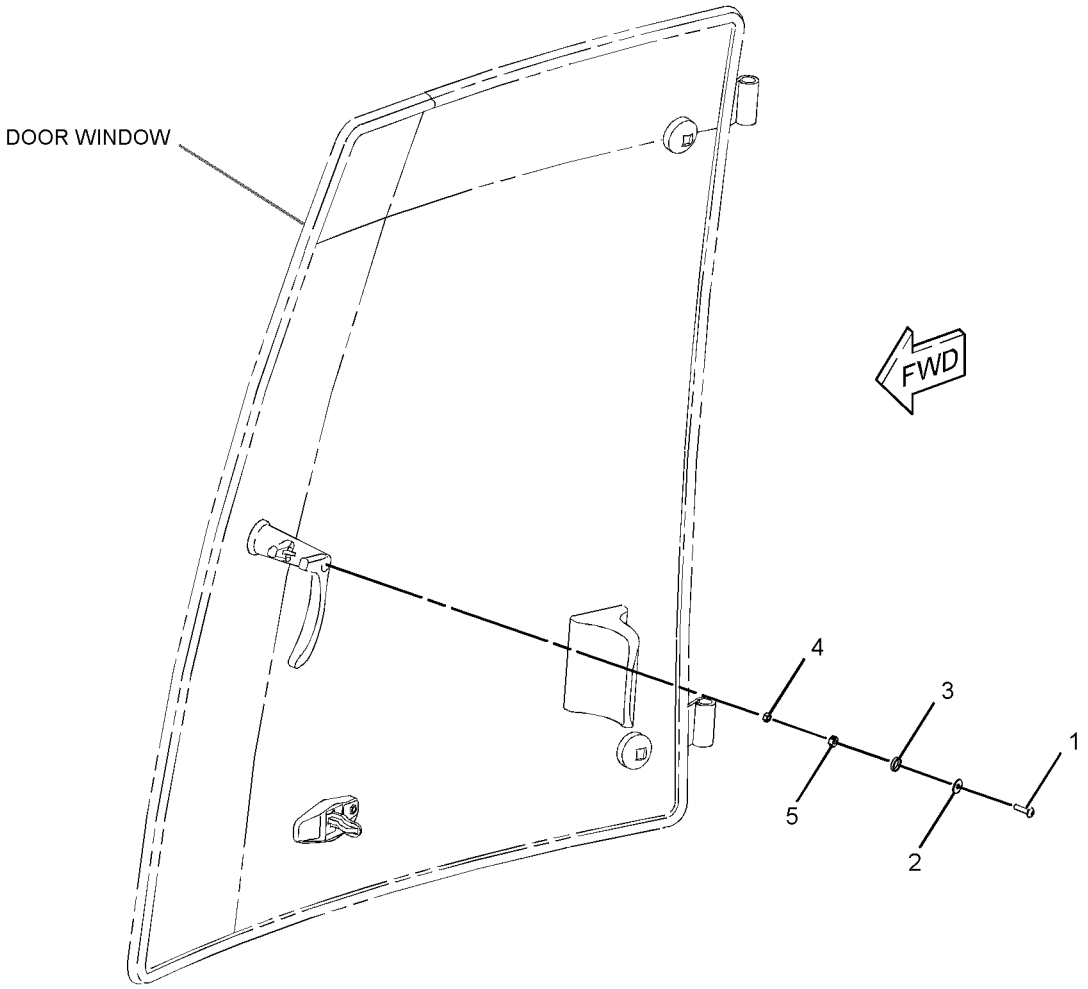

GRAPHIC #1 **<END>** g01353996

OPERATOR STATION

299-6986 LATCH GP-CAB DOOR & WINDOW

S/N: DPH1-UP
PART OF 333-9901 WINDOW GP-DOOR
AN ATTACHMENT

SMCS-7308, 7310 **i02693061**

NOTE	REF NO	GRAPHIC REF	PART NUMBER	QTY	PART NAME 1 2 3 4 5 6 (PRODUCT LEVEL)	SEE PAGE
M	1	1	**161-6984**	1	SCREW-TRUSS HEAD (M5X0.8X20-MM)	
	2	1	**161-6987**	1	WASHER-HARD (5.2X16X1.5-MM THK)	
	3	1	**161-9294**	1	SPRING-FLAT WIRE	
M	4	1	**162-6556**	1	LOCKNUT (M6X1-THD)	
M	5	1	**5C-2874**	1	NUT (M5X0.8-THD)	

M-METRIC PART

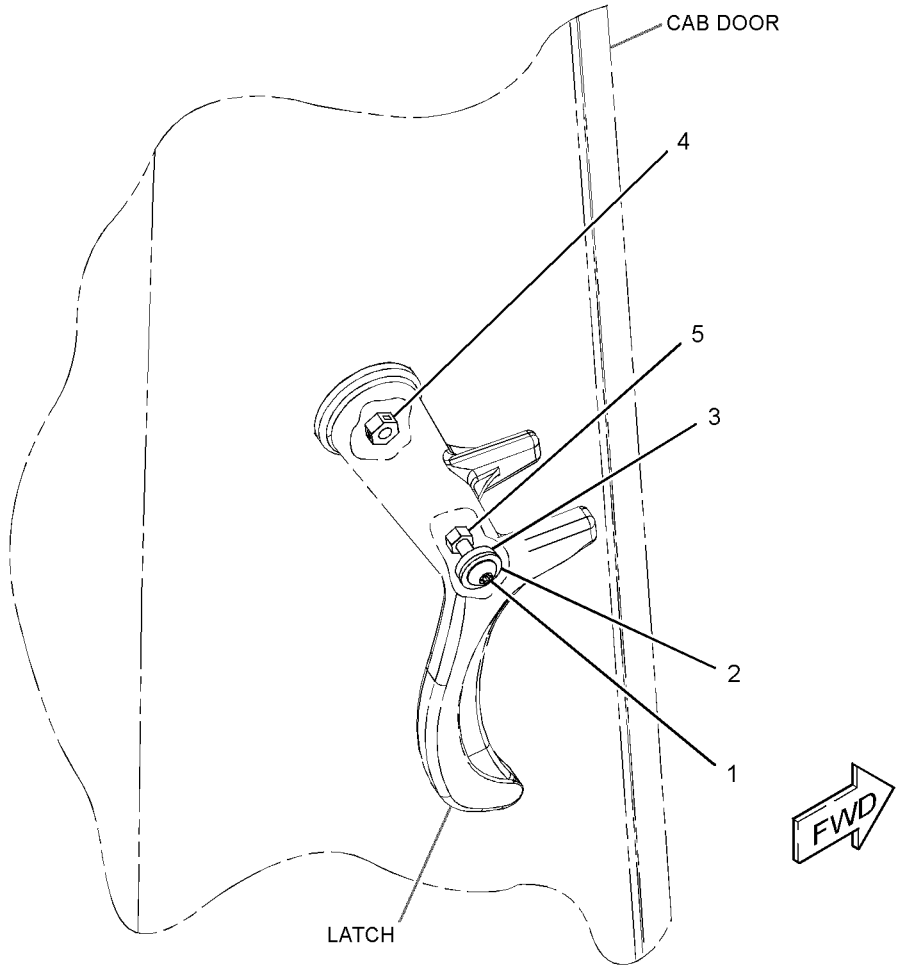

GRAPHIC #1 **<END>** g01354326

OPERATOR STATION

209-3367 LEVER GP-GOVERNOR–HANDHELD

S/N: DPH1-UP
PART OF 206-1640 CONTROL GP-GOVERNOR
AN ATTACHMENT

SMCS-1265 **i02159826**

NOTE	REF NO	GRAPHIC REF	PART NUMBER	QTY	PART NAME 1 2 3 4 5 6 (PRODUCT LEVEL)	SEE PAGE
	1	1	**209-3366**	1	CABLE AS	
	2	1	**219-0343**	1	LEVER AS	
	3	1	**8T-4742**	1	END-YOKE ROD	
	4	1	**8T-4744**	1	PIN AS-SPRING	
M	5	1	**8T-4971**	1	BOLT (M6X1X30-MM)	
M	6	1	**129-3178**	1	LOCKNUT (M6X1-THD)	

M-METRIC PART

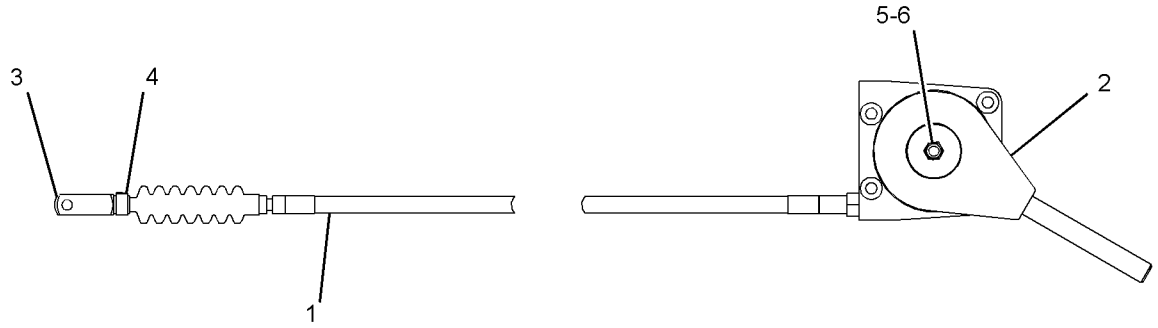

GRAPHIC #1 **<END>** g01096744

OPERATOR STATION

317-5543 LINER GP-CAB

S/N: DPH1-UP

PART OF 335-3049, 335-3050 CAB AR

AN ATTACHMENT

SMCS-7329 **i03417781**

NOTE	REF NO	GRAPHIC REF	PART NUMBER	QTY	PART NAME 1 2 3 4 5 6 (PRODUCT LEVEL)	SEE PAGE
	1	1	**325-9311**	3	FASTENER	
	2	1	**5G-2003**	2	SPACER (6.8X13X10-MM THK)	
	3	1	**8E-1118**	1	ANTENNA AS	
	4	1	**8R-6111**	1	CABLE AS-COAXIAL	
	5	1	**9U-8263**	1	COVER	
	6	1	**084-4277**	1	LAMP GP-DOME (12-VOLT)	
		1	**210-8754**	1	LAMP (12-VOLT)	
	7	1	**132-2249**	1	SPACER (7.4X12.7X24-MM THK)	
	8	1	**145-0981**	2	SPACER (8.5X12.7X18-MM)	
	9	1	**169-7291**	2	COVER-SPEAKER	
	10	1	**209-4716**	2	PLATE	
	11	1	**262-9567**	2	SPEAKER	
	12	1	**282-7832**	1	GROMMET	
	13	1	**282-7835**	1	PLATE	
	14	1	**292-5773**	1	COVER	
	15	1	**317-5542**	1	LINER AS-CAB	
		1	**263-5781**	2	PLATE AS	
					(EACH INCLUDES)	
		1	**205-7047**	8	INSERT-THREADED (M4X0.7-THD)	
M	16	1	**113-0920**	8	BOLT-SOCKET HEAD (M4X0.7X35-MM)	
M	17	1	**121-9870**	5	SCREW-MACHINE (M6X1X40-MM)	
M	18	1	**8C-4982**	8	BOLT-SOCKET HEAD (M4X0.7X20-MM)	
M	19	1	**8C-3798**	2	BOLT-LOCKING (M6X1X30-MM)	
	20	1	**9X-2038**	3	WASHER (7X19X2-MM THK)	
	21	1	**9X-8256**	2	WASHER (6.6X12X2-MM THK)	

M-METRIC PART

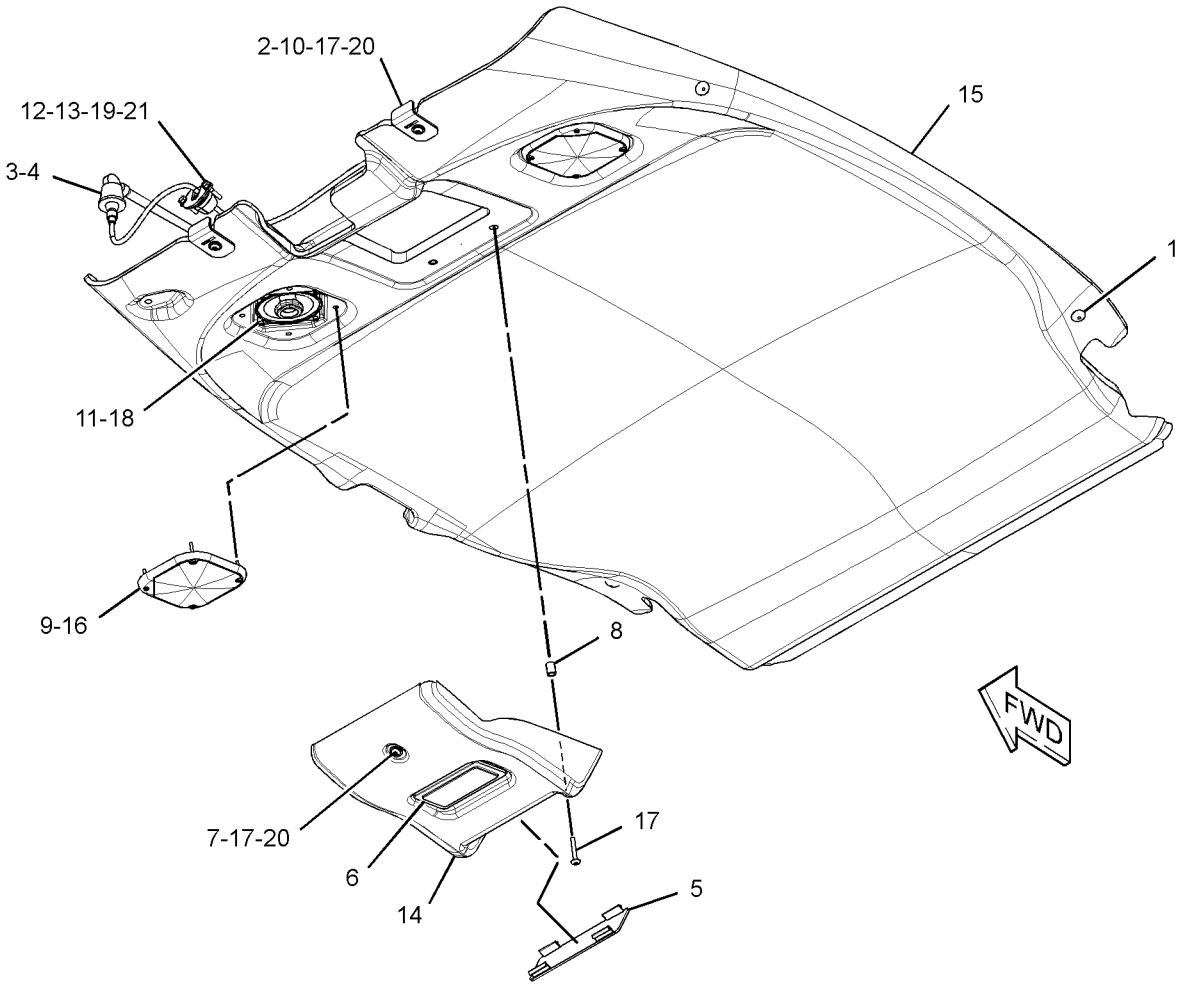

GRAPHIC #1 **<END>** g01625714

OPERATOR STATION

315-2940 LINES GP-HEATER

S/N: DPH1-UP
PART OF 335-3049 CAB AR
AN ATTACHMENT

SMCS-1812 **i03462303**

NOTE	REF NO	GRAPHIC REF	PART NUMBER	QTY	PART NAME 1 2 3 4 5 6 (PRODUCT LEVEL)	SEE PAGE
	1	1	**6P-8855**	1	TUBE	
	2	1	**7K-1181**	3	STRAP-CABLE	
	3	1	**9M-4814**	1	CONNECTOR-HOSE	
	4	1	**6V-0675**	1	ELBOW	
E	5	1	**5P-0767**		HOSE (260-CM)	
E	5A	1	**5P-0767**		HOSE (205-CM)	
E	5B	1	**5P-0767**		HOSE (22-CM)	
E	5C	1	**5P-0767**		HOSE (65-CM)	
	6	1	**3E-4321**	4	CLIP	
	7	1	**5D-1026**	8	CLAMP-BAND	
	8	1	**8T-4121**	2	WASHER-HARD (11X21X2.5-MM THK)	
M	9	1	**8T-4137**	2	BOLT (M10X1.5X20-MM)	

E-ORDER BY THE CENTIMETER
M-METRIC PART

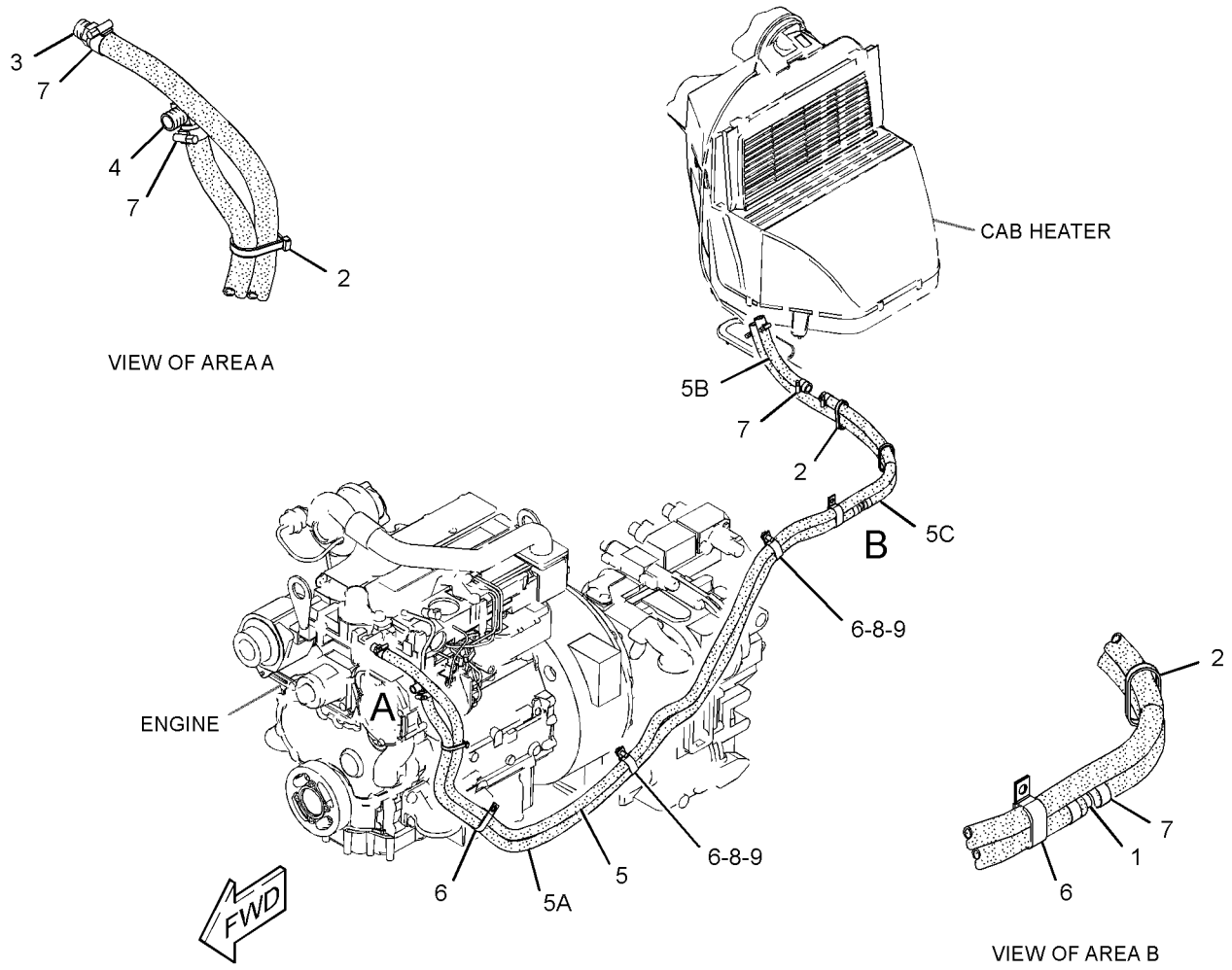

GRAPHIC #1 **<END>** g01808733

OPERATOR STATION

315-2939 LINES GP-HEATER & AIR COND

S/N: DPH1-UP
PART OF 335-3050 CAB AR
AN ATTACHMENT

SMCS-1380, 1808, 1812 **i03500281**

NOTE	REF NO	GRAPHIC REF	PART NUMBER	QTY	PART NAME 1 2 3 4 5 6 (PRODUCT LEVEL)	SEE PAGE
	1	1	**3S-2093**	2	STRAP-CABLE	
	2	1	**6P-8855**	1	TUBE	
	3	1	**7K-1181**	4	STRAP-CABLE	
	4	1	**9M-4814**	1	CONNECTOR-HOSE	
	5	1	**105-9411**	1	SUPPORT	
	6	1	**114-0063**	1	PLATE-INSTRUCTION	
	7	1	**130-9984**	3	CLIP	
	8	1	**6V-0675**	1	ELBOW	
	9	1	**170-0235**	1	ACCUMULATOR-REFRIGERANT (AIR CONDITIONER)	
I	10	1	**214-3736**	1	HOSE AS	
	11	1	**283-4237**	1	RECEIVER-REFRIGERANT DRYER (AIR CONDITIONER)	
		1	**3E-0068**	1	TUBE AS-REFRIGERANT ORIFICE	
	12	1	**289-6018**	2	U-BOLT	
	13	1	**289-6021**	1	PLATE	
	14	1	**297-5252**	1	HOSE AS	
I	15	1	**166-7208**	1	HOSE AS	
	16	1	**297-5254**	1	HOSE AS	
I	17	1	**319-5639**	1	HOSE AS	
	19	1	**109-1633**	1	CLIP (SLOT)	
	20	1	**109-1634**	1	CLIP (TAB)	
M	21	1	**208-9293**	2	BOLT-FLANGE HEAD (M10X1.5X30-MM)	
	22	1	**2K-4973**	4	LOCKNUT (3/8-16-THD)	
	23	1	**3E-4321**	4	CLIP	
	24	1	**5D-1026**	8	CLAMP-BAND	
	25	1	**5K-5338**	1	CLIP	
	26	1	**8T-4121**	10	WASHER-HARD (11X21X2.5-MM THK)	
M	27	1	**8T-4136**	1	BOLT (M10X1.5X25-MM)	
M	28	1	**8T-4137**	2	BOLT (M10X1.5X20-MM)	
M	29	1	**8T-4139**	1	BOLT (M12X1.75X30-MM)	
M	30	1	**8T-4196**	1	BOLT (M10X1.5X35-MM)	
	31	1	**8T-4223**	1	WASHER-HARD (13.5X25.5X3-MM THK)	
	33	1	**9X-7380**	2	SEAL-O-RING	
	34	1	**9X-7381**	3	SEAL-O-RING	
	35	1	**9X-7382**	1	SEAL-O-RING	
	36	1	**9X-7383**	2	SEAL-O-RING	
E	37	1	**5P-0767**		HOSE (260-CM)	
E	37A	1	**5P-0767**		HOSE (65-CM)	
E	37B	1	**5P-0767**		HOSE (22-CM)	
E	37C	1	**5P-0767**		HOSE (205-CM)	
M	38	1	**8T-4185**	2	BOLT (M10X1.5X50-MM)	
	39	1	**194-8648**	2	BOSS	

E-ORDER BY THE CENTIMETER
I-REFER TO HYDRAULIC INFORMATION SYSTEM
M-METRIC PART

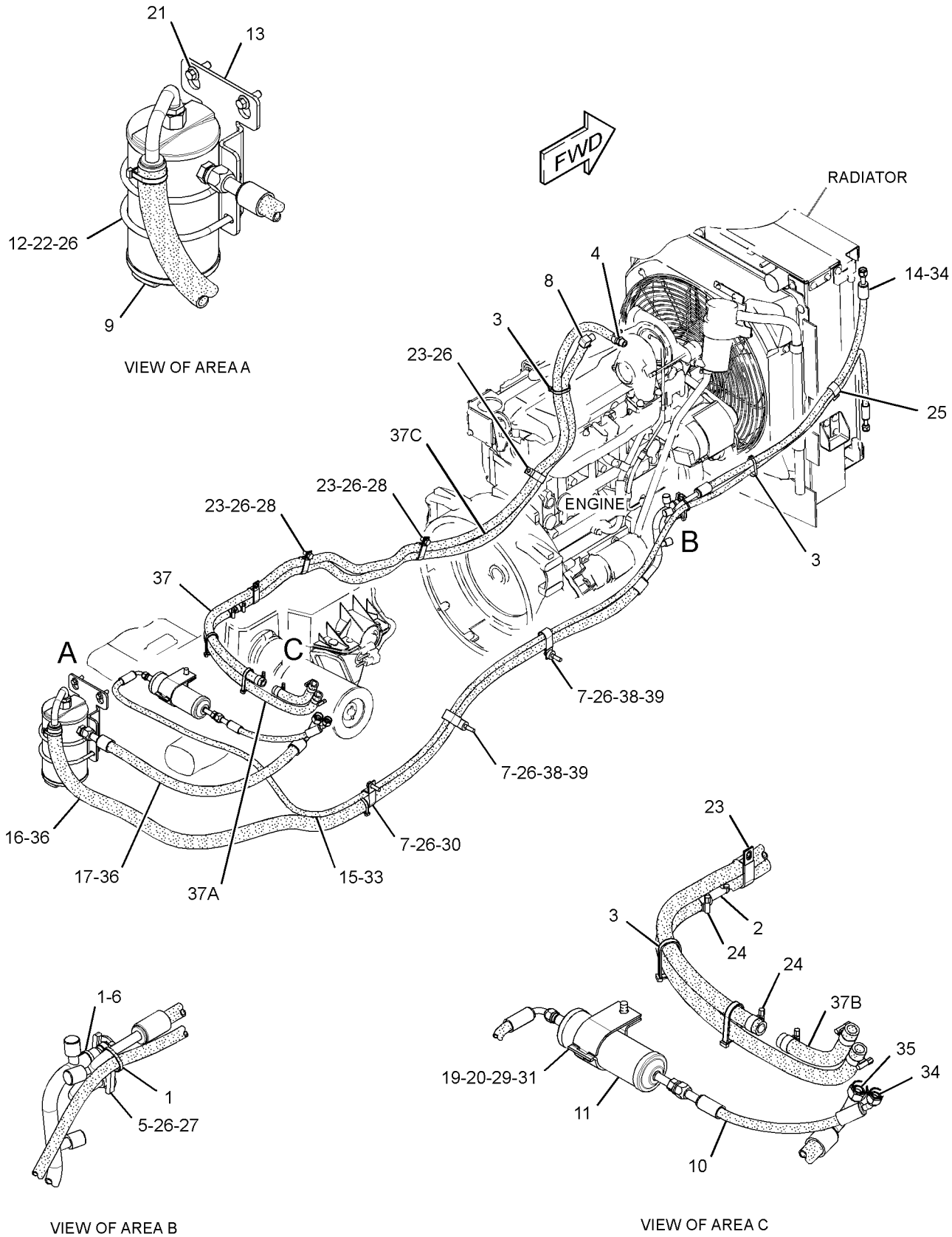

GRAPHIC #1 **<END>** g01805933

OPERATOR STATION

259-6276 MIRROR GP-REAR VIEW—INTERIOR

S/N: DPH1-UP

PART OF 335-3049, 335-3050 CAB AR, 335-3047, 335-3048 CANOPY AR-OPEN ROPS

AN ATTACHMENT

SMCS-7319 **i02403099**

NOTE	REF NO	GRAPHIC REF	PART NUMBER	QTY	PART NAME 1 2 3 4 5 6 (PRODUCT LEVEL)	SEE PAGE
M	1	1	**8C-4982**	2	BOLT-SOCKET HEAD (M4X0.7X20-MM)	
	2	1	**199-0929**	1	MIRROR AS	
	3	1	**096-6166**	2	WASHER-HARD (4.5X9X1-MM THK)	

M-METRIC PART

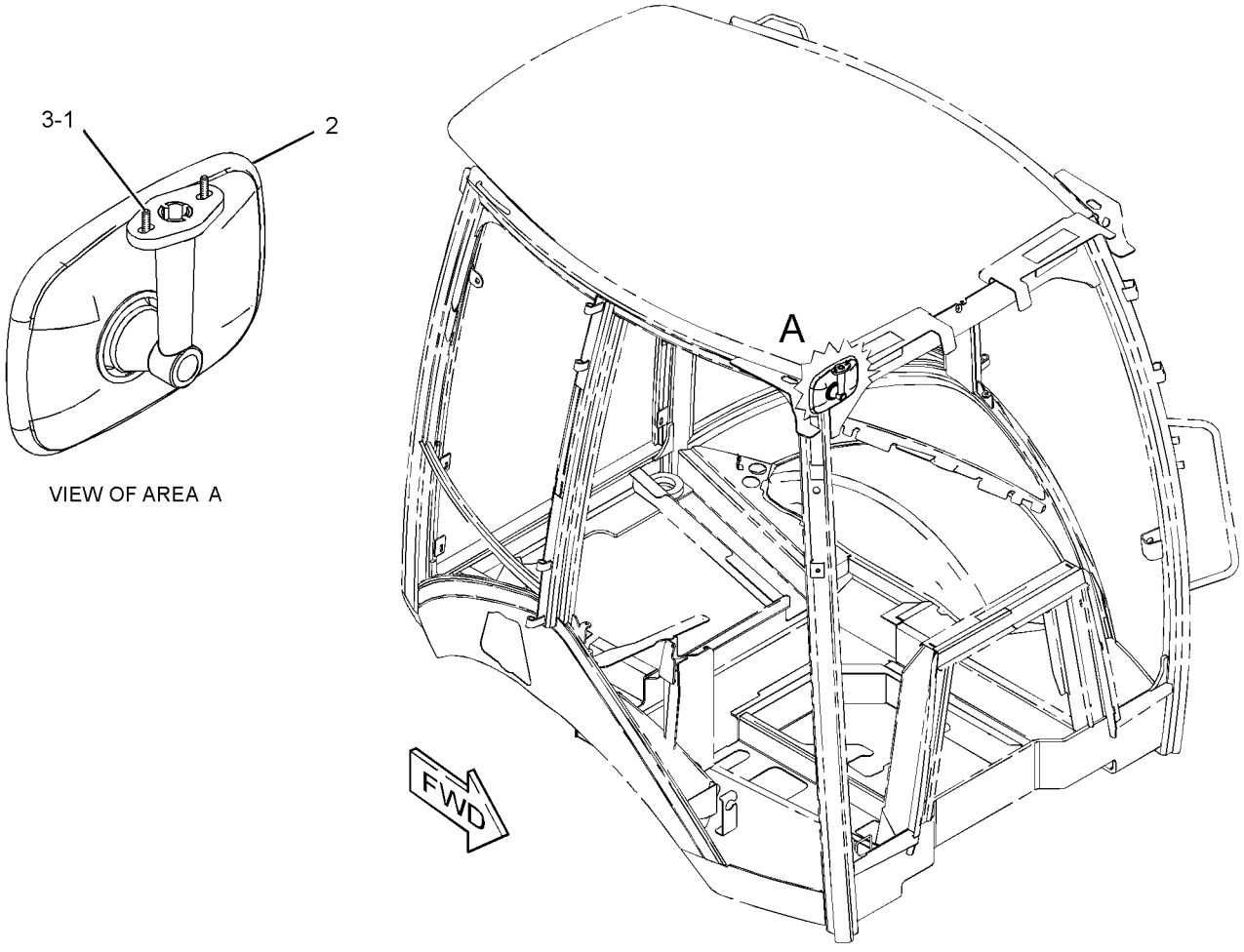

VIEW OF AREA A

GRAPHIC #1 **<END>** g01214241

336-9168 MIRROR GP-REAR VIEW—EXTERIOR

S/N: DPH1-UP

PART OF 335-3049, 335-3050 CAB AR, 335-3047, 335-3048 CANOPY AR-OPEN ROPS AN ATTACHMENT

SMCS-7319 **i03338640**

NOTE	REF NO	GRAPHIC REF	PART NUMBER	QTY	PART NAME 1 2 3 4 5 6 (PRODUCT LEVEL)	SEE PAGE
	1	1	**180-0448**	2	MIRROR AS	
	2	1	**159-7105**	1	BRACKET & MOUNTING AS (LH)	
	3	1	**159-7106**	1	BRACKET & MOUNTING AS (RH)	
	4	1	**8T-4224**	4	WASHER-HARD (8.8X16X2-MM THK)	
M	5	1	**8T-4908**	4	BOLT (M8X1.25X25-MM)	

M-METRIC PART

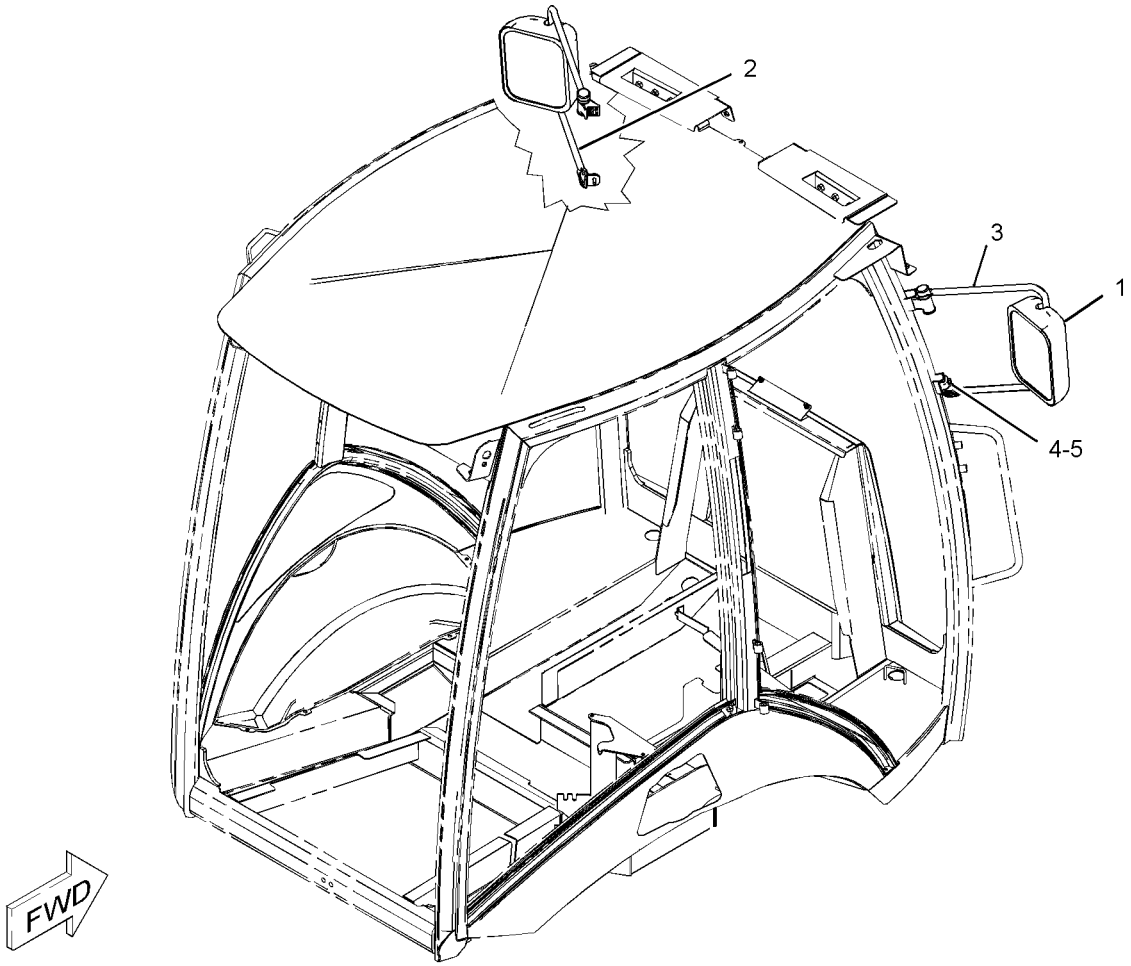

GRAPHIC #1 **<END>** g01090966

OPERATOR STATION

313-3752 MOTOR GP-WINDOW WIPER–12-VOLT

S/N: DPH1-UP

PART OF 340-8276 WASHER GP-WINDOW, 317-5547 WIPER & WASHER GP-WINDOW

AN ATTACHMENT

SMCS-7305 **i03500282**

NOTE	REF NO	GRAPHIC REF	PART NUMBER	QTY	PART NAME 1 2 3 4 5 6 (PRODUCT LEVEL)	SEE PAGE
	1	1	**102-8806**	1	KIT-RECEPTACLE (8-PIN)	
					(INCLUDES RECEPTACLE AS & WEDGE)	
	2	1	**8T-8737**	1	PLUG-SEAL	
	3	1	**186-3735**	7	PIN-CONNECTOR (16-GA TO 18-GA)	
	4	1	**206-5823**	1	CAP (MOTOR)	
	5	1	**3F-9556**	1	LOCKWASHER	
M	6	1	**5C-7261**	1	NUT (M8X1.25-THD)	

M-METRIC PART

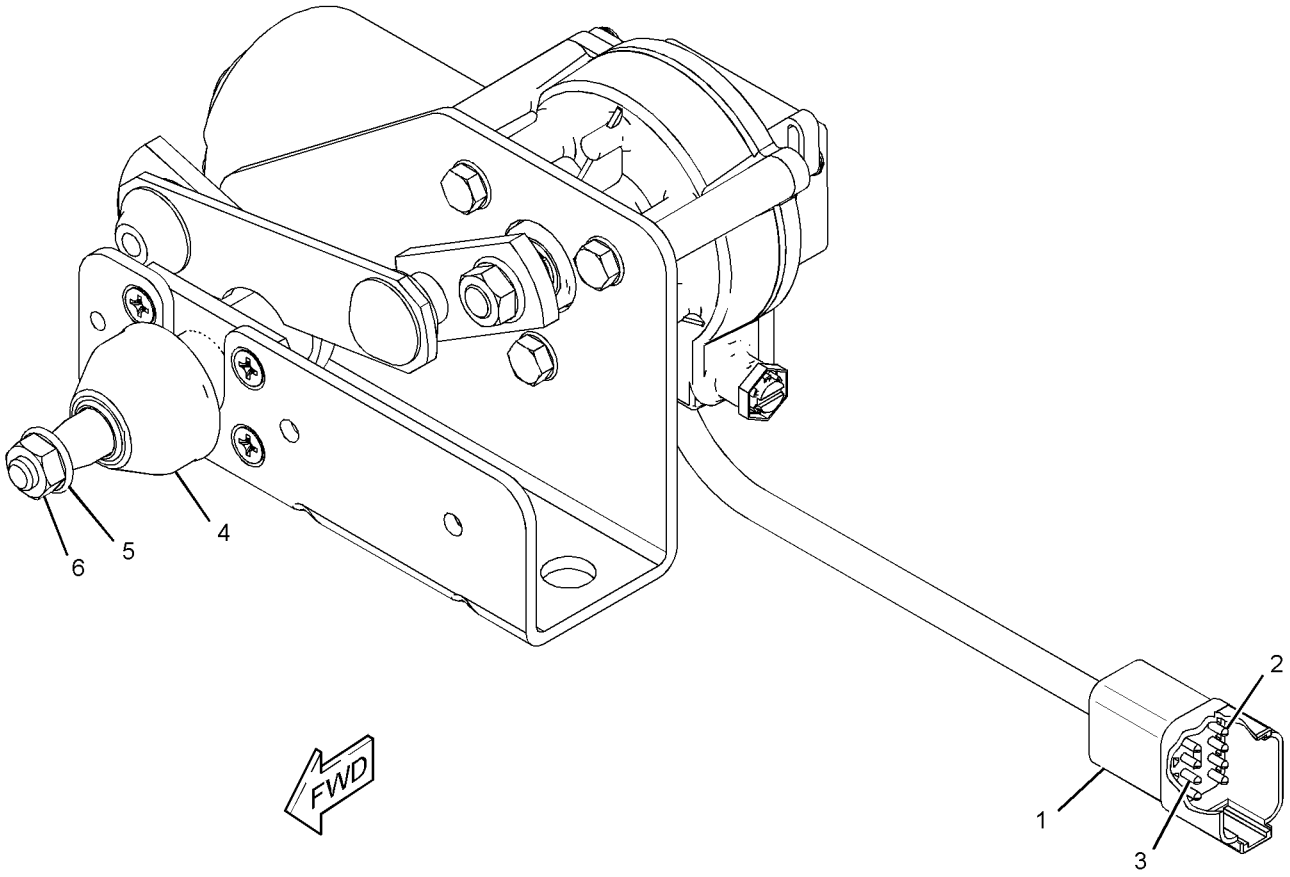

GRAPHIC #1 **<END>** g01570360

315-1318 MOTOR GP-WINDOW WIPER–REAR

S/N: DPH1-UP
PART OF 315-1272 WIPER GP-WINDOW
AN ATTACHMENT

SMCS-7305 **i03214029**

NOTE	REF NO	GRAPHIC REF	PART NUMBER	QTY	PART NAME 1 2 3 4 5 6 (PRODUCT LEVEL)	SEE PAGE
	1	1	**102-8804**	1	KIT-RECEPTACLE (4-PIN)	
					(INCLUDES RECEPTACLE AS & WEDGE)	
	2	1	**186-3735**	4	PIN-CONNECTOR (16-GA TO 18-GA)	
M	3	1	**5C-7261**	1	NUT (M8X1.25-THD)	
M	4	1	**8C-6437**	1	NUT (M16X1-THD)	
	5	1	**263-3823**	1	CAP-WIPER	

M-METRIC PART

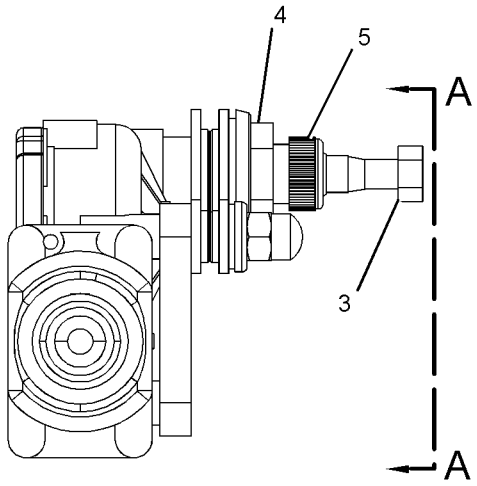

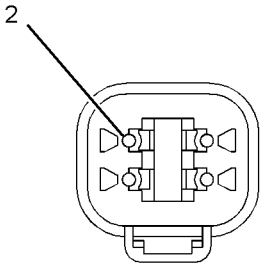

VIEW B-B

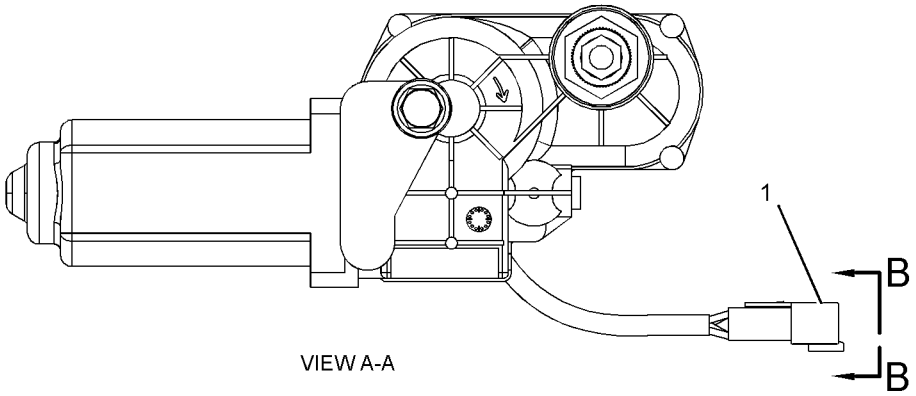

VIEW A-A

GRAPHIC #1 **<END>** g01654033

OPERATOR STATION

204-4248 MOUNTING GP-CAB

S/N: DPH1-UP

PART OF 329-0293 CHASSIS AR

SMCS-7301 **i02509401**

NOTE	REF NO	GRAPHIC REF	PART NUMBER	QTY	PART NAME 1 2 3 4 5 6 (PRODUCT LEVEL)	SEE PAGE
	1	1	**6Y-9930**	2	MOUNT AS	
	2	1	**118-2990**	2	MOUNT AS	
	3	1	**9W-6582**	2	SLEEVE	
M	4	1	**7X-2532**	2	BOLT (M20X2.5X130-MM)	
	5	1	**8C-3291**	2	WASHER (17X90X10-MM THK)	
	6	1	**8T-4123**	4	WASHER (22X35X3.5-MM THK)	
M	7	1	**8T-4131**	2	NUT (M20X2.5-THD)	
M	8	1	**8T-4132**	2	NUT (M16X2-THD)	
M	9	1	**8T-4173**	2	BOLT (M16X2X110-MM)	
	10	1	**9W-6584**	2	WASHER (20.5X114X10-MM THK)	
	11	1	**9X-8257**	4	WASHER (17.5X30X3.5-MM THK)	
	12	1	**1L-6377**	2	BUTTON-PLUG	

M-METRIC PART

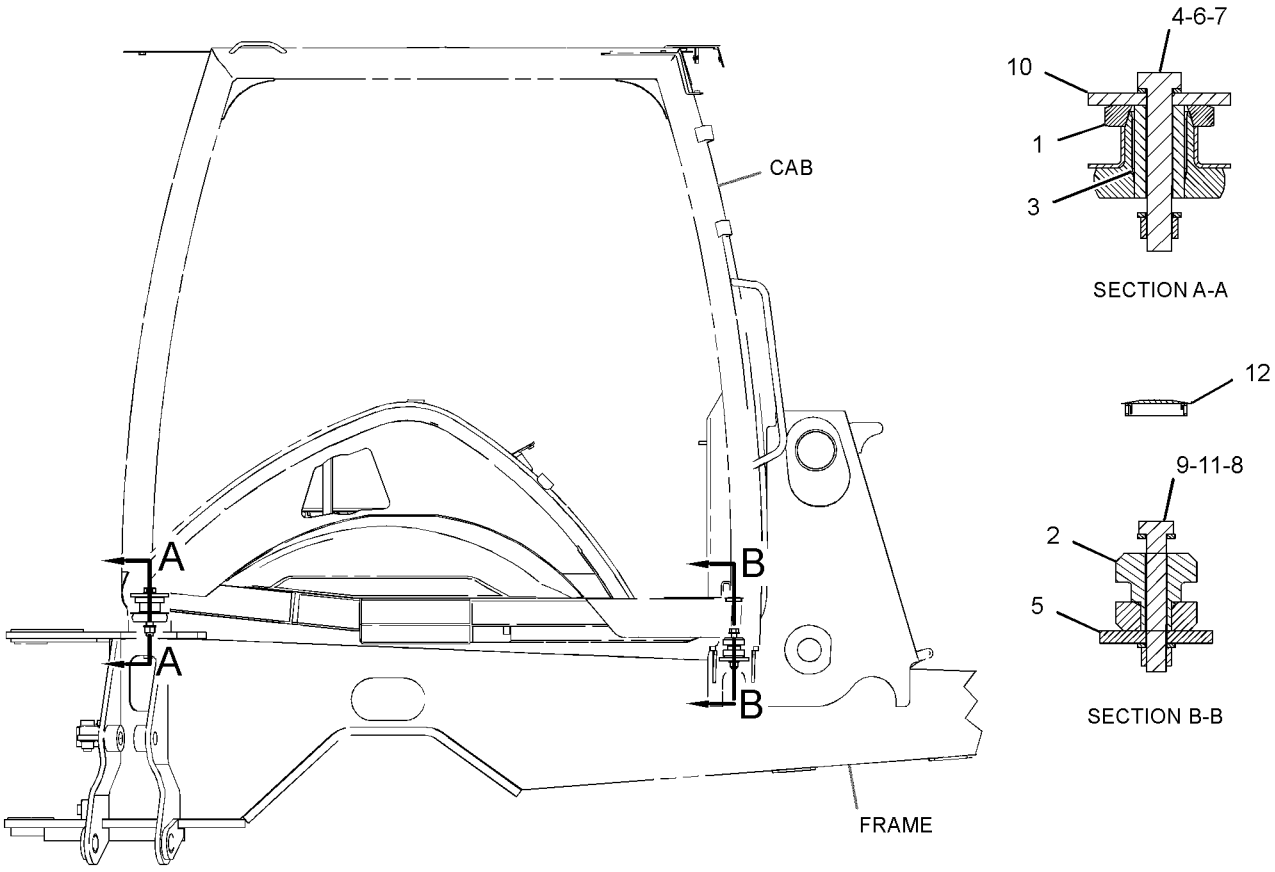

RIGHT SIDE VIEW

GRAPHIC #1 **<END>** g01271349

OPERATOR STATION

322-9483 PAN GP-SEAT

S/N: DPH1-UP
PART OF 322-9482, 322-9517 SEAT GP
AN ATTACHMENT

SMCS-7312, 7321 **i03179100**

NOTE	REF NO	GRAPHIC REF	PART NUMBER	QTY	PART NAME 1 2 3 4 5 6 (PRODUCT LEVEL)	SEE PAGE
M	1	1	**142-4901**	2	SCREW (M10X1.5X20-MM)	
	2	1	**322-9484**	1	PAN AS	
	3	1	**322-9485**	1	KIT-PLATE	
					(INCLUDES LOCKNUTS, KNOB, SPRING, & ROD)	
	4	1	**322-9487**	1	PAN-SEAT BACK	
M	5	1	**127-2170**	2	SCREW-TRUSS HEAD (M8X1.25X20-MM)	
M	6	1	**6V-7743**	4	LOCKNUT (M6X1-THD)	
	7	1	**8H-5505**	4	WASHER-PLATED	
M	8	1	**9X-2042**	4	SCREW-TRUSS HEAD (M6X1X12-MM)	

M-METRIC PART

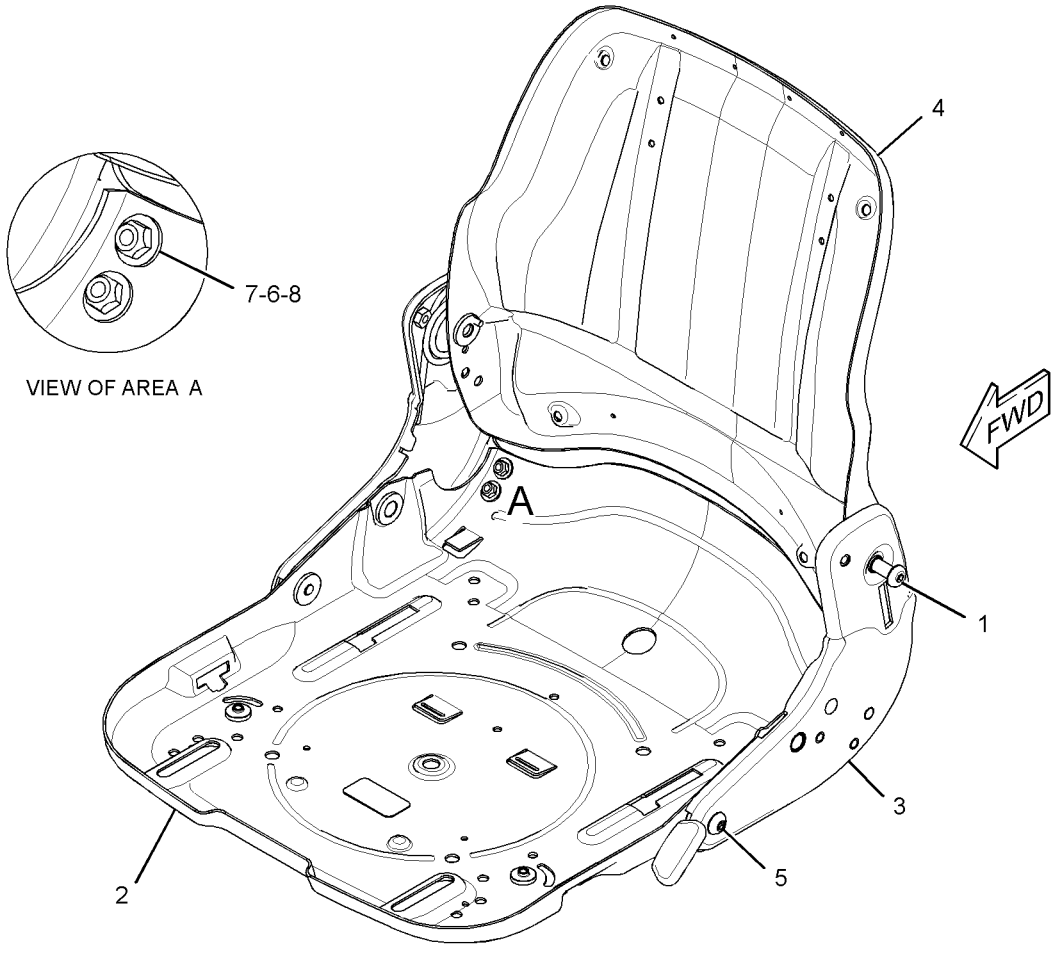

GRAPHIC #1 **<END>** g01626852

OPERATOR STATION

209-3378 PEDAL GP-GOVERNOR

S/N: DPH1-UP
PART OF 206-1640 CONTROL GP-GOVERNOR
AN ATTACHMENT

SMCS-1265 **i03592816**

NOTE	REF NO	GRAPHIC REF	PART NUMBER	QTY	PART NAME 1 2 3 4 5 6 (PRODUCT LEVEL)	SEE PAGE
M	1	1	**129-3178**	1	LOCKNUT (M6X1-THD)	
M	2	1	**5C-7261**	1	NUT (M8X1.25-THD)	
M	3	1	**5C-9553**	1	BOLT (M6X1X16-MM)	
	4	1	**8T-4205**	1	WASHER-HARD (7.2X14.5X2-MM THK)	
M	5	1	**095-0641**	4	BOLT-SOCKET HEAD (M4X0.7X10-MM)	
	6	1	**243-0063**	1	BOOT	
	7	1	**3F-9556**	2	LOCKWASHER	
	8	1	**6V-8186**	2	NUT-FULL (5/16-24-THD)	
	9	1	**8T-6902**	3	CLIP	
M	10	1	**9X-2842**	1	BOLT (M8X1.25X45-MM)	
					AVAILABLE REPAIR KIT(S):	
			164-1154	1	KIT-SERVICE	
					(INCLUDES CLAMP & SCREWS)	
			243-0062	1	KIT-REPAIR (GOVERNOR PEDAL)	
					(INCLUDES SHAFT, CLIPS & BEARINGS)	

M-METRIC PART

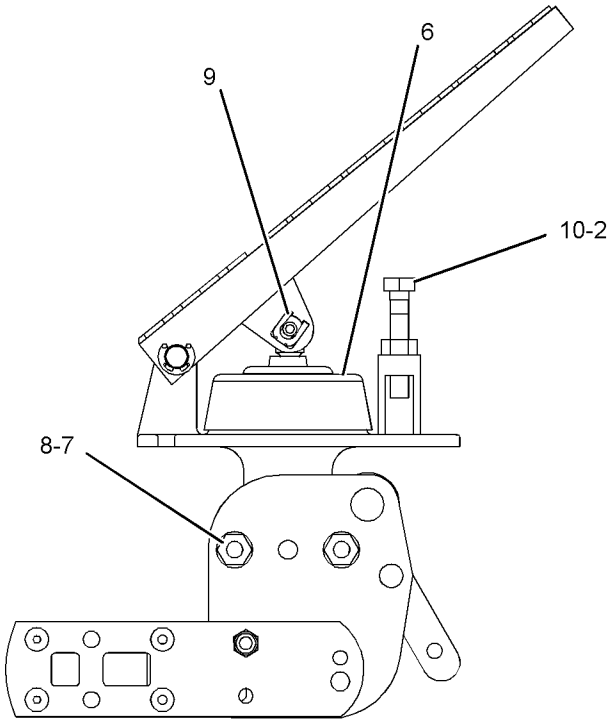

RIGHT SIDE VIEW

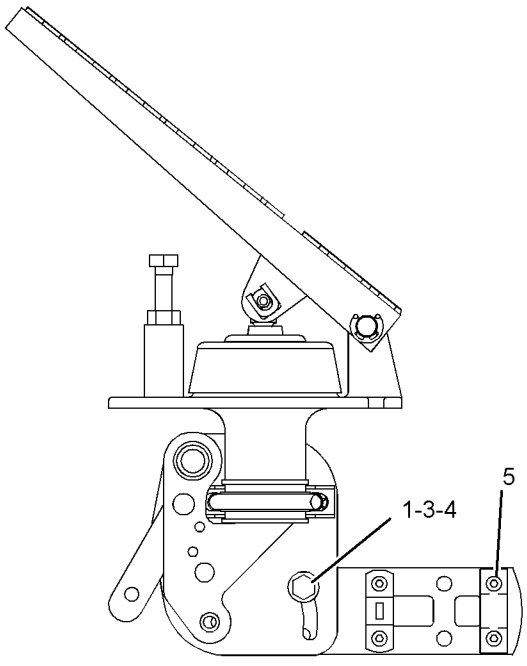

LEFT SIDE VIEW

GRAPHIC #1 **<END>** g01081364

OPERATOR STATION

334-7225 ROOF GP-CAB

S/N: DPH1-UP

PART OF 335-3049, 335-3050 CAB AR, 335-3047, 335-3048 CANOPY AR-OPEN ROPS AN ATTACHMENT

SMCS-7301 **i03686780**

NOTE	REF NO	GRAPHIC REF	PART NUMBER	QTY	PART NAME 1 2 3 4 5 6 (PRODUCT LEVEL)	SEE PAGE
	1	1	**193-5915**	2	PLUG	
	2	1	**334-7227**	1	CAP AS	
	3	1	**341-5749**	5	SPACER (8.5X12.7X4.3-MM THK)	
	4	1	**341-5750**	5	PLATE	
	5	1	**8C-9987**	3	WASHER (8.3X28X2.5-MM THK)	
M	6	1	**8T-4189**	8	BOLT (M8X1.25X20-MM)	
B	7	1	**193-5914**	2	PLUG	
	8	1	**8T-4224**	5	WASHER-HARD (8.8X16X2-MM THK)	

B-USE AS REQUIRED
M-METRIC PART

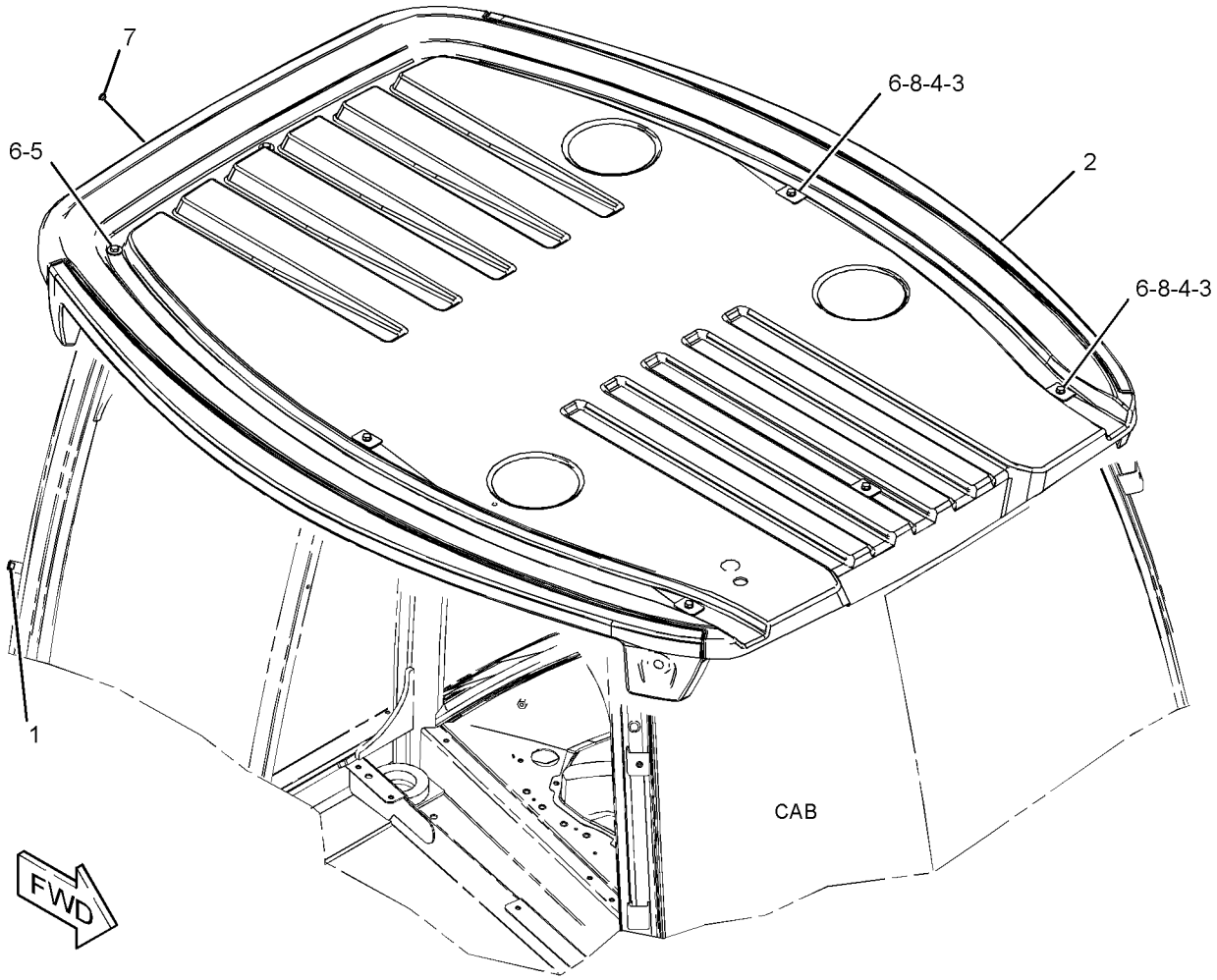

GRAPHIC #1 **<END>** g01983395

OPERATOR STATION

322-9482 SEAT GP

S/N: DPH1-UP
PART OF 314-4288 SEAT GP-SUSPENSION
AN ATTACHMENT

SMCS-7312, 7321, 7324, 7336 **i03179081**

NOTE	REF NO	GRAPHIC REF	PART NUMBER	QTY	PART NAME 1 2 3 4 5 6 (PRODUCT LEVEL)	SEE PAGE
	1	1	**7R-4229**	2	WASHER (6.4X17X3-MM THK)	
	2	1	**119-3859**	6	SCREW-PAN HEAD (10-16X0.75-IN)	
Y	3	1	**322-9483**	1	PAN GP-SEAT	605
	4	1	**322-9488**	1	CUSHION AS-SEAT	
	5	1	**322-9489**	1	CUSHION AS-SEAT	

Y-SEPARATE ILLUSTRATION

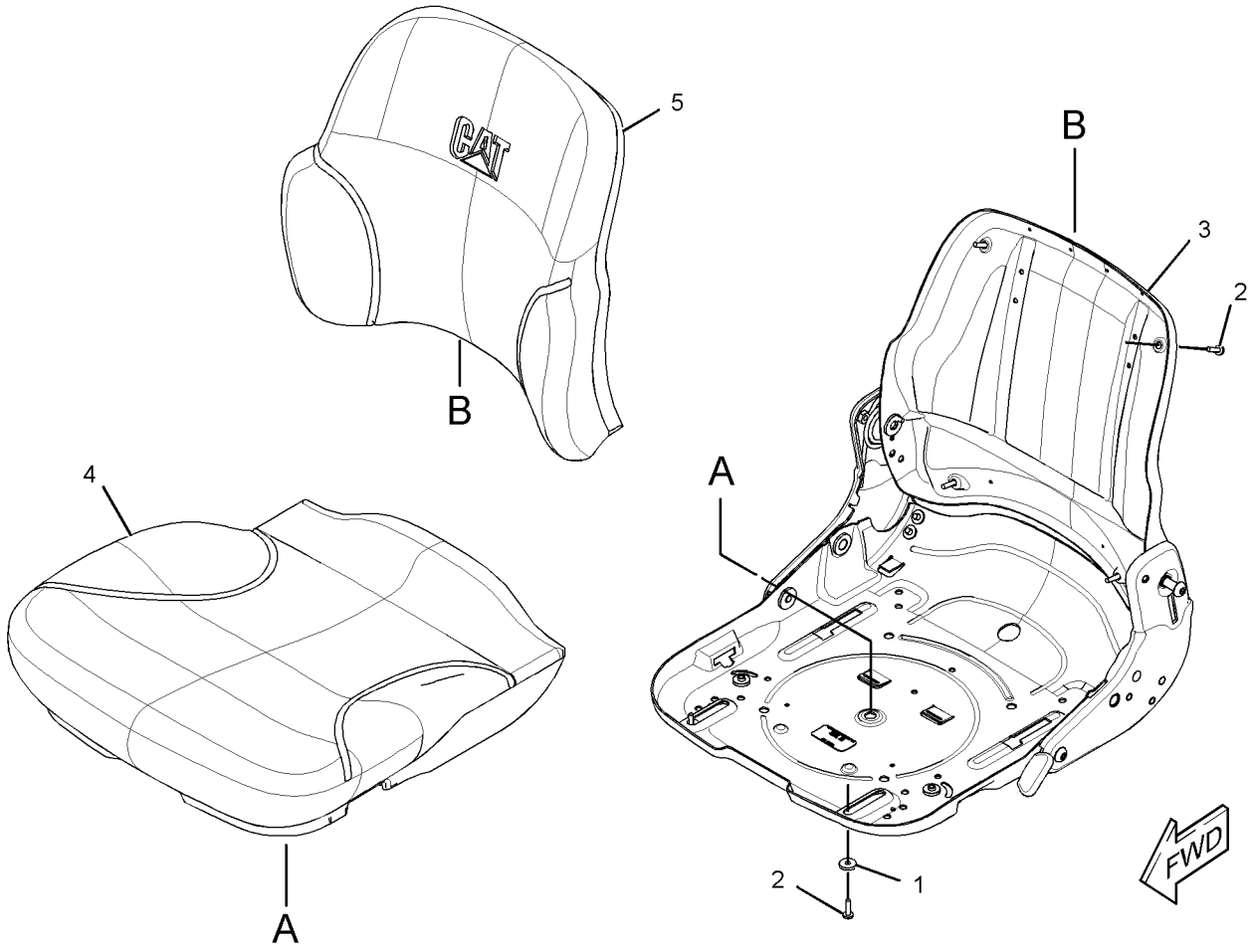

GRAPHIC #1 **<END>** g01626844

OPERATOR STATION

322-9517 SEAT GP

S/N: DPH1-UP
PART OF 314-4289 SEAT GP-SUSPENSION
AN ATTACHMENT

SMCS-7312, 7321, 7324, 7336 **i03179020**

NOTE	REF NO	GRAPHIC REF	PART NUMBER	QTY	PART NAME 1 2 3 4 5 6 (PRODUCT LEVEL)	SEE PAGE
	1	1	**7R-4229**	2	WASHER (6.4X17X3-MM THK)	
	2	1	**119-3859**	6	SCREW-PAN HEAD (10-16X0.75-IN)	
Y	3	1	**322-9483**	1	PAN GP-SEAT	605
	4	1	**322-9518**	1	CUSHION AS-SEAT	
	5	1	**322-9519**	1	CUSHION AS-SEAT	

Y-SEPARATE ILLUSTRATION

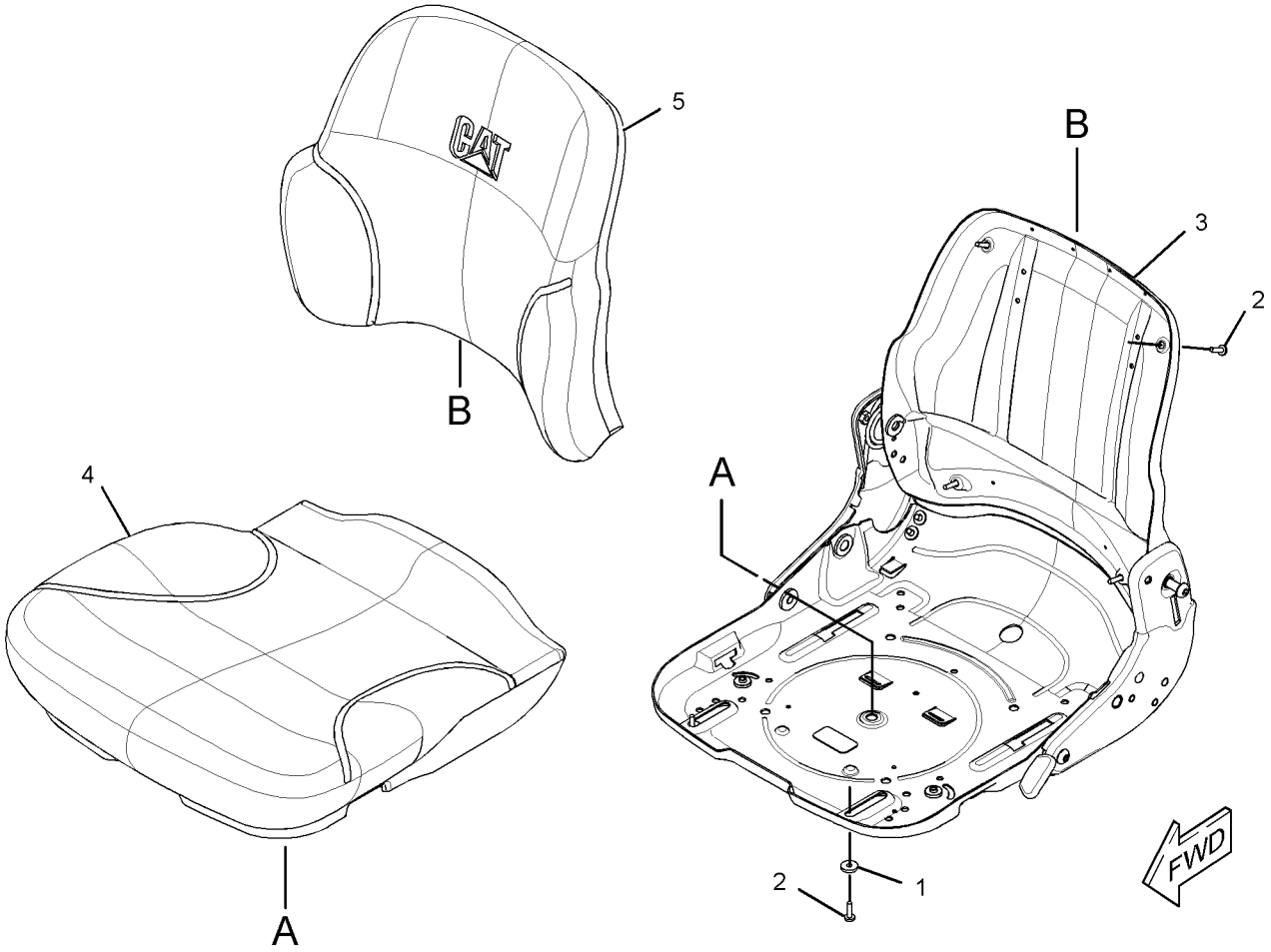

GRAPHIC #1 **<END>** g01626870

OPERATOR STATION

324-2896 SEAT GP

S/N: DPH1-UP
PART OF 314-4290 SEAT GP-SUSPENSION
AN ATTACHMENT

SMCS-7312, 7321, 7324, 7336 **i03502361**

NOTE	REF NO	GRAPHIC REF	PART NUMBER	QTY	PART NAME 1 2 3 4 5 6 (PRODUCT LEVEL)	SEE PAGE
	1	1	**1V-0358**	4	WASHER (8.6X33.3X1.2-MM THK)	
	2	1	**164-1244**	1	CUSHION AS-BACK	
	3	1	**180-5796**	1	CUSHION AS-SEAT	
	4	1	**197-4521**	1	KIT-KNOB	
	5	1	**203-9858**	1	SPACER (8.5X20X12-MM THK)	
	6	1	**220-3790**	1	ARMREST AS (RH)	
M		1	**6A-9083**	1	SCREW-MACHINE (M6X1X15-MM)	
	7	1	**220-3791**	1	ARMREST AS (LH)	
M		1	**6A-9083**	1	SCREW-MACHINE (M6X1X15-MM)	
	8	1	**119-3859**	2	SCREW-PAN HEAD (10-16X0.75-IN)	
Y	9	1	**324-2897**	1	KIT-SEAT FRAME	589
	10	1	**324-2900**	1	BRACKET	
	11	1	**324-2901**	1	BRACKET	
	12	1	**0S-1595**	2	BOLT (1/2-13X1.25-IN)	
	13	1	**1K-6872**	2	LOCKNUT (1/2-13-THD)	
	14	1	**5P-8245**	2	WASHER-HARD (13.5X25.5X3-MM THK)	
M	15	1	**6V-9189**	1	LOCKNUT (M8X1.25-THD)	
M	16	1	**8C-6431**	1	SCREW-FLAT HEAD	
M	17	1	**8T-4908**	4	BOLT (M8X1.25X25-MM)	
	18	1	**8T-9501**	2	SCREW (10-16X0.75-IN)	

M-METRIC PART
Y-SEPARATE ILLUSTRATION

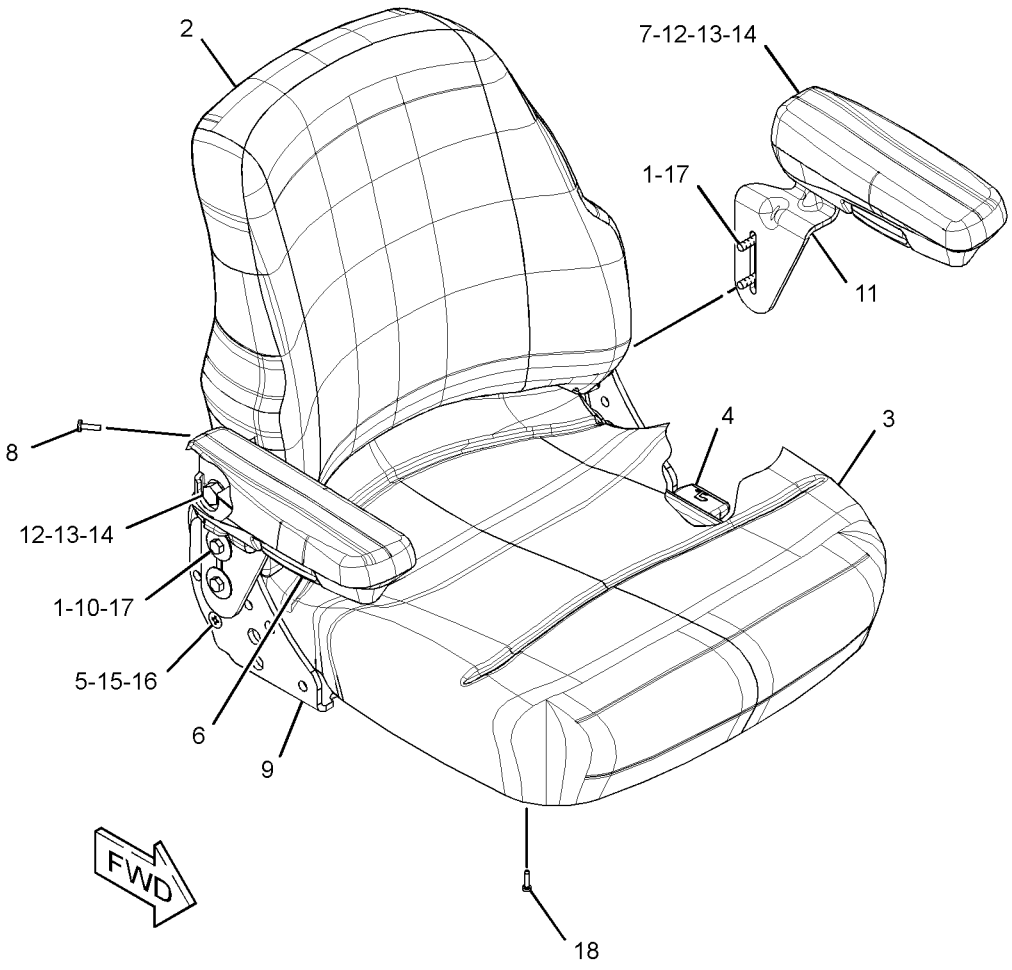

GRAPHIC #1 **<END>** g01625312

OPERATOR STATION

314-4288 SEAT GP-SUSPENSION—VINYL

S/N: DPH1-UP
PART OF 315-9888 SEAT GP-SUSPENSION
AN ATTACHMENT

SMCS-7324, 7336 **i03178988**

NOTE	REF NO	GRAPHIC REF	PART NUMBER	QTY	PART NAME 1 2 3 4 5 6 (PRODUCT LEVEL)	SEE PAGE
	1	1	**0S-1594**	4	BOLT (3/8-16X1-IN)	
	2	1	**2K-4973**	4	LOCKNUT (3/8-16-THD)	
	3	1	**308-3554**	8	SPACER (9.9X28.4X3.2-MM THK)	
	4	1	**322-9480**	1	KIT-SEAT BELT	
					(INCLUDES SPACER, BOLTS & WASHERS)	
	5	1	**322-9481**	1	BASE-SEAT	
Y	6	1	**322-9482**	1	SEAT GP	608
Y	7	1	**322-9486**	1	SWIVEL GP-SEAT	622
Y	8	1	**322-9498**	1	SUSPENSION GP-SEAT	618
	9	1	**322-9511**	1	CAP	
					PARTS SHOWN IN GRAPHIC(S) WITHOUT A REFERENCE NUMBER ARE NOT SERVICED SEPARATELY	

Y-SEPARATE ILLUSTRATION

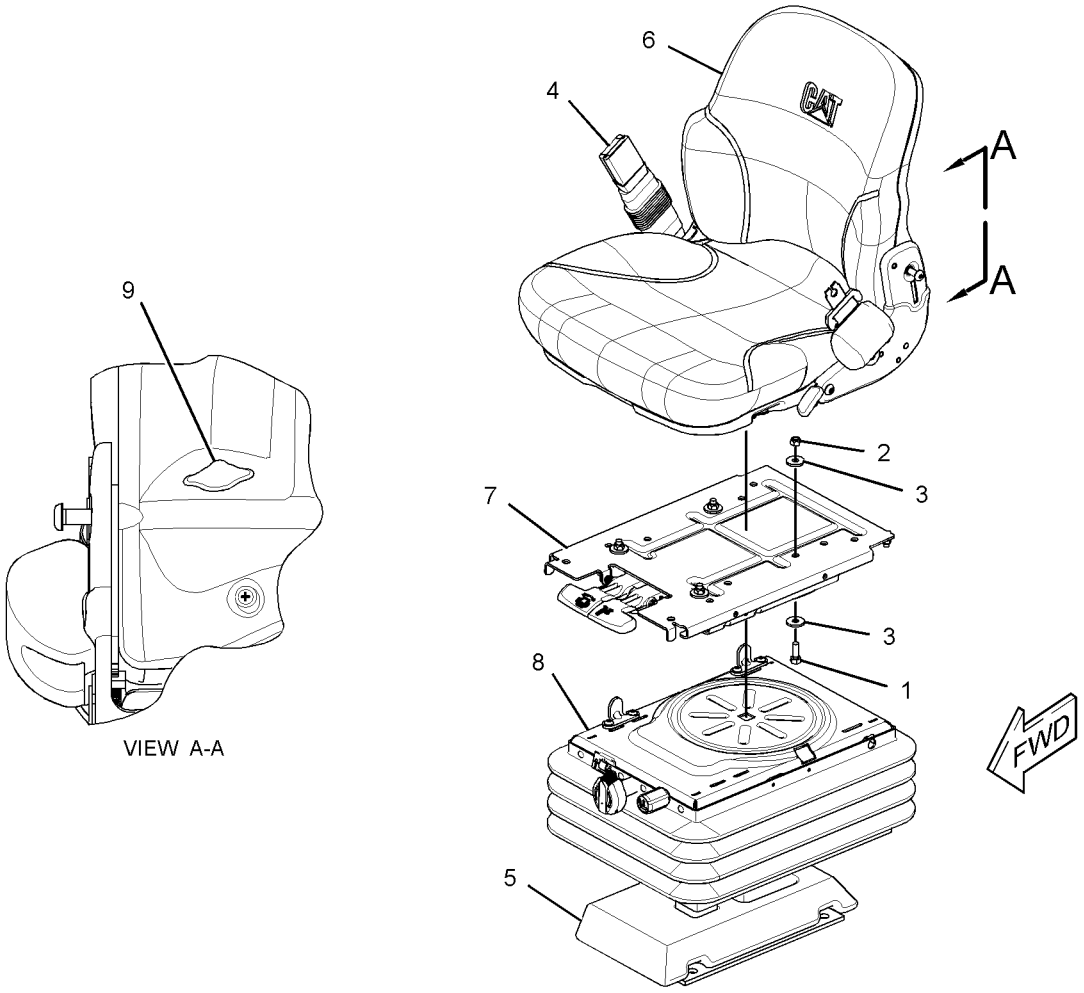

GRAPHIC #1 **<END>** g01625763

OPERATOR STATION

314-4289 SEAT GP-SUSPENSION—CLOTH

S/N: DPH1-UP

PART OF 315-9889 SEAT GP-SUSPENSION

AN ATTACHMENT

SMCS-7324, 7336 **i03178981**

NOTE	REF NO	GRAPHIC REF	PART NUMBER	QTY	PART NAME 1 2 3 4 5 6 (PRODUCT LEVEL)	SEE PAGE
	1	1	**0S-1594**	4	BOLT (3/8-16X1-IN)	
	2	1	**2K-4973**	4	LOCKNUT (3/8-16-THD)	
	3	1	**308-3554**	8	SPACER (9.9X28.4X3.2-MM THK)	
	4	1	**322-9480**	1	KIT-SEAT BELT	
					(INCLUDES SPACER, BOLTS & WASHERS)	
	5	1	**322-9481**	1	BASE-SEAT	
Y	6	1	**322-9486**	1	SWIVEL GP-SEAT	622
Y	7	1	**322-9498**	1	SUSPENSION GP-SEAT	618
	8	1	**322-9511**	1	CAP	
Y	9	1	**322-9517**	1	SEAT GP	609

Y-SEPARATE ILLUSTRATION

314-4289 SEAT GP-SUSPENSION *(contd.)* i03178981

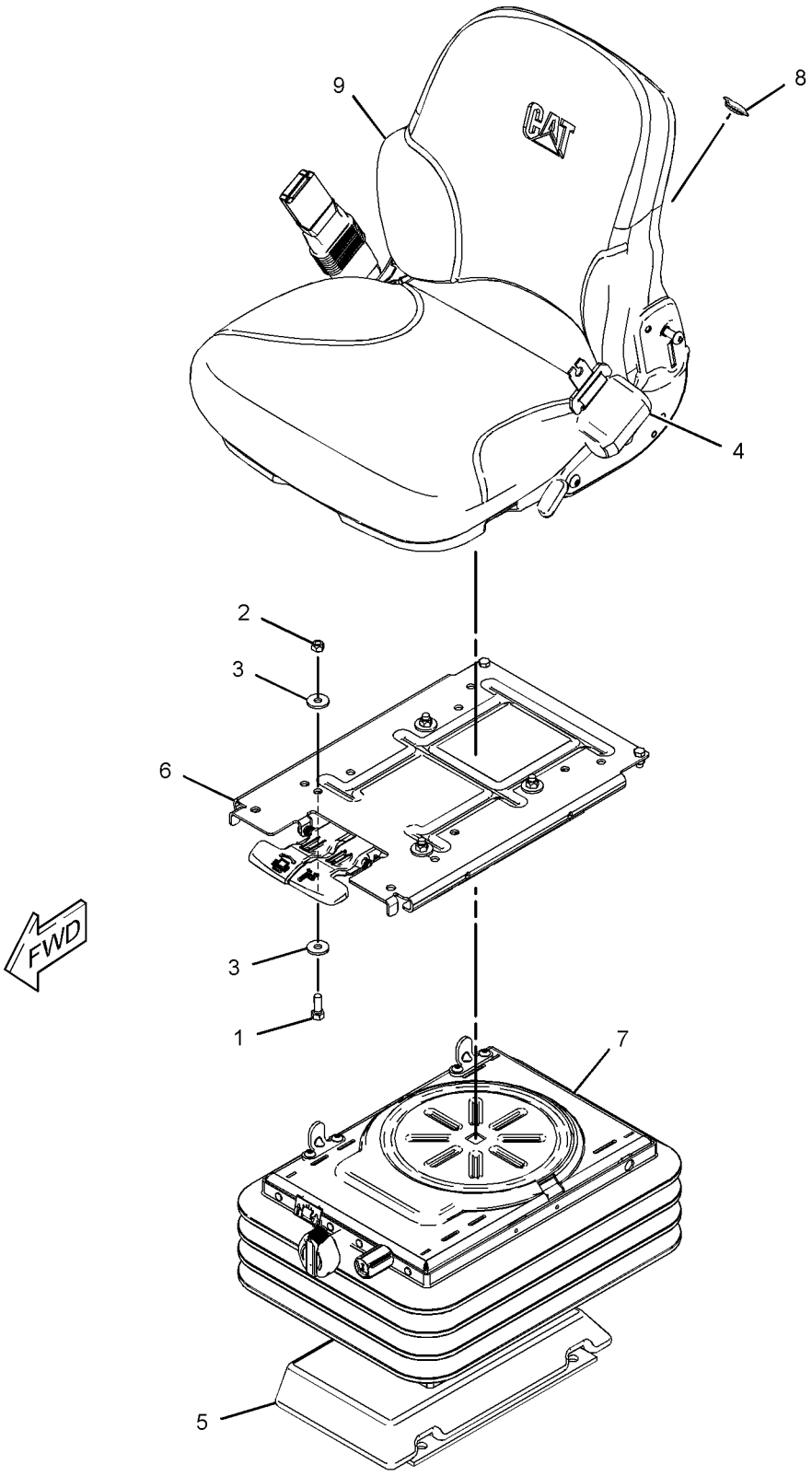

GRAPHIC #1 **<END>** g01625751

OPERATOR STATION

314-4290 SEAT GP-SUSPENSION—CLOTH

S/N: DPH1-UP

PART OF 315-9890 SEAT GP-SUSPENSION

AN ATTACHMENT

SMCS-7324, 7336 **i03164080**

NOTE	REF NO	GRAPHIC REF	PART NUMBER	QTY	PART NAME 1 2 3 4 5 6 (PRODUCT LEVEL)	SEE PAGE
	1	1	**0S-1594**	4	BOLT (3/8-16X1-IN)	
	2	1	**2K-4973**	4	LOCKNUT (3/8-16-THD)	
	3	1	**308-3554**	8	SPACER (9.9X28.4X3.2-MM THK)	
	4	1	**322-9480**	1	KIT-SEAT BELT	
					(INCLUDES SPACER, WASHERS & BOLTS)	
	5	1	**322-9481**	1	BASE-SEAT	
Y	6	1	**322-9486**	1	SWIVEL GP-SEAT	622
Y	7	1	**324-2890**	1	SUSPENSION GP-SEAT	620
Y	8	1	**324-2896**	1	SEAT GP	610

Y-SEPARATE ILLUSTRATION

314-4290 SEAT GP-SUSPENSION *(contd.)* i03164080

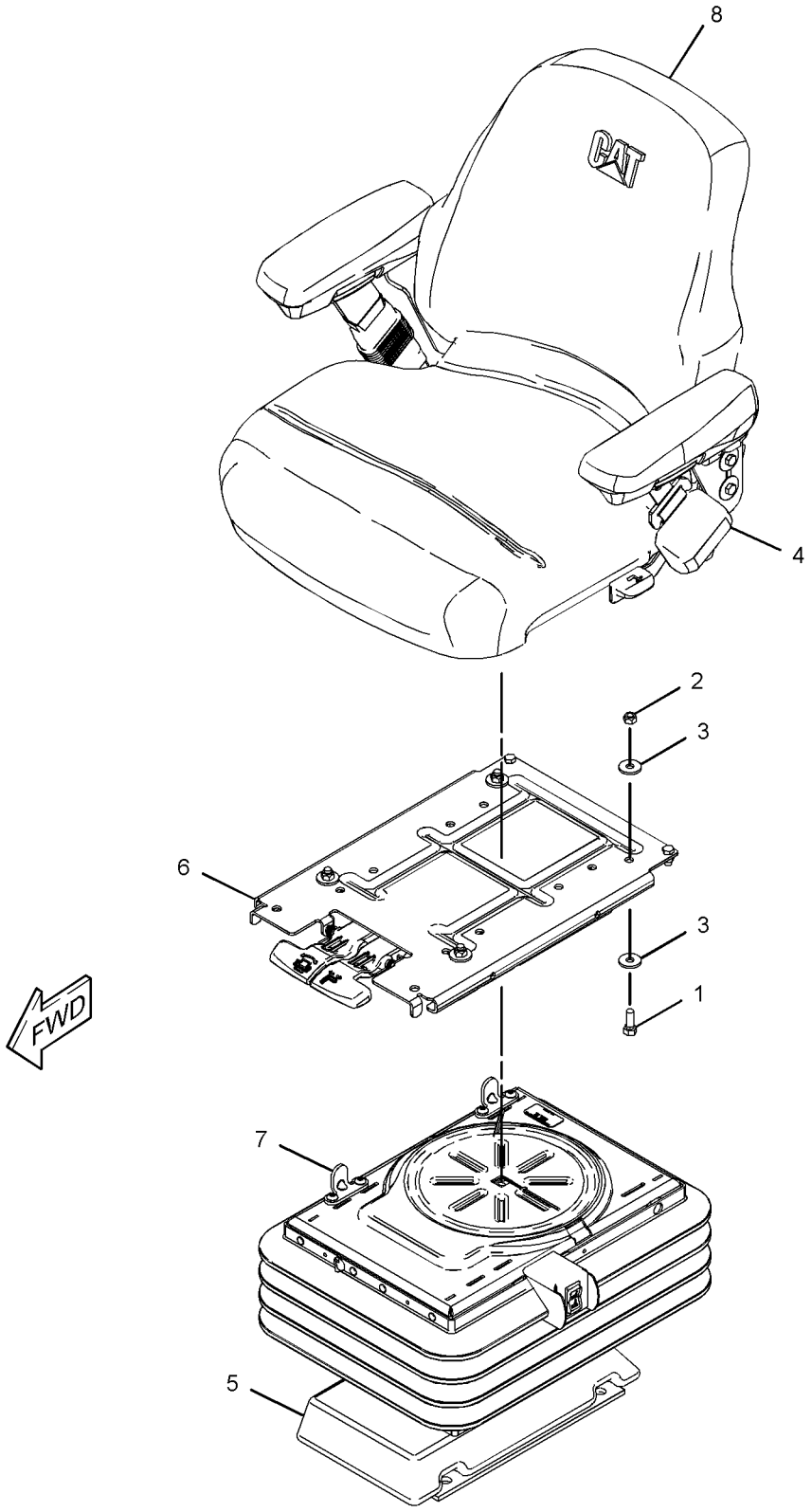

GRAPHIC #1 **<END>** g01625141

315-9888 SEAT GP-SUSPENSION—VINYL

S/N: DPH1-UP
PART OF 335-3047 CANOPY AR-OPEN ROPS
AN ATTACHMENT

SMCS-7324, 7336 **i03178986**

NOTE	PART NUMBER	QTY	PART NAME 1 2 3 4 5 6 (PRODUCT LEVEL)	SEE PAGE
Y	**314-4288**	1	SEAT GP-SUSPENSION (VINYL)	612
M	**8T-4139**	4	BOLT (M12X1.75X30-MM)	
	3S-2093	1	STRAP-CABLE	
	8T-4223	4	WASHER-HARD (13.5X25.5X3-MM THK)	

M-METRIC PART
Y-SEPARATE ILLUSTRATION

<END>

315-9889 SEAT GP-SUSPENSION—CLOTH

S/N: DPH1-UP
PART OF 335-3048 CANOPY AR-OPEN ROPS
AN ATTACHMENT

SMCS-7324, 7336 **i03178980**

NOTE	PART NUMBER	QTY	PART NAME 1 2 3 4 5 6 (PRODUCT LEVEL)	SEE PAGE
Y	**314-4289**	1	SEAT GP-SUSPENSION (CLOTH)	613
M	**8T-4139**	4	BOLT (M12X1.75X30-MM)	
	3S-2093	1	STRAP-CABLE	
	8T-4223	4	WASHER-HARD (13.5X25.5X3-MM THK)	

M-METRIC PART
Y-SEPARATE ILLUSTRATION

<END>

315-9890 SEAT GP-SUSPENSION—CLOTH

S/N: DPH1-UP
PART OF 335-3049, 335-3050 CAB AR
AN ATTACHMENT

SMCS-7324, 7336 **i03164824**

NOTE	PART NUMBER	QTY	PART NAME 1 2 3 4 5 6 (PRODUCT LEVEL)	SEE PAGE
Y	**314-4290**	1	SEAT GP-SUSPENSION (CLOTH)	615
M	**8T-4139**	4	BOLT (M12X1.75X30-MM)	
	3S-2093	1	STRAP-CABLE	
	8T-4223	4	WASHER-HARD (13.5X25.5X3-MM THK)	

M-METRIC PART
Y-SEPARATE ILLUSTRATION

<END>

OPERATOR STATION

322-9498 SUSPENSION GP-SEAT

S/N: DPH1-UP

PART OF 314-4288, 314-4289 SEAT GP-SUSPENSION

AN ATTACHMENT

SMCS-7312, 7324 **i03500301**

NOTE	REF NO	GRAPHIC REF	PART NUMBER	QTY	PART NAME 1 2 3 4 5 6 (PRODUCT LEVEL)	SEE PAGE
	1	1	**164-1230**	4	BEARING	
	2	1	**304-1021**	4	ROLLER	
	3	1	**304-1023**	2	BUMPER	
	4	1	**2K-4973**	4	LOCKNUT (3/8-16-THD)	
	5	1	**2L-5893**	1	PIN-SPRING	
M	6	1	**2Y-9282**	2	NUT	
	7	1	**305-4353**	2	SPACER (6.4X24X6-MM THK)	
M	8	1	**6V-7743**	4	LOCKNUT (M6X1-THD)	
	9	1	**7X-0288**	2	BOLT (3/8-16X1.625-IN)	
M	10	1	**9X-2044**	4	SCREW-TRUSS HEAD (M6X1X16-MM)	
	11	1	**308-3554**	1	SPACER (9.9X28.4X3.2-MM THK)	
	12	1	**322-9497**	1	BASE-SEAT	
	13	1	**322-9499**	1	ARM AS-SCISSORS	
	14	1	**322-9500**	1	HOUSING AS	
	15	1	**322-9501**	1	BRACKET AS	
	16	1	**322-9502**	2	BUSHING-SPRING	
	17	1	**322-9503**	1	KNOB	
	18	1	**322-9504**	1	BRACKET	
	19	1	**322-9505**	1	NUT	
	20	1	**322-9506**	1	SHAFT	
	21	1	**322-9507**	2	SHAFT	
	22	1	**322-9508**	2	SPRING	
	23	1	**322-9509**	2	BRACKET-STOP	
	24	1	**322-9510**	1	LINK	
	25	1	**322-9515**	1	SPRING	
	26	1	**322-9516**	1	SPRING	
	27	1	**327-8281**	3	RETAINER	
	28	1	**328-7742**	1	SHOCK ABSORBER	

M-METRIC PART

322-9498 SUSPENSION GP-SEAT *(contd.)* i03500301

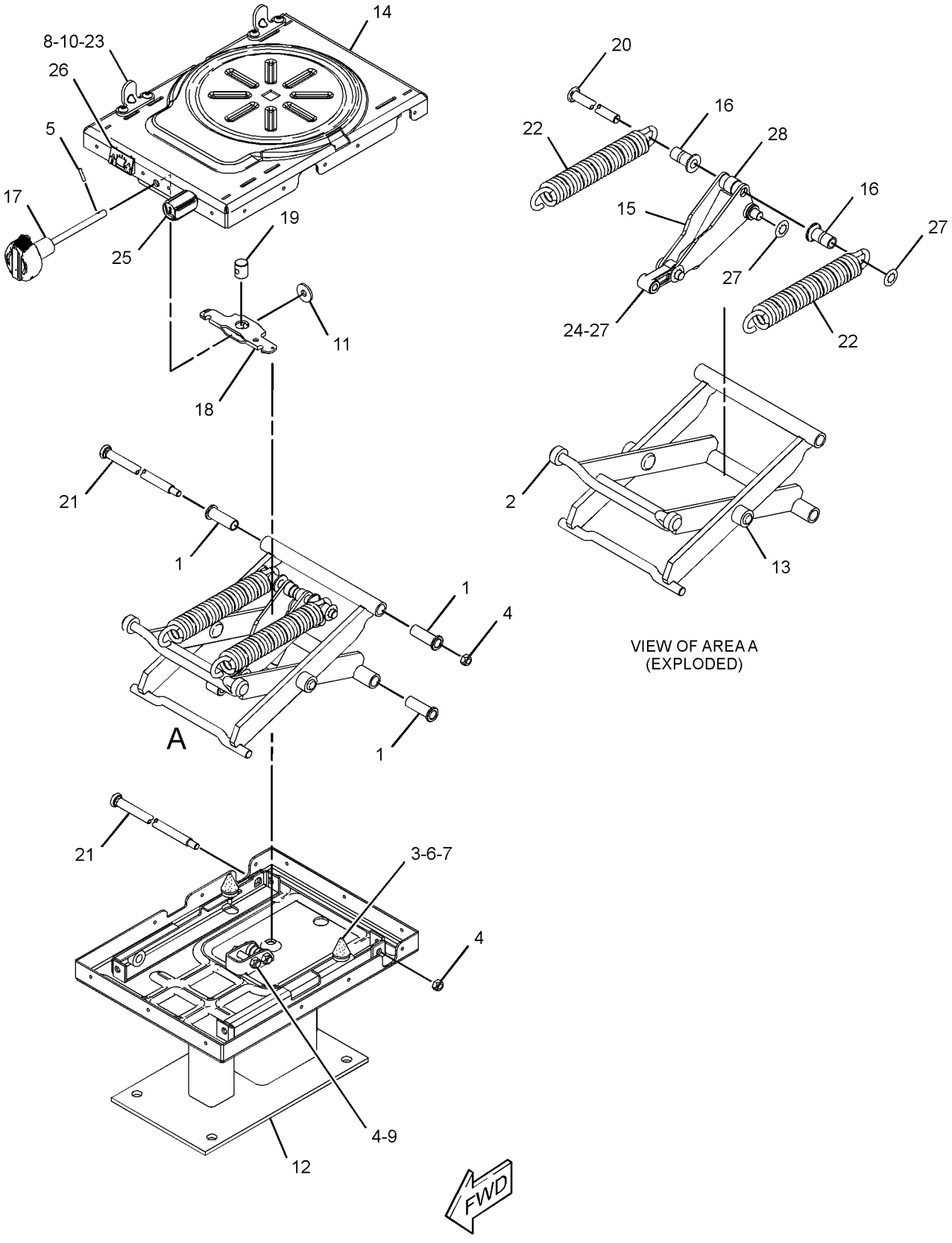

GRAPHIC #1 **<END>** g01627650

OPERATOR STATION

324-2890 SUSPENSION GP-SEAT

S/N: DPH1-UP
PART OF 314-4290 SEAT GP-SUSPENSION
AN ATTACHMENT

SMCS-7312, 7324 **i03500320**

NOTE	REF NO	GRAPHIC REF	PART NUMBER	QTY	PART NAME 1 2 3 4 5 6 (PRODUCT LEVEL)	SEE PAGE
	1	1	**164-1230**	4	BEARING	
	2	1	**204-1682**	4	STRAP-CABLE	
	3	1	**304-1021**	4	ROLLER	
	4	1	**304-1023**	2	BUMPER	
	7	1	**305-4353**	2	SPACER (6.4X24X6-MM THK)	
	8	1	**313-3280**	2	NUT	
	9	1	**321-5776**	1	RING-RETAINING	
	10	1	**322-9507**	2	SHAFT	
	11	1	**322-9509**	2	BRACKET-STOP	
	12	1	**322-9520**	1	BASE-SEAT	
	13	1	**324-2889**	1	HOUSING-UPPER	
	14	1	**324-2891**	1	ARM AS-SCISSORS	
	15	1	**324-2892**	2	PLATE	
	16	1	**324-2893**	2	STOP	
Y	17	1	**324-2894**	1	KIT-SEAT SUSPENSION (AIR)	590
	18	1	**324-2895**	1	SWITCH-TOGGLE (SUSPENSION SEAT)	
	19	1	**328-7742**	1	SHOCK ABSORBER	
	20	1	**031-4155**	2	LOCKNUT (5/16-18-THD)	
M	21	1	**129-3178**	1	LOCKNUT (M6X1-THD)	
	22	1	**1B-2705**	2	BOLT-CARRIAGE (5/16-18X0.75-IN)	
	23	1	**2K-4973**	2	LOCKNUT (3/8-16-THD)	
	24	1	**4K-9890**	2	WASHER (8.6X17.3X1.6-MM THK)	
M	25	1	**6V-7743**	4	LOCKNUT (M6X1-THD)	
M	26	1	**9X-2044**	4	SCREW-TRUSS HEAD (M6X1X16-MM)	
					PARTS SHOWN IN GRAPHIC(S) WITHOUT A REFERENCE NUMBER ARE NOT SERVICED SEPARATELY	

M-METRIC PART
Y-SEPARATE ILLUSTRATION

324-2890 SUSPENSION GP-SEAT *(contd.)* i03500320

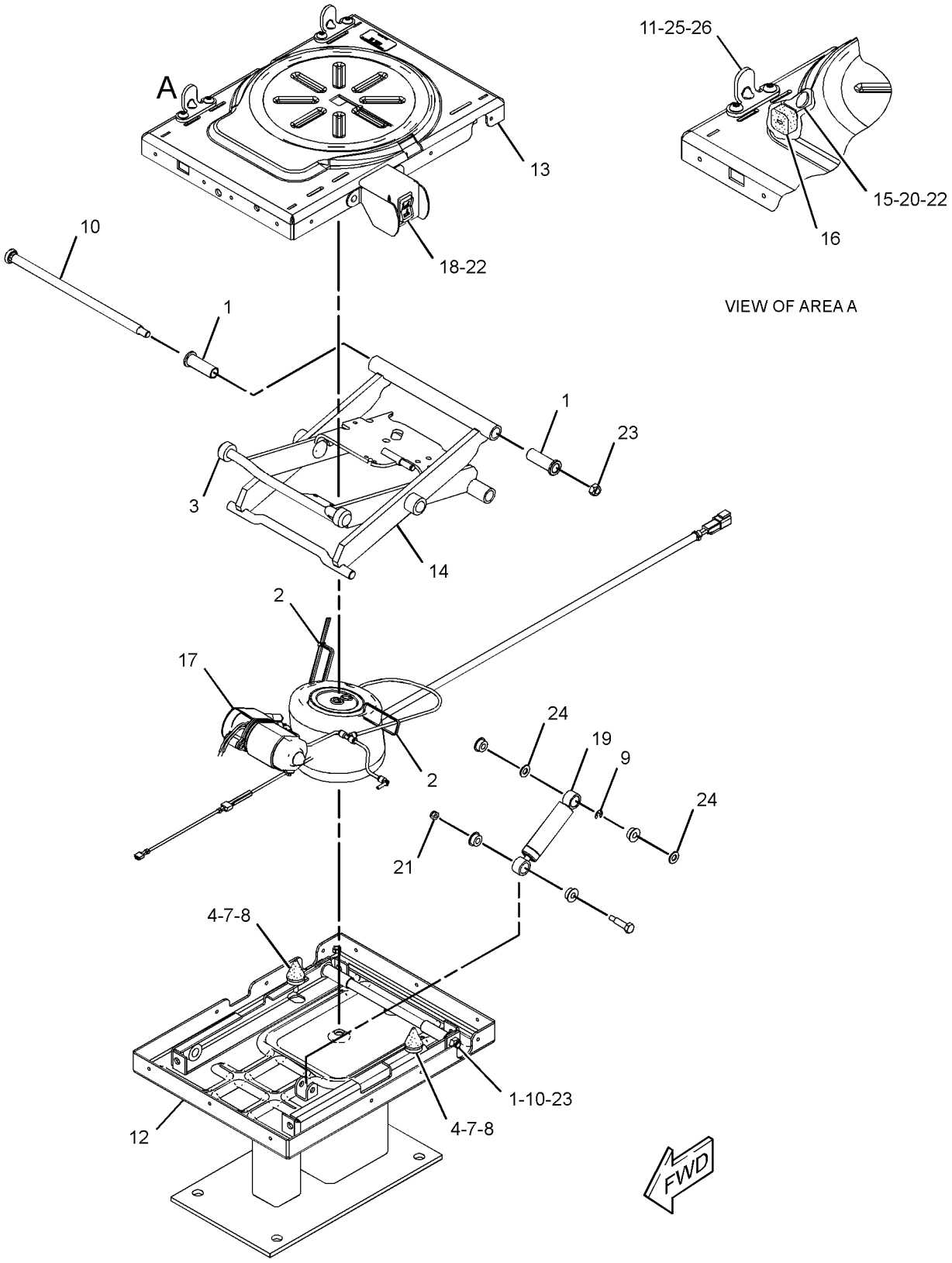

GRAPHIC #1 **<END>** g01623750

OPERATOR STATION

322-9486 SWIVEL GP-SEAT

S/N: DPH1-UP

PART OF 314-4288, 314-4289, 314-4290 SEAT GP-SUSPENSION

AN ATTACHMENT

SMCS-7312, 7321 **i03579014**

NOTE	REF NO	GRAPHIC REF	PART NUMBER	QTY	PART NAME 1 2 3 4 5 6 (PRODUCT LEVEL)	SEE PAGE
	1	1	**161-9283**	1	WASHER (19.8X31.8X1.6-MM THK)	
	2	1	**161-9285**	1	NUT (3/4-10-THD)	
	3	1	**161-9288**	1	SHAFT-PIVOT	
	5	1	**215-1242**	1	RING	
	6	1	**260-0030**	1	SHAFT-PIVOT	
	7	1	**260-0033**	1	SPRING-TORSION	
	8	1	**260-0034**	1	SPRING-RETURN	
	9	1	**260-0035**	1	SPRING-RETURN	
	10	1	**260-0041**	1	BOLT (3/4-1-X1.42-IN)	
	11	1	**260-0057**	1	LATCH AS-SLIDE	
	12	1	**313-5637**	2	BOLT	
	13	1	**322-9490**	1	HANDLE (SWIVEL)	
	14	1	**322-9491**	1	HANDLE (SLIDE)	
	15	1	**322-9492**	1	SPRING	
	16	1	**322-9493**	1	PLATE AS-SLIDE	
	17	1	**322-9494**	1	KIT-BLOCK	
					(INCLUDES BLOCK-SLIDERS & SETSCREWS)	
	18	1	**322-9495**	1	PLATE AS-UPPER	
	19	1	**322-9496**	1	LATCH (SWIVEL)	
	20	1	**031-4155**	2	LOCKNUT (5/16-18-THD)	
	21	1	**2L-5893**	1	PIN-SPRING	
	22	1	**3B-4631**	1	PIN-COTTER	
	23	1	**4B-9784**	8	BALL	
	24	1	**4B-4283**	1	WASHER (20.6X37.5X3.5-MM THK)	
	25	1	**8S-7803**	3	RING-RETAINING	
	26	1	**9R-5708**	2	LOCKWASHER	

322-9486 SWIVEL GP-SEAT *(contd.)* **i03579014**

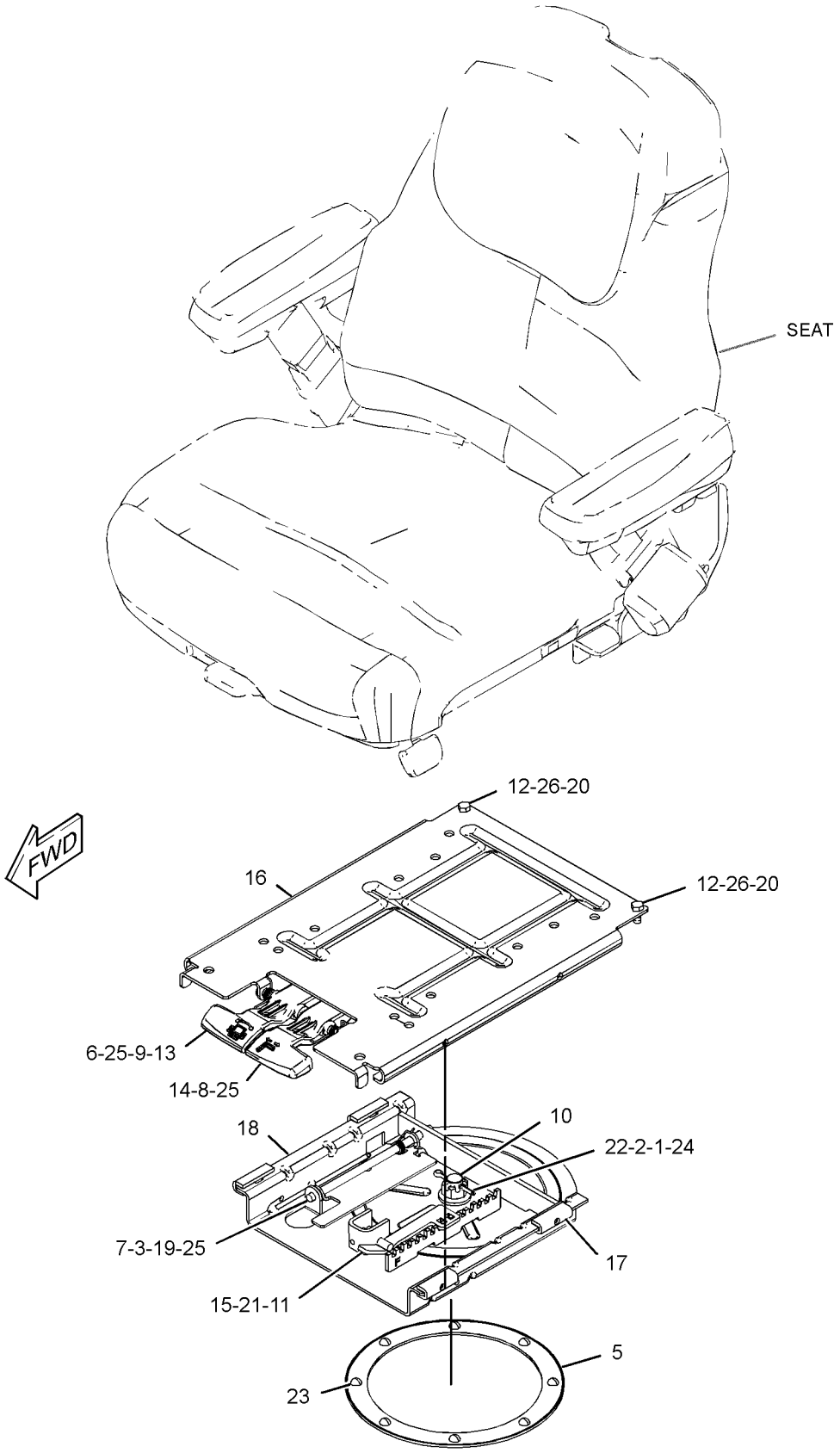

GRAPHIC #1

<END>

g01623695

OPERATOR STATION

206-1704 TRIM GP-CAB—OPEN ROPS

S/N: DPH1-UP

PART OF 335-3047, 335-3048 CANOPY AR-OPEN ROPS

AN ATTACHMENT

SMCS-7329, 7451 **i03532221**

NOTE	REF NO	GRAPHIC REF	PART NUMBER	QTY	PART NAME 1 2 3 4 5 6 (PRODUCT LEVEL)	SEE PAGE
E	1	1	**8C-7524**		SEAL (40-CM)	
	2	1	**9C-4457**	4	FASTENER	
	3	1	**141-1762**	1	SPACER (21.2X25.4X20-MM THK)	
	4	1	**206-1623**	1	INSERT (LH)	
	5	1	**206-1625**	1	INSERT (RH)	
	6	1	**206-1637**	1	CONSOLE-STORAGE	
	7	1	**206-1665**	2	PLUG	
	8	1	**206-1666**	1	PLUG	
	9	1	**206-1683**	1	INSERT	
	10	1	**206-1798**	1	COVER-POST	
	11	1	**206-1799**	4	PLUG	
	12	1	**213-1888**	1	COVER-FENDER	
	13	1	**261-9632**	1	COVER AS	
		1	**206-1684**	1	COVER (CAB FILTER)	
	14	1	**282-7833**	1	GROMMET	
	15	1	**282-7835**	1	PLATE	
M	16	1	**6V-7744**	1	LOCKNUT (M10X1.5-THD)	
	17	1	**8T-4222**	1	WASHER-PLATED (11X32X2.5-MM THK)	
M	18	1	**8T-4178**	1	BOLT (M10X1.5X90-MM)	
M	19	1	**8C-3798**	2	BOLT-LOCKING (M6X1X30-MM)	
	20	1	**9X-2038**	3	WASHER (7X19X2-MM THK)	
M	21	1	**9X-2044**	7	SCREW-TRUSS HEAD (M6X1X16-MM)	
	22	1	**9X-8256**	2	WASHER (6.6X12X2-MM THK)	

E-ORDER BY THE CENTIMETER
M-METRIC PART

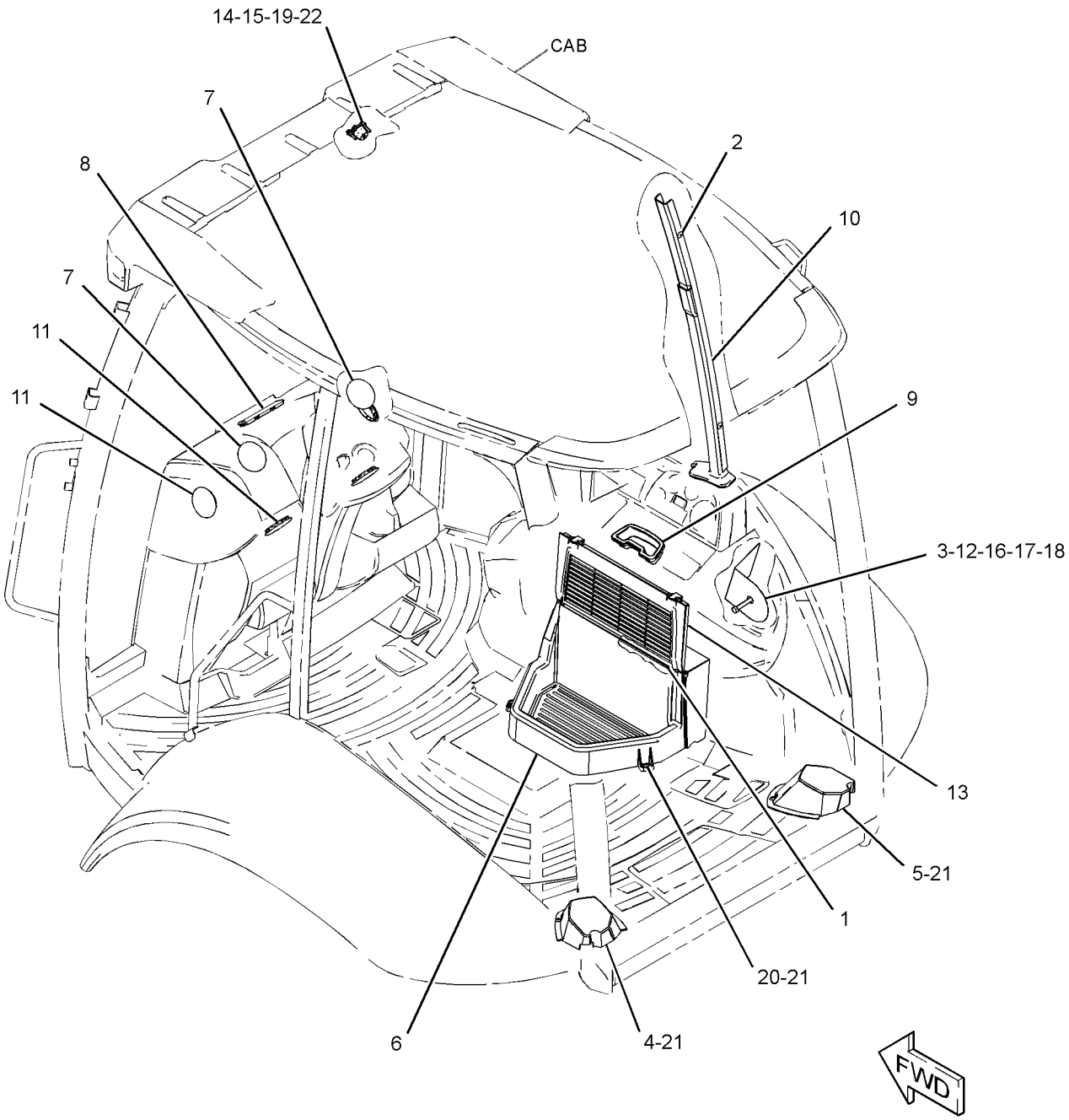

GRAPHIC #1 **<END>** g01870813

OPERATOR STATION

206-1857 VISOR GP-CAB

S/N: DPH1-UP
PART OF 335-3049, 335-3050 CAB AR
AN ATTACHMENT

SMCS-7301 **i02704721**

NOTE	REF NO	GRAPHIC REF	PART NUMBER	QTY	PART NAME 1 2 3 4 5 6 (PRODUCT LEVEL)	SEE PAGE
CE	1	1	**8C-3681**		HOSE (2.5-CM EACH)	
	2	1	**9R-3205**	1	VISOR AS	
C	3	1	**5P-9297**	2	CLIP	

C-CHANGE FROM PREVIOUS TYPE
E-ORDER BY THE CENTIMETER

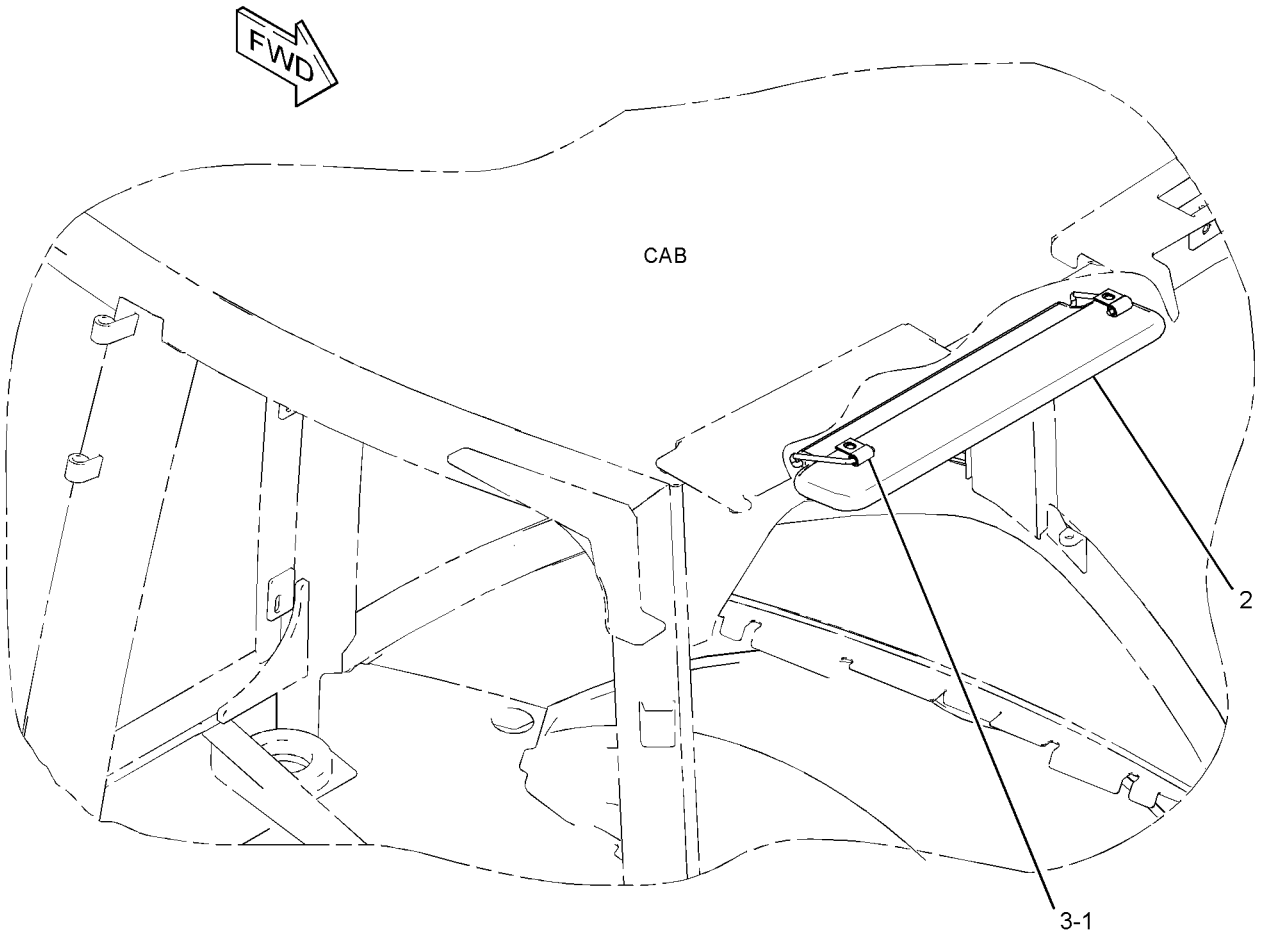

GRAPHIC #1 **<END>** g01384970

OPERATOR STATION

340-8276 WASHER GP-WINDOW

S/N: DPH1-UP
PART OF 335-3049, 335-3050 CAB AR
AN ATTACHMENT

SMCS-7306 **i03712386**

NOTE	REF NO	GRAPHIC REF	PART NUMBER	QTY	PART NAME 1 2 3 4 5 6 (PRODUCT LEVEL)	SEE PAGE
	1	1	**3S-2093**	12	STRAP-CABLE	
	2	1	**8T-1118**	1	NOZZLE AS-WASHER	
	3	1	**9R-3469**	2	DIAPHRAGM	
	4	1	**9X-8372**	1	FILM-INSTRUCTION (WASHER FILL)	
	5	1	**101-0745**	1	BLADE AS-WIPER (600-MM) (FRONT)	
	6	1	**121-6936**	1	CONNECTOR	
	7	1	**154-5410**	1	ARM-WINDOW WIPER (FRONT)	
	8	1	**214-3763**	1	TANK GP-WINDOW WASHER	
		1	**6T-1375**	2	PUMP AS-WASHER	
		1	**8E-8293**	2	GROMMET	
		1	**214-3742**	1	TANK-WASHER	
		1	**254-5683**	1	CAP	
	9	1	**214-4709**	1	SWITCH AS-ROCKER (WIPER, WASHER, REAR)	
		1	**111-7899**	1	GASKET	
	10	1	**276-8791**	1	CLIP	
	11	1	**283-3451**	2	CONNECTOR AS	
Y	12	1	**313-3752**	1	MOTOR GP-WINDOW WIPER (12-VOLT)	602
	13	1	**315-1284**	1	NOZZLE	
	14	1	**156-0283**	2	WASHER-HARD (8.4X35X2.5-MM THK)	
M	15	1	**6V-7357**	1	BOLT (M6X1X25-MM)	
	16	1	**8T-4205**	1	WASHER-HARD (7.2X14.5X2-MM THK)	
M	17	1	**8T-5093**	2	BOLT-LOCKING (M8X1.25X25-MM)	
E	18	1	**144-0195**		HOSE (52-CM)	
E	18A	1	**144-0195**		HOSE (72-CM)	
E	18B	1	**144-0195**		HOSE (21-CM EACH)	

E-ORDER BY THE CENTIMETER
M-METRIC PART
Y-SEPARATE ILLUSTRATION

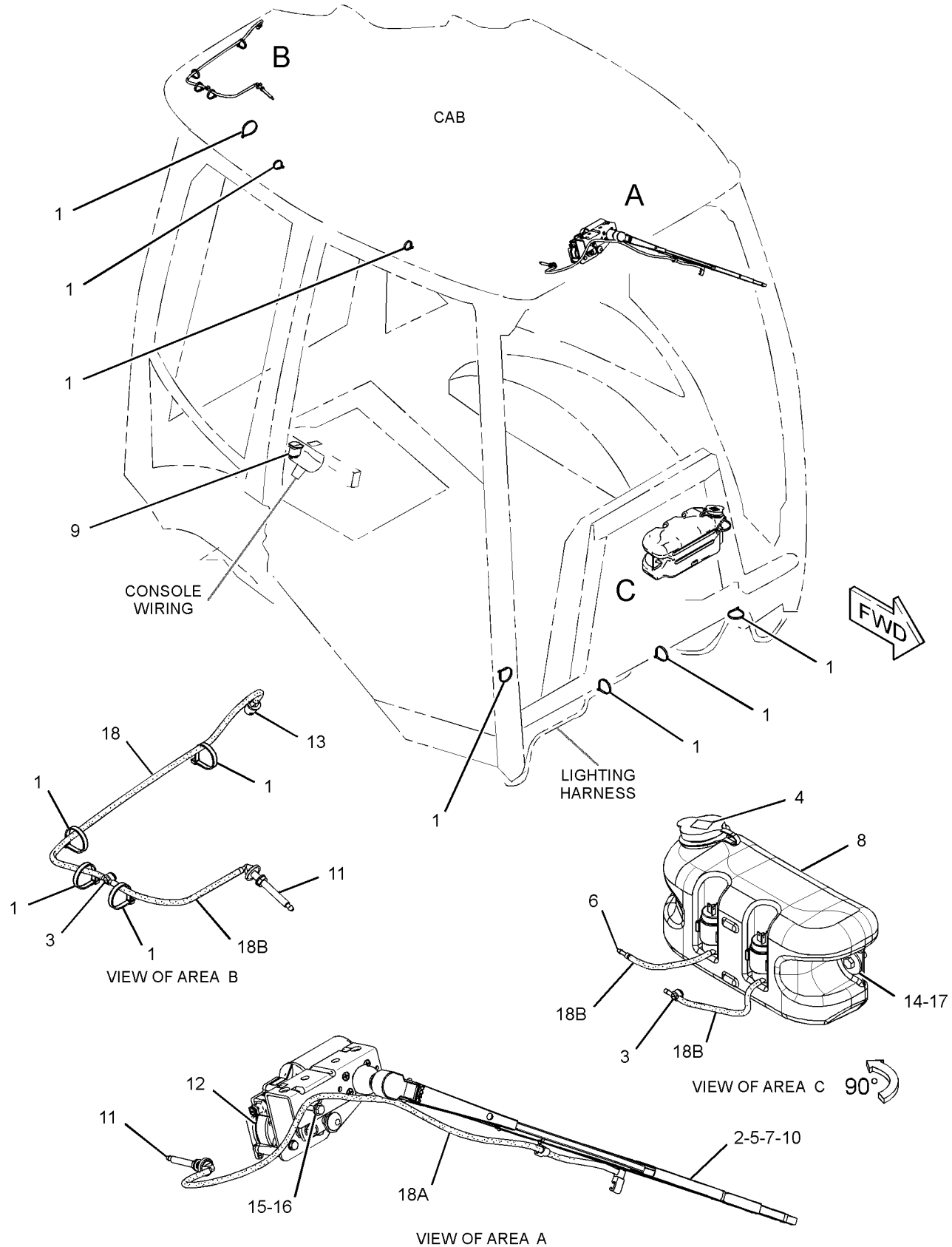

GRAPHIC #1

<END>

g01972114

OPERATOR STATION

315-1270 WINDOW GP-CAB—REAR

S/N: DPH1-UP
PART OF 342-7147 CAB GP
AN ATTACHMENT

SMCS-7310 **i03651202**

NOTE	REF NO	GRAPHIC REF	PART NUMBER	QTY	PART NAME 1 2 3 4 5 6 (PRODUCT LEVEL)	SEE PAGE
	1	1	**5C-6588**	2	WASHER (13X22X2-MM THK)	
	2	1	**7H-3937**	4	LOCKWASHER	
	3	1	**146-4023**	2	PLUG	
	4	1	**167-8182**	2	BUMPER	
	5	1	**180-3748**	8	INSERT-THREADED (M8X1.25-THD)	
Y	6	1	*311-3639*	1	WIRING GP-WIPER (REAR)	227
Y	7	1	*315-1272*	1	WIPER GP-WINDOW (REAR)	635
	8	1	**315-1277**	1	FRAME AS	
	9	1	**315-1282**	1	PLATE AS	
	10	1	**315-1299**	1	GLASS (REAR)	
	11	1	**315-1300**	2	ROLLER	
	12	1	**315-1301**	2	ROLLER	
	13	1	**315-1302**	1	HANDLE GP-DOOR (LH)	
	14	1	**315-1303**	1	HANDLE GP-DOOR (RH)	
					(EACH HANDLE GP INCLUDES)	
		1	**317-4261**	1	AXLE	
		1	**317-4262**	1	SPRING	
		1	**317-4263**	1	PIN	
	15	1	**315-1304**	2	PIVOT	
	16	1	**315-1306**	1	BRACKET	
	17	1	**315-1311**	2	SPRING-GAS	
	18	1	**315-1312**	2	CAP	
	19	1	**315-1313**	1	SEAL	
	20	1	**315-1314**	1	SEAL	
	21	1	**344-1004**	1	SEAL	
	22	1	**316-8228**	2	SCREW-BUTTON HEAD (M8X1.25X45-MM)	
	23	1	**323-6066**	1	SEAL	
	24	1	**325-1968**	2	PLATE	
	25	1	**325-9315**	2	CORNER	
	26	1	**326-6389**	1	BRACKET AS	
	27	1	**335-2224**	2	FOAM	
M	28	1	**131-3540**	2	LOCKNUT (M8X1.25-THD)	
M	29	1	**172-4018**	8	BOLT-SOCKET HEAD (M8X1.25X35-MM)	
	30	1	**3F-9556**	4	LOCKWASHER	
	31	1	**4D-6433**	2	WASHER-HARD (12X25.5X2-MM THK)	
M	32	1	**5C-7261**	8	NUT (M8X1.25-THD)	
	33	1	**5P-4116**	2	WASHER-HARD (8.8X20.5X2-MM THK)	
M	34	1	**8T-0389**	2	LOCKNUT (M10X1.5-THD)	
M	35	1	**8T-4133**	2	NUT (M10X1.5-THD)	
	36	1	**9P-2553**	2	SPACER (6.83X10.28X11-MM THK)	
M	37	1	**9X-2045**	2	SCREW-TRUSS HEAD (M6X1X20-MM)	
E	38	1	**9X-2092**		TRIM-EDGE (88-CM)	
	39	1	**6C-9089**	2	NUT-CAP	

E-ORDER BY THE CENTIMETER
M-METRIC PART
Y-SEPARATE ILLUSTRATION

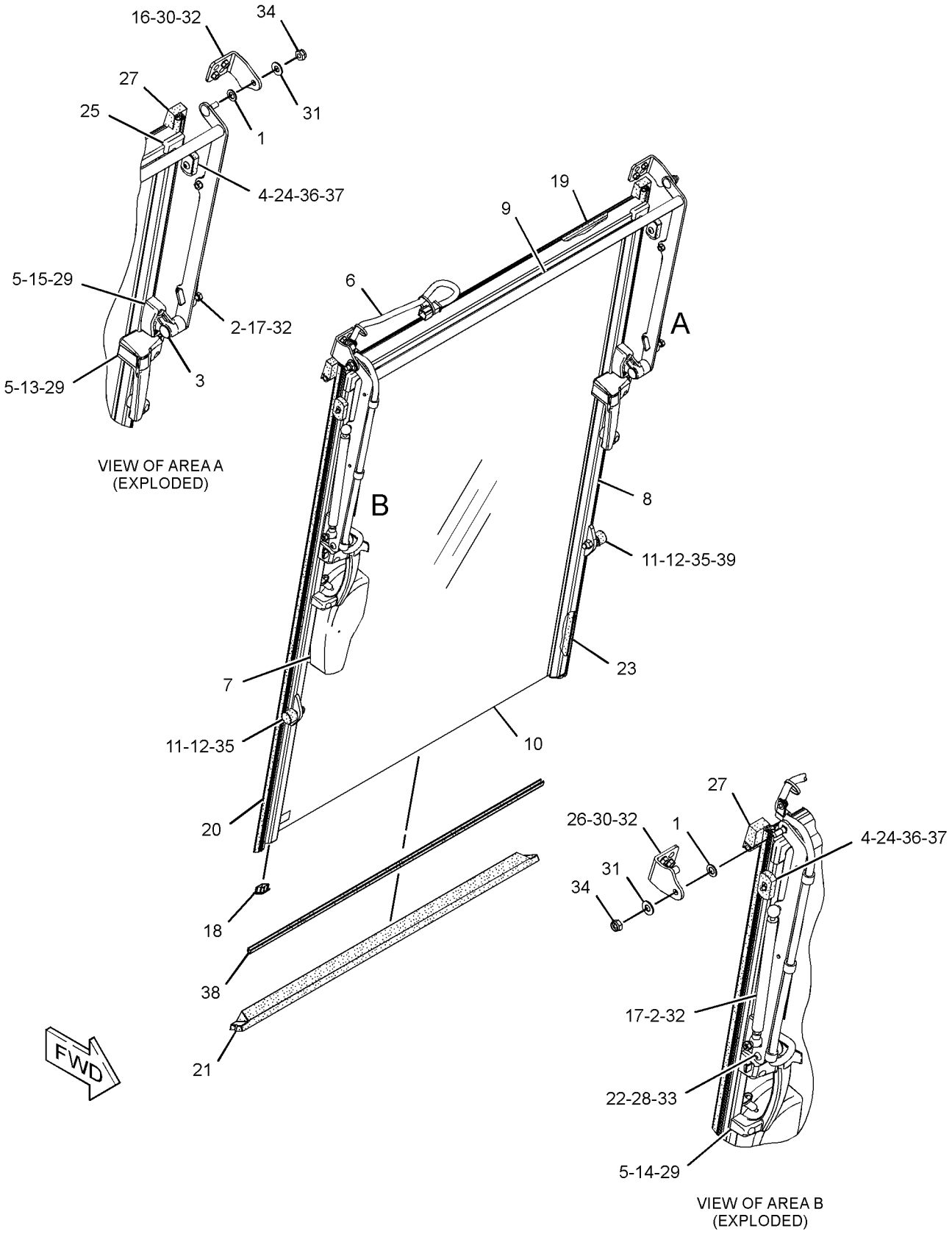

GRAPHIC #1 **<END>** g01960733

OPERATOR STATION

333-9901 WINDOW GP-DOOR–LH

S/N: DPH1-UP
PART OF 329-1168 DOOR GP-CAB
AN ATTACHMENT

SMCS-7308, 7310 **i03564760**

NOTE	REF NO	GRAPHIC REF	PART NUMBER	QTY	PART NAME 1 2 3 4 5 6 (PRODUCT LEVEL)	SEE PAGE
E	1	1	**148-5353**		SEAL (354-CM)	
	2	1	**100-7608**	1	HANDLE (LH)	
	3	1	**129-8542**	5	RETAINER	
	4	1	**129-8545**	6	WASHER (13X40X3-MM THK)	
M	5	1	**136-4192**	3	BOLT (M6X1X35-MM)	
	6	1	**154-5423**	2	SPACER (6.6X12.7X17-MM THK)	
	7	1	**205-9587**	1	GLASS (LH)	
	8	1	**205-9590**	1	HINGE (UPPER)	
	9	1	**205-9591**	1	HINGE (LOWER)	
Y	10	1	**299-6986**	1	LATCH GP-CAB DOOR & WINDOW (LH)	593
	11	1	**223-2030**	1	LATCH AS (HOLD OPEN) (LH)	
M		1	**6V-7743**	2	LOCKNUT (M6X1-THD)	
M		1	**9X-2045**	2	SCREW-TRUSS HEAD (M6X1X20-MM)	
		1	**143-2827**	1	SPRING	
M	12	1	**6V-7743**	2	LOCKNUT (M6X1-THD)	

E-ORDER BY THE CENTIMETER
M-METRIC PART
Y-SEPARATE ILLUSTRATION

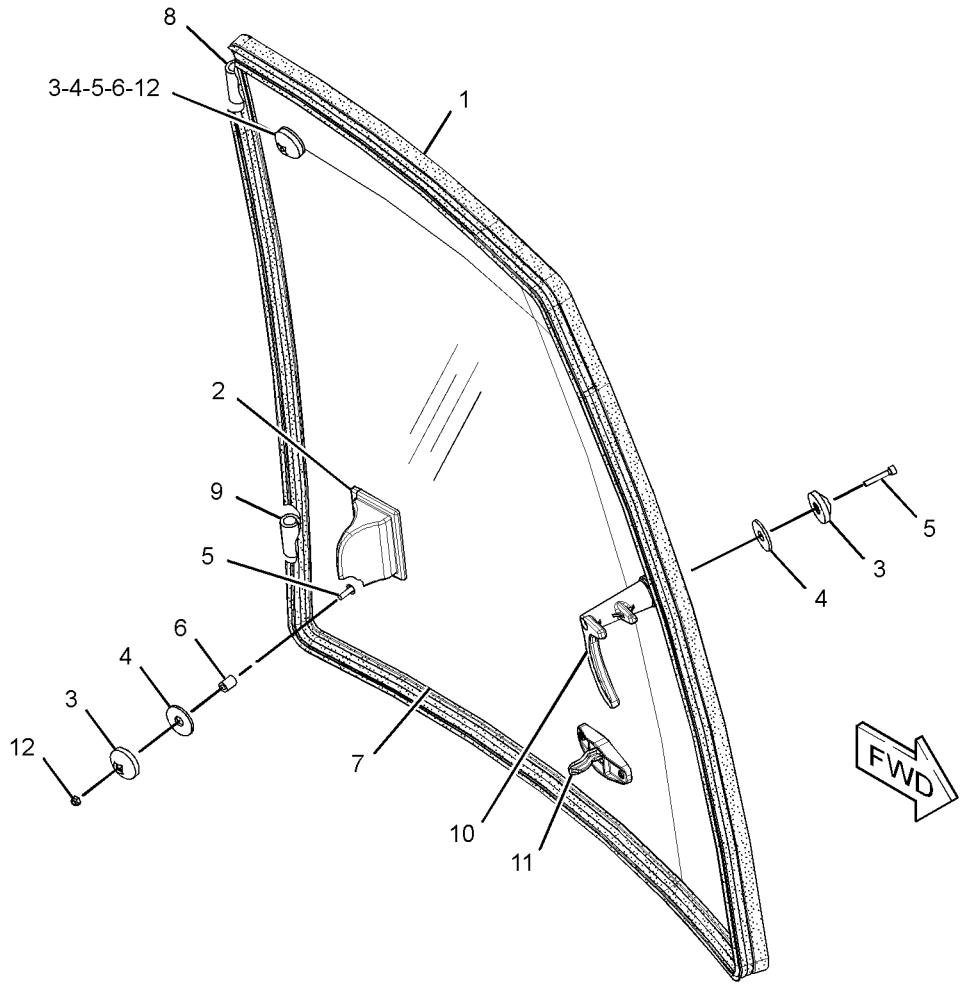

GRAPHIC #1 **<END>** g01890354

OPERATOR STATION

333-9902 WINDOW GP-DOOR–RH

S/N: DPH1-UP
PART OF 329-1167 DOOR GP-CAB
AN ATTACHMENT

SMCS-7308, 7310 **i03564761**

NOTE	REF NO	GRAPHIC REF	PART NUMBER	QTY	PART NAME 1 2 3 4 5 6 (PRODUCT LEVEL)	SEE PAGE
E	1	1	**148-5353**		SEAL (354-CM)	
	2	1	**100-7608**	1	HANDLE (RH)	
	3	1	**129-8542**	5	RETAINER	
	4	1	**129-8545**	6	WASHER (13X40X3-MM THK)	
M	5	1	**136-4192**	3	BOLT (M6X1X35-MM)	
	6	1	**154-5423**	2	SPACER (6.6X12.7X17-MM THK)	
	7	1	**205-9597**	1	GLASS (RH)	
	8	1	**205-9614**	1	HINGE (LOWER)	
	9	1	**205-9615**	1	HINGE (UPPER)	
Y	10	1	**299-6985**	1	LATCH GP-CAB DOOR & WINDOW (RH)	592
	11	1	**223-2030**	1	LATCH AS (HOLD OPEN) (RH)	
M		1	**6V-7743**	2	LOCKNUT (M6X1-THD)	
M		1	**9X-2045**	2	SCREW-TRUSS HEAD (M6X1X20-MM)	
		1	**143-2827**	1	SPRING	
M	12	1	**6V-7743**	2	LOCKNUT (M6X1-THD)	

E-ORDER BY THE CENTIMETER
M-METRIC PART
Y-SEPARATE ILLUSTRATION

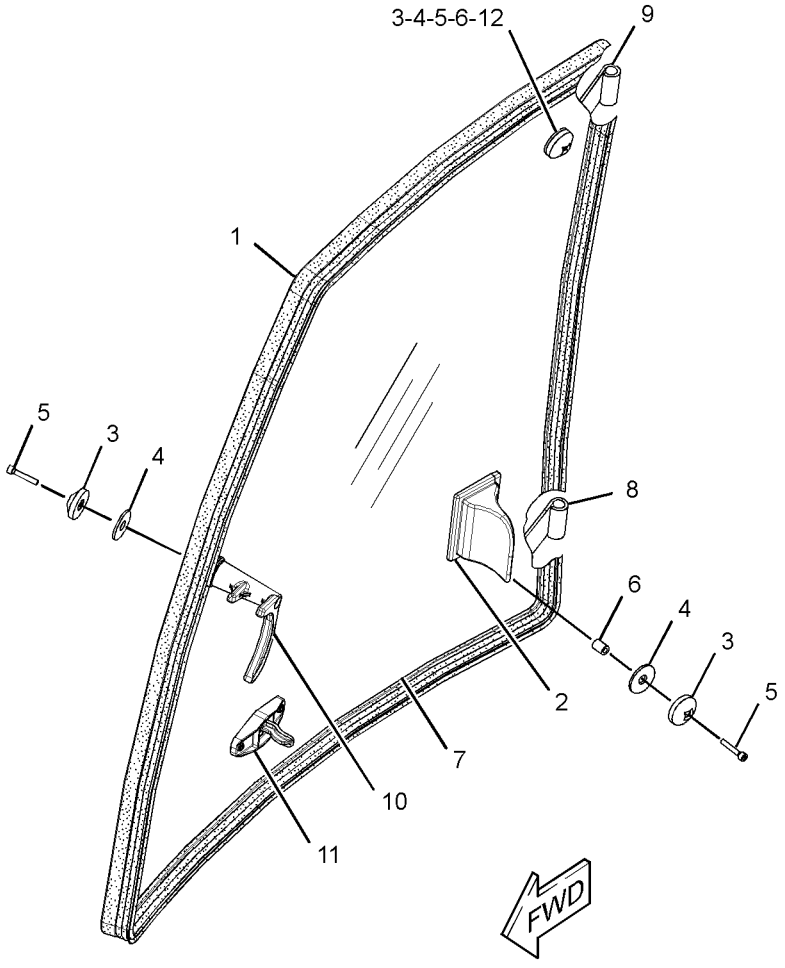

GRAPHIC #1 **<END>** g01890418

OPERATOR STATION

317-5547 WIPER & WASHER GP-WINDOW

S/N: DPH1-UP
PART OF 335-3047, 335-3048 CANOPY AR-OPEN ROPS
AN ATTACHMENT

SMCS-7305, 7306 **i03660672**

NOTE	REF NO	GRAPHIC REF	PART NUMBER	QTY	PART NAME 1 2 3 4 5 6 (PRODUCT LEVEL)	SEE PAGE
M	1	1	**8T-5093**	2	BOLT-LOCKING (M8X1.25X25-MM)	
	2	1	**3S-2093**	10	STRAP-CABLE	
	3	1	**6K-9632**	1	TEE	
	4	1	**8T-1118**	1	NOZZLE AS-WASHER	
	5	1	**9R-3469**	2	DIAPHRAGM	
	6	1	**9X-8372**	1	FILM-INSTRUCTION (WASHER FILL)	
	7	1	**101-0745**	1	BLADE AS-WIPER (600-MM) (CAB DOOR)	
	8	1	**154-5410**	1	ARM-WINDOW WIPER	
	9	1	**214-3763**	1	TANK GP-WINDOW WASHER	
		1	**6T-1375**	2	PUMP AS-WASHER	
		1	**8E-8293**	2	GROMMET	
		1	**214-3742**	1	TANK-WASHER	
		1	**254-5683**	1	CAP	
	10	1	**276-8791**	1	CLIP	
	11	1	**283-3451**	1	CONNECTOR AS	
Y	12	1	**313-3752**	1	MOTOR GP-WINDOW WIPER (12-VOLT)	602
	13	1	**156-0283**	2	WASHER-HARD (8.4X35X2.5-MM THK)	
M	14	1	**6V-7357**	1	BOLT (M6X1X25-MM)	
	15	1	**8T-4205**	1	WASHER-HARD (7.2X14.5X2-MM THK)	
E	17	1	**144-0195**		HOSE (514-CM)	
E	17A	1	**144-0195**		HOSE (72-CM)	
E	17B	1	**144-0195**		HOSE (10-CM EACH)	

E-ORDER BY THE CENTIMETER
M-METRIC PART
Y-SEPARATE ILLUSTRATION

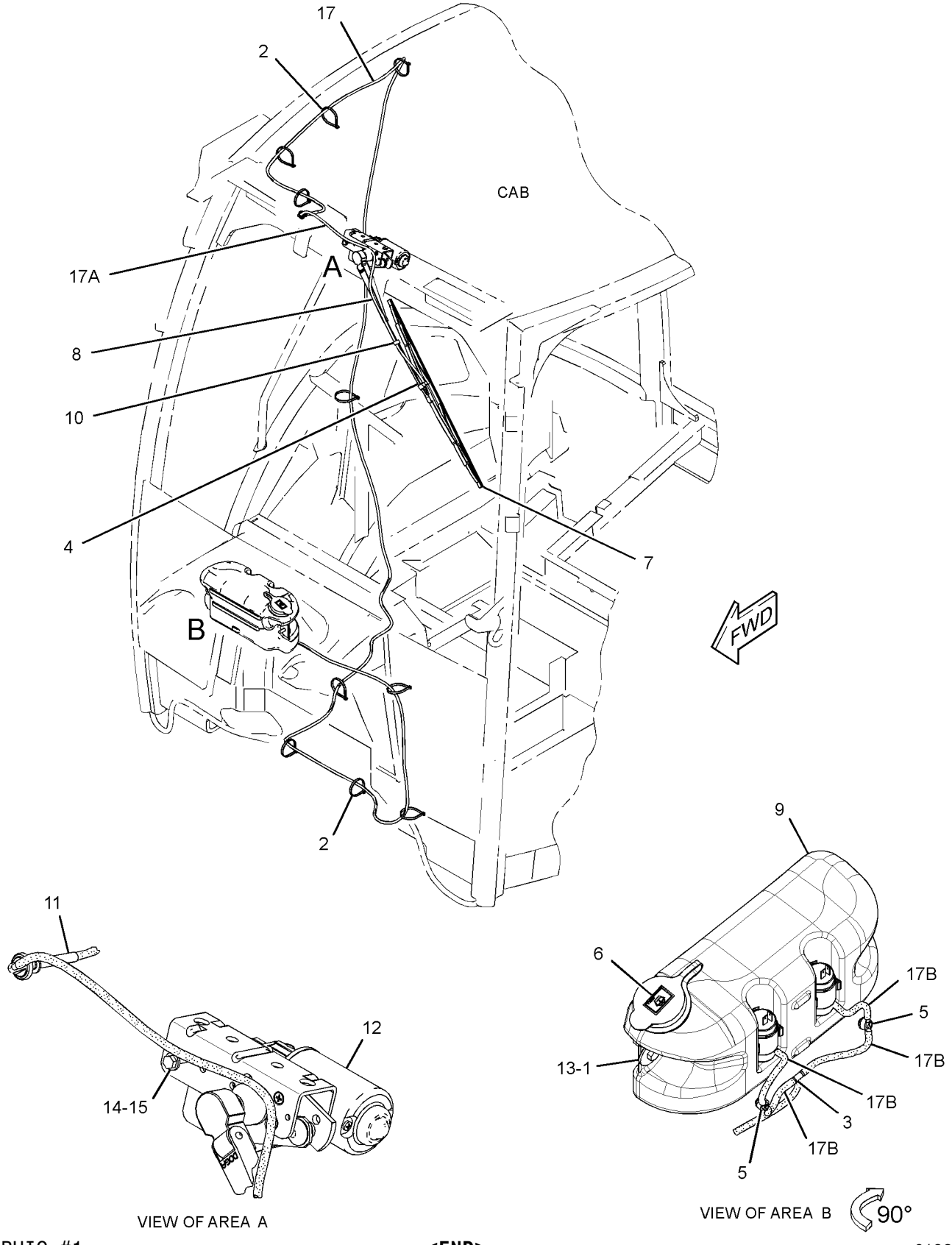

GRAPHIC #1 **<END>** g01965024

OPERATOR STATION

315-1272 WIPER GP-WINDOW–REAR

S/N: DPH1-UP
PART OF 315-1270 WINDOW GP-CAB
AN ATTACHMENT

SMCS-7305 **i03332455**

NOTE	REF NO	GRAPHIC REF	PART NUMBER	QTY	PART NAME 1 2 3 4 5 6 (PRODUCT LEVEL)	SEE PAGE
	1	1	**315-1316**	1	BLADE AS (WIPER, REAR)	
	2	1	**315-1317**	1	ARM GP-WINDOW WIPER (REAR)	
Y	3	1	**315-1318**	1	MOTOR GP-WINDOW WIPER (REAR)	603
	4	1	**315-1319**	1	COVER	

Y-SEPARATE ILLUSTRATION

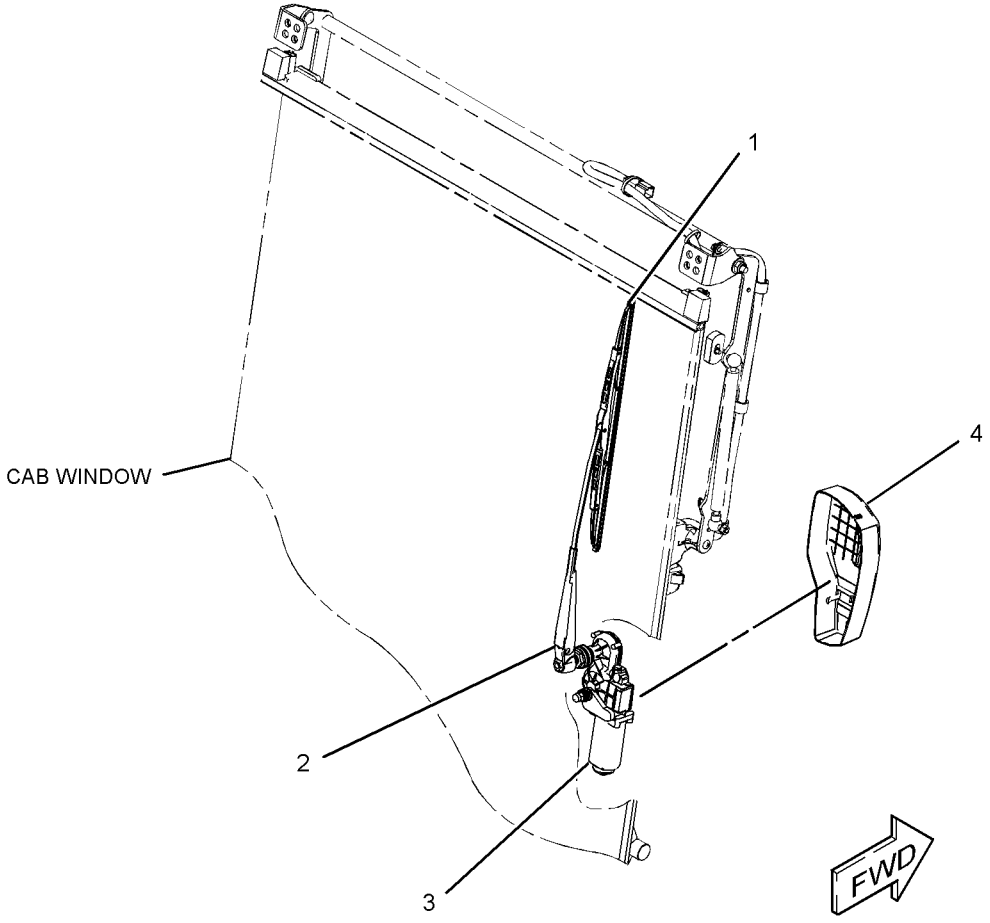

GRAPHIC #1 **<END>** g01653534

SERVICE EQUIPMENT AND SUPPLIES

343-7808 FILM GP

S/N: DPH1-UP

PART OF 329-0293 CHASSIS AR

SMCS-7405, 7557 **i03642577**

NOTE	REF NO	GRAPHIC REF	PART NUMBER	QTY	PART NAME 1 2 3 4 5 6 (PRODUCT LEVEL)	SEE PAGE
	1	1	**292-2833**	1	FILM-IDENTIFICATION (BOOM, RH)	
	2	1	**292-2834**	1	FILM-IDENTIFICATION (BOOM, LH)	
	3	1	**294-4961**	1	FILM-IDENTIFICATION (428E, LIFT ARM, LH)	
	4	1	**294-4962**	1	FILM-IDENTIFICATION (428E, LIFT ARM, RH)	

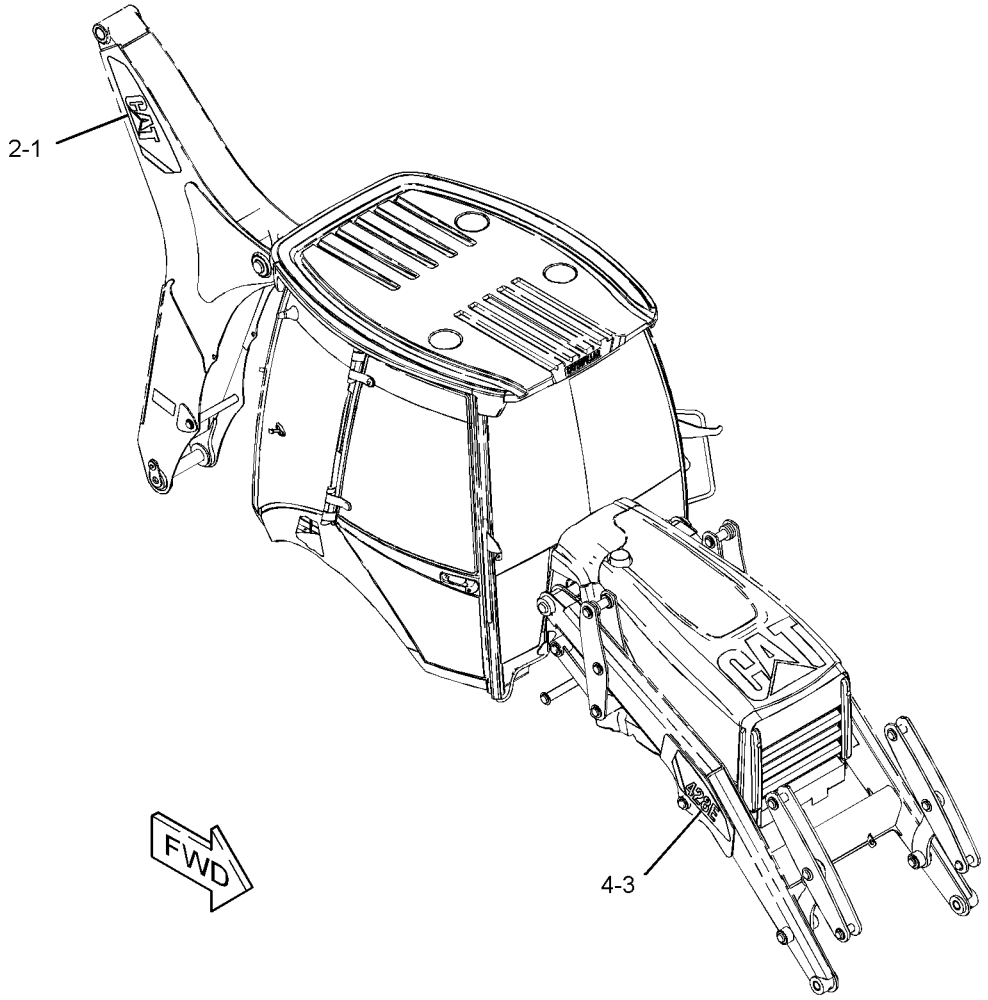

GRAPHIC #1 **<END>** g01999926

SERVICE EQUIPMENT AND SUPPLIES

216-0910 LOCK GP-VANDALISM

S/N: DPH1-UP
AN ATTACHMENT

SMCS-7315 **i03326060**

NOTE	REF NO	GRAPHIC REF	PART NUMBER	QTY	PART NAME 1 2 3 4 5 6 (PRODUCT LEVEL)	SEE PAGE
	1	1	**246-2641**	3	PADLOCK GP	
					(EACH INCLUDES)	
		1	**5P-8500**	1	KEY	

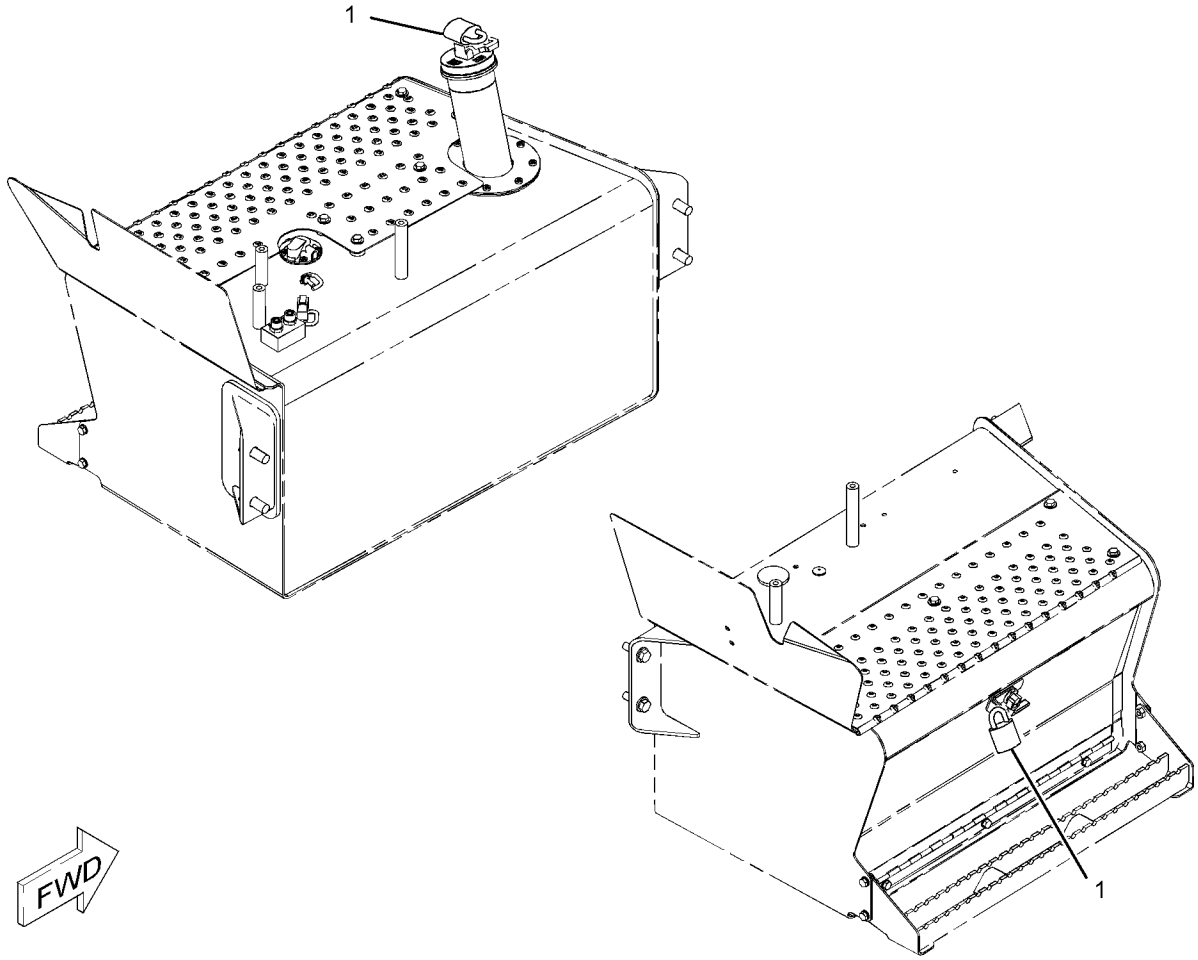

GRAPHIC #1 **<END>** g01096994

SERVICE EQUIPMENT AND SUPPLIES

342-8061 PLATE & FILM GP

S/N: DPH1-UP

PART OF 329-0293 CHASSIS AR

SMCS-7405 **i03657452**

NOTE	PART NUMBER	QTY	PART NAME 1 2 3 4 5 6 (PRODUCT LEVEL)	SEE PAGE
	239-6989	1	PLATE-SERIAL NUMBER (MACHINE)	
	225-4150	1	PLATE-SERVICE INFORMATION (MACHINE)	
	323-3308	30	CAP	
	323-3309	15	CAP	
	323-6645	10	CAP	
B	**193-5913**	2	PLUG	
B	**193-5914**	16	PLUG	
B	**193-5915**	6	PLUG	
B	**193-5916**	4	PLUG	
	258-9999	2	FILM (LIFT EYE LOCATION)	
			(ON FRONT SIDE OF THE FRONT AXLE BETWEEN THE CHASSIS & WHEEL ASSEMBLY ON THE LH & RH SIDE OF THE MACHINE)	
	255-0796	1	FILM-IDENTIFICATION (LUBRICATION POINTS)	
			(UNDER THE HOOD ON PRE-CLEANER)	
	134-7258	1	FILM-INFORMATION (EXTENDED LIFE COOLANT,READ OMM)	
			(ON SHUNT TANK NEXT TO RADIATOR CAP)	
	224-8946	1	FILM-WARNING (NO ETHER SPRAY/AIR INTK, INTL)	
			(UNDER HOOD ON PRE-CLEANER UNDER THE SERVICE FILM)	
	259-4402	1	FILM-WARNING (HOT FLUID UNDER PRESSURE)	
			(ON TOP OF THE RADIATOR SHUNT TANK CAP)	

B-USE AS REQUIRED

<END>

206-1701 PROTECTION GP-VANDALISM—ROTATING GUARD

S/N: DPH1-UP

PART OF 335-3049, 335-3050 CAB AR, 335-3047, 335-3048 CANOPY AR-OPEN ROPS AN ATTACHMENT

SMCS-7315 **i03500322**

NOTE	REF NO	GRAPHIC REF	PART NUMBER	QTY	PART NAME 1 2 3 4 5 6 (PRODUCT LEVEL)	SEE PAGE
	1	1	**206-1852**	1	COVER-VANDALISM	
	2	1	**206-1853**	2	BUSHING	
	3	1	**206-1855**	1	PLATE	
	4	1	**206-1856**	1	BRACKET	
J	5	1	**226-0291**	1	LOCK AS	
M	6	1	**129-3178**	2	LOCKNUT (M6X1-THD)	
M	7	1	**174-8131**	1	SCREW-TRUSS HEAD (M4X0.7X12-MM)	
	8	1	**232-4636**	2	BOLT-CARRIAGE (M6X1-THD)	
	9	1	**8C-9660**	1	WASHER (4.6X7.9X0.8-MM THK)	
M	10	1	**8T-2659**	1	LOCKNUT (M4X0.7-THD)	
	11	1	**9X-2038**	2	WASHER (7X19X2-MM THK)	

J-REQUIRES 5P-8500 KEY
M-METRIC PART

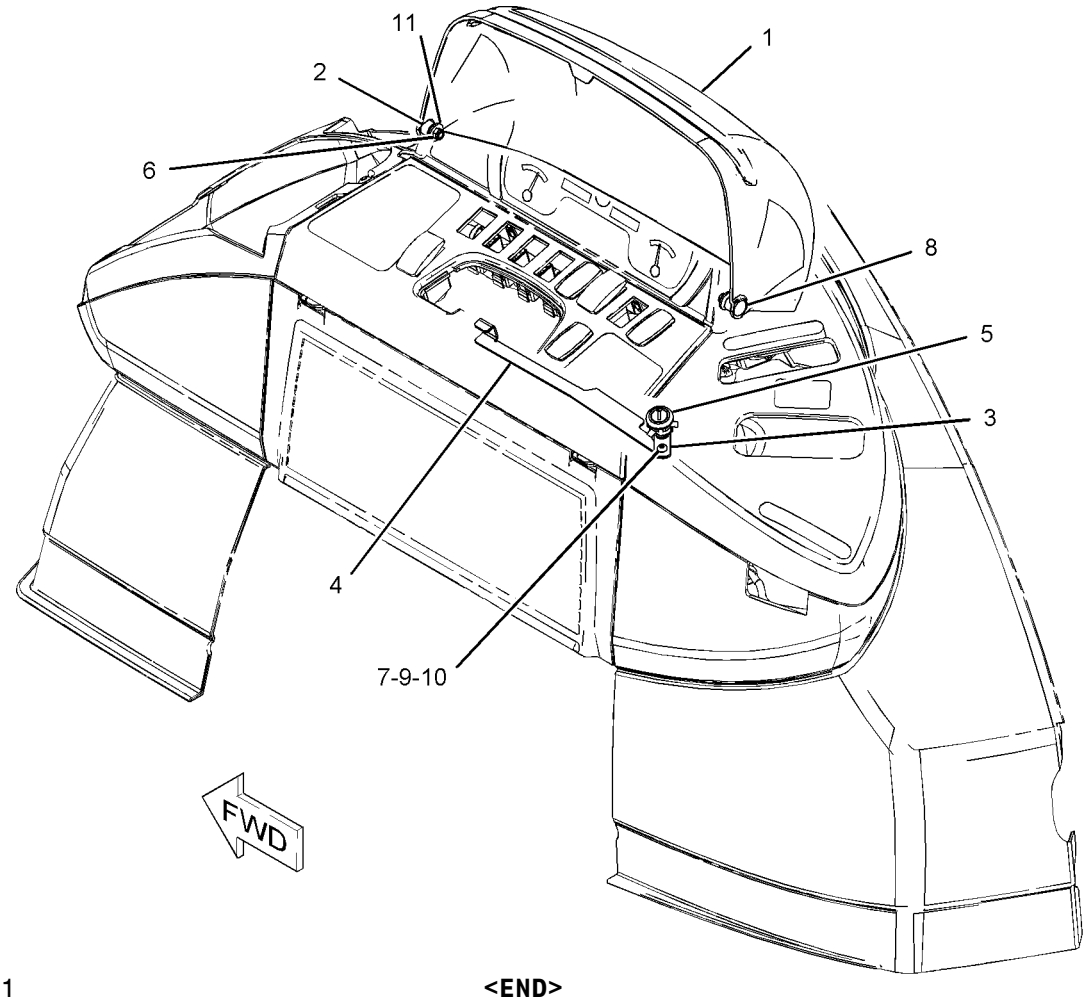

GRAPHIC #1 **<END>** g01083362

SERVICE EQUIPMENT AND SUPPLIES

243-1022 SERVICE GP-FILTER–KIT

S/N: DPH1-UP

AN ATTACHMENT

SMCS-1260, 1261, 1263, 1308, 3067, 5068 **i02474610**

NOTE	PART NUMBER	QTY	PART NAME 1 2 3 4 5 6 (PRODUCT LEVEL)	SEE PAGE
	7W-2326	1	FILTER AS-ENGINE OIL	
	119-4740	1	FILTER-OIL (STANDARD EFFICIENCY) (HYDRAULIC)	
	126-1817	1	FILTER-OIL (ULTRA HIGH EFFICIENCY)	
	228-9130	1	FILTER AS-WATER SEP & FUEL	

<END>

PART NUMBER INDEX

Part	Page
0	
0S-1594	612
	613
	615
0S-1595	610
0S-1603	43
	44
1	
1A-0621	297
1B-2705	620
1B-8736	19
	20
	25
	49
1H-3244	181
	182
	183
	184
	577
1J-9671	338
	339
1K-6872	610
1K-7082	251
1L-6377	216
	604
1M-6119	150
	152
1M-6120	150
	152
1P-0810	152
1P-4278	120
	123
	125
	160
	162
	412
1P-4584	392
1R-5396	300
	301
1S-7251	152
	204
1S-7252	150
1S-9593	172
	175
1V-0358	610
2	
2B-0858	35
	36
	64
	67
2B-0941	244
2D-2628	269
2D-2629	269
2D-2630	269
2D-2631	269
2D-2633	269
2K-4973	598
	612
	613
2K-5986	297
2K-6830	345
	346
2L-5893	618
	622
2L-8066	204
2L-8067	195
	204
2L-8069	195
	216
2L-8075	220
2L-8079	204
2M-9780	371
	382
	385
	386
	390
	396
2P-1279	386
2P-1293	359
	360
	364
	368
2P-8104	185
2R-0364	445
	557
	561
2S-3163	555
2S-3745	583
	585
2U-9234	327
2W-9710	88
	98
2Y-5821	345
	346
2Y-9282	618
3	
3B-4506	335
3B-4610	302
3B-4631	622
3B-5317	408
3B-5319	436
	438
	440
	441
	533
	534
	535
3B-6552	321
	323
3B-8488	325
	430
	433
	449
	451
	453
3B-8489	321
	323
	325
3D-2824	362
	366
	379
	385
	392
	399
	402
	405
	416
3E-0068	598
3E-3371	213
3E-4321	597
	598
3E-4337	590
3E-5153	185
3E-5154	185
3E-6600	551
	557
	561
3E-6735	345
	346
3E-8299	215
3E-9362	195
3F-5108	527
3F-9556	205
	602
	606
	629
3J-1907	144
	222
	224
	231
	250
	263
	264
	297
	305
	349
	356
	372
	382
	385
	388
	390
	396
3J-4818	205
3J-7354	297
	305
	338
	339
	390
	398
3K-0360	305
	368
	374
	378
	381
	382
	385
	390
	396
	402
	406
	412
3K-8460	120
3N-5739	345
	346
3P-0439	325
3S-2093	144
	150
	152
	157
	163
	172
	174
	175
	177
	179
	196
	198
	200
	202
	205
	207
	209
	211
	213
	216
	220
	222
	224
	227
	264
	386
	399
	542
	546
	557
	561
	587
	598
	617
	627
	633
3S-6049	150

► **PRIMARY REFERENCE**

PART NUMBER INDEX

Part	Page
3S-6050	150
3T-5760	150
	152
4	
4B-2043	194
4B-4283	622
4B-4863	101
	103
4B-9784	622
4D-2297	422
	423
	424
	425
	426
	427
	428
4D-6433	629
4D-6466	152
4D-7388	88
	98
4D-9517	445
4E-8619	▶303
	304
4F-3657	487
	488
	489
	490
	499
	500
	502
	503
	504
	505
	506
	507
	509
	511
	526
	539
4F-4879	590
4H-0408	46
4H-2558	580
4I-3038	553
4I-6287	396
	399
4J-0520	237
4J-0522	234
	244
4J-1888	512
	513
	514
	522
	523
	525
	528
	537
4J-5477	250
	297
	305
	385
	390
	398
	402
4J-9535	418
	419
4K-0367	487
	488
	489
	490
	499
	500
	502
	503
	504
	505
	506
	507
	509
	511
	526
	527
	539
4K-9890	620
4L-6454	231
4P-7428	205
	220
4P-7581	205
4P-8134	205
	216
4V-2264	590
4W-9972	264
5	
5A-3604	445
5B-9079	69
5C-2874	171
	205
	592
	593
5C-2890	175
	181
	182
	183
	184
	194
	196
	205
	215
	216
	297
	366
	551
5C-6588	629
5C-7261	86
	88
	95
	97
	98
	158
	163
	165
	166
	172
	175
	181
	182
	183
	184
	191
	196
	205
	207
	216
	297
	308
	341
	342
	374
	376
	394
	457
	461
	529
	542
	602
	603
	606
	629
5C-8312	101
	103
5C-9553	409
	445
	573
	575
	606
5D-1026	73
	88
	98
	305
	390
	597
	598
5D-6523	445
5D-8159	457
	461
	528
	529
	537
5E-8557	333
5G-2003	595
5H-3193	557
	561
5I-3978	399
5K-5338	297
	598
5K-9090	356
	359
	360
	364
	392
5P-0370	443
5P-0599	386
5P-0743	378
	390
5P-0747	150
	152
	204
5P-0761	150
	152
5P-0767	597
	598
5P-1076	327
5P-1420	120
	123
	125
	160
	163
5P-1442	123
	125
	297
	412
5P-1505	305
	390
5P-1506	394
5P-4115	224
5P-4116	73
	83
	84
	85
	86
	94
	95
	101
	103
	147
	172
	175
	244
	297
	308
	321
	323
	394
	542
	546
	566
	578
	580
	629
5P-4571	198
	200
	590
5P-4868	392
5P-5148	366
	409
5P-5637	583
	585
5P-5655	583
	585
5P-5677	557
	561
5P-5688	583
	585
5P-5927	315
	551
5P-5995	224
5P-6006	204
5P-6129	580
5P-6718	264
5P-7070	553
5P-7464	372
	374
	388

▶ **PRIMARY REFERENCE**

PART NUMBER INDEX

Part	Page
5P-7465	372
	374
	388
5P-7648	542
	546
5P-7814	120
5P-7958	162
	213
	445
5P-8066	264
5P-8245	43
	44
	610
5P-8500	637
5P-9297	626
5P-9768	540
	541
	544
	545
5T-5439	287
	288
5T-9771	321
	323
5V-2545	255
	256
6	
6A-9083	610
6C-3680	583
	585
6C-9089	629
6D-0337	►269
	270
6D-0443	269
6E-1135	445
6E-1478	345
	346
6E-5431	566
6H-3587	198
	200
	216
6H-3616	53
	54
6I-0217	47
	49
	56
	58
	90
	92
	111
	113
	115
	129
	132
	136
	140
6I-0218	80
6I-0254	90
	92
6I-0260	23
	56
	58
	74
	78
	79
	80
	129
	132
	136
	140
	148
	149
6I-0289	56
	58
6I-0291	129
	132
	136
	140
6I-0363	56
	58
6I-0364	110
	187
	188
6I-0423	45
	46
6I-0501	39
	40
6I-0563	110
	111
	113
	115
6I-0572	29
	33
	56
	58
	81
	82
	105
	111
6I-0594	187
	188
6I-0645	47
	49
	148
	149
6I-0646	21
	23
6I-0650	47
	49
	148
	149
6I-0846	21
	23
6I-0847	45
	46
6I-0917	21
	23
6I-1497	73
	75
6I-4374	80
6J-2680	392
6K-0806	195
	207
	215
	263
	588
6K-8178	123
	125
6K-9632	633
6L-4725	578
	580
6N-6984	88
	98
6P-8855	597
	598
6S-8620	297
6T-0465	152
6T-1375	627
	633
6T-5017	117
6T-5598	152
6T-9142	235
6T-9143	235
6T-9144	235
6T-9145	235
6T-9146	235
6T-9147	235
6T-9160	259
6T-9163	235
6T-9164	235
6T-9165	235
6T-9166	235
6V-0675	597
	598
6V-0852	264
	390
6V-1249	359
	372
	388
	402
6V-1363	101
	103
6V-2315	300
	301
6V-2317	165
	166
6V-2689	557
	561
6V-3213	508
	510
6V-3305	120
6V-3965	264
	390
6V-4292	305
6V-4364	508
	510
6V-4589	263
6V-5201	430
	433
6V-5204	430
	448
	451
	453
6V-5215	234
6V-5653	390
6V-5764	216
6V-6228	229
	231
	237
6V-6717	578
	580
6V-7238	378
6V-7357	297
	583
	585
	627
	633
6V-7359	374
6V-7420	382
	385
6V-7646	532
6V-7687	327
	430
6V-7731	263
6V-7743	308
	542
	605
	618
	620
	631
	632
6V-7744	313
	314
	430
	557
	559
	561
	563
	565
	624
6V-7970	420
	421
6V-8076	224
6V-8097	263
6V-8144	528
	536
	537
6V-8186	606
6V-8335	263
	565
6V-8378	264
6V-8397	305
	350
	372
	382
	388
	396
	399
6V-8398	347
	348
	351
	353
	354
	360
	362
	364
	366
	368
	372
	374
	379
	381
	382
	385
	388
	396
	399
	402

► **PRIMARY REFERENCE**

PART NUMBER INDEX

Part	Page
6V-8455	243
6V-8500	259
6V-8523	209
6V-8625	374
	381
	402
6V-8626	371
6V-8627	250
	385
6V-8628	305
6V-8633	366
	402
6V-8634	305
	396
6V-8635	356
	392
6V-8636	399
6V-8638	382
	385
	396
6V-8639	368
	396
	402
6V-8641	250
	305
	385
	390
	398
	402
6V-8642	385
6V-8647	398
6V-8713	362
	366
	379
6V-8714	392
6V-8716	86
6V-8721	382
	396
6V-8724	372
	382
	388
6V-8757	257
	260
6V-8759	296
6V-8780	398
6V-8801	152
6V-8932	563
6V-8978	418
	419
6V-8989	376
6V-8993	385
6V-8996	376
6V-9000	297
6V-9023	198
	200
	204
	216
6V-9169	386
6V-9170	360
	362
	364
	368
	374
	376
	386
6V-9172	360
	364
6V-9178	268
6V-9182	86
6V-9189	315
	386
	610
6V-9208	390
6V-9632	190
	532
6V-9746	86
	360
	364
	368
6V-9796	362
6V-9828	390
6V-9830	356
	362
	364
6V-9831	366
	379
6V-9833	356
6V-9835	390
	398
6V-9838	379
6V-9840	392
6V-9845	379
6V-9849	385
6V-9850	305
6V-9851	396
6V-9852	376
6V-9854	392
6V-9877	368
6Y-1341	263
6Y-1896	264
6Y-2035	263
6Y-2736	259
6Y-2737	234
6Y-7929	257
6Y-7957	260
6Y-9930	604
	7
7C-0351	56
	58
7C-1224	56
	58
7C-4354	123
	125
7C-4616	47
	49
7D-7233	75
	394
7E-3870	108
7H-3937	583
	585
	629
7J-9108	224
	343
	344
	351
	359
	360
	362
	364
	366
	368
	371
	376
	379
	382
	385
	396
	402
7K-1181	117
	123
	125
	152
	172
	175
	204
	211
	215
	224
	250
	295
	297
	305
	381
	382
	390
	394
	396
	597
	598
7K-9208	325
7M-8485	86
	356
	360
	364
	368
	392
	405
7N-5274	150
7N-7221	202
	204
	216
7N-7779	204
	303
7N-7780	204
	303
7N-9017	204
7N-9737	303
7N-9738	204
7R-2751	216
7R-4229	608
	609
7R-8239	302
7S-1912	123
	125
7T-0093	583
	585
7T-2646	235
7T-2651	234
7T-3017	259
7T-3018	259
7T-3021	259
7T-3022	259
7T-3034	235
7T-3051	234
7T-3109	263
7T-3111	264
7T-3119	263
7T-3195	263
7T-3249	263
7T-3251	264
7T-3253	234
7T-4532	548
7T-4848	217
7T-6087	185
7T-6088	185
7T-6090	185
7T-6092	185
7T-6093	185
7T-6099	185
7T-6739	583
7T-6799	202
7T-9987	150
7W-1176	45
	46
7W-2326	75
	640
7W-4634	39
	40
7W-4642	45
	46
7W-7381	224
7X-0288	618
7X-0465	566
7X-0579	88
	96
	97
	98
	331
	578
	580
7X-0586	101
	103
7X-0603	88
	98
7X-0605	396
7X-0618	251
	542
7X-0620	570
7X-0632	327
	449
	451
	453
7X-0818	117
	244
7X-0872	224
7X-2393	542
7X-2444	385
7X-2476	311
7X-2532	604
7X-2533	160
	163
7X-2534	196
	207
	217
7X-2537	333
7X-2538	549
7X-2540	83
	84

PART NUMBER INDEX

Part	Page
	85
7X-2543	379
	449
	451
	453
7X-2553	252
	549
7X-2559	231
7X-2572	330
7X-3164	382
	385
7X-3165	224
	386
7X-3383	445
7X-4741	263
7X-4744	268
7X-7729	83
	84
	85
	150
	152
	217
	297
	394
	412
	449
	451
	453
	557
	561
	563
	568
7X-7958	394
7Y-3883	204
8	
8A-8563	396
8C-3056	152
8C-3290	310
	311
	312
8C-3291	604
8C-3347	325
8C-3398	205
	215
	217
8C-3446	356
8C-3451	356
8C-3681	88
	98
	626
8C-3756	583
	585
8C-3798	73
	198
	200
	572
	595
	624
8C-4982	595
	600
8C-5457	185
8C-5748	263
8C-6431	610
8C-6437	603
8C-6712	297
8C-7524	583
	585
	624
8C-8522	308
8C-8989	396
8C-9660	639
8C-9778	185
8C-9783	185
8C-9987	550
	607
8D-2707	269
8E-1118	595
8E-5707	257
	260
8E-8293	627
	633
8F-1434	171
	185
	205
	264
8F-3590	198
	200
	205
	217
8H-5505	605
8J-2413	421
8J-4455	185
8K-1117	360
	364
	368
	374
8L-2746	263
8L-2779	263
8L-8413	7
	8
	9
	10
	11
	12
	13
	14
	162
	195
	204
	207
	211
	213
	216
	222
8M-2770	224
8M-2773	123
	125
8N-0869	152
8R-2916	568
8R-6111	595
8R-6263	303
8S-0023	244
8S-0024	244
8S-0948	305
8S-3020	150
8S-7803	542
	622
8T-0076	305
8T-0144	521
8T-0154	378
8T-0164	297
8T-0271	451
	453
8T-0285	217
8T-0292	231
8T-0328	205
	217
	264
8T-0389	167
	168
	169
	170
	449
	451
	453
	629
8T-0404	362
8T-1118	627
	633
8T-1482	325
8T-1580	234
8T-1581	263
8T-1683	305
8T-1715	368
8T-1893	372
	388
8T-1894	372
	388
8T-1899	402
8T-1900	402
8T-2223	88
	98
8T-2658	553
8T-2659	639
8T-3444	372
	388
8T-3490	75
	86
	110
	120
	335
8T-3612	88
	98
	117
	308
	335
8T-3844	366
8T-4001	311
	312
8T-4121	55
	75
	83
	84
	85
	86
	110
	120
	123
	125
	144
	152
	185
	194
	198
	200
	205
	217
	220
	225
	244
	297
	305
	313
	314
	325
	331
	360
	362
	364
	368
	372
	374
	379
	388
	394
	396
	402
	412
	415
	416
	435
	445
	449
	451
	453
	549
	557
	559
	561
	563
	565
	568
	587
	597
	598
8T-4122	55
	313
	314
	328
	355
	526
	527
8T-4123	331
	604
8T-4131	604
8T-4132	55
	328
	604
8T-4133	88
	98
	110
	123
	125
	150
	152
	185
	198

► **PRIMARY REFERENCE**

PART NUMBER INDEX

Part	Page	Part	Page	Part	Page	Part	Page
	200		331	8T-4189	73		323
	205		379		88	8T-4200	88
	217		396		95		94
	220		412		96		95
	298		435		97		98
	308		445		98		158
	360		597		101		163
	364		598		103		217
	368	8T-4138	73		123		243
	374		117		125		329
	379		158		147		542
	402		163		158		546
	445		217		163		559
	449		298		177		578
	451		563		179		580
	453		566		191	8T-4205	73
	495	8T-4139	331		205		117
	496		598		304		158
	497		617		308		160
	498	8T-4141	331		331		163
	499	8T-4167	310		333		175
	500		311		566		181
	501		312		607		182
	502		325	8T-4191	374		183
	503		330		412		184
	504	8T-4171	196	8T-4192	86		196
	505		205		251		205
	506		207		372		207
	507		227		388		215
	557		532	8T-4193	147		217
	559	8T-4172	83		447		227
	561		84	8T-4195	110		298
	563		85		120		308
	565		305		313		366
	568		563		314		409
	587	8T-4173	604		360		551
	629	8T-4176	244		364		578
8T-4136	75		430		368		580
	86	8T-4177	396		379		583
	110	8T-4178	495		402		585
	123		496		445		606
	125		497		449		627
	217		498		451		633
	244		499		453	8T-4222	88
	298		500		559		98
	327		501		563		313
	331		502		565		314
	360		503		568		321
	364		504	8T-4196	55		323
	372		505		83		624
	374		506		84	8T-4223	86
	388		507		85		123
	394		624		194		125
	433	8T-4179	123		220		205
	549		125		321		244
	557		205		323		252
	561		412		327		308
	568	8T-4182	415		362		331
	598	8T-4183	308		451		335
8T-4137	150		392		453		372
	152		415		559		388
	205	8T-4185	379		565		392
	217		598		587		396
	225	8T-4186	416		598		412
	305	8T-4187	325	8T-4197	321		415

PART NUMBER INDEX

Part	Page	Part	Page	Part	Page	Part	Page
	570		565		565		222
	598	8T-4744	594	8T-6466	152		224
	617	8T-4753	171		563		542
8T-4224	83	8T-4773	557	8T-6684	392		546
	84		561	8T-6685	430		583
	85		563		449		585
	95	8T-4778	313	8T-6696	382		588
	117		314	8T-6703	88		602
	123	8T-4815	557		98	8T-8799	152
	125		561	8T-6726	101		195
	150		563		103		204
	158		565		372		207
	163	8T-4908	83		382		215
	165		84		388	8T-8894	144
	166		85	8T-6869	335		568
	177		88		386	8T-9402	73
	179		98		409		101
	181		101	8T-6885	209	8T-9405	101
	182		103	8T-6902	566		103
	183		117		606		355
	184		177	8T-6912	295	8T-9501	557
	191		179		383		561
	196		298		399		570
	205		315		409		610
	207		329	8T-6974	573	8X-9618	215
	217		359		575	8Y-5737	578
	243		366	8T-7338	321		580
	295		374		323	8Y-6352	578
	298		376		355		580
	302		445	8T-7529	73	8Y-6967	578
	304		550		86		580
	329		559		394	8Y-7309	542
	331		601	8T-7547	88	8Y-8081	150
	333		610		98		152
	335	8T-4956	244		172		
	359		252		175		
	366		396		298	**9**	
	374		570		321		
	376	8T-4970	75		323	9C-4457	624
	382	8T-4971	594		331	9F-5644	184
	386	8T-4984	88		341	9M-0164	412
	396		98		342	9M-1974	263
	399	8T-5005	150		566	9M-2307	171
	409		152	8T-7876	82	9M-4335	325
	445		305		121	9M-4814	597
	457		394	8T-7963	383		598
	461	8T-5035	325	8T-7968	399	9M-5733	341
	529	8T-5093	315	8T-7971	325		342
	549		627	8T-8737	162	9M-6738	209
	559		633		167		382
	601	8T-5439	251		168	9M-7958	75
	607		274		169		88
8T-4241	436		275		170		98
	438		276		172	9M-7959	578
	440		279		195		580
	441		280		198	9M-8406	123
	451		281		200		125
	453		284		202		158
8T-4244	335		285		204		163
8T-4648	325		287		207		374
	335		291		209	9N-0869	341
8T-4742	594		293		213		342
8T-4743	557		294		215	9N-2231	578
	561		325		216		580
	563	8T-6431	559		220	9P-2553	629

► **PRIMARY REFERENCE**

PART NUMBER INDEX

Part	Page
9P-9150	263
9R-0109	430
	433
	528
	536
	537
9R-0111	430
9R-0139	436
	441
9R-0147	438
	440
9R-0153	347
	348
	354
9R-0158	430
	436
	438
	440
	441
	451
	453
	508
	510
	533
	534
	535
9R-0162	449
	451
	464
	465
	466
	467
	468
	469
	470
	471
9R-0170	438
	440
9R-0320	485
	486
9R-0411	430
9R-0481	325
	433
9R-0868	▶447
9R-1004	362
9R-1005	362
9R-1496	463
	516
	517
9R-1499	177
	179
9R-1510	436
	441
	508
	510
	533
	535
9R-1765	557
	561
9R-1766	557
	561
	570
9R-1767	557
	561
	570
9R-2053	209
9R-2806	295
9R-2807	295
	298
9R-2959	451
	453
9R-3092	343
	449
	451
	453
9R-3205	626
9R-3469	627
	633
9R-3545	290
	291
	292
	294
9R-3884	305
9R-4110	325
9R-4668	▶408
	455
	456
	457
	461
	462
9R-4672	519
9R-4675	519
	520
9R-4676	512
	513
	514
9R-4677	408
9R-4678	408
9R-5205	463
9R-5206	463
9R-5264	516
9R-5271	516
	517
9R-5294	519
	520
9R-5301	435
	443
	444
9R-5313	463
	520
9R-5320	▶526
9R-5321	▶527
9R-5708	622
9R-5832	463
9R-5866	▶539
9R-7240	146
9R-7891	453
9R-7941	198
	200
9R-7942	173
9R-7958	173
9R-7980	198
	200
9R-8165	566
9R-8291	327
	433
9R-8292	449
	451
	453
9R-8870	372
	388
9R-8987	464
	465
	466
	467
9R-8988	464
	465
	466
	467
9R-9028	444
9R-9105	438
	440
	534
	535
9R-9702	251
9R-9868	557
	561
9R-9901	559
	563
9R-9925	412
9S-4183	416
9S-4185	390
9S-4191	144
	263
	356
9S-8004	231
	349
	404
	405
9S-8008	404
	405
9S-9334	405
9T-2883	345
	346
9T-4007	349
9U-8263	595
9U-8875	257
9U-8886	257
	355
9W-0607	165
	166
9W-0625	561
9W-0844	198
	200
	211
	216
	227
	542
	546
9W-0852	198
	200
	220
	227
	546
9W-3324	167
	168
	169
	170
9W-3326	175
9W-4216	341
	342
9W-4363	372
9W-5460	234
9W-6582	604
9W-6584	604
9W-8215	527
9W-9910	55
9W-9915	55
9W-9952	55
9W-9953	55
9X-1054	195
	204
	207
	211
9X-1055	195
	204
	211
9X-2036	185
9X-2038	317
	318
	551
	553
	555
	559
	563
	572
	573
	575
	578
	580
	595
	624
	639
9X-2040	557
	561
9X-2042	190
	605
9X-2043	317
	318
	572
9X-2044	298
	551
	553
	618
	620
	624
9X-2045	194
	297
	542
	553
	555
	559
	563
	566
	573
	575
	577
	578
	580
	629
	631
	632
9X-2060	449
	451
	453
9X-2092	629
9X-2480	205
9X-2842	606
9X-3401	7
	8

▶ **PRIMARY REFERENCE**

PART NUMBER INDEX

Part	Page
	9
	10
	11
	12
	13
	14
	162
	172
	175
	195
	198
	200
	209
	213
	216
	222
	224
	542
	546
	561
9X-3402	175
	204
	216
	224
9X-3982	412
9X-4244	165
	166
9X-4611	345
	346
9X-6165	194
9X-6418	374
9X-6611	345
	346
9X-6615	263
9X-7114	331
9X-7378	196
9X-7380	598
9X-7381	598
9X-7382	598
9X-7383	598
9X-7385	548
9X-8118	173
9X-8139	173
9X-8256	75
	198
	200
	563
	566
	572
	595
	624
9X-8257	147
	252
	321
	323
	447
	549
	604
9X-8372	627
	633
9X-8699	333
9Y-5015	35
	36

0

Part	Page
005-0469	234
	235
005-0471	263
014-5645	263
031-4155	620
	622
031-5644	88
	98
	180
032-9090	25
032-9091	25
033-7687	43
	44
034-1432	532
035-8017	121
	129
	132
035-8063	33
	193
035-8068	29
	33
038-9317	150
	152
039-9133	302
067-6002	29
	33
067-6006	29
	33
	35
	36
067-6043	29
	33
067-6095	20
067-6179	47
	49
067-6213	56
	58
067-6264	121
	129
	132
067-6265	121
	129
	132
067-6873	25
067-6874	25
067-6999	121
	129
	132
069-4080	144
069-4707	229
	231
	239
082-2774	321
	323
084-4277	595
089-7990	251
091-0081	374
091-1745	557
	561
091-2436	195
	198
	200
	204

Part	Page
	216
	224
091-5928	521
	524
091-9035	152
	305
	394
092-3635	305
093-8828	239
095-0641	606
095-0924	253
095-0929	327
095-1041	239
095-1751	420
	421
095-7950	433
096-5516	259
	436
	438
	440
	441
096-6166	216
	600
097-7234	198
	200
098-5747	246
098-6004	451
	453
099-8232	405

1

Part	Page
100-3253	167
	168
	169
	170
100-3254	167
	168
	169
	170
100-3255	167
	168
	169
	170
100-3685	185
100-3751	47
	49
	90
	92
100-4112	185
100-4113	185
100-4115	185
100-4118	185
100-4119	185
100-4336	305
100-4461	76
	77
100-4830	51
	52
	129
	132
	136
	140
100-4838	21

Part	Page
	23
100-4841	21
	23
	29
	33
100-5041	195
	204
	211
100-6674	195
	204
	216
100-7608	631
	632
100-8451	148
	149
101-0333	297
101-0745	627
	633
101-2987	53
	54
101-3617	45
101-3771	56
	58
101-3895	47
	49
	80
101-4411	532
101-4412	532
101-4413	532
101-4414	532
101-4415	531
101-7404	144
102-3582	345
	346
102-8801	198
	200
	216
	220
102-8802	7
	8
	9
	10
	11
	12
	13
	14
	146
	162
	171
	195
	196
	204
	207
	213
	216
	548
	557
	561
	570
	590
102-8803	163
	172
	175
	191
	195

► **PRIMARY REFERENCE**

PART NUMBER INDEX

Part	Page
	207
	209
	213
	222
102-8804	202
	211
	216
	222
	227
	603
102-8805	162
	167
	168
	169
	170
	198
	200
	213
	216
102-8806	162
	200
	213
	542
	546
	602
102-9941	39
	40
103-2543	217
104-1995	195
	216
104-3288	235
104-6310	▶528
	529
104-6311	528
	537
104-6312	459
	460
	528
104-6313	515
	518
	538
104-6316	528
	537
104-6317	528
	537
105-3480	570
105-8034	297
105-9411	598
106-0401	357
106-0406	357
106-8020	146
106-8704	211
106-8835	129
106-8916	111
	113
	115
106-9388	515
	518
	538
106-9586	268
106-9861	234
107-5591	557
	561
	570
107-6709	360
	364
107-6826	255
	256
108-3872	360
	364
	368
108-4311	590
109-1633	598
109-1634	598
110-0203	215
110-2445	101
	103
110-2861	515
	518
	538
110-6109	578
	580
110-7595	557
	561
110-7887	202
111-0859	41
	42
111-3422	129
	132
	135
	139
111-3423	129
	132
	135
	139
111-4332	430
111-4337	430
	436
	438
	440
	441
111-4627	578
	580
111-6792	196
	216
111-6793	216
111-6795	195
	216
111-6816	195
	216
111-7899	174
	175
	177
	179
	189
	195
	198
	200
	202
	207
	211
	215
	220
	222
	224
	587
	627
111-7906	243
111-7907	▶243
	262
111-8222	106
112-1533	325
112-1776	528
	537
112-1826	255
	▶355
112-1931	▶463
113-0920	595
113-6349	148
	149
113-8087	443
113-8129	90
	92
113-8490	216
113-8491	216
113-8492	216
113-9083	463
113-9084	463
114-0063	598
114-1042	406
114-2579	105
	106
114-3832	516
	517
114-3833	516
	517
114-4363	45
	46
115-1052	542
115-1162	105
115-1615	162
	196
	204
	207
	211
	213
115-1918	355
115-6433	433
116-4825	430
116-5763	315
116-7471	215
117-3534	355
117-9713	243
117-9887	255
	256
118-1348	435
	443
118-2990	604
118-6854	308
118-7110	526
118-7286	86
118-8118	119
	143
118-8119	119
119-3662	195
	198
	200
	202
	204
	207
	211
	216
	220
	542
	546
119-3859	608
	609
	610
119-4167	557
	561
119-4594	430
	536
119-4740	255
	640
119-5025	117
119-5708	75
119-6346	402
119-9631	583
120-4553	372
120-9027	553
120-9286	5
120-9762	234
121-0883	45
	46
121-0904	260
121-2059	235
121-2060	235
121-2061	235
121-2500	257
121-4480	119
121-6936	627
121-7385	263
121-7389	263
121-7390	263
121-7391	263
121-7396	263
121-7398	235
121-7399	235
121-7400	235
121-7401	235
121-7402	235
121-7403	263
121-7404	263
121-9797	▶443
121-9870	595
121-9875	263
122-1877	260
122-1878	260
122-1879	235
122-1883	264
122-1884	260
122-1886	257
122-3652	234
122-4401	195
	216
122-6785	263
122-6787	264
122-9250	406
	421
123-0428	331
123-0708	307
123-0714	257
123-1373	152
123-1377	264
123-2918	264
123-2919	264
123-2920	234
	257
123-4065	96
	97

▶ **PRIMARY REFERENCE**

PART NUMBER INDEX

Part	Page	Part	Page	Part	Page	Part	Page
123-6758	162	127-2170	315	132-3821	521		487
	213		605		524		488
123-7615	198	127-3017	263	132-5789	152		489
	200	127-4471	75		205		490
	204		412	132-8769	▶357		491
123-7637	360	127-4834	312	133-1011	47		492
	364	128-3094	465		49		493
	368	128-3778	464	133-3413	156		494
123-8905	257	128-4168	204	133-6517	156		495
	260	128-4170	198	133-8916	565		496
123-8906	234		200	134-0143	445		497
	235		216	134-4807	443		498
123-8907	259	128-4172	204	134-5884	468		499
	263	128-4190	216		469		500
123-8908	235	128-4249	216		470		501
123-8909	257	128-5596	355		471		502
123-8910	235		▶411	134-5885	468		503
123-8912	260	128-7716	583		469		504
124-0174	224		585		470		505
124-0312	578	128-7903	430		471		506
	580	128-7905	430	134-7258	638		507
124-2456	308	129-3178	101	135-5009	152		509
124-3536	60		103	135-5893	282		511
	61		583		283	138-2053	20
124-3815	47		585	135-8203	487	138-8454	160
	49		594		488		162
	106		606		489	140-3640	88
	132		620		490		98
	136		639		499	140-7649	345
	140	129-3738	542		500		346
124-5640	195	129-4741	308		502	140-8714	129
	204	129-5256	542		503		132
124-6259	101	129-5257	542		504		136
	103	129-8542	631		505		140
125-7874	162		632		506	140-8718	129
	175	129-8545	631		507		132
	195		632		509		136
	198	130-2057	467		511		140
	200	130-4832	578		539	140-8783	148
	202		580	135-8206	487		149
	204	130-7092	▶119		488	140-9378	215
	207		120		489	141-0888	407
	211	130-7282	231		490	141-1667	109
	213	130-7881	83		499		111
	216		84		500	141-1762	624
	220		85		502	141-8061	162
	222	130-8150	411		503		200
	224	130-9984	86		504		204
125-7875	198		394		505		213
	200		598		506		227
	204	131-1812	119		507	142-0485	297
	216	131-2117	466		509	142-3391	83
	542	131-3540	629		511		84
	546	131-3987	573	136-1955	73		85
125-7876	152		575	136-4192	631	142-4901	605
	224	132-2249	573		632	142-7405	563
126-1766	162		575	136-6887	473	143-0539	▶185
	213		595	136-6889	474		187
126-1767	202	132-3056	412	136-6890	475	143-1344	185
	222	132-3721	521	136-7808	237	143-2827	542
	548	132-3723	521	137-4234	456		631
126-1768	202	132-3777	522		458		632
126-1817	356		525		459	144-0195	578
	640	132-3778	522		460		580
126-4974	443		525		462		627

▶ **PRIMARY REFERENCE**

PART NUMBER INDEX

Part	Page	Part	Page	Part	Page	Part	Page
	633	148-8378	372		469		224
144-0367	392		382		470		227
144-5287	343		388		471	155-2274	216
144-6734	241	148-8382	362	151-7926	469		542
145-0981	595	148-8383	305	151-9272	202		546
145-2350	95	148-8385	297	151-9275	215	156-0283	315
146-4023	629	148-8390	371		570		627
146-6347	307	148-8393	376	152-3968	128		633
146-6729	185	148-8407	144		132	156-6175	216
146-8319	277		356		135	157-1669	144
146-9439	189	148-8408	416		139	159-1503	86
	194	148-8411	390	152-6144	229		394
	215	148-8426	382		231	159-3590	321
	222	148-8429	392		237		323
147-0203	257	148-8446	379	153-6241	396	159-4269	573
147-0209	263	148-8447	224	154-2302	399		575
	▶268	149-4236	111	154-5257	485	159-4945	573
147-0238	257	149-9954	143		486	159-4946	575
147-1979	35	150-3026	305	154-5279	436	159-7105	601
147-5553	113	150-3027	390		441	159-7106	601
	115	150-3033	297		533	159-7907	303
148-5353	631	150-3052	360		535	159-8033	308
	632		364	154-5280	436	160-2246	209
148-8311	368	150-3053	360		441		394
148-8315	385		364		533	160-3518	162
148-8316	398		368		535		213
148-8317	392	150-3060	372	154-5404	229		215
148-8318	305		388	154-5410	627		588
	396	150-3757	259		633	160-5083	368
148-8325	250	150-4029	398	154-5416	295	160-7599	5
	305	150-4031	379	154-5423	631	161-3249	260
	385	150-4052	385		632	161-4130	468
	390	150-5968	390	155-2255	216		469
	398		398	155-2260	162		470
	402	151-1975	120		204		471
148-8328	366	151-4841	117		211	161-6149	406
	402		123		213	161-6984	592
148-8335	356		125		216		593
	392		250		220	161-6987	592
148-8336	399		297		222		593
148-8339	86	151-7829	▶464	155-2265	162	161-7145	325
148-8340	368		487		198		350
	396	151-7830	▶465		200		353
	402		488		213		354
148-8341	362	151-7831	▶466		216	161-7147	347
	366		489	155-2270	162		348
	379	151-7832	▶467		172	161-9044	573
148-8345	382		490		175		575
	385	151-7887	▶487		195	161-9283	589
	396	151-7888	▶488		198		622
148-8351	385	151-7889	▶489		200	161-9285	622
148-8352	392	151-7890	▶490		204	161-9288	622
148-8359	368	151-7902	464		207	161-9294	592
148-8360	86		465		211		593
148-8362	392		466		213	161-9820	148
148-8364	374		467		216		149
	381		468		220	161-9916	382
	402		469		222		385
148-8367	305		470		295	162-4004	313
148-8368	250		471		583		314
	385	151-7903	464	155-2271	198	162-6556	592
148-8369	305		465		200		593
148-8370	396		466		213	163-0753	296
148-8372	382		467		216		▶302
	396		468		220	163-1135	590

▶ **PRIMARY REFERENCE**

PART NUMBER INDEX

Part	Page	Part	Page	Part	Page	Part	Page
164-1153	570		346		563	178-8214	259
164-1154	606	167-3692	216		578	178-8465	7
164-1178	555	167-3693	204		580		8
164-1230	618	167-8182	629	174-4643	229		9
	620	167-8251	555	174-4647	231		10
164-1244	610	168-0443	508	174-4650	231		11
164-1249	589		510	174-4671	229		12
164-1251	589	168-0444	508	174-8131	639		13
164-1252	589		510	174-9638	111		14
164-1253	589	168-0480	464		113	178-8850	▶522
164-1254	589		465		115	178-9242	150
164-1255	589		466	174-9711	263		152
164-1256	589		467	175-0054	263	178-9566	260
164-1361	559		468	175-4291	165	180-0448	601
	563		469		166	180-3730	146
164-1368	295		470	175-4292	165	180-3748	629
	557		471		166	180-5796	610
	561	168-8389	456	175-7877	5	180-9339	162
	570		458	175-7904	355		207
	578		459	176-0626	327		211
	580		460	176-1477	7		213
164-1371	559		462		8		227
	563		487		9		557
164-1395	117		488		10	180-9340	162
	557		489		11		172
	566		490		12		175
164-1399	559		491		13		195
	563		492		14		198
164-1402	563		493	176-1521	7		200
164-1404	244		494		8		202
	563		495		9		204
164-1421	563		496		10		207
164-1422	563		497		11		211
164-1425	563		498		12		213
164-1429	563		499		13		216
164-1435	563		500		14		220
164-1438	563		501	176-2947	202		224
164-1547	565		502	176-6219	128		227
164-3876	308		503		132		542
164-5549	396		504		135		546
	399		505		139	183-6084	566
164-5567	390		506	176-6251	▶521	184-0982	146
164-5605	305		507		522	184-5293	553
164-7556	165		509		525	184-6581	144
	166		511	176-6252	521	185-0882	35
164-8474	578	169-1616	421	177-4877	573		36
	580	169-3261	307		575	185-0884	29
164-9425	205	169-5326	136	177-9645	583		33
	587		140		585	185-1546	69
164-9598	302	169-5861	120	177-9648	195	185-1861	7
164-9599	302	169-5862	297		207		8
165-0312	202	169-7291	595	177-9653	583		9
165-2273	378	169-7409	376		585		10
165-4021	73	170-0235	598	177-9656	195		11
165-6365	224	170-0950	194		207		12
165-6595	297	170-6312	563	178-1304	274		13
165-7951	144	171-1357	368	178-1781	152		14
165-8996	251	172-4018	629	178-2593	457	185-4015	583
166-2033	385	172-5317	257		461		585
166-7208	598	172-6050	257		529	185-6627	106
166-7870	447		260	178-3593	▶533	185-6643	73
166-9413	232	172-8037	588	178-3620	390	186-3735	146
167-2183	345	172-8039	588	178-7230	277		162
	346	172-8591	555		278		167
167-2303	345		559	178-7539	215		168

▶ **PRIMARY REFERENCE**

PART NUMBER INDEX

Part	Page
	169
	170
	171
	191
	196
	202
	204
	213
	215
	220
	222
	588
	590
	602
	603
186-3736	222
	583
186-5110	590
188-4651	224
189-0881	578
	580
189-3158	195
	204
	215
	220
	222
190-5128	563
190-5134	559
190-7634	146
192-2112	583
	585
192-7805	590
192-7876	143
193-0161	128
193-0618	143
193-1681	321
	323
193-1683	321
	323
193-1684	321
	323
193-3356	578
	580
193-5913	638
193-5914	607
	638
193-5915	607
	638
193-5916	638
193-9055	315
194-0832	274
194-5390	111
	113
	115
194-5622	578
	580
194-8648	598
195-0189	▶167
	177
195-0190	▶168
	177
195-0191	▶169
	179
195-0192	▶170
	179
195-2132	53
	54
195-2134	53
	54
195-2136	53
	54
195-2221	53
	54
195-5830	144
195-6329	279
195-6345	282
	283
	285
	286
	289
	290
	292
195-6348	277
	278
	279
	282
	286
	289
195-9712	171
196-0030	▶171
	172
	175
196-2966	216
197-4521	610
197-5107	573
	575
197-9155	231
198-0098	565
198-7811	231
	239
198-7814	246
	249
198-7823	229
198-7825	229
198-7838	229
198-7841	229
198-7842	229
198-7843	229
199-0639	229
	231
199-0641	231
199-0646	239
199-0648	249
199-0652	231
199-0653	254
199-0656	239
199-0658	231
199-0659	242
199-0662	231
199-0663	239
199-0670	231
199-0672	300
	301
199-0673	242
199-0675	239
199-0676	231
199-0678	239
199-0679	231
199-0680	239
199-0681	300
	301
199-0683	229
199-0684	239
199-0685	239
199-0686	239
199-0687	239
199-0688	231
	239
199-0689	239
199-0690	239
199-0691	239
199-0692	239
199-0693	239
199-0694	242
199-0695	237
	239
199-0697	239
199-0700	300
	301
199-0701	300
	301
199-0702	300
	301
199-0703	300
	301
199-0706	231
199-0752	300
	301
199-0756	242
199-0759	300
	301
199-0760	254
199-0778	231
199-0783	313
	314
199-0784	242
199-0785	239
199-0786	231
199-0787	231
199-0807	242
199-0808	242
199-0858	237
	239
199-0929	600
199-9267	192
	193
199-9751	35
	36
	63
	66
	2
200-1898	162
	213
200-5728	588
200-5921	521
201-1024	215
201-1234	468
	469
	470
	471
201-1235	472
	473
	474
	475
	478
201-1238	491
	492
	493
	494
	495
	496
	497
	498
	501
201-1239	491
	492
	493
	494
	495
	496
	497
	498
	501
201-1868	271
	▶274
201-1869	274
201-1870	▶274
201-1915	274
	275
	276
	284
	287
	288
	291
	293
	294
201-1916	279
	280
	281
	285
	287
	291
201-1919	275
	276
	279
	280
	281
	284
	285
	287
	288
	291
	293
	294
201-1920	▶270
	274
	275
	276
	277
	278
	279
	282
	283
	284
	285
	286
	288

PART NUMBER INDEX

Part	Page	Part	Page	Part	Page	Part	Page
	289	205-9629	542	206-1684	578	206-1847	580
	290	205-9920	172		580	206-1850	318
	291		175		624	206-1852	639
	292		204	206-1687	555	206-1853	639
	293		220	206-1690	555	206-1854	553
	294		412	206-1692	555	206-1855	639
201-1929	275	206-1345	158	206-1695	561	206-1856	639
201-1962	270		162	206-1696	551	206-1857	540
	271		194	206-1698	551		541
	▶275		195	206-1699	551		▶626
201-1963	▶275		198	206-1701	540	206-1874	566
201-1964	▶275		200		541	206-2423	152
201-1975	278		202		544		222
201-3954	▶313		204		545		224
201-9459	190		220		▶639	206-5823	602
202-5909	73		227	206-1702	540	207-4254	229
202-5993	297	206-1590	542		541	207-4257	254
202-6017	190	206-1618	540		544	207-4258	229
202-6029	297		541		545	207-5962	254
202-6186	274		544		▶551	208-0321	229
	275		545	206-1704	544	208-0322	237
	276		▶577		545	208-3600	390
	284	206-1623	624		▶624	208-5235	491
	288	206-1625	624	206-1706	551		492
	293	206-1632	568	206-1708	551		493
202-6611	166	206-1634	297		553		494
202-6614	165	206-1637	624	206-1712	551		495
203-9858	610	206-1638	255	206-1760	297		496
204-0317	305		▶297	206-1766	297		497
204-0775	190	206-1640	7	206-1769	297		498
204-1682	620		8	206-1798	624		501
204-2281	402		9	206-1799	624	208-5245	491
204-3080	229		10	206-1803	578		492
204-4248	5		11		580		493
	▶604		12	206-1804	578		494
204-5258	532		13		580		495
204-5259	532		14	206-1805	578		496
204-9921	583		▶117		580		497
	585	206-1642	255	206-1807	578		498
205-1627	101		▶295		580		501
	103	206-1647	542	206-1808	578	208-8240	263
205-2357	399		546		580		264
205-6298	190	206-1648	578	206-1809	578	208-9281	109
205-7047	595		580		580	208-9293	598
205-7048	573	206-1652	305	206-1810	578	209-3366	594
	575	206-1653	578		580	209-3367	117
205-7198	385		580	206-1815	578		▶594
205-9163	264	206-1659	553		580	209-3378	117
205-9362	216	206-1662	553	206-1816	578		▶606
205-9587	631	206-1663	553		580	209-4157	253
205-9588	575	206-1665	624	206-1817	578	209-4573	109
205-9590	631	206-1666	624		580	209-4716	595
205-9591	631	206-1667	553	206-1818	578	209-7454	237
205-9597	632		555		580	209-7456	229
205-9598	573	206-1668	557	206-1835	317	209-7459	248
205-9605	542	206-1669	570		318	209-7460	246
	546	206-1672	559	206-1838	317		249
205-9606	542		563		318	209-7461	248
	546	206-1673	559	206-1840	▶317	209-7462	237
205-9607	542		563		544	209-7463	237
	546	206-1678	555		545	209-7464	229
205-9608	542	206-1681	555	206-1841	▶318	209-7465	246
205-9609	542	206-1682	578		540		249
205-9614	632		580		541	209-7466	253
205-9615	632	206-1683	624	206-1846	580	209-7472	237

▶ **PRIMARY REFERENCE**

PART NUMBER INDEX

Part	Page
209-7473	237
209-9219	31
	32
209-9875	229
209-9882	229
	▶237
209-9883	229
209-9884	229
	▶246
209-9885	229
	▶248
209-9886	229
209-9887	229
210-1707	436
	438
	440
	441
210-3097	231
210-3098	231
210-3099	231
210-3100	231
210-3106	231
210-5924	229
	▶253
210-5931	253
210-5932	245
	246
	248
210-5937	229
210-5942	229
210-5946	229
210-5947	229
210-6139	98
210-6475	542
210-6491	551
210-6807	7
	8
	9
	10
	11
	12
	13
	14
	▶108
210-7302	231
210-7305	231
210-7665	583
	585
210-7666	583
	585
210-7773	412
210-8363	580
	▶583
210-8364	578
	▶585
210-8401	583
210-8402	585
210-8754	595
211-0052	216
211-2660	583
	585
211-2661	578
	580
211-3649	▶310
211-3652	▶311
211-3653	▶312
211-3782	▶315
	540
	541
	544
	545
211-4265	▶211
	417
211-4291	▶180
211-4348	392
211-5358	590
211-6735	229
211-9286	251
212-3416	583
	585
212-5702	239
212-5712	300
	301
212-5713	231
212-6934	109
212-8960	344
212-9353	83
	85
213-0139	195
	207
213-1887	315
213-1888	624
213-1889	315
213-4222	254
213-6055	195
	207
213-6057	542
	546
213-6064	211
213-6089	152
213-6091	150
213-6092	150
213-6683	433
213-6702	327
213-6703	436
	441
213-8000	▶523
213-8008	523
	▶524
	525
214-2968	▶165
	198
	200
214-2969	▶166
	174
214-3203	33
	68
214-3254	310
	311
214-3255	312
214-3647	96
214-3736	598
214-3740	▶244
	255
214-3742	627
	633
214-3763	627
	633
214-4285	445
214-4692	189
214-4693	202
214-4695	195
	207
214-4697	198
	200
214-4698	174
214-4699	198
	200
214-4700	174
214-4701	587
214-4703	207
214-4709	627
214-4711	177
	179
214-4713	220
214-4716	215
214-4717	215
214-4718	195
214-4719	222
214-4721	175
214-4722	202
214-4723	215
214-4746	342
214-5097	229
214-7024	▶531
214-7025	531
	▶532
214-7026	532
214-7043	445
214-7568	390
215-1216	524
215-1217	524
215-1242	622
215-1906	351
215-2023	229
215-2913	542
	546
215-4012	109
215-7066	297
215-7067	297
215-9515	123
	125
216-0910	▶637
216-1600	239
216-1601	254
216-1602	245
216-1606	254
216-1608	231
216-1609	231
	▶245
216-1610	231
	▶254
216-1612	239
	▶300
216-1613	239
	▶301
216-2267	235
216-4457	237
216-4458	237
216-4461	237
216-4464	237
216-4465	237
216-4466	237
216-4475	6
	▶255
216-4476	255
	▶256
216-4554	590
216-4983	109
216-5332	▶378
216-5981	328
216-7374	523
	525
216-7375	524
216-7376	524
216-7377	521
	524
216-7473	229
216-8314	27
	28
216-8634	47
	49
216-8687	241
216-8689	241
216-8700	241
216-9111	276
216-9112	283
216-9113	282
216-9147	270
	▶276
216-9148	276
216-9149	▶276
216-9498	237
	▶241
217-2345	239
217-2346	239
217-2347	300
	301
217-2349	300
	301
217-2877	246
217-2878	248
	▶249
217-2879	246
	248
217-2883	229
217-2885	229
217-2914	231
217-8185	412
217-9672	▶328
217-9920	297
	▶304
218-0666	578
	580
219-0302	542
	546
219-0343	594
219-3271	156
219-3366	▶468
	491
219-3367	▶469
	492
219-3368	▶470
	493
219-3369	▶471
	494
219-3390	▶491
219-3391	▶492
219-3392	▶493
219-3393	▶494

▶ **PRIMARY REFERENCE**

PART NUMBER INDEX

Part	Page	Part	Page	Part	Page	Part	Page
219-6281	583	221-8119	255	225-5634	69		113
	585		▶262		70		115
219-6283	583	222-1801	313	225-5638	69	225-8533	111
	585		314		70		113
219-6284	583	222-1802	313	225-5640	69		115
	585		314	225-5927	158	225-8534	111
219-6285	583	222-3518	123		162		113
	585		125	225-5959	69		115
219-6286	583	222-4067	412		70	225-8536	111
	585	222-8935	209	225-5960	69		113
219-6287	583	222-9824	264		70		115
	585	223-1882	▶534	225-5961	69	225-8848	51
219-6288	583	223-2028	575		70		52
	585	223-2029	573	225-5962	69	225-8858	29
219-6292	583	223-2030	542		70		33
	585		631	225-5963	▶69	226-0291	315
219-6314	162		632		72		639
	213	223-8267	317	225-6005	56	226-0449	101
219-8751	237		318		58	226-1240	433
219-8752	237	224-2147	553	225-6041	56	226-4346	245
219-8753	237	224-2149	553		58		246
219-8754	237	224-5132	338	225-6451	21		248
219-8755	237		339		23	226-4364	231
219-8756	237	224-5152	338	225-6456	21	226-4365	231
219-8757	237		339		23		246
219-8758	237	224-5917	123	225-6461	21		248
219-8759	237		125		23	226-4366	231
219-8783	253	224-6829	261	225-6464	21		246
219-8795	229	224-8946	638		23		248
	231	225-0312	308	225-6477	21	226-4367	231
219-8798	229	225-4150	638		23	226-4370	231
219-8799	231	225-4287	94	225-6478	21		246
219-8834	300		95		23		248
219-8835	301	225-4317	17	225-6479	21	226-4560	167
219-8836	239		18		23		168
219-8839	231		▶64	225-6522	23		169
219-9483	468	225-5436	61		74		170
219-9485	470	225-5437	61	225-6817	80	226-4561	167
219-9486	469	225-5438	60	225-6818	80		168
	471		61	225-7733	360		169
219-9488	472	225-5439	60		364		170
220-0269	557		61	225-7738	90	226-5540	▶349
	561	225-5441	60		92		455
220-0738	315		61	225-7739	90		456
	553	225-5451	60		92		457
	578		61	225-7741	90		461
	580	225-5453	60		92		462
220-3470	570		61	225-7772	25	226-5635	572
220-3762	583	225-5454	60	225-7941	82	227-1057	202
220-3785	544		61		193		215
	545	225-5458	60	225-7944	29		540
	▶572		61		33		541
220-3790	610	225-5459	60		81		544
220-3791	610		61		82		545
220-5725	585	225-5495	35	225-8016	90	227-1184	405
220-7108	436	225-5496	35	225-8019	90	227-1185	405
	438	225-5498	35		92	227-1197	405
	440	225-5499	35	225-8287	47	227-1198	405
	441	225-5501	37		49		406
220-8631	45		38	225-8329	76	227-1199	405
	46	225-5502	37		77		406
221-0811	6		38	225-8524	111	227-5509	407
	▶251	225-5625	69		113	227-5556	315
221-2420	578	225-5629	69		115	227-7449	100
	580		70	225-8526	111	228-4592	566

▶ **PRIMARY REFERENCE**

PART NUMBER INDEX

Part	Page
228-4593	566
228-4595	566
228-5089	152
228-5856	195
	202
	207
	216
	224
228-6050	169
	170
228-6051	167
	168
228-6052	167
	168
	169
	170
228-6053	167
	168
	169
	170
228-6054	167
	168
	169
	170
228-6056	167
	168
	169
	170
228-7090	382
228-7091	376
228-9130	143
	640
228-9132	143
229-4896	23
229-5085	246
	248
229-5092	245
229-5093	241
229-5280	566
229-5745	566
229-8757	191
229-9855	152
230-2389	570
230-2390	570
230-2610	244
230-3810	232
230-3811	232
230-4011	175
	204
	216
230-4013	224
230-4014	224
230-5008	162
	213
230-5009	162
	213
	224
230-5738	6
	▶231
230-5743	6
	▶229
230-7300	17
	18
	▶43
230-7355	17
	18
	▶90
230-7569	17
	18
	▶65
230-7578	17
	18
	▶76
230-7886	129
230-8094	56
	58
230-8989	129
	132
	136
	140
230-8995	129
	132
	136
	140
230-8996	129
	132
	136
	140
230-8997	129
	132
	136
	140
230-8998	129
	132
	136
	140
230-9127	21
	23
230-9357	349
231-0033	17
	18
	▶78
231-0046	65
231-0149	17
	18
	▶105
231-0670	242
231-0671	242
231-0692	239
	▶242
231-0693	242
231-0694	242
231-0695	242
231-0696	242
231-0697	242
231-0698	231
231-0699	231
231-0700	246
231-0701	249
231-0703	246
	248
231-0745	248
231-2872	563
231-2873	563
231-2875	565
231-2876	565
231-3057	156
231-3058	▶156
	157
231-9361	555
232-0252	394
232-1322	35
	36
	63
	66
232-1323	129
	132
	136
	140
232-1328	129
	132
	136
	140
232-1540	565
232-1542	566
232-1793	132
	136
	140
232-1794	129
	132
	136
	140
232-2725	129
	132
	136
	140
232-2726	129
	132
	136
	140
232-2865	317
	318
232-2869	317
	318
232-2870	317
	318
232-3126	121
	127
	136
	140
232-3149	129
	132
	136
	140
232-3157	129
	132
	136
	140
232-3274	129
	132
	136
	140
232-3657	47
	49
232-3666	47
	49
232-3751	29
	33
	81
	82
232-4636	639
232-6204	17
	18
	▶66
232-6661	17
	18
	▶154
232-6662	154
	155
232-7400	▶25
	27
	28
232-7440	29
	33
232-7449	31
	32
232-7596	29
	33
232-7597	29
	33
232-7599	29
	33
232-7600	29
232-7603	29
232-7604	▶29
	32
233-0619	345
	346
233-2589	345
	346
233-2613	345
	346
233-3784	25
233-3785	25
233-3786	25
233-5260	553
233-7432	17
	18
	▶51
234-1981	▶100
	101
	103
234-3030	109
	111
234-6927	412
235-0128	117
235-1790	129
	132
235-5843	412
235-7091	394
235-8528	392
235-8634	152
236-1583	244
236-1673	129
	132
236-1674	129
	132
236-2144	121
	132
236-6651	75
236-6923	195
236-8228	▶128
	129
236-8229	18
	▶129
236-8238	17
	18
	▶45
237-0024	17

▶ **PRIMARY REFERENCE**

PART NUMBER INDEX

Part	Page
	18
	▶187
237-0769	21
	23
237-0975	110
237-3658	17
	18
	▶53
237-3786	111
237-3794	111
	113
	115
237-3797	412
237-3921	111
	113
	115
237-3922	111
237-3924	17
	18
	▶111
237-3943	590
237-4157	100
237-4894	192
	193
237-4896	17
	18
	▶192
237-5188	234
237-5214	17
	▶132
238-0251	445
238-2799	17
	18
	▶82
238-4628	407
238-5081	382
238-5254	229
238-5255	229
238-5256	246
	248
238-5290	239
238-5291	231
238-5292	231
238-5293	231
238-5294	231
238-5298	231
	▶239
238-7492	195
238-8671	129
	132
	136
	140
239-1434	117
239-2270	108
239-6989	638
239-9430	435
240-5571	132
	136
	140
241-0037	338
	339
241-6215	224
241-6225	360
	364
241-6226	360
	364
241-8450	360
	364
242-3197	▶150
242-9751	83
	84
	85
243-0062	606
243-0063	606
243-1022	▶640
243-5027	152
244-2041	331
244-3106	204
244-3111	315
244-3112	315
244-3113	315
245-4827	252
245-6103	147
245-6109	308
245-8026	202
245-8778	412
	▶414
245-8780	396
	▶407
245-9828	43
	44
246-1163	23
246-2641	637
246-7853	433
246-7854	321
	323
	430
246-8038	222
246-8053	152
246-8058	152
247-0144	90
247-1080	331
247-1385	88
	98
247-4001	110
247-4868	▶35
	38
247-4884	121
	127
247-4885	17
	18
	▶127
247-5557	315
247-8179	577
247-8222	312
247-9730	101
	103
248-2215	▶157
248-2707	117
248-2708	566
248-2709	555
248-2710	566
248-2714	573
	575
248-3231	101
	103
248-5245	321
	323
249-0974	81
	82
249-2482	551
249-3124	407
249-3125	407
249-4207	472
	473
	474
	475
	478
249-4209	472
	473
	474
	475
	478
249-4210	472
	473
	474
	475
	478
249-4211	479
249-4220	▶472
	495
249-4221	▶495
249-5512	101
	103
249-7562	▶277
	279
249-7563	▶277
	279
249-7565	▶277
	280
249-7566	▶278
	280
249-7568	▶278
	281
249-7569	▶278
	281
249-7571	▶279
	281
249-7572	▶279
	281
249-7669	▶143
	144
249-9226	132
249-9255	▶270
249-9256	▶270
249-9261	▶270
249-9262	▶271
249-9263	▶271
249-9271	273
	▶279
249-9387	270
	▶280
249-9388	273
	▶280
249-9390	270
	273
	▶280
249-9392	270
	▶281
249-9399	271
	▶281
249-9400	271
	▶281
249-9407	280
	▶282
249-9408	280
	▶282
249-9409	280
	▶282
249-9410	280
	▶283
249-9411	281
	▶283
250-0230	281
	▶283
250-1057	457
	461
	529
250-1440	382
	385
250-1470	382
250-1471	382
250-1878	333
250-2314	88
	98
250-3330	333
250-3331	331
250-3344	331
250-5881	335
250-6587	515
	518
	538
250-6850	333
250-6858	333
250-7910	555
250-7911	555
251-2437	41
	42
251-3227	88
	98
251-4375	333
251-5625	340
251-5626	417
251-5627	566
252-1862	573
	575
252-1863	573
	575
252-1864	575
252-1865	573
252-2157	321
	323
252-4659	444
252-4660	▶444
252-6005	457
	461
	▶537
252-6438	35
	36
252-9043	461
	462
	▶512
252-9044	512
	▶515
252-9045	515
	▶516
252-9046	512
	▶519
252-9051	513
	514

▶ **PRIMARY REFERENCE**

PART NUMBER INDEX

Part	Page
	▶520
252-9059	455
	▶513
252-9060	513
	▶517
	518
252-9063	456
	457
	▶514
252-9064	514
	▶518
252-9072	516
252-9073	516
252-9078	519
	520
252-9080	519
	520
252-9081	519
252-9084	520
252-9087	519
252-9088	520
252-9095	515
	518
	538
252-9100	516
252-9983	312
252-9985	311
253-0354	144
253-1549	297
253-1817	573
	575
253-1857	573
	575
253-1858	573
	575
253-2470	585
253-4137	101
	103
253-4138	101
	103
253-5024	229
253-8295	414
253-9395	211
253-9510	583
	585
254-1126	573
	575
254-1127	573
	575
254-2187	110
254-2267	78
	79
254-2270	78
	79
254-3954	35
	36
254-4418	73
254-5303	304
254-5683	627
	633
254-9301	335
254-9926	307
255-0793	555
255-0794	555
255-0795	578
255-0796	638
255-2749	568
255-3447	111
	113
	115
255-4692	101
	103
255-9086	▶529
255-9087	529
	▶538
256-0323	330
256-0324	▶330
256-0546	▶250
	255
256-0550	250
256-5299	540
	541
	544
	545
256-9600	517
257-0468	405
	421
257-0477	404
257-0478	404
257-7211	162
	213
257-7212	162
	213
257-7214	162
	213
257-7733	421
258-2354	553
258-3697	573
	575
258-4946	37
	38
258-9999	638
259-0127	232
259-1831	259
259-2940	288
259-4402	638
259-6276	540
	541
	544
	545
	▶600
259-8417	98
260-0030	622
260-0033	622
260-0034	622
260-0035	622
260-0041	622
260-0057	622
260-0634	101
	103
260-1393	101
	103
260-9136	379
260-9137	379
260-9213	366
260-9214	366
260-9219	382
261-0371	84
261-0376	83
	85
261-0406	84
261-0423	83
	85
261-0428	83
	85
261-0524	202
261-5517	295
	▶296
261-5519	296
261-7694	162
261-9632	624
261-9635	295
261-9636	551
261-9637	551
261-9639	551
	553
261-9644	555
261-9645	555
262-2781	588
262-3705	158
	162
262-4080	297
262-4082	297
262-4084	297
262-4341	158
	162
262-4727	175
262-7079	382
262-7081	382
262-8088	86
	394
262-9567	595
262-9786	100
263-3823	603
263-5376	109
	111
263-5781	595
263-7261	570
263-8850	162
	213
264-7029	175
	204
	216
264-7030	224
264-7031	162
	202
	213
266-1554	271
	▶284
266-1555	284
266-1556	▶284
266-1560	284
266-2275	120
266-2585	421
266-2814	227
266-4157	172
	175
	209
	227
267-2701	182
	183
	215
267-5211	181
	182
267-5213	181
	182
	183
	184
267-8321	92
267-8363	286
267-8364	285
	286
268-0867	17
	18
268-1547	374
268-1548	374
269-0381	325
	▶345
269-0382	345
269-0386	345
	346
269-0986	160
	162
269-9115	555
270-2795	557
	561
270-3217	▶588
270-5290	327
271-4487	▶252
	255
271-7167	244
271-7309	252
272-0537	146
272-2232	17
	18
272-2265	80
272-6369	473
	480
272-6410	▶496
272-6411	▶473
	496
272-7872	▶497
272-7873	▶474
	497
272-7914	474
	477
272-7916	475
	476
272-7918	476
	477
	479
	480
	485
272-7919	476
	477
	479
	480
	485
272-7920	476
	477
	479
	480
272-7921	476
	477
	479
	480
272-7922	478

▶ **PRIMARY REFERENCE**

PART NUMBER INDEX

Part	Page
272-9234	▶498
272-9235	▶475
	498
272-9608	▶499
272-9609	▶476
	499
272-9800	173
273-0042	▶500
273-0043	▶477
	500
273-0093	▶501
273-0094	▶478
	501
273-0799	▶502
273-0800	▶479
	502
273-0862	▶503
273-0863	▶480
	503
273-1374	▶504
273-1375	▶481
	504
273-1462	480
	481
273-1463	479
	482
273-1465	477
	483
273-1466	476
	484
273-1474	544
	545
273-1948	▶505
273-1949	▶482
	505
273-1950	▶506
273-1951	▶483
	506
273-1957	▶507
273-1958	▶484
	507
273-3599	485
273-3622	472
	473
	474
	475
	478
273-3730	485
	486
273-3731	▶508
273-3732	508
	▶509
273-3733	▶485
	509
273-3755	485
273-3756	485
273-3791	▶510
273-3792	510
	▶511
273-3793	▶486
	511
273-5077	▶271
273-5078	▶271
273-5080	271
	273
273-5081	271
	▶285
273-5093	285
273-5094	285
	▶286
273-5095	285
	▶286
273-5096	285
	▶286
273-5532	478
273-9190	215
274-3774	204
	220
274-3775	220
274-4274	345
	346
274-4553	257
	260
274-4555	355
274-4716	27
274-8034	263
274-8614	263
274-8616	257
274-8617	257
274-8620	259
274-8621	259
274-8623	263
274-8625	263
274-8628	257
274-8629	257
274-8630	235
274-8636	257
274-8637	259
274-9872	184
	215
275-0001	335
275-0468	▶234
	263
275-0469	234
275-0470	▶235
	263
275-0475	263
275-0477	263
275-0478	▶259
	263
275-0553	215
275-0570	195
	207
275-0652	297
275-0653	297
275-1038	129
	132
	136
	140
275-7877	215
275-9883	56
	58
276-2334	396
276-5450	162
	213
276-5605	29
	33
276-7287	▶181
	196
	207
276-7290	▶182
	215
276-7291	▶183
	215
276-7476	60
276-8791	627
	633
277-3012	47
	49
277-5156	17
	18
278-0215	259
278-0216	259
278-0217	259
278-0218	259
278-1438	152
278-1439	152
278-5113	70
278-5126	19
278-6377	181
	184
	215
279-4969	382
279-5556	325
	▶346
279-5557	346
280-7009	263
280-7012	263
281-4726	360
	364
281-5969	362
281-5983	376
282-7832	595
282-7833	198
	200
	572
	624
282-7835	198
	200
	572
	595
	624
283-3451	627
	633
283-4237	598
284-0078	209
284-1602	577
284-2917	101
284-3425	148
	149
284-5165	101
284-9039	146
285-1207	540
	541
285-3583	297
285-3584	297
285-9109	583
	585
286-1072	162
	213
286-3018	396
286-3019	396
286-3592	90
286-4880	154
286-7848	39
	40
286-9338	485
	486
286-9340	485
	486
287-3923	▶120
287-7251	402
287-7252	402
287-7268	379
287-7269	379
287-8573	21
	23
287-8597	45
	46
288-0422	47
	49
288-1157	335
288-1394	61
288-1395	61
288-9734	549
289-3412	308
289-6018	598
289-6021	598
289-6410	315
289-9871	317
	318
289-9872	317
289-9873	318
289-9875	317
	318
290-3347	328
290-3972	297
290-7831	549
291-5108	557
	561
291-8378	297
292-2833	636
292-2834	636
292-3995	333
292-3996	333
292-5773	595
292-9784	215
293-1980	551
	555
293-2147	263
293-4053	100
293-4671	75
	412
293-4984	262
293-5352	101
	103
293-8761	259
293-9289	251
294-0288	47
	49
294-4961	636
294-4962	636
294-9812	257
	260
294-9815	262
	▶263
294-9820	264
294-9821	257

▶ **PRIMARY REFERENCE**

PART NUMBER INDEX

Part	Page
295-5550	103
295-5893	162
	213
295-8141	209
295-8142	209
295-8143	209
296-5616	▶80
	81
	82
297-3233	▶94
	96
297-5252	598
297-5254	598
297-7964	390
298-3599	297
298-4524	25
298-5112	15
	16
	▶77
298-5129	15
	16
	▶63
298-5131	15
	16
	▶67
298-5398	392
298-5901	101
	103
299-2212	▶548
	549
299-3141	▶333
	335
299-4246	94
	▶341
299-4247	341
299-4248	341
299-4684	75
299-4687	75
299-4716	11
	12
	13
	▶83
299-4729	7
	8
	9
	10
	▶84
299-4732	83
	84
299-4996	215
299-6985	▶592
	632
299-6986	▶593
	631

3

Part	Page
300-1702	117
300-6575	215
300-6792	550
301-0988	▶314
301-9672	94
301-9725	541
	▶550
301-9765	109
301-9766	109
302-8432	263
303-0413	▶272
303-0414	▶272
303-0415	▶272
303-0418	272
	▶287
303-0419	272
	▶287
303-0421	272
	▶287
303-0423	272
	▶288
303-0428	287
	▶288
303-0429	287
	▶288
303-0430	287
	▶289
303-0431	287
	▶289
303-0434	287
	▶289
303-0435	287
	▶290
303-0438	288
	▶290
303-0439	288
	▶290
303-0441	289
303-0442	289
	290
303-0443	290
303-2933	146
303-5767	15
	16
	▶46
303-5768	15
	16
	▶44
303-5769	15
	16
	▶188
303-5770	15
	16
	▶41
303-5778	15
	16
	▶54
303-5795	188
304-1021	618
	620
304-1023	618
	620
304-3266	256
304-3269	255
304-3920	9
	10
	13
	14
	▶109
304-3922	109
304-4022	9
	10
	13
	14
	▶88
304-4023	▶95
	97
304-5696	222
304-6673	85
304-7847	95
	▶342
304-7848	88
304-7849	342
304-7850	95
304-7851	95
304-8760	15
	16
	▶47
304-8761	15
	16
	▶68
304-8764	56
	58
304-8965	583
	585
304-9457	75
305-3295	6
	▶189
305-3423	263
305-3424	260
305-3425	260
305-3427	▶260
	263
305-3429	▶257
	264
305-3431	257
	260
305-4353	618
	620
305-6917	109
305-6918	97
305-7881	148
	149
306-0348	215
306-0351	215
306-7346	215
306-8857	39
	40
307-2033	7
	8
	9
	10
	11
	12
	13
	14
	▶75
307-2242	83
	85
307-3488	392
307-3529	396
308-1792	21
	23
308-2154	▶404
	419
308-2155	419
308-2160	418
308-2161	418
308-2872	420
308-2877	406
308-2878	406
308-2879	421
308-2882	422
	424
	425
308-2883	424
308-2884	423
	427
308-2885	426
	428
308-2886	404
308-2888	406
308-2889	406
308-2890	406
308-3025	356
308-3074	227
308-3437	399
	▶429
308-3554	612
	613
	615
	618
308-4315	438
	440
308-5496	390
308-9568	390
308-9973	▶190
	255
309-1325	▶173
	180
309-7555	15
	16
	▶74
309-9105	7
	8
	11
	12
	▶96
309-9106	9
	10
	13
	14
	▶97
310-0843	536
310-0851	327
310-2333	204
310-2644	7
	8
	11
	12
	▶101
310-3933	445
310-5613	▶207
	540
310-6216	▶307
	568
310-7304	95
310-9356	570
311-1218	227
311-2230	▶261
	272
	273

▶ **PRIMARY REFERENCE**

PART NUMBER INDEX

Part	Page	Part	Page	Part	Page	Part	Page
311-2768	109	315-1311	629	316-6925	15	317-6268	388
311-3639	▶227	315-1312	629		16	317-6269	388
	629	315-1313	629		▶193	317-6270	▶388
311-3641	255	315-1314	629	316-6941	15		455
	▶570	315-1316	635		16		456
311-6094	73	315-1317	635		▶79		457
311-6886	146	315-1318	▶603	316-6945	433	317-7120	321
311-8055	331		635	316-6946	449		323
	▶335	315-1319	635		451	317-7180	331
311-8060	335	315-1369	▶86		453	317-7181	331
311-8062	5		255	316-6947	449	317-7313	331
	▶331	315-2939	541		451	317-8141	550
311-8070	215		▶598		453	317-9776	15
312-3083	215	315-2940	540	316-6948	451		16
313-3280	620		▶597		453		▶148
313-3380	5	315-3371	204	316-6949	451	318-2365	129
	▶152	315-3379	92		453		132
313-3476	359	315-3381	136	316-6951	327	318-7246	▶455
313-3477	359		140	316-6952	327		458
313-3486	392	315-3384	19	316-7290	540	318-7247	▶456
313-3490	392	315-3385	▶70		▶578	318-7248	▶457
313-3752	▶602		71	316-7291	541		459
	627	315-3386	70		▶580	318-7263	▶458
	633	315-3387	70	316-7896	▶36	318-7264	▶459
313-5637	622	315-3388	70		37	318-9901	▶525
313-6572	445	315-3390	36	316-8228	629	318-9902	▶535
313-6709	578	315-3391	36	316-9782	415	318-9903	▶525
	580	315-3392	36		▶419	318-9904	▶535
313-6710	578	315-3393	36	316-9784	416	319-0755	152
	580	315-3394	36		▶418	319-4504	449
313-6711	553	315-3395	60	317-2017	147	319-5639	598
313-6712	553	315-3396	25	317-2250	388	319-6385	195
313-6713	553	315-3397	25	317-3059	147	319-6834	▶272
313-7109	333	315-3398	25	317-3769	74	319-6835	272
314-4018	548	315-3411	15	317-3778	74		▶291
314-4288	▶612		16	317-4261	629	319-6836	272
	617		▶92	317-4262	629		▶291
314-4289	▶613	315-3418	15	317-4263	629	319-6837	291
	617		16	317-4367	388		292
314-4290	▶615		▶155	317-4920	209	319-6838	292
	617	315-4533	445	317-4921	209	319-6906	366
314-6700	7	315-5384	327	317-4922	209	319-6907	366
	8	315-5401	86	317-4928	445	319-6908	366
	9	315-5496	73	317-5502	109	319-7186	▶291
	10	315-5667	94	317-5538	540	319-7187	291
	11	315-7645	409		541		▶292
	12	315-7646	409		544	319-7191	291
	13	315-7647	409		545		▶292
	14	315-9721	113		▶568	319-7192	291
	▶144	315-9888	544	317-5539	540		▶292
315-0033	95		▶617		541	319-8524	578
315-1270	542	315-9889	545		544		580
	▶629		▶617		545	319-9667	451
315-1272	629	315-9890	540		▶553		453
	▶635		541	317-5541	568	319-9668	451
315-1277	629		▶617	317-5542	595		453
315-1282	629	316-1194	333	317-5543	540	320-2948	325
315-1284	627	316-4741	433		541	320-2949	325
315-1299	629	316-4742	451		▶595	320-3568	435
315-1300	629	316-4743	451	317-5544	307	320-3614	430
315-1301	629		453	317-5547	544	320-3619	325
315-1302	629	316-4811	325		545	320-3620	325
315-1303	629	316-6899	15		▶633	320-4725	433
315-1304	629		16	317-6266	388	320-4769	340
315-1306	629		▶81	317-6267	388		417

▶ **PRIMARY REFERENCE**

PART NUMBER INDEX

Part	Page
	▶536
320-4771	430
320-5932	1
	2
	3
	4
	▶351
320-5933	5
	▶325
320-5934	6
	▶347
320-5935	▶353
	451
	453
320-5936	1
	2
	3
	4
	▶344
320-5937	1
	2
	3
	4
	▶343
320-5938	320
	▶350
320-7812	402
320-8438	366
320-8639	▶336
	337
320-8641	336
320-8642	336
320-9164	436
	441
320-9213	121
320-9241	436
	441
320-9835	553
320-9943	372
320-9944	372
320-9945	372
320-9946	372
320-9947	▶460
320-9948	460
	▶461
320-9949	▶372
	461
	462
320-9950	▶462
321-2559	308
321-3096	359
321-3113	14
	▶85
321-4059	430
321-4060	6
	▶430
321-5657	146
321-5776	620
321-6111	374
321-6341	374
321-6383	368
321-6387	360
	364
321-7031	75
321-7038	541
321-7178	1
	2
	3
	4
	▶371
321-7179	1
	2
	3
	▶374
321-7183	▶368
321-7192	1
	2
	3
	4
	▶401
321-7205	358
	▶398
321-7231	358
	▶366
321-7246	▶359
	370
321-7303	359
321-7704	9
	13
	▶15
321-7705	10
	14
	▶16
321-7782	15
	16
322-1923	7
	11
	▶17
322-1924	8
	12
	▶18
322-3037	▶158
322-3040	158
	162
322-3736	433
322-3764	5
	▶327
322-3768	325
322-3770	325
322-4583	430
322-4584	430
322-4585	430
322-4586	430
322-4587	430
322-4589	430
322-6827	▶184
	204
322-8414	542
	573
	575
322-9476	15
	16
	▶56
322-9480	612
	613
	615
322-9481	612
	613
	615
322-9482	▶608
	612
322-9483	▶605
	608
	609
322-9484	605
322-9485	605
322-9486	612
	613
	615
	▶622
322-9487	605
322-9488	608
322-9489	608
322-9490	622
322-9491	622
322-9492	622
322-9493	622
322-9494	622
322-9495	622
322-9496	622
322-9497	618
322-9498	612
	613
	▶618
322-9499	618
322-9500	618
322-9501	618
322-9502	618
322-9503	618
322-9504	618
322-9505	618
322-9506	618
322-9507	618
	620
322-9508	618
322-9509	618
	620
322-9510	618
322-9511	612
	613
322-9515	618
322-9516	618
322-9517	▶609
	613
322-9518	609
322-9519	609
322-9520	620
322-9615	111
	113
	115
322-9616	111
	113
	115
322-9663	35
	36
322-9664	36
322-9761	96
	97
323-0974	▶337
323-0975	▶337
323-0993	▶222
	340
323-2023	4
	▶376
323-2045	376
323-2096	1
	2
	3
	4
	▶409
323-2424	343
323-2431	343
323-2433	343
323-2435	343
323-2465	350
	353
323-2466	354
323-2470	343
	344
	351
323-3308	638
323-3309	638
323-3324	555
323-4212	347
	348
323-4219	347
	348
323-4221	347
	348
323-4224	347
323-6066	629
323-6645	638
323-9083	366
323-9084	366
323-9085	366
323-9086	366
323-9307	9
	10
	13
	14
	▶73
324-0345	344
324-0352	344
	351
324-0354	344
	351
324-0355	350
	353
324-0356	347
	348
324-0357	344
324-0386	343
324-0391	351
324-0399	344
	351
324-0402	351
324-0411	354
324-0436	353
324-0444	47
	49
324-0496	350
	353
324-0498	350
	353
324-0501	353
324-0505	350
324-0512	354
324-0516	350
324-0519	354

▶ **PRIMARY REFERENCE**

PART NUMBER INDEX

Part	Page
324-0525	354
324-0530	354
324-0548	1
	2
	3
	4
	▶433
324-0550	1
	2
	3
	▶451
324-0552	4
	▶449
324-2578	263
324-2889	620
324-2890	615
	▶620
324-2891	620
324-2892	620
324-2893	620
324-2894	▶590
	620
324-2895	620
324-2896	▶610
	615
324-2897	▶589
	610
324-2900	610
324-2901	610
324-3408	84
324-3851	96
	97
324-5929	358
	▶412
324-6213	7
	8
	11
	12
	▶98
324-7594	371
324-7596	401
324-7597	371
324-7598	374
	376
324-7599	364
	374
	376
324-7602	374
324-7603	374
324-7604	374
324-7611	360
	364
324-7612	368
324-7815	398
324-7816	398
324-7817	398
325-1021	5
	▶6
325-1034	6
	▶435
325-1968	629
325-1969	331
325-2009	430
325-2011	305
325-3036	7
	8
	9
	10
	11
	12
	13
	14
	▶110
325-3495	110
325-3639	331
325-5483	331
325-5855	88
	98
325-6257	▶356
	394
325-7563	448
325-8341	204
325-9308	568
325-9310	542
	546
325-9311	595
325-9315	629
326-0088	430
326-0089	327
326-0093	430
326-1801	320
	▶399
326-1803	358
	▶402
326-1880	41
	42
326-6389	629
326-7959	158
	▶160
326-8992	19
326-8993	▶135
	136
326-8999	15
	16
	▶31
326-9000	15
	16
	▶27
326-9002	15
	16
	▶60
326-9003	15
	16
	▶37
326-9004	15
	16
	▶71
326-9005	15
	16
	▶19
326-9006	15
	▶136
326-9008	15
	16
	▶21
326-9009	15
	16
	▶39
326-9010	15
	▶113
326-9012	15
	16
	▶121
326-9013	15
	16
	▶52
326-9147	▶139
	140
326-9149	16
	▶140
326-9153	115
326-9156	16
	▶115
327-0103	321
327-0104	323
327-0107	320
	▶321
327-0108	320
	▶323
327-0110	▶320
327-0111	▶320
327-0222	366
327-0223	366
327-2272	220
327-3753	409
327-4172	175
327-6983	▶360
	370
327-8281	618
327-8298	360
	364
328-1485	160
	▶213
328-1907	160
	162
328-1944	5
	▶220
328-1950	▶175
328-1953	▶172
328-1954	▶194
328-2477	385
328-2481	▶162
328-3211	570
328-5196	448
328-5234	436
	441
328-5333	402
328-5358	402
328-5964	320
	▶448
328-7020	172
328-7742	618
	620
328-7749	590
328-7750	590
328-7751	590
328-7752	590
328-8594	209
328-9650	449
329-0058	6
	▶209
329-0078	▶5
329-0123	5
	▶358
329-0129	15
	16
	▶106
329-0143	360
	364
329-0293	▶5
329-0304	▶255
329-0319	▶6
	255
329-1167	542
	▶573
329-1168	542
	▶575
329-1169	573
329-1170	575
329-1322	5
	▶445
329-1329	445
329-1330	445
329-1331	445
329-1348	293
329-1350	▶273
329-1351	▶273
329-1352	▶273
329-1354	273
	▶293
329-1355	293
329-1919	293
329-2959	331
329-3483	379
329-3484	379
329-3485	379
329-3486	379
329-3487	379
329-3488	379
329-3489	379
329-3490	379
329-3491	362
329-3492	362
329-3493	381
329-3494	362
329-3497	381
329-3501	382
329-3502	382
329-3503	▶362
	417
329-3504	340
	▶381
	417
329-3506	▶382
	417
329-3545	382
329-3546	381
	382
329-3547	382
329-3548	379
329-3596	382
329-3597	362
329-3598	362
329-3600	340
	▶379
	417
329-3819	379
329-3820	379
329-3821	379
329-4508	385

▶ **PRIMARY REFERENCE**

PART NUMBER INDEX

Part	Page
329-5390	379
329-5699	98
329-5700	88
329-6655	35
329-7293	396
329-7495	▶587
329-7496	▶177
329-7497	▶179
329-9748	453
329-9749	1
	2
	▶453
330-0798	321
	323
330-4926	436
330-5738	436
	441
330-5739	436
	441
330-6124	385
330-6734	103
330-6982	557
	561
330-6987	557
330-6988	557
	561
330-6990	557
	561
330-6991	557
	561
330-6994	557
330-6996	557
	561
330-7002	557
	561
330-7612	172
	175
330-7613	175
330-9591	379
330-9669	448
330-9670	448
330-9686	565
330-9687	590
330-9752	379
331-0797	399
331-0798	399
331-1520	344
	351
331-1521	325
	327
331-1522	325
331-2489	321
	323
331-3770	368
331-3779	360
331-4335	563
331-4339	358
	▶415
331-4340	415
331-4345	1
	2
	3
	370
	▶565
331-4356	566
331-4357	566
331-4360	557
	561
331-4365	321
	323
331-6299	360
	364
331-7306	360
331-7798	590
331-7799	590
331-8037	438
331-8538	246
	248
331-8675	396
331-8676	340
	▶396
331-8678	381
331-8679	382
331-9945	417
	▶557
332-0092	409
332-1025	376
332-1829	360
332-2577	194
332-2578	438
	440
332-2579	438
	440
332-2691	▶364
	370
332-6410	358
	▶566
332-6587	9
	10
	13
	14
	▶103
332-7333	101
	103
332-7541	86
332-7542	86
332-7953	▶340
332-7955	▶417
332-7958	▶417
332-8571	385
332-8572	385
332-9192	340
	▶416
	417
333-0739	366
333-0790	438
	440
333-0791	438
	440
333-0792	438
	440
333-1320	368
333-4391	▶559
333-5427	6
	▶354
333-7265	321
	323
333-7905	557
333-8324	557
	561
333-9901	575
	▶631
333-9902	573
	▶632
334-0681	▶4
334-0682	▶1
334-0683	▶1
334-0751	1
	3
	4
	▶436
334-0752	1
	3
	▶438
334-2318	61
334-2319	61
334-3569	340
	▶561
334-3754	17
	18
	▶42
334-3755	17
	18
	▶40
334-3756	17
	18
	▶149
334-3757	17
	18
	▶49
334-4169	451
	453
334-4202	17
	18
	▶32
334-4203	17
	18
	▶28
334-4204	17
	18
	▶61
334-4205	17
	18
	▶38
334-4207	17
	18
	▶72
334-4208	17
	18
	▶20
334-4603	412
334-4943	359
334-7152	7
	8
	9
	10
	11
	12
	13
	14
	▶55
334-7225	540
	541
	544
	545
	▶607
334-7227	607
334-7931	374
334-7947	376
334-8021	358
	▶394
334-9386	379
335-1584	31
	▶33
335-1692	358
	▶392
335-1836	55
335-2224	629
335-3047	▶544
335-3048	▶545
335-3049	▶540
335-3050	▶541
335-3820	559
335-9798	17
	18
	▶23
335-9799	17
	18
	▶58
336-6396	451
	453
336-7533	555
336-7545	540
	541
	544
	545
	▶555
336-7612	308
336-8184	364
336-8185	364
336-9096	177
	179
336-9168	540
	541
	544
	545
	▶601
337-5351	555
337-5352	158
337-6245	563
337-6246	563
337-6247	563
337-6256	▶563
337-7029	177
	179
337-8655	329
337-8684	396
338-0426	392
338-0427	392
338-0444	3
	▶385
338-1421	▶329
338-1508	307
338-2412	350
	353
338-2413	354
338-2415	343
	344
	351
338-2442	350

▶ **PRIMARY REFERENCE**

PART NUMBER INDEX

Part	Page	Part	Page	Part	Page	Part	Page
	353	340-6918	▶174	343-4847	559		453
338-2443	354		540	343-4848	559	346-6559	451
338-2445	343		541	343-7400	409		453
	344		544	343-7808	5	346-6560	451
	351		545		▶636		453
338-3328	542	340-7025	305	343-8050	347	346-7487	▶191
338-3578	559	340-7026	305		348		417
338-5723	202	340-7030	6	343-8051	343	346-9825	148
338-5731	195		▶305	343-8052	344		149
338-5733	▶195	340-7125	305		351	347-1126	385
	541	340-8276	540	344-1004	629	347-1127	385
338-5734	5		541	344-1301	▶370	348-5460	440
	▶204		▶627	344-1303	▶370	348-5463	441
338-5743	▶202	340-9290	321	344-2134	566	348-5464	2
	540		323	344-2170	366		▶440
	541	340-9308	343	344-2171	366	348-5465	2
	544		344	344-2543	449		4
	545		350	344-5289	▶340		▶441
338-9357	146		351	344-6334	566	349-1098	224
338-9358	▶146		353	344-7954	175	349-1099	224
	147		354	344-8098	402	349-1100	224
338-9362	308	340-9311	350	344-8154	402	349-1101	3
338-9495	559		353	344-8163	402		▶224
338-9496	559	340-9313	344	344-8250	▶405	349-2773	224
338-9497	559		351		419	349-3644	5
338-9831	590	340-9315	347	344-8251	419	350-0666	358
339-0010	385		348		▶420		▶410
339-0089	385	340-9325	343	344-8252	419	350-1078	224
339-2886	385	341-0076	399		▶421	350-1101	224
339-2935	385	341-0121	402	344-8253	419	350-2374	20
339-3067	202	341-0596	▶273		▶422	350-3733	451
339-3497	385	341-0695	5	344-8254	419		453
339-3498	385		▶308		▶423	350-3842	343
339-4287	385	341-0696	5	344-8255	419		344
339-4834	358		▶147		▶424		347
	▶390	341-4712	325	344-8256	419		348
339-4986	▶7	341-5749	607		▶425		350
339-4987	▶8	341-5750	607	344-8257	418		351
339-4988	▶9	341-5752	374		▶426		353
339-4989	▶10	341-7143	559	344-8258	418		354
339-4990	▶11	341-9201	294		▶427	350-5801	▶406
339-4991	▶12	341-9202	273	344-8259	418		418
339-4992	▶13		▶294		▶428	350-6930	▶4
339-4993	▶14	341-9203	▶294	344-8938	304	350-6931	▶2
340-1650	399	341-9204	▶294	344-8939	304	350-6932	▶2
340-3213	▶215	341-9304	333	345-3672	▶338	350-6941	▶3
	540	342-0409	305		396	350-6942	▶3
	541	342-2161	430	345-3674	▶339	350-8841	422
	544	342-2162	430	345-7477	7		423
	545	342-2622	430		8		424
340-3214	215	342-7142	546		11		425
340-3551	198	342-7143	544		12		426
	200		545		▶123		427
340-3552	▶198		▶546	345-7478	9		428
	540	342-7146	542		10	350-8866	420
	541	342-7147	540		13		421
340-6272	325		541		14		422
	350		▶542		▶125		423
	353	342-8061	5	346-0407	47		424
	354		▶638		49		425
340-6338	344	343-0528	563	346-0408	47		426
	351	343-0656	▶5		49		427
340-6912	▶200	343-2876	435	346-5517	382		428
	544	343-4301	401	346-5518	191	350-8869	426
	545	343-4355	202	346-5631	451	350-8887	427

▶ **PRIMARY REFERENCE**

PART NUMBER INDEX

Part	Page	Part	Page	Part	Page	Part	Page
350-8888	427						
350-8897	428						
350-8898	428						
350-8934	420						
	421						
	422						
	423						
	424						
	425						
350-9471	224						
351-0287	390						
351-0288	390						
351-0289	390						
351-0290	390						
351-9352	6						
	▶348						
351-9353	348						

▶ PRIMARY REFERENCE



© 2009 CATERPILLAR
ALL RIGHTS
RESERVED

CAT, CATERPILLAR, THEIR RESPECTIVE LOGOS, “CATERPILLAR YELLOW” AND THE POWER EDGE TRADE DRESS, AS WELL AS CORPORATE AND PRODUCT IDENTITY USED HEREIN, ARE TRADEMARKS OF CATERPILLAR AND MAY NOT BE USED WITHOUT PERMISSION.

PRINTED IN
U.S.A.