CATERPILLAR®

SEBP5948
January 2012

RUTHZIL TRATOR COMERCIAL DE PEÇAS LTDA 11 97083-6812 ROLANDO

Parts Manual

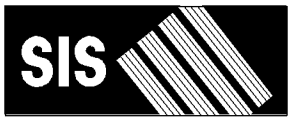

See "General Information" for New Parts Manual Features.

428F Backhoe Loader

SJW1-Up (Machine)
C4Z1-Up (Engine)

Powered By C4.4 Engine

Product and Dealer Information

Note: For product identification plate locations, see the section “Product Identification Information” in the Operation and Maintenance Manual.

Delivery Date: _____

Product Information

Model: _____

Product Identification Number: _____

Engine Serial Number: _____

Transmission Serial Number: _____

Generator Serial Number: _____

Attachment Serial Numbers: _____

Attachment Information: _____

Customer Equipment Number: _____

Dealer Equipment Number: _____

Dealer Information

Name: _____ Branch: _____

Address: _____

_____

_____

	Dealer Contact	Phone Number	Hours
Sales:	_____	_____	_____
Parts:	_____	_____	_____
Service:	_____	_____	_____

MEMORANDA

TABLE OF CONTENTS

Name	Page
GENERAL INFORMATION	A4
REPAIR ALTERNATIVES	A7
SUPPLEMENTAL COOLANT ADDITIVES	A8
MAINTENANCE PARTS	A9
INDEX	A12
MACHINE ARRANGEMENT	1
BACKHOE AR-EXTENDABLE STICK	1
BACKHOE AR-STANDARD STICK	2
CHASSIS AR	2
COMMON AR	3
CONVERSION AR-CERTIFICATION	3
CONVERSION AR-ROADING	4
DISTRIBUTION AR	5
DRIVE AR-BACKHOE LOADER	6
LOADER AR	7
OPTION AR-BACKHOE	7
OPTION AR-REGIONAL	7
ENGINE ARRANGEMENT	8
ENGINE AR-COMPLETE	8
ENGINE AR-PRIMARY	10
BASIC ENGINE	12
CAMSHAFT GP	12
COVER GP-VALVE MECHANISM	13
CRANKSHAFT GP	15
CYLINDER BLOCK GP	17
CYLINDER HEAD GP	19
DRIVE GP-FAN	21
FLYWHEEL GP	22
HOUSING GP-FLYWHEEL	23
HOUSING GP-FRONT	24
LIFTING GP-ENGINE	26
MOUNTING GP-ENGINE	27
MOUNTING GP-ENGINE & XMSN	29
PAN GP-OIL	31
PISTON & ROD GP	33
PLUG GP-CYLINDER HEAD	35
PLUG GP-ENGINE	36
PULLEY GP-CRANKSHAFT	38
ROCKER ARM GP	39
VALVE MECHANISM GP	40
LUBRICATION SYSTEM	41
BREATHER GP	41
FILLER GP-ENGINE OIL	43
GAUGE GP-OIL LEVEL & FILLER	44
GAUGE GP-OIL LEVEL (DIPSTICK)	45
PUMP GP-ENGINE OIL	46
COOLING SYSTEM	47
CONNECTION GP-WATER	47
COOLER GP-ENGINE OIL	48
FAN GP-SUCTION	50
LINES GP-POWER TRAIN COOLER	54
PUMP GP-WATER	58
RADIATOR & HYD OIL COOLER GP	60
TANK & LINES GP-COOLANT	61
AIR INLET AND EXHAUST SYSTEM	64
AIR CLEANER GP	64
COVER GP-INLET MANIFOLD	67
EXTENSION GP-EXHAUST	69
LINES GP-AIR	70
MUFFLER GP	71
TURBOCHARGER GP	72
FUEL SYSTEM	76
CONTROL GP-GOVERNOR	76
FILTER GP-WATER SEP & FUEL	78
LINES GP-FUEL	79
MOUNTING GP-GOVERNOR CONTROL	83
PUMP GP-FUEL INJECTION	84
PUMP GP-FUEL PRM & PRIM FILTER	92
TANK GP-FUEL	93
ELECTRICAL AND STARTING SYSTEM	96
ALTERNATOR GP-CHARGING	96
BATTERY & WIRING GP	97
BATTERY GP	101
ELECTRONICS AR-MACHINE	103
ELECTRONICS GP-COMMUNICATION	103
ELECTRONICS GP-MACHINE	104
GLOW PLUG GP	105
HEATER GP-JACKET WATER	106
LAMP GP-FLOOD	108
LAMP GP-HEAD & SIGNAL	110
LAMP GP-REGISTRATION PLATE	114
LAMP GP-WARNING BEACON	115
LIGHTING GP-FLOOD	116
LIGHTING GP-ROADING	117
LIGHTING GP-WARNING BEACON	124
RELAY GP	126
STARTING MOTOR GP-ELECTRIC	130
SWITCH GP-ALL WHEEL DRIVE	131
SWITCH GP-DIFFERENTIAL LOCK	133
SWITCH GP-DISCONNECT	134
SWITCH GP-PRESSURE	136
WIRING GP-AIR CONDITIONER	137
WIRING GP-AUXILIARY	140
WIRING GP-CAB	142
WIRING GP-COMMUNICATION	144
WIRING GP-CONSOLE	146

TABLE OF CONTENTS

Name	Page
WIRING GP-ENGINE	148
WIRING GP-HEATER	151
WIRING GP-KICKOUT & POSITIONER	153
WIRING GP-LOAD CONTROL	157
WIRING GP-PLATFORM	159
WIRING GP-REAR	173
WIRING GP-RIDE CONTROL	177
WIRING GP-SENSOR	181
WIRING GP-TRANSMISSION CONTROL	184
WIRING GP-WIPER	188
POWER TRAIN	190
AXLE GP-DRIVE & STEERING	190
AXLE GP-REAR	192
CASE AS-TRANSMISSION	195
DIFFERENTIAL & BEVEL GEAR GP	198
DIFFERENTIAL GP	202
DRIVE GP-FLEXIBLE COUPLING	204
FILLER GP-POWER TRAIN OIL	206
FLANGE GP-WHEEL	210
HOUSING & FLANGE GP-AXLE	211
HOUSING GP-AXLE	213
LINES GP-POWER TRAIN OIL	215
LOCK GP-DIFFERENTIAL	216
LOCKOUT GP-FOURTH GEAR	218
MOUNTING GP-AXLE	219
MOUNTING GP-TRANSMISSION	220
PLANETARY GP-FINAL DRIVE	222
POWER TRAIN AR	224
SHAFT GP-COUNTER	226
SHAFT GP-DRIVE	230
SHAFT GP-IDLER	233
SHAFT GP-INPUT	235
SHAFT GP-OUTPUT	241
SHAFT GP-MAIN	246
STOP GP-STEERING	248
TORQUE CONVERTER AR	249
TRANSMISSION AR-DIRECT DRIVE	251
TRANSMISSION AR-POWER SHIFT	253
TRANSMISSION GP-DIRECT DRIVE	256
TRANSMISSION GP-POWER SHIFT	267
VALVE & MTG GP-SOLENOID	274
VALVE GP-RELIEF	275
VALVE GP-SOLENOID	276
VALVE GP-TIRE	281
WHEEL & TIRE AR	282
WHEEL & TIRE GP	286
BRAKING SYSTEM	307
CONTROL GP-PARKING BRAKE	307
CONTROL GP-SERVICE BRAKE	309
CYLINDER GP-BRAKE	313
LEVER GP-HAND CONTROL	317
STEERING SYSTEM	318
LINES GP-STEERING	318
PUMP GP-METERING	320
STEERING COLUMN GP	321
FRAME AND BODY	322
BOX GP-STORAGE	322
COUNTERWEIGHT GP	324
COVER GP-PROTECTION	328
FENDER GP-FRONT	330
FENDER GP-REAR	331
FLOORPLATE GP	333
FRAME AR-LOADER	334
FRAME GP-LOADER	335
FRAME GP-SLIDING	339
FRAME GP-SWING	341
GRILL GP-RADIATOR	343
GUARD GP-DEBRIS	345
GUARD GP-DRIVE SHAFT	346
GUARD GP-FUEL TANK	347
GUARD GP-LIGHTING	348
HOOD & GUARD GP	349
HOOD GP-ENGINE	351
KIT-GUARD	352
KIT-ROADING CONVERSION	352
LINER GP-SOUND SUPPRESSION	353
REFLECTOR GP	354
HYDRAULIC SYSTEM	355
ACCUMULATOR GP-HYDRAULIC	355
ACCUMULATOR GP-RIDE CONTROL	357
CONTROL AR-RIDE	359
CYLINDER GP-BACKHOE BUCKET	360
CYLINDER GP-BOOM	362
CYLINDER GP-HYDRAULIC	363
CYLINDER GP-LIFT	367
CYLINDER GP-MULTIPURPOSE BUKT	369
CYLINDER GP-STABILIZER	370
CYLINDER GP-STICK	371
CYLINDER GP-TILT	374
DRIVE & MTG GP-PUMP	375
FILTER GP-OIL	377
FITTING GP-HYDRAULIC	378
HYDRAULIC AR	379
LINES GP-AUXILIARY HYDRAULIC	380
LINES GP-BACKHOE	390
LINES GP-BACKHOE AUXILIARY	392
LINES GP-BOOM	396
LINES GP-BUCKET	397
LINES GP-BUCKET CYLINDER	399
LINES GP-LIFT & TILT	401
LINES GP-LIFT CYLINDER	403
LINES GP-LOAD CONTROL VALVE	407
LINES GP-MULTIPURPOSE BUCKET	412

TABLE OF CONTENTS

Name	Page
LINES GP-PILOT	416
LINES GP-PUMP	418
LINES GP-RETURN	420
LINES GP-RIDE CONTROL	422
LINES GP-SIDESHIFT	424
LINES GP-STABILIZER	426
LINES GP-STICK	428
LINES GP-SWING	429
MANIFOLD GP-RIDE CONTROL	431
MOUNTING GP-CYLINDER	432
MOUNTING GP-LINES	433
PUMP & MTG GP-HYDRAULIC	434
PUMP GP-PISTON	435
SHAFT GP-PUMP DRIVE	436
TANK & MTG GP-HYDRAULIC	437
VALVE & MTG GP-BANK	438
VALVE & MTG GP-SOLENOID	440
VALVE AR-BANK 3	441
VALVE GP-BANK 3	443
IMPLEMENTS	444
ARM GP-LIFT	444
BOOM GP	447
BRACE GP-LIFT CYLINDER	449
LINKAGE AR	450
LINKAGE AR-BUCKET	450
LINKAGE GP-BACKHOE BUCKET	452
LINKAGE GP-BUCKET	459
LOCK GP-STABILIZER LEG	460
LOCK GP-TRANSPORT	461
PAD GP-STABILIZER	467
STABILIZER GP-BACKHOE	468
STICK GP	469
STICK GP-EXTENDABLE	471
WORK TOOLS	475
BUCKET AR-MULTIPURPOSE	475
BUCKET AS-GENERAL PURPOSE	481
BUCKET AS-HOE	482
BUCKET GP-GENERAL PURPOSE	495
BUCKET GP-HOE	496
BUCKET GP-MULTIPURPOSE	511
BULLDOZER AS	513
CLAM AS-MULTIPURPOSE BUCKET	517
EDGE GP-CUTTING	519
GUARD GP-BUCKET	521
MOUNTING GP-BUCKET	523
MOUNTING GP-FORK	525
TOOTH GP-UNI	526
OPERATOR STATION	527
AIR CONDITIONER & MOUNTING GP	527
CAB AR	530
CAB GP	532
COMPRESSOR GP-REFRIGERANT	535
CONDENSER & MTG GP-REFRIGERANT	537
CONSOLE GP-OPERATOR	538
CONTROL GP-HYDRAULIC HAND	544
CONTROL GP-HYDRAULIC LOCKOUT	552
CONTROL GP-HYDRAULIC PEDAL	554
CONTROL GP-STABILIZER	557
CONTROL GP-STEERING	559
CONTROL GP-TRANSMISSION	560
DOOR GP-CAB	562
DUCT GP-CAB AIR	566
FLOOR MAT GP	567
HEATER & AIR CONDITIONER AR	568
HEATER & AIR CONDITIONER GP	569
HEATER GP-CAB	571
INSTALLATION GP-RADIO	575
KIT-RADIO	576
KIT-SEAT FRAME	577
KIT-SEAT SUSPENSION	578
LATCH GP-CAB DOOR & WINDOW	580
LEVER GP-GOVERNOR	582
LINER GP-CAB	583
LINES GP-HEATER	585
LINES GP-HEATER & AIR COND	587
MIRROR GP-REAR VIEW	590
MOTOR GP-WINDOW WIPER	593
MOUNTING GP-CAB	595
MOUNTING GP-HYDRAULIC LOCKOUT	596
PEDAL GP-GOVERNOR	597
ROOF GP-CAB	598
SEAT GP	599
SEAT GP-SUSPENSION	601
SUSPENSION GP-SEAT	604
SWIVEL GP-SEAT	606
VISOR GP-CAB	608
WINDOW GP-CAB	609
WINDOW GP-DOOR	611
WIPER & WASHER GP-WINDOW	613
WIPER GP-WINDOW	615
SERVICE EQUIPMENT AND SUPPLIES	616
FILM GP	616
FILM GP-INTERNATIONAL	617
INSTALLATION AR-WHEEL CHOCK	618
KIT-TOOL	619
LINK GP-SHIPPING	620
LOCK GP-VANDALISM	621
PLATE & FILM GP	622
PLATE AS-SIDE REFLECTIVE	625
PLATE GP-IDENTIFICATION	626
TRANSPORT GP-MACHINE	627
PART NUMBER INDEX	B1

GENERAL INFORMATION

1. MACHINE IDENTIFICATION

Caterpillar machines are identified by Product Identification Numbers (PIN). Some components included in a machine may be identified by Serial Numbers (S/N). Typical components that will be serialized include engines, transmissions, bulldozers, and rippers. The machine and engine are further identified by arrangement numbers and in some cases modification numbers. These numbers are shown on the product identification plate(s) and on the master plate in the operator's compartment.

Caterpillar dealers need all of these numbers to determine accurate parts identification.

SIS *New Feature*

Effective First Quarter 2001 the Caterpillar Product Identification Number (PIN) changed from 8 to 17 characters. In an effort to provide uniform equipment identification, Caterpillar and other construction equipment manufacturers are moving to comply with the latest version of the product identification numbering standard. Non-road machine PINs are defined by ISO 10261. The new PIN format will apply to all Caterpillar machines and generator sets. The PIN plates and frame marking will display the 17 character PIN. The new format will look like the following:

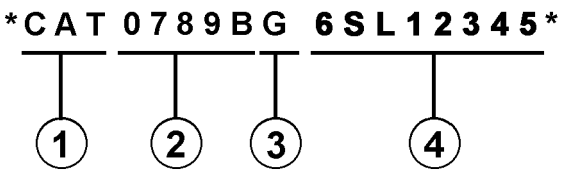

Where:

1. Caterpillar's World Manufacturing Code (characters 1-3)

2. Machine Descriptor (characters 4-8)

3. Check Character (character 9)

4. Machine Indicator Section (MIS) or Product Sequence Number (characters 10-17). These were previously referred to as the Serial Number.

Machines and generator sets produced before First Quarter 2001 will maintain their 8 character PIN format.

Components such as engines, transmissions, axles, etc. and work tools will continue to use an 8 character Serial Number (S/N).

2. ORDERING PARTS

⚠ WARNING

When replacement parts are required for this product Caterpillar recommends using Caterpillar replacement parts or parts with equivalent specifications including, but not limited to, physical dimensions, type, strength and material.

Failure to heed this warning can lead to premature failures, product damage, personal injury or death.

Quality Caterpillar replacement parts are available from Caterpillar dealers throughout the world. Their parts inventories are up to date and include all parts normally required to protect your investment in Caterpillar machines. Dealers may offer repair kits or remanufactured parts to allow selection of the most effective repair alternative for a particular situation. When ordering parts, your order should specify the quantity, part number, part name, and the serial number/product identification number of the machine for which the parts are needed.

3. PARTS MANUAL ORGANIZATION

Product information in this manual is presented as "information elements" that represent all of the components for the specific model. Engine Arrangement and Seat Group are examples of information elements. The information elements are organized alphabetically by part name and secondarily by part number within each major section of the manual.

4. TABLE OF CONTENTS

A table of contents (TOC) is found at the beginning of the manual. The TOC lists each section of the manual with a complete list of all information elements organized as they appear in the manual. Page numbers are provided for quick reference to detailed parts identification illustrations and serviceable consist lists.

5. MAINTENANCE PARTS INDEX

The Maintenance Parts Index, located near the beginning of the manual, references most frequently used maintenance part numbers, providing description, quantity, usage and page number. This information is organized alphabetically by part description.

6. INDEX

The index located near the front of the manual is an alphabetical listing of all information elements included in the manual. Page numbers are provided for quick reference to detailed parts identification illustrations and serviceable consist lists.

7. PART NUMBER INDEX

A numerical index listing all part numbers and the corresponding page number(s) appears at the back of the manual.

8. CAPTIONS

Captions located at the beginning of each information element identify the part number and part name along with additional descriptive information. PIN and S/N information found in each caption should be used to select correct information for a specific machine. Field replacement options, identification of optional attachment components, and where used ("part of") information is also provided.

The first line of a caption is shown in larger type font to indicate the beginning of an information element. Captions for additional pages that may be required to illustrate an information element will be shown in standard type font and will include the term *(contd.)* .

9. NON-SERVICED PARTS

In some instances it is necessary to display non-serviced parts that are a link to a lower level serviceable consist lists. These non-serviced part numbers are shown in *italic* type indicating that they are not available.

10. PARTS LIST REFERENCE NUMBERS

Numbers shown in the Ref No column correspond to numbers used in the associated graphic(s). An alphabetic suffix may be added to a reference number to identify lower level consist items. Numbers shown in the Graphic Ref column refer to the graphic number identifier displayed in the lower left corner of each illustration. The Graphic Ref number may be used in combination with the item Ref No to determine the correct part number. There may be intentional omission of a Ref No in a consist list as information is updated to reflect the latest serviceable part numbers.

11. INDENTED PART NAMES

When a part name is indented in a parts list, it is part of (included in) the group or assembly under which it is indented.

12. ILLUSTRATION REFERENCE LETTERS

When necessary, illustrations contain reference letters (A, B, C etc.) that are intended to track lines and harnesses from one point to another. They are also used to show where to reconnect illustrations that have been separated.

13. ABBREVIATIONS AND SYMBOLS

O.D. – Outside Diameter
I.D. – Inside Diameter
A – Not Part Of This Group
B – Use As Required
C – Change From Previous Type
D – Order By The Meter
E – Order By The Centimeter
F – Not Shown
G – Order By The Inch
I – Refer To Hydraulic Information System
M – Metric Part
R – Remfg Part May Be Available
Y – Separate Illustration
Z – Not Serviced Separately

SIS *New Feature*

14. DESCRIPTION OF TYPE CHANGES

Type - A type is defined as any configuration change that requires an additional Information Element for an Arrangement, Group, or Assembly. If serial number breaks for types are not available, a type # (Type 1, Type 2, etc.) will be displayed in the caption. These "type" changes are identified with a "C" note (change from previous type) in the Parts List. Only the "types" that apply to this Parts Manual will be included. Additional types may exist causing "C" notes to appear on an Information Element when no other types are shown.

15.<END>

This symbol indicates the end of an information element.

NOTE:

Continuing improvement and advancement of product design may cause changes to your machine which may not be included in this publication. Whenever a question arises regarding your Caterpillar product or this publication, please consult your Caterpillar dealer for the latest available information.

GENERAL INFORMATION

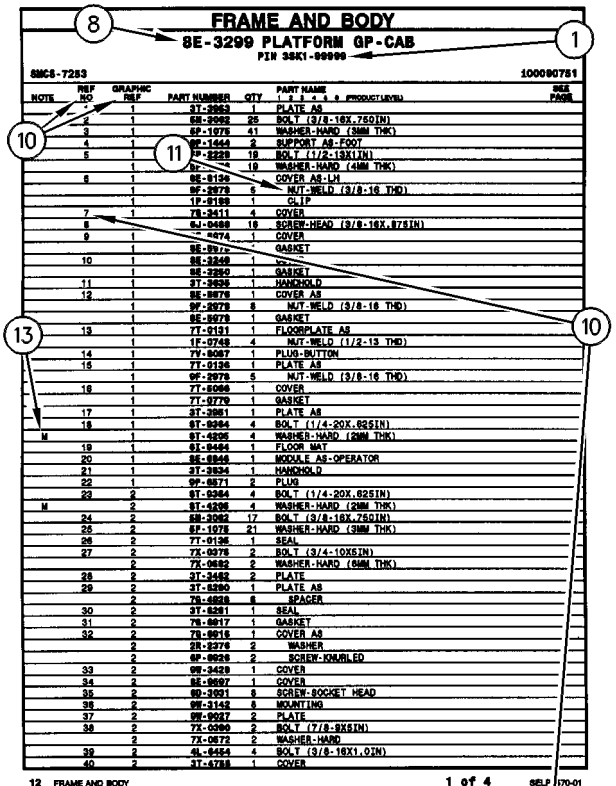

FRAME AND BODY

8E-3299 PLATFORM GP-CAB

PIN 3SK1-99999

SMCS-7283 100090751

NOTE	REF NO	GRAPHIC REF	PART NUMBER	QTY	PART NAME (1 2 3 4 5 6 PRODUCT LEVEL)	SEE PAGE
	*	1	3T-3963	1	PLATE AS	
	2	1	6M-2062	25	BOLT (3/8-16X.750IN)	
	3	1	6P-1075	41	WASHER-HARD (3MM THK)	
	4	1	9F-1444	2	SUPPORT AS-FOOT	
	5	1	9P-2229	19	BOLT (1/2-13X1IN)	
		1	9P-[illegible]	19	WASHER-HARD (4MM THK)	
	6	1	8E-8136	*	COVER AS-LH	
		1	9F-2978	6	NUT-WELD (3/8-16 THD)	
		1	1P-8189	1	CLIP	
	7	1	7X-3411	4	COVER	
	8	1	6J-0468	18	SCREW-HEAD (3/8-16X.87SIN)	
	9	1	[illegible]-8074	1	COVER	
		1	8E-8976	*	GASKET	
	10	1	8E-3248	1	[illegible]	
		1	8E-2260	1	GASKET	
	11	1	3T-3636	1	HANDHOLD	
	12	1	8E-8976	1	COVER AS	
		1	9F-2979	8	NUT-WELD (3/8-16 THD)	
		1	8E-8978	1	GASKET	
	13	1	7T-9131	1	FLOORPLATE AS	
		1	1F-0748	4	NUT-WELD (1/2-13 THD)	
	14	1	7Y-8067	1	PLUG-BUTTON	
	15	1	7T-0136	1	PLATE AS	
		1	9F-2978	5	NUT-WELD (3/8-16 THD)	
	16	1	7T-8066	1	COVER	
		1	7T-9779	1	GASKET	
	17	1	3T-3961	1	PLATE AS	
	18	1	9T-0264	4	BOLT (1/4-20X.62SIN)	
M		1	9T-4295	4	WASHER-HARD (2MM THK)	
	19	1	9X-8464	1	FLOOR MAT	
	20	1	8E-8946	1	MODULE AS-OPERATOR	
	21	1	3T-3934	1	HANDHOLD	
	22	1	9F-8671	2	PLUG	
	23	2	9T-0264	4	BOLT (1/4-20X.62SIN)	
M		2	9T-4295	4	WASHER-HARD (2MM THK)	
	24	2	6M-2062	17	BOLT (3/8-16X.750IN)	
	25	2	6P-1075	21	WASHER-HARD (3MM THK)	
	26	2	7T-0136	1	SEAL	
	27	2	7X-0078	2	BOLT (3/4-10X5IN)	
		2	7X-0682	2	WASHER-HARD (6MM THK)	
	28	2	3T-3482	2	PLATE	
	29	2	3T-8290	1	PLATE AS	
		2	7X-4828	6	SPACER	
	30	2	3T-8281	1	SEAL	
	31	2	7X-8017	1	GASKET	
	32	2	7X-8016	1	COVER AS	
		2	2R-2276	2	WASHER	
		2	9F-8026	2	SCREW-KNURLED	
	33	2	9M-3429	1	COVER	
	34	2	8E-8697	1	COVER	
	35	2	9D-3091	8	SCREW-SOCKET HEAD	
	36	2	9M-3142	8	MOUNTING	
	37	2	9M-9017	2	PLATE	
	38	2	7X-0360	2	BOLT (7/8-9X5IN)	
		2	7X-0672	2	WASHER-HARD	
	39	2	4L-8454	4	BOLT (3/8-16X1.0IN)	
	40	2	3T-4788	1	COVER	

12 FRAME AND BODY 1 of 4 SELP4570-01

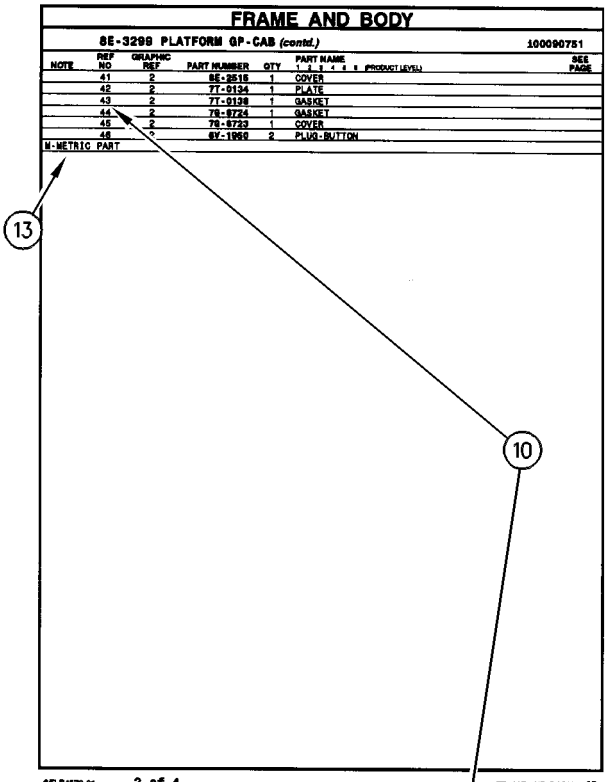

FRAME AND BODY

8E-3299 PLATFORM GP-CAB (contd.) 100090751

NOTE	REF NO	GRAPHIC REF	PART NUMBER	QTY	PART NAME (1 2 3 4 5 6 PRODUCT LEVEL)	SEE PAGE
	41	2	8E-2515	1	COVER	
	42	2	7T-0134	1	PLATE	
	43	2	7T-0138	1	GASKET	
	44	2	7G-8724	1	GASKET	
	45	2	7G-8723	1	COVER	
	46	*	8Y-1950	2	PLUG-BUTTON	

M-METRIC PART

SELP4570-01 2 of 4 FRAME AND BODY 13

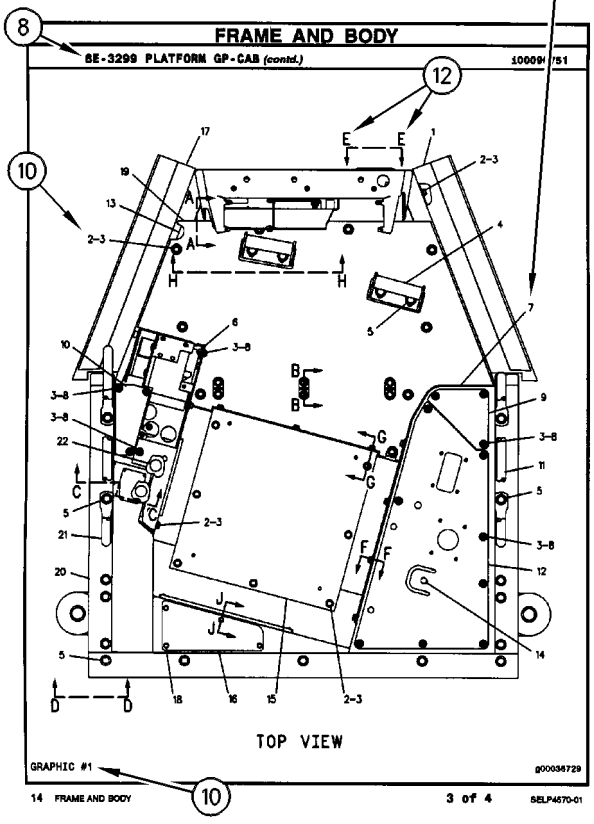

FRAME AND BODY

8E-3299 PLATFORM GP-CAB (contd.) 100090751

TOP VIEW

GRAPHIC #1 g00036729

14 FRAME AND BODY 3 of 4 SELP4570-01

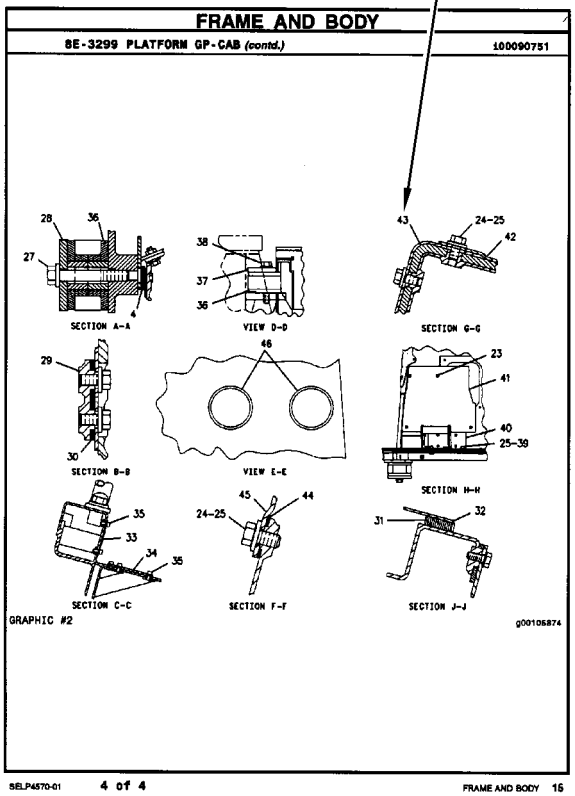

FRAME AND BODY

8E-3299 PLATFORM GP-CAB (contd.) 100090751

SECTION A-A

VIEW D-D

SECTION G-G

SECTION B-B

VIEW E-E

SECTION H-H

SECTION C-C

SECTION F-F

SECTION J-J

GRAPHIC #2 g00105874

SELP4570-01 4 of 4 FRAME AND BODY 15

REPAIR ALTERNATIVES

REMANUFACTURED COMPONENTS

As an option when making repairs consider Caterpillar Remanufactured Components. Components that are available through the Caterpillar Remanufactured Program are identified three ways in the parts book:

- with the letter R in the note field of the parts list
- with an R* at the beginning of the first line of the caption
- with an *R at the end of the first line of the caption

Typical components included in the Remanufacturing Program include:

ALTERNATORS
CONNECTING RODS
CRANKSHAFTS - UNDERSIZE
CRANKSHAFTS - UPGRADE TO NEW
CYLINDER HEADS
ELECTRONIC CONTROL MODULES (ECM)
ELECTRONIC SENSORS
FUEL INJECTORS
FUEL NOZZLES
FUEL PUMPS
GOVERNORS
OIL PUMPS
PISTONS
SHORT BLOCKS
STARTERS
TURBOCHARGERS - COMPLETE
TURBOCHARGER CARTRIDGES
WATER PUMPS

Caterpillar Remanufactured engines for many engine arrangements are also available.

SUPPLEMENTAL COOLANT ADDITIVES

CUSTOMER BENEFITS:

Protects against cavitation, foam, erosion, corrosion, and scale buildup in cooling systems.

- Provides measured coolant conditioner.

DESCRIPTION:

Additives deplete from the coolant with normal operation. For this reason, Supplemental Coolant Additives (SCA) must be added to all heavy duty coolants at regular intervals. In addition, when not using a fully formulated, pre-charged antifreeze, like Caterpillar's DEAC, an initial charge of SCA must be added to the cooling system. The amount of SCA added to the system is dependent on the capacity of the system.

The SCA for initial fill is provided as a liquid. SCA's for maintenance intervals are available in liquid form and as a spin-on element. (No Spin-on available for 3600 Family of Engines)

NOTE:

The amount of SCA added at initial fill is not the same as the amount added at maintenance intervals.

The coolant additive elements can be used with any ethylene or propylene glycol type antifreeze which meets ASTM D4985 or ASTM D5345 Specifications.

NOTE:

For use with standard heavy duty coolant only, not for use with Extended Life Coolant.

PARTS NEEDED:

Cooling System Capacity		Liquid SCA at Initial Fill	Liquid SCA at Maintenance*	Spin-on SCA Maintenance Element*
Liters	Gallons			
22-30	(6-8)	3P-2044 (1)	6V-3542 (1)	111-2370 (1)
30-38	(8-10)	3P-2044 (1) 6V-3542 (1)	111-2372 (1)	111-2369 (1)
38-49	(10-13)	3P-2044 (1) 8T-1589 (1)	111-2372 (1)	111-2369 (1)
49-64	(13-17)	3P-2044 (2)	8T-1589 (1)	9N-3368 (1)
64-83	(17-22)	3P-2044 (2) 8T-1589 (1)	111-2372 (1) 6V-3542 (1)	111-2371 (1)
83-114	(22-30)	3P-2044 (3) 8T-1589 (1)	3P-2044 (1)	9N-3718 (1)
114-163	(30-43)	3P-2044 (5)	3P-2044 (1) 6V-3542 (1)	111-2371 (2)
163-242	(43-64)	3P-2044 (8)	3P-2044 (2)	9N-3718 (2)

** Normal maintenance period is 250 hrs. See your Operation and Maintenance Manual for complete coolant maintenance instructions.*

( ) Indicates quantity required.

MAINTENANCE PARTS

DESCRIPTION	PART NUMBER	QTY	WHERE USED	PAGE
AIR INLET AND EXHAUST SYSTEM				
FILTER ELEMENT-AIR (PRIMARY)	346-6687	1	AIR CLEANER GP	64
FILTER ELEMENT-AIR (SECONDARY)	346-6688	1	AIR CLEANER GP	64
BASIC ENGINE				
GASKET (VALVE COVER)	225-6451	1	COVER GP-VALVE MECHANISM	13
PLUG-DRAIN (ENGINE OIL)	7C-0351	2	PAN GP-OIL	31
COOLING SYSTEM				
BELT-SERPENTINE (FAN PULLEY)	298-5872	1	FAN GP-SUCTION	52
BELT-SERPENTINE (FAN)	309-6655	1	FAN GP-SUCTION	50
CAP AS-COOLANT TANK	251-3227	1	TANK & LINES GP-COOLANT	61
HOSE-RADIATOR (LOWER)	373-9373	1	TANK & LINES GP-COOLANT	61
HOSE-RADIATOR (UPPER)	354-8258	1	TANK & LINES GP-COOLANT	61
REGULATOR GP-TEMPERATURE (INCLUDES CONNECTOR) (WATER)	254-2267	1	CONNECTION GP-WATER	47
ELECTRICAL AND STARTING SYSTEM				
BATTERY (12-VOLT, MAINTENANCE FREE)	230-6368	1	BATTERY & WIRING GP	97
		1	BATTERY GP	101
BELT-DRIVE (WARNING BEACON)	9X-8139	1	LAMP GP-WARNING BEACON	115
FLASHER AS (12-VOLT) (HAZARD)	7T-4848	1	WIRING GP-PLATFORM	166
FLASHER AS (12-VOLT, HAZARD, TURN SIGNAL)	374-9636	1	WIRING GP-PLATFORM	161
FUSE (10-AMPERE)	113-8490	9	WIRING GP-PLATFORM	160
		9	WIRING GP-PLATFORM	167
FUSE (15-AMPERE)	113-8491	12	WIRING GP-PLATFORM	160
		12	WIRING GP-PLATFORM	167
FUSE (20-AMPERE)	113-8492	5	WIRING GP-PLATFORM	160
		6	WIRING GP-PLATFORM	167
FUSE (30-AMPERE)	274-9872	1	RELAY GP	129
FUSE (30-AMPERE) (MAIN)	274-9872	1	WIRING GP-PLATFORM	159
		1	WIRING GP-PLATFORM	166
FUSE (40-AMPERE)	278-6377	1	RELAY GP	126
		1	RELAY GP	129
		1	WIRING GP-PLATFORM	159
FUSE (40-AMPERE) (POWER, 2)	278-6377	1	WIRING GP-PLATFORM	166
FUSE (60-AMPERE)	267-2701	2	RELAY GP	127
		1	RELAY GP	128
		1	WIRING GP-PLATFORM	159
FUSE (60-AMPERE) (POWER, 1)	267-2701	1	WIRING GP-PLATFORM	166
GLOW PLUG (12-VOLT)	232-6662	4	GLOW PLUG GP	105
KEY (BATTERY DISCONNECT)	8H-5306	1	SWITCH GP-DISCONNECT	134
LAMP (12-VOLT)	7S-1800	1	WIRING GP-REAR	173
LAMP (12-VOLT, 10-WATT)	195-9712	1	LAMP GP-REGISTRATION PLATE	114
LAMP (12-VOLT, 21-WATT)	9W-3326	1	WIRING GP-REAR	173
LAMP (12-VOLT, 21-WATT) (AMBER)	226-4560	1	LAMP GP-HEAD & SIGNAL	110
		1	LAMP GP-HEAD & SIGNAL	111
		1	LAMP GP-HEAD & SIGNAL	112
		1	LAMP GP-HEAD & SIGNAL	113
LAMP (12-VOLT, 21-WATT) (ROADING LIGHTS)	9W-3326	1	LIGHTING GP-ROADING	117
		1	LIGHTING GP-ROADING	122

MAINTENANCE PARTS

DESCRIPTION	PART NUMBER	QTY	WHERE USED	PAGE
LAMP (12-VOLT, 5-WATT) (CLEAR)	226-4561	1	LAMP GP-HEAD & SIGNAL	110
		1	LAMP GP-HEAD & SIGNAL	111
		1	LAMP GP-HEAD & SIGNAL	112
		1	LAMP GP-HEAD & SIGNAL	113
LAMP (12-VOLT, 55-WATT) (FLOODLIGHT)	9W-0607	1	LAMP GP-FLOOD	108
		1	LAMP GP-FLOOD	109
LAMP (12-VOLT, 55-WATT) (WARNING BEACON)	9X-8118	1	LAMP GP-WARNING BEACON	115
LAMP GP-SIGNAL (12-VOLT) (STOP, TAIL, TURN, LH)	336-9096	1	WIRING GP-REAR	173
LAMP GP-SIGNAL (12-VOLT) (STOP, TAIL, TURN, RH)	336-9096	1	WIRING GP-REAR	173
LAMP-HEAD (12-VOLT, 60/55-WATT) (CLEAR)	9W-3324	1	LAMP GP-HEAD & SIGNAL	110
		1	LAMP GP-HEAD & SIGNAL	111
		1	LAMP GP-HEAD & SIGNAL	112
		1	LAMP GP-HEAD & SIGNAL	113
FUEL SYSTEM				
CAP-FUEL (LOCKABLE, VENTED)	284-9039	1	TANK GP-FUEL	93
ELEMENT-WATER SEPARATOR (FUEL FILTER)	361-9554	1	PUMP GP-FUEL PRM & PRIM FILTER	92
FILTER ELEMENT-FUEL (WATER SEPARATOR)	156-1200	1	FILTER GP-WATER SEP & FUEL	78
STRAINER (FUEL TANK)	340-4152	1	TANK GP-FUEL	93
HYDRAULIC SYSTEM				
BREATHER (HYDRAULIC TANK)	361-9918	1	TANK & MTG GP-HYDRAULIC	437
CAP AS	6V-9830	2	LINES GP-AUXILIARY HYDRAULIC	380
		1	LINES GP-AUXILIARY HYDRAULIC	384
STRAINER (HYDRAULIC TANK)	254-1098	1	TANK & MTG GP-HYDRAULIC	437
LUBRICATION SYSTEM				
CAP AS-FILLER (ENGINE OIL)	236-6651	1	GAUGE GP-OIL LEVEL & FILLER	44
FILTER AS-ENGINE OIL	7W-2326	1	GAUGE GP-OIL LEVEL & FILLER	44
OPERATOR STATION				
BLADE AS-WIPER (450-MM) (REAR)	315-1316	1	WIPER GP-WINDOW	615
BLADE AS-WIPER (600-MM) (FRONT)	101-0745	1	WIPER & WASHER GP-WINDOW	613
DRYER AS-AIR	283-4236	1	LINES GP-HEATER & AIR COND	587
FILTER ELEMENT AS-AIR (CAB HEATER)	211-2661	1	AIR CONDITIONER & MOUNTING GP	527
		1	HEATER GP-CAB	571
FILTER ELEMENT-AIR (CAB HEATER)	211-2660	1	HEATER & AIR CONDITIONER GP	569
		1	HEATER GP-CAB	573
LAMP (12-VOLT)	210-8754	1	LINER GP-CAB	583

MAINTENANCE PARTS

DESCRIPTION	PART NUMBER	QTY	WHERE USED	PAGE
POWER TRAIN				
BREATHER (AXLE, FRONT)	253-5024	1	AXLE GP-DRIVE & STEERING	190
BREATHER (AXLE, REAR)	197-9155	1	AXLE GP-REAR	192
BREATHER (TRANSMISSION)	7T-3251	1	TRANSMISSION GP-DIRECT DRIVE	257
		1	TRANSMISSION GP-DIRECT DRIVE	261
		1	TRANSMISSION GP-POWER SHIFT	267
BREATHER AS (TRANSMISSION)	293-2147	1	TRANSMISSION GP-DIRECT DRIVE	257
CAP-DUST	6V-0852	1	TRANSMISSION GP-DIRECT DRIVE	256
		1	TRANSMISSION GP-POWER SHIFT	267
FILTER-OIL (STANDARD EFFICIENCY) (TRANSMISSION)	119-4740	1	TRANSMISSION AR-DIRECT DRIVE	252
		1	TRANSMISSION AR-POWER SHIFT	253
		1	TRANSMISSION AR-POWER SHIFT	255
PLUG AS-DRAIN (MAGNETIC) (AXLE, FRONT)	152-6144	4	AXLE GP-DRIVE & STEERING	190
		1	DIFFERENTIAL & BEVEL GEAR GP	198
PLUG AS-DRAIN (MAGNETIC) (AXLE, REAR)	152-6144	4	AXLE GP-REAR	192
PLUG AS-DRAIN (TRANSMISSION)	6Y-1896	1	TRANSMISSION GP-DIRECT DRIVE	256
		1	TRANSMISSION GP-DIRECT DRIVE	261
		1	TRANSMISSION GP-POWER SHIFT	267
STRAINER-SUCTION (TRANSMISSION)	7T-2651	1	CASE AS-TRANSMISSION	195
		1	TRANSMISSION GP-DIRECT DRIVE	261
		1	TRANSMISSION GP-POWER SHIFT	267

INDEX

Name	Page
A	
ACCUMULATOR GP-HYDRAULIC	356
ACCUMULATOR GP-HYDRAULIC–CHARGED	355
ACCUMULATOR GP-RIDE CONTROL–CHARGED	358
ACCUMULATOR GP-RIDE CONTROL–UNCHARGED	357
ACCUMULATOR-REFRIGERANT	587
AFTERCOOLER GP-AIR	60
AIR CLEANER GP	64 65
AIR CONDITIONER & MOUNTING GP	527
ALTERNATOR GP-CHARGING	96
ARM GP-LIFT	444
ARM GP-WINDOW WIPER (REAR)	615
AXLE GP-DRIVE & STEERING–FRONT	190
AXLE GP-REAR	192
B	
BACKHOE AR-EXTENDABLE STICK–SIDESHIFT	1
BACKHOE AR-STANDARD STICK	2
BATTERY & WIRING GP	97
BATTERY (12-VOLT, MAINTENANCE FREE)	97 101
BATTERY GP	101
BELT-DRIVE (WARNING BEACON)	115
BELT-SERPENTINE (FAN PULLEY)	52
BELT-SERPENTINE (FAN)	50
BLADE AS-WIPER (450-MM) (REAR)	615
BLADE AS-WIPER (600-MM) (FRONT)	613
BLOWER GP-CAB (HEATER)	569 573
BOOM GP	447
BOX GP-STORAGE	322 323
BRACE GP-LIFT CYLINDER	449
BRAKE GP-MECH CALIPER PARKING	193
BREATHER (AXLE, FRONT)	190
BREATHER (AXLE, REAR)	192
BREATHER (HYDRAULIC TANK)	437
BREATHER (TRANSMISSION)	257 261 267
BREATHER AS (TRANSMISSION)	257
BREATHER GP–CRANKCASE	41
BUCKET AR-MULTIPURPOSE	475 476 477 478 479 480
BUCKET AS-GENERAL PURPOSE	481
BUCKET AS-HOE–HEAVY-DUTY	485 486 487 488 489 490 491 492 493 494
BUCKET AS-HOE–HIGH CAPACITY	482 483 484
BUCKET GP-GENERAL PURPOSE	495
BUCKET GP-HOE–HEAVY-DUTY	499 500 501 502 503 504 505 506 507 508 509 510
BUCKET GP-HOE–HIGH CAPACITY	496 497 498
BUCKET GP-MULTIPURPOSE	511 512
BULLDOZER AS–MULTIPURPOSE BUCKET	513 514 515 516
C	
CAB AR	530
CAB AR–MECH, AIR CONDITIONER	531
CAB AR–MECH, NON-AC	530
CAB GP–STANDARD	532
CAMSHAFT GP	12
CAP AS	380 384
CAP AS-COOLANT TANK	61
CAP AS-FILLER (ENGINE OIL)	44
CAP-DUST	256 267
CAP-FUEL (LOCKABLE, VENTED)	93
CASE AS-TRANSMISSION–ALL WHEEL DRIVE	196
CASE AS-TRANSMISSION–FRONT	195
CHASSIS AR	2

INDEX

Name	Page
CHOCK GP-WHEEL	618
CLAM AS-MULTIPURPOSE BUCKET	517
	518
COMMON AR	3
COMPRESSOR GP-REFRIGERANT	535
	536
CONDENSER & MTG GP-REFRIGERANT	537
CONNECTION GP-WATER	47
CONSOLE GP-OPERATOR–FRONT	540
CONSOLE GP-OPERATOR–LH	538
CONSOLE GP-OPERATOR–RH	542
CONTROL AR-RIDE	359
CONTROL GP-GOVERNOR	76
CONTROL GP-HYDRAULIC HAND–BACKHOE PATTERN	548
CONTROL GP-HYDRAULIC HAND–EXCAVATOR PATTERN	550
CONTROL GP-HYDRAULIC HAND–LOADER	544
	546
CONTROL GP-HYDRAULIC LOCKOUT–HAND THROTTLE	553
CONTROL GP-HYDRAULIC LOCKOUT–PEDAL, BACKHOE	552
CONTROL GP-HYDRAULIC PEDAL–AUXILIARY, EXTENDABLE STICK	554
	555
CONTROL GP-PARKING BRAKE	307
	308
CONTROL GP-SERVICE BRAKE	309
CONTROL GP-STABILIZER–WITH ALARM	557
CONTROL GP-STEERING–TILT	559
CONTROL GP-TRANSMISSION	186
	560
CONTROL GP-TRANSMISSION (SHUTTLE)	560
CONTROL GP-UNPROGRAMMED (MACHINE)	104
CONVERSION AR-CERTIFICATION–OUTSIDE NACD	3
CONVERSION AR-ROADING–ITALY	4
CONVERSION AR-ROADING–UNITED KINGDOM	4
COOLER GP-ENGINE OIL	48
	49
COOLER GP-OIL	60
COUNTERWEIGHT GP	324
	325
	326
	327
COVER GP	443
COVER GP-INLET MANIFOLD	67
COVER GP-PROTECTION	328
	329
COVER GP-VALVE MECHANISM	13
CRANKSHAFT GP	15
	16
CYLINDER BLOCK GP	17
	18
CYLINDER GP-BACKHOE BUCKET	360
CYLINDER GP-BOOM	362
CYLINDER GP-BRAKE	313
	315
CYLINDER GP-HYDRAULIC–LH	365
CYLINDER GP-HYDRAULIC–RH	363
CYLINDER GP-LIFT	367
	368
CYLINDER GP-MULTIPURPOSE BUKT	369
CYLINDER GP-STABILIZER	370
CYLINDER GP-STEERING (FRONT AXLE)	190
CYLINDER GP-STICK	371
	373
CYLINDER GP-TILT	374
CYLINDER HEAD GP	19
	20

D

Name	Page
DIFFERENTIAL & BEVEL GEAR GP	202
DIFFERENTIAL & BEVEL GEAR GP–FRONT	198
DIFFERENTIAL & BEVEL GEAR GP–REAR	200
DIFFERENTIAL GP–AXLE, FRONT	202
DIFFERENTIAL GP–AXLE, REAR	203
DISTRIBUTION AR	5
	6
DOOR GP-CAB–LH	564
DOOR GP-CAB–RH	562
DRIVE & MTG GP-PUMP	375
	376
DRIVE AR-BACKHOE LOADER–4-WHEEL DRIVE, 2-WHEEL STEER	6
DRIVE GP-FAN	21
DRIVE GP-FLEXIBLE COUPLING	204
	205
DRYER AS-AIR	587
DUCT GP-CAB AIR	566

E

Name	Page
EDGE GP-CUTTING	519
	520
ELECTRONICS AR-MACHINE	103
ELECTRONICS GP-COMMUNICATION–PRODUCT LINK 121SR	103
ELECTRONICS GP-MACHINE	104
ELEMENT-WATER SEPARATOR (FUEL FILTER)	92
ENGINE AR-COMPLETE	8
	9
ENGINE AR-PRIMARY	10
	11
EXTENSION GP-EXHAUST	69

INDEX

Name	Page
F	
FAN GP-SUCTION–WITH AIR CONDITIONER	52
FAN GP-SUCTION–WITHOUT AIR CONDITIONER	50
FENDER GP (RH)	331
FENDER GP-FRONT	330
FENDER GP-REAR	331
FILLER GP-ENGINE OIL	43
FILLER GP-POWER TRAIN OIL–AUTOSHIFT	206
FILLER GP-POWER TRAIN OIL–STANDARD SHIFT	208
FILM (REFLECTOR)	521
FILM (STD CROSS PATTERN)	548
FILM GP	616
FILM GP-INTERNATIONAL	617
FILM-CERTIFICATION (ROPS, FOPS, READ OMM)	532
FILM-COVER	159
FILM-IDENTIFICATION (12-VOLT)	140
FILM-IDENTIFICATION (CAT)	349
FILM-IDENTIFICATION (FUSE, RELAY PANEL)	161, 168
FILM-IDENTIFICATION (GROUP NO., SEQUENCE NO.)	569, 573
FILM-IDENTIFICATION (JUMP START)	140
FILM-IDENTIFICATION (LIFT EYE LOCATION)	219
FILM-IDENTIFICATION (TEMPERATURE CONTROL)	527, 571
FILM-INFORMATION (BELT ROUTING)	50, 52
FILM-INFORMATION (HYDO ADVANCED 10)	437
FILM-INFORMATION (LIFT EYE, TIE-DOWN LOCATION)	335, 337
FILM-INFORMATION (TIE-DOWN)	335, 337
FILM-INSTRUCTION (AUXILIARY CONTROL VALVE)	393
FILM-INSTRUCTION (AUXILIARY)	554, 555
FILM-INSTRUCTION (BEACON)	125
FILM-INSTRUCTION (BOOM LOCK)	76
FILM-INSTRUCTION (EXCAVATOR CONTROL)	550
FILM-INSTRUCTION (EXTENDABLE STICK PIN, READ OMM)	471, 473
FILM-INSTRUCTION (EXTENDABLE STICK)	554, 555
FILM-INSTRUCTION (FORWARD, NEUTRAL, REVERSE)	540
FILM-INSTRUCTION (OIL FLOW DIRECTION)	384, 388, 393
FILM-INSTRUCTION (STABILIZER, SIDESHIFT)	557
FILM-INSTRUCTION (START SWITCH)	542
FILM-INSTRUCTION (VARIABLE SPEED)	76
FILM-NOTICE (ROADING HEIGHT)	4
FILM-WARNING (CONTROL PATTERN, READ OMM)	548
FILM-WARNING (HIGH PRESS CYLINDER, READ OMM)	422, 617
FILM-WARNING (HIGH PRESSURE, READ OMM)	357, 358
FILM-WARNING (HYD PRESS, READ OMM, INTL)	384, 388, 393, 617
FILM-WARNING (NO ENTRANCE, EXIT, READ OMM)	339, 617
FILM-WARNING (PRODUCT LINK 300, INTL)	144, 617
FILM-WARNING (TIPPING HAZARD, READ OMM)	181
FILTER AS-ENGINE OIL	44
FILTER ELEMENT AS-AIR (CAB HEATER)	527, 571
FILTER ELEMENT-AIR (CAB HEATER)	569, 573
FILTER ELEMENT-AIR (PRIMARY)	64
FILTER ELEMENT-AIR (SECONDARY)	64
FILTER ELEMENT-FUEL (WATER SEPARATOR)	78
FILTER GP-FUEL (WATER SEPARATOR)	78
FILTER GP-OIL	377
FILTER GP-OIL (HYDRAULIC)	377
FILTER GP-WATER SEP & FUEL	78
FILTER-OIL (STANDARD EFFICIENCY) (TRANSMISSION)	252, 253, 255
FINAL DRIVE GP	223
FITTING & MTG GP-HYDRAULIC	390
FITTING GP-HYDRAULIC–QUICK DISCONNECT	378
FLANGE GP-WHEEL	210
FLASHER AS (12-VOLT) (HAZARD)	166
FLASHER AS (12-VOLT, HAZARD, TURN SIGNAL)	161

INDEX

Name	Page
FLOOR MAT	567
FLOOR MAT GP	567
FLOORPLATE GP	333
FLYWHEEL GP	22
FRAME AR-LOADER	334
FRAME AR-LOADER–NARROW	334
FRAME GP-LOADER	337
FRAME GP-LOADER–NARROW	335
FRAME GP-SLIDING	339
FRAME GP-SWING	341
FUSE (10-AMPERE)	160
	167
FUSE (15-AMPERE)	160
	167
FUSE (20-AMPERE)	160
	167
FUSE (30-AMPERE)	129
FUSE (30-AMPERE) (MAIN)	159
	166
FUSE (40-AMPERE)	126
	129
	159
FUSE (40-AMPERE) (POWER, 2)	166
FUSE (60-AMPERE)	127
	128
	159
FUSE (60-AMPERE) (POWER, 1)	166

G

GASKET (VALVE COVER)	13
GAUGE (HYDRAULIC TANK)	437
GAUGE AS-OIL LEVEL (DIPSTICK) (ENGINE)	45
GAUGE GP-OIL LEVEL & FILLER	44
GAUGE GP-OIL LEVEL (DIPSTICK)	45
GAUGE-OIL LEVEL (DIPSTICK) (POWER TRAIN)	206
	208
GEAR GP-RING	192
	211
	212
GLOW PLUG (12-VOLT)	105
GLOW PLUG GP	105
GRILL GP-RADIATOR	343
GUARD GP-BUCKET	521
	522
GUARD GP-DEBRIS–CANOPY	345
GUARD GP-DRIVE SHAFT	346
GUARD GP-FUEL TANK	347
GUARD GP-LIGHTING	348

H

HANDLE GP-DOOR (LH)	609
HANDLE GP-DOOR (RH)	609
HARNESS AS-ALARM	148
HARNESS AS-CAB (OBJECT HANDLING)	181
HARNESS AS-CAB (ROOF)	142
HARNESS AS-CHASSIS (LOAD CONTROL)	157
HARNESS AS-CONSOLE	146
HARNESS AS-ENGINE	148
HARNESS AS-FUEL TANK (FUEL SHUTOFF)	8
	9
HARNESS AS-HEATER & AIR COND	151
HARNESS AS-HEATER & AIR COND (CAB)	569
HARNESS AS-HEATER & AIR COND (COMPRESSOR)	137
HARNESS AS-HEATER & AIR COND (VENT)	137
HARNESS AS-HEATER (CAB)	573
HARNESS AS-LIGHTING	532
HARNESS AS-PLATFORM	160
	167
HARNESS AS-RADIO (FLANGE)	575
HARNESS AS-RADIO (PRODUCT LINK)	144
HARNESS AS-REAR	173
	181
HARNESS AS-REAR LIGHTING	117
	122
HARNESS AS-RIDE CONTROL	177
	179
HARNESS AS-SWITCH (HOE)	181
HARNESS AS-SWITCH (OBJECT HANDLING)	181
HARNESS AS-TRANSMISSION (AUTOSHIFT)	186
HARNESS AS-TRANSMISSION (STANDARD SHIFT)	184
HARNESS AS-VALVE (SEAT AIR COMPRESSOR)	578
HARNESS AS-WINDOW WIPER	188
HARNESS AS-WIRING (KICKOUT, POSITIONER)	153
	155
HARNESS AS-WIRING (PRODUCT LINK)	144
HARNESS AS-WIRING (SEAT AIR COMPRESSOR)	578
HEATER & AIR CONDITIONER AR	568
HEATER & AIR CONDITIONER GP	569
HEATER GP-CAB	571
	573
HEATER GP-JACKET WATER	106
	107
HOOD & GUARD GP	349
HOOD GP-ENGINE	351
HOSE-RADIATOR (LOWER)	61
HOSE-RADIATOR (UPPER)	61
HOUSING & FLANGE GP-AXLE–LH	212
HOUSING & FLANGE GP-AXLE–RH	211
HOUSING GP-AXLE–LH	214
HOUSING GP-AXLE–RH	213

INDEX

Name	Page
HOUSING GP-FLYWHEEL	23
HOUSING GP-FRONT	24
HYDRAULIC AR	379

I

INDICATOR AS (LH TURN SIGNAL, PARKING BRAKE)	159, 166
INDICATOR AS (RH TURN SIGNAL, HIGH BEAM)	159, 166
INSTALLATION AR-WHEEL CHOCK	618
INSTALLATION GP-RADIO	575

K

KEY (BATTERY DISCONNECT)	134
KIT-GUARD	352
KIT-RADIO	576
KIT-ROADING CONVERSION–FOG	352
KIT-SEAT FRAME	577
KIT-SEAT SUSPENSION–AIR	578
KIT-TOOL–HAND	619

L

LAMP (12-VOLT)	173, 583
LAMP (12-VOLT, 10-WATT)	114
LAMP (12-VOLT, 21-WATT)	173
LAMP (12-VOLT, 21-WATT) (AMBER)	110, 111, 112, 113
LAMP (12-VOLT, 21-WATT) (ROADING LIGHTS)	117, 122
LAMP (12-VOLT, 5-WATT) (CLEAR)	110, 111, 112, 113
LAMP (12-VOLT, 55-WATT) (FLOODLIGHT)	108, 109
LAMP (12-VOLT, 55-WATT) (WARNING BEACON)	115
LAMP GP-DOME (12-VOLT) (CAB)	583
LAMP GP-FLOOD	108, 109
LAMP GP-HEAD & SIGNAL–LH	111, 113
LAMP GP-HEAD & SIGNAL–RH	110, 112
LAMP GP-REGISTRATION PLATE	114
LAMP GP-ROADING (FOG LIGHT, RED, REAR)	117, 122
LAMP GP-SIGNAL (12-VOLT) (STOP, TAIL, TURN, LH)	173
LAMP GP-SIGNAL (12-VOLT) (STOP, TAIL, TURN, RH)	173
LAMP GP-WARNING BEACON–AMBER	115
LAMP-HEAD (12-VOLT, 60/55-WATT) (CLEAR)	110, 111, 112, 113
LATCH GP-CAB DOOR & WINDOW	580, 581
LEVER GP-GOVERNOR–HANDHELD	582
LEVER GP-HAND CONTROL	317
LIFTING GP-ENGINE	26
LIGHTING GP-FLOOD	116
LIGHTING GP-ROADING–DIPPED, LH	121
LIGHTING GP-ROADING–DIPPED, RH	119
LIGHTING GP-ROADING–FOG	117
LIGHTING GP-ROADING–FOG LIGHT	122
LIGHTING GP-WARNING BEACON	125
LIGHTING GP-WARNING BEACON–AMBER, MAGNETIC MOUNT, ROTATING	124
LINER GP-CAB	583
LINER GP-SOUND SUPPRESSION	353
LINES GP-AIR	70
LINES GP-AUXILIARY HYDRAULIC	383
LINES GP-AUXILIARY HYDRAULIC–EXTENDABLE STICK	382
LINES GP-AUXILIARY HYDRAULIC–EXTENDABLE STICK, 1-WAY	388
LINES GP-AUXILIARY HYDRAULIC–PARALLEL LIFT	380
LINES GP-AUXILIARY HYDRAULIC–SIDESHIFT	386
LINES GP-AUXILIARY HYDRAULIC–STANDARD STICK, 1-WAY	384
LINES GP-BACKHOE	390
LINES GP-BACKHOE AUXILIARY–EXTENDABLE STICK, 2-WAY	392, 393
LINES GP-BACKHOE AUXILIARY–STANDARD STICK, 1-WAY	392
LINES GP-BOOM	396
LINES GP-BUCKET CYLINDER–STANDARD STICK	399
LINES GP-BUCKET–EXTENDABLE STICK	397
LINES GP-FUEL	79, 81
LINES GP-HEATER	585
LINES GP-HEATER & AIR COND	587
LINES GP-LIFT & TILT	401

INDEX

Name	Page
LINES GP-LIFT CYLINDER	404
LINES GP-LIFT CYLINDER–PARALLEL LIFT	403
LINES GP-LOAD CONTROL VALVE	407
LINES GP-LOAD CONTROL VALVE–BOOM CYLINDER HEAD END	410
LINES GP-MULTIPURPOSE BUCKET	412
	414
LINES GP-PILOT	416
LINES GP-POWER TRAIN COOLER	54
	56
LINES GP-POWER TRAIN OIL	215
LINES GP-PUMP	418
LINES GP-RETURN	420
LINES GP-RIDE CONTROL	422
LINES GP-SIDESHIFT	424
LINES GP-STABILIZER	426
LINES GP-STEERING	318
LINES GP-STICK	428
LINES GP-SWING	429
LINK GP-SHIPPING	620
LINKAGE AR	450
LINKAGE AR-BUCKET–WITH LIFTING EYE	451
LINKAGE AR-BUCKET–WITHOUT LIFTING EYE	450
LINKAGE GP-BACKHOE BUCKET–LIFTING	452
LINKAGE GP-BACKHOE BUCKET–WITH LIFTING EYE	454
LINKAGE GP-BACKHOE BUCKET–WITHOUT LIFTING EYE	456
	457
LINKAGE GP-BUCKET (LIFTING)	459
LINKAGE GP-BUCKET (WITHOUT LIFTING EYE)	456
LINKAGE GP-BUCKET–LIFTING	459
LITERATURE GP	3
LOADER AR–PARALLEL LIFT	7
LOCK GP-DIFFERENTIAL–AUTOSHIFT	216
LOCK GP-STABILIZER LEG	460
LOCK GP-TRANSPORT	462
	465
	466
LOCK GP-TRANSPORT–BACKHOE BUCKET	461
LOCK GP-TRANSPORT–SIDESHIFT	463
LOCK GP-VANDALISM	621
LOCKOUT GP-FOURTH GEAR	218

M

Name	Page
MANIFOLD GP-CONTROL (INLET)	443
MANIFOLD GP-RIDE CONTROL	431
MIRROR GP-REAR VIEW–EXTERIOR	591
	592
MIRROR GP-REAR VIEW–INTERIOR	590
MOTOR GP-WINDOW WIPER	593
MOTOR GP-WINDOW WIPER–REAR	594
MOUNTING GP-AXLE	219
MOUNTING GP-BUCKET–BACKHOE, QUICK COUPLER	523
MOUNTING GP-BUCKET–PARALLEL LIFT	524
MOUNTING GP-CAB	595
MOUNTING GP-CYLINDER–MULTIPURPOSE BUCKET	432
MOUNTING GP-ENGINE	27
MOUNTING GP-ENGINE & XMSN	29
	30
MOUNTING GP-FORK–MULTIPURPOSE BUCKET	525
MOUNTING GP-GOVERNOR CONTROL–ENGINE	83
MOUNTING GP-HYDRAULIC LOCKOUT	596
MOUNTING GP-LINES	433
MOUNTING GP-TRANSMISSION	220
	221
MOUNTING GP-WHEEL (FRONT)	286
	287
	288
	296
	299
	300
	303
	305
	306
MOUNTING GP-WHEEL (REAR)	291
	292
	293
	297
	299
	303
MUFFLER GP–TURBOCHARGER	71

O

Name	Page
OPTION AR-BACKHOE	7
OPTION AR-REGIONAL–GERMANY	7

P

Name	Page
PAD GP-STABILIZER–STREET	467
PADLOCK GP	621
PAN GP-OIL	31
PANEL GP-INSTRUMENT	103
PEDAL GP-GOVERNOR	597
PISTON & ROD GP	33
PLANETARY GP-FINAL DRIVE–AXLE	222
	223
PLATE & FILM GP	622
	623
	624
PLATE AS-SIDE REFLECTIVE	625
PLATE GP-COVER (LOADER FRAME)	335

INDEX

Name	Page
	337
PLATE GP-IDENTIFICATION	626
PLATE-IDENTIFICATION (WORK TOOL)	499
	500
	501
	502
	504
PLUG AS-DRAIN (MAGNETIC) (AXLE, FRONT)	190
	198
PLUG AS-DRAIN (MAGNETIC) (AXLE, REAR)	192
PLUG AS-DRAIN (TRANSMISSION)	256
	261
	267
PLUG GP-CYLINDER HEAD	35
PLUG GP-ENGINE	36
	37
PLUG-DRAIN (ENGINE OIL)	31
POWER TRAIN AR–ALL WHEEL DRIVE, 2-WHEEL STEER, AUTOSHIFT	224
	225
POWER TRAIN AR–ALL WHEEL DRIVE, 2-WHEEL STEER, STD SHIFT	224
PULLEY GP-CRANKSHAFT	38
PUMP & MTG GP-HYDRAULIC–IMPLEMENT	434
PUMP GP-ENGINE OIL	46
PUMP GP-FUEL INJECTION	84
	85
	88
	89
PUMP GP-FUEL PRM & PRIM FILTER–WITH WATER SEPARATOR	92
PUMP GP-METERING	320
PUMP GP-PISTON	435
PUMP GP-TRANSMISSION	267
PUMP GP-TRANSMISSION (POWER TRAIN)	256
	261
PUMP GP-WATER	58

R

RADIATOR & HYD OIL COOLER GP	60
RADIATOR GP	60
REFLECTOR GP–SIDE SHIFT	354
REGULATOR GP-TEMPERATURE (INCLUDES CONNECTOR) (WATER)	47
RELAY AS (12-VOLT) (AIR CONDITIONER, HEATER)	137
RELAY AS (12-VOLT) (ALL WHEEL DRIVE)	132
RELAY AS (12-VOLT) (BACKUP ALARM)	166
RELAY AS (12-VOLT) (DEAD ENGINE LOWER)	157
RELAY AS (12-VOLT) (FORWARD HORN)	159
RELAY AS (12-VOLT) (FRONT HORN)	166
RELAY AS (12-VOLT) (FUEL PUMP)	159
	166
RELAY AS (12-VOLT) (HIGH SPEED)	137
	151
RELAY AS (12-VOLT) (LOAD CONTROL)	157
RELAY AS (12-VOLT) (LOW SIDE)	159
RELAY AS (12-VOLT) (NEUTRAL LOCK ALARM)	159
RELAY AS (12-VOLT) (NEUTRAL START)	159
	166
RELAY AS (12-VOLT) (NEUTRALIZER)	159
RELAY AS (12-VOLT) (PARKING BRAKE ALARM)	159
RELAY AS (12-VOLT) (POSITION LAMP)	159
RELAY AS (12-VOLT) (REAR HORN)	159
	166
RELAY AS (12-VOLT) (RIDE CONTROL)	177
	179
RELAY AS (12-VOLT) (START)	159
	166
RELAY GP–POWER DISTRIBUTION	126
RELAY GP–POWER, 1	127
RELAY GP–POWER, 2	128
RELAY GP–STARTING MOTOR	129
ROCKER ARM GP	39
ROOF GP-CAB	598

S

SEAT GP–CLOTH	599
SEAT GP-SUSPENSION–CLOTH	601
	603
SENDER AS-FUEL LEVEL	93
SENDER AS-TEMPERATURE (12-VOLT) (TRANSMISSION OIL)	256
	261
	267
SENDER AS-TEMPERATURE (ENGINE COOLANT)	148
SENSOR AS-POSITION (BUCKET)	153
	155
SENSOR GP-MOISTURE (WATER SEPARATOR)	92
SENSOR GP-PRESSURE (RIDE CONTROL)	177
SENSOR GP-SPEED (TRANSMISSION OUTPUT 1)	267
SENSOR GP-SPEED (TRANSMISSION)	262
SERVICE GP-MACHINE	104
SHAFT GP-AXLE	190
SHAFT GP-COUNTER	226
	228
SHAFT GP-COUNTER (TRANSMISSION)	257
SHAFT GP-DRIVE	230
	231
	232
SHAFT GP-IDLER (TRANSMISSION)	256

INDEX

Name	Page
SHAFT GP-IDLER–POWERSHIFT	233
SHAFT GP-INPUT	235, 239
SHAFT GP-INPUT–ALL WHEEL DRIVE	237
SHAFT GP-MAIN	246
SHAFT GP-OUTPUT–FRONT	244, 245
SHAFT GP-OUTPUT–MAIN	241
SHAFT GP-OUTPUT–REAR	243
SHAFT GP-POWER TAKE-OFF (TRANSMISSION)	376
SHAFT GP-PUMP DRIVE	436
SOFTWARE GP-COMMUNICATION (PRODUCT LINK 121SR)	103
SOFTWARE GP-MACHINE	104
SPRING AS-GAS (GRILL, RH)	349
SPRING AS-GAS (HOOD, RH)	349
SPRING AS-GAS (LOCKABLE) (GRILL, LH)	349
SPRING AS-GAS (LOCKABLE) (HOOD, LH)	349
SPRING GP-GAS (CAB DOOR)	562, 564
SPRING GP-GAS (STEERING COLUMN)	321
STABILIZER GP-BACKHOE	468
STARTING MOTOR GP-ELECTRIC–12-VOLT	130
STEERING COLUMN GP–TILT	321
STICK GP	469
STICK GP-EXTENDABLE	471, 473
STOP GP-STEERING	248, 284
STRAINER (FUEL TANK)	93
STRAINER (HYDRAULIC TANK)	437
STRAINER-SUCTION (TRANSMISSION)	195, 261, 267
SUN VISOR	608
SUSPENSION GP-SEAT–DELUXE, CLOTH	604
SWITCH AS (PARKING BRAKE)	307
SWITCH AS (STABILIZER UP ALARM)	557
SWITCH AS-FOOT (DIFFERENTIAL LOCK ON, OFF)	133
SWITCH AS-LIMIT (LOAD CONTROL)	135
SWITCH AS-LIMIT (SERVICE BRAKE)	309
SWITCH AS-MULTIFUNCTION (HD LIGHT, TURN SIG, WDO WIPER)	159, 166
SWITCH AS-PRESSURE (ENGINE OIL)	136
SWITCH AS-PRESSURE (REFRIGERANT)	137
SWITCH AS-PRESSURE (RIDE CONTROL)	179
SWITCH AS-PUSH BUTTON (BUCKET POSITIONER)	153, 155
SWITCH AS-PUSH BUTTON (NEUTRALIZER, DOWNSHIFT)	544
SWITCH AS-PUSH BUTTON (PUSH BUTTON)	546
SWITCH AS-ROCKER (AIR CONDITIONER, HEATER SELECT)	137
SWITCH AS-ROCKER (ALL WHEEL DRIVE)	131, 132
SWITCH AS-ROCKER (ALL WHEEL DRIVE, BRAKE)	4
SWITCH AS-ROCKER (AUTOSHIFT, STANDARD SHIFT)	186
SWITCH AS-ROCKER (BLOWER FAN SPEED)	137, 151
SWITCH AS-ROCKER (FLOODLIGHTS, FRONT)	116, 142
SWITCH AS-ROCKER (FLOODLIGHTS, REAR)	116, 142
SWITCH AS-ROCKER (FOG LIGHT, REAR)	117, 122
SWITCH AS-ROCKER (HAZARD WARNING LIGHTS)	159, 166
SWITCH AS-ROCKER (HEATER)	151
SWITCH AS-ROCKER (HORN)	173
SWITCH AS-ROCKER (LOAD CONTROL)	157
SWITCH AS-ROCKER (LOAD STABILITY, BUCKET)	181
SWITCH AS-ROCKER (RIDE CONTROL)	177, 179
SWITCH AS-ROCKER (ROADING LIGHTS)	173
SWITCH AS-ROCKER (SIDESHIFT, LOCK-UNLOCK)	173
SWITCH AS-ROCKER (STARTING AID)	146
SWITCH AS-ROCKER (TRANSMISSION NEUTRAL LOCK)	159, 166
SWITCH AS-ROCKER (WARNING BEACON)	159
SWITCH AS-ROCKER (WIPER, WASHER, REAR)	613
SWITCH AS-START (KEY)	146
SWITCH GP-ALL WHEEL DRIVE	131, 132
SWITCH GP-DIFFERENTIAL LOCK	133
SWITCH GP-DISCONNECT–BATTERY	134
SWITCH GP-DISCONNECT–QUICK DROP	135
SWITCH GP-PRESSURE–ENGINE OIL	136
SWITCH GP-PUSH BUTTON (NEUTRALIZER)	560
SWITCH GP-PUSH BUTTON (NEUTRALIZER, DOWNSHIFT)	544, 546
SWITCH-PRESSURE (AIR CLEANER)	65
SWITCH-TEMPERATURE (FUEL)	85, 89
SWITCH-TEMPERATURE (HVAC) (AIR CONDITIONER)	569

INDEX

Name	Page
SWITCH-TOGGLE (SUSPENSION SEAT)	604
SWIVEL GP-SEAT	606
SYNCHRONIZER GP	243

T

Name	Page
TANK & LINES GP-COOLANT–EXPANSION, RADIATOR	61
TANK & MTG GP-HYDRAULIC	437
TANK GP-EXPANSION (COOLANT)	61
TANK GP-FUEL	93 94
TIE ROD GP	190
TIP GP-PENETRATION	499 500 501 502 504 510
TOOTH GP-UNI	496 497 498 503 505 506 508 526
TORQUE CONVERTER AR	249 250
TRANSMISSION AR-DIRECT DRIVE	252
TRANSMISSION AR-DIRECT DRIVE–ALL WHEEL DRIVE, STD SHIFT	251
TRANSMISSION AR-POWER SHIFT	253 254 255
TRANSMISSION AR-POWER SHIFT–4-WHEEL DRIVE, AUTO SHIFT	254
TRANSMISSION GP-DIRECT DRIVE–ALL WHEEL DRIVE	256 261
TRANSMISSION GP-POWER SHIFT	267
TRANSPORT GP-MACHINE	627
TURBOCHARGER GP	72 74

V

Name	Page
VALVE & MTG GP-BANK	438 439
VALVE & MTG GP-SOLENOID	274 440
VALVE AR-BANK 3	441 442
VALVE AS-PRESSURE RELIEF (REFRIGERANT COMPRESSOR)	535
VALVE GP-BANK 3–MECHANICAL	443
VALVE GP-BANK 7 (MECHANICAL)	439
VALVE GP-CHECK (PILOT CONTROL)	404
VALVE GP-CONTROL (AUXILIARY)	443
VALVE GP-CONTROL (LIFT)	443
VALVE GP-CONTROL (TILT)	443
VALVE GP-LOAD CONTROL (BOOM)	407
VALVE GP-LOAD CONTROL (LIFT & TILT)	404
VALVE GP-LOAD CONTROL (STABILIZER)	426
VALVE GP-LOAD CONTROL (STICK)	407
VALVE GP-MANIFOLD & REDUCING (SERVICE BRAKE CONTROL)	309
VALVE GP-PRESSURE CONTROL (290-BAR)	429
VALVE GP-PRESSURE REDUCING (SERVICE BRAKE)	309
VALVE GP-RADIATOR DRAIN	60
VALVE GP-RELIEF	268 275
VALVE GP-RELIEF (TORQUE CONVERTER INLET)	256 261 267
VALVE GP-SHUTOFF (HYDRAULIC OIL)	434
VALVE GP-SOLENOID	276
VALVE GP-SOLENOID (12-VOLT)	268
VALVE GP-SOLENOID (12-VOLT) (ACCUMULATOR)	431
VALVE GP-SOLENOID (12-VOLT) (CLUTCH)	262 268
VALVE GP-SOLENOID (12-VOLT) (DIFFERENTIAL LOCK)	257 262 268 274
VALVE GP-SOLENOID (12-VOLT) (FORWARD, REVERSE)	257
VALVE GP-SOLENOID (12-VOLT) (REVERSE)	262 268
VALVE GP-SOLENOID (12-VOLT) (RIDE CONTROL, SWITCH)	431
VALVE GP-SOLENOID (12-VOLT) (TRANSMISSION)	262 268
VALVE GP-SOLENOID–CLUTCH	278
VALVE GP-SOLENOID–TRANSMISSION	279
VALVE GP-TIRE	281 282
VALVE MECHANISM GP	40
VISOR GP-CAB	608

W

Name	Page
WHEEL & TIRE AR–ALL WHEEL DRIVE	282 283 284

INDEX

Name	Page
	285
WHEEL & TIRE AR–ALL WHEEL DRIVE, BIAS	285
WHEEL & TIRE GP–FRONT	286
	287
	288
	296
	299
	300
	303
	305
	306
WHEEL & TIRE GP–FRONT, LH	286
	287
	288
	296
	300
	302
	304
	305
	306
WHEEL & TIRE GP–FRONT, RH	286
	287
	288
	296
	300
	302
	303
	305
	306
WHEEL & TIRE GP–REAR	291
	292
	293
	297
	299
	303
WHEEL & TIRE GP–REAR, LH	289
	290
	291
	294
	295
	297
	298
	301
	304
WHEEL & TIRE GP–REAR, RH	289
	290
	291
	294
	295
	298
	301
	302
	304
WINDOW GP-CAB–REAR	609
WINDOW GP-DOOR–LH	611
WINDOW GP-DOOR–RH	612
WIPER & WASHER GP-WINDOW	613
WIPER GP-WINDOW–REAR	615
WIRING GP-AIR CONDITIONER	137
WIRING GP-AUXILIARY	140
WIRING GP-CAB–ROOF	142
WIRING GP-COMMUNICATION	144
WIRING GP-CONSOLE	4
WIRING GP-CONSOLE–SIDE	146
WIRING GP-ENGINE–PILOT & MECHANICAL	148
WIRING GP-HEATER	151
WIRING GP-KICKOUT & POSITIONER	155
WIRING GP-KICKOUT & POSITIONER–PARALLEL LIFT	153
WIRING GP-LOAD CONTROL	157
WIRING GP-PLATFORM	159
	166
WIRING GP-REAR–SIDESHIFT	173
WIRING GP-RIDE CONTROL	177
WIRING GP-RIDE CONTROL–MECHANICAL	179
WIRING GP-SENSOR–OBJECT HANDLING	181
WIRING GP-TRANSMISSION CONTROL–AUTOSHIFT	186
WIRING GP-TRANSMISSION CONTROL–STANDARD SHIFT	184
WIRING GP-WIPER–REAR	188

MEMORANDA

MACHINE ARRANGEMENT

340-1733 BACKHOE AR-EXTENDABLE STICK–SIDESHIFT

S/N: SJW1-UP
PART OF 389-3761, 389-3762 DISTRIBUTION AR
FOR USE WITH 340-1740–PAGE 450, 340-1741–PAGE 451
AN ATTACHMENT

SMCS-6504, 6533 **i04628811**

NOTE	PART NUMBER	QTY	PART NAME 1 2 3 4 5 6 (PRODUCT LEVEL)	SEE PAGE
Y	*324-0548*	1	BOOM GP	447
Y	*353-1388*	1	CONTROL GP-HYDRAULIC PEDAL (AUXILIARY, EXTENDABLE STICK)	555
Y	**320-5937**	1	CYLINDER GP-BACKHOE BUCKET	360
Y	**320-5936**	1	CYLINDER GP-BOOM	362
Y	**320-5932**	1	CYLINDER GP-STICK	371
Y	*378-9623*	1	FRAME GP-SWING	341
Y	*321-7231*	1	LINES GP-BACKHOE	390
Y	*365-3333*	1	LINES GP-BUCKET (EXTENDABLE STICK)	397
Y	*368-5465*	1	LINES GP-SIDESHIFT	424
Y	*353-1418*	1	LOCK GP-TRANSPORT (SIDESHIFT)	463
Y	*323-2096*	1	MOUNTING GP-LINES	433
Y	*324-0550*	1	STICK GP-EXTENDABLE	471

Y-SEPARATE ILLUSTRATION

<END>

340-1734 BACKHOE AR-EXTENDABLE STICK–SIDESHIFT

S/N: SJW1-UP
JCB
FOR USE WITH 340-1743–PAGE 450, 340-1750–PAGE 450
AN ATTACHMENT

SMCS-6504, 6533 **i04643150**

NOTE	PART NUMBER	QTY	PART NAME 1 2 3 4 5 6 (PRODUCT LEVEL)	SEE PAGE
Y	*324-0548*	1	BOOM GP	447
Y	*353-1388*	1	CONTROL GP-HYDRAULIC PEDAL	555
Y	**320-5937**	1	CYLINDER GP-BACKHOE BUCKET	360
Y	**320-5936**	1	CYLINDER GP-BOOM	362
Y	**320-5932**	1	CYLINDER GP-STICK	371
Y	*378-9623*	1	FRAME GP-SWING	341
Y	*321-7231*	1	LINES GP-BACKHOE	390
Y	*365-3333*	1	LINES GP-BUCKET (EXTENDABLE STICK)	397
Y	*368-5465*	1	LINES GP-SIDESHIFT	424
Y	*353-1418*	1	LOCK GP-TRANSPORT (SIDESHIFT)	463
Y	*323-2096*	1	MOUNTING GP-LINES	433
Y	*329-9749*	1	STICK GP-EXTENDABLE	473

Y-SEPARATE ILLUSTRATION

<END>

MACHINE ARRANGEMENT

340-1732 BACKHOE AR-STANDARD STICK

S/N: SJW1-UP

FOR USE WITH 340-1740—PAGE 450, 340-1741—PAGE 451

AN ATTACHMENT

SMCS-6502, 6504 **i04608711**

NOTE	PART NUMBER	QTY	PART NAME 1 2 3 4 5 6 (PRODUCT LEVEL)	SEE PAGE
Y	*324-0548*	1	BOOM GP	447
Y	**320-5937**	1	CYLINDER GP-BACKHOE BUCKET	360
Y	**320-5936**	1	CYLINDER GP-BOOM	362
Y	**320-5932**	1	CYLINDER GP-STICK	371
Y	*378-9623*	1	FRAME GP-SWING	341
Y	*321-7231*	1	LINES GP-BACKHOE	390
Y	*323-2023*	1	LINES GP-BUCKET CYLINDER (STANDARD STICK)	399
Y	*368-5465*	1	LINES GP-SIDESHIFT	424
Y	*353-1418*	1	LOCK GP-TRANSPORT (SIDESHIFT)	463
Y	*323-2096*	1	MOUNTING GP-LINES	433
Y	*324-0552*	1	STICK GP	469

Y-SEPARATE ILLUSTRATION

<END>

340-1693 CHASSIS AR

S/N: SJW1-UP

PART OF 367-5957 COMMON AR

SMCS-7000 **i04549427**

NOTE	PART NUMBER	QTY	PART NAME 1 2 3 4 5 6 (PRODUCT LEVEL)	SEE PAGE
Y	**320-5938**	2	CYLINDER GP-STABILIZER	370
Y	*320-5933*	1	FRAME GP-SLIDING	339
Y	*337-9821*	1	LINES GP-STABILIZER	426
Y	*216-0910*	1	LOCK GP-VANDALISM	621
Y	*328-5964*	1	STABILIZER GP-BACKHOE	468
Y	*362-4625*	1	TANK GP-FUEL	94
B	**193-5914**	10	PLUG	
B	**193-5915**	12	PLUG	

B-USE AS REQUIRED
Y-SEPARATE ILLUSTRATION

<END>

MACHINE ARRANGEMENT

367-5957 COMMON AR

S/N: SJW1-UP

SMCS-7000 **i04611571**

NOTE	PART NUMBER	QTY	PART NAME 1 2 3 4 5 6 (PRODUCT LEVEL)	SEE PAGE
Y	*340-1693*	1	CHASSIS AR	2
Y	*367-5834*	1	FILM GP	616
Y	*353-1392*	1	FILM GP-INTERNATIONAL	617
Y	*340-1718*	1	HYDRAULIC AR	379
Y	*340-1701*	1	LOADER AR (PARALLEL LIFT)	7
Y	*374-7438*	1	PLATE GP-IDENTIFICATION	626
	285-1203	1	LITERATURE GP	
	5P-8500	2	KEY	
	5P-7958	1	SLEEVE-CABLE SPLICE	
	5P-7957	1	LANYARD	

Y-SEPARATE ILLUSTRATION

<END>

341-3105 CONVERSION AR-CERTIFICATION—OUTSIDE NACD

S/N: SJW1-UP
PART OF 389-3761, 389-3762 DISTRIBUTION AR
AN ATTACHMENT

SMCS-7000 **i04560201**

NOTE	PART NUMBER	QTY	PART NAME 1 2 3 4 5 6 (PRODUCT LEVEL)	SEE PAGE
Y	*216-1238*	1	LOCK GP-STABILIZER LEG	460
Y	*347-4525*	1	MIRROR GP-REAR VIEW	592
Y	*152-0184*	1	REFLECTOR GP (SIDESHIFT)	354

Y-SEPARATE ILLUSTRATION

<END>

MACHINE ARRANGEMENT

341-3107 CONVERSION AR-ROADING—ITALY

S/N: SJW1-UP

FOR USE WITH 341-3105—PAGE 3. CANNOT BE USED WITH 372-8661—PAGE 122, 329-7496—PAGE 119, 252-4660—PAGE 461, 337-6851—PAGE 330

AN ATTACHMENT

SMCS-7000 **i04609235**

NOTE	PART NUMBER	QTY	PART NAME 1 2 3 4 5 6 (PRODUCT LEVEL)	SEE PAGE
Y	*231-2879*	1	CONTROL GP-HYDRAULIC LOCKOUT (PEDAL, BACKHOE)	552
Y	*332-4254*	1	CONTROL GP-HYDRAULIC LOCKOUT (HAND THROTTLE)	553
Y	*337-6851*	1	FENDER GP-FRONT	330
Y	*214-7024*	1	GUARD GP-BUCKET	521
Y	*329-7496*	1	LIGHTING GP-ROADING (DIPPED, RH)	119
Y	*372-8661*	1	LIGHTING GP-ROADING (FOG LIGHT)	122
Y	*343-3433*	1	LIGHTING GP-WARNING BEACON (AMBER, MAGNETIC MOUNT, ROTATIN)	125
Y	*252-4660*	1	LOCK GP-TRANSPORT (BACKHOE BUCKET)	461
Y	*374-6872*	1	LOCK GP-TRANSPORT (LOADER)	466
Y	*278-8223*	1	MOUNTING GP-HYDRAULIC LOCKOUT	596
Y	*374-7439*	1	PLATE & FILM GP (ENGINE)	623
Y	*374-7440*	1	PLATE & FILM GP (MACHINE)	624
Y	*101-4419*	3	PLATE AS-SIDE REFLECTIVE	625
	246-3229	1	WIRING GP-CONSOLE	
	8Y-7833	1	WIRE AS	
	283-7616	1	SWITCH AS-ROCKER (ALL WHEEL DRIVE, BRAKE)	
	111-7899	1	GASKET	
B	**101-4416**	8	COVER-WORK LIGHT	

B-USE AS REQUIRED
Y-SEPARATE ILLUSTRATION

<END>

341-3111 CONVERSION AR-ROADING—UNITED KINGDOM

S/N: SJW1-UP

FOR USE WITH 341-3105—PAGE 3. CANNOT BE USED WITH 372-8661—PAGE 122, 211-4291—PAGE 124

AN ATTACHMENT

SMCS-7000 **i04552037**

NOTE	PART NUMBER	QTY	PART NAME 1 2 3 4 5 6 (PRODUCT LEVEL)	SEE PAGE
Y	*372-8661*	1	LIGHTING GP-ROADING (FOG LIGHT)	122
Y	*211-4291*	1	LIGHTING GP-WARNING BEACON (AMBER, MAGNETIC MOUNT, ROTATIN)	124
	349-3644	1	FILM-NOTICE (ROADING HEIGHT)	
			(INSIDE OF THE FRONT WINDSCREEN IN THE TOP LH CORNER, BELOW THE SUN VISOR)	
	160-7599	2	RESTRAINER-BUCKET	

Y-SEPARATE ILLUSTRATION

<END>

MACHINE ARRANGEMENT

389-3761 DISTRIBUTION AR

S/N: SJW1-UP

AN ATTACHMENT

SMCS-7000 **i04629240**

NOTE	PART NUMBER	QTY	PART NAME 1 2 3 4 5 6 (PRODUCT LEVEL)	SEE PAGE
Y	*340-1733*	1	BACKHOE AR-EXTENDABLE STICK (SIDESHIFT)	1
Y	**350-1588**	1	BUCKET AR-MULTIPURPOSE	478
Y	*374-6852*	1	CAB AR (MECH, NON-AC)	530
Y	*340-1746*	1	CONTROL AR-RIDE	359
Y	*353-1386*	1	CONTROL GP-HYDRAULIC HAND (BACKHOE PATTERN)	548
Y	*341-3105*	1	CONVERSION AR-CERTIFICATION (OUTSIDE NACD)	3
Y	*337-9695*	1	COUNTERWEIGHT GP	326
Y	*337-9866*	1	ENGINE AR-COMPLETE	8
Y	*337-6851*	1	FENDER GP-FRONT	330
Y	*132-8769*	1	FITTING GP-HYDRAULIC (QUICK DISCONNECT)	378
Y	*373-4296*	1	FRAME AR-LOADER	334
Y	*337-9697*	1	GUARD GP-DRIVE SHAFT	346
Y	*338-1421*	1	GUARD GP-LIGHTING	348
Y	*329-7496*	1	LIGHTING GP-ROADING (DIPPED, RH)	119
Y	*211-4291*	1	LIGHTING GP-WARNING BEACON (AMBER, MAGNETIC MOUNT, ROTATIN)	124
Y	*353-1490*	1	LINES GP-AUXILIARY HYDRAULIC (EXTENDABLE STICK, 1-WAY)	382
Y	*340-1740*	1	LINKAGE AR-BUCKET (WITHOUT LIFTING EYE)	450
Y	*9R-0868*	1	PAD GP-STABILIZER (STREET)	467
Y	*374-6826*	1	POWER TRAIN AR (ALL WHEEL DRIVE, 2-WHEEL STEER)	224
Y	*9R-5866*	1	TOOTH GP-UNI	526
Y	*373-4267*	1	VALVE AR-BANK 3	441

Y-SEPARATE ILLUSTRATION

<END>

MACHINE ARRANGEMENT

389-3762 DISTRIBUTION AR

S/N: SJW1-UP

AN ATTACHMENT

SMCS-7000 **i04629239**

NOTE	PART NUMBER	QTY	PART NAME 1 2 3 4 5 6 (PRODUCT LEVEL)	SEE PAGE
Y	*340-1733*	1	BACKHOE AR-EXTENDABLE STICK (SIDESHIFT)	1
Y	**350-1588**	1	BUCKET AR-MULTIPURPOSE	478
Y	*374-6854*	1	CAB AR (MECH, AIR CONDITIONER)	531
Y	*340-1746*	1	CONTROL AR-RIDE	359
Y	*353-1386*	1	CONTROL GP-HYDRAULIC HAND (BACKHOE PATTERN)	548
Y	*341-3105*	1	CONVERSION AR-CERTIFICATION (OUTSIDE NACD)	3
Y	*337-9695*	1	COUNTERWEIGHT GP	326
Y	**337-9867**	1	ENGINE AR-COMPLETE	9
Y	*337-6851*	1	FENDER GP-FRONT	330
Y	*132-8769*	1	FITTING GP-HYDRAULIC (QUICK DISCONNECT)	378
Y	*373-4296*	1	FRAME AR-LOADER	334
Y	*337-9697*	1	GUARD GP-DRIVE SHAFT	346
Y	*338-1421*	1	GUARD GP-LIGHTING	348
Y	*329-7496*	1	LIGHTING GP-ROADING (DIPPED, RH)	119
Y	*211-4291*	1	LIGHTING GP-WARNING BEACON (AMBER, MAGNETIC MOUNT, ROTATIN)	124
Y	*353-1492*	1	LINES GP-BACKHOE AUXILIARY (EXTENDABLE STICK, 2-WAY)	392
Y	*340-1740*	1	LINKAGE AR-BUCKET (WITHOUT LIFTING EYE)	450
Y	*9R-0868*	1	PAD GP-STABILIZER (STREET)	467
Y	*374-6826*	1	POWER TRAIN AR (ALL WHEEL DRIVE, 2-WHEEL STEER)	224
Y	*9R-5866*	1	TOOTH GP-UNI	526
Y	*373-4267*	1	VALVE AR-BANK 3	441

Y-SEPARATE ILLUSTRATION

<END>

353-1501 DRIVE AR-BACKHOE LOADER–

4-WHEEL DRIVE, 2-WHEEL STEER

S/N: SJW1-UP

PART OF 374-6826, 374-6834, 374-6842 POWER TRAIN AR

AN ATTACHMENT

SMCS-3268, 3278, 3282, 4304, 4313, 4334 **i04611576**

NOTE	PART NUMBER	QTY	PART NAME 1 2 3 4 5 6 (PRODUCT LEVEL)	SEE PAGE
Y	**230-5743**	1	AXLE GP-DRIVE & STEERING (FRONT)	190
Y	**230-5738**	1	AXLE GP-REAR	192
Y	*206-1642*	1	CONTROL GP-PARKING BRAKE	307
Y	*337-9825*	1	LINES GP-STEERING	318
Y	*337-9837*	1	MOUNTING GP-AXLE	219
Y	*308-9973*	1	SWITCH GP-DIFFERENTIAL LOCK (SIDESHIFT)	133

Y-SEPARATE ILLUSTRATION

<END>

MACHINE ARRANGEMENT

340-1701 LOADER AR—PARALLEL LIFT

S/N: SJW1-UP

PART OF 367-5957 COMMON AR

SMCS-6100 **i04640932**

NOTE	PART NUMBER	QTY	PART NAME 1 2 3 4 5 6 (PRODUCT LEVEL)	SEE PAGE
Y	*337-9846*	1	ARM GP-LIFT	444
Y	*337-9841*	1	BRACE GP-LIFT CYLINDER	449
Y	**358-5034**	1	CYLINDER GP-LIFT (LH)	367
Y	**358-5035**	1	CYLINDER GP-LIFT (RH)	368
Y	**358-5045**	2	CYLINDER GP-TILT	374

Y-SEPARATE ILLUSTRATION

<END>

377-0023 OPTION AR-BACKHOE

S/N: SJW1-UP

240-VOLT

CANNOT BE USED WITH 331-5461—PAGE 101

AN ATTACHMENT

SMCS-7000 **i04603830**

NOTE	PART NUMBER	QTY	PART NAME 1 2 3 4 5 6 (PRODUCT LEVEL)	SEE PAGE
Y	*331-5461*	1	BATTERY GP (HEAVY-DUTY)	101
Y	*367-6032*	1	HEATER GP-JACKET WATER (240-VOLT)	107

Y-SEPARATE ILLUSTRATION

<END>

341-3109 OPTION AR-REGIONAL—GERMANY

S/N: SJW1-UP

FOR USE WITH 341-3105—PAGE 3. CANNOT BE USED WITH 329-7496—PAGE 119, 337-6851—PAGE 330

AN ATTACHMENT

SMCS-7000 **i04609393**

NOTE	PART NUMBER	QTY	PART NAME 1 2 3 4 5 6 (PRODUCT LEVEL)	SEE PAGE
Y	*337-6851*	1	FENDER GP-FRONT	330
Y	*214-7024*	1	GUARD GP-BUCKET	521
Y	*360-8982*	1	INSTALLATION AR-WHEEL CHOCK	618
Y	*329-7496*	1	LIGHTING GP-ROADING (DIPPED, RH)	119
Y	*130-8149*	1	LOCKOUT GP-FOURTH GEAR	218
Y	*360-8981*	1	PLATE & FILM GP	622
	252-4670	1	KIT-TOOL (HAND)	
			(INCLUDES SPANNERS, PLIERS, GREASE GUN, SOCKETS, SLIDING T BAR & HEADS, PRESSURE GAUGE, HYDRAULIC CONNECTOR & CLOTH)	

Y-SEPARATE ILLUSTRATION

<END>

ENGINE ARRANGEMENT

337-9866 ENGINE AR-COMPLETE

S/N: SJW1-UP
PART OF 389-3761 DISTRIBUTION AR
AN ATTACHMENT

SMCS-1000 **i04629237**

NOTE	PART NUMBER	QTY	PART NAME 1 2 3 4 5 6 (PRODUCT LEVEL)	SEE PAGE
Y	*352-1449*	1	AIR CLEANER GP	65
Y	*357-6501*	1	BATTERY & WIRING GP	97
Y	*353-1380*	1	BOX GP-STORAGE	322
Y	*360-8798*	1	BREATHER GP (CRANKCASE)	41
Y	**354-7363**	1	ENGINE AR-PRIMARY	10
Y	*350-3689*	1	EXTENSION GP-EXHAUST	69
Y	*352-3463*	1	GAUGE GP-OIL LEVEL & FILLER	44
Y	*337-9702*	1	HOOD & GUARD GP	349
Y	*337-9735*	1	LINER GP-SOUND SUPPRESSION	353
Y	*337-9748*	1	LINES GP-AIR	70
Y	*337-9734*	1	LINES GP-FUEL	81
Y	*353-1364*	1	MOUNTING GP-GOVERNOR CONTROL	83
Y	*352-1454*	1	MUFFLER GP	71
Y	*354-7361*	1	TANK & LINES GP-COOLANT	61
Y	*357-3199*	1	WIRING GP-ENGINE (PILOT & MECHANICAL)	148
	178-8465	1	HARNESS AS-FUEL TANK (FUEL SHUTOFF)	
	9X-3401	2	PIN-CONNECTOR (16-GA TO 18-GA)	
	176-1477	1	PLUG AS (2-PIN)	
	102-8802	1	KIT-RECEPTACLE (2-PIN)	
			(INCLUDES RECEPTACLE AS & WEDGE)	
	185-1861	1	SEAL-WIRE	
	8L-8413	2	STRAP-CABLE	
	176-1521	2	TERMINAL	

Y-SEPARATE ILLUSTRATION

ENGINE ARRANGEMENT

337-9867 ENGINE AR-COMPLETE

S/N: SJW1-UP

PART OF 389-3762 DISTRIBUTION AR

AN ATTACHMENT

SMCS-1000 **i04628797**

NOTE	PART NUMBER	QTY	PART NAME 1 2 3 4 5 6 (PRODUCT LEVEL)	SEE PAGE
Y	*352-1449*	1	AIR CLEANER GP	65
Y	*357-6501*	1	BATTERY & WIRING GP	97
Y	*353-1380*	1	BOX GP-STORAGE	322
Y	*360-8798*	1	BREATHER GP (CRANKCASE)	41
Y	**364-5743**	1	ENGINE AR-PRIMARY	11
Y	*350-3689*	1	EXTENSION GP-EXHAUST	69
Y	*352-3463*	1	GAUGE GP-OIL LEVEL & FILLER (ENGINE)	44
Y	*337-9702*	1	HOOD & GUARD GP	349
Y	*337-9735*	1	LINER GP-SOUND SUPPRESSION	353
Y	*337-9748*	1	LINES GP-AIR	70
Y	*337-9734*	1	LINES GP-FUEL	81
Y	*353-1364*	1	MOUNTING GP-GOVERNOR CONTROL	83
Y	*352-1454*	1	MUFFLER GP	71
Y	*354-7361*	1	TANK & LINES GP-COOLANT (EXPANSION, RADIATOR)	61
Y	*357-3199*	1	WIRING GP-ENGINE (PILOT & MECHANICAL)	148
	178-8465	1	HARNESS AS-FUEL TANK (FUEL SHUTOFF)	
	9X-3401	2	PIN-CONNECTOR (16-GA TO 18-GA)	
	176-1477	1	PLUG AS (2-PIN)	
	102-8802	1	KIT-RECEPTACLE (2-PIN)	
			(INCLUDES RECEPTACLE AS & WEDGE)	
	185-1861	2	SEAL-WIRE	
	8L-8413	2	STRAP-CABLE	
	176-1521	2	TERMINAL	

Y-SEPARATE ILLUSTRATION

ENGINE ARRANGEMENT

354-7363 ENGINE AR-PRIMARY

S/N: C4Z1-UP
70 BRAKE KW (94 BHP) AT 2200 RPM
PART OF 337-9866 ENGINE AR-COMPLETE
AN ATTACHMENT

SMCS-1000 **i04634170**

NOTE	PART NUMBER	QTY	PART NAME 1 2 3 4 5 6 (PRODUCT LEVEL)	SEE PAGE
Y	*317-9776*	1	ALTERNATOR GP-CHARGING	96
Y	*326-9005*	1	CAMSHAFT GP	12
Y	*316-6941*	1	CONNECTION GP-WATER	47
Y	*316-6899*	1	COOLER GP-ENGINE OIL	48
Y	*329-0129*	1	COVER GP-INLET MANIFOLD	67
Y	*326-9008*	1	COVER GP-VALVE MECHANISM	13
Y	*326-9000*	1	CRANKSHAFT GP	15
Y	*326-8999*	1	CYLINDER BLOCK GP	17
Y	*326-9003*	1	CYLINDER HEAD GP	20
Y	*384-4108*	1	DRIVE GP-FAN	21
Y	*309-7555*	1	FILLER GP-ENGINE OIL	43
Y	*303-5768*	1	FLYWHEEL GP	22
Y	*315-3418*	1	GLOW PLUG GP	105
Y	*303-5767*	1	HOUSING GP-FLYWHEEL	23
Y	*304-8760*	1	HOUSING GP-FRONT	24
Y	*326-9013*	1	LIFTING GP-ENGINE	26
Y	*326-9012*	1	LINES GP-FUEL	79
Y	*384-4107*	1	MOUNTING GP-ENGINE	27
Y	*322-9476*	1	PAN GP-OIL	31
Y	*326-9002*	1	PISTON & ROD GP	33
Y	*298-5129*	1	PLUG GP-CYLINDER HEAD	35
Y	*298-5131*	1	PLUG GP-ENGINE	36
Y	*304-8761*	1	PLUG GP-ENGINE	37
Y	*360-7347*	1	PULLEY GP-CRANKSHAFT	38
Y	*298-5112*	1	PUMP GP-ENGINE OIL	46
Y	*326-9006*	1	PUMP GP-FUEL INJECTION	85
Y	*315-3411*	1	PUMP GP-WATER	58
Y	*303-5769*	1	STARTING MOTOR GP-ELECTRIC	130
Y	*316-6925*	1	SWITCH GP-PRESSURE	136
Y	*326-9010*	1	TURBOCHARGER GP	72
Y	*326-9004*	1	VALVE MECHANISM GP	40
	359-0744	1	CYLINDER BLOCK GP-SHORT	

Y-SEPARATE ILLUSTRATION

ENGINE ARRANGEMENT

364-5743 ENGINE AR-PRIMARY

S/N: C4Z1-UP
75 BRAKE KW (100 BHP) AT 2200 RPM
PART OF 337-9867 ENGINE AR-COMPLETE
AN ATTACHMENT

SMCS-1000 **i04664138**

NOTE	PART NUMBER	QTY	PART NAME 1 2 3 4 5 6 (PRODUCT LEVEL)	SEE PAGE
Y	*317-9776*	1	ALTERNATOR GP-CHARGING	96
Y	*326-9005*	1	CAMSHAFT GP	12
Y	*316-6941*	1	CONNECTION GP-WATER	47
Y	*316-6899*	1	COOLER GP-ENGINE OIL	48
Y	*329-0129*	1	COVER GP-INLET MANIFOLD	67
Y	*326-9008*	1	COVER GP-VALVE MECHANISM	13
Y	*326-9000*	1	CRANKSHAFT GP	15
Y	*326-8999*	1	CYLINDER BLOCK GP	17
Y	*326-9003*	1	CYLINDER HEAD GP	20
Y	*384-4108*	1	DRIVE GP-FAN	21
Y	*309-7555*	1	FILLER GP-ENGINE OIL	43
Y	*303-5768*	1	FLYWHEEL GP	22
Y	*315-3418*	1	GLOW PLUG GP	105
Y	*303-5767*	1	HOUSING GP-FLYWHEEL	23
Y	*304-8760*	1	HOUSING GP-FRONT	24
Y	*326-9013*	1	LIFTING GP-ENGINE	26
Y	*326-9012*	1	LINES GP-FUEL	79
Y	*384-4107*	1	MOUNTING GP-ENGINE	27
Y	*322-9476*	1	PAN GP-OIL	31
Y	*326-9002*	1	PISTON & ROD GP	33
Y	*298-5129*	1	PLUG GP-CYLINDER HEAD	35
Y	*298-5131*	1	PLUG GP-ENGINE	36
Y	*304-8761*	1	PLUG GP-ENGINE	37
Y	*360-7347*	1	PULLEY GP-CRANKSHAFT	38
Y	*298-5112*	1	PUMP GP-ENGINE OIL	46
Y	*326-9149*	1	PUMP GP-FUEL INJECTION	89
Y	*315-3411*	1	PUMP GP-WATER	58
Y	*303-5769*	1	STARTING MOTOR GP-ELECTRIC (12-VOLT)	130
Y	*316-6925*	1	SWITCH GP-PRESSURE	136
Y	*326-9156*	1	TURBOCHARGER GP	74
Y	*326-9004*	1	VALVE MECHANISM GP	40
	359-0744	1	CYLINDER BLOCK GP-SHORT	
			PLEASE USE THE GASKET KIT LINK IN SIS OR CONTACT YOUR LOCAL DEALER FOR THE LATEST GASKET KIT INFORMATION	

Y-SEPARATE ILLUSTRATION

BASIC ENGINE

326-9005 CAMSHAFT GP

S/N: C4Z1-UP

PART OF 354-7363, 364-5743 ENGINE AR-PRIMARY

AN ATTACHMENT

SMCS-1210, 1211, 1212 **i04443634**

NOTE	REF NO	GRAPHIC REF	PART NUMBER	QTY	PART NAME 1 2 3 4 5 6 (PRODUCT LEVEL)	SEE PAGE
	1	1	**278-5126**	8	PUSHROD	
	2	1	**315-3384**	8	TAPPET	
	3	1	**380-2601**	1	CAMSHAFT AS	
	3A	1	**1B-8736**	1	KEY-WOODRUFF	

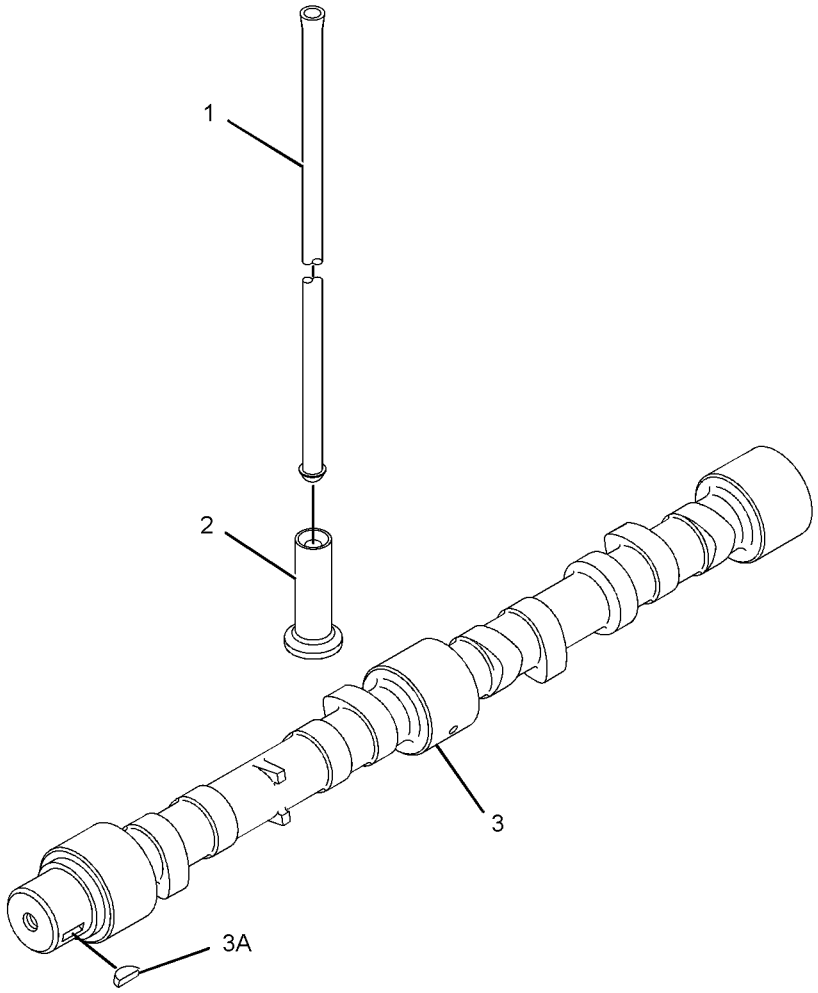

GRAPHIC #1 **<END>** g01611455

326-9008 COVER GP-VALVE MECHANISM

S/N: C4Z1-UP

PART OF 354-7363, 364-5743 ENGINE AR-PRIMARY

AN ATTACHMENT

SMCS-1107, 1120 **i03127792**

NOTE	REF NO	GRAPHIC REF	PART NUMBER	QTY	PART NAME 1 2 3 4 5 6 (PRODUCT LEVEL)	SEE PAGE
	1	1	**6I-0846**	3	BOLT (M6X1X14-MM)	
	2	1	**6I-0917**	1	BOLT (M6X1X25-MM)	
	3	1	**100-4838**	2	BOLT (M6X20-MM)	
M	4	1	**100-4841**	2	BOLT (M6X1X10-MM)	
	5	1	**230-9127**	1	COVER	
	6	1	**237-0769**	1	SHIELD-HEAT	
	7	1	**287-8573**	1	PIPE-BREATHER	
	8	1	**308-1792**	1	COVER GP-VALVE MECHANISM	
	8A	1	**225-6451**	1	GASKET (VALVE COVER)	
	8B	1	**225-6456**	1	SPRING	
	8C	1	**225-6461**	1	CAP	
	8D	1	**225-6464**	1	DIAPHRAGM (CRANKCASE PRESSURE CONTACTOR)	
	8E	1	**225-6477**	1	PLATE	
	8F	1	**225-6478**	4	SCREW-MACHINE	
	8G	1	**225-6479**	1	CAP	

M-METRIC PART

326-9008 **COVER GP-VALVE MECHANISM** *(contd.)* **i03127792**

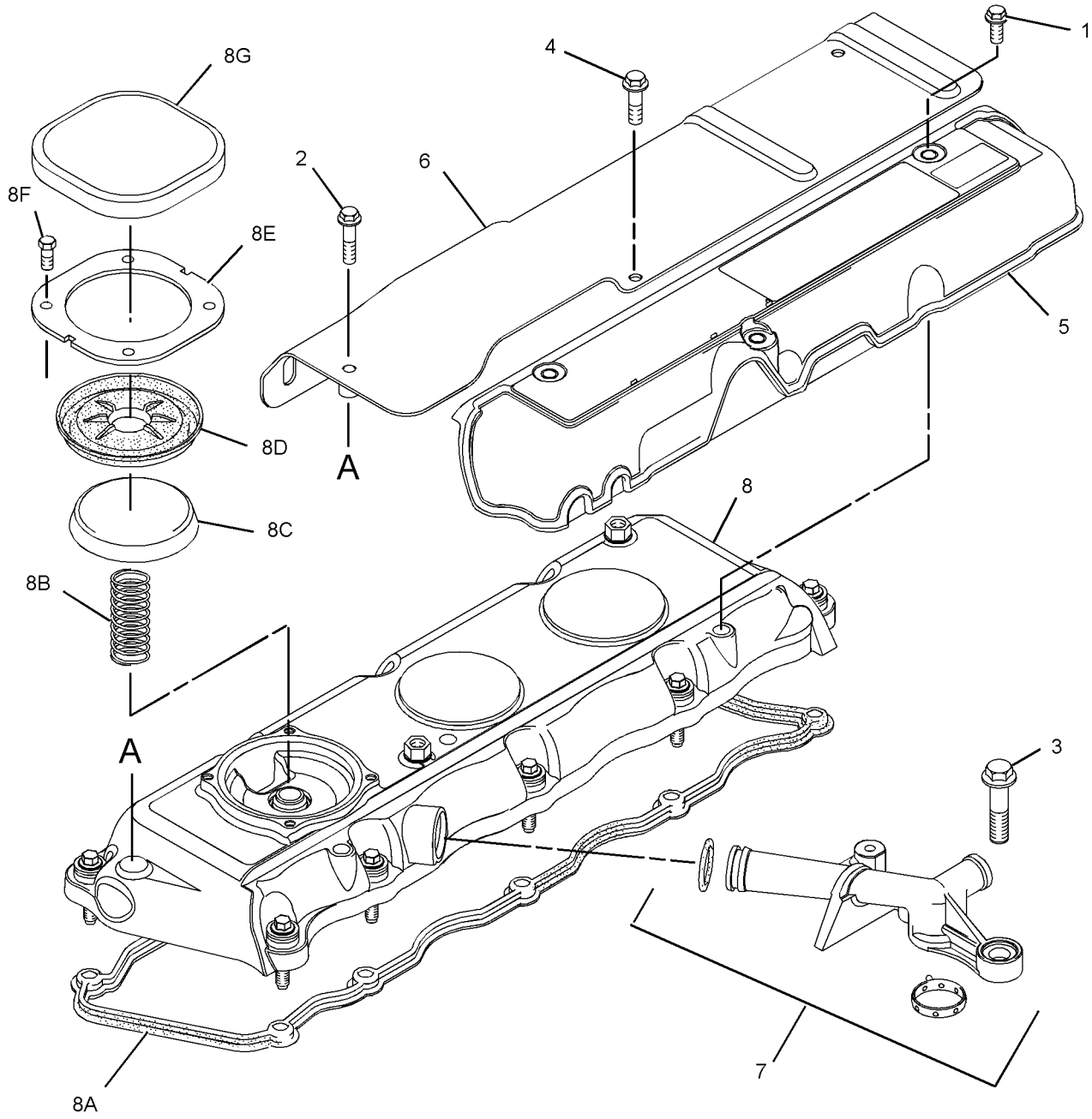

GRAPHIC #1 **<END>** g01615434

BASIC ENGINE

326-9000 CRANKSHAFT GP

S/N: C4Z1-UP

PART OF 354-7363, 364-5743 ENGINE AR-PRIMARY

AN ATTACHMENT

SMCS-1202, 1203, 1204, 1230, 1231, 1232 **i04018871**

NOTE	REF NO	GRAPHIC REF	PART NUMBER	QTY	PART NAME 1 2 3 4 5 6 (PRODUCT LEVEL)	SEE PAGE
	1	1	**216-8314**	1	GEAR-CRANKSHAFT (34-TEETH)	
CY	2	1	**359-0715**	1	CRANKSHAFT GP	16
C	3	1	**1B-8736**	1	KEY-WOODRUFF	
					AVAILABLE REPAIR KIT(S):	
			274-4716	1	KIT-CRANKSHAFT	

C-CHANGE FROM PREVIOUS TYPE
Y-SEPARATE ILLUSTRATION

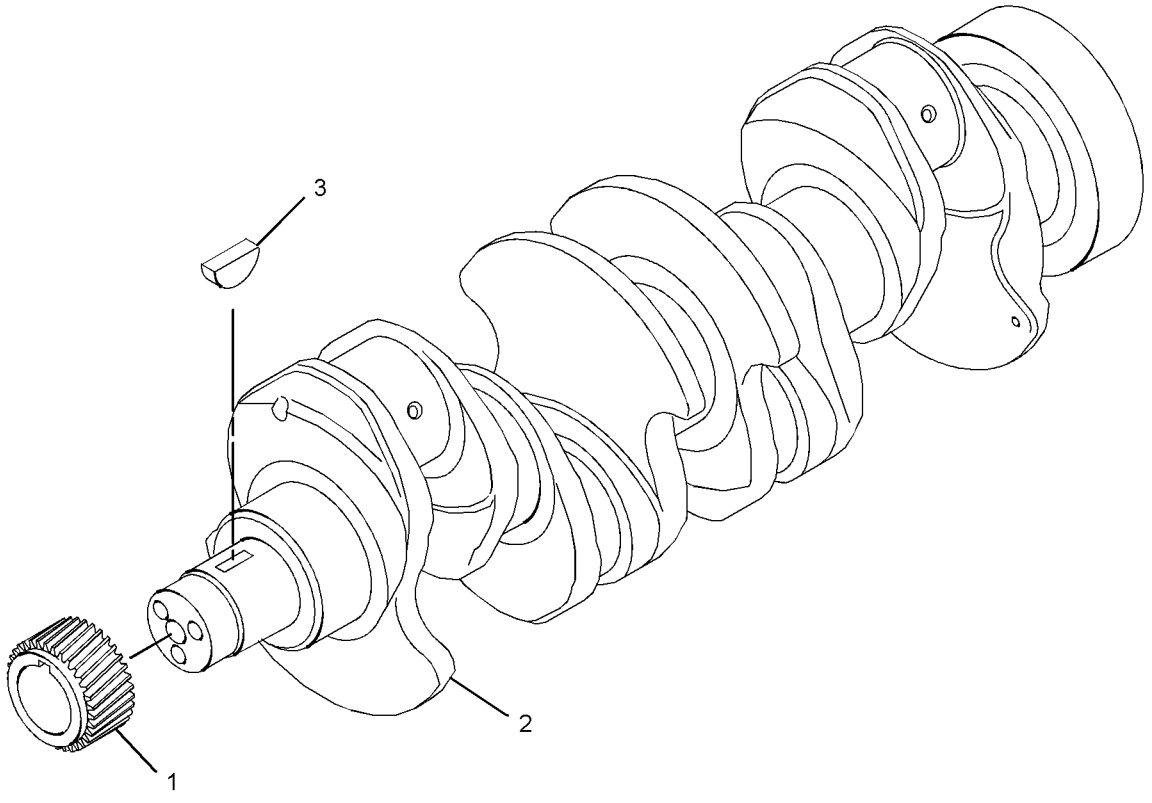

GRAPHIC #1 **<END>** g02163313

BASIC ENGINE

359-0715 CRANKSHAFT GP

S/N: C4Z1-UP
PART OF 326-9000 CRANKSHAFT GP
AN ATTACHMENT

SMCS-1202, 1203, 1204, 1230, 1231, 1232 **i03959730**

NOTE	REF NO	GRAPHIC REF	PART NUMBER	QTY	PART NAME 1 2 3 4 5 6 (PRODUCT LEVEL)	SEE PAGE
	1	1	**032-9090**	2	WASHER-THRUST (STANDARD-UPPER)	
AB		1	**067-6873**		WASHER-THRUST (0.18-MM OS)	
	2	1	**032-9091**	2	WASHER-THRUST (STANDARD-LOWER)	
AB		1	**067-6874**		WASHER-THRUST (0.18-MM OS)	
	3	1	**353-7423**	1	KIT-BEARING (MAIN)	
AB		1	**233-3786**		KIT-CRANKSHAFT BEARING (0.030-IN US)	
AB		1	**353-7424**		KIT-BEARING (0.25-MM US)	
AB		1	**353-7425**		KIT-BEARING (0.50-MM US)	
	4	1	**353-9667**	1	KIT-ROD BEARING (STANDARD)	

A-NOT PART OF THIS GROUP
B-USE AS REQUIRED

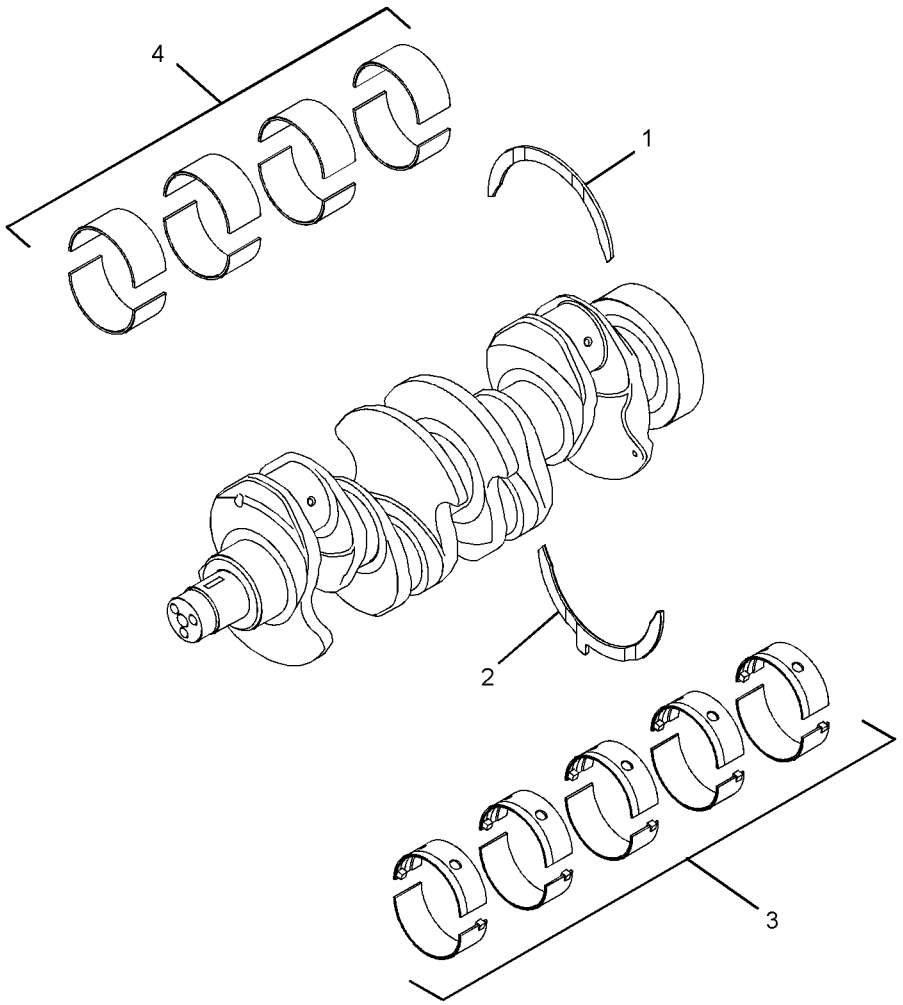

GRAPHIC #1 **<END>** g02174712

326-8999 CYLINDER BLOCK GP

S/N: C4Z1-UP

PART OF 354-7363, 364-5743 ENGINE AR-PRIMARY

AN ATTACHMENT

SMCS-1201 **i04639972**

NOTE	REF NO	GRAPHIC REF	PART NUMBER	QTY	PART NAME 1 2 3 4 5 6 (PRODUCT LEVEL)	SEE PAGE
M	1	1	**209-9219**	10	BOLT (M8X1.25X16-MM)	
	2	1	**232-7449**	1	HOUSING AS	
CY	3	1	**362-2190**	1	CYLINDER BLOCK GP	18

C-CHANGE FROM PREVIOUS TYPE
M-METRIC PART
Y-SEPARATE ILLUSTRATION

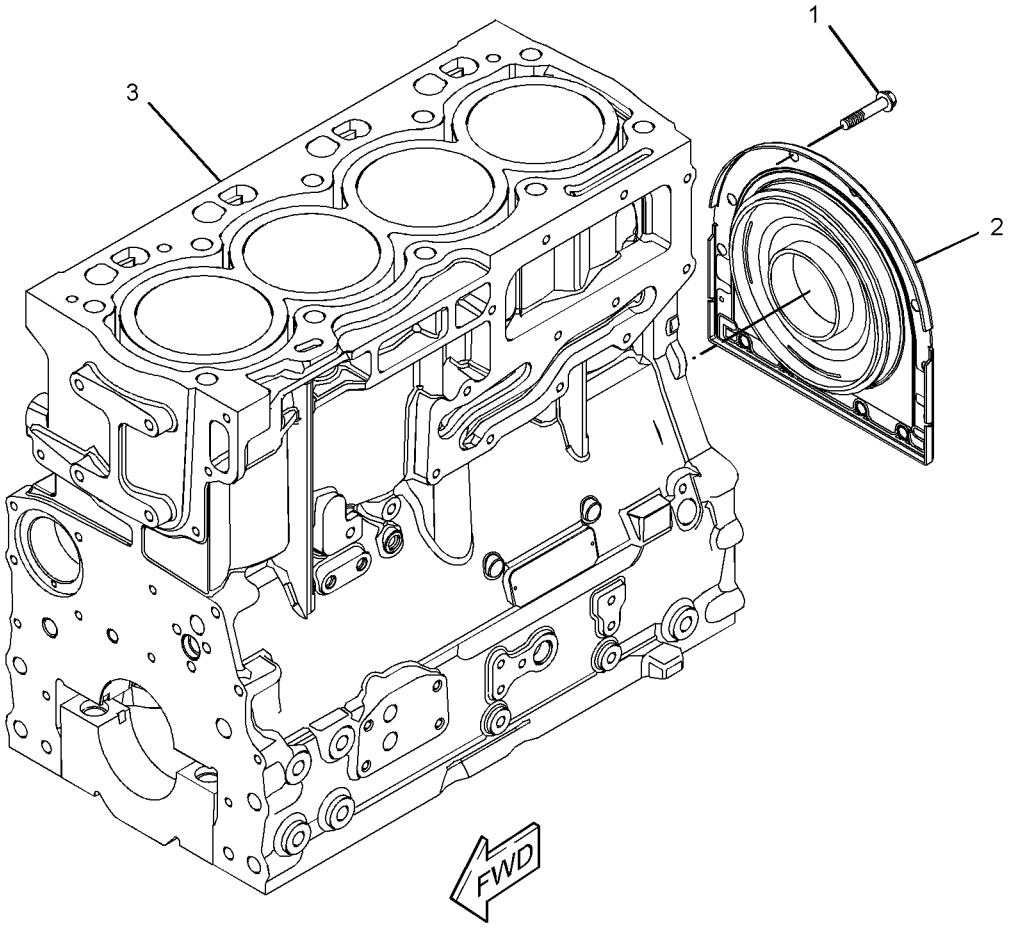

GRAPHIC #1 **<END>** g02500198

BASIC ENGINE

362-2190 CYLINDER BLOCK GP

S/N: C4Z1-UP

PART OF 326-8999 CYLINDER BLOCK GP

AN ATTACHMENT

SMCS-1201 **i04340138**

NOTE	REF NO	GRAPHIC REF	PART NUMBER	QTY	PART NAME 1 2 3 4 5 6 (PRODUCT LEVEL)	SEE PAGE
	1	1	**6I-0572**	1	BOLT (M8X1.25X20-MM)	
	2	1	**6I-0646**	1	BOLT (M10X1.5X14-MM)	
	3	1	**035-8063**	1	PLUG	
M	4	1	**100-4841**	4	BOLT (M6X1X10-MM)	
	5	1	**214-3203**	1	WASHER (SEALING)	
	6	1	**225-7944**	1	GASKET	
	7	1	**232-3751**	1	PLATE	
	8	1	**232-7600**	1	PLUG-CUP	
	9	1	**232-7603**	1	PLUG	
	10	1	**276-5605**	4	JET AS-PISTON COOLING	

M-METRIC PART

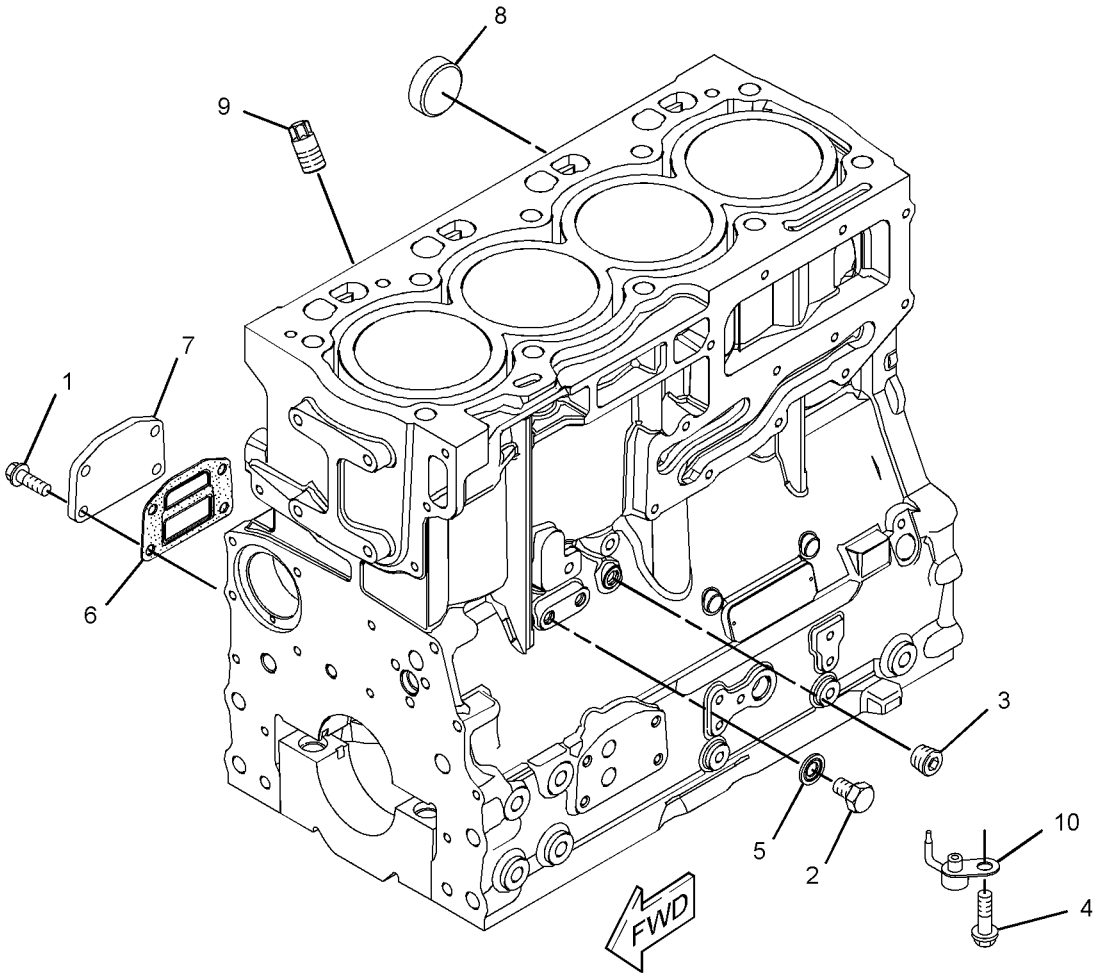

GRAPHIC #1 **<END>** g02500056

316-7896 CYLINDER HEAD GP

S/N: C4Z1-UP

PART OF 326-9003 CYLINDER HEAD GP

AN ATTACHMENT

SMCS-1100, 1101, 1103, 1104, 1105, 1106, 1108, 1109, 1115, 1117, 1121, 1124, 1125

i03131134

NOTE	REF NO	GRAPHIC REF	PART NUMBER	QTY	PART NAME 1 2 3 4 5 6 (PRODUCT LEVEL)	SEE PAGE
	1	1	**2B-0858**	2	PLUG-PIPE	
	2	1	**9Y-5015**	2	PLUG-FREEZE	
	3	1	**067-6006**	4	PLUG	
	4	1	**185-0882**	8	GUIDE-VALVE	
	5	1	**199-9751**	1	SEAL-O-RING	
	6	1	**232-1322**	1	PLUG	
	7	1	**315-3390**	4	VALVE-INLET	
	8	1	**315-3391**	8	SPRING	
	9	1	**315-3392**	8	CAP	
	10	1	**315-3393**	16	COLLET	
	11	1	**315-3394**	4	VALVE-EXHAUST	
	12	1	**252-6438**	4	SEAL-INLET VALVE (GREEN)	
	13	1	**254-3954**	4	SEAL-EXHAUST VALVE (BROWN)	
	14	1	**322-9663**	4	INSERT-VALVE SEAT	
	15	1	**322-9664**	4	SEAT-VALVE	

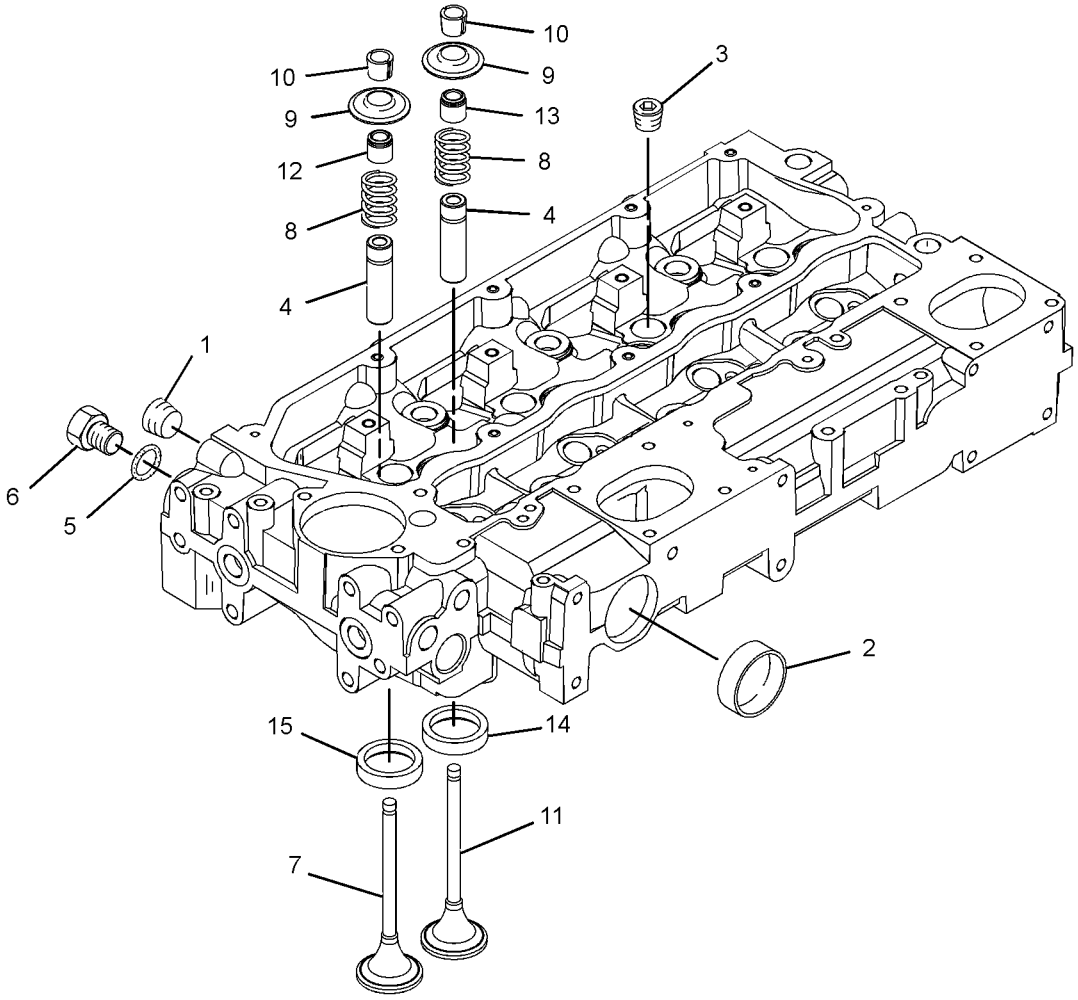

GRAPHIC #1

<END>

g01542313

326-9003 CYLINDER HEAD GP

S/N: C4Z1-UP
PART OF 354-7363, 364-5743 ENGINE AR-PRIMARY
AN ATTACHMENT

SMCS-1100, 1101, 1103, 1104, 1105, 1106, 1108, 1109, 1115, 1117, 1121, 1124, 1125

i03127782

NOTE	REF NO	GRAPHIC REF	PART NUMBER	QTY	PART NAME 1 2 3 4 5 6 (PRODUCT LEVEL)	SEE PAGE
	1	1	**225-5501**	7	BOLT (M15X1.5X137-MM)	
	2	1	**225-5502**	3	BOLT (M15X1.5X162-MM)	
	3	1	**258-4946**	1	GASKET-HEAD	
Y	4	1	**316-7896**	1	CYLINDER HEAD GP	19

Y-SEPARATE ILLUSTRATION

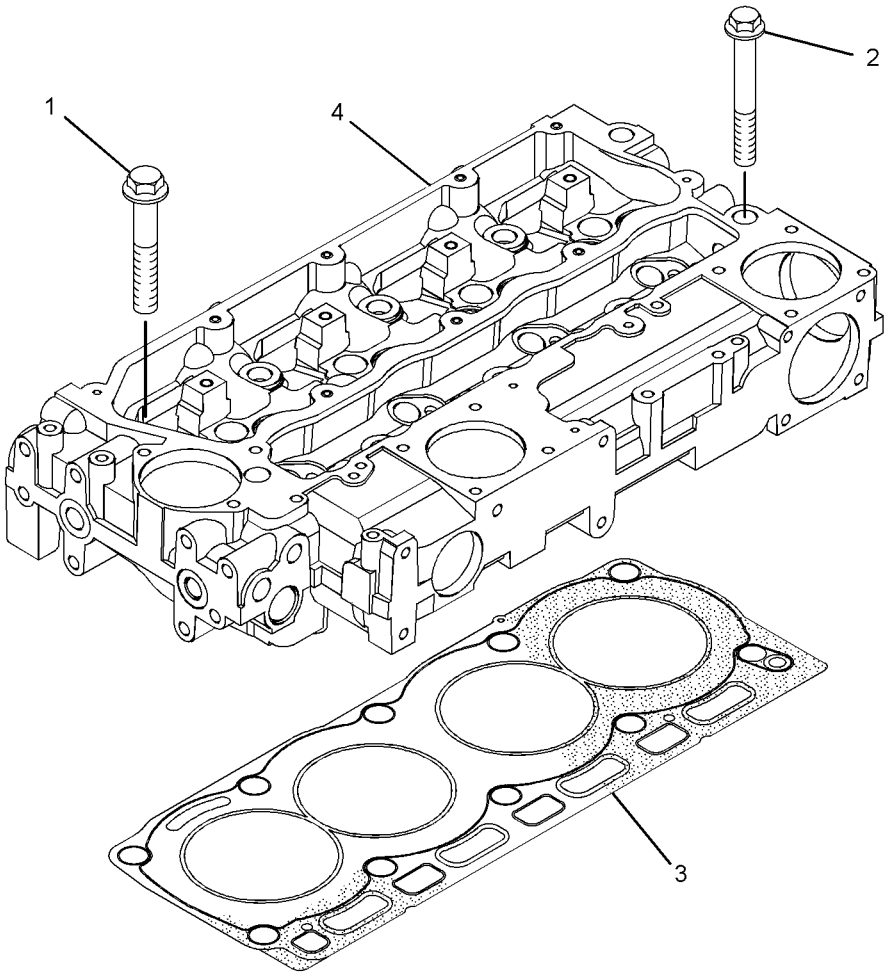

GRAPHIC #1

<END>

g01523242

384-4108 DRIVE GP-FAN

S/N: C4Z1-UP

PART OF 354-7363, 364-5743 ENGINE AR-PRIMARY

AN ATTACHMENT

SMCS-1357, 1358, 1359, 1390 **i04634259**

NOTE	REF NO	GRAPHIC REF	PART NUMBER	QTY	PART NAME 1 2 3 4 5 6 (PRODUCT LEVEL)	SEE PAGE
	1	1	**111-0859**	4	BOLT (M10X1.5X35-MM)	
	2	1	**289-8336**	1	HOUSING AS	

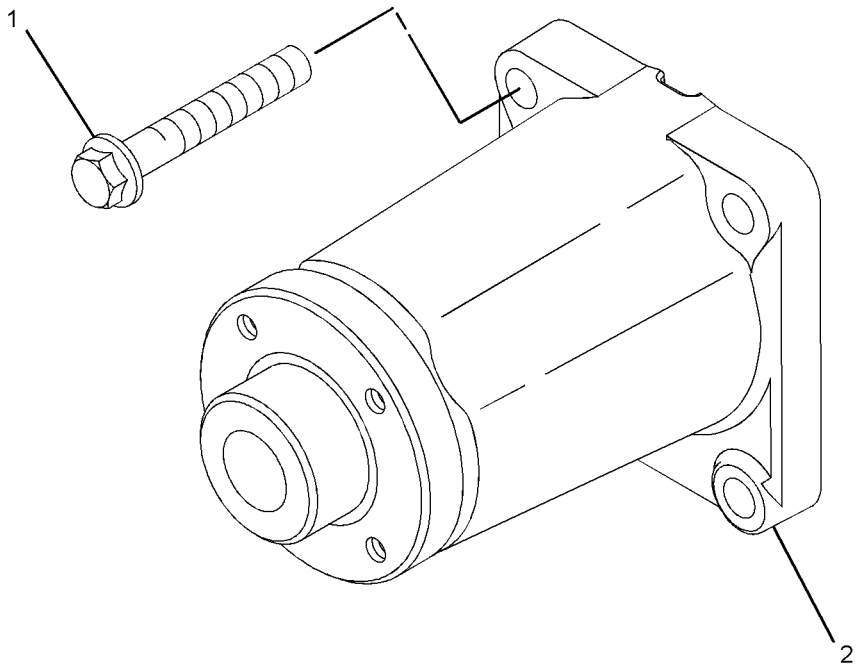

GRAPHIC #1 **<END>** g02780976

303-5768 FLYWHEEL GP

S/N: C4Z1-UP
PART OF 354-7363, 364-5743 ENGINE AR-PRIMARY
AN ATTACHMENT

SMCS-1156, 1158 **i03128301**

NOTE	REF NO	GRAPHIC REF	PART NUMBER	QTY	PART NAME 1 2 3 4 5 6 (PRODUCT LEVEL)	SEE PAGE
	1	1	**245-9828**	1	FLYWHEEL AS	
	1A	1	**033-7687**	1	RING-STARTING MOTOR (126-TEETH)	
	2	1	**0S-1603**	10	BOLT (1/2-20X1.5-IN)	
	3	1	**5P-8245**	10	WASHER-HARD (13.5X25.5X3-MM THK)	

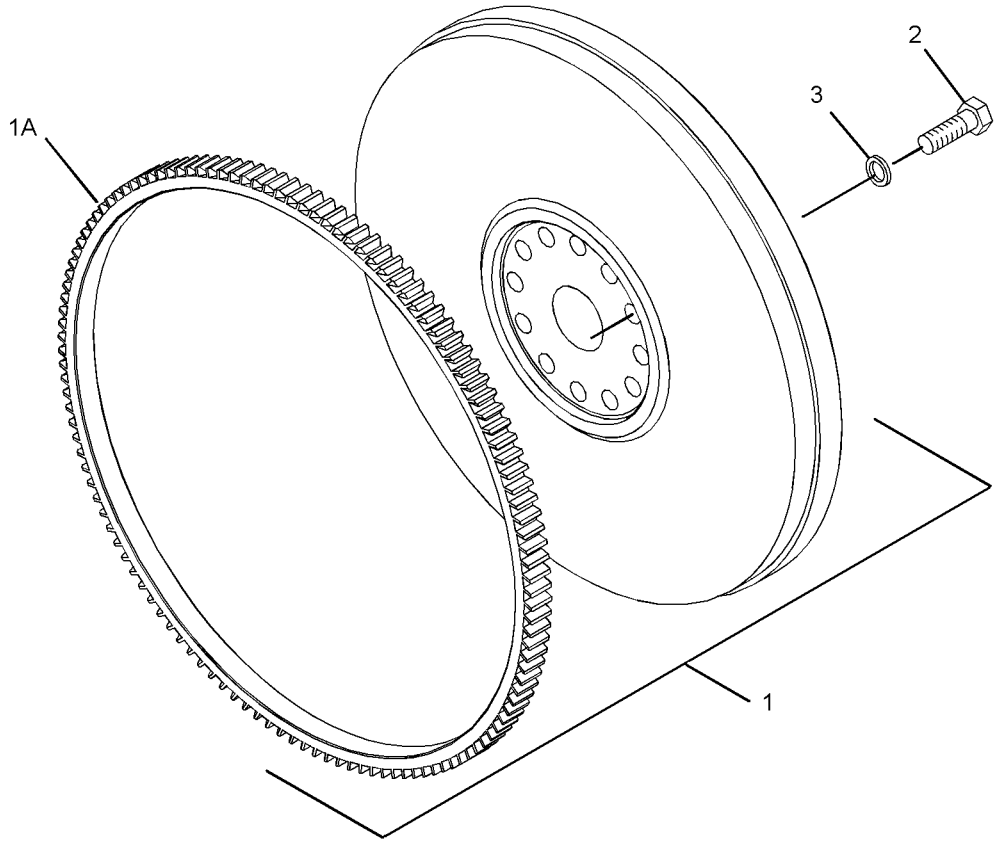

GRAPHIC #1 **<END>** g01372699

303-5767 HOUSING GP-FLYWHEEL

S/N: C4Z1-UP

PART OF 354-7363, 364-5743 ENGINE AR-PRIMARY

AN ATTACHMENT

SMCS-1157 **i03128293**

NOTE	REF NO	GRAPHIC REF	PART NUMBER	QTY	PART NAME 1 2 3 4 5 6 (PRODUCT LEVEL)	SEE PAGE
M	1	1	**6I-0423**	2	BOLT (M12X1.75X30-MM)	
	2	1	**6I-0847**	2	PLUG	
	3	1	**7W-1176**	1	PLATE-COVER	
	4	1	**7W-4642**	1	SHIELD-DUST	
	5	1	**287-8597**	2	DOWEL	
	6	1	**114-4363**	2	BOLT (M8X1.25X12-MM)	
	7	1	**4H-0408**	3	PLUG-PROTECTION	
M	8	1	**121-0883**	6	BOLT (M10X1.5X30-MM)	
	9	1	**220-8631**	1	HOUSING-FLYWHEEL	

M-METRIC PART

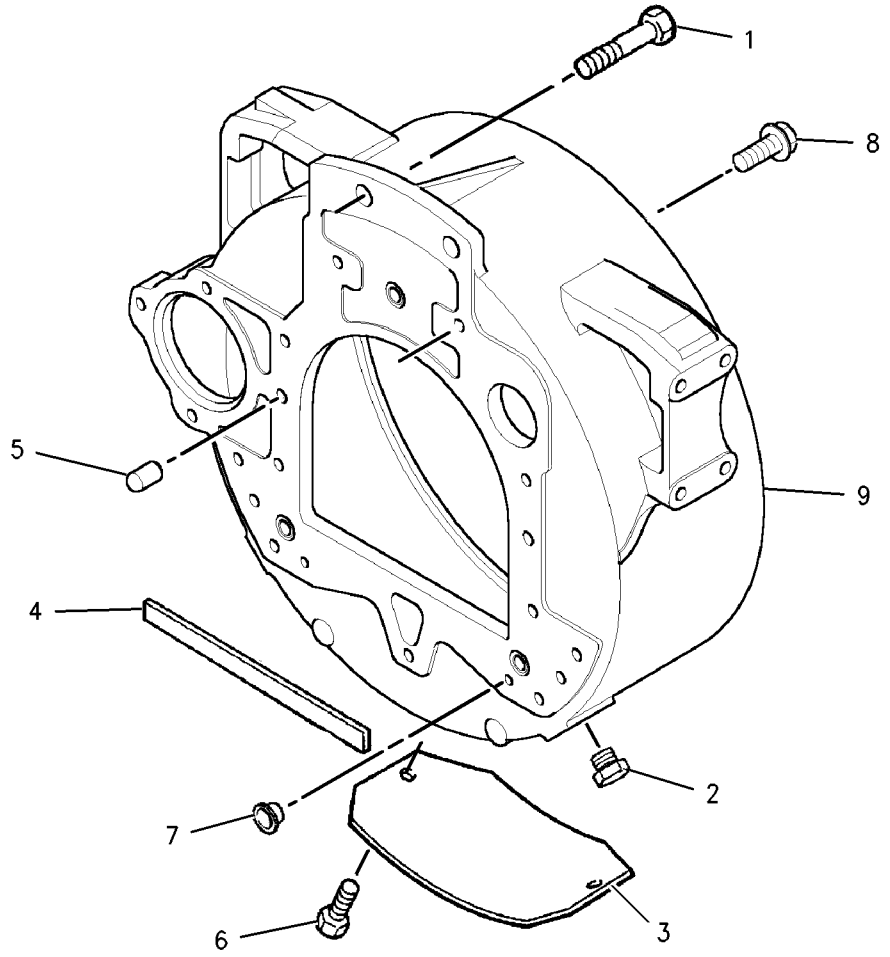

GRAPHIC #1 **<END>** g00902549

BASIC ENGINE

304-8760 HOUSING GP-FRONT

S/N: C4Z1-UP

PART OF 354-7363, 364-5743 ENGINE AR-PRIMARY

AN ATTACHMENT

SMCS-1151, 1162, 1166, 1206 **i03569721**

NOTE	REF NO	GRAPHIC REF	PART NUMBER	QTY	PART NAME 1 2 3 4 5 6 (PRODUCT LEVEL)	SEE PAGE
	1	1	**294-0288**	1	HOUSING-FRONT	
	2	1	**277-3012**	1	GASKET-COVER	
	3	1	**288-0422**	1	SEAL-OIL (FRONT)	
M	4	1	**6I-0217**	6	BOLT (M8X1.25X20-MM)	
M	5	1	**101-3895**	2	BOLT (M8X1.25X35-MM)	
M	6	1	**6I-0645**	4	BOLT (M8X1.25X25-MM)	
CJ	7	1	**346-0407**	1	GEAR-IDLER (73-TEETH)	
	8	1	**324-0444**	1	HUB-IDLER GEAR	
C	9	1	**346-0408**	1	PLATE	
M	10	1	**6I-0650**	3	BOLT (M10X1.5X65-MM)	
	11	1	**216-8634**	1	GEAR-CAMSHAFT (68-TEETH)	
	12	1	**133-1011**	1	WASHER	
	13	1	**067-6179**	1	DOWEL	
	14	1	**232-3666**	1	WASHER-THRUST	
	15	1	**7C-4616**	1	BOLT (M12X1.75X45-MM)	
	16	1	**232-3657**	1	COVER AS-FRONT	
	16A	1	**225-8287**	1	GASKET	
M	17	1	**124-3815**	10	BOLT (M8X16X1.25-MM)	
M	18	1	**100-3751**	5	BOLT (M8X1.25X65-MM)	

C-CHANGE FROM PREVIOUS TYPE
J-CAN ONLY BE USED IN CONJUNCTION WITH 346-0408 & 324-0444
M-METRIC PART

304-8760 **HOUSING GP-FRONT** *(contd.)* **i03569721**

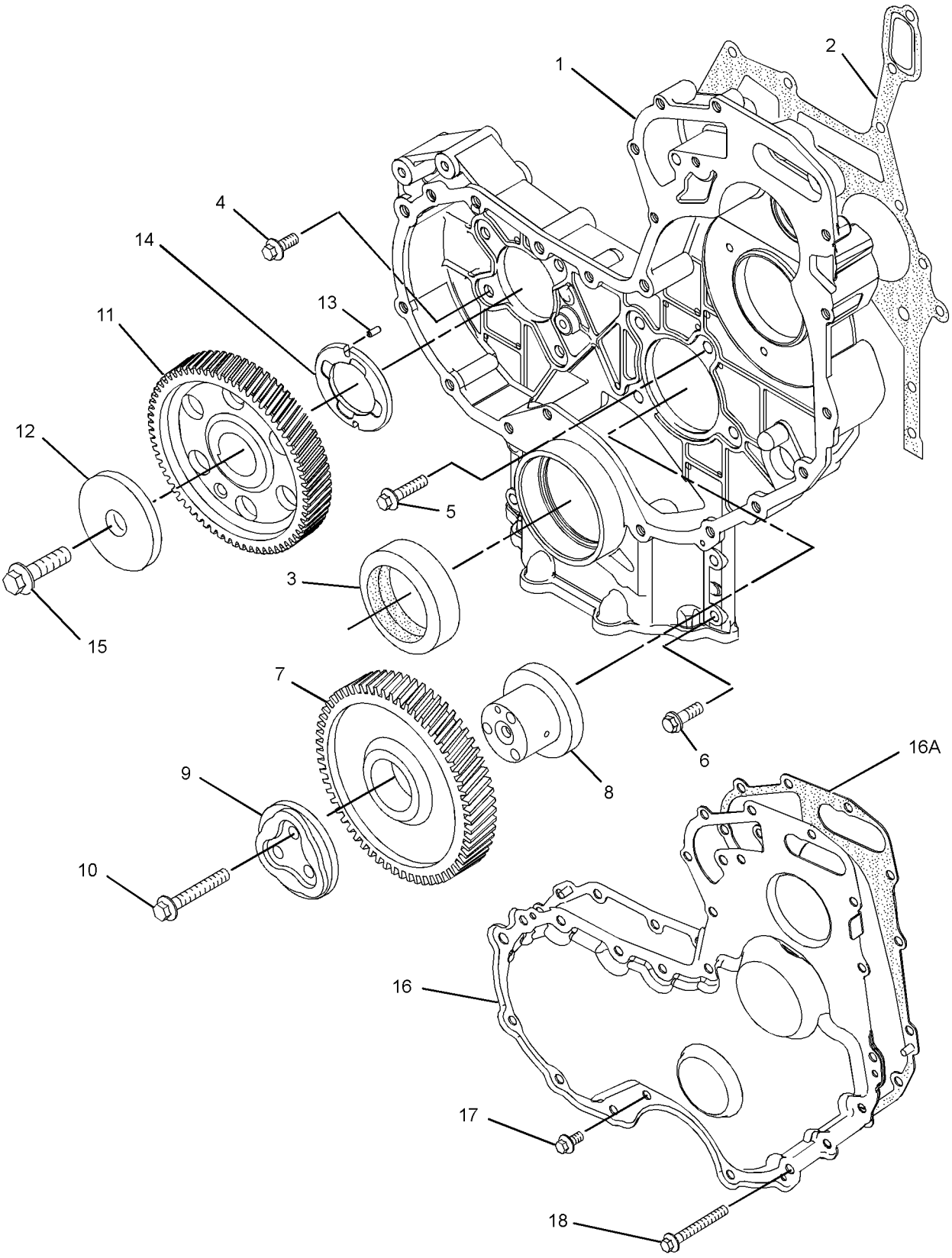

GRAPHIC #1 **<END>** g01900827

326-9013 LIFTING GP-ENGINE

S/N: C4Z1-UP
PART OF 354-7363, 364-5743 ENGINE AR-PRIMARY
AN ATTACHMENT

SMCS-1122 **i03124517**

NOTE	REF NO	GRAPHIC REF	PART NUMBER	QTY	PART NAME 1 2 3 4 5 6 (PRODUCT LEVEL)	SEE PAGE
M	1	1	**100-4830**	4	BOLT (M10X1.5X20-MM)	
	2	1	**225-8848**	2	PLATE-LIFTING	

M-METRIC PART

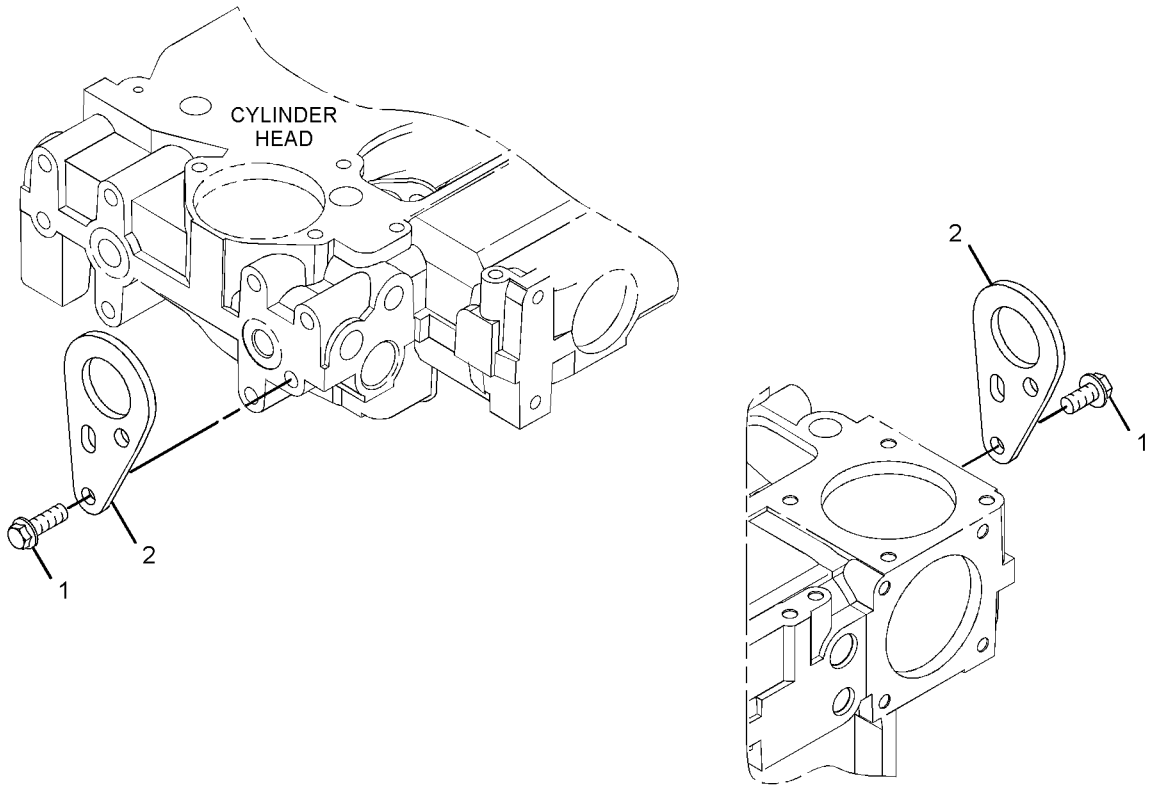

GRAPHIC #1 **<END>** g01636462

384-4107 MOUNTING GP-ENGINE

S/N: C4Z1-UP

PART OF 354-7363, 364-5743 ENGINE AR-PRIMARY

AN ATTACHMENT

SMCS-1152, 1153, 1154 **i04642291**

NOTE	REF NO	GRAPHIC REF	PART NUMBER	QTY	PART NAME 1 2 3 4 5 6 (PRODUCT LEVEL)	SEE PAGE
	1	1	**195-2136**	8	STUD	
	2	1	**195-2221**	8	NUT (M12X1.75-THD)	
	3	1	**6H-3616**	8	PLUG-PROTECTION	
	4	1	**304-3711**	1	MOUNT-ENGINE	
	5	1	**347-7045**	1	BRACKET	

384-4107 **MOUNTING GP-ENGINE** *(contd.)* **i04642291**

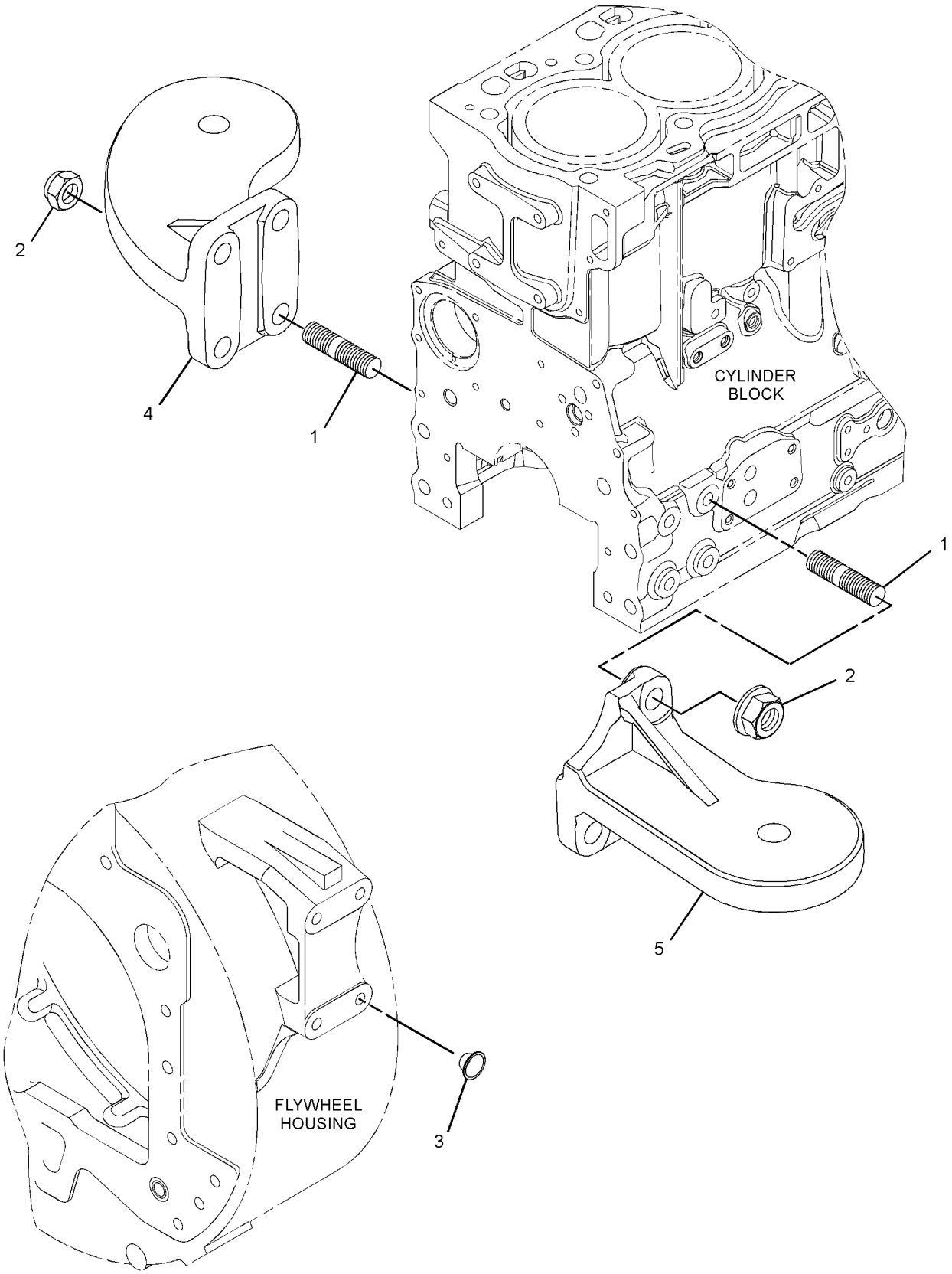

GRAPHIC #1 **<END>** g02783716

337-9727 MOUNTING GP-ENGINE & XMSN

S/N: SJW1-UP
PART OF 353-1507 TRANSMISSION AR-DIRECT DRIVE, 353-1510 TRANSMISSION AR-POWER SHIFT AN ATTACHMENT

SMCS-1152, 1153, 1154 **i04597510**

NOTE	REF NO	GRAPHIC REF	PART NUMBER	QTY	PART NAME 1 2 3 4 5 6 (PRODUCT LEVEL)	SEE PAGE
	1	1	**3E-4892**	2	WASHER (16.75X100X6-MM THK)	
	2	1	**9W-9915**	4	MOUNT AS	
	3	1	**9W-9952**	4	WASHER (16.75X86X8-MM THK)	
	4	1	**9W-9953**	4	SLEEVE	
	5	1	**335-1836**	4	BOLT-SPECIAL	
	6	1	**7X-0515**	4	WASHER-HARD (17X35X5-MM THK)	
	7	1	**8T-4121**	12	WASHER-HARD (11X21X2.5-MM THK)	
M	8	1	**8T-4132**	4	NUT (M16X2-THD)	
M	9	1	**8T-4196**	12	BOLT (M10X1.5X35-MM)	

M-METRIC PART

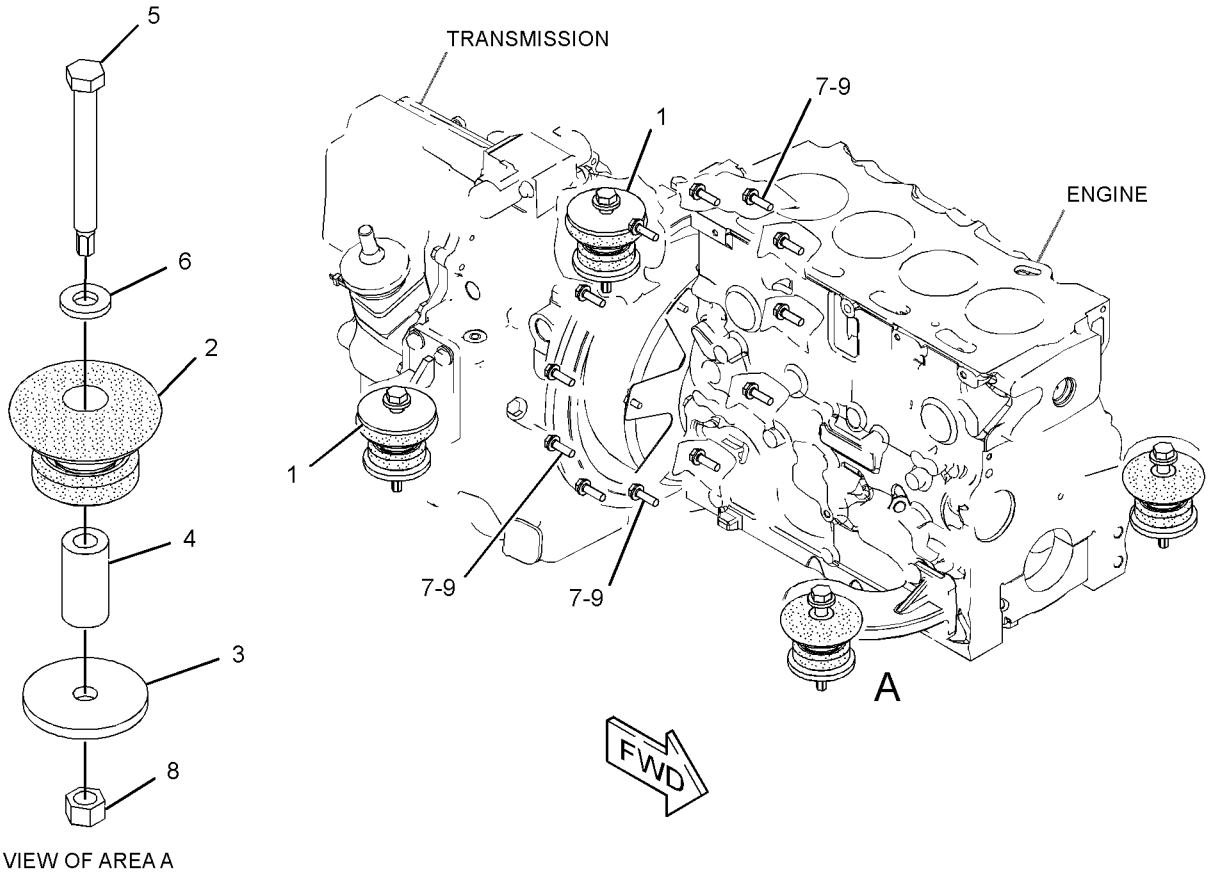

VIEW OF AREA A

GRAPHIC #1 **<END>** g02806179

BASIC ENGINE

337-9728 MOUNTING GP-ENGINE & XMSN

S/N: SJW1-UP

PART OF 353-1511 TRANSMISSION AR-POWER SHIFT

AN ATTACHMENT

SMCS-1152, 1153, 1154 **i04612369**

NOTE	REF NO	GRAPHIC REF	PART NUMBER	QTY	PART NAME 1 2 3 4 5 6 (PRODUCT LEVEL)	SEE PAGE
	1	1	**3E-4892**	2	WASHER (16.75X100X6-MM THK)	
	2	1	**9W-9915**	4	MOUNT AS (ENGINE, FRONT)	
	3	1	**9W-9952**	4	WASHER (16.75X86X8-MM THK)	
	4	1	**9W-9953**	4	SLEEVE	
	5	1	**335-1836**	4	BOLT-SPECIAL	
	6	1	**7X-0515**	4	WASHER-HARD (17X35X5-MM THK)	
	7	1	**8T-4121**	12	WASHER-HARD (11X21X2.5-MM THK)	
M	8	1	**8T-4132**	4	NUT (M16X2-THD)	
M	9	1	**8T-4185**	12	BOLT (M10X1.5X50-MM)	

M-METRIC PART

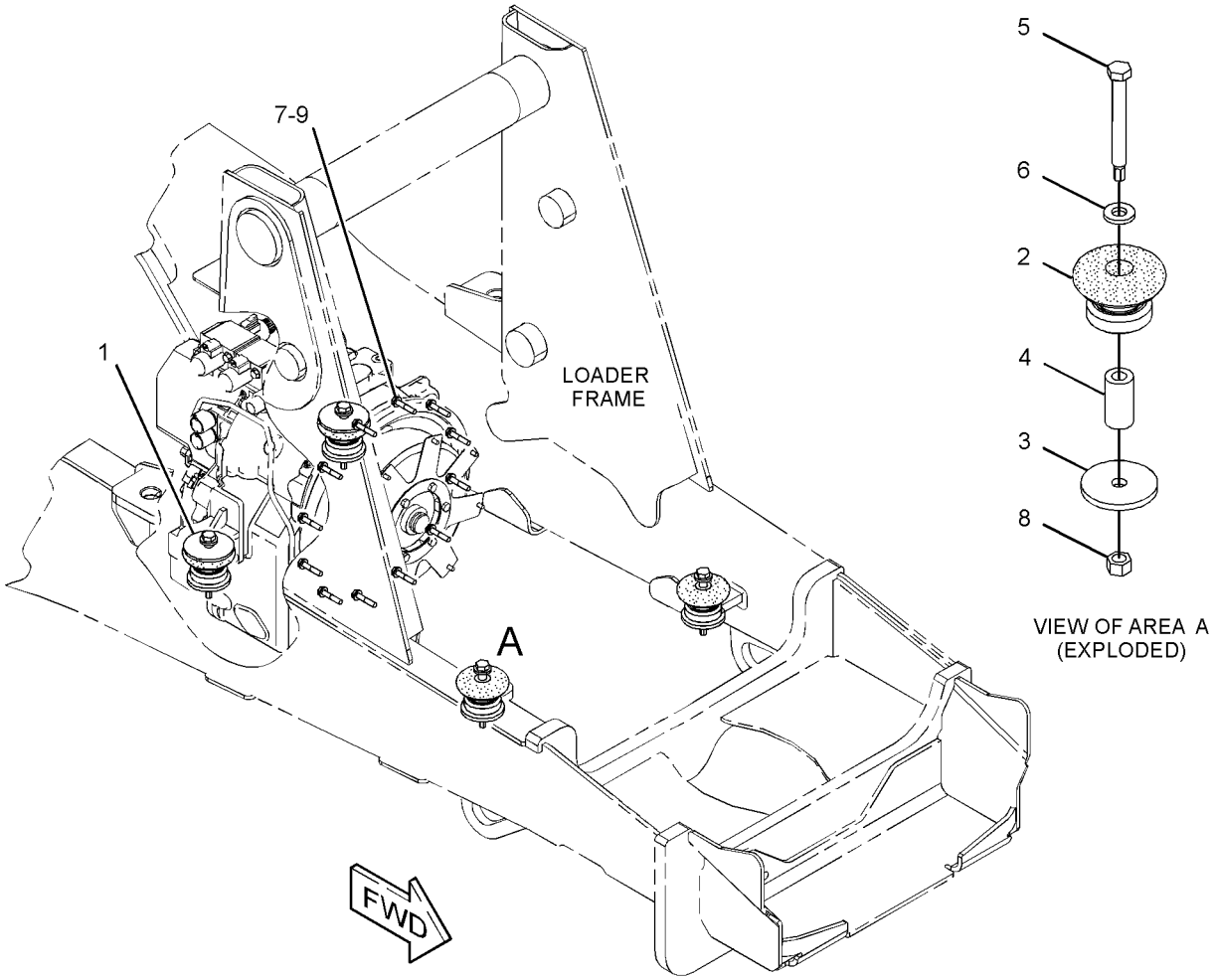

GRAPHIC #1 **<END>** g02822538

322-9476 PAN GP-OIL

S/N: C4Z1-UP

PART OF 354-7363, 364-5743 ENGINE AR-PRIMARY

AN ATTACHMENT

SMCS-1302 **i04641771**

NOTE	REF NO	GRAPHIC REF	PART NUMBER	QTY	PART NAME 1 2 3 4 5 6 (PRODUCT LEVEL)	SEE PAGE
M	1	1	**6I-0217**	14	BOLT (M8X1.25X20-MM)	
M	2	1	**6I-0260**	2	BOLT (M8X1.25X25-MM)	
	3	1	**6I-0289**	2	PLUG	
M	4	1	**6I-0363**	2	BOLT (M6X1X20-MM)	
	5	1	**6I-0572**	2	BOLT (M8X1.25X20-MM)	
	6	1	**7C-0351**	2	PLUG-DRAIN (ENGINE OIL)	
	7	1	**067-6213**	1	GASKET	
	8	1	**101-3771**	4	BOLT	
	9	1	**225-6005**	1	GASKET	
	10	1	**225-6041**	1	TUBE	
	11	1	**230-8094**	1	BRIDGE	
	12	1	**275-9883**	2	SEAL (DRAIN PLUG)	
C	13	1	**353-5219**	1	PAN-OIL	

C-CHANGE FROM PREVIOUS TYPE
M-METRIC PART

322-9476 **PAN GP-OIL** *(contd.)* **i04641771**

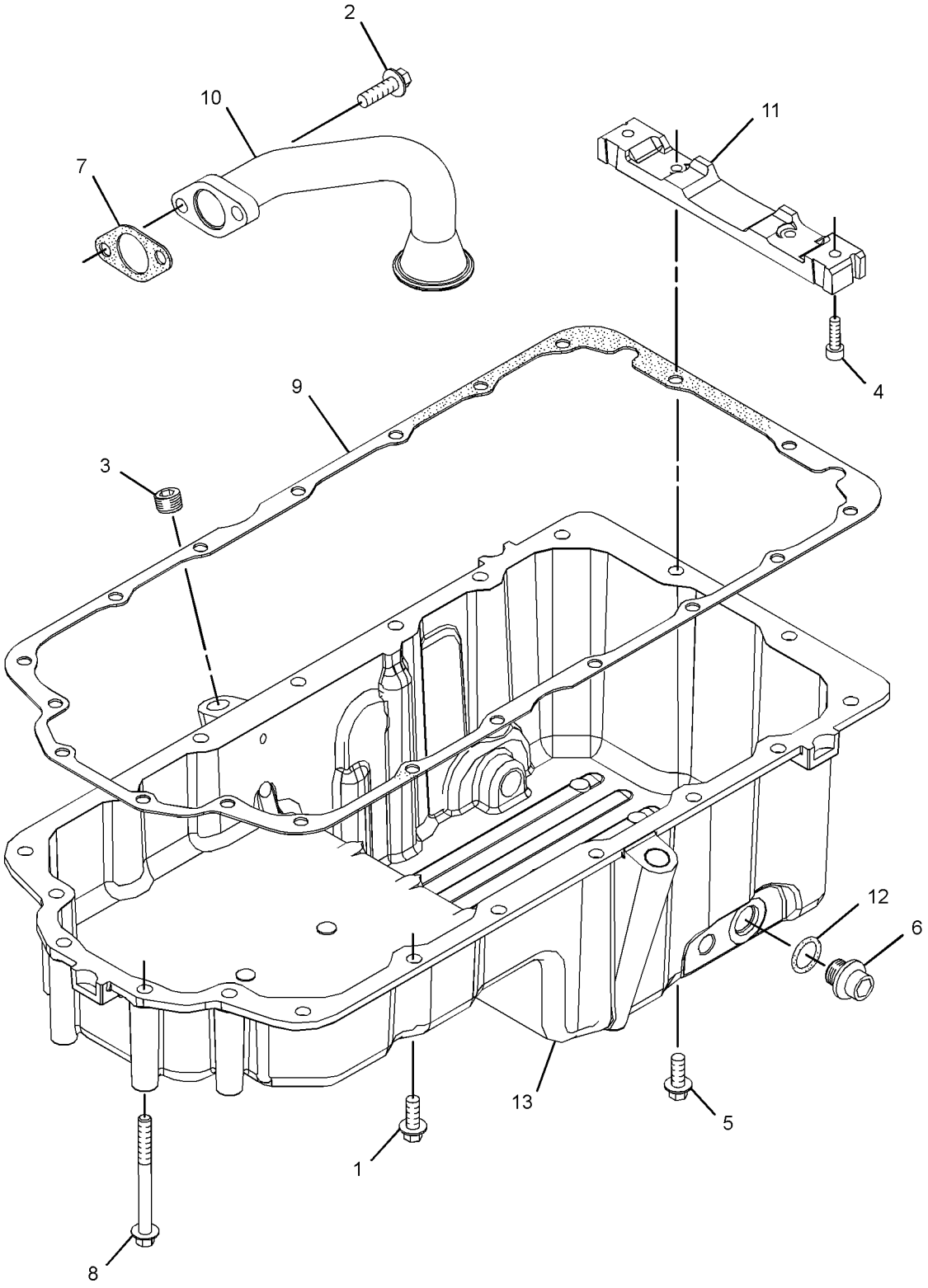

GRAPHIC #1 **<END>** g02788399

326-9002 PISTON & ROD GP

S/N: C4Z1-UP

PART OF 354-7363, 364-5743 ENGINE AR-PRIMARY

AN ATTACHMENT

SMCS-1213, 1214, 1215, 1218, 1219, 1225, 1239 **i04001203**

NOTE	REF NO	GRAPHIC REF	PART NUMBER	QTY	PART NAME 1 2 3 4 5 6 (PRODUCT LEVEL)	SEE PAGE
	1	1	**315-3395**	4	PISTON AS	
					(EACH INCLUDES)	
	1A	1	**124-3536**	2	RING-RETAINING	
	1B	1	**276-7476**	1	KIT-PISTON RING	
BCJ	2	1	**359-0724**	4	ROD AS-CONNECTING (LENGTH B)	
					—OR—	
BCJ		1	**359-0723**	4	ROD AS-CONNECTING (LENGTH P)	
					—OR—	
BCJ		1	**359-0722**	4	ROD AS-CONNECTING (LENGTH G)	
					—OR—	
BCJ		1	**359-0721**	4	ROD AS-CONNECTING (LENGTH W)	
					—OR—	
BCJ		1	**359-0720**	4	ROD AS-CONNECTING (LENGTH O)	
					—OR—	
BCJ		1	**359-0719**	4	ROD AS-CONNECTING (LENGTH R)	
					(EACH INCLUDES)	
	2A	1	**225-5438**	1	BUSHING	
	2B	1	**323-9312**	2	BOLT	

B-USE AS REQUIRED
C-CHANGE FROM PREVIOUS TYPE
J-ENSURE THAT CORRECT ROD LENGTH IS FITTED

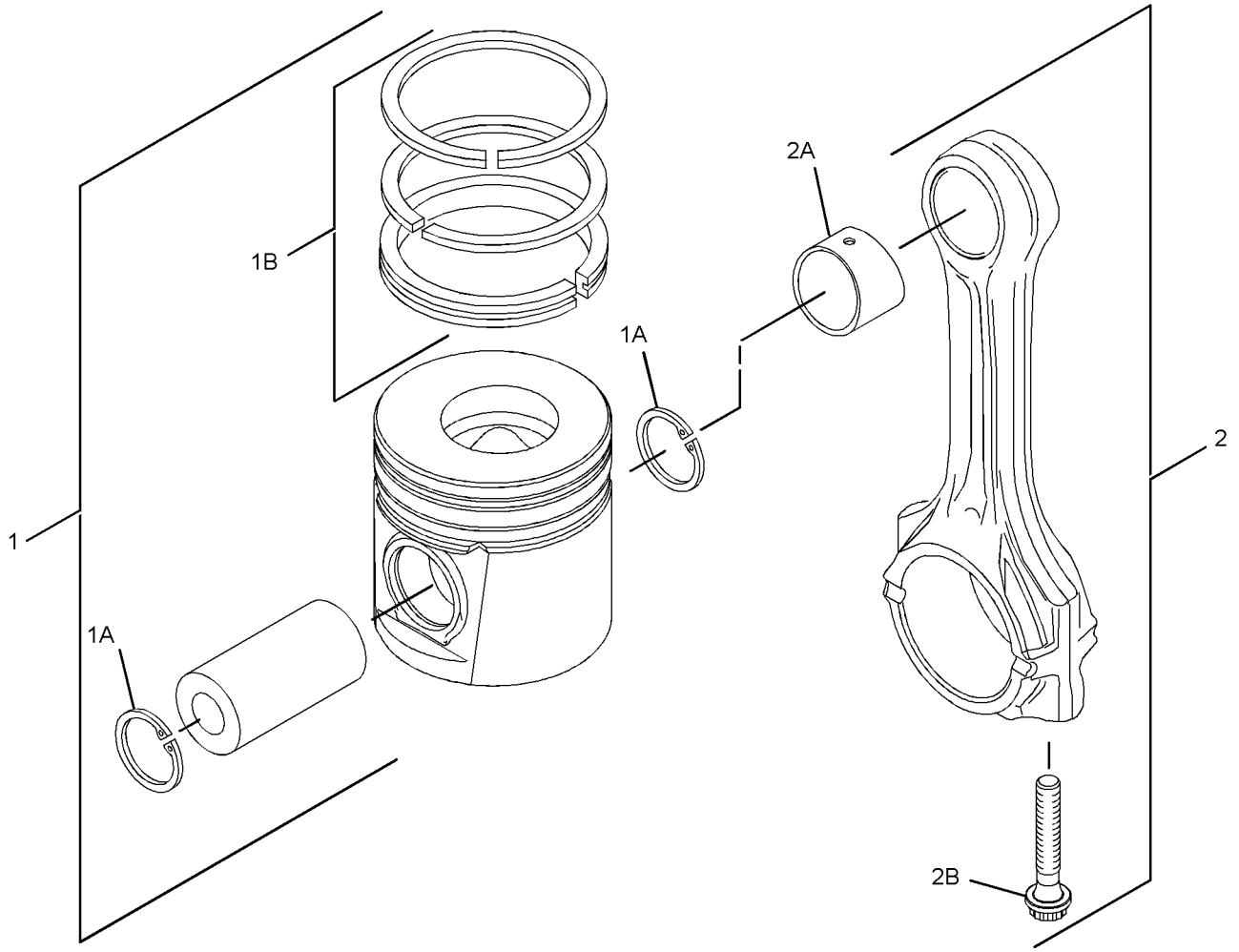

GRAPHIC #1 **<END>** g02178226

298-5129 PLUG GP-CYLINDER HEAD

S/N: C4Z1-UP

PART OF 354-7363, 364-5743 ENGINE AR-PRIMARY

AN ATTACHMENT

SMCS-1100 **i03128287**

NOTE	REF NO	GRAPHIC REF	PART NUMBER	QTY	PART NAME 1 2 3 4 5 6 (PRODUCT LEVEL)	SEE PAGE
	1	1	**232-1322**	1	PLUG	
	2	1	**199-9751**	1	SEAL-O-RING	

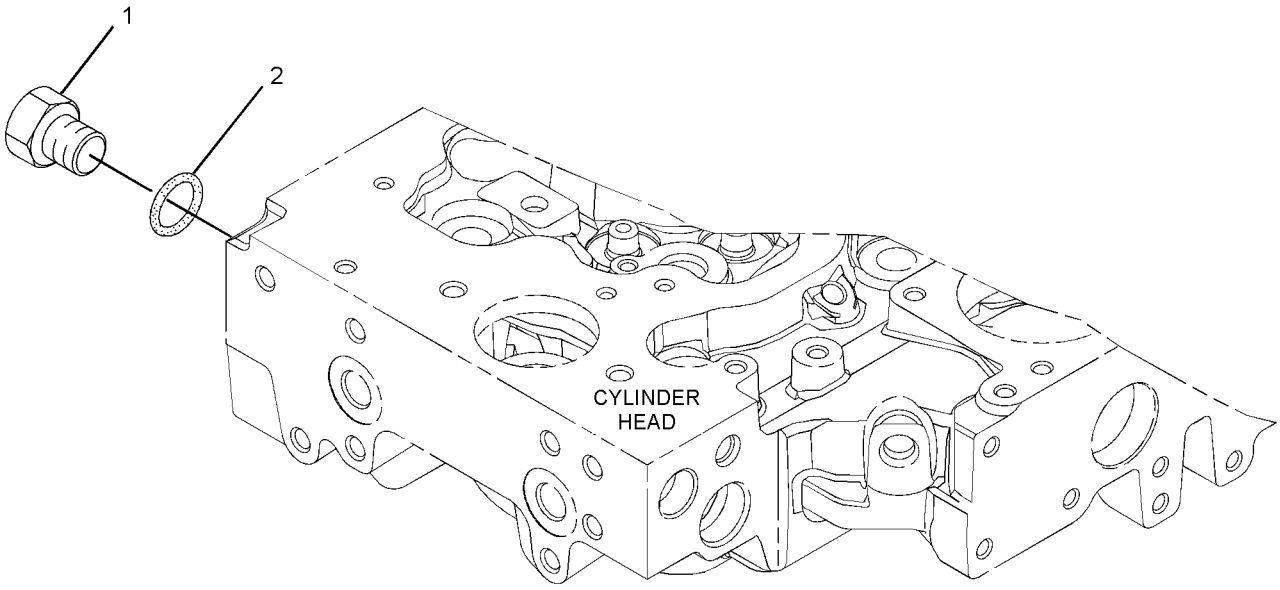

GRAPHIC #1 **<END>** g01305536

298-5131 PLUG GP-ENGINE

S/N: C4Z1-UP
PART OF 354-7363, 364-5743 ENGINE AR-PRIMARY
AN ATTACHMENT

SMCS-1000 **i03128286**

NOTE	REF NO	GRAPHIC REF	PART NUMBER	QTY	PART NAME 1 2 3 4 5 6 (PRODUCT LEVEL)	SEE PAGE
	1	1	**2B-0858**	3	PLUG-PIPE	

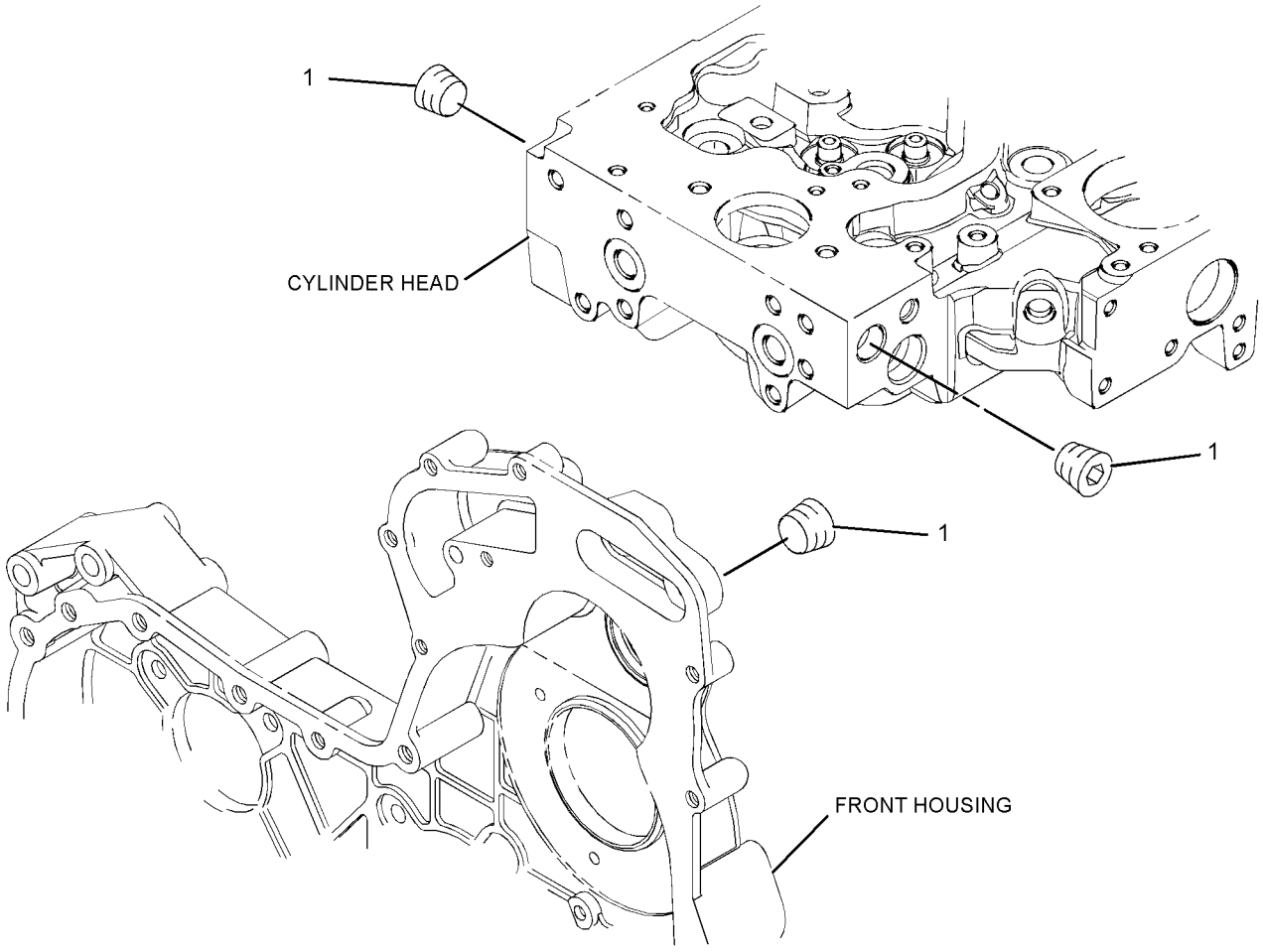

GRAPHIC #1 **<END>** g01305448

304-8761 PLUG GP-ENGINE

S/N: C4Z1-UP
PART OF 354-7363, 364-5743 ENGINE AR-PRIMARY
AN ATTACHMENT

SMCS-1000 **i03128290**

NOTE	REF NO	GRAPHIC REF	PART NUMBER	QTY	PART NAME 1 2 3 4 5 6 (PRODUCT LEVEL)	SEE PAGE
	1	1	**6I-0646**	1	BOLT (M10X1.5X14-MM)	
	2	1	**214-3203**	1	WASHER (SEALING)	

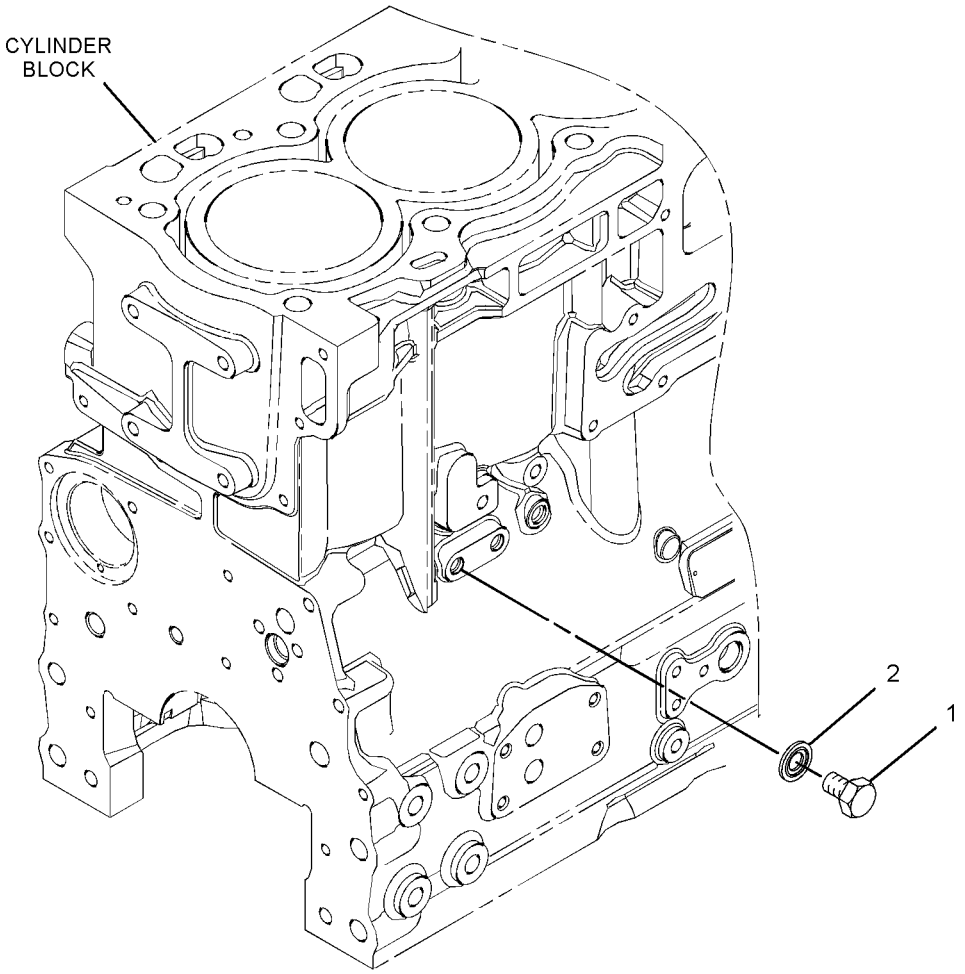

GRAPHIC #1 **<END>** g01373022

BASIC ENGINE

360-7347 PULLEY GP-CRANKSHAFT

S/N: C4Z1-UP

PART OF 354-7363, 364-5743 ENGINE AR-PRIMARY

AN ATTACHMENT

SMCS-1205 **i03902916**

NOTE	PART NUMBER	QTY	PART NAME 1 2 3 4 5 6 (PRODUCT LEVEL)	SEE PAGE
M	**102-9941**	3	BOLT (M12X1.75X25-MM)	
	334-9334	3	BOLT	
	286-7848	1	PULLEY GP-ENGINE	
	359-0750	1	PULLEY-CRANKSHAFT	

M-METRIC PART

<END>

315-3385 ROCKER ARM GP

S/N: C4Z1-UP

PART OF 326-9004 VALVE MECHANISM GP

AN ATTACHMENT

SMCS-1102, 1123 **i03131135**

NOTE	REF NO	GRAPHIC REF	PART NUMBER	QTY	PART NAME 1 2 3 4 5 6 (PRODUCT LEVEL)	SEE PAGE
	1	1	**225-5634**	1	SHAFT AS	
	1A	1	**225-5629**	2	PLUG	
	2	1	**225-5638**	3	SPRING	
	3	1	**225-5959**	2	CLIP	
	4	1	**225-5960**	1	BOLT (M8X1.25X60-MM)	
	5	1	**225-5961**	2	WASHER (26.7X34.32X0.38-MM THK)	
	6	1	**225-5962**	3	BOLT (M8X1.25X30-MM)	
	7	1	**315-3386**	4	ROCKER ARM AS	
					(EACH INCLUDES)	
	7A	1	**278-5113**	1	ADJUSTING SCREW (TORX)	
	7B	1	**315-3387**	1	NUT	
	8	1	**315-3388**	4	ROCKER ARM AS	
					(EACH INCLUDES)	
	8A	1	**278-5113**	1	ADJUSTING SCREW (TORX)	
	8B	1	**315-3387**	1	NUT	

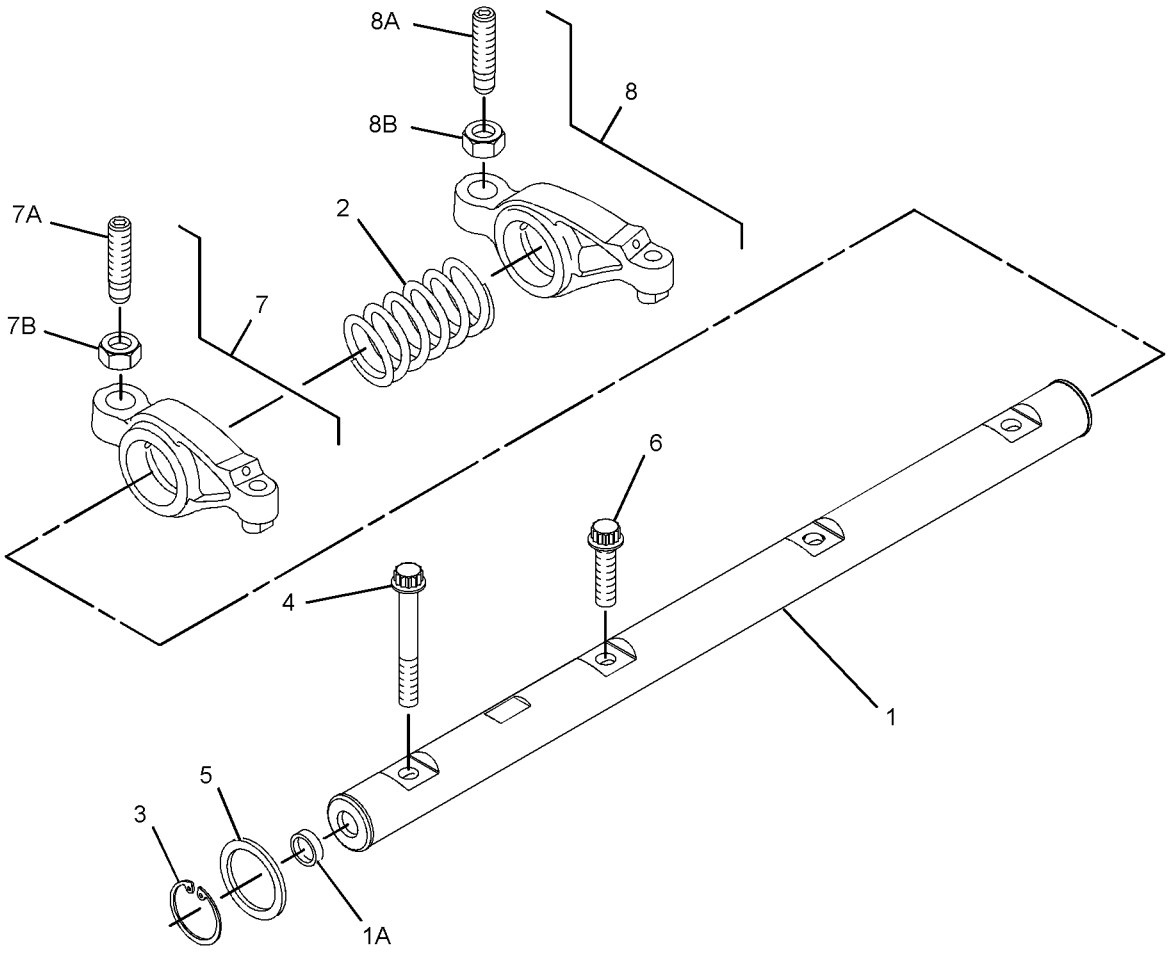

GRAPHIC #1 **<END>** g01399975

326-9004 VALVE MECHANISM GP

S/N: C4Z1-UP

PART OF 354-7363, 364-5743 ENGINE AR-PRIMARY

AN ATTACHMENT

SMCS-1102, 1112, 1121, 1123, 1208, 1209 **i03127783**

NOTE	REF NO	GRAPHIC REF	PART NUMBER	QTY	PART NAME 1 2 3 4 5 6 (PRODUCT LEVEL)	SEE PAGE
Y	1	1	**315-3385**	1	ROCKER ARM GP	39

Y-SEPARATE ILLUSTRATION

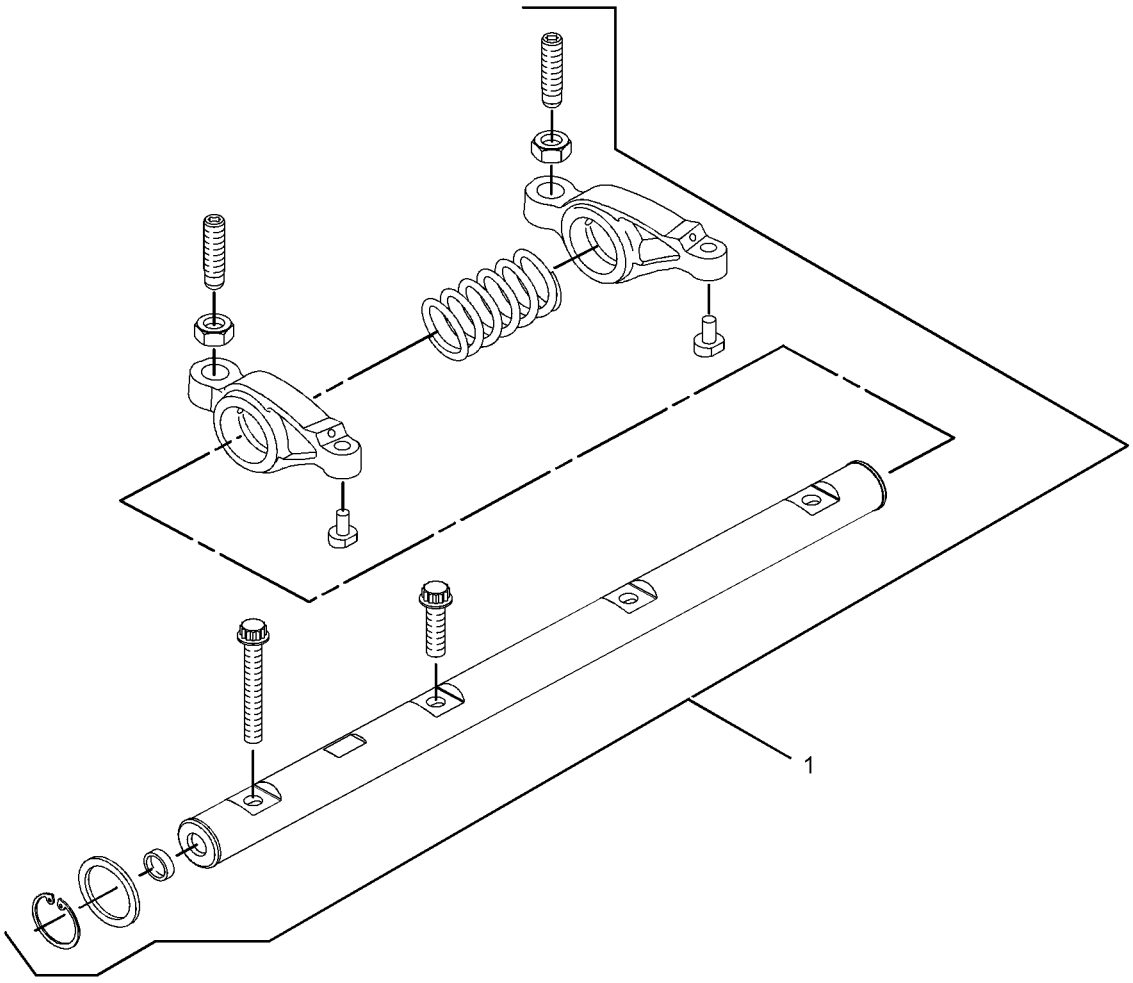

GRAPHIC #1 **<END>** g01611483

360-8798 BREATHER GP–CRANKCASE

S/N: SJW1-UP

PART OF 337-9866, 337-9867 ENGINE AR-COMPLETE

AN ATTACHMENT

SMCS-1317 **i04628872**

NOTE	REF NO	GRAPHIC REF	PART NUMBER	QTY	PART NAME 1 2 3 4 5 6 (PRODUCT LEVEL)	SEE PAGE
	1	1	**6I-1497**	1	SEAL	
	2	1	**165-4021**	1	CANISTER AS-BREATHER (CRANKCASE)	
		1	**185-6643**	1	SEAL (BREATHER)	
	3	1	**178-3620**	1	STRAP-DUAL CLAMP	
	4	1	**202-5909**	1	TUBE AS-OIL	
	5	1	**205-9920**	1	STRAP-CABLE	
	6	1	**298-0663**	1	CLIP	
	7	1	**323-3308**	5	CAP	
	8	1	**361-7547**	1	PLATE AS	
	9	1	**361-7549**	1	HOSE-BREATHER	
	10	1	**3S-2093**	2	STRAP-CABLE	
	11	1	**5D-1026**	2	CLAMP-BAND	
	12	1	**6G-2263**	1	SPACER (10.5X19X28.5-MM THK)	
M	13	1	**7X-0818**	1	BOLT (M8X1.25X45-MM)	
	14	1	**8T-4224**	4	WASHER-HARD (8.8X16X2-MM THK)	
M	15	1	**8T-4908**	3	BOLT (M8X1.25X25-MM)	
M	16	1	**8T-4971**	2	BOLT (M6X1X30-MM)	
	17	1	**8T-9402**	3	CLAMP-HOSE	
	18	1	**9X-8256**	2	WASHER (6.6X12X2-MM THK)	
E	19	1	**5P-1505**		HOSE (82-CM)	
E	20	1	**136-1955**		HOSE (110-CM)	

E-ORDER BY THE CENTIMETER
M-METRIC PART

360-8798 **BREATHER GP** *(contd.)* **i04628872**

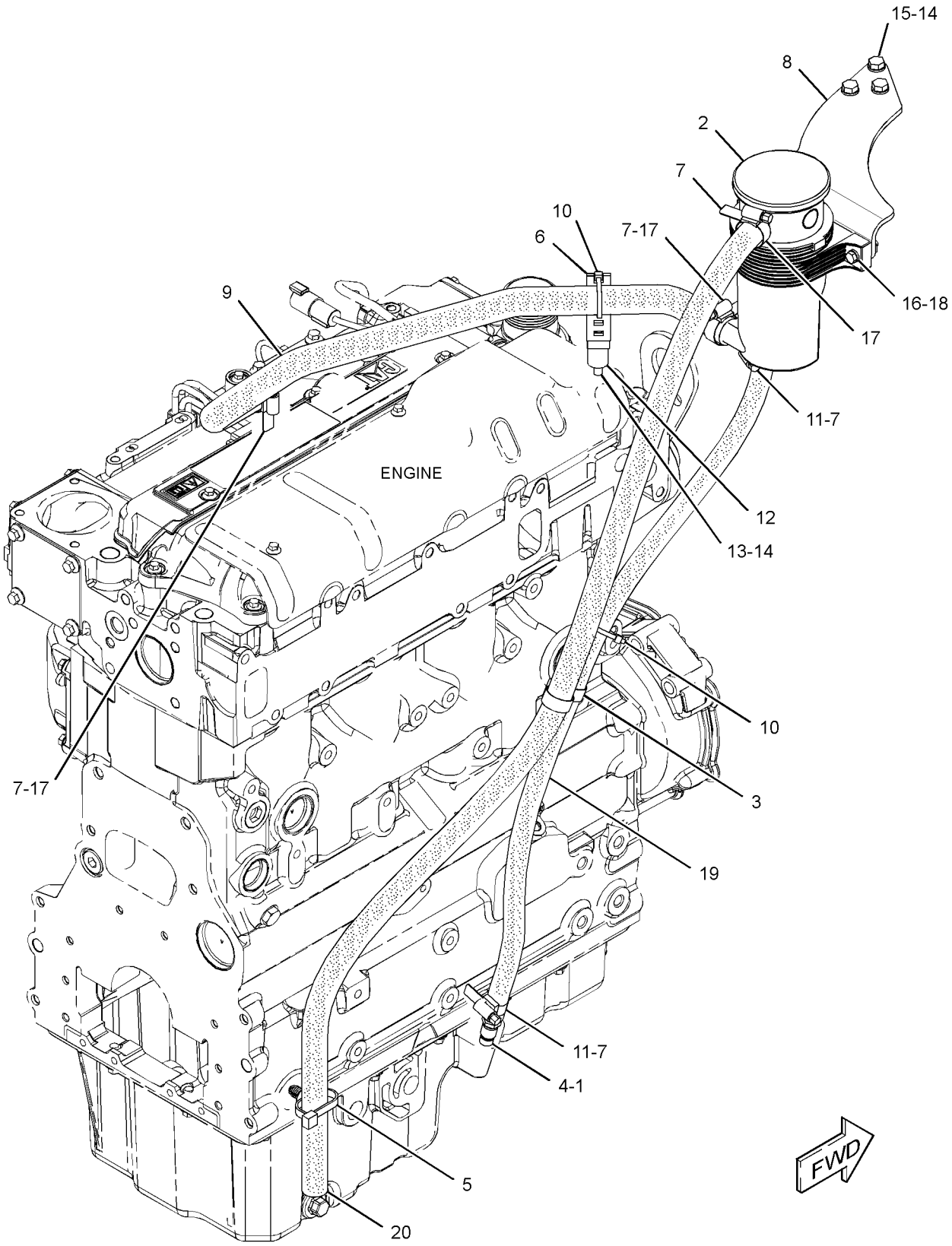

GRAPHIC #1 **<END>** g02822548

309-7555 FILLER GP-ENGINE OIL

S/N: C4Z1-UP

PART OF 354-7363, 364-5743 ENGINE AR-PRIMARY

AN ATTACHMENT

SMCS-1316 **i03128307**

NOTE	REF NO	GRAPHIC REF	PART NUMBER	QTY	PART NAME 1 2 3 4 5 6 (PRODUCT LEVEL)	SEE PAGE
M	1	1	**6I-0260**	2	BOLT (M8X1.25X25-MM)	
	2	1	**225-6522**	1	PLUG-CUP	
	3	1	**317-3769**	1	FILLER GP-ENGINE OIL	
	3A	1	**317-3778**	1	SEAL-O-RING	

M-METRIC PART

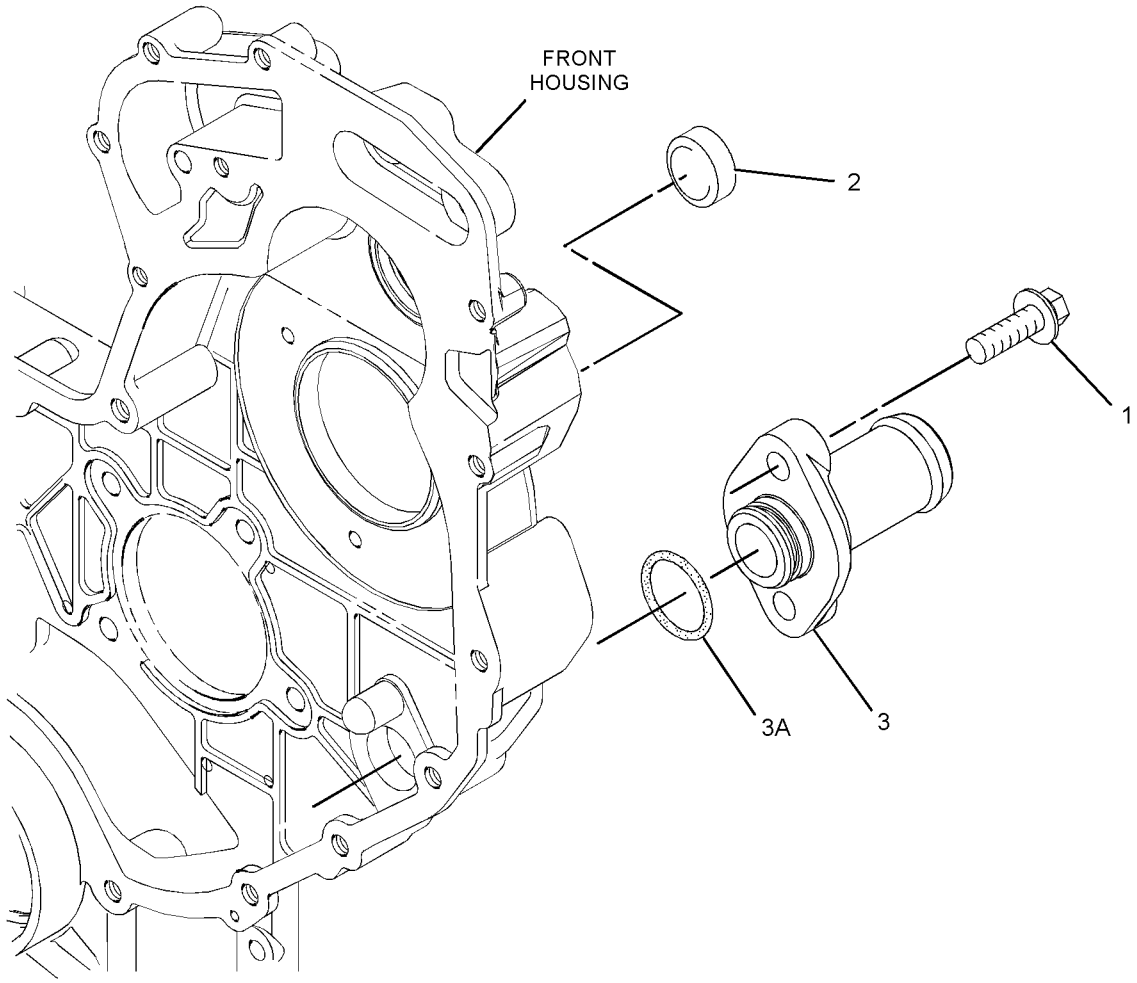

GRAPHIC #1 **<END>** g01378834

LUBRICATION SYSTEM

352-3463 GAUGE GP-OIL LEVEL & FILLER

S/N: SJW1-UP

PART OF 337-9866, 337-9867 ENGINE AR-COMPLETE

AN ATTACHMENT

SMCS-1316, 1326 **i04628854**

NOTE	REF NO	GRAPHIC REF	PART NUMBER	QTY	PART NAME 1 2 3 4 5 6 (PRODUCT LEVEL)	SEE PAGE
	1	1	**6I-1497**	1	SEAL	
	2	1	**9M-7958**	1	CLAMP-HOSE	
	3	1	**236-6651**	1	CAP AS-FILLER (ENGINE OIL)	
	4	1	**323-3308**	2	CAP	
Y	5	1	**351-8191**	1	GAUGE GP-OIL LEVEL (DIPSTICK) (ENGINE)	45
	6	1	**352-7601**	1	HOSE	
	7	1	**352-7634**	1	BRACKET AS	
	8	1	**362-8059**	1	TUBE AS	
	9	1	**127-4471**	1	CLAMP-HOSE	
	10	1	**139-1398**	1	CLIP	
	11	1	**7W-2326**	1	FILTER AS-ENGINE OIL	
M	12	1	**8T-4189**	4	BOLT (M8X1.25X20-MM)	
	13	1	**8T-4224**	4	WASHER-HARD (8.8X16X2-MM THK)	

M-METRIC PART
Y-SEPARATE ILLUSTRATION

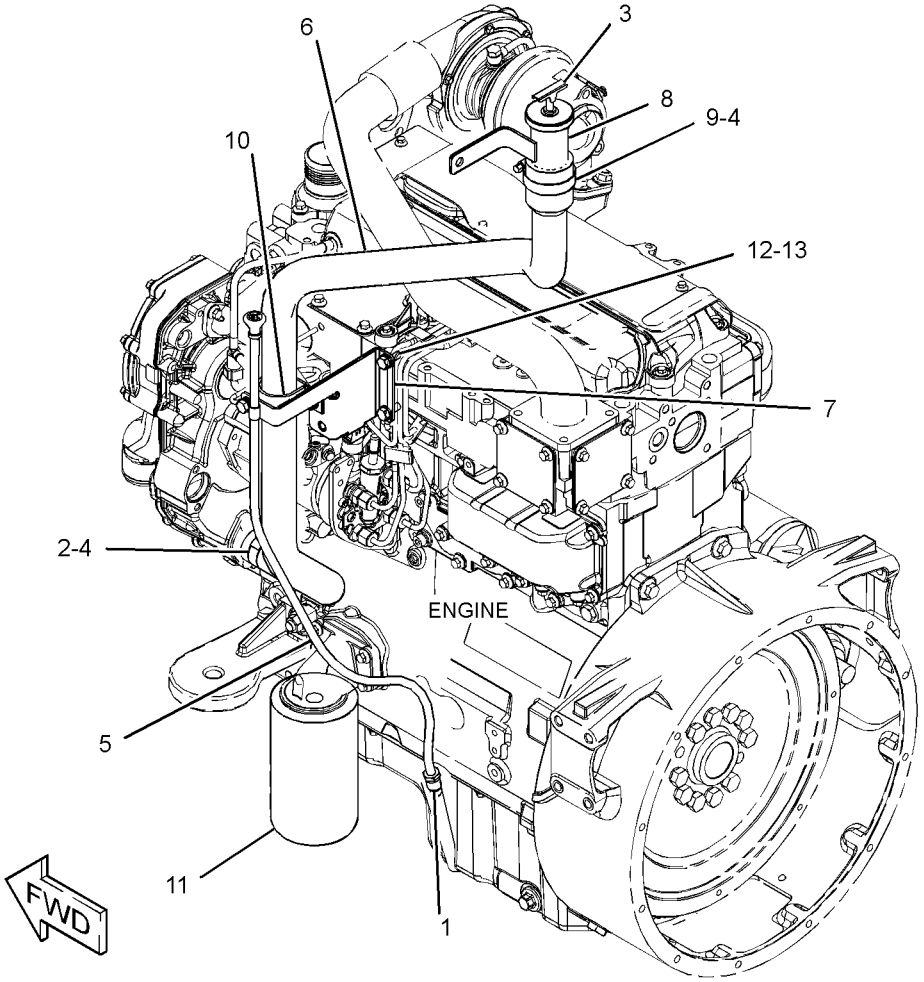

GRAPHIC #1 **<END>** g02823276

351-8191 GAUGE GP-OIL LEVEL (DIPSTICK)

S/N: SJW1-UP
PART OF 352-3463 GAUGE GP-OIL LEVEL & FILLER
AN ATTACHMENT

SMCS-1326 **i04611721**

NOTE	REF NO	GRAPHIC REF	PART NUMBER	QTY	PART NAME 1 2 3 4 5 6 (PRODUCT LEVEL)	SEE PAGE
	1	1	*351-8190*	1	GAUGE AS-OIL LEVEL (DIPSTICK) (ENGINE)	
		1	**275-9891**	2	SEAL-O-RING	

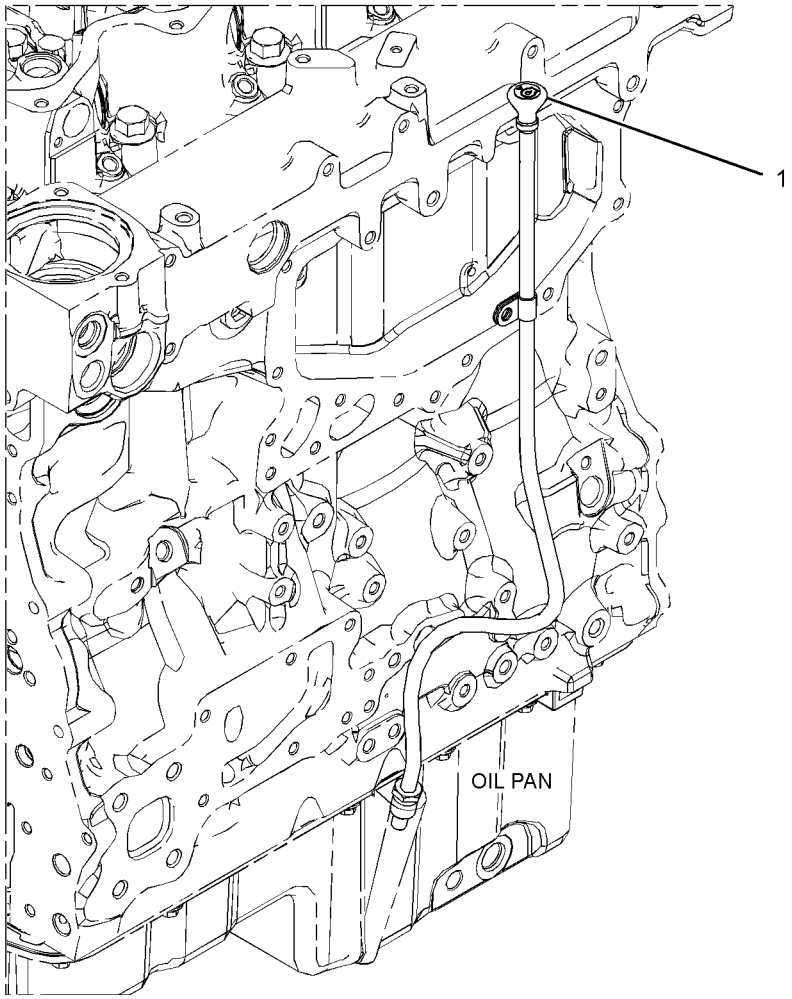

GRAPHIC #1 **<END>** g02828617

LUBRICATION SYSTEM

298-5112 PUMP GP-ENGINE OIL

S/N: C4Z1-UP
PART OF 354-7363, 364-5743 ENGINE AR-PRIMARY
AN ATTACHMENT

SMCS-1304, 1315 **i03128291**

NOTE	REF NO	GRAPHIC REF	PART NUMBER	QTY	PART NAME 1 2 3 4 5 6 (PRODUCT LEVEL)	SEE PAGE
	1	1	**225-8329**	1	PUMP AS-ENGINE OIL	
M	2	1	**100-4461**	5	BOLT (M10X1.50X50-MM)	

M-METRIC PART

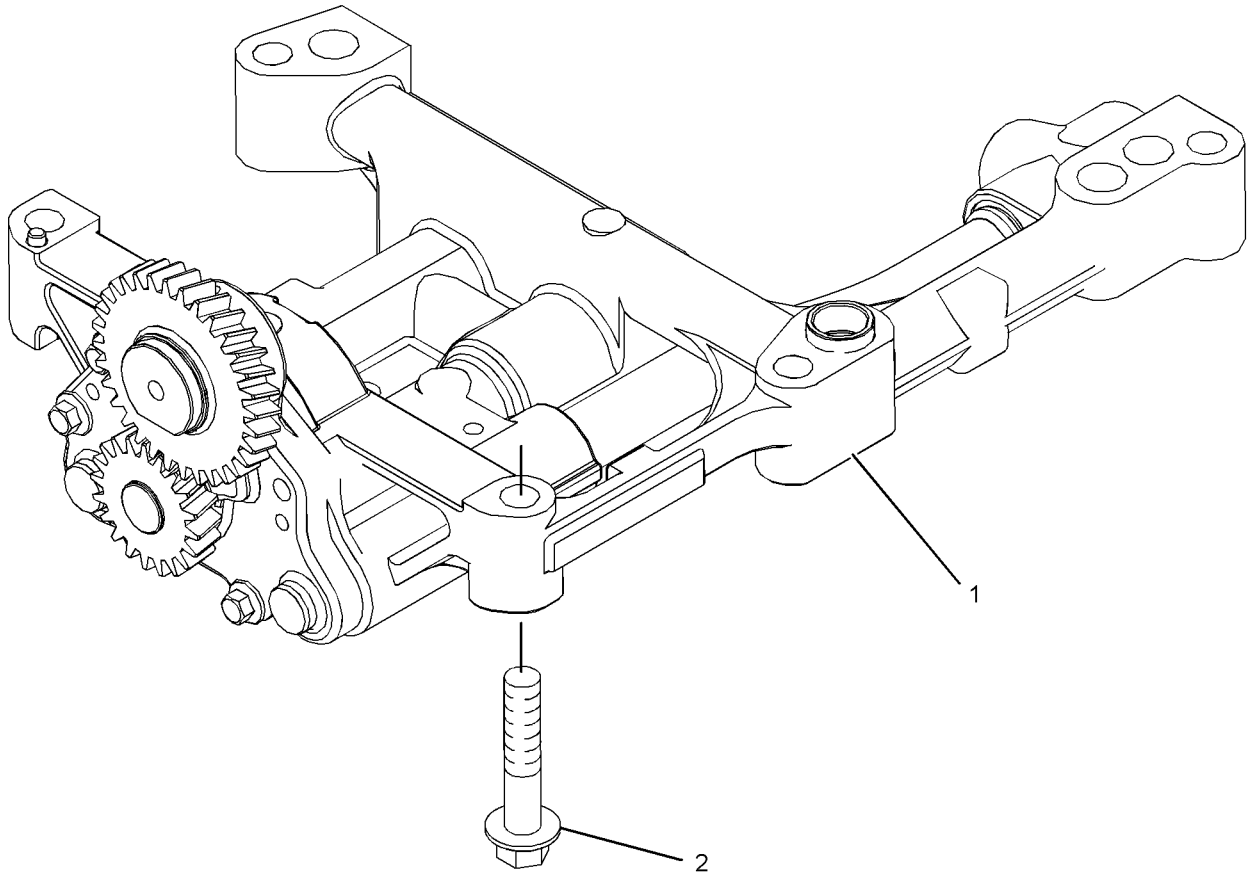

GRAPHIC #1 **<END>** g01304952

316-6941 CONNECTION GP-WATER

S/N: C4Z1-UP

PART OF 354-7363, 364-5743 ENGINE AR-PRIMARY

AN ATTACHMENT

SMCS-1380 **i03128305**

NOTE	REF NO	GRAPHIC REF	PART NUMBER	QTY	PART NAME 1 2 3 4 5 6 (PRODUCT LEVEL)	SEE PAGE
	1	1	**254-2267**	1	REGULATOR GP-TEMPERATURE (INCLUDES CONNECTOR) (WATER)	
	1A	1	**254-2270**	1	SEAL-O-RING	
M	2	1	**6I-0260**	2	BOLT (M8X1.25X25-MM)	

M-METRIC PART

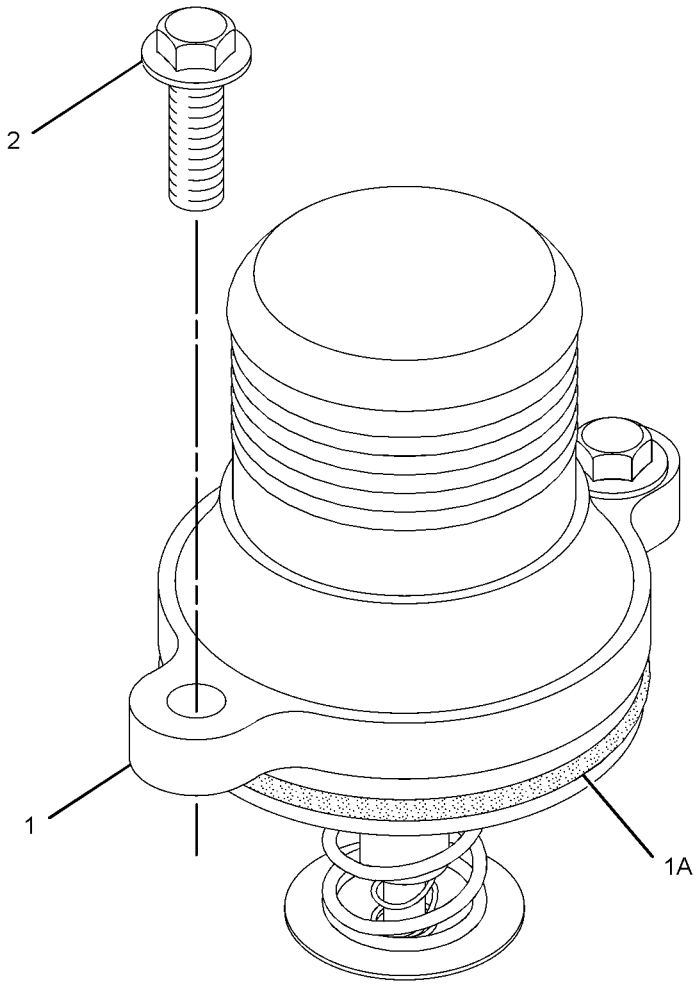

GRAPHIC #1 **<END>** g01319398

316-6899 COOLER GP-ENGINE OIL

S/N: C4Z1-UP
PART OF 354-7363, 364-5743 ENGINE AR-PRIMARY
AN ATTACHMENT

SMCS-1378 **i03919094**

NOTE	REF NO	GRAPHIC REF	PART NUMBER	QTY	PART NAME 1 2 3 4 5 6 (PRODUCT LEVEL)	SEE PAGE
	1	1	**6I-0572**	4	BOLT (M8X1.25X20-MM)	
M	2	1	**6I-0645**	4	BOLT (M8X1.25X25-MM)	
	3	1	**225-7944**	2	GASKET (ENGINE OIL FILTER BASE)	
	4	1	**232-3751**	1	PLATE	
	5	1	**249-0974**	1	HEAD AS-OIL FILTER	
Y	6	1	**354-1274**	1	COOLER GP-ENGINE OIL	49

M-METRIC PART
Y-SEPARATE ILLUSTRATION

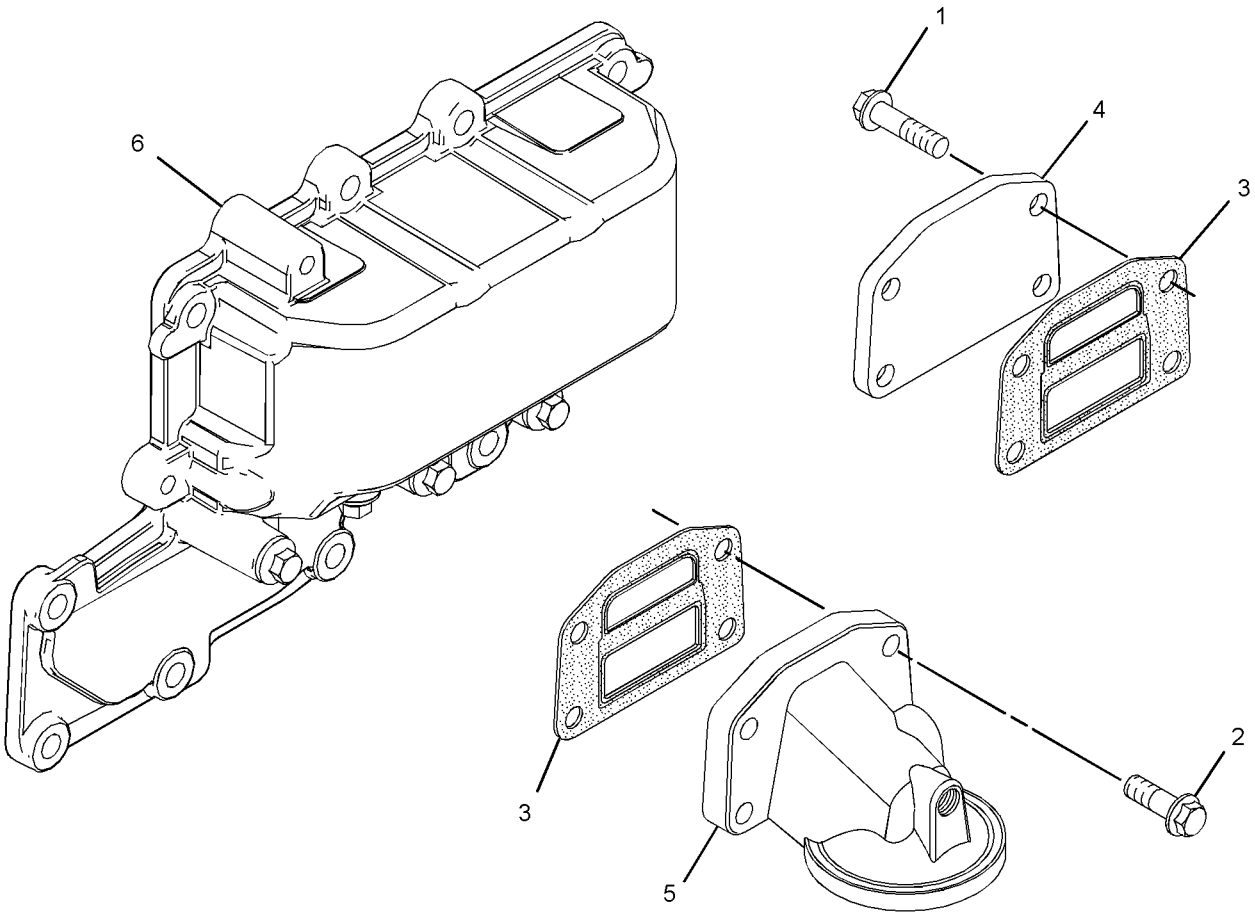

GRAPHIC #1 **<END>** g02151330

354-1274 COOLER GP-ENGINE OIL

S/N: C4Z1-UP

PART OF 316-6899 COOLER GP-ENGINE OIL

AN ATTACHMENT

SMCS-1378 **i03900469**

NOTE	REF NO	GRAPHIC REF	PART NUMBER	QTY	PART NAME 1 2 3 4 5 6 (PRODUCT LEVEL)	SEE PAGE
M	1	1	**6I-0260**	10	BOLT (M8X1.25X25-MM)	
	2	1	**6I-4374**	3	BOLT (M8X1.25X60-MM)	
M	3	1	**101-3895**	4	BOLT (M8X1.25X35-MM)	
	4	1	**225-6817**	1	COOLER-OIL	
	5	1	**225-6818**	2	SEAL	
	6	1	**272-2265**	1	SEAL	

M-METRIC PART

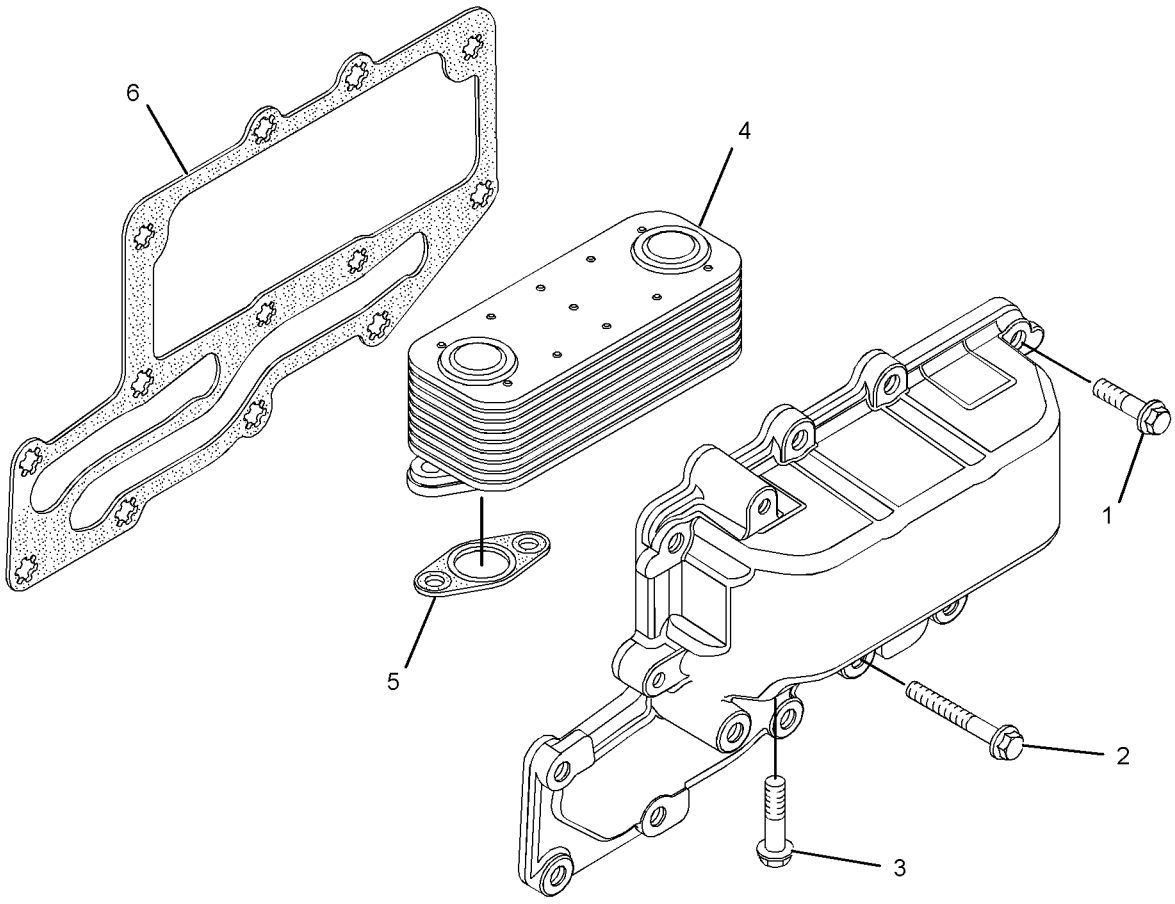

GRAPHIC #1 **<END>** g02140458

COOLING SYSTEM

375-9569 FAN GP-SUCTION—WITHOUT AIR CONDITIONER

S/N: SJW1-UP

PART OF 374-6887 HEATER & AIR CONDITIONER AR

AN ATTACHMENT

SMCS-1356, 1360 **i04611449**

NOTE	REF NO	GRAPHIC REF	PART NUMBER	QTY	PART NAME 1 2 3 4 5 6 (PRODUCT LEVEL)	SEE PAGE
	1	1	**261-0406**	1	BELT TENSIONER	
	2	1	**284-1026**	1	PULLEY	
	3	1	**309-6655**	1	BELT-SERPENTINE (FAN)	
	4	1	**349-3261**	1	PLATE-TENSIONER	
	5	1	**352-8358**	1	GUARD AS-FAN	
	6	1	**371-2055**	1	FILM-INFORMATION (BELT ROUTING)	
	7	1	**374-5381**	1	SPIDER AS-FAN (9-BLADE)	
	8	1	**379-2197**	1	SPACER-FAN	
M	9	1	**178-3336**	4	NUT-HEX FLANGE (M8X1.25-THD)	
	10	1	**342-9920**	4	BOLT-FLANGE HEAD (M8X1.25X20-MM)	
	11	1	**5P-4116**	4	WASHER-HARD (8.8X20.5X2-MM THK)	
	12	1	**8T-4121**	3	WASHER-HARD (11X21X2.5-MM THK)	
M	13	1	**8T-4196**	3	BOLT (M10X1.5X35-MM)	
	14	1	**8T-4224**	4	WASHER-HARD (8.8X16X2-MM THK)	
M	15	1	**8T-7547**	4	BOLT (M8X1.25X30-MM)	
M	16	1	**9X-2099**	4	STUD (M8X1.25X52.75-MM)	

M-METRIC PART

375-9569 **FAN GP-SUCTION** *(contd.)* **i04611449**

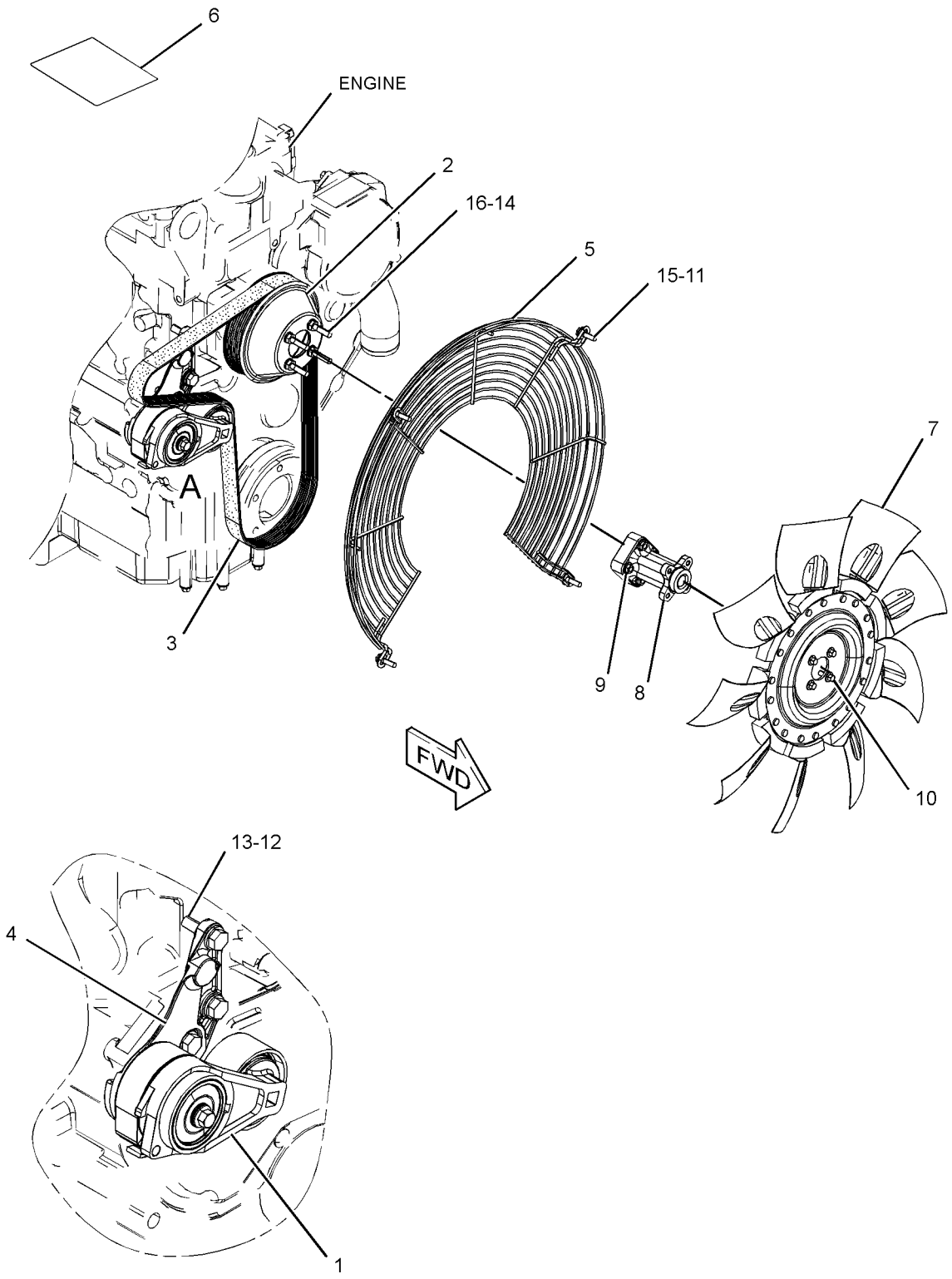

VIEW OF AREA A
(PARTS REMOVED FOR CLARITY)

GRAPHIC #1 **<END>** g02815778

375-9570 FAN GP-SUCTION—WITH AIR CONDITIONER

S/N: SJW1-UP

PART OF 374-6889 HEATER & AIR CONDITIONER AR

AN ATTACHMENT

SMCS-1356, 1360 **i04611489**

NOTE	REF NO	GRAPHIC REF	PART NUMBER	QTY	PART NAME 1 2 3 4 5 6 (PRODUCT LEVEL)	SEE PAGE
	1	1	**261-0376**	1	BELT TENSIONER	
	2	1	**261-0428**	1	PULLEY AS-IDLER	
M		1	**307-2242**	1	BOLT (M10X1.5X45-MM)	
	3	1	**284-1026**	1	PULLEY	
	4	1	**298-5872**	1	BELT-SERPENTINE (FAN PULLEY)	
	5	1	**348-8149**	1	PLATE-MOUNTING	
	6	1	**352-8358**	1	GUARD AS-FAN	
	7	1	**371-2054**	1	FILM-INFORMATION (BELT ROUTING)	
	8	1	**374-5381**	1	SPIDER AS-FAN (9-BLADE)	
	9	1	**379-2197**	1	SPACER-FAN	
M	10	1	**178-3336**	4	NUT-HEX FLANGE (M8X1.25-THD)	
	11	1	**342-9920**	4	BOLT-FLANGE HEAD (M8X1.25X20-MM)	
	12	1	**5P-4116**	4	WASHER-HARD (8.8X20.5X2-MM THK)	
	13	1	**8T-4121**	3	WASHER-HARD (11X21X2.5-MM THK)	
M	14	1	**8T-4196**	3	BOLT (M10X1.5X35-MM)	
	15	1	**8T-4224**	4	WASHER-HARD (8.8X16X2-MM THK)	
M	16	1	**8T-7547**	4	BOLT (M8X1.25X30-MM)	
M	17	1	**9X-2099**	4	STUD (M8X1.25X52.75-MM)	

M-METRIC PART

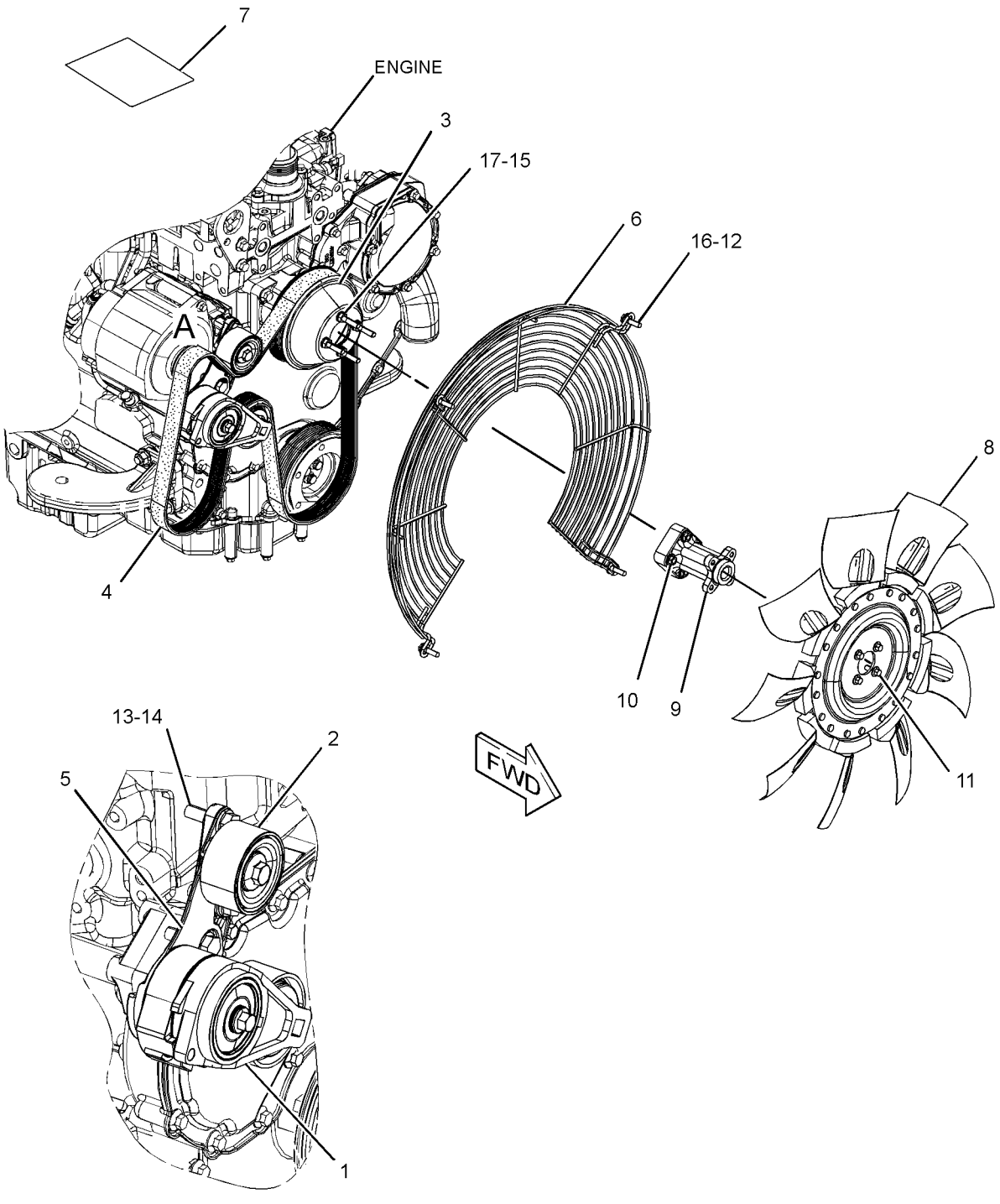

VIEW OF AREA A
(PARTS REMOVED FOR CLARITY)

GRAPHIC #1 **<END>** g02813478

COOLING SYSTEM

337-9779 LINES GP-POWER TRAIN COOLER

S/N: SJW1-UP
PART OF 353-1507 TRANSMISSION AR-DIRECT DRIVE, 353-1510 TRANSMISSION AR-POWER SHIFT AN ATTACHMENT

SMCS-1375, 3016 **i04555033**

NOTE	REF NO	GRAPHIC REF	PART NUMBER	QTY	PART NAME 1 2 3 4 5 6 (PRODUCT LEVEL)	SEE PAGE
	1	1	**323-3308**	6	CAP	
I	2	1	**364-1940**	1	HOSE AS	
I	3	1	**364-1941**	1	HOSE AS	
G	4	1	**160-2244**		SLEEVE-ABRASION (9.9-IN EACH)	
	5	1	*386-6191*	1	ELBOW AS	
		1	**2M-9780**	1	SEAL-O-RING	
		1	**275-4918**	1	ELBOW	
	6	1	*148-8339*	2	CONNECTOR AS	
					(EACH INCLUDES)	
		1	**6V-8716**	1	CONNECTOR	
		1	**6V-9746**	1	SEAL-O-RING	
		1	**7M-8485**	1	SEAL-O-RING	
	7	1	**164-4227**	1	CLIP	
	8	1	**3E-7445**	6	CLAMP-HOSE	
	9	1	**6D-4246**	2	CLIP	
	10	1	**8T-4121**	1	WASHER-HARD (11X21X2.5-MM THK)	
M	11	1	**8T-4137**	2	BOLT (M10X1.5X20-MM)	
	12	1	**8T-4222**	1	WASHER-PLATED (11X32X2.5-MM THK)	
E	13	1	**262-8088**		HOSE (101.5-CM)	
E	13A	1	**262-8088**		HOSE (54.8-CM)	

E-ORDER BY THE CENTIMETER
G-ORDER BY THE INCH
I-REFER TO HYDRAULIC INFORMATION SYSTEM
M-METRIC PART

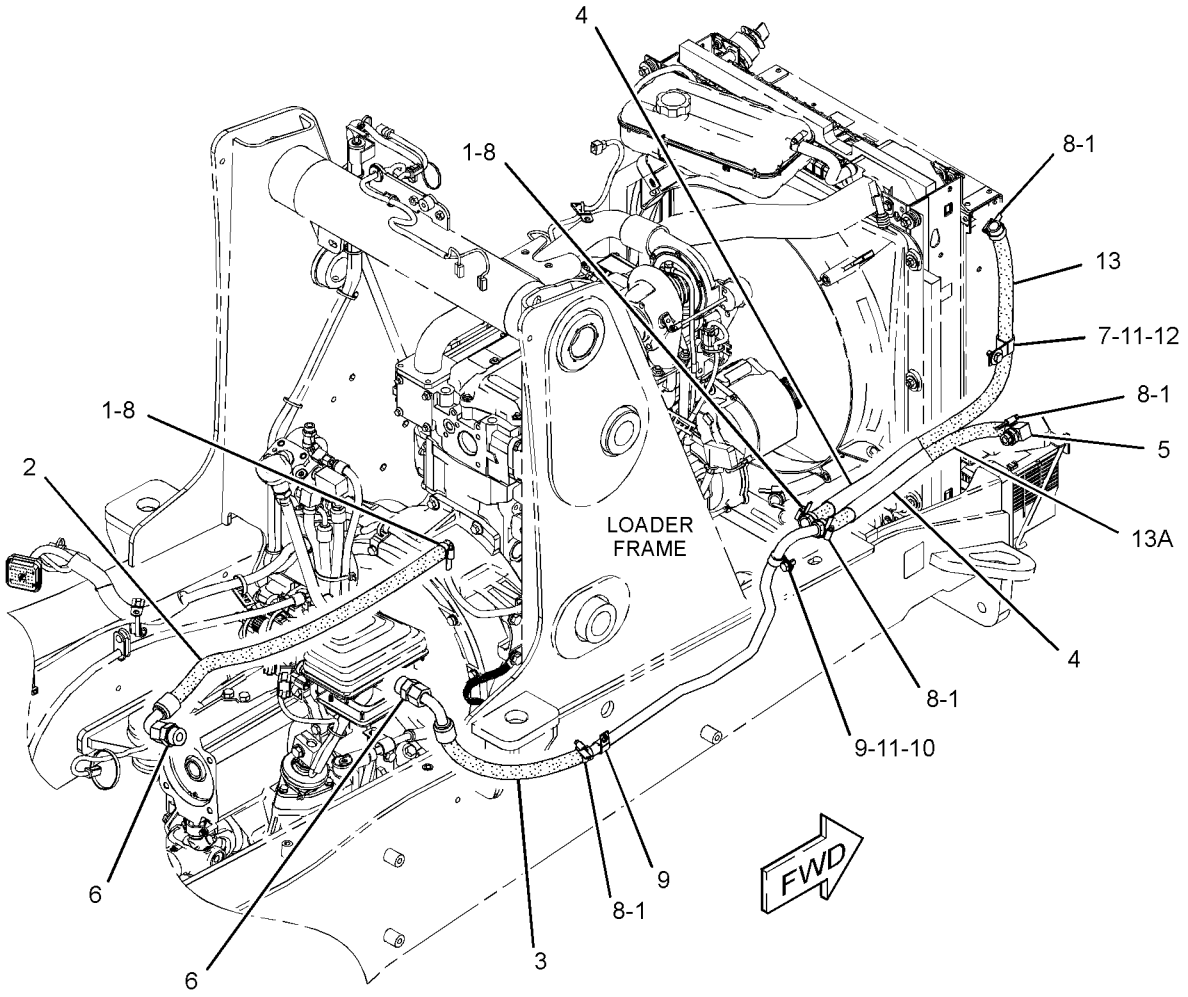

GRAPHIC #1 **<END>** g02807717

COOLING SYSTEM

380-5753 LINES GP-POWER TRAIN COOLER

S/N: SJW1-UP

PART OF 353-1511 TRANSMISSION AR-POWER SHIFT

AN ATTACHMENT

SMCS-1375, 3016 **i04565430**

NOTE	REF NO	GRAPHIC REF	PART NUMBER	QTY	PART NAME 1 2 3 4 5 6 (PRODUCT LEVEL)	SEE PAGE
	1	1	**323-3308**	6	CAP	
I	2	1	**364-1940**	1	HOSE AS	
	3	1	**370-4021**	1	TUBE	
I	4	1	**380-5771**	1	HOSE AS	
	5	1	*386-6191*	1	ELBOW AS	
		1	**2M-9780**	1	SEAL-O-RING	
		1	**275-4918**	1	ELBOW	
	6	1	*148-8339*	2	CONNECTOR AS	
					(EACH INCLUDES)	
		1	**6V-8716**	1	CONNECTOR	
		1	**6V-9746**	1	SEAL-O-RING	
		1	**7M-8485**	1	SEAL-O-RING	
	7	1	**164-4227**	1	CLIP	
	8	1	**3E-7445**	6	CLAMP-HOSE	
	9	1	**6D-4246**	2	CLIP	
	10	1	**8T-4121**	1	WASHER-HARD (11X21X2.5-MM THK)	
M	11	1	**8T-4137**	2	BOLT (M10X1.5X20-MM)	
	12	1	**8T-4222**	1	WASHER-PLATED (11X32X2.5-MM THK)	
E	13	1	**262-8088**		HOSE (102-CM)	
E	13A	1	**262-8088**		HOSE (55-CM)	
G	14	1	**160-2244**		SLEEVE-ABRASION (9.8-IN EACH)	

E-ORDER BY THE CENTIMETER
G-ORDER BY THE INCH
I-REFER TO HYDRAULIC INFORMATION SYSTEM
M-METRIC PART

380-5753 **LINES GP-POWER TRAIN COOLER** *(contd.)* **i04565430**

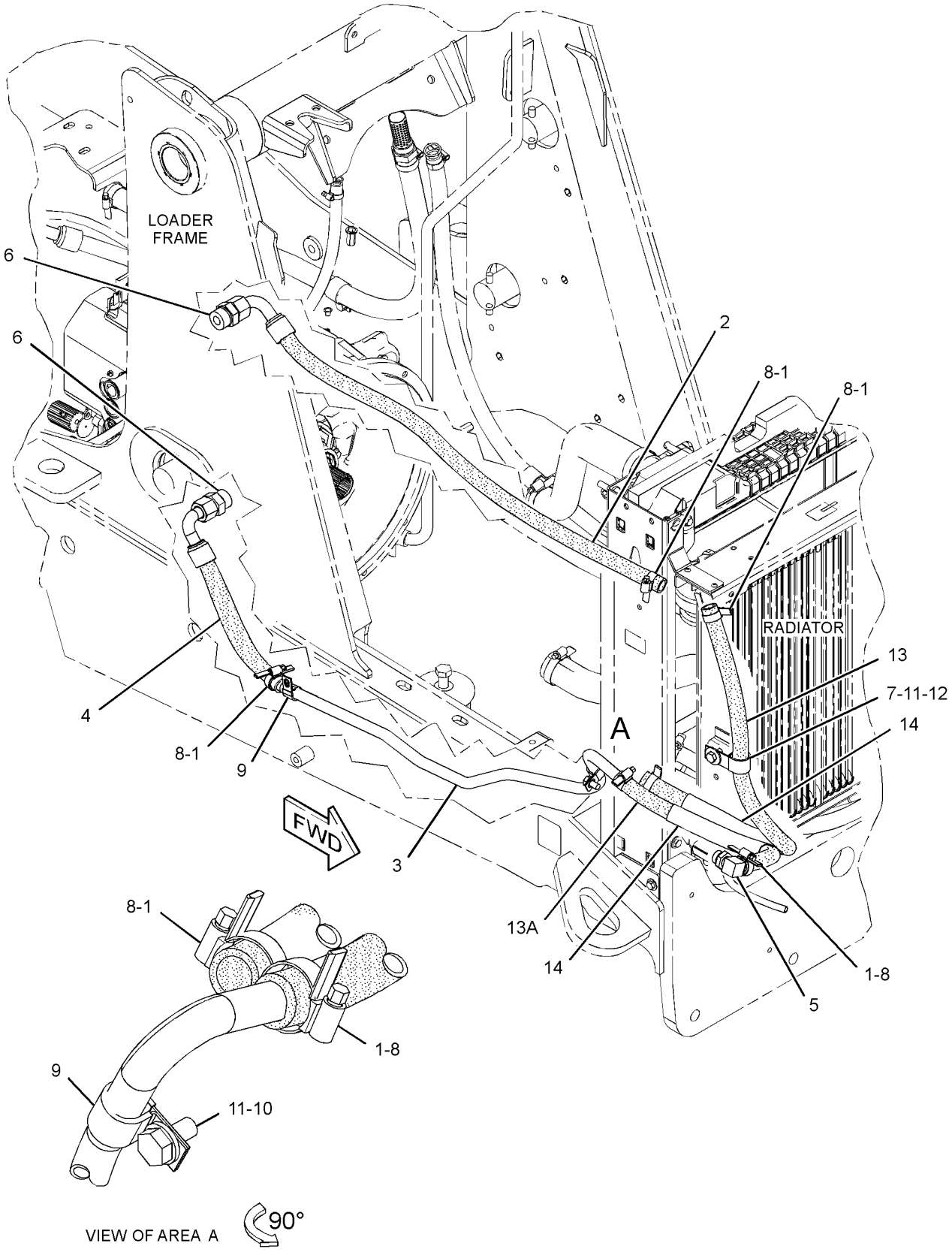

GRAPHIC #1 **<END>** g02834717

COOLING SYSTEM

315-3411 PUMP GP-WATER

S/N: C4Z1-UP

PART OF 354-7363, 364-5743 ENGINE AR-PRIMARY

AN ATTACHMENT

SMCS-1361 **i03899940**

NOTE	REF NO	GRAPHIC REF	PART NUMBER	QTY	PART NAME 1 2 3 4 5 6 (PRODUCT LEVEL)	SEE PAGE
M	1	1	**6I-0217**	2	BOLT (M8X1.25X20-MM)	
M	2	1	**6I-0254**	2	BOLT (M8X1.25X30-MM)	
M	3	1	**100-3751**	5	BOLT (M8X1.25X65-MM)	
	4	1	**113-8129**	2	BOLT (M8X1.25X75-MM)	
	5	1	**225-7741**	1	CONNECTION AS	
	5A	1	**225-7738**	1	SEAL-O-RING	
	5B	1	**225-7739**	1	SEAL-O-RING	
	6	1	**355-2252**	1	PUMP GP-WATER	
	6A	1	**225-8019**	1	GASKET	

M-METRIC PART

315-3411 **PUMP GP-WATER** *(contd.)* **i03899940**

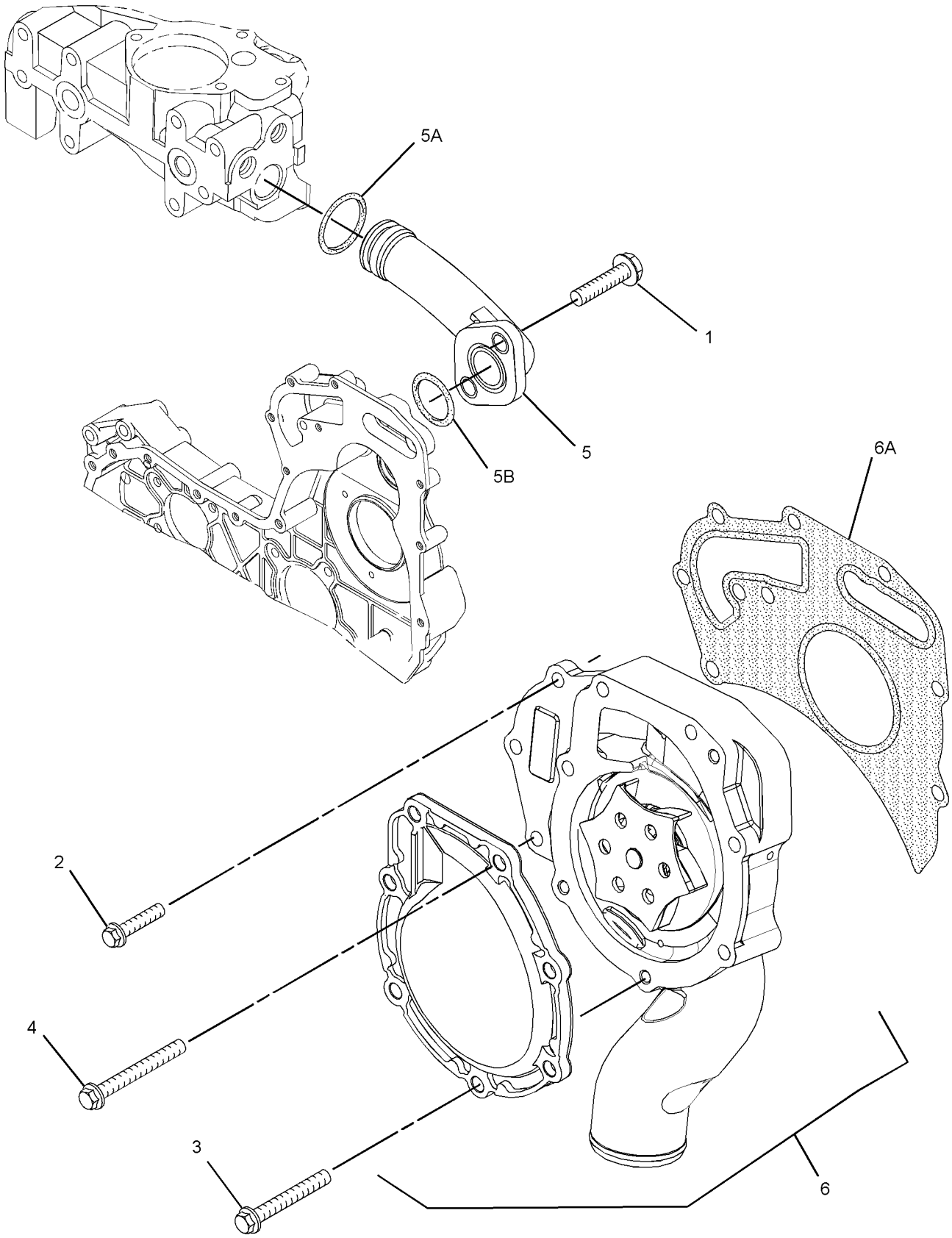

GRAPHIC #1 **<END>** g02146895

COOLING SYSTEM

358-3844 RADIATOR & HYD OIL COOLER GP

S/N: SJW1-UP
PART OF 354-7361 TANK & LINES GP-COOLANT
AN ATTACHMENT

SMCS-1353, 1374 **i04628871**

NOTE	REF NO	GRAPHIC REF	PART NUMBER	QTY	PART NAME 1 2 3 4 5 6 (PRODUCT LEVEL)	SEE PAGE
	1	1	**377-5263**	1	RADIATOR GP	
		1	**225-4287**	1	VALVE GP-RADIATOR DRAIN	
		1	**385-8594**	2	RECEPTACLE	
	2	1	**377-5264**	1	AFTERCOOLER GP-AIR	
	3	1	**377-5265**	1	COOLER GP-OIL	
		1	**385-8591**	2	STUD	
		1	**385-8593**	2	RETAINER	

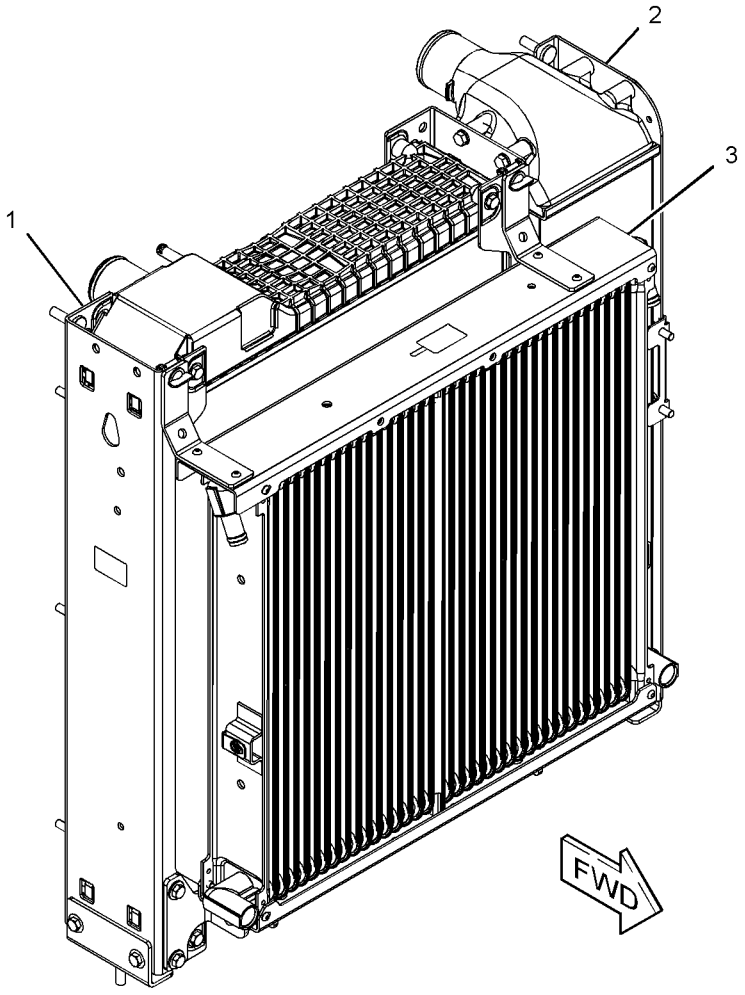

GRAPHIC #1 **<END>** g02824762

354-7361 TANK & LINES GP-COOLANT—EXPANSION, RADIATOR

S/N: SJW1-UP

PART OF 337-9866, 337-9867 ENGINE AR-COMPLETE

AN ATTACHMENT

SMCS-1354, 1380 **i04628873**

NOTE	REF NO	GRAPHIC REF	PART NUMBER	QTY	PART NAME 1 2 3 4 5 6 (PRODUCT LEVEL)	SEE PAGE
	1	1,2	**6N-6984**	4	MOUNT-RUBBER	
	2	2	**9M-7958**	1	CLAMP-HOSE	
	3	1	**247-1385**	1	TANK GP-EXPANSION (COOLANT)	
		1	**251-3227**	1	CAP AS-COOLANT TANK	
	4	1	**275-4918**	1	ELBOW	
	5	1,2	**323-3308**	7	CAP	
	6	2	**323-3309**	4	CAP	
	7	1	**329-5699**	1	HOSE	
	8	2	**343-5421**	2	SHROUD AS	
	9	1	**352-8799**	1	PLATE	
	10	1	**353-8082**	1	SEAL	
	11	2	**354-8258**	1	HOSE-RADIATOR (UPPER)	
Y	12	1	**358-3844**	1	RADIATOR & HYD OIL COOLER GP	60
	13	2	**373-9373**	1	HOSE-RADIATOR (LOWER)	
	14	1	**164-4227**	1	CLIP	
	15	1	**1B-3057**	1	CLIP	
	16	1	**2M-9780**	1	SEAL-O-RING	
	17	2	**3E-7445**	4	CLAMP-HOSE	
	18	2	**4D-7388**	1	CLIP	
M	19	2	**5C-7261**	8	NUT (M8X1.25-THD)	
	20	1	**5D-1026**	2	CLAMP-BAND	
	21	1,2	**5P-4116**	5	WASHER-HARD (8.8X20.5X2-MM THK)	
	22	2	**7X-0579**	10	WASHER-HARD (8.8X25.5X2-MM THK)	
M	23	1,2	**8T-4133**	4	NUT (M10X1.5-THD)	
M	24	1	**8T-4137**	1	BOLT (M10X1.5X20-MM)	
M	25	2	**8T-4200**	3	BOLT (M8X1.25X16-MM)	
	26	1,2	**8T-4222**	7	WASHER-PLATED (11X32X2.5-MM THK)	
M	27	1,2	**8T-4908**	4	BOLT (M8X1.25X25-MM)	
	28	2	**8T-4984**	4	CLAMP-HOSE	
E	29	1	**8C-3681**		HOSE (50-CM)	
E	29A	1	**8C-3681**		HOSE (110-CM)	
E	30	2	**262-8088**		HOSE (62.5-CM)	
E	30A	1	**262-8088**		HOSE (110.5-CM)	
E	31	1	**150-1974**		SEAL (56.5-CM EACH)	
G	32	2	**160-2244**		SLEEVE-ABRASION (10-IN EACH)	

E-ORDER BY THE CENTIMETER
G-ORDER BY THE INCH
M-METRIC PART
Y-SEPARATE ILLUSTRATION

354-7361 **TANK & LINES GP-COOLANT** *(contd.)* **i04628873**

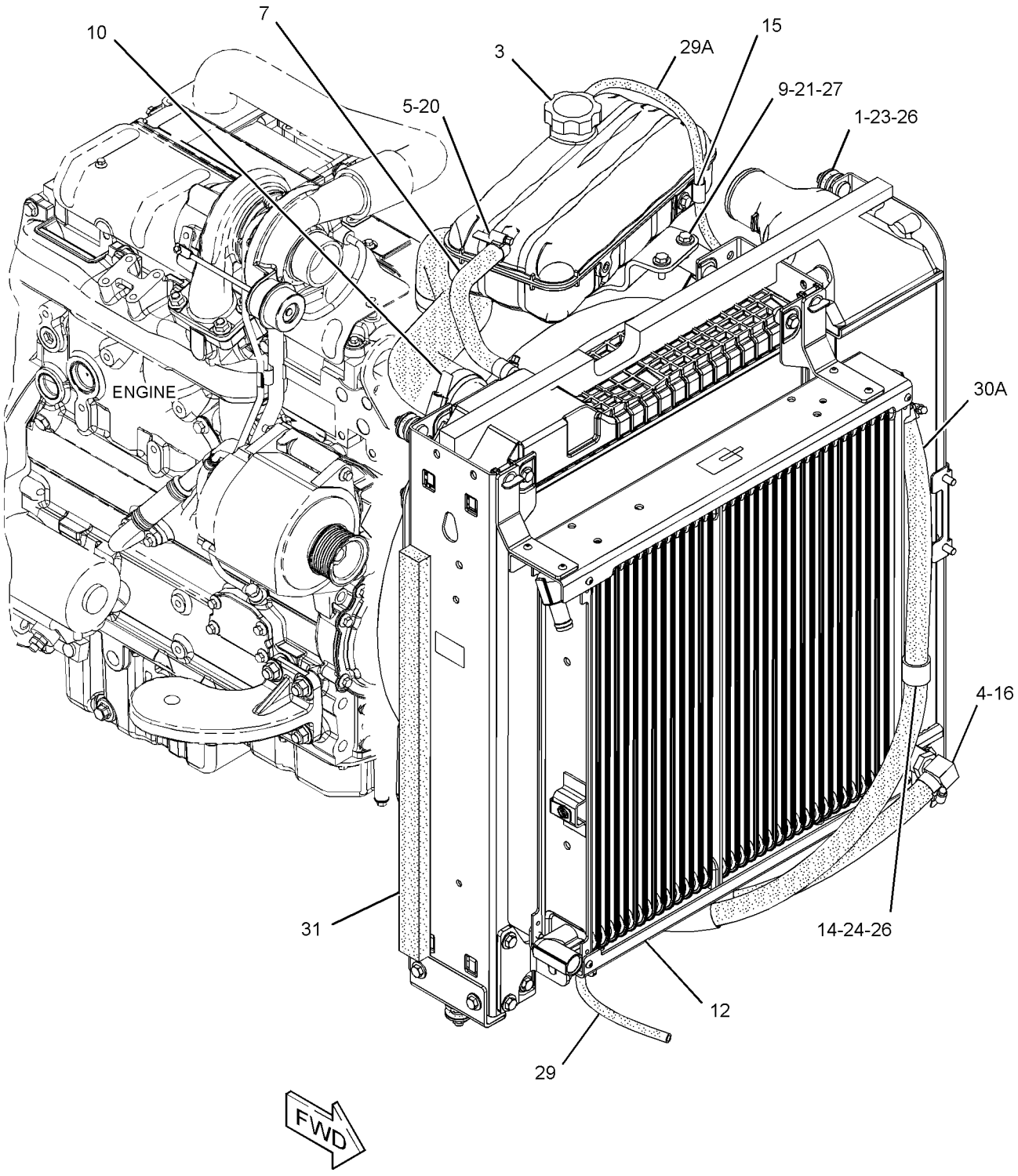

GRAPHIC #1 g02825117

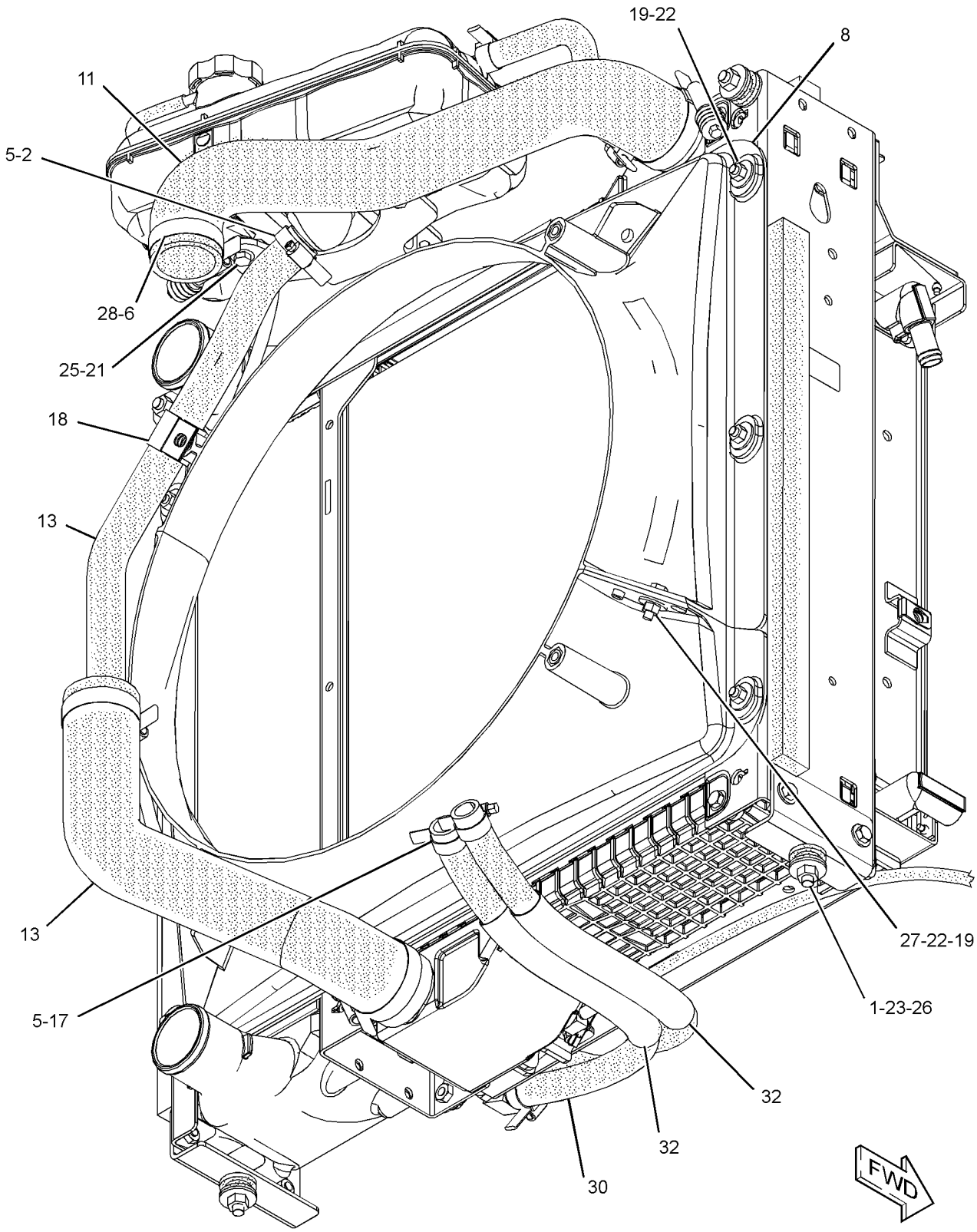

GRAPHIC #2 **<END>** g02825498

AIR INLET AND EXHAUST SYSTEM

343-5643 AIR CLEANER GP

S/N: SJW1-UP
PART OF 352-1449 AIR CLEANER GP
AN ATTACHMENT

SMCS-1051, 1054 **i04628898**

NOTE	REF NO	GRAPHIC REF	PART NUMBER	QTY	PART NAME 1 2 3 4 5 6 (PRODUCT LEVEL)	SEE PAGE
	1	1	**346-6687**	1	FILTER ELEMENT-AIR (PRIMARY)	
	2	1	**346-6688**	1	FILTER ELEMENT-AIR (SECONDARY)	
	3	1	**353-1641**	1	COVER	
	4	1	**353-4847**	1	VALVE-AIR CLEANER DUST	

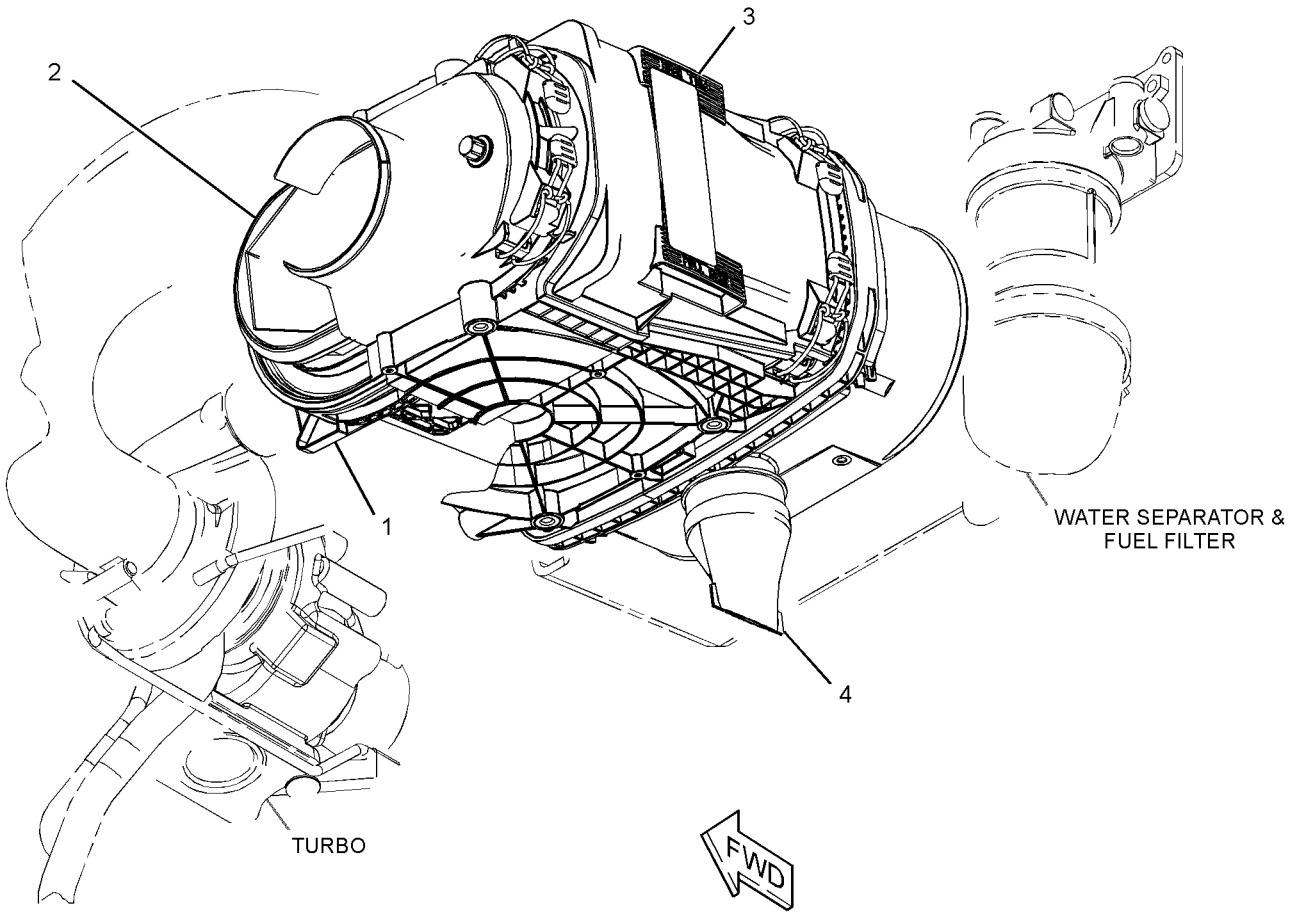

GRAPHIC #1 **<END>** g02823057

AIR INLET AND EXHAUST SYSTEM

352-1449 AIR CLEANER GP

S/N: SJW1-UP

PART OF 337-9866, 337-9867 ENGINE AR-COMPLETE

AN ATTACHMENT

SMCS-1051, 1054 **i04628856**

NOTE	REF NO	GRAPHIC REF	PART NUMBER	QTY	PART NAME 1 2 3 4 5 6 (PRODUCT LEVEL)	SEE PAGE
	1	1	**276-4836**	1	SWITCH-PRESSURE (AIR CLEANER)	
	2	1	**323-3309**	1	CAP	
	3	1	**323-6645**	1	CAP	
	4	1	**339-3043**	1	DUCT-AIR	
	5	1	**341-8901**	1	SUPPORT AS	
Y	6	1	**343-5643**	1	AIR CLEANER GP	64
	7	1	**352-2717**	1	HOSE	
	8	1	**367-8073**	1	SEAL	
	9	1	**376-0645**	1	PLATE-INSTRUCTION (LUBRICATION POINTS)	
	10	1	**179-6401**	2	SCREW-PAN HEAD (6-32XO.5-IN)	
	11	1	**295-5550**	1	CLAMP-BAND (CONSTANT TENSION)	
	12	1	**4H-3001**	1	PLUG-BUTTON	
M	13	1	**5C-9553**	4	BOLT (M6X1X16-MM)	
	14	1	**5P-1717**	1	CLAMP-HOSE	
	15	1	**5P-4116**	4	WASHER-HARD (8.8X20.5X2-MM THK)	
	16	1	**7X-7729**	2	WASHER (11X25X3-MM THK)	
M	17	1	**8T-4133**	2	NUT (M10X1.5-THD)	
M	18	1	**8T-4908**	4	BOLT (M8X1.25X25-MM)	
	19	1	**9X-6165**	4	WASHER (6.5X22X2.5-MM THK)	

M-METRIC PART
Y-SEPARATE ILLUSTRATION

352-1449 **AIR CLEANER GP** *(contd.)* **i04628856**

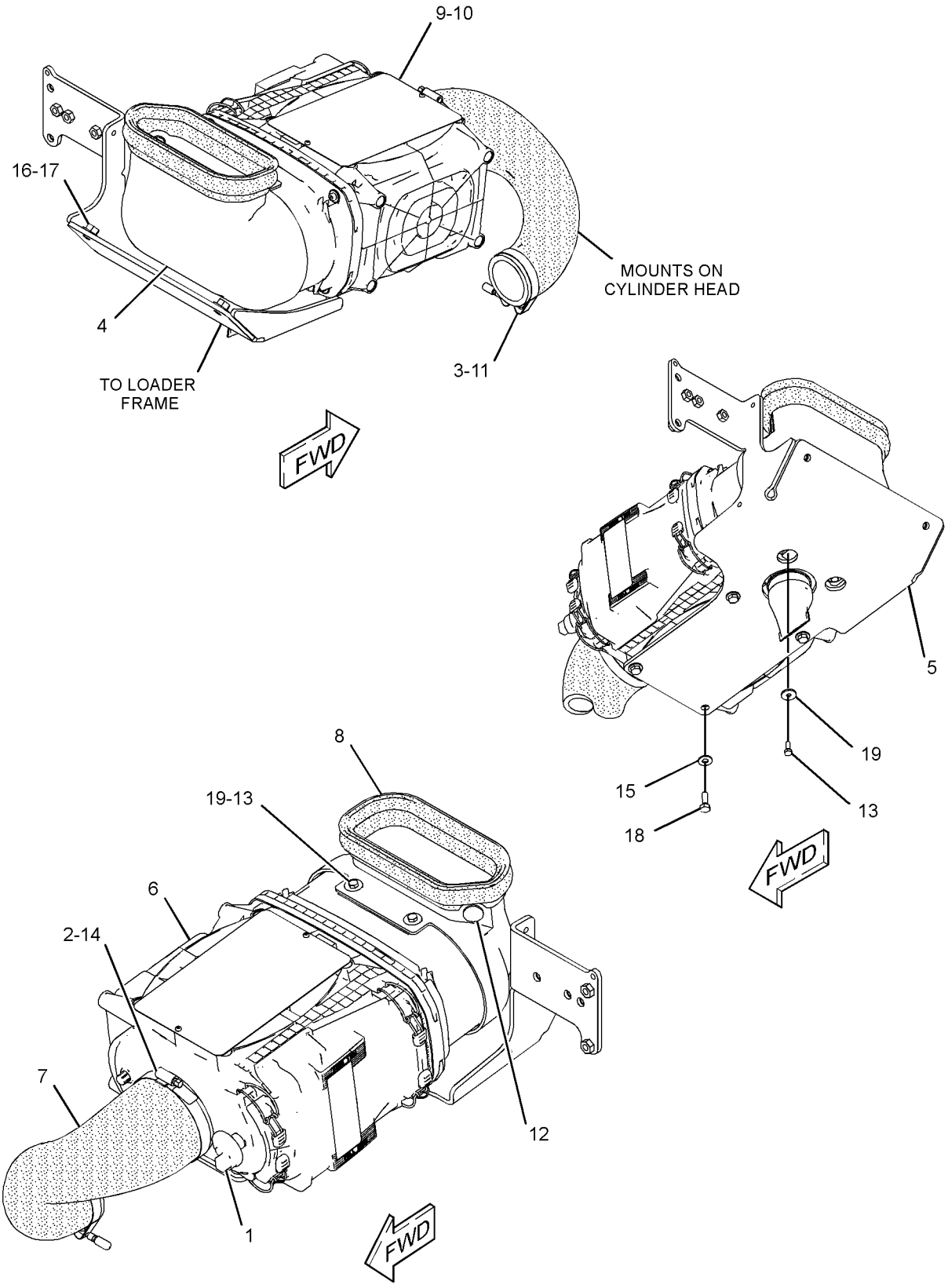

GRAPHIC #1 **<END>** g02826860

AIR INLET AND EXHAUST SYSTEM

329-0129 COVER GP-INLET MANIFOLD

S/N: C4Z1-UP

PART OF 354-7363, 364-5743 ENGINE AR-PRIMARY

AN ATTACHMENT

SMCS-1058 **i03130574**

NOTE	REF NO	GRAPHIC REF	PART NUMBER	QTY	PART NAME 1 2 3 4 5 6 (PRODUCT LEVEL)	SEE PAGE
	1	1	**111-8222**	4	BOLT (M8X16-MM)	
	2	1	**114-2579**	3	GASKET	
M	3	1	**124-3815**	8	BOLT (M8X16X1.25-MM)	
	4	1	**185-6627**	3	PLATE	

M-METRIC PART

329-0129 **COVER GP-INLET MANIFOLD** *(contd.)* **i03130574**

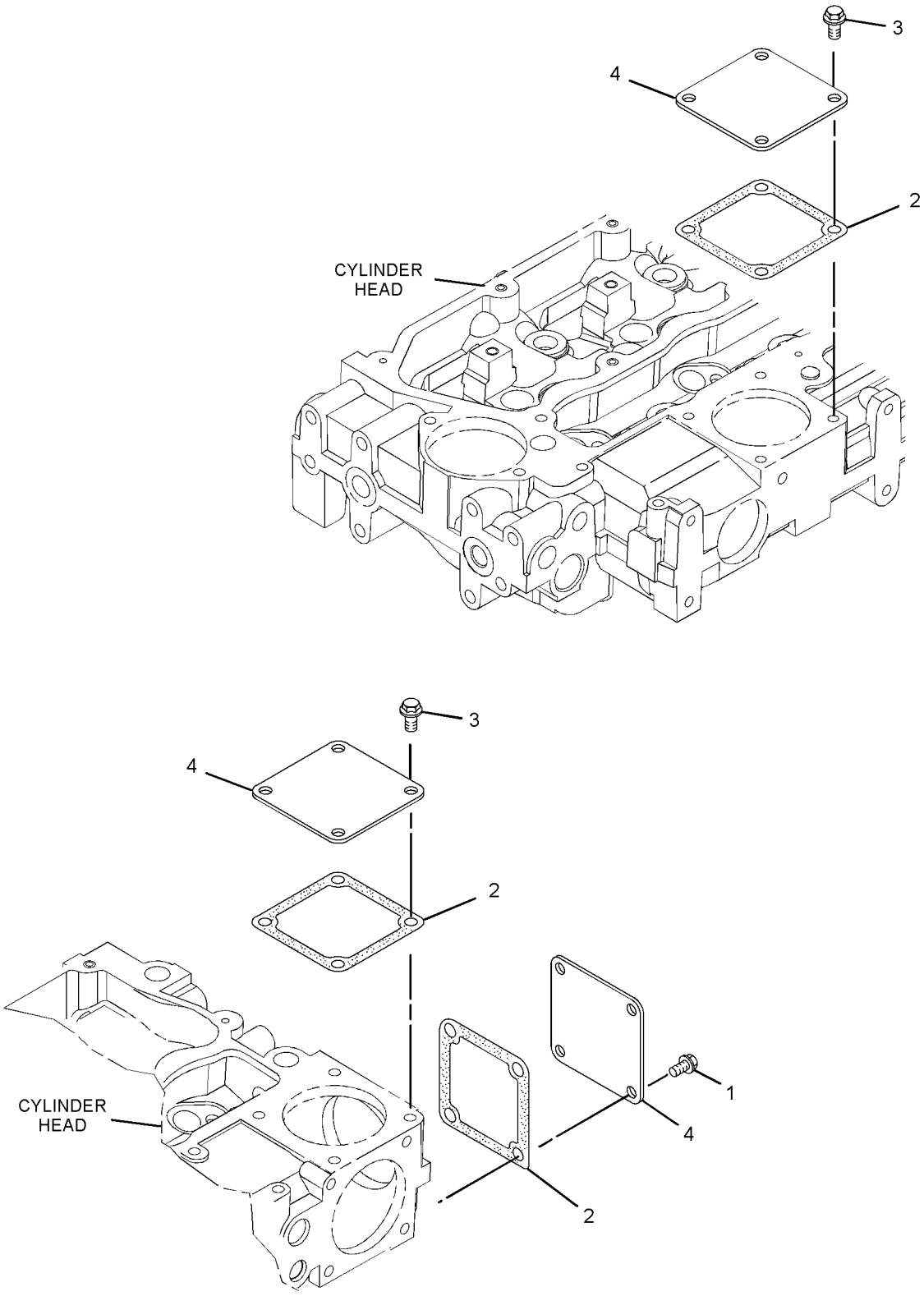

GRAPHIC #1 **<END>** g01619466

350-3689 EXTENSION GP-EXHAUST

S/N: SJW1-UP

PART OF 337-9866, 337-9867 ENGINE AR-COMPLETE

AN ATTACHMENT

SMCS-1061 **i04582812**

NOTE	REF NO	GRAPHIC REF	PART NUMBER	QTY	PART NAME 1 2 3 4 5 6 (PRODUCT LEVEL)	SEE PAGE
	1	1	**7E-3870**	1	CLAMP-MUFFLER	
	2	1	**239-2270**	1	PIPE-EXTENSION	
	3	1	**350-4310**	1	SUPPORT AS	
	4	1	**7X-7729**	2	WASHER (11X25X3-MM THK)	
M	5	1	**8T-4195**	2	BOLT (M10X1.5X30-MM)	

M-METRIC PART

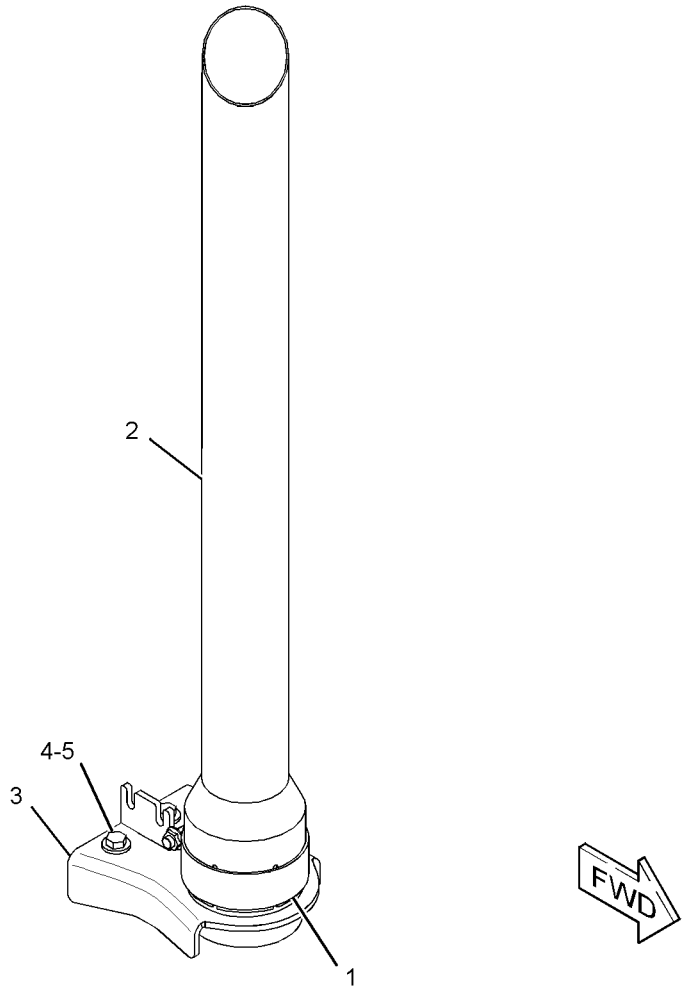

GRAPHIC #1 **<END>** g02806196

AIR INLET AND EXHAUST SYSTEM

337-9748 LINES GP-AIR

S/N: SJW1-UP

PART OF 337-9866, 337-9867 ENGINE AR-COMPLETE

AN ATTACHMENT

SMCS-1071 **i04628829**

NOTE	REF NO	GRAPHIC REF	PART NUMBER	QTY	PART NAME 1 2 3 4 5 6 (PRODUCT LEVEL)	SEE PAGE
	1	1	**234-3030**	1	GASKET-INLET	
	2	1	**263-5376**	1	HOSE	
	3	1	**305-6917**	1	TUBE AS	
	4	1	**311-2768**	1	HOSE	
	5	1	**323-3309**	8	CAP	
	6	1	**343-6096**	1	HOSE-ELBOW	
	7	1	**358-6523**	1	TUBE-AIR	
	8	1	**358-6524**	1	TUBE-AIR	
	9	1	**358-6684**	1	HOSE-ELBOW	
	10	1	**144-0367**	1	CLAMP-HOSE	
	11	1	**208-9281**	5	BOLT-FLANGE HEAD (M8X1.25X20-MM)	
	12	1	**8T-4224**	2	WASHER-HARD (8.8X16X2-MM THK)	
	13	1	**8T-4984**	1	CLAMP-HOSE	
	14	1	**8T-6703**	6	CLAMP-HOSE	

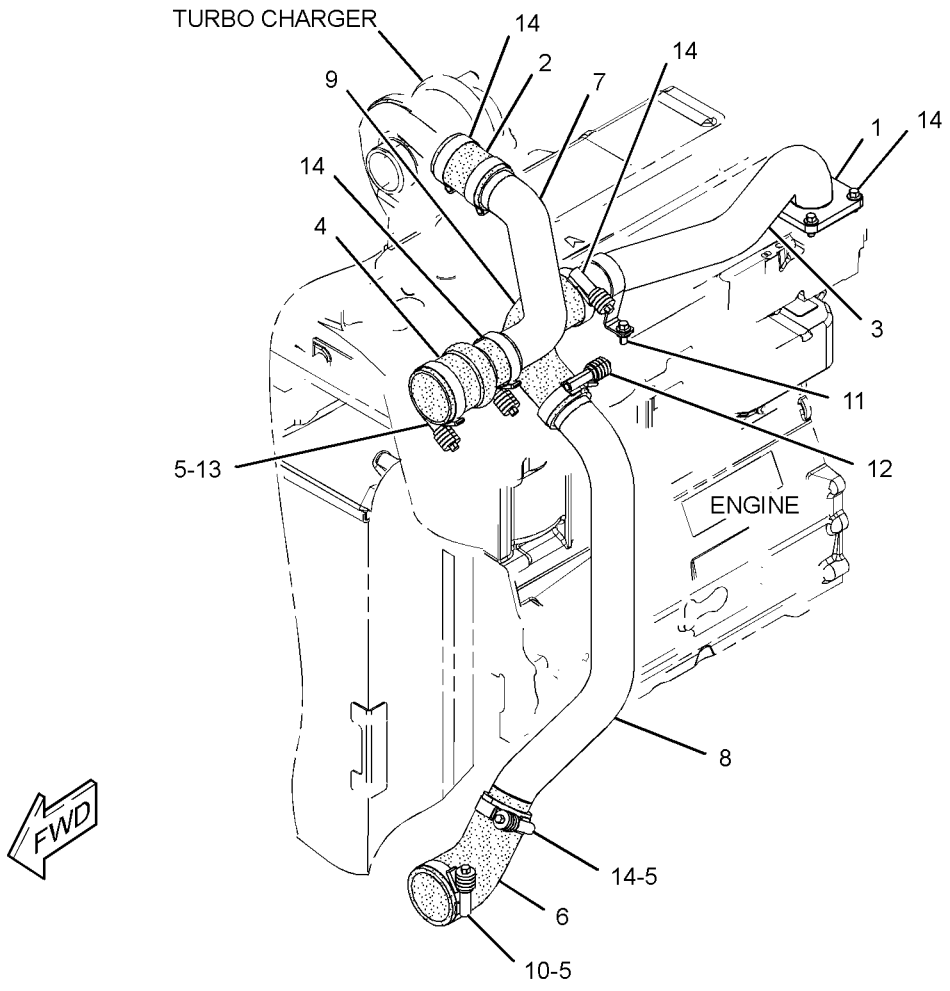

GRAPHIC #1 **<END>** g02813836

352-1454 MUFFLER GP–TURBOCHARGER

S/N: SJW1-UP

PART OF 337-9866, 337-9867 ENGINE AR-COMPLETE

AN ATTACHMENT

SMCS-1062 **i04580330**

NOTE	REF NO	GRAPHIC REF	PART NUMBER	QTY	PART NAME 1 2 3 4 5 6 (PRODUCT LEVEL)	SEE PAGE
	1	1	**6I-0364**	3	STUD (M10X1.5X30-MM)	
	2	1	**6I-0563**	3	NUT (M10X1.5-THD)	
	3	1	**352-1930**	1	SUPPORT AS	
	4	1	**359-3495**	1	MUFFLER AS	
	5	1	**373-6522**	1	SUPPORT	
	6	1	**5P-4116**	4	WASHER-HARD (8.8X20.5X2-MM THK)	
	7	1	**7X-7729**	6	WASHER (11X25X3-MM THK)	
M	8	1	**8T-4136**	4	BOLT (M10X1.5X25-MM)	
M	9	1	**8T-4189**	2	BOLT (M8X1.25X20-MM)	
M	10	1	**8T-4195**	2	BOLT (M10X1.5X30-MM)	
M	11	1	**8T-4908**	2	BOLT (M8X1.25X25-MM)	

M-METRIC PART

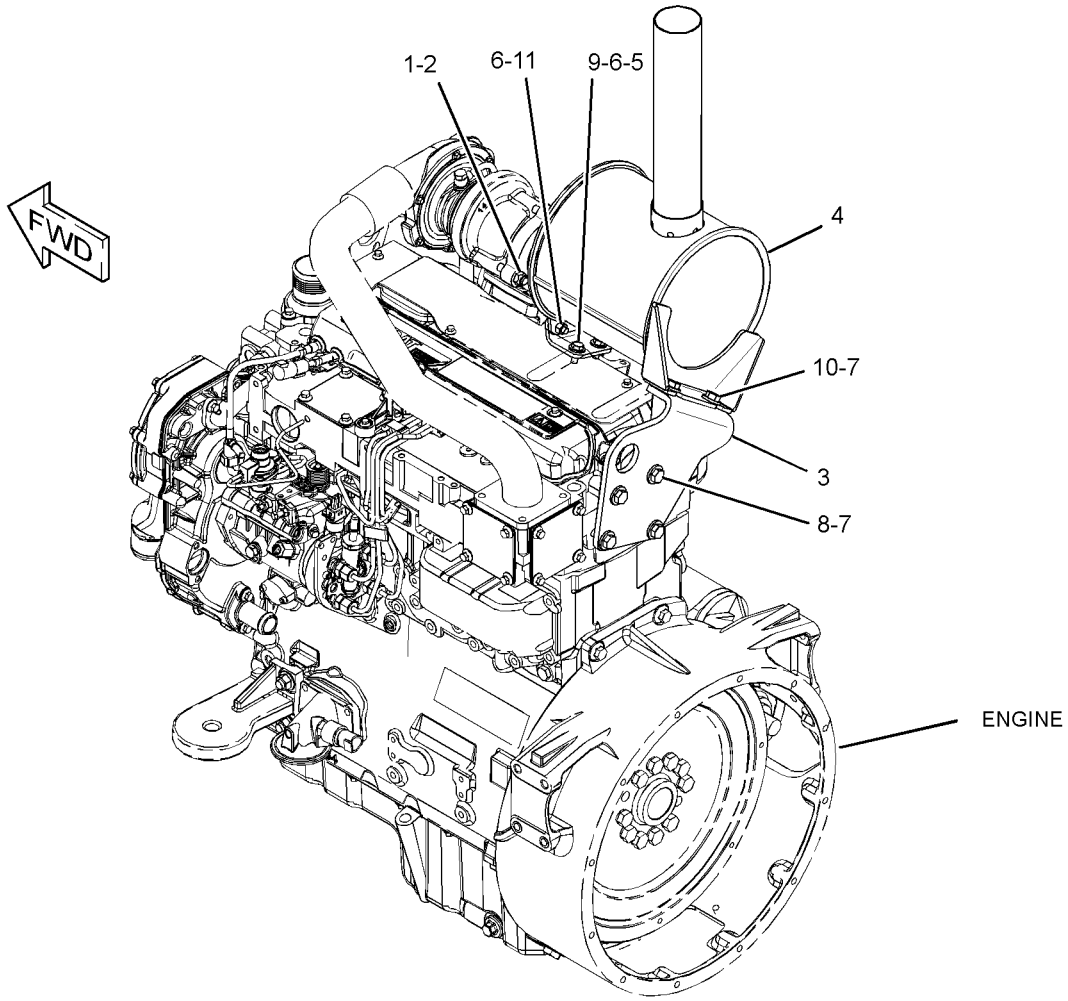

GRAPHIC #1 **<END>** g02809279

AIR INLET AND EXHAUST SYSTEM

326-9010 TURBOCHARGER GP

S/N: C4Z1-UP
PART OF 354-7363 ENGINE AR-PRIMARY
AN ATTACHMENT

SMCS-1052, 1053 **i04642159**

NOTE	REF NO	GRAPHIC REF	PART NUMBER	QTY	PART NAME 1 2 3 4 5 6 (PRODUCT LEVEL)	SEE PAGE
M	1	1	**6I-0217**	2	BOLT (M8X1.25X20-MM)	
	2	1	**6I-0563**	4	NUT (M10X1.5-THD)	
	3	1	**106-8916**	2	BOLT (M6X16-MM)	
	4	1	**147-5553**	4	STUD	
	5	1	**174-9638**	8	BOLT	
	6	1	**194-5390**	1	GASKET-MANIFOLD	
	7	1	**225-8533**	1	GASKET	
	8	1	**225-8534**	1	GASKET	
	9	1	**225-8536**	1	GASKET	
	10	1	**237-3794**	1	BOLT	
	11	1	**237-3921**	1	CLIP	
	12	1	**371-5700**	1	MANIFOLD-EXHAUST	
	13	1	**315-9721**	1	TURBOCHARGER	
	14	1	**322-9615**	1	TUBE-TURBOCHARGER	
	15	1	**322-9616**	1	TUBE AS-TURBOCHARGER	
	15A	1	**225-8524**	2	BOLT-SPECIAL (BANJO)	
	15B	1	**225-8526**	4	WASHER (10.4X13.75X1.37-MM THK)	

M-METRIC PART

326-9010 **TURBOCHARGER GP** *(contd.)* **i04642159**

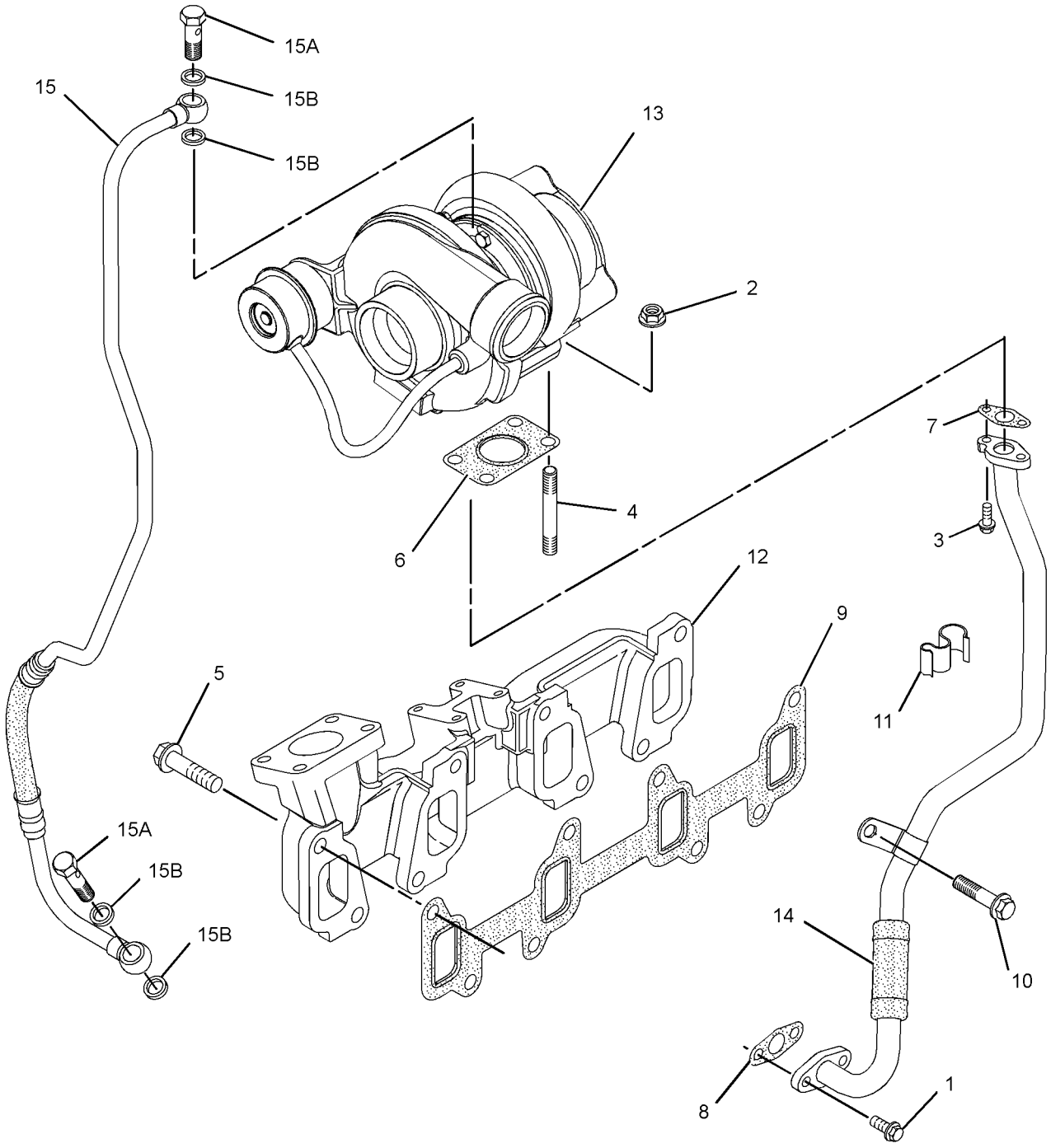

GRAPHIC #1 **<END>** g01615204

AIR INLET AND EXHAUST SYSTEM

326-9156 TURBOCHARGER GP

S/N: C4Z1-UP
PART OF 364-5743 ENGINE AR-PRIMARY
AN ATTACHMENT

SMCS-1052, 1053 **i04641829**

NOTE	REF NO	GRAPHIC REF	PART NUMBER	QTY	PART NAME 1 2 3 4 5 6 (PRODUCT LEVEL)	SEE PAGE
M	1	1	**6I-0217**	2	BOLT (M8X1.25X20-MM)	
	2	1	**6I-0563**	4	NUT (M10X1.5-THD)	
	3	1	**106-8916**	2	BOLT (M6X16-MM)	
	4	1	**147-5553**	4	STUD	
	5	1	**174-9638**	8	BOLT	
	6	1	**194-5390**	1	GASKET-MANIFOLD	
	7	1	**225-8533**	1	GASKET	
	8	1	**225-8534**	1	GASKET	
	9	1	**225-8536**	1	GASKET	
	10	1	**237-3794**	1	BOLT	
	11	1	**237-3921**	1	CLIP	
	12	1	**371-5700**	1	MANIFOLD-EXHAUST	
	13	1	**322-9615**	1	TUBE-TURBOCHARGER	
	14	1	**322-9616**	1	TUBE AS-TURBOCHARGER	
	14A	1	**225-8524**	2	BOLT-SPECIAL (BANJO)	
	14B	1	**225-8526**	4	WASHER (10.4X13.75X1.37-MM THK)	
	15	1	**326-9153**	1	TURBOCHARGER	

M-METRIC PART

326-9156 **TURBOCHARGER GP** *(contd.)* **i04641829**

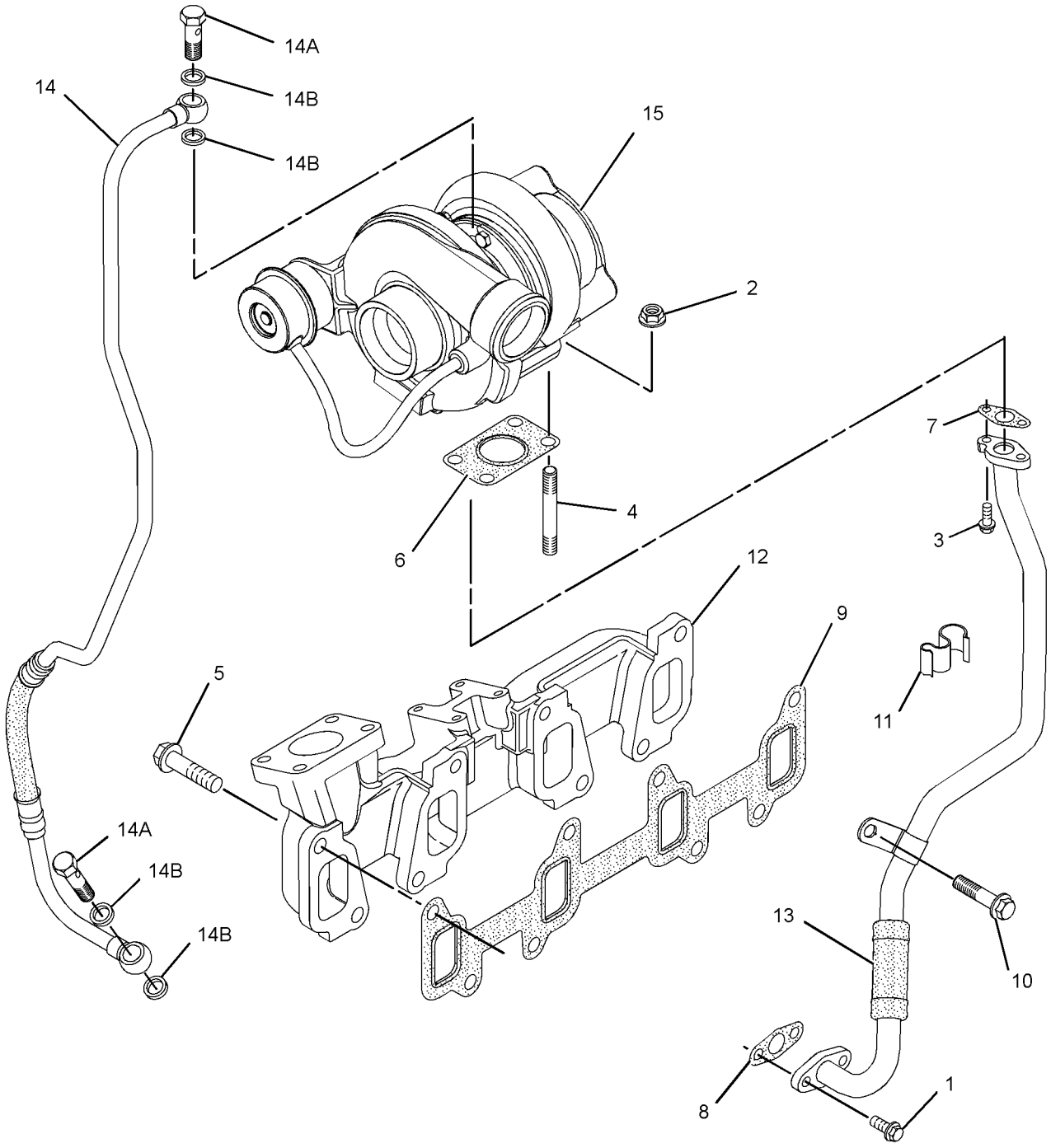

GRAPHIC #1 **<END>** g01615034

341-6719 CONTROL GP-GOVERNOR

S/N: SJW1-UP

PART OF 353-1457, 353-1461 ELECTRONICS AR-MACHINE

AN ATTACHMENT

SMCS-1265 **i04580997**

NOTE	REF NO	GRAPHIC REF	PART NUMBER	QTY	PART NAME 1 2 3 4 5 6 (PRODUCT LEVEL)	SEE PAGE
	1	1	**7K-1181**	2	STRAP-CABLE	
	2	1	**151-4841**	1	BLOCK	
	3	1	**164-1395**	1	KNOB (GOVERNOR CONTROL)	
	4	1	**206-1345**	1	STRAP-CABLE	
	5	1	**206-1692**	1	COVER AS (CONTROLS, REAR)	
		1	**206-1667**	3	CLIP	
Y	6	1	**209-3367**	1	LEVER GP-GOVERNOR (HANDHELD)	582
Y	7	1	**209-3378**	1	PEDAL GP-GOVERNOR (MECHANICAL)	597
	8	1	**235-0128**	1	CABLE AS	
M		1	**5C-2890**	2	NUT (M6X1-THD)	
		1	**8T-4742**	2	END-YOKE ROD	
		1	**8T-4744**	2	PIN AS-SPRING	
		1	**222-2690**	1	CLIP	
	9	1	**248-2707**	1	GROMMET	
	10	1	**250-7910**	1	FILM-INSTRUCTION (BOOM LOCK)	
	11	1	**250-7911**	1	FILM-INSTRUCTION (VARIABLE SPEED)	
	12	1	**300-1702**	1	BRACKET AS	
	13	1	**356-4070**	1	PLATE	
	14	1	**3S-2093**	2	STRAP-CABLE	
M	15	1	**5C-2890**	2	NUT (M6X1-THD)	
M	16	1	**7X-0818**	1	BOLT (M8X1.25X45-MM)	
M	17	1	**8C-6802**	3	SCREW-FLAT HEAD (6X1X26.3-MM)	
M	18	1	**8T-4138**	3	BOLT (M6X1X20-MM)	
	19	1	**8T-4205**	3	WASHER-HARD (7.2X14.5X2-MM THK)	
	20	1	**8T-4224**	2	WASHER-HARD (8.8X16X2-MM THK)	
M	21	1	**8T-4908**	1	BOLT (M8X1.25X25-MM)	
	22	1	**9X-2038**	4	WASHER (7X19X2-MM THK)	
M	23	1	**9X-2043**	2	SCREW-TRUSS HEAD (M6X1X14-MM)	

M-METRIC PART
Y-SEPARATE ILLUSTRATION

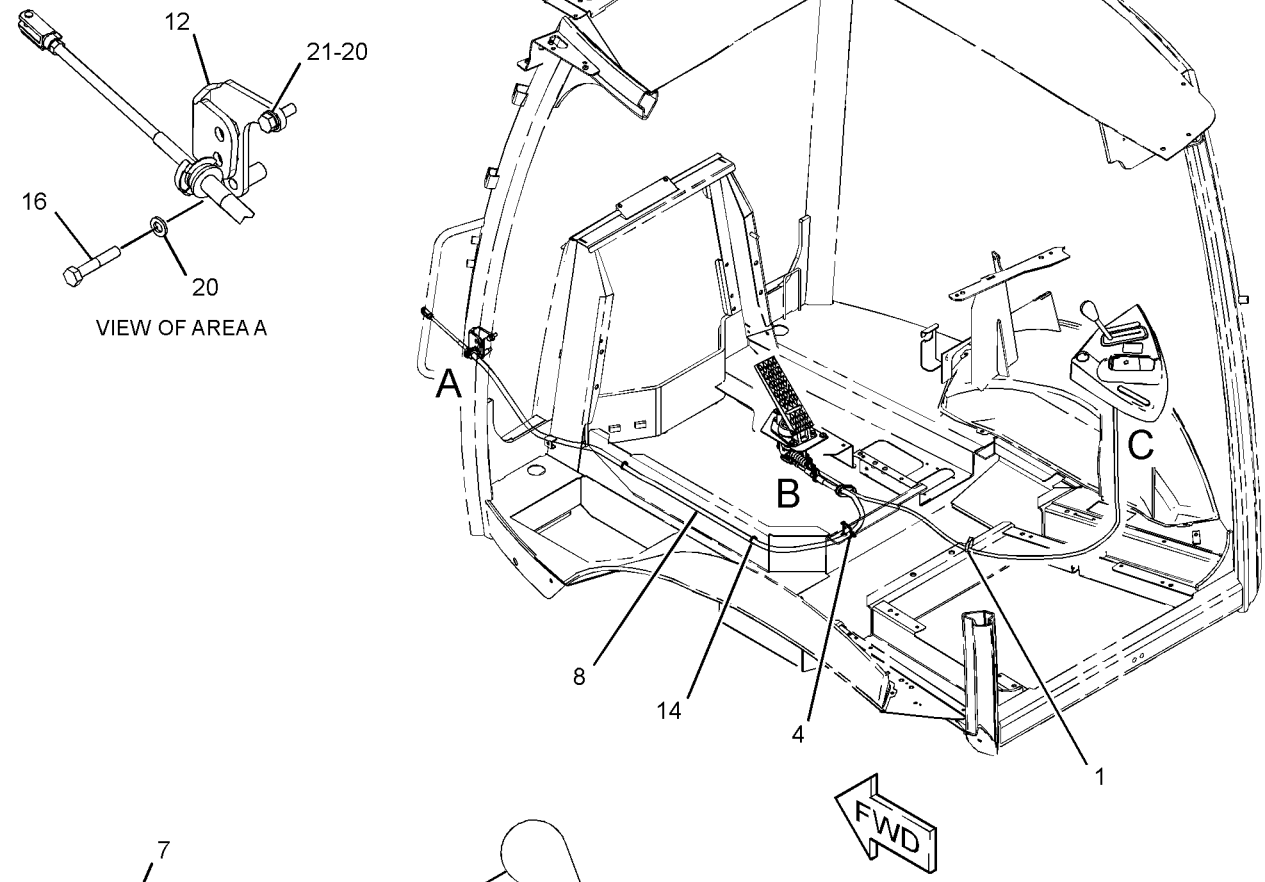

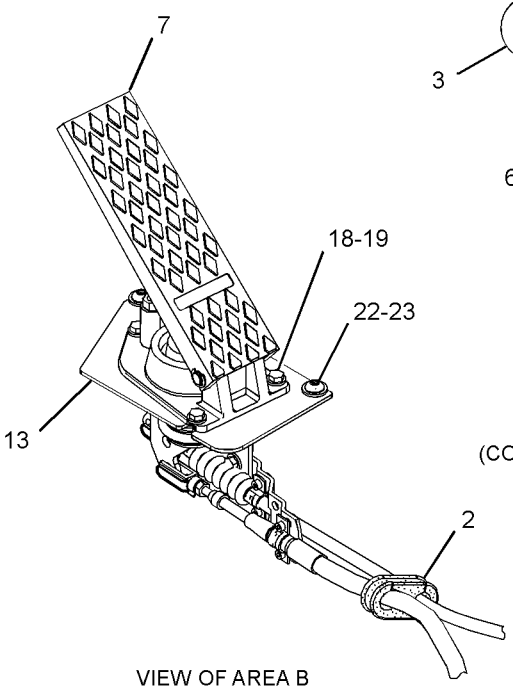

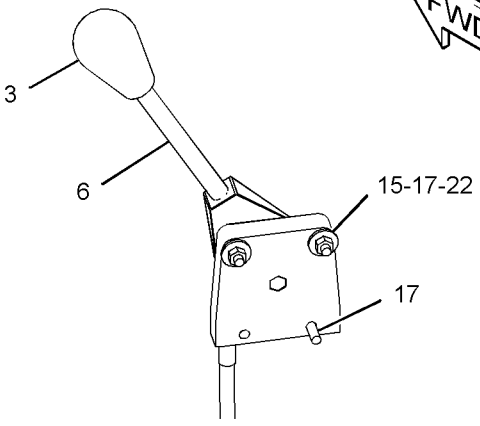

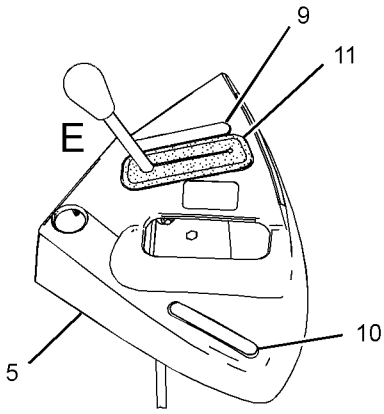

GRAPHIC #1 **<END>** g02798430

362-1266 FILTER GP-WATER SEP & FUEL

S/N: SJW1-UP
FIELD INSTALLATION

SMCS-1261, 1263 **i04629786**

NOTE	REF NO	GRAPHIC REF	PART NUMBER	QTY	PART NAME 1 2 3 4 5 6 (PRODUCT LEVEL)	SEE PAGE
	1	1	**246-2622**	2	ELBOW	
	2	1	**285-5098**	1	FILTER GP-FUEL (WATER SEPARATOR)	
		1	**118-8118**	1	RING-RETAINING	
		1	**118-8119**	1	NUT	
		1	**149-3516**	1	BASE AS	
		1	**156-1200**	1	FILTER ELEMENT-FUEL (WATER SEPARATOR)	
	3	1	**359-0264**	1	SUPPORT AS	
M		1	**159-9540**	2	NUT-WELD (M8X1.25-THD)	
	4	1	**362-2820**	2	CAP	
	5	1	*169-5861*	2	PLUG AS	
					(EACH INCLUDES)	
		1	**3K-8460**	1	PLUG	
		1	**5P-7814**	1	SEAL-O-RING	
	6	1	**359-7323**	2	CLAMP-HOSE	
	7	1	**5P-4116**	2	WASHER-HARD (8.8X20.5X2-MM THK)	
M	8	1	**8T-4189**	2	BOLT (M8X1.25X20-MM)	
	9	1	**8T-4224**	2	WASHER-HARD (8.8X16X2-MM THK)	
M	10	1	**8T-7547**	2	BOLT (M8X1.25X30-MM)	

M-METRIC PART

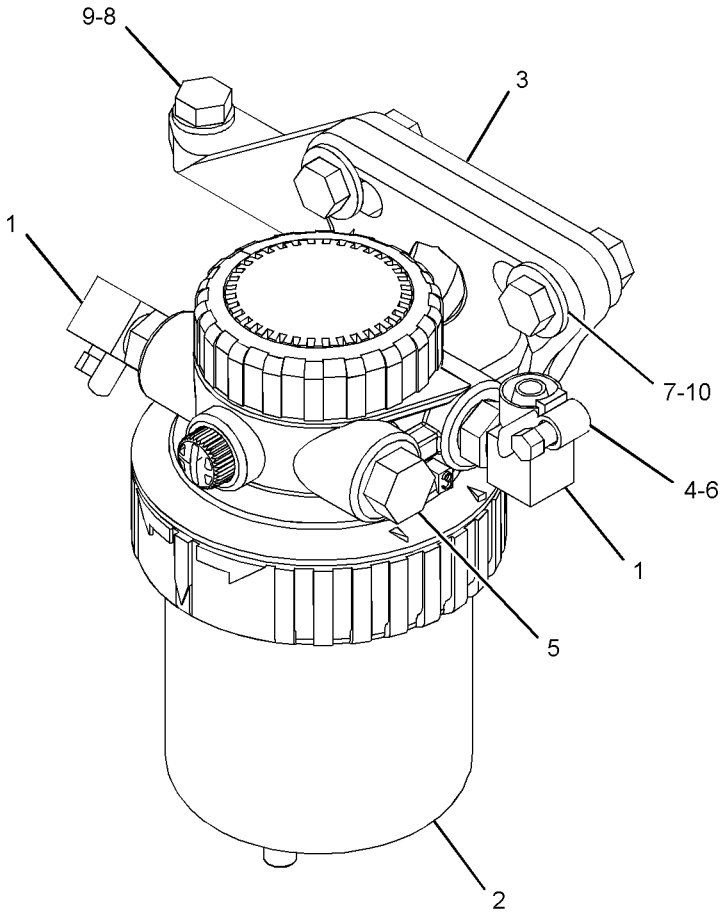

GRAPHIC #1 **<END>** g02809479

326-9012 LINES GP-FUEL

S/N: C4Z1-UP

PART OF 354-7363, 364-5743 ENGINE AR-PRIMARY

AN ATTACHMENT

SMCS-1274 **i04641490**

NOTE	REF NO	GRAPHIC REF	PART NUMBER	QTY	PART NAME 1 2 3 4 5 6 (PRODUCT LEVEL)	SEE PAGE
	1	1	**8T-7876**	1	SEAL-O-RING	
	2	1	**035-8017**	1	UNION	
	3	1	**365-3308**	1	NUT-COMPRESSION	
	4	1	**067-6265**	1	FITTING-BRASS	
	5	1	**232-3126**	1	CLIP	
	6	1	**236-2144**	1	TUBE AS	
	6A	1	**067-6999**	1	FERRULE	
	7	1	**247-4884**	1	TUBE AS	
	8	1	**320-9213**	1	CONNECTION	

326-9012 **LINES GP-FUEL** *(contd.)* **i04641490**

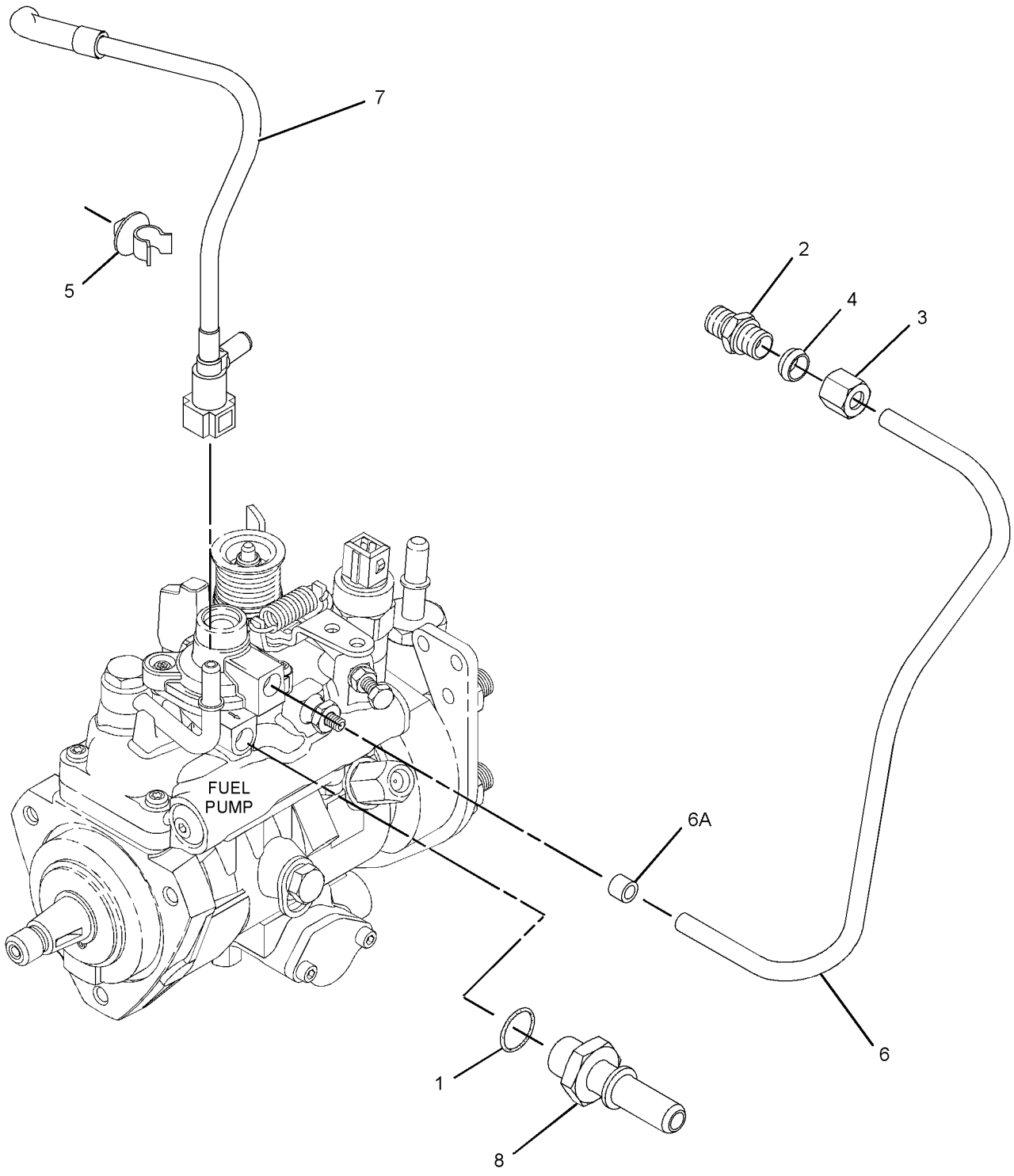

GRAPHIC #1 **<END>** g01613613

FUEL SYSTEM

337-9734 LINES GP-FUEL

S/N: SJW1-UP

PART OF 337-9866, 337-9867 ENGINE AR-COMPLETE

AN ATTACHMENT

SMCS-1274 **i04553571**

NOTE	REF NO	GRAPHIC REF	PART NUMBER	QTY	PART NAME 1 2 3 4 5 6 (PRODUCT LEVEL)	SEE PAGE
	1	1	**069-4080**	1	FITTING	
	2	1	**215-9513**	1	CONNECTOR-HOSE	
	3	1	**215-9515**	1	CONNECTOR-HOSE (QUICK DISCONNECT)	
	4	1	**222-3518**	1	TEE	
	5	1	**224-5917**	1	CONNECTOR-SPECIAL	
	6	1	**241-4275**	1	TEE-SPECIAL	
	7	1	**246-2622**	1	ELBOW	
	8	1	*297-7958*	1	ADAPTER AS	
		1	**3J-1907**	1	SEAL-O-RING	
		1	**205-3079**	1	ADAPTER	
Y	9	1	**349-1063**	1	PUMP GP-FUEL PRM & PRIM FILTER (WITH WATER SEPARATOR)	92
	10	1	**362-2820**	14	CAP	
	11	1	**090-5725**	1	ELBOW	
	12	1	**100-4336**	4	CLIP	
	13	1	*148-8407*	2	PLUG AS	
					(EACH INCLUDES)	
		1	**3J-1907**	1	SEAL-O-RING	
		1	**9S-4191**	1	PLUG-O-RING	
	14	1	**359-7323**	12	CLAMP-HOSE	
	15	1	**359-7325**	2	CLAMP-HOSE	
	16	1	**3J-1907**	1	SEAL-O-RING	
	17	1	**4D-6466**	1	CLIP	
	18	1	**5P-4116**	4	WASHER-HARD (8.8X20.5X2-MM THK)	
	19	1	**8T-4121**	4	WASHER-HARD (11X21X2.5-MM THK)	
M	20	1	**8T-4189**	2	BOLT (M8X1.25X20-MM)	
M	21	1	**8T-4196**	4	BOLT (M10X1.5X35-MM)	
M	22	1	**8T-7547**	2	BOLT (M8X1.25X30-MM)	
	23	1	**9M-8406**	2	CLIP	
E	24	1	**5P-1442**		HOSE (108-CM)	
E	25	1	**5P-1505**		HOSE (149-CM)	
E	26	1	**5P-1420**		HOSE (65-CM)	
E	26A	1	**5P-1420**		HOSE (39-CM EACH)	
E	26B	1	**5P-1420**		HOSE (4.5-CM)	
E	26C	1	**5P-1420**		HOSE (44.5-CM)	

E-ORDER BY THE CENTIMETER
M-METRIC PART
Y-SEPARATE ILLUSTRATION

337-9734 **LINES GP-FUEL** *(contd.)* **i04553571**

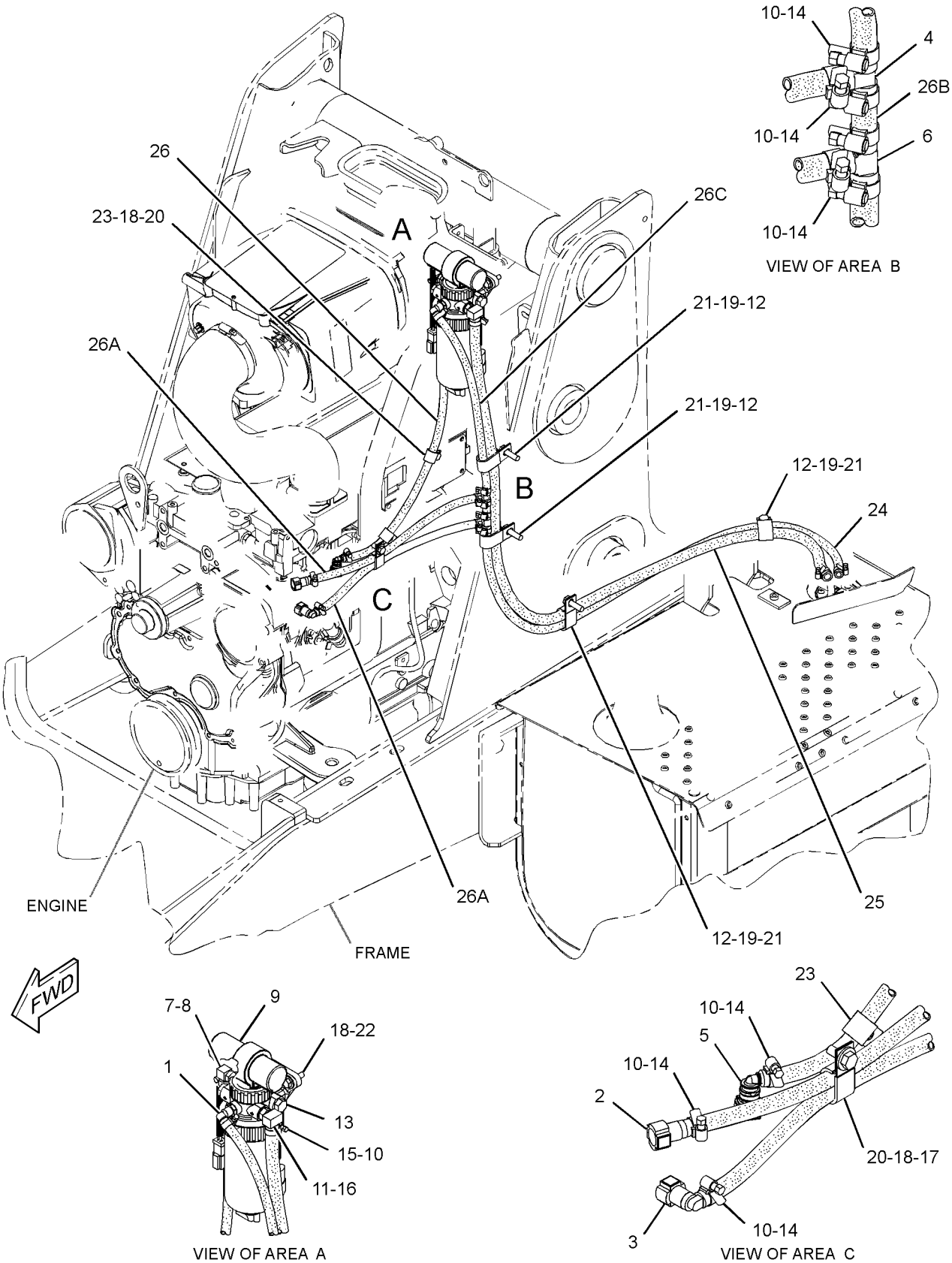

GRAPHIC #1 **<END>** g02827736

353-1364 MOUNTING GP-GOVERNOR CONTROL–ENGINE

S/N: SJW1-UP

PART OF 337-9866, 337-9867 ENGINE AR-COMPLETE

AN ATTACHMENT

SMCS-1264, 1265 **i04605592**

NOTE	REF NO	GRAPHIC REF	PART NUMBER	QTY	PART NAME 1 2 3 4 5 6 (PRODUCT LEVEL)	SEE PAGE
	1	1	**239-1434**	1	PLATE	
	2	1	**8T-4224**	2	WASHER-HARD (8.8X16X2-MM THK)	
M	3	1	**8T-4908**	2	BOLT (M8X1.25X25-MM)	

M-METRIC PART

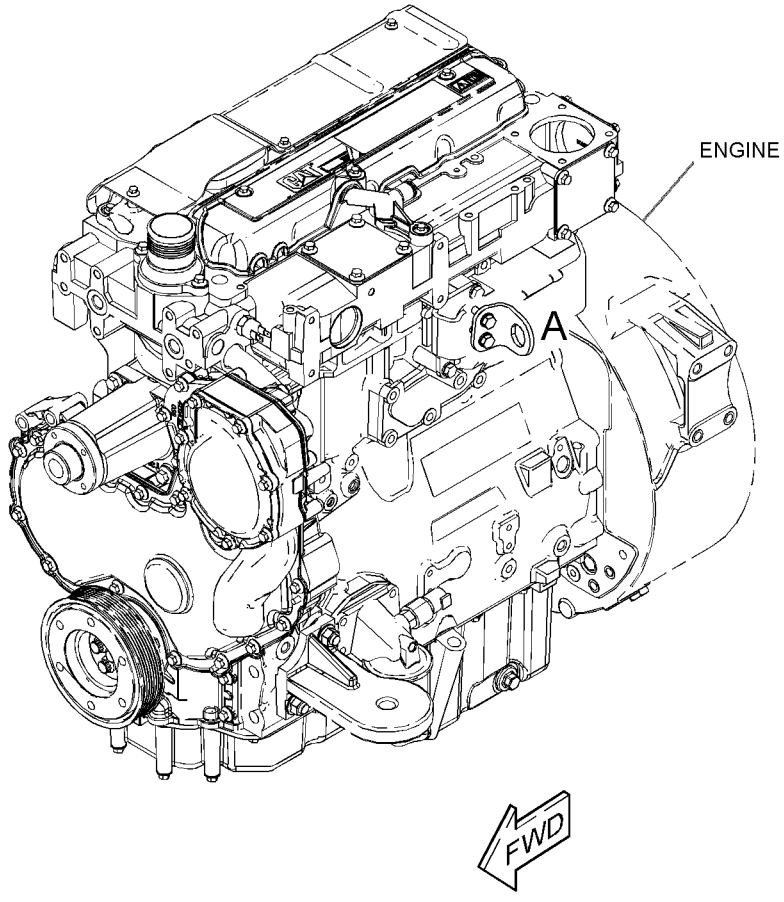

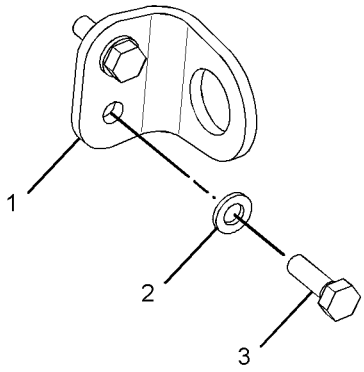

VIEW OF AREA A

GRAPHIC #1 **<END>** g02788564

326-8993 PUMP GP-FUEL INJECTION

S/N: C4Z1-UP

PART OF 326-9006 PUMP GP-FUEL INJECTION

AN ATTACHMENT

SMCS-1251, 1290 **i03138002**

NOTE	REF NO	GRAPHIC REF	PART NUMBER	QTY	PART NAME 1 2 3 4 5 6 (PRODUCT LEVEL)	SEE PAGE
	1	1	**111-3422**	1	NUT	
	2	1	**111-3423**	1	WASHER	
	3	1	**152-3968**	1	SEAL-O-RING	
	4	1	**176-6219**	1	VALVE GP-SOLENOID (12-VOLT)	

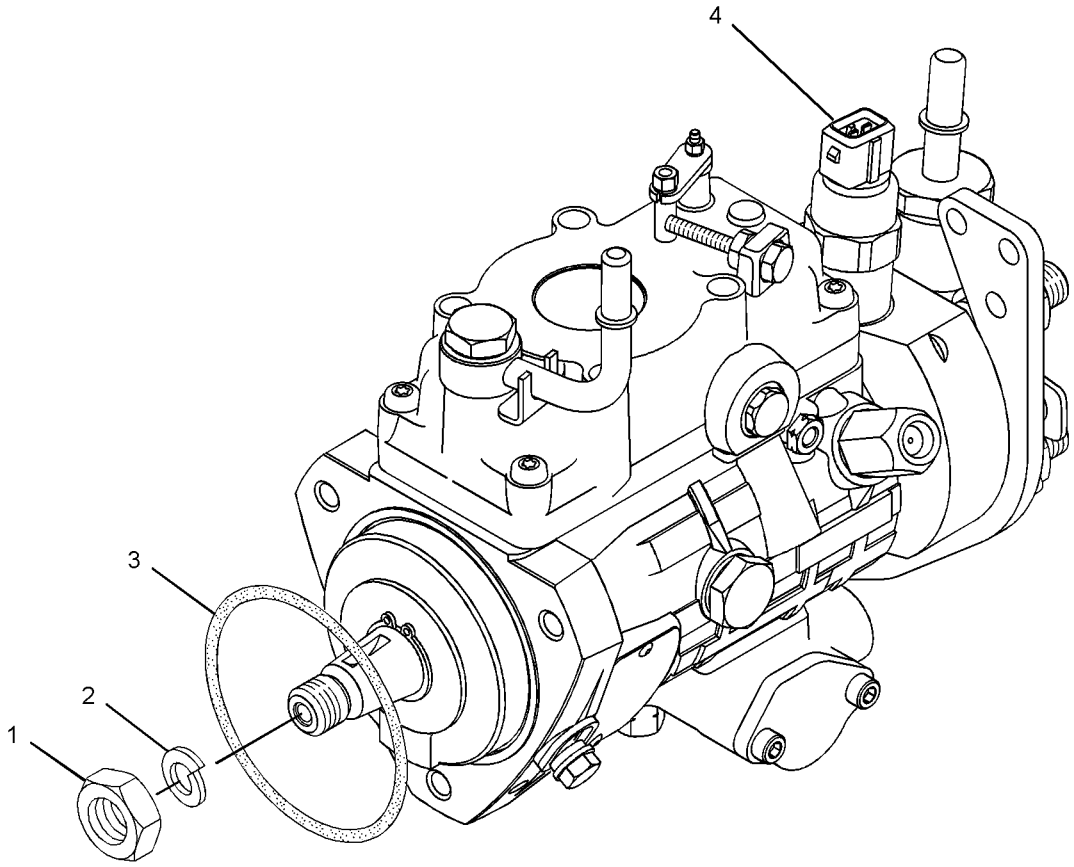

GRAPHIC #1 **<END>** g01615399

326-9006 PUMP GP-FUEL INJECTION

S/N: C4Z1-UP
PART OF 354-7363 ENGINE AR-PRIMARY
AN ATTACHMENT

SMCS-1251, 1290 **i04642135**

NOTE	REF NO	GRAPHIC REF	PART NUMBER	QTY	PART NAME 1 2 3 4 5 6 (PRODUCT LEVEL)	SEE PAGE
M	1	1	**6I-0217**	1	BOLT (M8X1.25X20-MM)	
M	2	1	**6I-0260**	3	BOLT (M8X1.25X25-MM)	
	3	1	**6I-0291**	1	NUT (M8X1.25-THD)	
M	4	1	**100-4830**	1	BOLT (M10X1.5X20-MM)	
M	5	1	**124-3815**	1	BOLT (M8X1.25X16-MM)	
	6	1	**140-8714**	1	CLIP	
	7	2	**169-5326**	1	SWITCH-TEMPERATURE (FUEL)	
	8	1	**230-8989**	1	GEAR-FUEL PUMP (68-TEETH)	
	9	1	**230-8995**	1	TUBE AS (CYL NO. 1)	
	10	1	**230-8996**	1	TUBE AS (CYL NO. 2)	
	11	1	**230-8997**	1	TUBE AS (CYL NO. 3)	
	12	1	**230-8998**	1	TUBE AS (CYL NO. 4)	
	14	1	**232-1328**	1	CAP	
	15	2	**232-1793**	1	CABLE	
	16	1	**232-1794**	3	HOSE	
	17	1	**232-2725**	2	CLIP	
	18	1	**232-2726**	1	CLIP	
	19	1	**232-3126**	1	CLIP	
	20	1	**232-3149**	3	WASHER (8.35X16.85X1.55-MM THK)	
	21	1	**232-3157**	1	BRACKET	
	22	1	**232-3274**	4	BOLT (M8X1.25X48.1-MM)	
	23	1	**238-8671**	4	CLAMP-INJECTOR	
	24	1	**240-5571**	1	BRACKET	
	25	1	**315-3381**	4	ATOMIZER AS	
					(EACH INCLUDES)	
	25A	1	**140-8718**	1	WASHER	
	25B	1	**275-1038**	1	SEAL-O-RING	
Y	26	1	**326-8993**	1	PUMP GP-FUEL INJECTION	84

M-METRIC PART
Y-SEPARATE ILLUSTRATION

326-9006 **PUMP GP-FUEL INJECTION** *(contd.)* **i04642135**

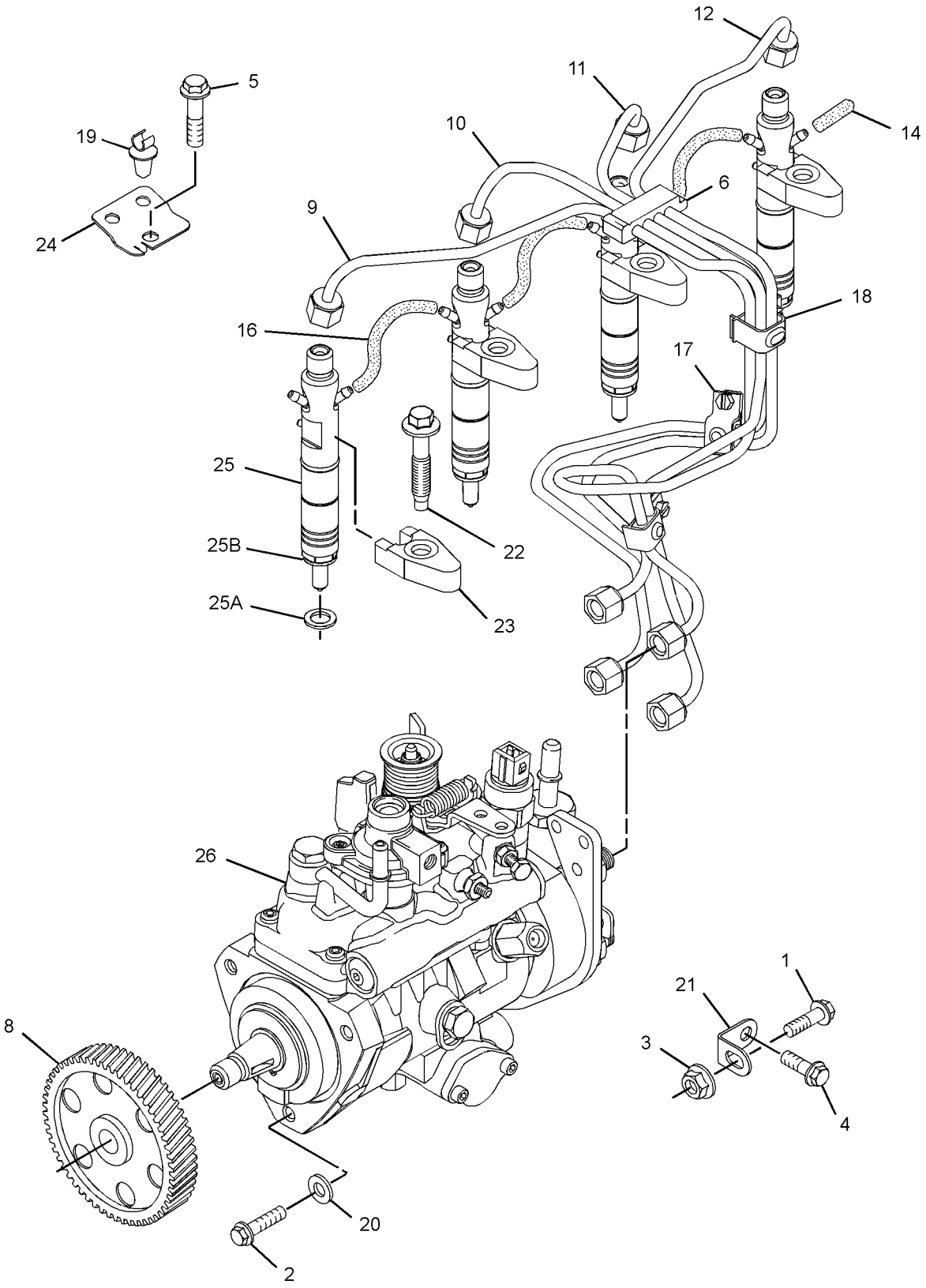

GRAPHIC #1 g02788508

326-9006 **PUMP GP-FUEL INJECTION** *(contd.)* **i04642135**

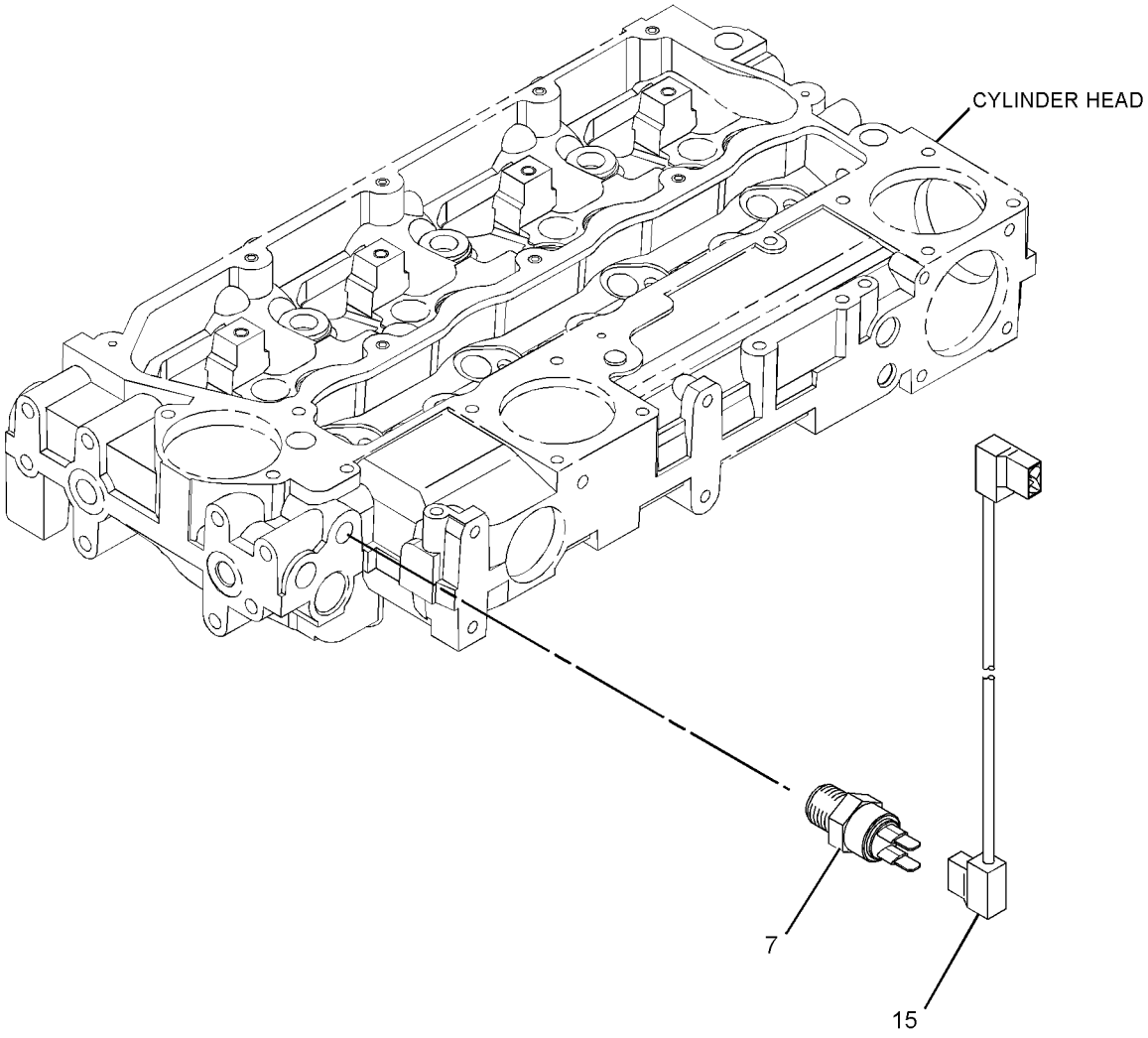

GRAPHIC #2 **<END>** g02788514

326-9147 PUMP GP-FUEL INJECTION

S/N: C4Z1-UP

PART OF 326-9149 PUMP GP-FUEL INJECTION

AN ATTACHMENT

SMCS-1251, 1290 **i03718046**

NOTE	REF NO	GRAPHIC REF	PART NUMBER	QTY	PART NAME 1 2 3 4 5 6 (PRODUCT LEVEL)	SEE PAGE
	1	1	**111-3422**	1	NUT	
	2	1	**111-3423**	1	WASHER	
	3	1	**152-3968**	1	SEAL-O-RING	
	4	1	**176-6219**	1	VALVE GP-SOLENOID (12-VOLT) (FUEL SHUTOFF)	

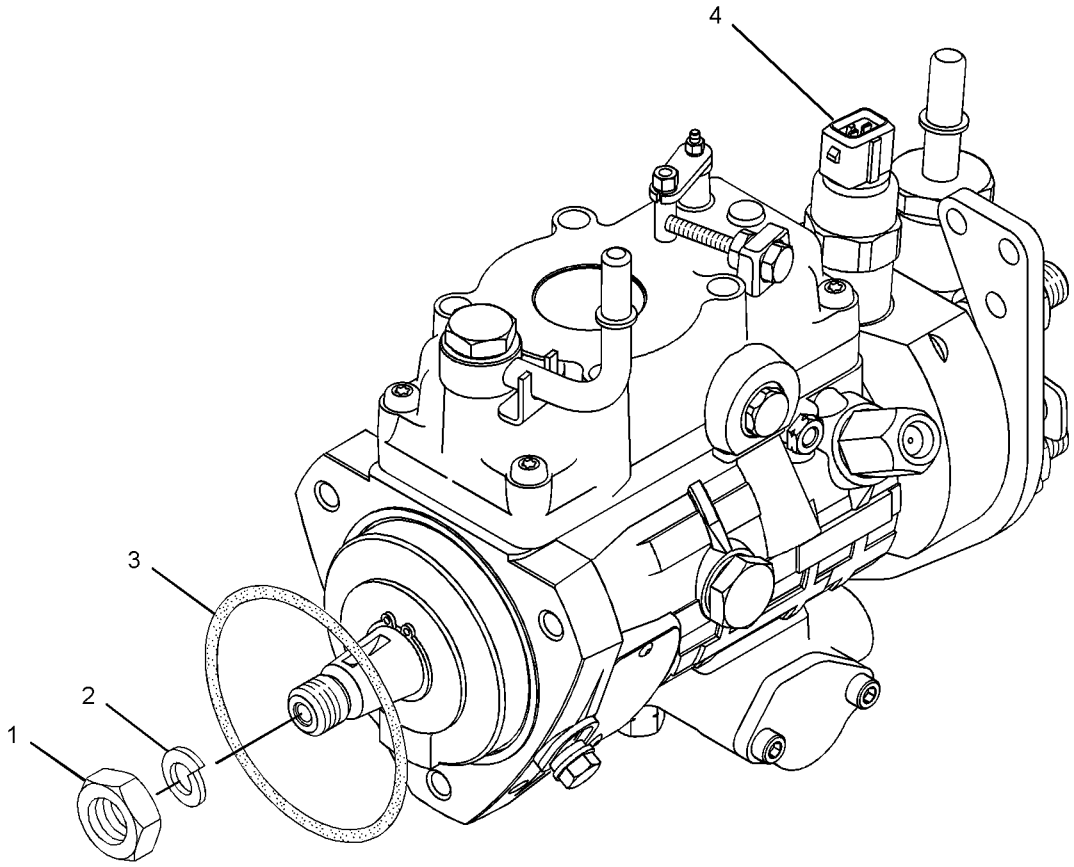

GRAPHIC #1 **<END>** g01615399

326-9149 PUMP GP-FUEL INJECTION

S/N: C4Z1-UP
PART OF 364-5743 ENGINE AR-PRIMARY
AN ATTACHMENT

SMCS-1251, 1290 **i04642330**

NOTE	REF NO	GRAPHIC REF	PART NUMBER	QTY	PART NAME 1 2 3 4 5 6 (PRODUCT LEVEL)	SEE PAGE
M	1	1	**6I-0217**	1	BOLT (M8X1.25X20-MM)	
M	2	1	**6I-0260**	3	BOLT (M8X1.25X25-MM)	
	3	1	**6I-0291**	1	NUT (M8X1.25-THD)	
M	4	1	**100-4830**	1	BOLT (M10X1.5X20-MM)	
M	5	1	**124-3815**	1	BOLT (M8X1.25X16-MM)	
	6	1	**140-8714**	1	CLIP	
	7	2	**169-5326**	1	SWITCH-TEMPERATURE (FUEL)	
	8	1	**230-8989**	1	GEAR-FUEL PUMP (68-TEETH)	
	9	1	**230-8995**	1	TUBE AS (CYL NO. 1)	
	10	1	**230-8996**	1	TUBE AS (CYL NO. 2)	
	11	1	**230-8997**	1	TUBE AS (CYL NO. 3)	
	12	1	**230-8998**	1	TUBE AS (CYL NO. 4)	
	14	1	**232-1328**	1	CAP	
	15	2	**232-1793**	1	CABLE	
	16	1	**232-1794**	3	HOSE	
	17	1	**232-2725**	2	CLIP	
	18	1	**232-2726**	1	CLIP	
	19	1	**232-3126**	1	CLIP	
	20	1	**232-3149**	3	WASHER (8.35X16.85X1.55-MM THK)	
	21	1	**232-3157**	1	BRACKET	
	22	1	**232-3274**	4	BOLT (M8X1.25X48.1-MM)	
	23	1	**238-8671**	4	CLAMP-INJECTOR	
	24	1	**240-5571**	1	BRACKET	
	25	1	**315-3381**	4	ATOMIZER AS	
					(EACH INCLUDES)	
	25A	1	**140-8718**	1	WASHER	
	25B	1	**275-1038**	1	SEAL-O-RING	
Y	26	1	**326-9147**	1	PUMP GP-FUEL INJECTION	88

M-METRIC PART
Y-SEPARATE ILLUSTRATION

326-9149 **PUMP GP-FUEL INJECTION** *(contd.)* **i04642330**

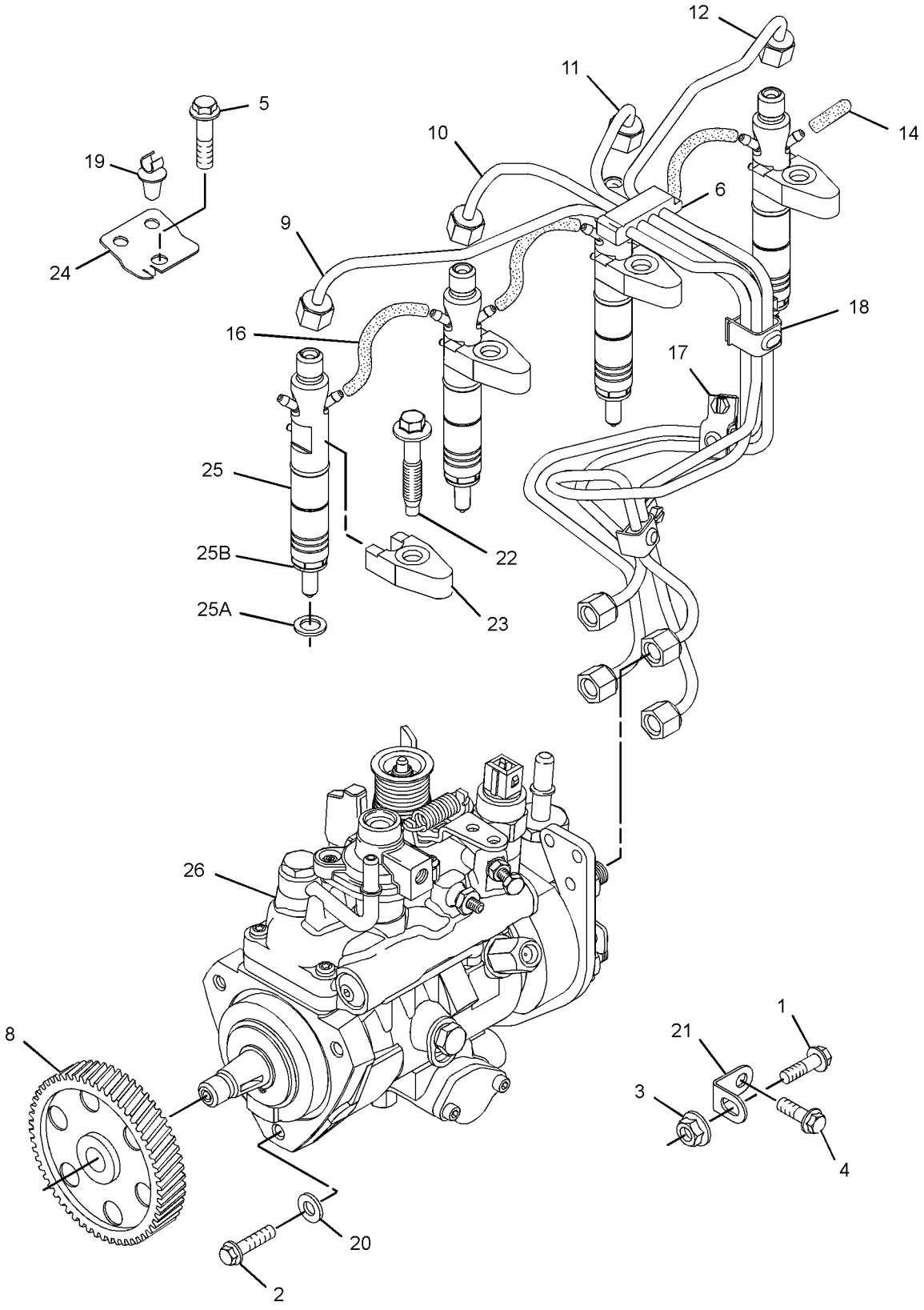

GRAPHIC #1 g01613834

326-9149 **PUMP GP-FUEL INJECTION** *(contd.)* **i04642330**

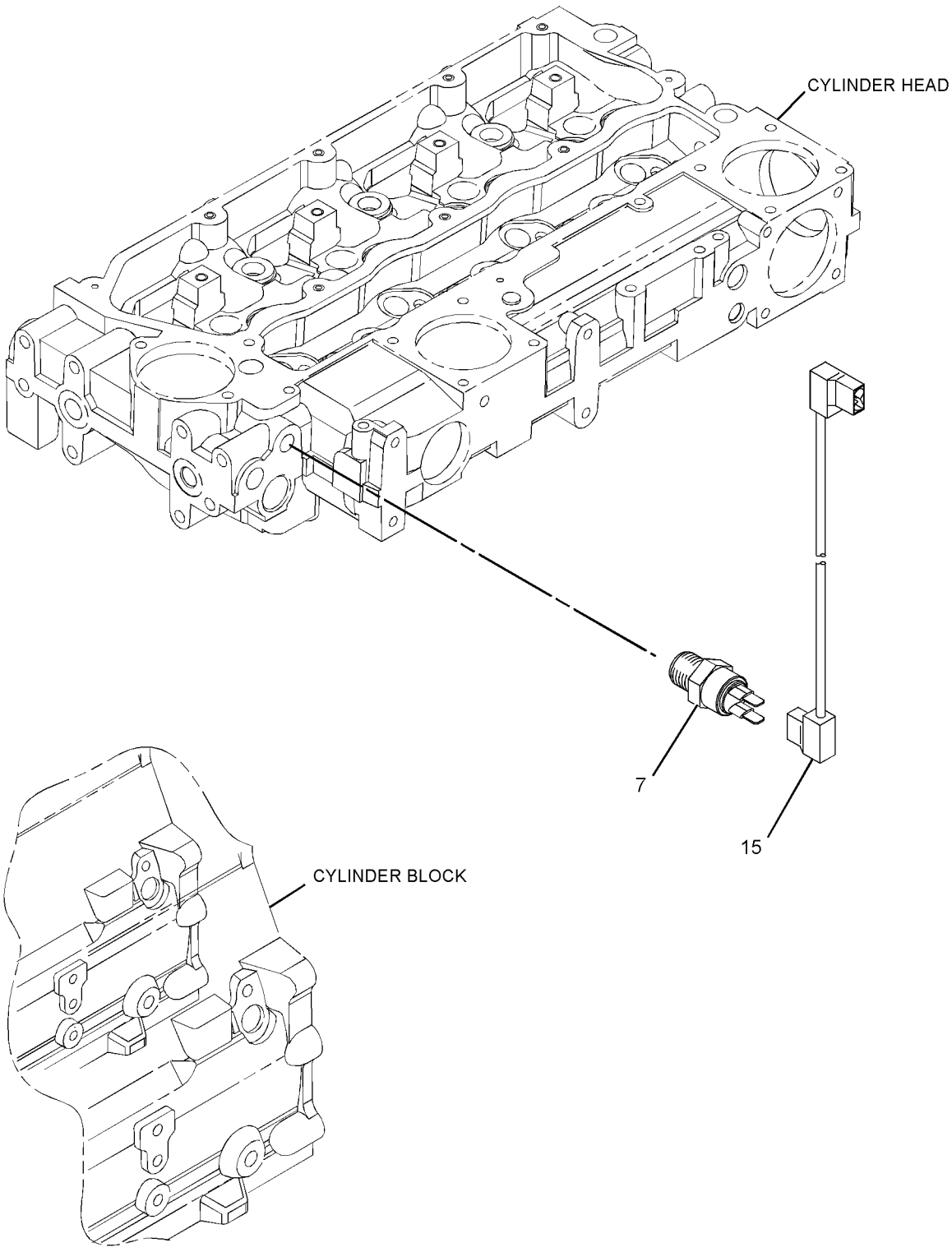

GRAPHIC #2 **<END>** g02788432

349-1063 PUMP GP-FUEL PRM & PRIM FILTER–
WITH WATER SEPARATOR
S/N: SJW1-UP
PART OF 337-9734 LINES GP-FUEL
AN ATTACHMENT

SMCS-1258, 1260, 1261 **i04583032**

NOTE	REF NO	GRAPHIC REF	PART NUMBER	QTY	PART NAME 1 2 3 4 5 6 (PRODUCT LEVEL)	SEE PAGE
	1	1	**118-8118**	1	RING-RETAINING	
	2	1	**149-9954**	1	DRAIN AS	
	3	1	**193-0618**	1	SENSOR GP-MOISTURE (WATER SEPARATOR)	
		1	**192-7876**	1	SCREW-MOUNTING	
	4	1	**361-9554**	1	ELEMENT-WATER SEPARATOR (FUEL FILTER)	
	5	1	**228-9132**	1	FITTING	

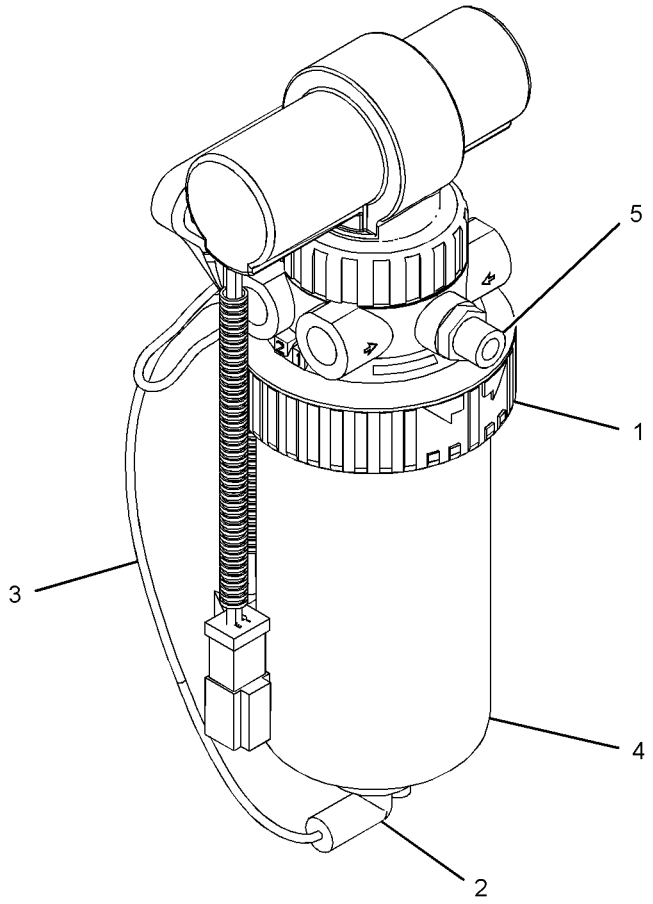

GRAPHIC #1 **<END>** g02736920

FUEL SYSTEM

362-4557 TANK GP-FUEL

S/N: SJW1-UP

PART OF 362-4625 TANK GP-FUEL

SMCS-1273 **i04547508**

NOTE	REF NO	GRAPHIC REF	PART NUMBER	QTY	PART NAME 1 2 3 4 5 6 (PRODUCT LEVEL)	SEE PAGE
	1	1	**284-9039**	1	CAP-FUEL (LOCKABLE, VENTED)	
	2	1	**314-7618**	1	PLUG AS	
		1	**190-7634**	1	SEAL-O-RING	
	3	1	**362-9029**	1	TANK AS-FUEL	
	4	1	**363-8475**	1	SENDER AS-FUEL LEVEL	
	4A	1	**310-4589**	1	GASKET	
	4B	1	**340-4152**	1	STRAINER (FUEL TANK)	
	4C	1	**102-8802**	1	KIT-RECEPTACLE (2-PIN)	
					(INCLUDES RECEPTACLE AS & WEDGE)	
	4D	1	**8T-8729**	1	PIN-CONNECTOR (16-GA TO 18-GA)	
	5	1	**198-9706**	6	SCREW-TRUSS HEAD (M5X0.8X16-MM)	

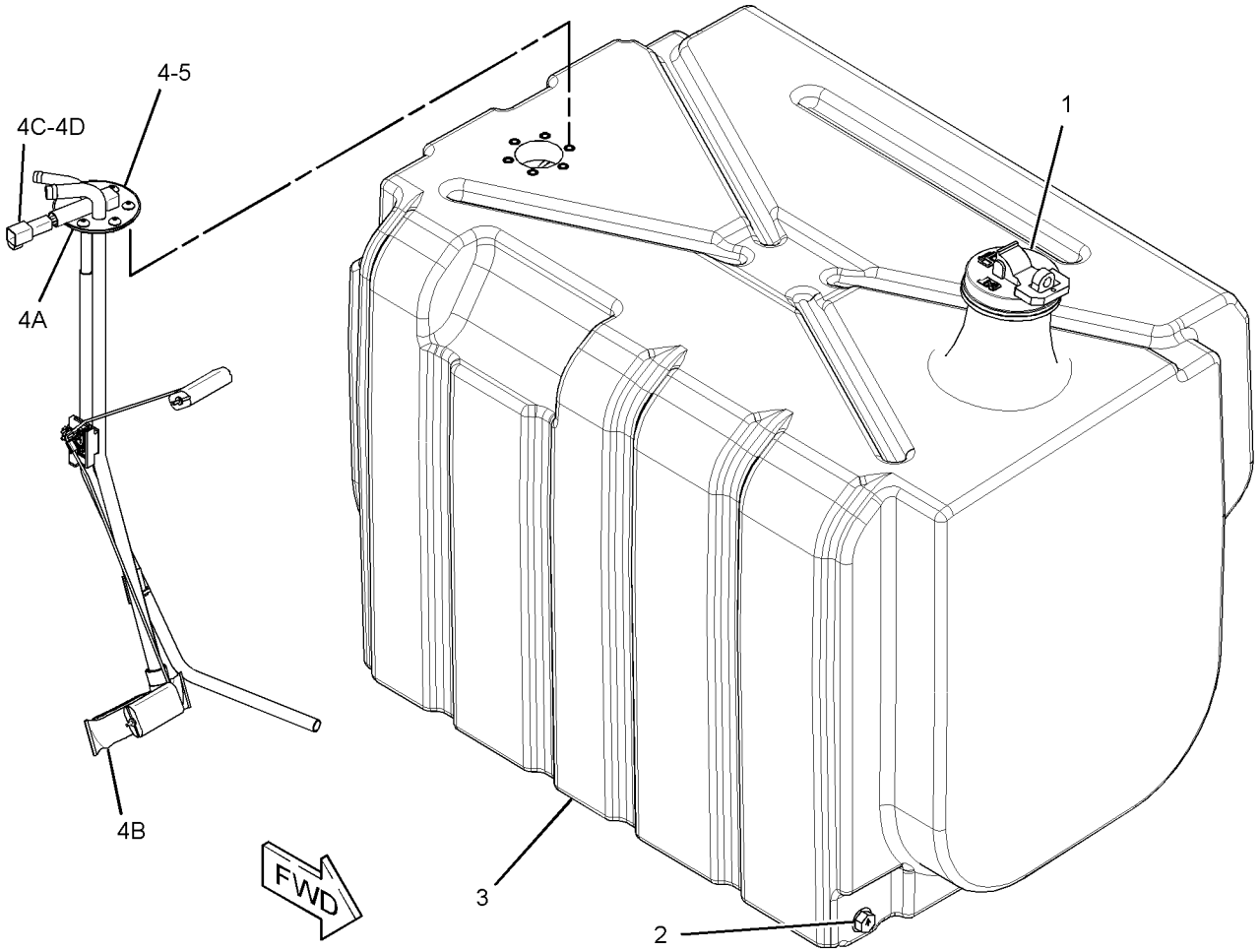

GRAPHIC #1 **<END>** g02777196

FUEL SYSTEM

362-4625 TANK GP-FUEL

S/N: SJW1-UP
166-LITERS (43.9-US GAL)
PART OF 340-1693 CHASSIS AR

SMCS-1273 **i04649829**

NOTE	REF NO	GRAPHIC REF	PART NUMBER	QTY	PART NAME 1 2 3 4 5 6 (PRODUCT LEVEL)	SEE PAGE
Y	1	1	*362-4557*	1	TANK GP-FUEL	93
	2	1	**362-4560**	1	TUBE AS	
	3	1	**362-4563**	1	PLATE	
	4	1	**362-4624**	1	TUBE AS	
	5	1	**362-9460**	1	FENDER	
	6	1	**363-8010**	1	STEP AS	
	7	1	**363-8031**	1	TREAD AS	
	8	1	**363-8348**	2	MOUNT	
	9	1	**364-2475**	1	SEAL-STRIP	
	10	1	**371-6659**	1	SEAL-CENTER	
	11	1	**380-8815**	1	PLATE	
	12	1	**156-0283**	3	WASHER-HARD (8.4X35X2.5-MM THK)	
	13	1	**5P-4116**	14	WASHER-HARD (8.8X20.5X2-MM THK)	
M	14	1	**8T-4189**	2	BOLT (M8X1.25X20-MM)	
M	15	1	**8T-4193**	4	BOLT (M16X2X50-MM)	
M	16	1	**8T-4908**	3	BOLT (M8X1.25X25-MM)	
M	17	1	**8T-6869**	8	BOLT (M8X1.25X60-MM)	
	18	1	**9X-8257**	4	WASHER (17.5X30X3.5-MM THK)	
M	19	1	**8T-7547**	4	BOLT (M8X1.25X30-MM)	
	20	1	**193-5913**	2	PLUG	

M-METRIC PART
Y-SEPARATE ILLUSTRATION

362-4625 **TANK GP-FUEL** *(contd.)* **i04649829**

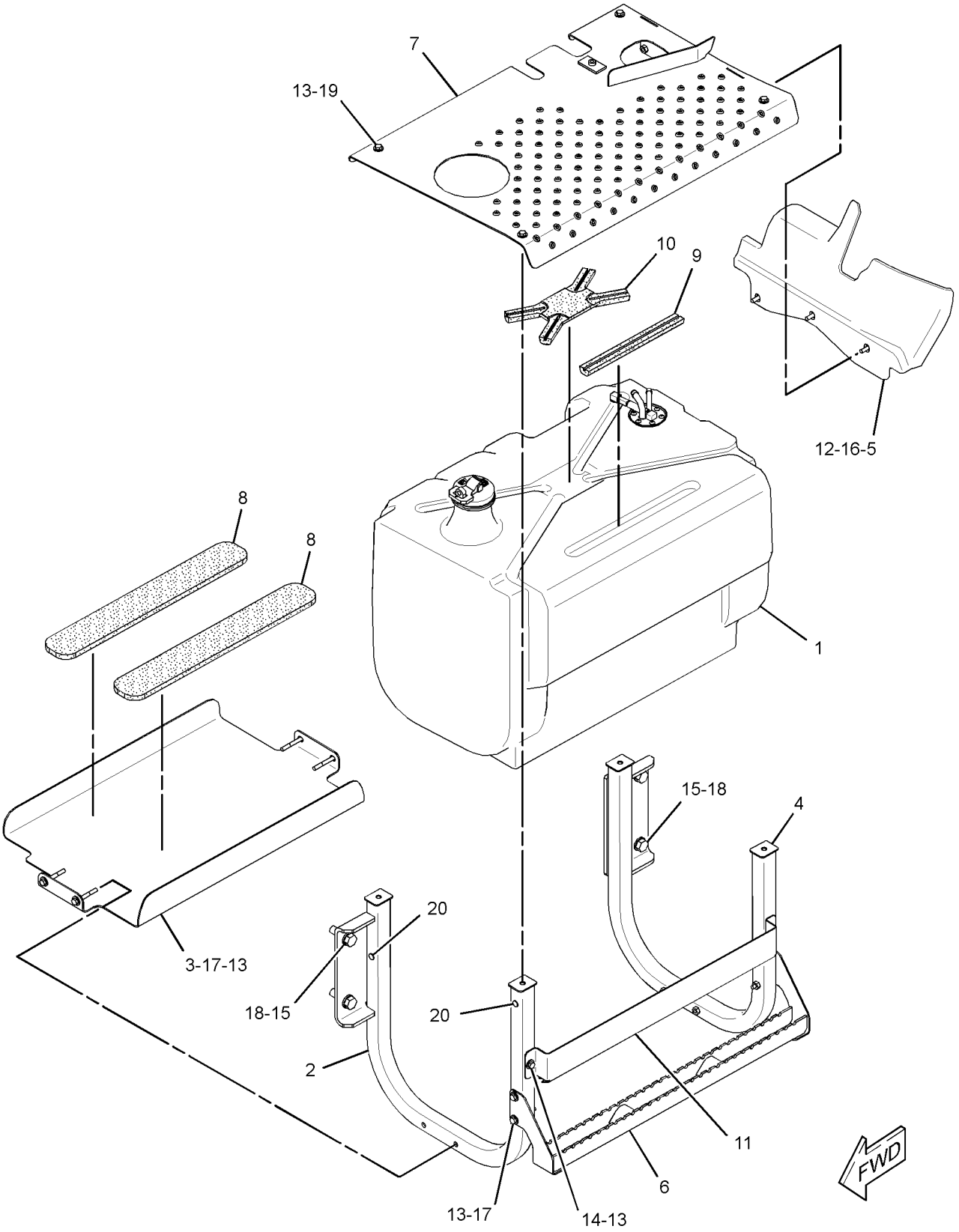

GRAPHIC #1 **<END>** g02829858

317-9776 ALTERNATOR GP-CHARGING

S/N: C4Z1-UP
12 VOLT 120 AMPERE
PART OF 354-7363, 364-5743 ENGINE AR-PRIMARY
AN ATTACHMENT

SMCS-1405, 1425 **i03899392**

NOTE	REF NO	GRAPHIC REF	PART NUMBER	QTY	PART NAME 1 2 3 4 5 6 (PRODUCT LEVEL)	SEE PAGE
M	1	1	**6I-0260**	1	BOLT (M8X1.25X25-MM)	
M	2	1	**6I-0650**	1	BOLT (M10X1.5X65-MM)	
	3	1	**359-9666**	1	BOLT-FLANGE HEAD	
	4	1	**113-6349**	1	NUT (M12X1.75X93-MM)	
M	5	1	**140-8783**	2	BOLT (M10X1.5X45-MM)	
	7	1	**346-9825**	1	ALTERNATOR GP-CHARGING	
	8	1	**284-3425**	1	PULLEY-ALTERNATOR	
	9	1	**305-7881**	1	BRACKET AS-ALTERNATOR	
	9A	1	**161-9820**	1	PIN	

M-METRIC PART

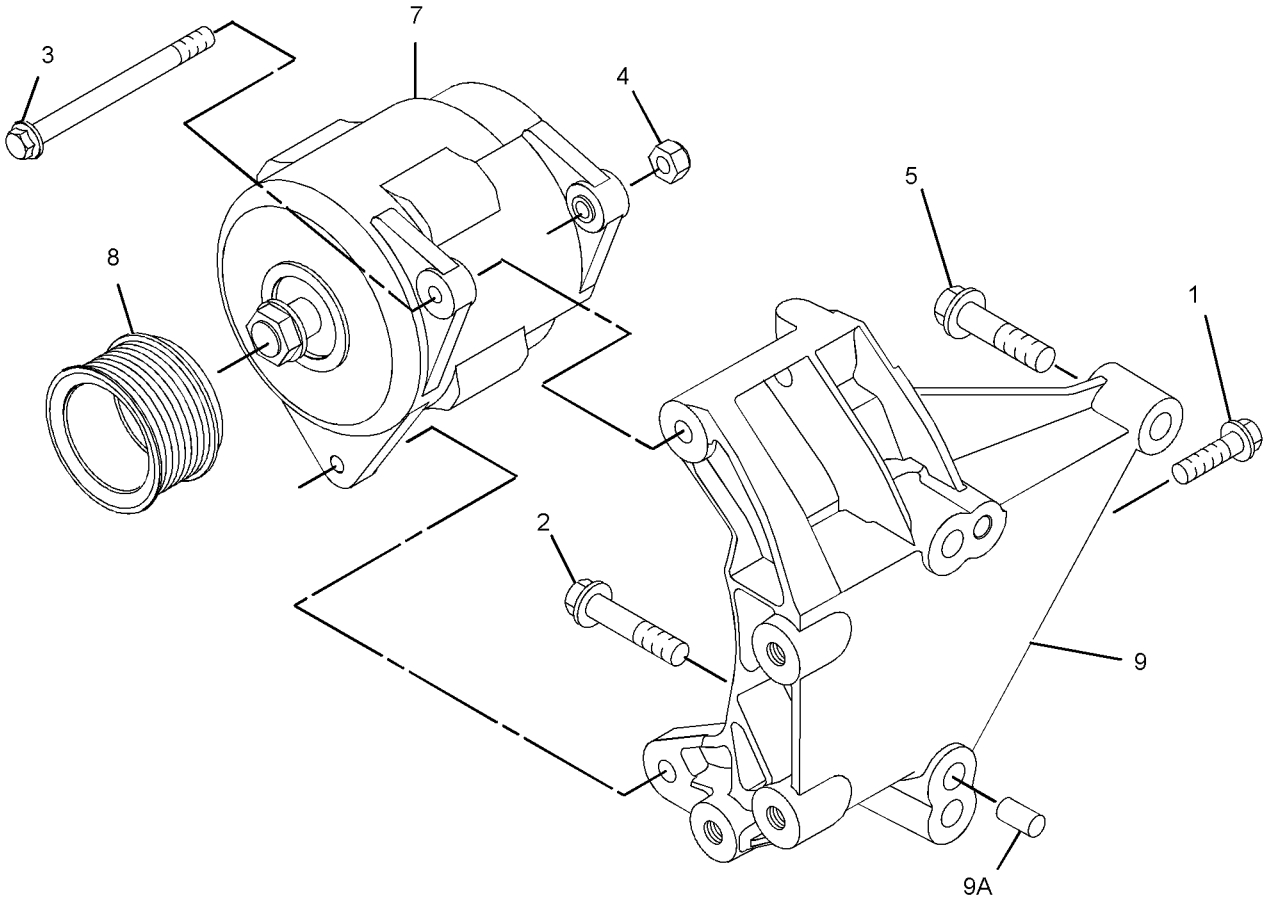

GRAPHIC #1 **<END>** g01953021

ELECTRICAL AND STARTING SYSTEM

357-6501 BATTERY & WIRING GP

S/N: SJW1-UP

PART OF 337-9866, 337-9867 ENGINE AR-COMPLETE

AN ATTACHMENT

SMCS-1401, 1402, 1408, 1411 **i04577649**

NOTE	REF NO	GRAPHIC REF	PART NUMBER	QTY	PART NAME 1 2 3 4 5 6 (PRODUCT LEVEL)	SEE PAGE
	1	1	**3E-8320**	1	PLATE-INSTRUCTION (BATTERY)	
	2	1	**7K-1181**	3	STRAP-CABLE	
Y	3	1	**7N-0718**	1	SWITCH GP-DISCONNECT (BATTERY)	134
	4	1	**8W-8528**	3	SLEEVE	
	5	2	**8Y-1816**	1	SPACER (12.5X25X25-MM THK)	
	6	2	**8X-5489**	2	SLEEVE	
	7	1	**206-2423**	1	SADDLE	
M	8	1,2	**8T-7963**	2	LOCKNUT (M8X1.25-THD)	
	9	1	**230-6368**	1	BATTERY (12-VOLT, MAINTENANCE FREE)	
	10	2	**263-6556**	1	STUD	
	11	1	**290-6746**	1	CABLE AS	
		1	**312-6455**	1	TERMINAL AS	
E		1	**125-7876**		TUBE-HEAT SHRINK (17.78-MM DIA) (5-CM)	
		1	**311-6184**	1	TERMINAL-RING (2-GA, 3/8-IN SCREW)	
E		1	**125-7876**		TUBE-HEAT SHRINK (17.78-MM DIA) (7-CM)	
	12	1	**331-5550**	1	CABLE AS	
		1	**1S-7252**	1	TERMINAL-CABLE (00-GA, 3/8-IN SCREW)	
M		1	**8U-0767**	1	BOLT (M8X1.25X16-MM)	
		1	**8T-4224**	1	WASHER-HARD (8.8X16X2-MM THK)	
		1	**030-1705**	1	TERMINAL-CABLE (00-GA, 5/16-IN SCREW)	
E		1	**135-5009**		TUBE-HEAT SHRINK (32-MM DIA) (10-CM)	
E		1	**159-8049**		CABLE (00-GA, RED) (59-CM)	
	13	1	**331-5552**	1	CABLE AS	
E		1	**159-8049**		CABLE (00-GA, RED) (147-CM)	
		1	**1S-7252**	2	TERMINAL-CABLE (00-GA, 3/8-IN SCREW)	
E		1	**135-5009**		TUBE-HEAT SHRINK (32-MM DIA) (20-CM)	
	14	1	**331-5555**	1	CABLE AS-BATTERY	
E		1	**159-8050**		CABLE (00-GA, BLACK) (98-CM)	
		1	**9G-8909**	1	COVER-TERMINAL (BLACK)	
M		1	**8U-0767**	1	BOLT (M8X1.25X16-MM)	
		1	**1S-7252**	1	TERMINAL-CABLE (00-GA, 3/8-IN SCREW)	
		1	**030-1705**	1	TERMINAL-CABLE (00-GA, 5/16-IN SCREW)	
E		1	**135-5009**		TUBE-HEAT SHRINK (32-MM DIA) (10-CM)	
		1	**5P-4116**	1	WASHER-HARD (8.8X20.5X2-MM THK)	
	15	1	**331-5556**	1	CABLE AS	
E		1	**159-8050**		CABLE (00-GA, BLACK) (58-CM)	
		1	**9G-8909**	1	COVER-TERMINAL (BLACK)	
		1	**1S-7252**	1	TERMINAL-CABLE (00-GA, 3/8-IN SCREW)	
		1	**274-9183**	1	TERMINAL-RING	
E		1	**135-5009**		TUBE-HEAT SHRINK (32-MM DIA) (10-CM)	
	16	2	**331-5581**	1	BRACKET AS	
	17	1,2	**360-8983**	2	ROD	
	18	1	**360-8984**	1	ANGLE	
	19	1	**362-8030**	1	BRACKET AS	
	20	1	**368-4714**	1	CABLE AS (POSITIVE)	
E		1	**5P-0761**		CABLE (00-GA, RED) (96-CM)	
		1	**8N-0869**	1	COVER-TERMINAL (RED)	
		1	**1S-7252**	2	TERMINAL-CABLE (00-GA, 3/8-IN SCREW)	
E		1	**125-7876**		TUBE-HEAT SHRINK (17.78-MM DIA) (5-CM)	
	21	1	**374-7337**	1	BRACKET AS	
	22	1	**133-3260**	1	SPACER (11X19X10-MM THK)	
	23	1	**138-7500**	1	SPACER (11X25X50-MM THK)	
M	24	2	**148-1899**	1	BOLT-CARRIAGE (M10X1.5X60-MM)	
M	25	1	**198-3899**	2	SCREW-BUTTON HEAD (M8X1.25X20-MM)	
	26	1,2	**1S-0994**	4	CLIP	

357-6501 **BATTERY & WIRING GP** *(contd.)* **i04577649**

NOTE	REF NO	GRAPHIC REF	PART NUMBER	QTY	PART NAME 1 2 3 4 5 6 (PRODUCT LEVEL)	SEE PAGE
	27	1	**353-7957**	1	GROMMET	
	28	1	**362-2904**	1	PLATE AS	
	29	1	**3J-4818**	1	LOCKWASHER	
M	30	2	**5C-7261**	2	NUT (M8X1.25-THD)	
	31	1,2	**5G-3676**	2	GROMMET	
	32	1,2	**5P-4116**	2	WASHER-HARD (8.8X20.5X2-MM THK)	
	33	2	**5T-6374**	1	SPACER (10.5X20X40-MM THK)	
	34	1	**6V-8801**	1	NUT (3/8-16-THD)	
	35	1,2	**7C-4354**	2	CLIP	
	36	1	**7X-7729**	1	WASHER (11X25X3-MM THK)	
	37	2	**8F-3590**	1	LOCKWASHER	
	38	1,2	**8T-1887**	3	CLIP (SLOT)	
	39	1,2	**8T-1888**	3	CLIP (TAB)	
M	40	2	**8T-3998**	2	BOLT (M4X0.7X12-MM)	
	41	1,2	**8T-4121**	13	WASHER-HARD (11X21X2.5-MM THK)	
M	42	1,2	**8T-4133**	3	NUT (M10X1.5-THD)	
M	43	1	**8T-4136**	1	BOLT (M10X1.5X25-MM)	
M	44	1,2	**8T-4137**	4	BOLT (M10X1.5X20-MM)	
M	45	1	**8T-4139**	1	BOLT (M12X1.75X30-MM)	
M	46	1	**8T-4172**	1	BOLT (M10X1.5X80-MM)	
M	47	2	**8T-4189**	1	BOLT (M8X1.25X20-MM)	
M	48	1	**8T-4192**	2	BOLT (M12X1.75X25-MM)	
M	49	1,2	**8T-4196**	4	BOLT (M10X1.5X35-MM)	
	50	1	**8T-4223**	3	WASHER-HARD (13.5X25.5X3-MM THK)	
	51	1,2	**8T-4224**	6	WASHER-HARD (8.8X16X2-MM THK)	
	52	1	**8T-4896**	1	WASHER-HARD (10.2X18.5X2.5-MM THK)	
M	53	2	**8T-5005**	1	BOLT (M10X1.5X70-MM)	
M	54	2	**8T-7547**	2	BOLT (M8X1.25X30-MM)	

E-ORDER BY THE CENTIMETER
M-METRIC PART
Y-SEPARATE ILLUSTRATION

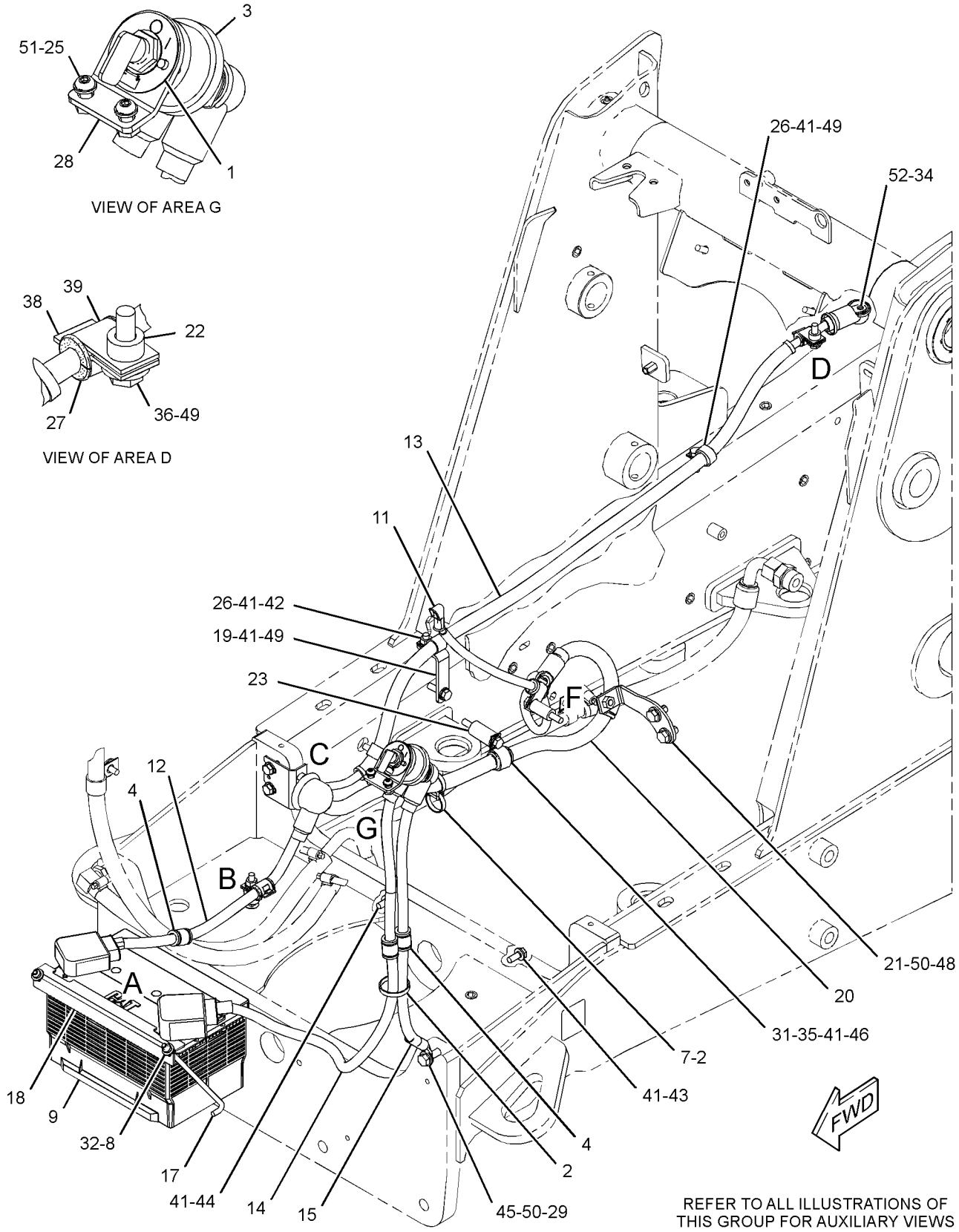

GRAPHIC #1

g02815177

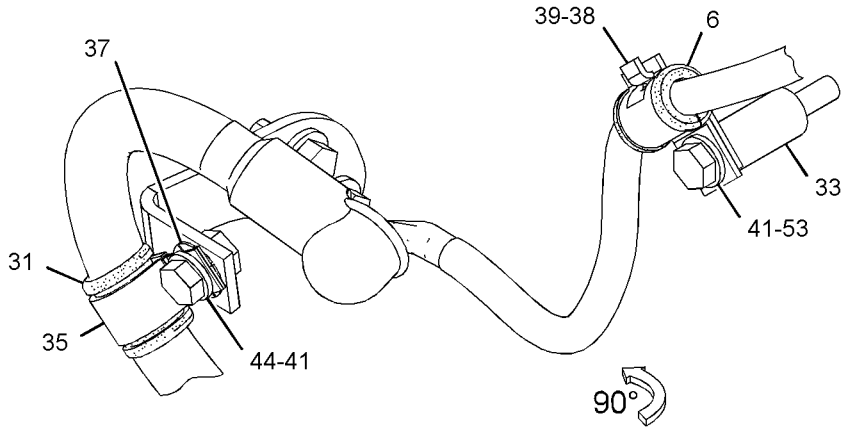

VIEW OF AREA F

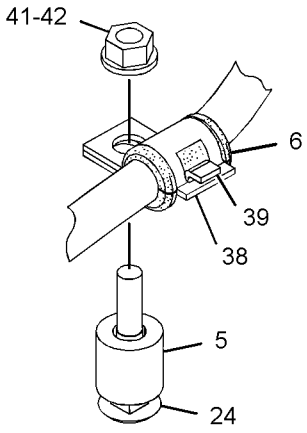

VIEW OF AREA B

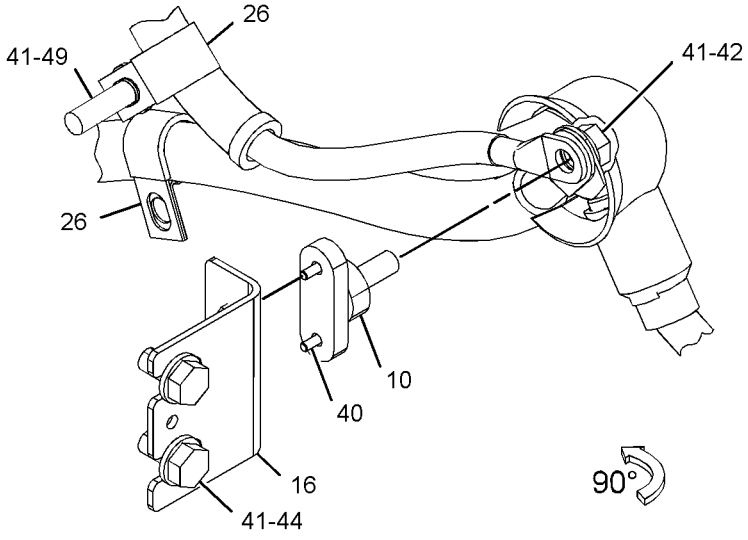

VIEW OF AREA C

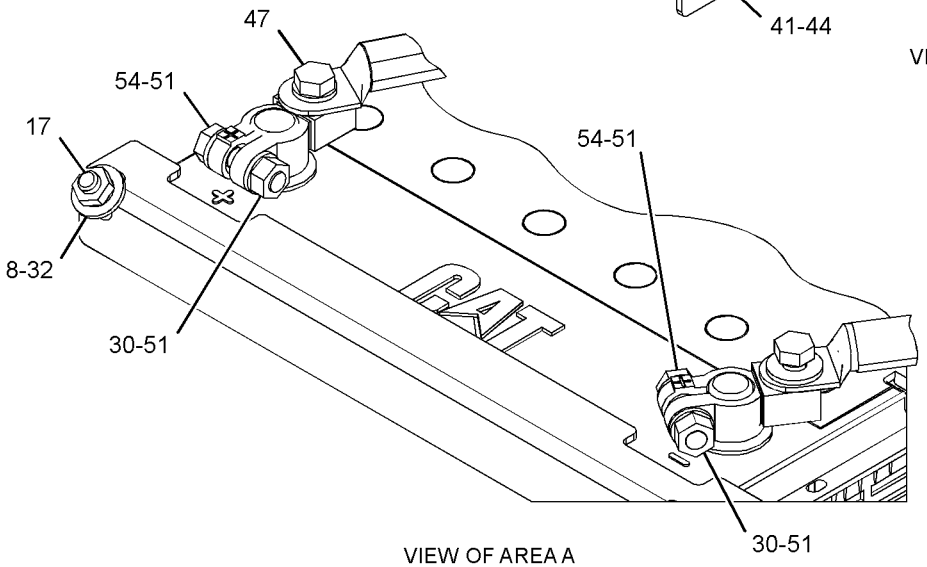

VIEW OF AREA A
(TERMINAL COVERS REMOVED)

GRAPHIC #2 **<END>** g02816577

331-5461 BATTERY GP

S/N: SJW1-UP
PART OF 377-0023 OPTION AR-BACKHOE
AN ATTACHMENT

SMCS-1401 **i04565414**

NOTE	REF NO	GRAPHIC REF	PART NUMBER	QTY	PART NAME 1 2 3 4 5 6 (PRODUCT LEVEL)	SEE PAGE
	1	1	**230-6368**	1	BATTERY (12-VOLT, MAINTENANCE FREE)	
	2	1	**331-5554**	1	CABLE AS (POSITIVE)	
		1	**9G-0004**	1	COVER AS-TERMINAL (RED)	
		1	**8L-8413**	1	STRAP-CABLE (WHITE)	
E		1	**135-5009**		TUBE-HEAT SHRINK (32-MM DIA) (5-CM)	
E		1	**159-8049**		CABLE (00-GA, RED) (39-CM)	
		1	**1M-6119**	1	BOLT (5/16-18X1.375-IN)	
		1	**1M-6120**	1	NUT (5/16-18-THD)	
		1	**375-2144**	1	TERMINAL-RING	
	3	1	**331-5557**	1	CABLE AS (NEGATIVE)	
		1	**9G-0005**	1	COVER AS-TERMINAL (BLACK)	
		1	**8L-8413**	1	STRAP-CABLE (WHITE)	
E		1	**135-5009**		TUBE-HEAT SHRINK (32-MM DIA) (5-CM)	
E		1	**159-8050**		CABLE (00-GA, BLACK) (38-CM)	
		1	**1M-6119**	1	BOLT (5/16-18X1.375-IN)	
		1	**1M-6120**	1	NUT (5/16-18-THD)	
		1	**375-2144**	1	TERMINAL-RING	
	4	1	**360-8983**	2	ROD	
	5	1	**360-8984**	1	ANGLE	
	6	1	**5P-4116**	2	WASHER-HARD (8.8X20.5X2-MM THK)	
M	7	1	**8T-7963**	2	LOCKNUT (M8X1.25-THD)	

E-ORDER BY THE CENTIMETER
M-METRIC PART

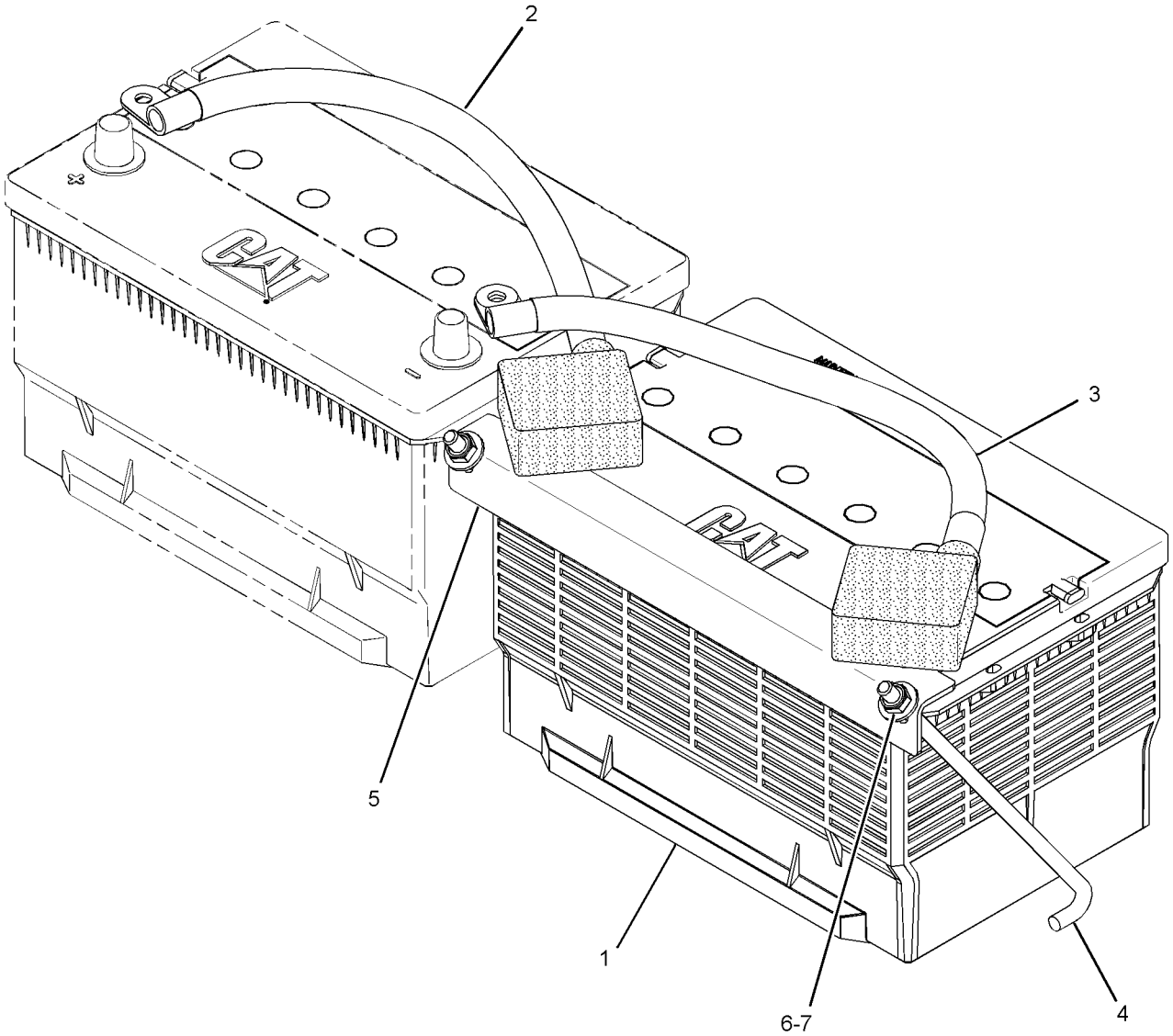

GRAPHIC #1 **<END>** g02804696

353-1457 ELECTRONICS AR-MACHINE

S/N: SJW1-UP
PART OF 374-6826 POWER TRAIN AR
AN ATTACHMENT

SMCS-1408, 7000, 7610, 7620 **i04637711**

NOTE	PART NUMBER	QTY	PART NAME 1 2 3 4 5 6 (PRODUCT LEVEL)	SEE PAGE
Y	*341-6719*	1	CONTROL GP-GOVERNOR	76
Y	*357-3259*	1	WIRING GP-CONSOLE	146
Y	*357-3197*	1	WIRING GP-PLATFORM	159
	386-1737	1	PANEL GP-INSTRUMENT	

Y-SEPARATE ILLUSTRATION

<END>

353-1461 ELECTRONICS AR-MACHINE

S/N: SJW1-UP
PART OF 374-6834, 374-6842 POWER TRAIN AR
AN ATTACHMENT

SMCS-1408, 7000, 7610, 7620 **i04612129**

NOTE	PART NUMBER	QTY	PART NAME 1 2 3 4 5 6 (PRODUCT LEVEL)	SEE PAGE
Y	**380-8261**	1	ELECTRONICS GP-MACHINE	104
Y	**341-6719**	1	CONTROL GP-GOVERNOR	76
Y	*357-3259*	1	WIRING GP-CONSOLE	146
Y	*357-3240*	1	WIRING GP-PLATFORM	166
	386-1737	1	PANEL GP-INSTRUMENT	

Y-SEPARATE ILLUSTRATION

<END>

336-3545 ELECTRONICS GP-COMMUNICATION–

PRODUCT LINK 121SR
S/N: SJW1-UP
PART OF 357-3214 WIRING GP-COMMUNICATION
AN ATTACHMENT

SMCS-7606, 7610, 7620 **i04630041**

NOTE	PART NUMBER	QTY	PART NAME 1 2 3 4 5 6 (PRODUCT LEVEL)	SEE PAGE
	377-4844	1	SOFTWARE GP-COMMUNICATION (PRODUCT LINK 121SR)	

<END>

ELECTRICAL AND STARTING SYSTEM

380-8261 ELECTRONICS GP-MACHINE

S/N: SJW1-UP

PART OF 353-1461 ELECTRONICS AR-MACHINE

AN ATTACHMENT

SMCS-7610, 7620 **i04612172**

NOTE	PART NUMBER	QTY	PART NAME 1 2 3 4 5 6 (PRODUCT LEVEL)	SEE PAGE
	382-3404	1	SOFTWARE GP-MACHINE	
			—OR—	
R	**304-5691**	1	CONTROL GP-UNPROGRAMMED (MACHINE)	
			—OR—	
	382-3405	1	SERVICE GP-MACHINE	
			(OPTIONAL SERVICE REPLACEMENT)(INCLUDES CONTROL GP & SOFTWARE)	

R-REMFG PART MAY BE AVAILABLE

<END>

315-3418 GLOW PLUG GP

S/N: C4Z1-UP

PART OF 354-7363, 364-5743 ENGINE AR-PRIMARY

AN ATTACHMENT

SMCS-1412 **i04641471**

NOTE	REF NO	GRAPHIC REF	PART NUMBER	QTY	PART NAME 1 2 3 4 5 6 (PRODUCT LEVEL)	SEE PAGE
	1	1	**368-3151**	1	BUS BAR GP	
		1	**369-2472**	1	SPACER	
		1	*370-2909*	1	WIRE AS (STARTING AID)	
		1	**276-1151**	1	PIN-CONNECTOR (6-GA)	
		1	**369-0473**	1	LOCKNUT	
	2	1	**232-6662**	4	GLOW PLUG (12-VOLT)	

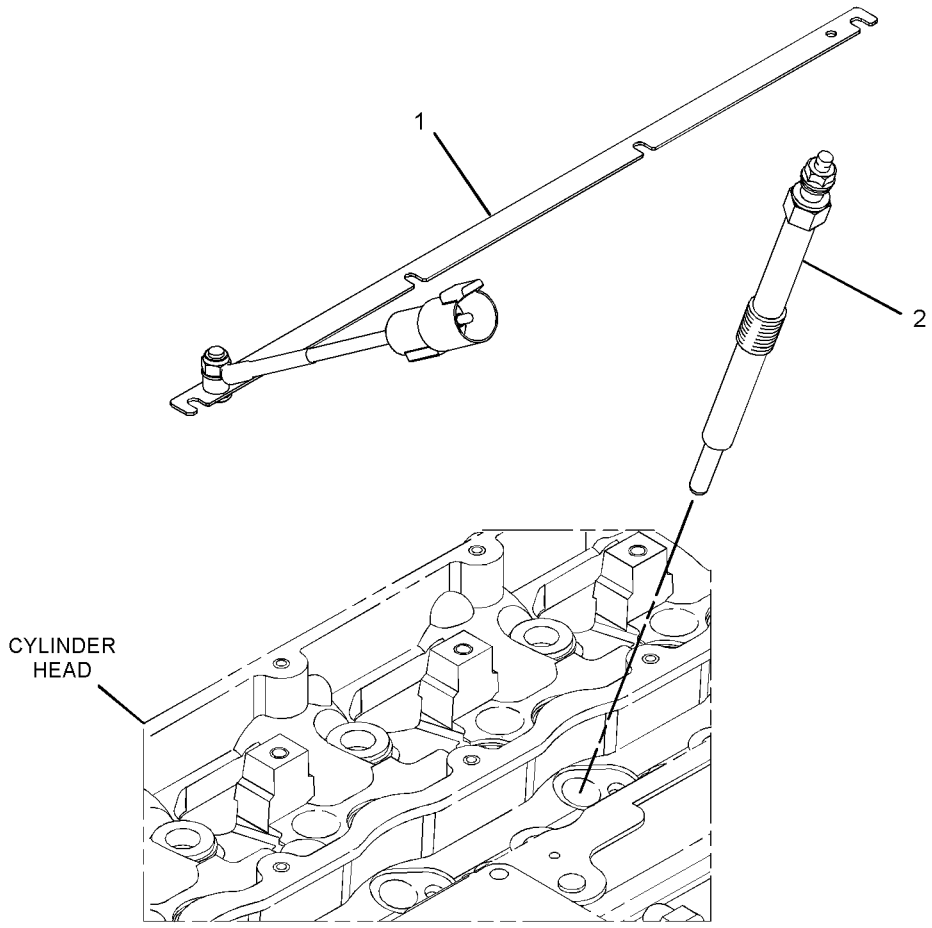

GRAPHIC #1 **<END>** g02788466

231-3058 HEATER GP-JACKET WATER

S/N: SJW1-UP
240-VOLT, 1000-WATT
PART OF 367-6032 HEATER GP-JACKET WATER
AN ATTACHMENT

SMCS-1383 **i03496460**

NOTE	REF NO	GRAPHIC REF	PART NUMBER	QTY	PART NAME 1 2 3 4 5 6 (PRODUCT LEVEL)	SEE PAGE
	1	1	**219-3271**	1	ELEMENT AS-JACKET WATER HEATER (240-VOLT, 1000-WATT)	
		1	**133-3413**	1	KIT-SEAL	
					(INCLUDES SEAL, SPACER & RINGS)	
		1	**133-6517**	1	CAP AS-DUST	
	2	1	**231-3057**	1	CORD AS-HEATER	

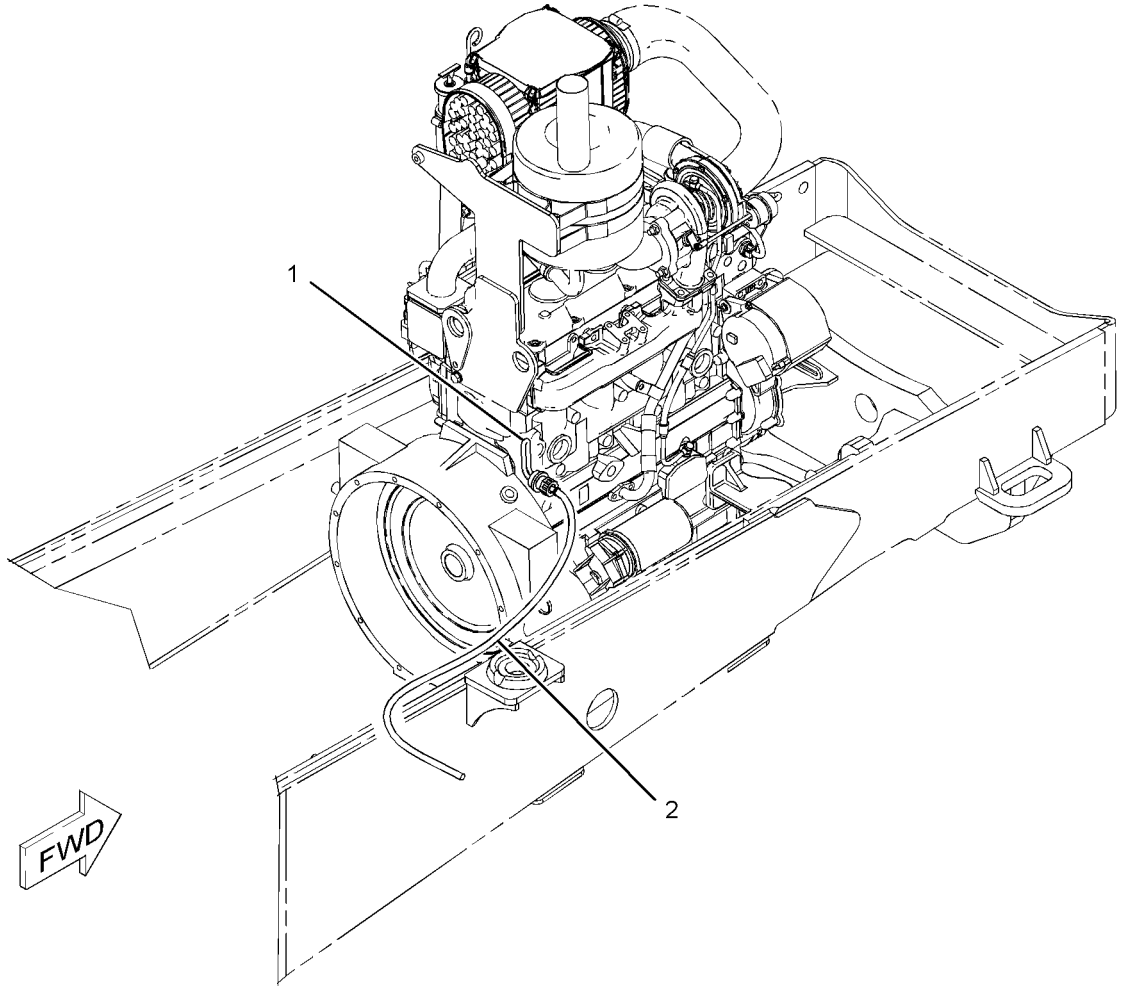

GRAPHIC #1 **<END>** g01105988

367-6032 HEATER GP-JACKET WATER

S/N: SJW1-UP
240-VOLT, 1000-WATT
PART OF 377-0023 OPTION AR-BACKHOE
AN ATTACHMENT

SMCS-1383 **i04603829**

NOTE	REF NO	GRAPHIC REF	PART NUMBER	QTY	PART NAME 1 2 3 4 5 6 (PRODUCT LEVEL)	SEE PAGE
Y	1	1	*231-3058*	1	HEATER GP-JACKET WATER (240-VOLT)	106
	2	1	**3S-2093**	3	STRAP-CABLE	
	3	1	**4P-7428**	1	CLIP	
	4	1	**4P-8134**	1	CLIP	
	5	1	**8T-4121**	1	WASHER-HARD (11X21X2.5-MM THK)	
M	6	1	**8T-4192**	1	BOLT (M12X1.75X25-MM)	
M	7	1	**8T-4196**	1	BOLT (M10X1.5X35-MM)	
	8	1	**8T-4223**	1	WASHER-HARD (13.5X25.5X3-MM THK)	

M-METRIC PART
Y-SEPARATE ILLUSTRATION

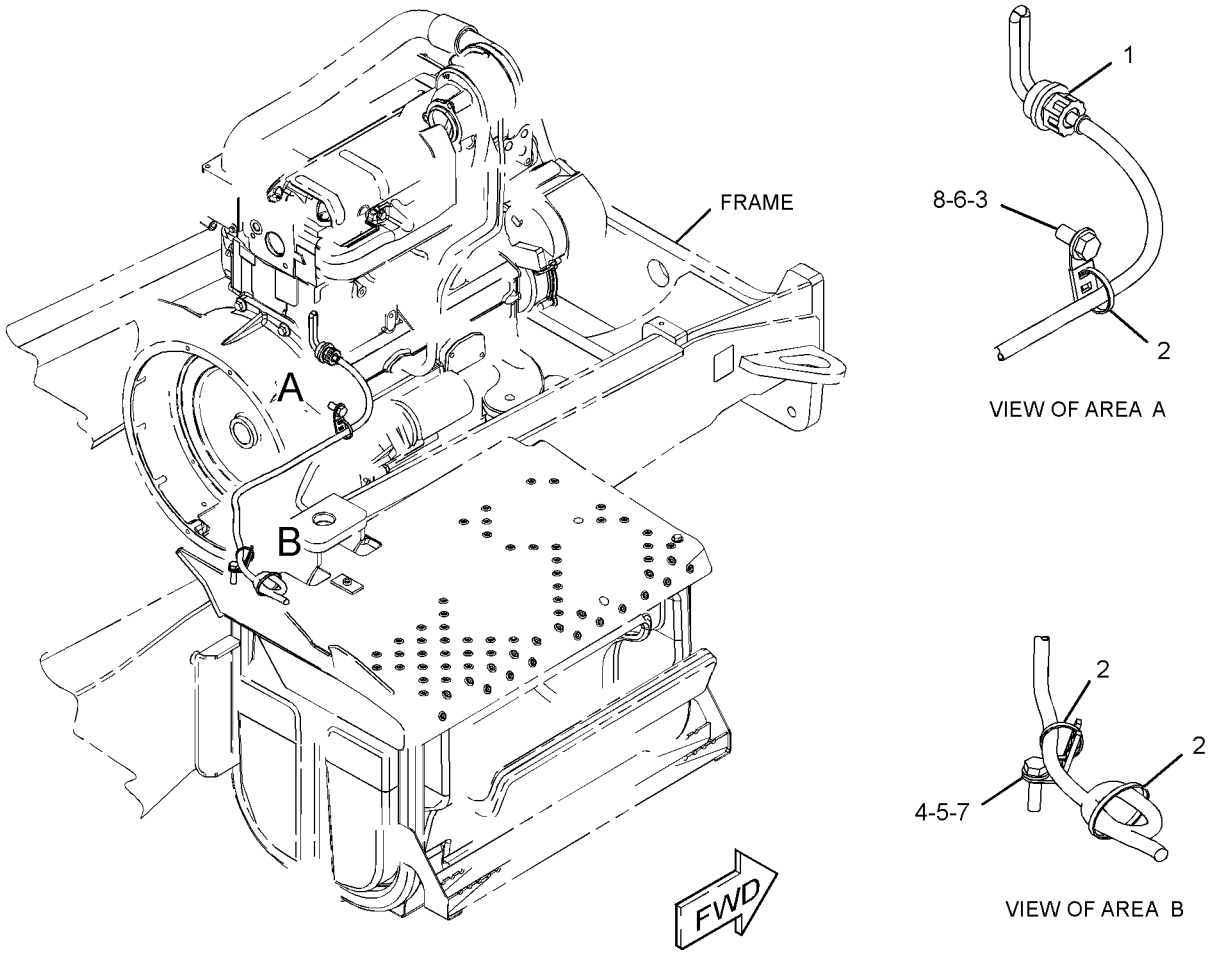

GRAPHIC #1 **<END>** g02818796

214-2968 LAMP GP-FLOOD

S/N: SJW1-UP
12-VOLT
PART OF 357-3237 WIRING GP-CAB
AN ATTACHMENT

SMCS-1429, 1434 **i03712363**

NOTE	REF NO	GRAPHIC REF	PART NUMBER	QTY	PART NAME 1 2 3 4 5 6 (PRODUCT LEVEL)	SEE PAGE
	1	1	**9W-0607**	1	LAMP (12-VOLT, 55-WATT) (FLOODLIGHT)	
M	2	1	**6V-2317**	1	BOLT (M8X1.25X30-MM)	
M	3	1	**5C-7261**	1	NUT (M8X1.25-THD)	
	4	1	**8T-4224**	2	WASHER-HARD (8.8X16X2-MM THK)	
	5	1	**9X-4244**	2	SCREW-SPECIAL (M4X1.79X25-MM)	
	6	1	**202-6614**	1	LENS AS (FLOODLIGHT)	
	7	1	**175-4292**	1	BODY AS	
	8	1	**164-7556**	1	BRACKET (LAMP RETAINING)	
	9	1	**175-4291**	1	BRACKET AS	

M-METRIC PART

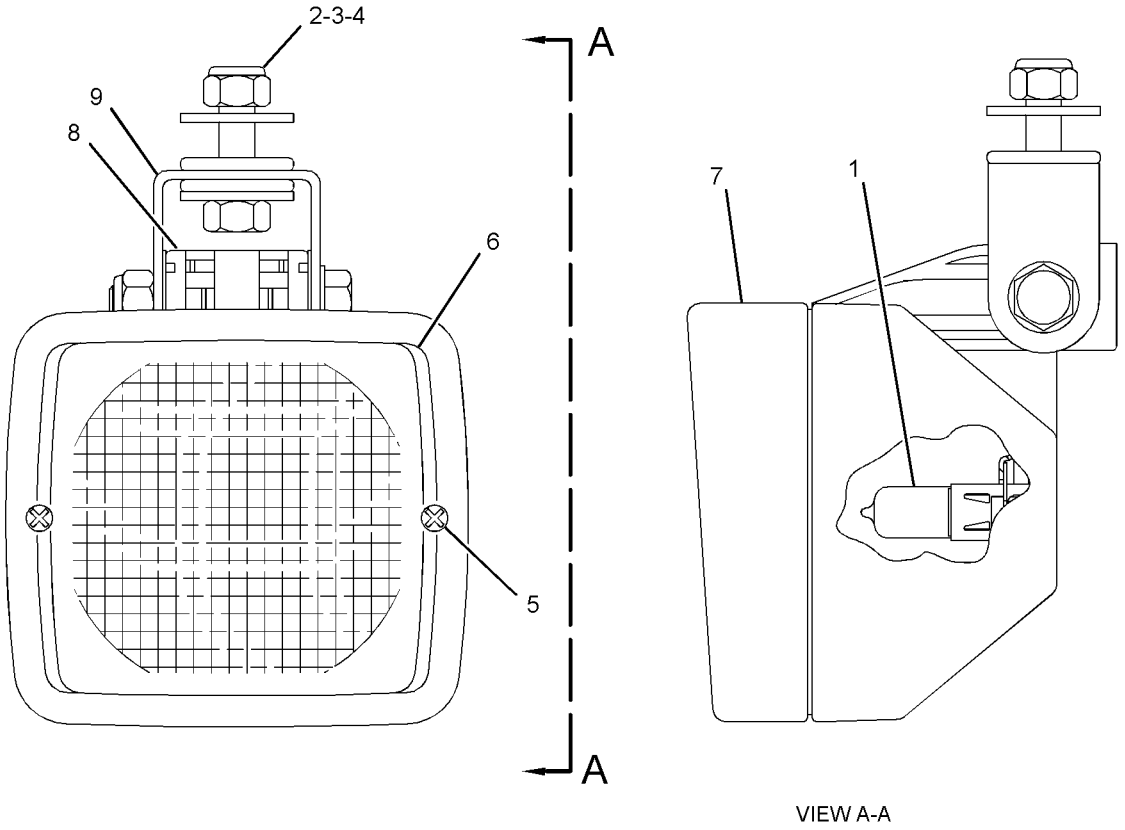

VIEW A-A

GRAPHIC #1 **<END>** g01181714

214-2969 LAMP GP-FLOOD

S/N: SJW1-UP
12-VOLT
PART OF 372-8664 LIGHTING GP-FLOOD
AN ATTACHMENT

SMCS-1429, 1434 **i03712370**

NOTE	REF NO	GRAPHIC REF	PART NUMBER	QTY	PART NAME 1 2 3 4 5 6 (PRODUCT LEVEL)	SEE PAGE
	1	1	**9W-0607**	1	LAMP (12-VOLT, 55-WATT) (FLOODLIGHT)	
M	2	1	**6V-2317**	1	BOLT (M8X1.25X30-MM)	
M	3	1	**5C-7261**	1	NUT (M8X1.25-THD)	
	4	1	**8T-4224**	2	WASHER-HARD (8.8X16X2-MM THK)	
	5	1	**9X-4244**	2	SCREW-SPECIAL (M4X1.79X25-MM)	
	6	1	**202-6611**	1	LENS AS (FLOODLIGHT)	
	7	1	**175-4292**	1	BODY AS	
	8	1	**164-7556**	1	BRACKET (LAMP RETAINING)	
	9	1	**175-4291**	1	BRACKET AS	

M-METRIC PART

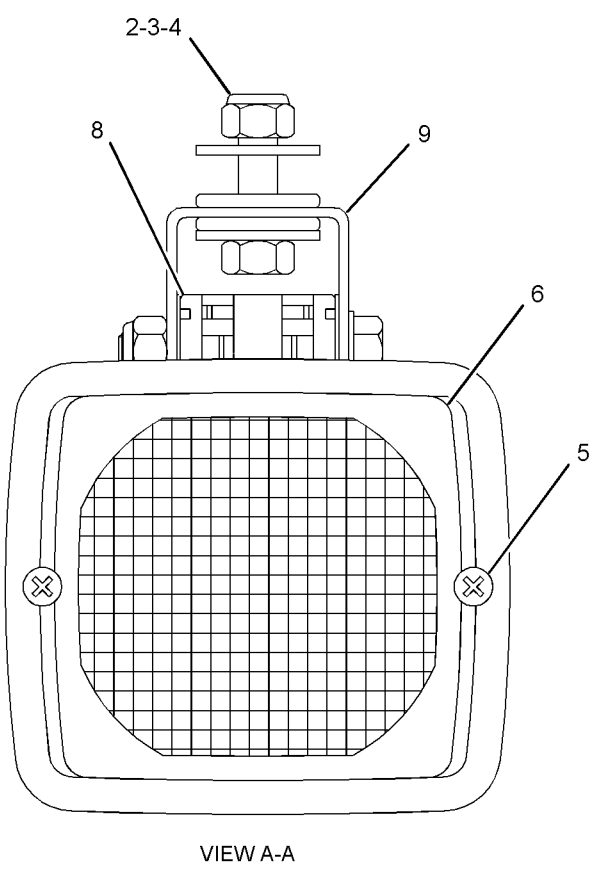

VIEW A-A

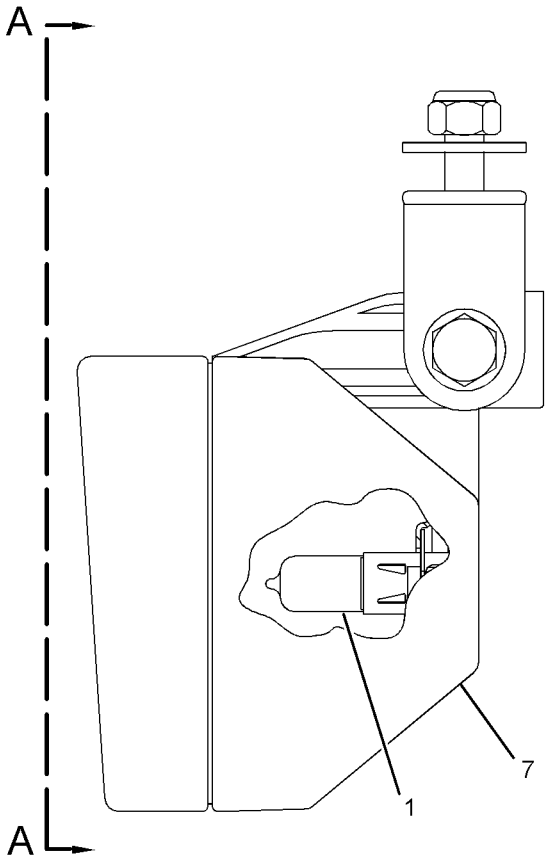

GRAPHIC #1 **<END>** g01971255

195-0189 LAMP GP-HEAD & SIGNAL–RH

S/N: SJW1-UP
12-VOLT
PART OF 329-7496 LIGHTING GP-ROADING
AN ATTACHMENT

SMCS-1429 **i04476293**

NOTE	REF NO	GRAPHIC REF	PART NUMBER	QTY	PART NAME 1 2 3 4 5 6 (PRODUCT LEVEL)	SEE PAGE
	1	1	**228-6053**	1	BODY AS	
	2	1	**228-6054**	1	BEZEL	
	3	1	**228-6051**	1	LENS AS (HEADLIGHT)	
	4	1	**228-6052**	1	LENS AS (TURN SIGNAL)	
	5	1	**228-6056**	6	SCREW (4-32X1.26-IN)	
	6	1	**9W-3324**	1	LAMP-HEAD (12-VOLT, 60/55-WATT) (CLEAR)	
	7	1	**226-4560**	1	LAMP (12-VOLT, 21-WATT) (AMBER)	
	8	1	**226-4561**	1	LAMP (12-VOLT, 5-WATT) (CLEAR)	
M	9	1	**8T-0389**	1	LOCKNUT (M10X1.5-THD)	
	10	1	**100-3253**	1	SPACER (SPHERICAL)	
	11	1	**100-3254**	1	SPACER (SPHERICAL)	
	12	1	**100-3255**	1	WASHER (SPHERICAL)	
	13	1	**102-8805**	1	KIT-RECEPTACLE (6-PIN)	
					(INCLUDES RECEPTACLE AS & WEDGE)	
	14	1	**8T-8729**	5	PIN-CONNECTOR (16-GA TO 18-GA)	
	15	1	**8T-8737**	1	PLUG-SEAL	

M-METRIC PART

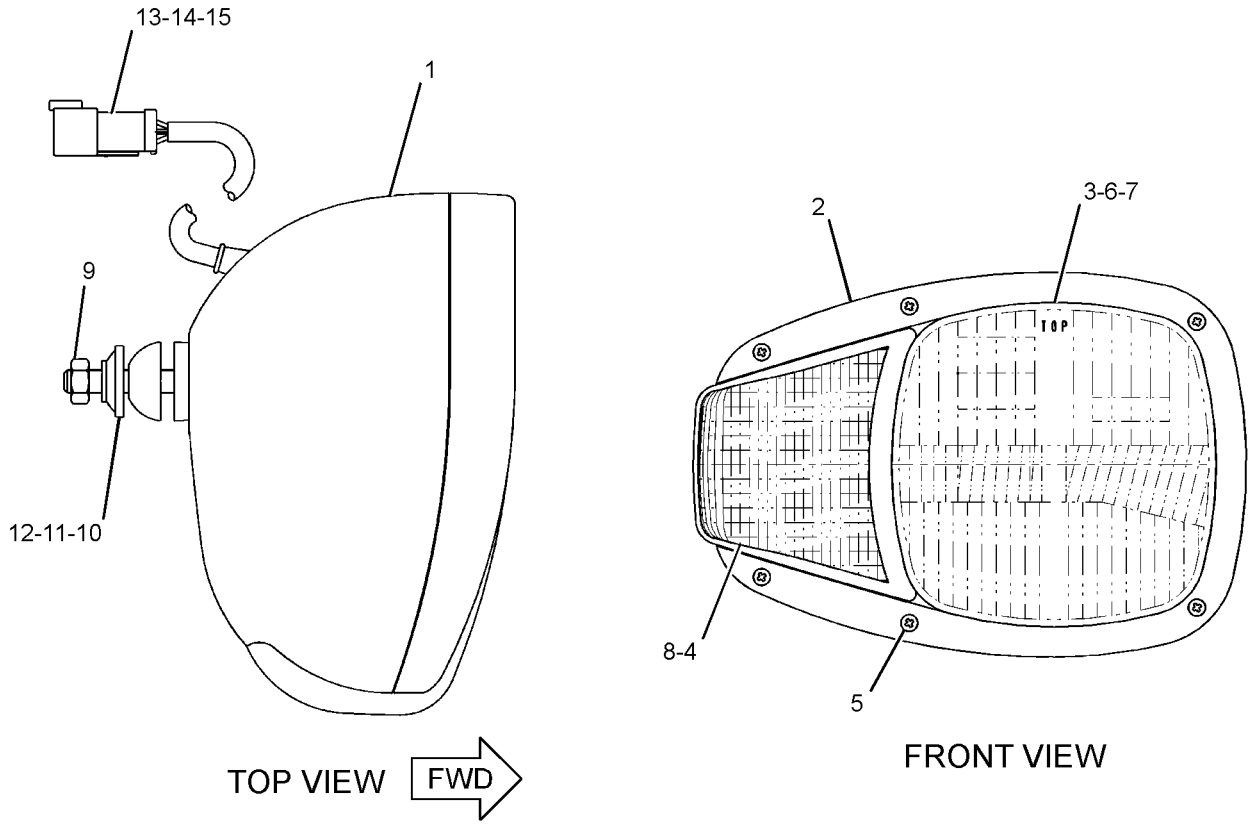

GRAPHIC #1 **<END>** g01313421

195-0190 LAMP GP-HEAD & SIGNAL–LH

S/N: SJW1-UP
12-VOLT
PART OF 329-7496 LIGHTING GP-ROADING
AN ATTACHMENT

SMCS-1429 **i04476292**

NOTE	REF NO	GRAPHIC REF	PART NUMBER	QTY	PART NAME 1 2 3 4 5 6 (PRODUCT LEVEL)	SEE PAGE
	1	1	**228-6053**	1	BODY AS	
	2	1	**228-6054**	1	BEZEL	
	3	1	**228-6051**	1	LENS AS (HEADLIGHT)	
	4	1	**228-6052**	1	LENS AS (TURN SIGNAL)	
	5	1	**228-6056**	6	SCREW (4-32X1.26-IN)	
	6	1	**9W-3324**	1	LAMP-HEAD (12-VOLT, 60/55-WATT) (CLEAR)	
	7	1	**226-4560**	1	LAMP (12-VOLT, 21-WATT) (AMBER)	
	8	1	**226-4561**	1	LAMP (12-VOLT, 5-WATT) (CLEAR)	
M	9	1	**8T-0389**	1	LOCKNUT (M10X1.5-THD)	
	10	1	**100-3253**	1	SPACER (SPHERICAL)	
	11	1	**100-3254**	1	SPACER (SPHERICAL)	
	12	1	**100-3255**	1	WASHER (SPHERICAL)	
	13	1	**102-8805**	1	KIT-RECEPTACLE (6-PIN)	
					(INCLUDES RECEPTACLE AS & WEDGE)	
	14	1	**8T-8729**	5	PIN-CONNECTOR (16-GA TO 18-GA)	
	15	1	**8T-8737**	1	PLUG-SEAL	

M-METRIC PART

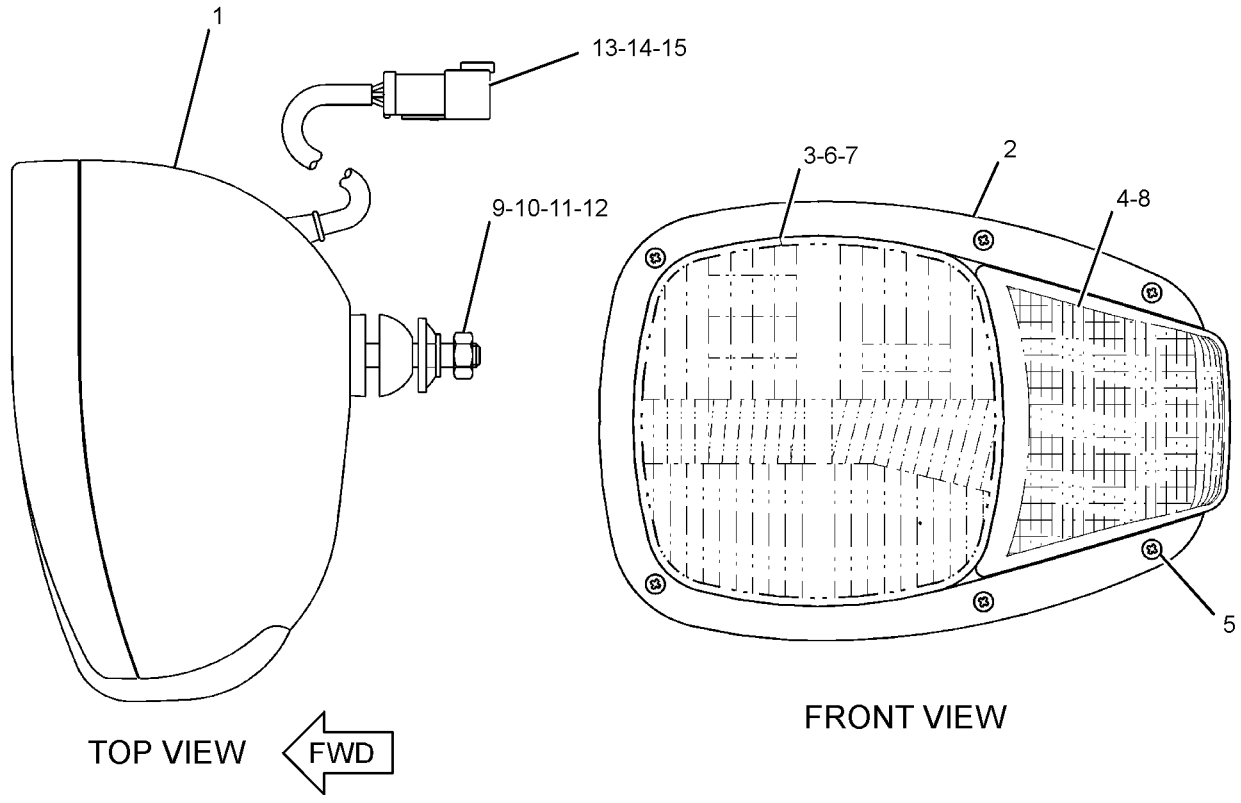

GRAPHIC #1 **<END>** g01313362

195-0191 LAMP GP-HEAD & SIGNAL–RH

S/N: SJW1-UP
12-VOLT
PART OF 329-7497 LIGHTING GP-ROADING
AN ATTACHMENT

SMCS-1429 **i04476291**

NOTE	REF NO	GRAPHIC REF	PART NUMBER	QTY	PART NAME 1 2 3 4 5 6 (PRODUCT LEVEL)	SEE PAGE
	1	1	**228-6053**	1	BODY AS	
	2	1	**228-6054**	1	BEZEL	
	3	1	**228-6050**	1	LENS AS (HEADLIGHT)	
	4	1	**228-6052**	1	LENS AS (TURN SIGNAL)	
	5	1	**228-6056**	6	SCREW (4-32X1.26-IN)	
	6	1	**9W-3324**	1	LAMP-HEAD (12-VOLT, 60/55-WATT) (CLEAR)	
	7	1	**226-4560**	1	LAMP (12-VOLT, 21-WATT) (AMBER)	
	8	1	**226-4561**	1	LAMP (12-VOLT, 5-WATT) (CLEAR)	
M	9	1	**8T-0389**	1	LOCKNUT (M10X1.5-THD)	
	10	1	**100-3253**	1	SPACER (SPHERICAL)	
	11	1	**100-3254**	1	SPACER (SPHERICAL)	
	12	1	**100-3255**	1	WASHER (SPHERICAL)	
	13	1	**102-8805**	1	KIT-RECEPTACLE (6-PIN)	
					(INCLUDES RECEPTACLE AS & WEDGE)	
	14	1	**8T-8729**	5	PIN-CONNECTOR (16-GA TO 18-GA)	
	15	1	**8T-8737**	1	PLUG-SEAL	

M-METRIC PART

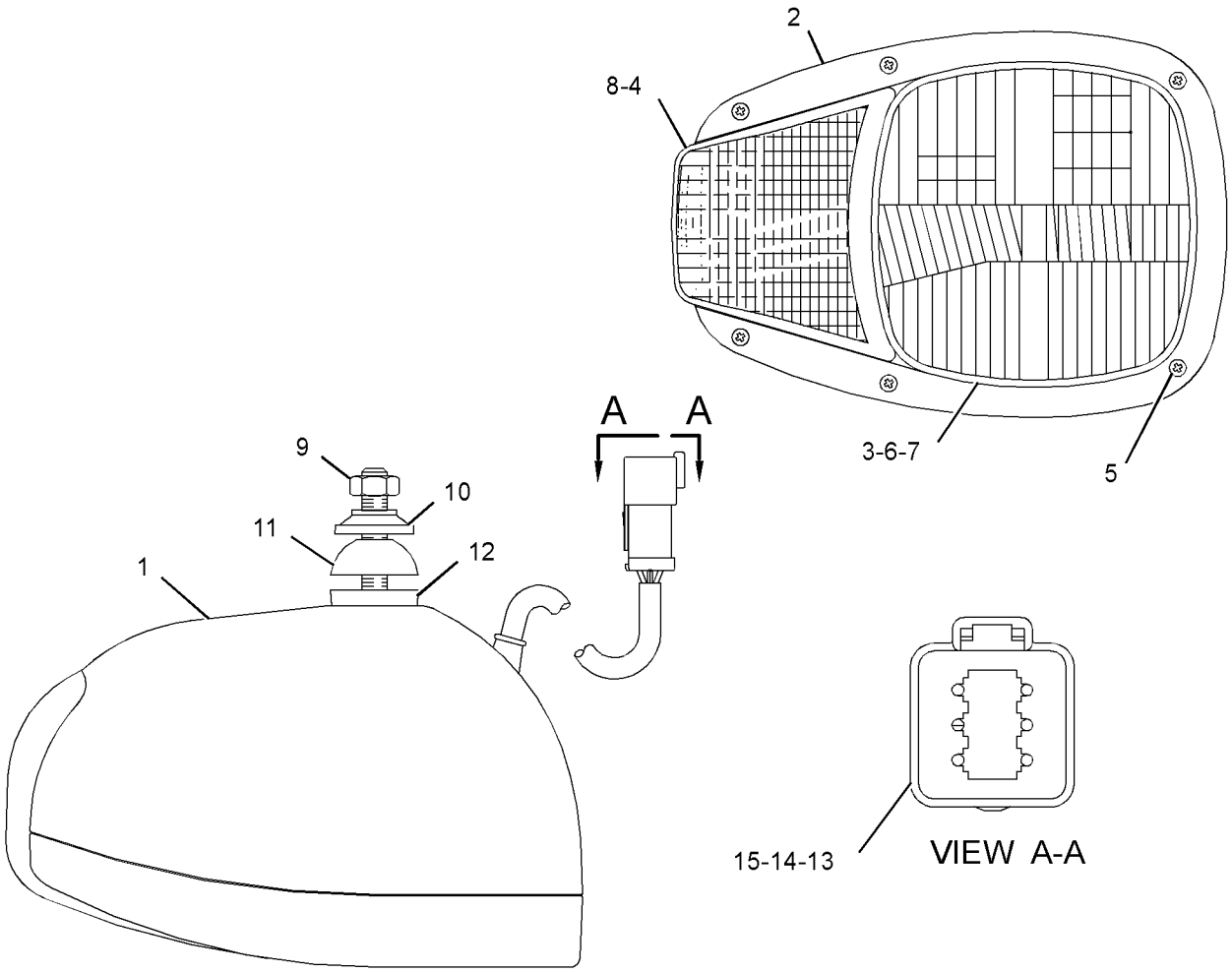

GRAPHIC #1 **<END>** g01948222

195-0192 LAMP GP-HEAD & SIGNAL–LH

S/N: SJW1-UP
12-VOLT
PART OF 329-7497 LIGHTING GP-ROADING
AN ATTACHMENT

SMCS-1429 **i04476290**

NOTE	REF NO	GRAPHIC REF	PART NUMBER	QTY	PART NAME 1 2 3 4 5 6 (PRODUCT LEVEL)	SEE PAGE
	1	1	**228-6053**	1	BODY AS	
	2	1	**228-6054**	1	BEZEL	
	3	1	**228-6050**	1	LENS AS (HEADLIGHT)	
	4	1	**228-6052**	1	LENS AS (TURN SIGNAL)	
	5	1	**228-6056**	6	SCREW (4-32X1.26-IN)	
	6	1	**9W-3324**	1	LAMP-HEAD (12-VOLT, 60/55-WATT) (CLEAR)	
	7	1	**226-4560**	1	LAMP (12-VOLT, 21-WATT) (AMBER)	
	8	1	**226-4561**	1	LAMP (12-VOLT, 5-WATT) (CLEAR)	
M	9	1	**8T-0389**	1	LOCKNUT (M10X1.5-THD)	
	10	1	**100-3253**	1	SPACER (SPHERICAL)	
	11	1	**100-3254**	1	SPACER (SPHERICAL)	
	12	1	**100-3255**	1	WASHER (SPHERICAL)	
	13	1	**102-8805**	1	KIT-RECEPTACLE (6-PIN)	
					(INCLUDES RECEPTACLE AS & WEDGE)	
	14	1	**8T-8729**	5	PIN-CONNECTOR (16-GA TO 18-GA)	
	15	1	**8T-8737**	1	PLUG-SEAL	

M-METRIC PART

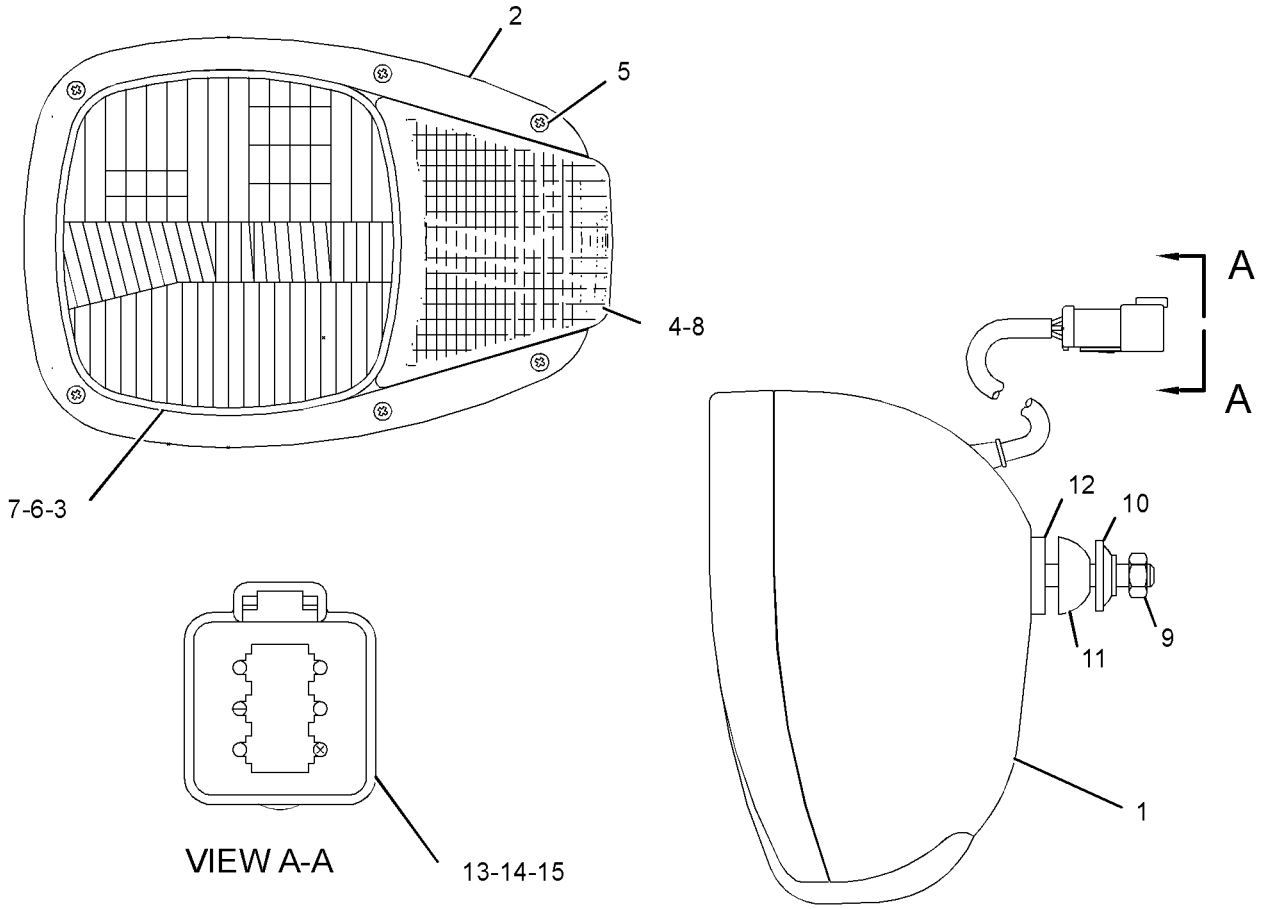

GRAPHIC #1 **<END>** g01948223

196-0030 LAMP GP-REGISTRATION PLATE

S/N: SJW1-UP
12-VOLT
PART OF 328-1950, 372-8661 LIGHTING GP-ROADING
AN ATTACHMENT

SMCS-1429 **i02224900**

NOTE	REF NO	GRAPHIC REF	PART NUMBER	QTY	PART NAME 1 2 3 4 5 6 (PRODUCT LEVEL)	SEE PAGE
	1	1	**195-9712**	1	LAMP (12-VOLT, 10-WATT)	
M	2	1	**5C-2874**	2	NUT (M5X0.8-THD)	
	3	1	**8F-1434**	2	LOCKWASHER	
M	4	1	**8T-4753**	2	SCREW (M5X0.8X20-MM)	
	5	1	**9M-2307**	2	WASHER (5.2X19X2-MM THK)	
	6	1	**102-8802**	1	KIT-RECEPTACLE (2-PIN)	
					(INCLUDES RECEPTACLE AS & WEDGE)	
	7	1	**186-3735**	2	PIN-CONNECTOR (16-GA TO 18-GA)	

M-METRIC PART

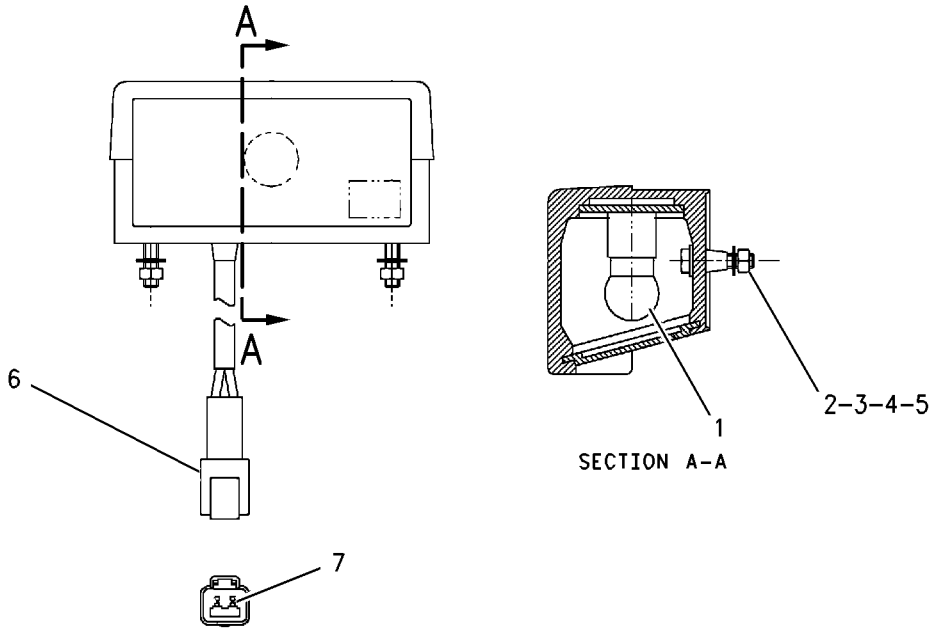

GRAPHIC #1 **<END>** g00890511

309-1325 LAMP GP-WARNING BEACON–AMBER

S/N: SJW1-UP
12-VOLT
PART OF 211-4291, 343-3433 LIGHTING GP-WARNING BEACON
AN ATTACHMENT

SMCS-1431 **i03631017**

NOTE	REF NO	GRAPHIC REF	PART NUMBER	QTY	PART NAME 1 2 3 4 5 6 (PRODUCT LEVEL)	SEE PAGE
	1	1	**272-9800**	1	LENS (AMBER)	
	2	1	**9X-8118**	1	LAMP (12-VOLT, 55-WATT) (WARNING BEACON)	
	3	1	**9X-8139**	1	BELT-DRIVE (WARNING BEACON)	
	4	1	**9R-7958**	1	CORD AS	
	4A	1	**9R-7942**	1	PLUG AS	

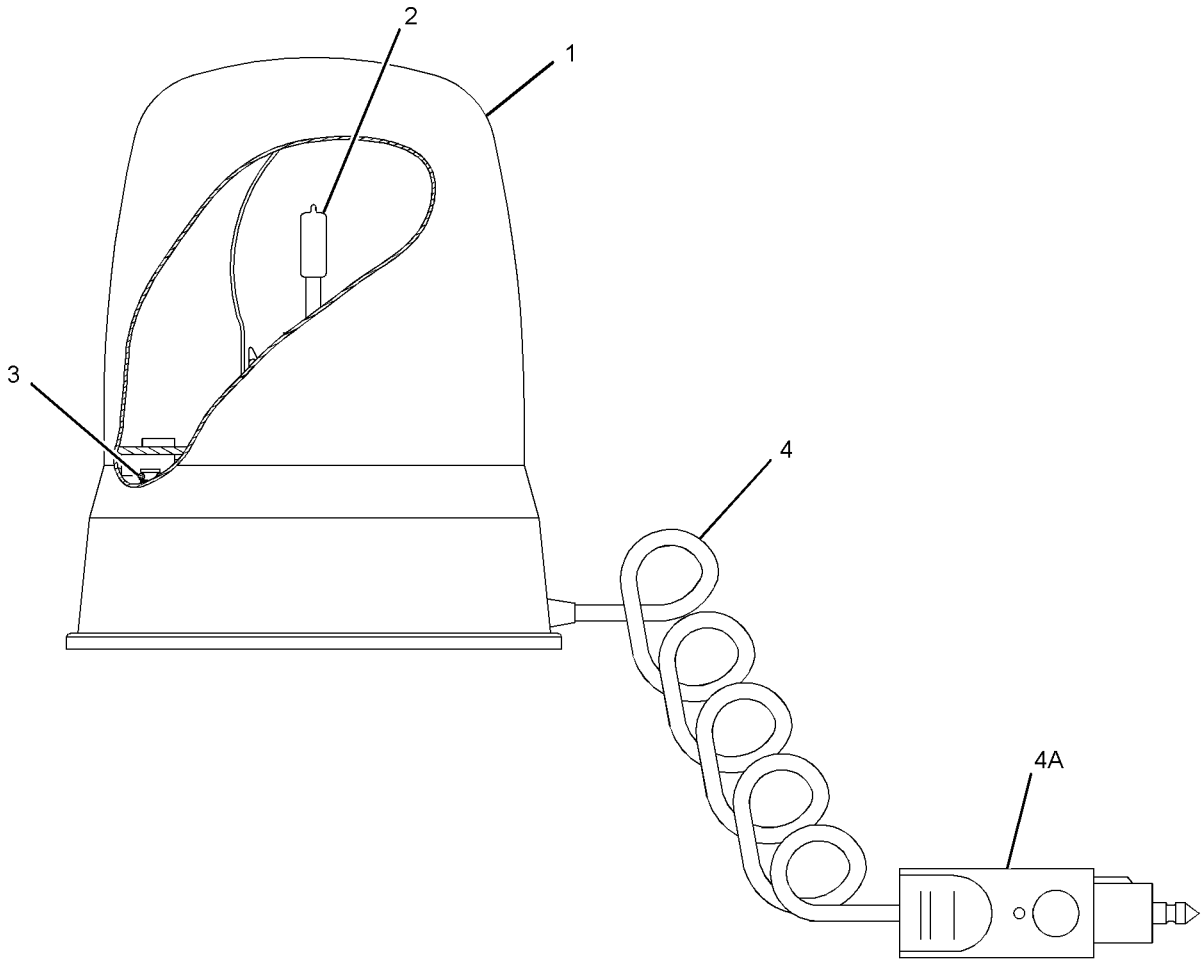

GRAPHIC #1 **<END>** g01382357

372-8664 LIGHTING GP-FLOOD

S/N: SJW1-UP
PART OF 353-1429 CAB AR
AN ATTACHMENT

SMCS-1434 **i04566185**

NOTE	REF NO	GRAPHIC REF	PART NUMBER	QTY	PART NAME 1 2 3 4 5 6 (PRODUCT LEVEL)	SEE PAGE
Y	1	1	**214-2969**	4	LAMP GP-FLOOD	109
	2	1	**214-4698**	1	SWITCH AS-ROCKER (FLOODLIGHTS, FRONT)	
	3	1	**214-4700**	1	SWITCH AS-ROCKER (FLOODLIGHTS, REAR)	
					(EACH SWITCH AS-ROCKER INCLUDES)	
		1	**111-7899**	1	GASKET	
	4	1	**3S-2093**	4	STRAP-CABLE	

Y-SEPARATE ILLUSTRATION

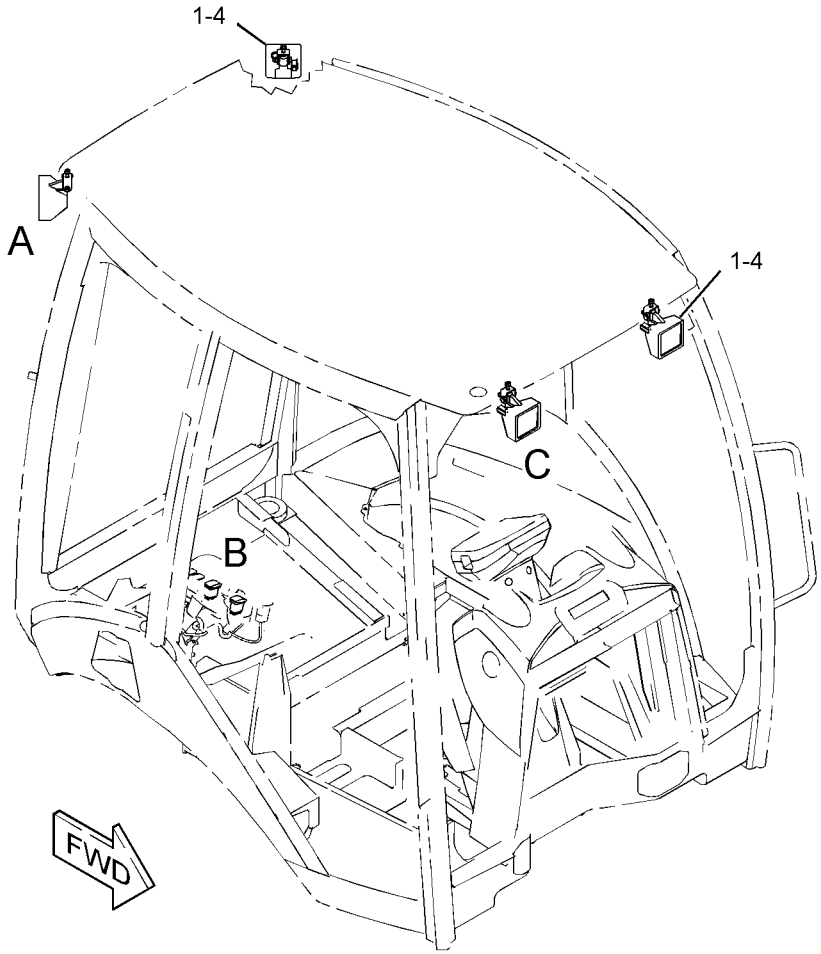

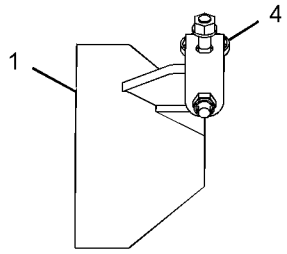

VIEW OF AREA A

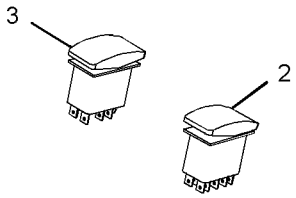

VIEW OF AREA B

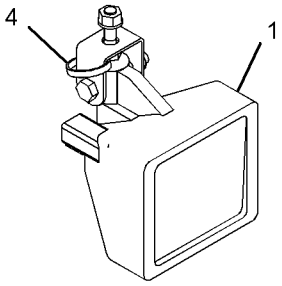

VIEW OF AREA C

GRAPHIC #1 **<END>** g02815836

328-1950 LIGHTING GP-ROADING—FOG

S/N: SJW1-UP

PART OF 353-6951 KIT-ROADING CONVERSION

AN ATTACHMENT

SMCS-1429 **i03652409**

NOTE	REF NO	GRAPHIC REF	PART NUMBER	QTY	PART NAME 1 2 3 4 5 6 (PRODUCT LEVEL)	SEE PAGE
	1	1	**7K-1181**	3	STRAP-CABLE	
Y	2	1	**196-0030**	1	LAMP GP-REGISTRATION PLATE (12-VOLT)	114
	3	1	**205-9920**	1	STRAP-CABLE	
	4	1	**214-4721**	1	SWITCH AS-ROCKER (FOG LIGHT, REAR)	
		1	**111-7899**	1	GASKET	
	5	1	**262-4727**	1	LAMP GP-ROADING (FOG LIGHT, RED, REAR)	
		1	**9W-3326**	1	LAMP (12-VOLT, 21-WATT) (ROADING LIGHTS)	
		1	**344-7954**	1	LENS	
	6	1	**327-4172**	1	HARNESS AS-REAR LIGHTING	
		1	**266-4157**	2	SLEEVE-BRAIDED	
		1	**230-4011**	1	PLUG AS-CONNECTOR (2-PIN)	
		1	**264-7029**	1	SEAL-CONNECTOR	
		1	**180-9340**	2	SOCKET-CONNECTOR (14-GA TO 18-GA)	
		1	**1S-9593**	2	STRAP-CABLE	
		1	**102-8803**	1	KIT-RECEPTACLE (3-PIN)	
					(INCLUDES RECEPTACLE AS & WEDGE)	
		1	**155-2270**	1	KIT-CONNECTING PLUG (2-PIN)	
					(INCLUDES PLUG AS, WEDGE & INTERFACE SEAL)	
E		1	**125-7874**		TUBE-HEAT SHRINK (5.72-MM DIA) (5-CM)	
		1	**9X-3402**	2	SOCKET-CONNECTOR (16-GA TO 18-GA)	
		1	**9X-3401**	3	PIN-CONNECTOR (16-GA TO 18-GA)	
	7	1	**330-7612**	1	PLATE	
	8	1	**330-7613**	1	PLATE	
	9	1	**3S-2093**	4	STRAP-CABLE	
M	10	1	**5C-2890**	2	NUT (M6X1-THD)	
M	11	1	**5C-7261**	2	NUT (M8X1.25-THD)	
	12	1	**5P-4116**	4	WASHER-HARD (8.8X20.5X2-MM THK)	
	13	1	**8T-4205**	2	WASHER-HARD (7.2X14.5X2-MM THK)	
M	14	1	**8T-7547**	2	BOLT (M8X1.25X30-MM)	

E-ORDER BY THE CENTIMETER
M-METRIC PART
Y-SEPARATE ILLUSTRATION

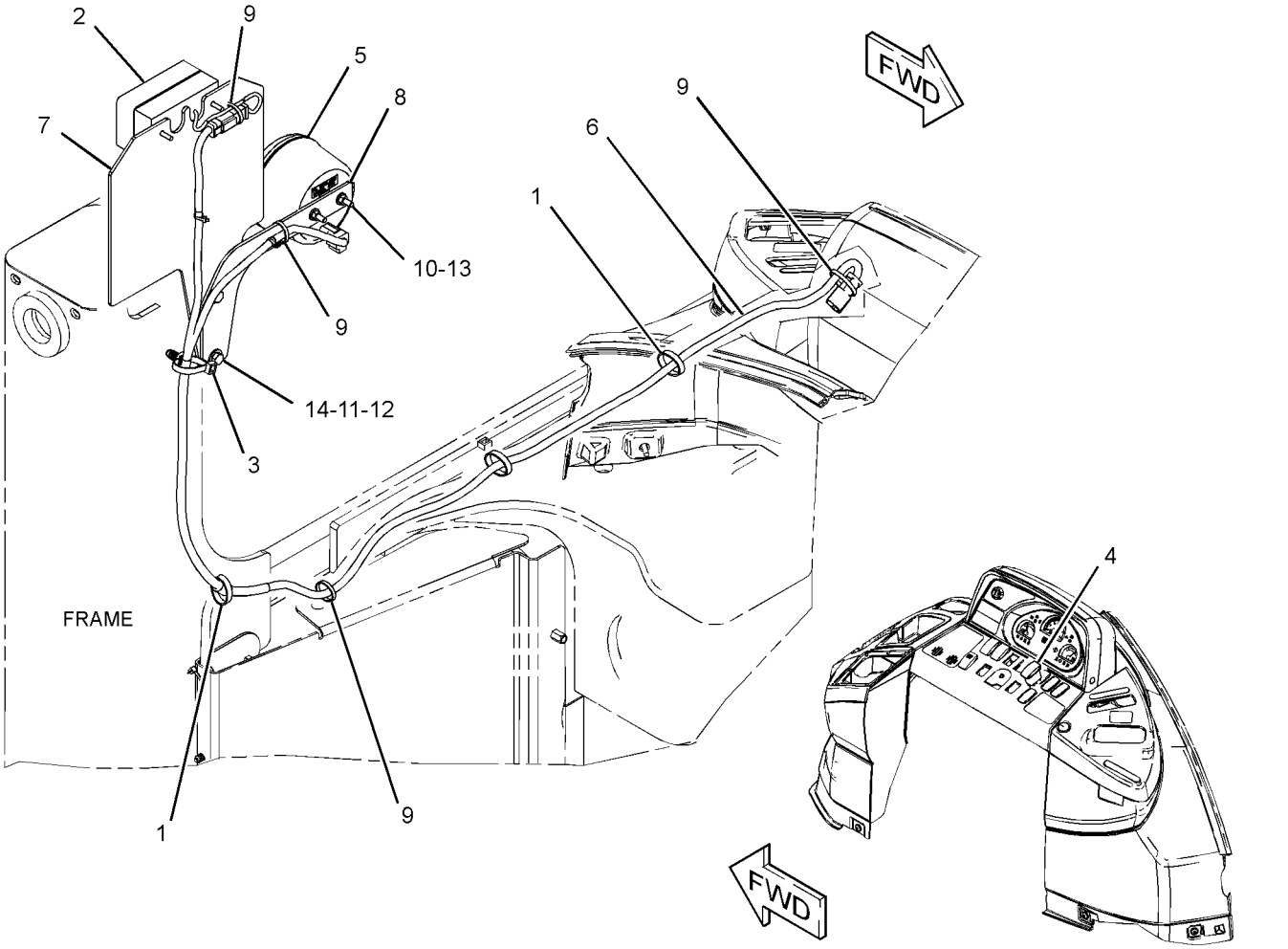

GRAPHIC #1 **<END>** g01963213

329-7496 LIGHTING GP-ROADING—DIPPED, RH

S/N: SJW1-UP

PART OF 341-3107 CONVERSION AR-ROADING, 389-3761, 389-3762 DISTRIBUTION AR, 341-3109 OPTION AR-REGIONAL

AN ATTACHMENT

SMCS-1429 **i04004346**

NOTE	REF NO	GRAPHIC REF	PART NUMBER	QTY	PART NAME 1 2 3 4 5 6 (PRODUCT LEVEL)	SEE PAGE
Y	1	1	**195-0189**	1	LAMP GP-HEAD & SIGNAL (FRONT, RH)	110
Y	2	1	**195-0190**	1	LAMP GP-HEAD & SIGNAL (FRONT, LH)	111
	3	1	**3S-2093**	2	STRAP-CABLE	

Y-SEPARATE ILLUSTRATION

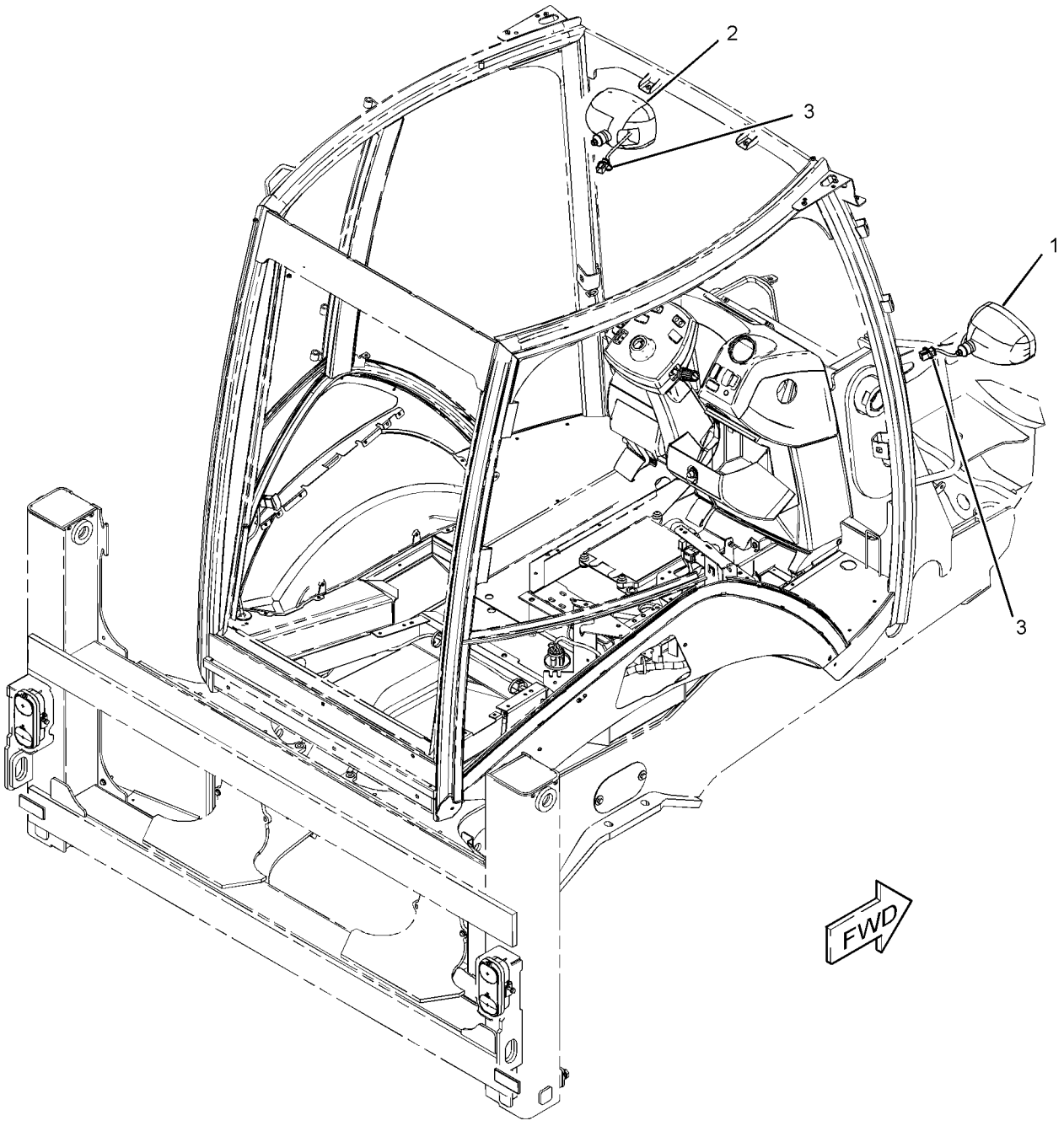

GRAPHIC #1 **<END>** g02181835

329-7497 LIGHTING GP-ROADING—DIPPED, LH

S/N: SJW1-UP

AN ATTACHMENT

SMCS-1429 **i04004347**

NOTE	REF NO	GRAPHIC REF	PART NUMBER	QTY	PART NAME 1 2 3 4 5 6 (PRODUCT LEVEL)	SEE PAGE
Y	1	1	**195-0191**	1	LAMP GP-HEAD & SIGNAL (RH)	112
Y	2	1	**195-0192**	1	LAMP GP-HEAD & SIGNAL (LH)	113
	3	1	**3S-2093**	2	STRAP-CABLE	

Y-SEPARATE ILLUSTRATION

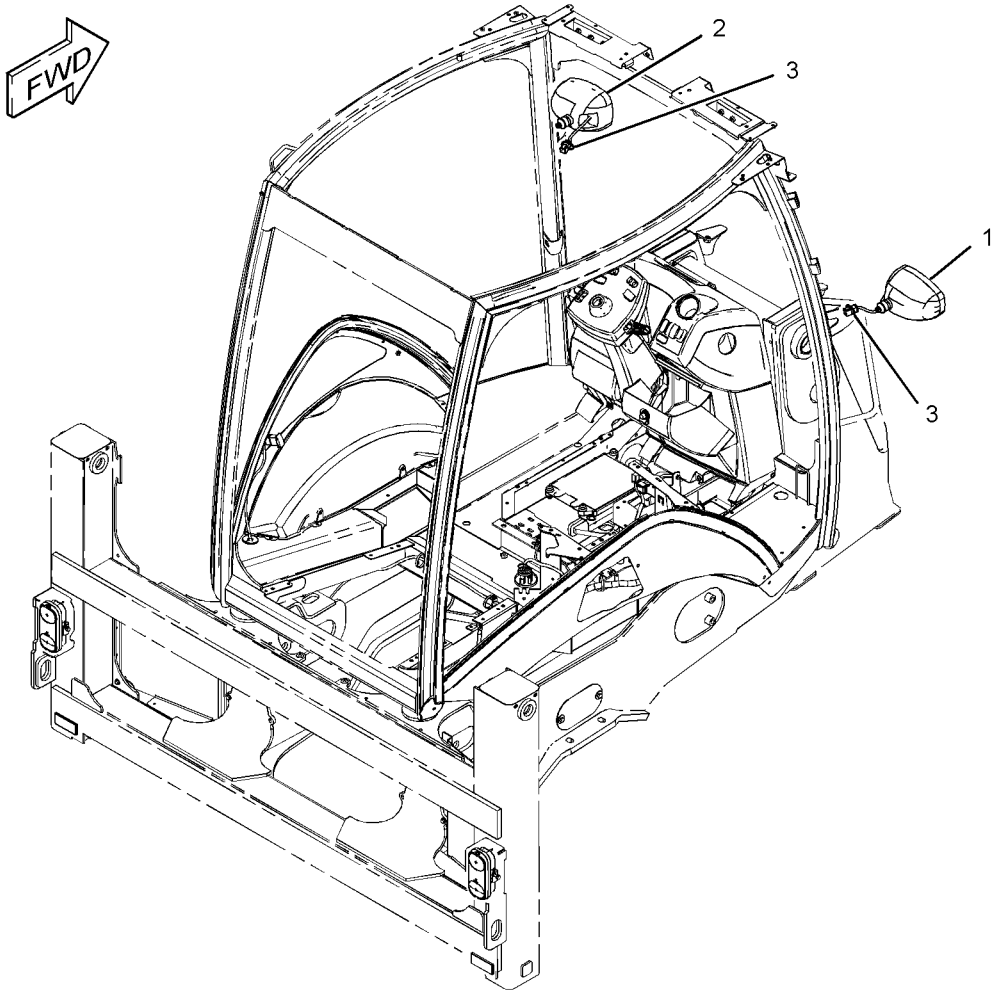

GRAPHIC #1 **<END>** g02178699

372-8661 LIGHTING GP-ROADING—FOG LIGHT

S/N: SJW1-UP
PART OF 341-3107, 341-3111 CONVERSION AR-ROADING
CANNOT BE USED WITH 341-3111—PAGE 4
AN ATTACHMENT

SMCS-1429 **i04547484**

NOTE	REF NO	GRAPHIC REF	PART NUMBER	QTY	PART NAME 1 2 3 4 5 6 (PRODUCT LEVEL)	SEE PAGE
	1	1	**7K-1181**	3	STRAP-CABLE	
Y	2	1	**196-0030**	1	LAMP GP-REGISTRATION PLATE (12-VOLT)	114
	3	1	**205-9920**	1	STRAP-CABLE	
	4	1	**261-5048**	1	SWITCH AS-ROCKER (FOG LIGHT, REAR)	
		1	**111-7899**	1	GASKET	
	5	1	**262-4727**	1	LAMP GP-ROADING (FOG LIGHT, RED, REAR)	
		1	**9W-3326**	1	LAMP (12-VOLT, 21-WATT) (ROADING LIGHTS)	
		1	**344-7954**	1	LENS	
	6	1	**327-4172**	1	HARNESS AS-REAR LIGHTING	
		1	**266-4157**	2	SLEEVE-BRAIDED	
		1	**9X-3401**	3	PIN-CONNECTOR (16-GA TO 18-GA)	
		1	**155-2270**	1	KIT-CONNECTING PLUG (2-PIN)	
					(INCLUDES PLUG AS, WEDGE & INTERFACE SEAL)	
		1	**230-4011**	1	PLUG AS-CONNECTOR (2-PIN)	
		1	**264-7029**	1	SEAL-CONNECTOR	
		1	**102-8803**	1	KIT-RECEPTACLE (3-PIN)	
					(INCLUDES RECEPTACLE AS & WEDGE)	
		1	**9X-3402**	2	SOCKET-CONNECTOR (16-GA TO 18-GA)	
		1	**180-9340**	2	SOCKET-CONNECTOR (14-GA TO 18-GA)	
		1	**1S-9593**	2	STRAP-CABLE	
E		1	**125-7874**		TUBE-HEAT SHRINK (5.72-MM DIA) (5-CM)	
	7	1	**330-7612**	1	PLATE	
	8	1	**330-7613**	1	PLATE	
	9	1	**3S-2093**	4	STRAP-CABLE	
M	10	1	**5C-2890**	2	NUT (M6X1-THD)	
M	11	1	**5C-7261**	2	NUT (M8X1.25-THD)	
	12	1	**5P-4116**	4	WASHER-HARD (8.8X20.5X2-MM THK)	
	13	1	**8T-4205**	2	WASHER-HARD (7.2X14.5X2-MM THK)	
M	14	1	**8T-7547**	2	BOLT (M8X1.25X30-MM)	

E-ORDER BY THE CENTIMETER
M-METRIC PART
Y-SEPARATE ILLUSTRATION

372-8661 **LIGHTING GP-ROADING** *(contd.)* **i04547484**

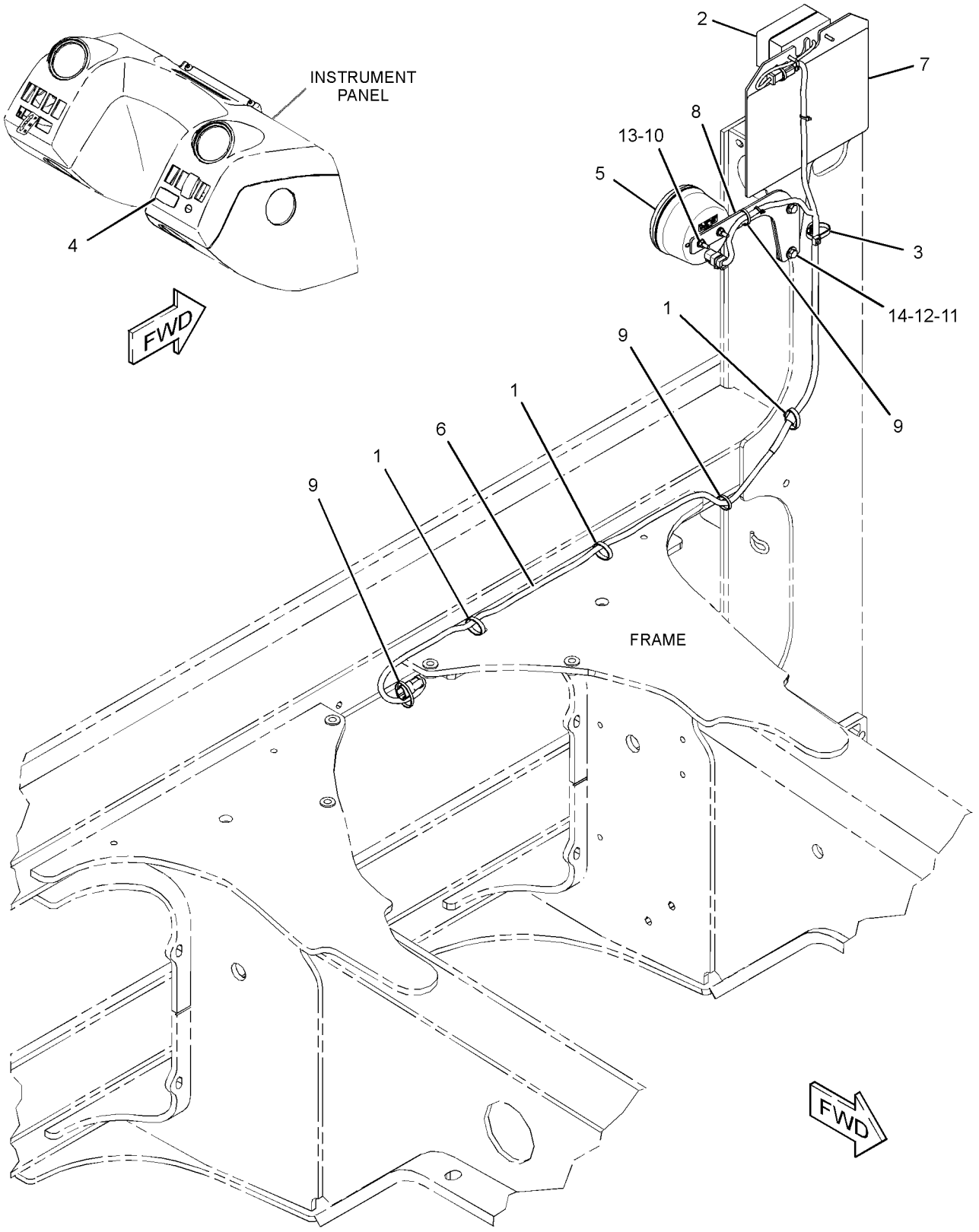

GRAPHIC #1 **<END>** g02776176

211-4291 LIGHTING GP-WARNING BEACON–
AMBER, MAGNETIC MOUNT, ROTATING
S/N: SJW1-UP
PART OF 341-3111 CONVERSION AR-ROADING, 389-3761, 389-3762 DISTRIBUTION AR AN ATTACHMENT

SMCS-1431 **i03799093**

NOTE	REF NO	GRAPHIC REF	PART NUMBER	QTY	PART NAME 1 2 3 4 5 6 (PRODUCT LEVEL)	SEE PAGE
Y	1	1	**309-1325**	1	LAMP GP-WARNING BEACON (12-VOLT, AMBER)	115
	2	1	**031-5644**	2	CLIP	

Y-SEPARATE ILLUSTRATION

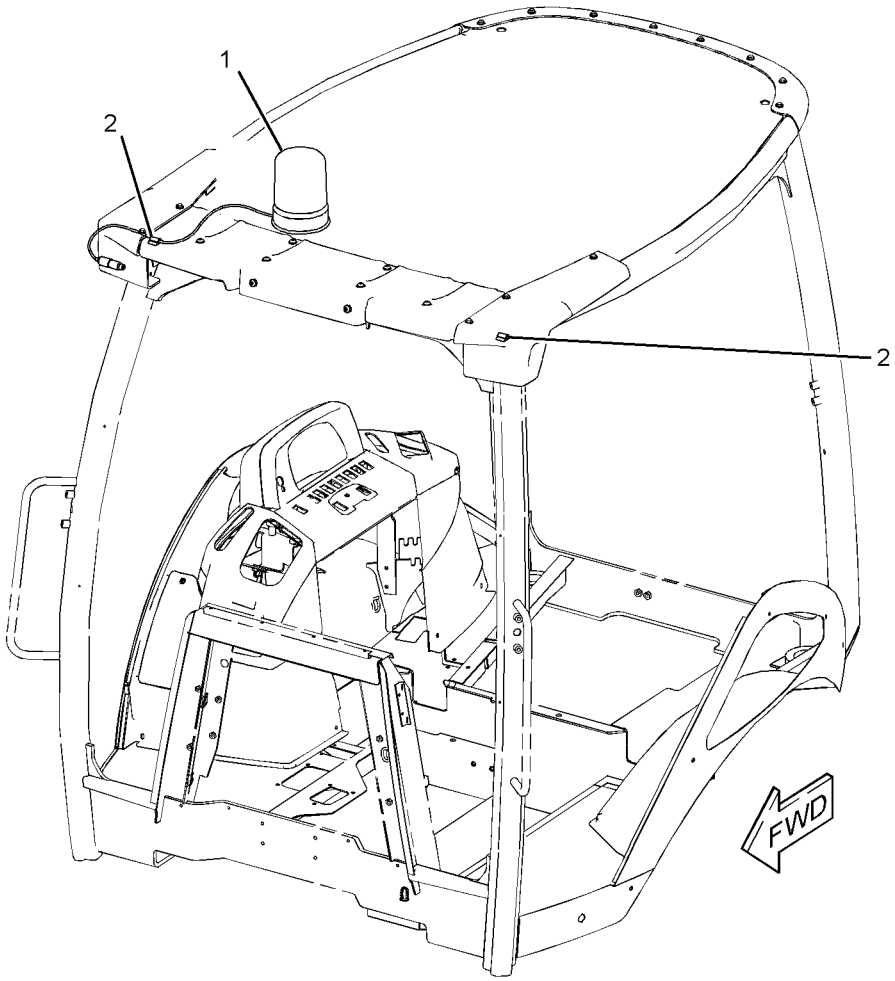

GRAPHIC #1 **<END>** g01228059

343-3433 LIGHTING GP-WARNING BEACON

S/N: SJW1-UP
PART OF 341-3107 CONVERSION AR-ROADING
AN ATTACHMENT

SMCS-1431 **i03860389**

NOTE	REF NO	GRAPHIC REF	PART NUMBER	QTY	PART NAME 1 2 3 4 5 6 (PRODUCT LEVEL)	SEE PAGE
	1	1	**8T-2427**	2	FILM-INSTRUCTION (BEACON)	
	2	1	**031-5644**	2	CLIP	
Y	3	1	**309-1325**	2	LAMP GP-WARNING BEACON (12-VOLT, AMBER)	115

Y-SEPARATE ILLUSTRATION

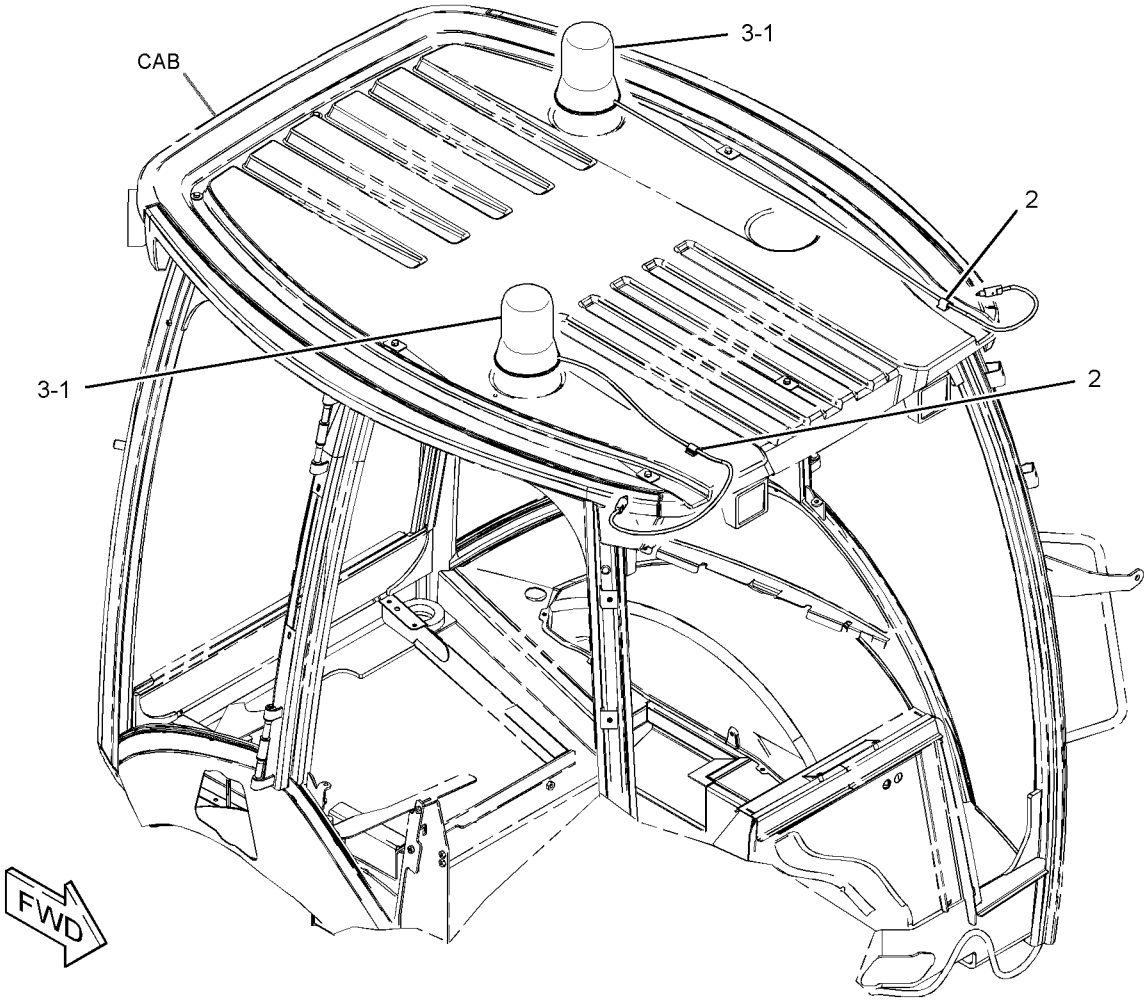

GRAPHIC #1 **<END>** g02110671

276-7287 RELAY GP—POWER DISTRIBUTION

S/N: SJW1-UP
12-VOLT
PART OF 357-3211 WIRING GP-AIR CONDITIONER, 359-0015 WIRING GP-HEATER
AN ATTACHMENT

SMCS-1422, 4493 **i03325084**

NOTE	REF NO	GRAPHIC REF	PART NUMBER	QTY	PART NAME 1 2 3 4 5 6 (PRODUCT LEVEL)	SEE PAGE
M	1	1	**5C-2890**	2	NUT (M6X1-THD)	
	2	1	**8T-4205**	2	WASHER-HARD (7.2X14.5X2-MM THK)	
	3	1	**1H-3244**	2	LOCKWASHER	
M	4	1	**5C-7261**	1	NUT (M8X1.25-THD)	
	5	1	**8T-4224**	1	WASHER-HARD (8.8X16X2-MM THK)	
	6	1	**267-5213**	1	COVER	
	7	1	**267-5211**	1	SEAL	
	8	1	**278-6377**	1	FUSE (40-AMPERE)	

M-METRIC PART

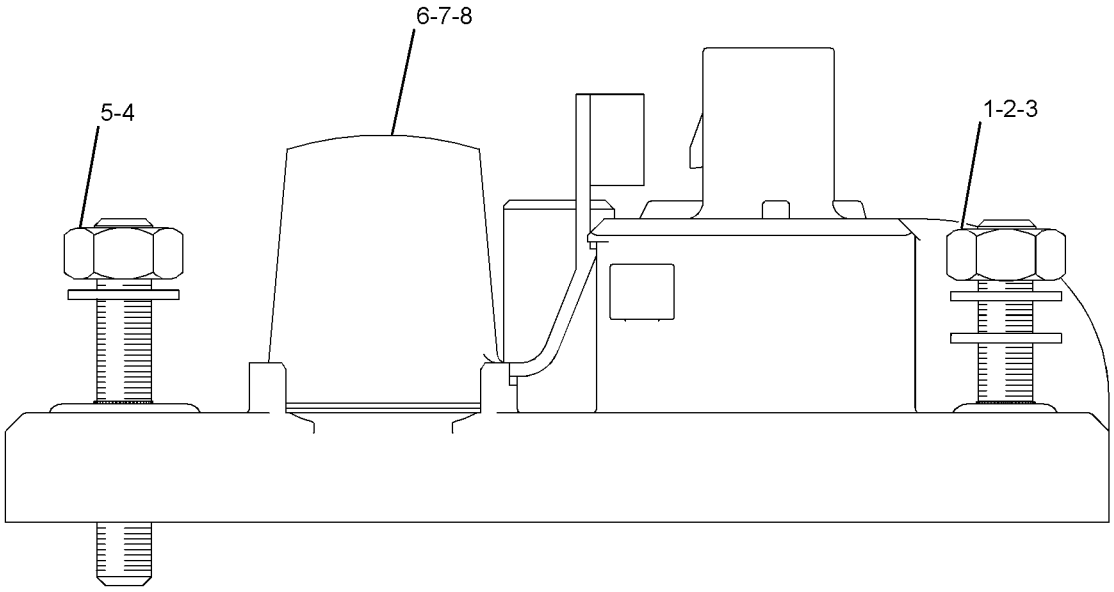

GRAPHIC #1 **<END>** g01290616

276-7290 RELAY GP–POWER, 1

S/N: SJW1-UP
12-VOLT
PART OF 357-3197, 357-3240 WIRING GP-PLATFORM
AN ATTACHMENT

SMCS-1422, 4493 **i04394021**

NOTE	REF NO	GRAPHIC REF	PART NUMBER	QTY	PART NAME 1 2 3 4 5 6 (PRODUCT LEVEL)	SEE PAGE
M	1	1	**5C-2890**	2	NUT (M6X1-THD)	
	2	1	**8T-4205**	2	WASHER-HARD (7.2X14.5X2-MM THK)	
	3	1	**1H-3244**	2	LOCKWASHER	
M	4	1	**5C-7261**	1	NUT (M8X1.25-THD)	
	5	1	**8T-4224**	1	WASHER-HARD (8.8X16X2-MM THK)	
	6	1	**267-5213**	1	COVER (FUSE)	
	7	1	**267-5211**	1	SEAL	
	8	1	**267-2701**	2	FUSE (60-AMPERE)	

M-METRIC PART

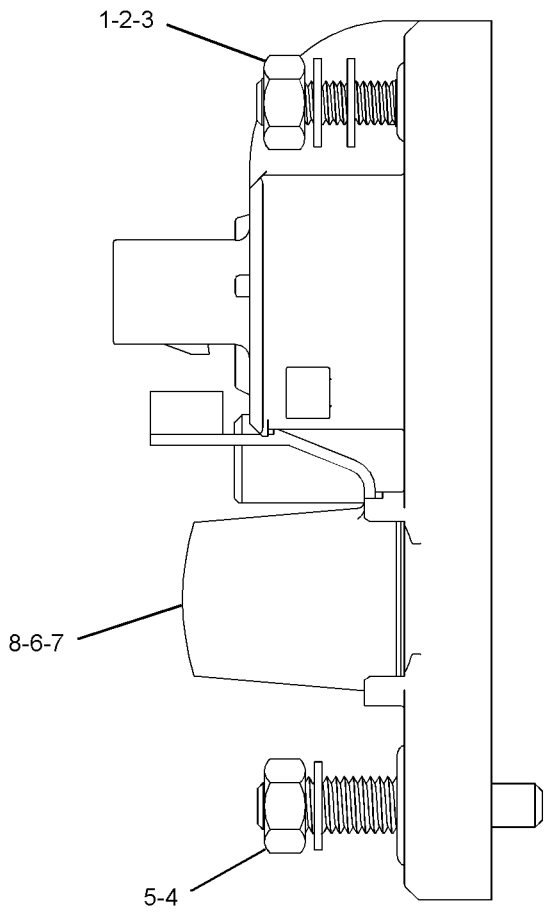

GRAPHIC #1 **<END>** g01278211

276-7291 RELAY GP–POWER, 2

S/N: SJW1-UP
12-VOLT
PART OF 357-3197, 357-3240 WIRING GP-PLATFORM
AN ATTACHMENT

SMCS-1422, 4493 **i03325141**

NOTE	REF NO	GRAPHIC REF	PART NUMBER	QTY	PART NAME 1 2 3 4 5 6 (PRODUCT LEVEL)	SEE PAGE
M	1	1	**5C-2890**	2	NUT (M6X1-THD)	
	2	1	**8T-4205**	2	WASHER-HARD (7.2X14.5X2-MM THK)	
	3	1	**1H-3244**	2	LOCKWASHER	
M	4	1	**5C-7261**	1	NUT (M8X1.25-THD)	
	5	1	**8T-4224**	1	WASHER-HARD (8.8X16X2-MM THK)	
	6	1	**267-5213**	1	COVER	
	7	1	**267-5211**	1	SEAL	
	8	1	**267-2701**	1	FUSE (60-AMPERE)	

M-METRIC PART

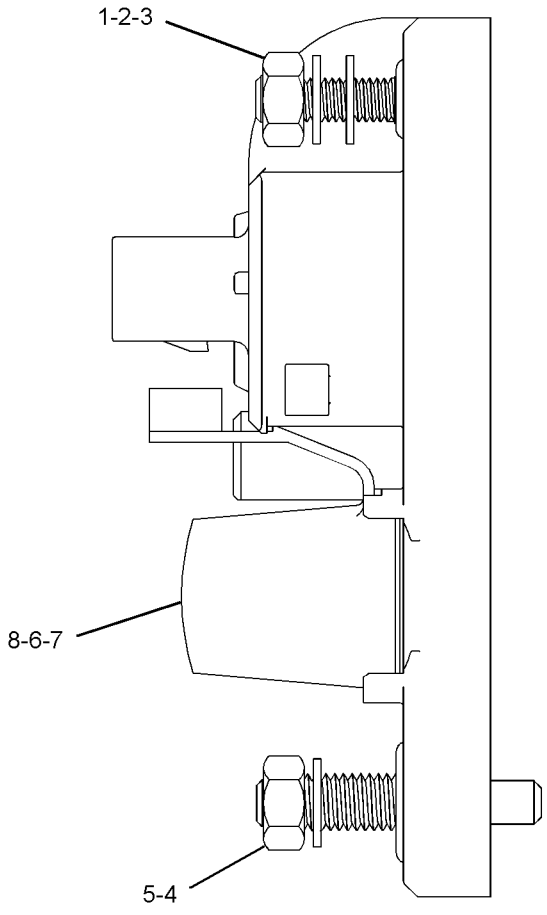

GRAPHIC #1 **<END>** g01278256

322-6827 RELAY GP–STARTING MOTOR

S/N: SJW1-UP
12-VOLT
PART OF 357-3197, 357-3240 WIRING GP-PLATFORM
AN ATTACHMENT

SMCS-1422, 4493 **i03498280**

NOTE	REF NO	GRAPHIC REF	PART NUMBER	QTY	PART NAME 1 2 3 4 5 6 (PRODUCT LEVEL)	SEE PAGE
	1	1	**274-9872**	1	FUSE (30-AMPERE)	
	2	1	**278-6377**	1	FUSE (40-AMPERE)	
	3	1	**267-5213**	1	COVER (FUSE)	
	4	1	**267-5211**	1	SEAL	
M	5	1	**5C-2890**	2	NUT (M6X1-THD)	
	6	1	**8T-4205**	2	WASHER-HARD (7.2X14.5X2-MM THK)	
	7	1	**1H-3244**	2	LOCKWASHER	
M	8	1	**5C-7261**	1	NUT (M8X1.25-THD)	
	9	1	**8T-4224**	1	WASHER-HARD (8.8X16X2-MM THK)	
	10	1	**9F-5644**	1	LOCKWASHER	

M-METRIC PART

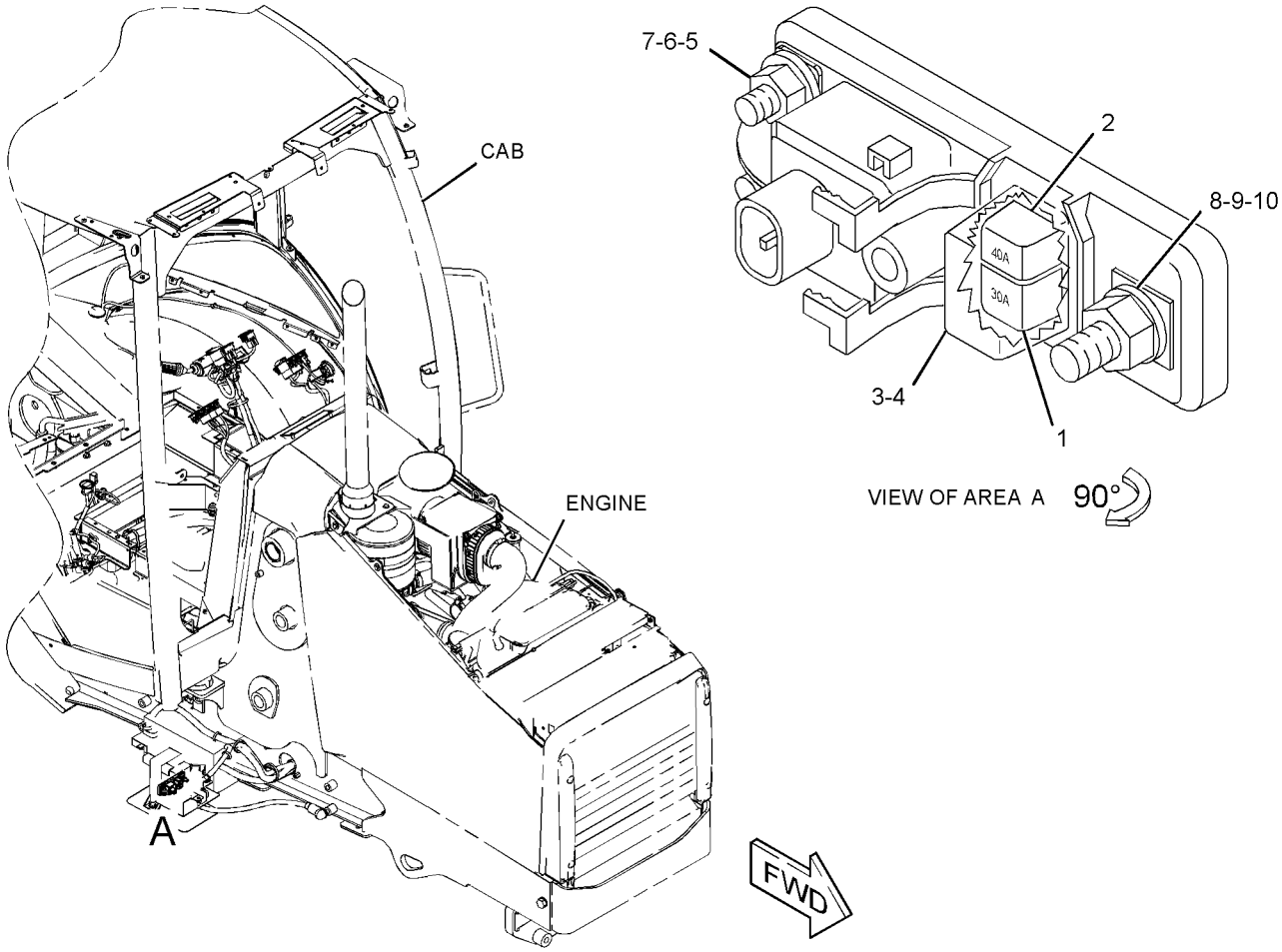

GRAPHIC #1 **<END>** g01571033

303-5769 STARTING MOTOR GP-ELECTRIC–12-VOLT

S/N: C4Z1-UP
PART OF 354-7363, 364-5743 ENGINE AR-PRIMARY
AN ATTACHMENT

SMCS-1453 **i03128303**

NOTE	REF NO	GRAPHIC REF	PART NUMBER	QTY	PART NAME 1 2 3 4 5 6 (PRODUCT LEVEL)	SEE PAGE
	1	1	**6I-0364**	3	STUD (M10X1.5X30-MM)	
	2	1	**6I-0594**	3	NUT (M10X1.5-THD)	
	3	1	**303-5795**	1	STARTING MOTOR-ELECTRIC	

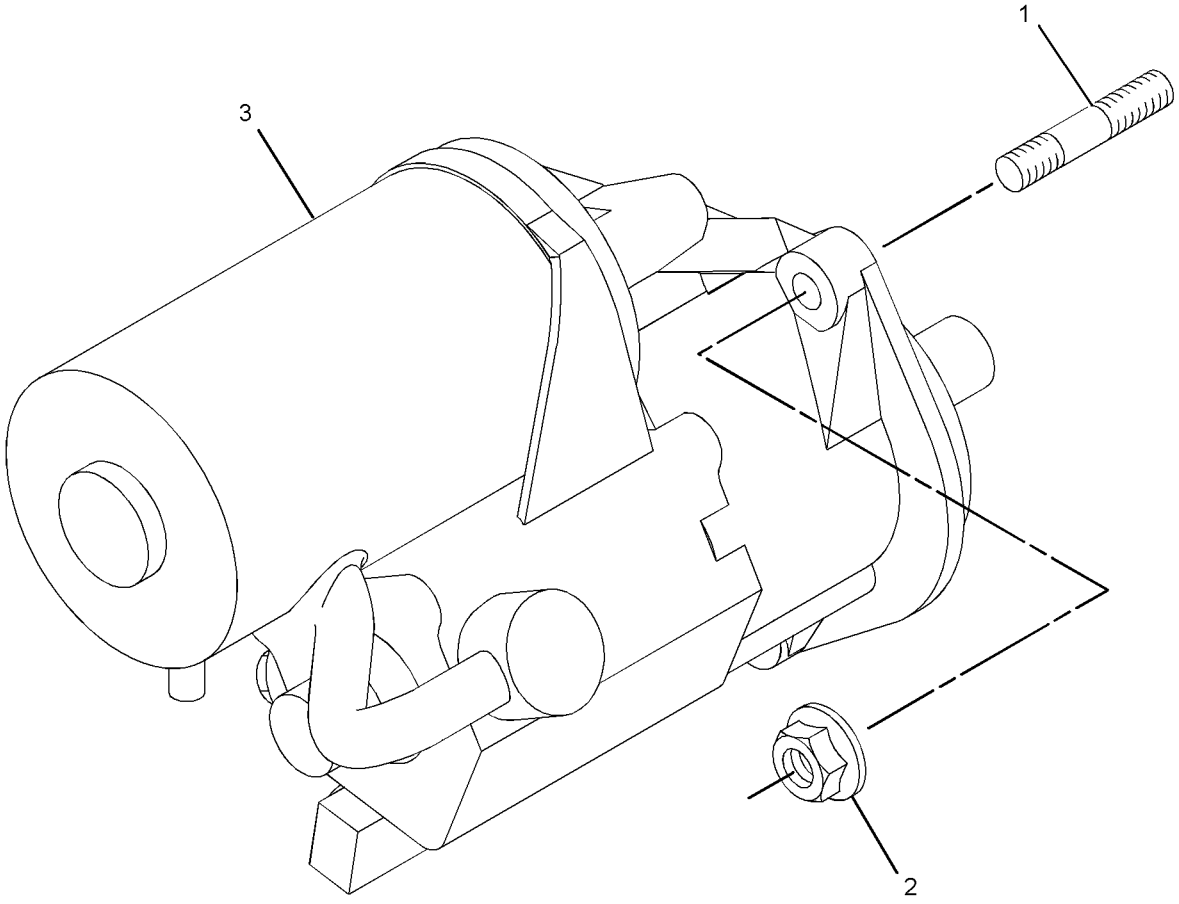

GRAPHIC #1 **<END>** g01376189

331-5456 SWITCH GP-ALL WHEEL DRIVE

S/N: SJW1-UP

PART OF 353-1510, 353-1511 TRANSMISSION AR-POWER SHIFT

AN ATTACHMENT

SMCS-1435, 4493 **i04597511**

NOTE	REF NO	GRAPHIC REF	PART NUMBER	QTY	PART NAME 1 2 3 4 5 6 (PRODUCT LEVEL)	SEE PAGE
	1	1	**362-3298**	1	SWITCH AS-ROCKER (ALL WHEEL DRIVE)	
		1	**111-7899**	1	GASKET	

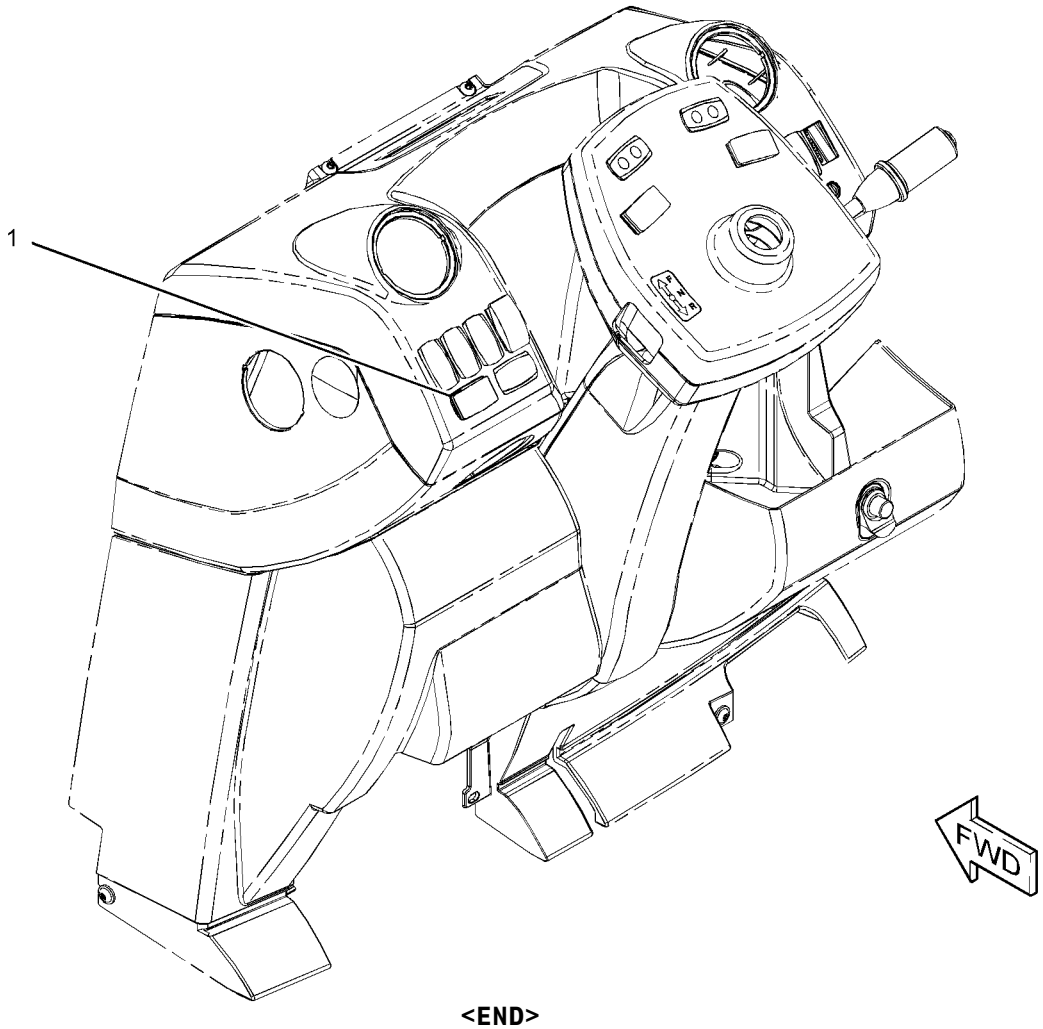

GRAPHIC #1 **<END>** g02806736

357-3229 SWITCH GP-ALL WHEEL DRIVE

S/N: SJW1-UP
PART OF 353-1507 TRANSMISSION AR-DIRECT DRIVE
AN ATTACHMENT

SMCS-1435, 4493 **i04611592**

NOTE	REF NO	GRAPHIC REF	PART NUMBER	QTY	PART NAME 1 2 3 4 5 6 (PRODUCT LEVEL)	SEE PAGE
	1	1	**146-9439**	1	RELAY AS (12-VOLT) (ALL WHEEL DRIVE)	
	2	1	**362-3298**	1	SWITCH AS-ROCKER (ALL WHEEL DRIVE)	
		1	**111-7899**	1	GASKET	

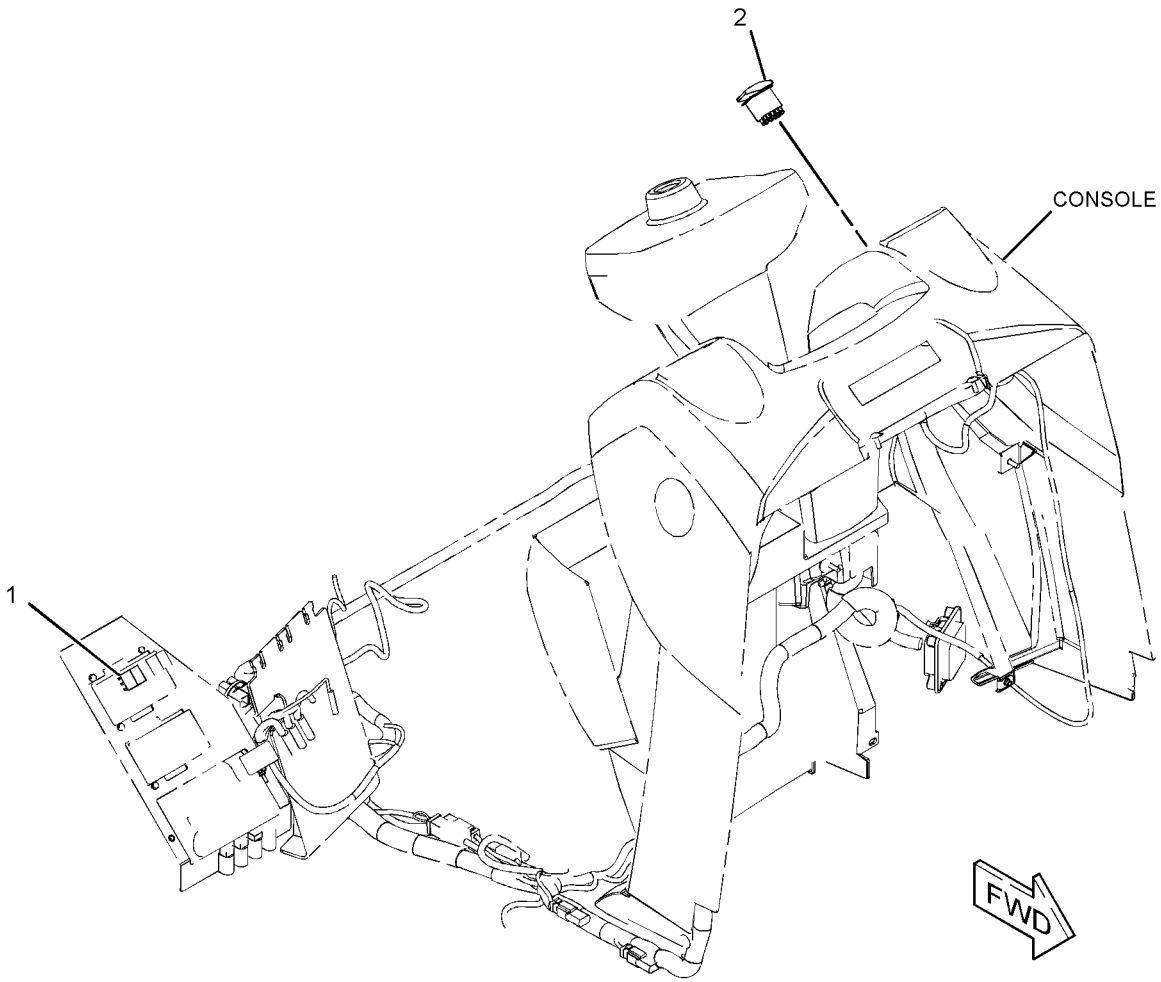

GRAPHIC #1 **<END>** g02797843

308-9973 SWITCH GP-DIFFERENTIAL LOCK

S/N: SJW1-UP

PART OF 353-1501 DRIVE AR-BACKHOE LOADER

AN ATTACHMENT

SMCS-1435, 3264 **i03906910**

NOTE	REF NO	GRAPHIC REF	PART NUMBER	QTY	PART NAME 1 2 3 4 5 6 (PRODUCT LEVEL)	SEE PAGE
	1	1	**201-9459**	1	BOOT	
	2	1	**204-0775**	1	SWITCH AS-FOOT (DIFFERENTIAL LOCK ON, OFF)	
	3	1	**205-6298**	1	ACTUATOR (DIFFERENTIAL LOCK CONTROL)	

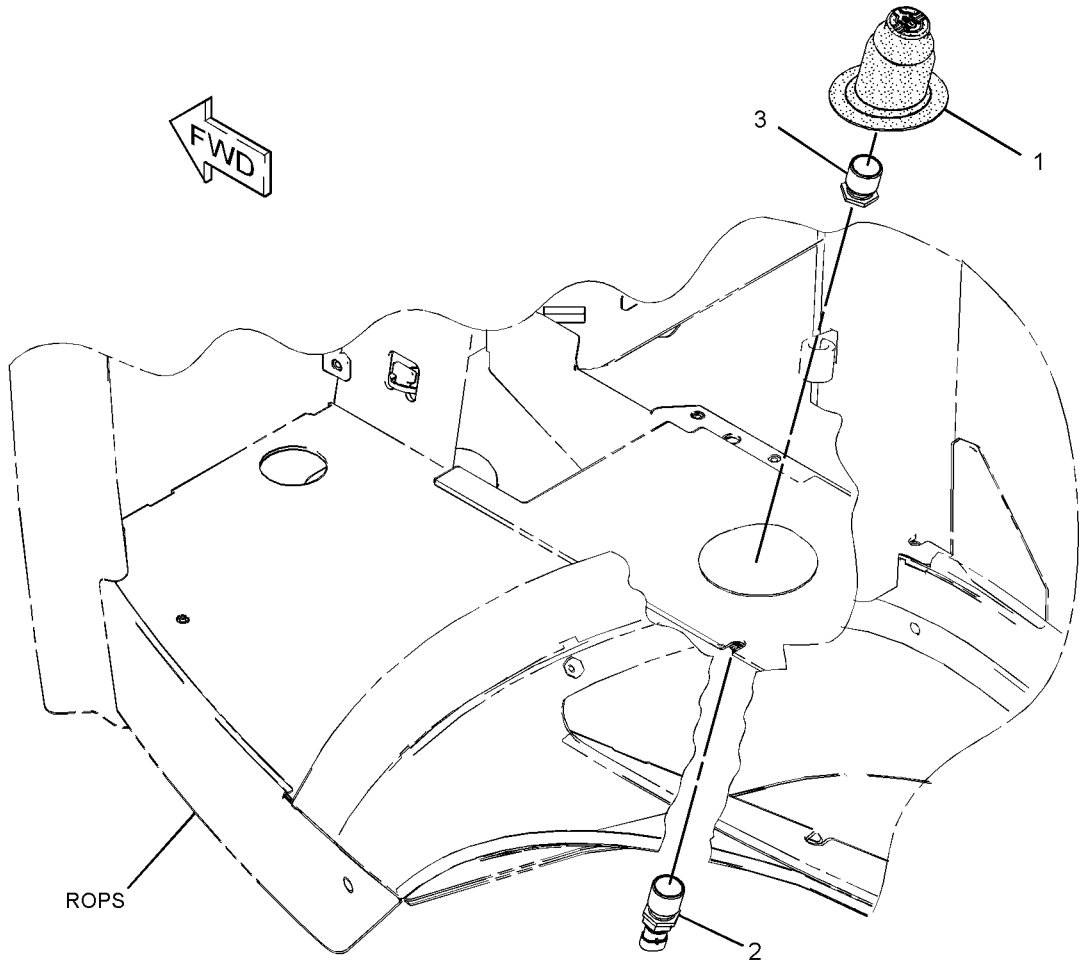

GRAPHIC #1 **<END>** g02148481

7N-0718 SWITCH GP-DISCONNECT–BATTERY

S/N: SJW1-UP

PART OF 357-6501 BATTERY & WIRING GP

AN ATTACHMENT

SMCS-1411 **i02544993**

NOTE	REF NO	GRAPHIC REF	PART NUMBER	QTY	PART NAME 1 2 3 4 5 6 (PRODUCT LEVEL)	SEE PAGE
	1	1	**8H-5306**	1	KEY (BATTERY DISCONNECT)	
	2	1	**8H-5303**	1	NUT (3/4-16-THD)	
	3	1	**2H-3922**	2	LOCKWASHER	
	4	1	**9F-5644**	2	LOCKWASHER	
	5	1	**6F-7045**	2	NUT-FULL (3/8-24-THD)	

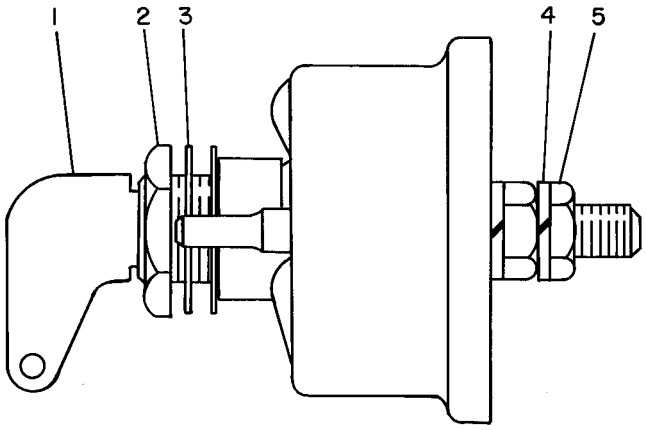

GRAPHIC #1 **<END>** g00084912

346-7487 SWITCH GP-DISCONNECT–QUICK DROP

S/N: SJW1-UP
PART OF 373-4268 VALVE AR-BANK 3
AN ATTACHMENT

SMCS-1411 **i03742061**

NOTE	REF NO	GRAPHIC REF	PART NUMBER	QTY	PART NAME 1 2 3 4 5 6 (PRODUCT LEVEL)	SEE PAGE
	1	1	**229-8757**	1	SWITCH AS-LIMIT (LOAD CONTROL)	
		1	**102-8803**	1	KIT-RECEPTACLE (3-PIN)	
					(INCLUDES RECEPTACLE AS & WEDGE)	
		1	**186-3735**	3	PIN-CONNECTOR (16-GA TO 18-GA)	
	2	1	**346-5518**	1	BRACKET	
	3	1	**3S-2093**	1	STRAP-CABLE	
M	4	1	**8T-4189**	2	BOLT (M8X1.25X20-MM)	
	5	1	**8T-4224**	2	WASHER-HARD (8.8X16X2-MM THK)	

M-METRIC PART

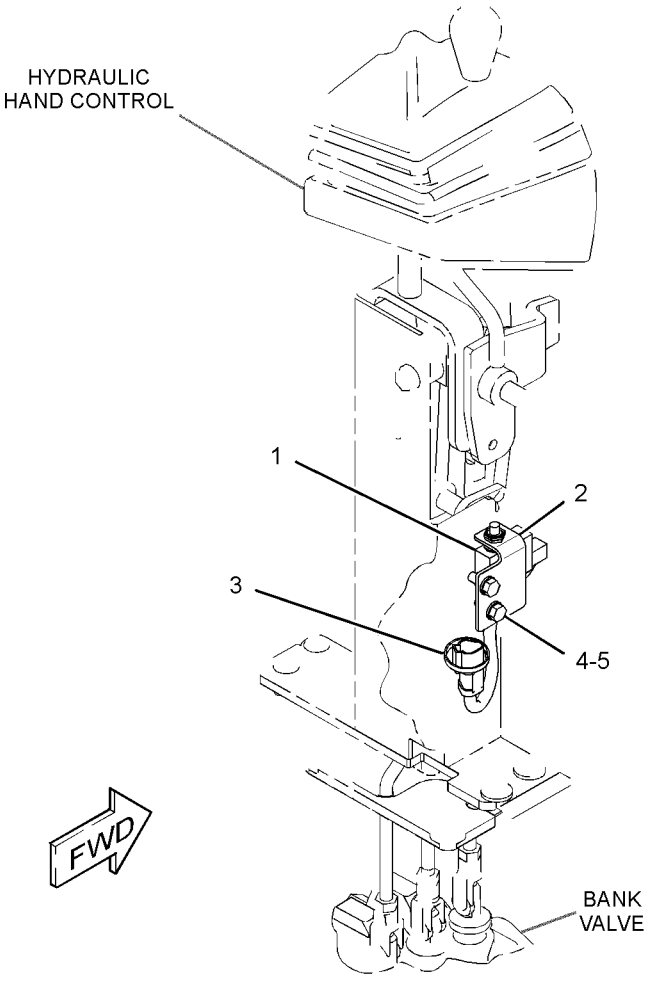

GRAPHIC #1 **<END>** g02111785

316-6925 SWITCH GP-PRESSURE–ENGINE OIL

S/N: C4Z1-UP

PART OF 354-7363, 364-5743 ENGINE AR-PRIMARY

AN ATTACHMENT

SMCS-1435 **i03128304**

NOTE	REF NO	GRAPHIC REF	PART NUMBER	QTY	PART NAME 1 2 3 4 5 6 (PRODUCT LEVEL)	SEE PAGE
	1	1	**035-8063**	1	PLUG	
	2	1	**199-9267**	1	SEAL-O-RING	
	3	1	**225-7941**	1	PLUG	
	4	1	**237-4894**	1	SWITCH AS-PRESSURE (ENGINE OIL)	

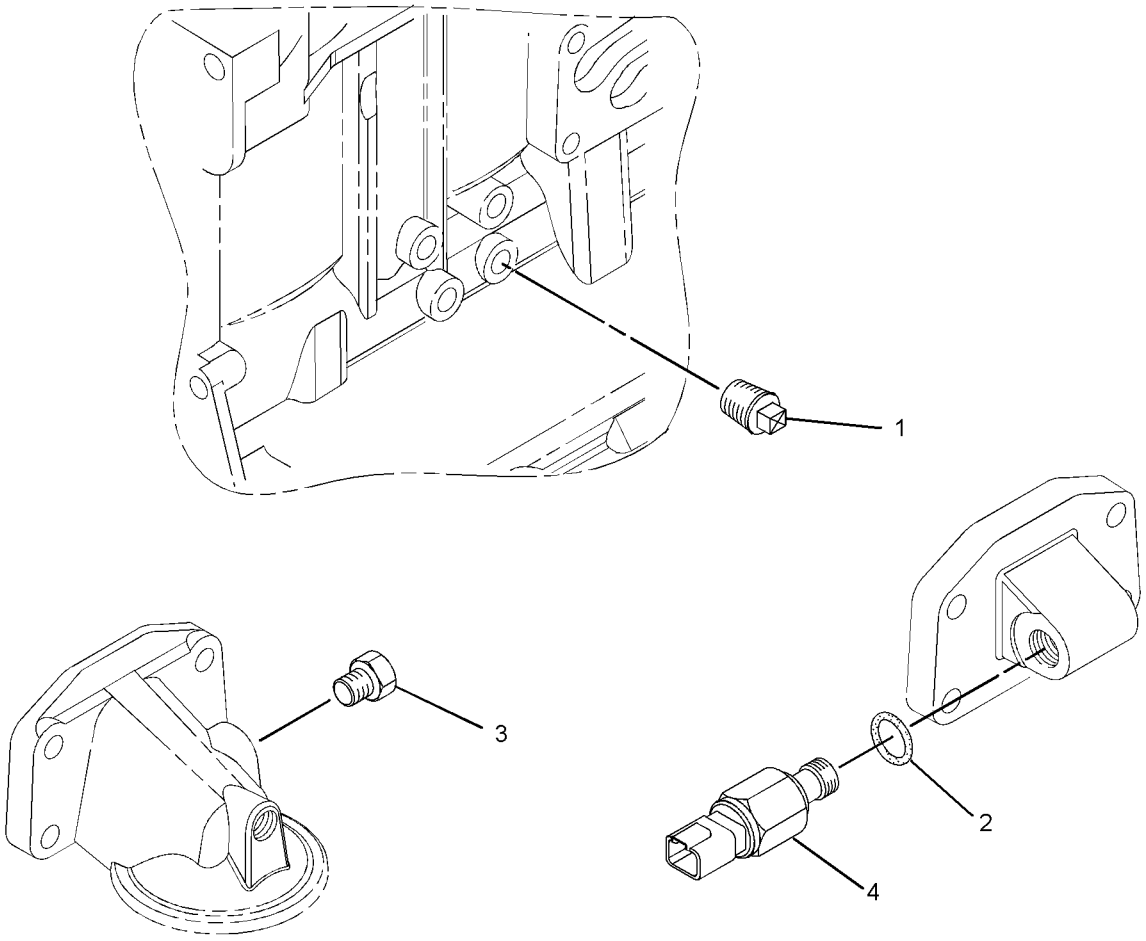

GRAPHIC #1 **<END>** g01400195

ELECTRICAL AND STARTING SYSTEM

357-3211 WIRING GP-AIR CONDITIONER

S/N: SJW1-UP

PART OF 374-6889 HEATER & AIR CONDITIONER AR

AN ATTACHMENT

SMCS-1408, 7320 **i04586154**

NOTE	REF NO	GRAPHIC REF	PART NUMBER	QTY	PART NAME 1 2 3 4 5 6 (PRODUCT LEVEL)	SEE PAGE
	1	1	**3E-9362**	1	RELAY AS (12-VOLT) (HIGH SPEED)	
	2	1	**6K-0806**	8	STRAP-CABLE	
	3	1	**8T-8799**	1	BOOT	
	4	1	**9X-7378**	1	SEAL-O-RING	
	5	1	**140-9378**	1	RELAY AS (12-VOLT) (AIR CONDITIONER, HEATER)	
	6	1	**189-3158**	1	SUPPRESSOR-ARC	
	7	1	**214-4695**	1	SWITCH AS-ROCKER (BLOWER FAN SPEED)	
	8	1	**214-4718**	1	SWITCH AS-ROCKER (AIR CONDITIONER, HEATER SELECT)	
					(EACH SWITCH AS INCLUDES)	
		1	**111-7899**	1	GASKET	
	9	1	**236-6923**	1	SWITCH AS-PRESSURE (REFRIGERANT)	
	10	1	**238-7492**	1	HARNESS AS-HEATER & AIR COND (COMPRESSOR)	
		1	**9X-3401**	2	PIN-CONNECTOR (16-GA TO 18-GA)	
		1	**155-2270**	2	KIT-CONNECTING PLUG (2-PIN)	
					(EACH INCLUDES PLUG AS, WEDGE & INTERFACE SEAL)	
		1	**102-8802**	1	KIT-RECEPTACLE (2-PIN)	
					(INCLUDES RECEPTACLE AS & WEDGE)	
		1	**100-6674**	2	SEAL-CONNECTOR	
		1	**180-9340**	4	SOCKET-CONNECTOR (14-GA TO 18-GA)	
		1	**124-5640**	2	TERMINAL-SOCKET	
		1	**3S-2093**	1	STRAP-CABLE	
E		1	**125-7874**		TUBE-HEAT SHRINK (5.72-MM DIA) (10-CM)	
	11	1	**275-0570**	1	BAR-BUS	
	12	1	**359-0016**	1	HARNESS AS-HEATER & AIR COND (VENT)	
		1	**228-5856**	2	CONNECTOR	
		1	**111-6795**	1	HOUSING-RELAY	
		1	**111-6816**	1	LOCK	
		1	**213-0139**	5	PIN	
		1	**8T-8729**	5	PIN-CONNECTOR (16-GA TO 18-GA)	
		1	**9X-3401**	2	PIN-CONNECTOR (16-GA TO 18-GA)	
		1	**177-9648**	1	KIT-CONNECTING PLUG (2-PIN)	
		1	**177-9656**	1	KIT-CONNECTING PLUG (4-PIN)	
					(EACH PLUG KIT INCLUDES PLUG AS, WEDGE & INTERFACE SEAL)	
		1	**8T-8737**	1	PLUG-SEAL	
		1	**102-8802**	2	KIT-RECEPTACLE (2-PIN)	
		1	**102-8803**	1	KIT-RECEPTACLE (3-PIN)	
					(EACH RECEPTACLE KIT INCLUDES RECEPTACLE AS & WEDGE)	
		1	**122-4401**	1	TERMINAL	
		1	**2L-8069**	1	TERMINAL-RING (2-GA TO 10-GA, 3/8-IN SCREW)	
		1	**2L-8067**	1	TERMINAL-RING (10-GA TO 12-GA, 1/4-IN SCREW)	
		1	**091-2436**	7	TERMINAL-BLADE (18-GA TO 22-GA)	
		1	**104-1995**	11	TERMINAL-BLADE (14-GA TO 18-GA)	
		1	**111-6792**	2	TERMINAL-RECEPTACLE (18-GA TO 20-GA)	
		1	**111-6794**	2	TERMINAL-RECEPTACLE	
E		1	**119-3662**		TUBE-HEAT SHRINK (10.85-MM DIA) (7-CM)	
E		1	**125-7874**		TUBE-HEAT SHRINK (5.72-MM DIA) (10-CM)	
E		1	**125-7875**		TUBE-HEAT SHRINK (7.44-MM DIA) (10-CM)	
	13	1	**096-6166**	2	WASHER-HARD (4.5X9X1-MM THK)	
Y	14	1	**276-7287**	1	RELAY GP (12-VOLT) (POWER DISTRIBUTION)	126
	15	1	**3S-2093**	6	STRAP-CABLE	
M	16	1	**5C-2890**	1	NUT (M6X1-THD)	

357-3211 **WIRING GP-AIR CONDITIONER** *(contd.)* **i04586154**

NOTE	REF NO	GRAPHIC REF	PART NUMBER	QTY	PART NAME 1 2 3 4 5 6 (PRODUCT LEVEL)	SEE PAGE
M	17	1	**5C-7261**	1	NUT (M8X1.25-THD)	
	18	1	**8C-3398**	1	LOCKWASHER	
M	19	1	**121-4405**	2	BOLT (M4X0.7X12-MM)	
	20	1	**8T-4205**	1	WASHER-HARD (7.2X14.5X2-MM THK)	
	21	1	**8T-4224**	1	WASHER-HARD (8.8X16X2-MM THK)	
M	22	1	**8T-9534**	1	BOLT (M6X1X50-MM)	

E-ORDER BY THE CENTIMETER
M-METRIC PART
Y-SEPARATE ILLUSTRATION

357-3211 **WIRING GP-AIR CONDITIONER** *(contd.)* **i04586154**

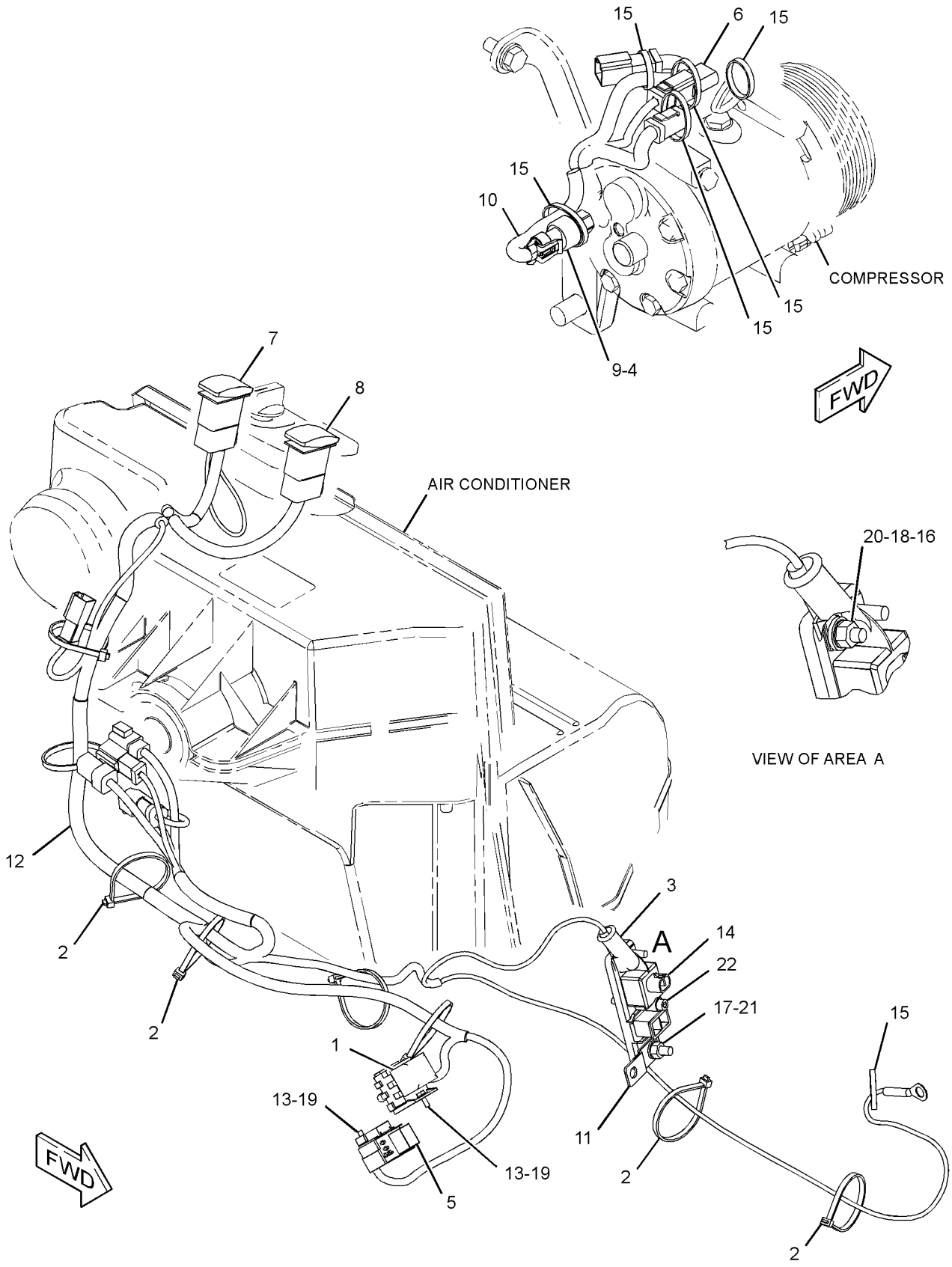

GRAPHIC #1 **<END>** g02814878

ELECTRICAL AND STARTING SYSTEM

383-9581 WIRING GP-AUXILIARY

S/N: SJW1-UP

AN ATTACHMENT

SMCS-1408, 7620 **i04629775**

NOTE	REF NO	GRAPHIC REF	PART NUMBER	QTY	PART NAME 1 2 3 4 5 6 (PRODUCT LEVEL)	SEE PAGE
	1	1	**106-0800**	1	TERMINAL AS-BATTERY (REMOTE JUMP START, POSITIVE)	
		1	**4D-5243**	1	LOCKWASHER	
		1	**9B-9146**	1	NUT-SPECIAL	
		1	**062-5388**	1	LOCKNUT (1-11-1/2-THD)	
		1	**277-5777**	1	COVER-TERMINAL	
	2	1	**122-4026**	1	SPACER (13X25X25-MM THK)	
	3	1	**159-8033**	1	FILM-IDENTIFICATION (12-VOLT)	
	4	1	**331-5518**	1	CABLE AS	
		1	**4D-1248**	1	TERMINAL (00-GA, 3/8-IN SCREW)	
E		1	**159-8049**		CABLE (00-GA, RED) (38-CM)	
		1	**276-1786**	1	COVER-TERMINAL (RED)	
		1	**315-0180**	1	TERMINAL-RING	
	5	1	**360-1845**	1	FILM-IDENTIFICATION (JUMP START)	
	6	1	**370-0042**	1	BRACKET	
	7	1	**383-2789**	1	COVER	
	8	1	**383-8936**	1	STUD	
	9	1	**383-8937**	1	RECEPTACLE	
	10	1	**388-4572**	1	COVER-TERMINAL (RED)	
	11	1	**388-5359**	1	RETAINER	
	12	1	**3S-2093**	2	STRAP-CABLE	
	13	1	**5P-4116**	2	WASHER-HARD (8.8X20.5X2-MM THK)	
M	14	1	**8T-4189**	2	BOLT (M8X1.25X20-MM)	

E-ORDER BY THE CENTIMETER
M-METRIC PART

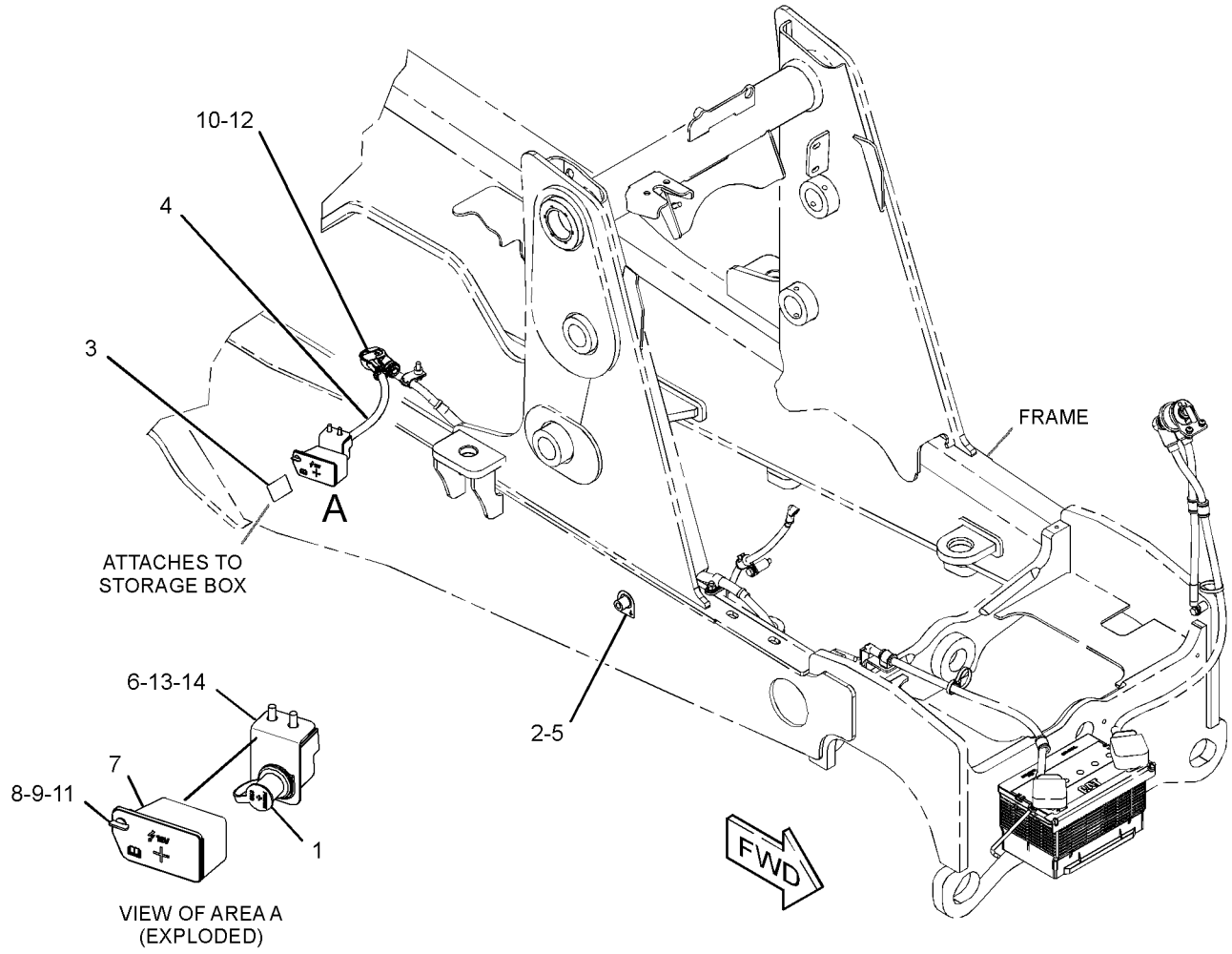

GRAPHIC #1 **<END>** g02828878

357-3237 WIRING GP-CAB–ROOF

S/N: SJW1-UP
PART OF 353-1429 CAB AR
AN ATTACHMENT

SMCS-1408, 7301 **i04553625**

NOTE	REF NO	GRAPHIC REF	PART NUMBER	QTY	PART NAME 1 2 3 4 5 6 (PRODUCT LEVEL)	SEE PAGE
	1	1	**9R-7941**	2	SOCKET AS	
					(EACH INCLUDES)	
		1	**9R-7980**	1	COVER	
	2	1	**206-1345**	9	STRAP-CABLE	
Y	3	1	**214-2968**	4	LAMP GP-FLOOD (12-VOLT)	108
B	4	1	**214-4697**	1	SWITCH AS-ROCKER (FLOODLIGHTS, FRONT)	
B	5	1	**214-4699**	1	SWITCH AS-ROCKER (FLOODLIGHTS, REAR)	
					(EACH SWITCH AS INCLUDES)	
		1	**111-7899**	1	GASKET	
B	6	1	**274-3776**	1	CAP-SEAL	
B	7	1	**274-3778**	2	CAP-SEAL	
	8	1	**282-7833**	1	GROMMET	
	9	1	**282-7835**	1	PLATE	
	10	1	**357-3238**	1	HARNESS AS-CAB (ROOF)	
		1	**123-7615**	2	CONNECTOR	
		1	**9W-0852**	2	PIN-CONNECTOR (14-GA TO 16-GA)	
		1	**9X-3401**	14	PIN-CONNECTOR (16-GA TO 18-GA)	
		1	**155-2265**	2	KIT-CONNECTING PLUG (8-PIN)	
		1	**155-2270**	8	KIT-CONNECTING PLUG (2-PIN)	
		1	**155-2271**	1	KIT-CONNECTING PLUG (4-PIN)	
					(EACH PLUG KIT INCLUDES PLUG AS, WEDGE & INTERFACE SEAL)	
		1	**8T-8737**	4	PLUG-SEAL	
		1	**102-8805**	1	KIT-RECEPTACLE (6-PIN)	
		1	**102-8801**	1	KIT-RECEPTACLE (12-PIN)	
					(EACH RECEPTACLE KIT INCLUDES RECEPTACLE AS & WEDGE)	
		1	**239-3104**	2	TERMINAL AS	
		1	**9W-0844**	4	SOCKET-CONNECTOR (14-GA TO 16-GA)	
		1	**180-9340**	30	SOCKET-CONNECTOR (14-GA TO 18-GA)	
		1	**097-7234**	2	TERMINAL-BLADE (18-GA TO 22-GA)	
		1	*128-4170*	1	TERMINAL AS	
		1	**6H-3587**	1	TERMINAL-RING (6-GA TO 8-GA, 3/8-IN SCREW)	
E		1	**6V-9023**		TUBE-HEAT SHRINK (12.7-MM DIA) (4-CM)	
		1	**5P-4571**	2	TERMINAL-BLADE (14-GA TO 16-GA)	
		1	**091-2436**	4	TERMINAL-BLADE (18-GA TO 22-GA)	
E		1	**119-3662**		TUBE-HEAT SHRINK (10.85-MM DIA) (13-CM)	
E		1	**125-7874**		TUBE-HEAT SHRINK (5.72-MM DIA) (30-CM)	
E		1	**125-7875**		TUBE-HEAT SHRINK (7.44-MM DIA) (5-CM)	
	11	1	**3S-2093**	20	STRAP-CABLE	
	12	1	**8F-3590**	1	LOCKWASHER	
	13	1	**8T-4121**	2	WASHER-HARD (11X21X2.5-MM THK)	
M	14	1	**8T-4133**	1	NUT (M10X1.5-THD)	
M	15	1	**8C-3798**	2	BOLT-LOCKING (M6X1X30-MM)	
	16	1	**9X-8256**	2	WASHER (6.6X12X2-MM THK)	
E	17	1	**3E-8299**		SEAL (3-CM)	

B-USE AS REQUIRED
E-ORDER BY THE CENTIMETER
M-METRIC PART
Y-SEPARATE ILLUSTRATION

357-3237 **WIRING GP-CAB** ***(contd.)*** **i04553625**

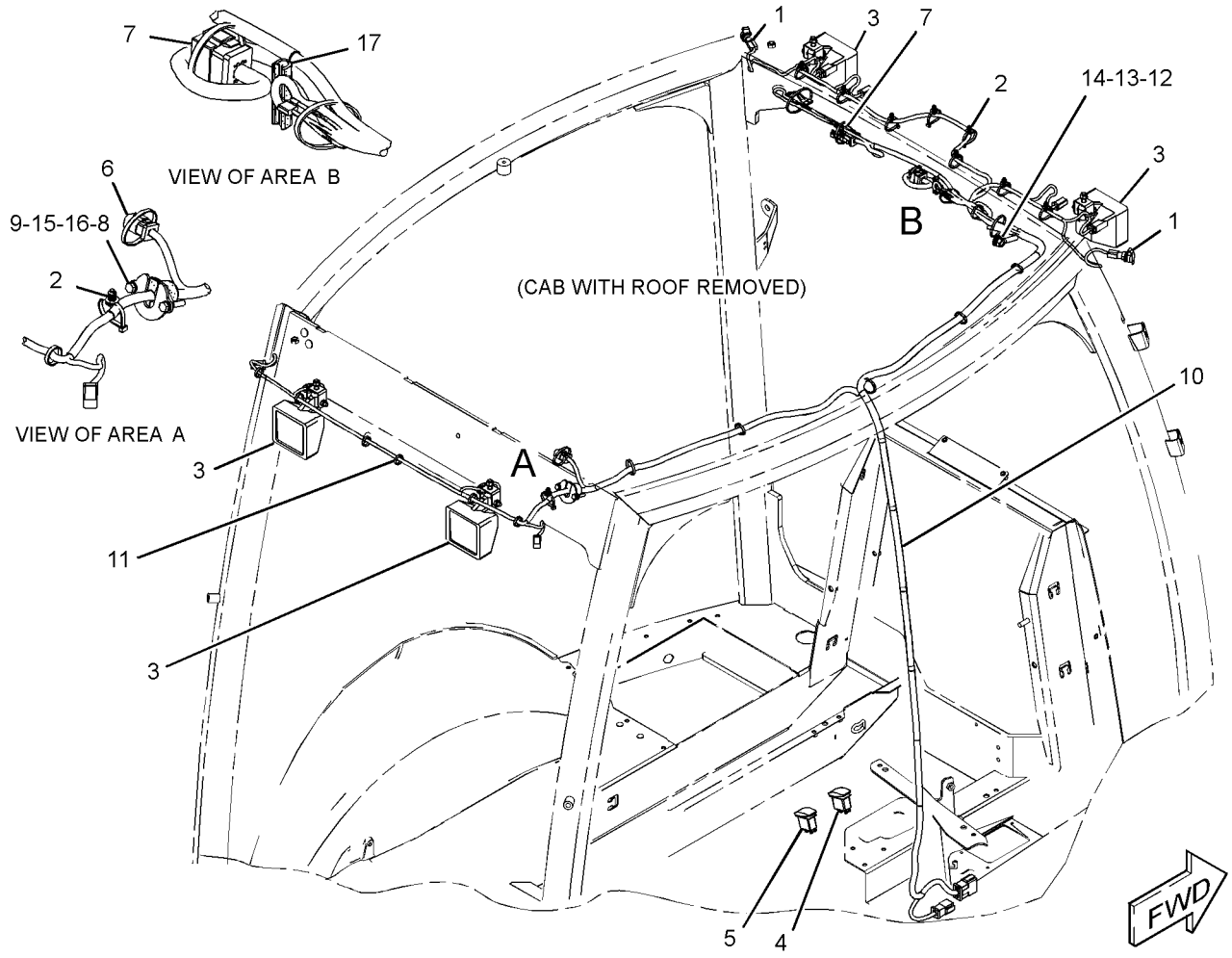

GRAPHIC #1 **<END>** g02774020

357-3214 WIRING GP-COMMUNICATION

S/N: SJW1-UP

AN ATTACHMENT

SMCS-1408, 7606 **i04580753**

NOTE	REF NO	GRAPHIC REF	PART NUMBER	QTY	PART NAME 1 2 3 4 5 6 (PRODUCT LEVEL)	SEE PAGE
	1	1	**7K-1181**	16	STRAP-CABLE	
	2	1	**249-9076**	6	CLIP	
	3	1	**260-7653**	1	FILM-WARNING (PRODUCT LINK 300, INTL)	
	4	1	**284-8531**	1	ANTENNA AS (MAGNETIC MOUNT, PRODUCT LINK)	
		1	**301-0589**	1	ANTENNA (FLEXIBLE)	
	5	1	**331-5529**	1	HARNESS AS-RADIO (PRODUCT LINK)	
		1	**9X-3401**	9	PIN-CONNECTOR (16-GA TO 18-GA)	
		1	**155-2255**	1	KIT-CONNECTING PLUG (12-PIN)	
					(INCLUDES PLUG AS, WEDGE & INTERFACE SEAL)	
		1	**8T-8737**	8	PLUG-SEAL	
		1	**102-8802**	1	KIT-RECEPTACLE (2-PIN)	
		1	**102-8801**	1	KIT-RECEPTACLE (12-PIN)	
					(EACH RECEPTACLE KIT INCLUDES RECEPTACLE AS & WEDGE)	
		1	**180-9340**	9	SOCKET-CONNECTOR (14-GA TO 18-GA)	
B		1	**329-3734**		TAPE	
	6	1	**331-5635**	1	HARNESS AS-WIRING (PRODUCT LINK)	
		1	**9X-3401**	7	PIN-CONNECTOR (16-GA TO 18-GA)	
		1	**155-2255**	1	KIT-CONNECTING PLUG (12-PIN)	
					(INCLUDES PLUG AS, WEDGE & INTERFACE SEAL)	
		1	**8T-8737**	5	PLUG-SEAL	
		1	**102-8804**	1	KIT-RECEPTACLE (4-PIN)	
					(INCLUDES RECEPTACLE AS & WEDGE)	
		1	**9X-4813**	1	RECEPTACLE AS-CONNECTOR (3-PIN)	
		1	**180-9340**	7	SOCKET-CONNECTOR (14-GA TO 18-GA)	
Y	7	1	**336-3545**	1	ELECTRONICS GP-COMMUNICATION (PRODUCT LINK 121SR)	103
M	8	1	**129-3178**	4	LOCKNUT (M6X1-THD)	
	9	1	**6P-6591**	1	GROMMET	
	10	1	**9X-8256**	4	WASHER (6.6X12X2-MM THK)	

B-USE AS REQUIRED
M-METRIC PART
Y-SEPARATE ILLUSTRATION

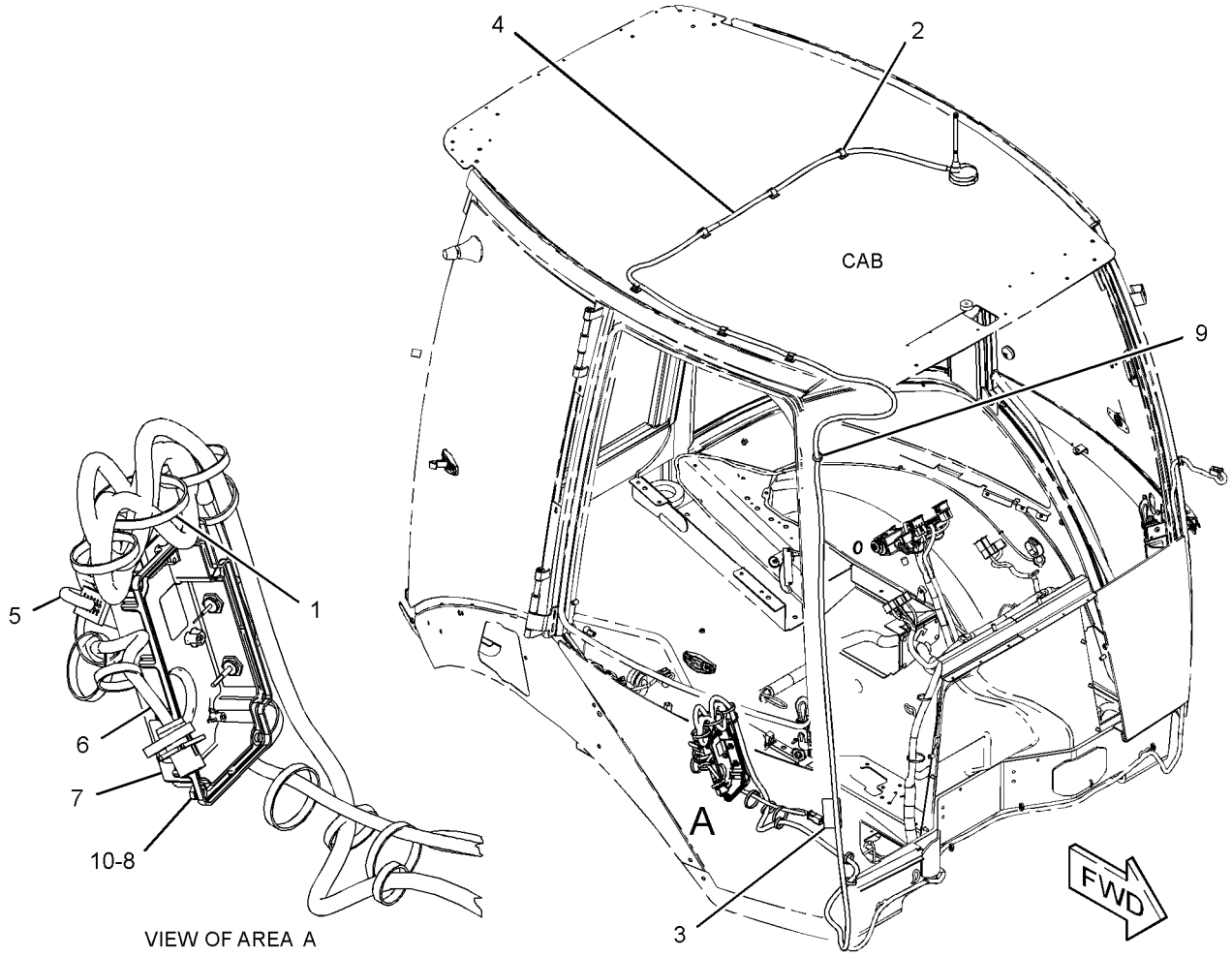

GRAPHIC #1 **<END>** g02808237

357-3259 WIRING GP-CONSOLE–SIDE

S/N: SJW1-UP
PART OF 353-1457, 353-1461 ELECTRONICS AR-MACHINE
AN ATTACHMENT

SMCS-1408 **i04580493**

NOTE	REF NO	GRAPHIC REF	PART NUMBER	QTY	PART NAME 1 2 3 4 5 6 (PRODUCT LEVEL)	SEE PAGE
	1	1	**110-7887**	1	SWITCH AS-START (KEY)	
		1	**7T-6799**	1	NUT-MOUNTING (1-32-THD)	
		1	**8T-8729**	4	PIN-CONNECTOR (16-GA TO 18-GA)	
		1	**102-8804**	1	KIT-RECEPTACLE (4-PIN)	
					(INCLUDES RECEPTACLE AS & WEDGE)	
	2	1	**165-0312**	1	WIRE AS	
	3	1	**206-1345**	3	STRAP-CABLE	
	4	1	**214-4722**	1	SWITCH AS-ROCKER (STARTING AID)	
		1	**111-7899**	1	GASKET	
B	5	1	**227-1057**	6	PLUG-HOLE	
	6	1	**331-5537**	1	HARNESS AS-CONSOLE	
		1	**228-5856**	8	CONNECTOR	
		1	**9X-3401**	2	PIN-CONNECTOR (16-GA TO 18-GA)	
					–OR–	
		1	**126-1767**	2	PIN-CONNECTOR (14-GA TO 16-GA)	
		1	**176-2947**	1	KIT-CONNECTING PLUG (4-PIN)	
					(INCLUDES PLUG AS, WEDGE & INTERFACE SEAL)	
		1	**261-0524**	1	PLUG AS-CONNECTOR (4-PIN)	
		1	**264-7031**	1	SEAL-CONNECTOR	
		1	**272-2838**		PLUG AS	
		1	**245-8026**	1	CONNECTOR	
		1	**8T-8737**	5	PLUG-SEAL	
		1	**340-2566**	3	PLUG-SEAL	
		1	**9X-3402**	4	SOCKET-CONNECTOR (16-GA TO 18-GA)	
					–OR–	
		1	**126-1768**	4	SOCKET-CONNECTOR (14-GA TO 16-GA)	
		1	**180-9340**	50	SOCKET-CONNECTOR (14-GA TO 18-GA)	
		1	**340-2567**	23	WIRE AS	
B		1	**329-3734**		TAPE	
		1	**7N-7221**	2	TERMINAL-BLADE (18-GA TO 22-GA)	
E		1	**119-3662**		TUBE-HEAT SHRINK (10.85-MM DIA) (13-CM)	
E		1	**125-7874**		TUBE-HEAT SHRINK (5.72-MM DIA) (50-CM)	
E		1	**125-7875**		TUBE-HEAT SHRINK (7.44-MM DIA) (5-CM)	
	7	1	**343-4355**	1	HORN	
	8	1	**3S-2093**	5	STRAP-CABLE	

B-USE AS REQUIRED
E-ORDER BY THE CENTIMETER

357-3259 **WIRING GP-CONSOLE** *(contd.)* **i04580493**

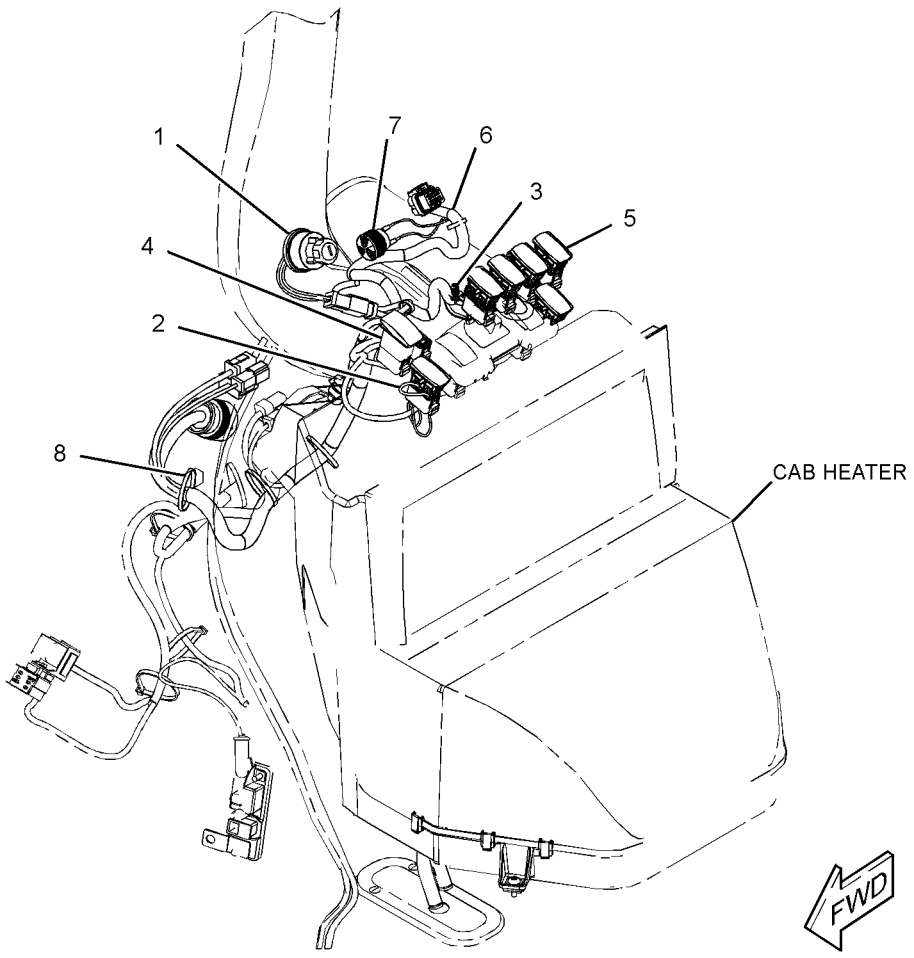

GRAPHIC #1 **<END>** g02797781

ELECTRICAL AND STARTING SYSTEM

357-3199 WIRING GP-ENGINE—PILOT & MECHANICAL

S/N: SJW1-UP

PART OF 337-9866, 337-9867 ENGINE AR-COMPLETE

AN ATTACHMENT

SMCS-1408 **i04605589**

NOTE	REF NO	GRAPHIC REF	PART NUMBER	QTY	PART NAME 1 2 3 4 5 6 (PRODUCT LEVEL)	SEE PAGE
	1	2	**4E-0724**	1	SPACER (9X20X28-MM THK)	
	2	1,2	**7K-1181**	6	STRAP-CABLE	
	3	1	**134-3355**	1	STRAP AS	
	4	1	**164-9425**	1	HORN AS (12-VOLT, LOW TONE)	
	5	2	**205-9920**	2	STRAP-CABLE	
	6	1,2	**206-1345**	3	STRAP-CABLE	
	7	2	**244-3106**	1	SENDER AS-TEMPERATURE (ENGINE COOLANT)	
		2	**102-8802**	1	KIT-RECEPTACLE (2-PIN)	
					(INCLUDES RECEPTACLE AS & WEDGE)	
		2	**8T-8729**	2	PIN-CONNECTOR (16-GA TO 18-GA)	
	8	2	**274-3774**	1	CAP-CONNECTOR	
	9	1,2	**298-0663**	5	CLIP	
	10	1	**331-5496**	1	HARNESS AS-ALARM	
		1	**8T-8729**	2	PIN-CONNECTOR (16-GA TO 18-GA)	
		1	**155-2270**	1	KIT-CONNECTING PLUG (2-PIN)	
					(INCLUDES PLUG AS, WEDGE & INTERFACE SEAL)	
		1	**102-8802**	1	KIT-RECEPTACLE (2-PIN)	
					(INCLUDES RECEPTACLE AS & WEDGE)	
		1	**8T-8730**	2	SOCKET-CONNECTOR (16-GA TO 18-GA)	
	11	2	**352-3964**	1	CLIP	
	12	1	**357-3200**	1	HARNESS AS-ENGINE	
E		1	**226-5849**		CONDUIT (26-CM)	
		1	**123-7615**	2	CONNECTOR	
		1	**213-0139**	3	PIN	
		1	**176-1477**	1	PLUG AS (2-PIN)	
		1	**258-4172**	1	PLUG AS-CONNECTOR	
		1	**155-2260**	1	KIT-CONNECTING PLUG (3-PIN)	
		1	**155-2270**	8	KIT-CONNECTING PLUG (2-PIN)	
					(EACH PLUG KIT INCLUDES PLUG AS, WEDGE & INTERFACE SEAL)	
		1	**8T-8730**	10	SOCKET-CONNECTOR (16-GA TO 18-GA)	
		1	**169-0705**	18	SEAL	
		1	**185-1861**	2	SEAL-WIRE	
		1	**180-9340**	19	SOCKET-CONNECTOR (14-GA TO 18-GA)	
		1	**204-6195**	1	SOCKET-CONNECTOR (18-PIN)	
		1	**275-0601**	17	SOCKET-CONNECTOR (16-GA TO 20-GA)	
		1	**176-1521**	2	TERMINAL	
		1	**2L-8076**	1	TERMINAL-RING (14-GA TO 16-GA, NO. 10 SCREW)	
		1	**2L-8079**	1	TERMINAL-RING (14-GA TO 16-GA, 3/8-IN SCREW)	
		1	**7N-7221**	1	TERMINAL-BLADE (18-GA TO 22-GA)	
		1	**091-2436**	44	TERMINAL-BLADE (18-GA TO 22-GA)	
		1	**2L-8066**	1	TERMINAL-RING (10-GA TO 12-GA, NO. 10 SCREW)	
		1	**7N-9017**	2	TERMINAL-RING (18-GA TO 22-GA, NO. 10 SCREW)	
E		1	**119-3662**		TUBE-HEAT SHRINK (10.85-MM DIA) (7-CM)	
E		1	**125-7874**		TUBE-HEAT SHRINK (5.72-MM DIA) (11-CM)	
E		1	**125-7875**		TUBE-HEAT SHRINK (7.44-MM DIA) (10-CM)	
D		1	**5P-6006**		TUBE-HEAT SHRINK (9.52-MM DIA) (0.1-M)	
	13	2	**132-5789**	1	CLIP	
	14	2	**230-7732**	1	MOUNTING-CABLE TIE	
	15	1	**3J-4818**	1	LOCKWASHER	
	16	1,2	**3S-2093**	23	STRAP-CABLE	

357-3199 **WIRING GP-ENGINE** *(contd.)* **i04605589**

NOTE	REF NO	GRAPHIC REF	PART NUMBER	QTY	PART NAME 1 2 3 4 5 6 (PRODUCT LEVEL)	SEE PAGE
	17	2	**4P-7429**	1	CLIP	
	18	2	**4P-7581**	3	CLIP	
	19	2	**4P-8134**	4	CLIP	
M	20	2	**5C-2874**	2	NUT (M5X0.8-THD)	
	21	2	**7G-7053**	1	GROMMET	
M	22	2	**7X-0818**	1	BOLT (M8X1.25X45-MM)	
	23	2	**8F-1434**	2	LOCKWASHER	
	24	1	**8F-3590**	1	LOCKWASHER	
	25	2	**8T-0328**	2	WASHER-HARD (5.5X10X1-MM THK)	
	26	1,2	**8T-4121**	7	WASHER-HARD (11X21X2.5-MM THK)	
M	27	1	**8T-4136**	1	BOLT (M10X1.5X25-MM)	
M	28	1,2	**8T-4137**	5	BOLT (M10X1.5X20-MM)	
M	29	2	**8T-4189**	3	BOLT (M8X1.25X20-MM)	
M	30	1,2	**8T-4192**	3	BOLT (M12X1.75X25-MM)	
	31	1,2	**8T-4223**	4	WASHER-HARD (13.5X25.5X3-MM THK)	
	32	2	**8T-4224**	4	WASHER-HARD (8.8X16X2-MM THK)	

D-ORDER BY THE METER
E-ORDER BY THE CENTIMETER
M-METRIC PART

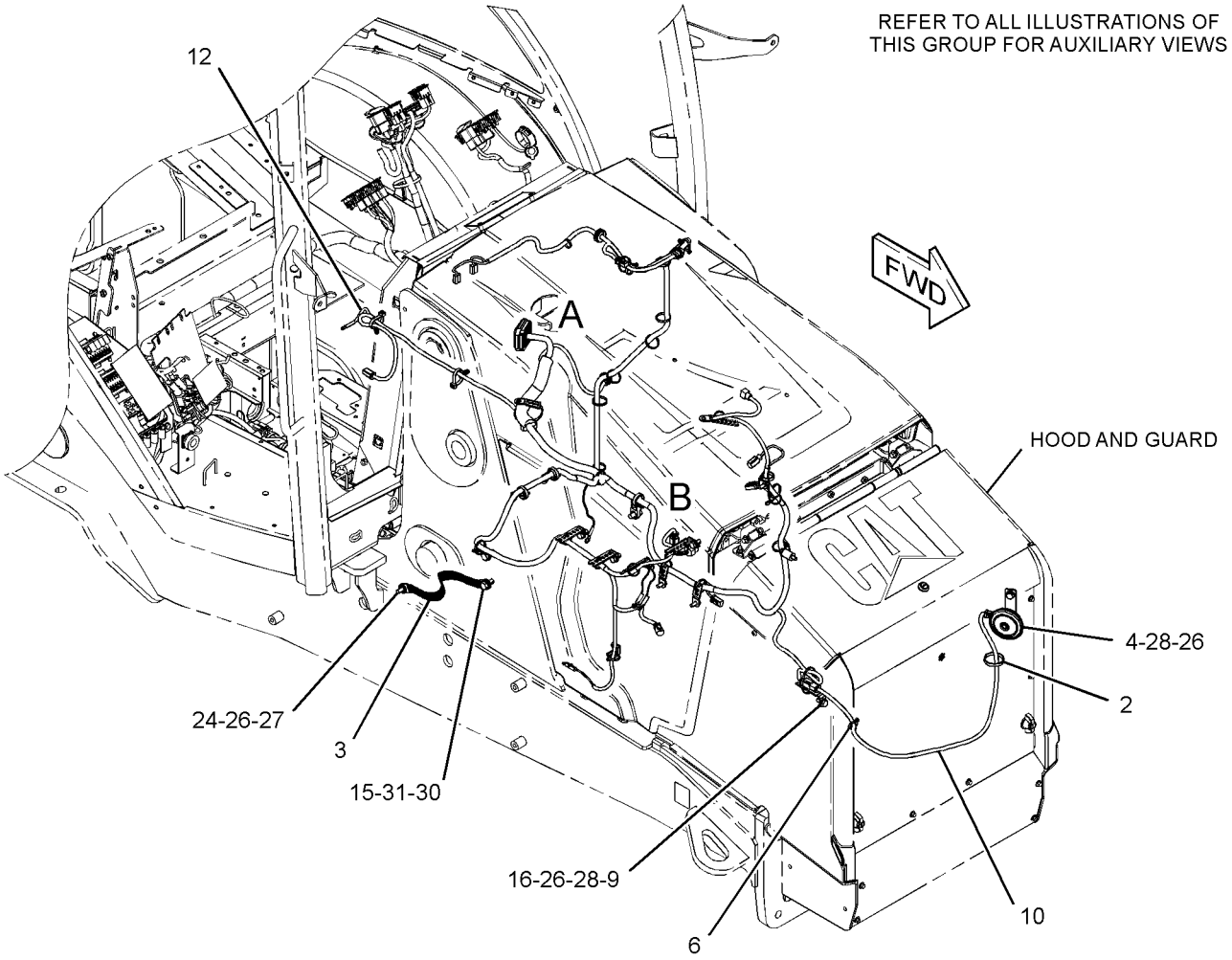

GRAPHIC #1 g02811356

357-3199 **WIRING GP-ENGINE** *(contd.)* **i04605589**

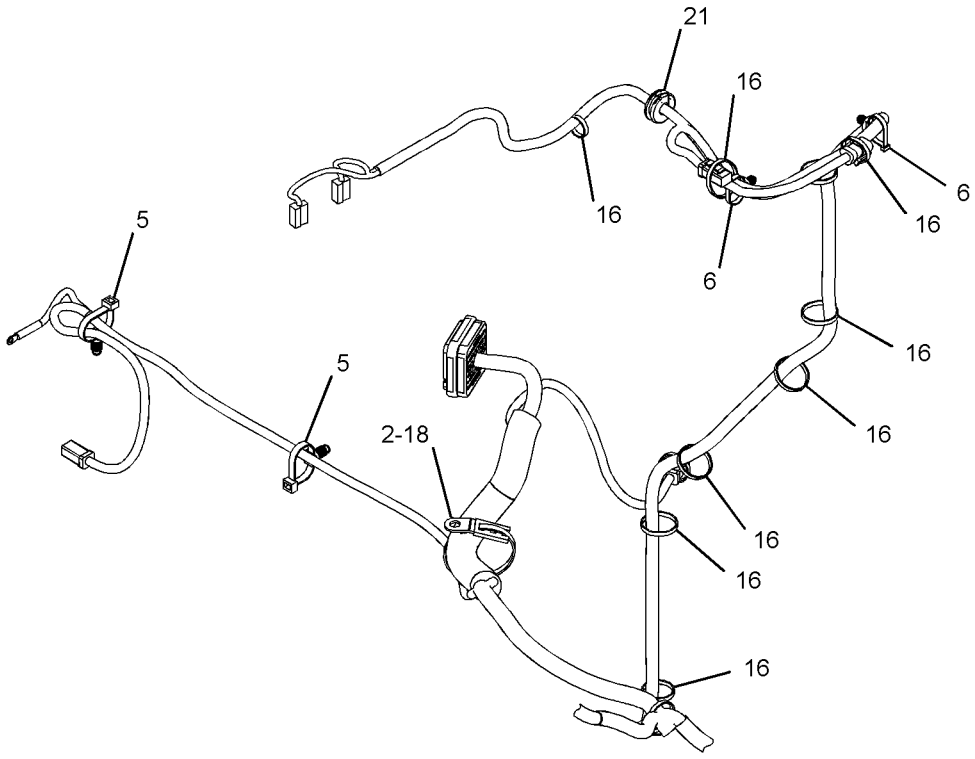

VIEW OF AREA A

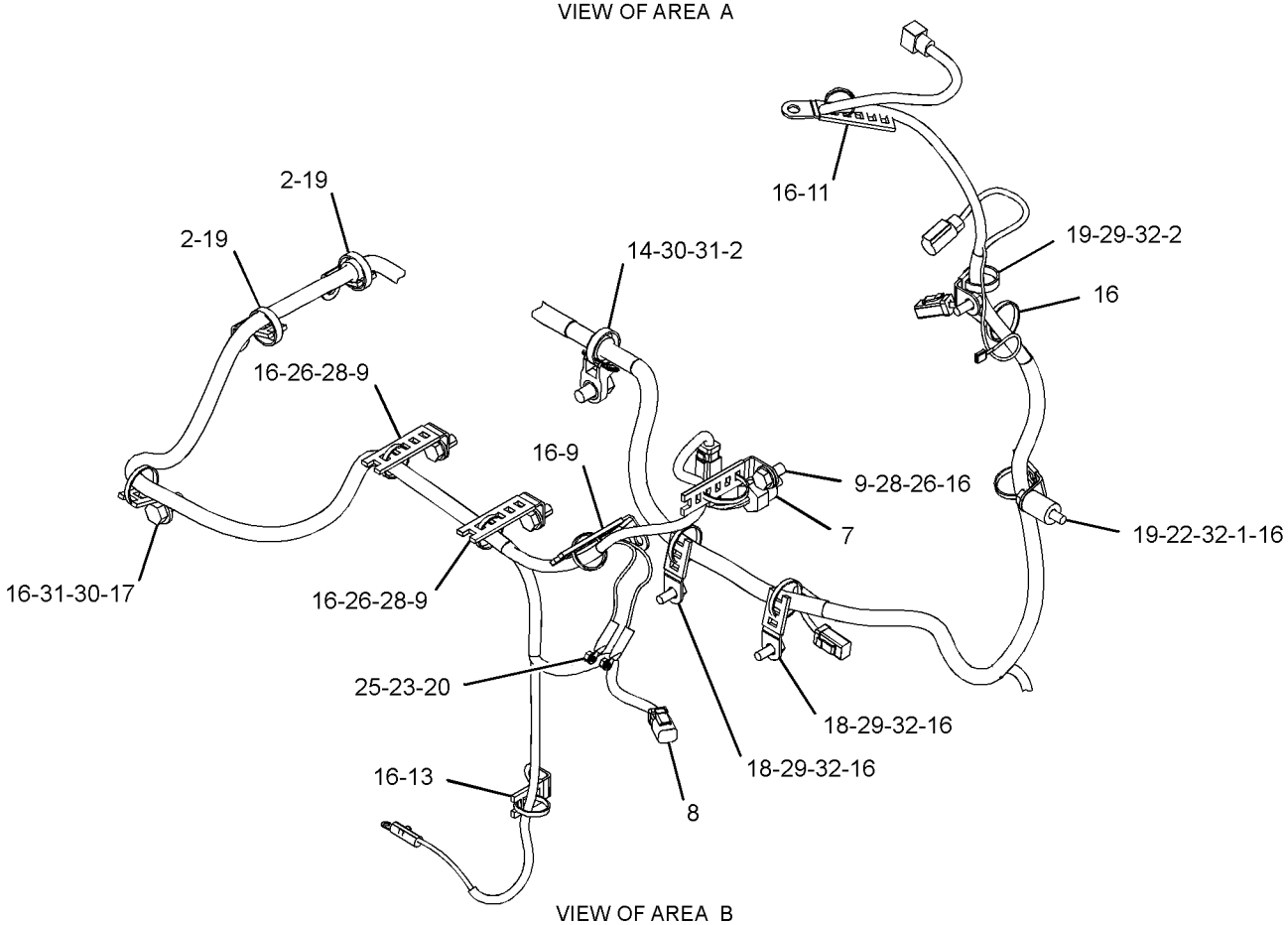

VIEW OF AREA B

GRAPHIC #2 **<END>** g02811357

359-0015 WIRING GP-HEATER

S/N: SJW1-UP

PART OF 374-6887 HEATER & AIR CONDITIONER AR

AN ATTACHMENT

SMCS-1408, 7304 **i04586212**

NOTE	REF NO	GRAPHIC REF	PART NUMBER	QTY	PART NAME 1 2 3 4 5 6 (PRODUCT LEVEL)	SEE PAGE
	1	1	**3E-9362**	1	RELAY AS (12-VOLT) (HIGH SPEED)	
	2	1	**6K-0806**	8	STRAP-CABLE	
	3	1	**8T-8799**	1	BOOT	
	4	1	**214-4695**	1	SWITCH AS-ROCKER (BLOWER FAN SPEED)	
	5	1	**214-4703**	1	SWITCH AS-ROCKER (HEATER)	
					(EACH SWITCH AS INCLUDES)	
		1	**111-7899**	1	GASKET	
	6	1	**275-0570**	1	BAR-BUS	
	7	1	**359-0016**	1	HARNESS AS-HEATER & AIR COND	
		1	**228-5856**	2	CONNECTOR	
		1	**111-6795**	1	HOUSING-RELAY	
		1	**111-6816**	1	LOCK	
		1	**213-0139**	5	PIN	
		1	**8T-8729**	5	PIN-CONNECTOR (16-GA TO 18-GA)	
		1	**9X-3401**	2	PIN-CONNECTOR (16-GA TO 18-GA)	
		1	**177-9648**	1	KIT-CONNECTING PLUG (2-PIN)	
		1	**177-9656**	1	KIT-CONNECTING PLUG (4-PIN)	
					(EACH PLUG KIT INCLUDES PLUG AS, WEDGE & INTERFACE SEAL)	
		1	**8T-8737**	1	PLUG-SEAL	
		1	**102-8802**	2	KIT-RECEPTACLE (2-PIN)	
		1	**102-8803**	1	KIT-RECEPTACLE (3-PIN)	
					(EACH RECEPTACLE KIT INCLUDES RECEPTACLE AS & WEDGE)	
		1	**122-4401**	1	TERMINAL	
		1	**2L-8069**	1	TERMINAL-RING (2-GA TO 10-GA, 3/8-IN SCREW)	
		1	**2L-8067**	1	TERMINAL-RING (10-GA TO 12-GA, 1/4-IN SCREW)	
		1	**091-2436**	7	TERMINAL-BLADE (18-GA TO 22-GA)	
		1	**104-1995**	11	TERMINAL-BLADE (14-GA TO 18-GA)	
		1	**111-6792**	2	TERMINAL-RECEPTACLE (18-GA TO 20-GA)	
		1	**111-6794**	2	TERMINAL-RECEPTACLE	
E		1	**119-3662**		TUBE-HEAT SHRINK (10.85-MM DIA) (7-CM)	
E		1	**125-7874**		TUBE-HEAT SHRINK (5.72-MM DIA) (10-CM)	
E		1	**125-7875**		TUBE-HEAT SHRINK (7.44-MM DIA) (10-CM)	
	8	1	**096-6166**	2	WASHER-HARD (4.5X9X1-MM THK)	
Y	9	1	**276-7287**	1	RELAY GP (12-VOLT) (POWER DISTRIBUTION)	126
	10	1	**3S-2093**	1	STRAP-CABLE	
M	11	1	**5C-2890**	1	NUT (M6X1-THD)	
M	12	1	**5C-7261**	1	NUT (M8X1.25-THD)	
	13	1	**8C-3398**	1	LOCKWASHER	
M	14	1	**8T-0285**	2	SCREW-MACHINE (M4X0.7X12-MM)	
	15	1	**8T-4205**	1	WASHER-HARD (7.2X14.5X2-MM THK)	
	16	1	**8T-4224**	1	WASHER-HARD (8.8X16X2-MM THK)	
M	17	1	**8T-9534**	1	BOLT (M6X1X50-MM)	

E-ORDER BY THE CENTIMETER
M-METRIC PART
Y-SEPARATE ILLUSTRATION

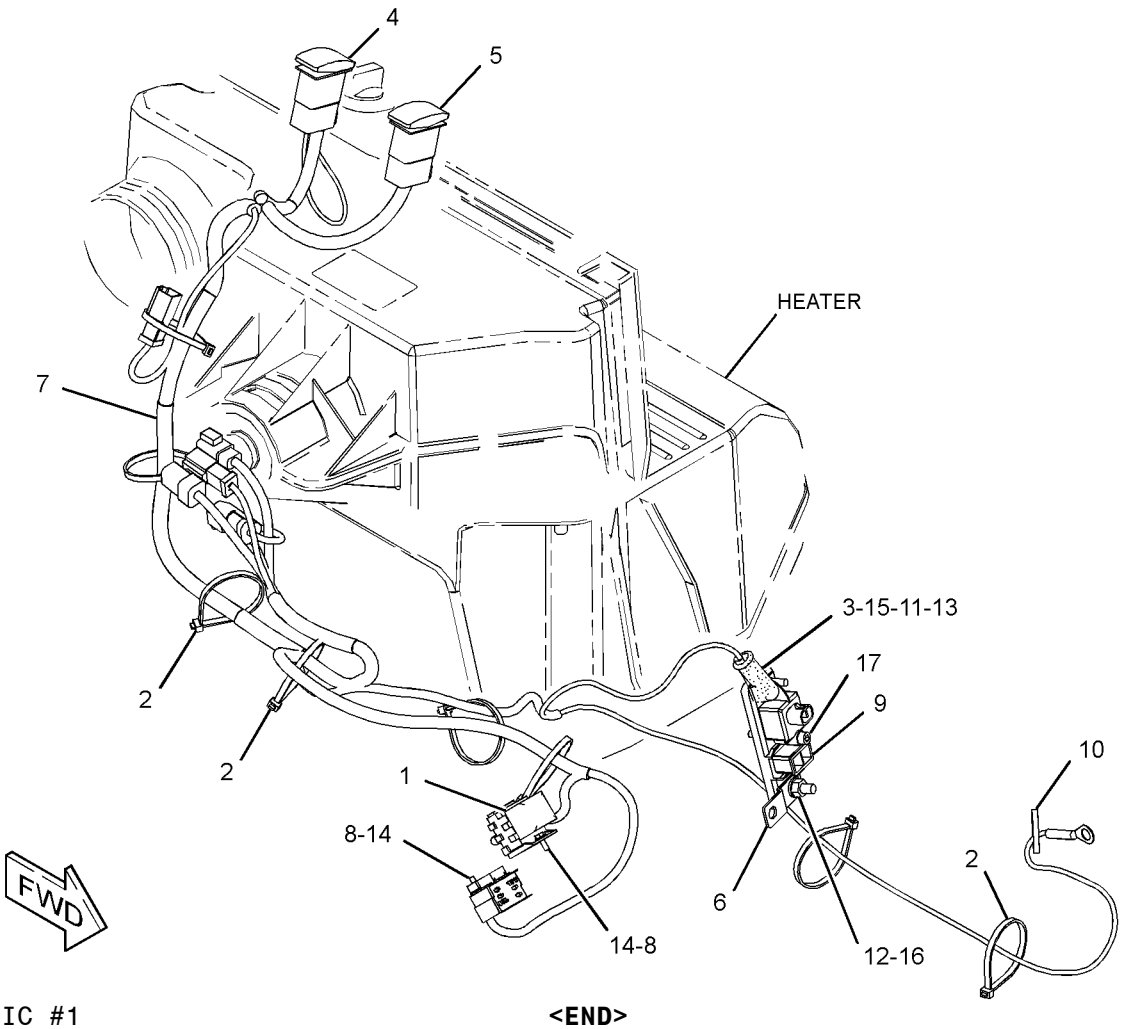

GRAPHIC #1 **<END>** g02806236

357-3221 WIRING GP-KICKOUT & POSITIONER–

PARALLEL LIFT

S/N: SJW1-UP

PART OF 373-4268 VALVE AR-BANK 3

AN ATTACHMENT

SMCS-5109, 5112, 5734 **i04637833**

NOTE	REF NO	GRAPHIC REF	PART NUMBER	QTY	PART NAME 1 2 3 4 5 6 (PRODUCT LEVEL)	SEE PAGE
	1	1	**7K-1181**	19	STRAP-CABLE	
	2	1	**331-5562**	1	SENSOR AS-POSITION (BUCKET)	
		1	**331-5563**	1	TUBE AS	
		1	**331-5564**	1	ROD AS	
		1	**284-0078**	1	SWITCH AS-PUSH BUTTON (BUCKET POSITIONER)	
		1	**295-8141**	1	CLIP	
		1	**295-8142**	2	SEAL-O-RING	
		1	**295-8143**	2	SEAL-O-RING	
	3	1	**354-5137**	2	SPACER (11X25X25-MM THK)	
	4	1	**357-3222**	1	HARNESS AS-WIRING (KICKOUT, POSITIONER)	
		1	**266-4157**	1	SLEEVE-BRAIDED	
E		1	**6V-8523**		HOSE (259-CM)	
		1	**9X-3401**	2	PIN-CONNECTOR (16-GA TO 18-GA)	
		1	**8T-8737**	1	PLUG-SEAL	
		1	**102-8803**	1	KIT-RECEPTACLE (3-PIN)	
					(INCLUDES RECEPTACLE AS & WEDGE)	
		1	**3S-2093**	1	STRAP-CABLE	
E		1	**8T-6885**		TUBE-HEAT SHRINK (19.05-MM DIA) (10-CM)	
	5	1	**3S-2093**	1	STRAP-CABLE	
M	6	1	**8T-4182**	2	BOLT (M10X1.5X45-MM)	
	7	1	**5G-3676**	2	GROMMET	
	8	1	**8T-1889**	2	CLIP (SLOT)	
	9	1	**8T-1890**	2	CLIP (TAB)	
	10	1	**8T-4121**	2	WASHER-HARD (11X21X2.5-MM THK)	

E-ORDER BY THE CENTIMETER
M-METRIC PART

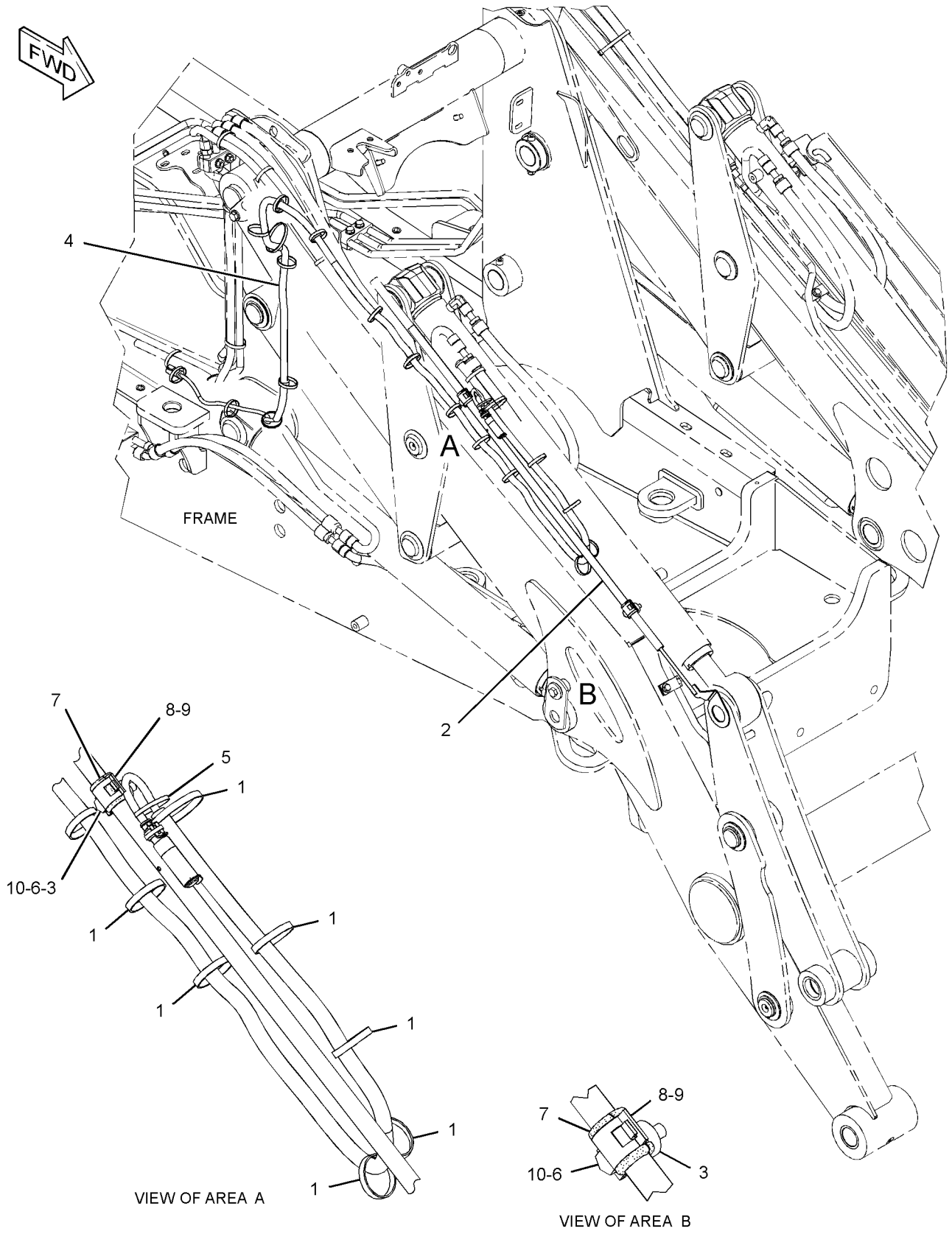

GRAPHIC #1 **<END>** g02823876

ELECTRICAL AND STARTING SYSTEM

385-0559 WIRING GP-KICKOUT & POSITIONER

S/N: SJW1-UP

PART OF 373-4266, 373-4267 VALVE AR-BANK 3

AN ATTACHMENT

SMCS-5109, 5112, 5734 **i04623418**

NOTE	REF NO	GRAPHIC REF	PART NUMBER	QTY	PART NAME 1 2 3 4 5 6 (PRODUCT LEVEL)	SEE PAGE
	1	1	**7K-1181**	18	STRAP-CABLE	
	2	1	**331-5562**	1	SENSOR AS-POSITION (BUCKET)	
		1	**284-0078**	1	SWITCH AS-PUSH BUTTON (BUCKET POSITIONER)	
		1	**295-8141**	1	CLIP	
		1	**295-8142**	2	SEAL-O-RING	
		1	**295-8143**	2	SEAL-O-RING	
		1	**331-5563**	1	TUBE AS	
		1	**331-5564**	1	ROD AS	
	3	1	**354-5137**	2	SPACER (11X25X25-MM THK)	
	4	1	**385-0558**	1	HARNESS AS-WIRING (KICKOUT, POSITIONER)	
		1	**266-4157**	1	SLEEVE-BRAIDED	
E		1	**6V-8523**		HOSE (233-CM)	
		1	**9X-3401**	2	PIN-CONNECTOR (16-GA TO 18-GA)	
					—OR—	
		1	**126-1767**	2	PIN-CONNECTOR (14-GA TO 16-GA)	
		1	**222-8935**	1	PLUG	
		1	**102-8803**	1	KIT-RECEPTACLE (3-PIN)	
					(INCLUDES RECEPTACLE AS & WEDGE)	
		1	**3S-2093**	1	STRAP-CABLE	
E		1	**8T-6885**		TUBE-HEAT SHRINK (19.05-MM DIA) (10-CM)	
	5	1	**3S-2093**	1	STRAP-CABLE	
	6	1	**5G-3676**	2	GROMMET	
	7	1	**8T-1889**	2	CLIP (SLOT)	
	8	1	**8T-1890**	2	CLIP (TAB)	
	9	1	**8T-4121**	2	WASHER-HARD (11X21X2.5-MM THK)	
M	10	1	**8T-4182**	2	BOLT (M10X1.5X45-MM)	

E-ORDER BY THE CENTIMETER
M-METRIC PART

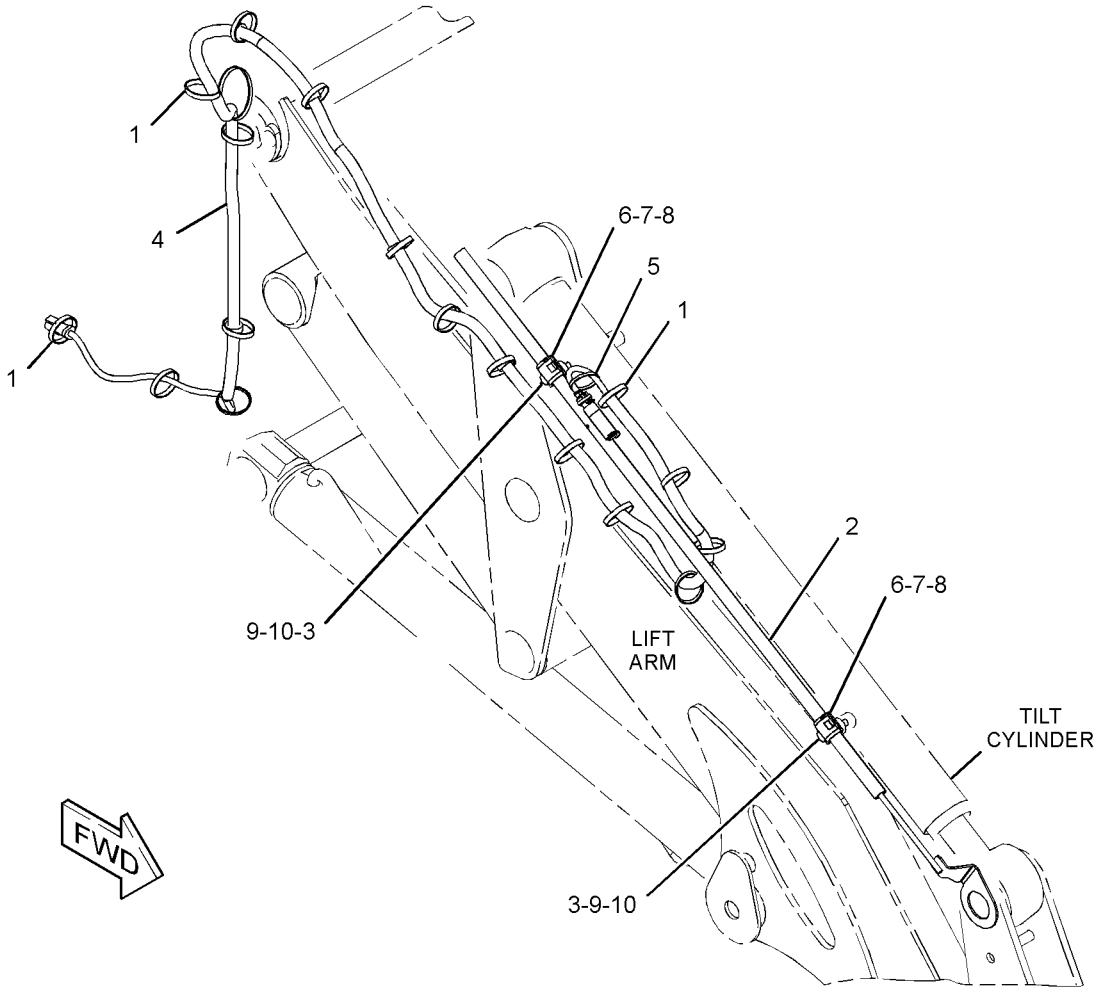

GRAPHIC #1 **<END>** g02821977

357-3248 WIRING GP-LOAD CONTROL

S/N: SJW1-UP
PART OF 373-4268 VALVE AR-BANK 3
AN ATTACHMENT

SMCS-1408 **i04618175**

NOTE	REF NO	GRAPHIC REF	PART NUMBER	QTY	PART NAME 1 2 3 4 5 6 (PRODUCT LEVEL)	SEE PAGE
	1	1	**7K-1181**	4	STRAP-CABLE	
B	2	1	**146-9439**	1	RELAY AS (12-VOLT) (LOAD CONTROL)	
B	3	1	**253-9395**	1	SWITCH AS-ROCKER (LOAD CONTROL)	
		1	**111-7899**	1	GASKET	
	4	1	**357-3247**	1	HARNESS AS-CHASSIS (LOAD CONTROL)	
		1	**9X-3401**	5	PIN-CONNECTOR (16-GA TO 18-GA)	
		1	**9X-1054**	2	PLUG AS-CONNECTOR (4-PIN)	
		1	**155-2260**	1	KIT-CONNECTING PLUG (3-PIN)	
		1	**155-2270**	6	KIT-CONNECTING PLUG (2-PIN)	
					(EACH PLUG KIT INCLUDES PLUG AS, WEDGE & INTERFACE SEAL)	
		1	**8T-8737**	1	PLUG-SEAL	
		1	**102-8805**	1	KIT-RECEPTACLE (6-PIN)	
					(INCLUDES RECEPTACLE AS & WEDGE)	
		1	**180-9340**	15	SOCKET-CONNECTOR (14-GA TO 18-GA)	
		1	**189-3158**	4	SUPPRESSOR-ARC	
		1	**9X-1055**	4	TERMINAL-RECEPTACLE (12-GA)	
		1	**100-5041**	4	TERMINAL-RECEPTACLE (18-GA TO 20-GA)	
E		1	**119-3662**		TUBE-HEAT SHRINK (10.85-MM DIA) (7-CM)	
E		1	**125-7874**		TUBE-HEAT SHRINK (5.72-MM DIA) (20-CM)	
E		1	**125-7875**		TUBE-HEAT SHRINK (7.44-MM DIA) (10-CM)	
	5	1	**115-1615**	2	RELAY AS (12-VOLT) (DEAD ENGINE LOWER)	
	6	1	**3S-2093**	13	STRAP-CABLE	

B-USE AS REQUIRED
E-ORDER BY THE CENTIMETER

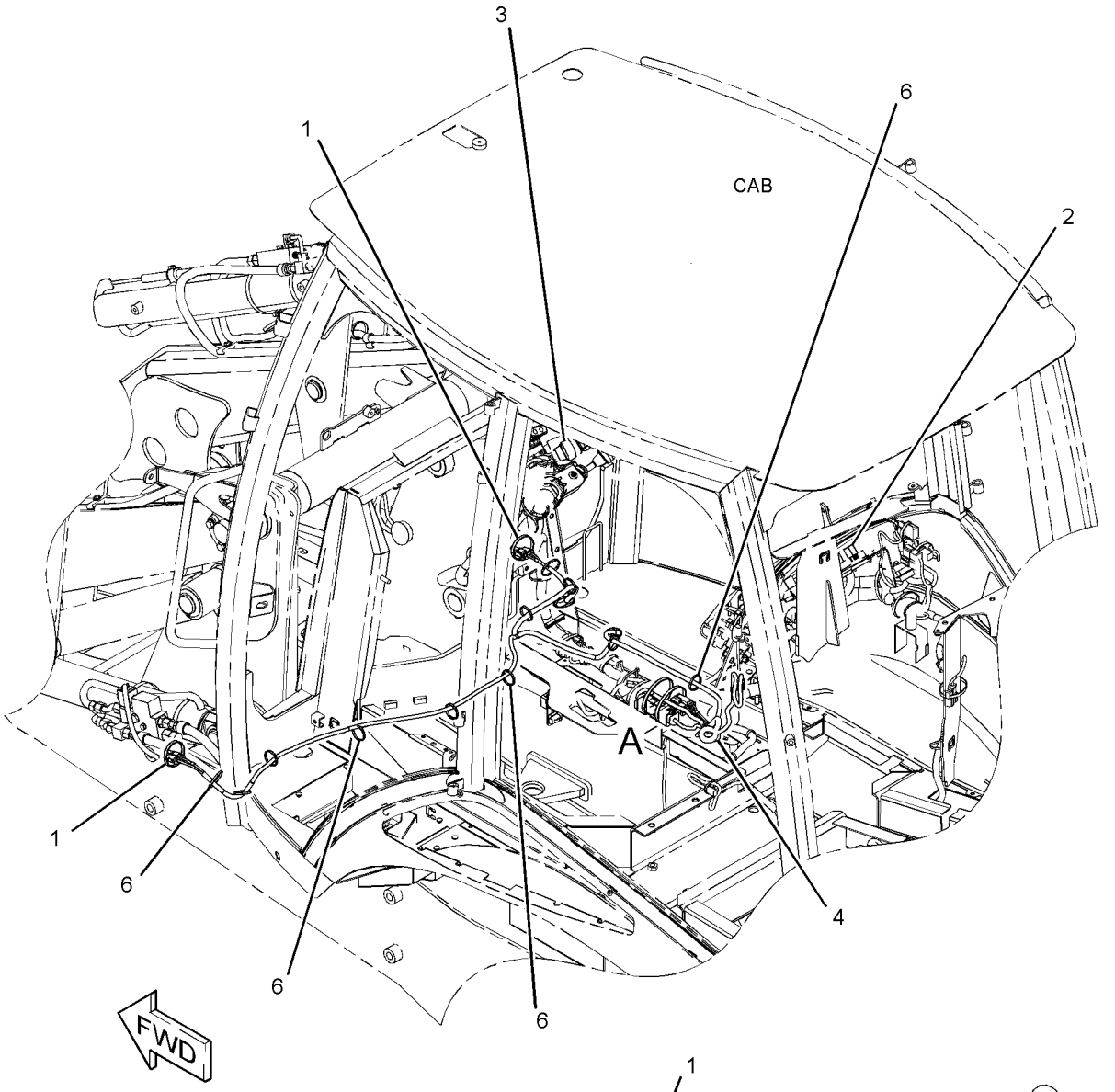

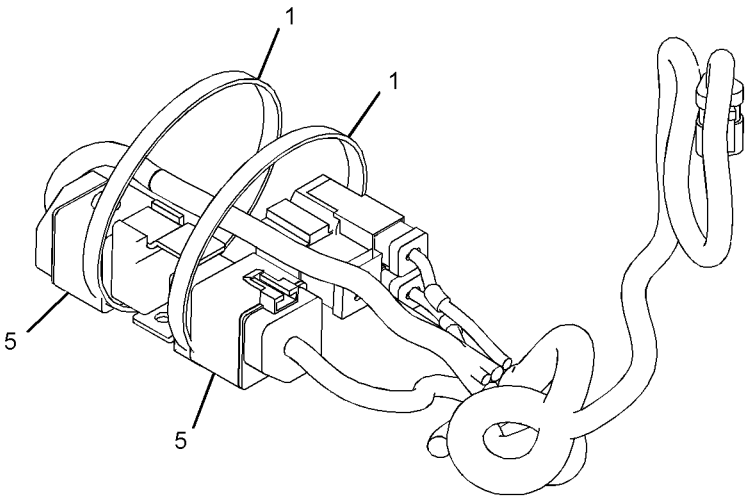

VIEW OF AREA A

GRAPHIC #1 **<END>** g02797544

ELECTRICAL AND STARTING SYSTEM

357-3197 WIRING GP-PLATFORM

S/N: SJW1-UP

PART OF 353-1457 ELECTRONICS AR-MACHINE

AN ATTACHMENT

SMCS-1408 **i04580389**

NOTE	REF NO	GRAPHIC REF	PART NUMBER	QTY	PART NAME 1 2 3 4 5 6 (PRODUCT LEVEL)	SEE PAGE
	1	2	**3E-9362**	1	RELAY AS (12-VOLT) (START)	
	2	1	**5P-9768**	1	PLUG-HOLE	
	3	1	**6K-0806**	3	STRAP-CABLE	
	4	1,2,3	**7K-1181**	23	STRAP-CABLE	
	5	2	**8T-8799**	5	BOOT	
	6	1	**8X-9618**	1	STRAP AS-GROUND	
	7	2	**116-7471**	1	PULLER-MINIFUSE	
	8	2	**140-9378**	1	RELAY AS (12-VOLT) (LOW SIDE)	
	8A	2	**140-9378**	1	RELAY AS (12-VOLT) (NEUTRALIZER)	
	8B	2	**140-9378**	1	RELAY AS (12-VOLT) (NEUTRAL LOCK ALARM)	
	8C	2	**140-9378**	1	RELAY AS (12-VOLT) (PARKING BRAKE ALARM)	
	8D	2	**140-9378**	1	RELAY AS (12-VOLT) (FUEL PUMP)	
	8E	2	**140-9378**	1	RELAY AS (12-VOLT) (NEUTRAL START)	
	9	2	**146-9439**	1	RELAY AS (12-VOLT) (POSITION LAMP)	
	9A	2	**146-9439**	1	RELAY AS (12-VOLT) (REAR HORN)	
	9B	2	**146-9439**	1	RELAY AS (12-VOLT) (FORWARD HORN)	
	10	1	**164-1368**	4	FASTENER-PANEL	
	11	3	*178-7539*	1	RECEPTACLE AS (POWER SUPPLY)	
	12	2	**193-5914**	4	PLUG	
	13	1	**196-2966**	1	PLUG	
	14	3	**201-1024**	1	BRACKET	
	15	1	**205-9920**	1	STRAP-CABLE	
	16	1,2,3	**206-1345**	4	STRAP-CABLE	
	17	1	**214-4716**	1	SWITCH AS-ROCKER (TRANSMISSION NEUTRAL LOCK)	
		1	**111-7899**	1	GASKET	
	18	1	**214-4717**	1	INDICATOR AS (LH TURN SIGNAL, PARKING BRAKE)	
	19	1	**214-4723**	1	INDICATOR AS (RH TURN SIGNAL, HIGH BEAM)	
					(EACH INDICATOR AS INCLUDES)	
		1	**111-7899**	1	GASKET	
B	20	1	**227-1057**	11	PLUG-HOLE	
	21	2	**258-4178**	1	FLANGE-MOUNTING	
	22	1	**261-5050**	1	SWITCH AS-ROCKER (WARNING BEACON)	
		1	**111-7899**	1	GASKET	
	23	2	**267-2701**	1	FUSE (60-AMPERE)	
	24	1	**273-9190**	1	SWITCH AS-MULTIFUNCTION (HD LIGHT, TURN SIG, WDO WIPER)	
		1	**8T-8729**	13	PIN-CONNECTOR (16-GA TO 18-GA)	
		1	**8T-8737**	1	PLUG-SEAL	
		1	**151-9275**	1	KIT-RECEPTACLE (6-PIN)	
		1	**160-3518**	1	KIT-RECEPTACLE (8-PIN)	
					(EACH RECEPTACLE KIT INCLUDES RECEPTACLE AS & WEDGE)	
	25	2	**274-9872**	1	FUSE (30-AMPERE) (MAIN)	
	26	3	**275-0553**	1	BAR-BUS	
	27	3	**275-0570**	1	BAR-BUS	
Y	28	3	**276-7290**	1	RELAY GP (12-VOLT) (POWER, 1)	127
Y	29	3	**276-7291**	1	RELAY GP (12-VOLT) (POWER, 2)	128
	30	2	**278-6377**	1	FUSE (40-AMPERE)	
	31	1	**290-6733**	1	BRACKET AS	
	32	2	**298-0663**	1	CLIP	
	33	2	**300-6575**	1	FILM-COVER	
	34	1	**306-7346**	1	SWITCH AS-ROCKER (HAZARD WARNING LIGHTS)	
		1	**111-7899**	1	GASKET	
	35	2	**312-3083**	1	BRACKET AS	
Y	36	3	**322-6827**	1	RELAY GP (12-VOLT) (STARTING MOTOR)	129

357-3197 **WIRING GP-PLATFORM** *(contd.)* **i04580389**

NOTE	REF NO	GRAPHIC REF	PART NUMBER	QTY	PART NAME 1 2 3 4 5 6 (PRODUCT LEVEL)	SEE PAGE
	37	2	**331-5636**	1	BRACKET AS	
	38	2	**344-2824**	1	PLATE AS	
	39	1	**356-4115**	1	GROMMET	
	40	1	**357-3236**	1	HARNESS AS-PLATFORM	
		1	**275-7877**	1	BLOCK AS-FUSE	
		1	**306-0348**	1	COVER-FUSE	
		1	**8C-3398**	2	LOCKWASHER	
M		1	**5C-2890**	2	NUT (M6X1-THD)	
		1	**306-0351**	1	SEAL-COVER	
		1	**8T-4205**	2	WASHER-HARD (7.2X14.5X2-MM THK)	
		1	**292-9784**	1	BLOCK AS-FUSE	
		1	**8T-8799**	2	BOOT	
		1	**110-0203**	2	CONNECTOR AS	
		1	**228-5856**	6	CONNECTOR	
		1	**110-0203**	2	CONNECTOR AS	
		1	**113-8490**	9	FUSE (10-AMPERE)	
		1	**113-8491**	12	FUSE (15-AMPERE)	
		1	**113-8492**	5	FUSE (20-AMPERE)	
		1	**111-6795**	2	HOUSING-RELAY	
		1	**111-6816**	2	LOCK	
		1	**8C-3398**	2	LOCKWASHER	
M		1	**5C-2890**	2	NUT (M6X1-THD)	
		1	**211-0052**	1	NUT (1-11/16-18-THD)	
		1	**110-0203**	6	CONNECTOR AS	
		1	**9X-3401**	48	PIN-CONNECTOR (16-GA TO 18-GA)	
		1	**262-9151**	3	PIN-CONNECTOR (12-GA TO 14-GA)	
		1	**271-5604**	14	PIN-CONNECTOR (20-GA)	
		1	**155-2255**	3	KIT-CONNECTING PLUG (12-PIN)	
		1	**155-2265**	3	KIT-CONNECTING PLUG (8-PIN)	
		1	**155-2260**	3	KIT-CONNECTING PLUG (3-PIN)	
		1	**155-2270**	10	KIT-CONNECTING PLUG (2-PIN)	
		1	**155-2271**	2	KIT-CONNECTING PLUG (4-PIN)	
		1	**155-2274**	4	KIT-CONNECTING PLUG (6-PIN)	
					(EACH PLUG KIT INCLUDES PLUG AS, WEDGE & INTERFACE SEAL)	
		1	**230-4011**	4	PLUG AS-CONNECTOR (2-PIN)	
					(EACH INCLUDES)	
		1	**264-7029**	1	SEAL-CONNECTOR	
		1	**205-9362**	1	PLUG AS	
		1	**7R-2751**	18	PLUG-CONNECTOR	
		1	**8T-8737**	31	PLUG-SEAL	
		1	**102-8802**	3	KIT-RECEPTACLE (2-PIN)	
		1	**102-8804**	1	KIT-RECEPTACLE (4-PIN)	
		1	**102-8805**	2	KIT-RECEPTACLE (6-PIN)	
		1	**102-8801**	1	KIT-RECEPTACLE (12-PIN)	
					(EACH RECEPTACLE KIT INCLUDES RECEPTACLE AS & WEDGE)	
		1	**167-3692**	1	RECEPTACLE AS-CONNECTOR (31-PIN)	
		1	**258-4170**	1	RECEPTACLE AS	
		1	**169-0705**	31	SEAL	
		1	**100-6674**	2	SEAL-CONNECTOR	
		1	**9W-0844**	11	SOCKET-CONNECTOR (14-GA TO 16-GA)	
		1	**9X-3402**	8	SOCKET-CONNECTOR (16-GA TO 18-GA)	
		1	**180-9340**	96	SOCKET-CONNECTOR (14-GA TO 18-GA)	
		1	**202-0313**	28	TERMINAL AS	
					(EACH INCLUDES)	
		1	**128-5016**	1	SEAL-CABLE	
		1	**202-0314**	24	TERMINAL AS	
					(EACH INCLUDES)	
		1	**128-4123**	1	SEAL	

357-3197 **WIRING GP-PLATFORM** *(contd.)* **i04580389**

NOTE	REF NO	GRAPHIC REF	PART NUMBER	QTY	PART NAME 1 2 3 4 5 6 (PRODUCT LEVEL)	SEE PAGE
		1	**8L-8413**	2	STRAP-CABLE (WHITE)	
		1	**189-3158**	5	SUPPRESSOR-ARC	
B		1	**329-3734**		TAPE	
		1	**122-4401**	1	TERMINAL	
		1	*128-4170*	1	TERMINAL AS	
		1	**6H-3587**	1	TERMINAL-RING (6-GA TO 8-GA, 3/8-IN SCREW)	
E		1	**6V-9023**		TUBE-HEAT SHRINK (12.7-MM DIA) (4-CM)	
		1	**2L-8067**	1	TERMINAL-RING (10-GA TO 12-GA, 1/4-IN SCREW)	
		1	**2L-8069**	1	TERMINAL-RING (2-GA TO 10-GA, 3/8-IN SCREW)	
		1	*128-4190*	6	TERMINAL AS	
					(EACH INCLUDES)	
		1	**6H-3586**	1	TERMINAL-RING (6-GA TO 8-GA, 1/4-IN SCREW)	
E		1	**6V-9023**		TUBE-HEAT SHRINK (12.7-MM DIA) (4-CM)	
		1	**7N-7221**	2	TERMINAL-BLADE (18-GA TO 22-GA)	
		1	**091-2436**	35	TERMINAL-BLADE (18-GA TO 22-GA)	
		1	**104-1995**	11	TERMINAL-BLADE (14-GA TO 18-GA)	
		1	**111-6792**	4	TERMINAL-RECEPTACLE (18-GA TO 20-GA)	
		1	**111-6793**	1	TERMINAL-RECEPTACLE	
		1	**111-6794**	2	TERMINAL-RECEPTACLE	
E		1	**119-3662**		TUBE-HEAT SHRINK (10.85-MM DIA) (46-CM)	
E		1	**125-7874**		TUBE-HEAT SHRINK (5.72-MM DIA) (145-CM)	
E		1	**125-7875**		TUBE-HEAT SHRINK (7.44-MM DIA) (40-CM)	
		1	**8T-4205**	2	WASHER-HARD (7.2X14.5X2-MM THK)	
		1	**310-0674**	1	LOCKWASHER	
	41	2	**358-7697**	1	BRACKET AS	
	42	2	**363-8477**	1	CABLE AS	
E		2	**8C-3056**		CABLE (2-GA, RED) (27-CM)	
		2	**299-6082**	1	COVER-TERMINAL	
		2	**308-8161**	1	COVER-TERMINAL	
		2	**6T-5598**	1	TERMINAL-RING (1-GA TO 2-GA, 5/16-IN SCREW)	
	43	1	**367-5026**	1	FILM-IDENTIFICATION (FUSE, RELAY PANEL)	
	44	1	**368-6231**	1	FILM-IDENTIFICATION (FUSE, RELAY PANEL)	
	45	2	**373-9138**	1	TERMINAL	
	46	2	**374-9636**	1	FLASHER AS (12-VOLT, HAZARD, TURN SIGNAL)	
	47	2	**380-5914**	1	BRACKET	
	48	2	**096-6166**	5	WASHER-HARD (4.5X9X1-MM THK)	
	49	2	**110-2028**	4	SCREW-PAN HEAD (10-14X0.75-IN)	
	50	1	**156-6175**	2	CLIP	
	51	1,2,3	**3S-2093**	24	STRAP-CABLE	
	52	1	**4P-7429**	1	CLIP	
	53	3	**4P-8134**	1	CLIP	
M	54	1,2,3	**5C-2890**	12	NUT (M6X1-THD)	
M	55	3	**5C-7261**	3	NUT (M8X1.25-THD)	
M	56	1,2	**5C-9553**	2	BOLT (M6X1X16-MM)	
	57	2	**6V-5764**	8	SCREW-MACHINE (10-32X0.625-IN)	
	58	2	**6V-8801**	1	NUT (3/8-16-THD)	
	59	1	**7P-1695**	6	WASHER (10.5X19X3-MM THK)	
	60	1,3	**8C-3398**	6	LOCKWASHER	
	61	1	**8F-3590**	4	LOCKWASHER	
M	62	2	**8T-0285**	5	SCREW-MACHINE (M4X0.7X12-MM)	
	63	2	**8T-0328**	12	WASHER-HARD (5.5X10X1-MM THK)	
	64	1	**8T-4121**	1	WASHER-HARD (11X21X2.5-MM THK)	
M	65	1	**8T-4133**	2	NUT (M10X1.5-THD)	
M	66	1,2	**8T-4138**	3	BOLT (M6X1X20-MM)	
M	67	1	**8T-4196**	1	BOLT (M10X1.5X35-MM)	
M	68	2,3	**8T-4200**	5	BOLT (M8X1.25X16-MM)	
	69	1,2,3	**8T-4205**	16	WASHER-HARD (7.2X14.5X2-MM THK)	

357-3197 **WIRING GP-PLATFORM** *(contd.)* **i04580389**

NOTE	REF NO	GRAPHIC REF	PART NUMBER	QTY	PART NAME 1 2 3 4 5 6 (PRODUCT LEVEL)	SEE PAGE
	70	2,3	**8T-4224**	8	WASHER-HARD (8.8X16X2-MM THK)	
	71	2	**8T-4896**	1	WASHER-HARD (10.2X18.5X2.5-MM THK)	
M	72	1	**101-7401**	2	BOLT-SOCKET HEAD (M10X1.5X20-MM)	
M	73	3	**8T-9534**	3	BOLT (M6X1X50-MM)	
	74	3	**9F-5644**	2	LOCKWASHER	
M	75	2	**9X-2043**	2	SCREW-TRUSS HEAD (M6X1X14-MM)	
E	76	1	**3E-6600**		SEAL (5-CM EACH)	
E	77	1,3	**3E-8299**		SEAL (3-CM EACH)	
E	77A	1	**3E-8299**		SEAL (7-CM)	
E	77B	3	**3E-8299**		SEAL (6-CM EACH)	
E	77C	2	**3E-8299**		SEAL (4-CM)	
E	77D	2	**3E-8299**		SEAL (10.8-CM)	
E	78	2	**103-2543**		SEAL (3-CM EACH)	

B-USE AS REQUIRED
E-ORDER BY THE CENTIMETER
M-METRIC PART
Y-SEPARATE ILLUSTRATION

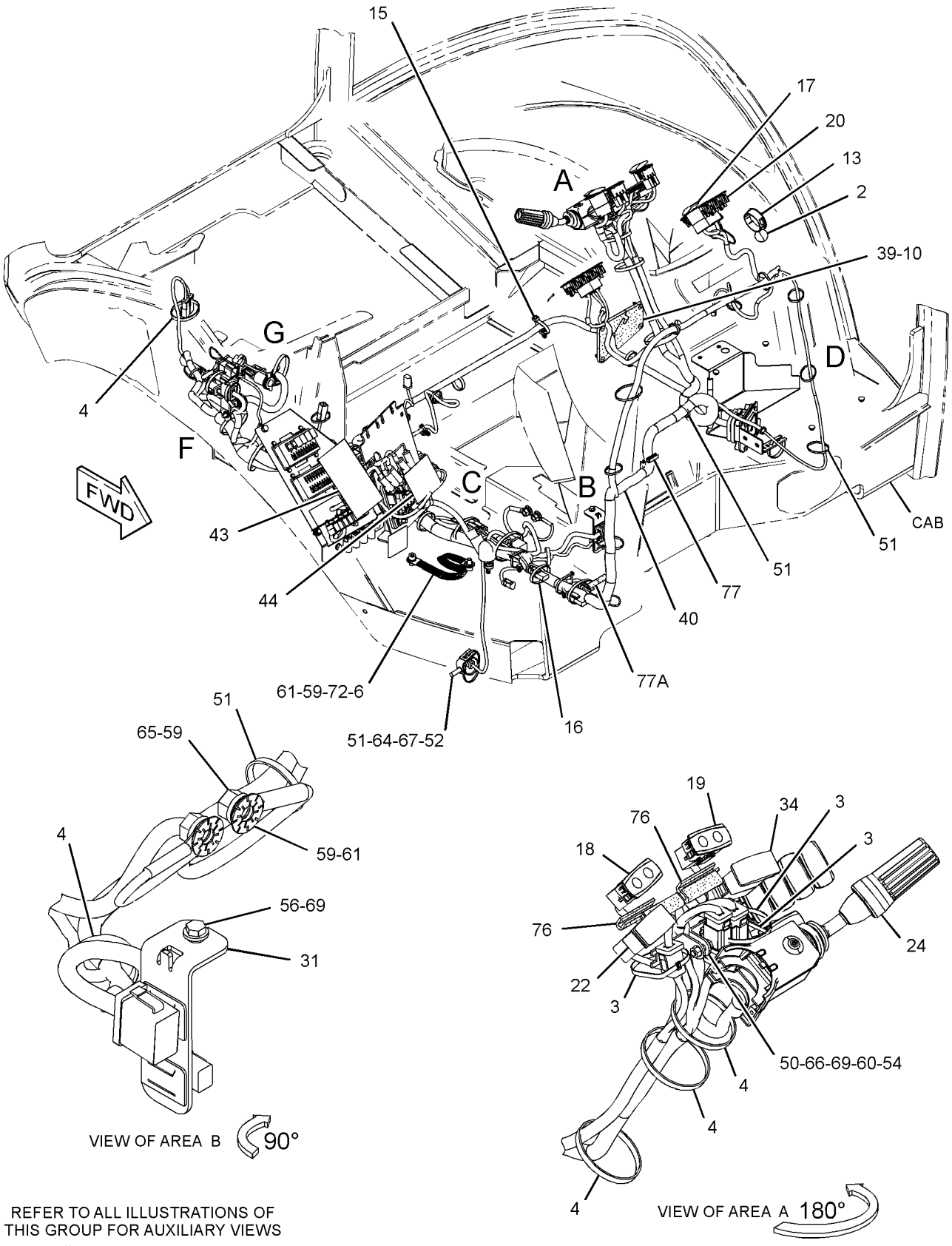

REFER TO ALL ILLUSTRATIONS OF THIS GROUP FOR AUXILIARY VIEWS

GRAPHIC #1

g02847716

357-3197 **WIRING GP-PLATFORM** *(contd.)* **i04580389**

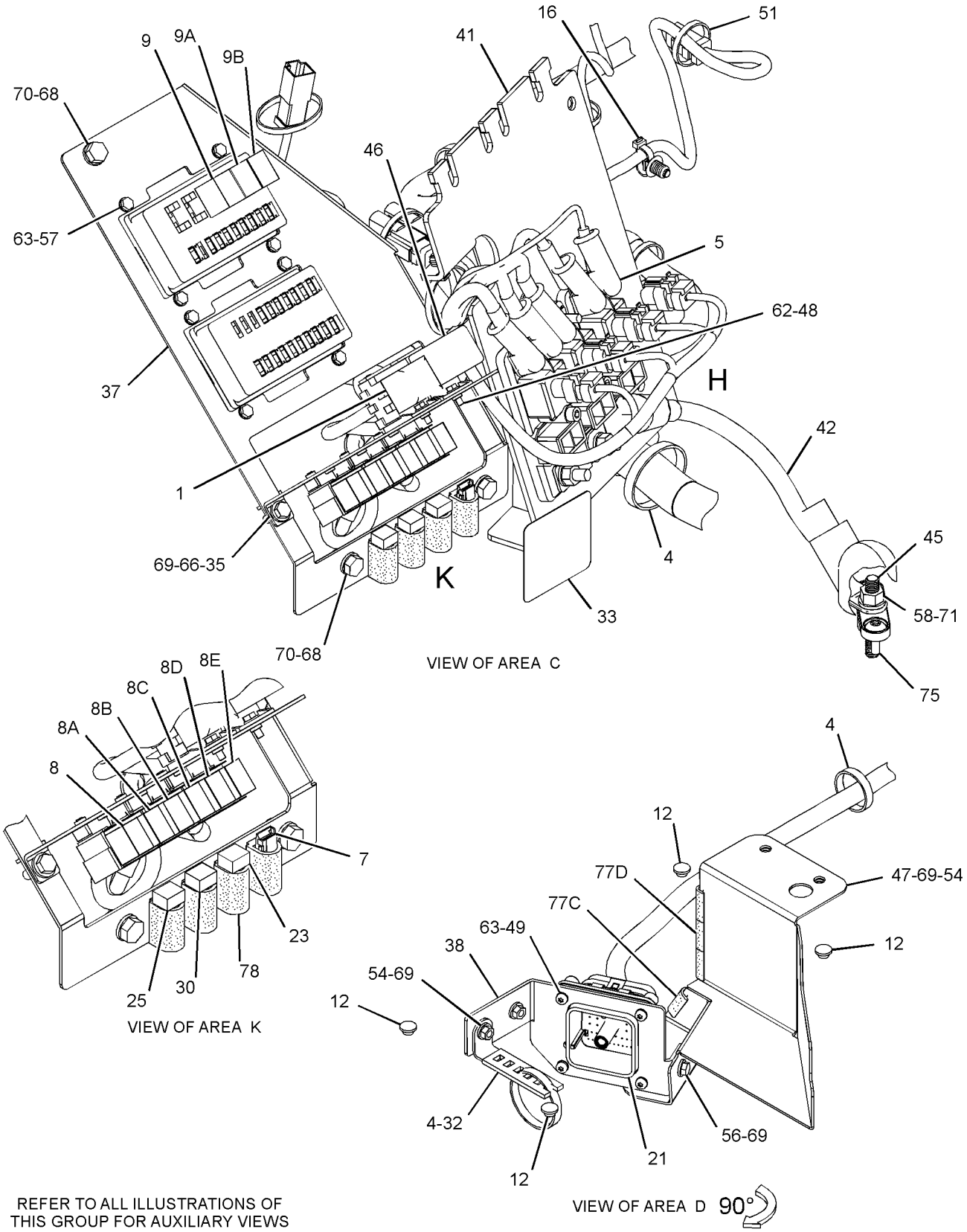

REFER TO ALL ILLUSTRATIONS OF THIS GROUP FOR AUXILIARY VIEWS

GRAPHIC #2

g02847779

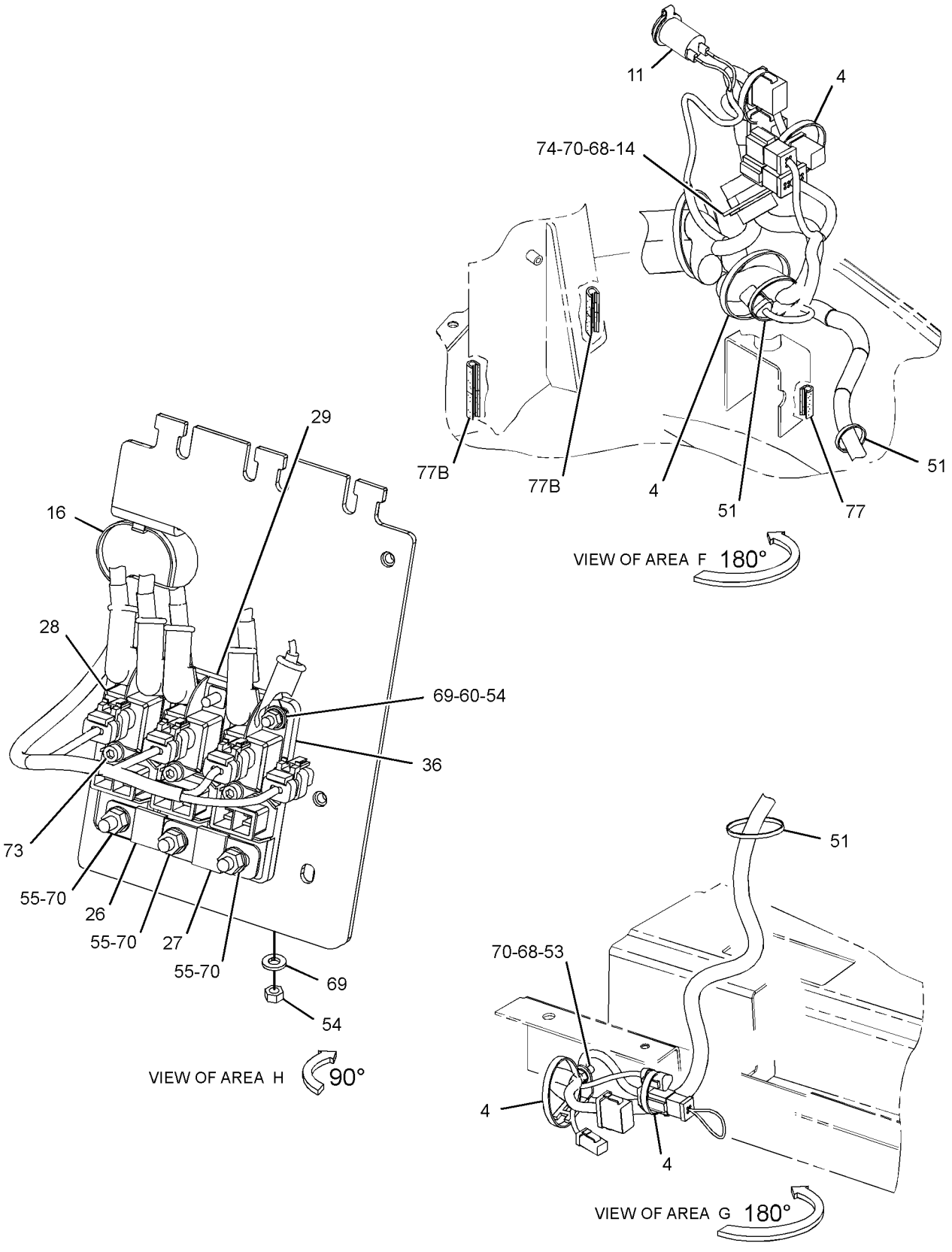

GRAPHIC #3 **<END>** g02847792

ELECTRICAL AND STARTING SYSTEM

357-3240 WIRING GP-PLATFORM

S/N: SJW1-UP

PART OF 353-1461 ELECTRONICS AR-MACHINE

AN ATTACHMENT

SMCS-1408 **i04612170**

NOTE	REF NO	GRAPHIC REF	PART NUMBER	QTY	PART NAME 1 2 3 4 5 6 (PRODUCT LEVEL)	SEE PAGE
	1	2	**3E-9362**	1	RELAY AS (12-VOLT) (START)	
	2	1	**5P-9768**	1	PLUG-HOLE	
	3	2	**6I-1418**	4	SPACER (8.2X12.7X28.7-MM THK)	
	4	1	**6K-0806**	3	STRAP-CABLE	
	5	1,2,3	**7K-1181**	28	STRAP-CABLE	
	6	2	**7T-4848**	1	FLASHER AS (12-VOLT) (HAZARD)	
	7	2	**8C-6354**	1	CAP-RECEPTACLE (ET CONNECTOR)	
	8	2,3	**8T-8799**	5	BOOT	
	9	2	**8T-9655**	8	MOUNT-ISOLATION	
	10	1	**8X-9618**	1	STRAP AS-GROUND	
	11	2	**116-7471**	1	PULLER-MINIFUSE	
	12	2	**140-9378**	1	RELAY AS (12-VOLT) (NEUTRAL START)	
	12A	2	**140-9378**	1	RELAY AS (12-VOLT) (FUEL PUMP)	
	12B	2	**140-9378**	1	RELAY AS (12-VOLT) (BACKUP ALARM)	
	13	2	**146-1815**	1	STRAP AS	
	14	2	**146-9439**	1	RELAY AS (12-VOLT) (FRONT HORN)	
	14A	2	**146-9439**	1	RELAY AS (12-VOLT) (REAR HORN)	
	15	1	**164-1368**	4	FASTENER-PANEL	
	16	3	**178-7539**	1	RECEPTACLE AS (POWER SUPPLY)	
	17	2	**179-6401**	4	SCREW-PAN HEAD (6-32X0.5-IN)	
	18	1	**196-2966**	1	PLUG	
	19	3	**201-1024**	1	BRACKET	
	20	1	**205-9920**	1	STRAP-CABLE	
	21	2,3	**206-1345**	4	STRAP-CABLE	
	22	1	**214-4716**	1	SWITCH AS-ROCKER (TRANSMISSION NEUTRAL LOCK)	
		1	**111-7899**	1	GASKET	
	23	1	**214-4717**	1	INDICATOR AS (LH TURN SIGNAL, PARKING BRAKE)	
	24	1	**214-4723**	1	INDICATOR AS (RH TURN SIGNAL, HIGH BEAM)	
					(EACH INDICATOR AS INCLUDES)	
		1	**111-7899**	1	GASKET	
B	25	1	**227-1057**	12	PLUG-HOLE	
	26	2	**258-4178**	1	FLANGE-MOUNTING	
	27	2	**267-2701**	1	FUSE (60-AMPERE) (POWER, 1)	
	28	1	**273-9190**	1	SWITCH AS-MULTIFUNCTION (HD LIGHT, TURN SIG, WDO WIPER)	
		1	**8T-8729**	13	PIN-CONNECTOR (16-GA TO 18-GA)	
		1	**8T-8737**	1	PLUG-SEAL	
		1	**151-9275**	1	KIT-RECEPTACLE (6-PIN)	
		1	**160-3518**	1	KIT-RECEPTACLE (8-PIN)	
					(EACH RECEPTACLE KIT INCLUDES RECEPTACLE AS & WEDGE)	
	29	2	**274-9872**	1	FUSE (30-AMPERE) (MAIN)	
	30	3	**275-0553**	1	BAR-BUS	
	31	3	**275-0570**	1	BAR-BUS	
Y	32	3	**276-7290**	1	RELAY GP (12-VOLT) (POWER, 1)	127
Y	33	3	**276-7291**	1	RELAY GP (12-VOLT) (POWER, 2)	128
	34	2	**278-6377**	1	FUSE (40-AMPERE) (POWER, 2)	
	35	1	**290-6733**	1	BRACKET AS	
	36	2	**298-0663**	1	CLIP	
	37	1	**306-7346**	1	SWITCH AS-ROCKER (HAZARD WARNING LIGHTS)	
		1	**111-7899**	1	GASKET	
	38	2	**312-3083**	1	BRACKET AS	
Y	39	3	**322-6827**	1	RELAY GP (12-VOLT) (STARTING MOTOR)	129
	40	2	**331-5578**	1	BRACKET	
	41	2	**331-5636**	1	BRACKET AS	

357-3240 **WIRING GP-PLATFORM** *(contd.)* **i04612170**

NOTE	REF NO	GRAPHIC REF	PART NUMBER	QTY	PART NAME 1 2 3 4 5 6 (PRODUCT LEVEL)	SEE PAGE
	42	2	**344-2824**	1	PLATE AS	
	43	1	**356-4114**	1	GROMMET	
	44	1	**357-3224**	1	HARNESS AS-PLATFORM	
		1	**275-7877**	1	BLOCK AS-FUSE	
		1	**306-0348**	1	COVER-FUSE	
		1	**8C-3398**	2	LOCKWASHER	
M		1	**5C-2890**	2	NUT (M6X1-THD)	
		1	**306-0351**	1	SEAL-COVER	
		1	**8T-4205**	2	WASHER-HARD (7.2X14.5X2-MM THK)	
		1	**292-9784**	1	BLOCK AS-FUSE	
		1	**8T-8799**	2	BOOT	
		1	**110-0203**	2	CONNECTOR AS	
		1	**228-5856**	7	CONNECTOR	
		1	**110-0203**	2	CONNECTOR AS	
		1	**113-8490**	9	FUSE (10-AMPERE)	
		1	**113-8491**	12	FUSE (15-AMPERE)	
		1	**113-8492**	6	FUSE (20-AMPERE)	
		1	**111-6795**	2	HOUSING-RELAY	
		1	**111-6816**	2	LOCK	
		1	**8C-3398**	2	LOCKWASHER	
M		1	**5C-2890**	2	NUT (M6X1-THD)	
		1	**211-0052**	1	NUT (1-11/16-18-THD)	
		1	**110-0203**	6	CONNECTOR AS	
		1	**9X-3401**	55	PIN-CONNECTOR (16-GA TO 18-GA)	
		1	**262-9151**	3	PIN-CONNECTOR (12-GA TO 14-GA)	
		1	**275-0600**	14	PIN-CONNECTOR	
		1	**147-1446**	1	PLUG AS-CONNECTOR (70-PIN)	
		1	**147-1445**	1	PLUG AS-CONNECTOR (70-PIN)	
					(EACH PLUG AS INCLUDES)	
		1	**159-9322**	1	SEAL-O-RING	
		1	**155-2255**	4	KIT-CONNECTING PLUG (12-PIN)	
		1	**155-2256**	1	KIT-CONNECTING PLUG (12-PIN)	
		1	**155-2265**	2	KIT-CONNECTING PLUG (8-PIN)	
		1	**155-2260**	5	KIT-CONNECTING PLUG (3-PIN)	
		1	**155-2270**	6	KIT-CONNECTING PLUG (2-PIN)	
		1	**155-2271**	3	KIT-CONNECTING PLUG (4-PIN)	
		1	**155-2274**	3	KIT-CONNECTING PLUG (6-PIN)	
					(EACH PLUG KIT INCLUDES PLUG AS, WEDGE & INTERFACE SEAL)	
		1	**230-4011**	4	PLUG AS-CONNECTOR (2-PIN)	
					(EACH INCLUDES)	
		1	**264-7029**	1	SEAL-CONNECTOR	
		1	**205-9362**	1	PLUG AS	
		1	**7R-2751**	20	PLUG-CONNECTOR	
		1	**8T-8737**	142	PLUG-SEAL	
		1	**102-8802**	3	KIT-RECEPTACLE (2-PIN)	
		1	**102-8804**	2	KIT-RECEPTACLE (4-PIN)	
		1	**102-8805**	1	KIT-RECEPTACLE (6-PIN)	
		1	**102-8801**	1	KIT-RECEPTACLE (12-PIN)	
					(EACH RECEPTACLE KIT INCLUDES RECEPTACLE AS & WEDGE)	
		1	**134-2540**	2	RESISTOR AS-CONNECTION (3-PIN)	
		1	**167-3692**	1	RECEPTACLE AS-CONNECTOR (31-PIN)	
		1	**258-4170**	1	RECEPTACLE AS	
		1	**9W-1951**	1	RECEPTACLE-CONNECTOR (9-PIN)	
		1	**169-0705**	10	SEAL	
		1	**100-6674**	2	SEAL-CONNECTOR	
		1	**9W-0844**	11	SOCKET-CONNECTOR (14-GA TO 16-GA)	
		1	**9X-3402**	61	SOCKET-CONNECTOR (16-GA TO 18-GA)	
		1	**180-9340**	105	SOCKET-CONNECTOR (14-GA TO 18-GA)	

357-3240 **WIRING GP-PLATFORM** *(contd.)* **i04612170**

NOTE	REF NO	GRAPHIC REF	PART NUMBER	QTY	PART NAME 1 2 3 4 5 6 (PRODUCT LEVEL)	SEE PAGE
		1	**202-0313**	25	TERMINAL AS	
					(EACH INCLUDES)	
		1	**128-5016**	1	SEAL-CABLE	
		1	**202-0314**	25	TERMINAL AS	
					(EACH INCLUDES)	
		1	**128-4123**	1	SEAL	
		1	**8L-8413**	2	STRAP-CABLE (WHITE)	
		1	**189-3158**	1	SUPPRESSOR-ARC	
B		1	**329-3734**		TAPE	
		1	*128-4170*	1	TERMINAL AS	
		1	**6H-3587**	1	TERMINAL-RING (6-GA TO 8-GA, 3/8-IN SCREW)	
E		1	**6V-9023**		TUBE-HEAT SHRINK (12.7-MM DIA) (4-CM)	
		1	**2L-8067**	1	TERMINAL-RING (10-GA TO 12-GA, 1/4-IN SCREW)	
		1	**2L-8069**	1	TERMINAL-RING (2-GA TO 10-GA, 3/8-IN SCREW)	
		1	*128-4190*	6	TERMINAL AS	
					(EACH INCLUDES)	
		1	**6H-3586**	1	TERMINAL-RING (6-GA TO 8-GA, 1/4-IN SCREW)	
E		1	**6V-9023**		TUBE-HEAT SHRINK (12.7-MM DIA) (4-CM)	
		1	**7N-7221**	2	TERMINAL-BLADE (18-GA TO 22-GA)	
		1	**091-2436**	48	TERMINAL-BLADE (18-GA TO 22-GA)	
		1	**101-1995**	9	PLATE	
		1	**111-6792**	4	TERMINAL-RECEPTACLE (18-GA TO 20-GA)	
		1	**111-6793**	1	TERMINAL-RECEPTACLE	
		1	**111-6794**	2	TERMINAL-RECEPTACLE	
E		1	**119-3662**		TUBE-HEAT SHRINK (10.85-MM DIA) (39-CM)	
E		1	**125-7874**		TUBE-HEAT SHRINK (5.72-MM DIA) (185-CM)	
E		1	**125-7875**		TUBE-HEAT SHRINK (7.44-MM DIA) (45-CM)	
		1	**8T-4205**	2	WASHER-HARD (7.2X14.5X2-MM THK)	
		1	**310-0674**	1	LOCKWASHER	
	45	2	**358-7697**	1	BRACKET AS	
	46	2	**363-8477**	1	CABLE AS	
		2	**6T-5598**	1	TERMINAL-RING (1-GA TO 2-GA, 5/16-IN SCREW)	
E		2	**8C-3056**		CABLE (2-GA, RED) (27-CM)	
		2	**299-6082**	1	COVER-TERMINAL	
		2	**308-8161**	1	COVER-TERMINAL	
	47	1	**367-5026**	1	FILM-IDENTIFICATION (FUSE, RELAY PANEL)	
	48	1	**368-6231**	1	FILM-IDENTIFICATION (FUSE, RELAY PANEL)	
	49	2	**373-9138**	1	TERMINAL	
	50	2	**380-5914**	1	BRACKET	
	51	2	**096-6166**	12	WASHER-HARD (4.5X9X1-MM THK)	
	52	2	**110-2028**	4	SCREW-PAN HEAD (10-14X0.75-IN)	
	53	2	**132-5789**	1	CLIP	
	54	1	**156-6175**	2	CLIP	
	55	2	**274-7409**	4	SCREW-TRUSS HEAD (M8X1.25X45-MM)	
	56	1,2,3	**3S-2093**	22	STRAP-CABLE	
	57	1	**4P-7429**	1	CLIP	
	58	3	**4P-8134**	1	CLIP	
M	59	1,2,3	**5C-2890**	12	NUT (M6X1-THD)	
M	60	2,3	**5C-7261**	7	NUT (M8X1.25-THD)	
M	61	1,2	**5C-9553**	3	BOLT (M6X1X16-MM)	
	62	2	**6V-5764**	8	SCREW-MACHINE (10-32X0.625-IN)	
	63	2	**6V-8801**	1	NUT (3/8-16-THD)	
	64	2	**7F-9223**	1	LOCKWASHER	
	65	2	**7X-0579**	4	WASHER-HARD (8.8X25.5X2-MM THK)	
	66	1	**7X-7729**	2	WASHER (11X25X3-MM THK)	
	67	1,3	**8C-3398**	6	LOCKWASHER	
	68	1	**8F-3590**	4	LOCKWASHER	

357-3240 **WIRING GP-PLATFORM** *(contd.)* **i04612170**

NOTE	REF NO	GRAPHIC REF	PART NUMBER	QTY	PART NAME 1 2 3 4 5 6 (PRODUCT LEVEL)	SEE PAGE
M	69	2	**8T-0285**	4	SCREW-MACHINE (M4X0.7X12-MM)	
	70	2	**8T-0328**	12	WASHER-HARD (5.5X10X1-MM THK)	
	71	1	**8T-4121**	5	WASHER-HARD (11X21X2.5-MM THK)	
M	72	1	**8T-4133**	2	NUT (M10X1.5-THD)	
M	73	1	**8T-4136**	1	BOLT (M10X1.5X25-MM)	
M	74	1	**8T-4137**	1	BOLT (M10X1.5X20-MM)	
M	75	1,2	**8T-4138**	3	BOLT (M6X1X20-MM)	
M	76	1	**8T-4196**	1	BOLT (M10X1.5X35-MM)	
M	77	2,3	**8T-4200**	5	BOLT (M8X1.25X16-MM)	
	78	1,2,3	**8T-4205**	16	WASHER-HARD (7.2X14.5X2-MM THK)	
	79	2,3	**8T-4224**	8	WASHER-HARD (8.8X16X2-MM THK)	
	80	2	**8T-4896**	1	WASHER-HARD (10.2X18.5X2.5-MM THK)	
M	81	3	**8T-9534**	3	BOLT (M6X1X50-MM)	
	82	3	**9F-5644**	2	LOCKWASHER	
M	83	2	**9X-2043**	2	SCREW-TRUSS HEAD (M6X1X14-MM)	
	84	2	**9X-6165**	2	WASHER (6.5X22X2.5-MM THK)	
E	85	1	**3E-6600**		SEAL (5-CM EACH)	
E	86	1,2,3	**3E-8299**		SEAL (3-CM EACH)	
E	86A	3	**3E-8299**		SEAL (6-CM EACH)	
E	86B	1	**3E-8299**		SEAL (7-CM)	
E	86C	2	**3E-8299**		SEAL (9-CM)	
E	87	2	**103-2543**		SEAL (3-CM EACH)	

B-USE AS REQUIRED
E-ORDER BY THE CENTIMETER
M-METRIC PART
Y-SEPARATE ILLUSTRATION

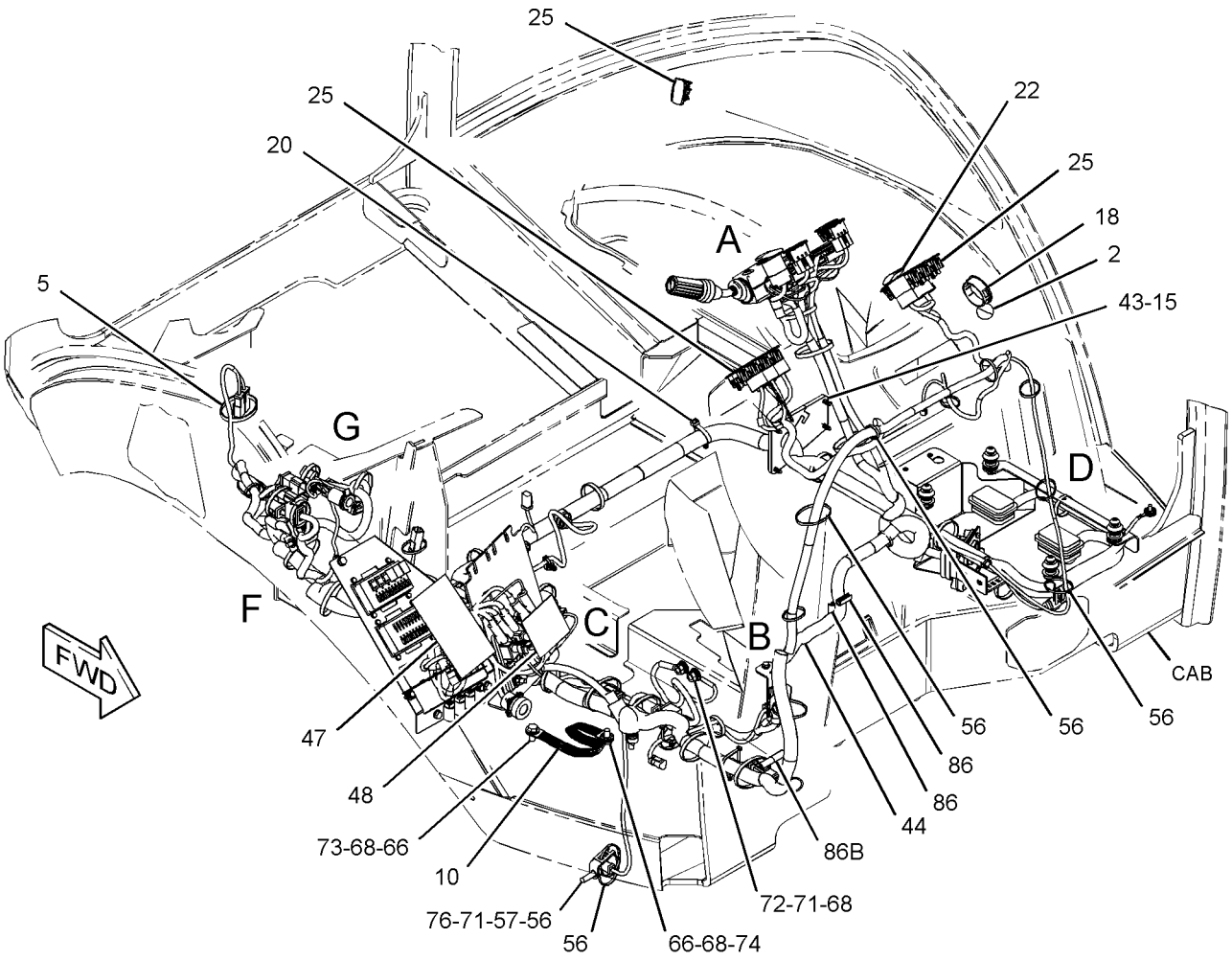

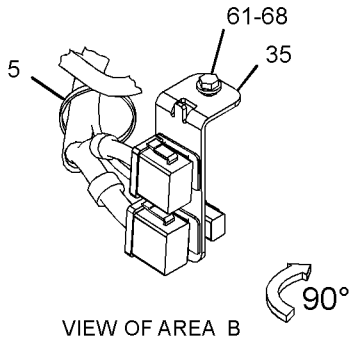

VIEW OF AREA B

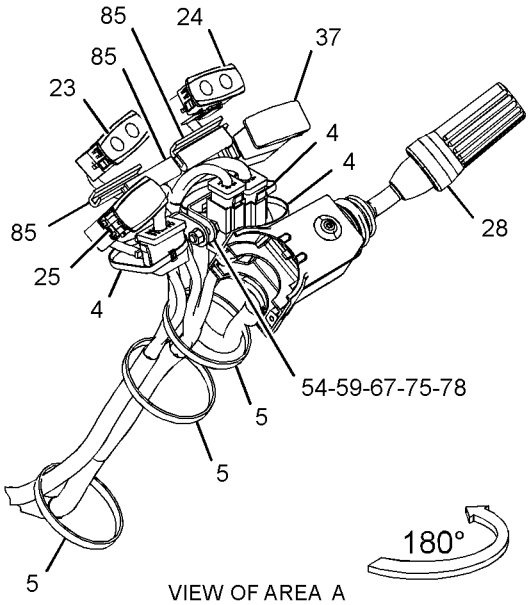

VIEW OF AREA A

REFER TO ALL ILLUSTRATIONS OF THIS GROUP FOR AUXILIARY VIEWS

GRAPHIC #1

g02819836

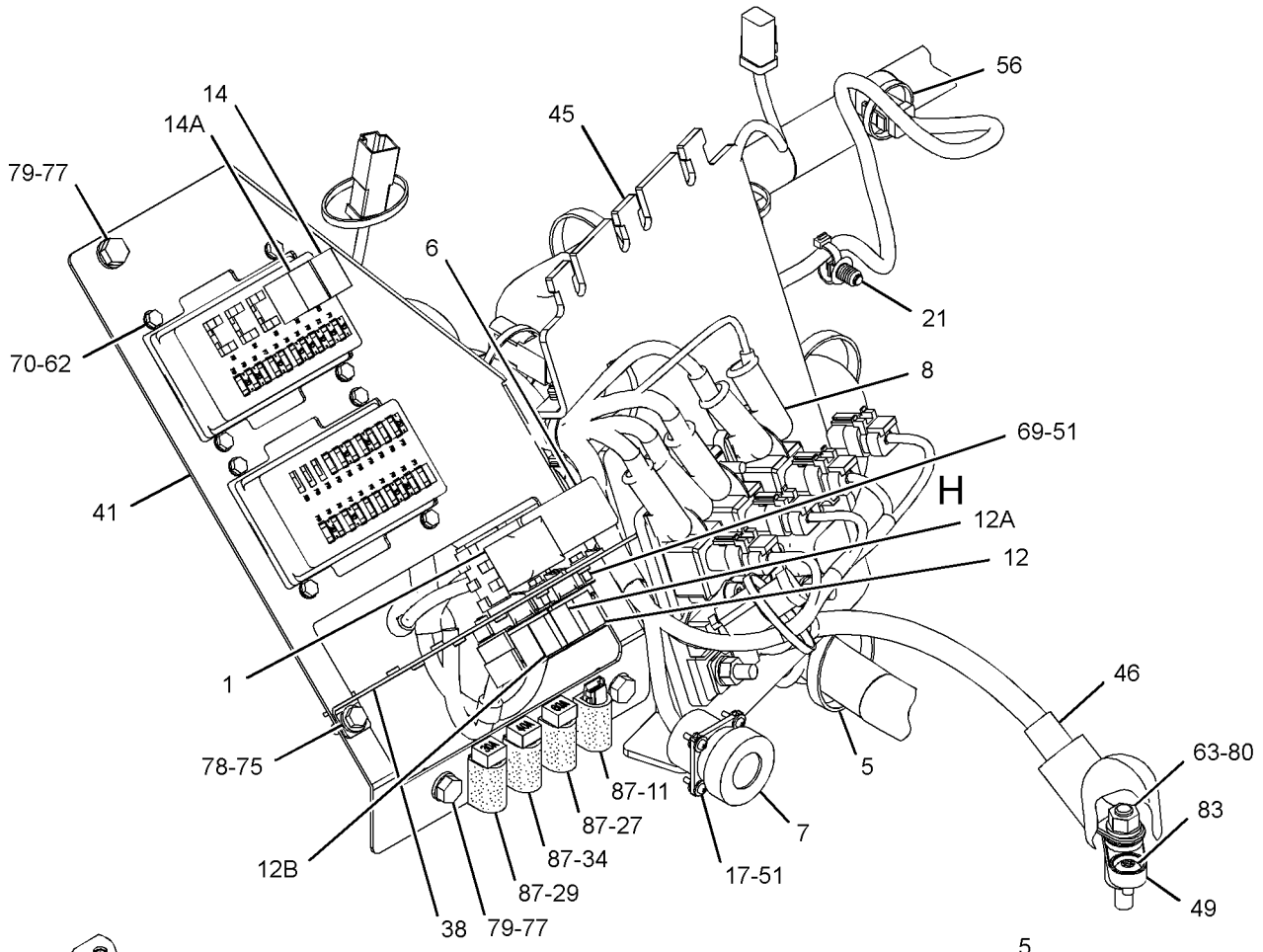

VIEW OF AREA C

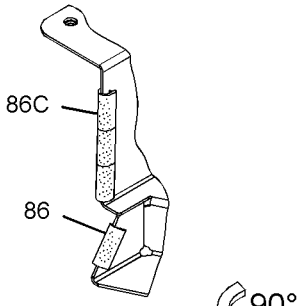

VIEW OF AREA J

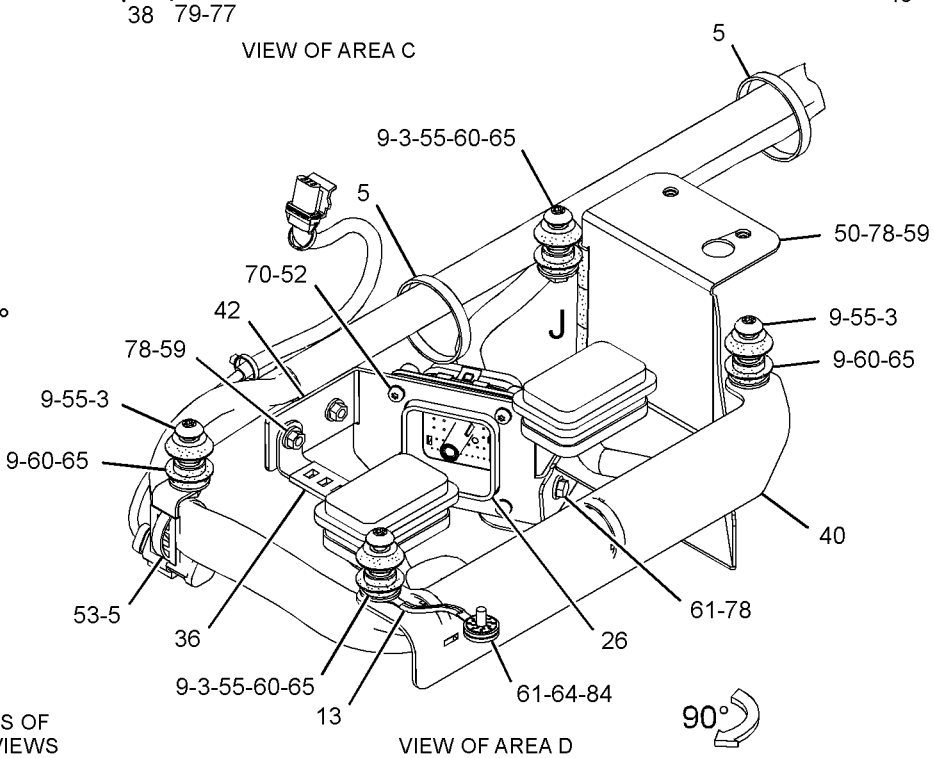

VIEW OF AREA D

REFER TO ALL ILLUSTRATIONS OF THIS GROUP FOR AUXILIARY VIEWS

GRAPHIC #2

g02844156

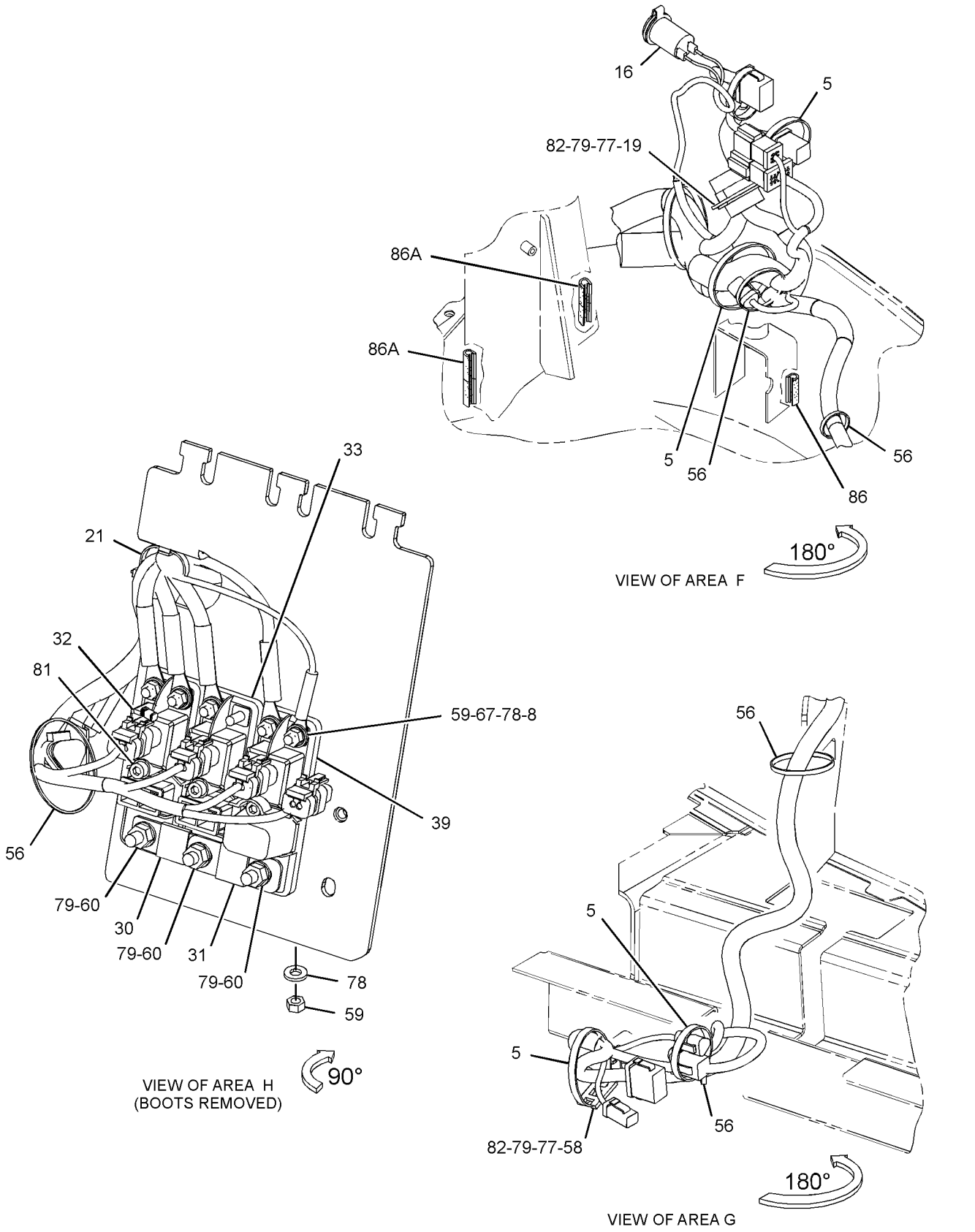

GRAPHIC #3 **<END>** g02820336

357-3205 WIRING GP-REAR–SIDESHIFT

S/N: SJW1-UP

PART OF 373-4266, 373-4267, 373-4268 VALVE AR-BANK 3

AN ATTACHMENT

SMCS-1408 **i04566132**

NOTE	REF NO	GRAPHIC REF	PART NUMBER	QTY	PART NAME 1 2 3 4 5 6 (PRODUCT LEVEL)	SEE PAGE
	1	1	**9R-1499**	2	REFLECTOR	
	2	2	**164-9425**	1	HORN AS (12-VOLT, LOW TONE)	
	3	2	**170-0950**	1	ALARM AS	
		2	**4B-2043**	2	NUT (8-32-THD)	
	4	1,2	**205-9920**	14	STRAP-CABLE	
	5	1,2	**206-1345**	4	STRAP-CABLE	
	6	1	**214-4711**	1	SWITCH AS-ROCKER (ROADING LIGHTS)	
	7	1	**214-4713**	1	SWITCH AS-ROCKER (SIDESHIFT, LOCK-UNLOCK)	
					(EACH SWITCH AS-ROCKER INCLUDES)	
		1	**111-7899**	1	GASKET	
	8	2	**336-9096**	1	LAMP GP-SIGNAL (12-VOLT) (STOP, TAIL, TURN, RH)	
	8A	1	**336-9096**	1	LAMP GP-SIGNAL (12-VOLT) (STOP, TAIL, TURN, LH)	
					(EACH LAMP GP INCLUDES)	
		1	**7S-1800**	1	LAMP (12-VOLT)	
		1	**9W-3326**	1	LAMP (12-VOLT, 21-WATT)	
		1	**352-4645**	1	LENS AS (TURN SIGNAL)	
	9	1,2	**337-7029**	2	BRACKET AS	
	10	1	**357-3206**	1	HARNESS AS-REAR	
		1	**274-3775**	2	CAP-CONNECTOR	
		1	**8T-8729**	1	PIN-CONNECTOR (16-GA TO 18-GA)	
		1	**9W-0852**	1	PIN-CONNECTOR (14-GA TO 16-GA)	
		1	**9X-3401**	2	PIN-CONNECTOR (16-GA TO 18-GA)	
		1	**155-2260**	2	KIT-CONNECTING PLUG (3-PIN)	
		1	**155-2271**	2	KIT-CONNECTING PLUG (4-PIN)	
		1	**155-2270**	3	KIT-CONNECTING PLUG (2-PIN)	
					(EACH PLUG KIT INCLUDES PLUG AS, WEDGE & INTERFACE SEAL)	
		1	**8T-8737**	2	PLUG-SEAL	
		1	**102-8802**	1	KIT-RECEPTACLE (2-PIN)	
		1	**102-8801**	1	KIT-RECEPTACLE (12-PIN)	
					(EACH RECEPTACLE KIT INCLUDES RECEPTACLE AS & WEDGE)	
		1	**180-9340**	19	SOCKET-CONNECTOR (14-GA TO 18-GA)	
		1	**189-3158**	1	SUPPRESSOR-ARC	
B		1	**329-3734**		TAPE	
		1	**2L-8075**	2	TERMINAL-RING (14-GA TO 16-GA, NO. 8 SCREW)	
E		1	**125-7874**		TUBE-HEAT SHRINK (5.72-MM DIA) (15-CM)	
E		1	**125-7875**		TUBE-HEAT SHRINK (7.44-MM DIA) (15-CM)	
	11	2	**365-2823**	1	PLATE AS	
	12	1	**214-4701**	1	SWITCH AS-ROCKER (HORN)	
		1	**111-7899**	1	GASKET	
	13	2	**281-2901**	1	SCREW-BUTTON HEAD (M10X1.5X40-MM)	
	14	1,2	**3S-2093**	8	STRAP-CABLE	
	15	2	**4P-7428**	2	CLIP	
	16	2	**8T-4121**	6	WASHER-HARD (11X21X2.5-MM THK)	
M	17	2	**8T-4133**	3	NUT (M10X1.5-THD)	
M	18	1,2	**8T-4189**	4	BOLT (M8X1.25X20-MM)	
M	19	2	**8T-4196**	2	BOLT (M10X1.5X35-MM)	
	20	1,2	**8T-4224**	6	WASHER-HARD (8.8X16X2-MM THK)	
M	21	1,2	**8T-4908**	2	BOLT (M8X1.25X25-MM)	
M	22	2	**9X-2044**	2	SCREW-TRUSS HEAD (M6X1X16-MM)	
	23	2	**9X-6165**	2	WASHER (6.5X22X2.5-MM THK)	

B-USE AS REQUIRED
E-ORDER BY THE CENTIMETER
M-METRIC PART

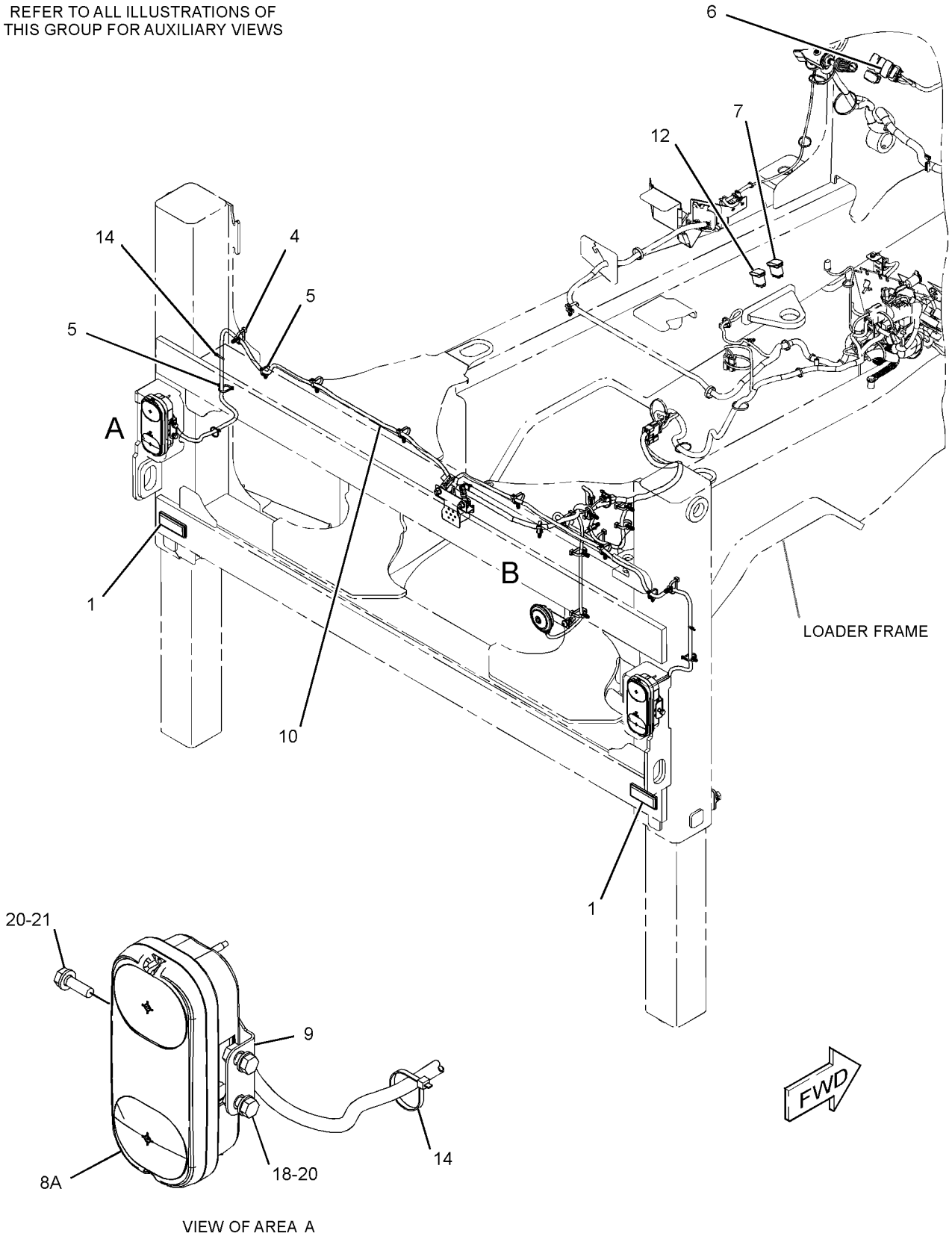

GRAPHIC #1 g02797575

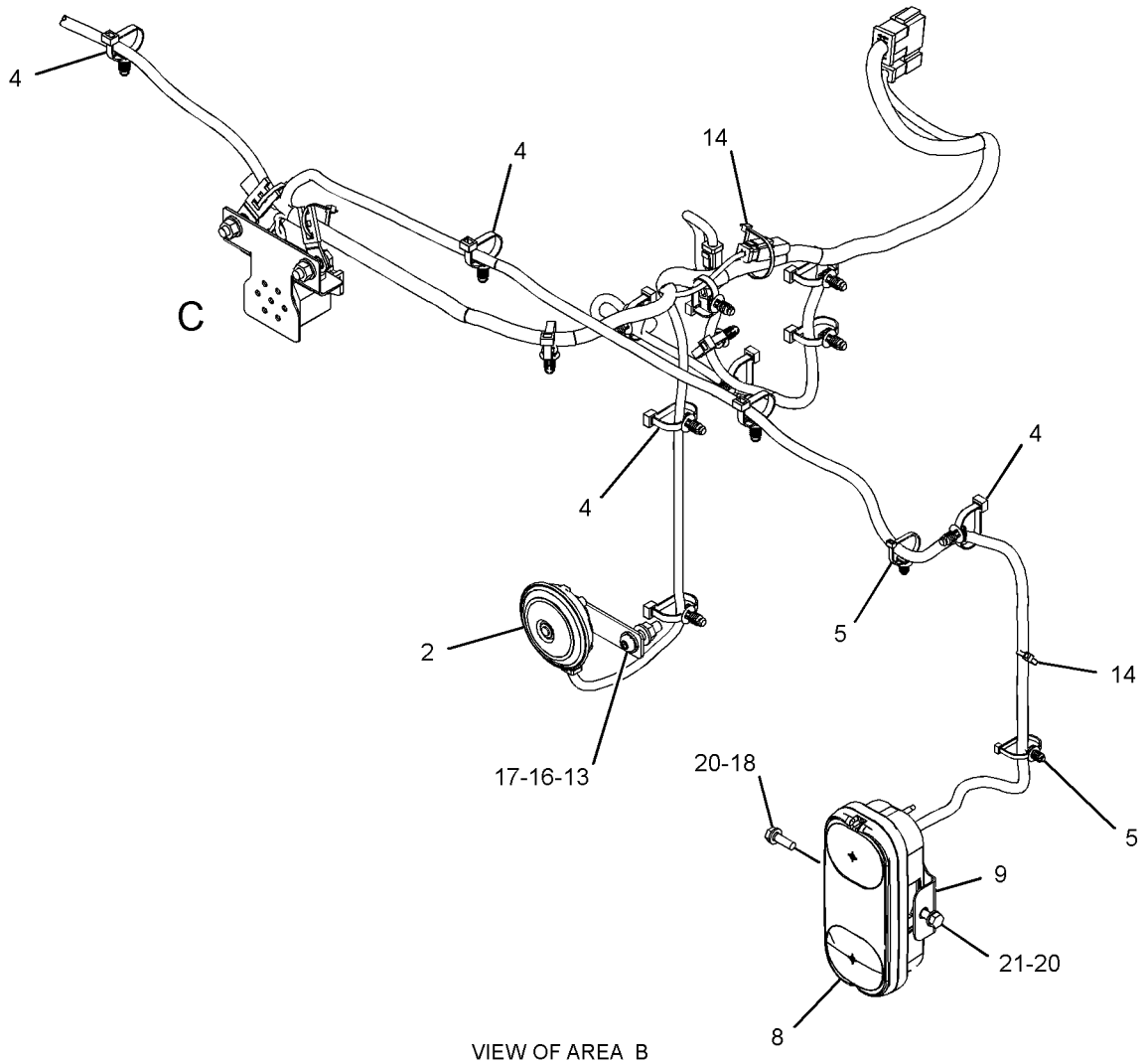

VIEW OF AREA B

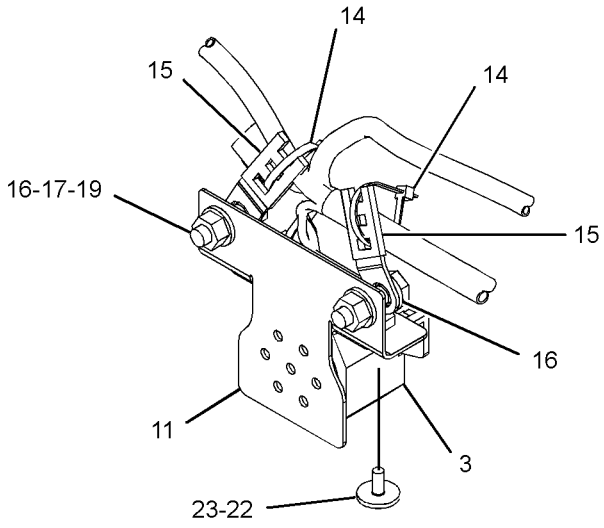

VIEW OF AREA C

GRAPHIC #2 **<END>** g02797641

331-5470 WIRING GP-RIDE CONTROL

S/N: SJW1-UP
PART OF 340-1747 CONTROL AR-RIDE
AN ATTACHMENT

SMCS-1408 **i04580718**

NOTE	REF NO	GRAPHIC REF	PART NUMBER	QTY	PART NAME 1 2 3 4 5 6 (PRODUCT LEVEL)	SEE PAGE
	1	1	**146-9439**	1	RELAY AS (12-VOLT) (RIDE CONTROL)	
	2	1	**205-9920**	3	STRAP-CABLE	
	3	1	**214-4710**	1	SWITCH AS-ROCKER (RIDE CONTROL)	
		1	**111-7899**	1	GASKET	
	4	1	**331-5471**	1	HARNESS AS-RIDE CONTROL	
		1	**8T-8729**	5	PIN-CONNECTOR (16-GA TO 18-GA)	
		1	**155-2270**	3	KIT-CONNECTING PLUG (2-PIN)	
					(EACH INCLUDES PLUG AS, WEDGE & INTERFACE SEAL)	
		1	**230-4013**	1	PLUG AS-CONNECTOR (3-PIN)	
		1	**264-7030**	1	SEAL-CONNECTOR	
		1	**8T-8737**	1	PLUG-SEAL	
		1	**102-8805**	1	KIT-RECEPTACLE (6-PIN)	
					(INCLUDES RECEPTACLE AS & WEDGE)	
		1	**8T-8730**	6	SOCKET-CONNECTOR (16-GA TO 18-GA)	
		1	**9X-3402**	3	SOCKET-CONNECTOR (16-GA TO 18-GA)	
		1	**189-3158**	1	SUPPRESSOR-ARC	
E		1	**125-7874**		TUBE-HEAT SHRINK (5.72-MM DIA) (10-CM)	
	5	1	**344-7391**	1	SENSOR GP-PRESSURE (RIDE CONTROL)	
	6	1	**3J-1907**	1	SEAL-O-RING	
	7	1	**3S-2093**	1	STRAP-CABLE	

E-ORDER BY THE CENTIMETER

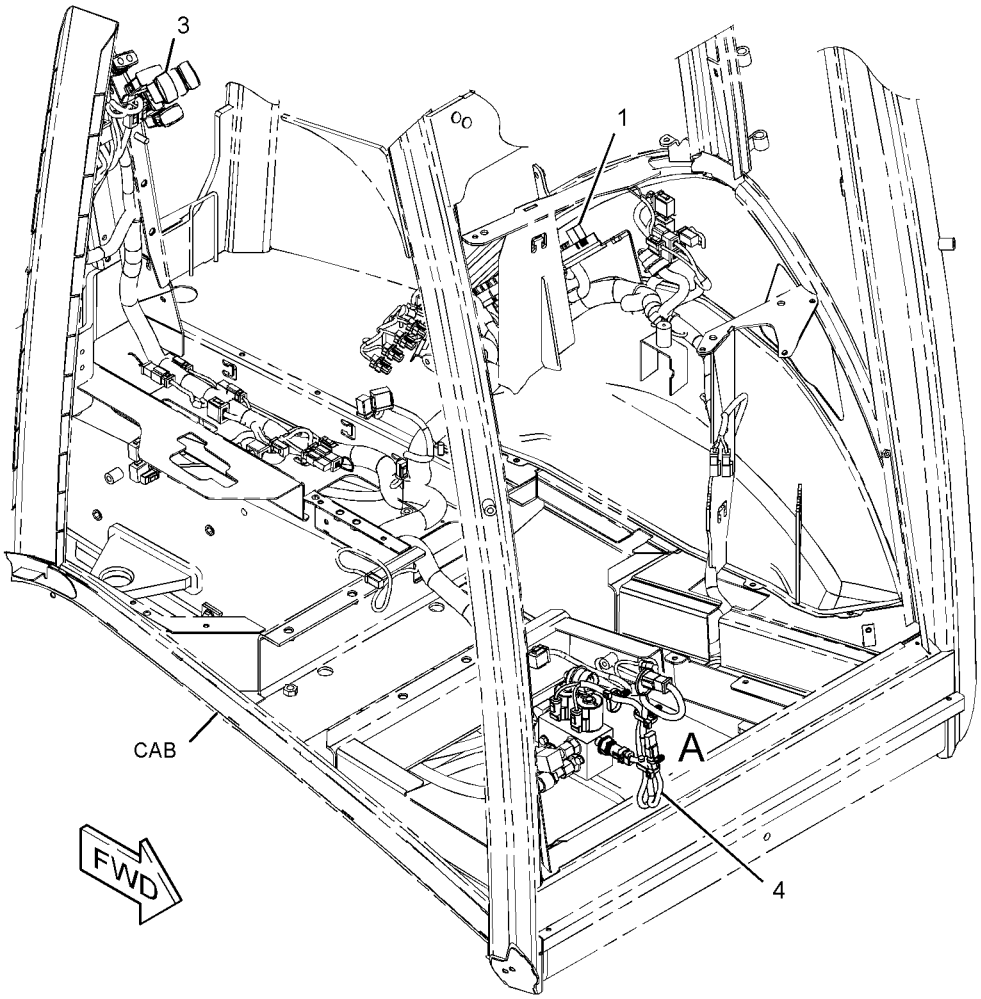

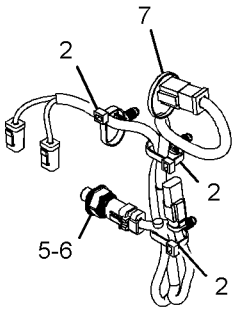

VIEW OF AREA A

GRAPHIC #1 **<END>** g02791924

357-3216 WIRING GP-RIDE CONTROL—MECHANICAL

S/N: SJW1-UP
PART OF 340-1746 CONTROL AR-RIDE
AN ATTACHMENT

SMCS-1408 **i04608870**

NOTE	REF NO	GRAPHIC REF	PART NUMBER	QTY	PART NAME 1 2 3 4 5 6 (PRODUCT LEVEL)	SEE PAGE
B	1	1	**146-9439**	1	RELAY AS (12-VOLT) (RIDE CONTROL)	
	2	1	**205-9920**	3	STRAP-CABLE	
B	3	1	**214-4719**	1	SWITCH AS-ROCKER (RIDE CONTROL)	
		1	**111-7899**	1	GASKET	
	4	1	**304-5696**	1	SWITCH AS-PRESSURE (RIDE CONTROL)	
		1	**8T-8729**	3	PIN-CONNECTOR (16-GA TO 18-GA)	
		1	**102-8803**	1	KIT-RECEPTACLE (3-PIN)	
					(INCLUDES RECEPTACLE AS & WEDGE)	
E		1	**9X-1813**		SLEEVE (23-CM)	
	5	1	**357-3217**	1	HARNESS AS-RIDE CONTROL	
		1	**8T-8729**	2	PIN-CONNECTOR (16-GA TO 18-GA)	
		1	**9X-3401**	4	PIN-CONNECTOR (16-GA TO 18-GA)	
		1	**155-2260**	1	KIT-CONNECTING PLUG (3-PIN)	
		1	**155-2270**	3	KIT-CONNECTING PLUG (2-PIN)	
					(EACH PLUG KIT INCLUDES PLUG AS, WEDGE & INTERFACE SEAL)	
		1	**8T-8737**	1	PLUG-SEAL	
		1	**102-8804**	1	KIT-RECEPTACLE (4-PIN)	
					(INCLUDES RECEPTACLE AS & WEDGE)	
		1	**180-9340**	8	SOCKET-CONNECTOR (14-GA TO 18-GA)	
		1	**189-3158**	1	SUPPRESSOR-ARC	
E		1	**125-7874**		TUBE-HEAT SHRINK (5.72-MM DIA) (10-CM)	
	6	1	**3J-1907**	1	SEAL-O-RING	
	7	1	**3S-2093**	2	STRAP-CABLE	

B-USE AS REQUIRED
E-ORDER BY THE CENTIMETER

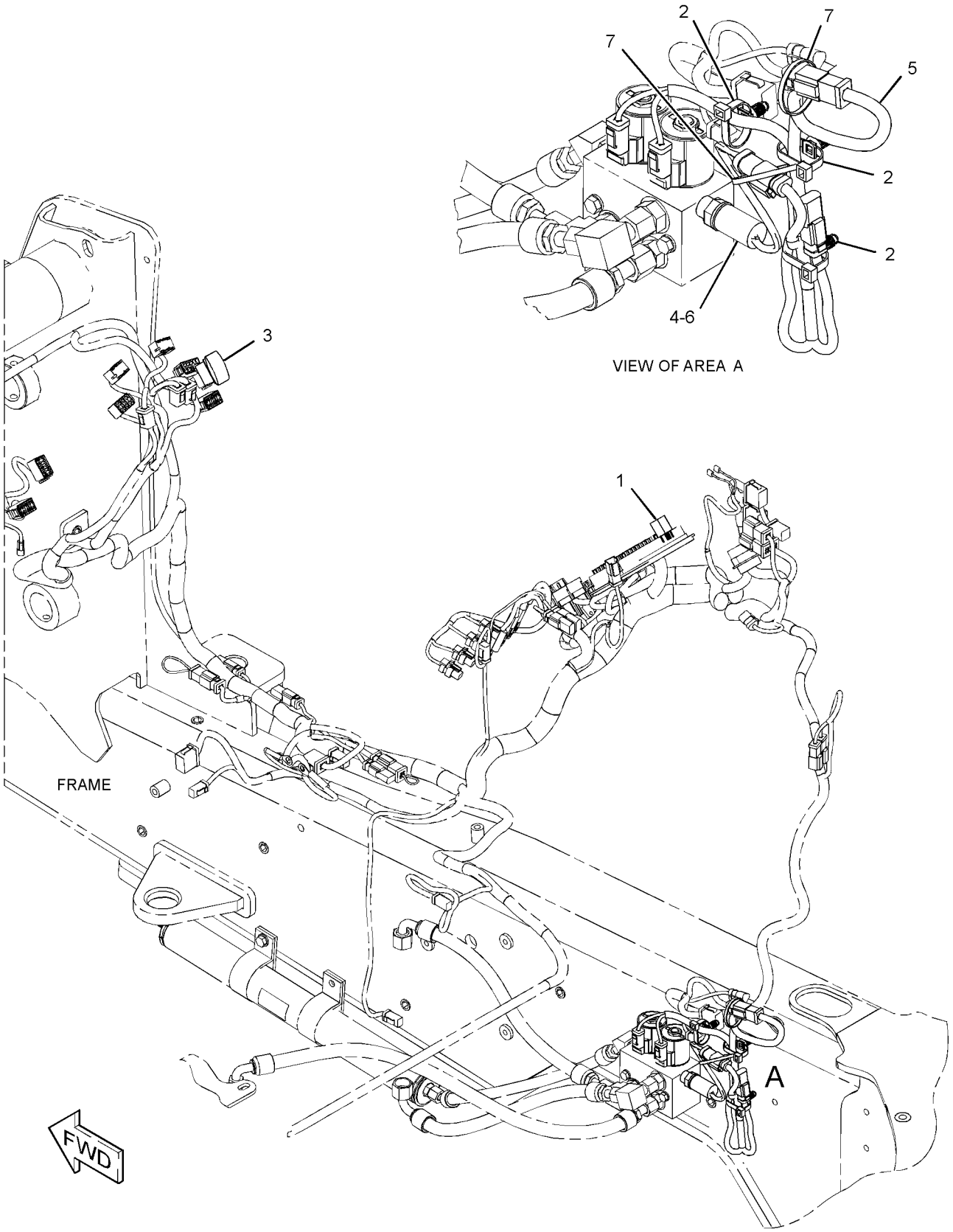

GRAPHIC #1 **<END>** g02790118

357-3233 WIRING GP-SENSOR—OBJECT HANDLING

S/N: SJW1-UP

PART OF 340-1750 LINKAGE AR, 340-1741 LINKAGE AR-BUCKET AN ATTACHMENT

SMCS-1408 **i04580791**

NOTE	REF NO	GRAPHIC REF	PART NUMBER	QTY	PART NAME 1 2 3 4 5 6 (PRODUCT LEVEL)	SEE PAGE
	1	1	**7K-1181**	10	STRAP-CABLE	
	2	1	*148-8447*	1	TEE AS-SWIVEL	
		1	**7J-9108**	1	SEAL-O-RING	
		1	**7X-0872**		TEE-SWIVEL	
	3	1	**206-2423**	2	SADDLE	
B	4	1	**274-3774**	1	CAP-CONNECTOR	
	5	1	**331-5570**	1	HARNESS AS-SWITCH (OBJECT HANDLING)	
		1	**228-5856**	1	CONNECTOR	
		1	**9X-3401**	4	PIN-CONNECTOR (16-GA TO 18-GA)	
		1	**230-4013**	1	PLUG AS-CONNECTOR (3-PIN)	
		1	**264-7030**	1	SEAL-CONNECTOR	
		1	**230-5009**	1	RECEPTACLE AS-CONNECTOR (4-PIN)	
		1	**9X-3402**	3	SOCKET-CONNECTOR (16-GA TO 18-GA)	
		1	**091-2436**	2	TERMINAL-BLADE (18-GA TO 22-GA)	
		1	**104-1995**	2	TERMINAL-BLADE (14-GA TO 18-GA)	
E		1	**125-7874**		TUBE-HEAT SHRINK (5.72-MM DIA) (5-CM)	
	6	1	**331-5571**	1	HARNESS AS-CAB (OBJECT HANDLING)	
		1	**9X-3401**	3	PIN-CONNECTOR (16-GA TO 18-GA)	
		1	**230-4013**	1	PLUG AS-CONNECTOR (3-PIN)	
		1	**264-7030**	1	SEAL-CONNECTOR	
		1	**230-4014**	1	RECEPTACLE AS-CONNECTOR (3-PIN)	
		1	**9X-3402**	3	SOCKET-CONNECTOR (16-GA TO 18-GA)	
	7	1	**349-1100**	1	HARNESS AS-SWITCH (HOE)	
E		1	**188-4651**		HOSE-HYDRAULIC (298-CM)	
		1	**9X-3401**	3	PIN-CONNECTOR (16-GA TO 18-GA)	
		1	**155-2271**	1	KIT-CONNECTING PLUG (4-PIN)	
					(INCLUDES PLUG AS, WEDGE & INTERFACE SEAL)	
		1	**8T-8737**	1	PLUG-SEAL	
		1	**230-4014**	1	RECEPTACLE AS-CONNECTOR (3-PIN)	
		1	**180-9340**	3	SOCKET-CONNECTOR (14-GA TO 18-GA)	
		1	**1S-9593**	2	STRAP-CABLE	
D		1	**5P-5995**		TUBE (0.3-M)	
E		1	**125-7876**		TUBE-HEAT SHRINK (17.78-MM DIA) (5-CM)	
	8	1	**349-2773**	1	FILM-WARNING (TIPPING HAZARD, READ OMM)	
	9	1	**350-1078**	1	SWITCH AS-ROCKER (LOAD STABILITY, BUCKET)	
		1	**111-7899**	1	GASKET	
	10	1	**350-9471**	1	PLATE AS	
	11	1	**357-3234**	1	HARNESS AS-REAR	
E		1	**188-4651**		HOSE-HYDRAULIC (131-CM)	
		1	**9X-3401**	3	PIN-CONNECTOR (16-GA TO 18-GA)	
		1	**155-2270**	1	KIT-CONNECTING PLUG (2-PIN)	
					(INCLUDES PLUG AS, WEDGE & INTERFACE SEAL)	
		1	**230-4013**	1	PLUG AS-CONNECTOR (3-PIN)	
		1	**264-7030**	1	SEAL-CONNECTOR	
		1	**230-4014**	1	RECEPTACLE AS-CONNECTOR (3-PIN)	
		1	**9X-3402**	3	SOCKET-CONNECTOR (16-GA TO 18-GA)	
		1	**180-9340**	2	SOCKET-CONNECTOR (14-GA TO 18-GA)	
		1	**8L-8413**	1	STRAP-CABLE (WHITE)	
D		1	**5P-5995**		TUBE (0.2-M)	
E		1	**125-7874**		TUBE-HEAT SHRINK (5.72-MM DIA) (10-CM)	
E		1	**125-7876**		TUBE-HEAT SHRINK (17.78-MM DIA) (5-CM)	
	12	1	**124-0174**	2	CLIP	
	13	1	*164-6874*	1	FITTING AS-ELBOW (QUICK DISCONNECT, MALE)	

357-3233 **WIRING GP-SENSOR** *(contd.)* **i04580791**

NOTE	REF NO	GRAPHIC REF	PART NUMBER	QTY	PART NAME 1 2 3 4 5 6 (PRODUCT LEVEL)	SEE PAGE
		1	**3J-1907**	1	SEAL-O-RING	
		1	**085-7356**	1	FITTING	
	14	1	**3S-2093**	28	STRAP-CABLE	
	15	1	**5P-4115**	1	WASHER-HARD (7.2X19X2-MM THK)	
	16	1	**7X-3165**	1	ADAPTER	
	17	1	**8M-2770**	1	CLIP	
	18	1	**8T-4121**	1	WASHER-HARD (11X21X2.5-MM THK)	
M	19	1	**8T-4137**	1	BOLT (M10X1.5X20-MM)	
M	20	1	**8T-6974**	1	BOLT (M6X1X80-MM)	

B-USE AS REQUIRED
D-ORDER BY THE METER
E-ORDER BY THE CENTIMETER
M-METRIC PART

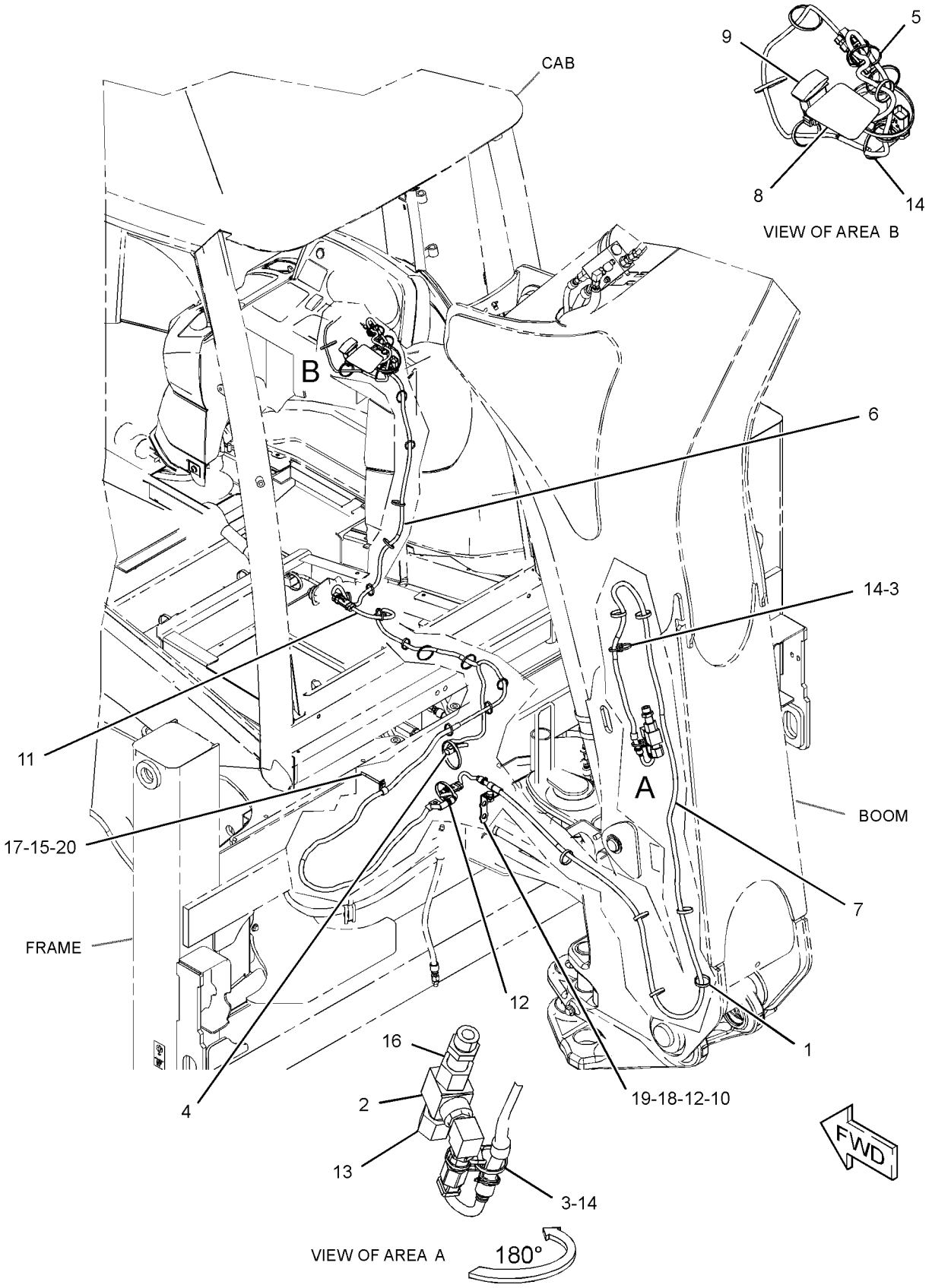

GRAPHIC #1

<END>

g02828416

331-5462 WIRING GP-TRANSMISSION CONTROL–

STANDARD SHIFT

S/N: SJW1-UP

PART OF 353-1507 TRANSMISSION AR-DIRECT DRIVE

AN ATTACHMENT

SMCS-1408, 3168 **i04573599**

NOTE	REF NO	GRAPHIC REF	PART NUMBER	QTY	PART NAME 1 2 3 4 5 6 (PRODUCT LEVEL)	SEE PAGE
	1	1	**7K-1181**	6	STRAP-CABLE	
	2	1	**9B-0523**	1	SPACER (0.53X0.75X1-IN THK)	
	3	1	**331-5463**	1	HARNESS AS-TRANSMISSION (STANDARD SHIFT)	
		1	**274-3774**	1	CAP-CONNECTOR	
		1	**9X-3401**	15	PIN-CONNECTOR (16-GA TO 18-GA)	
		1	**155-2270**	7	KIT-CONNECTING PLUG (2-PIN)	
					(EACH INCLUDES PLUG AS, WEDGE & INTERFACE SEAL)	
		1	**230-4013**	1	PLUG AS-CONNECTOR (3-PIN)	
		1	**264-7030**	1	SEAL-CONNECTOR	
		1	**8T-8737**	9	PLUG-SEAL	
		1	**102-8801**	1	KIT-RECEPTACLE (12-PIN)	
		1	**190-7614**	1	KIT-RECEPTACLE (12-PIN)	
					(EACH RECEPTACLE KIT INCLUDES RECEPTACLE AS & WEDGE)	
		1	**274-3781**	1	CAP-SEAL	
		1	**9X-3402**	3	SOCKET-CONNECTOR (16-GA TO 18-GA)	
		1	**180-9340**	14	SOCKET-CONNECTOR (14-GA TO 18-GA)	
		1	**189-3158**	1	SUPPRESSOR-ARC	
		1	**7N-9017**	1	TERMINAL-RING (18-GA TO 22-GA, NO. 10 SCREW)	
E		1	**125-7874**		TUBE-HEAT SHRINK (5.72-MM DIA) (5-CM)	
	4	1	**352-3965**	1	CLIP	
B	5	1	**3S-2093**	6	STRAP-CABLE	
	6	1	**4P-7429**	1	CLIP	
M	7	1	**8T-4194**	1	BOLT (M12X1.75X50-MM)	
	8	1	**8T-4223**	3	WASHER-HARD (13.5X25.5X3-MM THK)	

B-USE AS REQUIRED
E-ORDER BY THE CENTIMETER
M-METRIC PART

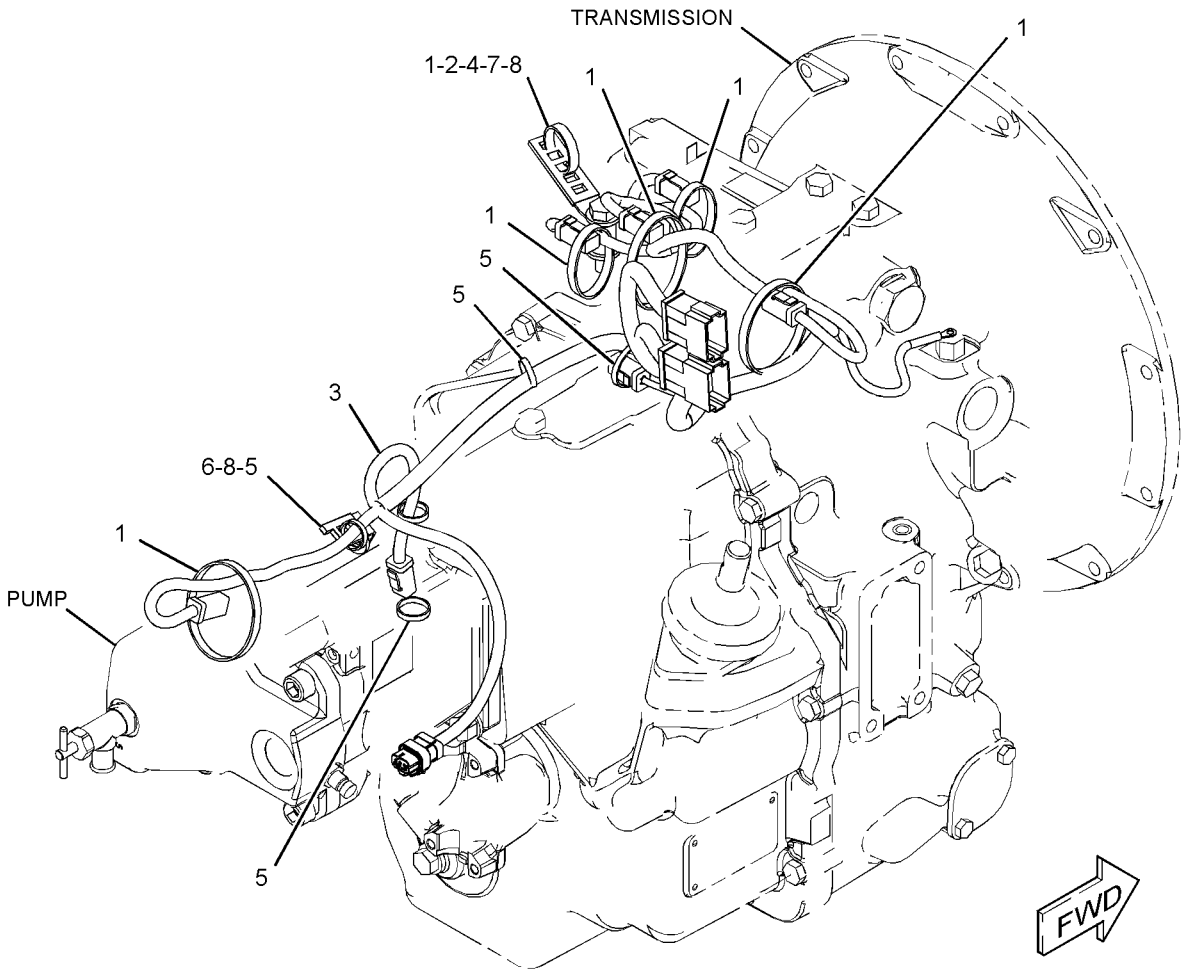

GRAPHIC #1 **<END>** g02838764

331-5464 WIRING GP-TRANSMISSION CONTROL–AUTOSHIFT

S/N: SJW1-UP

PART OF 353-1510, 353-1511 TRANSMISSION AR-POWER SHIFT AN ATTACHMENT

SMCS-1408, 3168 **i04603169**

NOTE	REF NO	GRAPHIC REF	PART NUMBER	QTY	PART NAME 1 2 3 4 5 6 (PRODUCT LEVEL)	SEE PAGE
	1	1	**7K-1181**	11	STRAP-CABLE	
	2	1	**164-1368**	8	FASTENER-PANEL	
	3	1	**214-4691**	1	SWITCH AS-ROCKER (AUTOSHIFT, STANDARD SHIFT)	
		1	**111-7899**	1	GASKET	
	4	1	**232-1545**	1	PLATE AS	
B	5	1	**274-3774**	1	CAP-CONNECTOR	
B	6	1	**274-3781**	1	CAP-SEAL	
	7	1	**274-9993**	1	PLATE	
	8	1	**310-9354**	1	CONTROL GP-TRANSMISSION	
		1	**8T-8737**	2	PLUG-SEAL	
		1	**174-3091**	1	KIT-RECEPTACLE (12-PIN)	
					(INCLUDES RECEPTACLE AS & WEDGE)	
	9	1	**331-5465**	1	HARNESS AS-TRANSMISSION (AUTOSHIFT)	
		1	**274-3774**	2	CAP-CONNECTOR	
		1	**9X-3401**	21	PIN-CONNECTOR (16-GA TO 18-GA)	
		1	**155-2270**	11	KIT-CONNECTING PLUG (2-PIN)	
					(EACH INCLUDES PLUG AS, WEDGE & INTERFACE SEAL)	
		1	**230-4013**	1	PLUG AS-CONNECTOR (3-PIN)	
		1	**264-7030**	1	SEAL-CONNECTOR	
		1	**8T-8737**	3	PLUG-SEAL	
		1	**102-8801**	1	KIT-RECEPTACLE (12-PIN)	
		1	**190-7614**	1	KIT-RECEPTACLE (12-PIN)	
					(EACH RECEPTACLE KIT INCLUDES RECEPTACLE AS & WEDGE)	
		1	**274-3781**	1	CAP-SEAL	
		1	**9X-3402**	3	SOCKET-CONNECTOR (16-GA TO 18-GA)	
		1	**180-9340**	22	SOCKET-CONNECTOR (14-GA TO 18-GA)	
		1	**7N-9017**	1	TERMINAL-RING (18-GA TO 22-GA, NO. 10 SCREW)	
E		1	**125-7874**		TUBE-HEAT SHRINK (5.72-MM DIA) (15-CM)	
M	10	1	**105-3480**	2	BOLT-SOCKET HEAD (M5X0.8X16-MM)	
	11	1	**3S-2093**	5	STRAP-CABLE	
	12	1	**4P-7429**	2	CLIP	
	13	1	**7X-0620**	1	WASHER-HARD (5.5X13X1.6-MM THK)	
M	14	1	**8T-4179**	1	BOLT (M12X1.75X20-MM)	
	15	1	**8T-4223**	3	WASHER-HARD (13.5X25.5X3-MM THK)	

B-USE AS REQUIRED
E-ORDER BY THE CENTIMETER
M-METRIC PART

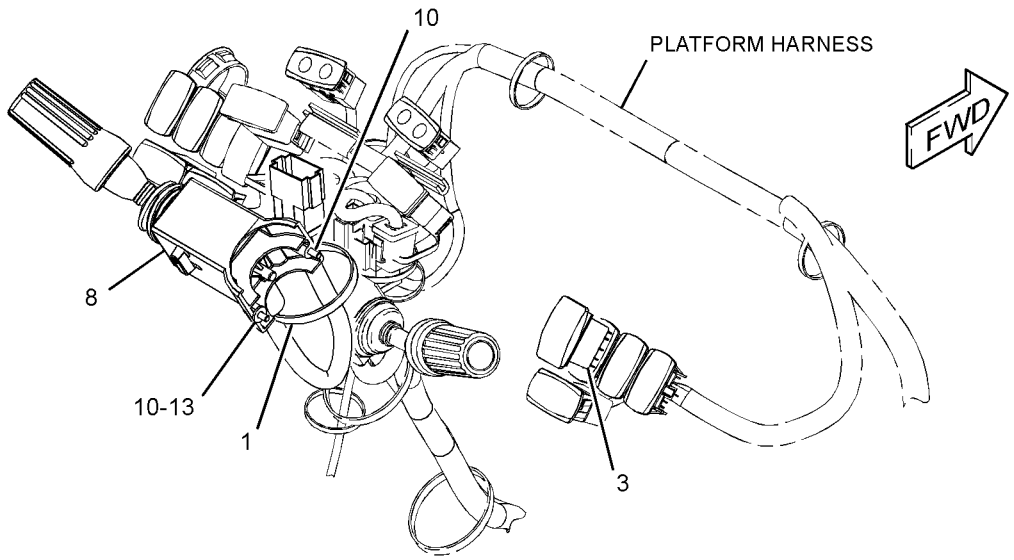

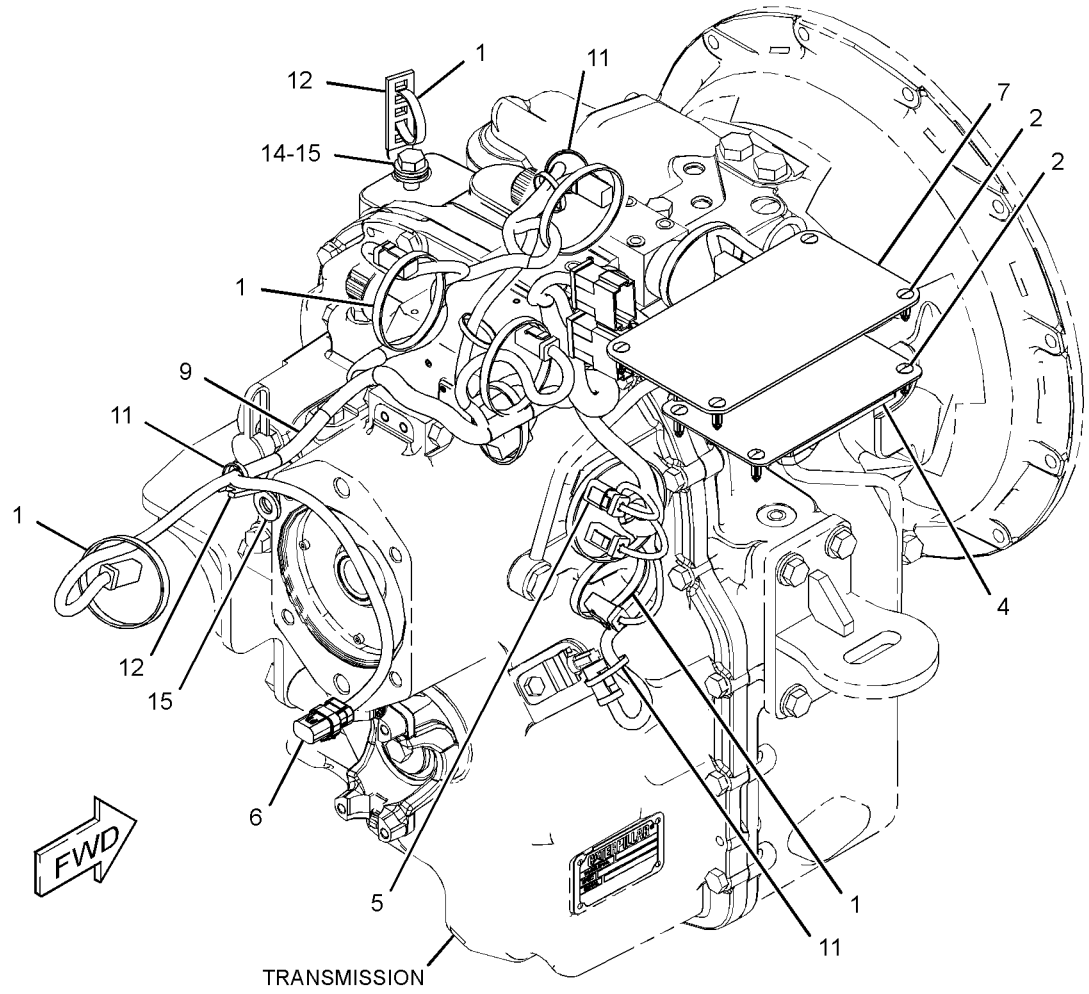

GRAPHIC #1 **<END>** g02828422

311-3639 WIRING GP-WIPER–REAR

S/N: SJW1-UP
PART OF 315-1270 WINDOW GP-CAB
AN ATTACHMENT

SMCS-1408, 7305 **i03971679**

NOTE	REF NO	GRAPHIC REF	PART NUMBER	QTY	PART NAME 1 2 3 4 5 6 (PRODUCT LEVEL)	SEE PAGE
	1	1	**206-1345**	3	STRAP-CABLE	
	2	1	**311-1218**	1	HARNESS AS-WINDOW WIPER	
		1	**266-4157**	7	SLEEVE-BRAIDED	
E		1	**266-2814**		CONDUIT-FLEXIBLE (9.52-MM ID) (141-CM)	
		1	**9W-0852**	2	PIN-CONNECTOR (14-GA TO 16-GA)	
		1	**9X-3401**	2	PIN-CONNECTOR (16-GA TO 18-GA)	
		1	**155-2271**	1	KIT-CONNECTING PLUG (4-PIN)	
					(INCLUDES PLUG AS, WEDGE & INTERFACE SEAL)	
		1	**102-8804**	1	KIT-RECEPTACLE (4-PIN)	
					(INCLUDES RECEPTACLE AS & WEDGE)	
		1	**9W-0844**	2	SOCKET-CONNECTOR (14-GA TO 16-GA)	
		1	**180-9340**	2	SOCKET-CONNECTOR (14-GA TO 18-GA)	
B		1	**141-8061**		TAPE	
	3	1	**308-3074**	4	CLIP	
	4	1	**3S-2093**	2	STRAP-CABLE	
M	5	1	**8T-4171**	4	BOLT (M6X1X12-MM)	
	6	1	**8T-4205**	5	WASHER-HARD (7.2X14.5X2-MM THK)	

B-USE AS REQUIRED
E-ORDER BY THE CENTIMETER
M-METRIC PART

311-3639 **WIRING GP-WIPER** *(contd.)* **i03971679**

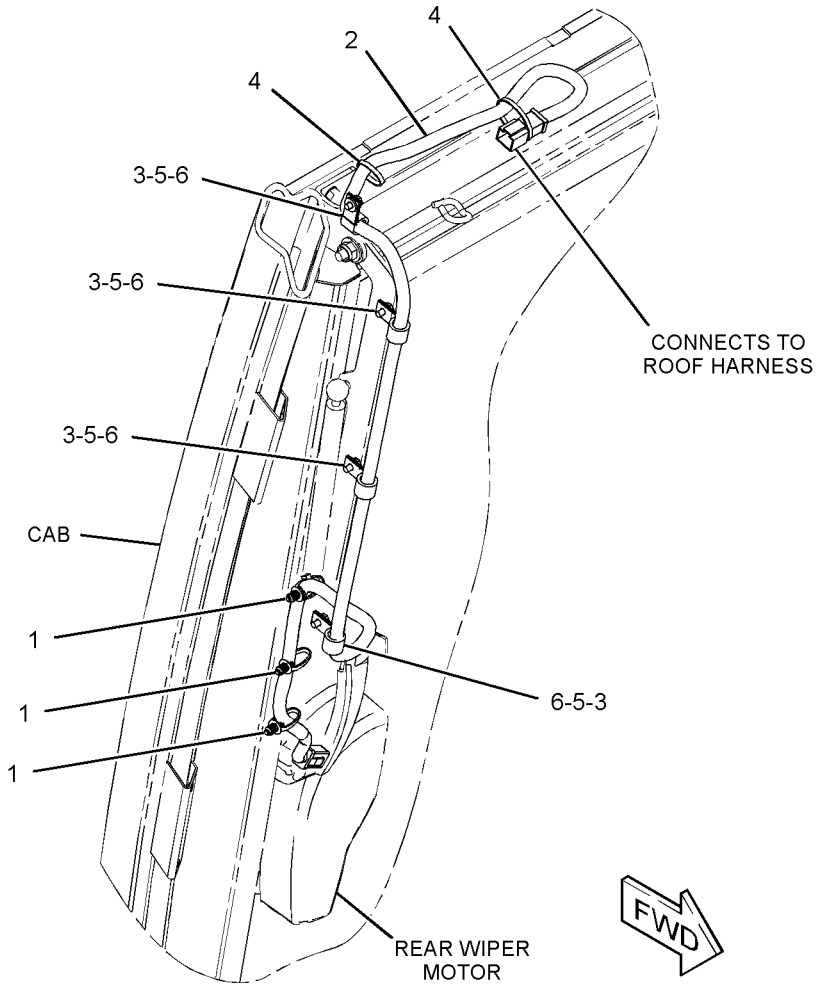

GRAPHIC #1

<END>

g01653654

230-5743 AXLE GP-DRIVE & STEERING–FRONT

S/N: SJW1-UP
PART OF 353-1501 DRIVE AR-BACKHOE LOADER
AN ATTACHMENT

SMCS-3020, 3250, 3258, 3259, 3260, 3264, 3278, 4050, 4303, 4313

i04403806

NOTE	REF NO	GRAPHIC REF	PART NUMBER	QTY	PART NAME 1 2 3 4 5 6 (PRODUCT LEVEL)	SEE PAGE
M	1	1	**8C-7505**	4	SCREW-FLAT HEAD (M8X1.25X20-MM)	
M	2	1	**207-4254**	6	BOLT (M20X1.5X80-MM)	
	3	1	**207-4258**	2	NUT (M20X1.5-THD)	
	4	1	**219-8798**	2	SEAL-LIP TYPE	
	5	1	**219-8795**	1	CAP	
	6	1	**209-9875**	2	DOWEL	
	7	1	**209-7456**	2	BUSHING	
	8	1	**152-6144**	4	PLUG AS-DRAIN (MAGNETIC) (AXLE, FRONT)	
					(EACH INCLUDES)	
		1	**6V-6228**	1	SEAL-O-RING	
	9	1	**208-0321**	11	BOLT-FLANGE HEAD (M12X1.75X33-MM)	
	10	1	**209-7464**	2	SEAL	
M	11	1	**199-0683**	16	BOLT (M16X2X38-MM)	
	12	1	**210-5937**	2	WASHER (46X66X3-MM THK)	
Y	13	1	**209-9882**	1	DIFFERENTIAL & BEVEL GEAR GP (FRONT)	198
	14	1	**210-5942**	2	RING	
	15	1	**209-9883**	1	HOUSING	
	16	1	**210-5946**	2	SHAFT GP-AXLE	
					(EACH INCLUDES)	
		1	**174-4671**	1	YOKE	
		1	**174-4643**	2	KIT-SPIDER	
					(EACH INCLUDES SNAP RINGS)	
	17	1	**209-9886**	2	TIE ROD GP	
					(EACH INCLUDES)	
		1	**204-3080**	1	BALL JOINT	
		1	**217-2883**	1	TIE ROD	
		1	**243-5026**	1	NUT-SPECIAL	
	18	1	**209-9887**	1	BUSHING	
	19	1	**210-5947**	2	WASHER-THRUST (44.6X58X7-MM THK)	
	20	1	*216-7473*	4	PIN AS (UPPER)	
					(EACH INCLUDES)	
		1	**3N-4968**	1	CONE-BEARING	
		1	**6D-1734**	1	CUP-BEARING	
		1	**198-7825**	1	SEAL	
		1	**198-7838**	1	PIN	
Y	21	1	**210-5924**	2	PLANETARY GP-FINAL DRIVE (AXLE)	222
Y	22	1	**209-9884**	1	HOUSING & FLANGE GP-AXLE (RH)	211
Y	23	1	**209-9885**	1	HOUSING & FLANGE GP-AXLE (LH)	212
	24	1	**211-6735**	2	SEAL-O-RING	
L	25	1	**214-5097**	1	CYLINDER GP-STEERING (FRONT AXLE)	
		1	**238-5254**	1	ROD	
		1	**238-5255**	2	CYLINDER HEAD	
	26	1	**253-5024**	1	BREATHER (AXLE, FRONT)	
B	27	1	**1U-8846**		SEALANT-GASKET	
	28	1	**154-5404**	2	BEARING	
B	29	1	**198-7841**	8	SHIM (0.15-MM THK)	
B	30	1	**198-7842**	4	SHIM (0.2-MM THK)	
B	31	1	**198-7843**	4	SHIM (0.5-MM THK)	
					AVAILABLE REPAIR KIT(S):	
L			**215-2023**	1	KIT-SEAL	
					(INCLUDES GUIDE RINGS, DUAL RINGS, ROD SEALS, BACKUP WASHERS, ROD WIPERS & PISTON SEAL)	

230-5743 AXLE GP-DRIVE & STEERING *(contd.)* i04403806

B-USE AS REQUIRED
L-KIT MARKED L SERVICES PART MARKED L
M-METRIC PART
Y-SEPARATE ILLUSTRATION

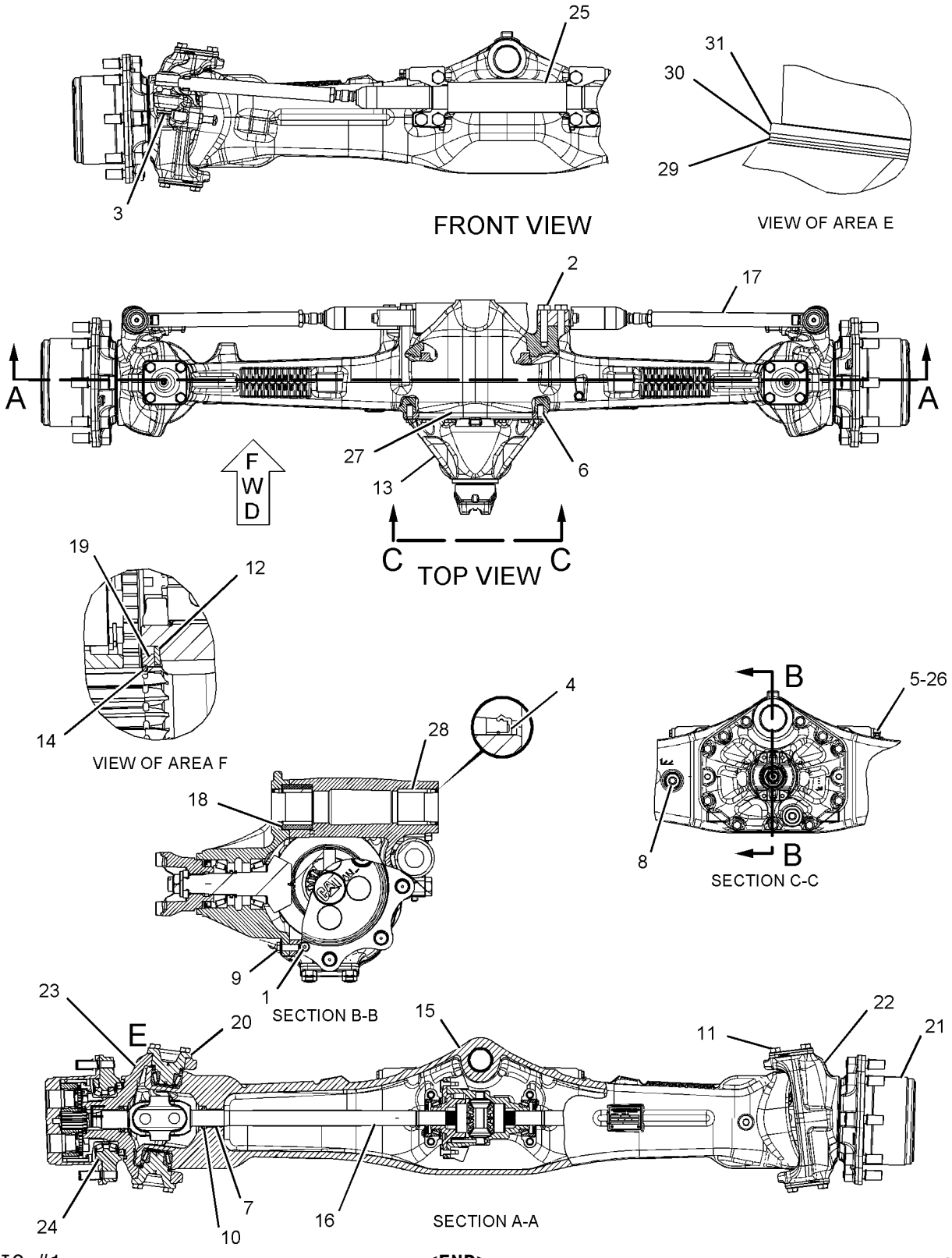

GRAPHIC #1 **<END>** g01094314

POWER TRAIN

230-5738 AXLE GP-REAR

S/N: SJW1-UP
PART OF 353-1501 DRIVE AR-BACKHOE LOADER
AN ATTACHMENT

SMCS-3278, 3282 **i04139489**

NOTE	REF NO	GRAPHIC REF	PART NUMBER	QTY	PART NAME 1 2 3 4 5 6 (PRODUCT LEVEL)	SEE PAGE
	1	1	**199-0639**	4	SCREW-FLAT HEAD (M8X1.25X20-MM)	
	2	1	**199-0641**	2	BOLT (M8X1.25X25-MM)	
M	3	1	**8T-0292**	2	BOLT (M8X1.25X90-MM)	
	4	1	**199-0652**	2	CLIP-PIN	
	5	1	**210-3097**	2	CLIP	
	6	1	**210-3098**	2	SEAL	
	7	1	**199-0688**	2	SHIM (2.9-MM THK)	
	8	1	**197-9155**	1	BREATHER (AXLE, REAR)	
	9	1	**199-0670**	2	SCREW-PURGE	
	10	1	**198-7811**	2	DOWEL	
	11	1	**152-6144**	4	PLUG AS-DRAIN (MAGNETIC) (AXLE, REAR)	
					(EACH INCLUDES)	
		1	**6V-6228**	1	SEAL-O-RING	
	12	1	**199-0676**	2	SPRING	
M	13	1	**199-0679**	2	BOLT (M16X2X95-MM)	
	14	1	**210-3099**	2	SLEEVE	
	15	1	**210-3100**	2	BUSHING	
	16	1	**199-0706**	1	PISTON	
	17	1	**199-0786**	8	PLATE	
	18	1	**199-0787**	6	PIN	
	19	1	**210-7305**	2	SHAFT	
	20	1	**210-3106**	1	BRACKET	
	21	1	**212-5713**	2	PLUG AS	
	22	1	*216-1608*	2	GEAR GP-RING	
					(EACH INCLUDES)	
		1	**199-0778**	1	RING-SNAP	
		1	**210-7302**	1	GEAR-RING (81-TEETH)	
		1	**226-4364**	1	HUB	
Y	23	1	*216-1609*	2	FLANGE GP-WHEEL	210
Y	24	1	**216-1610**	2	PLANETARY GP-FINAL DRIVE (AXLE)	223
	25	1	**217-2914**	1	COVER (DIFFERENTIAL LOCK)	
	26	1	**231-0699**	1	COVER (DIFFERENTIAL LOCK)	
	27	1	**219-8839**	1	ROD	
	28	1	**174-4647**	1	BUSHING	
	29	1	**174-4650**	1	SPACER (20X32X8-MM THK)	
	30	1	**231-0698**	2	SHAFT-AXLE	
	31	1	**226-4366**	2	NUT-SPANNER	
	32	1	**226-4365**	2	WASHER-TAB	
	33	1	**226-4367**	2	SPACER (110X123X22.99-MM THK)	
	34	1	**226-4370**	6	BOLT-SELF-LOCKING	
	35	1	**238-5291**	6	DISC-BRAKE	
	36	1	**238-5292**	2	HUB-BRAKE	
	37	1	**238-5293**	1	HOUSING-AXLE (LH)	
	38	1	**238-5294**	1	HOUSING-AXLE (RH)	
Y	39	1	*238-5298*	1	DIFFERENTIAL & BEVEL GEAR GP (REAR)	200
	40	1	**199-0658**	2	O-RING-CAP	
	41	1	**219-8799**	2	SEAL-O-RING	
	42	1	**199-0662**	2	SEAL-O-RING	
	43	1	**130-7282**	1	BRACKET	
M	44	1	**7X-2559**	26	BOLT (M16X2X160-MM)	
	45	1	**4L-6454**	2	BOLT (3/8-16X1-IN)	
	46	1	**3J-1907**	1	SEAL-O-RING	
	47	1	**9S-8004**	1	PLUG-O-RING	
	48	1	**219-8795**	1	CAP	
B	49	1	**069-4707**		SEALANT (GASKET)	

230-5738 AXLE GP-REAR *(contd.)* i04139489

NOTE	REF NO	GRAPHIC REF	PART NUMBER	QTY	PART NAME 1 2 3 4 5 6 (PRODUCT LEVEL)	SEE PAGE
J	50	1	**259-0127**	1	BRAKE GP-MECH CALIPER PARKING	
					AVAILABLE REPAIR KIT(S):	
J			**166-9413**	1	KIT-CAM (COUNTERCLOCKWISE)	
					(INCLUDES CAMS, BEARINGS & RETAINER)	
J			**230-3810**	1	KIT-BRAKE LINING	
					(INCLUDES LINERS & SPRING)	
J			**230-3811**	1	KIT-BRAKE CALIPER	
					(INCLUDES SLEEVES, WASHERS, NUTS, BOLT, LININGS, BEARING, BOOT, SEAL, SPRING & O-RINGS)	

B-USE AS REQUIRED
J-KITS MARKED J SERVICES PART(S) MARKED J
M-METRIC PART
Y-SEPARATE ILLUSTRATION

230-5738 AXLE GP-REAR *(contd.)* **i04139489**

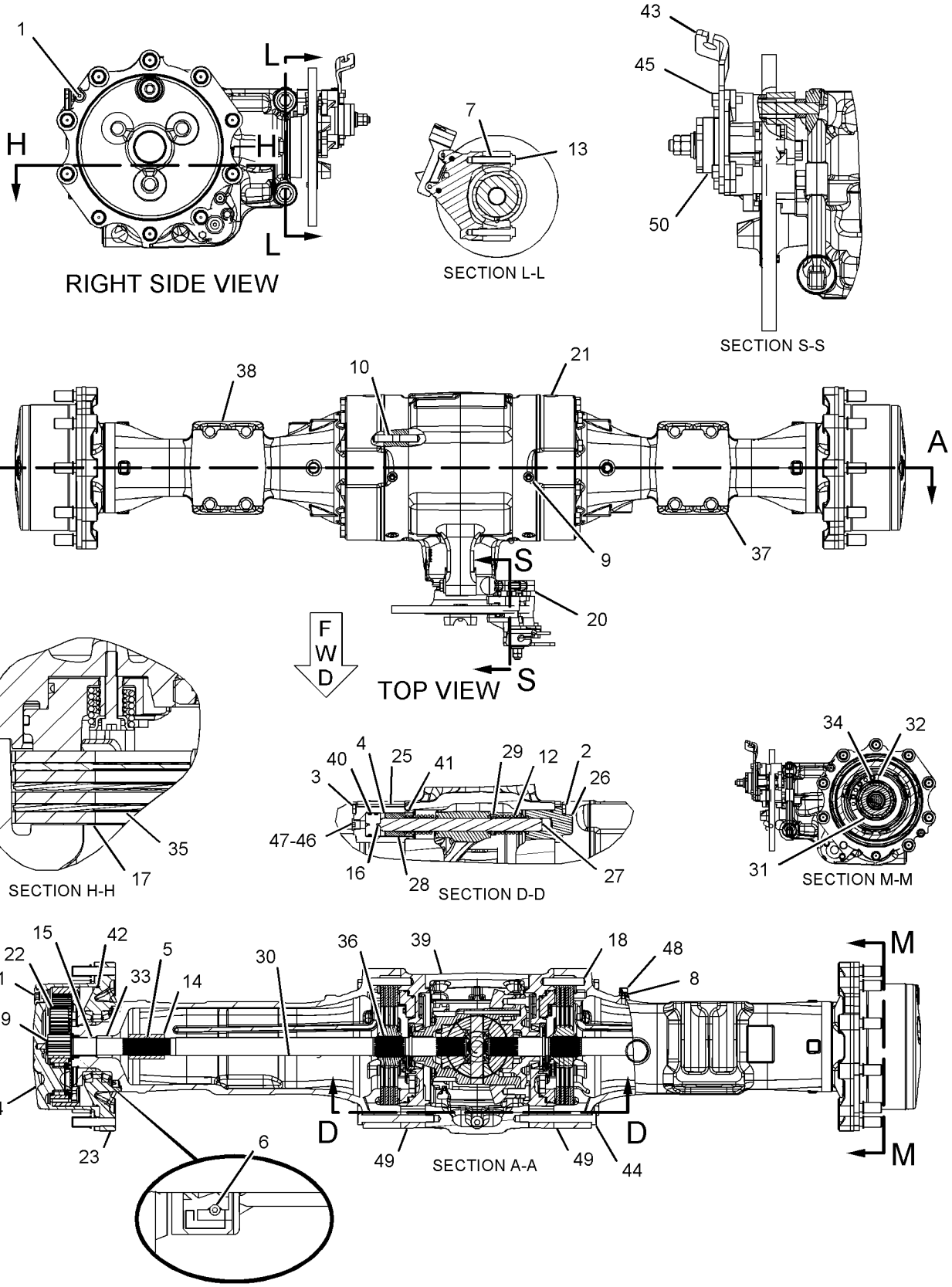

GRAPHIC #1 **<END>** g01093644

275-0468 CASE AS-TRANSMISSION–FRONT

S/N: SJW1-UP
PART OF 359-0393 TRANSMISSION GP-DIRECT DRIVE
AN ATTACHMENT

SMCS-3030, 3064 **i03978290**

NOTE	REF NO	GRAPHIC REF	PART NUMBER	QTY	PART NAME 1 2 3 4 5 6 (PRODUCT LEVEL)	SEE PAGE
	1	1	**120-9762**	4	SEAL-O-RING	
M	2	1	**6V-5215**	2	BOLT (M8X1.25X16-MM)	
	3	1	**7T-2651**	1	STRAINER-SUCTION (TRANSMISSION)	
	4	1	**106-9861**	1	PLATE-COVER	
	5	1	**7T-3051**	1	PLUG	
	6	1	**005-0469**	1	CUP-BEARING	
	7	1	**8T-1580**	1	CUP	
	8	1	**6Y-2737**	1	CUP-BEARING	
	9	1	**123-8906**	2	CUP-TAPERED ROLLER	
	10	1	**9W-5460**	1	RING	
	11	1	**4J-0522**	1	SEAL-O-RING	
	12	1	**275-0469**	1	CASE AS-FRONT	
		1	**122-3652**	2	PLUG	
		1	**123-2920**	3	PLUG	
		1	**237-5188**	1	PLUG-EXPANSION	
	13	1	**7T-3253**	2	DOWEL	

M-METRIC PART

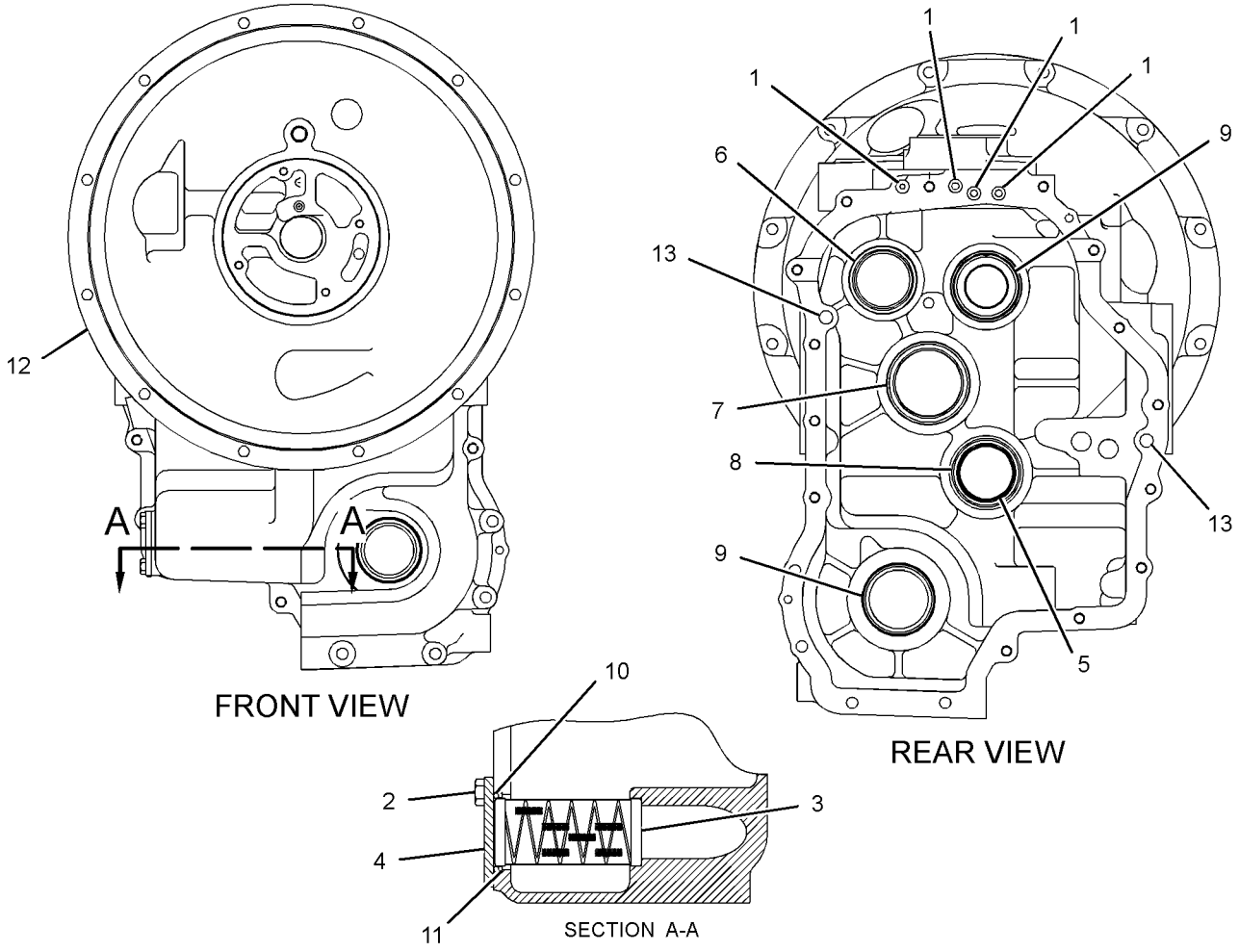

GRAPHIC #1 **<END>** g01220674

365-2814 CASE AS-TRANSMISSION—ALL WHEEL DRIVE

S/N: SJW1-UP

PART OF 359-0393 TRANSMISSION GP-DIRECT DRIVE

AN ATTACHMENT

SMCS-3030, 3064 **i04647430**

NOTE	REF NO	GRAPHIC REF	PART NUMBER	QTY	PART NAME 1 2 3 4 5 6 (PRODUCT LEVEL)	SEE PAGE
	1	1	**005-0469**	1	CUP-BEARING	
	2	1	**121-7398**	1	SPACER (70X79.5X2-MM THK)	
B	3	1	**121-7399**	1	SHIM (0.05-MM THK)	
B	4	1	**121-7400**	1	SHIM (0.08-MM THK)	
B	5	1	**121-7401**	1	SHIM (0.18-MM THK)	
B	6	1	**121-7402**	1	SHIM (0.6-MM THK)	
	7	1	**123-8908**	2	CUP-TAPERED ROLLER	
	8	1	**123-8910**	1	CUP-TAPERED ROLLER	
	9	1	**302-8432**	1	SEAL-LIP TYPE	
	10	1	**123-8906**	1	CUP-TAPERED ROLLER	
B	11	1	**6T-9142**	1	SHIM (0.508-MM THK)	
B	12	1	**6T-9143**	1	SHIM (0.381-MM THK)	
B	13	1	**6T-9144**	1	SHIM (0.051-MM THK)	
B	14	1	**6T-9145**	1	SHIM (0.178-MM THK)	
B	15	1	**6T-9146**	1	SHIM (0.127-MM THK)	
B	16	1	**6T-9147**	1	SHIM (0.076-MM THK)	
B	17	1	**6T-9163**	2	SHIM (0.599-MM THK)	
B	18	1	**6T-9164**	2	SHIM (0.178-MM THK)	
B	19	1	**6T-9165**	2	SHIM (0.076-MM THK)	
B	20	1	**6T-9166**	2	SHIM (0.051-MM THK)	
	21	1	**7T-2646**	2	SPACER (66X79.5X2.02-MM THK)	
	22	1	**7T-3034**	1	SPACER (56.9X64.5X1.98-MM)	
B	23	1	**104-3288**	1	SHIM (0.05-MM THK)	
B	24	1	**121-2059**	1	SHIM (0.08-MM THK)	
B	25	1	**121-2060**	1	SHIM (0.18-MM THK)	
B	26	1	**121-2061**	1	SHIM (0.6-MM THK)	
	27	1	**122-1879**	1	SPACER (58X67.5X2-MM THK)	

PARTS SHOWN IN GRAPHIC(S) WITHOUT A REFERENCE NUMBER ARE NOT SERVICED SEPARATELY

B-USE AS REQUIRED

365-2814 CASE AS-TRANSMISSION *(contd.)* **i04647430**

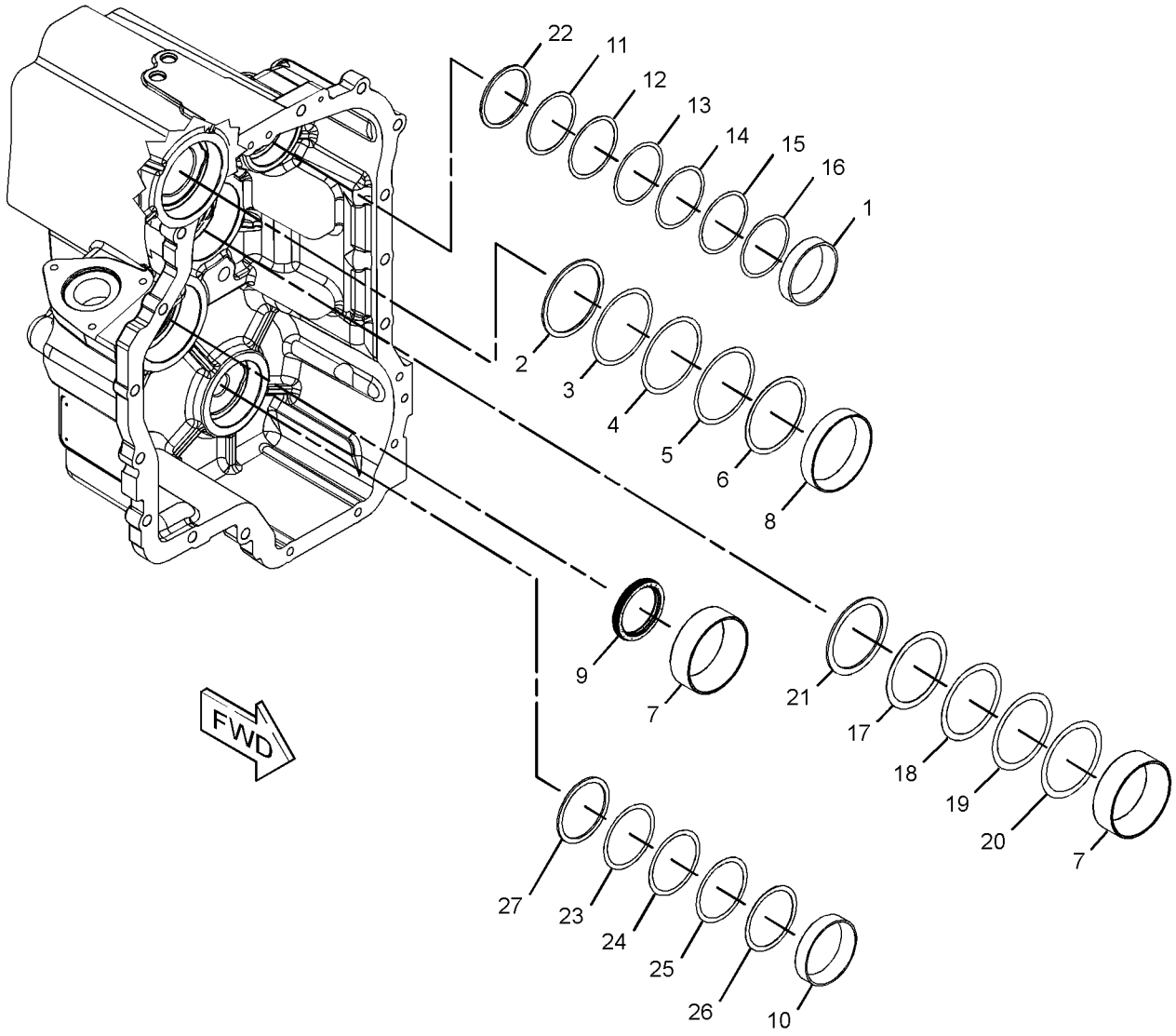

GRAPHIC #1 **<END>** g02823836

209-9882 DIFFERENTIAL & BEVEL GEAR GP–FRONT

S/N: SJW1-UP
PART OF 230-5743 AXLE GP-DRIVE & STEERING
AN ATTACHMENT

SMCS-3256, 3258, 3281, 3283, 3284 **i03973173**

NOTE	REF NO	GRAPHIC REF	PART NUMBER	QTY	PART NAME 1 2 3 4 5 6 (PRODUCT LEVEL)	SEE PAGE
	1	1	**4J-0520**	1	SEAL-O-RING	
	2	1	**216-4457**	1	SEAL	
	3	1	**216-4458**	2	BEARING	
	4	1	**136-7808**	1	BEARING AS-TAPERED ROLLER	
	5	1	**216-4461**	1	BEARING	
	6	1	**209-7454**	2	NUT (M94X2-THD)	
	7	1	**152-6144**	1	PLUG AS-DRAIN (MAGNETIC) (AXLE, FRONT)	
		1	**6V-6228**	1	SEAL-O-RING	
	8	1	**209-7462**	2	WASHER (40X50X2-MM THK)	
	9	1	**209-7463**	1	SLEEVE	
M	10	1	**199-0695**	2	BOLT (M6X1X14-MM)	
M	11	1	**209-7472**	1	NUT (M24X1.5-THD)	
B	12	1	**209-7473**	1	SHIM (2.5-MM THK)	
B		1	**219-8751**	1	SHIM (2.6-MM THK)	
B		1	**219-8752**	1	SHIM (2.7-MM THK)	
B		1	**219-8753**	1	SHIM (2.8-MM THK)	
B		1	**219-8754**	1	SHIM (2.9-MM THK)	
B		1	**219-8755**	1	SHIM (3-MM THK)	
B		1	**219-8756**	1	SHIM (3.1-MM THK)	
B		1	**219-8757**	1	SHIM (3.2-MM THK)	
B		1	**219-8758**	1	SHIM (3.3-MM THK)	
B		1	**219-8759**	1	SHIM (3.4-MM THK)	
	13	1	**216-4465**	1	WASHER (24.5X52X10-MM THK)	
	14	1	**216-4464**	1	YOKE	
	15	1	**199-0858**	2	RETAINER	
	16	1	**216-4466**	1	KIT-BEVEL GEAR & PINION	
					(INCLUDES SPACER, NUT, WASHERS, O-RING SEAL & BEVEL GEAR AS)	
Y	17	1	**216-9498**	1	DIFFERENTIAL GP (AXLE, FRONT)	202
	18	1	**208-0322**	4	BOLT-FLANGE HEAD (M14X2X75-MM)	

B-USE AS REQUIRED
M-METRIC PART
Y-SEPARATE ILLUSTRATION

209-9882 DIFFERENTIAL & BEVEL GEAR GP *(contd.)* i03973173

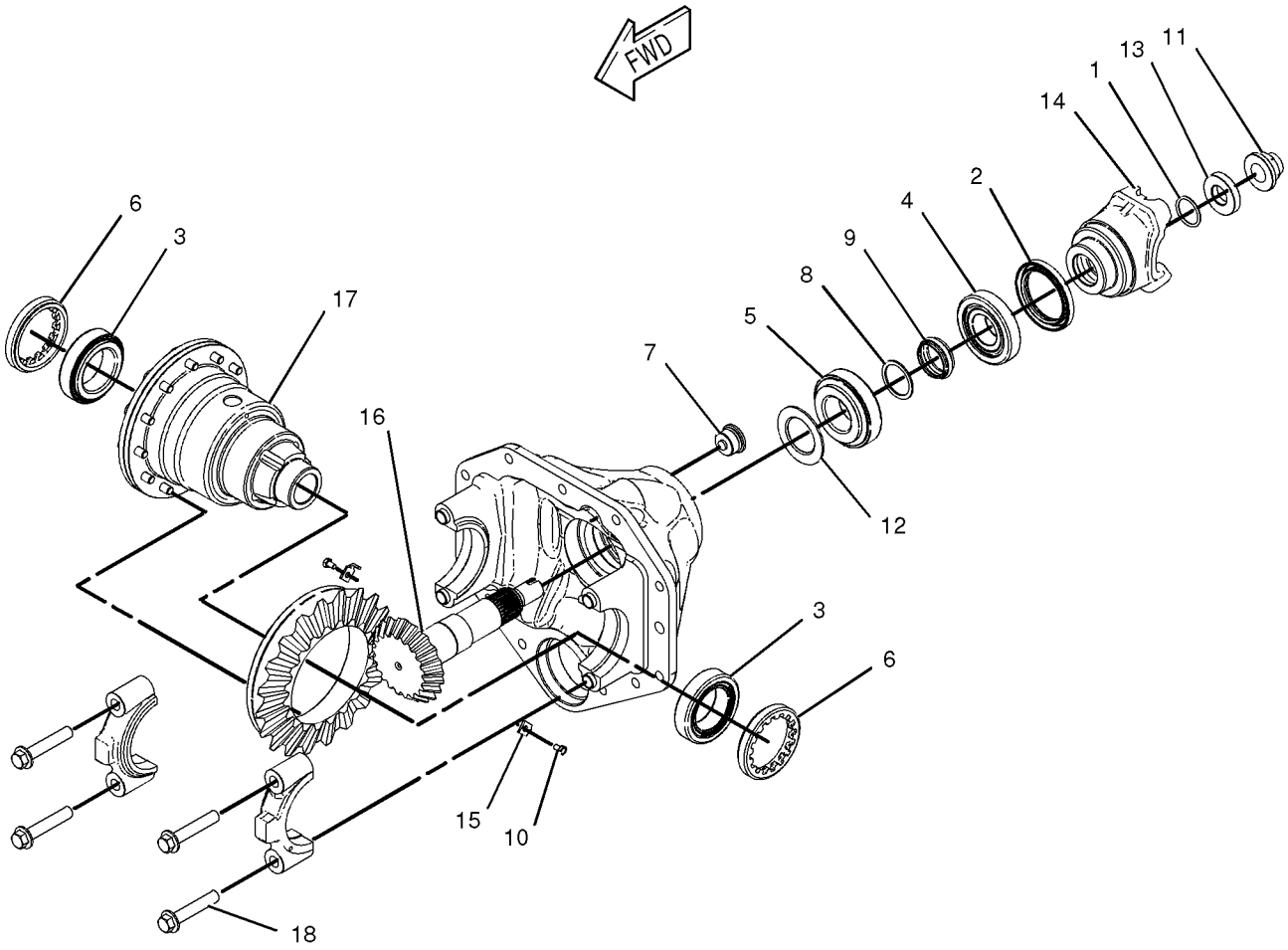

GRAPHIC #1 **<END>** g01028597

238-5298 DIFFERENTIAL & BEVEL GEAR GP–REAR

S/N: SJW1-UP
PART OF 230-5738 AXLE GP-REAR
AN ATTACHMENT

SMCS-3256, 3258, 3281, 3283, 3284 **i04459585**

NOTE	REF NO	GRAPHIC REF	PART NUMBER	QTY	PART NAME 1 2 3 4 5 6 (PRODUCT LEVEL)	SEE PAGE
	1	1	**199-0646**	4	BOLT	
	2	1	**199-0656**	2	CUP & CONE AS	
L	3	1	**199-0663**	1	SEAL-O-RING	
	4	1	**198-7811**	2	DOWEL	
	5	1	**199-0675**	2	NUT (M104X2-THD)	
L	6	1	**199-0678**	2	WASHER (45.5X55X2-MM THK)	
L	7	1	**199-0680**	1	SPACER (47X50X19.2-MM THK)	
M	8	1	**199-0695**	2	BOLT (M6X1X14-MM)	
	9	1	**199-0697**	1	SEAL	
L	10	1	**199-0785**	1	WASHER (30.5X58X10-MM THK)	
L	11	1	**217-2346**	1	KIT-BEVEL GEAR & PINION	
					(ALSO INCLUDES BEVEL GEAR & PINION)	
	12	1	**199-0858**	2	RETAINER	
L	13	1	**212-5702**	1	NUT (M30X2-THD)	
	14	1	**216-1600**	1	DISC-BRAKE	
	15	1	**095-1041**	1	BEARING AS	
	16	1	**093-8828**	1	BEARING AS	
Y	17	1	**216-1612**	1	CYLINDER GP-BRAKE (RH)	313
Y	18	1	**216-1613**	1	CYLINDER GP-BRAKE (LH)	315
	19	1	**219-8836**	1	FORK	
Y	20	1	**231-0692**	1	DIFFERENTIAL GP (AXLE, REAR)	203
	21	1	**238-5290**	1	HOUSING-CENTER	
B	22	1	**1U-8846**		SEALANT-GASKET	
B	23	1	**199-0684**	1	SHIM (2.5-MM THK)	
B	24	1	**199-0685**	1	SHIM (2.6-MM THK)	
B	25	1	**199-0686**	1	SHIM (2.7-MM THK)	
B	26	1	**199-0687**	1	SHIM (2.8-MM THK)	
B	27	1	**199-0688**	1	SHIM (2.9-MM THK)	
B	28	1	**199-0689**	1	SHIM (3-MM THK)	
B	29	1	**199-0690**	1	SHIM (3.1-MM THK)	
B	30	1	**199-0691**	1	SHIM (3.2-MM THK)	
B	31	1	**199-0692**	1	SHIM (3.3-MM THK)	
B	32	1	**199-0693**	1	SHIM (3.4-MM THK)	
FJ			**199-0808**	1	PIN	
FJ			**231-0670**	1	SHAFT	
FJ			**231-0671**	2	WASHER-THRUST	
FJ			**231-0695**	2	WASHER-THRUST	
					AVAILABLE REPAIR KIT(S):	
J			**217-2345**	1	KIT-DIFFERENTIAL	

B-USE AS REQUIRED
F-NOT SHOWN
J-KIT MARKED J SERVICES PARTS MARKED J
L-KIT MARKED L SERVICES PARTS MARKED L
M-METRIC PART
Y-SEPARATE ILLUSTRATION

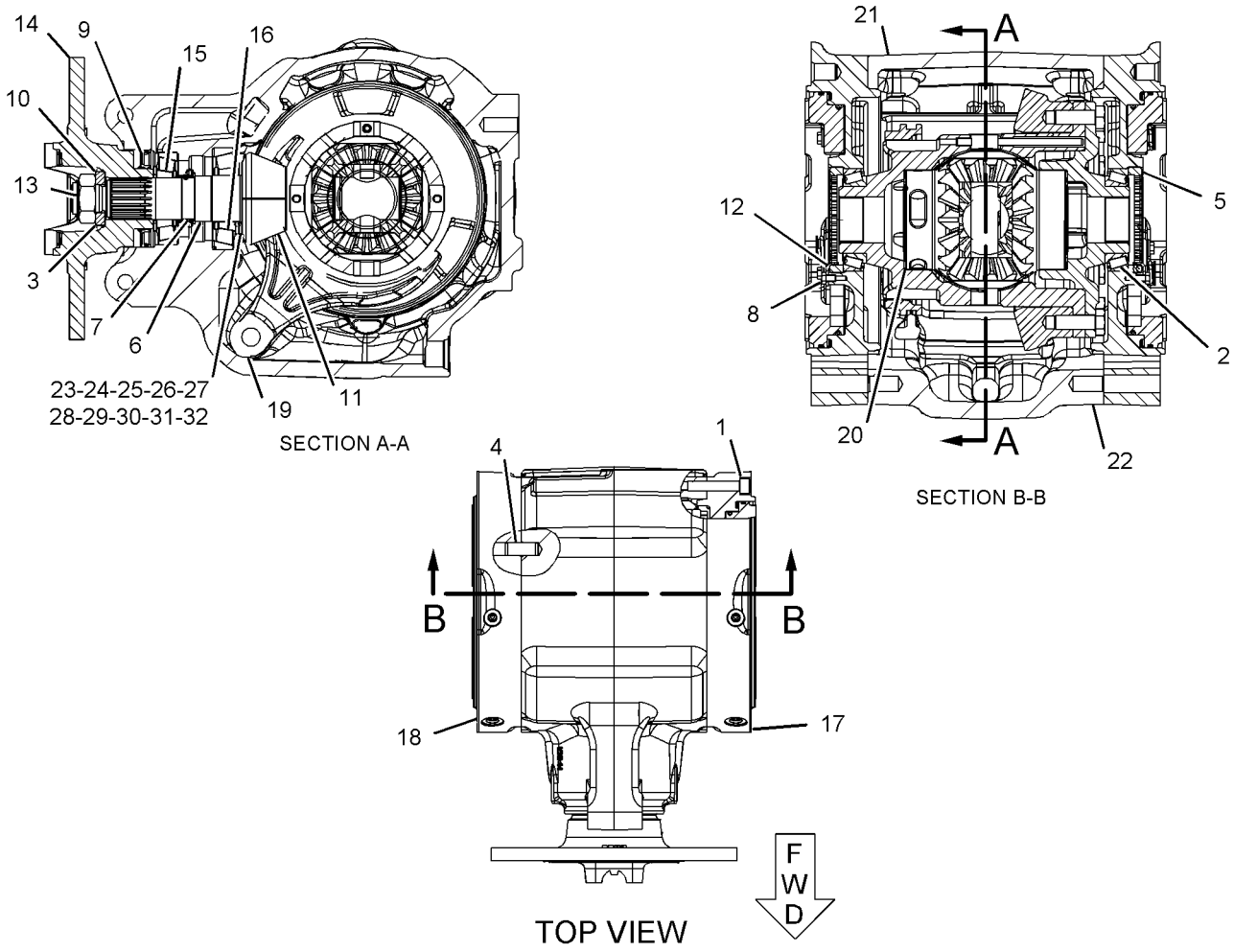

GRAPHIC #1

<END>

g01107896

216-9498 DIFFERENTIAL GP–AXLE, FRONT

S/N: SJW1-UP

PART OF 209-9882 DIFFERENTIAL & BEVEL GEAR GP

AN ATTACHMENT

SMCS-3258 **i04403755**

NOTE	REF NO	GRAPHIC REF	PART NUMBER	QTY	PART NAME 1 2 3 4 5 6 (PRODUCT LEVEL)	SEE PAGE
	1	1	**211-0092**	2	WASHER-THRUST (22X42X2-MM THK)	
	2	1	**209-7455**	1	PIN	
	3	1	**216-8687**	1	COVER	
	4	1	**216-9497**	1	DIFFERENTIAL & BEVEL GEAR GP	
	5	1	**216-8689**	1	HOUSING-DIFFERENTIAL	
	6	1	**216-8691**	1	RETAINER	
	7	1	**229-5093**	2	WASHER-THRUST (49X72X1.5-MM THK)	
M	8	1	**144-6734**	12	BOLT (M10X1.5X30-MM)	

M-METRIC PART

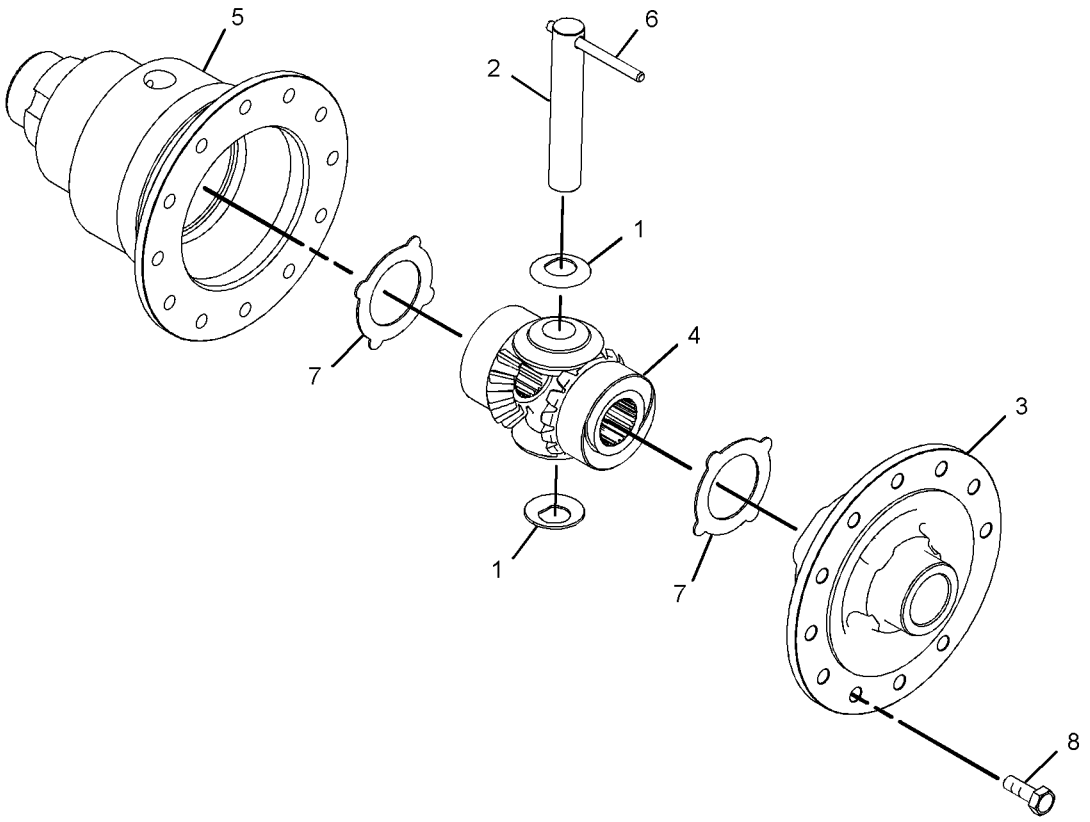

GRAPHIC #1 **<END>** g02596016

231-0692 DIFFERENTIAL GP–AXLE, REAR

S/N: SJW1-UP

PART OF 238-5298 DIFFERENTIAL & BEVEL GEAR GP

AN ATTACHMENT

SMCS-3258 **i02188622**

NOTE	REF NO	GRAPHIC REF	PART NUMBER	QTY	PART NAME 1 2 3 4 5 6 (PRODUCT LEVEL)	SEE PAGE
	1	1	**199-0673**	2	BUSHING	
	2	1	**199-0694**	12	BOLT (M14X2X40-MM)	
	3	1	**199-0756**	1	COLLAR	
	4	1	**199-0784**	1	COVER-DIFFERENTIAL	
	5	1	**199-0807**	4	PIN	
	6	1	**199-0808**	3	PIN	
	7	1	**231-0670**	1	SHAFT	
	8	1	**231-0671**	4	WASHER-THRUST	
	9	1	**231-0695**	2	WASHER-THRUST	
	10	1	**231-0693**	1	CASE-DIFFERENTIAL	
	11	1	**231-0696**	2	SHAFT	
	12	1	**231-0697**	1	RETAINER	
	13	1	**231-0694**	1	GEAR AS	
	14	1	**199-0659**	4	SEAL-PIN	

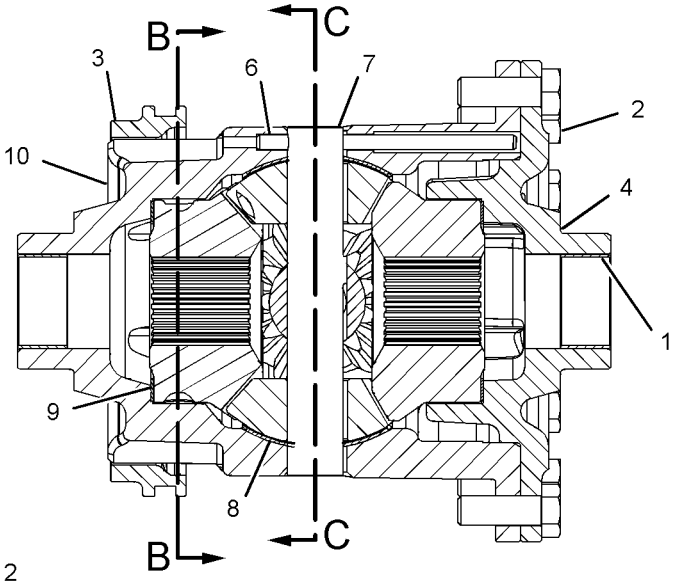

FRONT VIEW
(SECTIONED)

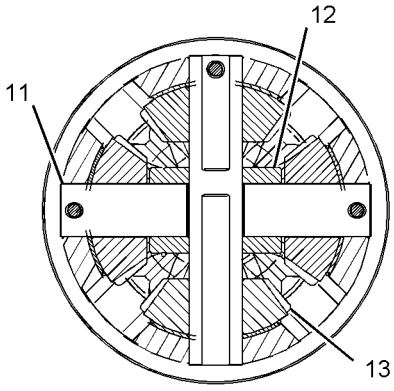

SECTION C-C

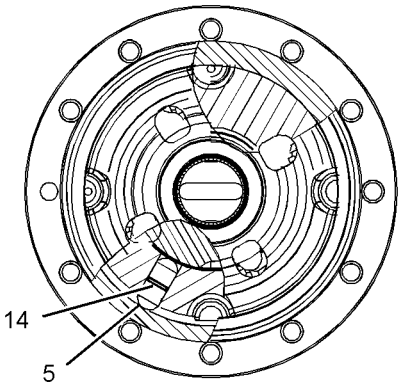

SECTION B-B

GRAPHIC #1 **<END>** g01107764

111-7907 DRIVE GP-FLEXIBLE COUPLING

S/N: SJW1-UP
PART OF 359-0403 TORQUE CONVERTER AR
AN ATTACHMENT

SMCS-3252 **i02594396**

NOTE	REF NO	GRAPHIC REF	PART NUMBER	QTY	PART NAME 1 2 3 4 5 6 (PRODUCT LEVEL)	SEE PAGE
M	1	1	**8T-4200**	8	BOLT (M8X1.25X16-MM)	
M	2	1	**6V-8455**	6	BOLT (M10X1.5X16-MM)	
	3	1	**117-9713**	1	PLATE-CONVERTER REINFORCEMENT	
	4	1	**8T-4224**	8	WASHER-HARD (8.8X16X2-MM THK)	
	5	1	**111-7906**	1	PLATE-CONVERTER DRIVE	

M-METRIC PART

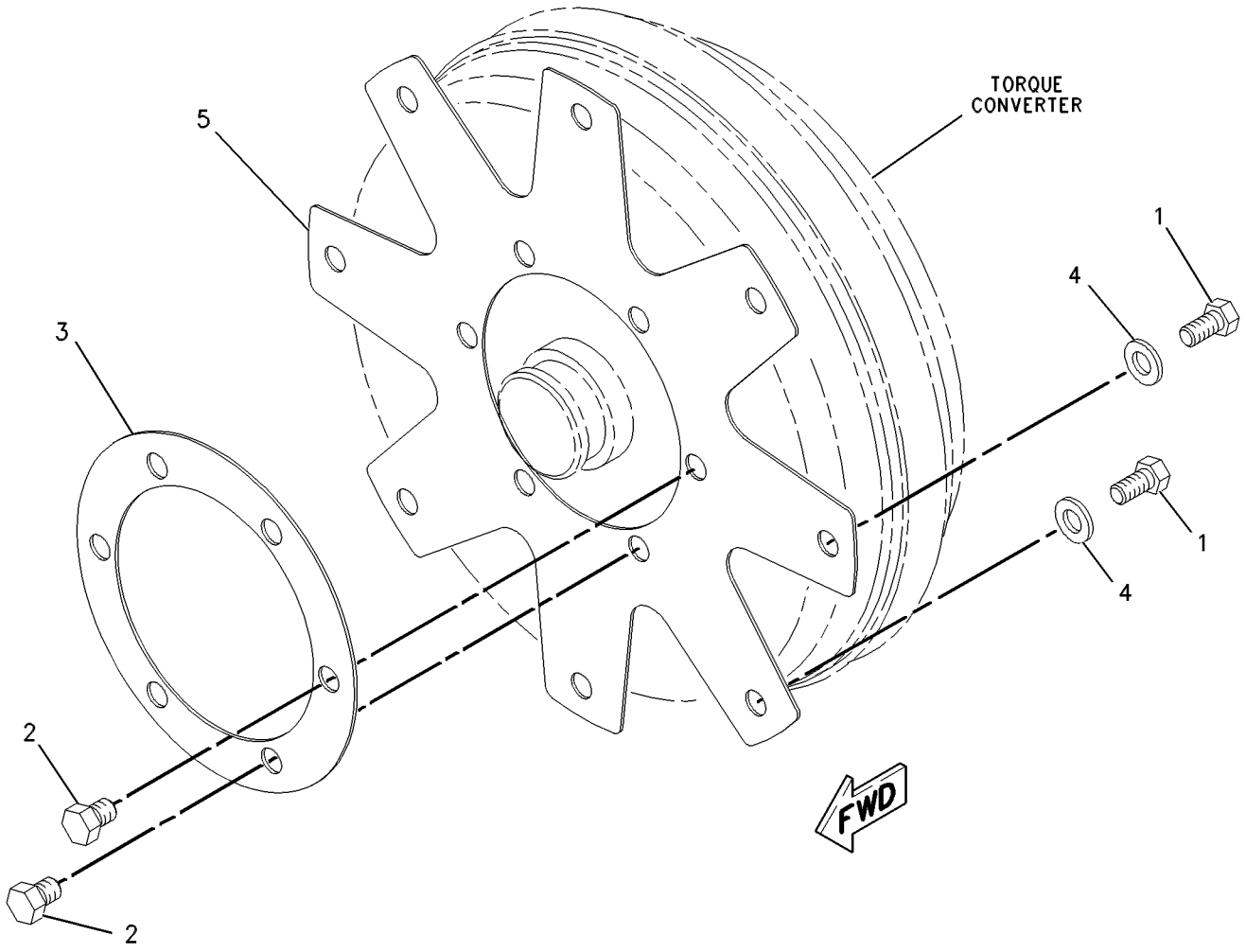

GRAPHIC #1 **<END>** g00547374

355-3845 DRIVE GP-FLEXIBLE COUPLING

S/N: SJW1-UP
PART OF 359-0406 TORQUE CONVERTER AR
AN ATTACHMENT

SMCS-3252 **i04612475**

NOTE	REF NO	GRAPHIC REF	PART NUMBER	QTY	PART NAME 1 2 3 4 5 6 (PRODUCT LEVEL)	SEE PAGE
	1	1	**355-3843**	1	PLATE-CONVERTER	
	2	1	**355-3844**	1	PLATE-CONVERTER	
M	3	1	**6V-8455**	4	BOLT (M10X1.5X16-MM)	
M	4	1	**8T-4200**	8	BOLT (M8X1.25X16-MM)	
	5	1	**8T-4224**	8	WASHER-HARD (8.8X16X2-MM THK)	

M-METRIC PART

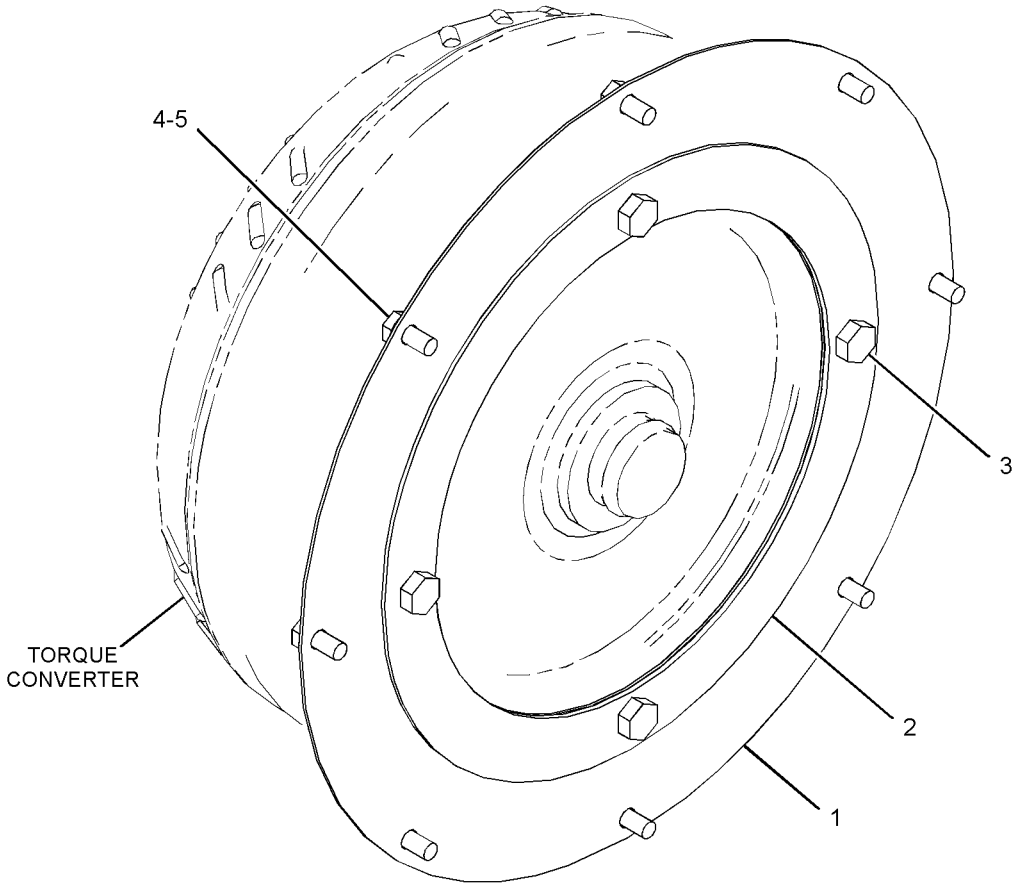

GRAPHIC #1 **<END>** g02811139

337-9701 FILLER GP-POWER TRAIN OIL—AUTOSHIFT

S/N: SJW1-UP

PART OF 353-1510, 353-1511 TRANSMISSION AR-POWER SHIFT

AN ATTACHMENT

SMCS-3005, 3081 **i04543241**

NOTE	REF NO	GRAPHIC REF	PART NUMBER	QTY	PART NAME 1 2 3 4 5 6 (PRODUCT LEVEL)	SEE PAGE
	1	1	**323-3308**	2	CAP	
	2	1	**361-1727**	1	FLANGE AS	
	3	1	**361-2693**	1	GAUGE-OIL LEVEL (DIPSTICK) (POWER TRAIN)	
	4	1	**361-7032**	1	TUBE AS	
	5	1	**363-9893**	1	BRACKET AS	
M		1	**159-9540**	1	NUT-WELD (M8X1.25-THD)	
	6	1	**3E-7445**	2	CLAMP-HOSE	
	7	1	**4J-0522**	1	SEAL-O-RING	
	8	1	**5P-4116**	2	WASHER-HARD (8.8X20.5X2-MM THK)	
	9	1	**8T-4121**	1	WASHER-HARD (11X21X2.5-MM THK)	
M	10	1	**8T-4189**	1	BOLT (M8X1.25X20-MM)	
M	11	1	**8T-4195**	1	BOLT (M10X1.5X30-MM)	
	12	1	**8T-4223**	2	WASHER-HARD (13.5X25.5X3-MM THK)	
M	13	1	**8T-4908**	1	BOLT (M8X1.25X25-MM)	
M	14	1	**8T-4956**	2	BOLT (M12X1.75X35-MM)	
	15	1	**262-8088**		HOSE (18.5-CM)	

M-METRIC PART

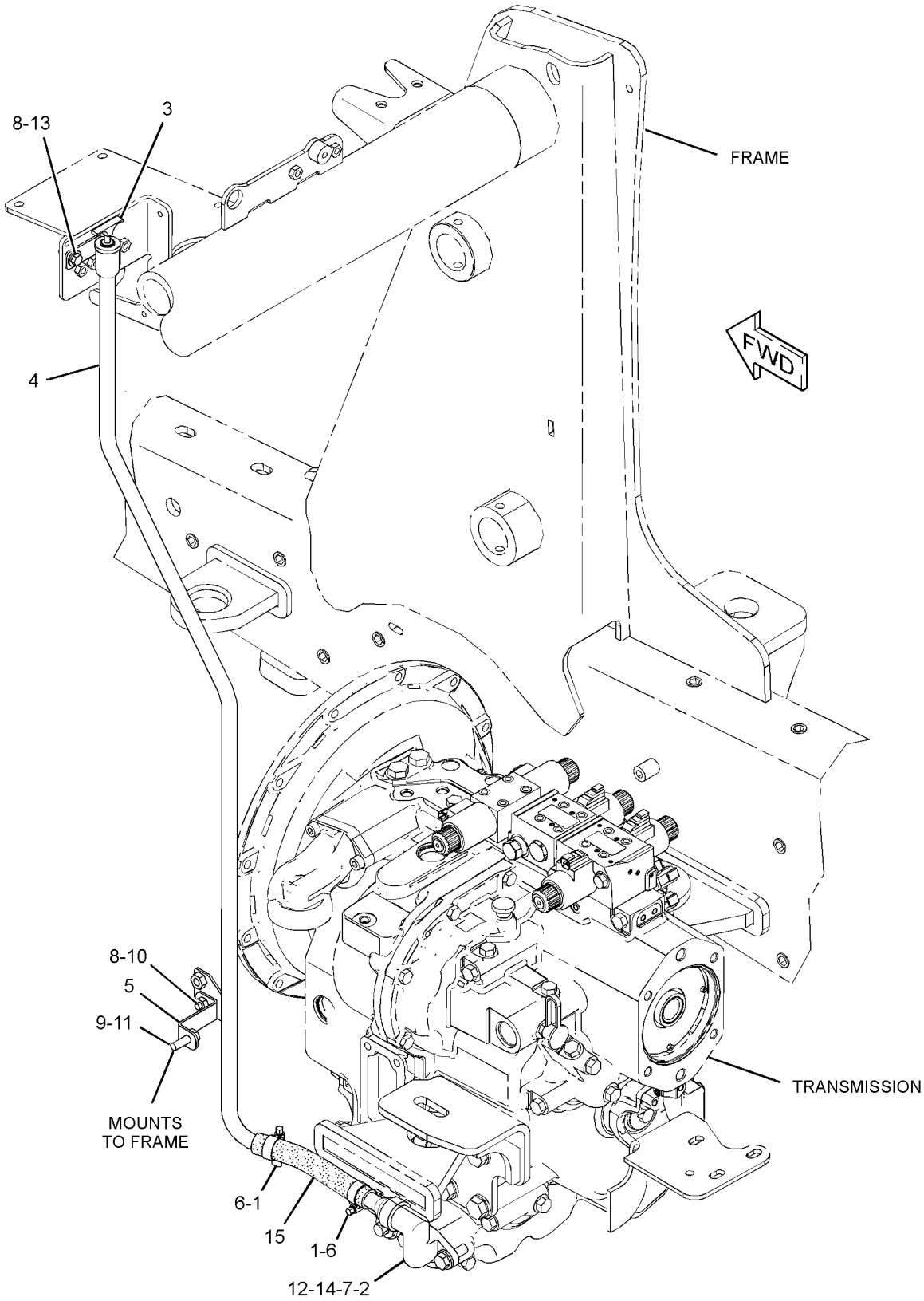

GRAPHIC #1

<END>

g02786397

337-9703 FILLER GP-POWER TRAIN OIL–STANDARD SHIFT

S/N: SJW1-UP
PART OF 353-1507 TRANSMISSION AR-DIRECT DRIVE
AN ATTACHMENT

SMCS-3005, 3081 **i04543236**

NOTE	REF NO	GRAPHIC REF	PART NUMBER	QTY	PART NAME 1 2 3 4 5 6 (PRODUCT LEVEL)	SEE PAGE
	1	1	**323-3308**	2	CAP	
	2	1	**361-1725**	1	TUBE AS	
	3	1	**361-1727**	1	FLANGE AS	
	4	1	**361-1728**	1	GAUGE-OIL LEVEL (DIPSTICK) (POWER TRAIN)	
	5	1	**363-9893**	1	BRACKET AS	
M		1	**159-9540**	1	NUT-WELD (M8X1.25-THD)	
	6	1	**3E-7445**	2	CLAMP-HOSE	
	7	1	**4J-0522**	1	SEAL-O-RING	
	8	1	**5P-4116**	2	WASHER-HARD (8.8X20.5X2-MM THK)	
	9	1	**8T-4121**	1	WASHER-HARD (11X21X2.5-MM THK)	
M	10	1	**8T-4189**	1	BOLT (M8X1.25X20-MM)	
M	11	1	**8T-4195**	1	BOLT (M10X1.5X30-MM)	
	12	1	**8T-4223**	2	WASHER-HARD (13.5X25.5X3-MM THK)	
M	13	1	**8T-4908**	1	BOLT (M8X1.25X25-MM)	
M	14	1	**8T-4956**	2	BOLT (M12X1.75X35-MM)	
E	15	1	**262-8088**		HOSE (18.5-CM)	

E-ORDER BY THE CENTIMETER
M-METRIC PART

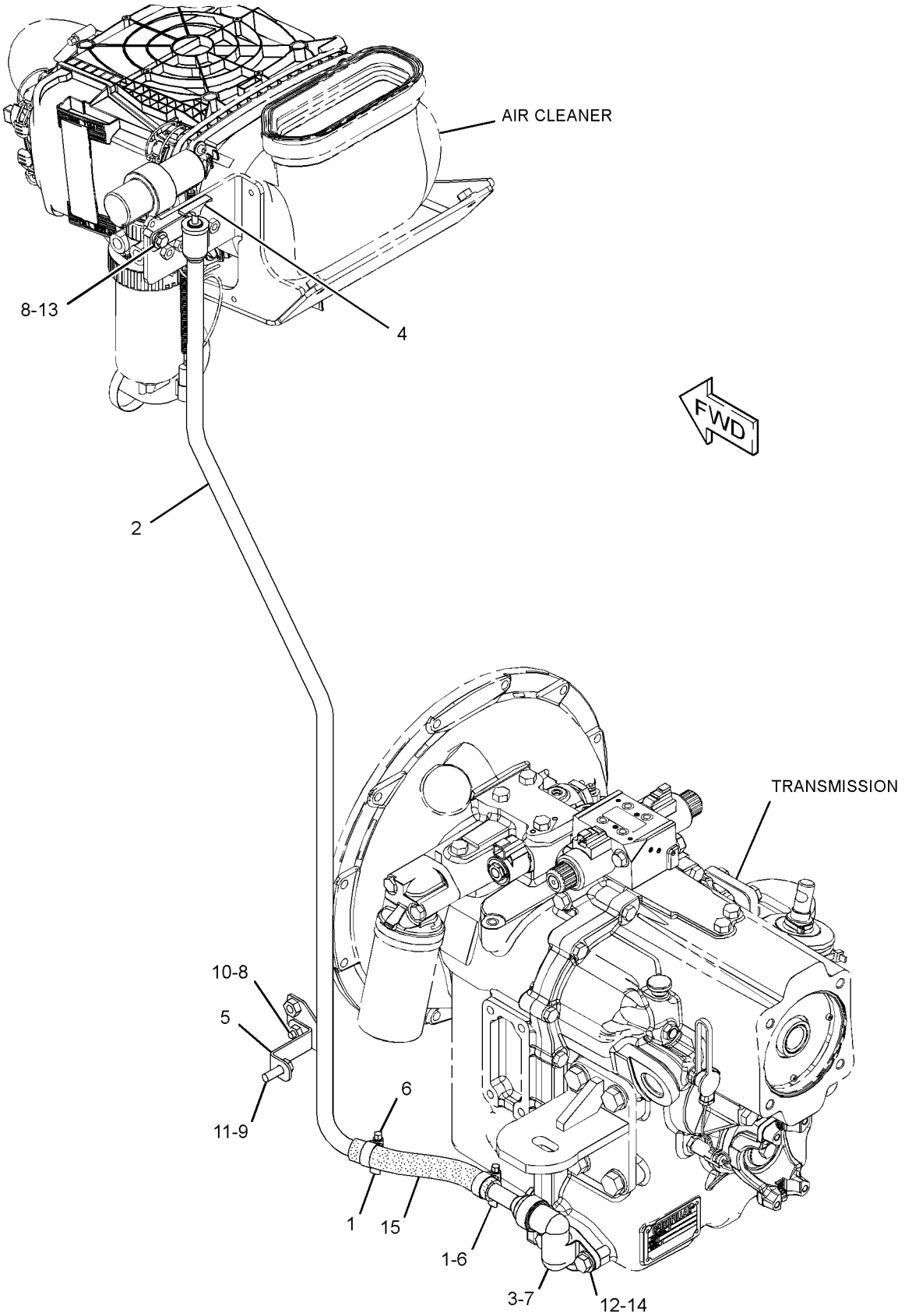

GRAPHIC #1 **<END>** g02785779

216-1609 FLANGE GP-WHEEL

S/N: SJW1-UP
PART OF 230-5738 AXLE GP-REAR
AN ATTACHMENT

SMCS-4057 **i04369628**

NOTE	REF NO	GRAPHIC REF	PART NUMBER	QTY	PART NAME 1 2 3 4 5 6 (PRODUCT LEVEL)	SEE PAGE
	1	1	**209-4232**	2	BEARING	
	2	1	**331-8538**	1	SEAL	
J	3	1	**226-4346**	10	STUD	
					AVAILABLE REPAIR KIT(S):	
			231-0719	1	KIT-WHEEL FLANGE	
					(ALSO INCLUDES FLANGE WHEEL)	

J-KIT MARKED J SERVICES PARTS MARKED J

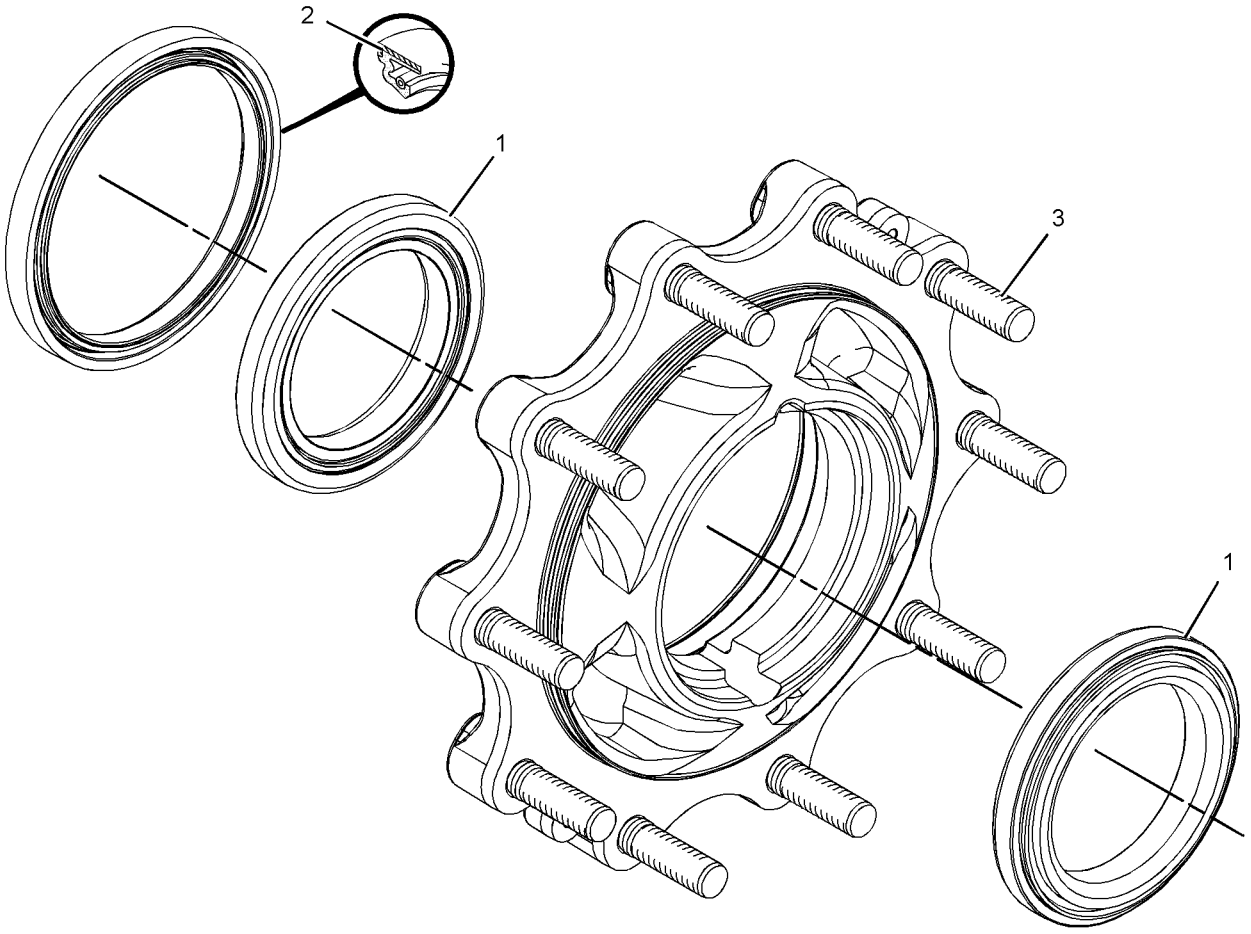

GRAPHIC #1 **<END>** g02531759

209-9884 HOUSING & FLANGE GP-AXLE–RH

S/N: SJW1-UP

PART OF 230-5743 AXLE GP-DRIVE & STEERING

AN ATTACHMENT

SMCS-4057, 4234 **i03973170**

NOTE	REF NO	GRAPHIC REF	PART NUMBER	QTY	PART NAME 1 2 3 4 5 6 (PRODUCT LEVEL)	SEE PAGE
Y	1	1	**217-2877**	1	HOUSING GP-AXLE (RH)	213
J	2	1	*231-0703*	1	FLANGE AS (AXLE)	
	2A	1	**210-5932**	2	BEARING-WHEEL	
	2B	1	**226-4346**	8	STUD	
	2C	1	**331-8538**	1	SEAL	
	3	1	**226-4366**	1	NUT-SPANNER	
	4	1	**226-4370**	3	BOLT-SELF-LOCKING	
	5	1	**229-5085**	1	SPACER (110X123X18.36-MM THK)	
	6	1	**217-2879**	1	GEAR GP-RING	
	7	1	**226-4365**	1	WASHER-TAB	
					AVAILABLE REPAIR KIT(S):	
J			**238-5256**	1	KIT-FLANGE (AXLE HOUSING)	
					(INCLUDES STUDS & WHEEL FLANGE)	

J-KIT MARKED J SERVICES PART MARKED J
Y-SEPARATE ILLUSTRATION

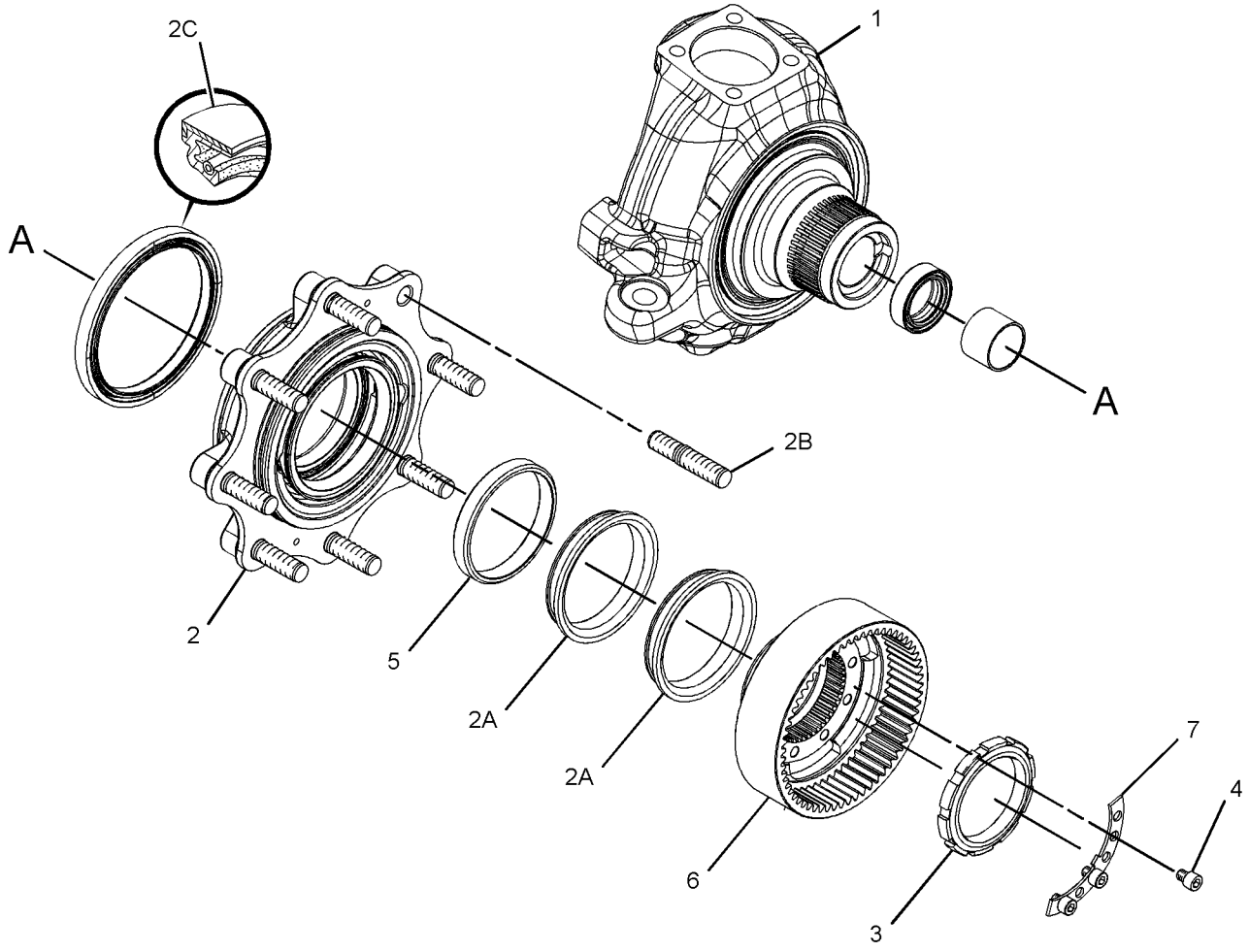

GRAPHIC #1 **<END>** g02164593

209-9885 HOUSING & FLANGE GP-AXLE–LH

S/N: SJW1-UP
PART OF 230-5743 AXLE GP-DRIVE & STEERING
AN ATTACHMENT

SMCS-4057, 4234 **i03920894**

NOTE	REF NO	GRAPHIC REF	PART NUMBER	QTY	PART NAME 1 2 3 4 5 6 (PRODUCT LEVEL)	SEE PAGE
Y	1	1	**217-2878**	1	HOUSING GP-AXLE (LH)	214
J	2	1	*231-0703*	1	FLANGE AS (AXLE)	
	2A	1	**210-5932**	2	BEARING-WHEEL	
	2B	1	**226-4346**	8	STUD	
	2C	1	**331-8538**	1	SEAL	
	3	1	**226-4366**	1	NUT-SPANNER	
	4	1	**226-4370**	4	BOLT-SELF-LOCKING	
	5	1	**229-5085**	1	SPACER (110X123X18.36-MM THK)	
	6	1	**217-2879**	1	GEAR GP-RING	
	7	1	**226-4365**	1	WASHER-TAB	
					AVAILABLE REPAIR KIT(S):	
J			**238-5256**	1	KIT-FLANGE (AXLE HOUSING)	
					(INCLUDES WHEEL FLANGE & STUDS)	

J-KIT MARKED J SERVICES PART(S) MARKED J
Y-SEPARATE ILLUSTRATION

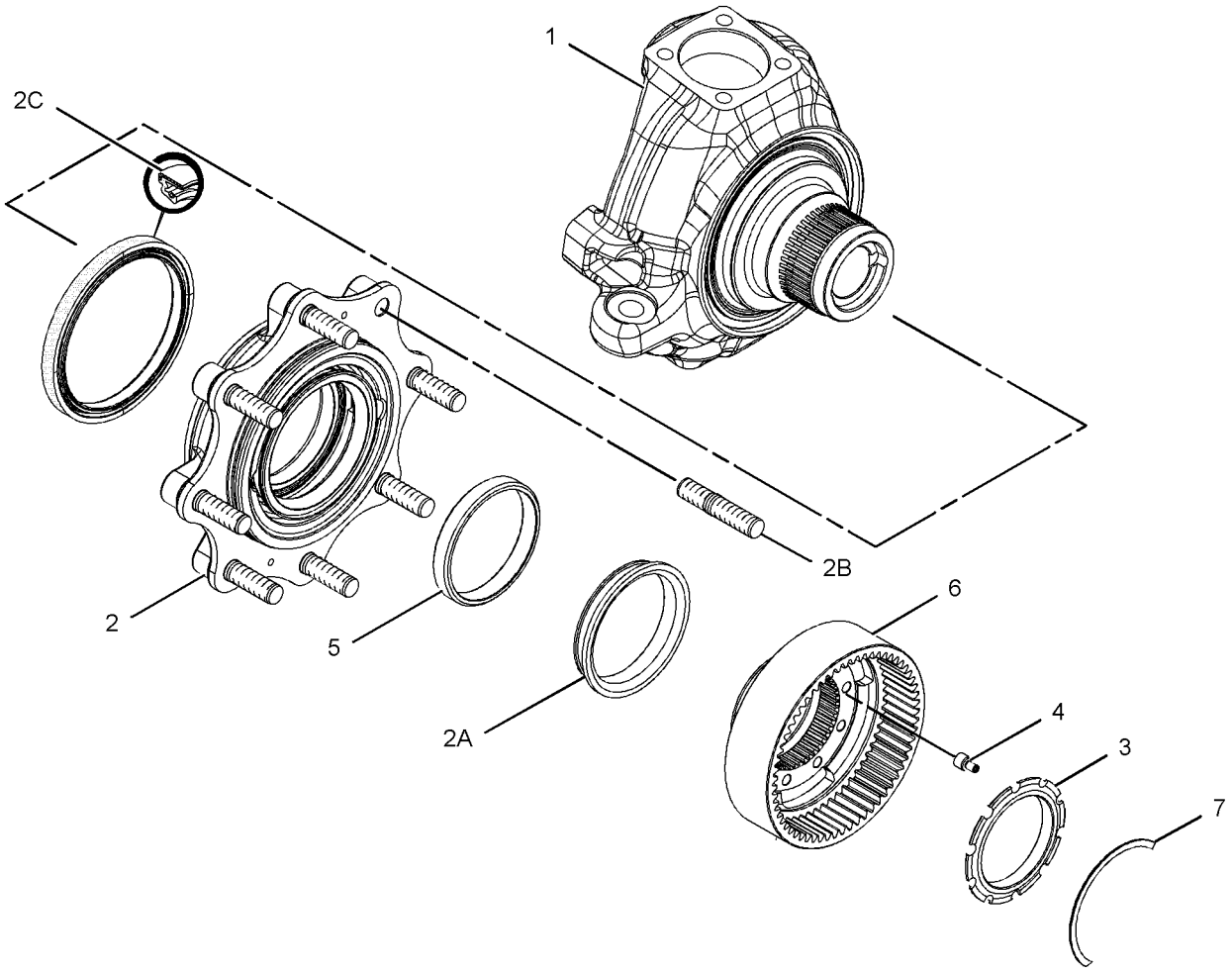

GRAPHIC #1 **<END>** g01180841

217-2877 HOUSING GP-AXLE–RH

S/N: SJW1-UP
PART OF 209-9884 HOUSING & FLANGE GP-AXLE
AN ATTACHMENT

SMCS-3256, 3258, 3260, 4251 **i02364961**

NOTE	REF NO	GRAPHIC REF	PART NUMBER	QTY	PART NAME 1 2 3 4 5 6 (PRODUCT LEVEL)	SEE PAGE
	1	1	**199-0648**	1	NUT-JAM (M16X2-THD)	
	2	1	**198-7814**	1	BOLT (M16X2X100-MM)	
	3	1	**209-7460**	1	BUSHING	
	4	1	**209-7465**	1	SEAL	
	5	1	**231-0700**	1	HOUSING	

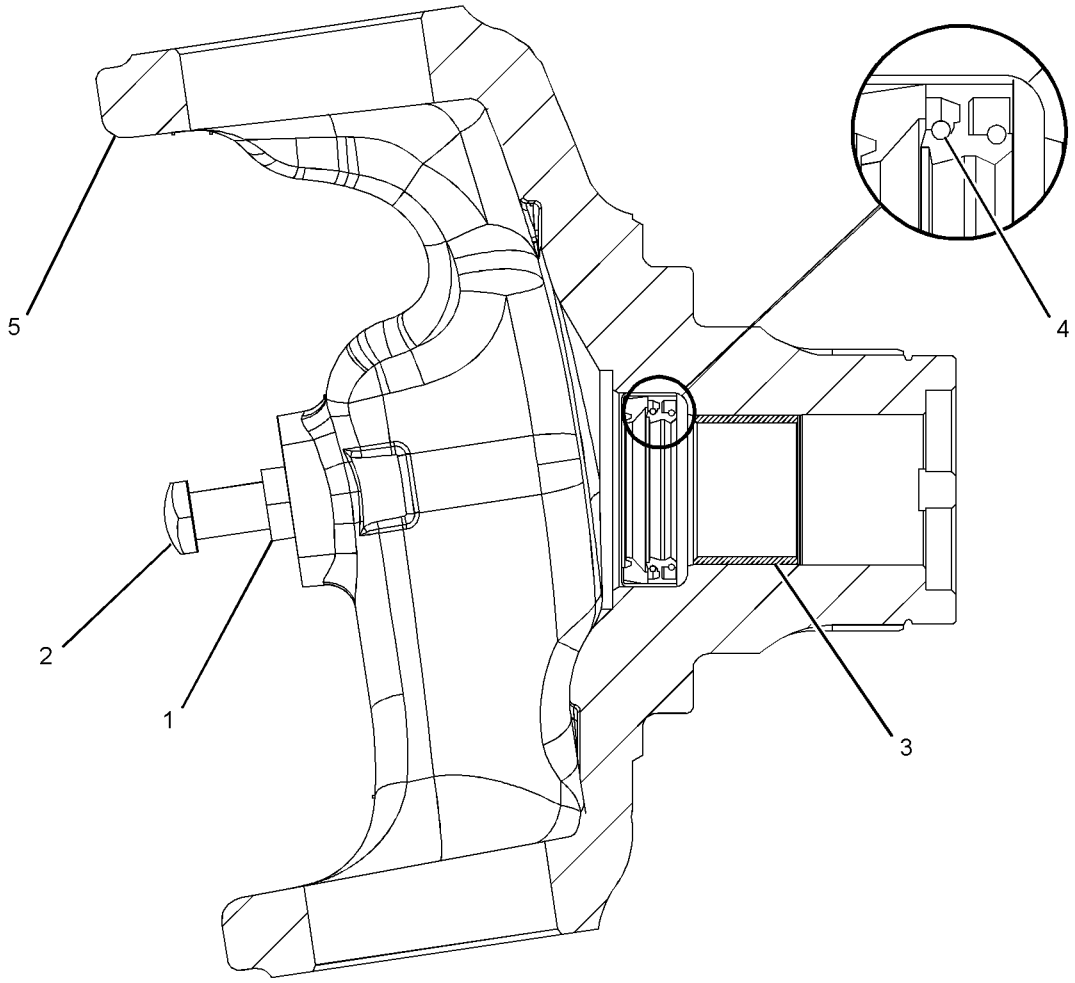

GRAPHIC #1 **<END>** g01181175

217-2878 HOUSING GP-AXLE–LH

S/N: SJW1-UP

PART OF 209-9885 HOUSING & FLANGE GP-AXLE

AN ATTACHMENT

SMCS-3256, 3258, 3260, 4251 **i02364974**

NOTE	REF NO	GRAPHIC REF	PART NUMBER	QTY	PART NAME 1 2 3 4 5 6 (PRODUCT LEVEL)	SEE PAGE
	1	1	**199-0648**	1	NUT-JAM (M16X2-THD)	
	2	1	**198-7814**	1	BOLT (M16X2X100-MM)	
	3	1	**209-7460**	1	BUSHING	
	4	1	**209-7465**	1	SEAL	
	5	1	**231-0701**	1	HOUSING	

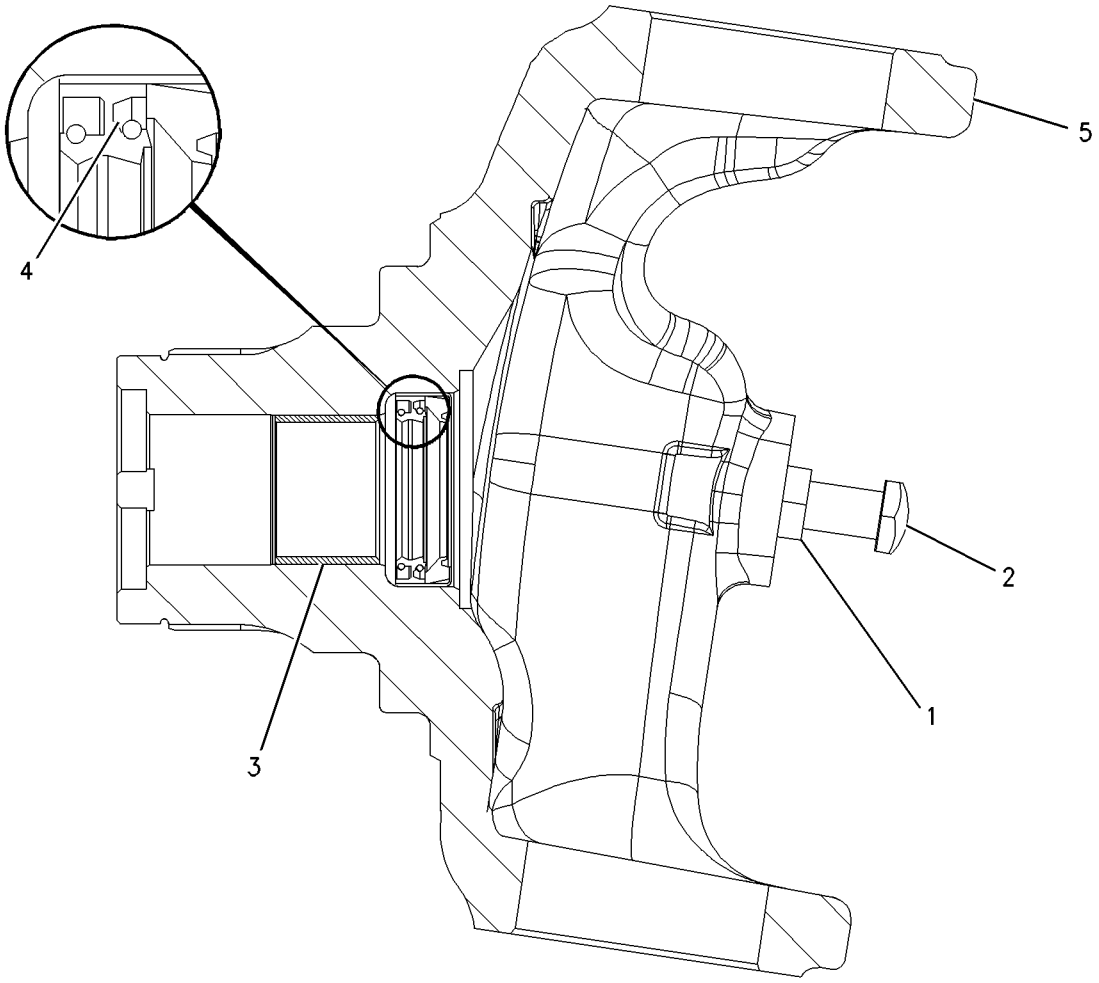

GRAPHIC #1 **<END>** g00926639

337-9717 LINES GP-POWER TRAIN OIL

S/N: SJW1-UP

PART OF 353-1507 TRANSMISSION AR-DIRECT DRIVE

AN ATTACHMENT

SMCS-3016, 3154 **i04574730**

NOTE	REF NO	GRAPHIC REF	PART NUMBER	QTY	PART NAME 1 2 3 4 5 6 (PRODUCT LEVEL)	SEE PAGE
	1	1	**9X-6772**	2	STRAP-CABLE	
	2	1	**151-4841**	2	BLOCK	
	3	1	*165-6365*	1	FITTING AS	
		1	**3J-1907**		SEAL-O-RING	
		1	**7W-7381**	1	FITTING-OUTLET	
I	4	1	**362-4915**	1	HOSE AS	
	5	1	*148-8325*	1	CONNECTOR AS	
		1	**3J-1907**	1	SEAL-O-RING	
		1	**4J-5477**	1	SEAL-O-RING	
		1	**6V-8641**	1	CONNECTOR	
	6	1	*148-8368*	1	ELBOW AS	
		1	**3J-1907**	1	SEAL-O-RING	
		1	**4J-5477**	1	SEAL-O-RING	
		1	**6V-8627**	1	ELBOW	

I-REFER TO HYDRAULIC INFORMATION SYSTEM

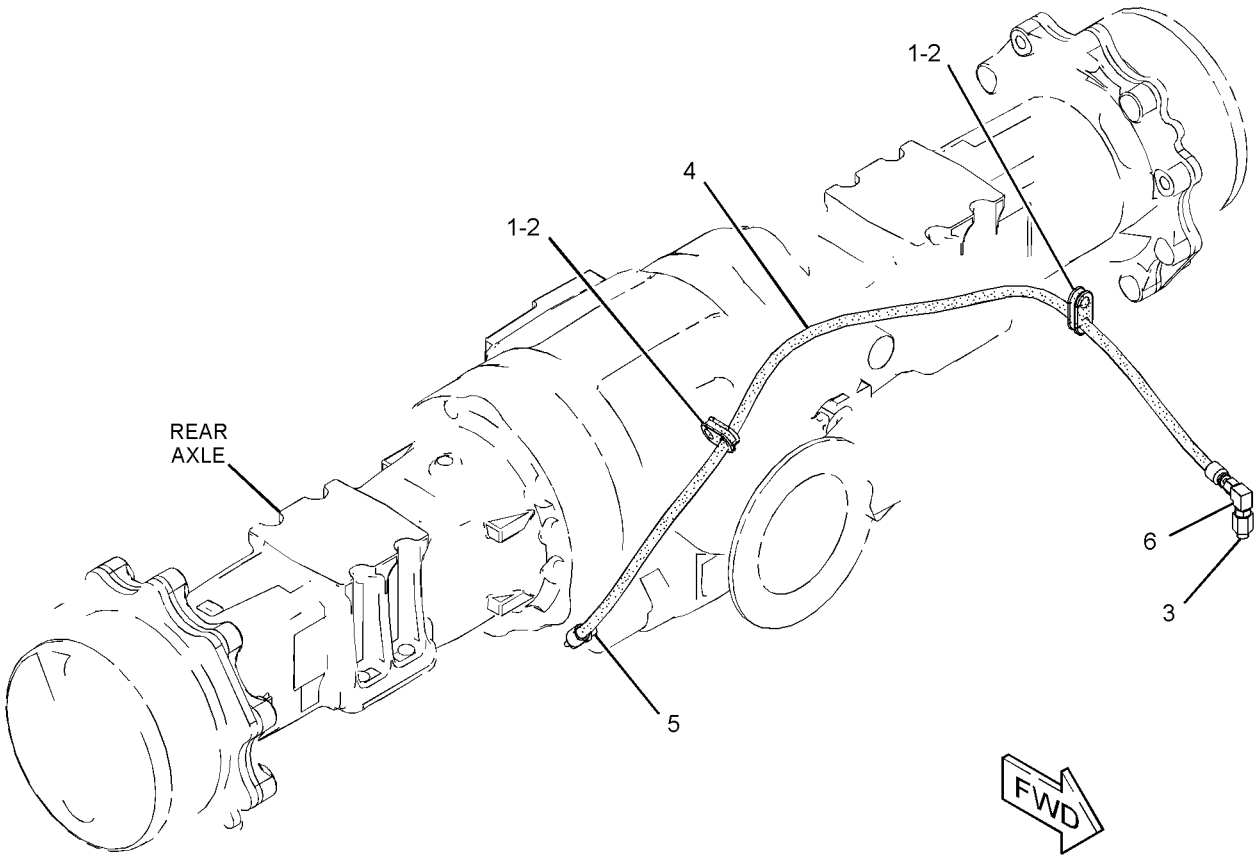

GRAPHIC #1 **<END>** g02806176

337-9719 LOCK GP-DIFFERENTIAL—AUTOSHIFT

S/N: SJW1-UP

PART OF 353-1510, 353-1511 TRANSMISSION AR-POWER SHIFT

AN ATTACHMENT

SMCS-3264, 3272 **i04602975**

NOTE	REF NO	GRAPHIC REF	PART NUMBER	QTY	PART NAME 1 2 3 4 5 6 (PRODUCT LEVEL)	SEE PAGE
	1	1	**9X-6772**	1	STRAP-CABLE	
	2	1	**151-4841**	1	BLOCK	
Y	3	1	**274-8048**	1	VALVE & MTG GP-SOLENOID (DIFFERENTIAL LOCK)	274
	4	1	**365-2181**	1	TUBE AS	
	5	1	**365-2182**	1	TUBE AS	
I	6	1	**365-2183**	1	HOSE AS	
	7	1	**365-2185**	1	PLATE AS	
	8	1	*148-8325*	3	CONNECTOR AS	
					(EACH INCLUDES)	
		1	**3J-1907**	1	SEAL-O-RING	
		1	**4J-5477**	1	SEAL-O-RING	
		1	**6V-8641**	1	CONNECTOR	
	9	1	*148-8368*	3	ELBOW AS	
					(EACH INCLUDES)	
		1	**3J-1907**	1	SEAL-O-RING	
		1	**4J-5477**	1	SEAL-O-RING	
		1	**6V-8627**	1	ELBOW	
	10	1	**6D-3479**	1	CLIP	
	11	1	**8T-4121**	3	WASHER-HARD (11X21X2.5-MM THK)	
M	12	1	**8T-4179**	2	BOLT (M12X1.75X20-MM)	
M	13	1	**8T-4195**	1	BOLT (M10X1.5X30-MM)	
	14	1	**8T-4223**	2	WASHER-HARD (13.5X25.5X3-MM THK)	
M	15	1	**8T-6466**	2	BOLT (M10X1.5X60-MM)	

I-REFER TO HYDRAULIC INFORMATION SYSTEM
M-METRIC PART
Y-SEPARATE ILLUSTRATION

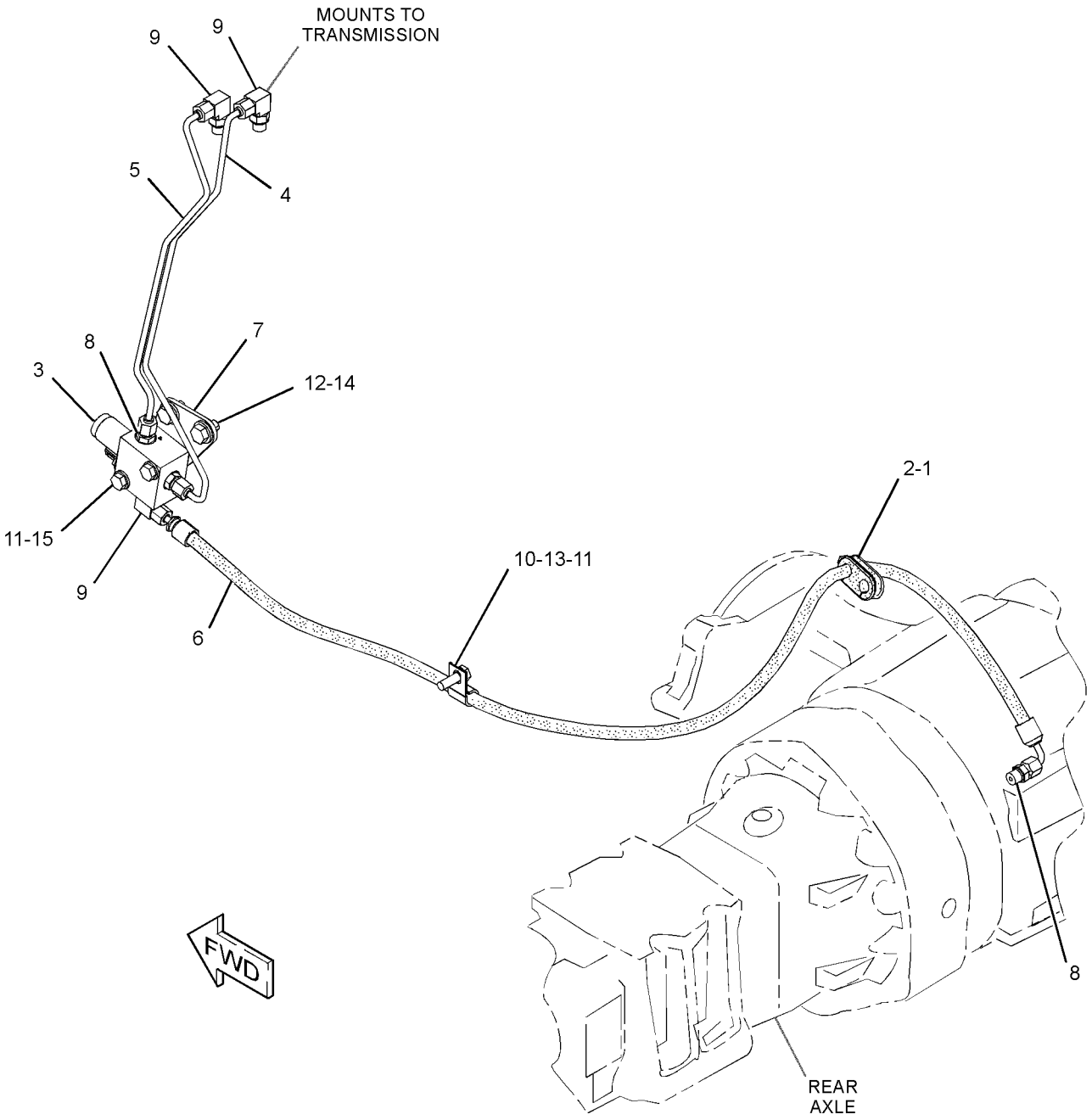

GRAPHIC #1 **<END>** g02806178

130-8149 LOCKOUT GP-FOURTH GEAR

S/N: SJW1-UP
PART OF 341-3109 OPTION AR-REGIONAL
AN ATTACHMENT

SMCS-7000 **i03569160**

NOTE	REF NO	GRAPHIC REF	PART NUMBER	QTY	PART NAME 1 2 3 4 5 6 (PRODUCT LEVEL)	SEE PAGE
	1	1	**120-9763**	1	PLUG-LOCKOUT	
	2	1	**3J-1907**	1	SEAL-O-RING	
D	3	1	**8C-8418**		LOCKWIRE (0.4-M)	
	4	1	**8S-8158**	1	SEAL-WIRE	
	5	1	**127-5469**	1	LOCKWASHER	

D-ORDER BY THE METER

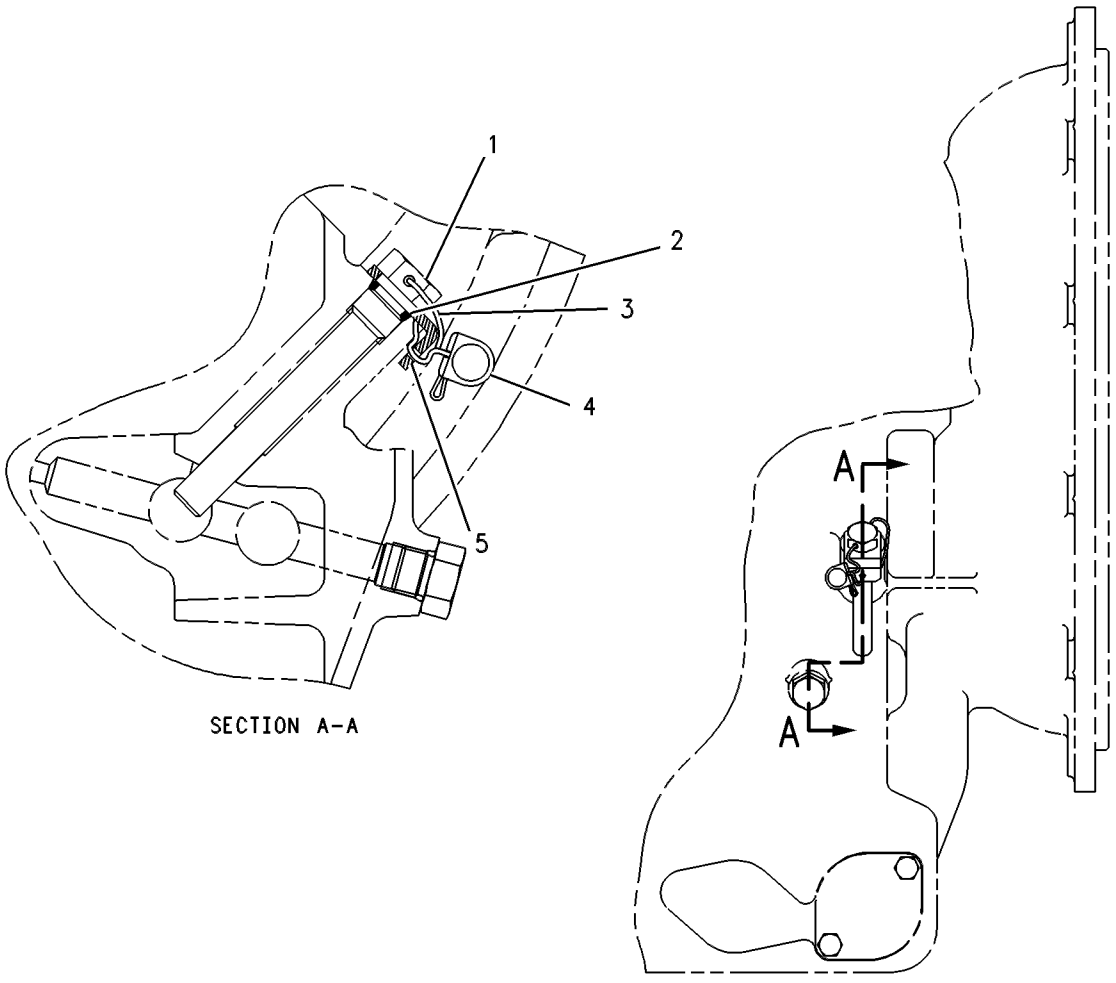

GRAPHIC #1 **<END>** g00258869

337-9837 MOUNTING GP-AXLE

S/N: SJW1-UP

PART OF 353-1501 DRIVE AR-BACKHOE LOADER

AN ATTACHMENT

SMCS-3268 **i04566200**

NOTE	REF NO	GRAPHIC REF	PART NUMBER	QTY	PART NAME 1 2 3 4 5 6 (PRODUCT LEVEL)	SEE PAGE
B	1	1	**1K-7082**	2	WASHER (2.266X4X0.031-IN THK)	
B	2	1	**9R-9702**	5	WASHER (56X100X1.6-MM THK)	
	3	1	**154-1580**	16	WASHER-HARD (22X38X6-MM THK)	
	4	1	**213-6754**	1	BOSS	
	5	1	**258-9999**	2	FILM-IDENTIFICATION (LIFT EYE LOCATION)	
	6	1	**361-5903**	1	PIN AS	
M	7	1	**089-7990**	8	BOLT (M20X2.5X250-MM)	
	8	1	**165-8996**	2	WASHER-THRUST (55.5X100.5X5-MM THK)	
	9	1	**7X-0590**	1	WASHER-HARD (13.5X44.5X6-MM THK)	
M	10	1	**8T-4131**	8	NUT (M20X2.5-THD)	
M	11	1	**8T-4183**	1	BOLT (M12X1.75X40-MM)	

B-USE AS REQUIRED
M-METRIC PART

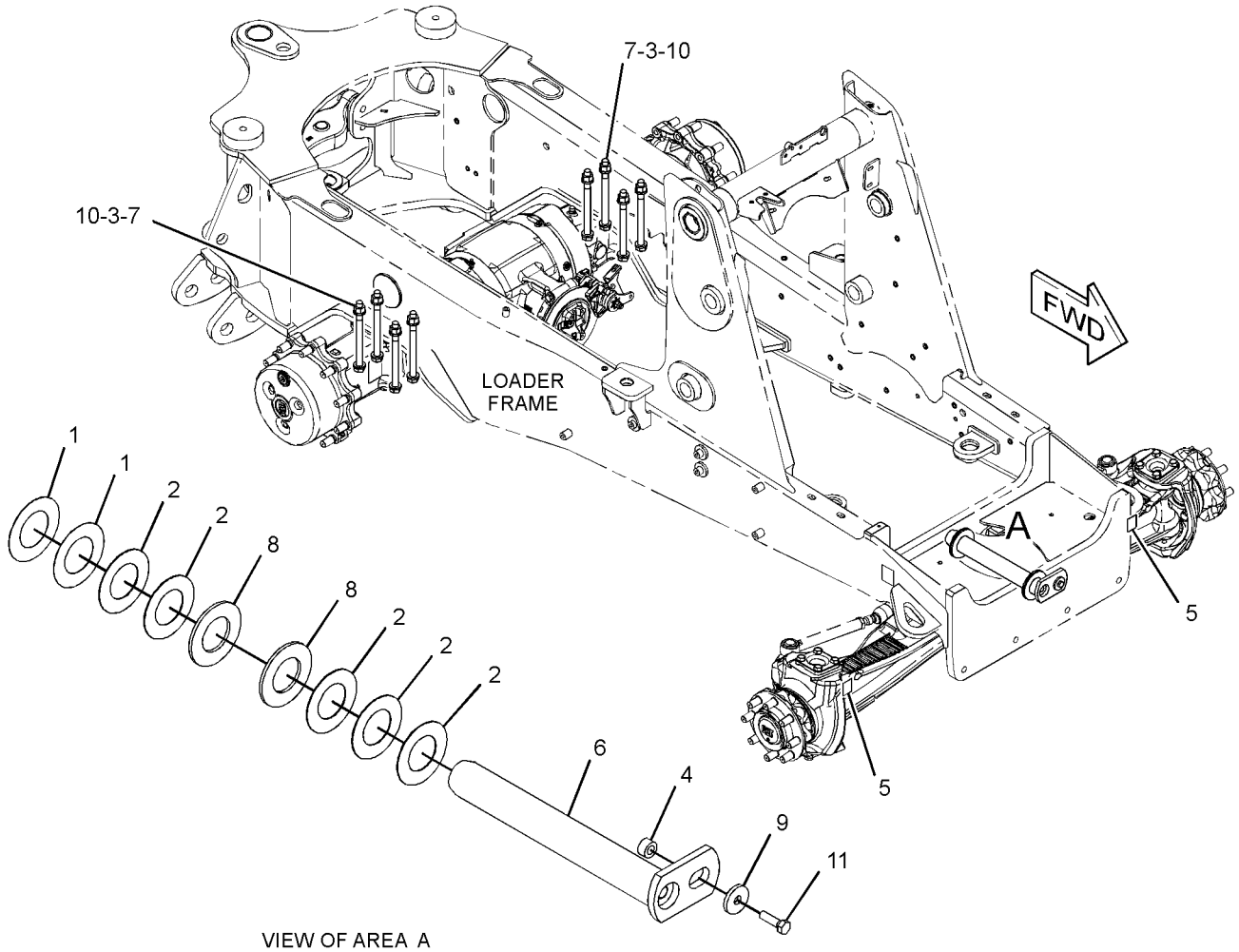

VIEW OF AREA A

GRAPHIC #1 **<END>** g02808238

POWER TRAIN

355-3833 MOUNTING GP-TRANSMISSION

S/N: SJW1-UP

PART OF 350-8606, 359-0380 TRANSMISSION AR-POWER SHIFT

AN ATTACHMENT

SMCS-3082 **i04597389**

NOTE	REF NO	GRAPHIC REF	PART NUMBER	QTY	PART NAME 1 2 3 4 5 6 (PRODUCT LEVEL)	SEE PAGE
	1	1	**355-3837**	1	SUPPORT AS	
	2	1	**355-3838**	1	SUPPORT AS	
M	3	1	**7X-2553**	4	BOLT (M16X2X40-MM)	
	4	1	**8T-4223**	4	WASHER-HARD (13.5X25.5X3-MM THK)	
M	5	1	**8T-4956**	4	BOLT (M12X1.75X35-MM)	
	6	1	**9X-8257**	4	WASHER (17.5X30X3.5-MM THK)	

M-METRIC PART

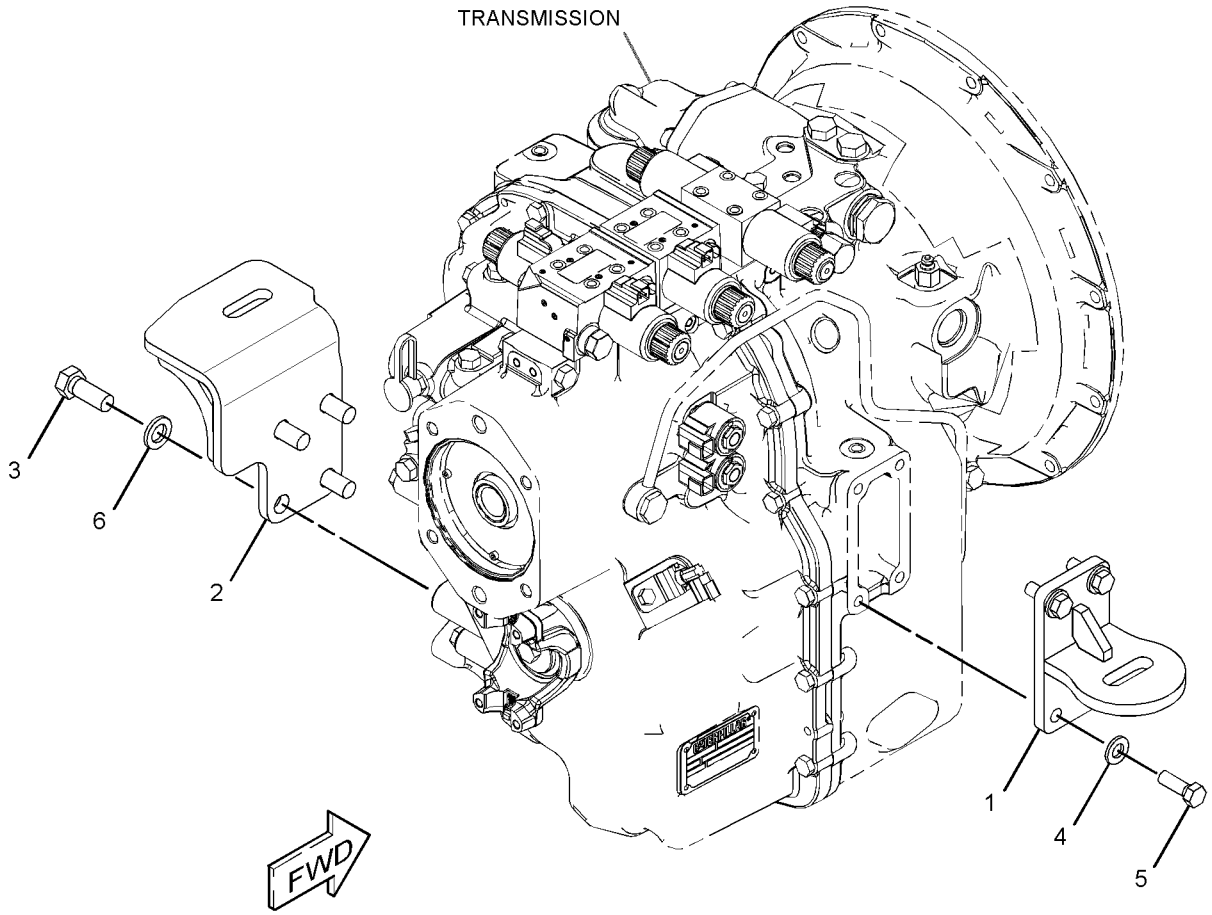

GRAPHIC #1 **<END>** g02788627

355-3841 MOUNTING GP-TRANSMISSION

S/N: SJW1-UP

PART OF 359-0377 TRANSMISSION AR-DIRECT DRIVE

AN ATTACHMENT

SMCS-3082 **i04577808**

NOTE	REF NO	GRAPHIC REF	PART NUMBER	QTY	PART NAME 1 2 3 4 5 6 (PRODUCT LEVEL)	SEE PAGE
	1	1	**355-3837**	1	SUPPORT AS (LH)	
	2	1	**355-3839**	1	SUPPORT AS (RH)	
M	3	1	**7X-2553**	4	BOLT (M16X2X40-MM)	
	4	1	**8T-4223**	4	WASHER-HARD (13.5X25.5X3-MM THK)	
M	5	1	**8T-4956**	4	BOLT (M12X1.75X35-MM)	
	6	1	**9X-8257**	4	WASHER (17.5X30X3.5-MM THK)	

M-METRIC PART

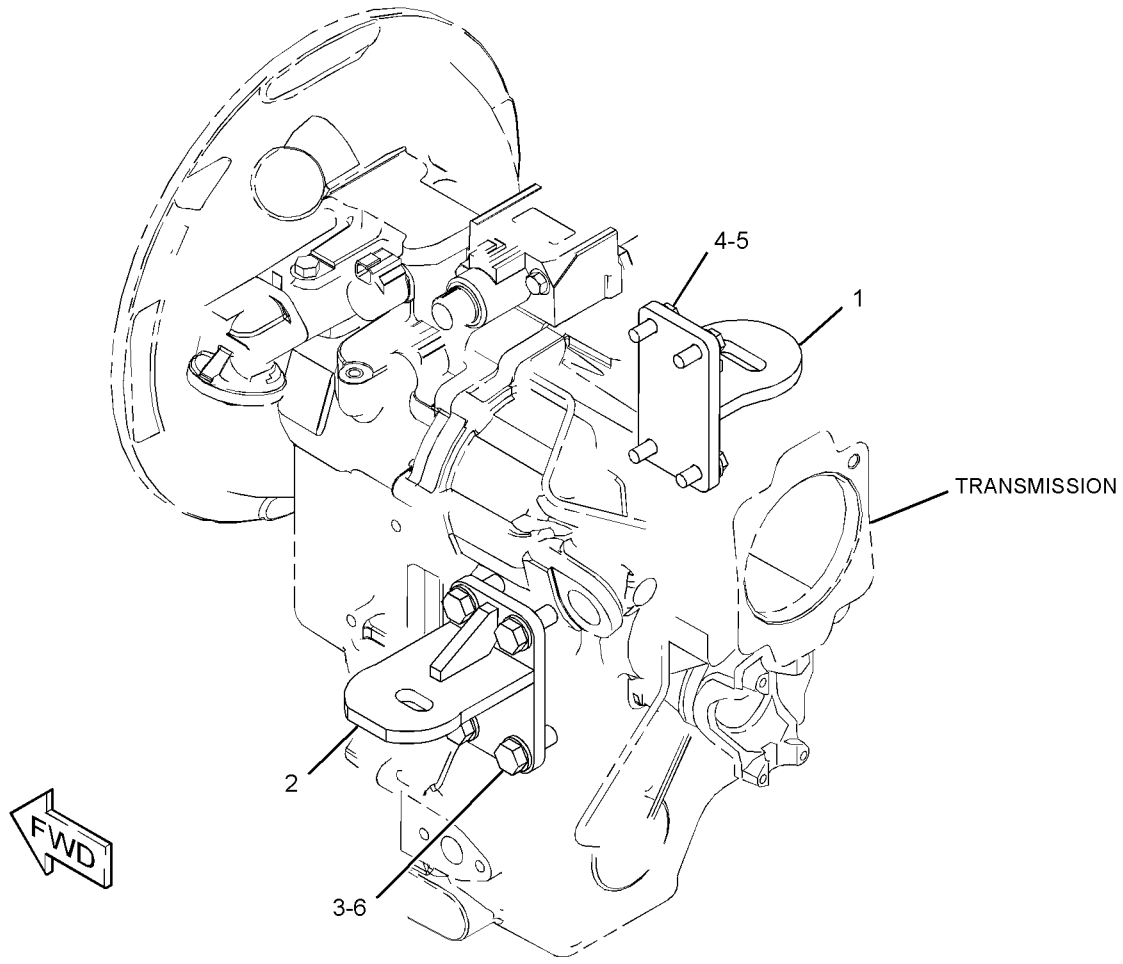

GRAPHIC #1 **<END>** g02806197

210-5924 PLANETARY GP-FINAL DRIVE–AXLE

S/N: SJW1-UP

PART OF 230-5743 AXLE GP-DRIVE & STEERING

AN ATTACHMENT

SMCS-4050 **i03156043**

NOTE	REF NO	GRAPHIC REF	PART NUMBER	QTY	PART NAME 1 2 3 4 5 6 (PRODUCT LEVEL)	SEE PAGE
	1	1	**210-5931**	4	RETAINER	
	2	1	**209-4157**	4	GEAR (23-TEETH)	
	3	1	**095-0924**	4	RING-RETAINING	
					AVAILABLE REPAIR KIT(S):	
			209-7466	1	KIT-PLANETARY CARRIER	
					(INCLUDES THRUST PLUG, SUN GEAR SHAFT & PLANET CARRIER)	
			219-8783	23	KIT-ROLLER BEARING	
					(EACH INCLUDES 10 NEEDLES)	
					(SERVICED IN QUANITY OF 10, EACH GEAR REQUIRES 56 ROLLERS OR 6 KITS, EACH WHEEL END AS. REQUIRES 224 ROLLERS OR 23 KITS)	

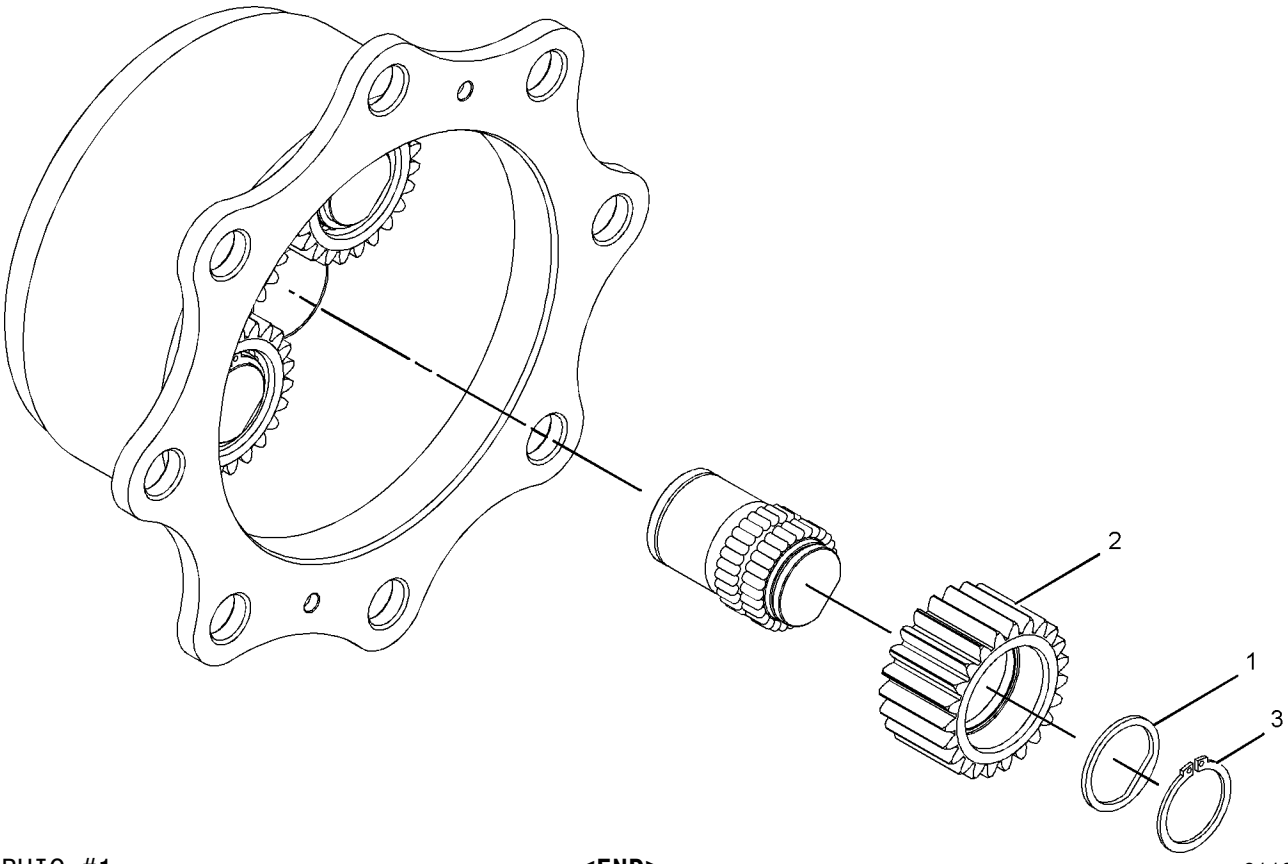

GRAPHIC #1 **<END>** g01132397

216-1610 PLANETARY GP-FINAL DRIVE–AXLE

S/N: SJW1-UP
PART OF 230-5738 AXLE GP-REAR
AN ATTACHMENT

SMCS-4050 **i03898318**

NOTE	REF NO	GRAPHIC REF	PART NUMBER	QTY	PART NAME 1 2 3 4 5 6 (PRODUCT LEVEL)	SEE PAGE
	1	1	**199-0653**	3	RING-RETAINING	
	2	1	**207-4257**	6	RING-RETAINER	
	3	1	**199-0760**	3	BEARING	
	4	1	**213-4222**	3	WASHER (50.1X61X2.5-MM THK)	
	5	1	**207-5962**	6	WASHER (65X72X2-MM THK)	
	6	1	**216-1606**	3	GEAR-PLANETARY (31-TEETH)	
	7	1	**216-1601**	1	CARRIER	
	8	1	**253-5022**	1	PLUG	

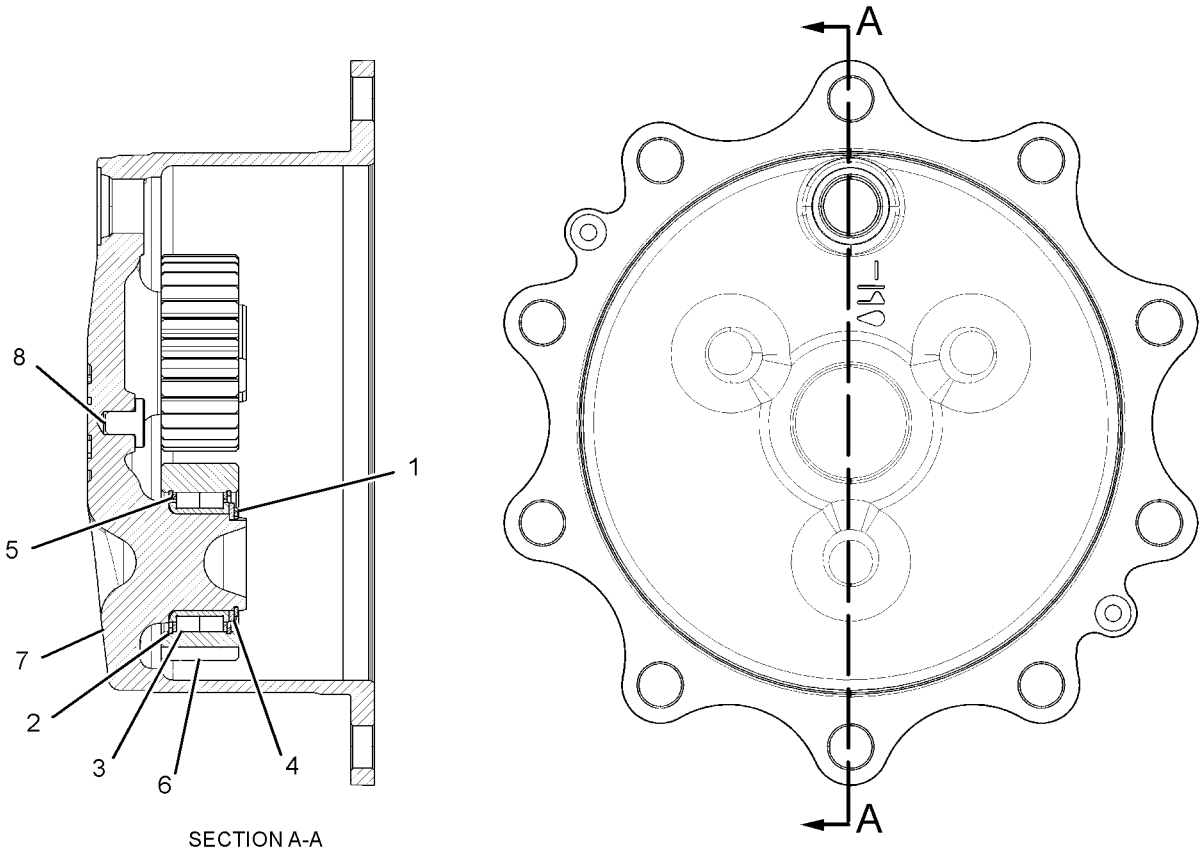

SECTION A-A

GRAPHIC #1 **<END>** g02141640

374-6826 POWER TRAIN AR–

ALL WHEEL DRIVE, 2-WHEEL STEER, STD SHIFT

S/N: SJW1-UP

PART OF 389-3761, 389-3762 DISTRIBUTION AR

FOR USE WITH 329-1350–PAGE 285, 329-1352–PAGE 285, 249-9256–PAGE 282, 273-5078–PAGE 283, 249-9262–PAGE 283, 303-0413–PAGE 284, 303-0415–PAGE 284, 341-0596–PAGE 285, 329-1351–PAGE 285, 249-9255–PAGE 282, 273-5077–PAGE 283, 249-9261–PAGE 282, 249-9263–PAGE 283, 303-0414–PAGE 284, 319-6834–PAGE 284

AN ATTACHMENT

SMCS-3000, 4000 **i04611575**

NOTE	PART NUMBER	QTY	PART NAME 1 2 3 4 5 6 (PRODUCT LEVEL)	SEE PAGE
Y	*359-0403*	1	TORQUE CONVERTER AR	249
Y	*353-1501*	1	DRIVE AR-BACKHOE LOADER (4-WHEEL DRIVE, 2-WHEEL STEER)	6
Y	*353-1457*	1	ELECTRONICS AR-MACHINE	103
Y	*353-1507*	1	TRANSMISSION AR-DIRECT DRIVE (ALL WHEEL DRIVE, STD SHIFT)	251

Y-SEPARATE ILLUSTRATION

<END>

374-6834 POWER TRAIN AR–

ALL WHEEL DRIVE, 2-WHEEL STEER, AUTOSHIFT

S/N: SJW1-UP

FOR USE WITH 329-1350–PAGE 285, 329-1352–PAGE 285, 249-9256–PAGE 282, 249-9262–PAGE 283, 273-5078–PAGE 283, 303-0413–PAGE 284, 303-0415–PAGE 284, 341-0596–PAGE 285, 329-1351–PAGE 285, 249-9255–PAGE 282, 273-5077–PAGE 283, 249-9261–PAGE 282, 249-9263–PAGE 283, 303-0414–PAGE 284, 319-6834–PAGE 284

AN ATTACHMENT

SMCS-3000, 4000 **i04611661**

NOTE	PART NUMBER	QTY	PART NAME 1 2 3 4 5 6 (PRODUCT LEVEL)	SEE PAGE
Y	*359-0403*	1	TORQUE CONVERTER AR	249
Y	*353-1501*	1	DRIVE AR-BACKHOE LOADER (4-WHEEL DRIVE, 2-WHEEL STEER)	6
Y	*353-1461*	1	ELECTRONICS AR-MACHINE	103
Y	*353-1510*	1	TRANSMISSION AR-POWER SHIFT (4-WHEEL DRIVE)	254

Y-SEPARATE ILLUSTRATION

<END>

374-6842 POWER TRAIN AR–

ALL WHEEL DRIVE, 2-WHEEL STEER, AUTOSHIFT

S/N: SJW1-UP

FOR USE WITH 329-1350–PAGE 285, 273-5078–PAGE 283, 249-9261–PAGE 282, 249-9262–PAGE 283, 249-9263–PAGE 283, 329-1351–PAGE 285, 329-1352–PAGE 285, 249-9255–PAGE 282, 249-9256–PAGE 282, 273-5077–PAGE 283, 303-0413–PAGE 284, 303-0414–PAGE 284, 303-0415–PAGE 284, 319-6834–PAGE 284, 341-0596–PAGE 285 AN ATTACHMENT

SMCS-3000, 4000 **i04612091**

NOTE	PART NUMBER	QTY	PART NAME 1 2 3 4 5 6 (PRODUCT LEVEL)	SEE PAGE
Y	*359-0406*	1	TORQUE CONVERTER AR	250
Y	*353-1501*	1	DRIVE AR-BACKHOE LOADER (4-WHEEL DRIVE, 2-WHEEL STEER)	6
Y	*353-1461*	1	ELECTRONICS AR-MACHINE	103
Y	*353-1511*	1	TRANSMISSION AR-POWER SHIFT (4-WHEEL DRIVE)	254

Y-SEPARATE ILLUSTRATION

<END>

274-4580 SHAFT GP-COUNTER

S/N: SJW1-UP
PART OF 359-0396 TRANSMISSION GP-DIRECT DRIVE
AN ATTACHMENT

SMCS-3053, 3063 **i04139511**

NOTE	REF NO	GRAPHIC REF	PART NUMBER	QTY	PART NAME 1 2 3 4 5 6 (PRODUCT LEVEL)	SEE PAGE
	1	1	**6T-9196**	1	SEAL	
	2	1	**6V-5100**	1	SEAL-O-RING	
	3	1	**6V-8757**	1	RING-RETAINING	
	4	1	**6Y-1192**	2	RING-SEAL	
	5	1	**6Y-7929**	8	DISC-FRICTION	
	6	1	**8E-5707**	1	PLATE-END	
	7	1	**122-1877**	1	WASHER-THRUST (40X65X4-MM THK)	
	8	1	**123-8907**	2	CONE-BEARING	
	9	1	**123-8908**	2	CUP-TAPERED ROLLER	
	10	1	**123-8912**	2	BEARING-ROLLER	
	11	1	**147-0203**	1	WASHER-THRUST (45.3X65X5-MM THK)	
	12	1	**147-0215**	1	GEAR (45/19-TEETH)	
	13	1	**147-0216**	1	GEAR (38-TEETH)	
	14	1	**147-0228**	1	PISTON-CLUTCH	
	15	1	**147-0238**	1	SPRING AS	
	16	1	**147-0258**	1	SPACER (46X50X16-MM THK)	
	17	1	**172-6050**	2	BEARING-SPECIAL	
	18	1	**173-0332**	1	SHAFT AS (COUNTERSHAFT)	
		1	**163-9091**	1	PLUG	
	19	1	**211-6752**	1	GEAR (46-TEETH)	
	20	1	**274-4553**	8	DISC-FRICTION	
	21	1	**274-8638**	1	RING-RETAINING	

274-4580 SHAFT GP-COUNTER *(contd.)* **i04139511**

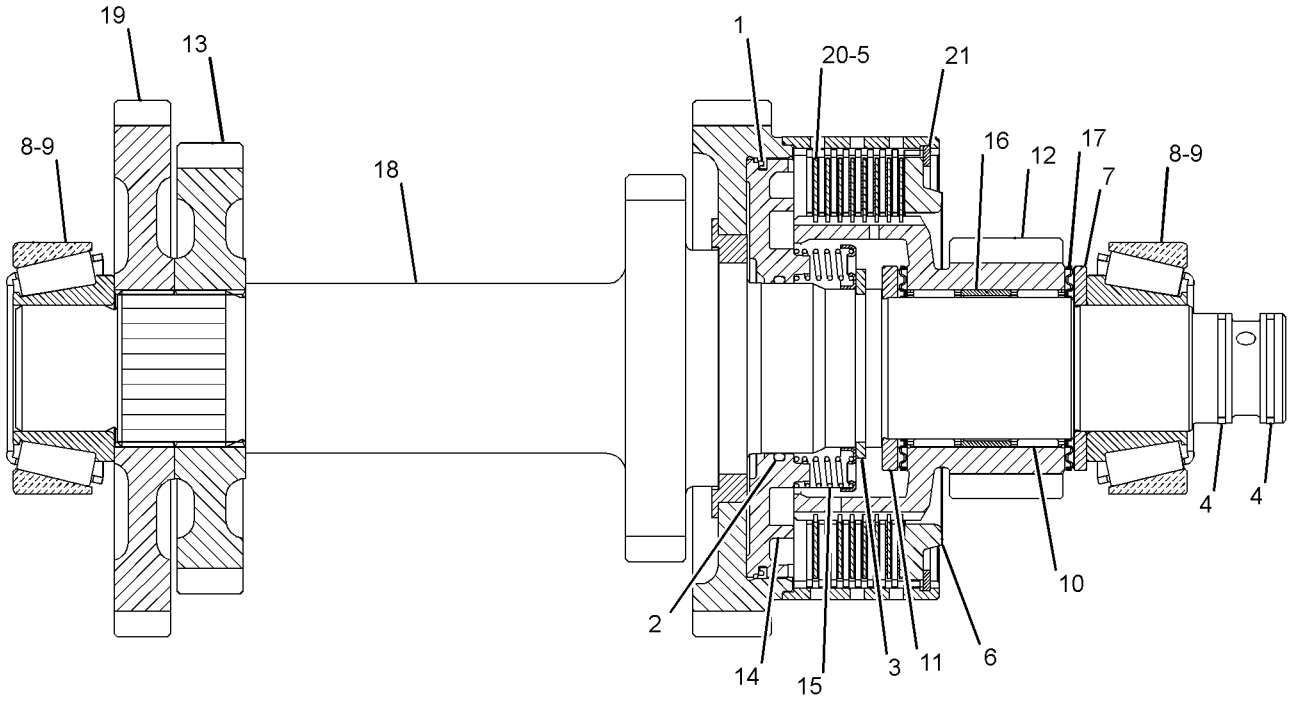

GRAPHIC #1 **<END>** g01216220

374-5112 SHAFT GP-COUNTER

S/N: SJW1-UP

PART OF 350-8607 TRANSMISSION GP-POWER SHIFT

AN ATTACHMENT

SMCS-3053, 3063 **i04611715**

NOTE	REF NO	GRAPHIC REF	PART NUMBER	QTY	PART NAME 1 2 3 4 5 6 (PRODUCT LEVEL)	SEE PAGE
	1	1	**6Y-1192**	2	RING-SEAL	
	2	1	**6Y-7929**	8	DISC-FRICTION	
	3	1	**8E-5707**	1	PLATE-END	
	4	1	**122-1877**	1	WASHER-THRUST (40X65X4-MM THK)	
	5	1	**123-8907**	2	CONE-BEARING	
	6	1	**123-8908**	2	CUP-TAPERED ROLLER	
	7	1	**123-8912**	2	BEARING-ROLLER	
	8	1	**147-0203**	1	WASHER-THRUST (45.3X65X5-MM THK)	
	9	1	**147-0215**	1	GEAR (45/19-TEETH)	
	10	1	**147-0216**	1	GEAR (38-TEETH)	
	11	1	**147-0238**	1	SPRING AS	
		1	**336-4721**	1	SPRING-RETAINER	
		1	**336-6851**	16	SPRING-PISTON	
	12	1	**147-0258**	1	SPACER (46X50X16-MM THK)	
	13	1	**172-6050**	2	BEARING-SPECIAL	
	14	1	**173-0332**	1	SHAFT AS	
		1	**163-9091**	1	PLUG	
	15	1	**274-4553**	8	DISC-FRICTION	
	16	1	**274-8638**	1	RING-RETAINING	
	17	1	**294-9810**	1	PISTON	
	18	1	**294-9812**	1	RETAINER-SPRING	
	19	1	**6V-8757**	1	RING-RETAINING	

374-5112 **SHAFT GP-COUNTER** *(contd.)* **i04611715**

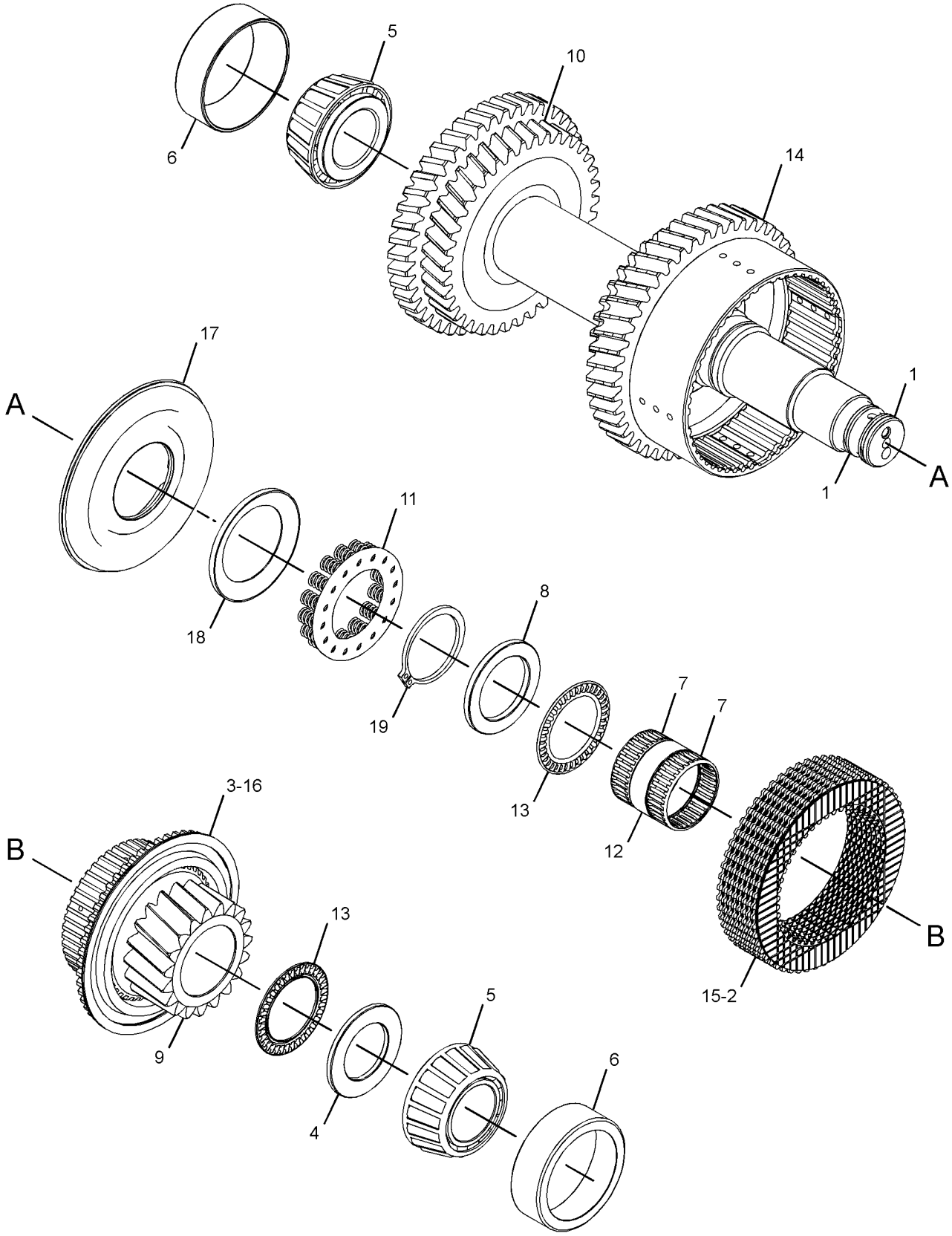

GRAPHIC #1 **<END>** g02797123

POWER TRAIN

353-1335 SHAFT GP-DRIVE

S/N: SJW1-UP
PART OF 353-1507 TRANSMISSION AR-DIRECT DRIVE, 353-1510, 353-1511 TRANSMISSION AR-POWER SHIFT AN ATTACHMENT

SMCS-3253 **i04706671**

NOTE	REF NO	GRAPHIC REF	PART NUMBER	QTY	PART NAME 1 2 3 4 5 6 (PRODUCT LEVEL)	SEE PAGE
M	1	1	**107-6826**	8	BOLT (5/16-24X0.75-IN)	
	2	1	**316-1935**	4	STRAP	
	3	1	**348-7144**	1	SHAFT AS	
		1	**304-3265**	2	KIT-SPIDER & BEARING	

M-METRIC PART

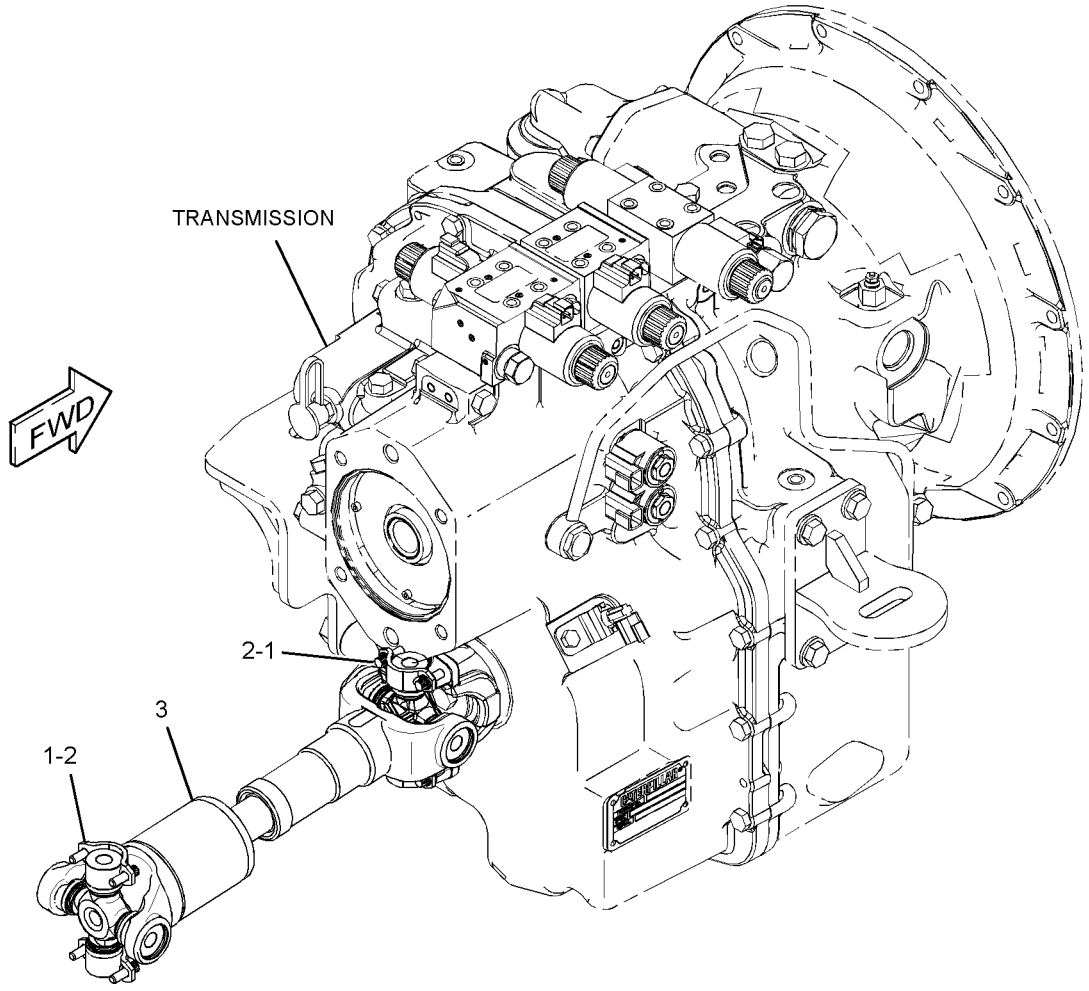

GRAPHIC #1 **<END>** g02809361

353-1336 SHAFT GP-DRIVE

S/N: SJW1-UP
PART OF 353-1507 TRANSMISSION AR-DIRECT DRIVE
AN ATTACHMENT

SMCS-3253 **i04577613**

NOTE	REF NO	GRAPHIC REF	PART NUMBER	QTY	PART NAME 1 2 3 4 5 6 (PRODUCT LEVEL)	SEE PAGE
M	1	1	**107-6826**	8	BOLT (5/16-24X0.75-IN)	
	2	1	**316-1935**	4	STRAP	
	3	1	**348-7143**	1	SHAFT AS	
		1	**304-3265**	2	KIT-SPIDER & BEARING	

M-METRIC PART

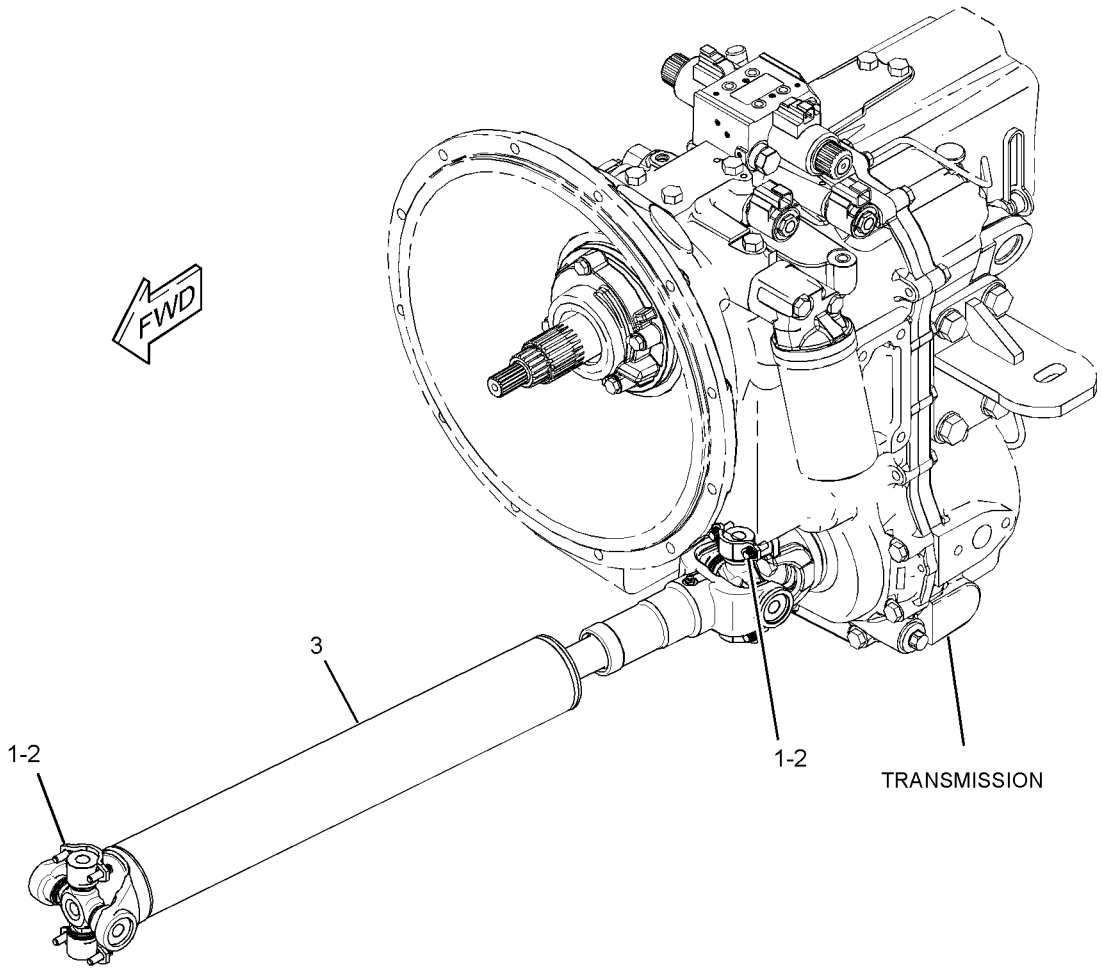

GRAPHIC #1 **<END>** g02809537

353-1337 SHAFT GP-DRIVE

S/N: SJW1-UP
PART OF 353-1510, 353-1511 TRANSMISSION AR-POWER SHIFT
AN ATTACHMENT

SMCS-3253 **i04605591**

NOTE	REF NO	GRAPHIC REF	PART NUMBER	QTY	PART NAME 1 2 3 4 5 6 (PRODUCT LEVEL)	SEE PAGE
M	1	1	**107-6826**	8	BOLT (5/16-24X0.75-IN)	
	2	1	**316-1935**	4	STRAP	
	3	1	**348-7146**	1	SHAFT AS	
		1	**304-3265**	2	KIT-SPIDER & BEARING (DRIVE SHAFT)	

M-METRIC PART

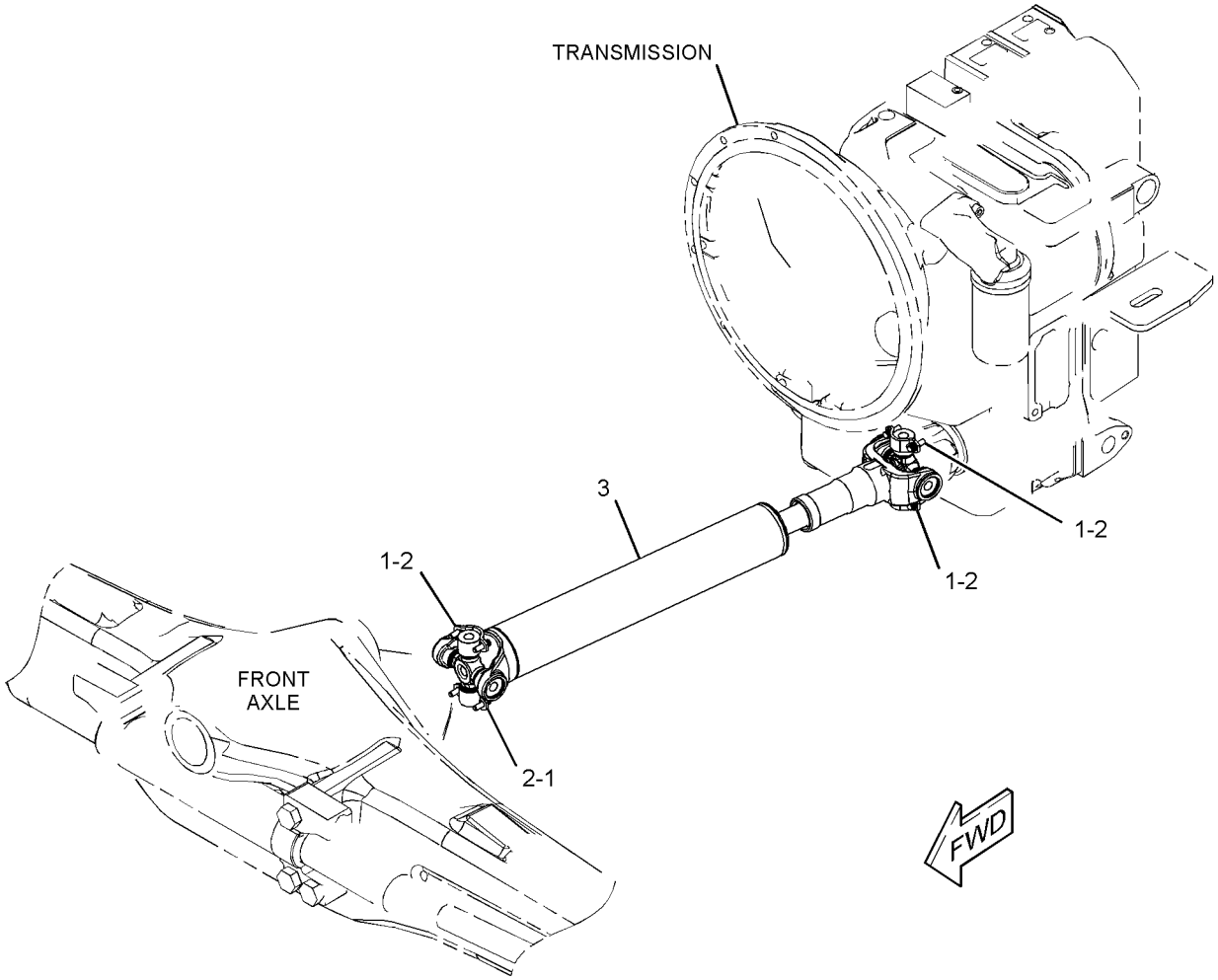

GRAPHIC #1 **<END>** g02811162

274-4561 SHAFT GP-IDLER–POWERSHIFT

S/N: SJW1-UP
PART OF 359-0396 TRANSMISSION GP-DIRECT DRIVE, 350-8607 TRANSMISSION GP-POWER SHIFT AN ATTACHMENT

SMCS-3063 **i03889089**

NOTE	REF NO	GRAPHIC REF	PART NUMBER	QTY	PART NAME 1 2 3 4 5 6 (PRODUCT LEVEL)	SEE PAGE
	1	1	**147-0256**	1	SHAFT AS-REVERSE	
		1	**163-9091**	1	PLUG	
		1	**147-0270**	1	ORIFICE	
	2	1	**147-0202**	1	GEAR (45/24-TEETH)	
	3	1	**123-8905**	2	CONE-BEARING	
	4	1	**147-0228**	1	PISTON-CLUTCH	
	5	1	**6T-9196**	1	SEAL	
	6	1	**6V-5100**	1	SEAL-O-RING	
	7	1	**147-0238**	1	SPRING AS	
	8	1	**274-4553**	5	DISC-FRICTION	
	9	1	**6Y-7929**	5	DISC-FRICTION	
	10	1	**147-0259**	1	SPACER (51.1X54.9X18.7-MM THK)	
	11	1	**6V-8757**	1	RING-RETAINING (EXTERNAL)	
	12	1	**121-2500**	1	WASHER-THRUST (50X70X4-MM THK)	
	13	1	**172-5317**	2	BEARING-SPECIAL	
	14	1	**121-0694**	1	WASHER-THRUST (40X70X4-MM THK)	
	15	1	**6Y-1192**	2	RING-SEAL	
	16	1	**8E-5707**	1	PLATE-END	
	17	1	**9U-8875**	1	RING-RETAINING (INTERNAL)	
	18	1	**7T-6655**	2	BEARING	
	19	1	**123-8906**	2	CUP-TAPERED ROLLER	

274-4561 SHAFT GP-IDLER *(contd.)* **i03889089**

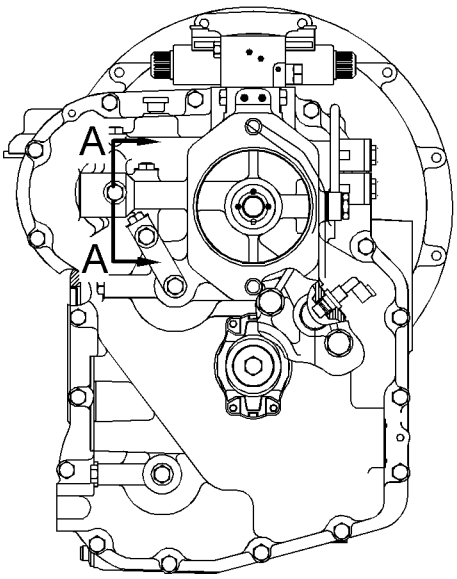

REAR VIEW

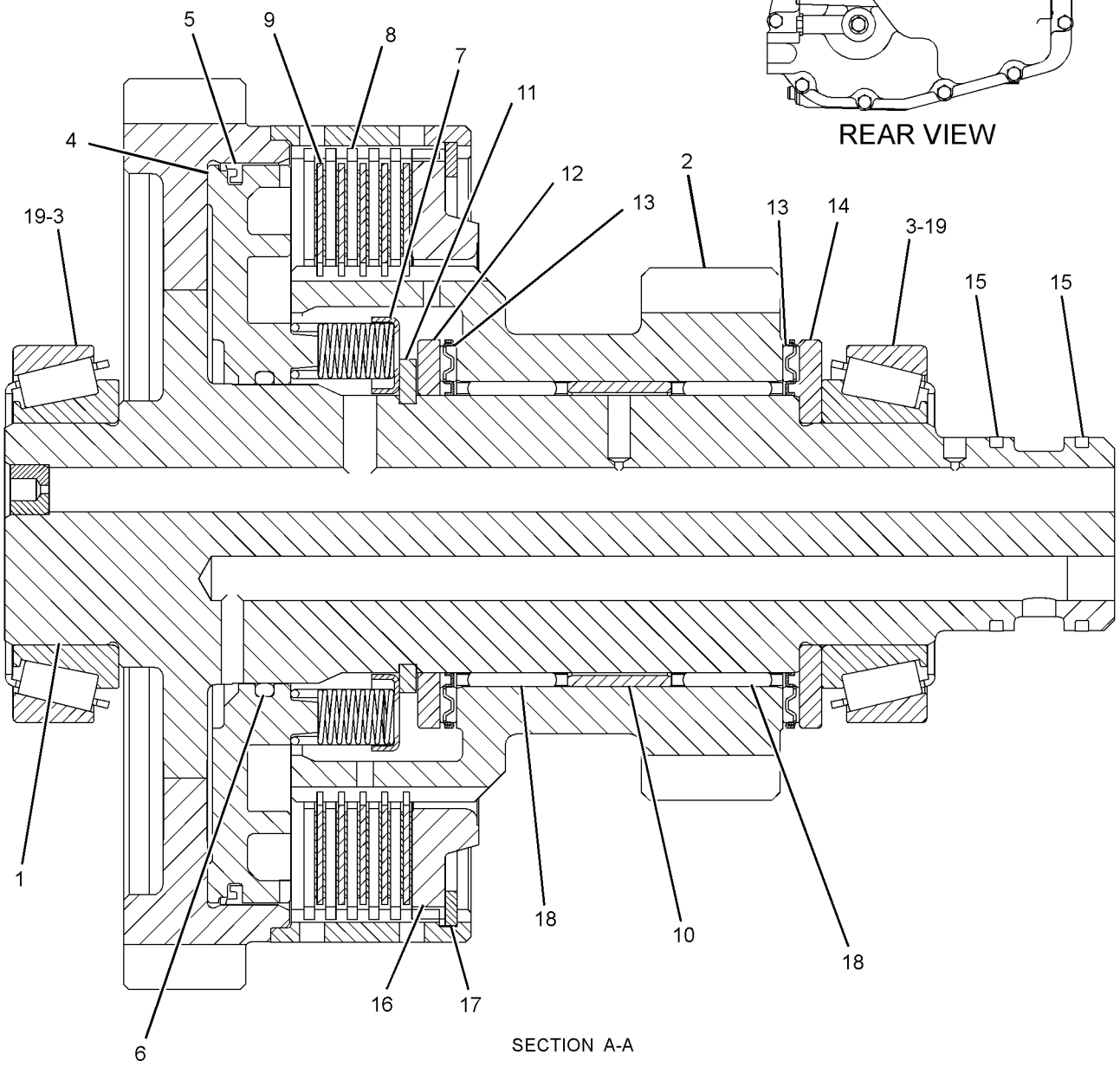

SECTION A-A

GRAPHIC #1 **<END>** g01216120

274-4578 SHAFT GP-INPUT

S/N: SJW1-UP
PART OF 359-0396 TRANSMISSION GP-DIRECT DRIVE
AN ATTACHMENT

SMCS-3053, 3063 **i03577181**

NOTE	REF NO	GRAPHIC REF	PART NUMBER	QTY	PART NAME 1 2 3 4 5 6 (PRODUCT LEVEL)	SEE PAGE
	1	1	**6T-9196**	2	SEAL	
	2	1	**6V-5100**	2	SEAL-O-RING	
	3	1	**6V-8757**	3	RING-RETAINING	
	4	1	**6Y-7929**	11	DISC-FRICTION	
	5	1	**7T-6655**	2	BEARING	
	6	1	**8E-5707**	2	PLATE-END	
	7	1	**9U-8886**	4	RING-SEAL	
	8	1	**121-0694**	1	WASHER-THRUST (40X70X4-MM THK)	
	9	1	**121-2500**	3	WASHER-THRUST (50X70X4-MM THK)	
	10	1	**122-1886**	1	RING-SEAL	
	11	1	**123-8905**	1	CONE-BEARING	
	12	1	**123-8906**	1	CUP-TAPERED ROLLER	
	13	1	**123-8909**	1	CONE-BEARING	
	14	1	**123-8910**	1	CUP-TAPERED ROLLER	
	15	1	**123-8913**	2	BEARING-ROLLER	
	16	1	**147-0202**	1	GEAR (45/24-TEETH)	
	17	1	**147-0224**	1	GEAR (45/32-TEETH)	
	18	1	**147-0228**	2	PISTON-CLUTCH	
	19	1	**147-0238**	2	SPRING AS	
	20	1	**147-0257**	1	SHAFT AS-INPUT	
		1	**123-0714**	1	BEARING	
		1	**123-2920**	3	PLUG	
	21	1	**147-0259**	1	SPACER (51.1X54.9X18.7-MM THK)	
	22	1	**172-5317**	4	BEARING-SPECIAL	
	23	1	**274-4553**	11	DISC-FRICTION	
	24	1	**274-8638**	2	RING-RETAINING	

274-4578 SHAFT GP-INPUT *(contd.)* **i03577181**

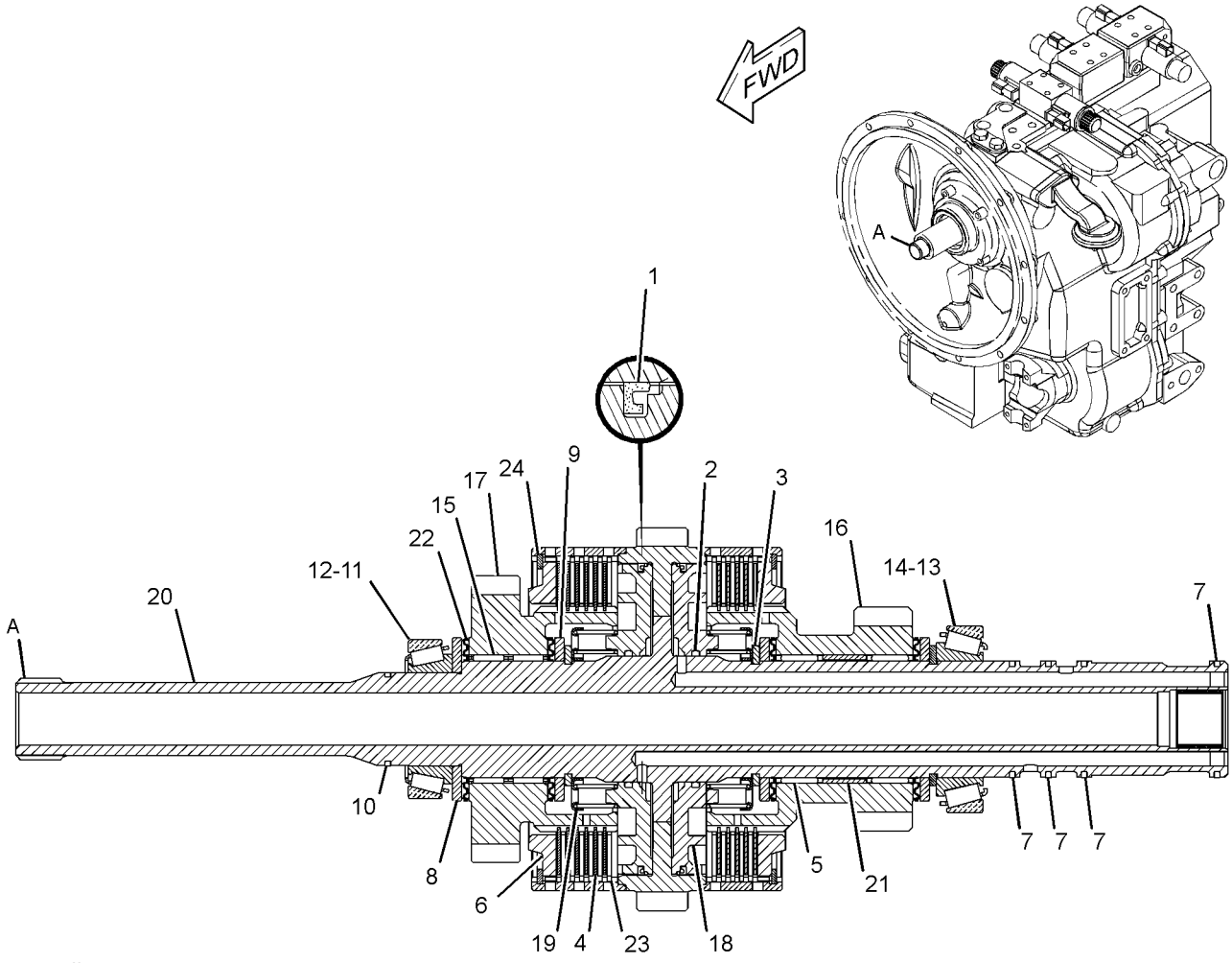

GRAPHIC #1 g01216057

<END>

305-3429 SHAFT GP-INPUT—ALL WHEEL DRIVE

S/N: SJW1-UP

PART OF 359-0393 TRANSMISSION GP-DIRECT DRIVE

AN ATTACHMENT

SMCS-3053, 3063 **i03043822**

NOTE	REF NO	GRAPHIC REF	PART NUMBER	QTY	PART NAME 1 2 3 4 5 6 (PRODUCT LEVEL)	SEE PAGE
	1	1	**9U-8875**	2	RING-RETAINING	
	2	1	**172-5317**	1	BEARING-SPECIAL	
	3	1	**172-6050**	1	BEARING-SPECIAL	
	4	1	**9U-8886**	4	RING-SEAL	
	5	1	**274-4553**	10	DISC-FRICTION	
	6	1	**122-1886**	1	RING-SEAL	
	7	1	**6V-8757**	3	RING-RETAINING	
	8	1	**121-2500**	2	WASHER-THRUST (50X70X4-MM THK)	
	9	1	**123-8905**	1	CONE-BEARING	
	10	1	**123-8909**	1	CONE-BEARING	
	11	1	**305-3431**	2	PISTON	
	12	1	**147-0238**	2	SPRING AS	
	13	1	**147-0203**	2	WASHER-THRUST (45.3X65X5-MM THK)	
	14	1	**6Y-7929**	10	DISC-FRICTION	
	15	1	**274-8616**	1	GEAR-FORWARD (24-TEETH)	
	16	1	**274-8617**	1	GEAR-REVERSE (27-TEETH)	
	17	1	**274-8628**	1	BEARING-NEEDLE	
	18	1	**274-8629**	1	BEARING-NEEDLE	
	19	1	**294-9821**	1	SPACER	
	20	1	**274-8636**	1	SHAFT AS	
		1	**123-0714**	2	BEARING	
		1	**123-2920**	3	PLUG	
	21	1	**8E-5707**	2	PLATE-END	
	22	1	**294-9812**	2	RETAINER-SPRING	

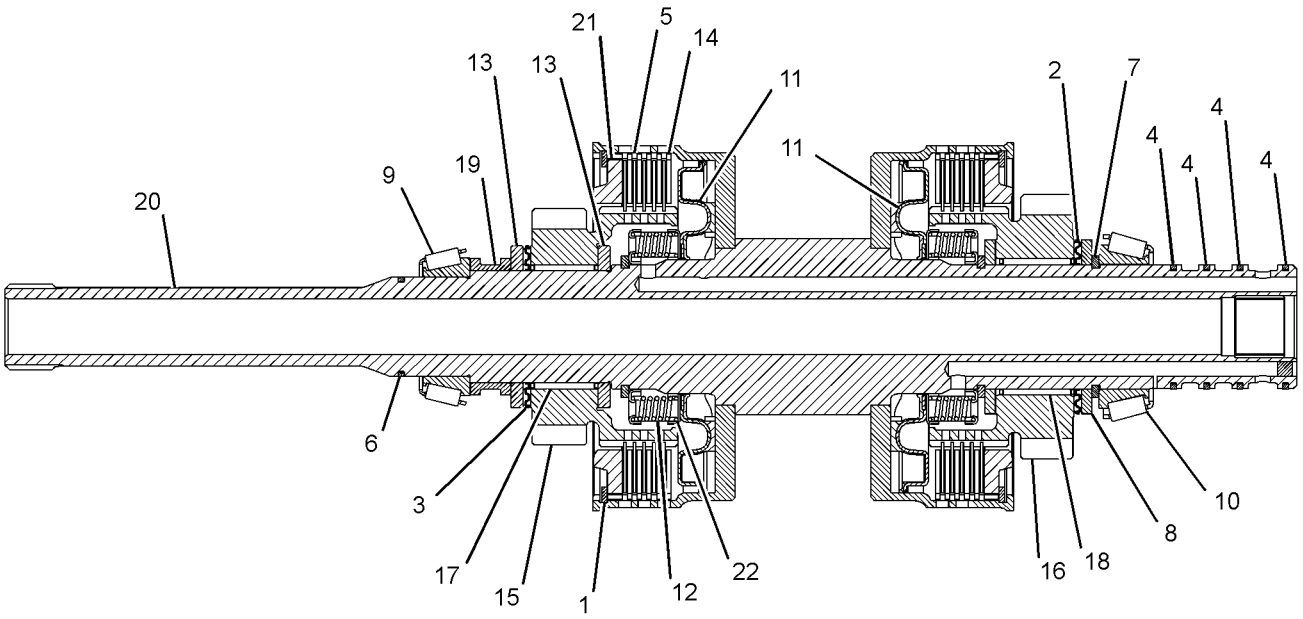

GRAPHIC #1 **<END>** g01383731

374-5110 SHAFT GP-INPUT

S/N: SJW1-UP
PART OF 350-8607 TRANSMISSION GP-POWER SHIFT
AN ATTACHMENT

SMCS-3053, 3063 **i04611710**

NOTE	REF NO	GRAPHIC REF	PART NUMBER	QTY	PART NAME 1 2 3 4 5 6 (PRODUCT LEVEL)	SEE PAGE
	1	1	**6Y-7929**	11	DISC-FRICTION	
	2	1	**7T-6655**	2	BEARING	
	3	1	**8E-5707**	2	PLATE-END	
	4	1	**9U-8886**	5	RING-SEAL	
	5	1	**121-0694**	1	WASHER-THRUST (40X70X4-MM THK)	
	6	1	**121-2500**	3	WASHER-THRUST (50X70X4-MM THK)	
	7	1	**122-1886**	1	RING-SEAL	
	8	1	**123-8905**	1	CONE-BEARING	
	9	1	**123-8906**	1	CUP-TAPERED ROLLER	
	10	1	**123-8909**	1	CONE-BEARING	
	11	1	**123-8910**	1	CUP-TAPERED ROLLER	
	12	1	**123-8913**	2	BEARING-ROLLER	
	13	1	**147-0202**	1	GEAR (45/24-TEETH)	
	14	1	**147-0224**	1	GEAR (45/32-TEETH)	
	15	1	**147-0238**	2	SPRING AS	
					(EACH INCLUDES)	
		1	**336-4721**	1	SPRING-RETAINER	
		1	**336-6851**	16	SPRING-PISTON	
	16	1	**147-0259**	1	SPACER (51.1X54.9X18.7-MM THK)	
	17	1	**172-5317**	4	BEARING-SPECIAL	
	18	1	**274-4553**	11	DISC-FRICTION	
	19	1	**274-8638**	2	RING-RETAINING	
	20	1	**294-9810**	2	PISTON	
	21	1	**294-9812**	2	RETAINER-SPRING	
	22	1	**374-5109**	1	SHAFT AS-INPUT	
	22A	1	**123-0714**	1	BEARING	
	22B	1	**123-2920**	3	PLUG	
	23	1	**6V-8757**	3	RING-RETAINING	

374-5110 SHAFT GP-INPUT *(contd.)* i04611710

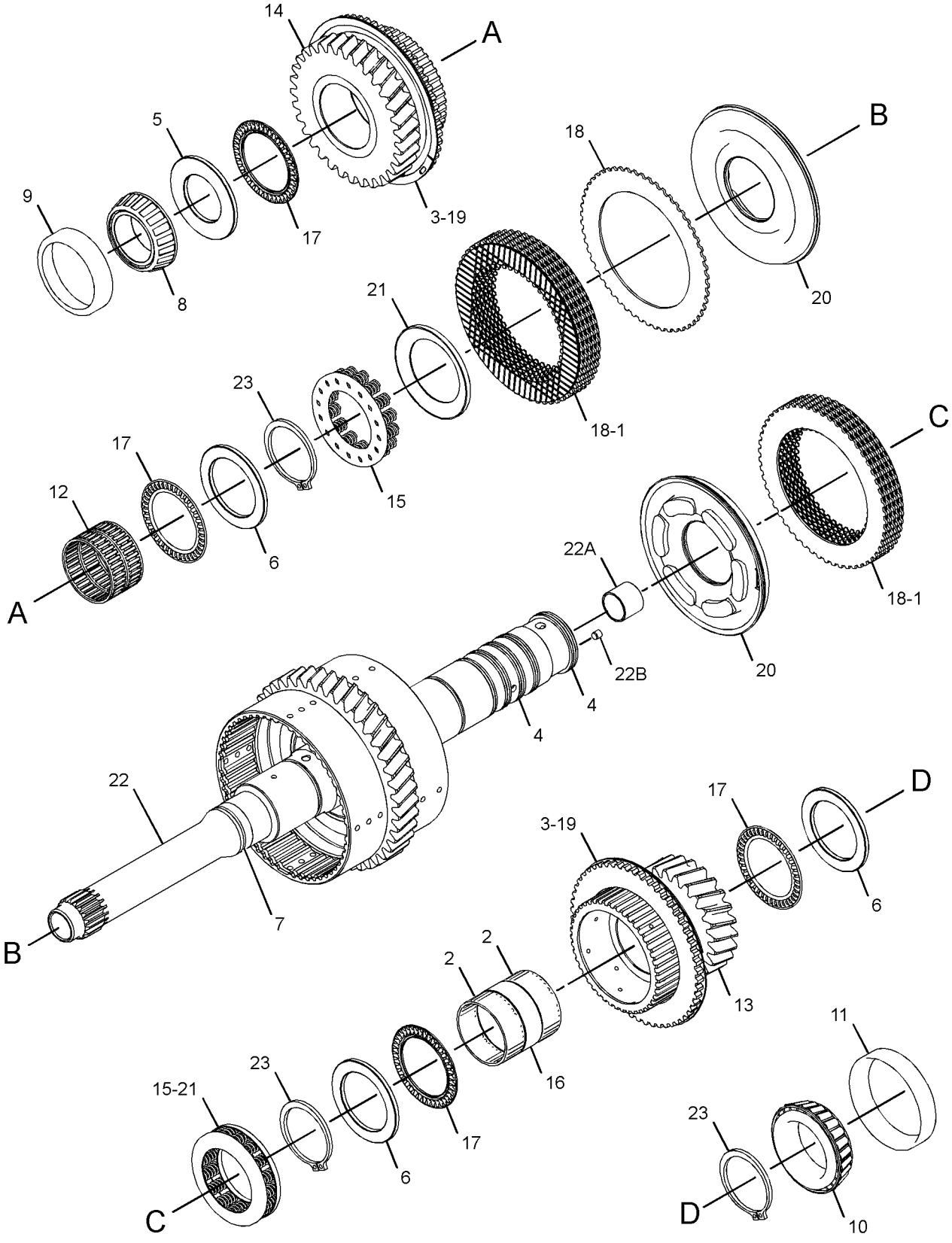

GRAPHIC #1 **<END>** g02797061

274-4582 SHAFT GP-OUTPUT–MAIN

S/N: SJW1-UP
PART OF 359-0396 TRANSMISSION GP-DIRECT DRIVE
AN ATTACHMENT

SMCS-3053, 3063 **i03577182**

NOTE	REF NO	GRAPHIC REF	PART NUMBER	QTY	PART NAME 1 2 3 4 5 6 (PRODUCT LEVEL)	SEE PAGE
	1	1	**6T-9196**	2	SEAL	
	2	1	**6Y-1192**	3	RING-SEAL	
	3	1	**6Y-7929**	13	DISC-FRICTION	
	4	1	**8E-5707**	2	PLATE-END	
	5	1	**8T-1580**	1	CUP	
	6	1	**8T-1581**	1	CONE	
	7	1	**009-2062**	2	SEAL-O-RING	
	8	1	**095-0927**	1	RING-RETAINING	
	9	1	**095-0928**	1	RING-RETAINING (EXTERNAL)	
	10	1	**121-0885**	1	RETAINER	
	11	1	**122-1877**	1	WASHER-THRUST (40X65X4-MM THK)	
	12	1	**123-8907**	1	CONE-BEARING	
	13	1	**123-8908**	1	CUP-TAPERED ROLLER	
	14	1	**123-8912**	2	BEARING-ROLLER	
	15	1	**147-0203**	1	WASHER-THRUST (45.3X65X5-MM THK)	
	16	1	**147-0205**	2	WASHER (55X78X5-MM THK)	
	17	1	**147-0242**	1	GEAR (48-TEETH)	
	18	1	**147-0248**	1	SPACER (56.2X60X15.8-MM THK)	
	19	1	**147-0260**	1	RETAINER-SPRING	
	20	1	**147-0261**	1	SHAFT AS-OUTPUT (REAR)	
		1	**163-9091**	2	PLUG	
	21	1	**150-3757**	2	BEARING	
	22	1	**157-2088**	2	PISTON AS	
	23	1	**157-2090**	1	GEAR (38-TEETH)	
	24	1	**172-6050**	2	BEARING-SPECIAL	
	25	1	**172-6743**	2	BEARING-SPECIAL	
	26	1	**178-9566**	2	SPRING-PISTON	
	27	1	**211-6753**	1	GEAR (24-TEETH)	
	28	1	**274-4553**	13	DISC-FRICTION	
	29	1	**274-8638**	2	RING-RETAINING	

274-4582 SHAFT GP-OUTPUT *(contd.)* i03577182

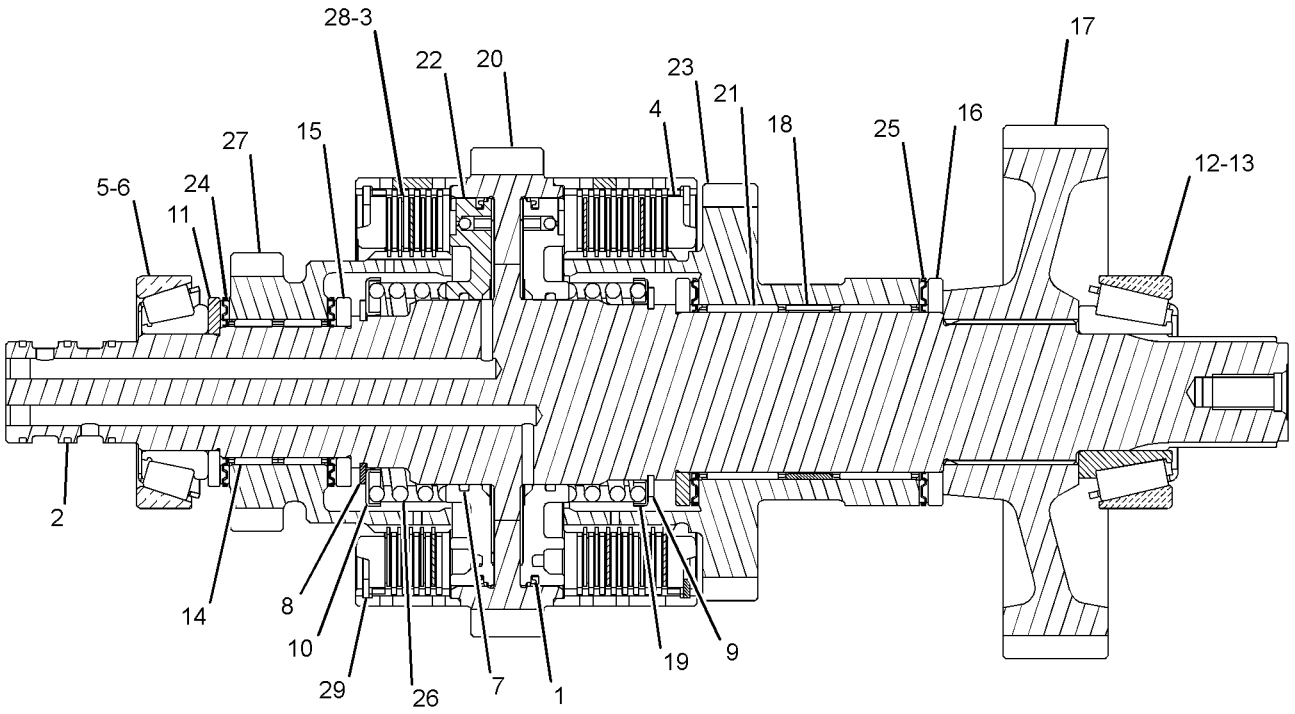

GRAPHIC #1 **<END>** g01216545

275-0478 SHAFT GP-OUTPUT–REAR

S/N: SJW1-UP
PART OF 359-0393 TRANSMISSION GP-DIRECT DRIVE
AN ATTACHMENT

SMCS-3053, 3063 **i02922492**

NOTE	REF NO	GRAPHIC REF	PART NUMBER	QTY	PART NAME 1 2 3 4 5 6 (PRODUCT LEVEL)	SEE PAGE
	1	1	**7T-3022**	2	SLEEVE	
	2	1	**6V-8500**	4	BEARING	
	3	1	**6T-9160**	1	GEAR (43-TEETH)	
	4	1	**7T-3017**	1	SPACER (52.5X59X9.6-MM THK)	
	5	1	**7T-3021**	2	SYNCHRONIZER GP	
	6	1	**096-5516**	1	RING-RETAINING	
	7	1	**259-1831**	1	GEAR (37-TEETH)	
	8	1	**6Y-2736**	1	CONE-BEARING	
	9	1	**123-8907**	1	CONE-BEARING	
	11	1	**274-8620**	1	GEAR-OUTPUT (37-TEETH)	
	12	1	**274-8621**	1	GEAR-OUTPUT (28-TEETH)	
	13	1	**274-8637**	1	SPACER-BEARING	
	14	1	**278-0215**	1	SHAFT-OUTPUT	
	15	1	**278-0216**	1	GEAR-OUTPUT (17-TEETH)	
	16	1	**278-0217**	1	BEARING-NEEDLE	
	17	1	**278-0218**	2	WASHER-THRUST	
	18	1	**178-8214**	1	CLIP	
	19	1	**7T-3018**	1	SLEEVE	
	20	1	**150-3757**	1	BEARING	
	21	1	**293-8761**	1	BEARING-NEEDLE	

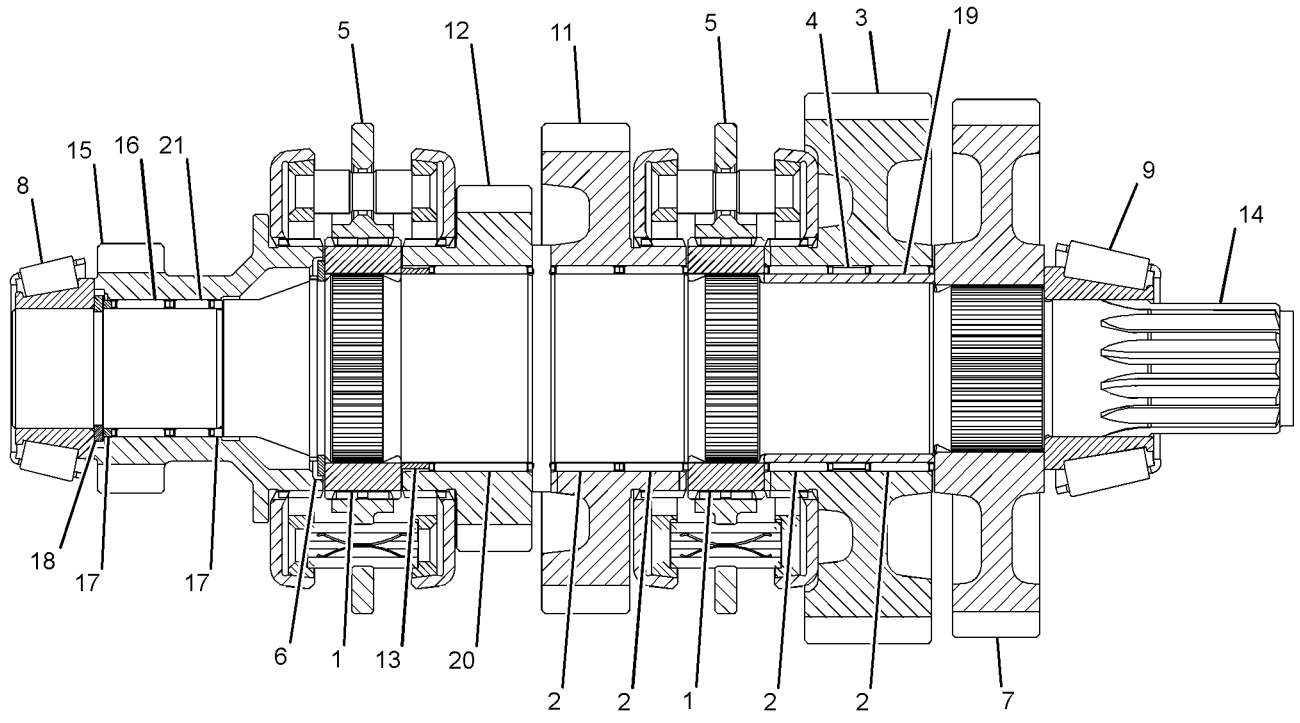

GRAPHIC #1 **<END>** g01508474

280-7007 SHAFT GP-OUTPUT–FRONT

S/N: SJW1-UP
PART OF 359-0396 TRANSMISSION GP-DIRECT DRIVE, 350-8607 TRANSMISSION GP-POWER SHIFT AN ATTACHMENT

SMCS-3053, 3063 **i04631238**

NOTE	REF NO	GRAPHIC REF	PART NUMBER	QTY	PART NAME 1 2 3 4 5 6 (PRODUCT LEVEL)	SEE PAGE
	1	1	**294-9812**	1	RETAINER-SPRING	
	3	1	**6V-8757**	1	RING-RETAINING	
	4	1	**337-3530**	8	DISC-FRICTION	
	5	1	**8E-5707**	1	PLATE-END	
	6	1	**122-1877**	1	WASHER-THRUST (40X65X4-MM THK)	
	7	1	**122-1878**	1	RING-SEAL	
	8	1	**122-1884**	1	SPACER (45X49X8-MM THK)	
	9	1	**123-8905**	2	CONE-BEARING	
	10	1	**123-8906**	2	CUP-TAPERED ROLLER	
	11	1	**123-8912**	2	BEARING-ROLLER	
	12	1	**147-0203**	1	WASHER-THRUST (45.3X65X5-MM THK)	
	13	1	**147-0207**	1	SHAFT AS-OUTPUT (FRONT)	
	14	1	**147-0210**	1	GEAR (45/36-TEETH)	
	15	1	**305-3431**	1	PISTON	
	16	1	**147-0238**	1	SPRING AS	
	17	1	**161-3249**	1	RING-RETAINING	
	18	1	**172-6050**	2	BEARING-SPECIAL	
	19	1	**274-4553**	8	DISC-FRICTION	

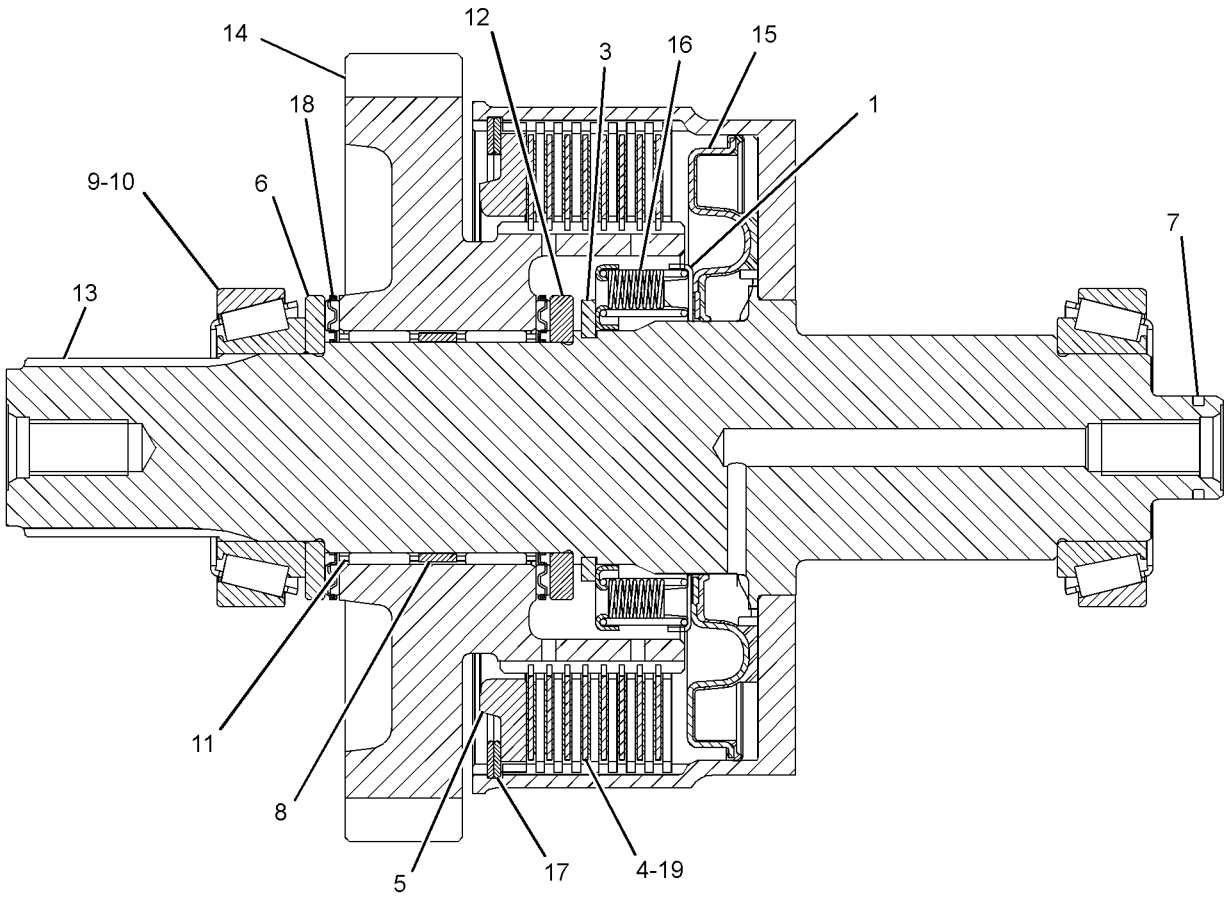

LEFT SIDE VIEW

GRAPHIC #1 **<END>** g01405501

305-3427 SHAFT GP-OUTPUT–FRONT

S/N: SJW1-UP

PART OF 359-0393 TRANSMISSION GP-DIRECT DRIVE

AN ATTACHMENT

SMCS-3053, 3063 **i02755327**

NOTE	REF NO	GRAPHIC REF	PART NUMBER	QTY	PART NAME 1 2 3 4 5 6 (PRODUCT LEVEL)	SEE PAGE
	1	1	**6V-8757**	1	RING-RETAINING	
	2	1	**274-4553**	8	DISC-FRICTION	
	3	1	**6Y-7957**	8	DISC-FRICTION	
	4	1	**305-3424**	1	WASHER-THRUST	
	5	1	**172-6050**	2	BEARING-SPECIAL	
	6	1	**122-1878**	1	RING-SEAL	
	7	1	**122-1877**	1	WASHER-THRUST (40X65X4-MM THK)	
	8	1	**122-1884**	1	SPACER (45X49X8-MM THK)	
	9	1	**305-3431**	1	PISTON (CLUTCH)	
	10	1	**123-8905**	2	CONE-BEARING	
	11	1	**178-9566**	1	SPRING-PISTON	
	12	1	**161-3249**	1	RING-RETAINING	
	13	1	**123-8912**	2	BEARING-ROLLER	
	14	1	**305-3425**	1	SHAFT AS-OUTPUT	
	15	1	**121-0904**	1	GEAR AS (36-TEETH)	
	16	1	**8E-5707**	1	PLATE-END	
	17	1	**294-9812**	1	RETAINER-SPRING	

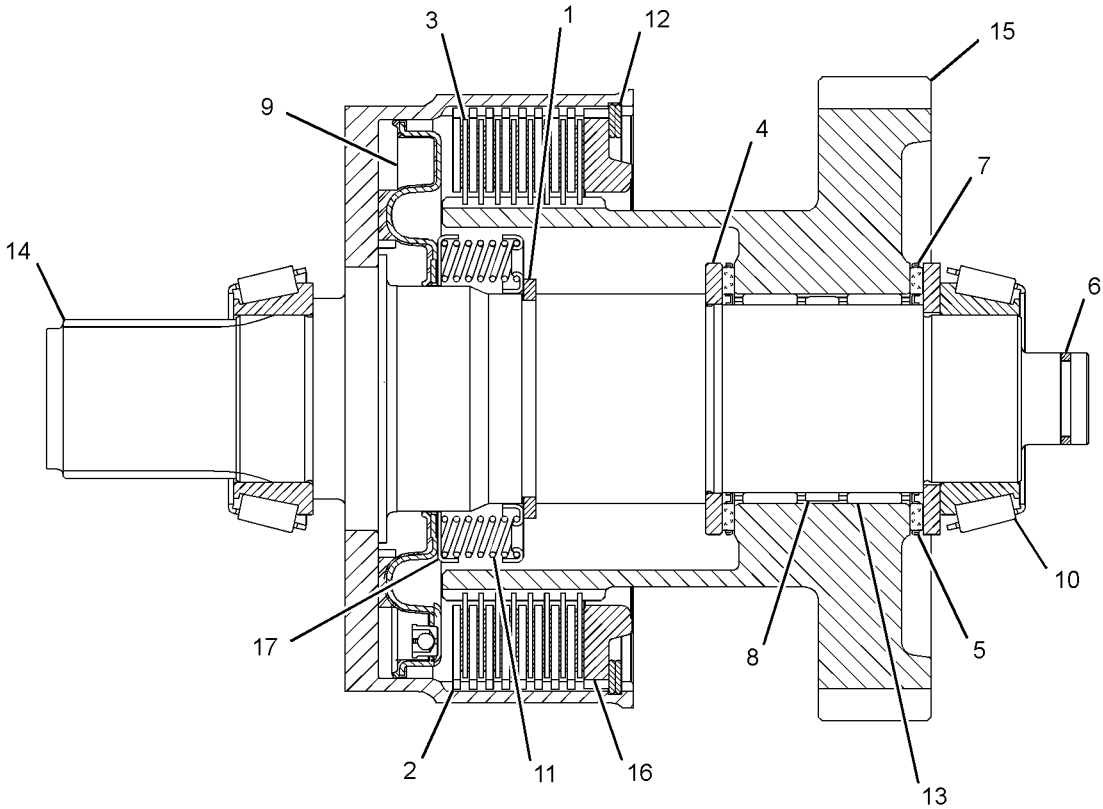

GRAPHIC #1 **<END>** g01382017

POWER TRAIN

374-5113 SHAFT GP-MAIN

S/N: SJW1-UP

PART OF 350-8607 TRANSMISSION GP-POWER SHIFT

AN ATTACHMENT

SMCS-3053, 3063 **i04611716**

NOTE	REF NO	GRAPHIC REF	PART NUMBER	QTY	PART NAME 1 2 3 4 5 6 (PRODUCT LEVEL)	SEE PAGE
	1	1	**6Y-1192**	3	RING-SEAL	
	2	1	**6Y-7929**	13	DISC-FRICTION	
	3	1	**8E-5707**	2	PLATE-END	
	4	1	**8T-1580**	1	CUP	
	5	1	**8T-1581**	1	CONE	
	6	1	**121-0885**	1	RETAINER	
	7	1	**122-1877**	1	WASHER-THRUST (40X65X4-MM THK)	
	8	1	**123-8907**	1	CONE-BEARING	
	9	1	**123-8908**	1	CUP-TAPERED ROLLER	
	10	1	**123-8912**	2	BEARING-ROLLER	
	11	1	**147-0203**	1	WASHER-THRUST (45.3X65X5-MM THK)	
	12	1	**147-0205**	2	WASHER (55X78X5-MM THK)	
	13	1	**147-0242**	1	GEAR (48-TEETH)	
	14	1	**147-0248**	1	SPACER (56.2X60X15.8-MM THK)	
	15	1	**147-0260**	1	RETAINER-SPRING	
	16	1	**147-0261**	1	SHAFT AS-OUTPUT (REAR)	
		1	**163-9091**	2	PLUG	
	17	1	**150-3757**	2	BEARING	
	18	1	**157-2090**	1	GEAR (38-TEETH)	
	19	1	**172-6050**	2	BEARING-SPECIAL	
	20	1	**172-6743**	2	BEARING-SPECIAL	
	21	1	**274-4553**	13	DISC-FRICTION	
	22	1	**274-8638**	2	RING-RETAINING	
	23	1	**294-9811**	2	PISTON	
	24	1	**294-9813**	2	SPRING-WAVE	
	25	1	**095-0928**	1	RING-RETAINING (EXTERNAL)	
	26	1	**095-0927**	1	RING-RETAINING	

374-5113 **SHAFT GP-MAIN** *(contd.)* **i04611716**

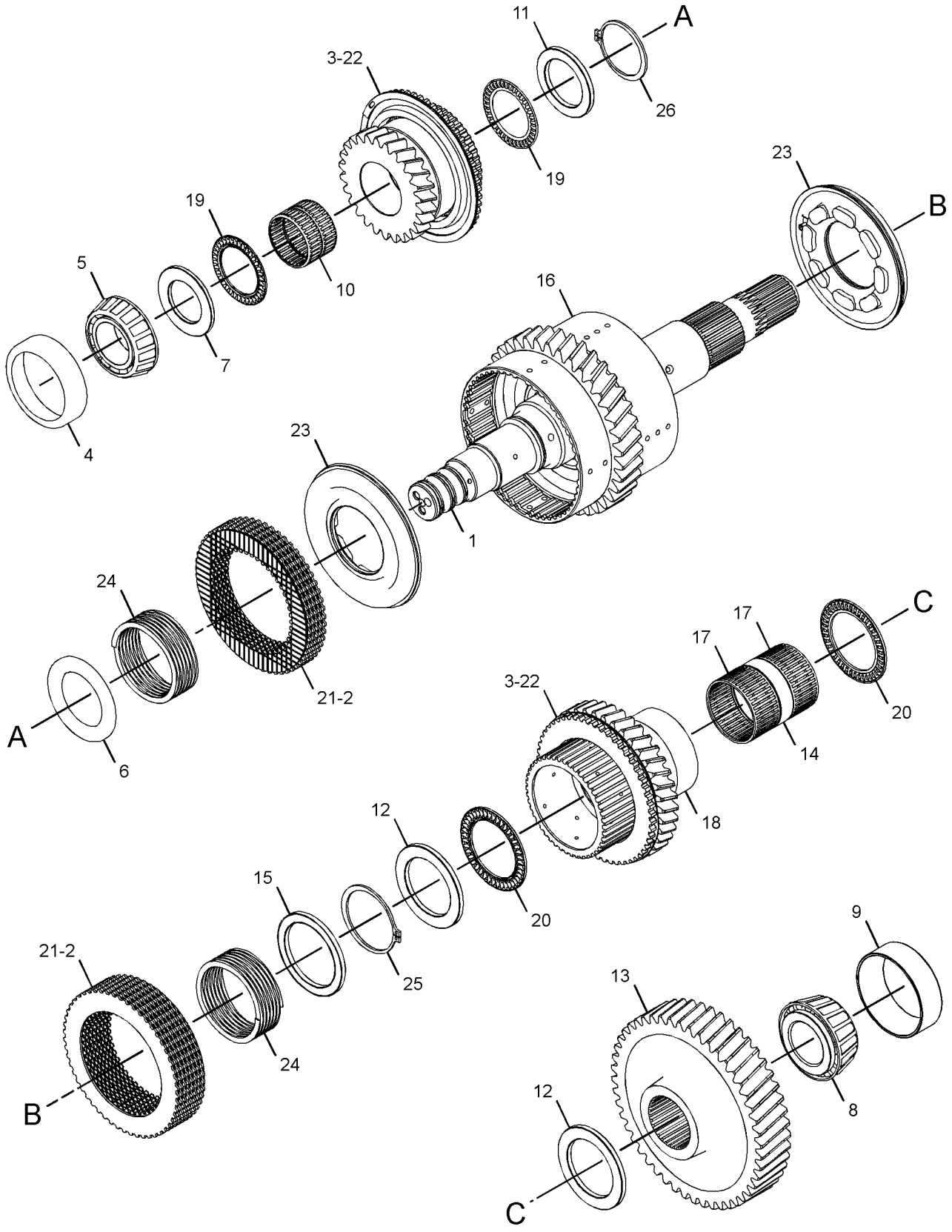

GRAPHIC #1 **<END>** g02797171

311-2230 STOP GP-STEERING

S/N: SJW1-UP
PART OF 303-0415, 319-6834, 341-0596 WHEEL & TIRE AR
FOR USE WITH 20-IN TIRES LOCATED ON THE FRONT AXLE
AN ATTACHMENT

SMCS-7188 **i02992380**

NOTE	REF NO	GRAPHIC REF	PART NUMBER	QTY	PART NAME 1 2 3 4 5 6 (PRODUCT LEVEL)	SEE PAGE
	1	1	**224-6829**	2	SPACER (17X24.5X17-MM THK)	

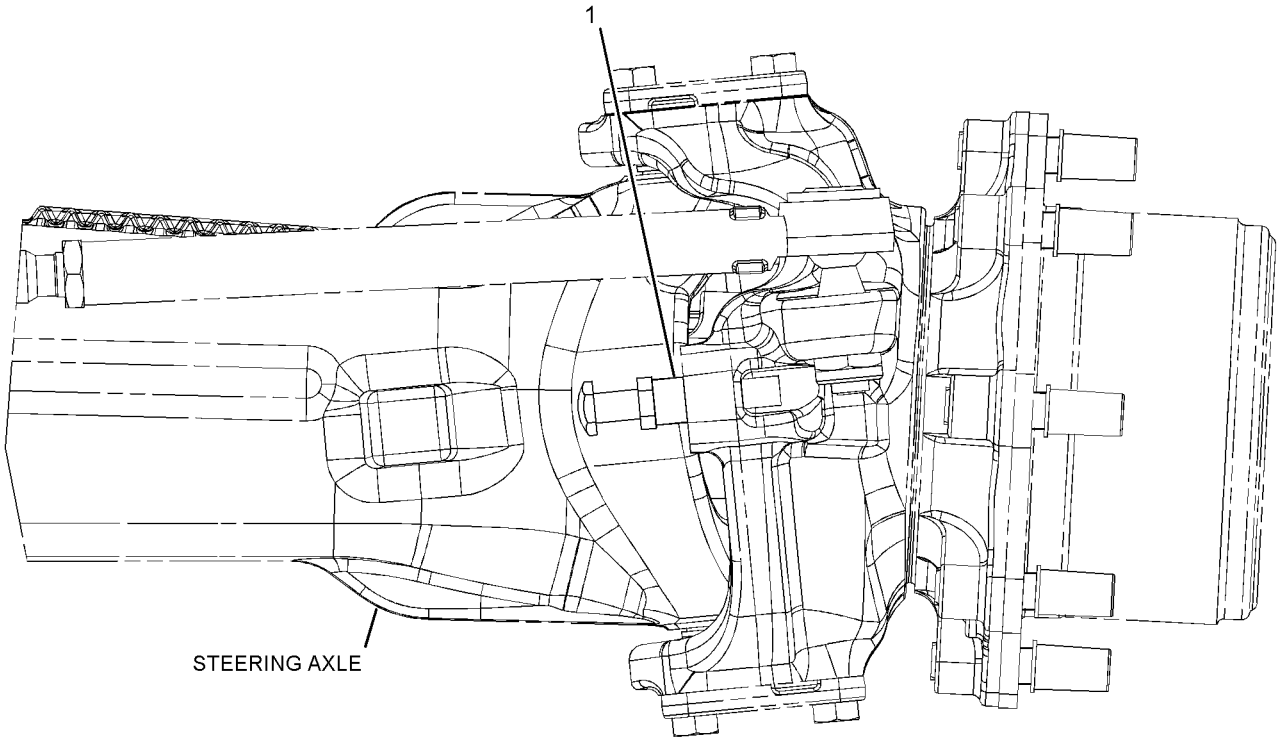

FRONT VIEW

GRAPHIC #1 **<END>** g01618844

POWER TRAIN

359-0403 TORQUE CONVERTER AR

S/N: SJW1-UP

PART OF 374-6826, 374-6834 POWER TRAIN AR

AN ATTACHMENT

SMCS-3101 **i04580369**

NOTE	REF NO	GRAPHIC REF	PART NUMBER	QTY	PART NAME 1 2 3 4 5 6 (PRODUCT LEVEL)	SEE PAGE
Y	1	1	*111-7907*	1	DRIVE GP-FLEXIBLE COUPLING	204
	2	1	**293-4984**	1	TORQUE CONVERTER AS	

Y-SEPARATE ILLUSTRATION

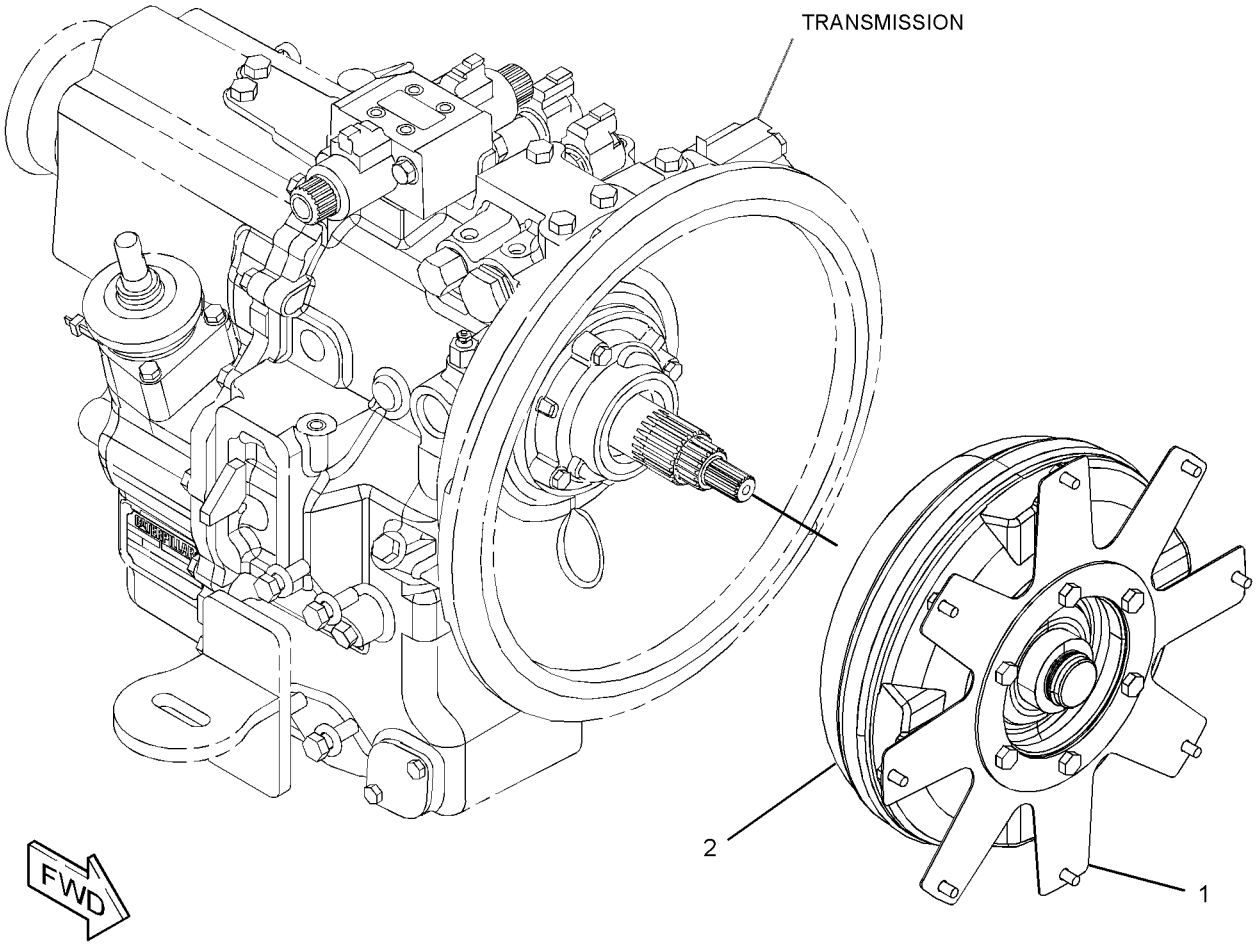

GRAPHIC #1 **<END>** g02797750

POWER TRAIN

359-0406 TORQUE CONVERTER AR

S/N: SJW1-UP
PART OF 374-6842 POWER TRAIN AR
AN ATTACHMENT

SMCS-3101 **i04612130**

NOTE	REF NO	GRAPHIC REF	PART NUMBER	QTY	PART NAME 1 2 3 4 5 6 (PRODUCT LEVEL)	SEE PAGE
Y	1	1	*355-3845*	1	DRIVE GP-FLEXIBLE COUPLING	205
	2	1	**361-6047**	1	TORQUE CONVERTER AS	

Y-SEPARATE ILLUSTRATION

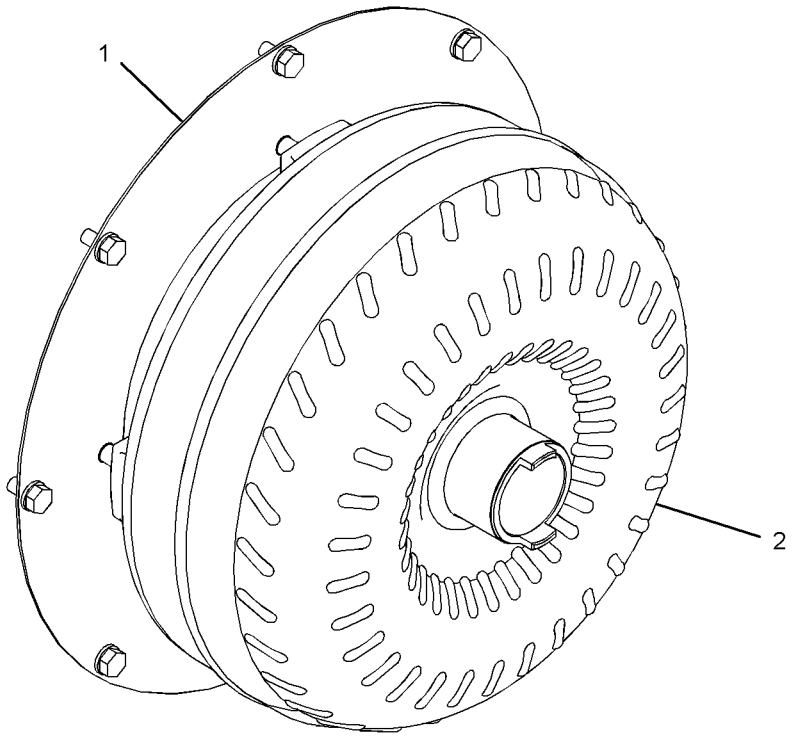

GRAPHIC #1 **<END>** g02821236

353-1507 TRANSMISSION AR-DIRECT DRIVE–
ALL WHEEL DRIVE, STD SHIFT
S/N: SJW1-UP
PART OF 374-6826 POWER TRAIN AR
AN ATTACHMENT

SMCS-3030 **i04611589**

NOTE	PART NUMBER	QTY	PART NAME 1 2 3 4 5 6 (PRODUCT LEVEL)	SEE PAGE
Y	*341-6687*	1	CONTROL GP-TRANSMISSION	560
Y	*337-9703*	1	FILLER GP-POWER TRAIN OIL (STANDARD SHIFT)	208
Y	*337-9779*	1	LINES GP-POWER TRAIN COOLER	54
Y	*337-9717*	1	LINES GP-POWER TRAIN OIL	215
Y	*337-9727*	1	MOUNTING GP-ENGINE & XMSN	29
Y	*353-1335*	1	SHAFT GP-DRIVE (REAR)	230
Y	*353-1336*	1	SHAFT GP-DRIVE (FRONT)	231
Y	*357-3229*	1	SWITCH GP-ALL WHEEL DRIVE	132
Y	*359-0377*	1	TRANSMISSION AR-DIRECT DRIVE (ALL WHEEL DRIVE, STD SHIFT)	252
Y	*331-5462*	1	WIRING GP-TRANSMISSION CONTROL (STANDARD SHIFT)	184

Y-SEPARATE ILLUSTRATION

<END>

359-0377 TRANSMISSION AR-DIRECT DRIVE

S/N: SJW1-UP

PART OF 353-1507 TRANSMISSION AR-DIRECT DRIVE

AN ATTACHMENT

SMCS-3030 **i04582830**

NOTE	REF NO	GRAPHIC REF	PART NUMBER	QTY	PART NAME 1 2 3 4 5 6 (PRODUCT LEVEL)	SEE PAGE
	1	1	**119-4740**	1	FILTER-OIL (STANDARD EFFICIENCY) (TRANSMISSION)	
Y	2	1	*353-1338*	1	DRIVE & MTG GP-PUMP	375
Y	3	1	*355-3841*	1	MOUNTING GP-TRANSMISSION	221
Y	4	1	*359-0393*	1	TRANSMISSION GP-DIRECT DRIVE	256

Y-SEPARATE ILLUSTRATION

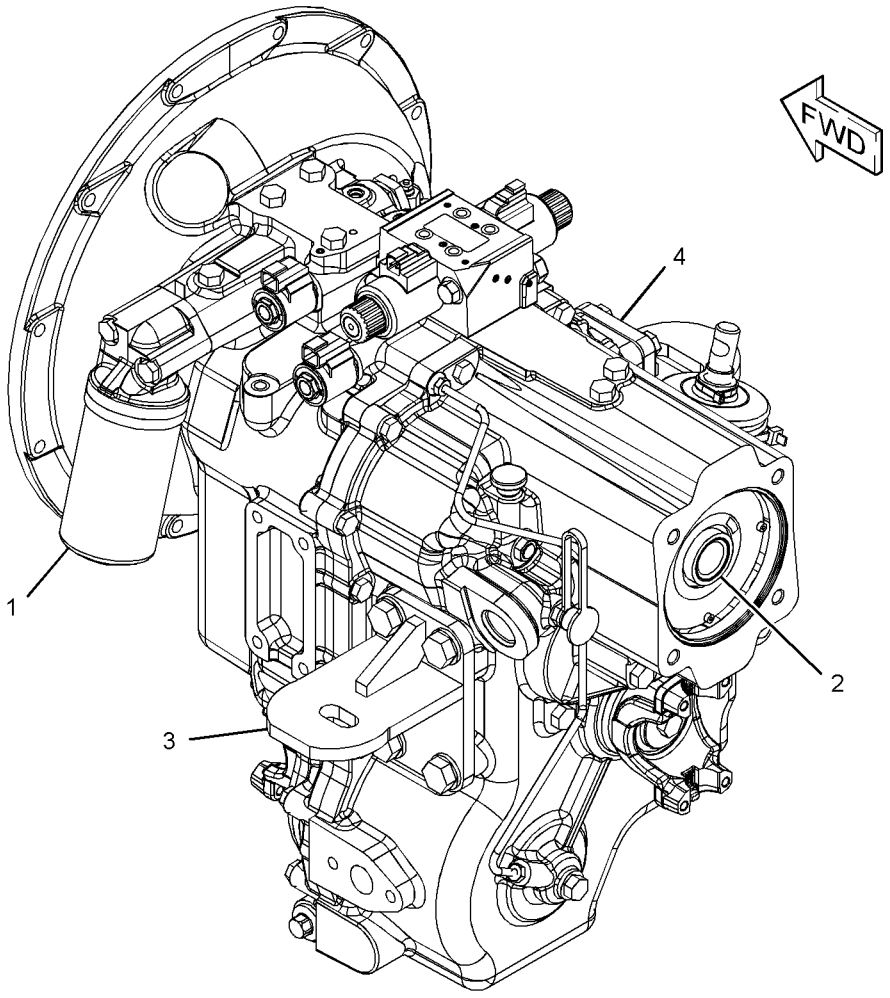

GRAPHIC #1 **<END>** g02797694

350-8606 TRANSMISSION AR-POWER SHIFT

S/N: SJW1-UP

PART OF 353-1511 TRANSMISSION AR-POWER SHIFT

AN ATTACHMENT

SMCS-3030 **i04612391**

NOTE	REF NO	GRAPHIC REF	PART NUMBER	QTY	PART NAME 1 2 3 4 5 6 (PRODUCT LEVEL)	SEE PAGE
Y	1	1	*350-8607*	1	TRANSMISSION GP-POWER SHIFT	267
Y	2	1	*353-1341*	1	DRIVE & MTG GP-PUMP	376
Y	3	1	*355-3833*	1	MOUNTING GP-TRANSMISSION	220
	4	1	**119-4740**	1	FILTER-OIL (STANDARD EFFICIENCY) (TRANSMISSION)	

Y-SEPARATE ILLUSTRATION

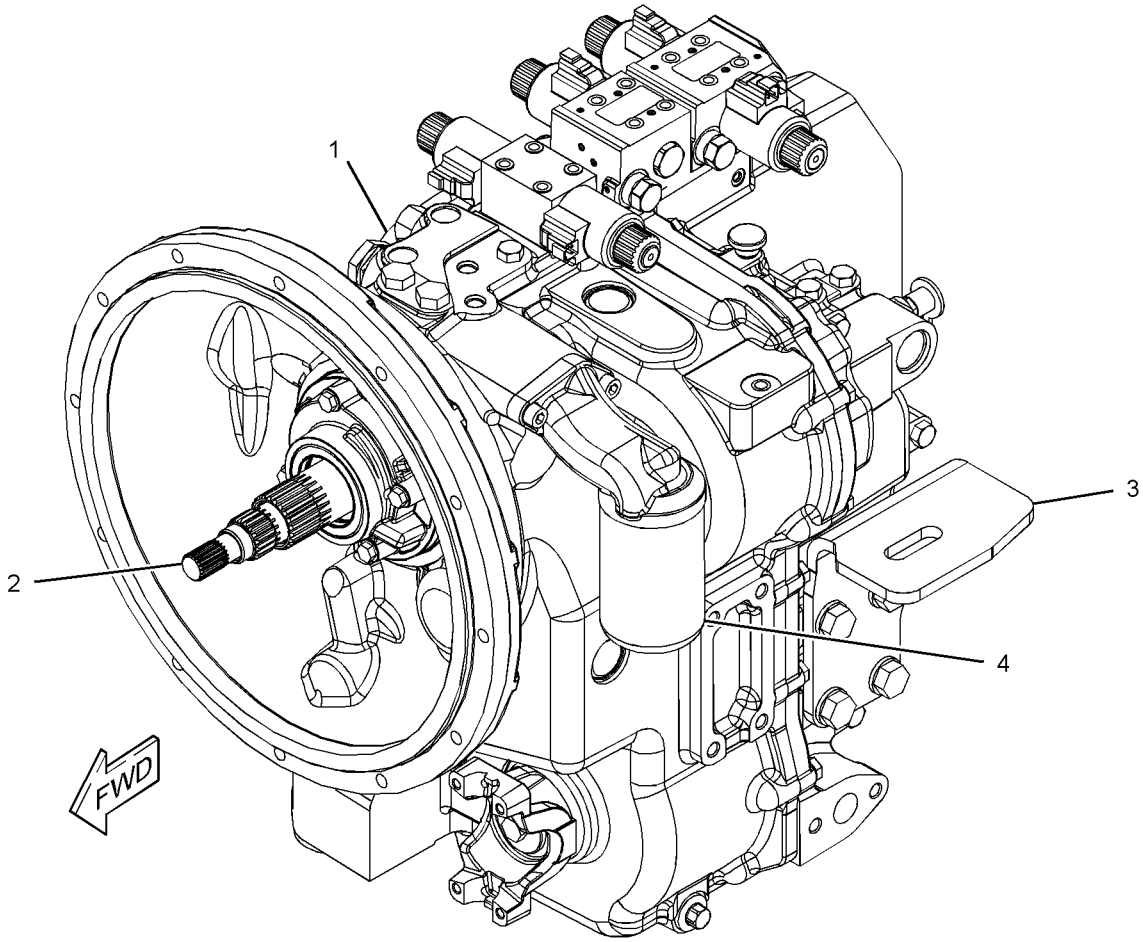

GRAPHIC #1 **<END>** g02823537

353-1510 TRANSMISSION AR-POWER SHIFT–
4-WHEEL DRIVE, AUTO SHIFT
S/N: SJW1-UP
PART OF 374-6834 POWER TRAIN AR
AN ATTACHMENT

SMCS-3030 **i04602972**

NOTE	PART NUMBER	QTY	PART NAME 1 2 3 4 5 6 (PRODUCT LEVEL)	SEE PAGE
Y	*337-9701*	1	FILLER GP-POWER TRAIN OIL	206
Y	*337-9779*	1	LINES GP-POWER TRAIN COOLER	54
Y	*337-9719*	1	LOCK GP-DIFFERENTIAL	216
Y	*337-9727*	1	MOUNTING GP-ENGINE & XMSN	29
Y	*353-1335*	1	SHAFT GP-DRIVE (REAR)	230
Y	*353-1337*	1	SHAFT GP-DRIVE (FRONT)	232
Y	*331-5456*	1	SWITCH GP-ALL WHEEL DRIVE	131
Y	*359-0380*	1	TRANSMISSION AR-POWER SHIFT	255
Y	*331-5464*	1	WIRING GP-TRANSMISSION CONTROL	186

Y-SEPARATE ILLUSTRATION

<END>

353-1511 TRANSMISSION AR-POWER SHIFT
S/N: SJW1-UP
PART OF 374-6842 POWER TRAIN AR
AN ATTACHMENT

SMCS-3030 **i04612132**

NOTE	PART NUMBER	QTY	PART NAME 1 2 3 4 5 6 (PRODUCT LEVEL)	SEE PAGE
Y	*337-9701*	1	FILLER GP-POWER TRAIN OIL	206
Y	*380-5753*	1	LINES GP-POWER TRAIN COOLER	56
Y	*337-9719*	1	LOCK GP-DIFFERENTIAL	216
Y	*337-9728*	1	MOUNTING GP-ENGINE & XMSN	30
Y	*353-1335*	1	SHAFT GP-DRIVE	230
Y	*353-1337*	1	SHAFT GP-DRIVE	232
Y	*331-5456*	1	SWITCH GP-ALL WHEEL DRIVE	131
Y	*350-8606*	1	TRANSMISSION AR-POWER SHIFT	253
Y	*331-5464*	1	WIRING GP-TRANSMISSION CONTROL	186

Y-SEPARATE ILLUSTRATION

<END>

359-0380 TRANSMISSION AR-POWER SHIFT

S/N: SJW1-UP

PART OF 353-1510 TRANSMISSION AR-POWER SHIFT

AN ATTACHMENT

SMCS-3030 **i04597390**

NOTE	REF NO	GRAPHIC REF	PART NUMBER	QTY	PART NAME 1 2 3 4 5 6 (PRODUCT LEVEL)	SEE PAGE
Y	1	1	*353-1338*	1	DRIVE & MTG GP-PUMP	375
Y	2	1	*355-3833*	1	MOUNTING GP-TRANSMISSION	220
Y	3	1	*359-0396*	1	TRANSMISSION GP-DIRECT DRIVE (ALL WHEEL DRIVE)	261
	4	1	**119-4740**	1	FILTER-OIL (STANDARD EFFICIENCY) (TRANSMISSION)	

Y-SEPARATE ILLUSTRATION

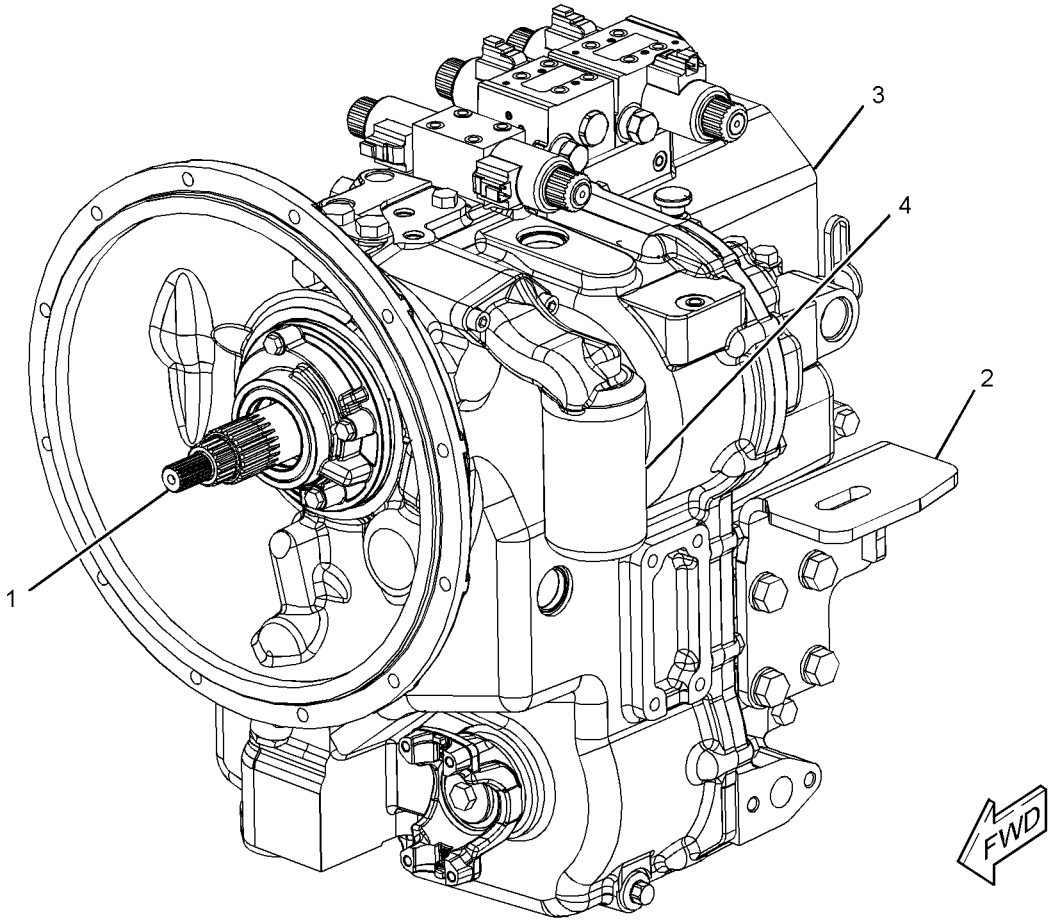

GRAPHIC #1 **<END>** g02831302

359-0393 TRANSMISSION GP-DIRECT DRIVE–
ALL WHEEL DRIVE
S/N: SJW1-UP
PART OF 359-0377 TRANSMISSION AR-DIRECT DRIVE
AN ATTACHMENT

SMCS-3030 **i04582832**

NOTE	REF NO	GRAPHIC REF	PART NUMBER	QTY	PART NAME 1 2 3 4 5 6 (PRODUCT LEVEL)	SEE PAGE
	1	1,3	**3J-1907**	2	SEAL-O-RING	
	2	3	**4W-9972**	1	SENDER AS-TEMPERATURE (12-VOLT) (TRANSMISSION OIL)	
		3	**6V-8378**	1	NUT (10-32-THD)	
		3	**8F-1434**	1	LOCKWASHER	
		3	**8T-0328**	1	WASHER-HARD (5.5X10X1-MM THK)	
	3	2	**5P-8066**	2	SEAL-O-RING	
	4	3	**365-4592**	1	CLAMP	
	5	1	**6V-0852**	1	CAP-DUST	
	6	1	**6V-3965**	1	FITTING (QUICK DISCONNECT)	
M	7	3	**6V-7731**	2	BOLT (M10X1.5X70-MM)	
M	8	1	**6V-8097**	2	BOLT (M12X1.75X30-MM)	
M	9	1	**161-7632**	14	BOLT-SELF-LOCKING (M10X1.5X40-MM)	
	10	1	**6Y-1341**	2	SPRING	
	11	1	**6Y-1896**	1	PLUG AS-DRAIN (TRANSMISSION)	
		1	**5P-6718**	1	SEAL-O-RING	
	12	3	**6Y-2035**	1	GASKET	
	13	3	**7T-3109**	1	PIN	
	14	3	**7T-3111**	1	COVER	
	15	2	**7T-3195**	2	WASHER (12.3X47X6.35-MM THK)	
	16	1	**7T-3249**	2	SCREW (3/8-24X0.75-IN)	
	17	2	**7X-4741**	1	SEAL	
M	18	2,3	**8C-5748**	7	BOLT (M8X1.25X55-MM)	
	19	3	**9M-1974**	3	WASHER-HARD (8.8X16X2-MM THK)	
	20	2	**9P-9150**	4	WASHER (8.25X18X0.84-MM THK)	
M	21	3	**9X-6615**	4	BOLT (M5X0.8X30-MM)	
	22	1	**014-5645**	3	BALL	
	23	2	**121-7385**	1	PUMP GP-TRANSMISSION (POWER TRAIN)	
		2	**208-8240**	1	SEAL-LIP TYPE	
	24	1	**121-7389**	1	ROD AS-GEARSHIFT (FIRST, SECOND)	
	25	1	**121-7390**	1	ROD AS-GEARSHIFT (THIRD, FOURTH)	
	26	3	**121-7391**	1	LEVER	
	27	3	**121-7396**	1	VALVE GP-RELIEF (TORQUE CONVERTER INLET)	
		3	**6V-4589**	1	SEAL-O-RING	
		3	**8L-2746**	1	SEAL-O-RING	
	28	1	**121-7403**	1	FORK-SHIFT (FIRST, SECOND)	
	29	1	**121-7404**	1	FORK-SHIFT (THIRD, FOURTH)	
M	30	1	**121-9875**	4	BOLT (M10X1.5X55-MM)	
	31	2	**122-1883**	1	SPACER (38X45X5-MM THK)	
	32	2	**122-3650**	1	PLUG	
	33	2	**122-6787**	2	YOKE AS	
					(EACH INCLUDES)	
		2	**123-1377**	1	GUARD	
	34	1	**123-2918**	2	SLEEVE	
	35	1	**123-2919**	2	NUT (M11X1-THD)	
	36	3	**127-3017**	1	SEAT AS	
Y	37	3	**147-0209**	1	VALVE GP-RELIEF (TRANSMISSION)	275
	38	3	**174-9711**	1	GASKET	
	39	3	**175-0054**	1	SEAL-O-RING	
	40	1	**205-9163**	1	WASHER (16X22X3-MM THK)	
	41	2	**208-8240**	1	SEAL-LIP TYPE	
	42	1	**237-5186**	1	PLATE-XMSN IDENTIFICATION	
Y	43	2	**275-0468**	1	CASE AS-TRANSMISSION (FRONT)	195
	44	2	**275-0475**	1	SHAFT GP-IDLER (TRANSMISSION)	

359-0393 **TRANSMISSION GP-DIRECT DRIVE** *(contd.)* **i04582832**

NOTE	REF NO	GRAPHIC REF	PART NUMBER	QTY	PART NAME 1 2 3 4 5 6 (PRODUCT LEVEL)	SEE PAGE
		2	**005-0471**	2	CONE-BEARING	
		2	**274-8623**	1	SHAFT-REVERSE	
	45	2	**275-0477**	1	SHAFT GP-COUNTER (TRANSMISSION)	
		2	**8T-1581**	1	CONE	
		2	**123-8907**	1	CONE-BEARING	
		2	**274-8625**	1	GEAR-COUNTERSHAFT (38-TEETH)	
Y	46	2	**275-0478**	1	SHAFT GP-OUTPUT (REAR)	243
	47	1	**293-2147**	1	BREATHER AS (TRANSMISSION)	
		1	**3J-1907**	1	SEAL-O-RING	
		1	**122-6785**	1	PLUG AS	
	48	1	**294-9820**	1	TUBE	
	49	3	**365-4591**	1	CLAMP	
Y	50	2	**305-3427**	1	SHAFT GP-OUTPUT (FRONT)	245
Y	51	2	**305-3429**	1	SHAFT GP-INPUT (ALL WHEEL DRIVE)	237
	52	3	**324-2578**	1	VALVE GP-SOLENOID (12-VOLT) (FORWARD, REVERSE)	
		3	**8L-2779**	1	SEAL-O-RING	
		3	**280-7012**	2	TUBE AS	
					(EACH INCLUDES)	
		3	**6V-8399**	1	SEAL-O-RING	
		3	**274-4560**	1	NUT-SELF LOCKING	
		3	**324-2579**	2	COIL AS (12-VOLT)	
	53	1,3	**334-5131**	12	PLUG AS	
					(EACH INCLUDES)	
		1,3	**3J-1907**	1	SEAL-O-RING	
		1,3	**9S-4191**	1	PLUG-O-RING	
	54	1	**336-5469**	4	RIVET	
	55	3	**344-2608**	1	HOUSING AS-FILTER	
		3	**7T-3119**	1	HOUSING	
	56	1	**363-8458**	1	GEAR (19-TEETH)	
Y	57	2	**365-2814**	1	CASE AS-TRANSMISSION (ALL WHEEL DRIVE)	196
	58	3	**305-3423**	2	VALVE GP-SOLENOID (12-VOLT) (DIFFERENTIAL LOCK)	
					(EACH INCLUDES)	
		3	**274-8034**	1	COIL AS (12-VOLT)	
	59	3	**7T-3251**	1	BREATHER (TRANSMISSION)	

M-METRIC PART
Y-SEPARATE ILLUSTRATION

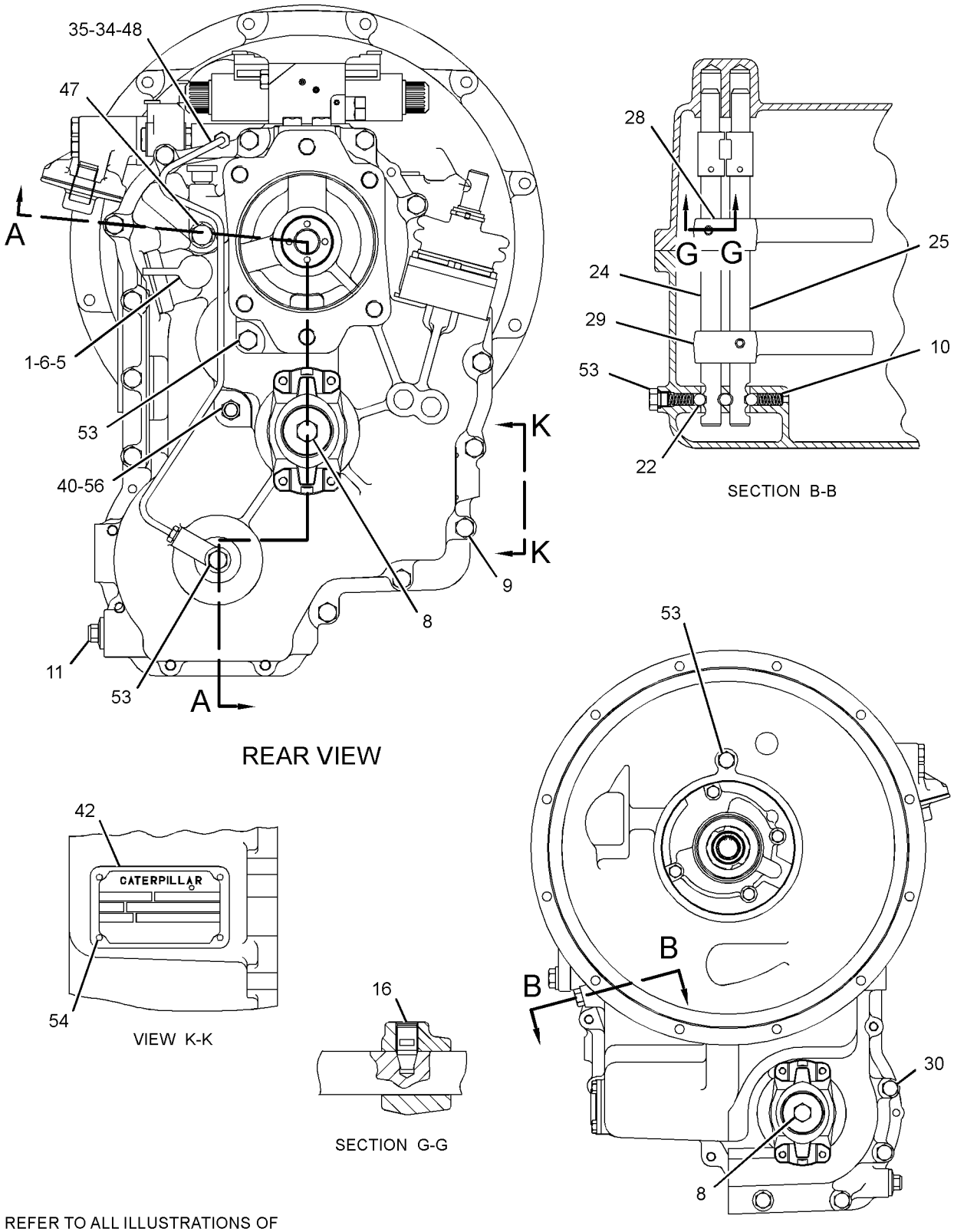

REFER TO ALL ILLUSTRATIONS OF
THIS GROUP FOR AUXILIARY VIEWS

GRAPHIC #1

g02819401

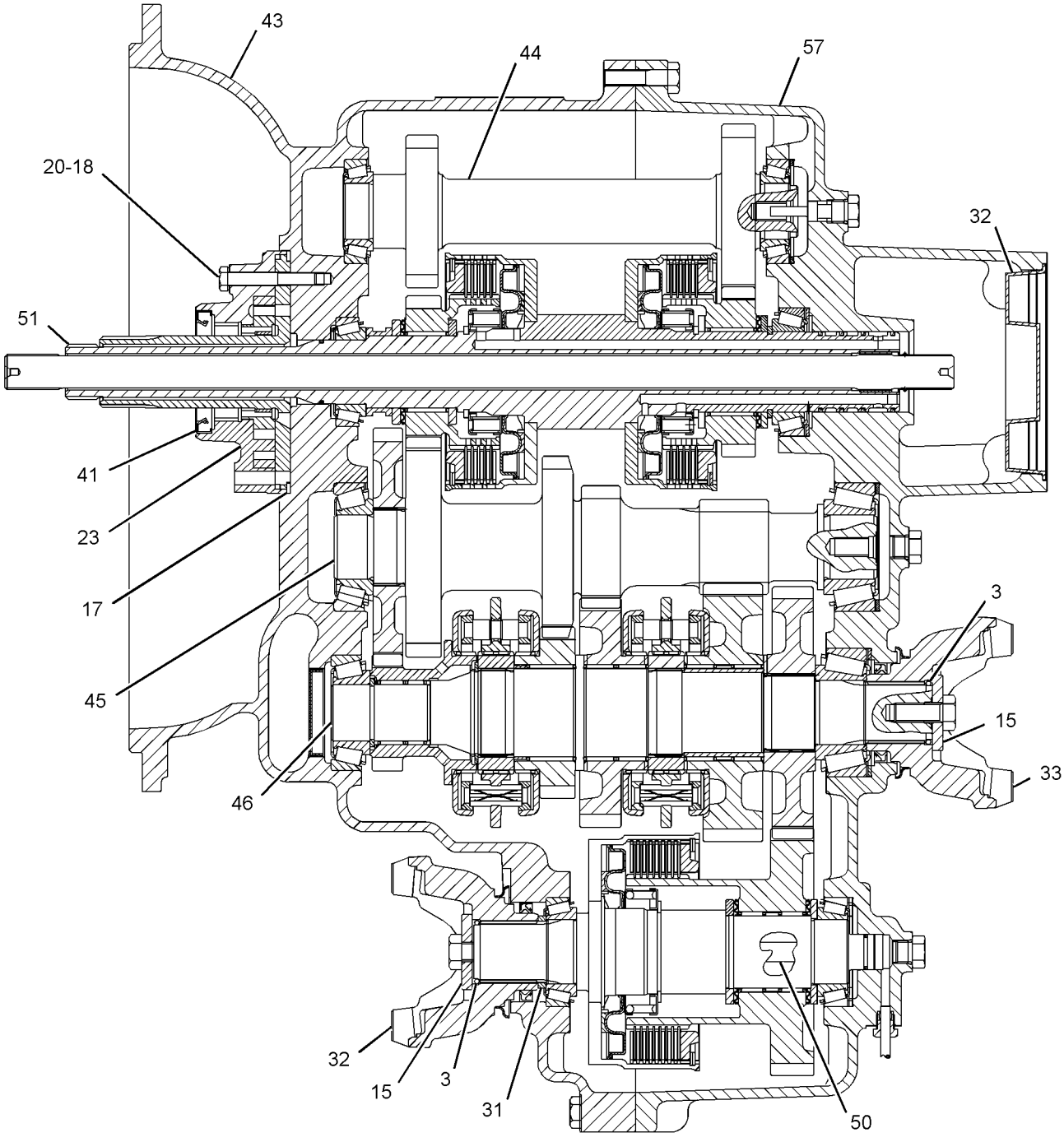

SECTION A-A

GRAPHIC #2

g02819416

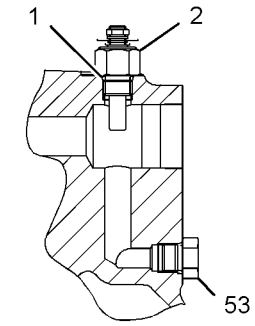

SECTION J

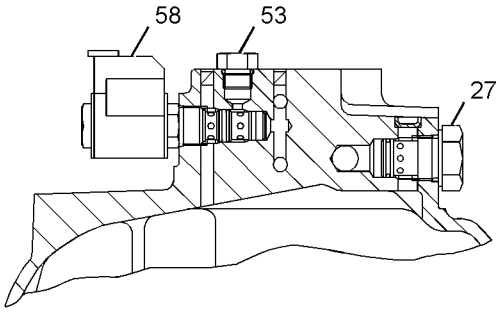

SECTION D-D

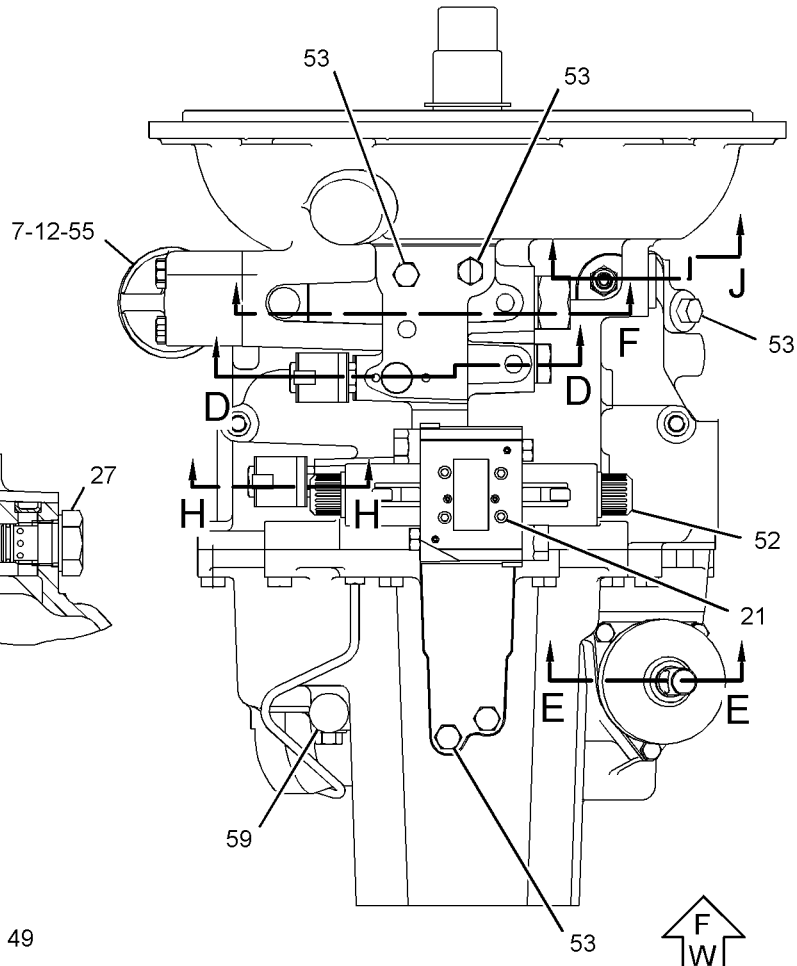

TOP VIEW

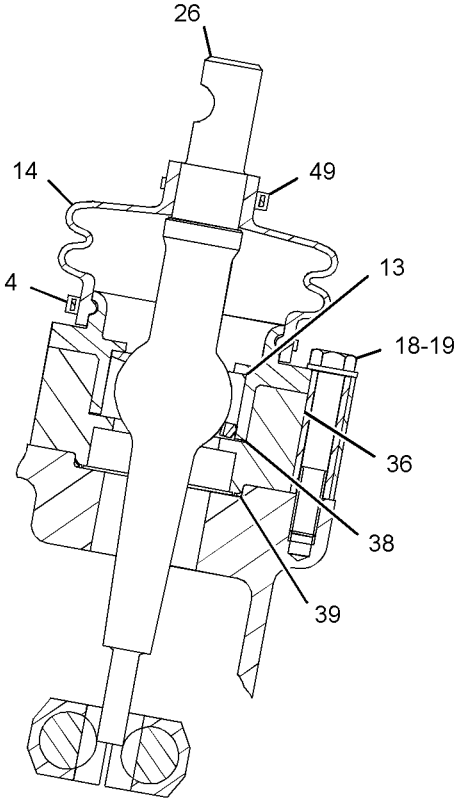

SECTION E-E

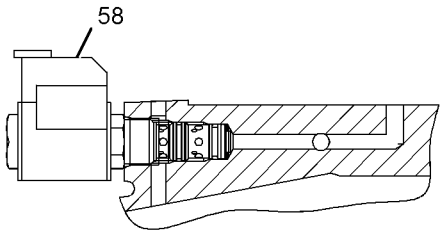

SECTION H-H

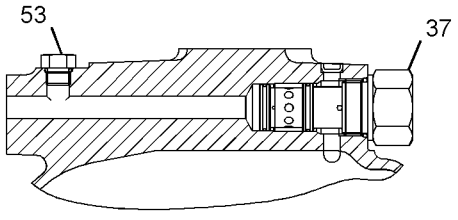

SECTION F

GRAPHIC #3 **<END>** g02819399

359-0396 TRANSMISSION GP-DIRECT DRIVE–

ALL WHEEL DRIVE

S/N: SJW1-UP

PART OF 359-0380 TRANSMISSION AR-POWER SHIFT

AN ATTACHMENT

SMCS-3030 **i04597409**

NOTE	REF NO	GRAPHIC REF	PART NUMBER	QTY	PART NAME 1 2 3 4 5 6 (PRODUCT LEVEL)	SEE PAGE
	1	1,4	**3J-1907**	1	SEAL-O-RING	
	2	3	**4F-7952**	1	SEAL-O-RING	
	3	4	**4W-9972**	1	SENDER AS-TEMPERATURE (12-VOLT) (TRANSMISSION OIL)	
		4	**6V-8378**	1	NUT (10-32-THD)	
		4	**8F-1434**	1	LOCKWASHER	
		4	**8T-0328**	1	WASHER-HARD (5.5X10X1-MM THK)	
	4	2	**5P-8066**	2	SEAL-O-RING	
	5	2	**6T-9163**	2	SHIM (0.599-MM THK)	
	6	2	**6T-9164**	2	SHIM (0.178-MM THK)	
	7	2	**6T-9165**	2	SHIM (0.076-MM THK)	
	8	2	**6T-9166**	2	SHIM (0.051-MM THK)	
	9	3	**6T-9202**	2	PLUG	
M	10	3	**6V-5215**	3	BOLT (M8X1.25X16-MM)	
M	11	2	**6V-8097**	2	BOLT (M12X1.75X30-MM)	
M	12	1	**161-7632**	16	BOLT-SELF-LOCKING (M10X1.5X40-MM)	
	13	4	**6Y-1896**	1	PLUG AS-DRAIN (TRANSMISSION)	
		4	**5P-6718**	1	SEAL-O-RING	
	14	2	**7T-2646**	2	SPACER (66X79.5X2.02-MM THK)	
	15	3	**7T-2651**	1	STRAINER-SUCTION (TRANSMISSION)	
	16	2	**7T-3195**	2	WASHER (12.3X47X6.35-MM THK)	
	17	4	**7T-3251**	1	BREATHER (TRANSMISSION)	
	18	1	**7T-3253**	2	DOWEL	
	19	2	**7X-4741**	1	SEAL	
	20	1,2,3	**7W-3556**	12	WASHER (14.27X20.57X1.5-MM THK)	
M	21	4	**8C-5748**	4	BOLT (M8X1.25X55-MM)	
M	22	2	**8C-8545**	2	BOLT-SOCKET HEAD (M5X0.8X20-MM)	
M	23	4	**8T-0271**	2	BOLT-SOCKET HEAD (M10X1.5X35-MM)	
M	24	1	**8T-0643**	1	BOLT (M10X1.5X80-MM)	
	25	4	**9P-9150**	4	WASHER (8.25X18X0.84-MM THK)	
	26	3	**9W-5460**	1	RING	
M	27	4	**9X-6615**	12	BOLT (M5X0.8X30-MM)	
	28	1	**104-3288**	2	SHIM (0.05-MM THK)	
	29	3	**106-9861**	1	PLATE-COVER	
	30	1	**117-1385**	1	SEAL-O-RING	
	31	2,4	**120-9762**	3	SEAL-O-RING	
	32	1	**121-2059**	2	SHIM (0.08-MM THK)	
	33	1	**121-2060**	2	SHIM (0.18-MM THK)	
	34	1	**121-2061**	2	SHIM (0.6-MM THK)	
	35	2	**121-7385**	1	PUMP GP-TRANSMISSION (POWER TRAIN)	
		2	**208-8240**	1	SEAL-LIP TYPE	
	36	3	*121-7396*	1	VALVE GP-RELIEF (TORQUE CONVERTER INLET)	
		3	**6V-4589**	1	SEAL-O-RING	
		3	**8L-2746**	1	SEAL-O-RING	
	37	2	**121-7398**	1	SPACER (70X79.5X2-MM THK)	
	38	2	**121-7399**	1	SHIM (0.05-MM THK)	
	39	2	**121-7400**	1	SHIM (0.08-MM THK)	
	40	2	**121-7401**	1	SHIM (0.18-MM THK)	
	41	2	**121-7402**	1	SHIM (0.6-MM THK)	
	42	1	**122-1879**	2	SPACER (58X67.5X2-MM THK)	
	43	2	**122-1883**	1	SPACER (38X45X5-MM THK)	
	44	2	**122-6787**	2	YOKE AS	
					(EACH INCLUDES)	
		2	**123-1377**	1	GUARD	

359-0396 TRANSMISSION GP-DIRECT DRIVE *(contd.)* i04597409

NOTE	REF NO	GRAPHIC REF	PART NUMBER	QTY	PART NAME 1 2 3 4 5 6 (PRODUCT LEVEL)	SEE PAGE
	45	2	**147-0201**	1	TUBE AS	
Y	46	3	**147-0209**	1	VALVE GP-RELIEF (TRANSMISSION)	275
	47	4	**147-0211**	1	ELBOW AS	
		4	**3G-6927**	1	ADAPTER	
	48	2	**147-0218**	1	TUBE AS-TRANSFER	
	49	1	**147-0226**	1	TUBE AS	
	50	1,2,3	**147-0234**	6	BOLT (9/16-18X0.83-IN)	
	51	3	**147-0236**	1	TUBE AS-TRANSFER	
	52	3	**147-0262**	4	WASHER (19.1X24.1X1.5-MM THK)	
	53	3	**147-0266**	2	BOLT (3/4-16X1.417-IN)	
	54	3	**237-5186**	1	PLATE-XMSN IDENTIFICATION	
	55	4	**150-7732**	2	SEAL-O-RING	
	56	1	**191-8304**	1	SENSOR GP-SPEED (TRANSMISSION)	
		1	**137-6645**	1	PAD-CONNECTOR	
	57	1	**205-9244**	2	PLUG	
	58	2	**302-8432**	2	SEAL-LIP TYPE	
	59	3	**305-3423**	2	VALVE GP-SOLENOID (12-VOLT) (DIFFERENTIAL LOCK)	
					(EACH INCLUDES)	
		3	**274-8034**	1	COIL AS (12-VOLT)	
	60	2	**274-4554**	1	CASE AS-FRONT	
		2	**147-0268**	4	PLUG	
		2	**163-9091**	4	PLUG	
	61	4	*274-4556*	3	PLUG AS	
					(EACH INCLUDES)	
		4	**8L-2786**	1	SEAL-O-RING	
		4	**9S-4185**	1	PLUG-O-RING	
Y	62	1	**274-4561**	1	SHAFT GP-IDLER (POWERSHIFT)	233
	63	2	**363-4651**	1	CASE AS-REAR	
Y	64	2	**274-4578**	1	SHAFT GP-INPUT (POWERSHIFT)	235
Y	65	2	**274-4580**	1	SHAFT GP-COUNTER	226
Y	66	2	**274-4582**	1	SHAFT GP-OUTPUT (MAIN)	241
Y	67	4	**280-7010**	1	VALVE GP-SOLENOID (12-VOLT) (TRANSMISSION)	279
Y	68	4	**278-0209**	1	VALVE GP-SOLENOID (12-VOLT) (REVERSE)	276
Y	69	4	**278-0213**	1	VALVE GP-SOLENOID (12-VOLT) (CLUTCH)	278
Y	70	2	**280-7007**	1	SHAFT GP-OUTPUT (FRONT)	244
	71	1,3,4	**334-5131**	15	PLUG AS	
					(EACH INCLUDES)	
		1,3,4	**3J-1907**	1	SEAL-O-RING	
		1,3,4	**9S-4191**	1	PLUG-O-RING	
	72	3	**336-5469**	4	RIVET	
	73	1	**6V-0852**	1	CAP-DUST	
	74	1,4	**6V-3965**	1	FITTING (QUICK DISCONNECT)	
	75	4	**147-0232**	2	PLUG	

M-METRIC PART
Y-SEPARATE ILLUSTRATION

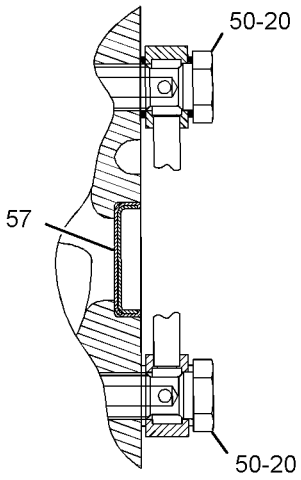

SECTION F-F

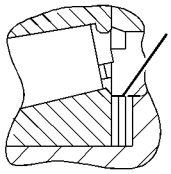

VIEW OF AREA M

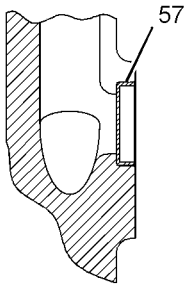

SECTION N-N

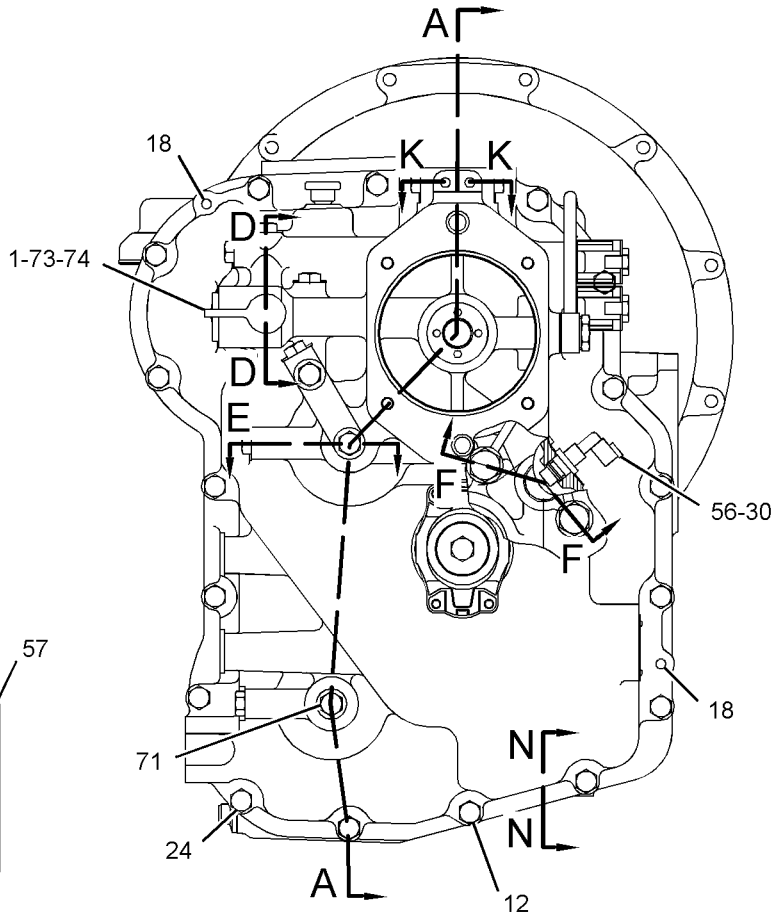

REAR VIEW

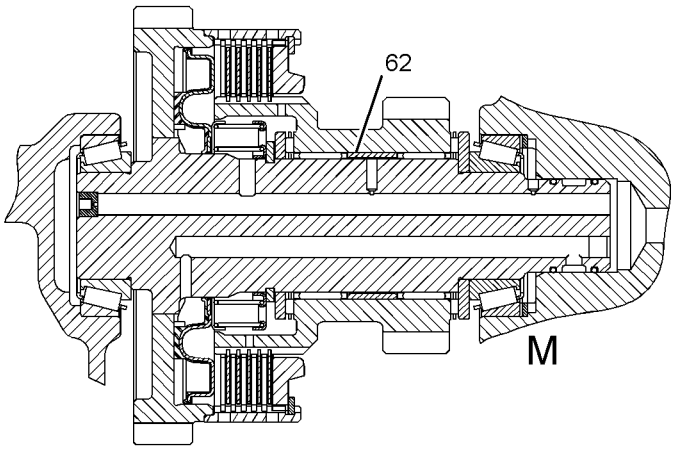

SECTION D-D

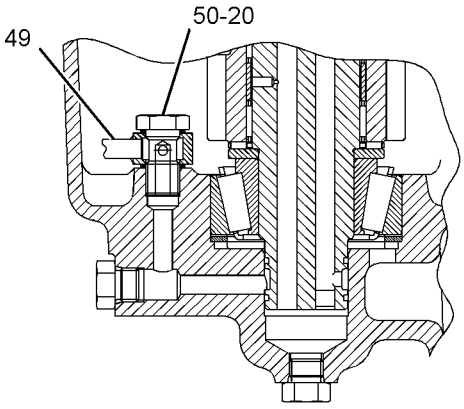

SECTION E

REFER TO ALL ILLUSTRATIONS OF
THIS GROUP FOR AUXILIARY VIEWS

GRAPHIC #1

g02827141

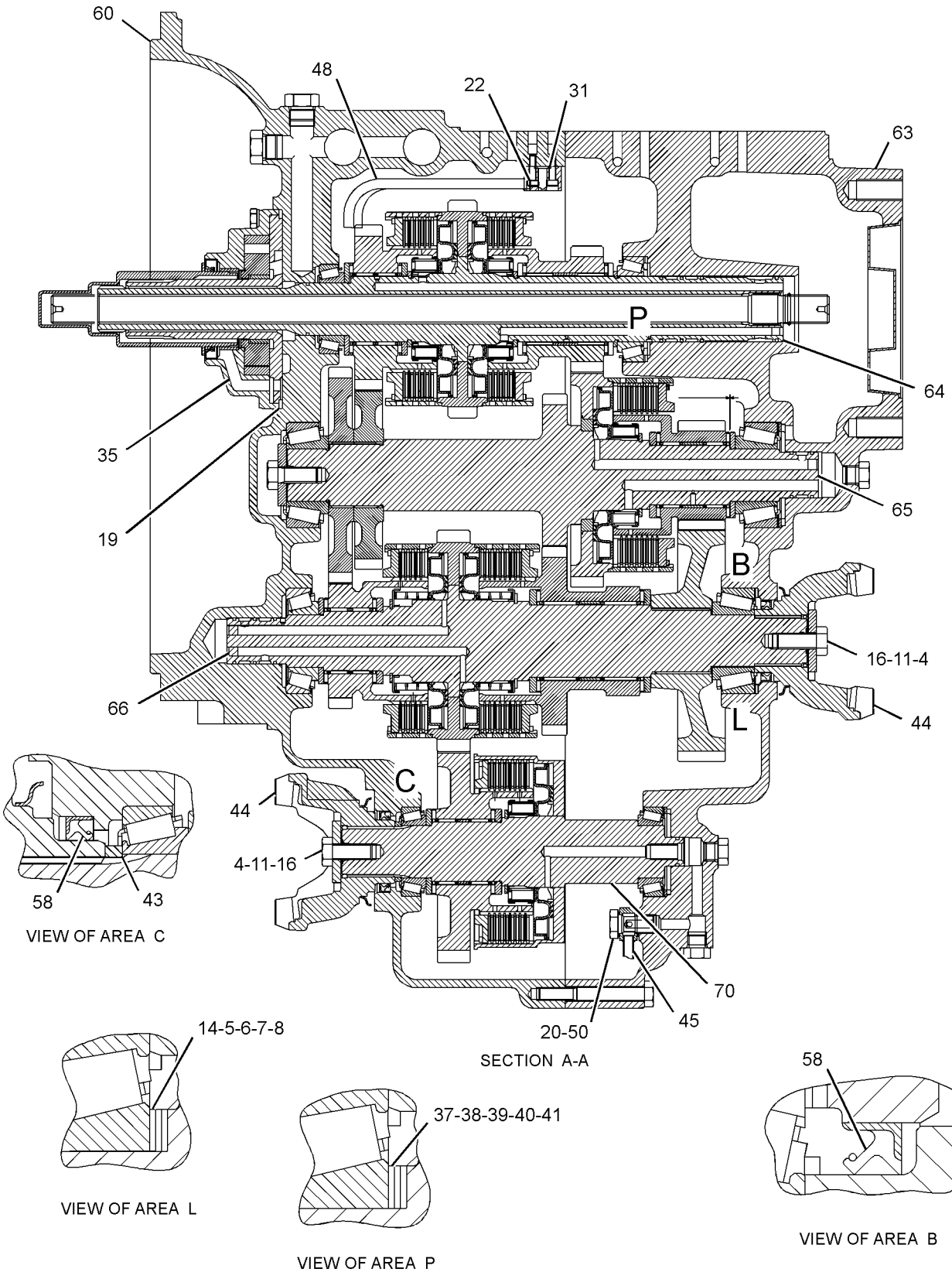

GRAPHIC #2

g02827244

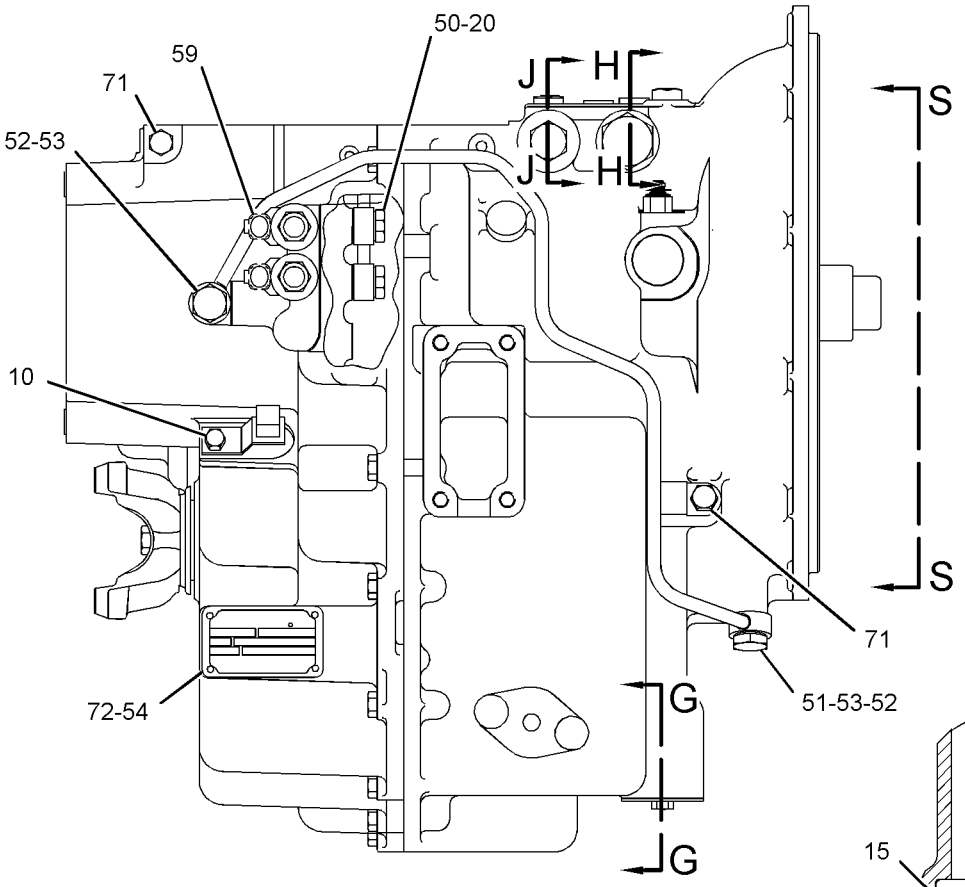

RIGHT SIDE VIEW

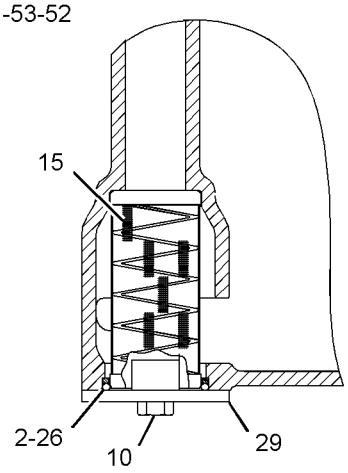

SECTION G-G

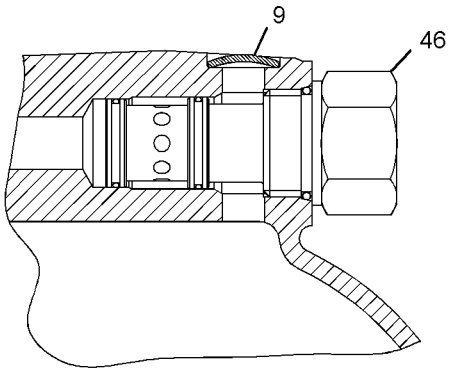

SECTION H-H

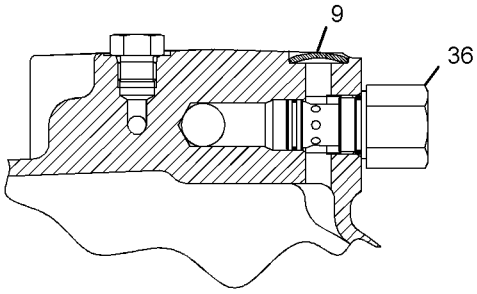

SECTION J-J

REFER TO ALL ILLUSTRATIONS OF
THIS GROUP FOR AUXILIARY VIEWS

GRAPHIC #3

g02827247

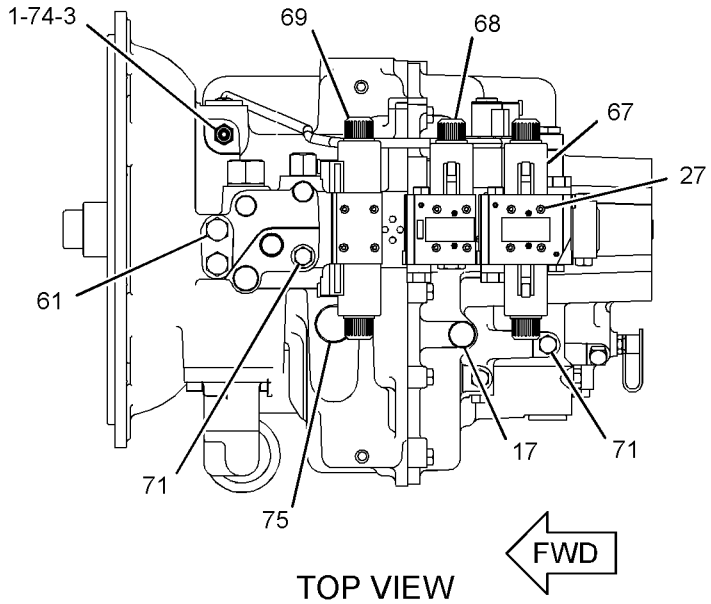

TOP VIEW

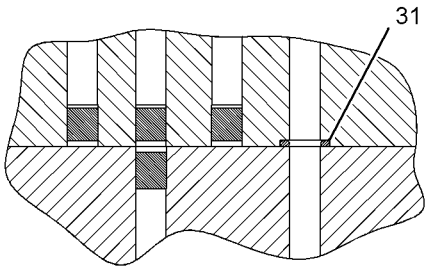

SECTION K-K

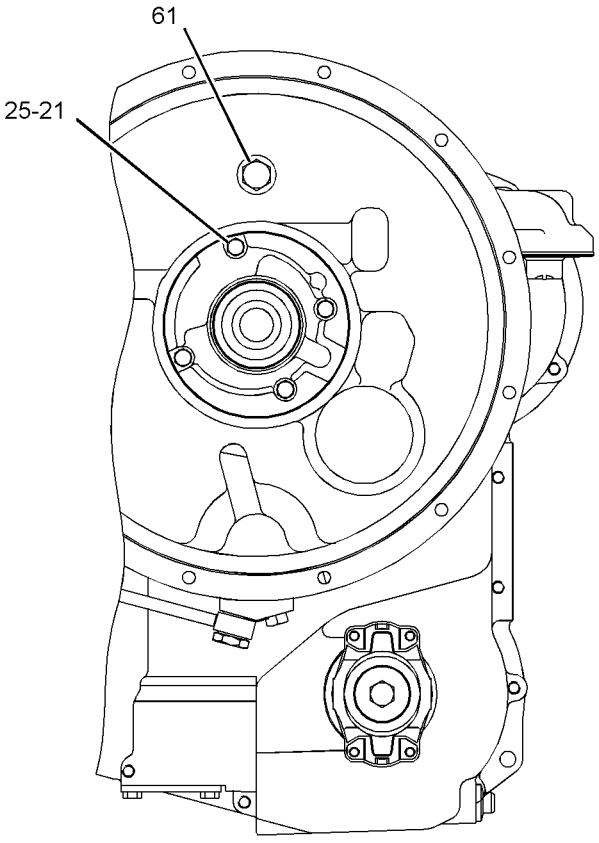

VIEW S-S

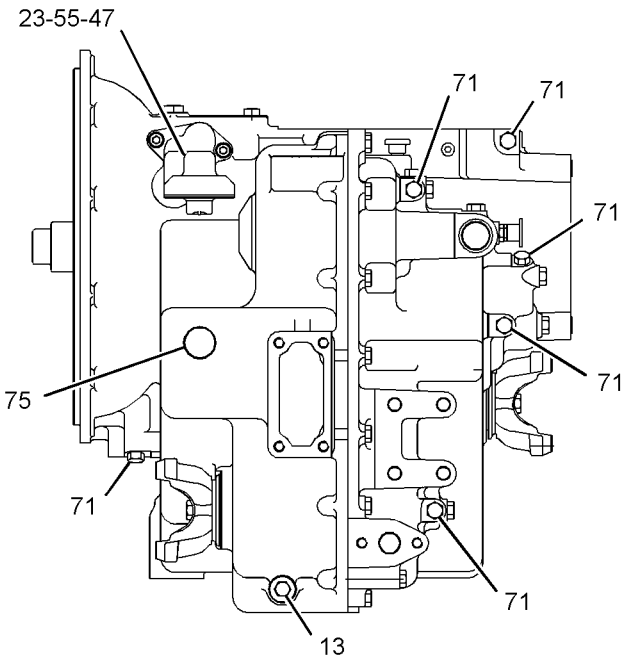

LEFT SIDE VIEW

GRAPHIC #4 **<END>** g02827252

350-8607 TRANSMISSION GP-POWER SHIFT

S/N: SJW1-UP

PART OF 350-8606 TRANSMISSION AR-POWER SHIFT

AN ATTACHMENT

SMCS-3030 **i04609514**

NOTE	REF NO	GRAPHIC REF	PART NUMBER	QTY	PART NAME 1 2 3 4 5 6 (PRODUCT LEVEL)	SEE PAGE
	1	3	**4W-9972**	1	SENDER AS-TEMPERATURE (12-VOLT) (TRANSMISSION OIL)	
		3	**6V-8378**	1	NUT (10-32-THD)	
		3	**8F-1434**	1	LOCKWASHER	
		3	**8T-0328**	1	WASHER-HARD (5.5X10X1-MM THK)	
B	2	5	**6T-9163**	2	SHIM (0.599-MM THK)	
B	3	5	**6T-9164**	2	SHIM (0.178-MM THK)	
B	4	5	**6T-9165**	2	SHIM (0.076-MM THK)	
B	5	5	**6T-9166**	2	SHIM (0.051-MM THK)	
	6	3	**6T-9202**	2	PLUG	
	7	1	**6V-0852**	1	CAP-DUST	
	8	1	**6Y-1896**	1	PLUG AS-DRAIN (TRANSMISSION)	
		1	**5P-6718**	1	SEAL-O-RING	
	9	5	**7T-2646**	2	SPACER (66X79.5X2.02-MM THK)	
	10	3	**7T-2651**	1	STRAINER-SUCTION (TRANSMISSION)	
	11	4	**7T-3195**	2	WASHER (12.3X47X6.35-MM THK)	
	12	1	**7T-3251**	1	BREATHER (TRANSMISSION)	
	13	1	**7T-3253**	2	DOWEL	
	14	4	**9P-9150**	4	WASHER (8.25X18X0.84-MM THK)	
	15	3	**9W-5460**	1	RING	
B	16	5	**104-3288**	2	SHIM (0.05-MM THK)	
	17	3	**106-9861**	1	PLATE-COVER	
	18	1,2	**120-9762**	3	SEAL-O-RING	
B	19	5	**121-2059**	2	SHIM (0.08-MM THK)	
B	20	5	**121-2060**	2	SHIM (0.18-MM THK)	
B	21	5	**121-2061**	2	SHIM (0.6-MM THK)	
	22	4	**121-7385**	1	PUMP GP-TRANSMISSION	
		4	**208-8240**	1	SEAL-LIP TYPE	
	23	3	*121-7396*	1	VALVE GP-RELIEF (TORQUE CONVERTER INLET)	
		3	**6V-4589**	1	SEAL-O-RING	
		3	**8L-2746**	1	SEAL-O-RING	
	24	5	**121-7398**	1	SPACER (70X79.5X2-MM THK)	
B	25	5	**121-7399**	1	SHIM (0.05-MM THK)	
B	26	5	**121-7400**	1	SHIM (0.08-MM THK)	
B	27	5	**121-7401**	1	SHIM (0.18-MM THK)	
B	28	5	**121-7402**	1	SHIM (0.6-MM THK)	
	29	5	**122-1879**	2	SPACER (58X67.5X2-MM THK)	
	30	5	**122-1883**	1	SPACER (38X45X5-MM THK)	
	31	2	**147-0201**	1	TUBE AS	
Y	32	3	**147-0209**	1	VALVE GP-RELIEF (TRANSMISSION)	275
	33	2	**147-0211**	1	ELBOW AS	
		2	**3G-6927**	1	ADAPTER	
	34	1	**147-0218**	1	TUBE AS-TRANSFER	
	35	1	**147-0226**	1	TUBE AS	
	36	1,2	**147-0232**	2	PLUG	
	37	1,2,3	**147-0234**	6	BOLT (9/16-18X0.83-IN)	
	38	3	**147-0236**	1	TUBE AS-TRANSFER	
	39	1,3	**147-0262**	4	WASHER (19.1X24.1X1.5-MM THK)	
	40	1,3	**147-0266**	2	BOLT (3/4-16X1.417-IN)	
	41	2	**150-7732**	2	SEAL-O-RING	
	42	1	**191-8304**	1	SENSOR GP-SPEED (TRANSMISSION OUTPUT 1)	
	43	1	**205-9244**	1	PLUG	
	44	2,3,4	*274-4556*	4	PLUG AS	
					(EACH INCLUDES)	
		2,3,4	**8L-2786**	1	SEAL-O-RING	

350-8607 TRANSMISSION GP-POWER SHIFT *(contd.)* i04609514

NOTE	REF NO	GRAPHIC REF	PART NUMBER	QTY	PART NAME 1 2 3 4 5 6 (PRODUCT LEVEL)	SEE PAGE
		2,3,4	**9S-4185**	1	PLUG-O-RING	
	45	3	**237-5186**	1	PLATE-XMSN IDENTIFICATION	
Y	46	1	**274-4561**	1	SHAFT GP-IDLER (POWERSHIFT)	233
Y	47	4	**278-0209**	1	VALVE GP-SOLENOID (12-VOLT) (REVERSE)	276
Y	48	4	**278-0213**	1	VALVE GP-SOLENOID (12-VOLT) (CLUTCH)	278
Y	49	4	**280-7007**	1	SHAFT GP-OUTPUT (FRONT)	244
Y	50	4	**280-7010**	1	VALVE GP-SOLENOID (12-VOLT) (TRANSMISSION)	279
	51	5	**302-8432**	2	SEAL-LIP TYPE	
	52	1	**305-3423**	2	VALVE GP-SOLENOID (12-VOLT) (DIFFERENTIAL LOCK)	
					(EACH INCLUDES)	
		1	**274-8034**	1	COIL AS (12-VOLT)	
	53	1,2,3	**334-5131**	16	PLUG AS	
					(EACH INCLUDES)	
		1,2,3	**3J-1907**	1	SEAL-O-RING	
		1,2,3	**9S-4191**	1	PLUG-O-RING	
	54	3	**336-5469**	4	RIVET	
	55	1	**366-1789**	1	VALVE GP-SOLENOID (12-VOLT)	
		1	**238-4626**	1	COIL AS (12-VOLT)	
	56	4	*374-5105*	1	CASE AS-REAR	
		4	**123-2920**	1	PLUG	
		4	**163-9091**	11	PLUG	
		4	**374-5103**	1	CASE-REAR	
		4	**378-8579**	1	PLUG-ORIFICE	
	57	4	*374-5106*	1	CASE AS-FRONT	
		4	**123-2920**	2	PLUG	
		4	**147-0268**	4	PLUG	
		4	**163-9091**	4	PLUG	
		4	**369-5823**	1	CASE-FRONT	
Y	58	4	**374-5110**	1	SHAFT GP-INPUT	239
	59	3	**388-9965**	1	VALVE GP-RELIEF	
		3	**7X-4744**	1	SEAL-O-RING	
		3	**106-9586**	1	SEAL-O-RING	
Y	60	4	*374-5112*	1	SHAFT GP-COUNTER	228
Y	61	4	*374-5113*	1	SHAFT GP-MAIN	246
	62	4	*380-9296*	2	YOKE AS	
					(EACH INCLUDES)	
		4	**123-1377**	1	GUARD	
		4	**362-7687**	1	YOKE-END	
	63	1	**117-1385**	1	SEAL-O-RING	
	64	1,3	**3J-1907**	2	SEAL-O-RING	
	65	3	**4F-7952**	1	SEAL-O-RING	
	66	4	**5P-8066**	2	SEAL-O-RING	
	67	1	**6V-3965**	1	FITTING (QUICK DISCONNECT)	
M	68	1,3	**6V-5215**	3	BOLT (M8X1.25X16-MM)	
M	69	1,2	**6V-5842**	16	BOLT (M10X1.5X40-MM)	
M	70	4	**6V-8097**	2	BOLT (M12X1.75X30-MM)	
	71	1,2,3	**7W-3556**	12	WASHER (14.27X20.57X1.5-MM THK)	
M	72	2	**9X-6615**	12	BOLT (M5X0.8X30-MM)	
	73	4	**7X-4741**	1	SEAL	
M	74	4	**8C-5748**	4	BOLT (M8X1.25X55-MM)	
M	75	1	**8C-8545**	2	BOLT-SOCKET HEAD (M5X0.8X20-MM)	
M	76	2	**8T-0271**	2	BOLT-SOCKET HEAD (M10X1.5X35-MM)	
M	77	1	**8T-0643**	1	BOLT (M10X1.5X80-MM)	

B-USE AS REQUIRED
M-METRIC PART
Y-SEPARATE ILLUSTRATION

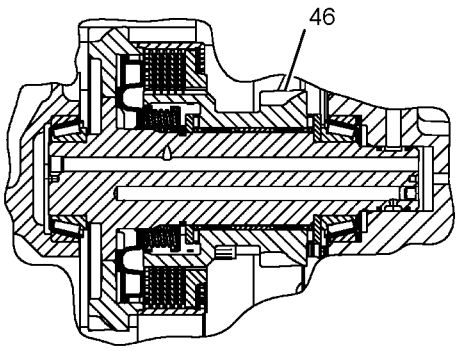

SECTION K-K

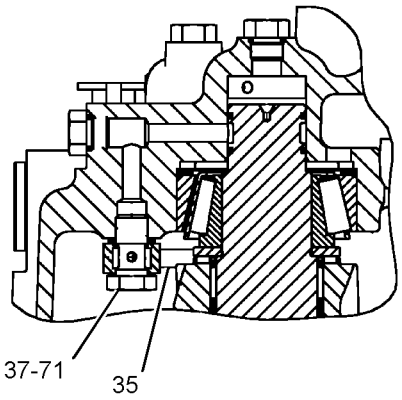

SECTION J-J

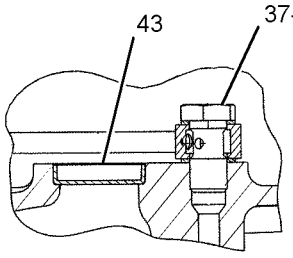

SECTION M-M

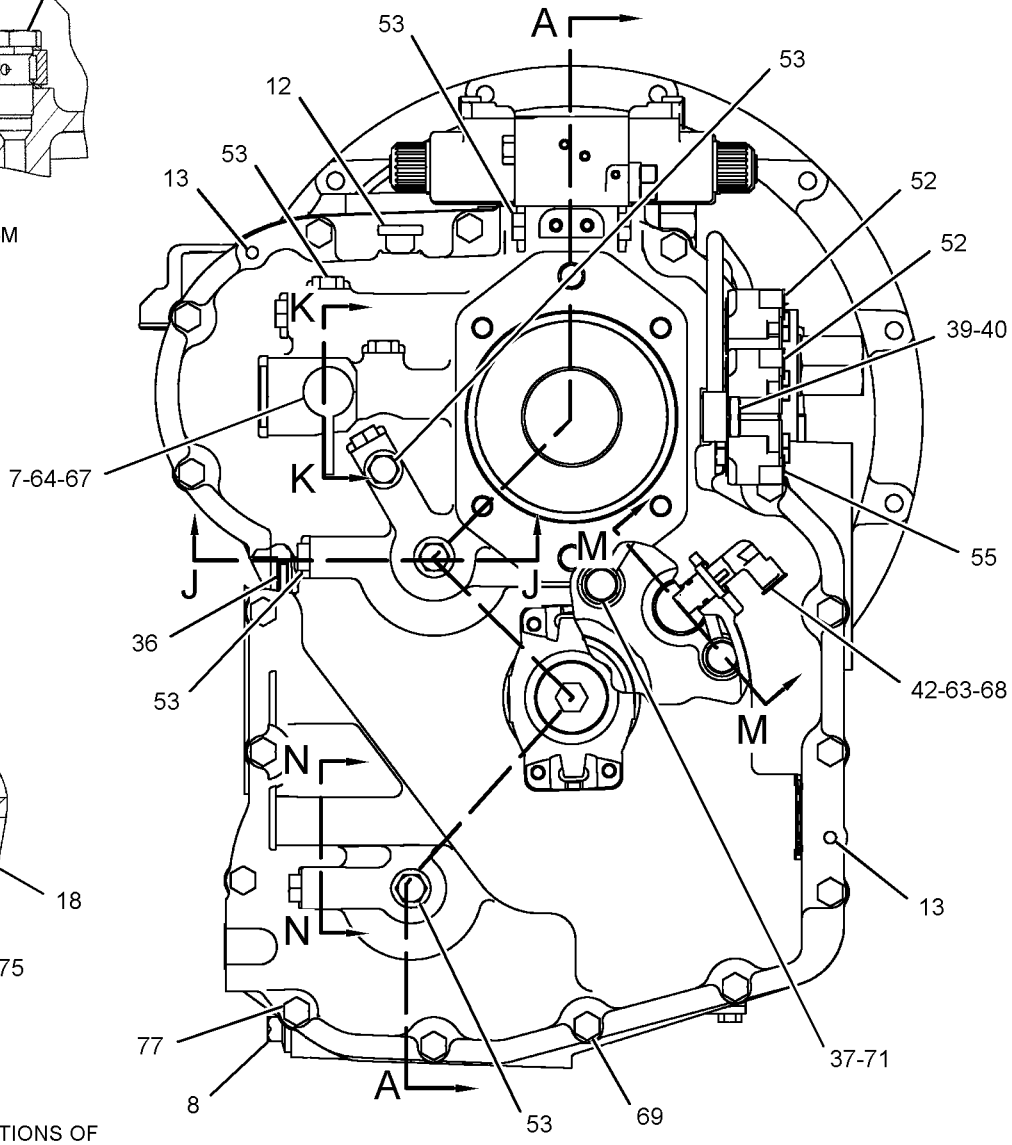

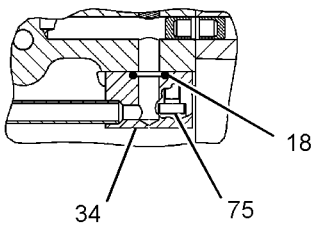

SECTION G-G

REFER TO ALL ILLUSTRATIONS OF THIS GROUP FOR AUXILIARY VIEWS

GRAPHIC #1

g02848681

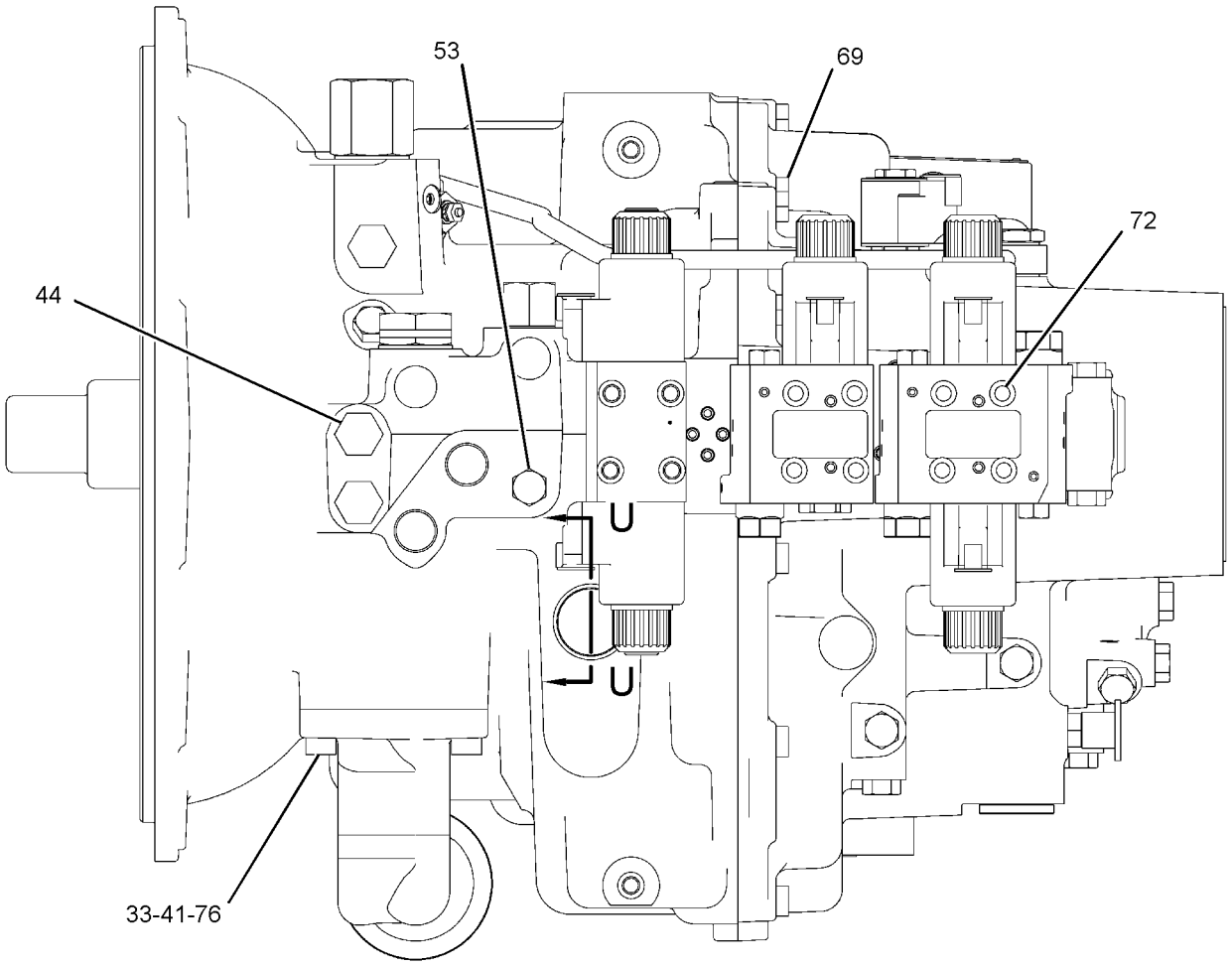

TOP VIEW

FWD

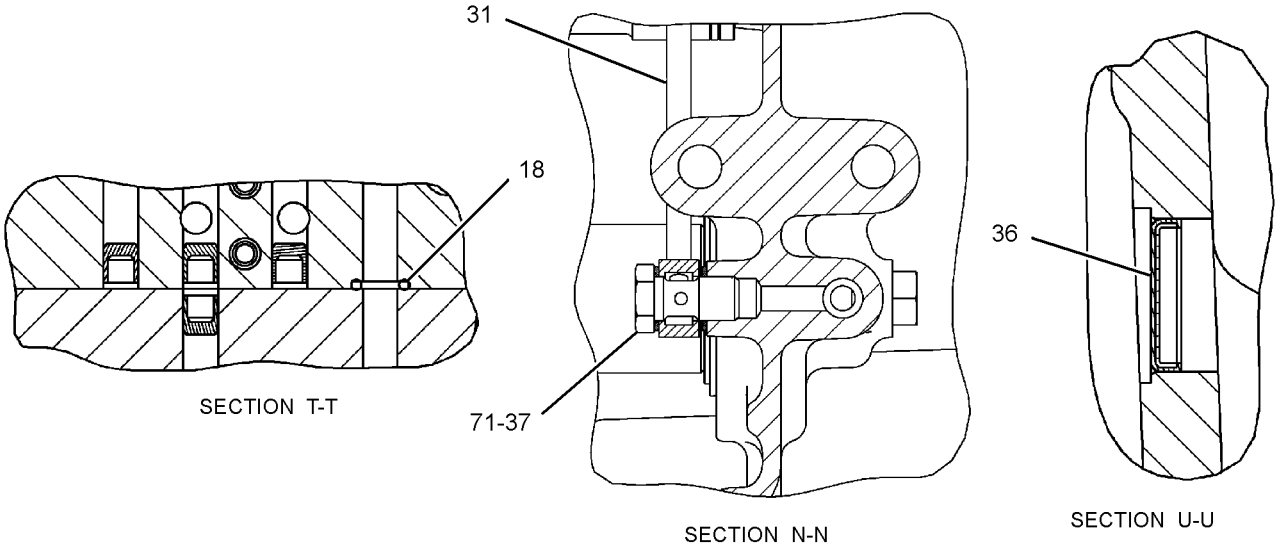

SECTION T-T

SECTION N-N

SECTION U-U

GRAPHIC #2

g02848684

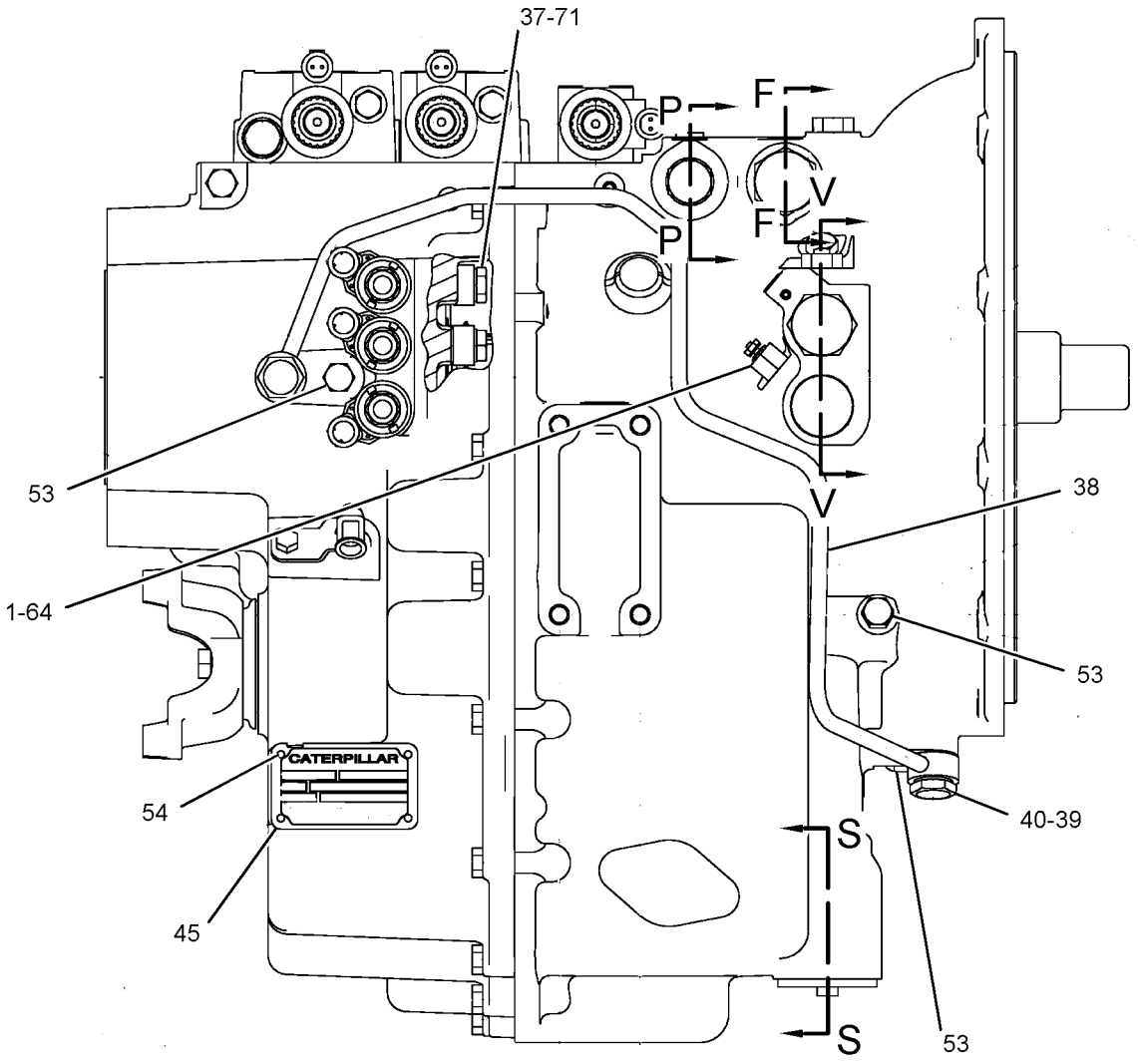

LEFT SIDE VIEW

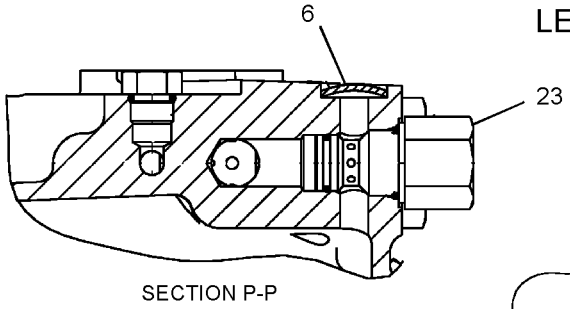

SECTION P-P

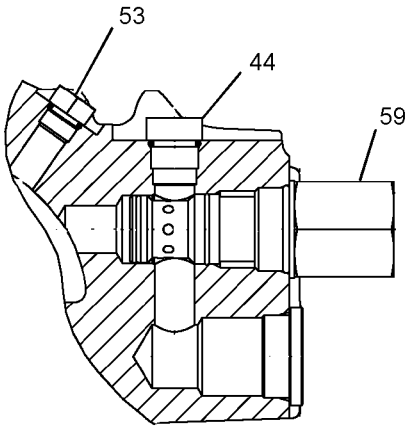

SECTION V-V

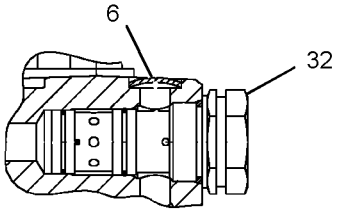

SECTION F-F

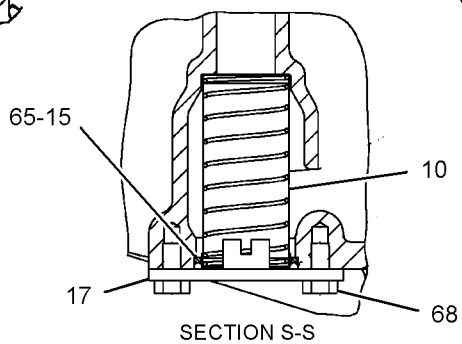

SECTION S-S

GRAPHIC #3

g02848678

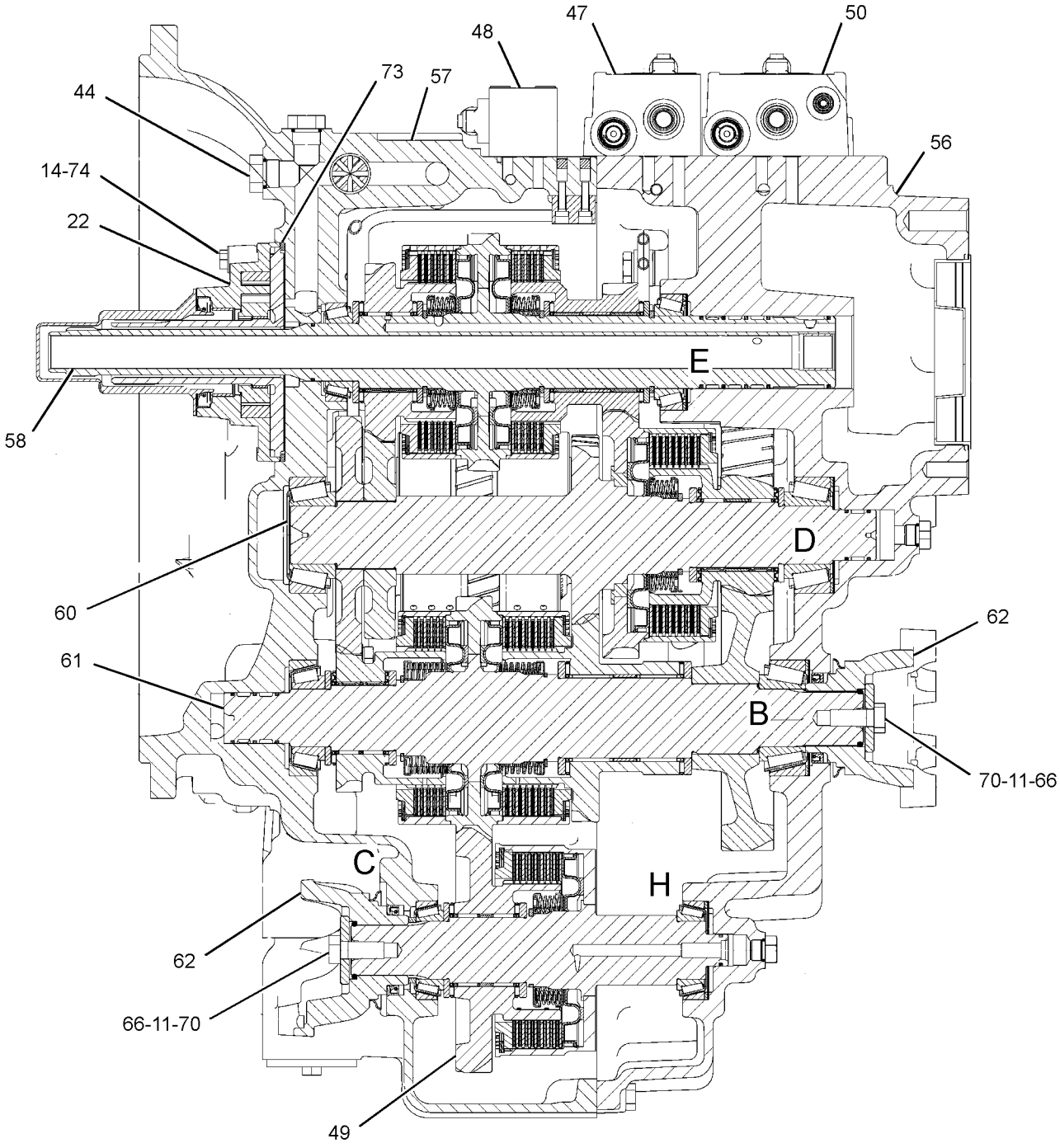

SECTION A-A

REFER TO ALL ILLUSTRATIONS OF
THIS GROUP FOR AUXILIARY VIEWS

GRAPHIC #4

g02848682

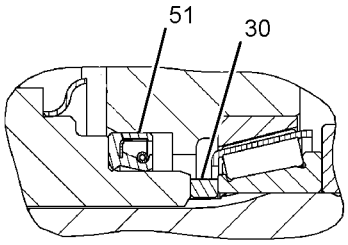

VIEW OF AREA C

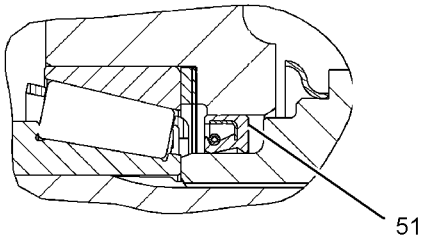

VIEW OF AREA B

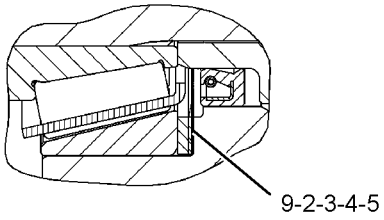

VIEW OF AREA D

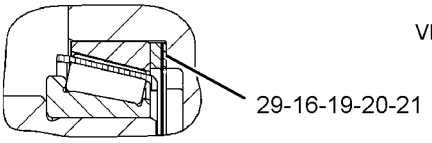

VIEW OF AREA H

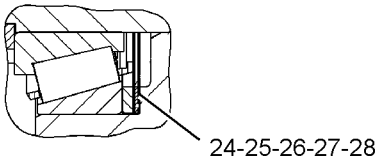

VIEW OF AREA E

GRAPHIC #5 **<END>** g02848683

274-8048 VALVE & MTG GP-SOLENOID

S/N: SJW1-UP
PART OF 337-9719 LOCK GP-DIFFERENTIAL
AN ATTACHMENT

SMCS-5479 **i04139542**

NOTE	REF NO	GRAPHIC REF	PART NUMBER	QTY	PART NAME 1 2 3 4 5 6 (PRODUCT LEVEL)	SEE PAGE
M	1	1	**096-5968**	2	BOLT-SOCKET HEAD (M5X0.8X8-MM)	
J	2	1	*274-8041*	1	VALVE GP-SOLENOID (12-VOLT) (DIFFERENTIAL LOCK)	
					AVAILABLE REPAIR KIT(S):	
J			**250-8330**	1	KIT-SEAL (VALVE)	
					(INCLUDES O-RINGS)	

J-KIT MARKED J SERVICES PART MARKED J
M-METRIC PART

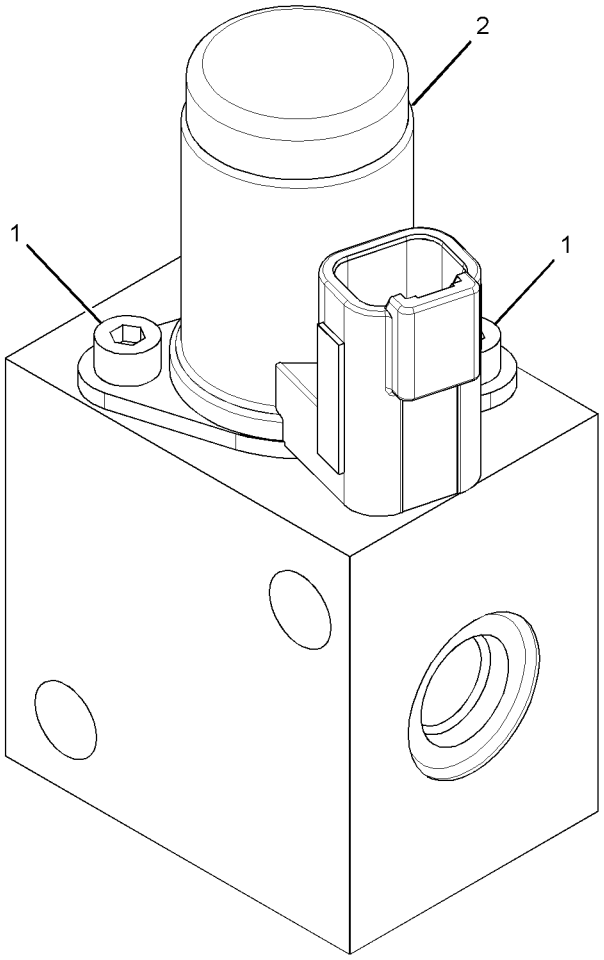

GRAPHIC #1 **<END>** g01346192

147-0209 VALVE GP-RELIEF

S/N: SJW1-UP

PART OF 359-0393, 359-0396 TRANSMISSION GP-DIRECT DRIVE, 350-8607 TRANSMISSION GP-POWER SHIFT AN ATTACHMENT

SMCS-3133, 3182, 3210, 3213 **i00724885**

NOTE	REF NO	GRAPHIC REF	PART NUMBER	QTY	PART NAME 1 2 3 4 5 6 (PRODUCT LEVEL)	SEE PAGE
	1	1	**7X-4744**	1	SEAL-O-RING	
	2	1	**6V-9178**	1	SEAL-O-RING	
	3	1	**106-9586**	1	SEAL-O-RING	

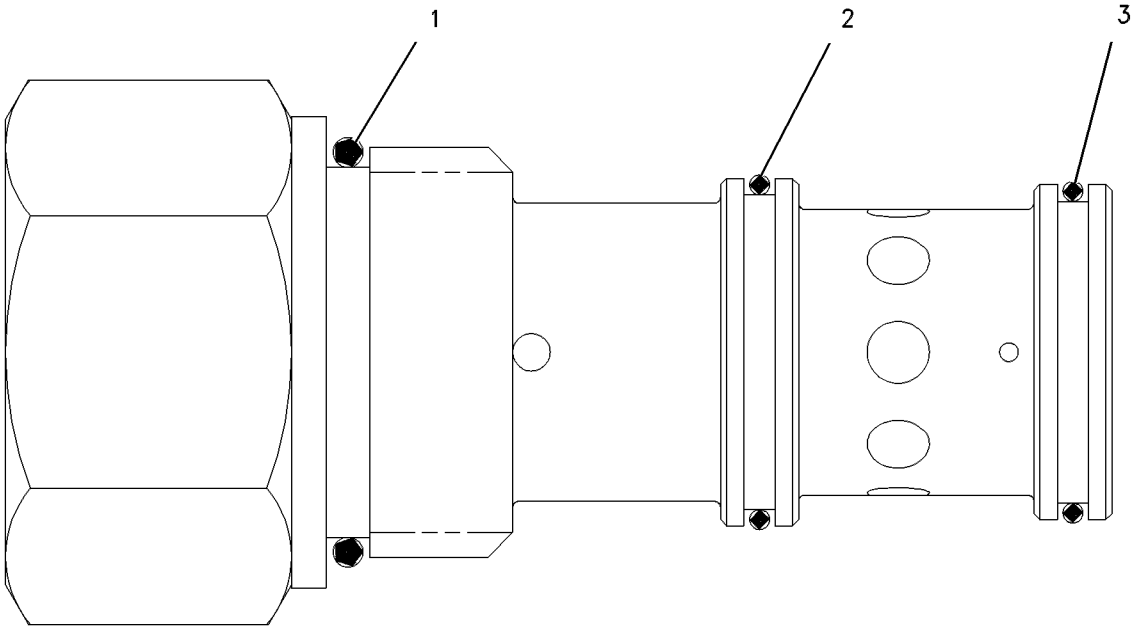

GRAPHIC #1 **<END>** g00304718

278-0209 VALVE GP-SOLENOID

S/N: SJW1-UP
24-VOLT
PART OF 359-0396 TRANSMISSION GP-DIRECT DRIVE, 350-8607 TRANSMISSION GP-POWER SHIFT AN ATTACHMENT

SMCS-3174, 5479 **i04611676**

NOTE	REF NO	GRAPHIC REF	PART NUMBER	QTY	PART NAME 1 2 3 4 5 6 (PRODUCT LEVEL)	SEE PAGE
	1	1	**336-4713**	1	CARRIER	
	2	1	**336-4714**	2	SPRING-CENTERING	
	3	1	**336-4715**	1	HOUSING-VALVE BODY	
	4	1	**336-4722**	1	POPPET	
	5	1	**336-4729**	1	HEAD	
	6	1	**336-6804**	1	SPACER	
	7	1	**336-6817**	1	PISTON	
	8	1	**336-6822**	1	LABEL	
	9	1	**336-6824**	1	PLUG	
	10	1	**336-6831**	2	SPRING	
	11	1	**336-6839**	1	SPOOL	
	12	1	**336-6846**	1	PLUG	
	13	1	**336-6847**	1	PLUG	
	14	1	**336-6848**	1	PIN	
	15	1	**336-6908**	2	PLUG	
	16	1	**336-6913**	4	PLUG	
	17	1	**336-6914**	1	PLUG	
	18	1	**336-7113**	2	WASHER-SPECIAL	
	19	1	**336-7114**	1	SPRING	
	20	1	**336-7524**	1	SEAL-O-RING	
	21	1	**336-7526**	1	SEAL-O-RING	
	22	1	**336-7529**	1	SEAL-O-RING	
	23	1	**8L-2779**	4	SEAL-O-RING	
	24	1	**280-7009**	1	COIL AS (12-VOLT)	
	25	1	**280-7012**	1	TUBE AS	
		1	**6V-8399**	1	SEAL-O-RING	
		1	**274-4560**	1	NUT-SELF LOCKING	

278-0209 **VALVE GP-SOLENOID** *(contd.)* **i04611676**

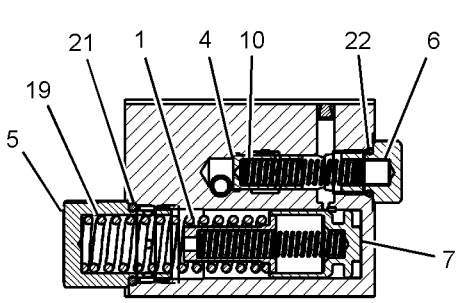

SECTION E-E

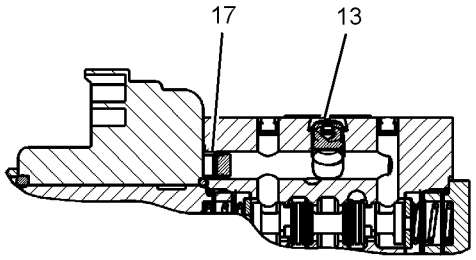

SECTION F-F

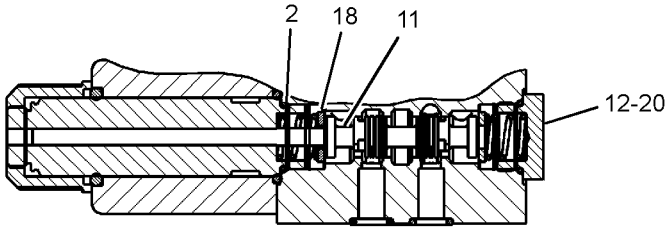

SECTION G-G

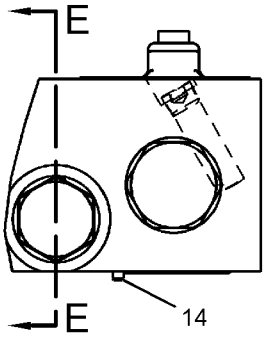

VIEW A-A

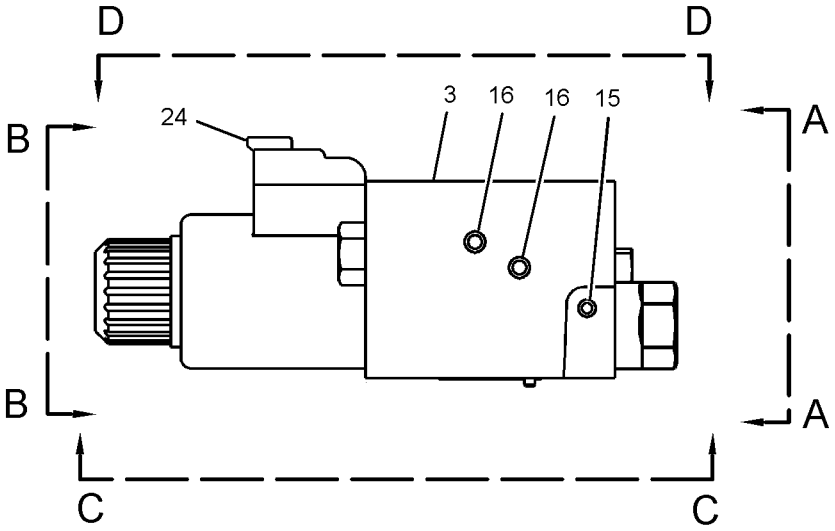

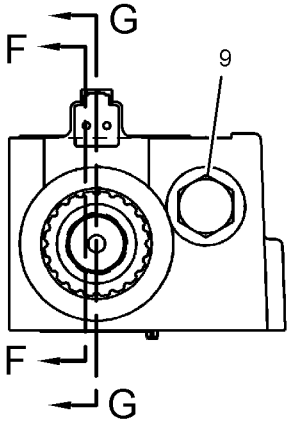

VIEW B-B

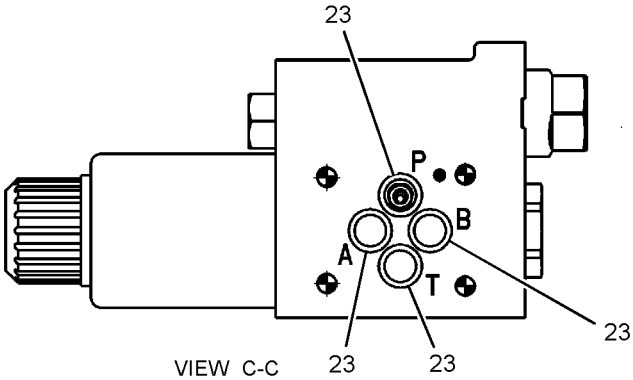

VIEW C-C

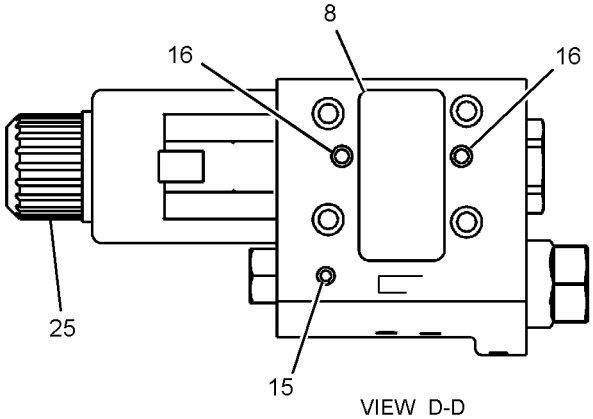

VIEW D-D

GRAPHIC #1 **<END>** g02791891

278-0213 VALVE GP-SOLENOID–CLUTCH

S/N: SJW1-UP
12-VOLT
PART OF 359-0396 TRANSMISSION GP-DIRECT DRIVE, 350-8607 TRANSMISSION GP-POWER SHIFT AN ATTACHMENT

SMCS-3174, 5479 **i04611677**

NOTE	REF NO	GRAPHIC REF	PART NUMBER	QTY	PART NAME 1 2 3 4 5 6 (PRODUCT LEVEL)	SEE PAGE
	1	1	**8L-2779**	4	SEAL-O-RING	
	2	1	**218-3597**	1	PLUG-ORIFICE	
	3	1	**286-0867**	2	TUBE AS	
					(EACH INCLUDES)	
		1	**6V-8399**	1	SEAL-O-RING	
		1	**274-4560**	1	NUT-SELF LOCKING	
	4	1	**280-7009**	2	COIL AS (12-VOLT)	

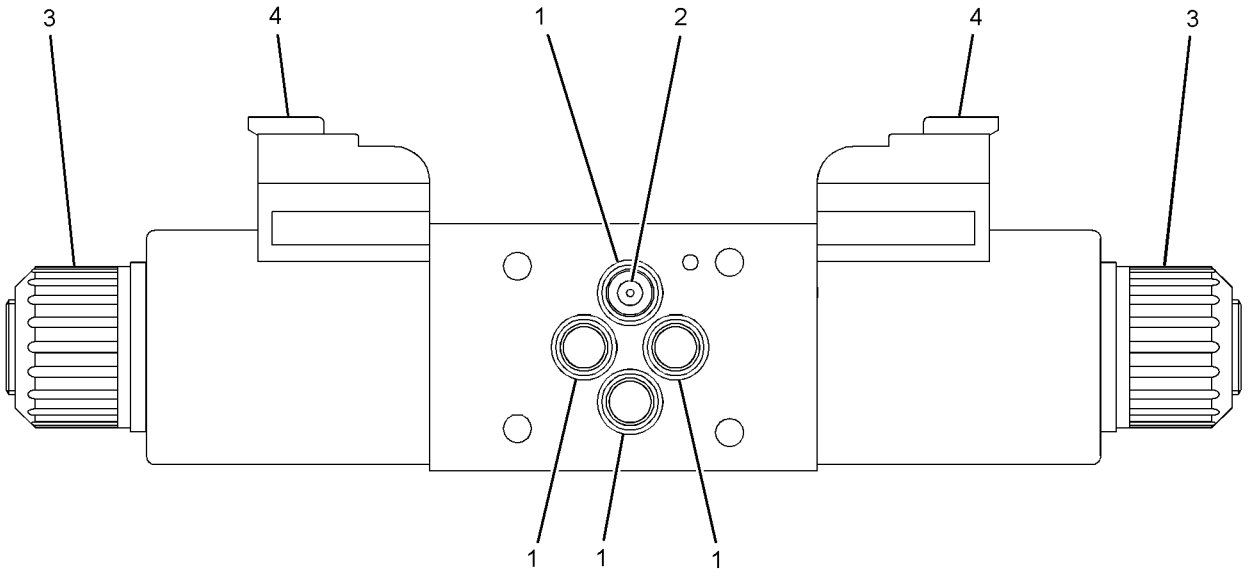

GRAPHIC #1 **<END>** g02791343

280-7010 VALVE GP-SOLENOID—TRANSMISSION

S/N: SJW1-UP
12-VOLT
PART OF 359-0396 TRANSMISSION GP-DIRECT DRIVE, 350-8607 TRANSMISSION GP-POWER SHIFT
AN ATTACHMENT

SMCS-3174, 5479 **i04611709**

NOTE	REF NO	GRAPHIC REF	PART NUMBER	QTY	PART NAME 1 2 3 4 5 6 (PRODUCT LEVEL)	SEE PAGE
	1	1	**336-4713**	2	CARRIER	
	2	1	**336-4714**	2	SPRING-CENTERING	
	3	1	**336-4722**	2	POPPET	
	4	1	**336-4728**	1	BODY-VALVE	
	5	1	**336-4729**	2	HEAD	
	6	1	**336-6804**	2	SPACER	
	7	1	**336-6817**	2	PISTON	
	8	1	**336-6822**	1	LABEL	
	9	1	**336-6824**	2	PLUG	
	10	1	**336-6831**	4	SPRING	
	11	1	**336-6839**	1	SPOOL	
	12	1	**336-6847**	1	PLUG	
	13	1	**336-6848**	1	PIN	
	14	1	**336-6908**	4	PLUG	
	15	1	**336-6913**	6	PLUG	
	16	1	**336-6914**	1	PLUG	
	17	1	**336-7113**	2	WASHER-SPECIAL	
	18	1	**336-7114**	2	SPRING	
	19	1	**336-7526**	2	SEAL-O-RING	
	20	1	**336-7529**	2	SEAL-O-RING	
	21	1	**8L-2779**	4	SEAL-O-RING	
	22	1	**280-7009**	2	COIL AS (12-VOLT)	
	23	1	**280-7012**	2	TUBE AS	
					(EACH INCLUDES)	
		1	**6V-8399**		SEAL-O-RING	
		1	**274-4560**	1	NUT-SELF LOCKING	

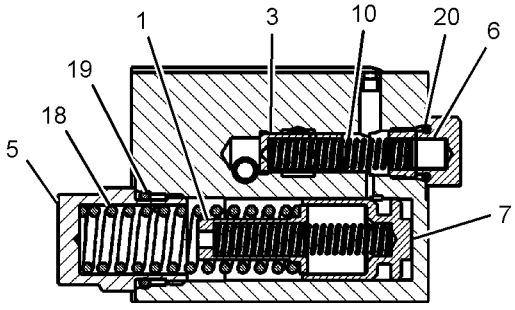

SECTION D-D

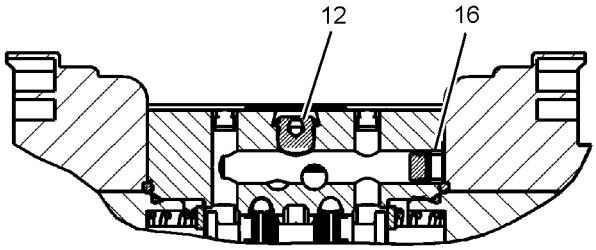

SECTION E-E

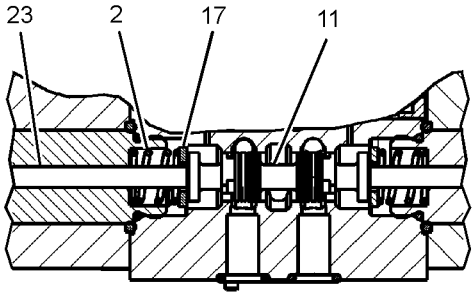

SECTION F-F

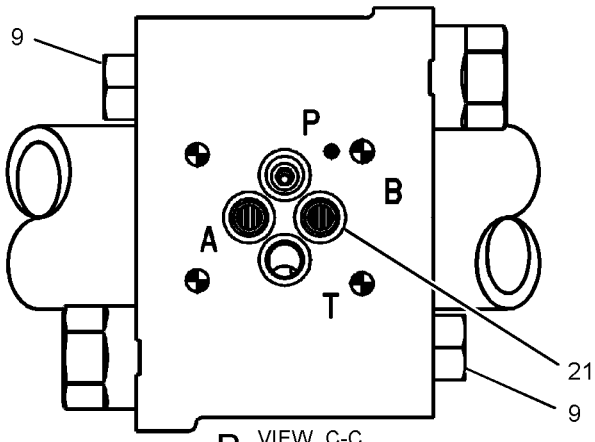

VIEW C-C

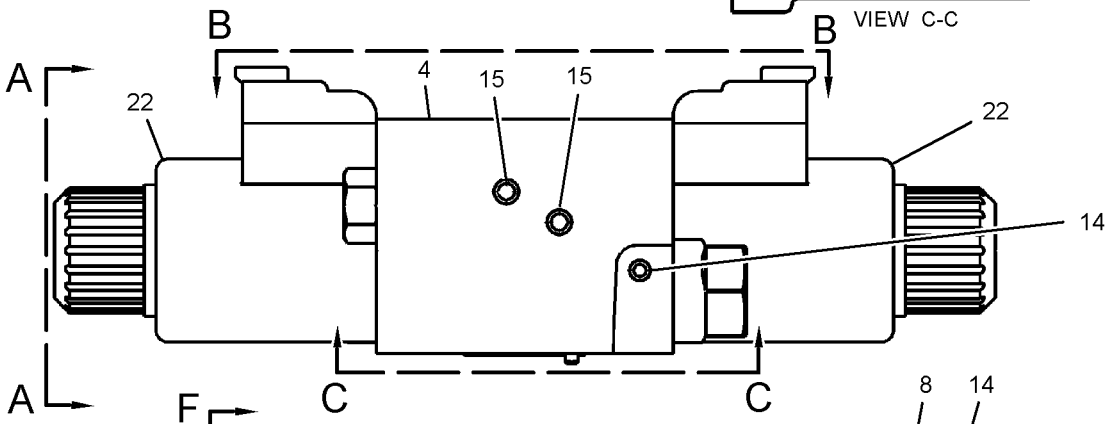

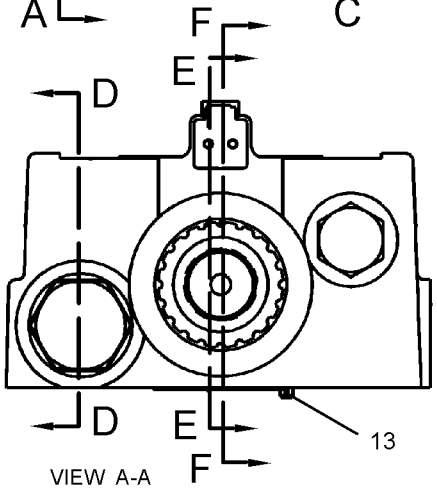

VIEW A-A

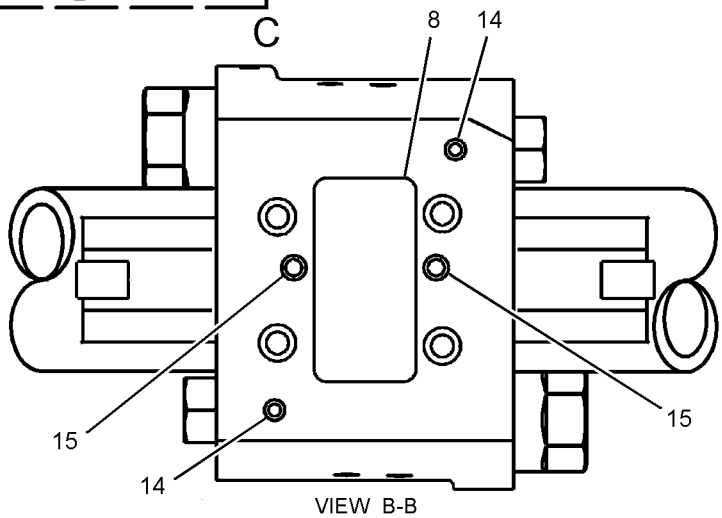

VIEW B-B

GRAPHIC #1 **<END>** g02791407

6D-0337 VALVE GP-TIRE

S/N: SJW1-UP
PART OF 201-1920 VALVE GP-TIRE
AN ATTACHMENT

SMCS-4203 **i03644348**

NOTE	REF NO	GRAPHIC REF	PART NUMBER	QTY	PART NAME 1 2 3 4 5 6 (PRODUCT LEVEL)	SEE PAGE
	1	1	**6D-0443**	1	HOUSING AS-CORE	
	1A	1	**2D-2628**	1	CORE-VALVE	
	1B	1	**2D-2633**	1	CAP (VALVE STEM)	
	2	1	**8D-2707**	1	SPUD AS	
	2A	1	**2D-2629**	1	GROMMET	
	2B	1	**2D-2630**	1	WASHER	
	2C	1	**2D-2631**	1	NUT (0.482-26-THD)	

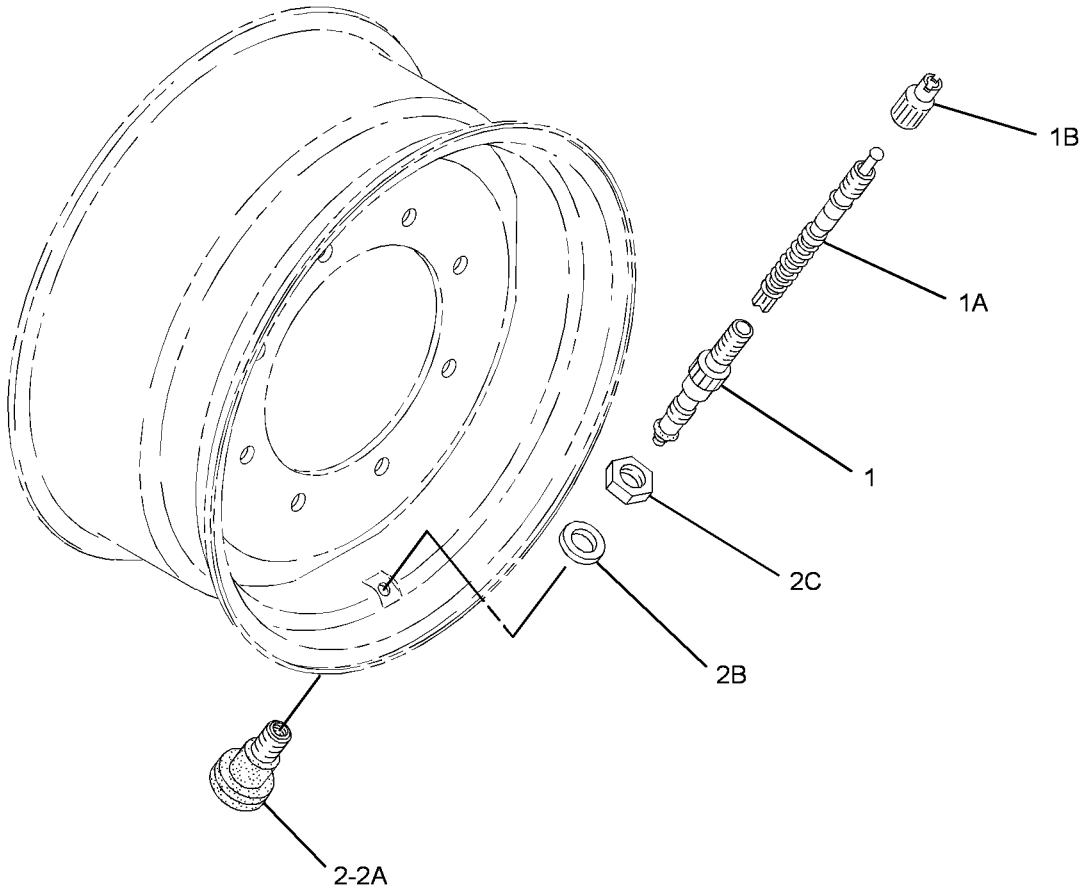

GRAPHIC #1 **<END>** g01955522

201-1920 VALVE GP-TIRE

S/N: SJW1-UP

PART OF 201-1869, 201-1870, 201-1963, 201-1964, 216-9148, 216-9149, 249-7562, 249-7563, 249-7565, 249-7566, 249-7568, 249-7569, 249-7571, 249-7572, 249-9407, 249-9408, 249-9409, 249-9410, 249-9411, 250-0230, 266-1555, 266-1556, 273-5093, 273-5094, 273-5095, 273-5096, 303-0428, 303-0429, 303-0430, 303-0431, 303-0434, 303-0435, 303-0438, 303-0439, 319-7186, 319-7187, 319-7191, 319-7192, 329-1355, 329-1919, 341-9203, 341-9204 WHEEL & TIRE GP

AN ATTACHMENT

SMCS-4203 **i03498408**

NOTE	PART NUMBER	QTY	PART NAME 1 2 3 4 5 6 (PRODUCT LEVEL)	SEE PAGE
Y	**6D-0337**	1	VALVE GP-TIRE	281

Y-SEPARATE ILLUSTRATION

<END>

249-9255 WHEEL & TIRE AR—ALL WHEEL DRIVE

S/N: SJW1-UP

AN ATTACHMENT

SMCS-4201, 4202, 4203, 4208, 4209 **i02213984**

NOTE	PART NUMBER	QTY	PART NAME 1 2 3 4 5 6 (PRODUCT LEVEL)	SEE PAGE
Y	*216-9147*	1	WHEEL & TIRE GP (FRONT)	288
Y	*249-9392*	1	WHEEL & TIRE GP (REAR)	293

Y-SEPARATE ILLUSTRATION

<END>

249-9256 WHEEL & TIRE AR—ALL WHEEL DRIVE

S/N: SJW1-UP

AN ATTACHMENT

SMCS-4201, 4202, 4203, 4208, 4209 **i02214100**

NOTE	PART NUMBER	QTY	PART NAME 1 2 3 4 5 6 (PRODUCT LEVEL)	SEE PAGE
Y	*216-9147*	1	WHEEL & TIRE GP (FRONT)	288
Y	*249-9387*	1	WHEEL & TIRE GP (REAR)	292

Y-SEPARATE ILLUSTRATION

<END>

249-9261 WHEEL & TIRE AR—ALL WHEEL DRIVE

S/N: SJW1-UP

AN ATTACHMENT

SMCS-4201, 4202, 4203, 4208, 4209 **i02177124**

NOTE	PART NUMBER	QTY	PART NAME 1 2 3 4 5 6 (PRODUCT LEVEL)	SEE PAGE
Y	*201-1962*	1	WHEEL & TIRE GP (FRONT)	287
Y	*249-9390*	1	WHEEL & TIRE GP (REAR)	292

Y-SEPARATE ILLUSTRATION

<END>

249-9262 WHEEL & TIRE AR—ALL WHEEL DRIVE

S/N: SJW1-UP
AN ATTACHMENT

SMCS-4201, 4202, 4203, 4208, 4209 **i02171207**

NOTE	PART NUMBER	QTY	PART NAME 1 2 3 4 5 6 (PRODUCT LEVEL)	SEE PAGE
Y	*201-1962*	1	WHEEL & TIRE GP (FRONT)	287
Y	*249-9399*	1	WHEEL & TIRE GP (REAR)	293

Y-SEPARATE ILLUSTRATION

<END>

249-9263 WHEEL & TIRE AR—ALL WHEEL DRIVE

S/N: SJW1-UP
AN ATTACHMENT

SMCS-4201, 4202, 4203, 4208, 4209 **i02214108**

NOTE	PART NUMBER	QTY	PART NAME 1 2 3 4 5 6 (PRODUCT LEVEL)	SEE PAGE
Y	*201-1868*	1	WHEEL & TIRE GP (FRONT)	286
Y	*249-9400*	1	WHEEL & TIRE GP (REAR)	293

Y-SEPARATE ILLUSTRATION

<END>

273-5077 WHEEL & TIRE AR—ALL WHEEL DRIVE

S/N: SJW1-UP
AN ATTACHMENT

SMCS-4201, 4202, 4203, 4208, 4209 **i02403925**

NOTE	PART NUMBER	QTY	PART NAME 1 2 3 4 5 6 (PRODUCT LEVEL)	SEE PAGE
Y	*266-1554*	1	WHEEL & TIRE GP (FRONT)	296
Y	*273-5081*	1	WHEEL & TIRE GP (REAR)	297

Y-SEPARATE ILLUSTRATION

<END>

273-5078 WHEEL & TIRE AR—ALL WHEEL DRIVE

S/N: SJW1-UP
AN ATTACHMENT

SMCS-4201, 4202, 4203, 4208, 4209 **i02404018**

NOTE	PART NUMBER	QTY	PART NAME 1 2 3 4 5 6 (PRODUCT LEVEL)	SEE PAGE
Y	*266-1554*	1	WHEEL & TIRE GP (FRONT)	296
Y	*273-5080*	1	WHEEL & TIRE GP (REAR)	297

Y-SEPARATE ILLUSTRATION

<END>

303-0413 WHEEL & TIRE AR—ALL WHEEL DRIVE

S/N: SJW1-UP
AN ATTACHMENT

SMCS-4201, 4202, 4203, 4208, 4209 **i02675636**

NOTE	PART NUMBER	QTY	PART NAME 1 2 3 4 5 6 (PRODUCT LEVEL)	SEE PAGE
Y	*303-0418*	1	WHEEL & TIRE GP (FRONT)	299
Y	*303-0419*	1	WHEEL & TIRE GP (REAR)	299

Y-SEPARATE ILLUSTRATION

<END>

303-0414 WHEEL & TIRE AR—ALL WHEEL DRIVE

S/N: SJW1-UP
AN ATTACHMENT

SMCS-4201, 4202, 4203, 4208, 4209 **i02675689**

NOTE	PART NUMBER	QTY	PART NAME 1 2 3 4 5 6 (PRODUCT LEVEL)	SEE PAGE
Y	*303-0418*	1	WHEEL & TIRE GP (FRONT)	299
Y	*303-0421*	1	WHEEL & TIRE GP (REAR)	299

Y-SEPARATE ILLUSTRATION

<END>

303-0415 WHEEL & TIRE AR—ALL WHEEL DRIVE

S/N: SJW1-UP
AN ATTACHMENT

SMCS-4201, 4202, 4203, 4208, 4209 **i03325570**

NOTE	PART NUMBER	QTY	PART NAME 1 2 3 4 5 6 (PRODUCT LEVEL)	SEE PAGE
Y	*311-2230*	1	STOP GP-STEERING	248
Y	*303-0421*	1	WHEEL & TIRE GP (REAR)	299
Y	*303-0423*	1	WHEEL & TIRE GP (FRONT)	300

Y-SEPARATE ILLUSTRATION

<END>

319-6834 WHEEL & TIRE AR—ALL WHEEL DRIVE

S/N: SJW1-UP
AN ATTACHMENT

SMCS-4201, 4202, 4203, 4208, 4209 **i03325572**

NOTE	PART NUMBER	QTY	PART NAME 1 2 3 4 5 6 (PRODUCT LEVEL)	SEE PAGE
Y	*311-2230*	1	STOP GP-STEERING	248
Y	*319-6835*	1	WHEEL & TIRE GP (FRONT)	303
Y	*319-6836*	1	WHEEL & TIRE GP (REAR)	303

Y-SEPARATE ILLUSTRATION

<END>

329-1350 WHEEL & TIRE AR—ALL WHEEL DRIVE, BIAS

S/N: SJW1-UP

AN ATTACHMENT

SMCS-4201, 4202, 4203, 4208, 4209 **i03097507**

NOTE	PART NUMBER	QTY	PART NAME 1 2 3 4 5 6 (PRODUCT LEVEL)	SEE PAGE
Y	*249-9388*	1	WHEEL & TIRE GP (REAR)	292
Y	*329-1354*	1	WHEEL & TIRE GP (FRONT)	305

Y-SEPARATE ILLUSTRATION

<END>

329-1351 WHEEL & TIRE AR—ALL WHEEL DRIVE, BIAS

S/N: SJW1-UP

AN ATTACHMENT

SMCS-4201, 4202, 4203, 4208, 4209 **i03099680**

NOTE	PART NUMBER	QTY	PART NAME 1 2 3 4 5 6 (PRODUCT LEVEL)	SEE PAGE
Y	*249-9271*	1	WHEEL & TIRE GP (REAR)	291
Y	*329-1354*	1	WHEEL & TIRE GP (FRONT)	305

Y-SEPARATE ILLUSTRATION

<END>

329-1352 WHEEL & TIRE AR—ALL WHEEL DRIVE, BIAS

S/N: SJW1-UP

AN ATTACHMENT

SMCS-4201, 4202, 4203, 4208, 4209 **i03091582**

NOTE	PART NUMBER	QTY	PART NAME 1 2 3 4 5 6 (PRODUCT LEVEL)	SEE PAGE
Y	*249-9390*	1	WHEEL & TIRE GP (REAR)	292
Y	*329-1354*	1	WHEEL & TIRE GP (FRONT)	305

Y-SEPARATE ILLUSTRATION

<END>

341-0596 WHEEL & TIRE AR—ALL WHEEL DRIVE

S/N: SJW1-UP

AN ATTACHMENT

SMCS-4201, 4202, 4203, 4208, 4209 **i03537760**

NOTE	PART NUMBER	QTY	PART NAME 1 2 3 4 5 6 (PRODUCT LEVEL)	SEE PAGE
Y	*311-2230*	1	STOP GP-STEERING	248
Y	*273-5080*	1	WHEEL & TIRE GP (REAR)	297
Y	*341-9202*	1	WHEEL & TIRE GP (FRONT)	306

Y-SEPARATE ILLUSTRATION

<END>

201-1868 WHEEL & TIRE GP—FRONT

S/N: SJW1-UP
PART OF 249-9263 WHEEL & TIRE AR
AN ATTACHMENT

SMCS-4201, 4202, 4203, 4208, 4209 **i03921369**

NOTE	PART NUMBER	QTY	PART NAME 1 2 3 4 5 6 (PRODUCT LEVEL)	SEE PAGE
Y	*201-1869*	1	WHEEL & TIRE GP (FRONT, LH)	286
Y	*201-1870*	1	WHEEL & TIRE GP (FRONT, RH)	286
	201-1915	1	MOUNTING GP-WHEEL (FRONT)	
M	**178-1304**	8	NUT-HEX FLANGE (M20X1.5-THD)	
	8T-5439	8	WASHER-HARD (21.5X45X6-MM THK)	

M-METRIC PART
Y-SEPARATE ILLUSTRATION

<END>

201-1869 WHEEL & TIRE GP—FRONT, LH

S/N: SJW1-UP
(10X18)
PART OF 201-1868 WHEEL & TIRE GP
AN ATTACHMENT

SMCS-4201, 4202, 4203, 4208, 4209 **i03498413**

NOTE	PART NUMBER	QTY	PART NAME 1 2 3 4 5 6 (PRODUCT LEVEL)	SEE PAGE
Y	*201-1920*	1	VALVE GP-TIRE	282
	202-6186	1	WHEEL AS (FRONT)	
	194-0832	1	TIRE (340/80-R18)	

Y-SEPARATE ILLUSTRATION

<END>

201-1870 WHEEL & TIRE GP—FRONT, RH

S/N: SJW1-UP
(10X18)
PART OF 201-1868 WHEEL & TIRE GP
AN ATTACHMENT

SMCS-4201, 4202, 4203, 4208, 4209 **i03498414**

NOTE	PART NUMBER	QTY	PART NAME 1 2 3 4 5 6 (PRODUCT LEVEL)	SEE PAGE
Y	*201-1920*	1	VALVE GP-TIRE	282
	202-6186	1	WHEEL AS (FRONT)	
	194-0832	1	TIRE (340/80-R18)	

Y-SEPARATE ILLUSTRATION

<END>

201-1962 WHEEL & TIRE GP—FRONT

S/N: SJW1-UP
PART OF 249-9261, 249-9262 WHEEL & TIRE AR
AN ATTACHMENT

SMCS-4201, 4202, 4203, 4208, 4209 **i03921389**

NOTE	PART NUMBER	QTY	PART NAME 1 2 3 4 5 6 (PRODUCT LEVEL)	SEE PAGE
Y	*201-1963*	1	WHEEL & TIRE GP (FRONT, LH)	287
Y	*201-1964*	1	WHEEL & TIRE GP (FRONT, RH)	287
	201-1915	1	MOUNTING GP-WHEEL (FRONT)	
	8T-5439	16	WASHER-HARD (21.5X45X6-MM THK)	
M	**201-1919**	16	NUT (M20X1.5-THD)	

M-METRIC PART
Y-SEPARATE ILLUSTRATION

<END>

201-1963 WHEEL & TIRE GP—FRONT, LH

S/N: SJW1-UP
(10X18)
PART OF 201-1962 WHEEL & TIRE GP
AN ATTACHMENT

SMCS-4201, 4202, 4203, 4208, 4209 **i03498416**

NOTE	PART NUMBER	QTY	PART NAME 1 2 3 4 5 6 (PRODUCT LEVEL)	SEE PAGE
Y	*201-1920*	1	VALVE GP-TIRE	282
	202-6186	1	WHEEL AS (FRONT)	
	201-1929	1	TIRE (340/80-R18)	

Y-SEPARATE ILLUSTRATION

<END>

201-1964 WHEEL & TIRE GP—FRONT, RH

S/N: SJW1-UP
(10X18)
PART OF 201-1962 WHEEL & TIRE GP
AN ATTACHMENT

SMCS-4201, 4202, 4203, 4208, 4209 **i03592770**

NOTE	PART NUMBER	QTY	PART NAME 1 2 3 4 5 6 (PRODUCT LEVEL)	SEE PAGE
Y	*201-1920*	1	VALVE GP-TIRE	282
	202-6186	1	WHEEL AS (FRONT)	
	201-1929	1	TIRE (340/80-R18)	

Y-SEPARATE ILLUSTRATION

<END>

216-9147 WHEEL & TIRE GP—FRONT

S/N: SJW1-UP
PART OF 249-9255, 249-9256 WHEEL & TIRE AR
AN ATTACHMENT

SMCS-4201, 4202, 4203, 4208, 4209 **i03921449**

NOTE	PART NUMBER	QTY	PART NAME 1 2 3 4 5 6 (PRODUCT LEVEL)	SEE PAGE
Y	*216-9148*	1	WHEEL & TIRE GP (FRONT, LH)	288
Y	*216-9149*	1	WHEEL & TIRE GP (FRONT, RH)	288
	201-1915	1	MOUNTING GP-WHEEL (FRONT)	
	8T-5439	16	WASHER-HARD (21.5X45X6-MM THK)	
M	**201-1919**	16	NUT (M20X1.5-THD)	

M-METRIC PART
Y-SEPARATE ILLUSTRATION

<END>

216-9148 WHEEL & TIRE GP—FRONT, LH

S/N: SJW1-UP
(10X18)
PART OF 216-9147 WHEEL & TIRE GP
AN ATTACHMENT

SMCS-4201, 4202, 4203, 4208, 4209 **i03934117**

NOTE	PART NUMBER	QTY	PART NAME 1 2 3 4 5 6 (PRODUCT LEVEL)	SEE PAGE
Y	*201-1920*	1	VALVE GP-TIRE	282
	202-6186	1	WHEEL AS (FRONT)	
	357-1994	1	TIRE (12.5/80-18)	

Y-SEPARATE ILLUSTRATION

<END>

216-9149 WHEEL & TIRE GP—FRONT, RH

S/N: SJW1-UP
(10X18)
PART OF 216-9147 WHEEL & TIRE GP
AN ATTACHMENT

SMCS-4201, 4202, 4203, 4208, 4209 **i03934123**

NOTE	PART NUMBER	QTY	PART NAME 1 2 3 4 5 6 (PRODUCT LEVEL)	SEE PAGE
Y	*201-1920*	1	VALVE GP-TIRE	282
	202-6186	1	WHEEL AS (FRONT)	
	357-1994	1	TIRE (12.5/80-18)	

Y-SEPARATE ILLUSTRATION

<END>

249-7562 WHEEL & TIRE GP—REAR, LH

S/N: SJW1-UP
(15X28)
PART OF 249-9271 WHEEL & TIRE GP
AN ATTACHMENT

SMCS-4201, 4202, 4203, 4208, 4209 **i03922814**

NOTE	PART NUMBER	QTY	PART NAME 1 2 3 4 5 6 (PRODUCT LEVEL)	SEE PAGE
Y	*201-1920*	1	VALVE GP-TIRE	282
	195-6348	1	WHEEL AS (LH, REAR)	
	146-8319	1	TIRE (16.9-28)	

Y-SEPARATE ILLUSTRATION

<END>

249-7563 WHEEL & TIRE GP—REAR, RH

S/N: SJW1-UP
(15X28)
PART OF 249-9271 WHEEL & TIRE GP
AN ATTACHMENT

SMCS-4201, 4202, 4203, 4208, 4209 **i03592784**

NOTE	PART NUMBER	QTY	PART NAME 1 2 3 4 5 6 (PRODUCT LEVEL)	SEE PAGE
Y	*201-1920*	1	VALVE GP-TIRE	282
	195-6348	1	WHEEL AS (RH,REAR)	
	146-8319	1	TIRE (16.9-28)	

Y-SEPARATE ILLUSTRATION

<END>

249-7565 WHEEL & TIRE GP—REAR, LH

S/N: SJW1-UP
(15X28)
PART OF 249-9388 WHEEL & TIRE GP
AN ATTACHMENT

SMCS-4201, 4202, 4203, 4208, 4209 **i03592785**

NOTE	PART NUMBER	QTY	PART NAME 1 2 3 4 5 6 (PRODUCT LEVEL)	SEE PAGE
Y	*201-1920*	1	VALVE GP-TIRE	282
	195-6348	1	WHEEL AS (LH,REAR)	
	178-7230	1	TIRE (16.9-28)	

Y-SEPARATE ILLUSTRATION

<END>

249-7566 WHEEL & TIRE GP–REAR, RH

S/N: SJW1-UP
(15X28)
PART OF 249-9388 WHEEL & TIRE GP
AN ATTACHMENT

SMCS-4201, 4202, 4203, 4208, 4209 **i03592786**

NOTE	PART NUMBER	QTY	PART NAME 1 2 3 4 5 6 (PRODUCT LEVEL)	SEE PAGE
Y	*201-1920*	1	VALVE GP-TIRE	282
	195-6348	1	WHEEL AS (RH,REAR)	
	178-7230	1	TIRE (16.9-28)	

Y-SEPARATE ILLUSTRATION

<END>

249-7568 WHEEL & TIRE GP–REAR, LH

S/N: SJW1-UP
(15X28)
PART OF 249-9399 WHEEL & TIRE GP
AN ATTACHMENT

SMCS-4201, 4202, 4203, 4208, 4209 **i03592788**

NOTE	PART NUMBER	QTY	PART NAME 1 2 3 4 5 6 (PRODUCT LEVEL)	SEE PAGE
Y	*201-1920*	1	VALVE GP-TIRE	282
	195-6348	1	WHEEL AS (LH,REAR)	
	201-1975	1	TIRE (440/80-R28)	

Y-SEPARATE ILLUSTRATION

<END>

249-7569 WHEEL & TIRE GP–REAR, RH

S/N: SJW1-UP
(15X28)
PART OF 249-9399 WHEEL & TIRE GP
AN ATTACHMENT

SMCS-4201, 4202, 4203, 4208, 4209 **i03592789**

NOTE	PART NUMBER	QTY	PART NAME 1 2 3 4 5 6 (PRODUCT LEVEL)	SEE PAGE
Y	*201-1920*	1	VALVE GP-TIRE	282
	195-6348	1	WHEEL AS (RH,REAR)	
	201-1975	1	TIRE (440/80-R28)	

Y-SEPARATE ILLUSTRATION

<END>

249-7571 WHEEL & TIRE GP—REAR, LH

S/N: SJW1-UP
(15X28)
PART OF 249-9400 WHEEL & TIRE GP
AN ATTACHMENT

SMCS-4201, 4202, 4203, 4208, 4209 **i03592790**

NOTE	PART NUMBER	QTY	PART NAME 1 2 3 4 5 6 (PRODUCT LEVEL)	SEE PAGE
Y	*201-1920*	1	VALVE GP-TIRE	282
	195-6348	1	WHEEL AS (LH,REAR)	
	195-6329	1	TIRE (440/80-R28)	

Y-SEPARATE ILLUSTRATION

<END>

249-7572 WHEEL & TIRE GP—REAR, RH

S/N: SJW1-UP
(15X28)
PART OF 249-9400 WHEEL & TIRE GP
AN ATTACHMENT

SMCS-4201, 4202, 4203, 4208, 4209 **i03592801**

NOTE	PART NUMBER	QTY	PART NAME 1 2 3 4 5 6 (PRODUCT LEVEL)	SEE PAGE
Y	*201-1920*	1	VALVE GP-TIRE	282
	195-6348	1	WHEEL AS (RH,REAR)	
	195-6329	1	TIRE (440/80-R28)	

Y-SEPARATE ILLUSTRATION

<END>

249-9271 WHEEL & TIRE GP—REAR

S/N: SJW1-UP
PART OF 329-1351 WHEEL & TIRE AR
AN ATTACHMENT

SMCS-4201, 4202, 4203, 4208, 4209 **i03922709**

NOTE	PART NUMBER	QTY	PART NAME 1 2 3 4 5 6 (PRODUCT LEVEL)	SEE PAGE
Y	*249-7562*	1	WHEEL & TIRE GP (REAR, LH)	289
Y	*249-7563*	1	WHEEL & TIRE GP (REAR, RH)	289
	201-1916	1	MOUNTING GP-WHEEL (REAR)	
	8T-5439	20	WASHER-HARD (21.5X45X6-MM THK)	
M	**201-1919**	20	NUT (M20X1.5-THD)	

M-METRIC PART
Y-SEPARATE ILLUSTRATION

<END>

249-9387 WHEEL & TIRE GP–REAR

S/N: SJW1-UP
PART OF 249-9256 WHEEL & TIRE AR
AN ATTACHMENT

SMCS-4201, 4202, 4203, 4208, 4209 **i03921707**

NOTE	PART NUMBER	QTY	PART NAME 1 2 3 4 5 6 (PRODUCT LEVEL)	SEE PAGE
Y	*249-9407*	1	WHEEL & TIRE GP (REAR, LH)	294
Y	*249-9408*	1	WHEEL & TIRE GP (REAR, RH)	294
	201-1916	1	MOUNTING GP-WHEEL (REAR)	
	8T-5439	20	WASHER-HARD (21.5X45X6-MM THK)	
M	**201-1919**	20	NUT (M20X1.5-THD)	

M-METRIC PART
Y-SEPARATE ILLUSTRATION

<END>

249-9388 WHEEL & TIRE GP–REAR

S/N: SJW1-UP
PART OF 329-1350 WHEEL & TIRE AR
AN ATTACHMENT

SMCS-4201, 4202, 4203, 4208, 4209 **i03922669**

NOTE	PART NUMBER	QTY	PART NAME 1 2 3 4 5 6 (PRODUCT LEVEL)	SEE PAGE
Y	*249-7565*	1	WHEEL & TIRE GP (REAR, LH)	289
Y	*249-7566*	1	WHEEL & TIRE GP (REAR, RH)	290
	201-1916	1	MOUNTING GP-WHEEL (REAR)	
	8T-5439	20	WASHER-HARD (21.5X45X6-MM THK)	
M	**201-1919**	20	NUT (M20X1.5-THD)	

M-METRIC PART
Y-SEPARATE ILLUSTRATION

<END>

249-9390 WHEEL & TIRE GP–REAR

S/N: SJW1-UP
PART OF 249-9261, 329-1352 WHEEL & TIRE AR
AN ATTACHMENT

SMCS-4201, 4202, 4203, 4208, 4209 **i03922670**

NOTE	PART NUMBER	QTY	PART NAME 1 2 3 4 5 6 (PRODUCT LEVEL)	SEE PAGE
Y	*249-9409*	1	WHEEL & TIRE GP (REAR, LH)	294
Y	*249-9410*	1	WHEEL & TIRE GP (REAR, RH)	295
	201-1916	1	MOUNTING GP-WHEEL (REAR)	
	8T-5439	20	WASHER-HARD (21.5X45X6-MM THK)	
M	**201-1919**	20	NUT (M20X1.5-THD)	

M-METRIC PART
Y-SEPARATE ILLUSTRATION

<END>

249-9392 WHEEL & TIRE GP–REAR

S/N: SJW1-UP
PART OF 249-9255 WHEEL & TIRE AR
AN ATTACHMENT

SMCS-4201, 4202, 4203, 4208, 4209 **i03920830**

NOTE	PART NUMBER	QTY	PART NAME 1 2 3 4 5 6 (PRODUCT LEVEL)	SEE PAGE
Y	*249-9411*	1	WHEEL & TIRE GP (REAR, LH)	295
Y	*250-0230*	1	WHEEL & TIRE GP (REAR, RH)	295
	201-1916	1	MOUNTING GP-WHEEL (REAR)	
	8T-5439	20	WASHER-HARD (21.5X45X6-MM THK)	
M	**201-1919**	20	NUT (M20X1.5-THD)	

M-METRIC PART
Y-SEPARATE ILLUSTRATION

<END>

249-9399 WHEEL & TIRE GP–REAR

S/N: SJW1-UP
PART OF 249-9262 WHEEL & TIRE AR
AN ATTACHMENT

SMCS-4201, 4202, 4203, 4208, 4209 **i03920831**

NOTE	PART NUMBER	QTY	PART NAME 1 2 3 4 5 6 (PRODUCT LEVEL)	SEE PAGE
Y	*249-7568*	1	WHEEL & TIRE GP (REAR, LH)	290
Y	*249-7569*	1	WHEEL & TIRE GP (REAR, RH)	290
	201-1916	1	MOUNTING GP-WHEEL (REAR)	
	8T-5439	20	WASHER-HARD (21.5X45X6-MM THK)	
M	**201-1919**	20	NUT (M20X1.5-THD)	

M-METRIC PART
Y-SEPARATE ILLUSTRATION

<END>

249-9400 WHEEL & TIRE GP–REAR

S/N: SJW1-UP
PART OF 249-9263 WHEEL & TIRE AR
AN ATTACHMENT

SMCS-4201, 4202, 4203, 4208, 4209 **i02469925**

NOTE	PART NUMBER	QTY	PART NAME 1 2 3 4 5 6 (PRODUCT LEVEL)	SEE PAGE
Y	*249-7571*	1	WHEEL & TIRE GP (LH)	291
Y	*249-7572*	1	WHEEL & TIRE GP (RH)	291
	201-1916	1	MOUNTING GP-WHEEL (REAR)	
	8T-5439	20	WASHER-HARD (21.5X45X6-MM THK)	
M	**201-1919**	20	NUT (M20X1.5-THD)	

M-METRIC PART
Y-SEPARATE ILLUSTRATION

<END>

249-9407 WHEEL & TIRE GP—REAR, LH

S/N: SJW1-UP
(15X28)
PART OF 249-9387 WHEEL & TIRE GP
AN ATTACHMENT

SMCS-4201, 4202, 4203, 4208, 4209 **i03934145**

NOTE	PART NUMBER	QTY	PART NAME 1 2 3 4 5 6 (PRODUCT LEVEL)	SEE PAGE
Y	*201-1920*	1	VALVE GP-TIRE	282
	195-6348	1	WHEEL AS (LH, REAR)	
	357-1996	1	TIRE (16.9-28)	

Y-SEPARATE ILLUSTRATION

<END>

249-9408 WHEEL & TIRE GP—REAR, RH

S/N: SJW1-UP
(15X28)
PART OF 249-9387 WHEEL & TIRE GP
AN ATTACHMENT

SMCS-4201, 4202, 4203, 4208, 4209 **i03934184**

NOTE	PART NUMBER	QTY	PART NAME 1 2 3 4 5 6 (PRODUCT LEVEL)	SEE PAGE
Y	*201-1920*	1	VALVE GP-TIRE	282
	195-6348	1	WHEEL AS (RH, REAR)	
	357-1996	1	TIRE (16.9-28)	

Y-SEPARATE ILLUSTRATION

<END>

249-9409 WHEEL & TIRE GP—REAR, LH

S/N: SJW1-UP
(16X26)
PART OF 249-9390 WHEEL & TIRE GP
AN ATTACHMENT

SMCS-4201, 4202, 4203, 4208, 4209 **i03920828**

NOTE	PART NUMBER	QTY	PART NAME 1 2 3 4 5 6 (PRODUCT LEVEL)	SEE PAGE
Y	*201-1920*	1	VALVE GP-TIRE	282
	195-6345	1	WHEEL AS (REAR, RH)	
	135-5893	1	TIRE (18.4/15-26)	

Y-SEPARATE ILLUSTRATION

<END>

249-9410 WHEEL & TIRE GP—REAR, RH

S/N: SJW1-UP
(16X26)
PART OF 249-9390 WHEEL & TIRE GP
AN ATTACHMENT

SMCS-4201, 4202, 4203, 4208, 4209 **i03592806**

NOTE	PART NUMBER	QTY	PART NAME 1 2 3 4 5 6 (PRODUCT LEVEL)	SEE PAGE
Y	*201-1920*	1	VALVE GP-TIRE	282
	195-6345	1	WHEEL AS (REAR, RH)	
	135-5893	1	TIRE (18.4/15-26)	

Y-SEPARATE ILLUSTRATION

<END>

249-9411 WHEEL & TIRE GP—REAR, LH

S/N: SJW1-UP
(16X26)
PART OF 249-9392 WHEEL & TIRE GP
AN ATTACHMENT

SMCS-4201, 4202, 4203, 4208, 4209 **i03934193**

NOTE	PART NUMBER	QTY	PART NAME 1 2 3 4 5 6 (PRODUCT LEVEL)	SEE PAGE
Y	*201-1920*	1	VALVE GP-TIRE	282
	195-6345	1	WHEEL AS (REAR, RH)	
	357-1995	1	TIRE (18.4-26)	

Y-SEPARATE ILLUSTRATION

<END>

250-0230 WHEEL & TIRE GP—REAR, RH

S/N: SJW1-UP
(16X26)
PART OF 249-9392 WHEEL & TIRE GP
AN ATTACHMENT

SMCS-4201, 4202, 4203, 4208, 4209 **i03934206**

NOTE	PART NUMBER	QTY	PART NAME 1 2 3 4 5 6 (PRODUCT LEVEL)	SEE PAGE
Y	*201-1920*	1	VALVE GP-TIRE	282
	195-6345	1	WHEEL AS (REAR, RH)	
	357-1995	1	TIRE (18.4-26)	

Y-SEPARATE ILLUSTRATION

<END>

266-1554 WHEEL & TIRE GP—FRONT

S/N: SJW1-UP
PART OF 273-5077, 273-5078 WHEEL & TIRE AR
AN ATTACHMENT

SMCS-4201, 4202, 4203, 4208, 4209 **i02469929**

NOTE	PART NUMBER	QTY	PART NAME 1 2 3 4 5 6 (PRODUCT LEVEL)	SEE PAGE
Y	*266-1555*	1	WHEEL & TIRE GP (FRONT, LH)	296
Y	*266-1556*	1	WHEEL & TIRE GP (FRONT, RH)	296
	201-1915	1	MOUNTING GP-WHEEL (FRONT)	
	8T-5439	16	WASHER-HARD (21.5X45X6-MM THK)	
M	**201-1919**	16	NUT (M20X1.5-THD)	

M-METRIC PART
Y-SEPARATE ILLUSTRATION

<END>

266-1555 WHEEL & TIRE GP—FRONT, LH

S/N: SJW1-UP
(10X18)
PART OF 266-1554 WHEEL & TIRE GP
AN ATTACHMENT

SMCS-4201, 4202, 4203, 4208, 4209 **i03592812**

NOTE	PART NUMBER	QTY	PART NAME 1 2 3 4 5 6 (PRODUCT LEVEL)	SEE PAGE
Y	*201-1920*	1	VALVE GP-TIRE	282
	202-6186	1	WHEEL AS (FRONT)	
	266-1560	1	TIRE (12.5/80-18)	

Y-SEPARATE ILLUSTRATION

<END>

266-1556 WHEEL & TIRE GP—FRONT, RH

S/N: SJW1-UP
(10X18)
PART OF 266-1554 WHEEL & TIRE GP
AN ATTACHMENT

SMCS-4201, 4202, 4203, 4208, 4209 **i03592813**

NOTE	PART NUMBER	QTY	PART NAME 1 2 3 4 5 6 (PRODUCT LEVEL)	SEE PAGE
Y	*201-1920*	1	VALVE GP-TIRE	282
	202-6186	1	WHEEL AS (FRONT)	
	266-1560	1	TIRE (12.5/80-18)	

Y-SEPARATE ILLUSTRATION

<END>

273-5080 WHEEL & TIRE GP—REAR

S/N: SJW1-UP
PART OF 273-5078, 341-0596 WHEEL & TIRE AR
AN ATTACHMENT

SMCS-4201, 4202, 4203, 4208, 4209 **i02469931**

NOTE	PART NUMBER	QTY	PART NAME 1 2 3 4 5 6 (PRODUCT LEVEL)	SEE PAGE
Y	*273-5093*	1	WHEEL & TIRE GP (REAR, LH)	297
Y	*273-5094*	1	WHEEL & TIRE GP (REAR, RH)	298
	201-1916	1	MOUNTING GP-WHEEL (REAR)	
	8T-5439	20	WASHER-HARD (21.5X45X6-MM THK)	
M	**201-1919**	20	NUT (M20X1.5-THD)	

M-METRIC PART
Y-SEPARATE ILLUSTRATION

<END>

273-5081 WHEEL & TIRE GP—REAR

S/N: SJW1-UP
PART OF 273-5077 WHEEL & TIRE AR
AN ATTACHMENT

SMCS-4201, 4202, 4203, 4208, 4209 **i02469932**

NOTE	PART NUMBER	QTY	PART NAME 1 2 3 4 5 6 (PRODUCT LEVEL)	SEE PAGE
Y	*273-5095*	1	WHEEL & TIRE GP (REAR, LH)	298
Y	*273-5096*	1	WHEEL & TIRE GP (REAR, RH)	298
	201-1916	1	MOUNTING GP-WHEEL (REAR)	
	8T-5439	20	WASHER-HARD (21.5X45X6-MM THK)	
M	**201-1919**	20	NUT (M20X1.5-THD)	

M-METRIC PART
Y-SEPARATE ILLUSTRATION

<END>

273-5093 WHEEL & TIRE GP—REAR, LH

S/N: SJW1-UP
(16X26)
PART OF 273-5080 WHEEL & TIRE GP
AN ATTACHMENT

SMCS-4201, 4202, 4203, 4208, 4209 **i03592814**

NOTE	PART NUMBER	QTY	PART NAME 1 2 3 4 5 6 (PRODUCT LEVEL)	SEE PAGE
Y	*201-1920*	1	VALVE GP-TIRE	282
	195-6345	1	WHEEL AS (REAR, RH)	
	267-8364	1	TIRE (480/80-R26)	

Y-SEPARATE ILLUSTRATION

<END>

273-5094 WHEEL & TIRE GP—REAR, RH

S/N: SJW1-UP
(16X26)
PART OF 273-5080 WHEEL & TIRE GP
AN ATTACHMENT

SMCS-4201, 4202, 4203, 4208, 4209 **i03592815**

NOTE	PART NUMBER	QTY	PART NAME 1 2 3 4 5 6 (PRODUCT LEVEL)	SEE PAGE
Y	*201-1920*	1	VALVE GP-TIRE	282
	195-6345	1	WHEEL AS (REAR, RH)	
	267-8364	1	TIRE (480/80-R26)	

Y-SEPARATE ILLUSTRATION

<END>

273-5095 WHEEL & TIRE GP—REAR, LH

S/N: SJW1-UP
(15X28)
PART OF 273-5081 WHEEL & TIRE GP
AN ATTACHMENT

SMCS-4201, 4202, 4203, 4208, 4209 **i03592817**

NOTE	PART NUMBER	QTY	PART NAME 1 2 3 4 5 6 (PRODUCT LEVEL)	SEE PAGE
Y	*201-1920*	1	VALVE GP-TIRE	282
	195-6348	1	WHEEL AS (REAR)	
	267-8363	1	TIRE (440/80-R28)	

Y-SEPARATE ILLUSTRATION

<END>

273-5096 WHEEL & TIRE GP—REAR, RH

S/N: SJW1-UP
(15X28)
PART OF 273-5081 WHEEL & TIRE GP
AN ATTACHMENT

SMCS-4201, 4202, 4203, 4208, 4209 **i03592818**

NOTE	PART NUMBER	QTY	PART NAME 1 2 3 4 5 6 (PRODUCT LEVEL)	SEE PAGE
Y	*201-1920*	1	VALVE GP-TIRE	282
	195-6348	1	WHEEL AS (REAR)	
	267-8363	1	TIRE (440/80-R28)	

Y-SEPARATE ILLUSTRATION

<END>

303-0418 WHEEL & TIRE GP–FRONT

S/N: SJW1-UP
PART OF 303-0413, 303-0414 WHEEL & TIRE AR
AN ATTACHMENT

SMCS-4201, 4202, 4203, 4208, 4209 **i04403882**

NOTE	PART NUMBER	QTY	PART NAME 1 2 3 4 5 6 (PRODUCT LEVEL)	SEE PAGE
Y	*303-0428*	1	WHEEL & TIRE GP (FRONT, LH) (FRONT, LH)	300
Y	*303-0429*	1	WHEEL & TIRE GP (FRONT, RH) (FRONT, RH)	300
	201-1915	1	MOUNTING GP-WHEEL (FRONT)	
	8T-5439	16	WASHER-HARD (21.5X45X6-MM THK)	
M	**201-1919**	16	NUT (M20X1.5-THD)	

M-METRIC PART
Y-SEPARATE ILLUSTRATION

<END>

303-0419 WHEEL & TIRE GP–REAR

S/N: SJW1-UP
PART OF 303-0413 WHEEL & TIRE AR
AN ATTACHMENT

SMCS-4201, 4202, 4203, 4208, 4209 **i02675652**

NOTE	PART NUMBER	QTY	PART NAME 1 2 3 4 5 6 (PRODUCT LEVEL)	SEE PAGE
Y	*303-0430*	1	WHEEL & TIRE GP (REAR, LH)	301
Y	*303-0431*	1	WHEEL & TIRE GP (REAR, RH)	301
	201-1916	1	MOUNTING GP-WHEEL (REAR)	
	8T-5439	20	WASHER-HARD (21.5X45X6-MM THK)	
M	**201-1919**	20	NUT (M20X1.5-THD)	

M-METRIC PART
Y-SEPARATE ILLUSTRATION

<END>

303-0421 WHEEL & TIRE GP–REAR

S/N: SJW1-UP
PART OF 303-0414, 303-0415 WHEEL & TIRE AR
AN ATTACHMENT

SMCS-4201, 4202, 4203, 4208, 4209 **i02675691**

NOTE	PART NUMBER	QTY	PART NAME 1 2 3 4 5 6 (PRODUCT LEVEL)	SEE PAGE
Y	*303-0434*	1	WHEEL & TIRE GP (REAR, LH)	301
Y	*303-0435*	1	WHEEL & TIRE GP (REAR, RH)	302
	201-1916	1	MOUNTING GP-WHEEL (REAR)	
	8T-5439	20	WASHER-HARD (21.5X45X6-MM THK)	
M	**201-1919**	20	NUT (M20X1.5-THD)	

M-METRIC PART
Y-SEPARATE ILLUSTRATION

<END>

303-0423 WHEEL & TIRE GP—FRONT

S/N: SJW1-UP
PART OF 303-0415 WHEEL & TIRE AR
AN ATTACHMENT

SMCS-4201, 4202, 4203, 4208, 4209 **i02675702**

NOTE	PART NUMBER	QTY	PART NAME 1 2 3 4 5 6 (PRODUCT LEVEL)	SEE PAGE
Y	*303-0438*	1	WHEEL & TIRE GP (FRONT, LH)	302
Y	*303-0439*	1	WHEEL & TIRE GP (FRONT, RH)	302
	201-1915	1	MOUNTING GP-WHEEL (FRONT)	
	5T-5439	16	PLATE	
M	**201-1919**	16	NUT (M20X1.5-THD)	

M-METRIC PART
Y-SEPARATE ILLUSTRATION

<END>

303-0428 WHEEL & TIRE GP—FRONT, LH

S/N: SJW1-UP
(10X18)
PART OF 303-0418 WHEEL & TIRE GP
AN ATTACHMENT

SMCS-4201, 4202, 4203, 4208, 4209 **i03592819**

NOTE	PART NUMBER	QTY	PART NAME 1 2 3 4 5 6 (PRODUCT LEVEL)	SEE PAGE
Y	*201-1920*	1	VALVE GP-TIRE	282
	202-6186	1	WHEEL AS (FRONT)	
	259-2940	1	TIRE (340/80-R18)	

Y-SEPARATE ILLUSTRATION

<END>

303-0429 WHEEL & TIRE GP—FRONT, RH

S/N: SJW1-UP
(10X18)
PART OF 303-0418 WHEEL & TIRE GP
AN ATTACHMENT

SMCS-4201, 4202, 4203, 4208, 4209 **i03592820**

NOTE	PART NUMBER	QTY	PART NAME 1 2 3 4 5 6 (PRODUCT LEVEL)	SEE PAGE
Y	*201-1920*	1	VALVE GP-TIRE	282
	202-6186	1	WHEEL AS (FRONT)	
	259-2940	1	TIRE (340/80-R18)	

Y-SEPARATE ILLUSTRATION

<END>

303-0430 WHEEL & TIRE GP—REAR, LH

S/N: SJW1-UP
(15X28)
PART OF 303-0419 WHEEL & TIRE GP
AN ATTACHMENT

SMCS-4201, 4202, 4203, 4208, 4209 **i03592821**

NOTE	PART NUMBER	QTY	PART NAME 1 2 3 4 5 6 (PRODUCT LEVEL)	SEE PAGE
Y	*201-1920*	1	VALVE GP-TIRE	282
	195-6348	1	WHEEL AS (REAR)	
	303-0441	1	TIRE (16.9-R28)	

Y-SEPARATE ILLUSTRATION

<END>

303-0431 WHEEL & TIRE GP—REAR, RH

S/N: SJW1-UP
(15X28)
PART OF 303-0419 WHEEL & TIRE GP
AN ATTACHMENT

SMCS-4201, 4202, 4203, 4208, 4209 **i03592825**

NOTE	PART NUMBER	QTY	PART NAME 1 2 3 4 5 6 (PRODUCT LEVEL)	SEE PAGE
Y	*201-1920*	1	VALVE GP-TIRE	282
	195-6348	1	WHEEL AS (REAR)	
	303-0441	1	TIRE (16.9-R28)	

Y-SEPARATE ILLUSTRATION

<END>

303-0434 WHEEL & TIRE GP—REAR, LH

S/N: SJW1-UP
(16X26)
PART OF 303-0421 WHEEL & TIRE GP
AN ATTACHMENT

SMCS-4201, 4202, 4203, 4208, 4209 **i03592826**

NOTE	PART NUMBER	QTY	PART NAME 1 2 3 4 5 6 (PRODUCT LEVEL)	SEE PAGE
Y	*201-1920*	1	VALVE GP-TIRE	282
	195-6345	1	WHEEL AS (REAR, RH)	
	303-0442	1	TIRE (480/80-R26)	

Y-SEPARATE ILLUSTRATION

<END>

303-0435 WHEEL & TIRE GP—REAR, RH

S/N: SJW1-UP
(16X26)
PART OF 303-0421 WHEEL & TIRE GP
AN ATTACHMENT

SMCS-4201, 4202, 4203, 4208, 4209 **i03592827**

NOTE	PART NUMBER	QTY	PART NAME 1 2 3 4 5 6 (PRODUCT LEVEL)	SEE PAGE
Y	*201-1920*	1	VALVE GP-TIRE	282
	195-6345	1	WHEEL AS (REAR, RH)	
	303-0442	1	TIRE (480/80-R26)	

Y-SEPARATE ILLUSTRATION

<END>

303-0438 WHEEL & TIRE GP—FRONT, LH

S/N: SJW1-UP
(11X20)
PART OF 303-0423 WHEEL & TIRE GP
AN ATTACHMENT

SMCS-4201, 4202, 4203, 4208, 4209 **i03592828**

NOTE	PART NUMBER	QTY	PART NAME 1 2 3 4 5 6 (PRODUCT LEVEL)	SEE PAGE
Y	*201-1920*	1	VALVE GP-TIRE	282
	9R-3545	1	WHEEL AS (FRONT)	
	303-0443	1	TIRE (335/80-R20)	

Y-SEPARATE ILLUSTRATION

<END>

303-0439 WHEEL & TIRE GP—FRONT, RH

S/N: SJW1-UP
(11X20)
PART OF 303-0423 WHEEL & TIRE GP
AN ATTACHMENT

SMCS-4201, 4202, 4203, 4208, 4209 **i03592829**

NOTE	PART NUMBER	QTY	PART NAME 1 2 3 4 5 6 (PRODUCT LEVEL)	SEE PAGE
Y	*201-1920*	1	VALVE GP-TIRE	282
	9R-3545	1	WHEEL AS (FRONT)	
	303-0443	1	TIRE (335/80-R20)	

Y-SEPARATE ILLUSTRATION

<END>

319-6835 WHEEL & TIRE GP—FRONT

S/N: SJW1-UP
PART OF 319-6834 WHEEL & TIRE AR
AN ATTACHMENT

SMCS-4201, 4202, 4203, 4208, 4209 **i02884193**

NOTE	PART NUMBER	QTY	PART NAME 1 2 3 4 5 6 (PRODUCT LEVEL)	SEE PAGE
Y	*319-7186*	1	WHEEL & TIRE GP (FRONT, RH)	303
Y	*319-7187*	1	WHEEL & TIRE GP (FRONT, LH)	304
	201-1915	1	MOUNTING GP-WHEEL (FRONT)	
	8T-5439	16	WASHER-HARD (21.5X45X6-MM THK)	
M	**201-1919**	16	NUT (M20X1.5-THD)	

M-METRIC PART
Y-SEPARATE ILLUSTRATION

<END>

319-6836 WHEEL & TIRE GP—REAR

S/N: SJW1-UP
PART OF 319-6834 WHEEL & TIRE AR
AN ATTACHMENT

SMCS-4201, 4202, 4203, 4208, 4209 **i03308880**

NOTE	PART NUMBER	QTY	PART NAME 1 2 3 4 5 6 (PRODUCT LEVEL)	SEE PAGE
Y	*319-7191*	1	WHEEL & TIRE GP (REAR, LH)	304
Y	*319-7192*	1	WHEEL & TIRE GP (REAR, RH)	304
	201-1916	1	MOUNTING GP-WHEEL (REAR)	
	8T-5439	20	WASHER-HARD (21.5X45X6-MM THK)	
M	**201-1919**	20	NUT (M20X1.5-THD)	

M-METRIC PART
Y-SEPARATE ILLUSTRATION

<END>

319-7186 WHEEL & TIRE GP—FRONT, RH

S/N: SJW1-UP
(11X20)
PART OF 319-6835 WHEEL & TIRE GP
AN ATTACHMENT

SMCS-4201, 4202, 4203, 4208, 4209 **i03592830**

NOTE	PART NUMBER	QTY	PART NAME 1 2 3 4 5 6 (PRODUCT LEVEL)	SEE PAGE
Y	*201-1920*	1	VALVE GP-TIRE	282
	9R-3545	1	WHEEL AS (FRONT)	
	319-6837	1	TIRE (340/80-R20)	

Y-SEPARATE ILLUSTRATION

<END>

319-7187 WHEEL & TIRE GP—FRONT, LH

S/N: SJW1-UP
(11X20)
PART OF 319-6835 WHEEL & TIRE GP
AN ATTACHMENT

SMCS-4201, 4202, 4203, 4208, 4209 **i03592831**

NOTE	PART NUMBER	QTY	PART NAME 1 2 3 4 5 6 (PRODUCT LEVEL)	SEE PAGE
Y	*201-1920*	1	VALVE GP-TIRE	282
	9R-3545	1	WHEEL AS (FRONT)	
	319-6837	1	TIRE (340/80-R20)	

Y-SEPARATE ILLUSTRATION

<END>

319-7191 WHEEL & TIRE GP—REAR, LH

S/N: SJW1-UP
(16X26)
PART OF 319-6836 WHEEL & TIRE GP
AN ATTACHMENT

SMCS-4201, 4202, 4203, 4208, 4209 **i03592832**

NOTE	PART NUMBER	QTY	PART NAME 1 2 3 4 5 6 (PRODUCT LEVEL)	SEE PAGE
Y	*201-1920*	1	VALVE GP-TIRE	282
	195-6345	1	WHEEL AS (REAR, RH)	
	319-6838	1	TIRE (480/80-R26)	

Y-SEPARATE ILLUSTRATION

<END>

319-7192 WHEEL & TIRE GP—REAR, RH

S/N: SJW1-UP
(16X26)
PART OF 319-6836 WHEEL & TIRE GP
AN ATTACHMENT

SMCS-4201, 4202, 4203, 4208, 4209 **i03592833**

NOTE	PART NUMBER	QTY	PART NAME 1 2 3 4 5 6 (PRODUCT LEVEL)	SEE PAGE
Y	*201-1920*	1	VALVE GP-TIRE	282
	195-6345	1	WHEEL AS (REAR, RH)	
	319-6838	1	TIRE (480/80-R26)	

Y-SEPARATE ILLUSTRATION

<END>

329-1354 WHEEL & TIRE GP—FRONT

S/N: SJW1-UP
PART OF 329-1350, 329-1351, 329-1352 WHEEL & TIRE AR
AN ATTACHMENT

SMCS-4201, 4202, 4203, 4208, 4209 **i03091583**

NOTE	PART NUMBER	QTY	PART NAME 1 2 3 4 5 6 (PRODUCT LEVEL)	SEE PAGE
Y	*329-1355*	1	WHEEL & TIRE GP (FRONT, LH)	305
Y	*329-1919*	1	WHEEL & TIRE GP (FRONT, RH)	305
	201-1915	1	MOUNTING GP-WHEEL (FRONT)	
	8T-5439	16	WASHER-HARD (21.5X45X6-MM THK)	
M	**201-1919**	16	NUT (M20X1.5-THD)	

M-METRIC PART
Y-SEPARATE ILLUSTRATION

<END>

329-1355 WHEEL & TIRE GP—FRONT, LH

S/N: SJW1-UP
(10X18)
PART OF 329-1354 WHEEL & TIRE GP
AN ATTACHMENT

SMCS-4201, 4202, 4203, 4208, 4209 **i03592834**

NOTE	PART NUMBER	QTY	PART NAME 1 2 3 4 5 6 (PRODUCT LEVEL)	SEE PAGE
Y	*201-1920*	1	VALVE GP-TIRE	282
	202-6186	1	WHEEL AS (FRONT)	
	329-1348	1	TIRE (12.5/80-18)	

Y-SEPARATE ILLUSTRATION

<END>

329-1919 WHEEL & TIRE GP—FRONT, RH

S/N: SJW1-UP
(10X18)
PART OF 329-1354 WHEEL & TIRE GP
AN ATTACHMENT

SMCS-4201, 4202, 4203, 4208, 4209 **i03592835**

NOTE	PART NUMBER	QTY	PART NAME 1 2 3 4 5 6 (PRODUCT LEVEL)	SEE PAGE
Y	*201-1920*	1	VALVE GP-TIRE	282
	202-6186	1	WHEEL AS (FRONT)	
	329-1348	1	TIRE (12.5/80-18)	

Y-SEPARATE ILLUSTRATION

<END>

341-9202 WHEEL & TIRE GP—FRONT

S/N: SJW1-UP
PART OF 341-0596 WHEEL & TIRE AR
AN ATTACHMENT

SMCS-4201, 4202, 4203, 4208, 4209 **i03640953**

NOTE	PART NUMBER	QTY	PART NAME 1 2 3 4 5 6 (PRODUCT LEVEL)	SEE PAGE
Y	*341-9203*	1	WHEEL & TIRE GP (FRONT, LH)	306
Y	*341-9204*	1	WHEEL & TIRE GP (FRONT, RH)	306
	201-1915	1	MOUNTING GP-WHEEL (FRONT)	
	8T-5439	16	WASHER-HARD (21.5X45X6-MM THK)	
M	**201-1919**	16	NUT (M20X1.5-THD)	

M-METRIC PART
Y-SEPARATE ILLUSTRATION

<END>

341-9203 WHEEL & TIRE GP—FRONT, LH

S/N: SJW1-UP
(11X20)
PART OF 341-9202 WHEEL & TIRE GP
AN ATTACHMENT

SMCS-4201, 4202, 4203, 4208, 4209 **i03538521**

NOTE	PART NUMBER	QTY	PART NAME 1 2 3 4 5 6 (PRODUCT LEVEL)	SEE PAGE
Y	*201-1920*	1	VALVE GP-TIRE	282
	9R-3545	1	WHEEL AS (FRONT)	
	341-9201	1	TIRE (340/80-R20)	

Y-SEPARATE ILLUSTRATION

<END>

341-9204 WHEEL & TIRE GP—FRONT, RH

S/N: SJW1-UP
(11X20)
PART OF 341-9202 WHEEL & TIRE GP
AN ATTACHMENT

SMCS-4201, 4202, 4203, 4208, 4209 **i03538524**

NOTE	PART NUMBER	QTY	PART NAME 1 2 3 4 5 6 (PRODUCT LEVEL)	SEE PAGE
Y	*201-1920*	1	VALVE GP-TIRE	282
	9R-3545	1	WHEEL AS (FRONT)	
	341-9201	1	TIRE (340/80-R20)	

Y-SEPARATE ILLUSTRATION

<END>

206-1642 CONTROL GP-PARKING BRAKE

S/N: SJW1-UP

PART OF 353-1501 DRIVE AR-BACKHOE LOADER

AN ATTACHMENT

SMCS-4282, 4284 **i04643270**

NOTE	REF NO	GRAPHIC REF	PART NUMBER	QTY	PART NAME 1 2 3 4 5 6 (PRODUCT LEVEL)	SEE PAGE
	1	1	**7K-1181**	1	STRAP-CABLE	
	2	1	**154-5416**	1	SWITCH AS (PARKING BRAKE)	
		1	**155-2270**	1	KIT-CONNECTING PLUG (2-PIN)	
					(INCLUDES PLUG AS, WEDGE & INTERFACE SEAL)	
	3	1	**164-1368**	2	FASTENER-PANEL	
	4	1	**261-9635**	1	BOOT (PARKING BRAKE)	
CY	5	1	**389-7167**	1	CONTROL GP-PARKING BRAKE	308
	6	1	**8T-4224**	2	WASHER-HARD (8.8X16X2-MM THK)	
M	7	1	**8T-6912**	2	BOLT (M8X1.25X50-MM)	
	8	1	**9R-2806**	1	PIN	
	9	1	**9R-2807**	1	CLIP	

C-CHANGE FROM PREVIOUS TYPE
M-METRIC PART
Y-SEPARATE ILLUSTRATION

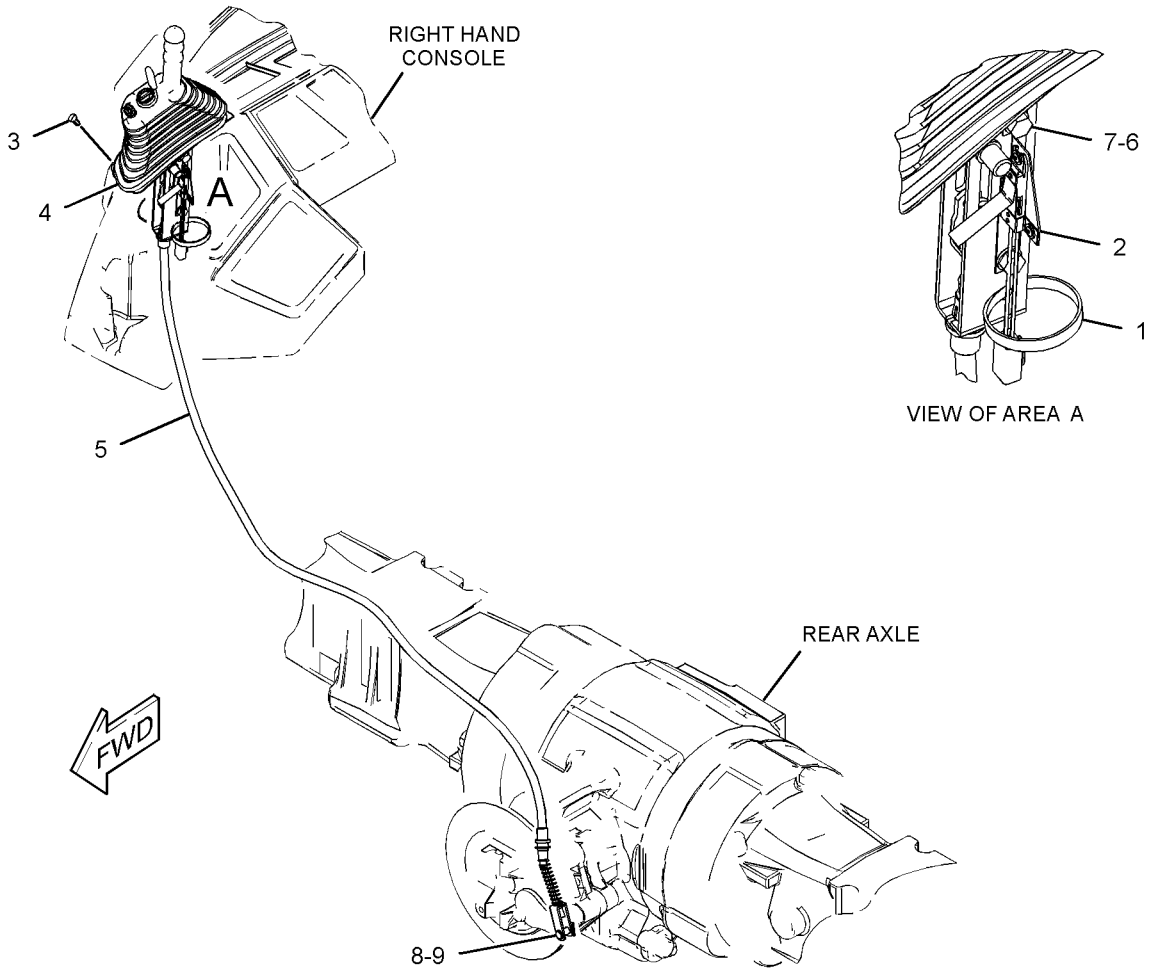

GRAPHIC #1 **<END>** g02821346

389-7167 CONTROL GP-PARKING BRAKE

S/N: SJW1-UP

PART OF 206-1642 CONTROL GP-PARKING BRAKE

AN ATTACHMENT

SMCS-4282, 4284 **i04643273**

NOTE	REF NO	GRAPHIC REF	PART NUMBER	QTY	PART NAME 1 2 3 4 5 6 (PRODUCT LEVEL)	SEE PAGE
Y	1	1	**163-0753**	1	LEVER GP-HAND CONTROL	317
	2	1	**389-7168**	1	CABLE AS	
		1	**6V-8759**	1	RING-RETAINING	

Y-SEPARATE ILLUSTRATION

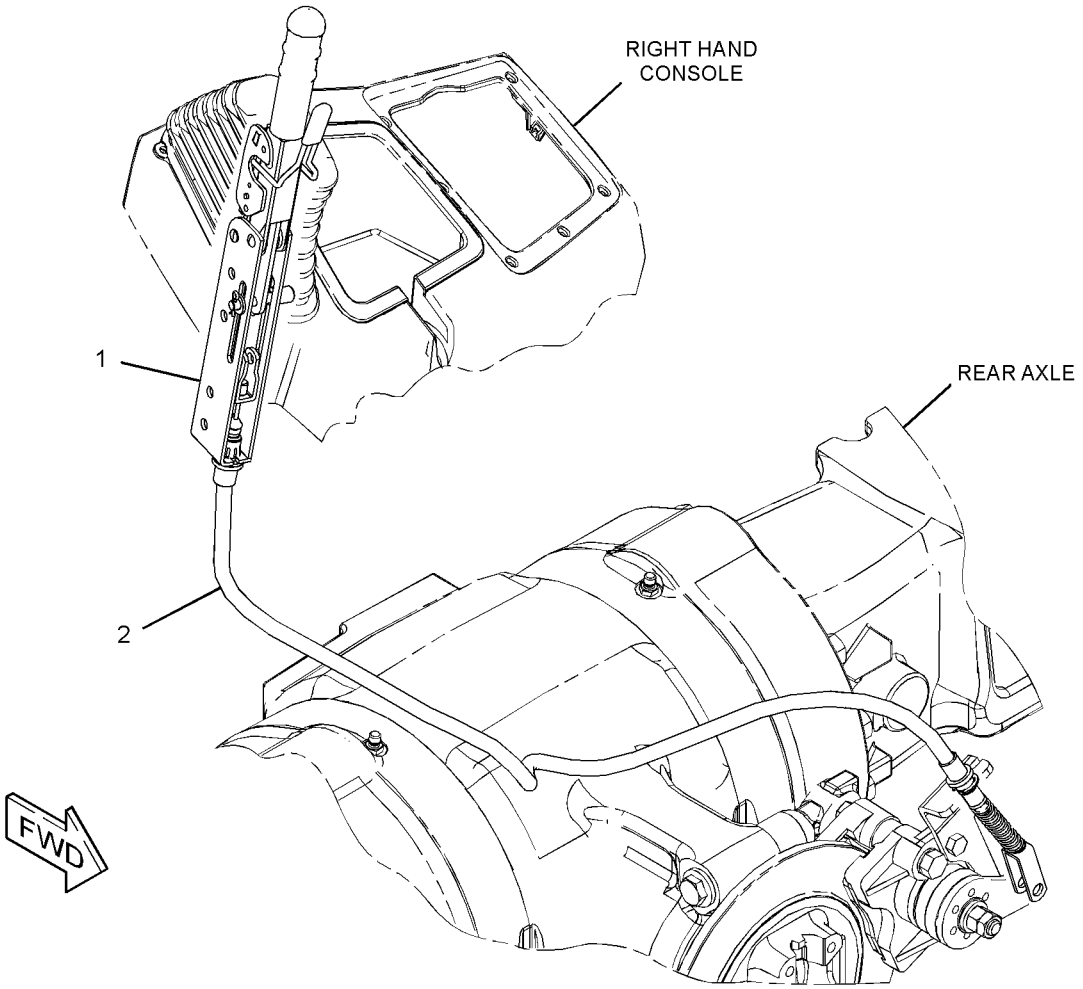

GRAPHIC #1 **<END>** g02822458

BRAKING SYSTEM

353-1361 CONTROL GP-SERVICE BRAKE

S/N: SJW1-UP

PART OF 340-1718 HYDRAULIC AR

SMCS-4269 **i04548432**

NOTE	REF NO	GRAPHIC REF	PART NUMBER	QTY	PART NAME 1 2 3 4 5 6 (PRODUCT LEVEL)	SEE PAGE
	1	1	**6V-0852**	1	CAP-DUST	
	2	2	**7C-0754**	1	TEE	
	3	1	**7K-1181**	3	STRAP-CABLE	
	4	1	**9R-9901**	2	FASTENER	
	5	2	**105-8034**	2	SWITCH AS-LIMIT (SERVICE BRAKE)	
	6	2	**131-2171**	1	CONNECTOR	
	7	1	**151-4841**	2	BLOCK	
	8	2	**153-2997**	1	FITTING AS (QUICK DISCONNECT, FEMALE)	
	9	2	**156-3631**	1	FITTING AS	
		2	**3K-0360**	1	SEAL-O-RING	
	10	1	*164-5567*	1	COUPLER AS-QUICK DISCONNECT (MALE)	
		1	**6V-3965**	1	FITTING (QUICK DISCONNECT)	
		1	**214-7568**	1	SEAL-O-RING	
	11	2	**165-6595**	1	PIN AS	
	12	2	*170-0967*	1	ELBOW AS	
		2	**3K-0360**	1	SEAL-O-RING	
		2	**5P-4906**	1	ELBOW	
	13	2	*194-2903*	1	ELBOW AS	
		2	**3K-0360**	1	SEAL-O-RING	
		2	**8T-0119**	1	ELBOW	
	14	1	*195-2037*	1	FITTING AS	
		1	**3K-0360**	1	SEAL-O-RING	
		1	**034-3679**	1	FITTING	
	15	2	**202-5993**	1	PLATE	
	16	1	**206-1634**	1	PLATE AS	
	17	2	**206-1752**	1	PLATE AS	
	18	2	**206-1766**	2	PIN	
	19	2	**206-1767**	1	SPRING (LH)	
	20	2	**220-8226**	1	VALVE AS-BRAKE (BOOST)	
		2	**262-4084**	2	BOOT	
	21	1	*241-6202*	1	ADAPTER AS	
		1	**2M-9780**	1	SEAL-O-RING	
		1	**219-8136**	1	ADAPTER	
I	22	1	**253-1549**	1	HOSE AS	
	23	2	**262-4081**	2	END-YOKE ROD	
	24	2	**275-0652**	1	PEDAL AS (LH)	
	24A	2	**202-6029**	2	BUSHING	
	25	2	**275-0653**	1	PEDAL AS (RH)	
	25A	2	**202-6029**	2	BUSHING	
	26	2	**286-1930**	2	RING-RETAINING	
	27	1	**291-8379**	1	COVER-BRAKE	
I	28	1	**293-5496**	1	HOSE AS	
	29	2	**298-3599**	1	PLATE AS	
	30	1	*351-0288*	1	TEE AS	
		1	**2M-9780**	1	SEAL-O-RING	
		1	**351-0287**	1	ADAPTER-TEE	
	31	1	**356-4064**	1	GROMMET	
I	32	1	**362-5364**	1	HOSE AS	
I	33	1	**368-9869**	1	HOSE AS	
	34	1	**373-6966**	1	VALVE GP-MANIFOLD & REDUCING (SERVICE BRAKE CONTROL)	
		1	**359-7226**	1	VALVE GP-PRESSURE REDUCING (SERVICE BRAKE)	
M	35	1	**096-5866**	2	BOLT (M8X1.25X75-MM)	
M	36	2	**142-0485**	2	NUT (M10X1.5-THD)	
	37	1	*148-8325*	4	CONNECTOR AS	
					(EACH INCLUDES)	

353-1361 CONTROL GP-SERVICE BRAKE *(contd.)* i04548432

NOTE	REF NO	GRAPHIC REF	PART NUMBER	QTY	PART NAME 1 2 3 4 5 6 (PRODUCT LEVEL)	SEE PAGE
		1	**3J-1907**	1	SEAL-O-RING	
		1	**4J-5477**	1	SEAL-O-RING	
		1	**6V-8641**	1	CONNECTOR	
	38	1	*148-8336*	1	CONNECTOR AS	
		1	**3J-1907**	1	SEAL-O-RING	
		1	**6V-8397**	1	SEAL-O-RING	
		1	**6V-8636**	1	CONNECTOR	
	39	1	*148-8353*	1	ELBOW AS	
		1	**3J-1907**	1	SEAL-O-RING	
		1	**6V-8397**	1	SEAL-O-RING	
		1	**6V-9001**	1	ELBOW	
	40	2	*148-8378*	1	ELBOW AS	
		2	**3J-1907**	1	SEAL-O-RING	
		2	**6V-8397**	1	SEAL-O-RING	
		2	**6V-8724**	1	ELBOW	
	41	1	*150-4043*	1	CONNECTOR AS	
		1	**3J-1907**	1	SEAL-O-RING	
		1	**6V-8398**	1	SEAL-O-RING	
		1	**6V-9873**	1	CONNECTOR	
	42	2	**206-1768**	1	SPRING (RH)	
	43	1	**277-1873**	1	CLIP	
	44	2	**2K-5986**	1	PIN-SPRING	
	45	2	**2M-9780**	1	SEAL-O-RING	
	46	1,2	**359-7325**	8	CLAMP-HOSE	
	47	2	**3E-4321**	1	CLIP	
	48	2	**3K-0360**	1	SEAL-O-RING	
M	49	2	**5C-2890**	1	NUT (M6X1-THD)	
M	50	1,2	**5C-7261**	6	NUT (M8X1.25-THD)	
	51	1,2	**5P-4116**	4	WASHER-HARD (8.8X20.5X2-MM THK)	
M	52	2	**6V-7357**	1	BOLT (M6X1X25-MM)	
	53	1,2	**7X-7729**	6	WASHER (11X25X3-MM THK)	
	54	1	**8T-4121**	1	WASHER-HARD (11X21X2.5-MM THK)	
M	55	1,2	**8T-4133**	2	NUT (M10X1.5-THD)	
M	56	1	**8T-4136**	5	BOLT (M10X1.5X25-MM)	
M	57	2	**8T-4138**	1	BOLT (M6X1X20-MM)	
M	58	2	**8T-4200**	1	BOLT (M8X1.25X16-MM)	
	59	2	**8T-4205**	1	WASHER-HARD (7.2X14.5X2-MM THK)	
	60	1,2	**8T-4224**	7	WASHER-HARD (8.8X16X2-MM THK)	
M	61	2	**8T-4908**	2	BOLT (M8X1.25X25-MM)	
	62	2	**9R-2807**	2	CLIP	
	63	1	**9R-5615**	2	PLUG	
M	64	1	**9X-2044**	2	SCREW-TRUSS HEAD (M6X1X16-MM)	
M	65	2	**9X-2045**	4	SCREW-TRUSS HEAD (M6X1X20-MM)	
E	66	1	**5P-1505**		HOSE (98-CM)	
E	67	2	**5P-0743**		HOSE (46.5-CM)	
E	67A	1	**5P-0743**		HOSE (42-CM)	
E	67B	2	**5P-0743**		HOSE (14.5-CM)	

E-ORDER BY THE CENTIMETER
I-REFER TO HYDRAULIC INFORMATION SYSTEM
M-METRIC PART

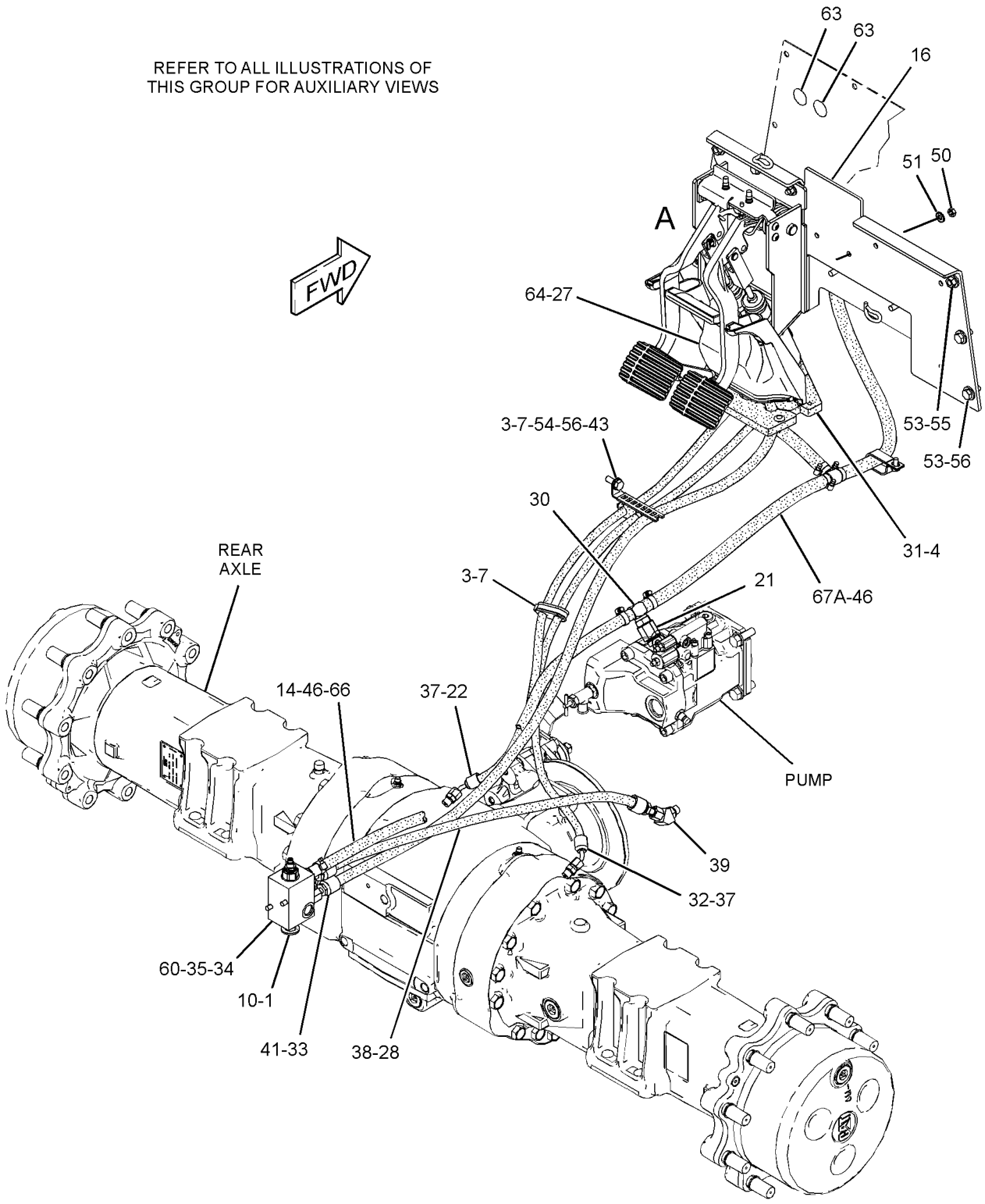

GRAPHIC #1

g02789985

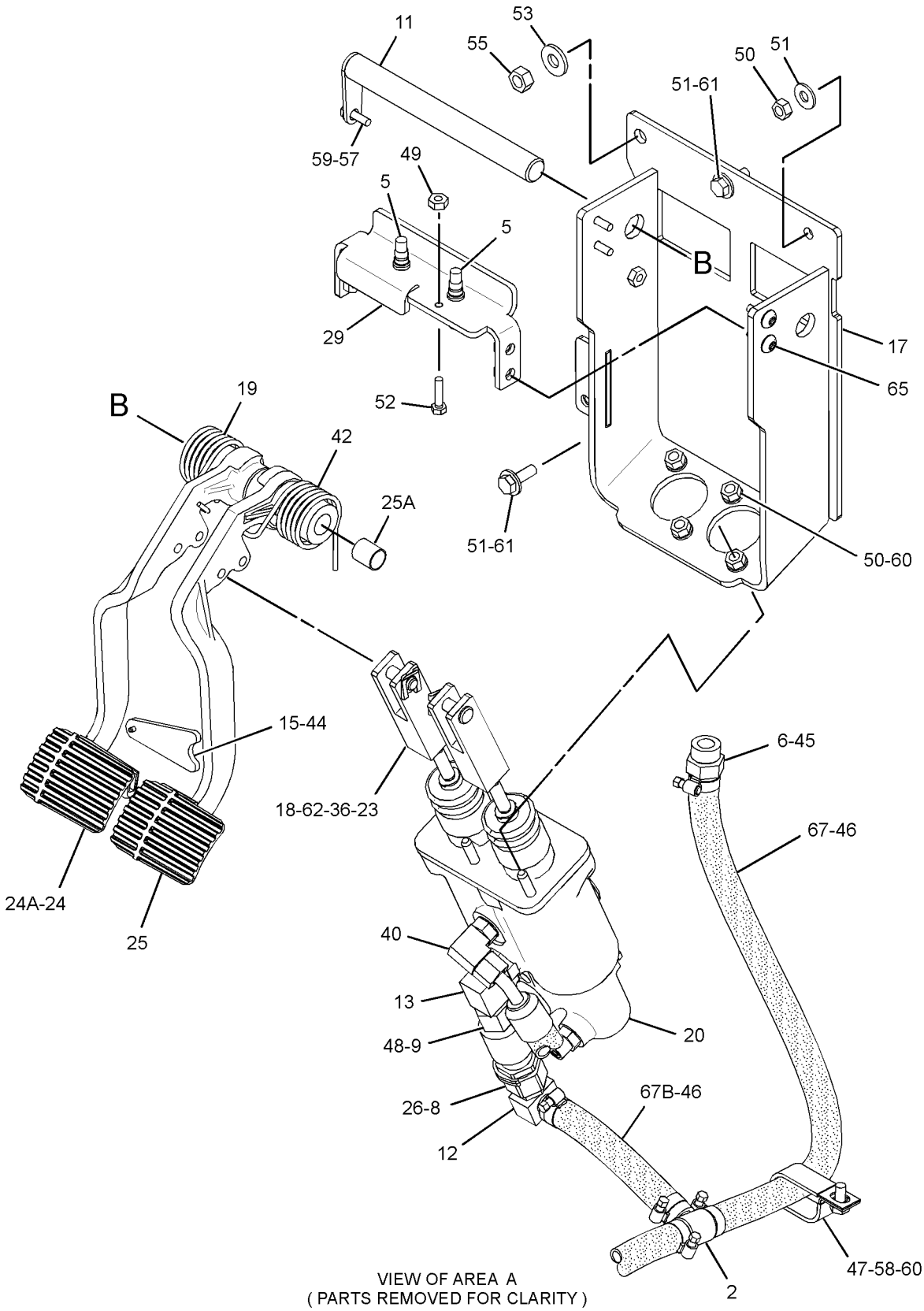

VIEW OF AREA A
(PARTS REMOVED FOR CLARITY)

GRAPHIC #2 **<END>** g02790263

216-1612 CYLINDER GP-BRAKE

S/N: SJW1-UP

PART OF 238-5298 DIFFERENTIAL & BEVEL GEAR GP

AN ATTACHMENT

SMCS-4262 **i04403972**

NOTE	REF NO	GRAPHIC REF	PART NUMBER	QTY	PART NAME 1 2 3 4 5 6 (PRODUCT LEVEL)	SEE PAGE
JM	1	1	**6V-2315**	3	BOLT (M6X1X35-MM)	
LM	2	1	**1R-5396**	3	BOLT (M6X1X35-MM)	
J	3	1	**199-0672**	3	SPACER-SPECIAL	
J	4	1	**199-0681**	3	WASHER (6.2X16.5X2-MM THK)	
L	5	1	**199-0701**	3	BRAKE-COVER	
L	6	1	**199-0702**	3	SPRING (INNER)	
L	7	1	**199-0703**	3	SPRING (OUTER)	
	8	1	**199-0752**	1	PISTON-BRAKE	
	9	1	**199-0759**	1	O-RING-INNER	
JL	10	1	**212-5712**	6	BUSHING	
	11	1	**219-8834**	1	CYLINDER-BRAKE	
	12	1	**199-0700**	1	O-RING-OUTER	
					AVAILABLE REPAIR KIT(S):	
J			**217-2347**	3	KIT-BRAKE CYLINDER (ADJUSTER)	
					(INCLUDES SPECIAL SPACERS, BUSHINGS, WASHERS & BOLTS)	
L			**217-2349**	3	KIT-BRAKE CYLINDER (SPRING RETENTION)	
					(INCLUDES BOLTS, BRAKE COVERS, SPRINGS & BUSHINGS)	

J-KIT MARKED J SERVICES PARTS MARKED J
L-KIT MARKED L SERVICES PARTS MARKED L
M-METRIC PART

216-1612 CYLINDER GP-BRAKE *(contd.)* **i04403972**

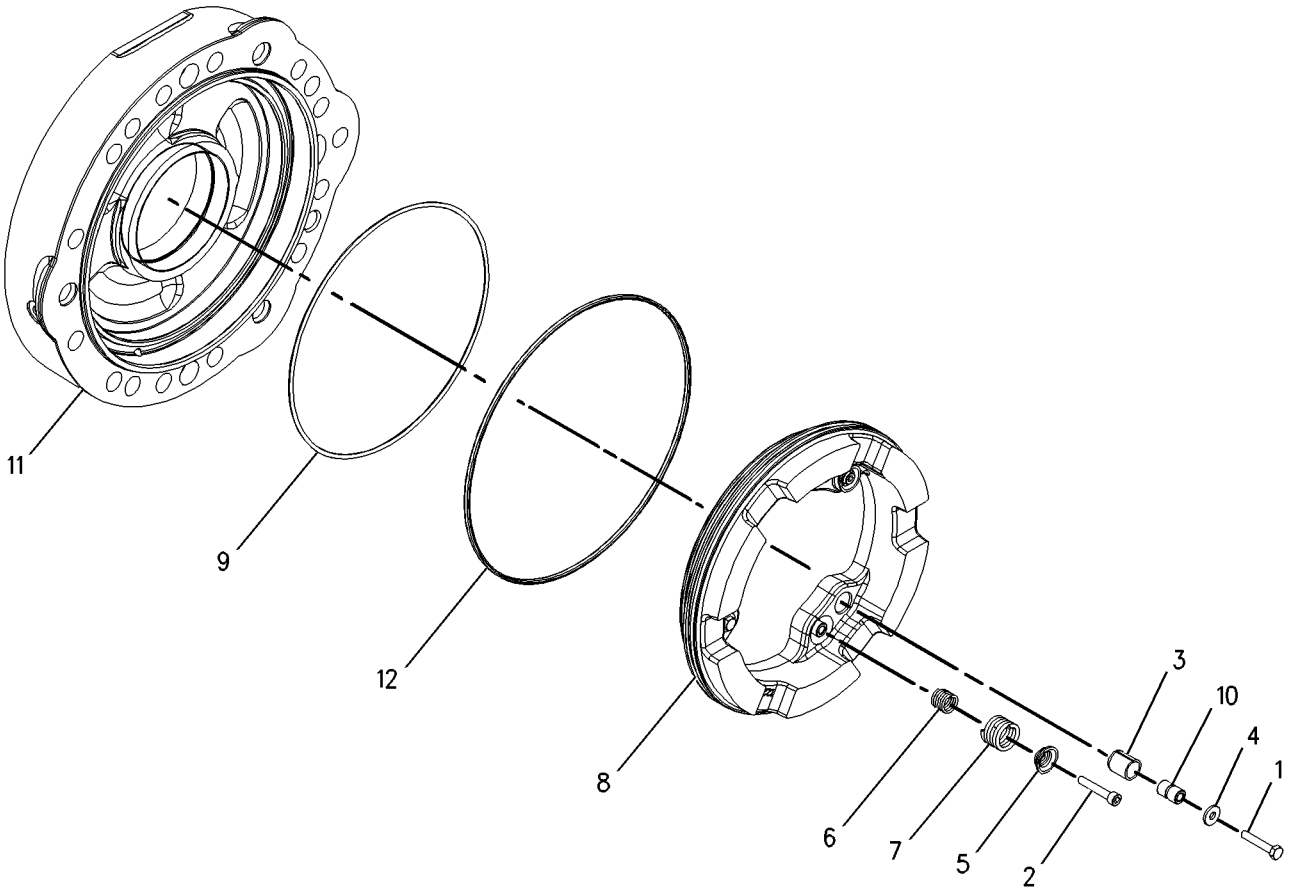

GRAPHIC #1 **<END>** g00953880

216-1613 CYLINDER GP-BRAKE

S/N: SJW1-UP

PART OF 238-5298 DIFFERENTIAL & BEVEL GEAR GP

AN ATTACHMENT

SMCS-4262 **i04404039**

NOTE	REF NO	GRAPHIC REF	PART NUMBER	QTY	PART NAME 1 2 3 4 5 6 (PRODUCT LEVEL)	SEE PAGE
JM	1	1	**6V-2315**	3	BOLT (M6X1X35-MM)	
LM	2	1	**1R-5396**	3	BOLT (M6X1X35-MM)	
J	3	1	**199-0672**	3	SPACER-SPECIAL	
J	4	1	**199-0681**	3	WASHER (6.2X16.5X2-MM THK)	
L	5	1	**199-0701**	3	BRAKE-COVER	
L	6	1	**199-0702**	3	SPRING (INNER)	
L	7	1	**199-0703**	3	SPRING (OUTER)	
	8	1	**199-0752**	1	PISTON-BRAKE	
	9	1	**199-0759**	1	O-RING-INNER	
JL	10	1	**212-5712**	6	BUSHING	
	11	1	**219-8835**	1	CYLINDER-BRAKE	
	12	1	**199-0700**	1	O-RING-OUTER	
					AVAILABLE REPAIR KIT(S):	
J			**217-2347**	3	KIT-BRAKE CYLINDER (ADJUSTER)	
					(INCLUDES SPECIAL SPACERS, BUSHINGS, WASHERS & BOLTS)	
L			**217-2349**	3	KIT-BRAKE CYLINDER (SPRING RETENTION)	
					(INCLUDES BOLTS, BRAKE COVERS, SPRINGS & BUSHINGS)	

J-KIT MARKED J SERVICES PARTS MARKED J
L-KIT MARKED L SERVICES PARTS MARKED L
M-METRIC PART

216-1613 CYLINDER GP-BRAKE *(contd.)* **i04404039**

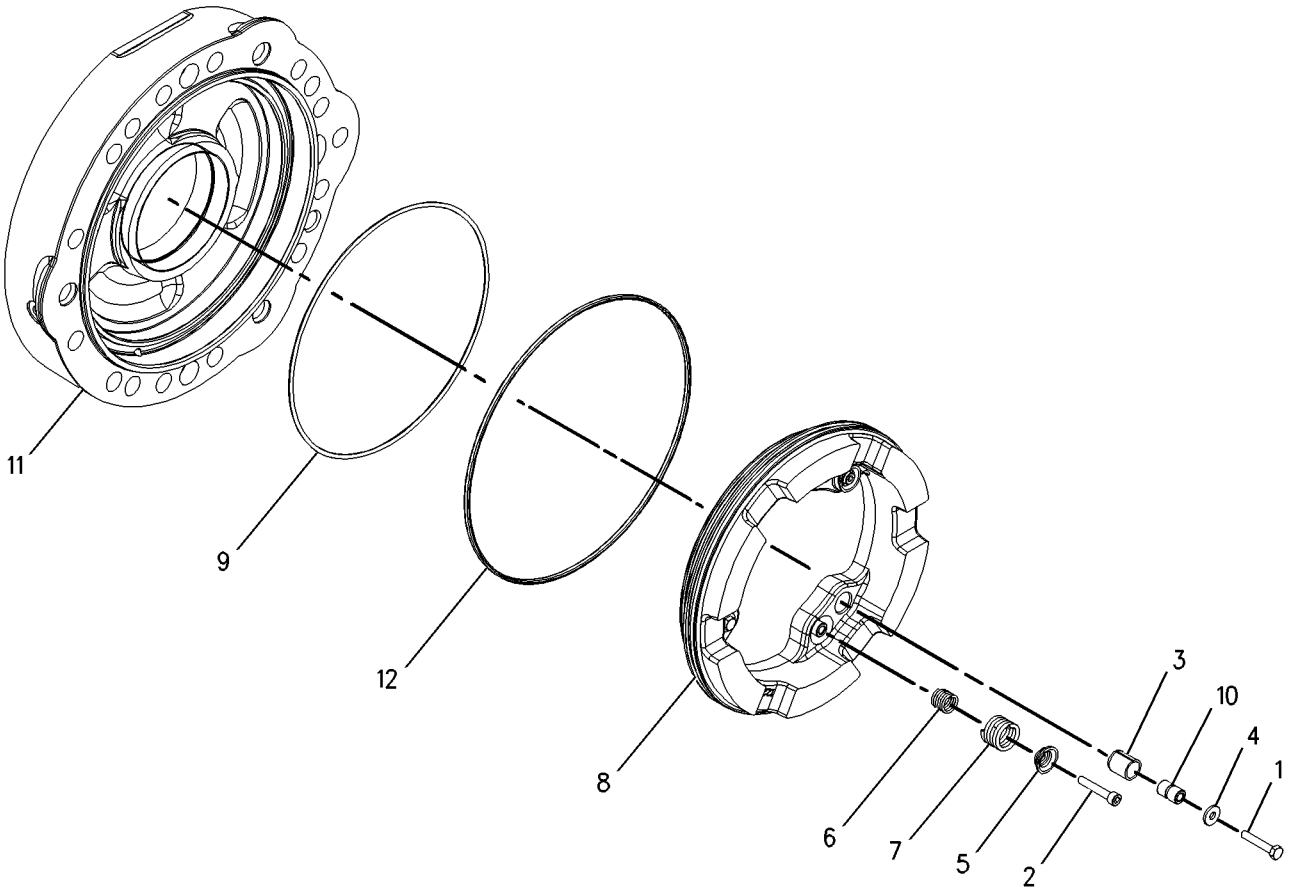

GRAPHIC #1 **<END>** g00995396

163-0753 LEVER GP-HAND CONTROL

S/N: SJW1-UP

PART OF 389-7167 CONTROL GP-PARKING BRAKE

AN ATTACHMENT

SMCS-4284 **i02156244**

NOTE	REF NO	GRAPHIC REF	PART NUMBER	QTY	PART NAME 1 2 3 4 5 6 (PRODUCT LEVEL)	SEE PAGE
	1	1	**7R-8239**	2	SPACER	
	2	1	**039-9133**	1	PIN	
	3	1	**164-9598**	1	GRIP	
	4	1	**164-9599**	1	COVER	
	5	1	**3B-4610**	1	PIN-COTTER	
	6	1	**8T-4224**	2	WASHER-HARD (8.8X16X2-MM THK)	

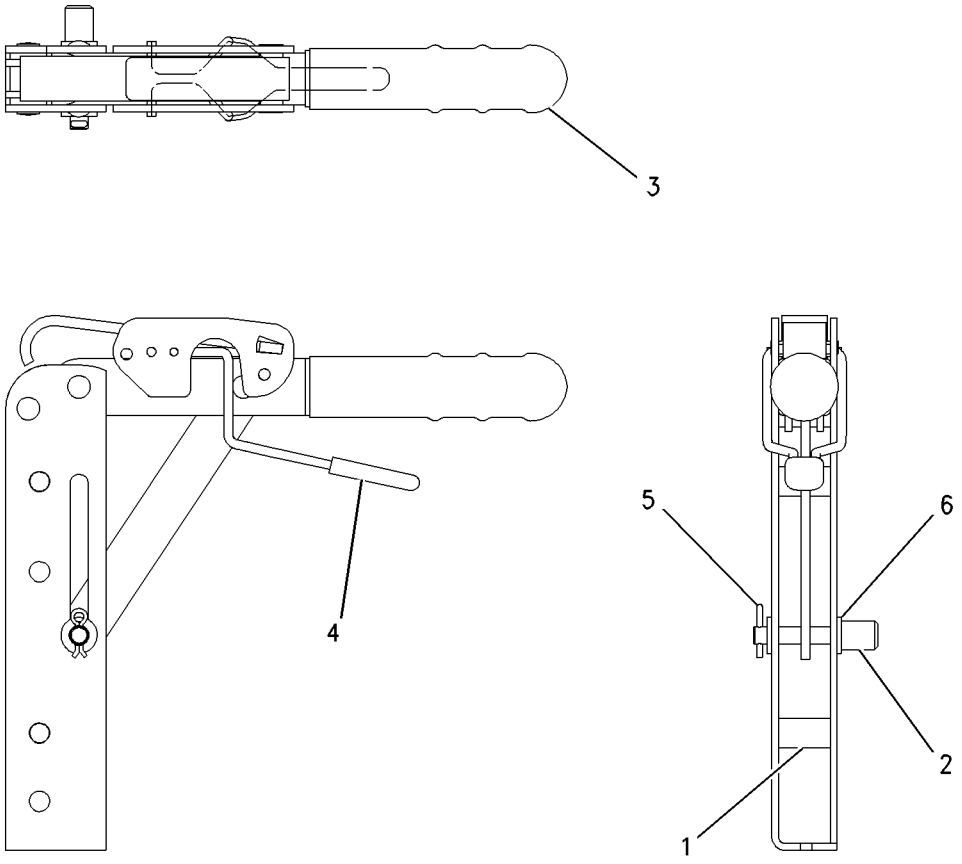

GRAPHIC #1 **<END>** g00729504

STEERING SYSTEM

337-9825 LINES GP-STEERING

S/N: SJW1-UP
PART OF 353-1501 DRIVE AR-BACKHOE LOADER
AN ATTACHMENT

SMCS-4304 **i04577537**

NOTE	REF NO	GRAPHIC REF	PART NUMBER	QTY	PART NAME 1 2 3 4 5 6 (PRODUCT LEVEL)	SEE PAGE
	1	1	**9X-6772**	6	STRAP-CABLE	
	2	1	*195-2037*	1	FITTING AS	
		1	**3K-0360**	1	SEAL-O-RING	
		1	**034-3679**	1	FITTING	
	3	1	*268-1559*	1	ADAPTER AS	
		1	**3J-1907**	1	SEAL-O-RING	
		1	**4J-5477**	1	SEAL-O-RING	
		1	**209-0939**	1	ADAPTER	
Y	4	1	**341-7654**	1	PUMP GP-METERING (HMU)	320
I	5	1	**361-4654**	1	HOSE AS	
I	6	1	**361-4655**	1	HOSE AS	
I	7	1	**362-9209**	1	HOSE AS	
I	8	1	**362-9239**	1	HOSE AS	
	9	1	**100-4336**	2	CLIP	
	10	1	*148-8318*	1	CONNECTOR AS	
		1	**3K-0360**	1	SEAL-O-RING	
		1	**6V-8397**	1	SEAL-O-RING	
		1	**6V-8634**	1	CONNECTOR	
	11	1	*148-8369*	1	ELBOW AS	
		1	**3J-7354**	1	SEAL-O-RING	
		1	**4J-5477**	1	SEAL-O-RING	
		1	**6V-8628**	1	ELBOW	
	12	1	*148-8374*	2	ELBOW AS	
					(EACH INCLUDES)	
		1	**3K-0360**	1	SEAL-O-RING	
		1	**6V-8397**	1	SEAL-O-RING	
		1	**6V-8723**	1	ELBOW	
	13	1	*148-8383*	3	ELBOW AS	
					(EACH INCLUDES)	
		1	**3K-0360**	1	SEAL-O-RING	
		1	**6V-8397**	1	SEAL-O-RING	
		1	**8T-1683**	1	ELBOW	
	14	1	*150-3026*	1	ELBOW AS	
		1	**3K-0360**	1	SEAL-O-RING	
		1	**6V-4292**	1	ELBOW	
	15	1	**359-7325**	2	CLAMP-HOSE	
	16	1	**4P-7429**	1	CLIP	
	17	1	**8S-0948**	1	CLIP	
	18	1	**8T-4121**	3	WASHER-HARD (11X21X2.5-MM THK)	
	19	1	**2B-0941**	2	SPACER (10.5X19X19-MM THK)	
M	20	1	**8T-4196**	1	BOLT (M10X1.5X35-MM)	
M	21	1	**8T-6466**	2	BOLT (M10X1.5X60-MM)	
E	22	1	**5P-1505**		HOSE (78-CM)	

E-ORDER BY THE CENTIMETER
I-REFER TO HYDRAULIC INFORMATION SYSTEM
M-METRIC PART
Y-SEPARATE ILLUSTRATION

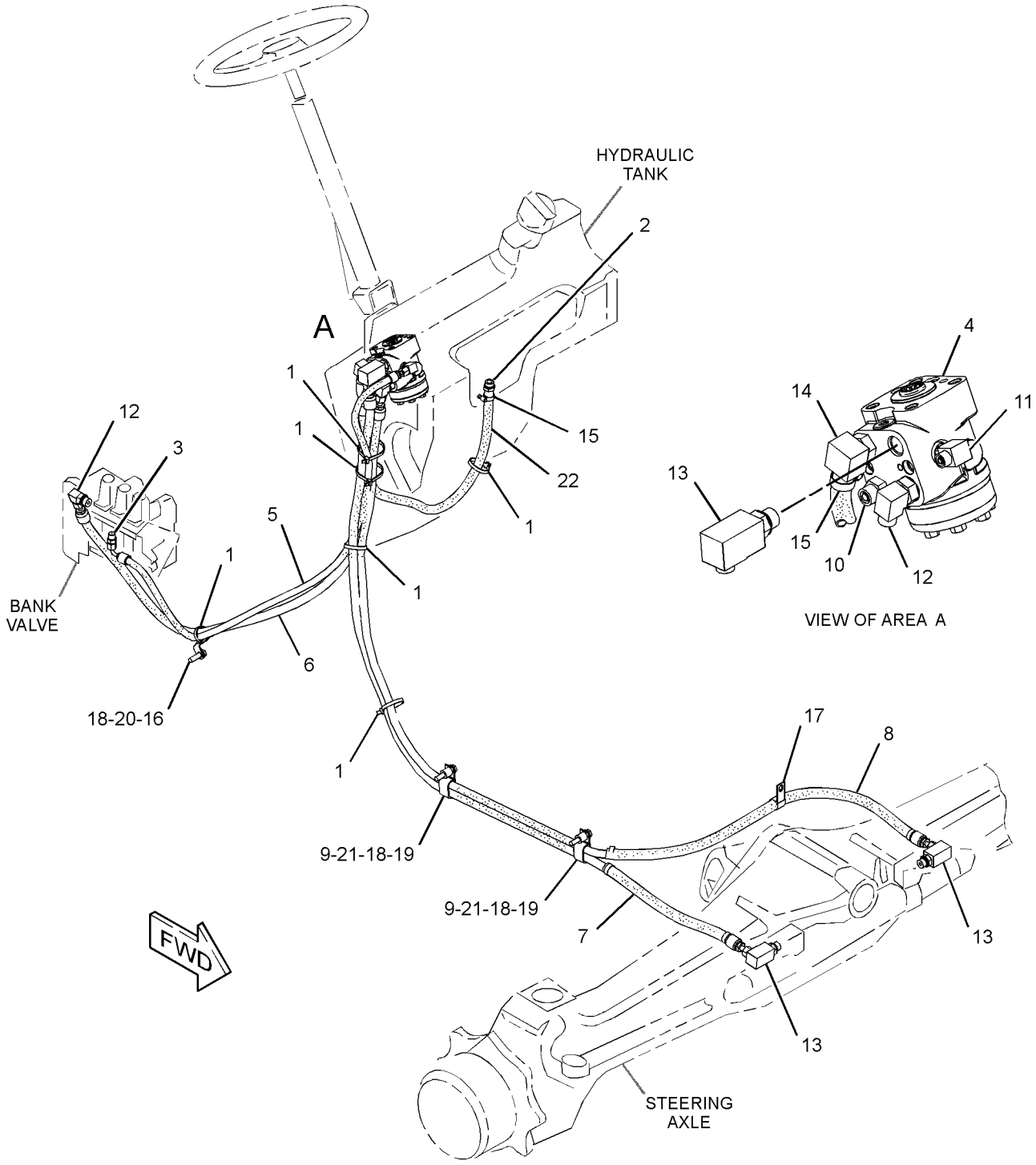

GRAPHIC #1 **<END>** g02796578

STEERING SYSTEM

341-7654 PUMP GP-METERING

S/N: SJW1-UP

PART OF 337-9825 LINES GP-STEERING

AN ATTACHMENT

SMCS-4312 **i04574413**

NOTE	REF NO	GRAPHIC REF	PART NUMBER	QTY	PART NAME 1 2 3 4 5 6 (PRODUCT LEVEL)	SEE PAGE
J	1	1	**7X-9866**	1	SEAL	
	2	1	**054-6882**	1	BEARING AS	
	3	1	**054-6733**	1	RING	
J	4	1	**7X-9873**	7	WASHER (8.2X11.9X1-MM THK)	
					PARTS SHOWN IN GRAPHIC(S) WITHOUT A REFERENCE NUMBER ARE NOT SERVICED SEPARATELY	
					AVAILABLE REPAIR KIT(S):	
J			**214-7469**	1	KIT-SEAL (HMU)	
					(ALSO INCLUDES SEAL RING & O-RING SEALS)	

J-KIT MARKED J SERVICES PARTS MARKED J

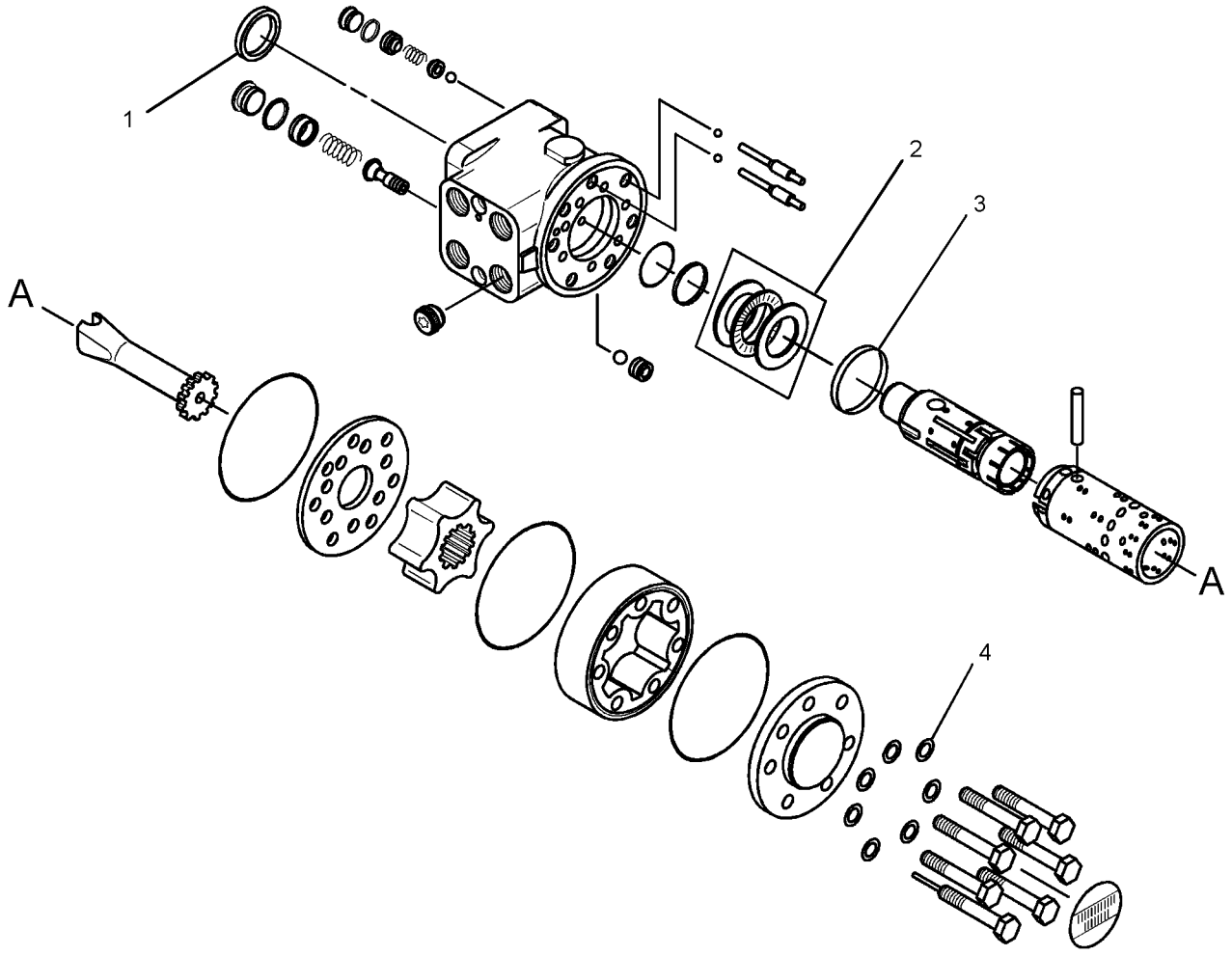

GRAPHIC #1 **<END>** g02812258

310-6216 STEERING COLUMN GP–TILT

S/N: SJW1-UP

PART OF 356-4120 CONTROL GP-STEERING

AN ATTACHMENT

SMCS-4310, 4338 **i03642520**

NOTE	REF NO	GRAPHIC REF	PART NUMBER	QTY	PART NAME 1 2 3 4 5 6 (PRODUCT LEVEL)	SEE PAGE
M	1	1	**169-3261**	1	NUT (M18X1.5-THD)	
	2	1	**338-1508**	1	SPRING GP-GAS (STEERING COLUMN)	
		1	**146-6347**	2	RING-RETAINING	
	3	1	**254-9926**	1	KIT-TILT PEDAL	
					(INCLUDES BOLT, RING, NUT, SPRING & TILT LEVER)	
M	4	1	**5C-8312**	1	NUT (M4X0.7-THD)	
	5	1	**317-5544**	1	CAM	
M	6	1	**123-0708**	1	SCREW-HEX SOCKET (M4X0.7X30-MM)	

M-METRIC PART

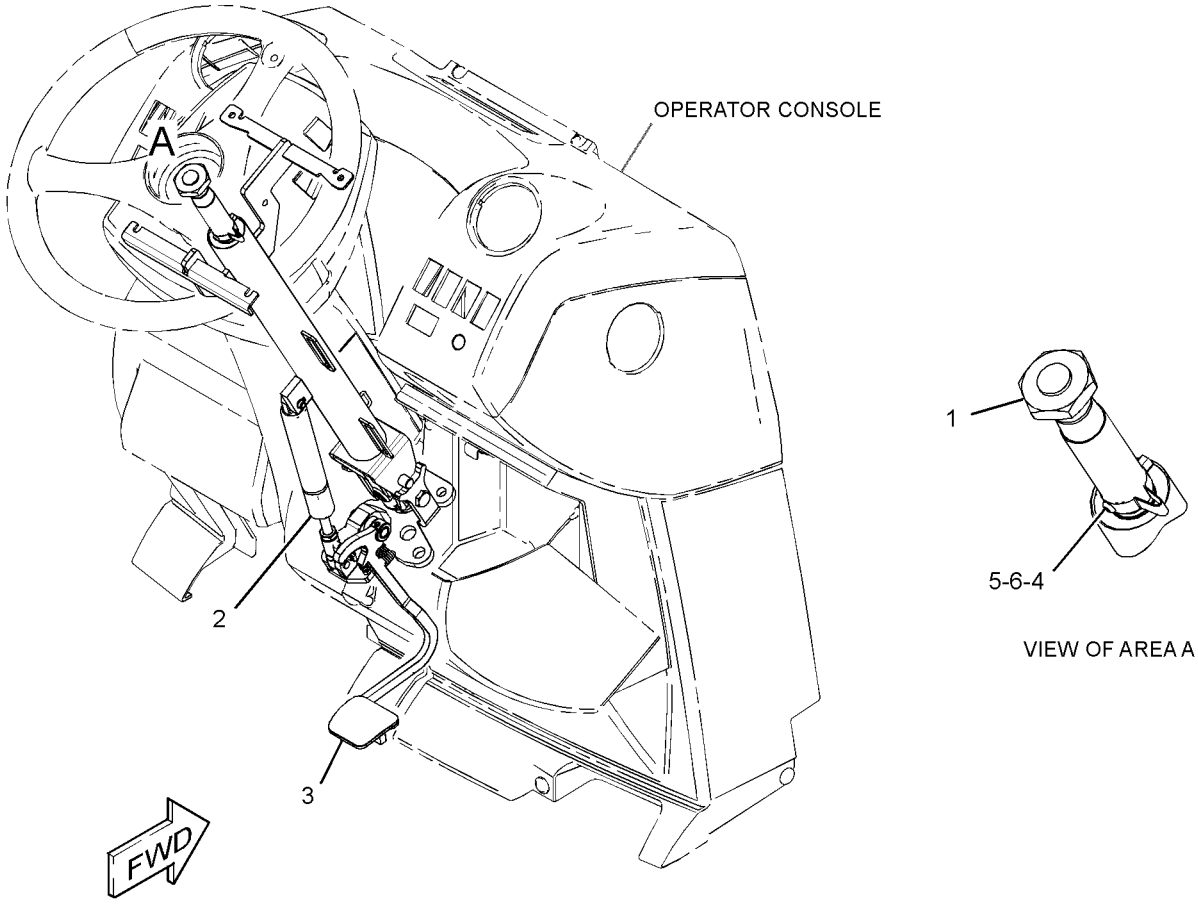

GRAPHIC #1 **<END>** g01960591

353-1380 BOX GP-STORAGE

S/N: SJW1-UP
PART OF 337-9866, 337-9867 ENGINE AR-COMPLETE
AN ATTACHMENT

SMCS-7268 **i04577847**

NOTE	REF NO	GRAPHIC REF	PART NUMBER	QTY	PART NAME 1 2 3 4 5 6 (PRODUCT LEVEL)	SEE PAGE
	1	1	**347-5947**	1	FENDER	
	2	1	**362-3069**	1	TUBE AS	
	3	1	**362-3070**	1	TUBE AS	
	4	1	**362-3074**	1	TREAD AS	
Y	5	1	**362-3079**	1	BOX GP-STORAGE	323
	6	1	**362-4563**	1	PLATE	
	7	1	**363-8010**	1	STEP AS	
	8	1	**363-8348**	2	MOUNT	
	9	1	**364-2475**	5	SEAL-STRIP	
	10	1	**156-0283**	3	WASHER-HARD (8.4X35X2.5-MM THK)	
	11	1	**5P-1076**	4	WASHER-HARD (13.5X30X4-MM THK)	
	12	1	**5P-4116**	12	WASHER-HARD (8.8X20.5X2-MM THK)	
M	13	1	**8T-4183**	4	BOLT (M12X1.75X40-MM)	
M	14	1	**8T-4189**	3	BOLT (M8X1.25X20-MM)	
M	15	1	**8T-6869**	8	BOLT (M8X1.25X60-MM)	
M	16	1	**8T-7547**	4	BOLT (M8X1.25X30-MM)	

M-METRIC PART
Y-SEPARATE ILLUSTRATION

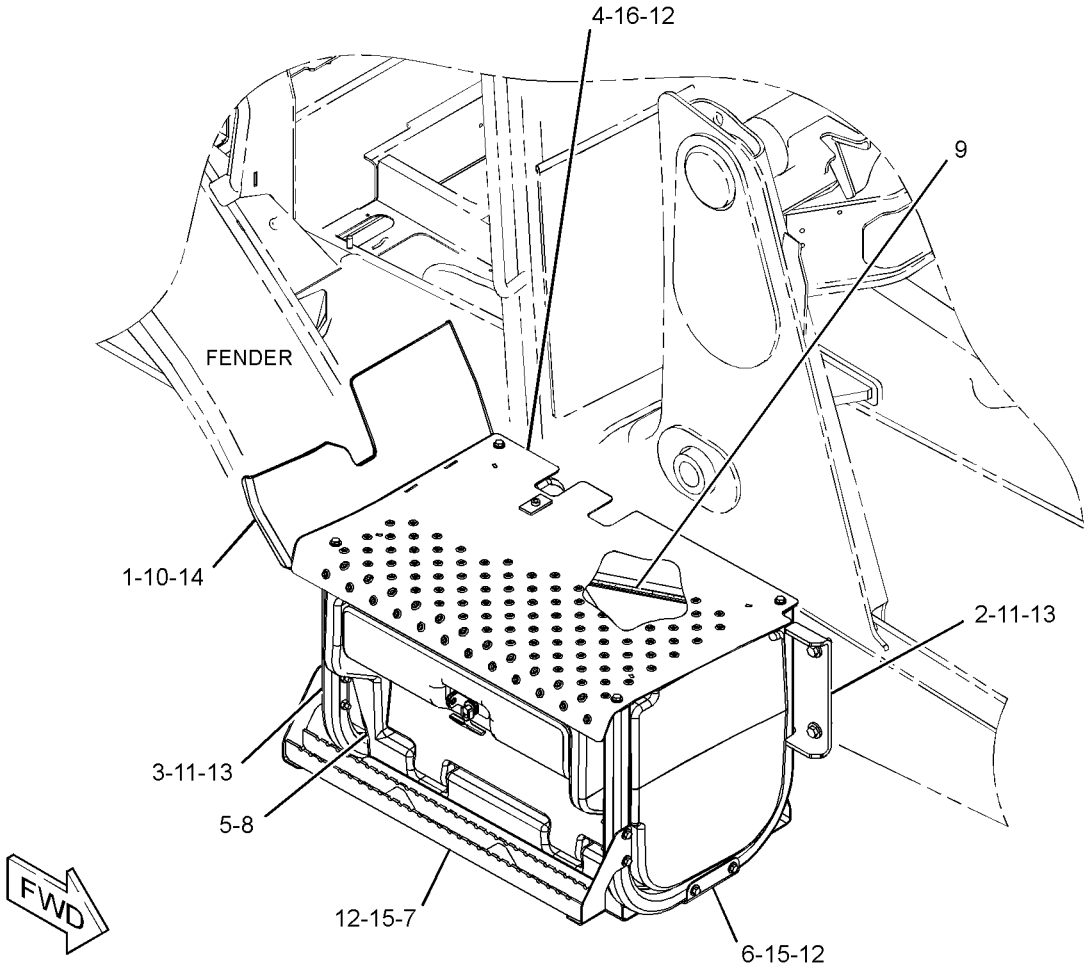

GRAPHIC #1 **<END>** g02811017

362-3079 BOX GP-STORAGE

S/N: SJW1-UP
PART OF 353-1380 BOX GP-STORAGE
AN ATTACHMENT

SMCS-7268 **i04577679**

NOTE	REF NO	GRAPHIC REF	PART NUMBER	QTY	PART NAME 1 2 3 4 5 6 (PRODUCT LEVEL)	SEE PAGE
M	1	1	**6V-9606**	2	BOLT (M6X1X140-MM)	
	2	1	**129-4741**	1	LATCH AS-T-BAR	
	3	1	**362-3080**	1	DOOR AS-ACCESS	
M	4	1	**129-3178**	2	LOCKNUT (M6X1-THD)	
M	5	1	**6V-7743**	2	LOCKNUT (M6X1-THD)	
M	6	1	**8T-4133**	2	NUT (M10X1.5-THD)	
	7	1	**9M-5732**	4	RIVET-POP	

M-METRIC PART

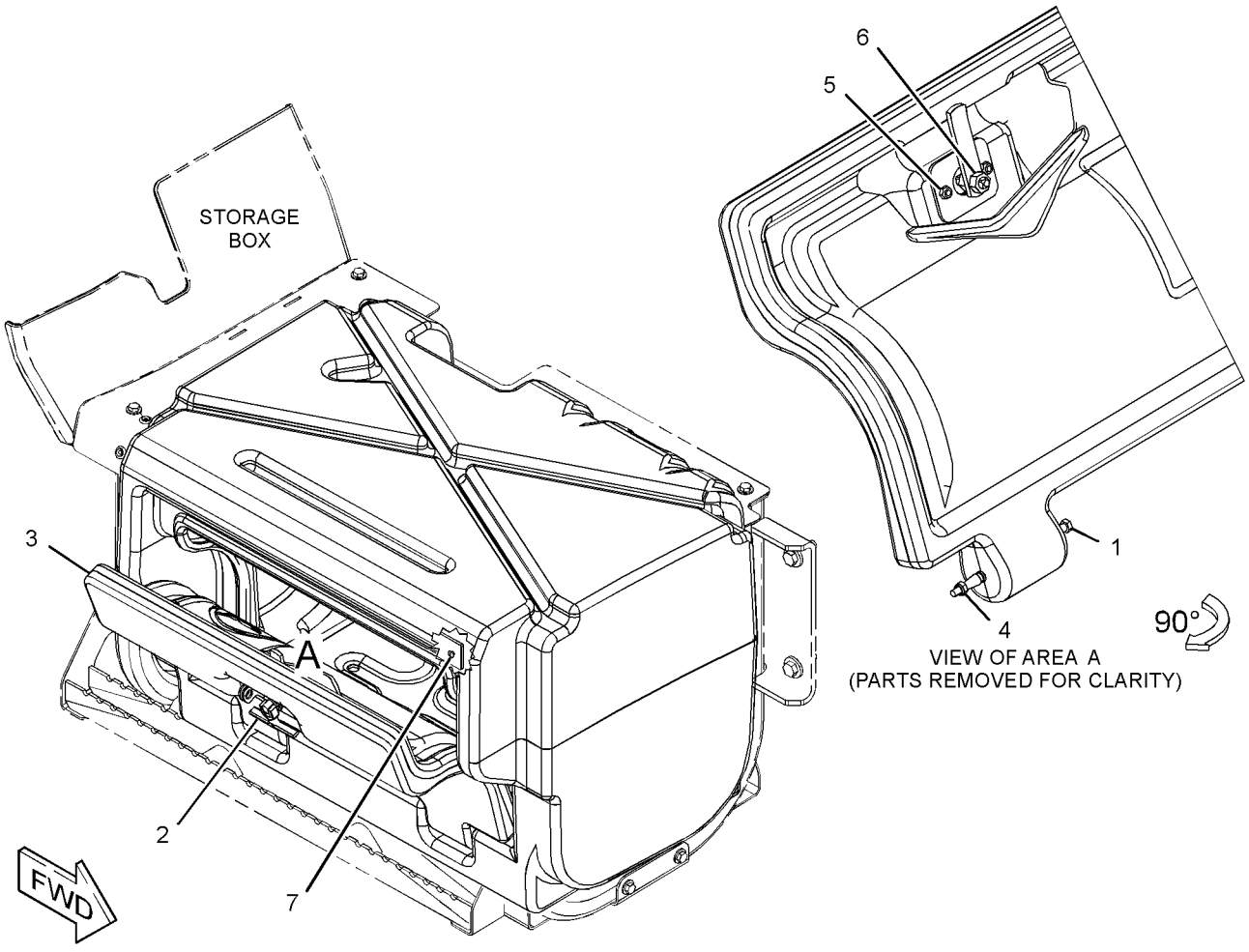

GRAPHIC #1 **<END>** g02818436

FRAME AND BODY

337-9693 COUNTERWEIGHT GP

S/N: SJW1-UP

AN ATTACHMENT

SMCS-7056 **i04549538**

NOTE	REF NO	GRAPHIC REF	PART NUMBER	QTY	PART NAME 1 2 3 4 5 6 (PRODUCT LEVEL)	SEE PAGE
	1	1	**366-1271**	4	CAP	

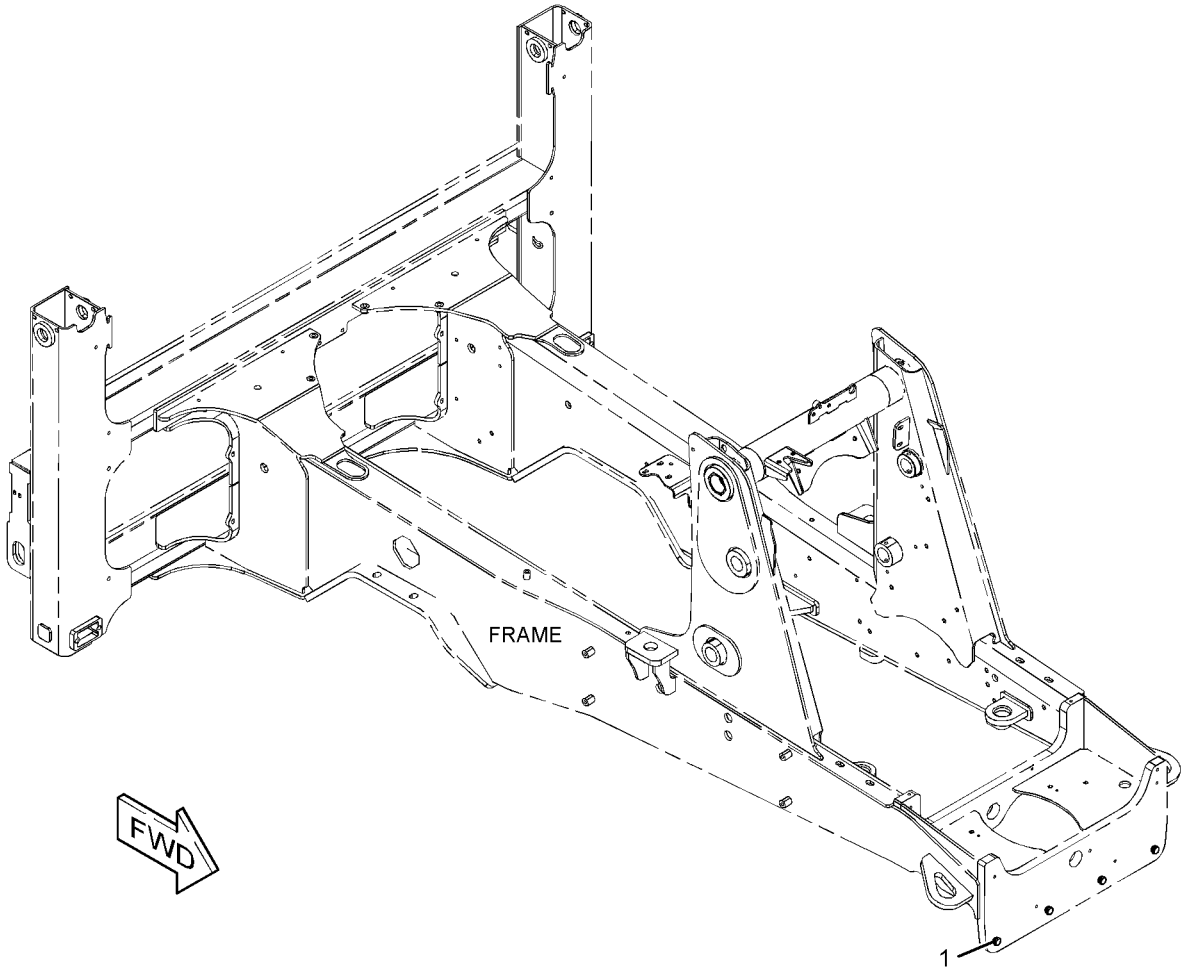

GRAPHIC #1 **<END>** g02773460

FRAME AND BODY

337-9694 COUNTERWEIGHT GP

S/N: SJW1-UP
116-KG (255-LB)
AN ATTACHMENT

SMCS-7056 **i04697090**

NOTE	REF NO	GRAPHIC REF	PART NUMBER	QTY	PART NAME 1 2 3 4 5 6 (PRODUCT LEVEL)	SEE PAGE
	1	1	**356-0041**	1	COUNTERWEIGHT	
M	2	1	**7X-2579**	2	BOLT (M24X3X240-MM)	
	3	1	**8T-4167**	2	WASHER-HARD (26X44X4-MM THK)	
	4	1	**366-1271**	2	CAP	

M-METRIC PART

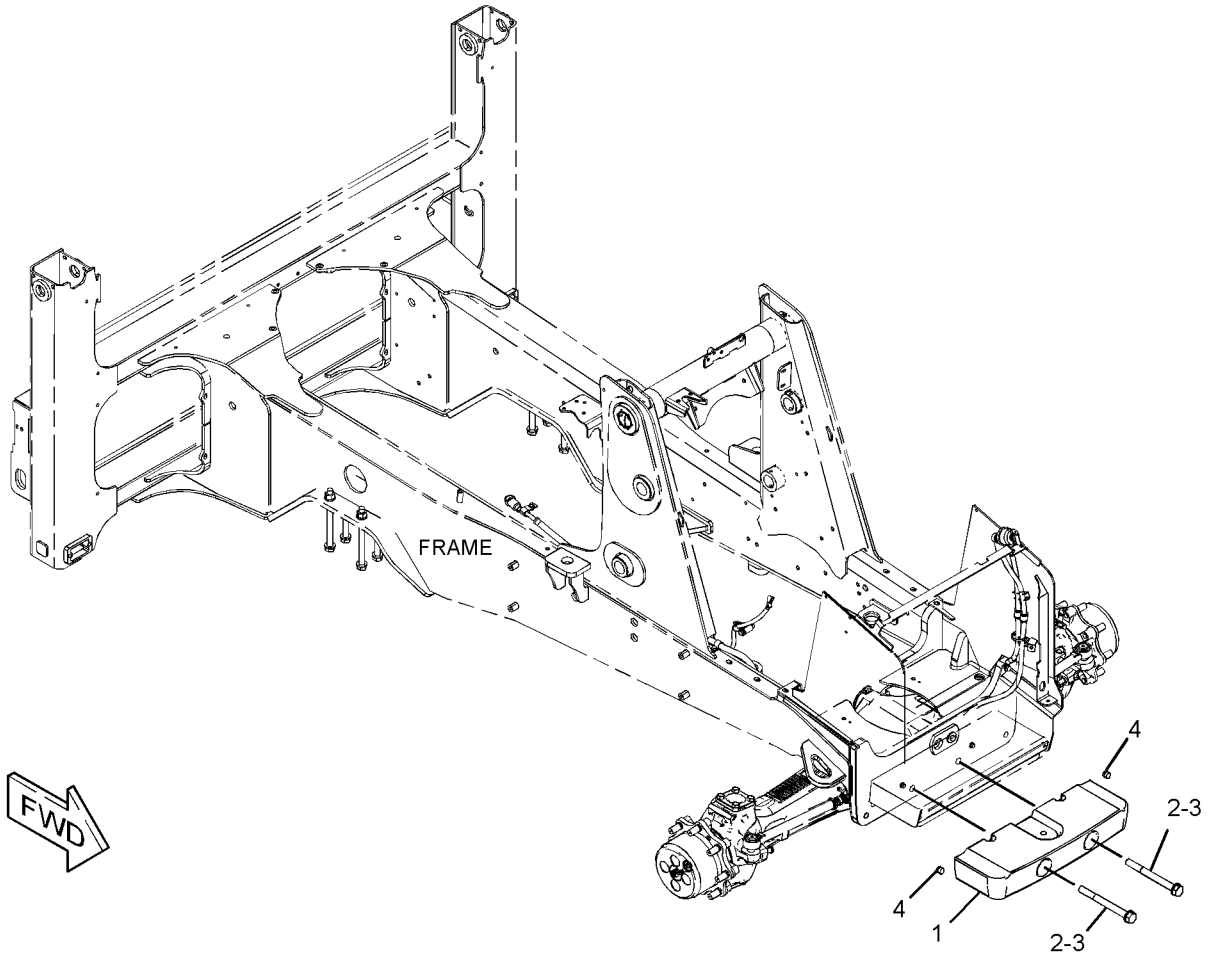

GRAPHIC #1 **<END>** g02806456

FRAME AND BODY

337-9695 COUNTERWEIGHT GP

S/N: SJW1-UP
240-KG (529-LB)
PART OF 389-3761, 389-3762 DISTRIBUTION AR
AN ATTACHMENT

SMCS-7056 **i04549542**

NOTE	REF NO	GRAPHIC REF	PART NUMBER	QTY	PART NAME 1 2 3 4 5 6 (PRODUCT LEVEL)	SEE PAGE
	1	1	**356-0042**	1	COUNTERWEIGHT	
M	2	1	**7X-2579**	4	BOLT (M24X3X240-MM)	
	3	1	**8T-4167**	4	WASHER-HARD (26X44X4-MM THK)	

M-METRIC PART

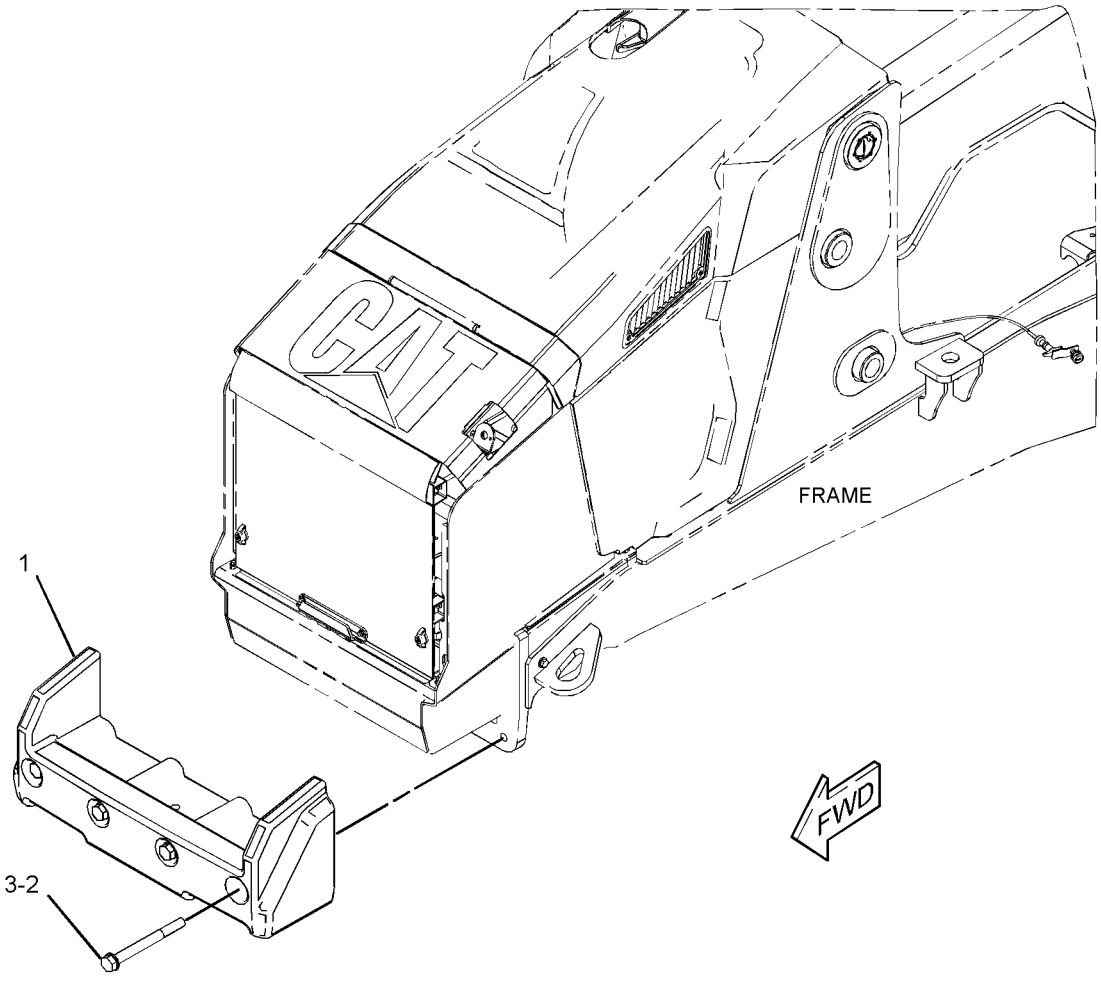

GRAPHIC #1 **<END>** g02812118

FRAME AND BODY

337-9696 COUNTERWEIGHT GP

S/N: SJW1-UP
460-KG (1015-LB)
AN ATTACHMENT

SMCS-7056 **i04549545**

NOTE	REF NO	GRAPHIC REF	PART NUMBER	QTY	PART NAME 1 2 3 4 5 6 (PRODUCT LEVEL)	SEE PAGE
	1	1	**341-2047**	1	COUNTERWEIGHT	
M	2	1	**7X-2579**	4	BOLT (M24X3X240-MM)	
	3	1	**8T-4167**	4	WASHER-HARD (26X44X4-MM THK)	

M-METRIC PART

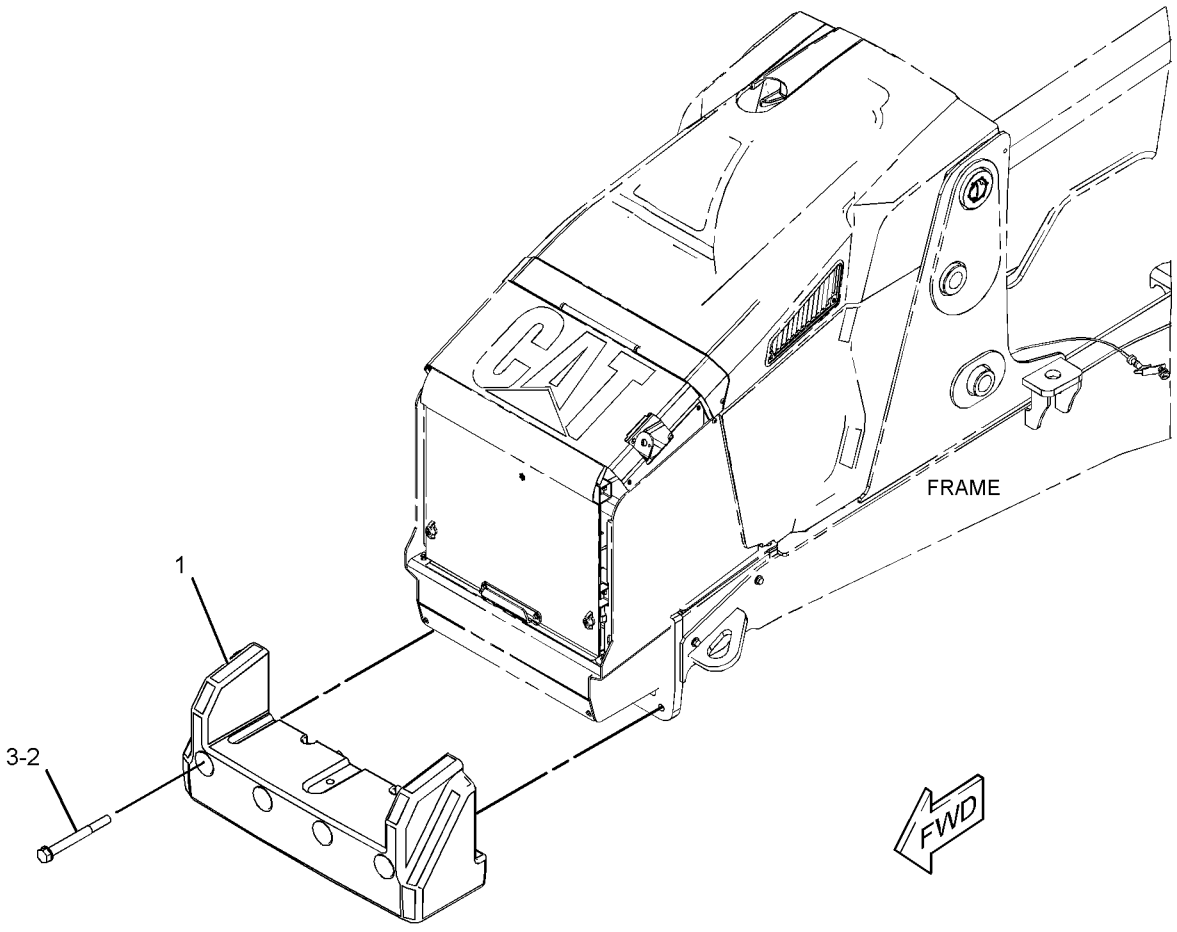

GRAPHIC #1 **<END>** g02812256

343-2901 COVER GP-PROTECTION

S/N: SJW1-UP

PART OF 340-1743 LINKAGE AR, 340-1740 LINKAGE AR-BUCKET AN ATTACHMENT

SMCS-7050, 7250, 7315 **i03765830**

NOTE	REF NO	GRAPHIC REF	PART NUMBER	QTY	PART NAME 1 2 3 4 5 6 (PRODUCT LEVEL)	SEE PAGE
	1	1	**3S-2093**	2	STRAP-CABLE	
	2	1	**353-3280**	1	COVER	
M	3	1	**5C-9553**	2	BOLT (M6X1X16-MM)	
	4	1	**7X-0579**	2	WASHER-HARD (8.8X25.5X2-MM THK)	
	5	1	**7X-7702**		CONDUIT-FLEXIBLE (23.35-MM ID, SPLIT) (75-CM EACH)	
	5A	1	**7X-7702**		CONDUIT-FLEXIBLE (23.35-MM ID, SPLIT) (64-CM)	

M-METRIC PART

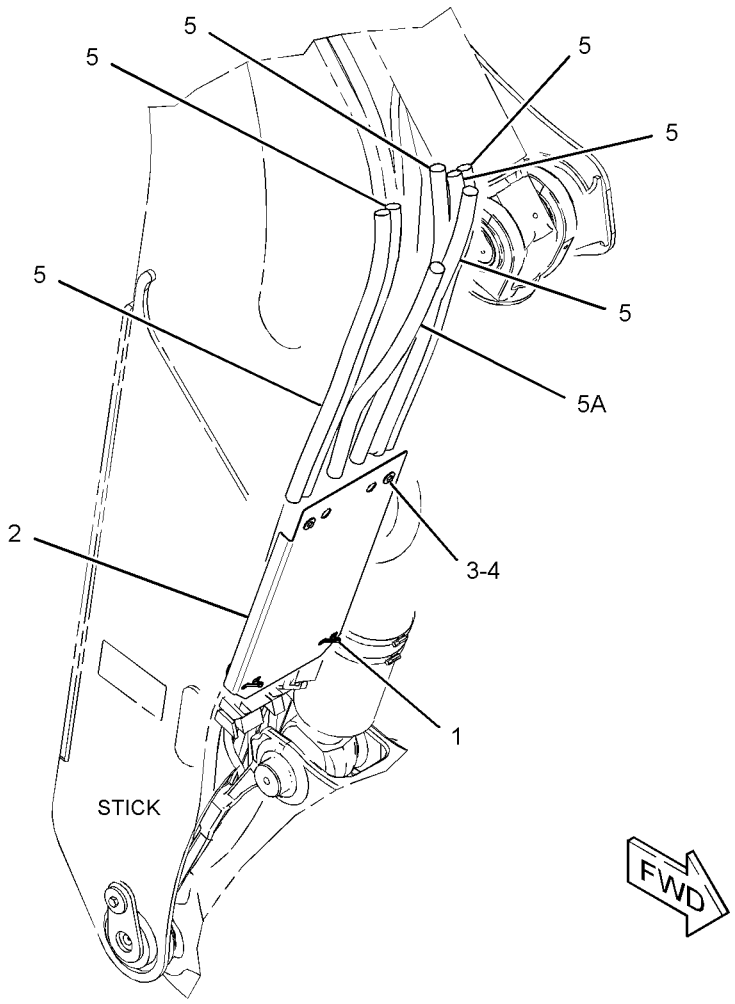

GRAPHIC #1 **<END>** g02108638

367-9973 COVER GP-PROTECTION

S/N: SJW1-UP

PART OF 340-1750 LINKAGE AR, 340-1741 LINKAGE AR-BUCKET AN ATTACHMENT

SMCS-7050, 7250, 7315 **i04201174**

NOTE	REF NO	GRAPHIC REF	PART NUMBER	QTY	PART NAME 1 2 3 4 5 6 (PRODUCT LEVEL)	SEE PAGE
	1	1	**3S-2093**	2	STRAP-CABLE	
	2	1	**363-0540**	1	COVER	
M	3	1	**5C-9553**	2	BOLT (M6X1X16-MM)	
	4	1	**7X-0579**	2	WASHER-HARD (8.8X25.5X2-MM THK)	
E	5	1	**7X-7702**		CONDUIT-FLEXIBLE (23.35-MM ID, SPLIT) (75-CM EACH)	
E	5A	1	**7X-7702**		CONDUIT-FLEXIBLE (23.35-MM ID, SPLIT) (64-CM EACH)	
E	5B	1	**7X-7702**		CONDUIT-FLEXIBLE (23.35-MM ID, SPLIT) (53-CM)	

E-ORDER BY THE CENTIMETER
M-METRIC PART

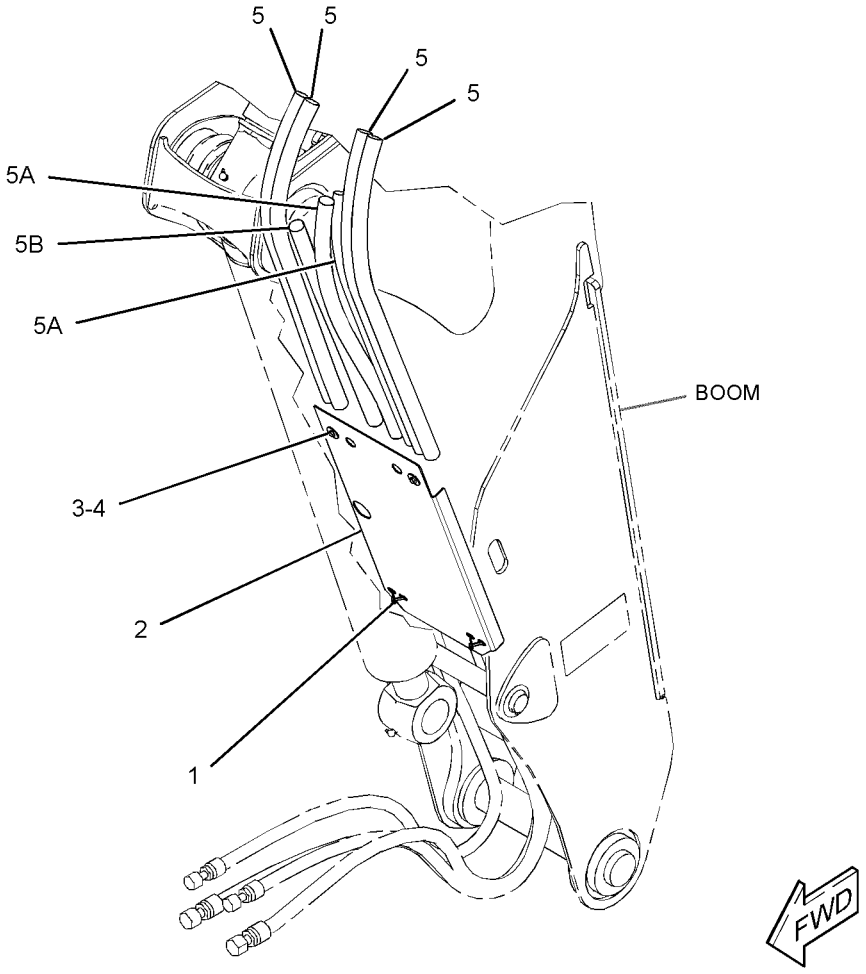

GRAPHIC #1 **<END>** g02485117

337-6851 FENDER GP-FRONT

S/N: SJW1-UP
PART OF 341-3107 CONVERSION AR-ROADING, 389-3761, 389-3762 DISTRIBUTION AR, 341-3109 OPTION AR-REGIONAL
AN ATTACHMENT

SMCS-7252 **i04549547**

NOTE	REF NO	GRAPHIC REF	PART NUMBER	QTY	PART NAME 1 2 3 4 5 6 (PRODUCT LEVEL)	SEE PAGE
M	1	1	**199-0783**	4	BOLT (M16X2X38-MM)	
	2	1	**375-1372**	1	BRACKET AS (LH)	
	3	1	**375-1373**	1	BRACKET AS (RH)	
	4	1	**377-5319**	2	PLATE	
	5	1	**377-5320**	2	FENDER	
M	6	1	**6V-7744**	4	LOCKNUT (M10X1.5-THD)	
	7	1	**8T-4121**	8	WASHER-HARD (11X21X2.5-MM THK)	
	8	1	**8T-4122**	12	WASHER-HARD (17X32X3.5-MM THK)	
M	9	1	**8T-4137**	4	BOLT (M10X1.5X20-MM)	
M	10	1	**8T-4195**	4	BOLT (M10X1.5X30-MM)	
	11	1	**8T-4222**	4	WASHER-PLATED (11X32X2.5-MM THK)	
M	12	1	**8T-4778**	4	LOCKNUT (M16X2-THD)	

M-METRIC PART

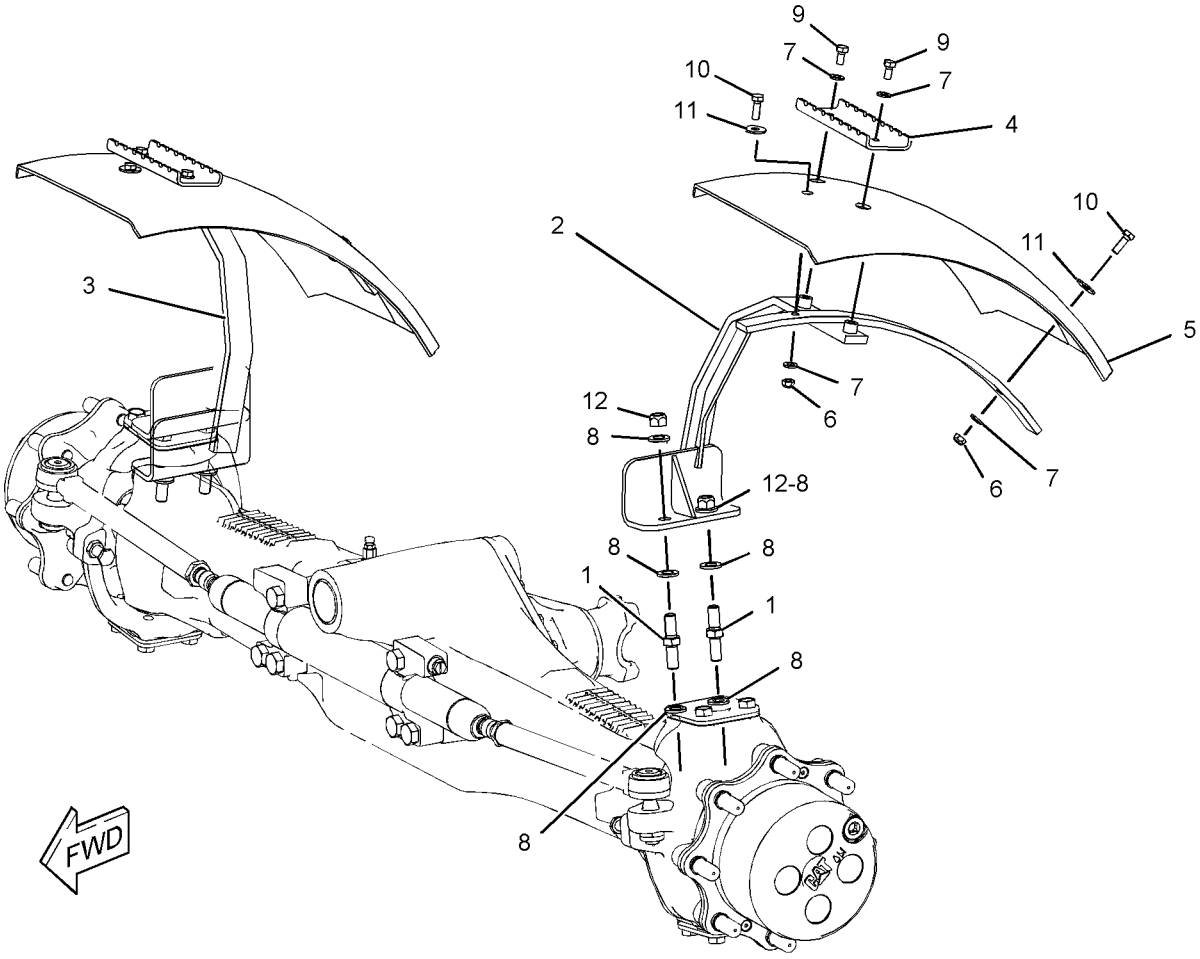

GRAPHIC #1 **<END>** g02760278

211-3782 FENDER GP-REAR

S/N: SJW1-UP
PART OF 353-1429 CAB AR
AN ATTACHMENT

SMCS-7252 **i04565377**

NOTE	REF NO	GRAPHIC REF	PART NUMBER	QTY	PART NAME 1 2 3 4 5 6 (PRODUCT LEVEL)	SEE PAGE
M	1	1	**8T-4908**	4	BOLT (M8X1.25X25-MM)	
E	2	1	**244-3113**		SEAL (219-CM EACH)	
	3	1	**116-5763**	1	CLIP-SPRING	
	4	1	**376-2119**	2	SCREW-BUTTON HEAD	
	6	1	**213-1889**	1	PLATE	
J	7	1	**226-0291**	1	LOCK AS (PROTECTION)	
	8	1	**227-5556**	1	PLATE	
	9	1	**244-3111**	1	FENDER-REAR (LH)	
	11	1	**247-5557**	1	GUARD	
M	12	1	**7Y-9099**	1	SCREW-TRUSS HEAD (M8X1.25X25-MM)	
	13	1	**156-0283**	22	WASHER-HARD (8.4X35X2.5-MM THK)	
M	14	1	**6V-9189**	4	LOCKNUT (M8X1.25-THD)	
M	15	1	**8T-5093**	14	BOLT-LOCKING (M8X1.25X25-MM)	
E	16	1	**220-0738**		SEAL (118-CM)	
	18	1	*289-6410*	1	FENDER GP (RH)	
		1	**213-1887**	1	COVER-FENDER	
		1	**244-3112**	1	FENDER-REAR (RH)	
D	19	1	**5P-5927**		SEAL (0.8-M)	

D-ORDER BY THE METER
E-ORDER BY THE CENTIMETER
J-REQUIRES CORPORATE KEY
M-METRIC PART

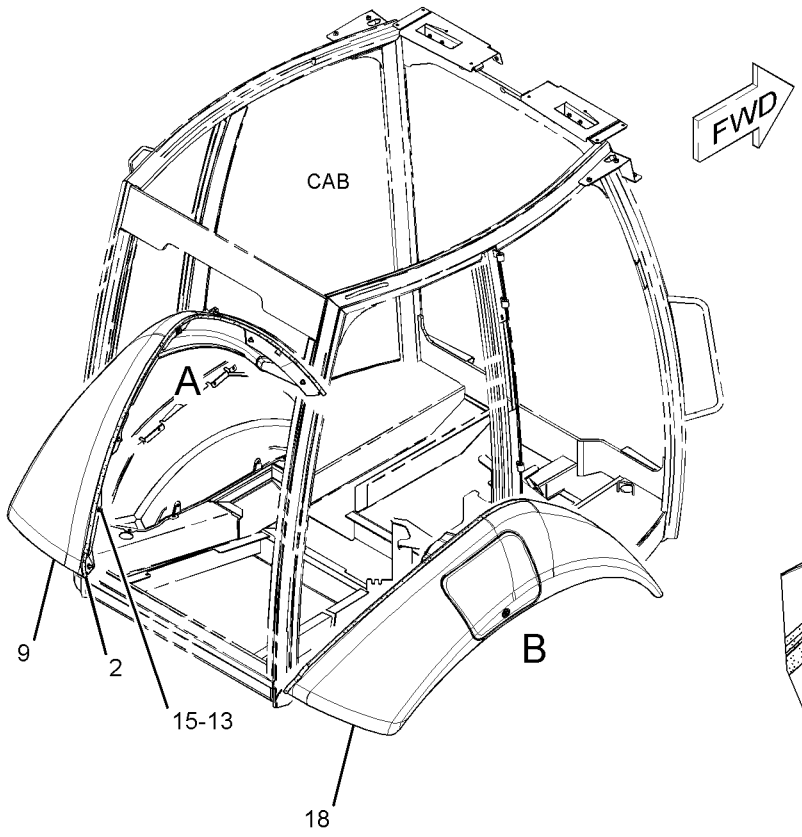

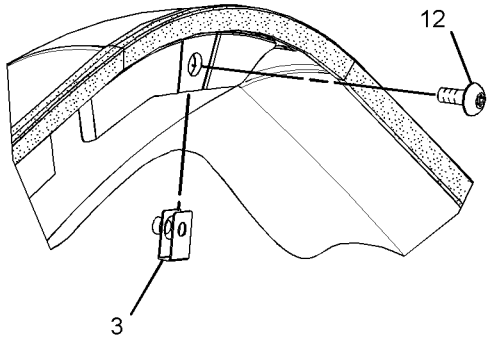

VIEW OF AREA A
(EXPLODED)

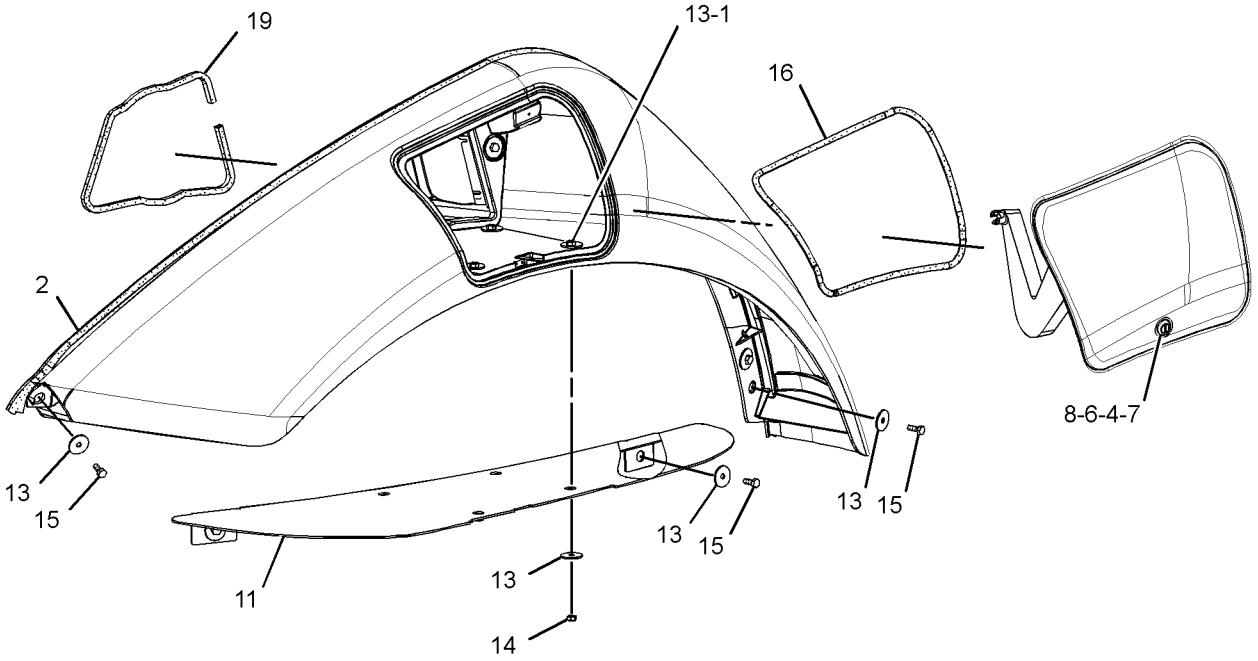

VIEW OF AREA B
(EXPLODED)

GRAPHIC #1 **<END>** g01367108

356-4106 FLOORPLATE GP

S/N: SJW1-UP
PART OF 373-4266, 373-4267, 373-4268 VALVE AR-BANK 3
AN ATTACHMENT

SMCS-7265 **i04617989**

NOTE	REF NO	GRAPHIC REF	PART NUMBER	QTY	PART NAME 1 2 3 4 5 6 (PRODUCT LEVEL)	SEE PAGE
E	1	1	**7X-7898**		TRIM (15-CM)	
	2	1	**206-1835**	1	PLATE AS	
	3	1	**223-8267**	1	PLATE AS	
	4	1	**289-9871**	1	PLATE AS	
	5	1	**289-9873**	1	PLATE AS	
	6	1	**289-9875**	1	PLATE AS	
	7	1	**299-4777**	1	PLATE AS	
	8	1	**356-4066**	1	PLATE AS	
	9	1	**356-4108**	1	PLATE AS	
	10	1	**356-4110**	1	PLATE	
	11	1	**356-4112**	1	PLATE AS	
	12	1	**356-4116**	1	PLATE AS	
	13	1	**9X-2038**	41	WASHER (7X19X2-MM THK)	
M	14	1	**9X-2043**	47	SCREW-TRUSS HEAD (M6X1X14-MM)	

E-ORDER BY THE CENTIMETER
M-METRIC PART

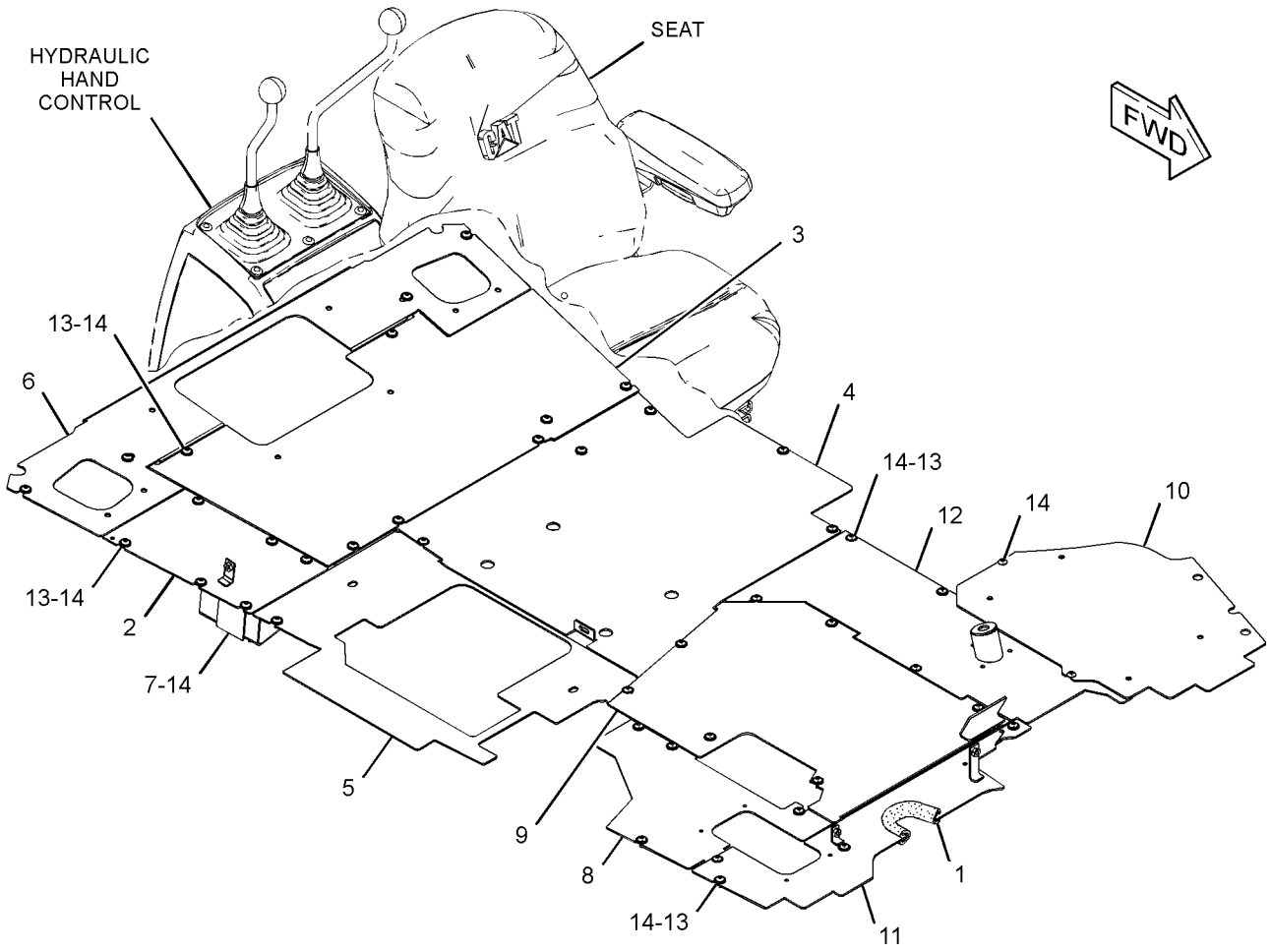

GRAPHIC #1 **<END>** g02789399

373-4295 FRAME AR-LOADER—NARROW

S/N: SJW1-UP
AN ATTACHMENT

SMCS-7054 **i04602895**

NOTE	PART NUMBER	QTY	PART NAME 1 2 3 4 5 6 (PRODUCT LEVEL)	SEE PAGE
Y	**353-1403**	1	FRAME GP-LOADER	335
Y-SEPARATE ILLUSTRATION				

<END>

373-4296 FRAME AR-LOADER

S/N: SJW1-UP
PART OF 389-3761, 389-3762 DISTRIBUTION AR
AN ATTACHMENT

SMCS-7054 **i04609649**

NOTE	PART NUMBER	QTY	PART NAME 1 2 3 4 5 6 (PRODUCT LEVEL)	SEE PAGE
Y	*353-1404*	1	FRAME GP-LOADER	337
Y-SEPARATE ILLUSTRATION				

<END>

353-1403 FRAME GP-LOADER–NARROW

S/N: SJW1-UP
PART OF 373-4295 FRAME AR-LOADER
AN ATTACHMENT

SMCS-7054 **i04603213**

NOTE	REF NO	GRAPHIC REF	PART NUMBER	QTY	PART NAME 1 2 3 4 5 6 (PRODUCT LEVEL)	SEE PAGE
B	1	1	**193-1681**	8	PAD (5.2-MM THK)	
B	2	1	**193-1683**	2	PAD (4.2-MM THK)	
B	3	1	**193-1684**	2	PAD (6.2-MM THK)	
M	4	1	**246-7854**	38	NUT-SPECIAL (M10X1.5-THD)	
	5	1	**248-5245**	2	FILM-INFORMATION (LIFT EYE, TIE-DOWN LOCATION)	
	6	1	**252-2157**	2	FILM-INFORMATION (TIE-DOWN)	
	7	1	**330-0798**	2	TUBE AS	
	8	1	**331-2489**	4	WEAR PAD	
	9	1	**331-4365**	2	COVER	
	10	1	**340-9290**	4	PLATE GP-COVER (LOADER FRAME)	
	11	1	**361-4343**	1	FRAME AS	
	12	1	*367-5378*	2	GUARD AS	
					(EACH INCLUDES)	
M		1	**252-6143**	6	NUT-SPECIAL (M8X1.25-THD)	
		1	**377-0002**	1	PLATE	
	13	1	**370-0495**	2	NUT-SPECIAL (M8X1.25-THD)	
	14	1	**370-5555**	2	CAP	
	15	1	**3B-8489**	2	FITTING-GREASE	
	16	1	**5P-4116**	6	WASHER-HARD (8.8X20.5X2-MM THK)	
M	17	1	**8T-4196**	2	BOLT (M10X1.5X35-MM)	
M	18	1	**099-3649**	2	BOLT (M8X1.25X40-MM)	
M	19	1	**8T-7338**	8	BOLT (M16X2X45-MM)	
M	20	1	**8T-7547**	4	BOLT (M8X1.25X30-MM)	
	21	1	**9X-8257**	8	WASHER (17.5X30X3.5-MM THK)	

B-USE AS REQUIRED
M-METRIC PART

353-1403 **FRAME GP-LOADER** *(contd.)* **i04603213**

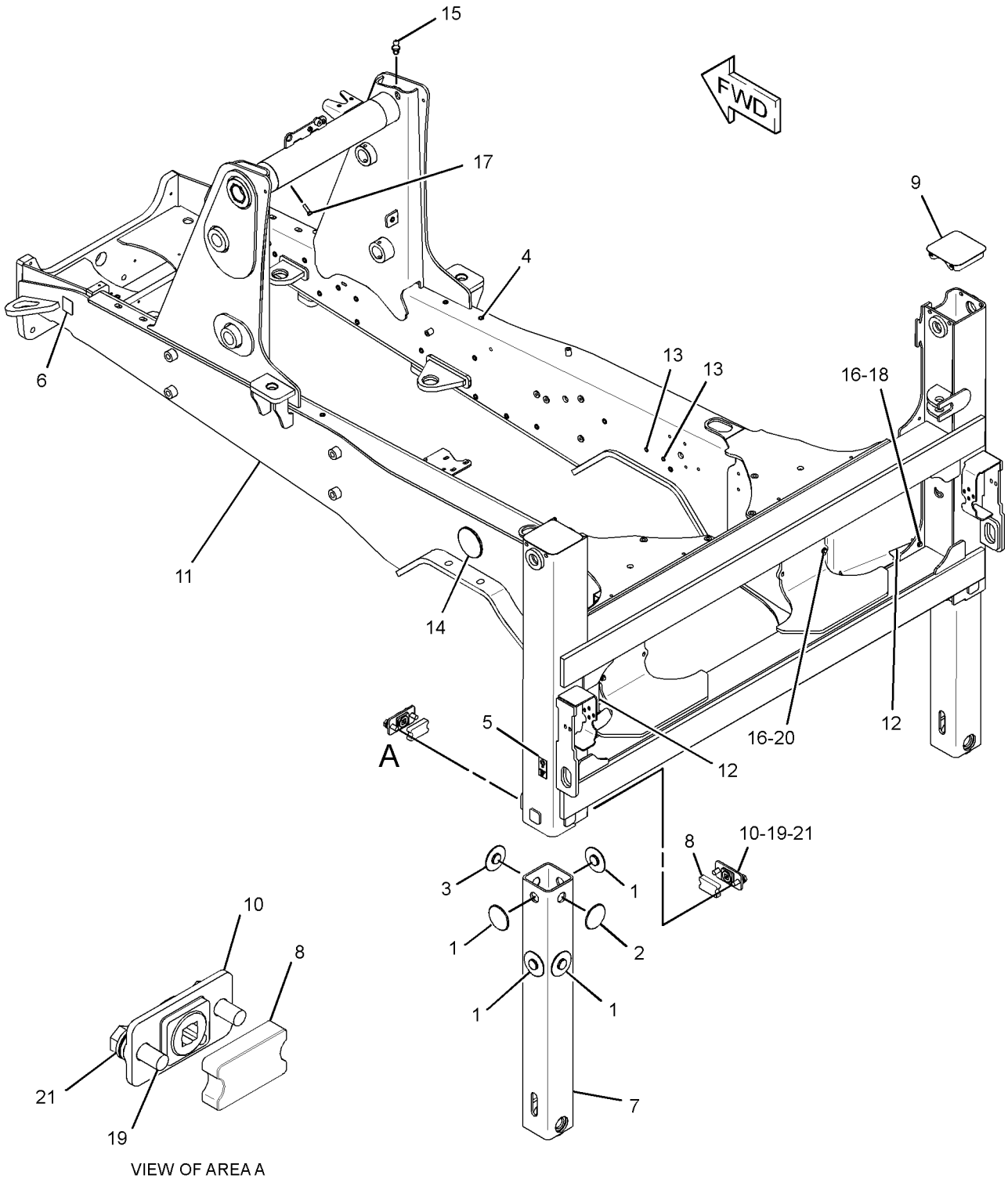

VIEW OF AREA A

GRAPHIC #1 **<END>** g02808083

353-1404 FRAME GP-LOADER

S/N: SJW1-UP
PART OF 373-4296 FRAME AR-LOADER
AN ATTACHMENT

SMCS-7054 **i04609653**

NOTE	REF NO	GRAPHIC REF	PART NUMBER	QTY	PART NAME 1 2 3 4 5 6 (PRODUCT LEVEL)	SEE PAGE
B	1	1	**193-1681**	8	PAD (5.2-MM THK)	
B	2	1	**193-1683**	2	PAD (4.2-MM THK)	
B	3	1	**193-1684**	2	PAD (6.2-MM THK)	
M	4	1	**246-7854**	38	NUT-SPECIAL (M10X1.5-THD)	
	5	1	**248-5245**	2	FILM-INFORMATION (LIFT EYE, TIE-DOWN LOCATION)	
	6	1	**252-2157**	2	FILM-INFORMATION (TIE-DOWN)	
	7	1	**330-0798**	2	TUBE AS	
	8	1	**331-2489**	4	WEAR PAD	
	9	1	**331-4365**	2	COVER	
	10	1	**340-9290**	4	PLATE GP-COVER (LOADER FRAME)	
	11	1	**360-6643**	1	FRAME AS	
	12	1	*367-5378*	2	GUARD AS	
					(EACH INCLUDES)	
M		1	**252-6143**	6	NUT-SPECIAL (M8X1.25-THD)	
		1	**377-0002**	1	PLATE	
	13	1	**370-0495**	2	NUT-SPECIAL (M8X1.25-THD)	
	14	1	**370-5555**	2	CAP	
	15	1	**3B-8489**	2	FITTING-GREASE	
	16	1	**5P-4116**	6	WASHER-HARD (8.8X20.5X2-MM THK)	
M	17	1	**8T-4196**	2	BOLT (M10X1.5X35-MM)	
M	18	1	**8T-4197**	2	BOLT (M8X1.25X40-MM)	
M	19	1	**8T-7338**	8	BOLT (M16X2X45-MM)	
M	20	1	**8T-7547**	4	BOLT (M8X1.25X30-MM)	
	21	1	**9X-8257**	8	WASHER (17.5X30X3.5-MM THK)	

B-USE AS REQUIRED
M-METRIC PART

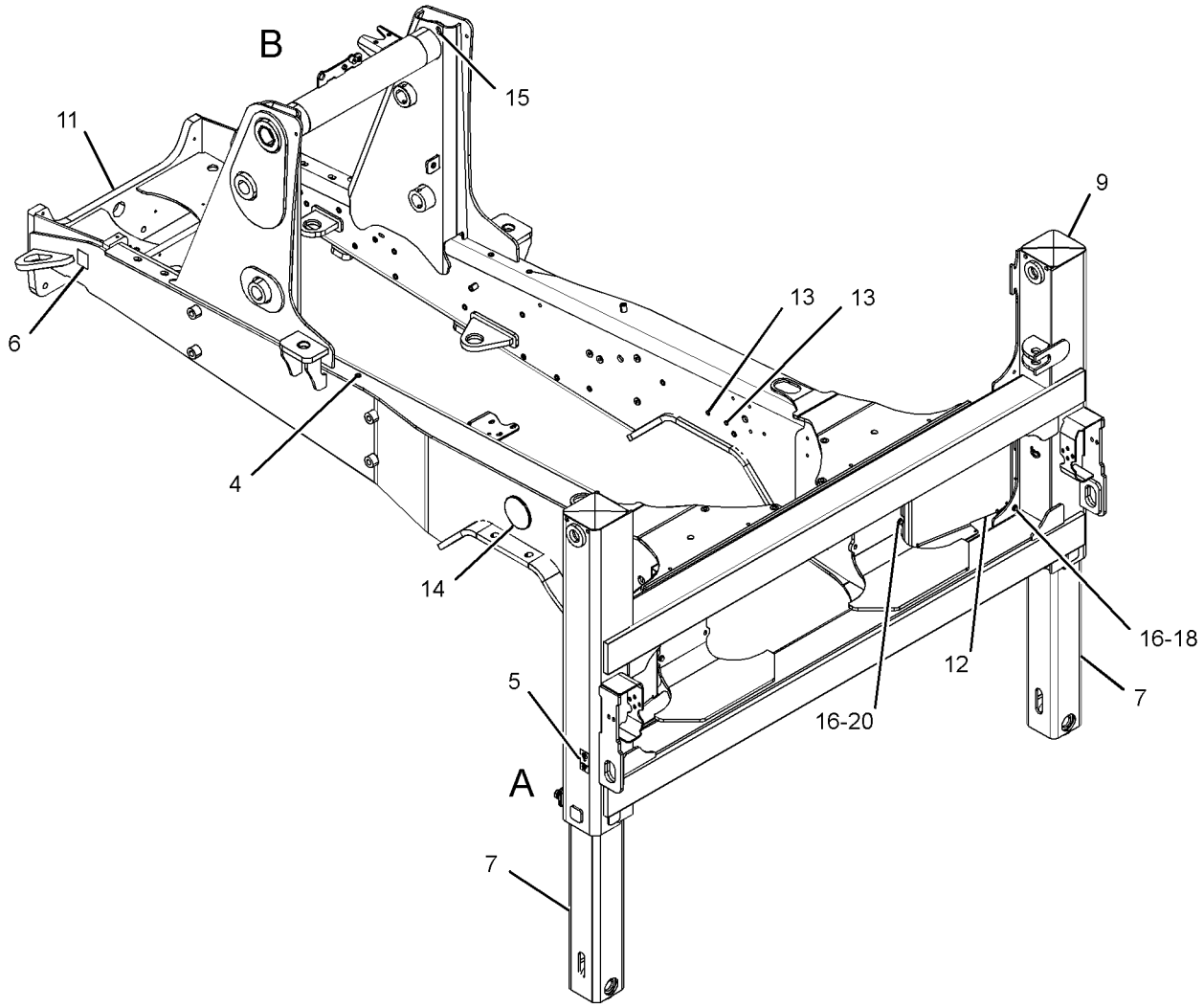

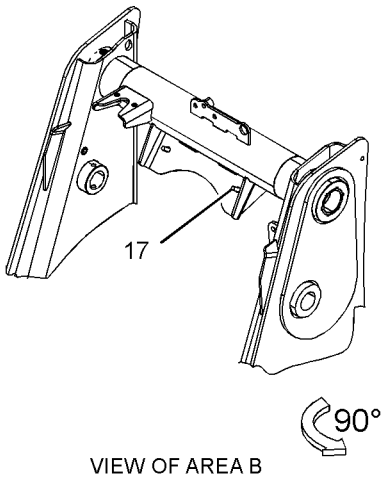

VIEW OF AREA B

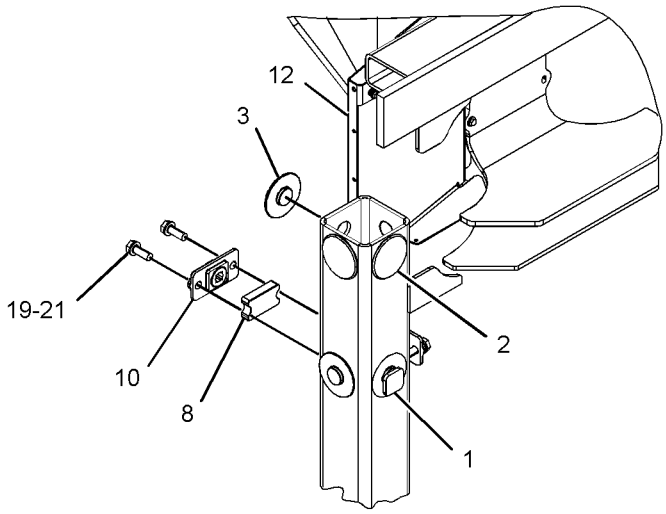

VIEW OF AREA A
(FRAME REMOVED FOR CLARITY)

GRAPHIC #1 **<END>** g02829417

FRAME AND BODY

320-5933 FRAME GP-SLIDING

S/N: SJW1-UP

PART OF 340-1693 CHASSIS AR

SMCS-5804, 6508 **i04577432**

NOTE	REF NO	GRAPHIC REF	PART NUMBER	QTY	PART NAME 1 2 3 4 5 6 (PRODUCT LEVEL)	SEE PAGE
	1	1	**9R-0481**	2	WASHER (71X110X4-MM THK)	
	2	1	**161-7145**	4	SEAL-PISTON	
CY	3	1	**381-8054**	1	CYLINDER GP-HYDRAULIC (RH)	363
CY	4	1	**381-8055**	1	CYLINDER GP-HYDRAULIC (LH)	365
	5	1	**316-4811**	1	WASHER (66.5X120X8-MM THK)	
	6	1	**320-2948**	4	CAP-CYLINDER END	
	7	1	**320-2949**	2	BAR	
	8	1	**320-3619**	4	PISTON	
	9	1	**320-3620**	2	PAD	
	10	1	**322-3768**	1	CAP & BEARING AS	
	10A	1	**9R-4110**	2	BUSHING	
	11	1	**322-3770**	1	FRAME AS-SLIDING	
	11A	1	**331-1521**	1	BEARING	
	11B	1	**331-1522**	1	BEARING	
	11C	1	**9R-4110**	2	BUSHING	
	12	1	**340-6272**	8	RING-WEAR	
	13	1	**341-4712**	2	BAR	
M	14	1	**112-1533**	12	BOLT (M24X3X160-MM)	
	15	1	**3B-8488**	2	FITTING-GREASE	
	16	1	**3B-8489**	2	FITTING-GREASE	
	17	1	**3P-0439**	4	SEAL-O-RING	
	18	1	**7K-9208**	4	SEAL-LIP TYPE	
	19	1	**8C-3347**	2	PIN-ROLL	
	20	1	**8T-1482**	6	WASHER-HARD (26X50X8-MM THK)	
	21	1	**8T-4121**	4	WASHER-HARD (11X21X2.5-MM THK)	
	22	1	**8T-4167**	6	WASHER-HARD (26X44X4-MM THK)	
M	23	1	**213-5007**	4	BOLT (M20X2.5X80-MM)	
M	24	1	**8T-4648**	16	BOLT (M12X1.75X70-MM)	
M	25	1	**8T-5035**	4	BOLT (M10X1.5X65-MM)	
	26	1	**8T-5439**	4	WASHER-HARD (21.5X45X6-MM THK)	
	27	1	**8T-7971**	16	WASHER-HARD (13.5X25.5X5-MM THK)	
	28	1	**298-4783**	2	DOWEL	
	29	1	**280-9658**	2	FILM-WARNING (NO ENTRANCE, EXIT, READ OMM)	

C-CHANGE FROM PREVIOUS TYPE
M-METRIC PART
Y-SEPARATE ILLUSTRATION

320-5933 **FRAME GP-SLIDING** *(contd.)* **i04577432**

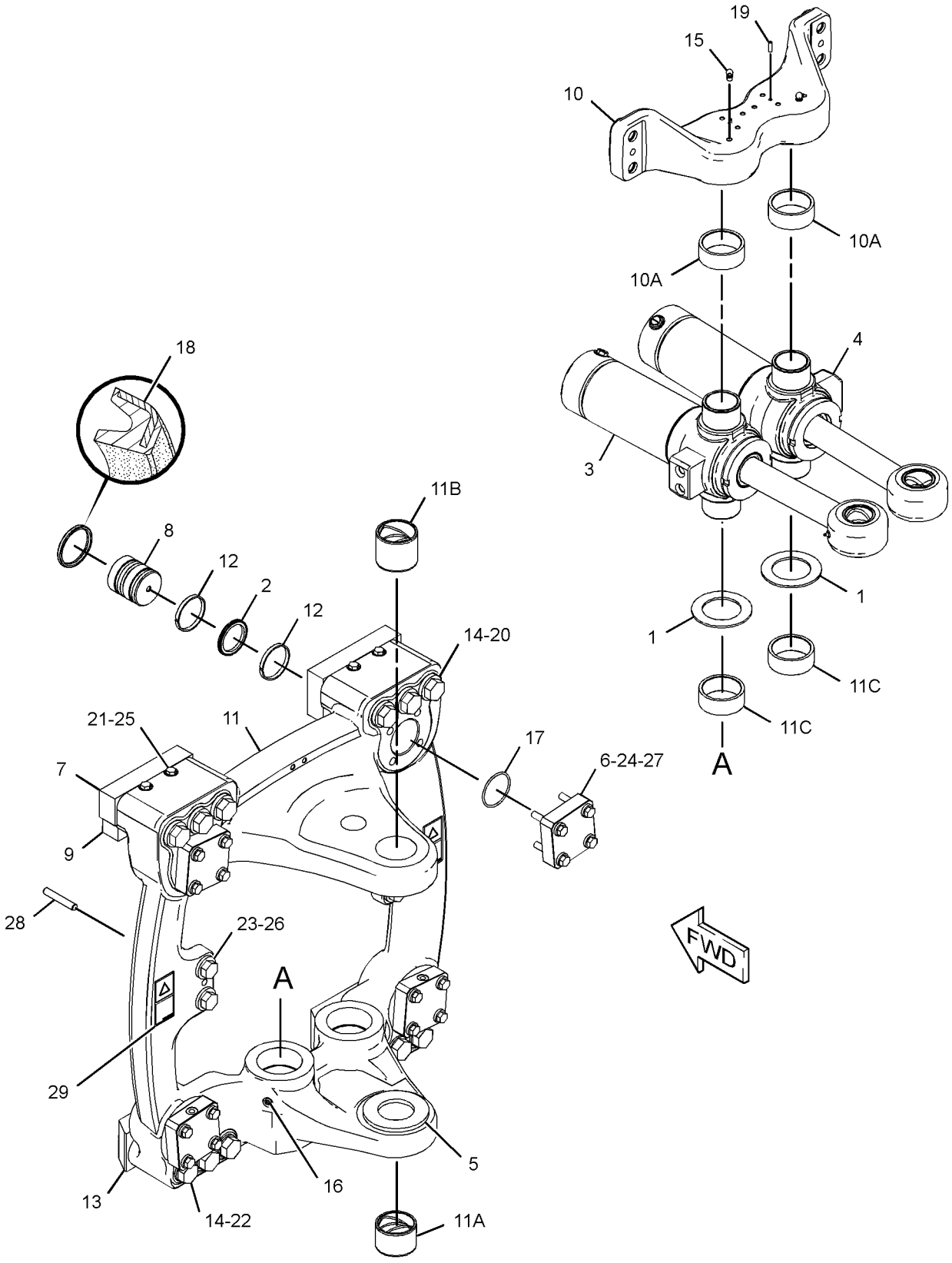

GRAPHIC #1 **<END>** g02131253

378-9623 FRAME GP-SWING

S/N: SJW1-UP

PART OF 340-1733, 340-1734 BACKHOE AR-EXTENDABLE STICK, 340-1732 BACKHOE AR-STANDARD STICK

AN ATTACHMENT

SMCS-6506 **i04628912**

NOTE	REF NO	GRAPHIC REF	PART NUMBER	QTY	PART NAME 1 2 3 4 5 6 (PRODUCT LEVEL)	SEE PAGE
	1	1	**2U-9234**	1	BUSHING	
B	2	1	**176-0626**	2	WASHER (67.5X120X3-MM THK)	
B	3	1	**9R-8291**	2	SPACER (66X125X1-MM THK)	
	4	1	**310-0851**	2	PIN	
	5	1	**316-6951**	1	PIN AS	
	6	1	**316-6952**	1	PIN AS	
	7	1	**326-0089**	1	PIN AS	
	8	1	**375-1442**	1	RING-RETAINING	
	9	1	**378-9622**	1	FRAME AS-SWING	
	9A	1	**213-6702**	4	BUSHING	
	9B	1	**331-1521**	2	BEARING	
	10	1	**270-5290**	1	BOLT-SOCKET HEAD (M12X1.75X300-MM)	
	11	1	**3B-8489**	2	FITTING-GREASE	
	12	1	**5P-1076**	2	WASHER-HARD (13.5X30X4-MM THK)	
M	13	1	**6V-7687**	1	LOCKNUT (M12X1.75-THD)	
	14	1	**7X-0632**	2	WASHER-HARD (11X36X6-MM THK)	
M	15	1	**8T-4136**	1	BOLT (M10X1.5X25-MM)	
M	16	1	**8T-4196**	1	BOLT (M10X1.5X35-MM)	

B-USE AS REQUIRED
M-METRIC PART

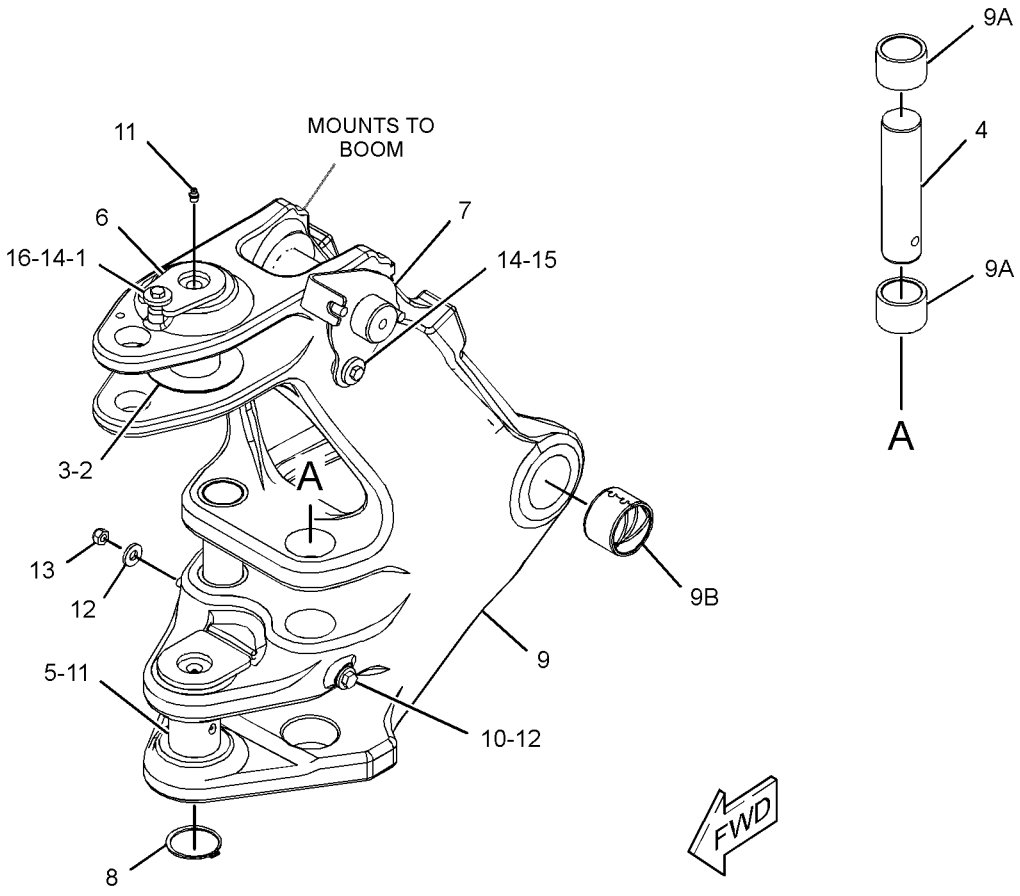

GRAPHIC #1 **<END>** g02823958

368-0291 GRILL GP-RADIATOR

S/N: SJW1-UP

PART OF 337-9702 HOOD & GUARD GP

AN ATTACHMENT

SMCS-7170 **i04577593**

NOTE	REF NO	GRAPHIC REF	PART NUMBER	QTY	PART NAME 1 2 3 4 5 6 (PRODUCT LEVEL)	SEE PAGE
	1	1	**129-5256**	8	BUSHING	
	2	1	**208-8469**	2	LOCKNUT (M6X1-THD)	
	3	1	**365-2511**	1	CAM-LATCH	
	4	1	**365-4093**	1	GRILL	
	5	1	**369-3473**	1	PIN	
	6	1	**369-3945**	1	BRACKET AS	
	7	1	**372-4600**	1	FRAME AS-GRILL	
	8	1	**372-4605**	1	GUARD AS	
	9	1	**372-4613**	2	PLATE	
	10	1	**382-6675**	2	LATCH-MAGNETIC	
	11	1	**130-1916**	2	STUD-BALL	
M	12	1	**178-3336**	2	NUT-HEX FLANGE (M8X1.25-THD)	
	13	1	**206-6969**	2	PAWL	
E	14	1	**220-0738**		SEAL (63-CM)	
	15	1	**233-5260**	1	LANYARD	
J	16	1	**260-3568**	2	LATCH AS	
	17	1	**277-0584**	1	LOCK AS	
	18	1	**342-9920**	12	BOLT-FLANGE HEAD (M8X1.25X20-MM)	
	19	1	**8S-7803**	2	RING-RETAINING	
	20	1	**8T-4123**	2	WASHER (22X35X3.5-MM THK)	

E-ORDER BY THE CENTIMETER
J-REQUIRES CORPORATE KEY
M-METRIC PART

368-0291 **GRILL GP-RADIATOR** *(contd.)* **i04577593**

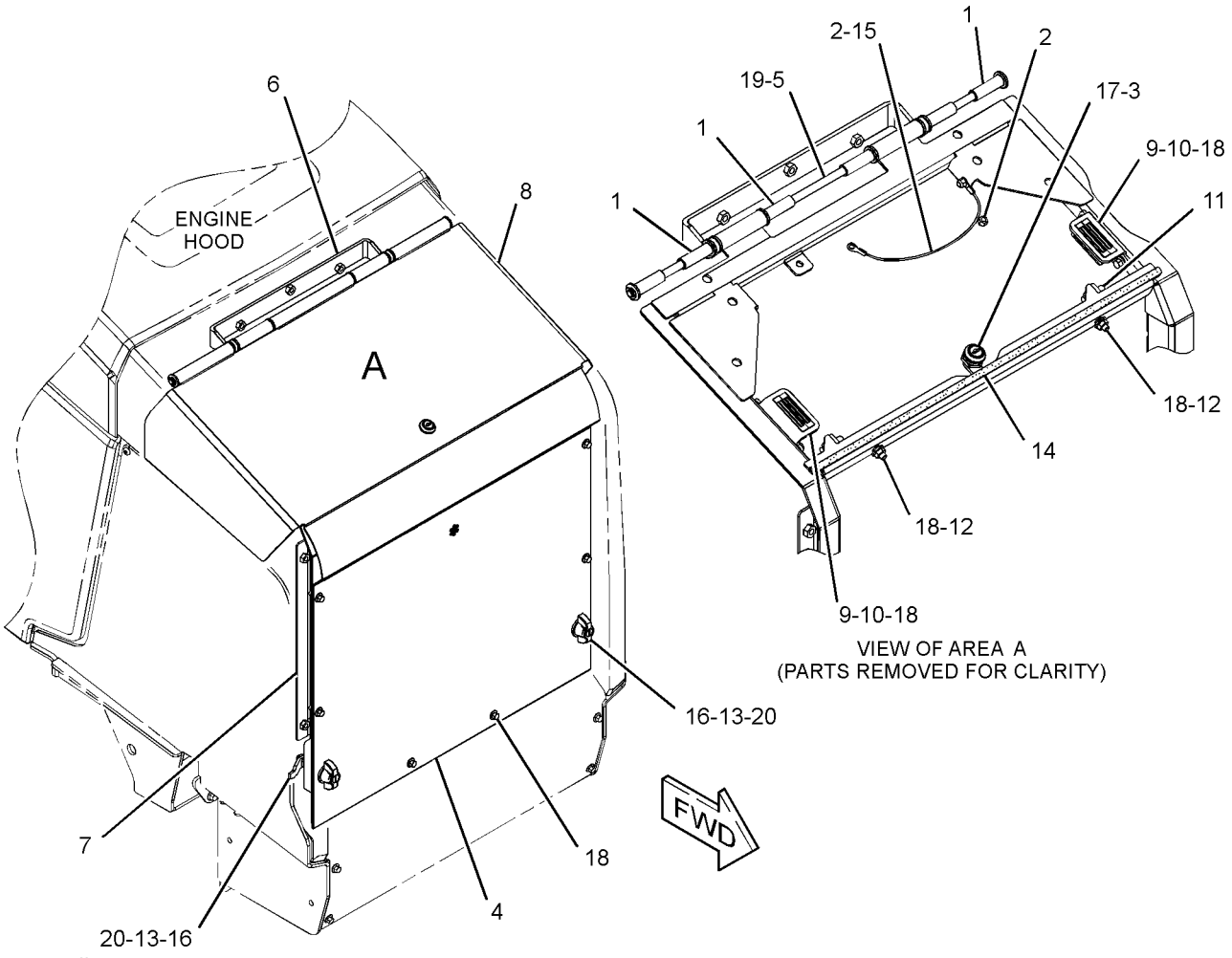

GRAPHIC #1 **<END>** g02818758

380-7775 GUARD GP-DEBRIS–CANOPY

S/N: SJW1-UP
PART OF 353-1429 CAB AR
AN ATTACHMENT

SMCS-7150, 7158 **i04565310**

NOTE	REF NO	GRAPHIC REF	PART NUMBER	QTY	PART NAME 1 2 3 4 5 6 (PRODUCT LEVEL)	SEE PAGE
	1	1	**164-1368**	6	FASTENER-PANEL	
	2	1	**378-3311**	1	MAT	
	3	1	**378-8059**	2	SEAL (6-GA, 1/4-IN SCREW)	

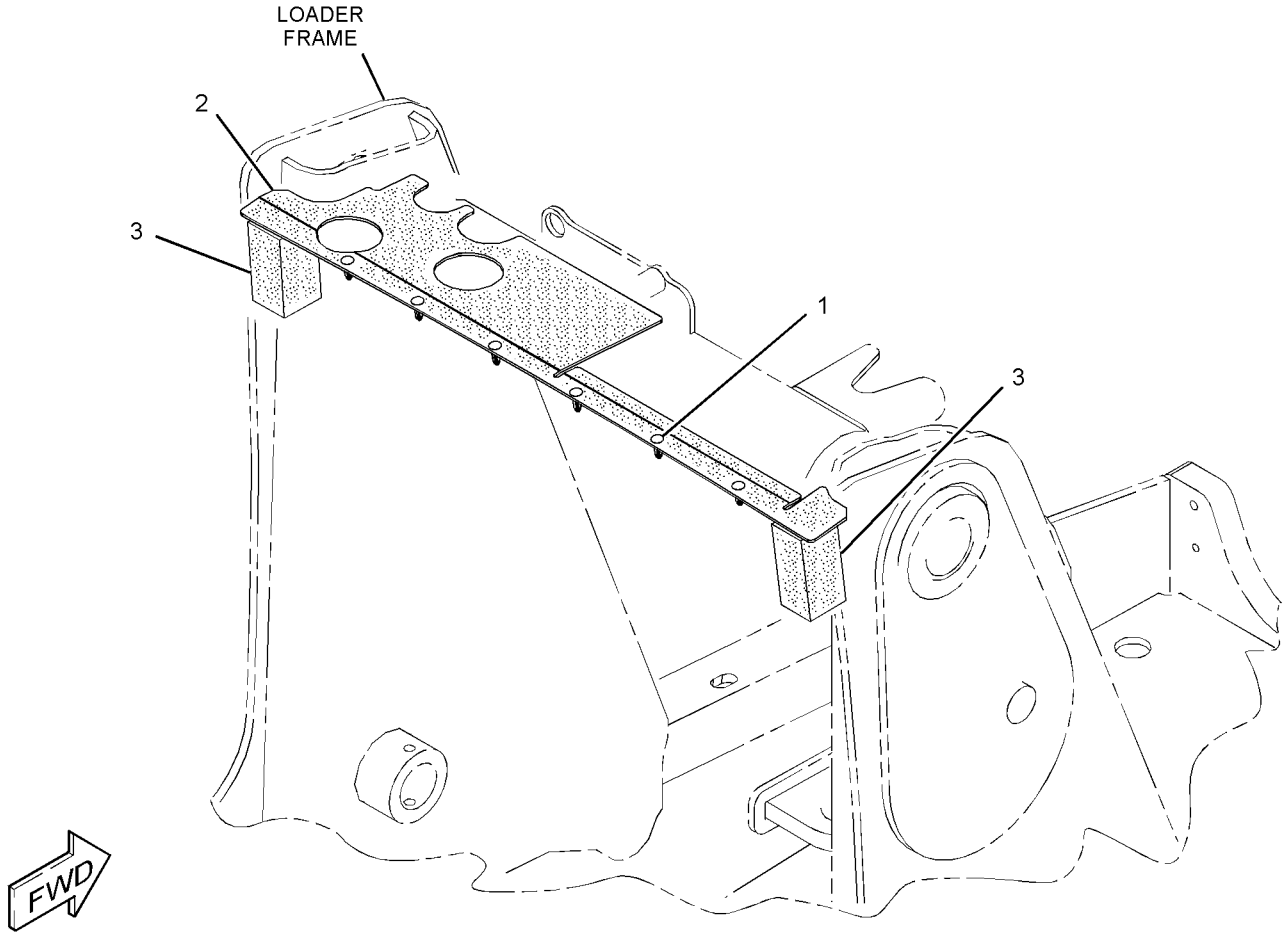

GRAPHIC #1 **<END>** g02809557

337-9697 GUARD GP-DRIVE SHAFT

S/N: SJW1-UP
PART OF 389-3761, 389-3762 DISTRIBUTION AR
AN ATTACHMENT

SMCS-7153 **i04609209**

NOTE	REF NO	GRAPHIC REF	PART NUMBER	QTY	PART NAME 1 2 3 4 5 6 (PRODUCT LEVEL)	SEE PAGE
	1	1	**360-8966**	1	GUARD AS	
M	2	1	**7X-2552**	4	BOLT (M16X2X30-MM)	
	3	1	**8T-4122**	4	WASHER-HARD (17X32X3.5-MM THK)	

M-METRIC PART

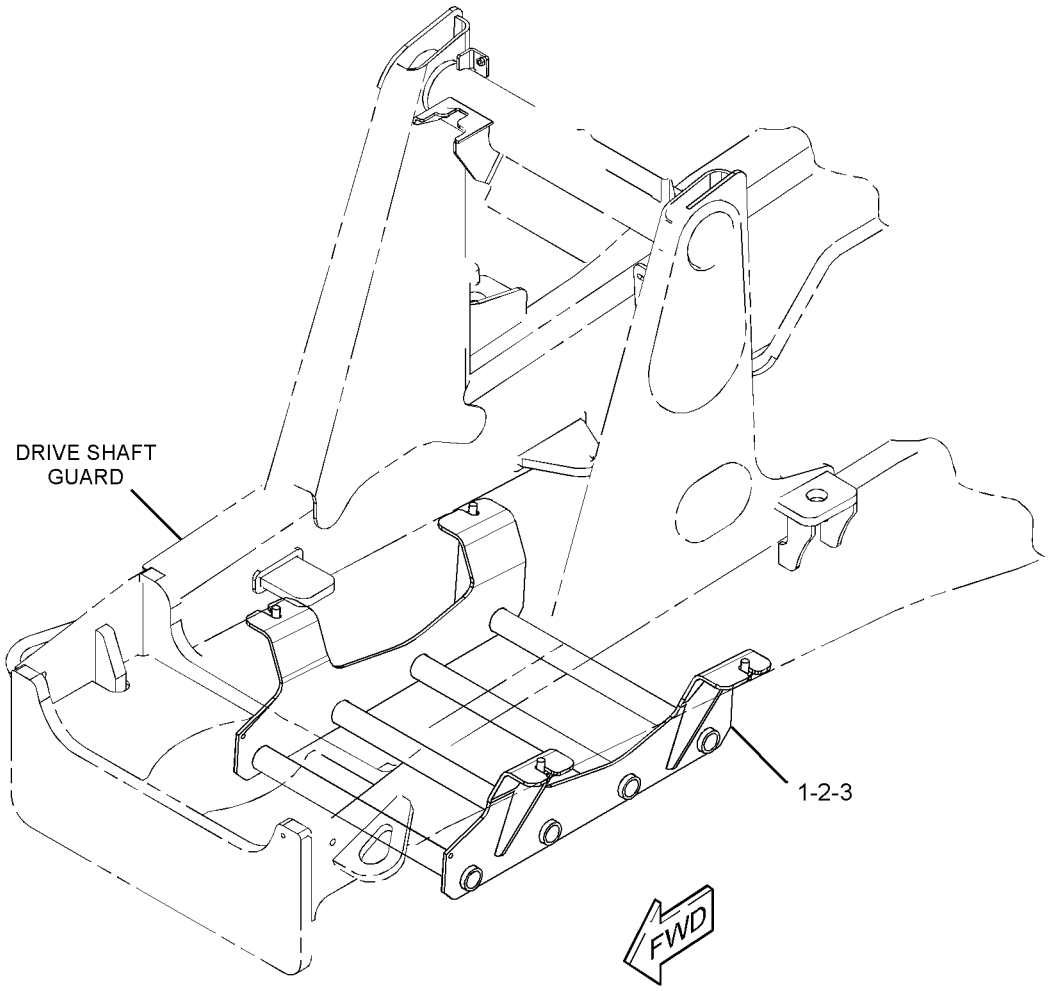

GRAPHIC #1 **<END>** g02798282

FRAME AND BODY

337-9722 GUARD GP-FUEL TANK

S/N: SJW1-UP
AN ATTACHMENT

SMCS-1273, 7150 **i04603069**

NOTE	REF NO	GRAPHIC REF	PART NUMBER	QTY	PART NAME 1 2 3 4 5 6 (PRODUCT LEVEL)	SEE PAGE
	1	1	**372-7230**	1	PLATE	
	2	1	**372-7231**	1	PLATE	
	3	1	**5P-4116**	2	WASHER-HARD (8.8X20.5X2-MM THK)	
M	4	1	**8T-4189**	2	BOLT (M8X1.25X20-MM)	

M-METRIC PART

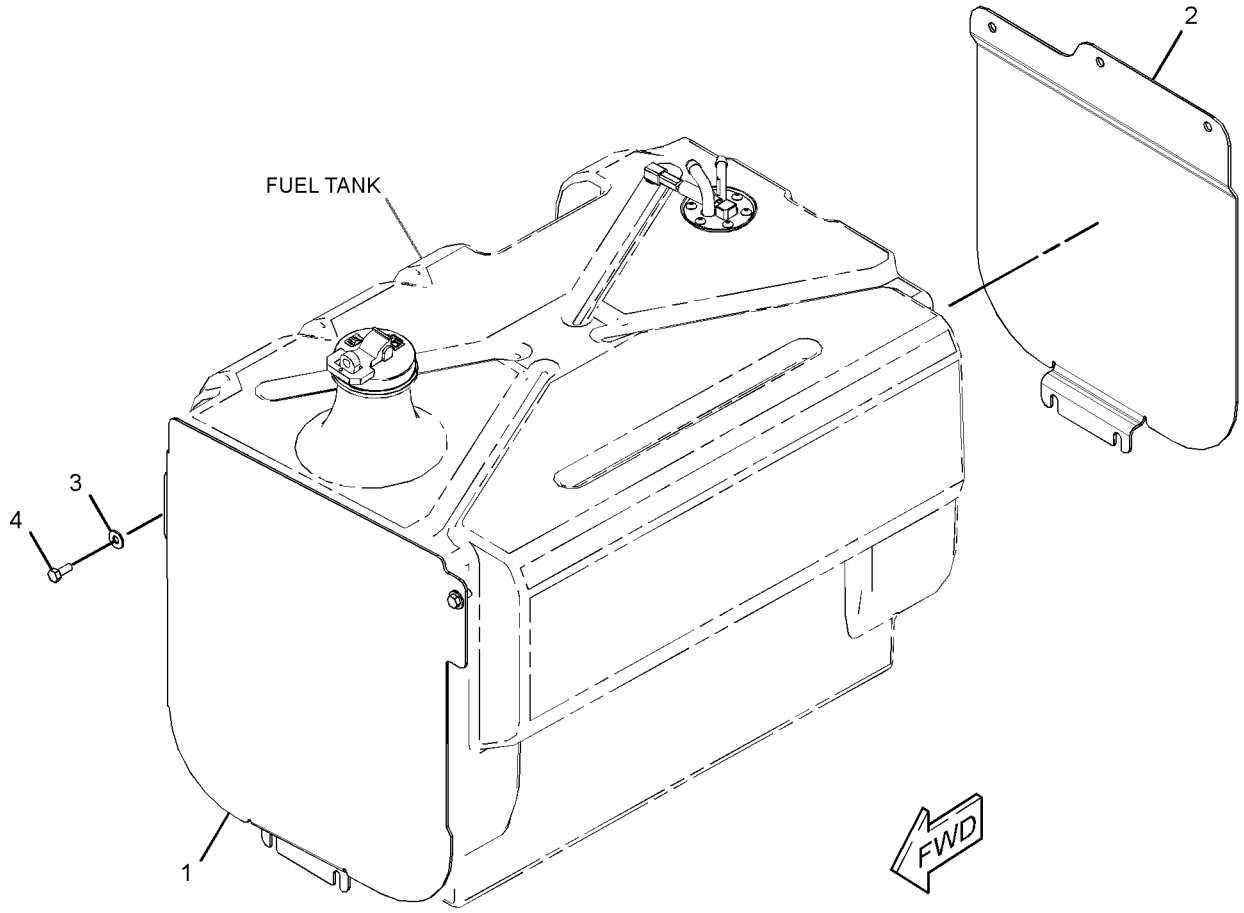

GRAPHIC #1 **<END>** g02788470

338-1421 GUARD GP-LIGHTING

S/N: SJW1-UP
PART OF 389-3761, 389-3762 DISTRIBUTION AR
AN ATTACHMENT

SMCS-715L **i04251354**

NOTE	REF NO	GRAPHIC REF	PART NUMBER	QTY	PART NAME 1 2 3 4 5 6 (PRODUCT LEVEL)	SEE PAGE
	1	1	**337-8655**	2	GUARD	
M	2	1	**7X-2536**	2	BOLT (M8X1.25X14-MM)	
	3	1	**8T-4224**	4	WASHER-HARD (8.8X16X2-MM THK)	
M	4	1	**8T-4189**	2	BOLT (M8X1.25X20-MM)	

M-METRIC PART

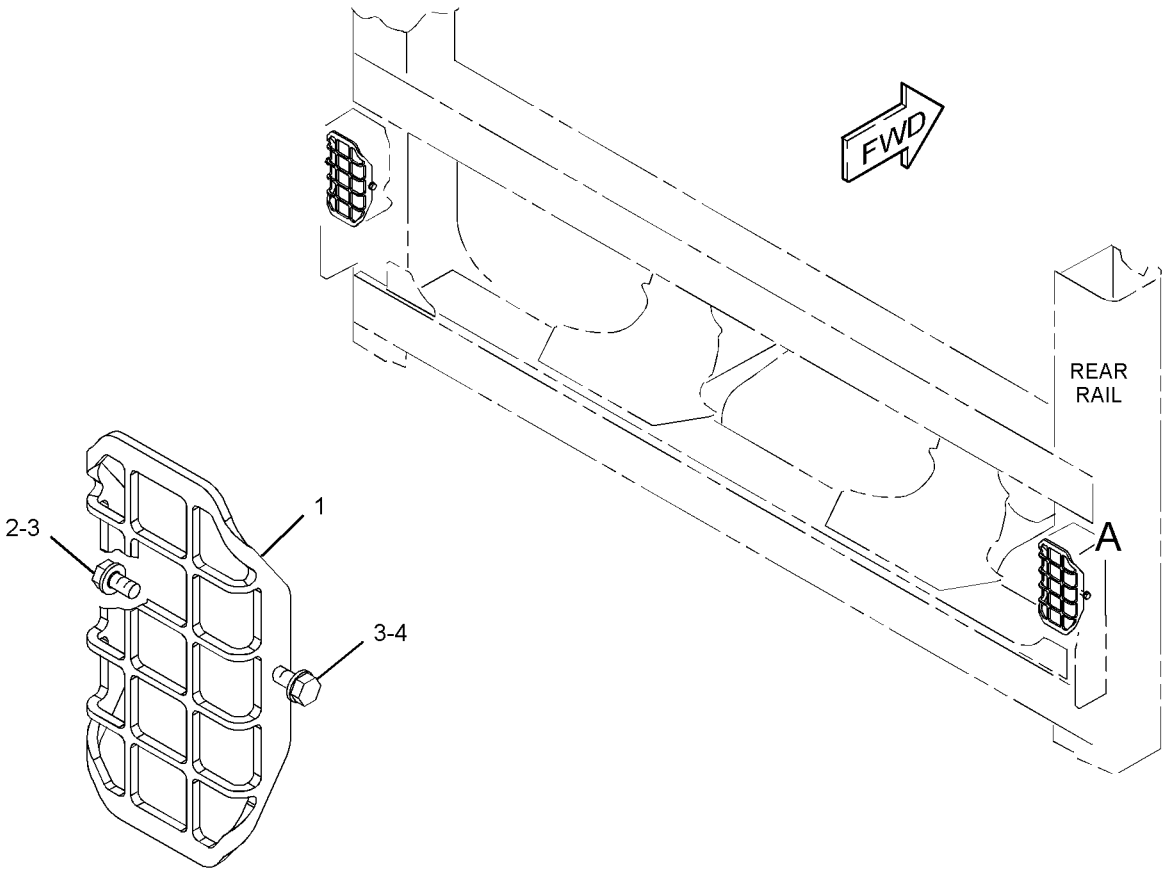

VIEW OF AREA A

GRAPHIC #1 **<END>** g01994458

FRAME AND BODY

337-9702 HOOD & GUARD GP

S/N: SJW1-UP

PART OF 337-9866, 337-9867 ENGINE AR-COMPLETE

AN ATTACHMENT

SMCS-7150, 7170, 7251, 7263 **i04577591**

NOTE	REF NO	GRAPHIC REF	PART NUMBER	QTY	PART NAME 1 2 3 4 5 6 (PRODUCT LEVEL)	SEE PAGE
	1	1	**130-1916**	2	STUD-BALL	
	2	1	**164-1368**	2	FASTENER-PANEL	
	3	1	**185-9777**	1	PLATE	
	4	1	**205-9920**	3	STRAP-CABLE	
J	5	1	**226-0294**	1	LOCK AS	
	6	1	**250-6858**	1	LATCH AS	
	7	1	**351-4746**	1	FILM-IDENTIFICATION (CAT)	
	8	1	**357-4273**	1	HOOD (RH)	
	9	1	**357-4274**	1	HOOD (LH)	
	10	1	**358-1415**	1	GUARD AS	
	11	1	**358-7863**	1	BRACKET AS	
	12	1	**358-7903**	1	CABLE AS	
	13	1	**362-8135**	1	BUMPER AS (RH)	
	14	1	**362-8136**	1	BUMPER AS (LH)	
	15	1	**363-2867**	1	SPRING AS-GAS (HOOD, RH)	
		1	**8T-2444**	2	STUD-BALL	
	16	1	**363-2868**	1	SPRING AS-GAS (GRILL, RH)	
	17	1	**366-9220**	1	MAT	
	18	1	**367-0055**	1	PLATE AS	
	19	1	**367-7625**	1	INSERT AS	
	20	1	**367-7764**	1	PLATE	
Y	21	1	*368-0291*	1	GRILL GP-RADIATOR	343
	22	1	**369-2053**	1	PLATE AS	
	23	1	**372-0739**	1	SPRING AS-GAS (LOCKABLE) (GRILL, LH)	
	24	1	**372-0740**	1	SPRING AS-GAS (LOCKABLE) (HOOD, LH)	
		1	**8T-2444**	2	STUD-BALL	
	25	1	**372-4616**	1	PLATE AS	
Y	26	1	*381-5559*	1	HOOD GP-ENGINE	351
M	27	1	**178-3336**	7	NUT-HEX FLANGE (M8X1.25-THD)	
M	28	1	**198-3899**	10	SCREW-BUTTON HEAD (M8X1.25X20-MM)	
	29	1	**342-9920**	9	BOLT-FLANGE HEAD (M8X1.25X20-MM)	
	30	1	**344-7932**	6	BOLT-FLANGE HEAD (M10X1.5X35-MM)	
M	31	1	**5C-7261**	6	NUT (M8X1.25-THD)	
	32	1	**5P-4116**	10	WASHER-HARD (8.8X20.5X2-MM THK)	
M	33	1	**6V-8949**	2	NUT (M10X1.5-THD)	
M	34	1	**7X-2537**	2	BOLT (M8X1.25X35-MM)	
E	35	1	**220-0738**		SEAL (52-CM EACH)	
E	35A	1	**220-0738**		SEAL (11-CM EACH)	
E	36	1	**9X-6383**		SEAL (27.5-CM EACH)	

E-ORDER BY THE CENTIMETER
J-REQUIRES CORPORATE KEY
M-METRIC PART
Y-SEPARATE ILLUSTRATION

337-9702 **HOOD & GUARD GP** *(contd.)* **i04577591**

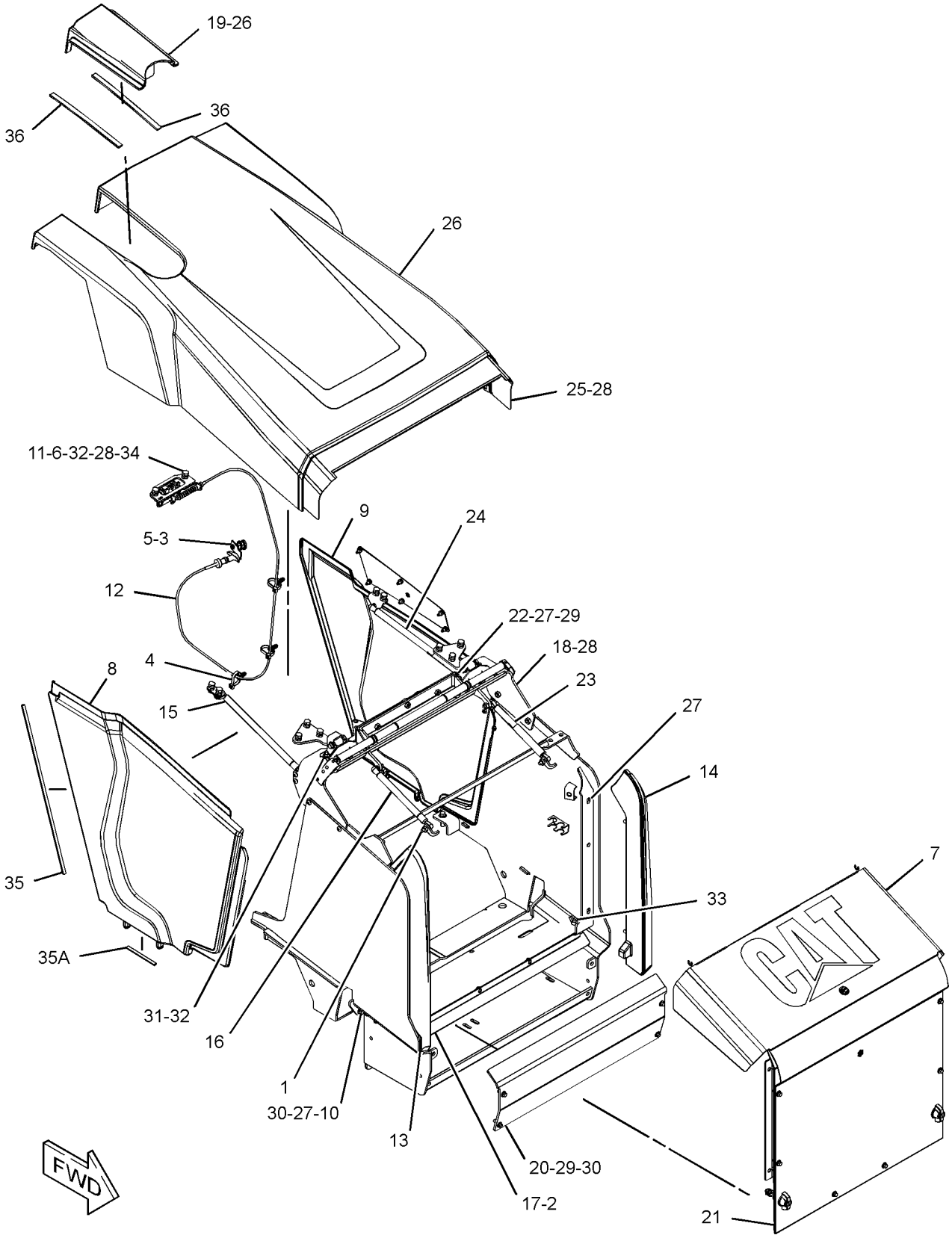

GRAPHIC #1 **<END>** g02817976

FRAME AND BODY

381-5559 HOOD GP-ENGINE

S/N: SJW1-UP
PART OF 337-9702 HOOD & GUARD GP
AN ATTACHMENT

SMCS-7251 **i04566215**

NOTE	REF NO	GRAPHIC REF	PART NUMBER	QTY	PART NAME 1 2 3 4 5 6 (PRODUCT LEVEL)	SEE PAGE
	1	1	**250-6850**	2	BRACKET AS	
	2	1	**358-7864**	1	BRACKET AS	
	3	1	**361-4643**	1	HOOD AS	
	4	1	**361-7891**	2	BRACKET AS	
	5	1	**371-7076**	1	HINGE AS (RH)	
	6	1	**371-7077**	1	HINGE AS (LH)	
	7	1	**372-4592**	1	GRILL	
M	8	1	**174-9194**	6	BOLT (M8X1.25X16-MM)	
	9	1	**208-9297**	2	BOLT-FLANGE HEAD (M10X1.5X50-MM)	
	10	1	**342-9920**	6	BOLT-FLANGE HEAD (M8X1.25X20-MM)	
M	11	1	**8T-4127**	6	SCREW-MACHINE (M5X0.8X20-MM)	
E	12	1	**220-0738**		SEAL (83-CM)	

E-ORDER BY THE CENTIMETER
M-METRIC PART

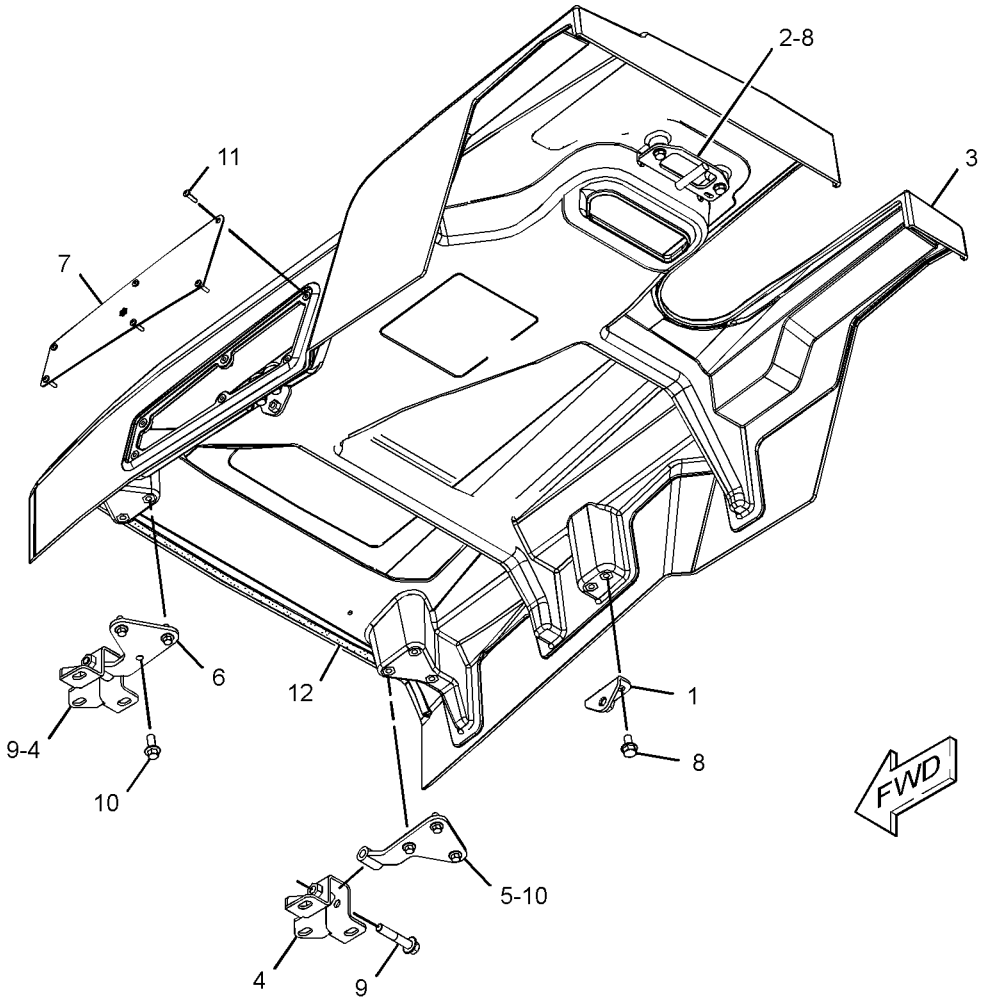

GRAPHIC #1 **<END>** g02790650

353-6955 KIT-GUARD

S/N: SJW1-UP
AN ATTACHMENT

SMCS-7153, 715L **i03869629**

NOTE	PART NUMBER	QTY	PART NAME 1 2 3 4 5 6 (PRODUCT LEVEL)	SEE PAGE
Y	*214-7024*	1	GUARD GP-BUCKET	521
Y-SEPARATE ILLUSTRATION				

<END>

353-6951 KIT-ROADING CONVERSION–FOG

S/N: SJW1-UP
AN ATTACHMENT

SMCS-1408, 1429, 1430, 1432, 7000, 7319 **i03869596**

NOTE	PART NUMBER	QTY	PART NAME 1 2 3 4 5 6 (PRODUCT LEVEL)	SEE PAGE
Y	*328-1950*	1	LIGHTING GP-ROADING (FOG)	117
Y-SEPARATE ILLUSTRATION				

<END>

FRAME AND BODY

337-9735 LINER GP-SOUND SUPPRESSION

S/N: SJW1-UP

PART OF 337-9866, 337-9867 ENGINE AR-COMPLETE

AN ATTACHMENT

SMCS-1801 **i04547481**

NOTE	REF NO	GRAPHIC REF	PART NUMBER	QTY	PART NAME 1 2 3 4 5 6 (PRODUCT LEVEL)	SEE PAGE
	1	1	**377-3802**	1	INSULATION (LH)	
	2	1	**377-3803**	1	INSULATION (RH)	

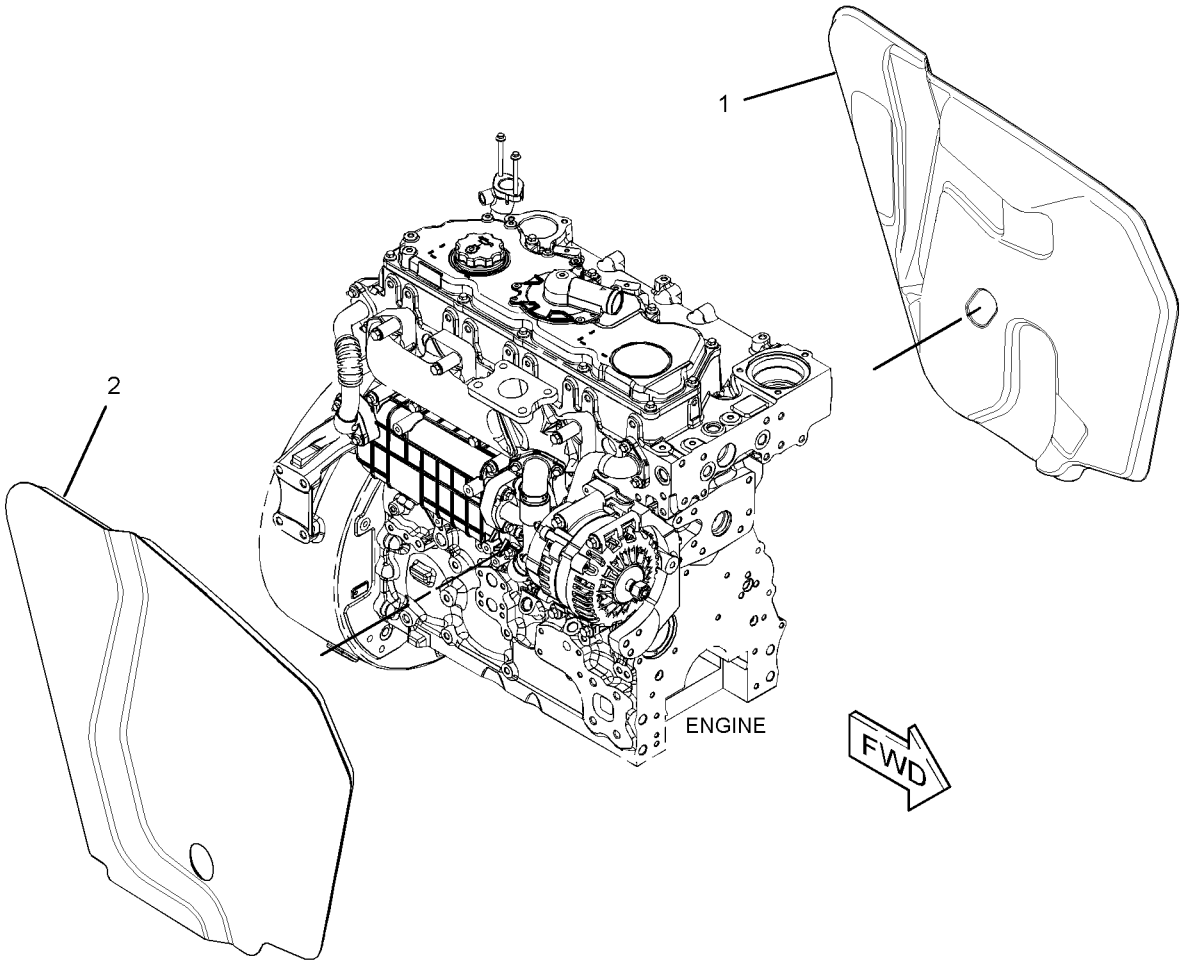

GRAPHIC #1 **<END>** g02772076

152-0184 REFLECTOR GP–SIDE SHIFT

S/N: SJW1-UP
PART OF 341-3105 CONVERSION AR-CERTIFICATION
AN ATTACHMENT

SMCS-1429 **i03323911**

NOTE	REF NO	GRAPHIC REF	PART NUMBER	QTY	PART NAME 1 2 3 4 5 6 (PRODUCT LEVEL)	SEE PAGE
	1	1	**9R-2404**	4	REFLECTOR-AMBER	

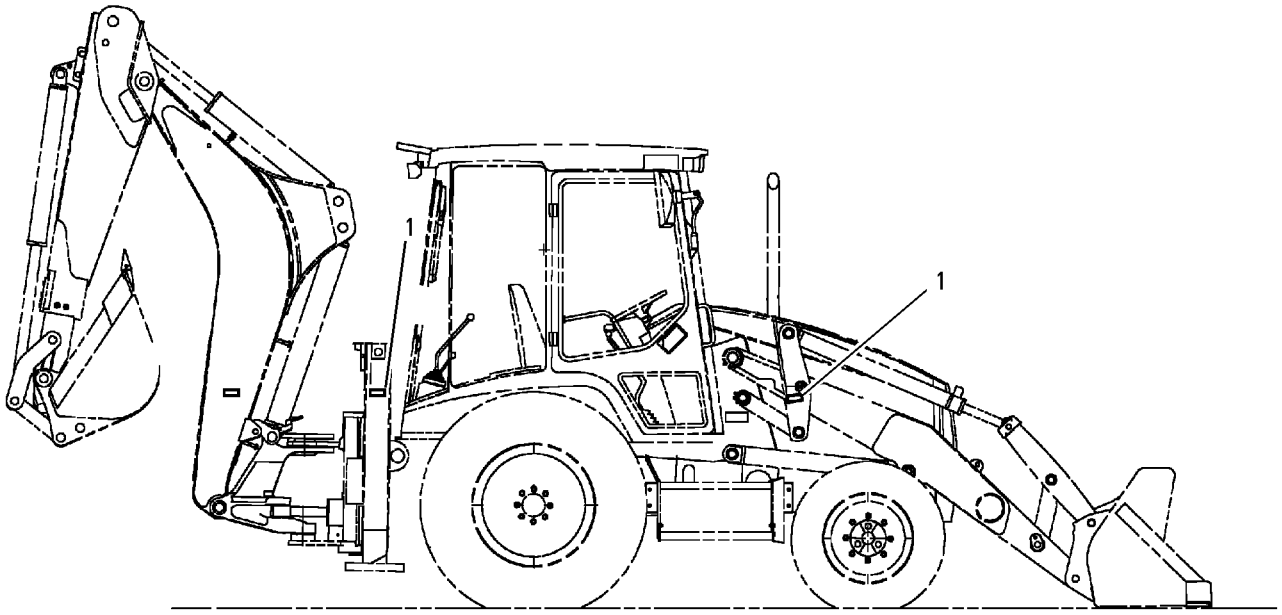

GRAPHIC #1 **<END>** g00816109

149-0686 ACCUMULATOR GP-HYDRAULIC–CHARGED

S/N: SJW1-UP

PART OF 353-1374 ACCUMULATOR GP-HYDRAULIC

AN ATTACHMENT

SMCS-5077 **i03909560**

NOTE	REF NO	GRAPHIC REF	PART NUMBER	QTY	PART NAME 1 2 3 4 5 6 (PRODUCT LEVEL)	SEE PAGE
					(NO SERVICED PARTS)	

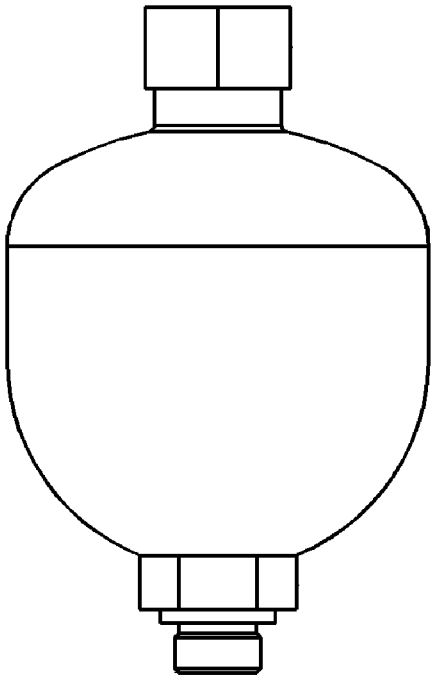

GRAPHIC #1 **<END>** g01423820

353-1374 ACCUMULATOR GP-HYDRAULIC

S/N: SJW1-UP

PART OF 373-4266, 373-4267, 373-4268 VALVE AR-BANK 3

AN ATTACHMENT

SMCS-5077 **i04611609**

NOTE	REF NO	GRAPHIC REF	PART NUMBER	QTY	PART NAME 1 2 3 4 5 6 (PRODUCT LEVEL)	SEE PAGE
Y	1	1	*149-0686*	1	ACCUMULATOR GP-HYDRAULIC (CHARGED)	355
	2	1	**3K-0360**	1	SEAL-O-RING	

Y-SEPARATE ILLUSTRATION

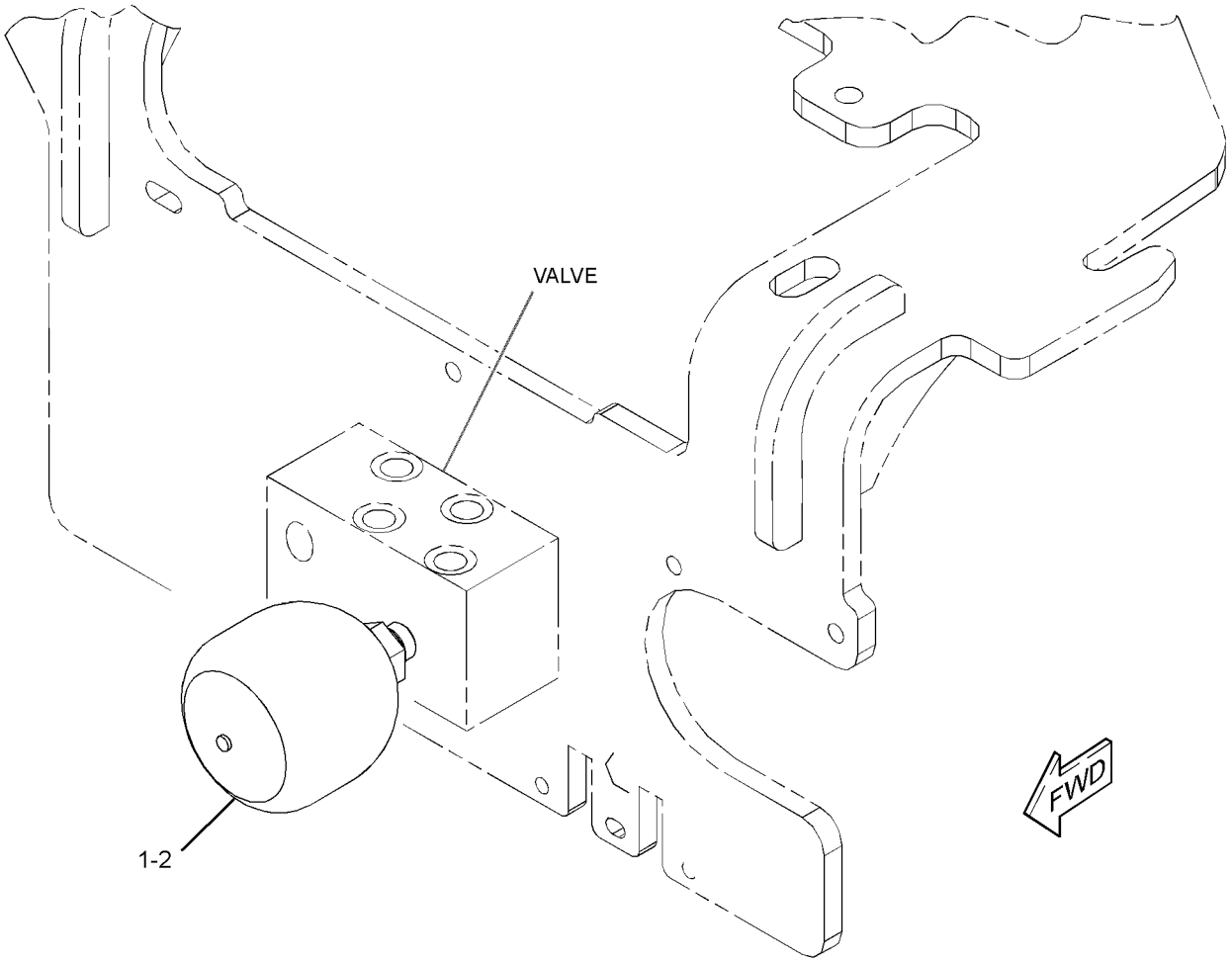

GRAPHIC #1 **<END>** g02813920

345-3674 ACCUMULATOR GP-RIDE CONTROL–UNCHARGED

S/N: SJW1-UP

SMCS-5077 **i04061330**

NOTE	REF NO	GRAPHIC REF	PART NUMBER	QTY	PART NAME 1 2 3 4 5 6 (PRODUCT LEVEL)	SEE PAGE
	1	1	**224-5132**	1	CAP (GAS VALVE)	
	2	1	**224-5152**	1	VALVE-GAS (HYDRAULIC ACCUMULATOR)	
	3	1	**3J-7354**	1	SEAL-O-RING	
	4	1	**1J-9671**	1	SEAL-O-RING	
	5	1	**241-0037**	1	FILM-WARNING (HIGH PRESSURE, READ OMM)	

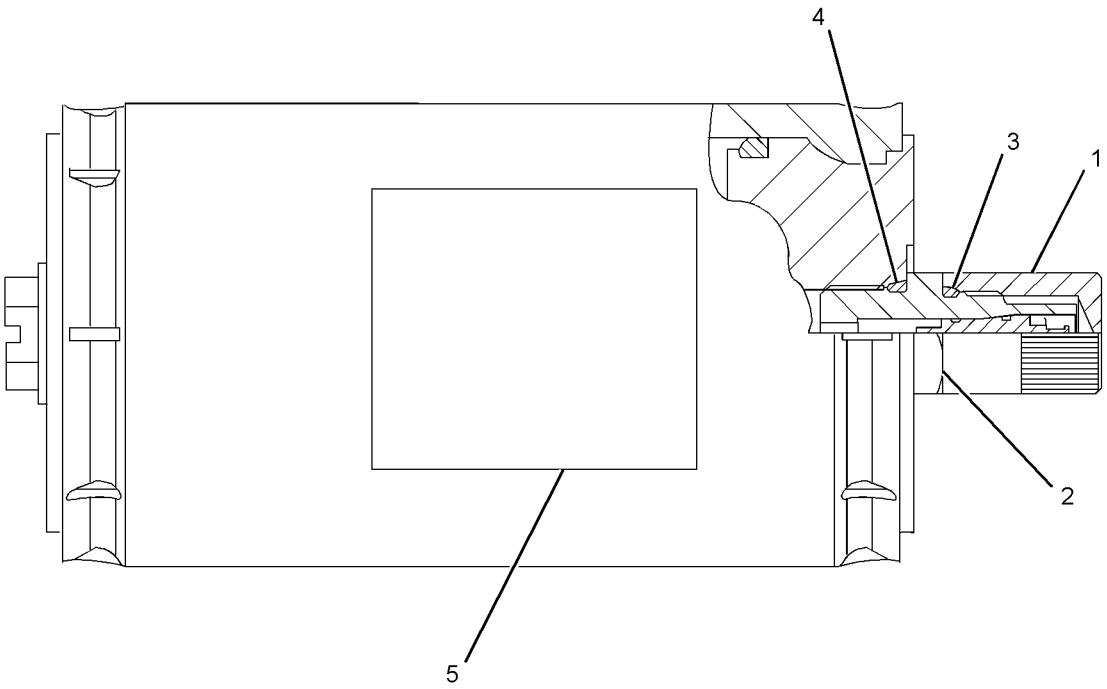

GRAPHIC #1 **<END>** g01966053

382-8033 ACCUMULATOR GP-RIDE CONTROL—CHARGED

S/N: SJW1-UP
PART OF 337-9793 LINES GP-RIDE CONTROL
FIELD REPLACEMENT ORDER 345-3674—PAGE 357
AN ATTACHMENT

SMCS-5077 **i04556055**

NOTE	REF NO	GRAPHIC REF	PART NUMBER	QTY	PART NAME 1 2 3 4 5 6 (PRODUCT LEVEL)	SEE PAGE
	1	1	**224-5132**	1	CAP (GAS VALVE)	
	2	1	**224-5152**	1	VALVE-GAS (HYDRAULIC ACCUMULATOR)	
	3	1	**3J-7354**	1	SEAL-O-RING	
	4	1	**1J-9671**	1	SEAL-O-RING	
	5	1	**241-0037**	1	FILM-WARNING (HIGH PRESSURE, READ OMM)	

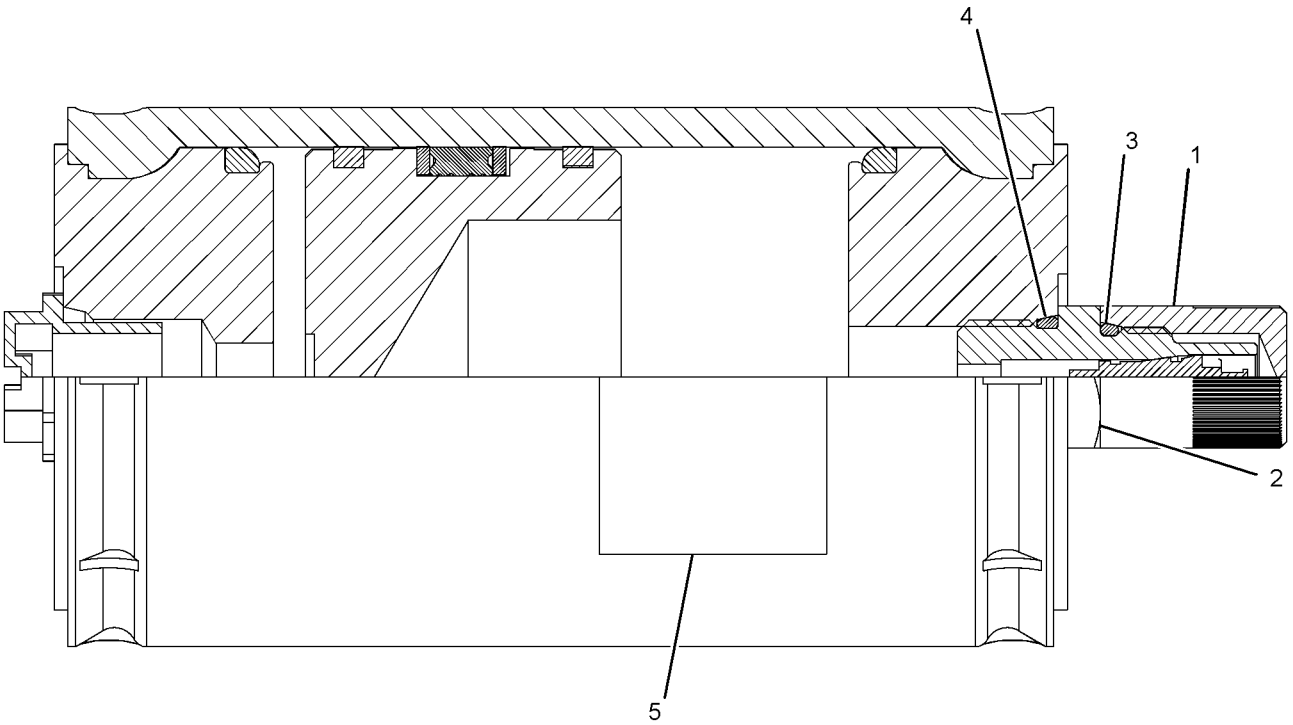

GRAPHIC #1 **<END>** g02780677

340-1746 CONTROL AR-RIDE

S/N: SJW1-UP
PART OF 389-3761, 389-3762 DISTRIBUTION AR
AN ATTACHMENT

SMCS-5004 **i04608869**

NOTE	PART NUMBER	QTY	PART NAME 1 2 3 4 5 6 (PRODUCT LEVEL)	SEE PAGE
Y	*337-9793*	1	LINES GP-RIDE CONTROL	422
Y	*357-3216*	1	WIRING GP-RIDE CONTROL	179

Y-SEPARATE ILLUSTRATION

<END>

340-1747 CONTROL AR-RIDE

S/N: SJW1-UP
AN ATTACHMENT

SMCS-5004 **i04603050**

NOTE	PART NUMBER	QTY	PART NAME 1 2 3 4 5 6 (PRODUCT LEVEL)	SEE PAGE
Y	*337-9793*	1	LINES GP-RIDE CONTROL	422
Y	*331-5470*	1	WIRING GP-RIDE CONTROL	177

Y-SEPARATE ILLUSTRATION

<END>

HYDRAULIC SYSTEM

320-5937 CYLINDER GP-BACKHOE BUCKET

S/N: SJW1-UP
90-MM (3.54-IN) BORE X 852-MM (33.54-IN) STROKE
PART OF 340-1733, 340-1734 BACKHOE AR-EXTENDABLE STICK, 340-1732 BACKHOE AR-STANDARD STICK
AN ATTACHMENT

SMCS-5457 **i03973089**

NOTE	REF NO	GRAPHIC REF	PART NUMBER	QTY	PART NAME 1 2 3 4 5 6 (PRODUCT LEVEL)	SEE PAGE
	1	1	**323-2424**	1	ROD AS	
	1A	1	**9R-3092**	2	BUSHING	
	2	1	**323-2431**	1	CYLINDER HEAD AS	
	2A	1	**323-2470**	1	BEARING	
		1	**338-2415**	1	SEAL-WIPER	
		1	**338-2445**	1	SEAL-U-CUP	
		1	**340-9325**	1	SEAL-O-RING	
	3	1	**323-2433**	1	PISTON AS	
		1	**144-5287**	1	SEAL-PISTON	
		1	**340-9308**	1	SEAL-O-RING	
		1	**343-8051**	2	RING-WEAR	
	4	1	**323-2435**	1	CYLINDER AS-HYDRAULIC	
	4A	1	**9R-3092**	2	BUSHING	
	5	1	**350-3842**	2	SET SCREW (M8X1.25X12-MM)	
	6	1	**7J-9108**	2	SEAL-O-RING	
					AVAILABLE REPAIR KIT(S):	
			324-0386	1	KIT-SEAL (BUCKET CYLINDER)	
					(INCLUDES PISTON SEAL, WEAR BEARING, WIPER SEAL, U-CUP SEAL, O-RING SEALS & WEAR RING)	

320-5937 CYLINDER GP-BACKHOE BUCKET *(contd.)* **i03973089**

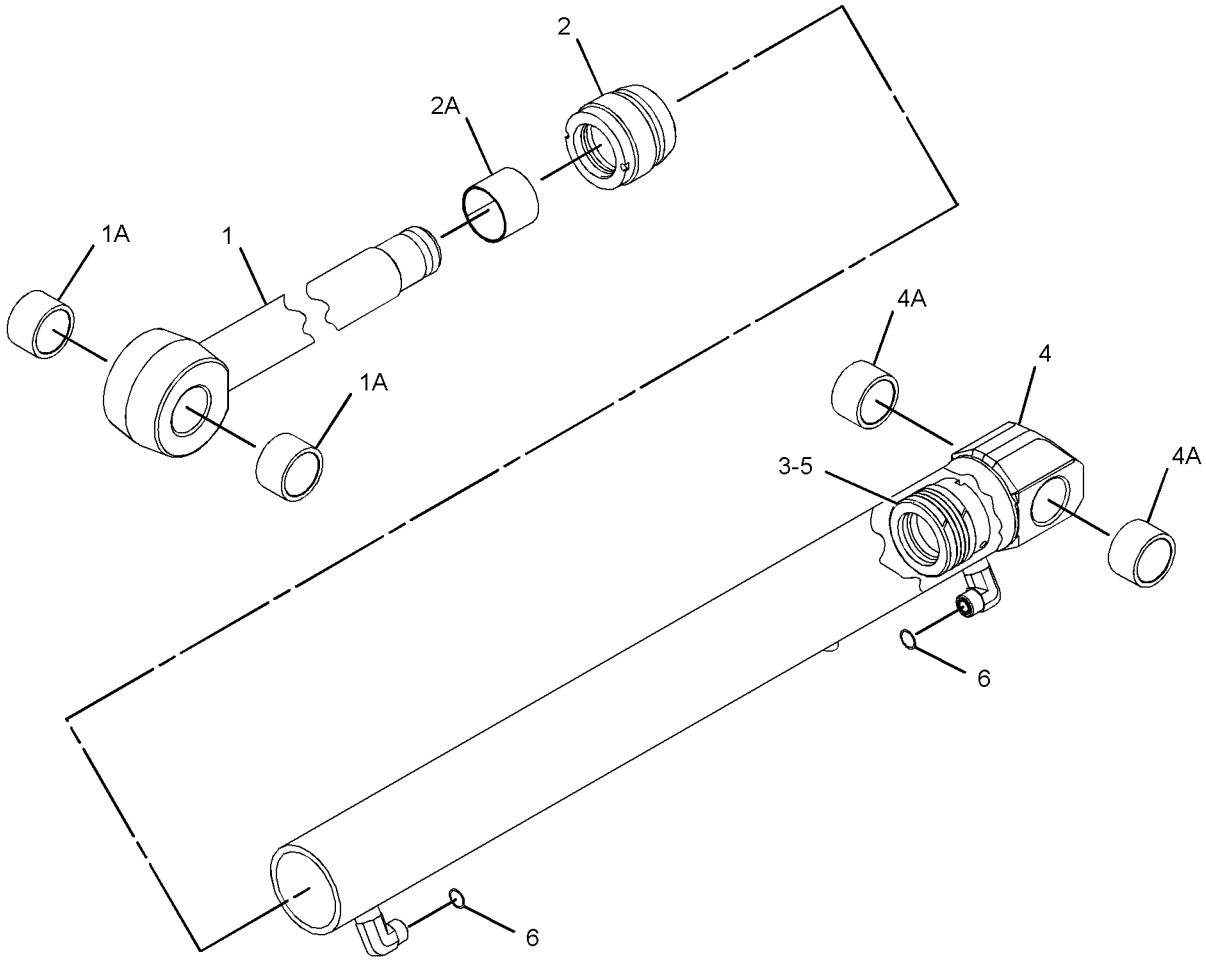

GRAPHIC #1 **<END>** g01993461

HYDRAULIC SYSTEM

320-5936 CYLINDER GP-BOOM

S/N: SJW1-UP
110-MM (4.33-IN) BORE X 942-MM (37-IN) STROKE
PART OF 340-1733, 340-1734 BACKHOE AR-EXTENDABLE STICK, 340-1732 BACKHOE AR-STANDARD STICK
AN ATTACHMENT

SMCS-5456 **i03693880**

NOTE	REF NO	GRAPHIC REF	PART NUMBER	QTY	PART NAME 1 2 3 4 5 6 (PRODUCT LEVEL)	SEE PAGE
	1	1	**324-0345**	1	ROD AS	
	1A	1	**331-1520**	1	BEARING	
	2	1	**324-0352**	1	HEAD AS	
	2A	1	**323-2470**	1	BEARING	
		1	**338-2415**	1	SEAL-WIPER	
		1	**338-2445**	1	SEAL-U-CUP	
		1	**340-9313**	1	SEAL-O-RING	
	3	1	**324-0354**	1	PISTON AS	
		1	**340-6338**	1	SEAL-PISTON	
		1	**340-9308**	1	SEAL-O-RING	
		1	**343-8052**	2	RING-WEAR	
	4	1	**324-0357**	1	CYLINDER AS-HYDRAULIC	
	4A	1	**212-8960**	2	BEARING	
	5	1	**350-3842**	2	SET SCREW (M8X1.25X12-MM)	
	6	1	**7J-9108**	1	SEAL-O-RING	
					AVAILABLE REPAIR KIT(S):	
			324-0399	1	KIT-SEAL (BOOM CYLINDER)	

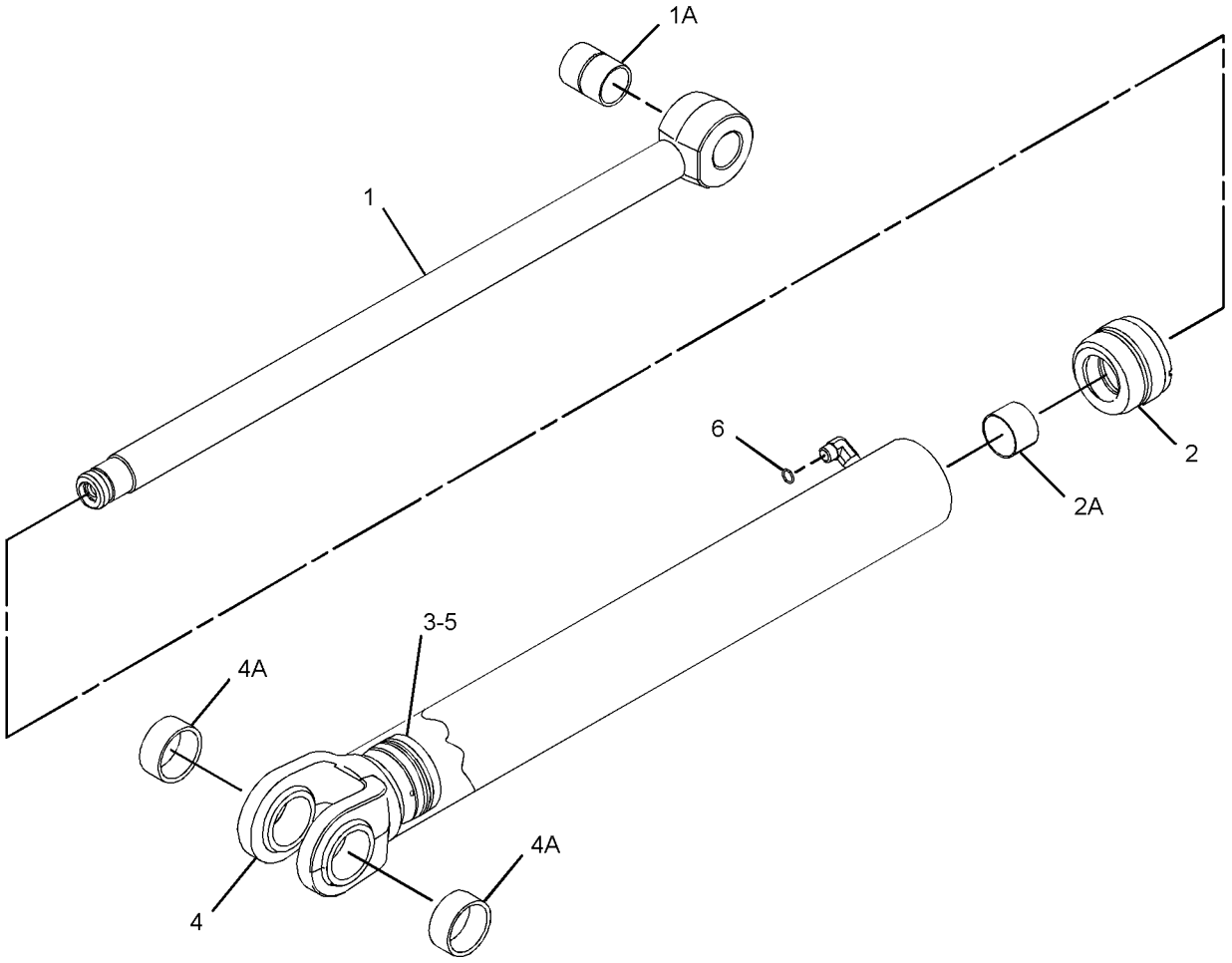

GRAPHIC #1 **<END>** g01993673

381-8054 CYLINDER GP-HYDRAULIC–RH

S/N: SJW1-UP
100-MM (4-IN) BORE X 254-MM (10-IN) STROKE
PART OF 320-5933 FRAME GP-SLIDING

SMCS-7562 **i04562809**

NOTE	REF NO	GRAPHIC REF	PART NUMBER	QTY	PART NAME 1 2 3 4 5 6 (PRODUCT LEVEL)	SEE PAGE
	1	1	**3B-8489**	1	FITTING-GREASE	
	2	1	**3N-5739**	1	SPRING	
	3	1	**6E-1478**	1	PLUNGER	
	4	1	**102-3582**	1	WASHER (11X19.5X2.5-MM THK)	
J	5	1	**233-0619**	1	SEAL-WIPER	
J	6	1	**233-2589**	1	RING-WEAR	
	7	1	**233-2613**	1	BEARING	
	8	1	**381-8085**	1	CYLINDER AS-HYDRAULIC	
	8A	1	**9T-2883**	2	BEARING	
	9	1	**269-0386**	1	ROD AS	
	9A	1	**274-4274**	1	BUSHING	
	10	1	**269-0388**	1	HEAD	
	11	1	**269-0389**	1	PISTON	
J	12	1	**140-7649**	1	SEAL-PISTON	
J	13	1	**167-2183**	1	SEAL AS-BUFFER	
J	14	1	**167-2303**	1	SEAL-U-CUP	
J	15	1	**2K-6830**	1	RING-BACKUP	
J	16	1	**2Y-5821**	1	RING	
J	17	1	**3E-6735**	1	SEAL-O-RING	
J	18	1	**9X-4611**	1	SEAL-O-RING	
M	19	1	**9X-6611**	1	SETSCREW-SOCKET (M10X1.5X16-MM)	
					AVAILABLE REPAIR KIT(S):	
J			**377-9352**	1	KIT-HYDRAULIC CYLINDER SEAL (RH)	

J-KIT MARKED J SERVICES PARTS MARKED J
M-METRIC PART

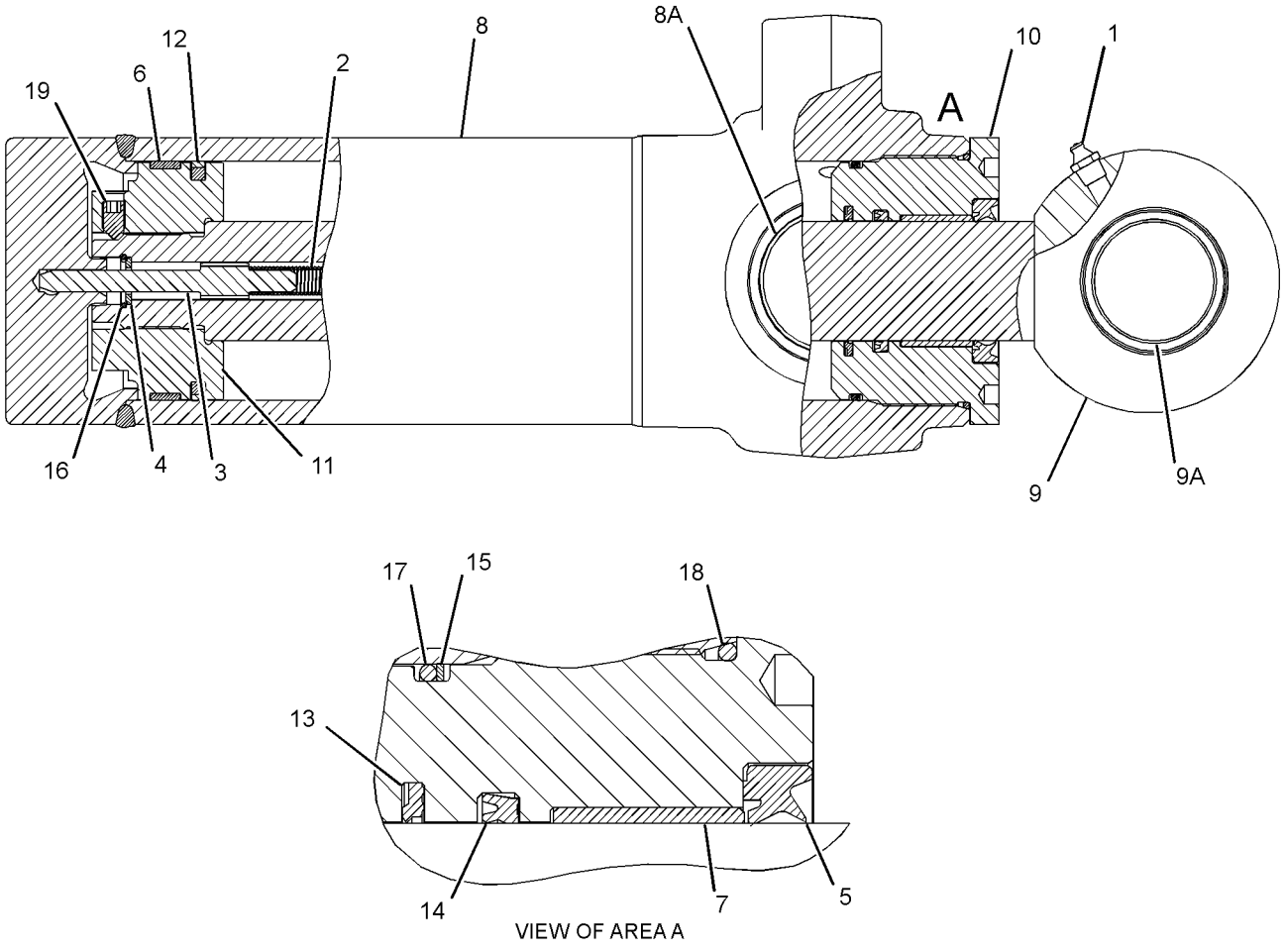

GRAPHIC #1 **<END>** g02096053

381-8055 CYLINDER GP-HYDRAULIC–LH

S/N: SJW1-UP

100-MM (3.9-IN) BORE X 254-MM (10-IN) STROKE. SWING

PART OF 320-5933 FRAME GP-SLIDING

SMCS-7562 **i04577409**

NOTE	REF NO	GRAPHIC REF	PART NUMBER	QTY	PART NAME 1 2 3 4 5 6 (PRODUCT LEVEL)	SEE PAGE
	1	1	**3B-8489**	1	FITTING-GREASE	
	2	1	**3N-5739**	1	SPRING	
	3	1	**6E-1478**	1	PLUNGER	
	4	1	**102-3582**	1	WASHER (11X19.5X2.5-MM THK)	
J	5	1	**140-7649**	1	SEAL-PISTON	
J	6	1	**233-0619**	1	SEAL-WIPER	
J	7	1	**233-2589**	1	RING-WEAR	
	8	1	**233-2613**	1	BEARING	
	9	1	**269-0386**	1	ROD AS	
	9A	1	**274-4274**	1	BUSHING	
	10	1	**269-0388**	1	HEAD	
	11	1	**269-0389**	1	PISTON	
	12	1	**381-8086**	1	CYLINDER AS-HYDRAULIC	
	12A	1	**9T-2883**	2	BEARING	
J	13	1	**167-2183**	1	SEAL AS-BUFFER	
J	14	1	**167-2303**	1	SEAL-U-CUP	
J	15	1	**2K-6830**	1	RING-BACKUP	
J	16	1	**2Y-5821**	1	RING	
J	17	1	**3E-6735**	1	SEAL-O-RING	
J	18	1	**9X-4611**	1	SEAL-O-RING	
M	19	1	**9X-6611**	1	SETSCREW-SOCKET (M10X1.5X16-MM)	
					AVAILABLE REPAIR KIT(S):	
J			**377-9352**	1	KIT-HYDRAULIC CYLINDER SEAL (SWING CYLINDER)	

J-KIT MARKED J SERVICES PARTS MARKED J
M-METRIC PART

381-8055 **CYLINDER GP-HYDRAULIC** *(contd.)* **i04577409**

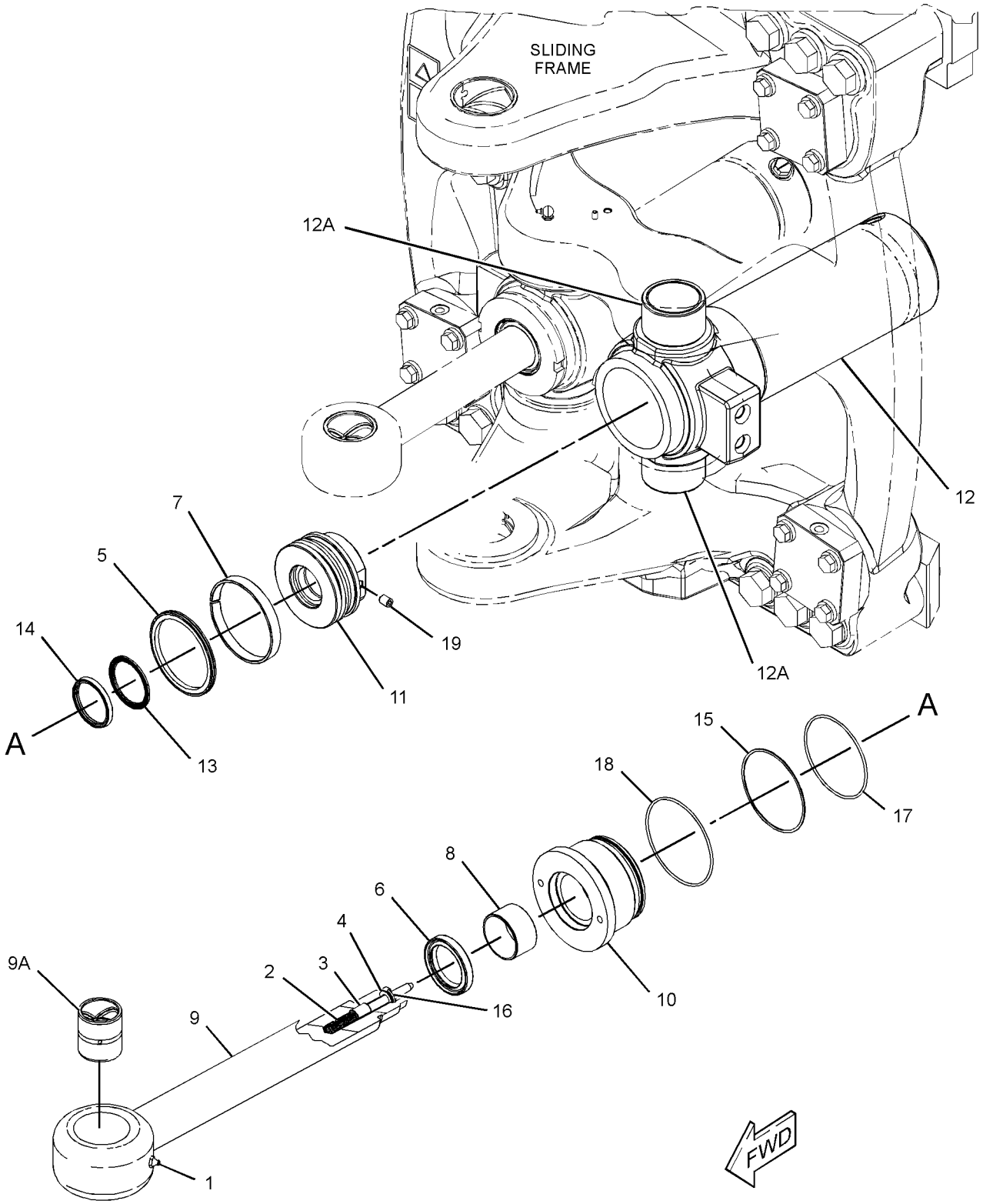

GRAPHIC #1 **<END>** g02832096

358-5034 CYLINDER GP-LIFT

S/N: SJW1-UP
80-MM(3.2-IN)BORE X 783-MM(30.8-IN)STROKE
PART OF 340-1701 LOADER AR

SMCS-5102 **i04548143**

NOTE	REF NO	GRAPHIC REF	PART NUMBER	QTY	PART NAME 1 2 3 4 5 6 (PRODUCT LEVEL)	SEE PAGE
	1	1	*323-4219*	1	HEAD AS	
J	1A	1	**323-2467**	1	BUSHING	
		1	**323-4218**	1	HEAD	
J		1	**338-2414**	1	SEAL-WIPER	
J		1	**338-2444**	1	SEAL-U-CUP	
	2	1	**323-4221**	1	PISTON AS	
J		1	**161-7147**	1	SEAL-PISTON	
		1	**323-4220**	1	PISTON	
J		1	**340-9312**	1	SEAL-O-RING	
	3	1	**350-3842**	2	SET SCREW (M8X1.25X12-MM)	
	4	1	**360-7060**	1	ROD AS-HYDRAULIC CYLINDER	
	4A	1	**362-5024**	2	BUSHING	
	5	1	**363-0326**	1	CYLINDER AS-LIFT	
	5A	1	**362-5024**	2	BUSHING	
	6	1	**6V-8398**	2	SEAL-O-RING	
					AVAILABLE REPAIR KIT(S):	
J			**324-0356**		KIT-SEAL (LIFT CYLINDER)	
					(ALSO INCLUDES O-RING SEAL & WEAR RINGS)	

J-KIT MARKED J SERVICES PARTS MARKED J

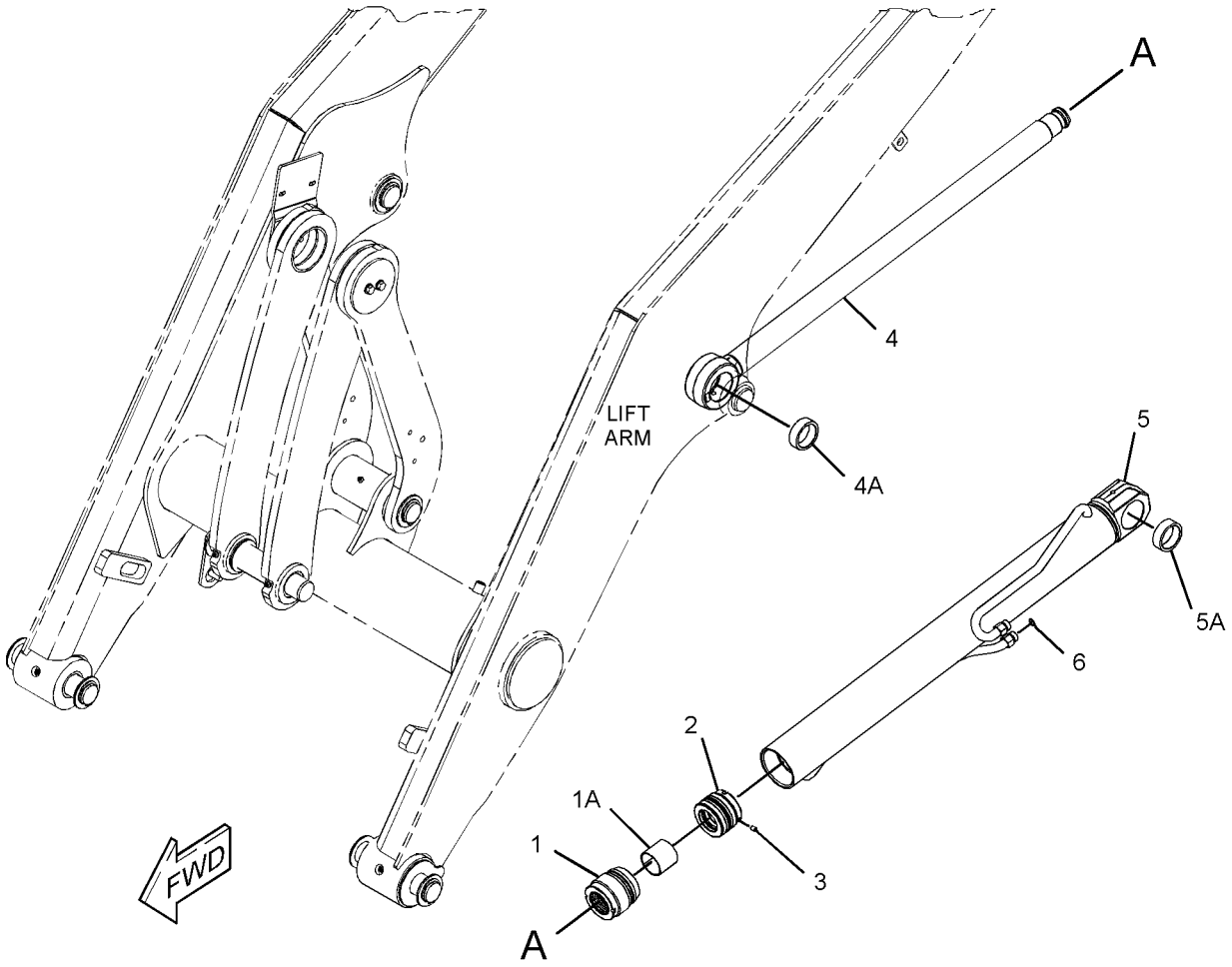

GRAPHIC #1 **<END>** g02831436

HYDRAULIC SYSTEM

358-5035 CYLINDER GP-LIFT

S/N: SJW1-UP
80-MM(3.2-IN)BORE X 783-MM(30.8-IN)STROKE
PART OF 340-1701 LOADER AR

SMCS-5102 **i04548144**

NOTE	REF NO	GRAPHIC REF	PART NUMBER	QTY	PART NAME 1 2 3 4 5 6 (PRODUCT LEVEL)	SEE PAGE
	1	1	*323-4219*	1	HEAD AS	
J	1A	1	**323-2467**	1	BUSHING	
		1	**323-4218**	1	HEAD	
J		1	**338-2414**	1	SEAL-WIPER	
J		1	**338-2444**	1	SEAL-U-CUP	
	2	1	**323-4221**	1	PISTON AS	
J		1	**161-7147**	1	SEAL-PISTON	
		1	**323-4220**	1	PISTON	
J		1	**340-9312**	1	SEAL-O-RING	
	3	1	**350-3842**	2	SET SCREW (M8X1.25X12-MM)	
	4	1	**360-7056**	1	CYLINDER AS-LIFT	
	4A	1	**362-5024**	2	BUSHING	
	5	1	**360-7060**	1	ROD AS-HYDRAULIC CYLINDER	
	5A	1	**362-5024**	2	BUSHING	
	6	1	**6V-8398**	2	SEAL-O-RING	
					AVAILABLE REPAIR KIT(S):	
J			**324-0356**	1	KIT-SEAL (LIFT CYLINDER)	
					(ALSO INCLUDES O-RING SEAL & WEAR RINGS)	

J-KIT MARKED J SERVICES PARTS MARKED J

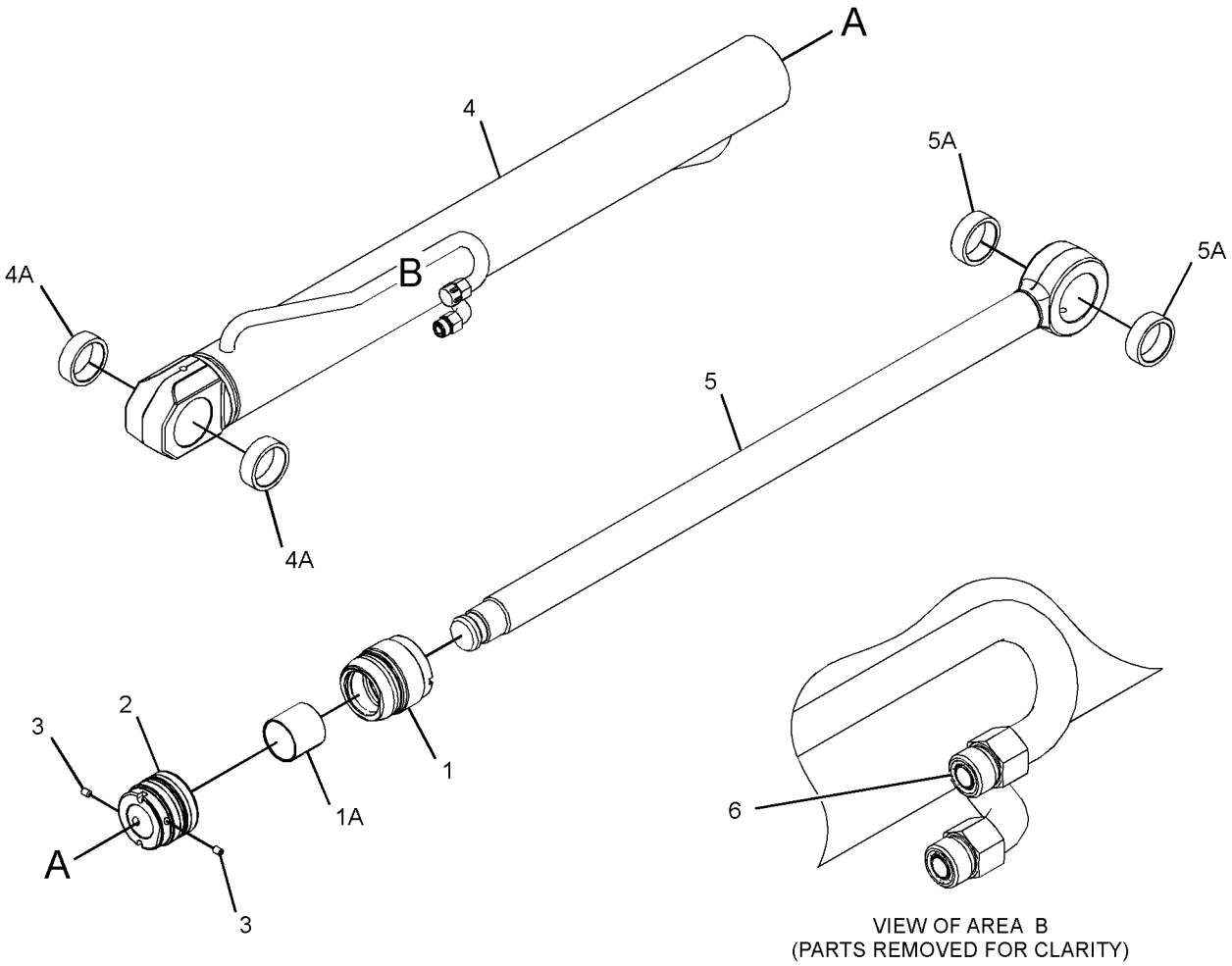

VIEW OF AREA B
(PARTS REMOVED FOR CLARITY)

GRAPHIC #1 **<END>** g02827757

226-5540 CYLINDER GP-MULTIPURPOSE BUKT

S/N: SJW1-UP
76-MM (2.99-IN) BORE X 262-MM (10.31-IN) STROKE
PART OF 350-1580, 350-1581, 350-1587, 350-1589 BUCKET AR-MULTIPURPOSE AN ATTACHMENT

SMCS-5457 **i04404170**

NOTE	REF NO	GRAPHIC REF	PART NUMBER	QTY	PART NAME 1 2 3 4 5 6 (PRODUCT LEVEL)	SEE PAGE
	1	1	**3B-8489**	2	FITTING-GREASE	
	2	1	**9S-8004**	2	PLUG-O-RING	
	3	1	**3J-1907**	2	SEAL-O-RING	
	4	1	**9T-4007**	2	BEARING	
					AVAILABLE REPAIR KIT(S):	
			230-9357	1	KIT-SEAL (BUCKET CYLINDER)	
					(INCLUDES WIPER SEAL, O-RINGS, MOISTURE EXCLUDER, POLYPAK, WEAR RINGS, O-RING LOADER & PISTON RING))	

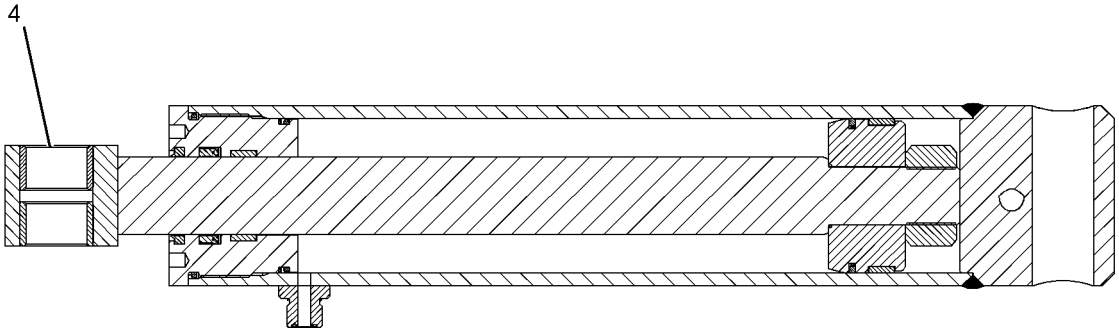

SECTION A-A



GRAPHIC #1 **<END>** g01086486

HYDRAULIC SYSTEM

320-5938 CYLINDER GP-STABILIZER

S/N: SJW1-UP
70-MM (2.75-IN) BORE X 700-MM (27.55-IN) STROKE
PART OF 340-1693 CHASSIS AR

SMCS-5468 **i03975129**

NOTE	REF NO	GRAPHIC REF	PART NUMBER	QTY	PART NAME 1 2 3 4 5 6 (PRODUCT LEVEL)	SEE PAGE
	1	1	**324-0496**	1	CYLINDER HEAD AS	
	1A	1	**323-2465**	1	BUSHING	
		1	**338-2412**	1	SEAL-WIPER	
		1	**338-2442**	1	SEAL-U-CUP	
		1	**340-9308**	1	SEAL-O-RING	
	2	1	**324-0498**	1	PISTON AS	
		1	**161-7145**	1	SEAL-PISTON	
		1	**340-6272**	2	RING-WEAR	
		1	**340-9311**	1	SEAL-O-RING	
	3	1	**324-0505**	1	ROD AS-HYDRAULIC CYLINDER	
	4	1	**324-0516**	1	CYLINDER AS-HYDRAULIC	
	5	1	**350-3842**	2	SET SCREW (M8X1.25X12-MM)	
	6	1	**6V-8397**	2	SEAL-O-RING	
					AVAILABLE REPAIR KIT(S):	
			324-0355	1	KIT-SEAL (STABILIZER CYLINDER)	
					(INCLUDES PISTON SEAL, WEAR BEARING, WIPER SEAL, U-CUP SEAL, O-RING SEALS & WEAR RING)	

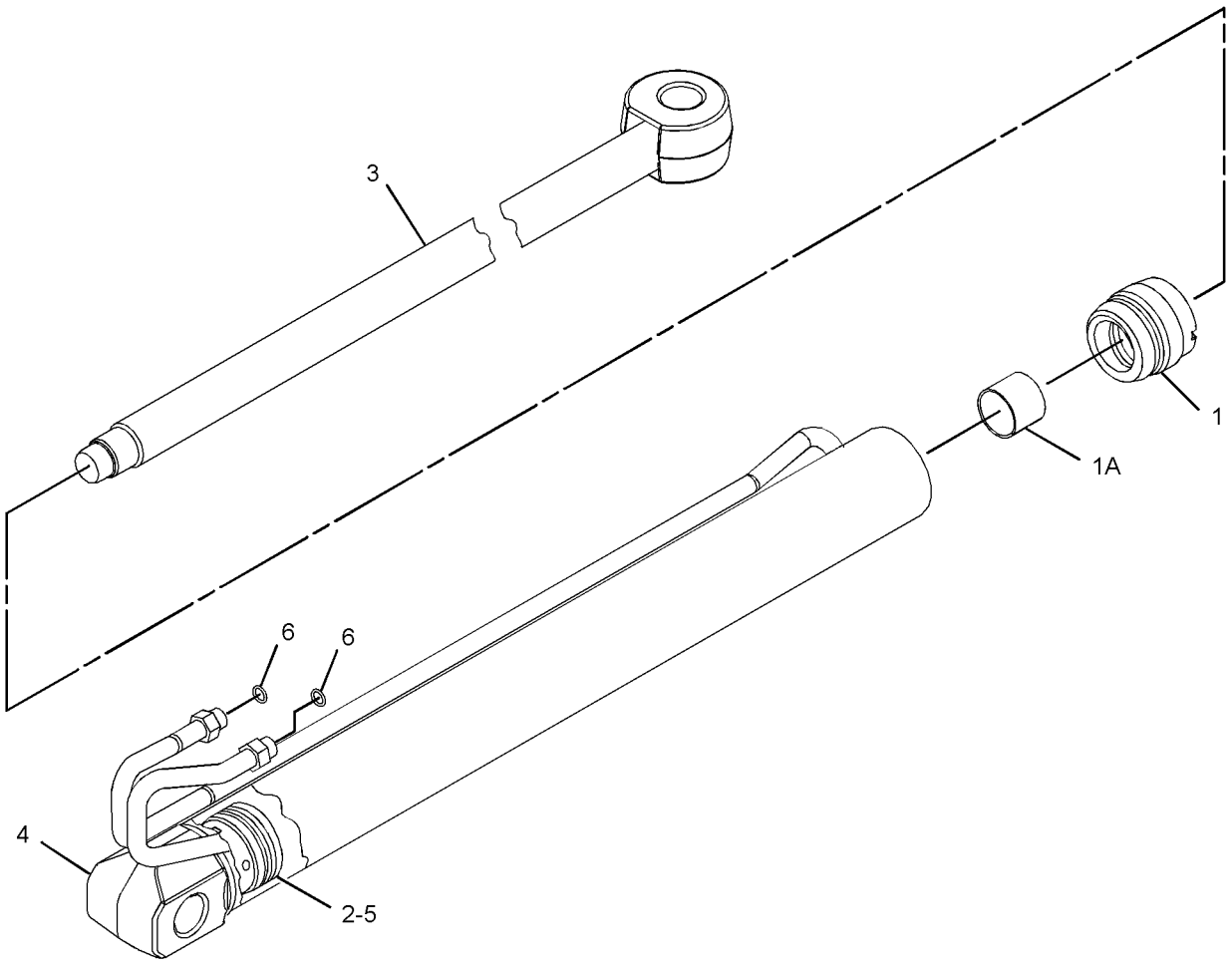

GRAPHIC #1 **<END>** g01993459

HYDRAULIC SYSTEM

320-5932 CYLINDER GP-STICK

S/N: SJW1-UP
110-MM (4.3-IN) BORE X 677-MM (26.65-IN) STROKE
PART OF 340-1733, 340-1734 BACKHOE AR-EXTENDABLE STICK, 340-1732 BACKHOE AR-STANDARD STICK
AN ATTACHMENT

SMCS-5458 **i03693866**

NOTE	REF NO	GRAPHIC REF	PART NUMBER	QTY	PART NAME 1 2 3 4 5 6 (PRODUCT LEVEL)	SEE PAGE
	1	1	**6V-8398**	1	SEAL-O-RING	
	2	1	**324-0352**	1	HEAD AS	
	2A	1	**323-2470**	1	BEARING	
		1	**340-9313**	1	SEAL-O-RING	
		1	**338-2415**	1	SEAL-WIPER	
		1	**338-2445**	1	SEAL-U-CUP	
	3	1	**324-0354**	1	PISTON AS	
		1	**340-6338**	1	SEAL-PISTON	
		1	**340-9308**	1	SEAL-O-RING	
		1	**343-8052**	2	RING-WEAR	
	4	1	**324-0391**	1	ROD AS	
	4A	1	**331-1520**	1	BEARING	
	5	1	**324-0402**	1	CYLINDER AS-HYDRAULIC	
	5A	1	**215-1906**	2	BUSHING	
	6	1	**350-3842**	2	SET SCREW (M8X1.25X12-MM)	
	7	1	**7J-9108**	1	SEAL-O-RING	
					AVAILABLE REPAIR KIT(S):	
			324-0399	1	KIT-SEAL (STICK CYLINDER)	

320-5932 CYLINDER GP-STICK *(contd.)* **i03693866**

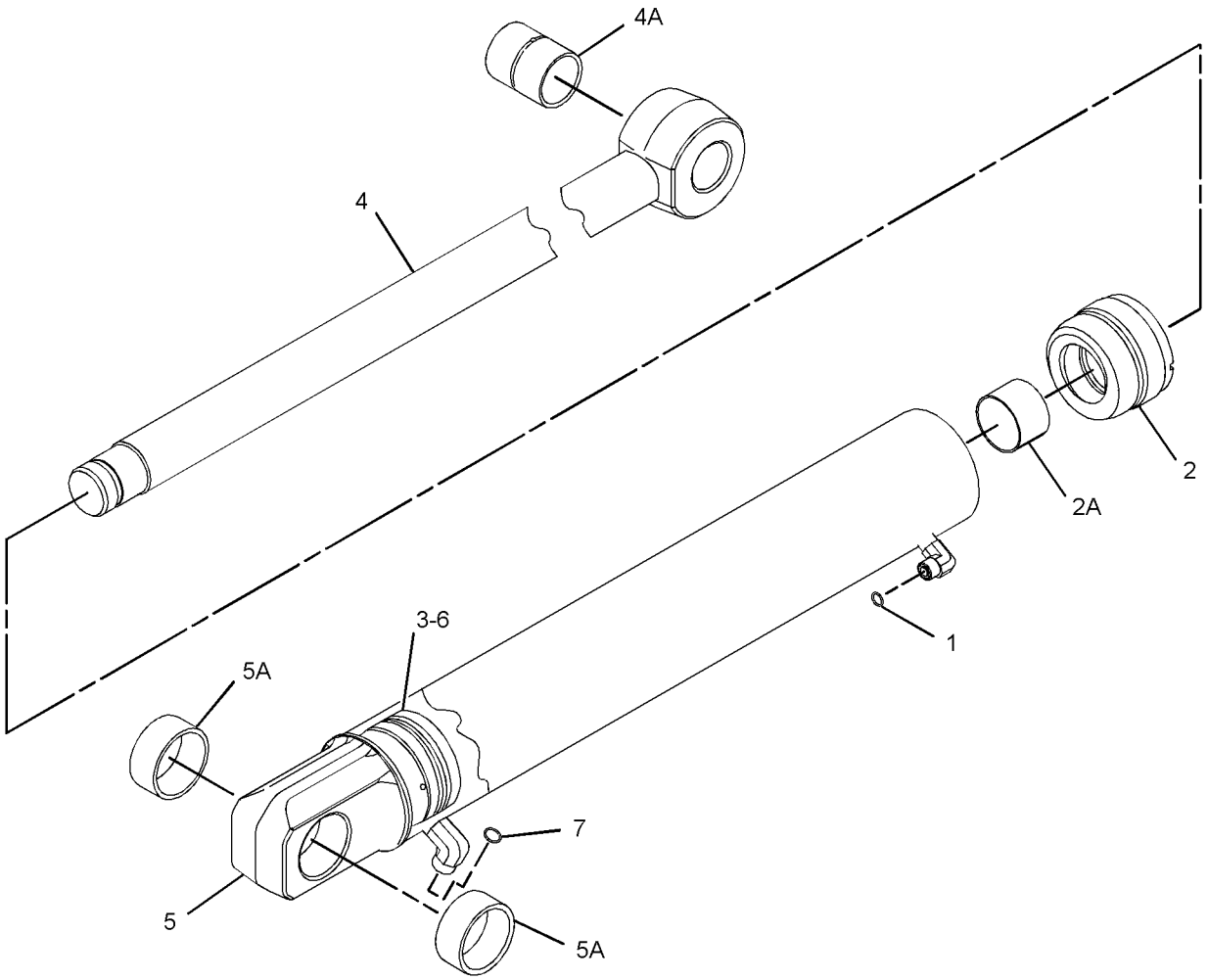

GRAPHIC #1 **<END>** g01994493

320-5935 CYLINDER GP-STICK

S/N: SJW1-UP
70-MM (2.75-IN) BORE X 1050-MM (41.35-IN) STROKE
PART OF 324-0550, 329-9749 STICK GP-EXTENDABLE
AN ATTACHMENT

SMCS-5458 **i03975131**

NOTE	REF NO	GRAPHIC REF	PART NUMBER	QTY	PART NAME 1 2 3 4 5 6 (PRODUCT LEVEL)	SEE PAGE
	1	1	**6V-8398**	1	SEAL-O-RING	
	2	1	**324-0436**	1	ROD AS	
	3	1	**324-0496**	1	CYLINDER HEAD AS	
	3A	1	**323-2465**	1	BUSHING	
		1	**338-2412**	1	SEAL-WIPER	
		1	**338-2442**	1	SEAL-U-CUP	
		1	**340-9308**	1	SEAL-O-RING	
	4	1	**324-0498**	1	PISTON AS	
		1	**161-7145**	1	SEAL-PISTON	
		1	**340-6272**	2	RING-WEAR	
		1	**340-9311**	1	SEAL-O-RING	
	5	1	**324-0501**	1	CYLINDER AS	
	6	1	**350-3842**	2	SET SCREW (M8X1.25X12-MM)	
					AVAILABLE REPAIR KIT(S):	
			324-0355	1	KIT-SEAL (EXTENDABLE STICK)	
					(INCLUDES PISTON SEAL, WEAR BEARING, WIPER SEAL, U-CUP SEAL, O-RING SEALS & WEAR RING)	

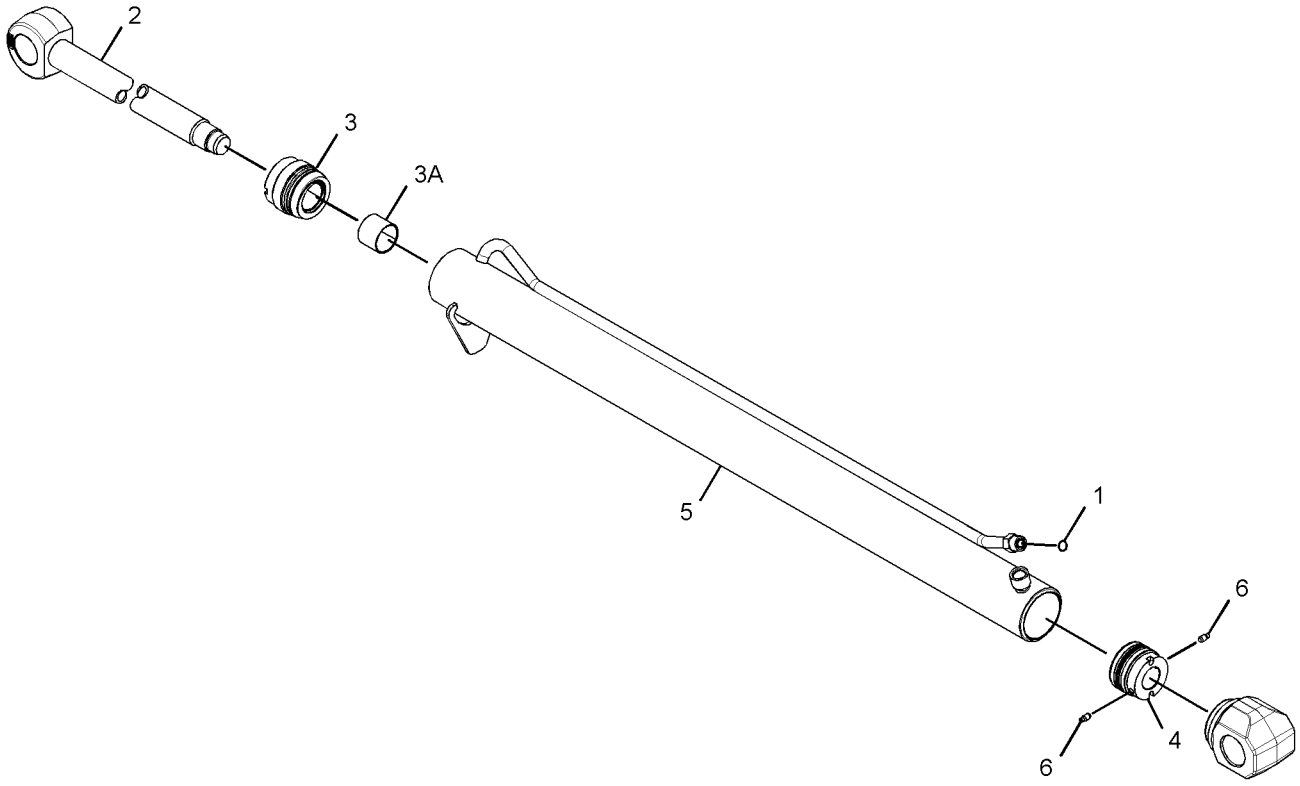

GRAPHIC #1 **<END>** g01991690

HYDRAULIC SYSTEM

358-5045 CYLINDER GP-TILT

S/N: SJW1-UP
90-MM (3.5-IN) BORE X 881.5-MM (34.7-IN) STROKE
PART OF 340-1701 LOADER AR

SMCS-5104 **i04548486**

NOTE	REF NO	GRAPHIC REF	PART NUMBER	QTY	PART NAME 1 2 3 4 5 6 (PRODUCT LEVEL)	SEE PAGE
	1	1	**324-0512**	1	HEAD AS	
J	1A	1	**323-2466**	1	BEARING	
J		1	**338-2413**	1	SEAL-WIPER	
J		1	**338-2443**	1	SEAL-U-CUP	
J		1	**340-9308**	1	SEAL-O-RING	
	2	1	**324-0525**	1	PISTON AS	
J		1	**161-7145**	1	SEAL-PISTON	
J		1	**340-6272**	2	RING-WEAR	
J		1	**340-9310**	1	SEAL-O-RING	
	3	1	**350-3842**	2	SET SCREW (M8X1.25X12-MM)	
	4	1	**360-9835**	1	ROD AS	
	4A	1	**9R-0153**	2	BUSHING	
	5	1	**360-9841**	1	CYLINDER AS-TILT	
	5A	1	**9R-0153**	2	BUSHING	
	6	1	**6V-8398**	2	SEAL-O-RING	
					AVAILABLE REPAIR KIT(S):	
J			**324-0411**	1	KIT-SEAL (TILT CYLINDER)	

J-KIT MARKED J SERVICES PARTS MARKED J

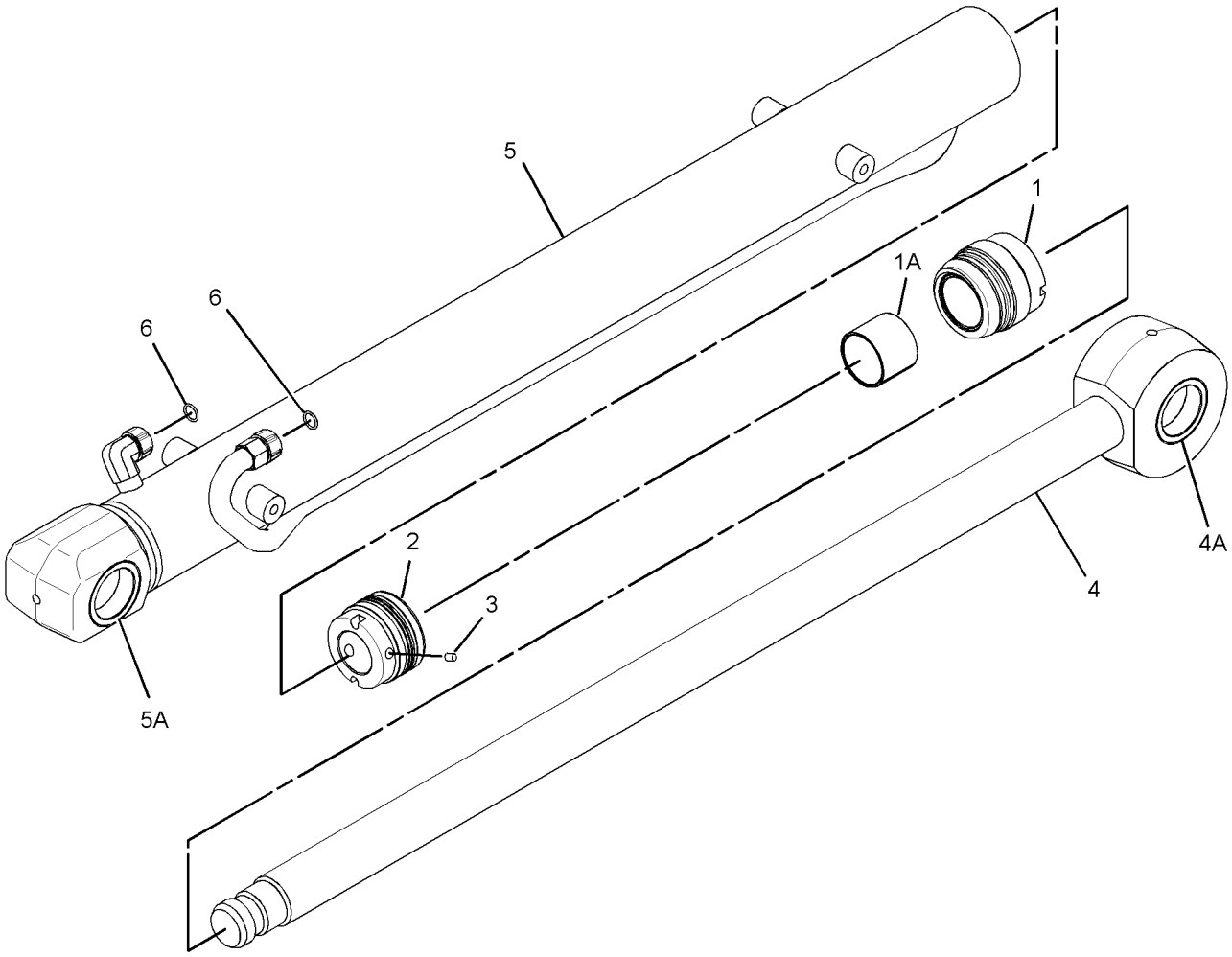

GRAPHIC #1 **<END>** g02774117

353-1338 DRIVE & MTG GP-PUMP

S/N: SJW1-UP
PART OF 359-0377 TRANSMISSION AR-DIRECT DRIVE, 359-0380 TRANSMISSION AR-POWER SHIFT AN ATTACHMENT

SMCS-3108, 5070 **i04574729**

NOTE	REF NO	GRAPHIC REF	PART NUMBER	QTY	PART NAME 1 2 3 4 5 6 (PRODUCT LEVEL)	SEE PAGE
	1	1	**9U-8886**	1	RING-SEAL	
	2	1	**115-1918**	1	PLATE	
	3	1	**117-3534**	1	ADAPTER	
Y	4	1	**128-5596**	1	SHAFT GP-PUMP DRIVE	436
	5	1	**274-4555**	1	HUB	
M	6	1	**8T-9405**	4	BOLT-SOCKET HEAD (M4X0.7X16-MM)	

M-METRIC PART
Y-SEPARATE ILLUSTRATION

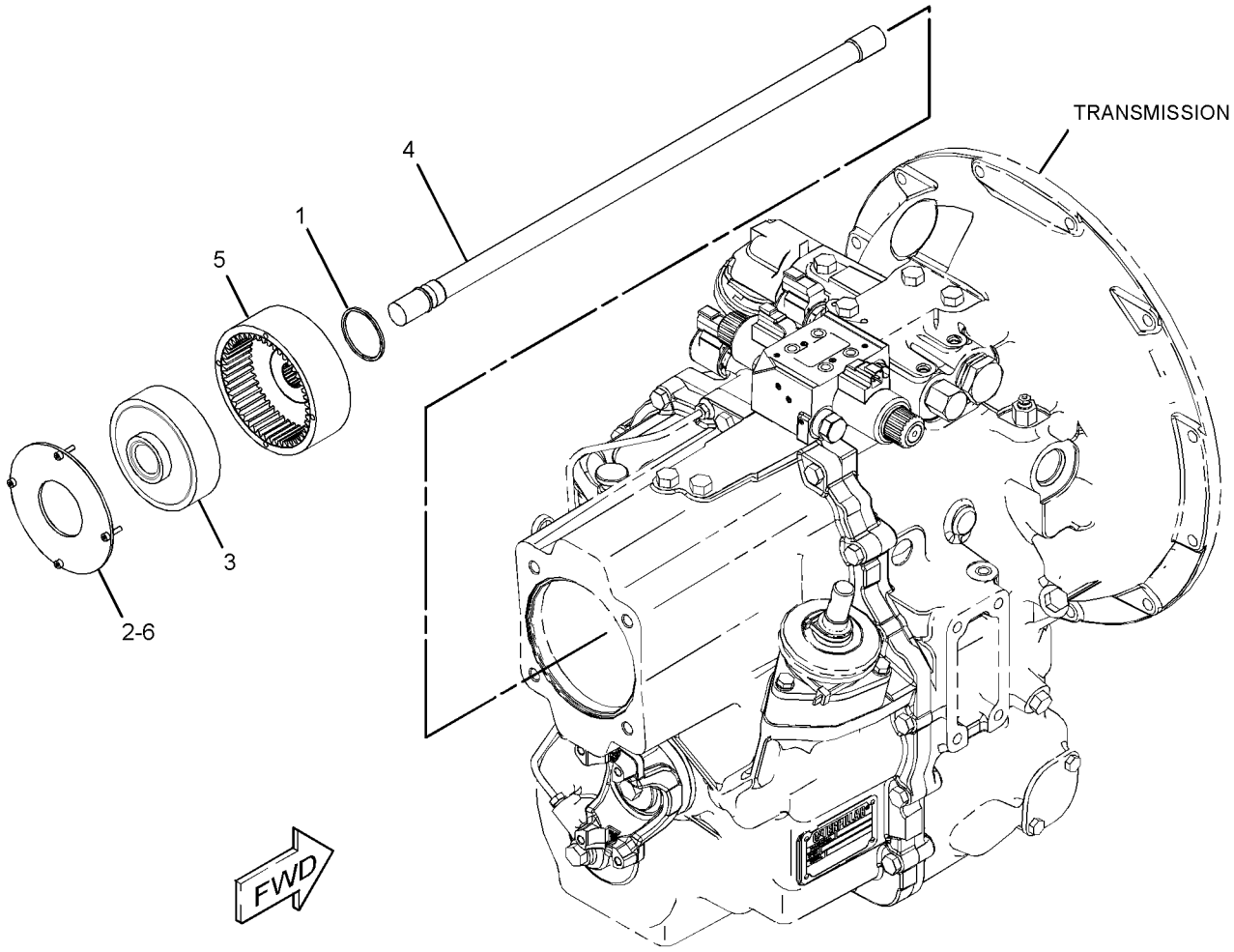

GRAPHIC #1 **<END>** g02809597

HYDRAULIC SYSTEM

353-1341 DRIVE & MTG GP-PUMP

S/N: SJW1-UP
PART OF 350-8606 TRANSMISSION AR-POWER SHIFT
AN ATTACHMENT

SMCS-3108, 5070 **i04612430**

NOTE	REF NO	GRAPHIC REF	PART NUMBER	QTY	PART NAME 1 2 3 4 5 6 (PRODUCT LEVEL)	SEE PAGE
	1	1	**9U-8886**	1	RING-SEAL	
	2	1	**115-1918**	1	PLATE	
	3	1	**117-3534**	1	ADAPTER	
	4	1	**274-4555**	1	HUB	
	5	1	**359-0389**	1	SHAFT GP-POWER TAKE-OFF (TRANSMISSION)	
		1	**130-8150**	1	RING-RETAINING	
M	6	1	**8T-9405**	4	BOLT-SOCKET HEAD (M4X0.7X16-MM)	

M-METRIC PART

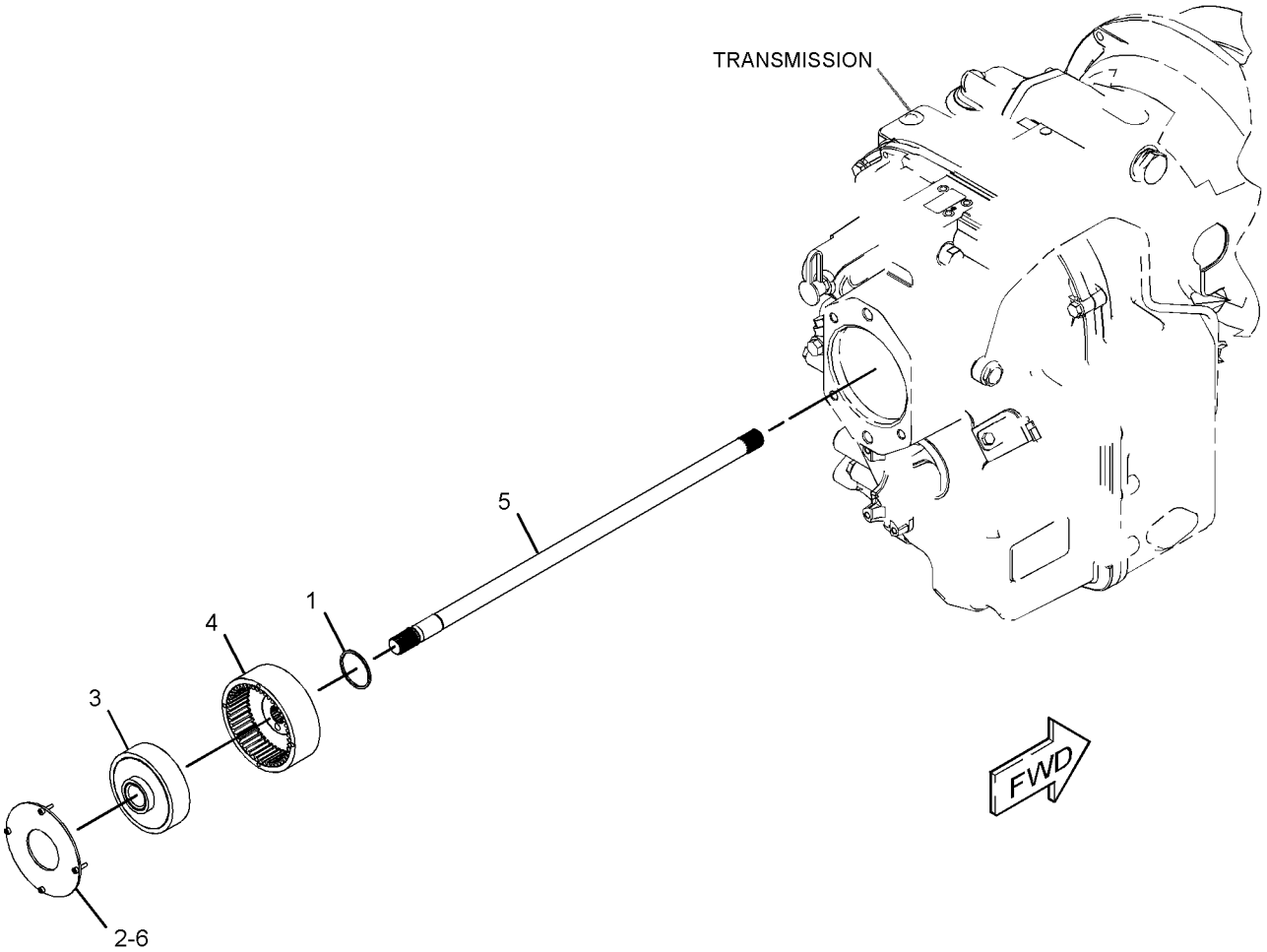

GRAPHIC #1 **<END>** g02820076

HYDRAULIC SYSTEM

353-1441 FILTER GP-OIL

S/N: SJW1-UP

PART OF 340-1718 HYDRAULIC AR

SMCS-5068 **i04548435**

NOTE	REF NO	GRAPHIC REF	PART NUMBER	QTY	PART NAME 1 2 3 4 5 6 (PRODUCT LEVEL)	SEE PAGE
	1	1	**361-6768**	1	FILTER GP-OIL (HYDRAULIC)	
		1	**362-1163**	1	HOUSING-HYDRAULIC OIL FILTER	
		1	**362-1164**	1	HOUSING AS-FILTER	
M	2	1	**8T-4137**	3	BOLT (M10X1.5X20-MM)	
	3	1	*148-8318*	1	CONNECTOR AS	
		1	**3K-0360**	1	SEAL-O-RING	
		1	**6V-8397**	1	SEAL-O-RING	
		1	**6V-8634**	1	CONNECTOR	
	4	1	*148-8347*	1	ELBOW AS	
		1	**3D-2824**	1	SEAL-O-RING	
		1	**6V-9007**	1	ELBOW	
		1	**6V-9746**	1	SEAL-O-RING	
B	5	1	**5K-9090**	1	SEAL-O-RING	
B	6	1	**6V-9829**	1	CAP AS	
B	7	1	**6V-9833**	1	CAP AS	
	8	1	**7X-7729**	3	WASHER (11X25X3-MM THK)	

B-USE AS REQUIRED
M-METRIC PART

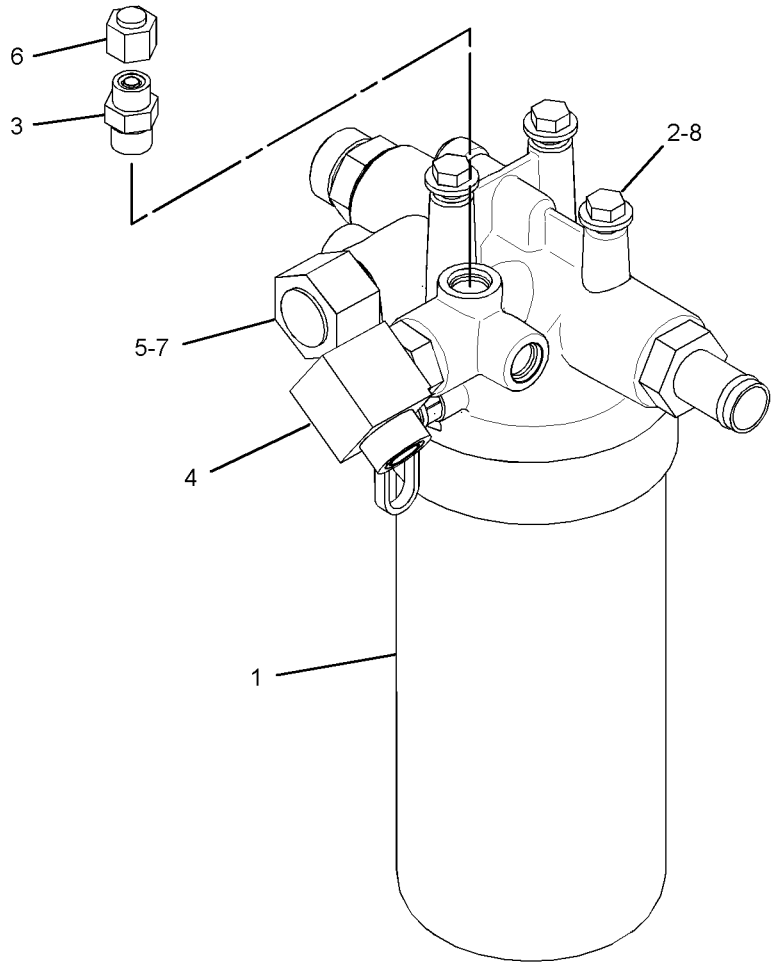

GRAPHIC #1 **<END>** g02799123

132-8769 FITTING GP-HYDRAULIC–QUICK DISCONNECT

S/N: SJW1-UP
PART OF 389-3761, 389-3762 DISTRIBUTION AR
AN ATTACHMENT

SMCS-5057 **i01499420**

NOTE	REF NO	GRAPHIC REF	PART NUMBER	QTY	PART NAME 1 2 3 4 5 6 (PRODUCT LEVEL)	SEE PAGE
	1	1	**106-0406**	1	FITTING (QUICK DISCONNECT, MALE)	
	2	1	**106-0401**	1	FITTING (QUICK DISCONNECT, FEMALE)	

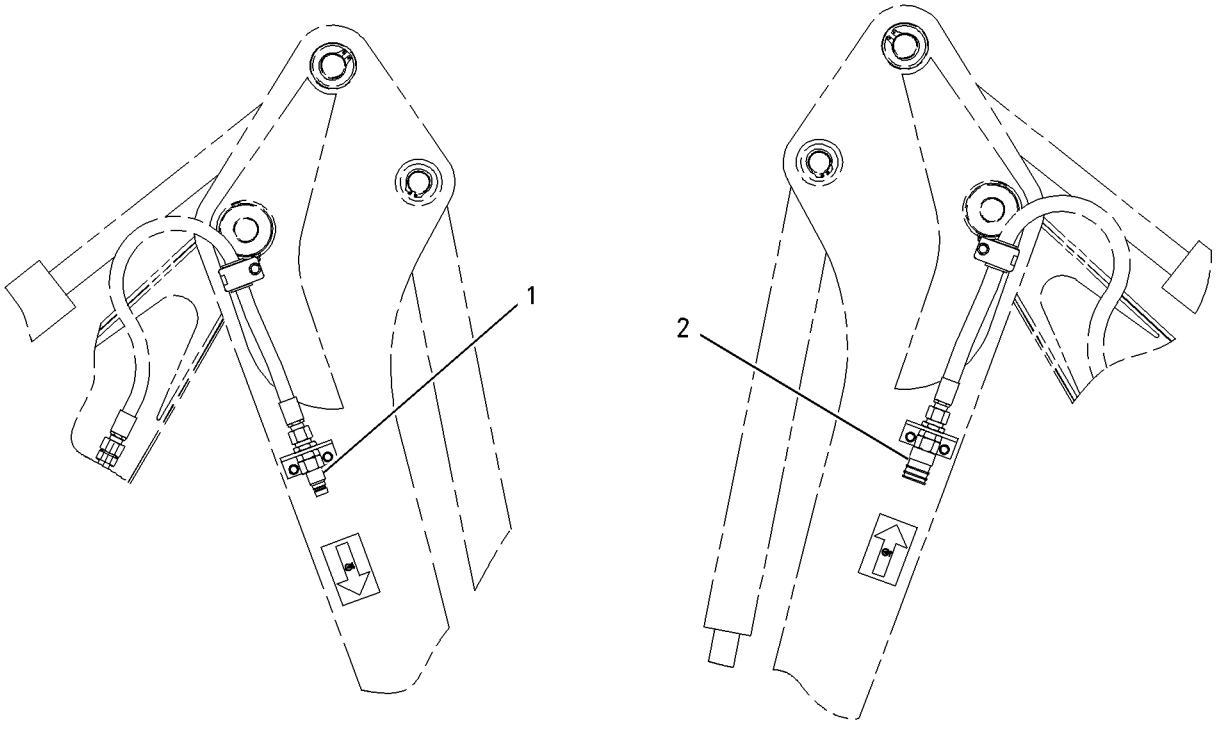

GRAPHIC #1 **<END>** g00778121

HYDRAULIC SYSTEM

340-1718 HYDRAULIC AR

S/N: SJW1-UP

PART OF 367-5957 COMMON AR

SMCS-5050 **i04611572**

NOTE	PART NUMBER	QTY	PART NAME 1 2 3 4 5 6 (PRODUCT LEVEL)	SEE PAGE
Y	*353-1361*	1	CONTROL GP-SERVICE BRAKE	309
Y	*353-1441*	1	FILTER GP-OIL (HYDRAULIC)	377
Y	*337-9774*	1	LINES GP-PUMP	418
Y	*337-9777*	1	LINES GP-RETURN	420
Y	*337-9770*	1	LINES GP-PILOT (SIGNAL)	416
Y	*326-1803*	1	LINES GP-SWING	429
Y	*337-9698*	1	PUMP & MTG GP-HYDRAULIC	434
Y	*351-5888*	1	TANK & MTG GP-HYDRAULIC	437

Y-SEPARATE ILLUSTRATION

<END>

HYDRAULIC SYSTEM

337-9812 LINES GP-AUXILIARY HYDRAULIC—PARALLEL LIFT

S/N: SJW1-UP
PART OF 373-4267, 373-4268 VALVE AR-BANK 3
AN ATTACHMENT

SMCS-5057 **i04618170**

NOTE	REF NO	GRAPHIC REF	PART NUMBER	QTY	PART NAME 1 2 3 4 5 6 (PRODUCT LEVEL)	SEE PAGE
	1	1	*281-5969*	2	ELBOW AS	
					(EACH INCLUDES)	
		1	**6V-8398**	1	SEAL-O-RING	
		1	**6V-9796**	1	ELBOW	
		1	**7J-9108**	1	SEAL-O-RING	
I	2	1	**362-1590**	2	HOSE AS	
	3	1	**362-1595**	1	TUBE AS	
	4	1	**362-1600**	1	TUBE AS	
	5	1	**371-8714**	1	TUBE AS	
	6	1	**371-8715**	1	TUBE AS	
	7	1	*148-8382*	2	ELBOW AS	
					(EACH INCLUDES)	
		1	**3D-2824**	1	SEAL-O-RING	
		1	**7J-9108**	1	SEAL-O-RING	
		1	**8T-0404**	1	ELBOW	
	8	1	**5G-3676**	2	GROMMET	
	9	1	**5P-4116**	2	WASHER-HARD (8.8X20.5X2-MM THK)	
	10	1	**6V-8398**	4	SEAL-O-RING	
	11	1	**6V-9170**	2	NUT-BULKHEAD (1-14-THD)	
	12	1	**6V-9830**	2	CAP AS	
	13	1	**8T-1889**	2	CLIP (SLOT)	
	14	1	**8T-1890**	2	CLIP (TAB)	
M	15	1	**099-3649**	2	BOLT (M8X1.25X40-MM)	
	16	1	**9R-1004**	2	CLIP (TAB)	
	17	1	**9R-1005**	2	CLIP (SLOT)	

I-REFER TO HYDRAULIC INFORMATION SYSTEM
M-METRIC PART

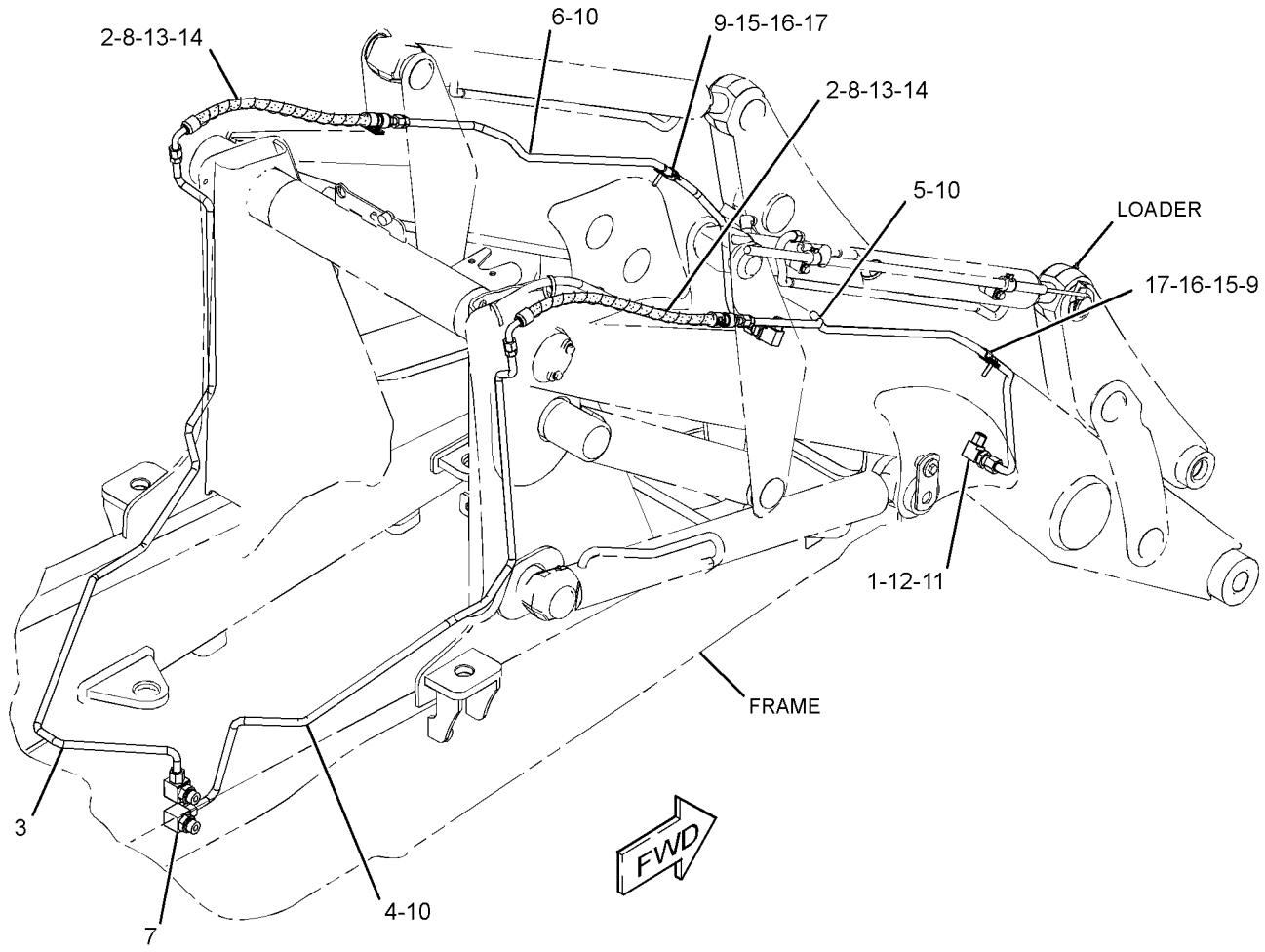

GRAPHIC #1 **<END>** g02798191

353-1490 LINES GP-AUXILIARY HYDRAULIC–EXTENDABLE STICK

S/N: SJW1-UP

PART OF 389-3761 DISTRIBUTION AR

FOR USE WITH 340-1733–PAGE 1, 340-1734–PAGE 1, 132-8769–PAGE 378 AN ATTACHMENT

SMCS-5057 **i04577652**

NOTE	PART NUMBER	QTY	PART NAME 1 2 3 4 5 6 (PRODUCT LEVEL)	SEE PAGE
Y	*371-5095*	1	LINES GP-AUXILIARY HYDRAULIC (SIDESHIFT)	386
Y	*374-6861*	1	LINES GP-AUXILIARY HYDRAULIC (EXTENDABLE STICK)	388

Y-SEPARATE ILLUSTRATION

<END>

353-1494 LINES GP-AUXILIARY HYDRAULIC

S/N: SJW1-UP

AN ATTACHMENT

SMCS-5057 **i04547482**

NOTE	REF NO	GRAPHIC REF	PART NUMBER	QTY	PART NAME 1 2 3 4 5 6 (PRODUCT LEVEL)	SEE PAGE
	1	1	*268-1548*	2	CONNECTOR AS	
					(EACH INCLUDES)	
		1	**6V-8398**	1	SEAL-O-RING	
		1	**7J-9108**	1	SEAL-O-RING	
		1	**268-1547**	1	CONNECTOR	
I	2	1	**324-7602**	1	HOSE AS	
I	3	1	**324-7603**	1	HOSE AS	
	4	1	*148-8364*	1	ELBOW AS	
		1	**3K-0360**	1	SEAL-O-RING	
		1	**6V-8398**	1	SEAL-O-RING	
		1	**6V-8625**	1	ELBOW	
	5	1	**6V-9170**	2	NUT-BULKHEAD (1-14-THD)	

I-REFER TO HYDRAULIC INFORMATION SYSTEM

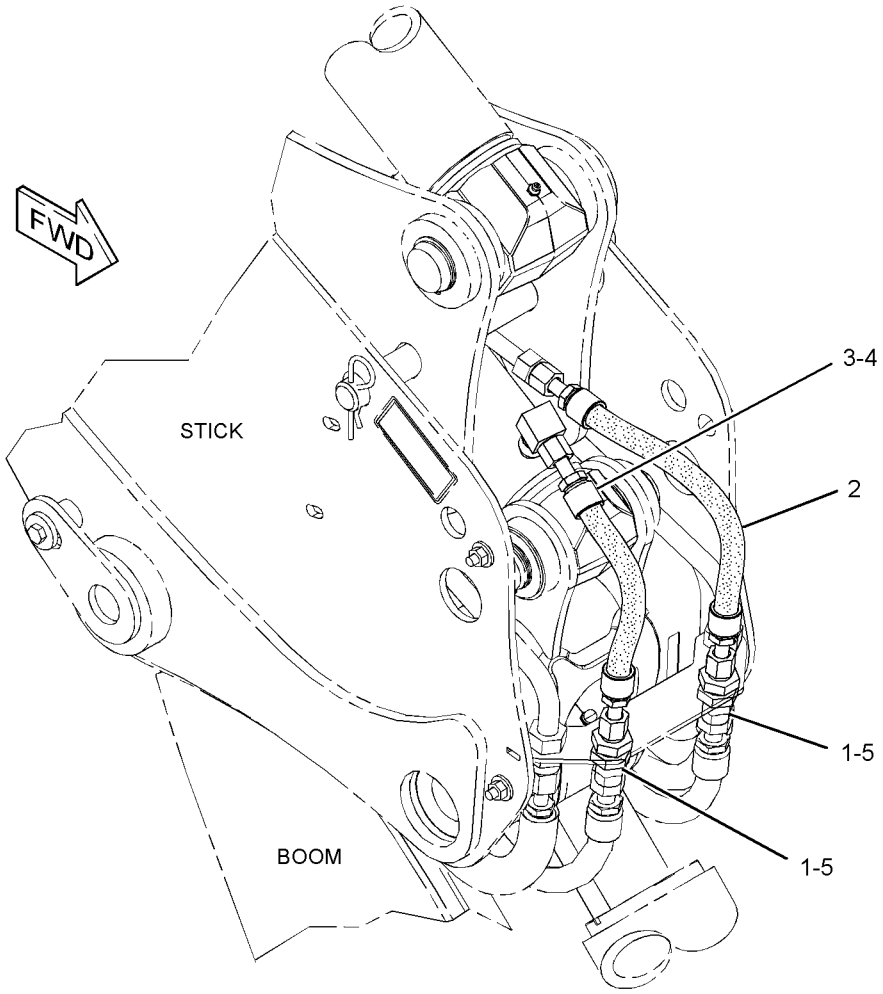

GRAPHIC #1 **<END>** g02773942

HYDRAULIC SYSTEM

365-3335 LINES GP-AUXILIARY HYDRAULIC–
STANDARD STICK, 1-WAY
S/N: SJW1-UP
PART OF 364-3388 LINES GP-BACKHOE AUXILIARY
AN ATTACHMENT

SMCS-5057 **i04549494**

NOTE	REF NO	GRAPHIC REF	PART NUMBER	QTY	PART NAME 1 2 3 4 5 6 (PRODUCT LEVEL)	SEE PAGE
	1	1	**123-7637**	2	CAP	
	2	1	*241-6226*	1	TEE AS	
		1	**6V-8398**	1	SEAL-O-RING	
		1	**6V-9746**	1	SEAL-O-RING	
		1	**7J-9108**	1	SEAL-O-RING	
		1	**241-6225**	1	TEE	
	3	1	**241-8450**	2	FILM-WARNING (HYD PRESS, READ OMM, INTL)	
	4	1	**281-4726**	2	FILM-INSTRUCTION (OIL FLOW DIRECTION)	
	5	1	**321-6387**	1	TUBE AS	
I	6	1	**324-7599**	1	HOSE AS	
I	7	1	**324-7611**	1	HOSE AS	
	8	1	**327-8298**	1	TUBE AS	
	9	1	**329-0143**	1	TUBE AS	
	10	1	**331-3779**	1	PLATE	
I	11	1	**331-6299**	1	HOSE AS	
	12	1	**332-1829**	1	PLATE	
	13	1	*150-3052*	1	CONNECTOR AS	
		1	**5K-9090**	1	SEAL-O-RING	
		1	**7M-8485**	1	SEAL-O-RING	
		1	**107-6709**	1	CONNECTOR	
	14	1	*150-3053*	1	CONNECTOR AS	
		1	**6V-9746**	1	SEAL-O-RING	
		1	**7M-8485**	1	SEAL-O-RING	
		1	**108-3872**	1	CONNECTOR	
	15	1	**2P-1293**	1	LOCKNUT (1-3/16-12-THD)	
	16	1	**6V-8398**	1	SEAL-O-RING	
	17	1	**6V-9170**	1	NUT-BULKHEAD (1-14-THD)	
	18	1	**6V-9172**	1	NUT (1-7/16-12-THD)	
	19	1	**6V-9746**	3	SEAL-O-RING	
	20	1	**6V-9830**	1	CAP AS	
	21	1	**8K-1117**	1	CLAMP	
	22	1	**8T-1889**	2	CLIP (SLOT)	
	23	1	**8T-1890**	2	CLIP (TAB)	
	24	1	**8T-4121**	8	WASHER-HARD (11X21X2.5-MM THK)	
M	25	1	**8T-4133**	4	NUT (M10X1.5-THD)	
M	26	1	**8T-4136**	1	BOLT (M10X1.5X25-MM)	
M	27	1	**8T-4195**	3	BOLT (M10X1.5X30-MM)	

I-REFER TO HYDRAULIC INFORMATION SYSTEM
M-METRIC PART

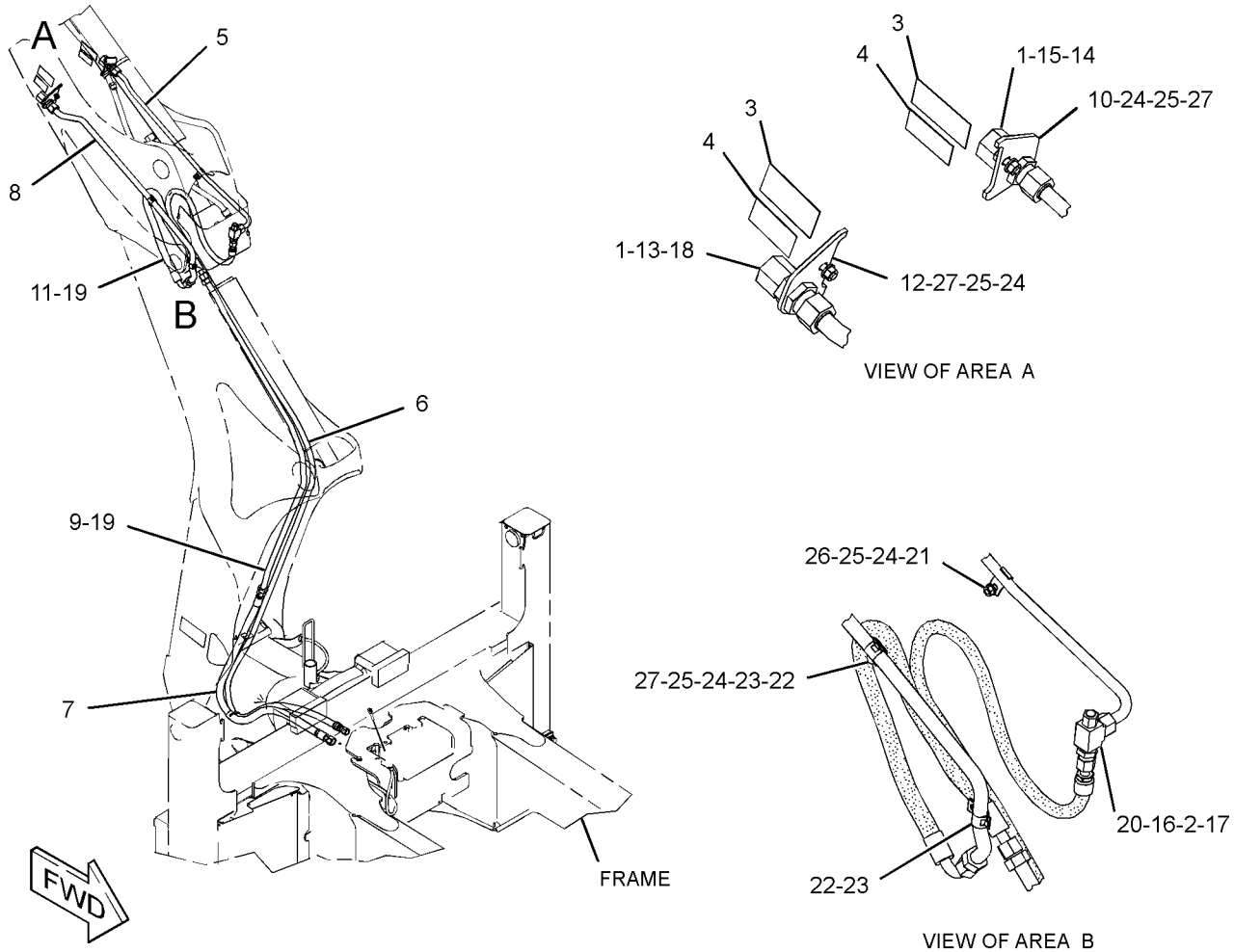

GRAPHIC #1

<END>

g02764177

HYDRAULIC SYSTEM

371-5095 LINES GP-AUXILIARY HYDRAULIC—SIDESHIFT

S/N: SJW1-UP

PART OF 353-1490 LINES GP-AUXILIARY HYDRAULIC, 353-1492, 364-3388 LINES GP-BACKHOE AUXILIARY AN ATTACHMENT

SMCS-5057 **i04549459**

NOTE	REF NO	GRAPHIC REF	PART NUMBER	QTY	PART NAME 1 2 3 4 5 6 (PRODUCT LEVEL)	SEE PAGE
	1	1	*313-3477*	2	TEE AS	
					(EACH INCLUDES)	
		1	**5K-9090**	1	SEAL-O-RING	
		1	**7J-9108**	2	SEAL-O-RING	
		1	**313-3476**	1	TEE	
	2	1	**321-3096**	1	TUBE AS	
	3	1	**321-3101**	1	BRACKET	
I	4	1	**321-7303**	2	HOSE AS	
	5	1	**368-4842**	1	TUBE AS	
	6	1	**371-5659**	1	HOSE AS	
	7	1	**2P-1293**	1	LOCKNUT (1-3/16-12-THD)	
	8	1	**5K-9090**	1	SEAL-O-RING	
	9	1	**6V-1249**	2	GROMMET	
	10	1	**6V-9746**	1	SEAL-O-RING	
	11	1	**8T-1889**	1	CLIP (SLOT)	
	12	1	**8T-1890**	1	CLIP (TAB)	
	13	1	**8T-4121**	1	WASHER-HARD (11X21X2.5-MM THK)	
M	14	1	**8T-4196**	1	BOLT (M10X1.5X35-MM)	
	15	1	**8T-4224**	2	WASHER-HARD (8.8X16X2-MM THK)	
M	16	1	**8T-4908**	2	BOLT (M8X1.25X25-MM)	

I-REFER TO HYDRAULIC INFORMATION SYSTEM
M-METRIC PART

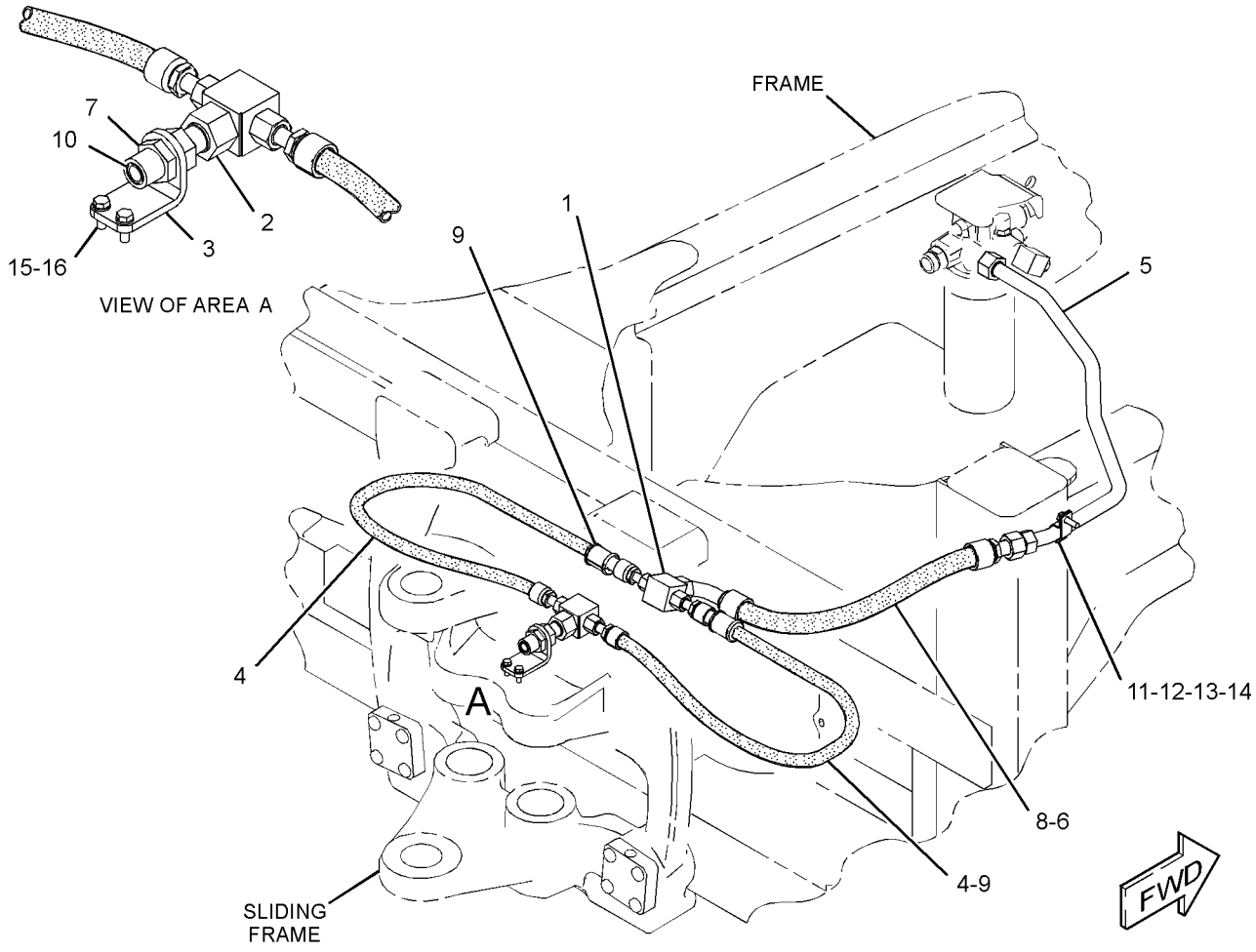

GRAPHIC #1 **<END>** g02816156

HYDRAULIC SYSTEM

374-6861 LINES GP-AUXILIARY HYDRAULIC–
EXTENDABLE STICK, 1-WAY
S/N: SJW1-UP
PART OF 353-1490 LINES GP-AUXILIARY HYDRAULIC
AN ATTACHMENT

SMCS-5057 **i04553436**

NOTE	REF NO	GRAPHIC REF	PART NUMBER	QTY	PART NAME 1 2 3 4 5 6 (PRODUCT LEVEL)	SEE PAGE
	1	1	**123-7637**	2	CAP	
	2	1	*241-6226*	1	TEE AS	
		1	**6V-8398**	1	SEAL-O-RING	
		1	**6V-9746**	1	SEAL-O-RING	
		1	**7J-9108**	1	SEAL-O-RING	
		1	**241-6225**	1	TEE	
	3	1	**241-8450**	2	FILM-WARNING (HYD PRESS, READ OMM, INTL)	
	4	1	**281-4726**	2	FILM-INSTRUCTION (OIL FLOW DIRECTION)	
	5	1	**321-6387**	1	TUBE AS	
I	6	1	**324-7611**	1	HOSE AS	
	7	1	**327-8298**	1	TUBE AS	
	8	1	**329-0143**	1	TUBE AS	
	9	1	**331-3779**	1	PLATE	
I	10	1	**331-6299**	1	HOSE AS	
I	11	1	**331-7306**	1	HOSE AS	
	12	1	**332-1829**	1	PLATE	
	13	1	*150-3052*	1	CONNECTOR AS	
		1	**5K-9090**	1	SEAL-O-RING	
		1	**7M-8485**	1	SEAL-O-RING	
		1	**107-6709**	1	CONNECTOR	
	14	1	*150-3053*	1	CONNECTOR AS	
		1	**6V-9746**	1	SEAL-O-RING	
		1	**7M-8485**	1	SEAL-O-RING	
		1	**108-3872**	1	CONNECTOR	
	15	1	**2P-1293**	1	LOCKNUT (1-3/16-12-THD)	
	16	1	**6V-8398**	1	SEAL-O-RING	
	17	1	**6V-9170**	2	NUT-BULKHEAD (1-14-THD)	
	18	1	**6V-9172**	1	NUT (1-7/16-12-THD)	
	19	1	**6V-9746**	3	SEAL-O-RING	
	20	1	**8K-1117**	1	CLAMP	
	21	1	**8T-1889**	2	CLIP (SLOT)	
	22	1	**8T-1890**	2	CLIP (TAB)	
	23	1	**8T-4121**	8	WASHER-HARD (11X21X2.5-MM THK)	
M	24	1	**8T-4133**	4	NUT (M10X1.5-THD)	
M	25	1	**8T-4136**	1	BOLT (M10X1.5X25-MM)	
M	26	1	**8T-4195**	3	BOLT (M10X1.5X30-MM)	
	27	1	*268-1548*	1	CONNECTOR AS	
		1	**6V-8398**	1	SEAL-O-RING	
		1	**7J-9108**	1	SEAL-O-RING	
		1	**268-1547**	1	CONNECTOR	
I	28	1	**324-7603**	1	HOSE AS	
	29	1	*148-8364*	1	ELBOW AS	
		1	**3K-0360**	1	SEAL-O-RING	
		1	**6V-8398**	1	SEAL-O-RING	
		1	**6V-8625**	1	ELBOW	

I-REFER TO HYDRAULIC INFORMATION SYSTEM
M-METRIC PART

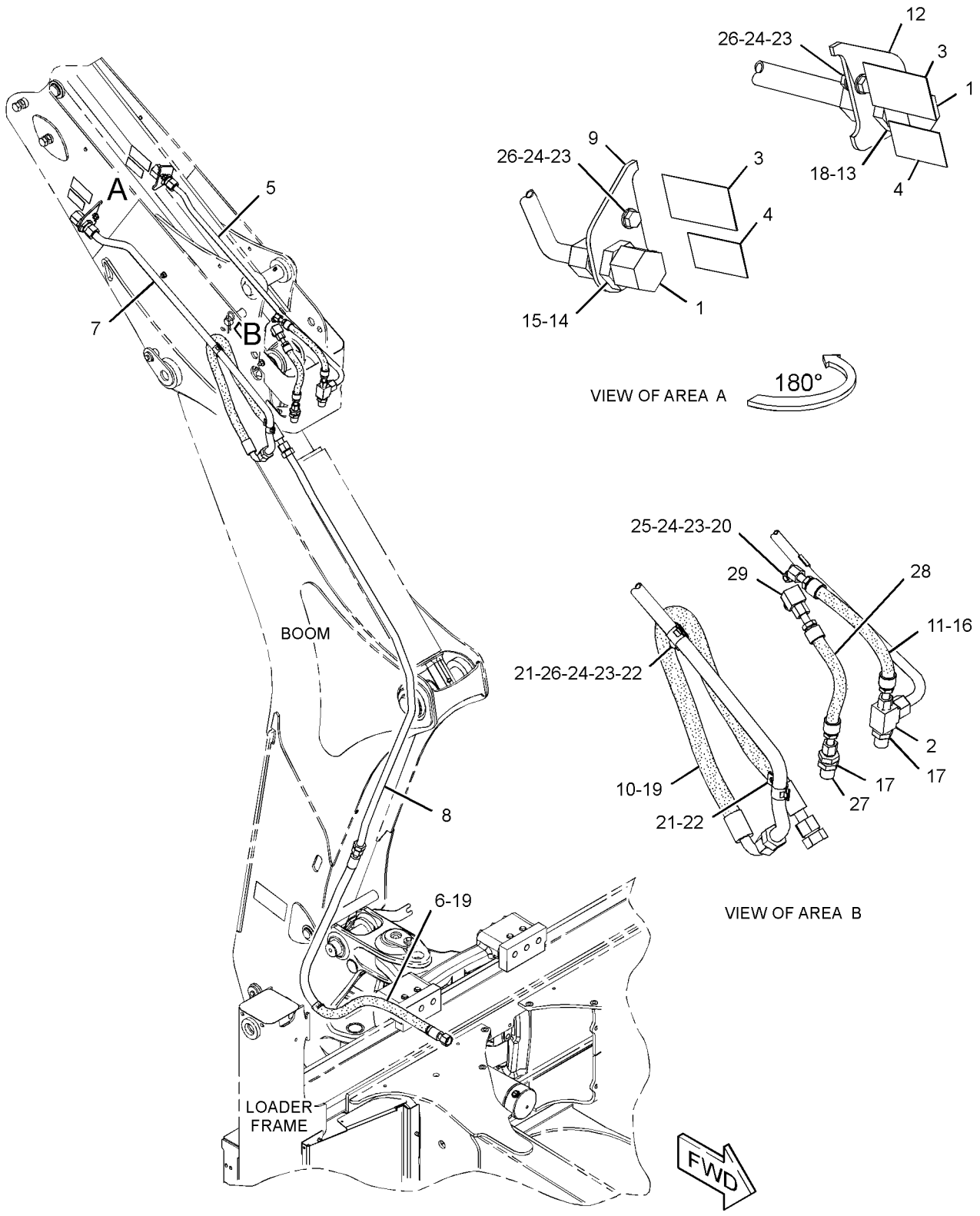

GRAPHIC #1 **<END>** g02829699

HYDRAULIC SYSTEM

321-7231 LINES GP-BACKHOE

S/N: SJW1-UP

PART OF 340-1733, 340-1734 BACKHOE AR-EXTENDABLE STICK, 340-1732 BACKHOE AR-STANDARD STICK AN ATTACHMENT

SMCS-5057 **i03871531**

NOTE	REF NO	GRAPHIC REF	PART NUMBER	QTY	PART NAME 1 2 3 4 5 6 (PRODUCT LEVEL)	SEE PAGE
	1	1	**6U-0456**	12	STRAP	
	2	1	*260-9214*	5	CONNECTOR AS	
					(EACH INCLUDES)	
		1	**3D-2824**	1	SEAL-O-RING	
		1	**7J-9108**	1	SEAL-O-RING	
		1	**260-9213**	1	CONNECTOR	
	3	1	**319-6906**	4	HOSE AS	
I	4	1	**319-6907**	2	HOSE AS	
	5	1	**319-6908**	2	HOSE AS	
	6	1	**320-8438**	4	CLAMP	
	7	1	**323-9083**	1	TUBE AS	
	8	1	**323-9084**	1	TUBE AS	
	9	1	**323-9085**	1	TUBE AS	
	10	1	**323-9086**	1	TUBE AS	
	11	1	**333-0739**	4	PLATE	
	12	1	*344-2170*	1	FITTING & MTG GP-HYDRAULIC	
		1	**6V-8398**	2	SEAL-O-RING	
		1	**7J-9108**	6	SEAL-O-RING	
		1	**327-0223**	1	FITTING & MTG GP-HYDRAULIC	
	13	1	*344-2171*	1	FITTING & MTG GP-HYDRAULIC	
		1	**6V-8398**	2	SEAL-O-RING	
		1	**7J-9108**	6	SEAL-O-RING	
		1	**327-0222**	1	FITTING & MTG GP-HYDRAULIC	
	14	1	*148-8328*	2	CONNECTOR AS	
					(EACH INCLUDES)	
		1	**3D-2824**	1	SEAL-O-RING	
		1	**6V-8398**	1	SEAL-O-RING	
		1	**6V-8633**	1	CONNECTOR	
	15	1	*148-8341*	1	CONNECTOR AS	
		1	**3D-2824**	1	SEAL-O-RING	
		1	**6V-8713**	1	CONNECTOR	
		1	**7J-9108**	1	SEAL-O-RING	
M	16	1	**5C-2890**	5	NUT (M6X1-THD)	
	17	1	**6V-8398**	2	SEAL-O-RING	
B	18	1	**6V-9831**	2	CAP AS	
	19	1	**7J-9108**	2	SEAL-O-RING	
M	20	1	**8T-3844**	6	BOLT (M6X1X70-MM)	
	21	1	**8T-4205**	12	WASHER-HARD (7.2X14.5X2-MM THK)	
	22	1	**8T-4224**	4	WASHER-HARD (8.8X16X2-MM THK)	
M	23	1	**8T-4908**	4	BOLT (M8X1.25X25-MM)	

B-USE AS REQUIRED
I-REFER TO HYDRAULIC INFORMATION SYSTEM
M-METRIC PART

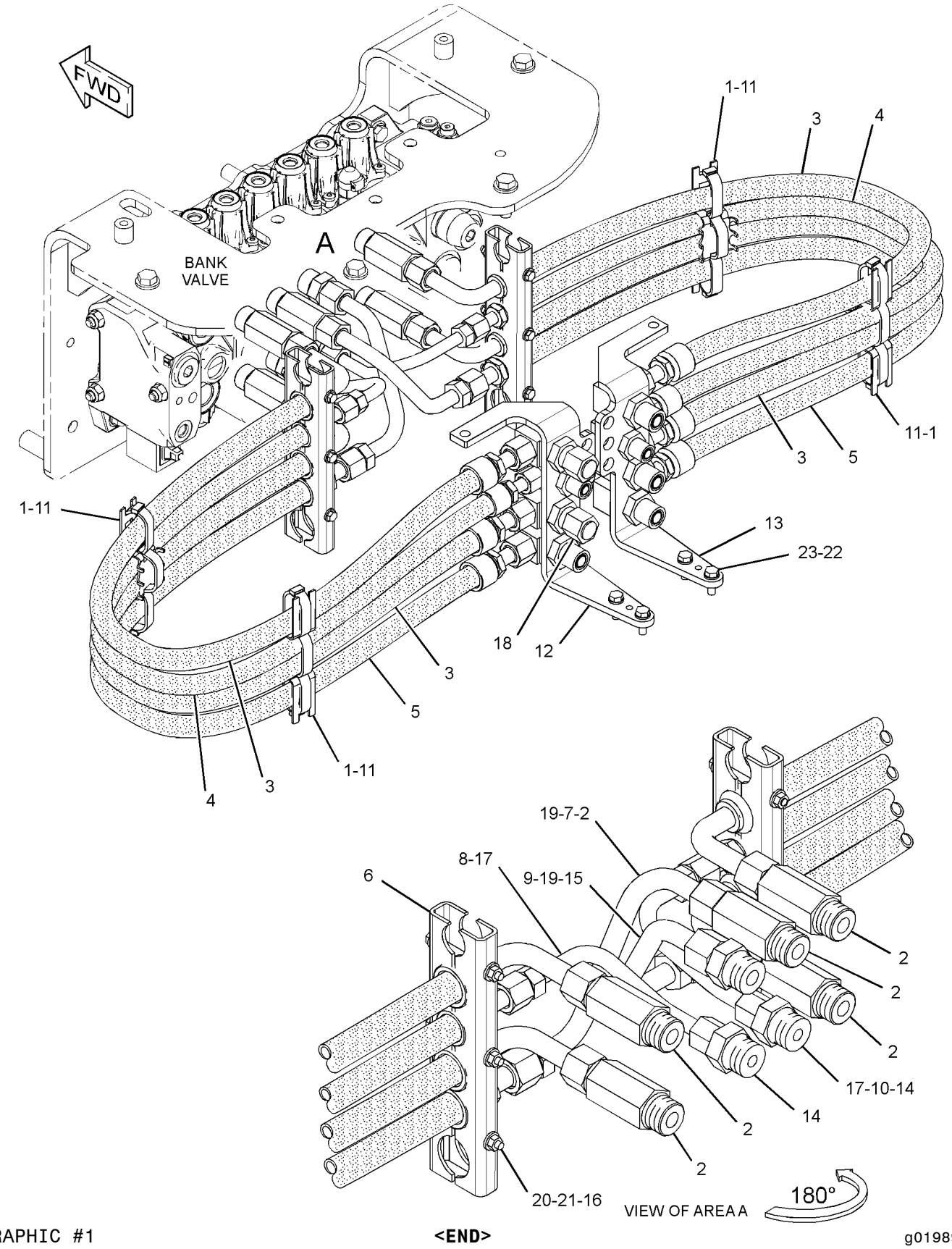

GRAPHIC #1

<END>

g01989253

353-1492 LINES GP-BACKHOE AUXILIARY–
EXTENDABLE STICK, 2-WAY
S/N: SJW1-UP
PART OF 389-3762 DISTRIBUTION AR
FOR USE WITH 340-1733–PAGE 1, 340-1734–PAGE 1, 132-8769–PAGE 378
AN ATTACHMENT

SMCS-5057 **i04549497**

NOTE	PART NUMBER	QTY	PART NAME 1 2 3 4 5 6 (PRODUCT LEVEL)	SEE PAGE
Y	*371-5095*	1	LINES GP-AUXILIARY HYDRAULIC (SIDESHIFT)	386
Y	*374-6863*	1	LINES GP-BACKHOE AUXILIARY (EXTENDABLE STICK, 2-WAY)	393

Y-SEPARATE ILLUSTRATION

<END>

364-3388 LINES GP-BACKHOE AUXILIARY–
STANDARD STICK, 1-WAY
S/N: SJW1-UP
FOR USE WITH 340-1732–PAGE 2, 132-8769–PAGE 378
AN ATTACHMENT

SMCS-5057 **i04611551**

NOTE	PART NUMBER	QTY	PART NAME 1 2 3 4 5 6 (PRODUCT LEVEL)	SEE PAGE
Y	*331-4345*	1	CONTROL GP-HYDRAULIC PEDAL (AUXILIARY, EXTENDABLE STICK)	554
Y	*365-3335*	1	LINES GP-AUXILIARY HYDRAULIC (STANDARD STICK, 1-WAY)	384
Y	*371-5095*	1	LINES GP-AUXILIARY HYDRAULIC (SIDESHIFT)	386

Y-SEPARATE ILLUSTRATION

<END>

HYDRAULIC SYSTEM

374-6863 LINES GP-BACKHOE AUXILIARY–
EXTENDABLE STICK, 2-WAY
S/N: SJW1-UP
PART OF 353-1492 LINES GP-BACKHOE AUXILIARY
AN ATTACHMENT

SMCS-5057 **i04549498**

NOTE	REF NO	GRAPHIC REF	PART NUMBER	QTY	PART NAME 1 2 3 4 5 6 (PRODUCT LEVEL)	SEE PAGE
	1	1	**123-7637**	3	CAP	
	2	1	**171-1357**	1	CONNECTOR AS	
		1	**3K-0360**	1	SEAL-O-RING	
		1	**7J-9108**	1	SEAL-O-RING	
		1	**160-5083**	1	CONNECTOR	
	3	1	*241-6226*	1	TEE AS	
		1	**6V-8398**	1	SEAL-O-RING	
		1	**6V-9746**	1	SEAL-O-RING	
		1	**7J-9108**	1	SEAL-O-RING	
		1	**241-6225**	1	TEE	
	4	1	**241-8450**	2	FILM-WARNING (HYD PRESS, READ OMM, INTL)	
	5	1	**269-2150**	1	FILM-INSTRUCTION (AUXILIARY CONTROL VALVE)	
	6	1	**281-4726**	2	FILM-INSTRUCTION (OIL FLOW DIRECTION)	
	7	1	**321-6383**	1	TUBE AS	
	8	1	**321-6387**	1	TUBE AS	
I	9	1	**324-7611**	1	HOSE AS	
I	10	1	**324-7612**	1	HOSE AS	
	11	1	**327-8298**	1	TUBE AS	
	12	1	**329-0143**	1	TUBE AS	
	13	1	**331-3770**	1	PLATE	
	14	1	**331-3779**	1	PLATE	
I	15	1	**331-6299**	1	HOSE AS	
I	16	1	**331-7306**	1	HOSE AS	
	17	1	**333-1320**	1	VALVE-MANUAL	
	18	1	*148-8311*	1	ADAPTER AS	
		1	**3K-0360**	1	SEAL-O-RING	
		1	**8T-1715**	1	ADAPTER	
	19	1	*148-8340*	1	CONNECTOR AS	
		1	**3K-0360**	1	SEAL-O-RING	
		1	**6V-8398**	1	SEAL-O-RING	
		1	**6V-8639**	1	CONNECTOR	
	20	1	*148-8359*	1	ELBOW AS	
		1	**3K-0360**	1	SEAL-O-RING	
		1	**6V-9746**	1	SEAL-O-RING	
		1	**6V-9877**	1	ELBOW	
	21	1	*150-3052*	1	CONNECTOR AS	
		1	**5K-9090**	1	SEAL-O-RING	
		1	**7M-8485**	1	SEAL-O-RING	
		1	**107-6709**	1	CONNECTOR	
	22	1	*150-3053*	2	CONNECTOR AS	
					(EACH INCLUDES)	
		1	**6V-9746**	1	SEAL-O-RING	
		1	**7M-8485**	1	SEAL-O-RING	
		1	**108-3872**	1	CONNECTOR	
	23	1	**2P-1293**	2	LOCKNUT (1-3/16-12-THD)	
	24	1	**6V-9170**	2	NUT-BULKHEAD (1-14-THD)	
	25	1	**6V-9172**	1	NUT (1-7/16-12-THD)	
	26	1	**6V-9746**	3	SEAL-O-RING	
	27	1	**8K-1117**	2	CLAMP	
	28	1	**8T-1889**	2	CLIP (SLOT)	
	29	1	**8T-1890**	2	CLIP (TAB)	
	30	1	**8T-4121**	10	WASHER-HARD (11X21X2.5-MM THK)	
M	31	1	**8T-4133**	5	NUT (M10X1.5-THD)	
M	32	1	**8T-4136**	1	BOLT (M10X1.5X25-MM)	

374-6863 LINES GP-BACKHOE AUXILIARY *(contd.)* i04549498

NOTE	REF NO	GRAPHIC REF	PART NUMBER	QTY	PART NAME 1 2 3 4 5 6 (PRODUCT LEVEL)	SEE PAGE
M	33	1	**8T-4195**	4	BOLT (M10X1.5X30-MM)	
	34	1	*148-8364*	1	ELBOW AS	
		1	**3K-0360**	1	SEAL-O-RING	
		1	**6V-8398**	1	SEAL-O-RING	
		1	**6V-8625**	1	ELBOW	

I-REFER TO HYDRAULIC INFORMATION SYSTEM
M-METRIC PART

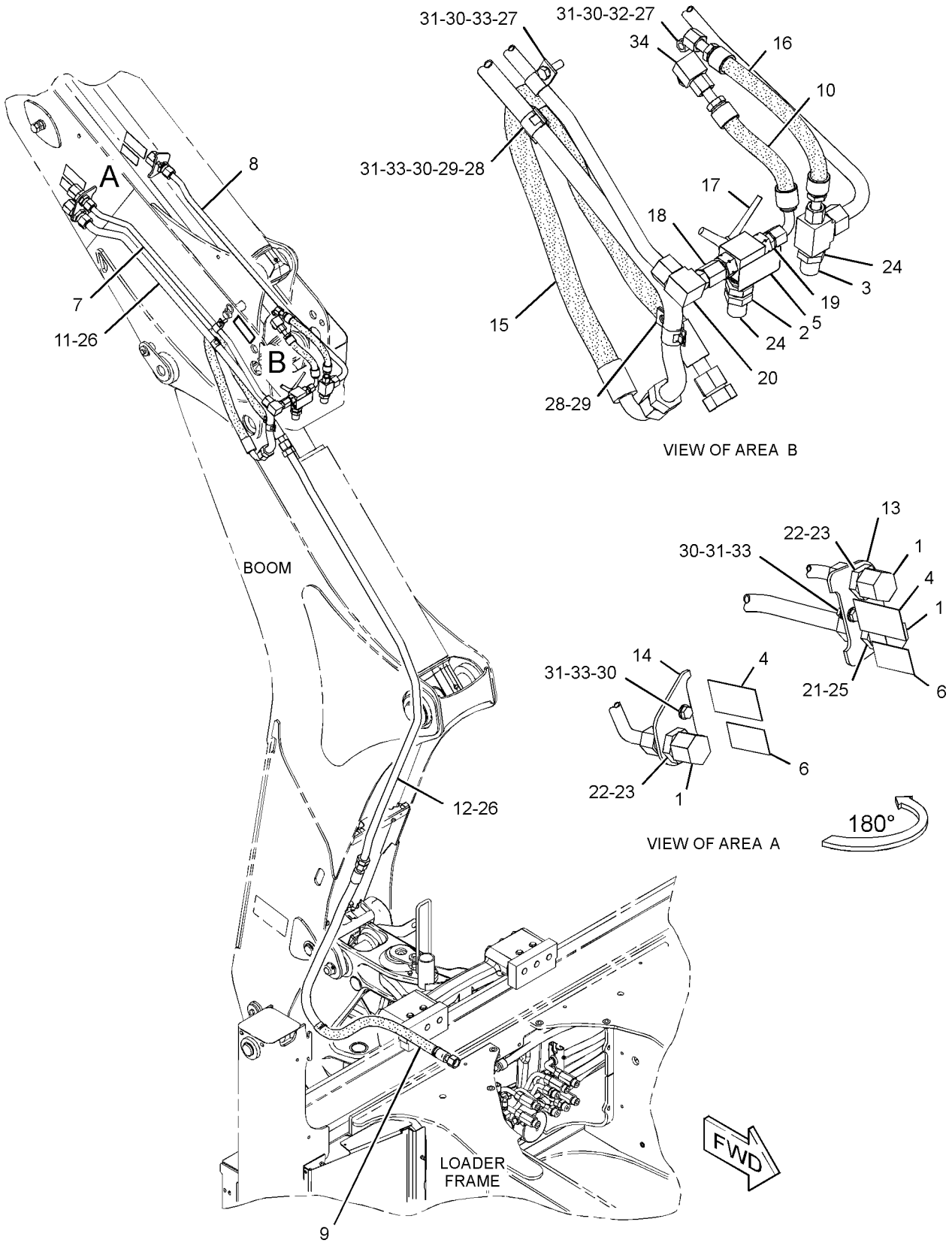

GRAPHIC #1 **<END>** g02828577

HYDRAULIC SYSTEM

365-3331 LINES GP-BOOM

S/N: SJW1-UP

PART OF 340-1743 LINKAGE AR, 340-1740 LINKAGE AR-BUCKET AN ATTACHMENT

SMCS-5057, 5456 **i04582956**

NOTE	REF NO	GRAPHIC REF	PART NUMBER	QTY	PART NAME 1 2 3 4 5 6 (PRODUCT LEVEL)	SEE PAGE
I	1	1	**324-7594**	1	HOSE AS	
I	2	1	**324-7597**	1	HOSE AS	
	3	1	*148-8390*	1	ELBOW AS	
		1	**2M-9780**	1	SEAL-O-RING	
		1	**6V-8626**	1	ELBOW	
		1	**7J-9108**	1	SEAL-O-RING	

I-REFER TO HYDRAULIC INFORMATION SYSTEM

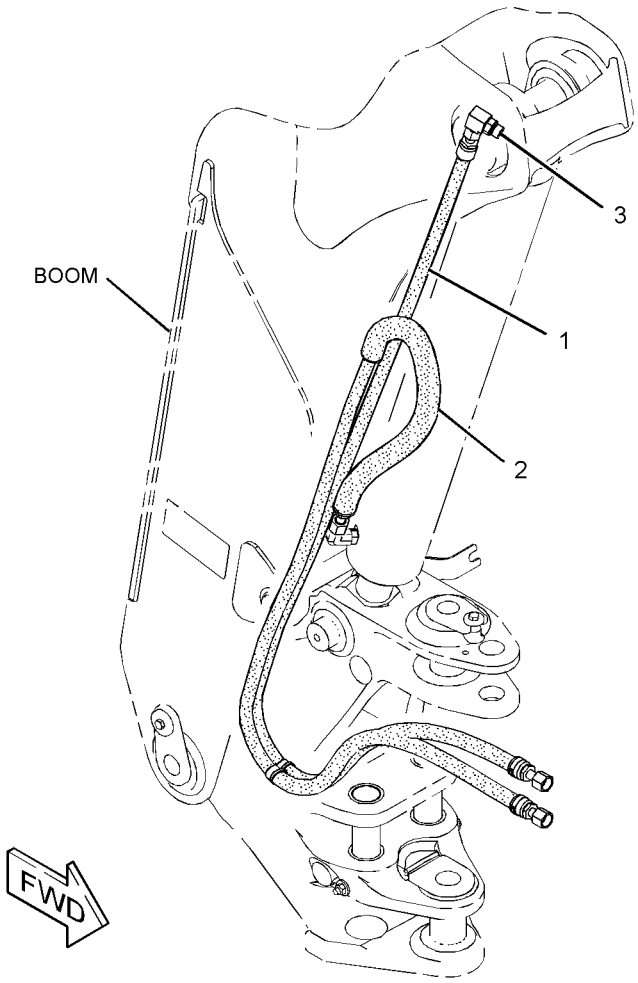

GRAPHIC #1 **<END>** g02819656

HYDRAULIC SYSTEM

365-3333 LINES GP-BUCKET—EXTENDABLE STICK

S/N: SJW1-UP

PART OF 340-1733, 340-1734 BACKHOE AR-EXTENDABLE STICK

AN ATTACHMENT

SMCS-5057, 5457 **i04552084**

NOTE	REF NO	GRAPHIC REF	PART NUMBER	QTY	PART NAME 1 2 3 4 5 6 (PRODUCT LEVEL)	SEE PAGE
	1	1	**5P-0599**	1	CLAMP-BAND	
	2	1	**9R-5948**	1	BLOCK	
	3	1	**091-0081**	1	SPACER (10.5X20X10-MM THK)	
I	4	1	**324-7598**	1	HOSE AS	
I	5	1	**324-7599**	3	HOSE AS	
I	6	1	**324-7604**	1	HOSE AS	
I	7	1	**334-7931**	1	HOSE AS	
	8	1	**341-5752**	1	TUBE AS	
	9	1	**364-4125**	1	TUBE AS	
	10	1	**364-4126**	1	TUBE AS	
	11	1	**5P-7464**	1	CLIP (SLOT)	
	12	1	**5P-7465**	1	CLIP (TAB)	
	13	1	**6V-7359**	1	GROMMET	
	14	1	**6V-9170**	2	NUT-BULKHEAD (1-14-THD)	
	15	1	**7J-9108**	5	SEAL-O-RING	
M	16	1	**8T-0389**	1	LOCKNUT (M10X1.5-THD)	
	17	1	**8T-1887**	2	CLIP (SLOT)	
	18	1	**8T-1888**	2	CLIP (TAB)	
	19	1	**8T-4121**	6	WASHER-HARD (11X21X2.5-MM THK)	
M	20	1	**8T-4133**	2	NUT (M10X1.5-THD)	
M	21	1	**8T-4191**	1	BOLT (M10X1.5X16-MM)	
M	22	1	**8T-4195**	2	BOLT (M10X1.5X30-MM)	
	23	1	**9R-1004**	1	CLIP (TAB)	
	24	1	**9R-1005**	1	CLIP (SLOT)	
M	25	1	**9X-6418**	1	BOLT (M10X1.5X45-MM)	

I-REFER TO HYDRAULIC INFORMATION SYSTEM
M-METRIC PART

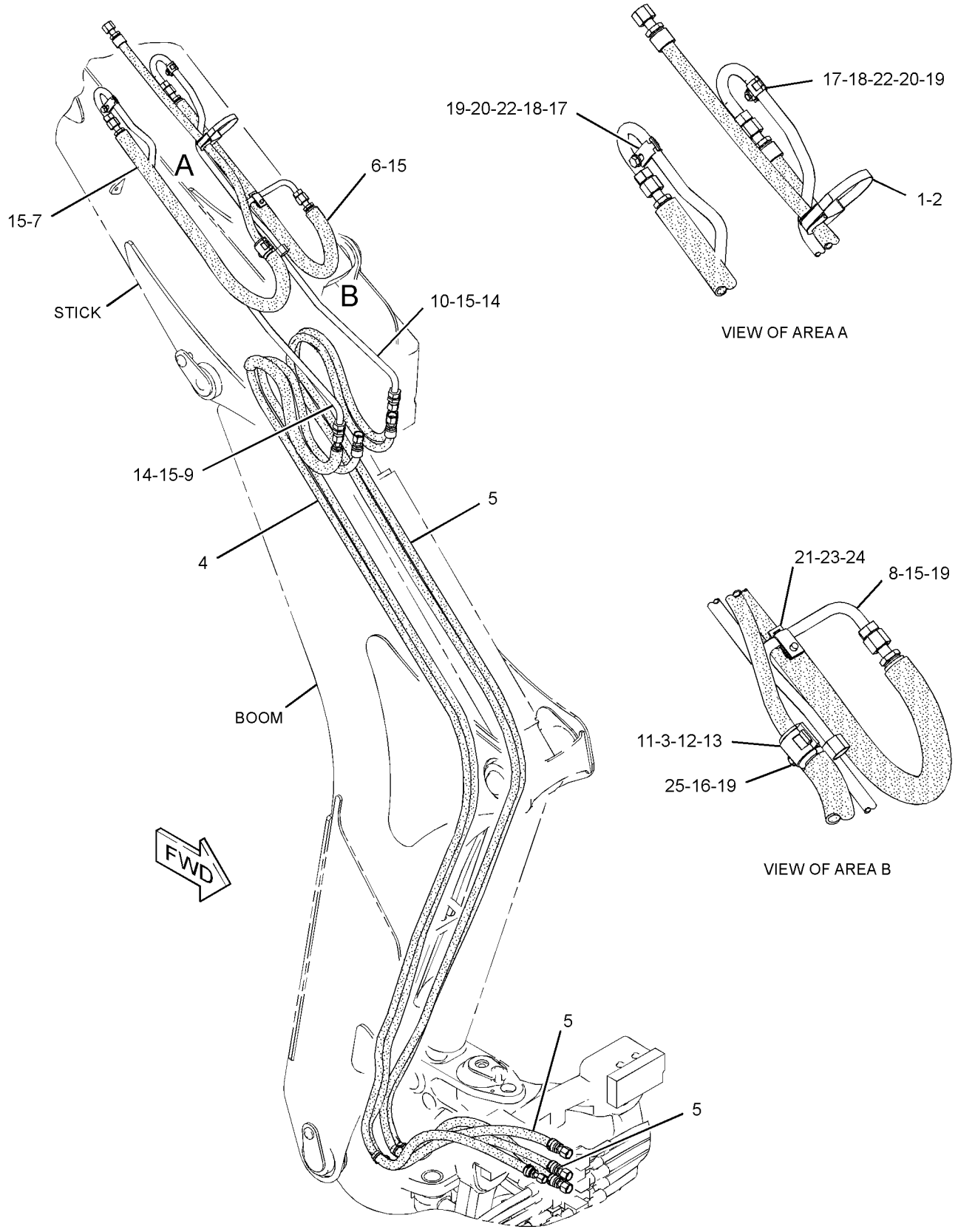

GRAPHIC #1 **<END>** g02763258

323-2023 LINES GP-BUCKET CYLINDER–STANDARD STICK

S/N: SJW1-UP

PART OF 340-1732 BACKHOE AR-STANDARD STICK

AN ATTACHMENT

SMCS-5057, 5457 **i04428794**

NOTE	REF NO	GRAPHIC REF	PART NUMBER	QTY	PART NAME 1 2 3 4 5 6 (PRODUCT LEVEL)	SEE PAGE
	1	1	**5P-0599**	1	CLAMP-BAND	
	2	1	**9R-5948**	1	BLOCK	
	3	1	*281-5983*	2	ELBOW AS	
					(EACH INCLUDES)	
		1	**6V-8989**	1	ELBOW	
		1	**228-7091**	2	SEAL-O-RING	
I	4	1	**324-7598**	1	HOSE AS	
I	5	1	**324-7599**	1	HOSE AS	
I	6	1	**332-1025**	1	HOSE AS	
I	7	1	**334-7947**	1	HOSE AS	
	8	1	*148-8393*	1	ELBOW AS	
		1	**6V-9852**	1	ELBOW	
		1	**7J-9108**	1	SEAL-O-RING	
	9	1	**6V-9170**	2	NUT-BULKHEAD (1-14-THD)	
	10	1	**7J-9108**	1	SEAL-O-RING	

I-REFER TO HYDRAULIC INFORMATION SYSTEM

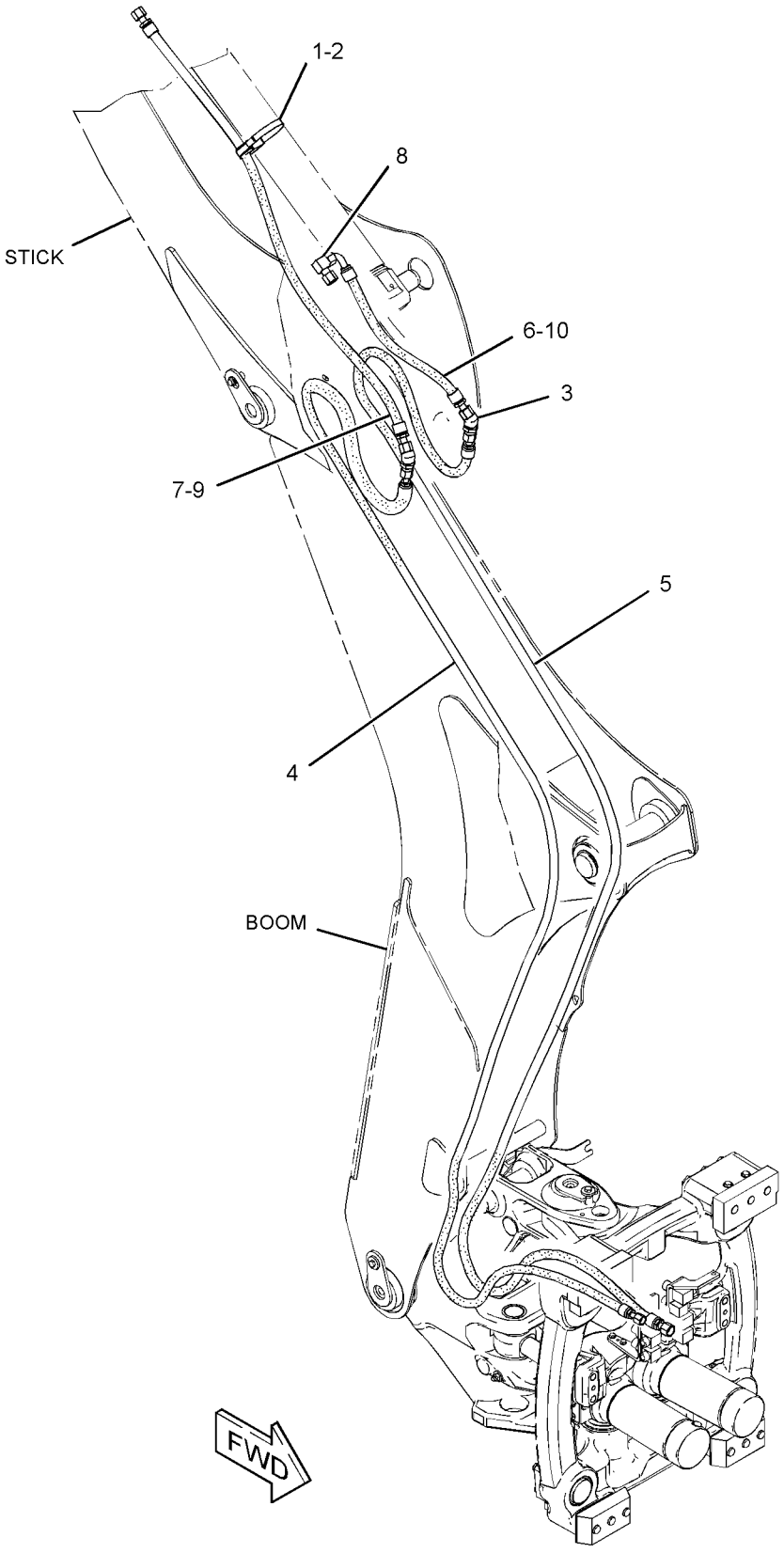

GRAPHIC #1 **<END>** g02615241

HYDRAULIC SYSTEM

337-9811 LINES GP-LIFT & TILT

S/N: SJW1-UP

PART OF 373-4266, 373-4267, 373-4268 VALVE AR-BANK 3

AN ATTACHMENT

SMCS-5057 **i04618153**

NOTE	REF NO	GRAPHIC REF	PART NUMBER	QTY	PART NAME 1 2 3 4 5 6 (PRODUCT LEVEL)	SEE PAGE
	1	1	**6W-2463**	4	CLAMP	
	2	1	**102-8703**	2	PLATE-COVER	
	3	1	*260-9137*	2	UNION AS-CROSS	
					(EACH INCLUDES)	
		1	**7J-9108**	4	SEAL-O-RING	
		1	**260-9136**	1	CROSS-UNION	
	4	1	*287-7269*	2	CONNECTOR AS	
					(EACH INCLUDES)	
		1	**3D-2824**	1	SEAL-O-RING	
		1	**7J-9108**	1	SEAL-O-RING	
		1	**287-7268**	1	CONNECTOR	
	5	1	**329-3820**	6	CLAMP	
	6	1	*330-9752*	2	ELBOW AS	
					(EACH INCLUDES)	
		1	**3D-2824**	1	SEAL-O-RING	
		1	**330-9591**	1	ELBOW	
	7	1	**362-1602**	1	TUBE AS	
	8	1	**362-1603**	1	TUBE AS	
	9	1	**362-2077**	1	TUBE AS	
	10	1	**362-2078**	1	TUBE AS	
	11	1	**362-2079**	1	TUBE AS	
	12	1	**362-2080**	1	TUBE AS	
	13	1	**363-6273**	1	TUBE AS	
	14	1	**363-6274**	1	TUBE AS	
	15	1	**367-9557**	2	PLATE	
	16	1	**373-5978**	1	PLATE	
	17	1	**374-0840**	1	PLATE	
M	18	1	**085-8091**	4	BOLT (M10X1.5X55-MM)	
	19	1	*150-4031*	2	TEE AS	
					(EACH INCLUDES)	
		1	**6V-9845**	1	TEE-SWIVEL	
		1	**7J-9108**	2	SEAL-O-RING	
	20	1	**6V-8398**	8	SEAL-O-RING	
	21	1	**6V-9831**	2	CAP AS	
M	22	1	**7X-2537**	2	BOLT (M8X1.25X35-MM)	
	23	1	**8T-4121**	16	WASHER-HARD (11X21X2.5-MM THK)	
M	24	1	**8T-4133**	8	NUT (M10X1.5-THD)	
M	25	1	**8T-4185**	2	BOLT (M10X1.5X50-MM)	
M	26	1	**8T-4195**	2	BOLT (M10X1.5X30-MM)	

M-METRIC PART

337-9811 **LINES GP-LIFT & TILT** *(contd.)* **i04618153**

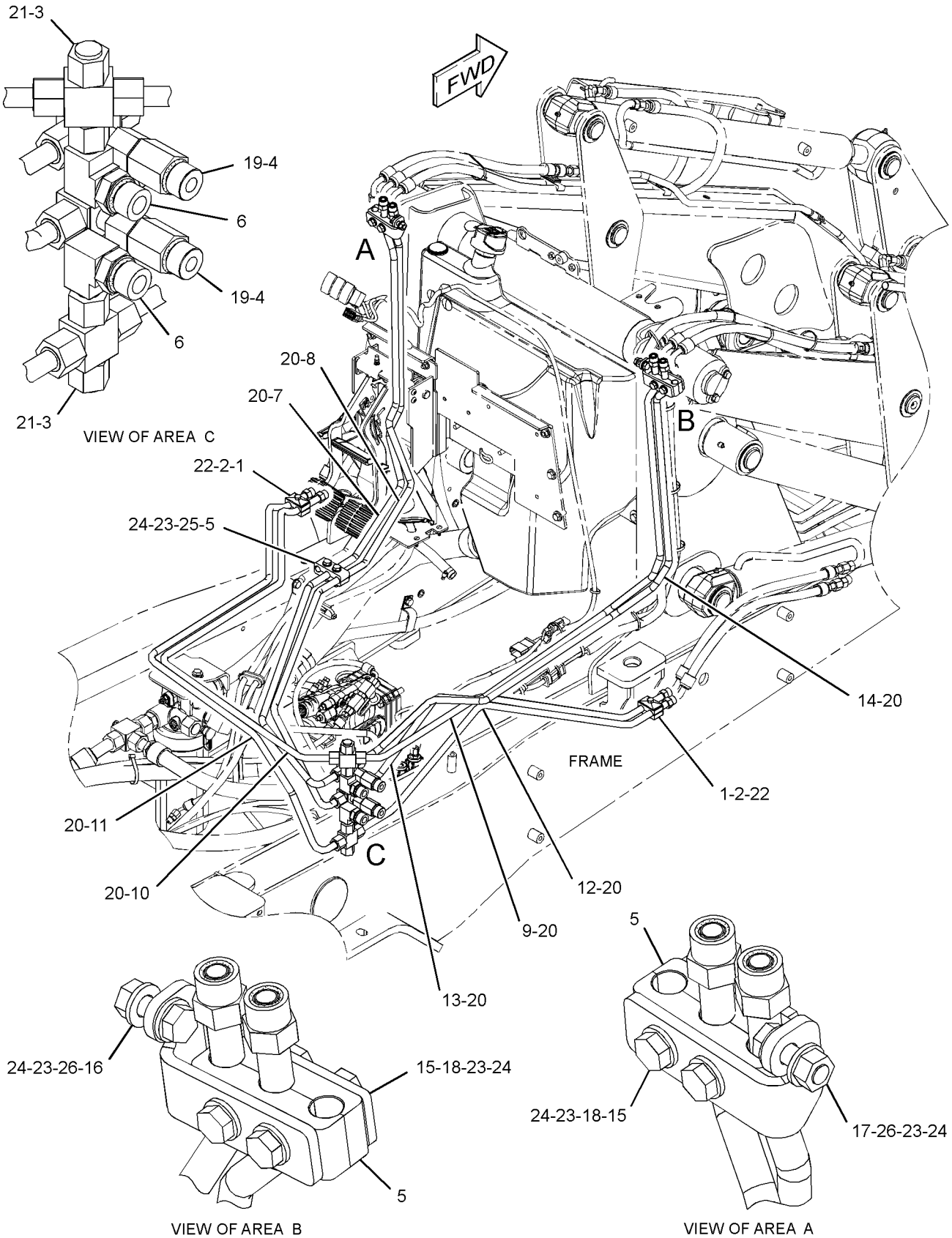

GRAPHIC #1 **<END>** g02797616

337-9810 LINES GP-LIFT CYLINDER–PARALLEL LIFT

S/N: SJW1-UP

PART OF 373-4266, 373-4267 VALVE AR-BANK 3

AN ATTACHMENT

SMCS-5057, 5102 **i04577353**

NOTE	REF NO	GRAPHIC REF	PART NUMBER	QTY	PART NAME 1 2 3 4 5 6 (PRODUCT LEVEL)	SEE PAGE
	1	1	**7K-1181**	2	STRAP-CABLE	
	2	1	**362-1426**	4	CLAMP	
I	3	1	**362-1583**	4	HOSE AS	
I	4	1	**371-8717**	2	HOSE AS	
I	5	1	**371-8718**	2	HOSE AS	
	6	1	**373-6484**	4	PLATE	
	7	1	**5P-4116**	4	WASHER-HARD (8.8X20.5X2-MM THK)	
M	8	1	**8T-6869**	4	BOLT (M8X1.25X60-MM)	

I-REFER TO HYDRAULIC INFORMATION SYSTEM
M-METRIC PART

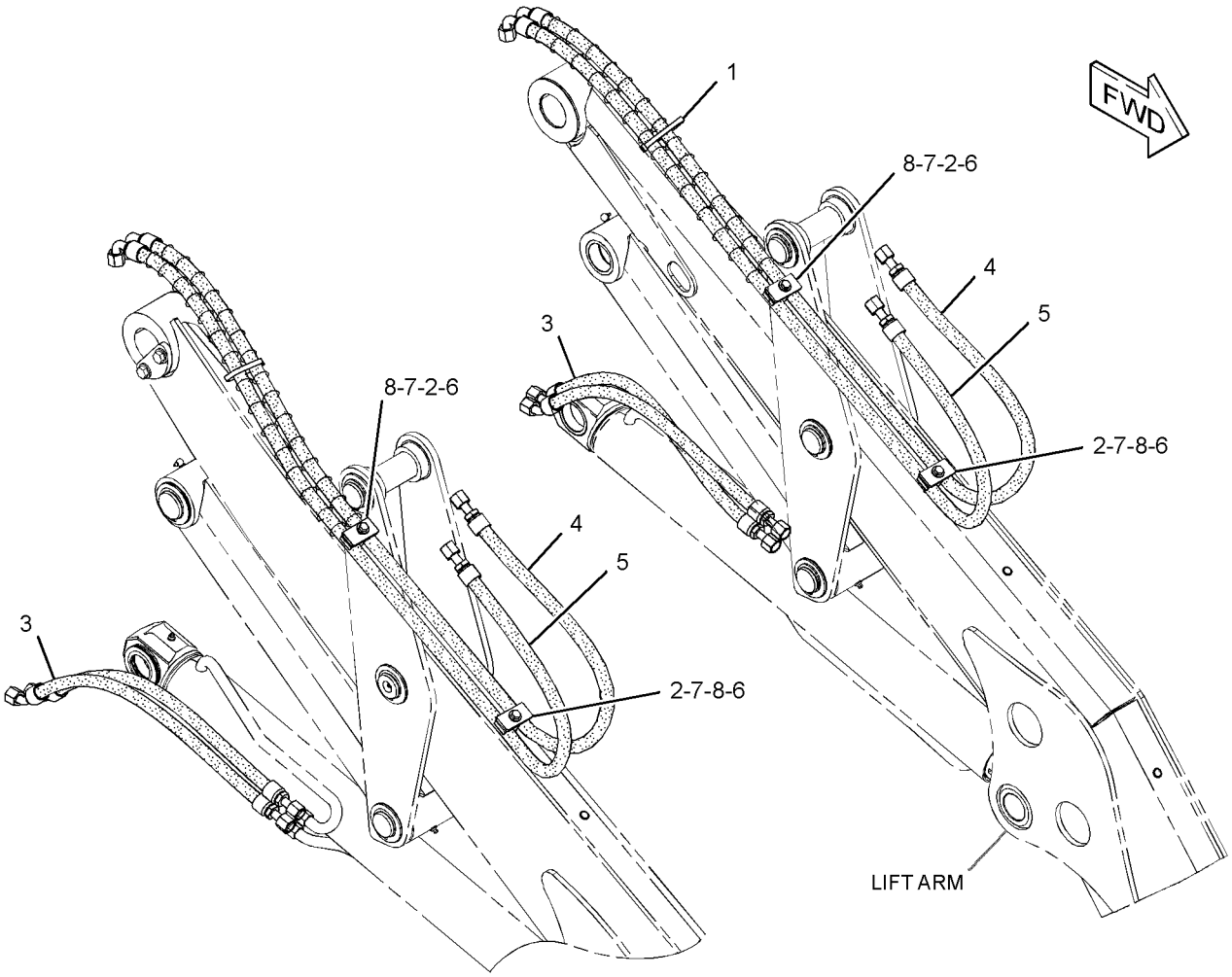

GRAPHIC #1 **<END>** g02797654

HYDRAULIC SYSTEM

362-9359 LINES GP-LIFT CYLINDER

S/N: SJW1-UP
PART OF 373-4268 VALVE AR-BANK 3
AN ATTACHMENT

SMCS-5057, 5102 **i04618172**

NOTE	REF NO	GRAPHIC REF	PART NUMBER	QTY	PART NAME 1 2 3 4 5 6 (PRODUCT LEVEL)	SEE PAGE
	1	1,2	**8T-6726**	4	CLAMP-HOSE	
	2	1,2	**9M-6738**	4	CLAMP-HOSE	
	3	1,2	*161-9916*	2	ADAPTER AS	
					(EACH INCLUDES)	
		1,2	**2M-9780**	1	SEAL-O-RING	
		1,2	**6V-7420**	1	ADAPTER	
	4	1,2	*250-1440*	2	ADAPTER AS	
					(EACH INCLUDES)	
		1,2	**3K-0360**	1	SEAL-O-RING	
		1,2	**7X-3164**	1	ADAPTER-SWIVEL	
	5	1,2	**262-7079**	2	VALVE GP-CHECK (PILOT CONTROL)	
	6	1,2	**262-7081**	2	VALVE GP-LOAD CONTROL (LIFT & TILT)	
	7	1,2	**279-4969**	2	BRACKET	
	8	1,2	*287-7252*	2	TEE AS	
					(EACH INCLUDES)	
		1,2	**3J-1907**	1	SEAL-O-RING	
		1,2	**6V-8398**	2	SEAL-O-RING	
		1,2	**287-7251**	1	TEE	
	9	1,2	**346-5517**	2	BRACKET	
	10	1,2	**362-1426**	4	CLAMP	
I	11	1,2	**362-1591**	2	HOSE AS	
I	12	1,2	**362-1592**	2	HOSE AS	
	13	1,2	**366-4280**	2	TUBE AS	
	14	1,2	**366-4281**	2	TUBE AS	
	15	1,2	**366-4354**	2	TUBE AS	
I	16	1	**371-8717**	2	HOSE AS	
	17	1,2	**373-6484**	4	PLATE	
I	18	1	**374-7889**	2	HOSE AS	
	19	1,2	*148-8345*	6	CONNECTOR AS	
					(EACH INCLUDES)	
		1,2	**2M-9780**	1	SEAL-O-RING	
		1,2	**6V-8398**	1	SEAL-O-RING	
		1,2	**6V-8638**	1	CONNECTOR	
	20	1,2	*148-8378*	2	ELBOW AS	
					(EACH INCLUDES)	
		1,2	**3J-1907**	1	SEAL-O-RING	
		1,2	**6V-8397**	1	SEAL-O-RING	
		1,2	**6V-8724**	1	ELBOW	
	21	1,2	*206-5123*	2	TEE AS	
					(EACH INCLUDES)	
		1,2	**6V-8397**	1	SEAL-O-RING	
		1,2	**6V-8398**	1	SEAL-O-RING	
		1,2	**206-5122**	1	TEE	
	22	1,2	**5P-4116**	4	WASHER-HARD (8.8X20.5X2-MM THK)	
	23	1,2	**8T-4224**	16	WASHER-HARD (8.8X16X2-MM THK)	
M	24	1,2	**8T-6869**	4	BOLT (M8X1.25X60-MM)	
M	25	1,2	**8T-6912**	8	BOLT (M8X1.25X50-MM)	
M	26	1,2	**8T-7963**	8	LOCKNUT (M8X1.25-THD)	

I-REFER TO HYDRAULIC INFORMATION SYSTEM
M-METRIC PART

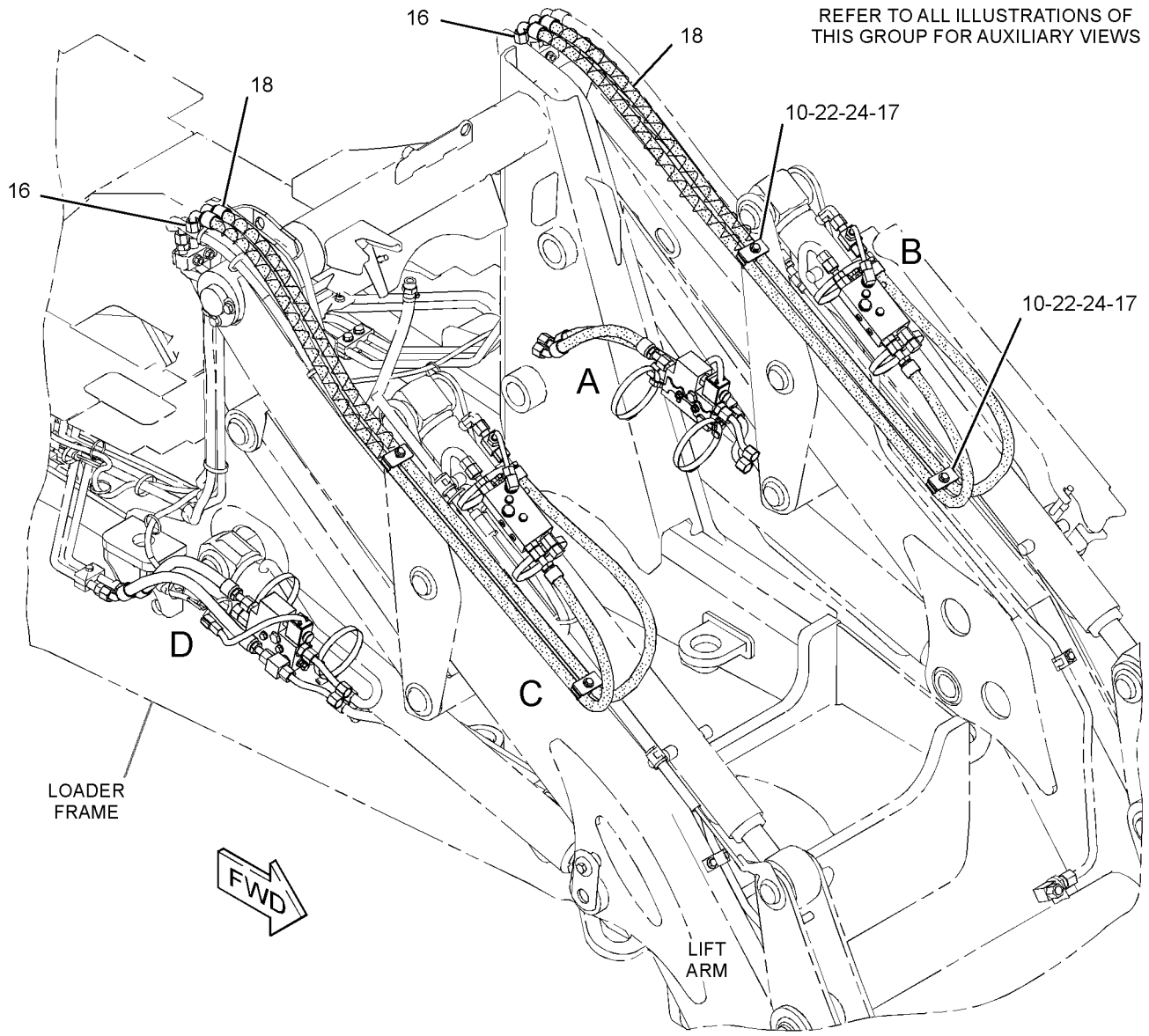

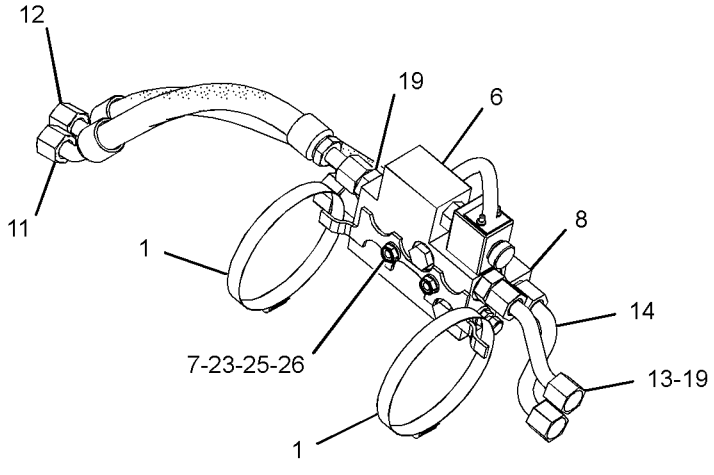

VIEW OF AREA A

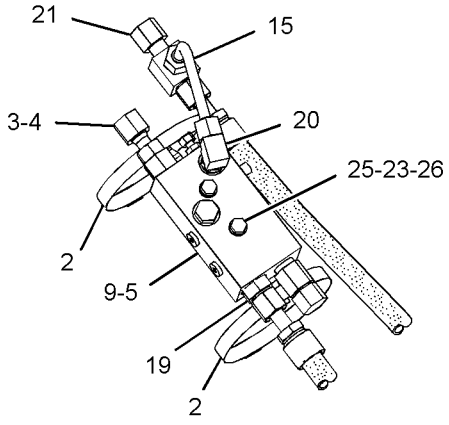

VIEW OF AREA B

GRAPHIC #1

g02797846

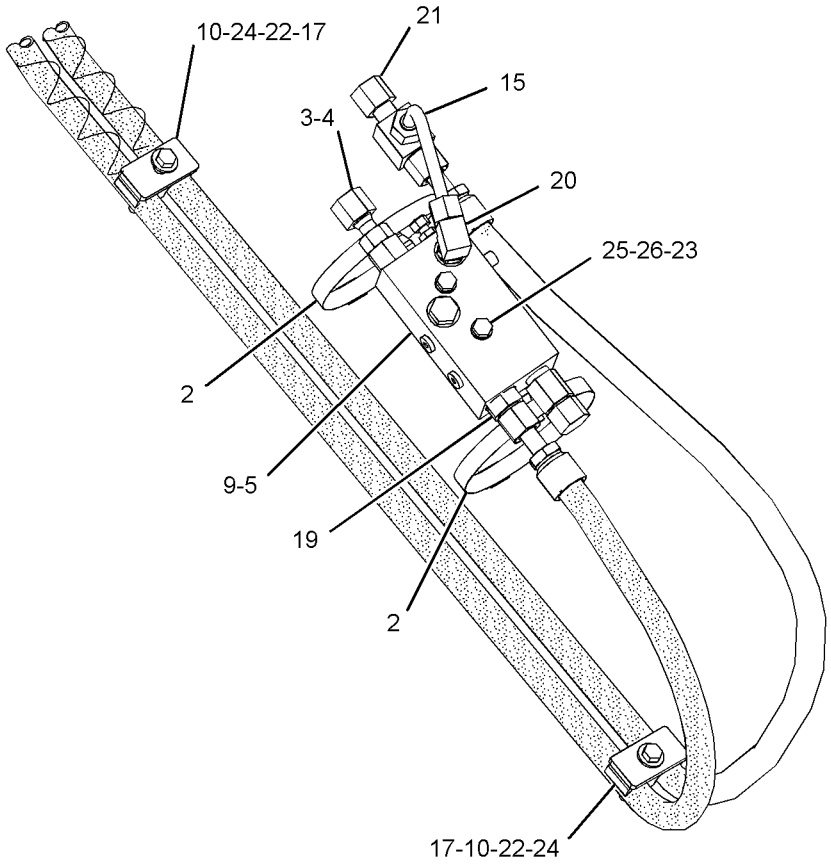

VIEW OF AREA C

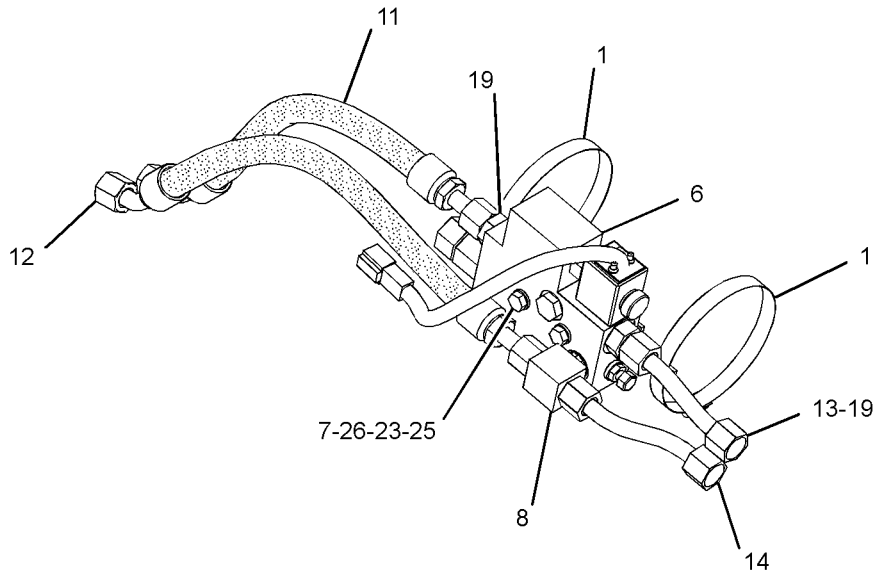

VIEW OF AREA D

GRAPHIC #2 **<END>** g02798158

HYDRAULIC SYSTEM

365-3338 LINES GP-LOAD CONTROL VALVE

S/N: SJW1-UP

PART OF 340-1750 LINKAGE AR, 340-1741 LINKAGE AR-BUCKET AN ATTACHMENT

SMCS-5057, 5811 **i04547483**

NOTE	REF NO	GRAPHIC REF	PART NUMBER	QTY	PART NAME 1 2 3 4 5 6 (PRODUCT LEVEL)	SEE PAGE
	1	1	**3S-2093**	1	STRAP-CABLE	
	2	1	*161-9916*	1	ADAPTER AS	
		1	**2M-9780**	1	SEAL-O-RING	
		1	**6V-7420**	1	ADAPTER	
	3	1	**205-7198**	1	TEE AS	
		1	**3J-1907**	1	SEAL-O-RING	
		1	**4J-5477**	2	SEAL-O-RING	
	4	1	*250-1440*	1	ADAPTER AS	
		1	**3K-0360**	1	SEAL-O-RING	
		1	**7X-3164**	1	ADAPTER-SWIVEL	
	5	1	*302-1413*	1	ADAPTER AS	
		1	**2M-9780**	1	SEAL-O-RING	
		1	**7X-3165**	1	ADAPTER	
I	6	1	**329-4508**	1	HOSE AS	
	7	1	*332-8572*	2	ADAPTER AS	
					(EACH INCLUDES)	
		1	**3D-2824**	1	SEAL-O-RING	
		1	**4J-5477**	1	SEAL-O-RING	
		1	**7J-9108**	1	SEAL-O-RING	
		1	**332-8571**	1	ADAPTER-TEE	
I	8	1	**339-0010**	1	HOSE AS	
I	9	1	**339-0089**	1	HOSE AS	
I	10	1	**339-2886**	1	HOSE AS	
I	11	1	**339-2935**	1	HOSE AS	
I	12	1	**339-3497**	2	HOSE AS	
	13	1	**339-4287**	2	BRACKET	
	14	1	**347-1126**	1	VALVE GP-LOAD CONTROL (BOOM)	
	15	1	**347-1127**	1	VALVE GP-LOAD CONTROL (STICK)	
I	16	1	**369-1123**	1	HOSE AS	
	17	1	*148-8315*	1	CONNECTOR AS	
		1	**2M-9780**	1	SEAL-O-RING	
		1	**6V-8642**	1	CONNECTOR	
		1	**7J-9108**	1	SEAL-O-RING	
	18	1	*148-8325*	2	CONNECTOR AS	
					(EACH INCLUDES)	
		1	**3J-1907**	1	SEAL-O-RING	
		1	**4J-5477**	1	SEAL-O-RING	
		1	**6V-8641**	1	CONNECTOR	
	19	1	*148-8328*	1	CONNECTOR AS	
		1	**3D-2824**	1	SEAL-O-RING	
		1	**6V-8398**	1	SEAL-O-RING	
		1	**6V-8633**	1	CONNECTOR	
	20	1	*148-8345*	1	CONNECTOR AS	
		1	**2M-9780**	1	SEAL-O-RING	
		1	**6V-8398**	1	SEAL-O-RING	
		1	**6V-8638**	1	CONNECTOR	
	21	1	*148-8351*	2	ELBOW AS	
					(EACH INCLUDES)	
		1	**4J-5477**	1	SEAL-O-RING	
		1	**6V-9849**	1	ELBOW	
	22	1	*148-8368*	1	ELBOW AS	
		1	**3J-1907**	1	SEAL-O-RING	
		1	**4J-5477**	1	SEAL-O-RING	
		1	**6V-8627**	1	ELBOW	

365-3338 LINES GP-LOAD CONTROL VALVE *(contd.)* i04547483

NOTE	REF NO	GRAPHIC REF	PART NUMBER	QTY	PART NAME 1 2 3 4 5 6 (PRODUCT LEVEL)	SEE PAGE
	23	1	*150-4052*	3	UNION AS	
					(EACH INCLUDES)	
		1	**4J-5477**	2	SEAL-O-RING	
		1	**6V-8993**	1	UNION	
	24	1	**2P-1279**	3	LOCKNUT (9/16-18-THD)	
	25	1	**5P-0599**	4	CLAMP-BAND	
M	26	1	**6V-9189**	3	LOCKNUT (M8X1.25-THD)	
	27	1	**8T-4224**	3	WASHER-HARD (8.8X16X2-MM THK)	
M	28	1	**8T-7329**	3	BOLT (M8X1.25X55-MM)	
	29	1	**343-4301**	1	HOSE AS	

I-REFER TO HYDRAULIC INFORMATION SYSTEM
M-METRIC PART

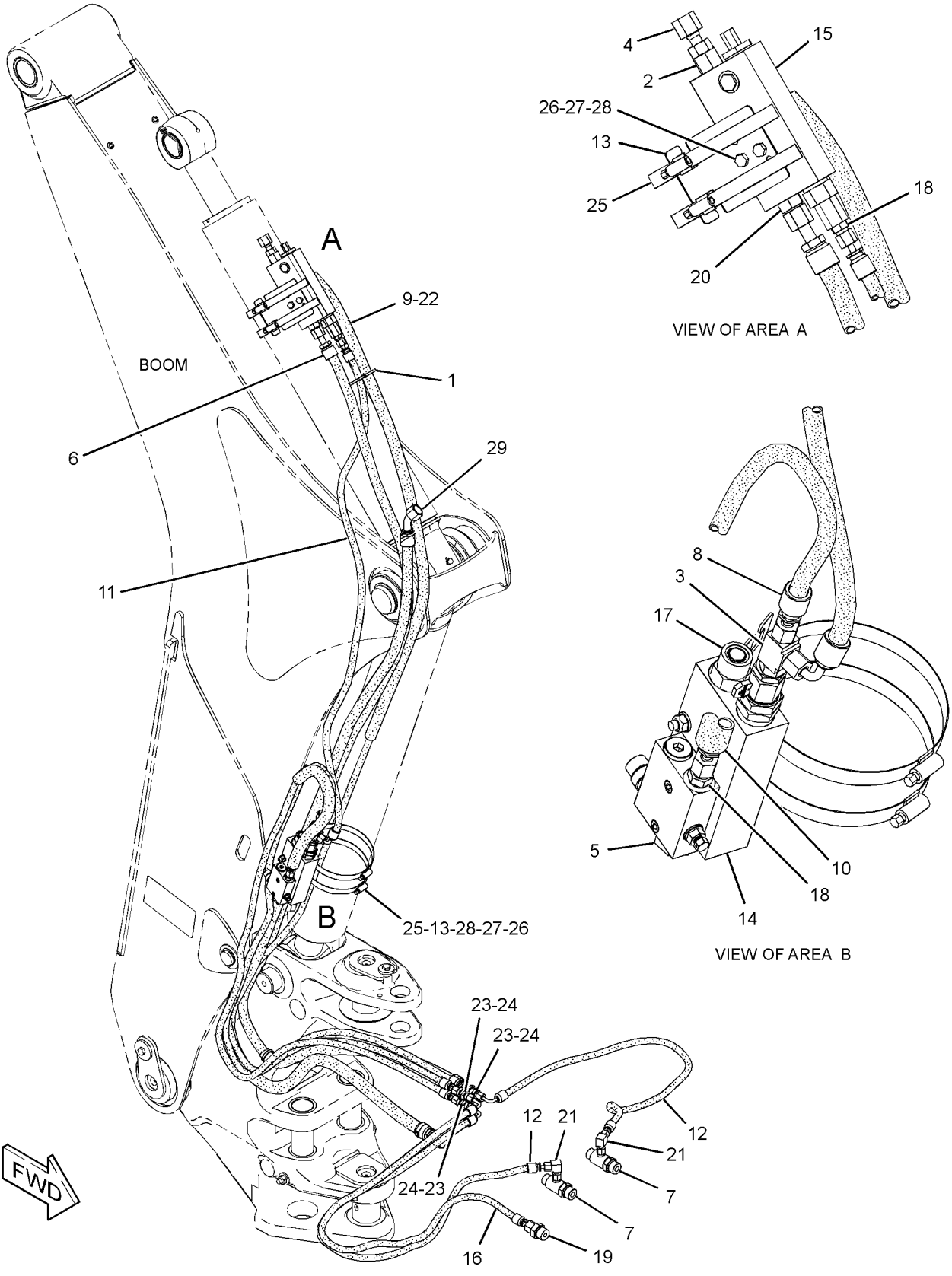

GRAPHIC #1 **<END>** g02774341

HYDRAULIC SYSTEM

369-5665 LINES GP-LOAD CONTROL VALVE–

BOOM CYLINDER HEAD END

S/N: SJW1-UP

PART OF 340-1750 LINKAGE AR, 340-1741 LINKAGE AR-BUCKET

AN ATTACHMENT

SMCS-5057, 5811 **i04597650**

NOTE	REF NO	GRAPHIC REF	PART NUMBER	QTY	PART NAME 1 2 3 4 5 6 (PRODUCT LEVEL)	SEE PAGE
	1	1	*164-9639*	1	CONNECTOR AS	
		1	**3J-1907**	1	SEAL-O-RING	
		1	**4J-5477**	1	SEAL-O-RING	
		1	**148-7925**	1	CONNECTOR	
	2	1	*260-9223*	1	ADAPTER AS	
		1	**3J-7354**	1	SEAL-O-RING	
		1	**7X-3162**	1	ADAPTER-SWIVEL	
Y	3	1	**332-6408**	1	VALVE & MTG GP-SOLENOID	440
	4	1	*341-0121*	1	TEE AS	
		1	**3D-2824**	1	SEAL-O-RING	
		1	**4J-5477**	1	SEAL-O-RING	
		1	**6V-8398**	1	SEAL-O-RING	
		1	**119-6346**	1	TEE-FACE SEAL	
I	5	1	**362-1612**	1	HOSE AS	
	6	1	*148-8305*	1	ADAPTER AS	
		1	**3J-1907**	1	SEAL-O-RING	
		1	**5P-9617**	1	ADAPTER	
	7	1	*150-5968*	1	TEE AS	
		1	**4J-5477**	2	SEAL-O-RING	
		1	**6V-9835**	1	TEE-SWIVEL	

I-REFER TO HYDRAULIC INFORMATION SYSTEM
Y-SEPARATE ILLUSTRATION

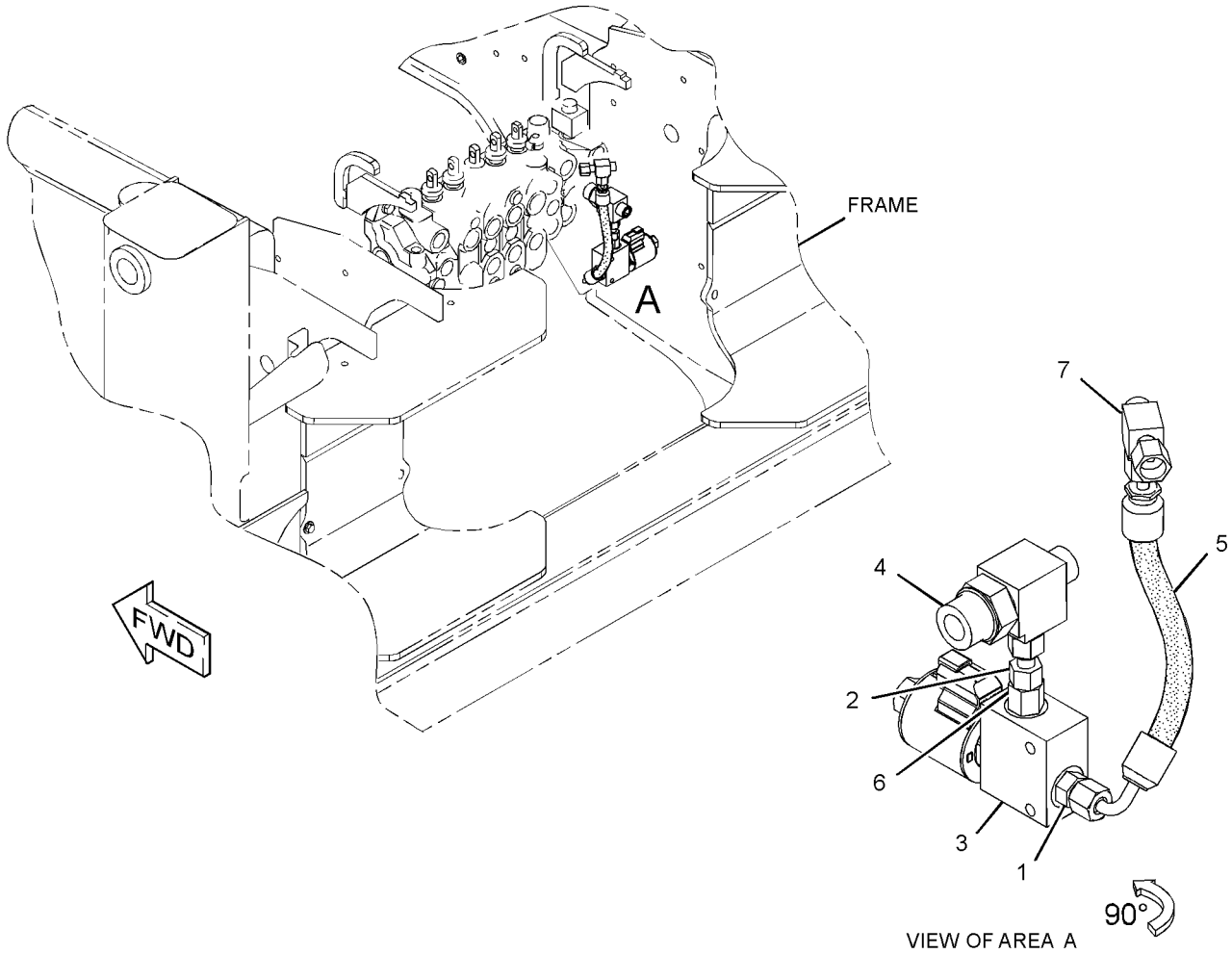

GRAPHIC #1 **<END>** g02817117

HYDRAULIC SYSTEM

350-1591 LINES GP-MULTIPURPOSE BUCKET

S/N: SJW1-UP

PART OF 350-1581, 350-1587 BUCKET AR-MULTIPURPOSE

AN ATTACHMENT

SMCS-5057 **i04586530**

NOTE	REF NO	GRAPHIC REF	PART NUMBER	QTY	PART NAME 1 2 3 4 5 6 (PRODUCT LEVEL)	SEE PAGE
	1	1	**8T-6726**	2	CLAMP-HOSE	
	2	1	**9R-8870**	2	BLOCK	
I	3	1	**9U-0361**	1	HOSE AS	
I	4	1	**227-3509**	1	HOSE AS	
I	5	1	**291-3654**	1	HOSE AS	
I	6	1	**317-2242**	1	HOSE AS	
I	7	1	**317-2243**	1	HOSE AS	
I	8	1	**317-2244**	1	HOSE AS	
	9	1	*148-8378*	2	ELBOW AS	
					(EACH INCLUDES)	
		1	**3J-1907**	1	SEAL-O-RING	
		1	**6V-8397**	1	SEAL-O-RING	
		1	**6V-8724**	1	ELBOW	
	10	1	*150-3060*	2	TEE AS	
					(EACH INCLUDES)	
		1	**6V-8397**	2	SEAL-O-RING	
		1	**6V-8398**	1	SEAL-O-RING	
		1	**8T-3444**	1	TEE-UNION	
	11	1	**5P-7464**	2	CLIP (SLOT)	
	12	1	**5P-7465**	2	CLIP (TAB)	
	13	1	**6V-1249**	2	GROMMET	
	14	1	**6V-8397**	2	SEAL-O-RING	
	15	1	**8T-1893**	8	CLIP (SLOT)	
	16	1	**8T-1894**	8	CLIP (TAB)	
	17	1	**8T-4121**	4	WASHER-HARD (11X21X2.5-MM THK)	
M	18	1	**8T-4136**	4	BOLT (M10X1.5X25-MM)	
M	19	1	**8T-4192**	2	BOLT (M12X1.75X25-MM)	
	20	1	**8T-4223**	2	WASHER-HARD (13.5X25.5X3-MM THK)	

I-REFER TO HYDRAULIC INFORMATION SYSTEM
M-METRIC PART

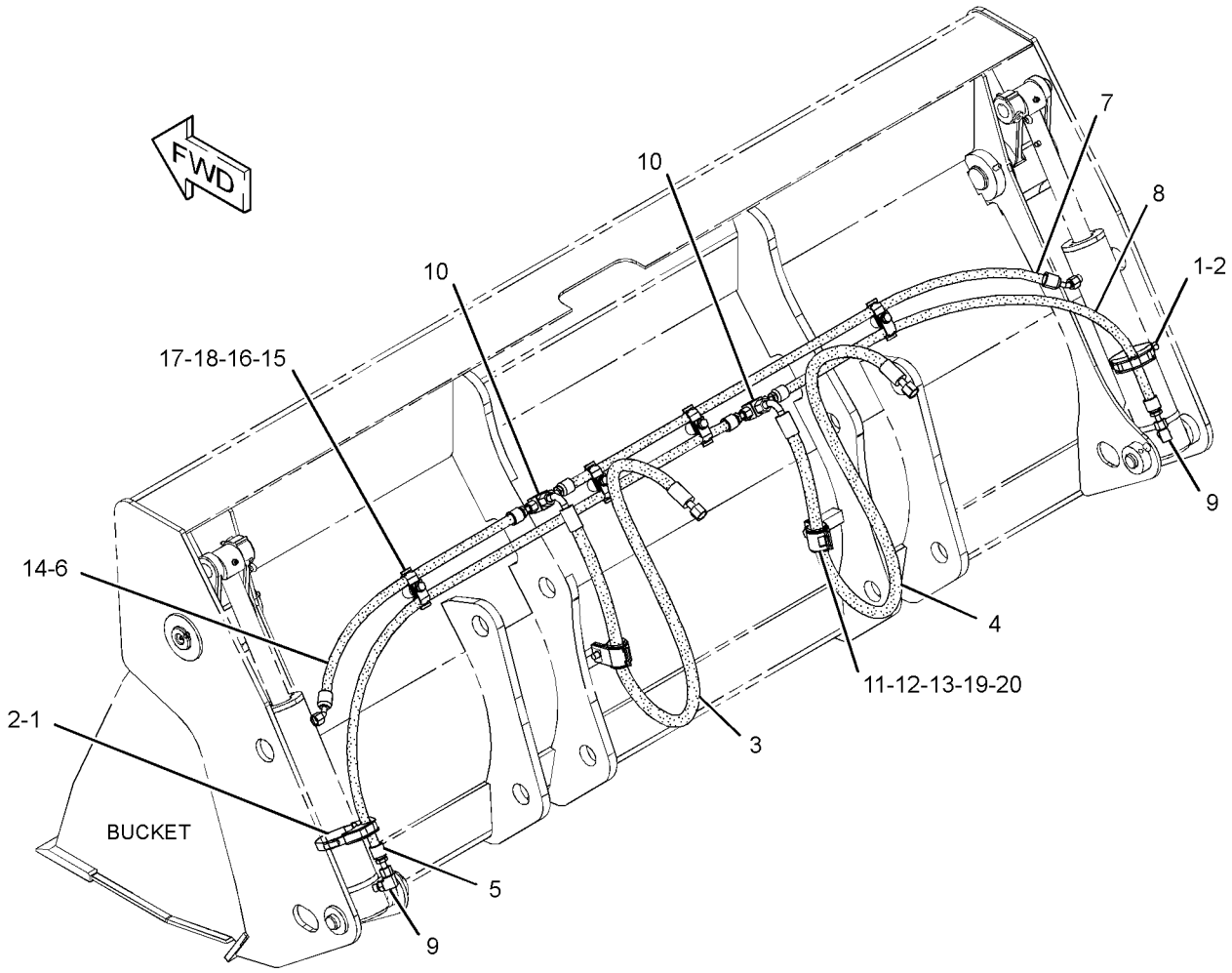

GRAPHIC #1 **<END>** g02761917

HYDRAULIC SYSTEM

350-1594 LINES GP-MULTIPURPOSE BUCKET

S/N: SJW1-UP

PART OF 350-1580, 350-1589 BUCKET AR-MULTIPURPOSE AN ATTACHMENT

SMCS-5057 **i04597075**

NOTE	REF NO	GRAPHIC REF	PART NUMBER	QTY	PART NAME 1 2 3 4 5 6 (PRODUCT LEVEL)	SEE PAGE
	1	1	**8T-6726**	2	CLAMP-HOSE	
	2	1	**9R-8870**	2	BLOCK	
I	3	1	**9U-0361**	1	HOSE AS	
I	4	1	**227-3509**	1	HOSE AS	
I	5	1	**346-5927**	1	HOSE AS	
I	6	1	**355-7516**	1	HOSE AS	
I	7	1	**362-4273**	1	HOSE AS	
I	8	1	**362-4274**	1	HOSE AS	
	9	1	*148-8378*	2	ELBOW AS	
					(EACH INCLUDES)	
		1	**3J-1907**	1	SEAL-O-RING	
		1	**6V-8397**	1	SEAL-O-RING	
		1	**6V-8724**	1	ELBOW	
	10	1	*150-3060*	2	TEE AS	
					(EACH INCLUDES)	
		1	**6V-8397**	2	SEAL-O-RING	
		1	**6V-8398**	1	SEAL-O-RING	
		1	**8T-3444**	1	TEE-UNION	
	11	1	**5P-7464**	2	CLIP (SLOT)	
	12	1	**5P-7465**	2	CLIP (TAB)	
	13	1	**6V-1249**	2	GROMMET	
	14	1	**6V-8397**	2	SEAL-O-RING	
	15	1	**8T-1893**	8	CLIP (SLOT)	
	16	1	**8T-1894**	8	CLIP (TAB)	
	17	1	**8T-4121**	4	WASHER-HARD (11X21X2.5-MM THK)	
M	18	1	**8T-4136**	4	BOLT (M10X1.5X25-MM)	
M	19	1	**8T-4192**	2	BOLT (M12X1.75X25-MM)	
	20	1	**8T-4223**	2	WASHER-HARD (13.5X25.5X3-MM THK)	

I-REFER TO HYDRAULIC INFORMATION SYSTEM
M-METRIC PART

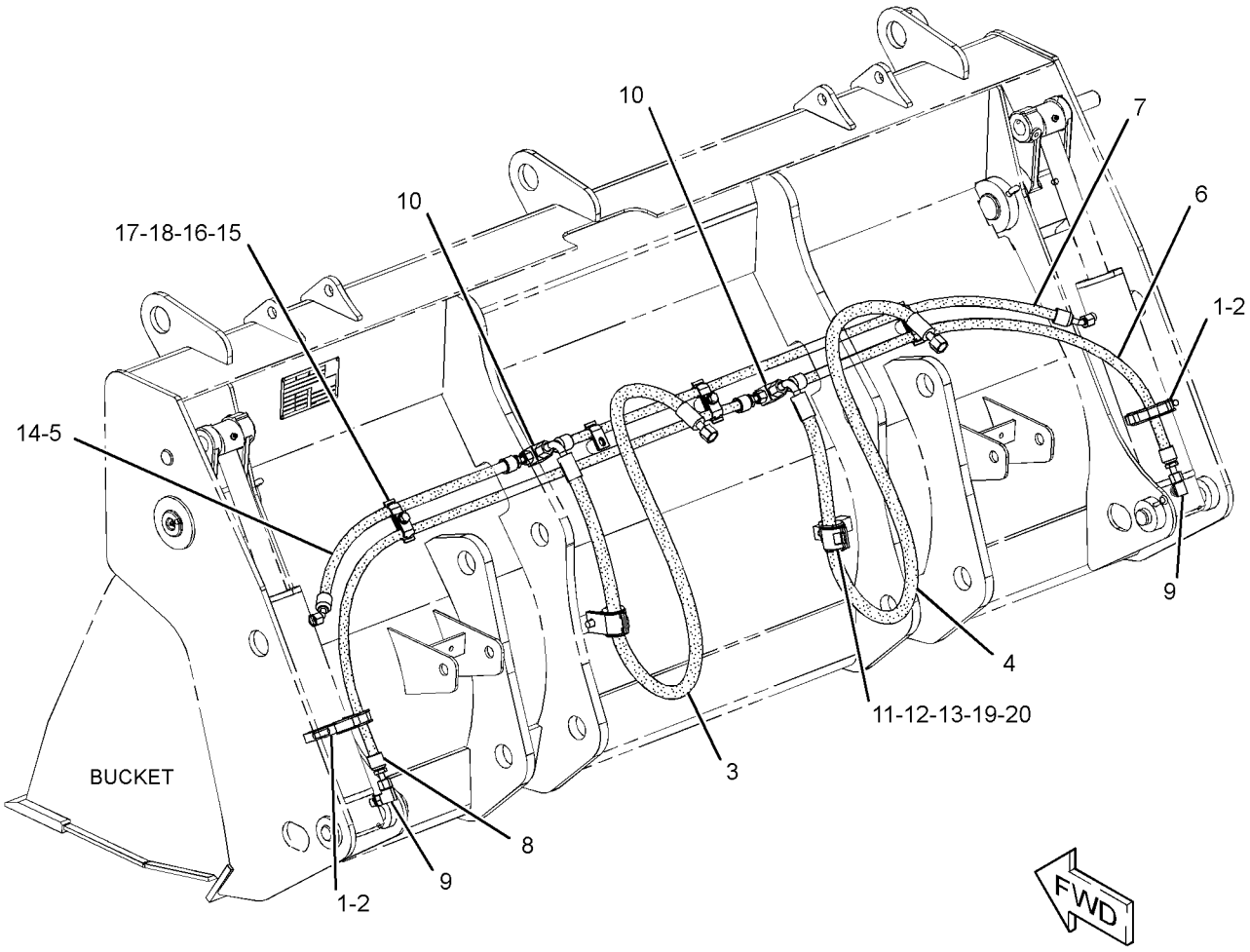

GRAPHIC #1 **<END>** g02761837

HYDRAULIC SYSTEM

337-9770 LINES GP-PILOT

S/N: SJW1-UP

PART OF 340-1718 HYDRAULIC AR

SMCS-5057, 5059 **i04548422**

NOTE	REF NO	GRAPHIC REF	PART NUMBER	QTY	PART NAME 1 2 3 4 5 6 (PRODUCT LEVEL)	SEE PAGE
	1	1	**6V-0852**	1	CAP-DUST	
	2	1	*164-5567*	1	COUPLER AS-QUICK DISCONNECT (MALE)	
		1	**6V-3965**	1	FITTING (QUICK DISCONNECT)	
		1	**214-7568**	1	SEAL-O-RING	
	3	1	**9X-6772**	3	STRAP-CABLE	
	4	1	*229-5336*	1	TEE AS	
		1	**3J-1907**	1	SEAL-O-RING	
		1	**4J-5477**	1	SEAL-O-RING	
		1	**081-5648**	1	TEE	
	5	1	*351-0290*	1	ADAPTER AS	
		1	**3J-7354**	1	SEAL-O-RING	
		1	**4J-5477**	1	SEAL-O-RING	
		1	**308-9568**	1	ADAPTER-TEE	
I	6	1	**361-9929**	1	HOSE AS	
I	7	1	**361-9930**	1	HOSE AS	
	8	1	*148-8325*	1	CONNECTOR AS	
		1	**3J-1907**	1	SEAL-O-RING	
		1	**4J-5477**	1	SEAL-O-RING	
		1	**6V-8641**	1	CONNECTOR	
	9	1	*150-3033*	1	ELBOW AS	
		1	**3J-1907**	1	SEAL-O-RING	
		1	**4J-5477**	1	SEAL-O-RING	
		1	**8T-0164**	1	ELBOW	

I-REFER TO HYDRAULIC INFORMATION SYSTEM

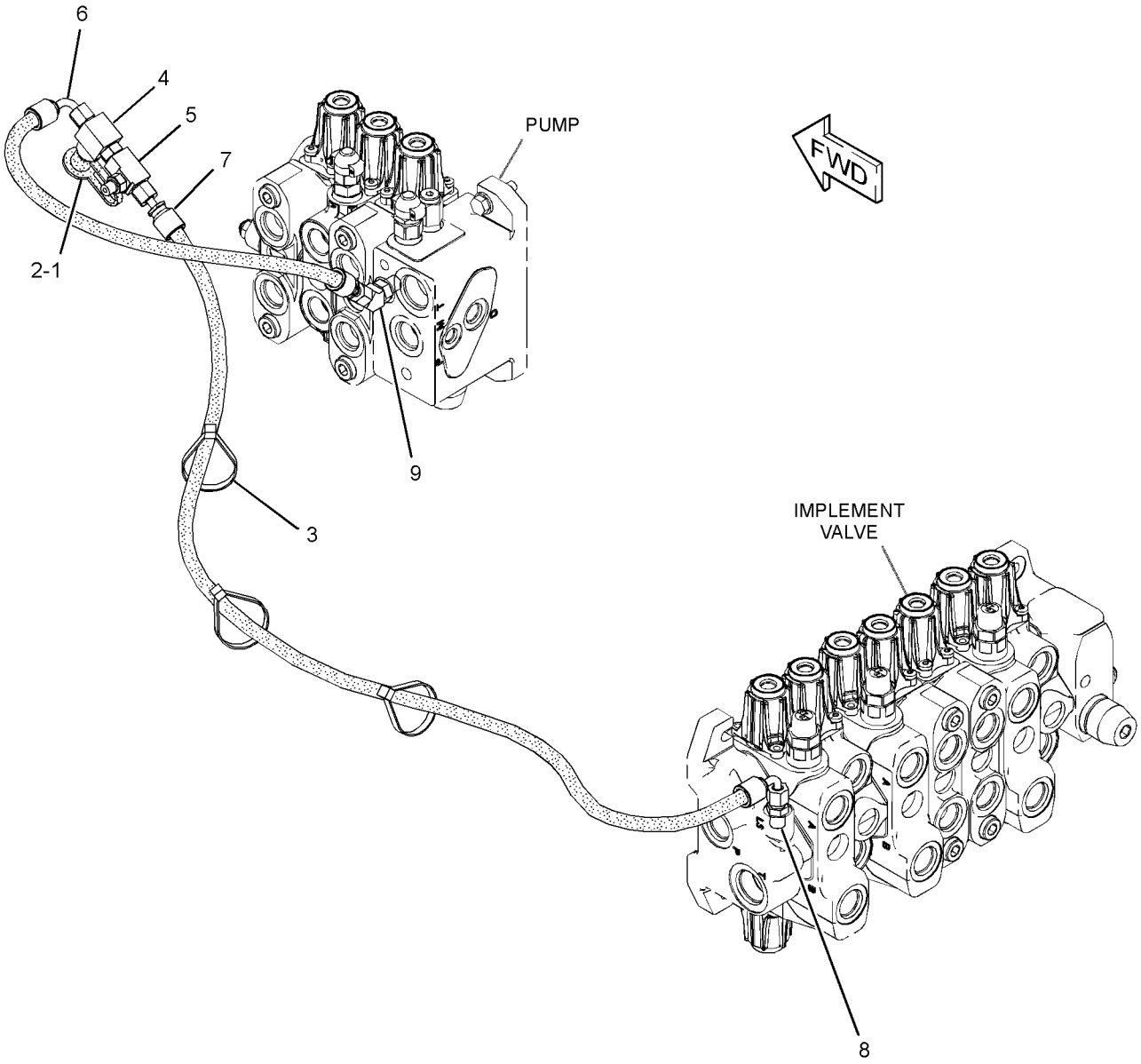

GRAPHIC #1 **<END>** g02783505

HYDRAULIC SYSTEM

337-9774 LINES GP-PUMP

S/N: SJW1-UP

PART OF 340-1718 HYDRAULIC AR

SMCS-5057 **i04548423**

NOTE	REF NO	GRAPHIC REF	PART NUMBER	QTY	PART NAME 1 2 3 4 5 6 (PRODUCT LEVEL)	SEE PAGE
	1	1	**335-9214**	1	CLAMP-BAND	
I	2	1	**363-0443**	1	HOSE AS	
I	3	1	**363-1316**	1	HOSE AS	
I	4	1	**363-2679**	1	HOSE AS	
	5	1	**370-3970**	1	TUBE AS	
	6	1	**370-4010**	1	HOSE	
	7	1	**375-2087**	1	HOSE AS	
	8	1	*148-8335*	3	CONNECTOR AS	
					(EACH INCLUDES)	
		1	**5K-9090**	1	SEAL-O-RING	
		1	**6V-8635**	1	CONNECTOR	
		1	**7M-8485**	1	SEAL-O-RING	
	9	1	*148-8362*	2	ELBOW AS	
					(EACH INCLUDES)	
		1	**3D-2824**	1	SEAL-O-RING	
		1	**5K-9090**	1	SEAL-O-RING	
		1	**8T-6684**	1	ELBOW	
	10	1	*148-8429*	2	TEE AS	
					(EACH INCLUDES)	
		1	**5K-9090**	2	SEAL-O-RING	
		1	**6V-9840**	1	TEE-SWIVEL	
	11	1	**1P-4584**	2	FLANGE-HALF	
	12	1	**5P-4868**	1	CLAMP-HOSE	
	13	1	**6J-2680**	1	SEAL-O-RING	
M	14	1	**8T-4183**	4	BOLT (M12X1.75X40-MM)	
	15	1	**8T-4223**	4	WASHER-HARD (13.5X25.5X3-MM THK)	

I-REFER TO HYDRAULIC INFORMATION SYSTEM
M-METRIC PART

337-9774 **LINES GP-PUMP** *(contd.)* **i04548423**

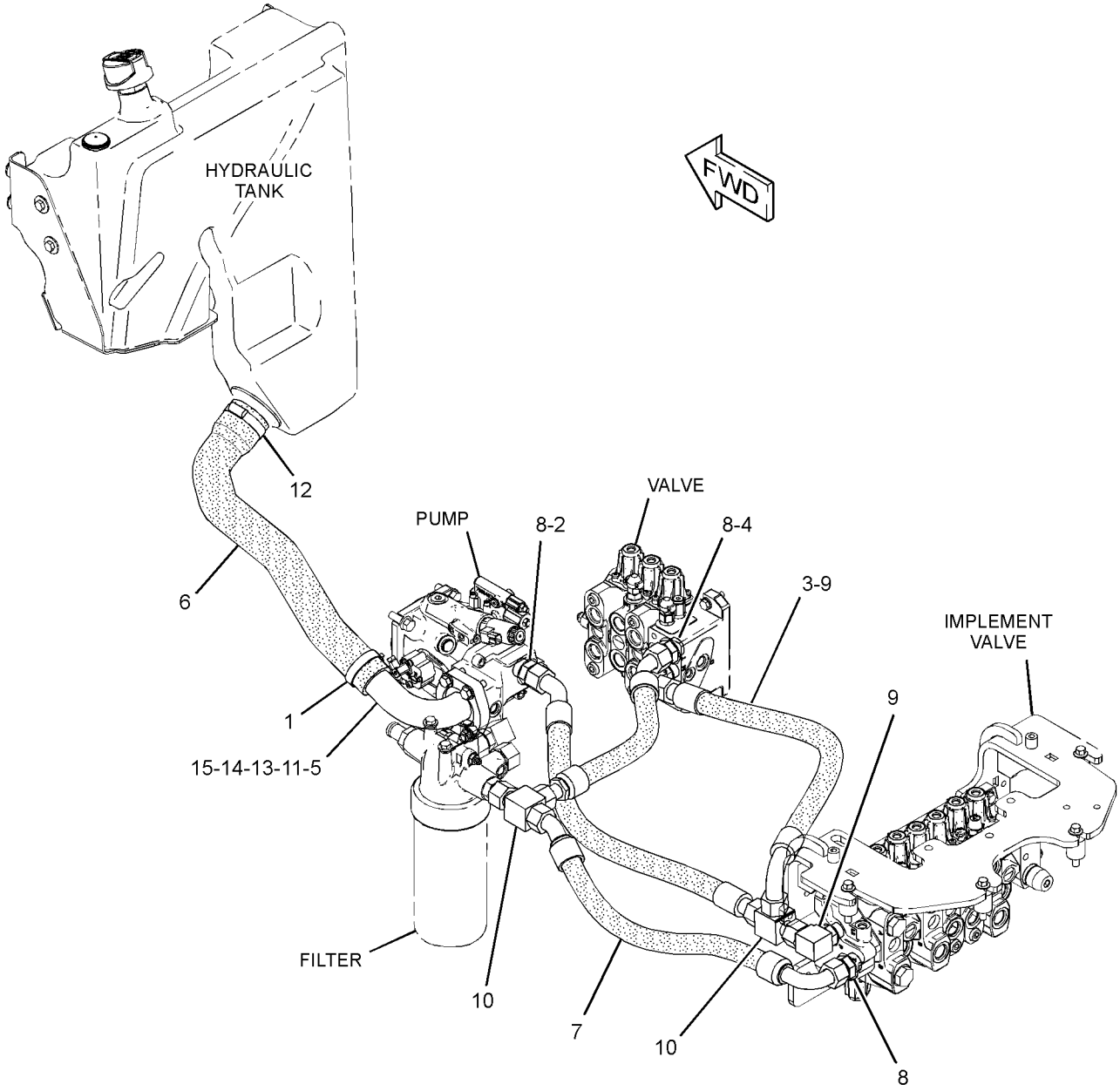

GRAPHIC #1 **<END>** g02783640

HYDRAULIC SYSTEM

337-9777 LINES GP-RETURN

S/N: SJW1-UP

PART OF 340-1718 HYDRAULIC AR

SMCS-5057 **i04548424**

NOTE	REF NO	GRAPHIC REF	PART NUMBER	QTY	PART NAME 1 2 3 4 5 6 (PRODUCT LEVEL)	SEE PAGE
	1	1	**130-9984**	1	CLIP	
	2	1	**323-3308**	5	CAP	
	3	1	*357-4621*	1	CONNECTOR AS	
		1	**033-6783**	1	FITTING	
		1	**238-5082**	1	SEAL-O-RING	
	4	1	**363-8466**	1	TUBE AS	
I	5	1	**371-1670**	1	HOSE AS	
	6	1	**380-5076**	1	DIFFUSER	
		1	**7M-8485**	1	SEAL-O-RING	
	7	1	**2B-0941**	1	SPACER (10.5X19X19-MM THK)	
	8	1	**2S-3440**	2	CLAMP-HOSE	
	9	1	**3E-7445**	3	CLAMP-HOSE	
	10	1	**5P-7854**	1	CLIP	
	11	1	**8T-4121**	4	WASHER-HARD (11X21X2.5-MM THK)	
M	12	1	**8T-4186**	1	BOLT (M10X1.5X40-MM)	
M	13	1	**8T-4196**	2	BOLT (M10X1.5X35-MM)	
M	14	1	**8T-6466**	1	BOLT (M10X1.5X60-MM)	
	15	1	**8T-7529**	1	CLIP	
	16	1	**205-9920**	1	STRAP-CABLE	
E	17	1	**136-1955**		HOSE (98-CM)	
E	18	1	**146-7453**		HOSE (108-CM)	

E-ORDER BY THE CENTIMETER
I-REFER TO HYDRAULIC INFORMATION SYSTEM
M-METRIC PART

337-9777 **LINES GP-RETURN** *(contd.)* **i04548424**

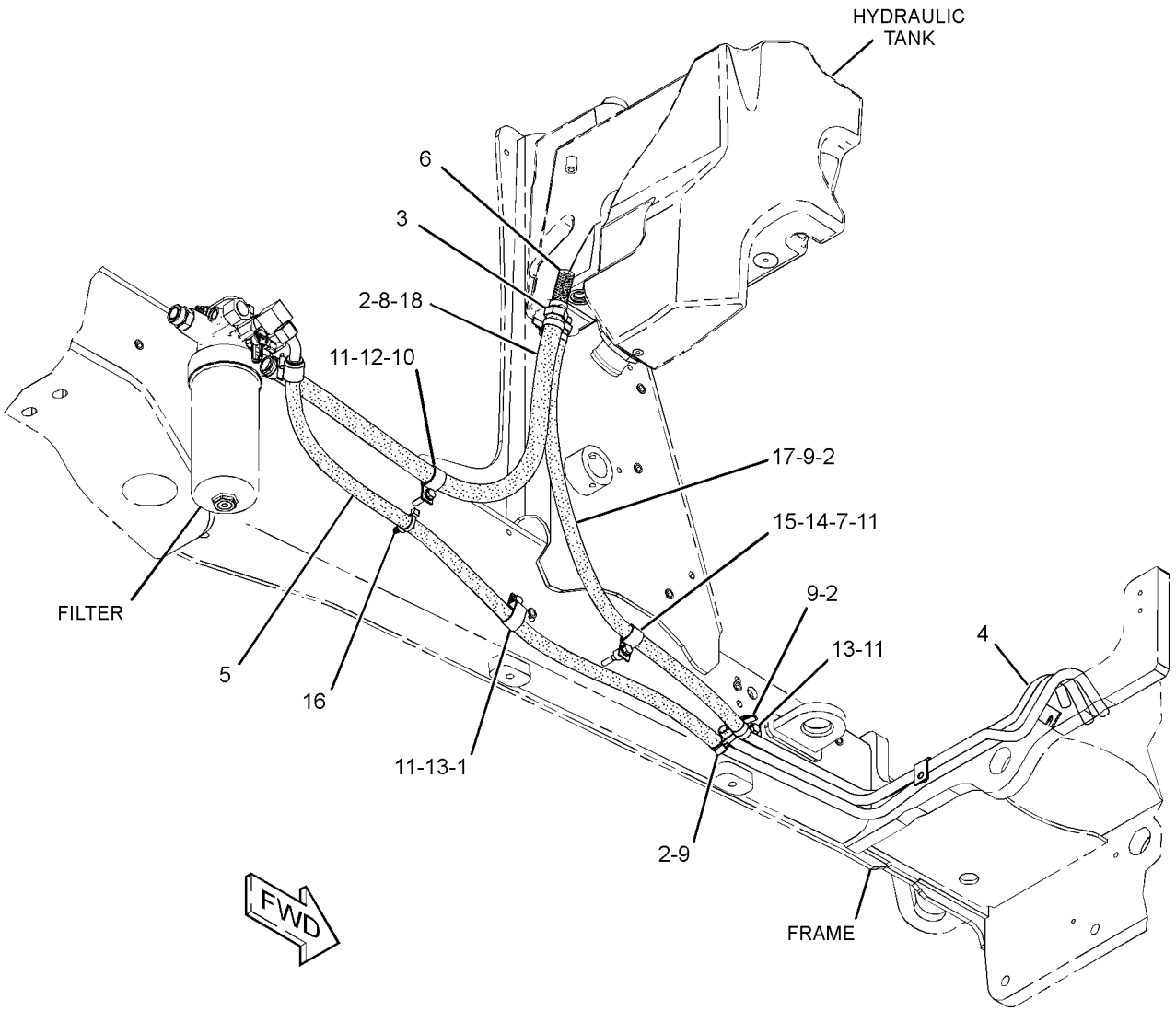

GRAPHIC #1 **<END>** g02784184

HYDRAULIC SYSTEM

337-9793 LINES GP-RIDE CONTROL

S/N: SJW1-UP

PART OF 340-1746, 340-1747 CONTROL AR-RIDE

AN ATTACHMENT

SMCS-5057, 5077, 5264 **i04555851**

NOTE	REF NO	GRAPHIC REF	PART NUMBER	QTY	PART NAME 1 2 3 4 5 6 (PRODUCT LEVEL)	SEE PAGE
Y	1	1	**245-8780**	1	MANIFOLD GP-RIDE CONTROL	431
	2	1	**276-2334**	1	FILM-WARNING (HIGH PRESS CYLINDER, READ OMM)	
I	3	1	**361-9950**	1	HOSE AS	
I	4	1	**361-9951**	1	HOSE AS	
I	5	1	**361-9952**	1	HOSE AS	
I	6	1	**363-5880**	1	HOSE AS	
Y	7	1	*382-8033*	1	ACCUMULATOR GP-RIDE CONTROL (CHARGED)	358
	8	1	**131-8201**	2	CLIP (SLOT)	
	9	1	**131-8202**	2	CLIP (TAB)	
	10	1	*148-8336*	1	CONNECTOR AS	
		1	**3J-1907**	1	SEAL-O-RING	
		1	**6V-8397**	1	SEAL-O-RING	
		1	**6V-8636**	1	CONNECTOR	
	11	1	*148-8340*	1	CONNECTOR AS	
		1	**3K-0360**	1	SEAL-O-RING	
		1	**6V-8398**	1	SEAL-O-RING	
		1	**6V-8639**	1	CONNECTOR	
	12	1	*148-8345*	1	CONNECTOR AS	
		1	**2M-9780**	1	SEAL-O-RING	
		1	**6V-8398**	1	SEAL-O-RING	
		1	**6V-8638**	1	CONNECTOR	
	13	1	*148-8363*	1	ELBOW AS	
		1	**3K-0360**	1	SEAL-O-RING	
		1	**6V-8397**	1	SEAL-O-RING	
		1	**6V-9876**	1	ELBOW	
	14	1	*148-8370*	1	ELBOW AS	
		1	**6V-8398**	1	SEAL-O-RING	
		1	**6V-9851**	1	ELBOW	
	15	1	*148-8372*	1	ELBOW AS	
		1	**2M-9780**	1	SEAL-O-RING	
		1	**6V-8398**	1	SEAL-O-RING	
		1	**6V-8721**	1	ELBOW	
	16	1	**8T-4121**	1	WASHER-HARD (11X21X2.5-MM THK)	
M	17	1	**8T-4177**	2	BOLT (M8X1.25X90-MM)	
M	18	1	**8T-4196**	1	BOLT (M10X1.5X35-MM)	
	19	1	**8T-4224**	2	WASHER-HARD (8.8X16X2-MM THK)	

I-REFER TO HYDRAULIC INFORMATION SYSTEM
M-METRIC PART
Y-SEPARATE ILLUSTRATION

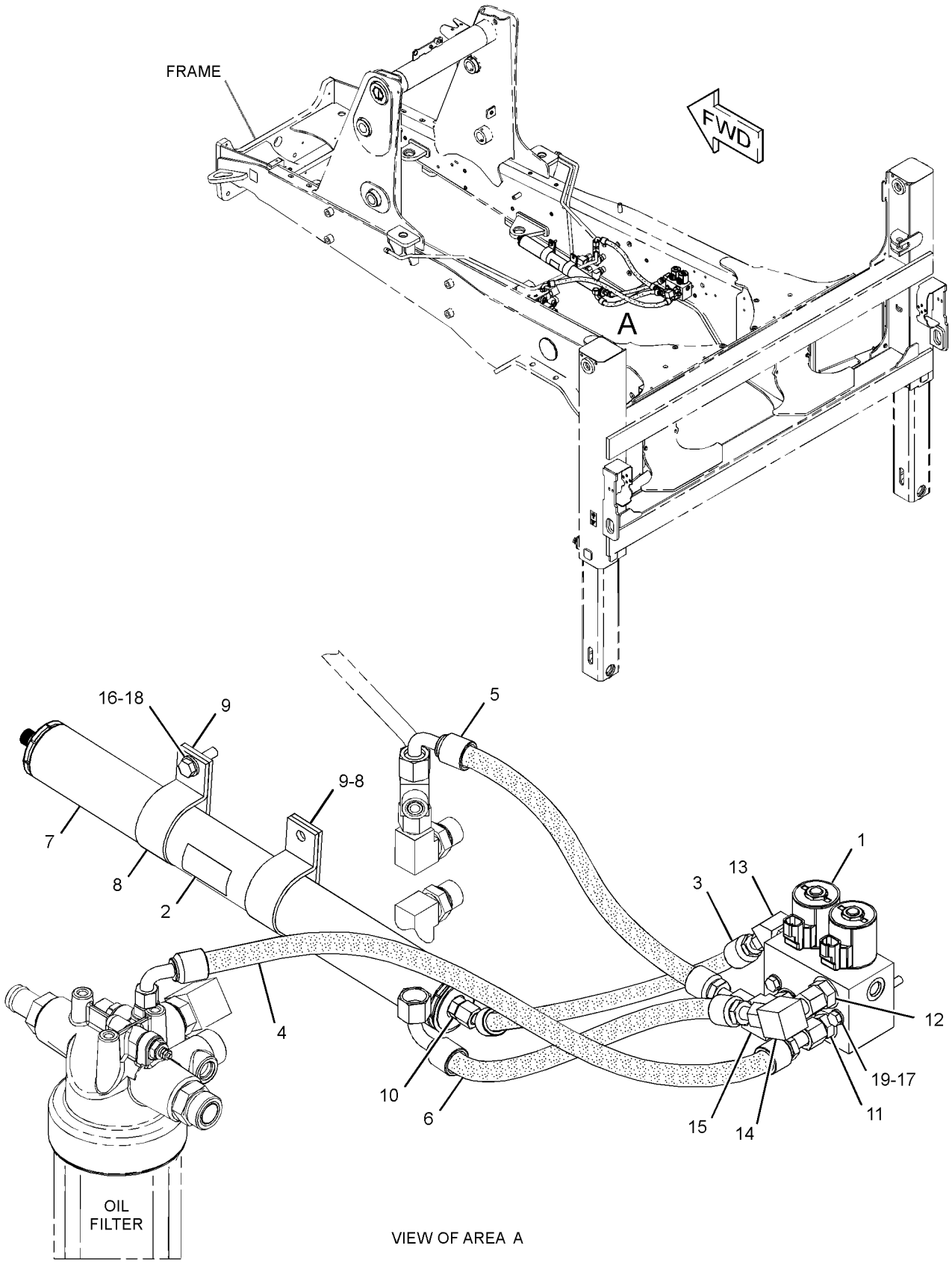

VIEW OF AREA A

GRAPHIC #1

<END>

g02778896

HYDRAULIC SYSTEM

368-5465 LINES GP-SIDESHIFT

S/N: SJW1-UP

PART OF 340-1733, 340-1734 BACKHOE AR-EXTENDABLE STICK, 340-1732 BACKHOE AR-STANDARD STICK AN ATTACHMENT

SMCS-5057 **i04553457**

NOTE	REF NO	GRAPHIC REF	PART NUMBER	QTY	PART NAME 1 2 3 4 5 6 (PRODUCT LEVEL)	SEE PAGE
I	1	1	**324-7815**	1	HOSE AS	
I	2	1	**324-7816**	2	HOSE AS	
I	3	1	**324-7817**	1	HOSE AS	
	4	1	*148-8316*	2	CONNECTOR AS	
					(EACH INCLUDES)	
		1	**3J-7354**	1	SEAL-O-RING	
		1	**4J-5477**	1	SEAL-O-RING	
		1	**6V-8647**	1	CONNECTOR	
	5	1	*148-8325*	1	CONNECTOR AS	
		1	**3J-1907**	1	SEAL-O-RING	
		1	**4J-5477**	1	SEAL-O-RING	
		1	**6V-8641**	1	CONNECTOR	
	6	1	*150-4029*	2	TEE AS	
					(EACH INCLUDES)	
		1	**3J-7354**	1	SEAL-O-RING	
		1	**4J-5477**	2	SEAL-O-RING	
		1	**6V-8780**	1	TEE-FACE SEAL	
	7	1	*150-5968*	1	TEE AS	
		1	**4J-5477**	2	SEAL-O-RING	
		1	**6V-9835**	1	TEE-SWIVEL	

I-REFER TO HYDRAULIC INFORMATION SYSTEM

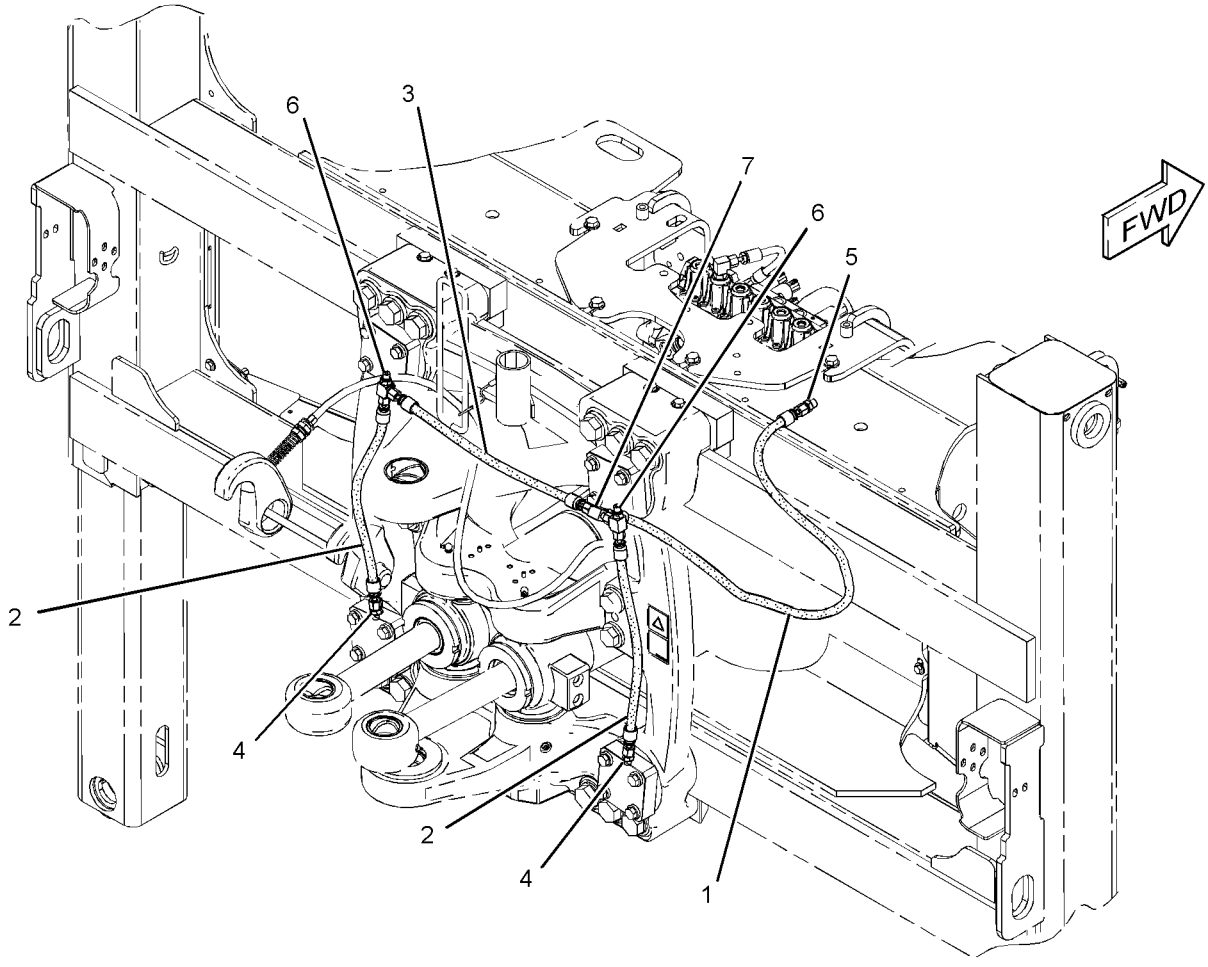

GRAPHIC #1 **<END>** g02774378

HYDRAULIC SYSTEM

337-9821 LINES GP-STABILIZER

S/N: SJW1-UP

PART OF 340-1693 CHASSIS AR

SMCS-5057, 5468 **i04549392**

NOTE	REF NO	GRAPHIC REF	PART NUMBER	QTY	PART NAME 1 2 3 4 5 6 (PRODUCT LEVEL)	SEE PAGE
	1	1	**3S-2093**	6	STRAP-CABLE	
	2	1	**154-2302**	2	SPACER (11X20X15-MM THK)	
	3	1	*205-2357*	4	CONNECTOR AS	
					(EACH INCLUDES)	
		1	**3D-2824**	1	SEAL-O-RING	
		1	**6V-8398**	1	SEAL-O-RING	
		1	**8T-7968**	1	CONNECTOR	
	4	1	**292-4251**	2	SCREW-TRUSS HEAD (M8X1.25X60-MM)	
	5	1	**308-3437**	2	VALVE GP-LOAD CONTROL (STABILIZER)	
I	6	1	**331-0797**	1	HOSE AS	
I	7	1	**331-0798**	3	HOSE AS	
	8	1	*148-8336*	4	CONNECTOR AS	
					(EACH INCLUDES)	
		1	**3J-1907**	1	SEAL-O-RING	
		1	**6V-8397**	1	SEAL-O-RING	
		1	**6V-8636**	1	CONNECTOR	
	9	1	*164-5549*	2	COUPLING AS	
					(EACH INCLUDES)	
		1	**3J-1907**	1	SEAL-O-RING	
		1	**4I-6287**	1	COUPLING	
	10	1	*340-1650*	2	ADAPTER AS	
					(EACH INCLUDES)	
		1	**3J-1907**	1	SEAL-O-RING	
		1	**341-0076**	1	ADAPTER	
	11	1	**5I-3978**	2	CLIP	
	12	1	**8T-4224**	2	WASHER-HARD (8.8X16X2-MM THK)	

I-REFER TO HYDRAULIC INFORMATION SYSTEM

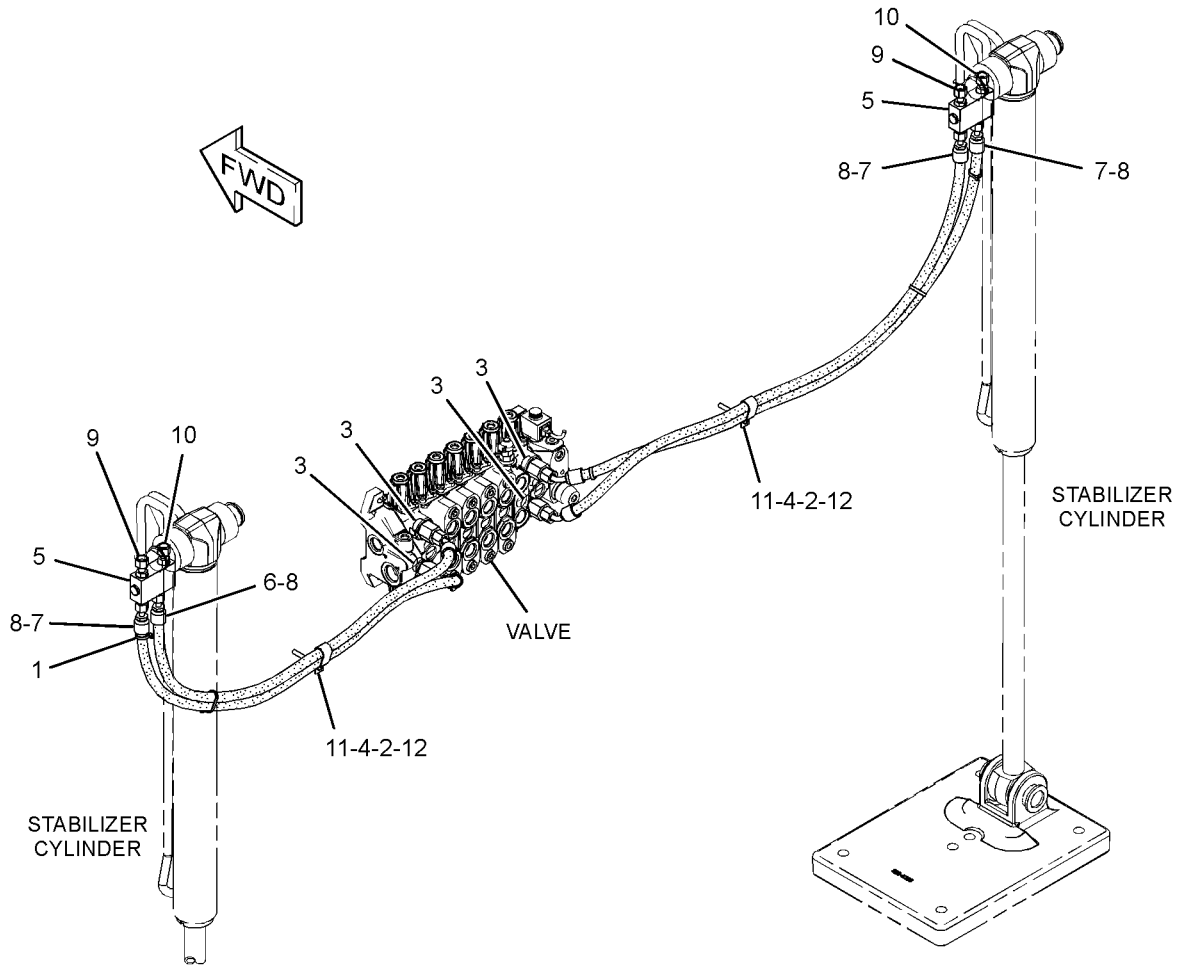

GRAPHIC #1 **<END>** g02772256

HYDRAULIC SYSTEM

321-7192 LINES GP-STICK

S/N: SJW1-UP
PART OF 340-1743 LINKAGE AR, 340-1740 LINKAGE AR-BUCKET
AN ATTACHMENT

SMCS-5057 **i03690282**

NOTE	REF NO	GRAPHIC REF	PART NUMBER	QTY	PART NAME 1 2 3 4 5 6 (PRODUCT LEVEL)	SEE PAGE
I	1	1	**324-7596**	1	HOSE AS	
	2	1	**343-4301**	1	HOSE AS	

I-REFER TO HYDRAULIC INFORMATION SYSTEM

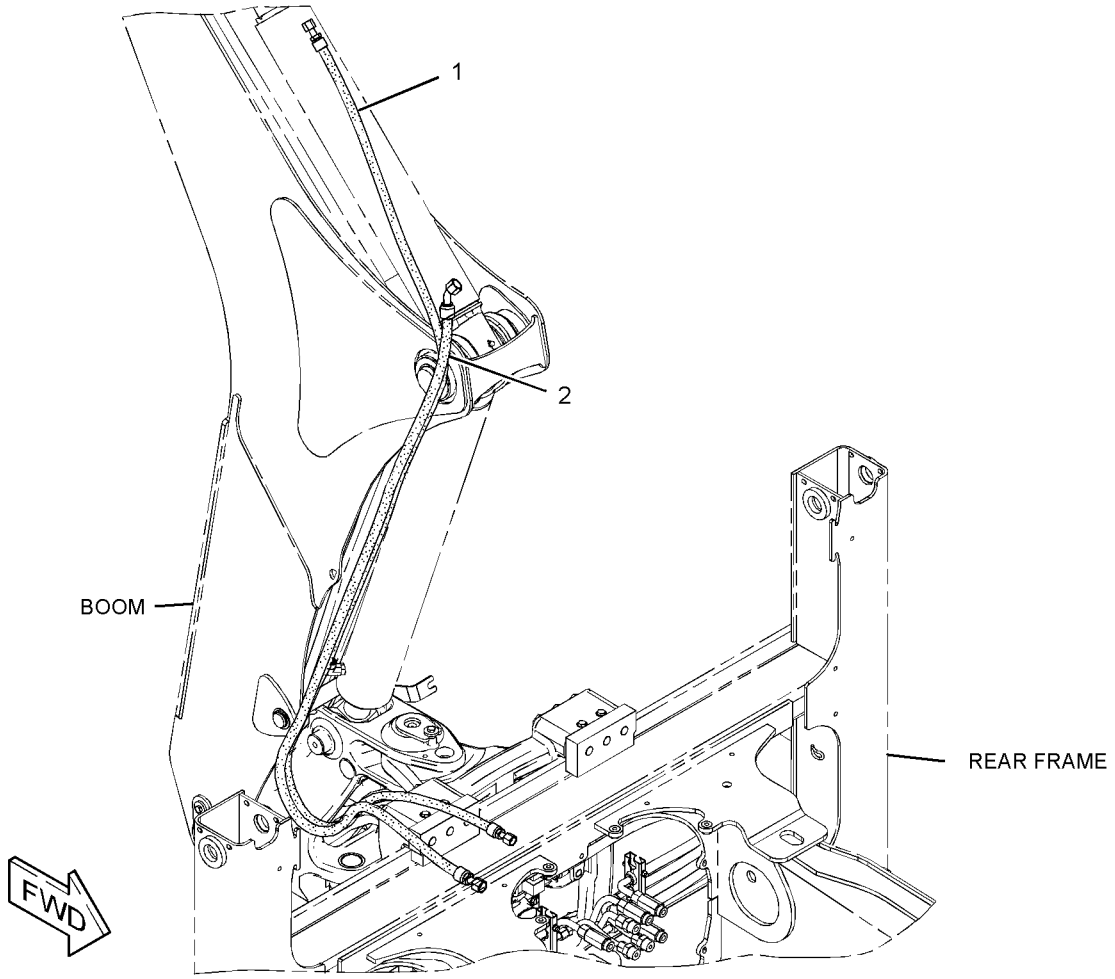

GRAPHIC #1 **<END>** g01989920

HYDRAULIC SYSTEM

326-1803 LINES GP-SWING

S/N: SJW1-UP

PART OF 340-1718 HYDRAULIC AR

SMCS-5057, 5105 **i03642535**

NOTE	REF NO	GRAPHIC REF	PART NUMBER	QTY	PART NAME 1 2 3 4 5 6 (PRODUCT LEVEL)	SEE PAGE
	1	1	**204-2281**	2	STRAP-CABLE	
	2	1	*287-7252*	1	TEE AS	
		1	**3J-1907**	1	SEAL-O-RING	
		1	**6V-8398**	2	SEAL-O-RING	
		1	**287-7251**	1	TEE	
	3	1	**320-7812**	1	VALVE GP-PRESSURE CONTROL (290-BAR)	
I	4	1	**328-5333**	2	HOSE AS	
I	5	1	**328-5358**	2	HOSE AS	
	6	1	*341-0121*	1	TEE AS	
		1	**3D-2824**	1	SEAL-O-RING	
		1	**4J-5477**	1	SEAL-O-RING	
		1	**6V-8398**	1	SEAL-O-RING	
		1	**119-6346**	1	TEE-FACE SEAL	
	7	1	**344-8098**	1	TUBE AS	
I	8	1	**344-8154**	1	HOSE AS	
	9	1	**344-8163**	1	TUBE AS	
	10	1	*148-8325*	1	CONNECTOR AS	
		1	**3J-1907**	1	SEAL-O-RING	
		1	**4J-5477**	1	SEAL-O-RING	
		1	**6V-8641**	1	CONNECTOR	
	11	1	*148-8328*	1	CONNECTOR AS	
		1	**3D-2824**	1	SEAL-O-RING	
		1	**6V-8398**	1	SEAL-O-RING	
		1	**6V-8633**	1	CONNECTOR	
	12	1	*148-8340*	4	CONNECTOR AS	
					(EACH INCLUDES)	
		1	**3K-0360**	1	SEAL-O-RING	
		1	**6V-8398**	1	SEAL-O-RING	
		1	**6V-8639**	1	CONNECTOR	
	13	1	*148-8364*	2	ELBOW AS	
					(EACH INCLUDES)	
		1	**3K-0360**	1	SEAL-O-RING	
		1	**6V-8398**	1	SEAL-O-RING	
		1	**6V-8625**	1	ELBOW	
	14	1	**6V-1249**	2	GROMMET	
	15	1	**6V-8398**	1	SEAL-O-RING	
	16	1	**8T-1899**	2	CLIP (SLOT)	
	17	1	**8T-1900**	2	CLIP (TAB)	
	18	1	**8T-4121**	4	WASHER-HARD (11X21X2.5-MM THK)	
M	19	1	**8T-4133**	2	NUT (M10X1.5-THD)	
M	20	1	**8T-4195**	2	BOLT (M10X1.5X30-MM)	

I-REFER TO HYDRAULIC INFORMATION SYSTEM
M-METRIC PART

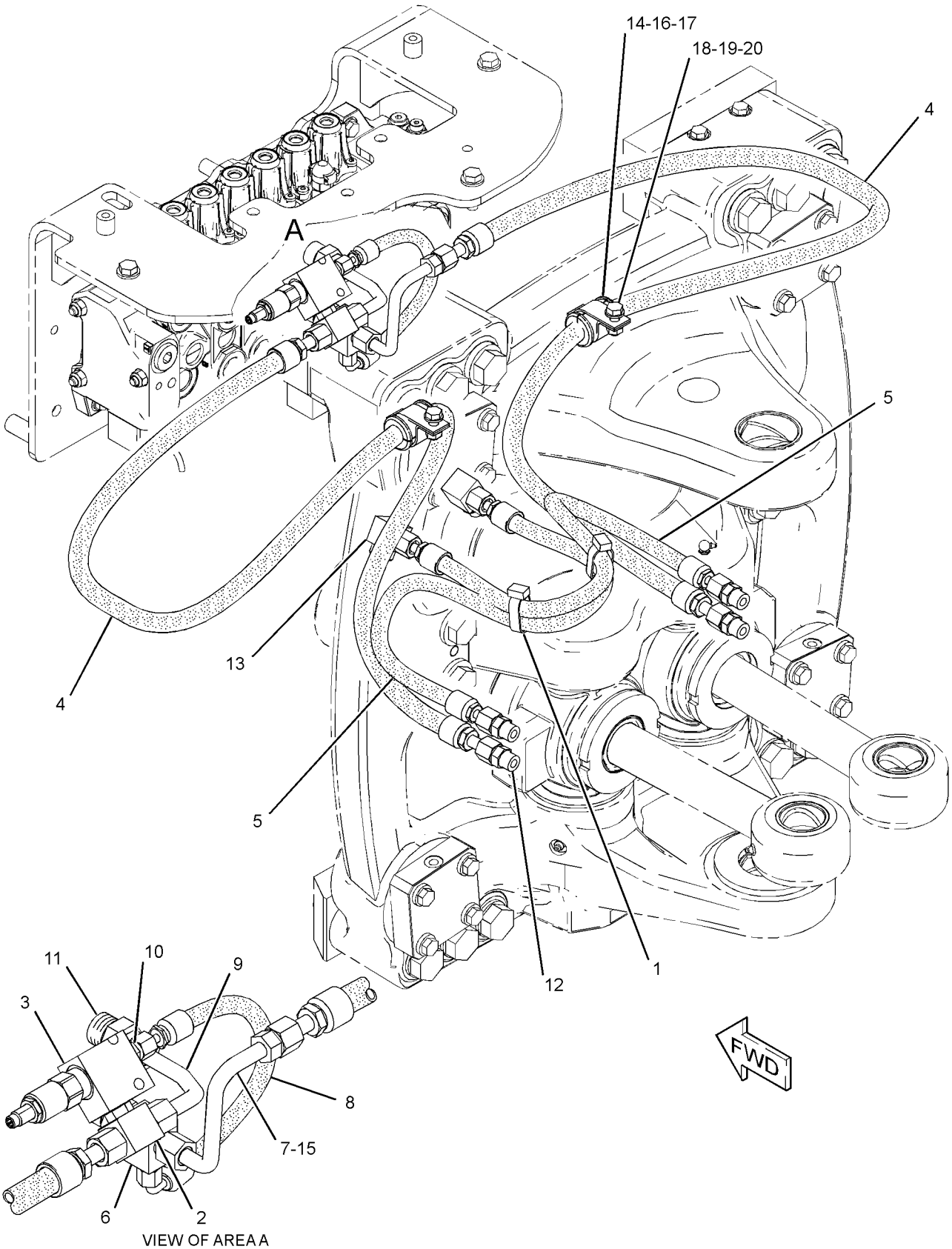

VIEW OF AREA A

GRAPHIC #1 **<END>** g01986077

245-8780 MANIFOLD GP-RIDE CONTROL

S/N: SJW1-UP
PART OF 337-9793 LINES GP-RIDE CONTROL
AN ATTACHMENT

SMCS-5264 **i04478830**

NOTE	REF NO	GRAPHIC REF	PART NUMBER	QTY	PART NAME 1 2 3 4 5 6 (PRODUCT LEVEL)	SEE PAGE
J	1	1	**249-3124**	1	VALVE GP-SOLENOID (12-VOLT) (RIDE CONTROL, SWITCH)	
L	2	1	**249-3125**	1	VALVE GP-SOLENOID (12-VOLT) (ACCUMULATOR)	
	3	1	**238-4628**	2	COIL AS (12-VOLT)	
					AVAILABLE REPAIR KIT(S):	
J			**141-0888**	1	KIT-SEAL (RIDE CONTROL, SWITCH)	
					(INCLUDES O-RING SEALS & BACK-UP RING)	
L			**227-5509**	1	KIT-SEAL (ACCUMULATOR)	

J-KIT MARKED J SERVICES PART MARKED J
L-KIT MARKED L SERVICES PART MARKED L

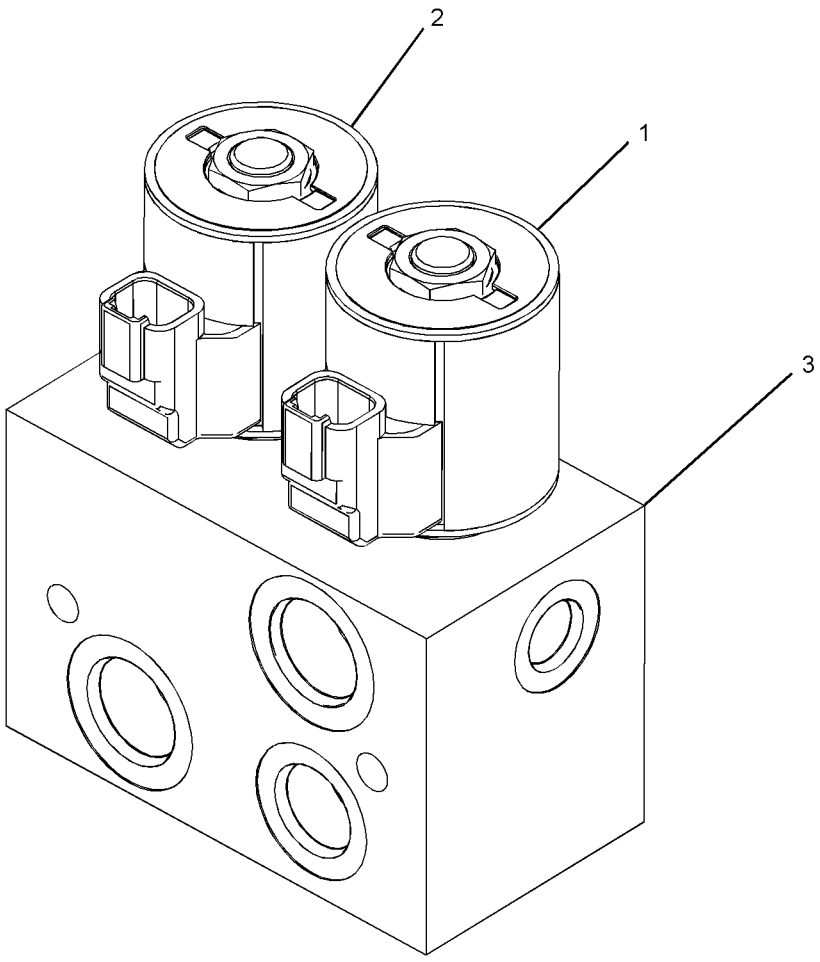

GRAPHIC #1 **<END>** g01646794

337-8935 MOUNTING GP-CYLINDER—MULTIPURPOSE BUCKET

S/N: SJW1-UP

PART OF 350-1580, 350-1581, 350-1587, 350-1589 BUCKET AR-MULTIPURPOSE AN ATTACHMENT

SMCS-5102, 6068, 7562 **i03872772**

NOTE	REF NO	GRAPHIC REF	PART NUMBER	QTY	PART NAME 1 2 3 4 5 6 (PRODUCT LEVEL)	SEE PAGE
	1	1	**3B-5317**	4	PIN-COTTER	
	2	1	**9R-4677**	2	PIN	
	3	1	**9R-4678**	2	PIN	

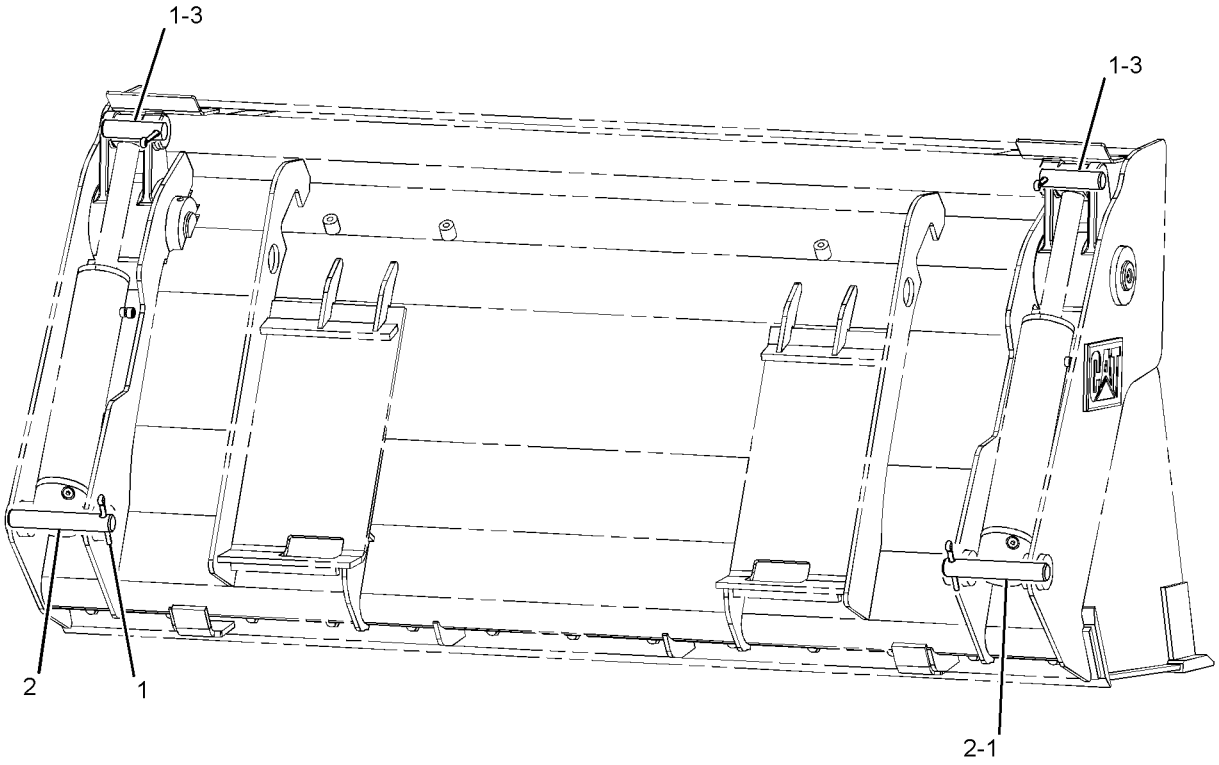

REAR VIEW

GRAPHIC #1 **<END>** g02138259

323-2096 MOUNTING GP-LINES

S/N: SJW1-UP

PART OF 340-1733, 340-1734 BACKHOE AR-EXTENDABLE STICK, 340-1732 BACKHOE AR-STANDARD STICK

AN ATTACHMENT

SMCS-5057 **i04546121**

NOTE	REF NO	GRAPHIC REF	PART NUMBER	QTY	PART NAME 1 2 3 4 5 6 (PRODUCT LEVEL)	SEE PAGE
	1	1	**5P-5148**	3	STRAP-CABLE	
	2	1	**315-7645**	1	CLAMP	
	3	1	**315-7646**	1	CLAMP	
	4	1	**315-7647**	1	CLAMP	
	5	1	**327-3753**	1	PLATE	
	6	1	**332-0092**	2	BLOCK	
	7	1	**343-7400**	1	CLAMP	
M	8	1	**8T-6870**	2	BOLT (M8X1.25X70-MM)	
	9	1	**367-9552**	2	PLATE	
	10	1	**8T-4224**	4	WASHER-HARD (8.8X16X2-MM THK)	
M	11	1	**8T-6869**	4	BOLT (M8X1.25X60-MM)	

M-METRIC PART

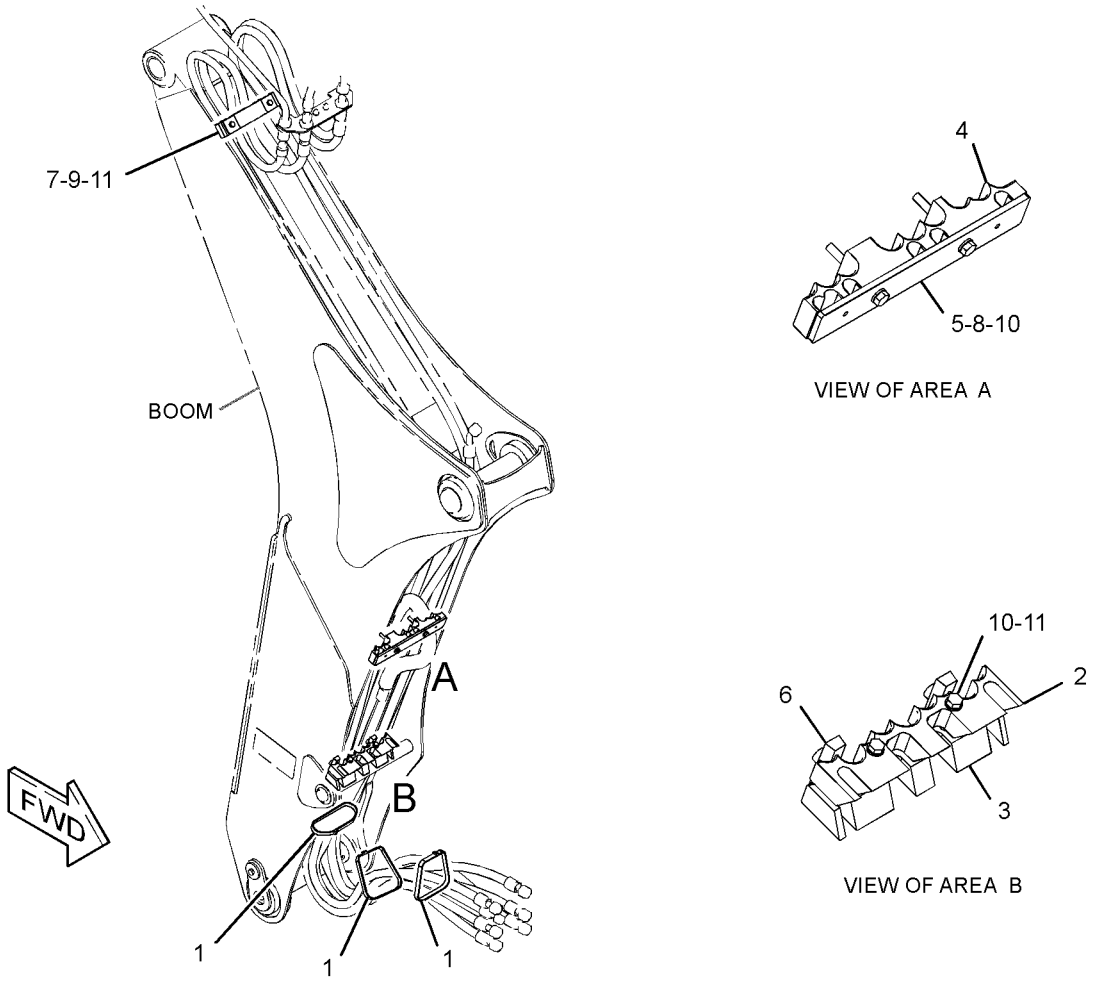

GRAPHIC #1 **<END>** g02791656

HYDRAULIC SYSTEM

337-9698 PUMP & MTG GP-HYDRAULIC—IMPLEMENT

S/N: SJW1-UP

PART OF 340-1718 HYDRAULIC AR

SMCS-1387, 4324, 5055, 5070, 5073, 5084 **i04548421**

NOTE	REF NO	GRAPHIC REF	PART NUMBER	QTY	PART NAME 1 2 3 4 5 6 (PRODUCT LEVEL)	SEE PAGE
	1	1	*165-2273*	1	VALVE GP-SHUTOFF (HYDRAULIC OIL)	
		1	**3K-0360**	1	SEAL-O-RING	
		1	**6V-7238**	1	VALVE-SHUTOFF (HYDRAULIC OIL)	
Y	2	1	**307-3063**	1	PUMP GP-PISTON (IMPLEMENT)	435
	3	1	**110-6349**	1	FITTING AS (QUICK DISCONNECT) (HYDRAULIC OIL)	
	4	1	**175-7904**	1	SEAL-O-RING	
	5	1	**5P-2566**	4	BOLT (1/2-13X1.5-IN)	
	6	1	**6V-0852**	1	CAP-DUST	
	7	1	**8T-4223**	4	WASHER-HARD (13.5X25.5X3-MM THK)	

Y-SEPARATE ILLUSTRATION

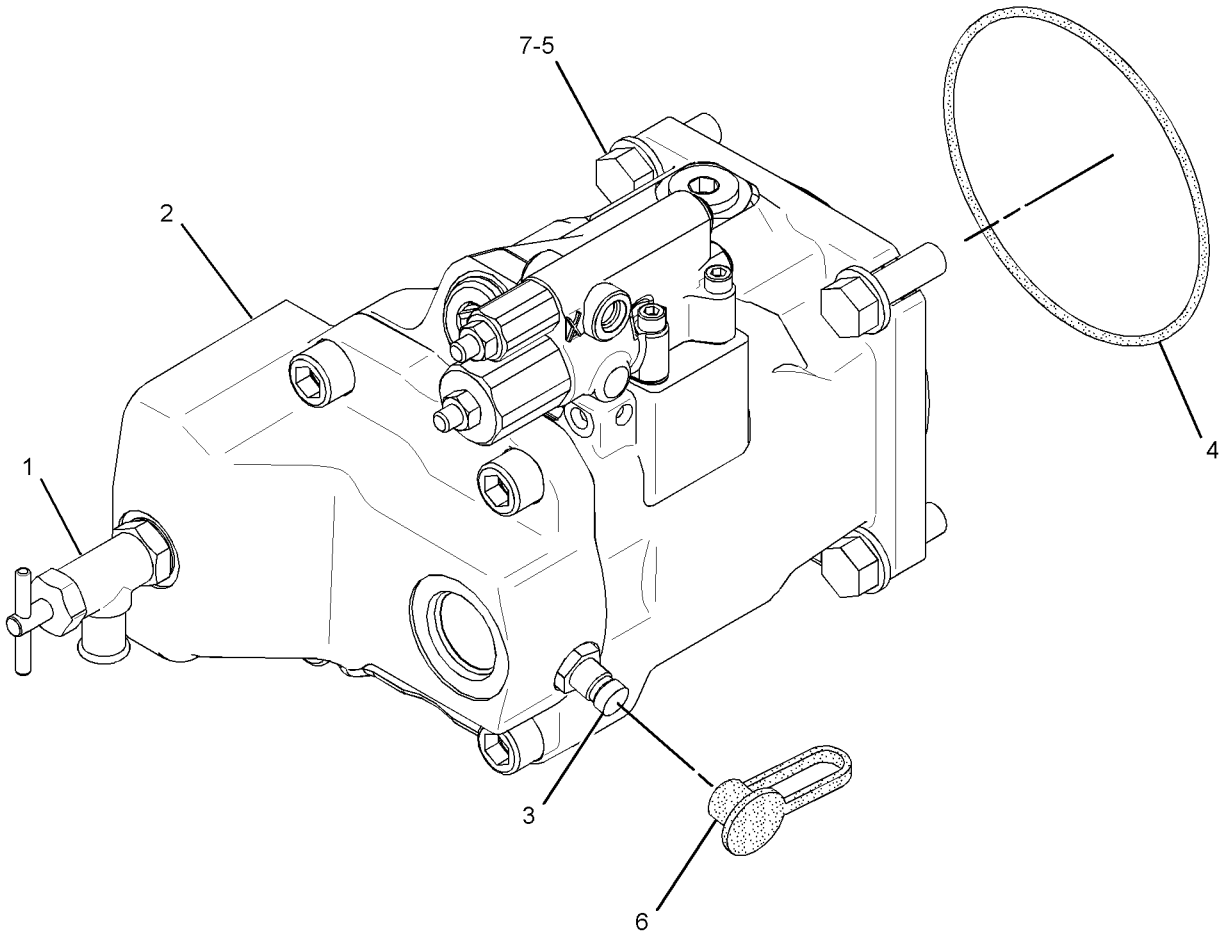

GRAPHIC #1 **<END>** g02788461

HYDRAULIC SYSTEM

307-3063 PUMP GP-PISTON

S/N: SJW1-UP

PART OF 337-9698 PUMP & MTG GP-HYDRAULIC

SMCS-5070 **i04638211**

NOTE	REF NO	GRAPHIC REF	PART NUMBER	QTY	PART NAME 1 2 3 4 5 6 (PRODUCT LEVEL)	SEE PAGE
					(NO BREAKDOWN OF SERVICEABLE PARTS AVAILABLE AT TIME OF PUBLICATION)	

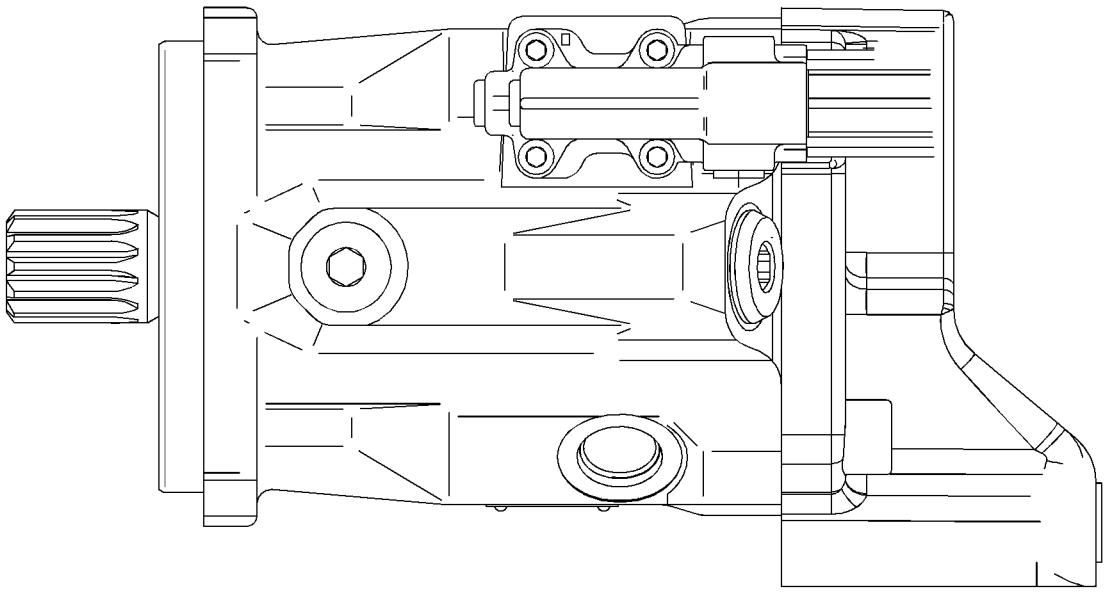

GRAPHIC #1 **<END>** g02788593

128-5596 SHAFT GP-PUMP DRIVE

S/N: SJW1-UP
PART OF 353-1338 DRIVE & MTG GP-PUMP
AN ATTACHMENT

SMCS-3108 **i00535584**

NOTE	REF NO	GRAPHIC REF	PART NUMBER	QTY	PART NAME 1 2 3 4 5 6 (PRODUCT LEVEL)	SEE PAGE
	1	1	**130-8150**	1	RING-RETAINING	

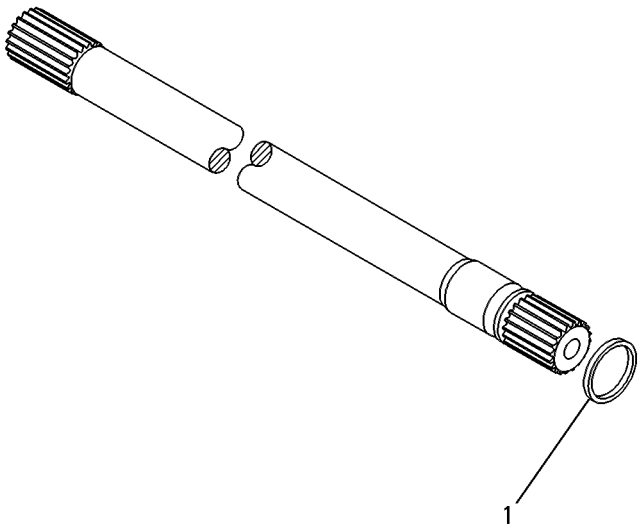

GRAPHIC #1 **<END>** g00131851

HYDRAULIC SYSTEM

351-5888 TANK & MTG GP-HYDRAULIC

S/N: SJW1-UP

PART OF 340-1718 HYDRAULIC AR

SMCS-5056 **i04548428**

NOTE	REF NO	GRAPHIC REF	PART NUMBER	QTY	PART NAME 1 2 3 4 5 6 (PRODUCT LEVEL)	SEE PAGE
	1	1	**254-1098**	1	STRAINER (HYDRAULIC TANK)	
	2	1	**334-4603**	1	FILM-INFORMATION (HYDO ADVANCED 10)	
	3	1	**358-9301**	1	TANK AS-HYDRAULIC	
	4	1	**361-9918**	1	BREATHER (HYDRAULIC TANK)	
	5	1	**363-9649**	1	GAUGE (HYDRAULIC TANK)	
	6	1	**371-1282**	1	BRACKET AS	
	7	1	**222-9151**	2	WASHER-HARD (11X32X5-MM THK)	
M	8	1	**8T-4186**	2	BOLT (M10X1.5X40-MM)	
M	9	1	**8T-4191**	5	BOLT (M10X1.5X16-MM)	
M	10	1	**8T-4195**	2	BOLT (M10X1.5X30-MM)	
	11	1	**8T-4222**	7	WASHER-PLATED (11X32X2.5-MM THK)	

M-METRIC PART

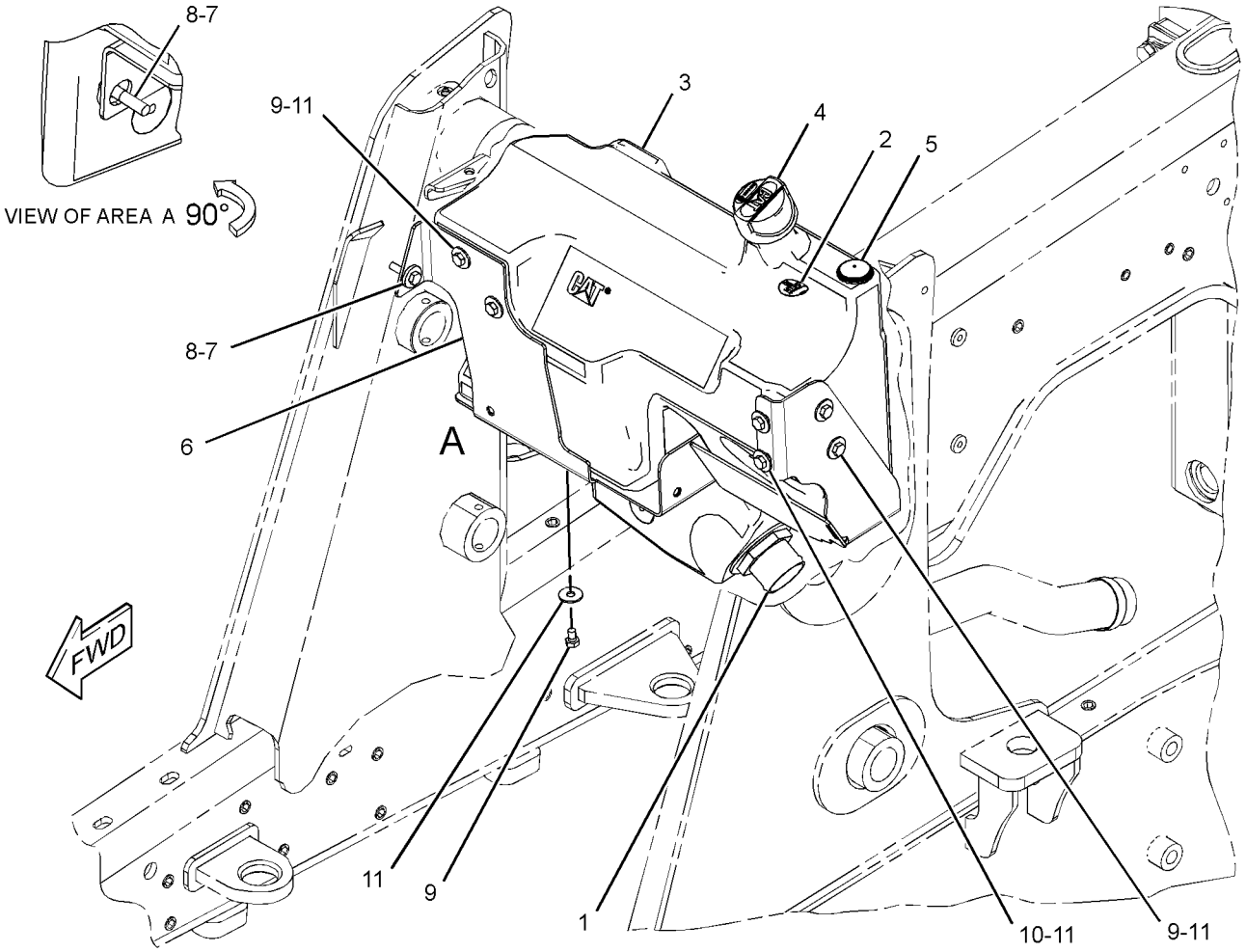

GRAPHIC #1 **<END>** g02789492

HYDRAULIC SYSTEM

337-9713 VALVE & MTG GP-BANK

S/N: SJW1-UP

PART OF 373-4266, 373-4267, 373-4268 VALVE AR-BANK 3

AN ATTACHMENT

SMCS-5051, 5057, 7265 **i04623529**

NOTE	REF NO	GRAPHIC REF	PART NUMBER	QTY	PART NAME 1 2 3 4 5 6 (PRODUCT LEVEL)	SEE PAGE
Y	1	1	**359-7209**	1	VALVE GP-BANK 3 (MECHANICAL)	443
	2	1	**344-7932**	3	BOLT-FLANGE HEAD (M10X1.5X35-MM)	

Y-SEPARATE ILLUSTRATION

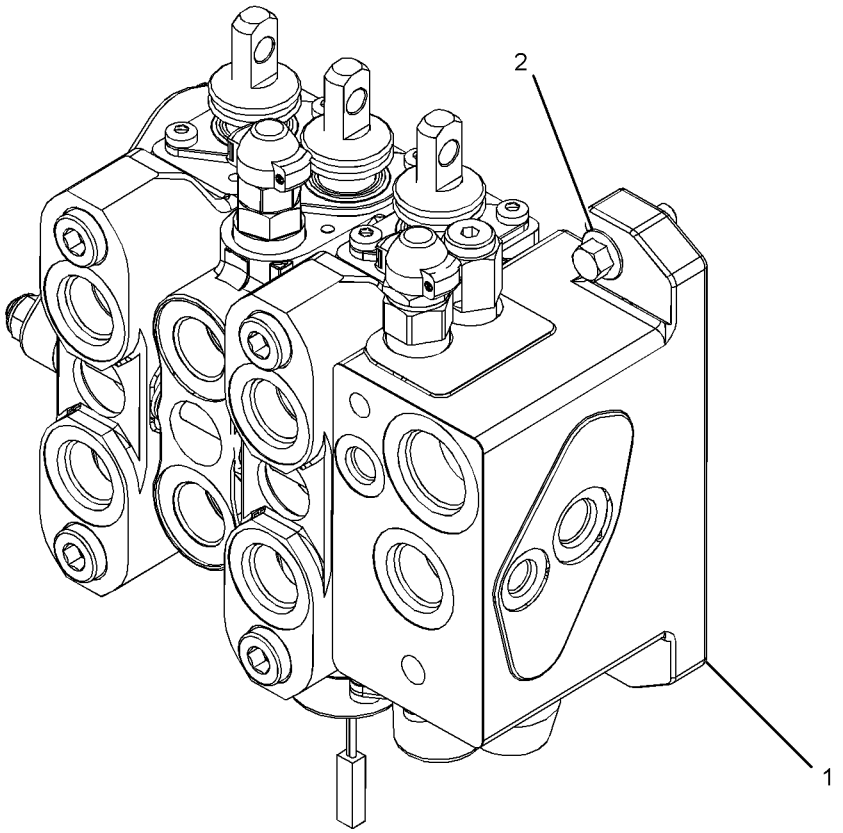

GRAPHIC #1 **<END>** g02818996

HYDRAULIC SYSTEM

337-9720 VALVE & MTG GP-BANK

S/N: SJW1-UP

PART OF 373-4266, 373-4267, 373-4268 VALVE AR-BANK 3

AN ATTACHMENT

SMCS-5051, 5057, 7265 **i04618152**

NOTE	REF NO	GRAPHIC REF	PART NUMBER	QTY	PART NAME 1 2 3 4 5 6 (PRODUCT LEVEL)	SEE PAGE
	1	1	**359-7214**	1	VALVE GP-BANK 7 (MECHANICAL)	
	2	1	**361-9737**	1	BRACKET AS	
	3	1	**8T-4121**	4	WASHER-HARD (11X21X2.5-MM THK)	
M	4	1	**8T-4133**	1	NUT (M10X1.5-THD)	
M	5	1	**8T-4182**	3	BOLT (M10X1.5X45-MM)	
M	6	1	**8T-4183**	4	BOLT (M12X1.75X40-MM)	
	7	1	**8T-4223**	4	WASHER-HARD (13.5X25.5X3-MM THK)	

M-METRIC PART

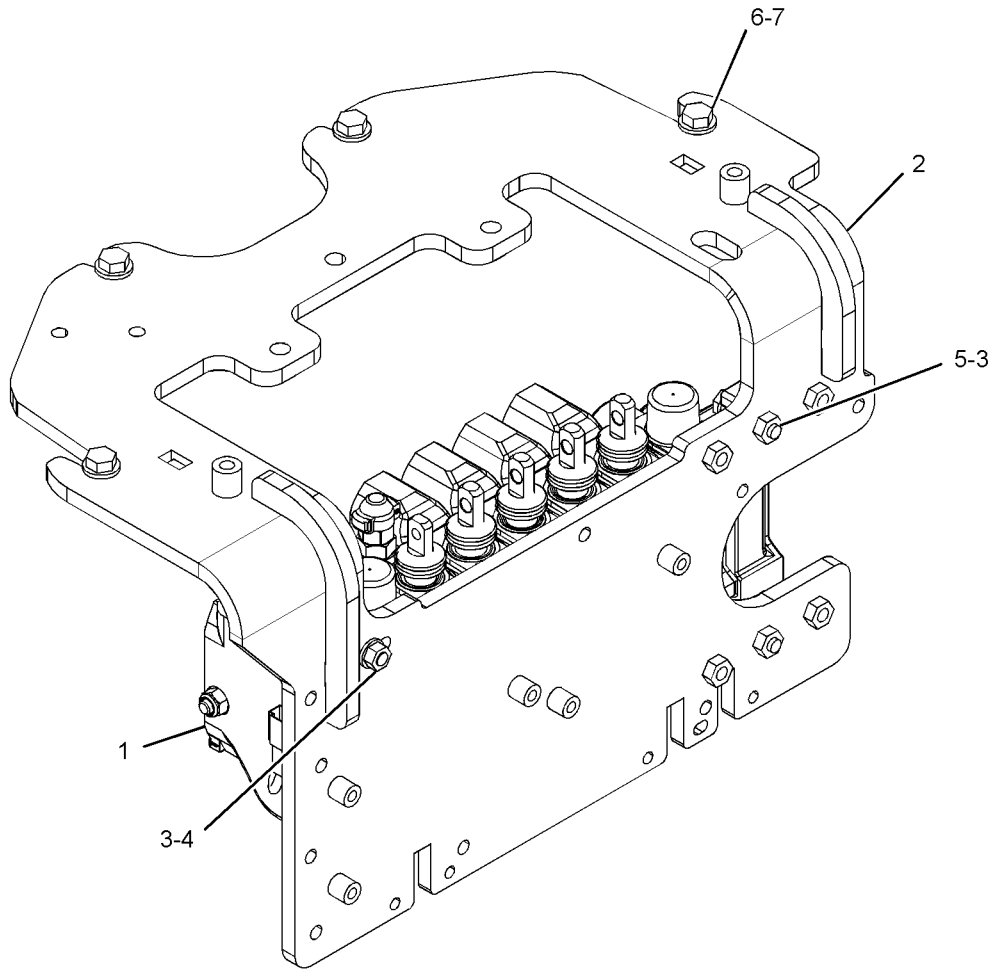

GRAPHIC #1 **<END>** g02798343

HYDRAULIC SYSTEM

332-6408 VALVE & MTG GP-SOLENOID

S/N: SJW1-UP
12-VOLT
PART OF 369-5665 LINES GP-LOAD CONTROL VALVE
AN ATTACHMENT

SMCS-4805, 5479 **i04334994**

NOTE	REF NO	GRAPHIC REF	PART NUMBER	QTY	PART NAME 1 2 3 4 5 6 (PRODUCT LEVEL)	SEE PAGE
	1	1	**274-8035**	1	COIL AS (12-VOLT)	
	2	1	**168-1777**	1	VALVE AS (QUICK COUPLER)	
	3	1	**168-1779**	1	KIT-SEAL	

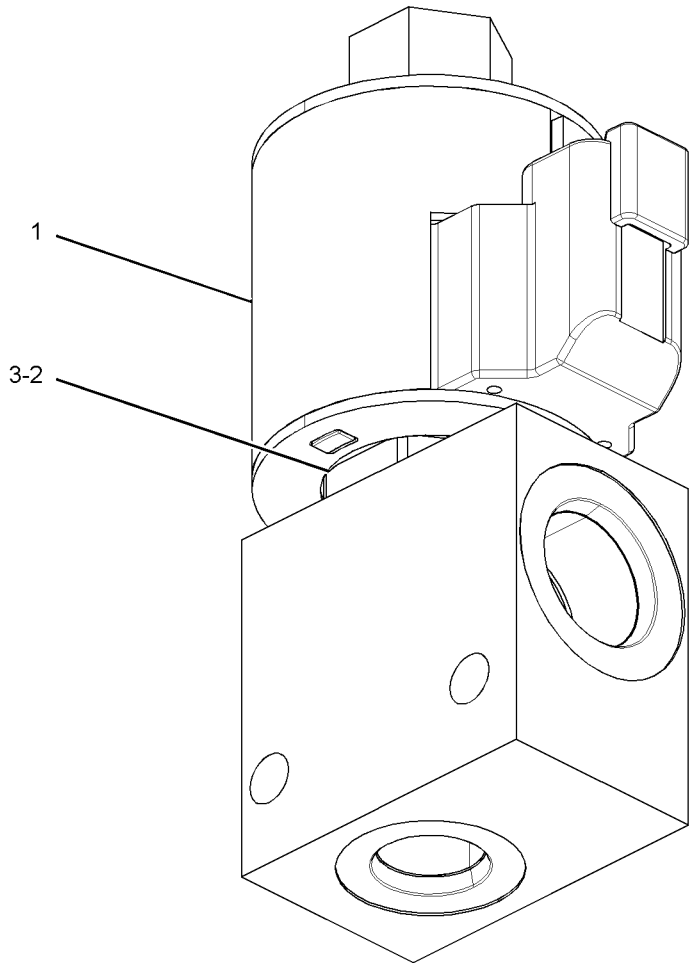

GRAPHIC #1 **<END>** g01790793

HYDRAULIC SYSTEM

373-4266 VALVE AR-BANK 3

S/N: SJW1-UP
FOR USE WITH PIN ON, GP LOADER BUCKETS
AN ATTACHMENT

SMCS-5051 **i04623312**

NOTE	PART NUMBER	QTY	PART NAME 1 2 3 4 5 6 (PRODUCT LEVEL)	SEE PAGE
Y	*353-1374*	1	ACCUMULATOR GP-HYDRAULIC	356
Y	*334-3569*	1	CONTROL GP-HYDRAULIC HAND (LOADER)	546
Y	*356-4106*	1	FLOORPLATE GP	333
Y	*337-9811*	1	LINES GP-LIFT & TILT	401
Y	*337-9810*	1	LINES GP-LIFT CYLINDER (PARALLEL LIFT)	403
Y	*353-1385*	1	MOUNTING GP-BUCKET (PARALLEL LIFT)	524
Y	*337-9713*	1	VALVE & MTG GP-BANK	438
Y	*337-9720*	1	VALVE & MTG GP-BANK	439
Y	*385-0559*	1	WIRING GP-KICKOUT & POSITIONER (RETURN TO DIG)	155
Y	*357-3205*	1	WIRING GP-REAR (SIDESHIFT)	173

Y-SEPARATE ILLUSTRATION

<END>

373-4267 VALVE AR-BANK 3

S/N: SJW1-UP
PART OF 389-3761, 389-3762 DISTRIBUTION AR
FOR USE WITH PIN ON, GP/MP LOADER BUCKET
AN ATTACHMENT

SMCS-5051 **i04623310**

NOTE	PART NUMBER	QTY	PART NAME 1 2 3 4 5 6 (PRODUCT LEVEL)	SEE PAGE
Y	*353-1374*	1	ACCUMULATOR GP-HYDRAULIC	356
Y	*331-9945*	1	CONTROL GP-HYDRAULIC HAND (LOADER)	544
Y	*356-4106*	1	FLOORPLATE GP	333
Y	*337-9812*	1	LINES GP-AUXILIARY HYDRAULIC (PARALLEL LIFT)	380
Y	*337-9811*	1	LINES GP-LIFT & TILT	401
Y	*337-9810*	1	LINES GP-LIFT CYLINDER (PARALLEL LIFT)	403
Y	*353-1385*	1	MOUNTING GP-BUCKET (PARALLEL LIFT)	524
Y	*337-9713*	1	VALVE & MTG GP-BANK	438
Y	*337-9720*	1	VALVE & MTG GP-BANK	439
Y	*385-0559*	1	WIRING GP-KICKOUT & POSITIONER (RETURN TO DIG)	155
Y	*357-3205*	1	WIRING GP-REAR (SIDESHIFT)	173

Y-SEPARATE ILLUSTRATION

<END>

HYDRAULIC SYSTEM

373-4268 VALVE AR-BANK 3

S/N: SJW1-UP
FOR USE WITH PIN ON, GP/MP LOADER BUCKET
AN ATTACHMENT

SMCS-5051 **i04623311**

NOTE	PART NUMBER	QTY	PART NAME 1 2 3 4 5 6 (PRODUCT LEVEL)	SEE PAGE
Y	*353-1374*	1	ACCUMULATOR GP-HYDRAULIC	356
Y	*331-9945*	1	CONTROL GP-HYDRAULIC HAND (LOADER)	544
Y	*356-4106*	1	FLOORPLATE GP	333
Y	*337-9812*	1	LINES GP-AUXILIARY HYDRAULIC (PARALLEL LIFT)	380
Y	*337-9811*	1	LINES GP-LIFT & TILT	401
Y	*362-9359*	1	LINES GP-LIFT CYLINDER	404
Y	*353-1385*	1	MOUNTING GP-BUCKET (PARALLEL LIFT)	524
Y	*346-7487*	1	SWITCH GP-DISCONNECT	135
Y	*337-9713*	1	VALVE & MTG GP-BANK	438
Y	*337-9720*	1	VALVE & MTG GP-BANK	439
Y	*357-3221*	1	WIRING GP-KICKOUT & POSITIONER (PARALLEL LIFT)	153
Y	*357-3248*	1	WIRING GP-LOAD CONTROL	157
Y	*357-3205*	1	WIRING GP-REAR (SIDESHIFT)	173

Y-SEPARATE ILLUSTRATION

<END>

359-7209 VALVE GP-BANK 3—MECHANICAL

S/N: SJW1-UP

PART OF 337-9713 VALVE & MTG GP-BANK

AN ATTACHMENT

SMCS-5051 **i04623531**

NOTE	REF NO	GRAPHIC REF	PART NUMBER	QTY	PART NAME 1 2 3 4 5 6 (PRODUCT LEVEL)	SEE PAGE
	1	1	**6V-8978**	12	SEAL-O-RING	
	2	1	**363-9102**	1	VALVE GP-CONTROL (LIFT)	
	3	1	**363-9806**	1	VALVE GP-CONTROL (TILT)	
	4	1	**363-9104**	1	VALVE GP-CONTROL (AUXILIARY)	
	5	1	**308-2160**	1	COVER GP	
	6	1	**308-2161**	1	KIT-FASTENER (BANK VALVE)	
					(INCLUDES TIE RODS & LOCKNUTS)	
	7	1	**4J-9535**	4	SEAL-O-RING	
	8	1	**363-9783**	1	MANIFOLD GP-CONTROL (INLET)	

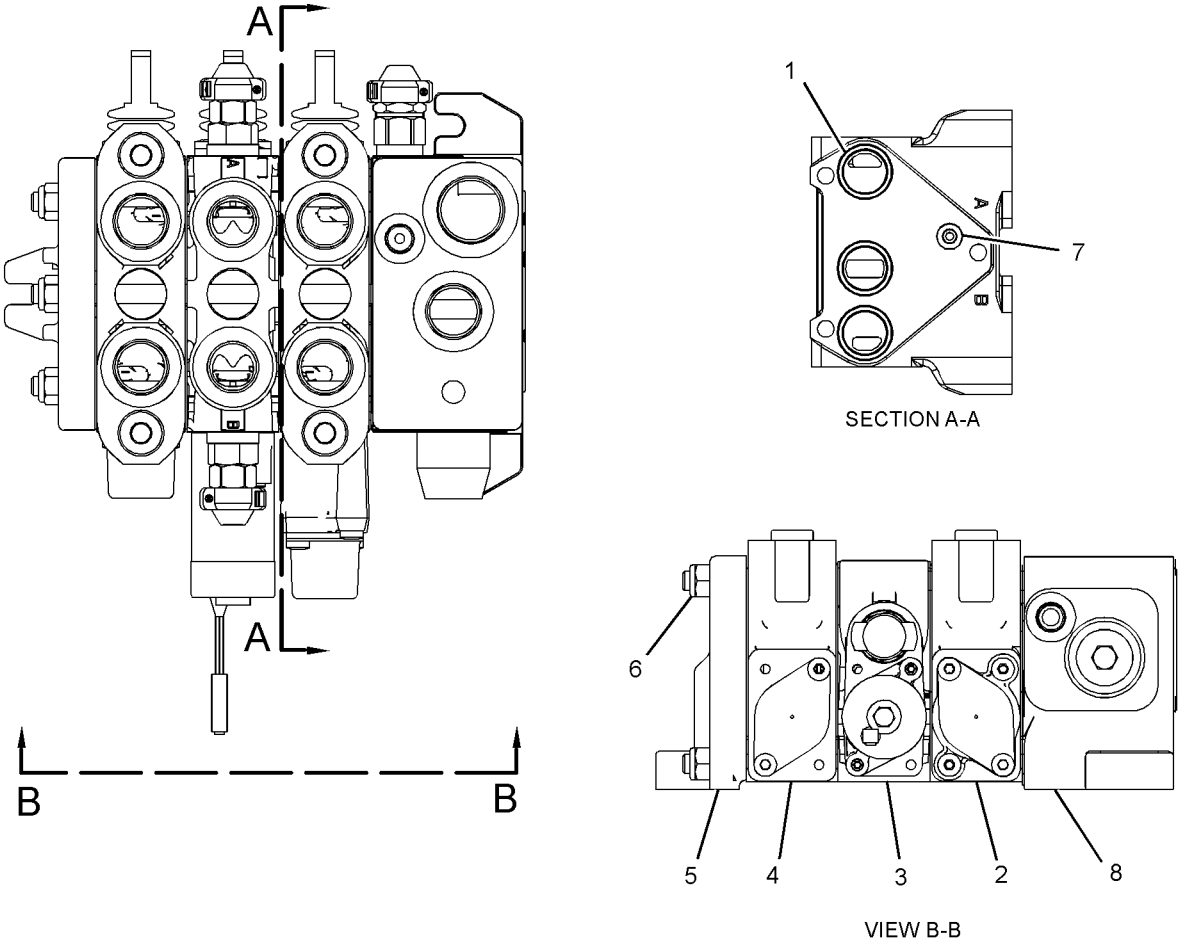

GRAPHIC #1 **<END>** g02823596

IMPLEMENTS

337-9846 ARM GP-LIFT

S/N: SJW1-UP

PART OF 340-1701 LOADER AR

SMCS-6118, 6119 **i04549413**

NOTE	REF NO	GRAPHIC REF	PART NUMBER	QTY	PART NAME 1 2 3 4 5 6 (PRODUCT LEVEL)	SEE PAGE
B	1	1,2	**111-4337**	40	WASHER (46X70X1-MM THK)	
B	2	1	**128-7903**	2	SPACER (61X114.3X3-MM THK)	
B	3	1	**128-7905**	3	SPACER (61X114.3X1-MM THK)	
	4	1	**340-1789**	1	ARM & BEARING AS	
	4A	1	**9R-0411**	12	BUSHING	
	5	1	**341-6152**	1	PIN	
	6	2	**358-4817**	2	LINK AS	
					(EACH INCLUDES)	
	6A	2	**9R-0153**	2	BUSHING	
	6B	2	**9R-3700**	2	BUSHING	
	7	2	**358-4842**	4	PLATE	
	8	2	**358-5379**	2	LINK AS	
					(EACH INCLUDES)	
	8A	2	**9R-0153**	4	BUSHING	
	9	2	**358-5381**	4	PLATE	
	10	2	**360-2813**	6	PIN	
	11	2	**360-2814**	4	PIN	
	12	1,2	**360-2815**	2	PIN	
	13	1,2	**360-2816**	4	PIN	
	14	2	**360-2820**	4	SPACER (46X63.5X22-MM THK)	
	16	1	**370-0495**	8	NUT-SPECIAL (M8X1.25-THD)	
	17	1	**372-5024**	2	PLATE	
	18	1	**372-5085**	2	PIN AS	
B	19	1,2	**373-8390**	8	SHIM (1-MM THK)	
	20	2	**3B-8488**	2	FITTING-GREASE	
	21	1,2	**3B-8489**	22	FITTING-GREASE	
	22	1,2	**6V-3213**	24	RING-RETAINING	
	23	1,2	**6V-4364**	4	RING-RETAINING	
M	24	1,2	**6V-7744**	4	LOCKNUT (M10X1.5-THD)	
B	25	1,2	**7X-0542**	10	WASHER-HARD (51X74X3-MM THK)	
	26	1	**7X-0590**	2	WASHER-HARD (13.5X44.5X6-MM THK)	
M	27	1	**8T-4139**	6	BOLT (M12X1.75X30-MM)	
	28	1	**8T-4223**	4	WASHER-HARD (13.5X25.5X3-MM THK)	
B	29	1,2	**9R-0158**	25	WASHER (46X69X3-MM THK)	
M	30	1,2	**9X-2158**	4	BOLT-SOCKET HEAD (M10X1.5X90-MM)	

B-USE AS REQUIRED
M-METRIC PART

337-9846 **ARM GP-LIFT** *(contd.)* **i04549413**

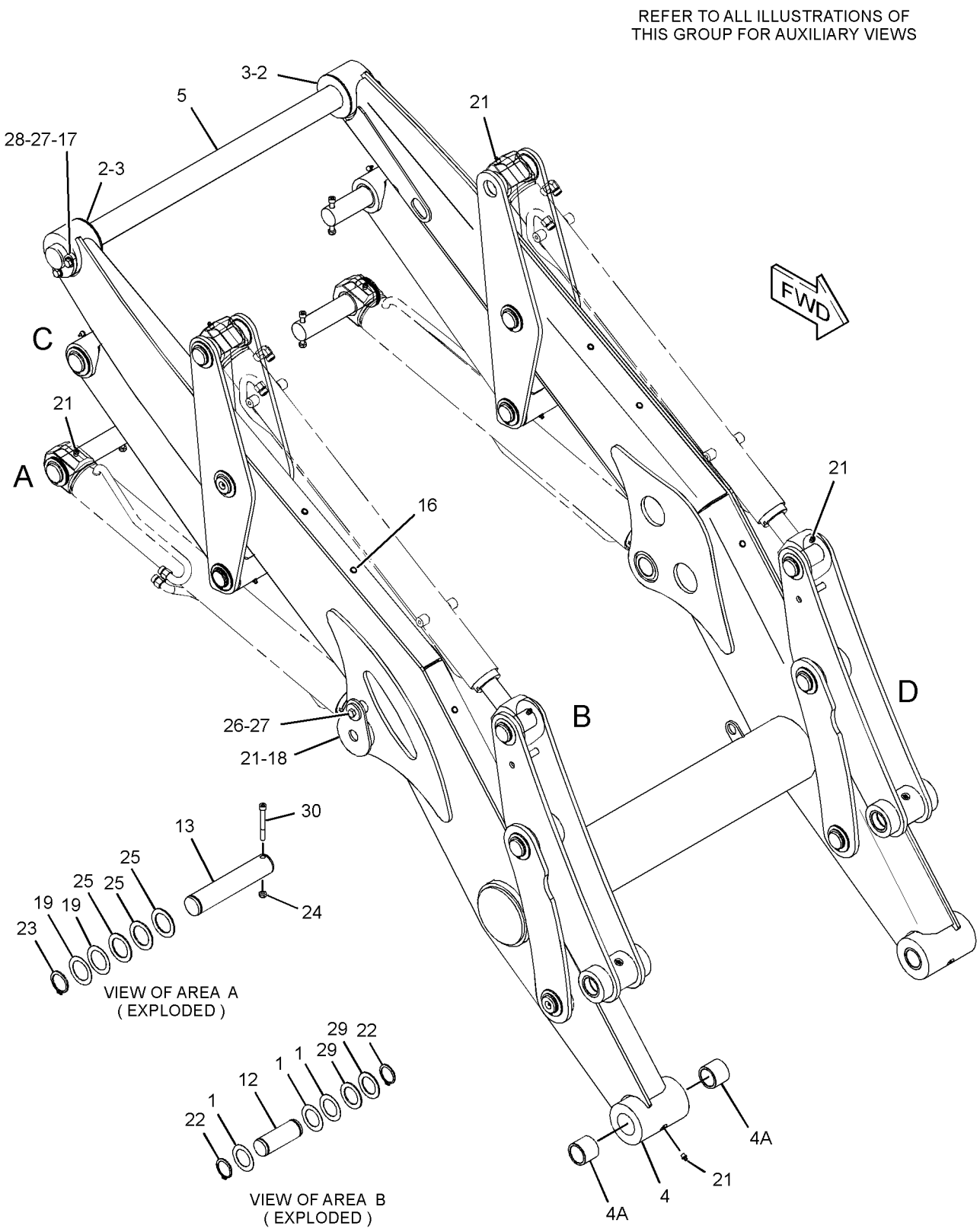

GRAPHIC #1 g02805079

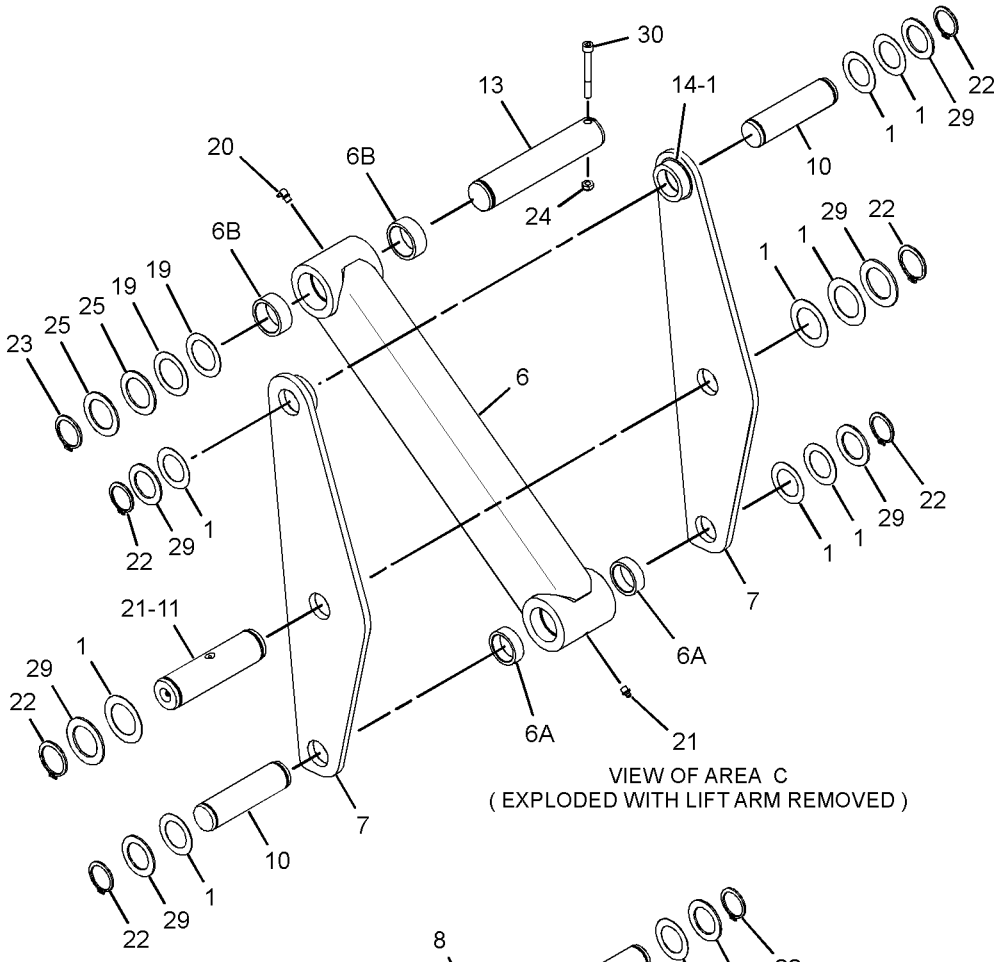

VIEW OF AREA C
(EXPLODED WITH LIFT ARM REMOVED)

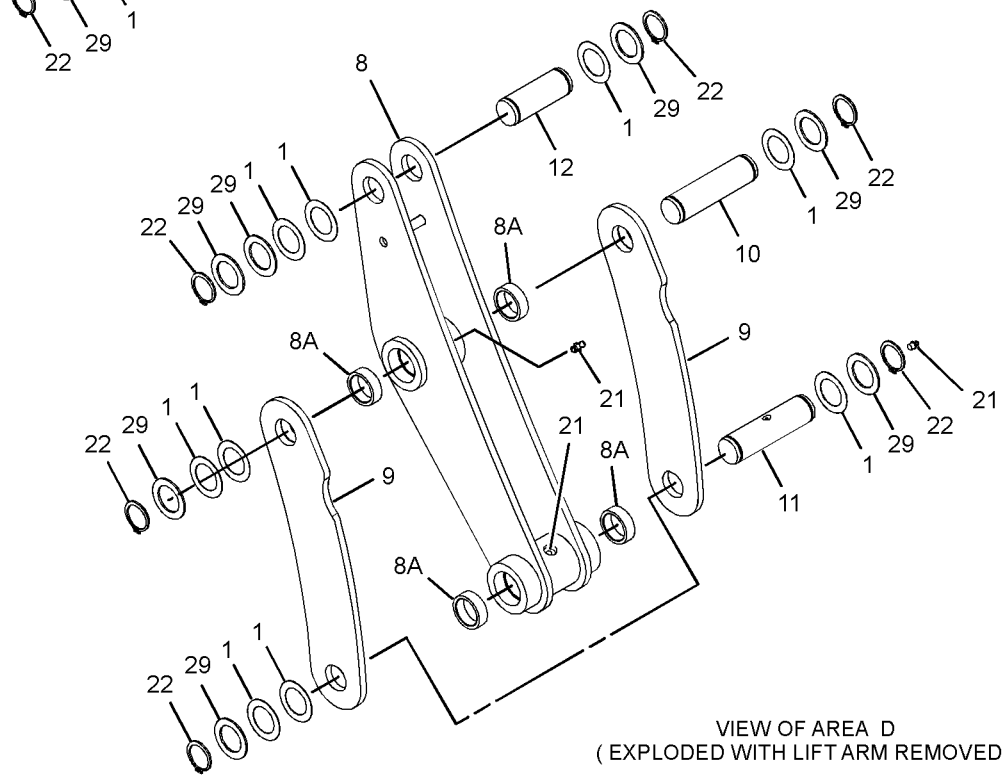

VIEW OF AREA D
(EXPLODED WITH LIFT ARM REMOVED)

GRAPHIC #2 **<END>** g02807103

324-0548 BOOM GP

S/N: SJW1-UP

PART OF 340-1733, 340-1734 BACKHOE AR-EXTENDABLE STICK, 340-1732 BACKHOE AR-STANDARD STICK

AN ATTACHMENT

SMCS-6501 **i04629955**

NOTE	REF NO	GRAPHIC REF	PART NUMBER	QTY	PART NAME 1 2 3 4 5 6 (PRODUCT LEVEL)	SEE PAGE
B	1	1	**9R-0481**	2	WASHER (71X110X4-MM THK)	
B	2	1	**9R-8291**	2	SPACER (66X125X1-MM THK)	
	3	1	**190-4374**	2	WASHER (38X60X2.5-MM THK)	
M	4	1	**246-7853**	6	NUT-SPECIAL (M8X1.25-THD)	
	5	1	**358-2307**	1	BOOM AS	
	5A	1	**213-6683**	2	BUSHING	
	6	1	**316-6945**	1	PIN	
	7	1	**320-4725**	1	PIN AS	
	8	1	**322-3736**	1	PIN-BOOM LOCK	
	9	1	**095-7950**	2	RING-RETAINING	
	10	1	**115-6433**	1	WASHER (11X50X6-MM THK)	
	11	1	**3B-8488**	4	FITTING-GREASE	
	12	1	**3B-8489**	2	FITTING-GREASE	
	13	1	**095-0924**	2	RING-RETAINING	
M	14	1	**8T-4136**	1	BOLT (M10X1.5X25-MM)	

B-USE AS REQUIRED
M-METRIC PART

324-0548 **BOOM GP** ***(contd.)*** **i04629955**

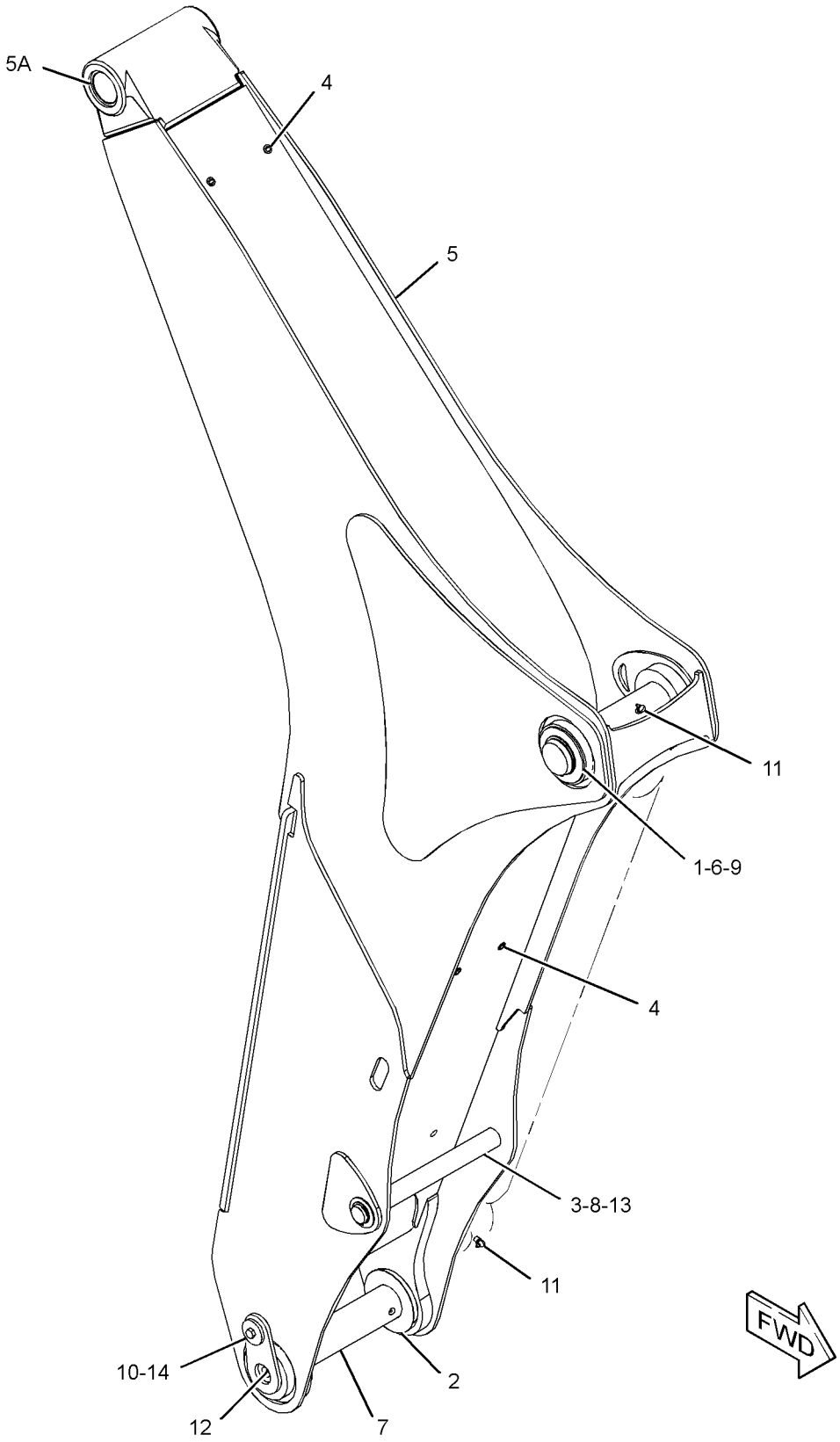

GRAPHIC #1 **<END>** g02789797

337-9841 BRACE GP-LIFT CYLINDER

S/N: SJW1-UP

PART OF 340-1701 LOADER AR

SMCS-7507 **i04553589**

NOTE	REF NO	GRAPHIC REF	PART NUMBER	QTY	PART NAME 1 2 3 4 5 6 (PRODUCT LEVEL)	SEE PAGE
	1	1	**118-1348**	1	PIN	
	2	1	**371-7649**	1	PLATE	
	3	1	**371-9284**	1	PLATE AS	
	4	1	**377-0774**	1	BLOCK AS	
	5	1	**389-1833**	1	BRACE AS	
		1	**376-8918**	1	BRACE	
	6	1	**5P-4116**	1	WASHER-HARD (8.8X20.5X2-MM THK)	
	7	1	**8T-4121**	2	WASHER-HARD (11X21X2.5-MM THK)	
M	8	1	**8T-4137**	2	BOLT (M10X1.5X20-MM)	
M	9	1	**8T-4200**	1	BOLT (M8X1.25X16-MM)	
	10	1	**9R-5301**	1	PIN-COTTER	

M-METRIC PART

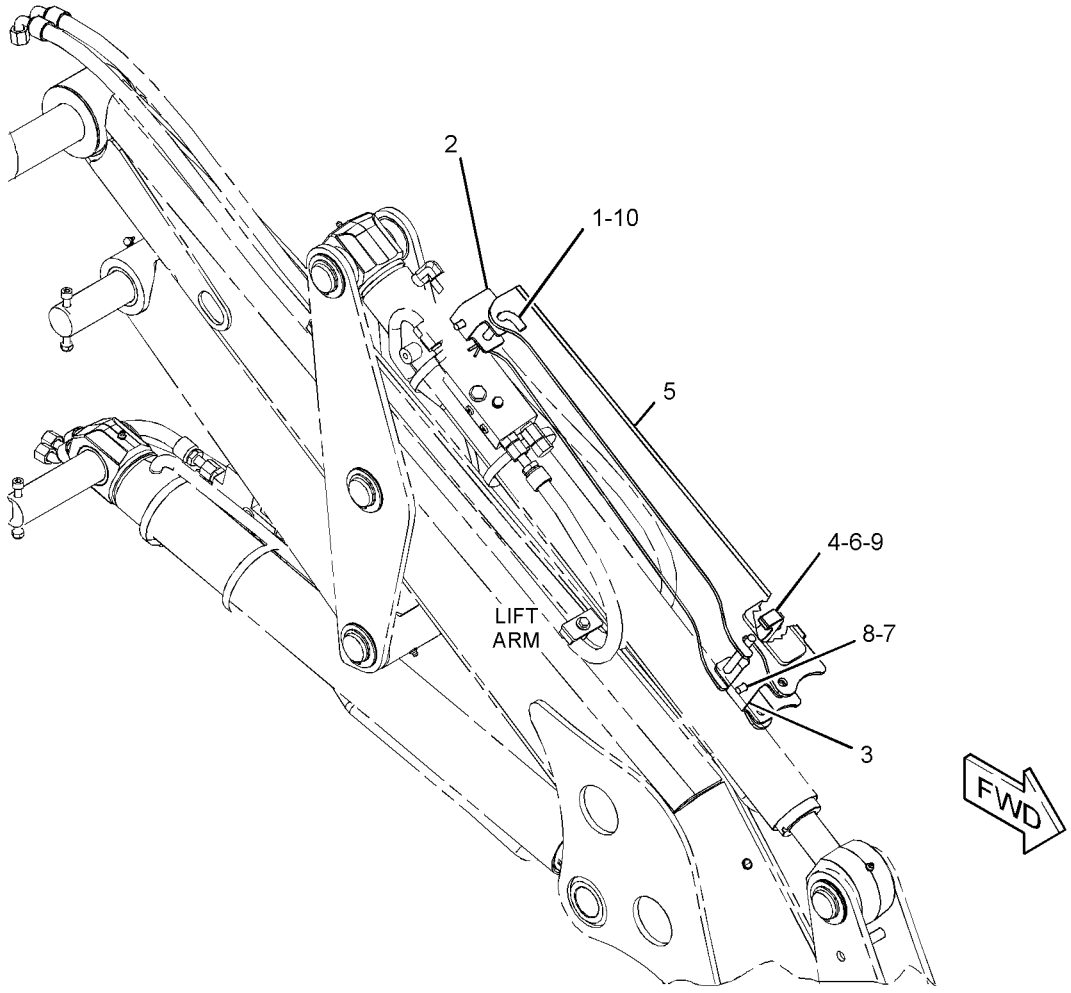

GRAPHIC #1 **<END>** g02808097

IMPLEMENTS

340-1743 LINKAGE AR

S/N: SJW1-UP
FOR USE WITH 340-1734—PAGE 1
AN ATTACHMENT

SMCS-6000 **i04583129**

NOTE	PART NUMBER	QTY	PART NAME 1 2 3 4 5 6 (PRODUCT LEVEL)	SEE PAGE
Y	*343-2901*	1	COVER GP-PROTECTION	328
Y	*365-3331*	1	LINES GP-BOOM	396
Y	*321-7192*	1	LINES GP-STICK	428
Y	*348-5464*	1	LINKAGE GP-BACKHOE BUCKET (WITHOUT LIFTING EYE)	456

Y-SEPARATE ILLUSTRATION

<END>

340-1750 LINKAGE AR

S/N: SJW1-UP
14-FT
FOR USE WITH 340-1734—PAGE 1
AN ATTACHMENT

SMCS-6000 **i04583130**

NOTE	PART NUMBER	QTY	PART NAME 1 2 3 4 5 6 (PRODUCT LEVEL)	SEE PAGE
Y	*367-9973*	1	COVER GP-PROTECTION	329
Y	*365-3338*	1	LINES GP-LOAD CONTROL VALVE (BOOM, STICK)	407
Y	*369-5665*	1	LINES GP-LOAD CONTROL VALVE (BOOM CYLINDER HEAD END)	410
Y	*334-0752*	1	LINKAGE GP-BACKHOE BUCKET	454
Y	*357-3233*	1	WIRING GP-SENSOR (OBJECT HANDLING)	181

Y-SEPARATE ILLUSTRATION

<END>

340-1740 LINKAGE AR-BUCKET—WITHOUT LIFTING EYE

S/N: SJW1-UP
PART OF 389-3761, 389-3762 DISTRIBUTION AR
FOR USE WITH 340-1732—PAGE 2, 340-1733—PAGE 1
AN ATTACHMENT

SMCS-6513 **i04608670**

NOTE	PART NUMBER	QTY	PART NAME 1 2 3 4 5 6 (PRODUCT LEVEL)	SEE PAGE
Y	*343-2901*	1	COVER GP-PROTECTION	328
Y	*365-3331*	1	LINES GP-BOOM	396
Y	*321-7192*	1	LINES GP-STICK	428
Y	*348-5465*	1	LINKAGE GP-BACKHOE BUCKET (WITHOUT LIFTING EYE)	457

Y-SEPARATE ILLUSTRATION

<END>

340-1741 LINKAGE AR-BUCKET—WITH LIFTING EYE

S/N: SJW1-UP

FOR USE WITH 340-1732—PAGE 2, 340-1733—PAGE 1

AN ATTACHMENT

SMCS-6513 **i04608715**

NOTE	PART NUMBER	QTY	PART NAME 1 2 3 4 5 6 (PRODUCT LEVEL)	SEE PAGE
Y	*367-9973*	1	COVER GP-PROTECTION	329
Y	*365-3338*	1	LINES GP-LOAD CONTROL VALVE (BOOM, STICK)	407
Y	*369-5665*	1	LINES GP-LOAD CONTROL VALVE (BOOM CYLINDER HEAD END)	410
Y	*334-0751*	1	LINKAGE GP-BACKHOE BUCKET (LIFTING)	452
Y	*357-3233*	1	WIRING GP-SENSOR (OBJECT HANDLING)	181

Y-SEPARATE ILLUSTRATION

<END>

334-0751 LINKAGE GP-BACKHOE BUCKET—LIFTING

S/N: SJW1-UP
PART OF 340-1741 LINKAGE AR-BUCKET
AN ATTACHMENT

SMCS-6513 **i04506871**

NOTE	REF NO	GRAPHIC REF	PART NUMBER	QTY	PART NAME 1 2 3 4 5 6 (PRODUCT LEVEL)	SEE PAGE
	1	1	**9R-0158**	2	WASHER (46X69X3-MM THK)	
	2	1	**9R-1510**	2	WASHER (51X82X4-MM THK)	
B	3	1	**111-4337**	2	WASHER (46X70X1-MM THK)	
	4	1	**154-5280**	1	PIN	
B	5	1	**210-1707**	2	SHIM (1-MM THK)	
B	6	1	**220-7108**	6	WASHER (51X85X1-MM THK)	
	7	1	**320-9164**	1	PIN	
	8	1	**320-9241**	1	PIN	
	9	1	**328-5234**	1	PIN	
C	10	1	**359-4737**	1	LINK AS	
	10A	1	**9R-0139**	2	BUSHING	
	10B	1	**213-6703**	2	BEARING	
	11	1	**330-5738**	1	LINK	
	12	1	**330-5739**	1	LINK	
	13	1	**096-5516**	2	RING-RETAINING	
	14	1	**154-5279**	1	PIN	
	15	1	**3B-5319**	4	PIN-COTTER	
	16	1	**3B-8489**	4	FITTING-GREASE	
	17	1	**8T-4241**	4	RING-RETAINING (EXTERNAL)	

B-USE AS REQUIRED
C-CHANGE FROM PREVIOUS TYPE

334-0751 **LINKAGE GP-BACKHOE BUCKET** *(contd.)* **i04506871**

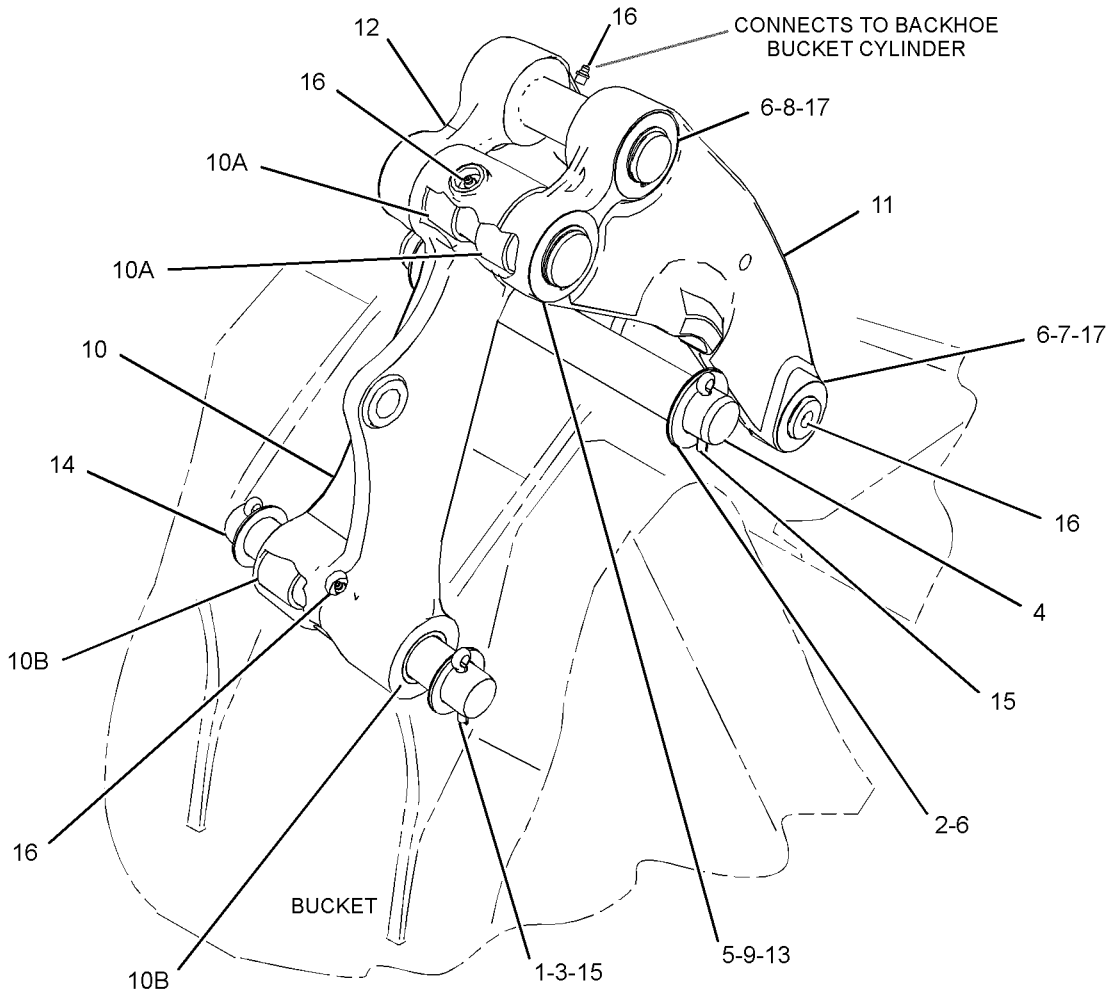

GRAPHIC #1 **<END>** g02793104

IMPLEMENTS

334-0752 LINKAGE GP-BACKHOE BUCKET—WITH LIFTING EYE

S/N: SJW1-UP
PART OF 340-1750 LINKAGE AR
AN ATTACHMENT

SMCS-6513 **i03920822**

NOTE	REF NO	GRAPHIC REF	PART NUMBER	QTY	PART NAME 1 2 3 4 5 6 (PRODUCT LEVEL)	SEE PAGE
	1	1	**9R-0158**	2	WASHER (46X69X3-MM THK)	
	2	1	**9R-9105**	2	PIN AS	
B	3	1	**111-4337**	4	WASHER (46X70X1-MM THK)	
B	4	1	**210-1707**	2	SHIM (1-MM THK)	
B	5	1	**220-7108**	4	WASHER (51X85X1-MM THK)	
	6	1	**308-4315**	2	SPACER (51X115X51-MM THK)	
Y	7	1	**356-4606**	1	LINKAGE GP-BUCKET (LIFTING)	459
	8	1	**332-2578**	1	PLATE AS (LH)	
	9	1	**332-2579**	1	PLATE AS (RH)	
	10	1	**333-0790**	1	PIN	
	11	1	**333-0791**	1	PIN	
	12	1	**333-0792**	1	PIN	
	13	1	**096-5516**	2	RING-RETAINING	
	14	1	**3B-5319**	2	PIN-COTTER	
	15	1	**3B-8489**	4	FITTING-GREASE	
	16	1	**8T-4241**	4	RING-RETAINING	

B-USE AS REQUIRED
Y-SEPARATE ILLUSTRATION

334-0752 **LINKAGE GP-BACKHOE BUCKET** *(contd.)* **i03920822**

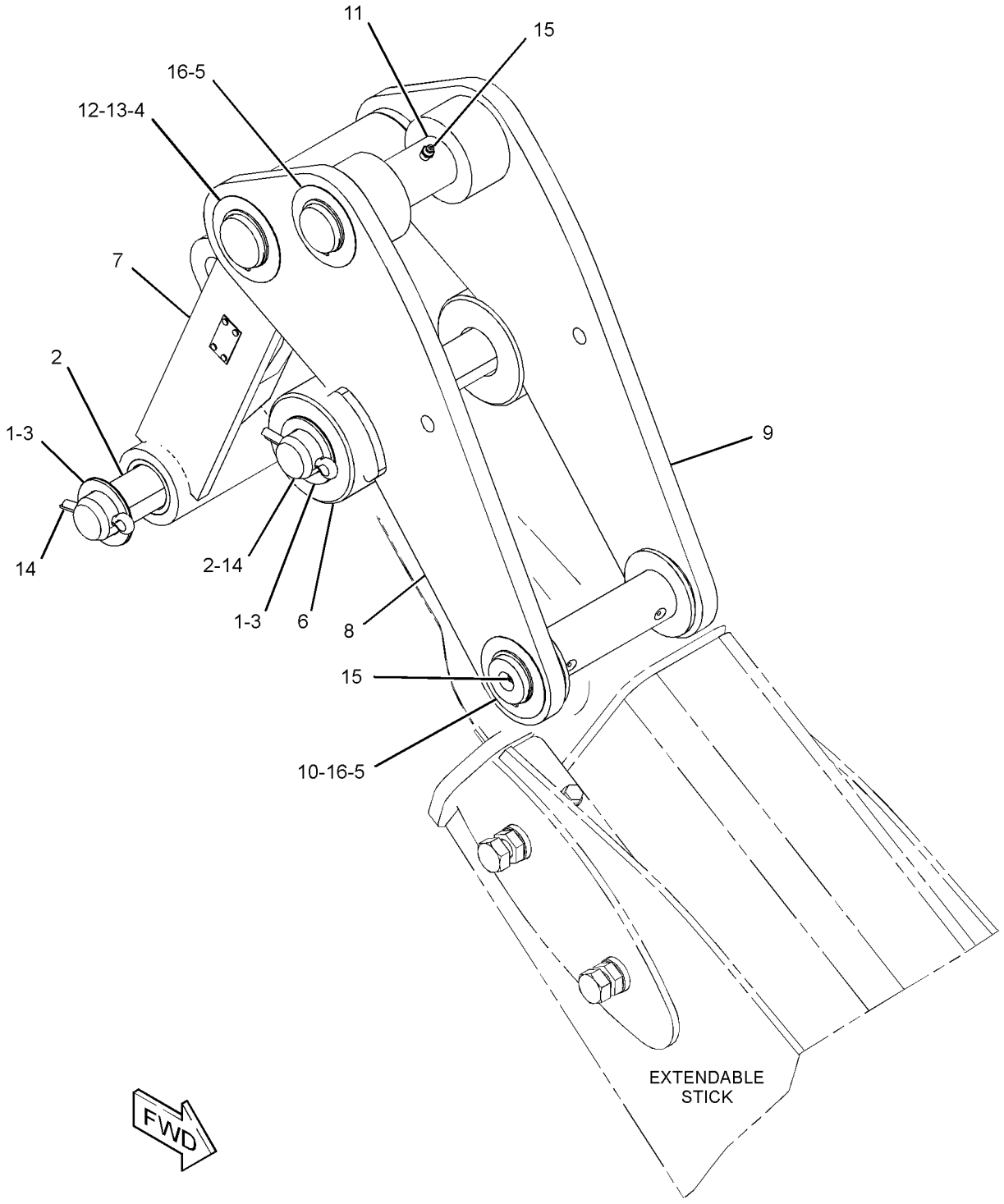

GRAPHIC #1 **<END>** g02139595

348-5464 LINKAGE GP-BACKHOE BUCKET–

WITHOUT LIFTING EYE

S/N: SJW1-UP

PART OF 340-1743 LINKAGE AR

AN ATTACHMENT

SMCS-6513 **i03920789**

NOTE	REF NO	GRAPHIC REF	PART NUMBER	QTY	PART NAME 1 2 3 4 5 6 (PRODUCT LEVEL)	SEE PAGE
	1	1	**9R-0158**	2	WASHER (46X69X3-MM THK)	
	2	1	**9R-9105**	2	PIN AS	
B	3	1	**111-4337**	4	WASHER (46X70X1-MM THK)	
B	4	1	**210-1707**	2	SHIM (1-MM THK)	
B	5	1	**220-7108**	4	WASHER (51X85X1-MM THK)	
	6	1	**308-4315**	2	SPACER (51X115X51-MM THK)	
	7	1	**332-2578**	1	PLATE AS (LH)	
	8	1	**332-2579**	1	PLATE AS (RH)	
	9	1	**333-0790**	1	PIN	
	10	1	**333-0791**	1	PIN	
	11	1	**333-0792**	1	PIN	
	12	1	**348-5460**	1	LINKAGE GP-BUCKET (WITHOUT LIFTING EYE)	
	12A	1	**9R-0147**	2	BUSHING	
	12B	1	**9R-0170**	2	BUSHING	
	13	1	**096-5516**	2	RING-RETAINING	
	14	1	**3B-5319**	2	PIN-COTTER	
	15	1	**3B-8489**	4	FITTING-GREASE	
	16	1	**8T-4241**	4	RING-RETAINING	

B-USE AS REQUIRED

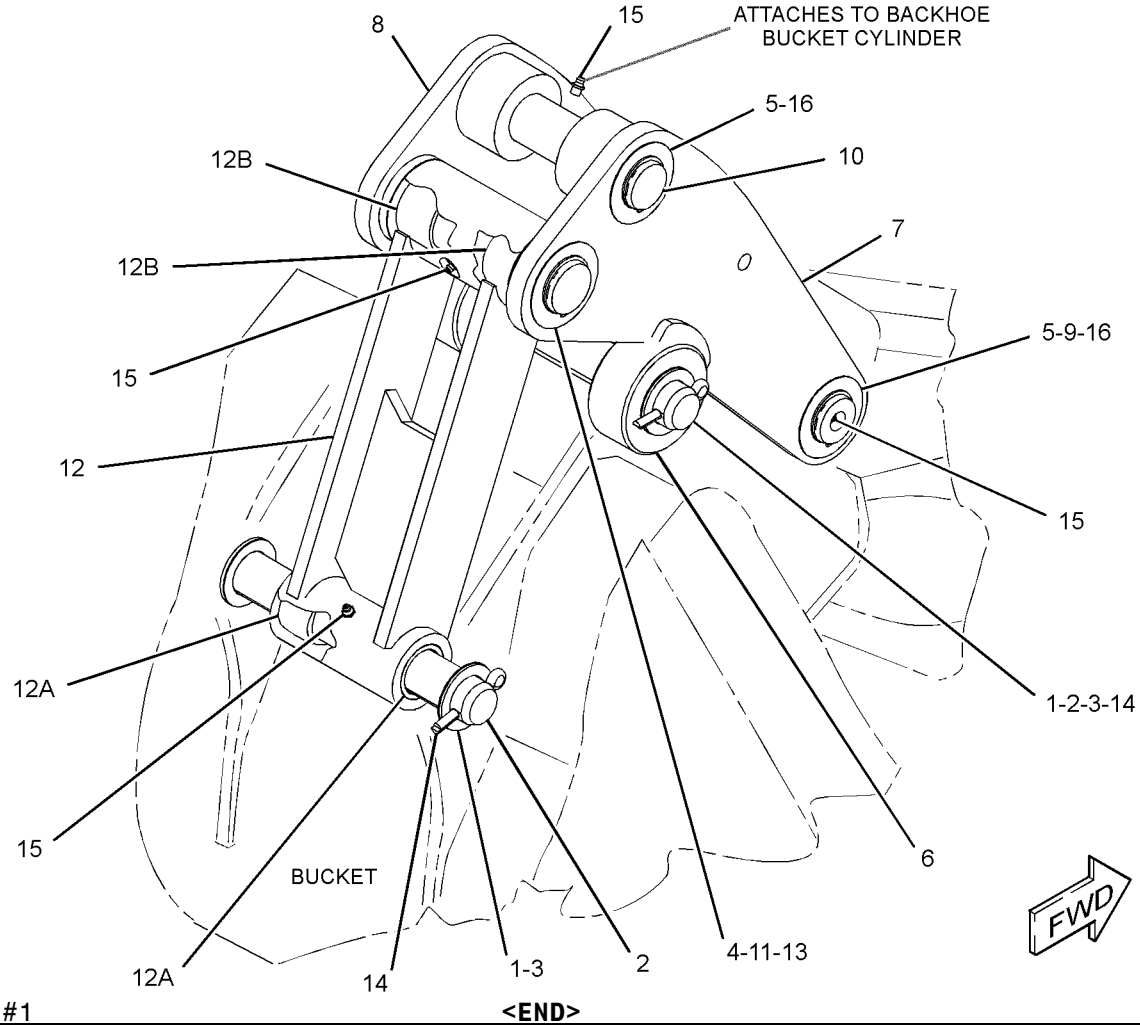

GRAPHIC #1 **<END>** g01994435

348-5465 LINKAGE GP-BACKHOE BUCKET–

WITHOUT LIFTING EYE

S/N: SJW1-UP

PART OF 340-1740 LINKAGE AR-BUCKET

AN ATTACHMENT

SMCS-6513 **i04454689**

NOTE	REF NO	GRAPHIC REF	PART NUMBER	QTY	PART NAME 1 2 3 4 5 6 (PRODUCT LEVEL)	SEE PAGE
	1	1	**9R-0158**	2	WASHER (46X69X3-MM THK)	
	2	1	**9R-1510**	2	WASHER (51X82X4-MM THK)	
B	3	1	**111-4337**	2	WASHER (46X70X1-MM THK)	
	4	1	**154-5280**	1	PIN	
B	5	1	**210-1707**	2	SHIM (1-MM THK)	
B	6	1	**220-7108**	6	WASHER (51X85X1-MM THK)	
	7	1	**320-9164**	1	PIN	
	8	1	**320-9241**	1	PIN	
	9	1	**328-5234**	1	PIN	
	10	1	**330-5738**	1	LINK	
	11	1	**330-5739**	1	LINK	
C	12	1	**359-4738**	1	LINK AS	
	12A	1	**9R-0170**	2	BUSHING	
	12B	1	**213-6703**	2	BEARING	
	13	1	**096-5516**	2	RING-RETAINING	
	14	1	**154-5279**	1	PIN	
	15	1	**3B-5319**	4	PIN-COTTER	
	16	1	**3B-8489**	4	FITTING-GREASE	
	17	1	**8T-4241**	4	RING-RETAINING (EXTERNAL)	

B-USE AS REQUIRED
C-CHANGE FROM PREVIOUS TYPE

348-5465 **LINKAGE GP-BACKHOE BUCKET** *(contd.)* **i04454689**

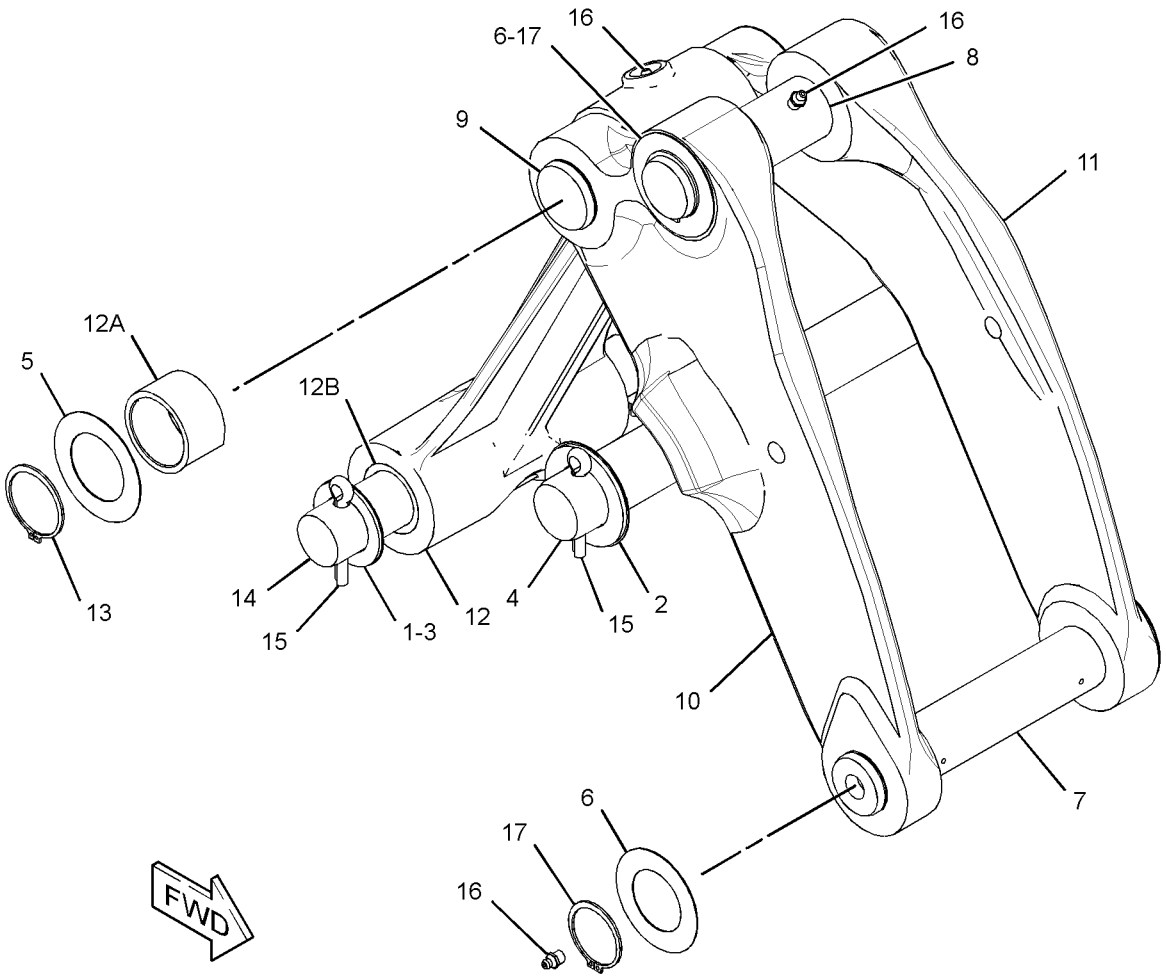

GRAPHIC #1 **<END>** g02827498

356-4606 LINKAGE GP-BUCKET–LIFTING

S/N: SJW1-UP

PART OF 334-0752 LINKAGE GP-BACKHOE BUCKET

AN ATTACHMENT

SMCS-6107, 6117, 6513 **i03879282**

NOTE	REF NO	GRAPHIC REF	PART NUMBER	QTY	PART NAME 1 2 3 4 5 6 (PRODUCT LEVEL)	SEE PAGE
	1	1	**331-8037**	1	LINKAGE GP-BUCKET (LIFTING)	
	1A	1	**9R-0147**	2	BUSHING	
	1B	1	**9R-0170**	2	BUSHING	

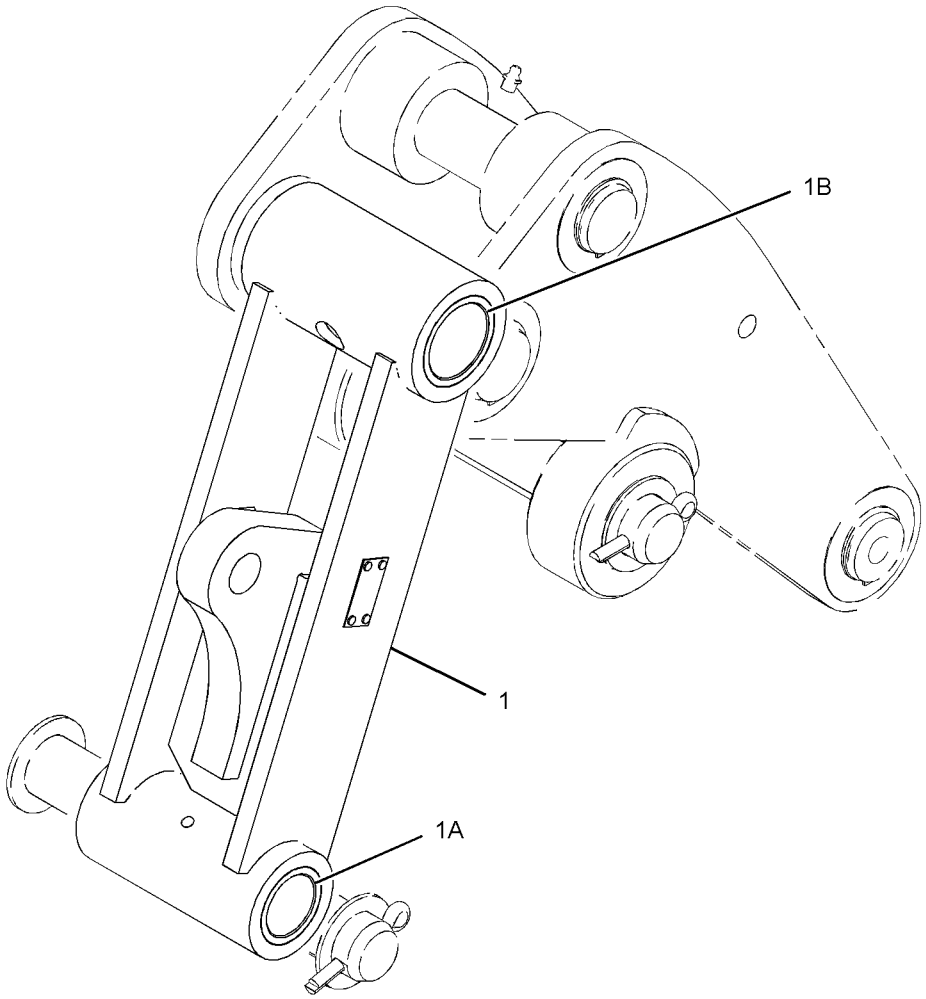

GRAPHIC #1 **<END>** g02139306

IMPLEMENTS

216-1238 LOCK GP-STABILIZER LEG

S/N: SJW1-UP
PART OF 341-3105 CONVERSION AR-CERTIFICATION
AN ATTACHMENT

SMCS-7222 **i04394896**

NOTE	REF NO	GRAPHIC REF	PART NUMBER	QTY	PART NAME 1 2 3 4 5 6 (PRODUCT LEVEL)	SEE PAGE
	1	1	**115-1858**	2	BRACKET	
	2	1	**231-3803**	2	CABLE AS	
B	3	1	**8T-4122**	2	WASHER-HARD (17X32X3.5-MM THK)	
BM	4	1	**8T-4132**	2	NUT (M16X2-THD)	
BM	5	1	**8T-4193**	2	BOLT (M16X2X50-MM)	
M	6	1	**5C-7261**	2	NUT (M8X1.25-THD)	
	7	1	**7X-0579**	2	WASHER-HARD (8.8X25.5X2-MM THK)	

B-USE AS REQUIRED
M-METRIC PART

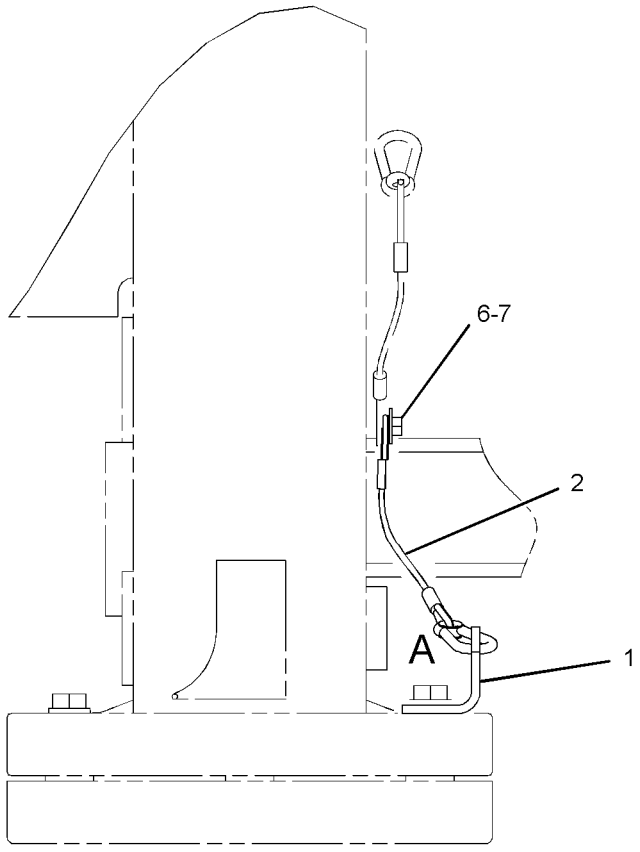

RIGHT SIDE VIEW

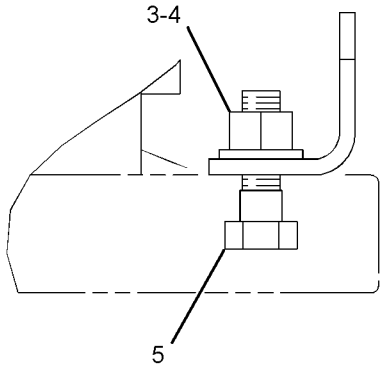

VIEW OF AREA A

GRAPHIC #1 **<END>** g02608177

252-4660 LOCK GP-TRANSPORT—BACKHOE BUCKET

S/N: SJW1-UP

PART OF 341-3107 CONVERSION AR-ROADING, 353-6953 LOCK GP-TRANSPORT AN ATTACHMENT

SMCS-7505 **i02210128**

NOTE	REF NO	GRAPHIC REF	PART NUMBER	QTY	PART NAME 1 2 3 4 5 6 (PRODUCT LEVEL)	SEE PAGE
	1	1	**9R-9028**	1	PIN	
	2	1	**252-4659**	1	CABLE AS	
	3	1	**9R-5301**	2	PIN-COTTER	

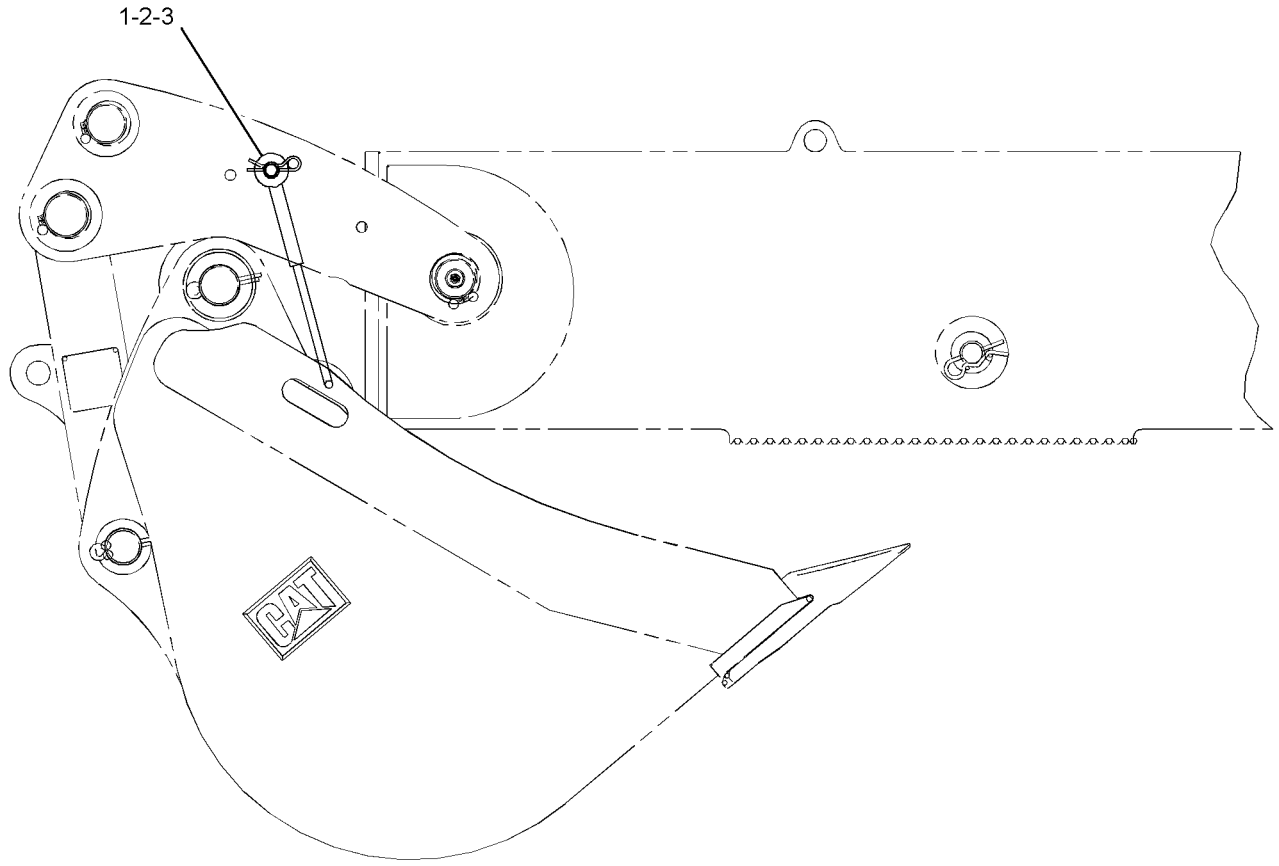

RIGHT SIDE VIEW

GRAPHIC #1 **<END>** g01116719

343-3428 LOCK GP-TRANSPORT

S/N: SJW1-UP
PART OF 353-6956 LOCK GP-TRANSPORT
AN ATTACHMENT

SMCS-7505 **i03775116**

NOTE	REF NO	GRAPHIC REF	PART NUMBER	QTY	PART NAME 1 2 3 4 5 6 (PRODUCT LEVEL)	SEE PAGE
	1	1	**118-1348**	1	PIN	
	2	1	**160-7599**	1	RESTRAINER-BUCKET	
	3	1	**349-3643**	1	BRACE	
	4	1	**9R-5301**	1	PIN-COTTER	

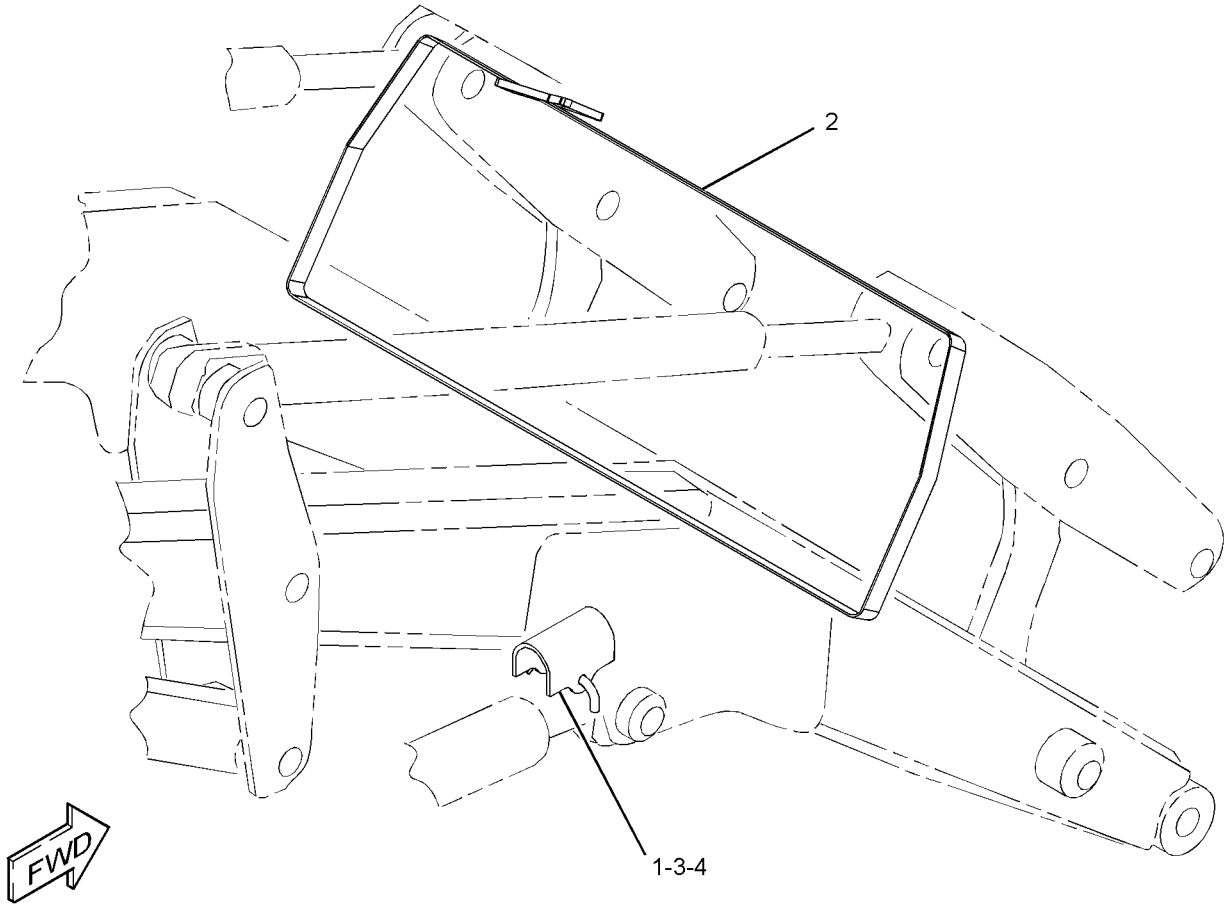

GRAPHIC #1 **<END>** g02107813

IMPLEMENTS

353-1418 LOCK GP-TRANSPORT—SIDESHIFT

S/N: SJW1-UP

PART OF 340-1733, 340-1734 BACKHOE AR-EXTENDABLE STICK, 340-1732 BACKHOE AR-STANDARD STICK

AN ATTACHMENT

SMCS-7505 **i04556138**

NOTE	REF NO	GRAPHIC REF	PART NUMBER	QTY	PART NAME 1 2 3 4 5 6 (PRODUCT LEVEL)	SEE PAGE
	1	1	**5P-7958**	1	SLEEVE-CABLE SPLICE	
	2	1	**134-0143**	1	CABLE	
	3	1	**214-4285**	2	PAD AS	
	4	1	**214-7043**	1	SPACER (6.15X7.94X10-MM THK)	
	5	1	**310-3933**	1	CABLE AS	
		1	**2R-0364**	1	RING-RETAINING	
		1	**4D-9517**	1	CLIP	
		1	**5D-6523**	1	CLIP	
		1	**8W-8909**	1	SLEEVE	
	6	1	**315-4533**	1	BRACKET AS	
	7	1	**317-4928**	1	PIN AS	
	8	1	**329-1329**	1	HOOK	
	9	1	**329-1330**	1	HOOK	
	10	1	**329-1331**	1	PIN	
	11	1	**370-8941**	1	PLATE AS	
M	12	1	**134-8273**	2	SCREW-FLAT HEAD (M10X1.5X25-MM)	
	13	1	**2B-0941**	1	SPACER (10.5X19X19-MM THK)	
	14	1	**3B-8489**	2	FITTING-GREASE	
M	15	1	**5A-3604**	2	BOLT-SOCKET HEAD (M8X1.25X25-MM)	
	16	1	**6E-1135**	2	PIN	
	17	1	**7X-3383**	2	WASHER (22X50X3-MM THK)	
	18	1	**8T-1887**	1	CLIP (SLOT)	
	19	1	**8T-1888**	1	CLIP (TAB)	
	20	1	**8T-4121**	4	WASHER-HARD (11X21X2.5-MM THK)	
M	21	1	**8T-4138**	1	BOLT (M6X1X20-MM)	
M	22	1	**8T-4186**	1	BOLT (M10X1.5X40-MM)	
M	23	1	**8T-4195**	2	BOLT (M10X1.5X30-MM)	
M	24	1	**8T-4196**	1	BOLT (M10X1.5X35-MM)	
	25	1	**8T-4224**	1	WASHER-HARD (8.8X16X2-MM THK)	
M	26	1	**8T-4908**	1	BOLT (M8X1.25X25-MM)	

M-METRIC PART

353-1418 **LOCK GP-TRANSPORT** *(contd.)* **i04556138**

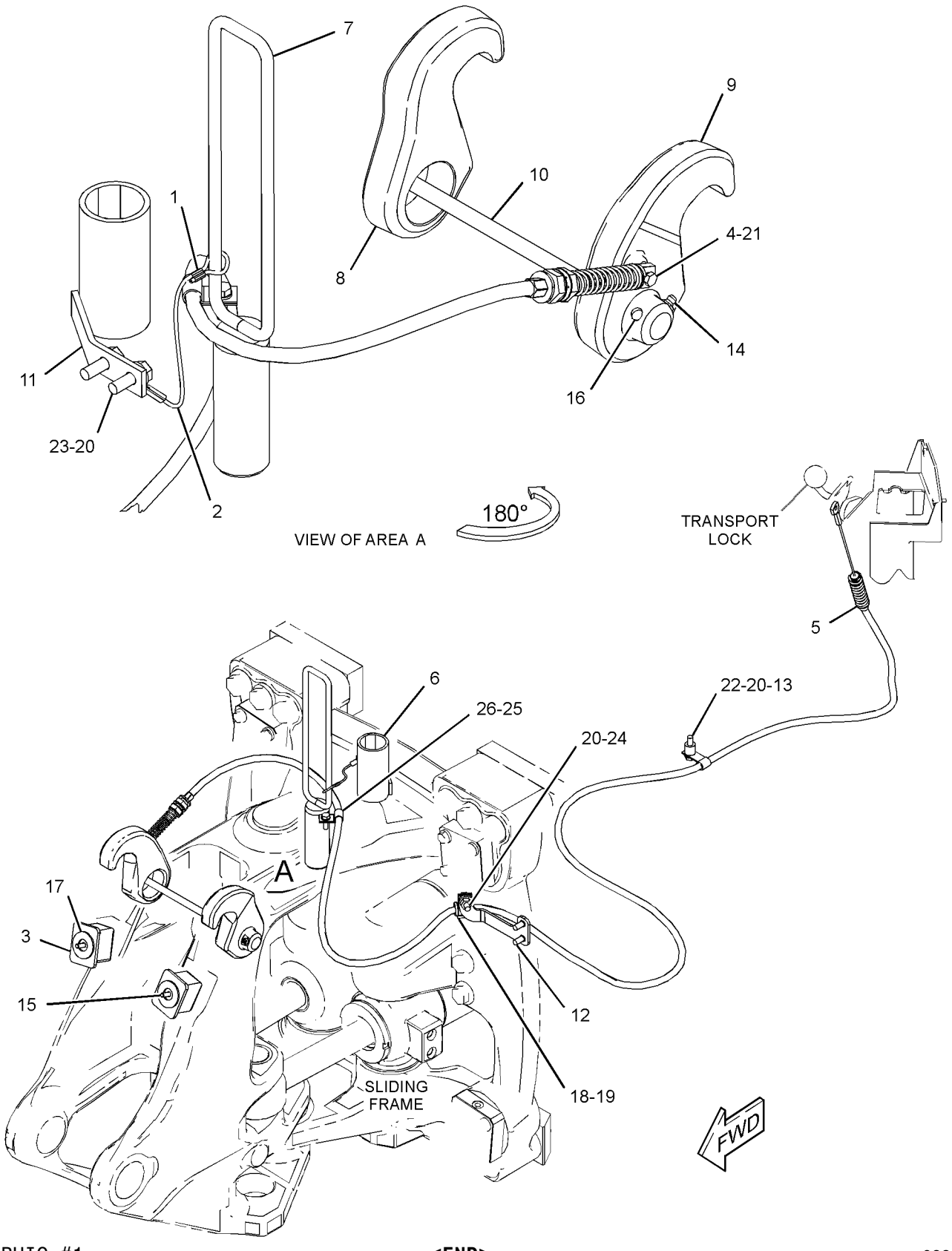

GRAPHIC #1 **<END>** g02828516

353-6953 LOCK GP-TRANSPORT

S/N: SJW1-UP
AN ATTACHMENT

SMCS-7505 **i03869598**

NOTE	PART NUMBER	QTY	PART NAME 1 2 3 4 5 6 (PRODUCT LEVEL)	SEE PAGE
Y	*252-4660*	1	LOCK GP-TRANSPORT (BACKHOE BUCKET)	461
Y-SEPARATE ILLUSTRATION				

<END>

353-6956 LOCK GP-TRANSPORT

S/N: SJW1-UP
AN ATTACHMENT

SMCS-7505 **i03920809**

NOTE	PART NUMBER	QTY	PART NAME 1 2 3 4 5 6 (PRODUCT LEVEL)	SEE PAGE
Y	*343-3428*	1	LOCK GP-TRANSPORT (LOADER)	462
Y-SEPARATE ILLUSTRATION				

<END>

374-6872 LOCK GP-TRANSPORT

S/N: SJW1-UP
PART OF 341-3107 CONVERSION AR-ROADING
AN ATTACHMENT

SMCS-7505 **i04609334**

NOTE	REF NO	GRAPHIC REF	PART NUMBER	QTY	PART NAME 1 2 3 4 5 6 (PRODUCT LEVEL)	SEE PAGE
	1	1	**160-7599**	1	RESTRAINER-BUCKET	
	2	1	**232-7612**	1	PIN	
	3	1	**377-0774**	1	BLOCK AS	
	4	1	**378-0598**	1	PLATE AS	
	5	1	**5P-4116**	1	WASHER-HARD (8.8X20.5X2-MM THK)	
M	6	1	**8T-4200**	1	BOLT (M8X1.25X16-MM)	
	7	1	**9R-5301**	1	PIN-COTTER	

M-METRIC PART

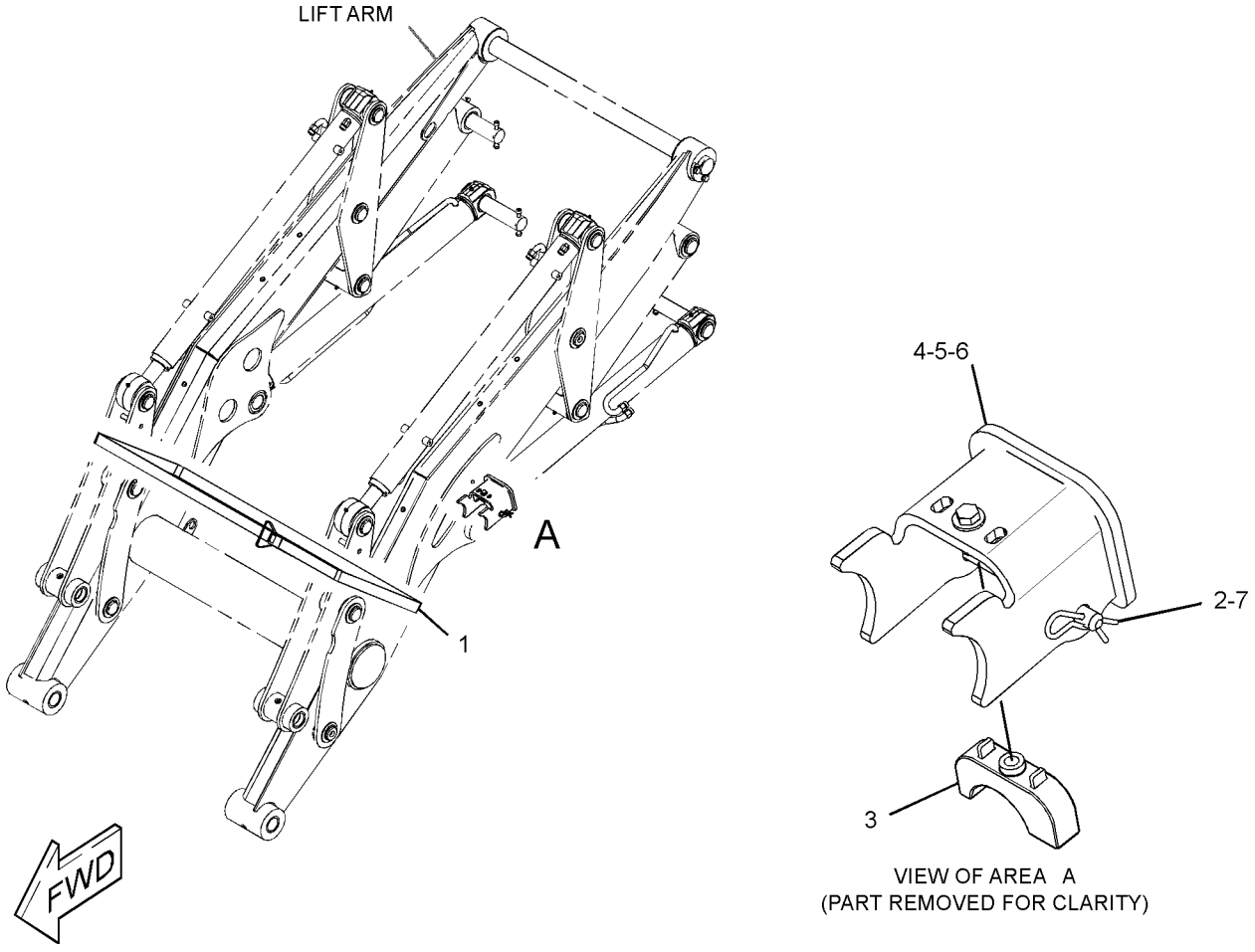

GRAPHIC #1 **<END>** g02798307

9R-0868 PAD GP-STABILIZER–STREET

S/N: SJW1-UP
PART OF 389-3761, 389-3762 DISTRIBUTION AR
FOR USE WITH 9R-1259 STABILIZER GP-SIDESHIFT
AN ATTACHMENT

SMCS-7222 **i01238045**

NOTE	REF NO	GRAPHIC REF	PART NUMBER	QTY	PART NAME 1 2 3 4 5 6 (PRODUCT LEVEL)	SEE PAGE
	1	1	**166-7870**	4	PAD AS-STABILIZER (STREET)	
M	2	1	**8T-4193**	12	BOLT (M16X2X50-MM)	
	3	1	**9X-8257**	12	WASHER (17.5X30X3.5-MM THK)	

M-METRIC PART

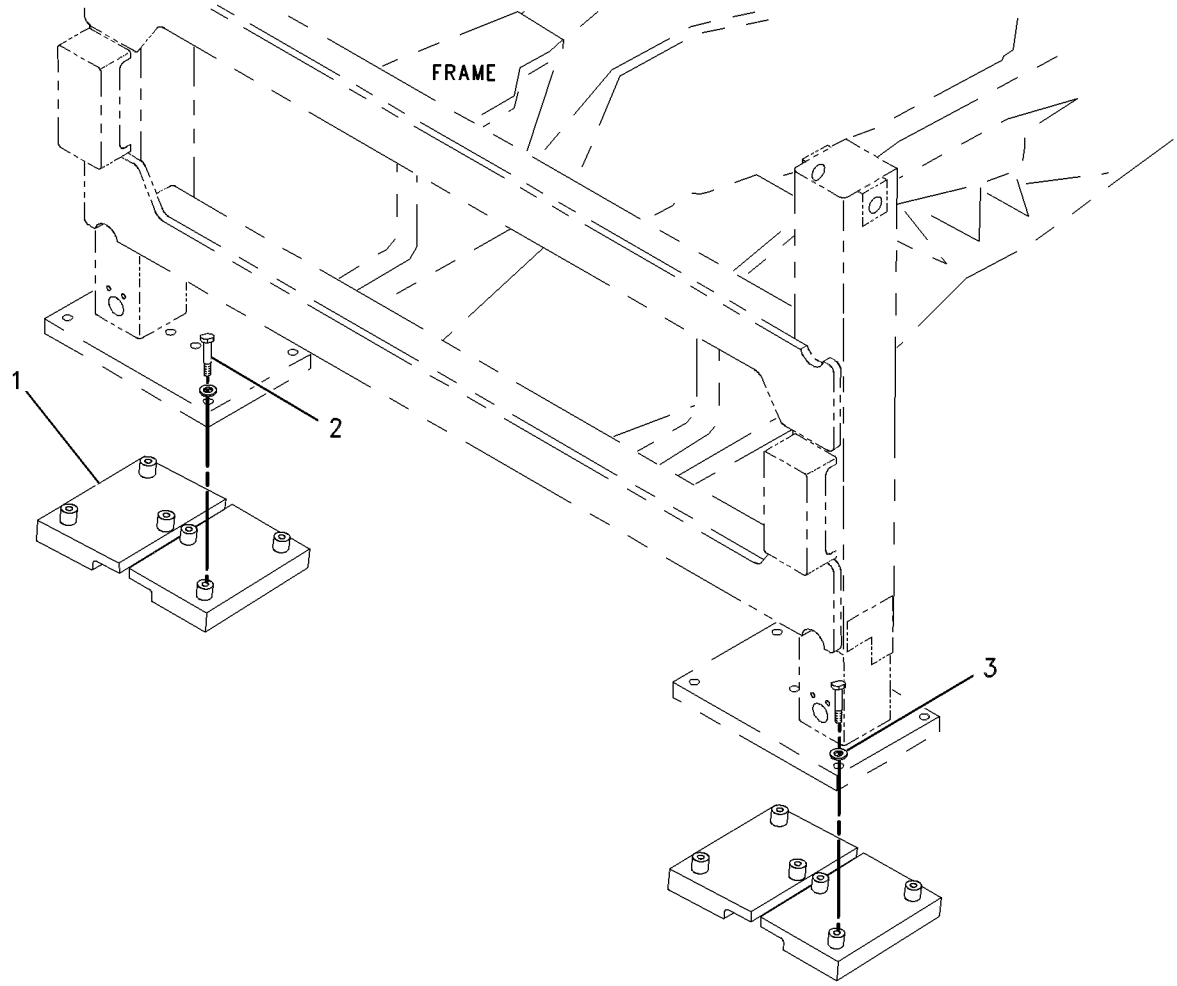

GRAPHIC #1 **<END>** g00661392

328-5964 STABILIZER GP-BACKHOE

S/N: SJW1-UP

PART OF 340-1693 CHASSIS AR

SMCS-7222 **i03642982**

NOTE	REF NO	GRAPHIC REF	PART NUMBER	QTY	PART NAME 1 2 3 4 5 6 (PRODUCT LEVEL)	SEE PAGE
	1	1	**325-7563**	4	SPACER (45.5X75X35-MM THK)	
	2	1	**328-5196**	2	PAD-STABILIZER	
	3	1	**330-9669**	2	PIN	
	4	1	**330-9670**	2	PIN AS	
	5	1	**6V-5204**	6	RING-RETAINING	

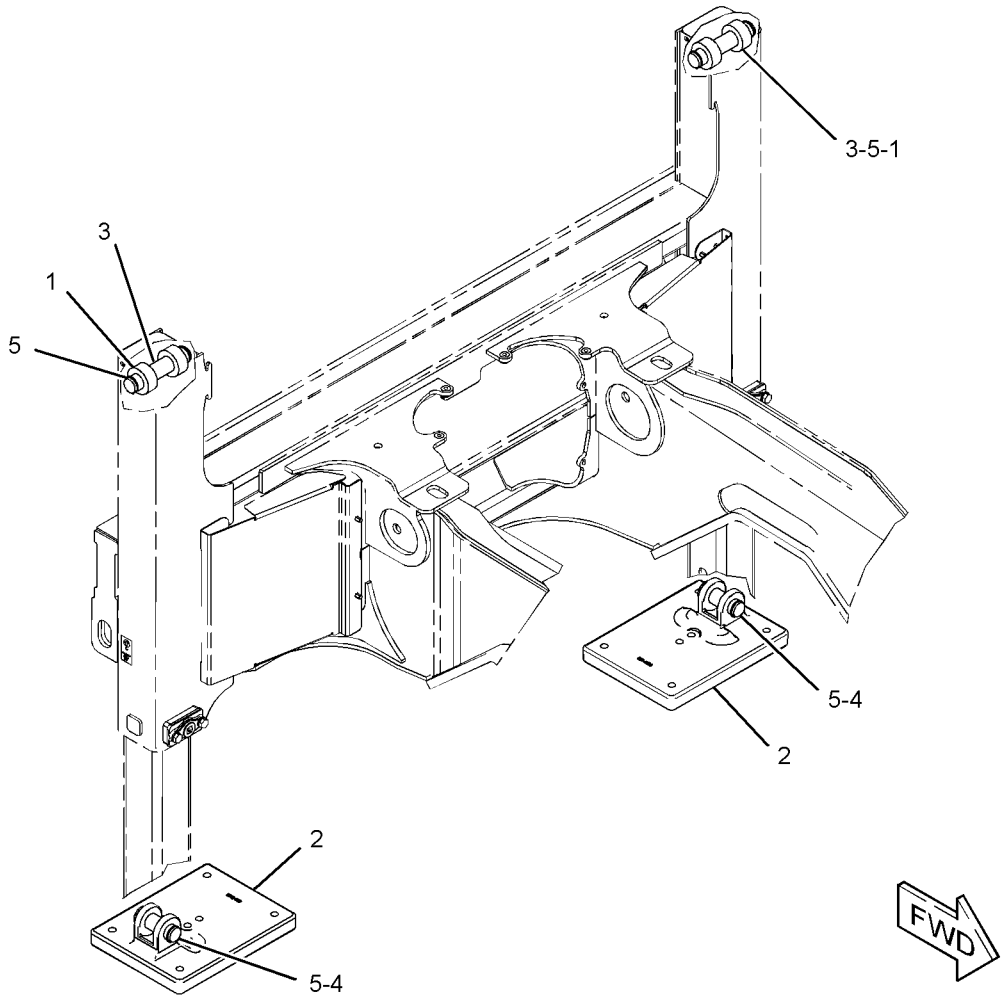

GRAPHIC #1 **<END>** g01986675

324-0552 STICK GP

S/N: SJW1-UP
PART OF 340-1732 BACKHOE AR-STANDARD STICK
AN ATTACHMENT

SMCS-6502 **i03865281**

NOTE	REF NO	GRAPHIC REF	PART NUMBER	QTY	PART NAME 1 2 3 4 5 6 (PRODUCT LEVEL)	SEE PAGE
B	1	1	**9R-8292**	2	SPACER (61X135X1-MM THK)	
	2	1	**316-6946**	1	PIN AS	
	3	1	**316-6947**	1	PIN	
	4	1	**319-4504**	1	STICK AS	
	4A	1	**9R-0162**	2	BUSHING	
	4B	1	**9R-3092**	2	BUSHING	
	5	1	**328-9650**	1	PIN	
	6	1	**344-2543**	1	PLATE	
	7	1	**3B-8488**	1	FITTING-GREASE	
	8	1	**3B-8489**	2	FITTING-GREASE	
	9	1	**7X-0632**	1	WASHER-HARD (11X36X6-MM THK)	
M	10	1	**7X-2543**	1	BOLT (M10X1.5X120-MM)	
	11	1	**7X-7729**	4	WASHER (11X25X3-MM THK)	
M	12	1	**8T-0389**	1	LOCKNUT (M10X1.5-THD)	
	13	1	**8T-4121**	3	WASHER-HARD (11X21X2.5-MM THK)	
M	14	1	**8T-4133**	5	NUT (M10X1.5-THD)	
M	15	1	**8T-4195**	1	BOLT (M10X1.5X30-MM)	
M	16	1	**8T-6685**	1	BOLT (M10X1.5X110-MM)	
M	17	1	**9X-2060**	4	BOLT (M10X1.5X30-MM)	

B-USE AS REQUIRED
M-METRIC PART

324-0552 **STICK GP** *(contd.)* **i03865281**

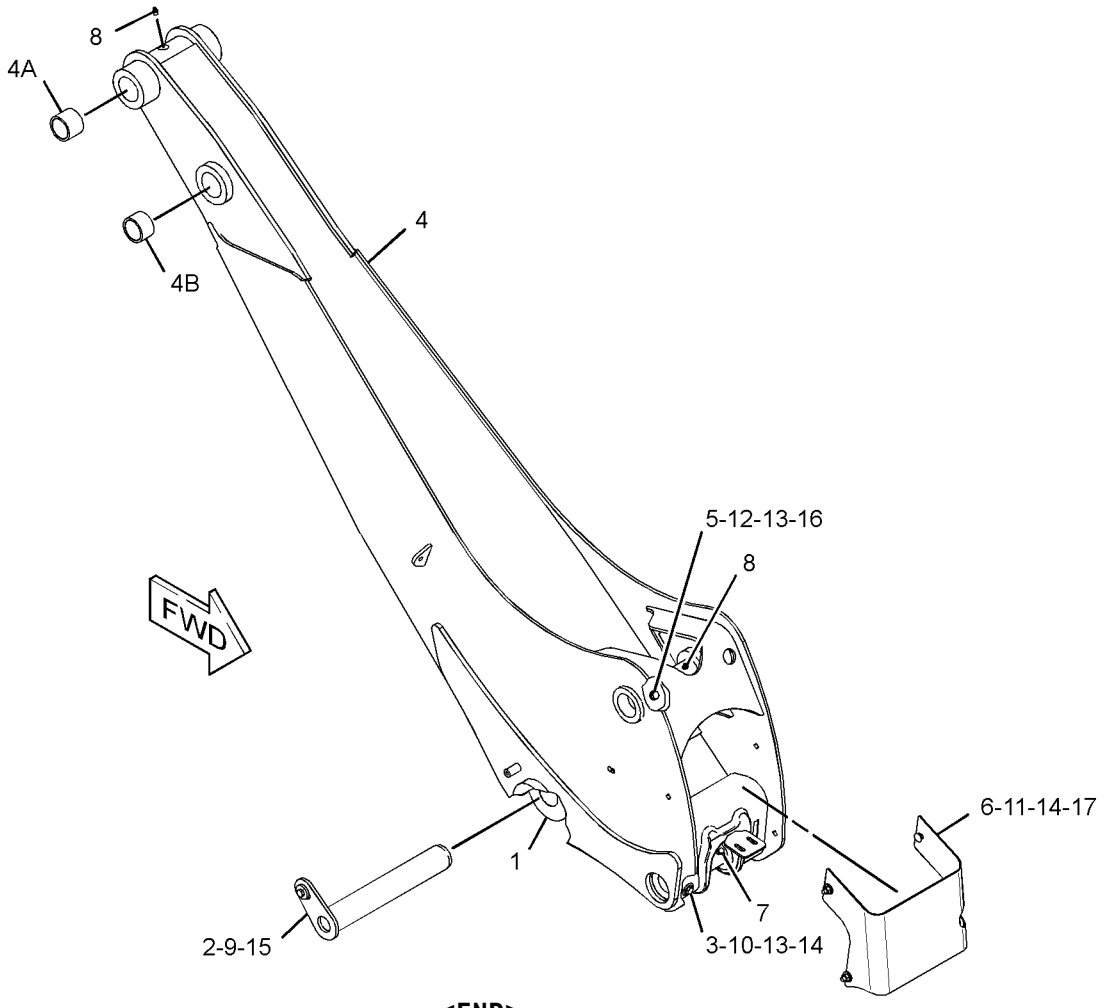

GRAPHIC #1 **<END>** g02115196

324-0550 STICK GP-EXTENDABLE

S/N: SJW1-UP

PART OF 340-1733 BACKHOE AR-EXTENDABLE STICK

AN ATTACHMENT

SMCS-6533 **i03865282**

NOTE	REF NO	GRAPHIC REF	PART NUMBER	QTY	PART NAME 1 2 3 4 5 6 (PRODUCT LEVEL)	SEE PAGE
B	1	1	**9R-0158**	4	WASHER (46X69X3-MM THK)	
	2	1	**9R-2959**	2	CLIP	
B	3	1	**9R-8292**	2	SPACER (61X135X1-MM THK)	
	4	1	**111-4337**	2	WASHER (46X70X1-MM THK)	
	5	1	**316-4742**	1	STICK AS	
	5A	1	**9R-0162**	2	BUSHING	
	5B	1	**9R-3092**	2	BUSHING	
	6	1	**316-4743**	1	STICK AS	
	7	1	**316-6946**	1	PIN AS	
	8	1	**316-6947**	1	PIN	
	9	1	**316-6948**	1	PIN	
	10	1	**316-6949**	2	PIN	
	11	1	**319-9667**	4	PAD AS	
	12	1	**319-9668**	4	PAD AS	
Y	13	1	**320-5935**	1	CYLINDER GP-STICK	373
	14	1	**334-4169**	1	LOCKPIN	
	15	1	**336-6396**	1	PLATE	
	16	1	**346-5631**	2	SPACER	
	17	1	**346-6559**	4	ADJUSTER	
	18	1	**346-6560**	4	ADJUSTER	
	19	1	**350-3733**	1	FILM-INSTRUCTION (EXTENDABLE STICK PIN, READ OMM)	
M	20	1	**105-3478**	2	BOLT-SOCKET HEAD (M10X1.5X35-MM)	
M	21	1	**208-7492**	8	NUT (M20X2.5-THD)	
	22	1	**3B-8488**	1	FITTING-GREASE	
	23	1	**3B-8489**	2	FITTING-GREASE	
	24	1	**6V-5204**	4	RING-RETAINING	
	25	1	**7X-0632**	1	WASHER-HARD (11X36X6-MM THK)	
M	26	1	**7X-2543**	1	BOLT (M10X1.5X120-MM)	
	27	1	**7X-7729**	4	WASHER (11X25X3-MM THK)	
M	28	1	**8T-0389**	2	LOCKNUT (M10X1.5-THD)	
	29	1	**8T-4121**	11	WASHER-HARD (11X21X2.5-MM THK)	
M	30	1	**8T-4133**	5	NUT (M10X1.5-THD)	
M	31	1	**8T-4195**	1	BOLT (M10X1.5X30-MM)	
M	32	1	**8T-4196**	8	BOLT (M10X1.5X35-MM)	
	33	1	**8T-4241**	2	RING-RETAINING	
M	34	1	**9X-2060**	4	BOLT (M10X1.5X30-MM)	

B-USE AS REQUIRED
M-METRIC PART
Y-SEPARATE ILLUSTRATION

324-0550 **STICK GP-EXTENDABLE** *(contd.)* **i03865282**

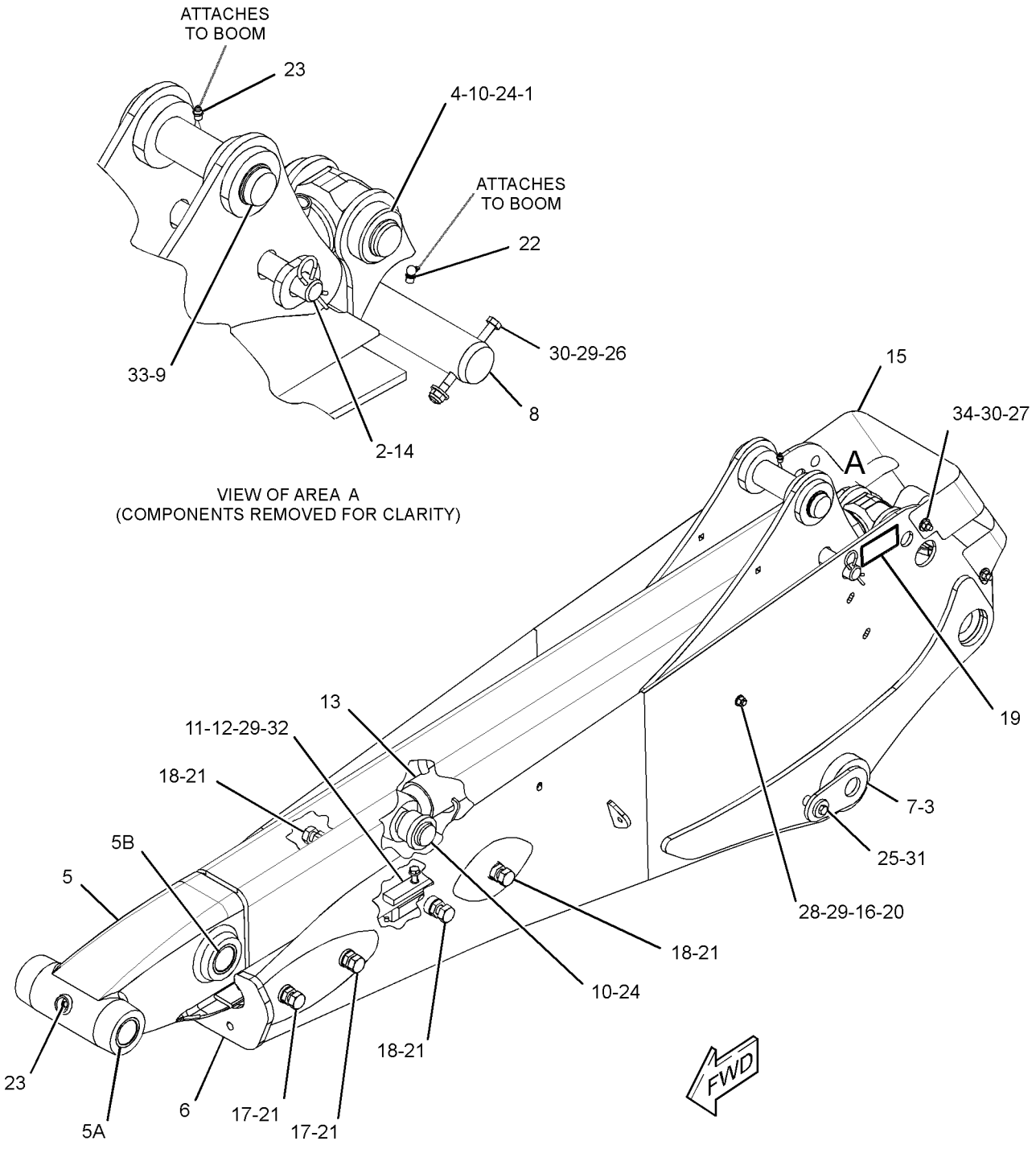

GRAPHIC #1 **<END>** g02115953

329-9749 STICK GP-EXTENDABLE

S/N: SJW1-UP

PART OF 340-1734 BACKHOE AR-EXTENDABLE STICK

AN ATTACHMENT

SMCS-6533 **i03865279**

NOTE	REF NO	GRAPHIC REF	PART NUMBER	QTY	PART NAME 1 2 3 4 5 6 (PRODUCT LEVEL)	SEE PAGE
B	1	1	**9R-0158**	4	WASHER (46X69X3-MM THK)	
	2	1	**9R-2959**	2	CLIP	
B	3	1	**9R-8292**	2	SPACER (61X135X1-MM THK)	
	4	1	**111-4337**	2	WASHER (46X70X1-MM THK)	
	5	1	**316-4743**	1	STICK AS	
	6	1	**316-6946**	1	PIN AS	
	7	1	**316-6947**	1	PIN	
	8	1	**316-6948**	1	PIN	
	9	1	**316-6949**	2	PIN	
	10	1	**319-9667**	4	PAD AS	
	11	1	**319-9668**	4	PAD AS	
Y	12	1	**320-5935**	1	CYLINDER GP-STICK	373
	13	1	**329-9748**	1	STICK AS	
	13A	1	**9R-3092**	2	BUSHING	
	13B	1	**9R-7891**	2	BUSHING	
	14	1	**334-4169**	1	LOCKPIN	
	15	1	**336-6396**	1	PLATE	
	16	1	**346-5631**	2	SPACER	
	17	1	**346-6559**	4	ADJUSTER	
	18	1	**346-6560**	4	ADJUSTER	
	19	1	**350-3733**	1	FILM-INSTRUCTION (EXTENDABLE STICK PIN, READ OMM)	
M	20	1	**105-3478**	2	BOLT-SOCKET HEAD (M10X1.5X35-MM)	
M	21	1	**208-7492**	8	NUT (M20X2.5-THD)	
	22	1	**3B-8488**	1	FITTING-GREASE	
	23	1	**3B-8489**	2	FITTING-GREASE	
	24	1	**6V-5204**	4	RING-RETAINING	
	25	1	**7X-0632**	1	WASHER-HARD (11X36X6-MM THK)	
M	26	1	**7X-2543**	1	BOLT (M10X1.5X120-MM)	
	27	1	**7X-7729**	4	WASHER (11X25X3-MM THK)	
M	28	1	**8T-0389**	2	LOCKNUT (M10X1.5-THD)	
	29	1	**8T-4121**	11	WASHER-HARD (11X21X2.5-MM THK)	
M	30	1	**8T-4133**	5	NUT (M10X1.5-THD)	
M	31	1	**8T-4195**	1	BOLT (M10X1.5X30-MM)	
M	32	1	**8T-4196**	8	BOLT (M10X1.5X35-MM)	
	33	1	**8T-4241**	2	RING-RETAINING	
M	34	1	**9X-2060**	4	BOLT (M10X1.5X30-MM)	

B-USE AS REQUIRED
M-METRIC PART
Y-SEPARATE ILLUSTRATION

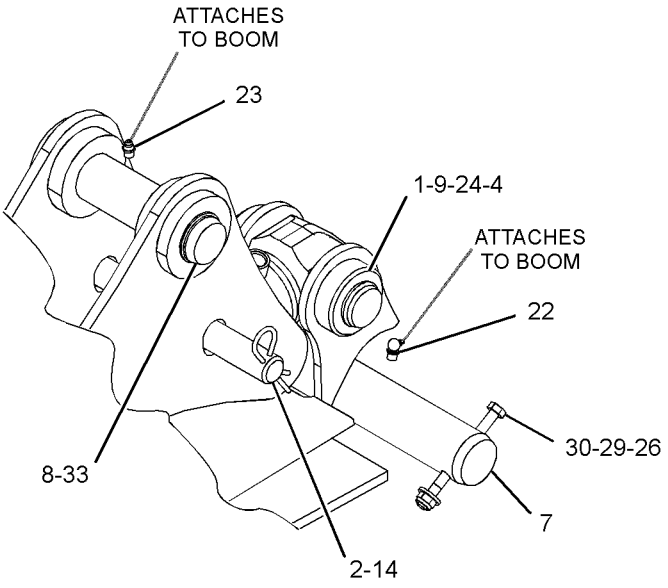

VIEW OF AREA A
(COMPONENTS REMOVED FOR CLARITY)

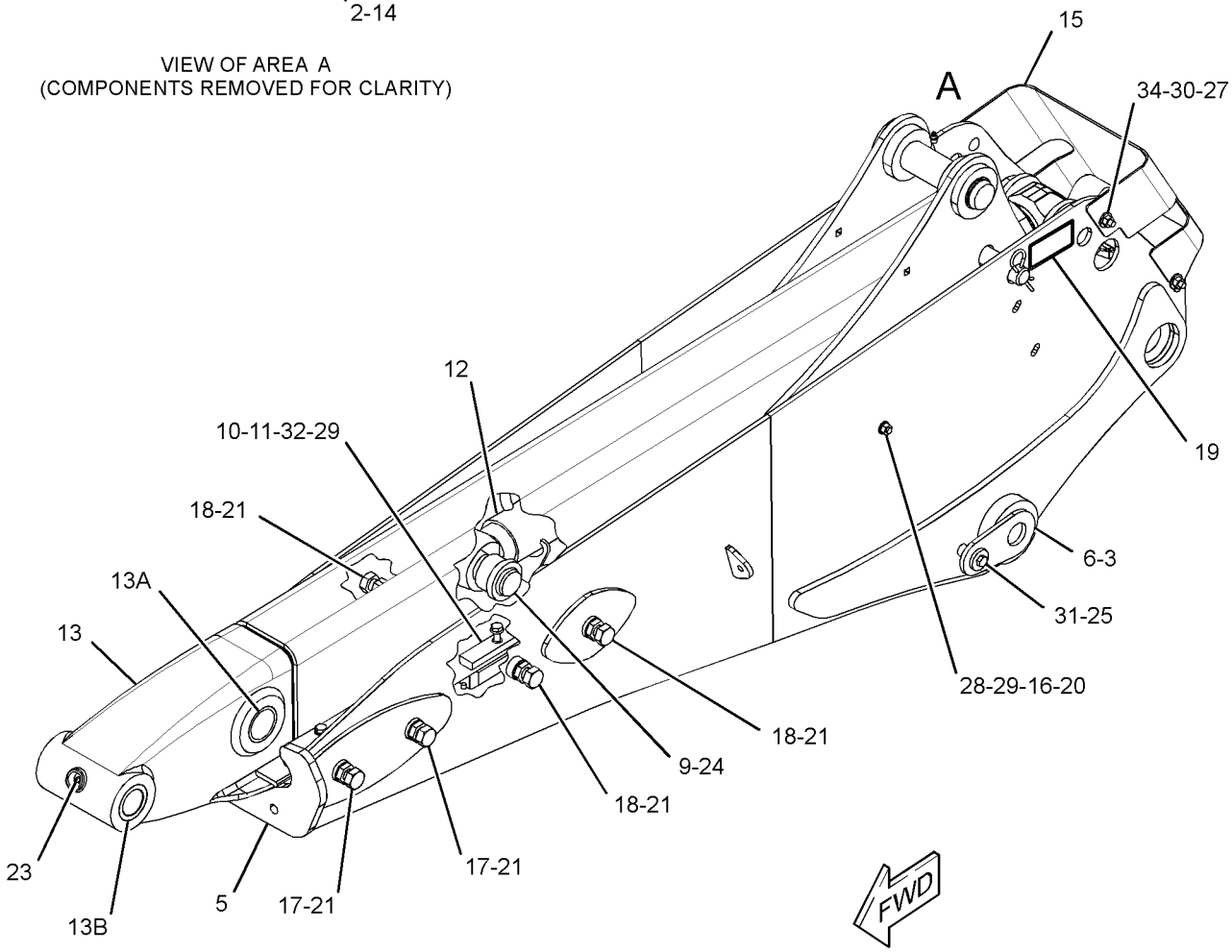

GRAPHIC #1 **<END>** g02115996

WORK TOOLS

350-1580 BUCKET AR-MULTIPURPOSE

S/N: SJW1-UP

AN ATTACHMENT

SMCS-6104 **i04597202**

NOTE	REF NO	GRAPHIC REF	PART NUMBER	QTY	PART NAME 1 2 3 4 5 6 (PRODUCT LEVEL)	SEE PAGE
	1	1	**168-8389**	4	TACK-FASTENER	
Y	2	1	**226-5540**	2	CYLINDER GP-MULTIPURPOSE BUKT	369
Y	3	1	*337-8935*	1	MOUNTING GP-CYLINDER (MULTIPURPOSE BUCKET)	432
Y	4	1	*350-1594*	1	LINES GP-MULTIPURPOSE BUCKET	414
Y	5	1	*350-7008*	1	BUCKET GP-MULTIPURPOSE	512
	6	1	**356-8635**	1	PLATE-IDENTIFICATION (WORK TOOL)	

Y-SEPARATE ILLUSTRATION

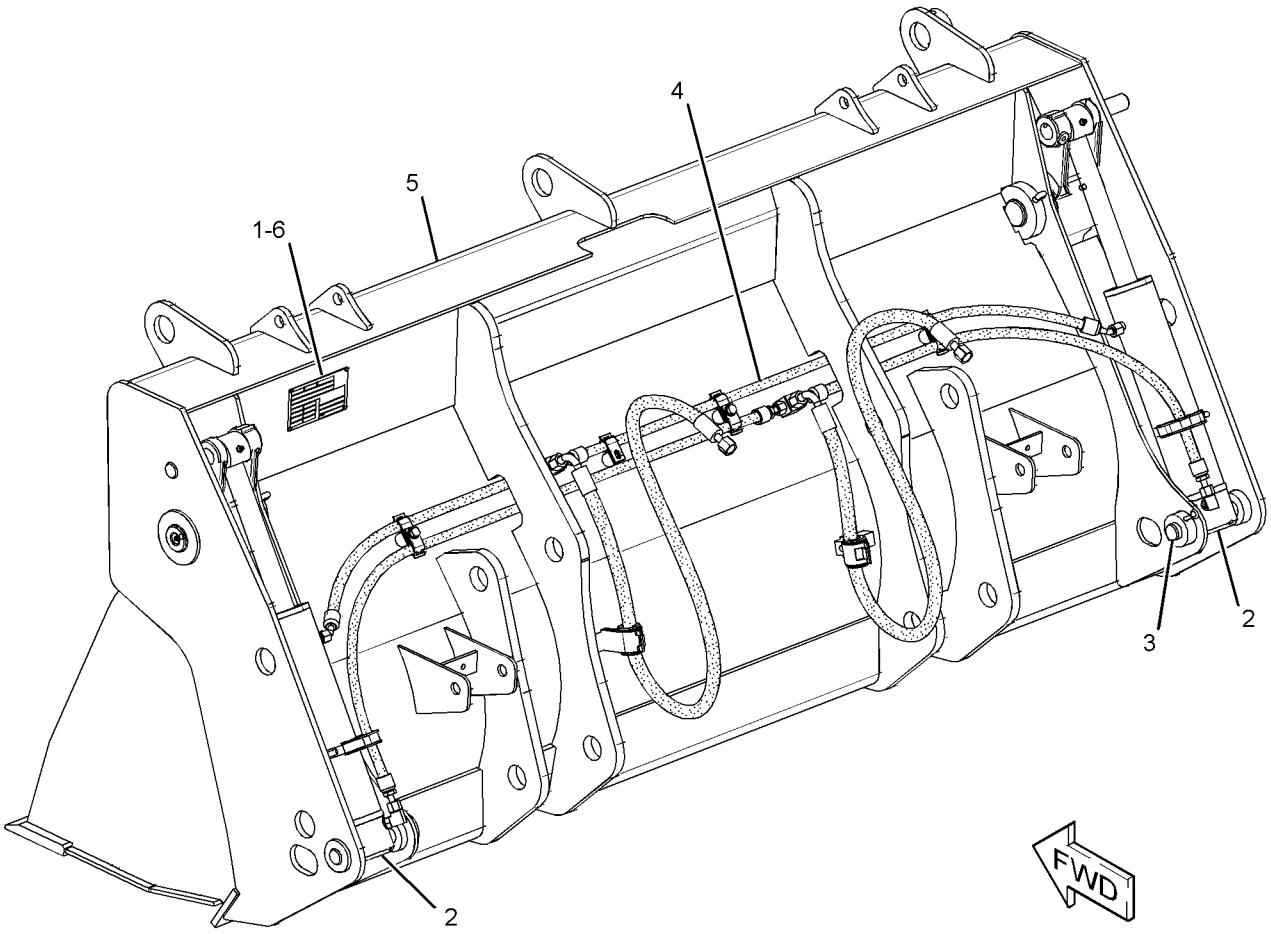

GRAPHIC #1 **<END>** g02760677

WORK TOOLS

350-1581 BUCKET AR-MULTIPURPOSE

S/N: SJW1-UP

AN ATTACHMENT

SMCS-6104 **i04597270**

NOTE	REF NO	GRAPHIC REF	PART NUMBER	QTY	PART NAME 1 2 3 4 5 6 (PRODUCT LEVEL)	SEE PAGE
	1	1	**168-8389**	4	TACK-FASTENER	
Y	2	1	**226-5540**	2	CYLINDER GP-MULTIPURPOSE BUKT	369
Y	3	1	*337-8935*	1	MOUNTING GP-CYLINDER (MULTIPURPOSE BUCKET)	432
Y	4	1	*350-1575*	1	BUCKET GP-MULTIPURPOSE	511
Y	5	1	*350-1591*	1	LINES GP-MULTIPURPOSE BUCKET	412
	6	1	**356-8635**	1	PLATE-IDENTIFICATION (WORK TOOL)	

Y-SEPARATE ILLUSTRATION

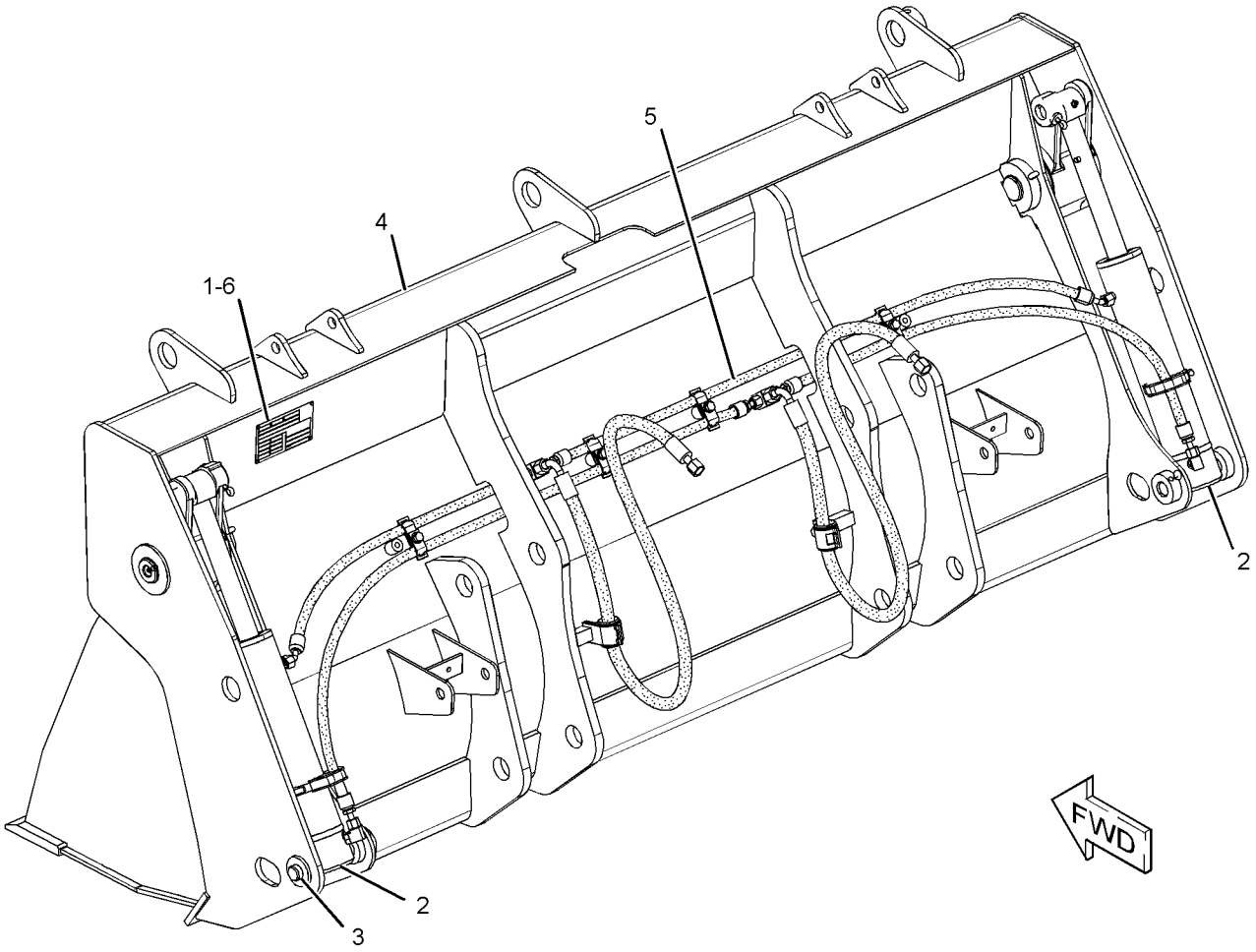

GRAPHIC #1 **<END>** g02760176

WORK TOOLS

350-1587 BUCKET AR-MULTIPURPOSE

S/N: SJW1-UP
PART OF 350-1588 BUCKET AR-MULTIPURPOSE
AN ATTACHMENT

SMCS-6104 **i04597291**

NOTE	REF NO	GRAPHIC REF	PART NUMBER	QTY	PART NAME 1 2 3 4 5 6 (PRODUCT LEVEL)	SEE PAGE
	1	1	**5D-8159**	2	PIN AS	
	2	1	**8T-4159**	4	BUMPER	
	3	1	**168-8389**	4	TACK-FASTENER	
Y	4	1	**226-5540**	1	CYLINDER GP-MULTIPURPOSE BUKT	369
	5	1	**250-1057**	2	PIN	
Y	6	1	*252-6005*	1	MOUNTING GP-FORK (MULTIPURPOSE BUCKET)	525
Y	7	1	*337-8935*	1	MOUNTING GP-CYLINDER (MULTIPURPOSE BUCKET)	432
Y	8	1	*350-1575*	1	BUCKET GP-MULTIPURPOSE	511
Y	9	1	*350-1591*	1	LINES GP-MULTIPURPOSE BUCKET	412
	10	1	**356-8635**	1	PLATE-IDENTIFICATION (WORK TOOL)	
M	11	1	**5C-7261**	8	NUT (M8X1.25-THD)	
	12	1	**8T-4122**	4	WASHER-HARD (17X32X3.5-MM THK)	
	13	1	**8T-4224**	4	WASHER-HARD (8.8X16X2-MM THK)	

M-METRIC PART
Y-SEPARATE ILLUSTRATION

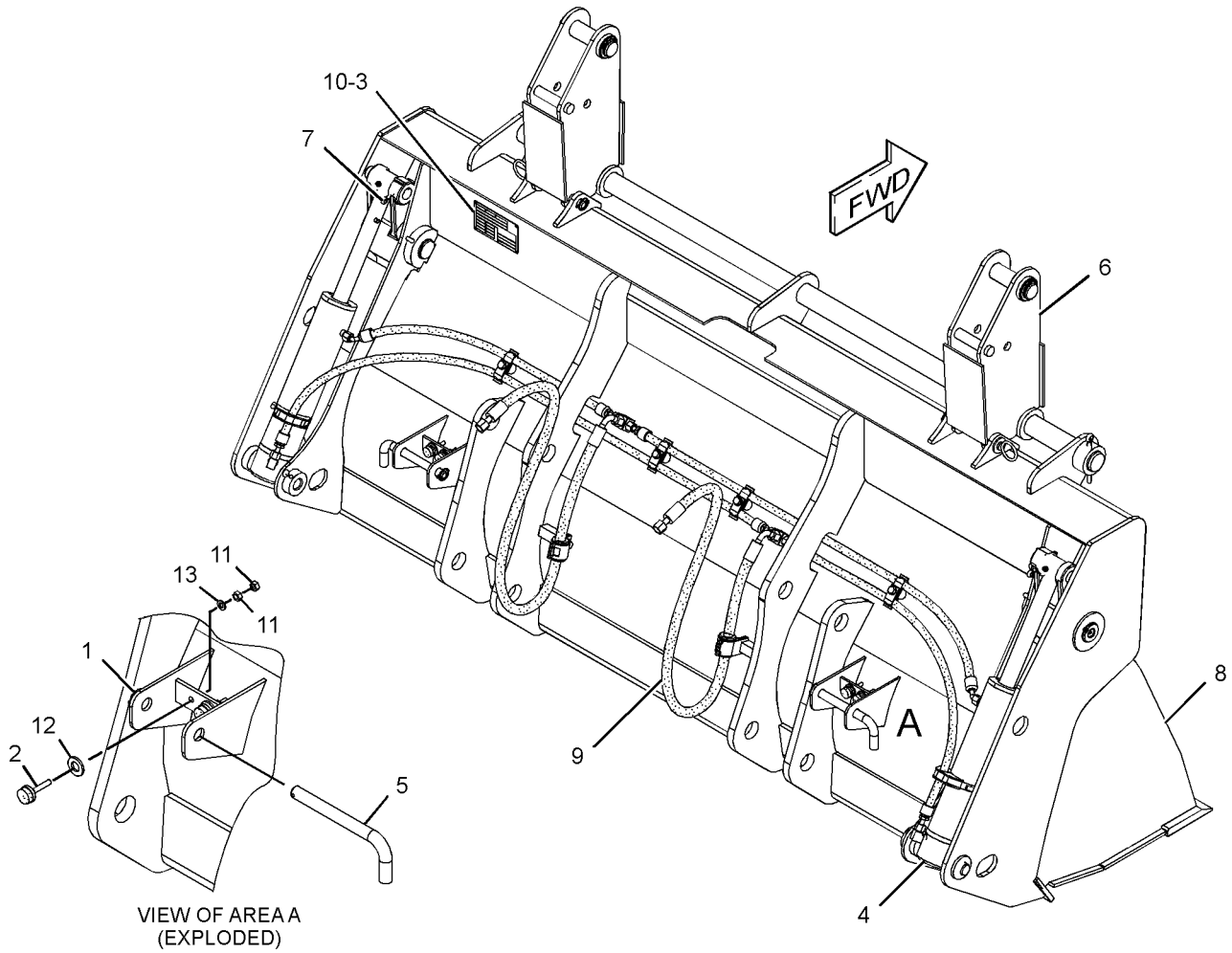

GRAPHIC #1 **<END>** g02824776

WORK TOOLS

350-1588 BUCKET AR-MULTIPURPOSE

S/N: SJW1-UP
PART OF 389-3761, 389-3762 DISTRIBUTION AR
AN ATTACHMENT

SMCS-6104 **i04597290**

NOTE	REF NO	GRAPHIC REF	PART NUMBER	QTY	PART NAME 1 2 3 4 5 6 (PRODUCT LEVEL)	SEE PAGE
	1	1	**104-6312**	2	FORK AS	
Y	2	1	*350-1587*	1	BUCKET AR-MULTIPURPOSE	477

Y-SEPARATE ILLUSTRATION

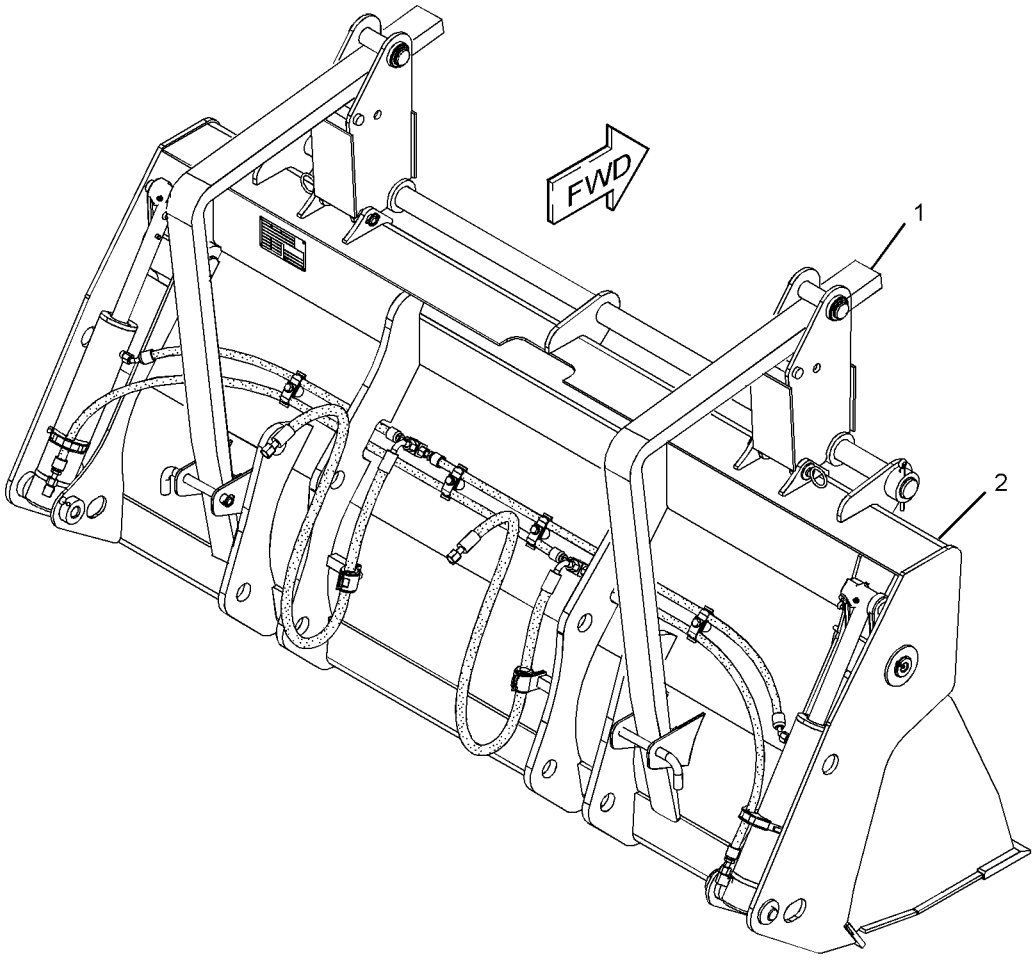

GRAPHIC #1 **<END>** g02831225

350-1589 BUCKET AR-MULTIPURPOSE

S/N: SJW1-UP
PART OF 350-1590 BUCKET AR-MULTIPURPOSE
AN ATTACHMENT

SMCS-6104 **i04603170**

NOTE	REF NO	GRAPHIC REF	PART NUMBER	QTY	PART NAME 1 2 3 4 5 6 (PRODUCT LEVEL)	SEE PAGE
	1	1	**5D-8159**	2	PIN AS	
	2	1	**8T-4159**	4	BUMPER	
	3	1	**168-8389**	4	TACK-FASTENER	
Y	4	1	**226-5540**	2	CYLINDER GP-MULTIPURPOSE BUKT	369
	5	1	**250-1057**	2	PIN	
Y	6	1	*252-6005*	1	MOUNTING GP-FORK	525
Y	7	1	*337-8935*	1	MOUNTING GP-CYLINDER (MULTIPURPOSE BUCKET)	432
Y	8	1	*350-1594*	1	LINES GP-MULTIPURPOSE BUCKET	414
Y	9	1	*350-7008*	1	BUCKET GP-MULTIPURPOSE	512
	10	1	**356-8635**	1	PLATE-IDENTIFICATION (WORK TOOL)	
M	11	1	**5C-7261**	8	NUT (M8X1.25-THD)	
	12	1	**8T-4122**	4	WASHER-HARD (17X32X3.5-MM THK)	
	13	1	**8T-4224**	4	WASHER-HARD (8.8X16X2-MM THK)	

M-METRIC PART
Y-SEPARATE ILLUSTRATION

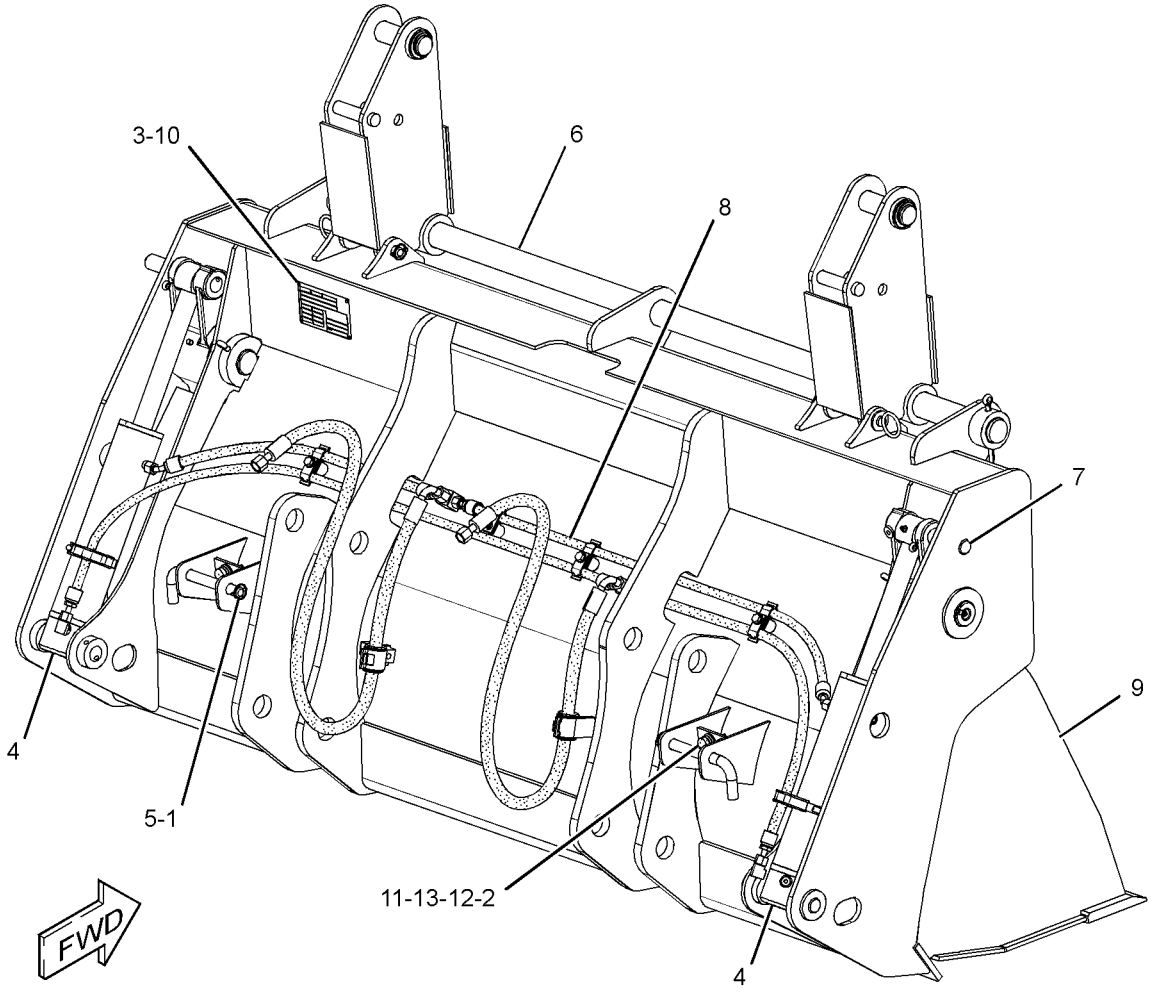

GRAPHIC #1 **<END>** g02760756

WORK TOOLS

350-1590 BUCKET AR-MULTIPURPOSE

S/N: SJW1-UP

AN ATTACHMENT

SMCS-6104 **i04603293**

NOTE	REF NO	GRAPHIC REF	PART NUMBER	QTY	PART NAME 1 2 3 4 5 6 (PRODUCT LEVEL)	SEE PAGE
	1	1	**104-6312**	2	FORK AS	
Y	2	1	*350-1589*	1	BUCKET AR-MULTIPURPOSE	479

Y-SEPARATE ILLUSTRATION

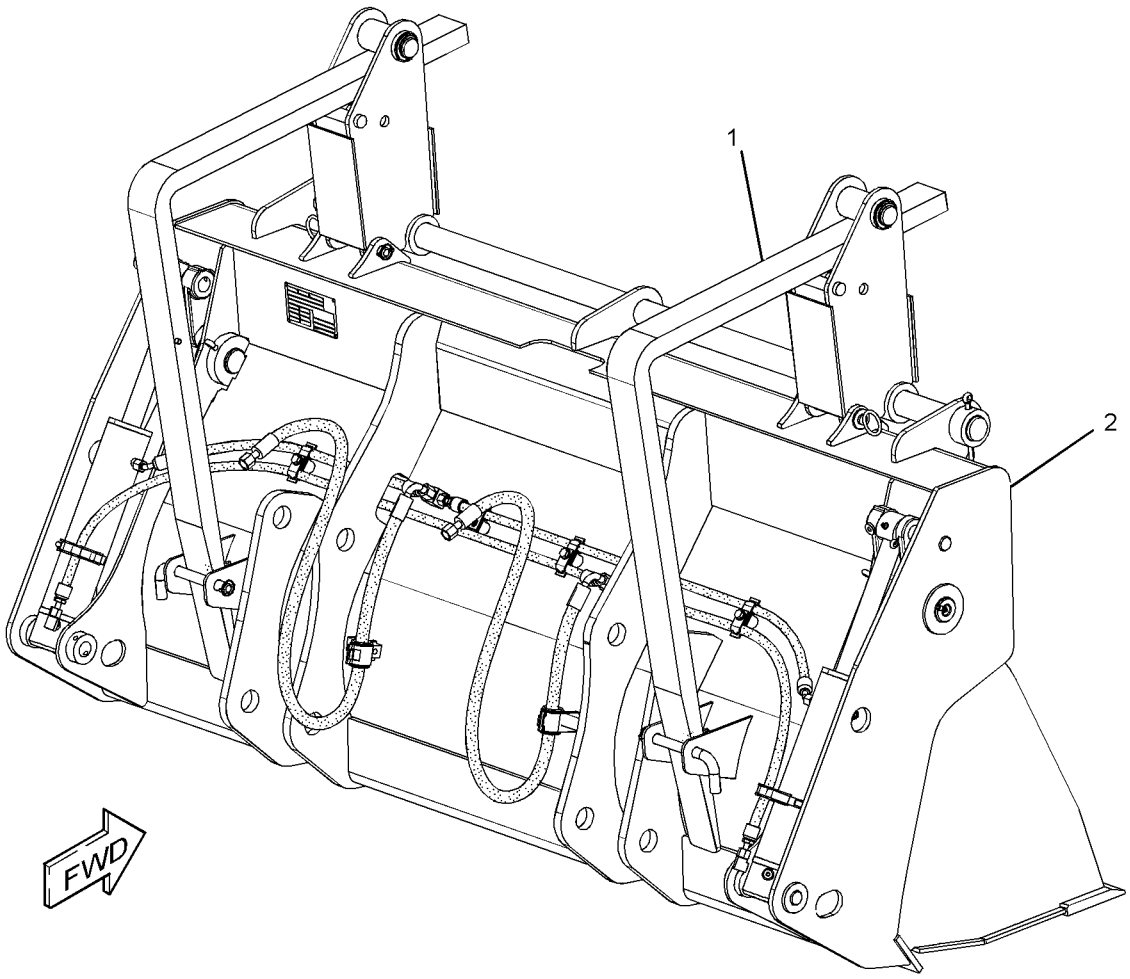

GRAPHIC #1 **<END>** g02761357

WORK TOOLS

337-7395 BUCKET AS-GENERAL PURPOSE

S/N: SJW1-UP
2406-MM (94.8-IN) WIDE X 1-CU M (1.3-CU YD) CAPACITY
PART OF 337-7394 BUCKET GP-GENERAL PURPOSE
AN ATTACHMENT

SMCS-6101 **i04608614**

NOTE	REF NO	GRAPHIC REF	PART NUMBER	QTY	PART NAME 1 2 3 4 5 6 (PRODUCT LEVEL)	SEE PAGE
	1	1	**9R-5205**	1	EDGE (LH)	
	2	1	**9R-5206**	1	EDGE (RH)	
	3	1	**9R-5313**	1	EDGE	
	4	1	**9R-5832**	2	EDGE	

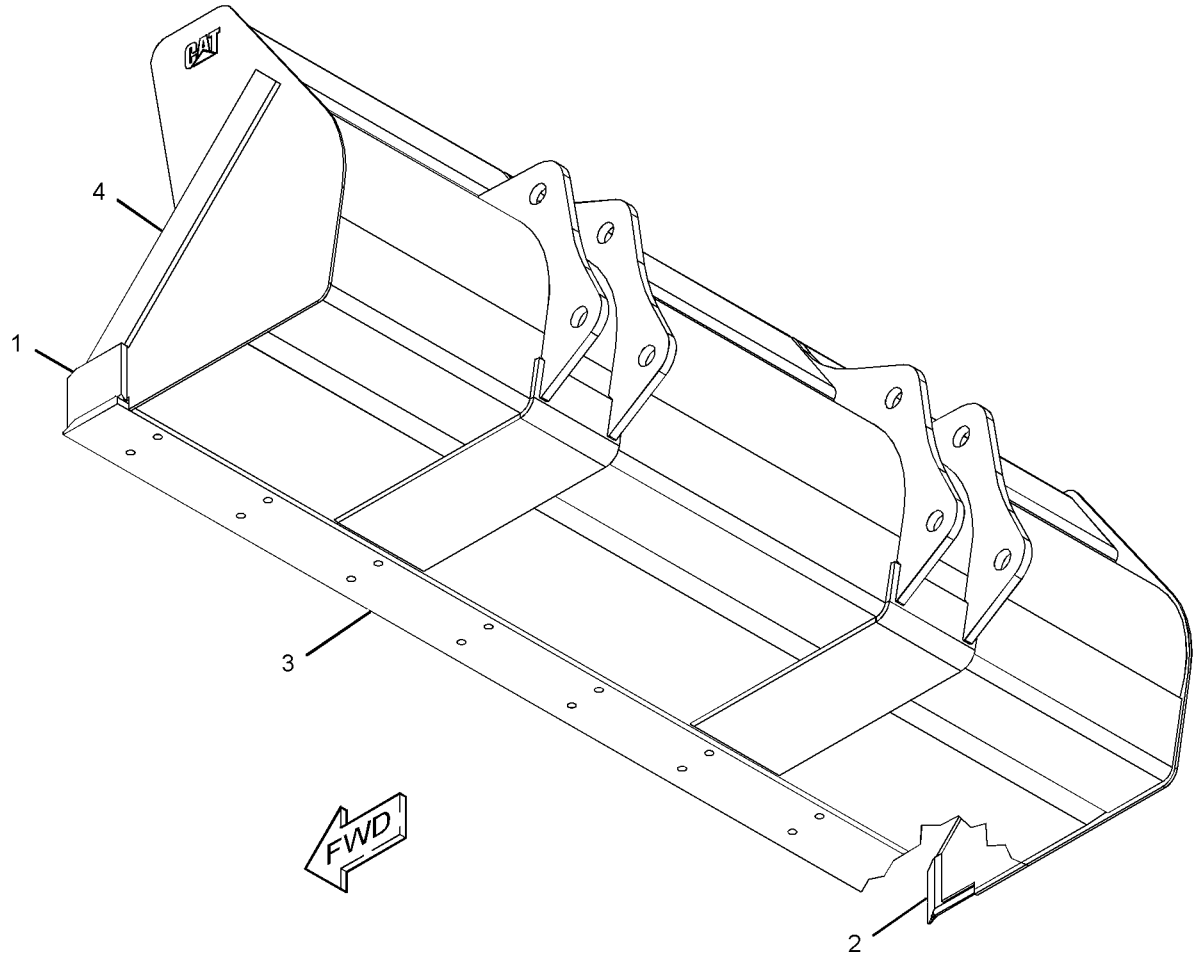

GRAPHIC #1 **<END>** g02823723

WORK TOOLS

151-7829 BUCKET AS-HOE—HIGH CAPACITY

S/N: SJW1-UP
458-MM (18-IN)
PART OF 151-7887 BUCKET GP-HOE
AN ATTACHMENT

SMCS-6503 **i02686003**

NOTE	REF NO	GRAPHIC REF	PART NUMBER	QTY	PART NAME 1 2 3 4 5 6 (PRODUCT LEVEL)	SEE PAGE
	1	1	**128-3778**	1	EDGE	
	2	1	*151-7902*	1	BRACKET AS (LH)	
	2A	1	**9R-0162**	1	BEARING-SLEEVE	
	2B	1	**168-0480**	1	BEARING-SLEEVE	
	3	1	**9R-8987**	1	EDGE (LH)	
	4	1	**9R-8988**	1	EDGE (RH)	
	5	1	*151-7903*	1	BRACKET AS (RH)	
	5A	1	**9R-0162**	1	BEARING-SLEEVE	
	5B	1	**168-0480**	1	BEARING-SLEEVE	

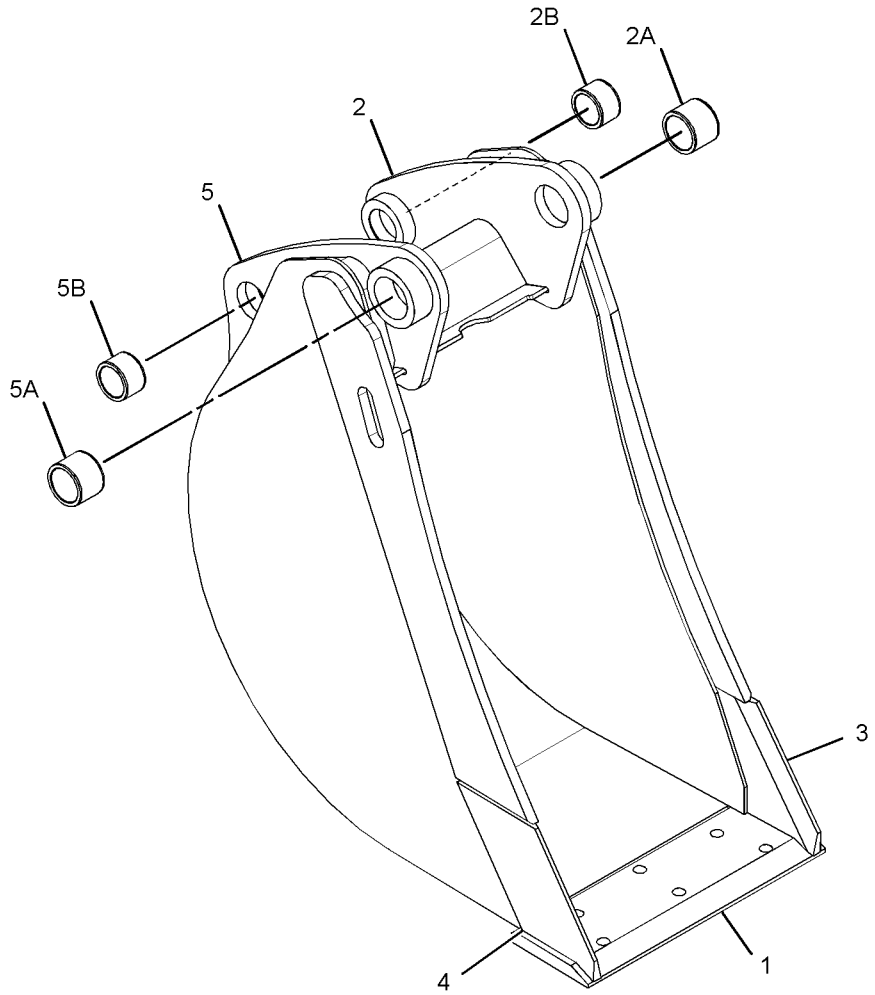

GRAPHIC #1 **<END>** g01424314

151-7830 BUCKET AS-HOE—HIGH CAPACITY

S/N: SJW1-UP
610-MM (24-IN)
PART OF 151-7888 BUCKET GP-HOE
AN ATTACHMENT

SMCS-6503 **i02685979**

NOTE	REF NO	GRAPHIC REF	PART NUMBER	QTY	PART NAME 1 2 3 4 5 6 (PRODUCT LEVEL)	SEE PAGE
	1	1	**9R-8987**	1	EDGE (LH)	
	2	1	**9R-8988**	1	EDGE (RH)	
	3	1	**128-3094**	1	EDGE	
	4	1	*151-7902*	1	BRACKET AS (LH)	
	4A	1	**168-0480**	1	BEARING-SLEEVE	
	4B	1	**9R-0162**	1	BEARING-SLEEVE	
	5	1	*151-7903*	1	BRACKET AS (RH)	
	5A	1	**168-0480**	1	BEARING-SLEEVE	
	5B	1	**9R-0162**	1	BEARING-SLEEVE	

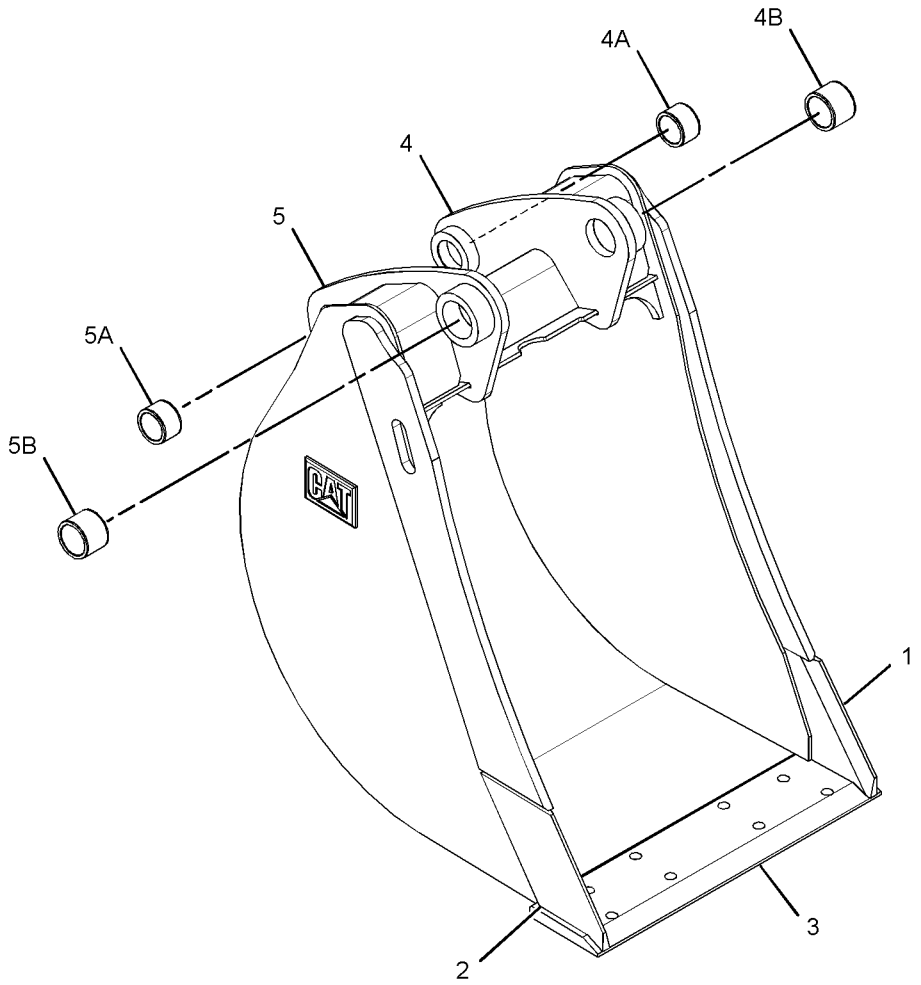

GRAPHIC #1 **<END>** g01398979

WORK TOOLS

151-7831 BUCKET AS-HOE—HIGH CAPACITY

S/N: SJW1-UP
762-MM (30-IN)
PART OF 151-7889 BUCKET GP-HOE
AN ATTACHMENT

SMCS-6503 **i02686105**

NOTE	REF NO	GRAPHIC REF	PART NUMBER	QTY	PART NAME 1 2 3 4 5 6 (PRODUCT LEVEL)	SEE PAGE
	1	1	*151-7902*	1	BRACKET AS (LH)	
	1A	1	**9R-0162**	1	BEARING-SLEEVE	
	1B	1	**168-0480**	1	BEARING-SLEEVE	
	2	1	**9R-8987**	1	EDGE (LH)	
	3	1	**9R-8988**	1	EDGE (RH)	
	4	1	**131-2117**	1	EDGE	
	5	1	*151-7903*	1	BRACKET AS (RH)	
	5A	1	**9R-0162**	1	BEARING-SLEEVE	
	5B	1	**168-0480**	1	BEARING-SLEEVE	

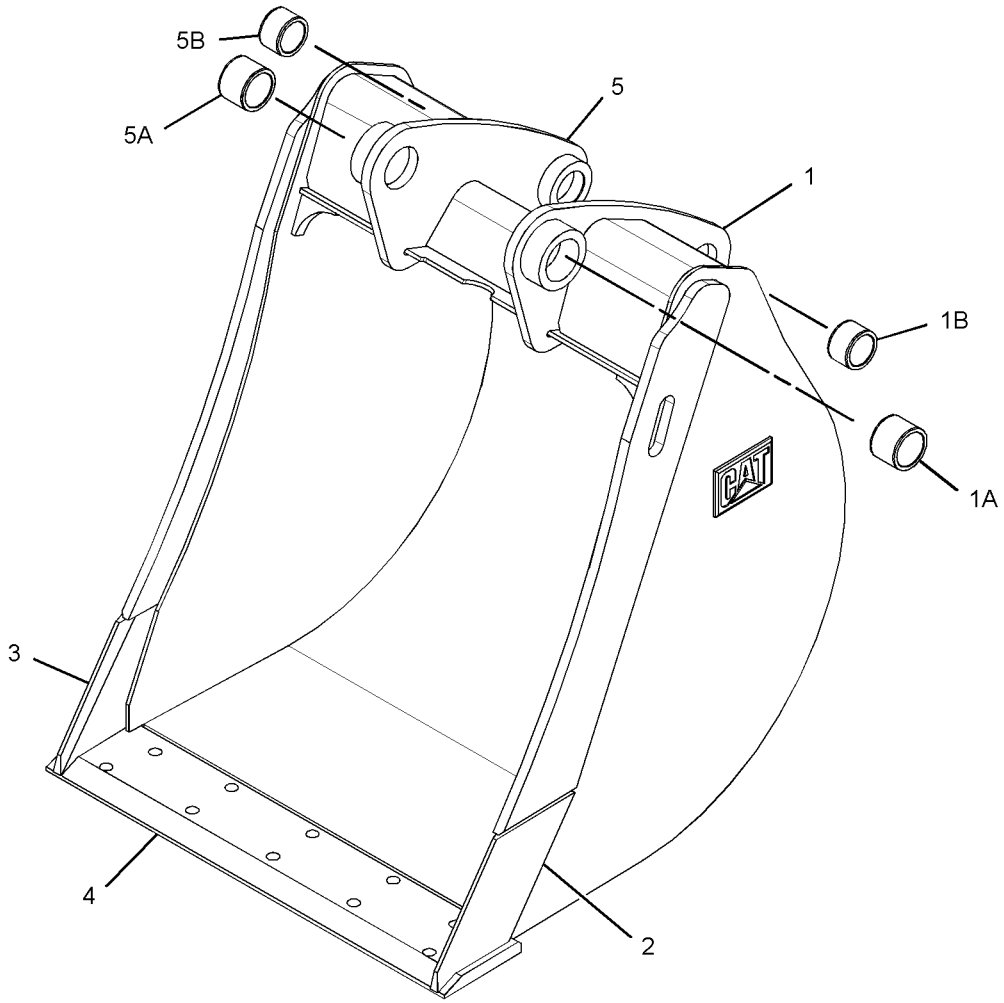

GRAPHIC #1 **<END>** g01359127

249-4220 BUCKET AS-HOE—HEAVY-DUTY

S/N: SJW1-UP
610-MM (24-IN)
PART OF 249-4221 BUCKET GP-HOE
AN ATTACHMENT

SMCS-6503 **i03726361**

NOTE	REF NO	GRAPHIC REF	PART NUMBER	QTY	PART NAME 1 2 3 4 5 6 (PRODUCT LEVEL)	SEE PAGE
	1	1	**201-1235**	5	ADAPTER (2-STRAP)	
	2	1	**219-9488**	1	EDGE	
	3	1	*249-4209*	1	PLATE AS (RH)	
		1	**249-4207**	1	EDGE (RH)	
	4	1	*249-4210*	1	PLATE AS (LH)	
		1	**273-3622**	1	EDGE (LH)	

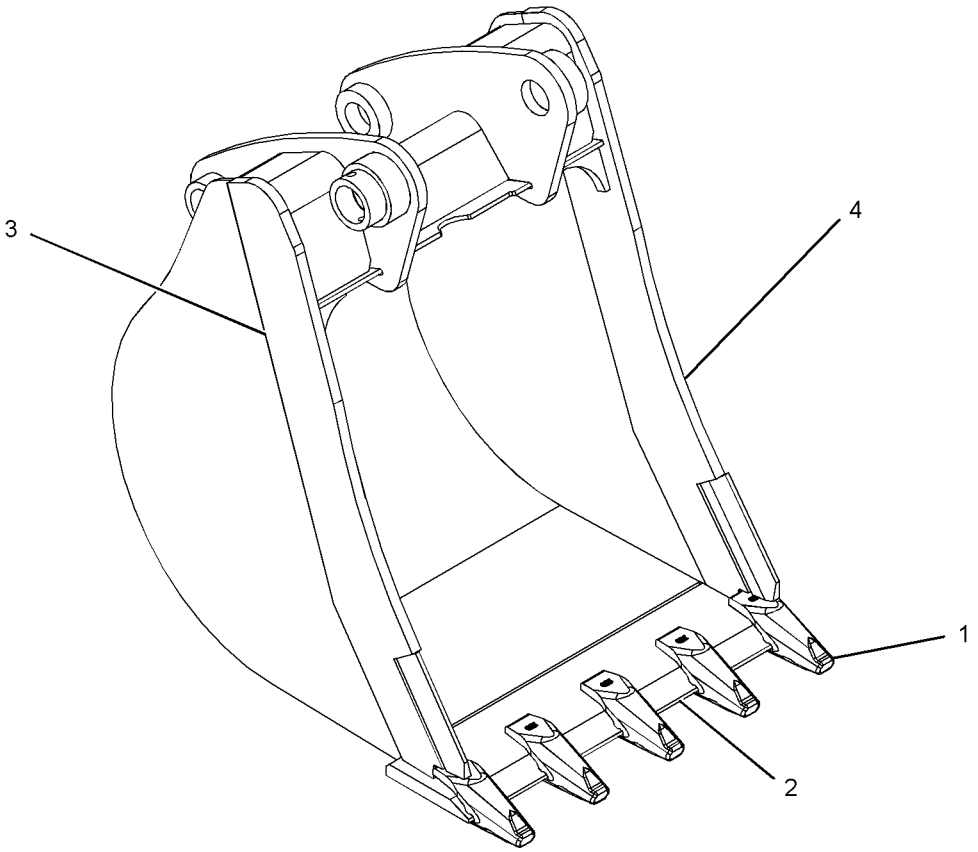

GRAPHIC #1 **<END>** g01226709

272-6411 BUCKET AS-HOE—HEAVY-DUTY

S/N: SJW1-UP
458-MM (18-IN)
PART OF 272-6410 BUCKET GP-HOE
AN ATTACHMENT

SMCS-6503 **i03726342**

NOTE	REF NO	GRAPHIC REF	PART NUMBER	QTY	PART NAME 1 2 3 4 5 6 (PRODUCT LEVEL)	SEE PAGE
	1	1	**136-6887**	1	EDGE	
	2	1	**201-1235**	4	ADAPTER (2-STRAP)	
	3	1	*249-4209*	1	PLATE AS (RH)	
		1	**249-4207**	1	EDGE (RH)	
	4	1	*249-4210*	1	PLATE AS (LH)	
		1	**273-3622**	1	EDGE (LH)	
	5	1	**272-6369**	4	PLATE	

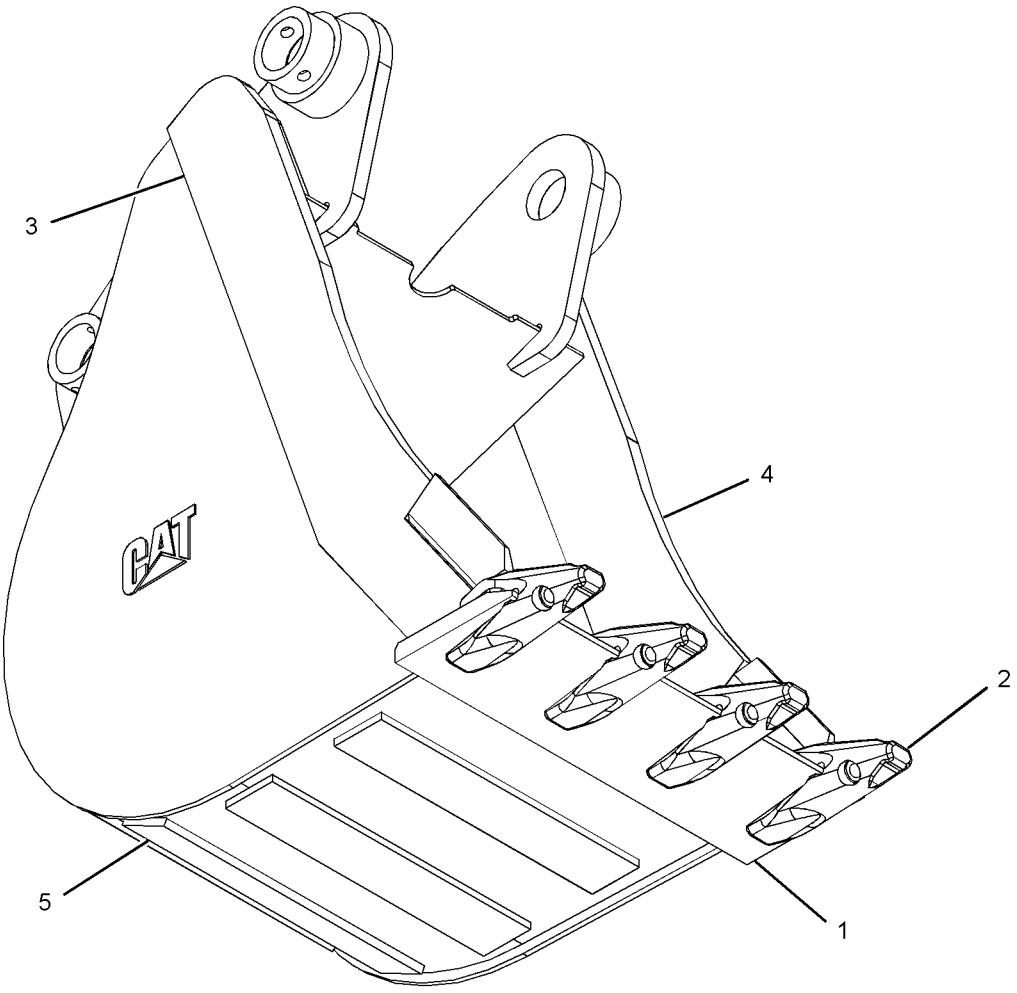

GRAPHIC #1 **<END>** g01214815

WORK TOOLS

272-7873 BUCKET AS-HOE—HEAVY-DUTY

S/N: SJW1-UP
762-MM (30-IN)
PART OF 272-7872 BUCKET GP-HOE
AN ATTACHMENT

SMCS-6503 **i03726600**

NOTE	REF NO	GRAPHIC REF	PART NUMBER	QTY	PART NAME 1 2 3 4 5 6 (PRODUCT LEVEL)	SEE PAGE
	1	1	**136-6889**	1	EDGE	
	2	1	**201-1235**	5	ADAPTER (2-STRAP)	
	3	1	*249-4209*	1	PLATE AS (RH)	
		1	**249-4207**	1	EDGE (RH)	
	4	1	*249-4210*	1	PLATE AS (LH)	
		1	**273-3622**	1	EDGE (LH)	
	5	1	**272-7914**	4	PLATE	

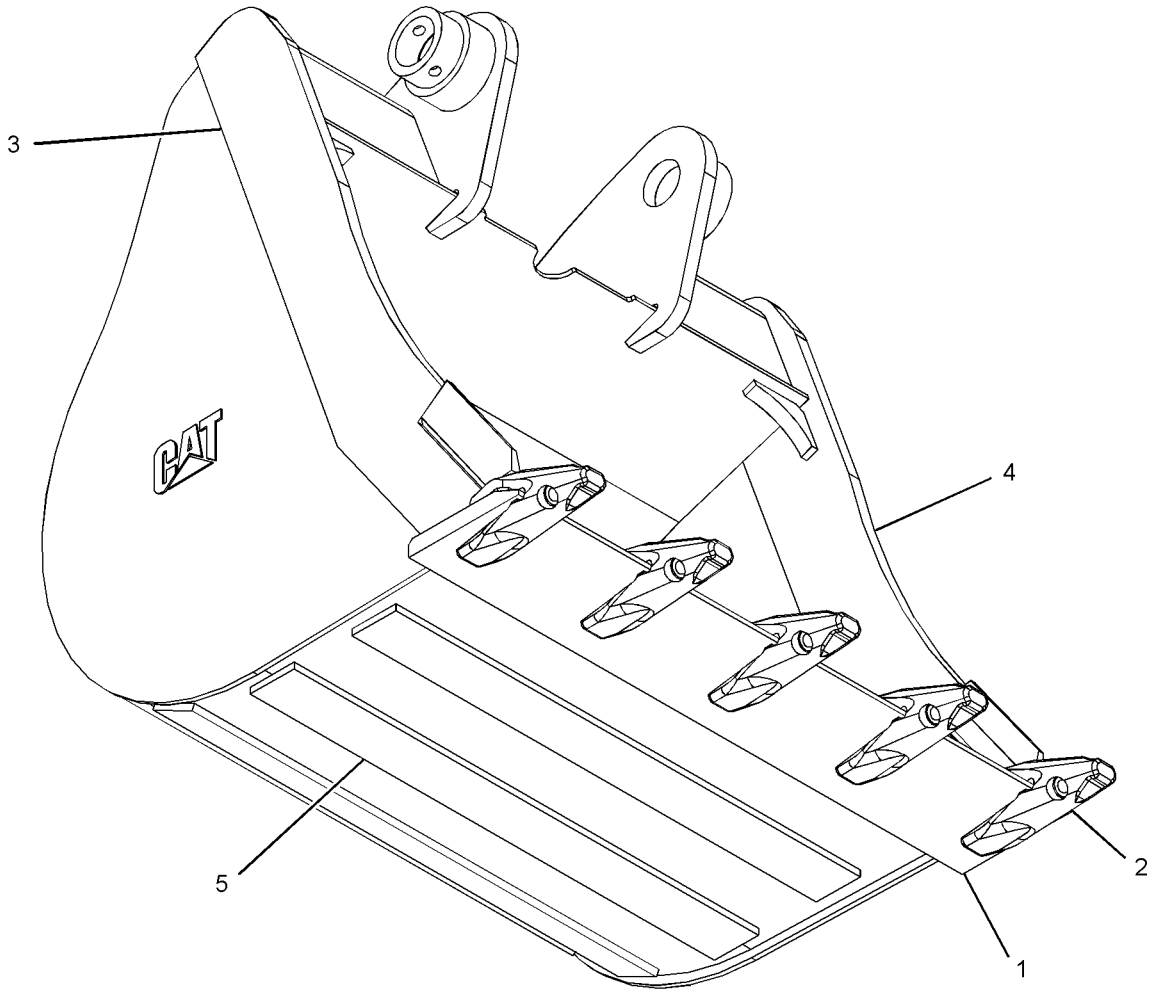

GRAPHIC #1 **<END>** g01215272

272-9235 BUCKET AS-HOE—HEAVY-DUTY

S/N: SJW1-UP
914-MM (36-IN)
PART OF 272-9234 BUCKET GP-HOE
AN ATTACHMENT

SMCS-6503 **i03726364**

NOTE	REF NO	GRAPHIC REF	PART NUMBER	QTY	PART NAME 1 2 3 4 5 6 (PRODUCT LEVEL)	SEE PAGE
	1	1	**201-1235**	6	ADAPTER (2-STRAP)	
	2	1	*249-4209*	1	PLATE AS (RH)	
		1	**249-4207**	1	EDGE (RH)	
	3	1	*249-4210*	1	PLATE AS (LH)	
		1	**273-3622**	1	EDGE (LH)	
	4	1	**272-7916**	4	PLATE	
	5	1	**136-6890**	1	EDGE	

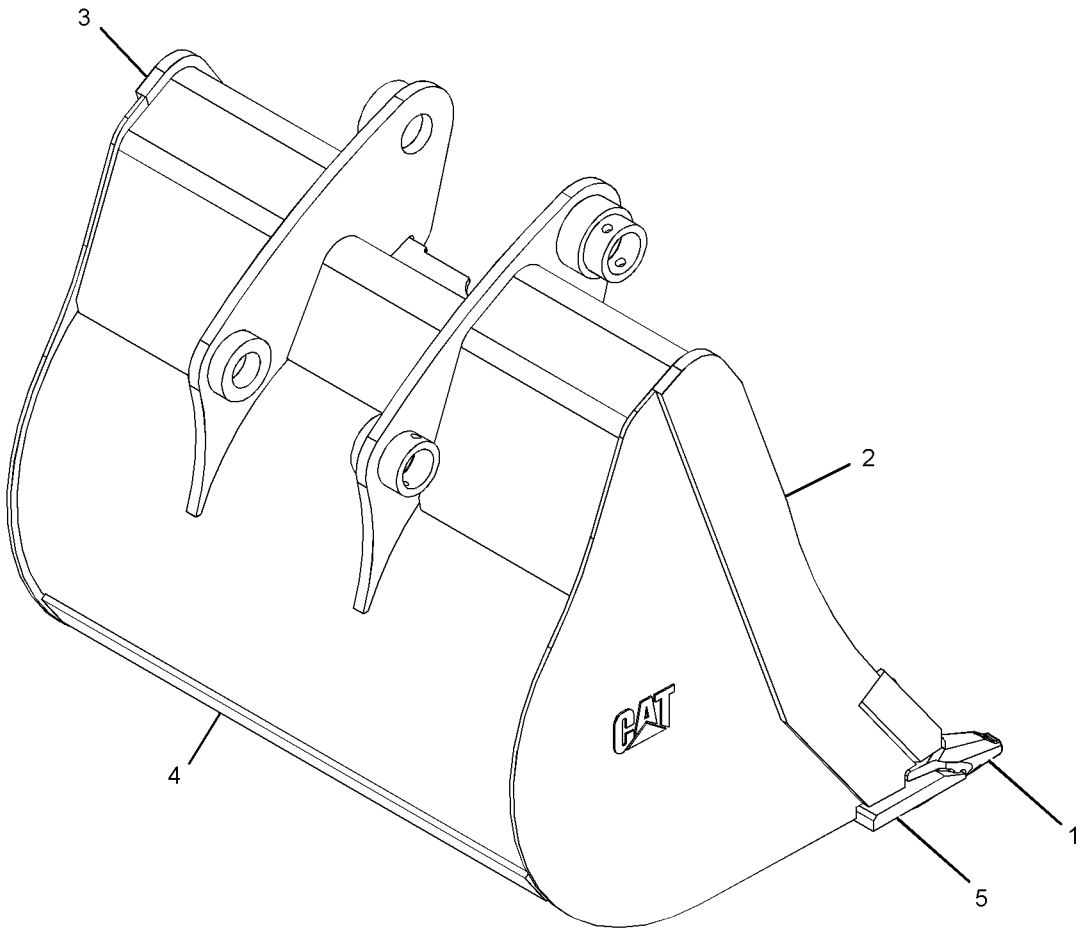

GRAPHIC #1 **<END>** g02009296

WORK TOOLS

273-0043 BUCKET AS-HOE—HEAVY-DUTY

S/N: SJW1-UP
762-MM (30-IN)
PART OF 273-0042 BUCKET GP-HOE
AN ATTACHMENT

SMCS-6503 **i02427539**

NOTE	REF NO	GRAPHIC REF	PART NUMBER	QTY	PART NAME 1 2 3 4 5 6 (PRODUCT LEVEL)	SEE PAGE
	1	1	**272-7914**	4	PLATE	
	2	1	*272-7920*	1	PLATE AS (RH)	
		1	**272-7918**	1	EDGE (RH)	
	3	1	*272-7921*	1	PLATE AS (LH)	
		1	**272-7919**	1	EDGE (LH)	
	4	1	**273-1465**	1	EDGE	

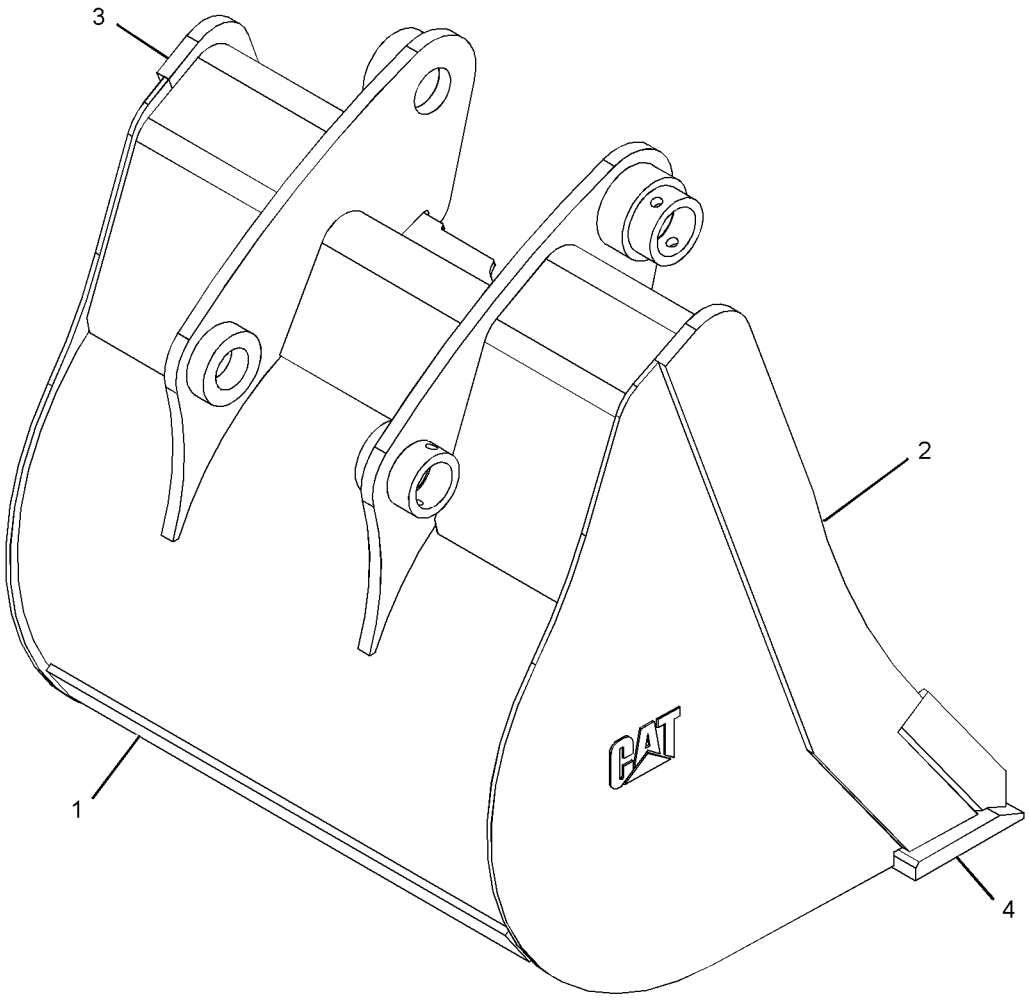

GRAPHIC #1 **<END>** g01214211

273-0094 BUCKET AS-HOE—HEAVY-DUTY

S/N: SJW1-UP
408-MM (16-IN)
PART OF 273-0093 BUCKET GP-HOE
AN ATTACHMENT

SMCS-6503 **i03726561**

NOTE	REF NO	GRAPHIC REF	PART NUMBER	QTY	PART NAME 1 2 3 4 5 6 (PRODUCT LEVEL)	SEE PAGE
	1	1	**201-1235**	3	ADAPTER (2-STRAP)	
	2	1	*249-4209*	1	PLATE AS (RH)	
		1	**249-4207**	1	EDGE (RH)	
	3	1	*249-4210*	1	PLATE AS (LH)	
		1	**273-3622**	1	EDGE (LH)	
	4	1	**272-7922**	1	EDGE	
	5	1	**273-5532**	4	PLATE	

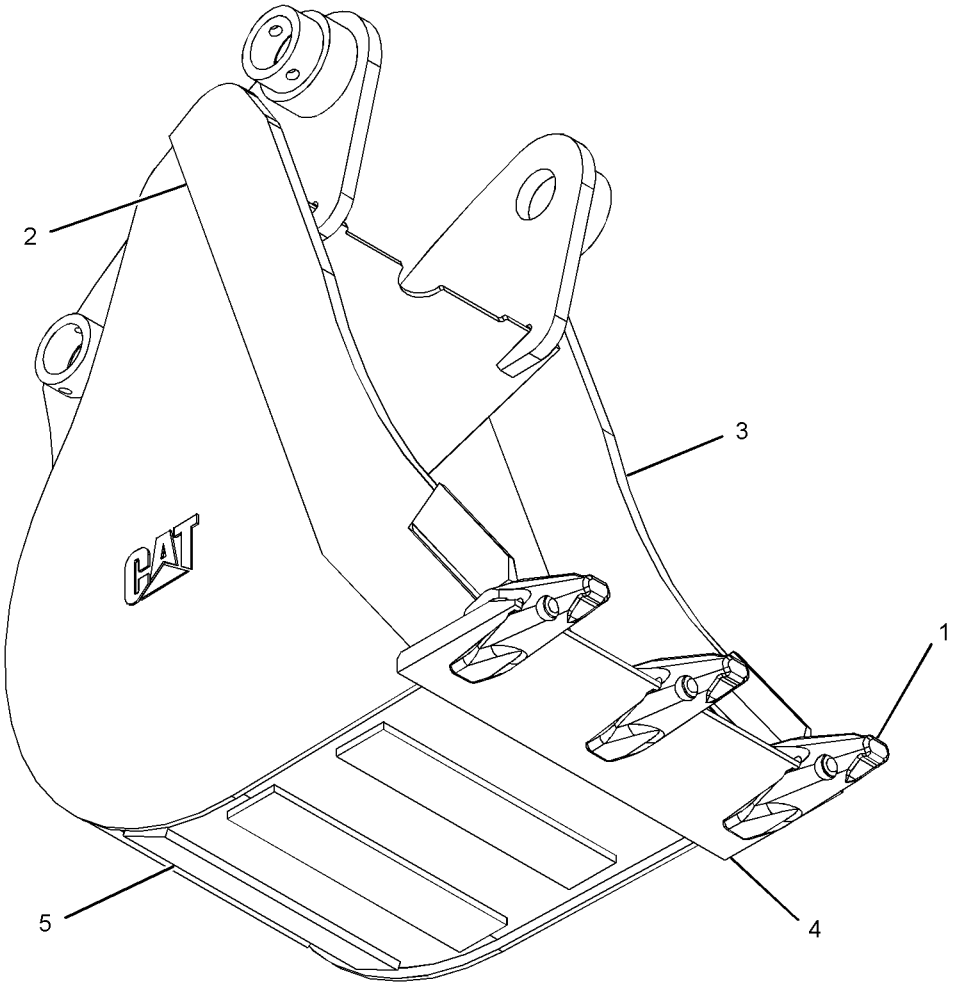

GRAPHIC #1 **<END>** g01214848

WORK TOOLS

273-0800 BUCKET AS-HOE—HEAVY-DUTY

S/N: SJW1-UP
610-MM (24-IN)
PART OF 273-0799 BUCKET GP-HOE
AN ATTACHMENT

SMCS-6503 **i02427585**

NOTE	REF NO	GRAPHIC REF	PART NUMBER	QTY	PART NAME 1 2 3 4 5 6 (PRODUCT LEVEL)	SEE PAGE
	1	1	**249-4211**	4	PLATE	
	2	1	*272-7920*	1	PLATE AS (RH)	
		1	**272-7918**	1	EDGE (RH)	
	3	1	*272-7921*	1	PLATE AS (LH)	
		1	**272-7919**	1	EDGE (LH)	
	4	1	**273-1463**	1	EDGE	

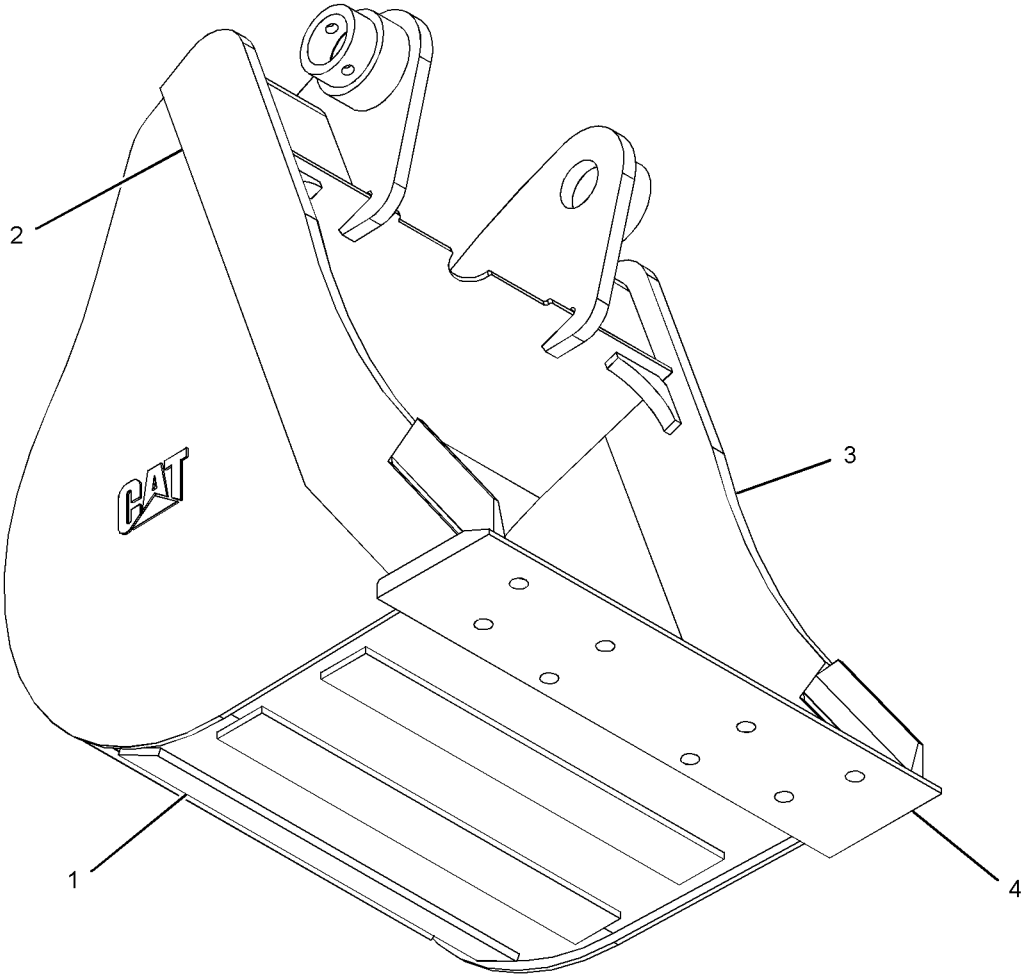

GRAPHIC #1 **<END>** g01214857

273-0863 BUCKET AS-HOE—HEAVY-DUTY

S/N: SJW1-UP
458-MM (18-IN)
PART OF 273-0862 BUCKET GP-HOE
AN ATTACHMENT

SMCS-6503 **i02427594**

NOTE	REF NO	GRAPHIC REF	PART NUMBER	QTY	PART NAME 1 2 3 4 5 6 (PRODUCT LEVEL)	SEE PAGE
	1	1	**272-6369**	4	PLATE	
	2	1	*272-7920*	1	PLATE AS (RH)	
		1	**272-7918**	1	EDGE (RH)	
	3	1	*272-7921*	1	PLATE AS (LH)	
		1	**272-7919**	1	EDGE (LH)	
	4	1	**273-1462**	1	EDGE	

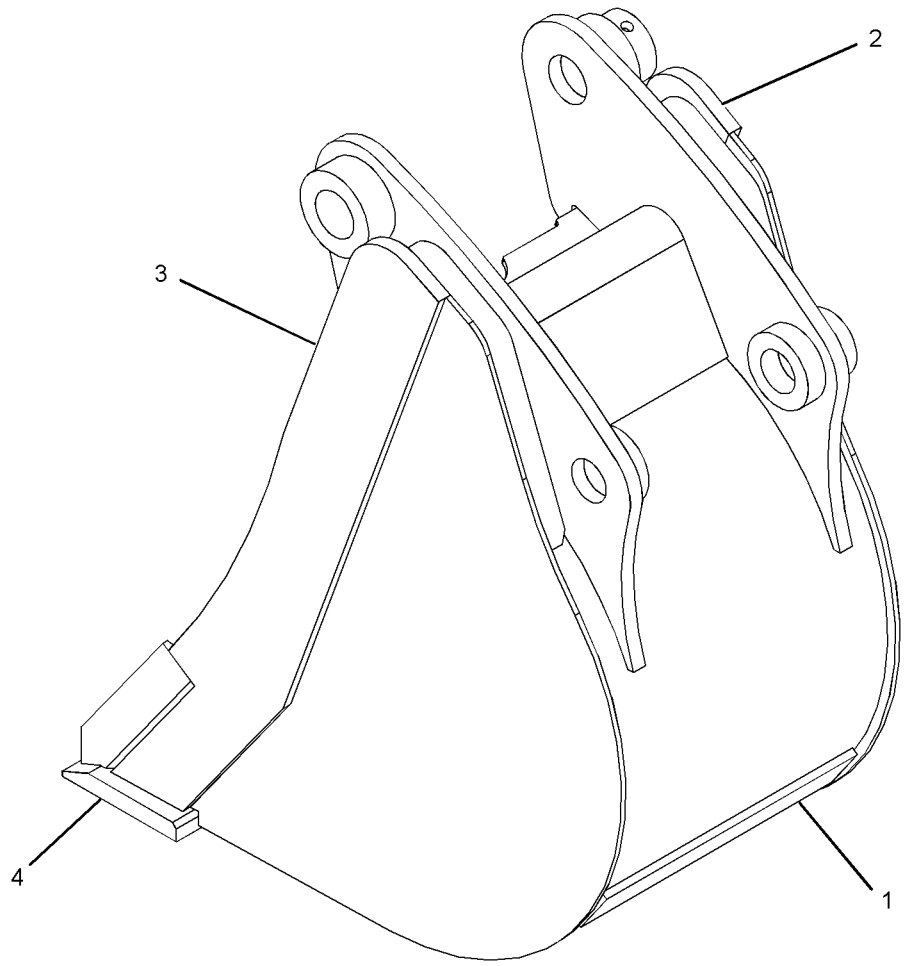

GRAPHIC #1 **<END>** g01215030

WORK TOOLS

273-3733 BUCKET AS-HOE—HEAVY-DUTY

S/N: SJW1-UP
305-MM (12-IN)
PART OF 273-3732 BUCKET GP-HOE
AN ATTACHMENT

SMCS-6503 **i02560416**

NOTE	REF NO	GRAPHIC REF	PART NUMBER	QTY	PART NAME 1 2 3 4 5 6 (PRODUCT LEVEL)	SEE PAGE
	1	1	*286-9340*	1	BRACKET AS (LH)	
		1	**9R-0320**	1	BEARING-SLEEVE	
		1	**154-5257**	1	BEARING-SLEEVE	
	2	1	*286-9338*	1	BRACKET AS (RH)	
		1	**9R-0320**	1	BEARING-SLEEVE	
		1	**154-5257**	1	BEARING-SLEEVE	
	3	1	**273-3599**	4	PLATE	
	4	1	**273-3730**	1	EDGE	
	5	1	*273-3755*	1	PLATE AS (RH)	
		1	**272-7918**	1	EDGE (RH)	
	6	1	*273-3756*	1	PLATE AS (LH)	
		1	**272-7919**	1	EDGE (LH)	

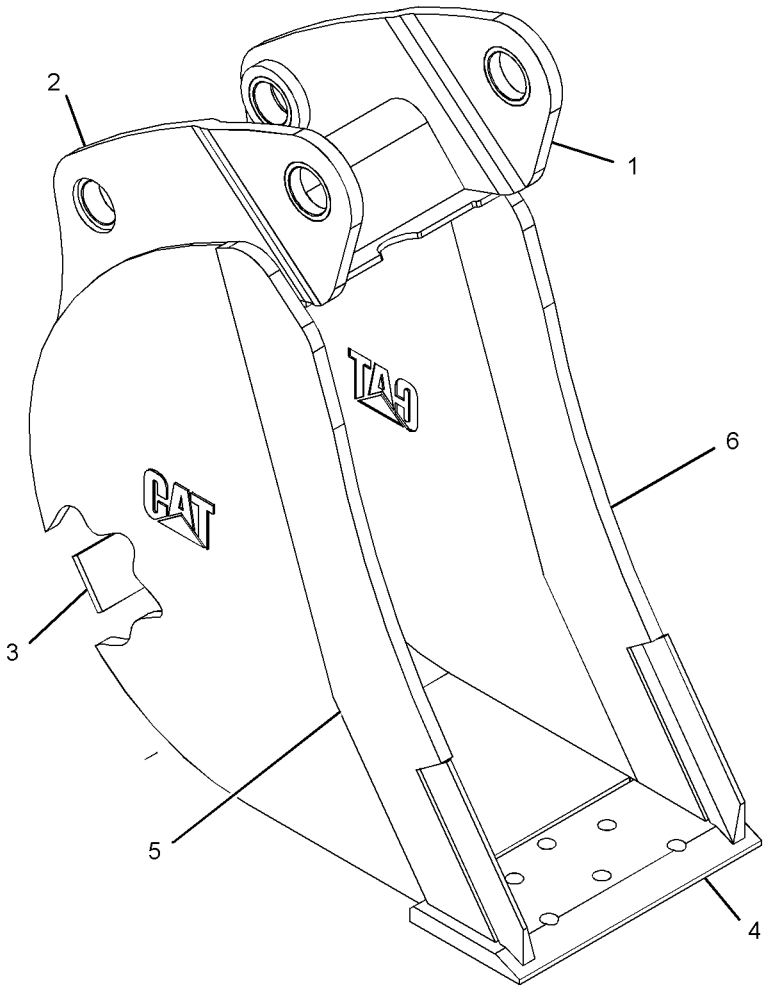

GRAPHIC #1 **<END>** g01215630

WORK TOOLS

319-9397 BUCKET AS-HOE—HEAVY-DUTY

S/N: SJW1-UP
305-MM (12-IN)
PART OF 319-9394 BUCKET GP-HOE
AN ATTACHMENT

SMCS-6503 **i03740165**

NOTE	REF NO	GRAPHIC REF	PART NUMBER	QTY	PART NAME 1 2 3 4 5 6 (PRODUCT LEVEL)	SEE PAGE
	1	1	*305-6815*	1	EDGE AS	
		1	**201-1235**	3	ADAPTER	
		1	**319-8968**	1	EDGE	
	2	1	*320-0267*	1	BRACKET AS (RH)	
	2A	1	**9R-0320**	1	BEARING-SLEEVE	
	2B	1	**154-5257**	1	BEARING-SLEEVE	
	3	1	**319-8975**	4	PLATE	
	4	1	*320-0268*	1	BRACKET AS (LH)	
	4A	1	**9R-0320**	1	BEARING-SLEEVE	
	4B	1	**154-5257**	1	BEARING-SLEEVE	
	5	1	*320-0256*	1	PLATE AS (RH)	
		1	**249-4207**	1	EDGE	
	6	1	*320-0257*	1	PLATE AS (LH)	
		1	**273-3622**	1	EDGE	

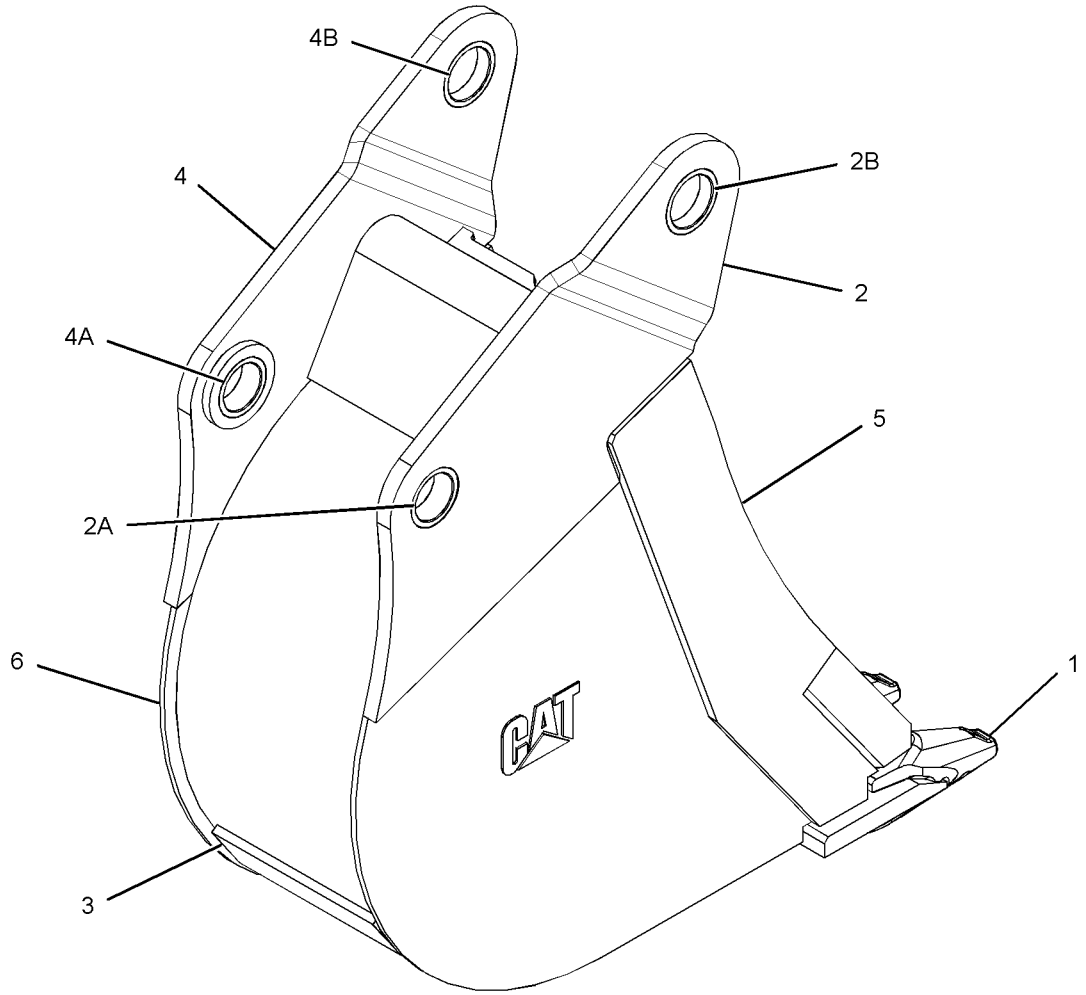

GRAPHIC #1 **<END>** g02113634

WORK TOOLS

337-7394 BUCKET GP-GENERAL PURPOSE

S/N: SJW1-UP

AN ATTACHMENT

SMCS-6101 **i04603410**

NOTE	REF NO	GRAPHIC REF	PART NUMBER	QTY	PART NAME 1 2 3 4 5 6 (PRODUCT LEVEL)	SEE PAGE
	1	1	**137-4234**	1	PLATE-IDENTIFICATION (WORK TOOL)	
	2	1	**168-8389**	4	TACK-FASTENER	
Y	3	1	*337-7395*	1	BUCKET AS-GENERAL PURPOSE	481

Y-SEPARATE ILLUSTRATION

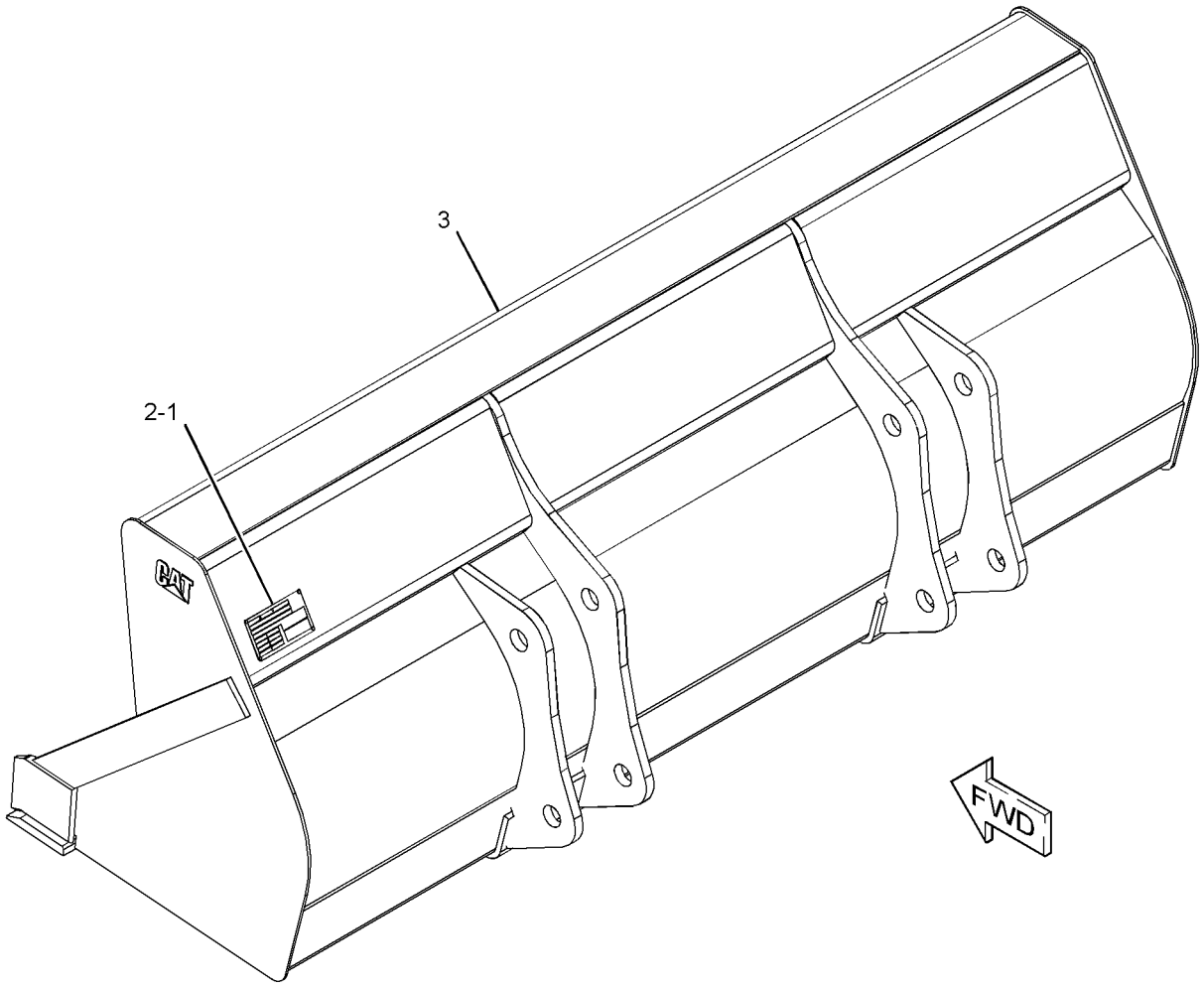

GRAPHIC #1 **<END>** g02762938

WORK TOOLS

151-7887 BUCKET GP-HOE—HIGH CAPACITY

S/N: SJW1-UP

AN ATTACHMENT

SMCS-6503 **i03595462**

NOTE	REF NO	GRAPHIC REF	PART NUMBER	QTY	PART NAME 1 2 3 4 5 6 (PRODUCT LEVEL)	SEE PAGE
C	1	1	*135-8206*	3	TOOTH GP-UNI	
					(EACH INCLUDES)	
		1	**4F-3657**	2	BOLT-PLOW (5/8-11X2.75-IN)	
		1	**4K-0367**	2	NUT-FULL (5/8-11-THD)	
		1	**135-8203**	1	TOOTH-UNI	
	2	1	**137-4234**	1	PLATE-IDENTIFICATION (WORK TOOL)	
Y	3	1	*151-7829*	1	BUCKET AS-HOE	482
C	4	1	**168-8389**	4	TACK-FASTENER	

C-CHANGE FROM PREVIOUS TYPE
Y-SEPARATE ILLUSTRATION

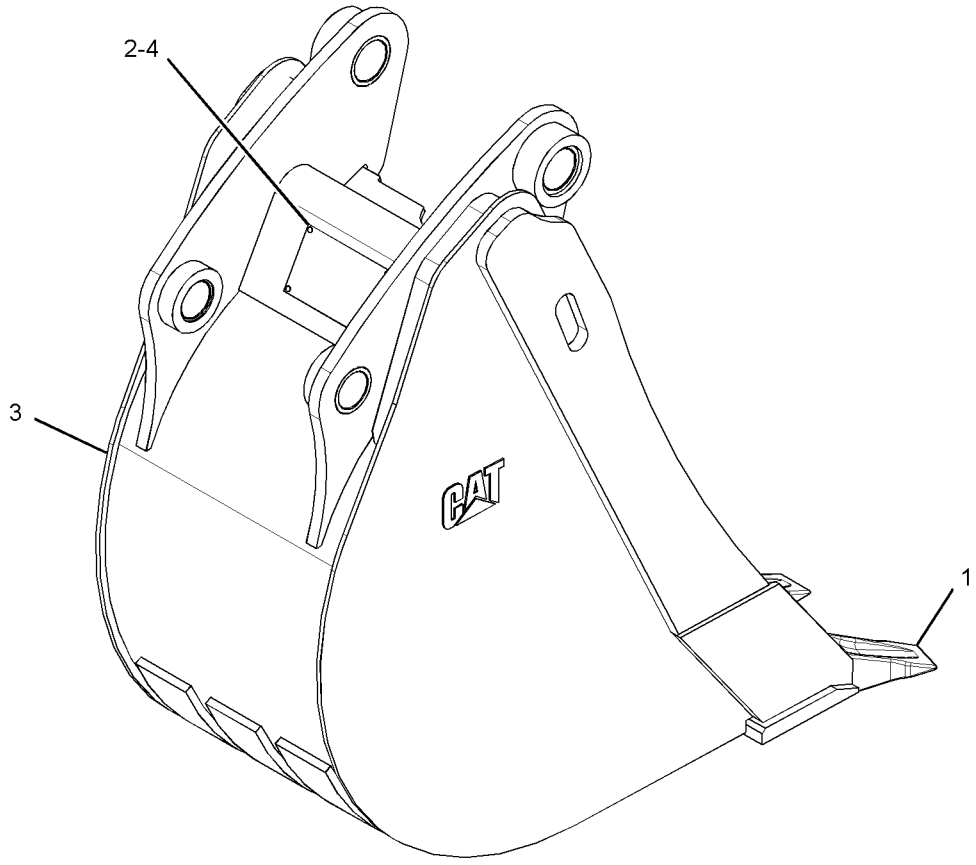

GRAPHIC #1 **<END>** g01398326

WORK TOOLS

151-7888 BUCKET GP-HOE—HIGH CAPACITY

S/N: SJW1-UP
AN ATTACHMENT

SMCS-6503 **i03595481**

NOTE	REF NO	GRAPHIC REF	PART NUMBER	QTY	PART NAME 1 2 3 4 5 6 (PRODUCT LEVEL)	SEE PAGE
C	1	1	*135-8206*	4	TOOTH GP-UNI	
					(EACH INCLUDES)	
		1	**4F-3657**	2	BOLT-PLOW (5/8-11X2.75-IN)	
		1	**4K-0367**	2	NUT-FULL (5/8-11-THD)	
		1	**135-8203**	1	TOOTH-UNI	
	2	1	**137-4234**	1	PLATE-IDENTIFICATION (WORK TOOL)	
Y	3	1	*151-7830*	1	BUCKET AS-HOE	483
C	4	1	**168-8389**	4	TACK-FASTENER	

C-CHANGE FROM PREVIOUS TYPE
Y-SEPARATE ILLUSTRATION

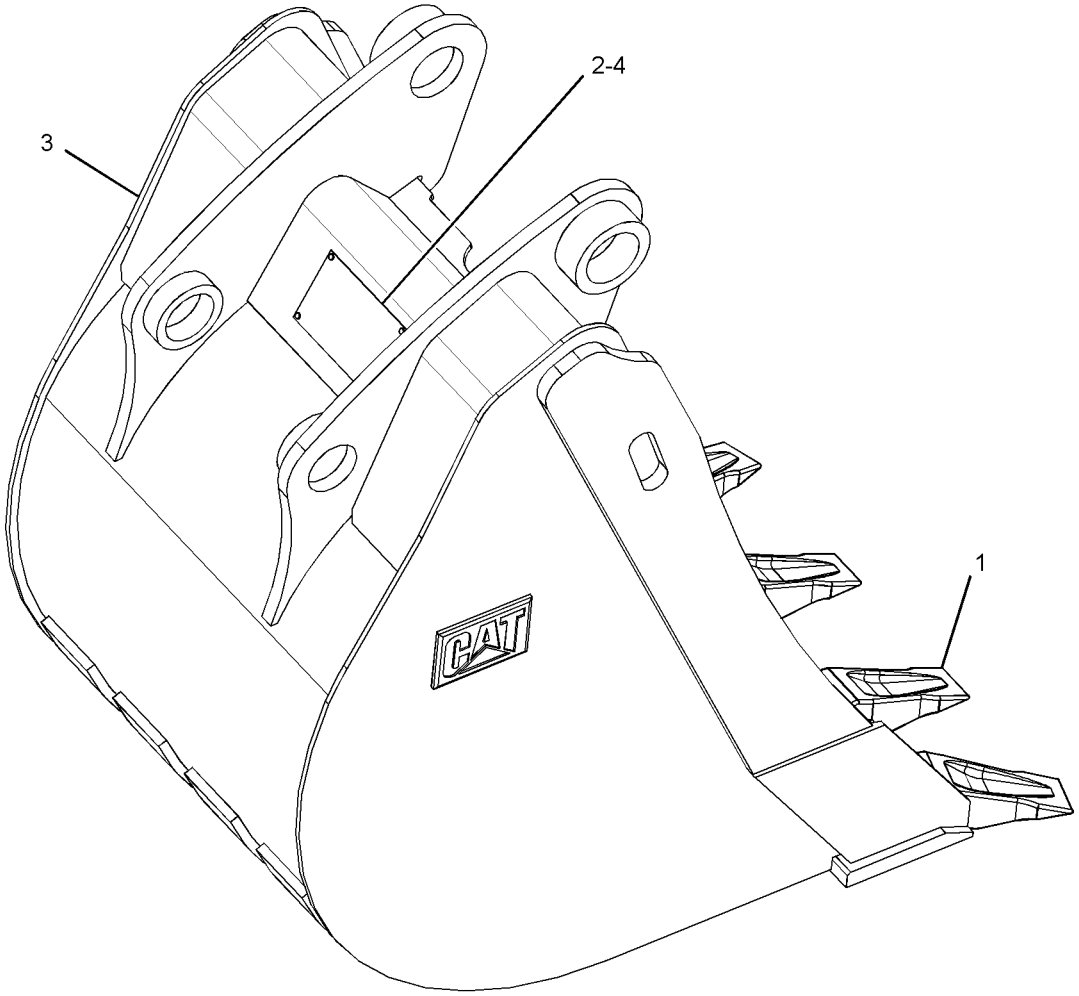

GRAPHIC #1 **<END>** g01398597

151-7889 BUCKET GP-HOE—HIGH CAPACITY

S/N: SJW1-UP

AN ATTACHMENT

SMCS-6503 **i03595500**

NOTE	REF NO	GRAPHIC REF	PART NUMBER	QTY	PART NAME 1 2 3 4 5 6 (PRODUCT LEVEL)	SEE PAGE
C	1	1	*135-8206*	5	TOOTH GP-UNI	
					(EACH INCLUDES)	
		1	**4F-3657**	2	BOLT-PLOW (5/8-11X2.75-IN)	
		1	**4K-0367**	2	NUT-FULL (5/8-11-THD)	
		1	**135-8203**	1	TOOTH-UNI	
	2	1	**137-4234**	1	PLATE-IDENTIFICATION (WORK TOOL)	
Y	3	1	*151-7831*	1	BUCKET AS-HOE	484
C	4	1	**168-8389**	4	TACK-FASTENER	

C-CHANGE FROM PREVIOUS TYPE
Y-SEPARATE ILLUSTRATION

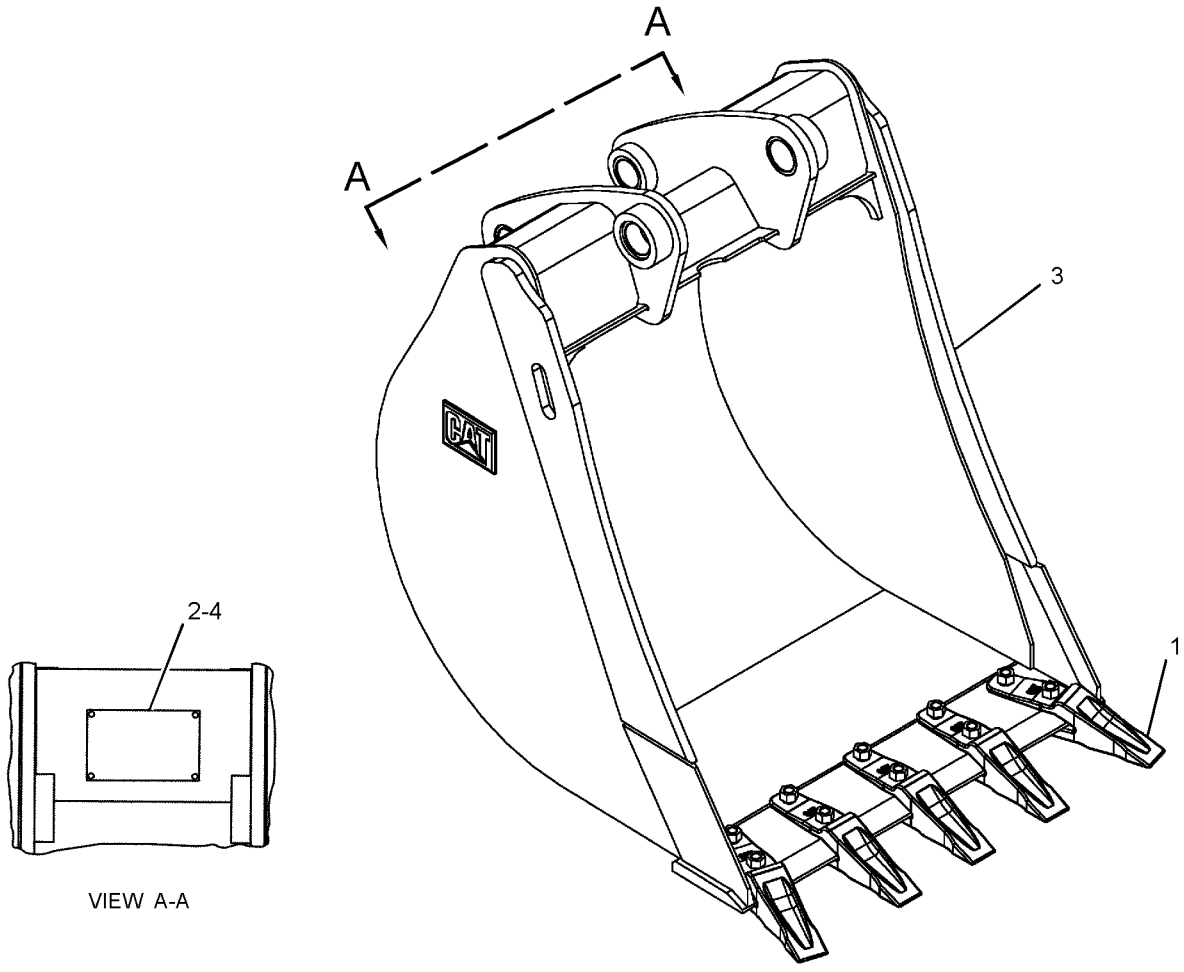

GRAPHIC #1 **<END>** g01356630

WORK TOOLS

249-4221 BUCKET GP-HOE—HEAVY-DUTY

S/N: SJW1-UP
AN ATTACHMENT

SMCS-6503 **i02399270**

NOTE	REF NO	GRAPHIC REF	PART NUMBER	QTY	PART NAME 1 2 3 4 5 6 (PRODUCT LEVEL)	SEE PAGE
	1	1	**137-4234**	1	PLATE-IDENTIFICATION (WORK TOOL)	
	2	1	**168-8389**	4	TACK-FASTENER	
	3	1	*208-5245*	5	TIP GP-PENETRATION	
					(EACH INCLUDES)	
		1	**201-1238**	1	PIN	
		1	**201-1239**	1	RETAINER AS	
		1	**208-5235**	1	TIP-PENETRATION	
Y	4	1	*249-4220*	1	BUCKET AS-HOE	485
M	5	1	**8T-4133**	4	NUT (M10X1.5-THD)	
M	6	1	**8T-4178**	2	BOLT (M10X1.5X90-MM)	

M-METRIC PART
Y-SEPARATE ILLUSTRATION

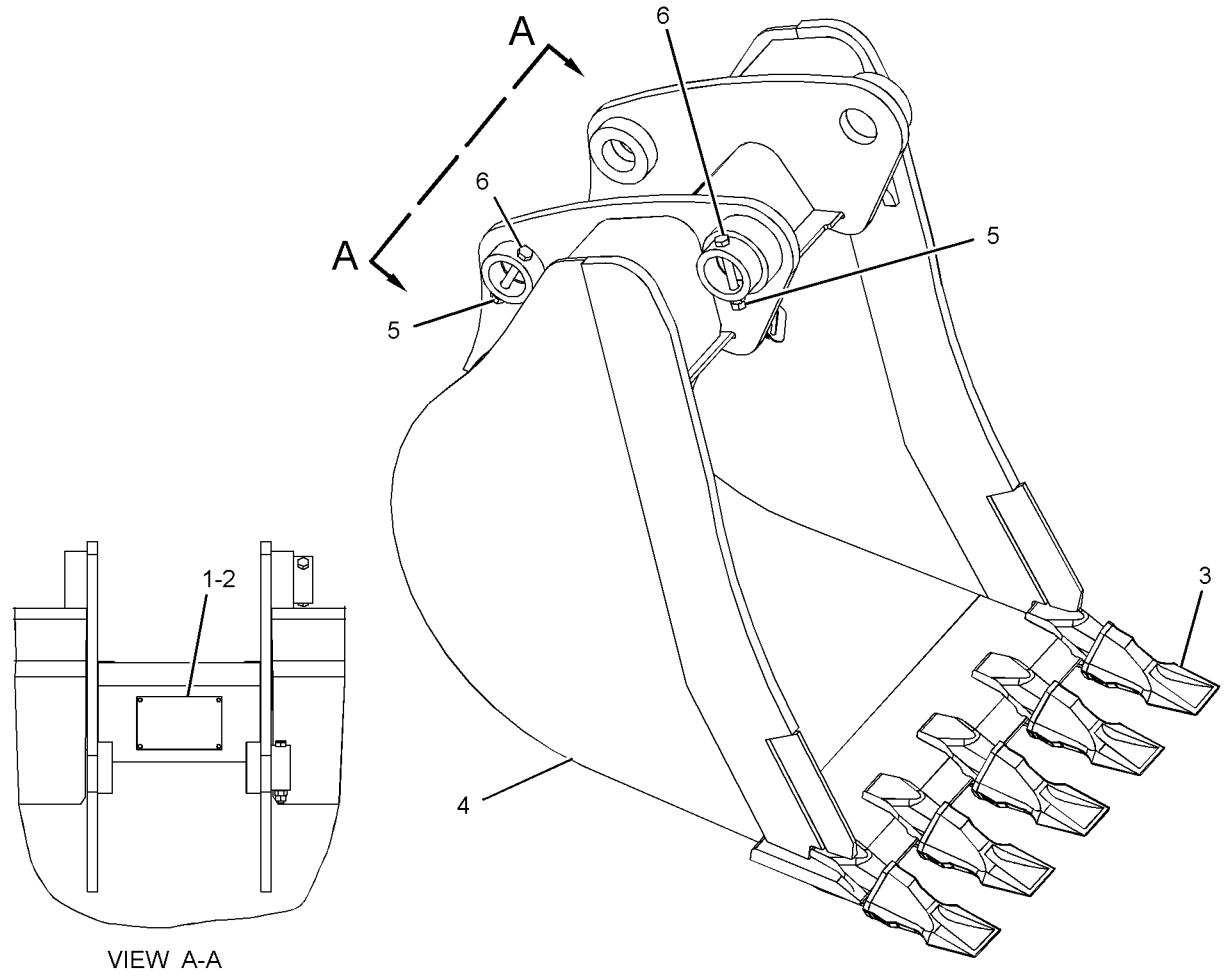

VIEW A-A

GRAPHIC #1 **<END>** g01200276

WORK TOOLS

272-6410 BUCKET GP-HOE—HEAVY-DUTY

S/N: SJW1-UP

AN ATTACHMENT

SMCS-6503 **i02425851**

NOTE	REF NO	GRAPHIC REF	PART NUMBER	QTY	PART NAME 1 2 3 4 5 6 (PRODUCT LEVEL)	SEE PAGE
	1	1	**137-4234**	1	PLATE-IDENTIFICATION (WORK TOOL)	
	2	1	**168-8389**	4	TACK-FASTENER	
	3	1	*208-5245*	4	TIP GP-PENETRATION	
					(EACH INCLUDES)	
		1	**201-1238**	1	PIN	
		1	**201-1239**	1	RETAINER AS	
		1	**208-5235**	1	TIP-PENETRATION	
Y	4	1	*272-6411*	1	BUCKET AS-HOE	486
M	5	1	**8T-4133**	4	NUT (M10X1.5-THD)	
M	6	1	**8T-4178**	2	BOLT (M10X1.5X90-MM)	

M-METRIC PART
Y-SEPARATE ILLUSTRATION

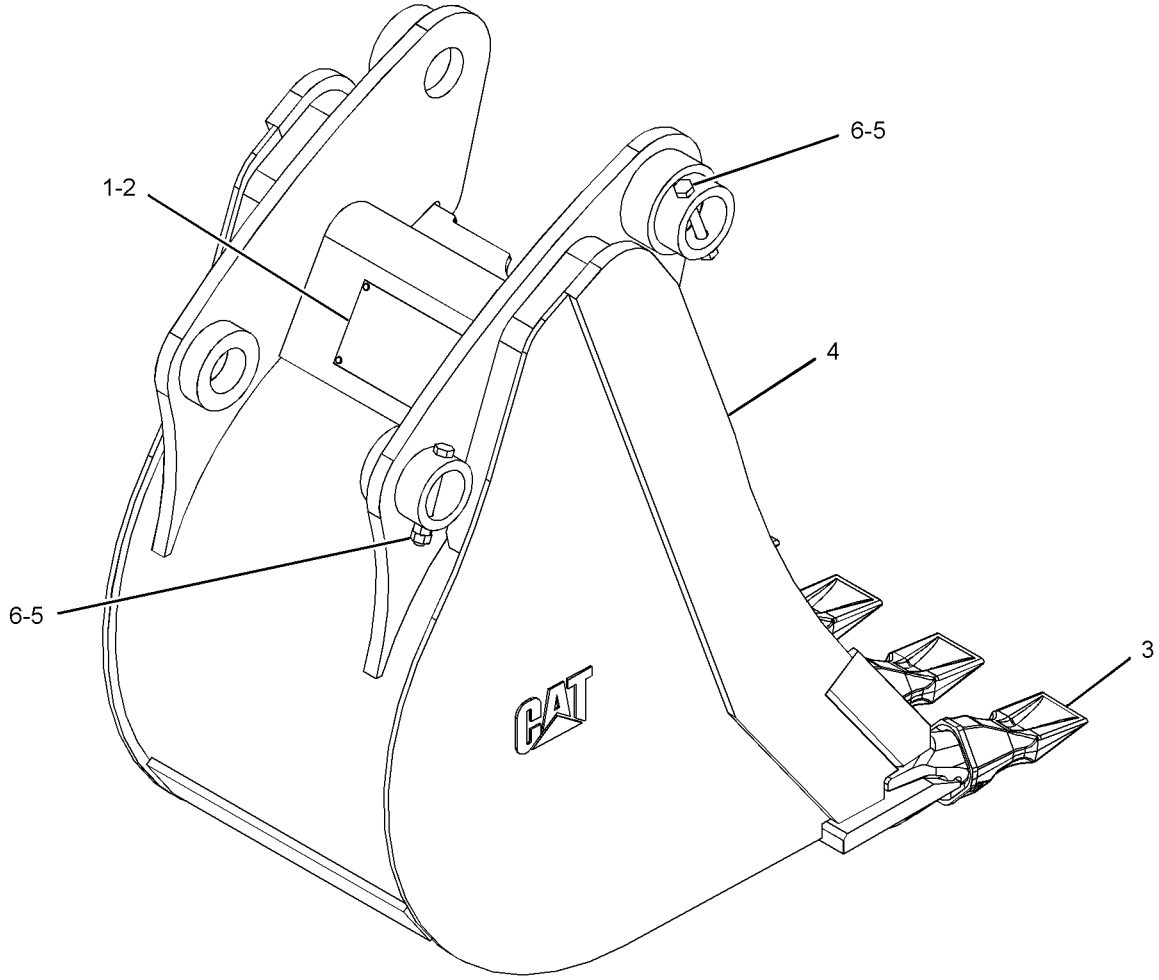

GRAPHIC #1 **<END>** g01214807

WORK TOOLS

272-7872 BUCKET GP-HOE—HEAVY-DUTY

S/N: SJW1-UP
AN ATTACHMENT

SMCS-6503 **i02425880**

NOTE	REF NO	GRAPHIC REF	PART NUMBER	QTY	PART NAME 1 2 3 4 5 6 (PRODUCT LEVEL)	SEE PAGE
	1	1	**137-4234**	1	PLATE-IDENTIFICATION (WORK TOOL)	
	2	1	**168-8389**	4	TACK-FASTENER	
	3	1	*208-5245*	5	TIP GP-PENETRATION	
					(EACH INCLUDES)	
		1	**201-1238**	1	PIN	
		1	**201-1239**	1	RETAINER AS	
		1	**208-5235**	1	TIP-PENETRATION	
Y	4	1	*272-7873*	1	BUCKET AS-HOE	487
M	5	1	**8T-4133**	4	NUT (M10X1.5-THD)	
M	6	1	**8T-4178**	2	BOLT (M10X1.5X90-MM)	

M-METRIC PART
Y-SEPARATE ILLUSTRATION

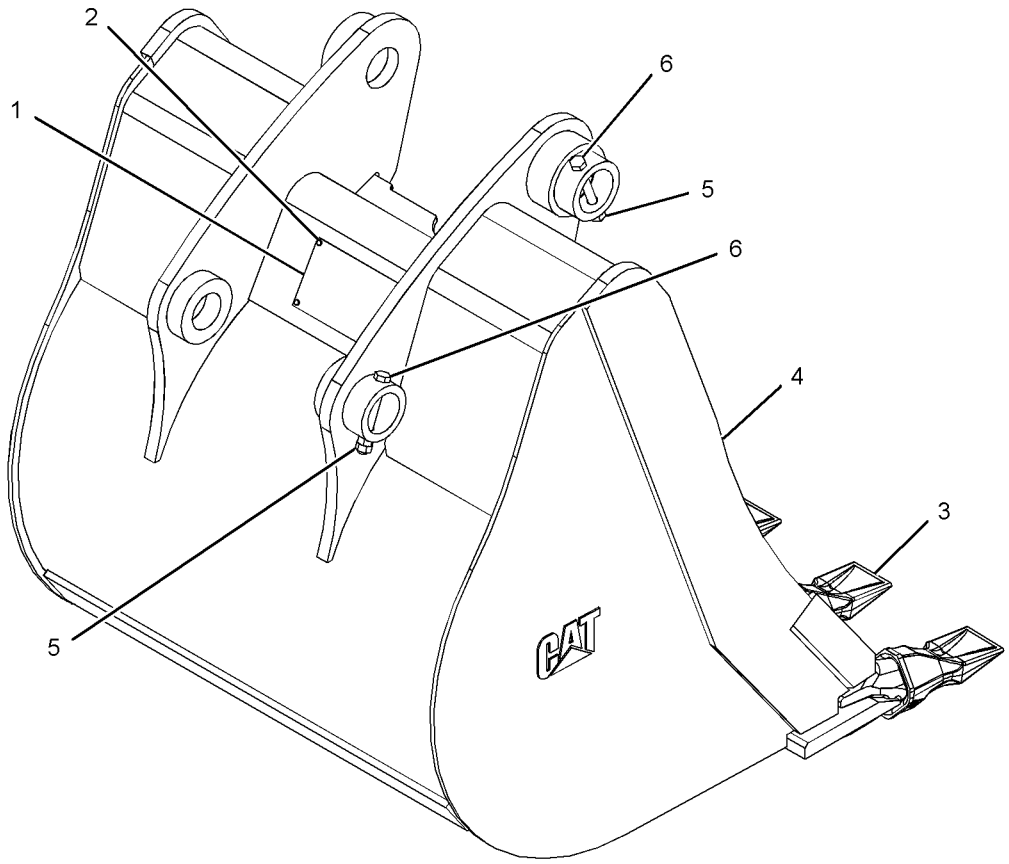

GRAPHIC #1 **<END>** g01215020

WORK TOOLS

272-9234 BUCKET GP-HOE—HEAVY-DUTY

S/N: SJW1-UP

AN ATTACHMENT

SMCS-6503 **i02427535**

NOTE	REF NO	GRAPHIC REF	PART NUMBER	QTY	PART NAME 1 2 3 4 5 6 (PRODUCT LEVEL)	SEE PAGE
	1	1	**137-4234**	1	PLATE-IDENTIFICATION (WORK TOOL)	
	2	1	**168-8389**	4	TACK-FASTENER	
	3	1	*208-5245*	6	TIP GP-PENETRATION	
					(EACH INCLUDES)	
		1	**201-1238**	1	PIN	
		1	**201-1239**	1	RETAINER AS	
		1	**208-5235**	1	TIP-PENETRATION	
Y	4	1	*272-9235*	1	BUCKET AS-HOE	488
M	5	1	**8T-4133**	4	NUT (M10X1.5-THD)	
M	6	1	**8T-4178**	2	BOLT (M10X1.5X90-MM)	

M-METRIC PART
Y-SEPARATE ILLUSTRATION

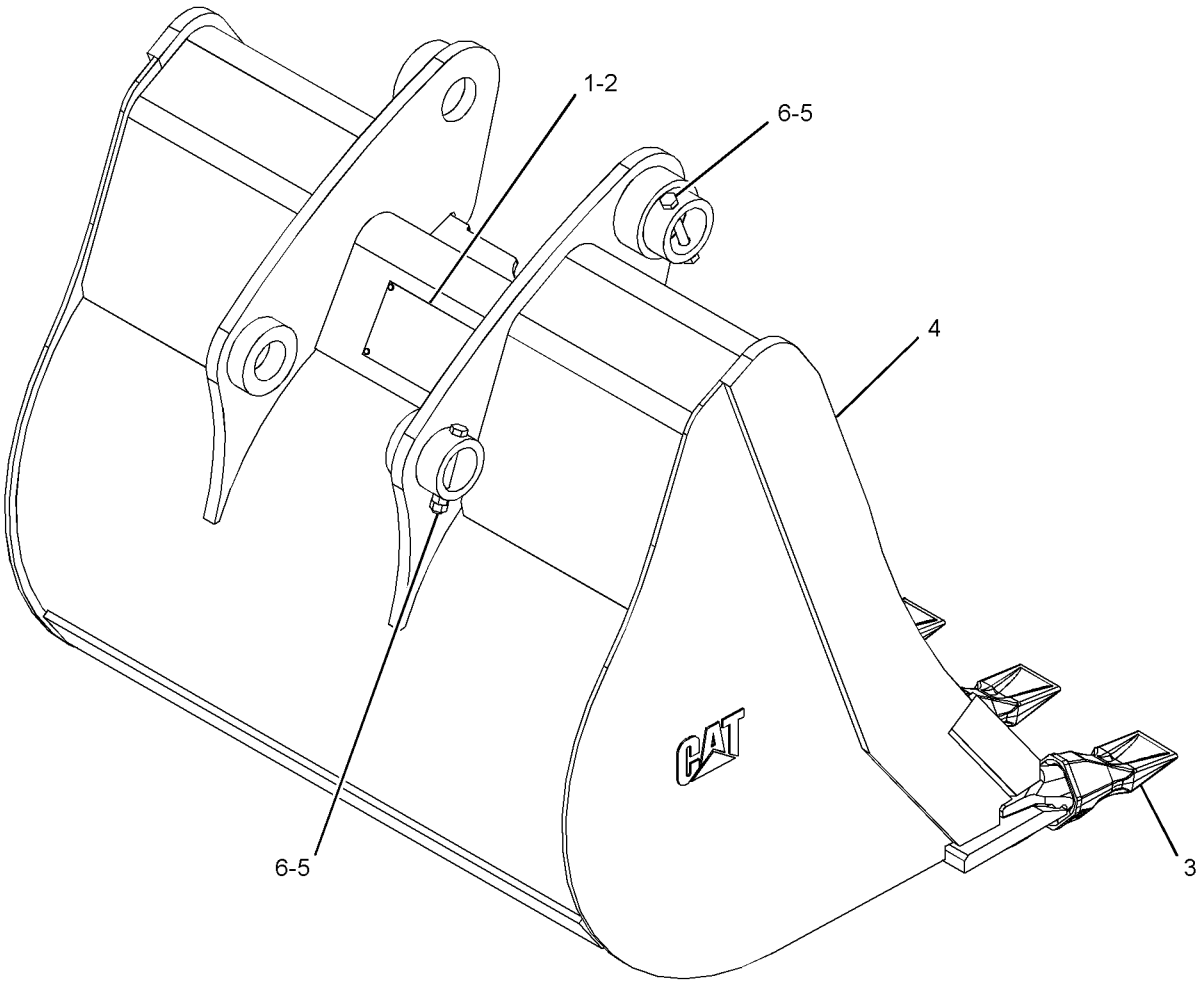

GRAPHIC #1 **<END>** g01214243

WORK TOOLS

273-0042 BUCKET GP-HOE—HEAVY-DUTY

S/N: SJW1-UP

AN ATTACHMENT

SMCS-6503 **i03599042**

NOTE	REF NO	GRAPHIC REF	PART NUMBER	QTY	PART NAME 1 2 3 4 5 6 (PRODUCT LEVEL)	SEE PAGE
	1	1	*135-8206*	5	TOOTH GP-UNI	
					(EACH INCLUDES)	
		1	**4F-3657**	2	BOLT-PLOW (5/8-11X2.75-IN)	
		1	**4K-0367**	2	NUT-FULL (5/8-11-THD)	
		1	**135-8203**	1	TOOTH-UNI	
	2	1	**137-4234**	1	PLATE-IDENTIFICATION (WORK TOOL)	
	3	1	**168-8389**	4	TACK-FASTENER	
Y	4	1	*273-0043*	1	BUCKET AS-HOE	489
M	5	1	**8T-4133**	4	NUT (M10X1.5-THD)	
M	6	1	**8T-4178**	2	BOLT (M10X1.5X90-MM)	

M-METRIC PART
Y-SEPARATE ILLUSTRATION

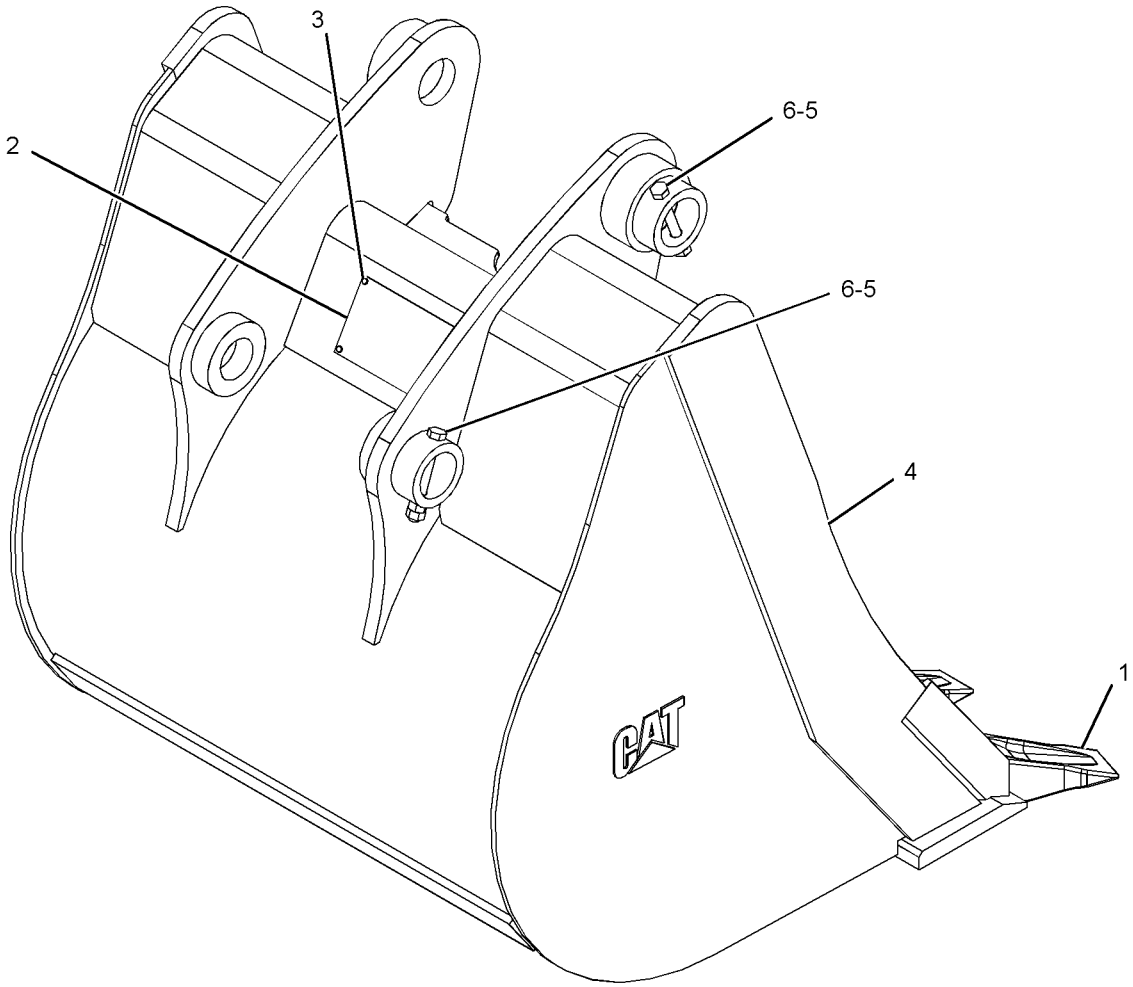

GRAPHIC #1 **<END>** g01214208

WORK TOOLS

273-0093 BUCKET GP-HOE—HEAVY-DUTY

S/N: SJW1-UP

AN ATTACHMENT

SMCS-6503 **i02427582**

NOTE	REF NO	GRAPHIC REF	PART NUMBER	QTY	PART NAME 1 2 3 4 5 6 (PRODUCT LEVEL)	SEE PAGE
	1	1	**137-4234**	1	PLATE-IDENTIFICATION (WORK TOOL)	
	2	1	**168-8389**	4	TACK-FASTENER	
	3	1	*208-5245*	3	TIP GP-PENETRATION	
					(EACH INCLUDES)	
		1	**201-1238**	1	PIN	
		1	**201-1239**	1	RETAINER AS	
		1	**208-5235**	1	TIP-PENETRATION	
Y	4	1	*273-0094*	1	BUCKET AS-HOE	490
M	5	1	**8T-4133**	4	NUT (M10X1.5-THD)	
M	6	1	**8T-4178**	2	BOLT (M10X1.5X90-MM)	

M-METRIC PART
Y-SEPARATE ILLUSTRATION

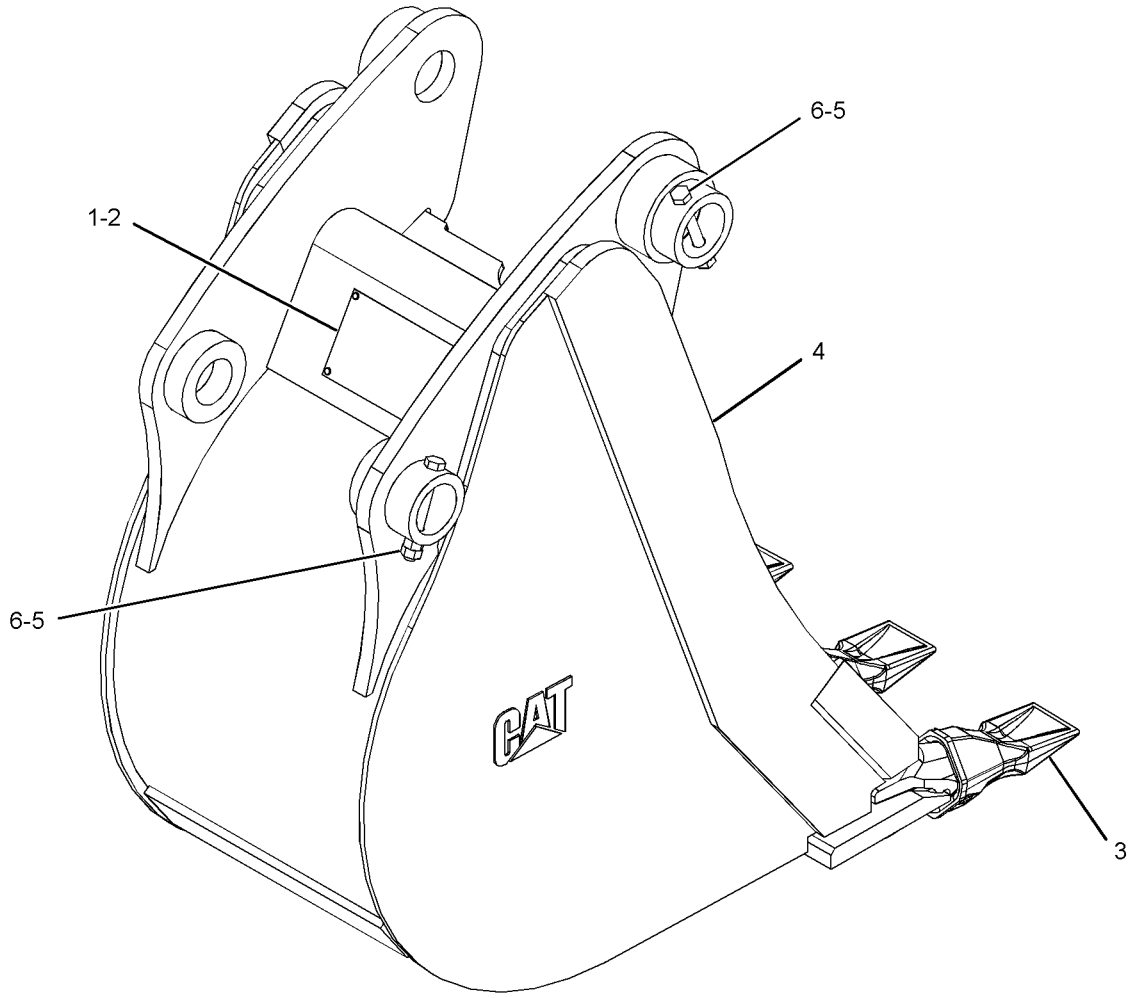

GRAPHIC #1 **<END>** g01214837

WORK TOOLS

273-0799 BUCKET GP-HOE—HEAVY-DUTY

S/N: SJW1-UP

AN ATTACHMENT

SMCS-6503 **i03599045**

NOTE	REF NO	GRAPHIC REF	PART NUMBER	QTY	PART NAME 1 2 3 4 5 6 (PRODUCT LEVEL)	SEE PAGE
	1	1	*135-8206*	4	TOOTH GP-UNI	
					(EACH INCLUDES)	
		1	**4F-3657**	2	BOLT-PLOW (5/8-11X2.75-IN)	
		1	**4K-0367**	2	NUT-FULL (5/8-11-THD)	
		1	**135-8203**	1	TOOTH-UNI	
	2	1	**137-4234**	1	PLATE-IDENTIFICATION (WORK TOOL)	
	3	1	**168-8389**	4	TACK-FASTENER	
Y	4	1	*273-0800*	1	BUCKET AS-HOE	491
M	5	1	**8T-4133**	4	NUT (M10X1.5-THD)	
M	6	1	**8T-4178**	2	BOLT (M10X1.5X90-MM)	

M-METRIC PART
Y-SEPARATE ILLUSTRATION

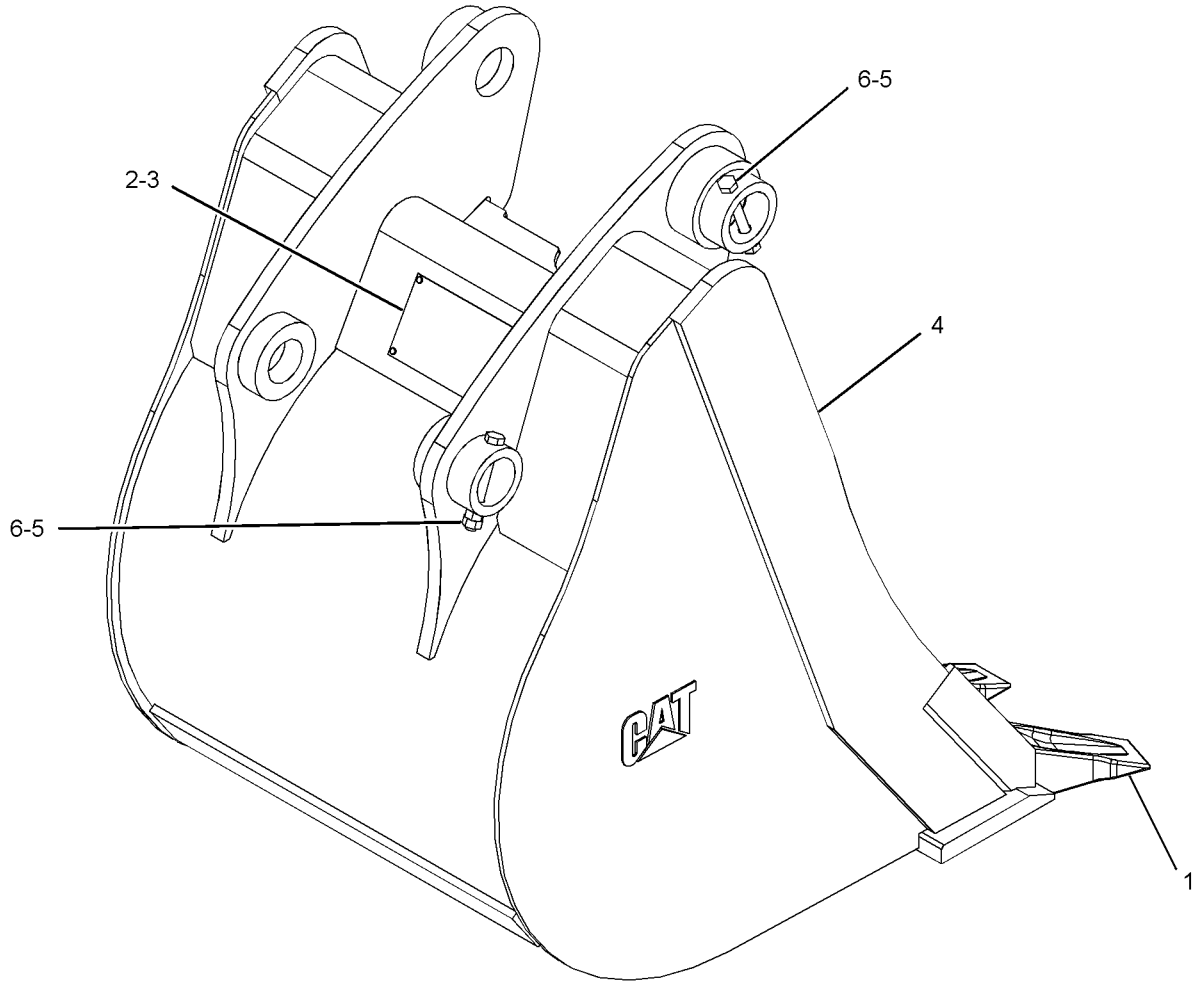

GRAPHIC #1 **<END>** g01214824

WORK TOOLS

273-0862 BUCKET GP-HOE—HEAVY-DUTY

S/N: SJW1-UP

AN ATTACHMENT

SMCS-6503 **i03599047**

NOTE	REF NO	GRAPHIC REF	PART NUMBER	QTY	PART NAME 1 2 3 4 5 6 (PRODUCT LEVEL)	SEE PAGE
	1	1	*135-8206*	3	TOOTH GP-UNI	
					(EACH INCLUDES)	
		1	**4F-3657**	2	BOLT-PLOW (5/8-11X2.75-IN)	
		1	**4K-0367**	2	NUT-FULL (5/8-11-THD)	
		1	**135-8203**	1	TOOTH-UNI	
	2	1	**137-4234**	1	PLATE-IDENTIFICATION (WORK TOOL)	
	3	1	**168-8389**	4	TACK-FASTENER	
Y	4	1	*273-0863*	1	BUCKET AS-HOE	492
M	5	1	**8T-4133**	4	NUT (M10X1.5-THD)	
M	6	1	**8T-4178**	2	BOLT (M10X1.5X90-MM)	

M-METRIC PART
Y-SEPARATE ILLUSTRATION

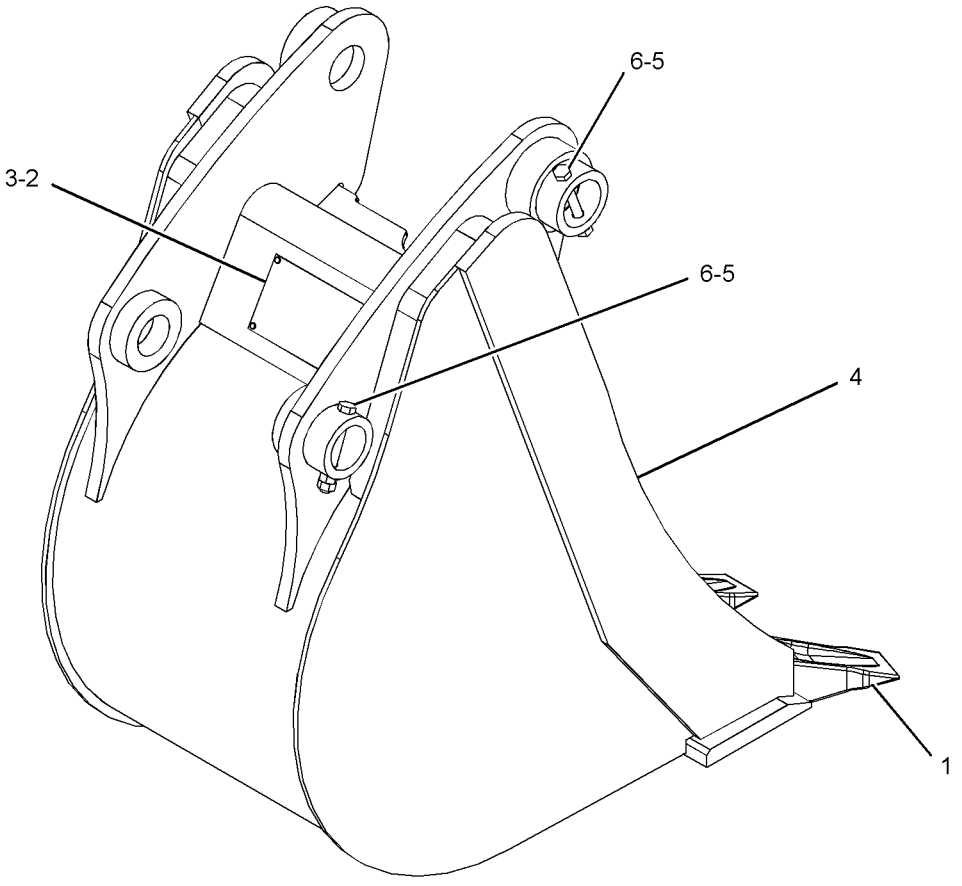

GRAPHIC #1 **<END>** g01220738

WORK TOOLS

273-3731 BUCKET GP-HOE—HEAVY-DUTY

S/N: SJW1-UP

AN ATTACHMENT

SMCS-6503 **i02427621**

NOTE	REF NO	GRAPHIC REF	PART NUMBER	QTY	PART NAME 1 2 3 4 5 6 (PRODUCT LEVEL)	SEE PAGE
	1	1	**9R-0158**	5	WASHER (46X69X3-MM THK)	
	2	1	**9R-1510**	3	WASHER (51X82X4-MM THK)	
	3	1	**168-0443**	1	PIN	
	4	1	**168-0444**	1	PIN	
Y	5	1	**273-3732**	1	BUCKET GP-HOE (HEAVY-DUTY)	508
	6	1	**6V-3213**	2	RING-RETAINING	
	7	1	**6V-4364**	2	RING-RETAINING	

Y-SEPARATE ILLUSTRATION

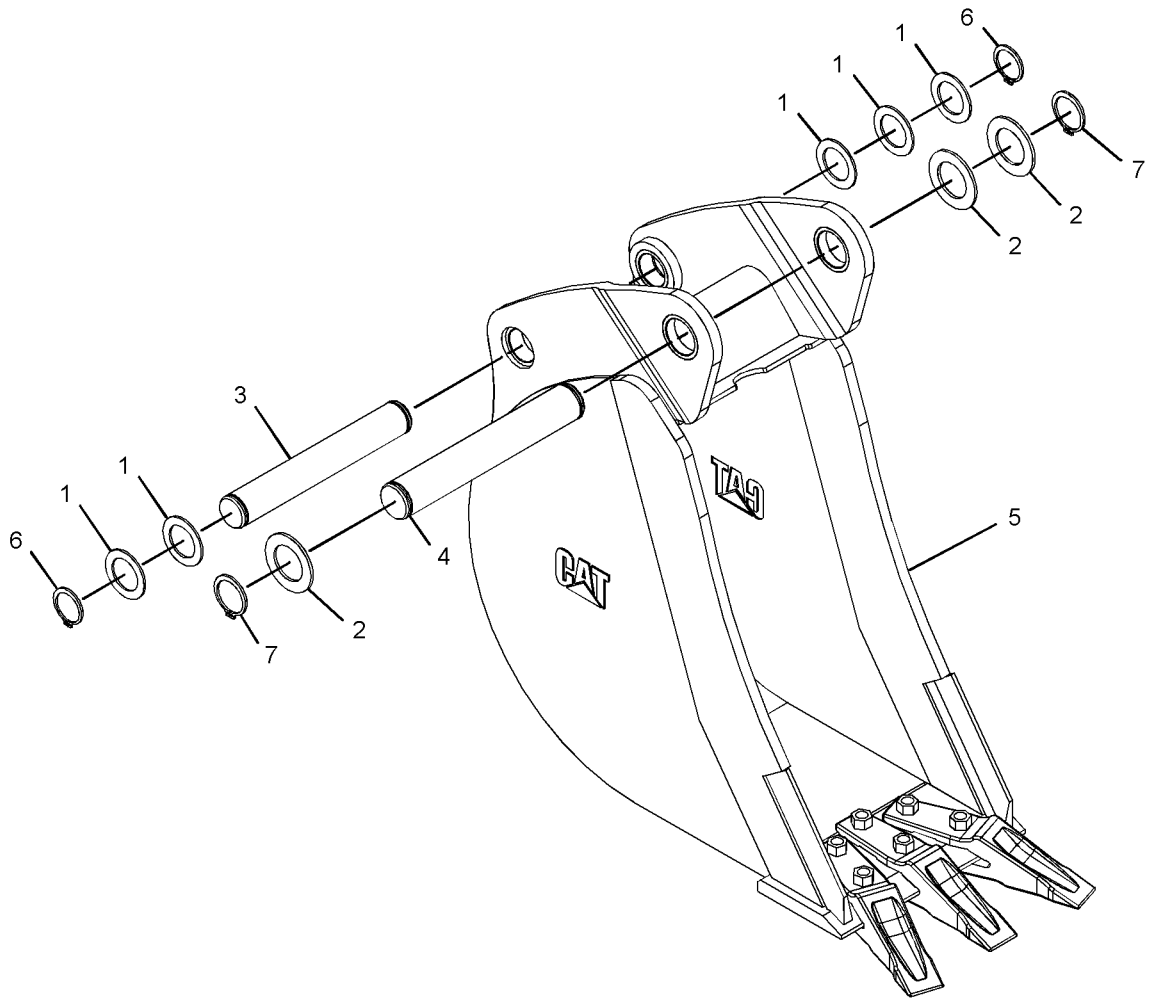

GRAPHIC #1 **<END>** g01215645

273-3732 BUCKET GP-HOE—HEAVY-DUTY

S/N: SJW1-UP
PART OF 273-3731 BUCKET GP-HOE
AN ATTACHMENT

SMCS-6503 **i03599052**

NOTE	REF NO	GRAPHIC REF	PART NUMBER	QTY	PART NAME 1 2 3 4 5 6 (PRODUCT LEVEL)	SEE PAGE
	1	1	*135-8206*	3	TOOTH GP-UNI	
					(EACH INCLUDES)	
		1	**4F-3657**	2	BOLT-PLOW (5/8-11X2.75-IN)	
		1	**4K-0367**	2	NUT-FULL (5/8-11-THD)	
		1	**135-8203**	1	TOOTH-UNI	
	2	1	**137-4234**	1	PLATE-IDENTIFICATION (WORK TOOL)	
	3	1	**168-8389**	4	TACK-FASTENER	
Y	4	1	*273-3733*	1	BUCKET AS-HOE	493

Y-SEPARATE ILLUSTRATION

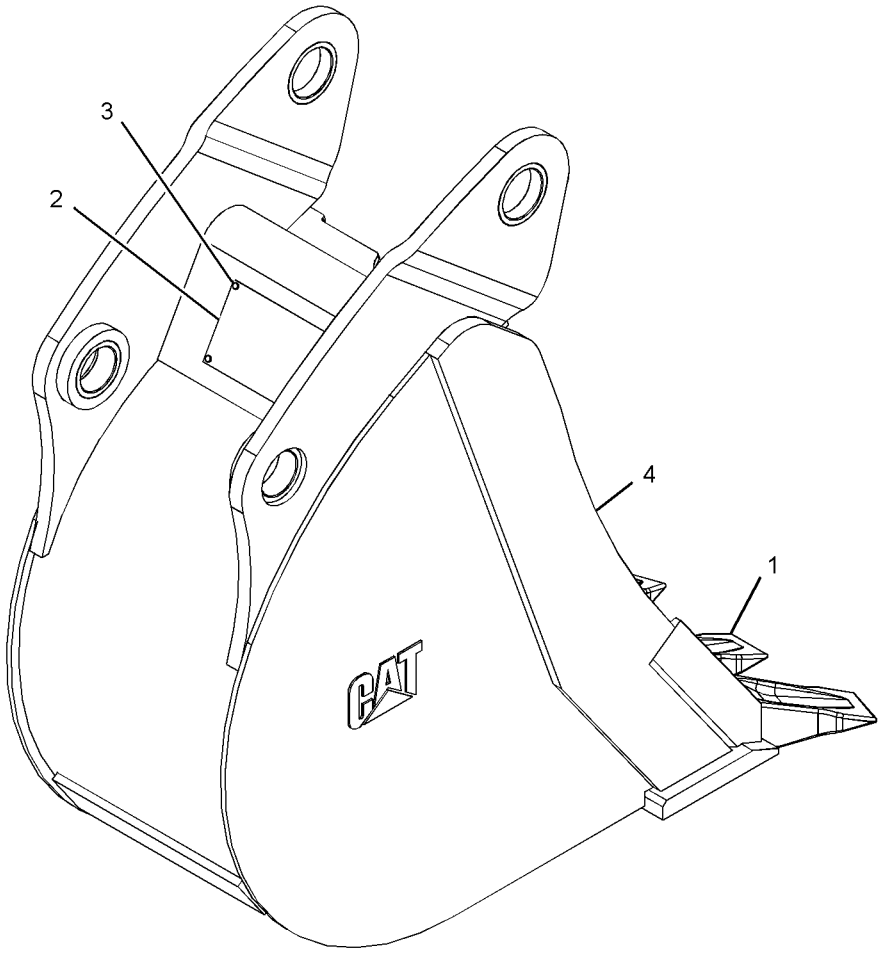

GRAPHIC #1 **<END>** g01228335

WORK TOOLS

319-8978 BUCKET GP-HOE—HEAVY-DUTY

S/N: SJW1-UP

AN ATTACHMENT

SMCS-6503 **i03740140**

NOTE	REF NO	GRAPHIC REF	PART NUMBER	QTY	PART NAME 1 2 3 4 5 6 (PRODUCT LEVEL)	SEE PAGE
	1	1	**9R-1510**	3	WASHER (51X82X4-MM THK)	
	2	1	**168-0443**	1	PIN	
	3	1	**168-0444**	1	PIN	
Y	4	1	**319-9394**	1	BUCKET GP-HOE (HEAVY-DUTY)	510
	5	1	**6V-3213**	2	RING-RETAINING	
	6	1	**6V-4364**	2	RING-RETAINING	
	7	1	**9R-0158**	8	WASHER (46X69X3-MM THK)	

Y-SEPARATE ILLUSTRATION

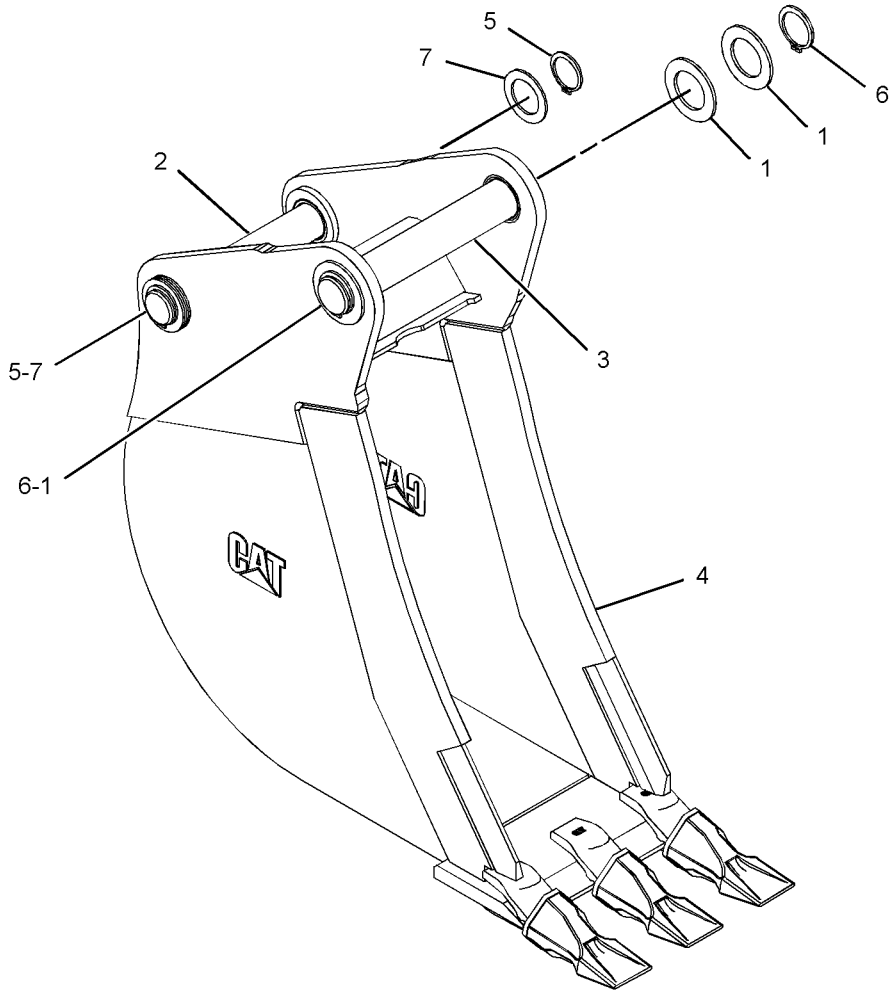

GRAPHIC #1 **<END>** g02108624

WORK TOOLS

319-9394 BUCKET GP-HOE—HEAVY-DUTY

S/N: SJW1-UP
PART OF 319-8978 BUCKET GP-HOE
AN ATTACHMENT

SMCS-6503 **i03740160**

NOTE	REF NO	GRAPHIC REF	PART NUMBER	QTY	PART NAME 1 2 3 4 5 6 (PRODUCT LEVEL)	SEE PAGE
	1	1	**137-4234**	1	PLATE-IDENTIFICATION (WORK TOOL)	
	2	1	**168-8389**	4	TACK-FASTENER	
	3	1	*208-5245*	3	TIP GP-PENETRATION	
					(EACH INCLUDES)	
		1	**201-1238**	1	PIN	
		1	**201-1239**	1	RETAINER AS	
		1	**208-5235**	1	TIP-PENETRATION	
Y	4	1	*319-9397*	1	BUCKET AS-HOE	494

Y-SEPARATE ILLUSTRATION

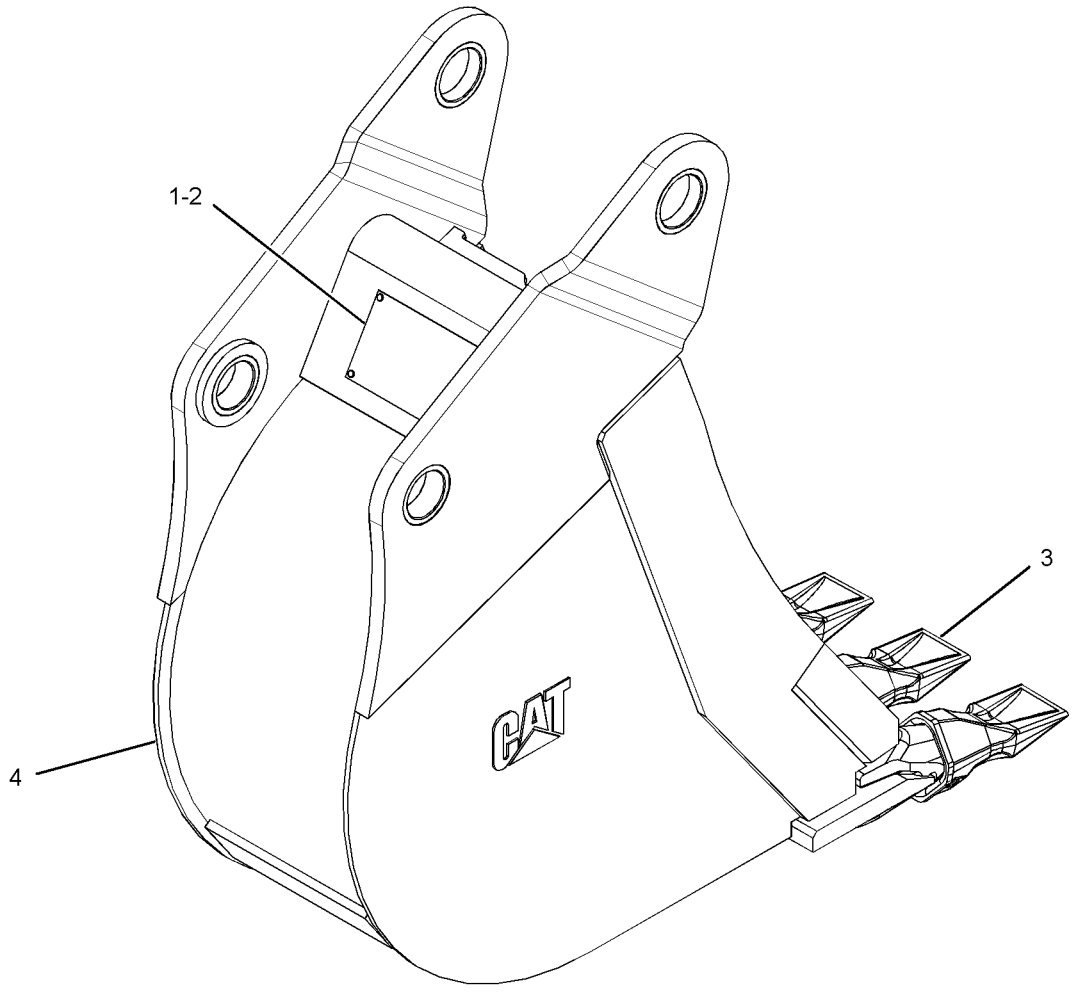

GRAPHIC #1 **<END>** g02113588

350-1575 BUCKET GP-MULTIPURPOSE

S/N: SJW1-UP
2341-MM (92.2-IN) WIDE X 1.03-CU M (1.4-CU YD) CAPACITY
PART OF 350-1581, 350-1587 BUCKET AR-MULTIPURPOSE
AN ATTACHMENT

SMCS-6104 **i04597249**

NOTE	REF NO	GRAPHIC REF	PART NUMBER	QTY	PART NAME 1 2 3 4 5 6 (PRODUCT LEVEL)	SEE PAGE
	1	1	**9R-4676**	2	PIN	
Y	2	1	**252-9051**	1	CLAM AS-MULTIPURPOSE BUCKET	518
Y	3	1	**350-1574**	1	BULLDOZER AS (MULTIPURPOSE BUCKET)	516
	4	1	**3B-8489**	2	FITTING-GREASE	
	5	1	**4J-1888**	2	PIN-COTTER	

Y-SEPARATE ILLUSTRATION

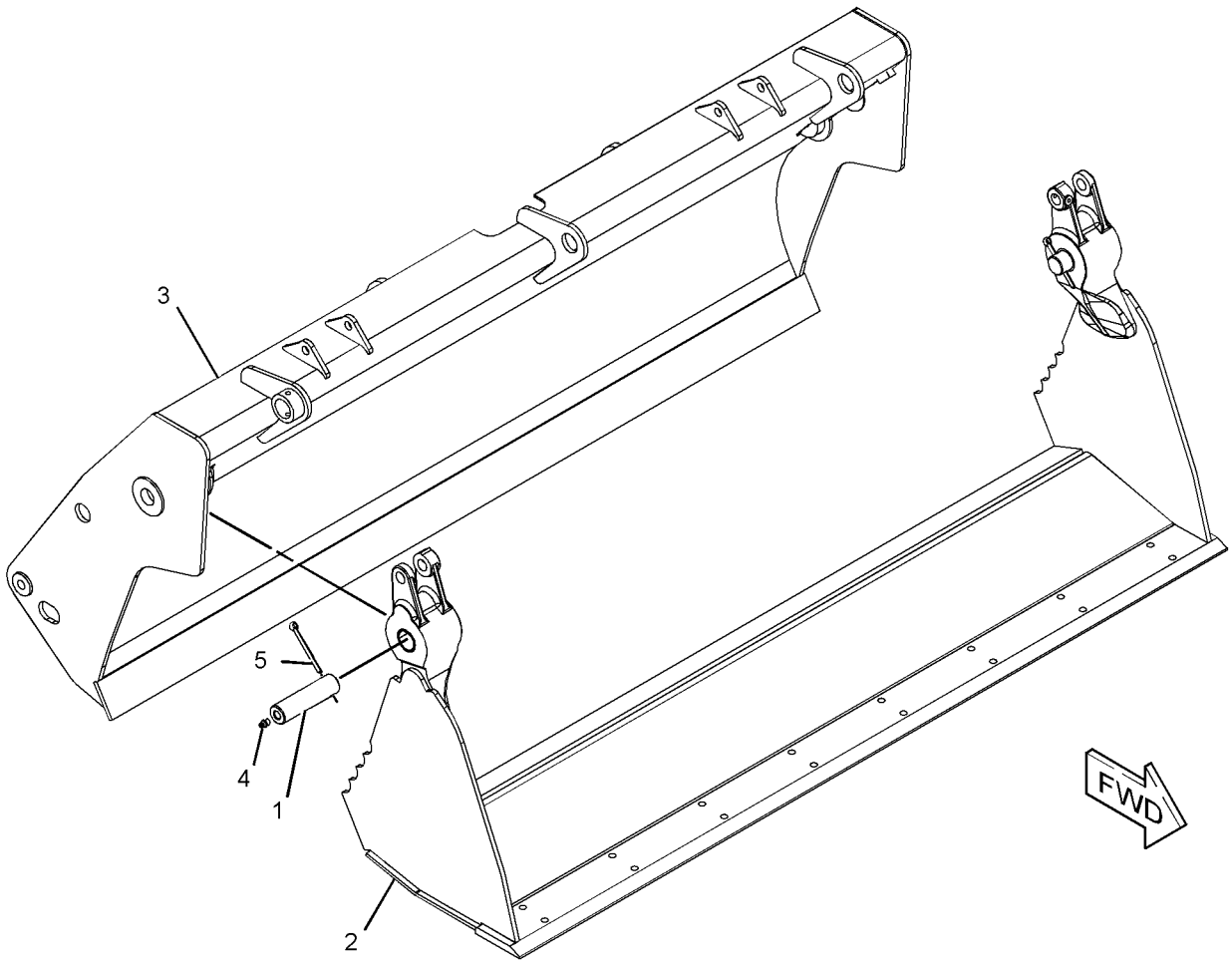

GRAPHIC #1 **<END>** g02763104

WORK TOOLS

350-7008 BUCKET GP-MULTIPURPOSE

S/N: SJW1-UP
2197-MM (86.5-IN) WIDE X 0.96-CU M (1.3-CU YD) CAPACITY
PART OF 350-1580, 350-1589 BUCKET AR-MULTIPURPOSE
AN ATTACHMENT

SMCS-6104 **i04597165**

NOTE	REF NO	GRAPHIC REF	PART NUMBER	QTY	PART NAME 1 2 3 4 5 6 (PRODUCT LEVEL)	SEE PAGE
	1	1	**9R-4676**	2	PIN	
Y	2	1	**337-7483**	1	BULLDOZER AS (MULTIPURPOSE BUCKET)	515
Y	3	1	**252-9046**	1	CLAM AS-MULTIPURPOSE BUCKET	517
	4	1	**3B-8489**	2	FITTING-GREASE	
	5	1	**4J-1888**	2	PIN-COTTER	

Y-SEPARATE ILLUSTRATION

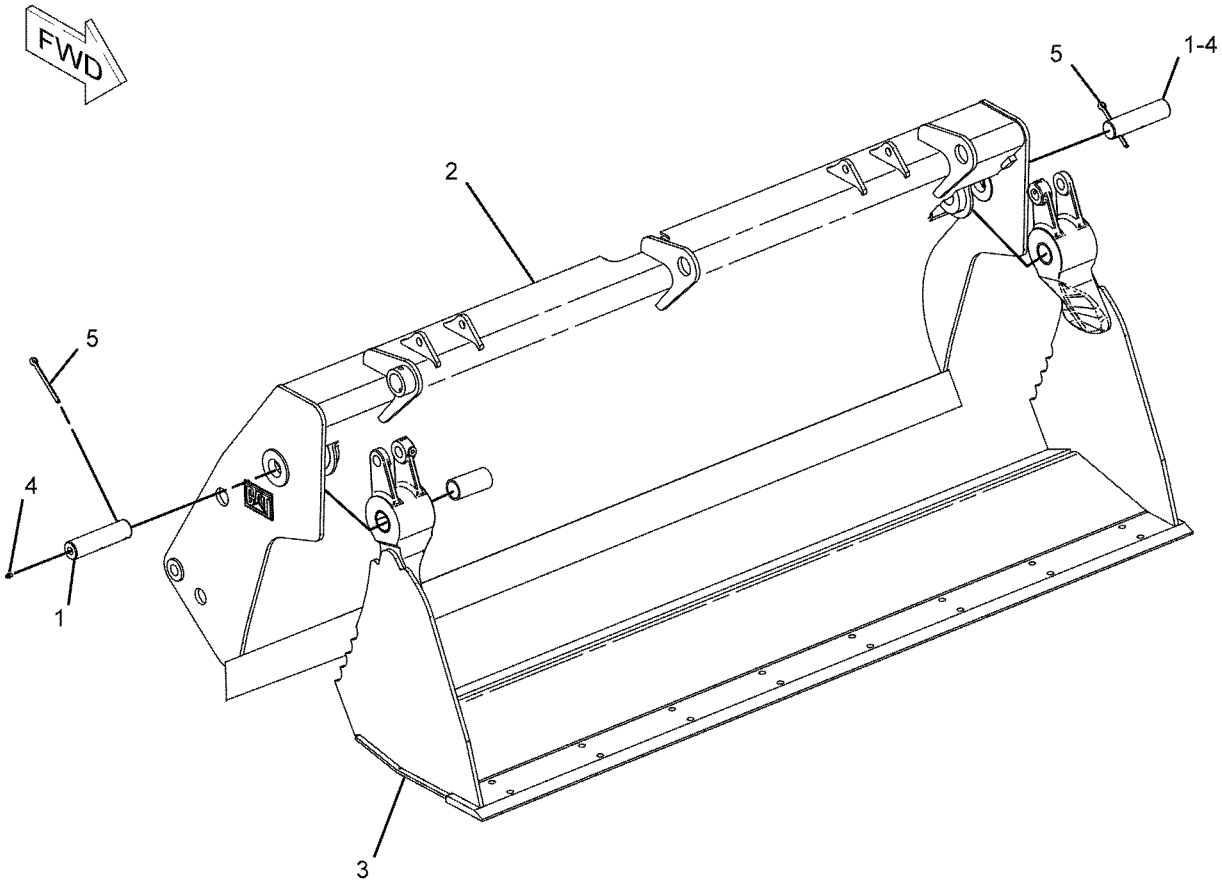

GRAPHIC #1 **<END>** g01121333

337-7410 BULLDOZER AS—MULTIPURPOSE BUCKET

S/N: SJW1-UP
1-CU M (1.4-CU YD)
PART OF 350-1574 BULLDOZER AS
AN ATTACHMENT

SMCS-6050 **i04599913**

NOTE	REF NO	GRAPHIC REF	PART NUMBER	QTY	PART NAME 1 2 3 4 5 6 (PRODUCT LEVEL)	SEE PAGE
	1	1	**256-9600**	1	EDGE	
M	2	1	**9R-5271**	4	BOSS (M10X1.5X25-MM)	

M-METRIC PART

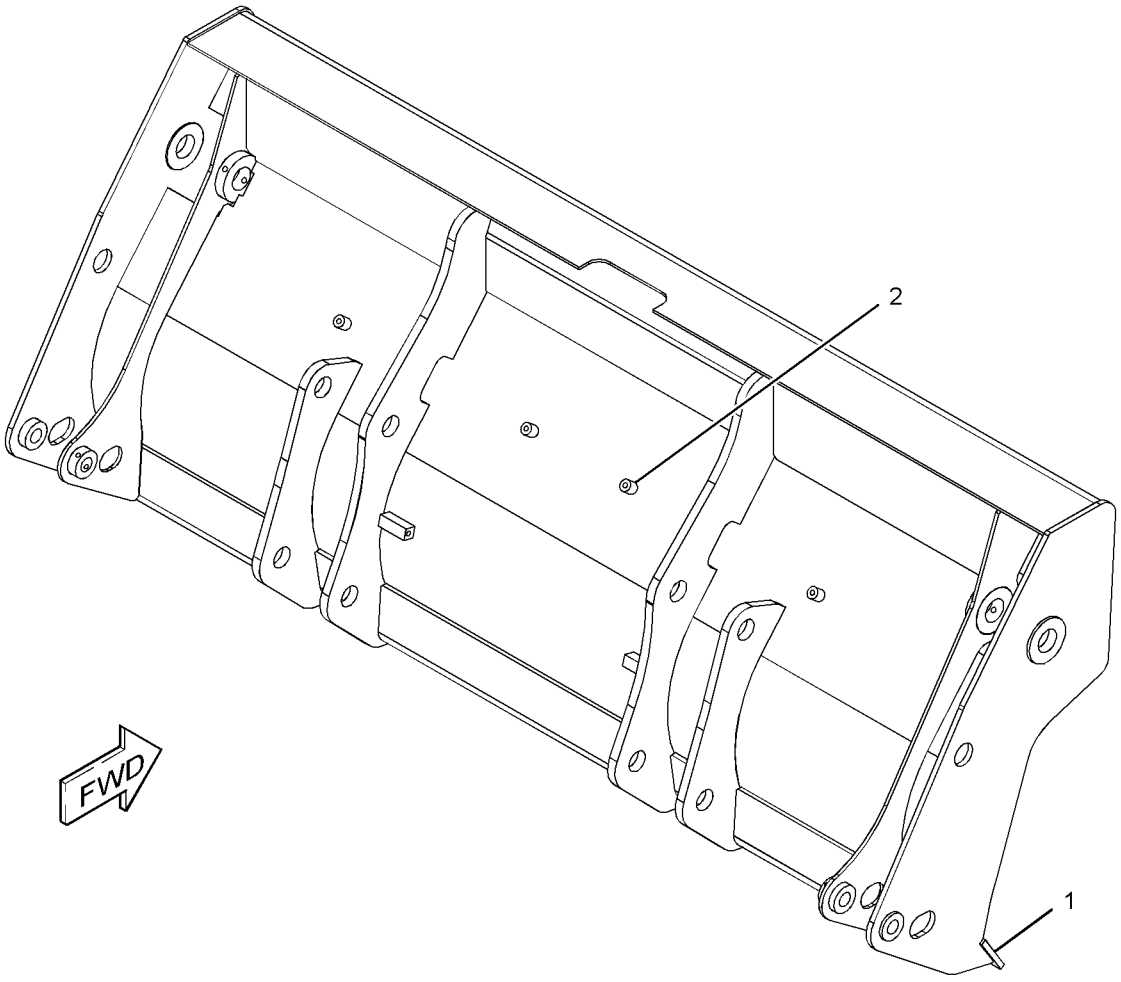

GRAPHIC #1 **<END>** g02837356

337-7482 BULLDOZER AS—MULTIPURPOSE BUCKET

S/N: SJW1-UP
1-CU M (1.3-CU YD) CAPACITY
PART OF 337-7483 BULLDOZER AS
AN ATTACHMENT

SMCS-6050 **i04603171**

NOTE	REF NO	GRAPHIC REF	PART NUMBER	QTY	PART NAME 1 2 3 4 5 6 (PRODUCT LEVEL)	SEE PAGE
	1	1	**252-9100**	1	EDGE	
M	2	1	**9R-5271**	4	BOSS (M10X1.5X25-MM)	

M-METRIC PART

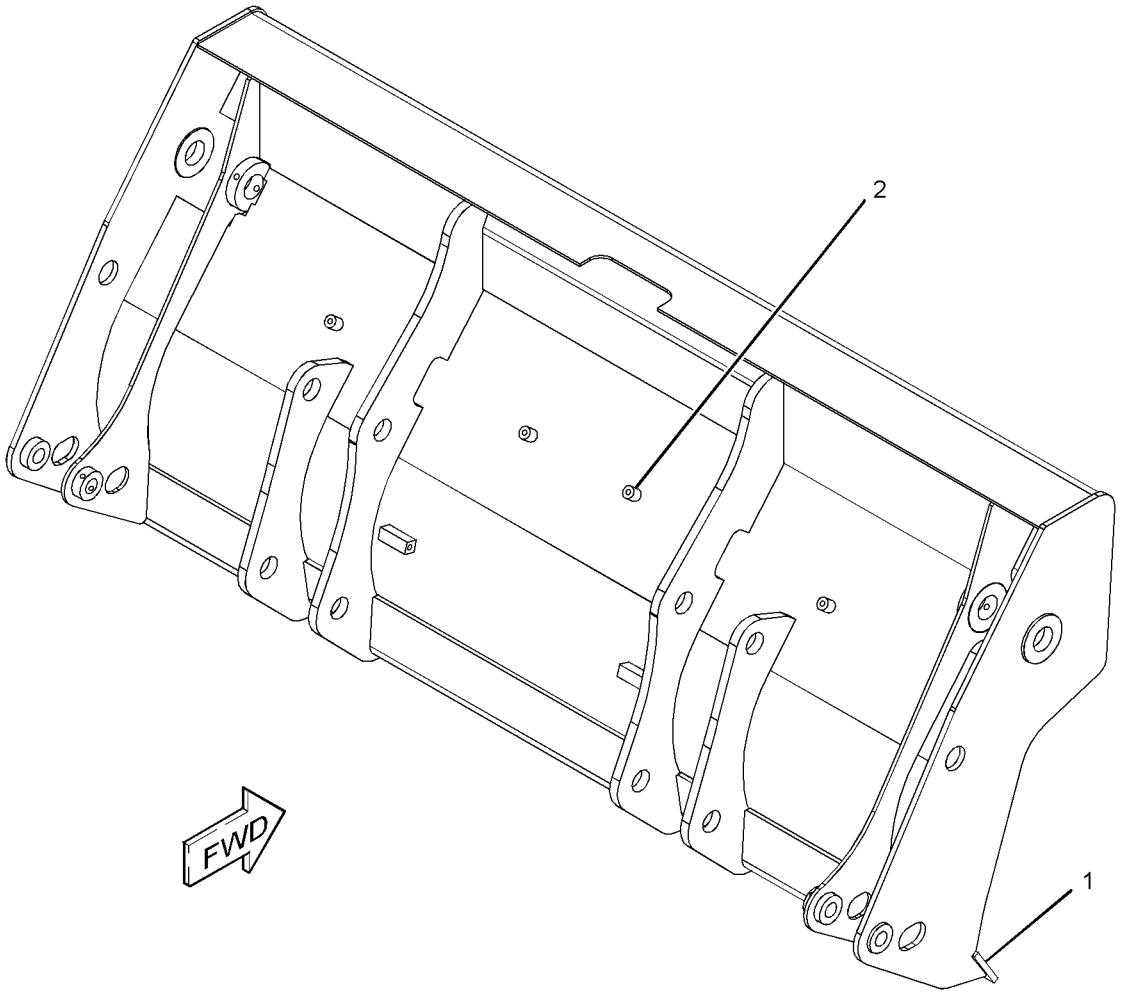

GRAPHIC #1 **<END>** g02829696

337-7483 BULLDOZER AS—MULTIPURPOSE BUCKET

S/N: SJW1-UP
1-CU M (1.3-CU YD) CAPACITY
PART OF 350-7008 BUCKET GP-MULTIPURPOSE
AN ATTACHMENT

SMCS-6050 **i04603032**

NOTE	REF NO	GRAPHIC REF	PART NUMBER	QTY	PART NAME 1 2 3 4 5 6 (PRODUCT LEVEL)	SEE PAGE
	1	1	**104-6313**	1	BRACKET AS	
		1	**106-9388**	1	BRACKET	
	2	1	**106-9388**	2	BRACKET	
	3	1	**110-2861**	4	BRACKET	
	4	1	**250-6587**	2	PLATE	
	5	1	**252-9095**	4	PLATE	
Y	6	1	*337-7482*	1	BULLDOZER AS (MULTIPURPOSE BUCKET)	514

Y-SEPARATE ILLUSTRATION

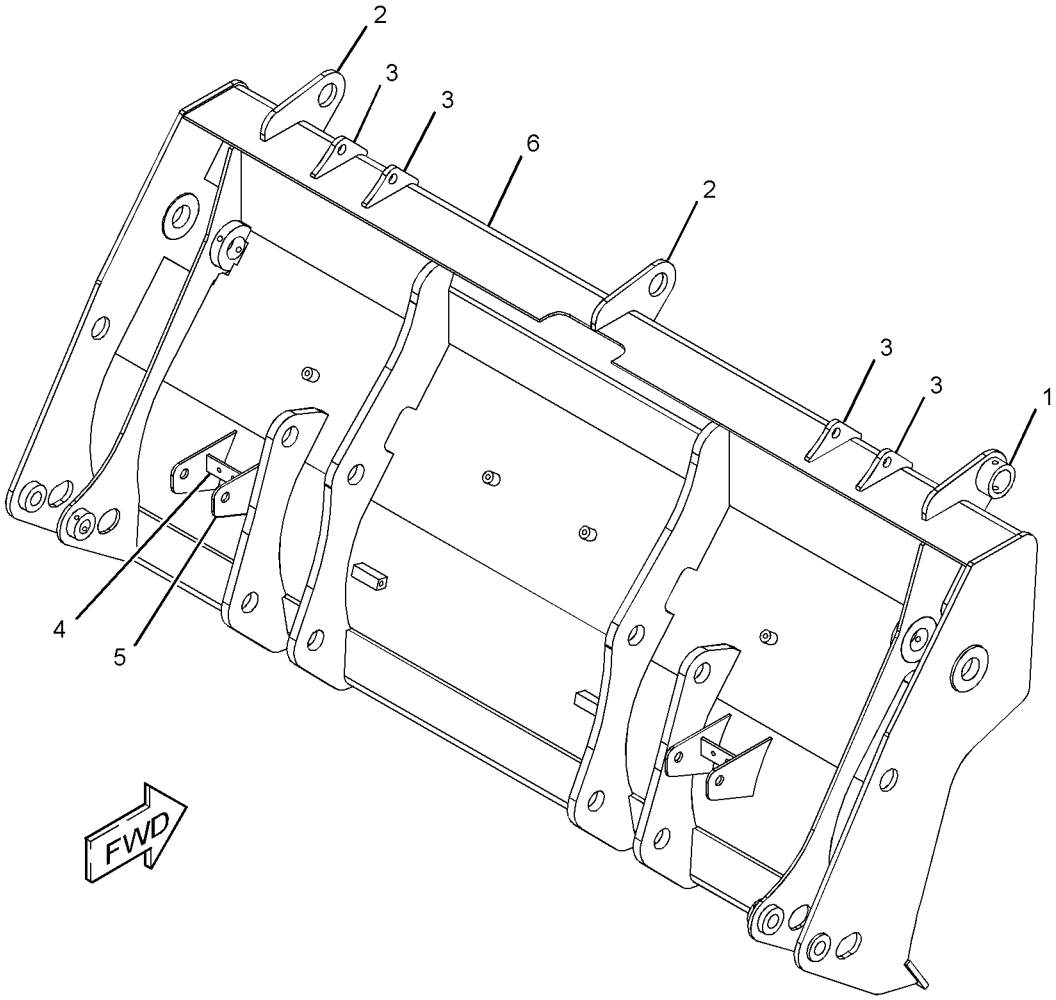

GRAPHIC #1 **<END>** g02824101

WORK TOOLS

350-1574 BULLDOZER AS—MULTIPURPOSE BUCKET

S/N: SJW1-UP

PART OF 350-1575 BUCKET GP-MULTIPURPOSE

AN ATTACHMENT

SMCS-6050 **i04597269**

NOTE	REF NO	GRAPHIC REF	PART NUMBER	QTY	PART NAME 1 2 3 4 5 6 (PRODUCT LEVEL)	SEE PAGE
	1	1	**104-6313**	1	BRACKET AS	
		1	**106-9388**	1	BRACKET	
	2	1	**106-9388**	2	BRACKET	
	3	1	**110-2861**	4	BRACKET	
	4	1	**250-6587**	2	PLATE	
	5	1	**252-9095**	4	PLATE	
Y	6	1	**337-7410**	1	BULLDOZER AS	513

Y-SEPARATE ILLUSTRATION

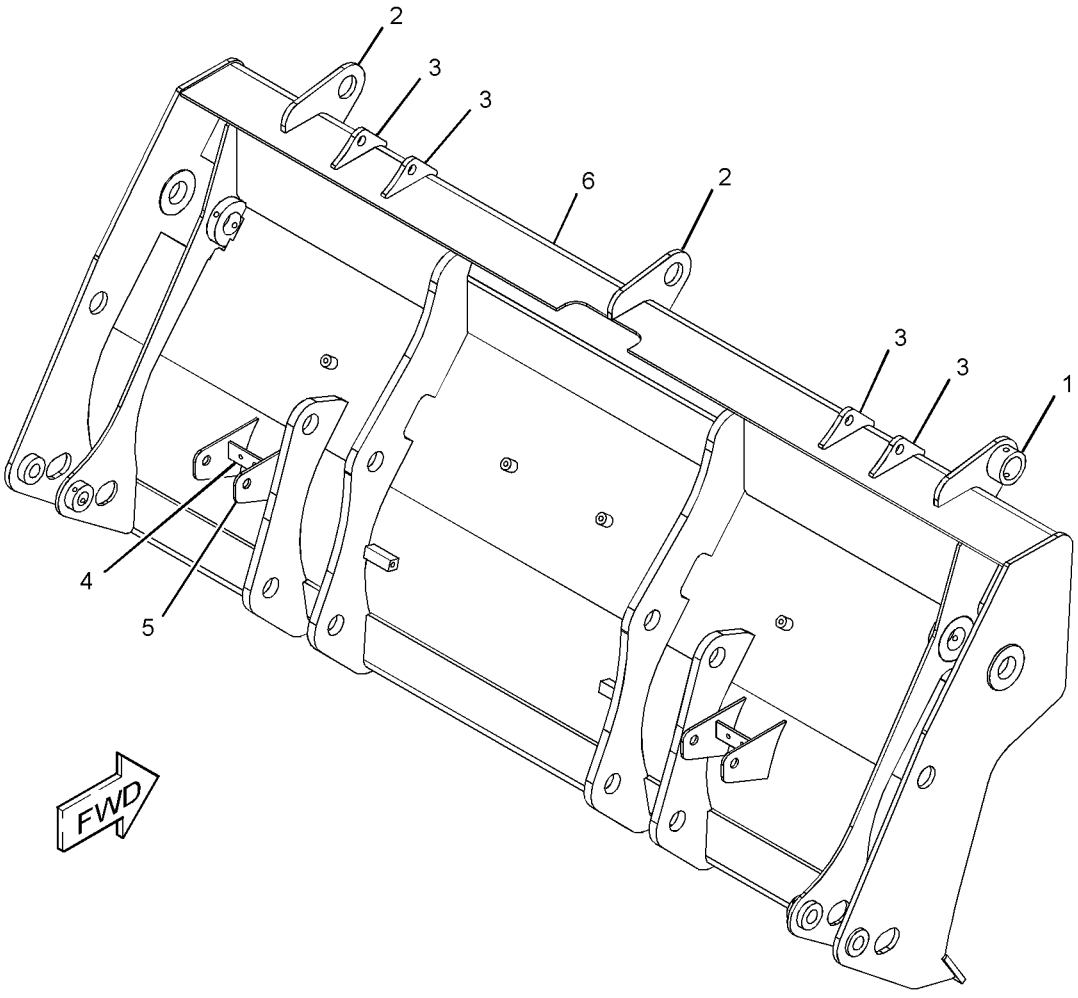

GRAPHIC #1 **<END>** g02814119

252-9046 CLAM AS-MULTIPURPOSE BUCKET

S/N: SJW1-UP

PART OF 350-7008 BUCKET GP-MULTIPURPOSE

AN ATTACHMENT

SMCS-6104 **i02223551**

NOTE	REF NO	GRAPHIC REF	PART NUMBER	QTY	PART NAME 1 2 3 4 5 6 (PRODUCT LEVEL)	SEE PAGE
	1	1	*252-9078*	1	PLATE AS (LH)	
	1A	1	**9R-4675**	1	BUSHING-TERMINAL	
	1B	1	**9R-5294**	1	HINGE	
	2	1	*252-9080*	1	PLATE AS (RH)	
	2A	1	**9R-4675**	1	BUSHING-TERMINAL	
	2B	1	**9R-5294**	1	HINGE	
	3	1	*252-9081*	1	PLATE AS	
	3A	1	**9R-4672**	1	EDGE	
	3B	1	**252-9087**	1	EDGE	

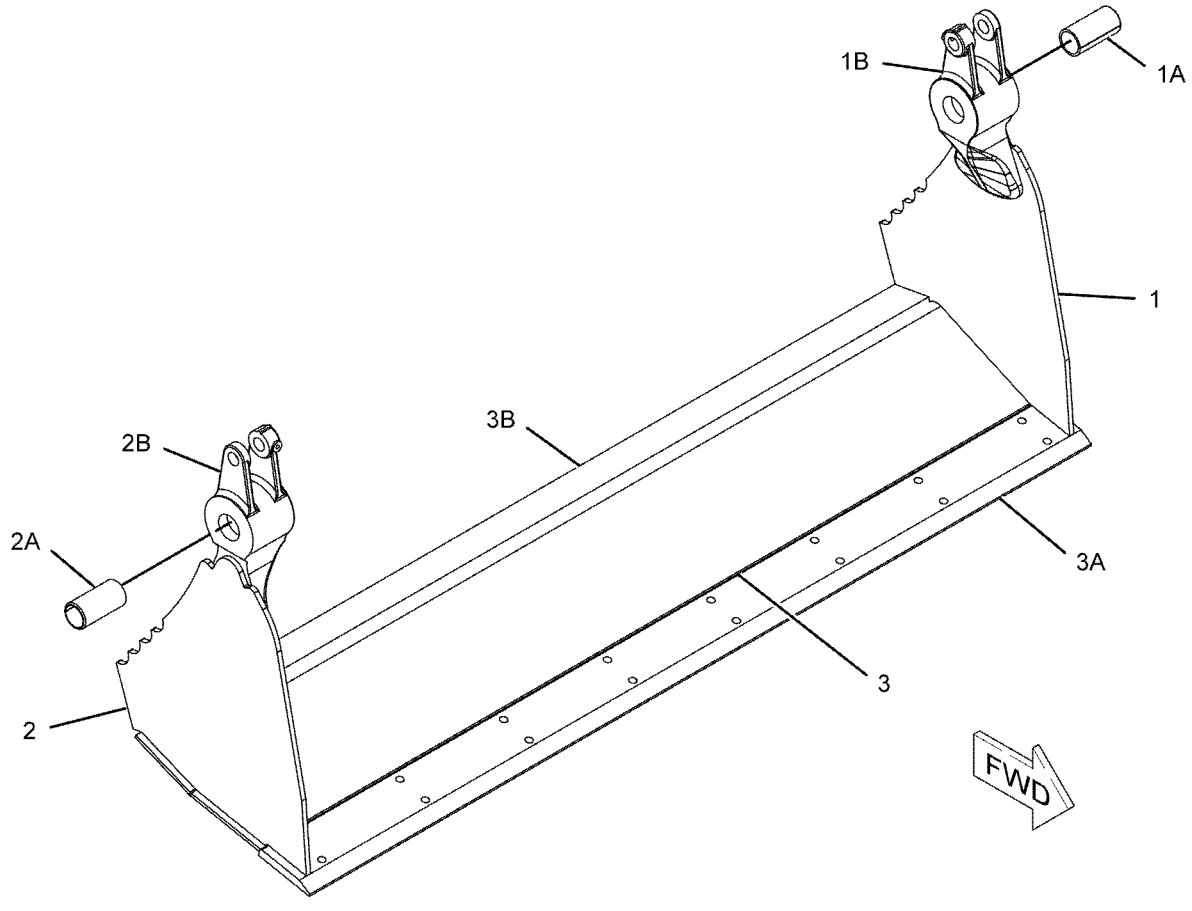

GRAPHIC #1 **<END>** g01121639

252-9051 CLAM AS-MULTIPURPOSE BUCKET

S/N: SJW1-UP
PART OF 350-1575 BUCKET GP-MULTIPURPOSE
AN ATTACHMENT

SMCS-6104 **i02223563**

NOTE	REF NO	GRAPHIC REF	PART NUMBER	QTY	PART NAME 1 2 3 4 5 6 (PRODUCT LEVEL)	SEE PAGE
	1	1	*252-9078*	1	PLATE AS (LH)	
	1A	1	**9R-4675**	1	BUSHING-TERMINAL	
	1B	1	**9R-5294**	1	HINGE	
	2	1	*252-9080*	1	PLATE AS (RH)	
	2A	1	**9R-4675**	1	BUSHING-TERMINAL	
	2B	1	**9R-5294**	1	HINGE	
	3	1	*252-9084*	1	PLATE AS	
	3A	1	**9R-5313**	1	EDGE	
	3B	1	**252-9088**	1	EDGE	

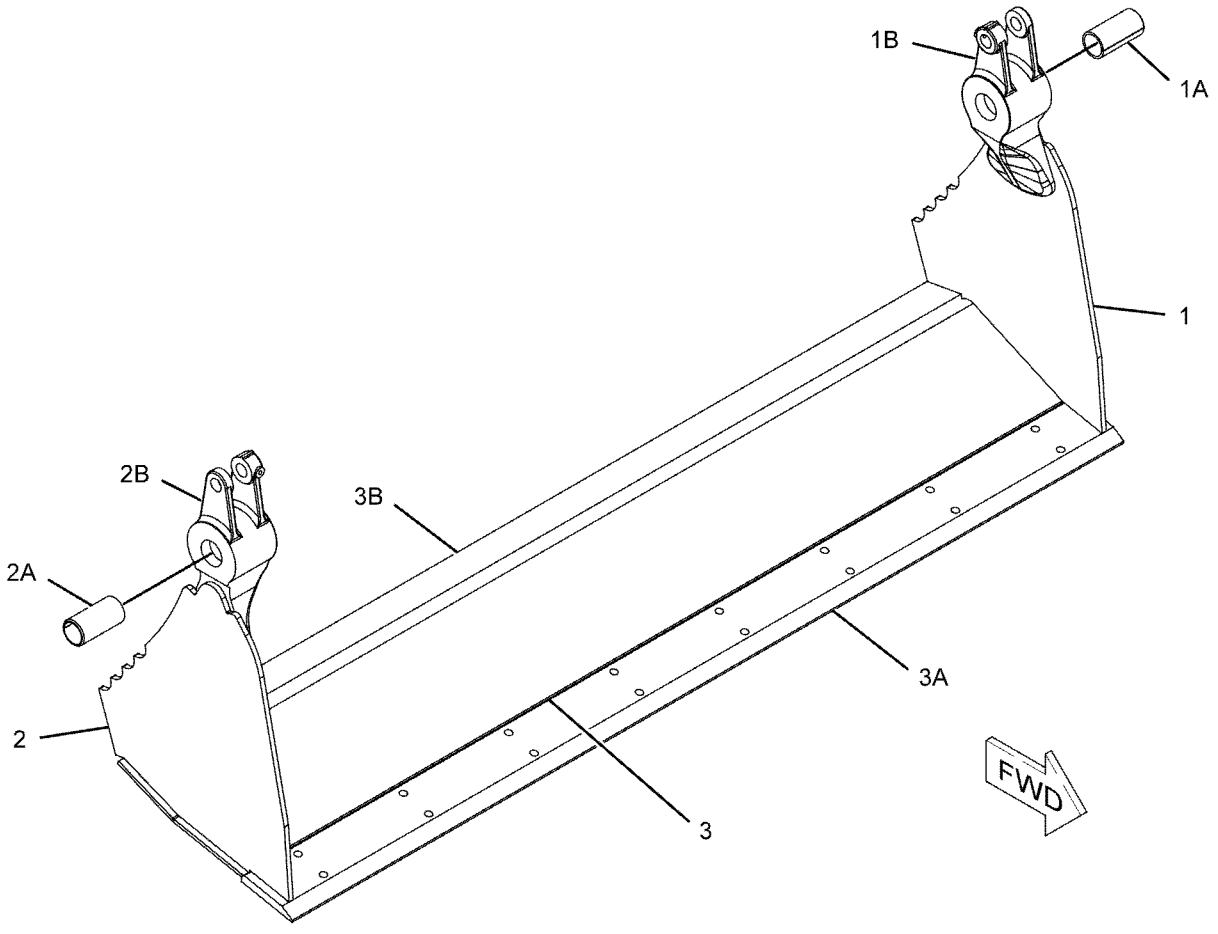

GRAPHIC #1 **<END>** g01121768

WORK TOOLS

9R-5320 EDGE GP-CUTTING

S/N: SJW1-UP
CANNOT BE USED WITH 9R-5866—PAGE 526
AN ATTACHMENT

SMCS-6801 **i00530080**

NOTE	REF NO	GRAPHIC REF	PART NUMBER	QTY	PART NAME 1 2 3 4 5 6 (PRODUCT LEVEL)	SEE PAGE
	1	1	**118-7110**	2	EDGE-CUTTING	
	2	1	**4F-3657**	8	BOLT-PLOW (5/8-11X2.75-IN)	
	3	1	**4K-0367**	8	NUT-FULL (5/8-11-THD)	
	4	1	**8T-4122**	8	WASHER-HARD (17X32X3.5-MM THK)	

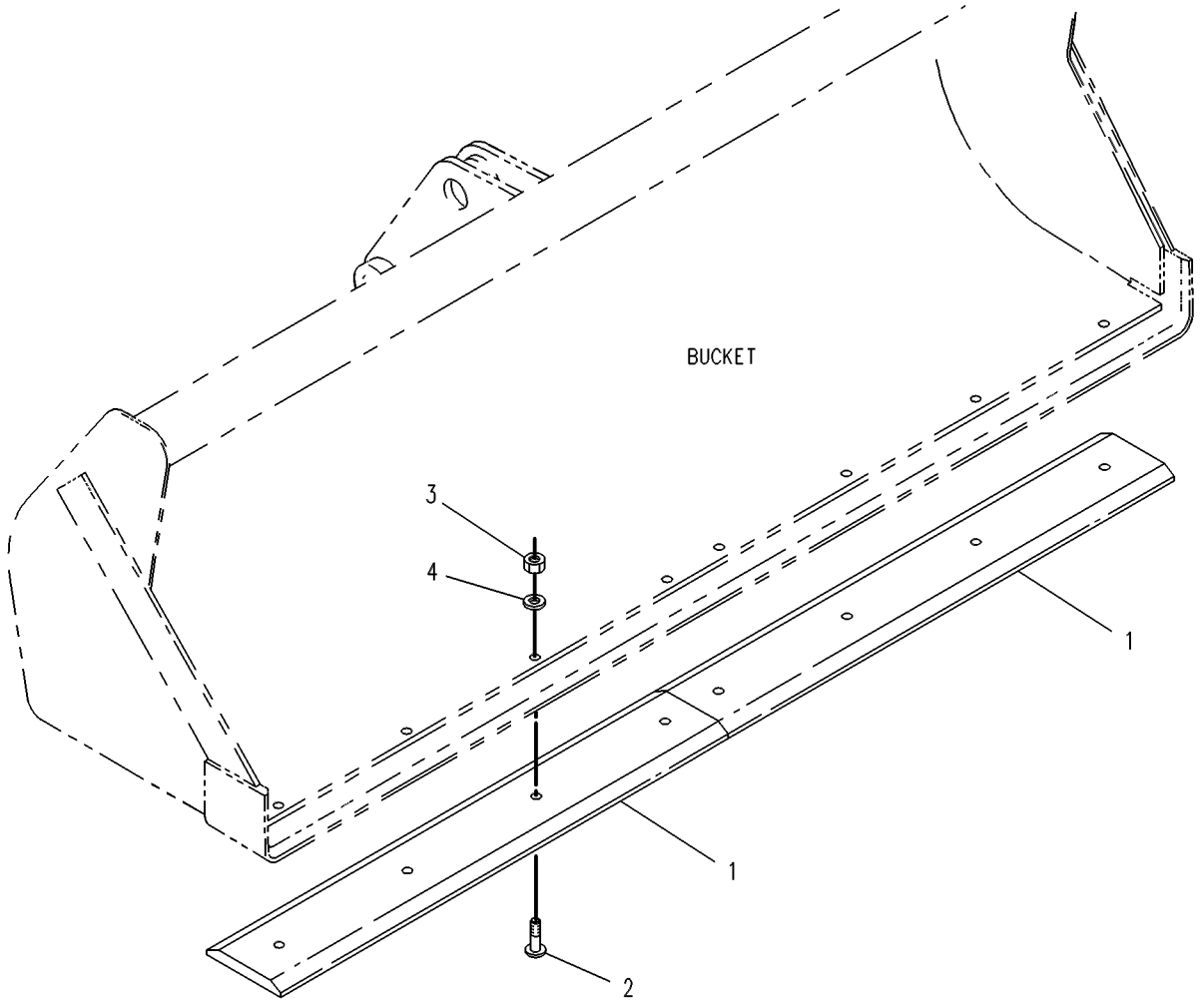

GRAPHIC #1 **<END>** g00131376

WORK TOOLS

9R-5321 EDGE GP-CUTTING

S/N: SJW1-UP
CANNOT BE USED WITH 9R-5866—PAGE 526
AN ATTACHMENT

SMCS-6801 **i00530701**

NOTE	REF NO	GRAPHIC REF	PART NUMBER	QTY	PART NAME 1 2 3 4 5 6 (PRODUCT LEVEL)	SEE PAGE
	1	1	**9W-8215**	2	EDGE-CUTTING	
	2	1	**3F-5108**	8	BOLT-PLOW (5/8-11X2.25-IN)	
	3	1	**4K-0367**	8	NUT-FULL (5/8-11-THD)	
	4	1	**8T-4122**	8	WASHER-HARD (17X32X3.5-MM THK)	

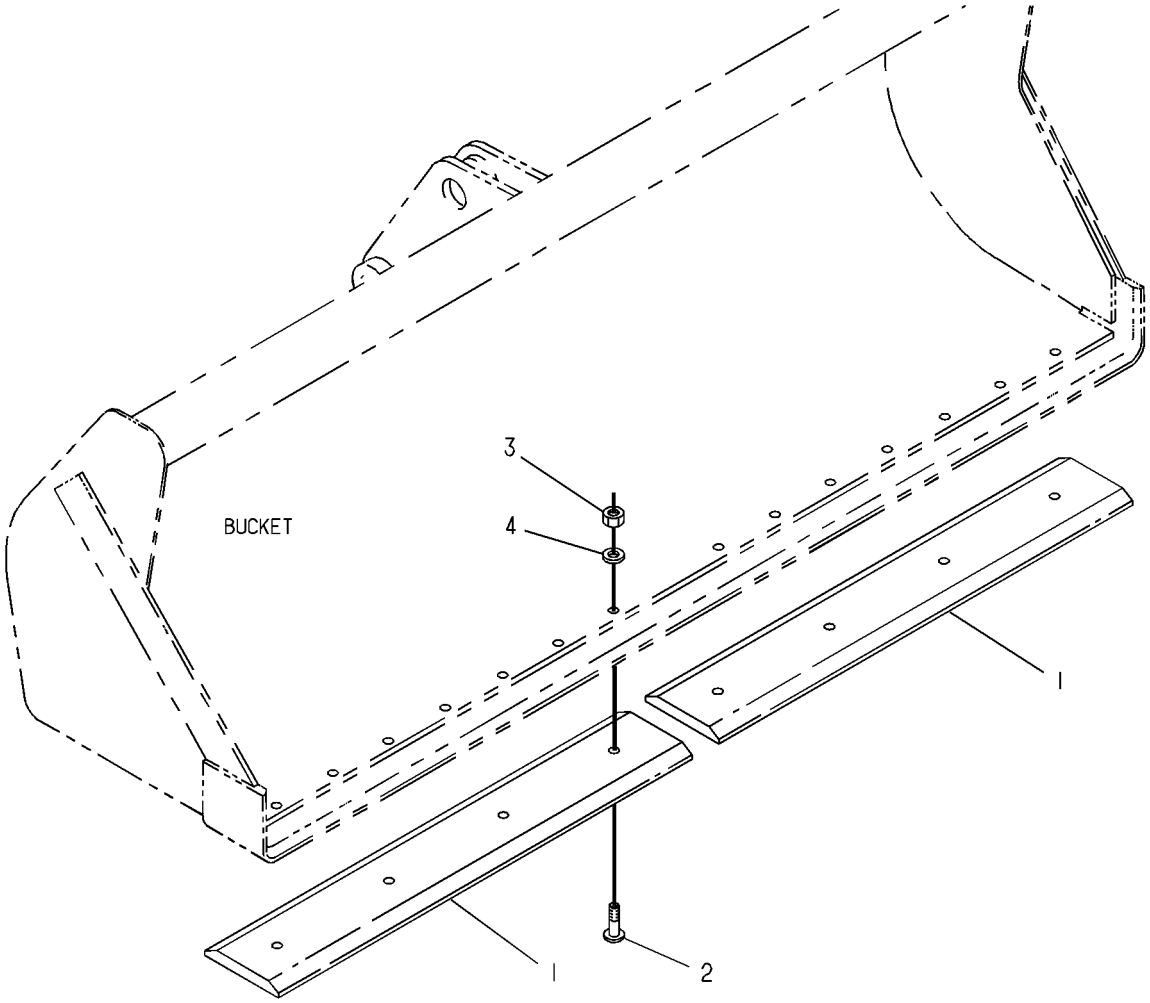

GRAPHIC #1 **<END>** g00130834

214-7024 GUARD GP-BUCKET

S/N: SJW1-UP
PART OF 341-3107 CONVERSION AR-ROADING, 353-6955 KIT-GUARD, 341-3109 OPTION AR-REGIONAL
AN ATTACHMENT

SMCS-6001, 6800, 6805 **i03310000**

NOTE	REF NO	GRAPHIC REF	PART NUMBER	QTY	PART NAME 1 2 3 4 5 6 (PRODUCT LEVEL)	SEE PAGE
	1	1	**101-4415**	1	FILM (REFLECTOR)	
Y	2	1	*214-7025*	1	GUARD GP-BUCKET	522

Y-SEPARATE ILLUSTRATION

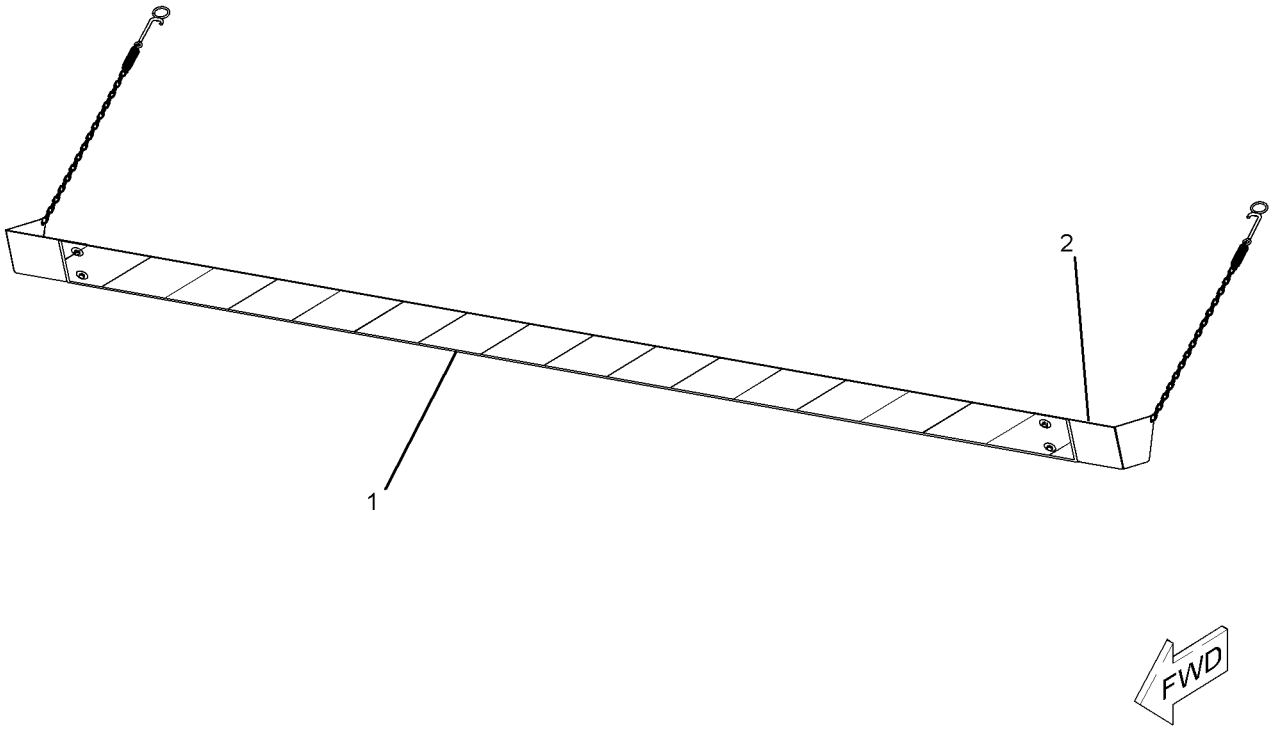

GRAPHIC #1 **<END>** g01120346

214-7025 GUARD GP-BUCKET

S/N: SJW1-UP
PART OF 214-7024 GUARD GP-BUCKET
AN ATTACHMENT

SMCS-6001, 6800, 6805 **i04169749**

NOTE	REF NO	GRAPHIC REF	PART NUMBER	QTY	PART NAME 1 2 3 4 5 6 (PRODUCT LEVEL)	SEE PAGE
	1	1	**214-7026**	1	PLATE	
	2	1	**101-4411**	2	RETAINER AS (GUARD)	
					(EACH INCLUDES)	
	2A	1	**101-4412**	1	CHAIN	
	2B	1	**101-4413**	1	SPRING	
	2C	1	**101-4414**	1	HOOK AS	
	3	1	**204-5258**	1	PLATE AS	
	4	1	**204-5259**	1	PLATE AS	
					(EACH PLATE AS INCLUDES)	
M		1	**6V-9632**	2	NUT-WELD (M6X1-THD)	
	5	1	**6V-7646**	4	WASHER-HARD (7.2X25X2-MM THK)	
M	6	1	**8T-4171**	4	BOLT (M6X1X12-MM)	
	7	1	**034-1432**	9	STRAP-CABLE	

M-METRIC PART

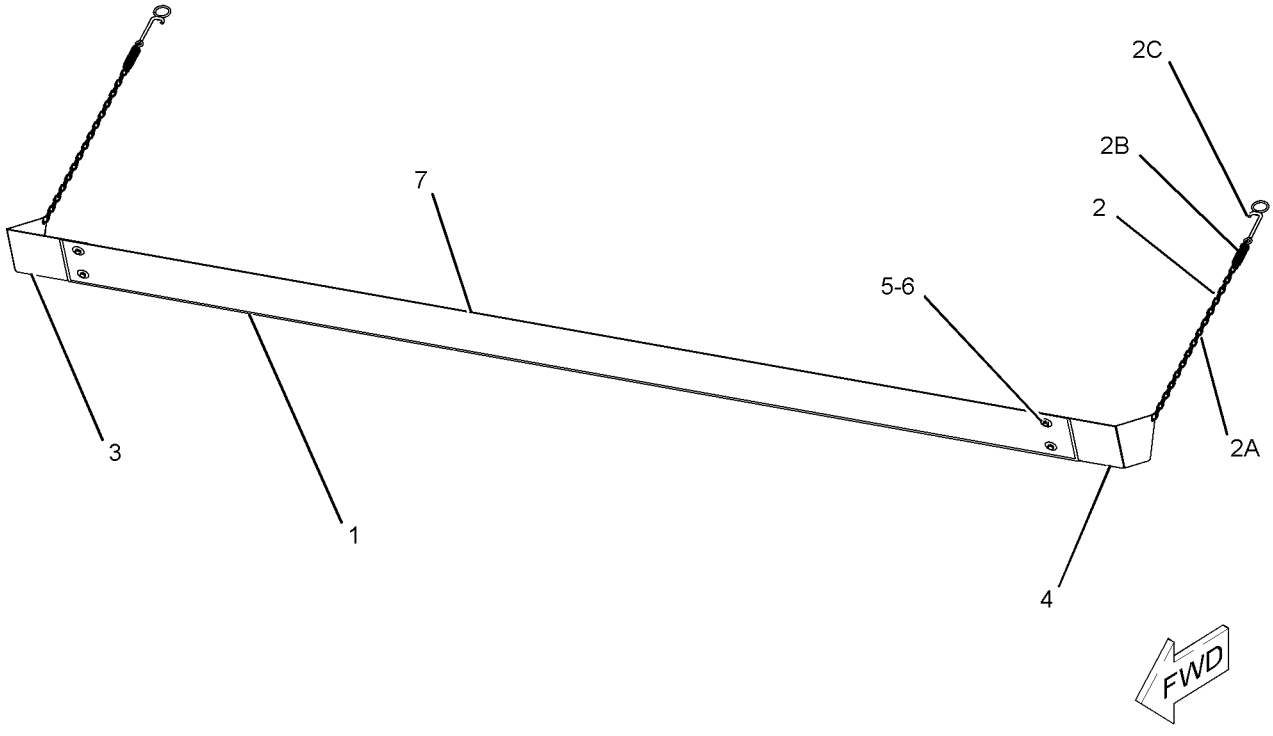

GRAPHIC #1 **<END>** g01121793

318-9902 MOUNTING GP-BUCKET—BACKHOE, QUICK COUPLER

S/N: SJW1-UP

AN ATTACHMENT

SMCS-6101 **i02990524**

NOTE	PART NUMBER	QTY	PART NAME 1 2 3 4 5 6 (PRODUCT LEVEL)	SEE PAGE
	154-5279	1	PIN	
	154-5280	1	PIN	
	3B-5319	4	PIN-COTTER	
B	**9R-0158**	5	WASHER (46X69X3-MM THK)	
B	**9R-1510**	5	WASHER (51X82X4-MM THK)	

B-USE AS REQUIRED

<END>

WORK TOOLS

353-1385 MOUNTING GP-BUCKET—PARALLEL LIFT

S/N: SJW1-UP

PART OF 373-4266, 373-4267, 373-4268 VALVE AR-BANK 3

AN ATTACHMENT

SMCS-6101 **i04618169**

NOTE	REF NO	GRAPHIC REF	PART NUMBER	QTY	PART NAME 1 2 3 4 5 6 (PRODUCT LEVEL)	SEE PAGE
	1	1	**111-4337**	8	WASHER (46X70X1-MM THK)	
B	2	1	**363-2855**	8	SHIM (1-MM THK)	
B	3	1	**363-2856**	6	SHIM (3-MM THK)	
	4	1	**364-3760**	4	PIN	
	5	1	**6V-3213**	8	RING-RETAINING	
	6	1	**9R-0158**	12	WASHER (46X69X3-MM THK)	

B-USE AS REQUIRED

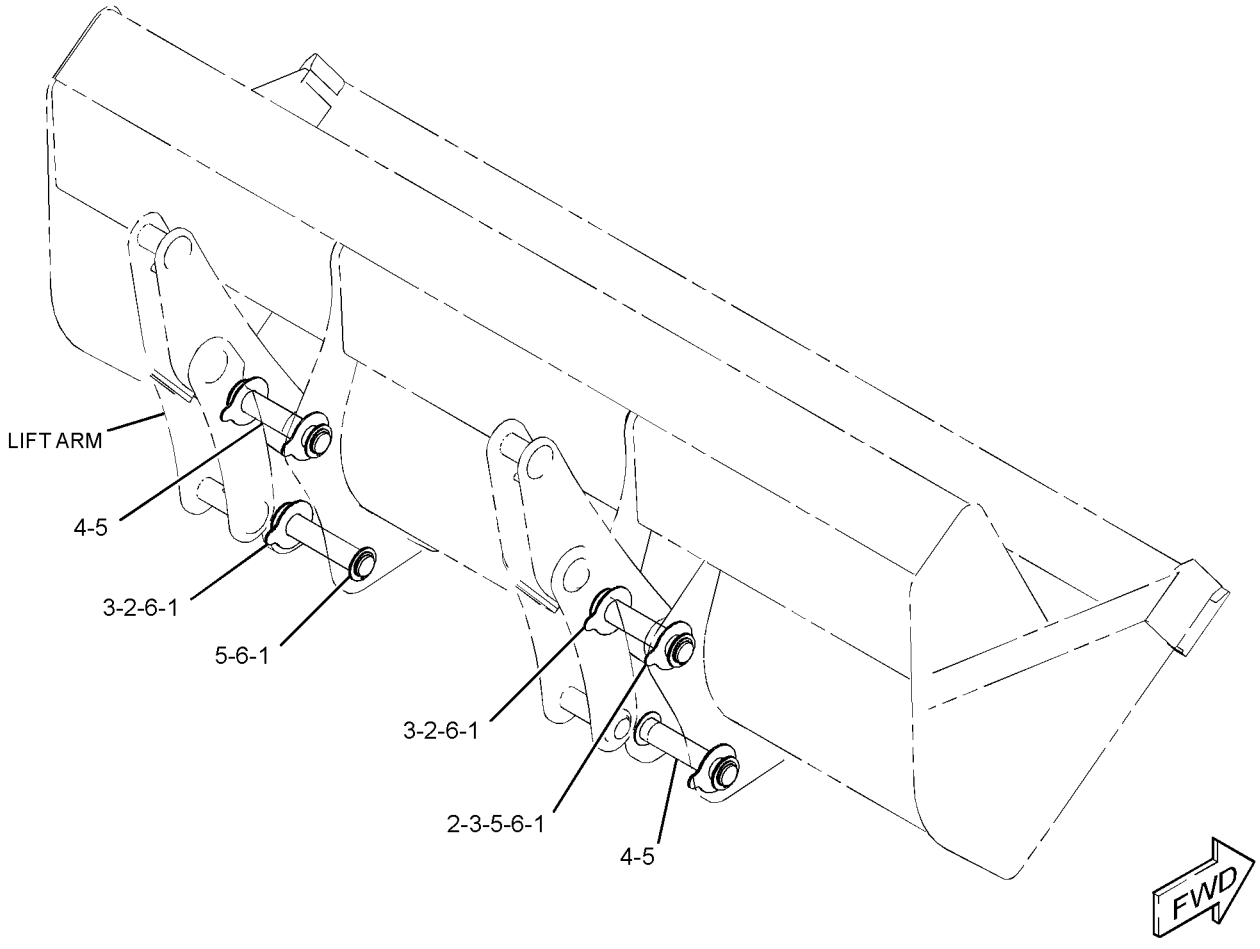

GRAPHIC #1 **<END>** g02839016

252-6005 MOUNTING GP-FORK—MULTIPURPOSE BUCKET

S/N: SJW1-UP

PART OF 350-1587, 350-1589 BUCKET AR-MULTIPURPOSE

AN ATTACHMENT

SMCS-6405 **i02164351**

NOTE	REF NO	GRAPHIC REF	PART NUMBER	QTY	PART NAME 1 2 3 4 5 6 (PRODUCT LEVEL)	SEE PAGE
	1	1	**5D-8159**	2	PIN AS	
	2	1	**104-6311**	2	BRACKET AS	
	3	1	**104-6316**	1	PIN	
	4	1	**104-6317**	2	PIN	
	5	1	**112-1776**	2	PIN AS	
	6	1	**4J-1888**	1	PIN-COTTER	
	7	1	**6V-8144**	4	RING-RETAINING	
	8	1	**9R-0109**	4	WASHER (41X64X3-MM THK)	

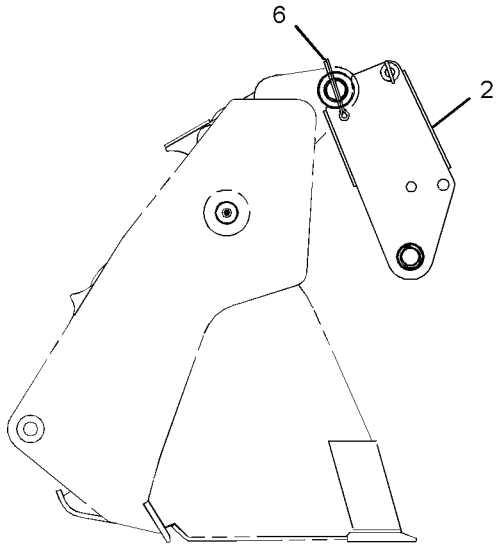

RIGHT SIDE VIEW

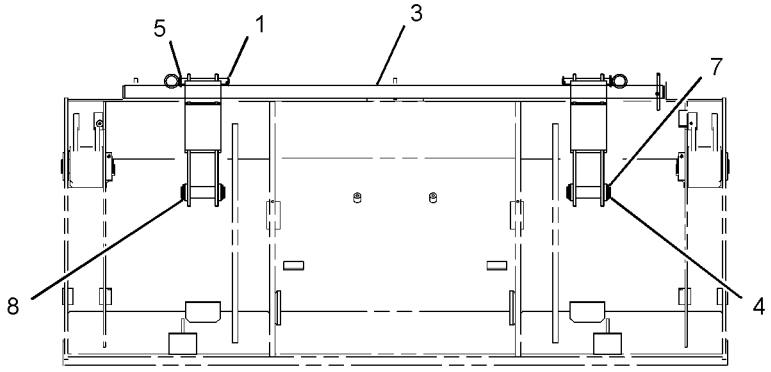

REAR VIEW

GRAPHIC #1 **<END>** g01097992

WORK TOOLS

9R-5866 TOOTH GP-UNI

S/N: SJW1-UP
PART OF 389-3761, 389-3762 DISTRIBUTION AR
FOR USE WITH LOADER BUCKETS. CANNOT BE USED WITH 9R-5321—PAGE 520, 9R-5320—PAGE 519
AN ATTACHMENT

SMCS-6822 **i01789850**

NOTE	REF NO	GRAPHIC REF	PART NUMBER	QTY	PART NAME 1 2 3 4 5 6 (PRODUCT LEVEL)	SEE PAGE
	1	1	**135-8203**	8	TOOTH-UNI	
	2	1	**4F-3657**	16	BOLT-PLOW (5/8-11X2.75 IN)	
	3	1	**4K-0367**	16	NUT-FULL (5/8-11 THD)	

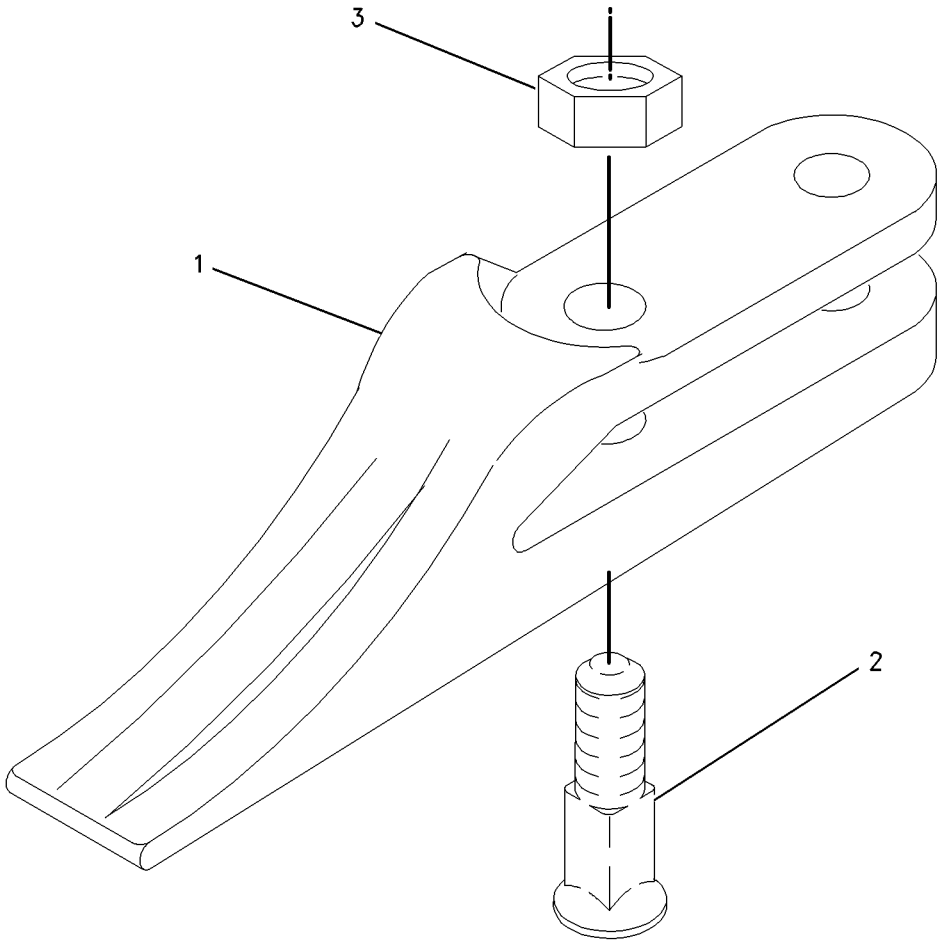

GRAPHIC #1 **<END>** g00915931

OPERATOR STATION

344-7511 AIR CONDITIONER & MOUNTING GP

S/N: SJW1-UP

PART OF 374-6889 HEATER & AIR CONDITIONER AR

AN ATTACHMENT

SMCS-7320 **i04586150**

NOTE	REF NO	GRAPHIC REF	PART NUMBER	QTY	PART NAME 1 2 3 4 5 6 (PRODUCT LEVEL)	SEE PAGE
	1	2	**6L-4725**	2	CLAMP-HOSE	
	2	2	**9N-2231**	1	GROMMET AS	
	3	2	**110-6109**	1	KNOB-CONTROL (AIR CONDITIONER)	
	4	2	**164-1368**	4	FASTENER-PANEL	
	5	2	**189-0881**	1	CONTROL AS	
		2	**129-1831**	1	CLAMP	
	6	2	**206-1648**	1	LOUVER	
	7	2	**206-1682**	1	PANEL-CONTROL	
	8	2	**206-1684**	1	COVER (CAB FILTER)	
	9	2	**206-1804**	1	GASKET	
	10	2	**206-1807**	1	GASKET	
	11	2	**206-1808**	1	PLATE	
	12	2	**206-1809**	1	ROD AS	
	13	2	**206-1818**	1	DUCT AS-AIR	
	14	2	**211-2661**	1	FILTER ELEMENT AS-AIR (CAB HEATER)	
	15	2	**255-0795**	1	FILM-IDENTIFICATION (TEMPERATURE CONTROL)	
	16	2	**319-8524**	1	HOSE-AIR	
	17	1	**356-4056**	1	INSULATION	
	18	1	**356-4057**	1	INSULATION	
Y	19	2	**358-7087**	1	HEATER & AIR CONDITIONER GP	569
M	20	2	**111-4627**	3	SCREW-MACHINE (M6X1X30-MM)	
	21	2	**4H-2558**	2	GROMMET	
	22	2	**5P-4116**	1	WASHER-HARD (8.8X20.5X2-MM THK)	
	23	2	**7X-0579**	1	WASHER-HARD (8.8X25.5X2-MM THK)	
M	24	2	**8T-4200**	1	BOLT (M8X1.25X16-MM)	
	25	2	**9X-2038**	2	WASHER (7X19X2-MM THK)	
M	26	2	**9X-2045**	2	SCREW-TRUSS HEAD (M6X1X20-MM)	
E	27	2	**220-0738**		SEAL (87-CM)	
D	28	2	**5P-6129**		TUBE (0.5-M EACH)	

D-ORDER BY THE METER
E-ORDER BY THE CENTIMETER
M-METRIC PART
Y-SEPARATE ILLUSTRATION

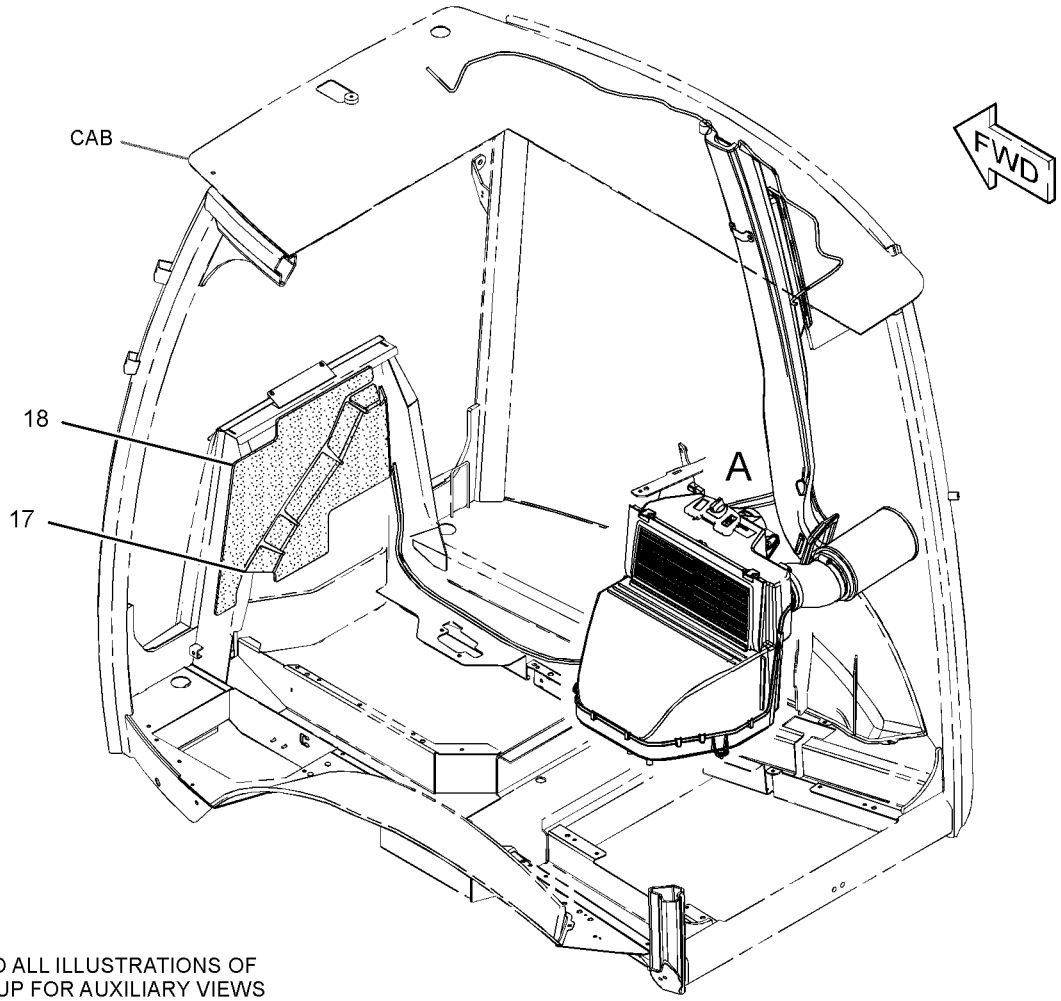

REFER TO ALL ILLUSTRATIONS OF
THIS GROUP FOR AUXILIARY VIEWS

GRAPHIC #1

g02790765

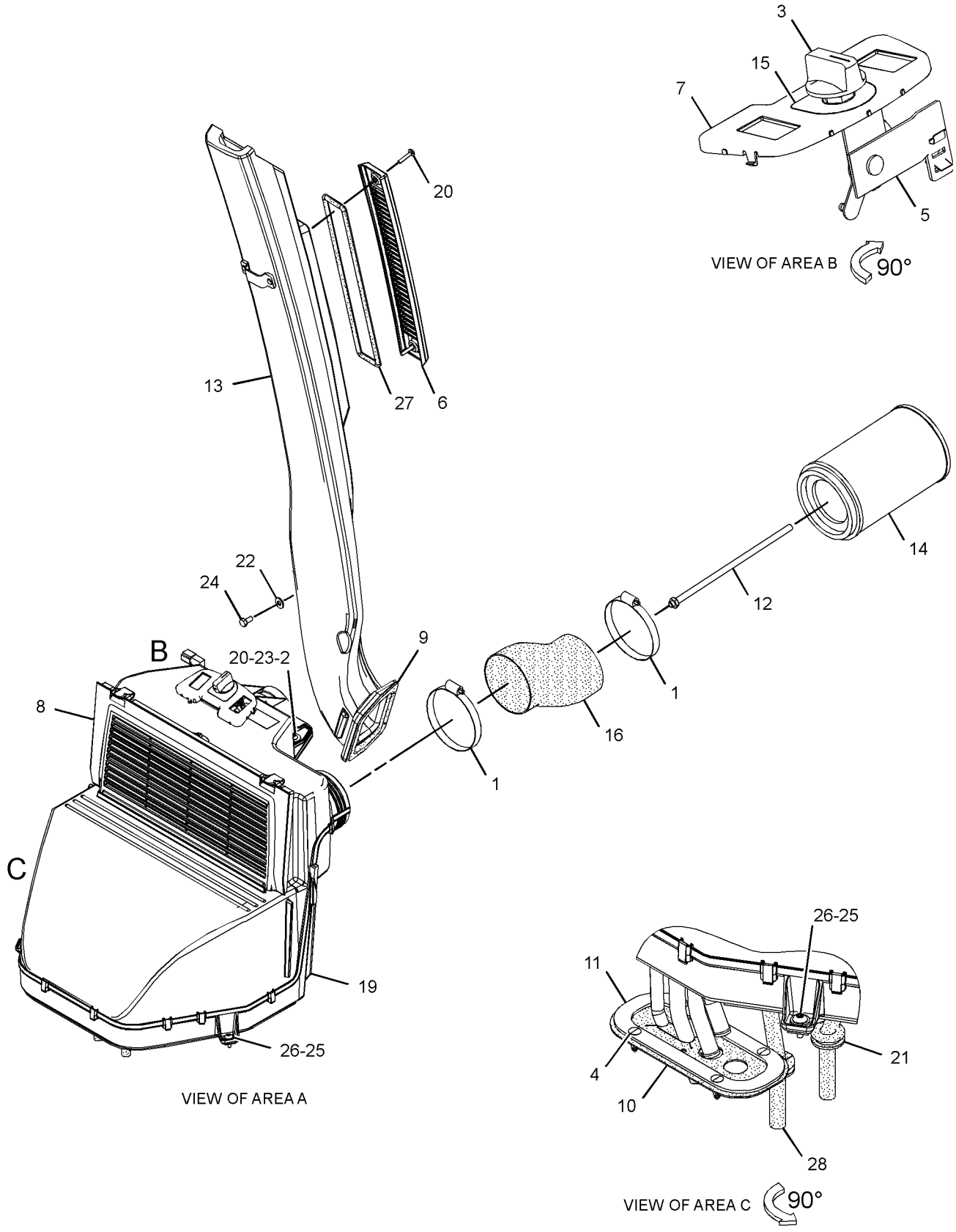

GRAPHIC #2 **<END>** g02790766

OPERATOR STATION

353-1429 CAB AR

S/N: SJW1-UP
PART OF 374-6852, 374-6854 CAB AR
AN ATTACHMENT

SMCS-7301, 7325 **i04611675**

NOTE	PART NUMBER	QTY	PART NAME 1 2 3 4 5 6 (PRODUCT LEVEL)	SEE PAGE
Y	*353-1399*	1	DUCT GP-CAB AIR	566
Y	*356-4104*	1	CAB GP	532
Y	*206-1702*	1	CONSOLE GP-OPERATOR (LH)	538
Y	*317-5539*	1	CONSOLE GP-OPERATOR (FRONT)	540
Y	*341-6677*	1	CONSOLE GP-OPERATOR (RH)	542
Y	*356-4120*	1	CONTROL GP-STEERING (TILT)	559
Y	*211-3782*	1	FENDER GP-REAR	331
Y	*206-1618*	1	FLOOR MAT GP	567
Y	*380-7775*	1	GUARD GP-DEBRIS	345
Y	*372-8664*	1	LIGHTING GP-FLOOD (CAB)	116
Y	*317-5543*	1	LINER GP-CAB	583
Y	*259-6276*	1	MIRROR GP-REAR VIEW (INTERIOR)	590
Y	*336-9168*	1	MIRROR GP-REAR VIEW (EXTERIOR)	591
Y	*204-4248*	1	MOUNTING GP-CAB	595
Y	*334-7225*	1	ROOF GP-CAB	598
Y	*206-1857*	1	VISOR GP-CAB	608
Y	*353-1366*	1	WIPER & WASHER GP-WINDOW	613
Y	*357-3237*	1	WIRING GP-CAB (ROOF)	142
	285-1207	1	MAT-PROTECTIVE	

Y-SEPARATE ILLUSTRATION

<END>

374-6852 CAB AR—MECH, NON-AC

S/N: SJW1-UP
PART OF 389-3761 DISTRIBUTION AR
AN ATTACHMENT

SMCS-7301, 7325 **i04611672**

NOTE	PART NUMBER	QTY	PART NAME 1 2 3 4 5 6 (PRODUCT LEVEL)	SEE PAGE
Y	*353-1429*	1	CAB AR (TRIM)	530
Y	*374-6870*	1	CONTROL GP-STABILIZER (WITH ALARM)	557
Y	*374-6887*	1	HEATER & AIR CONDITIONER AR	568
Y	*315-9890*	1	SEAT GP-SUSPENSION (CLOTH)	603

Y-SEPARATE ILLUSTRATION

<END>

OPERATOR STATION

374-6854 CAB AR—MECH, AIR CONDITIONER

S/N: SJW1-UP

PART OF 389-3762 DISTRIBUTION AR

AN ATTACHMENT

SMCS-7301, 7325 **i04611971**

NOTE	PART NUMBER	QTY	PART NAME 1 2 3 4 5 6 (PRODUCT LEVEL)	SEE PAGE
Y	*353-1429*	1	CAB AR (TRIM)	530
Y	*374-6870*	1	CONTROL GP-STABILIZER (WITH ALARM)	557
Y	*374-6889*	1	HEATER & AIR CONDITIONER AR	568
Y	*315-9890*	1	SEAT GP-SUSPENSION (CLOTH)	603

Y-SEPARATE ILLUSTRATION

<END>

OPERATOR STATION

356-4104 CAB GP–STANDARD

S/N: SJW1-UP
PART OF 353-1429 CAB AR
AN ATTACHMENT

SMCS-7301 **i04611679**

NOTE	REF NO	GRAPHIC REF	PART NUMBER	QTY	PART NAME 1 2 3 4 5 6 (PRODUCT LEVEL)	SEE PAGE
	1	1	**3S-2093**	6	STRAP-CABLE	
	2	1,2	**8Y-7309**	2	RETAINER	
	3	1	**129-3738**	2	GUARD-STRIKER	
	4	1,2	**129-5256**	12	BUSHING	
	5	1,2	**129-5257**	8	BUSHING	
	6	1	**205-9608**	1	GLASS (REAR, RH)	
	7	2	**205-9609**	1	GLASS (REAR, LH)	
	8	1,2	**205-9629**	4	SPACER (15.9X21.4X50-MM THK)	
	9	1,2	**206-1590**	4	PIN	
	10	1	**210-6475**	2	PLATE	
	11	1	**215-2913**	1	GROMMET	
	12	1	**219-0302**	1	FILM-WARNING (NO WELD, NO DRILL, READ OMM)	
	13	1,2	**223-2030**	2	LATCH AS (HOLD OPEN)	
					(EACH INCLUDES)	
M		1,2	**6V-7743**	2	LOCKNUT (M6X1-THD)	
M		1,2	**9X-2045**	2	SCREW-TRUSS HEAD (M6X1X20-MM)	
		1,2	**143-2827**	1	SPRING	
Y	14	2	*315-1270*	1	WINDOW GP-CAB (REAR)	609
Y	15	1	**329-1167**	1	DOOR GP-CAB (RH)	562
Y	16	2	**329-1168**	1	DOOR GP-CAB (LH)	564
	17	1	**338-3328**	2	BOLT-STRIKER	
	18	1	**356-0804**	1	CAB AS (STANDARD)	
	19	1	**356-4054**	1	PLATE	
	20	1	**357-3241**	1	HARNESS AS-LIGHTING	
		1	**9W-0852**	3	PIN-CONNECTOR (14-GA TO 16-GA)	
		1	**9X-3401**	4	PIN-CONNECTOR (16-GA TO 18-GA)	
		1	**155-2274**	2	KIT-CONNECTING PLUG (6-PIN)	
					(EACH INCLUDES PLUG AS, WEDGE & INTERFACE SEAL)	
		1	**8T-8737**	3	PLUG-SEAL	
		1	**102-8806**	1	KIT-RECEPTACLE (8-PIN)	
					(INCLUDES RECEPTACLE AS & WEDGE)	
		1	**9W-0844**	2	SOCKET-CONNECTOR (14-GA TO 16-GA)	
		1	**180-9340**	8	SOCKET-CONNECTOR (14-GA TO 18-GA)	
E		1	**125-7874**		TUBE-HEAT SHRINK (5.72-MM DIA) (15-CM)	
	21	1	**371-2051**	1	FILM-CERTIFICATION (ROPS, FOPS, READ OMM)	
	22	1	**380-7826**	1	GLASS (FRONT, LH)	
	23	1	**380-7827**	1	GLASS (FRONT, RH)	
	24	1	**380-7828**	1	GLASS	
M	25	1,2	**5C-7261**	2	NUT (M8X1.25-THD)	
	26	1	**5P-4116**	11	WASHER-HARD (8.8X20.5X2-MM THK)	
	27	1	**5P-7648**	2	GROMMET	
	28	1	**7X-0618**	2	WASHER-HARD (13.5X40X5-MM THK)	
	29	1,2	**7X-2393**	2	BUMPER-CONICAL	
	30	1,2	**8S-7803**	8	RING-RETAINING	
M	31	1	**8T-4200**	11	BOLT (M8X1.25X16-MM)	
E	32	1,2	**322-8414**		SEAL-CAB (368-CM EACH)	

E-ORDER BY THE CENTIMETER
M-METRIC PART
Y-SEPARATE ILLUSTRATION

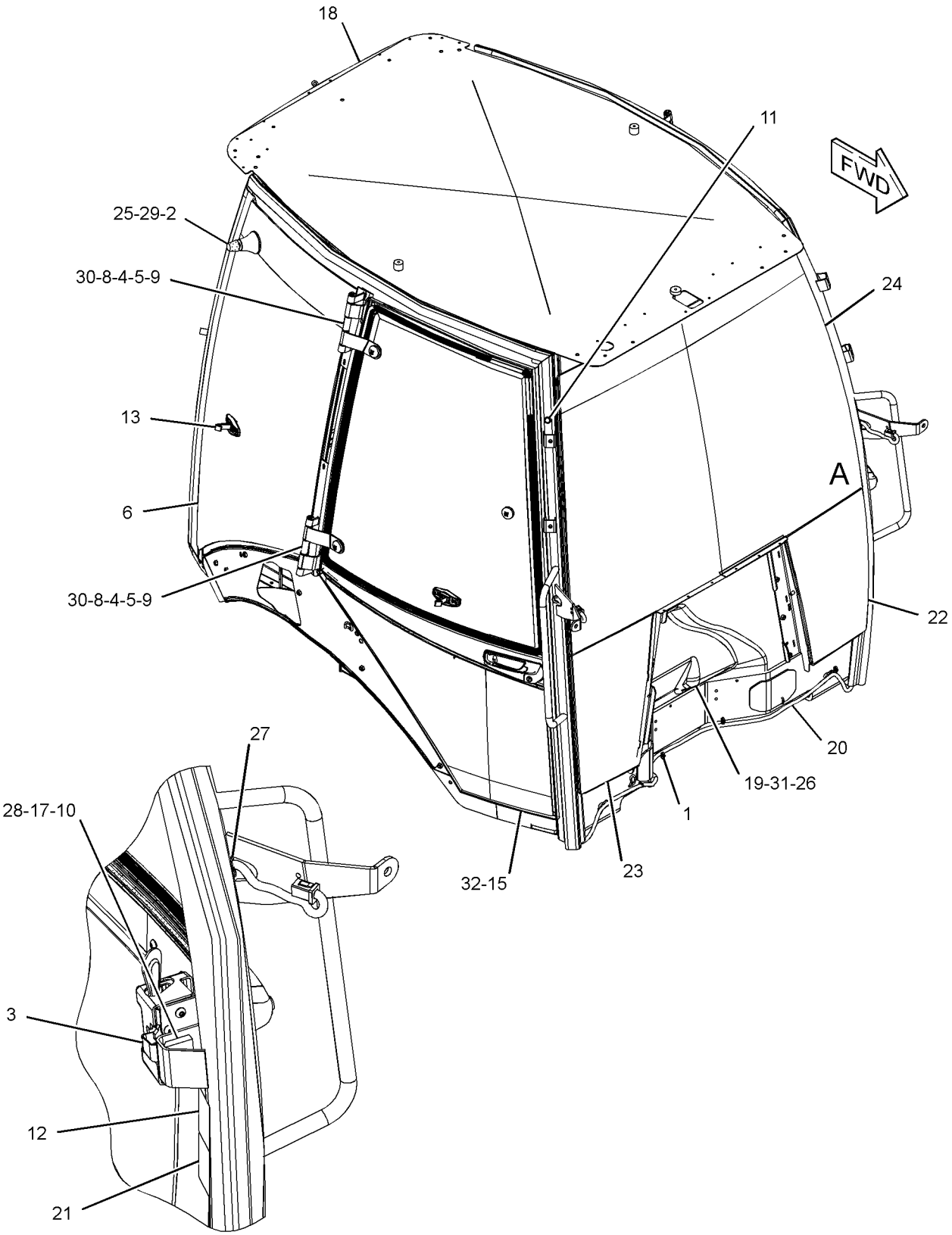

VIEW OF AREA A
(PARTS REMOVED FOR CLARITY)

GRAPHIC #1 g02797878

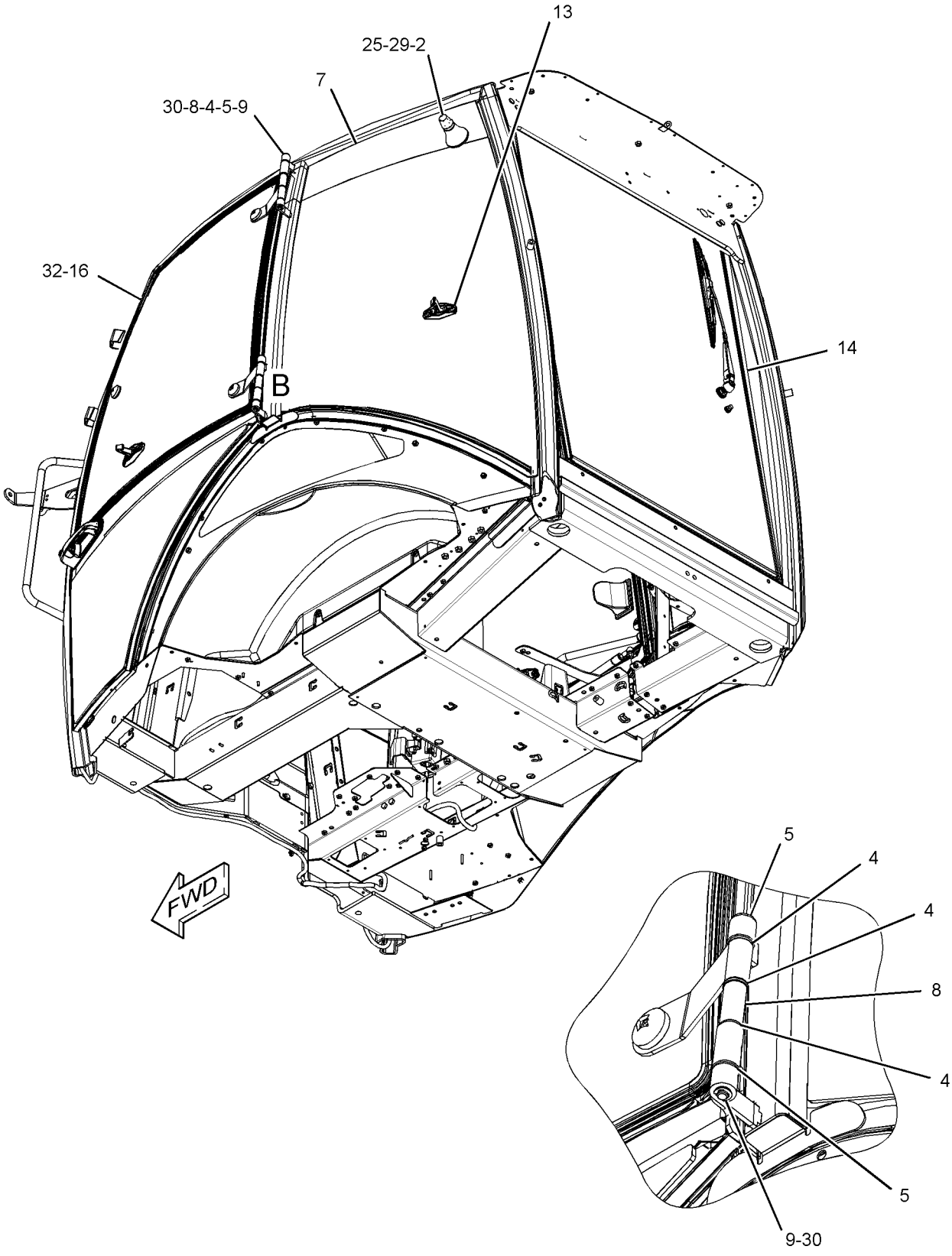

VIEW OF AREA B

GRAPHIC #2 **<END>** g02797880

OPERATOR STATION

299-2212 COMPRESSOR GP-REFRIGERANT

S/N: SJW1-UP

PART OF 321-7038 COMPRESSOR GP-REFRIGERANT

AN ATTACHMENT

SMCS-1802 **i03729560**

NOTE	REF NO	GRAPHIC REF	PART NUMBER	QTY	PART NAME 1 2 3 4 5 6 (PRODUCT LEVEL)	SEE PAGE
	1	1	**126-1767**	2	PIN-CONNECTOR (14-GA TO 16-GA)	
	2	1	**102-8802**	1	KIT-RECEPTACLE (2-PIN)	
					(INCLUDES RECEPTACLE AS & WEDGE)	
	3	1	**314-4018**	1	VALVE AS-PRESSURE RELIEF (REFRIGERANT COMPRESSOR)	
	4	1	**7T-4532**	1	PLUG AS	
	5	1	**9X-7385**	2	SEAL-O-RING	

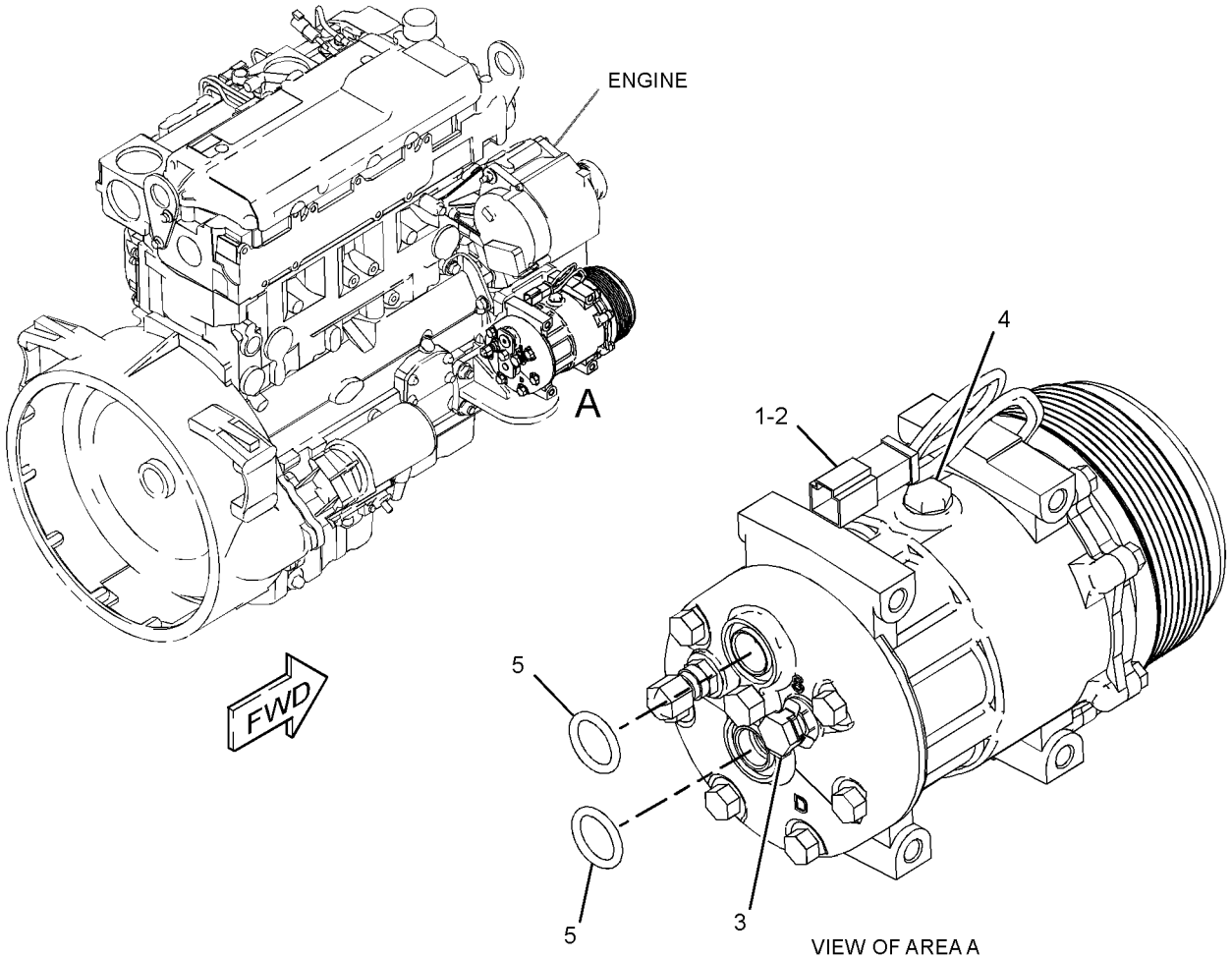

GRAPHIC #1

<END>

g01513535

OPERATOR STATION

321-7038 COMPRESSOR GP-REFRIGERANT

S/N: SJW1-UP

PART OF 374-6889 HEATER & AIR CONDITIONER AR

AN ATTACHMENT

SMCS-1802 **i03035509**

NOTE	REF NO	GRAPHIC REF	PART NUMBER	QTY	PART NAME 1 2 3 4 5 6 (PRODUCT LEVEL)	SEE PAGE
	1	1	**288-9734**	1	BRACKET	
	2	1	**290-7831**	1	BRACKET	
Y	3	1	**299-2212**	1	COMPRESSOR GP-REFRIGERANT	535
M	4	1	**7X-2538**	4	BOLT (M8X1.25X100-MM)	
M	5	1	**7X-2553**	2	BOLT (M16X2X40-MM)	
	6	1	**8T-4121**	2	WASHER-HARD (11X21X2.5-MM THK)	
M	7	1	**8T-4136**	2	BOLT (M10X1.5X25-MM)	
	8	1	**8T-4224**	4	WASHER-HARD (8.8X16X2-MM THK)	
	9	1	**9X-8257**	2	WASHER (17.5X30X3.5-MM THK)	

M-METRIC PART
Y-SEPARATE ILLUSTRATION

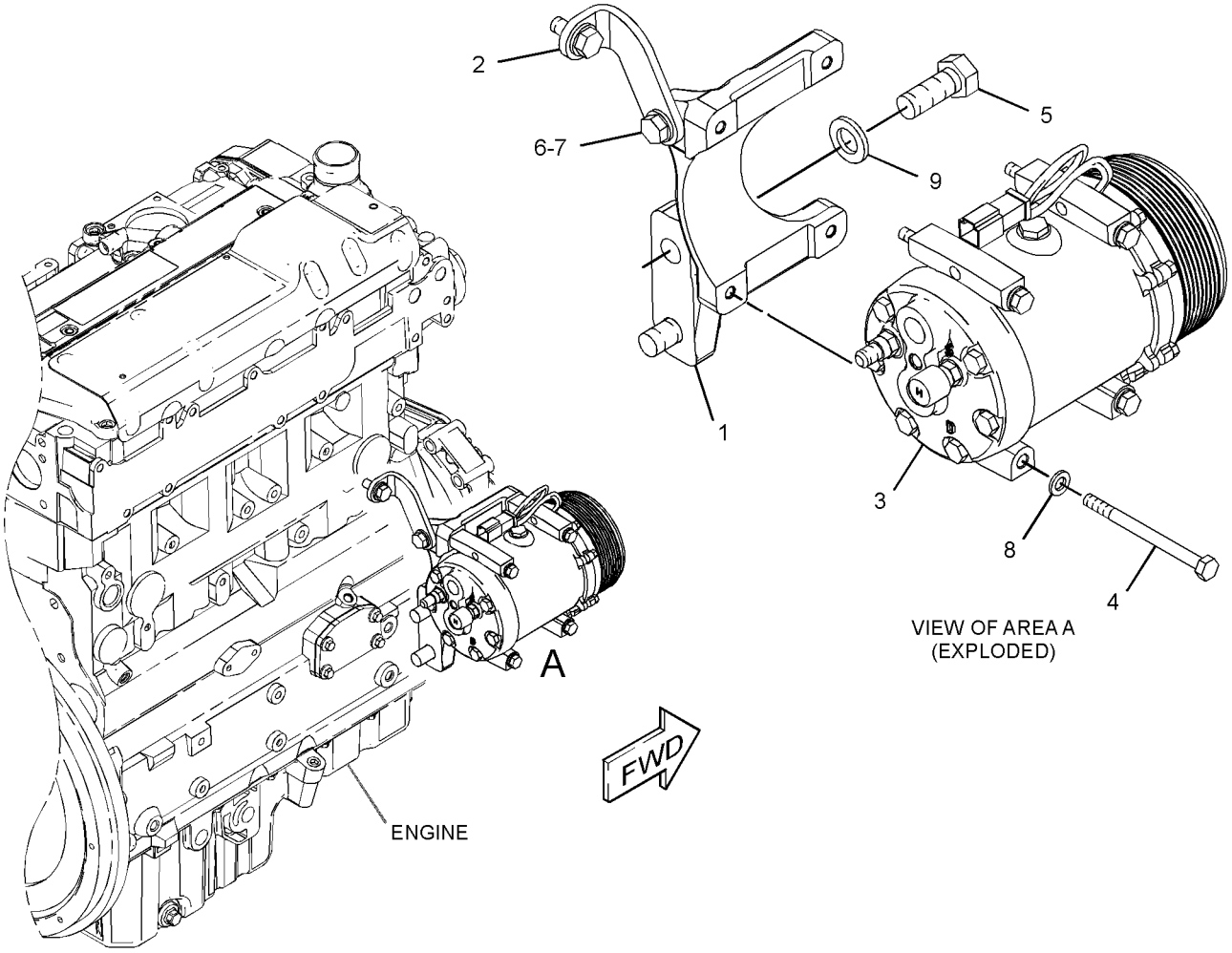

GRAPHIC #1 **<END>** g01570153

OPERATOR STATION

337-9765 CONDENSER & MTG GP-REFRIGERANT

S/N: SJW1-UP

PART OF 374-6889 HEATER & AIR CONDITIONER AR

AN ATTACHMENT

SMCS-1805 **i04586129**

NOTE	REF NO	GRAPHIC REF	PART NUMBER	QTY	PART NAME 1 2 3 4 5 6 (PRODUCT LEVEL)	SEE PAGE
	1	1	**359-9885**	1	CONDENSER AS	
		1	**317-8141**	4	MOUNT	
	2	1	**7X-0579**	4	WASHER-HARD (8.8X25.5X2-MM THK)	
M	3	1	**8T-7547**	4	BOLT (M8X1.25X30-MM)	

M-METRIC PART

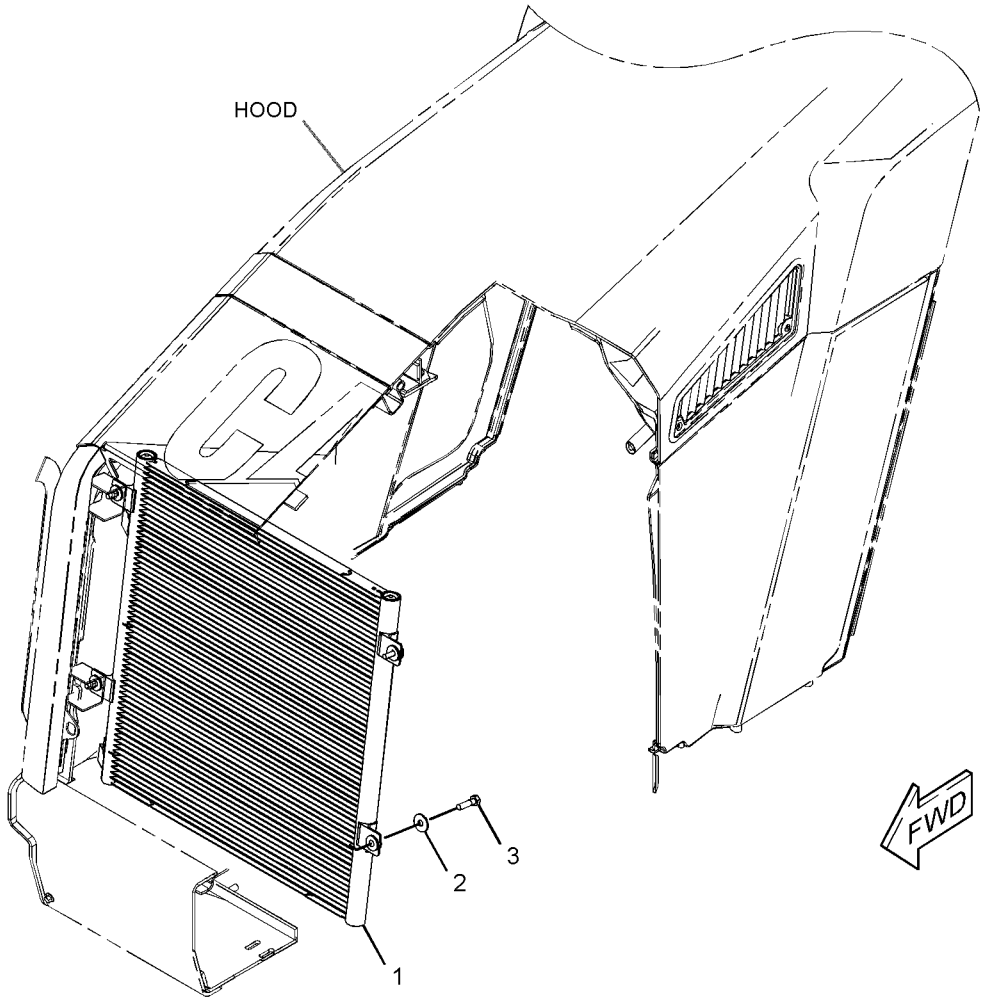

GRAPHIC #1 **<END>** g02788536

OPERATOR STATION

206-1702 CONSOLE GP-OPERATOR—LH

S/N: SJW1-UP
PART OF 353-1429 CAB AR
AN ATTACHMENT

SMCS-5258, 7451 **i03126124**

NOTE	REF NO	GRAPHIC REF	PART NUMBER	QTY	PART NAME 1 2 3 4 5 6 (PRODUCT LEVEL)	SEE PAGE
E	1	1	**3E-6600**		SEAL (34-CM)	
D	2	1	**5P-5927**		SEAL (1.7-M)	
	3	1	**206-1696**	1	CONSOLE AS (LH)	
	4	1	**206-1698**	1	DOOR-STORAGE	
	5	1	**206-1699**	1	CUP HOLDER	
	6	1	**206-1706**	1	BOX AS-STORAGE	
J	7	1	**206-1708**	1	LOCK AS	
	8	1	**206-1712**	1	HINGE-DOOR	
	9	1	**210-6491**	1	CUP HOLDER	
	10	1	**249-2482**	1	PLATE	
	11	1	**261-9636**	1	BRACKET-SUPPORT	
	12	1	**261-9637**	2	BRACKET AS	
	13	1	**261-9639**	3	SCREW-PAN HEAD (12X0.5-IN)	
E	14	1	**293-1980**		SEAL (71-CM)	
E	14A	1	**293-1980**		SEAL (77-CM)	
M	15	1	**5C-2890**	3	NUT (M6X1-THD)	
	16	1	**8T-4205**	3	WASHER-HARD (7.2X14.5X2-MM THK)	
	17	1	**9X-2038**	6	WASHER (7X19X2-MM THK)	
M	18	1	**9X-2044**	19	SCREW-TRUSS HEAD (M6X1X16-MM)	

D-ORDER BY THE METER
E-ORDER BY THE CENTIMETER
J-REQUIRES CORPORATE KEY
M-METRIC PART

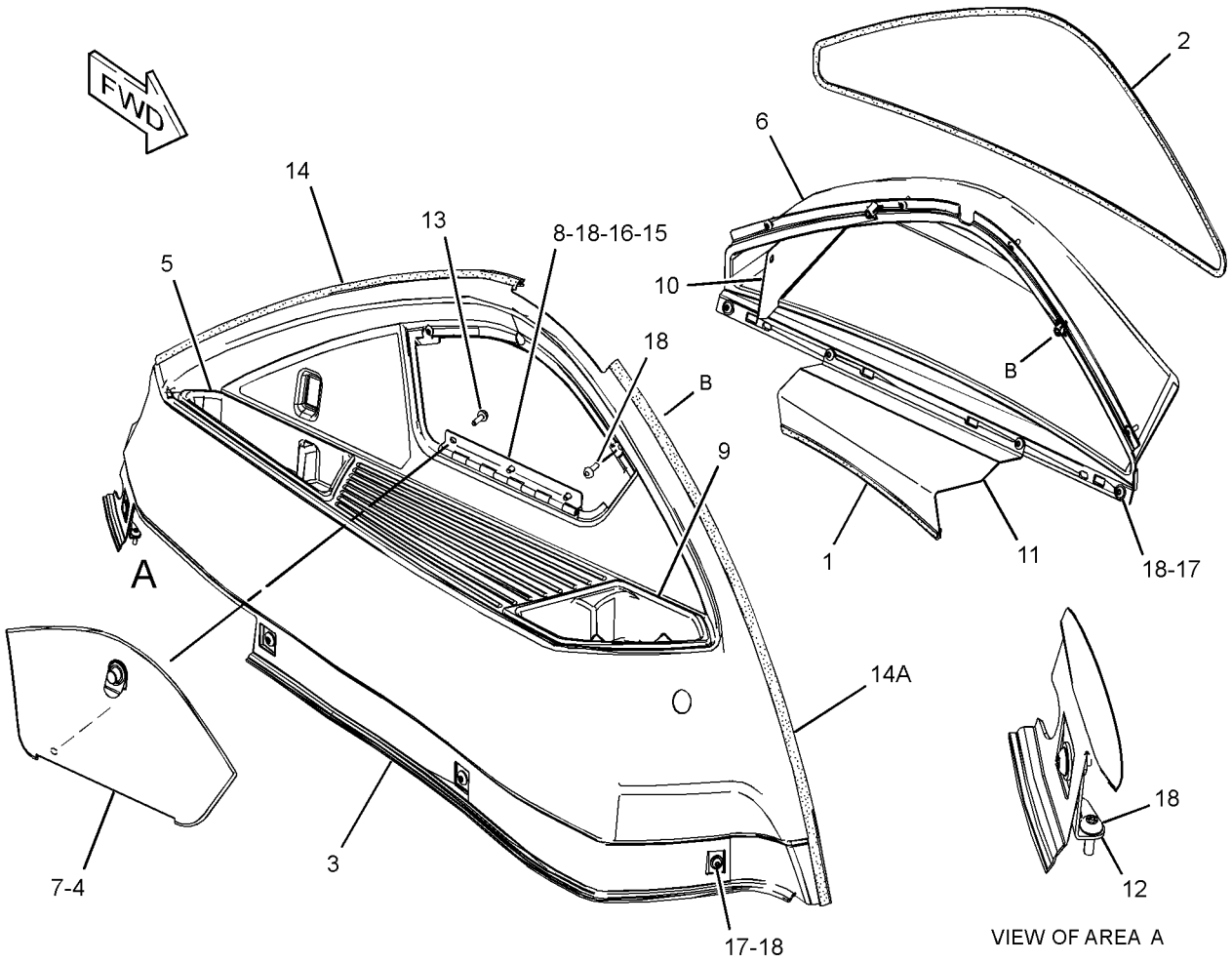

GRAPHIC #1 **<END>** g01520782

OPERATOR STATION

317-5539 CONSOLE GP-OPERATOR—FRONT

S/N: SJW1-UP
PART OF 353-1429 CAB AR
AN ATTACHMENT

SMCS-5258, 7451 **i04556060**

NOTE	REF NO	GRAPHIC REF	PART NUMBER	QTY	PART NAME 1 2 3 4 5 6 (PRODUCT LEVEL)	SEE PAGE
	1	1	**4I-3038**	2	WASHER (3.3X8X0.5-MM THK)	
	2	1	**206-1659**	1	DOOR-STORAGE	
	3	1	**206-1662**	1	CONSOLE AS-FRONT (UPPER)	
		1	**206-1667**	8	CLIP	
	4	1	**206-1663**	1	CONSOLE-FRONT (MIDDLE)	
J	5	1	**206-1708**	1	LOCK AS	
	6	1	**224-2147**	1	CONSOLE AS-FRONT (LOWER, LH)	
	7	1	**224-2149**	1	CONSOLE AS-FRONT (LOWER, RH)	
BC	8	1	**227-1057**	1	PLUG-HOLE	
	9	1	**233-5260**	2	LANYARD	
	10	1	**258-2354**	1	BRACKET-LATCH	
	11	1	**261-9639**	10	SCREW-PAN HEAD (12.0X0.5-IN)	
	12	1	**313-6711**	1	COVER AS-STEERING COLUMN (UPPER)	
		1	**206-1667**	2	CLIP	
	13	1	**313-6712**	1	COVER AS-STEERING COLUMN (FRONT)	
	14	1	**313-6713**	1	COVER AS-STEERING COLUMN (REAR)	
					(EACH COVER AS INCLUDES)	
		1	**206-1667**	4	CLIP	
	15	1	**320-9835**	1	FILM-INSTRUCTION (FORWARD, NEUTRAL, REVERSE)	
M	16	1	**120-9027**	2	SCREW-PAN HEAD (M3X0.5X16-MM)	
	17	1	**206-1854**	1	HINGE	
M	18	1	**8T-2658**	2	LOCKNUT (M3X0.5-THD)	
	19	1	**9X-2038**	3	WASHER (7X19X2-MM THK)	
M	20	1	**9X-2044**	2	SCREW-TRUSS HEAD (M6X1X16-MM)	
M	21	1	**9X-2045**	16	SCREW-TRUSS HEAD (M6X1X20-MM)	
D	22	1	**5P-7070**		INSULATION-STRIP (0.1-M EACH)	
E	23	1	**220-0738**		SEAL (22-CM)	

B-USE AS REQUIRED
C-CHANGE FROM PREVIOUS TYPE
D-ORDER BY THE METER
E-ORDER BY THE CENTIMETER
J-REQUIRES CORPORATE KEY
M-METRIC PART

317-5539 **CONSOLE GP-OPERATOR** *(contd.)* **i04556060**

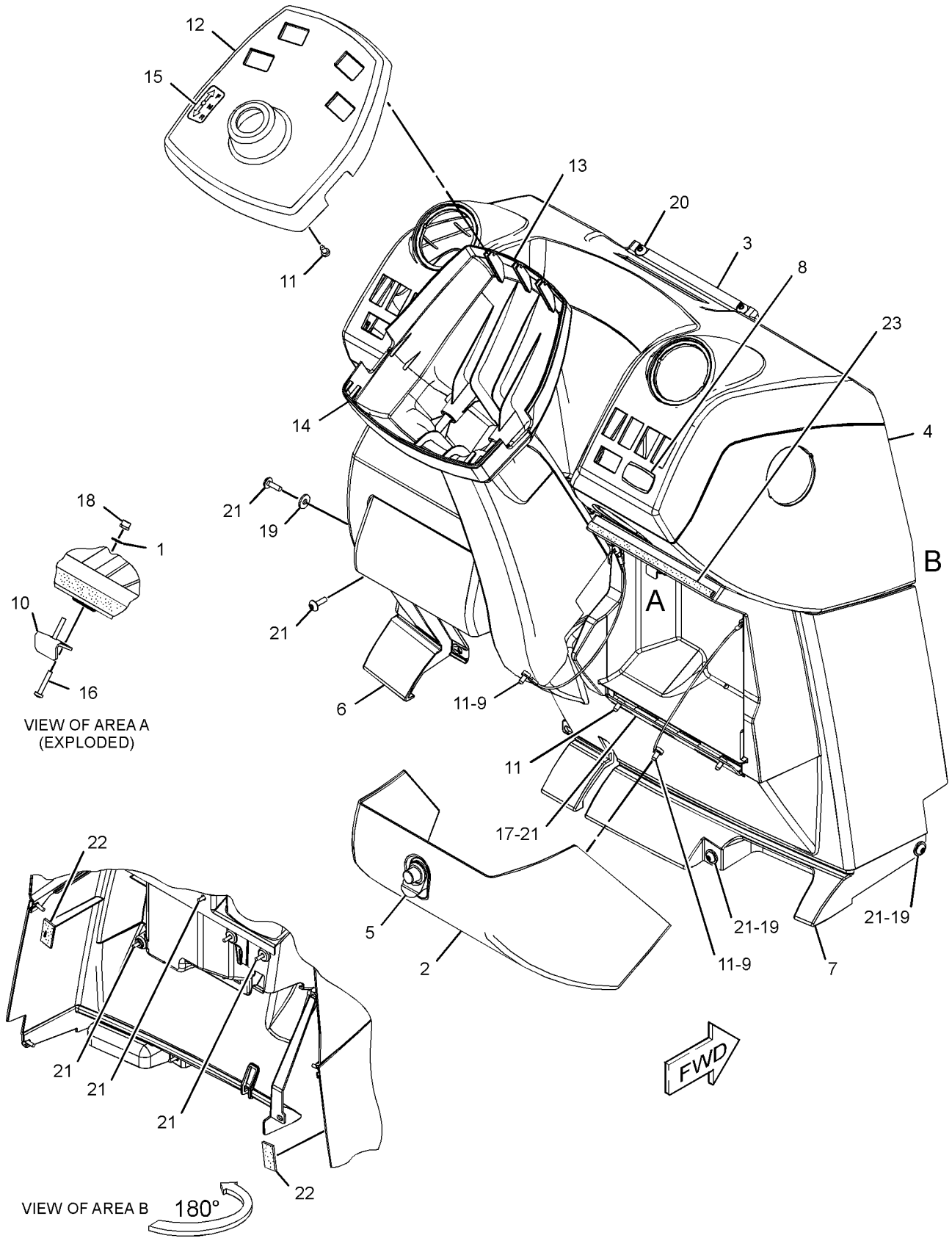

VIEW OF AREA A
(EXPLODED)

VIEW OF AREA B

GRAPHIC #1 **<END>** g02779417

OPERATOR STATION

341-6677 CONSOLE GP-OPERATOR—RH

S/N: SJW1-UP
PART OF 353-1429 CAB AR
AN ATTACHMENT

SMCS-5258, 7451 **i04548496**

NOTE	REF NO	GRAPHIC REF	PART NUMBER	QTY	PART NAME 1 2 3 4 5 6 (PRODUCT LEVEL)	SEE PAGE
B	1	1	**2S-3163**	1	PLUG	
	2	1	**164-1178**	1	CLIP	
	3	1	**167-8251**	1	FASTENER	
	4	1	**206-1678**	1	HOUSING AS (UPPER)	
	5	1	**206-1681**	1	PANEL AS (LOWER)	
		1	**172-8591**	5	NUT-SPRING	
	6	1	**206-1687**	1	COVER-FUSE	
	7	1	**206-1690**	1	COVER (FENDER, REAR)	
B	8	1	**248-2709**	2	PLUG	
	9	1	**261-9644**	1	COVER AS (CONTROLS, FRONT, LOWER)	
		1	**206-1667**	1	CLIP	
	10	1	**261-9645**	1	COVER AS (CONTROLS, FRONT, UPPER)	
		1	**206-1667**	4	CLIP	
	11	1	**269-9115**	1	COVER AS (FENDER, FRONT)	
		1	**172-8591**	1	NUT-SPRING	
E	12	1	**293-1980**		SEAL (73-CM)	
E	12A	1	**293-1980**		SEAL (77.5-CM)	
	13	1	**336-7533**	1	PANEL AS-GAUGE	
		1	**206-1667**	2	CLIP	
	14	1	**337-5351**	1	FILM-INSTRUCTION (START SWITCH)	
	15	1	**9X-2038**	5	WASHER (7X19X2-MM THK)	
M	16	1	**9X-2045**	16	SCREW-TRUSS HEAD (M6X1X20-MM)	

B-USE AS REQUIRED
E-ORDER BY THE CENTIMETER
M-METRIC PART

341-6677 **CONSOLE GP-OPERATOR** *(contd.)* **i04548496**

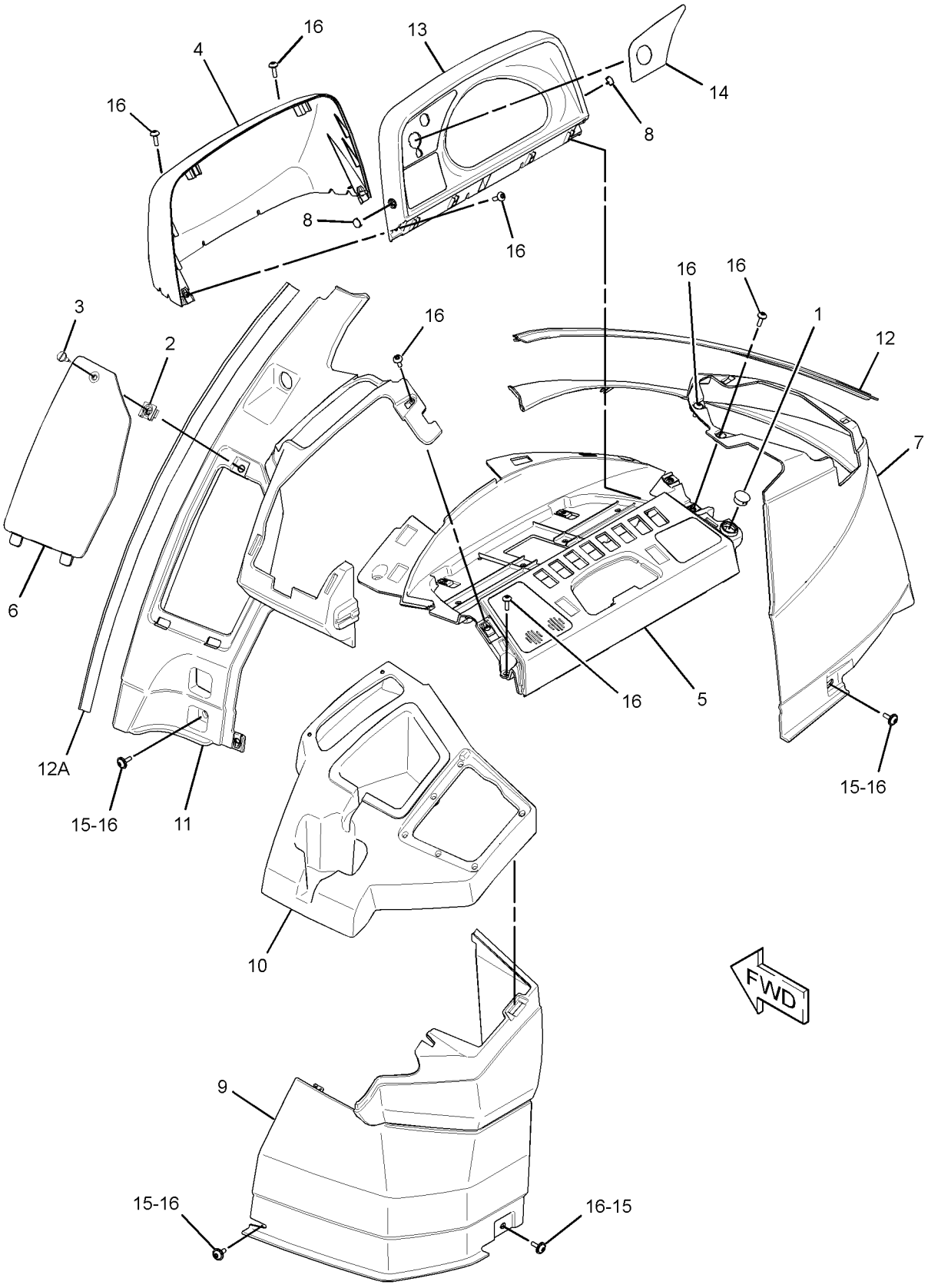

GRAPHIC #1 **<END>** g02788839

OPERATOR STATION

331-9945 CONTROL GP-HYDRAULIC HAND—LOADER

S/N: SJW1-UP

PART OF 373-4267, 373-4268 VALVE AR-BANK 3

AN ATTACHMENT

SMCS-5063 **i04574351**

NOTE	REF NO	GRAPHIC REF	PART NUMBER	QTY	PART NAME 1 2 3 4 5 6 (PRODUCT LEVEL)	SEE PAGE
E	1	1	**3E-6600**		SEAL (7-CM)	
	2	1	**2R-0364**	6	RING-RETAINING	
	3	1	**102-8802**	1	KIT-RECEPTACLE (2-PIN)	
					(INCLUDES RECEPTACLE AS & WEDGE)	
	4	1	**3S-2093**	2	STRAP-CABLE	
	5	1	**8T-4743**	3	PIN	
	6	1	**8T-4773**	5	BALL JOINT	
	7	1	**9R-1765**	1	COVER-TOP	
	8	1	**9R-1766**	1	COVER-BOTTOM	
	9	1	**9R-1767**	1	BOOT	
	10	1	**9R-9868**	1	SWITCH GP-PUSH BUTTON (NEUTRALIZER, DOWNSHIFT)	
		1	**180-9339**	2	PIN-CONNECTOR (14-GA TO 18-GA)	
D		1	**5P-5677**		WIRE (18-GA, BLACK) (0.1-M EACH)	
D		1	**6V-2689**		TUBE-HEAT SHRINK (6.35-MM DIA) (1.1-M)	
		1	**9W-0625**	1	SWITCH AS-PUSH BUTTON (NEUTRALIZER, DOWNSHIFT)	
	11	1	**091-1745**	7	WASHER (16.6X24X1.2-MM THK)	
	12	1	**107-5591**	1	NUT-JAM (3/4-16-THD)	
	13	1	**119-4167**	1	ROD	
	14	1	**164-1368**	12	FASTENER-PANEL	
	15	1	**164-1395**	1	KNOB (GOVERNOR CONTROL)	
	16	1	**183-3134**	2	BEARING	
	17	1	**206-1668**	1	BOOT	
	18	1	**220-0269**	1	SHAFT	
	19	1	**270-2795**	1	PLATE	
	20	1	**291-5108**	1	GASKET	
	21	1	**365-2913**	1	BRACKET AS	
	22	1	**330-6987**	1	LEVER AS-VALVE	
	22A	1	**183-3136**	1	BUSHING	
	23	1	**330-6988**	1	PIN	
	24	1	**330-6994**	1	ROD	
	25	1	**330-6996**	1	ROD	
	26	1	**330-7002**	1	LEVER AS-VALVE	
	26A	1	**183-3134**	2	BEARING	
	27	1	**331-4360**	1	ROD	
	28	1	**333-7905**	1	PIN	
	29	1	**333-8324**	1	JOINT AS	
	29A	1	**183-3136**	1	BUSHING	
	30	1	**365-2915**	1	PIN AS	
		1	**330-6990**	2	LEVER	
	31	1	**352-8367**	1	PLATE	
	33	1	**5H-3193**	1	PIN-SPRING	
	34	1	**5P-4116**	2	WASHER-HARD (8.8X20.5X2-MM THK)	
M	35	1	**6V-7744**	7	LOCKNUT (M10X1.5-THD)	
	36	1	**7X-7729**	4	WASHER (11X25X3-MM THK)	
	37	1	**8T-4121**	6	WASHER-HARD (11X21X2.5-MM THK)	
M	38	1	**8T-4133**	8	NUT (M10X1.5-THD)	
M	39	1	**8T-4136**	1	BOLT (M10X1.5X25-MM)	
M	40	1	**8T-4189**	2	BOLT (M8X1.25X20-MM)	
	41	1	**8T-4815**	3	ROD END	
	42	1	**8T-9501**	2	SCREW (10-16X0.75-IN)	
M	43	1	**9X-2040**	2	SCREW-TRUSS HEAD (M10X1.5X25-MM)	

D-ORDER BY THE METER
E-ORDER BY THE CENTIMETER
M-METRIC PART

331-9945 **CONTROL GP-HYDRAULIC HAND** *(contd.)* **i04574351**

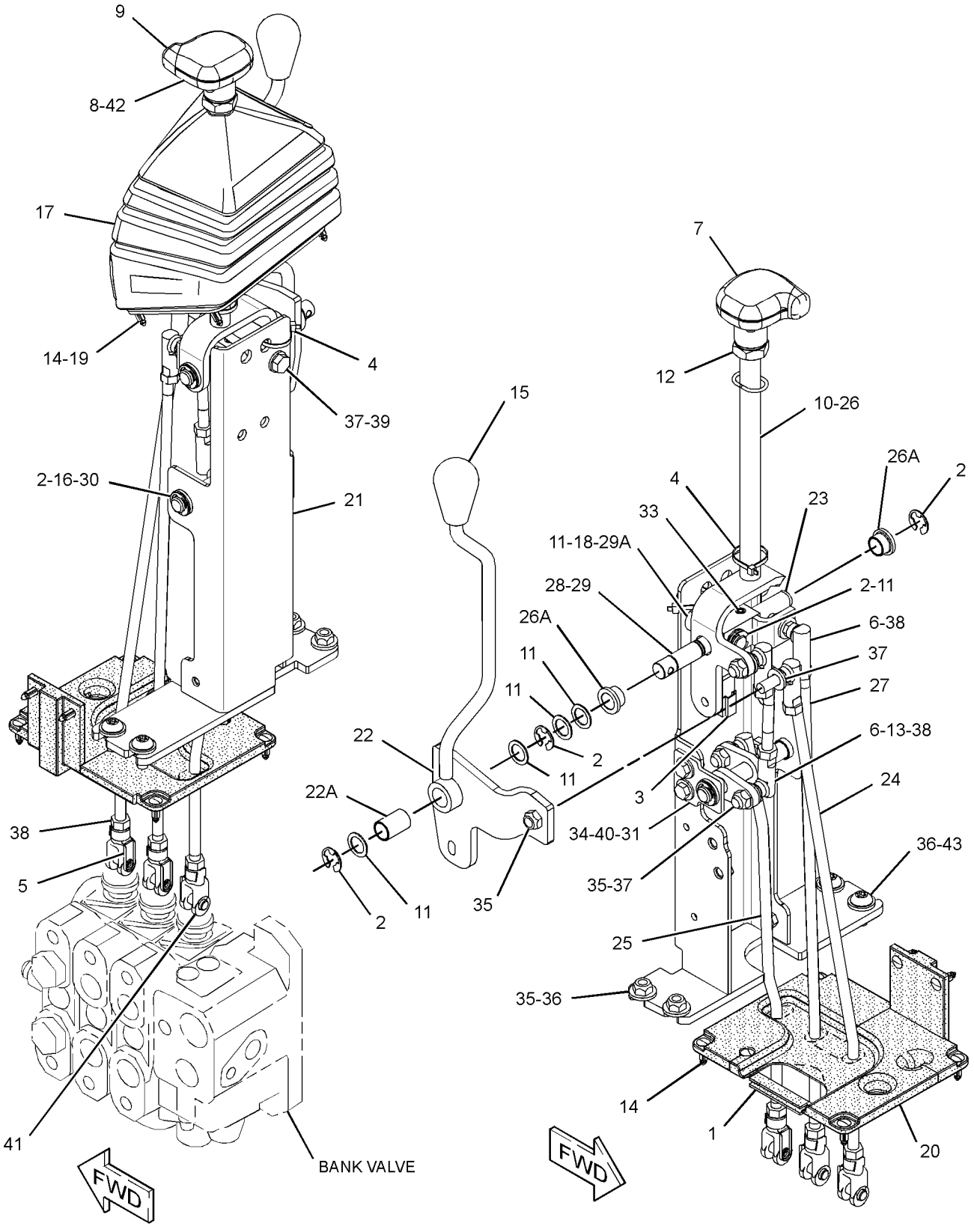

GRAPHIC #1 **<END>** g02820457

OPERATOR STATION

334-3569 CONTROL GP-HYDRAULIC HAND—LOADER

S/N: SJW1-UP
PART OF 373-4266 VALVE AR-BANK 3
AN ATTACHMENT

SMCS-5063 **i04574352**

NOTE	REF NO	GRAPHIC REF	PART NUMBER	QTY	PART NAME 1 2 3 4 5 6 (PRODUCT LEVEL)	SEE PAGE
E	1	1	**3E-6600**		SEAL (7-CM)	
	2	1	**2R-0364**	5	RING-RETAINING	
	4	1	**3S-2093**	2	STRAP-CABLE	
	5	1	**8T-4743**	2	PIN	
	6	1	**8T-4773**	4	BALL JOINT	
	7	1	**9R-1765**	1	COVER-TOP	
	8	1	**9R-1766**	1	COVER-BOTTOM	
	9	1	**9R-1767**	1	BOOT	
	10	1	**9R-9868**	1	SWITCH GP-PUSH BUTTON (NEUTRALIZER, DOWNSHIFT)	
D		1	**5P-5677**		WIRE (18-GA, BLACK) (2-M)	
D		1	**6V-2689**		TUBE-HEAT SHRINK (6.35-MM DIA) (1.1-M)	
		1	**9W-0625**	1	SWITCH AS-PUSH BUTTON (PUSH BUTTON)	
		1	**9X-3401**	2	PIN-CONNECTOR (16-GA TO 18-GA)	
	11	1	**091-1745**	5	WASHER (16.6X24X1.2-MM THK)	
	12	1	**107-5591**	1	NUT-JAM (3/4-16-THD)	
	13	1	**119-4167**	1	ROD	
	14	1	**164-1368**	12	FASTENER-PANEL	
	15	1	**206-1695**	1	BOOT	
	16	1	**220-0269**	1	SHAFT	
	17	1	**270-2795**	1	PLATE	
	18	1	**291-5108**	1	GASKET	
	19	1	**365-2913**	1	BRACKET AS	
	20	1	**330-6988**	1	PIN	
	23	1	**330-6996**	1	ROD	
	24	1	**330-7002**	1	LEVER AS-VALVE	
	24A	1	**183-3134**	2	BEARING	
	25	1	**331-4360**	1	ROD	
	26	1	**333-8324**	1	JOINT AS	
	26A	1	**183-3136**	1	BUSHING	
	28	1	**102-8802**	1	KIT-RECEPTACLE (2-PIN) (INCLUDES RECEPTACLE AS & WEDGE)	
	29	1	**5H-3193**	1	PIN-SPRING	
M	30	1	**6V-7744**	6	LOCKNUT (M10X1.5-THD)	
	31	1	**7X-7729**	4	WASHER (11X25X3-MM THK)	
	32	1	**8T-4121**	5	WASHER-HARD (11X21X2.5-MM THK)	
M	33	1	**8T-4133**	6	NUT (M10X1.5-THD)	
M	34	1	**8T-4136**	1	BOLT (M10X1.5X25-MM)	
	35	1	**8T-4815**	2	ROD END	
	36	1	**8T-9501**	2	SCREW (10-16X0.75-IN)	
M	37	1	**9X-2040**	2	SCREW-TRUSS HEAD (M10X1.5X25-MM)	
C	38	1	**365-2915**	1	PIN AS	
		1	**330-6990**	2	LEVER	
C	39	1	**352-8367**	1	PLATE	
C	40	1	**5P-4116**	2	WASHER-HARD (8.8X20.5X2-MM THK)	
CM	41	1	**8T-4189**	2	BOLT (M8X1.25X20-MM)	
C	42	1	**183-3134**	2	BEARING	

C-CHANGE FROM PREVIOUS TYPE
D-ORDER BY THE METER
E-ORDER BY THE CENTIMETER
M-METRIC PART

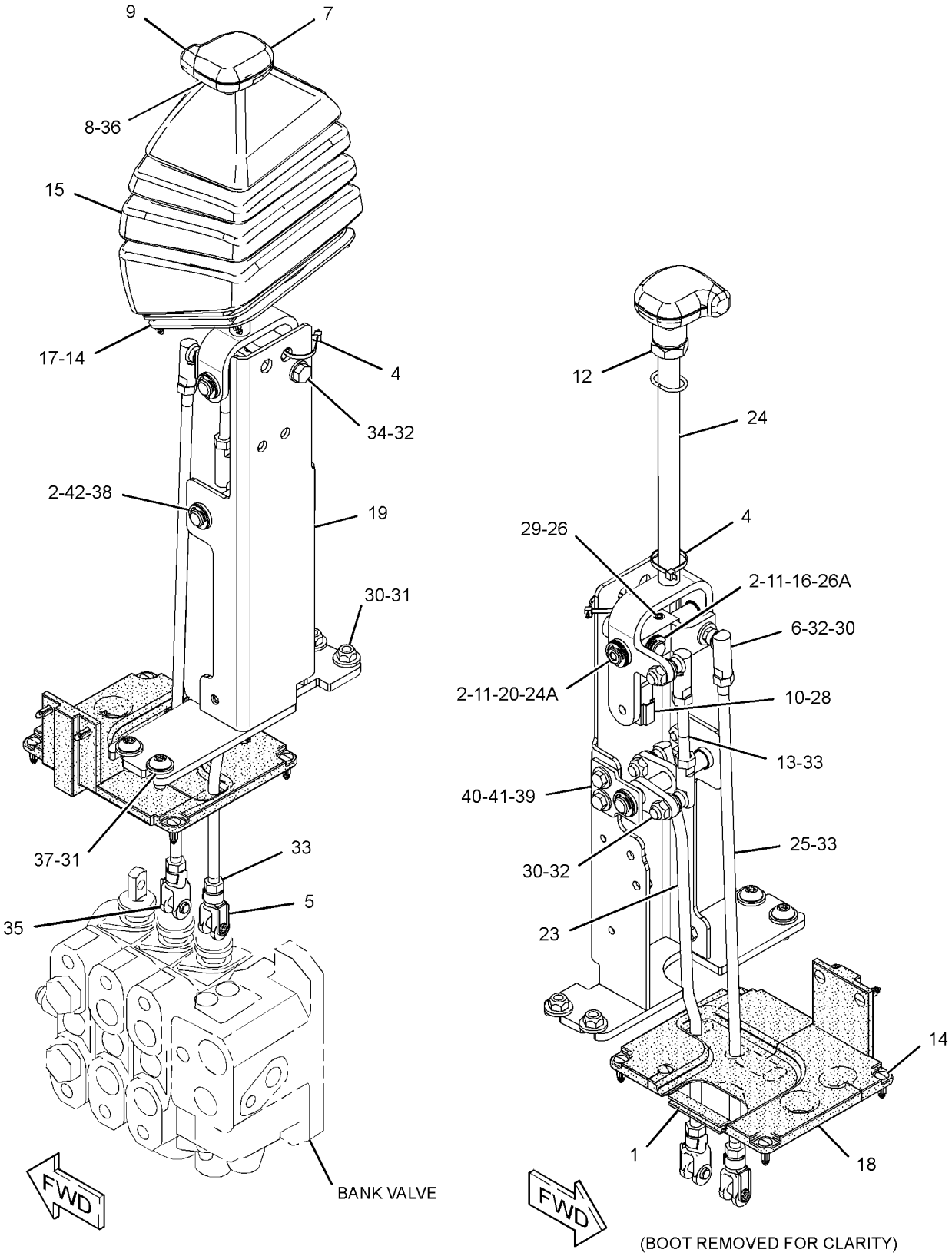

GRAPHIC #1 **<END>** g02821437

OPERATOR STATION

353-1386 CONTROL GP-HYDRAULIC HAND—BACKHOE PATTERN

S/N: SJW1-UP

PART OF 389-3761, 389-3762 DISTRIBUTION AR

AN ATTACHMENT

SMCS-5063 **i04611531**

NOTE	REF NO	GRAPHIC REF	PART NUMBER	QTY	PART NAME 1 2 3 4 5 6 (PRODUCT LEVEL)	SEE PAGE
	1	1	**8T-4773**	5	BALL JOINT	
	2	1	**8T-6431**	5	ROD END	
	3	1	**9R-9901**	6	FASTENER	
	4	1	**164-1361**	2	BOOT	
	5	1	**164-1371**	2	PLATE	
	6	1	**164-1399**	2	KNOB	
	7	1	**190-5134**	2	FILM (STD CROSS PATTERN)	
	8	1	**206-1672**	1	CONSOLE (REAR)	
	9	1	**206-1673**	1	CONSOLE AS (REAR)	
		1	**172-8591**	2	NUT-SPRING	
	10	1	**206-1766**	4	PIN	
	11	1	**251-5621**	1	FILM-WARNING (CONTROL PATTERN, READ OMM)	
	12	1	**338-3578**	2	ROD	
	13	1	**343-4847**	1	LEVER AS (RH)	
	14	1	**343-4848**	1	LEVER AS (LH)	
	15	1	**344-5863**	1	SPACER (20X35X6-MM THK)	
	16	1	**366-5045**	1	SUPPORT AS	
	17	1	**366-5048**	1	SHAFT AS	
	18	1	**366-5052**	1	ROD	
	19	1	**366-5290**	1	TOWER AS	
	20	1	**366-5453**	1	BRACKET AS (LH)	
	21	1	**366-5461**	1	ROD	
	22	1	**366-5618**	1	ROD	
	23	1	**366-5620**	1	MAT	
	24	1	**371-4326**	1	BRACKET AS (RH)	
M	25	1	**6V-7744**	6	LOCKNUT (M10X1.5-THD)	
	26	1	**8T-0706**	1	RING-RETAINING	
	27	1	**8T-4121**	15	WASHER-HARD (11X21X2.5-MM THK)	
M	28	1	**8T-4133**	12	NUT (M10X1.5-THD)	
M	29	1	**8T-4195**	7	BOLT (M10X1.5X30-MM)	
M	30	1	**8T-4196**	1	BOLT (M10X1.5X35-MM)	
	31	1	**8T-4224**	6	WASHER-HARD (8.8X16X2-MM THK)	
M	32	1	**8T-4908**	6	BOLT (M8X1.25X25-MM)	
	33	1	**9R-2807**	4	CLIP	
	34	1	**9X-2038**	4	WASHER (7X19X2-MM THK)	
M	35	1	**9X-2045**	6	SCREW-TRUSS HEAD (M6X1X20-MM)	

M-METRIC PART

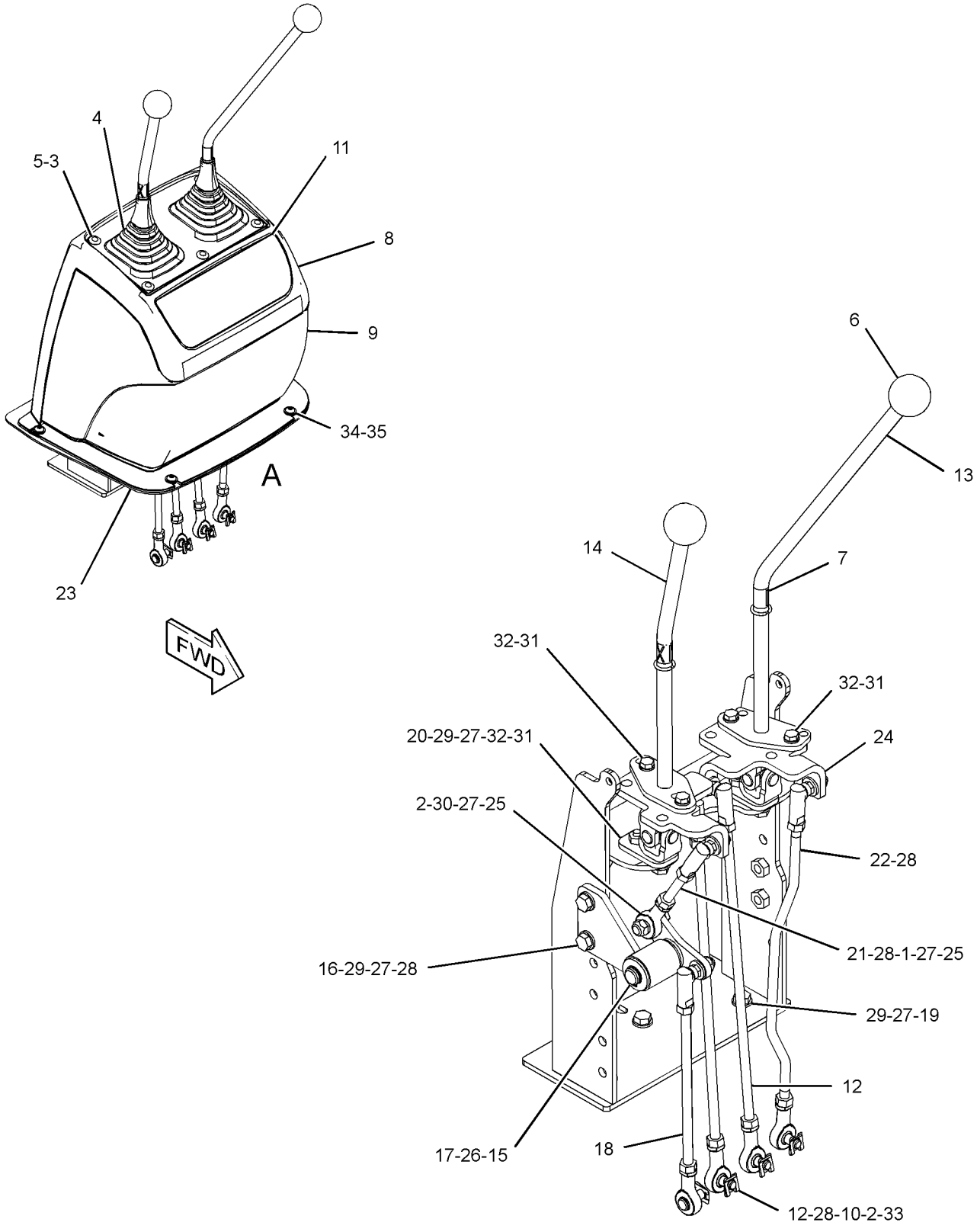

VIEW OF AREA A
(CONSOLE REMOVED FOR CLARITY)

GRAPHIC #1 **<END>** g02798213

OPERATOR STATION

353-1387 CONTROL GP-HYDRAULIC HAND—EXCAVATOR PATTERN

S/N: SJW1-UP

AN ATTACHMENT

SMCS-5063 **i04608873**

NOTE	REF NO	GRAPHIC REF	PART NUMBER	QTY	PART NAME 1 2 3 4 5 6 (PRODUCT LEVEL)	SEE PAGE
	1	1	**8T-4773**	8	BALL JOINT	
	2	1	**9R-9901**	6	FASTENER	
	3	1	**142-7405**	2	COLLAR	
	4	1	**164-1361**	2	BOOT	
	5	1	**164-1371**	2	PLATE	
	6	1	**164-1399**	2	KNOB	
	7	1	**164-1421**	1	PLATE	
	8	1	**164-1422**	1	SHAFT AS	
	9	1	**164-1425**	1	COUPLER AS	
	9A	1	**164-1415**	2	BEARING	
	10	1	**164-1435**	2	PLATE	
	11	1	**164-1438**	2	ROD	
	12	1	**170-6312**	4	BEARING	
	13	1	**190-5128**	1	FILM-INSTRUCTION (EXCAVATOR CONTROL)	
	14	1	**206-1672**	1	CONSOLE (REAR)	
	15	1	**206-1673**	1	CONSOLE AS (REAR)	
		1	**172-8591**	2	NUT-SPRING	
	16	1	**231-2873**	1	LEVER AS (LH)	
	16A	1	**164-1436**	1	BEARING	
	17	1	**337-6245**	1	ROD	
	18	1	**337-6246**	2	ROD	
	19	1	**337-6247**	1	ROD	
	20	1	**366-5054**	1	LEVER AS (RH)	
	20A	1	**164-1436**	1	BEARING	
	21	1	**366-5055**	1	COUPLER AS	
	21A	1	**164-1415**	2	BEARING	
	22	1	**366-5287**	1	TOWER AS	
	23	1	**366-5619**	1	MAT	
	24	1	**164-1402**	2	SLEEVE	
	25	1	**164-1404**	2	SPACER (10.67X16.95X23-MM THK)	
M	26	1	**6V-7744**	12	LOCKNUT (M10X1.5-THD)	
M	27	1	**6V-8932**	2	SETSCREW-SOCKET (M6X1X10-MM)	
	28	1	**7X-7729**	8	WASHER (11X25X3-MM THK)	
	29	1	**8T-4121**	21	WASHER-HARD (11X21X2.5-MM THK)	
M	30	1	**8T-4133**	16	NUT (M10X1.5-THD)	
M	31	1	**8T-4138**	6	BOLT (M6X1X20-MM)	
M	32	1	**8T-4172**	2	BOLT (M10X1.5X80-MM)	
M	33	1	**8T-4195**	7	BOLT (M10X1.5X30-MM)	
	34	1	**8T-4743**	4	PIN	
	35	1	**8T-4815**	4	ROD END	
M	36	1	**8T-6466**	2	BOLT (M10X1.5X60-MM)	
	37	1	**9X-2038**	4	WASHER (7X19X2-MM THK)	
M	38	1	**9X-2045**	6	SCREW-TRUSS HEAD (M6X1X20-MM)	
	39	1	**9X-8256**	6	WASHER (6.6X12X2-MM THK)	

M-METRIC PART

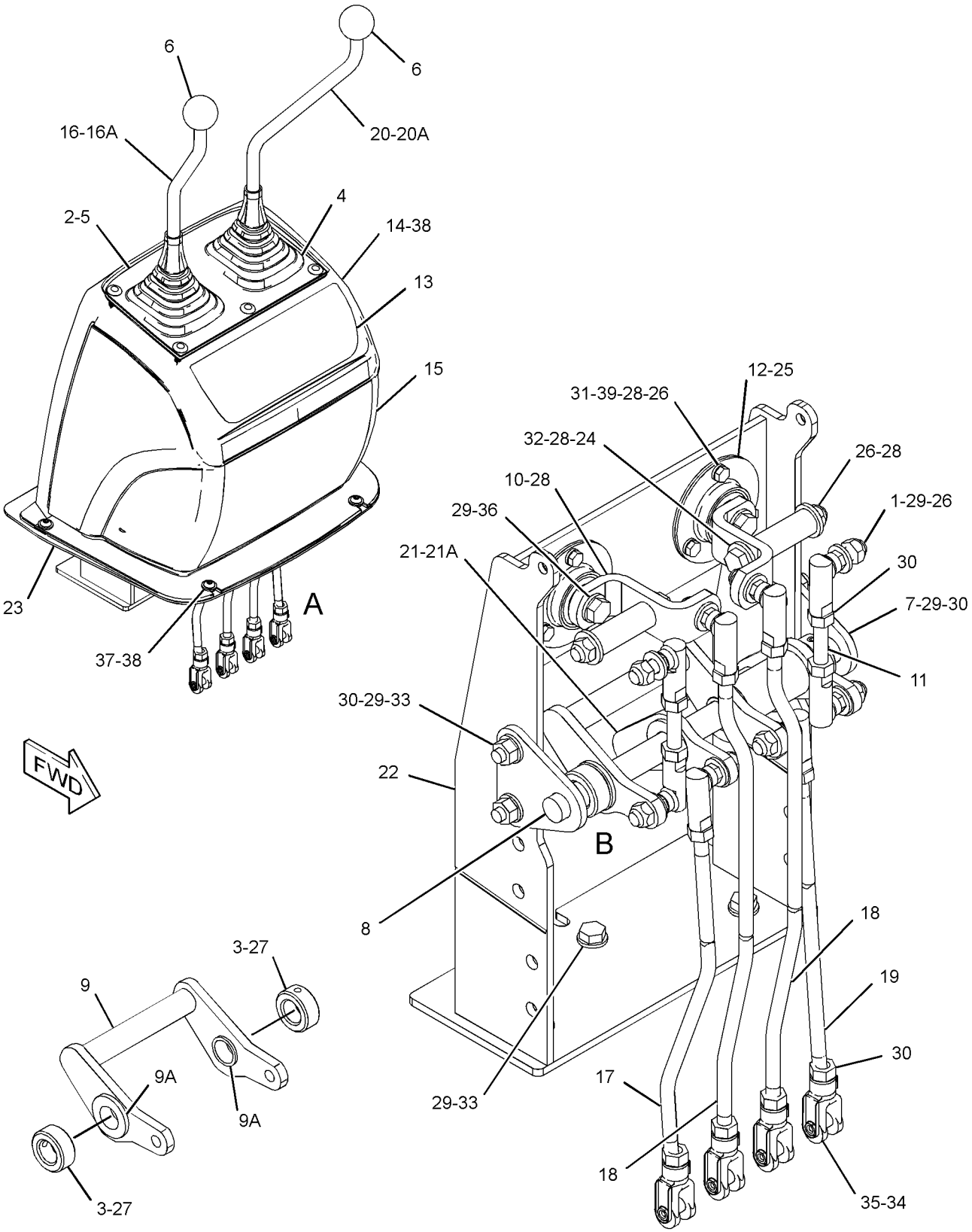

VIEW OF AREA B
(PARTS REMOVED FOR CLARITY)

VIEW OF AREA A
(CONSOLE REMOVED FOR CLARITY)

GRAPHIC #1

<END>

g02789760

OPERATOR STATION

231-2879 CONTROL GP-HYDRAULIC LOCKOUT–

PEDAL, BACKHOE

S/N: SJW1-UP

PART OF 341-3107 CONVERSION AR-ROADING

AN ATTACHMENT

SMCS-5001 **i03371829**

NOTE	REF NO	GRAPHIC REF	PART NUMBER	QTY	PART NAME 1 2 3 4 5 6 (PRODUCT LEVEL)	SEE PAGE
	1	1	**184-5382**	1	PIN	
	2	1	**179-8235**	1	LOCK PIN	

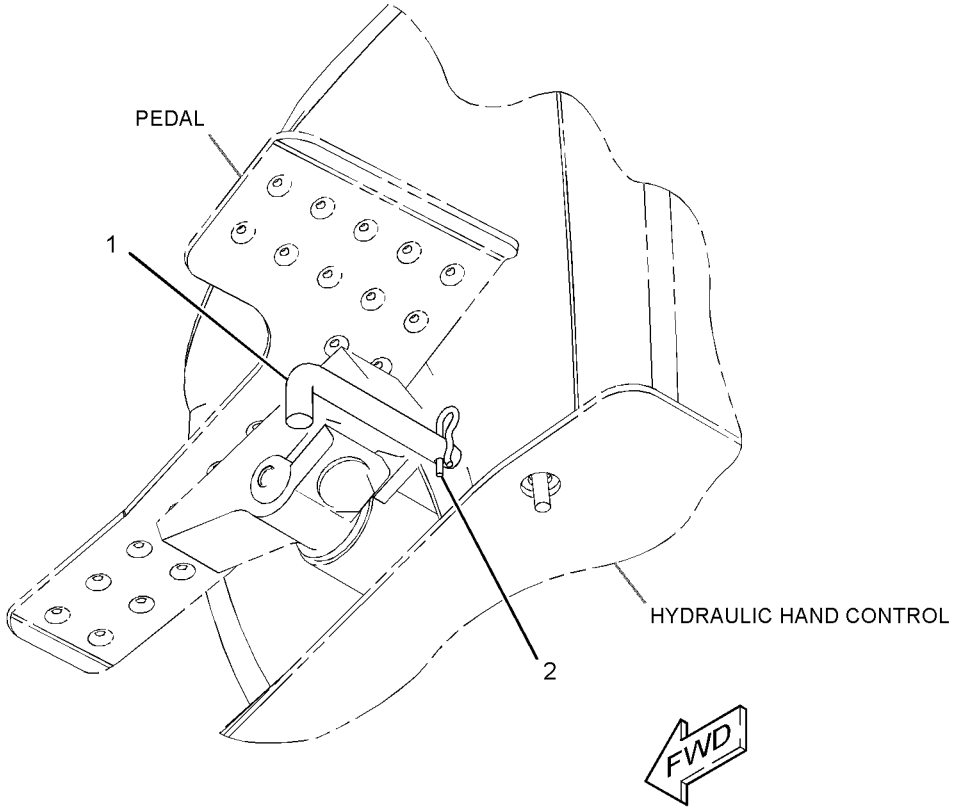

GRAPHIC #1 **<END>** g01809176

OPERATOR STATION

332-4254 CONTROL GP-HYDRAULIC LOCKOUT–HAND THROTTLE

S/N: SJW1-UP

PART OF 341-3107 CONVERSION AR-ROADING

AN ATTACHMENT

SMCS-5001 **i03860355**

NOTE	REF NO	GRAPHIC REF	PART NUMBER	QTY	PART NAME 1 2 3 4 5 6 (PRODUCT LEVEL)	SEE PAGE
	1	1	**183-6438**	2	SPACER (10.5X20X14-MM THK)	
	2	1	**297-1330**	1	PIN	
	3	1	**330-6992**	1	BLOCK	
	4	1	**346-5063**	1	PIN	
	5	1	**352-9742**	2	BLOCK	
M	6	1	**5C-7261**	2	NUT (M8X1.25-THD)	
	7	1	**8T-4121**	2	WASHER-HARD (11X21X2.5-MM THK)	
M	8	1	**8T-4137**	2	BOLT (M10X1.5X20-MM)	
M	9	1	**8T-4197**	2	BOLT (M8X1.25X40-MM)	
	10	1	**8T-4224**	4	WASHER-HARD (8.8X16X2-MM THK)	

M-METRIC PART

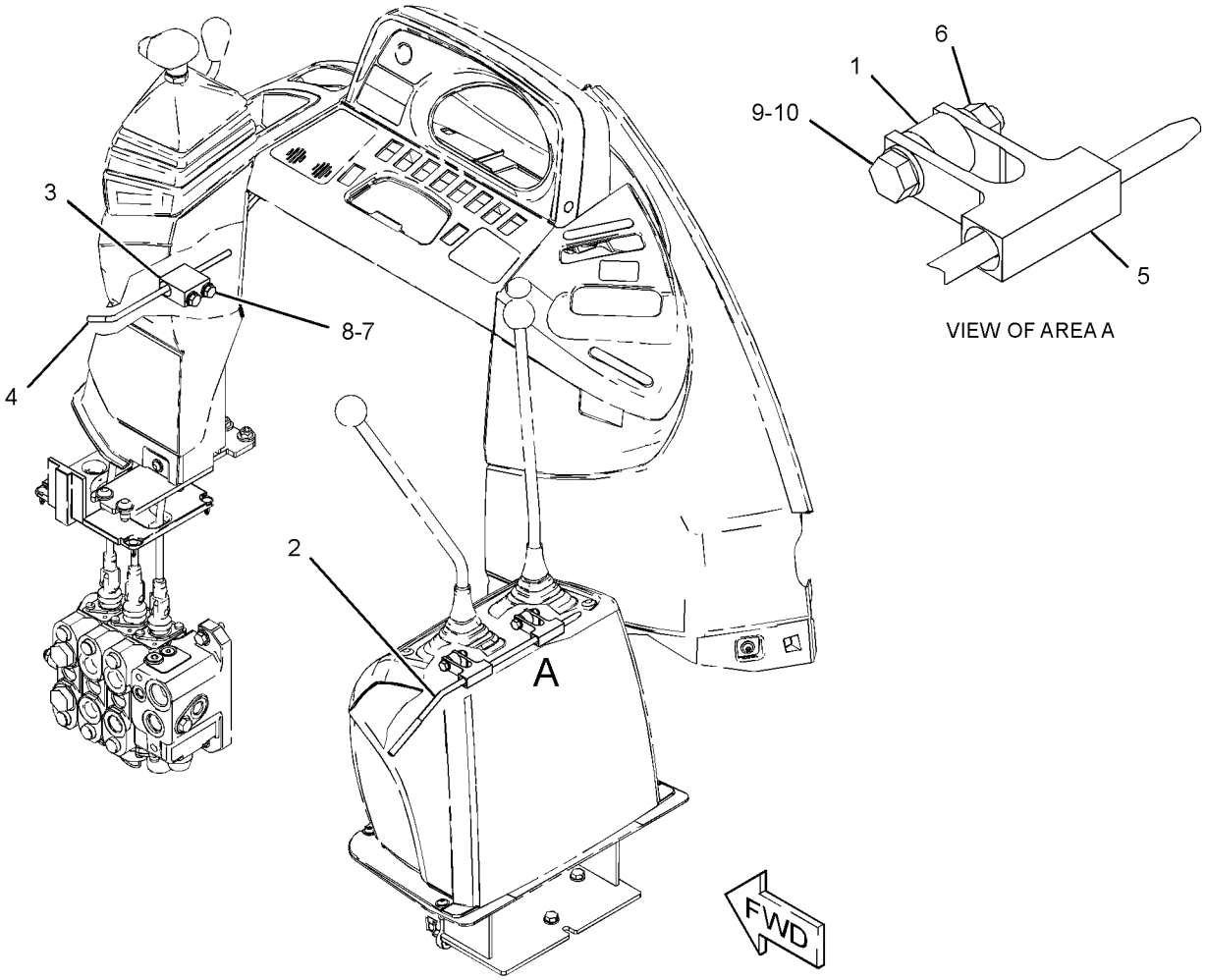

GRAPHIC #1 **<END>** g02113733

OPERATOR STATION

331-4345 CONTROL GP-HYDRAULIC PEDAL–
AUXILIARY, EXTENDABLE STICK
S/N: SJW1-UP
PART OF 364-3388 LINES GP-BACKHOE AUXILIARY
AN ATTACHMENT

SMCS-5063 **i03744303**

NOTE	REF NO	GRAPHIC REF	PART NUMBER	QTY	PART NAME 1 2 3 4 5 6 (PRODUCT LEVEL)	SEE PAGE
	1	1	**8T-4743**	1	PIN	
	2	1	**8T-6431**	1	ROD END	
B	3	1	**133-8916**	1	FILM-INSTRUCTION (EXTENDABLE STICK)	
B	4	1	**198-0098**	1	FILM-INSTRUCTION (AUXILIARY)	
	5	1	**231-2875**	1	SUPPORT AS (RH)	
	6	1	**231-2876**	1	PEDAL AS (RH)	
	7	1	**232-1540**	1	SEAL	
	8	1	**330-9686**	1	ROD	
	9	1	**353-3433**	1	SHAFT AS	
	10	1	**9R-2807**	1	CLIP	
M	11	1	**6V-8335**	1	BOLT-SELF-LOCKING (M10X1.5X40-MM)	
	12	1	**8T-4121**	3	WASHER-HARD (11X21X2.5-MM THK)	
M	13	1	**8T-4133**	2	NUT (M10X1.5-THD)	
M	14	1	**8T-4195**	2	BOLT (M10X1.5X30-MM)	
	15	1	**206-1766**	1	PIN	
	16	1	**8T-4815**	1	ROD END	

B-USE AS REQUIRED
M-METRIC PART

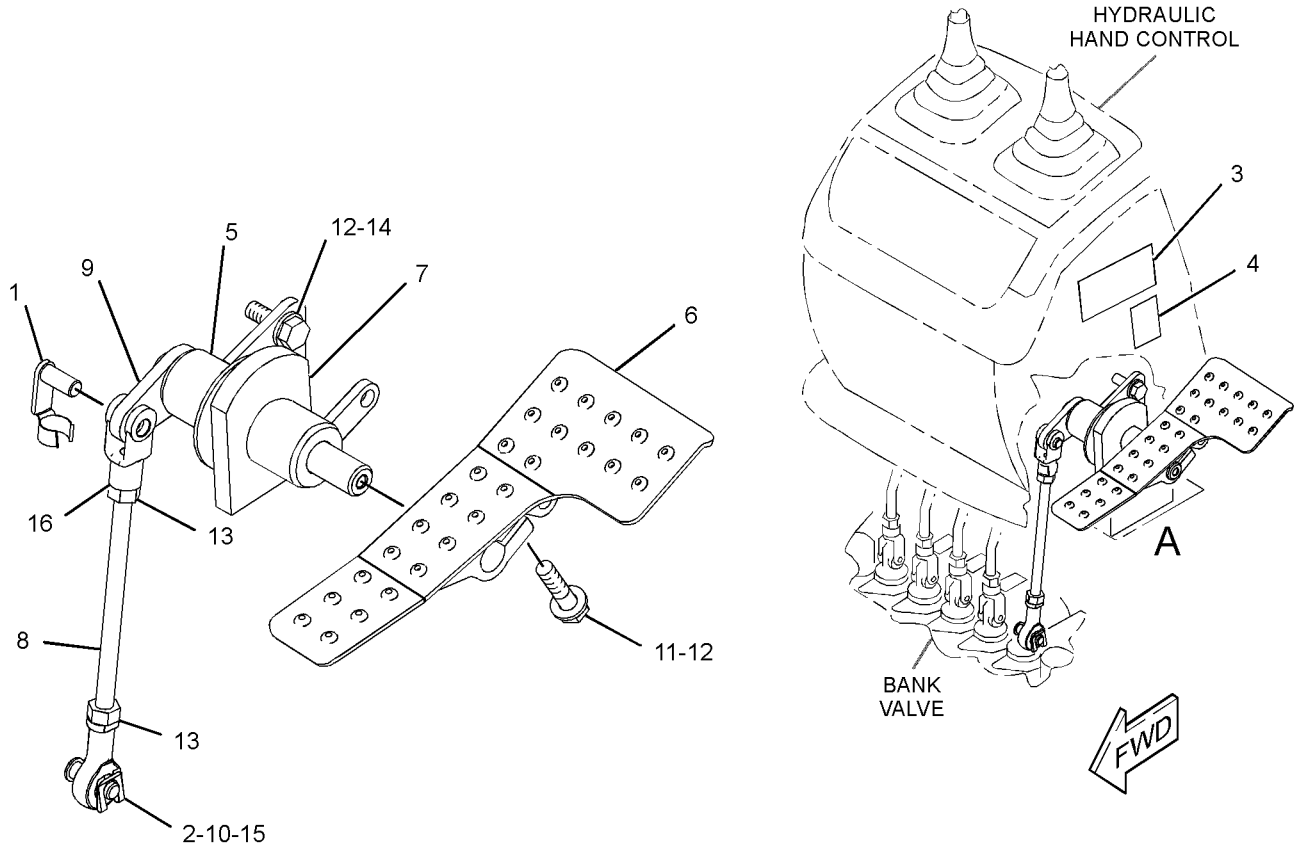

VIEW OF AREA A
(EXPLODED)

GRAPHIC #1 **<END>** g02110974

353-1388 CONTROL GP-HYDRAULIC PEDAL–
AUXILIARY, EXTENDABLE STICK
S/N: SJW1-UP
PART OF 340-1733, 340-1734 BACKHOE AR-EXTENDABLE STICK
AN ATTACHMENT

SMCS-5063 **i04555836**

NOTE	REF NO	GRAPHIC REF	PART NUMBER	QTY	PART NAME 1 2 3 4 5 6 (PRODUCT LEVEL)	SEE PAGE
	1	1	**8T-4773**	2	BALL JOINT	
	2	1	**8T-6431**	2	ROD END	
	3	1	**133-8916**	1	FILM-INSTRUCTION (EXTENDABLE STICK)	
	4	1	**198-0098**	1	FILM-INSTRUCTION (AUXILIARY)	
	5	1	**206-1766**	1	PIN	
	6	1	**231-2875**	1	SUPPORT AS (RH)	
	7	1	**231-2876**	1	PEDAL AS (RH)	
	8	1	**232-1540**	1	SEAL	
	9	1	**353-3433**	1	SHAFT AS	
	10	1	**366-5457**	1	PLATE AS	
	11	1	**366-5460**	1	ROD	
	12	1	**366-5461**	1	ROD	
	13	1	**368-0546**	1	PLATE AS	
	14	1	**036-4453**	2	RING-RETAINING	
M	15	1	**6V-7744**	3	LOCKNUT (M10X1.5-THD)	
M	16	1	**161-7632**	1	BOLT-SELF-LOCKING (M10X1.5X40-MM)	
	17	1	**8M-3175**	1	WASHER-HARD (10.2X16X3-MM THK)	
	18	1	**8T-4121**	10	WASHER-HARD (11X21X2.5-MM THK)	
M	19	1	**8T-4133**	6	NUT (M10X1.5-THD)	
M	20	1	**8T-4186**	1	BOLT (M10X1.5X40-MM)	
M	21	1	**8T-4195**	4	BOLT (M10X1.5X30-MM)	
	22	1	**9R-2807**	1	CLIP	

M-METRIC PART

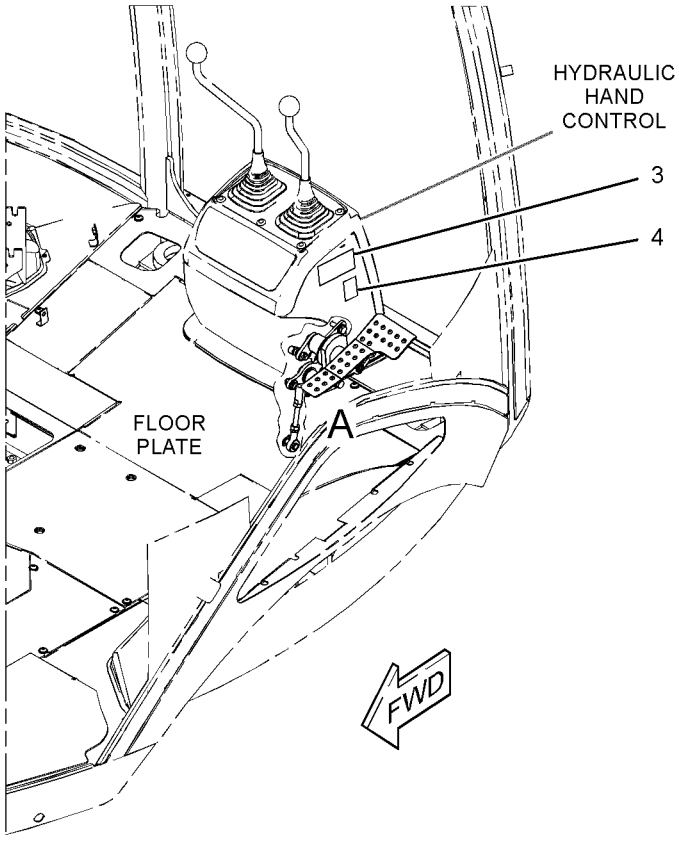

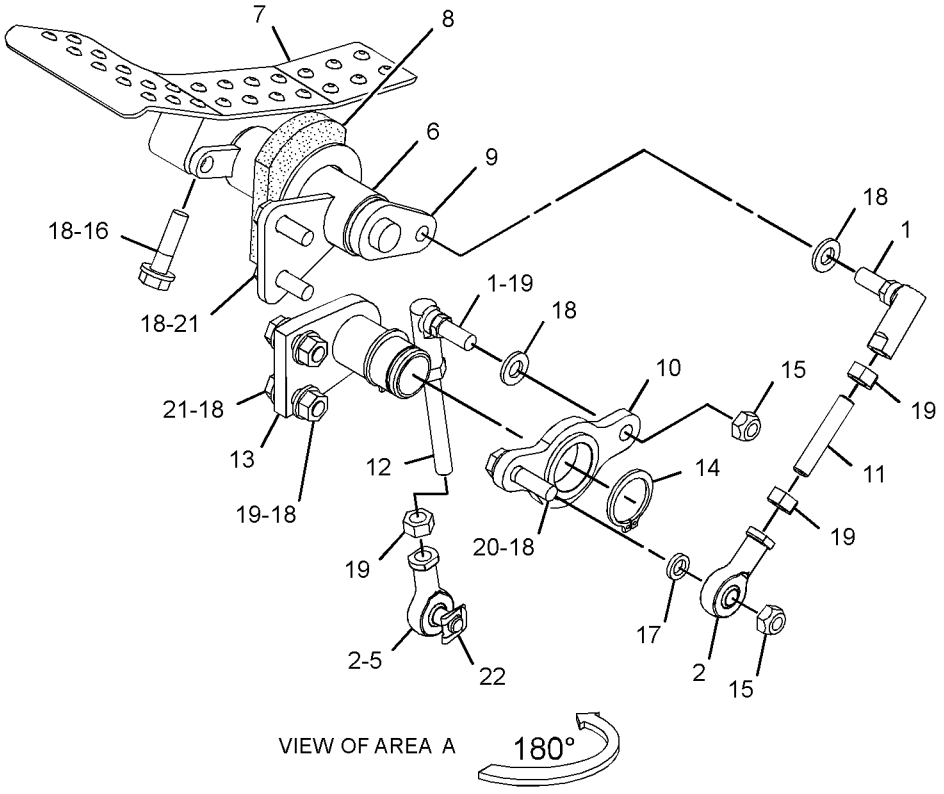

GRAPHIC #1 **<END>** g02782037

OPERATOR STATION

374-6870 CONTROL GP-STABILIZER—WITH ALARM

S/N: SJW1-UP

PART OF 374-6852, 374-6854 CAB AR

AN ATTACHMENT

SMCS-7222 **i04611765**

NOTE	REF NO	GRAPHIC REF	PART NUMBER	QTY	PART NAME 1 2 3 4 5 6 (PRODUCT LEVEL)	SEE PAGE
	1	1	**9R-8165**	1	BEARING	
	2	1	**164-1395**	1	KNOB (GOVERNOR CONTROL)	
	3	1	**183-6084**	1	BEARING	
	4	1	**206-1874**	1	LEVER AS	
	5	1	**229-5745**	1	SPACER (8X15.875X11.6-MM THK)	
	6	1	**232-1542**	1	SEAL	
	7	1	**248-2708**	1	GROMMET	
	8	1	**248-2710**	1	GROMMET	
	9	1	**251-5627**	1	FILM-INSTRUCTION (STABILIZER, SIDESHIFT)	
	10	1	**344-6334**	2	PIN	
	11	1	**356-4094**	1	PLATE AS	
	12	1	**357-9887**	2	SPACER	
	13	1	**357-9951**	2	LEVER AS-CONTROL	
					(EACH INCLUDES)	
		1	**228-4592**	1	KNOB	
		1	**228-4593**	1	GAITER	
		1	**228-4595**	1	SWITCH AS (STABILIZER UP ALARM)	
		1	**357-9950**	1	CABLE AS (STABILIZER)	
	14	1	**5P-4116**	6	WASHER-HARD (8.8X20.5X2-MM THK)	
B	15	1	**6E-5431**	1	SHIM (0.5-MM THK)	
M	16	1	**7X-0465**	3	BOLT (M6X1X100-MM)	
M	17	1	**8T-4138**	1	BOLT (M6X1X20-MM)	
M	18	1	**8T-4189**	4	BOLT (M8X1.25X20-MM)	
	19	1	**8T-6902**	1	CLIP	
M	20	1	**8T-7547**	1	BOLT (M8X1.25X30-MM)	
M	21	1	**9X-2045**	4	SCREW-TRUSS HEAD (M6X1X20-MM)	
	22	1	**9X-8256**	4	WASHER (6.6X12X2-MM THK)	

B-USE AS REQUIRED
M-METRIC PART

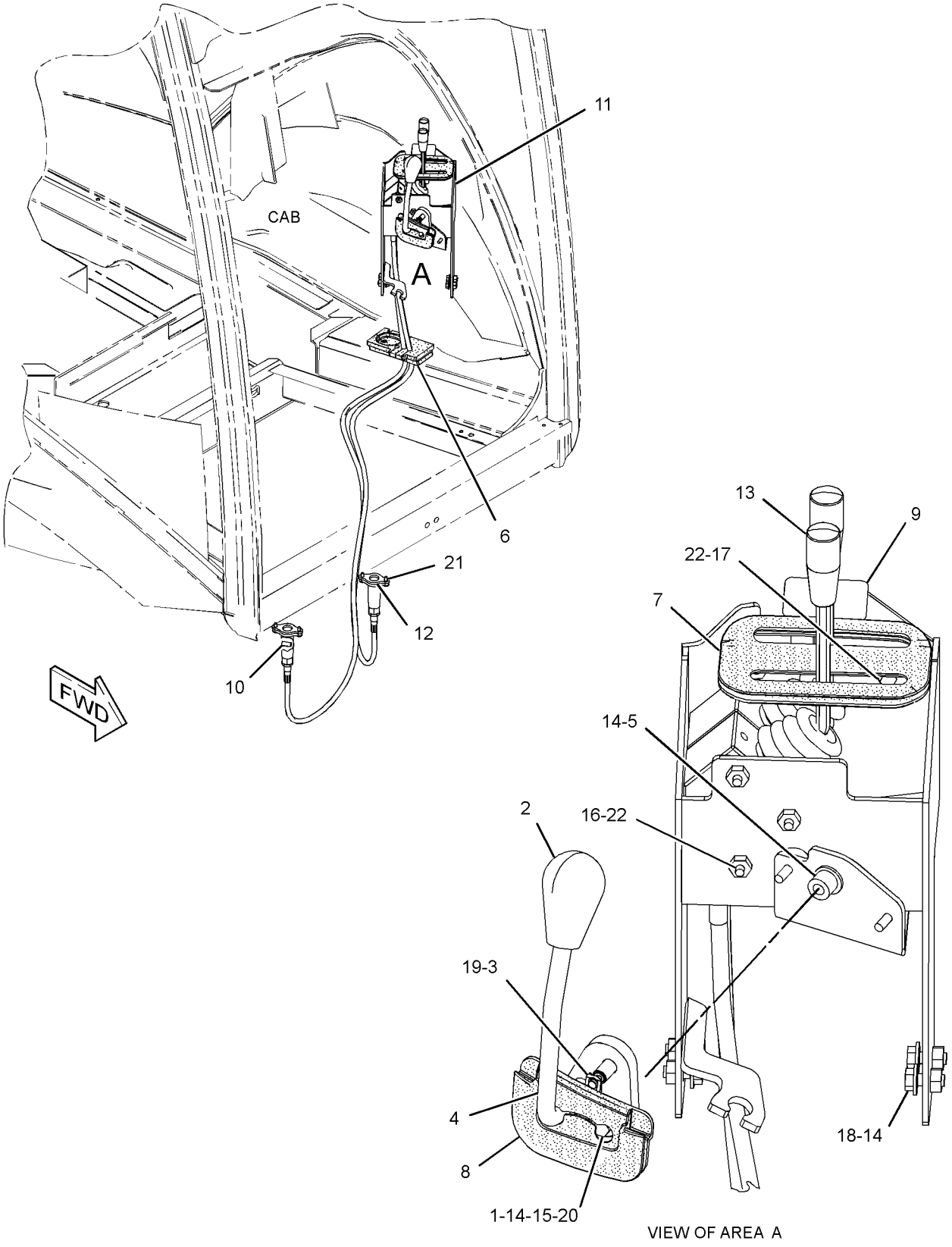

GRAPHIC #1 **<END>** g02819680

OPERATOR STATION

356-4120 CONTROL GP-STEERING–TILT

S/N: SJW1-UP
PART OF 353-1429 CAB AR
AN ATTACHMENT

SMCS-4309, 4310, 4338 **i04565291**

NOTE	REF NO	GRAPHIC REF	PART NUMBER	QTY	PART NAME 1 2 3 4 5 6 (PRODUCT LEVEL)	SEE PAGE
	1	1	**8R-2916**	1	COVER AS (CAT STEERING WHEEL)	
	2	1	**255-2749**	1	PLUG	
Y	3	1	**310-6216**	1	STEERING COLUMN GP	321
	4	1	**317-5541**	1	STEERING WHEEL	
	5	1	**325-9308**	1	KNOB AS	
	6	1	**356-4121**	1	PLATE AS	
	7	1	**7X-7729**	6	WASHER (11X25X3-MM THK)	
	8	1	**8T-4121**	4	WASHER-HARD (11X21X2.5-MM THK)	
M	9	1	**8T-4133**	2	NUT (M10X1.5-THD)	
M	10	1	**8T-4136**	4	BOLT (M10X1.5X25-MM)	
M	11	1	**8T-4195**	4	BOLT (M10X1.5X30-MM)	
M	12	1	**101-7401**	1	BOLT-SOCKET HEAD (M10X1.5X20-MM)	

M-METRIC PART
Y-SEPARATE ILLUSTRATION

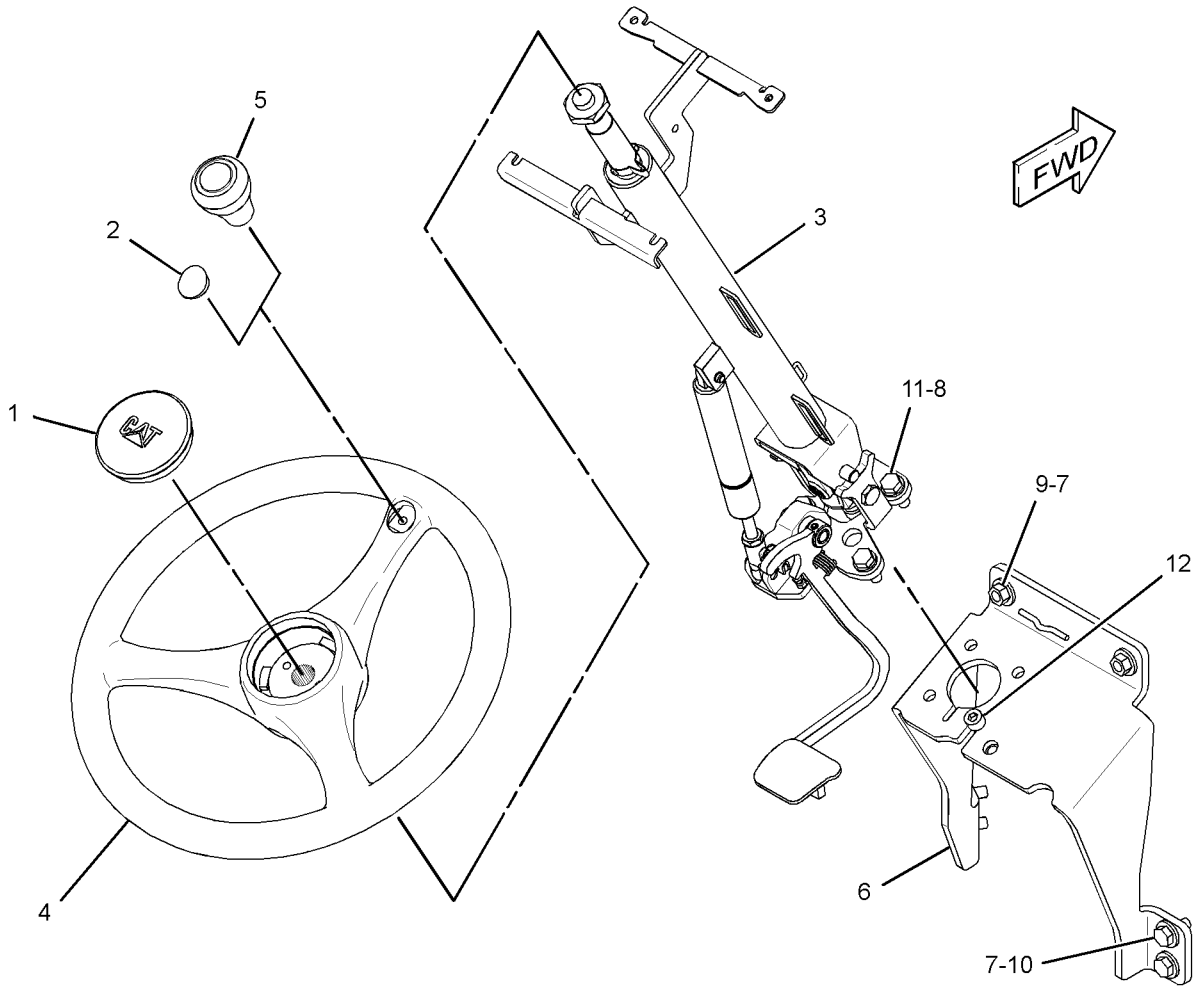

GRAPHIC #1 **<END>** g02809681

OPERATOR STATION

341-6687 CONTROL GP-TRANSMISSION

S/N: SJW1-UP
PART OF 353-1507 TRANSMISSION AR-DIRECT DRIVE
AN ATTACHMENT

SMCS-3065, 3168 **i04606570**

NOTE	REF NO	GRAPHIC REF	PART NUMBER	QTY	PART NAME 1 2 3 4 5 6 (PRODUCT LEVEL)	SEE PAGE
	1	1	**8T-9501**	2	SCREW (10-16X0.75-IN)	
	2	1	**3S-2093**	1	STRAP-CABLE	
	3	1	**9R-1766**	1	COVER-BOTTOM	
	4	1	**9R-1767**	1	BOOT	
	5	1	**107-5591**	1	NUT-JAM (3/4-16-THD)	
	6	1	**164-1153**	1	KNOB (UPPER)	
	7	1	**164-1368**	8	FASTENER-PANEL	
	8	1	**206-1669**	1	BOOT	
	9	1	**220-3470**	1	BOOT-SEAL	
	10	1	**230-2389**	1	PLATE	
	11	1	**230-2390**	1	PLATE	
	12	1	**263-7261**	1	SWITCH GP-PUSH BUTTON (NEUTRALIZER)	
	13	1	**310-9356**	1	CONTROL GP-TRANSMISSION (SHUTTLE)	
		1	**151-9275**	1	KIT-RECEPTACLE (6-PIN)	
					(INCLUDES RECEPTACLE AS & WEDGE)	
	14	1	**356-4074**	1	ROD AS	
M	15	1	**105-3480**	2	BOLT-SOCKET HEAD (M5X0.8X16-MM)	
	16	1	**102-8802**	1	KIT-RECEPTACLE (2-PIN)	
					(INCLUDES RECEPTACLE AS & WEDGE)	
	17	1	**7X-0620**	1	WASHER-HARD (5.5X13X1.6-MM THK)	
	18	1	**8T-4223**	1	WASHER-HARD (13.5X25.5X3-MM THK)	
M	19	1	**8T-4956**	1	BOLT (M12X1.75X35-MM)	

M-METRIC PART

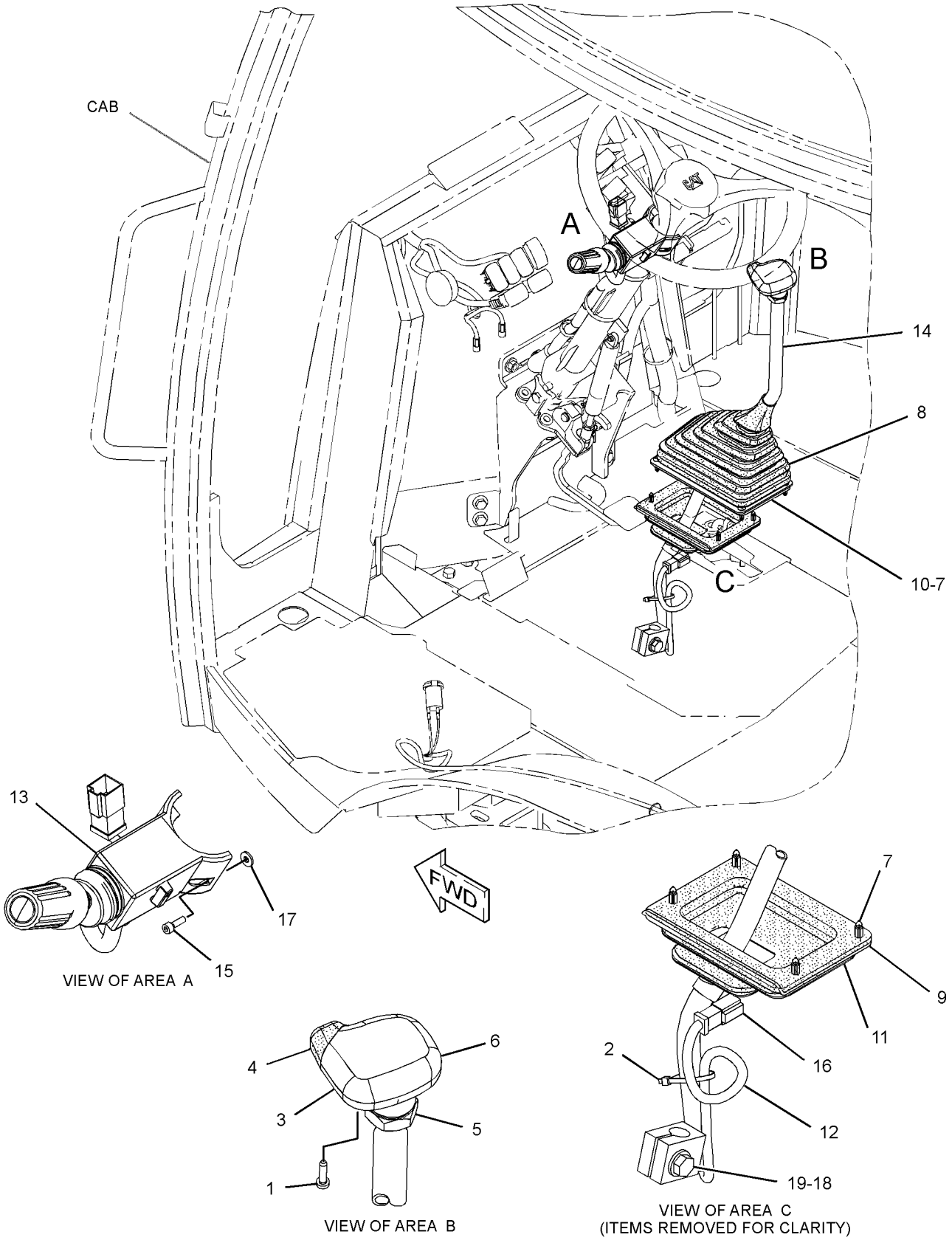

GRAPHIC #1 **<END>** g02823956

OPERATOR STATION

329-1167 DOOR GP-CAB—RH

S/N: SJW1-UP
PART OF 356-4104 CAB GP
AN ATTACHMENT

SMCS-7308 **i04633190**

NOTE	REF NO	GRAPHIC REF	PART NUMBER	QTY	PART NAME 1 2 3 4 5 6 (PRODUCT LEVEL)	SEE PAGE
	1	1	**132-2249**	2	SPACER (7.4X12.7X24-MM THK)	
J	2	1	**159-4269**	1	SPRING GP-GAS (CAB DOOR)	
	3	1	**159-4945**	1	KEEPER	
B	4	1	**177-4877**	1	SHIM (1-MM THK)	
	5	1	**205-9598**	1	GLASS (RH)	
	6	1	**248-2714**	2	NUT-ACORN (M6X1-THD)	
N	7	1	**252-1862**	1	HANDLE AS (PULL)	
	8	1	**252-1863**	1	GASKET	
	9	1	**252-1865**	1	LATCH AS (RH)	
	10	1	**253-1817**	1	SPACER (6.5X14.5X12-MM THK)	
	11	1	**253-1857**	1	PLATE	
	12	1	**253-1858**	1	COVER (LATCH)	
	13	1	**254-1126**	1	PLATE	
	14	1	**254-1127**	1	PLATE	
	15	1	**258-3697**	2	WASHER-NYLON (7X20X2-MM THK)	
	16	1	**329-1169**	1	DOOR AS (RH)	
Y	17	1	*333-9902*	1	WINDOW GP-DOOR (RH)	612
	18	1	**223-2029**	1	SEAL AS (RH)	
M	19	1	**174-8131**	2	SCREW-TRUSS HEAD (M4X0.7X12-MM)	
	20	1	**197-5107**	2	SCREW-TRUSS HEAD (M6X1X60-MM)	
	21	1	**205-7048**	2	INSERT-THREADED (M6X1-THD)	
M	22	1	**5C-9553**	3	BOLT (M6X1X16-MM)	
M	23	1	**8T-6974**	1	BOLT (M6X1X80-MM)	
	24	1	**9X-2038**	4	WASHER (7X19X2-MM THK)	
M	25	1	**9X-2045**	4	SCREW-TRUSS HEAD (M6X1X20-MM)	
E	26	1	**322-8414**		SEAL-CAB (347-CM)	
					PARTS SHOWN IN GRAPHIC(S) WITHOUT A REFERENCE NUMBER ARE NOT SERVICED SEPARATELY	
					AVAILABLE REPAIR KIT(S):	
J			**161-9044**	1	KIT-FITTING	
					(INCLUDES FITTING AS & NUT)	

B-USE AS REQUIRED
E-ORDER BY THE CENTIMETER
J-KIT MARKED J SERVICES PART MARKED J
M-METRIC PART
N-REQUIRES CORPORATE KEY
Y-SEPARATE ILLUSTRATION

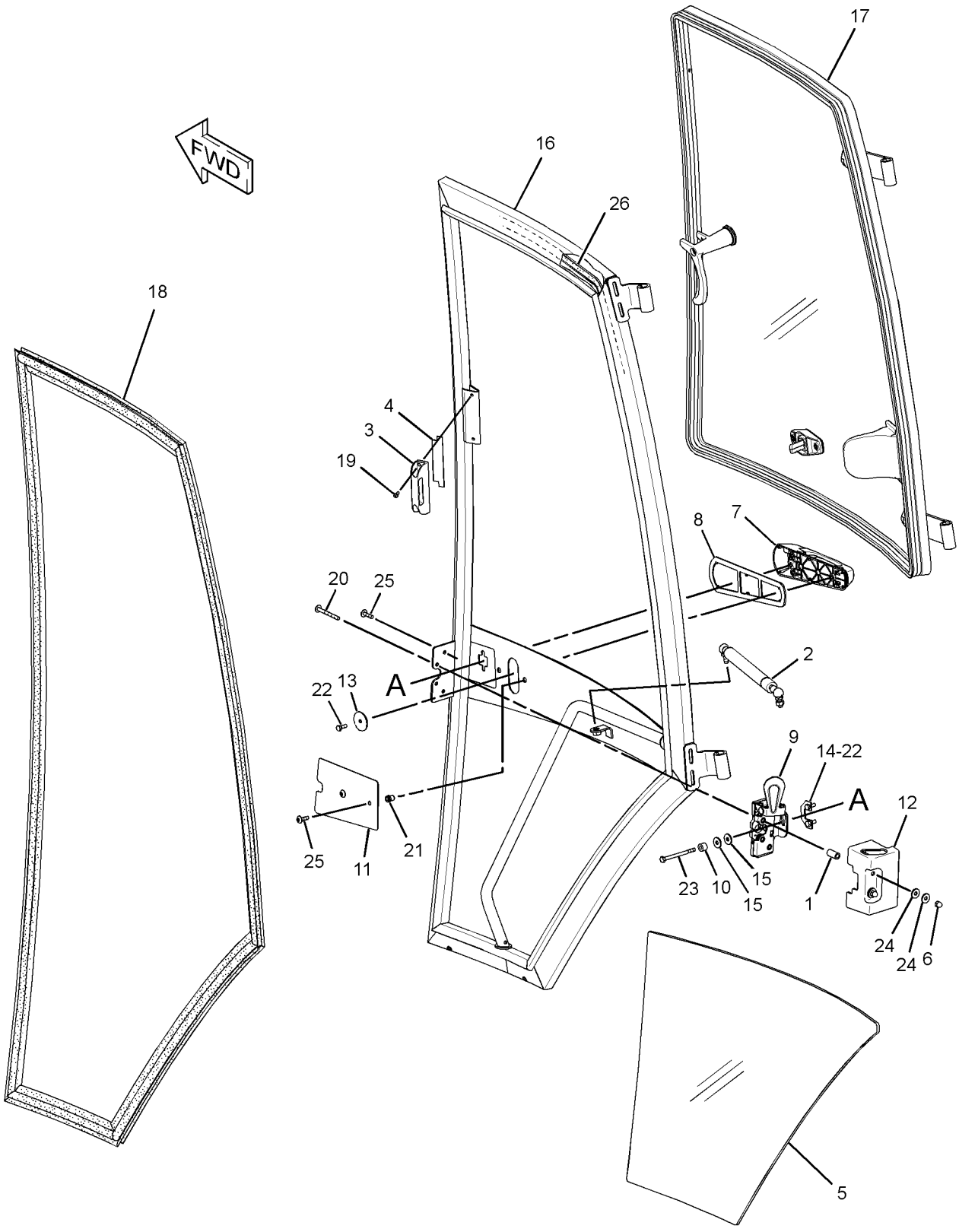

GRAPHIC #1 **<END>** g01819794

OPERATOR STATION

329-1168 DOOR GP-CAB—LH

S/N: SJW1-UP
PART OF 356-4104 CAB GP
AN ATTACHMENT

SMCS-7308 **i04631251**

NOTE	REF NO	GRAPHIC REF	PART NUMBER	QTY	PART NAME 1 2 3 4 5 6 (PRODUCT LEVEL)	SEE PAGE
	1	1	**132-2249**	2	SPACER (7.4X12.7X24-MM THK)	
J	2	1	**159-4269**	1	SPRING GP-GAS (CAB DOOR)	
B	3	1	**177-4877**	1	SHIM (1-MM THK)	
	4	1	**205-9588**	1	GLASS (LH)	
	5	1	**248-2714**	2	NUT-ACORN (M6X1-THD)	
N	6	1	**252-1862**	1	HANDLE AS (PULL)	
	7	1	**252-1863**	1	GASKET	
	8	1	**252-1864**	1	LATCH AS (LH)	
	9	1	**253-1817**	1	SPACER (6.5X14.5X12-MM THK)	
	10	1	**253-1857**	1	PLATE	
	11	1	**253-1858**	1	COVER (LATCH)	
	12	1	**254-1126**	1	PLATE	
	13	1	**254-1127**	1	PLATE	
	14	1	**258-3697**	2	WASHER-NYLON (7X20X2-MM THK)	
	15	1	**329-1170**	1	DOOR AS (LH)	
Y	16	1	**333-9901**	1	WINDOW GP-DOOR (LH)	611
	17	1	**223-2028**	1	SEAL AS (LH)	
M	18	1	**174-8131**	2	SCREW-TRUSS HEAD (M4X0.7X12-MM)	
	19	1	**159-4946**	1	KEEPER	
	20	1	**197-5107**	2	SCREW-TRUSS HEAD (M6X1X60-MM)	
	21	1	**205-7048**	2	INSERT-THREADED (M6X1-THD)	
M	22	1	**5C-9553**	3	BOLT (M6X1X16-MM)	
M	23	1	**8T-6974**	1	BOLT (M6X1X80-MM)	
	24	1	**9X-2038**	4	WASHER (7X19X2-MM THK)	
M	25	1	**9X-2045**	4	SCREW-TRUSS HEAD (M6X1X20-MM)	
E	26	1	**322-8414**		SEAL-CAB (347-CM)	
					PARTS SHOWN IN GRAPHIC(S) WITHOUT A REFERENCE NUMBER ARE NOT SERVICED SEPARATELY	
					AVAILABLE REPAIR KIT(S):	
J			**161-9044**	1	KIT-FITTING	
					(INCLUDES NUT & FITTING AS)	

B-USE AS REQUIRED
E-ORDER BY THE CENTIMETER
J-KIT MARKED J SERVICES PART MARKED J
M-METRIC PART
N-REQUIRES CORPORATE KEY
Y-SEPARATE ILLUSTRATION

329-1168 DOOR GP-CAB *(contd.)* **i04631251**

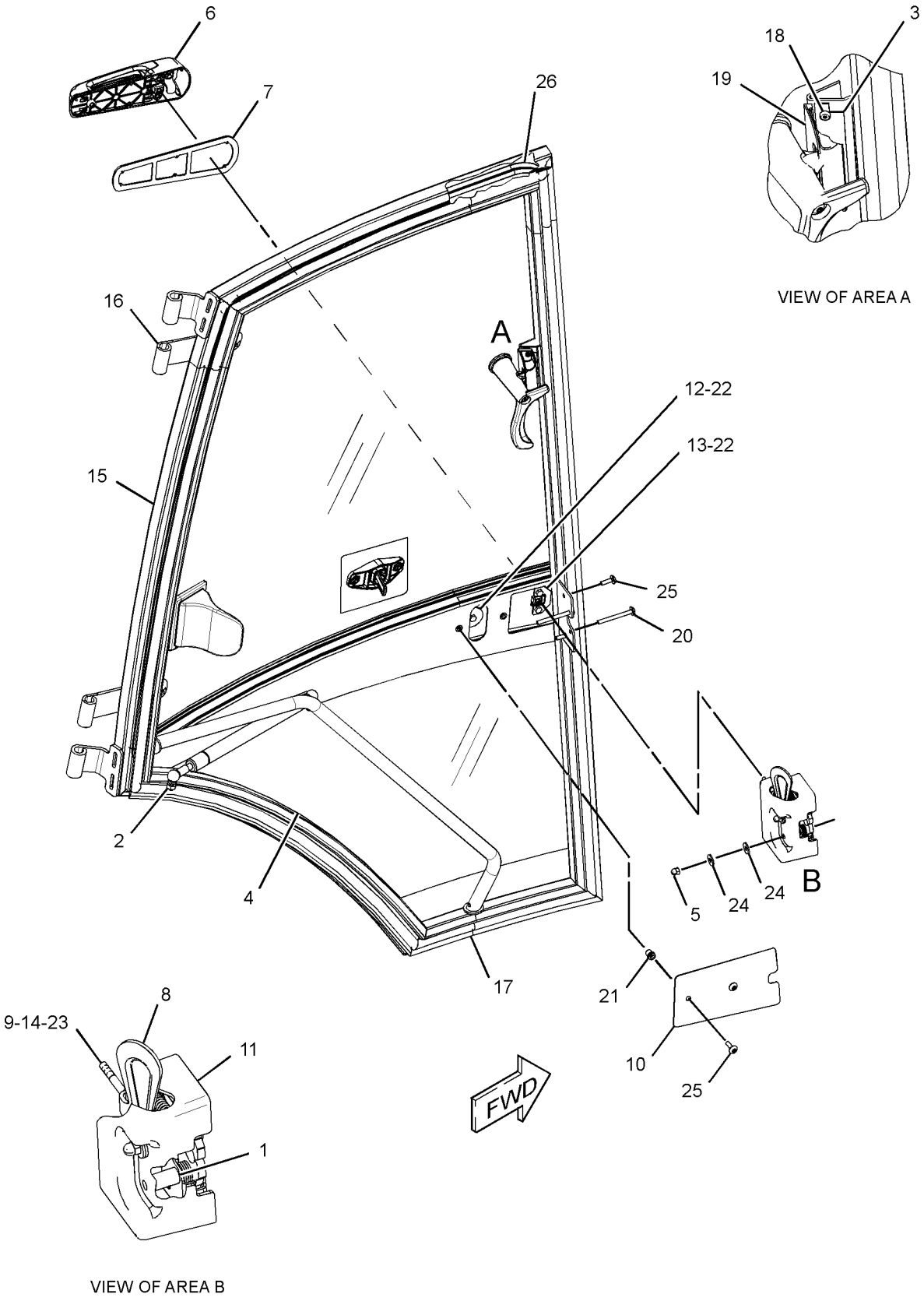

GRAPHIC #1 **<END>** g02797040

OPERATOR STATION

353-1399 DUCT GP-CAB AIR

S/N: SJW1-UP
PART OF 353-1429 CAB AR
AN ATTACHMENT

SMCS-734D **i04611429**

NOTE	REF NO	GRAPHIC REF	PART NUMBER	QTY	PART NAME 1 2 3 4 5 6 (PRODUCT LEVEL)	SEE PAGE
	1	1	**8Y-6352**	1	LOUVER AS	
	2	1	**8Y-6967**	6	LOUVER AS-VENT	
	3	1	**9M-7959**	4	CLAMP-HOSE	
	4	1	**164-8474**	2	LOUVER AS-VENT	
	5	1	**206-1653**	4	GASKET	
	6	1	**206-1803**	2	GASKET	
	7	1	**206-1805**	1	GASKET	
	8	1	**206-1810**	1	DUCT-AIR	
	9	1	**206-1815**	1	DUCT-AIR	
	10	1	**206-1816**	1	DUCT-AIR	
	11	1	**206-1817**	2	DUCT-AIR	
	12	1	**218-0666**	6	LOUVER AS	
	13	1	**221-2420**	2	HOSE-AIR	
	14	1	**313-6709**	1	DUCT-AIR	
	15	1	**313-6710**	1	DUCT-AIR	
	16	1	**8T-4205**	4	WASHER-HARD (7.2X14.5X2-MM THK)	
	17	1	**9X-2038**	2	WASHER (7X19X2-MM THK)	
M	18	1	**9X-2045**	6	SCREW-TRUSS HEAD (M6X1X20-MM)	

M-METRIC PART

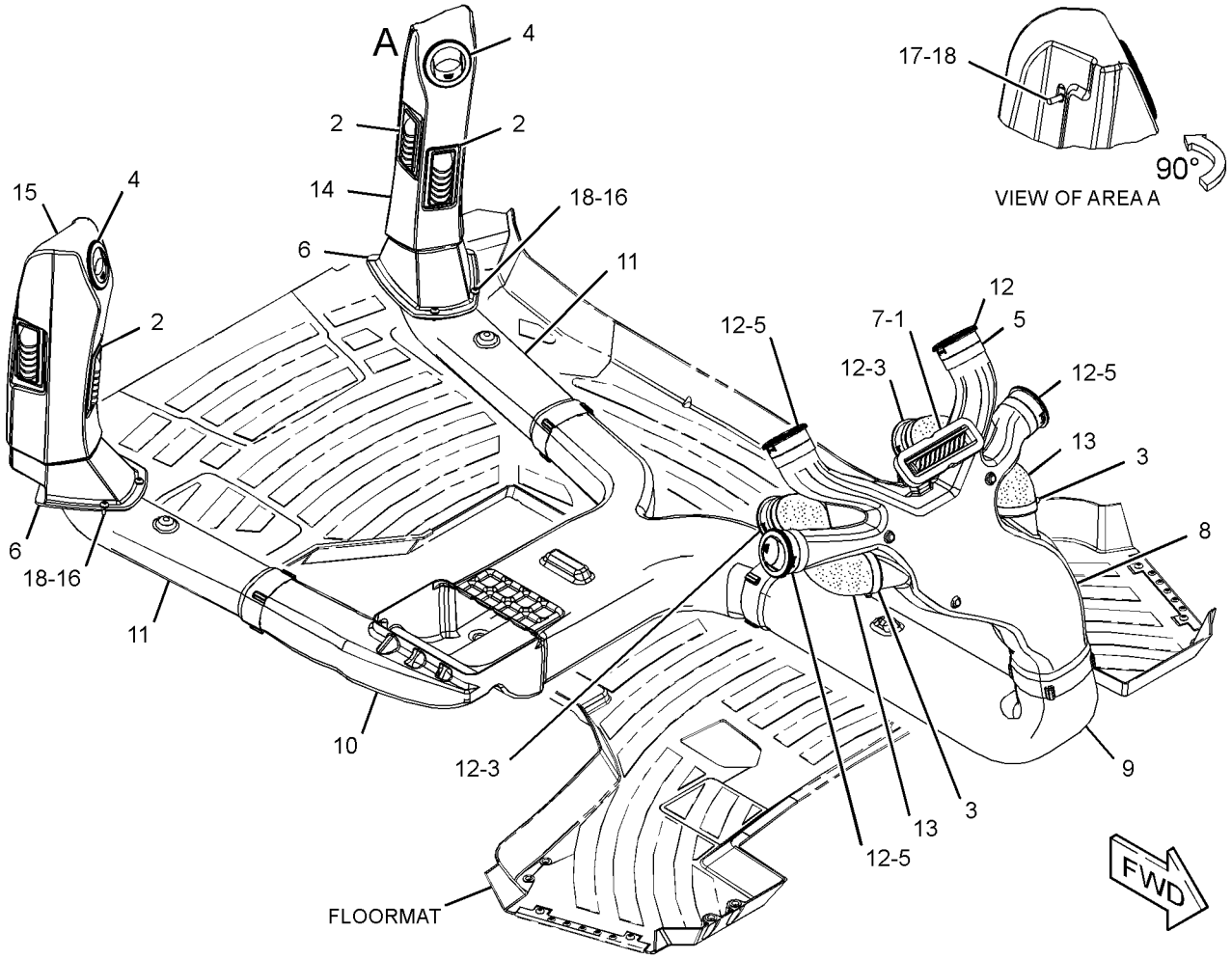

GRAPHIC #1 **<END>** g02827056

OPERATOR STATION

206-1618 FLOOR MAT GP

S/N: SJW1-UP
PART OF 353-1429 CAB AR
AN ATTACHMENT

SMCS-7265 **i04253750**

NOTE	REF NO	GRAPHIC REF	PART NUMBER	QTY	PART NAME 1 2 3 4 5 6 (PRODUCT LEVEL)	SEE PAGE
C	1	1	**285-5914**	2	PLATE	
	2	1	**284-1602**	1	FLOOR MAT	
	3	1	**1H-3244**	4	LOCKWASHER	
M	4	1	**9X-2045**	4	SCREW-TRUSS HEAD (M6X1X20-MM)	

C-CHANGE FROM PREVIOUS TYPE
M-METRIC PART

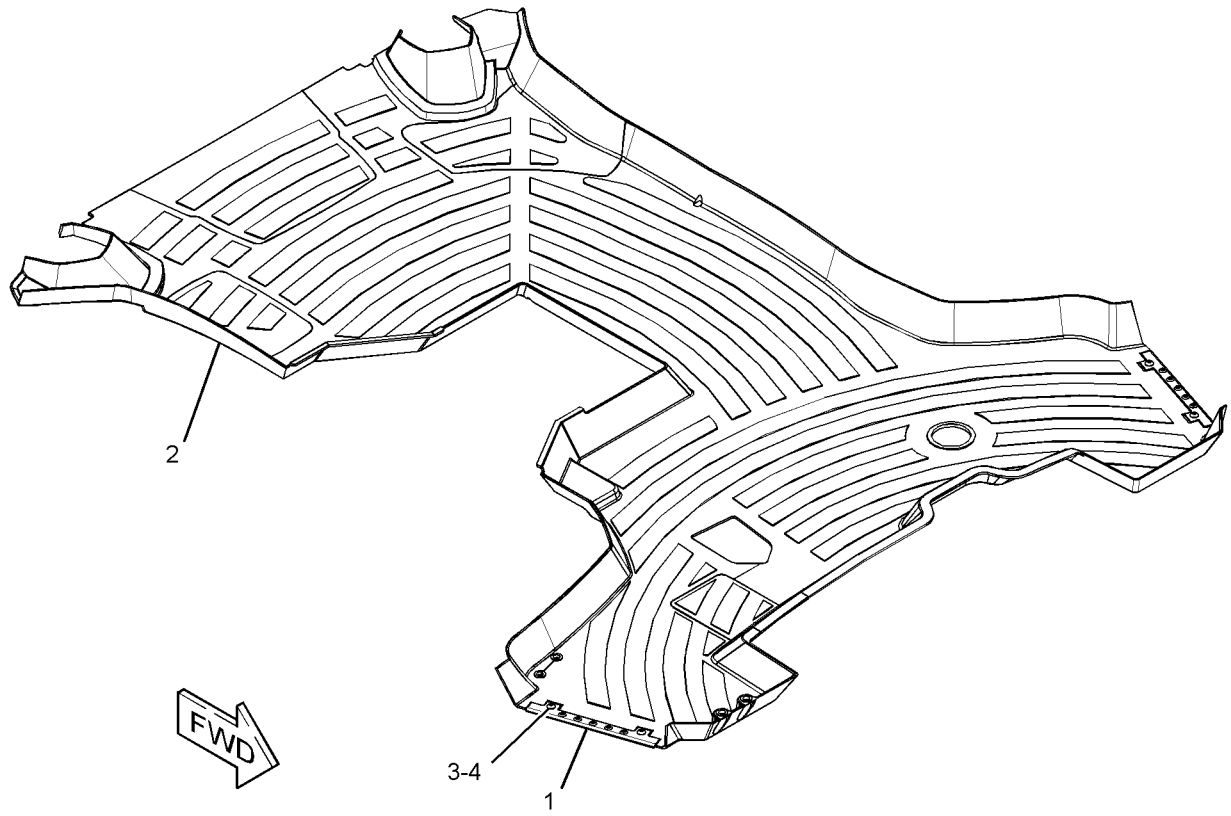

GRAPHIC #1 **<END>** g02437956

OPERATOR STATION

374-6887 HEATER & AIR CONDITIONER AR

S/N: SJW1-UP
PART OF 374-6852 CAB AR
AN ATTACHMENT

SMCS-7304, 7309, 7320, 7337 **i04611414**

NOTE	PART NUMBER	QTY	PART NAME 1 2 3 4 5 6 (PRODUCT LEVEL)	SEE PAGE
Y	*375-9569*	1	FAN GP-SUCTION (WITHOUT AIR CONDITIONER)	50
Y	*341-6710*	1	HEATER GP-CAB	571
Y	*337-9781*	1	LINES GP-HEATER	585
Y	*359-0015*	1	WIRING GP-HEATER	151

Y-SEPARATE ILLUSTRATION

<END>

374-6889 HEATER & AIR CONDITIONER AR

S/N: SJW1-UP
PART OF 374-6854 CAB AR
AN ATTACHMENT

SMCS-7304, 7309, 7320, 7337 **i04611470**

NOTE	PART NUMBER	QTY	PART NAME 1 2 3 4 5 6 (PRODUCT LEVEL)	SEE PAGE
Y	*344-7511*	1	AIR CONDITIONER & MOUNTING GP	527
Y	*321-7038*	1	COMPRESSOR GP-REFRIGERANT	536
Y	*337-9765*	1	CONDENSER & MTG GP-REFRIGERANT	537
Y	*375-9570*	1	FAN GP-SUCTION (WITH AIR CONDITIONER)	52
Y	*337-9783*	1	LINES GP-HEATER & AIR COND	587
Y	*357-3211*	1	WIRING GP-AIR CONDITIONER	137

Y-SEPARATE ILLUSTRATION

<END>

OPERATOR STATION

358-7087 HEATER & AIR CONDITIONER GP

S/N: SJW1-UP
PART OF 344-7511 AIR CONDITIONER & MOUNTING GP
AN ATTACHMENT

SMCS-7304, 7309, 7320, 7337 **i04404158**

NOTE	REF NO	GRAPHIC REF	PART NUMBER	QTY	PART NAME 1 2 3 4 5 6 (PRODUCT LEVEL)	SEE PAGE
	1	1	**8C-3756**	1	FILM-IDENTIFICATION (GROUP NO., SEQUENCE NO.)	
	2	1	**119-9631**	1	SWITCH-TEMPERATURE (HVAC) (AIR CONDITIONER)	
	3	1	**185-4015**	11	CLIP	
M	4	1	**187-7719**	3	SCREW-HEX FLANGE (M5X2.24X14-MM)	
	5	1	**204-9921**	1	RESISTOR AS	
	6	1	**210-7665**	1	HOUSING-TOP	
	7	1	**210-7666**	1	BAFFLE	
	8	1	**210-8401**	1	COIL AS-EVAPORATOR	
D		1	**5P-5688**	1	SEAL (1-M)	
		1	**219-6283**	1	LATCH	
	9	1	**211-2660**	1	FILTER ELEMENT-AIR (CAB HEATER)	
	10	1	**219-6281**	1	COVER AS	
		1	**6C-3680**	1	RIVET-POP	
		1	**219-6283**	1	LATCH	
	15	1	**219-6292**	1	HOUSING AS	
		1	**7H-3937**	4	LOCKWASHER (EXTERNAL TOOTH)	
M		1	**129-3178**	4	LOCKNUT (M6X1-THD)	
	16	1	**220-3762**	1	HARNESS AS-HEATER & AIR COND (CAB)	
		1	**128-7716**	1	CONNECTOR	
		1	**7T-6739**	1	HOUSING-PLUG	
		1	**7T-0093**	3	PIN-CONNECTOR (12-GA TO 14-GA)	
		1	**155-2270**	1	KIT-CONNECTING PLUG (2-PIN)	
					(INCLUDES PLUG AS, WEDGE & INTERFACE SEAL)	
		1	**8T-8737**	1	PLUG-SEAL	
		1	**177-9653**	1	KIT-RECEPTACLE (4-PIN)	
					(INCLUDES RECEPTACLE AS & WEDGE)	
		1	**8T-8730**	2	SOCKET-CONNECTOR (16-GA TO 18-GA)	
		1	**192-2112**	5	SOCKET-TERMINAL	
	17	1	**253-9510**	1	GUARD	
	18	1	**304-8965**	1	BLOWER GP-CAB (HEATER)	
		1	**7T-0093**		PIN-CONNECTOR (12-GA TO 14-GA)	
		1	**177-9645**	1	KIT-RECEPTACLE (2-PIN)	
					(INCLUDES RECEPTACLE AS & WEDGE)	
	19	1	**2S-3745**	4	SCREW-TAPPING (10-16XO.5-IN)	
M	20	1	**6V-7357**	4	BOLT (M6X1X25-MM)	
	21	1	**8T-4205**	5	WASHER-HARD (7.2X14.5X2-MM THK)	
D	22	1	**5P-5655**		SEAL (O.5-M)	
DJ	23	1	**5P-5637**		SEAL (O.8-M)	
EJ	24	1	**8C-7524**		SEAL (35-CM)	
					AVAILABLE REPAIR KIT(S):	
J			**285-9109**	1	KIT-SEAL (HVAC)	
					(INCLUDES GASKETS & SEALS)	

D-ORDER BY THE METER
E-ORDER BY THE CENTIMETER
J-KIT MARKED J SERVICES PARTS MARKED J
M-METRIC PART

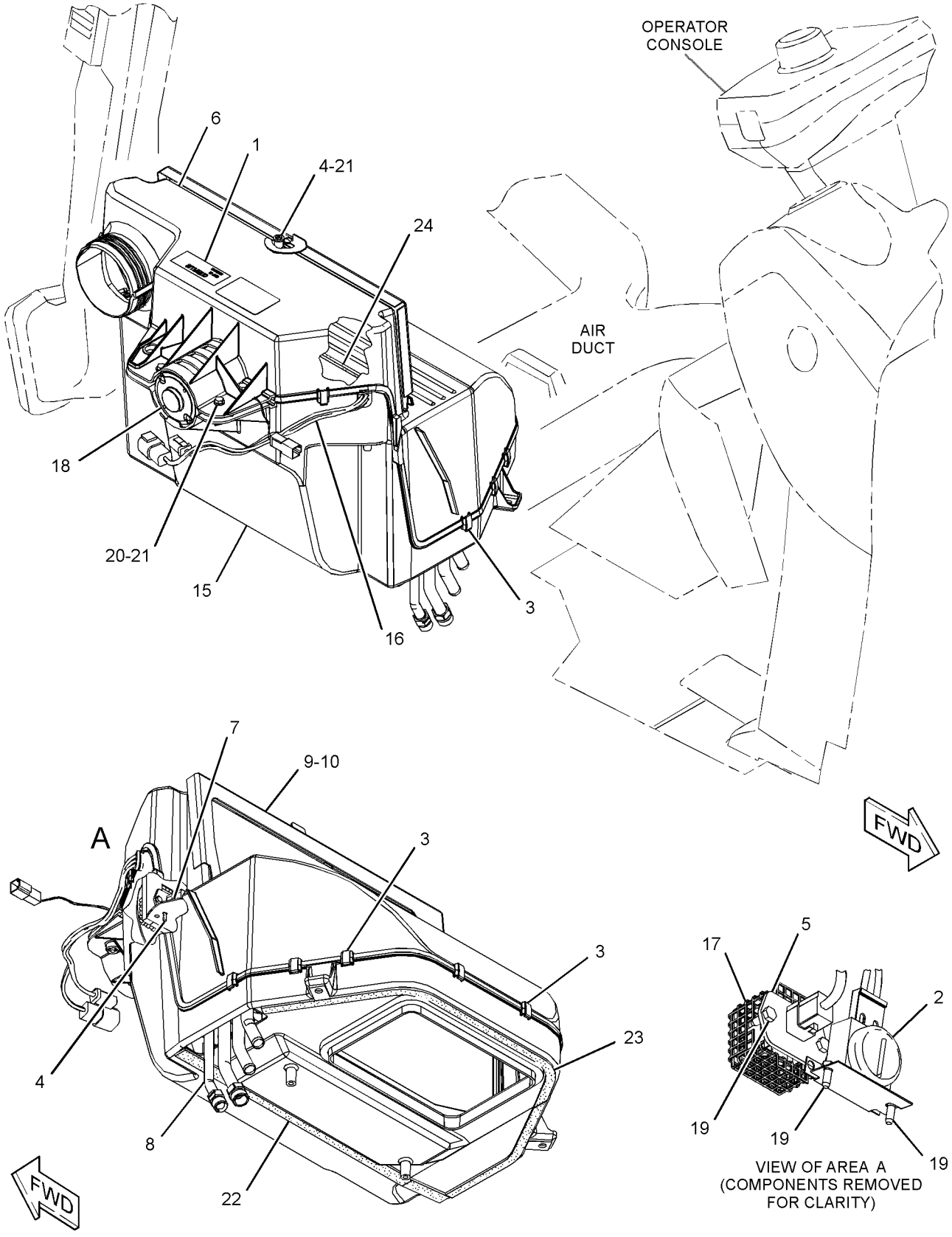

GRAPHIC #1 **<END>** g02178000

OPERATOR STATION

341-6710 HEATER GP-CAB

S/N: SJW1-UP

PART OF 374-6887 HEATER & AIR CONDITIONER AR

AN ATTACHMENT

SMCS-7304 **i04586210**

NOTE	REF NO	GRAPHIC REF	PART NUMBER	QTY	PART NAME 1 2 3 4 5 6 (PRODUCT LEVEL)	SEE PAGE
	1	1	**6L-4725**	2	CLAMP-HOSE	
	2	1	**9N-2231**	1	GROMMET AS	
	3	1	**110-6109**	1	KNOB-CONTROL (TEMPERATURE)	
	4	1	**164-1368**	4	FASTENER-PANEL	
	5	1	**189-0881**	1	CONTROL AS	
		1	**129-1831**	1	CLAMP	
	6	1	**206-1648**	1	LOUVER	
	7	1	**206-1682**	1	PANEL-CONTROL	
	8	1	**206-1684**	1	COVER (CAB FILTER)	
	9	1	**206-1804**	1	GASKET	
	10	1	**206-1807**	1	GASKET	
	11	1	**206-1808**	1	PLATE	
	12	1	**206-1809**	1	ROD AS	
	13	1	**206-1818**	1	DUCT AS-AIR	
	14	1	**211-2661**	1	FILTER ELEMENT AS-AIR (CAB HEATER)	
	15	1	**255-0795**	1	FILM-IDENTIFICATION (TEMPERATURE CONTROL)	
	16	1	**319-8524**	1	HOSE-AIR	
Y	17	1	**358-7086**	1	HEATER GP-CAB	573
M	18	1	**111-4627**	3	SCREW-MACHINE (M6X1X30-MM)	
	19	1	**5P-4116**	1	WASHER-HARD (8.8X20.5X2-MM THK)	
	20	1	**7X-0579**	1	WASHER-HARD (8.8X25.5X2-MM THK)	
M	21	1	**8T-4200**	1	BOLT (M8X1.25X16-MM)	
	22	1	**9X-2038**	2	WASHER (7X19X2-MM THK)	
M	23	1	**9X-2045**	2	SCREW-TRUSS HEAD (M6X1X20-MM)	
E	24	1	**220-0738**		SEAL (87-CM)	

E-ORDER BY THE CENTIMETER
M-METRIC PART
Y-SEPARATE ILLUSTRATION

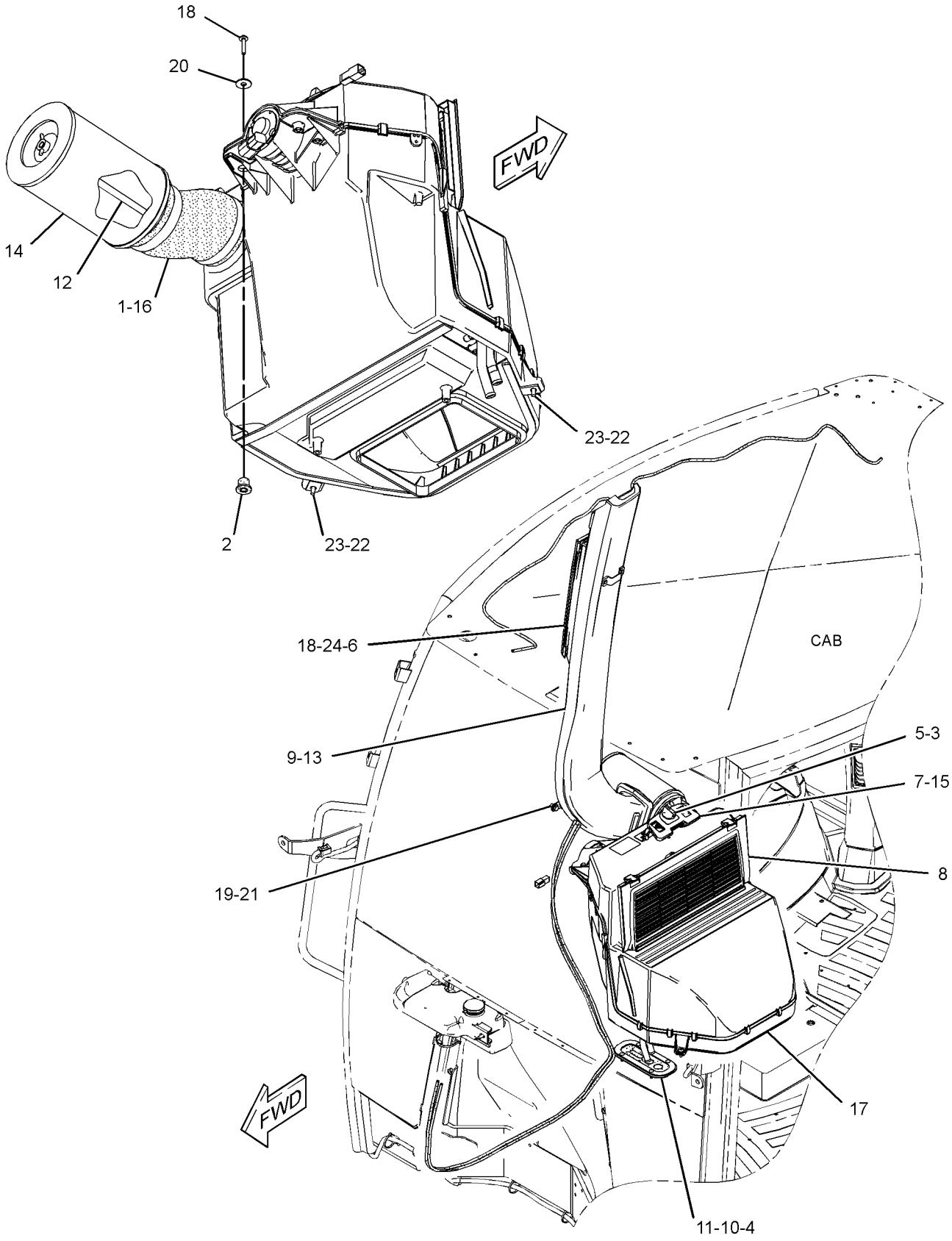

GRAPHIC #1 **<END>** g02815297

OPERATOR STATION

358-7086 HEATER GP-CAB

S/N: SJW1-UP
PART OF 341-6710 HEATER GP-CAB
AN ATTACHMENT

SMCS-7304 **i04404157**

NOTE	REF NO	GRAPHIC REF	PART NUMBER	QTY	PART NAME 1 2 3 4 5 6 (PRODUCT LEVEL)	SEE PAGE
	1	1	**8C-3756**	1	FILM-IDENTIFICATION (GROUP NO., SEQUENCE NO.)	
	2	1	**185-4015**	11	CLIP	
M	3	1	**187-7719**	3	SCREW-HEX FLANGE (M5X2.24X14-MM)	
	4	1	**204-9921**	1	RESISTOR AS	
	5	1	**210-7665**	1	HOUSING-TOP	
	6	1	**210-7666**	1	BAFFLE	
	7	1	**210-8402**	1	COIL AS-HEATER	
D		1	**5P-5688**	1	SEAL (1-M)	
		1	**219-6283**	1	LATCH	
	8	1	**211-2660**	1	FILTER ELEMENT-AIR (CAB HEATER)	
	9	1	**219-6281**	1	COVER AS	
		1	**6C-3680**	1	RIVET-POP	
		1	**219-6283**	1	LATCH	
	14	1	**219-6292**	1	HOUSING AS	
		1	**7H-3937**	4	LOCKWASHER (EXTERNAL TOOTH)	
M		1	**129-3178**	4	LOCKNUT (M6X1-THD)	
	15	1	**253-2470**	1	HARNESS AS-HEATER (CAB)	
		1	**128-7716**	1	CONNECTOR	
		1	**220-5725**	1	GROMMET	
		1	**7T-0093**	3	PIN-CONNECTOR (12-GA TO 14-GA)	
		1	**8T-8737**	1	PLUG-SEAL	
		1	**177-9653**	1	KIT-RECEPTACLE (4-PIN)	
					(INCLUDES RECEPTACLE AS & WEDGE)	
		1	**192-2112**	3	SOCKET-TERMINAL	
	16	1	**253-9510**	1	GUARD	
	17	1	**304-8965**	1	BLOWER GP-CAB (HEATER)	
		1	**7T-0093**		PIN-CONNECTOR (12-GA TO 14-GA)	
		1	**177-9645**	1	KIT-RECEPTACLE (2-PIN)	
					(INCLUDES RECEPTACLE AS & WEDGE)	
	18	1	**2S-3745**	2	SCREW-TAPPING (10-16X0.5-IN)	
M	19	1	**6V-7357**	4	BOLT (M6X1X25-MM)	
	20	1	**8T-4205**	5	WASHER-HARD (7.2X14.5X2-MM THK)	
D	21	1	**5P-5655**		SEAL (0.5-M)	
DJ	22	1	**5P-5637**		SEAL (0.8-M)	
EJ	23	1	**8C-7524**		SEAL (35-CM)	
					AVAILABLE REPAIR KIT(S):	
J			**285-9109**	1	KIT-SEAL (HVAC)	
					(INCLUDES GASKETS & SEALS)	

D-ORDER BY THE METER
E-ORDER BY THE CENTIMETER
J-KIT MARKED J SERVICES PARTS MARKED J
M-METRIC PART

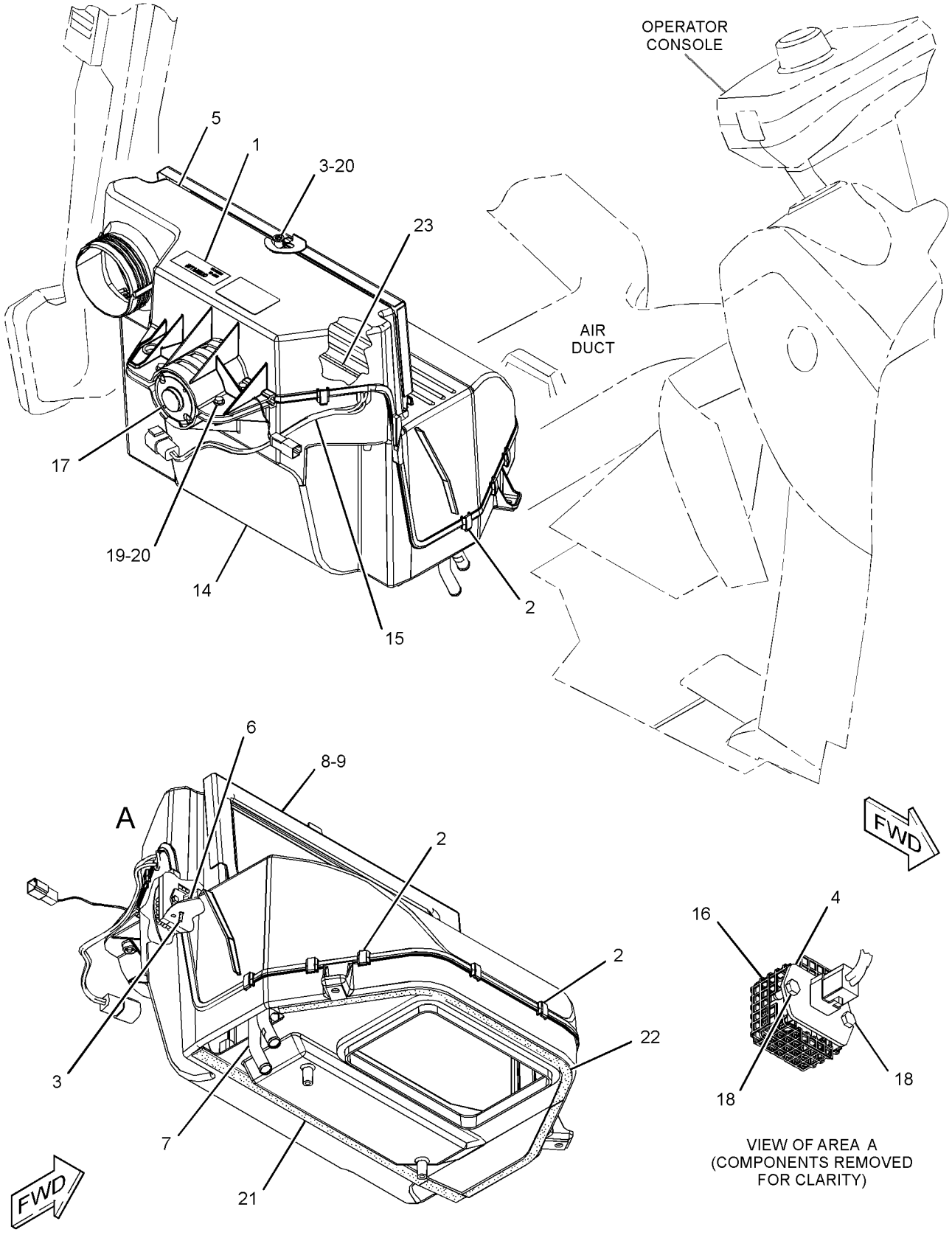

GRAPHIC #1 **<END>** g02177999

OPERATOR STATION

270-3217 INSTALLATION GP-RADIO

S/N: SJW1-UP
PART OF 353-6954 KIT-RADIO
AN ATTACHMENT

SMCS-1408, 7338 **i04004976**

NOTE	REF NO	GRAPHIC REF	PART NUMBER	QTY	PART NAME 1 2 3 4 5 6 (PRODUCT LEVEL)	SEE PAGE
	1	1	**200-5728**	1	HARNESS AS-RADIO (FLANGE)	
		1	**172-8039**	11	TERMINAL (RADIO)	
		1	**8T-8737**	1	PLUG-SEAL	
		1	**160-3518**	1	KIT-RECEPTACLE (8-PIN)	
					(INCLUDES RECEPTACLE AS & WEDGE)	
		1	**172-8037**	1	CONNECTOR (RADIO)	
		1	**8T-8729**	7	PIN-CONNECTOR (16-GA TO 18-GA)	
	2	1	**262-2781**	1	RADIO	
F			**6K-0806**	1	STRAP-CABLE	

F-NOT SHOWN

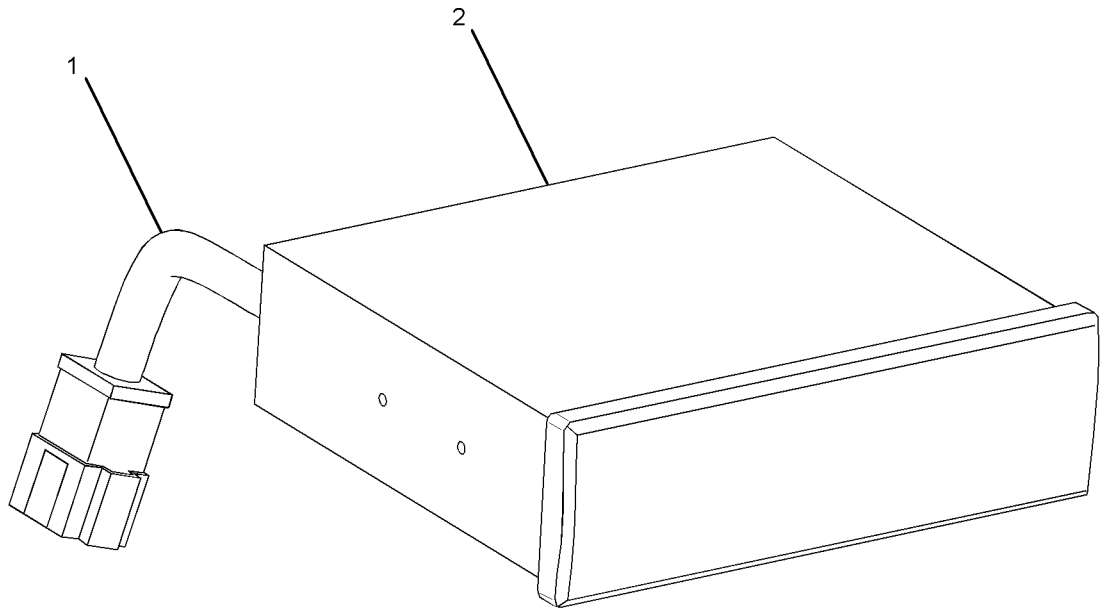

GRAPHIC #1 **<END>** g02126699

OPERATOR STATION

353-6954 KIT-RADIO

S/N: SJW1-UP

AN ATTACHMENT

SMCS-7338 **i03869609**

NOTE	PART NUMBER	QTY	PART NAME 1 2 3 4 5 6 (PRODUCT LEVEL)	SEE PAGE
Y	*270-3217*	1	INSTALLATION GP-RADIO	575

Y-SEPARATE ILLUSTRATION

<END>

OPERATOR STATION

324-2897 KIT-SEAT FRAME

S/N: SJW1-UP
PART OF 324-2896 SEAT GP
AN ATTACHMENT

SMCS-7321 **i03121860**

NOTE	REF NO	GRAPHIC REF	PART NUMBER	QTY	PART NAME 1 2 3 4 5 6 (PRODUCT LEVEL)	SEE PAGE
	1	1	**164-1255**	1	SECTOR	
	2	1	**164-1256**	2	SPACER (19X25.4X12.5-MM THK)	
	3	1	**161-9283**	1	WASHER (19.8X31.8X1.6-MM THK)	
	4	1	**164-1249**	1	LEVER AS (RECLINER CONTROL)	
	5	1	**164-1251**	1	SPRING (RECLINER)	
	6	1	**164-1252**	1	SPRING (SEAT RECLINER)	
	7	1	**164-1253**	1	PLATE	
	8	1	**164-1254**	1	SECTOR	
					PARTS SHOWN IN GRAPHIC(S) WITHOUT A REFERENCE NUMBER ARE NOT SERVICED SEPARATELY	

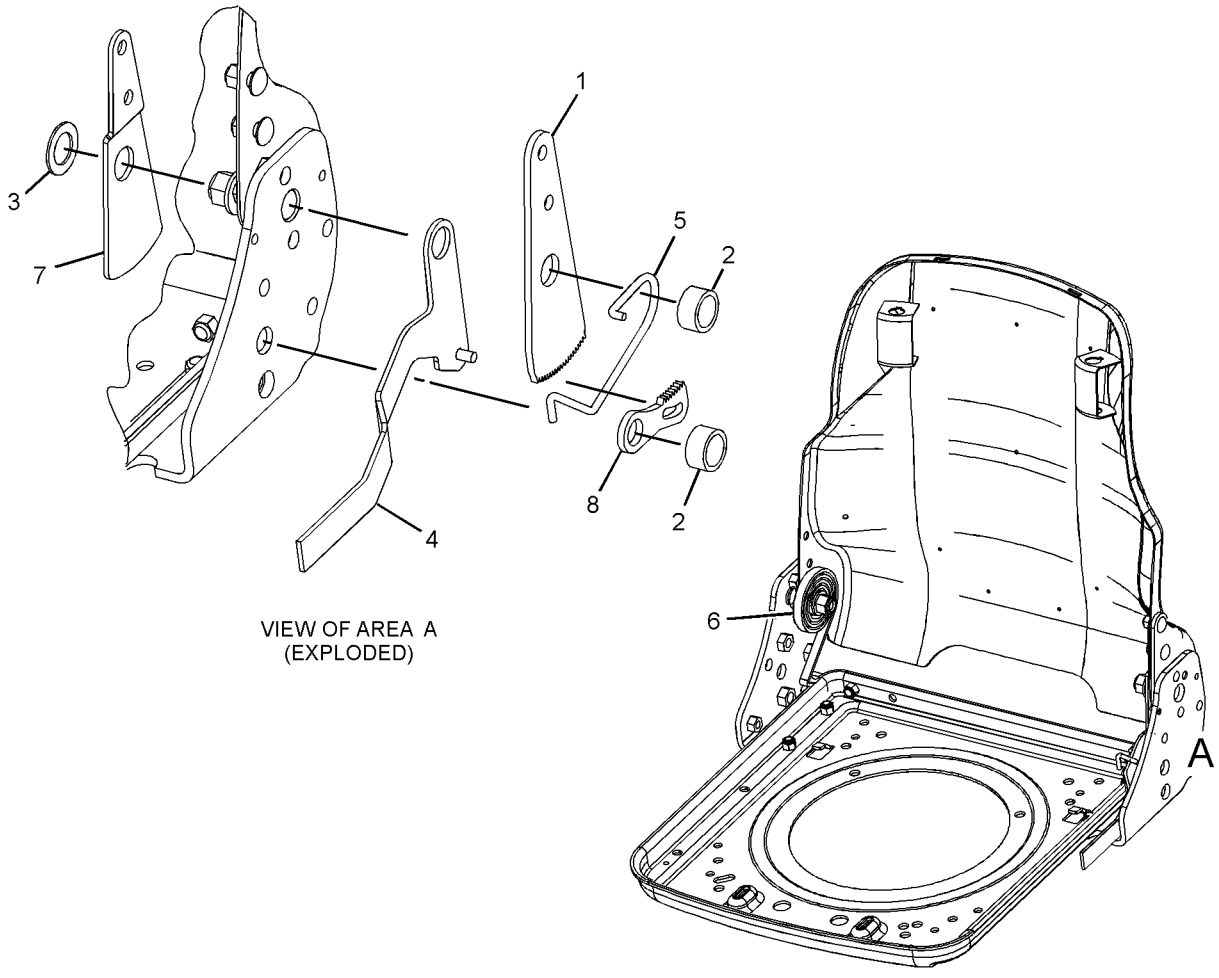

VIEW OF AREA A
(EXPLODED)

GRAPHIC #1 **<END>** g01626962

OPERATOR STATION

324-2894 KIT-SEAT SUSPENSION—AIR

S/N: SJW1-UP
PART OF 324-2890 SUSPENSION GP-SEAT
AN ATTACHMENT

SMCS-7312, 7324 **i03724323**

NOTE	REF NO	GRAPHIC REF	PART NUMBER	QTY	PART NAME 1 2 3 4 5 6 (PRODUCT LEVEL)	SEE PAGE
	1	1	**163-1135**	1	SPRING	
	2	1	**186-5110**	2	BOLT-SHOULDER	
	3	1	**192-7805**	1	HARNESS AS-VALVE (SEAT AIR COMPRESSOR)	
		1	**5P-4571**	2	TERMINAL-BLADE (14-GA TO 16-GA)	
		1	**102-8802**	1	KIT-RECEPTACLE (2-PIN)	
					(INCLUDES RECEPTACLE AS & WEDGE)	
		1	**186-3735**	2	PIN-CONNECTOR (16-GA TO 18-GA)	
E		1	**211-5358**		CONDUIT-FLEXIBLE (64-CM)	
	4	1	**237-3943**	1	BRACKET	
	5	1	**4F-4879**	1	BOLT (3/8-16X0.5-IN)	
	6	1	**328-7749**	1	HARNESS AS-WIRING (SEAT AIR COMPRESSOR)	
	7	1	**328-7750**	1	TEE	
	8	1	**328-7751**	1	ELBOW	
	9	1	**328-7752**	1	ELBOW	
	10	1	**330-9687**	1	TUBE	
	11	1	**331-7798**	1	TUBE	
	12	1	**331-7799**	1	TUBE	
	13	1	**108-4311**	1	SCREW-MACHINE (3/8-16X0.75-IN)	
	14	1	**3E-4337**	1	RIVET-POP	
	15	1	**4V-2264**	1	NUT-PUSH	
	16	1	**216-4554**	2	SHIM (1.4-MM THK)	
	17	1	**338-9831**	1	CLIP	

E-ORDER BY THE CENTIMETER

324-2894 KIT-SEAT SUSPENSION *(contd.)* **i03724323**

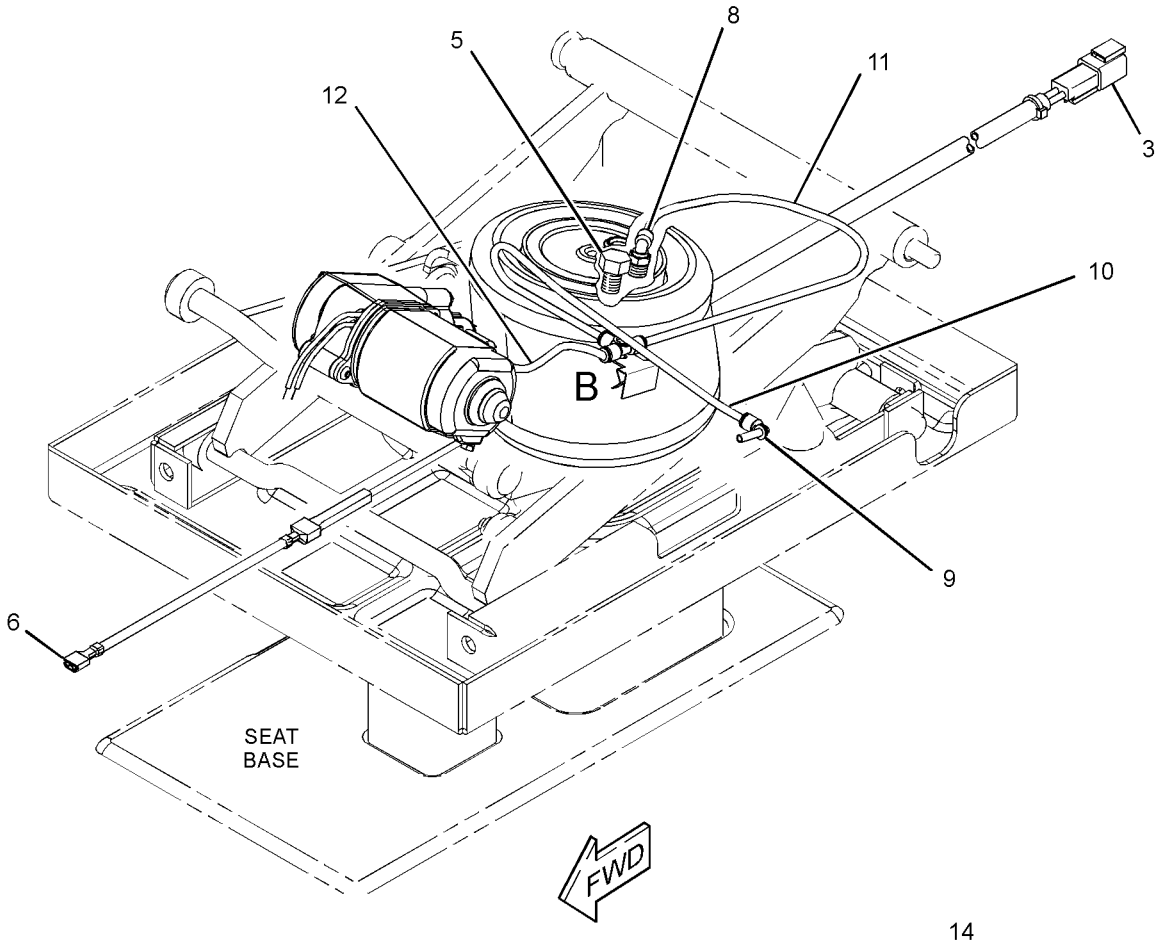

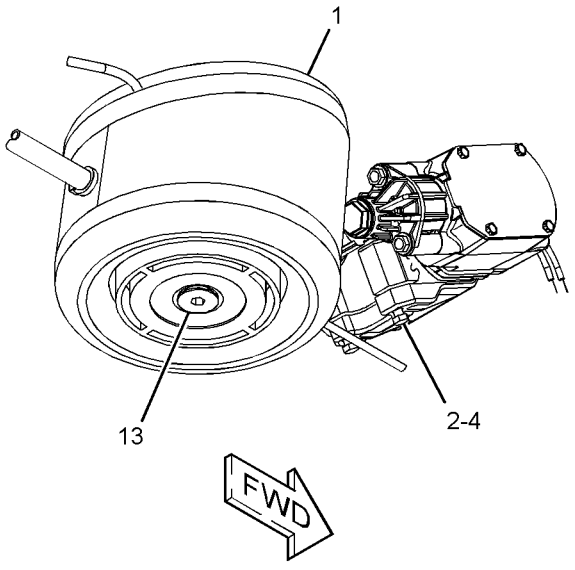

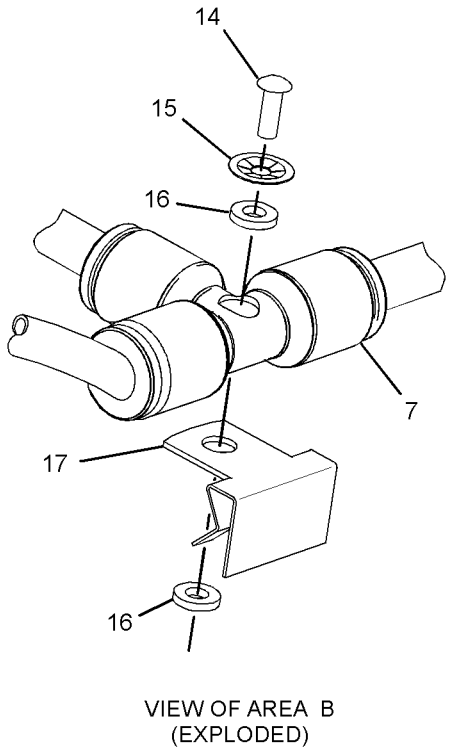

VIEW OF AREA B
(EXPLODED)

GRAPHIC #1 **<END>** g01783376

OPERATOR STATION

299-6985 LATCH GP-CAB DOOR & WINDOW

S/N: SJW1-UP
PART OF 333-9902 WINDOW GP-DOOR
AN ATTACHMENT

SMCS-7308, 7310 **i02693060**

NOTE	REF NO	GRAPHIC REF	PART NUMBER	QTY	PART NAME 1 2 3 4 5 6 (PRODUCT LEVEL)	SEE PAGE
M	1	1	**161-6984**	1	SCREW-TRUSS HEAD (M5X0.8X20-MM)	
	2	1	**161-6987**	1	WASHER-HARD (5.2X16X1.5-MM THK)	
	3	1	**161-9294**	1	SPRING-FLAT WIRE	
M	4	1	**162-6556**	1	LOCKNUT (M6X1-THD)	
M	5	1	**5C-2874**	1	NUT (M5X0.8-THD)	

M-METRIC PART

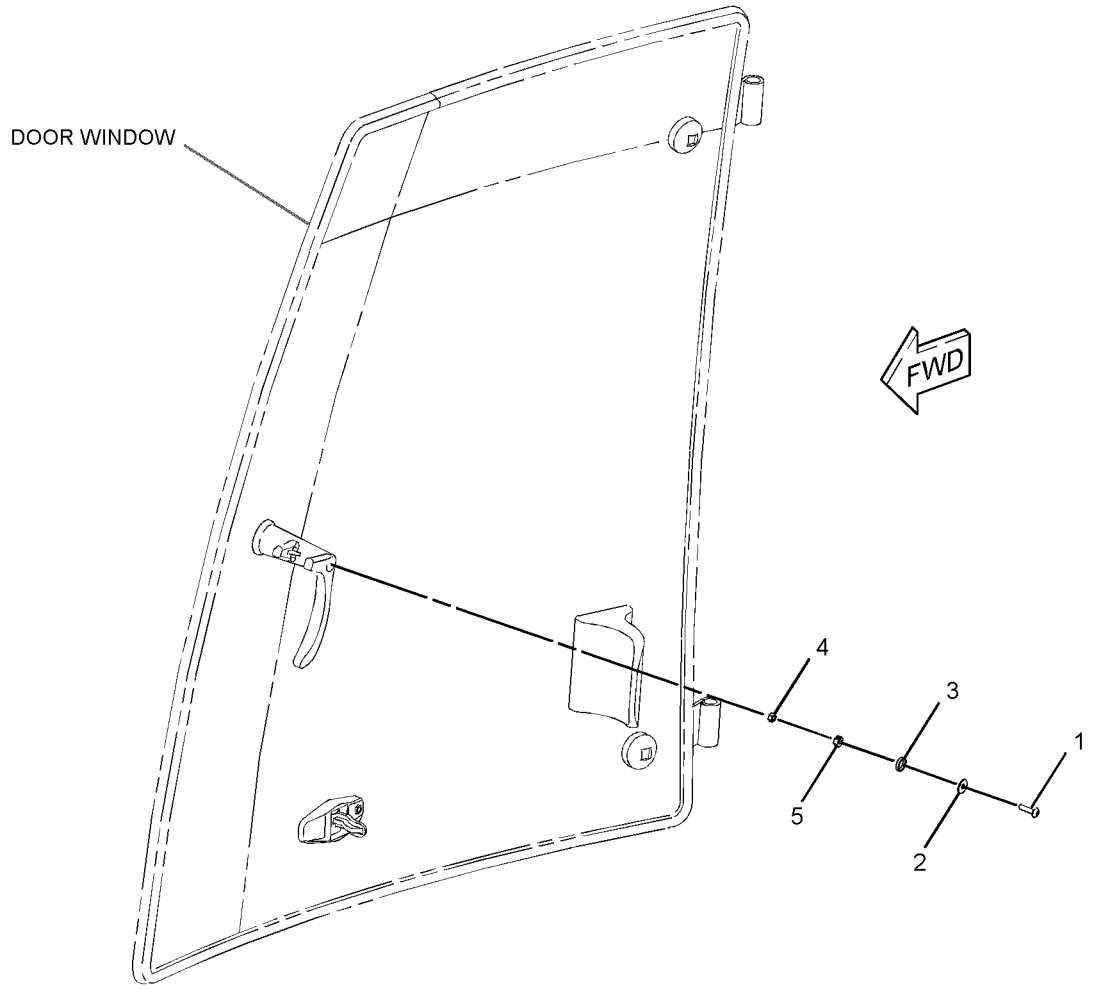

GRAPHIC #1 **<END>** g01353996

OPERATOR STATION

299-6986 LATCH GP-CAB DOOR & WINDOW

S/N: SJW1-UP

PART OF 333-9901 WINDOW GP-DOOR

AN ATTACHMENT

SMCS-7308, 7310 **i02693061**

NOTE	REF NO	GRAPHIC REF	PART NUMBER	QTY	PART NAME 1 2 3 4 5 6 (PRODUCT LEVEL)	SEE PAGE
M	1	1	**161-6984**	1	SCREW-TRUSS HEAD (M5X0.8X20-MM)	
	2	1	**161-6987**	1	WASHER-HARD (5.2X16X1.5-MM THK)	
	3	1	**161-9294**	1	SPRING-FLAT WIRE	
M	4	1	**162-6556**	1	LOCKNUT (M6X1-THD)	
M	5	1	**5C-2874**	1	NUT (M5X0.8-THD)	

M-METRIC PART

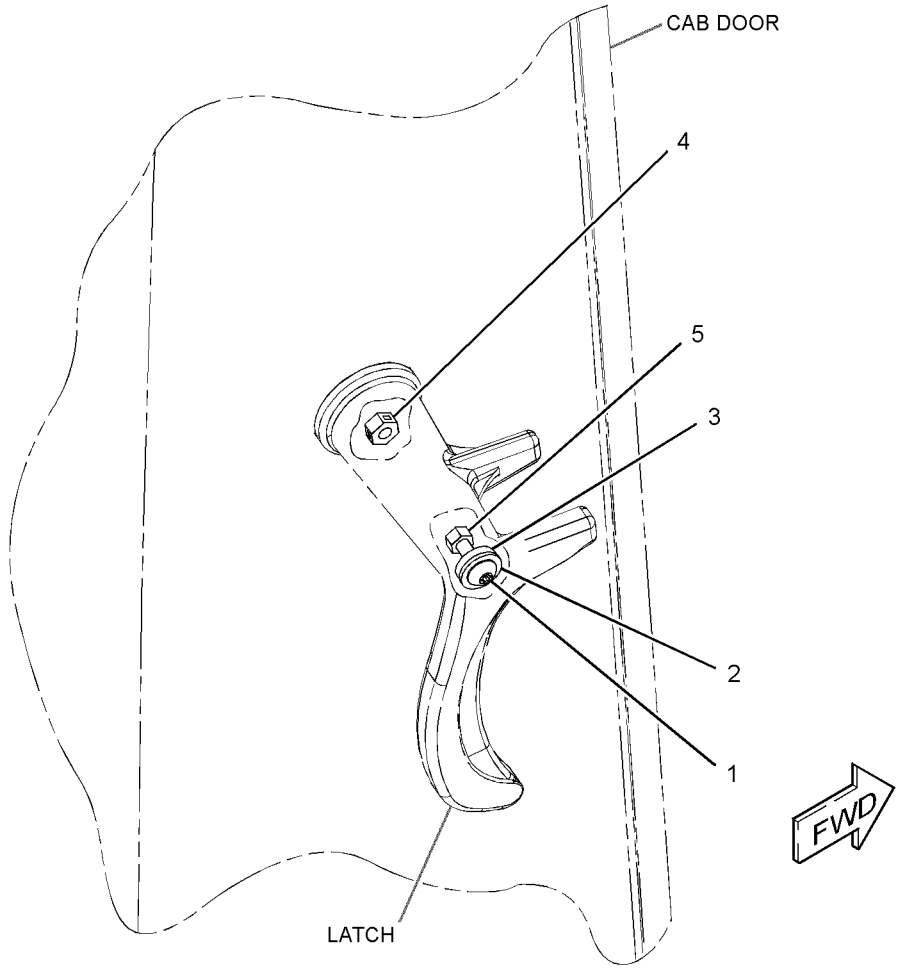

GRAPHIC #1 **<END>** g01354326

OPERATOR STATION

209-3367 LEVER GP-GOVERNOR–HANDHELD

S/N: SJW1-UP
PART OF 341-6719 CONTROL GP-GOVERNOR
AN ATTACHMENT

SMCS-1265 **i02159826**

NOTE	REF NO	GRAPHIC REF	PART NUMBER	QTY	PART NAME 1 2 3 4 5 6 (PRODUCT LEVEL)	SEE PAGE
	1	1	**209-3366**	1	CABLE AS	
	2	1	**219-0343**	1	LEVER AS	
	3	1	**8T-4742**	1	END-YOKE ROD	
	4	1	**8T-4744**	1	PIN AS-SPRING	
M	5	1	**8T-4971**	1	BOLT (M6X1X30-MM)	
M	6	1	**129-3178**	1	LOCKNUT (M6X1-THD)	

M-METRIC PART

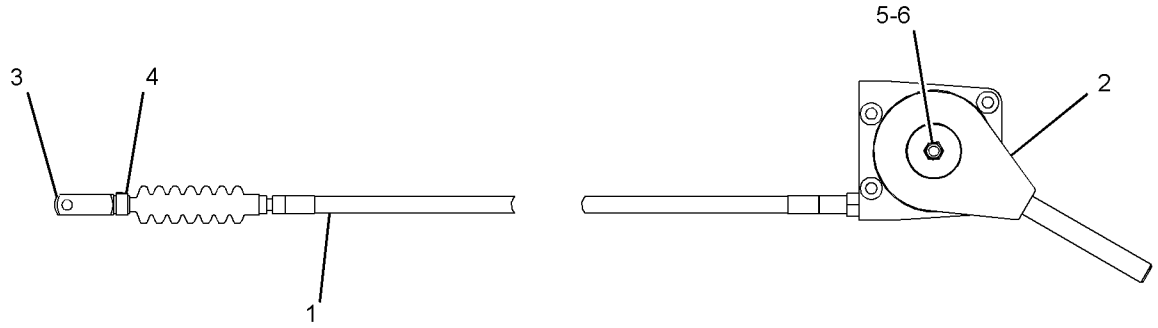

GRAPHIC #1 **<END>** g01096744

OPERATOR STATION

317-5543 LINER GP-CAB

S/N: SJW1-UP
PART OF 353-1429 CAB AR
AN ATTACHMENT

SMCS-7329 **i04552028**

NOTE	REF NO	GRAPHIC REF	PART NUMBER	QTY	PART NAME 1 2 3 4 5 6 (PRODUCT LEVEL)	SEE PAGE
	1	1	**325-9311**	3	FASTENER	
	2	1	**5G-2003**	2	SPACER (6.8X13X10-MM THK)	
	3	1	**8E-1118**	1	ANTENNA AS	
	4	1	**8R-6111**	1	CABLE AS-COAXIAL	
	5	1	**9U-8263**	1	COVER	
	6	1	**084-4277**	1	LAMP GP-DOME (12-VOLT) (CAB)	
		1	**210-8754**	1	LAMP (12-VOLT)	
	7	1	**132-2249**	1	SPACER (7.4X12.7X24-MM THK)	
	8	1	**145-0981**	2	SPACER (8.5X12.7X18-MM)	
	9	1	**169-7291**	2	COVER-SPEAKER	
	10	1	**209-4716**	2	PLATE	
	11	1	**262-9567**	2	SPEAKER	
M	12	1	**8C-4982**	8	BOLT-SOCKET HEAD (M4X0.7X20-MM)	
	13	1	**9X-2038**	3	WASHER (7X19X2-MM THK)	
	14	1	**292-5773**	1	COVER	
	15	1	**317-5542**	1	LINER AS-CAB	
		1	**263-5781**	2	PLATE AS	
					(EACH INCLUDES)	
		1	**205-7047**	8	INSERT-THREADED (M4X0.7-THD)	
M	16	1	**113-0920**	8	BOLT-SOCKET HEAD (M4X0.7X35-MM)	
M	17	1	**121-9870**	5	SCREW-MACHINE (M6X1X40-MM)	
	18	1	**282-7835**	1	PLATE	
	19	1	**282-7832**	1	GROMMET	
	20	1	**9X-8256**	2	WASHER (6.6X12X2-MM THK)	
M	21	1	**8C-3798**	2	BOLT-LOCKING (M6X1X30-MM)	

M-METRIC PART

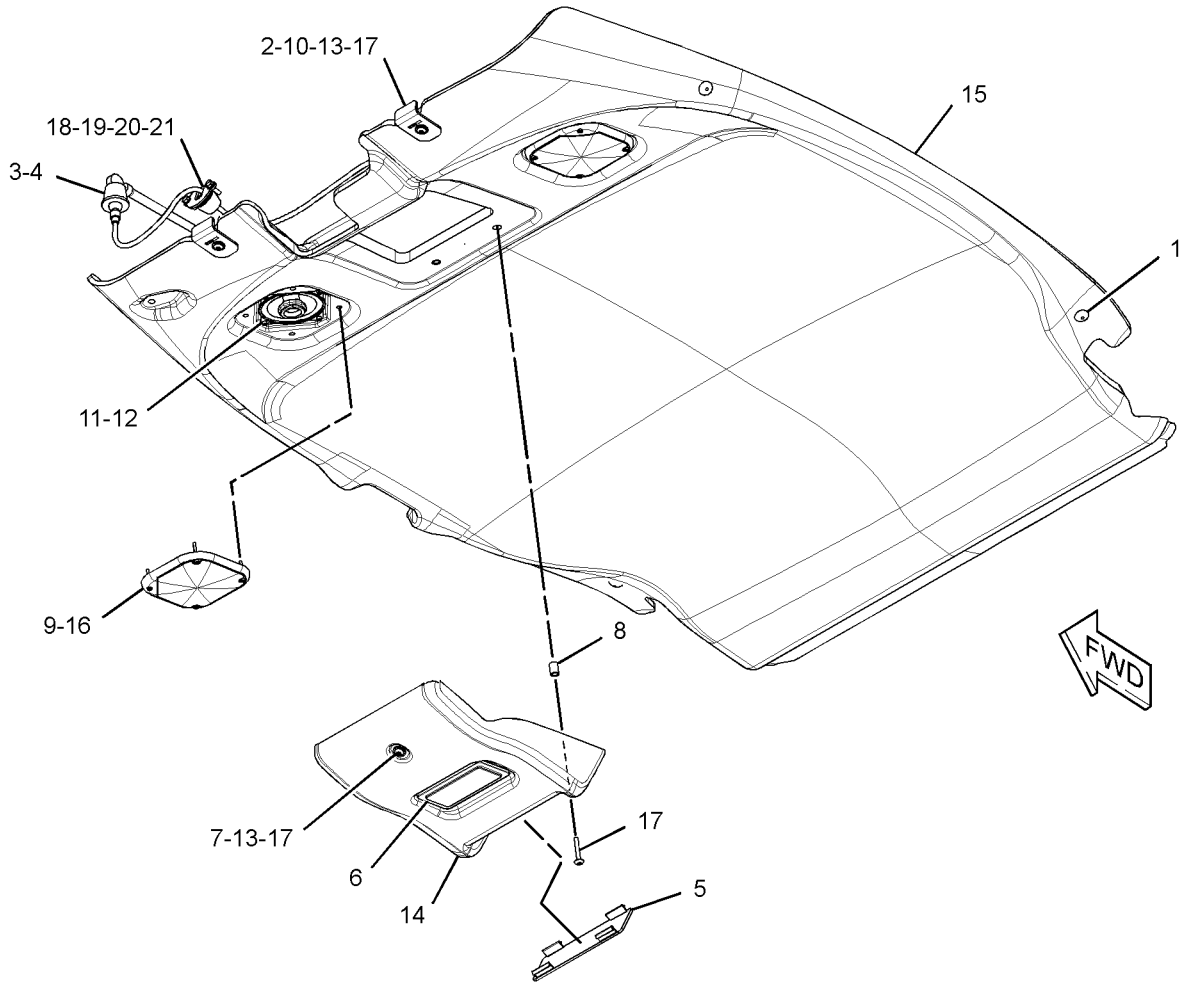

GRAPHIC #1 **<END>** g02468683

OPERATOR STATION

337-9781 LINES GP-HEATER

S/N: SJW1-UP

PART OF 374-6887 HEATER & AIR CONDITIONER AR

AN ATTACHMENT

SMCS-1812 **i04585931**

NOTE	REF NO	GRAPHIC REF	PART NUMBER	QTY	PART NAME 1 2 3 4 5 6 (PRODUCT LEVEL)	SEE PAGE
	1	1	**5D-1026**	8	CLAMP-BAND	
	2	1	**6P-8855**	1	SPACER-SPECIAL	
	3	1	**7K-1181**	3	STRAP-CABLE	
	4	1	**8Y-5737**	1	CLAMP	
	5	1	**134-3856**	1	ELBOW	
	6	1	**194-5622**	1	VALVE AS-WATER (AIR CONDITIONER)	
		1	**6V-6717**	1	SCREW-WASHER HEAD (8-32X9.52-MM)	
		1	**124-0312**	2	SCREW-PAN HEAD (8-16X0.32-IN)	
	7	1	**323-3309**	8	CAP	
	8	1	**344-2846**	1	BRACKET	
	9	1	**361-4239**	1	CABLE AS	
	10	1	**124-0312**	2	SCREW-PAN HEAD (8-16X0.32-IN)	
	11	1	**2V-9121**	1	FITTING	
	12	1	**3E-4321**	4	CLIP	
	13	1	**8T-4121**	2	WASHER-HARD (11X21X2.5-MM THK)	
M	14	1	**8T-4138**	1	BOLT (M6X1X20-MM)	
M	15	1	**8T-4196**	2	BOLT (M10X1.5X35-MM)	
	16	1	**8T-4205**	1	WASHER-HARD (7.2X14.5X2-MM THK)	
E	17	1	**5P-0767**		HOSE (241.5-CM)	
E	17A	1	**5P-0767**		HOSE (228-CM)	
E	17B	1	**5P-0767**		HOSE (32-CM)	
E	17C	1	**5P-0767**		HOSE (30.5-CM)	

E-ORDER BY THE CENTIMETER
M-METRIC PART

337-9781 **LINES GP-HEATER** *(contd.)* **i04585931**

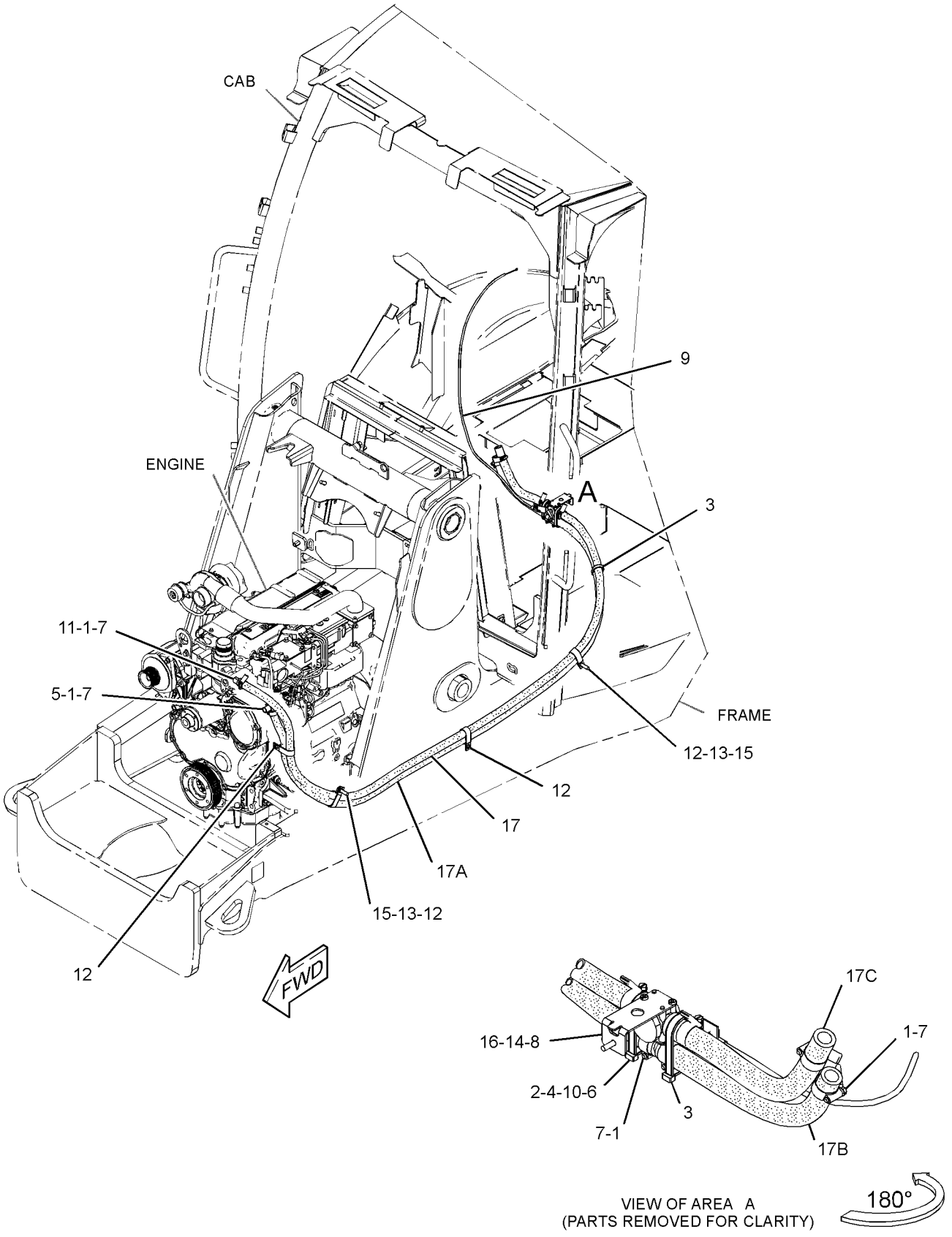

GRAPHIC #1 **<END>** g02816902

OPERATOR STATION

337-9783 LINES GP-HEATER & AIR COND

S/N: SJW1-UP

PART OF 374-6889 HEATER & AIR CONDITIONER AR

AN ATTACHMENT

SMCS-1380, 1808, 1812 **i04586149**

NOTE	REF NO	GRAPHIC REF	PART NUMBER	QTY	PART NAME 1 2 3 4 5 6 (PRODUCT LEVEL)	SEE PAGE
	1	1	**3S-2093**	1	STRAP-CABLE	
	2	1	**5D-1026**	8	CLAMP-BAND	
	3	1	**6P-8855**	1	SPACER-SPECIAL	
	4	1	**7K-1181**	9	STRAP-CABLE	
	5	1	**8Y-5737**	1	CLAMP	
	6	1	**130-9984**	3	CLIP	
	7	1	**9X-3959**	1	ELBOW	
	8	1	**151-4841**	2	BLOCK	
	9	1	**177-2215**	1	STRAP-DUAL CLAMP	
	10	1	**194-5622**	1	VALVE AS-WATER (AIR CONDITIONER)	
		1	**6V-6717**	1	SCREW-WASHER HEAD (8-32X9.52-MM)	
		1	**124-0312**	2	SCREW-PAN HEAD (8-16X0.32-IN)	
	11	1	**205-9920**	1	STRAP-CABLE	
	12	1	**255-0800**	1	PLATE	
	13	1	**274-5909**	1	ACCUMULATOR-REFRIGERANT	
	14	1	**283-4236**	1	DRYER AS-AIR	
		1	**3E-0068**	1	TUBE AS-REFRIGERANT ORIFICE	
	15	1	**315-7790**	1	PLATE	
	16	1	**317-4270**	1	BRACKET AS	
	17	1	**323-3309**	8	CAP	
	18	1	**344-2846**	1	BRACKET	
	19	1	**361-4239**	1	CABLE AS	
	20	1	**361-8151**	1	HOSE AS	
	21	1	**361-8157**	1	HOSE AS	
	22	1	**361-8158**	1	HOSE AS	
	23	1	**362-8670**	1	HOSE AS	
	24	1	**363-7486**	1	HOSE AS	
	25	1	**377-5823**	1	BRACKET AS	
	26	1	**109-1633**	1	CLIP (SLOT)	
	27	1	**109-1634**	1	CLIP (TAB)	
	28	1	**124-0312**	2	SCREW-PAN HEAD (8-16X0.32-IN)	
	29	1	**2P-4556**	2	CLIP	
	30	1	**2V-9121**	1	FITTING	
	31	1	**3E-4321**	4	CLIP	
	32	1	**4D-7388**	1	CLIP	
M	33	1	**5C-7261**	1	NUT (M8X1.25-THD)	
	34	1	**5K-5338**	1	CLIP	
	35	1	**5P-4116**	2	WASHER-HARD (8.8X20.5X2-MM THK)	
	36	1	**8T-4121**	8	WASHER-HARD (11X21X2.5-MM THK)	
M	37	1	**8T-4136**	3	BOLT (M10X1.5X25-MM)	
M	38	1	**8T-4138**	1	BOLT (M6X1X20-MM)	
M	39	1	**8T-4139**	1	BOLT (M12X1.75X30-MM)	
M	40	1	**8T-4189**	2	BOLT (M8X1.25X20-MM)	
M	41	1	**8T-4196**	5	BOLT (M10X1.5X35-MM)	
	42	1	**8T-4205**	1	WASHER-HARD (7.2X14.5X2-MM THK)	
	43	1	**8T-4223**	1	WASHER-HARD (13.5X25.5X3-MM THK)	
	44	1	**8T-4224**	1	WASHER-HARD (8.8X16X2-MM THK)	
	45	1	**9X-7380**	2	SEAL-O-RING	
	46	1	**9X-7381**	3	SEAL-O-RING	
	47	1	**9X-7382**	1	SEAL-O-RING	
	48	1	**9X-7383**	2	SEAL-O-RING	
E	49	1	**5P-0767**		HOSE (30.5-CM)	
E	49A	1	**5P-0767**		HOSE (32-CM)	
E	49B	1	**5P-0767**		HOSE (228-CM)	
E	49C	1	**5P-0767**		HOSE (241.5-CM)	

337-9783 LINES GP-HEATER & AIR COND *(contd.)* i04586149

NOTE	REF NO	GRAPHIC REF	PART NUMBER	QTY	PART NAME 1 2 3 4 5 6 (PRODUCT LEVEL)	SEE PAGE
D	50	1	**160-2246**		SLEEVE-ABRASION (47.6-IN)	

D-ORDER BY THE METER
E-ORDER BY THE CENTIMETER
M-METRIC PART

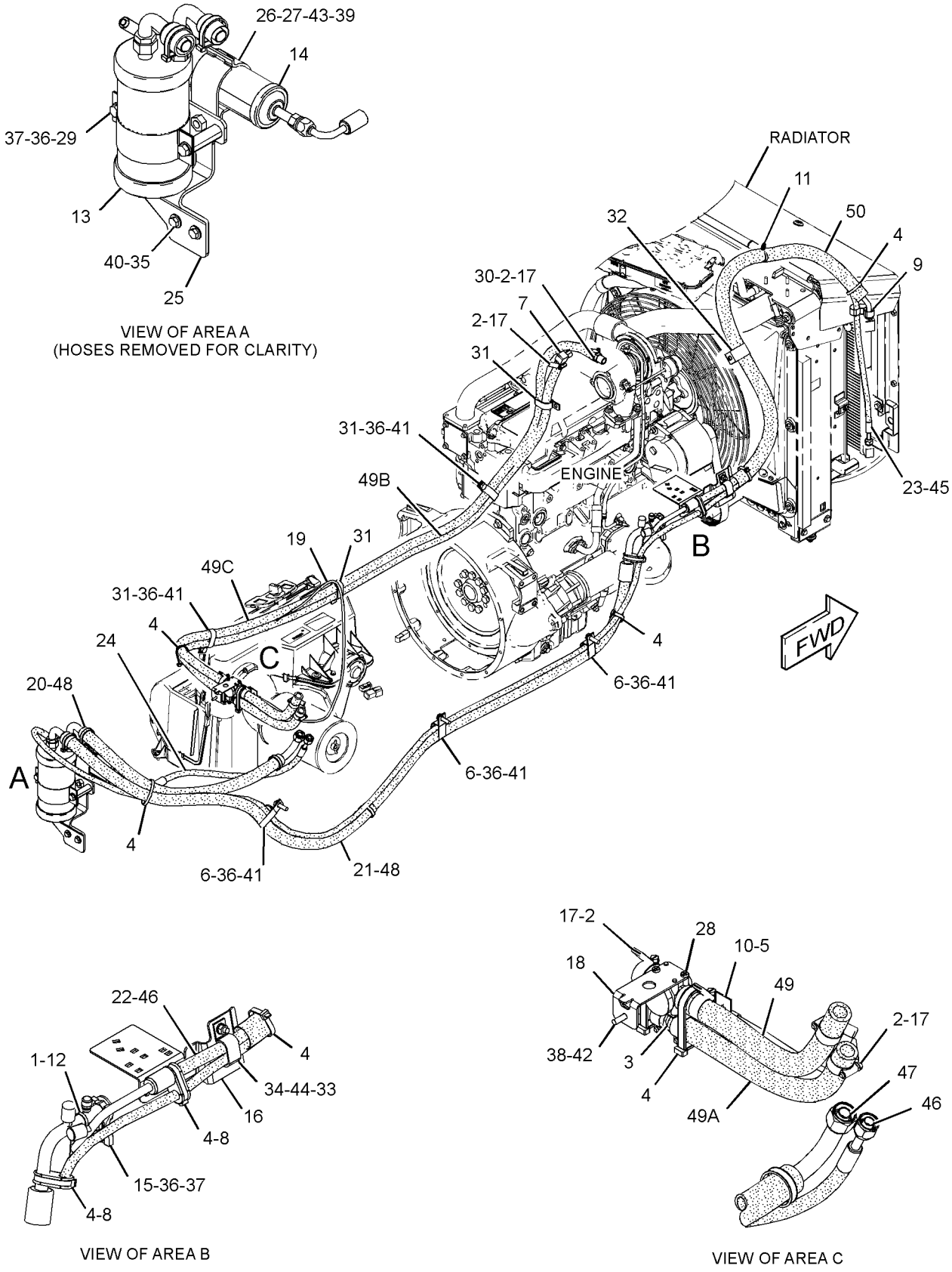

GRAPHIC #1 **<END>** g02789511

OPERATOR STATION

259-6276 MIRROR GP-REAR VIEW—INTERIOR

S/N: SJW1-UP
PART OF 353-1429 CAB AR
AN ATTACHMENT

SMCS-7319 **i04403125**

NOTE	REF NO	GRAPHIC REF	PART NUMBER	QTY	PART NAME 1 2 3 4 5 6 (PRODUCT LEVEL)	SEE PAGE
M	1	1	**197-7499**	2	BOLT (M4X0.7X25-MM)	
	2	1	**199-0929**	1	MIRROR AS	
	3	1	**096-6166**	2	WASHER-HARD (4.5X9X1-MM THK)	

M-METRIC PART

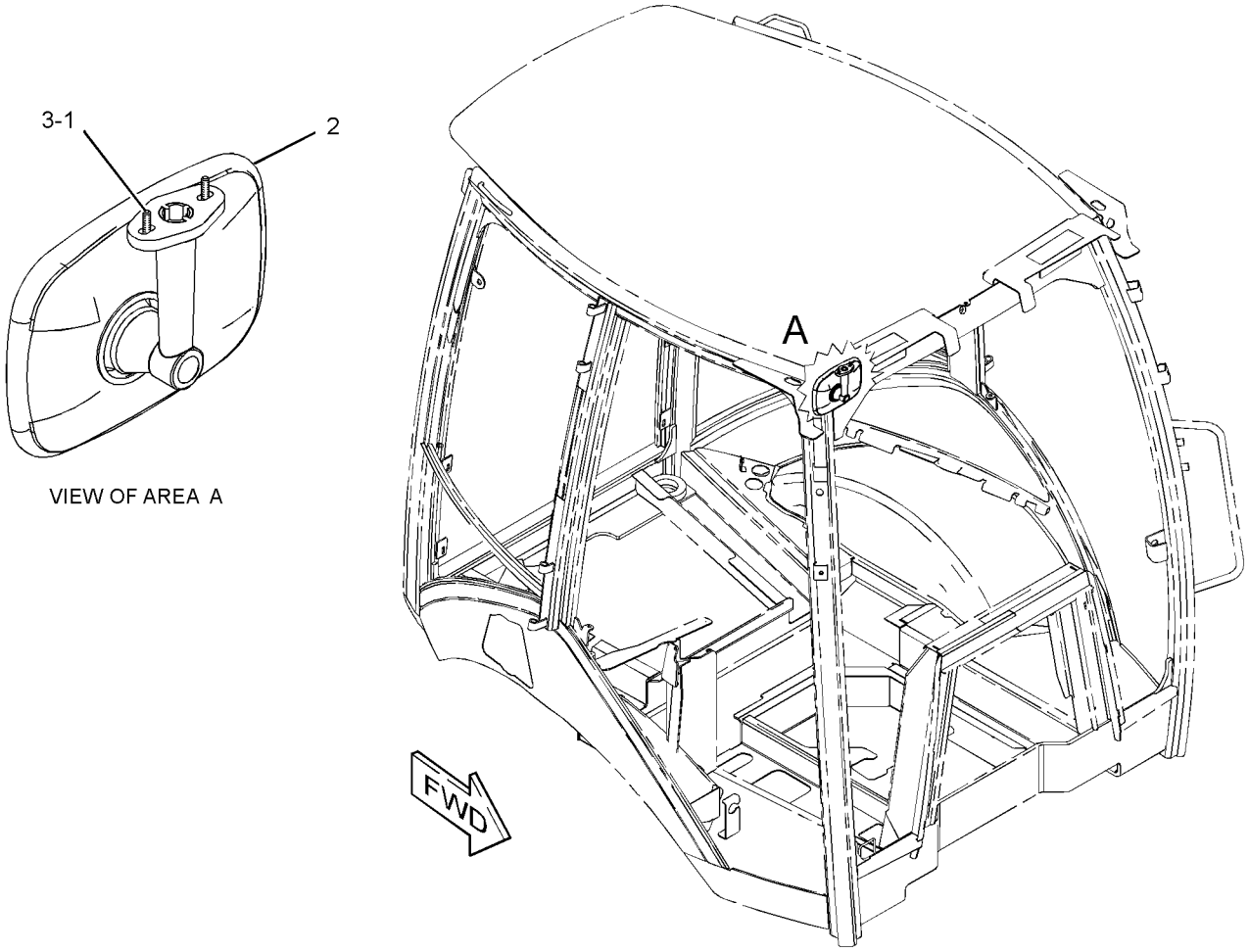

VIEW OF AREA A

GRAPHIC #1 **<END>** g01214241

336-9168 MIRROR GP-REAR VIEW–EXTERIOR

S/N: SJW1-UP
PART OF 353-1429 CAB AR
AN ATTACHMENT

SMCS-7319 **i03338640**

NOTE	REF NO	GRAPHIC REF	PART NUMBER	QTY	PART NAME 1 2 3 4 5 6 (PRODUCT LEVEL)	SEE PAGE
	1	1	**180-0448**	2	MIRROR AS	
	2	1	**159-7105**	1	BRACKET & MOUNTING AS (LH)	
	3	1	**159-7106**	1	BRACKET & MOUNTING AS (RH)	
	4	1	**8T-4224**	4	WASHER-HARD (8.8X16X2-MM THK)	
M	5	1	**8T-4908**	4	BOLT (M8X1.25X25-MM)	

M-METRIC PART

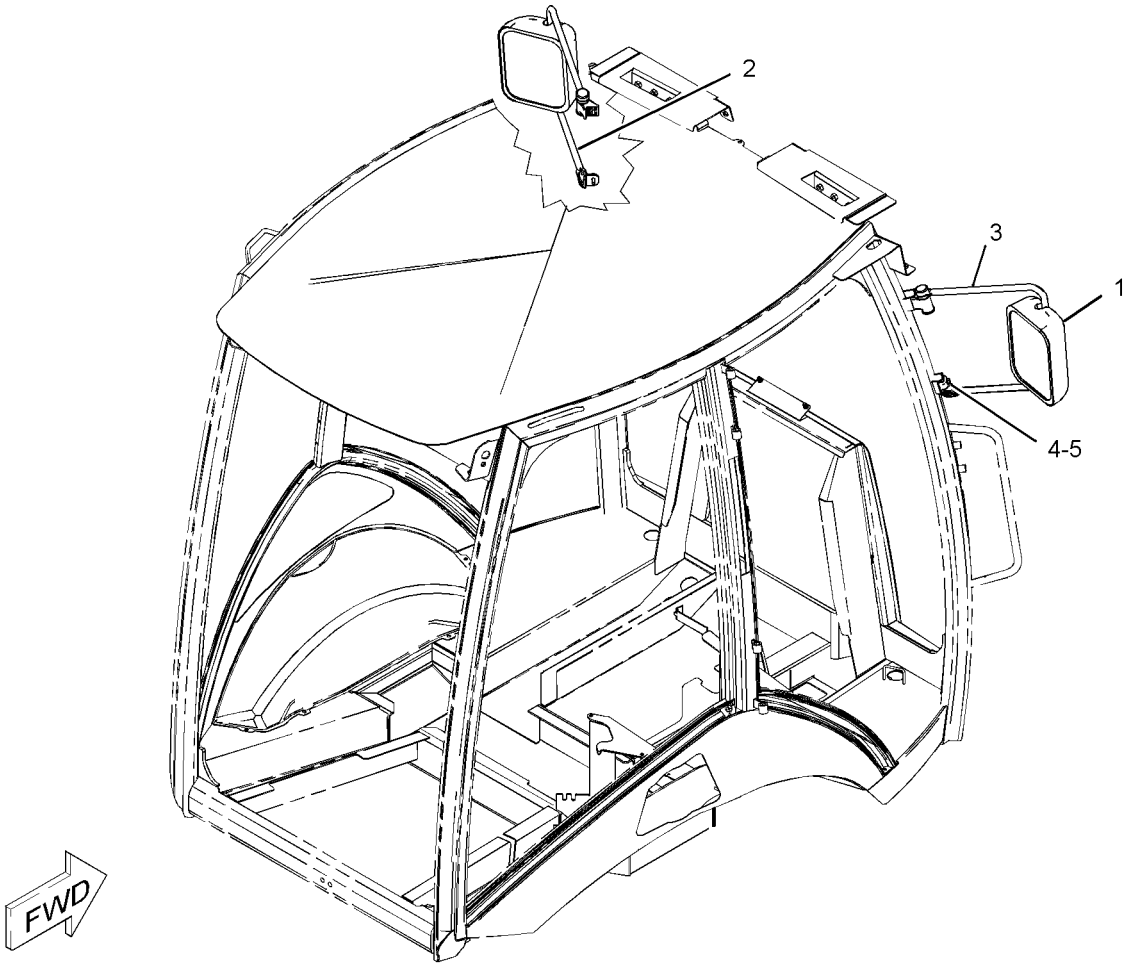

GRAPHIC #1 **<END>** g01090966

OPERATOR STATION

347-4525 MIRROR GP-REAR VIEW—EXTERIOR

S/N: SJW1-UP
PART OF 341-3105 CONVERSION AR-CERTIFICATION
AN ATTACHMENT

SMCS-7319 **i03765847**

NOTE	REF NO	GRAPHIC REF	PART NUMBER	QTY	PART NAME 1 2 3 4 5 6 (PRODUCT LEVEL)	SEE PAGE
	1	1	**220-4050**	1	MIRROR (EXTERIOR, REAR)	
	2	1	**344-1001**	1	BRACKET AS-MOUNTING	
	3	1	**8T-4121**	2	WASHER-HARD (11X21X2.5-MM THK)	
M	4	1	**8T-4136**	2	BOLT (M10X1.5X25-MM)	

M-METRIC PART

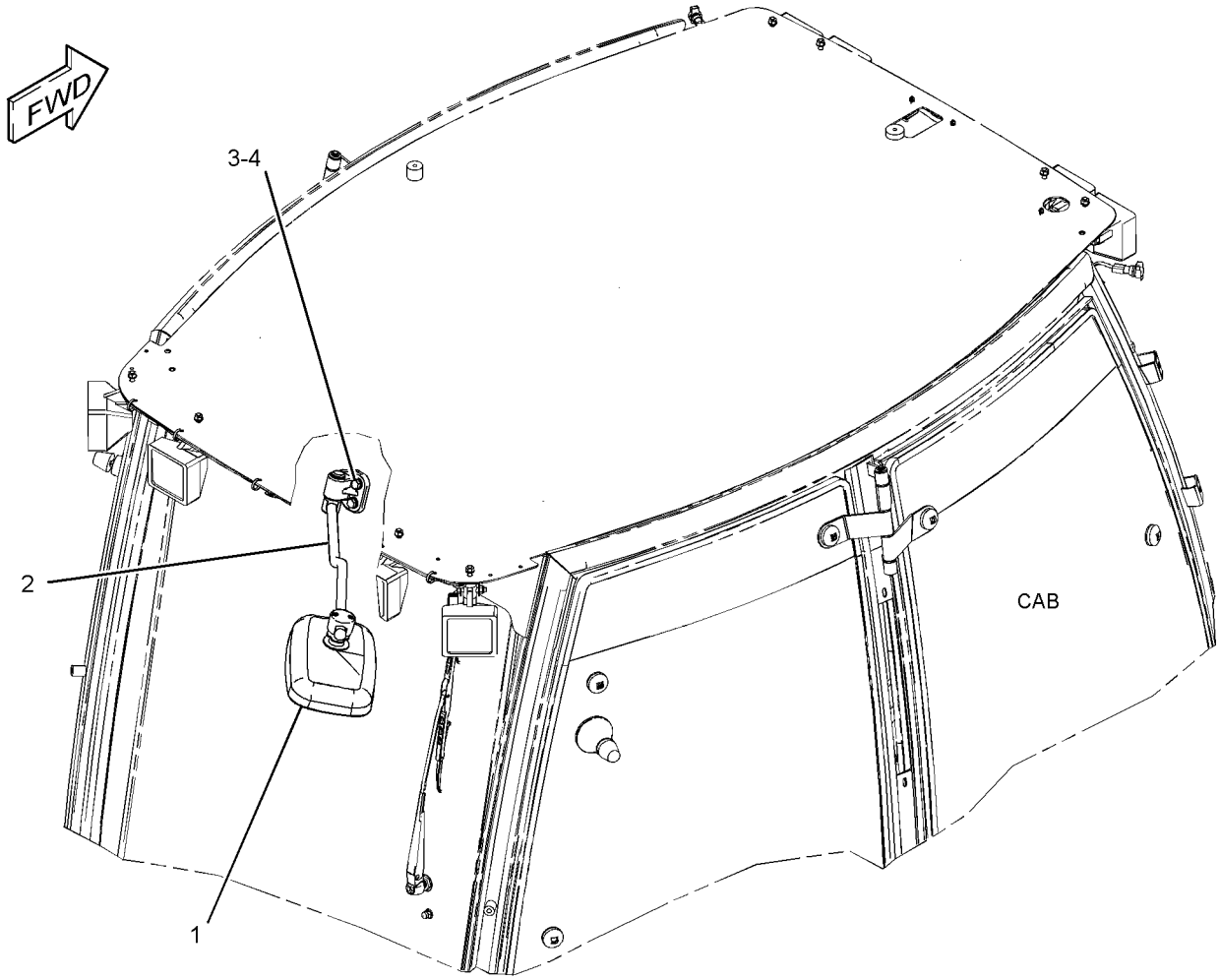

GRAPHIC #1 **<END>** g02108679

313-3752 MOTOR GP-WINDOW WIPER

S/N: SJW1-UP
12-VOLT
PART OF 353-1366 WIPER & WASHER GP-WINDOW
AN ATTACHMENT

SMCS-7305 **i03500282**

NOTE	REF NO	GRAPHIC REF	PART NUMBER	QTY	PART NAME 1 2 3 4 5 6 (PRODUCT LEVEL)	SEE PAGE
	1	1	**102-8806**	1	KIT-RECEPTACLE (8-PIN)	
					(INCLUDES RECEPTACLE AS & WEDGE)	
	2	1	**8T-8737**	1	PLUG-SEAL	
	3	1	**186-3735**	7	PIN-CONNECTOR (16-GA TO 18-GA)	
	4	1	**206-5823**	1	CAP (MOTOR)	
	5	1	**3F-9556**	1	LOCKWASHER	
M	6	1	**5C-7261**	1	NUT (M8X1.25-THD)	

M-METRIC PART

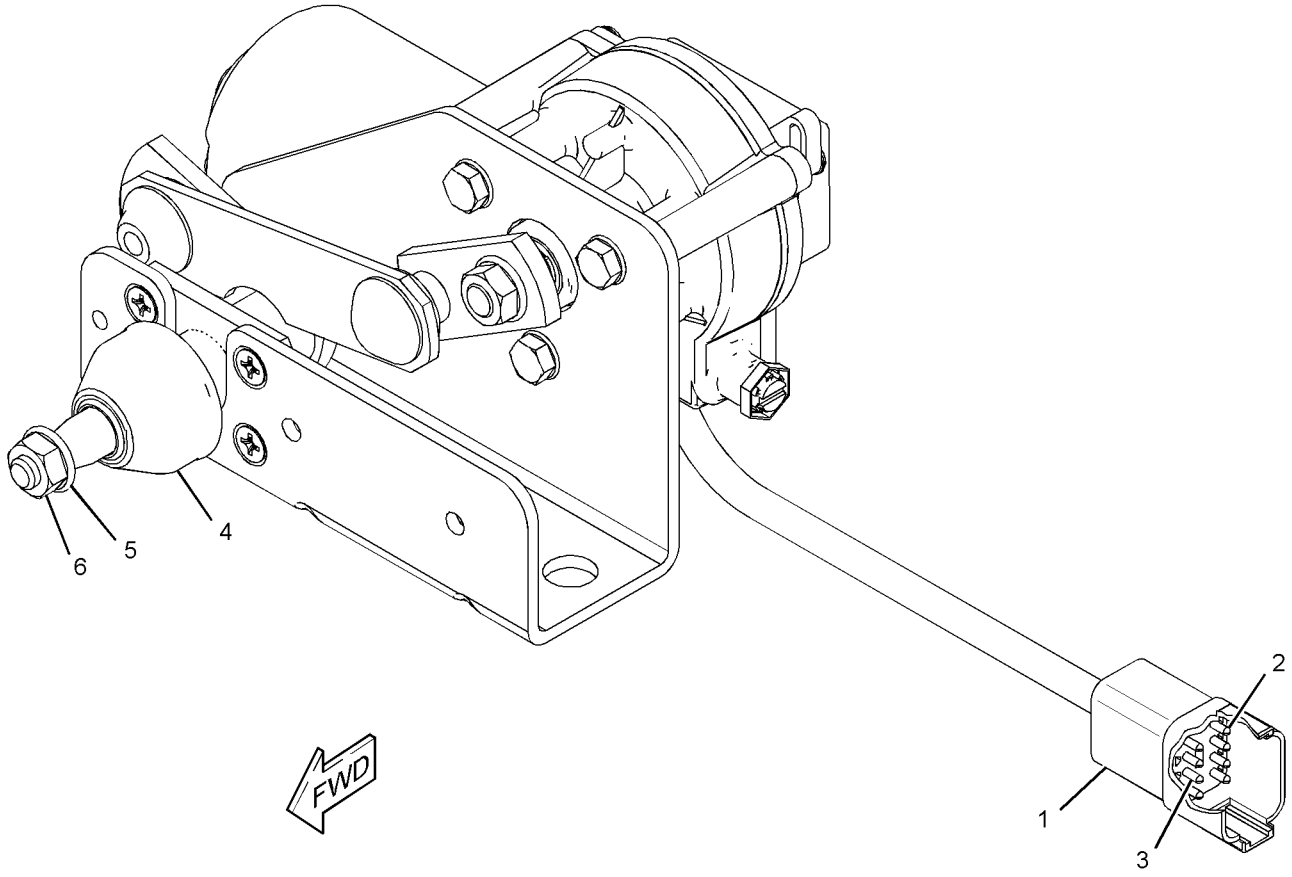

GRAPHIC #1 **<END>** g01570360

OPERATOR STATION

315-1318 MOTOR GP-WINDOW WIPER–REAR

S/N: SJW1-UP
PART OF 315-1272 WIPER GP-WINDOW
AN ATTACHMENT

SMCS-7305 **i04156381**

NOTE	REF NO	GRAPHIC REF	PART NUMBER	QTY	PART NAME 1 2 3 4 5 6 (PRODUCT LEVEL)	SEE PAGE
	1	1	**102-8804**	1	KIT-RECEPTACLE (4-PIN)	
					(INCLUDES RECEPTACLE AS & WEDGE)	
	2	1	**263-3823**	1	CAP-WIPER	
M	3	1	**5C-7261**	1	NUT (M8X1.25-THD)	
M	4	1	**8C-6437**	1	NUT (M16X1-THD)	

M-METRIC PART

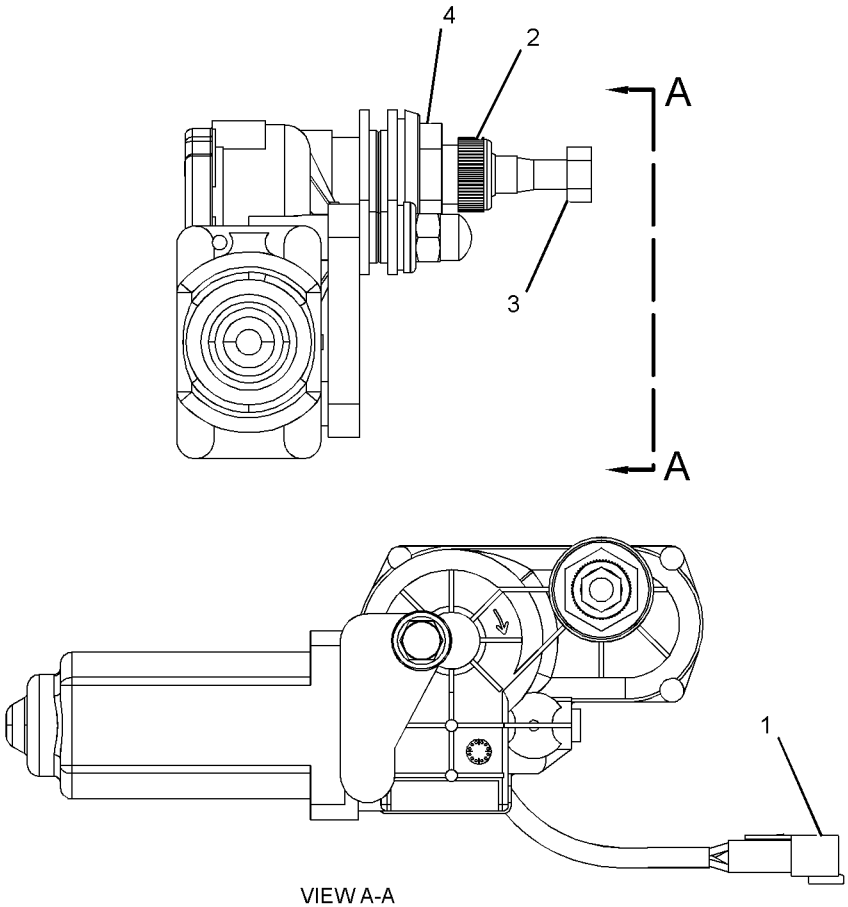

VIEW A-A

GRAPHIC #1 **<END>** g02351501

OPERATOR STATION

204-4248 MOUNTING GP-CAB

S/N: SJW1-UP
PART OF 353-1429 CAB AR
AN ATTACHMENT

SMCS-7301 **i04439890**

NOTE	REF NO	GRAPHIC REF	PART NUMBER	QTY	PART NAME 1 2 3 4 5 6 (PRODUCT LEVEL)	SEE PAGE
	1	1	**6Y-9930**	2	MOUNT AS	
	2	1	**118-2990**	2	MOUNT AS	
	3	1	**9W-6582**	2	SLEEVE	
M	4	1	**7X-2532**	2	BOLT (M20X2.5X130-MM)	
	5	1	**297-5849**	2	WASHER-HARD (17X75X10-MM THK)	
	6	1	**8T-4123**	4	WASHER (22X35X3.5-MM THK)	
M	7	1	**8T-4131**	2	NUT (M20X2.5-THD)	
M	8	1	**8T-4132**	2	NUT (M16X2-THD)	
	9	1	**335-1836**	2	BOLT-SPECIAL	
	10	1	**9W-6584**	2	WASHER (20.5X114X10-MM THK)	
	11	1	**9X-8257**	4	WASHER (17.5X30X3.5-MM THK)	
	12	1	**1L-6377**	2	BUTTON-PLUG	

M-METRIC PART

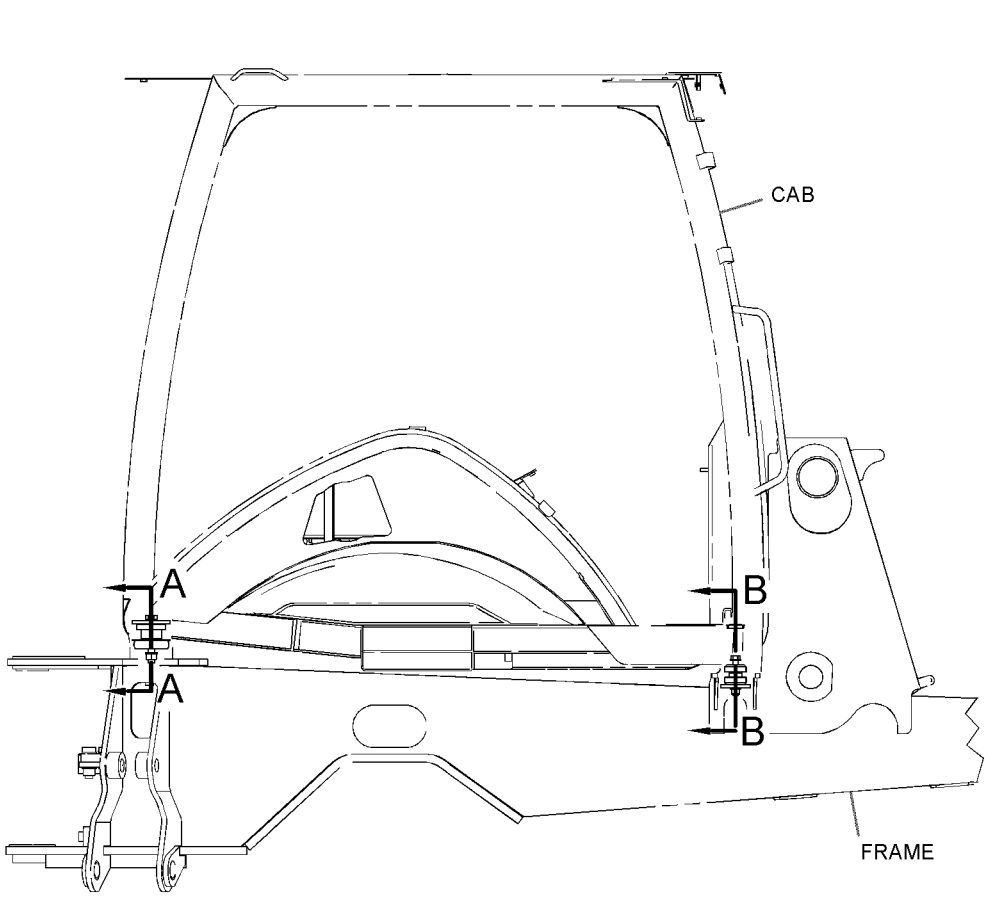

RIGHT SIDE VIEW

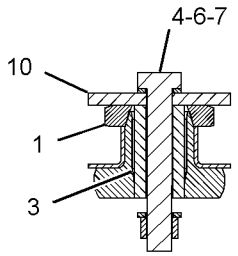

SECTION A-A

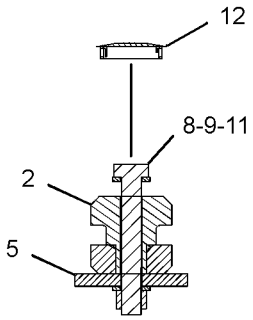

SECTION B-B

GRAPHIC #1 **<END>** g02820219

OPERATOR STATION

278-8223 MOUNTING GP-HYDRAULIC LOCKOUT

S/N: SJW1-UP
PART OF 341-3107 CONVERSION AR-ROADING
AN ATTACHMENT

SMCS-5001 **i03374169**

NOTE	REF NO	GRAPHIC REF	PART NUMBER	QTY	PART NAME 1 2 3 4 5 6 (PRODUCT LEVEL)	SEE PAGE
	1	1	**279-8725**	4	CLIP	
	2	1	**096-5962**	4	WASHER-HARD (3.4X7X0.8-MM THK)	
M	3	1	**155-4098**	4	SCREW-BUTTON HEAD (M3X0.5X1-MM)	
M	4	1	**3C-6969**	4	NUT (M3X0.5-THD)	

M-METRIC PART

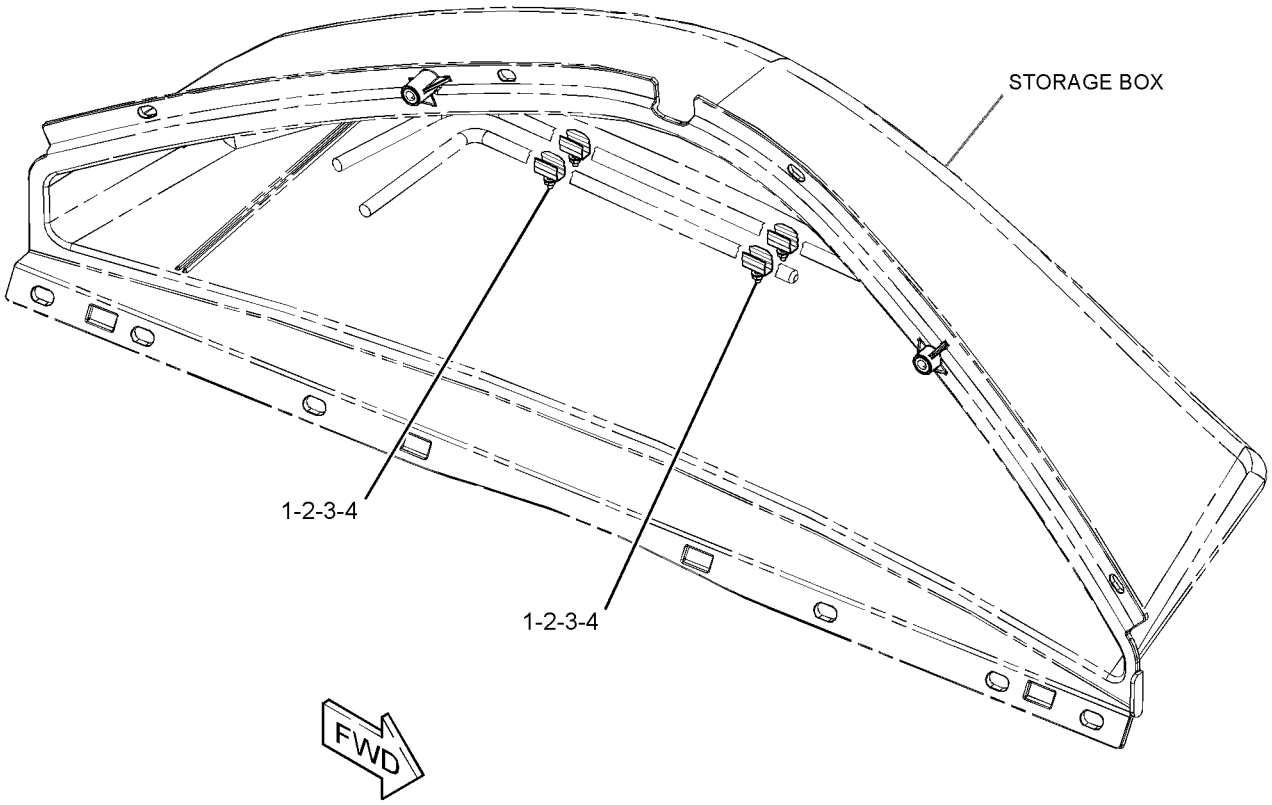

GRAPHIC #1 **<END>** g01792393

OPERATOR STATION

209-3378 PEDAL GP-GOVERNOR

S/N: SJW1-UP

PART OF 341-6719 CONTROL GP-GOVERNOR

AN ATTACHMENT

SMCS-1265 **i03592816**

NOTE	REF NO	GRAPHIC REF	PART NUMBER	QTY	PART NAME 1 2 3 4 5 6 (PRODUCT LEVEL)	SEE PAGE
M	1	1	**129-3178**	1	LOCKNUT (M6X1-THD)	
M	2	1	**5C-7261**	1	NUT (M8X1.25-THD)	
M	3	1	**5C-9553**	1	BOLT (M6X1X16-MM)	
	4	1	**8T-4205**	1	WASHER-HARD (7.2X14.5X2-MM THK)	
M	5	1	**095-0641**	4	BOLT-SOCKET HEAD (M4X0.7X10-MM)	
	6	1	**243-0063**	1	BOOT	
	7	1	**3F-9556**	2	LOCKWASHER	
	8	1	**6V-8186**	2	NUT-FULL (5/16-24-THD)	
	9	1	**8T-6902**	3	CLIP	
M	10	1	**9X-2842**	1	BOLT (M8X1.25X45-MM)	
					AVAILABLE REPAIR KIT(S):	
			164-1154	1	KIT-SERVICE	
					(INCLUDES CLAMP & SCREWS)	
			243-0062	1	KIT-REPAIR (GOVERNOR PEDAL)	
					(INCLUDES SHAFT, CLIPS & BEARINGS)	

M-METRIC PART

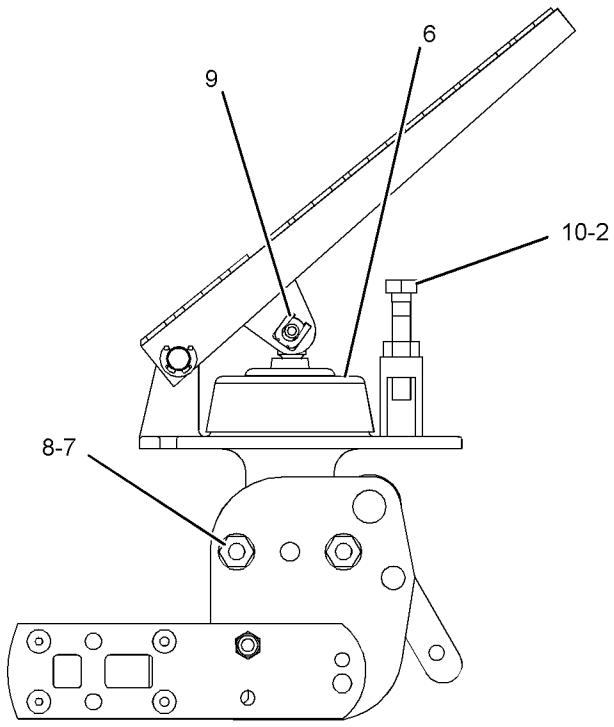

RIGHT SIDE VIEW

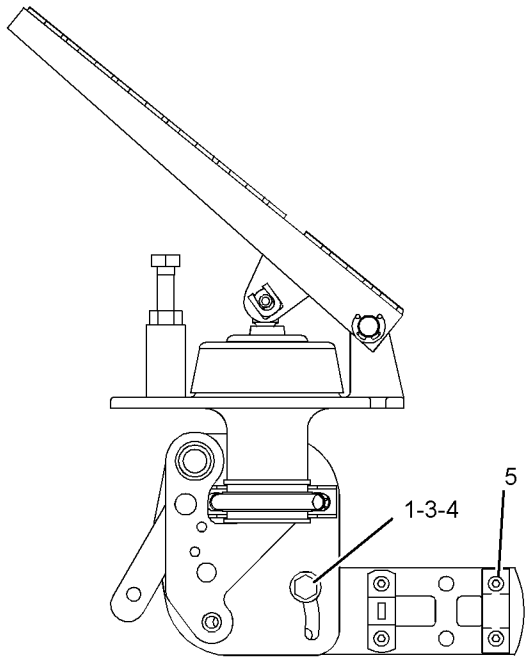

LEFT SIDE VIEW

GRAPHIC #1 **<END>** g01081364

OPERATOR STATION

334-7225 ROOF GP-CAB

S/N: SJW1-UP
PART OF 353-1429 CAB AR
AN ATTACHMENT

SMCS-7301 **i03686780**

NOTE	REF NO	GRAPHIC REF	PART NUMBER	QTY	PART NAME 1 2 3 4 5 6 (PRODUCT LEVEL)	SEE PAGE
	1	1	**193-5915**	2	PLUG	
	2	1	**334-7227**	1	CAP AS	
	3	1	**341-5749**	5	SPACER (8.5X12.7X4.3-MM THK)	
	4	1	**341-5750**	5	PLATE	
	5	1	**8C-9987**	3	WASHER (8.3X28X2.5-MM THK)	
M	6	1	**8T-4189**	8	BOLT (M8X1.25X20-MM)	
B	7	1	**193-5914**	2	PLUG	
	8	1	**8T-4224**	5	WASHER-HARD (8.8X16X2-MM THK)	

B-USE AS REQUIRED
M-METRIC PART

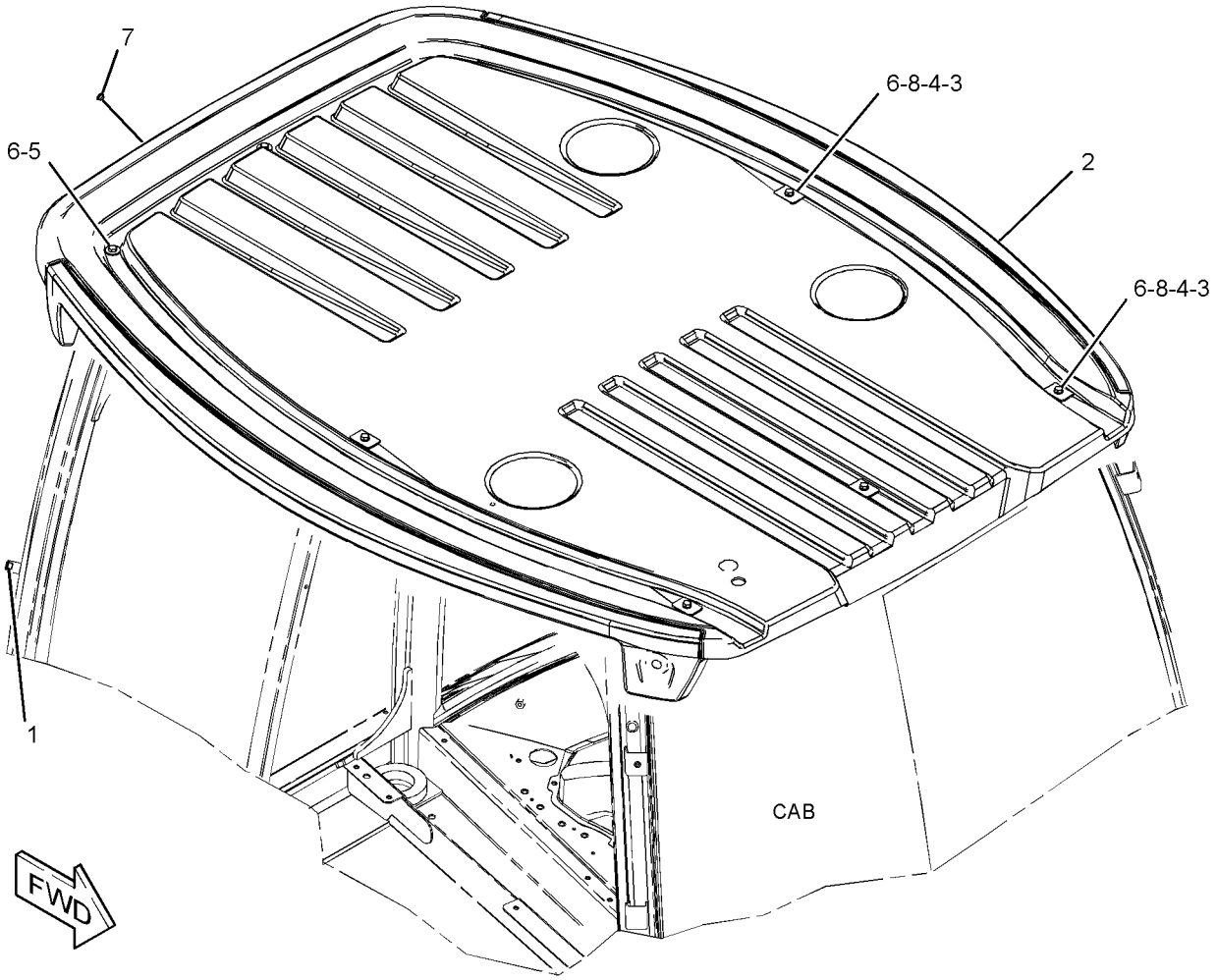

GRAPHIC #1 **<END>** g01983395

OPERATOR STATION

324-2896 SEAT GP–CLOTH

S/N: SJW1-UP

PART OF 314-4290 SEAT GP-SUSPENSION

AN ATTACHMENT

SMCS-7312, 7321, 7324, 7336 **i04004956**

NOTE	REF NO	GRAPHIC REF	PART NUMBER	QTY	PART NAME 1 2 3 4 5 6 (PRODUCT LEVEL)	SEE PAGE
	1	1	**1V-0358**	4	WASHER (8.6X33.3X1.2-MM THK)	
	2	1	**164-1244**	1	CUSHION AS-BACK	
	3	1	**180-5796**	1	CUSHION AS-SEAT	
	4	1	**197-4521**	1	KIT-KNOB (RECLINER)	
	5	1	**203-9858**	1	SPACER (8.5X20X12-MM THK)	
	6	1	**220-3790**	1	ARMREST AS (RH)	
	7	1	**220-3791**	1	ARMREST AS (LH)	
					EACH ARMREST AS INCLUDES	
M		1	**6A-9083**	1	SCREW-MACHINE (M6X1X15-MM)	
	8	1	**119-3859**	2	SCREW-PAN HEAD (10-16X0.75-IN)	
Y	9	1	**324-2897**	1	KIT-SEAT FRAME	577
	10	1	**324-2900**	1	BRACKET	
	11	1	**324-2901**	1	BRACKET	
	12	1	**0S-1595**	2	BOLT (1/2-13X1.25-IN)	
	13	1	**1K-6872**	2	LOCKNUT (1/2-13-THD)	
	14	1	**5P-8245**	2	WASHER-HARD (13.5X25.5X3-MM THK)	
M	15	1	**6V-9189**	1	LOCKNUT (M8X1.25-THD)	
M	16	1	**8C-6431**	1	SCREW-FLAT HEAD	
M	17	1	**8T-4908**	4	BOLT (M8X1.25X25-MM)	
	18	1	**8T-9501**	2	SCREW (10-16X0.75-IN)	

M-METRIC PART
Y-SEPARATE ILLUSTRATION

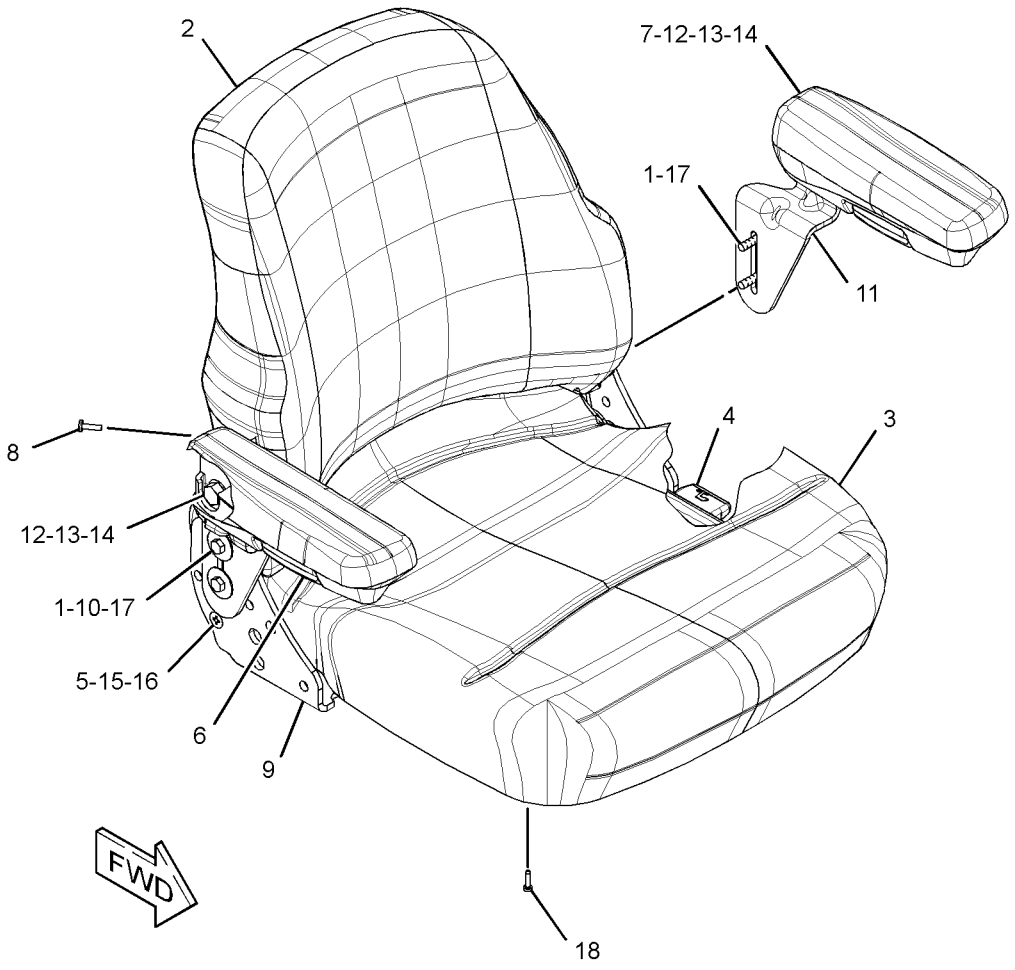

GRAPHIC #1 **<END>** g01625312

OPERATOR STATION

314-4290 SEAT GP-SUSPENSION—CLOTH

S/N: SJW1-UP

PART OF 315-9890 SEAT GP-SUSPENSION

AN ATTACHMENT

SMCS-7324, 7336 **i04004953**

NOTE	REF NO	GRAPHIC REF	PART NUMBER	QTY	PART NAME 1 2 3 4 5 6 (PRODUCT LEVEL)	SEE PAGE
	1	1	**0S-1594**	4	BOLT (3/8-16X1-IN)	
	2	1	**2K-4973**	4	LOCKNUT (3/8-16-THD)	
	3	1	**308-3554**	8	SPACER (9.9X28.4X3.2-MM THK)	
	4	1	**322-9480**	1	KIT-SEAT BELT (RETRACTABLE, 2-IN)	
					(INCLUDES SPACER, WASHERS & BOLTS)	
	5	1	**322-9481**	1	BASE-SEAT	
Y	6	1	**322-9486**	1	SWIVEL GP-SEAT	606
Y	7	1	**324-2890**	1	SUSPENSION GP-SEAT	604
Y	8	1	**324-2896**	1	SEAT GP (CLOTH)	599

Y-SEPARATE ILLUSTRATION

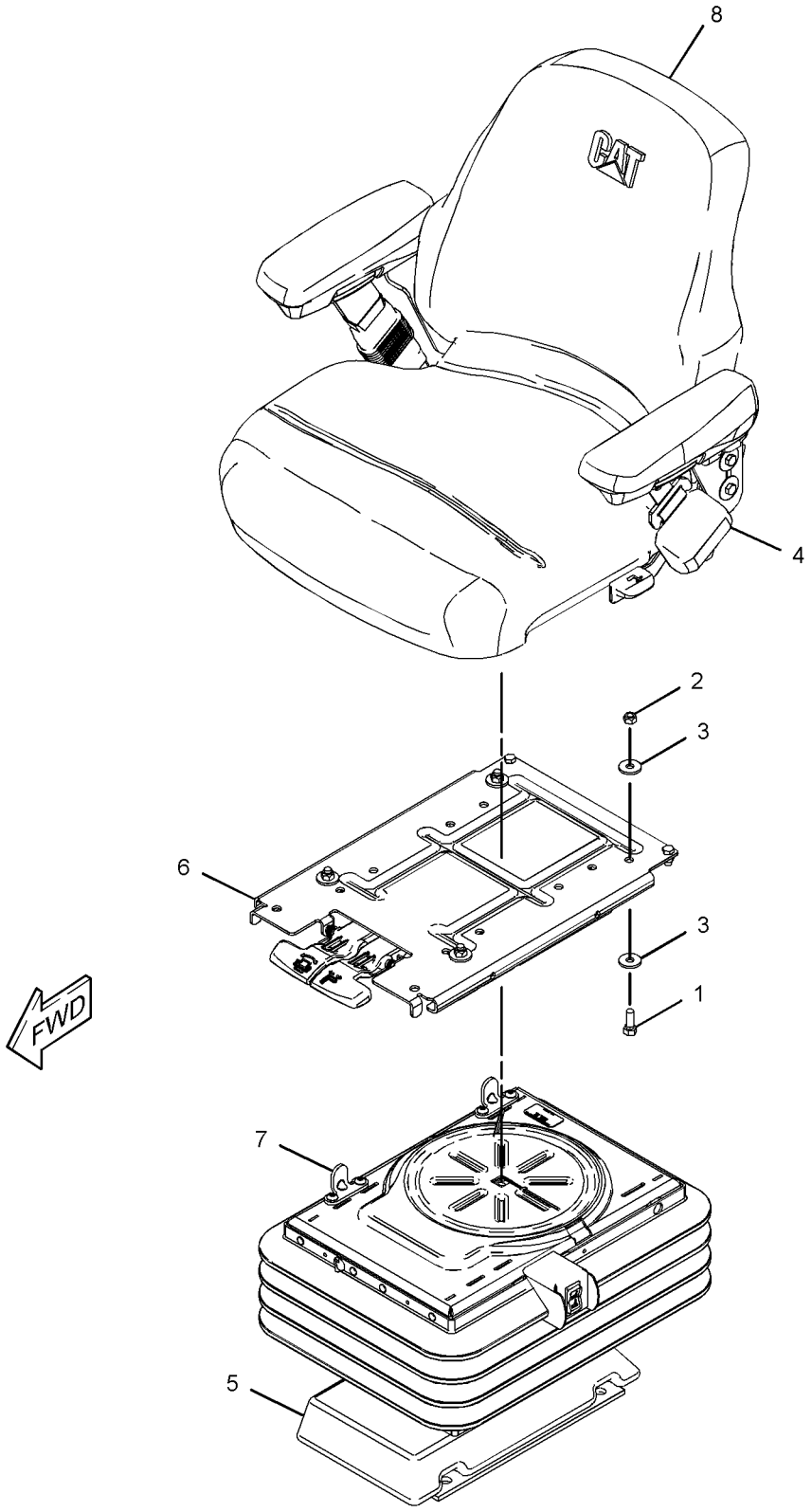

GRAPHIC #1 **<END>** g01625141

315-9890 SEAT GP-SUSPENSION–CLOTH

S/N: SJW1-UP

PART OF 374-6852, 374-6854 CAB AR

AN ATTACHMENT

SMCS-7324, 7336 **i03164824**

NOTE	PART NUMBER	QTY	PART NAME 1 2 3 4 5 6 (PRODUCT LEVEL)	SEE PAGE
Y	**314-4290**	1	SEAT GP-SUSPENSION (CLOTH)	601
M	**8T-4139**	4	BOLT (M12X1.75X30-MM)	
	3S-2093	1	STRAP-CABLE	
	8T-4223	4	WASHER-HARD (13.5X25.5X3-MM THK)	

M-METRIC PART
Y-SEPARATE ILLUSTRATION

<END>

OPERATOR STATION

324-2890 SUSPENSION GP-SEAT—DELUXE, CLOTH

S/N: SJW1-UP
PART OF 314-4290 SEAT GP-SUSPENSION
AN ATTACHMENT

SMCS-7312, 7324 **i04253669**

NOTE	REF NO	GRAPHIC REF	PART NUMBER	QTY	PART NAME 1 2 3 4 5 6 (PRODUCT LEVEL)	SEE PAGE
	1	1	**164-1230**	4	BEARING	
	2	1	**204-1682**	4	STRAP-CABLE	
	3	1	**304-1021**	4	ROLLER	
	4	1	**304-1023**	2	BUMPER	
	7	1	**305-4353**	2	SPACER (6.4X24X6-MM THK)	
	8	1	**313-3280**	2	NUT (M6X1-THD)	
	9	1	**321-5776**	1	RING-RETAINING	
	10	1	**322-9507**	2	SHAFT	
	11	1	**322-9509**	2	BRACKET-STOP	
	12	1	**345-4230**	1	BASE-SEAT	
	13	1	**324-2889**	1	HOUSING-UPPER	
	14	1	**366-2574**	1	ARM AS-SCISSORS	
	15	1	**324-2892**	2	PLATE	
	16	1	**324-2893**	2	STOP	
Y	17	1	**324-2894**	1	KIT-SEAT SUSPENSION (AIR)	578
	18	1	**324-2895**	1	SWITCH-TOGGLE (SUSPENSION SEAT)	
	19	1	**328-7742**	1	SHOCK ABSORBER	
	20	1	**031-4155**	2	LOCKNUT (5/16-18-THD)	
M	21	1	**129-3178**	1	LOCKNUT (M6X1-THD)	
	22	1	**1B-2705**	2	BOLT-CARRIAGE (5/16-18X0.75-IN)	
	23	1	**2K-4973**	2	LOCKNUT (3/8-16-THD)	
	24	1	**4K-9890**	2	WASHER (8.6X17.3X1.6-MM THK)	
M	25	1	**6V-7743**	4	LOCKNUT (M6X1-THD)	
M	26	1	**9X-2044**	4	SCREW-TRUSS HEAD (M6X1X16-MM)	
	27	1	**366-2575**	1	PIN	

M-METRIC PART
Y-SEPARATE ILLUSTRATION

324-2890 SUSPENSION GP-SEAT *(contd.)* i04253669

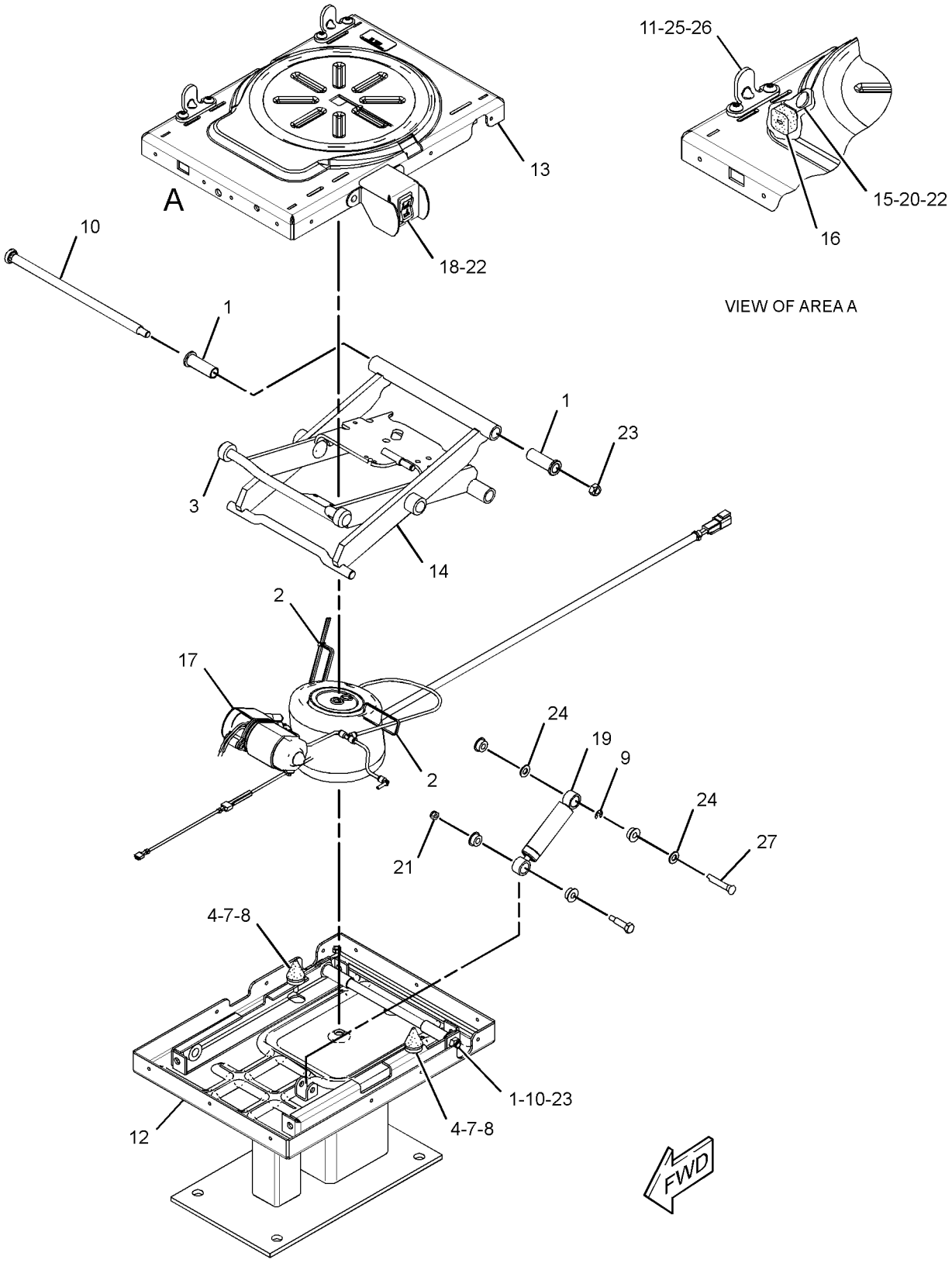

GRAPHIC #1 **<END>** g02458839

OPERATOR STATION

322-9486 SWIVEL GP-SEAT

S/N: SJW1-UP
PART OF 314-4290 SEAT GP-SUSPENSION
AN ATTACHMENT

SMCS-7312, 7321 **i04004929**

NOTE	REF NO	GRAPHIC REF	PART NUMBER	QTY	PART NAME 1 2 3 4 5 6 (PRODUCT LEVEL)	SEE PAGE
	1	1	**161-9283**	1	WASHER (19.8X31.8X1.6-MM THK)	
	2	1	**161-9285**	1	NUT (3/4-10-THD)	
	3	1	**161-9288**	1	SHAFT-PIVOT	
	5	1	**215-1242**	1	RING	
	6	1	**260-0030**	1	SHAFT-PIVOT	
	7	1	**260-0033**	1	SPRING-TORSION	
	8	1	**260-0034**	1	SPRING-RETURN	
	9	1	**260-0035**	1	SPRING-RETURN	
	10	1	**260-0041**	1	BOLT (3/4-10X1.42-IN)	
	11	1	**260-0057**	1	LATCH AS-SLIDE	
	12	1	**313-5637**	2	BOLT (5/16-18X0.75-IN)	
	13	1	**322-9490**	1	HANDLE (SWIVEL)	
	14	1	**322-9491**	1	HANDLE (SLIDE)	
	15	1	**322-9492**	1	SPRING	
	16	1	**322-9493**	1	PLATE AS-SLIDE	
	17	1	**322-9494**	1	KIT-BLOCK	
					(INCLUDES SLIDER BLOCKS & SETSCREWS)	
	18	1	**322-9495**	1	PLATE AS-UPPER	
	19	1	**322-9496**	1	LATCH (SWIVEL)	
	20	1	**031-4155**	2	LOCKNUT (5/16-18-THD)	
	21	1	**2L-5893**	1	PIN-SPRING	
	22	1	**3B-4631**	1	PIN-COTTER	
	23	1	**4B-9784**	8	BALL	
	24	1	**4B-4283**	1	WASHER (20.6X37.5X3.5-MM THK)	
	25	1	**8S-7803**	3	RING-RETAINING	
	26	1	**9R-5708**	2	LOCKWASHER	

322-9486 SWIVEL GP-SEAT *(contd.)* **i04004929**

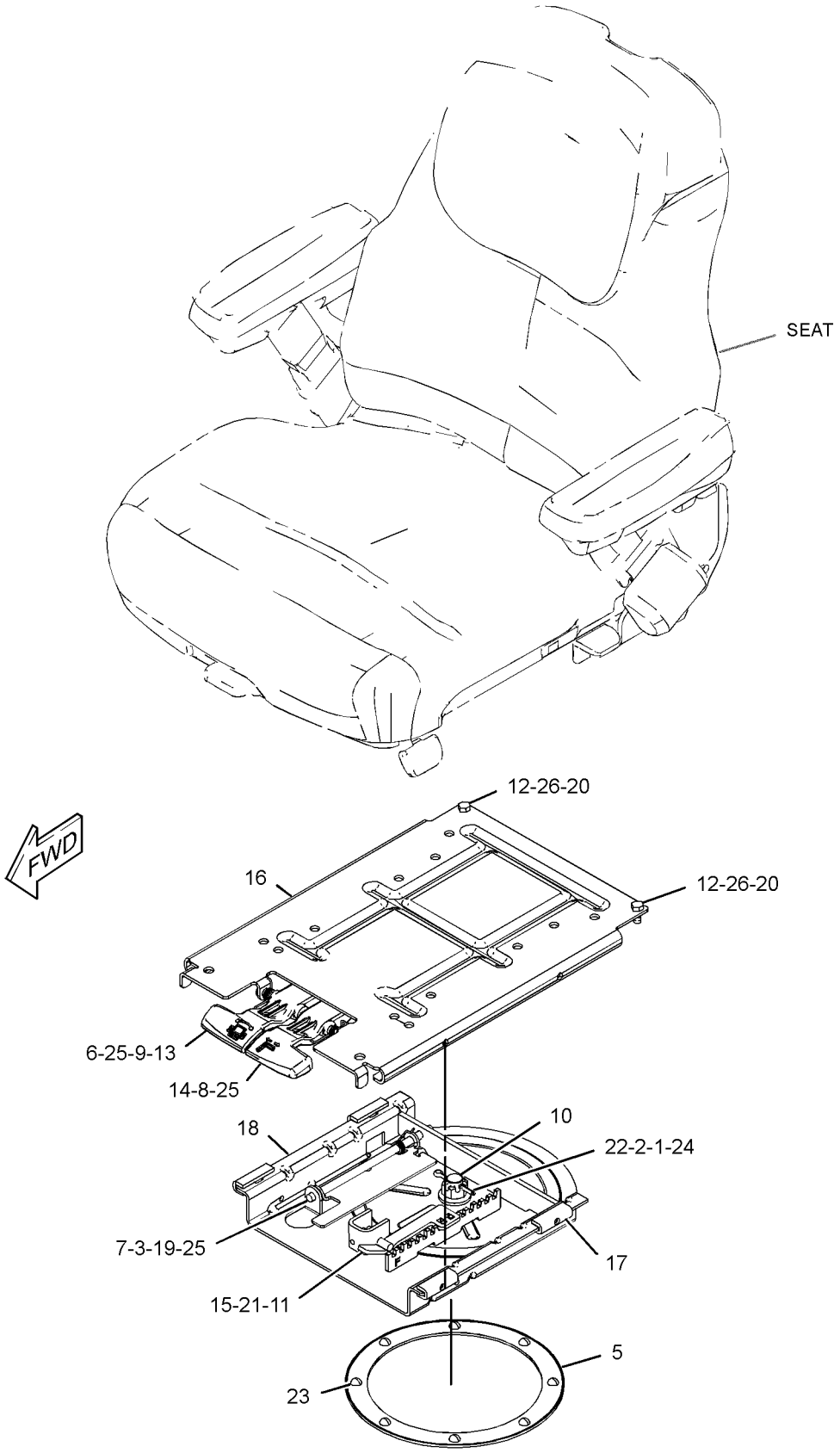

GRAPHIC #1

<END>

g01623695

OPERATOR STATION

206-1857 VISOR GP-CAB

S/N: SJW1-UP
PART OF 353-1429 CAB AR
AN ATTACHMENT

SMCS-7301 **i02704721**

NOTE	REF NO	GRAPHIC REF	PART NUMBER	QTY	PART NAME 1 2 3 4 5 6 (PRODUCT LEVEL)	SEE PAGE
CE	1	1	**8C-3681**		HOSE (2.5-CM EACH)	
	2	1	**9R-3205**	1	VISOR AS	
C	3	1	**5P-9297**	2	CLIP	

C-CHANGE FROM PREVIOUS TYPE
E-ORDER BY THE CENTIMETER

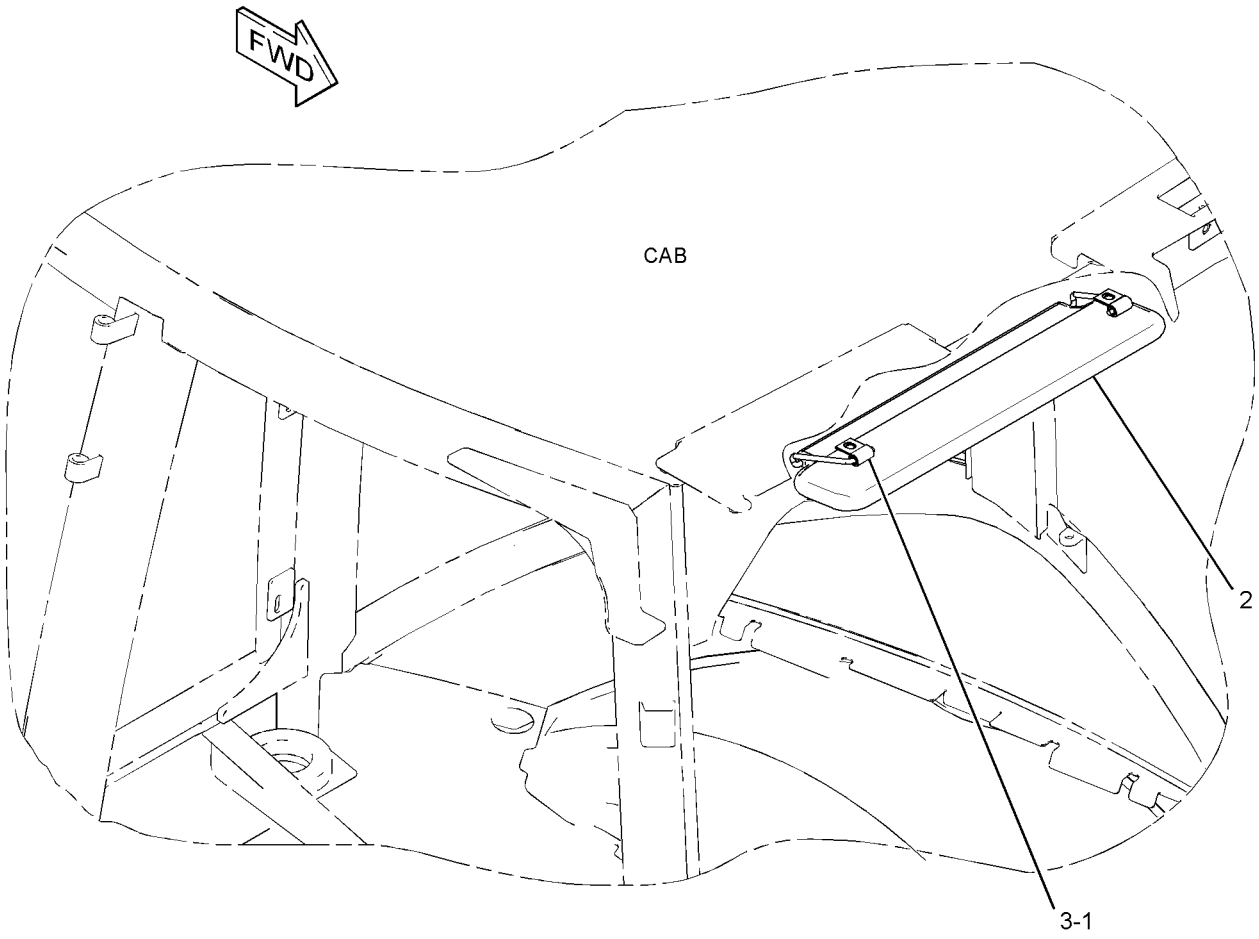

GRAPHIC #1 **<END>** g01384970

OPERATOR STATION

315-1270 WINDOW GP-CAB—REAR

S/N: SJW1-UP
PART OF 356-4104 CAB GP
AN ATTACHMENT

SMCS-7310 **i03651202**

NOTE	REF NO	GRAPHIC REF	PART NUMBER	QTY	PART NAME 1 2 3 4 5 6 (PRODUCT LEVEL)	SEE PAGE
	1	1	**5C-6588**	2	WASHER (13X22X2-MM THK)	
	2	1	**7H-3937**	4	LOCKWASHER (EXTERNAL TOOTH)	
	3	1	**146-4023**	2	PLUG	
	4	1	**167-8182**	2	BUMPER	
	5	1	**180-3748**	8	INSERT-THREADED (M8X1.25-THD)	
Y	6	1	*311-3639*	1	WIRING GP-WIPER (REAR)	188
Y	7	1	*315-1272*	1	WIPER GP-WINDOW (REAR)	615
	8	1	**315-1277**	1	FRAME AS	
	9	1	**315-1282**	1	PLATE AS	
	10	1	**315-1299**	1	GLASS (REAR)	
	11	1	**315-1300**	2	ROLLER	
	12	1	**315-1301**	2	ROLLER	
	13	1	**315-1302**	1	HANDLE GP-DOOR (LH)	
	14	1	**315-1303**	1	HANDLE GP-DOOR (RH)	
					(EACH HANDLE GP INCLUDES)	
		1	**317-4261**	1	AXLE	
		1	**317-4262**	1	SPRING	
		1	**317-4263**	1	PIN	
	15	1	**315-1304**	2	PIVOT	
	16	1	**315-1306**	1	BRACKET	
	17	1	**315-1311**	2	SPRING-GAS	
	18	1	**315-1312**	2	CAP	
	19	1	**315-1313**	1	SEAL	
	20	1	**315-1314**	1	SEAL	
	21	1	**344-1004**	1	SEAL	
	22	1	**316-8228**	2	SCREW-BUTTON HEAD (M8X1.25X45-MM)	
	23	1	**323-6066**	1	SEAL	
	24	1	**325-1968**	2	PLATE	
	25	1	**325-9315**	2	CORNER	
	26	1	**326-6389**	1	BRACKET AS	
	27	1	**335-2224**	2	FOAM	
M	28	1	**131-3540**	2	LOCKNUT (M8X1.25-THD)	
M	29	1	**172-4018**	8	BOLT-SOCKET HEAD (M8X1.25X35-MM)	
	30	1	**3F-9556**	4	LOCKWASHER	
	31	1	**4D-6433**	2	WASHER-HARD (12X25.5X2-MM THK)	
M	32	1	**5C-7261**	8	NUT (M8X1.25-THD)	
	33	1	**5P-4116**	2	WASHER-HARD (8.8X20.5X2-MM THK)	
M	34	1	**8T-0389**	2	LOCKNUT (M10X1.5-THD)	
M	35	1	**8T-4133**	2	NUT (M10X1.5-THD)	
	36	1	**9P-2553**	2	SPACER (6.83X10.28X11-MM THK)	
M	37	1	**9X-2045**	2	SCREW-TRUSS HEAD (M6X1X20-MM)	
E	38	1	**9X-2092**		TRIM-EDGE (88-CM)	
	39	1	**6C-9089**	2	NUT-CAP	

E-ORDER BY THE CENTIMETER
M-METRIC PART
Y-SEPARATE ILLUSTRATION

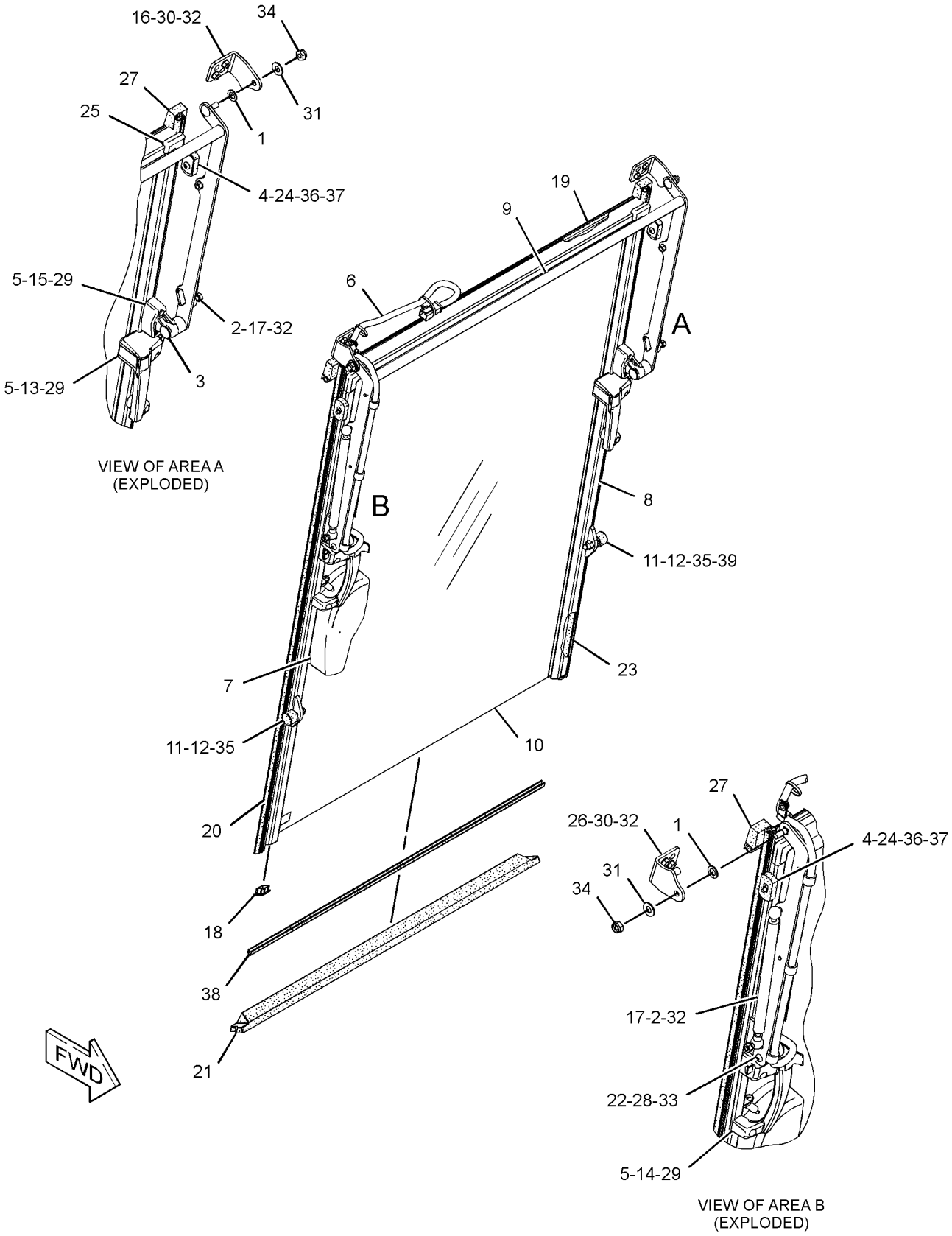

GRAPHIC #1 **<END>** g01960733

OPERATOR STATION

333-9901 WINDOW GP-DOOR–LH

S/N: SJW1-UP
PART OF 329-1168 DOOR GP-CAB
AN ATTACHMENT

SMCS-7308, 7310 **i04354069**

NOTE	REF NO	GRAPHIC REF	PART NUMBER	QTY	PART NAME 1 2 3 4 5 6 (PRODUCT LEVEL)	SEE PAGE
E	1	1	**148-5353**		SEAL (354-CM)	
	2	1	**100-7608**	1	HANDLE (LH)	
	3	1	**129-8542**	5	RETAINER	
	4	1	**129-8545**	6	WASHER (13X40X3-MM THK)	
M	5	1	**136-4192**	3	BOLT (M6X1X35-MM)	
	6	1	**154-5423**	2	SPACER (6.6X12.7X17-MM THK)	
	7	1	**205-9587**	1	GLASS (LH)	
	8	1	**205-9590**	1	HINGE (UPPER)	
	9	1	**205-9591**	1	HINGE (LOWER)	
Y	10	1	**299-6986**	1	LATCH GP-CAB DOOR & WINDOW (LH)	581
	11	1	*330-0427*	1	LATCH GP (LH)	
M		1	**6V-7743**	2	LOCKNUT (M6X1-THD)	
M		1	**9X-2045**	2	SCREW-TRUSS HEAD (M6X1X20-MM)	
		1	**143-2827**	1	SPRING	
		1	**330-0422**	2	GASKET	
M	12	1	**6V-7743**	2	LOCKNUT (M6X1-THD)	

E-ORDER BY THE CENTIMETER
M-METRIC PART
Y-SEPARATE ILLUSTRATION

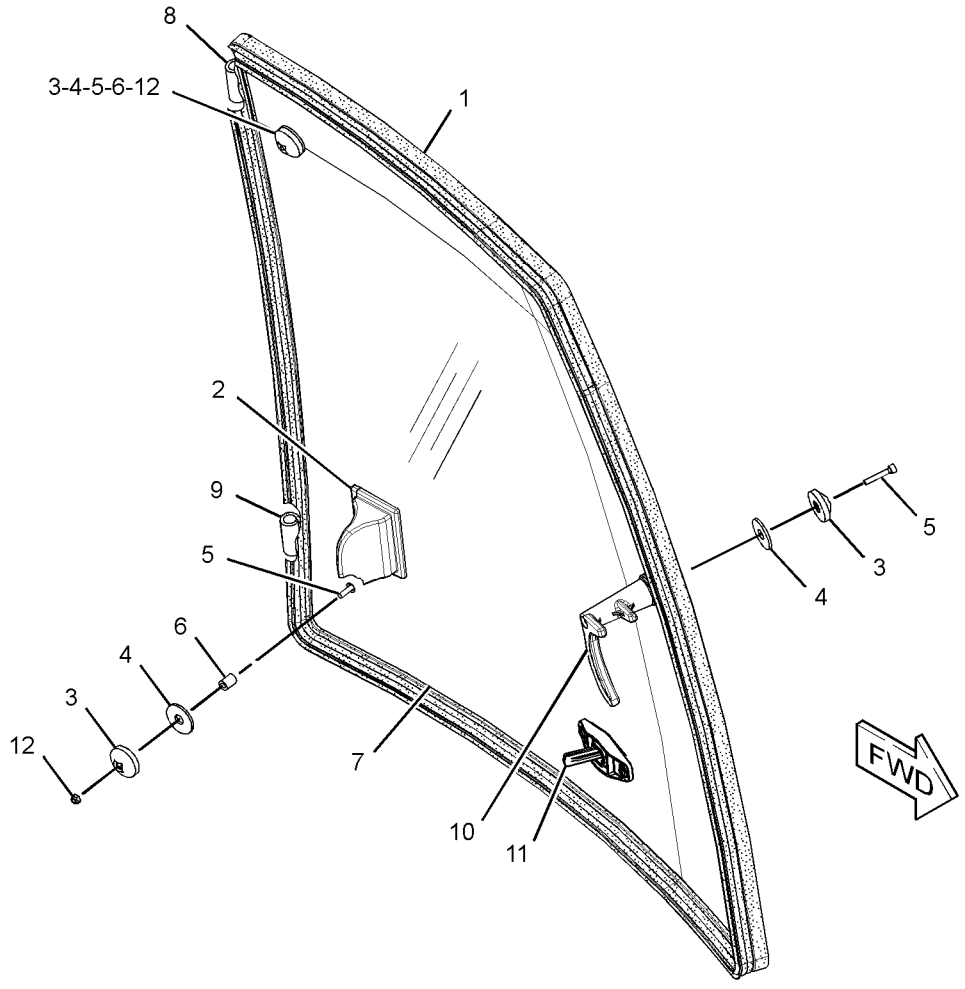

GRAPHIC #1 **<END>** g02512736

OPERATOR STATION

333-9902 WINDOW GP-DOOR–RH

S/N: SJW1-UP
PART OF 329-1167 DOOR GP-CAB
AN ATTACHMENT

SMCS-7308, 7310 **i04354070**

NOTE	REF NO	GRAPHIC REF	PART NUMBER	QTY	PART NAME 1 2 3 4 5 6 (PRODUCT LEVEL)	SEE PAGE
E	1	1	**148-5353**		SEAL (354-CM)	
	2	1	**100-7608**	1	HANDLE (RH)	
	3	1	**129-8542**	5	RETAINER	
	4	1	**129-8545**	6	WASHER (13X40X3-MM THK)	
M	5	1	**136-4192**	3	BOLT (M6X1X35-MM)	
	6	1	**154-5423**	2	SPACER (6.6X12.7X17-MM THK)	
	7	1	**205-9597**	1	GLASS (RH)	
	8	1	**205-9614**	1	HINGE (LOWER)	
	9	1	**205-9615**	1	HINGE (UPPER)	
Y	10	1	**299-6985**	1	LATCH GP-CAB DOOR & WINDOW (RH)	580
	11	1	*330-0428*	1	LATCH GP (RH)	
M		1	**6V-7743**	2	LOCKNUT (M6X1-THD)	
M		1	**9X-2045**	2	SCREW-TRUSS HEAD (M6X1X20-MM)	
		1	**143-2827**	1	SPRING	
		1	**330-0422**	2	GASKET	
M	12	1	**6V-7743**	2	LOCKNUT (M6X1-THD)	

E-ORDER BY THE CENTIMETER
M-METRIC PART
Y-SEPARATE ILLUSTRATION

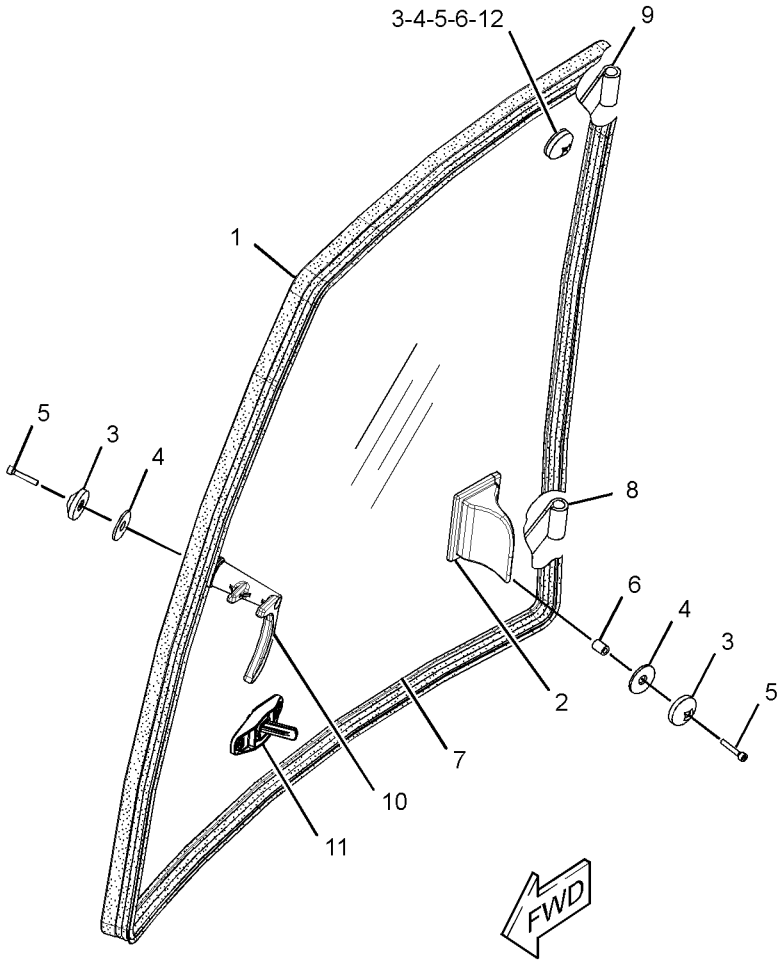

GRAPHIC #1 **<END>** g02512776

OPERATOR STATION

353-1366 WIPER & WASHER GP-WINDOW

S/N: SJW1-UP
PART OF 353-1429 CAB AR
AN ATTACHMENT

SMCS-7305, 7306 **i04611431**

NOTE	REF NO	GRAPHIC REF	PART NUMBER	QTY	PART NAME 1 2 3 4 5 6 (PRODUCT LEVEL)	SEE PAGE
E	1	1	**144-0195**		HOSE (72-CM)	
E	1A	1	**144-0195**		HOSE (21-CM)	
E	1B	1	**144-0195**		HOSE (52-CM)	
E	1C	1	**144-0195**		HOSE (40-CM)	
E	1D	1	**144-0195**		HOSE (42.5-CM)	
	2	1	**3S-2093**	10	STRAP-CABLE	
	3	1	**8T-1118**	1	NOZZLE AS-WASHER	
	4	1	**9R-3469**	2	DIAPHRAGM	
	5	1	**101-0745**	1	BLADE AS-WIPER (600-MM) (FRONT)	
	6	1	**121-6936**	1	CONNECTOR	
	7	1	**154-5410**	1	ARM-WINDOW WIPER	
	8	1	**214-4709**	1	SWITCH AS-ROCKER (WIPER, WASHER, REAR)	
		1	**111-7899**	1	GASKET	
	9	1	**276-8791**	1	CLIP	
	10	1	**283-3451**	2	CONNECTOR AS	
Y	11	1	**313-3752**	1	MOTOR GP-WINDOW WIPER (12-VOLT) (FRONT)	593
	12	1	**315-1284**	1	NOZZLE	
	13	1	**346-5168**	1	TANK AS-WINDOW WASHER	
E		1	**9X-6383**		SEAL (57-CM)	
	14	1	**5P-4116**	1	WASHER-HARD (8.8X20.5X2-MM THK)	
M	15	1	**6V-7357**	1	BOLT (M6X1X25-MM)	
M	16	1	**8T-4189**	1	BOLT (M8X1.25X20-MM)	
	17	1	**8T-4205**		WASHER-HARD (7.2X14.5X2-MM THK)	

E-ORDER BY THE CENTIMETER
M-METRIC PART
Y-SEPARATE ILLUSTRATION

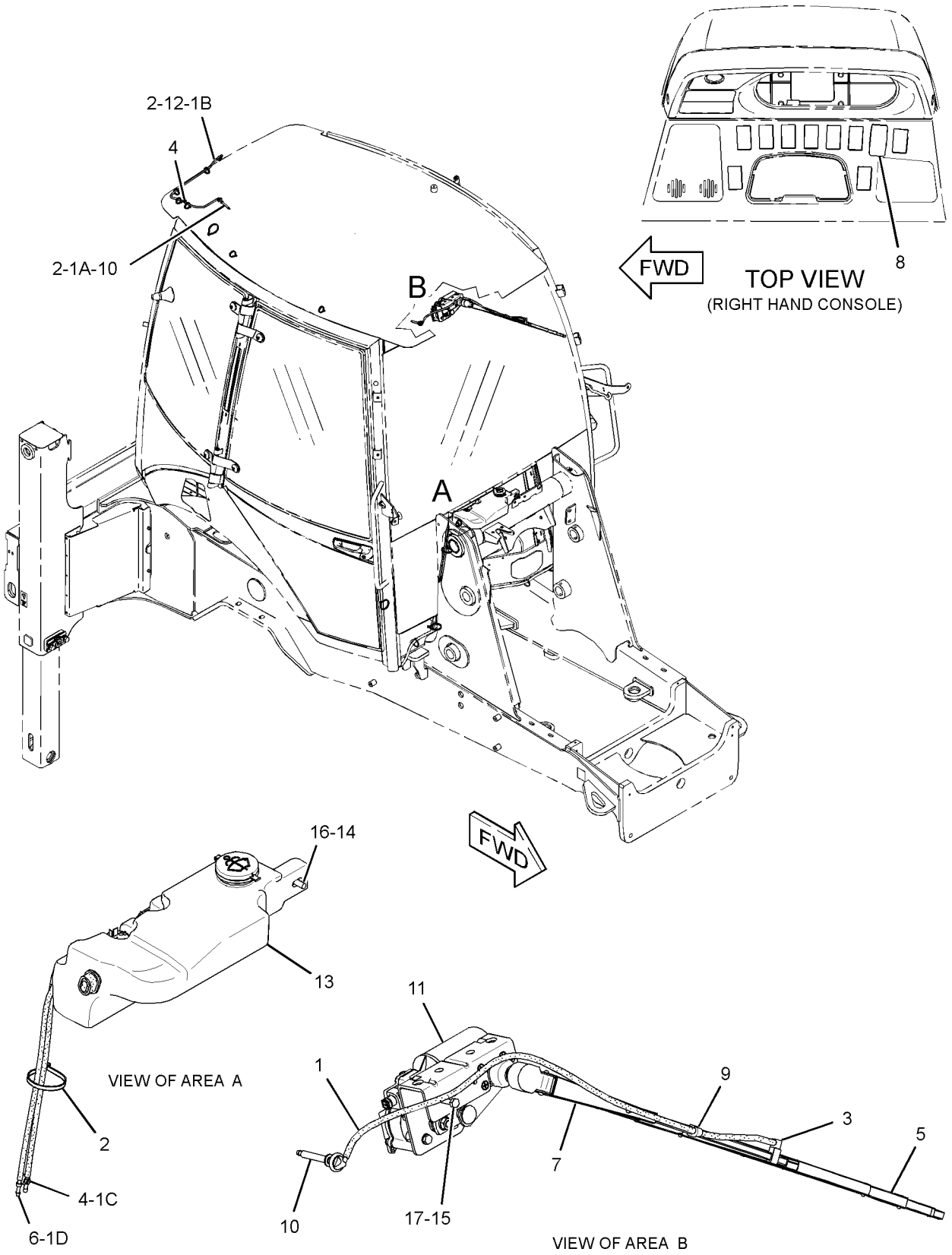

GRAPHIC #1 **<END>** g02807669

OPERATOR STATION

315-1272 WIPER GP-WINDOW–REAR

S/N: SJW1-UP
PART OF 315-1270 WINDOW GP-CAB
AN ATTACHMENT

SMCS-7305 **i04156382**

NOTE	REF NO	GRAPHIC REF	PART NUMBER	QTY	PART NAME 1 2 3 4 5 6 (PRODUCT LEVEL)	SEE PAGE
	1	1	**315-1316**	1	BLADE AS-WIPER (450-MM) (REAR)	
	2	1	**315-1317**	1	ARM GP-WINDOW WIPER (REAR)	
Y	3	1	**315-1318**	1	MOTOR GP-WINDOW WIPER (REAR)	594
	4	1	**315-1319**	1	COVER	
	5	1	**369-2189**	1	SHIM (0.5-MM THK)	

Y-SEPARATE ILLUSTRATION

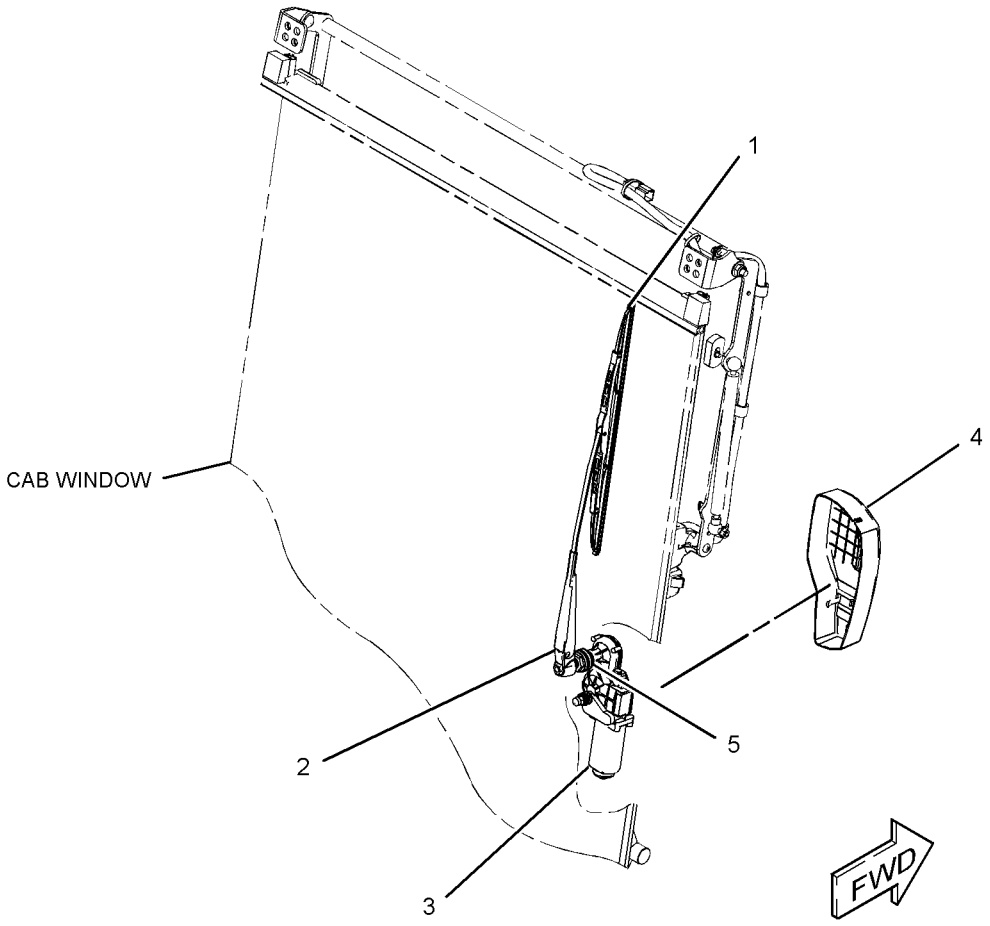

GRAPHIC #1 **<END>** g02351496

SERVICE EQUIPMENT AND SUPPLIES

367-5834 FILM GP

S/N: SJW1-UP

PART OF 367-5957 COMMON AR

SMCS-7405, 7557 **i04549342**

NOTE	REF NO	GRAPHIC REF	PART NUMBER	QTY	PART NAME 1 2 3 4 5 6 (PRODUCT LEVEL)	SEE PAGE
	1	1	**370-3941**	1	FILM-IDENTIFICATION (428F, LIFT ARM, RH)	
	2	1	**370-3957**	1	FILM-IDENTIFICATION (CAT, BOOM, RH)	
	3	1	**370-3940**	1	FILM-IDENTIFICATION (428F, LIFT ARM, LH)	
	4	1	**370-3956**	1	FILM-IDENTIFICATION (CAT, BOOM, LH)	

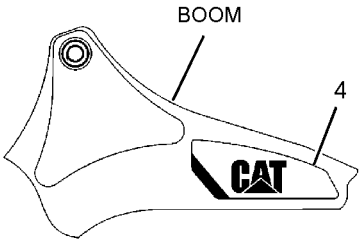

LEFT SIDE VIEW

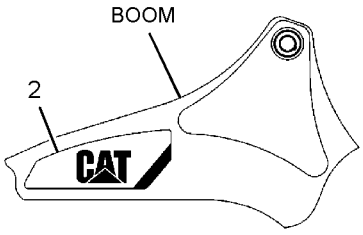

RIGHT SIDE VIEW

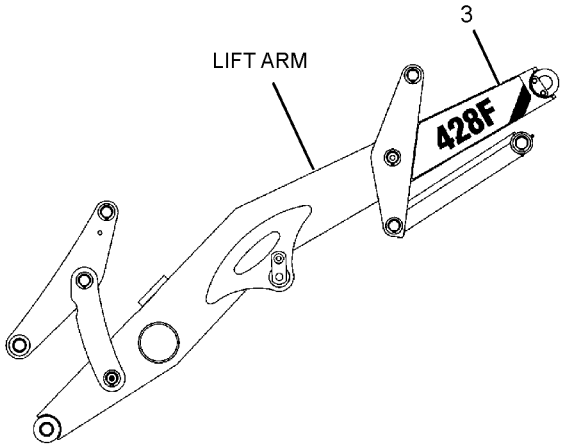

LEFT SIDE VIEW

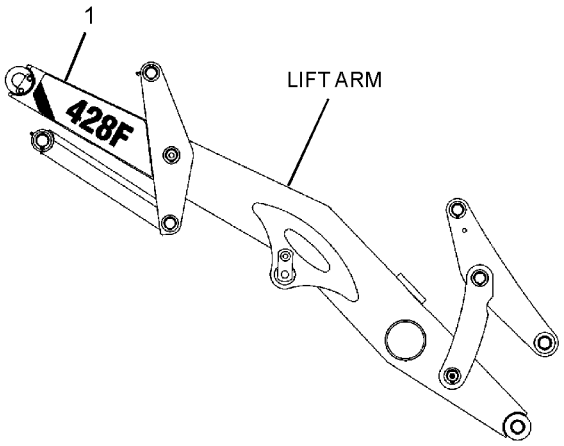

RIGHT SIDE VIEW

GRAPHIC #1 **<END>** g02771476

SERVICE EQUIPMENT AND SUPPLIES

353-1392 FILM GP-INTERNATIONAL

S/N: SJW1-UP

PART OF 367-5957 COMMON AR

SMCS-7405, 7557 **i04549343**

NOTE	REF NO	GRAPHIC REF	PART NUMBER	QTY	PART NAME 1 2 3 4 5 6 (PRODUCT LEVEL)	SEE PAGE
	1	1	**224-8946**	1	FILM-WARNING (NO ETHER SPRAY/AIR INTK, INTL)	
	2	1	**225-0312**	1	FILM-WARNING (JUMP START, READ OMM, INTL)	
	3	1	**226-1240**	2	FILM-WARNING (CRUSH HAZARD, STAY BACK, INTL)	
	4	1	**228-7316**	1	FILM-WARNING (HOT SURFACE, HANDS CLEAR, INTL)	
	5	1	**239-9430**	1	FILM-WARNING (ARM BRACE, READ OMM, INTL)	
	6	1	**240-7095**	2	FILM-WARNING (NO ENTRANCE, EXIT, READ OMM)	
	7	1	**241-8450**	2	FILM-WARNING (HYD PRESS, READ OMM, INTL)	
	8	1	**255-0793**	1	FILM-WARNING (READ OMM)	
	9	1	**255-0794**	1	FILM-WARNING (SEAT BELT)	
	10	1	**259-4402**	1	FILM-WARNING (HOT FLUID UNDER PRESSURE)	
	11	1	**260-7653**	1	FILM-WARNING (PRODUCT LINK 300, INTL)	
	12	1	**276-2334**	1	FILM-WARNING (HIGH PRESS CYLINDER, READ OMM)	
	13	1	**280-9658**	2	FILM-WARNING (NO ENTRANCE, EXIT, READ OMM)	
	14	1	**282-9043**	1	FILM-WARNING (QUICK COUPLER)	
	15	1	**373-2673**	1	FILM-WARNING (HOT SURFACE, HANDS CLEAR, OMM)	

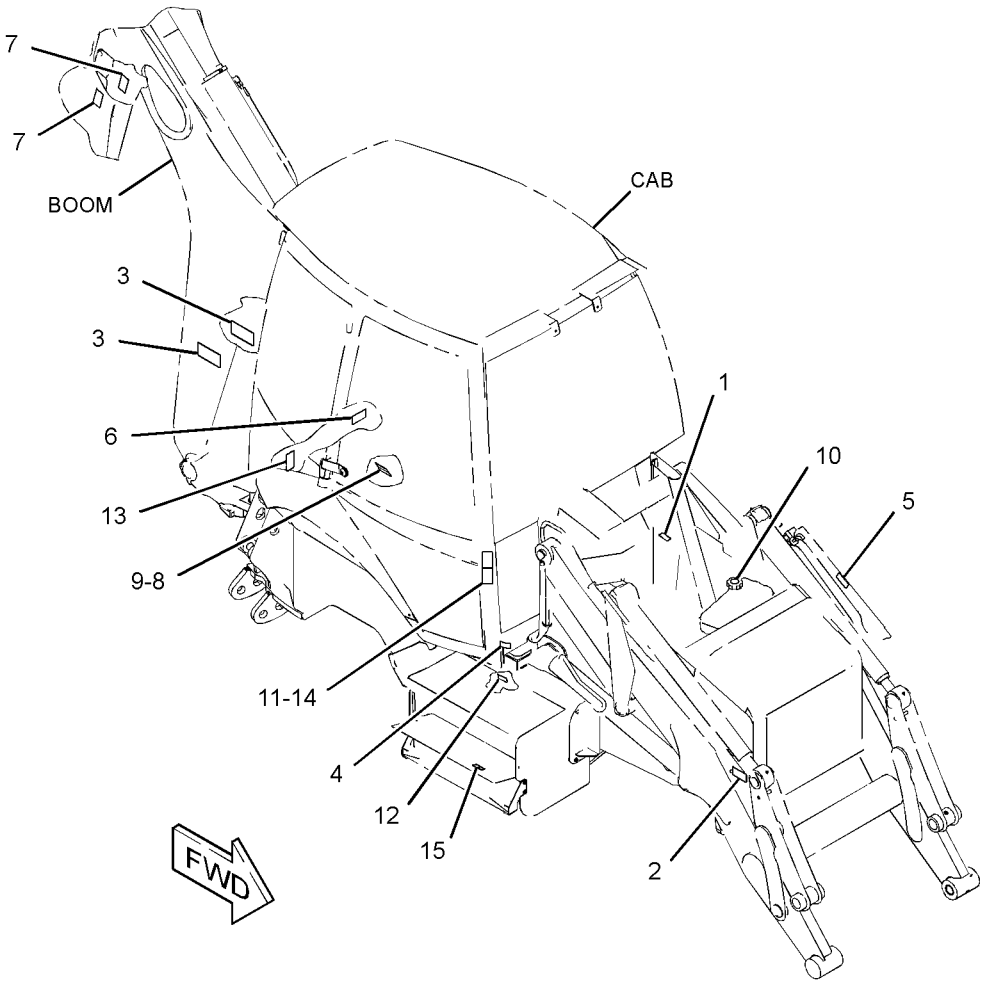

GRAPHIC #1 **<END>** g02773756

SERVICE EQUIPMENT AND SUPPLIES

360-8982 INSTALLATION AR-WHEEL CHOCK

S/N: SJW1-UP
PART OF 341-3109 OPTION AR-REGIONAL
AN ATTACHMENT

SMCS-7000 **i04609429**

NOTE	REF NO	GRAPHIC REF	PART NUMBER	QTY	PART NAME 1 2 3 4 5 6 (PRODUCT LEVEL)	SEE PAGE
	1	1	**114-9342**	2	CHOCK GP-WHEEL	

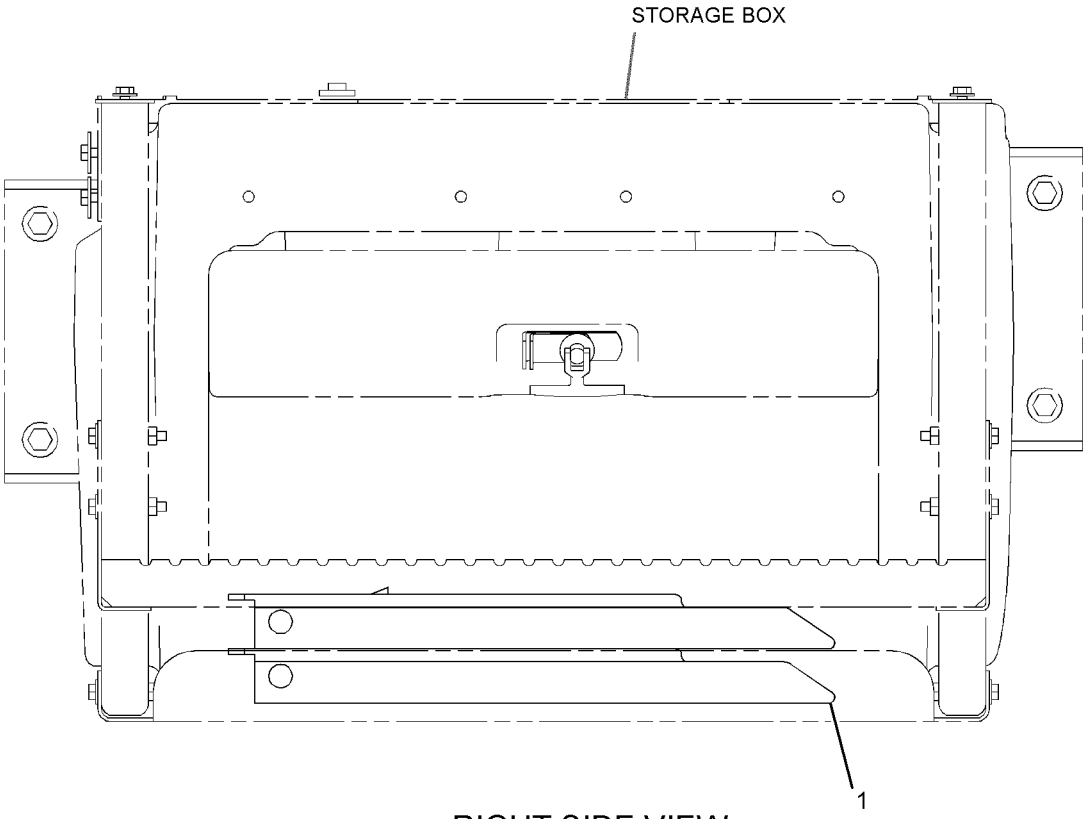

RIGHT SIDE VIEW

GRAPHIC #1 **<END>** g02798161

SERVICE EQUIPMENT AND SUPPLIES

353-6952 KIT-TOOL–HAND

S/N: SJW1-UP

AN ATTACHMENT

SMCS-0600, 0701 **i04650570**

NOTE	PART NUMBER	QTY	PART NAME 1 2 3 4 5 6 (PRODUCT LEVEL)	SEE PAGE
	252-4670	1	KIT-TOOL (HAND)	
			(INCLUDES SPANNERS, PLIERS, GREASE GUN, TUBE, CONNECTOR, SOCKETS, SLIDING T BARS, TIRE PRESSURE GAUGE & TOOL WRAP)	

<END>

SERVICE EQUIPMENT AND SUPPLIES

175-7877 LINK GP-SHIPPING

S/N: SJW1-UP

AN ATTACHMENT

SMCS-6513 **i04555809**

NOTE	REF NO	GRAPHIC REF	PART NUMBER	QTY	PART NAME 1 2 3 4 5 6 (PRODUCT LEVEL)	SEE PAGE
	1	1	**120-9286**	1	PLATE	
					PARTS SHOWN IN GRAPHIC(S) WITHOUT A REFERENCE NUMBER ARE NOT SERVICED SEPARATELY	

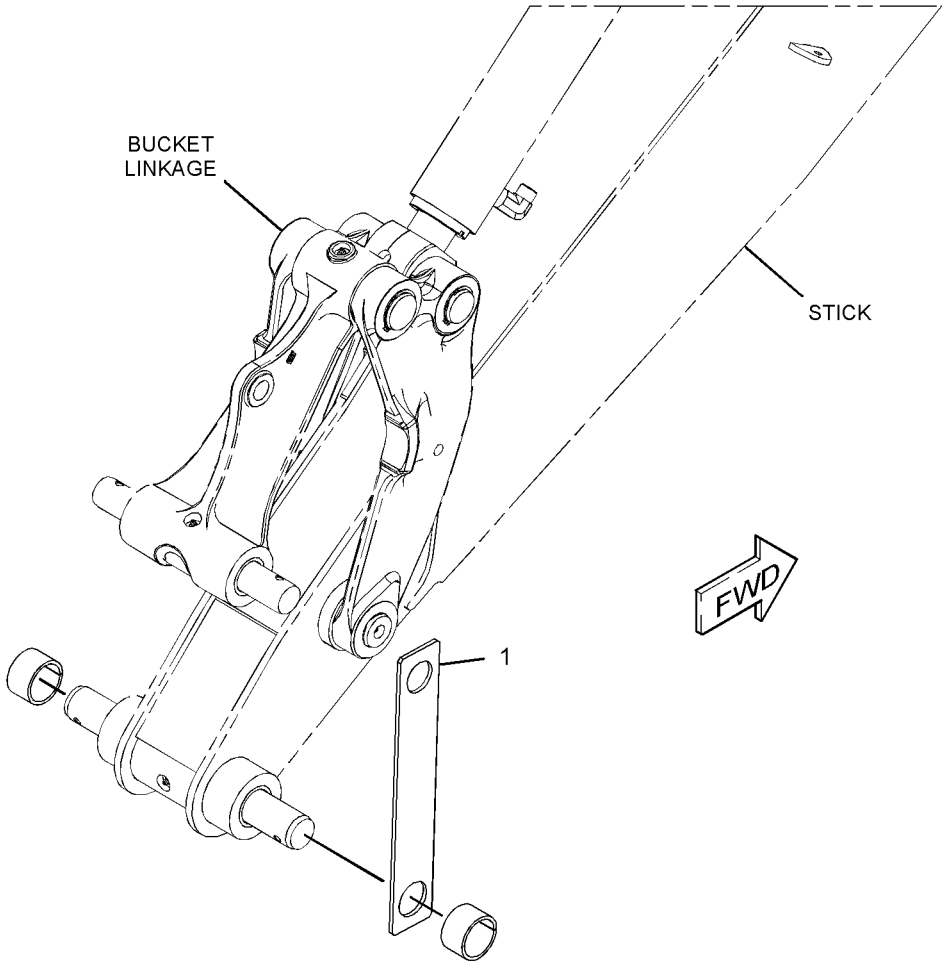

GRAPHIC #1 **<END>** g02778216

SERVICE EQUIPMENT AND SUPPLIES

216-0910 LOCK GP-VANDALISM

S/N: SJW1-UP

PART OF 340-1693 CHASSIS AR

SMCS-7315 **i03326060**

NOTE	REF NO	GRAPHIC REF	PART NUMBER	QTY	PART NAME 1 2 3 4 5 6 (PRODUCT LEVEL)	SEE PAGE
	1	1	**246-2641**	3	PADLOCK GP	
					(EACH INCLUDES)	
		1	**5P-8500**	1	KEY	

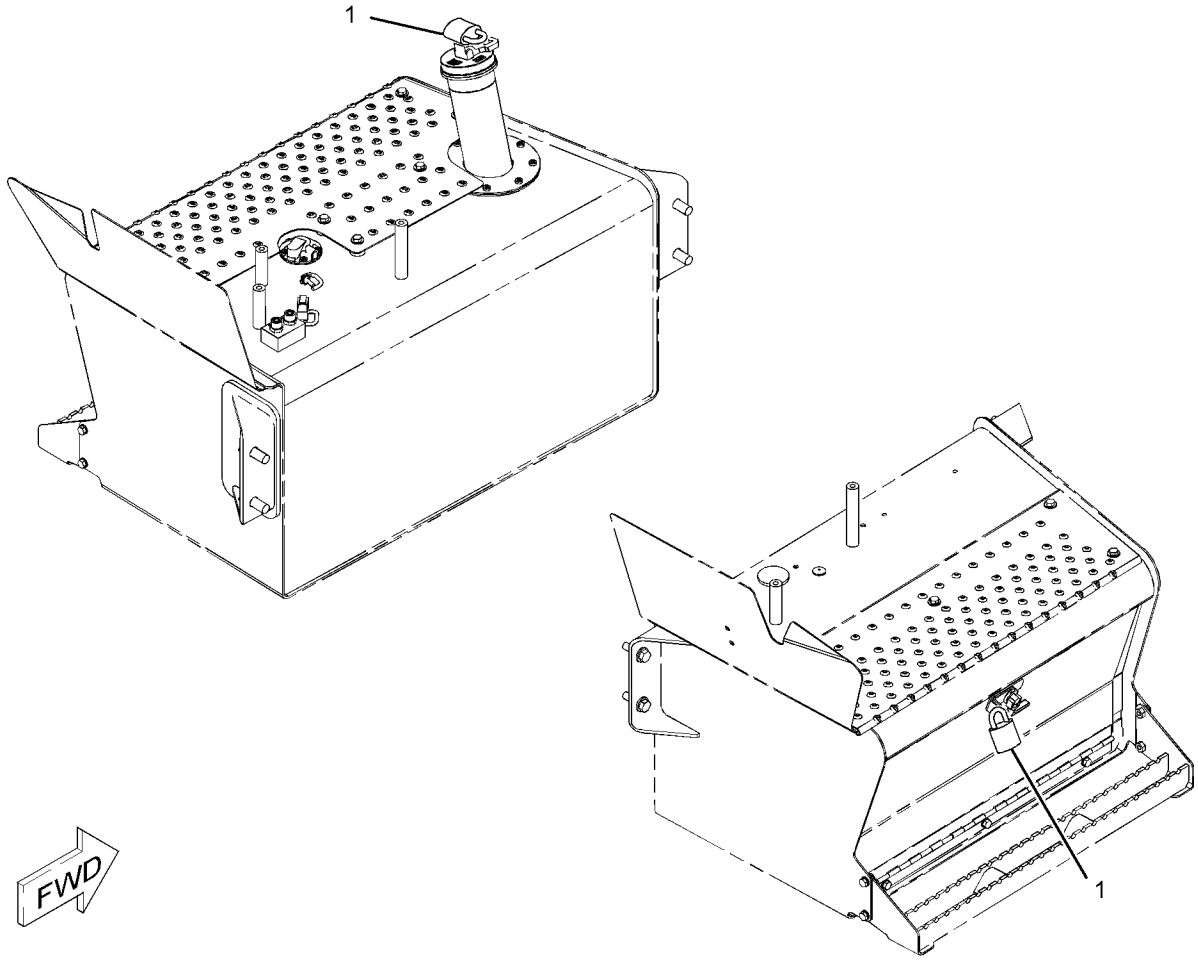

GRAPHIC #1 **<END>** g01096994

SERVICE EQUIPMENT AND SUPPLIES

360-8981 PLATE & FILM GP

S/N: SJW1-UP
PART OF 341-3109 OPTION AR-REGIONAL
AN ATTACHMENT

SMCS-7405 **i04609416**

NOTE	REF NO	GRAPHIC REF	PART NUMBER	QTY	PART NAME 1 2 3 4 5 6 (PRODUCT LEVEL)	SEE PAGE
	1	1	**8T-9530**	4	TACK-FASTENER	
	2	1	**106-0827**	4	FILM-IDENTIFICATION (20-KM/H)	
	3	1	**131-6010**	1	FILM-INSTRUCTION (WHEEL CHOCK)	
	4	1	**159-7342**	1	PLATE-INFORMATION (MAXIMUM WEIGHT)	

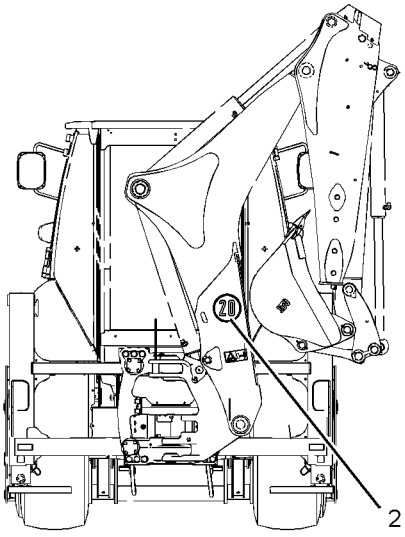

REAR VIEW

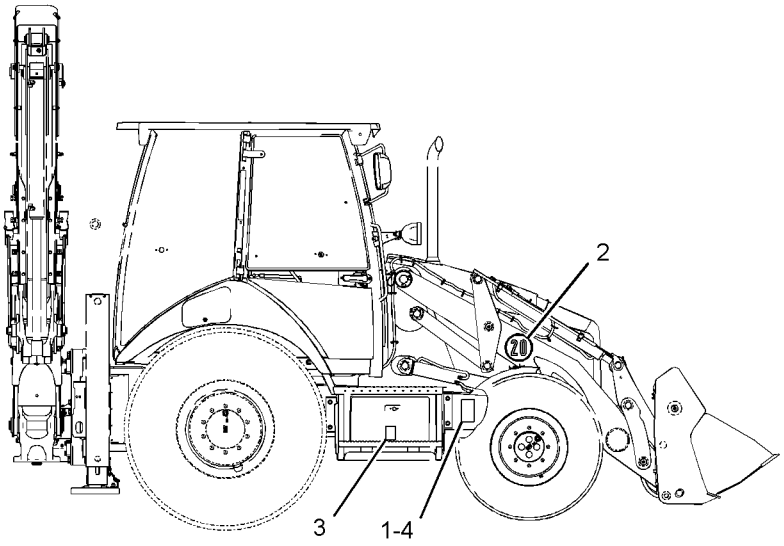

RIGHT SIDE VIEW

GRAPHIC #1 **<END>** g02829539

SERVICE EQUIPMENT AND SUPPLIES

374-7439 PLATE & FILM GP

S/N: SJW1-UP

PART OF 341-3107 CONVERSION AR-ROADING

AN ATTACHMENT

SMCS-7405 **i04609310**

NOTE	REF NO	GRAPHIC REF	PART NUMBER	QTY	PART NAME 1 2 3 4 5 6 (PRODUCT LEVEL)	SEE PAGE
	1	1	**233-6513**	1	PLATE-SERIAL NUMBER (ENGINE)	

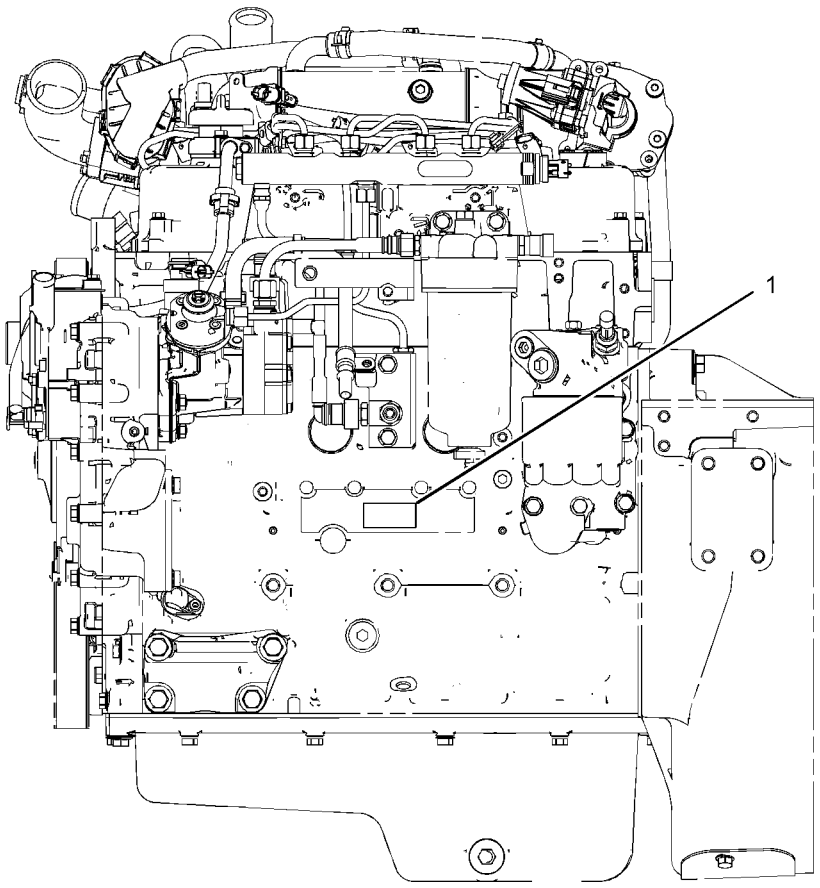

LEFT SIDE VIEW

GRAPHIC #1 **<END>** g02798369

SERVICE EQUIPMENT AND SUPPLIES

374-7440 PLATE & FILM GP

S/N: SJW1-UP
PART OF 341-3107 CONVERSION AR-ROADING
AN ATTACHMENT

SMCS-7405 **i04609309**

NOTE	REF NO	GRAPHIC REF	PART NUMBER	QTY	PART NAME 1 2 3 4 5 6 (PRODUCT LEVEL)	SEE PAGE
	1	1	**8T-9530**	4	TACK-FASTENER	
	2	1	**159-7342**	1	PLATE-INFORMATION (MAXIMUM WEIGHT)	
	3	1	**170-3492**	1	FILM-INSTRUCTION (PARKING BRAKE)	

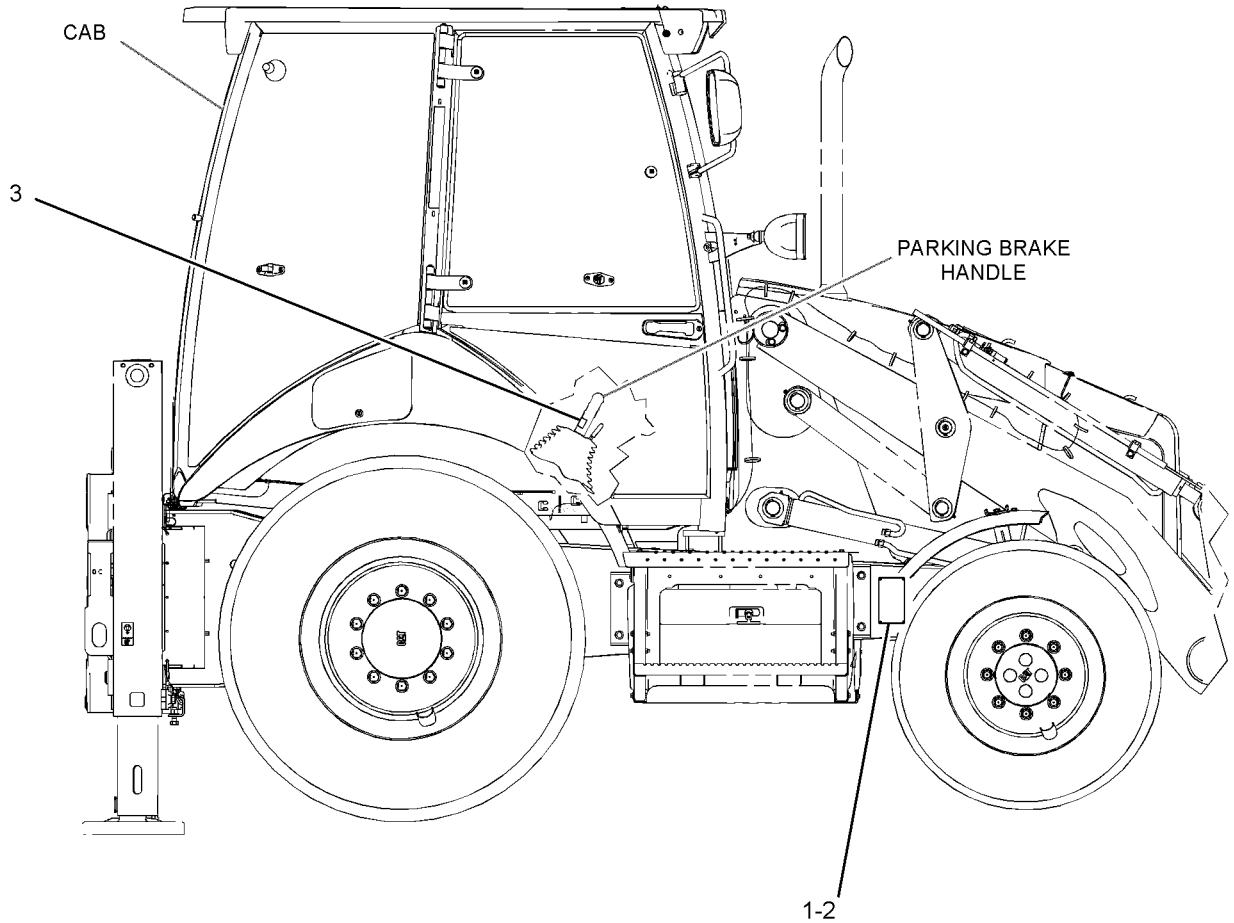

RIGHT SIDE VIEW

GRAPHIC #1 **<END>** g02798450

SERVICE EQUIPMENT AND SUPPLIES

101-4419 PLATE AS-SIDE REFLECTIVE

S/N: SJW1-UP

PART OF 341-3107 CONVERSION AR-ROADING

AN ATTACHMENT

SMCS-7405 **i00534481**

NOTE	REF NO	GRAPHIC REF	PART NUMBER	QTY	PART NAME 1 2 3 4 5 6 (PRODUCT LEVEL)	SEE PAGE
	1	1	**101-4420**	1	PLATE	
	2	1	**101-4421**	1	BRACKET AS	
M		1	**5C-7261**	1	NUT (M8X1.25-THD)	
M		1	**8T-4244**	1	NUT (M12X1.75-THD)	
	3	1	**101-4422**	1	MAGNET AS	
	4	1	**101-4423**	1	REFLECTOR	
M	5	1	**8T-4179**	1	BOLT (M12X1.75X20-MM)	
	6	1	**8T-4223**	1	WASHER-HARD (13.5X25.5X3-MM THK)	
M	7	1	**101-4424**	1	SCREW-THUMB (M8X1.25-THD)	
M	8	1	**8T-0287**	1	BOLT (M5X0.8X10-MM)	
	9	1	**8F-1434**	1	LOCKWASHER	
	10	1	**4B-4274**	1	WASHER (5.5X13X1.2-MM THK)	
	11	1	**5P-1076**	1	WASHER-HARD (13.5X30X4-MM THK)	

M-METRIC PART

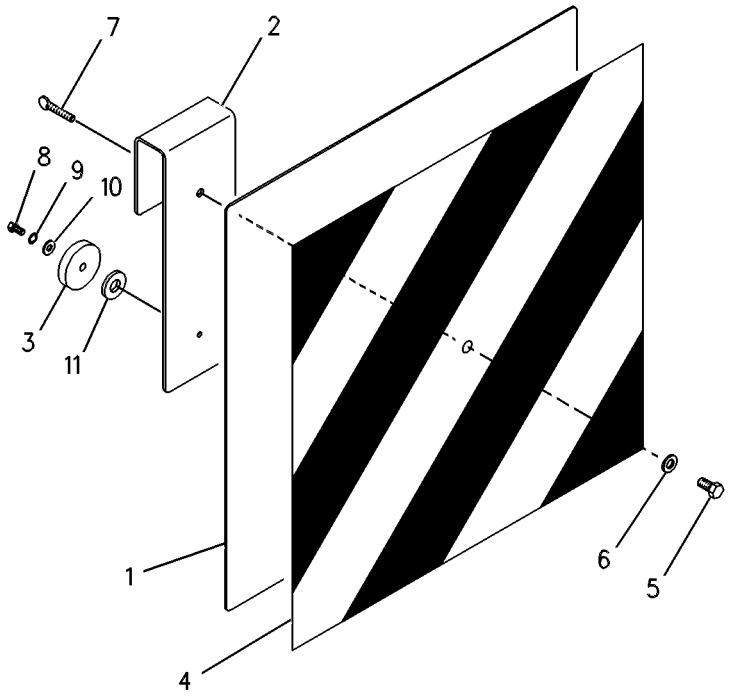

GRAPHIC #1 **<END>** g00260486

SERVICE EQUIPMENT AND SUPPLIES

374-7438 PLATE GP-IDENTIFICATION

S/N: SJW1-UP

PART OF 367-5957 COMMON AR

SMCS-7557 **i04548441**

NOTE	REF NO	GRAPHIC REF	PART NUMBER	QTY	PART NAME 1 2 3 4 5 6 (PRODUCT LEVEL)	SEE PAGE
	1	1	**225-4150**	1	PLATE-SERVICE INFORMATION (MACHINE)	
	2	1	**239-6989**	1	PLATE-SERIAL NUMBER (MACHINE)	

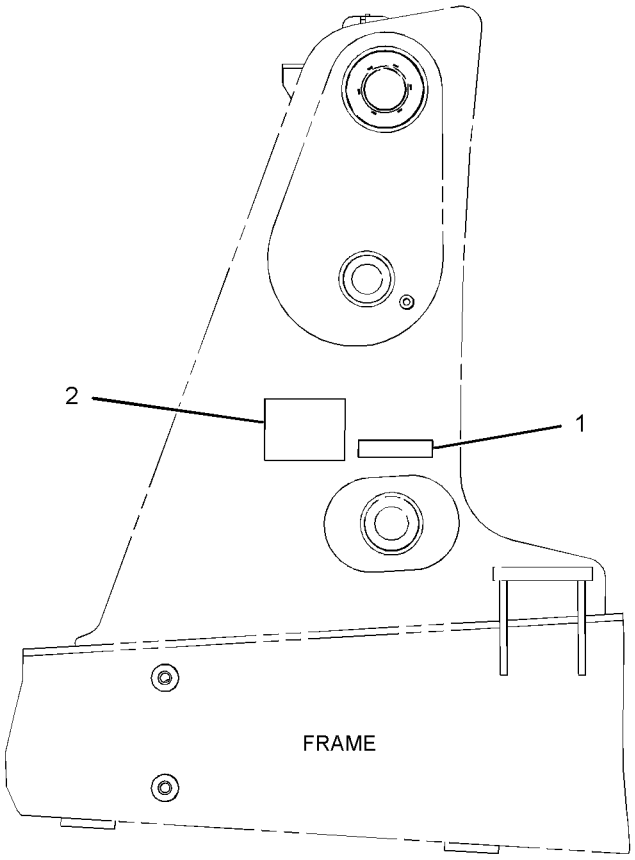

LEFT SIDE VIEW

GRAPHIC #1 **<END>** g02777322

SERVICE EQUIPMENT AND SUPPLIES

124-5525 TRANSPORT GP-MACHINE

S/N: SJW1-UP

AN ATTACHMENT

SMCS-0355 **i03983771**

NOTE	REF NO	GRAPHIC REF	PART NUMBER	QTY	PART NAME 1 2 3 4 5 6 (PRODUCT LEVEL)	SEE PAGE
	1	1	**3B-5322**	2	PIN-COTTER	
B	2	1	**9R-4066**	8	WASHER (61X98X4-MM THK)	
	3	1	**120-9332**	2	BLOCK	
	4	1	**120-9333**	1	TUBE	
	5	1	**125-4594**	2	PLATE AS	
B	6	1	**111-4335**	4	SPACER (46X63.5X27.1-MM THK)	
	7	1	**034-1432**	2	STRAP-CABLE	

B-USE AS REQUIRED

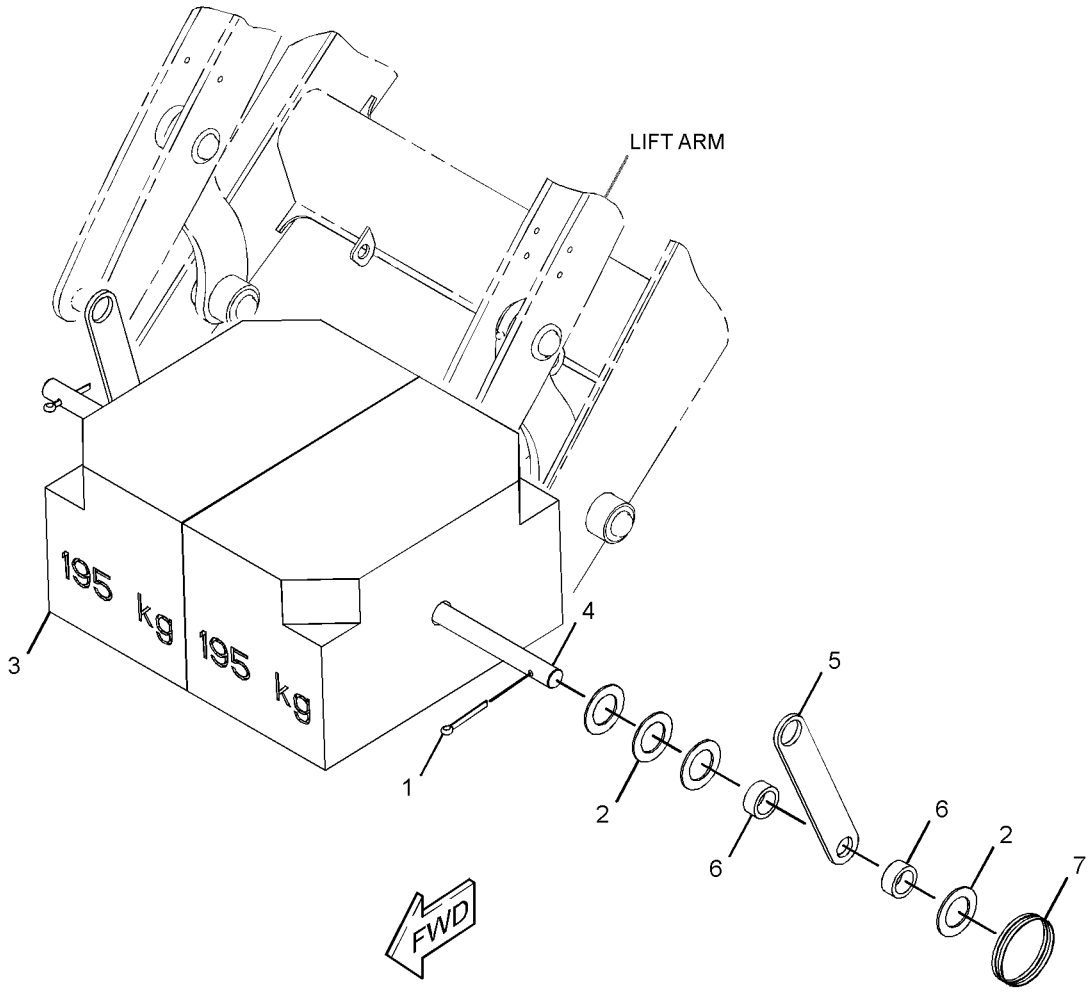

GRAPHIC #1 **<END>** g02176286

MEMORANDA

PART NUMBER INDEX

Part	Page
0	
0S-1594	601
0S-1595	599
0S-1603	22
1	
1B-2705	604
1B-3057	61
1B-8736	12
	15
1H-3244	126
	127
	128
	129
	567
1J-9671	357
	358
1K-6872	599
1K-7082	219
1L-6377	595
1M-6119	101
1M-6120	101
1P-4584	418
1R-5396	313
	315
1S-0994	97
1S-7252	97
1S-9593	117
	122
	181
1U-8846	190
	200
1V-0358	599
2	
2B-0858	19
	36
2B-0941	318
	420
	463
2D-2628	281
2D-2629	281
2D-2630	281
2D-2631	281
2D-2633	281
2H-3922	134
2K-4973	601
	604
2K-5986	310
2K-6830	363
	365
2L-5893	606
2L-8066	148
2L-8067	137
	151
	161
	168
2L-8069	137
	151
	161
	168
2L-8075	173
2L-8076	148
2L-8079	148
2M-9780	54
	56
	61
	309
	310
	396
	404
	407
	422
2P-1279	408
2P-1293	384
	386
	388
	393
2P-4556	587
2R-0364	463
	544
	546
2S-3163	542
2S-3440	420
2S-3745	569
	573
2U-9234	341
2V-9121	585
	587
2Y-5821	363
	365
3	
3B-4610	317
3B-4631	606
3B-5317	432
3B-5319	452
	454
	456
	457
	523
3B-5322	627
3B-8488	339
	444
	447
	469
	471
	473
3B-8489	335
	337
	339
	341
	363
	365
	369
	444
	447
	452
	454
	456
	457
	463
	469
	471
	473
	511
	512
3C-6969	596
3D-2824	377
	380
	390
	401
	407
	410
	418
	426
	429
3E-0068	587
3E-4321	310
	585
	587
3E-4337	578
3E-4892	29
	30
3E-6600	162
	169
	538
	544
	546
3E-6735	363
	365
3E-7445	54
	56
	61
	206
	208
	420
3E-8299	142
	162
	169
3E-8320	97
3E-9362	137
	151
	159
	166
3F-5108	520
3F-9556	593
	597
	609
3G-6927	262
	267
3J-1907	81
	177
	179
	182
	192
	215
	216
	218
	256
	257
	261
	262
	268
	310
	318
	369
	404
	407
	410
	412
	414
	416
	422
	424
	426
	429
3J-4818	98
	148
3J-7354	318
	357
	358
	410
	416
	424
3K-0360	309
	310
	318
	356
	377
	383
	388
	393
	394
	404
	407
	422
	429
	434
3K-8460	78
3N-4968	190
3N-5739	363
	365
3P-0439	339
3S-2093	41
	76
	107
	116
	117
	119
	121
	122
	135
	137
	140
	142
	146
	148
	151
	153
	155
	157
	161
	168
	173
	177
	179
	182
	184
	186
	188
	328
	329
	407

► **PRIMARY REFERENCE**

PART NUMBER INDEX

Part	Page
	426
	532
	544
	546
	560
	587
	603
	613
4	
4B-2043	173
4B-4274	625
4B-4283	606
4B-9784	606
4D-1248	140
4D-5243	140
4D-6433	609
4D-6466	81
4D-7388	61
	587
4D-9517	463
4E-0724	148
4F-3657	496
	497
	498
	503
	505
	506
	508
	519
	526
4F-4879	578
4F-7952	261
	268
4H-0408	23
4H-2558	527
4H-3001	65
4I-3038	540
4I-6287	426
4J-0520	198
4J-0522	195
	206
	208
4J-1888	511
	512
	525
4J-5477	215
	216
	310
	318
	407
	408
	410
	416
	424
	429
4J-9535	443
4K-0367	496
	497
	498
	503
	505
	506
4K-9890	604
4L-6454	192
4P-7428	107
	173
4P-7429	149
	161
	168
	184
	186
	318
4P-7581	149
4P-8134	107
	149
	161
	168
4V-2264	578
4W-9972	256
	261
	267
5	
5A-3604	463
5C-2874	114
	149
	580
	581
5C-2890	76
	117
	122
	126
	127
	128
	129
	137
	151
	160
	161
	167
	168
	310
	390
	538
5C-6588	609
5C-7261	61
	98
	108
	109
	117
	122
	126
	127
	128
	129
	138
	151
	161
	168
	310
	349
	460
	477
	479
	532
	553
	587
	593
	594
	597
	609
	625
5C-8312	321
5C-9553	65
	161
	168
	328
	329
	562
	564
	597
5D-1026	41
	61
	585
	587
5D-6523	463
5D-8159	477
	479
	525
5G-2003	583
5G-3676	98
	153
	155
	380
5H-3193	544
	546
5I-3978	426
5K-5338	587
5K-9090	377
	384
	386
	388
	393
	418
5P-0599	397
	399
	408
5P-0743	310
5P-0761	97
5P-0767	585
	587
5P-1076	322
	341
	625
5P-1420	81
5P-1442	81
5P-1505	41
	81
	310
	318
5P-1717	65
5P-2566	434
5P-4115	182
5P-4116	50
	52
	61
5P-4571	65
	71
	78
	81
	94
	97
	98
	101
	117
	122
	140
	206
	208
	310
	322
	335
	337
	347
	349
	380
	403
	404
	449
	466
	527
	532
	544
	546
	557
	571
	587
	609
	613
5P-4571	142
	578
5P-4868	418
5P-4906	309
5P-5148	433
5P-5637	569
	573
5P-5655	569
	573
5P-5677	544
	546
5P-5688	569
	573
5P-5927	331
	538
5P-5995	181
5P-6006	148
5P-6129	527
5P-6718	256
	261
	267
5P-7070	540
5P-7464	397
	412
	414
5P-7465	397
	412
	414
5P-7648	532
5P-7814	78
5P-7854	420
5P-7957	3

PART NUMBER INDEX

Part	Page
5P-7958	3
	463
5P-8066	256
	261
	268
5P-8245	22
	599
5P-8500	3
	621
5P-9297	608
5P-9617	410
5P-9768	159
	166
5T-5439	300
5T-6374	98
6A-9083	599
6C-3680	569
	573
6C-9089	609
6D-0337	▶281
	282
6D-0443	281
6D-1734	190
6D-3479	216
6D-4246	54
	56
6E-1135	463
6E-1478	363
	365
6E-5431	557
6F-7045	134
6G-2263	41
6H-3586	161
	168
6H-3587	142
	161
	168
6H-3616	27
6I-0217	24
	31
	58
	72
	74
	85
	89
6I-0254	58
6I-0260	31
	43
	47
	49
	85
	89
	96
6I-0289	31
6I-0291	85
	89
6I-0363	31
6I-0364	71
	130
6I-0423	23
6I-0563	71
	72
	74
6I-0572	18
	31
	48
6I-0594	130
6I-0645	24
	48
6I-0646	18
	37
6I-0650	24
	96
6I-0846	13
6I-0847	23
6I-0917	13
6I-1418	166
6I-1497	41
	44
6I-4374	49
6J-2680	418
6K-0806	137
	151
	159
	166
	575
6L-4725	527
	571
6N-6984	61
6P-6591	144
6P-8855	585
	587
6T-5598	161
	168
6T-9142	196
6T-9143	196
6T-9144	196
6T-9145	196
6T-9146	196
6T-9147	196
6T-9160	243
6T-9163	196
	261
	267
6T-9164	196
	261
	267
6T-9165	196
	261
	267
6T-9166	196
	261
	267
6T-9196	226
	233
	235
	241
6T-9202	261
	267
6U-0456	390
6V-0852	256
	262
	267
	309
	416
	434
6V-1249	386
	412
	414
	429
6V-2315	313
	315
6V-2317	108
	109
6V-2689	544
	546
6V-3213	444
	507
	509
	524
6V-3965	256
	262
	268
	309
	416
6V-4292	318
6V-4364	444
	507
	509
6V-4589	256
	261
	267
6V-5100	226
	233
	235
6V-5204	468
	471
	473
6V-5215	195
	261
	268
6V-5764	161
	168
6V-5842	268
6V-6228	190
	192
	198
6V-6717	585
	587
6V-7238	434
6V-7357	310
	569
	573
	613
6V-7359	397
6V-7420	404
	407
6V-7646	522
6V-7687	341
6V-7731	256
6V-7743	323
	532
	604
	611
	612
6V-7744	330
	444
	544
	546
	548
	550
	555
6V-8097	256
	261
	268
6V-8144	525
6V-8186	597
6V-8335	554
6V-8378	256
	261
	267
6V-8397	310
	318
	370
	377
	404
	412
	414
	422
	426
6V-8398	310
	367
	368
	371
	373
	374
	380
	383
	384
	388
	390
	393
	394
	401
	404
	407
	410
	412
	414
	422
	426
6V-8399	257
	276
	278
	279
6V-8455	204
	205
6V-8500	243
6V-8523	153
	155
6V-8625	383
	388
	394
	429
6V-8626	396
6V-8627	215
	216
	407
6V-8628	318
6V-8633	390
	407
	429
6V-8634	318
	377
6V-8635	418

▶ **PRIMARY REFERENCE**

PART NUMBER INDEX

Part	Page
6V-8636	310
	422
	426
6V-8638	404
	407
	422
6V-8639	393
	422
	429
6V-8641	215
	216
	310
	407
	416
	424
	429
6V-8642	407
6V-8647	424
6V-8713	390
6V-8716	54
	56
6V-8721	422
6V-8723	318
6V-8724	310
	404
	412
	414
6V-8757	226
	228
	233
	235
	237
	239
	244
	245
6V-8759	308
6V-8780	424
6V-8801	98
	161
	168
6V-8932	550
6V-8949	349
6V-8978	443
6V-8989	399
6V-8993	408
6V-9001	310
6V-9007	377
6V-9023	142
	161
	168
6V-9170	380
	383
	384
	388
	393
	397
	399
6V-9172	384
	388
	393
6V-9178	275
6V-9189	331
	408
	599
6V-9606	323
6V-9632	522
6V-9746	54
	56
	377
	384
	386
	388
	393
6V-9796	380
6V-9829	377
6V-9830	380
	384
6V-9831	390
	401
6V-9833	377
6V-9835	410
	424
6V-9840	418
6V-9845	401
6V-9849	407
6V-9851	422
6V-9852	399
6V-9873	310
6V-9876	422
6V-9877	393
6W-2463	401
6Y-1192	226
	228
	233
	241
	246
6Y-1341	256
6Y-1896	256
	261
	267
6Y-2035	256
6Y-2736	243
6Y-2737	195
6Y-7929	226
	228
	233
	235
	237
6Y-7957	245
6Y-9930	595
	7
7C-0351	31
7C-0754	309
7C-4354	98
7C-4616	24
7E-3870	69
7F-9223	168
7G-7053	149
7H-3937	569
	573
	609
7J-9108	181
	360
	362
	371
	380
	383
	384
	386
	388
	390
	393
	396
	397
	399
	401
	407
7K-1181	76
	97
	117
	122
	144
	148
	153
	155
	157
	159
	166
	181
	184
	186
	307
	309
	403
	585
	587
7K-9208	339
7M-8485	54
	56
	384
	388
	393
	418
	420
7N-0718	97
	▶134
7N-7221	146
	148
	161
	168
7N-9017	148
	184
	186
7P-1695	161
7R-2751	160
	167
7R-8239	317
7S-1800	173
7T-0093	569
	573
7T-2646	196
	261
	267
7T-2651	195
	261
	267
7T-3017	243
7T-3018	243
7T-3021	243
7T-3022	243
7T-3034	196
7T-3051	195
7T-3109	256
7T-3111	256
7T-3119	257
7T-3195	256
	261
	267
7T-3249	256
7T-3251	257
	261
	267
7T-3253	195
	261
	267
7T-4532	535
7T-4848	166
7T-6655	233
	235
	239
7T-6739	569
7T-6799	146
7W-1176	23
7W-2326	44
7W-3556	261
	268
7W-4642	23
7W-7381	215
7X-0465	557
7X-0515	29
	30
7X-0542	444
7X-0579	61
	168
	328
	329
	460
	527
	537
	571
7X-0590	219
	444
7X-0618	532
7X-0620	186
	560
7X-0632	341
	469
	471
	473
7X-0818	41
	76
	149
7X-0872	181
7X-2393	532
7X-2532	595
7X-2536	348
7X-2537	349
	401
7X-2538	536
7X-2543	469
	471
	473
7X-2552	346
7X-2553	220

▶ **PRIMARY REFERENCE**

PART NUMBER INDEX

Part	Page	Part	Page	Part	Page	Part	Page
	221	8C-7524	569		169	8T-4121	29
	536		573	8T-0287	625		30
7X-2559	192	8C-8418	218	8T-0292	192		50
7X-2579	325	8C-8545	261	8T-0328	149		52
	326		268		161		54
	327	8C-9987	598		169		56
7X-3162	410	8D-2707	281		256		81
7X-3164	404	8E-1118	583		261		98
	407	8E-5707	226		267		107
7X-3165	182		228	8T-0389	110		142
	407		233		111		149
7X-3383	463		235		112		153
7X-4741	256		237		113		155
	261		239		397		161
	268		241		469		169
7X-4744	268		244		471		173
	275		245		473		182
7X-7702	328		246		609		206
	329	8F-1434	114	8T-0404	380		208
7X-7729	65		149	8T-0643	261		216
	69		256		268		310
	71		261	8T-0706	548		318
	98		267	8T-1118	613		330
	168		625	8T-1482	339		339
	310	8F-3590	98	8T-1580	195		384
	377		142		241		386
	469		149		246		388
	471		161	8T-1581	241		393
	473		168		246		397
	544	8H-5303	134		257		401
	546	8H-5306	134	8T-1683	318		412
	550	8K-1117	384	8T-1715	393		414
	559		388	8T-1887	98		420
7X-7898	333		393		397		422
7X-9866	320	8L-2746	256		463		429
7X-9873	320		261	8T-1888	98		439
7Y-9099	331		267		397		449
		8L-2779	257		463		463
			276	8T-1889	153		469
8			278		155		471
			279		380		473
8C-3056	161	8L-2786	262		384		536
	168		267		386		544
8C-3347	339	8L-8413	8		388		546
8C-3398	138		9		393		548
	151		101	8T-1890	153		550
	160		161		155		553
	161		168		380		554
	167		181		384		555
	168	8M-2770	182		386		559
8C-3681	61	8M-3175	555		388		585
	608	8N-0869	97		393		587
8C-3756	569	8R-2916	559	8T-1893	412		592
	573	8R-6111	583		414	8T-4122	330
8C-3798	142	8S-0948	318	8T-1894	412		346
	583	8S-7803	343		414		460
8C-4982	583		532	8T-1899	429		477
8C-5748	256		606	8T-1900	429		479
	261	8S-8158	218	8T-2427	125		519
	268	8T-0119	309	8T-2444	349		520
8C-6354	166	8T-0164	416	8T-2658	540	8T-4123	343
8C-6431	599	8T-0271	261	8T-3444	412		595
8C-6437	594		268		414	8T-4127	351
8C-6802	76	8T-0285	151	8T-3844	390	8T-4131	219
8C-7505	190		161	8T-3998	98		595

► **PRIMARY REFERENCE**

PART NUMBER INDEX

Part	Page
8T-4132	29
	30
	460
	595
8T-4133	61
	65
	98
	142
	161
	169
	173
	310
	323
	384
	388
	393
	397
	401
	429
	439
	469
	471
	473
	499
	500
	501
	502
	503
	504
	505
	506
	544
	546
	548
	550
	554
	555
	559
	609
8T-4136	71
	98
	149
	169
	310
	341
	384
	388
	393
	412
	414
	447
	536
	544
	546
	559
	587
	592
8T-4137	54
	56
	61
	98
	149
	169
	182
	330
	377
	449
	553
8T-4138	76
	161
	169
	310
	463
	550
	557
	585
	587
8T-4139	98
	444
	587
	603
8T-4159	477
	479
8T-4167	325
	326
	327
	339
8T-4171	188
	522
8T-4172	98
	550
8T-4177	422
8T-4178	499
	500
	501
	502
	503
	504
	505
	506
8T-4179	186
	216
	625
8T-4182	153
	155
	439
8T-4183	219
	322
	418
	439
8T-4185	30
	401
8T-4186	420
	437
	463
	555
8T-4189	44
	71
	78
	81
	94
	98
	135
	140
	149
	173
	206
	208
	322
	347
	348
	544
	546
	557
	587
	598
	613
8T-4191	397
	437
8T-4192	98
	107
	149
	412
	414
8T-4193	94
	460
	467
8T-4194	184
8T-4195	69
	71
	206
	208
	216
	330
	384
	388
	394
	397
	401
	429
	437
	463
	469
	471
	473
	548
	550
	554
	555
	559
8T-4196	29
	50
	52
	81
	98
	107
	161
	169
	173
	318
	335
	337
	341
	386
	420
	422
	463
	471
	473
	548
	585
	587
8T-4197	337
	553
8T-4200	61
	161
	169
	204
	205
	310
	449
	466
	527
	532
	571
8T-4205	76
	117
	122
	126
	127
	128
	129
	138
	151
	160
	161
	167
	168
	169
	188
	310
	390
	538
	566
	569
	573
	585
	587
	597
	613
8T-4222	54
	56
	61
	330
	437
8T-4223	98
	107
	149
	184
	186
	206
	208
	216
	220
	221
	412
	414
	418
	434
	439
	444
	560
	587
	603
	625
8T-4224	41
	44
	50
	52
	70

► **PRIMARY REFERENCE**

PART NUMBER INDEX

Part	Page	Part	Page	Part	Page	Part	Page
	76		550		433		166
	78		554	8T-6870	433		167
	83	8T-4896	98	8T-6885	153		173
	97		162		155		177
	98		169	8T-6902	557		179
	108	8T-4908	41		597		181
	109		61	8T-6912	307		184
	126		65		404		186
	127		71	8T-6974	182		532
	128		76		562		569
	129		83		564		573
	135		94	8T-7329	408		575
	138		173	8T-7338	335		593
	149		206		337	8T-8799	137
	151		208	8T-7529	420		151
	162		310	8T-7547	50		159
	169		331		52		160
	173		386		78		166
	204		390		81		167
	205		463		94	8T-9402	41
	307		548		98	8T-9405	375
	310		591		117		376
	317		599		122	8T-9501	544
	348	8T-4956	206		322		546
	386		208		335		560
	390		220		337		599
	404		221		537	8T-9530	622
	408		560		557		624
	422	8T-4971	41	8T-7876	79	8T-9534	138
	426		582	8T-7963	97		151
	433	8T-4984	61		101		162
	463		70		404		169
	477	8T-5005	98	8T-7968	426	8T-9655	166
	479	8T-5035	339	8T-7971	339	8U-0767	97
	536	8T-5093	331	8T-8729	93	8W-8528	97
	548	8T-5439	286		110	8W-8909	463
	553		287		111	8X-5489	97
	587		288		112	8X-9618	159
	591		291		113		166
	598		292		137	8Y-1816	97
8T-4241	452		293		146	8Y-5737	585
	454		296		148		587
	456		297		151	8Y-6352	566
	457		299		159	8Y-6967	566
	471		303		166	8Y-7309	532
	473		305		173	8Y-7833	4
8T-4244	625		306		177		
8T-4648	339		339		179		
8T-4742	76	8T-6431	548		575	**9**	
	582		554	8T-8730	148		
8T-4743	544		555		177	9B-0523	184
	546	8T-6466	216		569	9B-9146	140
	550		318	8T-8737	110	9F-5644	129
	554		420		111		134
8T-4744	76		550		112		162
	582	8T-6684	418		113		169
8T-4753	114	8T-6685	469		137	9G-0004	101
8T-4773	544	8T-6703	70		142	9G-0005	101
	546	8T-6726	404		144	9G-8909	97
	548		412		146	9M-1974	256
	550		414		151	9M-2307	114
	555	8T-6869	94		153	9M-5732	323
8T-4778	330		322		157	9M-6738	404
8T-4815	544		403		159	9M-7958	44
	546		404		160		61

► **PRIMARY REFERENCE**

PART NUMBER INDEX

Part	Page
9M-7959	566
9M-8406	81
9N-2231	527
	571
9P-2553	609
9P-9150	256
	261
	267
9R-0109	525
9R-0139	452
9R-0147	456
	459
9R-0153	374
	444
9R-0158	444
	452
	454
	456
	457
	471
	473
	507
	509
	523
	524
9R-0162	469
	471
	482
	483
	484
9R-0170	456
	457
	459
9R-0320	493
	494
9R-0411	444
9R-0481	339
	447
9R-0868	5
	6
	▶467
9R-1004	380
	397
9R-1005	380
	397
9R-1499	173
9R-1510	452
	457
	507
	509
	523
9R-1765	544
	546
9R-1766	544
	546
	560
9R-1767	544
	546
	560
9R-2404	354
9R-2806	307
9R-2807	307
	310
	548
	554
	555
9R-2959	471
	473
9R-3092	360
	469
	471
	473
9R-3205	608
9R-3469	613
9R-3545	302
	303
	304
	306
9R-3700	444
9R-4066	627
9R-4110	339
9R-4672	517
9R-4675	517
	518
9R-4676	511
	512
9R-4677	432
9R-4678	432
9R-5205	481
9R-5206	481
9R-5271	513
	514
9R-5294	517
	518
9R-5301	449
	461
	462
	466
9R-5313	481
	518
9R-5320	▶519
9R-5321	▶520
9R-5615	310
9R-5708	606
9R-5832	481
9R-5866	5
	6
	▶526
9R-5948	397
	399
9R-7891	473
9R-7941	142
9R-7942	115
9R-7958	115
9R-7980	142
9R-8165	557
9R-8291	341
	447
9R-8292	469
	471
	473
9R-8870	412
	414
9R-8987	482
	483
	484
9R-8988	482
	483
	484
9R-9028	461
9R-9105	454
	456
9R-9702	219
9R-9868	544
	546
9R-9901	309
	548
	550
9S-4185	262
	268
9S-4191	81
	257
	262
	268
9S-8004	192
	369
9T-2883	363
	365
9T-4007	369
9U-0361	412
	414
9U-8263	583
9U-8875	233
	237
9U-8886	235
	237
	239
	375
	376
9W-0607	108
	109
9W-0625	544
	546
9W-0844	142
	160
	167
	188
	532
9W-0852	142
	173
	188
	532
9W-1951	167
9W-3324	110
	111
	112
	113
9W-3326	117
	122
	173
9W-5460	195
	261
	267
9W-6582	595
9W-6584	595
9W-8215	520
9W-9915	29
	30
9W-9952	29
	30
9W-9953	29
	30
9X-1054	157
9X-1055	157
9X-1813	179
9X-2038	76
	333
	527
	538
	540
	542
	548
	550
	562
	564
	566
	571
	583
9X-2040	544
	546
9X-2043	76
	162
	169
	333
9X-2044	173
	310
	538
	540
	604
9X-2045	310
	527
	532
	540
	542
	548
	550
	557
	562
	564
	566
	567
	571
	609
	611
	612
9X-2060	469
	471
	473
9X-2092	609
9X-2099	50
	52
9X-2158	444
9X-2842	597
9X-3401	8
	9
	117
	122
	137
	142
	144
	146
	151
	153
	155
	157
	160
	167
	173
	179
	181

▶ **PRIMARY REFERENCE**

PART NUMBER INDEX

Part	Page
	184
	186
	188
	532
	546
9X-3402	117
	122
	146
	160
	167
	177
	181
	184
	186
9X-3959	587
9X-4244	108
	109
9X-4611	363
	365
9X-4813	144
9X-6165	65
	169
	173
9X-6383	349
	613
9X-6418	397
9X-6611	363
	365
9X-6615	256
	261
	268
9X-6772	215
	216
	318
	416
9X-7378	137
9X-7380	587
9X-7381	587
9X-7382	587
9X-7383	587
9X-7385	535
9X-8118	115
9X-8139	115
9X-8256	41
	142
	144
	550
	557
	583
9X-8257	94
	220
	221
	335
	337
	467
	536
	595
9Y-5015	19
0	
005-0469	195
	196
005-0471	257
009-2062	241
014-5645	256
030-1705	97
031-4155	604
	606
031-5644	124
	125
032-9090	16
032-9091	16
033-6783	420
033-7687	22
034-1432	522
	627
034-3679	309
	318
035-8017	79
035-8063	18
	136
036-4453	555
039-9133	317
054-6733	320
054-6882	320
062-5388	140
067-6006	19
067-6179	24
067-6213	31
067-6265	79
067-6873	16
067-6874	16
067-6999	79
069-4080	81
069-4707	192
081-5648	416
084-4277	583
085-7356	182
085-8091	401
089-7990	219
090-5725	81
091-0081	397
091-1745	544
	546
091-2436	137
	142
	148
	151
	161
	168
	181
093-8828	200
095-0641	597
095-0924	222
	447
095-0927	241
	246
095-0928	241
	246
095-1041	200
095-7950	447
096-5516	243
	452
	454
	456
	457
096-5866	309
096-5962	596
096-5968	274
096-6166	137
	151
	161
	168
	590
097-7234	142
099-3649	335
	380
1	
100-3253	110
	111
	112
	113
100-3254	110
	111
	112
	113
100-3255	110
	111
	112
	113
100-3751	24
	58
100-4336	81
	318
100-4461	46
100-4830	26
	85
	89
100-4838	13
100-4841	13
	18
100-5041	157
100-6674	137
	160
	167
100-7608	611
	612
101-0745	613
101-1995	168
101-3771	31
101-3895	24
	49
101-4411	522
101-4412	522
101-4413	522
101-4414	522
101-4415	521
101-4416	4
101-4419	4
	►625
101-4420	625
101-4421	625
101-4422	625
101-4423	625
101-4424	625
101-7401	162
	559
102-3582	363
	365
102-8703	401
102-8801	142
	144
	160
	167
	173
	184
	186
102-8802	8
	9
	93
	114
	137
	144
	148
	151
	160
	167
	173
	535
	544
	546
	560
	578
102-8803	117
	122
	135
	137
	151
	153
	155
	179
102-8804	144
	146
	160
	167
	179
	188
	594
102-8805	110
	111
	112
	113
	142
	157
	160
	167
	177
102-8806	532
	593
102-9941	38
103-2543	162
	169
104-1995	137
	151
	161
	181
104-3288	196
	261
	267
104-6311	525
104-6312	478
	480
104-6313	515
	516
104-6316	525

► **PRIMARY REFERENCE**

PART NUMBER INDEX

Part	Page
104-6317	525
105-3478	471
	473
105-3480	186
	560
105-8034	309
106-0401	378
106-0406	378
106-0800	140
106-0827	622
106-8916	72
	74
106-9388	515
	516
106-9586	268
	275
106-9861	195
	261
	267
107-5591	544
	546
	560
107-6709	384
	388
	393
107-6826	230
	231
	232
108-3872	384
	388
	393
108-4311	578
109-1633	587
109-1634	587
110-0203	160
	167
110-2028	161
	168
110-2861	515
	516
110-6109	527
	571
110-6349	434
110-7887	146
111-0859	21
111-3422	84
	88
111-3423	84
	88
111-4335	627
111-4337	444
	452
	454
	456
	457
	471
	473
	524
111-4627	527
	571
111-6792	137
	151
	161
	168
111-6793	161
	168
111-6794	137
	151
	161
	168
111-6795	137
	151
	160
	167
111-6816	137
	151
	160
	167
111-7899	4
	116
	117
	122
	131
	132
	137
	142
	146
	151
	157
	159
	166
	173
	177
	179
	181
	186
	613
111-7906	204
111-7907	▶204
	249
111-8222	67
112-1533	339
112-1776	525
113-0920	583
113-6349	96
113-8129	58
113-8490	160
	167
113-8491	160
	167
113-8492	160
	167
114-2579	67
114-4363	23
114-9342	618
115-1615	157
115-1858	460
115-1918	375
	376
115-6433	447
116-5763	331
116-7471	159
	166
117-1385	261
	268
117-3534	375
	376
117-9713	204
118-1348	449
	462
118-2990	595
118-7110	519
118-8118	78
	92
118-8119	78
119-3662	137
	142
	146
	148
	151
	157
	161
	168
119-3859	599
119-4167	544
	546
119-4740	252
	253
	255
119-6346	410
	429
119-9631	569
120-9027	540
120-9286	620
120-9332	627
120-9333	627
120-9762	195
	261
	267
120-9763	218
121-0694	233
	235
	239
121-0883	23
121-0885	241
	246
121-0904	245
121-2059	196
	261
	267
121-2060	196
	261
	267
121-2061	196
	261
	267
121-2500	233
	235
	237
	239
121-4405	138
121-6936	613
121-7385	256
	261
	267
121-7389	256
121-7390	256
121-7391	256
121-7396	256
	261
	267
121-7398	196
	261
	267
121-7399	196
	237
	261
121-7400	196
	261
	267
121-7401	196
	261
	267
121-7402	196
	261
	267
121-7403	256
121-7404	256
121-9870	583
121-9875	256
122-1877	226
	228
	241
	244
	245
	246
122-1878	244
	245
122-1879	196
	261
	267
122-1883	256
	261
	267
122-1884	244
	245
122-1886	235
	237
	239
122-3650	256
122-3652	195
122-4026	140
122-4401	137
	151
	161
122-6785	257
122-6787	256
	261
123-0708	321
123-0714	235
	237
	239
123-1377	256
	261
	268
123-2918	256
123-2919	256
123-2920	195
	235
	237
	239
	268
123-7615	142
	148
123-7637	384
	388
	393
123-8905	233
	235
	237

▶ **PRIMARY REFERENCE**

PART NUMBER INDEX

Part	Page
	239
	244
	245
123-8906	195
	196
	233
	235
	239
	244
123-8907	226
	228
	241
	243
	246
	257
123-8908	196
	226
	228
	241
	246
123-8909	235
	237
	239
123-8910	196
	235
	239
123-8912	226
	228
	241
	244
	245
	246
123-8913	235
	239
124-0174	181
124-0312	585
	587
124-3536	33
124-3815	24
	67
	85
	89
124-5525	▶627
124-5640	137
125-4594	627
125-7874	117
	122
	137
	142
	146
	148
	151
	157
	161
	168
	173
	177
	179
	181
	184
	186
	532
125-7875	137
	142
	146
	148
	151
	157
	161
	168
	173
125-7876	97
	181
126-1767	146
	155
	535
126-1768	146
127-3017	256
127-4471	44
127-5469	218
128-3094	483
128-3778	482
128-4123	160
	168
128-4170	142
	161
	168
128-4190	161
	168
128-5016	160
	168
128-5596	375
	▶436
128-7716	569
	573
128-7903	444
128-7905	444
129-1831	527
	571
129-3178	144
	323
	569
	573
	582
	597
	604
129-3738	532
129-4741	323
129-5256	343
	532
129-5257	532
129-8542	611
	612
129-8545	611
	612
130-1916	343
	349
130-7282	192
130-8149	7
	▶218
130-8150	376
	436
130-9984	420
	587
131-2117	484
131-2171	309
131-3540	609
131-6010	622
131-8201	422
131-8202	422
132-2249	562
	564
	583
132-5789	148
	168
132-8769	5
	6
	▶378
133-1011	24
133-3260	97
133-3413	106
133-6517	106
133-8916	554
	555
134-0143	463
134-2540	167
134-3355	148
134-3856	585
134-8273	463
135-5009	97
	101
135-5893	294
	295
135-8203	496
	497
	498
	503
	505
	506
	508
	526
135-8206	496
	497
	498
	503
	505
	506
	508
136-1955	41
	420
136-4192	611
	612
136-6887	486
136-6889	487
136-6890	488
136-7808	198
137-4234	495
	496
	497
	498
	499
	500
	501
	502
	503
	504
	505
	506
	508
	510
137-6645	262
138-7500	97
139-1398	44
140-7649	363
	365
140-8714	85
	89
140-8718	85
	89
140-8783	96
140-9378	137
	159
	166
141-0888	431
141-8061	188
142-0485	309
142-7405	550
143-2827	532
	611
	612
144-0195	613
144-0367	70
144-5287	360
144-6734	202
145-0981	583
146-1815	166
146-4023	609
146-6347	321
146-7453	420
146-8319	289
146-9439	132
	157
	159
	166
	177
	179
147-0201	262
	267
147-0202	233
	235
	239
147-0203	226
	228
	237
	241
	244
	246
147-0205	241
	246
147-0207	244
147-0209	256
	262
	267
	▶275
147-0210	244
147-0211	262
	267
147-0215	226
	228
147-0216	226
	228
147-0218	262
	267
147-0224	235
	239
147-0226	262
	267
147-0228	226
	233
	235

▶ **PRIMARY REFERENCE**

PART NUMBER INDEX

Part	Page
147-0232	262
	267
147-0234	262
	267
147-0236	262
	267
147-0238	226
	228
	233
	235
	237
	239
	244
147-0242	241
	246
147-0248	241
	246
147-0256	233
147-0257	235
147-0258	226
	228
147-0259	233
	235
	239
147-0260	241
	246
147-0261	241
	246
147-0262	262
	267
147-0266	262
	267
147-0268	262
	268
147-0270	233
147-1445	167
147-1446	167
147-5553	72
	74
148-1899	97
148-5353	611
	612
148-7925	410
148-8305	410
148-8311	393
148-8315	407
148-8316	424
148-8318	318
	377
148-8325	215
	216
	309
	407
	416
	424
	429
148-8328	390
	407
	429
148-8335	418
148-8336	310
	422
	426
148-8339	54
	56
148-8340	393
	422
	429
148-8341	390
148-8345	404
	407
	422
148-8347	377
148-8351	407
148-8353	310
148-8359	393
148-8362	418
148-8363	422
148-8364	383
	388
	394
	429
148-8368	215
	216
	407
148-8369	318
148-8370	422
148-8372	422
148-8374	318
148-8378	310
	404
	412
	414
148-8382	380
148-8383	318
148-8390	396
148-8393	399
148-8407	81
148-8429	418
148-8447	181
149-0686	▶355
	356
149-3516	78
149-9954	92
150-1974	61
150-3026	318
150-3033	416
150-3052	384
	388
	393
150-3053	384
	388
	393
150-3060	412
	414
150-3757	241
	243
	246
150-4029	424
150-4031	401
150-4043	310
150-4052	408
150-5968	410
	424
150-7732	262
	267
151-4841	76
	215
	216
	309
	587
151-7829	▶482
	496
151-7830	▶483
	497
151-7831	▶484
	498
151-7887	▶496
151-7888	▶497
151-7889	▶498
151-7902	482
	483
	484
151-7903	482
	483
	484
151-9275	159
	166
	560
152-0184	3
	▶354
152-3968	84
	88
152-6144	190
	192
	198
153-2997	309
154-1580	219
154-2302	426
154-5257	493
	494
154-5279	452
	457
	523
154-5280	452
	457
	523
154-5404	190
154-5410	613
154-5416	307
154-5423	611
	612
155-2255	144
	160
	167
155-2256	167
155-2260	148
	157
	160
	167
	173
	179
155-2265	142
	160
	167
155-2270	117
	122
	137
	142
	148
	157
	160
	167
	173
	177
	179
	181
	184
	186
	307
	569
155-2271	142
	160
	167
	173
	181
	188
155-2274	160
	167
	532
155-4098	596
156-0283	94
	322
	331
156-1200	78
156-3631	309
156-6175	161
	168
157-2088	241
157-2090	241
	246
159-4269	562
	564
159-4945	562
159-4946	564
159-7105	591
159-7106	591
159-7342	622
	624
159-8033	140
159-8049	97
	101
	140
159-8050	97
	101
159-9322	167
159-9540	78
	206
	208
160-2244	54
	56
	61
160-2246	588
160-3518	159
	166
	575
160-5083	393
160-7599	4
	462
	466
161-3249	244
	245
161-6984	580
	581
161-6987	580
	581
161-7145	339
	370
	373
	374

▶ **PRIMARY REFERENCE**

PART NUMBER INDEX

Part	Page	Part	Page	Part	Page	Part	Page
161-7147	367	164-1425	550	169-3261	321		151
	368	164-1435	550	169-5326	85	177-9653	569
161-7632	256	164-1436	550		89		573
	261	164-1438	550	169-5861	78	177-9656	137
	555	164-4227	54	169-7291	583		151
161-9044	562		56	170-0950	173	178-1304	286
	564		61	170-0967	309	178-3336	50
161-9283	577	164-5549	426	170-3492	624		52
	606	164-5567	309	170-6312	550		343
161-9285	606		416	171-1357	393		349
161-9288	606	164-6874	181	172-4018	609	178-3620	41
161-9294	580	164-7556	108	172-5317	233	178-7230	289
	581		109		235		290
161-9820	96	164-8474	566		237	178-7539	159
161-9916	404	164-9425	148		239		166
	407		173	172-6050	226	178-8214	243
162-6556	580	164-9598	317		228	178-8465	8
	581	164-9599	317		237		9
163-0753	308	164-9639	410		241	178-9566	241
	▶317	165-0312	146		244		245
163-1135	578	165-2273	434		245	179-6401	65
163-9091	226	165-4021	41		246		166
	228	165-6365	215	172-6743	241	179-8235	552
	233	165-6595	309		246	180-0448	591
	241	165-8996	219	172-8037	575	180-3748	609
	246	166-7870	467	172-8039	575	180-5796	599
	262	166-9413	193	172-8591	542	180-9339	544
	268	167-2183	363		548	180-9340	117
164-1153	560		365		550		122
164-1154	597	167-2303	363	173-0332	226		137
164-1178	542		365		228		142
164-1230	604	167-3692	160	174-3091	186		144
164-1244	599		167	174-4643	190		146
164-1249	577	167-8182	609	174-4647	192		148
164-1251	577	167-8251	542	174-4650	192		157
164-1252	577	168-0443	507	174-4671	190		160
164-1253	577		509	174-8131	562		167
164-1254	577	168-0444	507		564		173
164-1255	577		509	174-9194	351		179
164-1256	577	168-0480	482	174-9638	72		181
164-1361	548		483		74		184
	550		484	174-9711	256		186
164-1368	159	168-1777	440	175-0054	256		188
	166	168-1779	440	175-4291	108		532
	186	168-8389	475		109	183-3134	544
	307		476	175-4292	108		546
	345		477		109	183-3136	544
	349		479	175-7877	▶620		546
	527		495	175-7904	434	183-6084	557
	544		496	176-0626	341	183-6438	553
	546		497	176-1477	8	184-5382	552
	560		498		9	185-0882	19
	571		499		148	185-1861	8
164-1371	548		500	176-1521	8		9
	550		501		9		148
164-1395	76		502		148	185-4015	569
	544		503	176-2947	146		573
	557		504	176-6219	84	185-6627	67
164-1399	548		505		88	185-6643	41
	550		506	177-2215	587	185-9777	349
164-1402	550		508	177-4877	562	186-3735	114
164-1404	550		510		564		135
164-1415	550	169-0705	148	177-9645	569		578
164-1421	550		160		573		593
164-1422	550		167	177-9648	137	186-5110	578

▶ **PRIMARY REFERENCE**

PART NUMBER INDEX

Part	Page
187-7719	569
	573
188-4651	181
189-0881	527
	571
189-3158	137
	157
	161
	168
	173
	177
	179
	184
190-4374	447
190-5128	550
190-5134	548
190-7614	184
	186
190-7634	93
191-8304	262
	267
192-2112	569
	573
192-7805	578
192-7876	92
193-0618	92
193-1681	335
	337
193-1683	335
	337
193-1684	335
	337
193-5913	94
193-5914	2
	159
	598
193-5915	2
	598
194-0832	286
194-2903	309
194-5390	72
	74
194-5622	585
	587
195-0189	▶110
	119
195-0190	▶111
	119
195-0191	▶112
	121
195-0192	▶113
	121
195-2037	309
	318
195-2136	27
195-2221	27
195-6329	291
195-6345	294
	295
	297
	298
	301
	302
	304
195-6348	289
	290
	291
	294
	298
	301
195-9712	114
196-0030	▶114
	117
	122
196-2966	159
	166
197-4521	599
197-5107	562
	564
197-7499	590
197-9155	192
198-0098	554
	555
198-3899	97
	349
198-7811	192
	200
198-7814	213
	214
198-7825	190
198-7838	190
198-7841	190
198-7842	190
198-7843	190
198-9706	93
199-0639	192
199-0641	192
199-0646	200
199-0648	213
	214
199-0652	192
199-0653	223
199-0656	200
199-0658	192
199-0659	203
199-0662	192
199-0663	200
199-0670	192
199-0672	313
	315
199-0673	203
199-0675	200
199-0676	192
199-0678	200
199-0679	192
199-0680	200
199-0681	313
	315
199-0683	190
199-0684	200
199-0685	200
199-0686	200
199-0687	200
199-0688	192
	200
199-0689	200
199-0690	200
199-0691	200
199-0692	200
199-0693	200
199-0694	203
199-0695	198
	200
199-0697	200
199-0700	313
	315
199-0701	313
	315
199-0702	313
	315
199-0703	313
	315
199-0706	192
199-0752	313
	315
199-0756	203
199-0759	313
	315
199-0760	223
199-0778	192
199-0783	330
199-0784	203
199-0785	200
199-0786	192
199-0787	192
199-0807	203
199-0808	200
	203
199-0858	198
	200
199-0929	590
199-9267	136
199-9751	19
	35
2	
200-5728	575
201-1024	159
	166
201-1235	485
	486
	487
	488
	490
	494
201-1238	499
	500
	501
	502
	504
	510
201-1239	499
	500
	501
	502
	504
	510
201-1868	283
	▶286
201-1869	286
201-1870	286
201-1915	286
	287
	288
	296
	299
	300
	303
	305
	306
201-1916	291
	292
	293
	297
	299
	303
201-1919	287
	288
	291
	292
	293
	296
	297
	299
	300
	303
	305
	306
201-1920	▶282
	286
	287
	288
	289
	290
	291
	294
	295
	296
	297
	298
	300
	301
	302
	303
	304
	305
	306
201-1929	287
201-1962	282
	283
	▶287
201-1963	▶287
201-1964	287
201-1975	290
201-9459	133
202-0313	160
	168
202-0314	160
	168
202-5909	41
202-5993	309
202-6029	309
202-6186	286
	287
	288
	296
	300
	305

▶ **PRIMARY REFERENCE**

PART NUMBER INDEX

Part	Page	Part	Page	Part	Page	Part	Page
202-6611	109	206-1653	566	206-6969	343	210-3098	192
202-6614	108	206-1659	540	207-4254	190	210-3099	192
203-9858	599	206-1662	540	207-4257	223	210-3100	192
204-0775	133	206-1663	540	207-4258	190	210-3106	192
204-1682	604	206-1667	76	207-5962	223	210-5924	190
204-2281	429		540	208-0321	190		▶222
204-3080	190		542	208-0322	198	210-5931	222
204-4248	530	206-1668	544	208-5235	499	210-5932	211
	▶595	206-1669	560		500		212
204-5258	522	206-1672	548		501	210-5937	190
204-5259	522		550		502	210-5942	190
204-6195	148	206-1673	548		504	210-5946	190
204-9921	569		550		510	210-5947	190
	573	206-1678	542	208-5245	499	210-6475	532
205-2357	426	206-1681	542		500	210-6491	538
205-3079	81	206-1682	527		501	210-7302	192
205-6298	133		571		502	210-7305	192
205-7047	583	206-1684	527		504	210-7665	569
205-7048	562		571		510		573
	564	206-1687	542	208-7492	471	210-7666	569
205-7198	407	206-1690	542		473		573
205-9163	256	206-1692	76	208-8240	256	210-8401	569
205-9244	262	206-1695	546		261	210-8402	573
	267	206-1696	538		267	210-8754	583
205-9362	160	206-1698	538	208-8469	343	211-0052	160
	167	206-1699	538	208-9281	70		167
205-9587	611	206-1702	530	208-9297	351	211-0092	202
205-9588	564		▶538	209-0939	318	211-2660	569
205-9590	611	206-1706	538	209-3366	582		573
205-9591	611	206-1708	538	209-3367	76	211-2661	527
205-9597	612		540		▶582		571
205-9598	562	206-1712	538	209-3378	76	211-3782	▶331
205-9608	532	206-1752	309		▶597		530
205-9609	532	206-1766	309	209-4157	222	211-4291	4
205-9614	612		548	209-4232	210		5
205-9615	612		554	209-4716	583		6
205-9629	532		555	209-7454	198		▶124
205-9920	41	206-1767	309	209-7455	202	211-5358	578
	117	206-1768	310	209-7456	190	211-6735	190
	122	206-1803	566	209-7460	213	211-6752	226
	148	206-1804	527		214	211-6753	241
	159		571	209-7462	198	212-5702	200
	166	206-1805	566	209-7463	198	212-5712	313
	173	206-1807	527	209-7464	190		315
	177		571	209-7465	213	212-5713	192
	179	206-1808	527		214	212-8960	362
	349		571	209-7466	222	213-0139	137
	420	206-1809	527	209-7472	198		148
	587		571	209-7473	198		151
206-1345	76	206-1810	566	209-9219	17	213-1887	331
	142	206-1815	566	209-9875	190	213-1889	331
	146	206-1816	566	209-9882	190	213-4222	223
	148	206-1817	566		▶198	213-5007	339
	159	206-1818	527	209-9883	190	213-6683	447
	166		571	209-9884	190	213-6702	341
	173	206-1835	333		▶211	213-6703	452
	188	206-1854	540	209-9885	190		457
206-1590	532	206-1857	530		▶212	213-6754	219
206-1618	530		▶608	209-9886	190	214-2968	▶108
	▶567	206-1874	557	209-9887	190		142
206-1634	309	206-2423	97	210-1707	452	214-2969	▶109
206-1642	6		181		454		116
	▶307	206-5122	404		456	214-3203	18
206-1648	527	206-5123	404		457		37
	571	206-5823	593	210-3097	192	214-4285	463

▶ **PRIMARY REFERENCE**

PART NUMBER INDEX

Part	Page
214-4691	186
214-4695	137
	151
214-4697	142
214-4698	116
214-4699	142
214-4700	116
214-4701	173
214-4703	151
214-4709	613
214-4710	177
214-4711	173
214-4713	173
214-4716	159
	166
214-4717	159
	166
214-4718	137
214-4719	179
214-4721	117
214-4722	146
214-4723	159
	166
214-5097	190
214-7024	4
	7
	352
	▶521
214-7025	521
	▶522
214-7026	522
214-7043	463
214-7469	320
214-7568	309
	416
215-1242	606
215-1906	371
215-2023	190
215-2913	532
215-9513	81
215-9515	81
216-0910	2
	▶621
216-1238	3
	▶460
216-1600	200
216-1601	223
216-1606	223
216-1608	192
216-1609	192
	▶210
216-1610	192
	▶223
216-1612	200
	▶313
216-1613	200
	▶315
216-4457	198
216-4458	198
216-4461	198
216-4464	198
216-4465	198
216-4466	198
216-4554	578
216-7473	190
216-8314	15
216-8634	24
216-8687	202
216-8689	202
216-8691	202
216-9147	282
	▶288
216-9148	▶288
216-9149	▶288
216-9497	202
216-9498	198
	▶202
217-2345	200
217-2346	200
217-2347	313
	315
217-2349	313
	315
217-2877	211
	▶213
217-2878	212
	▶214
217-2879	211
	212
217-2883	190
217-2914	192
218-0666	566
218-3597	278
219-0302	532
219-0343	582
219-3271	106
219-6281	569
	573
219-6283	569
	573
219-6292	569
	573
219-8136	309
219-8751	198
219-8752	198
219-8753	198
219-8754	198
219-8755	198
219-8756	198
219-8757	198
219-8758	198
219-8759	198
219-8783	222
219-8795	190
	192
219-8798	190
219-8799	192
219-8834	313
219-8835	315
219-8836	200
219-8839	192
219-9488	485
220-0269	544
	546
220-0738	331
	343
	349
	351
	527
	540
	571
220-3470	560
220-3762	569
220-3790	599
220-3791	599
220-4050	592
220-5725	573
220-7108	452
	454
	456
	457
220-8226	309
220-8631	23
221-2420	566
222-2690	76
222-3518	81
222-8935	155
222-9151	437
223-2028	564
223-2029	562
223-2030	532
223-8267	333
224-2147	540
224-2149	540
224-5132	357
	358
224-5152	357
	358
224-5917	81
224-6829	248
224-8946	617
225-0312	617
225-4150	626
225-4287	60
225-5438	33
225-5501	20
225-5502	20
225-5629	39
225-5634	39
225-5638	39
225-5959	39
225-5960	39
225-5961	39
225-5962	39
225-6005	31
225-6041	31
225-6451	13
225-6456	13
225-6461	13
225-6464	13
225-6477	13
225-6478	13
225-6479	13
225-6522	43
225-6817	49
225-6818	49
225-7738	58
225-7739	58
225-7741	58
225-7941	136
225-7944	18
	48
225-8019	58
225-8287	24
225-8329	46
225-8524	72
	74
225-8526	72
	74
225-8533	72
	74
225-8534	72
	74
225-8536	72
	74
225-8848	26
226-0291	331
226-0294	349
226-1240	617
226-4346	210
	211
	212
226-4364	192
226-4365	192
	211
	212
226-4366	192
	211
	212
226-4367	192
226-4370	192
	211
	212
226-4560	110
	111
	112
	113
226-4561	110
	111
	112
	113
226-5540	▶369
	475
	476
	477
	479
226-5849	148
227-1057	146
	159
	166
	540
227-3509	412
	414
227-5509	431
227-5556	331
228-4592	557
228-4593	557
228-4595	557
228-5856	137
	146
	151
	160
	167
	181
228-6050	112
	113
228-6051	110
	111
228-6052	110
	111

▶ **PRIMARY REFERENCE**

PART NUMBER INDEX

Part	Page	Part	Page	Part	Page	Part	Page
	112	231-0695	200	233-6513	623		▶431
	113		203	234-3030	70	245-9828	22
228-6053	110	231-0696	203	235-0128	76	246-2622	78
	111	231-0697	203	236-2144	79		81
	112	231-0698	192	236-6651	44	246-2641	621
	113	231-0699	192	236-6923	137	246-3229	4
228-6054	110	231-0700	213	237-0769	13	246-7853	447
	111	231-0701	214	237-3794	72	246-7854	335
	112	231-0703	211		74		337
	113		212	237-3921	72	247-1385	61
228-6056	110	231-0719	210		74	247-4884	79
	111	231-2873	550	237-3943	578	247-5557	331
	112	231-2875	554	237-4894	136	248-2707	76
	113		555	237-5186	256	248-2708	557
228-7091	399	231-2876	554		262	248-2709	542
228-7316	617		555		268	248-2710	557
228-9132	92	231-2879	4	237-5188	195	248-2714	562
229-5085	211		▶552	238-4626	268		564
	212	231-3057	106	238-4628	431	248-5245	335
229-5093	202	231-3058	▶106	238-5082	420		337
229-5336	416		107	238-5254	190	249-0974	48
229-5745	557	231-3803	460	238-5255	190	249-2482	538
229-8757	135	232-1322	19	238-5256	211	249-3124	431
230-2389	560		35		212	249-3125	431
230-2390	560	232-1328	85	238-5290	200	249-4207	485
230-3810	193		89	238-5291	192		486
230-3811	193	232-1540	554	238-5292	192		487
230-4011	117		555	238-5293	192		488
	122	232-1542	557	238-5294	192		490
	160	232-1545	186	238-5298	192		494
	167	232-1793	85		▶200	249-4209	485
230-4013	177		89	238-7492	137		486
	181	232-1794	85	238-8671	85		487
	184		89		89		488
	186	232-2725	85	239-1434	83		490
230-4014	181		89	239-2270	69	249-4210	485
230-5009	181	232-2726	85	239-3104	142		486
230-5738	6		89	239-6989	626		487
	▶192	232-3126	79	239-9430	617		488
230-5743	6		85	240-5571	85		490
	▶190		89		89	249-4211	491
230-6368	97	232-3149	85	240-7095	617	249-4220	▶485
	101		89	241-0037	357		499
230-7732	148	232-3157	85		358	249-4221	▶499
230-8094	31		89	241-4275	81	249-7562	▶289
230-8989	85	232-3274	85	241-6202	309		291
	89		89	241-6225	384	249-7563	▶289
230-8995	85	232-3657	24		388		291
	89	232-3666	24		393	249-7565	▶289
230-8996	85	232-3751	18	241-6226	384		292
	89		48		388	249-7566	▶290
230-8997	85	232-6662	105		393		292
	89	232-7449	17	241-8450	384	249-7568	▶290
230-8998	85	232-7600	18		388		293
	89	232-7603	18		393	249-7569	▶290
230-9127	13	232-7612	466		617		293
230-9357	369	233-0619	363	243-0062	597	249-7571	▶291
231-0670	200		365	243-0063	597		293
	203	233-2589	363	243-5026	190	249-7572	▶291
231-0671	200		365	244-3106	148		293
	203	233-2613	363	244-3111	331	249-9076	144
231-0692	200		365	244-3112	331	249-9255	▶282
	▶203	233-3786	16	244-3113	331	249-9256	▶282
231-0693	203	233-5260	343	245-8026	146	249-9261	▶282
231-0694	203		540	245-8780	422	249-9262	▶283

▶ **PRIMARY REFERENCE**

PART NUMBER INDEX

Part	Page
249-9263	▶283
249-9271	285
	▶291
249-9387	282
	▶292
249-9388	285
	▶292
249-9390	282
	285
	▶292
249-9392	282
	▶293
249-9399	283
	▶293
249-9400	283
	▶293
249-9407	292
	▶294
249-9408	292
	▶294
249-9409	292
	▶294
249-9410	292
	▶295
249-9411	293
	▶295
250-0230	293
	▶295
250-1057	477
	479
250-1440	404
	407
250-6587	515
	516
250-6850	351
250-6858	349
250-7910	76
250-7911	76
250-8330	274
251-3227	61
251-5621	548
251-5627	557
252-1862	562
	564
252-1863	562
	564
252-1864	564
252-1865	562
252-2157	335
	337
252-4659	461
252-4660	4
	▶461
	465
252-4670	7
	619
252-6005	477
	479
	▶525
252-6143	335
	337
252-6438	19
252-9046	512
	▶517
252-9051	511
252-9078	517
	518
252-9080	517
	518
252-9081	517
252-9084	518
252-9087	517
252-9088	518
252-9095	515
	516
252-9100	514
253-1549	309
253-1817	562
	564
253-1857	562
	564
253-1858	562
	564
253-2470	573
253-5022	223
253-5024	190
253-9395	157
253-9510	569
	573
254-1098	437
254-1126	562
	564
254-1127	562
	564
254-2267	47
254-2270	47
254-3954	19
254-9926	321
255-0793	617
255-0794	617
255-0795	527
	571
255-0800	587
255-2749	559
256-9600	513
258-2354	540
258-3697	562
	564
258-4170	160
	167
258-4172	148
258-4178	159
	166
258-4946	20
258-9999	219
259-0127	193
259-1831	243
259-2940	300
259-4402	617
259-6276	530
	▶590
260-0030	606
260-0033	606
260-0034	606
260-0035	606
260-0041	606
260-0057	606
260-3568	343
260-7653	144
	617
260-9136	401
260-9137	401
260-9213	390
260-9214	390
260-9223	410
261-0376	52
261-0406	50
261-0428	52
261-0524	146
261-5048	122
261-5050	159
261-9635	307
261-9636	538
261-9637	538
261-9639	538
	540
261-9644	542
261-9645	542
262-2781	575
262-4081	309
262-4084	309
262-4727	117
	122
262-7079	404
262-7081	404
262-8088	54
	56
	61
	206
	208
262-9151	160
	167
262-9567	583
263-3823	594
263-5376	70
263-5781	583
263-6556	97
263-7261	560
264-7029	117
	122
	160
	167
264-7030	177
	181
	184
	186
264-7031	146
266-1554	283
	▶296
266-1555	296
266-1556	▶296
266-1560	296
266-2814	188
266-4157	117
	122
	153
	155
	188
267-2701	127
	128
	159
	166
267-5211	126
	127
267-5213	126
	127
	128
	129
267-8363	298
267-8364	297
	298
268-1547	383
	388
268-1548	383
	388
268-1559	318
269-0386	363
	365
269-0388	363
	365
269-0389	363
	365
269-2150	393
269-9115	542
270-2795	544
	546
270-3217	▶575
	576
270-5290	341
271-5604	160
272-2265	49
272-2838	146
272-6369	486
	492
272-6410	▶500
272-6411	▶486
	500
272-7872	▶501
272-7873	▶487
	501
272-7914	487
	489
272-7916	488
272-7918	489
	491
	492
	493
272-7919	489
	491
	492
272-7920	489
	491
	492
272-7921	489
	491
	492
272-7922	490
272-9234	▶502
272-9235	▶488
	502
272-9800	115
273-0042	▶503
273-0043	▶489
	503
273-0093	▶504
273-0094	▶490

PART NUMBER INDEX

Part	Page	Part	Page	Part	Page	Part	Page
	504		376		89		388
273-0799	▶505	274-4556	262	275-4918	54		393
273-0800	▶491		267		56	281-5969	380
	505	274-4560	257		61	281-5983	399
273-0862	▶506		276	275-7877	160	282-7832	583
273-0863	▶492		278		167	282-7833	142
	506		279	275-9883	31	282-7835	142
273-1462	492	274-4561	▶233	275-9891	45		583
273-1463	491		262	276-1151	105	282-9043	617
273-1465	489		268	276-1786	140	283-3451	613
273-3599	493	274-4578	▶235	276-2334	422	283-4236	587
273-3622	485		262		617	283-7616	4
	486	274-4580	▶226	276-4836	65	284-0078	153
	487		262	276-5605	18		155
	488	274-4582	▶241	276-7287	▶126	284-1026	50
	490		262		137		52
	494	274-4716	15		151	284-1602	567
273-3730	493	274-5909	587	276-7290	▶127	284-3425	96
273-3731	▶507	274-7409	168		159	284-8531	144
273-3732	507	274-8034	257		166	284-9039	93
	▶508		262	276-7291	▶128	285-1203	3
273-3733	▶493		268		159	285-1207	530
	508	274-8035	440		166	285-5098	78
273-3755	493	274-8041	274	276-7476	33	285-5914	567
273-3756	493	274-8048	216	276-8791	613	285-9109	569
273-5077	▶283		▶274	277-0584	343		573
273-5078	▶283	274-8616	237	277-1873	310	286-0867	278
273-5080	283	274-8617	237	277-3012	24	286-1930	309
	285	274-8620	243	277-5777	140	286-7848	38
	▶297	274-8621	243	278-0209	262	286-9338	493
273-5081	283	274-8623	257		268	286-9340	493
	▶297	274-8625	257		▶276	287-7251	404
273-5093	▶297	274-8628	237	278-0213	262		429
273-5094	297	274-8629	237		268	287-7252	404
	▶298	274-8636	237		▶278		429
273-5095	297	274-8637	243	278-0215	243	287-7268	401
	▶298	274-8638	226	278-0216	243	287-7269	401
273-5096	297		228	278-0217	243	287-8573	13
	▶298		235	278-0218	243	287-8597	23
273-5532	490		239	278-5113	39	288-0422	24
273-9190	159		241	278-5126	12	288-9734	536
	166		246	278-6377	126	289-6410	331
274-3774	148	274-9183	97		129	289-8336	21
	181	274-9872	129		159	289-9871	333
	184		159		166	289-9873	333
	186		166	278-8223	4	289-9875	333
274-3775	173	274-9993	186		▶596	290-6733	159
274-3776	142	275-0468	▶195	279-4969	404		166
274-3778	142		256	279-8725	596	290-6746	97
274-3781	184	275-0469	195	280-7007	▶244	290-7831	536
	186	275-0475	256		262	291-3654	412
274-4274	363	275-0477	257		268	291-5108	544
	365	275-0478	▶243	280-7009	276		546
274-4553	226		257		278	291-8379	309
	228	275-0553	159		279	292-4251	426
	233		166	280-7010	262	292-5773	583
	235	275-0570	137		268	292-9784	160
	237		151		▶279		167
	239		159	280-7012	257	293-1980	538
	241		166		276		542
	244	275-0600	167		279	293-2147	257
	245	275-0601	148	280-9658	339	293-4984	249
	246	275-0652	309		617	293-5496	309
274-4554	262	275-0653	309	281-2901	173	293-8761	243
274-4555	375	275-1038	85	281-4726	384	294-0288	24

▶ **PRIMARY REFERENCE**

PART NUMBER INDEX

Part	Page
294-9810	228
	239
294-9811	246
294-9812	228
	237
	239
	244
	245
294-9813	246
294-9820	257
294-9821	237
295-5550	65
295-8141	153
	155
295-8142	153
	155
295-8143	153
	155
297-1330	553
297-5849	595
297-7958	81
298-0663	41
	148
	159
	166
298-3599	309
298-4783	339
298-5112	10
	11
	▶46
298-5129	10
	11
	▶35
298-5131	10
	11
	▶36
298-5872	52
299-2212	▶535
	536
299-4777	333
299-6082	161
	168
299-6985	▶580
	612
299-6986	▶581
	611

3

Part	Page
300-1702	76
300-6575	159
301-0589	144
302-1413	407
302-8432	196
	262
	268
303-0413	▶284
303-0414	▶284
303-0415	▶284
303-0418	284
	▶299
303-0419	284
	▶299
303-0421	284
	▶299
303-0423	284
	▶300
303-0428	299
	▶300
303-0429	299
	▶300
303-0430	299
	▶301
303-0431	299
	▶301
303-0434	299
	▶301
303-0435	299
	▶302
303-0438	300
	▶302
303-0439	300
	▶302
303-0441	301
303-0442	301
	302
303-0443	302
303-5767	10
	11
	▶23
303-5768	10
	11
	▶22
303-5769	10
	11
	▶130
303-5795	130
304-1021	604
304-1023	604
304-3265	230
	231
	232
304-3711	27
304-5691	104
304-5696	179
304-8760	10
	11
	▶24
304-8761	10
	11
	▶37
304-8965	569
	573
305-3423	257
	262
	268
305-3424	245
305-3425	245
305-3427	▶245
	257
305-3429	▶237
	257
305-3431	237
	244
	245
305-4353	604
305-6815	494
305-6917	70
305-7881	96
306-0348	160
	167
306-0351	160
	167
306-7346	159
	166
307-2242	52
307-3063	434
	▶435
308-1792	13
308-2160	443
308-2161	443
308-3074	188
308-3437	426
308-3554	601
308-4315	454
	456
308-8161	161
	168
308-9568	416
308-9973	6
	▶133
309-1325	▶115
	124
	125
309-6655	50
309-7555	10
	11
	▶43
310-0674	161
	168
310-0851	341
310-3933	463
310-4589	93
310-6216	▶321
	559
310-9354	186
310-9356	560
311-1218	188
311-2230	▶248
	284
	285
311-2768	70
311-3639	▶188
	609
311-6184	97
312-3083	159
	166
312-6455	97
313-3280	604
313-3476	386
313-3477	386
313-3752	▶593
	613
313-5637	606
313-6709	566
313-6710	566
313-6711	540
313-6712	540
313-6713	540
314-4018	535
314-4290	▶601
	603
314-7618	93
315-0180	140
315-1270	532
	▶609
315-1272	609
	▶615
315-1277	609
315-1282	609
315-1284	613
315-1299	609
315-1300	609
315-1301	609
315-1302	609
315-1303	609
315-1304	609
315-1306	609
315-1311	609
315-1312	609
315-1313	609
315-1314	609
315-1316	615
315-1317	615
315-1318	▶594
	615
315-1319	615
315-3381	85
	89
315-3384	12
315-3385	▶39
	40
315-3386	39
315-3387	39
315-3388	39
315-3390	19
315-3391	19
315-3392	19
315-3393	19
315-3394	19
315-3395	33
315-3411	10
	11
	▶58
315-3418	10
	11
	▶105
315-4533	463
315-7645	433
315-7646	433
315-7647	433
315-7790	587
315-9721	72
315-9890	530
	531
	▶603
316-1935	230
	231
	232
316-4742	471
316-4743	471
	473
316-4811	339
316-6899	10
	11
	▶48
316-6925	10
	11
	▶136

▶ **PRIMARY REFERENCE**

PART NUMBER INDEX

Part	Page
316-6941	10
	11
	▶47
316-6945	447
316-6946	469
	471
	473
316-6947	469
	471
	473
316-6948	471
	473
316-6949	471
	473
316-6951	341
316-6952	341
316-7896	▶19
	20
316-8228	609
317-2242	412
317-2243	412
317-2244	412
317-3769	43
317-3778	43
317-4261	609
317-4262	609
317-4263	609
317-4270	587
317-4928	463
317-5539	530
	▶540
317-5541	559
317-5542	583
317-5543	530
	▶583
317-5544	321
317-8141	537
317-9776	10
	11
	▶96
318-9902	▶523
319-4504	469
319-6834	▶284
319-6835	284
	▶303
319-6836	284
	▶303
319-6837	303
	304
319-6838	304
319-6906	390
319-6907	390
319-6908	390
319-7186	303
319-7187	303
	▶304
319-7191	303
	▶304
319-7192	303
	▶304
319-8524	527
	571
319-8968	494
319-8975	494
319-8978	▶509
319-9394	509
	▶510
319-9397	▶494
	510
319-9667	471
	473
319-9668	471
	473
320-0256	494
320-0257	494
320-0267	494
320-0268	494
320-2948	339
320-2949	339
320-3619	339
320-3620	339
320-4725	447
320-5932	1
	2
	▶371
320-5933	2
	▶339
320-5935	▶373
	471
	473
320-5936	1
	2
	▶362
320-5937	1
	2
	▶360
320-5938	2
	▶370
320-7812	429
320-8438	390
320-9164	452
	457
320-9213	79
320-9241	452
	457
320-9835	540
321-3096	386
321-3101	386
321-5776	604
321-6383	393
321-6387	384
	388
	393
321-7038	▶536
	568
321-7192	▶428
	450
321-7231	1
	2
	▶390
321-7303	386
322-3736	447
322-3768	339
322-3770	339
322-6827	▶129
	159
	166
322-8414	532
	562
	564
322-9476	10
	11
	▶31
322-9480	601
322-9481	601
322-9486	601
	▶606
322-9490	606
322-9491	606
322-9492	606
322-9493	606
322-9494	606
322-9495	606
322-9496	606
322-9507	604
322-9509	604
322-9615	72
	74
322-9616	72
	74
322-9663	19
322-9664	19
323-2023	2
	▶399
323-2096	1
	2
	▶433
323-2424	360
323-2431	360
323-2433	360
323-2435	360
323-2465	370
	373
323-2466	374
323-2467	367
	368
323-2470	360
	362
	371
323-3308	41
	44
	54
	56
	61
	206
	208
	420
323-3309	61
	65
	70
	585
	587
323-4218	367
	368
323-4219	367
	368
323-4220	367
	368
323-4221	367
	368
323-6066	609
323-6645	65
323-9083	390
323-9084	390
323-9085	390
323-9086	390
323-9312	33
324-0345	362
324-0352	362
	371
324-0354	362
	371
324-0355	370
	373
324-0356	367
	368
324-0357	362
324-0386	360
324-0391	371
324-0399	362
	371
324-0402	371
324-0411	374
324-0436	373
324-0444	24
324-0496	370
	373
324-0498	370
	373
324-0501	373
324-0505	370
324-0512	374
324-0516	370
324-0525	374
324-0548	1
	2
	▶447
324-0550	1
	▶471
324-0552	2
	▶469
324-2578	257
324-2579	257
324-2889	604
324-2890	601
	▶604
324-2892	604
324-2893	604
324-2894	▶578
	604
324-2895	604
324-2896	▶599
	601
324-2897	▶577
	599
324-2900	599
324-2901	599
324-7594	396
324-7596	428
324-7597	396
324-7598	397
	399
324-7599	384
	397
	399
324-7602	383
324-7603	383
	388
324-7604	397
324-7611	384

▶ **PRIMARY REFERENCE**

PART NUMBER INDEX

Part	Page	Part	Page	Part	Page	Part	Page
	388	328-5196	468		546	331-5564	153
	393	328-5234	452	330-6990	544		155
324-7612	393		457		546	331-5570	181
324-7815	424	328-5333	429	330-6992	553	331-5571	181
324-7816	424	328-5358	429	330-6994	544	331-5578	166
324-7817	424	328-5964	2	330-6996	544	331-5581	97
325-1968	609		▶468		546	331-5635	144
325-7563	468	328-7742	604	330-7002	544	331-5636	160
325-9308	559	328-7749	578		546		166
325-9311	583	328-7750	578	330-7612	117	331-6299	384
325-9315	609	328-7751	578		122		388
326-0089	341	328-7752	578	330-7613	117		393
326-1803	379	328-9650	469		122	331-7306	388
	▶429	329-0129	10	330-9591	401		393
326-6389	609		11	330-9669	468	331-7798	578
326-8993	▶84		▶67	330-9670	468	331-7799	578
	85	329-0143	384	330-9686	554	331-8037	459
326-8999	10		388	330-9687	578	331-8538	210
	11		393	330-9752	401		211
	▶17	329-1167	532	331-0797	426		212
326-9000	10		▶562	331-0798	426	331-9945	441
	11	329-1168	532	331-1520	362		442
	▶15		▶564		371		▶544
326-9002	10	329-1169	562	331-1521	339	332-0092	433
	11	329-1170	564		341	332-1025	399
	▶33	329-1329	463	331-1522	339	332-1829	384
326-9003	10	329-1330	463	331-2489	335		388
	11	329-1331	463		337	332-2578	454
	▶20	329-1348	305	331-3770	393		456
326-9004	10	329-1350	▶285	331-3779	384	332-2579	454
	11	329-1351	▶285		388		456
	▶40	329-1352	▶285		393	332-4254	4
326-9005	10	329-1354	285	331-4345	392		▶553
	11		▶305		▶554	332-6408	410
	▶12	329-1355	▶305	331-4360	544		▶440
326-9006	10	329-1919	305		546	332-8571	407
	▶85	329-3734	144	331-4365	335	332-8572	407
326-9008	10		146		337	333-0739	390
	11		161	331-5456	▶131	333-0790	454
	▶13		168		254		456
326-9010	10		173	331-5461	7	333-0791	454
	▶72	329-3820	401		▶101		456
326-9012	10	329-4508	407	331-5462	▶184	333-0792	454
	11	329-5699	61		251		456
	▶79	329-7496	4	331-5463	184	333-1320	393
326-9013	10		5	331-5464	▶186	333-7905	544
	11		6		254	333-8324	544
	▶26		7	331-5465	186		546
326-9147	▶88		▶119	331-5470	▶177	333-9901	564
	89	329-7497	▶121		359		▶611
326-9149	11	329-9748	473	331-5471	177	333-9902	562
	▶89	329-9749	1	331-5496	148		▶612
326-9153	74		▶473	331-5518	140	334-0751	451
326-9156	11	330-0422	611	331-5529	144		▶452
	▶74		612	331-5537	146	334-0752	450
327-0222	390	330-0427	611	331-5550	97		▶454
327-0223	390	330-0428	612	331-5552	97	334-3569	441
327-3753	433	330-0798	335	331-5554	101		▶546
327-4172	117		337	331-5555	97	334-4169	471
	122	330-5738	452	331-5556	97		473
327-8298	384		457	331-5557	101	334-4603	437
	388	330-5739	452	331-5562	153	334-5131	257
	393		457		155		262
328-1950	▶117	330-6987	544	331-5563	153		268
	352	330-6988	544		155	334-7225	530

▶ **PRIMARY REFERENCE**

PART NUMBER INDEX

Part	Page
	▶598
334-7227	598
334-7931	397
334-7947	399
334-9334	38
335-1836	29
	30
	595
335-2224	609
335-9214	418
336-3545	▶103
	144
336-4713	276
	279
336-4714	276
	279
336-4715	276
336-4721	228
	239
336-4722	276
	279
336-4728	279
336-4729	276
	279
336-5469	257
	262
	268
336-6396	471
	473
336-6804	276
	279
336-6817	276
	279
336-6822	276
	279
336-6824	276
	279
336-6831	276
	279
336-6839	276
	279
336-6846	276
336-6847	276
	279
336-6848	276
	279
336-6851	228
	239
336-6908	276
	279
336-6913	276
	279
336-6914	276
	279
336-7113	276
	279
336-7114	276
	279
336-7524	276
336-7526	276
	279
336-7529	276
	279
336-7533	542
336-9096	173
336-9168	530
	▶591
337-3530	244
337-5351	542
337-6245	550
337-6246	550
337-6247	550
337-6851	4
	5
	6
	7
	▶330
337-7029	173
337-7394	▶495
337-7395	▶481
	495
337-7410	▶513
	516
337-7482	▶514
	515
337-7483	512
	▶515
337-8655	348
337-8935	▶432
	475
	476
	477
	479
337-9693	▶324
337-9694	▶325
337-9695	5
	6
	▶326
337-9696	▶327
337-9697	5
	6
	▶346
337-9698	379
	▶434
337-9701	▶206
	254
337-9702	8
	9
	▶349
337-9703	▶208
	251
337-9713	▶438
	441
	442
337-9717	▶215
	251
337-9719	▶216
	254
337-9720	▶439
	441
	442
337-9722	▶347
337-9727	▶29
	251
	254
337-9728	▶30
	254
337-9734	8
	9
	▶81
337-9735	8
	9
	▶353
337-9748	8
	9
	▶70
337-9765	▶537
	568
337-9770	379
	▶416
337-9774	379
	▶418
337-9777	379
	▶420
337-9779	▶54
	251
	254
337-9781	568
	▶585
337-9783	568
	▶587
337-9793	359
	▶422
337-9810	▶403
	441
337-9811	▶401
	441
	442
337-9812	▶380
	441
	442
337-9821	2
	▶426
337-9825	6
	▶318
337-9837	6
	▶219
337-9841	7
	▶449
337-9846	7
	▶444
337-9866	5
	▶8
337-9867	6
	▶9
338-1421	5
	6
	▶348
338-1508	321
338-2412	370
	373
338-2413	374
338-2414	367
	368
338-2415	360
	362
	371
338-2442	370
	373
338-2443	374
338-2444	367
	368
338-2445	360
	362
	371
338-3328	532
338-3578	548
338-9831	578
339-0010	407
339-0089	407
339-2886	407
339-2935	407
339-3043	65
339-3497	407
339-4287	407
340-1650	426
340-1693	▶2
	3
340-1701	3
	▶7
340-1718	3
	▶379
340-1732	▶2
340-1733	▶1
	5
	6
340-1734	▶1
340-1740	5
	6
	▶450
340-1741	▶451
340-1743	▶450
340-1746	5
	6
	▶359
340-1747	▶359
340-1750	▶450
340-1789	444
340-2566	146
340-2567	146
340-4152	93
340-6272	339
	370
	373
	374
340-6338	362
	371
340-9290	335
	337
340-9308	360
	362
	370
	371
	373
	374
340-9310	374
340-9311	370
	373
340-9312	367
	368
340-9313	362
	371
340-9325	360
341-0076	426
341-0121	410
	429
341-0596	▶285
341-2047	327
341-3105	▶3
	5

▶ **PRIMARY REFERENCE**

PART NUMBER INDEX

Part	Page	Part	Page	Part	Page	Part	Page
	6		438		476	353-1338	252
341-3107	▶4	344-7954	117		477		255
341-3109	▶7		122	350-1594	▶414		▶375
341-3111	▶4	344-8098	429		475	353-1341	253
341-4712	339	344-8154	429		479		▶376
341-5749	598	344-8163	429	350-3689	8	353-1361	▶309
341-5750	598	345-3674	▶357		9		379
341-5752	397	345-4230	604		▶69	353-1364	8
341-6152	444	346-0407	24	350-3733	471		9
341-6677	530	346-0408	24		473		▶83
	▶542	346-5063	553	350-3842	360	353-1366	530
341-6687	251	346-5168	613		362		▶613
	▶560	346-5517	404		367	353-1374	▶356
341-6710	568	346-5518	135		368		441
	▶571	346-5631	471		370		442
341-6719	▶76		473		371	353-1380	8
	103	346-5927	414		373		9
341-7654	318	346-6559	471		374		▶322
	▶320		473	350-4310	69	353-1385	441
341-8901	65	346-6560	471	350-7008	475		442
341-9201	306		473		479		▶524
341-9202	285	346-6687	64		▶512	353-1386	5
	▶306	346-6688	64	350-8606	▶253		6
341-9203	306	346-7487	▶135		254		▶548
341-9204	▶306		442	350-8607	253	353-1387	▶550
342-9920	50	346-9825	96		▶267	353-1388	1
	52	347-1126	407	350-9471	181		▶555
	343	347-1127	407	351-0287	309	353-1392	3
	349	347-4525	3	351-0288	309		▶617
	351		▶592	351-0290	416	353-1399	530
343-2901	▶328	347-5947	322	351-4746	349		▶566
	450	347-7045	27	351-5888	379	353-1403	334
343-3428	▶462	348-5460	456		▶437		▶335
	465	348-5464	450	351-8190	45	353-1404	334
343-3433	4		▶456	351-8191	44		▶337
	▶125	348-5465	450		▶45	353-1418	1
343-4301	408		▶457	352-1449	8		2
	428	348-7143	231		9		▶463
343-4355	146	348-7144	230		▶65	353-1429	▶530
343-4847	548	348-7146	232	352-1454	8		531
343-4848	548	348-8149	52		9	353-1441	▶377
343-5421	61	349-1063	81		▶71		379
343-5643	▶64		▶92	352-1930	71	353-1457	▶103
	65	349-1100	181	352-2717	65		224
343-6096	70	349-2773	181	352-3463	8	353-1461	▶103
343-7400	433	349-3261	50		9		224
343-8051	360	349-3643	462		▶44		225
343-8052	362	349-3644	4	352-3964	148	353-1490	5
	371	350-1078	181	352-3965	184		▶382
344-1001	592	350-1574	511	352-4645	173	353-1492	6
344-1004	609		▶516	352-7601	44		▶392
344-2170	390	350-1575	476	352-7634	44	353-1494	▶383
344-2171	390		477	352-8358	50	353-1501	▶6
344-2543	469		▶511		52		224
344-2608	257	350-1580	▶475	352-8367	544		225
344-2824	160	350-1581	▶476		546	353-1507	224
	167	350-1587	▶477	352-8799	61		▶251
344-2846	585		478	352-9742	553	353-1510	224
	587	350-1588	5	353-1335	▶230		▶254
344-5863	548		6		251	353-1511	225
344-6334	557		▶478		254		▶254
344-7391	177	350-1589	▶479	353-1336	▶231	353-1641	64
344-7511	▶527		480		251	353-3280	328
	568	350-1590	▶480	353-1337	▶232	353-3433	554
344-7932	349	350-1591	▶412		254		555

▶ **PRIMARY REFERENCE**

PART NUMBER INDEX

Part	Page	Part	Page	Part	Page	Part	Page
353-4847	64		▶459	358-5045	7	360-2820	444
353-5219	31	356-8635	475		▶374	360-6643	337
353-6951	▶352		476	358-5379	444	360-7056	368
353-6952	▶619		477	358-5381	444	360-7060	367
353-6953	▶465		479	358-6523	70		368
353-6954	▶576	357-1994	288	358-6524	70	360-7347	10
353-6955	▶352	357-1995	295	358-6684	70		11
353-6956	▶465	357-1996	294	358-7086	571		▶38
353-7423	16	357-3197	103		▶573	360-8798	8
353-7424	16		▶159	358-7087	527		9
353-7425	16	357-3199	8		▶569		▶41
353-7957	98		9	358-7697	161	360-8966	346
353-8082	61		▶148		168	360-8981	7
353-9667	16	357-3200	148	358-7863	349		▶622
354-1274	48	357-3205	▶173	358-7864	351	360-8982	7
	▶49		441	358-7903	349		▶618
354-5137	153		442	358-9301	437	360-8983	97
	155	357-3206	173	359-0015	▶151		101
354-7361	8	357-3211	▶137		568	360-8984	97
	9		568	359-0016	137		101
	▶61	357-3214	▶144		151	360-9835	374
354-7363	8	357-3216	▶179	359-0264	78	360-9841	374
	▶10		359	359-0377	251	361-1725	208
354-8258	61	357-3217	179		▶252	361-1727	206
355-2252	58	357-3221	▶153	359-0380	254		208
355-3833	▶220		442		▶255	361-1728	208
	253	357-3222	153	359-0389	376	361-2693	206
	255	357-3224	167	359-0393	252	361-4239	585
355-3837	220	357-3229	▶132		▶256		587
	221		251	359-0396	255	361-4343	335
355-3838	220	357-3233	▶181		▶261	361-4643	351
355-3839	221		450	359-0403	224	361-4654	318
355-3841	▶221		451		▶249	361-4655	318
	252	357-3234	181	359-0406	225	361-5903	219
355-3843	205	357-3236	160		▶250	361-6047	250
355-3844	205	357-3237	▶142	359-0715	15	361-6768	377
355-3845	▶205		530		▶16	361-7032	206
	250	357-3238	142	359-0719	33	361-7547	41
355-7516	414	357-3240	103	359-0720	33	361-7549	41
356-0041	325		▶166	359-0721	33	361-7891	351
356-0042	326	357-3241	532	359-0722	33	361-8151	587
356-0804	532	357-3247	157	359-0723	33	361-8157	587
356-4054	532	357-3248	▶157	359-0724	33	361-8158	587
356-4056	527		442	359-0744	10	361-9554	92
356-4057	527	357-3259	103		11	361-9737	439
356-4064	309		▶146	359-0750	38	361-9918	437
356-4066	333	357-4273	349	359-3495	71	361-9929	416
356-4070	76	357-4274	349	359-4737	452	361-9930	416
356-4074	560	357-4621	420	359-4738	457	361-9950	422
356-4094	557	357-6501	8	359-7209	438	361-9951	422
356-4104	530		9		▶443	361-9952	422
	▶532		▶97	359-7214	439	362-1163	377
356-4106	▶333	357-9887	557	359-7226	309	362-1164	377
	441	357-9950	557	359-7323	78	362-1266	▶78
	442	357-9951	557		81	362-1426	403
356-4108	333	358-1415	349	359-7325	81		404
356-4110	333	358-2307	447		310	362-1583	403
356-4112	333	358-3844	▶60		318	362-1590	380
356-4114	167		61	359-9666	96	362-1591	404
356-4115	160	358-4817	444	359-9885	537	362-1592	404
356-4116	333	358-4842	444	360-1845	140	362-1595	380
356-4120	530	358-5034	7	360-2813	444	362-1600	380
	▶559		▶367	360-2814	444	362-1602	401
356-4121	559	358-5035	7	360-2815	444	362-1603	401
356-4606	454		▶368	360-2816	444	362-1612	410

▶ **PRIMARY REFERENCE**

PART NUMBER INDEX

Part	Page	Part	Page	Part	Page	Part	Page
362-2077	401	363-8477	161	366-5618	548	371-4326	548
362-2078	401		168	366-5619	550	371-5095	382
362-2079	401	363-9102	443	366-5620	548		▶386
362-2080	401	363-9104	443	366-9220	349		392
362-2190	17	363-9649	437	367-0055	349	371-5659	386
	▶18	363-9783	443	367-5026	161	371-5700	72
362-2820	78	363-9806	443		168		74
	81	363-9893	206	367-5378	335	371-6659	94
362-2904	98		208		337	371-7076	351
362-3069	322	364-1940	54	367-5834	3	371-7077	351
362-3070	322		56		▶616	371-7649	449
362-3074	322	364-1941	54	367-5957	▶3	371-8714	380
362-3079	322	364-2475	94	367-6032	7	371-8715	380
	▶323		322		▶107	371-8717	403
362-3080	323	364-3388	▶392	367-7625	349		404
362-3298	131	364-3760	524	367-7764	349	371-8718	403
	132	364-4125	397	367-8073	65	371-9284	449
362-4273	414	364-4126	397	367-9552	433	372-0739	349
362-4274	414	364-5743	9	367-9557	401	372-0740	349
362-4557	▶93		▶11	367-9973	▶329	372-4592	351
	94	365-2181	216		450	372-4600	343
362-4560	94	365-2182	216		451	372-4605	343
362-4563	94	365-2183	216	368-0291	▶343	372-4613	343
	322	365-2185	216		349	372-4616	349
362-4624	94	365-2511	343	368-0546	555	372-5024	444
362-4625	2	365-2814	▶196	368-3151	105	372-5085	444
	▶94		257	368-4714	97	372-7230	347
362-4915	215	365-2823	173	368-4842	386	372-7231	347
362-5024	367	365-2913	544	368-5465	1	372-8661	4
	368		546		2		▶122
362-5364	309	365-2915	544		▶424	372-8664	▶116
362-7687	268		546	368-6231	161		530
362-8030	97	365-3308	79		168	373-2673	617
362-8059	44	365-3331	▶396	368-9869	309	373-4266	▶441
362-8135	349		450	369-0473	105	373-4267	5
362-8136	349	365-3333	1	369-1123	407		6
362-8670	587		▶397	369-2053	349		▶441
362-9029	93	365-3335	▶384	369-2189	615	373-4268	▶442
362-9209	318		392	369-2472	105	373-4295	▶334
362-9239	318	365-3338	▶407	369-3473	343	373-4296	5
362-9359	▶404		450	369-3945	343		6
	442		451	369-5665	▶410		▶334
362-9460	94	365-4093	343		450	373-5978	401
363-0326	367	365-4591	257		451	373-6484	403
363-0443	418	365-4592	256	369-5823	268		404
363-0540	329	366-1271	324	370-0042	140	373-6522	71
363-1316	418		325	370-0495	335	373-6966	309
363-2679	418	366-1789	268		337	373-8390	444
363-2855	524	366-2574	604		444	373-9138	161
363-2856	524	366-2575	604	370-2909	105		168
363-2867	349	366-4280	404	370-3940	616	373-9373	61
363-2868	349	366-4281	404	370-3941	616	374-0840	401
363-4651	262	366-4354	404	370-3956	616	374-5103	268
363-5880	422	366-5045	548	370-3957	616	374-5105	268
363-6273	401	366-5048	548	370-3970	418	374-5106	268
363-6274	401	366-5052	548	370-4010	418	374-5109	239
363-7486	587	366-5054	550	370-4021	56	374-5110	▶239
363-8010	94	366-5055	550	370-5555	335		268
	322	366-5287	550		337	374-5112	▶228
363-8031	94	366-5290	548	370-8941	463		268
363-8348	94	366-5453	548	371-1282	437	374-5113	▶246
	322	366-5457	555	371-1670	420		268
363-8458	257	366-5460	555	371-2051	532	374-5381	50
363-8466	420	366-5461	548	371-2054	52		52
363-8475	93		555	371-2055	50	374-6826	5

▶ **PRIMARY REFERENCE**

PART NUMBER INDEX

Part	Page	Part	Page	Part	Page	Part	Page
	6		▶341				
	▶224	379-2197	50				
374-6834	▶224		52				
374-6842	▶225	380-2601	12				
374-6852	5	380-5076	420				
	▶530	380-5753	▶56				
374-6854	6		254				
	▶531	380-5771	56				
374-6861	382	380-5914	161				
	▶388		168				
374-6863	392	380-7775	▶345				
	▶393		530				
374-6870	530	380-7826	532				
	531	380-7827	532				
	▶557	380-7828	532				
374-6872	4	380-8261	103				
	▶466		▶104				
374-6887	530	380-8815	94				
	▶568	380-9296	268				
374-6889	531	381-5559	349				
	▶568		▶351				
374-7337	97	381-8054	339				
374-7438	3		▶363				
	▶626	381-8055	339				
374-7439	4		▶365				
	▶623	381-8085	363				
374-7440	4	381-8086	365				
	▶624	382-3404	104				
374-7889	404	382-3405	104				
374-9636	161	382-6675	343				
375-1372	330	382-8033	▶358				
375-1373	330		422				
375-1442	341	383-2789	140				
375-2087	418	383-8936	140				
375-2144	101	383-8937	140				
375-9569	▶50	383-9581	▶140				
	568	384-4107	10				
375-9570	▶52		11				
	568		▶27				
376-0645	65	384-4108	10				
376-2119	331		11				
376-8918	449		▶21				
377-0002	335	385-0558	155				
	337	385-0559	▶155				
377-0023	▶7		441				
377-0774	449	385-8591	60				
	466	385-8593	60				
377-3802	353	385-8594	60				
377-3803	353	386-1737	103				
377-4844	103	386-6191	54				
377-5263	60		56				
377-5264	60	388-4572	140				
377-5265	60	388-5359	140				
377-5319	330	388-9965	268				
377-5320	330	389-1833	449				
377-5823	587	389-3761	▶5				
377-9352	363	389-3762	▶6				
	365	389-7167	307				
378-0598	466		▶308				
378-3311	345	389-7168	308				
378-8059	345						
378-8579	268						
378-9622	341						
378-9623	1						
	2						

▶ **PRIMARY REFERENCE**

MEMORANDA



© 2012 CATERPILLAR
ALL RIGHTS
RESERVED

CAT, CATERPILLAR, THEIR RESPECTIVE LOGOS, “CATERPILLAR YELLOW” AND THE POWER EDGE TRADE DRESS, AS WELL AS CORPORATE AND PRODUCT IDENTITY USED HEREIN, ARE TRADEMARKS OF CATERPILLAR AND MAY NOT BE USED WITHOUT PERMISSION.