RUTHZIL TRATOR COMERCIAL DE PEÇAS LTDA 11 97083-6812 ROLANDO CITRANGULO

JANEIRO 2005

430

Bobcat®

Parts Manual

S/N 5630 11001 & Above

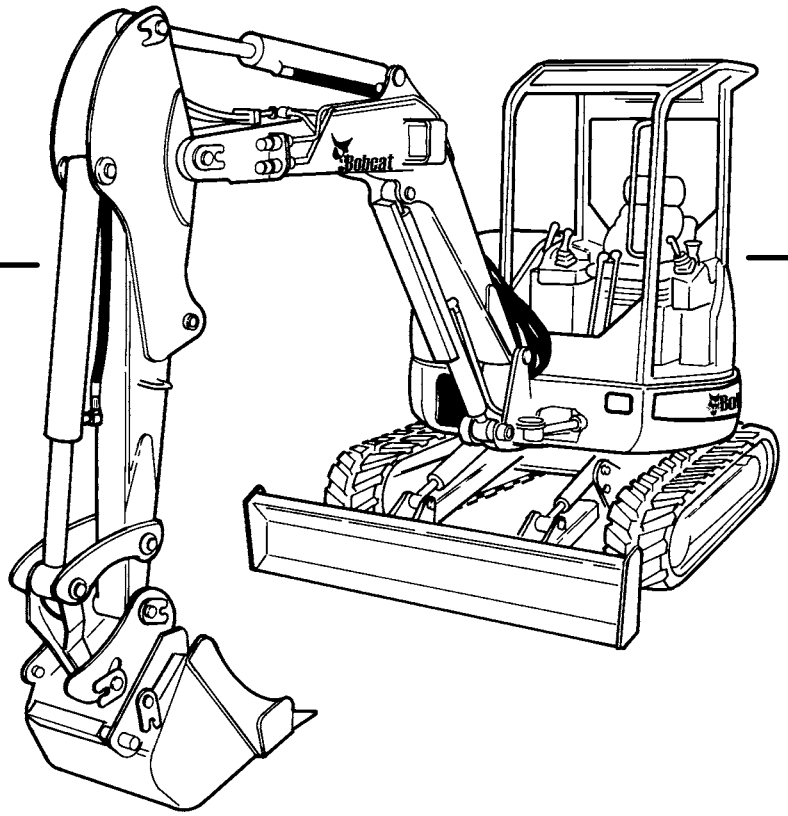

Bobcat®

6904108 (1-05)

Printed in U.S.A.

© Bobcat Company 2005

MAINTENANCE ITEMS
Model 430AG

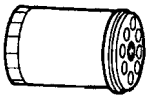



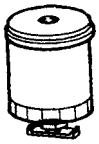

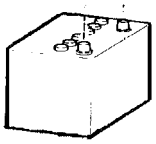

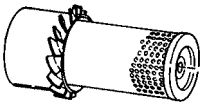







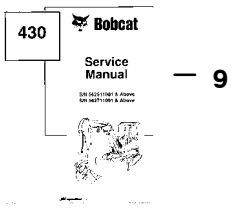

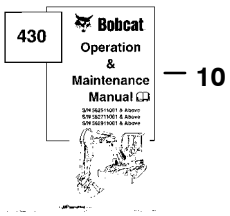



B-22400

MAINTENANCE ITEMS (Cont'd)
Model 430AG

Ref. No.	Part Number	Description	Remarks	Serial Number	Qty.
1	6675517	FILTER	engine oil - 6 pack -		
			See Page NO TAG		x
2	6667352	ELEMENT	fuel - See Page NO TAG		x
	6633977	FILTER	fuel - inline - See Page NO TAG		x
3	6666333	FILTER	air cleaner - primary		x
	6666334	FILTER	inner		x
4	6661248	FILTER	hydraulic - See Page NO TAG		x
	6681012	FILTER	hydraulic - inline - See Page NO TAG		
			x		
5	6674687	BATTERY			x
6	6903117	FLUID	hyd/hydro - (2) 2.5 -		x
			See Page NO TAG		x
	6903118	FLUID	hyd/hydro - 5 Gal.-		x
			See Page NO TAG		x
	6903119	FLUID	hyd/hydro - 55 Gal. -		x
			See Page NO TAG		x
7	6903105	MOTOR OIL	15W40 CE/SG -1 Qt. -		
			See Page NO TAG		x
	6903106	MOTOR OIL	15W40 CE/SG -1 Gal. -		
			See Page NO TAG		x
	6903113	MOTOR OIL	15W40 CE/SG - 2.5 Gal. -		x
			See Page NO TAG		x
	6903107	MOTOR OIL	10W30 CE/SG -1 Qt.		x
			See Page NO TAG		x
	6903108	MOTOR OIL	10W30 CE/SG -1 Gal. -		x
			See Page NO TAG		x
	6903112	MOTOR OIL	10W30 CE/SG - 2.5 Gal. -		x
			See Page NO TAG		x
	6903109	MOTOR OIL	30 CE/SG -1 Qt. -		
			See Page NO TAG]		x
	6903110	MOTOR OIL	30 CE/SG -1 Gal. -		
			See Page NO TAG		x
	6903111	MOTOR OIL	30 CE/SG -2.5 Gal. -		
			See Page NO TAG		x
	6903121	LUBRICANT	80W90 - 1Qt. - See Page NO TAG		x
8*	6902318	MANUAL	service		x
9*	6902316	MANUAL	operation & maintenance		x
10*	6903360	MANUAL	parts		x

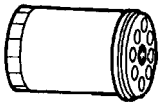



B-24306

MAINTENANCE SCHEDULE (Cont'd)
Model 430AG - 50 Hour Service Schedule

Ref. No.	Part Number	Description	Remarks	Serial Number	Qty.
1	6675517	FILTER	engine oil (6 pack) -		
			See Page NO TAG		x
2	6903108	MOTOR OIL	10W30 CE/SG -1 Gal. -		x
			See Page NO TAG		x
	6903112	MOTOR OIL	10W30 CE/SG - 2.5 Gal. -		x
			See Page NO TAG		x
	6903105	MOTOR OIL	15W40 CE/SG -1 Qt. -		
			See Page NO TAG		x
	6903106	MOTOR OIL	15W40 CE/SG -1 Gal. -		
			See Page NO TAG		x
	6903113	MOTOR OIL	15W40 CE/SG - 2.5 Gal. -		x
			See Page NO TAG		x
	6903109	MOTOR OIL	30 CE/SG -1 Qt. -		
			See Page NO TAG		x
	6903110	MOTOR OIL	30 CE/SG -1 Gal. -		
			See Page NO TAG		x
	6903111	MOTOR OIL	30 CE/SG -2.5 Gal. -		
			See Page NO TAG		x

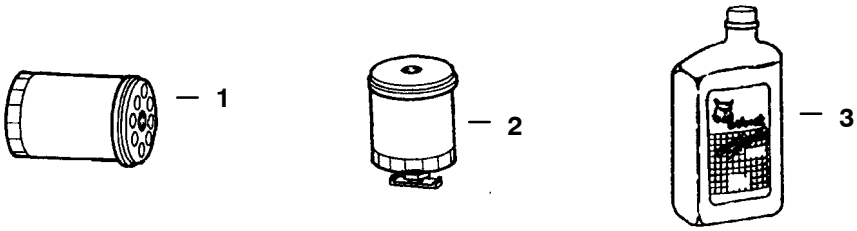

B-24307

MAINTENANCE SCHEDULE (Cont'd)
Model 430AG – 100 Hour Service Schedule

Ref. No.	Part Number	Description	Remarks	Serial Number	Qty.
1	6661248	FILTER	hydraulic		x
2	6681012	FILTER	hydraulic in line–casedrain & fan		x
3	6903105	MOTOR OIL	15W40 CE/SG –1 Qt. –		
			See Page NO TAG		x
	6903106	MOTOR OIL	15W40 CE/SG –1 Gal. –		
			See Page NO TAG		x
	6903113	MOTOR OIL	15W40 CE/SG – 2.5 Gal. –		x
			See Page NO TAG		x
	6903107	MOTOR OIL	10W30 CE/SG –1 Qt. –		x
			See Page NO TAG		x
	6903108	MOTOR OIL	10W30 CE/SG –1 Gal. –		x
			See Page NO TAG –		x
	6903112	MOTOR OIL	10W30 CE/SG – 2.5 Gal. –		x
			See Page NO TAG		x
	6903109	MOTOR OIL	30 CE/SG –1 Qt. –		
			See Page NO TAG		x
	6903110	MOTOR OIL	30 CE/SG –1 Gal. –		
			See Page NO TAG		x
	6903111	MOTOR OIL	30 CE/SG –2.5 Gal. –		
			See Page NO TAG		x



B-24308

MAINTENANCE SCHEDULE (Cont'd)
Model 430AG – 250 Hour Service Schedule

Ref. No.	Part Number	Description	Remarks	Serial Number	Qty.
1	6633977	FILTER	fuel – inline – See Page NO TAG		x
2	6667352	ELEMENT	fuel – See Page NO TAG		x

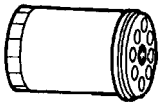

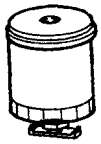





B-24309

MAINTENANCE SCHEDULE (Cont'd)
Model 430AG – 500 Hour Service Schedule

Ref. No.	Part Number	Description	Remarks	Serial Number	Qty.
1	6675517	FILTER	engine oil (6 pack) –		
			See Page NO TAG		x
2	6661248	FILTER	hydraulic		x
	6681012	FILTER	hydraulic in line–casedrain & fan		x
3	6903117	FLUID	hyd/hydro – (2) 2.5 –		x
			See Page NO TAG		x
	6903118	FLUID	hyd/hydro – 5 Gal.–		x
			See Page NO TAG		x
	6903119	FLUID	hyd/hydro – 55 Gal. –		x
			See Page NO TAG		x
4	6903108	MOTOR OIL	10W30 CE/SG –1 Gal. –		x
			See Page NO TAG		x
	6903112	MOTOR OIL	10W30 CE/SG – 2.5 Gal. –		x
			See Page NO TAG		x
	6903105	MOTOR OIL	15W40 CE/SG –1 Qt. –		
			See Page NO TAG		x
	6903106	MOTOR OIL	15W40 CE/SG –1 Gal. –		
			See Page NO TAG		x
	6903113	MOTOR OIL	15W40 CE/SG – 2.5 Gal. –		x
			See Page NO TAG		x
	6903107	MOTOR OIL	10W30 CE/SG –1 Qt.		x
			See Page NO TAG		x
	6903109	MOTOR OIL	30 CE/SG –1 Qt. –		
			See Page NO TAG		x
	6903110	MOTOR OIL	30 CE/SG –1 Gal. –		
			See Page NO TAG		x
	6903111	MOTOR OIL	30 CE/SG –2.5 Gal. –		
			See Page NO TAG		x

GENERAL INFORMATION

When using the machine serial number, use the complete number.

Some Serial Number breaks are not available at time of printing. These are listed as & Below or & Above.

The number shown in the quantity column in this manual is the number of parts needed for the illustration on the page. For some parts an "x" will be shown in the quantity column. This "x" indicates that the quantity to be used is "As Needed".

When references L.H. and R.H. are used in this manual, it is done from the operator's seat in the forward operating position.

Some of the illustrations and information found in this parts manual were supplied to Bobcat by machine component companies.

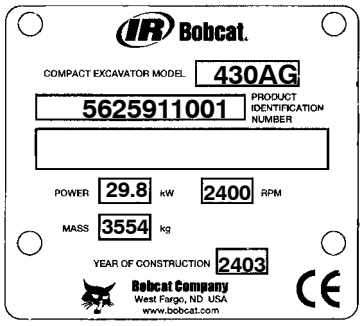

ABBREVIATIONS & SYMBOLS

SALES = Order from Gwinner Sales Department

NSS = Not Serviced Seperately

NAP = Not Available as Parts

*** = Changed or Added Sections, Pages or Part Numbers**

Disposition Code Definition (Found in the Remarks Column)

[A] = Use Up

[B] = Use Up on Other Appplication (See PNI)

[C] = File PDR Report With Bobcat Parts Sales

[D] = Part Number Error

Explications en francais	**Grid Nb**	**3**
Erklärungen auf deutsch	**Grid Nb**	**4**
Spiegazioni in italiano	**Grid Nb**	**5**
Explicaciones en espanol	**Grid Nb**	**6**
Verklaring in het Nederlands	**Grid Nb**	**7**

NOTE D'INFORMATION

Pour toute référence au numéro de série de l'engin, toujours donner le numéro complet.

Le chiffré apparaissant dans la colonne des quantités de ce manuel représentent le nombre de pièces nécessaires pour l'illustration reprise sur la page. Dans certains cas, on lira un "x" dans la colonne des quantités. Cet "x" indique que la quantité nécessaire est "selon besoin".

Pour toute référence vers la GAUCHE ou la DROITE dans ce manuel, considérer que la personne se trouve assise dans le siège de l'opérateur, en position de fonctionnement en marche avant.

Certaines illustrations et informations reprises dans ce manuel de pièces de rechange ont été fournies à Bobcat, par des fabricants de composants.

ABREVIATIONS & SYMBOLES

SALES	= Commander au Service Ventes à Bruxelles
NSS	= Pas vendu séparément
NAP	= Non disponible comme pièce de rechange
	= Chapitre, page ou numéro de pièce modifié ou supplémentaire
BTI	= Bobcat Technical Information Bulletin : voir à la fin de la microfiché du modèle concerné ou la microfiche générale reprenant l' ensemble des "BTI".
was 6535403	= était avant 6535403
adj. (adjustment)	= réglage
Assembly	= ensemble
available W/Ref.	= disponible avec réf.
bulk/sold per foot	= en vrac/vendu par pied
does not include	= ne comprend pas
included with	= compris dans
I.D.	= D.I. (diamètre intérieur)
O.D.	= D.E. (diamètre extérieur)
not in kit	= pas en kit
W/ - WO/	= inclus/ – non inclus/
Qty	= quantité requise
see page/ref.	= voir page/réf.
used with ref/	= utilisé avec réf.
0,05 inch thickness	= 0,05 pouce d'épaisseur (un pouce = 25.4 mm)
weld on	= à souder

ALLGEMEINE INFORMATIONEN

Bei Angabe der Maschinen–Seriennummer stets die komplette Nummer angeben.

Bei der in der Mengenspalte (Anzahl) in diesem Handbuch angegebenen Zahl handelt es sich um die Anzahl von Teilen, die für die Abbildung auf der betreffenden Seite benötigt werden. Bei manchen Teilen in der Mengenspalte ist ein “x” angegeben. Dieses “x” weist darauf hin, dass sich die Anzahl der verwendeten Teile auf den “Bedarf” bezieht.

Bei Verwendung der Seitenangaben links und rechts in diesem Handbuch gelten diese für die Blickrichtung vom Fahrersitz aus, und zwar in Vorwärts–Betriebsrichtung.

Einige der in diesem Ersatzteilhandbuch aufgeführten Abbildungen und Informationen wurden der Bobcat, von den Herstellern von Maschinenbauteilen zur Verfügung gestellt.

ABKÜRZUNGEN UND SYMBOLE

SALES	= Bestellung bei der Verkaufsabteilung in Brüssel
NSS	= Nicht einzeln erhältlich
NAP	= Nicht als Ersatzteil erhältlich
	= Geänderte oder hinzugefügte Abschnitte, Seiten oder Teilenummern
BTI	= Bobcat Technical Information Bulletin : Siehe am Ende der Mikrokarte des jeweiligen Modells oder der allgemeinen Mikrokarte der BTI.
was 6535403	= War 6535403
adj.	= Einstellung
Assembly	= Baugruppe
available W/Ref.	= erhältlich mit der Referenz
bulk/sold per foot	= Mengenabnahme / Verkauf pro Fuss
does not include	= beinhaltet nicht
included with	= enthalten in
I.D.	= Innendurchmesser
O.D.	= Aussendurchmesser
not in kit	= nicht in Bausatz
W/ – WO/	= mit/ – ohne/
Qty	= Anzahl
see page/ref.	= Siehe Seite / Referenz
used with ref.	= verwendet mit Referenz
0.05 inch thickness	= Dicke : 0.05 Zoll (ein Zoll = 25.4 mm)
weld on	= anschweissen

INFORMAZIONI GENERALI

Quando si usa il numero di serie della macchina usare il numero completo.

Il numero mostrato nella colonna della quantità di questo manuale corrisponde al numero di componenti necessari per l'illustrazione della pagina. Per alcuni componenti appare "X" nella colonna delle quantità. Questa "X" indica che la quantità da usare è "come necessario".

See in questo manuale si fa riferimento alla parte destra o sinistra, si intende dal sedile dell'operatore nella posizione in avanti di funzionamento.

Alcune delle illustrazioni e informazioni trovate in questo manuale di componenti sono state fornite alla Bobcat, da società di componenti di macchine.

SIMBOLI E ABBREVIAZIONI

SALES	= Ordinare al servizio vendite di Bruxelles
NSS	= Non vendute separatamente
NAP	= Non disponibile come componente
	= Sezioni, pagine o numeri di componente cambiati o aggiunti
BTI	= (Bobcat Technical information) Ved. al termine del microfiche del modello relativo oppure microfiche generale
was 6535403	= era 6535403
adj. (adjustment)	= regol. (regolazione)
Assembly	= Complessivo
available W/ref.	= disponibile con rif.
bulk/sold per foot	= alla rinfusa/venduto al piede
does not include	= non comprende
Included with	= compreso con
I.D.	= d. i.
O.D.	= d. e.
not in kit	= non fa parte del kit
W/ – WO/	= con – senza
Qty	= Qtà
see page/ref	= ved. pagina/rif.
used with ref.	= usato con il rif.
0,05 inch thickness	= spessore 0,05 pollici (un pollice = 25,4 mm)
weld on	= a saldare

INFORMACION GENERAL

Al utilizar el número de serie de la máquina, debe emplearse el número completo.

El número que figura en la columna de “Unidades” en este manual es el número de piezas que se necesitan para la ilustración que consta en la página. En algunas piezas aparece una “x” en la columna de “Unidades”. Esta “x” indica que las unidades a utilizar son “según sea necesario”.

Cuando se empleen las referencias izq. y dcha., éstas se entienden mirando desde el asiento del conductor, en posición de marcha adelante.

Algunas de las ilustraciones y la información que figuran en este manual de piezas han sido facilitadas a Bobcat, por empresas de componentes de máquinas.

ABREVIATURAS Y SIMBOLOS

VENTAS	= Pedido al Departamento de Ventas de Bruselas
NSS	= No se vende por separado
NAP	= No disponible como pieza de repuesto
	= Secciones, páginas o referencias modificadas o añadidas
BTI	= (Bobcat Tecnical Information) Ver al final de la microficha del modelo afectado o en la microficha general “Boletín de Información Técnica Bobcat”.
was 6535403	= era anteriormente el 6535403
adj. (adjustment)	= ajuste
assembly	= conjunto
available W/Ref.	= disponible con la ref.
bulk/sold per foot	= a granel/vendido por pies
does not include	= no incluye
included with	= incluido en
I.D.	= diámetro interior
O.D.	= diámetro exterior
not in kit	= no en el kit
W/ - WO/	= con/ – sin
Qty	= Unidades
see page /ref.	= ver página/ref.
used with ref.	= empleado con la ref.
0,05 inch thickness	= 0,05 pulgadas de espesor (1 pulgada = 25,4 mm)
weld on	= debe ser soldado

ALGEMENE INFORMATIE

Als u het serienummer van de machine gebruikt, geef dan het gehele serienummer.

Het cijfer dat voorkomt in de kolom “Aantal”, in deze handleiding, is het aantal onderdelen dat nodig is van de illustratie op de pagina. Voor sommige onderdelen staat er een “x” in de kolom “Aantal”. Deze “x” betekent dat er een aantal “zoals nodig” vereist is.

Wanneer er in deze handleiding naar “links” en naar “rechts” gerefereerd wordt, moet dit verstaan worden voor een bestuurder die in de bestuurdersstoel zit in de voorwaartse bedrijfsstand.

Sommige van de illustraties en informatie in deze onderdelen-handleiding werden door firma’s van machine-componenten geleverd aan Bobcat.

AFKORTINGEN EN SYMBOLEN

SALES	= Bestellen bij de Verkoopafdeling te Brussel
NSS	= Niet afzonderlijk te verkrijgen
NAP	= Niet beschikbaar als onderdeel
	= Gewijzigde of toegevoegde paragrafen, pagina’s of onderdeelnummers
BTI	= Bobcat Technical Information Bulletin : Zie einde van de microfiche van het desbetreffende model of einde van de algemene microfiche die het geheel van alle “BTI” herneemt.
was 6535403	= was vroeger 6535403
adj. (adjustment)	= afstelling
Assembly	= geheel
available W/Ref.	= beschikbaar met ref.
bulk/sold per foot	= bulk/aan de meter verkocht
does not include	= bevat niet
includes with	= is bevat in
I.D.	= ϕ inw. (inwendige diameter)
O.D.	= ϕ uitw. (uitwendige diameter)
not in kit	= niet in de kit
W/ - WO/	= met/ - zonder/
Qty	= vereiste aantal
see page/ref.	= zie pagina/ref.
used with ref/	= gebruikt met ref.
0,05 inch thickness	= 0.05 inch dik (een inch = 25.4 mm)
weld on	= te lassen

430AG ALPHABETICAL INDEX

ADHESIVE **292**
ALARM **154**
ANTI-FREEZE **290**
ARM **74**
BLOCK HEATER **228**
CAB **36**
DOOR **24**
EXCHANGER **104**
FLOORMAT **40**
HYD/HYDRO FLUID **290**
KEY **152**
LUBRICANT **290**
OIL **290**
PAINT **290**
PEDAL **82**
POLISH **290**
SEALANT **290**
SEAT **28**
SENSOR **156**
STARTER **160**
SWIVEL **130**
UNDERCARRIAGE **48**

430AG CONTENTS

MAIN FRAME 19-46
UPPERSTRUCTURE 19–28
OPERATOR CAB & RIGHT WINDOW 23–28
CAB ENCLOSURE & CANOPY 33–40
SEAT SUSPENSION, INSULATION & R.H. COVER 41–46
UNDERCARRIAGE 47-62
UNDERCARRIAGE 47–48
RECOIL SPRING & FRONT IDLER 49–56
TRACK ROLLER & TRACKS 57–62
WORK EQUIPMENT 63-72
ARM & BUCKET LINK 63–64
EXTENDIBLE ARM & SWING FRAME 65–68
BOOM & BLADE 69–72
CONTROL CONSOLE 73-84
R.H. & L.H. CONSOLE 73–76
BLADE CONTROL & THROTTLE CONTROL 77–80
TRAVEL & OFFSET 81–84
HYDRAULIC CIRCUITRY 85-148
HYDRAULIC CIRCUITRY 85–102
HYDROSTATIC OIL FILTER 103–104
ISO/STD 105–106
SELECTOR VALVE ASSY 107–108
JOYSTICKS 109–114
TRAVEL MOTOR, PRESSURE VALVE & SWING MOTOR 115–120
HYDRAULIC CONTROL VALVE 121–122
MOTOR CARRIER & FAN MOTOR 123–126
HYDRAULIC TANK 127–128
SWIVEL JOINT 129–130
CYLINDERS 131–148
ELECTRICAL 149-160
ELECTRICAL 149–156
ALTERNATOR & STARTER 157–160
POWER UNIT 161-222
ENGINE & ATTACHING PARTS 161–166
ENGINE BREAKDOWN 167–220
FUEL SYSTEM 221–222
ACCESSORIES & OPTIONS 223-288
AIR CONDITIONER UPGRADE KIT 223–224
BEACON KIT & BLOCK HEATER 225–228
CLAMP KIT & COUNTERWEIGHT KIT 229–234
DECALS & DIRECT TO TANK KIT 235–238
EXTENDIBLE ARM KIT 239–240
HEATER BOX & KIT 241–244
HVAC BOX, HVAC DUCT & HVAC INSTALLATION 245–252
KEYLESS IGNITION KIT 253–254
LONG ARM KIT & MOTION ALARM KIT 255–258
PURIFIER MUFFLER & RADIO KIT 259–262
SEAT BELT KIT 263–264
SECONDARY AUXILIARY KIT 265–266
SOLAR KIT 267–268
SPECIAL APPLICATION KIT 269–270
STEEL TRACK KIT 273–274
STROBE LIGHT KIT & TOP GUARD KIT 275–280
X–CHANGE 281–288
BULK ITEMS 289-290
NUMERICAL INDEX 291

MAINTENANCE ITEMS

Ref.	Part Number	Description	Remarks
1	6675517	FILTER	engine oil - 6 pack
2	6667352	FILTER FUEL	fuel
2	6633977	FILTER	fuel - inline
3	6666334	FILTER	inner
4	6666333	FILTER	air cleaner - primary
5	6661248	ELEMENT	hydraulic
5	6681012	FILTER	hydraulic - inline
6	6674687	BATTERY	
7	6903117	HYD FLUID 2.5 GAL.	Was 6563328
7	6903119	HYD. FLUID 55GAL	Was 6563330
7	6903118	HYD. FLUID 5GAL	Was 6722344
8	6903105	OIL 15W40 QT. 12	Was 6657299
8	6903107	OIL 10W30 QT. 12	Was 6657301
8	6903112	OIL 10W30 2.5 GAL 2	Was 6674205
8	6903110	OIL 30W GAL. 6	Was 6724559
8	6903121	GEAR LUBE 12	Was 6634393
8	6903111	OIL 30W 2.5 GAL 2	Was 6674206
8	6903109	OIL 30W QT. 12	Was 6657303
8	6903108	OIL 10W30 GAL. 6	Was 6724557
8	6903113	OIL 15W40 2.5 GAL. 2	Was 6674204
8	6903106	OIL 15W40 GAL. 6	Was 6724558
9	6902318	MANUAL	Service
10	6902316	MANUAL	Operation & Maintenance
11	6903360	MANUAL	Parts
12	6902317	HANDBOOK	Operator

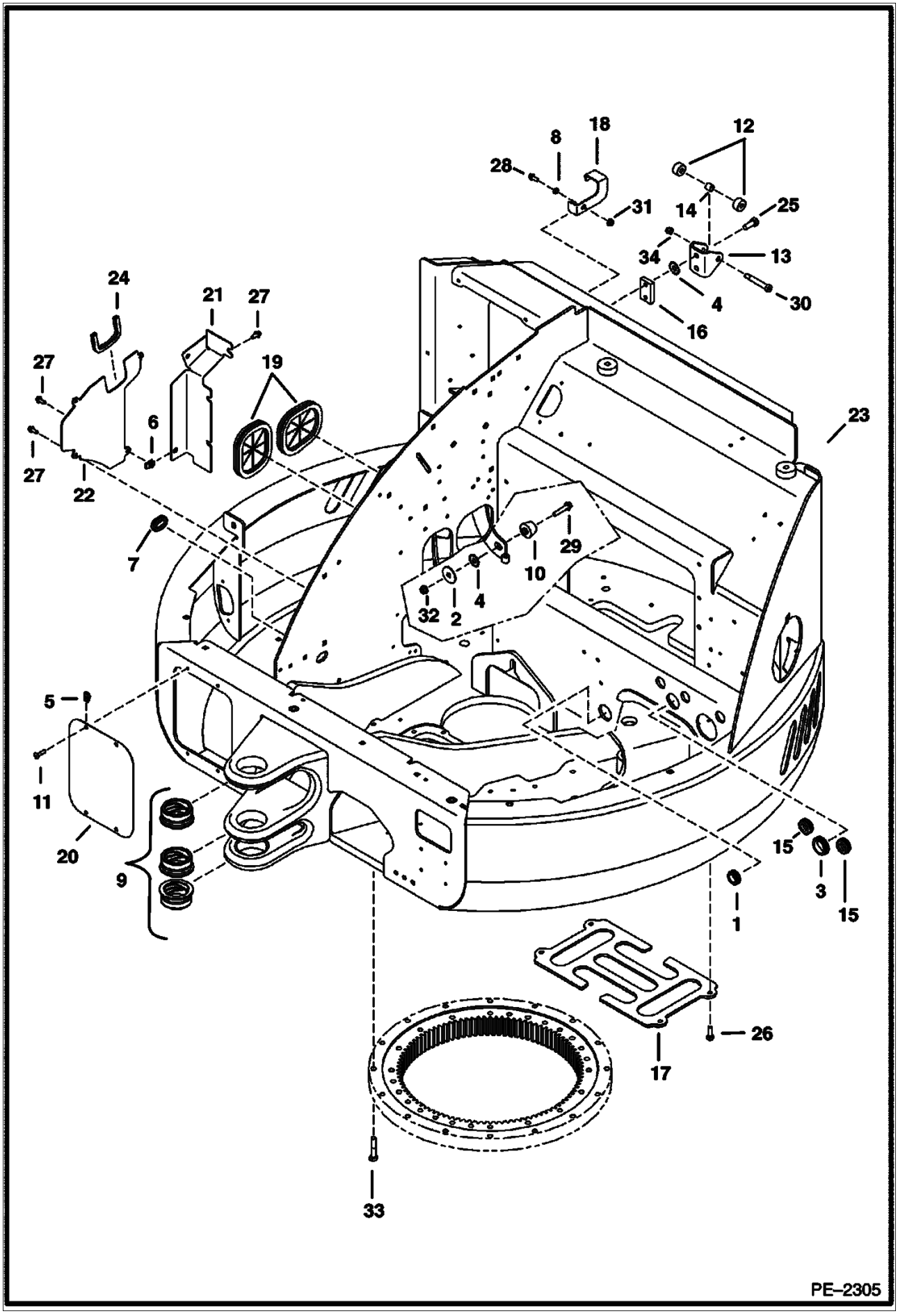
8
18
12
28
31
14
25
34
13
4
30
16
24
21
27
27
19
6
23
27
22
7
29
10
4
32
2
5
11
20
9
15
3
15
1
26
17
33
PE–2305

UPPERSTRUCTURE (Cont'd)

Ref. No.	Part Number	Description	Remarks	Serial Number	Qty.
1	6515603	GROMMET			1
2	6560899	WASHER	flat		1
3	6670119	GROMMET			1
4	6675273	WASHER			3
5	6676026	NUT			4
6	6676169	NUT			2
7	6681886	GROMMET			1
8	6807220	SPACER			1
9	6807956	BUSHING			3
10	6682272	SEAL	rubber		1
11	6809030	SCREW			4
12	6809726	ROLLER			2
13	6809727	STRIKER			1
14	6809734	BUSHING			1
15	6810133	GROMMET			2
16	6810802	BAR	bar		1
17	6810972	PLATE			1
18	6811886	PLATE			1
19	6814926	GROMMET			2
20	6816555	SCREEN			1
21	7101106	COVER			1
22	7101107	COVER			1
23	7102269	UPPERSTRUCTURE			1
24	7104660	SEAL			1
25	17C000820B	BOLT			2
26	1CM01030B	SCREW			4
27	26GM08020B	SCREW			7
28	29CM00820B	BOLT			1
29	29CM01050B	SCREW			1
30	38C000840B	BOLT			1
31	43DM00008B	NUT			1
32	51DM00010B	NUT			1
33	55CM01260B	SCREW			16
34	59D000006B	NUT			1

UPPERSTRUCTURE LOCK

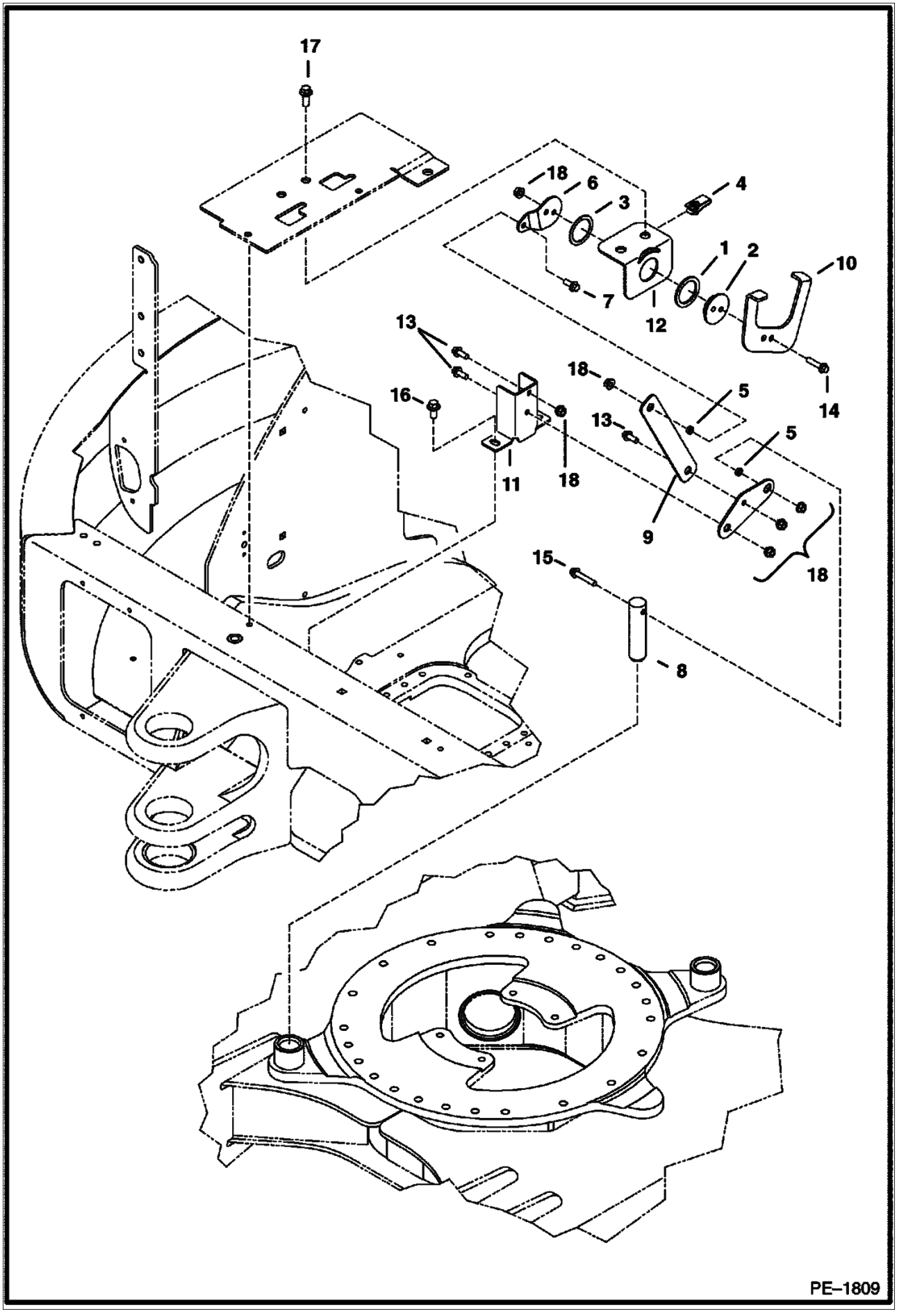

UPPERSTRUCTURE LOCK (Cont'd)

Ref. No.	Part Number	Description	Remarks	Serial Number	Qty.
1	6567962	WASHER			1
2	6567963	SPACER			1
3	6630945	WASHER			2
4	6675722	NUT			2
5	6807220	SPACER			5
6	6808596	LEVER			1
7	6808597	LEVER			1
8	6808598	PIN			1
9	6814729	LINK			1
10	6814730	LEVER			1
11	6814731	BRACKET			1
12	6814732	BRACKET			1
13	29CM00820B	BOLT			4
14	29CM00835B	BOLT			3
15	29CM00845B	SCREW			1
16	29CM01020B	SCREW			2
17	29CM01025B	SCREW			2
18	51DM00008B	NUT			7

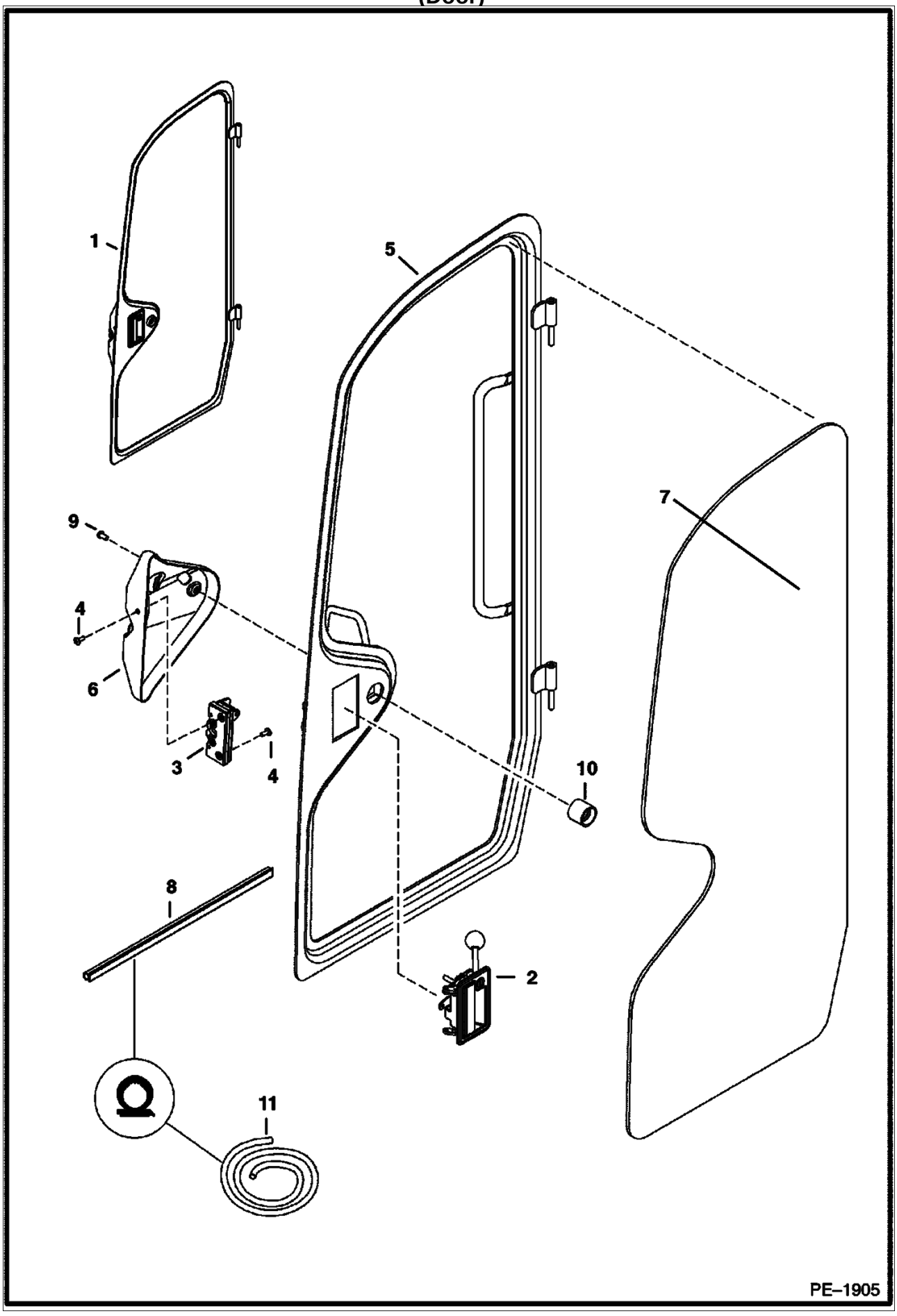
1
5
7
9
4
6
3
4
10
8
2
11
PE–1905

OPERATOR CAB (Cont'd)
(Door)

Ref. No.	Part Number	Description	Remarks	Serial Number	Qty.
1	6810944	DOOR	assy - W/Ref. 2 - 11		1
2	6679885	HANDLE	door		1
2		KEY			1
3	6679886	LATCH			1
4	6803202	SCREW			4
5		DOOR	NAP - frame - order 6810944		1
6	6813574	COVER	latch		1
7		DOOR	NAP - glass - order 6810944		1
8	6817305	SEAL	door - use 22.5" (571.5mm) of Ref. 11		1
9	25G000510B	SCREW	socket		1
10	6675386	SOCKET			1
11	6684518	SEAL	bulk - sold per foot		x

OPERATOR CAB
(Front Window)

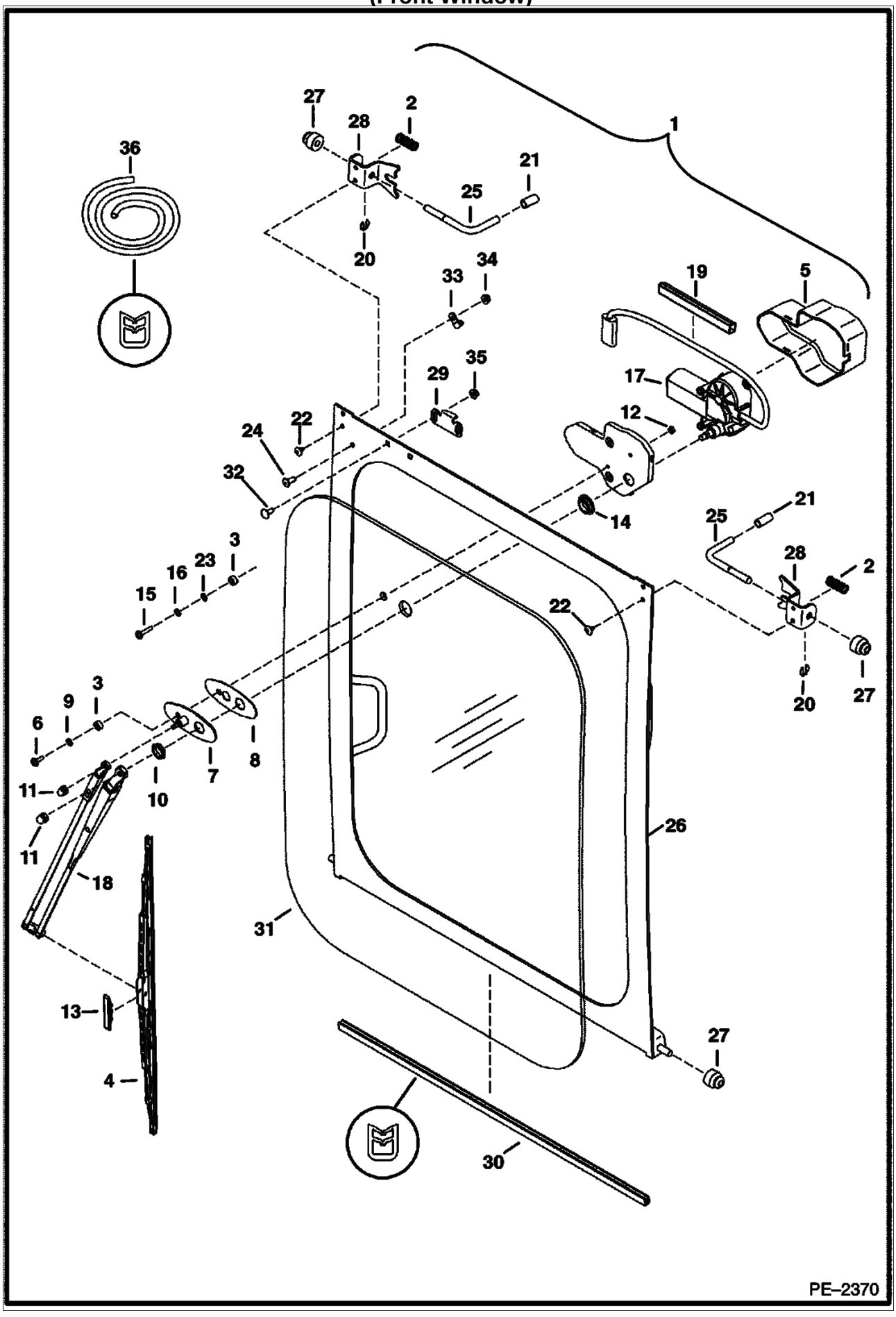

OPERATOR CAB (Cont'd)
(Front Window)

Ref. No.	Part Number	Description	Remarks	Serial Number	Qty.
1	6812705	WINDOW	assy		1
2	6610082	SPRING			2
3	6664085	BUSHING			2
4	6677834	BLADE	wiper		1
5	6685140	COVER	motor		1
6	6677837	BOLT			1
7	6677839	GASKET			1
8	6677840	SWIVEL ASSY			1
9	6677841	WASHER			1
10	6677842	NUT			1
11	6677843	NUT			1
12	6677844	NUT			2
13	6677845	ADAPTER			1
14	6677847	GROMMET			1
15	6682492	TRIM	bulk - sold per foot		2
16	6818073	CLEANER			1
17	6684139	MOTOR			1
18	6680180	ARM			1
19	6680971	RETAINER			1
20	6681651	RING	retaining		2
21	6681652	CAP			2
22	6589675	SCREW			4
23	51DM00006B	NUT			2
24	6803202	SCREW			1
25	6812413	PIN			2
26		WINDOW	NAP - frame - order Ref. 1		1
27	6813028	ROLLER			4
28	6814423	BRACKET			2
29	6816437	BRACKET			1
30		SEAL	NAP - use 33" of Ref. 15		1
31		WINDOW	NAP - front		1
32	21CM00616B	BOLT			2
33	30H000010B	CLAMP			1
34	43DM00006B	NUT			2
35	51DM00006B	NUT			2
36	6682492	TRIM	Buld - Sold Per Foot		x

OPERATOR SEAT

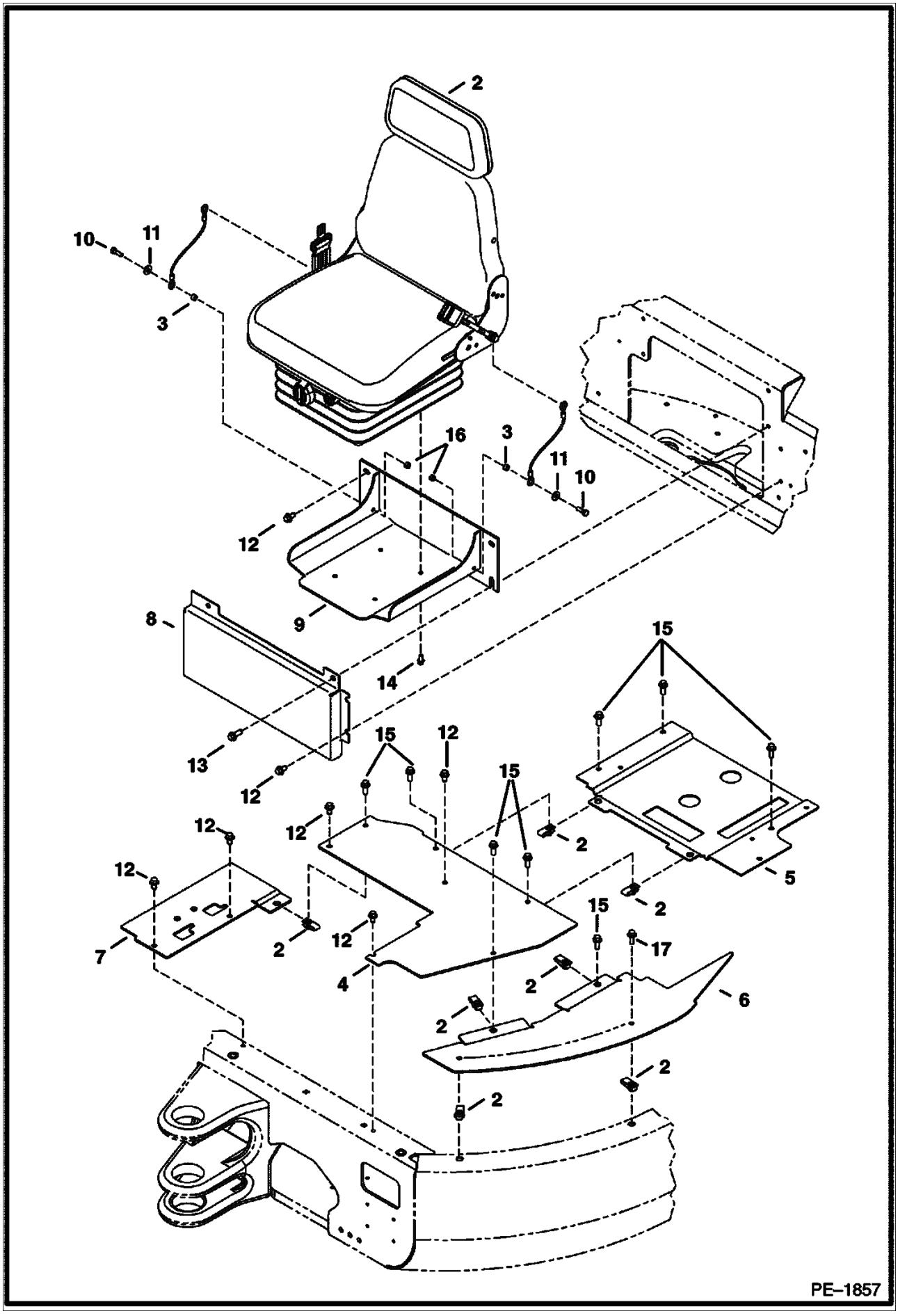

OPERATOR SEAT (Cont'd)

Ref. No.	Part Number	Description	Remarks	Serial Number	Qty.
1	6685657	SEAT	See Illustration SEAT SUSPENSION/ PE2300		1
2	6675722	NUT			7
3	6802539	SPACER			2
4	6812296	PLATE	front		1
5	6812297	PLATE	rear		1
6	6812298	PLATE			1
7	6812299	PLATE			1
8	6812458	PLATE			1
9	6814192	SEAT			1
10	1CM00825B	BOLT			2
11	25E000016B	WASHER			2
12	26GM10020B	SCREW			9
13	26GM10030B	SCREW			2
14	29CM00816B	SCREW			4
15	29CM01025B	SCREW			8
16	53DM00008B	NUT			7
17	27CM01030B	SCREW			2

RIGHT WINDOW
(S/N 5627 11174 & Above)

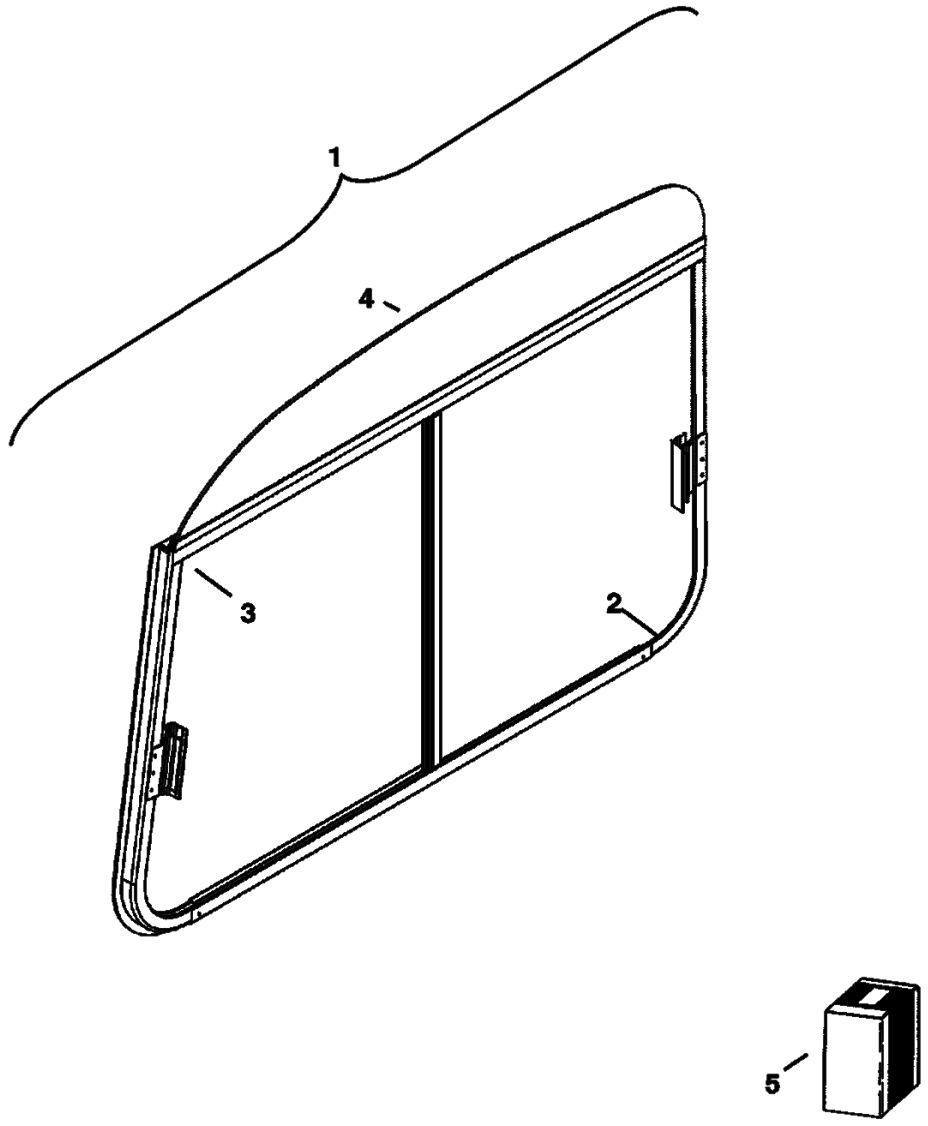

RIGHT WINDOW (Cont'd)
(S/N 5627 11174 & Above)

Ref. No.	Part Number	Description	Remarks	Serial Number	Qty.
1	7100571	WINDOW	assy		1
2	6685772	WINDOW	rear		1
3	6685773	WINDOW	front		1
4	6685774	FRAME			1
5	6679641	LATCH KIT			1

RIGHT WINDOW
(S/N 5627 11173 & Below)

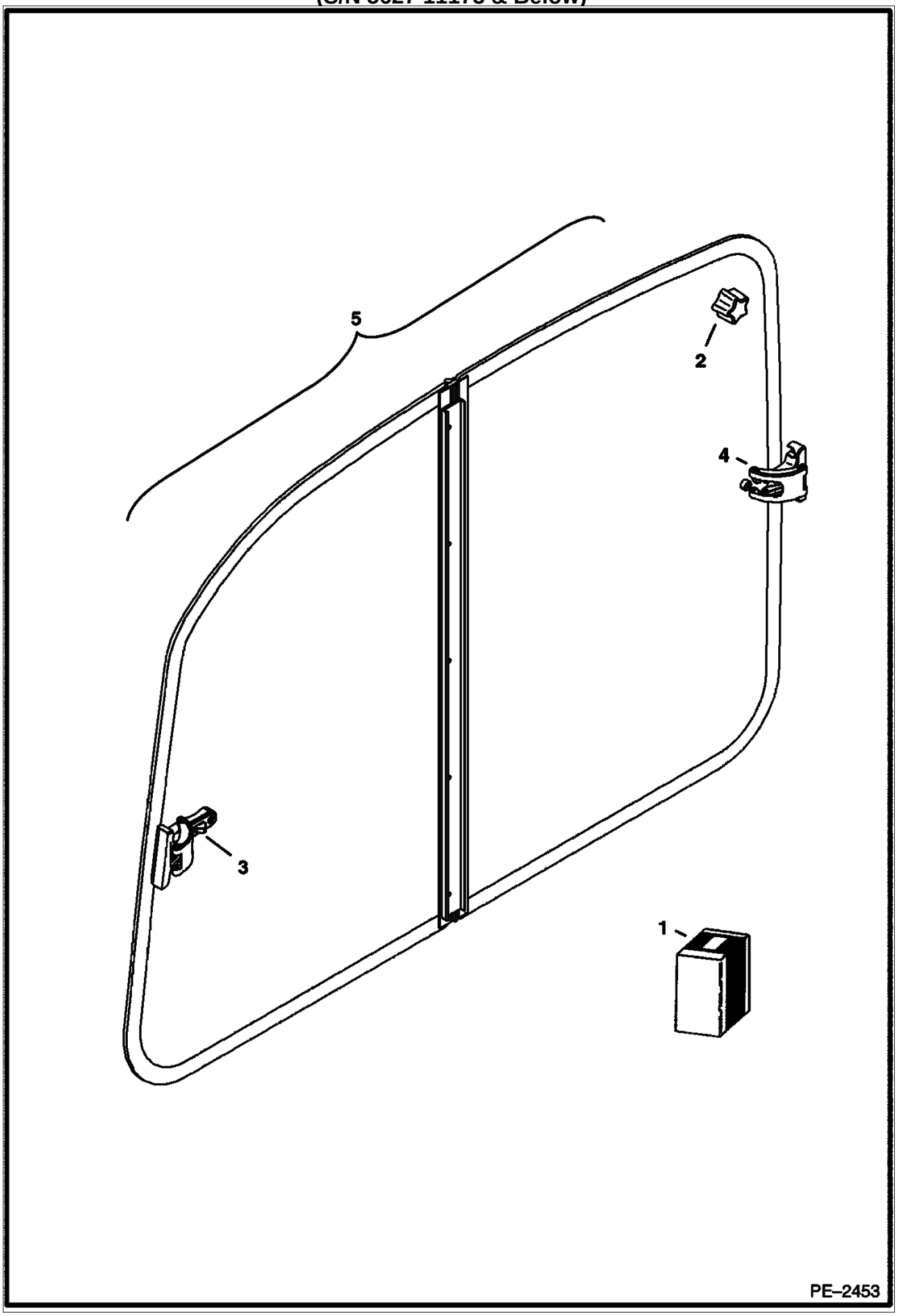

RIGHT WINDOW (Cont'd)
(S/N 5627 11173 & Below)

Ref. No.	Part Number	Description	Remarks	Serial Number	Qty.
1	6814895	WINDOW	Kit		1
2	6684583	KNOB			1
3	6686938	LATCH	front		1
4	6686939	LATCH	rear		1

CAB ENCLOSURE

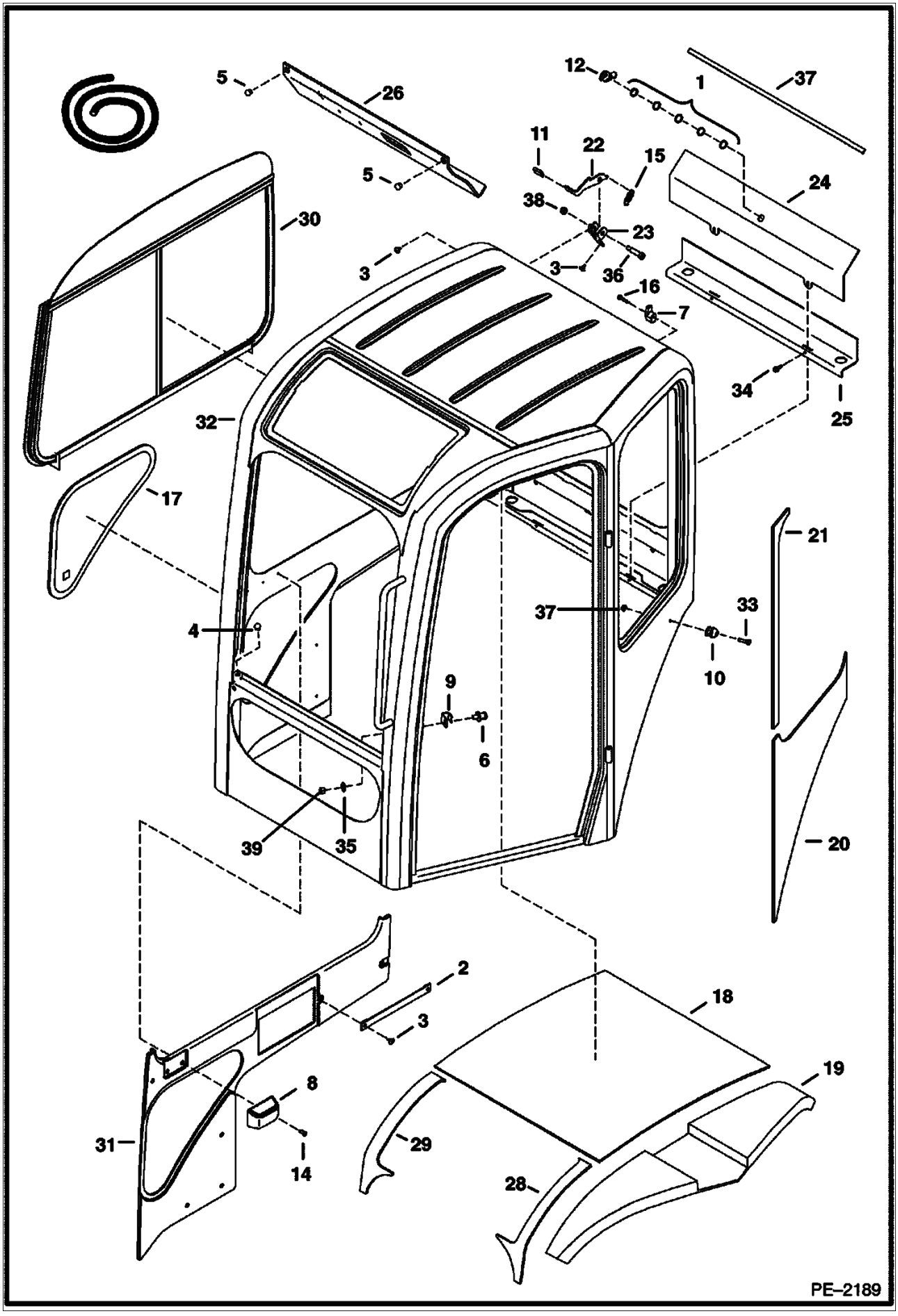

CAB ENCLOSURE (Cont'd)

Ref. No.	Part Number	Description	Remarks	Serial Number	Qty.
1	6536802	WASHER			5
2	6589347	STRAP			1
3	6589675	SCREW			4
4	6597572	BUMPER			4
5	6630207	RIVET			2
6	6654170	STRIKER BOLT			1
7	6658289	HOOK			1
8	6664075	ASH TRAY			1
9	6664083	COVER			1
10	6675385	PLUG			1
11	6677500	HANDLE			1
12	6681922	LATCH			1
13	6682740	RETAINER			1
14	6706517	SCREW			2
15	6714210	SPRING			1
16	6808424	SCREW			1
17	6811792	WINDOW			1
18	6813567	INSULATION	door		1
19	6813568	INSULATION			1
20	6813569	INSULATION			1
21	6814241	INSULATION			1
22	6814721	HANDLE			1
23	6814724	CHANNEL			1
24	6814958	COVER	rear		1
25	6815542	SEAL	cover		1
26	6815626	INSULATION			1
27	6816115	PAD			1
28	6818275	INSULATION	R.H. - front		1
29	6818276	INSULATION	L.H. - front		1
30	7100571	WINDOW	See Illustration RIGHT WINDOW/ PE2297		1
31	7101010	INSULATION			1
32	7101122	CAB			1
32	7101967	CAB	Complete- W/Door, Windows, Insulation, Decals		1
33	1C000416B	SCREW			1
34	26GM06020B	SCREW			2
35	27E000006B	WASHER			1
36	4F006106B	PIN	Was - 38C000620B		1
37	55D000004B	NUT			1
38	59D000005B	NUT			1
39	61D000007B	NUT			1

CAB ENCLOSURE

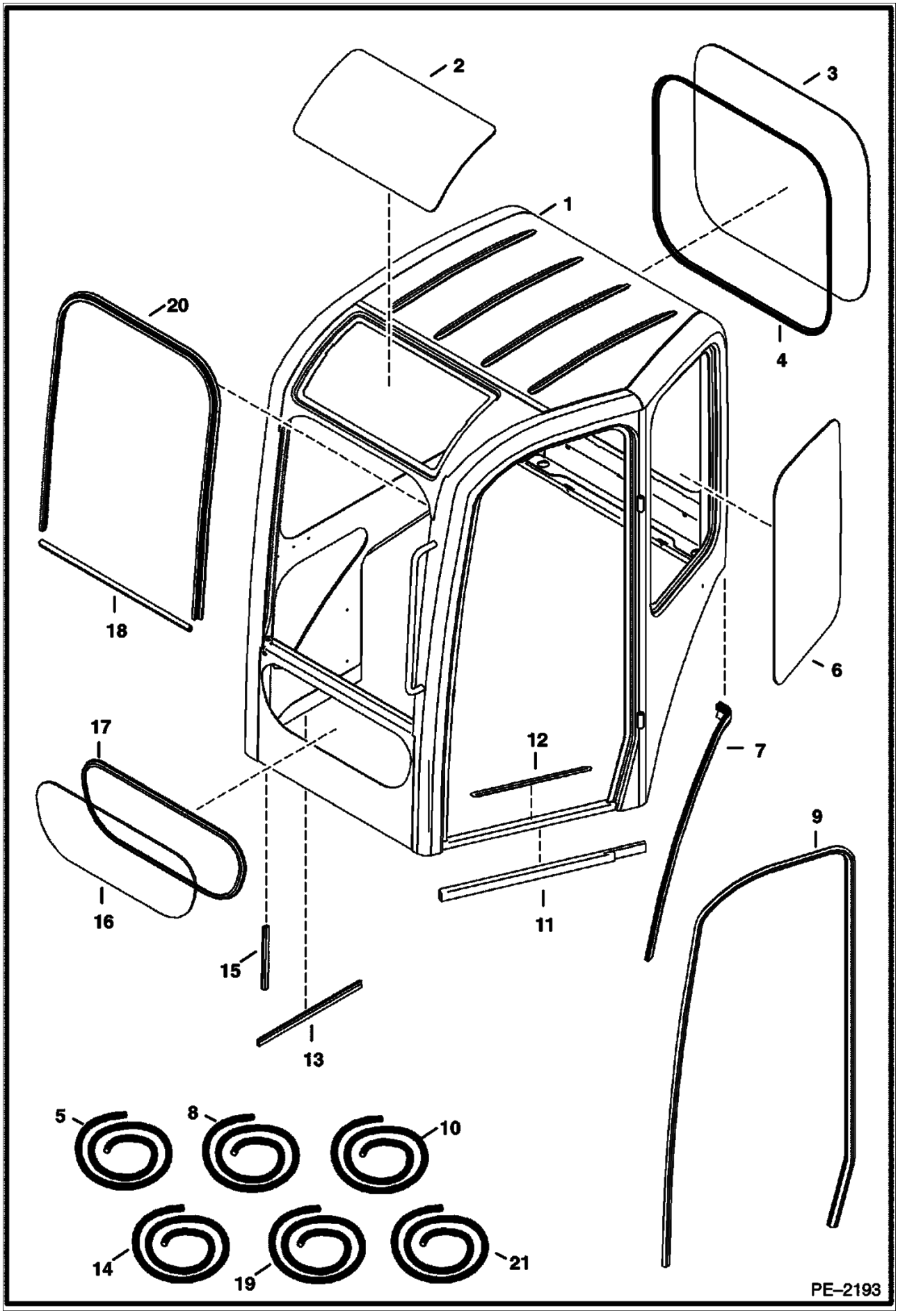

CAB ENCLOSURE (Cont'd)

Ref. No.	Part Number	Description	Remarks	Serial Number	Qty.
1	7101122	CAB	W/A		1
1	7101967	CAB	Complete- W/Door, Windows, Insulation, Decals		1
2	6817530	WINDOW	top		1
3	6816125	WINDOW	rear		1
4		SEAL	NAP - use 104" (2642mm)of Ref. 5		1
5	6815939	SEAL	bulk - sold per foot		x
6	6816126	WINDOW	side - L.H.		1
7		SEAL	NAP - 34" (864mm)of Ref. 8		1
8	6817343	SEAL	bulk - sold per foot		x
9		SEAL	NAP - use 127" (3226mm)of Ref. 10		1
10	7100721	SEAL	bulk - sold per foot		x
11	7100929	SEAL			1
12	6807327	SAFETY TREAD			1
13		SEAL	NAP - use 18" (458mm)of Ref. 14		1
14	6681883	SEAL			1
15	6682740	RETAINER			1
16	6815150	WINDOW	front - lower		1
17		SEAL	NAP - use 66" (1677mm)of Ref. 5		1
18		SEAL	NAP - use 26" (661mm)of Ref. 19		1
19	6684518	SEAL	bulk - sold per foot		x
20		SEAL	NAP - use 92" (2337mm)of Ref. 21		1
21	7100712	SEAL	bulk - sold per foot		x

CAB ENCLOSURE

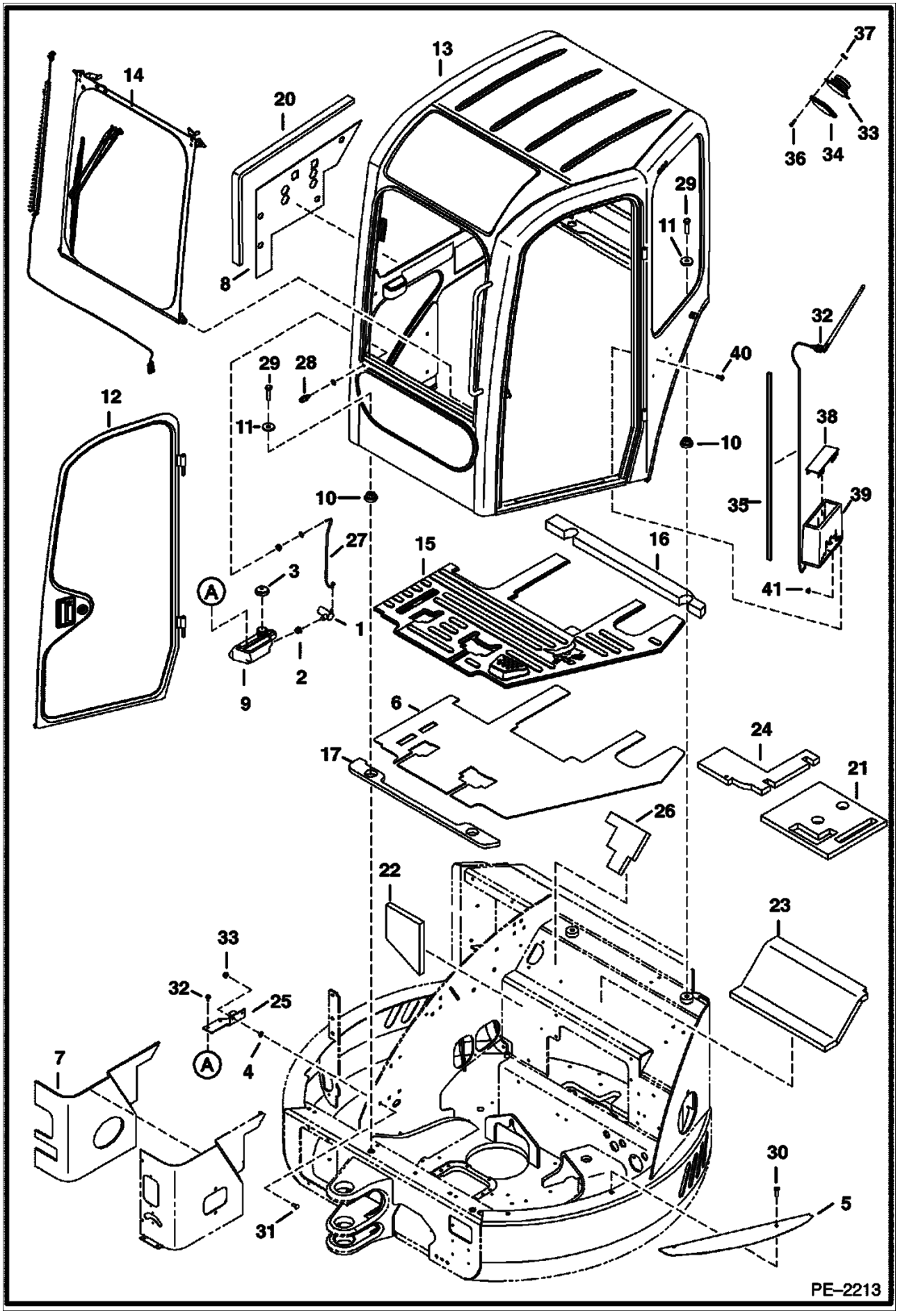

CAB ENCLOSURE (Cont'd)

Ref. No.	Part Number	Description	Remarks	Serial Number	Qty.
1	6664554	PUMP			1
2	6666766	GROMMET			1
3	6674993	CAP			1
4	6675859	BOLT	retainer		2
5	6680293	TREAD	safety		1
6	6684544	FLOORMAT			1
7	6684896	INSULATION			1
8	6684897	INSULATION			1
9	6736875	TANK	washer		1
10	6804026	MOUNT			4
11	6805244	WASHER	flat		4
12	6810944	DOOR	See Illustration OPERATOR CAB/ PE1905		1
13	7104082	CAB			1
13	7101967	CAB	Complete- W/Door, Windows, Insulation, Decals		1
14	6812705	WINDOW	See Illustration OPERATOR CAB/ PE2370 FRONT		1
15	6812712	FLOORMAT			1
16	6814325	SEAL			1
17	6814326	SEAL			1
18	43DM00008B	NUT			2
19	35D000408B	SCREW			2
20	6814908	SEAL	cab		1
21	6814922	INSULATION	floor		1
22	6816598	INSULATION	R.H. console		1
23	6816607	INSULATION	seat		1
24	6816678	INSULATION	R.H. console		1
25	6817751	BRACKET			1
26	6817902	INSULATION			1
27	7100202	HOSE	wiper		1
28	7101511	NOZZLE	washer		1
29	10CM01455B	SCREW			4
30	27CM01030B	SCREW			2
31	28CM00820B	BOLT			2
32	6676114	ANTENNA			1
33	6685606	SPEAKER	4"		2
34	6685607	GRILLE	grill		2
35	6685654	RETAINER			1
36	6685743	SCREW			8
37	6685744	NUT			8
38	6685745	COVER	plastic		1
39	6685799	BRACKET	radio		1
40	6803202	SCREW			4
41	51DM00006B	NUT			4

CANOPY

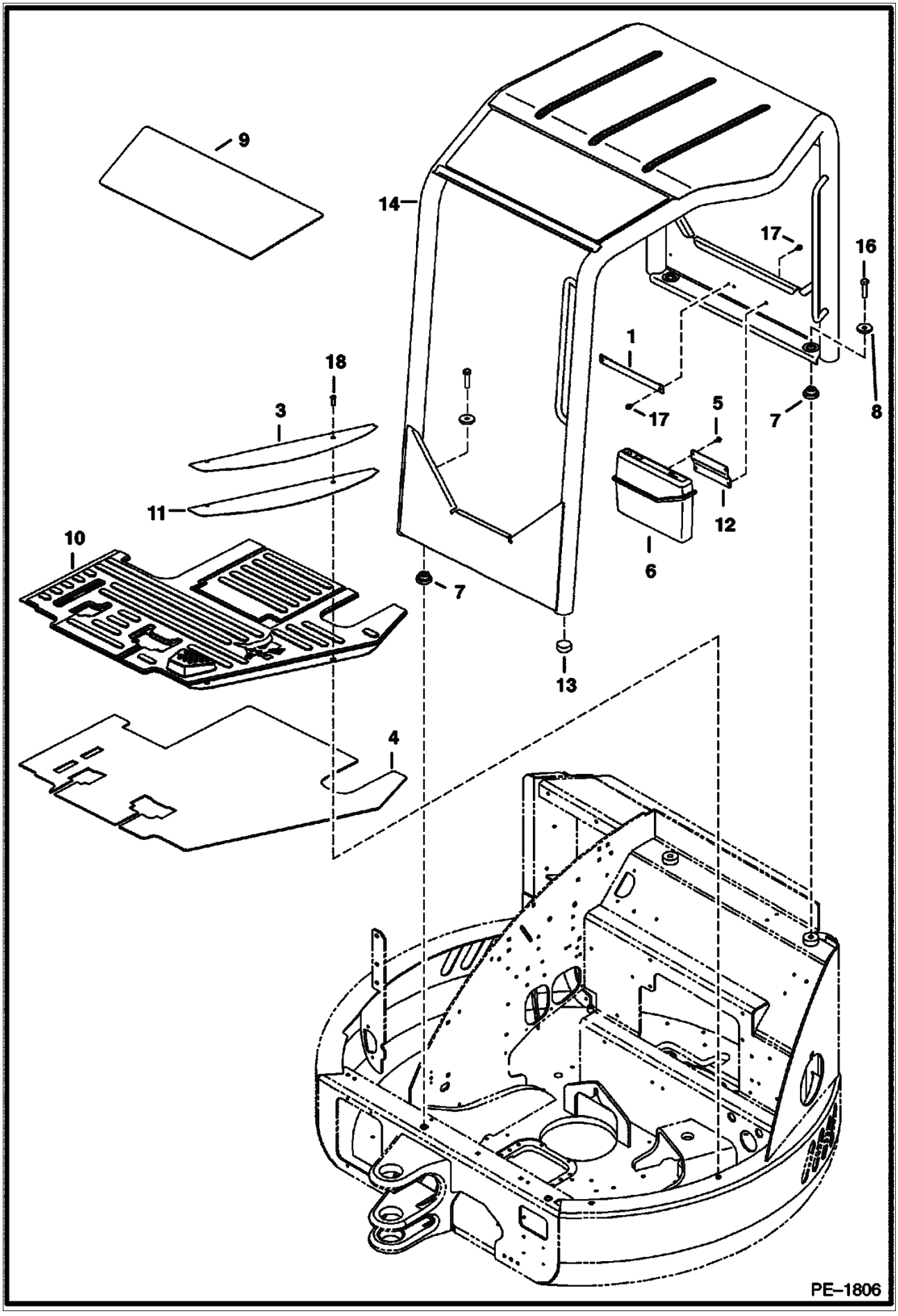

CANOPY (Cont'd)

Ref. No.	Part Number	Description	Remarks	Serial Number	Qty.
1	6589347	STRAP			1
2	6630207	RIVET			2
3	6680293	TREAD			1
4	6684561	FLOORMAT			1
5	6702642	SCREW			1
6	6708827	CONTAINER			1
7	6804026	MOUNT			4
8	6805244	WASHER			4
9	6812030	WINDOW			1
10	6812711	FLOORMAT	canopy		1
11	6812714	PLATE			1
12	6813083	BRACKET			1
13	6816135	INSULATION			1
14	6818380	CANOPY			1
15	6818403	PLATE			1
16	10CM01455B	SCREW			4
17	26GM08016B	SCREW			4
18	27CM01030B	SCREW			2

SEAT SUSPENSION
(Vinyl)

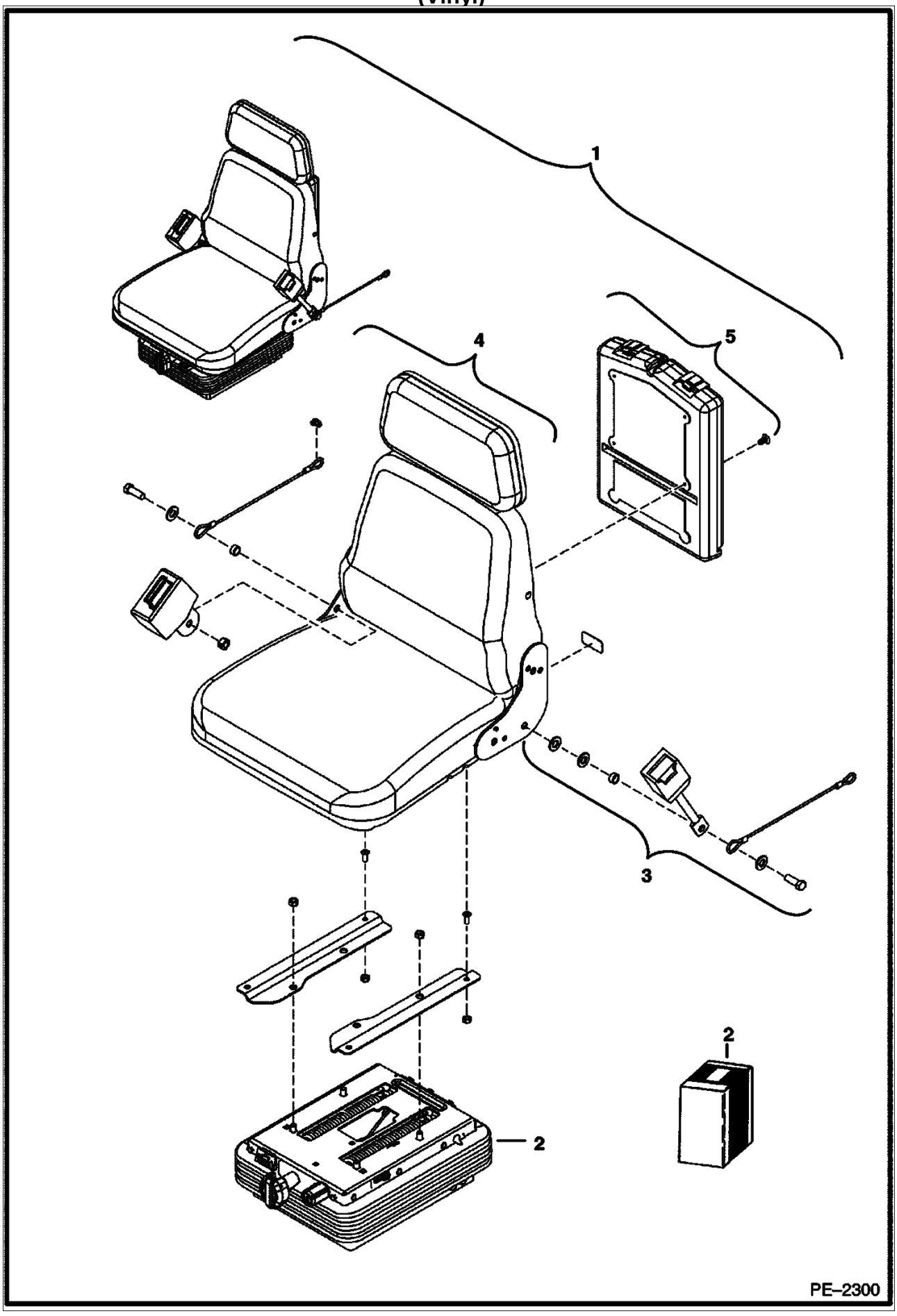

SEAT SUSPENSION (Cont'd)
(Vinyl)

Ref. No.	Part Number	Description	Remarks	Serial Number	Qty.
1	6685657	SEAT	assy		1
2	6686151	SUSPENSION	assy		1
3	6686089	KIT	seat belt		1
4	6686088	KIT	seat - top, bottom & back cushions on frame		1
5	6686150	BOX	manual w/hardware		1

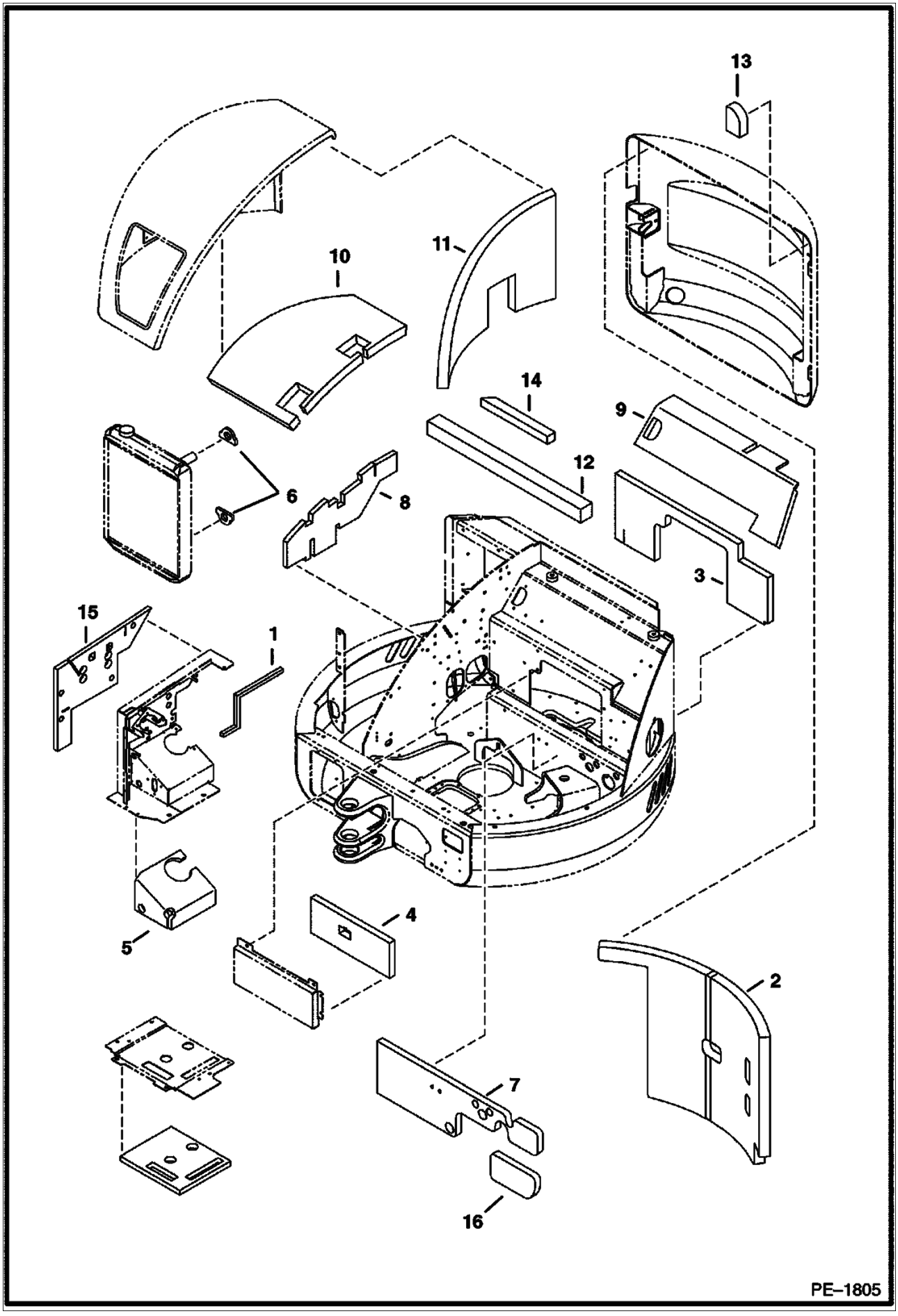
13
10
11
14
9
12
6
8
3
15
1
4
5
2
7
16
PE–1805

INSULATION (Cont'd)

Ref. No.	Part Number	Description	Remarks	Serial Number	Qty.
1	6808577	SEAL	cab		1
2	6811891	INSULATION	tailgate		1
3	7103022	INSULATION	engine Was - 6811892		1
4	6812193	INSULATION	seat		1
5	6812252	INSULATION	console		1
6	6812377	INSULATION	radiator		1
7	7103023	INSULATION	engine Was - 6813527		1
8	7103019	INSULATION	valve Was - 6813529 [A]		1
9	6814355	INSULATION	engine		1
10	6814371	INSULATION	R.H. cover		1
11	6814372	INSULATION	R.H. cover		1
12	6814393	INSULATION	tailgate		1
13	6816600	INSULATION	tailgate		1
14	7103034	INSULATION	R.H. cover Was - 6817304		1
15	6817918	INSULATION			1
16	6818393	INSULATION	engine		1

R.H. COVER

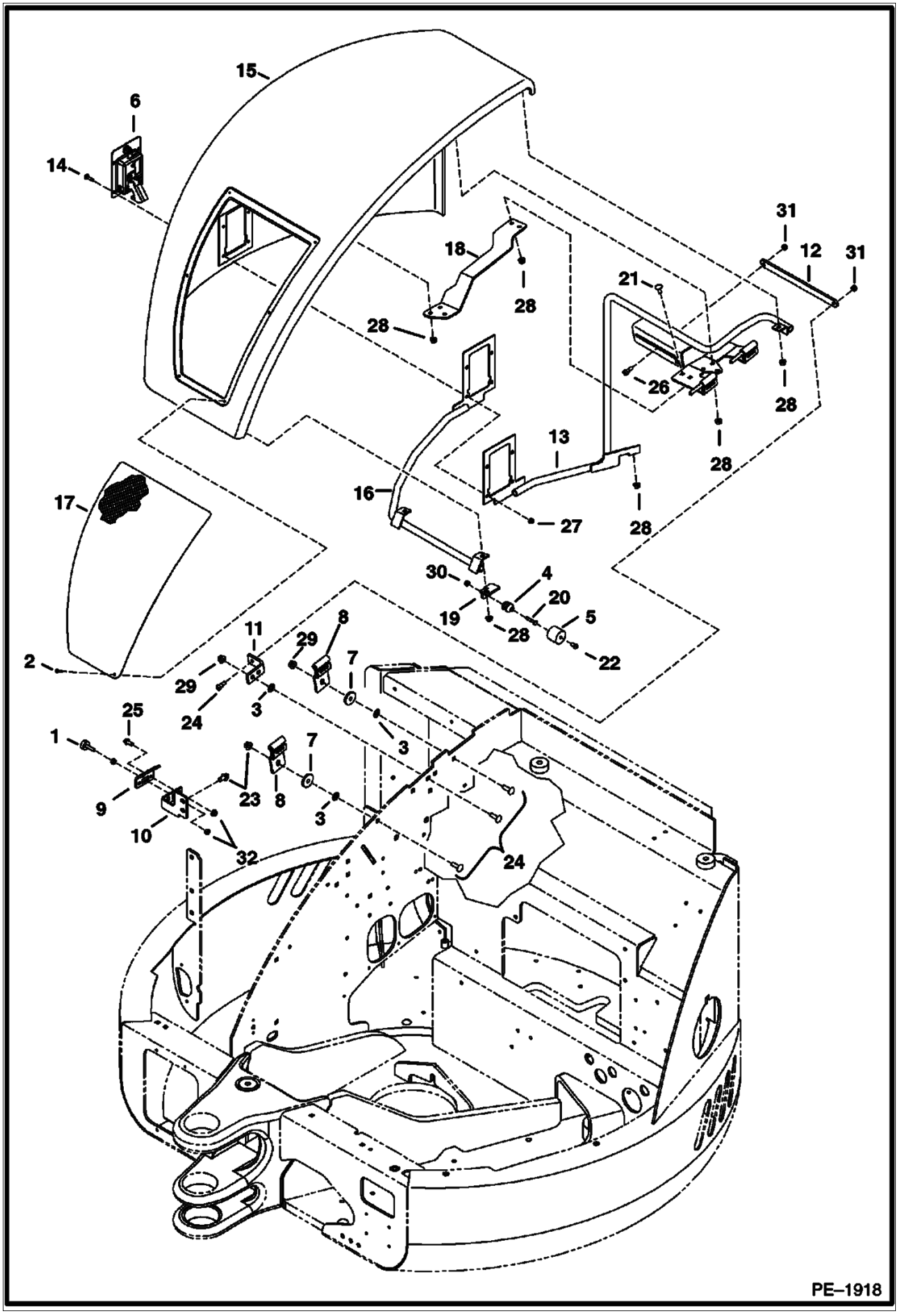
15
6
14
31
12
31
18
28
21
28
28
26
28
28
13
16
17
27
28
30
4
20
19
28
5
22
2
11
29
8
29
7
24
3
3
25
1
7
23
8
9
3
10
32
24
PE–1918

R.H. COVER (Cont'd)

Ref. No.	Part Number	Description	Remarks	Serial Number	Qty.
1	6655399	BUMPER			1
2	6669224	BOLT			6
3	6674264	BOLT	retainer		4
4	6675385	PLUG			1
5	6675386	SOCKET			1
6	6684408	LATCH			1
6	6709527	KEY			1
7	6805244	WASHER			2
8	6812809	HINGE	NAP Was - 6812809 Order 7105711 (1) Also order 35.5"(902mm) of Ref. 33 [A]		1
9	6813216	BRACKET			1
10	6815412	BRACKET			1
11	6816050	BRACKET	NAP Was - 6816050 Order 7105711(1) Also Order 35.5"(902mm) of Ref. 33 [A]		1
12	6816051	BAR			1
13	6816052	COVER			1
14	6816193	SCREW			4
15	6816300	COVER	R.H.		1
16	6816465	COVER			1
17	6816568	SCREEN			1
18	6816789	BRACKET			1
19	6817750	BRACKET			1
20	1C000420B	SCREW			1
21	21CM00820B	BOLT	carriage		2
22	25G000510B	SCREW			1
23	26GM10020B	SCREW			2
24	28CM01030B	BOLT	carriage		4
25	29CM00820B	BOLT			2
26	38C000606B	SCREW			2
27	43DM00006B	NUT			4
28	43DM00008B	NUT			14
29	43DM00010B	NUT			4
30	55D000004B	NUT			1
31	59D000005B	NUT			2
32	61D000005B	NUT			2
33	6675546	SEAL- BULK/FT	BULK - Sold per foot		x

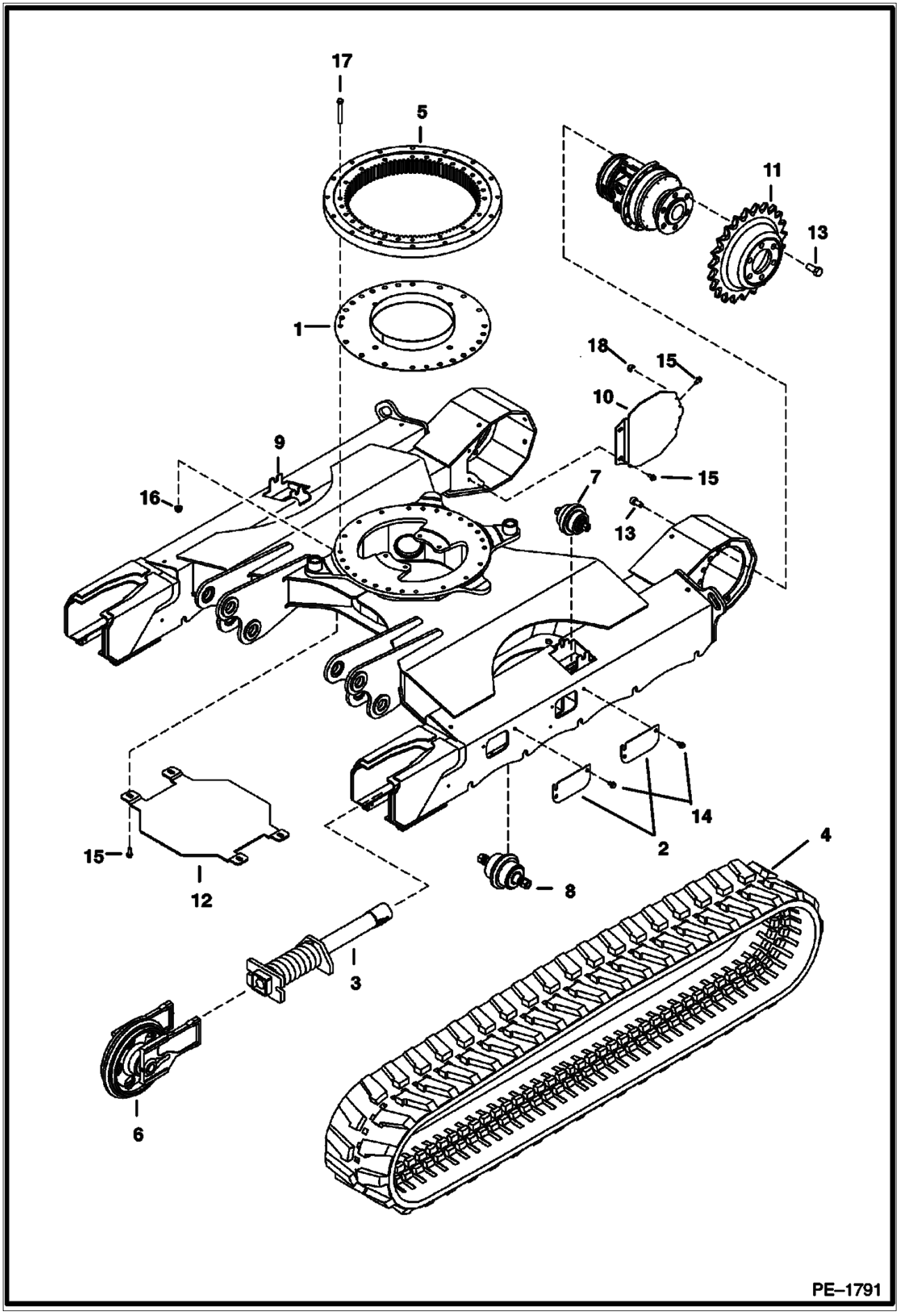
17
5
11
13
1
18
15
10
9
15
16
7
13
14
2
4
15
12
8
3
6
PE–1791

UNDERCARRIAGE (Cont'd)

Ref. No.	Part Number	Description	Remarks	Serial Number	Qty.
1	6535548	FLANGE			1
2	6596723	COVER			4
3	6817235	CYLINDER	See Illustration RECOIL SPRING/ PE1798		2
4	6678825	TRACK			2
5	6678952	BEARING			1
6	7106424	IDLER	See Illustration FRONT IDLER/ PE1801A		2
7	6815111	ROLLER	See Illustration TRACK ROLLER/ PE1800 ASSY		2
8	6815119	ROLLER	See Illustration TRACK ROLLER/ PE1914 ASSY		10
9	6810822	UNDERCARRIAGE			1
10	6816483	COVER			2
11	6815922	SPROCKET			2
12	6813288	PLATE			1
13	55CM01445B	SCREW			12
14	26GM10020B	SCREW			16
15	26GM10030B	SCREW			4
16	51DM00012B	NUT			24
17	7CM01290B	SCREW			24
18	6675722	NUT			4
19	6685454	MOTOR	See Illustration TRAVEL MOTOR/ MS1998		2

RECOIL SPRING
(Rubber Tracks)

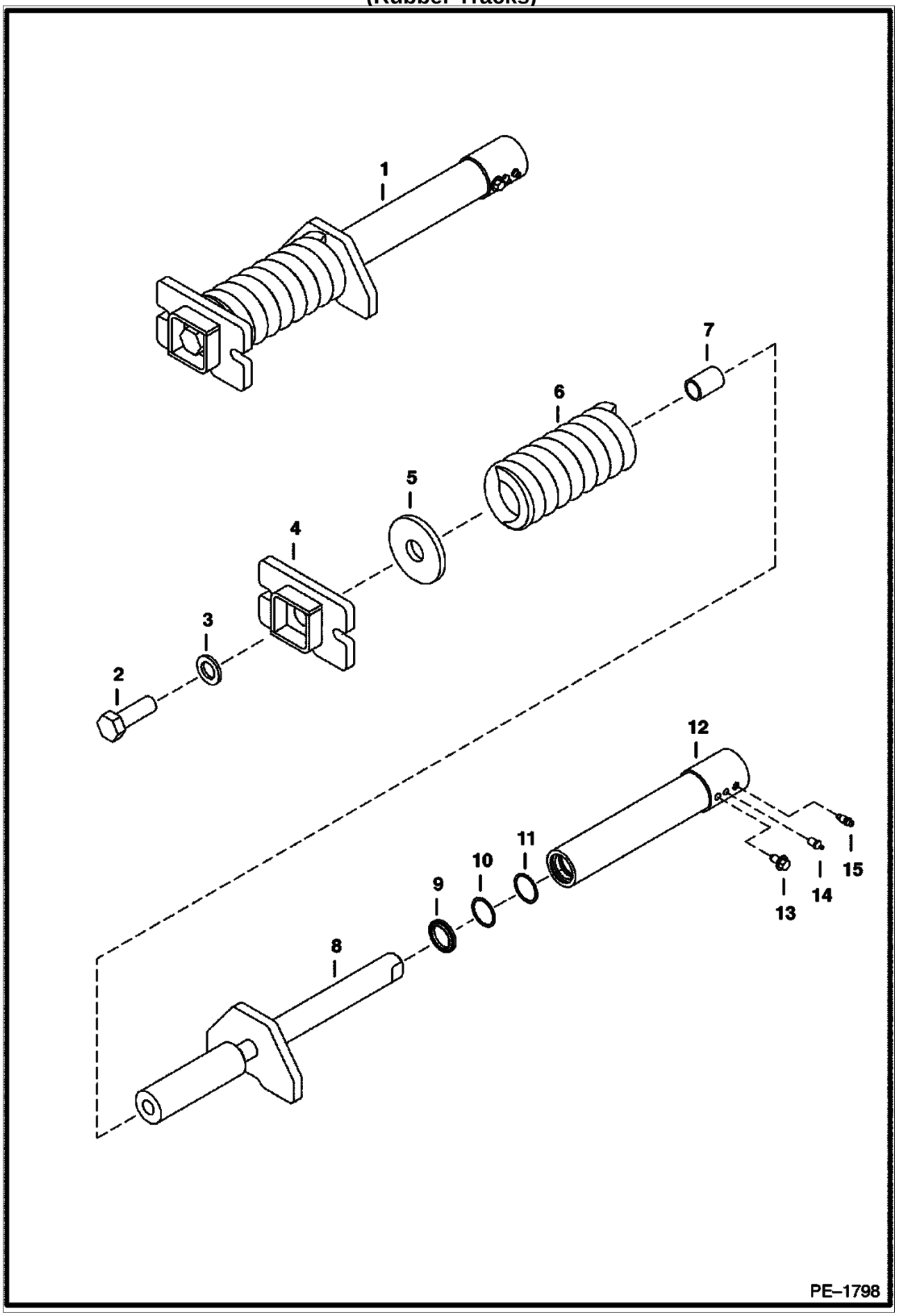

RECOIL SPRING (Cont'd)
(Rubber Tracks)

Ref. No.	Part Number	Description	Remarks	Serial Number	Qty.
1	6817235	CYLINDER	assy - W/Ref. 2-15		1
2	1CM02470B	BOLT			1
3	1EM00240B	WASHER			1
4	6811048	BRACKET			1
5	6597318	SPACER			1
6	6536438	SPRING			1
7	6814007	SPACER			1
8	6817230	SHAFT			1
9	6666544	WIPER			1
10	6684445	RING	back-up		1
11	6684446	O-RING			1
12	6817231	TUBE			1
13	26GM10020B	SCREW			1
14	6655752	FITTING			1
15	6645812	SCREW	bleed		1

RECOIL SPRING
4(Steel Tracks)

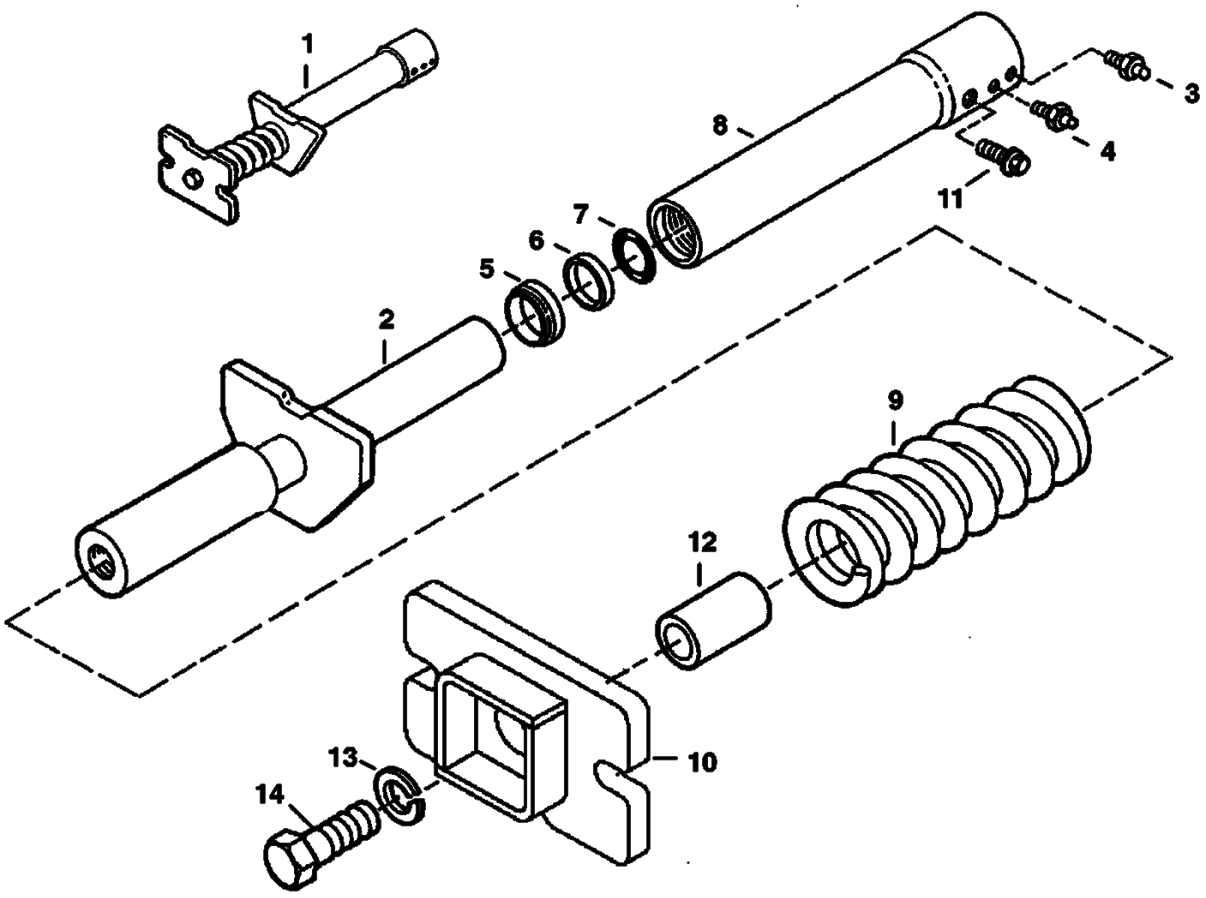

RECOIL SPRING (Cont'd)
4(Steel Tracks)

Ref. No.	Part Number	Description	Remarks	Serial Number	Qty.
1	6817652	CYLINDER	assy		2
2	6817230	SHAFT			1
3	6645812	SCREW			1
4	6655752	FITTING			1
5	6666544	WIPER			1
6	6684445	RING			1
7	6684446	O-RING			1
8	6817231	TUBE			1
9	6536438	SPRING			1
10	6811048	BRACKET			1
11	26GM10020B	SCREW			1
12	6814007	SPACER			1
13	1EM00240B	WASHER			1
14	1CM02470B	BOLT			1

FRONT IDLER
(Steel)

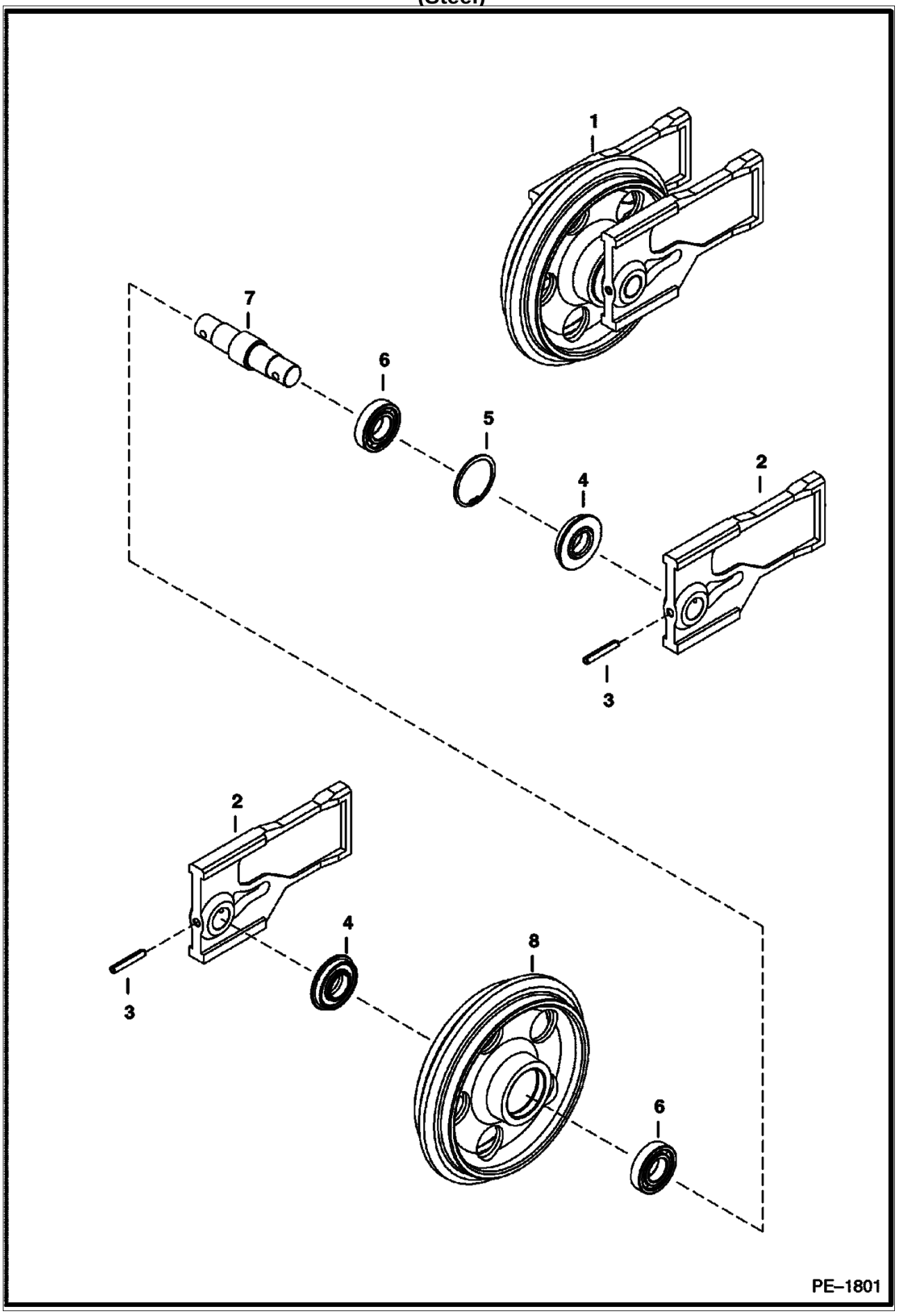

FRONT IDLER (Cont'd)
(Steel)

Ref. No.	Part Number	Description	Remarks	Serial Number	Qty.
1	6815121	IDLER	assy - front - Ref. 2-8 - steel track		2
2	6598481	BLOCK			2
3	2JM01060B	PIN			2
4	6679881	SEAL			2
5	7JM00072B	RING			2
6	6684339	BEARING			2
7	6588997	SHAFT			1
8	6815122	IDLER	steel track		1

FRONT IDLER
(Rubber)

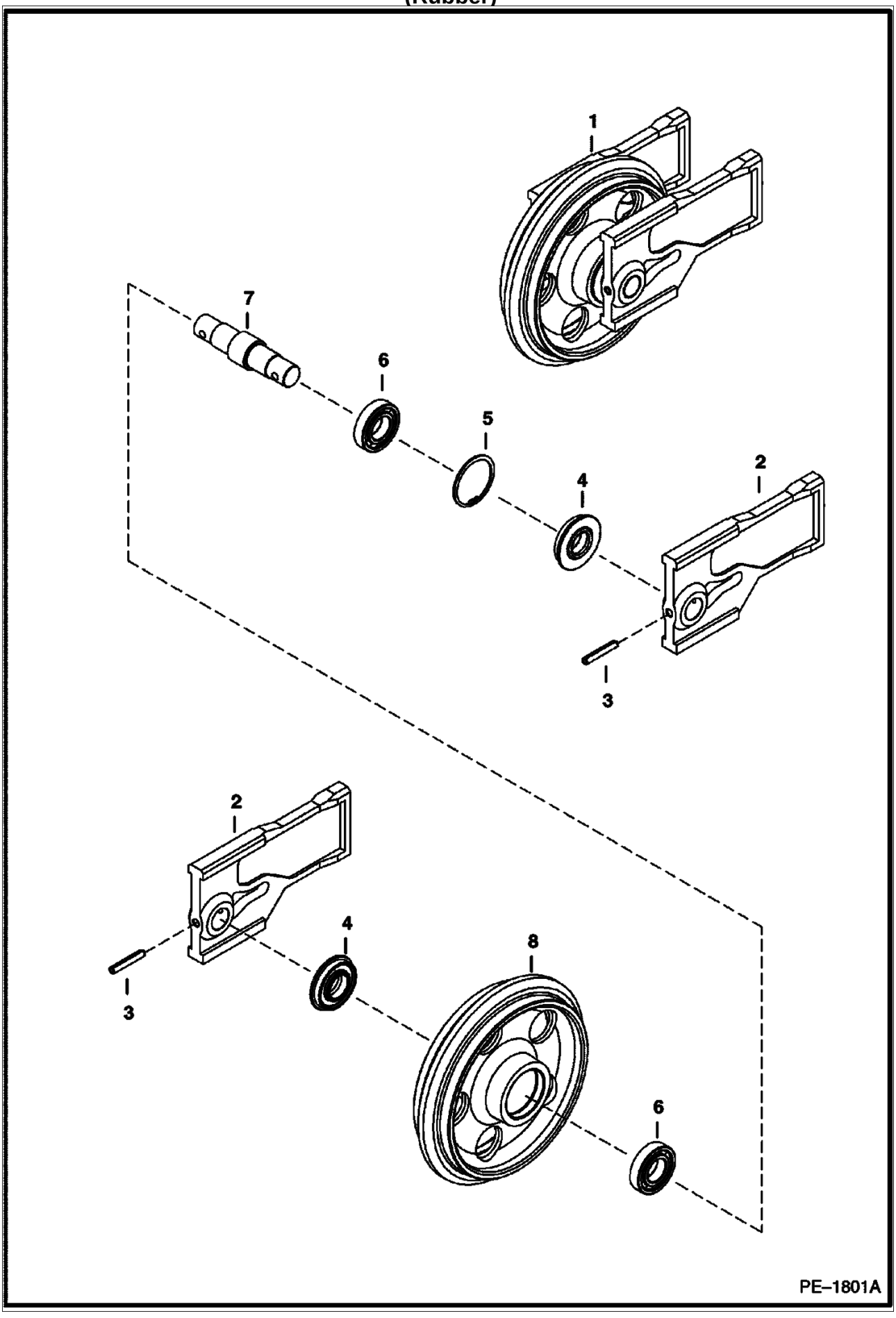

FRONT IDLER (Cont'd)
(Rubber)

Ref. No.	Part Number	Description	Remarks	Serial Number	Qty.
1	7106424	IDLER	assy - Ref. 2-7 - rubber track		2
2	6598481	BLOCK			2
3	2JM01060B	PIN			2
4	6679881	SEAL			2
5	7JM00072B	RING			1
6	6679883	BEARING			2
7	7106425	SHAFT			1
8	6815118	IDLER	rubber track		1

TRACK ROLLER
(Rubber)

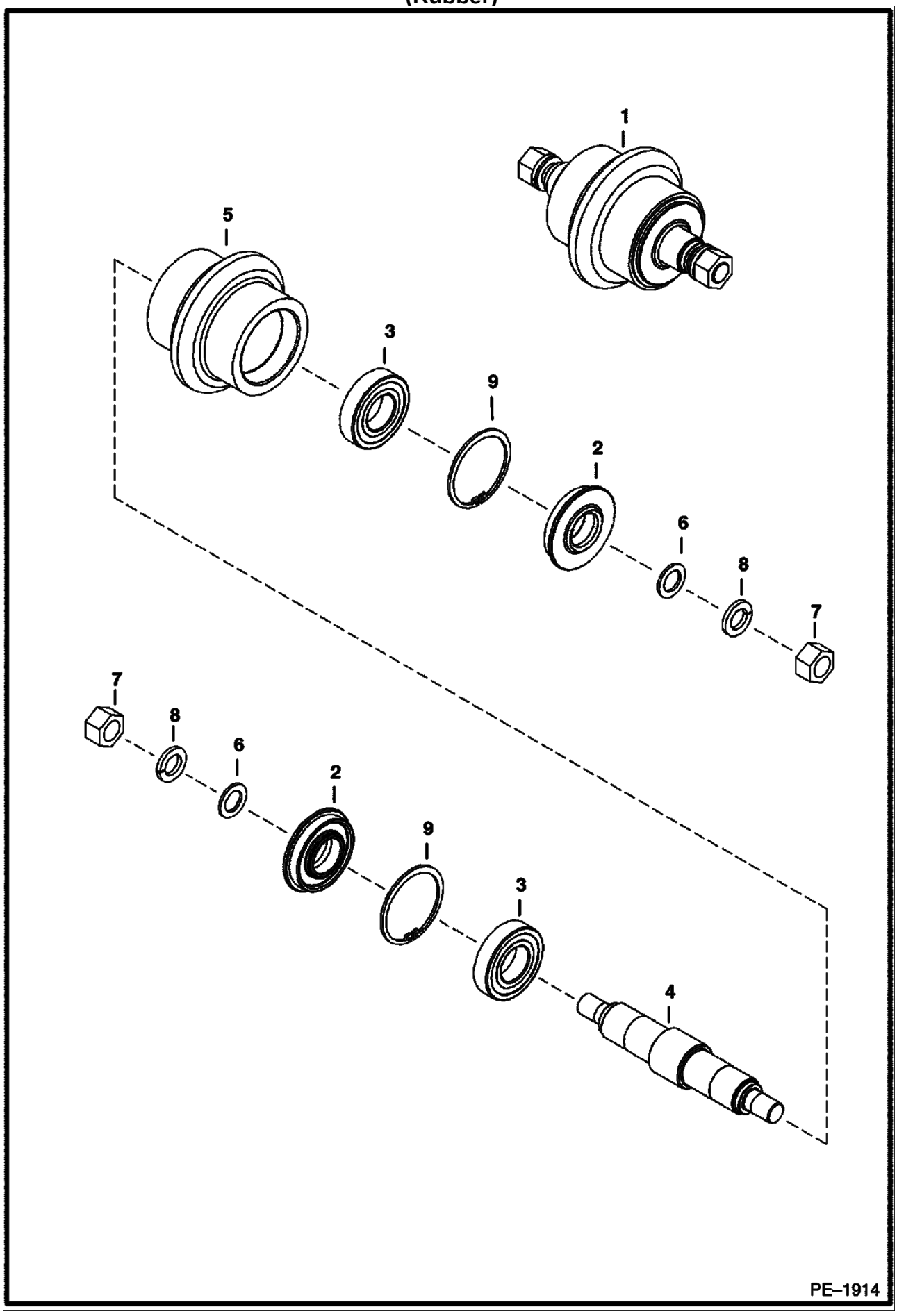

TRACK ROLLER (Cont'd)
(Rubber)

Ref. No.	Part Number	Description	Remarks	Serial Number	Qty.
1	6815119	ROLLER	assy		10
2	6679881	SEAL			2
3	6680291	BEARING			2
4	6810769	SHAFT			1
5	6815120	ROLLER			1
6	15EM00200B	WASHER			2
7	1DM00020B	NUT			2
8	6EM00200B	WASHER			2
9	7JM00072B	RING			1

TRACK ROLLER
(Top)

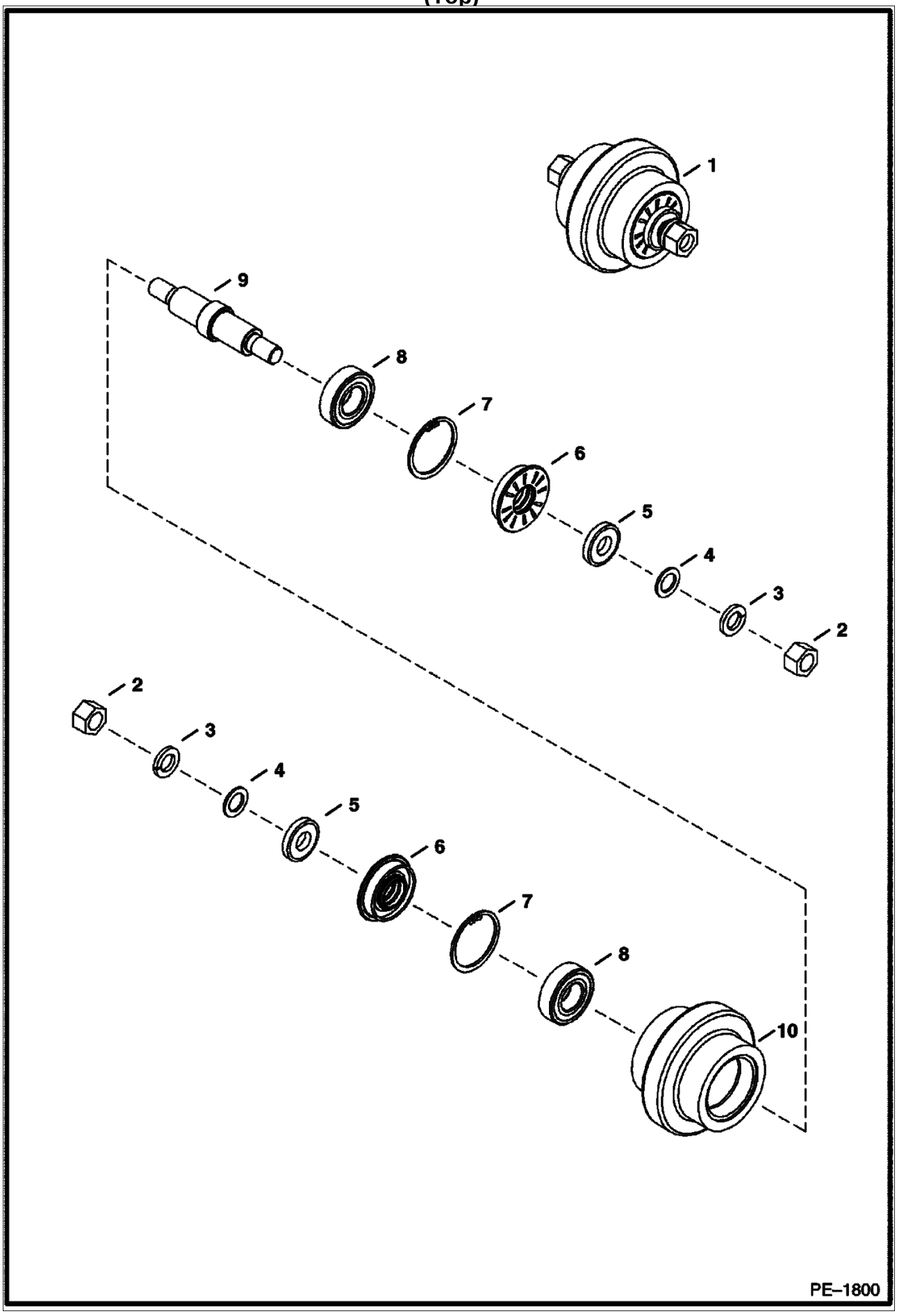

TRACK ROLLER (Cont'd)
(Top)

Ref. No.	Part Number	Description	Remarks	Serial Number	Qty.
1	6815111	ROLLER	assy - rubber		6
2	1DM00016B	NUT			2
3	6EM00160B	WASHER			2
4	15EM00160B	WASHER			2
5	6533873	SPACER			2
6	6681719	SEAL			2
7	7JM00052B	SNAP RING			2
8	6680289	BEARING			2
9	6807914	SHAFT			1
10	6815112	ROLLER	rubber		1
10	6815116	ROLLER	steel		1

NOTE: Rubber tracks should be used in matched pairs.
When replacing a single track, check the embossed part number on the inside surface of the track and order that P/N.

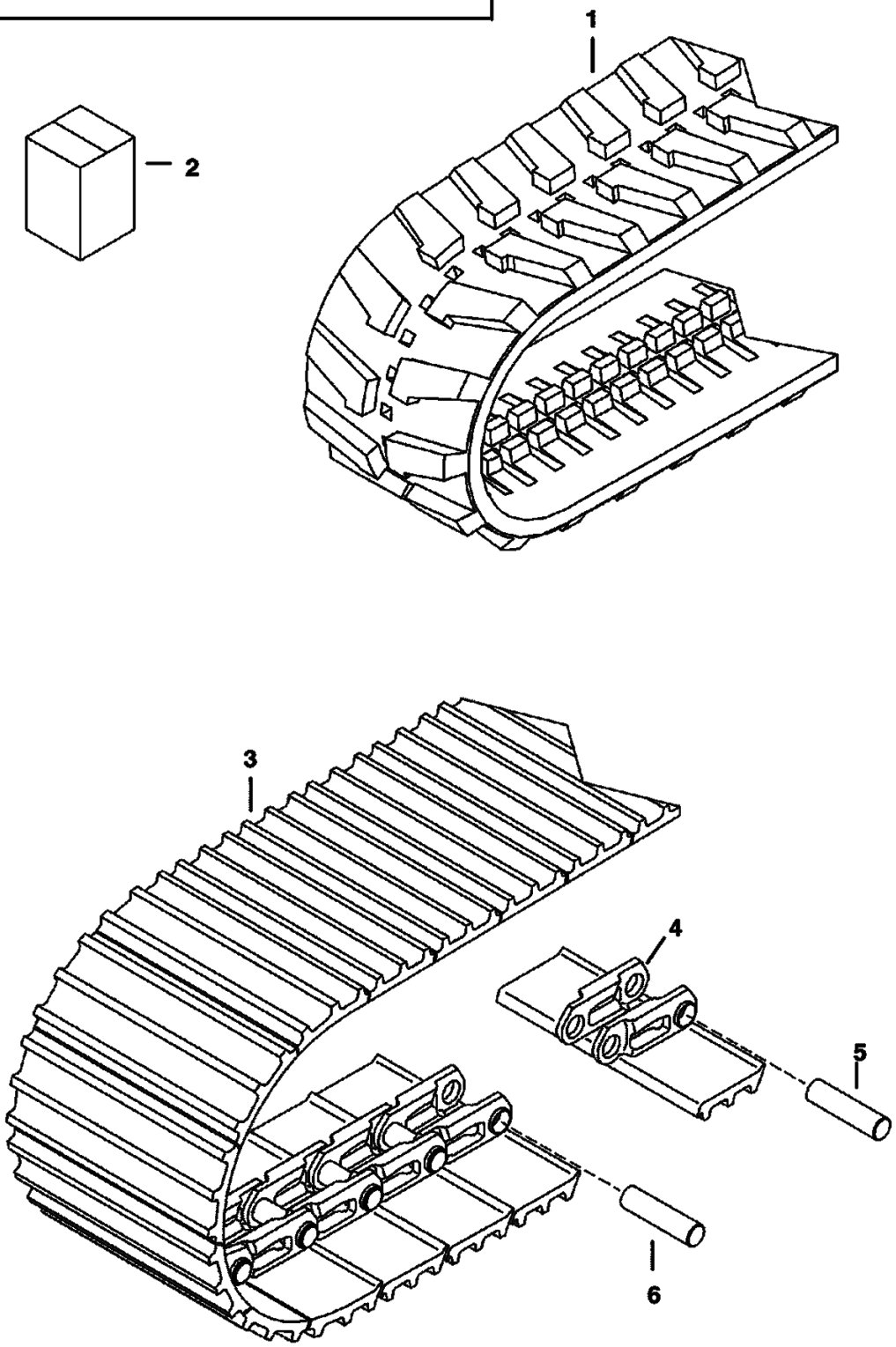

Ref. No.	Part Number	Description	Remarks	Serial Number	Qty.
1	6678825	TRACK	rubber		2
2	6817157	STEEL TRACK KIT	See Illustration STEEL TRACK KIT/ PE2197 STEEL TRACK		1
3	6684245	TRACK	Berco - steel - W/Ref. 4, 5 & 6 P/N is for 1 track		2
4	6677821	PAD	quantity shown for 1 track		47
5	6677822	PIN	quantity shown for 1 track		46
6	6677823	PIN, MASTER	quantity shown for 1 track		1

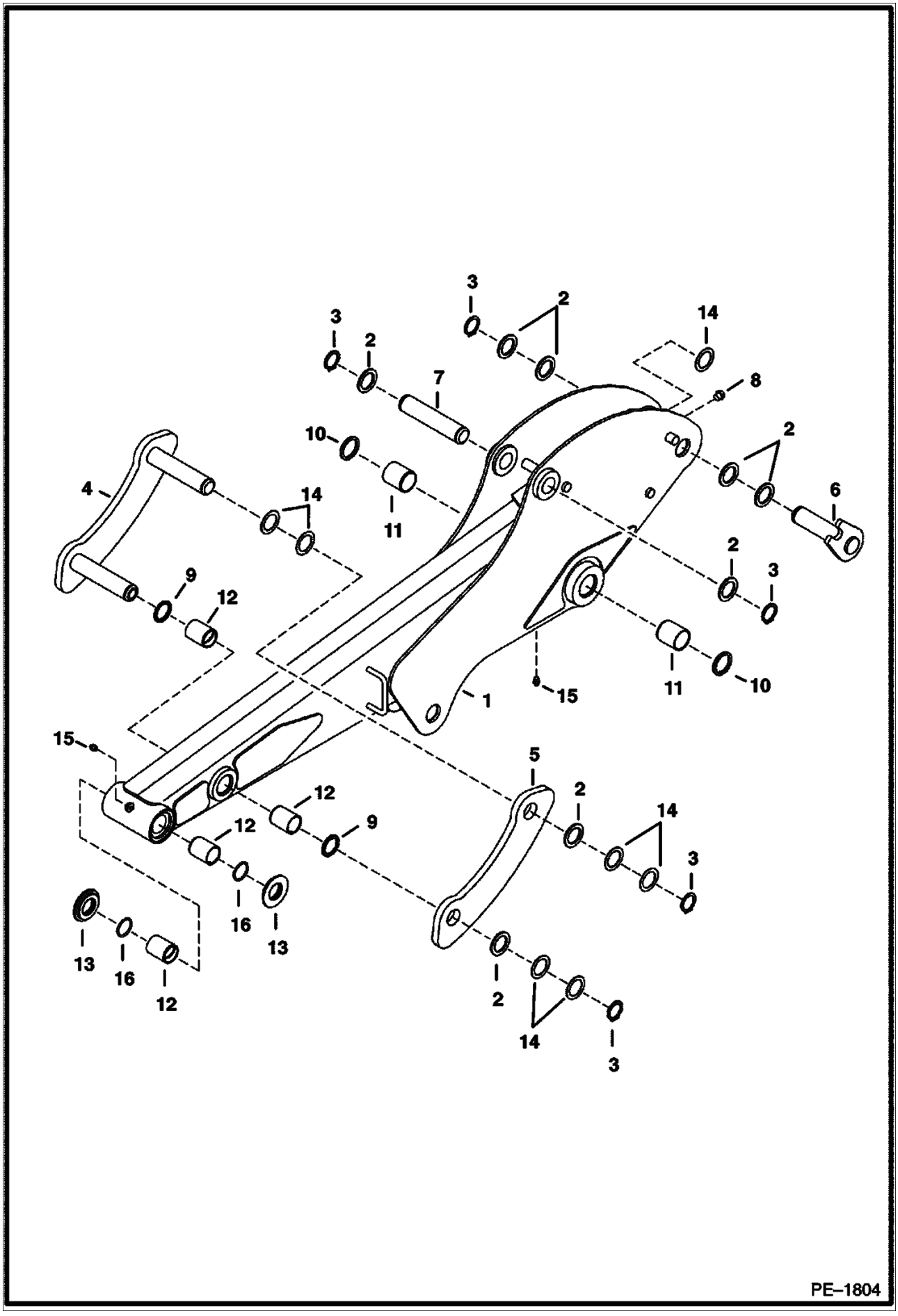
PE–1804

ARM & BUCKET LINK (Cont'd)

Ref. No.	Part Number	Description	Remarks	Serial Number	Qty.
1	7102806	ARM	standard		1
1	7102694	ARM	long		8
2	6534111	WASHER			5
3	6534154	RING			1
4	6589900	LINK			1
5	6595175	LINK			1
6	6595222	PIN			1
7	6596216	PIN			1
8	6597572	BUMPER			1
9	6652915	SEAL	dust		2
10	6660075	SEAL	dust		2
11	6803207	BUSHING	wear		2
12	6803213	BUSHING			4
13	6810627	WASHER			2
14	6811636	SPACER			7
15	10H000025B	GREASE ZERK	grease		3
16	25K040112B	O-RING			2

EXTENDIBLE ARM

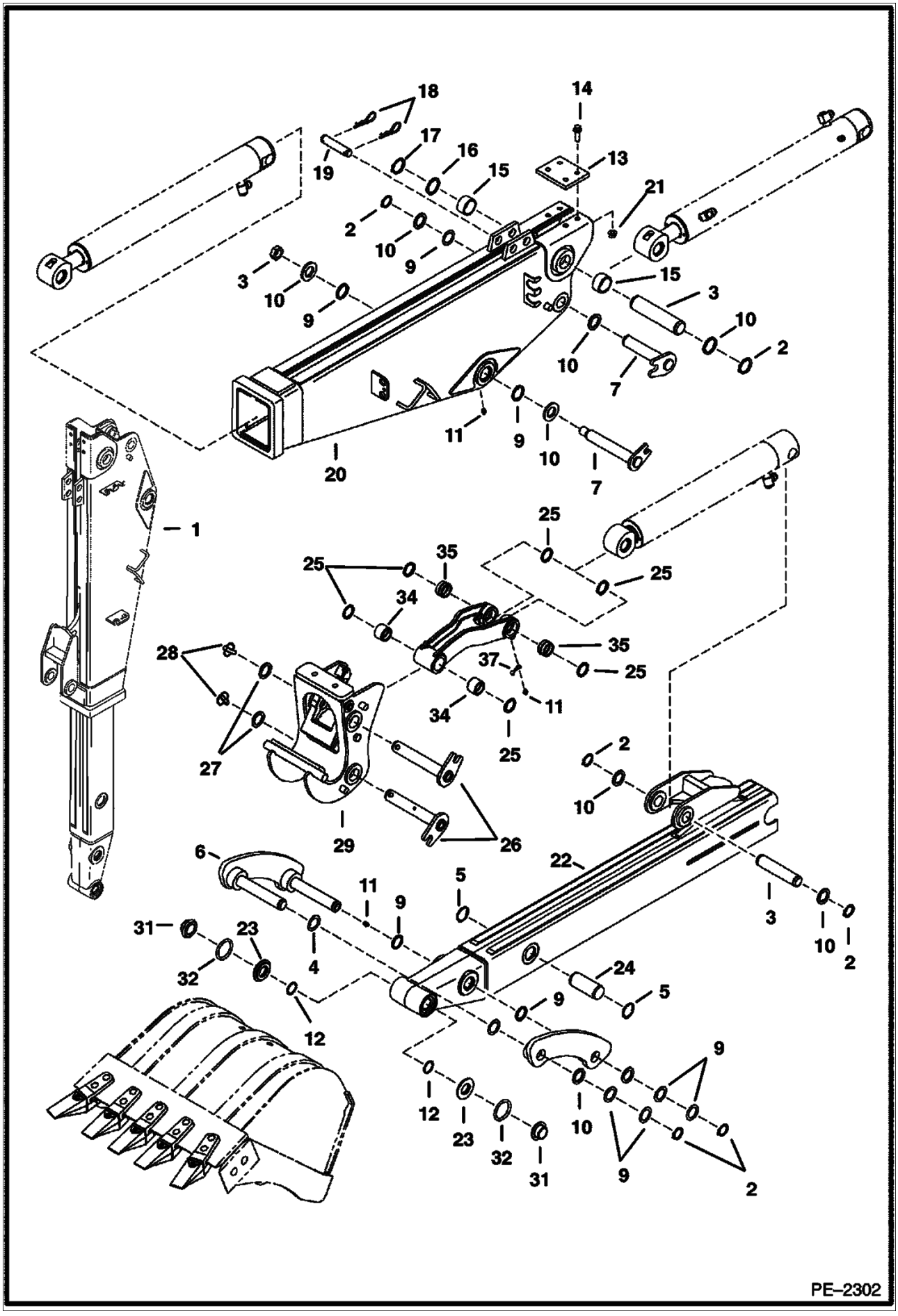

EXTENDIBLE ARM (Cont'd)

Ref. No.	Part Number	Description	Remarks	Serial Number	Qty.
1	6812292	ARM	assy		1
2	6534154	RING	retaining		5
3	6596216	PIN			1
4	6652915	SEAL	dust		8
5	6660075	SEAL	dust		2
6	6805465	LINK			1
7	6805845	PIN			1
8	6805982	LINK			1
9	6811636	SPACER			7
10	6534111	WASHER			6
11	10H000025B	GREASE ZERK	grease		3
12	25K0040112B	O-RING	hydraulic		2
13	6805396	PLATE			1
14	30CM01240B	SCREW			1
15	6806122	SPACER			2
16	6628547	WASHER			2
17	6668787	RING	retaining		2
18	6675029	PIN	hair		2
19	6805348	PIN			1
20	6810387	ARM	outer		1
21	51DM00012B	NUT			4
22	6812293	ARM	inner		1
23	6810627	WASHER	thrust		2
24	6805381	PIN			1
25	6652943	COVER	grease		2
26	6806971	PIN			1
27	6534111	WASHER			2
28	6560382	RING	lock		2
29	6812421	X-CHANGEt			1
30	6805373	LINK			1
31	6810525	BUSHING			2
32	6811260	O-RING			2
33	6536748	NUT	lock		2
34	6803438	BUSHING			2
35	6803309	BUSHING	wear		2

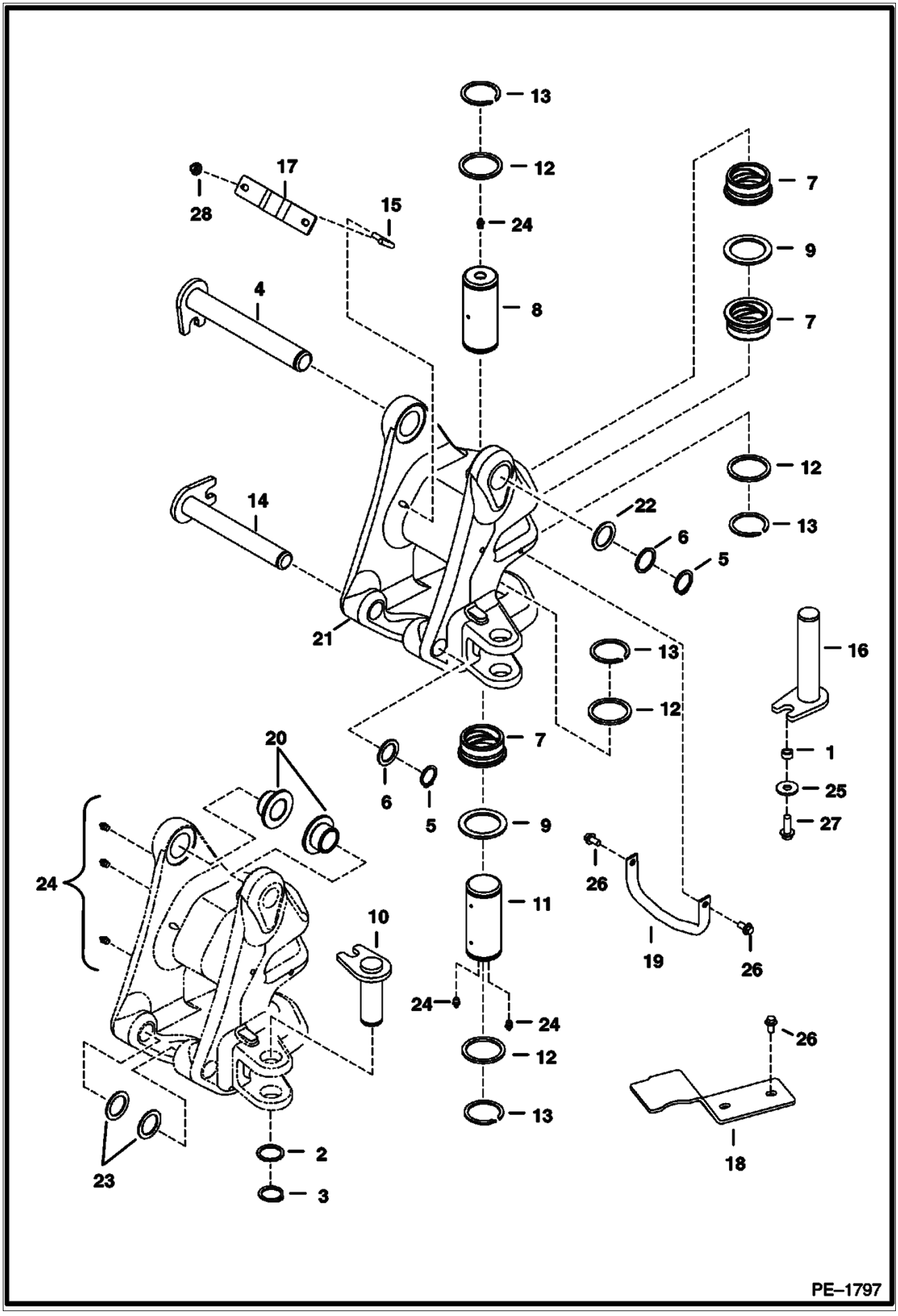
13
12
24
8
7
9
7
17
28
15
4
14
21
12
13
22
6
5
16
1
25
27
13
12
7
6
5
9
20
24
10
11
26
19
26
24
24
12
13
26
18
2
3
23
PE–1797

SWING FRAME (Cont'd)

Ref. No.	Part Number	Description	Remarks	Serial Number	Qty.
1	6503451	SPACER			1
2	6534111	WASHER			1
3	6534154	RING	retaining		1
4	6597198	PIN			1
5	6665618	RING	retaining		2
6	6666549	WASHER	support		2
7	6807956	BUSHING			3
8	6807961	PIN			1
9	6807962	WASHER			2
10	6807964	PIN			1
11	6807965	PIN			1
12	6808174	WASHER			4
13	6808175	RING	retaining		4
14	6808205	PIN			1
15	6808211	BOLT			2
16	6808267	PIN			1
17	6808601	BRACKET			1
18	6808984	BRACKET			1
19	6809253	SUPPORT			1
20	6810581	BUSHING			2
21	6810698	FRAME			1
22	6810704	WASHER			1
23	6811636	SPACER			2
24	10H000025B	GREASE ZERK	grease		6
25	17EM00120B	WASHER			1
26	29CM01020B	SCREW			4
27	29CM01235B	BOLT			1
28	51DM00010B	NUT			2

BOOM

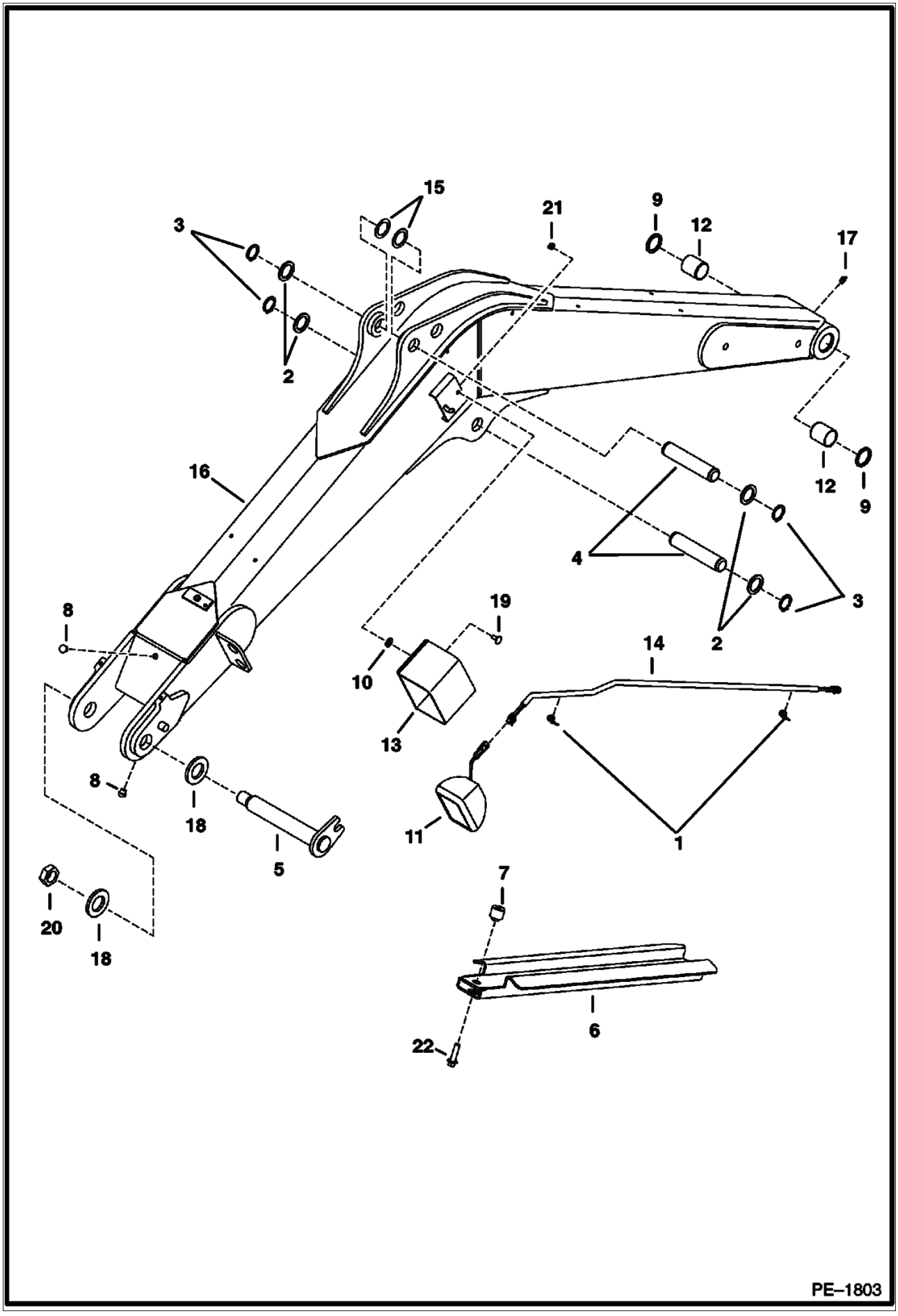

BOOM (Cont'd)

Ref. No.	Part Number	Description	Remarks	Serial Number	Qty.
1	1715312B	TIE			5
2	6534111	WASHER			4
3	6534154	RING			4
4	6596216	PIN			2
5	6596238	PIN			1
6	6596493	SHIELD			1
7	6596506	SPACER			1
8	6597572	BUMPER			2
9	6660075	SEAL			2
10	6675859	BOLT			2
11	6675938	LIGHT			2
11	6677934	BULB			1
11	6676203	BEZEL			1
11	17C000532B	BOLT			1
11	6676204	NUT			1
11	61D000005B	NUT			1
12	6803207	BUSHING			2
13	6808258	HOUSING			1
14	6808415	HARNESS			1
15	6811636	SPACER			2
16	6811976	BOOM			1
17	10H000025B	GREASE ZERK	grease		1
18	1EM00380B	WASHER			2
19	21CM00820B	BOLT			2
20	39DM00030B	NUT			1
21	4DM00008B	NUT			2
22	59CM01245B	SCREW			1

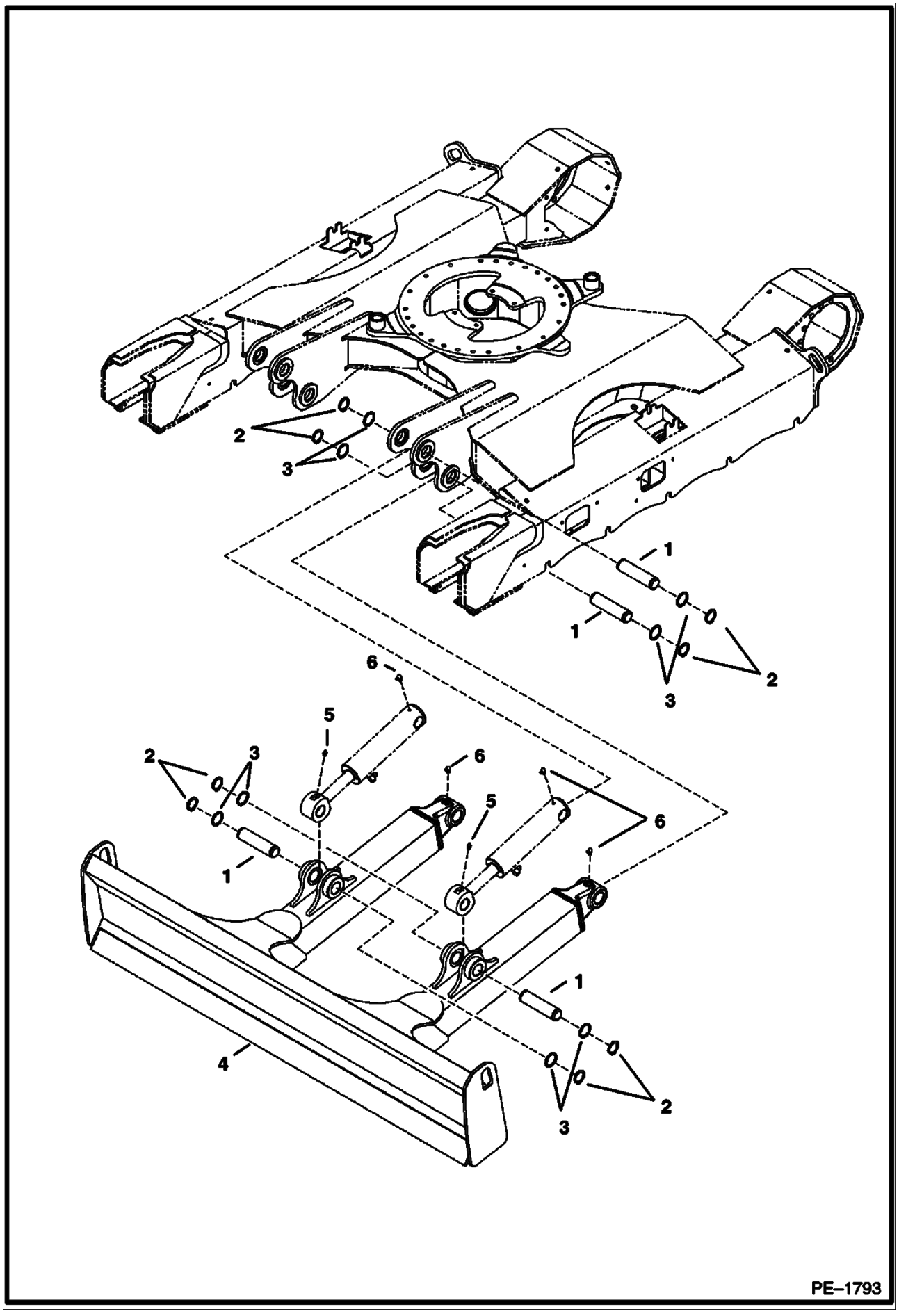
1
2
3
4
5
6
PE–1793

BLADE (Cont'd)

Ref. No.	Part Number	Description	Remarks	Serial Number	Qty.
1	6597461	PIN			6
2	6665618	RING			12
3	6666549	WASHER			12
4	6812184	BLADE			1
5	10H000025B	GREASE ZERK	grease		2
6	12H000015B	GREASE ZERK	grease		4

R.H. CONSOLE

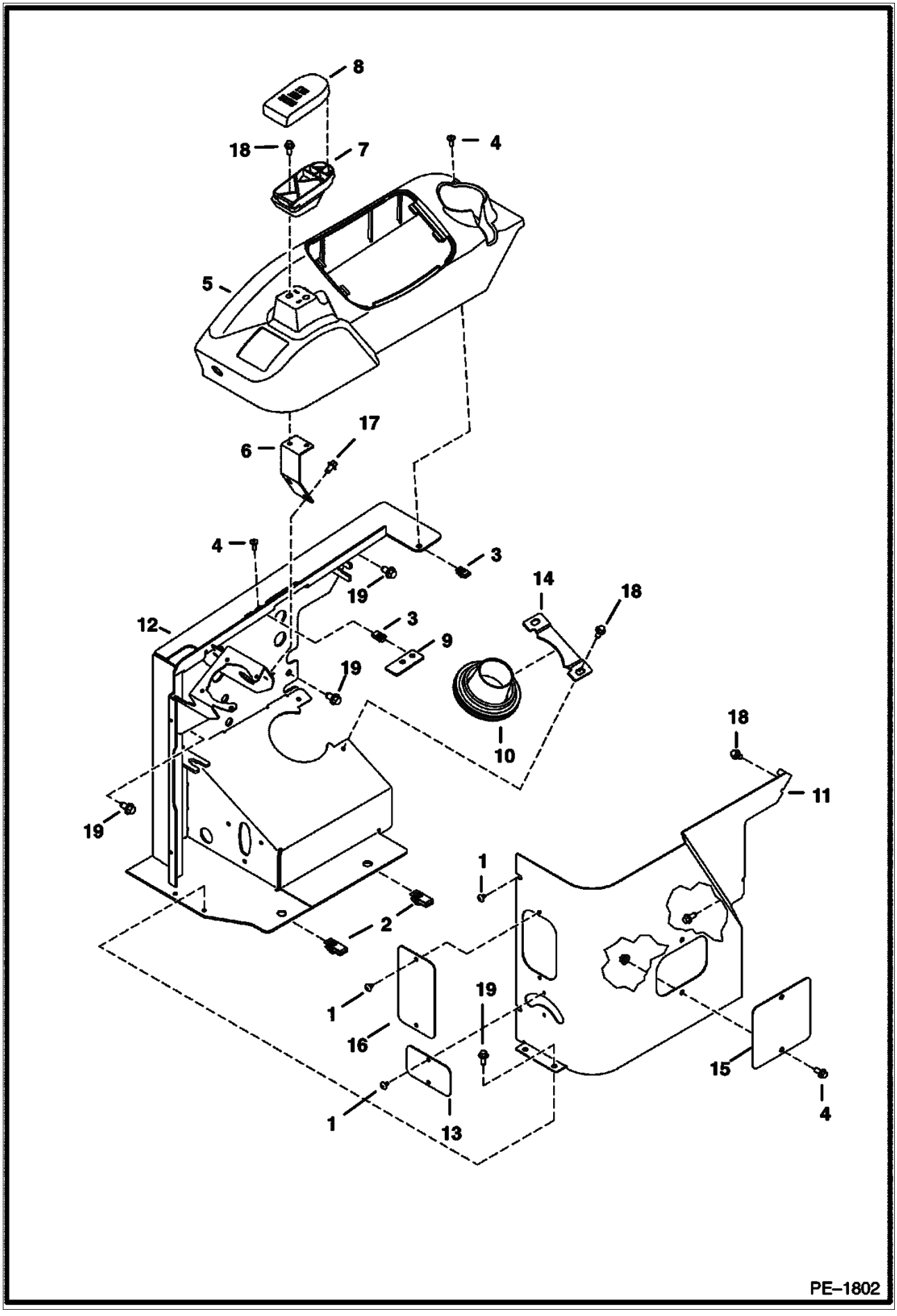
8
18
7
4
5
17
6
4
3
19
14
18
12
3
9
19
10
18
11
19
1
2
1
19
16
15
4
1
13
PE–1802

R.H. CONSOLE (Cont'd)

Ref. No.	Part Number	Description	Remarks	Serial Number	Qty.
1	6589675	SCREW			6
2	6675722	NUT			2
3	6676026	NUT			5
4	6803202	SCREW			5
5	6807033	COVER			1
6	6807362	SUPPORT			1
7	6807982	ARMREST			1
8	6807983	COVER	armrest		1
9	6810405	STOP			1
10	6810671	BOOT			1
11	6811998	PANEL			1
12	6812010	CONSOLE			1
13	6812065	COVER			1
14	6814609	PLATE			1
15	6814933	COVER			1
16	6814934	COVER			1
17	26GM08016B	SCREW			2
18	26GM08020B	SCREW			8
19	26GM10030B	SCREW			4
20	6814607	PLATE			1
21	29CM00816B	SCREW			2
22	26GM08016B	SCREW			3

L.H. CONSOLE

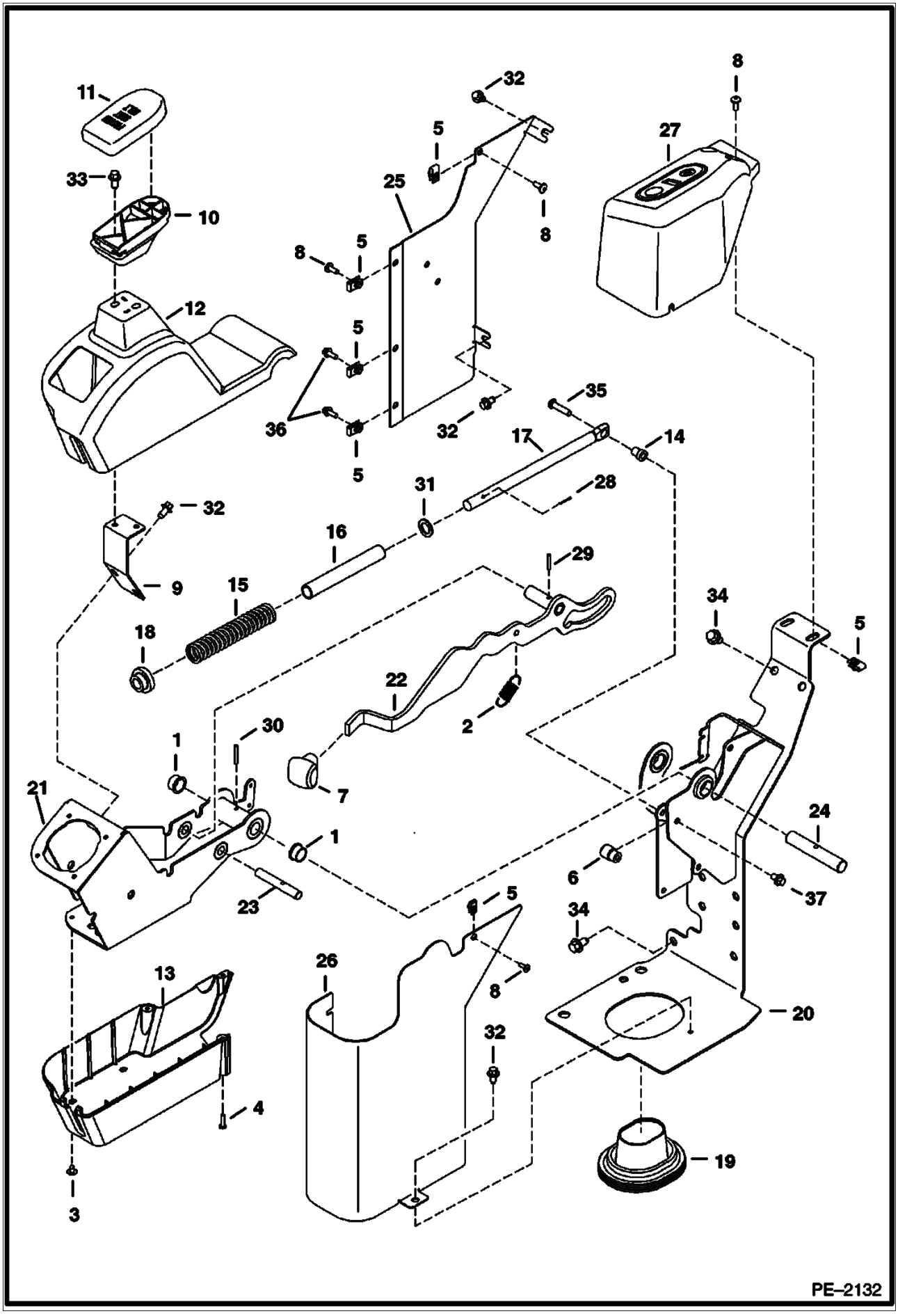
11
33
10
12
32
5
25
8
27
35
36
17
14
31
28
16
29
9
15
18
34
22
2
1
30
7
21
24
6
37
23
26
13
4
3
20
19
PE–2132

L.H. CONSOLE (Cont'd)

Ref. No.	Part Number	Description	Remarks	Serial Number	Qty.
1	6536801	BUSHING			2
2	6563128	SPRING			1
3	6589675	SCREW			4
4	6669224	BOLT			3
5	6676026	NUT			7
6	6678918	BEARING			1
7	6803199	HANDLE			1
8	6803202	SCREW			5
9	6807362	SUPPORT			1
10	6807982	ARMREST			1
11	6807983	COVER	armrest		1
12	6807984	COVER	L.H. - upper		1
13	6807985	COVER	L.H. - lower		1
14	6808749	BUSHING			1
15	6808840	SPRING			1
16	6810454	TUBE			1
17	6810455	SHAFT			1
18	6810456	BUSHING			1
19	6810671	BOOT			1
20	6811719	CONSOLE	L.H.		1
21	6811751	CONSOLE			1
22	6811760	HANDLE			1
23	6811762	PIN			1
24	6811771	PIN			1
25	6811783	COVER	L.H.		1
26	6811785	COVER	L.H. - lower		1
27	6811973	CONSOLE	L.H. - rear		1
28	13JM20025B	PIN	cotter		1
29	14J001816B	PIN	coiled		1
30	14J000820B	PIN	coiled		1
31	15EM00160B	WASHER			1
32	26GM08016B	SCREW			5
33	26GM08020B	SCREW			2
34	26GM10020B	SCREW			5
35	27CM00835B	SCREW			1
36	29CM00616B	SCREW			2
37	29CM00812B	SCREW			1

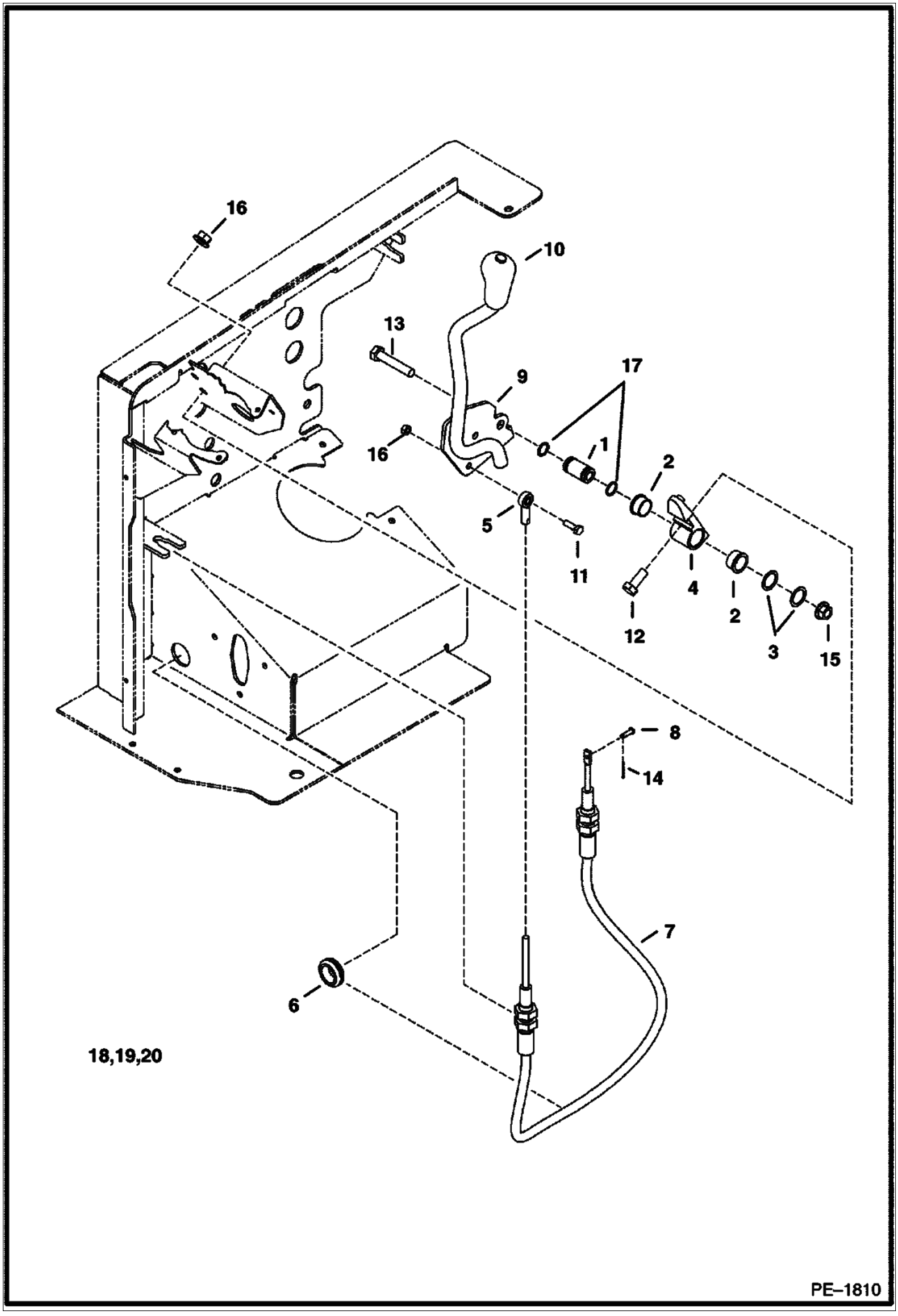
16
10
13
9
17
16
1
2
5
11
4
2
12
3
15
8
14
7
6
18,19,20
PE–1810

BLADE CONTROL (Cont'd)

Ref. No.	Part Number	Description	Remarks	Serial Number	Qty.
1	6536545	SLEEVE			1
2	6536801	BUSHING			2
3	6536802	WASHER			2
4	6537481	MOUNT			1
5	6593671	CONNECTOR			1
6	6676508	GROMMET			1
7	6679038	CABLE			1
8	6801068	PIN			1
9	7100534	PLATE			1
10	6807948	LEVER			1
11	1CM00620B	BOLT			1
12	1CM01025B	SCREW			1
13	1CM01055B	SCREW			1
14	1F000212B	PIN			1
15	43DM00010B	NUT			2
16	4DM00006B	NUT			1
17	58K000015B	O-RING			2
18	84G003724B	BOLT			2
19	6815898	MOUNT			1
20	6562266	CLAMP			2

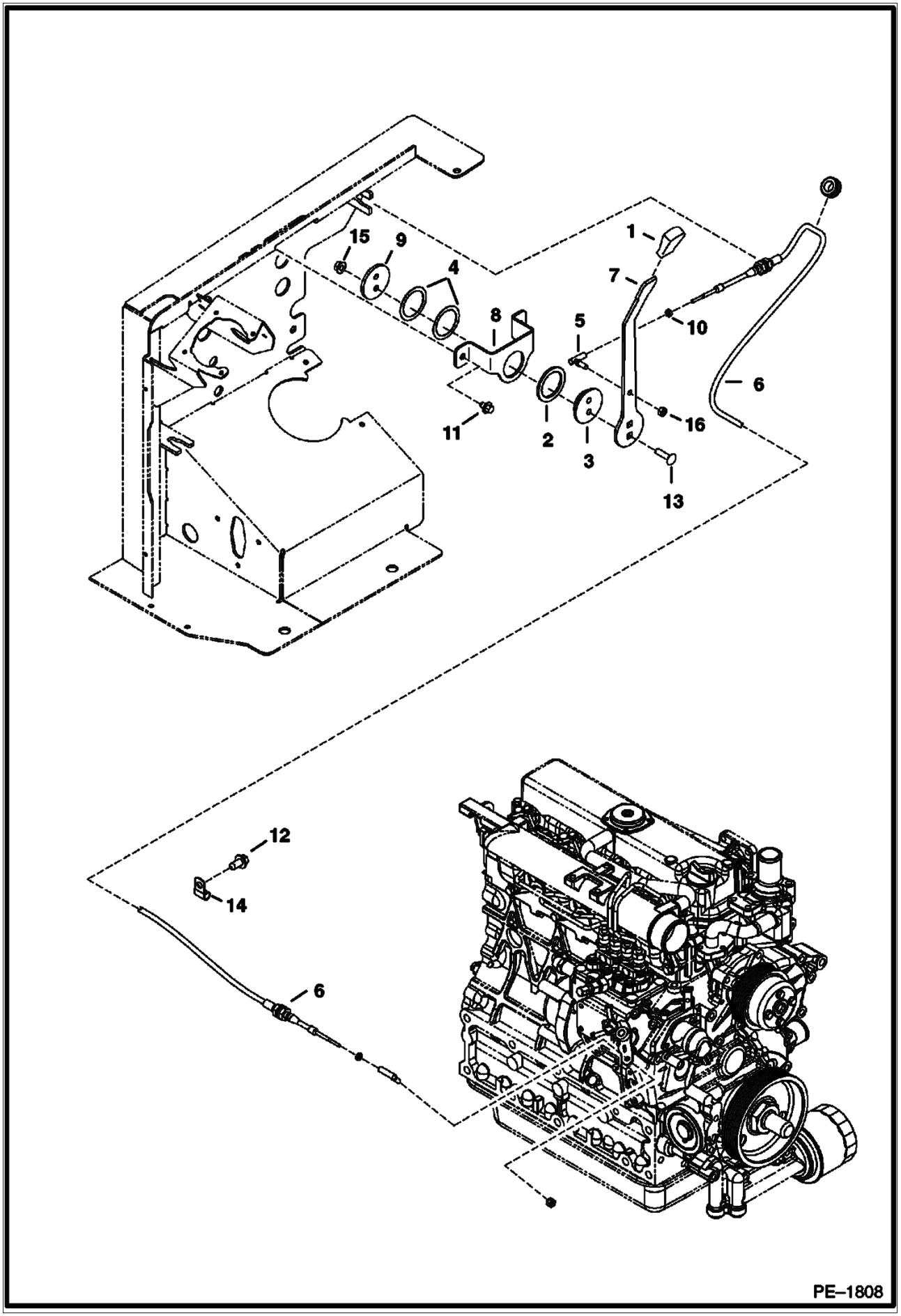
15
9
4
8
1
7
5
10
6
16
11
2
3
13
12
14
6
PE–1808

THROTTLE CONTROL (Cont'd)

Ref. No.	Part Number	Description	Remarks	Serial Number	Qty.
1	6564452	GRIP			1
2	6567962	WASHER			1
3	6567963	SPACER			1
4	6630945	WASHER			2
5	6644965	BALL JOINT			2
6	6680996	CABLE			1
7	6812089	HANDLE			1
8	6812154	BRACKET			1
9	6812686	WASHER			1
10	14D000010B	NUT			2
11	26GM08013B	SCREW			2
12	26GM10020B	SCREW			1
13	28CM00830B	BOLT			2
14	30H000023B	CLAMP			1
15	43DM00008B	NUT			2
16	62D000004B	NUT			2

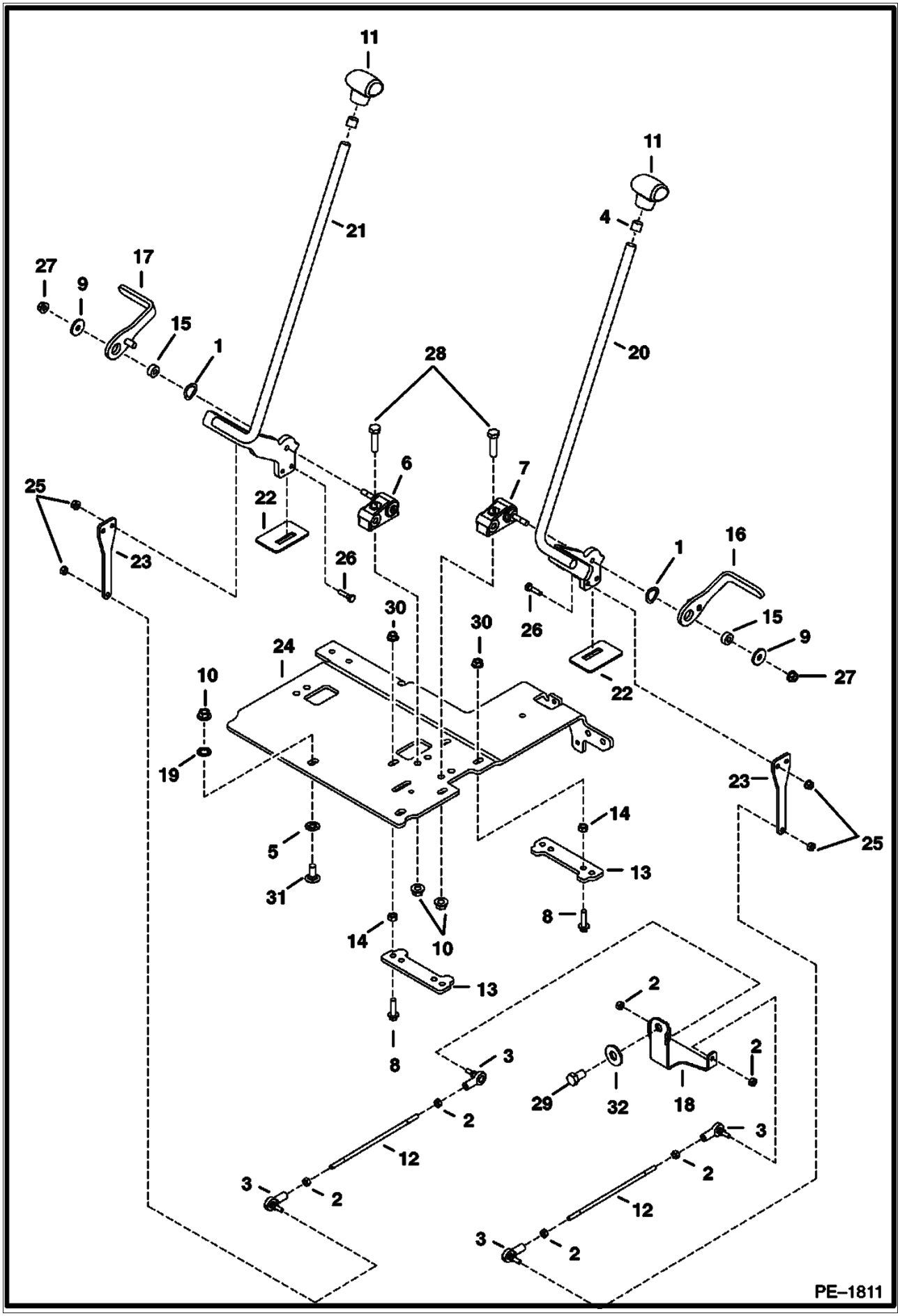
11
21
27
9
17
15
1
28
6
22
25
23
26
30
24
10
19
5
31
14
13
8
10
2
3
12
29
32
18
4
20
7
16
PE–1811

Ref. No.	Part Number	Description	Remarks	Serial Number	Qty.
1	6536803	WASHER			3
2	62D000004B	NUT			8
3	6631036	JOINT			4
4	6672494	RING			2
5	6674264	BOLT			2
6	6677904	BEARING			1
7	6677908	BEARING			2
8	29CM00830B	SCREW			4
9	6701174	WASHER			3
10	51DM00010B	NUT			5
11	6804068	HANDLE			2
12	6808004	ROD			2
13	6809084	STOP	pedal		2
14	4DM00008B	NUT			4
15	6810303	SPACER			3
16	6810508	PEDAL	L.H.		2
17	6810511	PEDAL	R.H.		1
18	6810515	PLATE			1
19	6E000008B	WASHER			2
20	6810532	PEDAL	L.H. - travel		1
21	6810533	PEDAL	R.H. - travel		1
22	6812070	SEAL			3
23	6812286	PLATE			2
24	6812930	MOUNT			1
25	83D000004B	NUT			4
26	1C000416B	SCREW			4
27	47DM00008B	NUT			3
28	1CM01040B	SCREW			3
29	1CM01220B	SCREW			1
30	43DM00008B	NUT			4
31	21CM01025B	BOLT	carriage		2
32	25E000022B	WASHER	flat		1

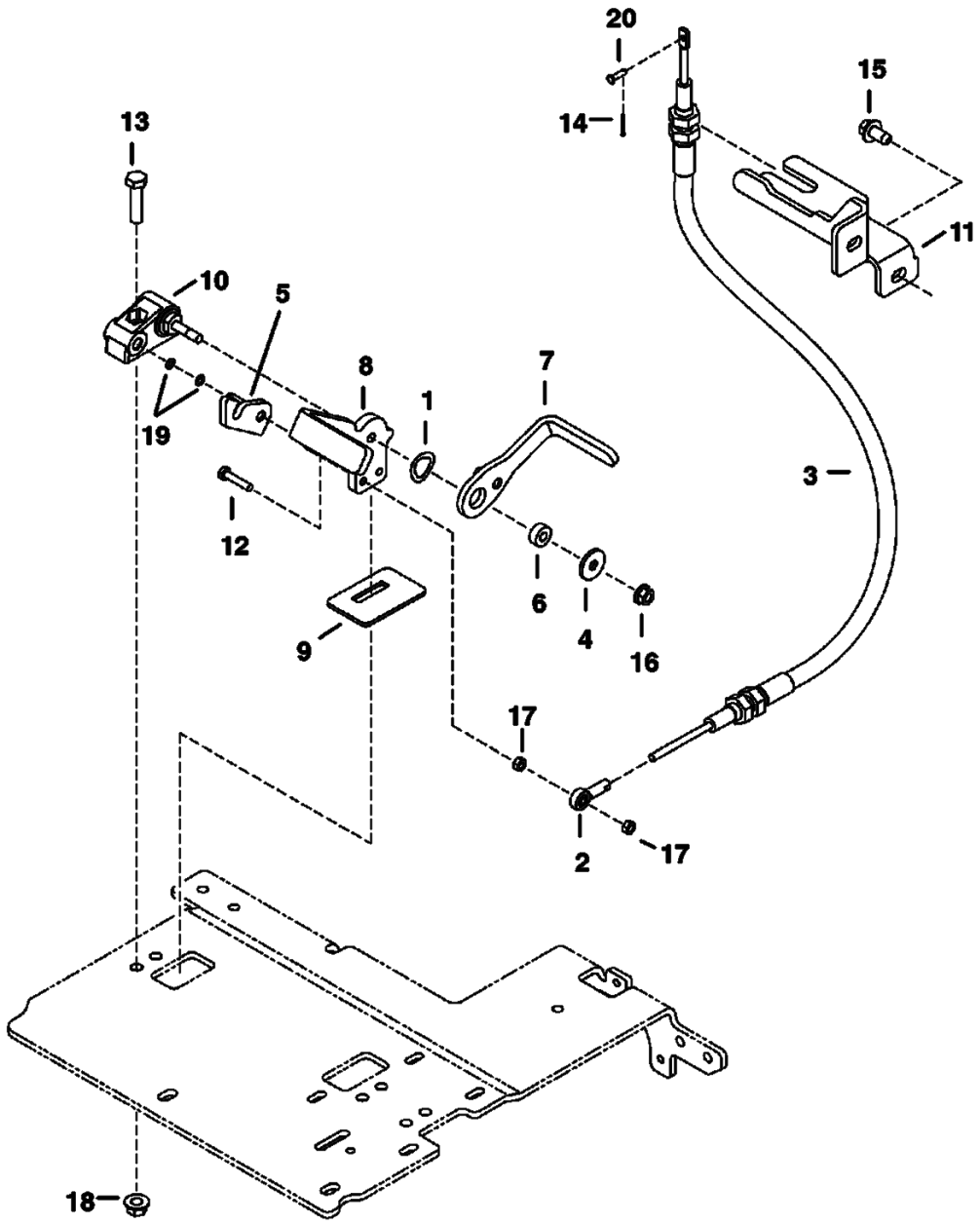
20
14
15
13
11
10
5
8
7
1
19
3
12
6
4
16
9
17
2
17
18
PE–1812

OFFSET (Cont'd)

Ref. No.	Part Number	Description	Remarks	Serial Number	Qty.
1	6536803	WASHER			3
2	6593671	CONNECTOR			1
3	6679038	CABLE			1
4	6701174	WASHER			3
5	6809194	LOCK			1
6	6810303	SPACER			3
7	6810508	PEDAL	L.H.		1
8	6916109	PEDAL	L.H.		1
9	6812070	SEAL			3
10	6677908	BEARING			2
11	6815898	MOUNT			1
12	1CM00630B	BOLT			1
13	1CM01040B	SCREW			3
14	1F000212B	PIN	cotter		1
15	26GM10020B	SCREW			2
16	47DM00008B	NUT			3
17	4DM00006B	NUT			2
18	51DM00010B	NUT			5
19	54K020080B	O-RING			2
20	6801068	PIN			1

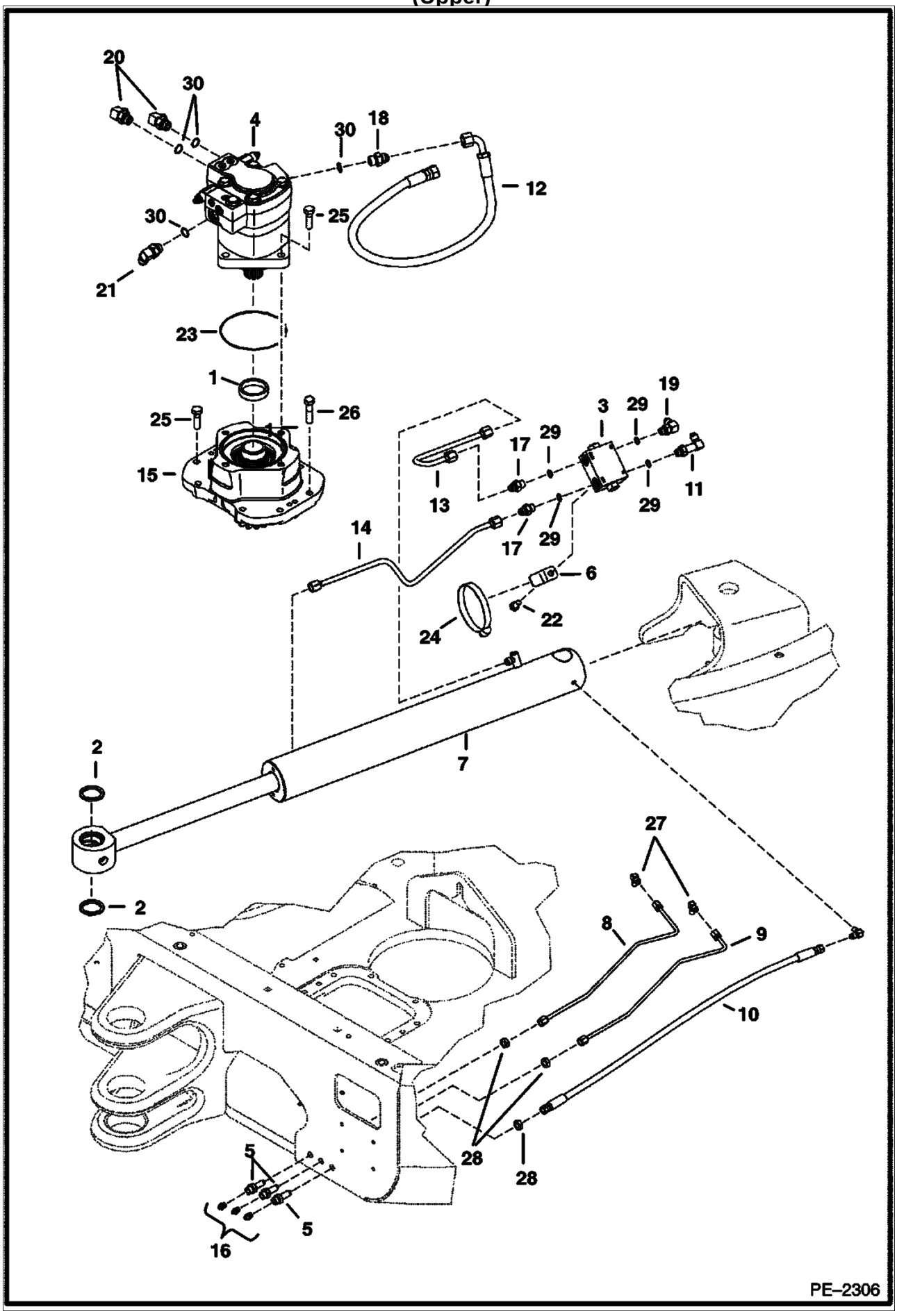
20
30
4
30
18
12
30
25
21
23
1
25
26
15
19
3
29
17
29
13
29
11
17
29
14
6
24
22
2
7
2
27
8
9
10
28
28
5
5
16
PE–2306

HYDRAULIC CIRCUITRY (Cont'd)
(Upper)

Ref. No.	Part Number	Description	Remarks	Serial Number	Qty.
1	6513681	BEARING			1
2	6660075	SEAL	dust		2
3	6676167	VALVE	lock		1
4	6687118	MOTOR	See Illustration SWING MOTOR/ MS1847		1
5	6801784	FITTING			3
6	6807345	MOUNT	lock valve		1
7	6807970	CYLINDER	See Illustration SWING CYLINDER/ PE2007 swing		1
8	6812177	TUBELINE			1
9	6812178	TUBELINE			1
10	6812179	HOSE			1
11	6812815	FITTING			1
12	6815035	HOSE			1
13	7102604	TUBELINE			1
14	7102605	TUBELINE			1
15	7106387	CARRIER	See Illustration MOTOR CARRIER/ PE1907		1
16	10H000025B	GREASE ZERK	grease		3
17	15KB00606B	ADAPTER			2
18	15KB00808B	ADAPTER			1
19	17KB00606B	ELBOW			1
20	17KB00608B	FITTING			2
21	17KB00808B	ELBOW			1
22	1CM01020B	BOLT			1
23	25K030508B	O-RING	hydraulic		1
24	42H000056B	CLAMP	hose		1
25	55CM01240B	SCREW			8
26	55CM01250B	SCREW			4
27	83F000003B	SCREW			3
28	86F000003B	NUT			3

HYDRAULIC CIRCUITRY
(Lower)

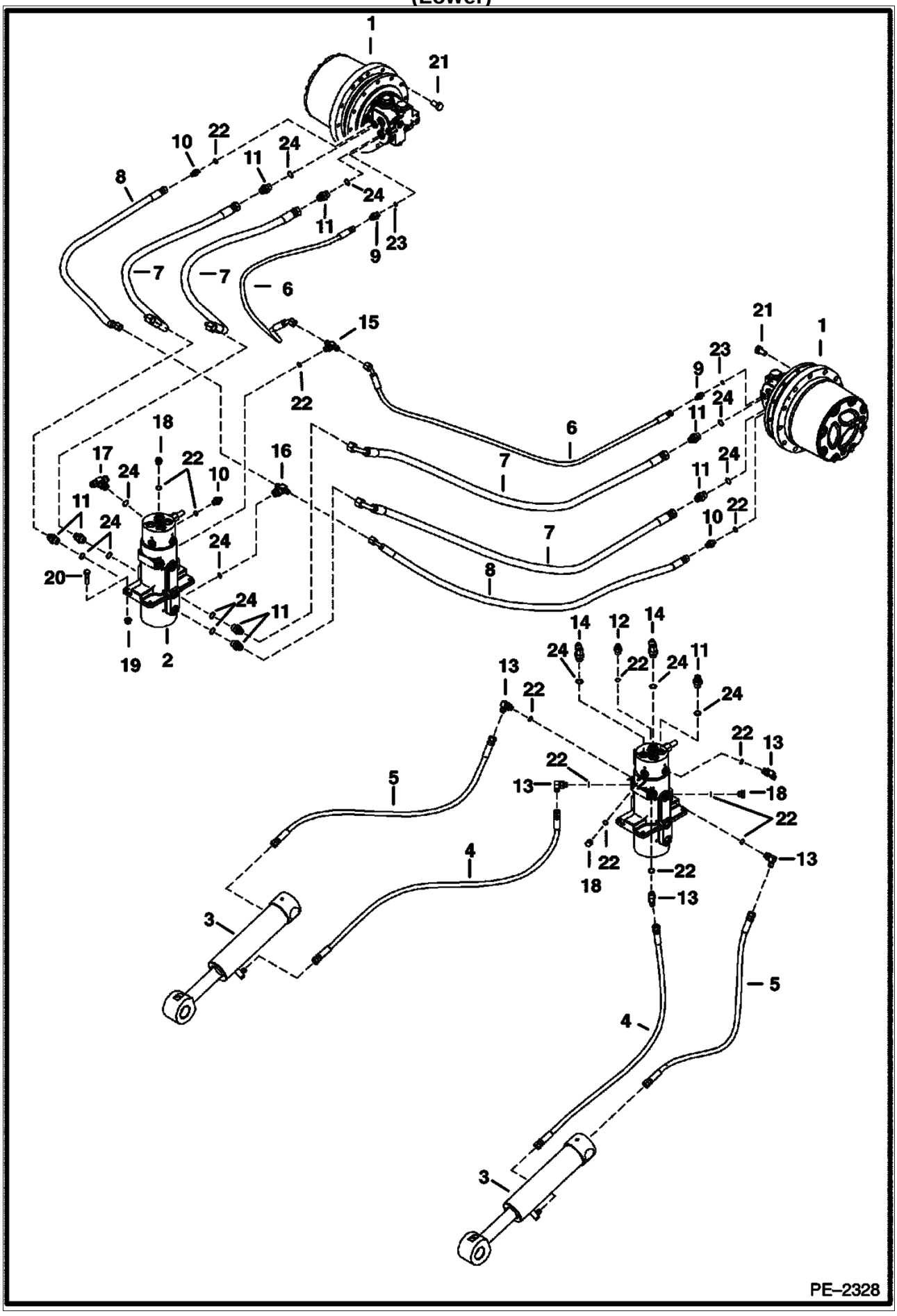

HYDRAULIC CIRCUITRY (Cont'd)
(Lower)

Ref. No.	Part Number	Description	Remarks	Serial Number	Qty.
1	6685454	MOTOR	See Illustration TRAVEL MOTOR/ MS1998 travel		2
2	6811778	SWIVEL	See Illustration SWIVEL JOINT/ PE1906		1
3	6812158	CYLINDER			2
4	6812230	HOSE			2
5	6812231	HOSE			2
6	6816492	HOSE			2
7	7101091	HOSE			4
8	7103043	HOSE			2
9	15KB00404B	ADAPTER	W/Ref. 23		4
10	15KB00606B	ADAPTER	W/Ref. 22		2
11	15KB00808B	ADAPTER	W/Ref. 24		2
12	16KB00606B	ADAPTER	W/Ref. 22		1
13	17KB00606B	ELBOW	W/Ref. 22		1
14	17KB00808B	ELBOW	W/Ref. 22		1
15	19KB00606B	TEE	W/Ref. 24		1
16	19KB00608B	TEE	W/Ref. 24		1
17	19KB00808B	FITTING	W/Ref. 22		1
18	24K000005B	PLUG			3
19	43DM00010B	NUT			4
20	53CM01040B	SCREW			4
21	55CM01425B	SCREW			24
22	79K000004B	O-RING			x
23	79K000006B	O-RING			x
24	79K000008B	O-RING			x

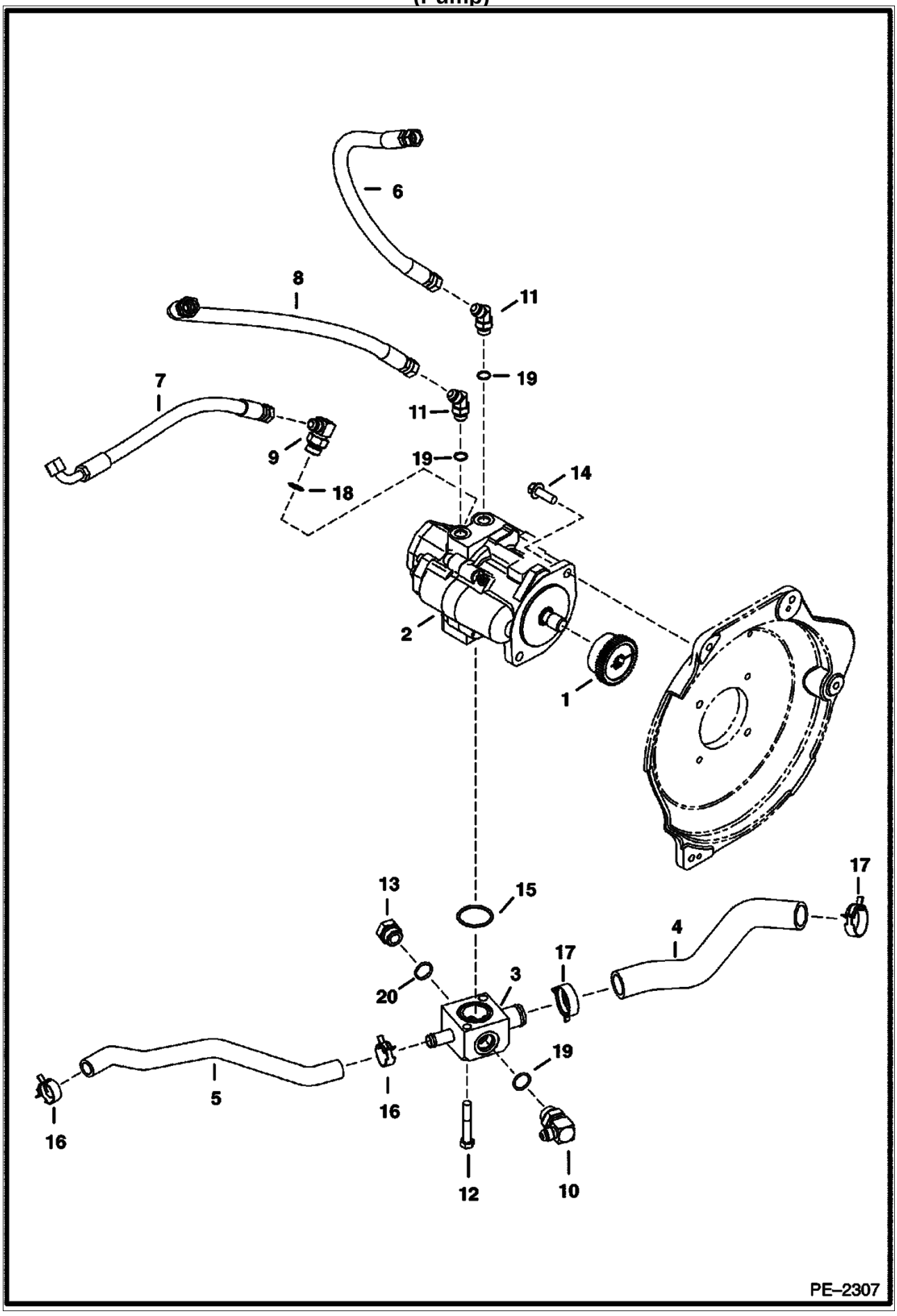
6
8
11
19
7
11
9
19
14
18
2
1
17
13
15
4
17
20
3
19
16
5
16
12
10
PE–2307

HYDRAULIC CIRCUITRY (Cont'd)
(Pump)

Ref. No.	Part Number	Description	Remarks	Serial Number	Qty.
1	6676535	COUPLER			1
2	6685836	PUMP	See Illustration HYDRAULIC PUMP/ MS2054 hydraulic		1
3	6814414	MANIFOLD	manifold		1
4	7101020	HOSE			1
5	7101112	HOSE			1
6	7102581	HOSE			1
7	7104651	HOSE			1
8	7104652	HOSE			1
9	17KB00810B	ELBOW			1
10	17KB00812B	FITTING			1
11	18KB00808B	ELBOW	W/Ref. 18		2
12	1CM01270B	SCREW			2
13	24K000008B	PLUG			1
14	29CM01235B	BOLT			2
15	58K000225B	O-RING			1
16	5HM00029B	CLAMP	hose		2
17	5HM00042B	CLAMP			2
18	79K000010B	O-RING			x
19	79K000008B	O-RING			x
20	79K000012B	O-RING			x

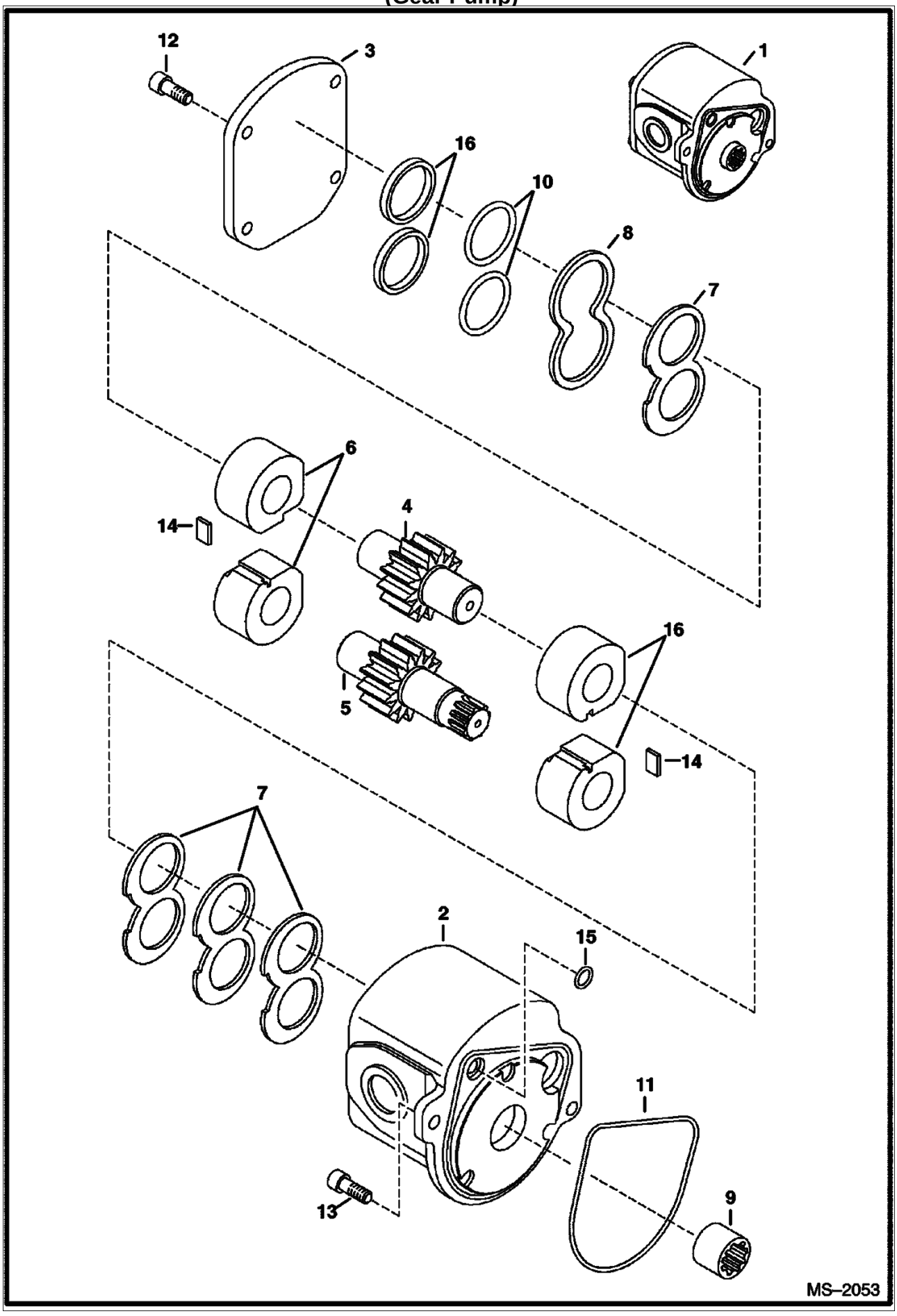
12
3
1
16
10
8
7
6
14
4
5
16
14
7
2
15
11
13
9
MS–2053

HYDRAULIC CIRCUITRY (Cont'd)
(Gear Pump)

Ref. No.	Part Number	Description	Remarks	Serial Number	Qty.
1	6687892	PUMP	gear - W/Ref. 2-16		1
2		HOUSING	NSS - order Ref. 1		1
3		COVER	NSS - order Ref. 1		1
4		GEAR	NSS - order Ref. 1		1
5		GEAR	NSS - order Ref. 1		1
6		PLATE	NSS - order Ref. 1		2
7		PLATE	NSS - thrust - order Ref. 1		4
8		GUIDE	NSS		1
9	6687897	COUPLING			1
10	6678637	SEAL			1
11	6687898	O-RING			2
12	6687900	BOLT			4
13	6678641	SCREW			2
14		BLOCK	NSS - order Ref. 1		1
15	6687899	O-RING			1
16	6678639	SEAL			2

HYDRAULIC CIRCUITRY
(Function Hoses)

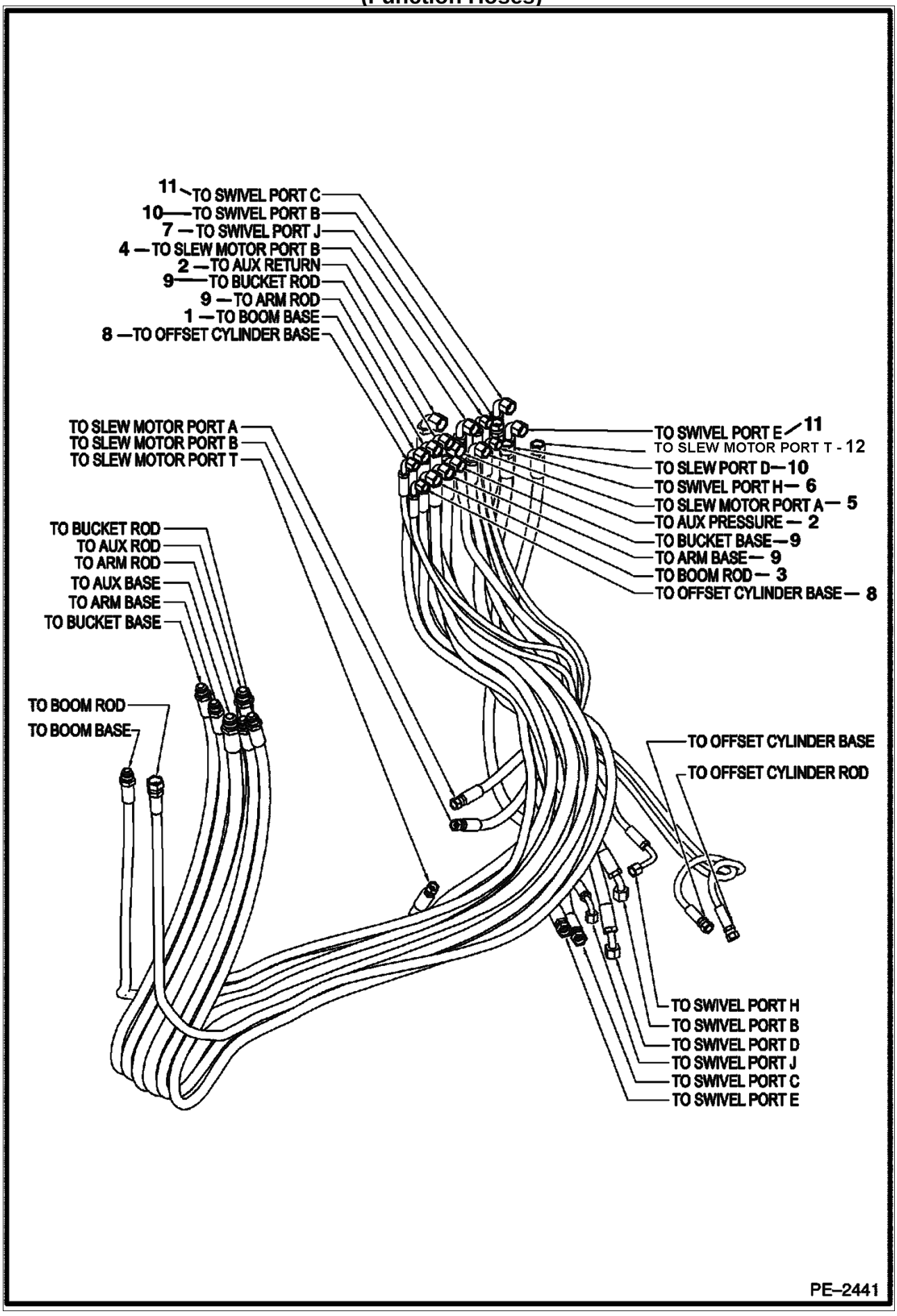

HYDRAULIC CIRCUITRY (Cont'd)
(Function Hoses)

Ref. No.	Part Number	Description	Remarks	Serial Number	Qty.
1	6628581	HOSE	valve to boom base		1
2	6807460	HOSE	valve to auxiliary return valve to auxiliary pressure		22
3	6813914	HOSE	valve to boom rod		1
4	6815033	HOSE	valve to slew motor, port 'B'		1
5	6815034	HOSE	valve to slew motor port 'A'		1
6	6815038	HOSE	valve to swivel port 'H'		1
7	6815575	HOSE	valve to swivel port 'J'		1
8	6815739	HOSE	valve to offset cylinder rod		1
9	6815874	HOSE	valve to offset cylinder base valve to arm base arm rod valve to bucket base bucket rod		1
10	7103036	HOSE	valve to swivel , port 'D'		2
11	7104755	HOSE	valve to swivel, port 'C' & 'E'		2
12	7104756	HOSE	valve to slew motor, port 'T'		1

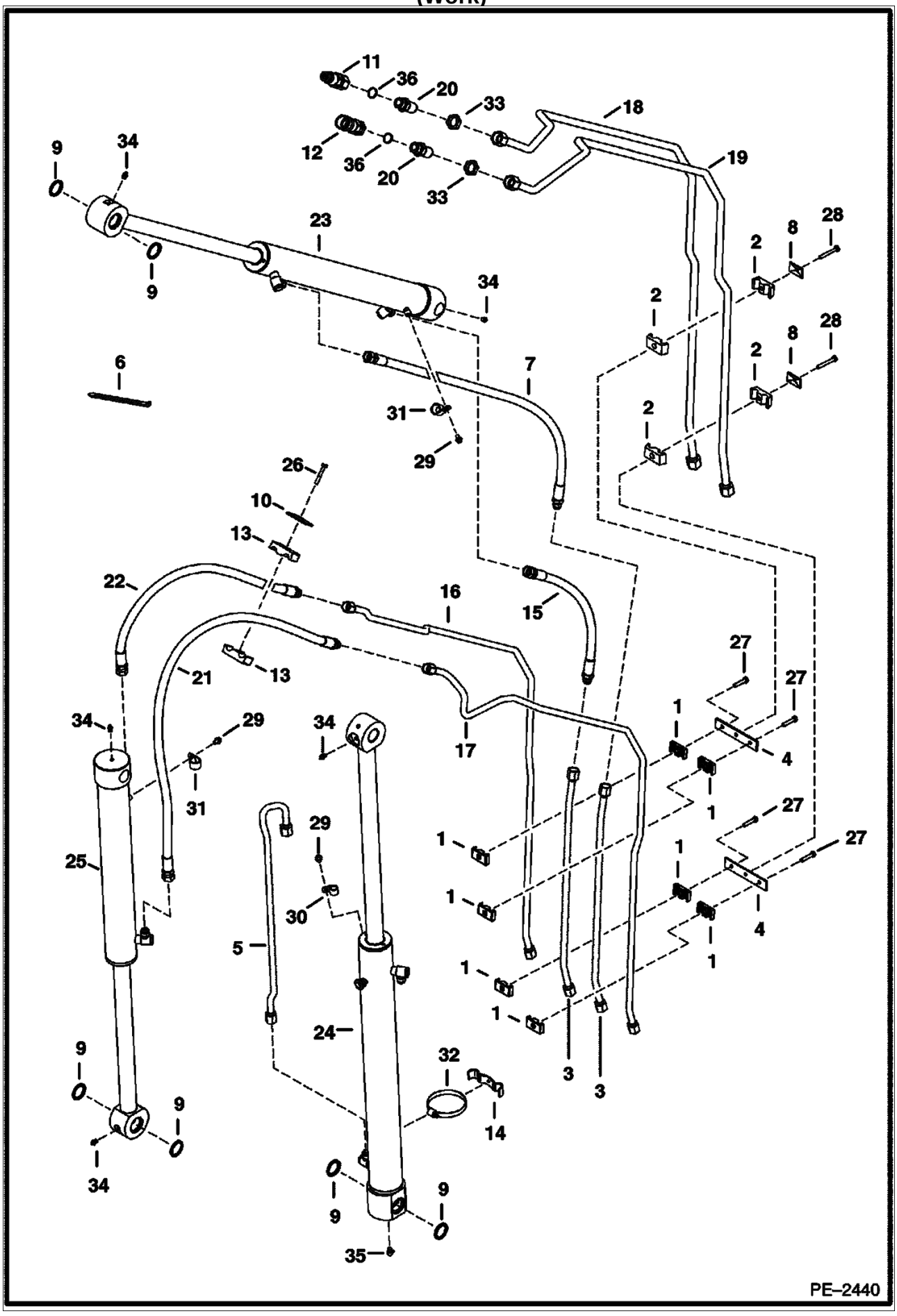
11
36
20
33
18
12
36
20
33
19
9
34
23
9
34
2
8
28
2
2
8
28
2
6
7
31
29
2
26
10
13
22
16
15
27
27
21
13
1
4
34
29
34
17
1
31
27
29
1
27
25
1
30
1
4
5
1
1
24
1
3
3
32
9
9
14
34
9
9
35
PE–2440

HYDRAULIC CIRCUITRY (Cont'd)
(Work)

Ref. No.	Part Number	Description	Remarks	Serial Number	Qty.
1	6701893	CLAMP	Was 6577697 [A]		8
2	6592506	CLAMP			4
3	6596042	TUBELINE			2
4	6596116	PLATE			2
5	6596855	TUBELINE			1
6	6624289	STA STRAP			3
7	7105235	HOSE	Was 6628360 [A]		1
8	6652521	COVER			2
9	6652915	SEAL	dust		6
10	6653493	COVER			1
11	6667808	COUPLER	flush face - male		1
12	6672960	COUPLER	flush face - female		1
13	6683610	CLAMP			2
14	6806461	CLAMP			1
15	6810465	HOSE			1
16	6812063	TUBELINE			1
17	6812064	TUBELINE			1
18	6812099	TUBELINE			1
19	6812100	TUBELINE			1
20	6812823	ADAPTER	W/Ref. 36		1
21	6814781	HOSE	standard arm		1
21	6814784	HOSE	long arm		1
22	6814782	HOSE	standard arm		1
22	6814783	HOSE	long arm		1
23	7100541	CYLINDER	See Illustration ARM CYLINDER/ PE1976A arm		1
24	7100731	CYLINDER	See Illustration BOOM CYLINDER/ PE1977A boom		1
25	7100799	CYLINDER	See Illustration BUCKET CYLINDER/ PE1979A bucket		2
26	1C000532B	BOLT			1
27	1CM00840B	SCREW			4
28	1CM00860B	SCREW			2
29	29CM00812B	SCREW			3
30	30H000037B	CLAMP			1
31	30H000050B	CLAMP			2
32	42H000056B	CLAMP			1
33	86F000008B	NUT			2
34	10H000025B	GREASE ZERK	grease		5
35	12H000015B	GREASE ZERK	grease		1
36	79K000012B	O-RING			x

HYDRAULIC CIRCUITRY
(Pilot)

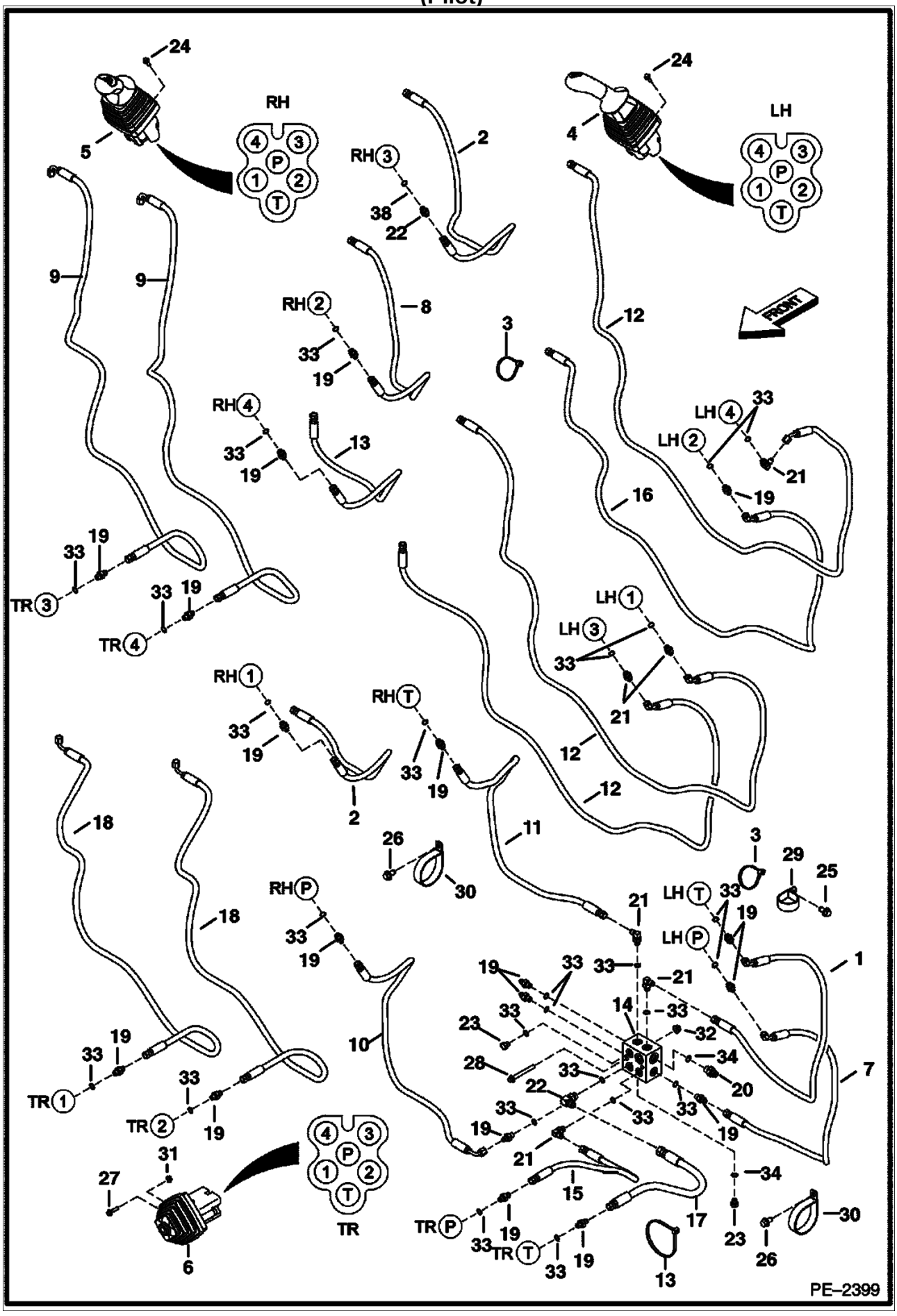

HYDRAULIC CIRCUITRY (Cont'd)
(Pilot)

Ref. No.	Part Number	Description	Remarks	Serial Number	Qty.
1	6578185	HOSE	assy		1
2	6597811	HOSE	assy		2
3	6624289	STA STRAP			7
4	6677894	JOYSTICK	See Illustration L.H. JOYSTICK/ MS1354		1
5	6677895	JOYSTICK	See Illustration R.H. JOYSTICK/ MS1352		1
6	6677896	JOYSTICK			1
7	6803091	HOSE			1
8	6806794	HOSE			1
9	6807480	HOSE			1
10	6807946	HOSE			1
11	6813790	HOSE			1
12	6813882	HOSE			3
13	6813884	HOSE			1
14	6814985	BLOCK			1
15	6815261	HOSE			1
16	6815465	HOSE			1
17	6817066	HOSE			1
18	7102576	HOSE			1
19	15KB00404B	ADAPTER			24
20	15KB00606B	ADAPTER			1
21	17KB00404B	ELBOW	90 degree		4
22	17KB00606B	ELBOW	90 degree		1
23	24K000003B	PLUG			2
24	26GM06020B	SCREW			8
25	26GM10016B	SCREW			1
26	26GM10020B	SCREW			2
27	29CM00625B	SCREW			3
28	29CM00870B	SCREW			2
29	30H000085B	CLAMP			1
30	30H000100B	CLAMP			2
31	43DM00006B	NUT			3
32	51DM00008B	NUT			2
33	79K000004B	O-RING			x
34	79K000006B	O-RING			x

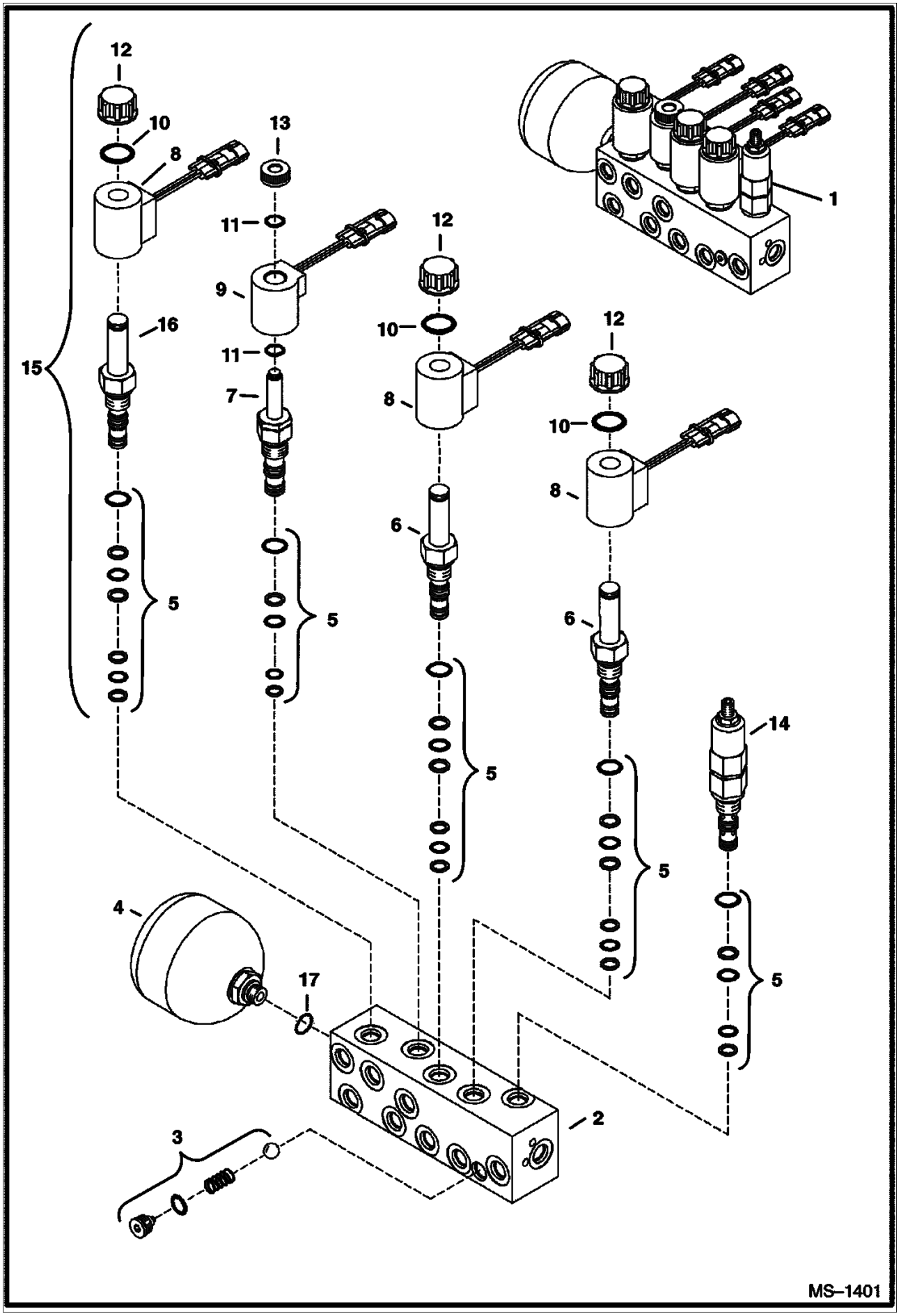
12
10
8
13
11
9
11
7
16
15
5
5
12
10
8
6
5
12
10
8
6
5
1
14
5
4
17
2
3
MS–1401

HYDRAULIC CIRCUITRY (Cont'd)

Ref. No.	Part Number	Description	Remarks	Serial Number	Qty.
1	6685162	MANIFOLD	assy, Refs. 2 - 14 - Was 6683161 [A]		1
2		BLOCK	NSS - order Ref. 1		1
3	6678990	VALVE	assy		1
4	6685832	ACCUMULATOR			1
5	6679078	SEAL KIT			5
6	6679032	VALVE			3
7	6678988	VALVE			1
8	6679074	COIL			3
9	6678984	COIL			1
10	6679684	O-RING			3
11	6679865	O-RING			2
12	6679075	NUT			3
13	6679076	NUT			1
14	6679033	VALVE			1
15	6683163	VALVE	assy		1
16	6683162	VALVE			1
17	79K000006B	O-RING			1

HYDRAULIC CIRCUITRY
(Cooler/Filter)

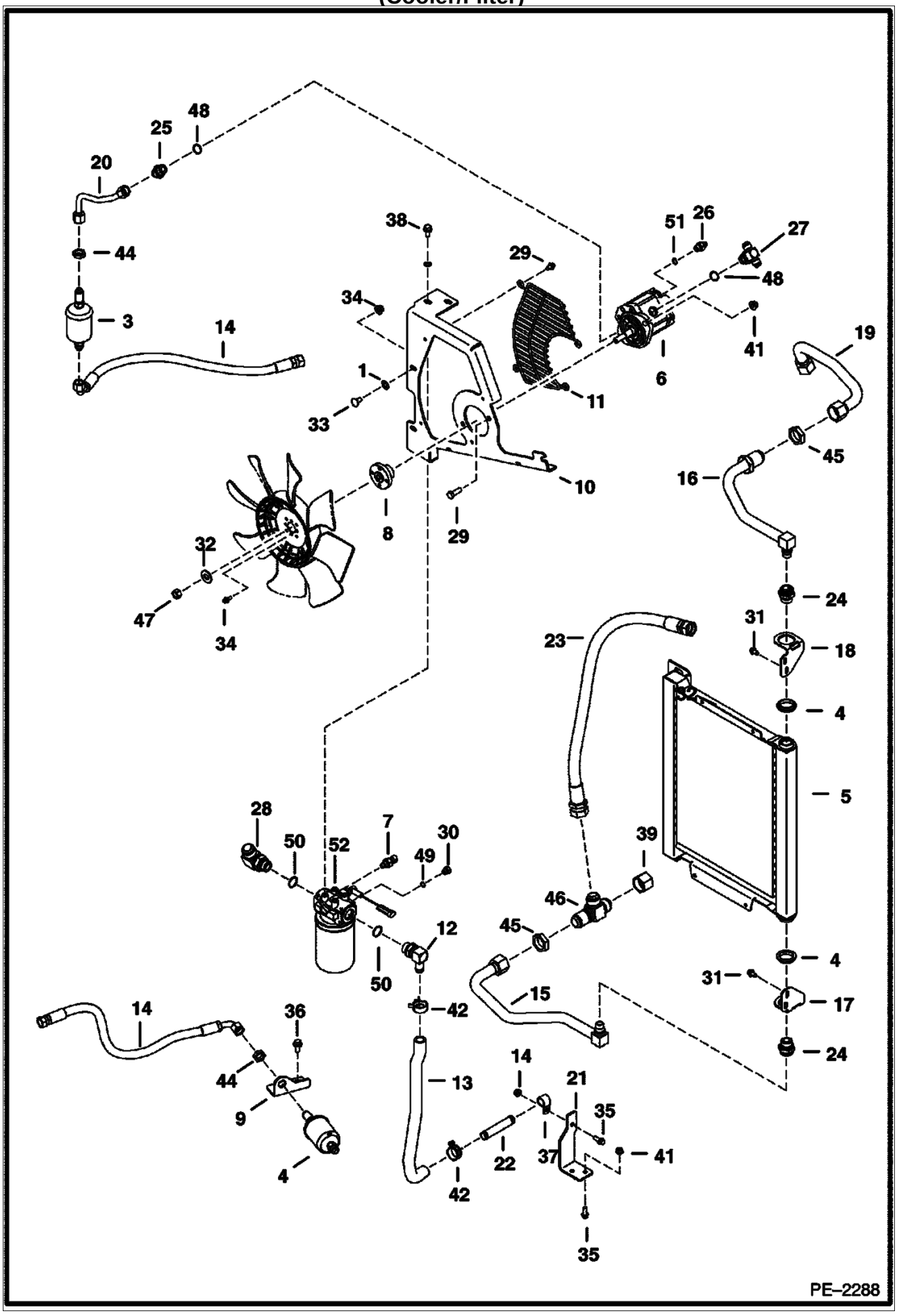

HYDRAULIC CIRCUITRY (Cont'd)
(Cooler/Filter)

Ref. No.	Part Number	Description	Remarks	Serial Number	Qty.
1	6674264	BOLT			3
2	6676969	FILTER	See Illustration HYDROSTATIC OIL FILTER/ B16487 assy		1
3	6681012	FILTER			2
4	6681623	BUSHING			2
5	6683316	EXCHANGER			1
6	6686269	MOTOR	See Illustration FAN MOTOR/ B24364 fan		1
7	6727869	SENDER	hyd temp.		1
8	6812390	HUB	fan		1
9	6814286	BRACKET			1
10	6814287	MOUNT			1
11	6814288	GUARD			1
12	6814419	FITTING	W/Ref. 50		1
13	6814421	HOSE			1
14	6814660	HOSE			1
15	6815879	TUBE			1
16	6815880	TUBE			1
17	6815881	BRACKET	oil cooler		1
18	6815882	BRACKET	oil cooler		1
19	6815883	TUBE			1
20	6815893	TUBE			1
21	7101025	BRACKET			1
22	7101113	TUBE	tube		1
23	7104788	HOSE			1
24	10L001212B	TUBE			2
25	15KB00810B	CONNECTOR	W/Ref. 48		1
26	17KB00406B	ELBOW	W/Ref. 51		1
27	17KB00810B	ELBOW	W/Ref. 48		1
28	17KB01612B	ELBOW	W/Ref. 50		1
29	1CM01030B	SCREW			2
30	24K000002B	PLUG	W/Ref. 49		1
31	26GM08016B	SCREW			8
32	27E000008B	WASHER			1
33	28CM01020B	BOLT			3
34	29CM00616B	SCREW			4
35	29CM00820B	BOLT			2
36	29CM01020B	SCREW			2
37	30H000065B	CLIP	insulated		1
38	35C000612B	BOLT			2
39	36K000010B	CAP			1
40	43DM00008B	NUT	flanged		3
41	51DM00010B	NUT	hex		5
42	5HM00029B	CLAMP			2
43	6E000006B	WASHER	lock		1
44	86F000006B	NUT	lock		2
45	86F000010B	NUT	lock		2
46	91K000010B	ADAPTER			1
47	96D000008B	NUT			1
48	79K000010B	O-RING			x
49	79K000003B	O-RING			x
50	79K000012B	O-RING			x
51	79K000006B	O-RING			x

HYDRAULIC CIRCUITRY
(Manifold)

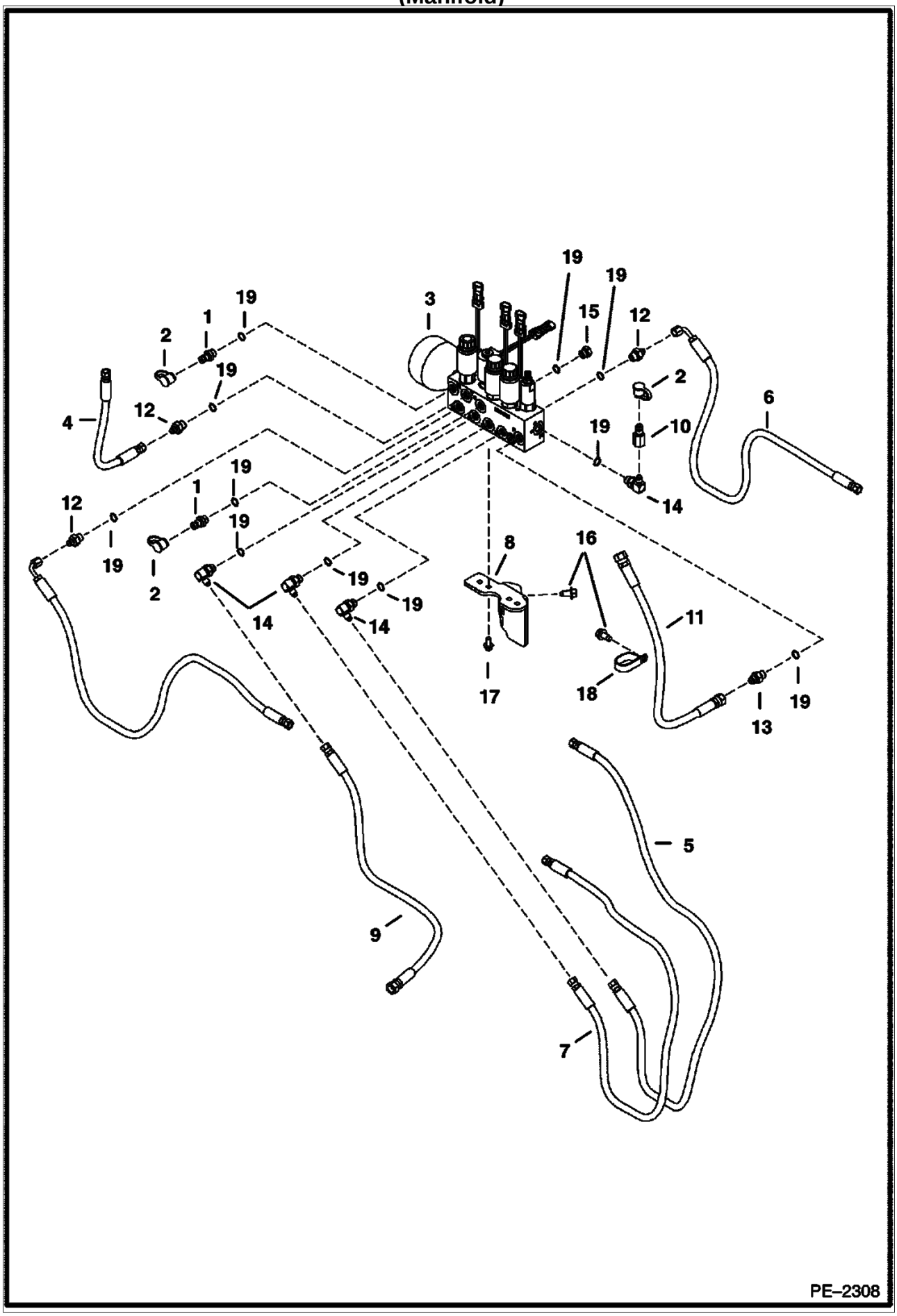

HYDRAULIC CIRCUITRY (Cont'd)
(Manifold)

Ref. No.	Part Number	Description	Remarks	Serial Number	Qty.
1	6630168	COUPLER			2
2	6630367	CAP			3
3	6685162	MANIFOLD	assy - See Page 13		1
4	6706228	HOSE			1
5	6802066	HOSE			1
6	6807945	HOSE			2
7	6812855	HOSE			1
8	6813694	BRACKET			1
9	6815221	HOSE			1
10	7000009	PLUG			1
11	7107843	HOSE			1
12	15KB00406B	ADAPTER	W/Ref. 19		3
13	15KB00606B	ADAPTER	W/Ref. 19		1
14	17KB00406B	ELBOW	W/Ref. 19		4
15	24K000005B	PLUG			1
16	26GM10020B	SCREW			3
17	29CM00816B	SCREW			2
18	31H000038B	CLAMP			1
19	79K000006B	O-RING			x

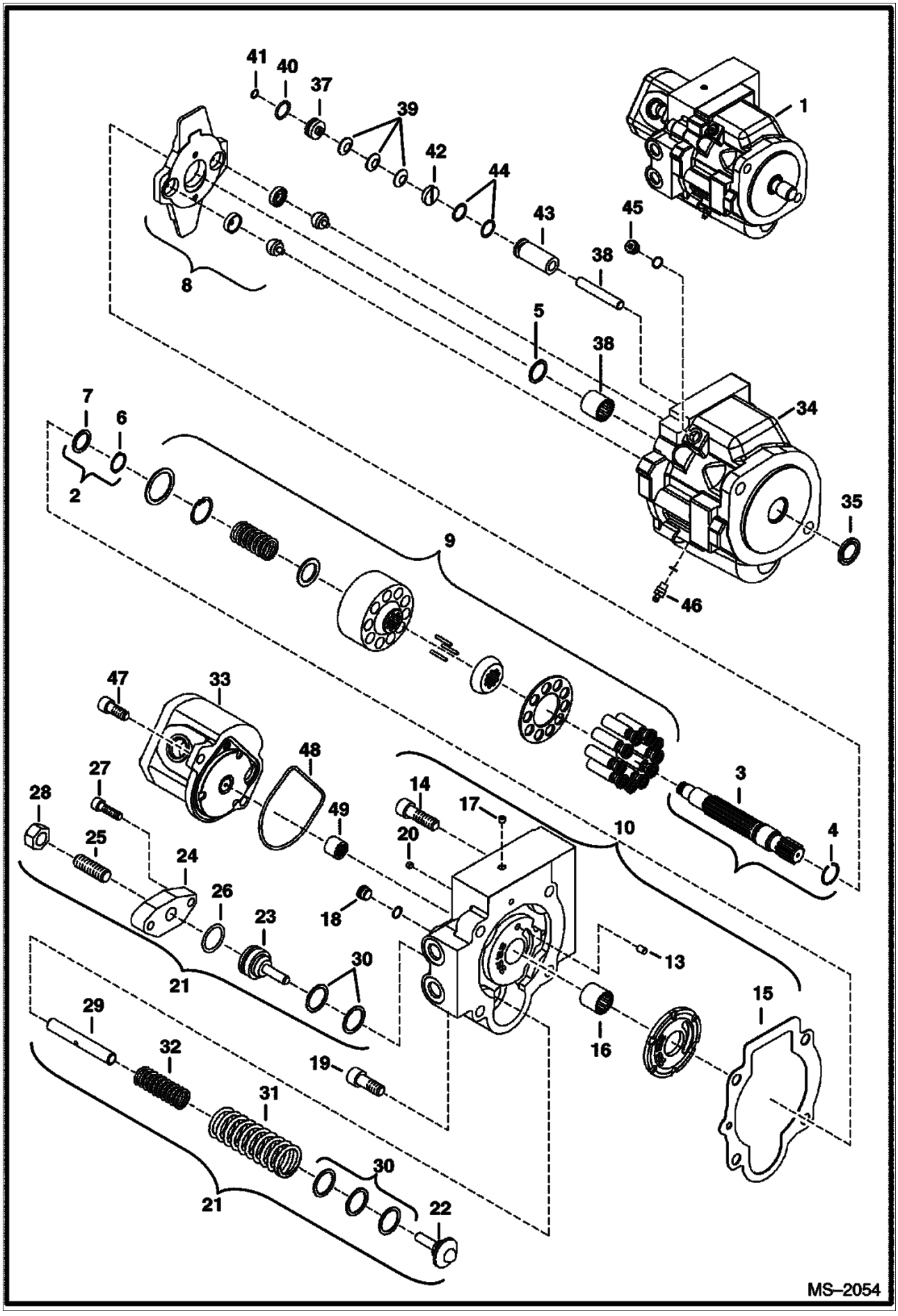
41
40
37
39
42
44
43
45
38
1
8
5
38
34
7
6
2
35
9
46
47
33
48
27
28
14
17
49
20
10
3
25
24
26
23
18
4
30
13
21
29
32
19
31
15
16
30
21
22
MS–2054

HYDRAULIC PUMP (Cont'd)

Ref. No.	Part Number	Description	Remarks	Serial Number	Qty.
1	6685836	PUMP	assy		1
2	6687780	SHAFT ASSY	assy -		1
2	6687780	SHAFT ASSY	assy - W/Ref. 3-7		1
3	6687895	SHAFT			1
4	6687791	RING			1
5	6687792	SHIM			1
6	6679471	RETAINER			1
7	6687793	SHIM			1
8	6687781	SWASH PLATE ASSY	swash plate assy		1
9	6687782	ROTARY GROUP	group		1
10	6687783	PORT PLATE ASSY	W/Ref. 11-20		1
11		PORT	NSS - plate - Order Ref. 10		1
12	6687794	CONTROL PLATE	control		1
13	6687795	PIN			1
14	6687796	BOLT			1
15	6687797	GASKET			1
16	6687798	BEARING			1
17	6678595	PLUG			1
18	6687799	PLUG			2
19	6687800	BOLT			1
20	6687801	ORIFICE			1
21	6687891	SPRING ASSY	seat assy - W/Ref. 22-30		1
22	6687802	SPRING SEAT	spring		1
23	6687803	SPRING	seat		1
24	6687896	COVER			1
25	6687805	ADJUSTING SCREW			1
26	6687806	ORING			1
27	6687807	BOLT	socket head		2
28	6687808	NUT			1
29	6687809	GUIDE			1
30	6687810	SHIM	.040" (1mm)		x
30	6687811	SHIM	.020" (.5mm)		x
30	6687812	SHIM	.012" (.3mm)		x
31	6687893	SPRING			1
32	6687894	SPRING			1
33	6687892	PUMP	See Illustration HYDRAULIC CIRCUITRY/ MS2053 gear - W/Ref. 48 & 49		1
34		HOUSING	NSS - order Ref. 1		1
35	6687813	SEAL	oil		1
36	6687814	BEARING			1
37	6687815	PISTON			1
38	6687816	PIN			1
39	6687817	SPRING	coned		3
40	6687818	ORING			1
41	6687819	ORING			1
42	6687820	SPACER			1
43	6687820	SPACER			1
44			.004" (.1mm)		x
44	6687823	SHIM	.020" (5mm)		1
44	6687824	SHIM	.039" (1mm)		1
45	6687789	PLUG			1
46	6687788	PLUG			1
47	6678641	SCREW			2

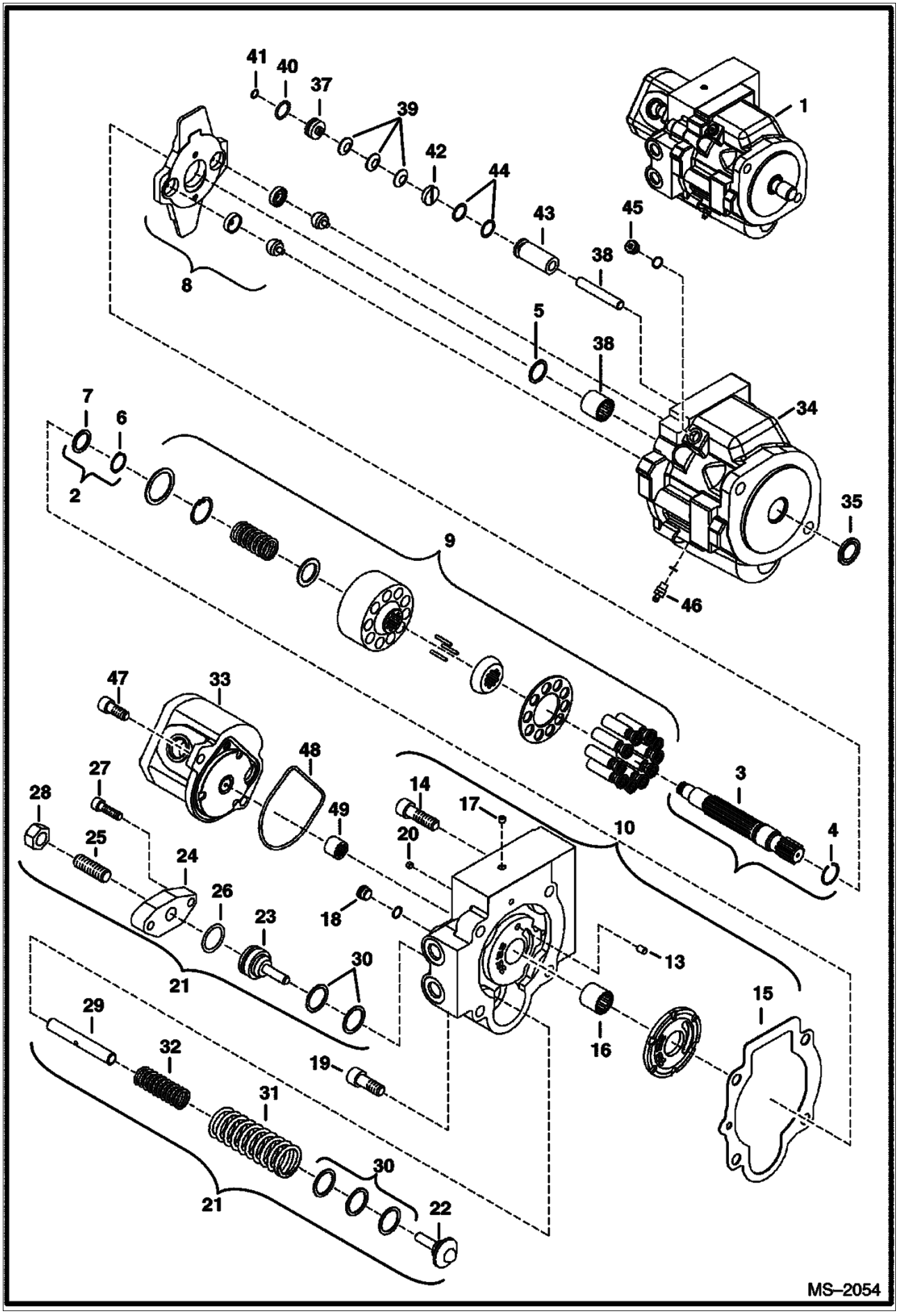
41
40
37
39
42
44
43
45
38
1
8
5
38
34
7
6
2
35
9
46
47
33
48
27
28
14
17
49
20
10
3
25
24
26
23
18
4
30
13
21
29
32
19
31
15
16
30
21
22
MS–2054

Ref. No.	Part Number	Description	Remarks	Serial Number	Qty.
48	6687898	O-RING			1
49	6687897	COUPLING			1

HYDROSTATIC OIL FILTER

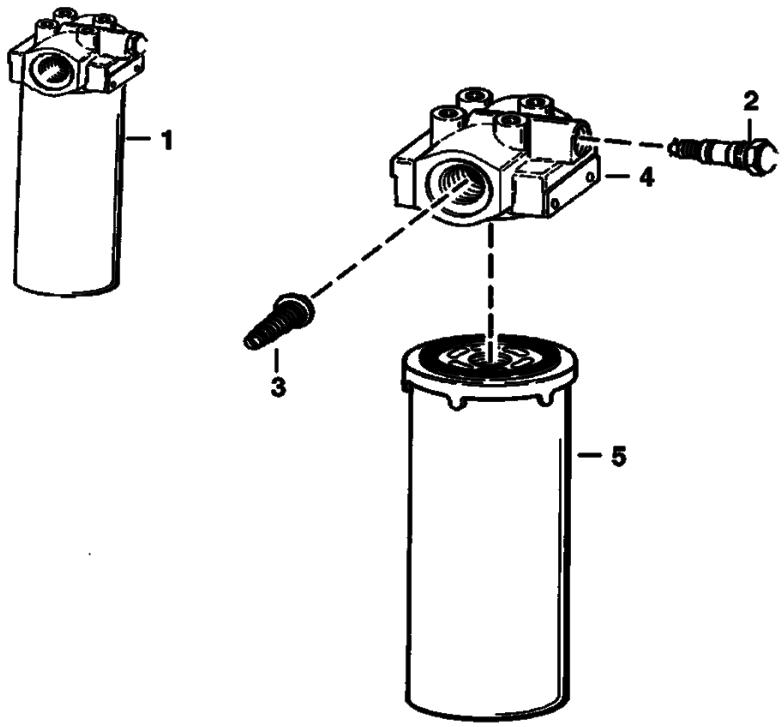

B–16487

HYDROSTATIC OIL FILTER (Cont'd)

Ref. No.	Part Number	Description	Remarks	Serial Number	Qty.
1	6676969	FILTER	assy - W/Ref. 2-5 (50 PSI by- pass & switch)		1
2	6660260	SWITCH	pressure - normally closed		1
2	6599365	KIT	Nut, washer & o-rings		1
3		VALVE	NAP - by-pass (50 PSI - Order Ref. 1)		1
4		HEAD	NSS - Order Ref. 1		1
5	6661248	ELEMENT			1

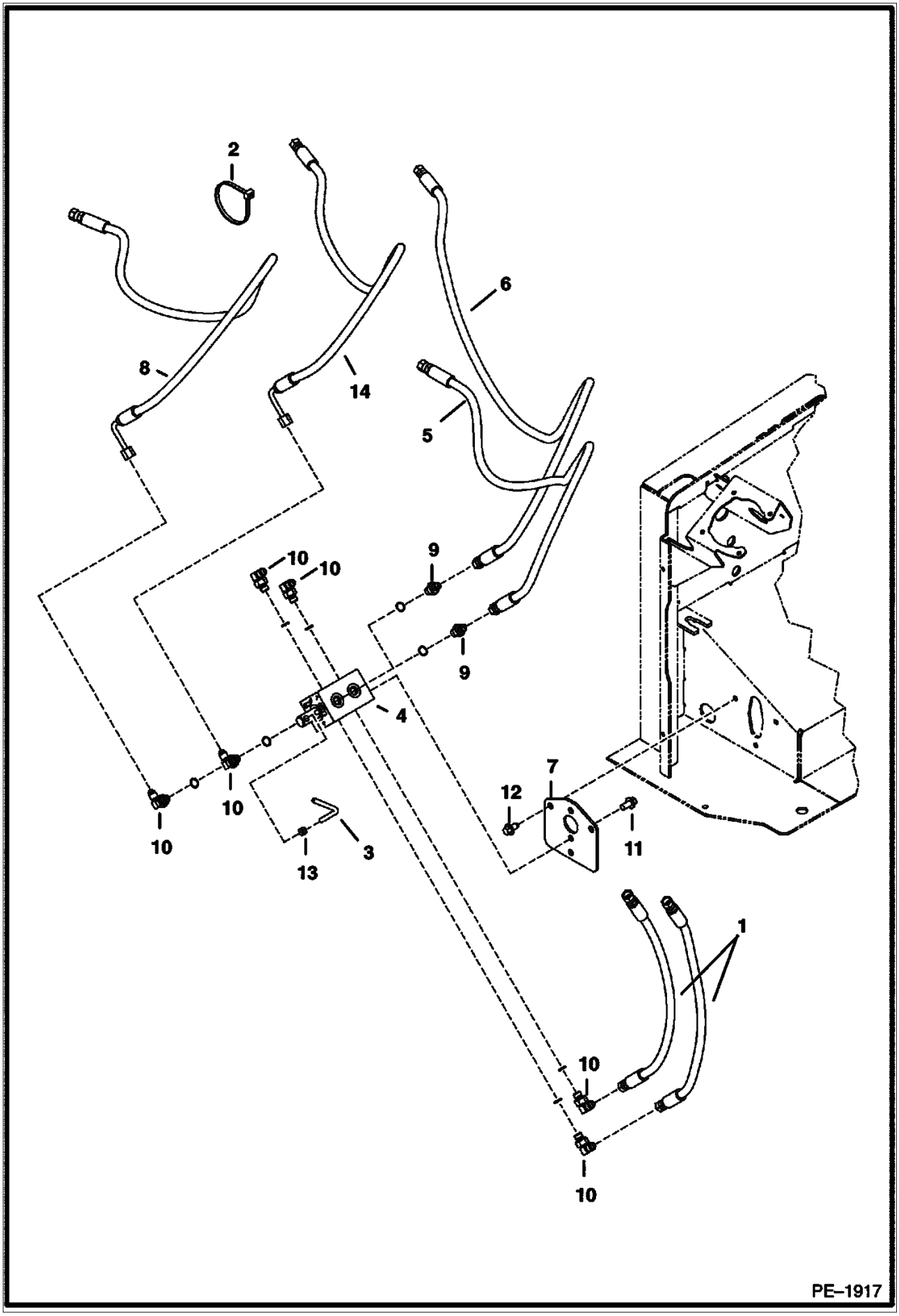
2
8
14
6
5
10
10
9
9
4
10
10
10
13
3
12
7
11
1
10
10
PE–1917

Ref. No.	Part Number	Description	Remarks	Serial Number	Qty.
1	6577775	HOSE			2
2	6624289	STA STRAP			2
3	6804251	HANDLE			1
4	6805768	VALVE	See Page 23		1
5	6812855	HOSE			1
6	6813790	HOSE			1
7	6814607	PLATE			1
8	6817266	HOSE			1
9	15KB00404B	ADAPTER			24
10	17KB00404B	ELBOW			6
11	26GM08016B	SCREW			3
12	29CM00816B	SCREW			2
13	4DM00006B	NUT			1
14	6807478	HOSE			1

SELECTOR VALVE ASSY
(ISO/STD)

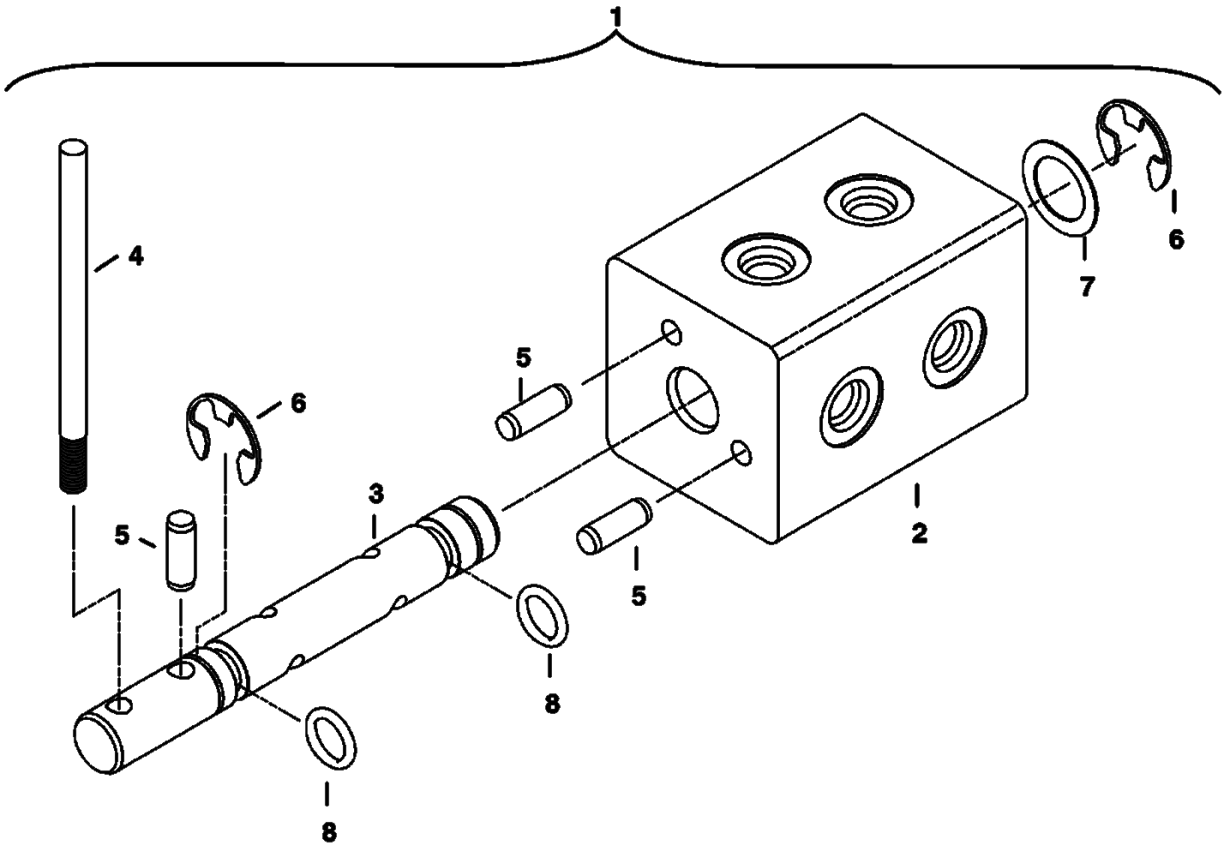

TS–1353A

SELECTOR VALVE ASSY (Cont'd)
(ISO/STD)

Ref. No.	Part Number	Description	Remarks	Serial Number	Qty.
1	6805768	VALVE	Assy - W/Refs. 2, 3, 5-8		1
2	6805769	VALVE	block		1
3	6803708	SPOOL			1
4	6597403	HANDLE	straight		1
4	6804251	HANDLE	bent		1
5	14J002512B	ROLL PIN			3
6	799119B	SNAP RING			2
7	6659297	WASHER			1
8	58K000111B	O-RING			2

R.H. JOYSTICK

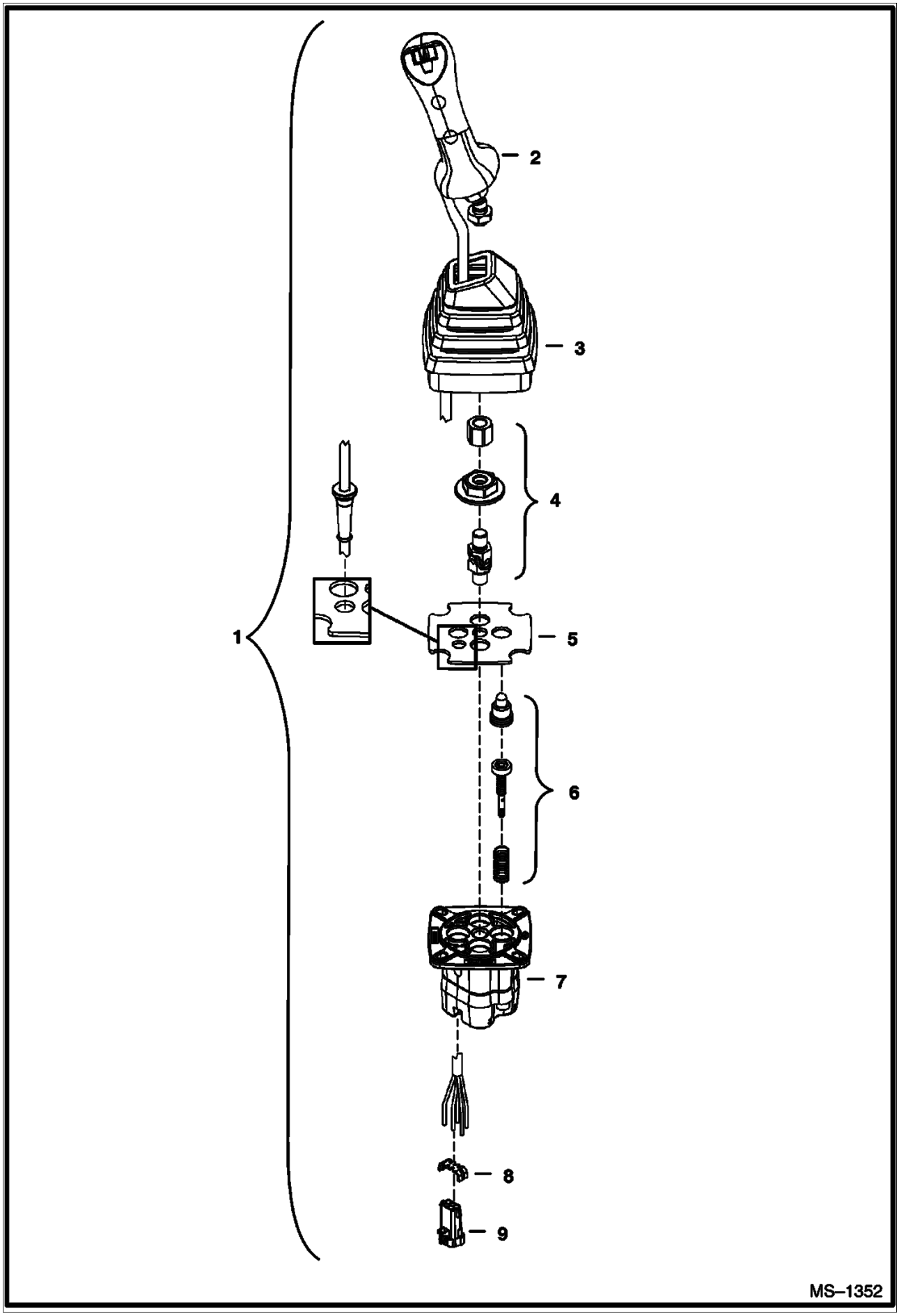

R.H. JOYSTICK (Cont'd)

Ref. No.	Part Number	Description	Remarks	Serial Number	Qty.
1	6677895	JOYSTICK	assy		1
2	6679953	HANDLE			1
3	6679955	BOOT			1
4	6679956	KIT			1
5	6679957	FLANGE			1
6	6679952	KIT	plunger		4
7		HOUSING	NSS - order Ref. 1		1
8	6679958	LOCK			1
9	6679960	CONNECTOR			1

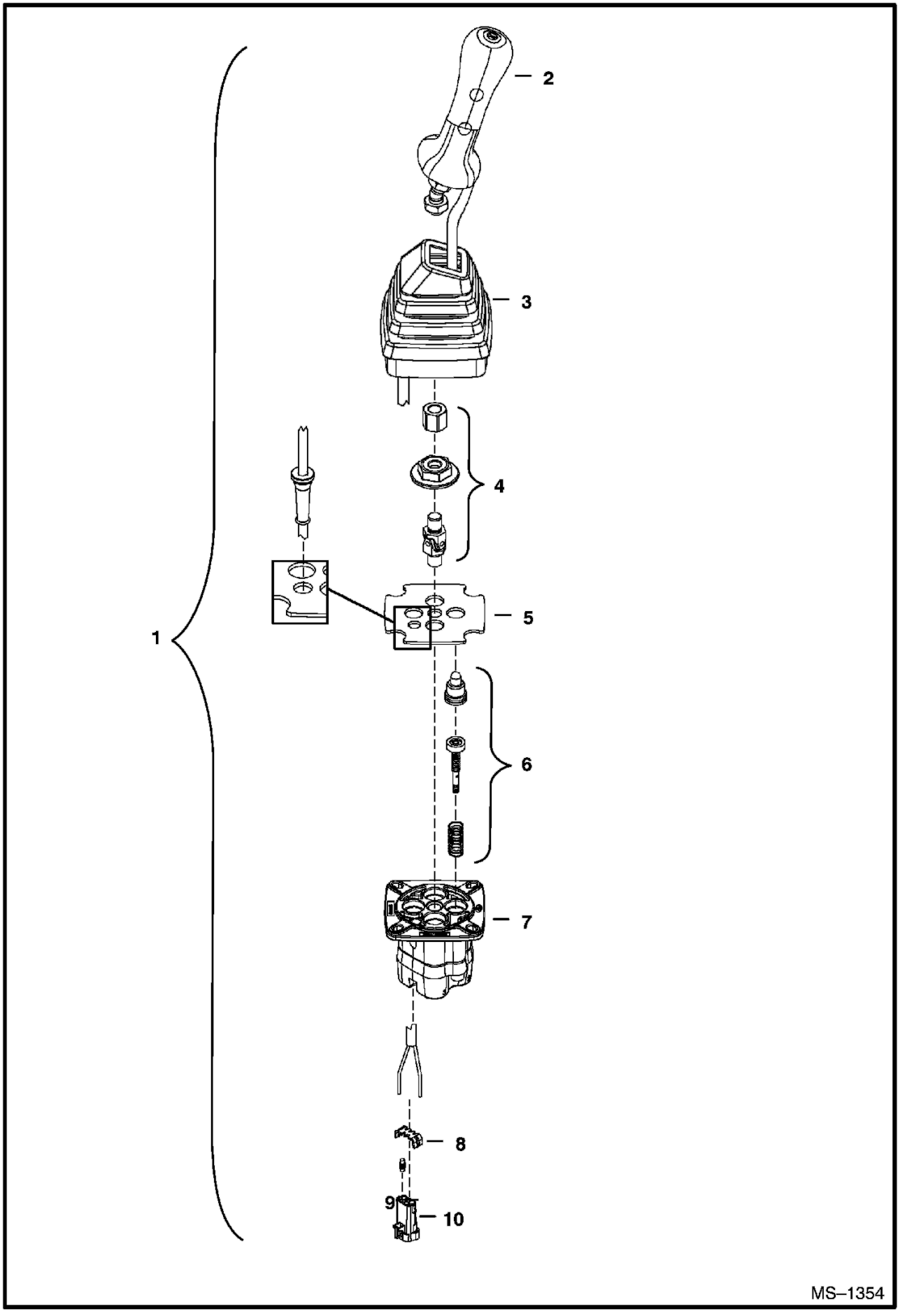
1
2
3
4
5
6
7
8
9
10
MS–1354

L.H. JOYSTICK (Cont'd)

Ref. No.	Part Number	Description	Remarks	Serial Number	Qty.
1	6677894	JOYSTICK	assy		1
2	6679954	HANDLE			1
3	6679955	BOOT			1
4	6679956	KIT			1
5	6679957	FLANGE			1
6	6679952	KIT	plunger		4
7		HOUSING	NSS - order Ref. 1		1
8	6679958	LOCK			1
9	6679959	PLUG			1
10	6679960	CONNECTOR			1

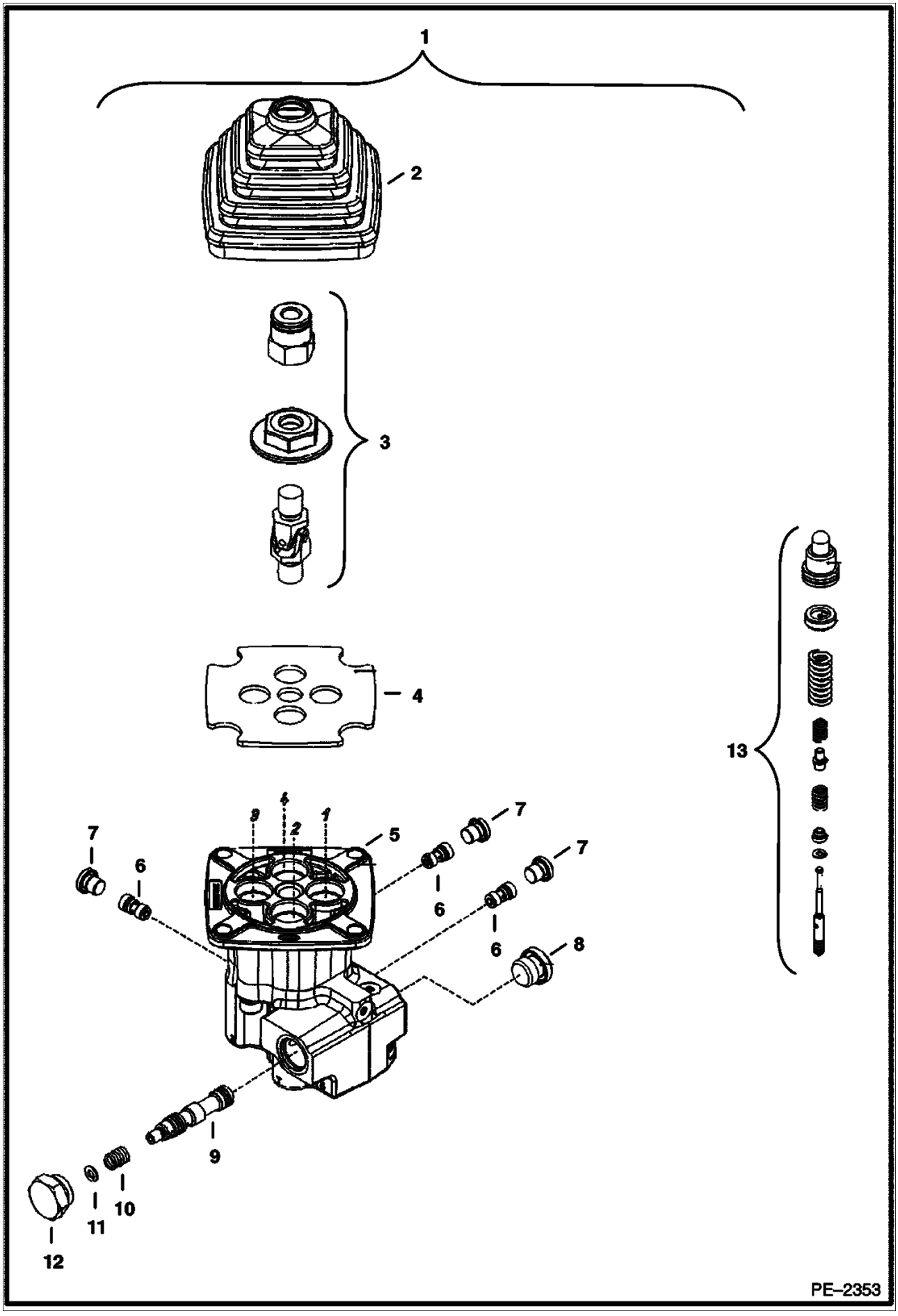
1
2
3
4
5
6
7
8
9
10
11
12
13
PE–2353

TRAVEL JOYSTICK (Cont'd)

Ref. No.	Part Number	Description	Remarks	Serial Number	Qty.
1	6685047	JOYSTICK	assy		1
2	6682238	BOOT			1
3	6679948	KIT	swivel		1
4	6679949	PLATE			1
5		BLOCK	NSS		1
6	6685332	SPOOL			3
7	6685333	PLUG			3
8	6685329	PLUG			1
9	6685334	SPOOL			1
10	6685335	SPRING			1
11	6673853	WASHER			1
12	6685336	PLUG			1
13	6685331	KIT	plunger		4

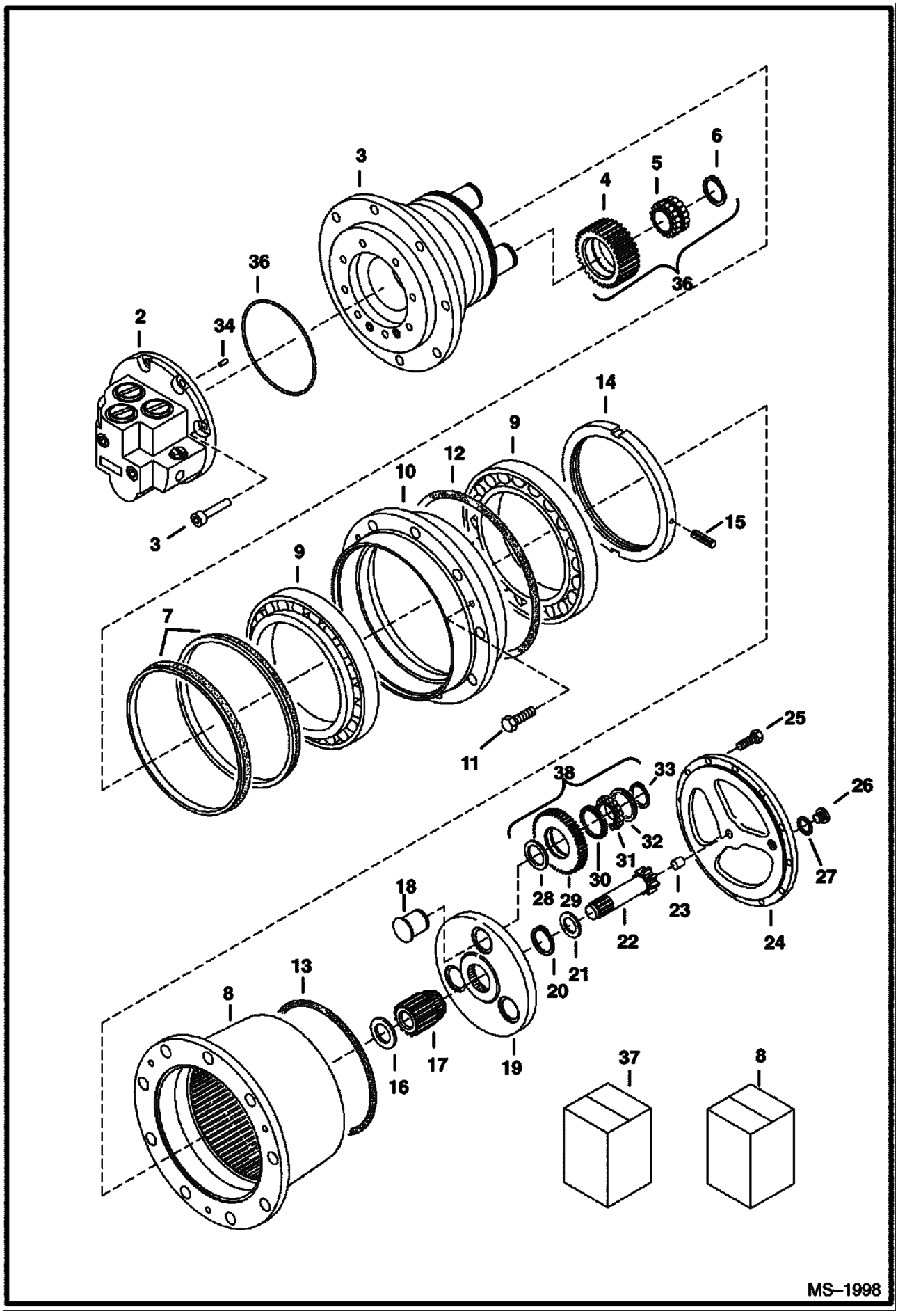
3
4
5
6
36
36
2
34
14
9
12
10
3
15
9
7
11
25
38
33
26
32
31
30
28
29
27
18
23
22
24
20
21
13
8
17
19
16
37
8
MS–1998

TRAVEL MOTOR (Cont'd)

Ref. No.	Part Number	Description	Remarks	Serial Number	Qty.
1	6685454	MOTOR	travel		1
2	6686917	MOTOR	hydraulic - W/Ref. 3, 34, 36		1
3	6686916	SPINDLE			1
4		GEAR	NSS - order Ref. 37		4
5		BEARING	NSS - order Ref. 37		4
6		RING	NSS - order Ref. 37		4
7	6686282	SEAL			2
8	6686287	HOUSING	ring		1
9	6686278	BEARING			2
10	6686274	RING			1
11	6686285	BOLT			3
12	6686288	O-RING			1
13	6686281	O-RING			1
14	6686272	NUT			1
15	6686291	PIN			2
16	6686286	WASHER			1
17	6686271	GEAR			1
18	6686273	PIN			1
19	6686913	CARRIER	planet		1
20	6686280	RING	snap		3
21	6686915	WASHER	thrust		1
22	6686914	SHAFT	input		1
23	6686277	BUTTON	thrust		1
24	6686276	COVER			1
25	6686279	BOLT			8
26	6686283	PLUG			2
27	6686284	SEAL	seal		2
28		RING	NSS - order Ref. 37		1
29		GEAR	NSS - order Ref. 38		3
30		CUP	NSS - order Ref. 38		3
31		GEAR	NSS - order Ref. 38		4
32		CUP	NSS - order Ref. 38		1
33		RING	NSS - snap - order Ref. 38		1
34	6686934	PIN	cylinder		1
35	6686935	BOLT	allen		8
36	6686937	O-RING			1
37	6686292	KIT	Ref. 5-6 & 28		1
38	6686918	KIT			1
39	6686935	BOLT			1

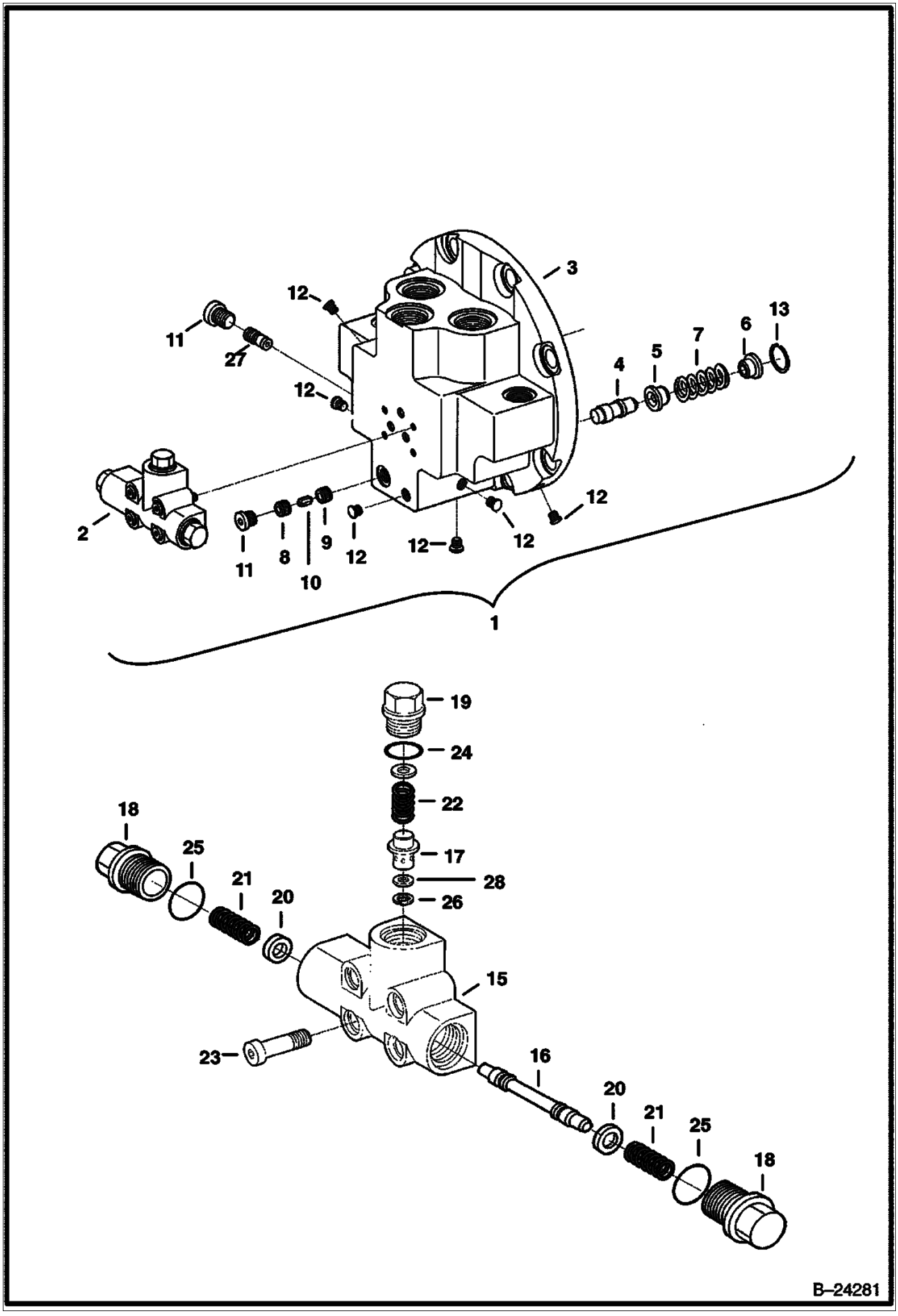
3
12
11
27
12
4
5
7
6
13
2
11
8
9
10
12
12—
12
12
1
19
24
22
18
25
17
21
28
20
26
15
23—
16
20
21
25
18
B–24281

PRESSURE VALVE (Cont'd)

Ref. No.	Part Number	Description	Remarks	Serial Number	Qty.
1	6686298	PORT PLATE			1
2	6686315	VALVE	pressure		1
3		PLATE	NAP		1
4	6686316	PISTON	control		1
5	6686317	COLLAR	spring		1
6	6686318	COLLAR	spring		1
7	6686319	SPRING	pressure		1
8	6686320	SCREW	throttle		1
9	6686321	SCREW	throttle		1
10	6671834	PIN			1
11	6686322	SCREW	locking		2
12		PIN	NAP - break-off		6
13	6686323	RING	retaining		1
14	6686324	RING	gasket		3
15		HOUSING	NSS		1
16		PISTON	NSS		1
17	6671887	PISTON			1
18	6671892	SCREW			2
19	6671884	SCREW			1
20	6671890	WASHER			2
21	6686599	SPRING	pressure		1
22	6666366	SPRING			1
23	6686600	SCREW			4
24	6686001	O-RING			1
25	6686002	O-RING			2
26	6686003	RING	retaining		1
27	6686314	VALVE	shuttle		1
28		ORIFICE			1

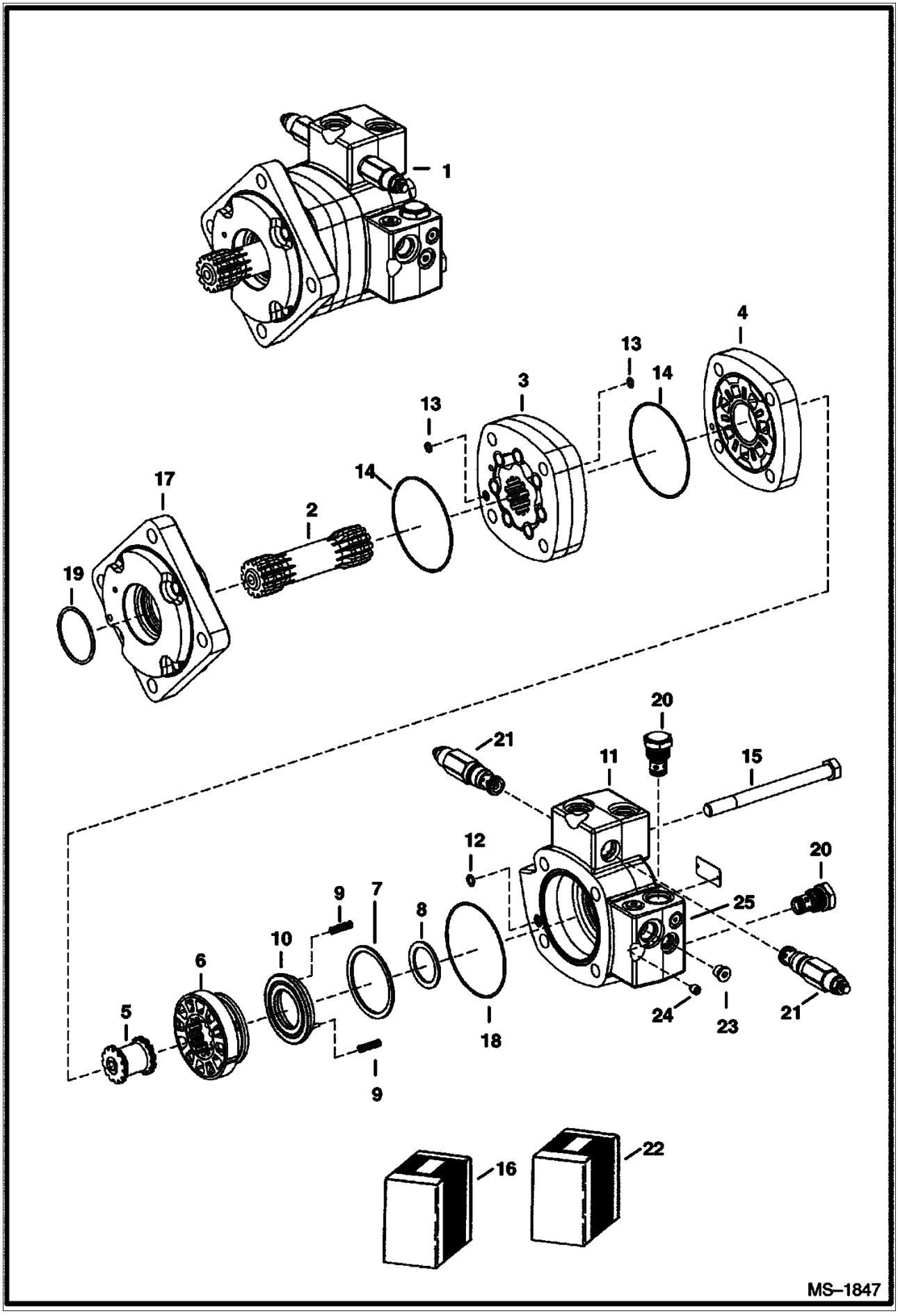
1
4
13
14
3
13
14
17
2
19
20
21
11
15
12
20
9
7
8
25
10
6
5
18
24
23
21
9
16
22
MS–1847

Ref. No.	Part Number	Description	Remarks	Serial Number	Qty.
1	6687118	MOTOR	swing - Was 6686694 [A]		1
2	6669196	DRIVE			1
3	6685361	FLANGE			1
4	6658759	PLATE			1
5	6513518	DRIVE			1
6	6678531	VALVE			1
7	6513520	SEAL			1
8	6513529	SEAL			1
9	6190121	SPRING			3
10	6658757	RING			1
11	6685178	HOUSING			1
12	25K020010B	SEAL			1
13	6667332	SEAL			2
14	6679818	O-RING			2
15	6658755	SCREW			4
16	6685182	SEAL KIT	rear		x
17	6513528	FLANGE			1
18	58K000044B	SEAL			1
19	6513799	SEAL			1
20	6685362	VALVE	check		2
21	6685179	VALVE	relief		2
22	6660856	SLEEVE	complete - Was 6685181 [A]		x
23	1992104B	PLUG			1
24	6685363	PLUG	orifice		1
25	6850003	PLUG			1

HYDRAULIC CONTROL VALVE

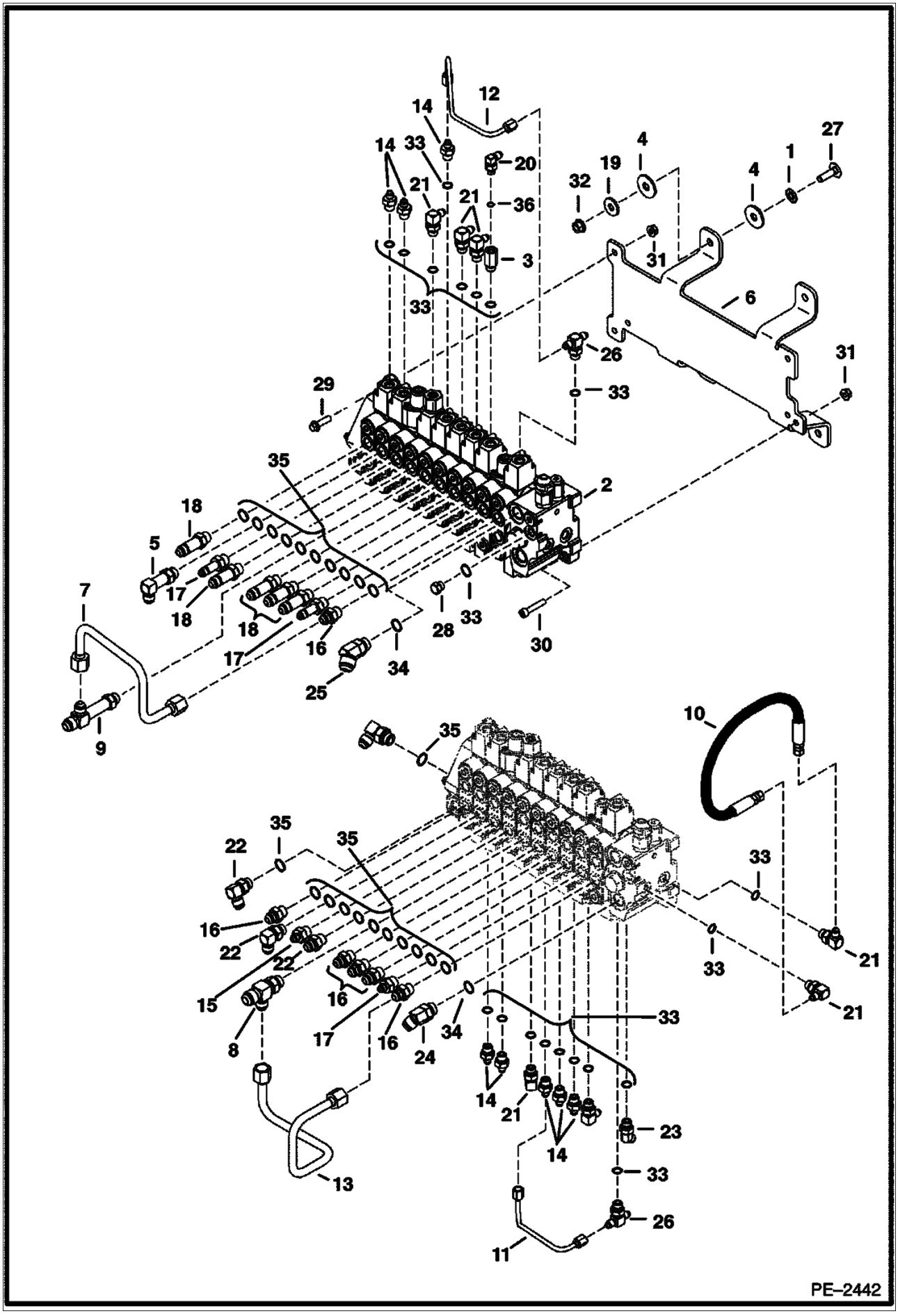

HYDRAULIC CONTROL VALVE (Cont'd)

Ref. No.	Part Number	Description	Remarks	Serial Number	Qty.
1	6674264	BOLT	retainer		4
2		VALVE	NAP - control - order 6687151 - Was 6685692 [A]		1
2	6687151	CONTROL VALVE			1
3	6686922	ORIFICE			1
4	6806720	INSULATOR			8
5	6812820	ELBOW			1
6	6813890	MOUNT			1
7	7102578	TUBELINE			1
8	7102955	TEE			1
9	7102956	TEE			1
10	7102958	HOSE			1
11	7102960	TUBELINE			1
12	7102961	TUBELINE			1
13	7107236	TUBELINE			1
14	15KB00406B	ADAPTER			8
15	15KB00608B	ADAPTER			2
16	15KB00808B	ADAPTER			7
17	16KB00608B	CONNECTOR			2
18	16KB00808B	CONNECTOR			5
19	17EM00100B	WASHER			4
20	17KB00404B	ELBOW	90 degree		1
21	17KB00406B	ELBOW	90 degree		7
22	17KB00808B	ELBOW	90 degree		3
23	18KB00606B	ELBOW	45 degree		1
24	18KB01010B	ADAPTER	45 degree		1
25	18KB01210B	ELBOW	45 degree		1
26	19KB00406B	TEE			2
27	21CM01035B	BOLT			4
28	24K000005B	PLUG			1
29	29CM00830B	SCREW			1
30	3GM00840B	SCREW			1
31	43DM00008B	NUT			3
32	51DM00010B	NUT			4
33	79K000006B	O-RING			x
34	79K000010B	O-RING			x
35	79K000008B	O-RING			x
36	79K000004B	O-RING			x

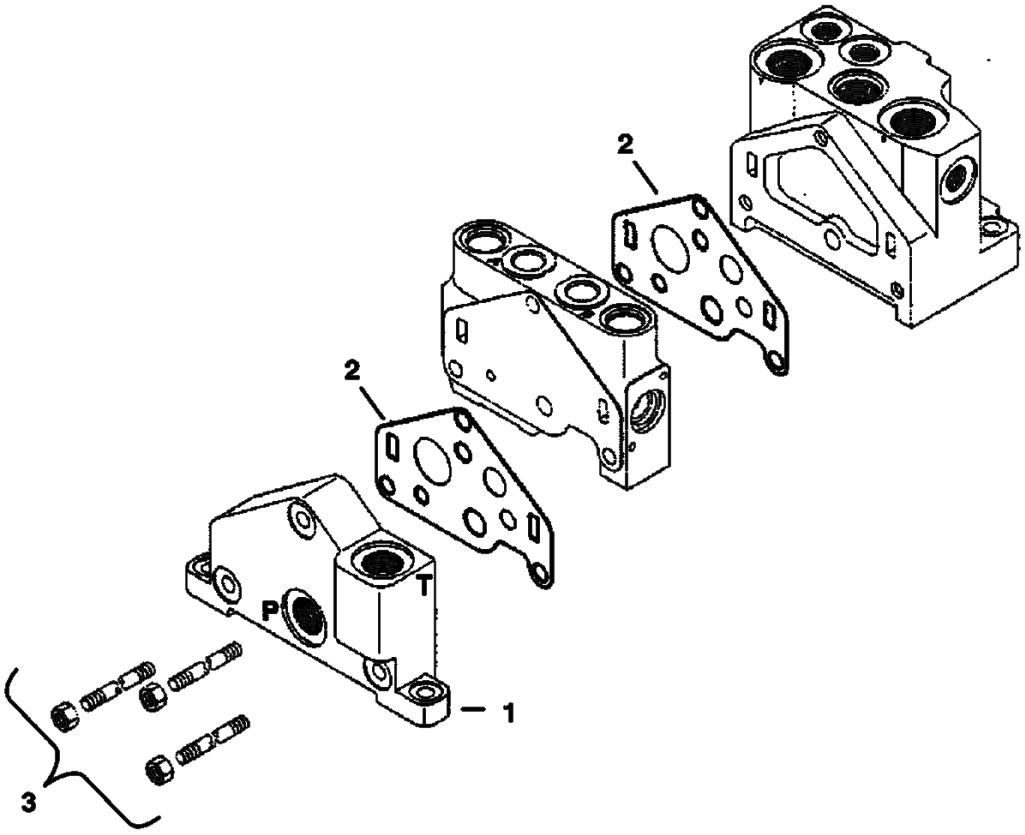

B–24709

CONTROL VALVE (Cont'd)
(Outlet Section)

Ref. No.	Part Number	Description	Remarks	Serial Number	Qty.
1	6687052	VALVE	outlet		1
2	6687070	SEAL	plate		2
3	6687053	KIT	tie rod		1

CONTROL VALVE
(Right Drive Section)

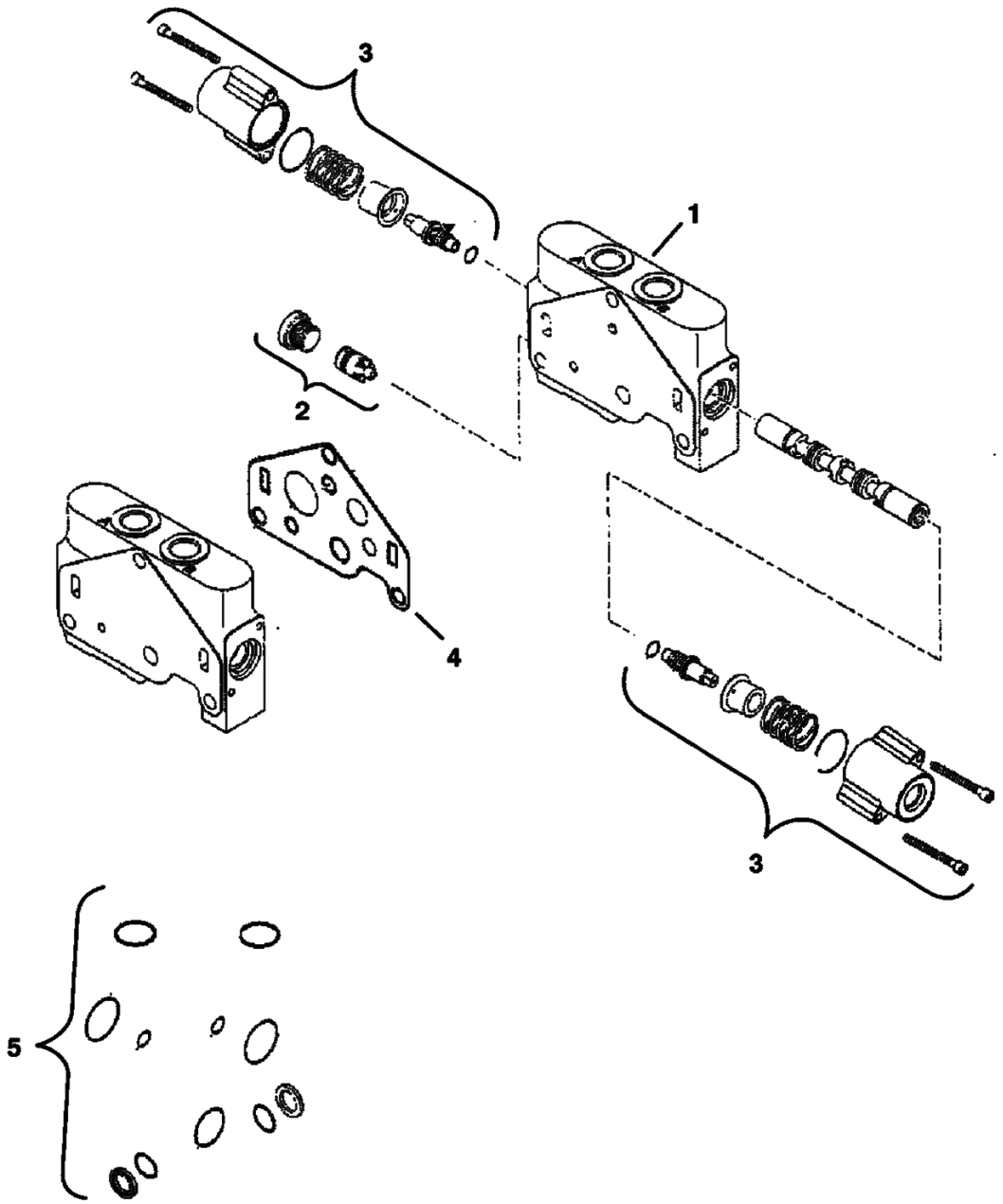

CONTROL VALVE (Cont'd)
(Right Drive Section)

Ref. No.	Part Number	Description	Remarks	Serial Number	Qty.
1	6687051	VALVE	R.H. travel		1
2	6687058	KIT	comp		1
3	6687065	KIT	end cap		2
4	6687070	SEAL	plate		1
5	6687071	KIT	assy		1

CONTROL VALVE
(Left Drive Section)

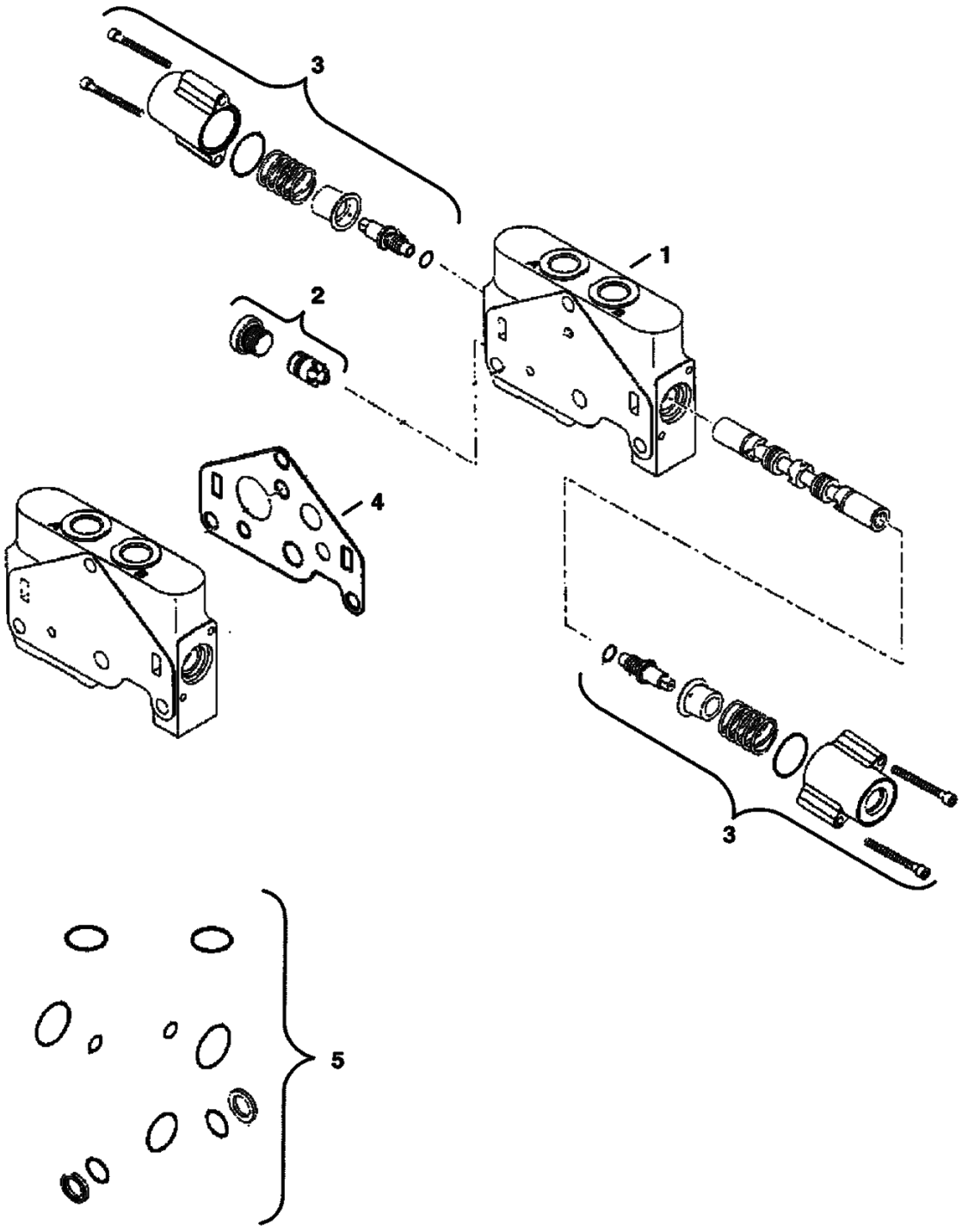

CONTROL VALVE (Cont'd)
(Left Drive Section)

Ref. No.	Part Number	Description	Remarks	Serial Number	Qty.
1	6687050	VALVE	L.H. Travel		1
2	6687058	KIT	comp		1
3	6687065	KIT	end cap		2
4	6687070	SEAL	plate		1
5	6687071	KIT	assy		1

CONTROL VALVE
(Blade Section)

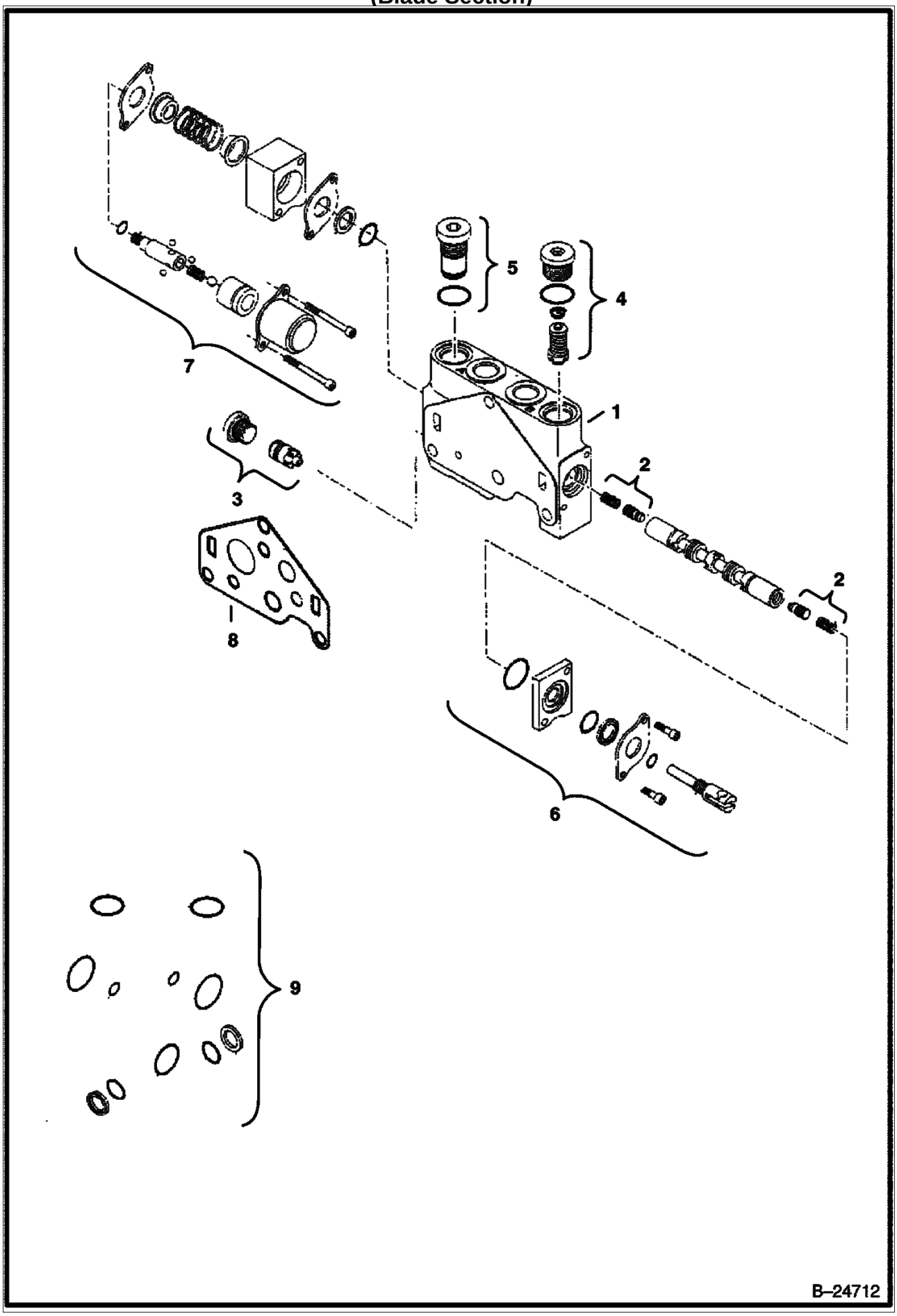

CONTROL VALVE (Cont'd)
(Blade Section)

Ref. No.	Part Number	Description	Remarks	Serial Number	Qty.
1	6687049	VALVE	blade		1
2	6687057	KIT	check valve		2
3	6687058	KIT	comp		1
4	6687061	VALVE	relief		1
5	6687063	PLUG			1
6		KIT	NSS - end cap - order Ref. 1		1
7		KIT	NSS		1
8	6687070	SEAL	plate		1
9	6687071	KIT	assy		1

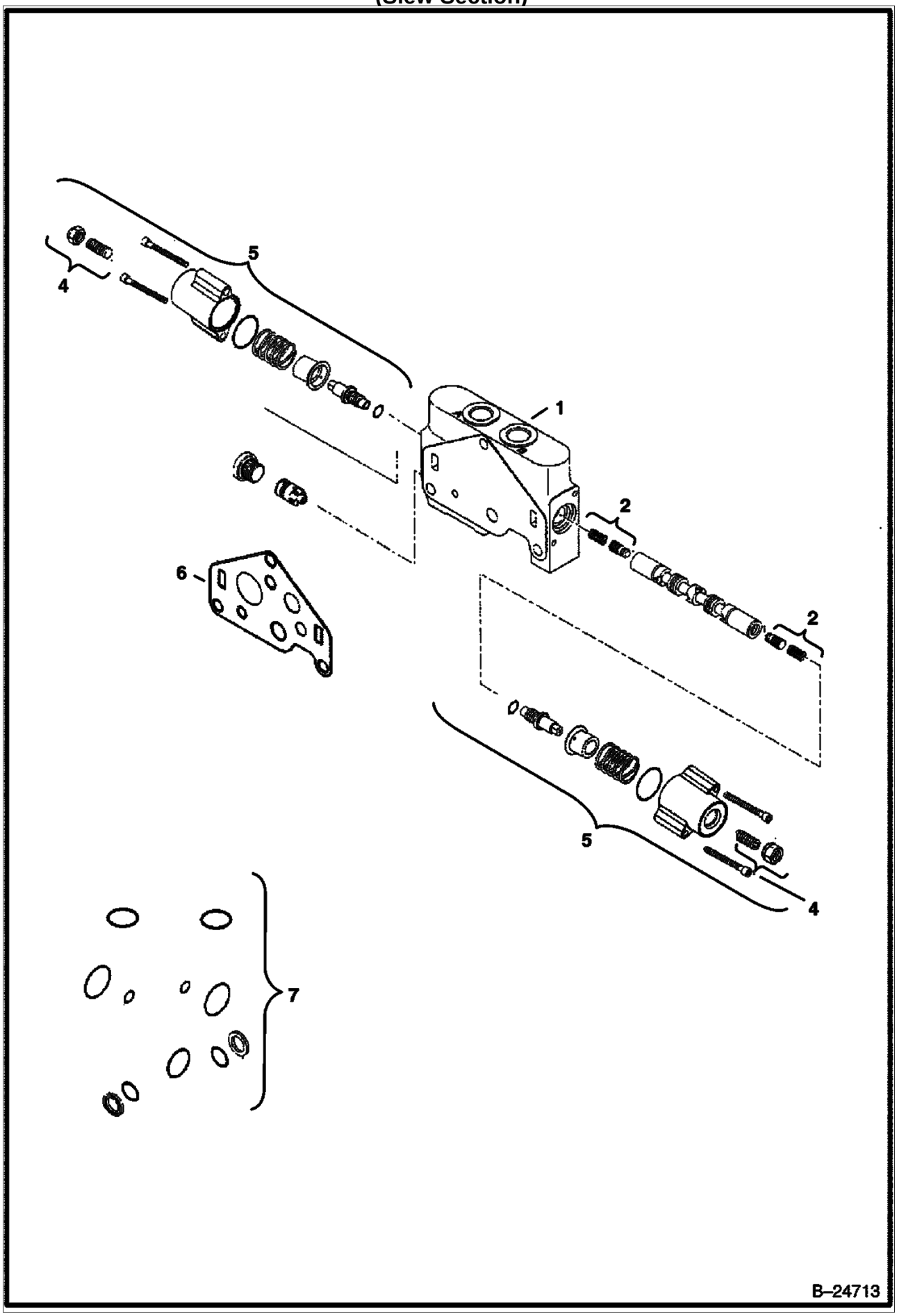
1
2
2
4
4
5
5
6
7
B–24713

CONTROL VALVE (Cont'd)
(Slew Section)

Ref. No.	Part Number	Description	Remarks	Serial Number	Qty.
1	6687048	VALVE	slew		1
2	6687057	KIT	check valve		2
3	6687058	KIT	comp		1
4	6687066	LIMITOR	stroke		2
5		CAP	NSS - end - order Ref. 1		2
6	6687070	SEAL	plate		1
7	6687071	KIT	assy		1

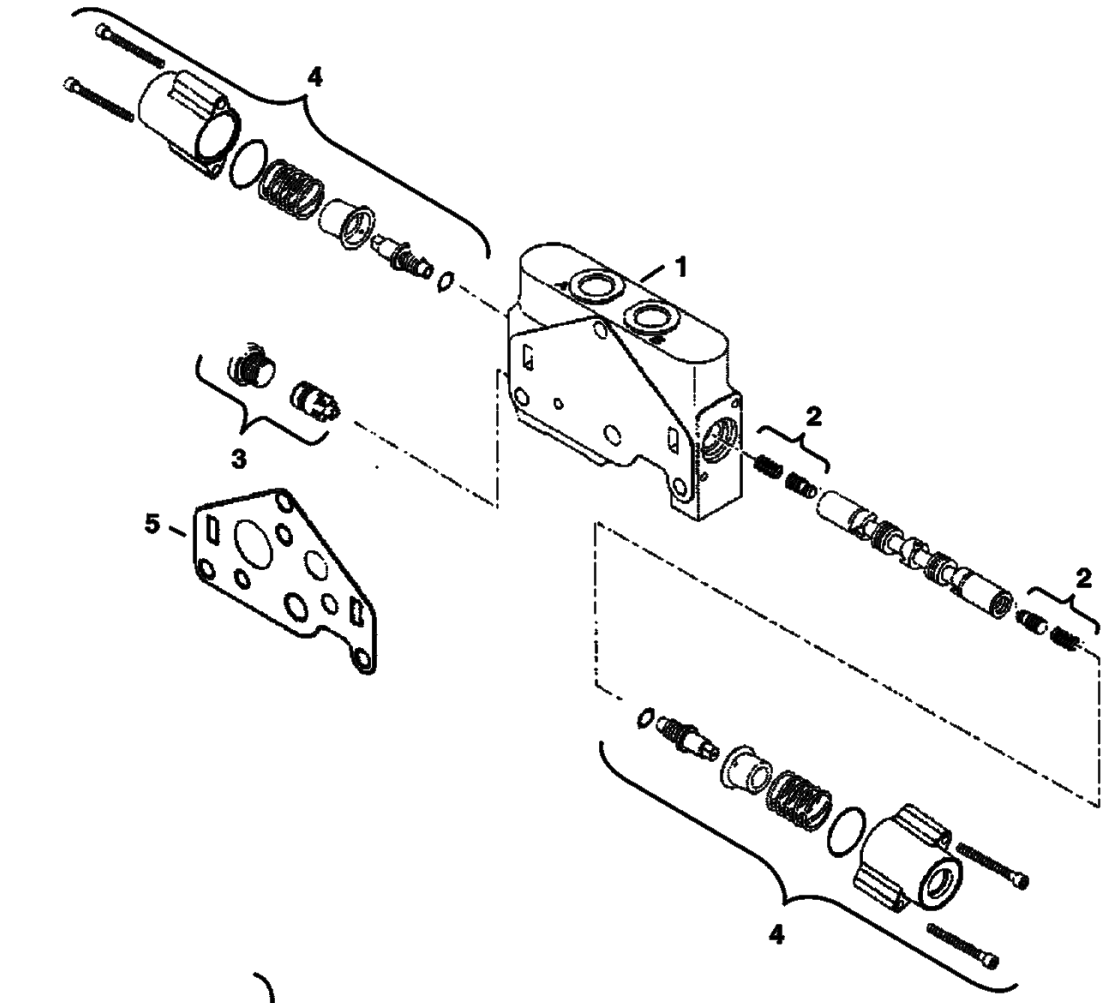
4
1
3
2
5
2
4
6
B–24714

CONTROL VALVE (Cont'd)
(Auxiliary Section)

Ref. No.	Part Number	Description	Remarks	Serial Number	Qty.
1	6687047	VALVE	auxiliary		1
2	6687057	KIT	check valve		1
3	6687058	KIT	comp		1
4	6687065	KIT	end cap		2
5	6687070	SEAL	plate		1
6	6687071	KIT	seal		1

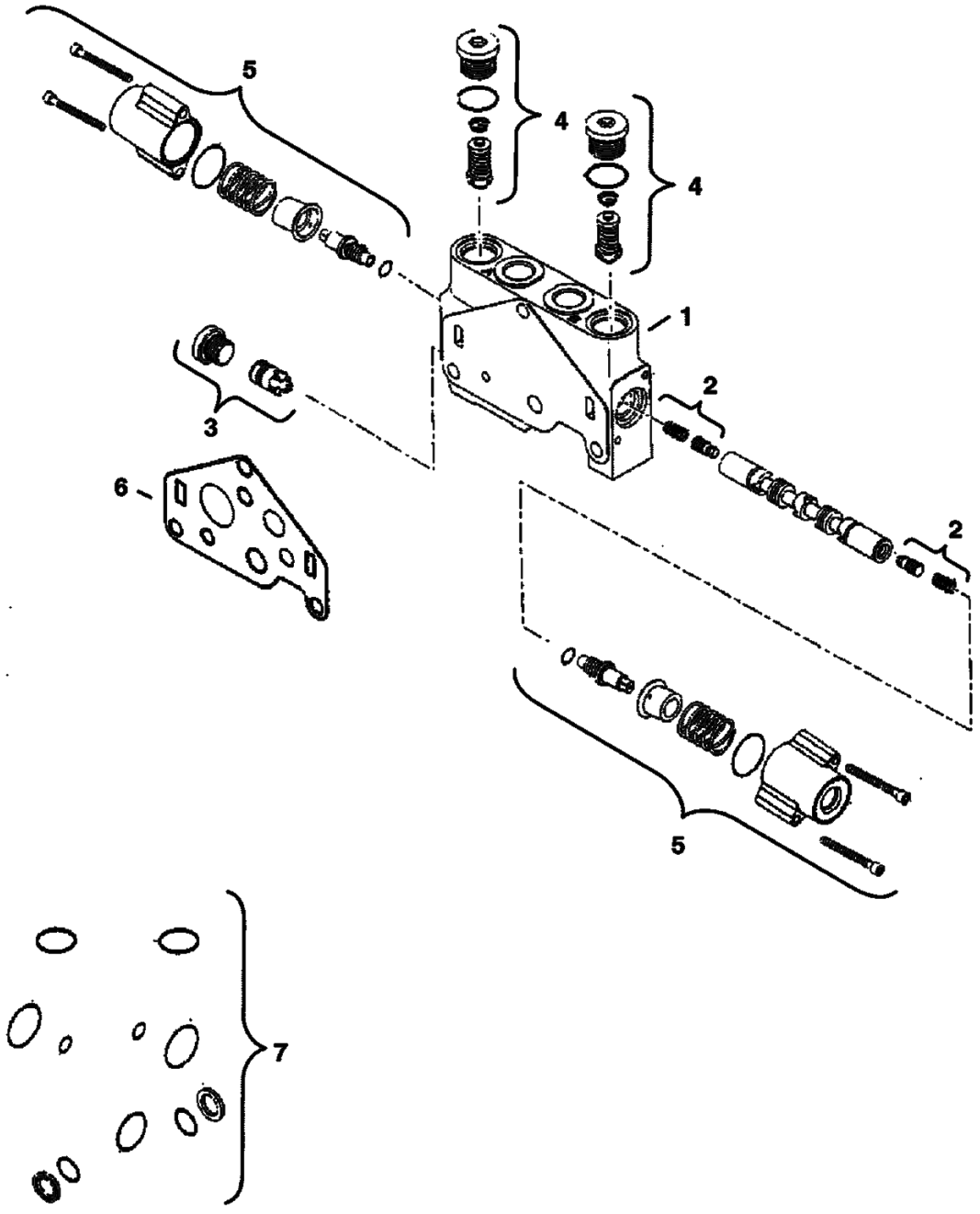
5
4
4
1
2
3
6
2
5
7
B–24715

CONTROL VALVE (Cont'd)
(Arm Section)

Ref. No.	Part Number	Description	Remarks	Serial Number	Qty.
1	6687045	VALVE	boom		1
2	6687057	KIT	check valve		2
3	6687058	KIT	comp		1
4	6687060	VALVE	relief		2
5	6687065	KIT	end cap		2
6	6687070	SEAL	plate		1
7	6687071	KIT	assy - seal		1

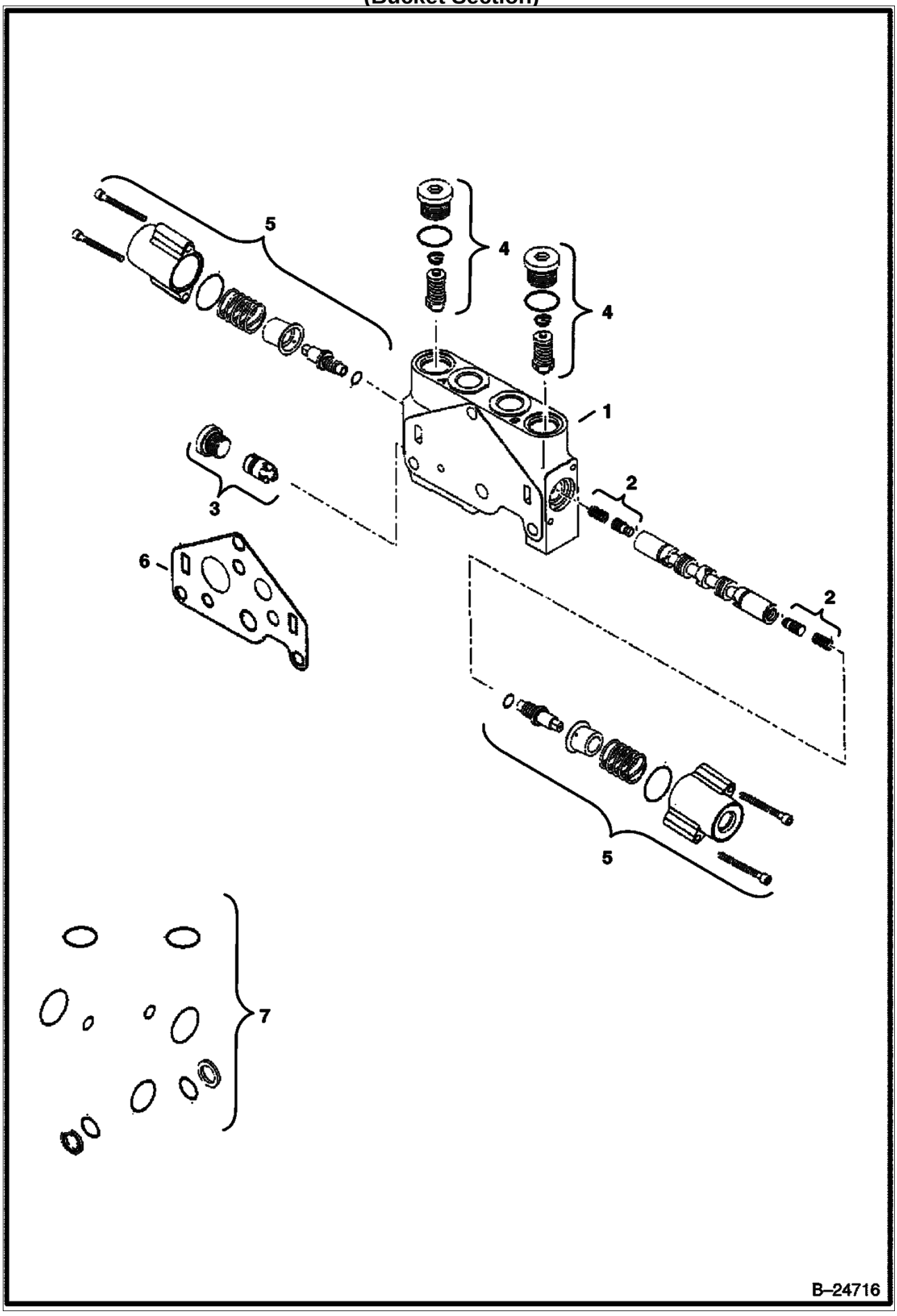
5
4
4
1
3
2
6
2
5
7
B–24716

CONTROL VALVE (Cont'd)
(Bucket Section)

Ref. No.	Part Number	Description	Remarks	Serial Number	Qty.
1	6687046	VALVE	bucket		1
2	6687057	KIT	check valve		2
3	6687058	KIT	comp		1
4	6687061	VALVE	relief		2
5	6687065	KIT	end cap		2
6	6687070	SEAL	plate		1
7	6687071	KIT	assy - seal		1

CONTROL VALVE
(Boom Section)

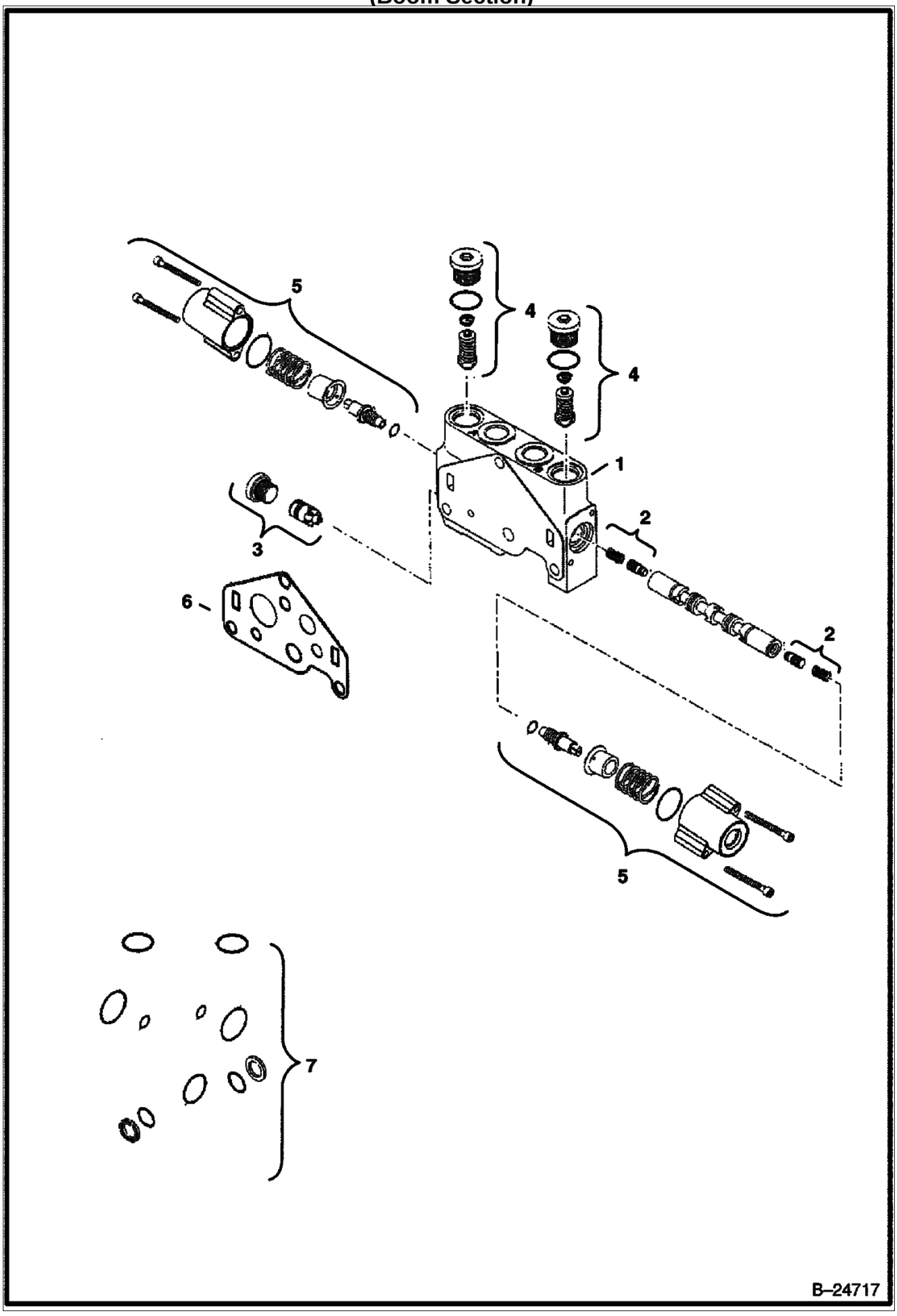

CONTROL VALVE (Cont'd)
(Boom Section)

Ref. No.	Part Number	Description	Remarks	Serial Number	Qty.
1	6687044	VALVE	boom		1
2	6687057	KIT	check valve		2
3	6687058	KIT	comp		1
4	6687061	VALVE	relief		2
5	6687065	KIT	end cap		2
6	6687070	SEAL	plate		1
7	6687071	KIT	assy - seal		1

CONTROL VALVE
(Boom Swing)

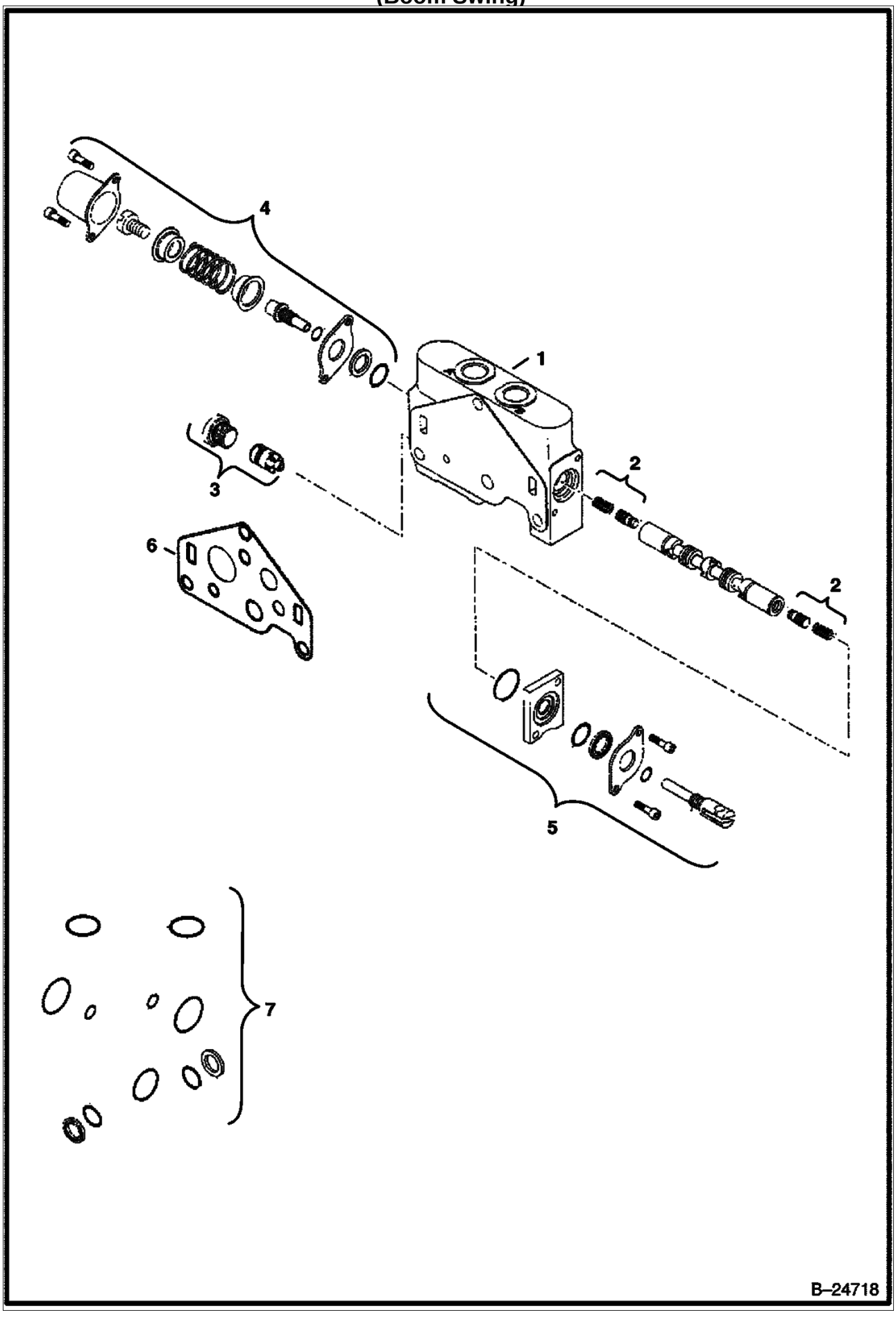

CONTROL VALVE (Cont'd)
(Boom Swing)

Ref. No.	Part Number	Description	Remarks	Serial Number	Qty.
1	6687873	VALVE	boom Was - 6687043		1
2	6687057	KIT	check valve		2
3	6687058	KIT	press comp		1
4		CAP	NSS - end - order Ref. 1		1
5		CAP	NSS - end - order Ref. 1		1
6	6687070	SEAL	plate		1
7	6687071	KIT	assy		1

CONTROL VALVE
(Auxiliary Section)

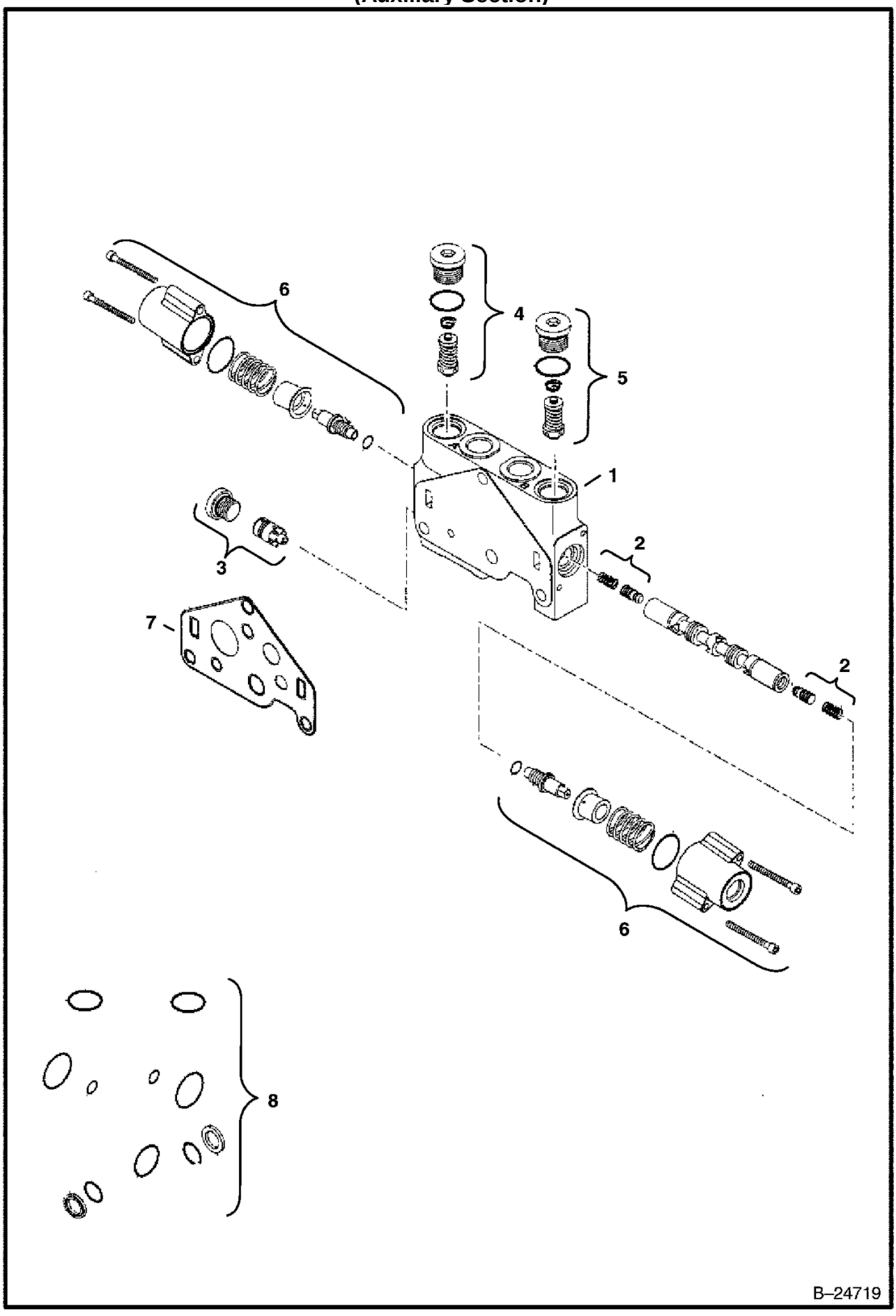

CONTROL VALVE (Cont'd)
(Auxiliary Section)

Ref. No.	Part Number	Description	Remarks	Serial Number	Qty.
1	6687042	VALVE	auxiliary		1
2	6687057	KIT	check valve		2
3	6687058	KIT	press comp		1
4	6687059	VALVE	press relief		1
5	6687062	VALVE	press relief		1
6	6687065	KIT	end cap		2
7	6687070	SEAL	plate		1
8	6687071	KIT	assy		1

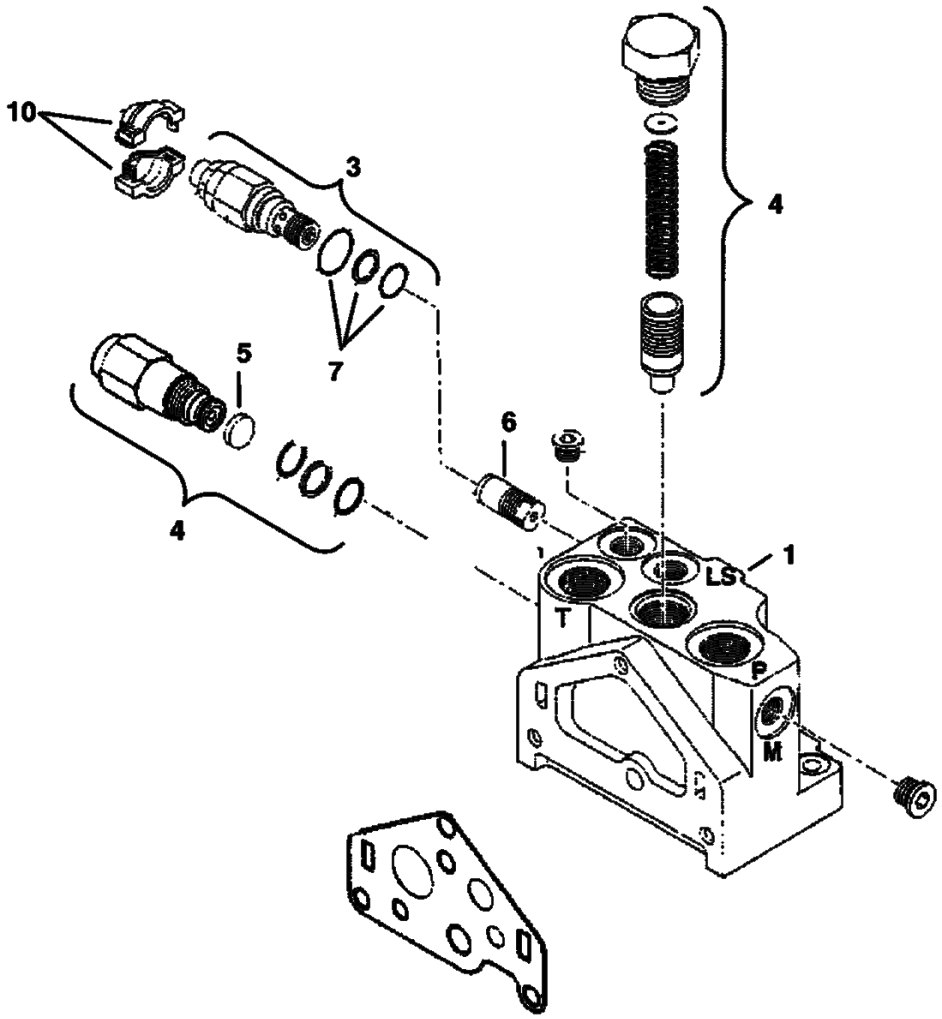
10
3
4
7
5
6
4
1
LS
T
P
M
B–24720

CONTROL VALVE (Cont'd)
(Inlet Section)

Ref. No.	Part Number	Description	Remarks	Serial Number	Qty.
1	6687041	VALVE	inlet		1
2	6687054	KIT	regulator		1
3	6687055	VALVE	press relief		1
4	6687056	FILTER	flow regulator w/filter		1
5	6687064	FILTER			1
6	6687067	DAMPER			1
7	6687068	KIT	relief valve seal		1
8	6687069	KIT	flow regulator		1
9	6687070	SEAL	plate		1
10	6687072	KIT	half		2

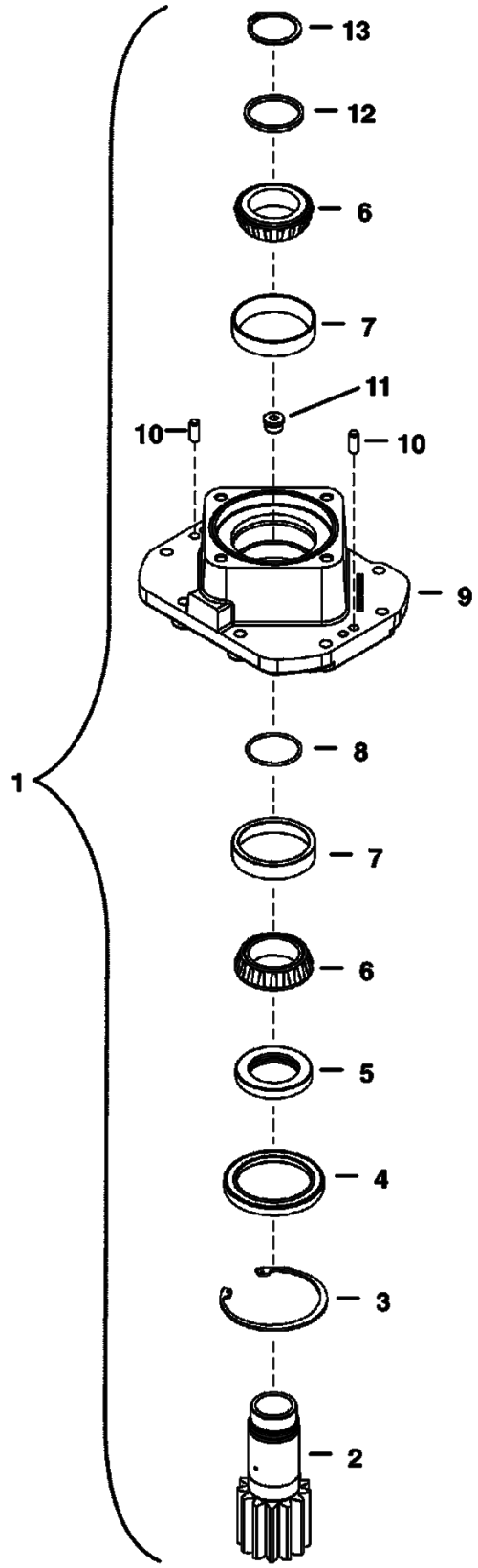

PE–1907

MOTOR CARRIER (Cont'd)

Ref. No.	Part Number	Description	Remarks	Serial Number	Qty.
1	7106387	CARRIER	assy - Ref. 2-13		1
2	6814571	SHAFT			1
3	6628419	RING	retaining		1
4	6665573	SEAL			1
5	6589949	SPACER			1
6	1320904B	BEARING			2
7	1320905B	CUP			2
8	25K040204B	O-RING			1
9	7106388	HOUSING			1
10	20JM01025B	PIN			2
11	47K000006B	FITTING			1
11	79K000008B	O-RING			1
12	6596894	WASHER			1
13	6596953	RING	retaining		1

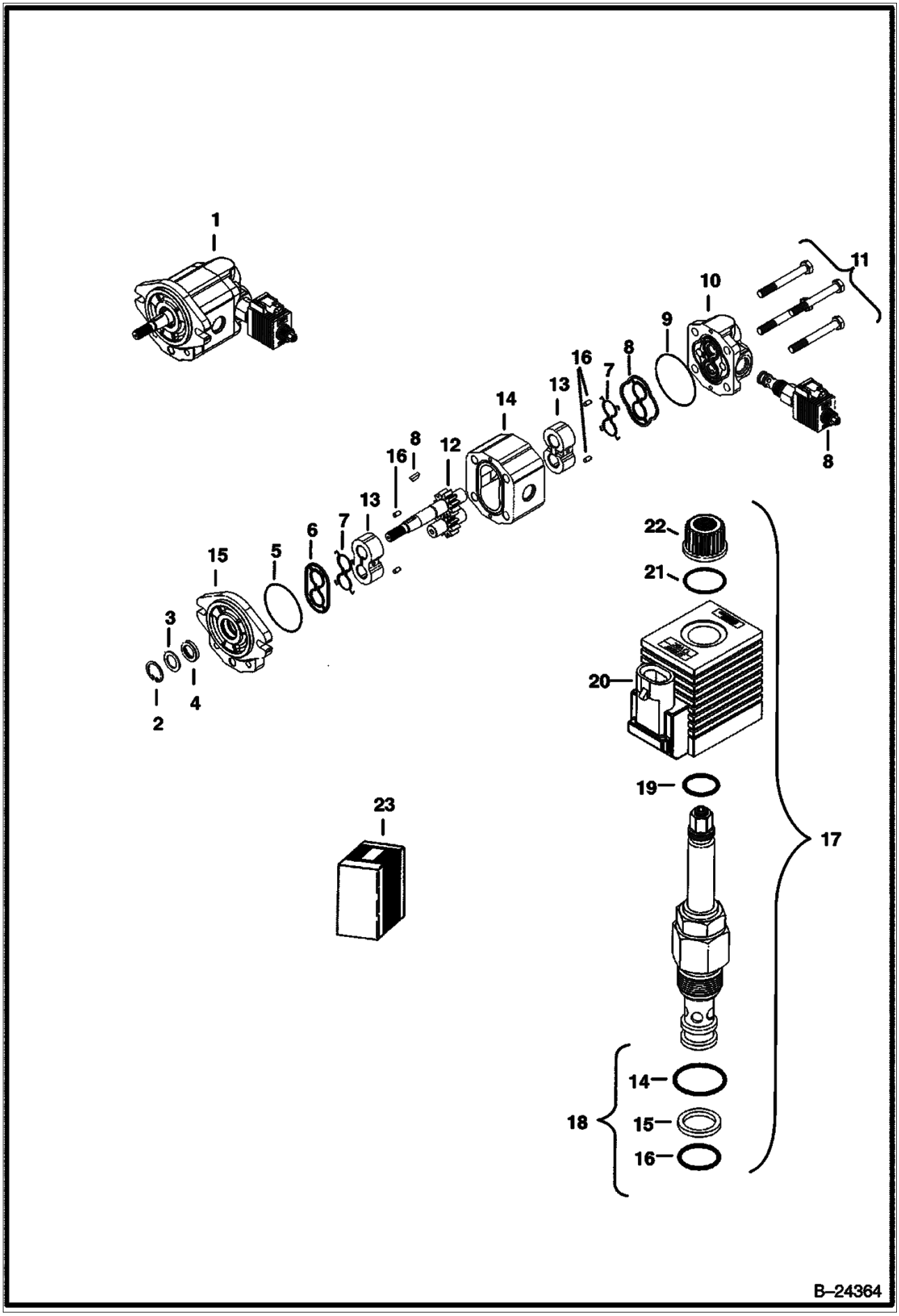
1
11
10
9
8
16
7
13
14
8
12
16
8
13
7
6
5
15
3
2
4
22
21
20
19
23
17
14
18
15
16
B–24364

FAN MOTOR (Cont'd)

Ref. No.	Part Number	Description	Remarks	Serial Number	Qty.
1	6686269	MOTOR			1
2	6686648	RING			1
3	6686650	WASHER			1
4	6686649	SEAL			1
5		O-RING	NSS - order Ref. 23		1
6		SEAL	NSS - order Ref. 23		1
7		RING	NSS - order Ref. 23		1
8	6686651	KEY	order Ref. 23		1
9		O-RING	NSS - order Ref. 23		1
10		COVER	NSS - order Ref. 1		1
11		BOLT	NSS - order Ref. 1		1
12		GEAR	NSS - order Ref. 1		1
13		BEARING	NSS - order Ref. 1		1
14		CASE	NSS - order Ref. 1		1
15		COVER	NSS - order Ref. 1		1
16		PIN	NSS - order Ref. 1		1
17	6686210	VALVE	solenoid valve Was - 6686653		1
18	6683206	SEAL KIT			1
19	6686209	O-RING			1
20	6684590	COIL			1
21	6686208	O-RING			1
22	6686207	NUT			1
23	6686647	SEAL KIT	gear pump		1

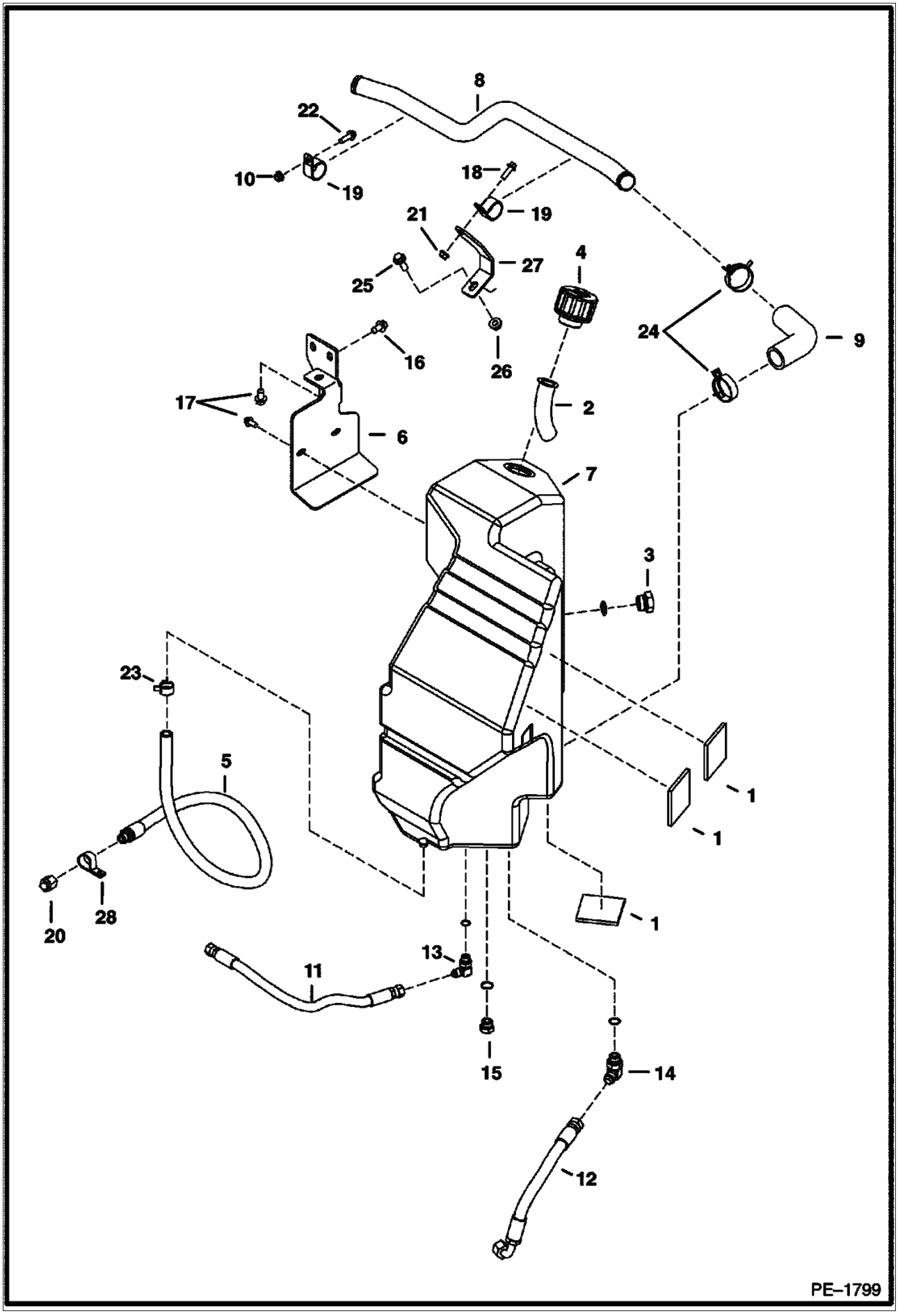
8
22
10
19
18
19
21
27
25
4
24
9
16
26
17
2
6
7
3
23
5
1
1
1
20
28
13
11
15
14
12
PE–1799

HYDRAULIC TANK (Cont'd)

Ref. No.	Part Number	Description	Remarks	Serial Number	Qty.
1	6578278	PAD	square - rubber		3
2	6587168	SCREEN			1
3	6665915	GAUGE			1
4	6674690	CAP			1
5	6812176	HOSE			1
6	6814175	BRACKET			1
7	6814617	TANK	hydraulic		1
8	6816886	TUBELINE			1
9	6814655	HOSE			1
10	6814661	TUBE			1
11	6815887	HOSE			1
12	6815894	HOSE			1
13	17KB00606B	ELBOW			1
14	17KB00808B	ELBOW			1
15	24K000006B	PLUG			1
16	26GM10020B	SCREW			3
17	29CM00816B	SCREW			2
18	29CM00820B	BOLT			2
19	30H000075B	CLAMP			3
20	36K000006B	CAP			1
21	43DM00008B	NUT			2
22	59CM10110B	SCREW			1
23	5HM00020B	CLAMP			1
24	5HM00042B	CLAMP			2
25	29CM01030B	SCREW			1
26	43DM00010B	NUT			1
27	6815896	BRACKET			1
28	30HJ00616B	CLAMP			1

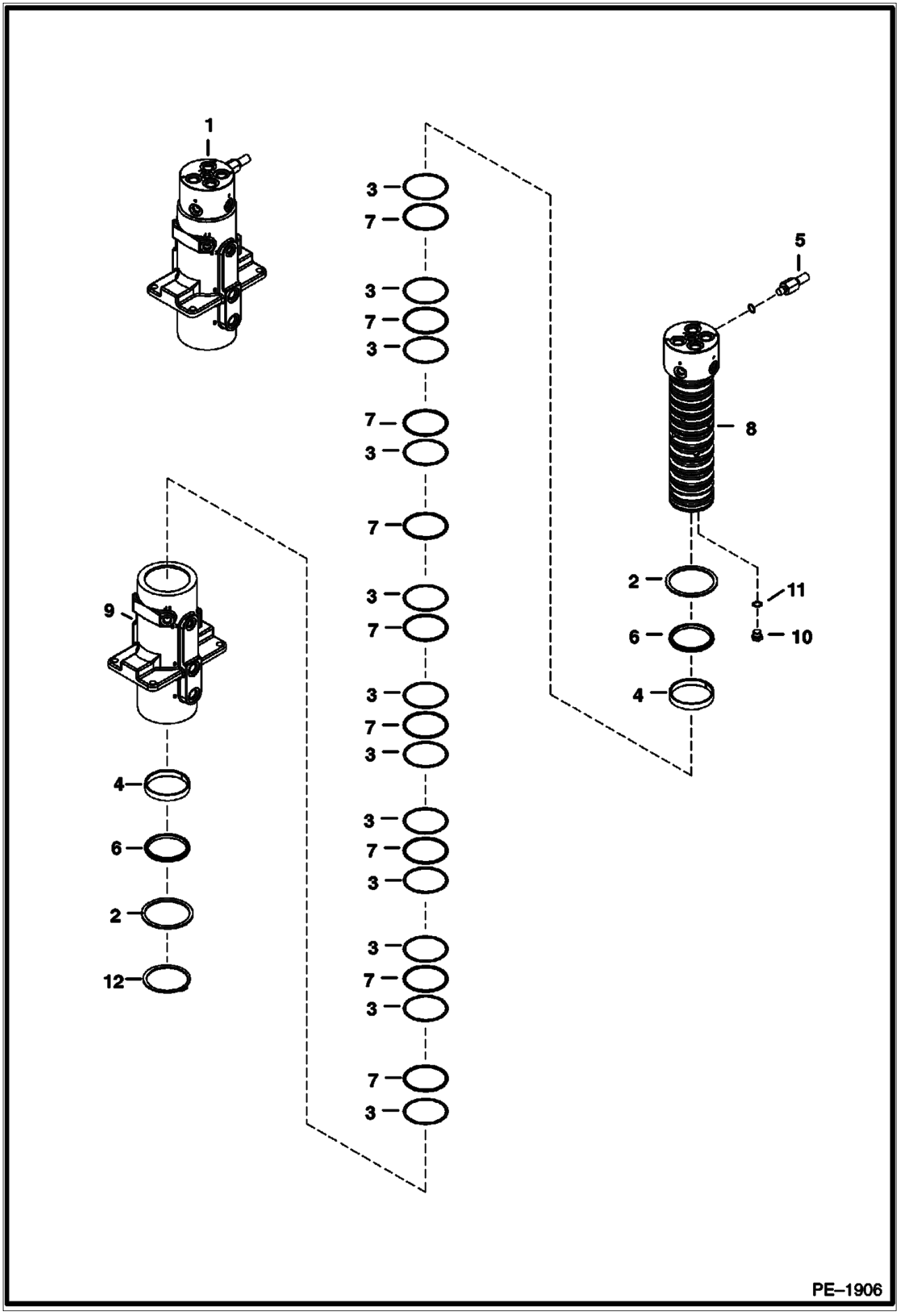
1
3
7
3
7
3
7
3
7
3
7
3
7
3
7
3
5
8
2
11
6
10
4
9
4
6
2
12
PE–1906

SWIVEL JOINT (Cont'd)

Ref. No.	Part Number	Description	Remarks	Serial Number	Qty.
1	6811778	SWIVEL	assy		1
2	6674221	WASHER			2
3	6679248	RING	back-up		12
4	6680323	RING	wear		2
5	6810029	STOP			1
6	7100535	SEAL			2
7	6810813	SEAL			9
8	6811775	SPOOL			1
9		BARREL	NAP - order Ref. 1		1
10	6812171	PLUG	W/Ref. 11		1
11	79K000006B	O-RING			1
12	6662076	RING	retaining		1

ARM CYLINDER
(Long Arm)

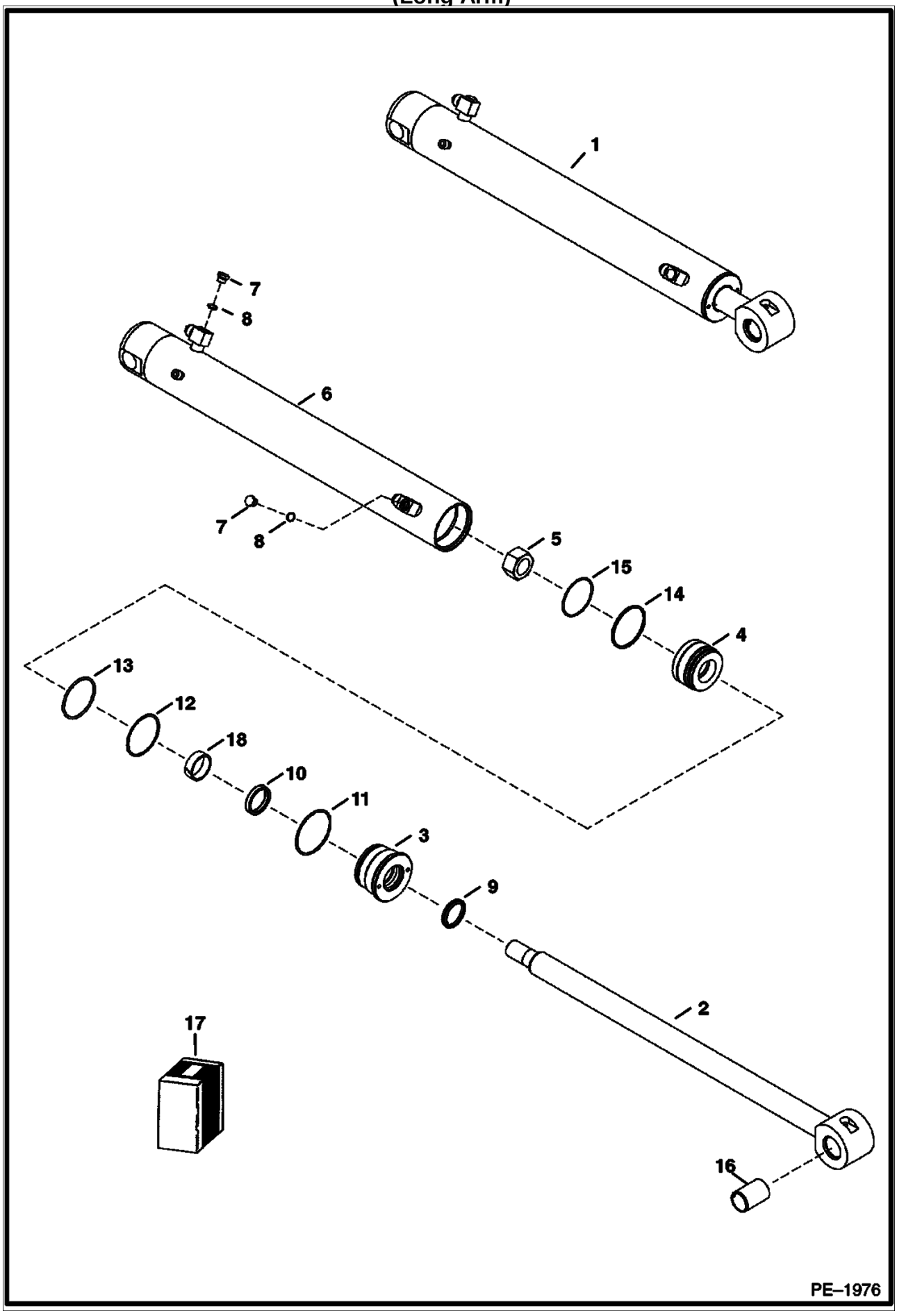

ARM CYLINDER (Cont'd)
(Long Arm)

Ref. No.	Part Number	Description	Remarks	Serial Number	Qty.
1	6817188	CYLINDER	W/Ref. 2-15		1
2	6810566	ROD			1
3	6814983	HEAD			1
4	6810022	PISTON			1
5	6810540	NUT			1
6	6817317	HOUSING			1
7	6816855	PLUG	W/Ref. 8		2
8	75K000006B	O-RING			2
9	6666544	WIPER	wiper		1
10	6667327	SEAL			1
11	82K000236B	O-RING			1
12	73K000234B	RING	back-up		1
13	54K040300B	O-RING			1
14	6513466	SEAL			1
15	54K030226B	O-RING			1
16	6803863	BUSHING			1
17	6815085	SEAL KIT	W/Refs. 5, 9-15, 18		1
18	6682027	SEAL	wear		1

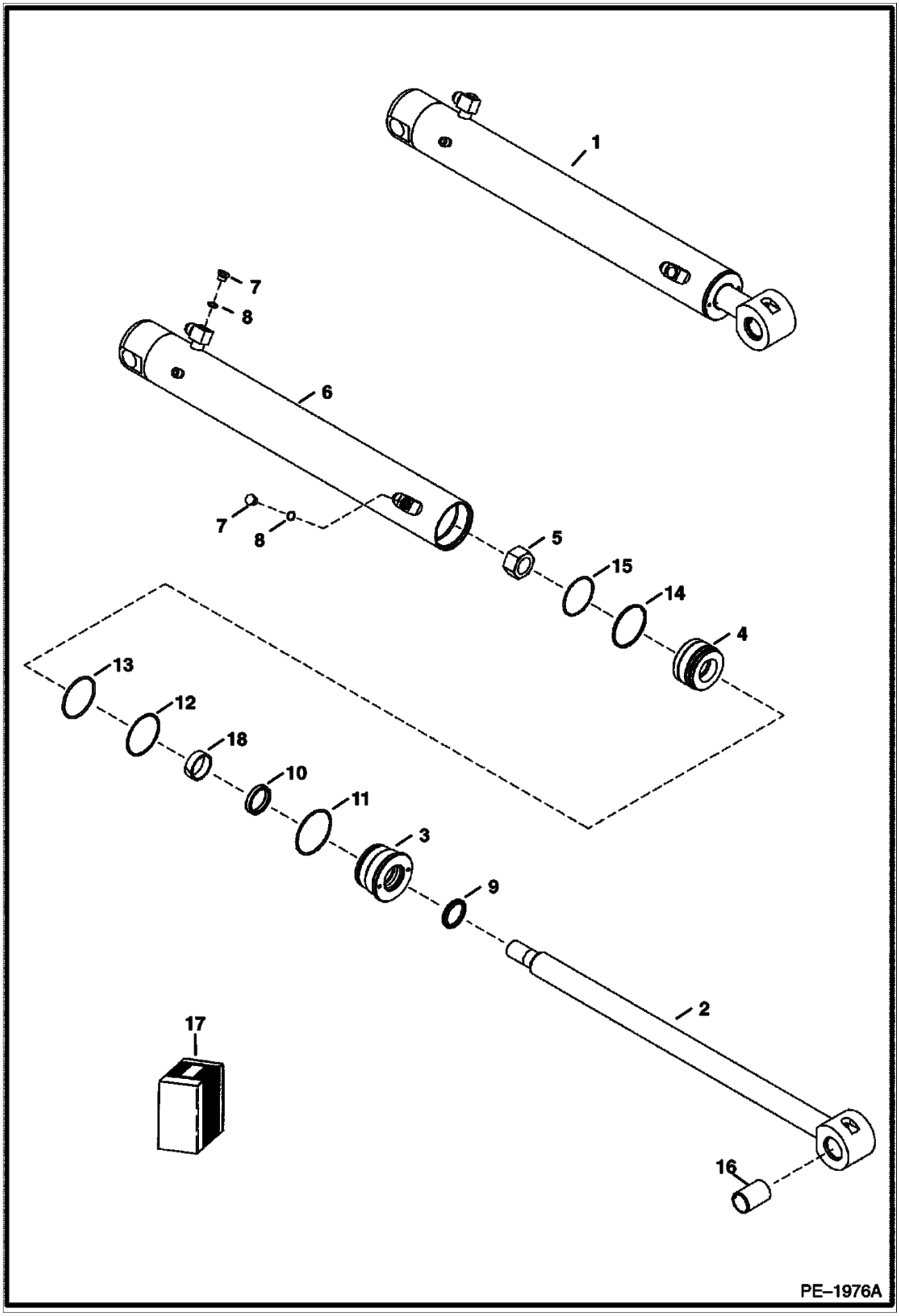
1
7
8
6
7
8
5
15
14
4
13
12
18
10
11
3
9
2
17
16
PE–1976A

ARM CYLINDER (Cont'd)

Ref. No.	Part Number	Description	Remarks	Serial Number	Qty.
1	7100542	CYLINDER	W/Ref. 2-15		1
2	7100544	SHAFT			1
3	7100546	HEAD			1
4	7100543	PISTON			1
5	6810539	NUT			1
6	7100547	HOUSING			1
7	6816855	PLUG	W/Ref.		2
8	75K000007B	O-RING			2
9	6665086	SEAL			1
10	6667326	SEAL			1
11	54K040224B	O-RING			1
12	73K000332B	O-RING	back-up		1
13	54K060212B	O-RING			1
14	6516229	PISTON SEAL	piston		1
15	54K030210B	O-RING			1
16	6803863	BUSHING	wear		1
17	6685197	RING	wear		1
18	10H000025B	GREASE ZERK			2
19	7100549	KIT	seal		1

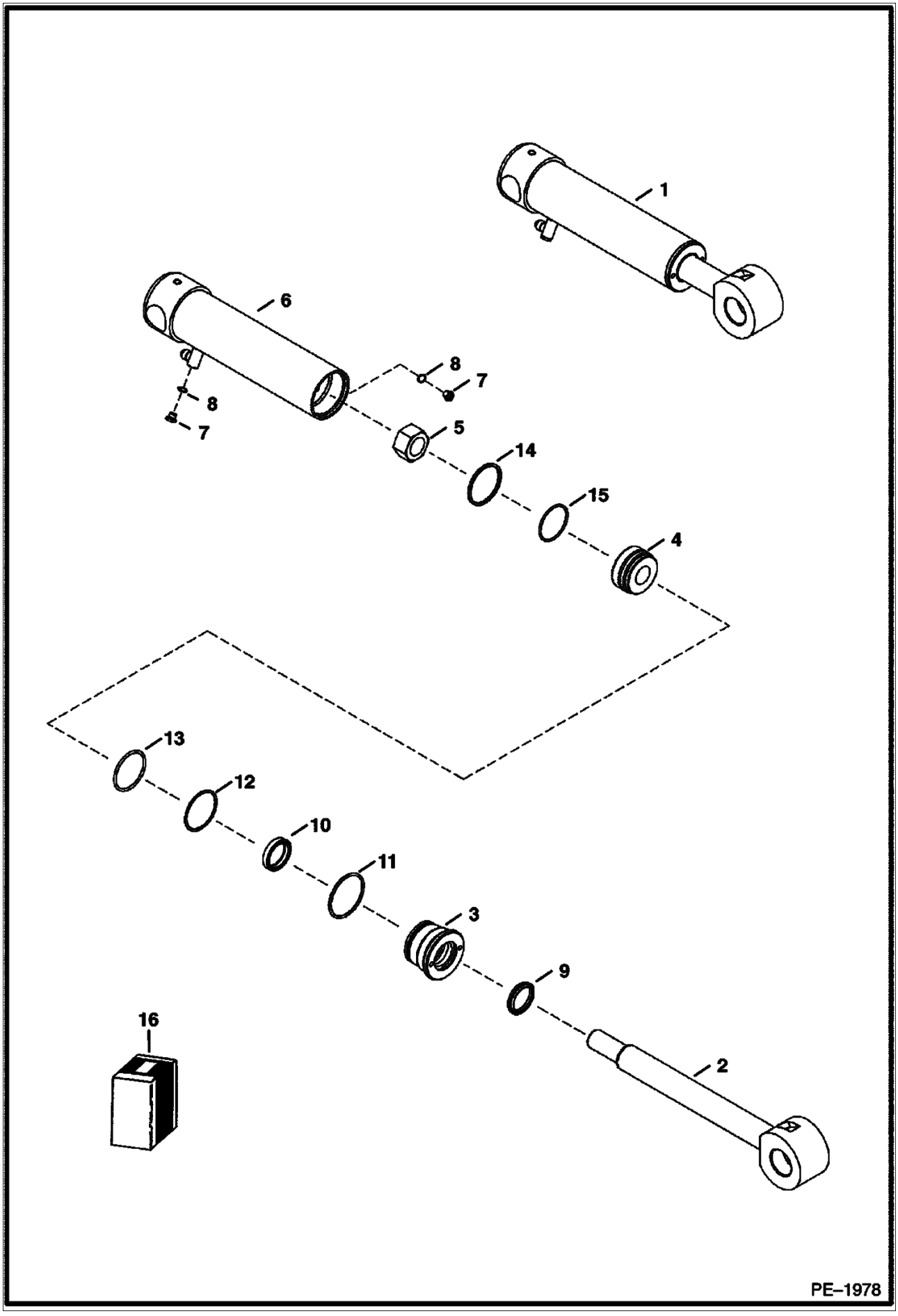
1
6
8
7
8
7
5
14
15
4
13
12
10
11
3
9
16
2
PE–1978

BLADE CYLINDER (Cont'd)

Ref. No.	Part Number	Description	Remarks	Serial Number	Qty.
1	6815009	CYLINDER	Ref. 2-15		1
2	6812160	ROD			1
3	6806124	HEAD			12
4	6815011	PISTON			1
5	6810539	NUT			1
6	6815010	HOUSING	W/Ref. 7 & 8		1
7	6812170	PLUG	W/Ref. 8		2
8	95K000003B	O-RING			1
9	6665086	SEAL	wiper		1
10	6667326	SEAL			1
11	54K040208B	O-RING			1
12	73K000228B	RING	back-up		1
13	82K000230B	SEAL			1
14	54K030202B	O-RING			1
15	1522534B	PISTON SEAL			1
16	6816537	SEAL KIT	Ref. 5, 9 & 15		x

BOOM CYLINDER
(Extendible Arm)

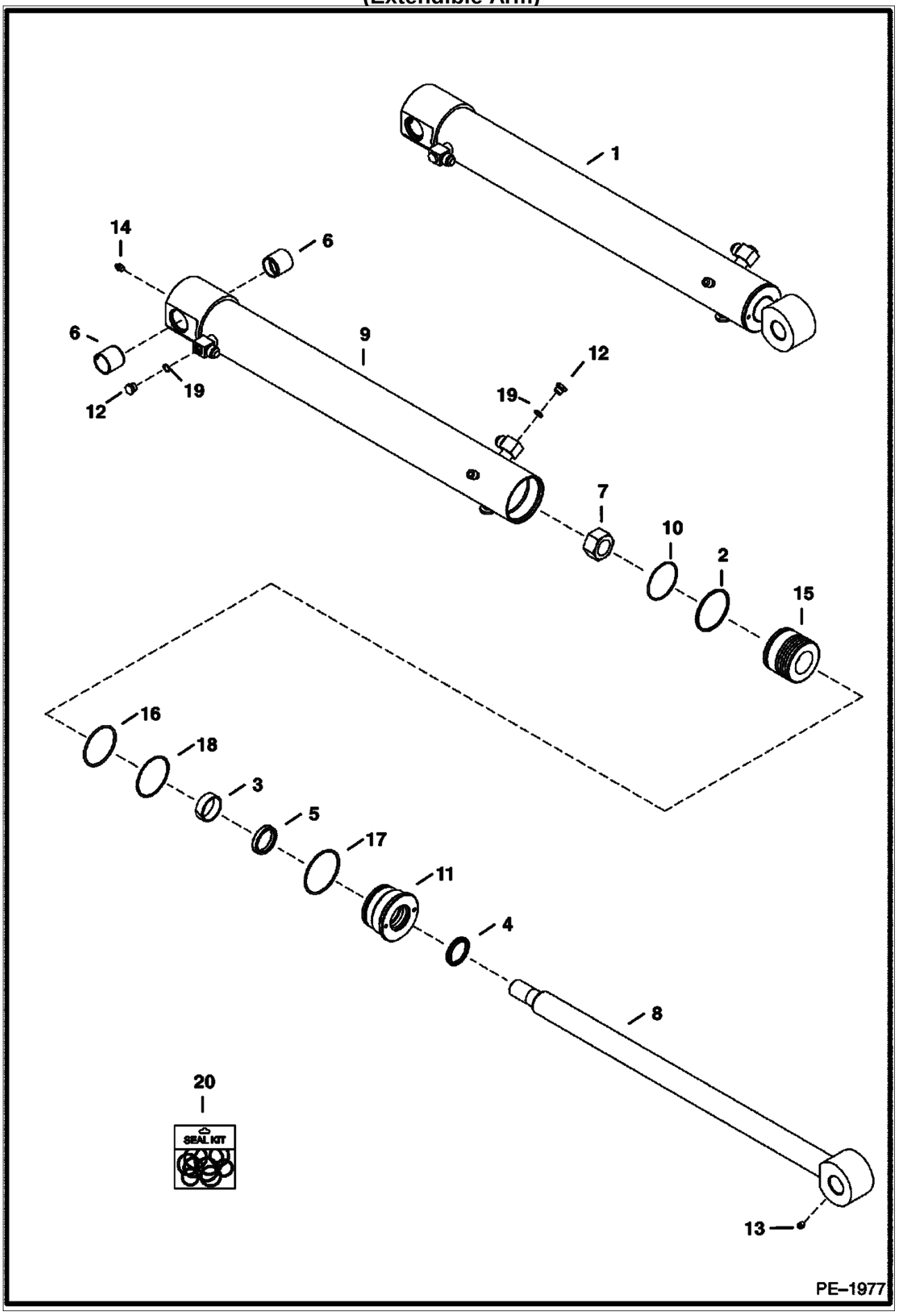

BOOM CYLINDER (Cont'd)
(Extendible Arm)

Ref. No.	Part Number	Description	Remarks	Serial Number	Qty.
1	6814980	CYLINDER	W/Refs. 2-19 - Also order (2) Ref. 6		1
2	6513466	SEAL			1
3	6666544	WIPER	Wiper		1
4	6667327	SEAL			1
5	6682027	SEAL	wear		1
6	6803982	BUSHING			2
7	6810540	NUT			1
8	6810560	ROD			1
9	6814981	HOUSING	Also order (2) Ref. 6		1
10	6814983	HEAD			1
11	6814984	PISTON			1
12	6816855	PLUG	W/Ref. 19		2
13	10H000025B	GREASE ZERK	grease		1
14	12H000015B	GREASE ZERK	grease		2
15	54K030226B	O-RING			1
16	54K040300B	O-RING			1
17	82K000236B	O-RING			1
18	73K000234B	RING	Back-up		1
19	75K000007B	O-RING			2
20	6815085	SEAL KIT	Ref. 2-5, 7, 15-18		x

BOOM CYLINDER
(Extendible Arm)

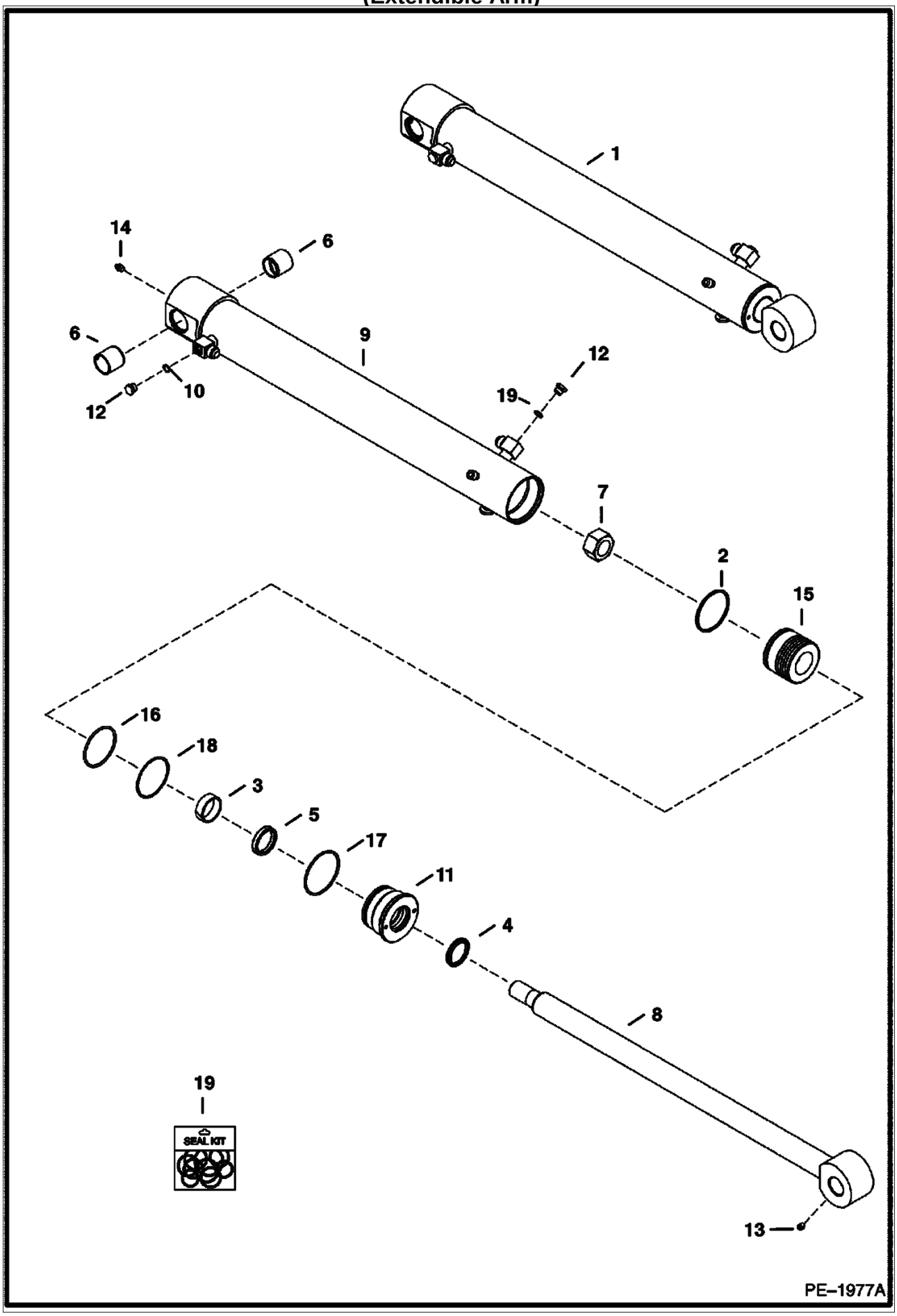

BOOM CYLINDER (Cont'd)
(Extendible Arm)

Ref. No.	Part Number	Description	Remarks	Serial Number	Qty.
1	7100732	CYLINDER			1
2	6685444	SEAL			1
3	6682027	SEAL			1
4	6666544	WIPER			1
5	6667327	SEAL			1
6	6803982	BUSHING			2
7	6810540	NUT			1
8	7103706	SHAFT			1
9	6818168	CASE			1
10	75K000007B	O-RING			2
11	6817562	HEAD			1
12	6816855	PLUG			2
13	10H000025B	GREASE ZERK	grease		1
14	12H000015B	GREASE ZERK	grease		2
15	6685204	PISTON			1
16	54K040224B	O-RING			1
17	54K040300B	O-RING			1
18	73K000232B	WASHER	Back-up		1

BUCKET CYLINDER
(Long Arm)

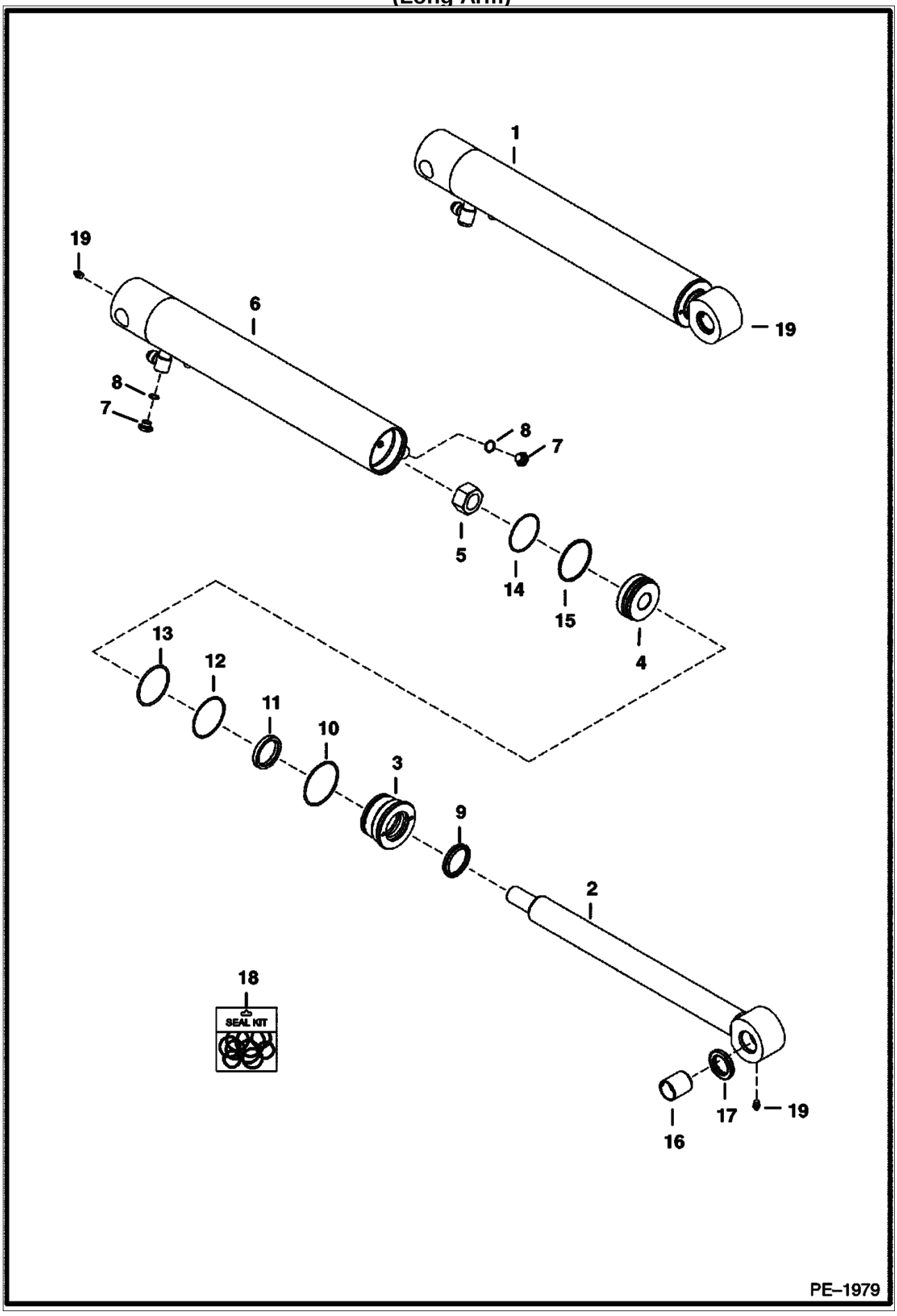

BUCKET CYLINDER (Cont'd)
(Long Arm)

Ref. No.	Part Number	Description	Remarks	Serial Number	Qty.
1	6812165	CYLINDER	W/Ref. 2-15, also order Ref. 16 & (2) Ref. 17		1
2	6803810	ROD	Also order Ref. 16 & (2) Ref. 17		1
3	6537294	HEAD			1
4	6537290	PISTON			1
5	6810540	NUT			1
6	6812166	HOUSING	W/Ref. 7 & 8		1
7	6812171	PLUG	W/Ref. 8		2
8	79K000007B	O-RING			2
9	6666545	WIPER	Wiper		1
10	6667328	SEAL			1
11	82K000236B	O-RING			1
12	73K000234B	RING	Back-up		1
13	54K040300B	O-RING			1
14	54K030226B	O-RING			1
15	6513466	SEAL	Sealing		1
16	6804139	BUSHING			1
17	6652915	SEAL	Dust		1
18	6810470	SEAL KIT	W/Ref. 5, 9-15		x
19	10H000025B	GREASE ZERK	grease		2

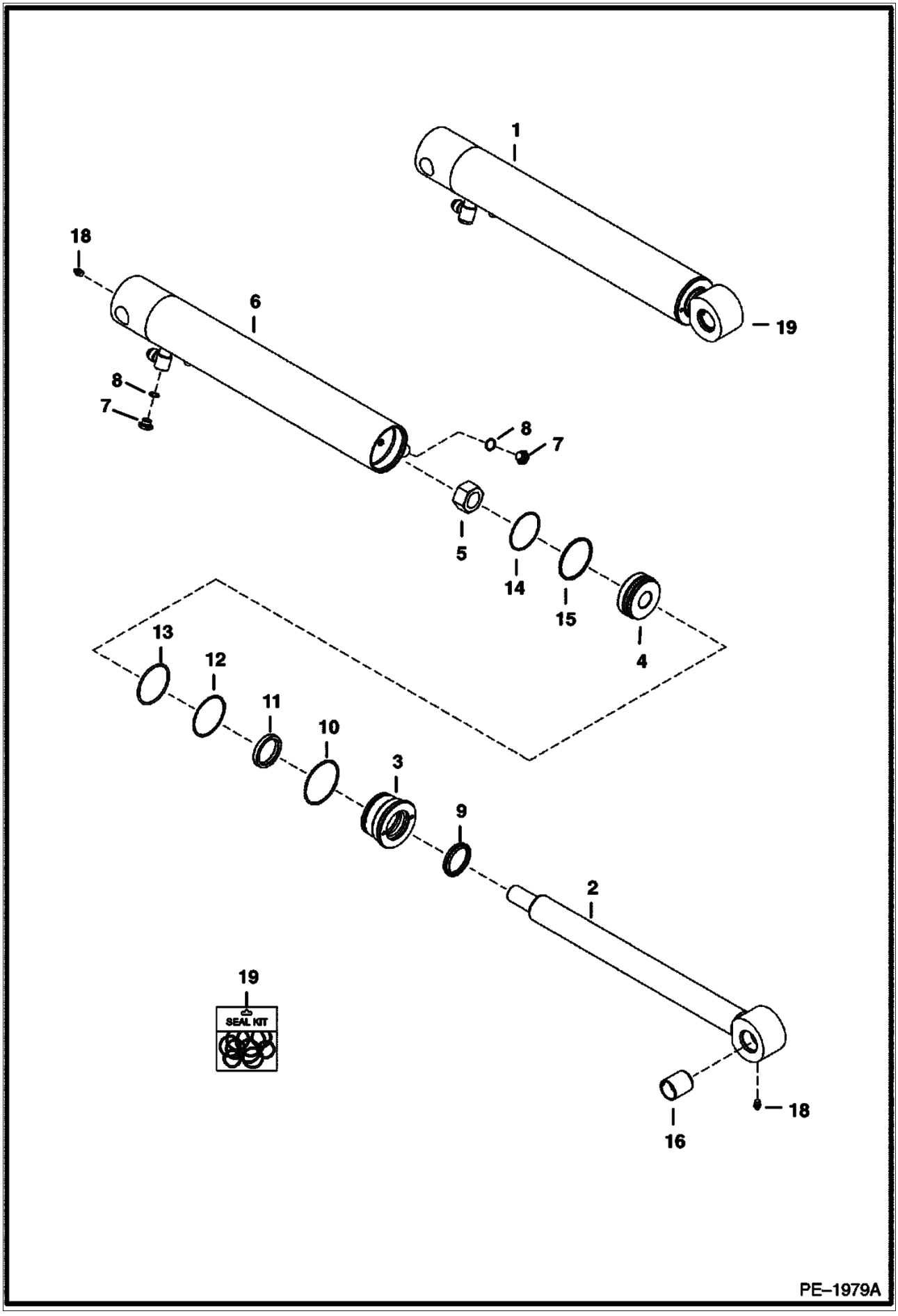
1
18
6
19
8
7
8
7
5
14
15
4
13
12
11
10
3
9
2
19
SEAL KIT
18
16
PE–1979A

BUCKET CYLINDER (Cont'd)

Ref. No.	Part Number	Description	Remarks	Serial Number	Qty.
1	7100800	CYLINDER	assy		1
2	7100802	ROD			1
3	6588679	HEAD			1
4	6539252	PISTON			1
5	6810540	NUT			1
6	7100801	CASE			1
7	6816885	PLUG	W/Ref. 8		2
8	79K000007B	O-RING			2
9	6666544	WIPER			1
10	54K040224B	O-RING			1
11	6667326	SEAL			1
12	73K000332B	O-RING	back-up		1
13	54K060212B	O-RING			1
14	54K030210B	O-RING			1
15	6516229	PISTON SEAL			1
16	6803863	BUSHING			1
17	6685197	RING	wear		1
18	10H000025B	GREASE ZERK	grease		2
19	7100549	KIT	seal		x

CLAMP CYLINDER

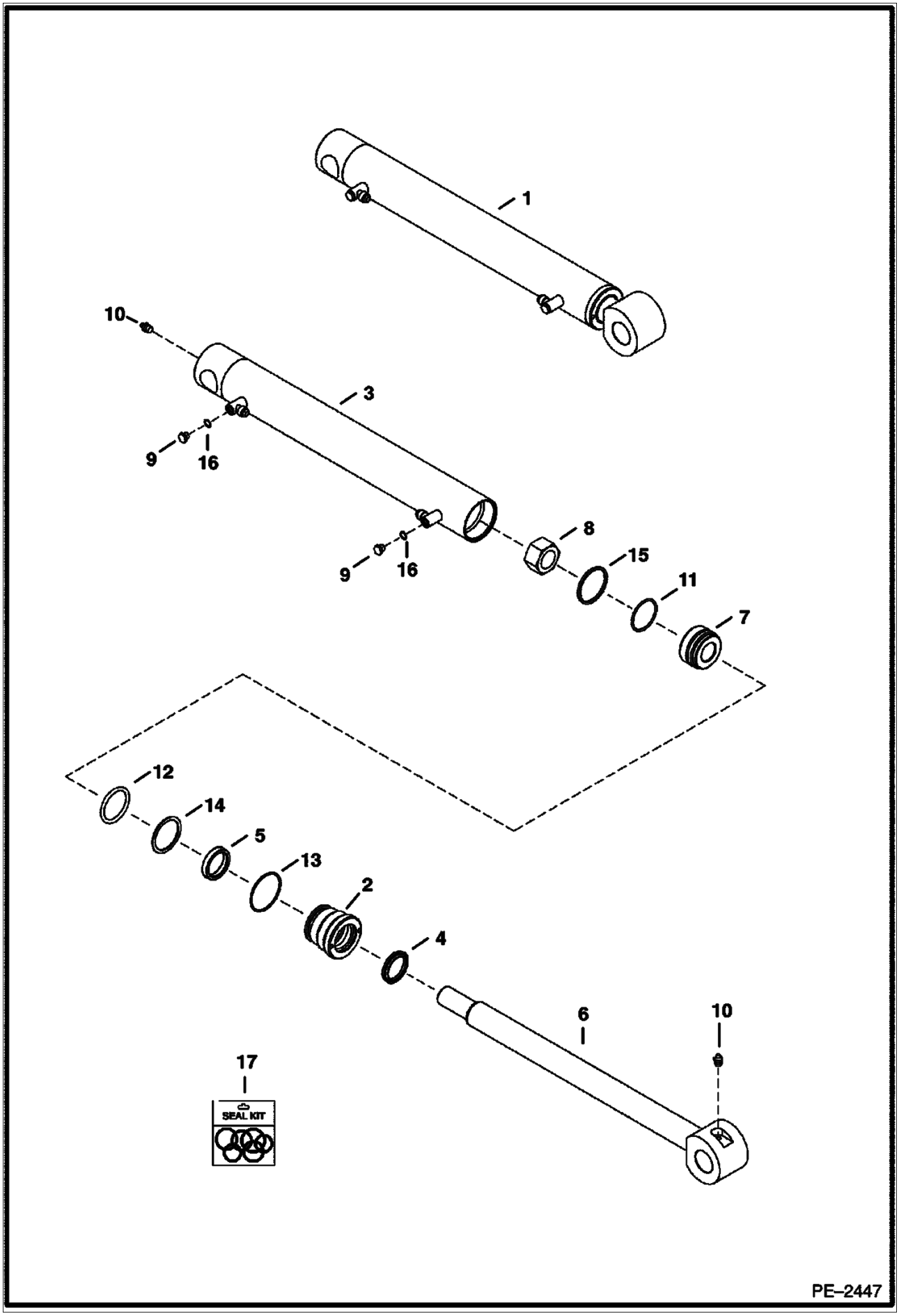

CLAMP CYLINDER (Cont'd)

Ref. No.	Part Number	Description	Remarks	Serial Number	Qty.
1	6817386	CYLINDER			1
2	6539236	HEAD			1
3	6588659	CASE			1
4	6665086	SEAL			1
5	6667326	SEAL			1
6	6802237	ROD			1
7	6806356	PISTON			1
8	6810539	NUT	piston		1
9	6812170	PLUG			1
10	10H000025B	GREASE ZERK	grease		2
11	54K030126B	O-RING			1
12	54K060128B	O-RING			1
13	58K000140B	O-RING			1
14	73K000328B	RING	back-up		1
15	6519328	RING	piston		1
16	75K000003B	O-RING			2
17	6816535	KIT			1

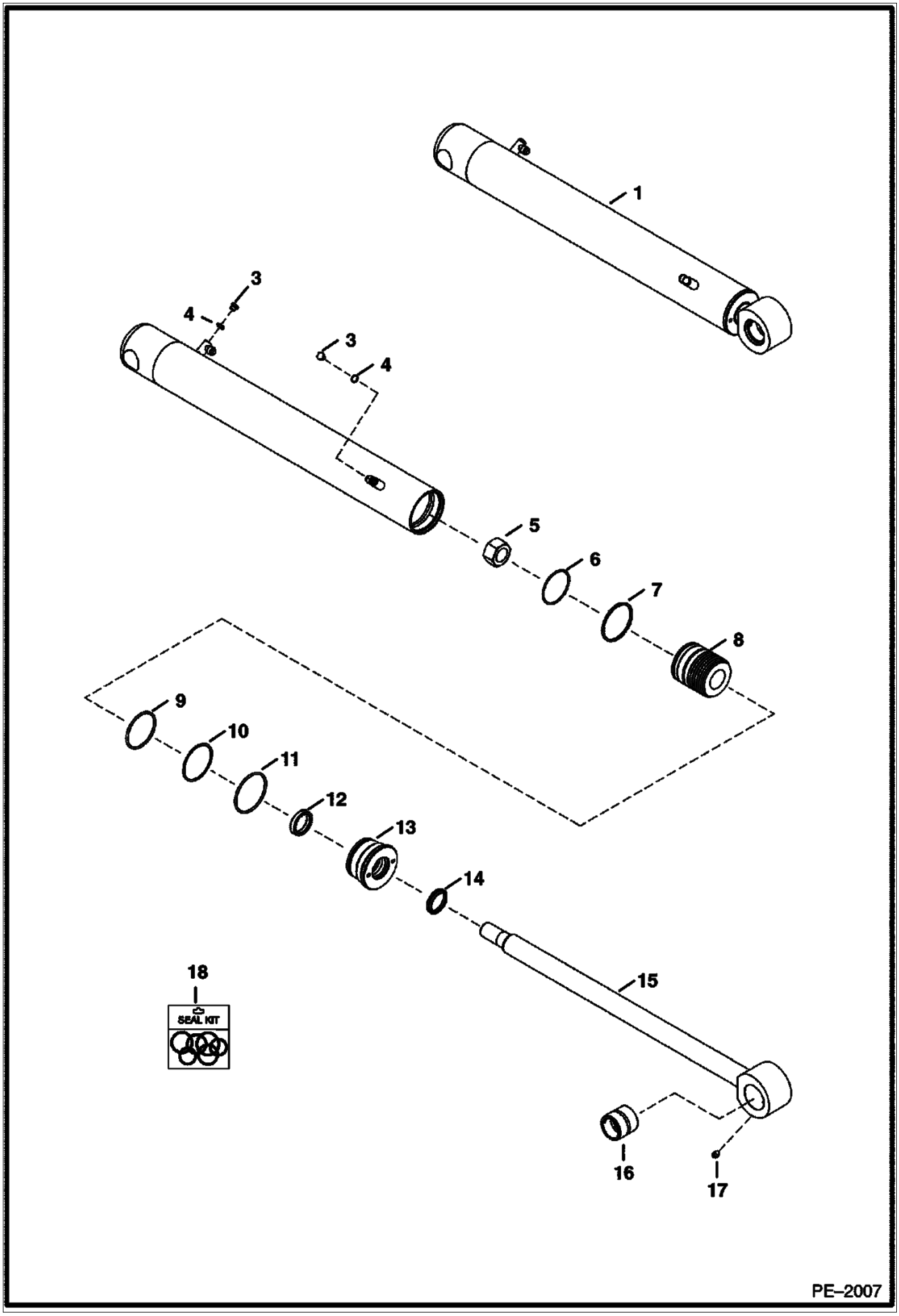
1
3
4
3
4
5
6
7
8
9
10
11
12
13
14
15
18
SEAL KIT
16
17
PE–2007

SWING CYLINDER (Cont'd)

Ref. No.	Part Number	Description	Remarks	Serial Number	Qty.
1	6816319	CYLINDER	assy - Ref. 2-17		1
2	6815992	HOUSING			1
3	6812170	PLUG	W/Ref. 4		2
4	75K000003B	O-RING			2
5	6810539	NUT			1
6	947088B	SEAL			1
7	54K030218B	O-RING			1
8	6816288	PISTON			1
9	54K040224B	O-RING			1
10	73K000232B	WASHER	back-up		1
11	54K040300B	O-RING			1
12	6667326	SEAL			1
13	6538367	HEAD			1
14	6665086	SEAL			1
15	6810420	ROD			1
16	6808997	BUSHING	wear		1
17	10H000025B	GREASE ZERK	grease		1
18	6816325	SEAL KIT	W/Ref. 5-7, 9-12, 14		1

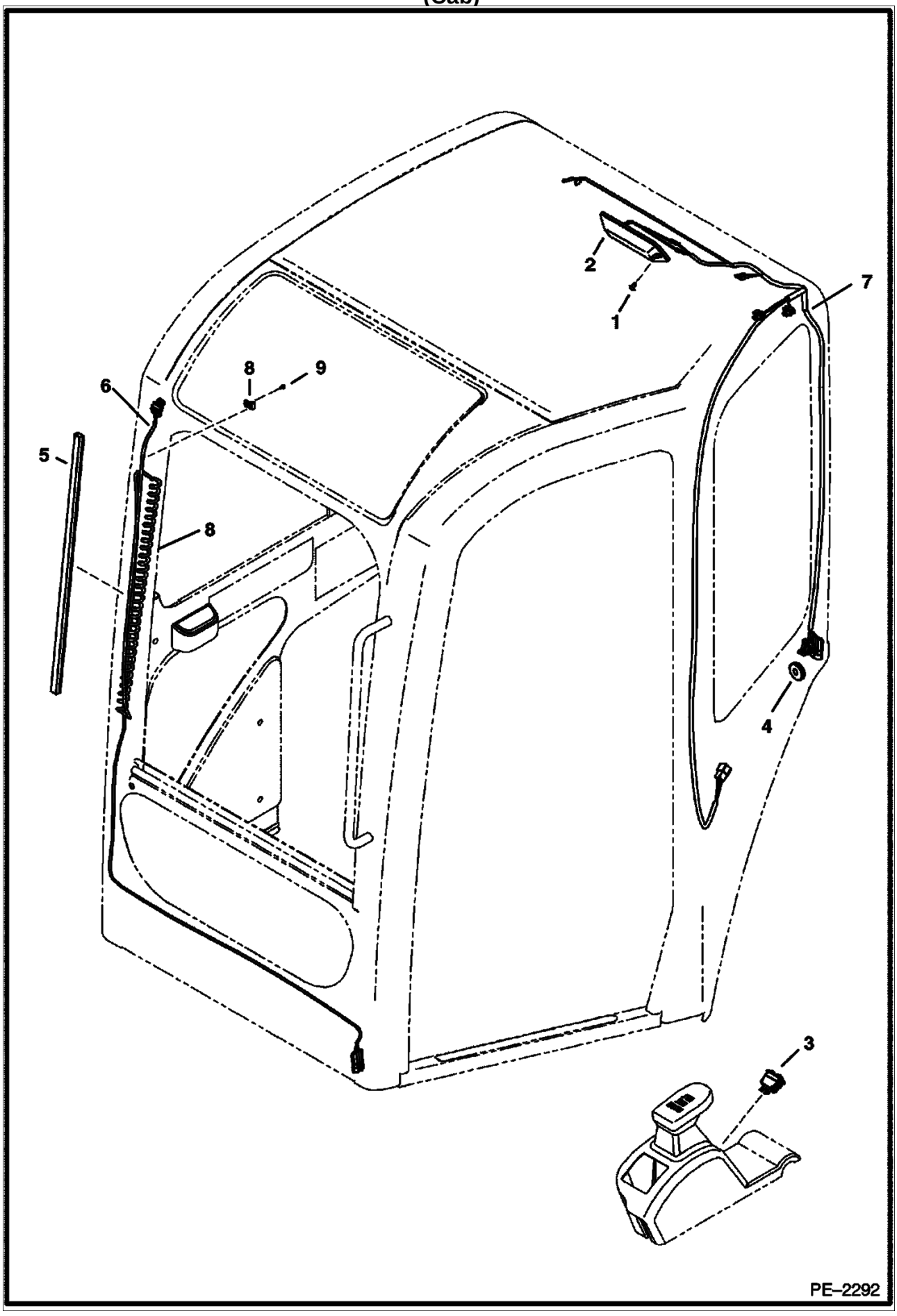
1
2
3
4
5
6
7
8
8
9
PE–2292

ELECTRICAL (Cont'd)
(Cab)

Ref. No.	Part Number	Description	Remarks	Serial Number	Qty.
1	6589675	SCREW			2
2	6664084	LIGHT	dome		1
3	6671113	SWITCH			1
4	6682697	GROMMET			1
5	6682741	RETAINER			1
6	7100772	CORD	wiper		1
7	7102833	HARNESS	cab		1
8	30H000010B	CLAMP			1
9	58G000806B	SCREW			1

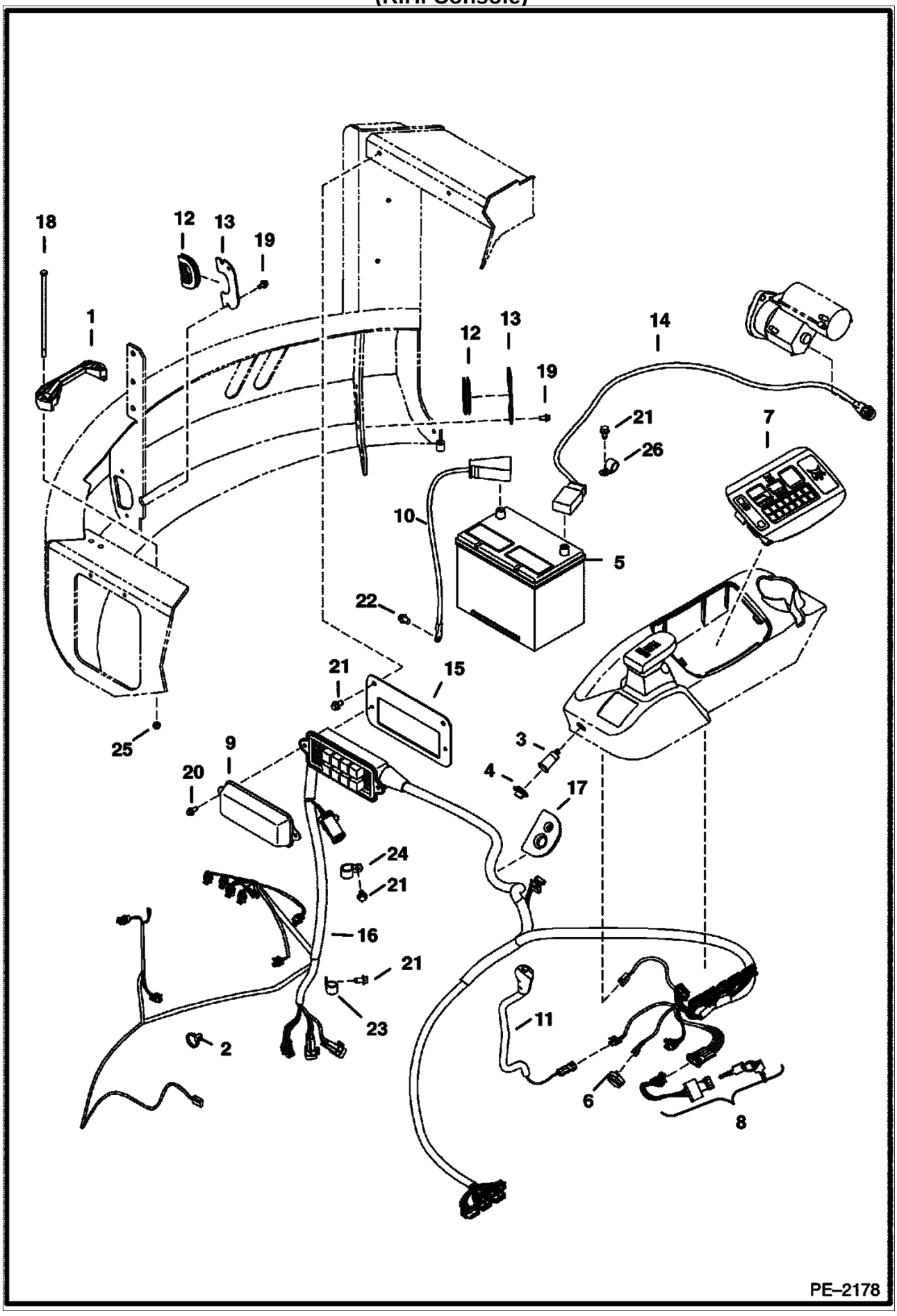
18
12
13
19
1
12
13
14
19
21
7
26
10
5
22
21
15
25
9
3
20
4
17
24
21
16
21
23
11
2
6
8
PE–2178

ELECTRICAL (Cont'd)
(R.H. Console)

Ref. No.	Part Number	Description	Remarks	Serial Number	Qty.
1	6569203	CLAMP	battery		1
2	6624289	STA STRAP			3
3	6664223	OUTLET			1
4	6664224	CAP			1
5	6674687	BATTERY			1
6	6675705	ALARM			1
7	6678690	CONTROLLER			1
8	6679842	SWITCH			1
8	6709527	KEY	ignition		1
9	6716621	COVER			1
10	6807431	CABLE	negative		1
11	6807948	LEVER			1
11	6675721	SWITCH			1
12	6810364	GROMMET			1
13	6810365	GROMMET	plate		1
14	6812394	CABLE	positive		1
15	6814704	BRACKET			1
16		HARNESS	console - R.H. Was - 6814920 Order 7105175 (1) and 7105174 (1)	& Below	1
16	7105175	HARNESS		& Above	1
17	6815653	GROMMET			1
18	17C005152B	BOLT	Was - 1C005148B [B]		2
19	26GM08016B	SCREW			4
20	26GM08020B	SCREW			2
21	26GM10020B	SCREW			6
22	29CM01016B	SCREW			1
23	30H000046B	CLAMP			1
24	30H000050B	CLAMP			3
25	51DM00008B	NUT			2
26	59D000005B	NUT			2
27	7105174	HARNESS		& Above	1

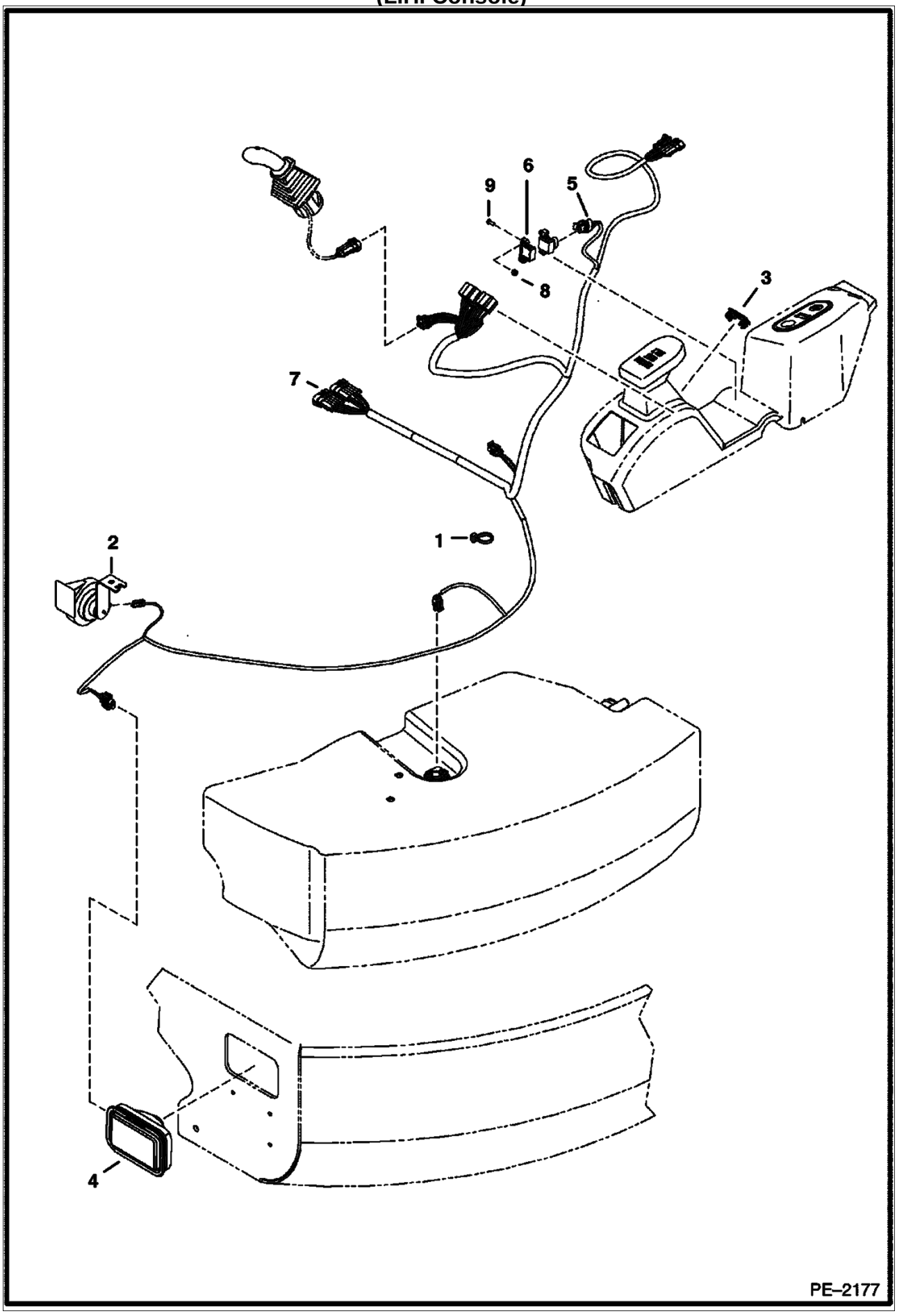
9
6
5
8
3
7
2
1
4
PE–2177

ELECTRICAL (Cont'd)
(L.H. Console)

Ref. No.	Part Number	Description	Remarks	Serial Number	Qty.
1	6624289	STA STRAP			3
2	6665105	ALARM			1
3	6665314	SWITCH			4
4	6676238	LIGHT			1
4	6667934	BULB			1
4	6676725	BEZEL	rubber mount		1
5	6680427	SENSOR			1
6	6680428	MAGNET			1
7	6812096	HARNESS			1
7	7101609	HARNESS			1
8	50D000008B	NUT			4
9	87G000808B	SCREW			4

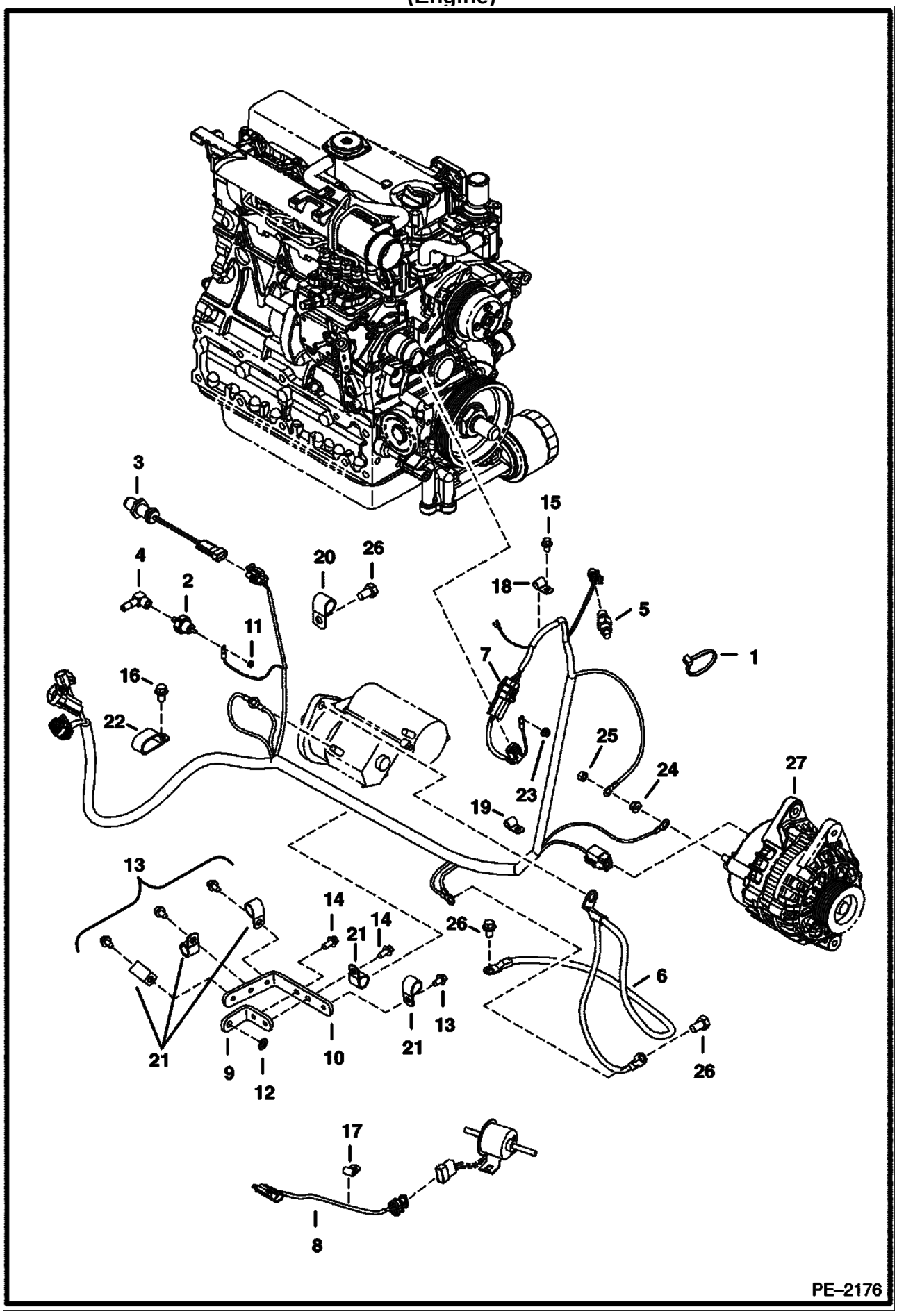
3
4
2
11
16
22
20
26
15
18
5
1
7
25
24
27
23
19
13
14
21
14
26
6
21
9
12
10
21
13
26
17
8
PE–2176

ELECTRICAL (Cont'd)
(Engine)

Ref. No.	Part Number	Description	Remarks	Serial Number	Qty.
1	6624289	STA STRAP			5
2	6631010	SWITCH	pressure - engine		1
3	6684037	SENSOR	speed		1
4	6707040	ELBOW			1
5	6718414	SENDER	temp - engine		1
6	6812395	CABLE	negative		1
7	6814829	HARNESS	engine		1
8	6815091	HARNESS	fuel pump		1
9	6817371	BRACKET			1
10	6817372	BRACKET			1
11	4DM00008B	NUT			1
12	6CM01220B	BOLT			2
13	12D000008B	NUT			1
14	15EM00100B	WASHER			1
15	26GM08016B	SCREW			4
16	26GM08020B	SCREW			2
17	29CM00812B	SCREW			1
18	29CM01016B	SCREW			2
19	30H000019B	CLAMP			1
20	30H000022B	CLIP			1
21	30H000026B	CLIP			1
22	30H000048B	CLAMP			1
23	30H000065B	CLIP			5
24	31H000042B	CLIP			1
25	43DM00006B	NUT			1
26	43DM00008B	NUT			2
27	6681857	ALTERNATOR			1

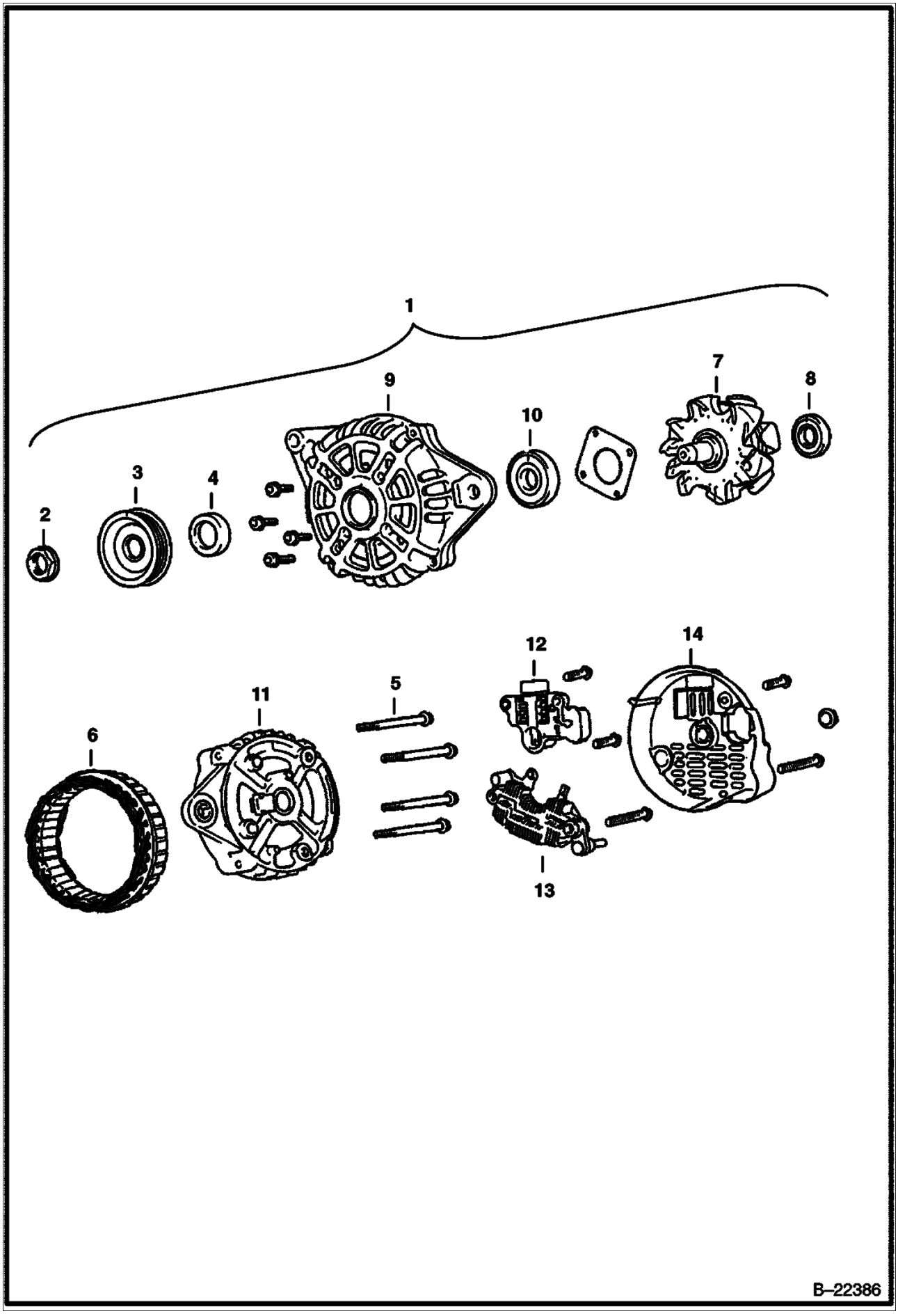
1
2
3
4
5
6
7
8
9
10
11
12
13
14
B–22386

ALTERNATOR (Cont'd)

Ref. No.	Part Number	Description	Remarks	Serial Number	Qty.
1	6681857	ALTERNATOR			1
2	6677497	NUT			1
3	6684653	PULLEY			1
4	6677495	SPACER			1
5	6677494	BOLT			1
6	6677493	STATOR			1
7	6677492	ROTOR			1
8	6684652	BEARING	rear		1
9	6677491	BRACKET			1
10	6684651	BEARING	front		1
11	6677490	BRACKET	rear		1
12	6684650	REGULATOR			1
13	6672488	RECTIFIER			1
14	6677487	COVER			1

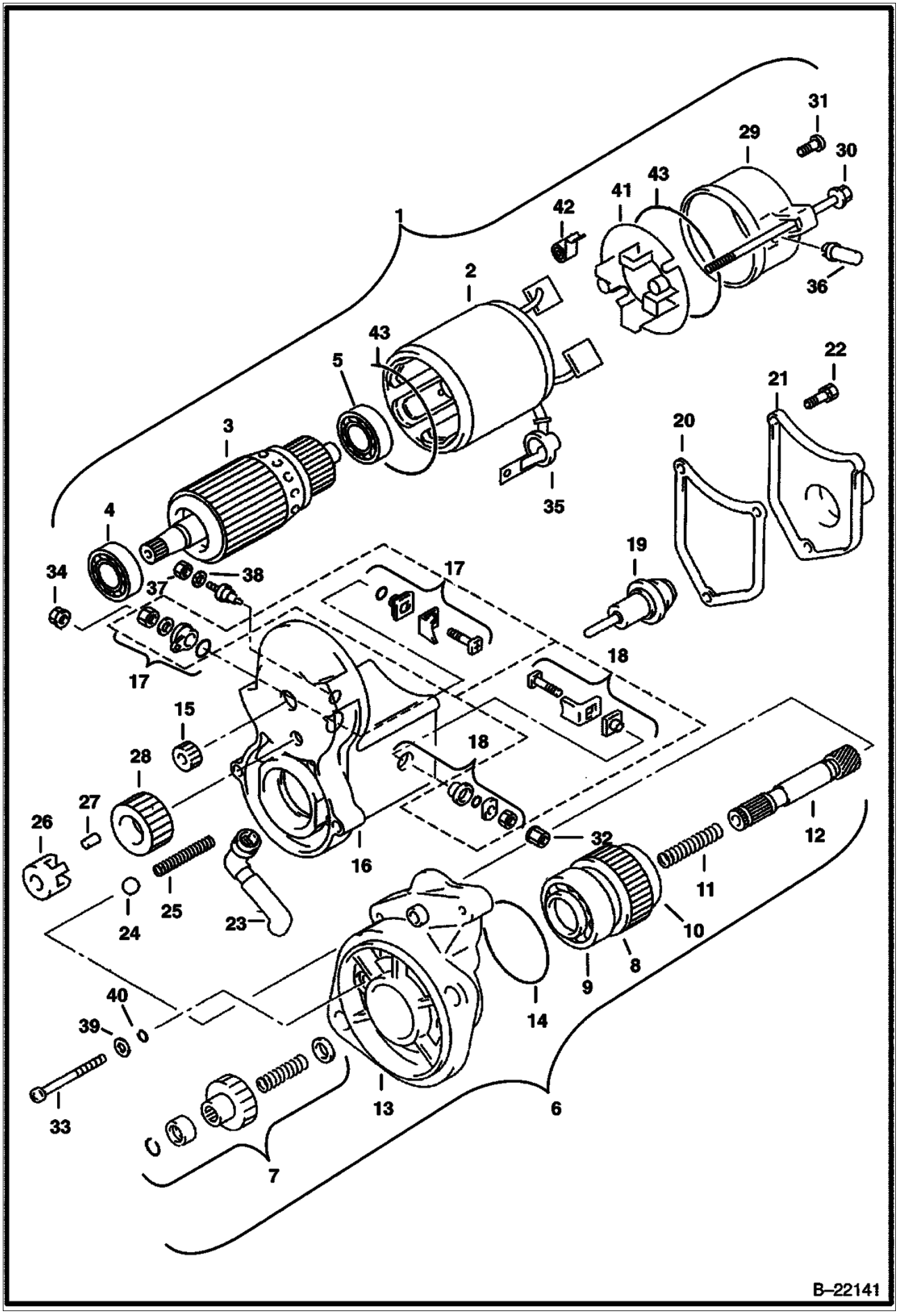
1
2
3
4
5
6
7
8
9
10
11
12
13
14
15
16
17
18
19
20
21
22
23
24
25
26
27
28
29
30
31
32
33
34
35
36
37
38
39
40
41
42
43
B–22141

STARTER (Cont'd)

Ref. No.	Part Number	Description	Remarks	Serial Number	Qty.
1	6681858	STARTER	assy		1
2	6674817	YOKE	assy		1
3	6674818	ARMATURE			1
4	6671985	BEARING			1
5	6674819	BEARING			1
6	6674820	CLUTCH	assy		1
7	6672172	KIT	starter		1
8	6674821	CLUTCH	starter		1
9	6671989	BEARING			1
10	6671990	BEARING			1
11	6671991	SPRING			1
12	6671992	SHAFT			1
13	6674823	HOUSING			1
14	6672013	O-RING			1
15	6674824	PINION			1
16	6684729	SWITCH			1
17	6684730	STARTER			1
18	6674826	STARTER			1
19	6684731	STARTER			1
20	6674828	PLUNGER			1
21	6674829	COVER			1
22	6674830	BOLT			3
23	6684732	BUSHING			1
24	6671122	BALL			1
25	6674831	SPRING			1
26	6672000	RETAINER			1
27	6671999	ROLLER			5
28	6672001	PINION			1
29	6684733	FRAME			1
30	6674833	BOLT			2
31	6674834	SCREW			2
32	6672006	NUT			1
33	6674835	SCREW			2
34	6672008	NUT			1
35	6672178	COVER	solenoid		1
36	6672007	BUSHING			1
37	6672011	NUT			1
38	6672012	WASHER			1
39	6666629	WASHER	plate		2
40	6666631	WASHER			2
41	6674836	HOLDER			1
42	6684734	SPRING			4
43	6671982	O-RING			2

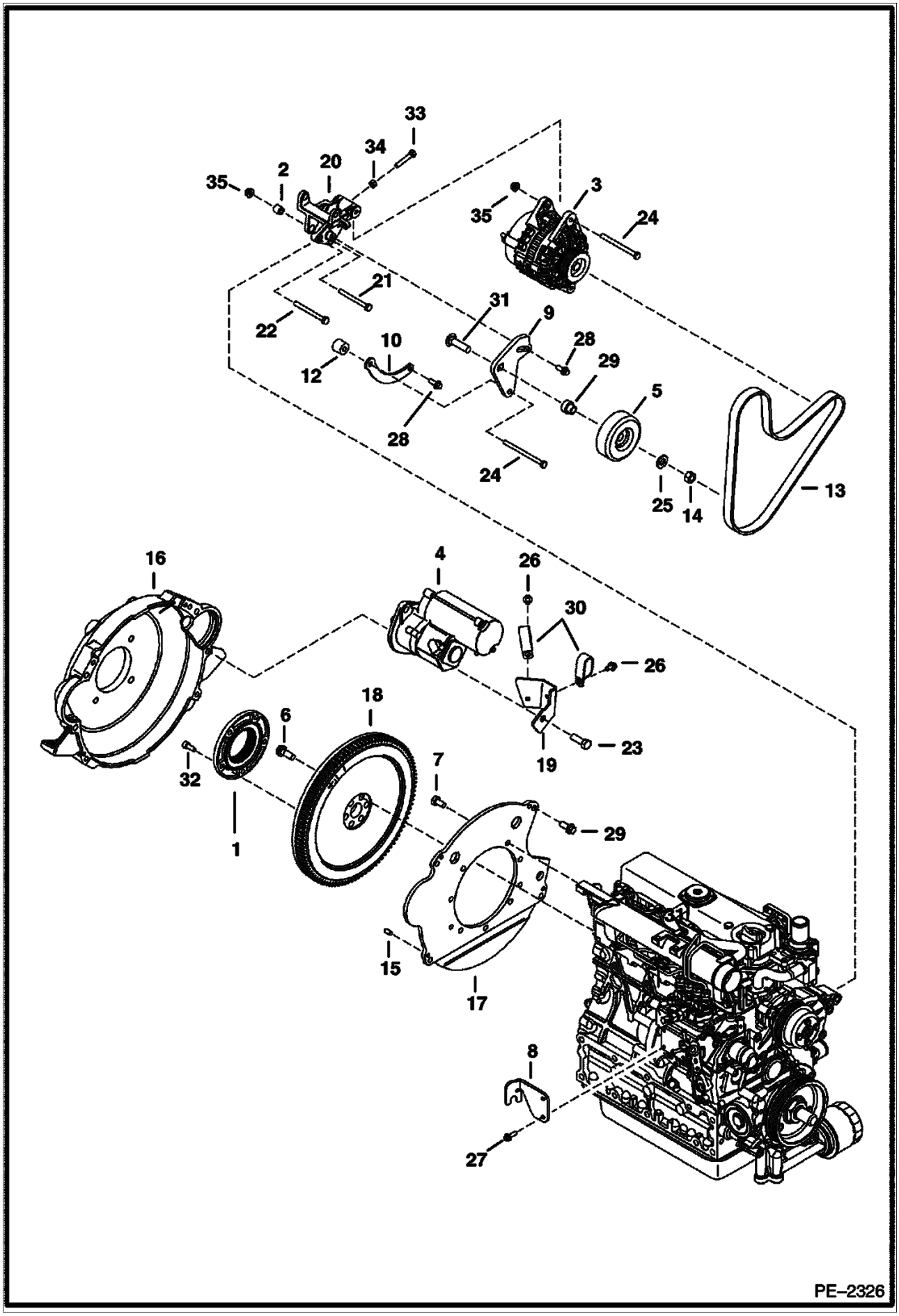
33
34
20
2
35
35
3
24
21
22
31
9
10
12
28
29
28
5
24
25
14
13
16
4
26
30
26
18
6
23
19
32
7
1
29
15
17
8
27
PE–2326

Ref. No.	Part Number	Description	Remarks	Serial Number	Qty.
1	6670757	COUPLER	flange		1
2	6675838	BUSHING			1
3	6681857	ALTERNATOR	See Illustration ALTERNATOR/ B22386		1
4	6681858	STARTER			1
5	6681942	IDLER			1
6	6654487	BOLT			x
7	6733378	SCREW			1
8	6814273	BRACKET			1
9	6814848	PLATE			1
10	6814859	TENSIONER			1
11	6814860	SPACER			1
12	6814861	SPACER			1
13	6815019	BELT			1
14	96D000008B	NUT			1
15	7101341	PIN			1
16	7101784	HOUSING			1
17	7101787	PLATE			1
18	7102172	FLYWHEEL			1
19	7102964	BUCKET			1
20	7103231	BRACKET			1
21	1CM00880B	SCREW			1
22	1CM00885B	SCREW			1
23	1CM01235B	SCREW			2
24	1CM08110B	SCREW			1
25	25E000021B	WASHER			1
26	26GM08016B	SCREW			2
27	29CM00620B	SCREW			2
28	29CM00820B	BOLT			2
29	29CM01025B	SCREW			4
30	31H000042B	CLIP			2
31	37C000832B	BOLT			1
32	3GM00820B	SCREW			5
33	4CM00845B	SCREW			1
34	4DM00008B	NUT			1
35	51DM00008B	NUT			1

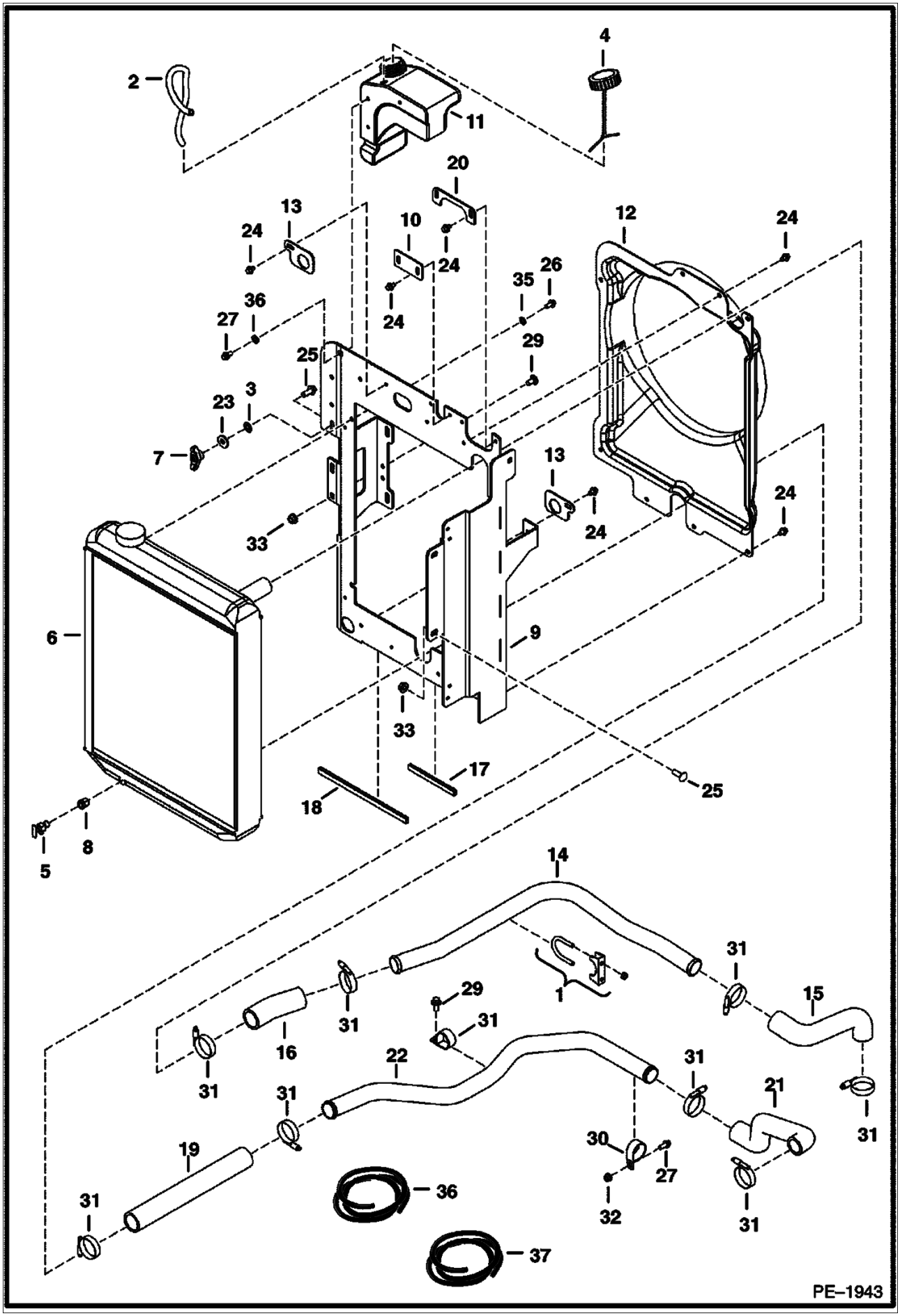
PE–1943

Ref. No.	Part Number	Description	Remarks	Serial Number	Qty.
1	710706B	CLAMP			2
2		HOSE	NAP - order 21" (533,4mm) of Ref. 37		1
3	6674264	BOLT	retainer		2
4	6675551	CAP			1
5	6679506	DRAIN			1
6	6679831	EXCHANGER			1
6	6682274	CAP	radiator		1
7	6685343	NUT	wing		2
8	6682999	ADAPTER			1
9	6813180	PLATE	radiator		1
10	6813203	PLATE			1
11	6813898	TANK	coolant		1
12	6814173	SHROUD			1
13	6814179	PLATE			2
14	6814416	TUBELINE			14
15	6814417	HOSE			1
16	6814418	HOSE			1
17		SEAL	NAP - use 6" (152.4mm) of Ref. 36		x
18		SEAL	NAP - use 11" (279.4mm) of Ref. 36		x
19	6814733	HOSE			1
20	6816118	PLATE			1
21	6816889	HOSE			1
22	7101023	TUBE			1
23	17EM00100B	WASHER			2
24	26GM08013B	SCREW			14
25	28CM01030B	BOLT			5
26	29CM00816B	SCREW			7
27	29CM00820B	BOLT			1
28	29CM01020B	SCREW			1
29	29CM01025B	SCREW			1
30	30H000060B	CLAMP			2
31	42HC00200B	CLAMP			8
32	43DM00008B	NUT			1
33	51DM00010B	NUT			4
34	6E000006B	WASHER			1
35	6EM00080B	WASHER	spring lock		3
36	6681883	SEAL	bulk - sold per foot		x
37	6577822	HOSE	bulk - sold per foot		x

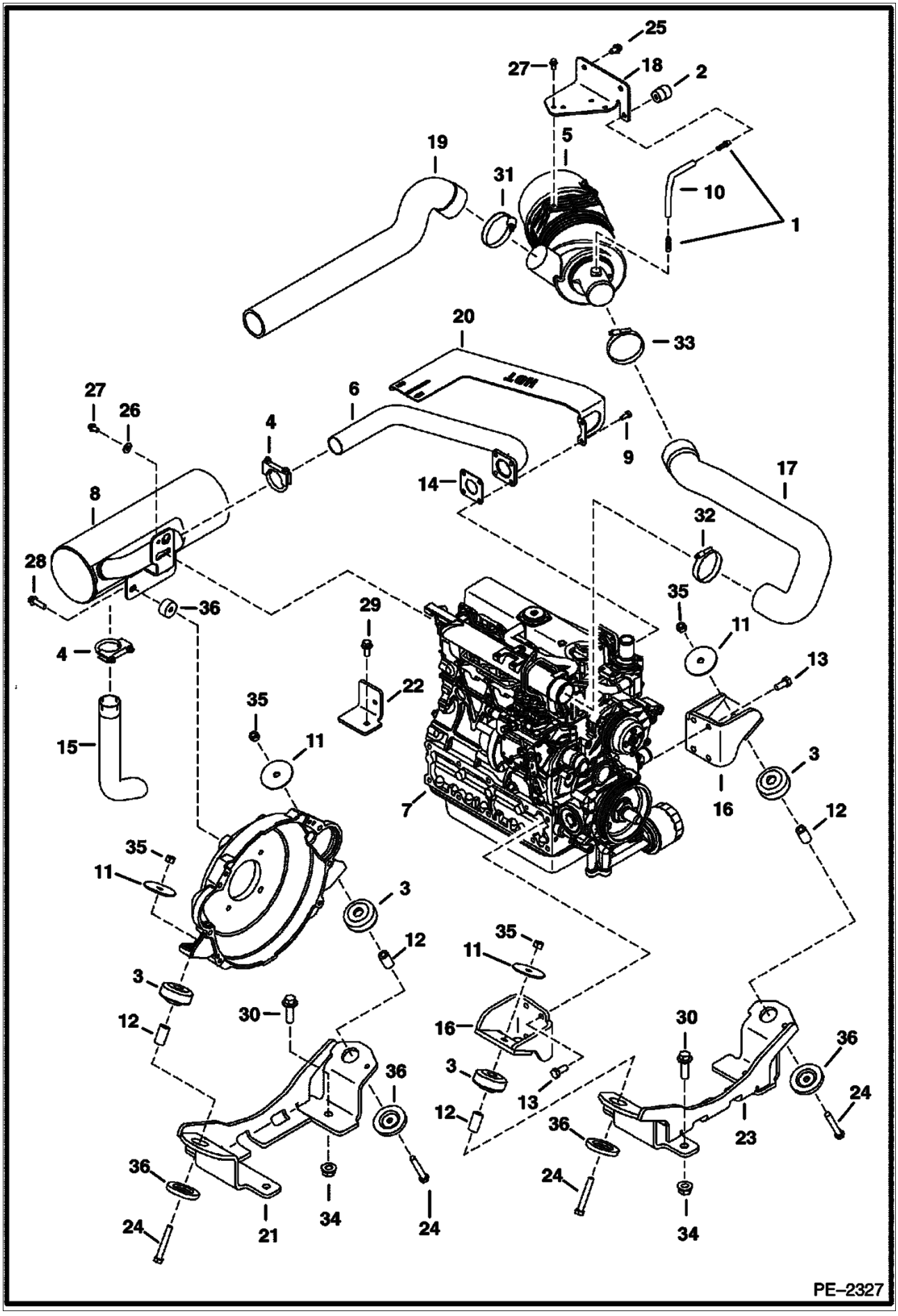
25
27
18
2
19
5
31
10
1
20
33
27
26
6
4
9
14
17
8
32
28
36
29
35
11
13
4
22
15
35
11
7
16
3
12
35
11
3
12
3
30
12
35
11
16
30
36
3
13
12
36
24
36
23
36
24
21
34
24
24
34
PE–2327

Ref. No.	Part Number	Description	Remarks	Serial Number	Qty.
1	6505813	CONNECTOR			2
2	6615007	GAUGE			1
3	6661785	MOUNT	engine		1
4	6677363	CLAMP			2
5	6678769	AIR CLEANER	See Illustration AIR CLEANER/ B20074		1
6	6682483	TUBE			1
7	6685049	ENGINE			1
8	6682482	MUFFLER			1
8	6685647	MUFFLER			1
9	6701123	SCREW			4
10	6704824	HOSE			1
11	6705106	WASHER			4
12	6706043	TUBE			4
13	6719828	BOLT			6
14	6727752	GASKET			1
15	6812917	PIPE			1
16	6814278	MOUNT			2
17	6814623	HOSE			1
18	6814640	BRACKET			1
19	6816123	HOSE			1
20	6817602	COVER	exhaust		1
21	7101021	MOUNT			1
22	7102959	BRACKET			1
23	7105076	MOUNT			1
24	1CM01280B	SCREW			1
25	26GM10020B	SCREW			2
26	27E000005B	WASHER			1
27	29CM00816B	SCREW			2
28	29CM01035B	SCREW			2
29	29CM01225B	SCREW			1
30	29CM01650B	SCREW			1
31	42H000044B	CLAMP			1
32	42HC00300B	CLAMP			1
33	42HC00325B	CLAMP			1
34	51DM00016B	NUT			1
35	53DM00012B	NUT			1
36	7101016	SPACER			1

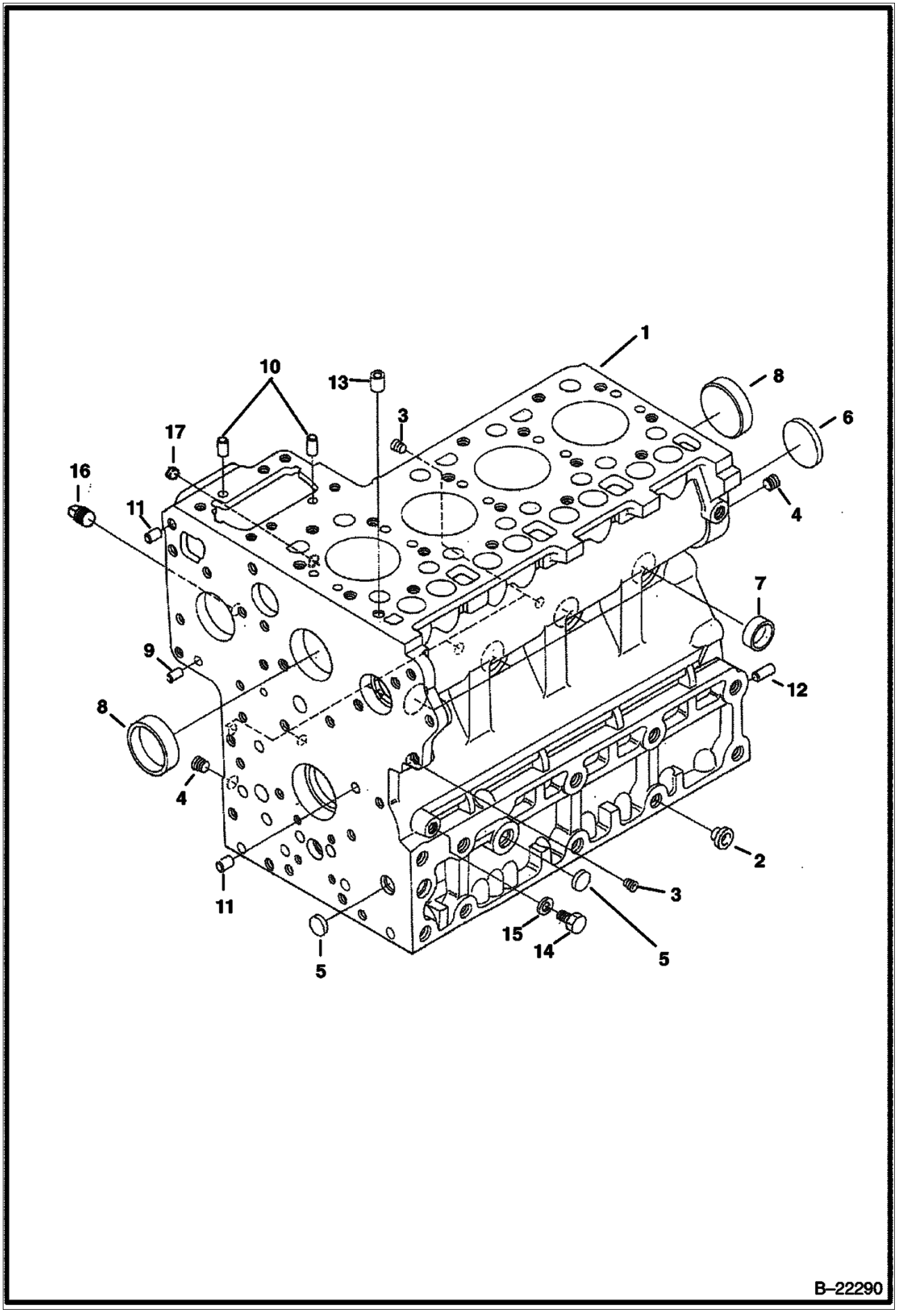
1
10
13
8
6
3
17
16
11
4
7
9
12
8
4
2
11
3
15
14
5
5
B–22290

CRANKCASE (Cont'd)

Ref. No.	Part Number	Description	Remarks	Serial Number	Qty.
1	6685076	CRANKCASE	W/Ref. 2-13		1
2	6598187	PLUG			2
3	6598169	PLUG			6
4	6598170	PLUG			2
5	6667418	PLUG	expansion		3
6	6657663	PLUG	expansion		1
7	3974389B	GASKET	sealing		6
8	6680639	PLUG			2
9	3974393B	PIN			2
10	3974394B	PIN			3
11	3974395B	PIN			2
12	3974868B	PIN			1
13	3974037B	PIN	pipe		1
14	3974051B	PLUG	W/Ref. 15		1
15	6680792	GASKET			1
16	16F000002B	PLUG			1
17	3975169	CAP	sealing Was - 3974169 [D]		1

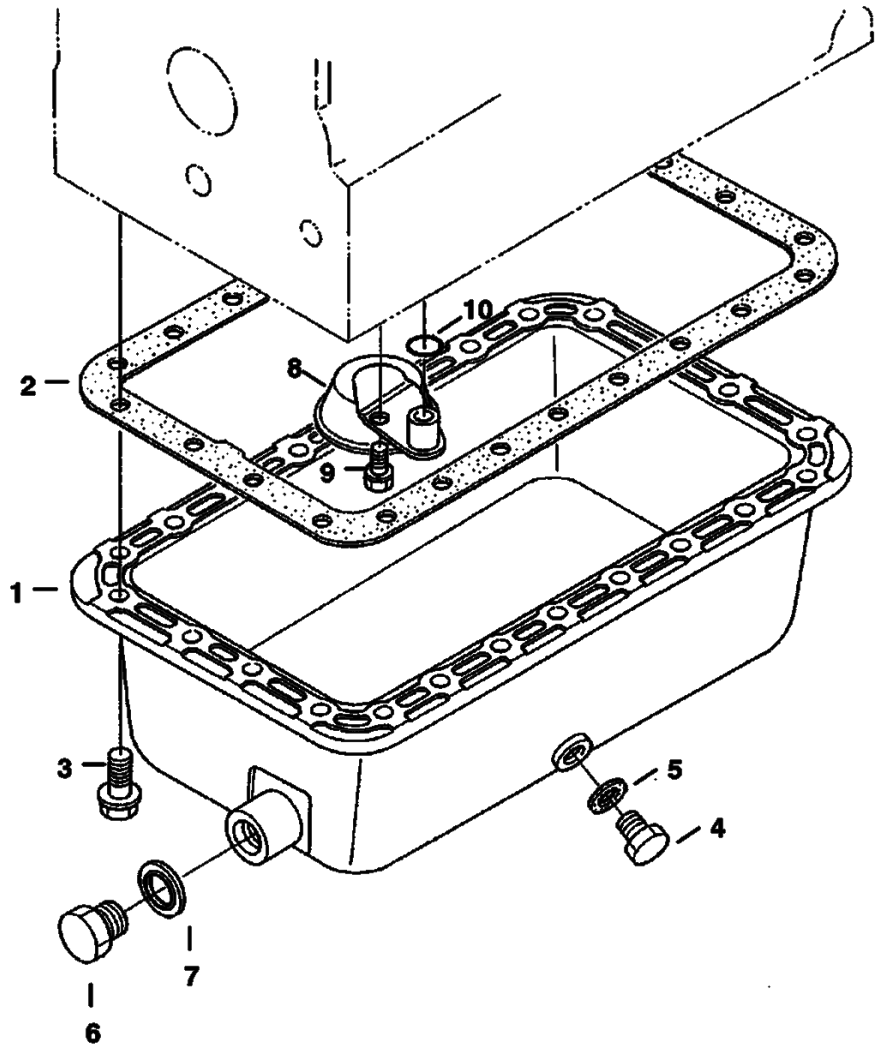

B–22291

OIL PAN (Cont'd)

Ref. No.	Part Number	Description	Remarks	Serial Number	Qty.
1	6655151	OIL PAN			1
2	6684753	GASKET			1
3	6653798	BOLT	flange		24
4	6640729	PLUG	W/Ref. 5		1
5	6680484	GASKET			1
6	3390195B	PLUG	W/Ref. 7		1
7	6631046	SEAL	w/rubber		1
8	6653568	FILTER	oil		1
9	6667420	BOLT			1
10	6684754	O-RING			1

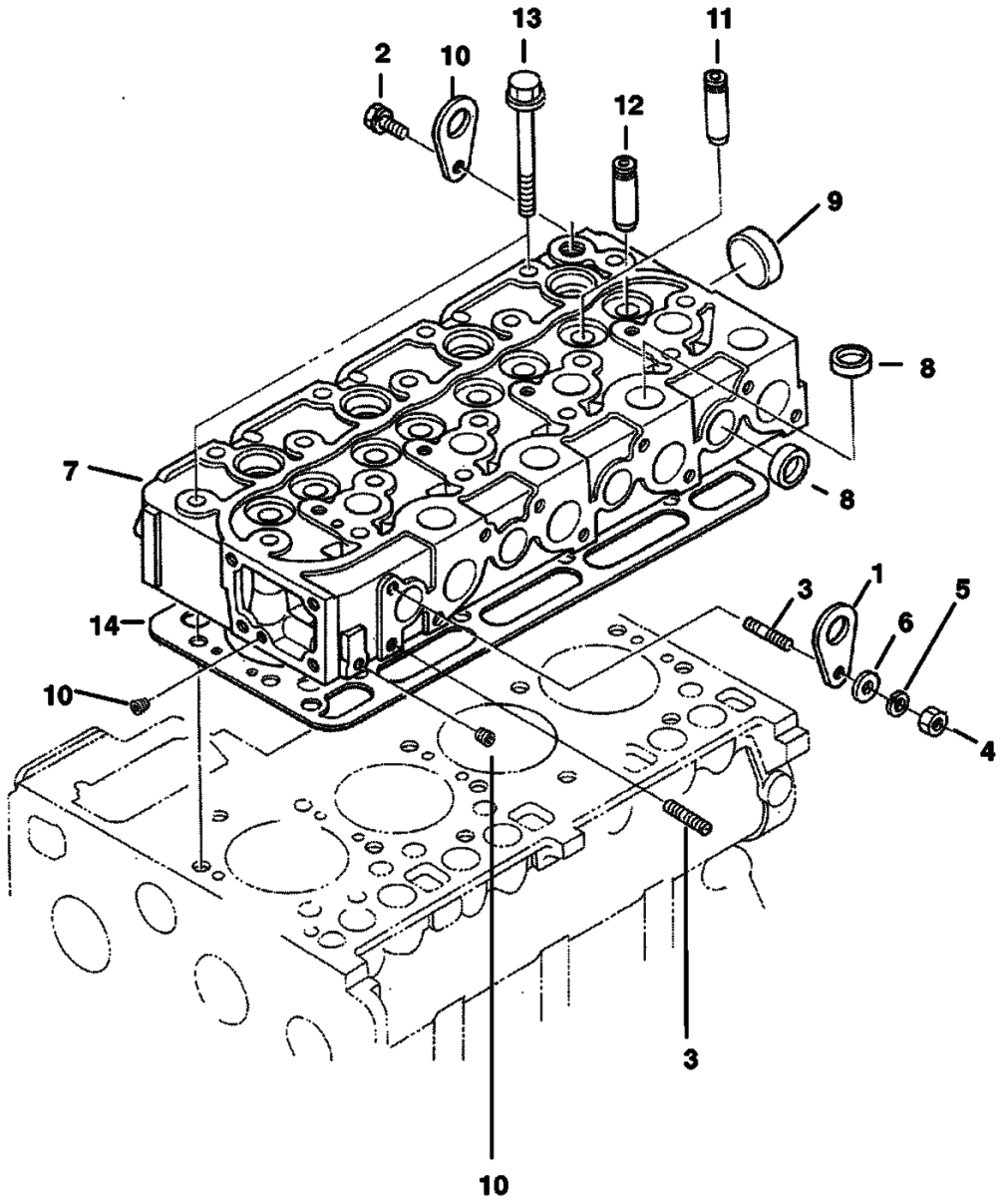
13
11
2
10
12
9
8
7
8
3
1
5
6
14
10
4
3
10
B–22292

CYLINDER HEAD (Cont'd)

Ref. No.	Part Number	Description	Remarks	Serial Number	Qty.
1	3974882B	BRACKET	engine		2
2	6667421	BOLT			1
3	6598156	STUD			2
4	6652792	NUT			1
5	6667422	WASHER			1
6	2EM00008B	WASHER			1
7	6685503	CYLINDER	head - W/Ref. 8-12		1
8	6680665	PLUG			12
9	6680666	PLUG			1
10	3918808B	PLUG			2
11	6655154	GUIDE	inlet valve		4
12	6684756	GUIDE	exhaust		4
13	6655158	BOLT	cylinder head		18
14	6685077	GASKET			1
14	6685078	GASKET			1
14	6685079	GASKET			1
14	6685080	GASKET			1
14	6685081	GASKET			1

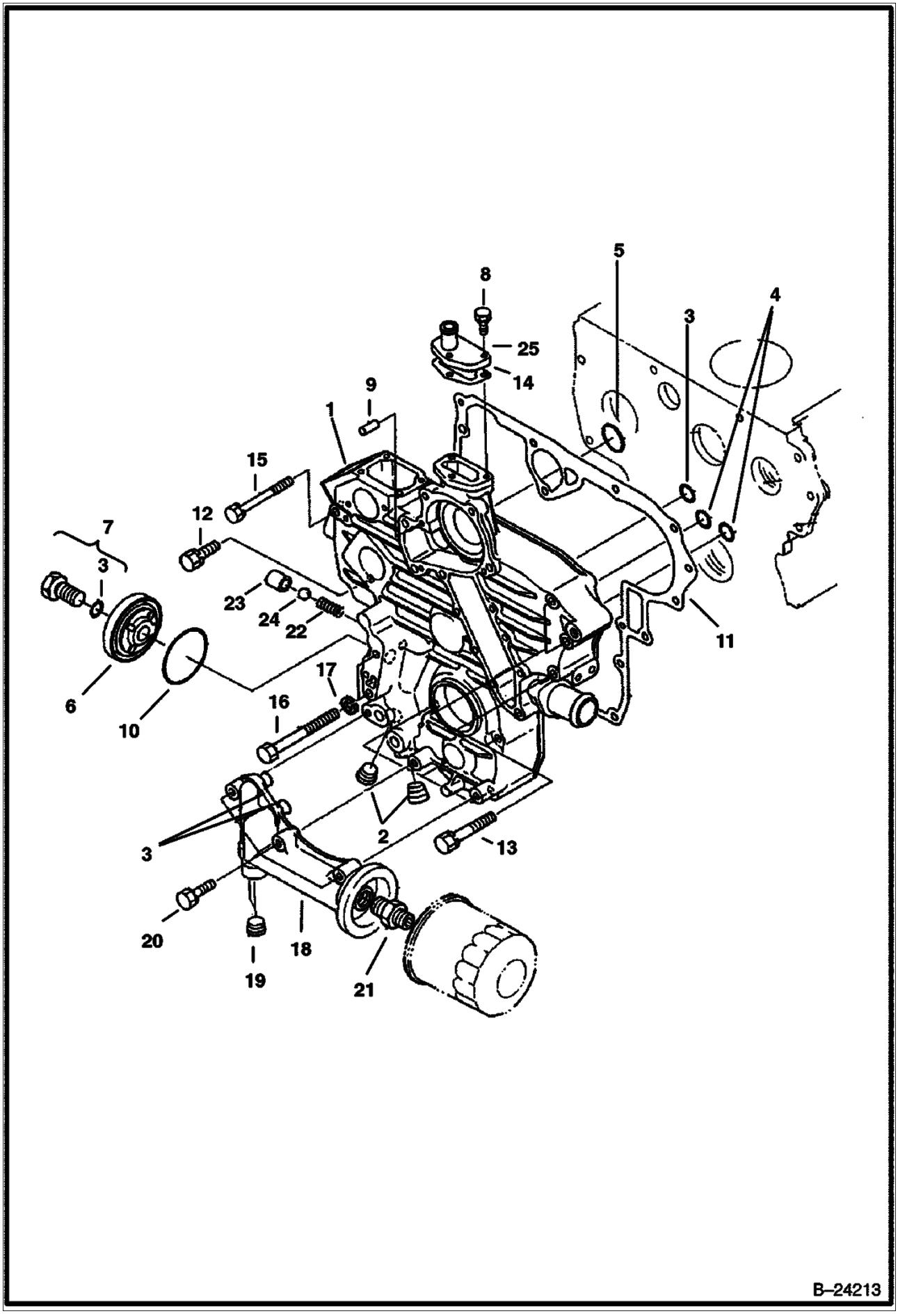
B–24213

GEARCASE (Cont'd)

Ref. No.	Part Number	Description	Remarks	Serial Number	Qty.
1	6684764	HOUSING	gearcase - W/Ref. 2-10		1
2	6672360	PLUG			2
3	6670769	O-RING			4
4	6680661	O-RING			2
5	6684765	SEAL			1
6	6684766	COVER			1
7	6684767	BOLT	W/Ref. 3		1
8	4CM00620B	BOLT			3
9	3974395B	PIN			2
10	6684769	O-RING			1
11	6684770	GASKET	gearcase		1
12	1CM00835B	BOLT			1
13	6680562	BOLT			6
14	6684774	GASKET			1
15	6653807	BOLT			1
16	6684772	BOLT			2
17	6667422	WASHER			2
18	6685082	FILTER			1
19	6672360	PLUG			2
20	1CM00840B	SCREW			3
21	6653809	ADAPTER			1
22	6652652	SPRING			1
23	3974893B	SEAT	valve		1
24	10J000013B	BALL			1
25	3974894B	FLANGE	water return		1

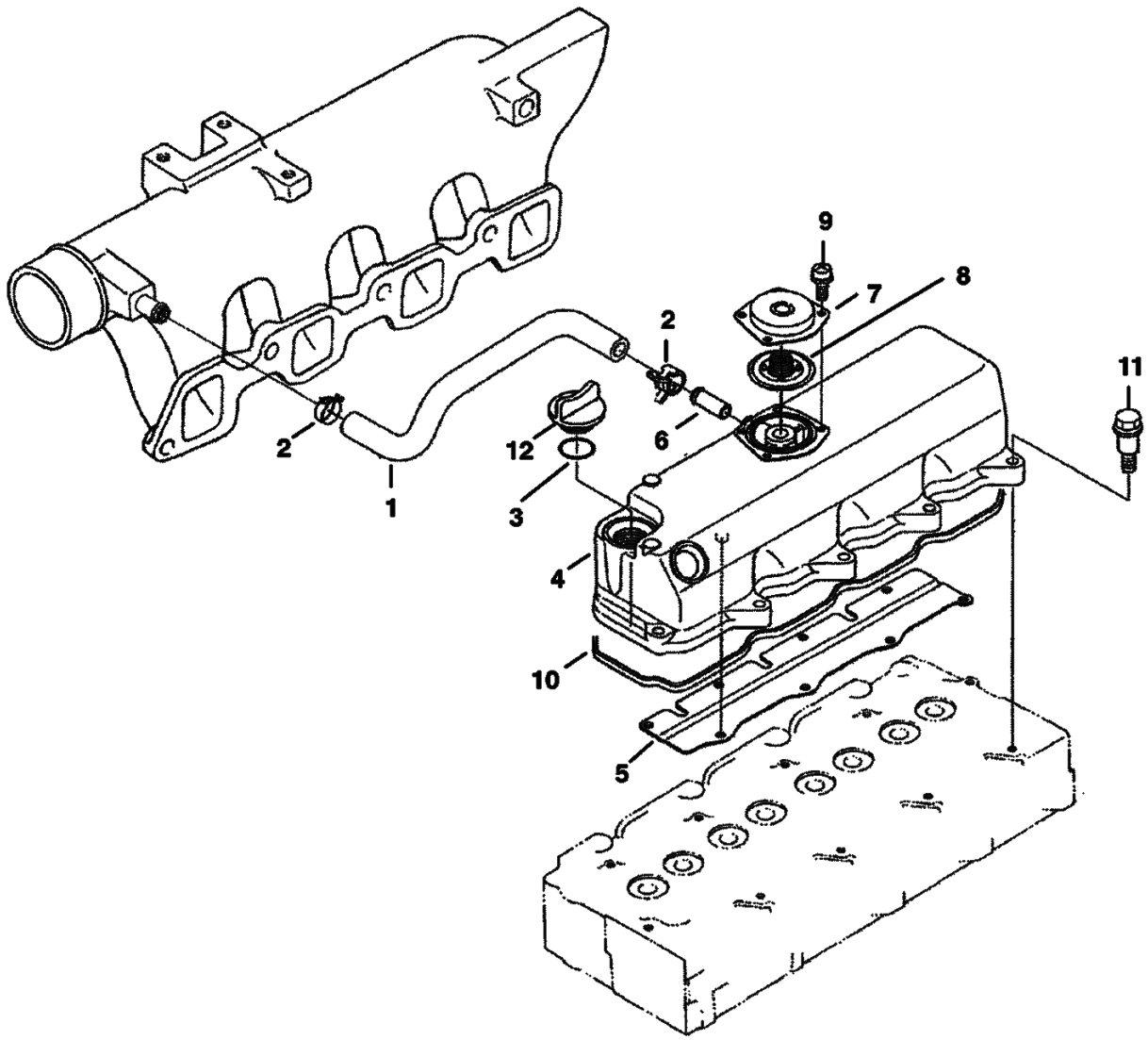
9
8
7
2
11
2
12
6
1
3
4
10
5
B–22294

HEAD COVER (Cont'd)

Ref. No.	Part Number	Description	Remarks	Serial Number	Qty.
1	6685084	TUBE	breather		1
2	3974679B	BAND			2
3	6684782	O-RING			1
4	6685085	COVER	assy - W/Ref. 5-9		1
5	6684779	SHIELD			1
6	6655880	PIPE	water return		1
7	6685086	COVER	breather		1
8	6685087	VALVE			1
9	3974928B	SCREW			4
10	6684780	GASKET	head cover		1
11	6684781	BOLT			10
12	6680908	CAP	oil filter		1

OIL FILTER

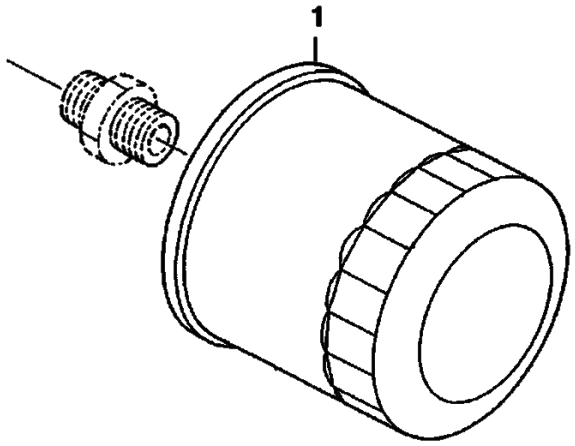

B–22295

Ref. No.	Part Number	Description	Remarks	Serial Number	Qty.
1	6675517	FILTER	engine oil (6 pack)		1

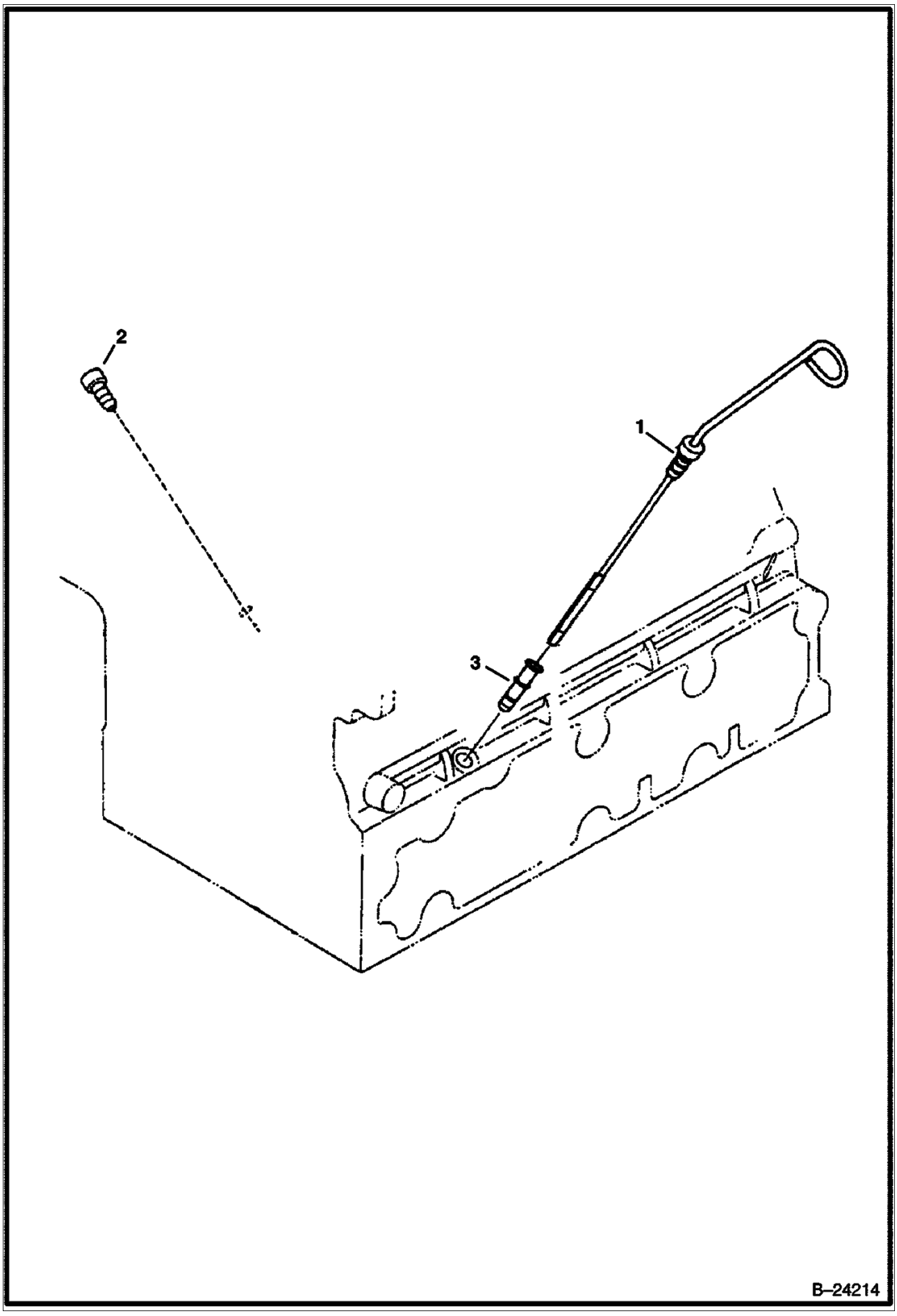
2
1
3
B–24214

Ref. No.	Part Number	Description	Remarks	Serial Number	Qty.
1	6684784	GAUGE	oil		1
2	6684785	PLUG			1
3	6681644	GUIDE	oil gauge		1

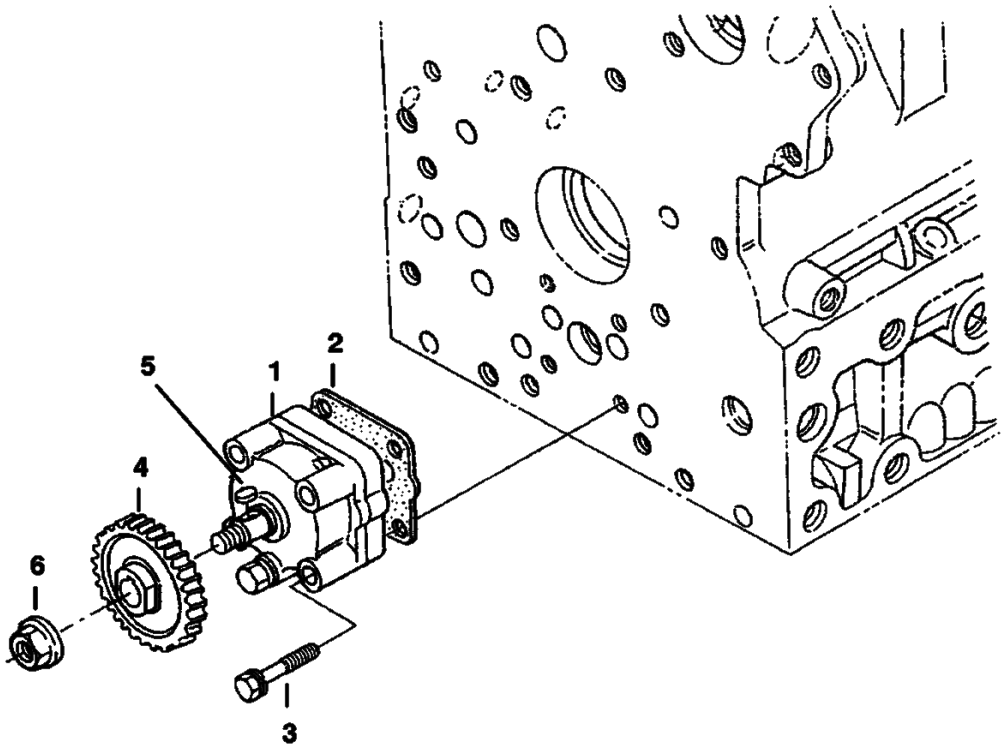

B–22297

OIL PUMP (Cont'd)

Ref. No.	Part Number	Description	Remarks	Serial Number	Qty.
1	3975426B	OIL PUMP	assy		1
2	6684786	GASKET	oil pump		1
3	6670770	BOLT			4
4	3975441B	GEAR			1
5	6652794	KEY	feather		1
6	6685088	NUT	flange		1

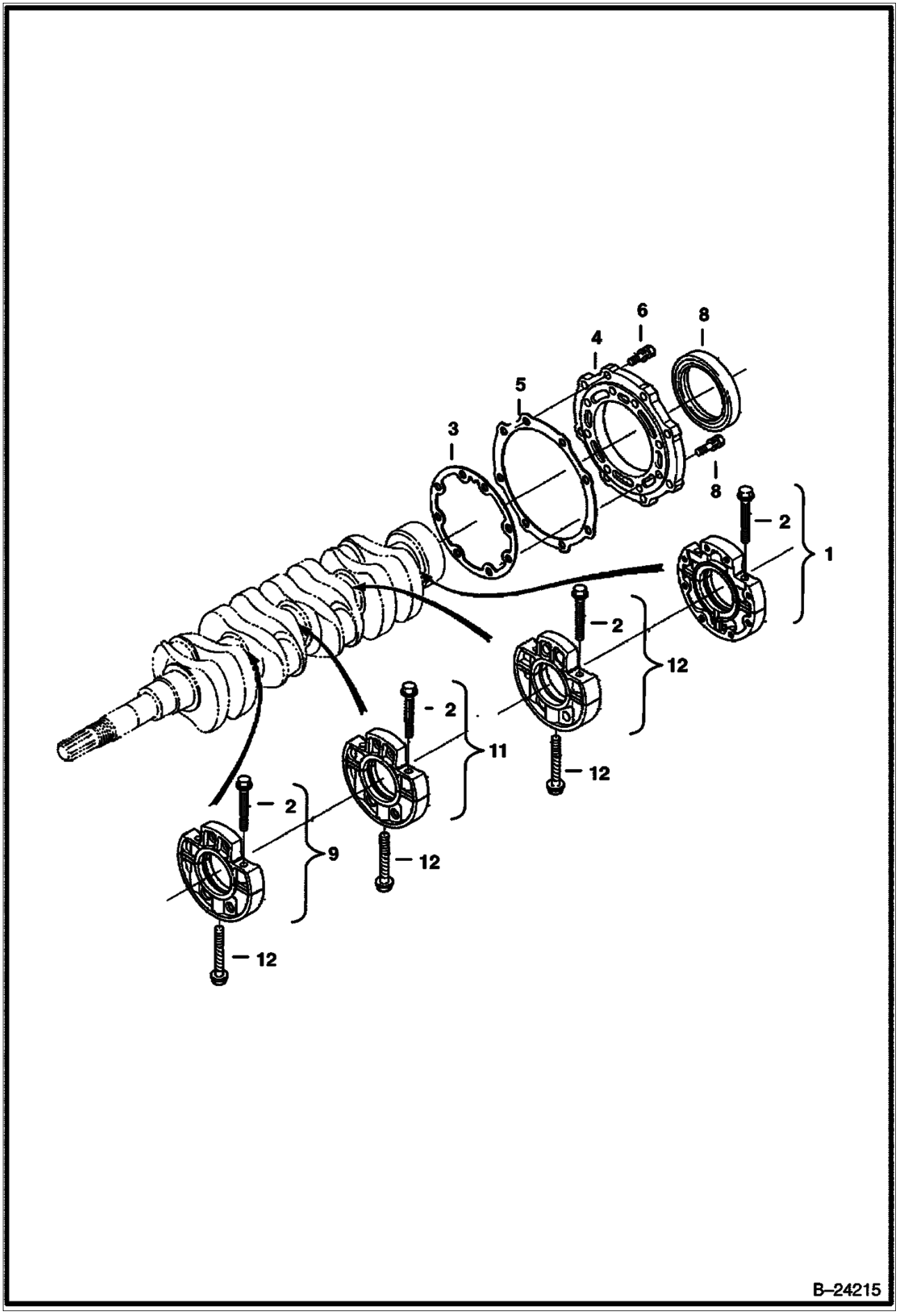
6
8
4
5
3
8
2
1
2
12
2
11
12
2
9
12
12
B–24215

MAIN BEARING CASE (Cont'd)

Ref. No.	Part Number	Description	Remarks	Serial Number	Qty.
1	6685480	CASE			1
2	6685482	BOLT			3
3	6684788	GASKET			1
4	6685515	COVER			1
5	6666814	GASKET			1
6	4CM00825B	BOLT			8
7	4CM00828B	BOLT			8
8	6684789	SEAL	oil		1
9	6685483	CASE	W/Ref. 2		1
10	6685484	CASE	W/Ref. 2		1
11	6685485	CASE	W/Ref. 2		1
12	6653821	BOLT			1

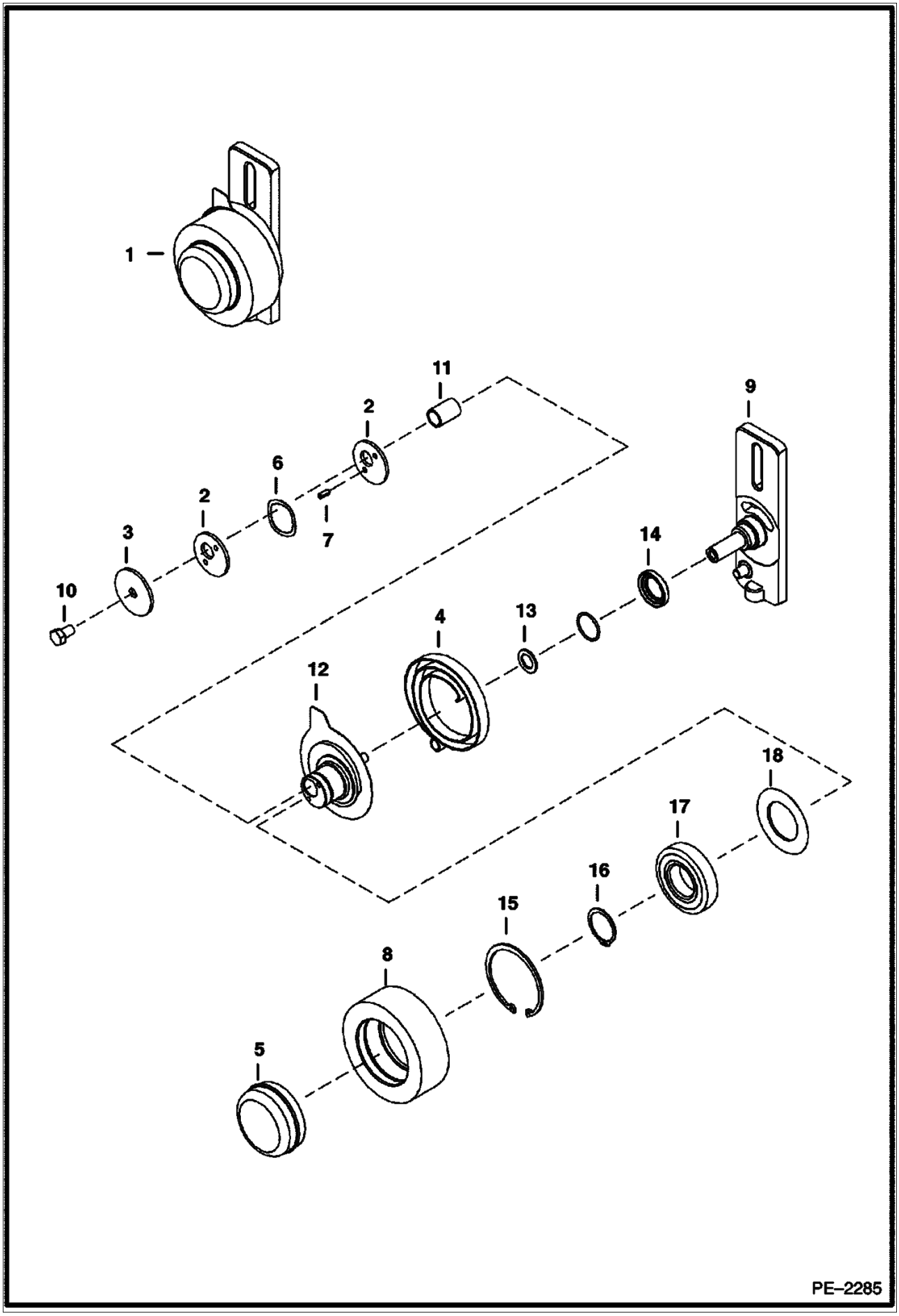
1
11
2
9
6
2
7
3
14
10
4
13
12
18
17
16
15
8
5
PE–2285

IDLER (Cont'd)

Ref. No.	Part Number	Description	Remarks	Serial Number	Qty.
1	7101660	IDLER	assy		1
2	6705231	WASHER			2
3	6705232	WASHER			1
4	6705491	SPRING			1
5	6708770	CAP	dust		1
6	6710585	WASHER			1
7	6713370	PIN			2
8	6814587	PULLEY			1
9	7101662	BRACKET			1
10	1C000610B	SCREW			1
11	6682442	SLEEVE			1
12	6814586	HUB	assy - W/Ref. 10 & pin		1
13	6703168	BEARING	thrust		1
14	6685735	SEAL			1
15	6658847	RING	retainer		1
16	6658536	RING	snap		1
17	6668114	BEARING			1
18	6664209	SEAL			1

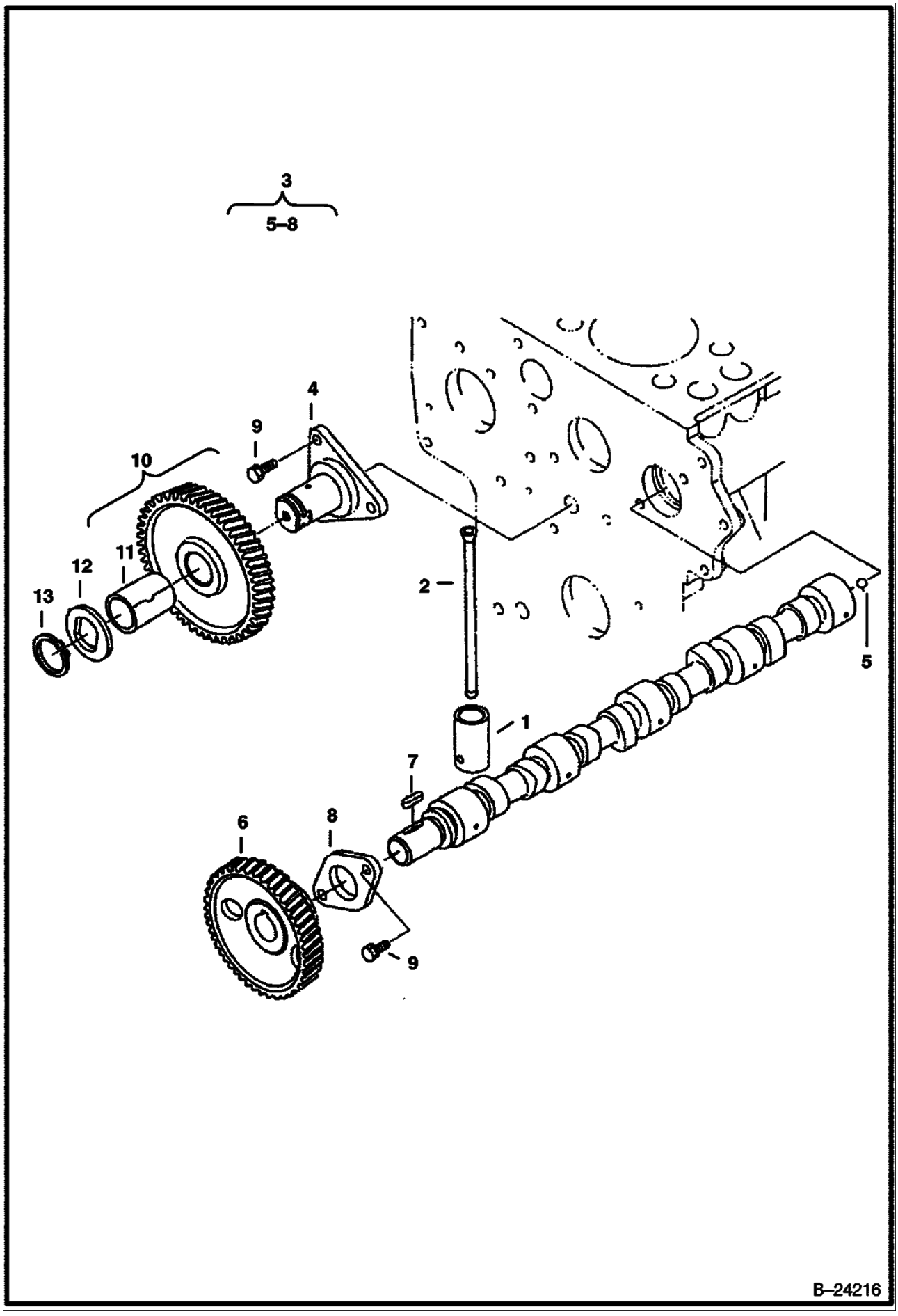
3
5–8
4
9
10
11
12
13
2
1
5
7
6
8
9
B–24216

CAMSHAFT & IDLE GEAR SHAFT (Cont'd)

Ref. No.	Part Number	Description	Remarks	Serial Number	Qty.
1	6680707	TAPPET			8
2	6655176	PUSHROD			8
3	6684791	CAMSHAFT	assy - W/Ref. 5-8		1
4	6684796	SHAFT			1
5	6652633	BALL			1
6	6685089	GEAR			1
7	6598100	KEY	feather		1
8	3974547B	STOPPER			1
9	4CM00818B	BOLT			5
10	6684793	GEAR	idle		1
11	6684794	BUSHING			1
12	6684795	COLLAR			1
13	6667433	CIRCLIP	external		1

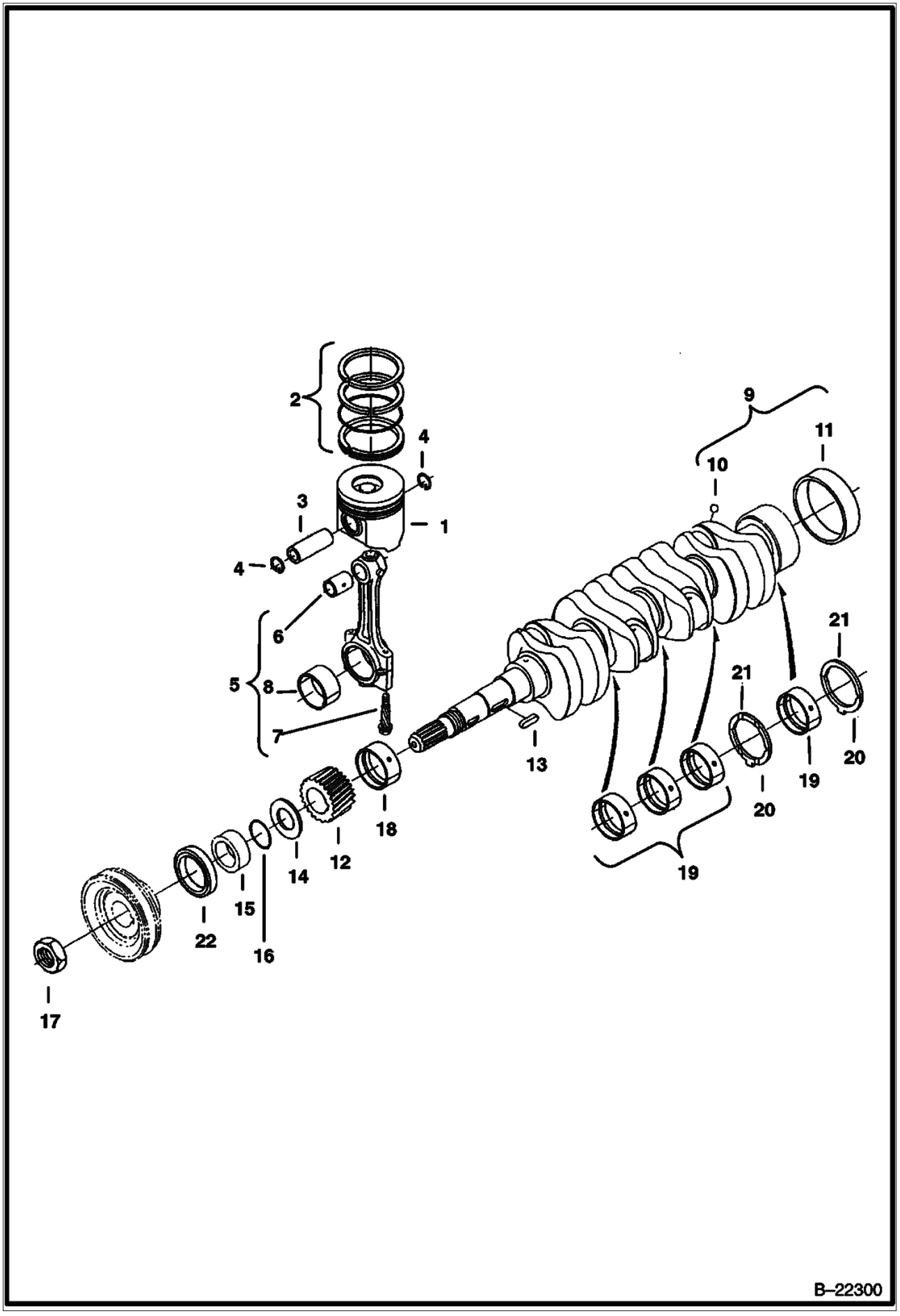
2
4
3
1
4
6
5
8
7
9
10
11
21
21
20
19
20
13
18
12
14
15
22
16
17
19
B–22300

Ref. No.	Part Number	Description	Remarks	Serial Number	Qty.
1	6685505	PISTON	std		4
1	6685508	PISTON	+0.25mm		4
1	6685506	PISTON	std		4
1	6685509	PISTON	+0.25mm		4
1	6685507	PISTON	std		4
1	6685510	PISTON	+0.25mm		4
2	6685095	RING			4
2	6685096	RING			4
3	6655179	PIN			4
4	6684805	CIRCLIP			8
5	6655181	ROD	connecting - assy - W/Ref. 6-8		4
6	6655243	BUSHING			4
7	6655498	BOLT			8
8	6655183	PIN	crank		4
8	6655236	PIN			4
8	6655237	PIN			4
9	6684806	CRANKSHAFT	W/Ref. 10 & 11		4
10	6652633	BALL			4
11	6684807	BUSHING			1
12	6684808	GEAR			1
13	6684809	KEY			1
14	6598141	OIL	slinger		1
15	3975337B	COLLAR			1
16	3974577B	O-RING			1
17	3974671B	NUT			1
18	6685486	BEARING	std		1
18	6685490	BEARING	-0.20mm		1
18	6685491	BEARING	-0.40mm		1
19	6685487	BEARING	std		4
19	6685492	BEARING	-0.20mm		4
19	6685493	BEARING	-0.40mm		4
20	6685488	WASHER	std		2
20	6685494	WASHER	+0.20mm		2
20	6685495	WASHER	+0.40mm		2
21	6685489	WASHER	std		2
21	6685496	WASHER	+0.20mm		2
21	6685497	WASHER	+0.40mm		2
22	6654710	SEAL			1

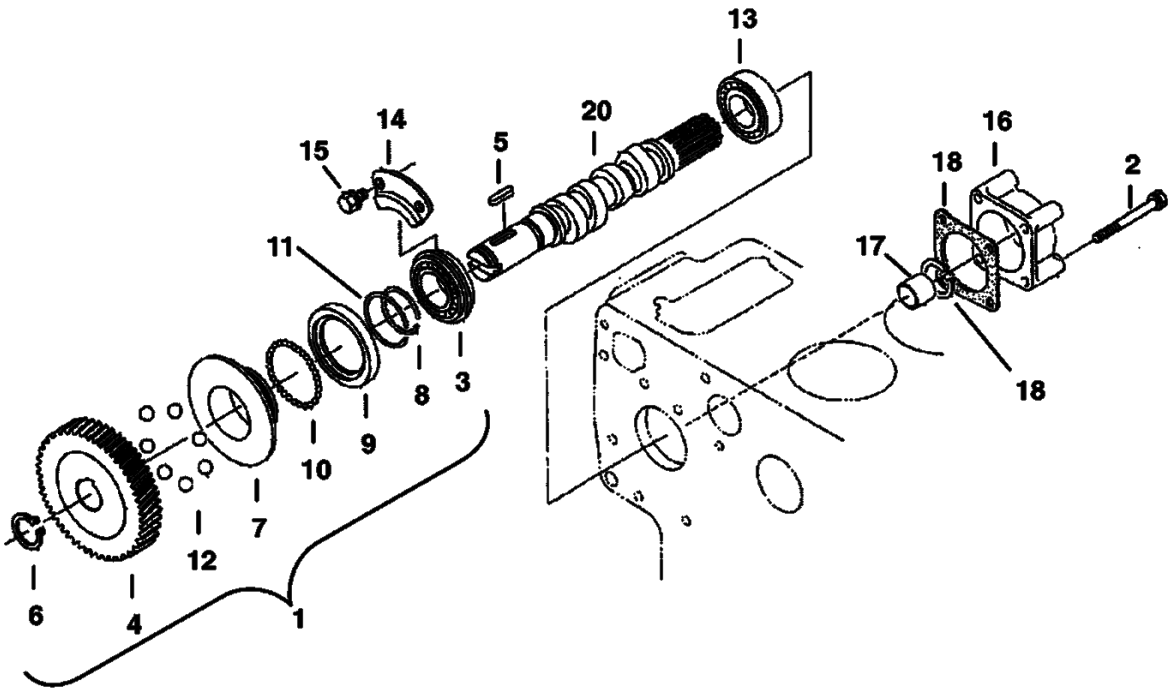
13
14
15
20
5
16
18
2
11
17
8
3
9
10
18
7
12
6
4
1
B–24217

FUEL CAMSHAFT & GOVERNOR SHAFT (Cont'd)

Ref. No.	Part Number	Description	Remarks	Serial Number	Qty.
1	6685504	CAMSHAFT	assy - W/Ref. 2-8 & 20		1
2	1CM00865B	BOLT			4
3	851242B	BEARING			1
4	6655212	GEAR			1
5	6598099	KEY			1
6	5JM00024B	CIRCLIP			1
7	6655213	SLEEVE	governor		1
8	3974618B	CIRCLIP			1
9	6655214	CASE			1
10	10J000005B	BALL			39
11	3974620B	CIRCLIP			1
12	6655215	BALL			7
13	6685479	BEARING	ball		1
14	6685517	STOPPER			1
15	6667420	BOLT			1
16	6667440	COVER			1
17	6685516	COLLAR			1
18	6684813	GASKET			1
19	3975432B	CIR-CLIP			1
20		CAMSHAFT	NSS - order Ref. 1		1

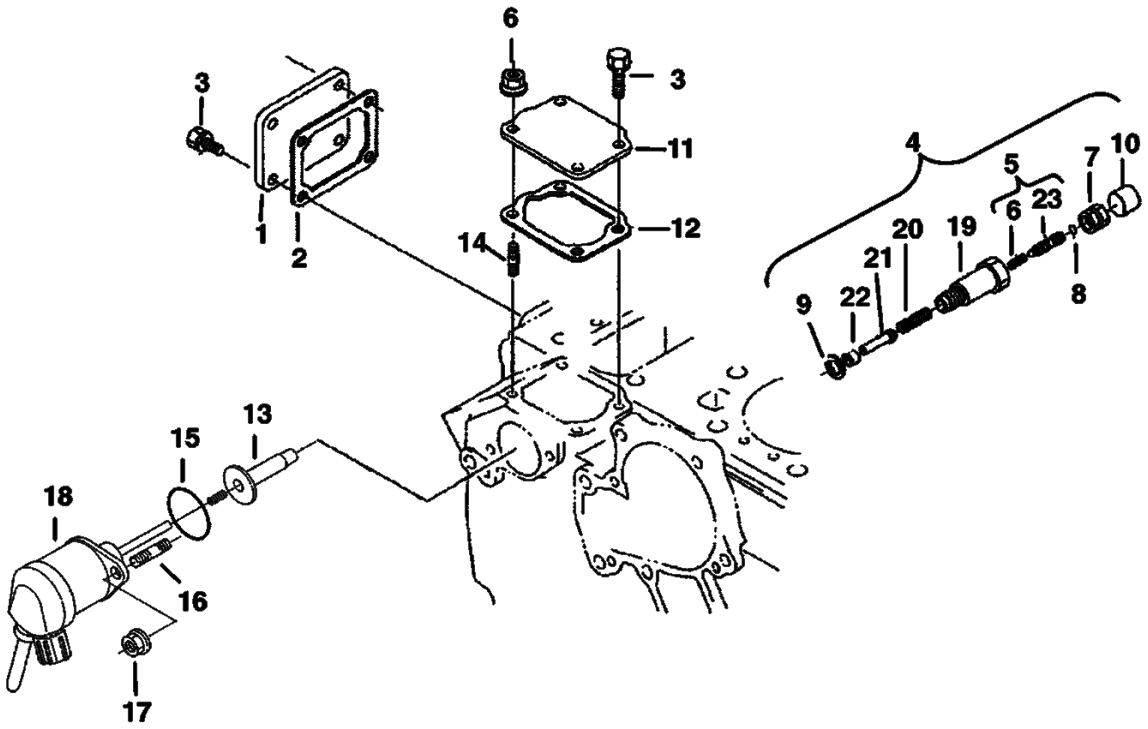
6
3
3
11
4
5
7
10
3
1
2
12
14
6
23
20
19
21
22
9
8
13
15
18
16
17
B–24218

IDLE APPARATUS (Cont'd)

Ref. No.	Part Number	Description	Remarks	Serial Number	Qty.
1	6684751	COVER			1
2	6684752	GASKET			1
3	4CM00616B	BOLT			6
4	6686334	CAMSHAFT	assy - fuel - W/Ref. 6-10		1
5	6685513	BOLT			1
6	6684827	NUT			2
7	6684817	NUT			1
8	6684891	SEAL			1
9	6684818	SEAL			1
10	6684819	CAP			1
11	6685500	COVER			1
12	6684824	GASKET			1
13	3974462B	STUD			2
14	6683087	STUD			2
15	6653561	NUT			2
16	6684825	GUIDE			1
17	6684826	SOLENOID	assy - fuel shut off		1
18	6677915	SEAL			1
19		PLUG	NSS - order Ref. 4		1
20		SPRING	NSS - order Ref. 4		1
21		PIN	NSS - order Ref. 4		1
22		COLLAR	NSS - order Ref. 4		1
23		BOLT	NSS - order Ref. 5		1

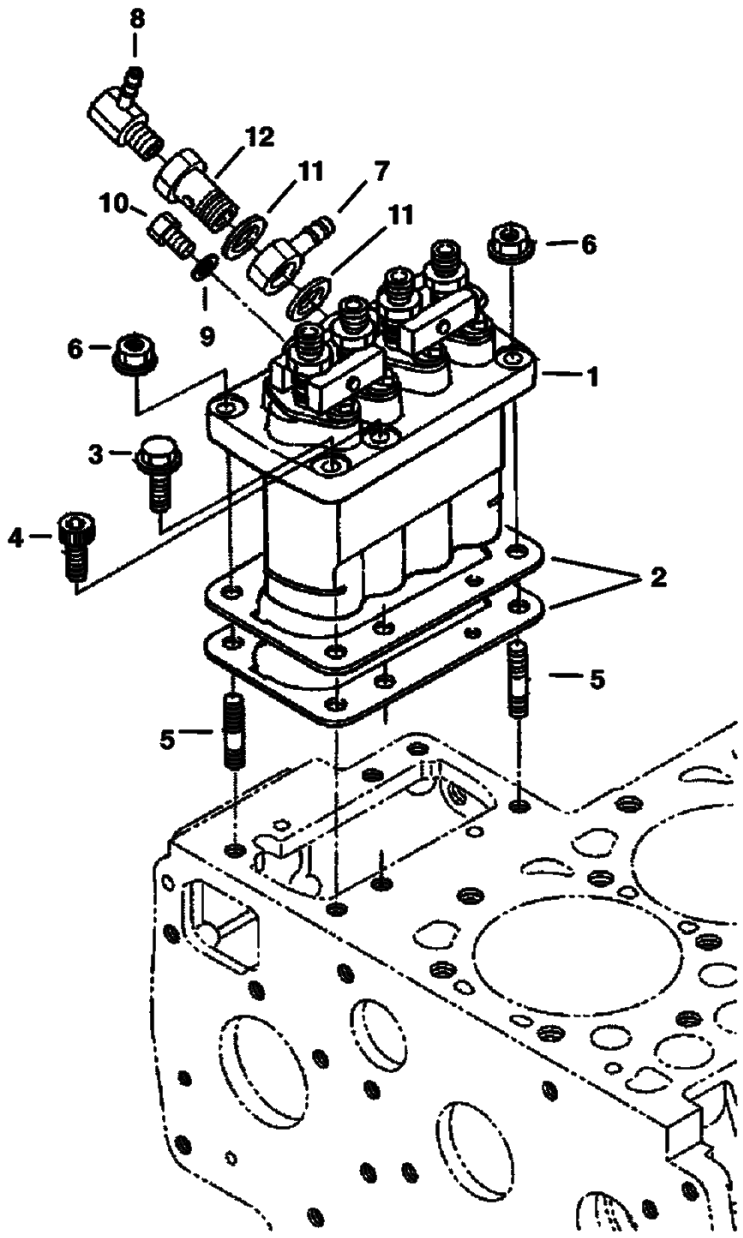
8
12
11
7
10
11
6
9
6
1
3
4
2
5
5
B–24219

INJECTION PUMP (Cont'd)

Ref. No.	Part Number	Description	Remarks	Serial Number	Qty.
1	6685099	PUMP			1
2	6682514	SHIM	0.20mm		1
2	6682515	SHIM	0.25mm		1
2	6655210	SHIM	0.30mm		1
2	6684829	SHIM	0.35mm		1
3	6680544	BOLT			3
4	6684830	BOLT			1
5	3974916B	STUD			2
6	6680663	NUT			2
7	6513707	JOINT			1
8	6652671	ORIFICE			1
9	6685471	GASKET			2
10	6599084	SCREW			2
11	6599118	GASKET			2
12	6685473	BOLT			1

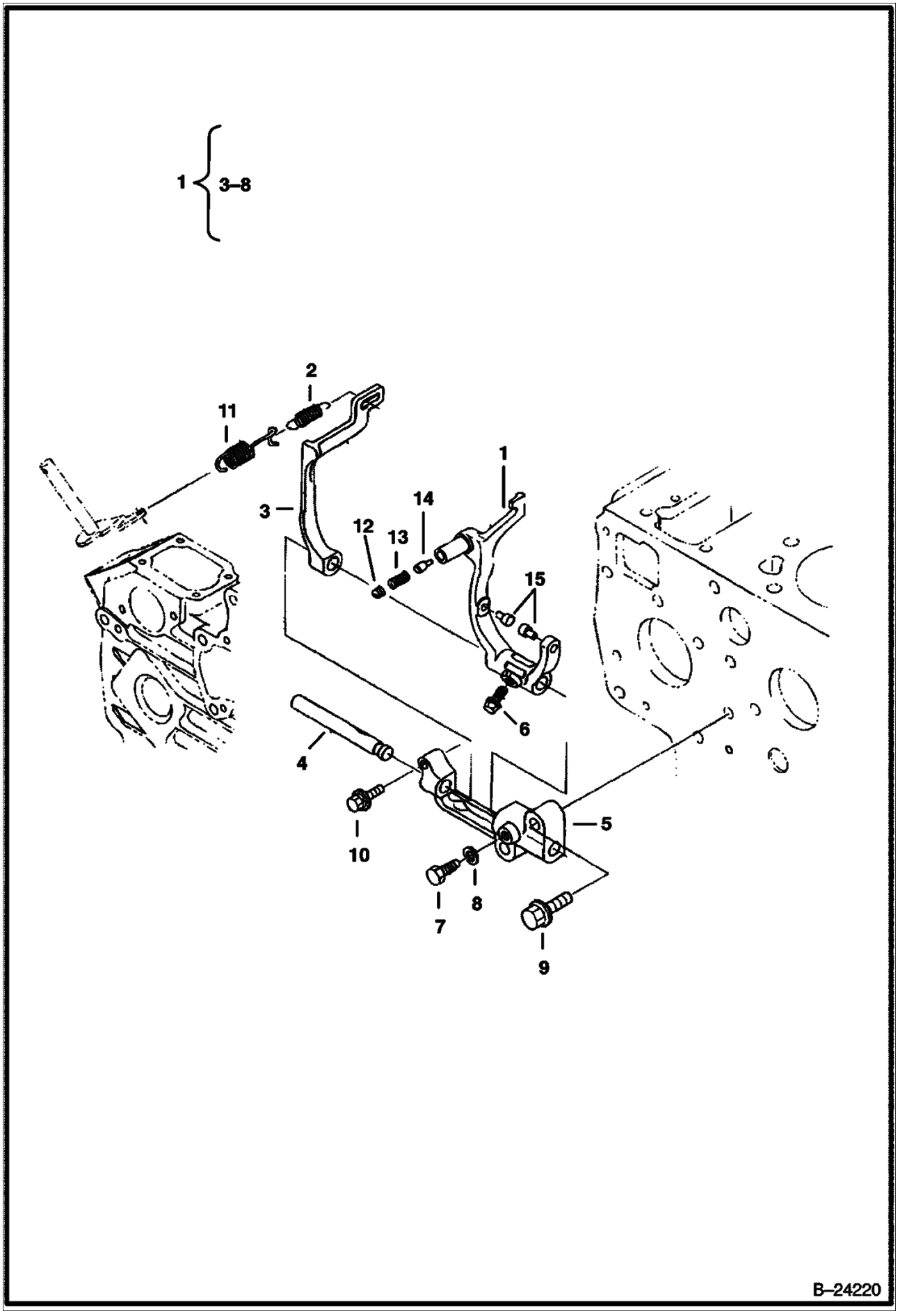
1
3–8
2
11
1
3
14
12
13
15
6
4
10
5
7
8
9
B–24220

GOVERNOR (Cont'd)

Ref. No.	Part Number	Description	Remarks	Serial Number	Qty.
1	6685100	LEVER	assy - W/Ref. 3-8, 14 & 15		1
2	6685514	SPRING			1
3	6684832	LEVER			1
4	6684833	SHAFT			1
5	6684834	HOLDER			1
6	6680830	BOLT			1
7	3974662B	BOLT			1
8	6667419	WASHER			1
9	6598355	BOLT			2
10	6685464	BOLT			1
11	6684835	SPRING			1
12		PLUG	NSS - Order Ref. 1		1
13		SPRING	NSS - Order Ref. 1		1
14		PLUG	NSS - Order Ref. 1		1
15		PLUG	NSS - Order Ref. 1		2

SPEED CONTROL PLATE

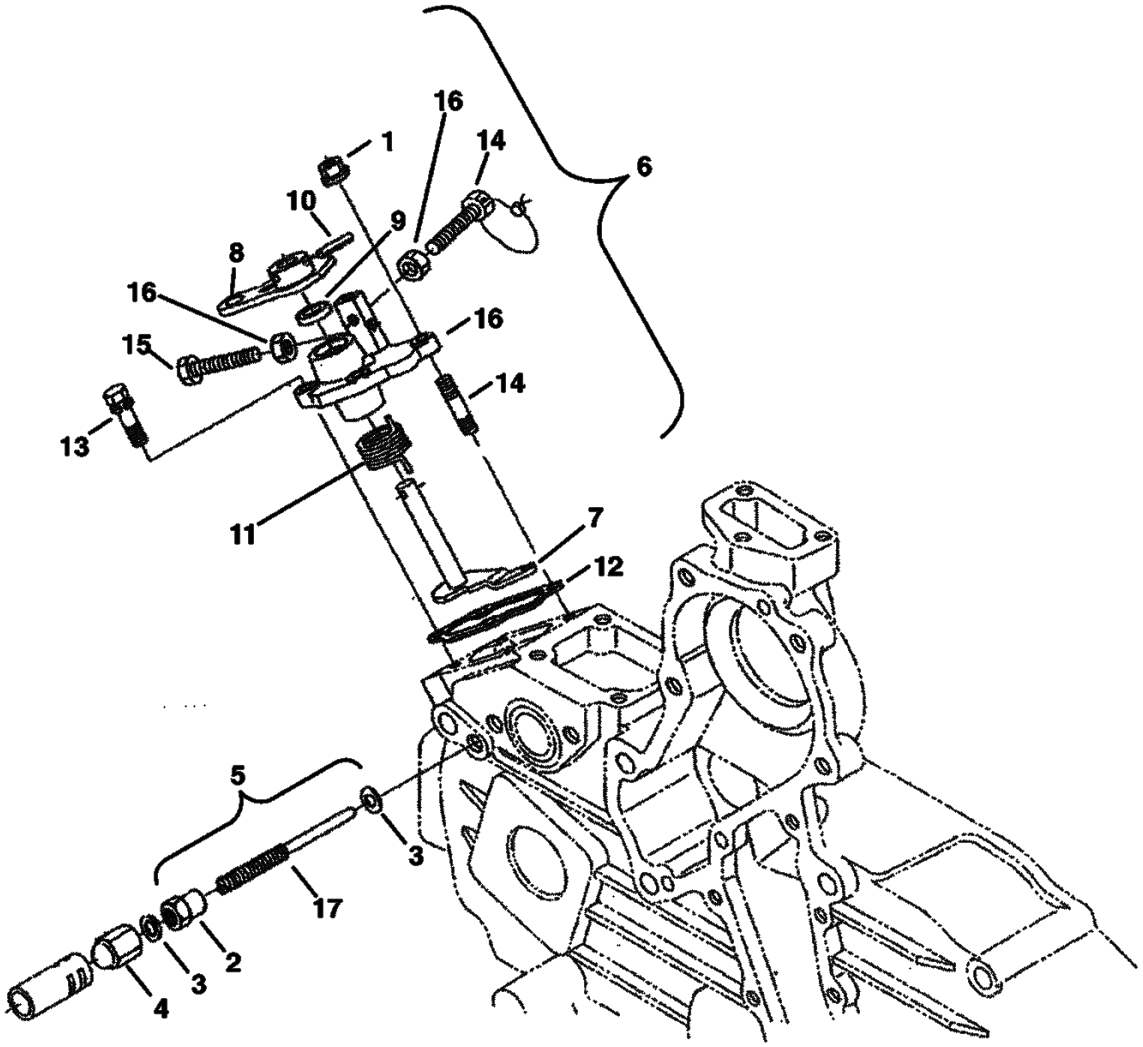

SPEED CONTROL PLATE (Cont'd)

Ref. No.	Part Number	Description	Remarks	Serial Number	Qty.
1	6680831	NUT			2
2	3974971B	NUT			1
3	3974972B	GASKET			2
4	6655223	NUT			1
5	6684836	BOLT	assy - W/Ref. 2, 3 & 17		1
6	6684837	PLATE	assy - W/Ref. 7-11, 15 & 16		1
7	6684838	LEVER			1
8	6684839	LEVER			1
9	6685476	SEAL			1
10	6598098	PIN			1
11	6684840	SPRING			1
12	6684841	GASKET			1
13	4CM00620B	BOLT			2
14	3974462B	STUD			2
15		BOLT	NSS - order Ref. 6		2
16		NUT	NSS - order Ref. 5		2
17		SCREW	NSS - order Ref. 6		2

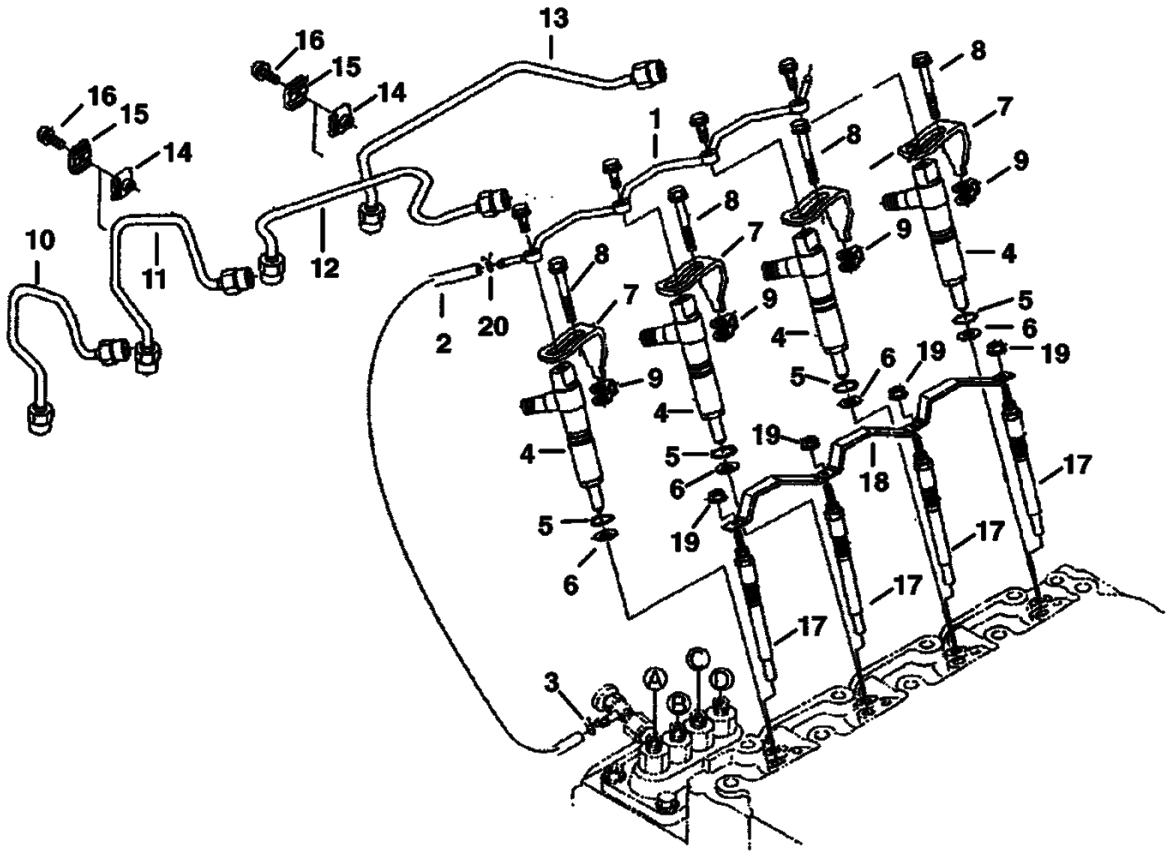
B–24221

NOZZLE HOLDER & GLOW PLUG (Cont'd)

Ref. No.	Part Number	Description	Remarks	Serial Number	Qty.
1	6684842	PIPE			1
2	6598146	PIPE	W/Ref. 3, 20		1
3	6680795	CLAMP			1
4	6685101	NOZZLE			4
5	6670769	O-RING			4
6	6680779	GASKET			4
7	6684845	CLAMP			4
8	6684844	BOLT			4
9	6685498	GASKET			4
10	6685102	PIPE			1
11	6685103	PIPE			1
12	6684848	PIPE			1
13	6684849	PIPE			1
14	6680785	CLAMP			2
15	6680786	CLAMP			2
16	3974260B	BOLT			2
17	6684850	GLOW PLUG			4
18	6684851	CORD			1
19	6670472	NUT			4
20	6654718	CLAMP			1

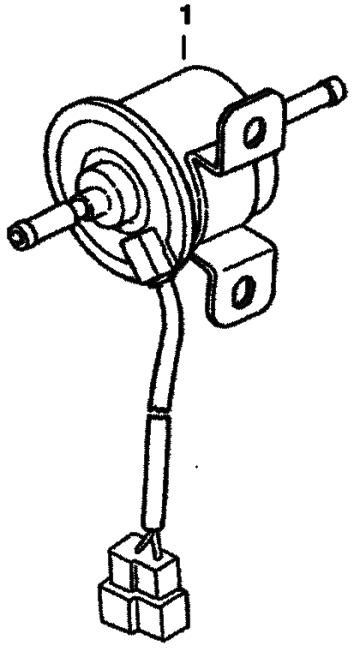

B–22307

FUEL PUMP (Cont'd)
(Electric)

Ref. No.	Part Number	Description	Remarks	Serial Number	Qty.
1	6684852	PUMP	fuel		1

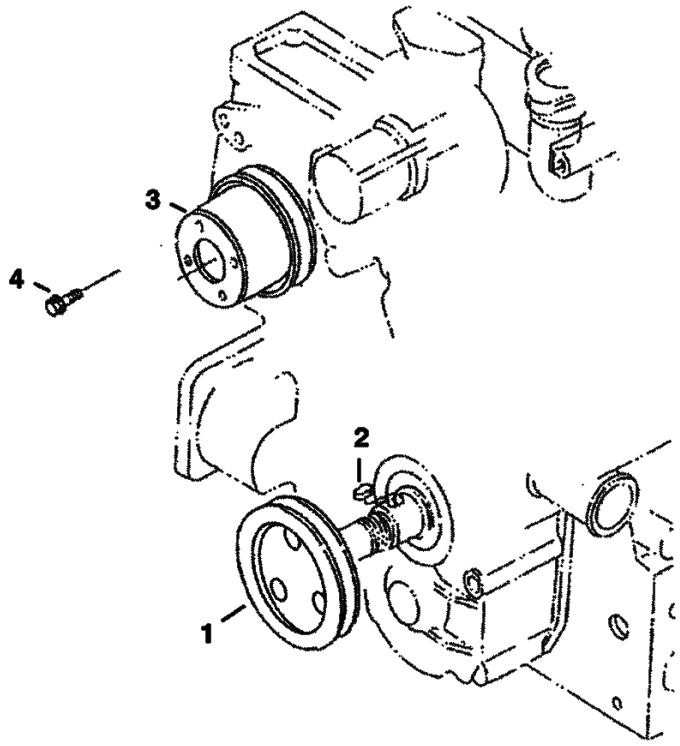

B–22308

FAN DRIVE PULLEY (Cont'd)

Ref. No.	Part Number	Description	Remarks	Serial Number	Qty.
1	6684853	PULLEY			1
2	3974546B	KEY			1
3	6684871	PULLEY			1
4	6652762	BOLT			4

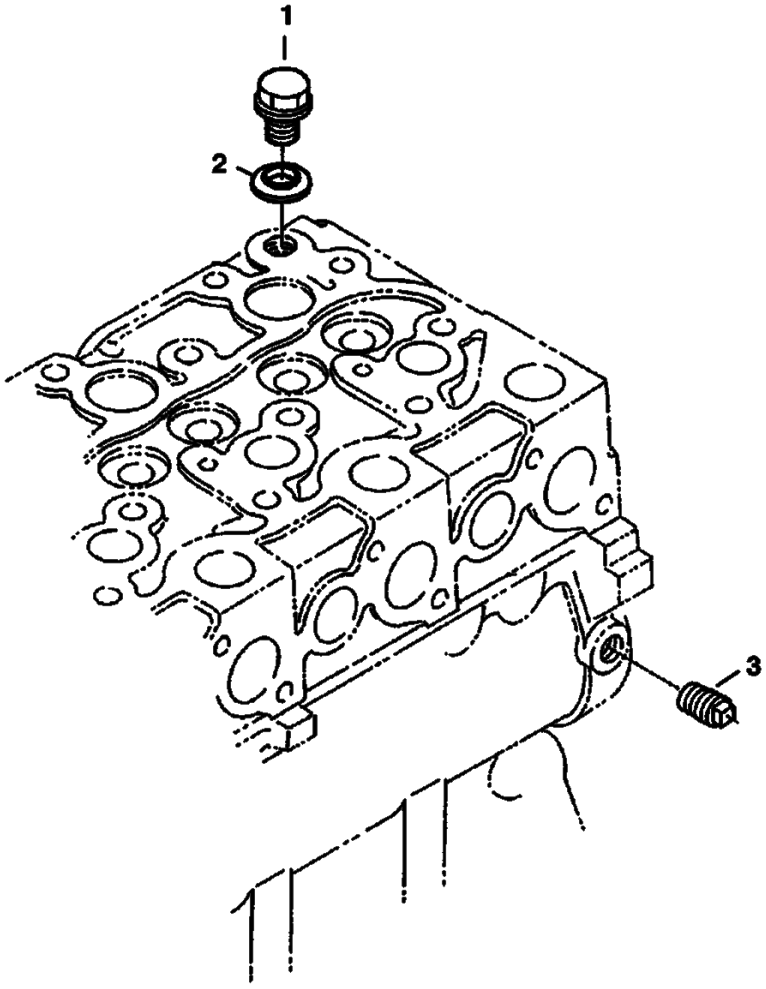

B–22309

PLUG (Cont'd)

Ref. No.	Part Number	Description	Remarks	Serial Number	Qty.
1	6655160	PLUG			1
2	6655161	WASHER			1
3	16F000002B	PLUG			1

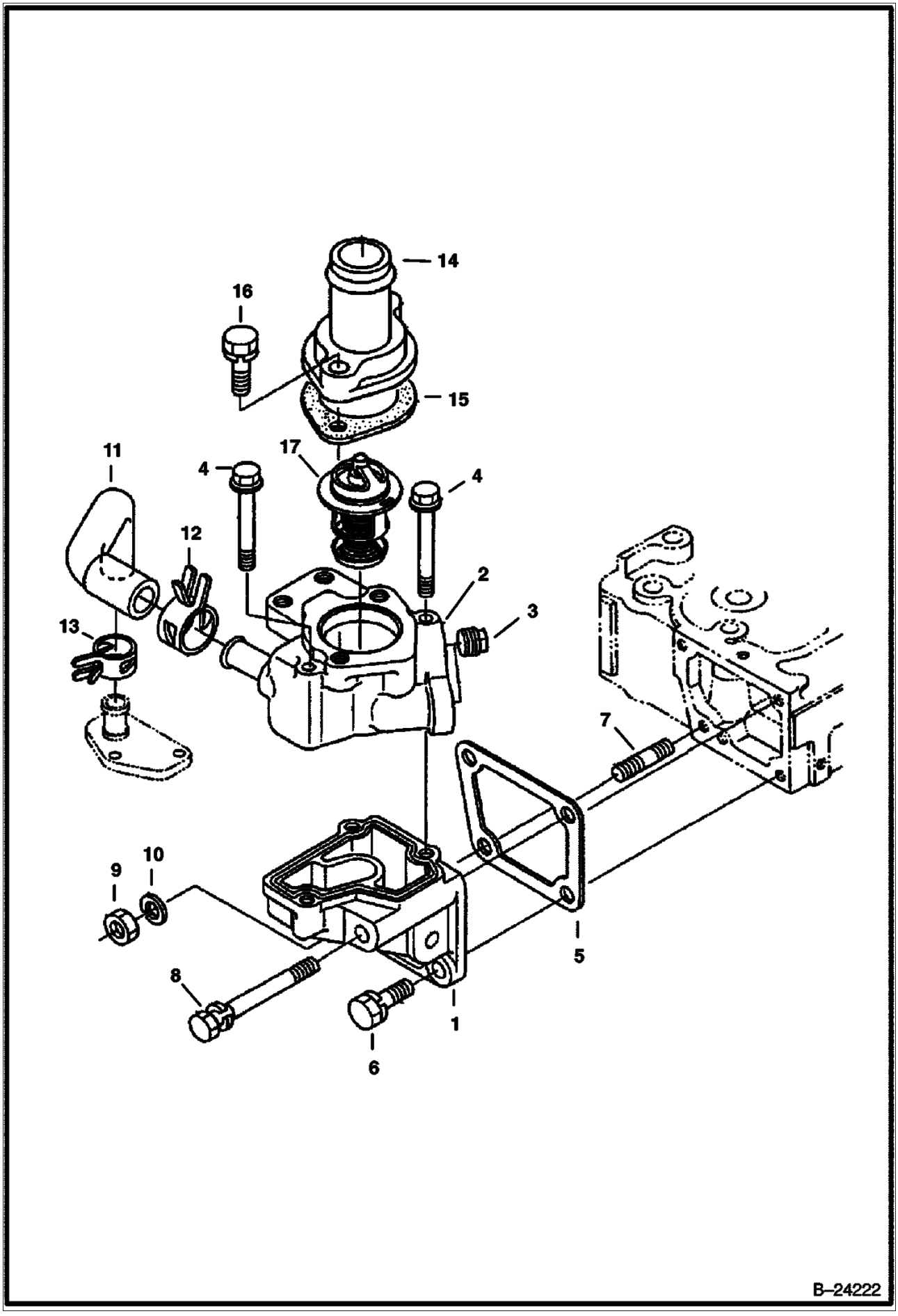
14
16
15
11
17
4
4
12
2
3
13
7
9
10
5
8
1
6
B–24222

WATER FLANGE & THERMOSTAT (Cont'd)

Ref. No.	Part Number	Description	Remarks	Serial Number	Qty.
1	6684855	FLANGE			1
1	6684854	FLANGE			1
2	6684856	FLANGE			1
3	6684857	PLUG			2
4	6684858	BOLT			2
4	6685104	BOLT			1
5	6684860	GASKET			1
6	4CM00822B	BOLT			2
7	3974347	STUD			1
8	6684861	BOLT			1
9	6652792	NUT			1
10	6667422	WASHER			1
11	6684862	PIPE			1
12	6675618	CLAMP			1
13	6684889	CLAMP			1
14	6598118	COVER			1
15	6684863	GASKET			1
16	1CM00835B	BOLT			2
17	6685520	THERMOSTAT			1

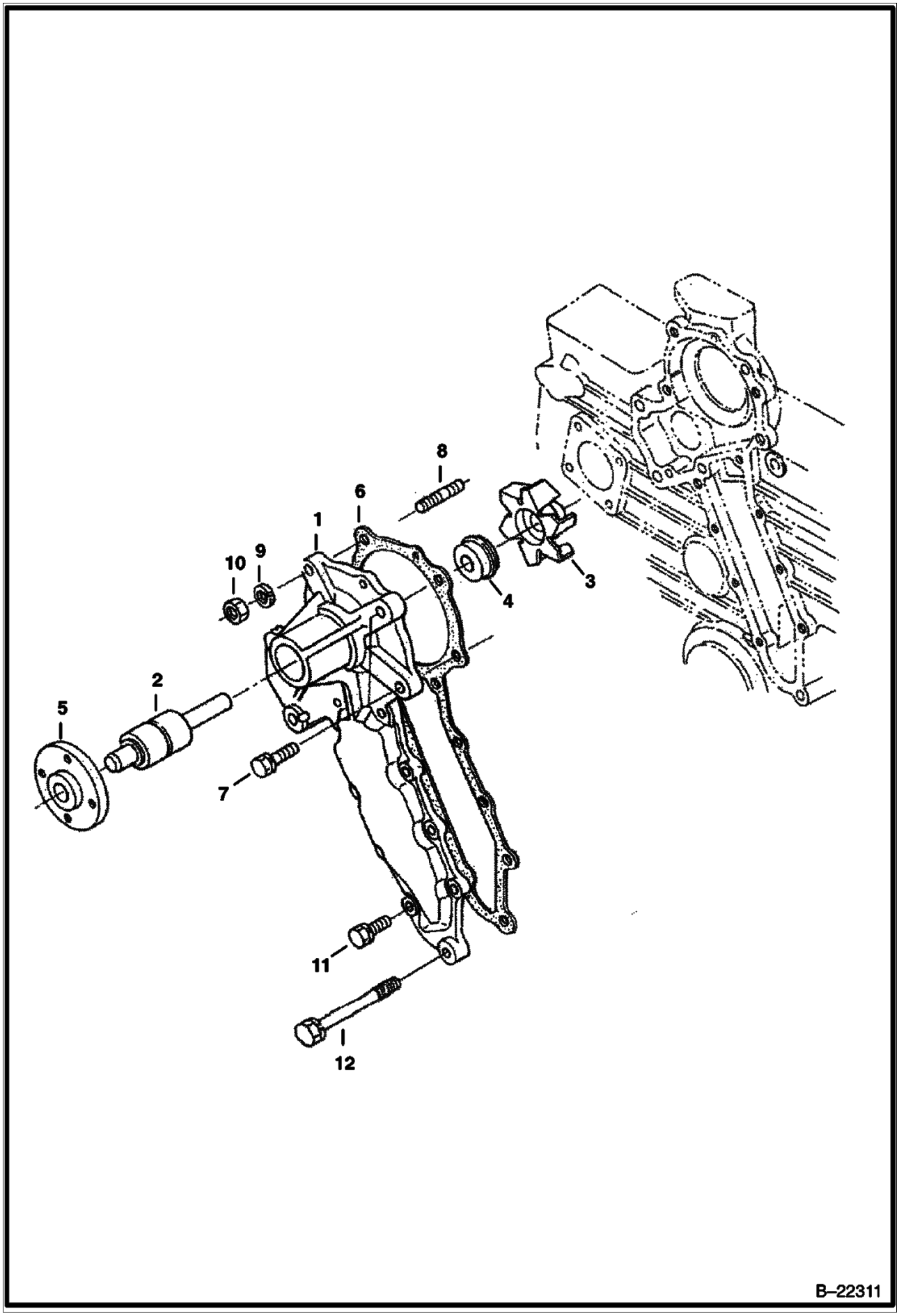
8
6
1
10
9
4
3
2
5
7
11
12
B–22311

WATER PUMP (Cont'd)

Ref. No.	Part Number	Description	Remarks	Serial Number	Qty.
1	6685105	PUMP	assy - W/Ref. 2-5		1
1	6685106	HOUSING			1
2	6667465	SEAL			1
3	6684867	SEAL			1
4	6684868	SEAL			1
5	6684869	FLANGE			1
6	6684870	GASKET			1
7	4CM00828B	BOLT			2
8	6653946	STUD			1
9	6667442	WASHER			1
10	6652792	NUT			1
11	6652580	BOLT			6
12	6653808	BOLT			4

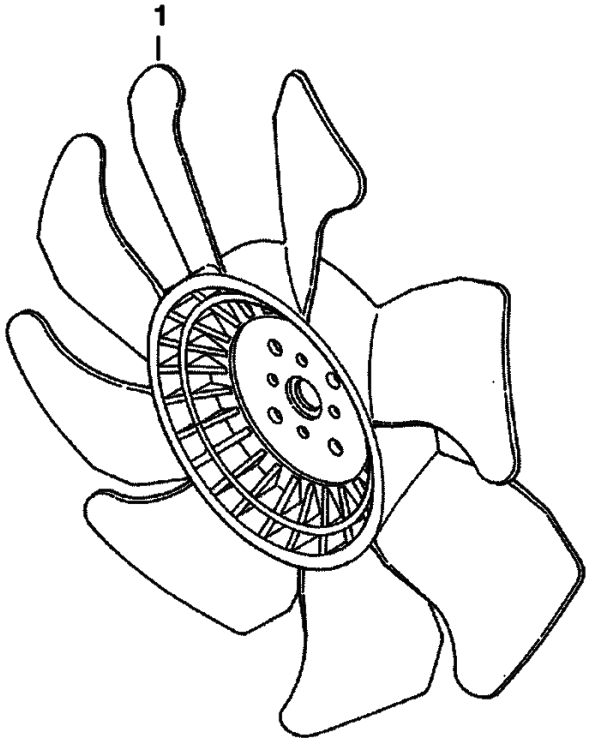

B–22312

FAN (Cont'd)

Ref. No.	Part Number	Description	Remarks	Serial Number	Qty.
1	6683810	FAN			1

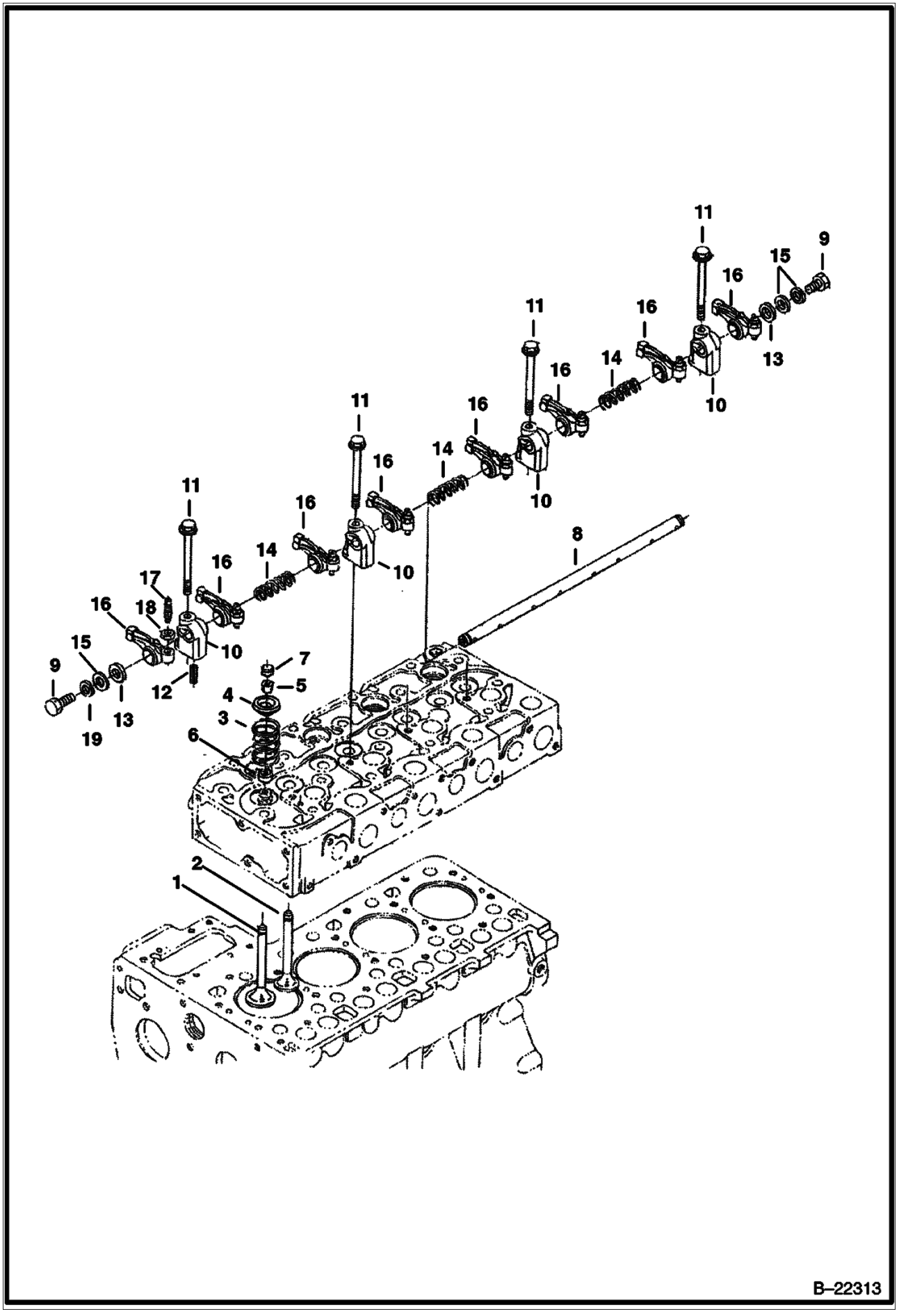
B–22313

Ref. No.	Part Number	Description	Remarks	Serial Number	Qty.
1	6684872	VALVE			4
2	6684873	VALVE			4
3	3974514B	SPRING			8
4	3974515B	RETAINER			8
5	6684874	COLLAR			8
6	3974517B	SEAL			8
7	3974518B	CAP			8
8	6684875	SHAFT			1
9	5CM00812B	BOLT			2
10	3974521B	BRACKET			4
11	6680685	BOLT			4
12	6667461	PIN			1
13	6680766	WASHER			2
14	3974525B	SPRING			3
15	6667451	WASHER			2
16	6655870	ROCKER ARM	assy - W/Ref. 17 & 18		8
17	3974920B	SCREW			8
18	6680874	NUT			8
19	6667422	WASHER			2

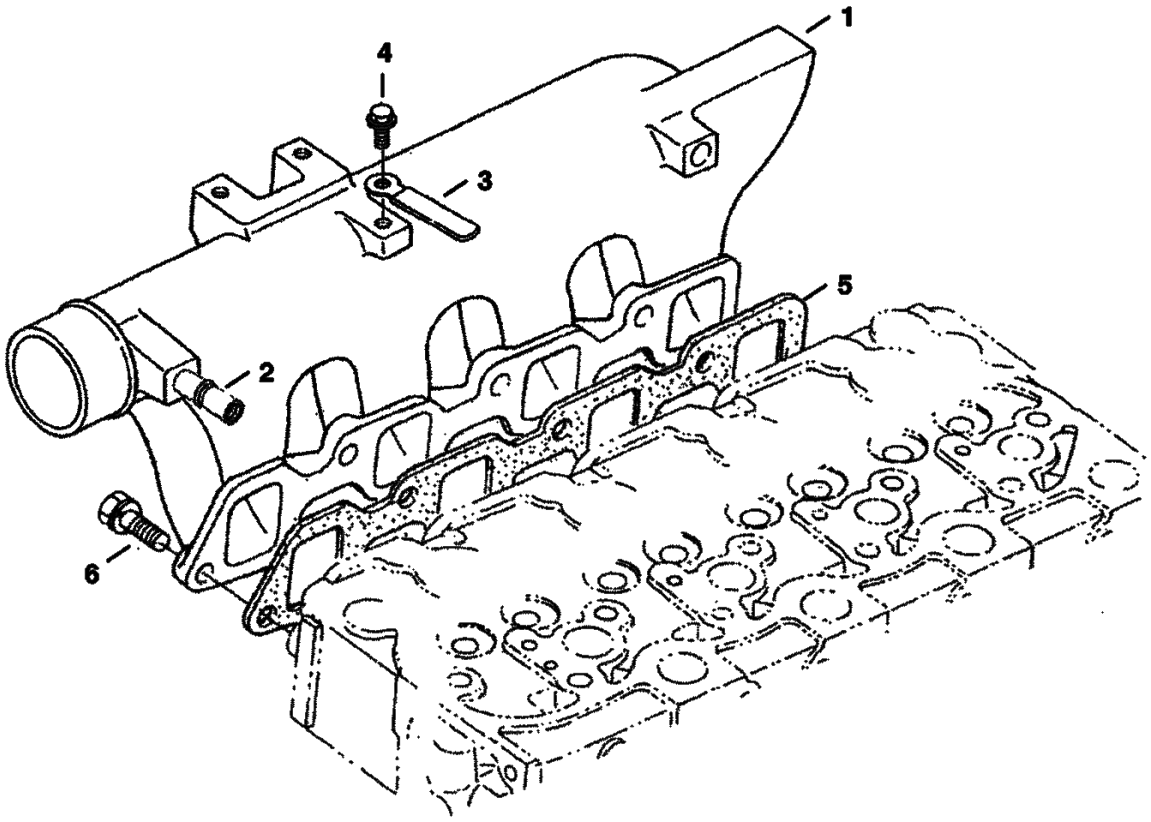

B–22314

INLET MANIFOLD (Cont'd)

Ref. No.	Part Number	Description	Remarks	Serial Number	Qty.
1	6685107	INLET	assy - W/Ref. 2-4		1
2	6655880	PIPE			1
3	6685108	CLAMP			1
4	6685109	BOLT			1
5	6684877	GASKET			1
6	4CM00822B	BOLT			1

EXHAUST MANIFOLD

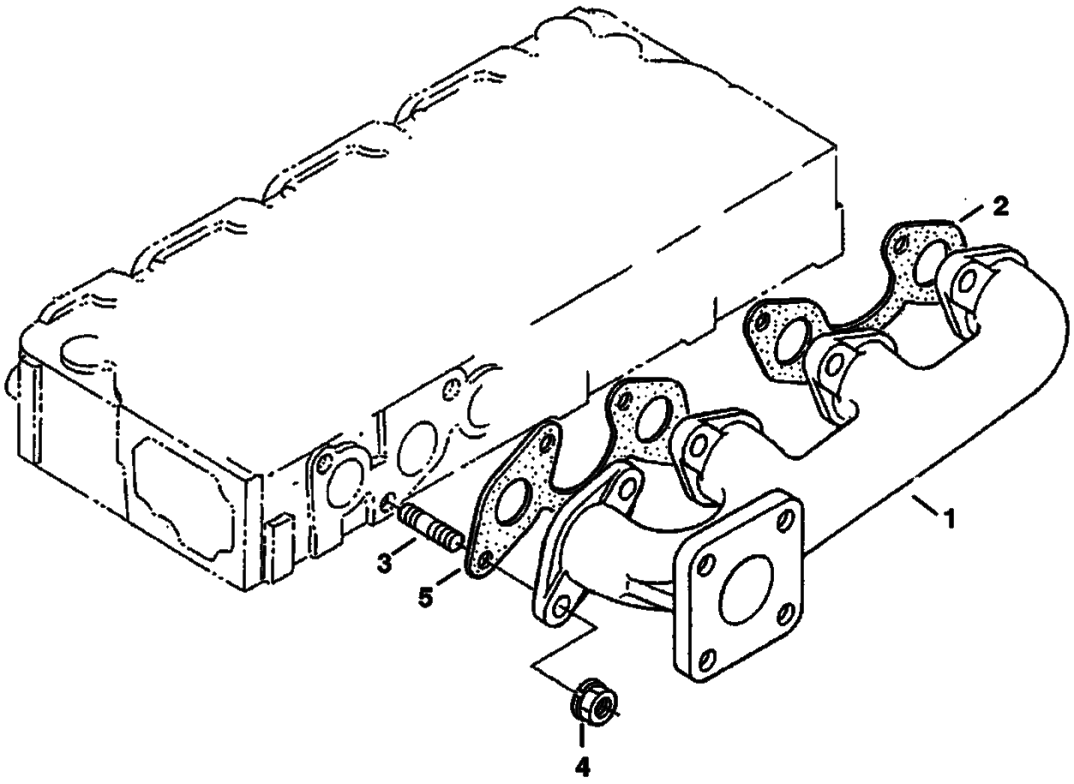

B–22315

EXHAUST MANIFOLD (Cont'd)

Ref. No.	Part Number	Description	Remarks	Serial Number	Qty.
1	6674581	MANIFOLD			1
2	6684880	GASKET			1
3	3974916B	STUD			8
4	6682532	NUT			8
5	6684879	GASKET			1

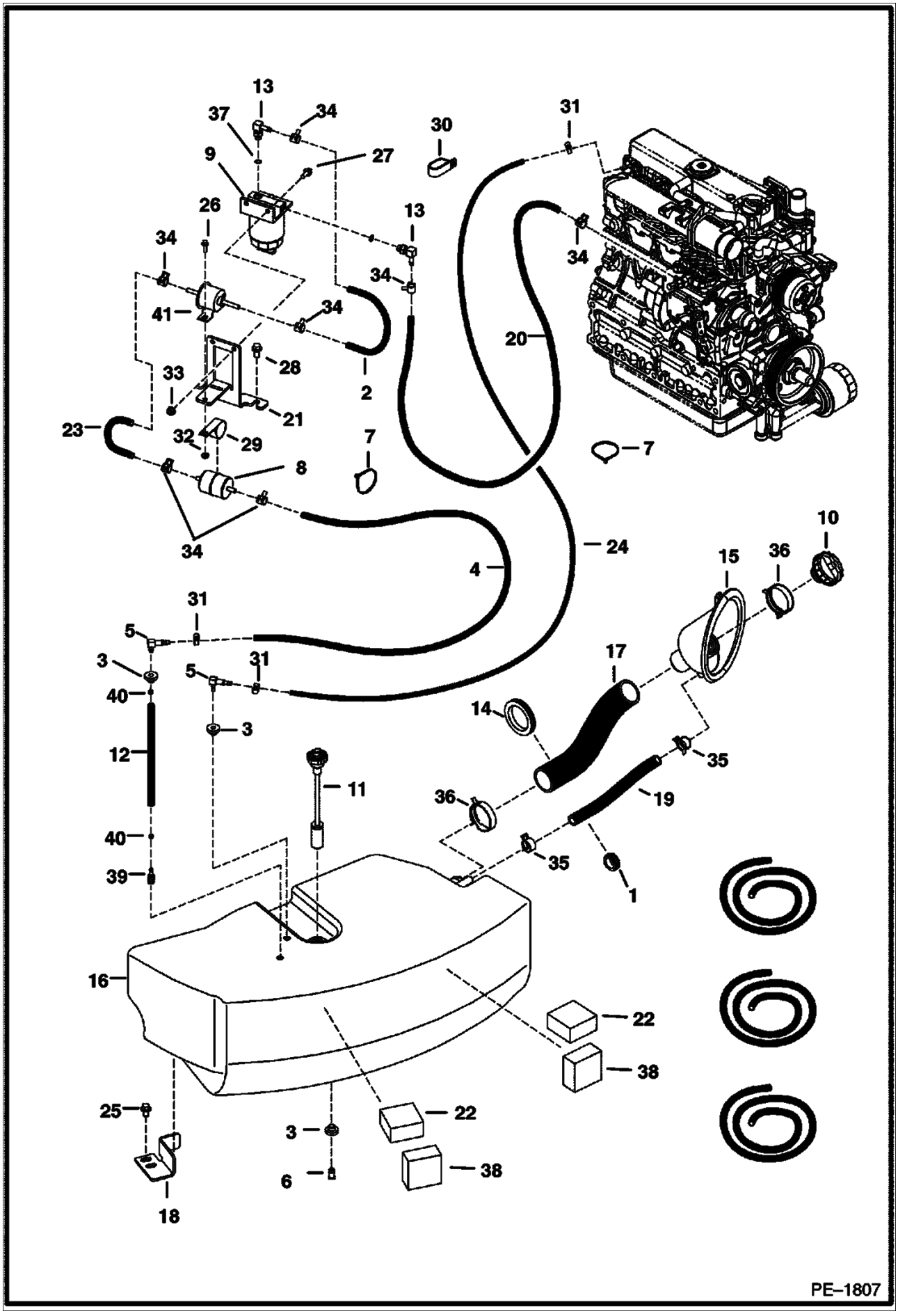
13
37
34
30
31
9
27
26
13
34
34
34
41
34
20
28
2
33
21
23
32
29
7
8
7
34
24
4
10
15
36
31
5
3
40
12
5
31
3
17
14
35
11
36
19
40
35
39
1
16
22
38
25
3
22
6
38
18
PE–1807

FUEL SYSTEM (Cont'd)

Ref. No.	Part Number	Description	Remarks	Serial Number	Qty.
1	6515603	GROMMET			1
2	6548761	HOSE			1
3	6553411	BUSHING			3
4	6562927	HOSE			1
5	6598908	ELBOW			1
6	6599645	PLUG			1
7	6610510	TIE	nylon		8
8	6633977	FILTER	fuel		1
9	6667353	FILTER ASSY	assy		1
9	6667352	FILTER FUEL	fuel		1
10	6680151	CAP	fuel		1
11	6680437	SENSOR	fuel		1
12	6683893	FUEL	tube		1
13	6715183	ELBOW			1
14	6807283	GROMMET			1
15	6811629	FUEL	fill		1
16	6811668	TANK	fuel		1
17	6811726	HOSE			1
18	6812104	BRACKET			1
19	6814501	HOSE	fuel		1
20	6814608	HOSE			1
21	6814817	BRACKET			1
22	6814957	BLOCK	foam		4
23	6815048	HOSE			1
24	6815049	HOSE			1
25	26GM10020B	SCREW			3
26	29CM00620B	SCREW			1
27	29CM00820B	BOLT			1
28	29CM01020B	SCREW			1
29	30HJ00624B	CLIP			1
30	31H000031B	CLAMP			2
31	42HS00004B	CLAMP			1
32	51DM00006B	NUT			1
33	51DM00008B	NUT			2
34	5HM00014B	CLAMP			7
35	5HM00023B	CLAMP			2
36	5HM00058B	CLAMP			2
37	79K000005B	O-RING			1
38	7101352	BLOCK	foam		2
39	6650239	SCREEN			1
40	6661213	RING			2
41	6684852	PUMP	fuel - electric		1

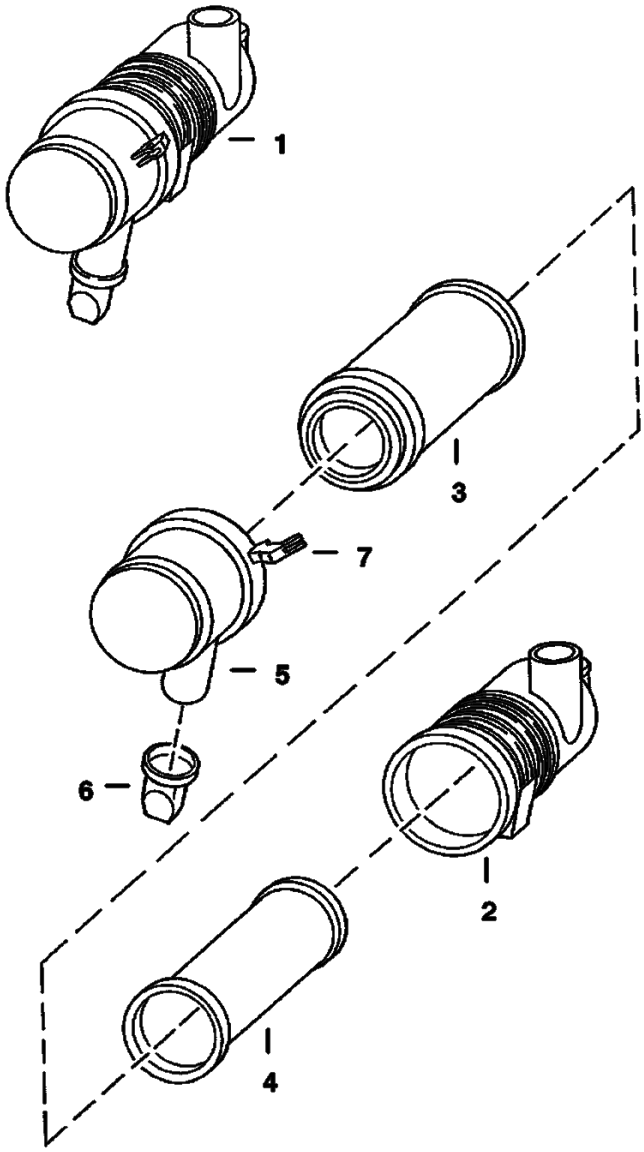

B–20074

AIR CLEANER (Cont'd)

Ref. No.	Part Number	Description	Remarks	Serial Number	Qty.
1	6678769	AIR CLEANER	assy		1
2		TANK	NAP - Order Ref. 1		1
3	6666333	FILTER	outer		1
4	6666334	FILTER	inner		1
5	6673951	COVER	Was 6667730 [A]		1
6	6666378	VALVE	evacuator		1
7			nss - Order Ref. 5		3

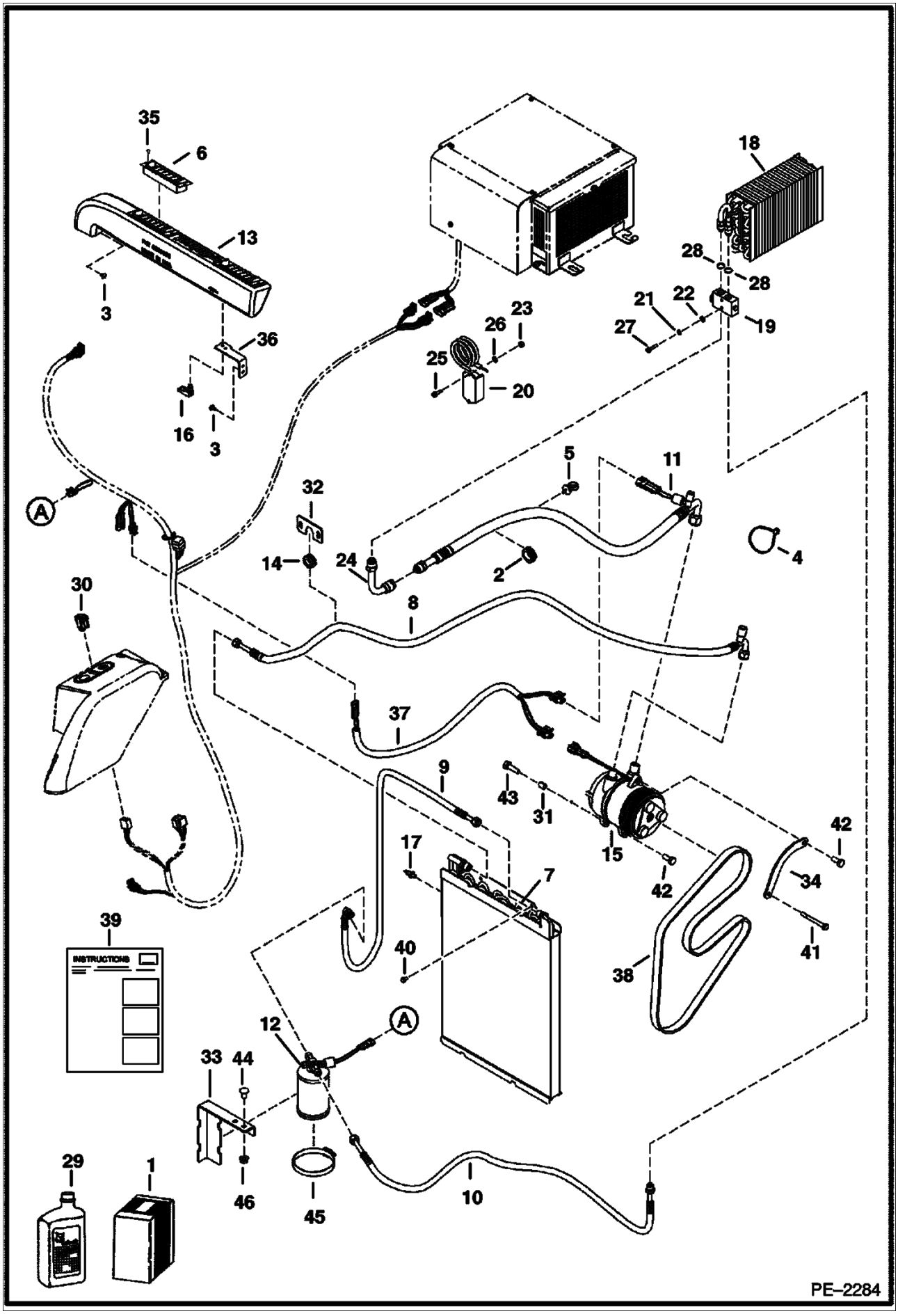
35
6
13
3
36
16
3
18
28
28
21
22
19
27
23
26
25
20
5
11
32
14
24
2
4
30
8
37
9
43
31
42
17
7
15
42
34
39
INSTRUCTIONS
40
38
41
12
33
44
46
45
10
29
1
PE–2284

AIR CONDITIONER UPGRADE KIT (Cont'd)

Ref. No.	Part Number	Description	Remarks	Serial Number	Qty.
1	6817109	A/C UPGRADE KIT			1
2	6515603	GROMMET			1
3	6589675	SCREW			1
4	6624289	STA STRAP			4
5	6675734	STRAP			1
6	6676713	LOUVER			2
7	6678831	CONDENSER			1
8	6680303	HOSE			1
9	6680304	HOSE			1
10	6680305	HOSE			1
11	6680306	HOSE			1
11	6679085	SWITCH			1
12	6680311	RECEIVER			1
13	6680976	DUCT			1
14	6681567	GROMMET			1
15	6681716	COMPRESSOR			1
16	6681878	LATCH			1
17	6682990	CLIP			3
18	6683909	COIL			1
19	6683910	VALVE			1
20	6683911	SWITCH	thermostat		1
21	6684499	WASHER	lock		2
22	6684500	WASHER	flat		2
23	6684520	NUT			2
24	6684649	ADAPTER			1
25	6685114	SCREW			1
26	6685115	WASHER	flat		2
27	6685116	SCREW			2
28	6685117	O-RING			2
29	6685118	OIL			1
30	6719176	SWITCH			1
31	6732732	BUSHING			1
32	6813191	PLATE			1
33	6813715	BRACKET			1
34	6813975	PLATE			1
35	6814024	SCREW			4
36	6814194	BRACKET			1
37	6814228	HARNESS			1
38	6815018	BELT			1
39	43DM00010B	NUT			2
40	1CM00610B	SCREW			4
41	1CM00880B	SCREW			1
42	5CM01025B	SCREW			2
43	5CM01030B	SCREW			1
44	28CM01020B	BOLT			2
45	42H000056B	CLAMP			2
46	6902640	INSTRUCTIONS			1

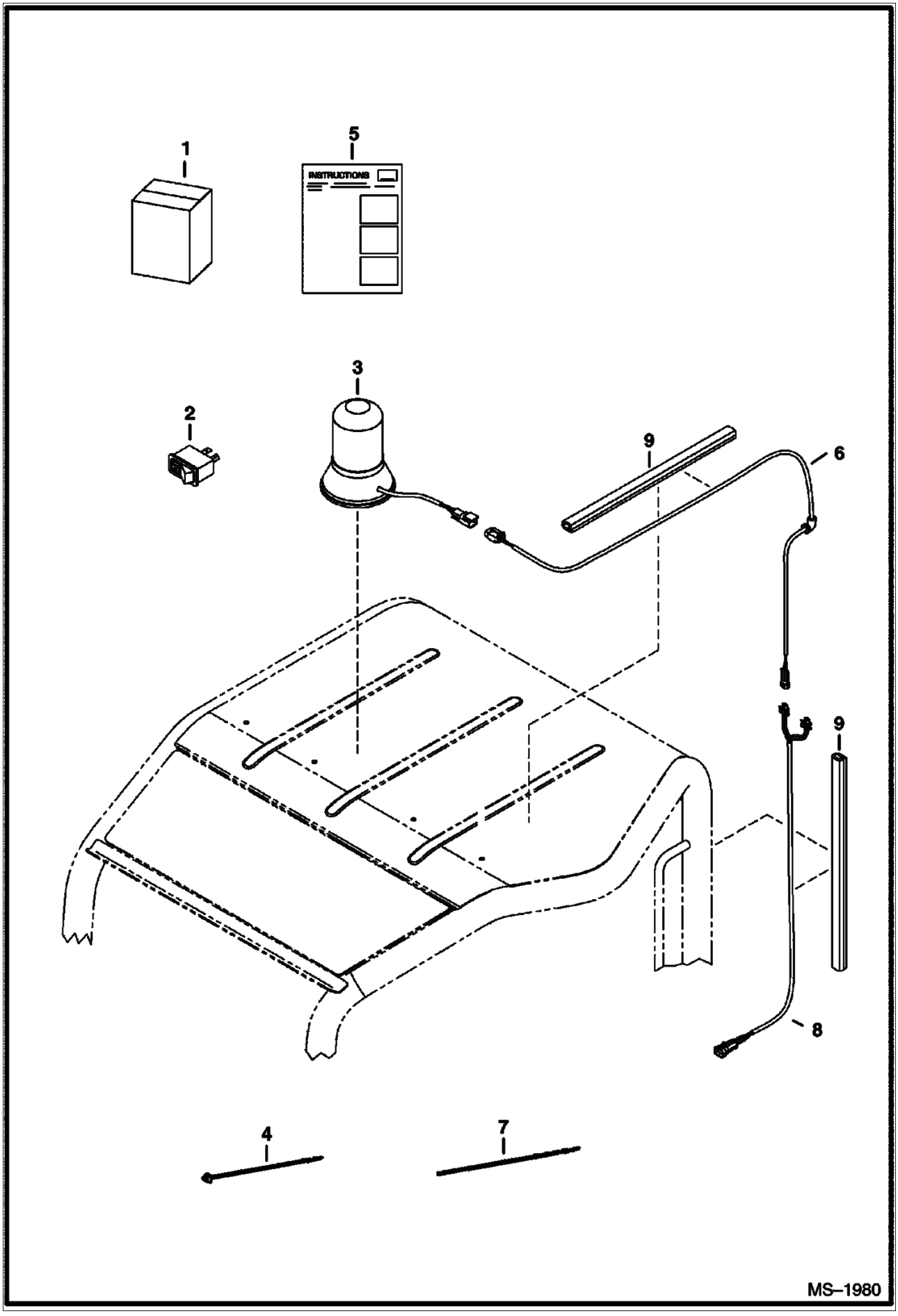
1
5
INSTRUCTIONS
3
2
9
6
9
8
4
7
MS–1980

BEACON KIT (Cont'd)

Ref. No.	Part Number	Description	Remarks	Serial Number	Qty.
1	7105014	KIT	beacon - W/Ref. 2-5		1
2	6665317	SWITCH			1
3	6675523	BEACON			1
4	6624289	STA STRAP			2
5	6682741	RETAINER			1
6	7104182	HARNESS			1
7	7104659	HARNESS			1
8	7104694	HARNESS			1
9	6903147	INSTRUCTION			1

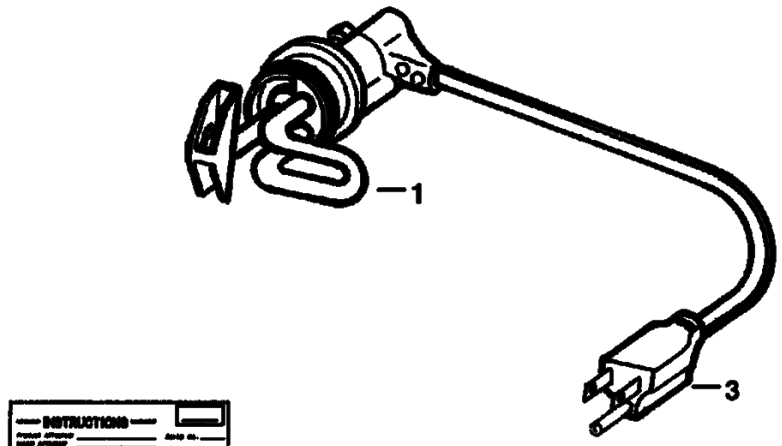

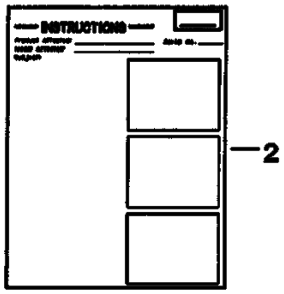

B–12299

BLOCK HEATER (Cont'd)
(Engine)

Ref. No.	Part Number	Description	Remarks	Serial Number	Qty.
1	6720736	PLUG	W/Ref. 2 & 3		1
2	6720038	INSTRUCTIONS			1
3	6668881	CORD			1

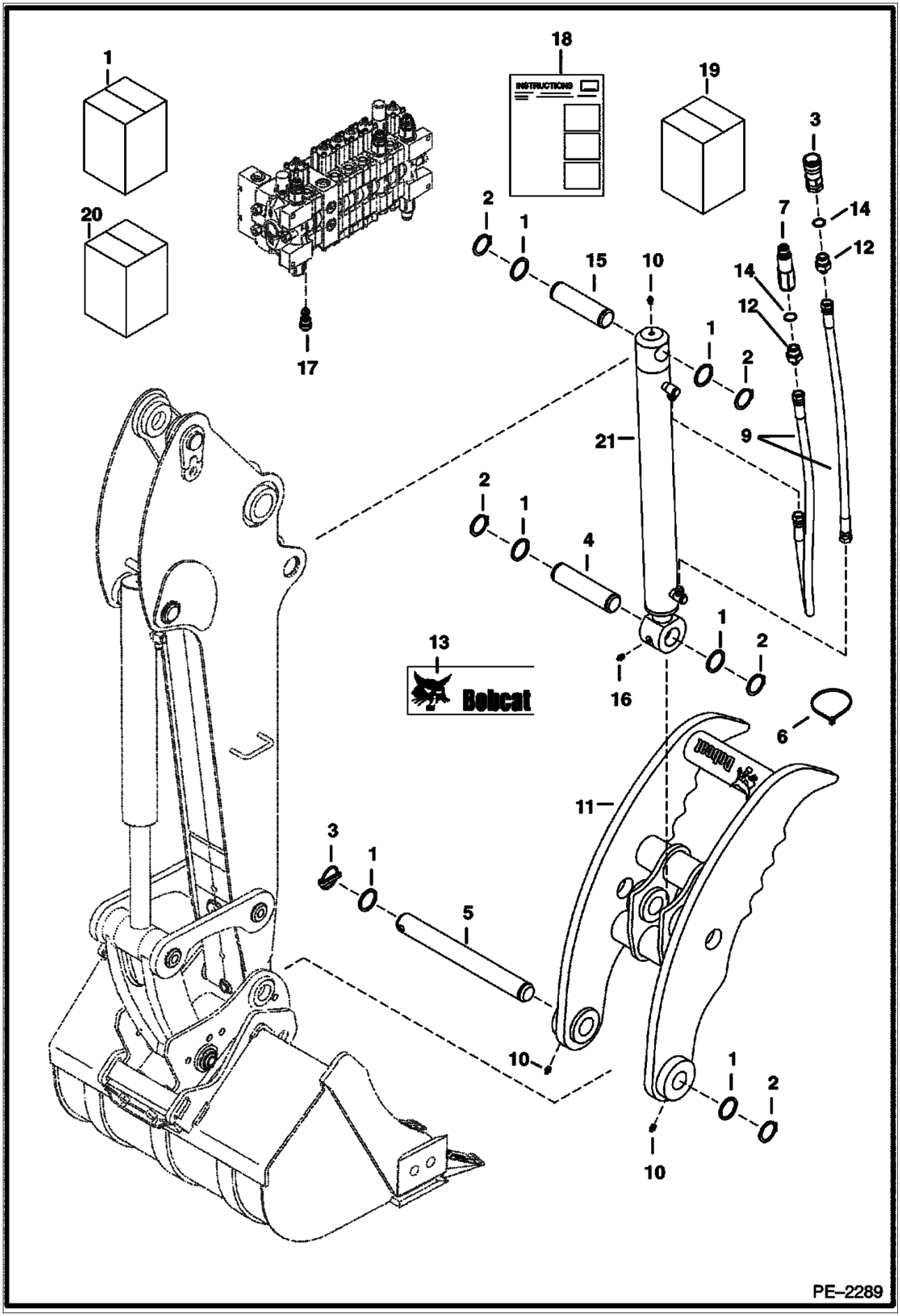
1
18
19
3
20
2
1
15
10
7
14
12
14
12
1
2
17
21
9
2
1
4
1
2
13
Bobcat
16
6
11
3
1
5
10
1
2
10
PE–2289

CLAMP KIT (Cont'd)

Ref. No.	Part Number	Description	Remarks	Serial Number	Qty.
1		KIT	SALES - Clamp - W/Refs. 2-19 - SALES # is 7104320		1
2	6534154	RING			5
3	6560382	RING	Retaining - Lock Ring		1
4	6595660	PIN	Used at both ends of cylinder		1
5	7104318	PIN	Clamp		1
6	6624289	STA STRAP			2
7	6672960	COUPLER	Female - flush face		1
8	6674688	COUPLER	Male - Flush Face		1
9	6711670	HOSE			2
9	6714274	HOSE			2
10	10H000025B	GREASE ZERK			4
11	7104317	CLAMP			1
12	15KB00612B	ADAPTER	W/Ref. 14		2
13	6727324	DECAL			1
14	79K000012B	O-RING			2
15	6806894	PIN			1
16	6534111	WASHER			6
17	6680065	VALVE	not used in 430AG or 430HAG		1
18	6900367	INSTRUCTIONS			1
19	6714421	LITERATURE			1
20	6714461	BAG OF PARTS			1
21	6817386	CYLINDER			1

COUNTERWEIGHT KIT
(Cast)

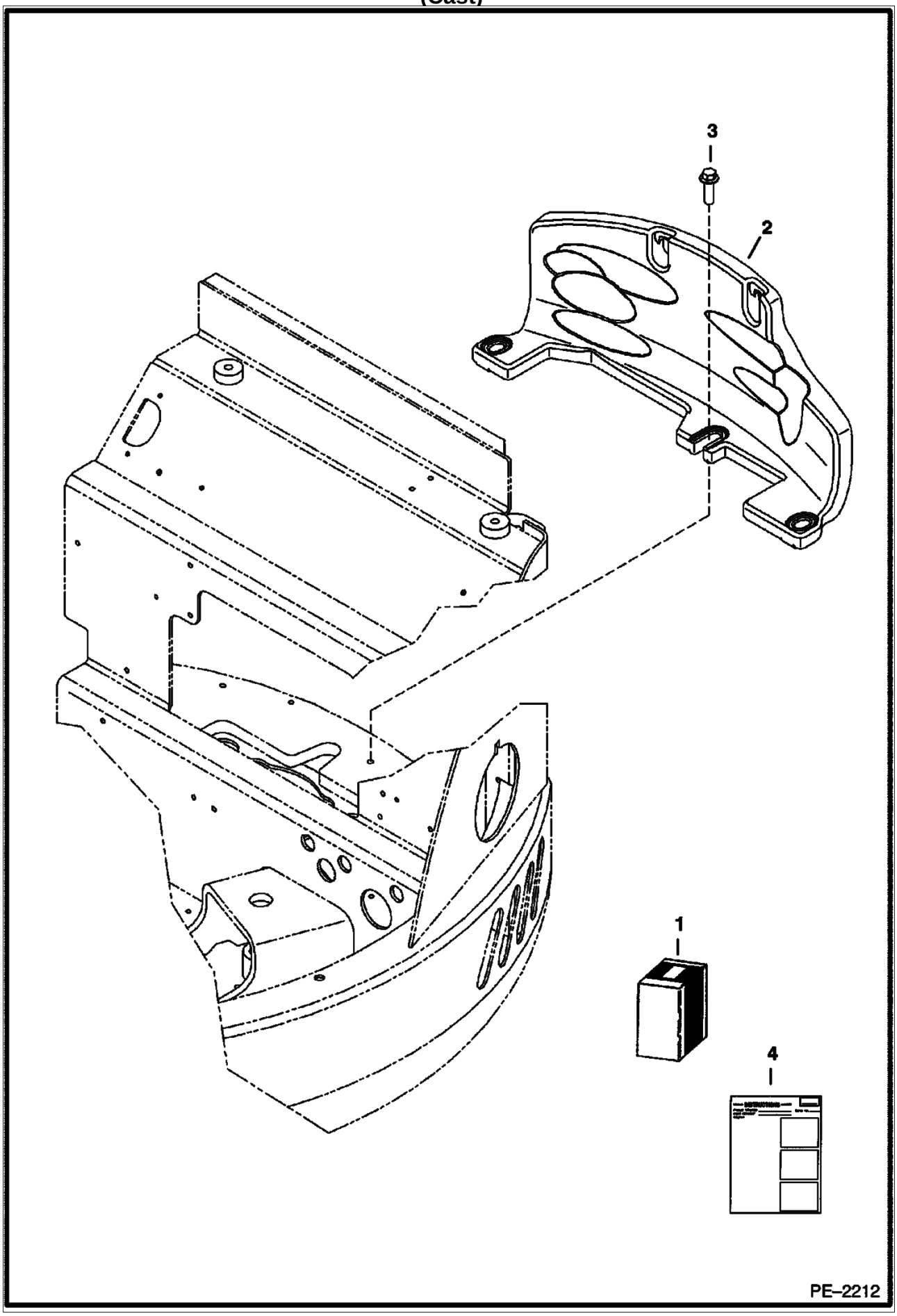

COUNTERWEIGHT KIT (Cont'd)
(Cast)

Ref. No.	Part Number	Description	Remarks	Serial Number	Qty.
1	7100972	KIT			1
2	6818005	CASTING	cast		1
3	29CM01650B	SCREW			3
4	6902710	INSTRUCTIONS			1

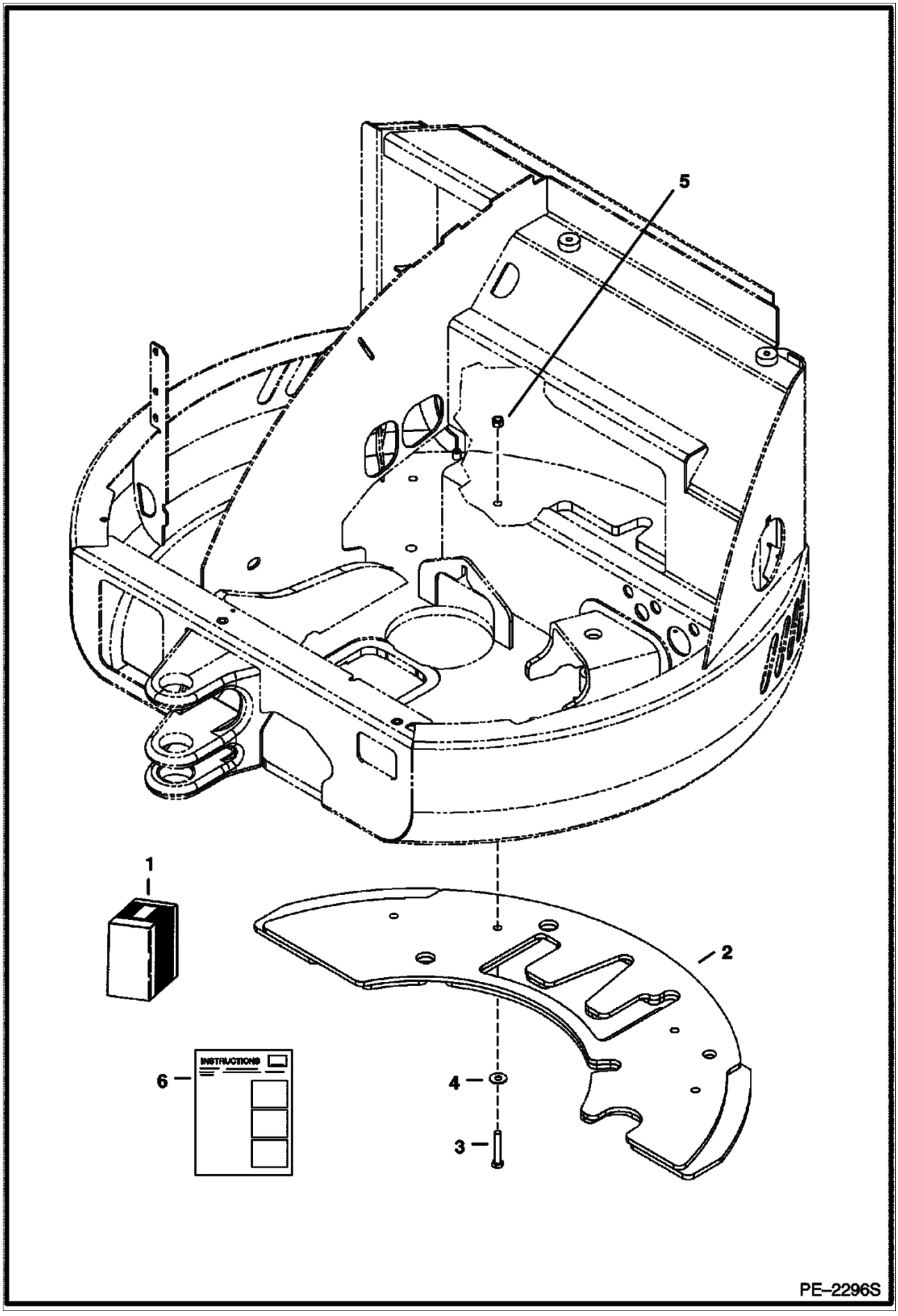
5
1
2
INSTRUCTIONS
6
4
3
PE–2296S

COUNTERWEIGHT KIT (Cont'd)

Ref. No.	Part Number	Description	Remarks	Serial Number	Qty.
1	7100954	KIT	counterweight		1
2	6816708	COUNTERWEIGHT			1
3	1CM01665B	BOLT			4
4	25E000026B	WASHER			4
5	51DM00016B	NUT			4
6	6902707	INSTRUCTION			1

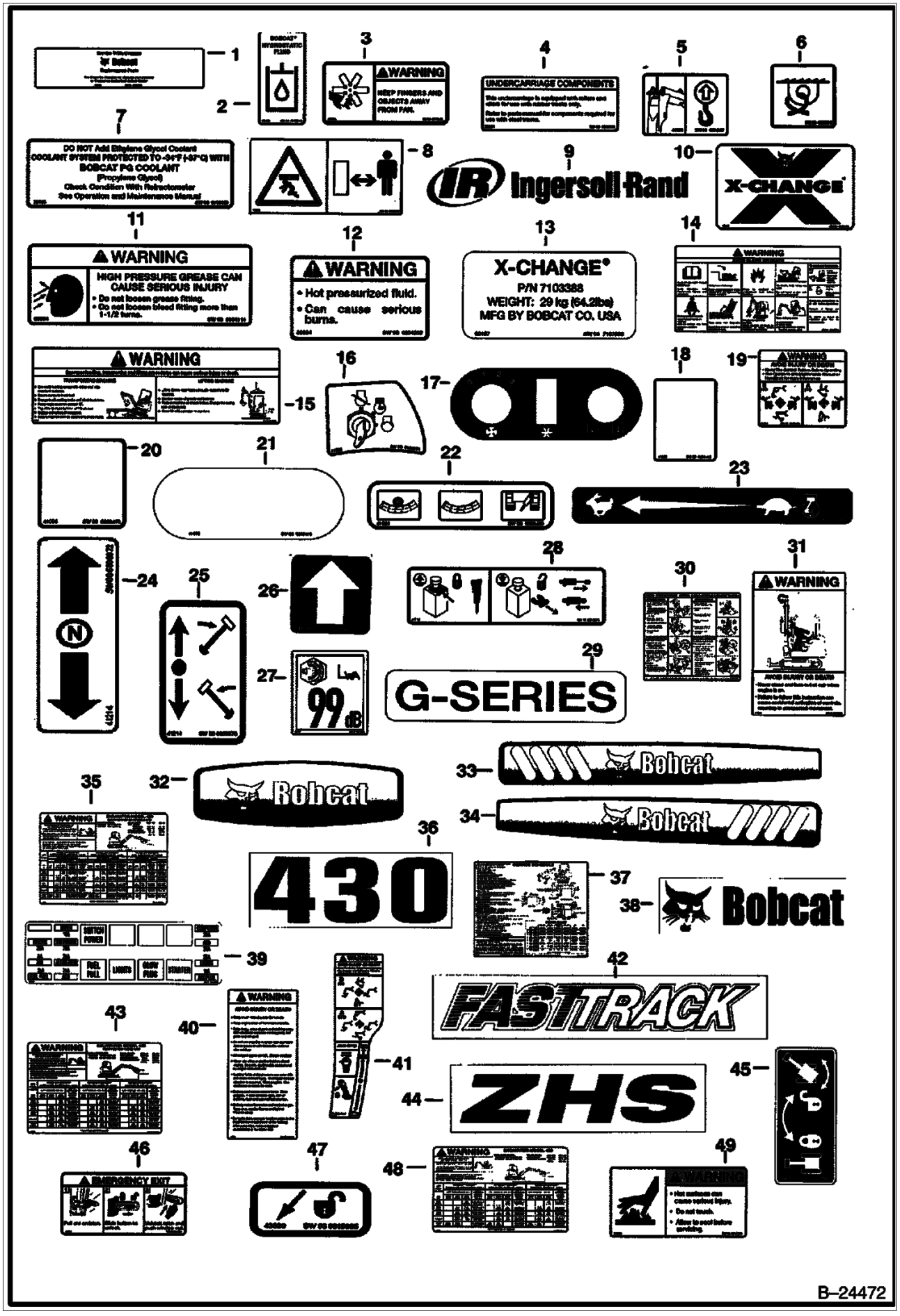
1
2
3
WARNING
KEEP FINGERS AND OBJECTS AWAY FROM FAN
4
UNDERCARRIAGE COMPONENTS
5
6
7
DO NOT Add Ethylene Glycol Coolant
COOLANT SYSTEM PROTECTED TO -34°F (-37°C) WITH BOBCAT PG COOLANT
(Propylene Glycol)
Check Condition With Refractometer
See Operation and Maintenance Manual
8
9
Ingersoll-Rand
10
X-CHANGE
11
WARNING
HIGH PRESSURE GREASE CAN CAUSE SERIOUS INJURY
• Do not loosen grease fitting.
• Do not loosen bleed fitting more than 1-1/2 turns.
12
WARNING
• Hot pressurized fluid.
• Can cause serious burns.
13
X-CHANGE®
P/N 7103388
WEIGHT: 29 kg (64.2lbs)
MFG BY BOBCAT CO. USA
14
WARNING
15
WARNING
16
17
18
19
WARNING
20
21
22
23
24
25
26
27
99 dB
28
29
G-SERIES
30
31
WARNING
32
Bobcat
33
Bobcat
34
Bobcat
35
WARNING
36
430
37
38
Bobcat
39
40
WARNING
41
42
FASTTRACK
43
44
ZHS
45
46
EMERGENCY EXIT
47
48
WARNING
49
WARNING
B–24472

Ref. No.	Part Number	Description	Remarks	Serial Number	Qty.
1	6565200	DECAL			1
2	6565990	DECAL			1
3	6576048	DECAL			1
4	6589129	DECAL			2
5	6594897	DECAL			1
6	6595014	DECAL	tie down		5
7	6708929	DECAL			1
8	6713507	DECAL			2
9	6735864	DECAL	IR logo		2
10	6803760	DECAL	x-change		1
11	6804114	DECAL			2
12	6804233	DECAL			1
13	7107953	DECAL	x-change		1
14	6807776	DECAL	warning		1
15	6808185	DECAL	warning		1
16	6808261	DECAL			1
17	6808433	DECAL			1
18	6808473	DECAL	R.H. cover		1
19	6808474	DECAL			1
20	6808475	DECAL			1
21	6808478	DECAL			1
22	6808480	DECAL			1
23	6808481	DECAL			1
24	6808872	DECAL			1
25	6808870	DECAL			1
26	6809263	DECAL			2
27	6812568	DECAL			1
28	6808879	DECAL			1
29	6817056	DECAL	G-Series		1
30	7102651	DECAL			1
31	6809829	DECAL			1
32	6812258	DECAL	rear logo		1
33	6813506	DECAL	R.H. logo		1
34	6813507	DECAL	L.H. logo		1
35	7107912	DECAL	lift capacity - ext. arm		1
36	6815021	DECAL	430		1
37	7104075	DECAL	service schedule		1
38	6815489	DECAL			2
39	6815625	DECAL			1
40	6815915	DECAL			1
41	6817815	DECAL			1
42	6815957	DECAL			1
43	7107911	DECAL	lift capacity		1
44	7107910	DECAL	lift capacity		1
45	6817225	DECAL	warning		1
46	6815983	DECAL			1
47	6815985	DECAL			1

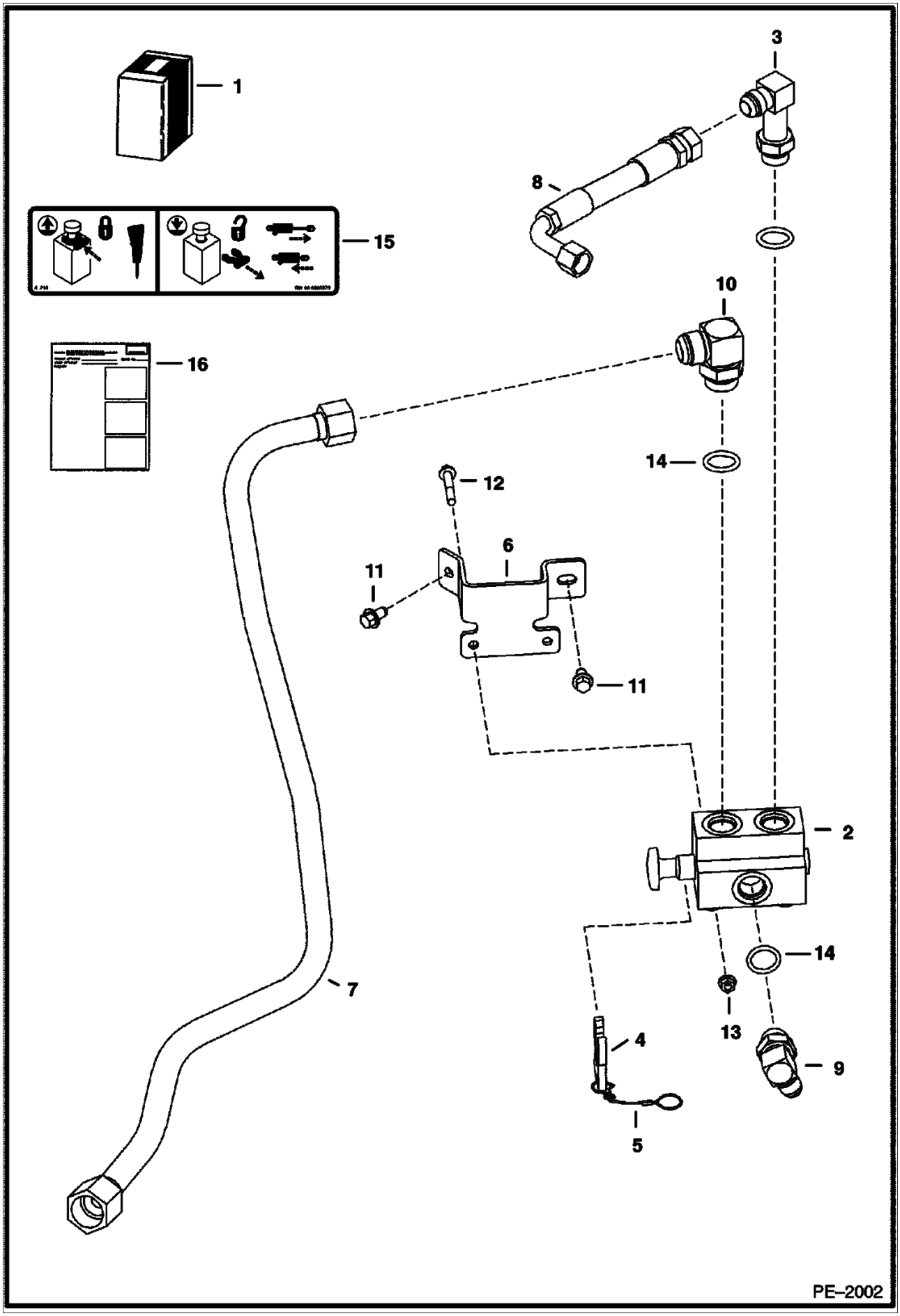
1
3
8
15
10
16
14
12
6
11
11
2
14
13
4
9
7
5
PE–2002

DIRECT TO TANK KIT (Cont'd)

Ref. No.	Part Number	Description	Remarks	Serial Number	Qty.
1	7102020	KIT	W/Ref. 2-14		1
2	6660267	VALVE			1
3	7107132	ELBOW	Was - 6716443 [B]		1
4	6808717	CLIP	retainer		1
5	6808831	WIRE ROPE			1
6	6814290	BRACKET			1
7	6815886	TUBELINE			1
8		HOSE	Was - 6815891 [B]		1
9	17KB01012B	ELBOW	W/Ref. 14		1
10	17KB01612B	ELBOW	W/Ref. 14		1
11	26GM10020B	SCREW			1
12	29CM00850B	SCREW			1
13	43DM00008B	NUT			2
14	79K000012B	O-RING			2
15	6808879	DECAL	valve		1
16	6902809	INSTRUCTION			1

EXTENDIBLE ARM KIT

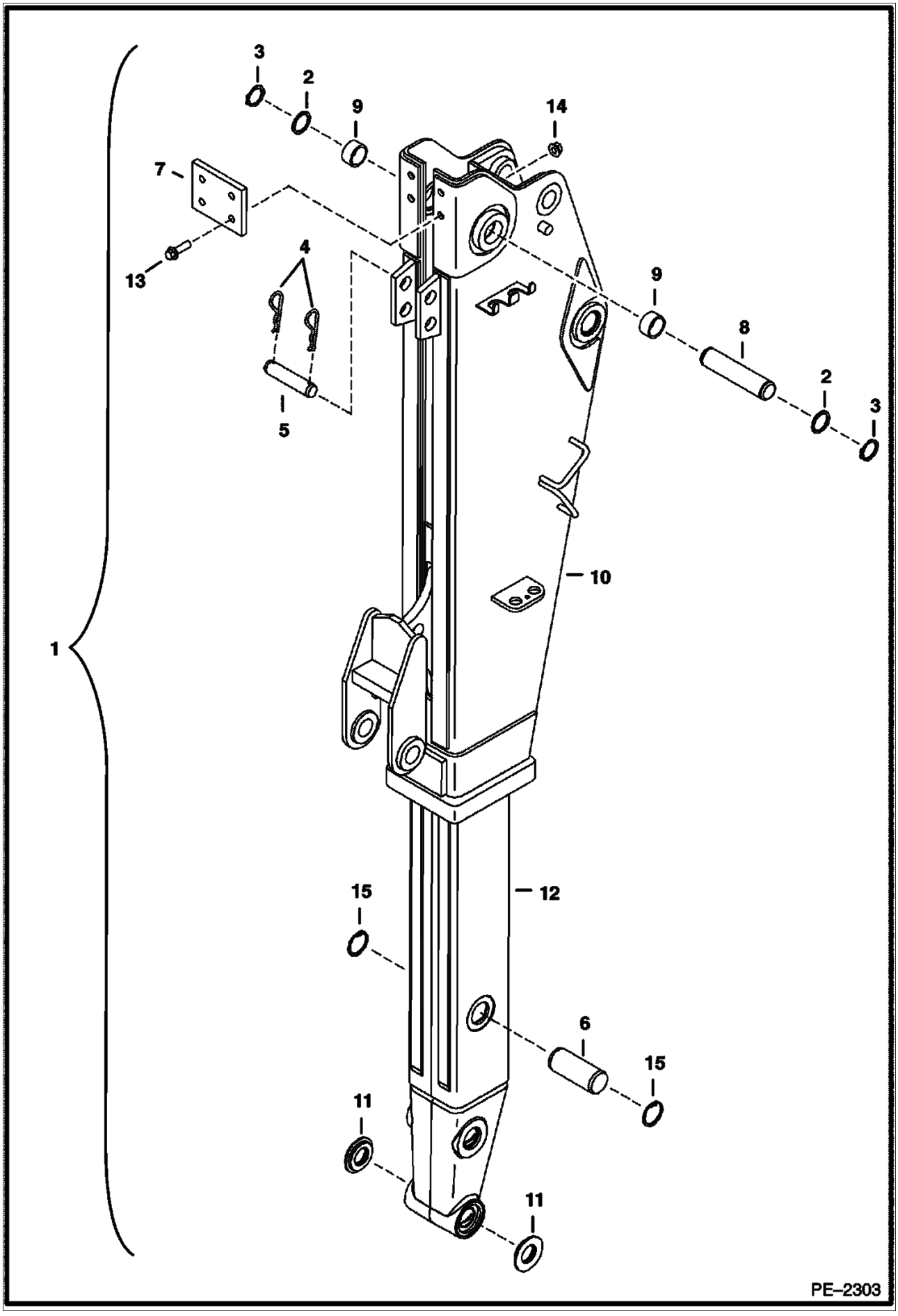

EXTENDIBLE ARM KIT (Cont'd)

Ref. No.	Part Number	Description	Remarks	Serial Number	Qty.
1		KIT	SALES - extendible link - order #6815280		1
2	6628547	WASHER			2
3	6668787	RING	retaining		2
4	6675029	PIN			2
5	6805348	PIN			1
6	6805381	PIN			1
7	6805396	PLATE			1
8	6805847	PIN			1
9	6812292	ARM	assy		1
10	6810387	ARM			1
11	6810627	WASHER			2
12	6812293	ARM			1
13	30CM01240B	SCREW			4
14	51DM00012B	NUT			4
15	8JM00045B	RING			2
16	6806122	SPACER			2

HEATER BOX

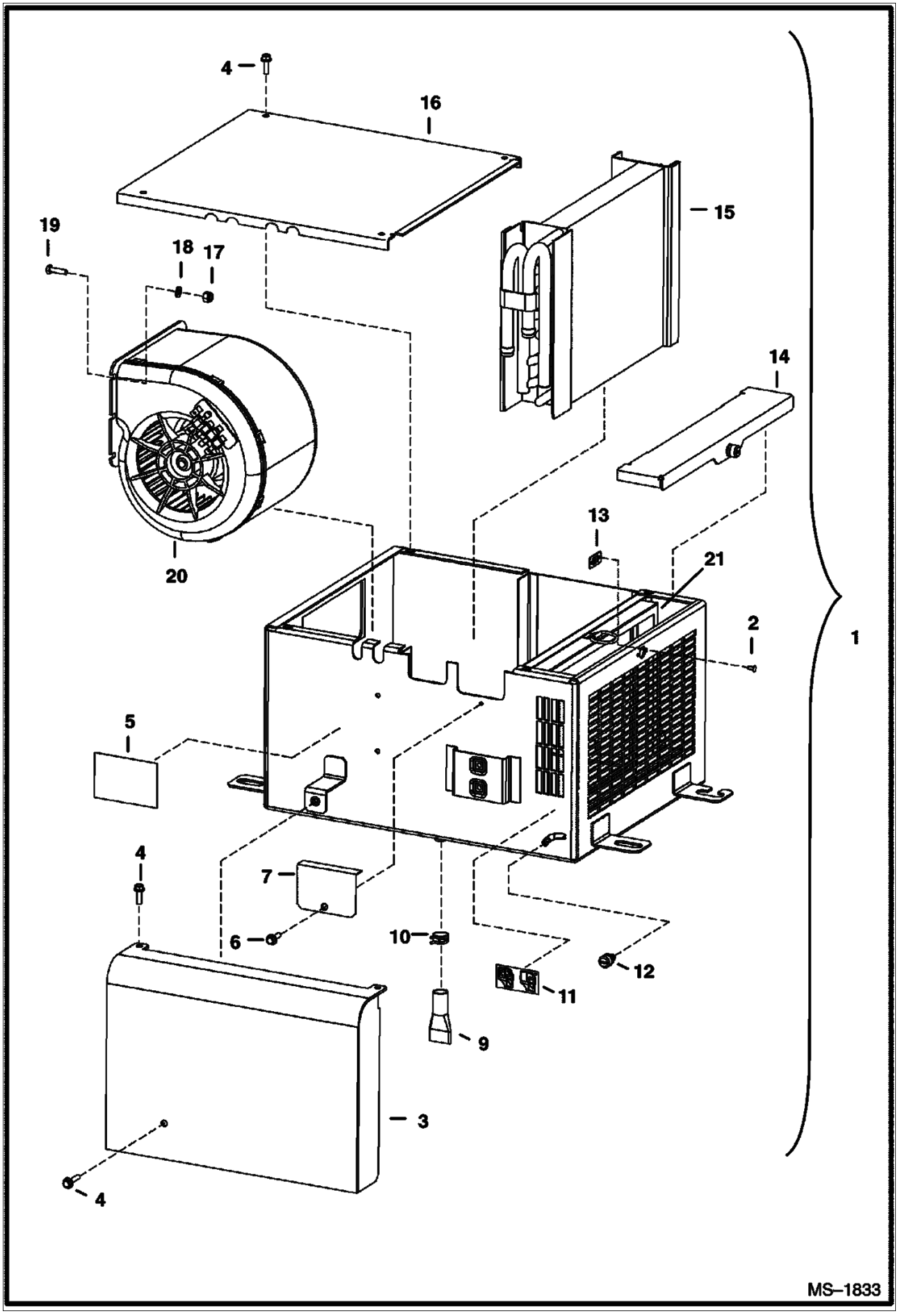

HEATER BOX (Cont'd)

Ref. No.	Part Number	Description	Remarks	Serial Number	Qty.
1	6680975	BOX	heater - W/Ref. 2 - 21		1
2		HOUSING	NSS - order Ref. 1		1
3	6685316	COVER			1
4	6685315	SCREW			5
5		PLATE	NAP - S/N		1
6	6684482	SCREW			7
7	6685318	COVER			1
8	6684503	NUT			7
9	6684507	TUBE			2
10	6684506	CLAMP			2
11	6685312	DECAL			1
12	6685321	SCREW			1
13	6685322	NUT			1
14	6685313	COVER			1
15	6685323	COIL	heater		1
16	6685317	COVER			1
17	6684521	NUT			4
18	6684500	WASHER			4
19	6685319	SCREW			4
20	6685320	BLOWER			1
21	6685314	FILTER			1

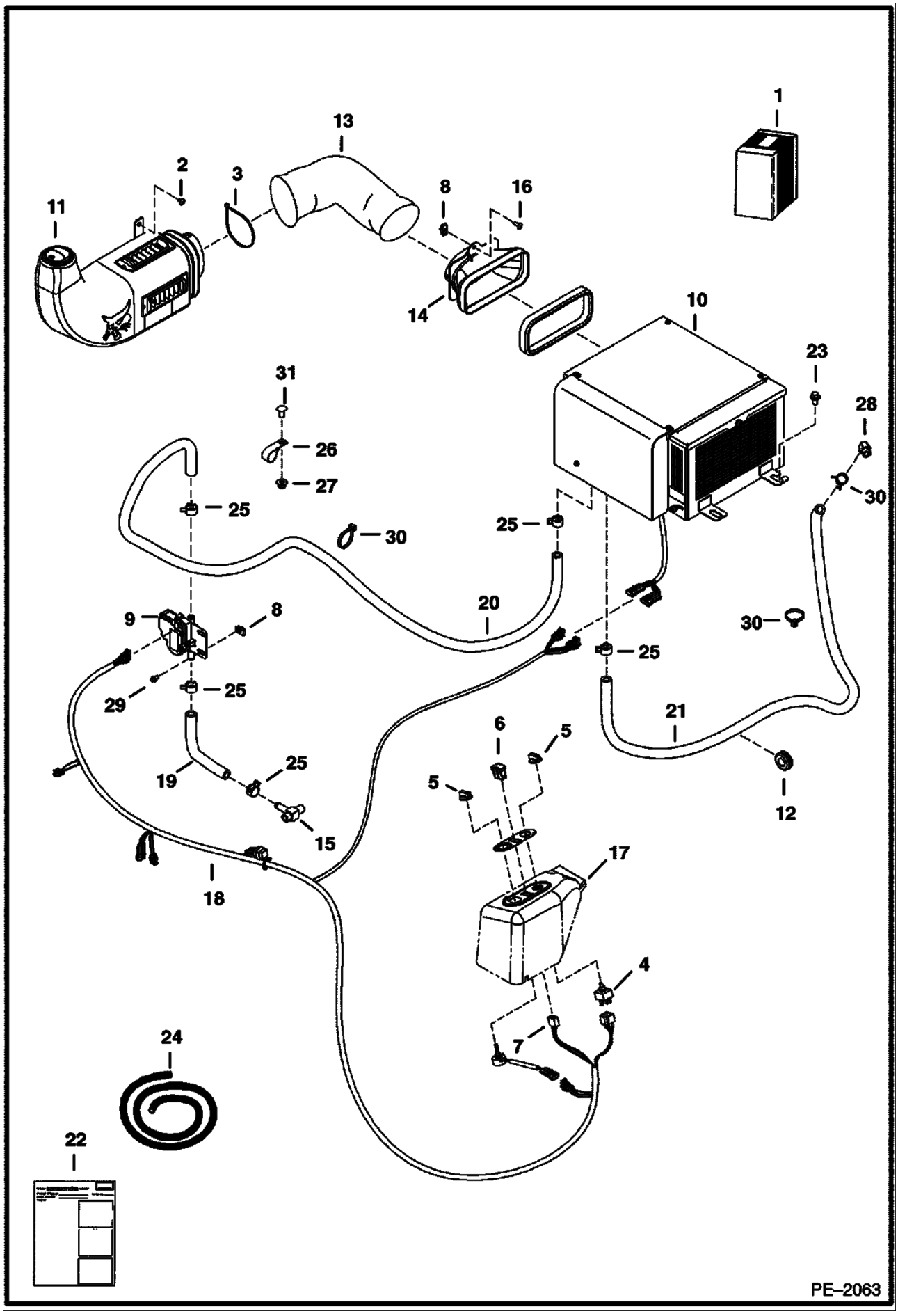
1
2
3
13
8
16
11
14
10
23
31
28
26
27
30
25
30
25
20
9
8
30
25
29
25
21
6
5
19
25
5
12
15
17
18
4
7
24
22
PE–2063

HEATER KIT (Cont'd)

Ref. No.	Part Number	Description	Remarks	Serial Number	Qty.
1	6817111	KIT	W/Ref. 2-18		1
2	6589675	SCREW			3
3	6610510	TIE	nylon		4
4	6675176	SWITCH			1
5	6675177	KNOB			2
6	6675181	PLUG			1
7	6675846	POTENTIOMETER	assy		1
8	6676026	NUT	clip		4
9	6685459	VALVE	heater		1
10	6680975	BOX	heater - assy		1
11	6680977	DUCT			1
11	6676713	LOUVER			2
11	6680308	LOUVER	round		1
11	6680321	CAP			1
11	6681509	DUCT			1
11	6681576	BRACKET			1
11	6681577	BRACKET			1
11	6814024	SCREW			4
11	58G000808B	SCREW			4
12	6681528	GROMMET			1
13	6681653	HOSE			1
13	6681881	DUCT			1
13	6681884	SEAL	sold by the foot - use 21" of Ref. 24		1
14		DUCT	NAP - assy		1
15	6682150	TEE			1
16	6803202	SCREW			4
17	6808433	DECAL	heater		1
18	6814229	HARNESS			1
19		HOSE	NAP - heater - use 9" of Ref. 24		1
20		HOSE	NAP - heater - use 78" of Ref. 24		1
21		HOSE	NAP - heater - use 72" of Ref. 24		1
22	6902520	INSTRUCTIONS			1
23	26GM10020B	SCREW			3
24	6565977	HOSE	bulk - sold per foot		x
25	5HM00020B	CLAMP			3
26	30HJ00616B	CLAMP			2
27	43DM00010B	NUT			1
28	6731085	ELBOW			1
29	29CM00612B	SCREW			1
30	6624289	STA STRAP			4
31	28CM01020B	BOLT			1

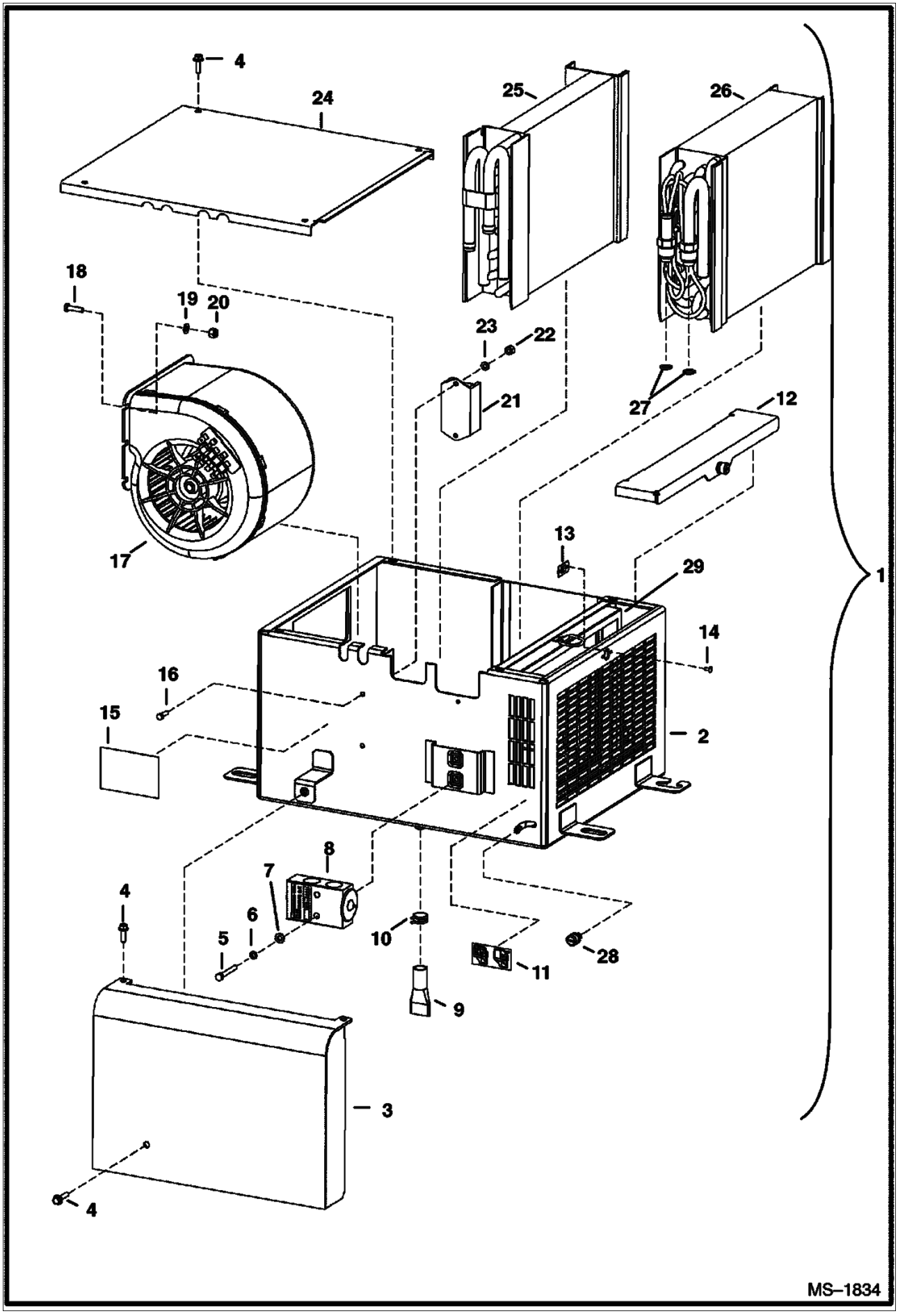
4
24
25
26
18
19
20
23
22
21
27
12
17
13
29
1
14
16
15
2
8
7
4
6
5
10
28
11
9
3
4
MS–1834

Ref. No.	Part Number	Description	Remarks	Serial Number	Qty.
1	6678966	BOX	HVAC - W/Ref. 2 - 29		1
2		CASE	NSS - Order Ref. 1		1
3	6685316	COVER			1
4	6685315	SCREW			5
5	6685116	SCREW			2
6	6684499	WASHER			2
7	6684500	WASHER			2
8	6684539	VALVE	expansion		1
9	6684507	TUBE	drain		2
10	6684506	CLAMP			2
11	6685312	DECAL			1
12	6685313	COVER			1
13	6685322	NUT			1
14		RIVET	NAP - by locally		1
15		PLATE	NAP		1
16	6685114	SCREW			2
17	6685320	BLOWER			1
18	6685319	SCREW			4
19	6684500	WASHER			6
20	6684521	NUT			4
21	6679082	THERMOSTAT			1
22	6684520	NUT			2
23	6685115	WASHER			2
24	6685317	COVER			1
25	6685323	COIL	heater		1
26	6685324	EVAPORATOR			1
27	6685325	O-RING			2
28	6685321	SCREW			1
29	6685314	FILTER			1

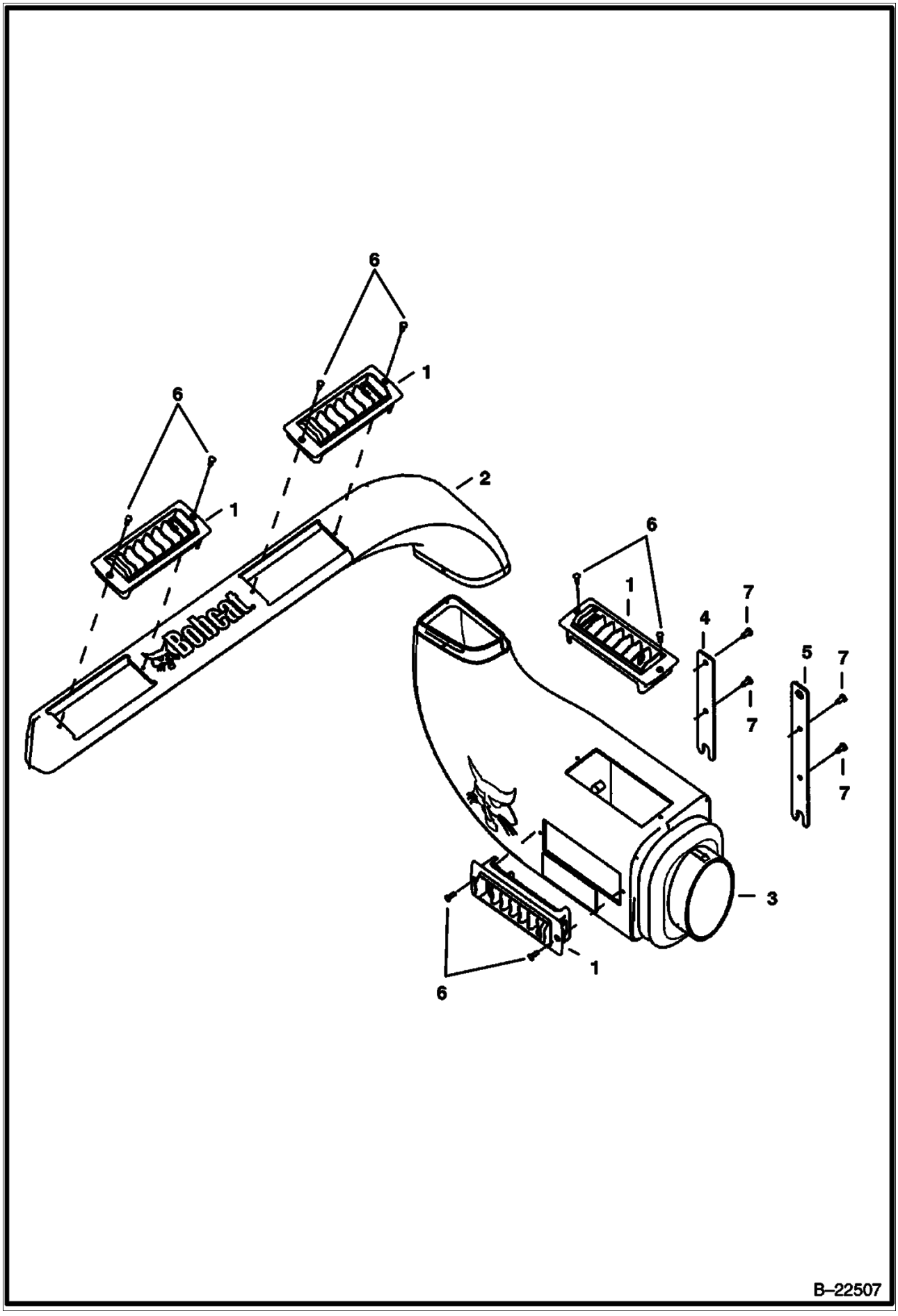
6
1
6
1
2
Bobcat
6
1
7
4
7
5
7
7
3
1
6
B–22507

Ref. No.	Part Number	Description	Remarks	Serial Number	Qty.
1	6676713	LOUVER			4
2	6680976	DUCT	crossmember		1
3	6681509	DUCT			1
4	6681576	BRACKET			1
5	6681577	BRACKET			1
6	6814024	SCREW			8
7	58G000808B	SCREW			4

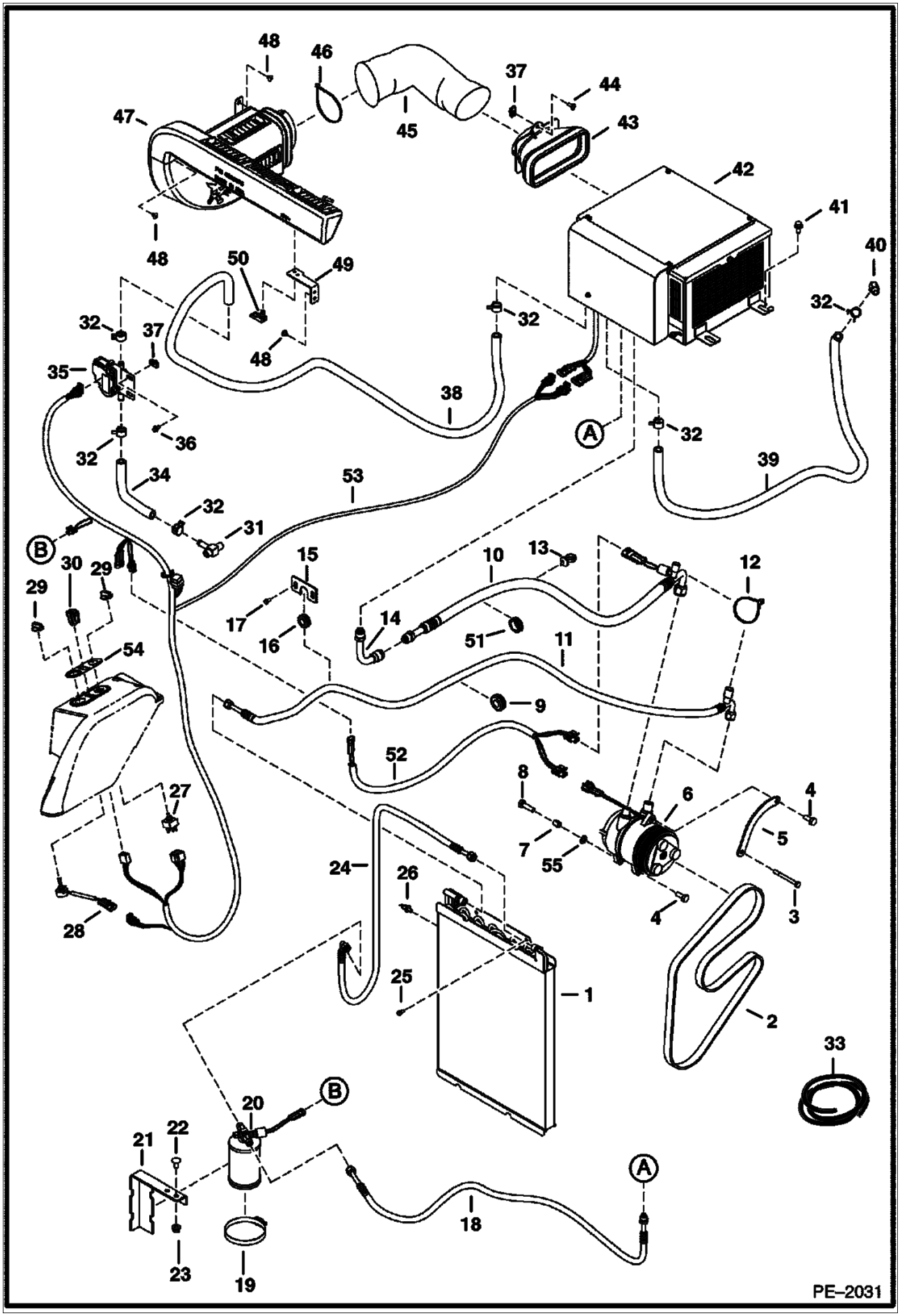
PE–2031

Ref. No.	Part Number	Description	Remarks	Serial Number	Qty.
1	6678831	CONDENSER			1
2	6815018	BELT			1
3	1CM00880B	SCREW			1
4	5CM01025B	SCREW			2
5	6813975	PLATE			1
6	6681716	COMPRESSOR			1
6	6685798	CLUTCH			1
7	6732732	BUSHING			1
8	5CM01030B	SCREW			1
9	6515603	GROMMET			1
10	6680306	HOSE			1
11	6680303	HOSE			1
11	6679085	SWITCH			1
12	6624289	STA STRAP			6
13	6675734	STRAP			1
14	6684649	ADAPTER			1
15	6813191	PLATE			1
16	6681567	GROMMET			1
17		SCREW			1
18	6680305	HOSE			1
19	42H000056B	CLAMP			2
20	6680311	RECEIVER			1
21	6813715	BRACKET			1
22	28CM01020B	BOLT			2
23	43DM00010B	NUT			2
24	6680304	HOSE			1
25	1CM00612B	SCREW			4
26	6682990	CLIP			3
27	6675176	SWITCH			1
28	6675846	POTENTIOMETER			1
29	6675177	KNOB			2
30	6719176	SWITCH	rocker		1
31	6682150	TEE			1
32	5HM00020B	CLAMP			6
33	6565977	HOSE	bulk - sold per foot		x
34		HOSE	NAP - use 9" (228.6mm) of Ref. 33		1
35	6684909	VALVE	heater		1
36	29CM00612B	SCREW			2
37	6676026	NUT			2
38		HOSE	NAP - use 78" (1981.2mm) of Ref. 33		1
39		HOSE	NAP - use 72" (1828.8mm) of Ref. 33		1
40	6731085	ELBOW			1
41	26GM10020B	SCREW			3
42	6678966	BOX	See Illustration HVAC BOX/ MS1834 HVAC		1
43	6681881	DUCT			1
44	6803202	SCREW			2
45	6681653	HOSE			1
46	6610510	TIE			1
47	6680976	DUCT	See Illustration HVAC DUCT/ B22507 ASSY		1
48	6589675	SCREW			2
49	6814194	BRACKET			1
50	6681878	LATCH			1
51	6681528	GROMMET			1

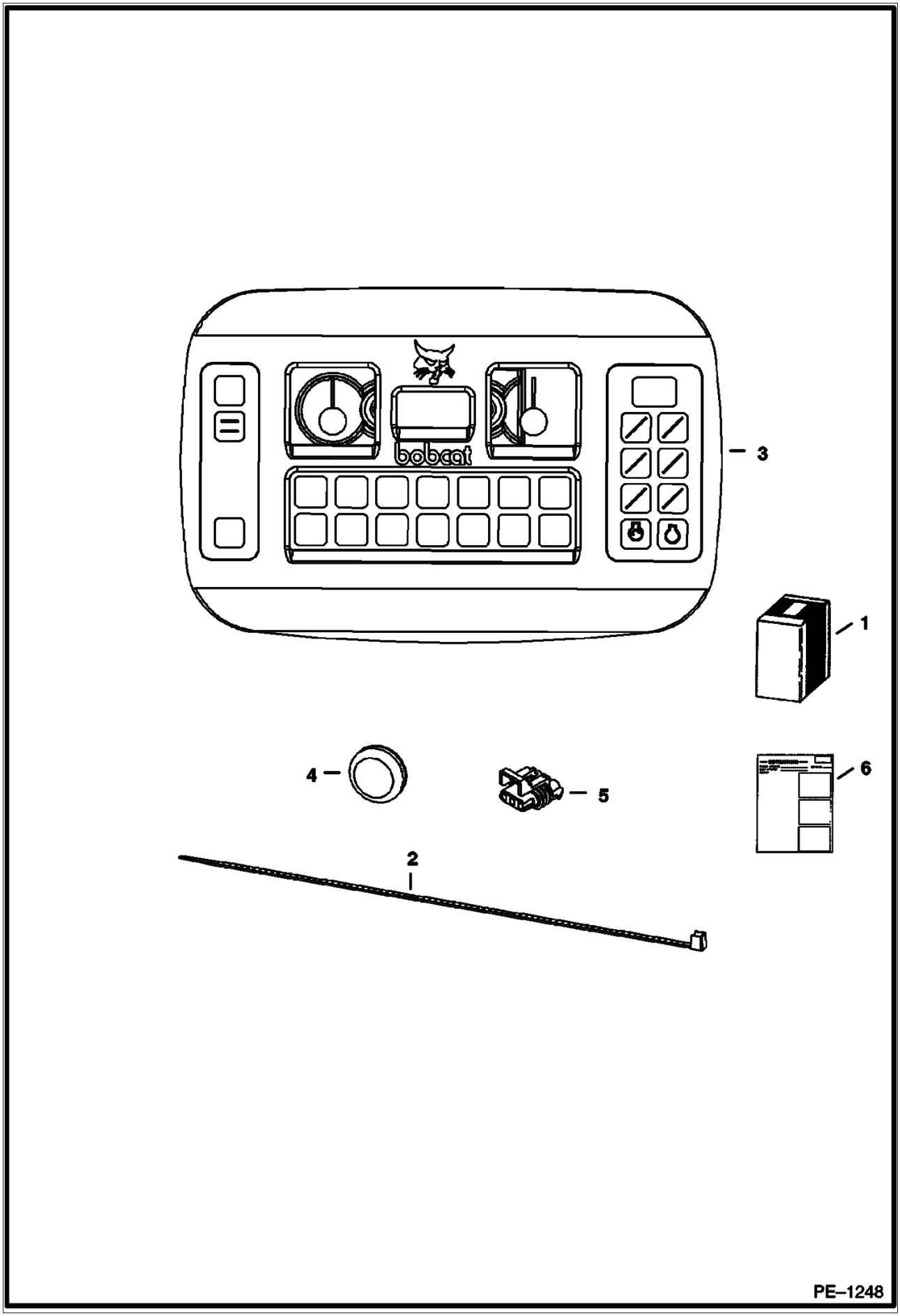
bobcat
3
1
4
5
6
2
PE–1248

KEYLESS IGNITION KIT (Cont'd)

Ref. No.	Part Number	Description	Remarks	Serial Number	Qty.
1	6814715	KIT			1
2	6610510	TIE			1
3	6676922	PLUG			1
4	6678691	CONTROLLER	keyless		1
5	6809227	CONNECTOR			1
6	6902601	INSTRUCTIONS			1

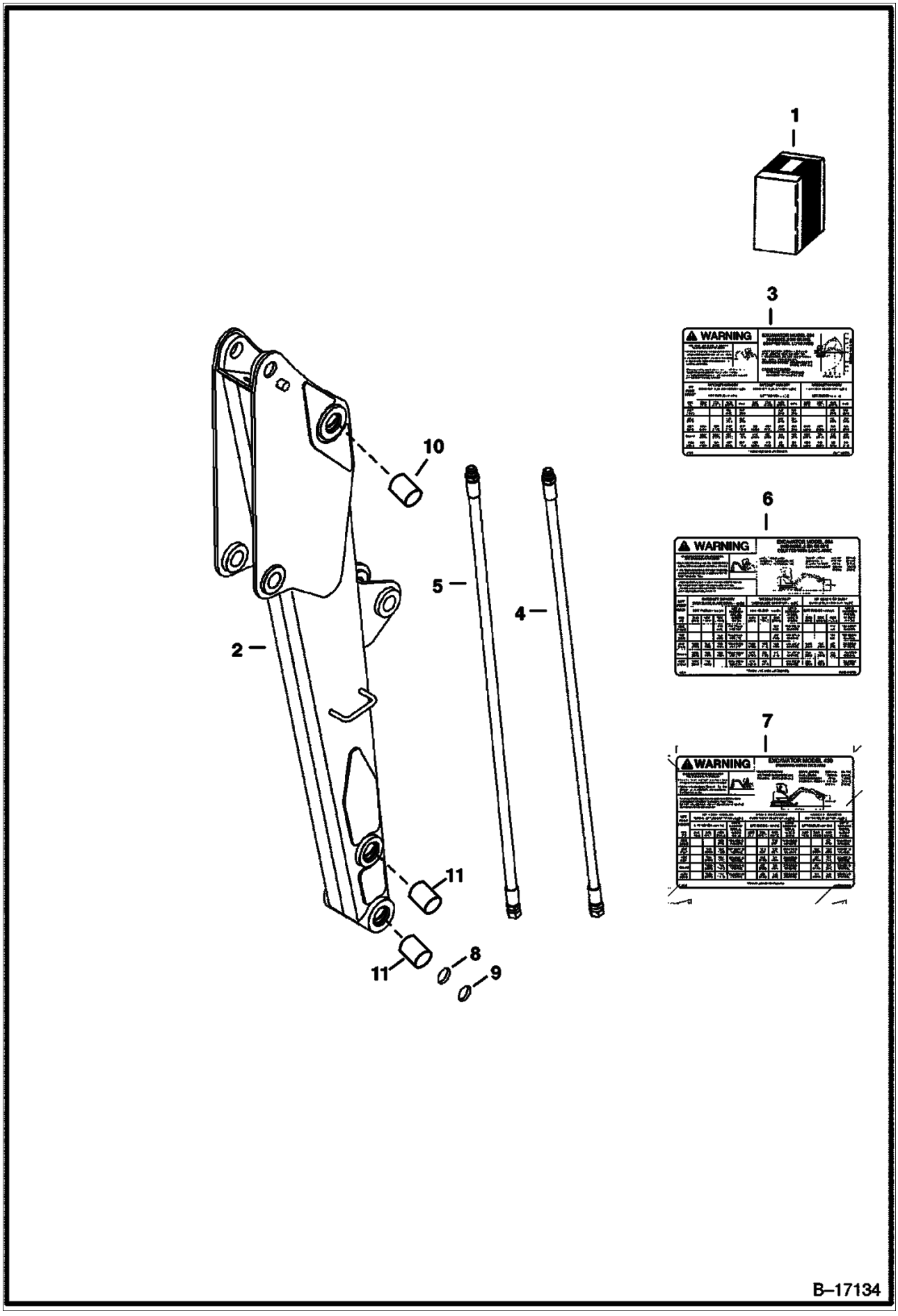
1
3
WARNING
10
5
4
2
6
WARNING
7
WARNING
11
11
8
9
B–17134

LONG ARM KIT (Cont'd)

Ref. No.	Part Number	Description	Remarks	Serial Number	Qty.
1		KIT	SALES - order Sales #6815280		1
2	7102694	ARM			1
3	6805626	DECAL			1
4	6814783	HOSE			1
5	6814784	HOSE			1
6	6810009	DECAL	capacity		1
7	6818043	DECAL			1
8	25K040112B	O-RING	used w/6812291 only - not in kit		2
9	6811260	O-RING	used w/6812291 only - not in kit		2
10	6803207	BUSHING			2
11	6803213	BUSHING			1

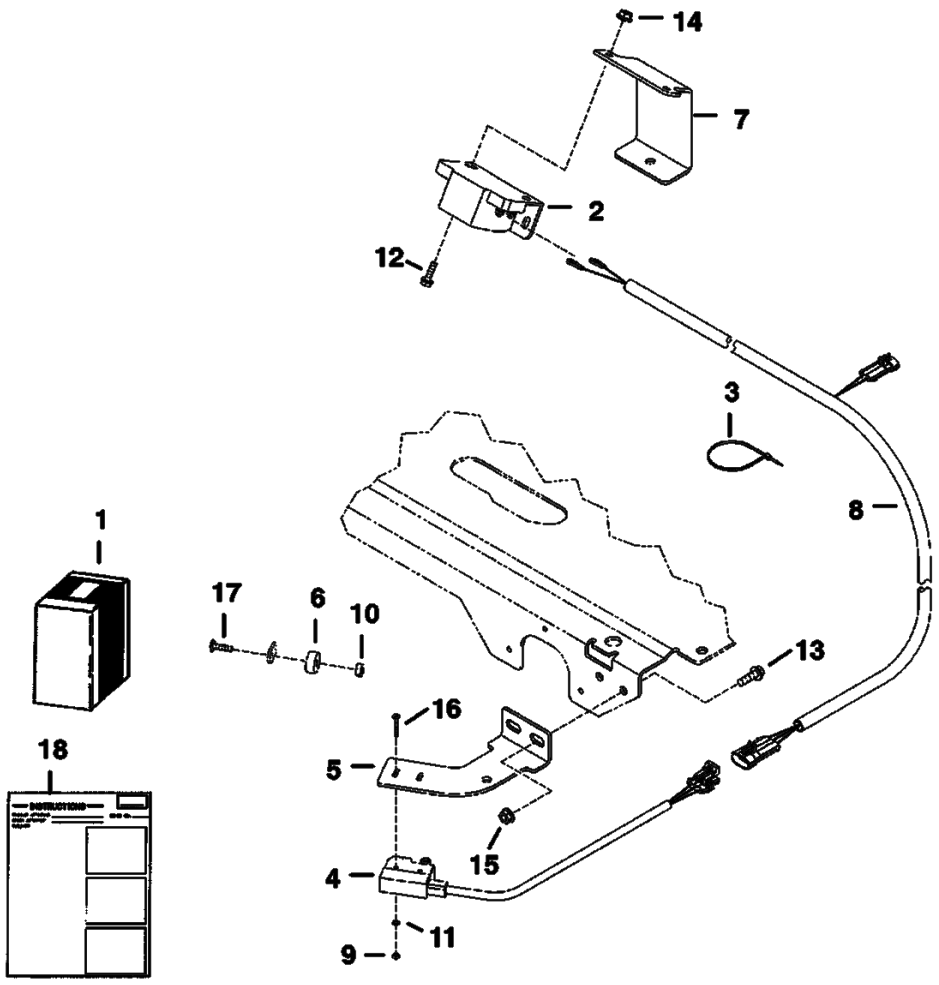

MS–1095

MOTION ALARM KIT (Cont'd)

Ref. No.	Part Number	Description	Remarks	Serial Number	Qty.
1	6808053	KIT	Ref. 2 - 18		1
2	6599931	ALARM			1
3	6610510	TIE			3
4	6661150	SWITCH			1
5	6808054	MOUNT	switch		1
6	6808580	BEARING			1
7	6808896	MOUNT	alarm		1
8	6809258	HARNESS			1
9	12D000006B	NUT			2
10	12D000010B	NUT			1
11	12E000006B	WASHER			2
12	29CM00616B	SCREW			2
13	29CM00816B	SCREW			2
14	43DM00006B	NUT			2
15	43DM00008B	NUT			2
16	85G000616B	SCREW			2
17	87G001010B	SCREW			2
18	6901053	INSTRUCTION			1
19	6810004	DECAL			1
20	6811056	MOUNT			1

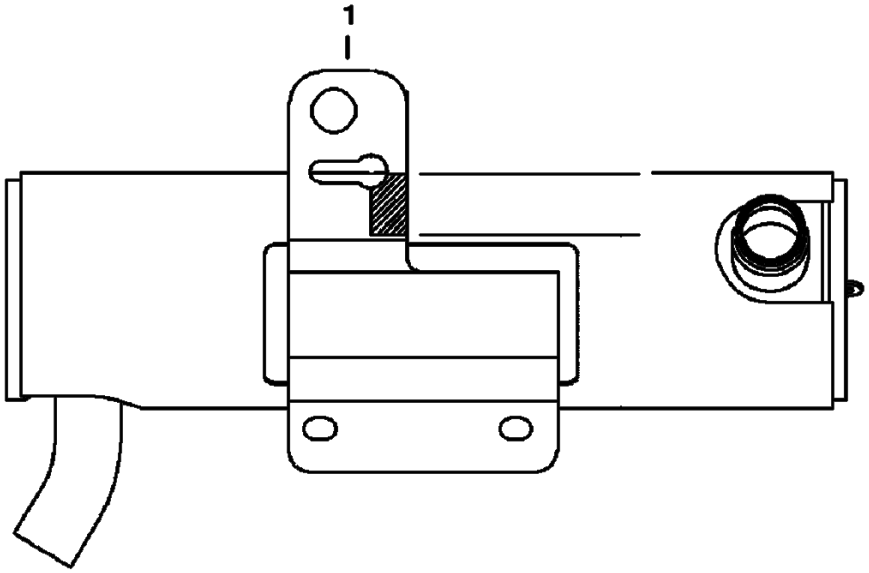

MS–1326

Ref. No.	Part Number	Description	Remarks	Serial Number	Qty.
1	6816047	PURIFIER			1

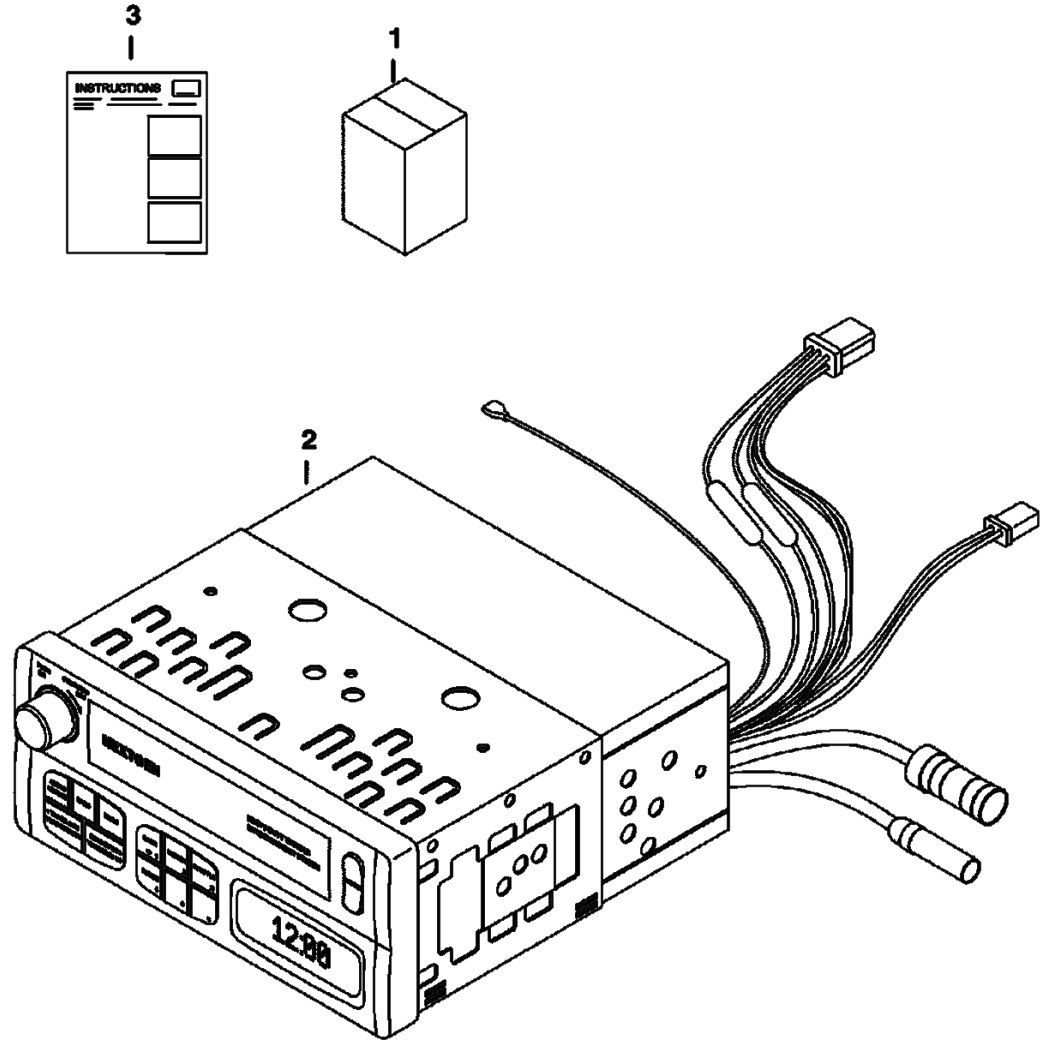

MS–1955

RADIO KIT (Cont'd)

Ref. No.	Part Number	Description	Remarks	Serial Number	Qty.
1	7100662	KIT	W/Ref. 2 & 3		1
2	6901445	RADIO			1
3	6902667	INSTRUCTIONS			1

SEAT BELT KIT
(Three Inch)

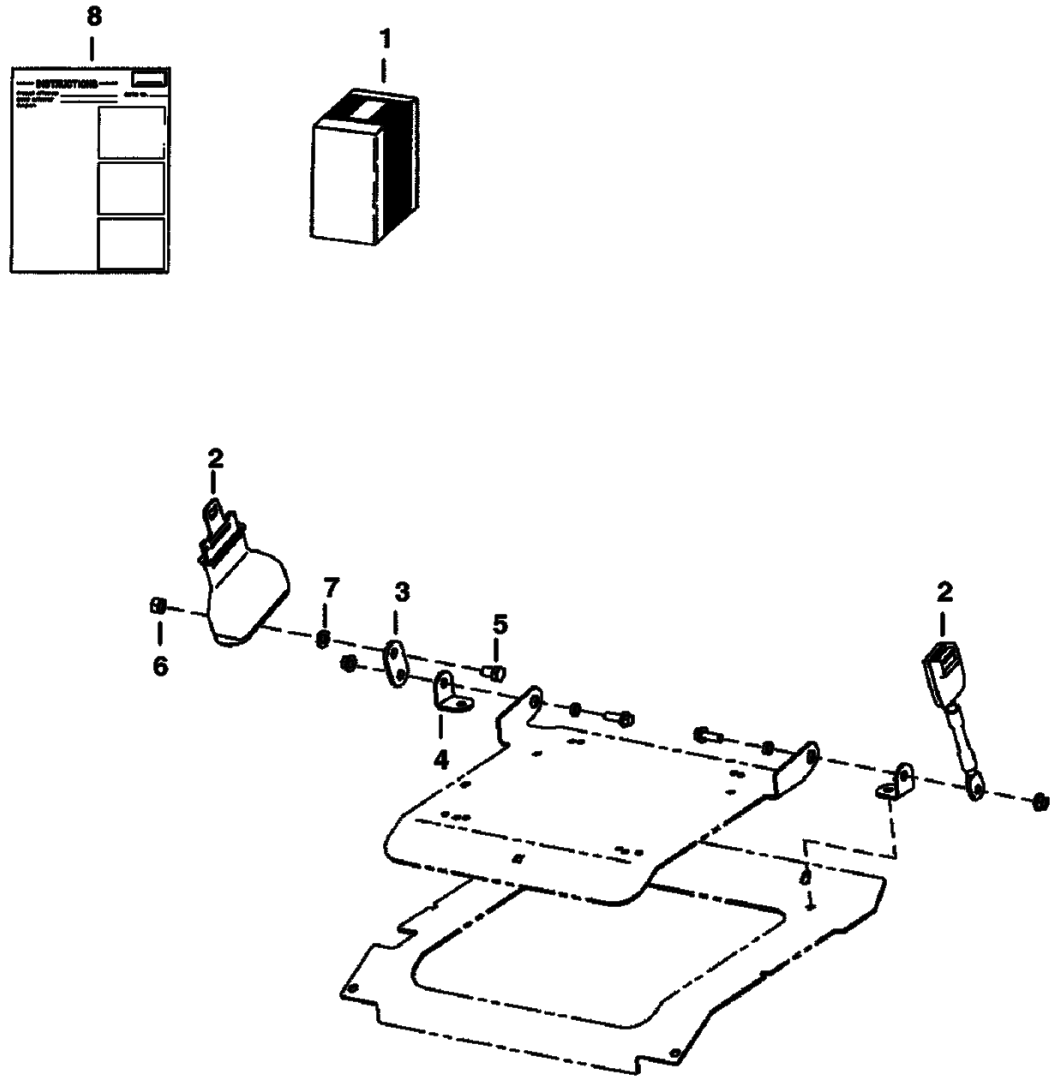

SEAT BELT KIT (Cont'd)
(Three Inch)

Ref. No.	Part Number	Description	Remarks	Serial Number	Qty.
1	7102902	KIT	3" seat belt		1
2	6685747	SEAT BELT	3"		1
3	7102065	BRACKET			1
4	1CM01250B	BOLT			1
5	1CM01220B	SCREW			1
6	53DM00012B	NUT			2
7	1EM00120B	WASHER			1
8	6902838	INSTRUCTIONS			1

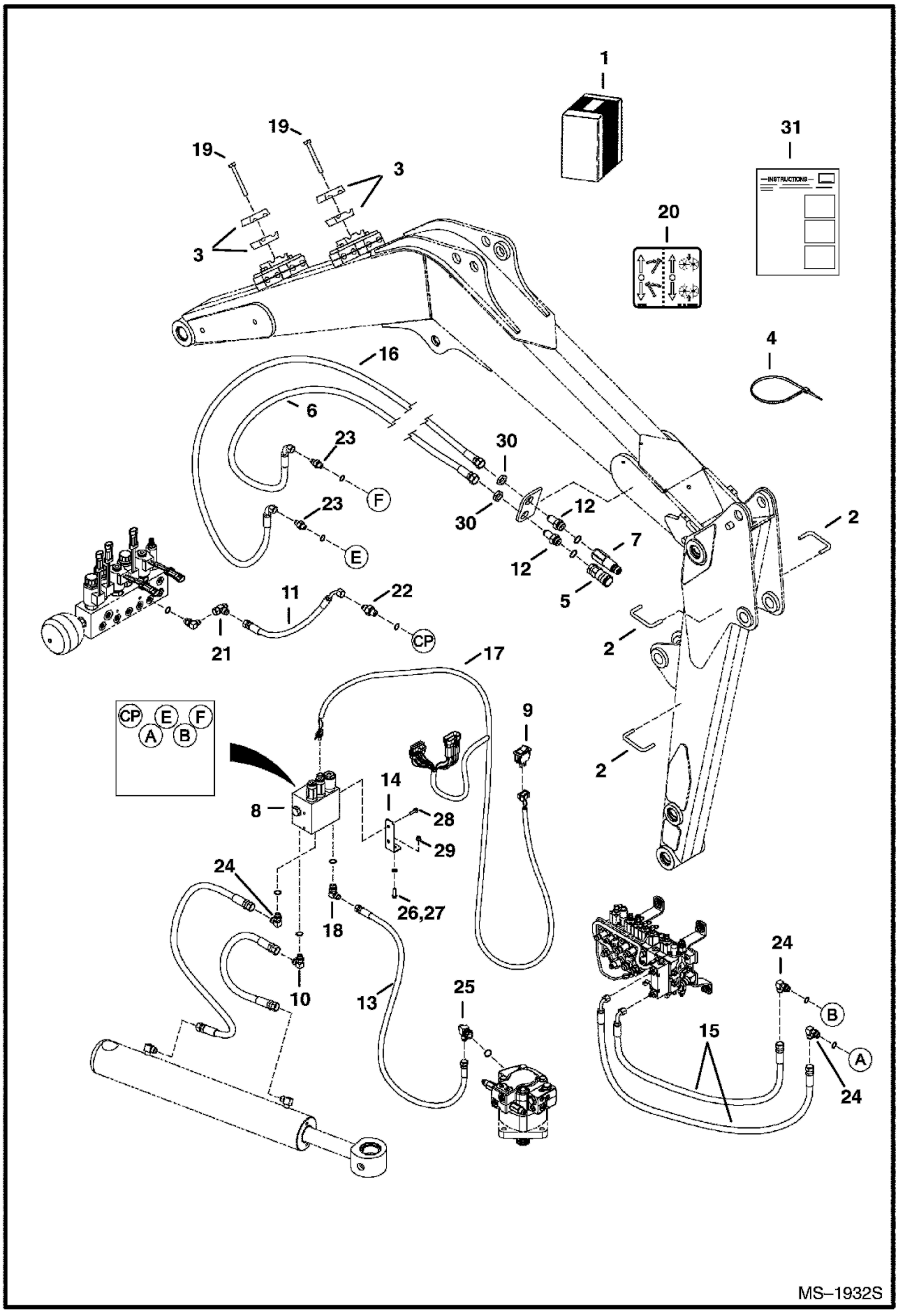
1
19
19
3
3
31
INSTRUCTIONS
20
4
16
6
23
F
23
E
30
30
12
12
7
5
2
2
2
2
11
22
21
CP
17
CP
E
F
A
B
9
8
14
28
29
24
26,27
18
10
13
25
24
15
B
A
24
MS–1932S

SECONDARY AUXILIARY KIT (Cont'd)

Ref. No.	Part Number	Description	Remarks	Serial Number	Qty.
1	6816880	KIT			1
2	6586391	GUIDE			1
3	6592506	CLAMP			4
4	6624289	STA STRAP			1
5	6672960	COUPLER	female flush face		1
6	6674264	BOLT	retainer		2
7	6674688	COUPLER	male flush face		1
8	6679888	VALVE ASSY			1
9	6679906	SWITCH			1
10	6703013	HOSE			1
11	6806995	HOSE			1
12	6812816	ADAPTER	hose		1
13	6815035	HOSE			1
14	6816892	BRACKET			2
15	6816893	HOSE			1
16	6816894	HOSE			2
17	6818394	HARNESS			1
18	6902493	INSTRUCTIONS			1
19	6958354	MOUNT			1
20	6958363	DECAL			1
21	13K000003B	TEE			1
22	15KB00406B	ADAPTER			1
23	15KB00606B	ADAPTER			2
24	17KB00606B	ELBOW			5
25	21KB00808B	TEE			1
26	28CM01020B	BOLT			2
27	29CM01020B	SCREW			2
28	35C000516B	BOLT			4
29	51DM00010B	NUT			2
30	86F000007B	NUT			2
31	6812815	FITTING			1
32	17KB00806B	FITTING			1
33	1CM08100B	BOLT			2

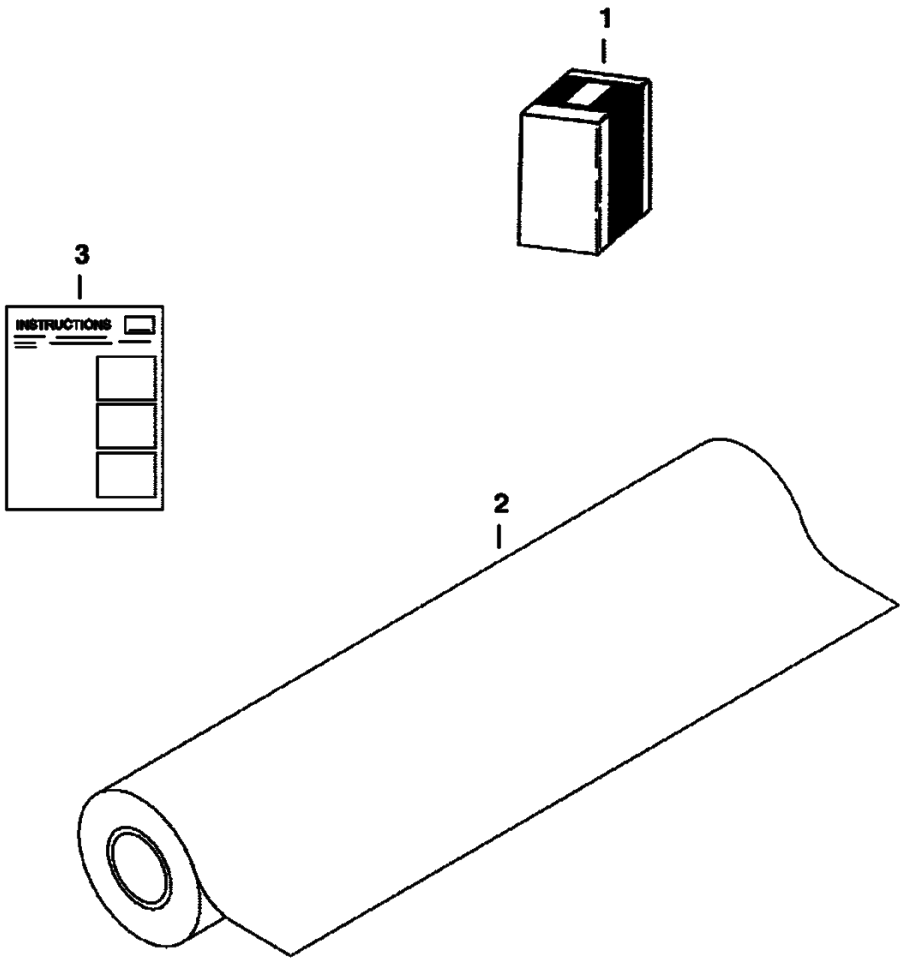

MS–1889

SOLAR KIT (Cont'd)

Ref. No.	Part Number	Description	Remarks	Serial Number	Qty.
1	6817568	KIT			1
2	6683889	SHIELD	solar film		1
3	6902534	INSTRUCTIONS			1

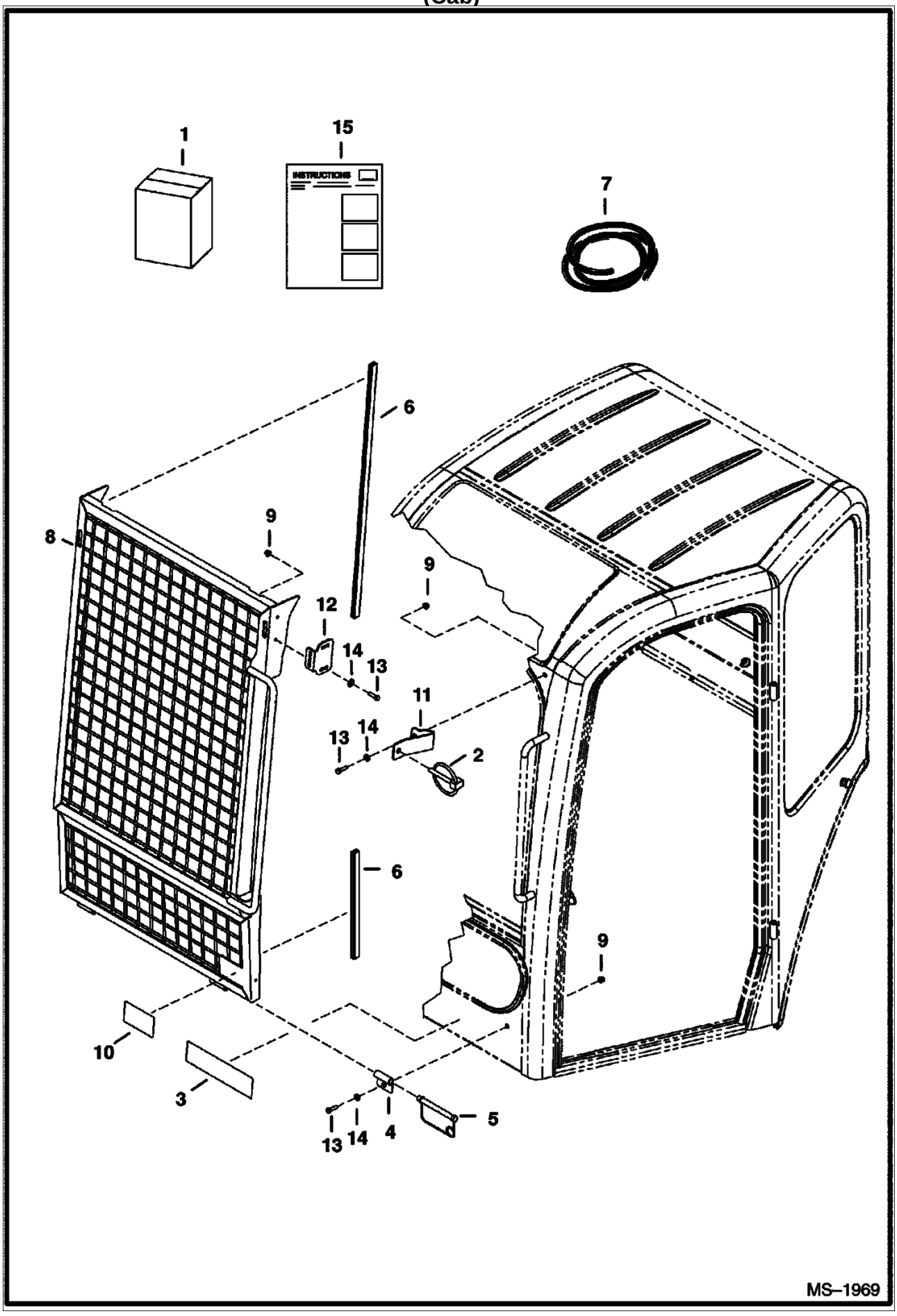
1
15
INSTRUCTIONS
7
6
8
9
9
12
14
13
11
13
14
2
6
9
10
3
13
14
4
5
MS–1969

SPECIAL APPLICATION KIT (Cont'd)
(Cab)

Ref. No.	Part Number	Description	Remarks	Serial Number	Qty.
1	6817753	KIT			1
2	6668928	LOCK PIN			2
3	6808185	DECAL	warning		1
4	6808924	HINGE			2
5	6808926	PIN			4
6		SEAL	NAP - use 70" (1778mm) of Ref. 7		1
7	6682492	TRIM	bulk - sold per foot		x
8	6817754	GUARD	front w/a		1
9	6902939	INSTRUCTION			1
10	7103195	DECAL			1
11	7103753	BRACKET			1
12	7103872	BRACKET			1
13	1CM00620B	BOLT			4
14	25E000013B	WASHER			4
15	51DM00006B	NUT			4

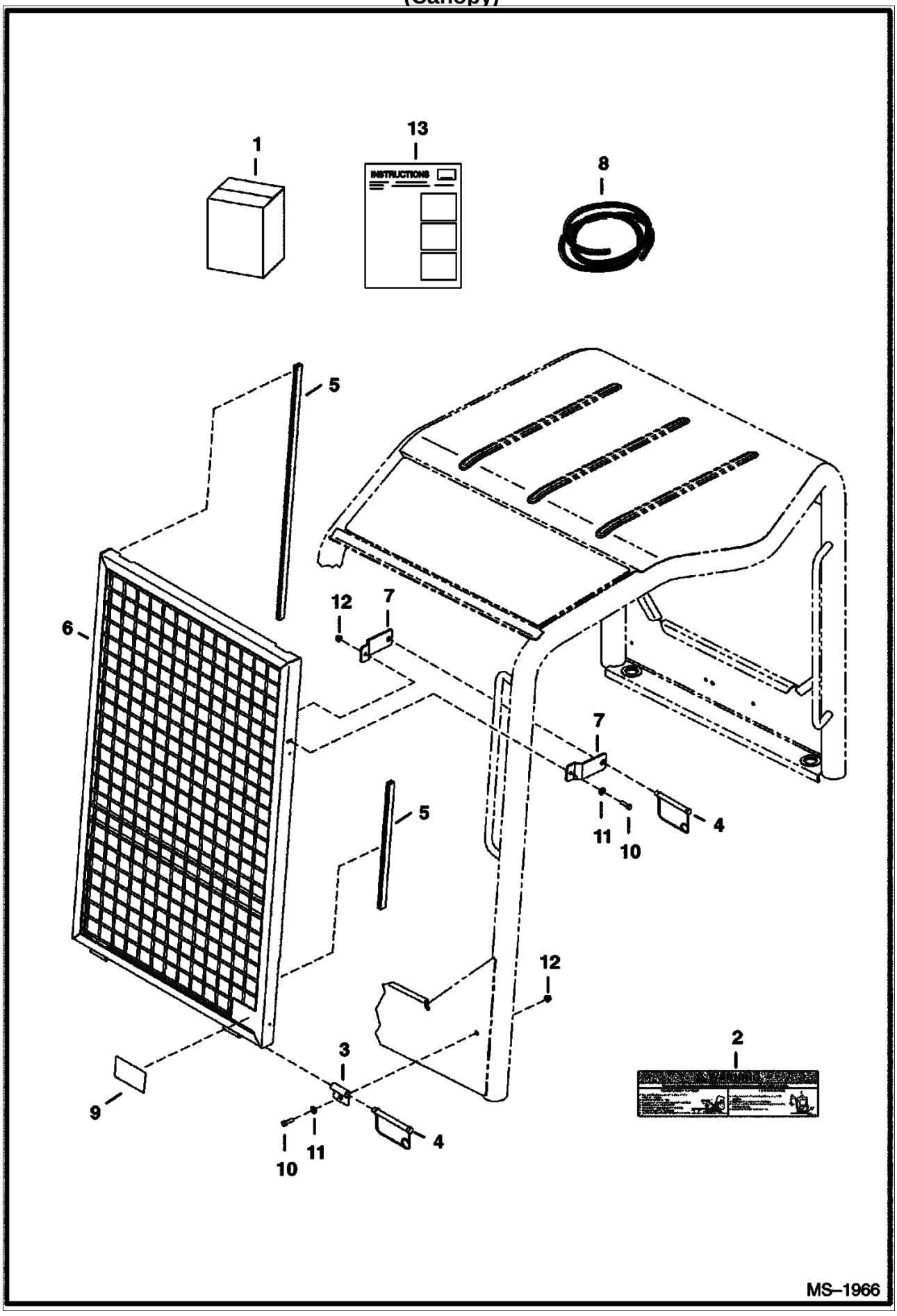
1
13
INSTRUCTIONS
8
5
6
12
7
7
5
11
10
4
12
2
3
9
4
11
10
MS–1966

SPECIAL APPLICATION KIT (Cont'd)
(Canopy)

Ref. No.	Part Number	Description	Remarks	Serial Number	Qty.
1	6818012	KIT			1
2	6808185	DECAL	warning		1
3	6808924	HINGE			2
4	6808926	PIN			4
5		SEAL	NAP - use 70" (1778mm) of Ref. 13		1
6	6818013	GUARD			1
7	6818017	BRACKET			4
8	6902939	INSTRUCTION			1
9	7103194	DECAL			1
10	1CM00620B	BOLT			4
11	25E000013B	WASHER			4
12	51DM00006B	NUT			4
13	6682492	TRIM	bulk - sold per foot		x

STEEL TRACK KIT

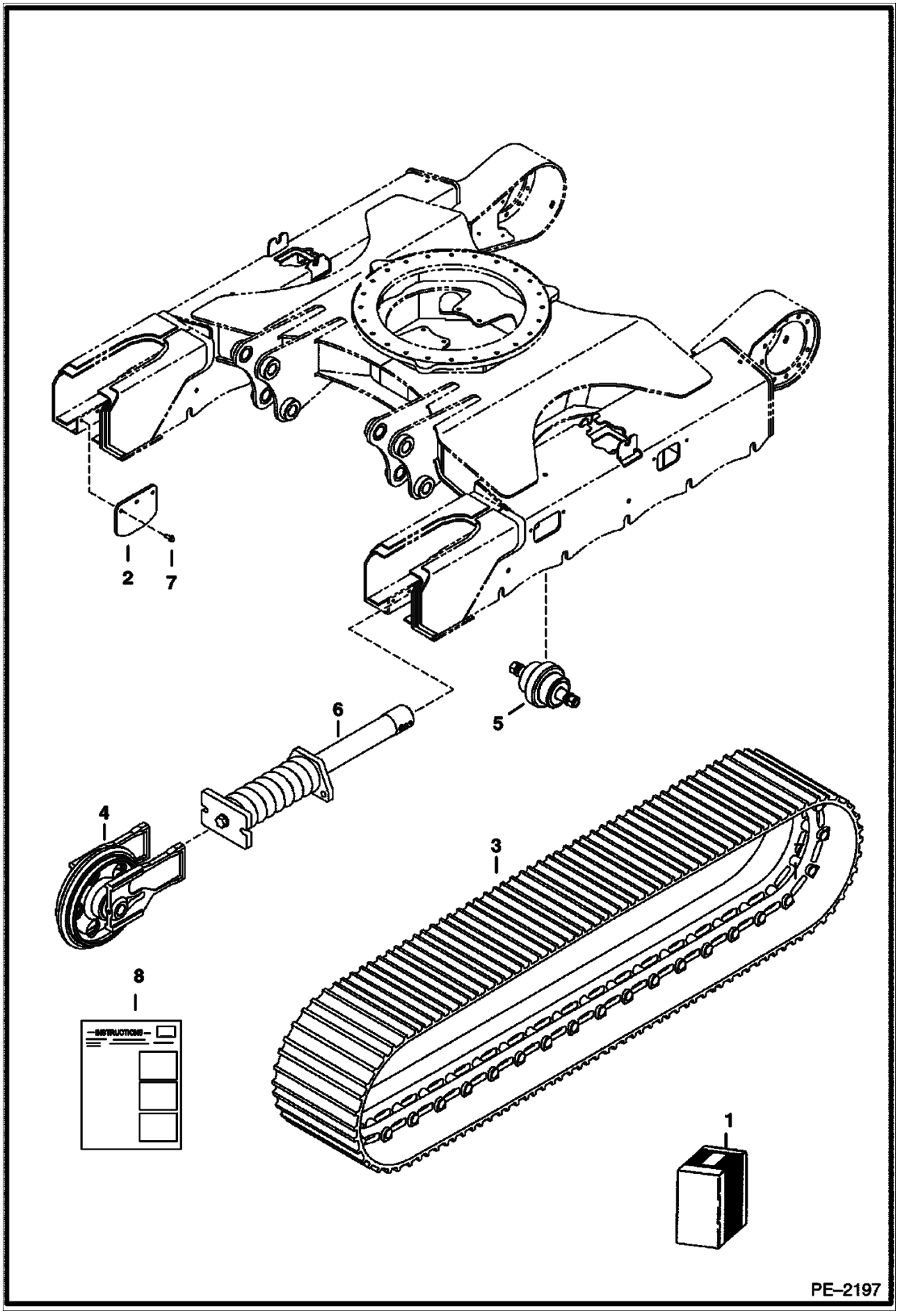

STEEL TRACK KIT (Cont'd)

Ref. No.	Part Number	Description	Remarks	Serial Number	Qty.
1	6817157	STEEL TRACK KIT			1
2	6596396	PLATE			4
3	6684245	TRACK	assy - steel		2
4	6815121	IDLER	assy - steel		2
5	6815123	ROLLER	assy		10
6	6817652	CYLINDER			2
7	6902625	INSTRUCTION			1
8	26GM10030B	SCREW			12

STROBE LIGHT KIT

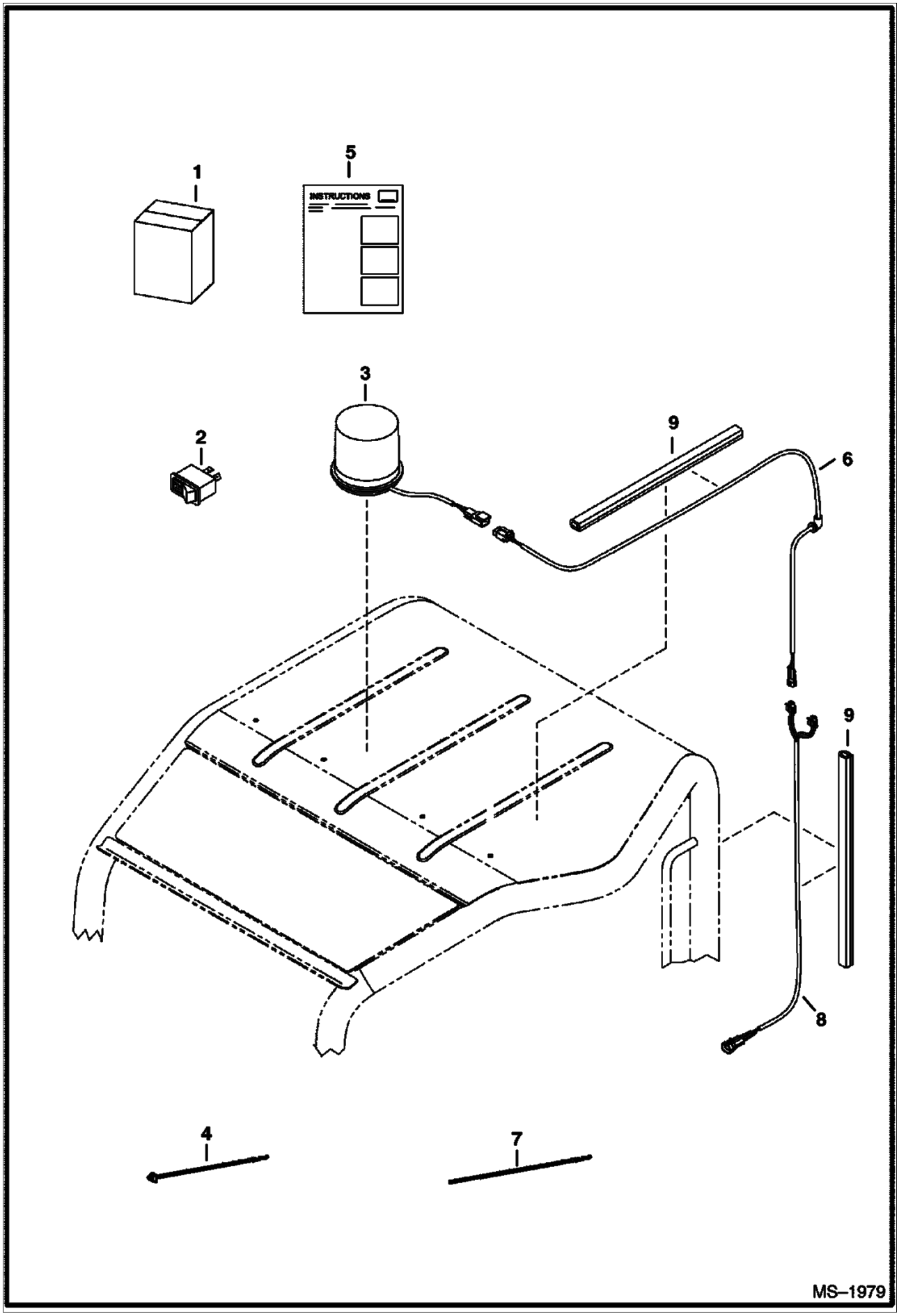

STROBE LIGHT KIT (Cont'd)

Ref. No.	Part Number	Description	Remarks	Serial Number	Qty.
1	7105013	KIT	W/Ref. 2-9		1
2	6665317	SWITCH			1
3	6675522	STROBE			1
4	6624289	STA STRAP			2
5	6903146	INSTRUCTION			1
6	7104182	HARNESS			1
7	7104659	HARNESS			1
8	7104694	HARNESS			1
9	6682741	RETAINER			2

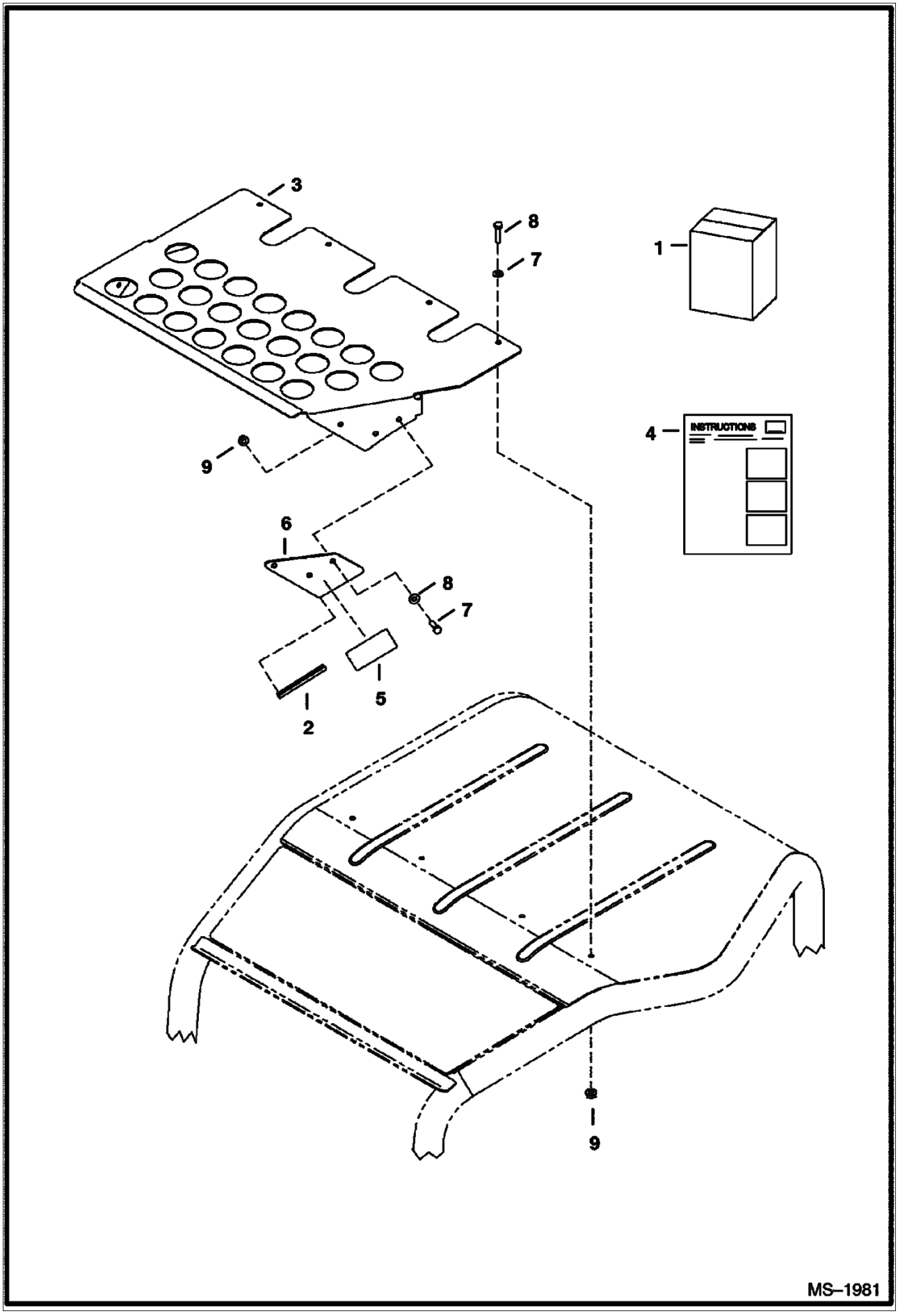
3
8
7
1
4
INSTRUCTIONS
9
6
8
7
2
5
9
MS–1981

TOP GUARD KIT (Cont'd)

Ref. No.	Part Number	Description	Remarks	Serial Number	Qty.
1	6817948	KIT	W/Ref. 4-9		1
2	6816136	TRIM			2
3	6817661	TOP GUARD	top		1
4	6902939	INSTRUCTION			1
5	7103193	DECAL			1
6	7103726	PLATE			2
7	1CM01020B	BOLT			10
8	15EM00100B	WASHER			10
9	51DM00010B	NUT			10

TOP GUARD LIGHT KIT

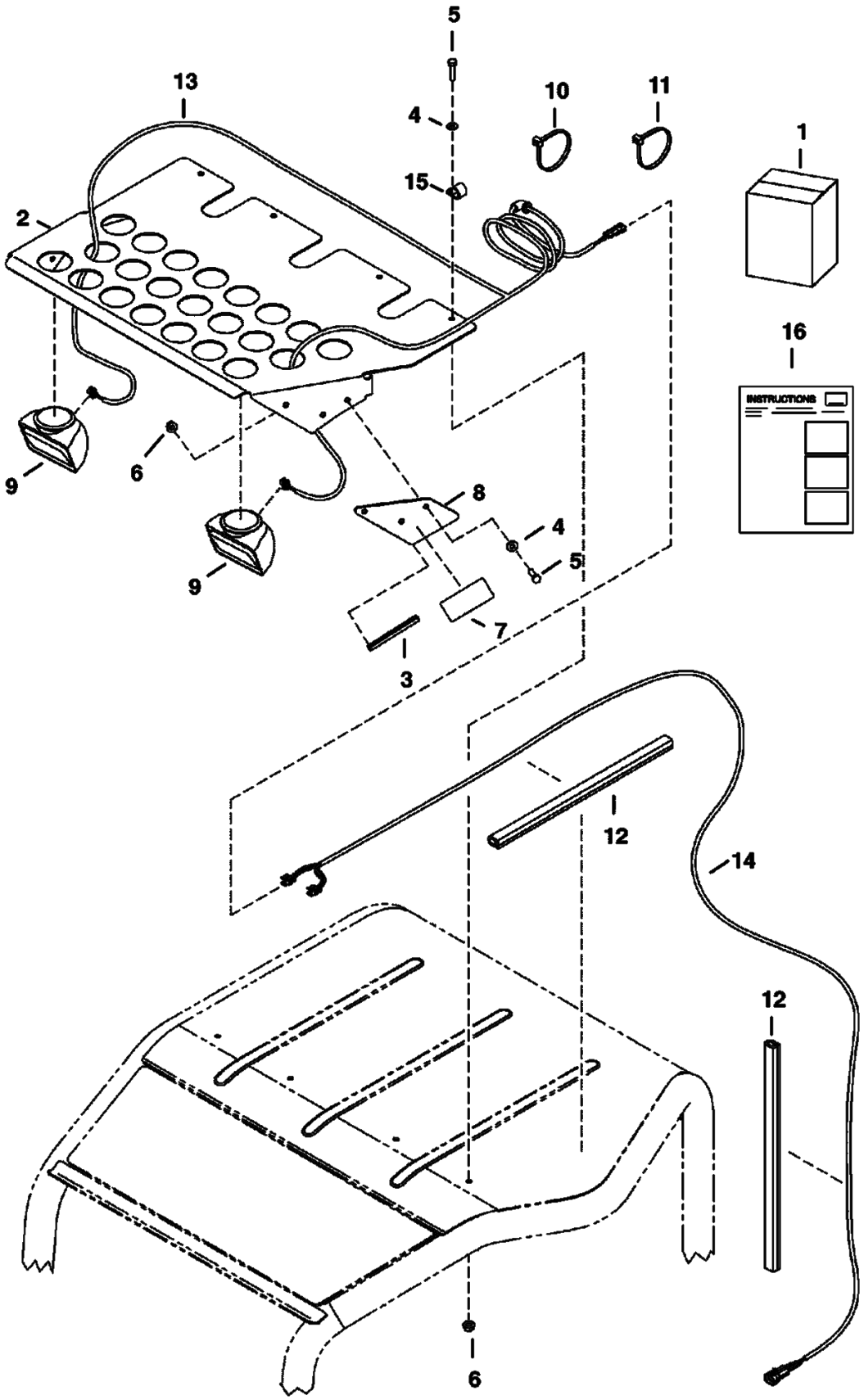

NOTE: Must also order Top Guard Kit 6817948

MS–1984

TOP GUARD LIGHT KIT (Cont'd)

Ref. No.	Part Number	Description	Remarks	Serial Number	Qty.
1	7104097	KIT	W/Ref. 2-15		1
2	6817661	TOP GUARD			1
3	6816136	TRIM			2
4	15EM00100B	WASHER			10
5	1CM01020B	BOLT			10
6	51DM00010B	NUT			10
7	7103193	DECAL			1
8	7103726	PLATE			2
9	6577801	LIGHT	assy		2
10	6610510	TIE			2
11	6624289	STA STRAP			2
12	6682741	RETAINER			2
13	7104183	HARNESS			1
14	7104659	HARNESS			1
15	30H000023B	CLAMP			4
16	6902939	INSTRUCTION			1

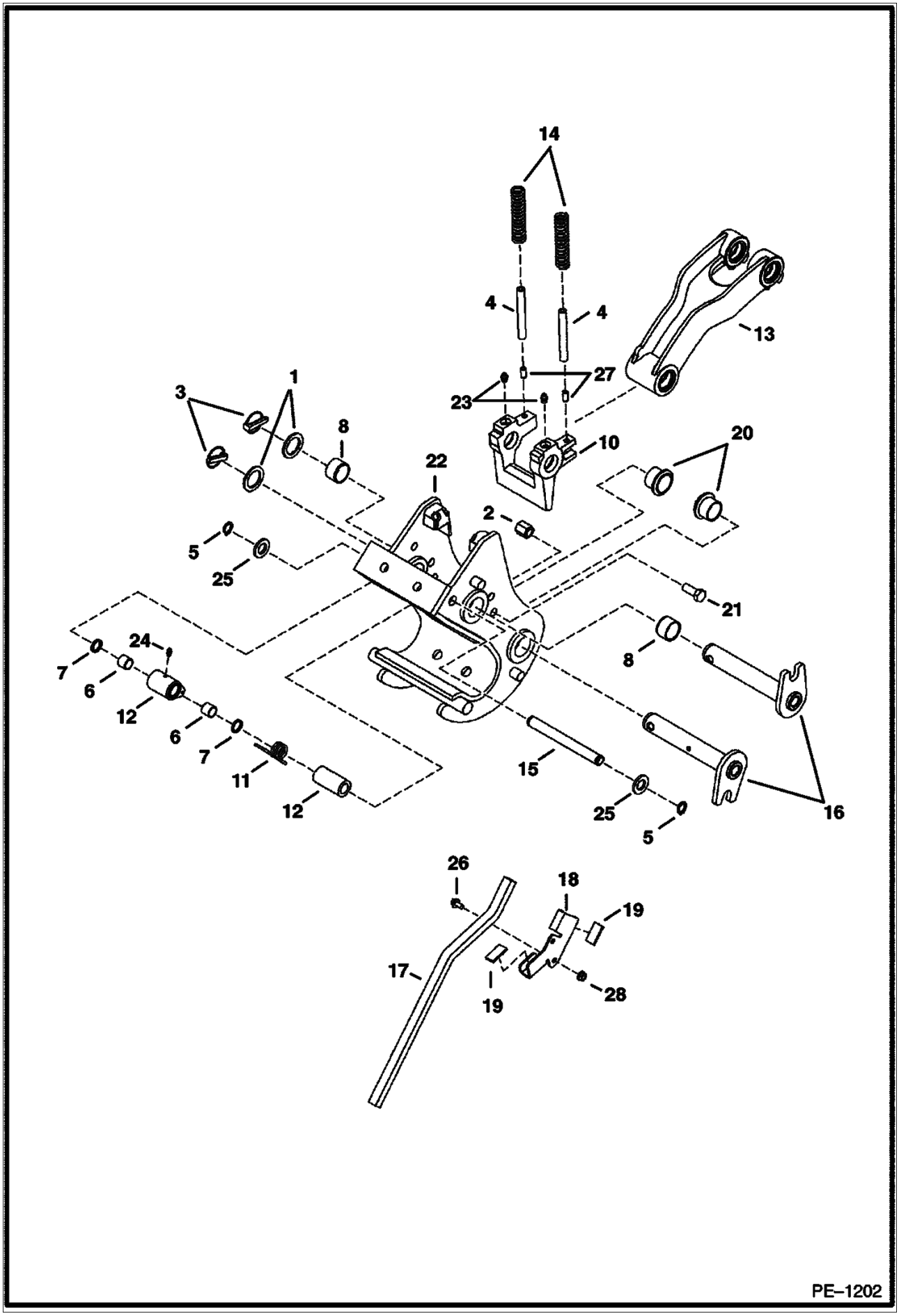
14
4
4
13
27
23
3
1
8
10
20
22
2
5
25
21
24
8
7
6
12
6
7
11
12
15
25
5
16
26
18
19
17
19
28
PE–1202

Ref. No.	Part Number	Description	Remarks	Serial Number	Qty.
1	6534111	WASHER			2
2	6536748	NUT			1
3	6560382	RING			2
4	6561741	HOSE			2
5	6662745	SNAP RING			2
6	6672019	BUSHING			2
7	6681505	SEAL			2
8	6802889	BUSHING			2
9	6802893	CATCH			1
10	6802897	LATCH			1
11	6804386	SPRING			1
12	6805296	SPACER			1
13	6805373	LINK			1
14	6806018	SPRING			2
15	6806953	PIN			1
16	6806971	PIN			2
17	6807074	LEVER			1
18	6810241	BRACKET			1
19	6810261	PAD			2
20	6810525	BUSHING			2
21	55CM01435B	SCREW			1
22	6812421	X-CHANGEt			1
23	10H000025B	GREASE ZERK	grease		2
24	10H000035B	GREASE ZERK	grease		1
25	25E000027B	WASHER			2
26	29CM00816B	SCREW			2
27	2JM01020B	PIN			1
28	43DM00008B	NUT			2

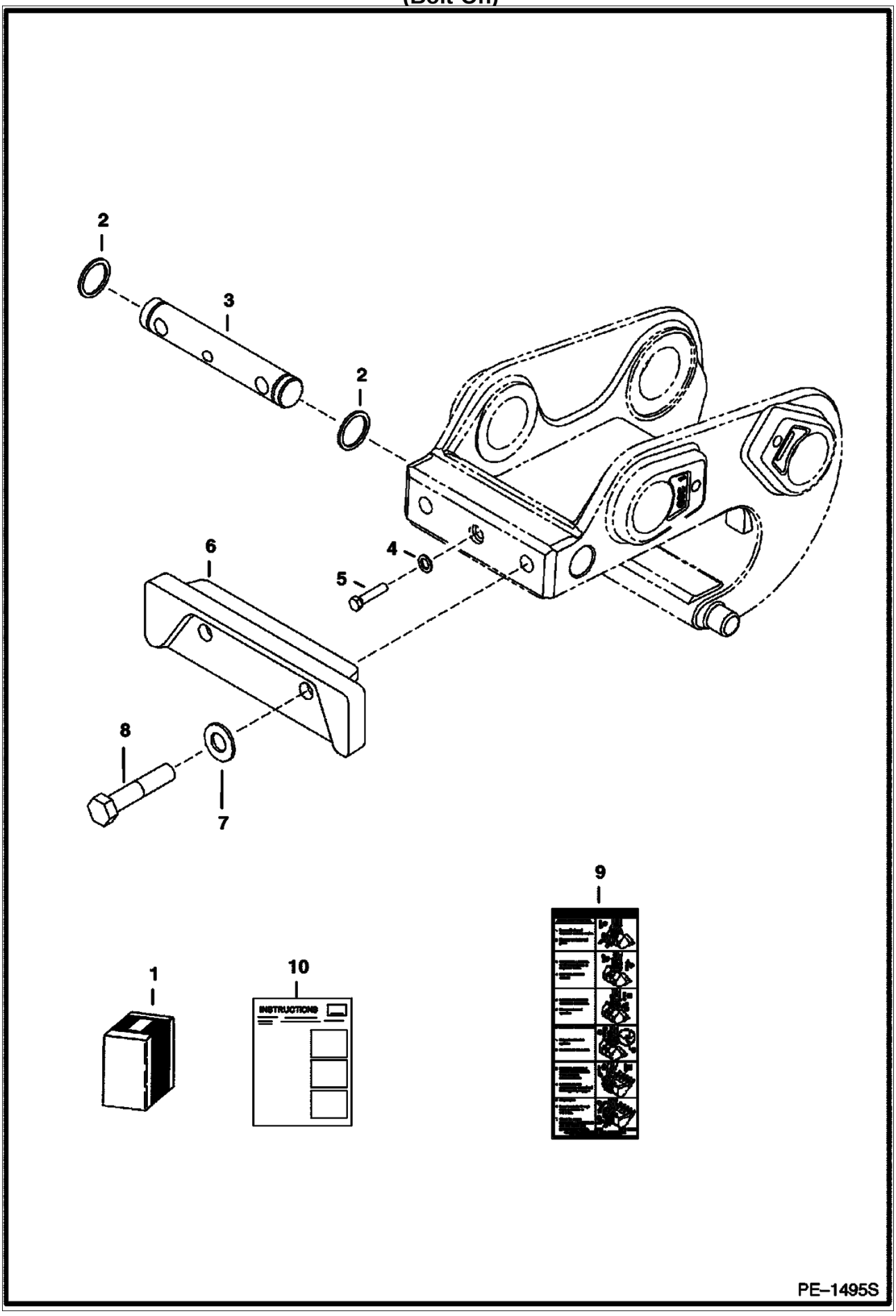
2
3
2
6
4
5
8
7
9
1
10
INSTRUCTIONS
PE–1495S

X-CHANGE (Cont'd)
(Bolt-On)

Ref. No.	Part Number	Description	Remarks	Serial Number	Qty.
1	6817828	KIT		5629 & Above	1
2	58K000214B	O-RING			2
3	6733540	PIN			1
4	17EM00100B	WASHER			1
5	1CM01050B	BOLT			1
6	7103112	PLATE			1
7	6816369	GASKET			2
8	17C001056B	BOLT			2
9	6806121	DECAL			1
10	6902620	INSTRUCTION			1

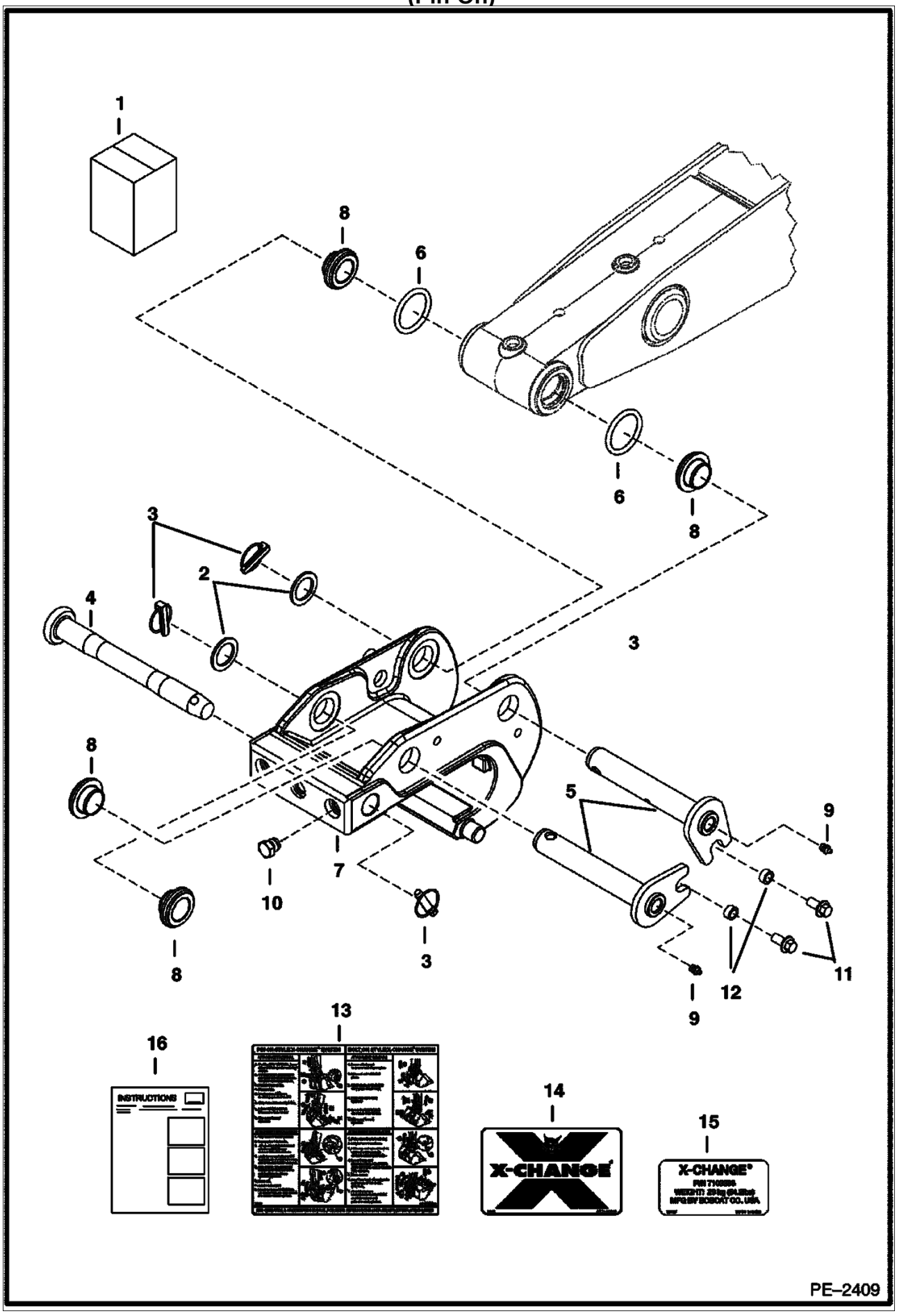
1
8
6
6
8
3
2
4
3
8
5
9
7
10
3
8
9
12
11
13
16
INSTRUCTIONS
14
X-CHANGE
15
X-CHANGE
PE–2409

X-CHANGE (Cont'd)
(Pin-On)

Ref. No.	Part Number	Description	Remarks	Serial Number	Qty.
1	7105177	KIT	X-Change - pin on		1
2	6534111	WASHER			2
3	6560382	RING			3
4	6734239	PIN			1
5	6806971	PIN			2
6	6811260	O-RING			2
7	6815102	X-CHANGE			1
8	7102891	BUSHING			4
9	10H000025B	GREASE ZERK			2
10	24K000006B	PLUG			3
11	29CM01225B	SCREW			2
12	6503451	SPACER			2
13	7102651	DECAL			2
14	6803760	DECAL			1
15	7107953	DECAL			1
16	6903155	INSTRUCTION			1

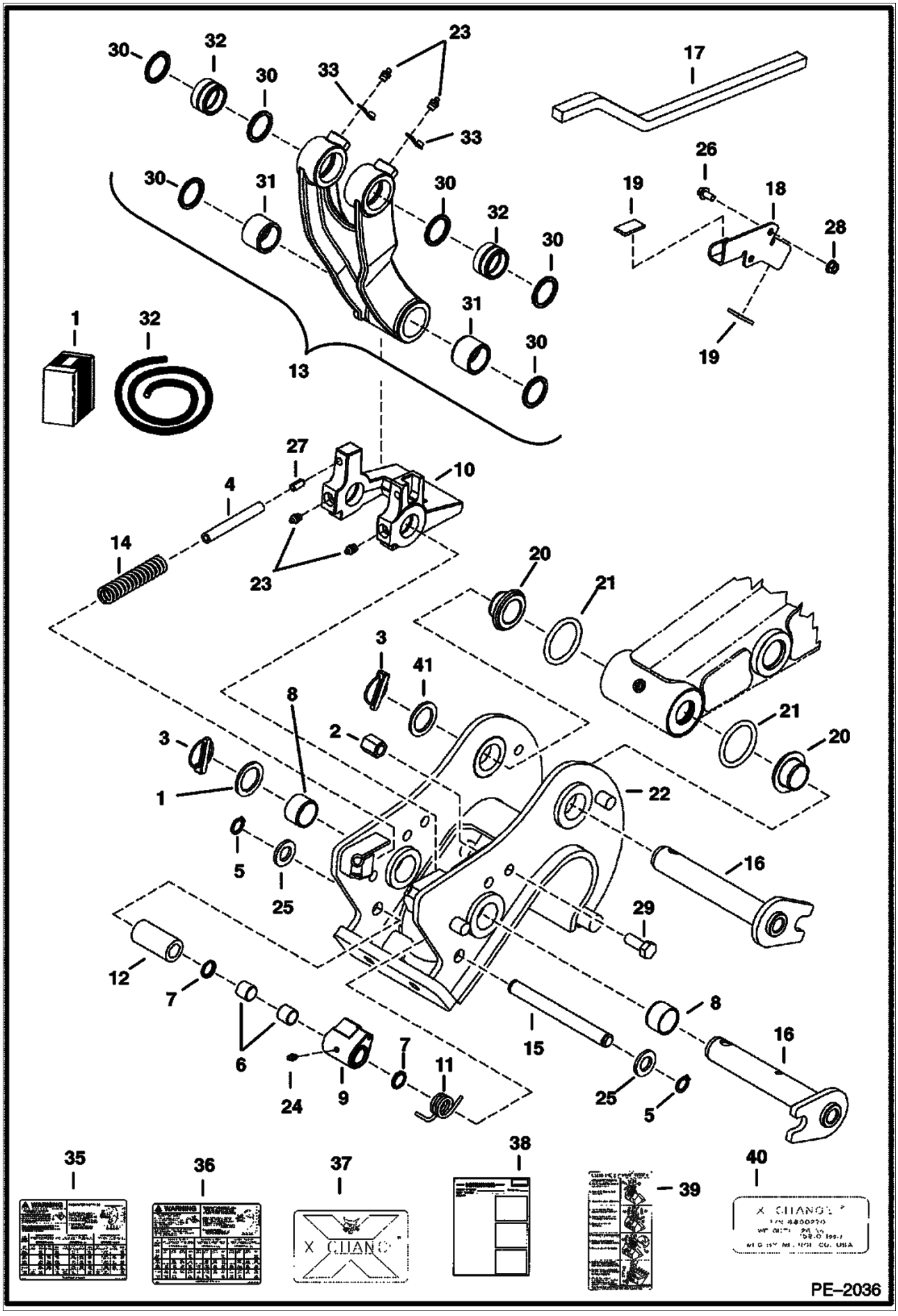
30
32
23
33
17
26
19
18
28
31
1
13
27
10
4
14
20
21
3
41
8
2
22
5
25
16
29
12
7
6
24
9
11
15
35
36
37
38
39
40
PE–2036

X-CHANGE KIT (Cont'd)

Ref. No.	Part Number	Description	Remarks	Serial Number	Qty.
1		KIT	SALES - X-Changet - W/Refs. 22-40 Sales #6813306	5629 & Below	1
2	6536748	NUT	Lock		1
3	6560382	RING	retaining		2
4		HOSE	NAP - 4.5" (114mm) long-Order Ref. 34		2
5	6662745	SNAP RING			2
6	6672019	BUSHING			2
7	6681505	SEAL	dust		1
8	6802889	BUSHING			4
8	6802889	BUSHING	use (4) w/6805513 , use (2) w/6812412 & (2) Ref. 20		2
9	6802893	CATCH			1
10	6802897	LATCH			1
11	6804386	SPRING			2
12	6805296	SPACER			2
13	6805373	LINK	W/Refs. 8, 23, 30 & 31		1
14	6806018	SPRING			2
15	6806953	PIN			1
16	6806971	PIN			2
17	6807074	LEVER	Release		1
18	6810241	BRACKET			1
19	6810261	PAD			2
20	6810525	BUSHING	used w/6812421 only		2
20	6813304	BUSHING	used w/mount 6805513 only		2
21	6811260	O-RING			2
22	6812421	X-CHANGEt			1
23	10H000025B	GREASE ZERK	grease		5
24	10H000035B	GREASE ZERK	grease		1
25	25E000027B	WASHER			2
26	29CM00816B	SCREW			2
27	2JM01020B	PIN	Spring		2
28	43DM00008B	NUT			2
29	55CM01435B	SCREW			2
30	6652915	SEAL	dust		4
31	6803438	BUSHING	wear		2
32	6803309	BUSHING	wear		2
33	6652943	COVER	dust		2
34	6577822	HOSE	bulk - sold per foot		x
35	6806615	DECAL	Lift capacity 331		1
36	6806616	DECAL	Lift capacity 331/334 Long Arm		1
37	6803760	DECAL	logo		1
38	6900541	INSTRUCTION			1
39	6805416	DECAL			1
40	6809264	DECAL	using X-Changet		1
41	6534111	WASHER			1

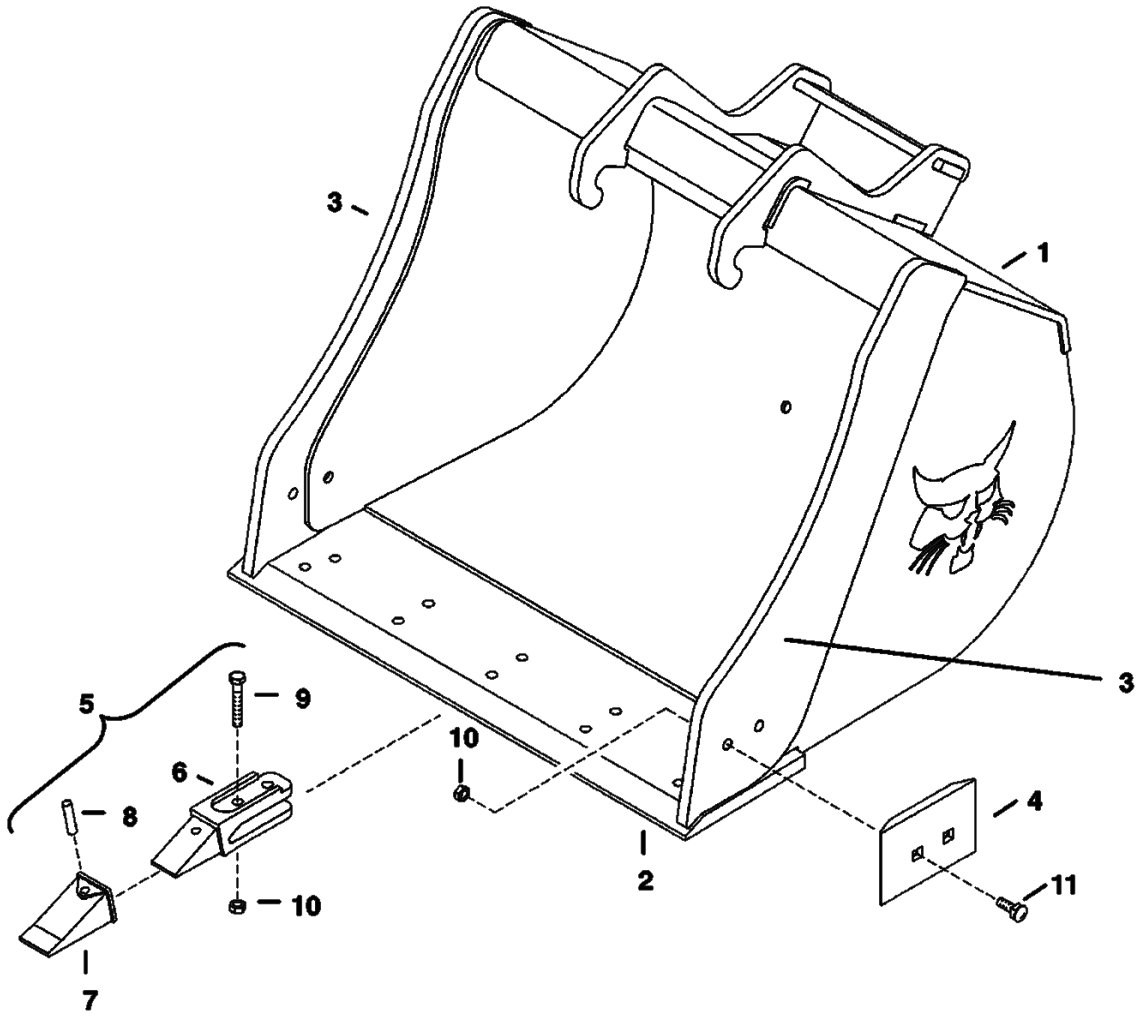
3
1
3
5
9
10
6
8
4
10
2
11
7
B–17139

X-CHANGE MOUNTED (Cont'd)
(Buckets)

Ref. No.	Part Number	Description	Remarks	Serial Number	Qty.
1		BUCKET	SALES - 13'' (330mm) - uses 3 teeth - SALES #6715500		x
1		BUCKET	SALES - 16'' (406mm) - uses 4 teeth - SALES #6715501		x
1		BUCKET	SALES - 20'' (508mm) - uses 5 teeth - SALES #6715502		x
1		BUCKET	SALES - 24'' (609mm) - uses 5 teeth - SALES #6715503		x
1		BUCKET	SALES - 30'' (762mm) - uses 5 teeth - SALES # 6715504		x
1		BUCKET	SALES - 36'' (914mm) - uses 6 teeth SALES #6715558		x
1		BUCKET	SALES - 39'' (990mm) - does not use teeth - SALES #6715550		x
2	6805433	CUTTING EDGE	13'' (330mm)		x
2	6805434	CUTTING EDGE	16'' (406mm)		1
2	6805435	CUTTING EDGE	20'' (508mm)		1
2	6805436	CUTTING EDGE	24'' (609mm)		1
2	6805437	CUTTING EDGE	30'' (762mm)		1
2	6805438	CUTTING EDGE	36'' (914mm)		1
2	6805815	CUTTING EDGE	39'' (990mm)		1
3	6805429	CUTTING EDGE	for 13'' (330mm), 16'' (406mm), 20'' (508mm), 24'' (609mm), 30'' (762mm) & 36'' (914mm)		2
3	6805771	CUTTING EDGE	for 39'' (990mm) bucket		2
4	6805464	CUTTER			2
5	6684448	TOOTH ASSY	W/Ref. 6 - 8		x
6		SHANK	NAP - bolt-on - Order 6808523 Shank Assy.		x
7	6716001	TOOTH			x
8	14J003732B	PIN			x
9	47C000832B	SCREW	(2) per tooth		x
10	95D000008B	NUT	(2) per tooth		x
11	39C000828B	BOLT			4

BULK ITEMS
(SEE NOTE)

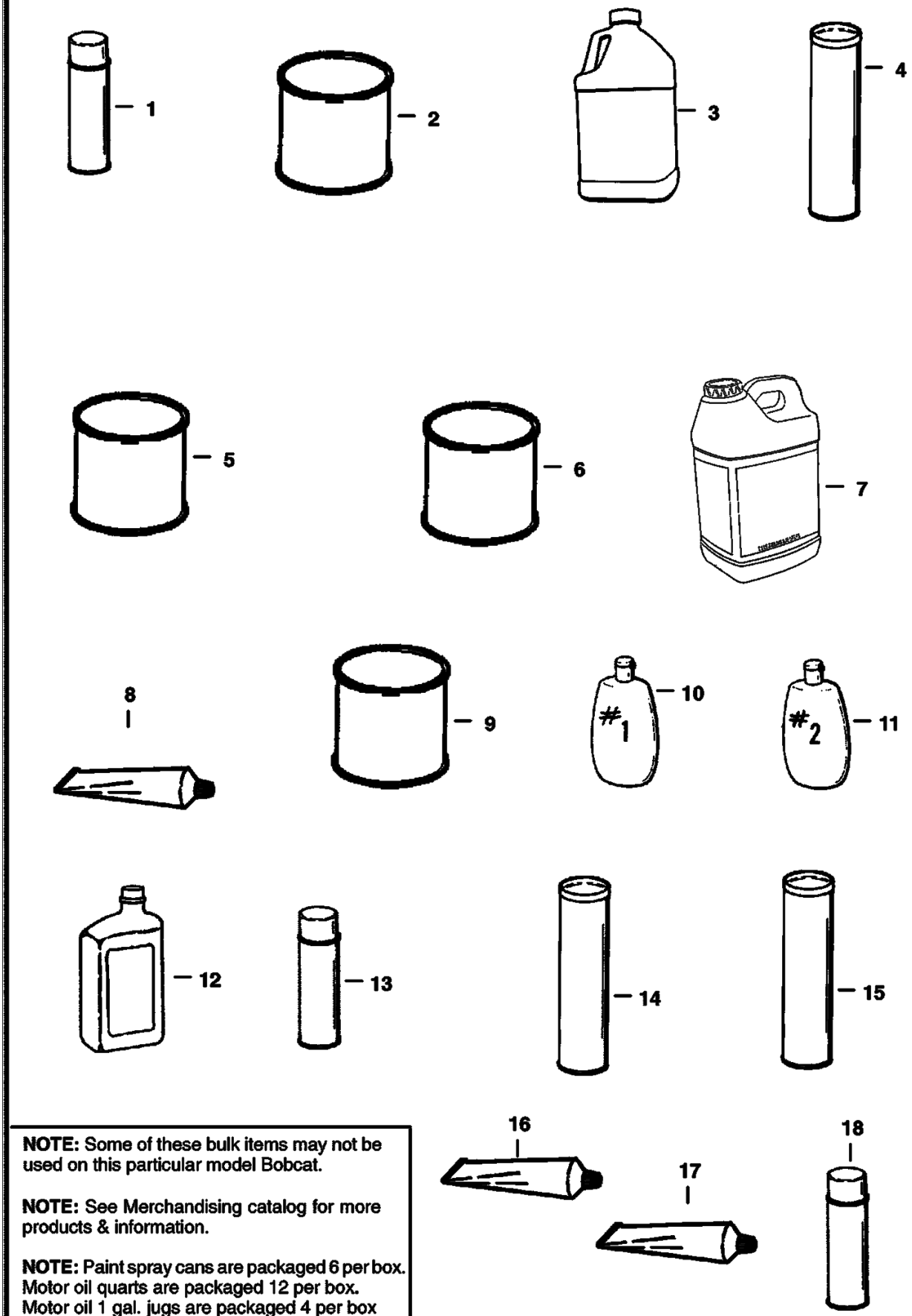

NOTE: Some of these bulk items may not be used on this particular model Bobcat.

NOTE: See Merchandising catalog for more products & information.

NOTE: Paint spray cans are packaged 6 per box.
Motor oil quarts are packaged 12 per box.
Motor oil 1 gal. jugs are packaged 4 per box
Motor oil 2.5 gal. jugs are packaged 2 per box.

BULK ITEMS (Cont'd)
(SEE NOTE)

Ref. No.	Part Number	Description	Remarks	Serial Number	Qty.
1	6902228	PAINT	orange - Spray Can - SEE NOTE		x
1	6902229	PAINT	charcoal -Spray Can -SEE NOTE		x
1	6902230	PAINT	white - Spray Can - SEE NOTE		x
2		PAINT	NAP - orange - Gal. - Also Order Ref. 5		x
2	6722782	PAINT	orange - Qt. - Also Order Ref. 5		x
2		PAINT	NAP - charcoal - Gal-Also Order Ref. 5		x
2	6902234	PAINT	charcoal - Qt. - Also Order Ref. 5		x
2		PAINT	NAP - white - Gallon - Also Order Ref. 5		x
2	6902235	PAINT	white - Qt. Also Order Ref. 5		x
3	6724094	ANTI-FREEEZE	gallon - PG - premixed		x
3	6724354	ANTI-FREEZE	gallon - PG - concentrate		x
4	6633583	SEALANT	chaincase covers		x
5		REDUCER	NAP - gallon		x
6		PRIMER	NAP - gallon		x
6	6653519	PRIMER	Qt.		x
7	6903117	HYD FLUID 2.5 GAL.	Was 6563328 [A]		x
7	6903118	HYD. FLUID 5GAL	Was 6722344 [A]		x
7		Hyd/Hydro Fluid	NAP - 30 Gallon Drum		x
7	6903119	HYD. FLUID 55GAL	Was 6563330 [A]		x
8	6599360	SEALANT	electrical - 3 oz. tube		x
9	6903121	GEAR LUBE 12	Was 6634393 [A]		x
10	6630188	POLISH	window-1 (8 oz.)		x
10	6630190	POLISH	window-1 (64 oz.)		x
11	6630189	POLISH	window-2 (8 oz.) - scratch remover		x
11	6630191	POLISH	window-2 (64 oz.) - scratch remover		x
12	6903109	OIL 30W QT. 12	Was 6657303 [A]		x
12	6903110	OIL 30W GAL. 6	Was 6724559 [A]		x
12	6903111	OIL 30W 2.5 GAL 2	Was 6674206 [A]		x
12	6903107	OIL 10W30 QT. 12	Was 6657301 [A]		x
12	6903108	OIL 10W30 GAL. 6	Was 6724557 [A]		x
12	6903112	OIL 10W30 2.5 GAL 2	Was 6674205 [A]		x
12	6903105	OIL 15W40 QT. 12	Was 6657299 [A]		x
12	6903106	OIL 15W40 GAL. 6	Was 6724558 [A]		x
12	6903113	OIL 15W40 2.5 GAL. 2	Was 6674204 [A]		x
13	6652818	ADHESIVE	insulation - spray can		x
14	6903122	GREASE 10	Was 6658266 [A]		x
15	6599719	GREASE	14.5 oz. cartridge - For fan idler bearing & spring loaded drive idler		x
16	6650407	ADHESIVE	1 oz. tube		x
17	6650388	SEALANT	flange		x
18	6736644	PAINT	orange - 5 oz. spray can		x
18	6736641	PAINT	charcoal - 5 oz. spray can		x
18	6736642	PAINT	white - 5 oz. spray can		x
18	6736645	PAINT	red - 5 oz. spray can		x

CONTENTS

MAIN FRAME 1-28
UPPERSTRUCTURE 1
UPPERSTRUCTURE LOCK 3
OPERATOR CAB 5-8
OPERATOR SEAT 9
RIGHT WINDOW 11-14
CAB ENCLOSURE 15-20
CANOPY 21
SEAT SUSPENSION 23
INSULATION 25
R.H. COVER 27
UNDERCARRIAGE 29-44
TRACK ROLLER 39-42
TRACKS 43
FRONT IDLER 35-38
UNDERCARRIAGE 29
RECOIL SPRING 31-34
WORK EQUIPMENT 45-54
ARM & BUCKET LINK 45
EXTENDIBLE ARM 47
SWING FRAME 49
BOOM 51
BLADE 53
CONTROLS 55-66
THROTTLE CONTROL 61
TRAVEL 63
OFFSET 65
R.H. CONSOLE 55
L.H. CONSOLE 57
BLADE CONTROL 59
HYDRAULIC SYSTEM 67-160
BLADE CYLINDER 147
BOOM CYLINDER 149-152
BUCKET CYLINDER 153-156
CLAMP CYLINDER 157
SWING CYLINDER 159
HYDROSTATIC OIL FILTER 91
ISO/STD 93
SELECTOR VALVE ASSY 95
R.H. JOYSTICK 97
L.H. JOYSTICK 99
TRAVEL JOYSTICK 101
TRAVEL MOTOR 103
PRESSURE VALVE 105
SWING MOTOR 107
HYDRAULIC CONTROL VALVE 109
CONTROL VALVE 111-134
MOTOR CARRIER 135
FAN MOTOR 137
HYDRAULIC TANK 139
SWIVEL JOINT 141
ARM CYLINDER 143-146
HYDRAULIC CIRCUITRY 67-86
HYDRAULIC PUMP 87-90
ELECTRICAL SYSTEM 161-172
ELECTRICAL 161-168
ALTERNATOR 169
STARTER 171
POWER UNIT 173-236

CONTENTS (Cont'd)

POWER UNIT

FUEL CAMSHAFT & GOVERNOR SHAFT 203
IDLE APPARATUS 205
INJECTION PUMP 207
GOVERNOR 209
SPEED CONTROL PLATE 211
NOZZLE HOLDER & GLOW PLUG 213
FUEL PUMP 215
FAN DRIVE PULLEY 217
PLUG 219
WATER FLANGE & THERMOSTAT 221
WATER PUMP 223
FAN 225
VALVE & ROCKER ARM 227
INLET MANIFOLD 229
EXHAUST MANIFOLD 231
FUEL SYSTEM 233
AIR CLEANER 235
CRANKCASE 179
OIL PAN 181
CYLINDER HEAD 183
GEARCASE 185
HEAD COVER 187
OIL FILTER 189
DIPSTICK & GUIDE 191
OIL PUMP 193
MAIN BEARING CASE 195
IDLER 197
CAMSHAFT & IDLE GEAR SHAFT 199
PISTON & CRANKSHAFT 201
ENGINE & ATTACHING PARTS 173-178

ACCESSORIES & OPTIONS 237-304

AIR CONDITIONER UPGRADE KIT 237
BEACON KIT 239
BLOCK HEATER 241
X-CHANGE KIT 299
X-CHANGE MOUNTED 301
BULK ITEMS 303
CLAMP KIT 243
COUNTERWEIGHT KIT 245-248
DECALS 249
DIRECT TO TANK KIT 251
EXTENDIBLE ARM KIT 253
HEATER BOX 255
HEATER KIT 257
HVAC BOX 259
HVAC DUCT 261
HVAC INSTALLATION 263
KEYLESS IGNITION KIT 265
LONG ARM KIT 267
MOTION ALARM KIT 269
PURIFIER MUFFLER 271
RADIO KIT 273
SEAT BELT KIT 275
SECONDARY AUXILIARY KIT 277
SOLAR KIT 279
SPECIAL APPLICATION KIT 281-284
STEEL TRACK KIT 285

CONTENTS (Cont'd)

ACCESSORIES & OPTIONS

STROBE LIGHT KIT 287
TOP GUARD KIT 289
TOP GUARD LIGHT KIT 291
X-CHANGE 293-298

NUMERICAL INDEX

Part No.	Description	Was	Code	Page
10CM01455B	SCREW	10CM01460B	A	20, 22
10CM01455B	SCREW	10CM01460B	B	20, 22
10CM01455B	SCREW			20, 22
10H000025B	GREASE ZERK	10H000015B	A	46, 48, 50, 52, 54, 68, 78, 146, 150, 152, 154, 156, 158, 160, 244, 294, 298, 300
10H000025B	GREASE ZERK	10H000035B	B	46, 48, 50, 52, 54, 68, 78, 146, 150, 152, 154, 156, 158, 160, 244, 294, 298, 300
10H000025B	GREASE ZERK	NSS	D	46, 48, 50, 52, 54, 68, 78, 146, 150, 152, 154, 156, 158, 160, 244, 294, 298, 300
10H000025B	GREASE ZERK	NSS		46, 48, 50, 52, 54, 68, 78, 146, 150, 152, 154, 156, 158, 160, 244, 294, 298, 300
10H000025B	GREASE ZERK			46, 48, 50, 52, 54, 68, 78, 146, 150, 152, 154, 156, 158, 160, 244, 294, 298, 300
10H000035B	GREASE ZERK	10H000025B	B	294, 300
10H000035B	GREASE ZERK	11H000025B	B	294, 300
10H000035B	GREASE ZERK			294, 300
10J000005B	BALL			204
10J000013B	BALL			186
10L001212B	TUBE			84
12D000006B	NUT	61D000004B	B	270
12D000006B	NUT			270
12D000008B	NUT	85D000004B	B	168
12D000008B	NUT			168
12D000010B	NUT	12D000008B	B	270
12D000010B	NUT	14D000010B	A	270
12D000010B	NUT	14D000010B	B	270
12D000010B	NUT	6664050	A	270
12D000010B	NUT	84G003116B	B	270
12D000010B	NUT			270
12E000006B	WASHER			270
12H000015B	GREASE ZERK	10H000015B	A	54, 78, 150, 152
12H000015B	GREASE ZERK	12H000025B	B	54, 78, 150, 152
12H000015B	GREASE ZERK	12H000025B	B,D	54, 78, 150, 152
12H000015B	GREASE ZERK	743332B	B	54, 78, 150, 152
12H000015B	GREASE ZERK	NSS	D	54, 78, 150, 152
12H000015B	GREASE ZERK	NSS		54, 78, 150, 152
12H000015B	GREASE ZERK			54, 78, 150, 152
1320904B	BEARING			136
1320905B	CUP			136
13JM20025B	PIN			58
13K000003B	TEE			278
14D000010B	NUT	12D000006B	A	62
14D000010B	NUT	14K000010B	A	62
14D000010B	NUT	8D000004B	B	62
14D000010B	NUT			62
14J000820B	PIN			58
14J001816B	PIN			58
14J002512B	ROLL PIN	14J002510B	B	96
14J002512B	ROLL PIN			96
14J003732B	PIN	6656387	A	302
14J003732B	PIN	6671145	A	302
14J003732B	PIN			302

Code for disposition of old part number

A -- Use up

B -- Use on other application (See PNI)

C -- File PDR Report with Bobcat Parts Sales

D -- Part Number Error

Part No.	Description	Was	Code	Page
1522534B	PISTON SEAL	NSS		148
1522534B	PISTON SEAL			148
15EM00100B	WASHER	6537432	A	168, 290, 292
15EM00100B	WASHER			168, 290, 292
15EM00160B	WASHER			42, 58
15EM00200B	WASHER			40
15KB00404B	ADAPTER			70, 80, 94
15KB00406B	ADAPTER			86, 110, 278
15KB00606B	ADAPTER	15KV-5	A	68, 70, 80, 86, 278
15KB00606B	ADAPTER	15KV-5		68, 70, 80, 86, 278
15KB00606B	ADAPTER	18KB606B	B	68, 70, 80, 86, 278
15KB00606B	ADAPTER			68, 70, 80, 86, 278
15KB00608B	ADAPTER	712555B	A	110
15KB00608B	ADAPTER			110
15KB00612B	ADAPTER	6578812	A	244
15KB00612B	ADAPTER			244
15KB00808B	ADAPTER	17KV00006B	B,D	68, 70, 110
15KB00808B	ADAPTER			68, 70, 110
15KB00810B	CONNECTOR			84
16F000002B	PLUG	15F-2	A	180, 220
16F000002B	PLUG	15F-2		180, 220
16F000002B	PLUG	6512916	A	180, 220
16F000002B	PLUG	998050B	A	180, 220
16F000002B	PLUG			180, 220
16KB00606B	ADAPTER			70
16KB00608B	CONNECTOR	6587170	A	110
16KB00608B	CONNECTOR			110
16KB00808B	CONNECTOR			110
1715312B	TIE	1715231	D	51, 52
1715312B	TIE	6610510	A	51, 52
1715312B	TIE			51, 52
17C000532B	BOLT	17C000544B	B	52
17C000532B	BOLT			52
17C000820B	BOLT	17C000816B	A	2
17C000820B	BOLT	17C000824B	B	2
17C000820B	BOLT	25G000820B	A	2
17C000820B	BOLT			2
17C001056B	BOLT			296
17C005152B	BOLT	- 1C005148B	B	164
17C005152B	BOLT	- 1C005148B		164
17C005152B	BOLT			164
17EM00100B	WASHER	15EM00080B	B	110, 176, 296
17EM00100B	WASHER			110, 176, 296
17EM00120B	WASHER	17EM00100B		50
17EM00120B	WASHER			50
17KB00404B	ELBOW	17KV-3	A	80, 94, 110
17KB00404B	ELBOW			80, 94, 110
17KB00406B	ELBOW			84, 86, 110
17KB00606B	ELBOW	17KN00005B	B	68, 70, 80, 140, 278
17KB00606B	ELBOW	17KV-5	A	68, 70, 80, 140, 278
17KB00606B	ELBOW	17KV-5		68, 70, 80, 140, 278
17KB00606B	ELBOW	17KV00005B	B	68, 70, 80, 140, 278
17KB00606B	ELBOW	21KB00606	A	68, 70, 80, 140, 278
17KB00606B	ELBOW	6657211	A	68, 70, 80, 140, 278
17KB00606B	ELBOW		A	68, 70, 80, 140, 278
17KB00606B	ELBOW			68, 70, 80, 140, 278

Code for disposition of old part number

A -- Use up

B -- Use on other application (See PNI)

C -- File PDR Report with Bobcat Parts Sales

D -- Part Number Error

Part No.	Description	Was	Code	Page
17KB00608B	FITTING			68
17KB00806B	FITTING	672942	A	278
17KB00806B	FITTING	672942		278
17KB00806B	FITTING	672942B	A	278
17KB00806B	FITTING			278
17KB00808B	ELBOW			68, 70, 110, 140
17KB00810B	ELBOW	6715716	A	72, 84
17KB00810B	ELBOW			72, 84
17KB00812B	FITTING			72
17KB01012B	ELBOW	1302104	A	252
17KB01012B	ELBOW	1302104B	A	252
17KB01012B	ELBOW			252
17KB01612B	ELBOW	1300309B	A	84, 252
17KB01612B	ELBOW	6800657	A	84, 252
17KB01612B	ELBOW			84, 252
18KB00606B	ELBOW			110
18KB00808B	ELBOW			72
18KB01010B	ADAPTER			110
18KB01210B	ELBOW			110
1992104B	PLUG	6665237	D	108
1992104B	PLUG			108
19KB00406B	TEE			110
19KB00606B	TEE	19K000005B	B	70
19KB00606B	TEE			70
19KB00608B	TEE			70
19KB00808B	FITTING			70
1C000416B	SCREW			16, 64
1C000420B	SCREW			28
1C000532B	BOLT			78
1C000610B	SCREW	1C000612B	B	198
1C000610B	SCREW			198
1CM00610B	SCREW			238
1CM00612B	SCREW			264
1CM00620B	BOLT	1CM00610B	D	60, 282, 284
1CM00620B	BOLT			60, 282, 284
1CM00630B	BOLT	1CM00625B	B	66
1CM00630B	BOLT	23GM00525B	B	66
1CM00630B	BOLT			66
1CM00825B	BOLT	1CM00820B	B	10
1CM00825B	BOLT	1CM00830B	A	10
1CM00825B	BOLT			10
1CM00835B	BOLT	1CM00825B	B	186, 222
1CM00835B	BOLT	1CM00830B	B	186, 222
1CM00835B	BOLT	1CM00830B	D	186, 222
1CM00835B	BOLT	1CM00834B	A	186, 222
1CM00835B	BOLT			186, 222
1CM00840B	SCREW	1C000532B	B	78, 186
1CM00840B	SCREW	1CM00850B	B	78, 186
1CM00840B	SCREW			78, 186
1CM00860B	SCREW	17C000520B		78
1CM00860B	SCREW	1CM00850B	B	78
1CM00860B	SCREW	1CM00870B	A	78
1CM00860B	SCREW	1CM00870B	B	78
1CM00860B	SCREW	1CM01060B	D	78
1CM00860B	SCREW		B	78
1CM00860B	SCREW			78

Code for disposition of old part number

A -- Use up

B -- Use on other application (See PNI)

C -- File PDR Report with Bobcat Parts Sales

D -- Part Number Error

Part No.	Description	Was	Code	Page
1CM00865B	BOLT			204
1CM00880B	SCREW	17CM-880	D	174, 238, 264
1CM00880B	SCREW	1CM-880	B,D	174, 238, 264
1CM00880B	SCREW	1CM00890B	B	174, 238, 264
1CM00880B	SCREW			174, 238, 264
1CM00885B	SCREW			174
1CM01020B	BOLT			68, 290, 292
1CM01025B	SCREW	6535080	A	60
1CM01025B	SCREW	7GM01025B	D	60
1CM01025B	SCREW			60
1CM01030B	SCREW	17C000512B	A	2, 84
1CM01030B	SCREW	1CM01025B	B	2, 84
1CM01030B	SCREW	1CM01040B	B	2, 84
1CM01030B	SCREW	3GM01025B	A	2, 84
1CM01030B	SCREW	7CM-1030	B	2, 84
1CM01030B	SCREW			2, 84
1CM01040B	SCREW	6646278		64, 66
1CM01040B	SCREW			64, 66
1CM01050B	BOLT			296
1CM01055B	SCREW	1CM01065B	B	60
1CM01055B	SCREW			60
1CM01220B	SCREW	6CM01220B	B	64, 276
1CM01220B	SCREW			64, 276
1CM01235B	SCREW	1CM01035B	D	174
1CM01235B	SCREW	1CM01225B	D	174
1CM01235B	SCREW	29CM01025B	D	174
1CM01235B	SCREW			174
1CM01250B	BOLT			276
1CM01270B	SCREW			72
1CM01280B	SCREW			178
1CM01665B	BOLT			248
1CM02470B	BOLT			32, 34
1CM08100B	BOLT			278
1CM08110B	SCREW			174
1DM00016B	NUT			42
1DM00020B	NUT	36DM00020B	A	40
1DM00020B	NUT	36DM00020B	B	40
1DM00020B	NUT			40
1EM00120B	WASHER			276
1EM00240B	WASHER			32, 34
1EM00380B	WASHER			52
1F000212B	PIN			60, 66
20JM01025B	PIN	6646267	A	136
20JM01025B	PIN	6646267		136
20JM01025B	PIN			136
21CM00616B	BOLT			8
21CM00820B	BOLT	29CM00820B	D	28, 52
21CM00820B	BOLT			28, 52
21CM01025B	BOLT			64
21CM01035B	BOLT			110
21KB00808B	TEE			278
24K000002B	PLUG			84
24K000003B	PLUG			80
24K000005B	PLUG			70, 86, 110
24K000006B	PLUG	6650157	D	140, 298
24K000006B	PLUG	6717401	B	140, 298

Code for disposition of old part number

A -- Use up

B -- Use on other application (See PNI)

C -- File PDR Report with Bobcat Parts Sales

D -- Part Number Error

Part No.	Description	Was	Code	Page
24K000006B	PLUG			140, 298
24K000008B	PLUG	24KN-8	A	72
24K000008B	PLUG	90KV00008B	B	72
24K000008B	PLUG			72
25E000013B	WASHER	17C000408B	B,D	282, 284
25E000013B	WASHER	25E000015B	A	282, 284
25E000013B	WASHER	25E000015B	B	282, 284
25E000013B	WASHER	664421	A	282, 284
25E000013B	WASHER	6E000004B	B	282, 284
25E000013B	WASHER	6E000004B		282, 284
25E000013B	WASHER			282, 284
25E000016B	WASHER	872229	B	10
25E000016B	WASHER			10
25E000021B	WASHER	4E000008B	B	174
25E000021B	WASHER	619027	A	174
25E000021B	WASHER	664425	A	174
25E000021B	WASHER			174
25E000022B	WASHER	17E000010B	B	64
25E000022B	WASHER			64
25E000026B	WASHER	25E-216	D	248
25E000026B	WASHER	6571554	A	248
25E000026B	WASHER			248
25E000027B	WASHER			294, 300
25G000510B	SCREW		B	6, 28
25G000510B	SCREW			6, 28
25K0040112B	O-RING			48
25K020010B	SEAL	NSS	D	108
25K020010B	SEAL	NSS		108
25K020010B	SEAL			108
25K030508B	O-RING	25K040404B	B	68
25K030508B	O-RING			68
25K040112B	O-RING	25K030118B	B	46, 268
25K040112B	O-RING			46, 268
25K040204B	O-RING	NSS		136
25K040204B	O-RING			136
26GM06020B	SCREW			16, 80
26GM08013B	SCREW	26GM08012B	A	62, 176
26GM08013B	SCREW			62, 176
26GM08016B	SCREW	1CM00812B	A	22, 56, 58, 84, 94, 164, 168, 174
26GM08016B	SCREW	1CM00812B	B	22, 56, 58, 84, 94, 164, 168, 174
26GM08016B	SCREW	1CM00816B	A	22, 56, 58, 84, 94, 164, 168, 174
26GM08016B	SCREW	1CM00816B	B	22, 56, 58, 84, 94, 164, 168, 174
26GM08016B	SCREW	1CM00820B	B	22, 56, 58, 84, 94, 164, 168, 174
26GM08016B	SCREW	29CM00812B	B	22, 56, 58, 84, 94, 164, 168, 174
26GM08016B	SCREW	29CM00816B	B	22, 56, 58, 84, 94, 164, 168, 174
26GM08016B	SCREW	29CM00820B	B	22, 56, 58, 84, 94, 164, 168, 174
26GM08016B	SCREW			22, 56, 58, 84, 94, 164, 168, 174

Code for disposition of old part number

A -- Use up

B -- Use on other application (See PNI)

C -- File PDR Report with Bobcat Parts Sales

D -- Part Number Error

Part No.	Description	Was	Code	Page
26GM08020B	SCREW	26GM08016B	D	2, 56, 58, 164, 168
26GM08020B	SCREW	29CM00820B	B	2, 56, 58, 164, 168
26GM08020B	SCREW			2, 56, 58, 164, 168
26GM10016B	SCREW			80
26GM10020B	SCREW	1CM00812B	B	10, 28, 30, 32, 34, 58, 62, 66, 80, 86, 140, 164, 178, 234, 252, 258, 264
26GM10020B	SCREW	26GM-10002	D	10, 28, 30, 32, 34, 58, 62, 66, 80, 86, 140, 164, 178, 234, 252, 258, 264
26GM10020B	SCREW	26GM01020B	A	10, 28, 30, 32, 34, 58, 62, 66, 80, 86, 140, 164, 178, 234, 252, 258, 264
26GM10020B	SCREW	26GM10030B	B	10, 28, 30, 32, 34, 58, 62, 66, 80, 86, 140, 164, 178, 234, 252, 258, 264
26GM10020B	SCREW	29CM-1016	A	10, 28, 30, 32, 34, 58, 62, 66, 80, 86, 140, 164, 178, 234, 252, 258, 264
26GM10020B	SCREW	29CM01016B	A	10, 28, 30, 32, 34, 58, 62, 66, 80, 86, 140, 164, 178, 234, 252, 258, 264
26GM10020B	SCREW	29CM01016B	B	10, 28, 30, 32, 34, 58, 62, 66, 80, 86, 140, 164, 178, 234, 252, 258, 264
26GM10020B	SCREW	29CM01020B	A	10, 28, 30, 32, 34, 58, 62, 66, 80, 86, 140, 164, 178, 234, 252, 258, 264
26GM10020B	SCREW	29CM01020B	B	10, 28, 30, 32, 34, 58, 62, 66, 80, 86, 140, 164, 178, 234, 252, 258, 264
26GM10020B	SCREW	29CM01020B	D	10, 28, 30, 32, 34, 58, 62, 66, 80, 86, 140, 164, 178, 234, 252, 258, 264
26GM10020B	SCREW	29CM01060B	A	10, 28, 30, 32, 34, 58, 62, 66, 80, 86, 140, 164, 178, 234, 252, 258, 264
26GM10020B	SCREW	99K000008B	B	10, 28, 30, 32, 34, 58, 62, 66, 80, 86, 140, 164, 178, 234, 252, 258, 264
26GM10020B	SCREW			10, 28, 30, 32, 34, 58, 62, 66, 80, 86, 140, 164, 178, 234, 252, 258, 264
26GM10030B	SCREW	26CM-10030	D	10, 30, 56, 286
26GM10030B	SCREW	26GM-130	D	10, 30, 56, 286
26GM10030B	SCREW	26GM10025B	A	10, 30, 56, 286
26GM10030B	SCREW	29CM01030B	B	10, 30, 56, 286
26GM10030B	SCREW			10, 30, 56, 286
27CM00835B	SCREW			58
27CM01030B	SCREW			10, 20, 22
27E000005B	WASHER	3727372B	B	178
27E000005B	WASHER			178
27E000006B	WASHER	25E000017B	D	16
27E000006B	WASHER	27E000016B	D	16
27E000006B	WASHER		B	16
27E000006B	WASHER			16
27E000008B	WASHER			84
28CM00820B	BOLT			20

Code for disposition of old part number

A -- Use up

B -- Use on other application (See PNI)

C -- File PDR Report with Bobcat Parts Sales

D -- Part Number Error

Part No.	Description	Was	Code	Page
28CM00830B	BOLT			62
28CM01020B	BOLT	1CM01016B	B	84, 238, 258, 264, 278
28CM01020B	BOLT	28CM01030B	B	84, 238, 258, 264, 278
28CM01020B	BOLT			84, 238, 258, 264, 278
28CM01030B	BOLT			28, 176
29CM00612B	SCREW			258, 264
29CM00616B	SCREW	1CM00610B	A	58, 84, 270
29CM00616B	SCREW	1CM00616B	A	58, 84, 270
29CM00616B	SCREW	1CM00616B	B	58, 84, 270
29CM00616B	SCREW	6652762	A	58, 84, 270
29CM00616B	SCREW			58, 84, 270
29CM00620B	SCREW	29CM00616B	B	174, 234
29CM00620B	SCREW			174, 234
29CM00625B	SCREW	17CM-625	A	80
29CM00625B	SCREW	17EM-625	D	80
29CM00625B	SCREW			80
29CM00812B	SCREW	29CM00612B	A	58, 78, 168
29CM00812B	SCREW	29CM00812B	A	58, 78, 168
29CM00812B	SCREW	29CM00820B	A	58, 78, 168
29CM00812B	SCREW	29CM00820B	B	58, 78, 168
29CM00812B	SCREW			58, 78, 168
29CM00816B	SCREW	1CM00816B	B	10, 56, 86, 94, 140, 176, 178, 270, 294, 300
29CM00816B	SCREW	1CM00820B	B	10, 56, 86, 94, 140, 176, 178, 270, 294, 300
29CM00816B	SCREW	26GM10020B	D	10, 56, 86, 94, 140, 176, 178, 270, 294, 300
29CM00816B	SCREW	29CM-815	B	10, 56, 86, 94, 140, 176, 178, 270, 294, 300
29CM00816B	SCREW	29CM00820B	B	10, 56, 86, 94, 140, 176, 178, 270, 294, 300
29CM00816B	SCREW	29GM-816	D	10, 56, 86, 94, 140, 176, 178, 270, 294, 300
29CM00816B	SCREW			10, 56, 86, 94, 140, 176, 178, 270, 294, 300
29CM00820B	BOLT	1CM00820B	B	2, 4, 28, 84, 140, 174, 176, 234
29CM00820B	BOLT	29CM00816B	B	2, 4, 28, 84, 140, 174, 176, 234
29CM00820B	BOLT	29CM00830B	B	2, 4, 28, 84, 140, 174, 176, 234
29CM00820B	BOLT	35C000512B	B	2, 4, 28, 84, 140, 174, 176, 234
29CM00820B	BOLT			2, 4, 28, 84, 140, 174, 176, 234
29CM00830B	SCREW	29CM00825B	B	64, 110
29CM00830B	SCREW			64, 110
29CM00835B	BOLT	29CM00830B	B	4
29CM00835B	BOLT	6653979	D	4
29CM00835B	BOLT			4
29CM00845B	SCREW			4
29CM00850B	SCREW			252
29CM00870B	SCREW			80
29CM01016B	SCREW	29CM01030B	B	164, 168
29CM01016B	SCREW			164, 168
29CM01020B	SCREW	- 26GM10020B		4, 50, 84, 176, 234, 278
29CM01020B	SCREW	1CM01020B	A	4, 50, 84, 176, 234, 278
29CM01020B	SCREW	1CM01020B	B	4, 50, 84, 176, 234, 278
29CM01020B	SCREW	1CM01025B	B	4, 50, 84, 176, 234, 278
29CM01020B	SCREW	1CM01030B	B	4, 50, 84, 176, 234, 278
29CM01020B	SCREW	26GM10020B	B	4, 50, 84, 176, 234, 278
29CM01020B	SCREW	26GM10020B		4, 50, 84, 176, 234, 278

Code for disposition of old part number

A -- Use up

B -- Use on other application (See PNI)

C -- File PDR Report with Bobcat Parts Sales

D -- Part Number Error

Part No.	Description	Was	Code	Page
29CM01020B	SCREW	29CM01016B	D	4, 50, 84, 176, 234, 278
29CM01020B	SCREW	49DM00010B	D	4, 50, 84, 176, 234, 278
29CM01020B	SCREW			4, 50, 84, 176, 234, 278
29CM01025B	SCREW	1CM01025B	A	4, 10, 174, 176
29CM01025B	SCREW	29CM01020B	A	4, 10, 174, 176
29CM01025B	SCREW	29GM-1025	D	4, 10, 174, 176
29CM01025B	SCREW	7GM01020B	A	4, 10, 174, 176
29CM01025B	SCREW	7GM01025B	A	4, 10, 174, 176
29CM01025B	SCREW			4, 10, 174, 176
29CM01030B	SCREW	1CM01030B	B	140
29CM01030B	SCREW			140
29CM01035B	SCREW	30CM01035B	B	178
29CM01035B	SCREW			178
29CM01050B	SCREW	29DM-1050	D	2
29CM01050B	SCREW			2
29CM01225B	SCREW			178, 298
29CM01235B	BOLT	59CM01235B	A	50, 72
29CM01235B	BOLT			50, 72
29CM01650B	SCREW			178, 246
2EM00008B	WASHER			184
2JM01020B	PIN			294, 300
2JM01060B	PIN			36, 38
30CM01240B	SCREW			48, 254
30H000010B	CLAMP			8, 162
30H000019B	CLAMP	30H000019B	B	168
30H000019B	CLAMP	30H000019B	B,D	168
30H000019B	CLAMP	30H000020B	B	168
30H000019B	CLAMP	30H000021B	B	168
30H000019B	CLAMP	30H000021B	B,D	168
30H000019B	CLAMP			168
30H000022B	CLIP	29CM00820B	A	168
30H000022B	CLIP	29CM00820B	B	168
30H000022B	CLIP			168
30H000023B	CLAMP			62, 292
30H000026B	CLIP			168
30H000037B	CLAMP	30H000007B	B	78
30H000037B	CLAMP	30H000007B	D	78
30H000037B	CLAMP	30H000031B	D	78
30H000037B	CLAMP			78
30H000046B	CLAMP	30H000041B		164
30H000046B	CLAMP	30H000042B	B	164
30H000046B	CLAMP	30H000047B	D	164
30H000046B	CLAMP	31H000038B	B	164
30H000046B	CLAMP			164
30H000048B	CLAMP			168
30H000050B	CLAMP	30H000045B	B	78, 164
30H000050B	CLAMP	30H000046B	A	78, 164
30H000050B	CLAMP	30H000046B	B	78, 164
30H000050B	CLAMP	31H000042B	B	78, 164
30H000050B	CLAMP	31H000045B	B	78, 164
30H000050B	CLAMP			78, 164
30H000060B	CLAMP	30H000050B	B	176
30H000060B	CLAMP	30H000058B	B	176
30H000060B	CLAMP	6703939	A	176
30H000060B	CLAMP			176
30H000065B	CLIP			84, 168

Code for disposition of old part number

A -- Use up

B -- Use on other application (See PNI)

C -- File PDR Report with Bobcat Parts Sales

D -- Part Number Error

Part No.	Description	Was	Code	Page
30H000075B	CLAMP			140
30H000085B	CLAMP	31H000042B	B	80
30H000085B	CLAMP			80
30H000100B	CLAMP			80
30HJ00616B	CLAMP	30HJ00512B	B	140, 258
30HJ00616B	CLAMP			140, 258
30HJ00624B	CLIP	30HJ-620	B	234
30HJ00624B	CLIP			234
31H000031B	CLAMP	31H000042B	B	234
31H000031B	CLAMP			234
31H000038B	CLAMP	30H000023B	A	86
31H000038B	CLAMP	30H000023B	B	86
31H000038B	CLAMP	30H000038B	B	86
31H000038B	CLAMP	30HJ00608B	B	86
31H000038B	CLAMP	31H000027B	B	86
31H000038B	CLAMP	31H000034B	B	86
31H000038B	CLAMP	31H000046B	B	86
31H000038B	CLAMP	31H000046B	B,D	86
31H000038B	CLAMP			86
31H000042B	CLIP	31H000046B	B	168, 174
31H000042B	CLIP			168, 174
3390195B	PLUG			182
35C000516B	BOLT	17C000516B	B	278
35C000516B	BOLT	35C000616B	B	278
35C000516B	BOLT	58G002512B	B	278
35C000516B	BOLT	6554744	A	278
35C000516B	BOLT	84G003112B	A	278
35C000516B	BOLT			278
35C000612B	BOLT	17C000612B	A	84
35C000612B	BOLT	17C000614B		84
35C000612B	BOLT	25G000612B	B	84
35C000612B	BOLT	31C-612	A	84
35C000612B	BOLT	31C000612B	A	84
35C000612B	BOLT	31C000612B	B	84
35C000612B	BOLT	31C000612B	B, D	84
35C000612B	BOLT	31C000612B	B,D	84
35C000612B	BOLT	35C000616B	B	84
35C000612B	BOLT	35C000620B	B	84
35C000612B	BOLT	45C000616B	B	84
35C000612B	BOLT			84
35D000408B	SCREW			20
36K000006B	CAP	36K000006B	B	140
36K000006B	CAP	36K000008B	B	140
36K000006B	CAP			140
36K000010B	CAP			84
37C000832B	BOLT			174
38C000606B	SCREW	6534900	A	28
38C000606B	SCREW			28
38C000840B	BOLT	37C000644	B	2
38C000840B	BOLT			2
3918808B	PLUG			184
3974037B	PIN			180
3974051B	PLUG			180
3974260B	BOLT			214
3974347	STUD			222
3974389B	GASKET	6680753	A	180

Code for disposition of old part number

A -- Use up

B -- Use on other application (See PNI)

C -- File PDR Report with Bobcat Parts Sales

D -- Part Number Error

Part No.	Description	Was	Code	Page
3974389B	GASKET			180
3974393B	PIN			180
3974394B	PIN			180
3974395B	PIN			180, 186
3974462B	STUD			206, 212
3974514B	SPRING			228
3974515B	RETAINER			228
3974517B	SEAL	6653830	A	228
3974517B	SEAL			228
3974518B	CAP			228
3974521B	BRACKET			228
3974525B	SPRING			228
3974546B	KEY			218
3974547B	STOPPER	6653843	A	200
3974547B	STOPPER			200
3974577B	O-RING			202
3974618B	CIRCLIP			204
3974620B	CIRCLIP	3974618B	A	204
3974620B	CIRCLIP			204
3974662B	BOLT			210
3974671B	NUT			202
3974679B	BAND			188
3974868B	PIN			180
3974882B	BRACKET	6670349	A	183, 184
3974882B	BRACKET			183, 184
3974893B	SEAT			186
3974894B	FLANGE			186
3974916B	STUD	6652670	D	208, 232
3974916B	STUD			208, 232
3974920B	SCREW			228
3974928B	SCREW			188
3974971B	NUT	6653903	A	212
3974971B	NUT			212
3974972B	GASKET			212
3975169	CAP	- 3974169	D	180
3975169	CAP	3974169	D	180
3975169	CAP			180
3975337B	COLLAR	3974576B	A	202
3975337B	COLLAR	3975336B	D	202
3975337B	COLLAR			202
3975426B	OIL PUMP	6598143	A	193, 194
3975426B	OIL PUMP			193, 194
3975432B	CIR-CLIP			204
3975441B	GEAR	3974869B	A	194
3975441B	GEAR			194
39C000828B	BOLT	- 39C000824B		302
39C000828B	BOLT			302
39DM00030B	NUT	40DM -30	D	52
39DM00030B	NUT			52
3GM00820B	SCREW	1CM00816B	A	174
3GM00820B	SCREW	1GM-820	B	174
3GM00820B	SCREW	36M-820	D	174
3GM00820B	SCREW	6674702	A	174
3GM00820B	SCREW	6678112	A	174
3GM00820B	SCREW			174
3GM00840B	SCREW			110

Code for disposition of old part number

A -- Use up
B -- Use on other application (See PNI)
C -- File PDR Report with Bobcat Parts Sales
D -- Part Number Error

Part No.	Description	Was	Code	Page
42H000044B	CLAMP	42H000048B	B	178
42H000044B	CLAMP			178
42H000056B	CLAMP			68, 78, 238, 264
42HC00200B	CLAMP	5HM00040B	B	176
42HC00200B	CLAMP	6672281	A	176
42HC00200B	CLAMP			176
42HC00300B	CLAMP	42H000040B	B	178
42HC00300B	CLAMP			178
42HC00325B	CLAMP			178
42HS00004B	CLAMP	42HL00050B	B	234
42HS00004B	CLAMP	6515575	A	234
42HS00004B	CLAMP	6515575	B	234
42HS00004B	CLAMP			234
43DM00006B	NUT	42DM00006B	B	8, 28, 80, 168, 270
43DM00006B	NUT	55D-4	B	8, 28, 80, 168, 270
43DM00006B	NUT	55D000004B	A	8, 28, 80, 168, 270
43DM00006B	NUT	55D000004B	B	8, 28, 80, 168, 270
43DM00006B	NUT	55D000004B	B	8, 28, 80, 168, 270
43DM00006B	NUT			8, 28, 80, 168, 270
43DM00008B	NUT	42DM -8	D	2, 20, 28, 62, 64, 84, 110, 140, 168, 176, 252, 270, 294, 300
43DM00008B	NUT	42DM00008B	A	2, 20, 28, 62, 64, 84, 110, 140, 168, 176, 252, 270, 294, 300
43DM00008B	NUT	42DM00008B	B	2, 20, 28, 62, 64, 84, 110, 140, 168, 176, 252, 270, 294, 300
43DM00008B	NUT	43DM00008B	B	2, 20, 28, 62, 64, 84, 110, 140, 168, 176, 252, 270, 294, 300
43DM00008B	NUT	4DM00006B	B	2, 20, 28, 62, 64, 84, 110, 140, 168, 176, 252, 270, 294, 300
43DM00008B	NUT	51DM00008B	B	2, 20, 28, 62, 64, 84, 110, 140, 168, 176, 252, 270, 294, 300
43DM00008B	NUT	53D000006B	B	2, 20, 28, 62, 64, 84, 110, 140, 168, 176, 252, 270, 294, 300
43DM00008B	NUT	6677843	B	2, 20, 28, 62, 64, 84, 110, 140, 168, 176, 252, 270, 294, 300
43DM00008B	NUT		B	2, 20, 28, 62, 64, 84, 110, 140, 168, 176, 252, 270, 294, 300
43DM00008B	NUT			2, 20, 28, 62, 64, 84, 110, 140, 168, 176, 252, 270, 294, 300
43DM00010B	NUT	42DM00008B	B	28, 60, 70, 140, 238, 258, 264
43DM00010B	NUT	42DM00010B	A	28, 60, 70, 140, 238, 258, 264
43DM00010B	NUT	42DM00010B	B	28, 60, 70, 140, 238, 258, 264
43DM00010B	NUT	4DM00010B	B	28, 60, 70, 140, 238, 258, 264
43DM00010B	NUT	6677842	B	28, 60, 70, 140, 238, 258, 264
43DM00010B	NUT			28, 60, 70, 140, 238, 258, 264
47C000832B	SCREW	17C000828B	A	302
47C000832B	SCREW	17C000828B	B	302
47C000832B	SCREW	47C000828B	B	302
47C000832B	SCREW			302
47DM00008B	NUT	51DM00008B	A	64, 66
47DM00008B	NUT	51DM00008B	B	64, 66
47DM00008B	NUT			64, 66
47K000006B	FITTING			136
4CM00616B	BOLT			206
4CM00620B	BOLT	4CM00020B	D	186, 212
4CM00620B	BOLT			186, 212
4CM00818B	BOLT			200

Code for disposition of old part number

A -- Use up

B -- Use on other application (See PNI)

C -- File PDR Report with Bobcat Parts Sales

D -- Part Number Error

Part No.	Description	Was	Code	Page
4CM00822B	BOLT			222, 230
4CM00825B	BOLT	1DM00008B	B	196
4CM00825B	BOLT			196
4CM00828B	BOLT			196, 224
4CM00845B	SCREW			174
4DM00006B	NUT	1DM00006B	B	60, 66, 94
4DM00006B	NUT	4CM-6	D	60, 66, 94
4DM00006B	NUT			60, 66, 94
4DM00008B	NUT	1DM00008B	A	52, 64, 168, 174
4DM00008B	NUT	1DM00008B	B	52, 64, 168, 174
4DM00008B	NUT	4DM00008B	B	52, 64, 168, 174
4DM00008B	NUT			52, 64, 168, 174
4F006106B	PIN	- 38C000620B		16
4F006106B	PIN	- 38C000620B Was - 38C000620B		16
4F006106B	PIN	1311652	A	16
4F006106B	PIN	38C000620B	B	16
4F006106B	PIN			16
50D000008B	NUT	12D000006B	B	166
50D000008B	NUT			166
51DM00006B	NUT			8, 20, 234, 282, 284
51DM00008B	NUT	43DM00008B	B	4, 80, 164, 174, 234
51DM00008B	NUT	45DM00008B	B	4, 80, 164, 174, 234
51DM00008B	NUT	47DM00008B	D	4, 80, 164, 174, 234
51DM00008B	NUT			4, 80, 164, 174, 234
51DM00010B	NUT	42DM00010B	A	2, 50, 64, 66, 84, 110, 176, 278, 290, 292
51DM00010B	NUT	42DM00010B	B	2, 50, 64, 66, 84, 110, 176, 278, 290, 292
51DM00010B	NUT	43DM00010B	A	2, 50, 64, 66, 84, 110, 176, 278, 290, 292
51DM00010B	NUT	43DM00010B	B	2, 50, 64, 66, 84, 110, 176, 278, 290, 292
51DM00010B	NUT	45DM00010B	A	2, 50, 64, 66, 84, 110, 176, 278, 290, 292
51DM00010B	NUT	45DM00010B	B	2, 50, 64, 66, 84, 110, 176, 278, 290, 292
51DM00010B	NUT	47DM00012B	B	2, 50, 64, 66, 84, 110, 176, 278, 290, 292
51DM00010B	NUT	51M-10	A	2, 50, 64, 66, 84, 110, 176, 278, 290, 292
51DM00010B	NUT	6512274	B	2, 50, 64, 66, 84, 110, 176, 278, 290, 292
51DM00010B	NUT			2, 50, 64, 66, 84, 110, 176, 278, 290, 292
51DM00012B	NUT	45DM00012B	B	30, 48, 254
51DM00012B	NUT	47DM00012B	B	30, 48, 254
51DM00012B	NUT			30, 48, 254
51DM00016B	NUT			178, 248
53CM01040B	SCREW	1CM01040B	B	70
53CM01040B	SCREW	3GM01025B	B	70
53CM01040B	SCREW			70
53DM00008B	NUT	40DM00008B	B	10
53DM00008B	NUT	49DM00008B	B	10
53DM00008B	NUT	54DM-8	B	10
53DM00008B	NUT			10
53DM00012B	NUT	1DM00012B	B, D	178, 276

Code for disposition of old part number

A -- Use up

B -- Use on other application (See PNI)

C -- File PDR Report with Bobcat Parts Sales

D -- Part Number Error

Part No.	Description	Was	Code	Page
53DM00012B	NUT	39DM00012B	B	178, 276
53DM00012B	NUT	49DM00012B	B	178, 276
53DM00012B	NUT			178, 276
54K020080B	O-RING			66
54K030126B	O-RING	25K-30126	B	158
54K030126B	O-RING	25K-31026	A	158
54K030126B	O-RING	25K030126B	A	158
54K030126B	O-RING	25K030126B	B	158
54K030126B	O-RING	NSS		158
54K030126B	O-RING			158
54K030202B	O-RING	25K030202B	A	148
54K030202B	O-RING	25K030202B	B	148
54K030202B	O-RING			148
54K030210B	O-RING	25K030210B	A	146, 156
54K030210B	O-RING	25K030210B	B	146, 156
54K030210B	O-RING			146, 156
54K030218B	O-RING	25K-30218	B	160
54K030218B	O-RING	25K030218B	A	160
54K030218B	O-RING	25K030218B	B	160
54K030218B	O-RING	58K-30218	B	160
54K030218B	O-RING	NSS	A	160
54K030218B	O-RING	NSS	D	160
54K030218B	O-RING	NSS		160
54K030218B	O-RING		A	160
54K030218B	O-RING			160
54K030226B	O-RING	25K-30266	A	144, 150, 154
54K030226B	O-RING	25K030226B	A	144, 150, 154
54K030226B	O-RING	25K030226B	B	144, 150, 154
54K030226B	O-RING	25K030226B	D	144, 150, 154
54K030226B	O-RING	54K030226B	D	144, 150, 154
54K030226B	O-RING	54K040300B	B	144, 150, 154
54K030226B	O-RING	NSS	A	144, 150, 154
54K030226B	O-RING	NSS	D	144, 150, 154
54K030226B	O-RING			144, 150, 154
54K040208B	O-RING	25K040208B	A	148
54K040208B	O-RING	25K040208B	B	148
54K040208B	O-RING			148
54K040224B	O-RING	25K040224B	A	146, 152, 156, 160
54K040224B	O-RING	25K040224B	B	146, 152, 156, 160
54K040224B	O-RING	58K-232	B	146, 152, 156, 160
54K040224B	O-RING	58K000232B	A	146, 152, 156, 160
54K040224B	O-RING	58K000232B	B	146, 152, 156, 160
54K040224B	O-RING	NSS	A	146, 152, 156, 160
54K040224B	O-RING	NSS	D	146, 152, 156, 160
54K040224B	O-RING	NSS		146, 152, 156, 160
54K040224B	O-RING			146, 152, 156, 160
54K040300B	O-RING	25K040300B	A	144, 150, 152, 154, 160
54K040300B	O-RING	58K-234	B	144, 150, 152, 154, 160
54K040300B	O-RING	58K000234B	A	144, 150, 152, 154, 160
54K040300B	O-RING	58K000234B	B	144, 150, 152, 154, 160
54K040300B	O-RING	58K000236B	A	144, 150, 152, 154, 160
54K040300B	O-RING	58K000236B	B	144, 150, 152, 154, 160
54K040300B	O-RING	58K000236B	D	144, 150, 152, 154, 160
54K040300B	O-RING	6513466	A	144, 150, 152, 154, 160
54K040300B	O-RING	73K000234B	A	144, 150, 152, 154, 160
54K040300B	O-RING	NSS	A	144, 150, 152, 154, 160

Code for disposition of old part number

A -- Use up

B -- Use on other application (See PNI)

C -- File PDR Report with Bobcat Parts Sales

D -- Part Number Error

Part No.	Description	Was	Code	Page
54K040300B	O-RING	NSS	D	144, 150, 152, 154, 160
54K040300B	O-RING	NSS		144, 150, 152, 154, 160
54K040300B	O-RING		A	144, 150, 152, 154, 160
~~54K040300B~~	~~O-RING~~			~~144, 150, 152, 154, 160~~
54K060128B	O-RING	25K-60128	B	158
54K060128B	O-RING	25K-61028	A	158
~~54K060128B~~	~~O-RING~~	~~25K060128B~~	~~A~~	~~158~~
54K060128B	O-RING	25K060128B	B	158
54K060128B	O-RING	NSS	D	158
~~54K060128B~~	~~O-RING~~	~~NSS~~		~~158~~
54K060128B	O-RING			158
54K060212B	O-RING	25K060212B	A	146, 156
~~54K060212B~~	~~O-RING~~	~~25K060212B~~	~~B~~	~~146, 156~~
54K060212B	O-RING			146, 156
55CM01240B	SCREW	7CM01240B	B	68
~~55CM01240B~~	~~SCREW~~			~~68~~
55CM01250B	SCREW	7CM01250B	B	68
55CM01250B	SCREW			68
~~55CM01260B~~	~~SCREW~~	~~7CM01260B~~	~~B~~	~~2~~
55CM01260B	SCREW			2
55CM01425B	SCREW			70
55CM01435B	SCREW	55C-1435	D	294, 300
~~55CM01435B~~	~~SCREW~~	~~7CM01435B~~	~~B~~	~~294, 300~~
55CM01435B	SCREW	7CM01435B	D	294, 300
55CM01435B	SCREW			294, 300
~~55CM01445B~~	~~SCREW~~			~~30~~
55D000004B	NUT	57D000004B	B	16, 28
55D000004B	NUT			16, 28
~~58G000806B~~	~~SCREW~~			~~162~~
58G000808B	SCREW			258, 262
58K000015B	O-RING	25K020016B	B,D	60
~~58K000015B~~	~~O-RING~~			~~60~~
58K000044B	SEAL	6658756	A	108
58K000044B	SEAL			108
~~58K000111B~~	~~O-RING~~	~~6647876~~	~~A~~	~~96~~
58K000111B	O-RING	6647876	B	96
58K000111B	O-RING			96
~~58K000140B~~	~~O-RING~~	~~54K-140~~	~~D~~	~~158~~
58K000140B	O-RING	58K000136B	D	158
58K000140B	O-RING	58K000136B	B, D	158
58K000140B	O-RING	NSS		158
58K000140B	O-RING			158
58K000214B	O-RING			296
58K000225B	O-RING			72
~~59CM01245B~~	~~SCREW~~	~~29CM01245B~~	~~B~~	~~52~~
59CM01245B	SCREW	59CM01240B	B	52
59CM01245B	SCREW			52
~~59CM10110B~~	~~SCREW~~			~~140~~
59D000005B	NUT	61D-5	B	16, 28, 164
59D000005B	NUT	61D000005B	A	16, 28, 164
~~59D000005B~~	~~NUT~~	~~61D000005B~~	~~B~~	~~16, 28, 164~~
59D000005B	NUT	85D000005B	B	16, 28, 164
59D000005B	NUT			16, 28, 164
~~59D000006B~~	~~NUT~~	~~62D000006B~~	~~B~~	~~2~~
59D000006B	NUT	6519662	A	2
59D000006B	NUT	83D000006B	B	2

Code for disposition of old part number

A -- Use up

B -- Use on other application (See PNI)

C -- File PDR Report with Bobcat Parts Sales

D -- Part Number Error

Part No.	Description	Was	Code	Page
59D000006B	NUT	85D000006B	B	2
59D000006B	NUT	85D000008B	B	2
59D000006B	NUT	85D000008B		2
59D000006B	NUT	91D000006B	B	2
59D000006B	NUT			2
5CM00812B	BOLT			228
5CM01025B	SCREW			238, 264
5CM01030B	SCREW			238, 264
5HM00014B	CLAMP			234
5HM00020B	CLAMP			140, 258, 264
5HM00023B	CLAMP	42H000008B	A	234
5HM00023B	CLAMP	52H-8	A	234
5HM00023B	CLAMP			234
5HM00029B	CLAMP	5HM00027B	C	72, 84
5HM00029B	CLAMP			72, 84
5HM00042B	CLAMP			72, 140
5HM00058B	CLAMP	42H000024B	B	234
5HM00058B	CLAMP			234
5JM00024B	CIRCLIP			204
6190121	SPRING			108
61D000005B	NUT	57D000005B	B,D	28, 52
61D000005B	NUT	61D000006B	B	28, 52
61D000005B	NUT	61D000006B		28, 52
61D000005B	NUT	61D000008B	B	28, 52
61D000005B	NUT	62D000005B	B	28, 52
61D000005B	NUT	83D000005B	B	28, 52
61D000005B	NUT	85D000005B	B	28, 52
61D000005B	NUT			28, 52
61D000007B	NUT	61D000006B	D	16
61D000007B	NUT			16
62D000004B	NUT	86D000004B	B	62, 64
62D000004B	NUT			62, 64
6503451	SPACER			49, 50, 298
6505813	CONNECTOR	6705813	A	177, 178
6505813	CONNECTOR	6705813	D	177, 178
6505813	CONNECTOR			177, 178
6513466	SEAL	1530265B	B,D	144, 150, 154
6513466	SEAL	NSS	A	144, 150, 154
6513466	SEAL	NSS	D	144, 150, 154
6513466	SEAL	NSS		144, 150, 154
6513466	SEAL	Nss		144, 150, 154
6513466	SEAL			144, 150, 154
6513518	DRIVE			108
6513520	SEAL	NSS	D	108
6513520	SEAL			108
6513528	FLANGE			108
6513529	SEAL	NSS	D	108
6513529	SEAL			108
6513681	BEARING			67, 68
6513707	JOINT	6652658	A	208
6513707	JOINT			208
6513799	SEAL			108
6515603	GROMMET			1, 2, 233, 234, 238, 264
6516229	PISTON SEAL	NSS		146, 156
6516229	PISTON SEAL			146, 156
6519328	RING	NSS	D	158

Code for disposition of old part number

A -- Use up

B -- Use on other application (See PNI)

C -- File PDR Report with Bobcat Parts Sales

D -- Part Number Error

Part No.	Description	Was	Code	Page
6519328	RING	NSS		158
6519328	RING			158
6533873	SPACER	NSS	A	42
6533873	SPACER			42
6534111	WASHER			46, 48, 50, 52, 244, 293, 294, 298, 300
6534154	RING			46, 48, 50, 52, 244
6535548	FLANGE			29, 30
6536438	SPRING			32, 34
6536545	SLEEVE			59, 60
6536748	NUT	1DM00014B	B	48, 294, 300
6536748	NUT			48, 294, 300
6536801	BUSHING			57, 58, 60
6536802	WASHER	27E000006B	B	15, 16, 60
6536802	WASHER			15, 16, 60
6536803	WASHER			63, 64, 65, 66
6537290	PISTON			154
6537294	HEAD			154
6537481	MOUNT			60
6538367	HEAD	6588367	D	160
6538367	HEAD			160
6539236	HEAD	6534380	A	158
6539236	HEAD	6539323	B, D	158
6539236	HEAD	6539326	D	158
6539236	HEAD	6555078	A	158
6539236	HEAD			158
6539252	PISTON			156
6548761	HOSE			234
6553411	BUSHING			234
6560382	RING			48, 244, 294, 298, 300
6560899	WASHER			2
6561741	HOSE			294
6562266	CLAMP	6502426	A	60
6562266	CLAMP	6502426	D	60
6562266	CLAMP			60
6562927	HOSE			234
6563128	SPRING			58
6564452	GRIP			61, 62
6565200	DECAL	6709781	A	249, 250
6565200	DECAL			249, 250
6565977	HOSE	6719144	B	258, 264
6565977	HOSE			258, 264
6565990	DECAL	6561378	A	250
6565990	DECAL		A	250
6565990	DECAL			250
6567962	WASHER			3, 4, 62
6567963	SPACER			4, 62
6569203	CLAMP	6563462	A	163, 164
6569203	CLAMP	6563462	B	163, 164
6569203	CLAMP			163, 164
6576048	DECAL	6557927	A	250
6576048	DECAL	6557930	A	250
6576048	DECAL	6565251	A	250
6576048	DECAL			250
6577775	HOSE	6501769	A	93, 94
6577775	HOSE			93, 94
6577801	LIGHT			292

Code for disposition of old part number

A -- Use up

B -- Use on other application (See PNI)

C -- File PDR Report with Bobcat Parts Sales

D -- Part Number Error

Part No.	Description	Was	Code	Page
6577822	HOSE	6562515	A	176, 300
6577822	HOSE	6562515	B	176, 300
6577822	HOSE	6562575	A	176, 300
6577822	HOSE	6564030	A	176, 300
6577822	HOSE	6577821	A	176, 300
6577822	HOSE	6577821	B	176, 300
6577822	HOSE	6586251	A	176, 300
6577822	HOSE	672221B	A	176, 300
6577822	HOSE		A	176, 300
6577822	HOSE			176, 300
6578185	HOSE			79, 80
6578278	PAD			139, 140
6586391	GUIDE			278
6587168	SCREEN			140
6588659	CASE			158
6588679	HEAD			156
6588997	SHAFT	6535558	A	36
6588997	SHAFT			36
6589129	DECAL			250
6589347	STRAP			16, 21, 22
6589675	SCREW	1CM00612B	A	8, 16, 55, 56, 58, 161, 162, 238, 258, 264
6589675	SCREW	1CM00612B	B	8, 16, 55, 56, 58, 161, 162, 238, 258, 264
6589675	SCREW	6587499	A	8, 16, 55, 56, 58, 161, 162, 238, 258, 264
6589675	SCREW	6587499	B	8, 16, 55, 56, 58, 161, 162, 238, 258, 264
6589675	SCREW	6810157	A	8, 16, 55, 56, 58, 161, 162, 238, 258, 264
6589675	SCREW			8, 16, 55, 56, 58, 161, 162, 238, 258, 264
6589900	LINK			46
6589949	SPACER			136
6592506	CLAMP	6577697	B	78, 278
6592506	CLAMP	6659498	A	78, 278
6592506	CLAMP			78, 278
6593671	CONNECTOR	6631036	A	60, 66
6593671	CONNECTOR	774332B	A	60, 66
6593671	CONNECTOR			60, 66
6594897	DECAL	6533897	B	250
6594897	DECAL			250
6595014	DECAL	6707867	A	250
6595014	DECAL	6718401	A	250
6595014	DECAL	6718401	B	250
6595014	DECAL			250
6595175	LINK			46
6595222	PIN			46
6595660	PIN			244
6596042	TUBELINE			78
6596116	PLATE			78
6596216	PIN	6595660	A	46, 48, 52
6596216	PIN			46, 48, 52
6596238	PIN			52
6596396	PLATE			286
6596493	SHIELD			52
6596506	SPACER			52

Code for disposition of old part number

A -- Use up

B -- Use on other application (See PNI)

C -- File PDR Report with Bobcat Parts Sales

D -- Part Number Error

Part No.	Description	Was	Code	Page
6596723	COVER	6539292	A	30
6596723	COVER			30
6596855	TUBELINE			78
6596894	WASHER			136
6596953	RING			136
6597198	PIN			50
6597318	SPACER			32
6597403	HANDLE			96
6597461	PIN			53, 54
6597572	BUMPER	6597345	A	16, 46, 52
6597572	BUMPER			16, 46, 52
6597811	HOSE			80
6598098	PIN			212
6598099	KEY	3974616B	A	204
6598099	KEY			204
6598100	KEY			200
6598118	COVER	6653947	A	222
6598118	COVER			222
6598141	OIL	3975011B	A	202
6598141	OIL			202
6598146	PIPE			214
6598156	STUD			184
6598169	PLUG			180
6598170	PLUG	6598190	D	180
6598170	PLUG			180
6598187	PLUG			180
6598355	BOLT			210
6598481	BLOCK			36, 38
6598908	ELBOW	6598909	D	234
6598908	ELBOW	6661382	A	234
6598908	ELBOW	6661382	B	234
6598908	ELBOW			234
6599084	SCREW			208
6599118	GASKET			208
6599360	SEALANT			304
6599365	KIT			92
6599645	PLUG			234
6599719	GREASE			304
6599931	ALARM	6579858	A	270
6599931	ALARM		A	270
6599931	ALARM			270
6610082	SPRING			8
6610510	TIE	1714312	A	234, 258, 264, 266, 270, 292
6610510	TIE	1715312B	A	234, 258, 264, 266, 270, 292
6610510	TIE	1715312B	B	234, 258, 264, 266, 270, 292
6610510	TIE	1715312B		234, 258, 264, 266, 270, 292
6610510	TIE	30H-23	B	234, 258, 264, 266, 270, 292
6610510	TIE	30H000023B	B	234, 258, 264, 266, 270, 292
6610510	TIE	30H000031B	B	234, 258, 264, 266, 270, 292
6610510	TIE	30H000031B		234, 258, 264, 266, 270, 292
6610510	TIE	6578824	A	234, 258, 264, 266, 270, 292
6610510	TIE	6591255	A	234, 258, 264, 266, 270, 292
6610510	TIE	6627289	B,D	234, 258, 264, 266, 270, 292
6610510	TIE	6633498	A	234, 258, 264, 266, 270, 292
6610510	TIE	6671037	D	234, 258, 264, 266, 270, 292
6610510	TIE	6705035	A	234, 258, 264, 266, 270, 292

Code for disposition of old part number

A -- Use up

B -- Use on other application (See PNI)

C -- File PDR Report with Bobcat Parts Sales

D -- Part Number Error

Part No.	Description	Was	Code	Page
6610510	TIE			234, 258, 264, 266, 270, 292
6615007	GAUGE			178
6624289	STA STRAP	6512052	A	78, 80, 94, 164, 165, 166, 167, 168, 238, 240, 244, 258, 264, 278, 288, 292
6624289	STA STRAP	6583348	A	78, 80, 94, 164, 165, 166, 167, 168, 238, 240, 244, 258, 264, 278, 288, 292
6624289	STA STRAP	6610510	A	78, 80, 94, 164, 165, 166, 167, 168, 238, 240, 244, 258, 264, 278, 288, 292
6624289	STA STRAP	6610510	B	78, 80, 94, 164, 165, 166, 167, 168, 238, 240, 244, 258, 264, 278, 288, 292
6624289	STA STRAP	6648361	A	78, 80, 94, 164, 165, 166, 167, 168, 238, 240, 244, 258, 264, 278, 288, 292
6624289	STA STRAP		B	78, 80, 94, 164, 165, 166, 167, 168, 238, 240, 244, 258, 264, 278, 288, 292
6624289	STA STRAP			78, 80, 94, 164, 165, 166, 167, 168, 238, 240, 244, 258, 264, 278, 288, 292
6628419	RING			136
6628547	WASHER	6803030	D	48, 254
6628547	WASHER			48, 254
6628581	HOSE			75, 76
6630168	COUPLER			85, 86
6630188	POLISH			304
6630189	POLISH			304
6630190	POLISH			304
6630191	POLISH			304
6630207	RIVET	1662965	A	16, 22
6630207	RIVET	6512797	A	16, 22
6630207	RIVET	6512797	B	16, 22
6630207	RIVET	6512797, 6598092, & 6513493	A	16, 22
6630207	RIVET	6513417	B	16, 22
6630207	RIVET	6513493	A	16, 22
6630207	RIVET	6598092	A	16, 22
6630207	RIVET	6598092	B	16, 22
6630207	RIVET	6630193	A	16, 22
6630207	RIVET	6630193	B	16, 22
6630207	RIVET	6630207	A	16, 22
6630207	RIVET	NAP	D	16, 22
6630207	RIVET	NAP		16, 22
6630207	RIVET			16, 22
6630367	CAP			86
6630945	WASHER			4, 62
6631010	SWITCH	6632186	B	168
6631010	SWITCH	6646596	A	168
6631010	SWITCH	6652576	A	168
6631010	SWITCH	6676053	B	168
6631010	SWITCH			168
6631036	JOINT			64
6631046	SEAL	3974403	A	182
6631046	SEAL			182

Code for disposition of old part number

A -- Use up

B -- Use on other application (See PNI)

C -- File PDR Report with Bobcat Parts Sales

D -- Part Number Error

Part No.	Description	Was	Code	Page
6633583	SEALANT	6555349	A	304
6633583	SEALANT	6632501	A	304
6633583	SEALANT			304
6633977	FILTER	6511393	A	234
6633977	FILTER	6511393	B	234
6633977	FILTER	6611393	B	234
6633977	FILTER			234
6640729	PLUG			182
6644965	BALL JOINT	6631036	B	62
6644965	BALL JOINT			62
6645812	SCREW			32, 34
6650239	SCREEN	6598911	A	234
6650239	SCREEN	6598911		234
6650239	SCREEN	6659239	D	234
6650239	SCREEN			234
6650388	SEALANT	1802303B	A	304
6650388	SEALANT			304
6650407	ADHESIVE			304
6652521	COVER	6647638	A	78
6652521	COVER	6806461	A	78
6652521	COVER			78
6652580	BOLT	3974038	B	224
6652580	BOLT			224
6652633	BALL	3974058B	A	200, 202
6652633	BALL			200, 202
6652652	SPRING	3974892B	A	186
6652652	SPRING			186
6652671	ORIFICE			208
6652762	BOLT	4CM00612B	A	218
6652762	BOLT	4CM00612B	B	218
6652762	BOLT			218
6652792	NUT			184, 222, 224
6652794	KEY			194
6652818	ADHESIVE	6632469	A	304
6652818	ADHESIVE	6632469	S	304
6652818	ADHESIVE			304
6652915	SEAL	NSS		46, 48, 78, 154, 300
6652915	SEAL			46, 48, 78, 154, 300
6652943	COVER			48, 300
6653493	COVER			78
6653519	PRIMER			304
6653561	NUT	6680663	D	206
6653561	NUT			206
6653568	FILTER	3974413B	A	182
6653568	FILTER			182
6653798	BOLT			182
6653807	BOLT	3974889B	A	186
6653807	BOLT			186
6653808	BOLT	3974890B	A	224
6653808	BOLT	3974890B	B	224
6653808	BOLT	6653809	B, D	224
6653808	BOLT			224
6653809	ADAPTER	3974891B	A	186
6653809	ADAPTER			186
6653821	BOLT	3974902B	A	196
6653821	BOLT			196

Code for disposition of old part number

A -- Use up

B -- Use on other application (See PNI)

C -- File PDR Report with Bobcat Parts Sales

D -- Part Number Error

Part No.	Description	Was	Code	Page
6653946	STUD			224
6654170	STRIKER BOLT			16
6654487	BOLT			174
6654710	SEAL			202
6654718	CLAMP	3974252B	A	214
6654718	CLAMP			214
6655151	OIL PAN			181, 182
6655154	GUIDE	3974434B	A	184
6655154	GUIDE	6653586	A	184
6655154	GUIDE	6653802	A	184
6655154	GUIDE			184
6655158	BOLT			184
6655160	PLUG			219, 220
6655161	WASHER			220
6655176	PUSHROD			200
6655179	PIN			202
6655181	ROD			202
6655183	PIN			202
6655210	SHIM			208
6655212	GEAR			204
6655213	SLEEVE			204
6655214	CASE	3974619B	A	204
6655214	CASE			204
6655215	BALL			204
6655223	NUT	3974972B	A	212
6655223	NUT	3974973B	A	212
6655223	NUT			212
6655236	PIN			202
6655237	PIN			202
6655243	BUSHING			202
6655399	BUMPER	6511847	A	27, 28
6655399	BUMPER	6714454	B	27, 28
6655399	BUMPER	6714454	B,D	27, 28
6655399	BUMPER	6714454	B,D	27, 28
6655399	BUMPER			27, 28
6655498	BOLT	3974940B	A	202
6655498	BOLT	3974940B		202
6655498	BOLT	6653855	A	202
6655498	BOLT	6655488	D	202
6655498	BOLT			202
6655752	FITTING	12H000015B	A	32, 34
6655752	FITTING			32, 34
6655870	ROCKER ARM	3975438B	A	228
6655870	ROCKER ARM	6598171	A	228
6655870	ROCKER ARM	6655490	D	228
6655870	ROCKER ARM			228
6655880	PIPE	6653939	A	188, 230
6655880	PIPE			188, 230
6657663	PLUG			180
6658289	HOOK			16
6658536	RING			198
6658755	SCREW			108
6658757	RING	6513521	A	108
6658757	RING	6513942	A	108
6658757	RING			108
6658759	PLATE			108

Code for disposition of old part number

A -- Use up

B -- Use on other application (See PNI)

C -- File PDR Report with Bobcat Parts Sales

D -- Part Number Error

Part No.	Description	Was	Code	Page
6658847	RING			198
6659297	WASHER			96
6660075	SEAL	6652915	A	46, 48, 52, 68
6660075	SEAL			46, 48, 52, 68
6660260	SWITCH	6632053	B,D	92
6660260	SWITCH	6674376	A	92
6660260	SWITCH	6684826	B	92
6660260	SWITCH			92
6660267	VALVE			252
6660856	SLEEVE	6685181	A	108
6660856	SLEEVE			108
6661150	SWITCH			270
6661213	RING			234
6661248	ELEMENT	6598903	B	92
6661248	ELEMENT	6630977	A	92
6661248	ELEMENT	6630977	B	92
6661248	ELEMENT	6660728	A	92
6661248	ELEMENT			92
6661785	MOUNT			178
6662076	RING			142
6662745	SNAP RING			294, 300
6664075	ASH TRAY			16
6664083	COVER			16
6664084	LIGHT			162
6664085	BUSHING			8
6664209	SEAL			198
6664223	OUTLET			164
6664224	CAP			164
6664554	PUMP			19, 20
6665086	SEAL	1615087	A	146, 148, 158, 160
6665086	SEAL	1615087	B	146, 148, 158, 160
6665086	SEAL	1657087B	A	146, 148, 158, 160
6665086	SEAL	NAP		146, 148, 158, 160
6665086	SEAL	NSS	A	146, 148, 158, 160
6665086	SEAL	NSS	D	146, 148, 158, 160
6665086	SEAL	NSS		146, 148, 158, 160
6665086	SEAL			146, 148, 158, 160
6665105	ALARM	6662635	A	166
6665105	ALARM			166
6665314	SWITCH	6668314	B,D	166
6665314	SWITCH	6719038	A	166
6665314	SWITCH	6807730	A	166
6665314	SWITCH	6807730	B	166
6665314	SWITCH			166
6665317	SWITCH			240, 288
6665573	SEAL			136
6665618	RING			50, 54
6665915	GAUGE	6656338	A	140
6665915	GAUGE	7000001	A	140
6665915	GAUGE			140
6666333	FILTER	6598492	B	236
6666333	FILTER			236
6666334	FILTER	6598362	B	236
6666334	FILTER	an optional on earlier models		236
6666334	FILTER			236
6666366	SPRING			106

Code for disposition of old part number

A -- Use up

B -- Use on other application (See PNI)

C -- File PDR Report with Bobcat Parts Sales

D -- Part Number Error

Part No.	Description	Was	Code	Page
6666378	VALVE			236
6666544	WIPER	1657088B	A	32, 34, 144, 150, 152, 156
6666544	WIPER	1657088B	B	32, 34, 144, 150, 152, 156
6666544	WIPER	1657088B	D	32, 34, 144, 150, 152, 156
6666544	WIPER	6665086	A	32, 34, 144, 150, 152, 156
6666544	WIPER	NSS	A	32, 34, 144, 150, 152, 156
6666544	WIPER	NSS	D	32, 34, 144, 150, 152, 156
6666544	WIPER	NSS		32, 34, 144, 150, 152, 156
6666544	WIPER			32, 34, 144, 150, 152, 156
6666545	WIPER	1657088B	A	154
6666545	WIPER	1657090B	A	154
6666545	WIPER	NSS	A	154
6666545	WIPER	NSS	D	154
6666545	WIPER	NSS		154
6666545	WIPER			154
6666549	WASHER			50, 54
6666629	WASHER			172
6666631	WASHER			172
6666766	GROMMET			20
6666814	GASKET	6655167	A	196
6666814	GASKET	6682505	B	196
6666814	GASKET		A	196
6666814	GASKET			196
6667326	SEAL	6518201	A	146, 148, 156, 158, 160
6667326	SEAL	6518201	B	146, 148, 156, 158, 160
6667326	SEAL	6538141	A	146, 148, 156, 158, 160
6667326	SEAL	6538141	B	146, 148, 156, 158, 160
6667326	SEAL	6538141	D	146, 148, 156, 158, 160
6667326	SEAL	NSS	A	146, 148, 156, 158, 160
6667326	SEAL	NSS	D	146, 148, 156, 158, 160
6667326	SEAL	NSS		146, 148, 156, 158, 160
6667326	SEAL			146, 148, 156, 158, 160
6667327	SEAL	58K000238B	D	144, 150, 152
6667327	SEAL	6538140	A	144, 150, 152
6667327	SEAL	6538140	B	144, 150, 152
6667327	SEAL	6538410	A	144, 150, 152
6667327	SEAL	NSS	A	144, 150, 152
6667327	SEAL	NSS	D	144, 150, 152
6667327	SEAL	NSS		144, 150, 152
6667327	SEAL			144, 150, 152
6667328	SEAL	6538277	A	154
6667328	SEAL	NSS	A	154
6667328	SEAL	NSS		154
6667328	SEAL		A	154
6667328	SEAL			154
6667332	SEAL	NSS		108
6667332	SEAL			108
6667352	FILTER FUEL	6647773	A	234
6667352	FILTER FUEL			234
6667353	FILTER ASSY	6657020	A	234
6667353	FILTER ASSY			234
6667418	PLUG	3974095B	D	180
6667418	PLUG	6666782	D	180
6667418	PLUG	6675623	D	180
6667418	PLUG	6684752	D	180
6667418	PLUG			180

Code for disposition of old part number

A -- Use up

B -- Use on other application (See PNI)

C -- File PDR Report with Bobcat Parts Sales

D -- Part Number Error

Part No.	Description	Was	Code	Page
6667419	WASHER			210
6667420	BOLT	6667439	A	182, 204
6667420	BOLT			182, 204
6667421	BOLT			184
6667422	WASHER			184, 186, 222, 228
6667433	CIRCLIP			200
6667440	COVER			204
6667442	WASHER			224
6667451	WASHER			228
6667461	PIN			228
6667465	SEAL	6653945	A	224
6667465	SEAL			224
6667808	COUPLER			78
6667934	BULB	6650111	A	166
6667934	BULB	6677934	D	166
6667934	BULB			166
6668114	BEARING	6662899	A	198
6668114	BEARING			198
6668787	RING	51DM00016B	D	48, 254
6668787	RING			48, 254
6668881	CORD			242
6668928	LOCK PIN			282
6669196	DRIVE			108
6669224	BOLT			28, 58
6670119	GROMMET			2
6670472	NUT			214
6670757	COUPLER			173, 174
6670769	O-RING			186, 214
6670770	BOLT			194
6671113	SWITCH			162
6671122	BALL	6632435	B,D	172
6671122	BALL			172
6671834	PIN			106
6671884	SCREW			106
6671887	PISTON			106
6671890	WASHER			106
6671892	SCREW			106
6671982	O-RING			172
6671985	BEARING			172
6671989	BEARING			172
6671990	BEARING			172
6671991	SPRING			172
6671992	SHAFT			172
6671999	ROLLER			172
6672000	RETAINER			172
6672001	PINION			172
6672006	NUT			172
6672007	BUSHING			172
6672008	NUT			172
6672011	NUT			172
6672012	WASHER			172
6672013	O-RING			172
6672019	BUSHING	6670859	D	294, 300
6672019	BUSHING			294, 300
6672172	KIT	6672173	D	172
6672172	KIT			172

Code for disposition of old part number

A -- Use up

B -- Use on other application (See PNI)

C -- File PDR Report with Bobcat Parts Sales

D -- Part Number Error

Part No.	Description	Was	Code	Page
6672178	COVER			172
6672360	PLUG			186
6672488	RECTIFIER			170
6672494	RING			64
6672960	COUPLER	6667807	A	78, 244, 278
6672960	COUPLER	6667807	D	78, 244, 278
6672960	COUPLER	6667808	A	78, 244, 278
6672960	COUPLER	6672760	D	78, 244, 278
6672960	COUPLER			78, 244, 278
6673853	WASHER			102
6673951	COVER	6667730	A	236
6673951	COVER			236
6674221	WASHER			142
6674264	BOLT			28, 64, 83, 84, 109, 110, 176, 278
6674581	MANIFOLD			231, 232
6674687	BATTERY	6669318	A	164
6674687	BATTERY	6669318	B	164
6674687	BATTERY	6669319	B	164
6674687	BATTERY		B	164
6674687	BATTERY			164
6674688	COUPLER	6667808	A	244, 278
6674688	COUPLER	6667808	B	244, 278
6674688	COUPLER	6672960	A	244, 278
6674688	COUPLER	6677808	A	244, 278
6674688	COUPLER		A	244, 278
6674688	COUPLER			244, 278
6674690	CAP			140
6674817	YOKE			172
6674818	ARMATURE			172
6674819	BEARING			172
6674820	CLUTCH			172
6674821	CLUTCH			172
6674823	HOUSING			172
6674824	PINION			172
6674826	STARTER			172
6674828	PLUNGER			172
6674829	COVER			172
6674830	BOLT			172
6674831	SPRING			172
6674833	BOLT			172
6674834	SCREW			172
6674835	SCREW			172
6674836	HOLDER			172
6674993	CAP			20
6675029	PIN			48, 254
6675176	SWITCH			258, 264
6675177	KNOB			258, 264
6675181	PLUG			258
6675273	WASHER	6675263	B,D	2
6675273	WASHER	6675263	B,D	2
6675273	WASHER			2
6675385	PLUG			16, 28
6675386	SOCKET			6, 28
6675517	FILTER	3974896	A	189, 190
6675517	FILTER	3974896B	A	189, 190
6675517	FILTER	6684783	A	189, 190

Code for disposition of old part number

A -- Use up

B -- Use on other application (See PNI)

C -- File PDR Report with Bobcat Parts Sales

D -- Part Number Error

Part No.	Description	Was	Code	Page
6675517	FILTER			189, 190
6675522	STROBE			288
6675523	BEACON			240
6675546	SEAL- BULK/FT			28
6675551	CAP			176
6675618	CLAMP			222
6675705	ALARM			164
6675721	SWITCH			164
6675722	NUT			4, 10, 30, 56
6675734	STRAP			238, 264
6675838	BUSHING			174
6675846	POTENTIOMETER	6675178	A	258, 264
6675846	POTENTIOMETER			258, 264
6675859	BOLT			20, 52
6675938	LIGHT			52
6676026	NUT			2, 56, 58, 258, 264
6676114	ANTENNA			20
6676167	VALVE			68
6676169	NUT			2
6676203	BEZEL			52
6676204	NUT			52
6676238	LIGHT	6675938	D	166
6676238	LIGHT			166
6676508	GROMMET			60
6676535	COUPLER			71, 72
6676713	LOUVER			238, 258, 261, 262
6676725	BEZEL			166
6676922	PLUG			266
6676969	FILTER			84, 91, 92
6677363	CLAMP	657904	A	178
6677363	CLAMP	657904	B	178
6677363	CLAMP	657904(A)	A	178
6677363	CLAMP	657904B	A	178
6677363	CLAMP	657904B	B	178
6677363	CLAMP			178
6677487	COVER			170
6677490	BRACKET			170
6677491	BRACKET			170
6677492	ROTOR			170
6677493	STATOR			170
6677494	BOLT			170
6677495	SPACER			170
6677497	NUT			170
6677500	HANDLE			16
6677821	PAD			44
6677822	PIN			44
6677823	PIN, MASTER			44
6677834	BLADE			8
6677837	BOLT			8
6677839	GASKET			8
6677840	SWIVEL ASSY			8
6677841	WASHER			8
6677842	NUT			8
6677843	NUT			8
6677844	NUT			8
6677845	ADAPTER			8

Code for disposition of old part number

A -- Use up

B -- Use on other application (See PNI)

C -- File PDR Report with Bobcat Parts Sales

D -- Part Number Error

Part No.	Description	Was	Code	Page
6677847	GROMMET			8
6677894	JOYSTICK			80, 99, 100
6677895	JOYSTICK			80, 97, 98
6677896	JOYSTICK			80
6677904	BEARING	6807119		64
6677904	BEARING	6807119 - Order 6677904 or Ref.65		64
6677904	BEARING			64
6677908	BEARING	6807119	A	64, 66
6677908	BEARING	6807119		64, 66
6677908	BEARING			64, 66
6677915	SEAL			206
6677934	BULB			52
6678531	VALVE			108
6678595	PLUG			88
6678637	SEAL			74
6678639	SEAL			74
6678641	SCREW			74, 88
6678690	CONTROLLER			164
6678691	CONTROLLER			266
6678769	AIR CLEANER			178, 235, 236
6678825	TRACK			30, 43, 44
6678831	CONDENSER			238, 263, 264
6678918	BEARING			58
6678952	BEARING			30
6678966	BOX			259, 260, 264
6678984	COIL			82
6678988	VALVE			82
6678990	VALVE			82
6679032	VALVE			82
6679033	VALVE	6679511	A	82
6679033	VALVE			82
6679038	CABLE			60, 66
6679074	COIL			82
6679075	NUT			82
6679076	NUT			82
6679078	SEAL KIT			82
6679082	THERMOSTAT			260
6679085	SWITCH			238, 264
6679248	RING			142
6679471	RETAINER			88
6679506	DRAIN	6513679	A	176
6679506	DRAIN	NAP	A	176
6679506	DRAIN			176
6679641	LATCH KIT			12
6679684	O-RING			82
6679818	O-RING			108
6679831	EXCHANGER			176
6679842	SWITCH	6675370	A	164
6679842	SWITCH	6675470	A	164
6679842	SWITCH			164
6679865	O-RING			82
6679881	SEAL	67117802	A	36, 38, 40
6679881	SEAL	6717802	A	36, 38, 40
6679881	SEAL	6725082	A	36, 38, 40
6679881	SEAL			36, 38, 40
6679883	BEARING	6673212	A	38

Code for disposition of old part number

A -- Use up

B -- Use on other application (See PNI)

C -- File PDR Report with Bobcat Parts Sales

D -- Part Number Error

Part No.	Description	Was	Code	Page
6679883	BEARING			38
6679885	HANDLE			6
6679886	LATCH			6
6679888	VALVE ASSY			278
6679906	SWITCH			278
6679948	KIT			102
6679949	PLATE			102
6679952	KIT			98, 100
6679953	HANDLE			98
6679954	HANDLE			100
6679955	BOOT			98, 100
6679956	KIT			98, 100
6679957	FLANGE			98, 100
6679958	LOCK			98, 100
6679959	PLUG			100
6679960	CONNECTOR			98, 100
6680065	VALVE			244
6680151	CAP			234
6680180	ARM			8
6680289	BEARING			42
6680291	BEARING			40
6680293	TREAD			20, 22
6680303	HOSE			238, 264
6680304	HOSE			238, 264
6680305	HOSE			238, 264
6680306	HOSE			238, 264
6680308	LOUVER			258
6680311	RECEIVER			238, 264
6680321	CAP			258
6680323	RING			142
6680427	SENSOR	6675665	A	166
6680427	SENSOR	6675666	A	166
6680427	SENSOR	6680427	A	166
6680427	SENSOR			166
6680428	MAGNET	6675665	A	166
6680428	MAGNET			166
6680437	SENSOR	6675662	A	234
6680437	SENSOR			234
6680484	GASKET	6680408	D	182
6680484	GASKET			182
6680544	BOLT			208
6680562	BOLT			186
6680639	PLUG			180
6680661	O-RING			186
6680663	NUT			208
6680665	PLUG			184
6680666	PLUG			184
6680685	BOLT			228
6680707	TAPPET			199, 200
6680766	WASHER			228
6680779	GASKET			214
6680785	CLAMP			214
6680786	CLAMP			214
6680792	GASKET			180
6680795	CLAMP			214
6680830	BOLT			210

Code for disposition of old part number

A -- Use up

B -- Use on other application (See PNI)

C -- File PDR Report with Bobcat Parts Sales

D -- Part Number Error

Part No.	Description	Was	Code	Page
6680831	NUT			211, 212
6680874	NUT			228
6680908	CAP			188
6680971	RETAINER			8
6680975	BOX			255, 256, 258
6680976	DUCT			238, 262, 264
6680977	DUCT			258
6680996	CABLE			62
6681012	FILTER			84
6681505	SEAL	6672517	A	294, 300
6681505	SEAL			294, 300
6681509	DUCT			258, 262
6681528	GROMMET			258, 264
6681567	GROMMET			238, 264
6681576	BRACKET			258, 262
6681577	BRACKET			258, 262
6681623	BUSHING			84
6681644	GUIDE			192
6681651	RING			8
6681652	CAP			8
6681653	HOSE			258, 264
6681716	COMPRESSOR			238, 264
6681719	SEAL			42
6681857	ALTERNATOR			168, 169, 170, 174
6681858	STARTER			171, 172, 174
6681878	LATCH			238, 264
6681881	DUCT			258, 264
6681883	SEAL			18, 176
6681884	SEAL			258
6681886	GROMMET			2
6681922	LATCH			16
6681942	IDLER			174
6682027	SEAL			144, 150, 152
6682150	TEE			258, 264
6682238	BOOT			102
6682272	SEAL			2
6682274	CAP	6646678	B	176
6682274	CAP			176
6682442	SLEEVE	6704393	A	198
6682442	SLEEVE	6704393		198
6682442	SLEEVE			198
6682482	MUFFLER			178
6682483	TUBE			178
6682492	TRIM			8, 282, 284
6682514	SHIM			208
6682515	SHIM			208
6682532	NUT			232
6682697	GROMMET			162
6682740	RETAINER			16, 18
6682741	RETAINER			162, 240, 288, 292
6682990	CLIP			238, 264
6682999	ADAPTER			176
6683087	STUD			206
6683162	VALVE			82
6683163	VALVE			82
6683206	SEAL KIT			138

Code for disposition of old part number

A -- Use up

B -- Use on other application (See PNI)

C -- File PDR Report with Bobcat Parts Sales

D -- Part Number Error

Part No.	Description	Was	Code	Page
6683316	EXCHANGER			84
6683610	CLAMP			78
6683810	FAN			225, 226
6683889	SHIELD			280
6683893	FUEL			234
6683909	COIL			238
6683910	VALVE			238
6683911	SWITCH			238
6684037	SENSOR	6658260	A	168
6684037	SENSOR	6658260	B	168
6684037	SENSOR	6679853	A	168
6684037	SENSOR	6679853	B	168
6684037	SENSOR			168
6684139	MOTOR			8
6684245	TRACK			44, 286
6684339	BEARING			36
6684408	LATCH			28
6684445	RING			32, 34
6684446	O-RING			32, 34
6684448	TOOTH ASSY	6808523	A	302
6684448	TOOTH ASSY			302
6684482	SCREW			256
6684499	WASHER			238, 260
6684500	WASHER			238, 256, 260
6684503	NUT			256
6684506	CLAMP			256, 260
6684507	TUBE			256, 260
6684518	SEAL			6, 18
6684520	NUT			238, 260
6684521	NUT			256, 260
6684539	VALVE			260
6684544	FLOORMAT			20
6684561	FLOORMAT			22
6684583	KNOB			14
6684590	COIL			138
6684649	ADAPTER			238, 264
6684650	REGULATOR			170
6684651	BEARING			170
6684652	BEARING			170
6684653	PULLEY			170
6684729	SWITCH			172
6684730	STARTER			172
6684731	STARTER			172
6684732	BUSHING			172
6684733	FRAME			172
6684734	SPRING			172
6684751	COVER			205, 206
6684752	GASKET			206
6684753	GASKET			182
6684754	O-RING			182
6684756	GUIDE			184
6684764	HOUSING			185, 186
6684765	SEAL			186
6684766	COVER			186
6684767	BOLT			186
6684769	O-RING			186

Code for disposition of old part number

A -- Use up

B -- Use on other application (See PNI)

C -- File PDR Report with Bobcat Parts Sales

D -- Part Number Error

Part No.	Description	Was	Code	Page
6684770	GASKET			186
6684772	BOLT			186
6684774	GASKET			186
6684779	SHIELD			188
6684780	GASKET			188
6684781	BOLT			188
6684782	O-RING			188
6684784	GAUGE			191, 192
6684785	PLUG			192
6684786	GASKET			194
6684788	GASKET			196
6684789	SEAL			196
6684791	CAMSHAFT			200
6684793	GEAR			200
6684794	BUSHING			200
6684795	COLLAR			200
6684796	SHAFT			200
6684805	CIRCLIP			202
6684806	CRANKSHAFT			202
6684807	BUSHING			202
6684808	GEAR			202
6684809	KEY			202
6684813	GASKET			204
6684817	NUT			206
6684818	SEAL			206
6684819	CAP			206
6684824	GASKET			206
6684825	GUIDE			206
6684826	SOLENOID	6681513	A	206
6684826	SOLENOID	6681513	B	206
6684826	SOLENOID			206
6684827	NUT			206
6684829	SHIM			208
6684830	BOLT			208
6684832	LEVER			210
6684833	SHAFT			210
6684834	HOLDER			210
6684835	SPRING			210
6684836	BOLT			212
6684837	PLATE			212
6684838	LEVER			212
6684839	LEVER			212
6684840	SPRING			212
6684841	GASKET			212
6684842	PIPE			213, 214
6684844	BOLT			214
6684845	CLAMP			214
6684848	PIPE			214
6684849	PIPE			214
6684850	GLOW PLUG			214
6684851	CORD			214
6684852	PUMP			215, 216, 234
6684853	PULLEY			217, 218
6684854	FLANGE			222
6684855	FLANGE			221, 222
6684856	FLANGE			222

Code for disposition of old part number

A -- Use up

B -- Use on other application (See PNI)

C -- File PDR Report with Bobcat Parts Sales

D -- Part Number Error

Part No.	Description	Was	Code	Page
6684857	PLUG			222
6684858	BOLT			222
6684860	GASKET			222
6684861	BOLT			222
6684862	PIPE			222
6684863	GASKET			222
6684867	SEAL			224
6684868	SEAL			224
6684869	FLANGE			224
6684870	GASKET			224
6684871	PULLEY			218
6684872	VALVE			227, 228
6684873	VALVE			228
6684874	COLLAR			228
6684875	SHAFT			228
6684877	GASKET			230
6684879	GASKET	6666781	D	232
6684879	GASKET	6684754	D	232
6684879	GASKET			232
6684880	GASKET	6684879	D	232
6684880	GASKET			232
6684889	CLAMP			222
6684891	SEAL			206
6684896	INSULATION			20
6684897	INSULATION			20
6684909	VALVE			264
6685047	JOYSTICK			101, 102
6685049	ENGINE			178
6685076	CRANKCASE			179, 180
6685077	GASKET			184
6685078	GASKET			184
6685079	GASKET			184
6685080	GASKET			184
6685081	GASKET			184
6685082	FILTER	6685083	D	186
6685082	FILTER			186
6685084	TUBE			187, 188
6685085	COVER			188
6685086	COVER			188
6685087	VALVE			188
6685088	NUT			194
6685089	GEAR			200
6685095	RING	6655178	A	202
6685095	RING			202
6685096	RING			202
6685099	PUMP			207, 208
6685100	LEVER			209, 210
6685101	NOZZLE			214
6685102	PIPE			214
6685103	PIPE			214
6685104	BOLT			222
6685105	PUMP			223, 224
6685106	HOUSING			224
6685107	INLET			229, 230
6685108	CLAMP			230
6685109	BOLT			230

Code for disposition of old part number

A -- Use up

B -- Use on other application (See PNI)

C -- File PDR Report with Bobcat Parts Sales

D -- Part Number Error

Part No.	Description	Was	Code	Page
6685114	SCREW			238, 260
6685115	WASHER			238, 260
6685116	SCREW			238, 260
6685117	O-RING			238
6685118	OIL			238
6685140	COVER			8
6685162	MANIFOLD	6683161	A	81, 82, 86
6685162	MANIFOLD			81, 82, 86
6685178	HOUSING			108
6685179	VALVE			108
6685182	SEAL KIT			108
6685197	RING			146, 156
6685204	PISTON			152
6685312	DECAL			256, 260
6685313	COVER			256, 260
6685314	FILTER			256, 260
6685315	SCREW			256, 260
6685316	COVER			256, 260
6685317	COVER			256, 260
6685318	COVER			256
6685319	SCREW			256, 260
6685320	BLOWER			256, 260
6685321	SCREW			256, 260
6685322	NUT			256, 260
6685323	COIL			256, 260
6685324	EVAPORATOR			260
6685325	O-RING			260
6685329	PLUG			102
6685331	KIT			102
6685332	SPOOL			102
6685333	PLUG			102
6685334	SPOOL			102
6685335	SPRING			102
6685336	PLUG			102
6685343	NUT	6681940	A	176
6685343	NUT			176
6685361	FLANGE	6669197	A	108
6685361	FLANGE			108
6685362	VALVE	6685180	A	108
6685362	VALVE			108
6685363	PLUG			108
6685444	SEAL			152
6685454	MOTOR			30, 69, 70, 103, 104
6685459	VALVE	6679812	A	258
6685459	VALVE			258
6685464	BOLT			210
6685471	GASKET			208
6685473	BOLT			208
6685476	SEAL			212
6685479	BEARING			204
6685480	CASE			195, 196
6685482	BOLT			196
6685483	CASE			196
6685484	CASE			196
6685485	CASE			196
6685486	BEARING			202

Code for disposition of old part number

A -- Use up

B -- Use on other application (See PNI)

C -- File PDR Report with Bobcat Parts Sales

D -- Part Number Error

Part No.	Description	Was	Code	Page
6685487	BEARING			202
6685488	WASHER			202
6685489	WASHER			202
6685490	BEARING			202
6685491	BEARING			202
6685492	BEARING			202
6685493	BEARING			202
6685494	WASHER			202
6685495	WASHER			202
6685496	WASHER			202
6685497	WASHER			202
6685498	GASKET			214
6685500	COVER			206
6685503	CYLINDER			184
6685504	CAMSHAFT			203, 204
6685505	PISTON			201, 202
6685506	PISTON			202
6685507	PISTON			202
6685508	PISTON			202
6685509	PISTON			202
6685510	PISTON			202
6685513	BOLT			206
6685514	SPRING			210
6685515	COVER			196
6685516	COLLAR			204
6685517	STOPPER			204
6685520	THERMOSTAT			222
6685606	SPEAKER			20
6685607	GRILLE			20
6685647	MUFFLER			178
6685654	RETAINER			20
6685657	SEAT	- 6682974		9, 10, 23, 24
6685657	SEAT	6682964	A	9, 10, 23, 24
6685657	SEAT	6682974	A	9, 10, 23, 24
6685657	SEAT			9, 10, 23, 24
6685735	SEAL	6661112	A	198
6685735	SEAL			198
6685743	SCREW			20
6685744	NUT			20
6685745	COVER			20
6685747	SEAT BELT			276
6685772	WINDOW			12
6685773	WINDOW			12
6685774	FRAME			12
6685798	CLUTCH			264
6685799	BRACKET			20
6685832	ACCUMULATOR	6679031	A	82
6685832	ACCUMULATOR	6679031		82
6685832	ACCUMULATOR			82
6685836	PUMP			72, 87, 88
6686001	O-RING			106
6686002	O-RING			106
6686003	RING			106
6686088	KIT			24
6686089	KIT			24
6686150	BOX			24

Code for disposition of old part number

A -- Use up

B -- Use on other application (See PNI)

C -- File PDR Report with Bobcat Parts Sales

D -- Part Number Error

Part No.	Description	Was	Code	Page
6686151	SUSPENSION			24
6686207	NUT			138
6686208	O-RING			138
6686209	O-RING			138
6686210	VALVE	- 6686653		138
6686210	VALVE		A	138
6686210	VALVE			138
6686269	MOTOR	6678949	A	84, 137, 138
6686269	MOTOR			84, 137, 138
6686271	GEAR			104
6686272	NUT			104
6686273	PIN			104
6686274	RING			104
6686276	COVER			104
6686277	BUTTON			104
6686278	BEARING			104
6686279	BOLT			104
6686280	RING			104
6686281	O-RING			104
6686282	SEAL			104
6686283	PLUG			104
6686284	SEAL			104
6686285	BOLT			104
6686286	WASHER			104
6686287	HOUSING			104
6686288	O-RING			104
6686291	PIN			104
6686292	KIT			104
6686298	PORT PLATE			105, 106
6686314	VALVE			106
6686315	VALVE			106
6686316	PISTON			106
6686317	COLLAR			106
6686318	COLLAR			106
6686319	SPRING			106
6686320	SCREW			106
6686321	SCREW			106
6686322	SCREW			106
6686323	RING			106
6686324	RING			106
6686334	CAMSHAFT	NAP	D	206
6686334	CAMSHAFT			206
6686599	SPRING			106
6686600	SCREW			106
6686647	SEAL KIT	6686647	A	138
6686647	SEAL KIT			138
6686648	RING			138
6686649	SEAL			138
6686650	WASHER			138
6686651	KEY			138
6686913	CARRIER			104
6686914	SHAFT			104
6686915	WASHER			104
6686916	SPINDLE			104
6686917	MOTOR			104
6686918	KIT			104

Code for disposition of old part number

A -- Use up

B -- Use on other application (See PNI)

C -- File PDR Report with Bobcat Parts Sales

D -- Part Number Error

Part No.	Description	Was	Code	Page
6686922	ORIFICE			110
6686934	PIN			104
6686935	BOLT			104
6686937	O-RING			104
6686938	LATCH			14
6686939	LATCH			14
6687041	VALVE			133, 134
6687042	VALVE			131, 132
6687044	VALVE			127, 128
6687045	VALVE			123, 124
6687046	VALVE			125, 126
6687047	VALVE			121, 122
6687048	VALVE			119, 120
6687049	VALVE			117, 118
6687050	VALVE			115, 116
6687051	VALVE			113, 114
6687052	VALVE			111, 112
6687053	KIT			112
6687054	KIT			134
6687055	VALVE			134
6687056	FILTER			134
6687057	KIT			118, 120, 122, 124, 126, 128, 130, 132
6687058	KIT			114, 116, 118, 120, 122, 124, 126, 128, 130, 132
6687059	VALVE			132
6687060	VALVE			124
6687061	VALVE			118, 126, 128
6687062	VALVE			132
6687063	PLUG			118
6687064	FILTER			134
6687065	KIT			114, 116, 122, 124, 126, 128, 132
6687066	LIMITOR			120
6687067	DAMPER			134
6687068	KIT			134
6687069	KIT			134
6687070	SEAL			112, 114, 116, 118, 120, 122, 124, 126, 128, 130, 132, 134
6687071	KIT			114, 116, 118, 120, 122, 124, 126, 128, 130, 132
6687072	KIT			134
6687118	MOTOR	6685181		68, 107, 108
6687118	MOTOR	6686694	A	68, 107, 108
6687118	MOTOR	6686694		68, 107, 108
6687118	MOTOR			68, 107, 108
6687151	CONTROL VALVE			110
6687780	SHAFT ASSY			88
6687781	SWASH PLATE ASSY			88
6687782	ROTARY GROUP			88
6687783	PORT PLATE ASSY			88
6687788	PLUG			88
6687789	PLUG			88
6687791	RING			88
6687792	SHIM			88

Code for disposition of old part number

A -- Use up

B -- Use on other application (See PNI)

C -- File PDR Report with Bobcat Parts Sales

D -- Part Number Error

Part No.	Description	Was	Code	Page
6687793	SHIM			88
6687794	CONTROL PLATE			88
6687795	PIN			88
6687796	BOLT			88
6687797	GASKET			88
6687798	BEARING			88
6687799	PLUG			88
6687800	BOLT			88
6687801	ORIFICE			88
6687802	SPRING SEAT			88
6687803	SPRING			88
6687805	ADJUSTING SCREW			88
6687806	ORING			88
6687807	BOLT			88
6687808	NUT			88
6687809	GUIDE			88
6687810	SHIM			88
6687811	SHIM			88
6687812	SHIM			88
6687813	SEAL			88
6687814	BEARING			88
6687815	PISTON			88
6687816	PIN			88
6687817	SPRING			88
6687818	ORING			88
6687819	ORING			88
6687820	SPACER			88
6687823	SHIM			88
6687824	SHIM			88
6687873	VALVE	- 6687043		129, 130
6687873	VALVE	6687043	A	129, 130
6687873	VALVE			129, 130
6687891	SPRING ASSY			88
6687892	PUMP			73, 74, 88
6687893	SPRING			88
6687894	SPRING			88
6687895	SHAFT			88
6687896	COVER			88
6687897	COUPLING			74, 90
6687898	O-RING			74, 88, 89, 90
6687899	O-RING			74
6687900	BOLT			74
6701123	SCREW	4CM00825B	B	178
6701123	SCREW			178
6701174	WASHER			64, 66
6701893	CLAMP	6577697	A	77, 78
6701893	CLAMP	6577699	A, D	77, 78
6701893	CLAMP	6655043	A	77, 78
6701893	CLAMP			77, 78
6702642	SCREW	84G003112B	A	22
6702642	SCREW	84G003112B	B	22
6702642	SCREW			22
6703013	HOSE	6706754	B,D	278
6703013	HOSE			278
6703168	BEARING			198
6704824	HOSE			178

Code for disposition of old part number

A -- Use up

B -- Use on other application (See PNI)

C -- File PDR Report with Bobcat Parts Sales

D -- Part Number Error

Part No.	Description	Was	Code	Page
6705106	WASHER			178
6705231	WASHER			198
6705232	WASHER			198
6705491	SPRING			198
6706043	TUBE	6705105	A	178
6706043	TUBE			178
6706228	HOSE			86
6706517	SCREW	58G000806B	A	16
6706517	SCREW	58G000806B	B	16
6706517	SCREW	6579119	A	16
6706517	SCREW	6579119	B,D	16
6706517	SCREW	6704400	A	16
6706517	SCREW	6704400	B	16
6706517	SCREW		A	16
6706517	SCREW			16
6707040	ELBOW	26F000001B	B	168
6707040	ELBOW	6658634	A	168
6707040	ELBOW	6658634	B, D	168
6707040	ELBOW			168
6708770	CAP			198
6708827	CONTAINER			22
6708929	DECAL	6708922	D	250
6708929	DECAL			250
6709527	KEY	6632560	A	28, 164
6709527	KEY	6632560	B,D	28, 164
6709527	KEY	6666202	A	28, 164
6709527	KEY			28, 164
6710585	WASHER	6709008	A	198
6710585	WASHER			198
6711670	HOSE	6628364	A	244
6711670	HOSE			244
6713370	PIN	14J-1808	B	198
6713370	PIN	14J001808B	A	198
6713370	PIN	14J001808B	B	198
6713370	PIN			198
6713507	DECAL	6813507	D	250
6713507	DECAL		A	250
6713507	DECAL			250
6714210	SPRING			16
6714274	HOSE	6711670	A	244
6714274	HOSE	6711670	D	244
6714274	HOSE			244
6714421	LITERATURE			244
6714461	BAG OF PARTS			244
6715183	ELBOW	6657083	A	234
6715183	ELBOW			234
6716001	TOOTH			302
6716621	COVER			164
6718414	SENDER	6718415	B	168
6718414	SENDER	6718415	B,D	168
6718414	SENDER	6718415	D	168
6718414	SENDER			168
6719176	SWITCH			238, 264
6719828	BOLT	6719827	B	178
6719828	BOLT	6CM01230B	A	178
6719828	BOLT	6CM01230B	B	178

Code for disposition of old part number

A -- Use up

B -- Use on other application (See PNI)

C -- File PDR Report with Bobcat Parts Sales

D -- Part Number Error

Part No.	Description	Was	Code	Page
6719828	BOLT			178
6720038	INSTRUCTIONS			242
6720736	PLUG	6654133	A	241, 242
6720736	PLUG			241, 242
6722782	PAINT			304
6724094	ANTI-FREEEZE	6658230	A	304
6724094	ANTI-FREEEZE	6658230		304
6724094	ANTI-FREEEZE			304
6724354	ANTI-FREEZE	6658230	A	304
6724354	ANTI-FREEZE			304
6727324	DECAL	6567987	A	244
6727324	DECAL	6567987	B	244
6727324	DECAL	6567988	A	244
6727324	DECAL	6567988	B	244
6727324	DECAL	6567988		244
6727324	DECAL	6569071	A	244
6727324	DECAL	6714353	A	244
6727324	DECAL	6714353	B	244
6727324	DECAL		D	244
6727324	DECAL			244
6727752	GASKET	6575580	A	178
6727752	GASKET	6575580	B	178
6727752	GASKET			178
6727869	SENDER	6718417(B)	B	84
6727869	SENDER			84
6731085	ELBOW			258, 264
6732732	BUSHING			238, 264
6733378	SCREW	5CM-1020	B	174
6733378	SCREW	5CM01020B	A	174
6733378	SCREW	5CM01020B	B	174
6733378	SCREW			174
6733540	PIN			296
6734239	PIN			298
6735864	DECAL	6731509	A	250
6735864	DECAL	6732424	A	250
6735864	DECAL	6732424	B	250
6735864	DECAL	6732495	B	250
6735864	DECAL			250
6736641	PAINT		A	304
6736641	PAINT			304
6736642	PAINT			304
6736644	PAINT			304
6736645	PAINT			304
6736875	TANK		A	20
6736875	TANK			20
6801068	PIN			60, 66
6801784	FITTING			68
6802066	HOSE			86
6802237	ROD			158
6802539	SPACER			10
6802889	BUSHING			294, 300
6802893	CATCH			294, 300
6802897	LATCH			294, 300
6803091	HOSE			80
6803199	HANDLE			58
6803202	SCREW	6589675	B	6, 8, 20, 56, 58, 258, 264

Code for disposition of old part number

A -- Use up

B -- Use on other application (See PNI)

C -- File PDR Report with Bobcat Parts Sales

D -- Part Number Error

Part No.	Description	Was	Code	Page
6803202	SCREW	6803203	D	6, 8, 20, 56, 58, 258, 264
6803202	SCREW			6, 8, 20, 56, 58, 258, 264
6803207	BUSHING			46, 52, 268
~~6803213~~	~~BUSHING~~			~~46, 268~~
6803309	BUSHING			48, 300
6803438	BUSHING			48, 300
~~6803708~~	~~SPOOL~~	~~6597402~~	~~A~~	~~96~~
6803708	SPOOL			96
6803760	DECAL			250, 298, 300
~~6803810~~	~~ROD~~			~~154~~
6803863	BUSHING	6803683	D	144, 146, 156
6803863	BUSHING			144, 146, 156
~~6803982~~	~~BUSHING~~			~~150, 152~~
6804026	MOUNT			20, 22
6804068	HANDLE	6802972	A	64
~~6804068~~	~~HANDLE~~			~~64~~
6804114	DECAL	6534739	A	250
6804114	DECAL	6589742	A	250
~~6804114~~	~~DECAL~~		~~A~~	~~250~~
6804114	DECAL			250
6804139	BUSHING	6803683	A	154
6804139	BUSHING	6803683	D	154
~~6804139~~	~~BUSHING~~	~~6803684~~	~~A~~	~~154~~
6804139	BUSHING			154
6804233	DECAL			250
~~6804251~~	~~HANDLE~~			~~94, 96~~
6804386	SPRING	6802072	D	294, 300
6804386	SPRING			294, 300
~~6805244~~	~~WASHER~~	~~6597241~~	~~A~~	~~20, 22, 28~~
6805244	WASHER	6803445	A	20, 22, 28
6805244	WASHER			20, 22, 28
~~6805296~~	~~SPACER~~			~~294, 300~~
6805348	PIN			48, 254
6805373	LINK			48, 294, 300
~~6805381~~	~~PIN~~			~~48, 254~~
6805396	PLATE			48, 254
6805416	DECAL			300
~~6805429~~	~~CUTTING EDGE~~			~~302~~
6805433	CUTTING EDGE			302
6805434	CUTTING EDGE			302
6805435	CUTTING EDGE			302
6805436	CUTTING EDGE			302
6805437	CUTTING EDGE			302
6805438	CUTTING EDGE			302
~~6805464~~	~~CUTTER~~			~~302~~
6805465	LINK			48
6805626	DECAL			268
~~6805768~~	~~VALVE~~	~~6805257~~	~~A~~	~~94, 95, 96~~
6805768	VALVE			94, 95, 96
6805769	VALVE	6597404	A	96
~~6805769~~	~~VALVE~~			~~96~~
6805771	CUTTING EDGE			302
6805815	CUTTING EDGE			302
~~6805845~~	~~PIN~~			~~48~~
6805847	PIN			254
6805982	LINK			48

Code for disposition of old part number

A -- Use up

B -- Use on other application (See PNI)

C -- File PDR Report with Bobcat Parts Sales

D -- Part Number Error

Part No.	Description	Was	Code	Page
6806018	SPRING	6804969	A	294, 300
6806018	SPRING	6804969	D	294, 300
6806018	SPRING			294, 300
6806121	DECAL			296
6806122	SPACER			48, 254
6806124	HEAD			148
6806356	PISTON			158
6806461	CLAMP	6652521	A	78
6806461	CLAMP			78
6806615	DECAL			300
6806616	DECAL			300
6806720	INSULATOR			110
6806794	HOSE			80
6806894	PIN			244
6806953	PIN	6802894	A	294, 300
6806953	PIN			294, 300
6806971	PIN	6534115	A	48, 294, 298, 300
6806971	PIN			48, 294, 298, 300
6806995	HOSE			278
6807033	COVER			56
6807074	LEVER	6803510	A	294, 300
6807074	LEVER			294, 300
6807220	SPACER			2, 4
6807283	GROMMET			234
6807327	SAFETY TREAD			18
6807345	MOUNT			68
6807362	SUPPORT			56, 58
6807431	CABLE			164
6807460	HOSE			76
6807478	HOSE	6802478	D	94
6807478	HOSE			94
6807480	HOSE			80
6807776	DECAL	6804230	A	250
6807776	DECAL	6808180	A	250
6807776	DECAL			250
6807914	SHAFT			42
6807945	HOSE			86
6807946	HOSE			80
6807948	LEVER			60, 164
6807956	BUSHING			2, 50
6807961	PIN			50
6807962	WASHER			50
6807964	PIN			50
6807965	PIN			50
6807970	CYLINDER			68
6807982	ARMREST			56, 58
6807983	COVER	6808983	D	56, 58
6807983	COVER			56, 58
6807984	COVER			58
6807985	COVER			58
6808004	ROD			64
6808053	KIT			269, 270
6808054	MOUNT			270
6808174	WASHER			50
6808175	RING			50
6808185	DECAL			250, 282, 284

Code for disposition of old part number

A -- Use up

B -- Use on other application (See PNI)

C -- File PDR Report with Bobcat Parts Sales

D -- Part Number Error

Part No.	Description	Was	Code	Page
6808205	PIN			50
6808211	BOLT	29CM01050B	A	50
6808211	BOLT			50
6808258	HOUSING			52
6808261	DECAL			250
6808267	PIN			50
6808415	HARNESS			52
6808424	SCREW			16
6808433	DECAL			250, 258
6808473	DECAL			250
6808474	DECAL			250
6808475	DECAL			250
6808478	DECAL			250
6808480	DECAL			250
6808481	DECAL			250
6808577	SEAL			25, 26
6808580	BEARING			270
6808596	LEVER			4
6808597	LEVER			4
6808598	PIN			4
6808601	BRACKET			50
6808717	CLIP			252
6808749	BUSHING			58
6808831	WIRE ROPE	6808837	B,D	252
6808831	WIRE ROPE			252
6808840	SPRING			58
6808870	DECAL			250
6808872	DECAL			250
6808879	DECAL			250, 252
6808896	MOUNT			270
6808924	HINGE			282, 284
6808926	PIN			282, 284
6808984	BRACKET			50
6808997	BUSHING	6807979	A	160
6808997	BUSHING	6807979	D	160
6808997	BUSHING			160
6809030	SCREW			2
6809084	STOP			64
6809194	LOCK	6807227	A	66
6809194	LOCK			66
6809227	CONNECTOR			266
6809253	SUPPORT			50
6809258	HARNESS			270
6809263	DECAL			250
6809264	DECAL			300
6809726	ROLLER	61D000006	B	2
6809726	ROLLER			2
6809727	STRIKER	6719524	B	2
6809727	STRIKER			2
6809734	BUSHING	6719550	B	2
6809734	BUSHING			2
6809829	DECAL			250
6810004	DECAL			270
6810009	DECAL			268
6810022	PISTON			144
6810029	STOP			142

Code for disposition of old part number

A -- Use up

B -- Use on other application (See PNI)

C -- File PDR Report with Bobcat Parts Sales

D -- Part Number Error

Part No.	Description	Was	Code	Page
6810133	GROMMET			2
6810241	BRACKET			294, 300
6810261	PAD			294, 300
6810303	SPACER			64, 66
6810364	GROMMET			164
6810365	GROMMET			164
6810387	ARM			48, 254
6810405	STOP			56
6810420	ROD	6807974	A	160
6810420	ROD			160
6810454	TUBE			58
6810455	SHAFT			58
6810456	BUSHING	6814056	D	58
6810456	BUSHING			58
6810465	HOSE			78
6810470	SEAL KIT	6803318	A	154
6810470	SEAL KIT			154
6810508	PEDAL	6808974	A	64, 66
6810508	PEDAL	6808974		64, 66
6810508	PEDAL			64, 66
6810511	PEDAL			64
6810515	PLATE			64
6810525	BUSHING			48, 294, 300
6810532	PEDAL	6806929	A	64
6810532	PEDAL			64
6810533	PEDAL	6806927	A	64
6810533	PEDAL	6806927		64
6810533	PEDAL			64
6810539	NUT	6804592	A	146, 148, 158, 160
6810539	NUT	6804592	B	146, 148, 158, 160
6810539	NUT			146, 148, 158, 160
6810540	NUT	92D000020B	A	144, 150, 152, 154, 156
6810540	NUT	92D000020B	B	144, 150, 152, 154, 156
6810540	NUT			144, 150, 152, 154, 156
6810560	ROD	6806236	A	150
6810560	ROD			150
6810566	ROD			144
6810581	BUSHING	6539528	A	50
6810581	BUSHING			50
6810627	WASHER			46, 48, 254
6810671	BOOT			56, 58
6810698	FRAME			50
6810704	WASHER			50
6810769	SHAFT	6589003	A	40
6810769	SHAFT	6807918	A	40
6810769	SHAFT	6810769	A	40
6810769	SHAFT			40
6810802	BAR	6719525	B	2
6810802	BAR			2
6810813	SEAL	6669254	A	142
6810813	SEAL			142
6810822	UNDERCARRIAGE			30
6810944	DOOR			5, 6, 20
6810972	PLATE			2
6811048	BRACKET	6595973	A	32, 34
6811048	BRACKET			32, 34

Code for disposition of old part number
A -- Use up
B -- Use on other application (See PNI)
C -- File PDR Report with Bobcat Parts Sales
D -- Part Number Error

Part No.	Description	Was	Code	Page
6811056	MOUNT			270
6811260	O-RING			48, 268, 298, 300
6811629	FUEL			234
6811636	SPACER			46, 48, 50, 52
6811668	TANK			234
6811719	CONSOLE			58
6811726	HOSE			234
6811751	CONSOLE			58
6811760	HANDLE			58
6811762	PIN			58
6811771	PIN			58
6811775	SPOOL			142
6811778	SWIVEL			70, 141, 142
6811783	COVER			58
6811785	COVER			58
6811792	WINDOW			16
6811886	PLATE			2
6811891	INSULATION			26
6811973	CONSOLE			58
6811976	BOOM			52
6811998	PANEL			56
6812010	CONSOLE			56
6812030	WINDOW			22
6812063	TUBELINE			78
6812064	TUBELINE			78
6812065	COVER			56
6812070	SEAL	6808430	A	64, 66
6812070	SEAL			64, 66
6812089	HANDLE			62
6812096	HARNESS			166
6812099	TUBELINE	6628643	D	78
6812099	TUBELINE			78
6812100	TUBELINE	6596042	D	78
6812100	TUBELINE			78
6812104	BRACKET			234
6812154	BRACKET			62
6812158	CYLINDER			70
6812160	ROD			148
6812165	CYLINDER			153, 154
6812166	HOUSING			154
6812170	PLUG	90KV00002B	A	148, 158, 160
6812170	PLUG			148, 158, 160
6812171	PLUG	90KV-5	B	142, 154
6812171	PLUG	90KV00005B	A	142, 154
6812171	PLUG	90KV00005B	B	142, 154
6812171	PLUG			142, 154
6812176	HOSE			140
6812177	TUBELINE			68
6812178	TUBELINE			68
6812179	HOSE			68
6812184	BLADE			54
6812193	INSULATION			26
6812230	HOSE			70
6812231	HOSE			70
6812252	INSULATION			26
6812258	DECAL			250

Code for disposition of old part number

A -- Use up

B -- Use on other application (See PNI)

C -- File PDR Report with Bobcat Parts Sales

D -- Part Number Error

Part No.	Description	Was	Code	Page
6812286	PLATE			64
6812292	ARM	6805399	A	47, 48, 254
6812292	ARM			47, 48, 254
6812293	ARM			48, 254
6812296	PLATE			10
6812297	PLATE			10
6812298	PLATE			10
6812299	PLATE			10
6812377	INSULATION			26
6812390	HUB			84
6812394	CABLE			164
6812395	CABLE			168
6812413	PIN			8
6812421	X-CHANGEt	6805513	A	48, 294, 300
6812421	X-CHANGEt			48, 294, 300
6812458	PLATE			10
6812568	DECAL			250
6812686	WASHER	6813373	A	62
6812686	WASHER			62
6812705	WINDOW			7, 8, 20
6812711	FLOORMAT			22
6812712	FLOORMAT			20
6812714	PLATE			22
6812809	HINGE	- 6812809 Order 7105711 (1) Also order 35.5"(902mm) of Ref. 33	A	28
6812815	FITTING	6715188	A	68, 278
6812815	FITTING			68, 278
6812816	ADAPTER	6715185	A	278
6812816	ADAPTER			278
6812820	ELBOW	6511914	A	110
6812820	ELBOW	6511914	D	110
6812820	ELBOW			110
6812823	ADAPTER			78
6812855	HOSE			86, 94
6812917	PIPE			178
6812930	MOUNT			64
6813028	ROLLER			8
6813083	BRACKET			22
6813180	PLATE			176
6813191	PLATE			238, 264
6813203	PLATE			176
6813216	BRACKET			28
6813288	PLATE			30
6813304	BUSHING			300
6813506	DECAL			250
6813507	DECAL			250
6813567	INSULATION			16
6813568	INSULATION			16
6813569	INSULATION			16
6813574	COVER			6
6813694	BRACKET			86
6813715	BRACKET			238, 264
6813790	HOSE			80, 94
6813882	HOSE			80

Code for disposition of old part number

A -- Use up
B -- Use on other application (See PNI)
C -- File PDR Report with Bobcat Parts Sales
D -- Part Number Error

Part No.	Description	Was	Code	Page
6813884	HOSE			80
6813890	MOUNT			110
6813898	TANK			176
6813914	HOSE			76
6813975	PLATE			238, 264
6814007	SPACER			32, 34
6814024	SCREW			238, 258, 262
6814173	SHROUD			176
6814175	BRACKET			140
6814179	PLATE			176
6814192	SEAT			10
6814194	BRACKET			238, 264
6814228	HARNESS			238
6814229	HARNESS			258
6814241	INSULATION			16
6814273	BRACKET			174
6814278	MOUNT			178
6814286	BRACKET			84
6814287	MOUNT			84
6814288	GUARD			84
6814290	BRACKET			252
6814325	SEAL			20
6814326	SEAL			20
6814355	INSULATION			26
6814371	INSULATION			26
6814372	INSULATION			26
6814393	INSULATION			26
6814414	MANIFOLD			72
6814416	TUBELINE			176
6814417	HOSE			176
6814418	HOSE			176
6814419	FITTING			84
6814421	HOSE			84
6814423	BRACKET			8
6814501	HOSE			234
6814571	SHAFT			136
6814586	HUB			198
6814587	PULLEY			198
6814607	PLATE			56, 94
6814608	HOSE			234
6814609	PLATE			56
6814617	TANK			140
6814623	HOSE			178
6814640	BRACKET			178
6814655	HOSE			140
6814660	HOSE			84
6814661	TUBE			140
6814704	BRACKET			164
6814715	KIT			265, 266
6814721	HANDLE			16
6814724	CHANNEL			16
6814729	LINK			4
6814730	LEVER			4
6814731	BRACKET			4
6814732	BRACKET			4
6814733	HOSE			176

Code for disposition of old part number

A -- Use up

B -- Use on other application (See PNI)

C -- File PDR Report with Bobcat Parts Sales

D -- Part Number Error

Part No.	Description	Was	Code	Page
6814781	HOSE			78
6814782	HOSE			78
6814783	HOSE			78, 268
6814784	HOSE			78, 268
6814817	BRACKET			234
6814829	HARNESS			168
6814848	PLATE			174
6814859	TENSIONER			174
6814860	SPACER			174
6814861	SPACER			174
6814895	WINDOW			13, 14
6814908	SEAL			20
6814922	INSULATION			20
6814926	GROMMET			2
6814933	COVER			56
6814934	COVER			56
6814957	BLOCK			234
6814958	COVER			16
6814980	CYLINDER			149, 150
6814981	HOUSING			150
6814983	HEAD			144, 150
6814984	PISTON			150
6814985	BLOCK			80
6815009	CYLINDER			147, 148
6815010	HOUSING			148
6815011	PISTON			148
6815018	BELT			238, 264
6815019	BELT			174
6815021	DECAL			250
6815033	HOSE			76
6815034	HOSE			76
6815035	HOSE			68, 278
6815038	HOSE			76
6815048	HOSE			234
6815049	HOSE			234
6815085	SEAL KIT	6810721	A	144, 150
6815085	SEAL KIT			144, 150
6815091	HARNESS			168
6815102	X-CHANGE			298
6815111	ROLLER			30, 41, 42
6815112	ROLLER			42
6815116	ROLLER			42
6815118	IDLER			38
6815119	ROLLER			30, 39, 40
6815120	ROLLER			40
6815121	IDLER			35, 36, 286
6815122	IDLER			36
6815123	ROLLER			286
6815150	WINDOW			18
6815221	HOSE			86
6815261	HOSE			80
6815412	BRACKET			28
6815465	HOSE			80
6815489	DECAL			250
6815542	SEAL			16
6815575	HOSE			76

Code for disposition of old part number

A -- Use up

B -- Use on other application (See PNI)

C -- File PDR Report with Bobcat Parts Sales

D -- Part Number Error

Part No.	Description	Was	Code	Page
6815625	DECAL			250
6815626	INSULATION			16
6815653	GROMMET			164
6815739	HOSE			76
6815874	HOSE			76
6815879	TUBE			84
6815880	TUBE			84
6815881	BRACKET			84
6815882	BRACKET			84
6815883	TUBE			84
6815886	TUBELINE			252
6815887	HOSE			140
6815893	TUBE			84
6815894	HOSE			140
6815896	BRACKET			140
6815898	MOUNT			60, 66
6815915	DECAL	6809612		250
6815915	DECAL			250
6815922	SPROCKET			30
6815939	SEAL			18
6815957	DECAL	6804276	A	250
6815957	DECAL		A	250
6815957	DECAL			250
6815983	DECAL			250
6815985	DECAL			250
6815992	HOUSING			160
6816047	PURIFIER			271, 272
6816050	BRACKET	- 6816050 Order 7105711(1) Also Order 35.5"(902mm) of Ref. 33	A	28
6816050	BRACKET			28
6816051	BAR			28
6816052	COVER			28
6816115	PAD			16
6816118	PLATE			176
6816123	HOSE			178
6816125	WINDOW			18
6816126	WINDOW			18
6816135	INSULATION			22
6816136	TRIM			290, 292
6816193	SCREW			28
6816288	PISTON			160
6816300	COVER			28
6816319	CYLINDER			159, 160
6816325	SEAL KIT	6589798	A	160
6816325	SEAL KIT	6804604	A	160
6816325	SEAL KIT	6808103	A	160
6816325	SEAL KIT			160
6816369	GASKET			296
6816437	BRACKET			8
6816465	COVER			28
6816483	COVER			30
6816492	HOSE			70
6816535	KIT	6806075	A	158
6816535	KIT			158

Code for disposition of old part number

A -- Use up

B -- Use on other application (See PNI)

C -- File PDR Report with Bobcat Parts Sales

D -- Part Number Error

Part No.	Description	Was	Code	Page
6816537	SEAL KIT	6803324	A	148
6816537	SEAL KIT	6803324	B	148
6816537	SEAL KIT	6814353	A	148
6816537	SEAL KIT			148
6816555	SCREEN			2
6816568	SCREEN			28
6816598	INSULATION			20
6816600	INSULATION			26
6816607	INSULATION			20
6816678	INSULATION			20
6816708	COUNTERWEIGHT			248
6816789	BRACKET			28
6816855	PLUG	- 6812171		144, 146, 150, 152
6816855	PLUG	- 90K000005B		144, 146, 150, 152
6816855	PLUG			144, 146, 150, 152
6816880	KIT			277, 278
6816885	PLUG			156
6816886	TUBELINE			140
6816889	HOSE			176
6816892	BRACKET			278
6816893	HOSE			278
6816894	HOSE			278
6817056	DECAL			250
6817066	HOSE			80
6817109	A/C UPGRADE KIT			237, 238
6817111	KIT			257, 258
6817157	STEEL TRACK KIT			44, 285, 286
6817188	CYLINDER	6810565	A	143, 144
6817188	CYLINDER			143, 144
6817225	DECAL			250
6817230	SHAFT			32, 34
6817231	TUBE			32, 34
6817235	CYLINDER			30, 31, 32
6817266	HOSE			94
6817305	SEAL			6
6817317	HOUSING			144
6817343	SEAL			18
6817371	BRACKET			168
6817372	BRACKET			168
6817386	CYLINDER	6805607	A	157, 158, 244
6817386	CYLINDER			157, 158, 244
6817530	WINDOW			18
6817562	HEAD			152
6817568	KIT			279, 280
6817602	COVER			178
6817652	CYLINDER	6816236	A	33, 34, 286
6817652	CYLINDER			33, 34, 286
6817661	TOP GUARD			290, 292
6817750	BRACKET			28
6817751	BRACKET			20
6817753	KIT			281, 282
6817754	GUARD			282
6817815	DECAL			250
6817828	KIT			295, 296
6817902	INSULATION			20

Code for disposition of old part number

A -- Use up

B -- Use on other application (See PNI)

C -- File PDR Report with Bobcat Parts Sales

D -- Part Number Error

Part No.	Description	Was	Code	Page
6817918	INSULATION			26
6817948	KIT			289, 290
6818005	CASTING			246
6818012	KIT			283, 284
6818013	GUARD			284
6818017	BRACKET			284
6818043	DECAL			268
6818073	CLEANER			8
6818168	CASE			152
6818275	INSULATION			16
6818276	INSULATION			16
6818380	CANOPY			22
6818393	INSULATION			26
6818394	HARNESS			278
6818403	PLATE			22
6850003	PLUG			108
6900367	INSTRUCTIONS	6900364	D	244
6900367	INSTRUCTIONS	6900367	D	244
6900367	INSTRUCTIONS			244
6900541	INSTRUCTION			300
6901053	INSTRUCTION			270
6901445	RADIO			274
6902228	PAINT	6722783	A	303, 304
6902228	PAINT	6722783 - SEE NOTE	A	303, 304
6902228	PAINT			303, 304
6902229	PAINT	6722786	A	304
6902229	PAINT	6722786 - SEE NOTE	A	304
6902229	PAINT			304
6902230	PAINT	6722789	A	304
6902230	PAINT	6722789 - SEE NOTE	A	304
6902230	PAINT		A	304
6902230	PAINT			304
6902234	PAINT	6722785	A	304
6902234	PAINT	6722785		304
6902234	PAINT			304
6902235	PAINT	6722788	A	304
6902235	PAINT	6722788		304
6902235	PAINT			304
6902493	INSTRUCTIONS			278
6902520	INSTRUCTIONS			258
6902534	INSTRUCTIONS			280
6902601	INSTRUCTIONS			266
6902620	INSTRUCTION			296
6902625	INSTRUCTION			286
6902640	INSTRUCTIONS			238
6902667	INSTRUCTIONS			274
6902707	INSTRUCTION			248
6902710	INSTRUCTIONS			246
6902809	INSTRUCTION			252
6902838	INSTRUCTIONS			276
6902939	INSTRUCTION			282, 284, 290, 292
6903105	OIL 15W40 QT. 12	6657299	A	304

Code for disposition of old part number

A -- Use up
B -- Use on other application (See PNI)
C -- File PDR Report with Bobcat Parts Sales
D -- Part Number Error

Part No.	Description	Was	Code	Page
6903105	OIL 15W40 QT. 12			304
6903106	OIL 15W40 GAL. 6	6657300	A	304
6903106	OIL 15W40 GAL. 6	6724558	A	304
6903106	OIL 15W40 GAL. 6			304
6903107	OIL 10W30 QT. 12	6657301	A	304
6903107	OIL 10W30 QT. 12			304
6903108	OIL 10W30 GAL. 6	6657302	A	304
6903108	OIL 10W30 GAL. 6	6724557	A	304
6903108	OIL 10W30 GAL. 6			304
6903109	OIL 30W QT. 12	6657303	A	304
6903109	OIL 30W QT. 12			304
6903110	OIL 30W GAL. 6	6657304	A	304
6903110	OIL 30W GAL. 6	6724559	A	304
6903110	OIL 30W GAL. 6			304
6903111	OIL 30W 2.5 GAL 2	6674206	A	304
6903111	OIL 30W 2.5 GAL 2			304
6903112	OIL 10W30 2.5 GAL 2	6674205	A	304
6903112	OIL 10W30 2.5 GAL 2			304
6903113	OIL 15W40 2.5 GAL. 2	6674204	A	304
6903113	OIL 15W40 2.5 GAL. 2	6674205	A	304
6903113	OIL 15W40 2.5 GAL. 2			304
6903117	HYD FLUID 2.5 GAL.	6563328	A	304
6903117	HYD FLUID 2.5 GAL.			304
6903118	HYD. FLUID 5GAL	6722344	A	304
6903118	HYD. FLUID 5GAL			304
6903119	HYD. FLUID 55GAL	6563330	A	304
6903119	HYD. FLUID 55GAL			304
6903121	GEAR LUBE 12	6634393	A	304
6903121	GEAR LUBE 12			304
6903122	GREASE 10	6658266	A	304
6903146	INSTRUCTION			288
6903147	INSTRUCTION			240

Code for disposition of old part number

A -- Use up

B -- Use on other application (See PNI)

C -- File PDR Report with Bobcat Parts Sales

D -- Part Number Error

Part No.	Description	Was	Code	Page
6903155	INSTRUCTION			298
6916109	PEDAL			66
6958354	MOUNT			278
6958363	DECAL			278
6CM01220B	BOLT	1CM01220B	B	168
6CM01220B	BOLT	5CM01220B	D	168
6CM01220B	BOLT			168
6E000006B	WASHER	6E000005B	B	84, 176
6E000006B	WASHER			84, 176
6E000008B	WASHER	9E000008B	B	64
6E000008B	WASHER			64
6EM00080B	WASHER	25E000016B	B	176
6EM00080B	WASHER	63EM00080B	B	176
6EM00080B	WASHER	6535023	A	176
6EM00080B	WASHER	6535049	A	176
6EM00080B	WASHER	6535074	A	176
6EM00080B	WASHER	6535148	A	176
6EM00080B	WASHER	6EM00100B	B	176
6EM00080B	WASHER	6EM00100B	D	176
6EM00080B	WASHER			176
6EM00160B	WASHER			42
6EM00200B	WASHER			40
7000009	PLUG			86
7100202	HOSE			20
7100534	PLATE			60
7100535	SEAL	6810610	A	142
7100535	SEAL			142
7100541	CYLINDER			78
7100542	CYLINDER			145, 146
7100543	PISTON			146
7100544	SHAFT			146
7100546	HEAD			146
7100547	HOUSING			146
7100549	KIT			146, 156
7100571	WINDOW			11, 12, 16
7100662	KIT			273, 274
7100712	SEAL			18
7100721	SEAL			18
7100731	CYLINDER			78
7100732	CYLINDER			151, 152
7100772	CORD			162
7100799	CYLINDER			78
7100800	CYLINDER			155, 156
7100801	CASE			156
7100802	ROD			156
7100929	SEAL			18
7100954	KIT			247, 248
7100972	KIT			245, 246
7101010	INSULATION			16
7101016	SPACER			178
7101020	HOSE			72
7101021	MOUNT			178
7101023	TUBE	6816890	A	176
7101023	TUBE			176
7101025	BRACKET			84
7101091	HOSE			70

Code for disposition of old part number

A -- Use up

B -- Use on other application (See PNI)

C -- File PDR Report with Bobcat Parts Sales

D -- Part Number Error

Part No.	Description	Was	Code	Page
7101106	COVER			2
7101107	COVER			2
7101112	HOSE			72
7101113	TUBE			84
7101122	CAB			16, 17, 18
7101341	PIN	21JM00816B	A	174
7101341	PIN	21JM00816B	B	174
7101341	PIN			174
7101352	BLOCK			234
7101511	NOZZLE			20
7101609	HARNESS			166
7101660	IDLER			197, 198
7101662	BRACKET			198
7101784	HOUSING			174
7101787	PLATE			174
7101967	CAB			16, 18, 20
7102020	KIT			251, 252
7102065	BRACKET			276
7102172	FLYWHEEL	6801358	A	174
7102172	FLYWHEEL	6801358		174
7102172	FLYWHEEL			174
7102269	UPPERSTRUCTURE			2
7102576	HOSE			80
7102578	TUBELINE			110
7102581	HOSE			72
7102604	TUBELINE			68
7102605	TUBELINE			68
7102651	DECAL			250, 298
7102694	ARM			46, 268
7102806	ARM			45, 46
7102833	HARNESS			162
7102891	BUSHING			298
7102902	KIT			275, 276
7102955	TEE			110
7102956	TEE			110
7102958	HOSE			110
7102959	BRACKET			178
7102960	TUBELINE			110
7102961	TUBELINE			110
7102964	BUCKET			174
7103019	INSULATION	- 6813529	A	26
7103019	INSULATION			26
7103022	INSULATION	- 6811892		26
7103022	INSULATION			26
7103023	INSULATION	- 6813527		26
7103023	INSULATION			26
7103034	INSULATION	- 6817304		26
7103034	INSULATION			26
7103036	HOSE			76
7103043	HOSE			70
7103112	PLATE			296
7103193	DECAL			290, 292
7103194	DECAL			284
7103195	DECAL			282
7103231	BRACKET	6816547	A	174
7103231	BRACKET			174

Code for disposition of old part number

A -- Use up

B -- Use on other application (See PNI)

C -- File PDR Report with Bobcat Parts Sales

D -- Part Number Error

Part No.	Description	Was	Code	Page
7103706	SHAFT			152
7103726	PLATE			290, 292
7103753	BRACKET			282
7103872	BRACKET			282
7104075	DECAL			250
7104082	CAB	- 7101122		20
7104082	CAB	7101122	A	20
7104082	CAB	7101122		20
7104082	CAB			20
7104097	KIT			291, 292
7104182	HARNESS			240, 288
7104183	HARNESS			292
7104317	CLAMP			244
7104318	PIN			244
7104651	HOSE			72
7104652	HOSE			72
7104659	HARNESS			240, 288, 292
7104660	SEAL			2
7104694	HARNESS			240, 288
7104755	HOSE			76
7104756	HOSE			76
7104788	HOSE			84
7105013	KIT			287, 288
7105014	KIT			239, 240
7105076	MOUNT			178
7105174	HARNESS			164
7105175	HARNESS			164
7105177	KIT			297, 298
7105235	HOSE	6628360	A	78
7105235	HOSE			78
7106387	CARRIER			68, 135, 136
7106388	HOUSING			136
7106424	IDLER			30, 37, 38
7106425	SHAFT			38
710706B	CLAMP	6634608	A	175, 176
710706B	CLAMP			175, 176
7107132	ELBOW	- 6716443	B	252
7107236	TUBELINE			110
7107843	HOSE			86
7107910	DECAL			250
7107911	DECAL			250
7107912	DECAL			250
7107953	DECAL			250, 298
73K000228B	RING	80K000228B	A	148
73K000228B	RING	80K000228B	B	148
73K000228B	RING			148
73K000232B	WASHER	80K000232B	A	152, 160
73K000232B	WASHER	80K000232B	B	152, 160
73K000232B	WASHER	80K000232B		152, 160
73K000232B	WASHER	NSS	A	152, 160
73K000232B	WASHER	NSS		152, 160
73K000232B	WASHER			152, 160
73K000234B	RING	80K000234B	A	144, 150, 154
73K000234B	RING	NSS		144, 150, 154
73K000234B	RING			144, 150, 154
73K000328B	RING	80K000328B	A	158

Code for disposition of old part number

A -- Use up

B -- Use on other application (See PNI)

C -- File PDR Report with Bobcat Parts Sales

D -- Part Number Error

Part No.	Description	Was	Code	Page
73K000328B	RING	NSS		158
73K000328B	RING			158
73K000332B	O-RING	80K000332B	A	146, 156
73K000332B	O-RING	80K000332B	B	146, 156
73K000332B	O-RING			146, 156
75K000003B	O-RING	95K000003B	B,D	158, 160
75K000003B	O-RING			158, 160
75K000006B	O-RING	75K000008B	B	144
75K000006B	O-RING	79K-6	B	144
75K000006B	O-RING	79K000006B	B	144
75K000006B	O-RING			144
75K000007B	O-RING			146, 150, 152
799119B	SNAP RING			96
79K000003B	O-RING	79K000006B	D	84
79K000003B	O-RING	91F000002B	A	84
79K000003B	O-RING	91F000002B	B	84
79K000003B	O-RING	91F000002B	D	84
79K000003B	O-RING	91F000005B	A	84
79K000003B	O-RING	91F000005B	D	84
79K000003B	O-RING	91F000005B		84
79K000003B	O-RING	91K000002B	A	84
79K000003B	O-RING	NSS		84
79K000003B	O-RING			84
79K000004B	O-RING	6535102	A	70, 80, 110
79K000004B	O-RING	6668957	A	70, 80, 110
79K000004B	O-RING	79K000007B	B	70, 80, 110
79K000004B	O-RING	91F000003B	A	70, 80, 110
79K000004B	O-RING			70, 80, 110
79K000005B	O-RING	79K000008B	B	234
79K000005B	O-RING	91F000004B	A	234
79K000005B	O-RING	91F000004B	B	234
79K000005B	O-RING			234
79K000006B	O-RING	6535047	A	70, 80, 82, 84, 86, 110, 142
79K000006B	O-RING	6634874	A	70, 80, 82, 84, 86, 110, 142
79K000006B	O-RING	6634874	B	70, 80, 82, 84, 86, 110, 142
79K000006B	O-RING	6634874	B,D	70, 80, 82, 84, 86, 110, 142
79K000006B	O-RING	6648281	A	70, 80, 82, 84, 86, 110, 142
79K000006B	O-RING	6655250	A	70, 80, 82, 84, 86, 110, 142
79K000006B	O-RING	6665471	A	70, 80, 82, 84, 86, 110, 142
79K000006B	O-RING	6665471	B	70, 80, 82, 84, 86, 110, 142
79K000006B	O-RING	75K000006B	B	70, 80, 82, 84, 86, 110, 142
79K000006B	O-RING	79K000010B	D	70, 80, 82, 84, 86, 110, 142
79K000006B	O-RING	91F-5	A	70, 80, 82, 84, 86, 110, 142
79K000006B	O-RING	91F000005B	A	70, 80, 82, 84, 86, 110, 142
79K000006B	O-RING	91F000005B	B	70, 80, 82, 84, 86, 110, 142
79K000006B	O-RING	91F000005B	D	70, 80, 82, 84, 86, 110, 142
79K000006B	O-RING	91F000005B		70, 80, 82, 84, 86, 110, 142
79K000006B	O-RING	99K000006B	A	70, 80, 82, 84, 86, 110, 142
79K000006B	O-RING	99K000006B	B	70, 80, 82, 84, 86, 110, 142
79K000006B	O-RING	99K000006B	B,D	70, 80, 82, 84, 86, 110, 142
79K000006B	O-RING		A	70, 80, 82, 84, 86, 110, 142
79K000006B	O-RING		B,D	70, 80, 82, 84, 86, 110, 142
79K000006B	O-RING			70, 80, 82, 84, 86, 110, 142
79K000007B	O-RING	75K-12	D	154, 156
79K000007B	O-RING	95K-12	D	154, 156
79K000007B	O-RING			154, 156

Code for disposition of old part number

A -- Use up

B -- Use on other application (See PNI)

C -- File PDR Report with Bobcat Parts Sales

D -- Part Number Error

Part No.	Description	Was	Code	Page
79K000008B	O-RING	6535126	A	70, 72, 110, 136
79K000008B	O-RING	6656437	A	70, 72, 110, 136
79K000008B	O-RING	79K000012B	A	70, 72, 110, 136
79K000008B	O-RING	79K000012B	D	70, 72, 110, 136
79K000008B	O-RING	91F-6	A	70, 72, 110, 136
79K000008B	O-RING	91F000006B	A	70, 72, 110, 136
79K000008B	O-RING	91F000006B	B	70, 72, 110, 136
79K000008B	O-RING	91F000006B	D	70, 72, 110, 136
79K000008B	O-RING	NSS	D	70, 72, 110, 136
79K000008B	O-RING	NSS		70, 72, 110, 136
79K000008B	O-RING			70, 72, 110, 136
79K000010B	O-RING	6515237	A	72, 84, 110
79K000010B	O-RING	6535113	A	72, 84, 110
79K000010B	O-RING	6665432	A	72, 84, 110
79K000010B	O-RING	69K000010B	B	72, 84, 110
79K000010B	O-RING	79000014B	B	72, 84, 110
79K000010B	O-RING	79K-8	B	72, 84, 110
79K000010B	O-RING	79K000007B	D	72, 84, 110
79K000010B	O-RING	79K000008B	B	72, 84, 110
79K000010B	O-RING	79K000012B	B	72, 84, 110
79K000010B	O-RING	79K000012B	D	72, 84, 110
79K000010B	O-RING	79K000014B	B	72, 84, 110
79K000010B	O-RING	91F-7	A	72, 84, 110
79K000010B	O-RING	91F000007B	A	72, 84, 110
79K000010B	O-RING	91F000007B	B	72, 84, 110
79K000010B	O-RING	91F000007B		72, 84, 110
79K000010B	O-RING	97K000010B	A	72, 84, 110
79K000010B	O-RING	99K000010B	B	72, 84, 110
79K000010B	O-RING			72, 84, 110
79K000012B	O-RING	17K-16	B	72, 78, 84, 244, 252
79K000012B	O-RING	58K000018B	B	72, 78, 84, 244, 252
79K000012B	O-RING	58K000018B	B,D	72, 78, 84, 244, 252
79K000012B	O-RING	6535115	A	72, 78, 84, 244, 252
79K000012B	O-RING	75K-12	B	72, 78, 84, 244, 252
79K000012B	O-RING	75K000012B	A	72, 78, 84, 244, 252
79K000012B	O-RING	79K-10	B,D	72, 78, 84, 244, 252
79K000012B	O-RING	79K-16	D	72, 78, 84, 244, 252
79K000012B	O-RING	79K-18	A	72, 78, 84, 244, 252
79K000012B	O-RING	79K-18	B	72, 78, 84, 244, 252
79K000012B	O-RING	79K000005B	B, D	72, 78, 84, 244, 252
79K000012B	O-RING	79K000010B	B	72, 78, 84, 244, 252
79K000012B	O-RING	79K000010B	D	72, 78, 84, 244, 252
79K000012B	O-RING	79K000016B	B	72, 78, 84, 244, 252
79K000012B	O-RING	79K000016B	D	72, 78, 84, 244, 252
79K000012B	O-RING	91F-8	A	72, 78, 84, 244, 252
79K000012B	O-RING	91F000008B	A	72, 78, 84, 244, 252
79K000012B	O-RING	91F000008B	B	72, 78, 84, 244, 252
79K000012B	O-RING	91F000008B		72, 78, 84, 244, 252
79K000012B	O-RING	97K000016B	B	72, 78, 84, 244, 252
79K000012B	O-RING	98K000012B	B	72, 78, 84, 244, 252
79K000012B	O-RING	99K-12	B	72, 78, 84, 244, 252
79K000012B	O-RING	99K000010B	B	72, 78, 84, 244, 252
79K000012B	O-RING	99K000012B	B	72, 78, 84, 244, 252
79K000012B	O-RING			72, 78, 84, 244, 252
7CM01290B	SCREW			30
7JM00052B	SNAP RING			42

Code for disposition of old part number

A -- Use up

B -- Use on other application (See PNI)

C -- File PDR Report with Bobcat Parts Sales

D -- Part Number Error

Part No.	Description	Was	Code	Page
7JM00072B	RING	6535561	A	36, 38, 40
7JM00072B	RING	6655060	A	36, 38, 40
7JM00072B	RING			36, 38, 40
82K000230B	SEAL	58K000230B	A	148
82K000230B	SEAL	58K000230B	B	148
82K000230B	SEAL			148
82K000236B	O-RING	58K-236	A	144, 150, 154
82K000236B	O-RING	58K000236	A	144, 150, 154
82K000236B	O-RING	58K000236B	A	144, 150, 154
82K000236B	O-RING	58K000236B	B	144, 150, 154
82K000236B	O-RING	58K236	A	144, 150, 154
82K000236B	O-RING			144, 150, 154
83D000004B	NUT	57D000004B	B	64
83D000004B	NUT	61D000004B	B	64
83D000004B	NUT	61D000005B	B	64
83D000004B	NUT	83D000005B	B	64
83D000004B	NUT	83D000005B	B,D	64
83D000004B	NUT			64
83F000003B	SCREW	83FN-3	A	68
83F000003B	SCREW	83FN00003B	B	68
83F000003B	SCREW			68
84G003724B	BOLT	17C000624B	B	60
84G003724B	BOLT	17C000626B	B	60
84G003724B	BOLT	84G003220B	D	60
84G003724B	BOLT	84G003720B	A	60
84G003724B	BOLT	84G003720B	B	60
84G003724B	BOLT	84G003720B		60
84G003724B	BOLT	84G003728B	B	60
84G003724B	BOLT	84G003728B		60
84G003724B	BOLT			60
851242B	BEARING			204
85G000616B	SCREW			270
86F000003B	NUT	6628475	A	68
86F000003B	NUT			68
86F000006B	NUT	7D000012B	B	84
86F000006B	NUT			84
86F000007B	NUT	86F000006B	B	278
86F000007B	NUT			278
86F000008B	NUT	86F000006B	B	78
86F000008B	NUT			78
86F000010B	NUT	61E000016B	D	84
86F000010B	NUT			84
87G000808B	SCREW			166
87G001010B	SCREW	85G001010B	B	270
87G001010B	SCREW			270
8JM00045B	RING			254
91K000010B	ADAPTER			84
947088B	SEAL	947098	D	160
947088B	SEAL	NSS	A	160
947088B	SEAL	NSS	D	160
947088B	SEAL	NSS		160
947088B	SEAL			160
95D000008B	NUT	83D000008B	B	302
95D000008B	NUT			302
95K000003B	O-RING	79K-3	B	148
95K000003B	O-RING	79K000003B	D	148

Code for disposition of old part number

A -- Use up

B -- Use on other application (See PNI)

C -- File PDR Report with Bobcat Parts Sales

D -- Part Number Error

Part No.	Description	Was	Code	Page
95K000003B	O-RING	95K000006B	D	148
95K000003B	O-RING			148
96D000008B	NUT	86D000008B	B	84, 174
96D000008B	NUT	92D-8	B	84, 174
96D000008B	NUT			84, 174

Code for disposition of old part number
A -- Use up
B -- Use on other application (See PNI)
C -- File PDR Report with Bobcat Parts Sales
D -- Part Number Error