CATERPILLAR®

SEBP3708-25
March 2009

RUTHZIL TRATOR COMERCIAL DE PEÇAS LTDA 11 97083-6812 ROLANDO

Parts Manual

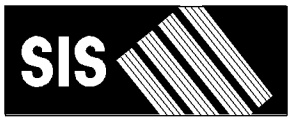

See "General Information" for New Parts Manual Features.

430E Backhoe Loader
Center Pivot

BYC1-Up (Machine)
EAT1-Up (Machine)
CRS1-Up (Engine)

Powered By 3054C Engine
This Parts Manual is also available in .PDF Format on Compact Disc (CD - ROM) - Caterpillar Form No. SERP3708.

Product and Dealer Information

Note: For product identification plate locations, see the section “Product Identification Information” in the Operation and Maintenance Manual.

Delivery Date: _____

Product Information

Model: _____

Product Identification Number: _____

Engine Serial Number: _____

Transmission Serial Number: _____

Generator Serial Number: _____

Attachment Serial Numbers: _____

Attachment Information: _____

Customer Equipment Number: _____

Dealer Equipment Number: _____

Dealer Information

Name: _____ Branch: _____

Address: _____

_____

_____

	Dealer Contact	Phone Number	Hours
Sales:	_____	_____	_____
Parts:	_____	_____	_____
Service:	_____	_____	_____

MEMORANDA

TABLE OF CONTENTS

Name	Page
GENERAL INFORMATION	A5
REPAIR ALTERNATIVES	A8
SUPPLEMENTAL COOLANT ADDITIVES	A9
MAINTENANCE PARTS	A10
INDEX	A14
MACHINE ARRANGEMENT	1
BACKHOE AR-EXTENDABLE STICK	1
BACKHOE AR-STANDARD STICK	3
CHASSIS AR	5
COMMON AR	6
DRIVE AR-BACKHOE LOADER	6
LOADER AR	7
ENGINE ARRANGEMENT	8
ENGINE AR	8
ENGINE AR-PRIMARY	10
BASIC ENGINE	13
COVER GP-CYLINDER HEAD	13
COVER GP-VALVE MECHANISM	14
CRANKSHAFT GP	22
CYLINDER BLOCK GP	25
CYLINDER HEAD GP	28
DRIVE GP-FAN	30
FLYWHEEL GP	31
HOUSING GP-FLYWHEEL	32
HOUSING GP-FRONT	33
LIFTING GP-ENGINE	35
MOUNTING GP-ENGINE	36
MOUNTING GP-ENGINE & XMSN	37
PAN GP-OIL	38
PISTON & ROD GP	42
PLUG GP-ENGINE	43
PULLEY GP-CRANKSHAFT	46
ROCKER ARM GP	47
VALVE MECHANISM GP	48
LUBRICATION SYSTEM	50
BREATHER GP	50
GAUGE GP-OIL LEVEL & FILLER	52
PUMP GP-ENGINE OIL	53
COOLING SYSTEM	54
CONNECTION GP-WATER	54
COOLER GP-ENGINE OIL	55
COOLER GP-FLTR BASE & ENG OIL	57
FAN GP-SUCTION	59
LINES GP-TRANSMISSION COOLER	62
MOUNTING & LINES GP-RADIATOR	66
MOUNTING GP-RAD & OIL COOLER	67
PUMP GP-WATER	69
RADIATOR & OIL COOLER GP	71
TANK GP-EXPANSION	73
AIR INLET AND EXHAUST SYSTEM	74
AIR CLEANER GP	74
EXTENSION GP-EXHAUST	78
INDICATOR GP-AIR FILTER CHANGE	79
MUFFLER GP	80
TURBOCHARGER GP	81
FUEL SYSTEM	83
CONTROL GP-GOVERNOR	83
FILTER GP-WATER SEP & FUEL	86
LINES GP-FUEL	87
LINES GP-FUEL FILTER	89
PUMP GP-FUEL INJECTION	90
PUMP GP-FUEL PRM & PRIM FILTER	100
TANK & MTG GP-FUEL	103
TANK GP-FUEL	104
ELECTRICAL AND STARTING SYSTEM	106
ALTERNATOR GP-CHARGING	106
BATTERY & WIRING GP	107
ELECTRONICS GP-COMMUNICATION	114
ELECTRONICS GP-MACHINE	114
ELECTRONICS GP-MONITOR	116
GLOW PLUG GP	117
GRADE CONTROL AR-LASER	119
HEATER GP-JACKET WATER	122
INSTALLATION GP-COMMUNICATION	123
LAMP GP-FLOOD	127
LAMP GP-WARNING BEACON	130
LIGHTING GP-FLOOD & SIGNAL	131
LIGHTING GP-WARNING BEACON	135
MAST GP	136
MOUNTING GP-SENSOR	137
PANEL GP-FUSE	138
RECEIVER GP-LASER	139
RELAY GP	140
SENSOR GP-SPEED	143
STARTING MOTOR GP-ELECTRIC	144
SWITCH GP-ALL WHEEL DRIVE	147
SWITCH GP-DIFFERENTIAL LOCK	148
SWITCH GP-DISCONNECT	149
SWITCH GP-PRESSURE	150
WIRING GP-AIR CONDITIONER	151
WIRING GP-CONSOLE	155
WIRING GP-CONTROL	160
WIRING GP-ENGINE	163
WIRING GP-EXTENDABLE STICK	168
WIRING GP-GRADE CONTROL	169
WIRING GP-HEATER	173
WIRING GP-KICKOUT & POSITIONER	175

TABLE OF CONTENTS

Name	Page
WIRING GP-PLATFORM	178
WIRING GP-POWER RECEPTACLE	196
WIRING GP-REAR	197
WIRING GP-RIDE CONTROL	201
WIRING GP-STABILIZER	203
WIRING GP-TRANSMISSION CONTROL	205
POWER TRAIN	206
AXLE GP-DRIVE & STEERING	206
AXLE GP-REAR	208
CASE AS-TRANSMISSION	211
CASE GP-TRANSMISSION	214
DIFFERENTIAL & BEVEL GEAR GP	219
DIFFERENTIAL GP	221
DRIVE GP-FLEXIBLE COUPLING	223
FILLER GP-POWER TRAIN OIL	224
FLANGE GP-WHEEL	230
HOUSING & FLANGE GP-AXLE	232
HOUSING GP-AXLE	234
KIT-WHEEL SPACER	238
LINES GP-POWER TRAIN OIL	239
MOUNTING GP-AXLE	240
MOUNTING GP-TRANSMISSION	241
PLANETARY GP-FINAL DRIVE	243
POWER TRAIN AR	245
SHAFT GP-COUNTER	247
SHAFT GP-DRIVE	249
SHAFT GP-IDLER	250
SHAFT GP-INPUT	252
SHAFT GP-OUTPUT	256
TRANSMISSION & MOUNTING GP	262
TRANSMISSION AR-DIRECT DRIVE	263
TRANSMISSION AR-POWER SHIFT	264
TRANSMISSION GP-DIRECT DRIVE	265
TRANSMISSION GP-POWER SHIFT	296
VALVE & LINES GP-DIFF LOCK	308
VALVE & MTG GP-SOLENOID	310
VALVE GP-RELIEF	311
VALVE GP-TIRE	312
WHEEL & TIRE AR	313
WHEEL & TIRE GP	316
BRAKING SYSTEM	330
CONTROL GP-PARKING BRAKE	330
CONTROL GP-SERVICE BRAKE	332
CYLINDER GP-BRAKE	338
LEVER GP-HAND CONTROL	340
STEERING SYSTEM	341
AXLE GP-FRONT	341
KNOB GP-STEERING	343
LINES GP-STEERING	344
PUMP GP-METERING	352
FRAME AND BODY	353
BOX GP-BATTERY	353
COUNTERWEIGHT GP	354
DOOR GP-BATTERY	358
EXTENSION GP-FENDER	359
FENDER GP-FRONT	360
FENDER GP-REAR	361
FLOORPLATE GP	363
FRAME GP-LOADER	366
FRAME GP-SWING	368
GRILL-RADIATOR	374
GUARD GP-DRIVE SHAFT	375
GUARD GP-RADIATOR	376
HOOD & GUARD GP	377
HOOD GP-ENGINE	381
HYDRAULIC SYSTEM	384
ACCUMULATOR GP-PILOT OIL	384
ACCUMULATOR GP-RIDE CONTROL	386
CONTROL AR-RIDE	387
CYLINDER & LINES GP-THUMB	388
CYLINDER GP-BACKHOE BUCKET	393
CYLINDER GP-BOOM	397
CYLINDER GP-EXTENDABLE STICK	401
CYLINDER GP-LIFT	403
CYLINDER GP-MULTIPURPOSE BUKT	404
CYLINDER GP-STABILIZER	405
CYLINDER GP-STICK	409
CYLINDER GP-SWING	413
CYLINDER GP-THUMB	415
CYLINDER GP-TILT	416
DRIVE & MTG GP-PUMP	418
FASTENER GP-VALVE	419
FILTER GP-OIL	420
FITTING GP-HYDRAULIC	421
HYDRAULIC AR	422
INSTALLATION GP-RIDE CONTROL	423
KICKOUT & POSITIONER GP	431
LINES GP-BACKHOE AUXILIARY	435
LINES GP-BOOM	443
LINES GP-BUCKET	447
LINES GP-DRAIN	456
LINES GP-EXTENDABLE STICK	457
LINES GP-HYDRAULIC OIL COOLER	459
LINES GP-LIFT CYLINDER	460
LINES GP-LOADER AUXILIARY	462
LINES GP-MULTIPURPOSE BUCKET	464
LINES GP-PILOT	468
LINES GP-PUMP	474
LINES GP-RIDE CONTROL	476
LINES GP-STABILIZER	480
LINES GP-STICK	498
LINES GP-SWING	501
LINES GP-TILT CYLINDER	503

TABLE OF CONTENTS

Name	Page
MANIFOLD & SOLENOID GP-CONTROL	505
MANIFOLD GP-CONTROL	508
MANIFOLD GP-RIDE CONTROL	510
MOUNTING GP-BANK VALVE	511
MOUNTING GP-CYLINDER	512
MOUNTING GP-LINES	516
PUMP GP-PISTON	519
ROTATING GP-PUMP	521
SHAFT GP-PUMP DRIVE	522
TANK & MTG GP-HYDRAULIC	523
VALVE & LINES GP-PILOT	527
VALVE AR-BANK 2	529
VALVE AR-BANK 3	529
VALVE AR-BANK 6	529
VALVE AR-BANK 7	530
VALVE AR-BANK 8	530
VALVE GP-BANK 2	531
VALVE GP-BANK 3	532
VALVE GP-BANK 6	533
VALVE GP-BANK 7	534
VALVE GP-BANK 8	535
VALVE GP-CONTROL	537
VALVE GP-PILOT	556
VALVE GP-PUMP CONTROL	559
VALVE GP-SOLENOID	560
IMPLEMENTS	561
ARM GP-LIFT	561
BOOM GP	563
BRACE GP-LIFT CYLINDER	564
GUARD GP-BOOM	565
LINK GP-THUMB	567
LINKAGE GP-BACKHOE BUCKET	568
LINKAGE GP-LOADER BUCKET	570
LOCK GP-TRANSPORT	572
PAD & GUARD GP-STABILIZER	577
PAD & MTG GP-STABILIZER	595
PAD GP-STABILIZER	598
STABILIZER GP-BACKHOE	600
STICK AS	601
STICK GP-EXTENDABLE	602
STICK GP-HOE	606
WORK TOOLS	607
BUCKET AR-GENERAL PURPOSE	607
BUCKET AR-MULTIPURPOSE	607
BUCKET AS-GENERAL PURPOSE	610
BUCKET AS-HOE	618
BUCKET GP-GENERAL PURPOSE	670
BUCKET GP-HOE	677
BUCKET GP-MULTIPURPOSE	721
BULLDOZER AS	726
CLAM AS-MULTIPURPOSE BUCKET	730
COUPLER AR-QUICK	732
COUPLER GP-QUICK	733
EDGE GP-CUTTING	739
EDGE-CUTTING	741
FORK GP	742
GUARD GP-WORK TOOL	743
MOUNTING GP-BUCKET	744
MOUNTING GP-MAST	745
PIN GP-COUPLER	746
THUMB AR	748
THUMB GP	784
TOOTH GP-UNI	786
OPERATOR STATION	787
AIR CONDITIONER & MOUNTING GP	787
BRACKET GP-MOUNTING	790
CAB AR-ENCLOSED ROPS	791
CAB AS	794
CAB GP-ENCLOSED ROPS	795
CANOPY AR-OPEN ROPS	801
CANOPY GP-OPEN ROPS	803
COMPRESSOR & MTG GP-REFRIG	806
COMPRESSOR GP-REFRIGERANT	810
CONDENSER & MTG GP-REFRIGERANT	811
CONSOLE GP-OPERATOR	812
CONTROL GP-HYDRAULIC HAND	818
CONTROL GP-JOYSTICK	823
CONTROL GP-STEERING	827
CONTROL GP-TRANSMISSION	831
COVER GP-CAB	833
COVER GP-WIPER MOTOR	834
DOOR GP-CAB	835
FLOOR MAT GP	843
HEATER GP-CAB	844
INSTALLATION GP-MONITOR	854
LATCH GP-CAB DOOR & WINDOW	856
LATCH GP-CONSOLE	858
LEVER GP-GOVERNOR	859
LINER GP-CAB	860
LINES GP-HEATER	864
LINES GP-HEATER & AIR COND	865
MIRROR GP-REAR VIEW	867
MOTOR GP-WINDOW WIPER	869
MOUNTING GP-BACKHOE CONTROL	870
MOUNTING GP-CAB	873
MOUNTING GP-MONITOR	874
PEDAL GP-GOVERNOR	875
RADIO GP-COMMUNICATION	876
ROOF GP-CAB	877
SEAT BELT GP	878
SEAT GP	880
SEAT GP-SUSPENSION	884
SUSPENSION GP-SEAT	891
TACHOMETER GP-ELECTRIC	897
TRIM GP-CAB	898

TABLE OF CONTENTS

Name	Page	Name	Page
VISOR GP-CAB	900		
WASHER GP-WINDOW	902		
WINDOW GP-CAB	906		
WINDOW GP-DOOR	916		
WIPER & WASHER GP-WINDOW	918		
WIPER GP-WINDOW	922		
SERVICE EQUIPMENT AND SUPPLIES	924		
FILM GP	924		
LOCK GP-VANDALISM	925		
PLATE & FILM GP	925		
PROTECTION GP-VANDALISM	929		
TRANSPORT AR-MACHINE	930		
TRANSPORT GP-MACHINE	932		
PART NUMBER INDEX	B1		

GENERAL INFORMATION

1. MACHINE IDENTIFICATION

Caterpillar machines are identified by Product Identification Numbers (PIN). Some components included in a machine may be identified by Serial Numbers (S/N). Typical components that will be serialized include engines, transmissions, bulldozers, and rippers. The machine and engine are further identified by arrangement numbers and in some cases modification numbers. These numbers are shown on the product identification plate(s) and on the master plate in the operator's compartment.

Caterpillar dealers need all of these numbers to determine accurate parts identification.

SIS *New Feature*

Effective First Quarter 2001 the Caterpillar Product Identification Number (PIN) changed from 8 to 17 characters. In an effort to provide uniform equipment identification, Caterpillar and other construction equipment manufacturers are moving to comply with the latest version of the product identification numbering standard. Non-road machine PINs are defined by ISO 10261. The new PIN format will apply to all Caterpillar machines and generator sets. The PIN plates and frame marking will display the 17 character PIN. The new format will look like the following:

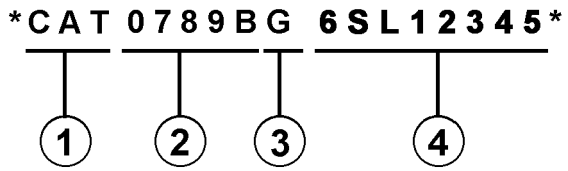

Where:

1. Caterpillar's World Manufacturing Code (characters 1-3)

2. Machine Descriptor (characters 4-8)

3. Check Character (character 9)

4. Machine Indicator Section (MIS) or Product Sequence Number (characters 10-17). These were previously referred to as the Serial Number.

Machines and generator sets produced before First Quarter 2001 will maintain their 8 character PIN format.

Components such as engines, transmissions, axles, etc. and work tools will continue to use an 8 character Serial Number (S/N).

2. ORDERING PARTS

⚠ WARNING

When replacement parts are required for this product Caterpillar recommends using Caterpillar replacement parts or parts with equivalent specifications including, but not limited to, physical dimensions, type, strength and material.

Failure to heed this warning can lead to premature failures, product damage, personal injury or death.

Quality Caterpillar replacement parts are available from Caterpillar dealers throughout the world. Their parts inventories are up to date and include all parts normally required to protect your investment in Caterpillar machines. Dealers may offer repair kits or remanufactured parts to allow selection of the most effective repair alternative for a particular situation. When ordering parts, your order should specify the quantity, part number, part name, and the serial number/product identification number of the machine for which the parts are needed.

3. PARTS MANUAL ORGANIZATION

Product information in this manual is presented as "information elements" that represent all of the components for the specific model. Engine Arrangement and Seat Group are examples of information elements. The information elements are organized alphabetically by part name and secondarily by part number within each major section of the manual.

4. TABLE OF CONTENTS

A table of contents (TOC) is found at the beginning of the manual. The TOC lists each section of the manual with a complete list of all information elements organized as they appear in the manual. Page numbers are provided for quick reference to detailed parts identification illustrations and serviceable consist lists.

5. MAINTENANCE PARTS INDEX

The Maintenance Parts Index, located near the beginning of the manual, references most frequently used maintenance part numbers, providing description, quantity, usage and page number. This information is organized alphabetically by part description.

6. INDEX

The index located near the front of the manual is an alphabetical listing of all information elements included in the manual. Page numbers are provided for quick reference to detailed parts identification illustrations and serviceable consist lists.

7. PART NUMBER INDEX

A numerical index listing all part numbers and the corresponding page number(s) appears at the back of the manual.

8. CAPTIONS

Captions located at the beginning of each information element identify the part number and part name along with additional descriptive information. PIN and S/N information found in each caption should be used to select correct information for a specific machine. Field replacement options, identification of optional attachment components, and where used ("part of") information is also provided.

The first line of a caption is shown in larger type font to indicate the beginning of an information element. Captions for additional pages that may be required to illustrate an information element will be shown in standard type font and will include the term *(contd.)* .

9. NON-SERVICED PARTS

In some instances it is necessary to display non-serviced parts that are a link to a lower level serviceable consist lists. These non-serviced part numbers are shown in *italic* type indicating that they are not available.

10. PARTS LIST REFERENCE NUMBERS

Numbers shown in the Ref No column correspond to numbers used in the associated graphic(s). An alphabetic suffix may be added to a reference number to identify lower level consist items. Numbers shown in the Graphic Ref column refer to the graphic number identifier displayed in the lower left corner of each illustration. The Graphic Ref number may be used in combination with the item Ref No to determine the correct part number. There may be intentional omission of a Ref No in a consist list as information is updated to reflect the latest serviceable part numbers.

11. INDENTED PART NAMES

When a part name is indented in a parts list, it is part of (included in) the group or assembly under which it is indented.

12. ILLUSTRATION REFERENCE LETTERS

When necessary, illustrations contain reference letters (A, B, C etc.) that are intended to track lines and harnesses from one point to another. They are also used to show where to reconnect illustrations that have been separated.

13. ABBREVIATIONS AND SYMBOLS

O.D. – Outside Diameter
I.D. – Inside Diameter
A – Not Part Of This Group
B – Use As Required
C – Change From Previous Type
D – Order By The Meter
E – Order By The Centimeter
F – Not Shown
G – Order By The Inch
I – Refer To Hydraulic Information System
M – Metric Part
R – Remfg Part May Be Available
Y – Separate Illustration
Z – Not Serviced Separately

SIS *New Feature*

14. DESCRIPTION OF TYPE CHANGES

Type - A type is defined as any configuration change that requires an additional Information Element for an Arrangement, Group, or Assembly. If serial number breaks for types are not available, a type # (Type 1, Type 2, etc.) will be displayed in the caption. These "type" changes are identified with a "C" note (change from previous type) in the Parts List. Only the "types" that apply to this Parts Manual will be included. Additional types may exist causing "C" notes to appear on an Information Element when no other types are shown.

15.<END>

This symbol indicates the end of an information element.

NOTE:

Continuing improvement and advancement of product design may cause changes to your machine which may not be included in this publication. Whenever a question arises regarding your caterpillar product or this publication, please consult your caterpillar dealer for the latest available information.

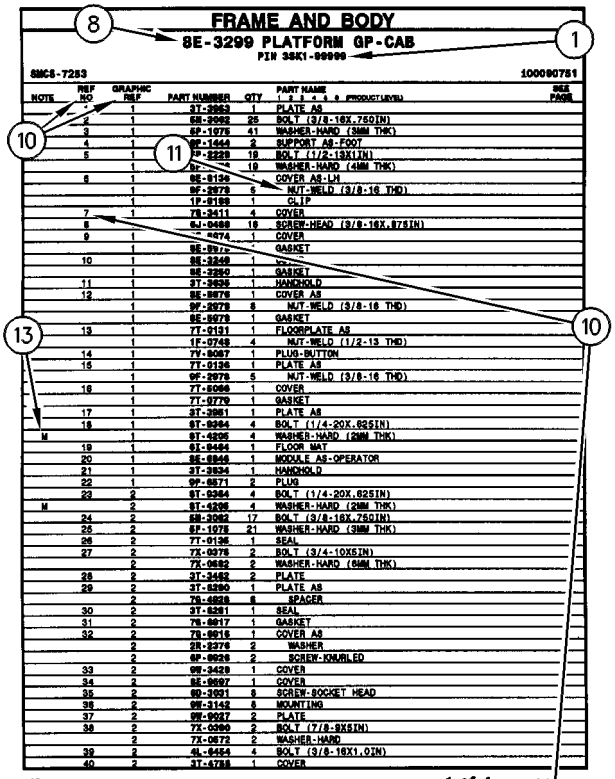
FRAME AND BODY
8E-3299 PLATFORM GP-CAB
PIN 3SK1-99999
SMCS-7253
100090751
NOTE REF NO GRAPHIC REF PART NUMBER QTY PART NAME SEE PAGE
1 1 3T-2953 1 PLATE AS
2 1 6E-2992 25 BOLT (3/8-16X.750IN)
3 1 6P-1076 41 WASHER-HARD (38MM THK)
4 1 9P-1444 2 SUPPORT AS-FOOT
5 1 7P-2229 19 BOLT (1/2-13X1IN)
1 19 WASHER-HARD (44MM THK)
6 1 8E-9136 COVER AS-LH
1 9F-2978 5 NUT-WELD (3/8-16 THD)
1 1P-0188 1 CLIP
7 1 7S-2411 4 COVER
8 9J-0498 18 SCREW-HEAD (3/8-16X.875IN)
9 1 1 COVER
1 GASKET
1 10
1 2
1 1
10 1 1
1 1
11 1 1 HANDHOLD
12 1 1 COVER AS
1 9F-2978 8 NUT-WELD (3/8-16 THD)
1 8E-9979 1 GASKET
13 1 7T-0131 1 FLOORPLATE AS
1 1F-0748 4 NUT-WELD (1/2-13 THD)
14 1 7V-8067 1 PLUG-BUTTON
15 1 7T-0136 1 PLATE AS
1 9F-2978 5 NUT-WELD (3/8-16 THD)
16 1 7T-8066 1 COVER
1 7T-9779 1 GASKET
17 1 3T-3951 1 PLATE AS
18 1 6T-8264 4 BOLT (1/4-20X.625IN)
M 1 9T-4205 4 WASHER-HARD (26MM THK)
19 1 6L-8494 1 FLOOR MAT
20 1 8E-8846 1 MODULE AS-OPERATOR
21 1 3T-3934 1 HANDHOLD
22 1 9P-8571 2 PLUG
23 2 6T-8264 4 BOLT (1/4-20X.625IN)
M 2 9T-4205 4 WASHER-HARD (26MM THK)
24 2 6B-3062 17 BOLT (3/8-16X.750IN)
25 2 6P-1076 21 WASHER-HARD (38MM THK)
26 2 7T-0135 1 SEAL
27 2 7X-0975 2 BOLT (3/4-10X5IN)
2 7X-0652 2 WASHER-HARD (64MM THK)
28 2 3T-3452 2 PLATE
29 2 3T-3290 1 PLATE AS
2 7S-4828 8 SPACER
30 2 3T-8281 1 SEAL
31 2 7S-8817 1 GASKET
32 2 7S-8815 1 COVER AS
2 2R-3276 2 WASHER
2 6P-9926 2 SCREW-KNURLED
33 2 9W-3429 1 COVER
34 2 8E-9597 1 COVER
35 2 6D-3931 8 SCREW-SOCKET HEAD
36 2 9W-3142 8 MOUNTING
37 2 9W-9027 2 PLATE
38 2 7X-0990 2 BOLT (7/8-9X5IN)
2 7X-0672 2 WASHER-HARD
39 2 4L-8454 4 BOLT (3/8-16X1.0IN)
40 2 3T-4788 1 COVER
12 FRAME AND BODY
1 of 4
SELP4570-01

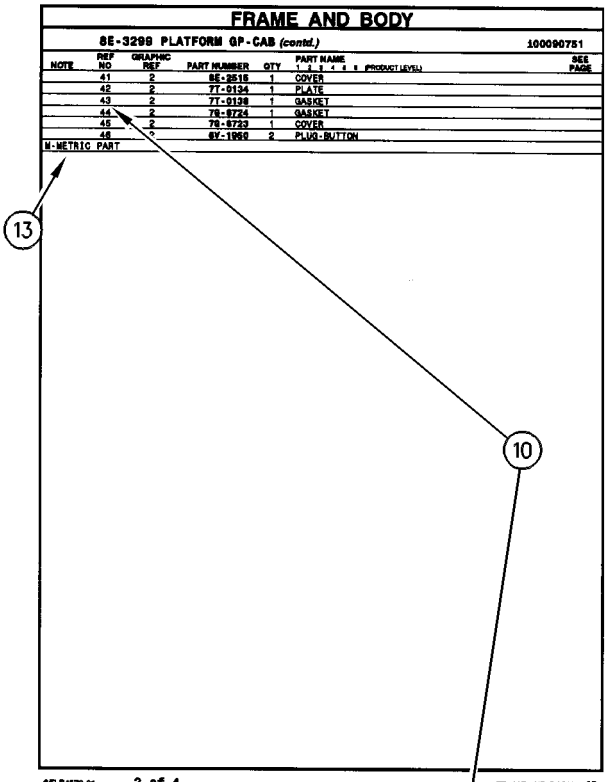
FRAME AND BODY
8E-3299 PLATFORM GP-CAB (contd.)
100090751
NOTE REF NO GRAPHIC REF PART NUMBER QTY PART NAME SEE PAGE
41 2 8E-2516 1 COVER
42 2 7T-0134 1 PLATE
43 2 7T-0138 1 GASKET
44 2 7S-8724 1 GASKET
45 2 7S-8723 1 COVER
46 2 6V-1950 2 PLUG-BUTTON
M-METRIC PART
SELP4570-01
2 of 4
FRAME AND BODY 13

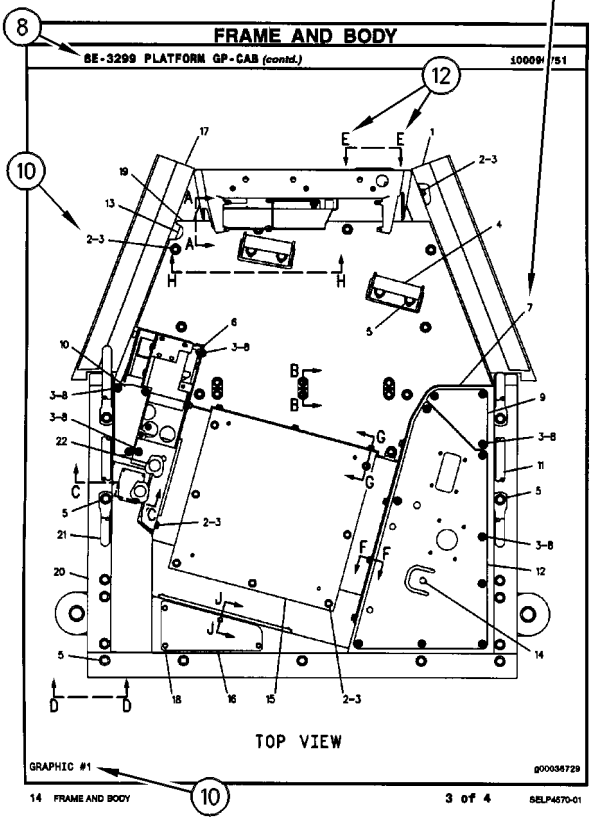
FRAME AND BODY
8E-3299 PLATFORM GP-CAB (contd.)
100090751
TOP VIEW
GRAPHIC #1
g00036729
14 FRAME AND BODY
3 of 4
SELP4570-01

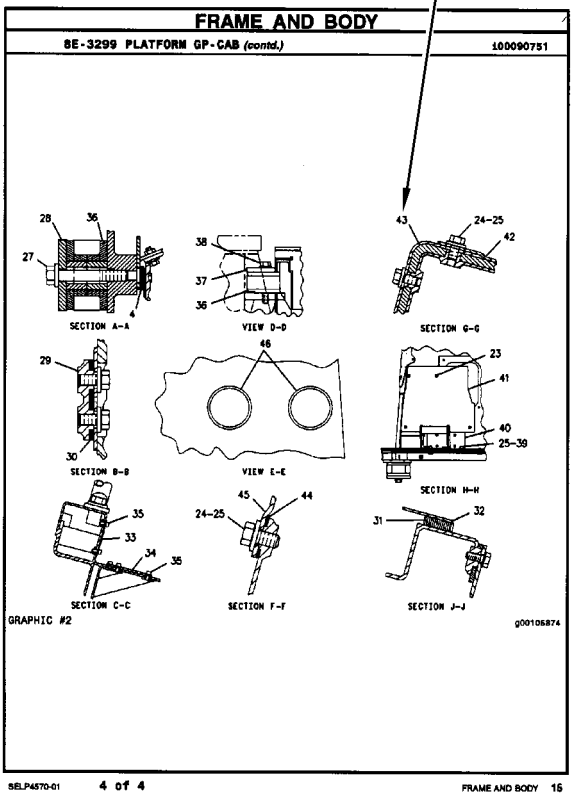
FRAME AND BODY
8E-3299 PLATFORM GP-CAB (contd.)
100090751
SECTION A-A
VIEW D-D
SECTION G-G
SECTION B-B
VIEW E-E
SECTION H-H
SECTION C-C
SECTION F-F
SECTION J-J
GRAPHIC #2
g00105874
SELP4570-01
4 of 4
FRAME AND BODY 15

REPAIR ALTERNATIVES

REMANUFACTURED COMPONENTS

As an option when making repairs consider Caterpillar Remanufactured Components. Components that are available through the Caterpillar Remanufactured Program are identified three ways in the parts book:

- with the letter R in the note field of the parts list
- with an R* at the beginning of the first line of the caption
- with an *R at the end of the first line of the caption

Typical components included in the Remanufacturing Program include:

ALTERNATORS
CONNECTING RODS
CRANKSHAFTS - UNDERSIZE
CRANKSHAFTS - UPGRADE TO NEW
CYLINDER HEADS
ELECTRONIC CONTROL MODULES (ECM)
ELECTRONIC SENSORS
FUEL INJECTORS
FUEL NOZZLES
FUEL PUMPS
GOVERNORS
OIL PUMPS
PISTONS
SHORT BLOCKS
STARTERS
TURBOCHARGERS - COMPLETE
TURBOCHARGER CARTRIDGES
WATER PUMPS

Caterpillar Remanufactured engines for many engine arrangements are also available.

SUPPLEMENTAL COOLANT ADDITIVES

CUSTOMER BENEFITS:

Protects against cavitation, foam, erosion, corrosion, and scale buildup in cooling systems.

- Provides measured coolant conditioner.

DESCRIPTION:

Additives deplete from the coolant with normal operation. For this reason, Supplemental Coolant Additives (SCA) must be added to all heavy duty coolants at regular intervals. In addition, when not using a fully formulated, pre-charged antifreeze, like Caterpillar's DEAC, an initial charge of SCA must be added to the cooling system. The amount of SCA added to the system is dependent on the capacity of the system.

The SCA for initial fill is provided as a liquid. SCA's for maintenance intervals are available in liquid form and as a spin-on element. (No Spin-on available for 3600 Family of Engines)

NOTE:

The amount of SCA added at initial fill is not the same as the amount added at maintenance intervals.

The coolant additive elements can be used with any ethylene or propylene glycol type antifreeze which meets ASTM D4985 or ASTM D5345 Specifications.

NOTE:

For use with standard heavy duty coolant only, not for use with Extended Life Coolant.

PARTS NEEDED:

Cooling System Capacity		Liquid SCA at Initial Fill	Liquid SCA at Maintenance*	Spin-on SCA Maintenance Element*
Liters	Gallons			
22-30	(6-8)	3P-2044 (1)	6V-3542 (1)	111-2370 (1)
30-38	(8-10)	3P-2044 (1) 6V-3542 (1)	111-2372 (1)	111-2369 (1)
38-49	(10-13)	3P-2044 (1) 8T-1589 (1)	111-2372 (1)	111-2369 (1)
49-64	(13-17)	3P-2044 (2)	8T-1589 (1)	9N-3368 (1)
64-83	(17-22)	3P-2044 (2) 8T-1589 (1)	111-2372 (1) 6V-3542 (1)	111-2371 (1)
83-114	(22-30)	3P-2044 (3) 8T-1589 (1)	3P-2044 (1)	9N-3718 (1)
114-163	(30-43)	3P-2044 (5)	3P-2044 (1) 6V-3542 (1)	111-2371 (2)
163-242	(43-64)	3P-2044 (8)	3P-2044 (2)	9N-3718 (2)

** Normal maintenance period is 250 hrs. See your Operation and Maintenance Manual for complete coolant maintenance instructions.*

( ) Indicates quantity required.

MAINTENANCE PARTS

DESCRIPTION	PART NUMBER	QTY	WHERE USED	PAGE
AIR INLET AND EXHAUST SYSTEM				
FILTER ELEMENT AS-AIR (PRIMARY)	227-7448	1	AIR CLEANER GP	76
FILTER ELEMENT-AIR (PRIMARY)	293-4053	1	AIR CLEANER GP	77
FILTER ELEMENT-AIR (SECONDARY)	227-7449	1	AIR CLEANER GP	76
		1	AIR CLEANER GP	77
BASIC ENGINE				
GASKET (VALVE COVER)	225-6451	1	COVER GP-VALVE MECHANISM	14
		1	COVER GP-VALVE MECHANISM	16
		1	COVER GP-VALVE MECHANISM	18
		1	COVER GP-VALVE MECHANISM	20
PLUG-DRAIN (ENGINE OIL)	7C-0351	2	PAN GP-OIL	38
		2	PAN GP-OIL	40
COOLING SYSTEM				
CAP AS-COOLANT TANK	251-3227	1	TANK GP-EXPANSION	73
HOSE-RADIATOR (LOWER)	210-6139	1	MOUNTING GP-RAD & OIL COOLER	67
HOSE-RADIATOR (UPPER)	210-6141	1	MOUNTING GP-RAD & OIL COOLER	67
REGULATOR GP-TEMPERATURE (INCLUDES CONNECTOR) (WATER)	254-2267	1	CONNECTION GP-WATER	54
V-BELT (AIR CONDITIONER)	1W-2934	1	FAN GP-SUCTION	59
	2P-6818	1	FAN GP-SUCTION	60
V-BELT SET (INCLUDES 2-BELTS)	3S-8447	1	FAN GP-SUCTION	59
		1	FAN GP-SUCTION	60
		1	FAN GP-SUCTION	61

MAINTENANCE PARTS

DESCRIPTION	PART NUMBER	QTY	WHERE USED	PAGE
ELECTRICAL AND STARTING SYSTEM				
BATTERY (12-VOLT, MAINTENANCE FREE)	230-6368	1	BATTERY & WIRING GP	107
		1	BATTERY & WIRING GP	109
		1	BATTERY & WIRING GP	110
		1	BATTERY & WIRING GP	112
BELT-DRIVE	9X-8139	1	LAMP GP-WARNING BEACON	130
FLASHER AS (12-VOLT)	7T-4848	1	WIRING GP-PLATFORM	178
		1	WIRING GP-PLATFORM	182
		1	WIRING GP-PLATFORM	186
FLASHER AS (12-VOLT) (HAZARD & TURN)	7T-4848	1	WIRING GP-PLATFORM	191
FUSE (10-AMPERE)	113-8490	11	PANEL GP-FUSE	138
	3K-8782	1	LAMP GP-WARNING BEACON	130
FUSE (15-AMPERE)	113-8491	13	PANEL GP-FUSE	138
FUSE (20-AMPERE)	113-8492	10	PANEL GP-FUSE	138
FUSE (40-AMPERE)	278-6377	1	RELAY GP	140
FUSE (60-AMPERE)	267-2701	2	RELAY GP	141
		1	RELAY GP	142
		1	WIRING GP-PLATFORM	178
		1	WIRING GP-PLATFORM	182
		1	WIRING GP-PLATFORM	186
		1	WIRING GP-PLATFORM	191
GLOW PLUG (12-VOLT)	232-6662	4	GLOW PLUG GP	117
		4	GLOW PLUG GP	118
KEY (BATTERY DISCONNECT)	8H-5306	1	SWITCH GP-DISCONNECT	149
LAMP (12-VOLT)	7X-9065	1	WIRING GP-CONSOLE	155
		1	WIRING GP-CONSOLE	158
LAMP (12-VOLT, 21-WATT)	3C-4883	1	LIGHTING GP-FLOOD & SIGNAL	131
		1	LIGHTING GP-FLOOD & SIGNAL	133
	9W-3326	1	LIGHTING GP-FLOOD & SIGNAL	131
		1	LIGHTING GP-FLOOD & SIGNAL	133
LAMP (12-VOLT, 5-WATT)	084-4348	1	LIGHTING GP-FLOOD & SIGNAL	131
		1	LIGHTING GP-FLOOD & SIGNAL	133
LAMP (12-VOLT, 55-WATT)	9W-0607	1	LAMP GP-FLOOD	128
		1	LAMP GP-FLOOD	129
	9X-8118	1	LAMP GP-WARNING BEACON	130
LAMP (12-VOLT, 55-WATT) (FLOODLIGHT)	9W-0607	1	LAMP GP-FLOOD	127
ENGINE ARRANGEMENT				
FILTER AS-ENGINE OIL	7W-2326	1	ENGINE AR-PRIMARY	10
FUEL SYSTEM				
CAP-FUEL	284-9039	1	TANK GP-FUEL	105
FILTER AS-WATER SEP & FUEL	228-9130	1	PUMP GP-FUEL PRM & PRIM FILTER	100
FILTER ELEMENT-FUEL (WATER SEPARATOR)	156-1200	1	FILTER GP-WATER SEP & FUEL	86
STRAINER-FUEL (FILLER NECK SCREEN)	180-3730	1	TANK GP-FUEL	105

MAINTENANCE PARTS

DESCRIPTION	PART NUMBER	QTY	WHERE USED	PAGE
HYDRAULIC SYSTEM				
CAP-FILL (HYDRAULIC OIL)	237-3797	1	TANK & MTG GP-HYDRAULIC	523
		1	TANK & MTG GP-HYDRAULIC	525
FILTER ELEMENT-BREATHER (HYDRAULIC TANK)	9R-9925	1	TANK & MTG GP-HYDRAULIC	523
		1	TANK & MTG GP-HYDRAULIC	525
FILTER ELEMENT-OIL (FLOW REGULATOR)	227-1197	1	MANIFOLD GP-CONTROL	508
FILTER-OIL (FIRE RESISTANT)	134-3014	1	FILTER GP-OIL	420
FILTER-OIL (ULTRA HIGH EFFICIENCY)	126-1817	1	FILTER GP-OIL	420
LUBRICATION SYSTEM				
FILTER AS-ENGINE OIL	7W-2326	1	GAUGE GP-OIL LEVEL & FILLER	52
OPERATOR STATION				
BLADE AS-WIPER (500-MM) (REAR)	5C-8811	1	WIPER GP-WINDOW	922
BLADE AS-WIPER (600-MM)	101-0745	1	WIPER & WASHER GP-WINDOW	920
BLADE AS-WIPER (600-MM) (FRONT)	101-0745	1	WIPER & WASHER GP-WINDOW	918
		1	WIPER GP-WINDOW	922
FILTER ELEMENT AS-AIR (CAB HEATER)	211-2661	1	AIR CONDITIONER & MOUNTING GP	787
		1	HEATER GP-CAB	844
FILTER ELEMENT-AIR (RECIRCULATION)	211-2660	1	HEATER GP-CAB	846
		1	HEATER GP-CAB	848
		1	HEATER GP-CAB	850
		1	HEATER GP-CAB	852
LAMP (12-VOLT)	122-7137	1	TACHOMETER GP-ELECTRIC	897
	210-8754	1	LINER GP-CAB	860
		1	LINER GP-CAB	862
SEAT BELT (2-IN)	206-1749	1	SEAT BELT GP	878
SEAT BELT GP	206-1750	1	SEAT BELT GP	879

MAINTENANCE PARTS

DESCRIPTION	PART NUMBER	QTY	WHERE USED	PAGE
POWER TRAIN				
BREATHER (AXLE)	197-9155	1	AXLE GP-REAR	208
BREATHER (FRONT AXLE)	253-5024	1	AXLE GP-DRIVE & STEERING	206
BREATHER (TRANSMISSION)	7T-3251	1	TRANSMISSION GP-DIRECT DRIVE	265
		1	TRANSMISSION GP-DIRECT DRIVE	270
		1	TRANSMISSION GP-DIRECT DRIVE	276
		1	TRANSMISSION GP-DIRECT DRIVE	281
		1	TRANSMISSION GP-DIRECT DRIVE	286
		1	TRANSMISSION GP-DIRECT DRIVE	291
		1	TRANSMISSION GP-POWER SHIFT	296
		1	TRANSMISSION GP-POWER SHIFT	302
BREATHER AS (SIDE)	293-2147	1	TRANSMISSION GP-DIRECT DRIVE	285
		1	TRANSMISSION GP-DIRECT DRIVE	290
BREATHER AS (TRANSMISSION)	293-2147	1	TRANSMISSION GP-DIRECT DRIVE	275
		1	TRANSMISSION GP-DIRECT DRIVE	280
	294-9822	1	TRANSMISSION GP-DIRECT DRIVE	270
FILTER-OIL (STANDARD EFFICIENCY) (HYDRAULIC)	119-4740	1	POWER TRAIN AR	245
		1	POWER TRAIN AR	246
PLUG AS-DRAIN (MAGNETIC)	152-6144	4	AXLE GP-DRIVE & STEERING	206
		1	DIFFERENTIAL & BEVEL GEAR GP	219
PLUG AS-DRAIN (MAGNETIC) (AXLE)	152-6144	4	AXLE GP-REAR	208
STRAINER (SUCTION)	7T-2651	1	CASE AS-TRANSMISSION	211
		1	CASE GP-TRANSMISSION	214
		1	CASE GP-TRANSMISSION	217
		1	TRANSMISSION GP-POWER SHIFT	296
		1	TRANSMISSION GP-POWER SHIFT	302

INDEX

Name	Page
A	
ACCUMULATOR GP-PILOT OIL–CHARGED	384
ACCUMULATOR GP-PILOT OIL–UNCHARGED	385
ACCUMULATOR GP-RIDE CONTROL–CHARGED	386
ACCUMULATOR GP-RIDE CONTROL–UNCHARGED	387
ACCUMULATOR-REFRIGERANT (AIR CONDITIONER)	865
AIR CLEANER GP	74 76 77
AIR COMPRESSOR GP (SUSPENSION SEAT)	891 893
AIR CONDITIONER & MOUNTING GP	787
ALTERNATOR GP-CHARGING–120-AMPERE, WITH MOUNTING	106
ARM GP-LIFT	561
ARMREST AS (LH)	885
ARMREST AS (RH)	885
AXLE GP-DRIVE & STEERING–FRONT	206
AXLE GP-FRONT	341
AXLE GP-REAR	208
B	
BACKHOE AR-EXTENDABLE STICK	1
BACKHOE AR-EXTENDABLE STICK–ACCUGRADE	2 3
BACKHOE AR-STANDARD STICK	3
BACKHOE AR-STANDARD STICK–ACCUGRADE	4 5
BATTERY & WIRING GP	109
BATTERY & WIRING GP–STANDARD	107 110 112
BATTERY (12-VOLT, MAINTENANCE FREE)	107 109 110 112
BELT-DRIVE	130
BLADE AS-WIPER (500-MM) (REAR)	922
BLADE AS-WIPER (600-MM)	920
BLADE AS-WIPER (600-MM) (FRONT)	918 922
BLOWER GP-CAB	852
BLOWER GP-CAB (HEATER)	846 848 850
BOOM GP	563
BOX GP-BATTERY–WITH STORAGE	353
BRACE GP-LIFT CYLINDER	564
BRACKET AS	382
BRACKET GP-MOUNTING–MONITOR	790
BRAKE GP-HYDRAULIC CALIPER	208
BREATHER (AXLE)	208
BREATHER (FRONT AXLE)	206
BREATHER (TRANSMISSION)	265 270 276 281 286 291 296 302
BREATHER AS (SIDE)	285 290
BREATHER AS (TRANSMISSION)	270 275 280
BREATHER GP–TURBO	50
BUCKET AR-GENERAL PURPOSE	607
BUCKET AR-MULTIPURPOSE	607 608 609
BUCKET AS-GENERAL PURPOSE	610 612 613 615 617
BUCKET AS-HOE	618 619 620 621 622 623 624 625 626 627
BUCKET AS-HOE–CORAL	658 659 660 661
BUCKET AS-HOE–HEAVY-DUTY	628 629 630 631 632 633 634 635 636 637 638

INDEX

Name	Page
	639
BUCKET AS-HOE–HIGH CAPACITY	640
	641
	642
	643
	644
	645
	646
	647
BUCKET AS-HOE– HIGH CAPACITY, PIN-LOCK	662
	663
	664
	665
	666
	667
	668
	669
BUCKET AS-HOE–ROCK	648
	649
	650
	651
	652
	653
	654
	655
	656
	657
BUCKET GP-GENERAL PURPOSE	670
	671
	672
	673
	674
	675
	676
BUCKET GP-HOE	677
	678
	679
	680
	681
	701
BUCKET GP-HOE–CORAL	697
	698
	699
	700
	704
BUCKET GP-HOE–HEAVY DUTY	702
BUCKET GP-HOE–HEAVY-DUTY	682
	683
	684
	685
	686
	687
BUCKET GP-HOE–HEAVY-DUTY, PIN-LOCK	705
	706
	707
	708
	709
	710
BUCKET GP-HOE–HIGH CAPACITY	688
	689
	690
	691
	717
BUCKET GP-HOE– HIGH CAPACITY, PIN-LOCK	711
	712
	713
	714
	715
	716
	718
	719
	720
BUCKET GP-HOE–ROCK	692
	693
	694
	695
	696
	703
BUCKET GP-MULTIPURPOSE	721
	723
	724
	725
BULLDOZER AS	726
	727
	728
	729

C

CAB AR-ENCLOSED ROPS	791
	792
	793
CAB AS	794
CAB GP-ENCLOSED ROPS	795
	798
CANOPY AR-OPEN ROPS	801
	802
CANOPY GP-OPEN ROPS– WITH FRONT WINDOW	805
CANOPY GP-OPEN ROPS– WITHOUT FRONT WINDOW	803
CAP AS-COOLANT TANK	73
CAP-FILL (HYDRAULIC OIL)	523
	525
CAP-FUEL	105
CARRIER AS-DIFFERENTIAL	219
CASE AS-TRANSMISSION–FRONT	211
CASE AS-TRANSMISSION–REAR	212

INDEX

Name	Page
CASE GP-TRANSMISSION–FRONT	214, 217
CASE GP-TRANSMISSION–REAR	215
CHASSIS AR	5
CLAM AS-MULTIPURPOSE BUCKET	730, 731
COMMON AR	6
COMPRESSOR & MTG GP-REFRIG	806, 808
COMPRESSOR GP-REFRIGERANT	810
CONDENSER & MTG GP-REFRIGERANT	811
CONNECTION GP-WATER	54
CONSOLE GP-OPERATOR–FRONT	816
CONSOLE GP-OPERATOR–LH	814
CONSOLE GP-OPERATOR–RH	812
CONTROL AR-RIDE	387
CONTROL GP-GOVERNOR	83, 84
CONTROL GP-HYDRAULIC HAND–LOADER	818, 820
CONTROL GP-JOYSTICK–LH	825, 826
CONTROL GP-JOYSTICK–RH	823, 824
CONTROL GP-PARKING BRAKE	330, 331
CONTROL GP-SERVICE BRAKE–STANDARD SHIFT	332, 335
CONTROL GP-STEERING–TILT	827, 829
CONTROL GP-TRANSMISSION	831
CONTROL GP-TRANSMISSION (FORWARD, NEUTRAL, REVERSE)	205, 831
CONTROL GP-UNPRGMED MONITOR (ADVISOR)	116
CONTROL GP-UNPROGRAMMED (MACHINE)	114, 115
COOLER GP-ENGINE OIL	55, 56, 57
COOLER GP-FLTR BASE & ENG OIL	57, 58
CORE AS-OIL COOLER (HYDRAULIC)	71, 72
CORE AS-OIL COOLER (TRANSMISSION)	71, 72
COUNTERWEIGHT GP	354, 355, 356, 357
COUPLER AR-QUICK–PIN-LOCK	732
COUPLER GP-QUICK–BACKHOE	733, 734
COUPLER GP-QUICK–CAT, CASE	736
COUPLER GP-QUICK–CAT, DEERE	737
COUPLER GP-QUICK–PIN-LOCK	735
COVER GP (OUTLET)	531, 532
COVER GP-CAB	833
COVER GP-CYLINDER HEAD	13
COVER GP-VALVE MECHANISM	14, 16, 18, 20
COVER GP-WIPER MOTOR	834
CRANKSHAFT GP	22, 24
CUSHION GP-SEAT	887, 888
CYLINDER & LINES GP-THUMB	388, 389, 391
CYLINDER BLOCK GP	25, 27
CYLINDER GP-BACKHOE BUCKET	393, 395
CYLINDER GP-BOOM	397, 399
CYLINDER GP-BRAKE	338, 339
CYLINDER GP-EXTENDABLE STICK	401, 602
CYLINDER GP-LIFT	403
CYLINDER GP-MULTIPURPOSE BUKT	404
CYLINDER GP-STABILIZER–LH	405
CYLINDER GP-STABILIZER–RH	407
CYLINDER GP-STEERING	206, 341
CYLINDER GP-STICK	409, 411, 412
CYLINDER GP-SWING	413
CYLINDER GP-THUMB	415
CYLINDER GP-TILT	416
CYLINDER HEAD GP	28, 29

D

Name	Page
DIAPHRAGM (CRANKCASE PRESSURE CONTACTOR)	14, 16
DIFFERENTIAL & BEVEL GEAR GP	219
DIFFERENTIAL GP	221, 222
DOOR GP-BATTERY	358
DOOR GP-CAB–LH	835

INDEX

Name	Page
	837
DOOR GP-CAB–RH	839
	841
DRIVE & MTG GP-PUMP	418
DRIVE AR-BACKHOE LOADER– 2-WHEEL DRIVE, 2-WHEEL STEER	6
DRIVE AR-BACKHOE LOADER– ALL WHEEL DRIVE, 2-WHEEL STEER	7
DRIVE GP-FAN	30
DRIVE GP-FLEXIBLE COUPLING	223
E	
EDGE GP-CUTTING	739
	740
EDGE-CUTTING	741
ELECTRONICS GP-COMMUNICATION– PRODUCT LINK 300	114
ELECTRONICS GP-MACHINE	114
	115
ELECTRONICS GP-MONITOR–ADVISOR	116
ENGINE AR	8
	9
ENGINE AR-PRIMARY	10
	11
	12
EXTENSION GP-EXHAUST	78
EXTENSION GP-FENDER	359
F	
FAN GP-SUCTION–WITH AIR CONDITIONER	59
	60
FAN GP-SUCTION– WITHOUT AIR CONDITIONER	61
FASTENER GP-VALVE (BANK)	529
FASTENER GP-VALVE–BANK	419
FENDER GP-FRONT	360
FENDER GP-REAR	361
FILLER GP-POWER TRAIN OIL	224
FILLER GP-POWER TRAIN OIL– 2-WHEEL DRIVE, STANDARD SHIFT	228
FILLER GP-POWER TRAIN OIL– ALL WHEEL DRIVE, STANDARD SHIFT	226
FILM (STABILIZER, AUTO UP)	792
	793
FILM (START SWITCH, READ OMM)	927
FILM (TEMPERATURE CONTROL)	787
	844
FILM GP–430E	924
FILM-CONTROL (BACKHOE, JOYSTICK)	791
	792
	793
	801
	802
FILM-IDENTIFICATION (CAT)	382
	383
FILM-IDENTIFICATION (CATERPILLAR)	801
	846
	848
	850
	852
FILM-IDENTIFICATION (CATERPILLAR, FRONT)	791
	792
	793
	802
FILM-IDENTIFICATION (CONSOLE, RH)	155
	158
FILM-IDENTIFICATION (STABILIZER CONTROL)	791
	801
	802
FILM-INSTRUCTION (BUCKET CONTROL)	529
FILM-INSTRUCTION (EXTENDABLE STICK PIN, READ OMM)	1
	2
	3
FILM-INSTRUCTION (LINK)	568
FILM-INSTRUCTION (NO STEP)	926
FILM-INSTRUCTION (OIL FLOW DIRECTION)	435
FILM-INSTRUCTION (UNLOCK)	381
FILM-INSTRUCTION (WASHER FILL)	902
	904
	918
	920
FILM-STRIPE (YELLOW)	377
	379
	382
FILM-WARNING (ACCUM, HIGH PRESS, READ OMM)	386
	470
FILM-WARNING (HIGH PRESS CYLINDER, READ OMM)	425
	428
	476
FILM-WARNING (HIGH PRESS CYLINDER, READ OMM) (INTL)	478
FILM-WARNING (HIGH PRESS CYLINDER, READ OMM) (U.S.)	478
FILM-WARNING (HIGH PRESSURE, READ OMM)	386
FILM-WARNING (HIGH PRESSURE, READ OMM, U.S.)	423
FILM-WARNING (HOT FLUID UND PRESS, READ OMM)	927
FILM-WARNING (HYD PRESS, READ OMM, INTL)	435

INDEX

Name	Page
	438
	440
FILM-WARNING (HYD PRESS, READ OMM, U.S.)	435
	437
	440
FILM-WARNING (NO WELD, NO DRILL, READ OMM)	926
FILM-WARNING (PRODUCT LINK 300, U.S.)	123
	124
FILTER AS-ENGINE OIL	10
	52
FILTER AS-WATER SEP & FUEL	100
FILTER BASE & ENG OIL COOLER	57
	58
FILTER ELEMENT AS-AIR (CAB HEATER)	787
	844
FILTER ELEMENT AS-AIR (PRIMARY)	76
FILTER ELEMENT-AIR (PRIMARY)	77
FILTER ELEMENT-AIR (RECIRCULATION)	846
	848
	850
	852
FILTER ELEMENT-AIR (SECONDARY)	76
	77
FILTER ELEMENT-BREATHER (HYDRAULIC TANK)	523
	525
FILTER ELEMENT-FUEL (WATER SEPARATOR)	86
FILTER ELEMENT-OIL (FLOW REGULATOR)	508
FILTER GP-FUEL	86
FILTER GP-OIL–HYDRAULIC	420
FILTER GP-WATER SEP & FUEL	86
FILTER-OIL (FIRE RESISTANT)	420
FILTER-OIL (STANDARD EFFICIENCY) (HYDRAULIC)	245
	246
FILTER-OIL (ULTRA HIGH EFFICIENCY)	420
FINAL DRIVE GP	244
FITTING GP-HYDRAULIC	421
FLANGE GP-WHEEL	230
	231
FLASHER AS (12-VOLT)	178
	182
	186
FLASHER AS (12-VOLT) (HAZARD & TURN)	191
FLOOR MAT	843
FLOOR MAT GP	843
FLOORPLATE GP	363
	364
	365
FLYWHEEL GP	31
FORK GP	742
FRAME GP-LOADER–SINGLE TILT	366
FRAME GP-SWING	368
	370
	372
FUSE (10-AMPERE)	130
	138
FUSE (15-AMPERE)	138
FUSE (20-AMPERE)	138
FUSE (40-AMPERE)	140
FUSE (60-AMPERE)	141
	142
	178
	182
	186
	191

G

GASKET (VALVE COVER)	14
	16
	18
	20
GAUGE AS-OIL LEVEL (DIPSTICK)	224
GAUGE GP-COOLANT TEMPERATURE	155
	158
GAUGE GP-FUEL LEVEL	155
	158
GAUGE GP-OIL LEVEL & FILLER–WITH FILTER	52
GAUGE GP-OIL TEMPERATURE (TORQUE CONVERTER)	155
	158
GAUGE-OIL LEVEL (DIPSTICK)	226
	228
GAUGE-OIL LEVEL (ENGINE DIPSTICK)	52
GAUGE-SIGHT (FLUID LEVEL)	523
	525
GEAR GP-BEVEL & PINION	219
GEAR GP-DIFFERENTIAL & BEVEL	221
GEAR GP-RING	232
	233
GEAR GP-RING (REAR AXLE)	208
GLOW PLUG (12-VOLT)	117
	118
GLOW PLUG GP	117
	118
GRADE CONTROL AR-LASER–ACCUGRADE	121
GRADE CONTROL AR-LASER–ACCUGRADE, MAST	119
GRILL-RADIATOR–SCREEN	374
GUARD GP-BOOM	565
	566
GUARD GP-DRIVE SHAFT	375
GUARD GP-RADIATOR	376
GUARD GP-WORK TOOL	743

INDEX

Name	Page
H	
HANDLE GP-MODULAR (LH)	825, 826
HANDLE GP-MODULAR (RH)	823, 824
HARNESS AS-AUXILIARY (HORN)	162
HARNESS AS-AUXILIARY (REAR)	160, 161
HARNESS AS-CAB	178, 182, 186, 902, 904
HARNESS AS-CAB (WIPER MOTOR)	918, 920
HARNESS AS-CONSOLE (FRONT)	157
HARNESS AS-CONSOLE (SIDE)	155, 158
HARNESS AS-CONTROL (ACCUGRADE, SITE REFERENCE)	854
HARNESS AS-CONTROL (PRODUCT LINK)	125
HARNESS AS-ENGINE	163, 165
HARNESS AS-FUEL TANK (FUEL SHUTOFF)	8
HARNESS AS-HEATER	850, 852
HARNESS AS-HEATER & AIR COND	151, 846, 848
HARNESS AS-HEATER & AIR COND (COMPRESSOR)	151, 153
HARNESS AS-HEATER & AIR COND (PLATFORM)	153, 173
HARNESS AS-HEATER & AIR COND (POWER)	151, 153
HARNESS AS-LIGHTING (ROOF)	131, 133
HARNESS AS-PANEL (AUTOSHIFT, STAND SHIFT SWITCH)	205
HARNESS AS-PLATFORM	191
HARNESS AS-PLATFORM (DISPLAY)	169, 171
HARNESS AS-POWER (DISTRIBUTION)	178, 182, 186, 191
HARNESS AS-RADIO (PRODUCT LINK)	123, 124
HARNESS AS-REAR (PLATFORM)	197, 199
HARNESS AS-REAR (STABILIZER, AUTO UP)	178, 182, 204
HARNESS AS-RIDE CONTROL	201, 423, 425, 428, 891, 893
HARNESS AS-SENSOR	4
HARNESS AS-SENSOR (ACCUGRADE)	5
HARNESS AS-SENSOR (BACKHOE)	2
HARNESS AS-SENSOR (BOOM, STICK, BUCKET)	169, 171
HARNESS AS-SENSOR (SWING)	169, 171
HARNESS AS-SENSOR (W/E-STICK)	3
HARNESS AS-TRANSMISSION	205
HARNESS AS-WIRING	177
HARNESS AS-WIRING (AUTOSHIFT)	205
HARNESS AS-WIRING (DIFFERENTIAL LOCK)	148
HARNESS AS-WIRING (EXTENDABLE STICK)	168
HARNESS AS-WIRING (KICKOUT, POSITIONER)	175, 176, 177
HARNESS AS-WIRING (MAST)	119, 121, 136
HARNESS AS-WIRING (RESISTOR)	191
HARNESS AS-WIRING (RESISTOR) (LADDER)	179, 182, 186
HEATER GP-CAB	844, 846, 848, 850, 852
HEATER GP-JACKET WATER	122
HOOD & GUARD GP	377, 379
HOOD GP-ENGINE	381, 382, 383
HOSE-RADIATOR (LOWER)	67
HOSE-RADIATOR (UPPER)	67
HOUSING & FLANGE GP-AXLE–LH	233
HOUSING & FLANGE GP-AXLE–RH	232
HOUSING GP-AXLE–LH	235
HOUSING GP-AXLE–REAR	236
HOUSING GP-AXLE–RH	234
HOUSING GP-FLYWHEEL	32

INDEX

Name	Page
HOUSING GP-FRONT	33
HYDRAULIC AR	422

I

Name	Page
INDICATOR AS (HIGH BEAM, TURN SIGNAL RH)	178, 182, 186, 191
INDICATOR AS (HYD OIL TEMP, FILTER)	167
INDICATOR AS (TURN SIGNAL LH, PARKING BRAKE)	178, 182, 186, 191
INDICATOR GP-AIR FILTER CHANGE	79
INDICATOR-AIR FILTER SERVICE	79
INSTALLATION GP-COMMUNICATION–PRODUCT LINK 121SR	123, 124
INSTALLATION GP-COMMUNICATION–PRODUCT LINK 300	125
INSTALLATION GP-MONITOR–ADVISOR	854
INSTALLATION GP-RIDE CONTROL–AUTOSHIFT	423, 425, 428

K

Name	Page
KEY (BATTERY DISCONNECT)	149
KICKOUT & POSITIONER GP	431, 433
KIT-RECEPTACLE (2-PIN)	178
KIT-WHEEL SPACER	238
KNOB GP-STEERING	343, 829

L

Name	Page
LAMP (12-VOLT)	155, 158, 860, 862, 897
LAMP (12-VOLT, 21-WATT)	131, 133
LAMP (12-VOLT, 5-WATT)	131, 133
LAMP (12-VOLT, 55-WATT)	128, 129, 130
LAMP (12-VOLT, 55-WATT) (FLOODLIGHT)	127
LAMP GP-DOME (12-VOLT)	860, 862
LAMP GP-FLOOD	127, 128, 129
LAMP GP-HEAD & SIGNAL (DIRECTIONAL)	131, 133
LAMP GP-SIGNAL (STOP, TAIL, TURN)	131, 133
LAMP GP-WARNING BEACON–AMBER, MAGNETIC MOUNT, ROTATING	130
LATCH GP-CAB DOOR & WINDOW	857
LATCH GP-CAB DOOR & WINDOW–RH	856
LATCH GP-CONSOLE	858
LEVER GP-GOVERNOR (HANDHELD)	83, 84
LEVER GP-GOVERNOR–HANDHELD	859
LEVER GP-HAND CONTROL	340
LIFTING GP-ENGINE	35
LIGHTING GP-FLOOD & SIGNAL–NACD, OPTIONAL	131, 133
LIGHTING GP-WARNING BEACON–AMBER, MAGNETIC MOUNT, ROTATING	135
LINER GP-CAB	860, 862
LINES GP-BACKHOE AUXILIARY	435, 437, 440
LINES GP-BOOM	443, 445
LINES GP-BUCKET	447, 449, 451, 454
LINES GP-DRAIN	456
LINES GP-EXTENDABLE STICK	457, 602, 604
LINES GP-FUEL	87
LINES GP-FUEL FILTER	89
LINES GP-HEATER	864
LINES GP-HEATER & AIR COND	865
LINES GP-HYDRAULIC	445, 449, 454, 499
LINES GP-HYDRAULIC OIL COOLER	459
LINES GP-LIFT CYLINDER	460
LINES GP-LOADER AUXILIARY	462
LINES GP-MULTIPURPOSE BUCKET	464, 466
LINES GP-PILOT–SIGNAL	468
LINES GP-PILOT–STABILIZER	473
LINES GP-PILOT–WITH ACCUMULATOR	470

INDEX

Name	Page
LINES GP-POWER TRAIN OIL–DIFFERENTIAL LOCK	239
LINES GP-PUMP	474
LINES GP-RIDE CONTROL	476
	478
LINES GP-STABILIZER	480
	482
	484
LINES GP-STABILIZER–6-BANK	492
	494
	496
LINES GP-STABILIZER–7-BANK	486
	488
	490
LINES GP-STEERING	344
	346
	348
	350
LINES GP-STICK	498
	499
LINES GP-SWING	501
LINES GP-TILT CYLINDER	503
LINES GP-TRANSMISSION COOLER	62
	64
LINK GP-THUMB	754
	755
	756
	757
	769
	770
	771
	772
	773
	774
	775
	776
	777
	778
	779
	783
LINK GP-THUMB–ADJUSTABLE	567
LINKAGE GP-BACKHOE BUCKET	568
LINKAGE GP-LOADER BUCKET	570
LOADER AR	7
LOCK GP-TRANSPORT	572
	576
LOCK GP-TRANSPORT–BOOM	574
LOCK GP-TRANSPORT–STABILIZER	573
LOCK GP-VANDALISM	925

M

Name	Page
MANIFOLD & SOLENOID GP-CONTROL	505
MANIFOLD & SOLENOID GP-CONTROL–BOOM, STICK, PATTERN SWITCH	506
MANIFOLD & SOLENOID GP-CONTROL–INLET	507
MANIFOLD GP-CONTROL (INLET)	507
MANIFOLD GP-CONTROL–INLET	509
MANIFOLD GP-CONTROL–OUTLET	508
MANIFOLD GP-HYDRAULIC	537
	539
	548
	549
MANIFOLD GP-RIDE CONTROL	510
MAST GP–LASER RECEIVER	136
MIRROR GP-REAR VIEW–INTERIOR	867
	868
MODULE GP-WARNING INDICATOR (WITH ALARM, FUNCTION LIGHTS)	155
	158
MOTOR GP-WINDOW WIPER (FRONT)	869
MOTOR GP-WINDOW WIPER (REAR)	922
MOTOR GP-WINDOW WIPER–FRONT	869
MOUNTING & LINES GP-RADIATOR–TRANSMISSION, HYDRAULIC OIL	66
MOUNTING GP-AXLE	240
MOUNTING GP-BACKHOE CONTROL–PILOT	870
MOUNTING GP-BANK VALVE	511
MOUNTING GP-BUCKET	744
MOUNTING GP-CAB	873
MOUNTING GP-CYLINDER–EXTENDABLE STICK	512
MOUNTING GP-CYLINDER–THUMB	513
	515
MOUNTING GP-ENGINE	36
MOUNTING GP-ENGINE & XMSN	37
MOUNTING GP-LINES–BACKHOE	516
	518
MOUNTING GP-MAST–GRADE CONTROL	745
MOUNTING GP-MONITOR–ACCUGRADE	874
MOUNTING GP-RAD & OIL COOLER–TRANSMISSION, HYDRAULIC OIL	67
MOUNTING GP-SENSOR–ANGLE	137
MOUNTING GP-TRANSMISSION	241
	242
MOUNTING GP-WHEEL	322
MOUNTING GP-WHEEL (FRONT)	316
	317
	321
	323
	325
	327
MOUNTING GP-WHEEL (REAR)	318
	320
	324
	326
	328
MUFFLER GP	80

INDEX

Name	Page
P	
PAD & GUARD GP-STABILIZER	583, 585, 587
PAD & GUARD GP-STABILIZER–STREET	577, 579, 581, 589, 591, 593
PAD & MTG GP-STABILIZER	597
PAD & MTG GP-STABILIZER–STREET	595, 596
PAD GP-STABILIZER–STREET	598, 599
PADLOCK GP (VANDALISM GUARD)	925
PAN GP-OIL	38, 40
PANEL GP-FUSE–INCLUDES RELAY	138
PEDAL GP-GOVERNOR	875
PIN GP-COUPLER (PIN-LOCK)	732
PIN GP-COUPLER–MACHINE	746
PIN GP-COUPLER–PIN-LOCK	747
PISTON & ROD GP	42
PLANETARY GP-FINAL DRIVE	243, 244
PLATE & FILM GP	925, 928
PLATE-IDENTIFICATION (CAT)	618, 620, 622, 624, 626, 628, 630, 632, 634, 636, 638, 640, 642, 644, 646, 648, 650, 652, 654, 656, 658, 659, 660, 661, 667
PLATE-IDENTIFICATION (WORK TOOL)	671, 673, 677, 678, 679, 680, 681, 682, 683, 684, 685, 686, 687, 688, 689, 690, 691, 692, 693, 694, 695, 696, 697, 698, 699, 700, 717, 718, 719, 720
PLUG AS-DRAIN (MAGNETIC)	206, 219
PLUG AS-DRAIN (MAGNETIC) (AXLE)	208
PLUG GP-CONTROL MANIFOLD	508
PLUG GP-CONTROL VALVE	537, 539, 541, 543, 545, 547, 550
PLUG GP-ENGINE	43, 44, 45
PLUG-DRAIN (ENGINE OIL)	38, 40
POWER TRAIN AR–2-WHEEL DRIVE, 2-WHEEL STEER, STD SHIFT	246
POWER TRAIN AR–ALL WHEEL DRIVE, 2-WHEEL STEER, AUTOSHIFT	245
POWER TRAIN AR–ALL WHEEL DRIVE, 2-WHEEL STEER, STD SHIFT	245
PROTECTION GP-VANDALISM–ROTATING GUARD	929
PULLEY GP-CRANKSHAFT	46
PUMP GP-ENGINE OIL	53

INDEX

Name	Page
PUMP GP-FUEL INJECTION	90, 91, 92, 93, 94, 97
PUMP GP-FUEL PRM & PRIM FILTER–WITH MOUNTING	101, 102
PUMP GP-FUEL PRM & PRIM FILTER–WITH WATER SEPARATOR	100
PUMP GP-METERING–HMU	352
PUMP GP-PISTON	519
PUMP GP-TRANSMISSION	265, 270, 275, 280, 285, 290, 296, 302
PUMP GP-WATER	69

R

Name	Page
RADIATOR & OIL COOLER GP–HYDRAULIC, TRANSMISSION	71, 72
RADIATOR GP	71, 72
RADIO GP-COMMUNICATION–PRODUCT LINK 121SR	876
RECEIVER GP-LASER (LR400C)	119
RECEIVER GP-LASER (LR410)	139
RECEIVER GP-LASER–SINGLE	139
REGULATOR GP-TEMPERATURE (INCLUDES CONNECTOR) (WATER)	54
RELAY AS (12-VOLT) (ACCUGRADE)	121
RELAY AS (12-VOLT) (ACCUGRADE, MAST)	119
RELAY AS (12-VOLT) (AIR CONDITIONER)	151, 153, 173
RELAY AS (12-VOLT) (ALL WHEEL DRIVE)	147
RELAY AS (12-VOLT) (BACKUP ALARM)	178, 182, 186, 191
RELAY AS (12-VOLT) (DIFFERENTIAL LOCK)	178, 182, 186, 191
RELAY AS (12-VOLT) (FUEL PUMP)	163, 165
RELAY AS (12-VOLT) (HEATER, A/C POWER)	151, 153
RELAY AS (12-VOLT) (HORN)	178, 182, 186, 191
RELAY AS (12-VOLT) (IMPLEMENT DISABLE)	178, 182, 186, 191
RELAY AS (12-VOLT) (POSITION LAMP)	178, 182, 186, 191
RELAY AS (12-VOLT) (RIDE CONTROL)	201, 423, 425, 428
RELAY AS (12-VOLT) (START)	163, 165
RELAY AS (12-VOLT) (STARTING AID)	163, 165
RELAY AS (12-VOLT) (TORQUE LIMITER)	178, 183, 187, 191
RELAY AS-TIMER (STABILIZER, AUTO UP, 12-VOLT)	203, 204
RELAY GP–POWER DISTRIBUTION	140
RELAY GP–POWER, 1	141
RELAY GP–POWER, 2	142
ROCKER ARM GP	47
ROOF GP-CAB	877
ROTATING GP-PUMP	521

S

Name	Page
SEAT BELT (2-IN)	878
SEAT BELT GP	879
SEAT BELT GP–RETRACTABLE, 2-IN	878
SEAT BELT GP–RETRACTABLE, 3-IN	879
SEAT GP–CLOTH	882
SEAT GP–VINYL	880
SEAT GP-SUSPENSION–CLOTH	885, 890
SEAT GP-SUSPENSION–DELUXE, CLOTH	886, 887, 888
SEAT GP-SUSPENSION–VINYL	884, 890
SENDER AS-FUEL LEVEL	104
SENDER AS-TEMPERATURE (12-VOLT)	265, 271, 276, 281

INDEX

Name	Page
SENDER AS-TEMPERATURE (12-VOLT) (TRANSMISSION OIL)	286, 291, 296, 302
SENDER AS-TEMPERATURE (ENGINE COOLANT)	163, 165
SENSOR AS-POSITION (ANGLE)	854
SENSOR AS-POSITION (BOOM SWING)	854
SENSOR GP-MOISTURE (WATER SEPARATOR)	100
SENSOR GP-POSITION	393, 399, 401
SENSOR GP-POSITION (LINEAR)	409
SENSOR GP-SPEED (TORQUE CONVERTER OUTPUT)	265, 270, 275, 280, 286, 291
SENSOR GP-SPEED (TRANSMISSION OUTPUT)	297, 303
SENSOR GP-SPEED–OUTPUT–TORQUE CONVERTER	143
SENSOR GP-TEMPERATURE (HYDRAULIC OIL)	167
SERVICE GP-MACHINE	114
SERVICE GP-MONITOR	116
SHAFT GP-AXLE	206
SHAFT GP-COUNTER	247, 265, 270, 275, 280
SHAFT GP-COUNTER (TRANSMISSION)	285, 290
SHAFT GP-DRIVE–FRONT	249
SHAFT GP-DRIVE–REAR	249
SHAFT GP-IDLER	250, 265, 270, 275, 280
SHAFT GP-IDLER (TRANSMISSION)	285, 290
SHAFT GP-INPUT	252, 254
SHAFT GP-OUTPUT–FRONT	259, 261
SHAFT GP-OUTPUT–MAIN	256
SHAFT GP-OUTPUT–REAR	258
SHAFT GP-PUMP DRIVE	260, 522
SOFTWARE GP-COMMUNICATION (PRODUCT LINK 300)	114
SOFTWARE GP-MACHINE	114
SOFTWARE GP-MONITOR	116
SPRING AS-GAS (LH)	381
SPRING GP-GAS	835, 837, 839, 841
SPRING GP-GAS (RH)	381
SPRING-GAS	910, 912
STABILIZER GP-BACKHOE	600
STARTING MOTOR GP-ELECTRIC	144
STARTING MOTOR GP-ELECTRIC–12-VOLT	146
STEERING COLUMN GP (TILT)	829
STICK AS	601
STICK GP-EXTENDABLE	602, 604
STICK GP-HOE	606
STRAINER (SUCTION)	211, 214, 217, 296, 302
STRAINER-FUEL (FILLER NECK SCREEN)	105
SUN VISOR	900, 901
SUSPENSION GP-SEAT	891, 893
SWITCH AS (LOWER LIMIT)	136
SWITCH AS (PARKING BRAKE)	330
SWITCH AS (PUSH BUTTON)	818, 820
SWITCH AS (STARTING MOTOR)(12-VOLT)	144
SWITCH AS (UPPER LIMIT)	136
SWITCH AS-FOOT (DIFFERENTIAL LOCK ON, OFF)	148
SWITCH AS-LIMIT (BRAKE PEDAL)	332, 335
SWITCH AS-LIMIT (SUSPENSION SEAT)	891
SWITCH AS-MULTIFUNCTION (HD LIGHT, TURN SIG, WDO WIPER)	178, 182, 186, 191
SWITCH AS-PRESSURE (ENGINE OIL)	150
SWITCH AS-PRESSURE (HYDRAULIC OIL FILTER BYPASS)	167
SWITCH AS-PRESSURE (REFRIGERANT)	151, 153
SWITCH AS-PRESSURE (RIDE CONTROL)	201, 423

INDEX

Name	Page
	425
	428
SWITCH AS-ROCKER (AIR CONDITIONER, HEATER SELECT)	151
	153
SWITCH AS-ROCKER (ALL WHEEL DRIVE)	147
SWITCH AS-ROCKER (AUTOSHIFT, STANDARD SHIFT)	205
SWITCH AS-ROCKER (AUXILIARY HYDRAULIC FLOW)	530
SWITCH AS-ROCKER (BLOWER FAN SPEED)	151
	153
	173
SWITCH AS-ROCKER (FLOODLIGHT, FRONT)	133
SWITCH AS-ROCKER (FLOODLIGHT, REAR)	133
SWITCH AS-ROCKER (FLOODLIGHTS, FRONT)	131
SWITCH AS-ROCKER (FLOODLIGHTS, REAR)	131
SWITCH AS-ROCKER (HAZARD WARNING LIGHTS)	178
	182
	186
	191
SWITCH AS-ROCKER (HEATER)	173
SWITCH AS-ROCKER (HORN)	829
SWITCH AS-ROCKER (HYDRAULIC LOCKOUT)	158
SWITCH AS-ROCKER (HYDRAULIC LOCKOUT) (IMPLEMENT DISABLE)	155
SWITCH AS-ROCKER (MODE SELECT)	178
	182
	186
	191
SWITCH AS-ROCKER (RIDE CONTROL)	201
	423
	425
	428
SWITCH AS-ROCKER (STARTING AID)	155
	158
SWITCH AS-ROCKER (TRANSMISSION NEUTRAL LOCK)	157
SWITCH AS-ROCKER (WARNING BEACON)	155
	158
SWITCH AS-ROCKER (WIPER, WASHER, REAR)	922
SWITCH AS-ROLLER (KICKOUT, POSITIONER)	175
	176
	177
SWITCH AS-START (KEY)	155
	158
SWITCH GP-ALL WHEEL DRIVE–INCLUDES RELAY	147
SWITCH GP-DIFFERENTIAL LOCK–CENTER PIVOT MACHINE	148
SWITCH GP-DISCONNECT–BATTERY	149
SWITCH GP-PRESSURE	332
SWITCH GP-PRESSURE (BRAKE)	335
SWITCH GP-PRESSURE–ENGINE OIL	150
SWITCH GP-PUSH BUTTON (NEUTRALIZER, DOWNSHIFT)	818
	820
	831
SWITCH-TEMPERATURE (AIR CONDITIONER)	846
	848
SWITCH-TEMPERATURE (ENGINE COOLANT)	163
	165
SWITCH-TEMPERATURE (FUEL)	94
	97
SYNCHRONIZER GP	258
	260

T

TACHOMETER GP-ELECTRIC	897
TANK & MTG GP-FUEL–INCLUDES STEP	103
TANK & MTG GP-HYDRAULIC	523
	525
TANK GP-EXPANSION	73
TANK GP-EXPANSION–COOLANT	73
TANK GP-FUEL	104
	105
TANK GP-HYDRAULIC	523
	525
TANK GP-WINDOW WASHER	902
	904
	918
	920
THUMB AR–24-IN, HYD, HEAVY-DUTY	750
THUMB AR–24-IN, HYD, HEAVY-DUTY, WITH COUPLER	751
THUMB AR–24-IN, HYD, ROCK	752
THUMB AR–24-IN, HYD, ROCK, WITH COUPLER	753
THUMB AR–24-IN, HYD, WITH COUPLER	758
THUMB AR–24-IN, MANUAL	748
THUMB AR–24-IN, MANUAL, HEAVY-DUTY	754
THUMB AR–24-IN, MANUAL, HEAVY-DUTY, WITH COUPLER	755
THUMB AR–24-IN, MANUAL, ROCK	756
THUMB AR–24-IN, MANUAL, ROCK, WITH COUPLER	757
THUMB AR–24-IN, MANUAL, WITH COUPLER	748

INDEX

Name	Page
	769
THUMB AR–24-IN, ROCK, MANUAL	748
THUMB AR–	
24-IN, ROCK, MANUAL, WITH COUPLER	749
THUMB AR–30-IN, HYD, HEAVY-DUTY	761
THUMB AR–30-IN, HYD, HEAVY-DUTY, WITH	
COUPLER	762
THUMB AR–30-IN, HYD, ROCK	763
THUMB AR–	
30-IN, HYD, ROCK, WITH COUPLER	764
THUMB AR–30-IN, HYD, WITH COUPLER	759
THUMB AR–30-IN, MANUAL, HEAVY-DUTY	770
THUMB AR–30-IN, MANUAL, HEAVY-DUTY,	
WITH COUPLER	772
THUMB AR–30-IN, MANUAL, ROCK	771
THUMB AR–	
30-IN, MANUAL, ROCK, WITH COUPLER	773
THUMB AR–	
30-IN, MANUAL, WITH COUPLER	774
THUMB AR–36-IN, HYD, HEAVY-DUTY	765
THUMB AR–36-IN, HYD, HEAVY-DUTY, WITH	
COUPLER	766
THUMB AR–36-IN, HYD, ROCK	767
THUMB AR–	
36-IN, HYD, ROCK, WITH COUPLER	768
THUMB AR–36-IN, HYD, WITH COUPLER	760
THUMB AR–36-IN, MANUAL, HEAVY-DUTY	775
THUMB AR–36-IN, MANUAL, HEAVY-DUTY,	
WITH COUPLER	777
THUMB AR–36-IN, MANUAL, ROCK	776
THUMB AR–	
36-IN, MANUAL, ROCK, WITH COUPLER	778
THUMB AR–	
36-IN, MANUAL, WITH COUPLER	779
THUMB AR–BACKHOE	748
THUMB AR–	
BACKHOE, HYDRAULIC COMMON	780
	781
	782
THUMB AR–BACKHOE, MANUAL COMMON	783
THUMB GP–BACKHOE	784
THUMB GP–BACKHOE, COMMON	785
TIE ROD GP	206
	341
TIP GP-BUCKET (SOIL)	717
	718
	719
	720
TIP GP-CHISEL	697
	698
	699
	700
TIP GP-PENETRATION	677
	678
	679
	680
	681
	682
	683
	684
	685
	686
	687
	688
	689
	690
	691
	692
	693
	694
	695
	696
	705
	706
	707
	708
	709
	710
	711
	712
	713
	714
	715
	716
TOOTH GP-UNI	786
TRANSMISSION & MOUNTING GP–	
2-WHEEL DRIVE, STANDARD SHIFT	263
TRANSMISSION & MOUNTING GP–	
ALL WHEEL DRIVE, AUTOSHIFT	262
TRANSMISSION & MOUNTING GP–	
ALL WHEEL DRIVE, STANDARD SHIFT	263
TRANSMISSION AR-DIRECT DRIVE–	
2-WHEEL DRIVE, STANDARD SHIFT	264
TRANSMISSION AR-DIRECT DRIVE–	
ALL WHEEL DRIVE, STANDARD SHIFT	263
TRANSMISSION AR-POWER SHIFT–	
ALL WHEEL DRIVE	264
TRANSMISSION GP-DIRECT DRIVE	265
	270
	275
	280
	285
	290
TRANSMISSION GP-POWER SHIFT	296
	302
TRANSPORT AR-MACHINE	930
	931
TRANSPORT GP-MACHINE	932
TRIM GP-CAB	898
TURBOCHARGER GP	81

INDEX

Name	Page
V	
V-BELT (AIR CONDITIONER)	59, 60
V-BELT SET (INCLUDES 2-BELTS)	59, 60, 61
VALVE & LINES GP-DIFF LOCK	308
VALVE & LINES GP-PILOT–BACKHOE	527
VALVE & MTG GP-SOLENOID–DIFFERENTIAL LOCK	310
VALVE AR-BANK 2	529
VALVE AR-BANK 3	529
VALVE AR-BANK 6	529
VALVE AR-BANK 7	530
VALVE AR-BANK 8	530
VALVE AS-MANUAL (DIRECTIONAL FLOW)	437
VALVE AS-RELIEF	810
VALVE AS-RELIEF (FLUSHING)	508
VALVE AS-WATER	787, 844
VALVE GP-BANK 2	531
VALVE GP-BANK 3	532
VALVE GP-BANK 6	533
VALVE GP-BANK 7	534
VALVE GP-BANK 8	535
VALVE GP-CHECK	509, 541, 543, 545, 547, 550
VALVE GP-CONTROL–AUXILIARY	552, 555
VALVE GP-CONTROL–BOOM	541, 543
VALVE GP-CONTROL–BUCKET	549
VALVE GP-CONTROL–EXTENDABLE STICK	550
VALVE GP-CONTROL–LIFT	553
VALVE GP-CONTROL–STABILIZER	537, 539
VALVE GP-CONTROL–STICK	545, 547
VALVE GP-CONTROL–SWING	548
VALVE GP-CONTROL–TILT	554
VALVE GP-CUSHION CROSSOVER RLF	501
VALVE GP-FLOW CONTROL (AUXILIARY, INLET)	508
VALVE GP-PILOT	527
VALVE GP-PILOT–TRUCK BODY	556, 557
VALVE GP-PRESSURE REDUCING	507
VALVE GP-PUMP CONTROL (POWER COMPENSATOR)	519
VALVE GP-PUMP CONTROL (PRESSURE, FLOW COMPENSATOR)	519
VALVE GP-PUMP CONTROL–POWER COMPENSATOR	559
VALVE GP-RELIEF	437, 537, 539, 545, 547, 548, 549, 550, 552, 554, 555
VALVE GP-RELIEF (INLET)	509
VALVE GP-RELIEF (LINE, BOOM CYLINDER HEAD END)	541, 543
VALVE GP-RELIEF (LINE, BOOM CYLINDER ROD END)	541, 543
VALVE GP-RELIEF (OUTLET)	508
VALVE GP-RELIEF (TORQUE CONVERTER INLET)	265, 270, 275, 280, 285, 290, 296, 302
VALVE GP-RELIEF–PUMP PRESSURE	311
VALVE GP-SHUTOFF	456
VALVE GP-SOLENOID	506, 507
VALVE GP-SOLENOID (12-VOLT) (AUXILIARY)	505
VALVE GP-SOLENOID (ACCUMULATOR)	510
VALVE GP-SOLENOID (ALL WHEEL DRIVE, CLUTCH ONE)	297, 303
VALVE GP-SOLENOID (CLUTCH)	297, 303
VALVE GP-SOLENOID (DIFFERENTIAL LOCK)	265, 270, 275, 280, 285, 290
VALVE GP-SOLENOID (FORWARD)	297, 303
VALVE GP-SOLENOID (FORWARD, REVERSE)	265

INDEX

Name	Page
	270
	275
	280
	285
	290
VALVE GP-SOLENOID (LOAD SENSING PRESSURE)	519
VALVE GP-SOLENOID (REVERSE)	297
	303
VALVE GP-SOLENOID (RIDE CONTROL, SWITCH)	510
VALVE GP-SOLENOID–12-VOLT	560
VALVE GP-TIRE	312
	313
VALVE MECHANISM GP	48
VISOR GP-CAB	900
	901

W

WASHER GP-WINDOW	902
	904
WHEEL & TIRE AR	314
	315
WHEEL & TIRE AR–2-WHEEL DRIVE, BIAS	314
WHEEL & TIRE AR–2-WHEEL DRIVE, BIAS FLOTATION	313
WHEEL & TIRE AR–4-WHEEL DRIVE	315
	316
WHEEL & TIRE AR–ALL WHEEL DRIVE, BIAS	313
	314
WHEEL & TIRE AR–ALL WHEEL DRIVE, RADIAL	313
WHEEL & TIRE AR–ALL WHEEL DRIVE, RADIAL, BIAS	314
WHEEL & TIRE GP–FRONT	316
	317
	321
	323
	327
WHEEL & TIRE GP–FRONT, LH	327
WHEEL & TIRE GP–FRONT, RH	328
WHEEL & TIRE GP–LH	316
	317
	318
	319
	320
	321
	323
	324
	325
	326
WHEEL & TIRE GP–REAR	318
	320
	322
	324
	325
	326
	328
WHEEL & TIRE GP–REAR, LH	322
	328
WHEEL & TIRE GP–REAR, RH	323
	329
WHEEL & TIRE GP–RH	317
	318
	319
	321
	322
	324
	325
	326
	327
WINDOW GP-CAB	914
WINDOW GP-CAB–REAR	910
	912
WINDOW GP-CAB–UPPER, LH	906
WINDOW GP-CAB–UPPER, RH	908
WINDOW GP-DOOR–LH	916
WINDOW GP-DOOR–RH	917
WIPER & WASHER GP-WINDOW	918
	920
WIPER GP-WINDOW	922
WIRING GP-AIR CONDITIONER	151
	153
WIRING GP-CONSOLE–FRONT	157
WIRING GP-CONSOLE–SIDE	155
	158
WIRING GP-CONTROL–JOYSTICK, LH	161
	162
WIRING GP-CONTROL–JOYSTICK, RH	160
WIRING GP-ENGINE	163
	165
	167
WIRING GP-EXTENDABLE STICK	168
	602
WIRING GP-GRADE CONTROL	169
	171
WIRING GP-HEATER	173
WIRING GP-KICKOUT & POSITIONER	175
	176
	177
WIRING GP-PLATFORM	178
	182
	186
	191
WIRING GP-POWER RECEPTACLE	196
WIRING GP-REAR–BACKUP ALARM	197
	199
WIRING GP-RIDE CONTROL	201
WIRING GP-STABILIZER	203

INDEX

Name	Page	Name	Page
	204		
WIRING GP-TRANSMISSION CONTROL– AUTOSHIFT, STANDARD SHIFT	205		

MEMORANDA

MACHINE ARRANGEMENT

213-9304 BACKHOE AR-EXTENDABLE STICK

S/N: EAT1-UP

AN ATTACHMENT

SMCS-6504, 6533 **i02485208**

NOTE	PART NUMBER	QTY	PART NAME 1 2 3 4 5 6 (PRODUCT LEVEL)	SEE PAGE
Y	*209-9932*	1	BOOM GP	563
Y	**210-7096**	1	CYLINDER GP-BACKHOE BUCKET	395
Y	**246-9884**	1	CYLINDER GP-BOOM	397
Y	**210-7092**	1	CYLINDER GP-STICK	411
Y	*225-8017*	1	ELECTRONICS GP-MACHINE	114
Y	*211-7629*	1	LINES GP-BOOM	443
Y	*246-9325*	1	LINES GP-BUCKET	451
Y	*211-7630*	1	LINES GP-STICK	498
Y	*213-6692*	1	LINKAGE GP-BACKHOE BUCKET	568
Y	*209-9939*	1	MOUNTING GP-CYLINDER (EXTENDABLE STICK)	512
Y	*246-9309*	1	MOUNTING GP-LINES	516
Y	*271-1406*	1	STICK GP-EXTENDABLE	604
	259-1802	2	FILM-INSTRUCTION (EXTENDABLE STICK PIN, READ OMM)	
			(FILM ON THE RH & LH SIDE OF THE MACHINE E-STICK. ALIGN THE EDGE OF THE DECAL WITH THE E-STICK PIN HOLE)	

Y-SEPARATE ILLUSTRATION

<END>

MACHINE ARRANGEMENT

213-9309 BACKHOE AR-EXTENDABLE STICK–ACCUGRADE

S/N: EAT1-UP

AN ATTACHMENT

SMCS-6504, 6533 **i03527724**

NOTE	PART NUMBER	QTY	PART NAME 1 2 3 4 5 6 (PRODUCT LEVEL)	SEE PAGE
Y	*209-9932*	1	BOOM GP	563
Y	**210-7095**	1	CYLINDER GP-BACKHOE BUCKET	393
Y	**268-9051**	1	CYLINDER GP-BOOM	399
Y	**210-7091**	1	CYLINDER GP-STICK	409
Y	*227-7373*	1	ELECTRONICS GP-MACHINE	114
Y	*246-8042*	1	WIRING GP-GRADE CONTROL	169
Y	*211-7629*	1	LINES GP-BOOM	443
Y	*246-9325*	1	LINES GP-BUCKET	451
Y	*211-7630*	1	LINES GP-STICK	498
Y	*213-6692*	1	LINKAGE GP-BACKHOE BUCKET	568
Y	*209-9939*	1	MOUNTING GP-CYLINDER (EXTENDABLE STICK)	512
Y	*246-9309*	1	MOUNTING GP-LINES	516
Y	*271-1403*	1	STICK GP-EXTENDABLE	602
	259-1802	2	FILM-INSTRUCTION (EXTENDABLE STICK PIN, READ OMM)	
			(ON THE RH & LH SIDE OF THE MACHINE E-STICK. ALIGN THE EDGE OF THE DECAL WITH THE E-STICK PIN HOLE)	
	246-8057	1	HARNESS AS-SENSOR (BACKHOE)	
	102-8802	1	KIT-RECEPTACLE (2-PIN)	
			(INCLUDES RECEPTACLE AS & WEDGE)	
	155-2271	4	KIT-CONNECTING PLUG (4-PIN)	
			(EACH PLUG KIT INCLUDES PLUG AS, WEDGE & INTERFACE SEAL)	
E	**5P-0767**		HOSE (246-CM)	
E	**6V-8523**		HOSE (552-CM)	
E	**8T-6885**		TUBE-HEAT SHRINK (19.05-MM DIA) (20-CM)	
D	**6V-2722**		TUBE-HEAT SHRINK (25.4-MM DIA) (0.1-M)	
E	**119-3662**		TUBE-HEAT SHRINK (10.85-MM DIA) (13-CM)	

D-ORDER BY THE METER
E-ORDER BY THE CENTIMETER
Y-SEPARATE ILLUSTRATION

<END>

MACHINE ARRANGEMENT

291-9207 BACKHOE AR-EXTENDABLE STICK–ACCUGRADE

S/N: EAT1-UP
AN ATTACHMENT

SMCS-6504, 6533 **i03527725**

NOTE	PART NUMBER	QTY	PART NAME 1 2 3 4 5 6 (PRODUCT LEVEL)	SEE PAGE
Y	*209-9932*	1	BOOM GP	563
Y	**210-7095**	1	CYLINDER GP-BACKHOE BUCKET	393
Y	**268-9051**	1	CYLINDER GP-BOOM	399
Y	**210-7091**	1	CYLINDER GP-STICK	409
Y	*227-7373*	1	ELECTRONICS GP-MACHINE	114
Y	*211-4253*	1	INSTALLATION GP-MONITOR (ADVISOR)	854
Y	*211-7629*	1	LINES GP-BOOM	443
Y	*246-9325*	1	LINES GP-BUCKET	451
Y	*211-7630*	1	LINES GP-STICK	498
Y	*213-6692*	1	LINKAGE GP-BACKHOE BUCKET	568
Y	*209-9939*	1	MOUNTING GP-CYLINDER (EXTENDABLE STICK)	512
Y	*246-9309*	1	MOUNTING GP-LINES	516
Y	*271-1403*	1	STICK GP-EXTENDABLE	602
Y	*246-8042*	1	WIRING GP-GRADE CONTROL	169
	259-1802	2	FILM-INSTRUCTION (EXTENDABLE STICK PIN, READ OMM)	
			(ON THE RH & LH SIDE OF THE MACHINE E-STICK. ALIGN THE EDGE OF THE DECAL WITH THE E-STICK PIN HOLE)	
	290-6810	1	HARNESS AS-SENSOR (W/E-STICK)	
	102-8804	1	KIT-RECEPTACLE (4-PIN)	
			(INCLUDES RECEPTACLE AS AND WEDGE)	
D	**6V-2722**		TUBE-HEAT SHRINK (25.4-MM DIA) (0.1-M)	
E	**6V-8523**		HOSE (381-CM)	
	155-2271	1	KIT-CONNECTING PLUG (4-PIN)	
			(INCLUDES PLUG AS AND WEDGE)	

D-ORDER BY THE METER
E-ORDER BY THE CENTIMETER
Y-SEPARATE ILLUSTRATION

<END>

213-9301 BACKHOE AR-STANDARD STICK

S/N: EAT1-UP
AN ATTACHMENT

SMCS-6502, 6504 **i02410890**

NOTE	PART NUMBER	QTY	PART NAME 1 2 3 4 5 6 (PRODUCT LEVEL)	SEE PAGE
Y	*209-9932*	1	BOOM GP	563
Y	**210-7096**	1	CYLINDER GP-BACKHOE BUCKET	395
Y	**246-9884**	1	CYLINDER GP-BOOM	397
Y	**210-7092**	1	CYLINDER GP-STICK	411
Y	*225-8017*	1	ELECTRONICS GP-MACHINE	114
Y	*211-7629*	1	LINES GP-BOOM	443
Y	*246-9323*	1	LINES GP-BUCKET	447
Y	*211-7630*	1	LINES GP-STICK	498
Y	*213-6692*	1	LINKAGE GP-BACKHOE BUCKET	568
Y	*246-9309*	1	MOUNTING GP-LINES	516
Y	*271-8668*	1	STICK GP-HOE	606

Y-SEPARATE ILLUSTRATION

<END>

MACHINE ARRANGEMENT

213-9306 BACKHOE AR-STANDARD STICK–ACCUGRADE

S/N: EAT1-UP

AN ATTACHMENT

SMCS-6502, 6504 **i02410892**

NOTE	PART NUMBER	QTY	PART NAME 1 2 3 4 5 6 (PRODUCT LEVEL)	SEE PAGE
Y	*209-9932*	1	BOOM GP	563
Y	**210-7095**	1	CYLINDER GP-BACKHOE BUCKET	393
Y	**268-9051**	1	CYLINDER GP-BOOM	399
Y	**210-7091**	1	CYLINDER GP-STICK	409
Y	*227-7373*	1	ELECTRONICS GP-MACHINE	114
Y	*246-8042*	1	WIRING GP-GRADE CONTROL	169
Y	*211-7629*	1	LINES GP-BOOM	443
Y	*246-9323*	1	LINES GP-BUCKET	447
Y	*211-7630*	1	LINES GP-STICK	498
Y	*213-6692*	1	LINKAGE GP-BACKHOE BUCKET	568
Y	*246-9309*	1	MOUNTING GP-LINES	516
Y	*271-8668*	1	STICK GP-HOE	606
	246-8057	1	HARNESS AS-SENSOR	
E	**119-3662**		TUBE-HEAT SHRINK (10.85-MM DIA) (13-CM)	
	102-8802	1	KIT-RECEPTACLE (2-PIN)	
			(INCLUDES RECEPTACLE AS & WEDGE)	
	155-2271	4	KIT-CONNECTING PLUG (4-PIN)	
			(EACH PLUG KIT INCLUDES PLUG AS, WEDGE & INTERFACE SEAL)	
E	**5P-0767**		HOSE (246-CM)	
E	**6V-8523**		HOSE (552-CM)	
E	**8T-6885**		TUBE-HEAT SHRINK (19.05-MM DIA) (20-CM)	
D	**6V-2722**		TUBE-HEAT SHRINK (25.4-MM DIA) (0.1-M)	

D-ORDER BY THE METER
E-ORDER BY THE CENTIMETER
Y-SEPARATE ILLUSTRATION

<END>

MACHINE ARRANGEMENT

291-9206 BACKHOE AR-STANDARD STICK–ACCUGRADE

S/N: EAT1-UP
AN ATTACHMENT

SMCS-6502, 6504 **i02605443**

NOTE	PART NUMBER	QTY	PART NAME 1 2 3 4 5 6 (PRODUCT LEVEL)	SEE PAGE
Y	*209-9932*	1	BOOM GP	563
Y	**210-7095**	1	CYLINDER GP-BACKHOE BUCKET	393
Y	**268-9051**	1	CYLINDER GP-BOOM	399
Y	**210-7091**	1	CYLINDER GP-STICK	409
Y	*227-7373*	1	ELECTRONICS GP-MACHINE	114
Y	*211-4253*	1	INSTALLATION GP-MONITOR (ADVISOR)	854
Y	*211-7629*	1	LINES GP-BOOM	443
Y	*246-9323*	1	LINES GP-BUCKET	447
Y	*211-7630*	1	LINES GP-STICK	498
Y	*213-6692*	1	LINKAGE GP-BACKHOE BUCKET	568
Y	*246-9309*	1	MOUNTING GP-LINES	516
Y	*271-8668*	1	STICK GP-HOE	606
Y	*246-8042*	1	WIRING GP-GRADE CONTROL	169
	290-6808	1	HARNESS AS-SENSOR (ACCUGRADE)	
	102-8804	1	KIT-RECEPTACLE (4-PIN)	
			(INCLUDES RECEPTACLE AS AND WEDGE)	
D	**6V-2722**		TUBE-HEAT SHRINK (25.4-MM DIA) (0.1-M)	
E	**6V-8523**		HOSE (270-CM)	
	155-2271	1	KIT-CONNECTING PLUG (4-PIN)	
			(INCLUDES PLUG AS AND WEDGE)	

D-ORDER BY THE METER
E-ORDER BY THE CENTIMETER
Y-SEPARATE ILLUSTRATION

<END>

213-9289 CHASSIS AR

S/N: EAT1-UP
PART OF 213-9275 COMMON AR

SMCS-7000 **i02780266**

NOTE	PART NUMBER	QTY	PART NAME 1 2 3 4 5 6 (PRODUCT LEVEL)	SEE PAGE
Y	*211-4285*	1	BATTERY & WIRING GP (STANDARD)	107
			-OR-	
Y	*290-6790*	1	BATTERY & WIRING GP (STANDARD)	110
Y	*253-0784*	1	BOX GP-BATTERY	353
Y	*250-7917*	1	FILM GP (430E)	924
Y	*214-2000*	1	FRAME GP-LOADER (SINGLE TILT)	366
Y	*251-4520*	1	FRAME GP-SWING	368
Y	*211-3546*	1	HOOD & GUARD GP	377
Y	*206-1641*	1	LOCK GP-TRANSPORT (STABILIZER)	573
Y	*214-7035*	1	LOCK GP-TRANSPORT (BOOM)	574
Y	*248-5711*	1	PLATE & FILM GP	925
Y	*266-5834*	1	STABILIZER GP-BACKHOE	600
Y	*245-6098*	1	TANK & MTG GP-FUEL (INCLUDES STEP)	103
Y	*211-4251*	1	WIRING GP-REAR (BACKUP ALARM)	197

Y-SEPARATE ILLUSTRATION

<END>

MACHINE ARRANGEMENT

213-9275 COMMON AR

S/N: EAT1-UP

SMCS-7000 **i02451302**

NOTE	PART NUMBER	QTY	PART NAME 1 2 3 4 5 6 (PRODUCT LEVEL)	SEE PAGE
Y	*213-9289*	1	CHASSIS AR	5
Y	*214-2202*	1	MOUNTING & LINES GP-RADIATOR (TRANSMISSION, HYDRAULIC OIL)	66
Y	**214-6903**	1	ENGINE AR	8
Y	*268-6455*	1	HYDRAULIC AR	422
Y	*213-9300*	1	LOADER AR	7
Y	*211-4248*	1	WIRING GP-ENGINE	163

Y-SEPARATE ILLUSTRATION

<END>

276-7466 COMMON AR

S/N: BYC1-UP

SMCS-7000 **i02478005**

NOTE	PART NUMBER	QTY	PART NAME 1 2 3 4 5 6 (PRODUCT LEVEL)	SEE PAGE
			(NO SERVICED PARTS)	

<END>

216-4739 DRIVE AR-BACKHOE LOADER–

2-WHEEL DRIVE, 2-WHEEL STEER

S/N: BYC1-UP; EAT1-UP

PART OF 293-2986 POWER TRAIN AR

AN ATTACHMENT

SMCS-3268, 3278, 3282, 4304, 4313, 4334 **i02179557**

NOTE	PART NUMBER	QTY	PART NAME 1 2 3 4 5 6 (PRODUCT LEVEL)	SEE PAGE
Y	**230-5745**	1	AXLE GP-FRONT	341
Y	**230-5739**	1	AXLE GP-REAR	208
Y	*211-6570*	1	LINES GP-STEERING	344
Y	*221-0811*	1	MOUNTING GP-AXLE	240
Y	*216-4475*	1	SHAFT GP-DRIVE (REAR)	249

Y-SEPARATE ILLUSTRATION

<END>

MACHINE ARRANGEMENT

216-4740 DRIVE AR-BACKHOE LOADER–

ALL WHEEL DRIVE, 2-WHEEL STEER

S/N: EAT1-UP

PART OF 218-5148, 218-5149 POWER TRAIN AR

AN ATTACHMENT

SMCS-3268, 3278, 3282, 4304, 4313, 4334 **i02274699**

NOTE	PART NUMBER	QTY	PART NAME 1 2 3 4 5 6 (PRODUCT LEVEL)	SEE PAGE
Y	**230-5743**	1	AXLE GP-DRIVE & STEERING (FRONT)	206
Y	**230-5739**	1	AXLE GP-REAR	208
Y	*217-9672*	1	GUARD GP-DRIVE SHAFT	375
Y	*211-6571*	1	LINES GP-STEERING	348
Y	*221-0811*	1	MOUNTING GP-AXLE	240
Y	*216-4475*	1	SHAFT GP-DRIVE (REAR)	249
Y	*211-4267*	1	SWITCH GP-ALL WHEEL DRIVE (INCLUDES RELAY)	147
Y-SEPARATE ILLUSTRATION				

<END>

213-9300 LOADER AR

S/N: EAT1-UP

PART OF 213-9275 COMMON AR

SMCS-6100 **i02808584**

NOTE	PART NUMBER	QTY	PART NAME 1 2 3 4 5 6 (PRODUCT LEVEL)	SEE PAGE
Y	*227-8378*	1	ARM GP-LIFT	561
Y	*218-0745*	1	BRACE GP-LIFT CYLINDER	564
Y	**228-3509**	2	CYLINDER GP-LIFT	403
Y	**200-7128**	1	CYLINDER GP-TILT	416
Y	*268-9418*	1	KICKOUT & POSITIONER GP	433
			S/N: EAT1-937	
Y	*220-5973*	1	KICKOUT & POSITIONER GP	431
			S/N: EAT938-UP	
Y	*246-5293*	1	LINES GP-LIFT CYLINDER	460
Y	*214-5950*	1	LINES GP-PILOT (SIGNAL)	468
Y	*246-5295*	1	LINES GP-TILT CYLINDER	503
Y	*202-5720*	1	LINKAGE GP-LOADER BUCKET	570
Y	*211-4262*	1	WIRING GP-KICKOUT & POSITIONER	175
Y-SEPARATE ILLUSTRATION				

<END>

ENGINE ARRANGEMENT

214-6903 ENGINE AR

S/N: EAT1-UP

PART OF 213-9275 COMMON AR

SMCS-1000 **i02992786**

NOTE	PART NUMBER	QTY	PART NAME 1 2 3 4 5 6 (PRODUCT LEVEL)	SEE PAGE
Y	*224-9473*	1	AIR CLEANER GP	74
Y	*206-1640*	1	CONTROL GP-GOVERNOR	83
Y	*245-6842*	1	ENGINE AR-PRIMARY	10
			S/N: EAT1-1238	
Y	*210-6807*	1	EXTENSION GP-EXHAUST	78
Y	*222-7091*	1	GAUGE GP-OIL LEVEL & FILLER (WITH FILTER)	52
Y	*247-5361*	1	LINES GP-FUEL	87
Y	*214-0973*	1	MOUNTING GP-ENGINE & XMSN	37
Y	*223-4960*	1	MUFFLER GP	80
Y	*253-0352*	1	PUMP GP-FUEL PRM & PRIM FILTER (WITH MOUNTING)	101
Y	*285-3605*	1	FILTER GP-WATER SEP & FUEL	86
	178-8465	1	HARNESS AS-FUEL TANK (FUEL SHUTOFF)	
	102-8802	1	KIT-RECEPTACLE (2-PIN)	
			(INCLUDES RECEPTACLE AS & WEDGE)	
	176-1477	1	PLUG AS	
	176-1522	2	SEAL	
	8L-8413	2	STRAP-CABLE	

Y-SEPARATE ILLUSTRATION

ENGINE ARRANGEMENT

319-2122 ENGINE AR

S/N: CRS1-UP
75 BRAKE KW (100 BHP) AT 2200 RPM
AN ATTACHMENT

SMCS-1000 **i03502020**

NOTE	PART NUMBER	QTY	PART NAME 1 2 3 4 5 6 (PRODUCT LEVEL)	SEE PAGE
Y	*252-6256*	1	ALTERNATOR GP-CHARGING (120-AMPERE, WITH MOUNTING)	106
Y	*231-0033*	1	CONNECTION GP-WATER	54
Y	*238-2799*	1	COOLER GP-FLTR BASE & ENG OIL	57
Y	*231-0149*	1	COVER GP-CYLINDER HEAD	13
Y	*335-9798*	1	COVER GP-VALVE MECHANISM	20
Y	*308-4729*	1	CRANKSHAFT GP	24
Y	*308-4728*	1	CYLINDER BLOCK GP	27
Y	*308-4731*	1	CYLINDER HEAD GP	29
Y	*251-2432*	1	DRIVE GP-FAN	30
Y	*230-7300*	1	FLYWHEEL GP	31
Y	*232-6661*	1	GLOW PLUG GP	117
Y	*236-8238*	1	HOUSING GP-FLYWHEEL	32
Y	*313-1380*	1	HOUSING GP-FRONT	33
Y	*233-7432*	1	LIFTING GP-ENGINE	35
Y	*247-4885*	1	LINES GP-FUEL FILTER	89
Y	*237-3658*	1	MOUNTING GP-ENGINE	36
Y	*335-9799*	1	PAN GP-OIL	40
Y	*308-4730*	1	PISTON & ROD GP	42
Y	*225-4317*	1	PLUG GP-ENGINE (FRONT HOUSING, CYLINDER HEAD)	43
Y	*230-7569*	1	PLUG GP-ENGINE (OIL FILL)	44
Y	*232-6204*	1	PLUG GP-ENGINE (CYLINDER HEAD)	45
Y	*230-7353*	1	PULLEY GP-CRANKSHAFT	46
Y	*230-7578*	1	PUMP GP-ENGINE OIL	53
Y	*313-1371*	1	PUMP GP-FUEL INJECTION	94
Y	*230-7355*	1	PUMP GP-WATER	69
Y	*237-0024*	1	STARTING MOTOR GP-ELECTRIC	146
Y	*237-4896*	1	SWITCH GP-PRESSURE	150
Y	*317-3111*	1	TURBOCHARGER GP	81
Y	*308-4732*	1	VALVE MECHANISM GP	48
	268-0867	1	CYLINDER BLOCK GP-SHORT	
			AVAILABLE GASKET KIT(S):	
	272-2232	1	KIT-GASKET (BOTTOM)	
	277-5156	1	KIT-GASKET (TOP)	

Y-SEPARATE ILLUSTRATION

ENGINE ARRANGEMENT

245-6842 ENGINE AR-PRIMARY

S/N: CRS1-1238
75 BRAKE KW (100 BHP) AT 2200 RPM
PART OF 214-6903 ENGINE AR

SMCS-1000 **i03502040**

NOTE	PART NUMBER	QTY	PART NAME 1 2 3 4 5 6 (PRODUCT LEVEL)	SEE PAGE
Y	*252-6256*	1	ALTERNATOR GP-CHARGING (120-AMPERE, WITH MOUNTING)	106
Y	*231-0033*	1	CONNECTION GP-WATER	54
Y	*238-2799*	1	COOLER GP-FLTR BASE & ENG OIL	57
Y	*231-0149*	1	COVER GP-CYLINDER HEAD	13
Y	*246-2582*	1	COVER GP-VALVE MECHANISM	14
Y	*308-4729*	1	CRANKSHAFT GP	24
Y	*308-4728*	1	CYLINDER BLOCK GP	27
Y	*308-4731*	1	CYLINDER HEAD GP	29
Y	*251-2432*	1	DRIVE GP-FAN	30
Y	*230-7300*	1	FLYWHEEL GP	31
Y	*232-6661*	1	GLOW PLUG GP	117
Y	*236-8238*	1	HOUSING GP-FLYWHEEL	32
Y	*313-1380*	1	HOUSING GP-FRONT	33
Y	*233-7432*	1	LIFTING GP-ENGINE	35
Y	*247-4885*	1	LINES GP-FUEL FILTER	89
Y	*237-3658*	1	MOUNTING GP-ENGINE	36
Y	*237-0025*	1	PAN GP-OIL	38
Y	*308-4730*	1	PISTON & ROD GP	42
Y	*225-4317*	1	PLUG GP-ENGINE (FRONT HOUSING, CYLINDER HEAD)	43
Y	*230-7569*	1	PLUG GP-ENGINE (OIL FILL)	44
Y	*232-6204*	1	PLUG GP-ENGINE (CYLINDER HEAD)	45
Y	*230-7353*	1	PULLEY GP-CRANKSHAFT	46
Y	*230-7578*	1	PUMP GP-ENGINE OIL	53
Y	*313-1371*	1	PUMP GP-FUEL INJECTION	94
Y	*230-7355*	1	PUMP GP-WATER	69
Y	*237-0024*	1	STARTING MOTOR GP-ELECTRIC	146
Y	*237-4896*	1	SWITCH GP-PRESSURE	150
Y	*317-3111*	1	TURBOCHARGER GP	81
Y	*308-4732*	1	VALVE MECHANISM GP	48
	7W-2326	1	FILTER AS-ENGINE OIL	
			AVAILABLE GASKET KIT(S):	
	272-2232	1	KIT-GASKET (BOTTOM)	
	276-3420	1	KIT-GASKET (TOP)	

Y-SEPARATE ILLUSTRATION

ENGINE ARRANGEMENT

320-8415 ENGINE AR-PRIMARY

S/N: CRS1-UP
75 BRAKE KW (100 BHP) AT 2200 RPM
AN ATTACHMENT

SMCS-1000 **i02944499**

NOTE	PART NUMBER	QTY	PART NAME 1 2 3 4 5 6 (PRODUCT LEVEL)	SEE PAGE
Y	*252-6256*	1	ALTERNATOR GP-CHARGING (120-AMPERE, WITH MOUNTING)	106
Y	*231-0033*	1	CONNECTION GP-WATER	54
Y	*238-2799*	1	COOLER GP-FLTR BASE & ENG OIL	57
Y	*231-0149*	1	COVER GP-CYLINDER HEAD	13
Y	*246-2582*	1	COVER GP-VALVE MECHANISM	14
Y	*308-4729*	1	CRANKSHAFT GP	24
Y	*308-4728*	1	CYLINDER BLOCK GP	27
Y	*308-4731*	1	CYLINDER HEAD GP	29
Y	*251-2432*	1	DRIVE GP-FAN	30
Y	*230-7300*	1	FLYWHEEL GP	31
Y	*232-6661*	1	GLOW PLUG GP	117
Y	*236-8238*	1	HOUSING GP-FLYWHEEL	32
Y	*313-1380*	1	HOUSING GP-FRONT	33
Y	*233-7432*	1	LIFTING GP-ENGINE	35
Y	*247-4885*	1	LINES GP-FUEL FILTER	89
Y	*237-3658*	1	MOUNTING GP-ENGINE	36
Y	*237-0025*	1	PAN GP-OIL	38
Y	*308-4730*	1	PISTON & ROD GP	42
Y	*225-4317*	1	PLUG GP-ENGINE (FRONT HOUSING, CYLINDER HEAD)	43
Y	*230-7569*	1	PLUG GP-ENGINE (OIL FILL)	44
Y	*232-6204*	1	PLUG GP-ENGINE (CYLINDER HEAD)	45
Y	*230-7353*	1	PULLEY GP-CRANKSHAFT	46
Y	*230-7578*	1	PUMP GP-ENGINE OIL	53
Y	*313-1371*	1	PUMP GP-FUEL INJECTION	94
Y	*230-7355*	1	PUMP GP-WATER	69
Y	*237-0024*	1	STARTING MOTOR GP-ELECTRIC	146
Y	*237-4896*	1	SWITCH GP-PRESSURE	150
Y	*317-3111*	1	TURBOCHARGER GP	81
Y	*308-4732*	1	VALVE MECHANISM GP	48
	268-0867	1	CYLINDER BLOCK GP-SHORT	
			AVAILABLE GASKET KIT(S):	
	272-2232	1	KIT-GASKET (BOTTOM)	
	277-5156	1	KIT-GASKET (TOP)	

Y-SEPARATE ILLUSTRATION

ENGINE ARRANGEMENT

325-5122 ENGINE AR-PRIMARY

S/N: CRS1-UP
75 BRAKE KW (100 BHP) AT 2200 RPM
AN ATTACHMENT

SMCS-1000 **i03502041**

NOTE	PART NUMBER	QTY	PART NAME 1 2 3 4 5 6 (PRODUCT LEVEL)	SEE PAGE
Y	*252-6256*	1	ALTERNATOR GP-CHARGING (120-AMPERE, WITH MOUNTING)	106
Y	*231-0033*	1	CONNECTION GP-WATER	54
Y	*238-2799*	1	COOLER GP-FLTR BASE & ENG OIL	57
Y	*231-0149*	1	COVER GP-CYLINDER HEAD	13
Y	*246-2582*	1	COVER GP-VALVE MECHANISM	14
Y	*308-4729*	1	CRANKSHAFT GP	24
Y	*308-4728*	1	CYLINDER BLOCK GP	27
Y	*308-4731*	1	CYLINDER HEAD GP	29
Y	*251-2432*	1	DRIVE GP-FAN	30
Y	*230-7300*	1	FLYWHEEL GP	31
Y	*232-6661*	1	GLOW PLUG GP	117
Y	*236-8238*	1	HOUSING GP-FLYWHEEL	32
Y	*313-1380*	1	HOUSING GP-FRONT	33
Y	*233-7432*	1	LIFTING GP-ENGINE	35
Y	*247-4885*	1	LINES GP-FUEL FILTER	89
Y	*237-3658*	1	MOUNTING GP-ENGINE	36
Y	*237-0025*	1	PAN GP-OIL	38
Y	*308-4730*	1	PISTON & ROD GP	42
Y	*225-4317*	1	PLUG GP-ENGINE (FRONT HOUSING, CYLINDER HEAD)	43
Y	*230-7569*	1	PLUG GP-ENGINE (OIL FILL)	44
Y	*232-6204*	1	PLUG GP-ENGINE (CYLINDER HEAD)	45
Y	*230-7353*	1	PULLEY GP-CRANKSHAFT	46
Y	*230-7578*	1	PUMP GP-ENGINE OIL	53
Y	*328-7358*	1	PUMP GP-FUEL INJECTION	97
Y	*230-7355*	1	PUMP GP-WATER	69
Y	*237-0024*	1	STARTING MOTOR GP-ELECTRIC	146
Y	*237-4896*	1	SWITCH GP-PRESSURE	150
Y	*317-3111*	1	TURBOCHARGER GP	81
Y	*308-4732*	1	VALVE MECHANISM GP	48
	268-0867	1	CYLINDER BLOCK GP-SHORT	
			AVAILABLE GASKET KIT(S):	
	272-2232	1	KIT-GASKET (BOTTOM)	
	277-5156	1	KIT-GASKET (TOP)	

Y-SEPARATE ILLUSTRATION

231-0149 COVER GP-CYLINDER HEAD

S/N: CRS1-1238

PART OF 319-2122 ENGINE AR, 245-6842, 320-8415, 325-5122 ENGINE AR-PRIMARY

ALSO AN ATTACHMENT

SMCS-1100 **i02358991**

NOTE	REF NO	GRAPHIC REF	PART NUMBER	QTY	PART NAME 1 2 3 4 5 6 (PRODUCT LEVEL)	SEE PAGE
	1	1	**6I-0572**	12	BOLT (M8X1.25X20-MM)	
	2	1	**114-2579**	3	GASKET	
	3	1	**115-1162**	3	PLATE	

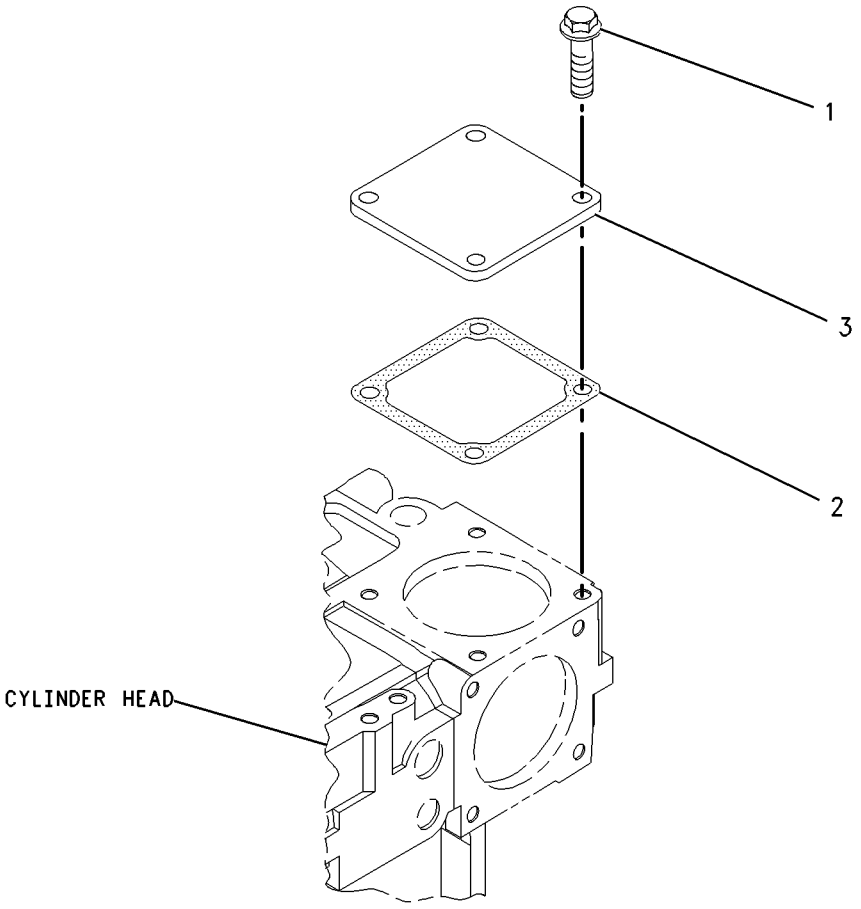

GRAPHIC #1 **<END>** g00986217

246-2582 COVER GP-VALVE MECHANISM

S/N: CRS1-UP

PART OF 245-6842 ENGINE AR-PRIMARY

TYPE 1

SMCS-1107, 1120 **i02597668**

NOTE	REF NO	GRAPHIC REF	PART NUMBER	QTY	PART NAME 1 2 3 4 5 6 (PRODUCT LEVEL)	SEE PAGE
M	1	1	**6I-0260**	2	BOLT (M8X1.25X25-MM)	
	2	1	**6I-0846**	3	BOLT (M6X1X14-MM)	
	3	1	**6I-0917**	1	BOLT (M6X1X25-MM)	
	4	1	**7C-1281**	1	BRACKET	
M	5	1	**100-4841**	2	BOLT (M6X1X10-MM)	
	6	1	**5D-1026**	1	CLAMP-HOSE	
	7	1	**162-1565**	1	SPRING (CRANKCASE BREATHER HOSE)	
	8	1	**198-8645**	1	HOSE (CRANKCASE BREATHER)	
	9	1	**225-6522**	1	PLUG-CUP	
	10	1	**230-9127**	1	COVER	
	11	1	**230-9144**	1	CONNECTOR	
	11A	1	**150-7732**	1	SEAL-O-RING	
	11B	1	**225-6455**	2	BOLT	
	11C	1	**225-6517**	1	GASKET	
	12	1	**237-0769**	1	SHIELD-HEAT	
	13	1	**246-1163**	1	FILLER AS-OIL	
	13A	1	**229-4896**	1	SEAL-O-RING	
	14	1	**247-7798**	1	COVER AS	
	14A	1	**225-6451**	1	GASKET (VALVE COVER)	
	14B	1	**225-6455**	10	BOLT (ISOLATOR)	
	14C	1	**225-6456**	1	SPRING (BREATHER VALVE)	
	14D	1	**225-6461**	1	CAP (BREATHER VALVE)	
	14E	1	**225-6464**	1	DIAPHRAGM (CRANKCASE PRESSURE CONTACTOR)	
	14F	1	**225-6477**	1	PLATE	
	14G	1	**225-6478**	4	SCREW-MACHINE	
	14H	1	**225-6479**	1	CAP (BREATHER VALVE)	

M-METRIC PART

246-2582 **COVER GP-VALVE MECHANISM** *(contd.)* **i02597668**

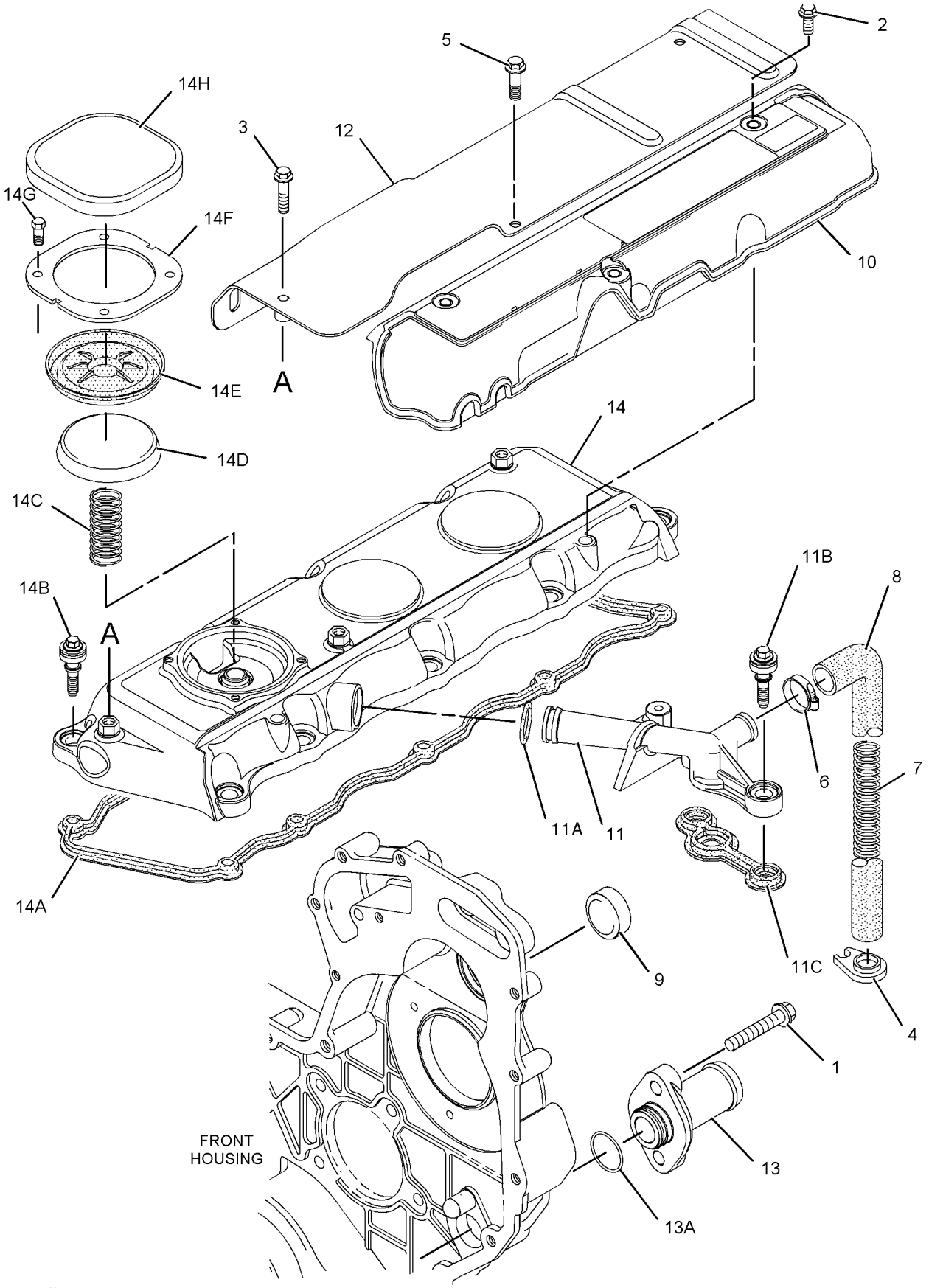

GRAPHIC #1 **<END>** g01049443

246-2582 COVER GP-VALVE MECHANISM

S/N: CRS1-UP
PART OF 245-6842 ENGINE AR-PRIMARY
TYPE 2

SMCS-1107, 1120 **i02593772**

NOTE	REF NO	GRAPHIC REF	PART NUMBER	QTY	PART NAME 1 2 3 4 5 6 (PRODUCT LEVEL)	SEE PAGE
M	1	1	**6I-0260**	2	BOLT (M8X1.25X25-MM)	
	2	1	**6I-0846**	3	BOLT (M6X1X14-MM)	
	3	1	**6I-0917**	1	BOLT (M6X1X25-MM)	
	4	1	**7C-1281**	1	BRACKET	
M	5	1	**100-4841**	2	BOLT (M6X1X10-MM)	
	6	1	**5D-1026**	1	CLAMP-HOSE	
	7	1	**162-1565**	1	SPRING (CRANKCASE BREATHER HOSE)	
	8	1	**198-8645**	1	HOSE (CRANKCASE BREATHER)	
	9	1	**225-6522**	1	PLUG-CUP	
	10	1	**230-9127**	1	COVER (INJECTOR)	
C	11	1	**287-8573**	1	PIPE-BREATHER (BREATHER)	
	12	1	**237-0769**	1	SHIELD-HEAT	
	13	1	**246-1163**	1	FILLER AS-OIL	
	13A	1	**229-4896**	1	SEAL-O-RING	
	14	1	**247-7798**	1	COVER AS	
	14A	1	**225-6451**	1	GASKET (VALVE COVER)	
	14B	1	**225-6455**	10	BOLT (ISOLATOR)	
	14C	1	**225-6456**	1	SPRING (BREATHER VALVE)	
	14D	1	**225-6461**	1	CAP (BREATHER VALVE)	
	14E	1	**225-6464**	1	DIAPHRAGM (CRANKCASE PRESSURE CONTACTOR)	
	14F	1	**225-6477**	1	PLATE	
	14G	1	**225-6478**	4	SCREW-MACHINE	
	14H	1	**225-6479**	1	CAP (BREATHER VALVE)	
C	15	1	**100-4838**	2	BOLT (M6X20-MM)	
F			**237-0022**	1	PLATE	

C-CHANGE FROM PREVIOUS TYPE
F-NOT SHOWN
M-METRIC PART

246-2582 **COVER GP-VALVE MECHANISM** *(contd.)* **i02593772**

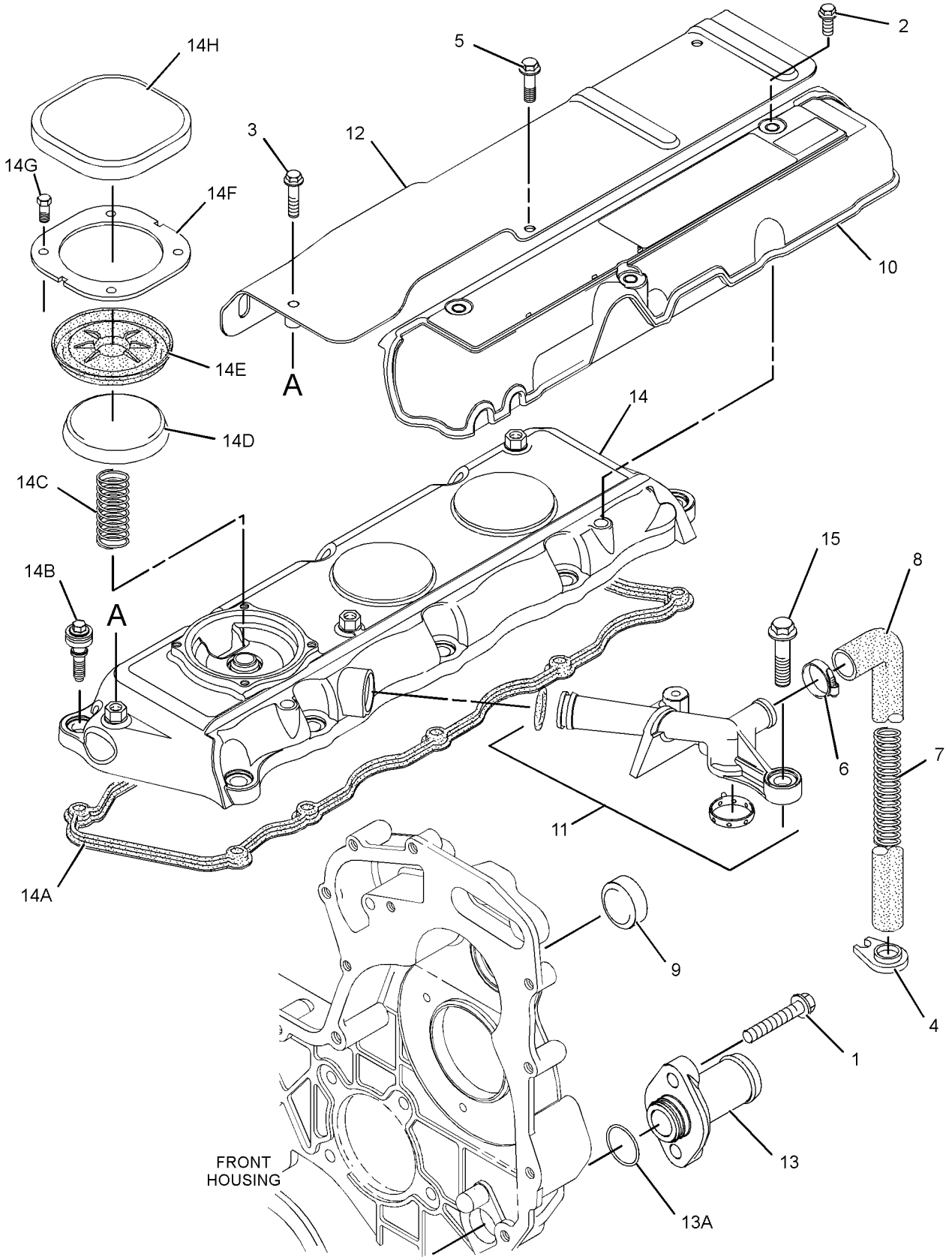

GRAPHIC #1 **<END>** g01265857

246-2582 COVER GP-VALVE MECHANISM

S/N: CRS1-UP
PART OF 245-6842, 320-8415, 325-5122 ENGINE AR-PRIMARY
ALSO AN ATTACHMENT
TYPE 3

SMCS-1107, 1120 **i02702300**

NOTE	REF NO	GRAPHIC REF	PART NUMBER	QTY	PART NAME 1 2 3 4 5 6 (PRODUCT LEVEL)	SEE PAGE
M	1	1	**6I-0260**	2	BOLT (M8X1.25X25-MM)	
	2	1	**6I-0846**	3	BOLT (M6X1X14-MM)	
	3	1	**6I-0917**	1	BOLT (M6X1X25-MM)	
	4	1	**7C-1281**	1	BRACKET	
M	5	1	**100-4841**	2	BOLT (M6X1X10-MM)	
	6	1	**5D-1026**	1	CLAMP-HOSE	
	7	1	**162-1565**	1	SPRING (CRANKCASE BREATHER HOSE)	
	8	1	**198-8645**	1	HOSE (CRANKCASE BREATHER)	
	9	1	**225-6522**	1	PLUG-CUP	
	10	1	**230-9127**	1	COVER (INJECTOR)	
	11	1	**287-8573**	1	PIPE-BREATHER (BREATHER)	
	12	1	**237-0769**	1	SHIELD-HEAT	
	13	1	**246-1163**	1	FILLER AS-OIL (ENGINE)	
	13A	1	**229-4896**	1	SEAL-O-RING	
C	14	1	**308-1792**	1	COVER GP-VALVE MECHANISM	
	14A	1	**225-6451**	1	GASKET (VALVE COVER)	
	14B	1	**225-6456**	1	SPRING (BREATHER VALVE)	
	14C	1	**225-6461**	1	CAP (BREATHER VALVE)	
	14D	1	**225-6464**	1	DIAPHRAGM (CRANKCASE PRESSURE CONTACTOR)	
	14E	1	**225-6477**	1	PLATE	
	14F	1	**225-6478**	4	SCREW-MACHINE	
	14G	1	**225-6479**	1	CAP (BREATHER VALVE)	
	15	1	**100-4838**	2	BOLT (M6X20-MM)	
F			**237-0022**	1	PLATE	

C-CHANGE FROM PREVIOUS TYPE
F-NOT SHOWN
M-METRIC PART

246-2582 **COVER GP-VALVE MECHANISM** *(contd.)* **i02702300**

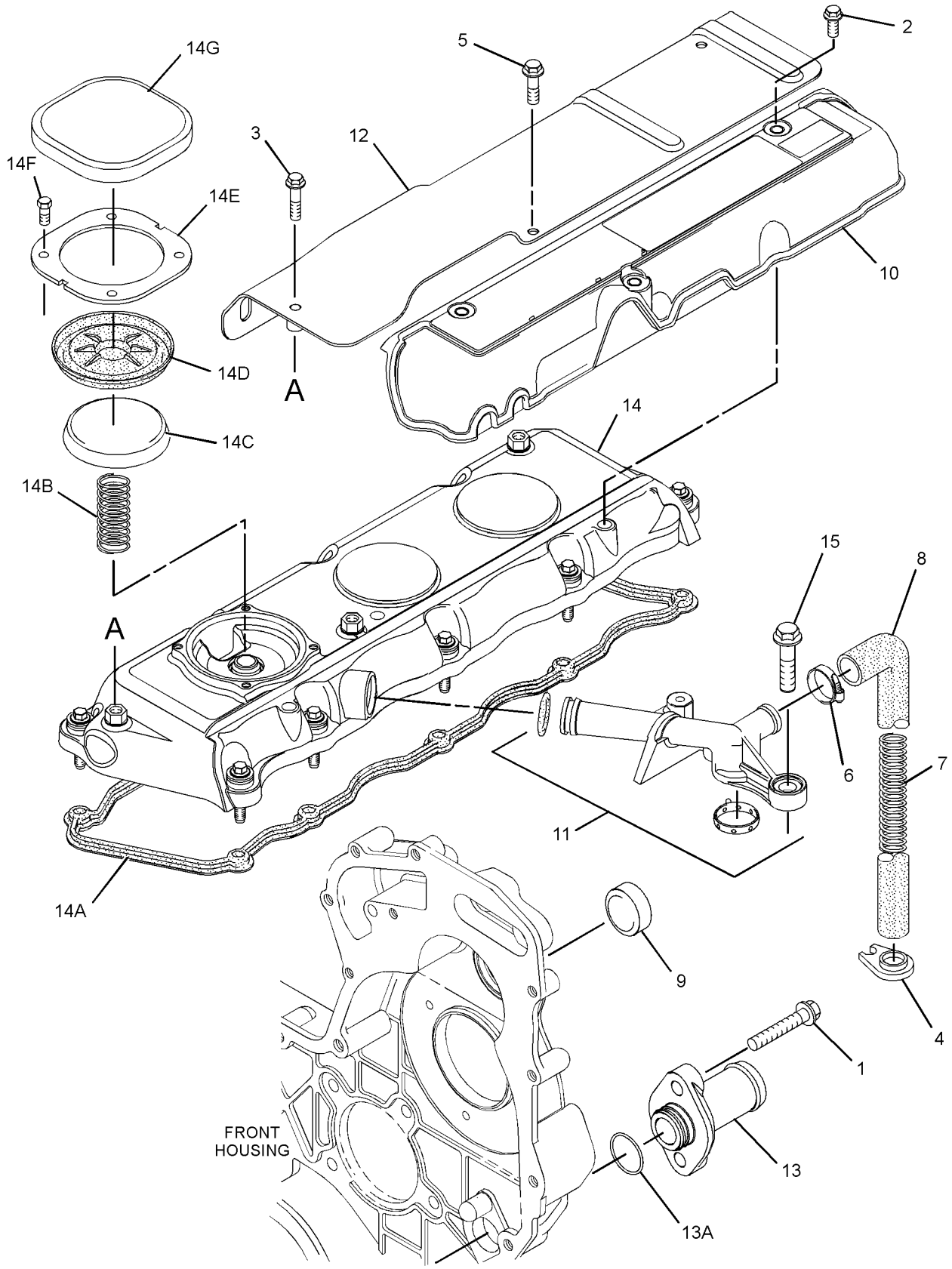

GRAPHIC #1 **<END>** g01397742

BASIC ENGINE

335-9798 COVER GP-VALVE MECHANISM

S/N: CRS1-UP
PART OF 319-2122 ENGINE AR
AN ATTACHMENT

SMCS-1107, 1120 **i03498842**

NOTE	REF NO	GRAPHIC REF	PART NUMBER	QTY	PART NAME 1 2 3 4 5 6 (PRODUCT LEVEL)	SEE PAGE
M	1	1	**6I-0260**	2	BOLT (M8X1.25X25-MM)	
	2	1	**6I-0846**	3	BOLT (M6X1X14-MM)	
	3	1	**6I-0917**	1	BOLT (M6X1X25-MM)	
	4	1	**100-4838**	2	BOLT (M6X20-MM)	
M	5	1	**100-4841**	2	BOLT (M6X1X10-MM)	
	6	1	**225-6522**	1	PLUG-CUP	
	7	1	**230-9127**	1	COVER	
	8	1	**237-0769**	1	SHIELD-HEAT	
	9	1	**246-1163**	1	FILLER AS-OIL	
	9A	1	**229-4896**	1	SEAL-O-RING	
	10	1	**287-8573**	1	PIPE-BREATHER	
	11	1	**308-1792**	1	COVER GP-VALVE MECHANISM	
	11A	1	**225-6451**	1	GASKET (VALVE COVER)	
	11B	1	**225-6456**	1	SPRING	
	11C	1	**225-6461**	1	CAP (VALVE COVER)	
	11D	1	**225-6464**	1	DIAPHRAGM (CRANKCASE PRESSURE CONTACTOR)	
	11E	1	**225-6477**	1	PLATE	
	11F	1	**225-6478**	4	SCREW-MACHINE	
	11G	1	**225-6479**	1	CAP (VALVE COVER)	

M-METRIC PART

335-9798 **COVER GP-VALVE MECHANISM** *(contd.)* **i03498842**

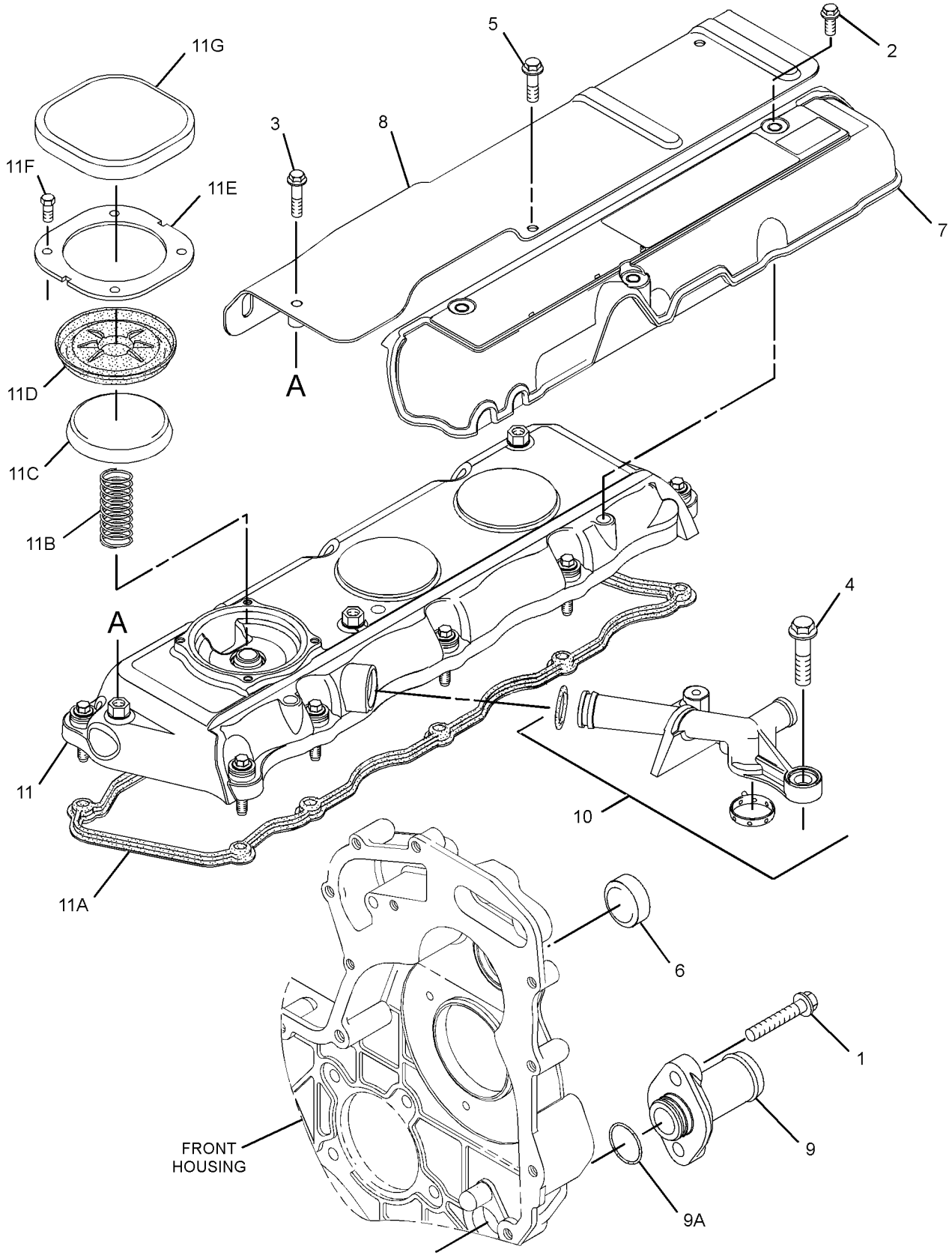

GRAPHIC #1 **<END>** g01651288

BASIC ENGINE

232-7400 CRANKSHAFT GP

S/N: CRS1-UP

PART OF 308-4729 CRANKSHAFT GP

ALSO AN ATTACHMENT

SMCS-1202, 1203, 1204, 1230, 1231, 1232 **i03331708**

NOTE	REF NO	GRAPHIC REF	PART NUMBER	QTY	PART NAME 1 2 3 4 5 6 (PRODUCT LEVEL)	SEE PAGE
	1	1	**1B-8736**	1	KEY-WOODRUFF	
	2	1	**225-7772**	1	BEARING SET-MAIN (STANDARD)	
AB		1	**233-3785**		KIT-CRANKSHAFT BEARING (0.020-IN US ID)	
AB		1	**233-3784**		KIT-CRANKSHAFT BEARING (0.010-IN US ID)	
AB		1	**233-3786**		KIT-CRANKSHAFT BEARING (0.030-IN US ID)	
	3	1	**032-9090**	2	WASHER-THRUST (STANDARD-UPPER)	
AB		1	**067-6873**		WASHER-THRUST (0.18-MM OS)	
	4	1	**032-9091**	2	WASHER-THRUST (STANDARD-LOWER)	
AB		1	**067-6874**		WASHER-THRUST (0.18-MM OS)	
	5	1	**298-4524**	1	KIT-BEARING	
AB		1	**315-3396**		KIT-BEARING (0.25-MM OS)	
AB		1	**315-3397**		KIT-BEARING (0.5-MM OS)	
AB		1	**315-3398**		KIT-BEARING (0.75-MM OS)	

A-NOT PART OF THIS GROUP
B-USE AS REQUIRED

232-7400 **CRANKSHAFT GP** *(contd.)* **i03331708**

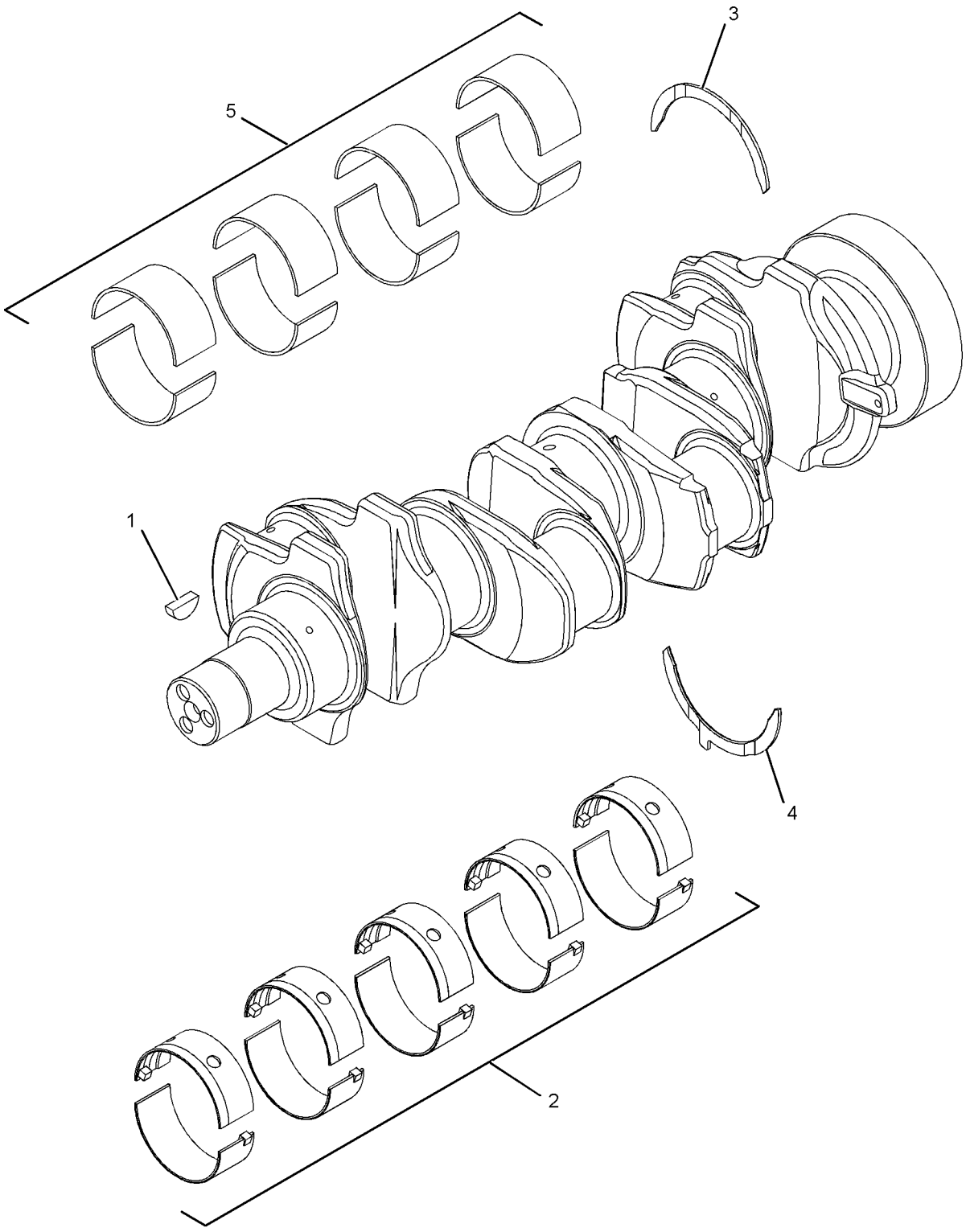

GRAPHIC #1 **<END>** g01369317

BASIC ENGINE

308-4729 CRANKSHAFT GP

S/N: CRS1-1238

PART OF 319-2122 ENGINE AR, 245-6842, 320-8415, 325-5122 ENGINE AR-PRIMARY

ALSO AN ATTACHMENT

SMCS-1202, 1203, 1204, 1230, 1231, 1232 **i02747293**

NOTE	REF NO	GRAPHIC REF	PART NUMBER	QTY	PART NAME 1 2 3 4 5 6 (PRODUCT LEVEL)	SEE PAGE
	1	1	**216-8314**	1	GEAR-CRANKSHAFT (34-TEETH)	
Y	2	1	**232-7400**	1	CRANKSHAFT GP	22

Y-SEPARATE ILLUSTRATION

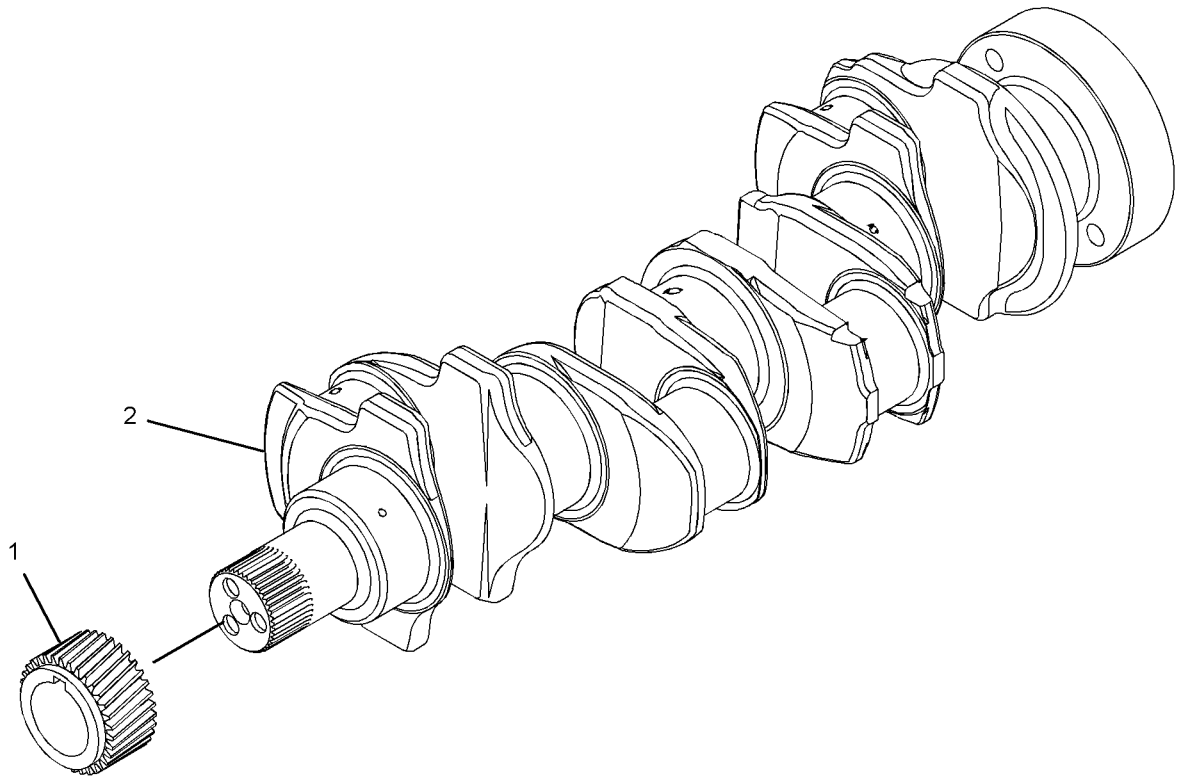

GRAPHIC #1 **<END>** g01376252

232-7604 CYLINDER BLOCK GP

S/N: CRS1-UP

PART OF 308-4728 CYLINDER BLOCK GP

ALSO AN ATTACHMENT

SMCS-1201 **i03251704**

NOTE	REF NO	GRAPHIC REF	PART NUMBER	QTY	PART NAME 1 2 3 4 5 6 (PRODUCT LEVEL)	SEE PAGE
	1	1	**6I-0572**	4	BOLT (M8X1.25X20-MM)	
	2	1	**035-8068**	10	BOLT (5/8-18X3.75-IN)	
	3	1	**067-6002**	10	DOWEL	
	4	1	**067-6006**	1	PLUG	
	5	1	**067-6043**	1	PLUG-SIDE	
M	6	1	**100-4841**	4	BOLT (M6X1X10-MM)	
	7	1	**185-0884**	2	DOWEL	
	8	1	**225-7944**	1	GASKET (ENGINE OIL FILTER BASE)	
	9	1	**225-8858**	2	PLUG	
	10	1	**232-3751**	1	PLATE	
	11	1	**232-7440**	1	BEARING	
	12	1	**276-5605**	4	JET AS-PISTON COOLING	
	13	1	**232-7596**	1	PLUG	
	14	1	**232-7597**	2	PLUG	
	15	1	**232-7599**	1	PLUG	
	16	1	**232-7600**	1	PLUG-CUP	
	17	1	**232-7603**	1	PLUG	

M-METRIC PART

232-7604 CYLINDER BLOCK GP *(contd.)* i03251704

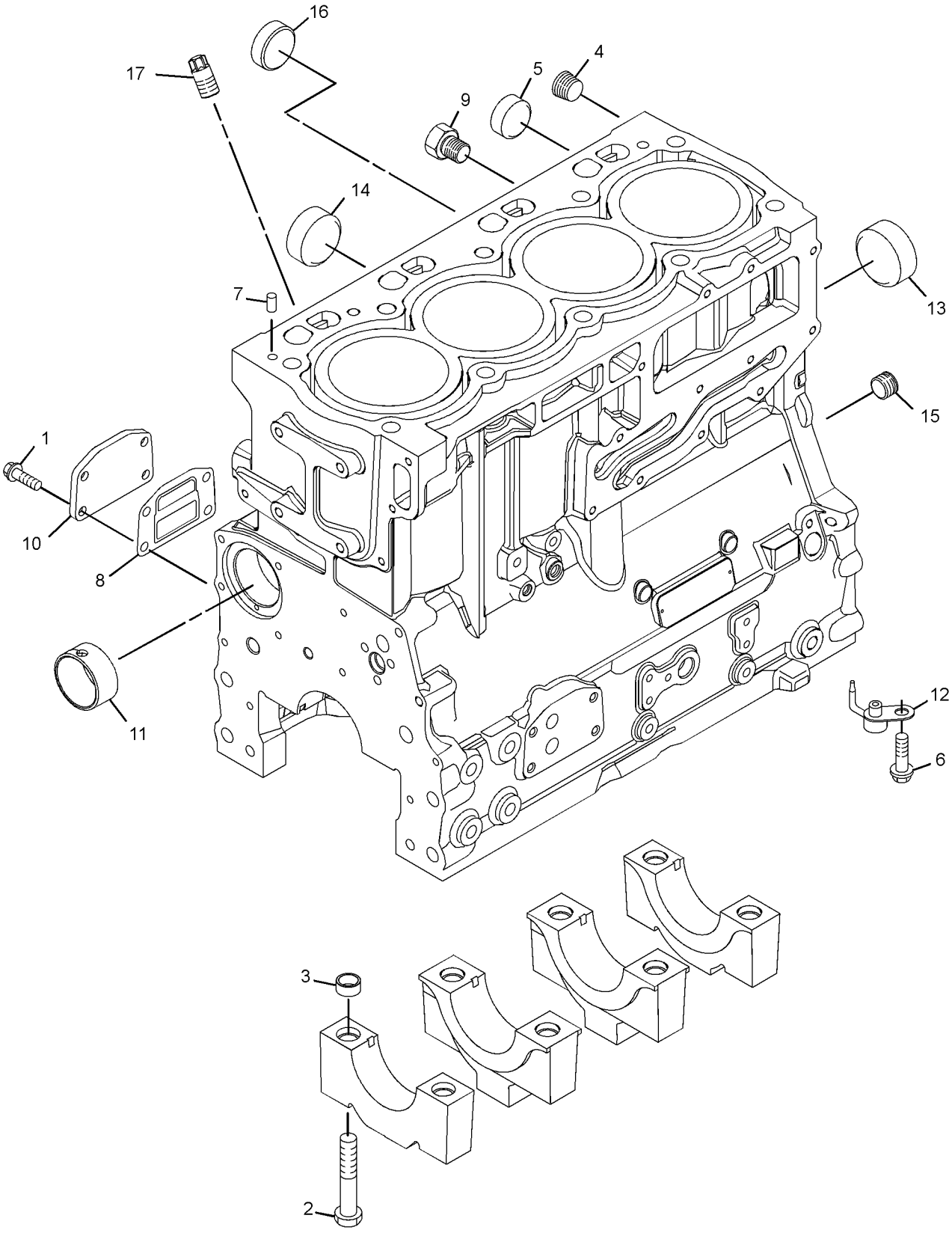

GRAPHIC #1 **<END>** g01652625

308-4728 CYLINDER BLOCK GP

S/N: CRS1-1238

PART OF 319-2122 ENGINE AR, 245-6842, 320-8415, 325-5122 ENGINE AR-PRIMARY ALSO AN ATTACHMENT

SMCS-1201 **i02719089**

NOTE	REF NO	GRAPHIC REF	PART NUMBER	QTY	PART NAME 1 2 3 4 5 6 (PRODUCT LEVEL)	SEE PAGE
M	1	1	**209-9219**	10	BOLT (M8X1.25X16-MM)	
	2	1	**232-7449**	1	HOUSING AS	
Y	3	1	**232-7604**	1	CYLINDER BLOCK GP	25

M-METRIC PART
Y-SEPARATE ILLUSTRATION

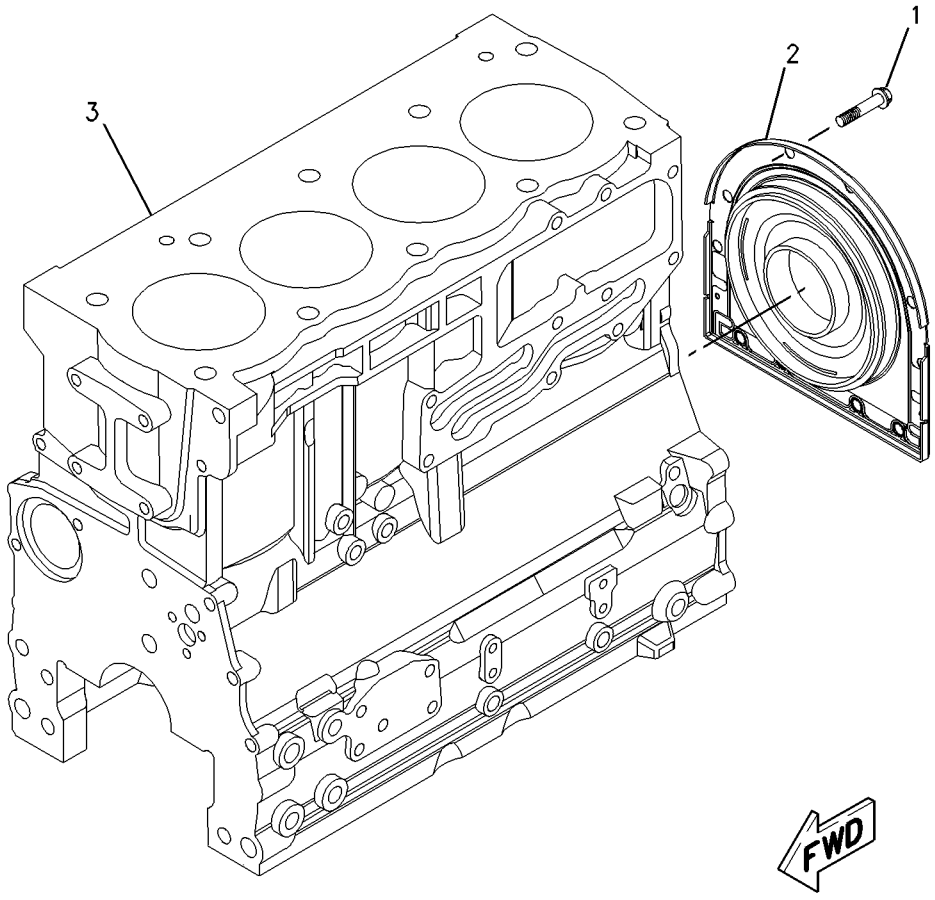

GRAPHIC #1 **<END>** g00952056

232-7519 CYLINDER HEAD GP

S/N: CRS1-UP
PART OF 308-4731 CYLINDER HEAD GP
ALSO AN ATTACHMENT

SMCS-1100, 1101, 1103, 1104, 1105, 1106, 1108, 1109, 1115, 1117, 1121, 1124, 1125

i03286641

NOTE	REF NO	GRAPHIC REF	PART NUMBER	QTY	PART NAME 1 2 3 4 5 6 (PRODUCT LEVEL)	SEE PAGE
	1	1	**2B-0858**	1	PLUG-PIPE	
	2	1	**9Y-5015**	2	PLUG-FREEZE	
	3	1	**067-6006**	4	PLUG	
	4	1	**147-1979**	16	RETAINER-VALVE SPRING	
	5	1	**185-0882**	8	GUIDE-VALVE (INTAKE)	
	6	1	**199-9751**	1	SEAL-O-RING	
	7	1	**329-6655**	4	INSERT-INLET	
	8	1	**322-9663**	4	INSERT-VALVE SEAT (EXHAUST)	
	9	1	**225-5495**	4	VALVE-INLET	
	10	1	**225-5496**	8	SPRING-VALVE	
	11	1	**252-6438**	4	SEAL-INLET VALVE	
	12	1	**225-5498**	8	CAP	
	13	1	**225-5499**	4	VALVE-EXHAUST	
	14	1	**232-1322**	1	PLUG	
	15	1	**254-3954**	4	SEAL-EXHAUST VALVE	

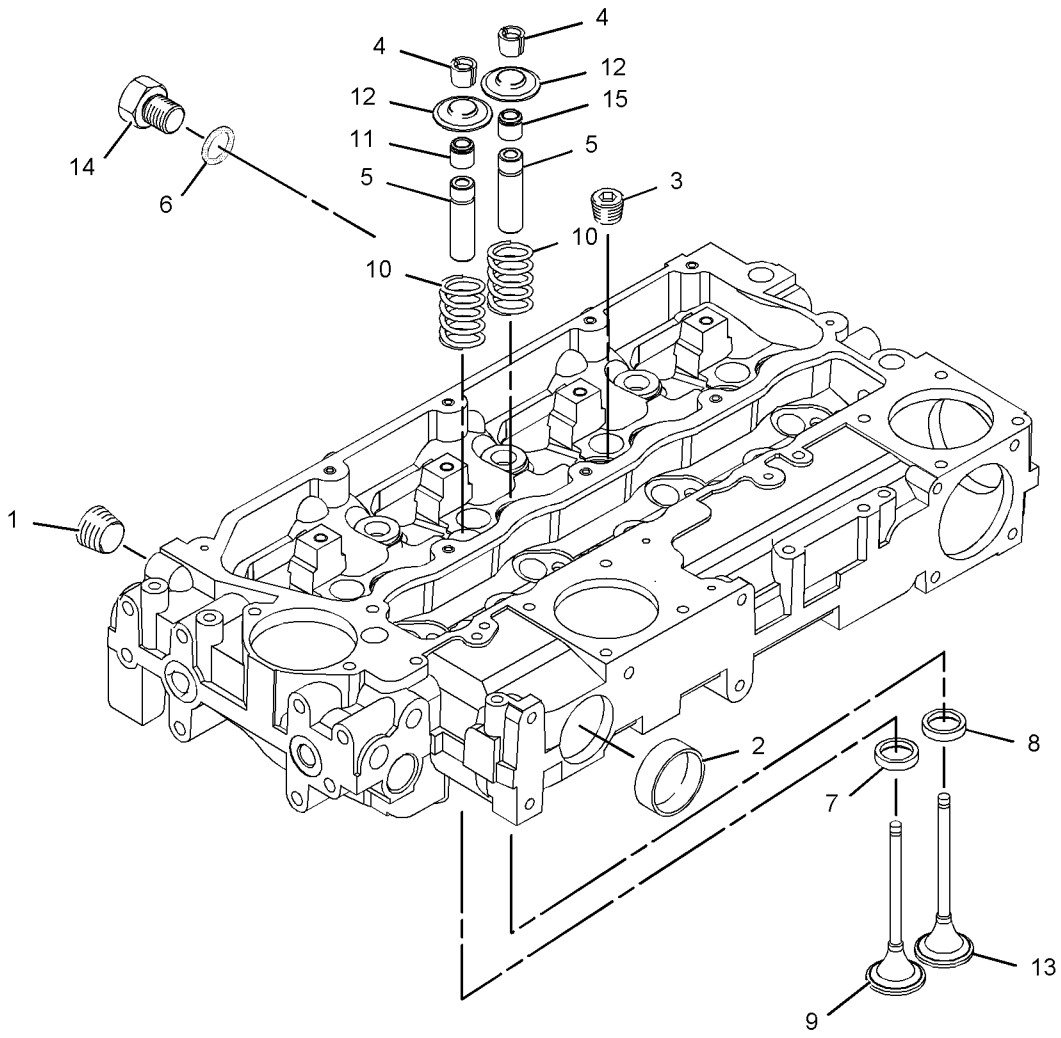

GRAPHIC #1

<END>

g01095382

308-4731 CYLINDER HEAD GP

S/N: CRS1-1238

PART OF 319-2122 ENGINE AR, 245-6842, 320-8415, 325-5122 ENGINE AR-PRIMARY

ALSO AN ATTACHMENT

SMCS-1100, 1101, 1103, 1104, 1105, 1106, 1108, 1109, 1115, 1117, 1121, 1124, 1125

i02719202

NOTE	REF NO	GRAPHIC REF	PART NUMBER	QTY	PART NAME 1 2 3 4 5 6 (PRODUCT LEVEL)	SEE PAGE
	1	1	**225-5501**	7	BOLT (M15X1.5X137-MM)	
	2	1	**225-5502**	3	BOLT (M15X1.5X162-MM)	
Y	3	1	**232-7519**	1	CYLINDER HEAD GP	28
	4	1	**258-4946**	1	GASKET-HEAD	

Y-SEPARATE ILLUSTRATION

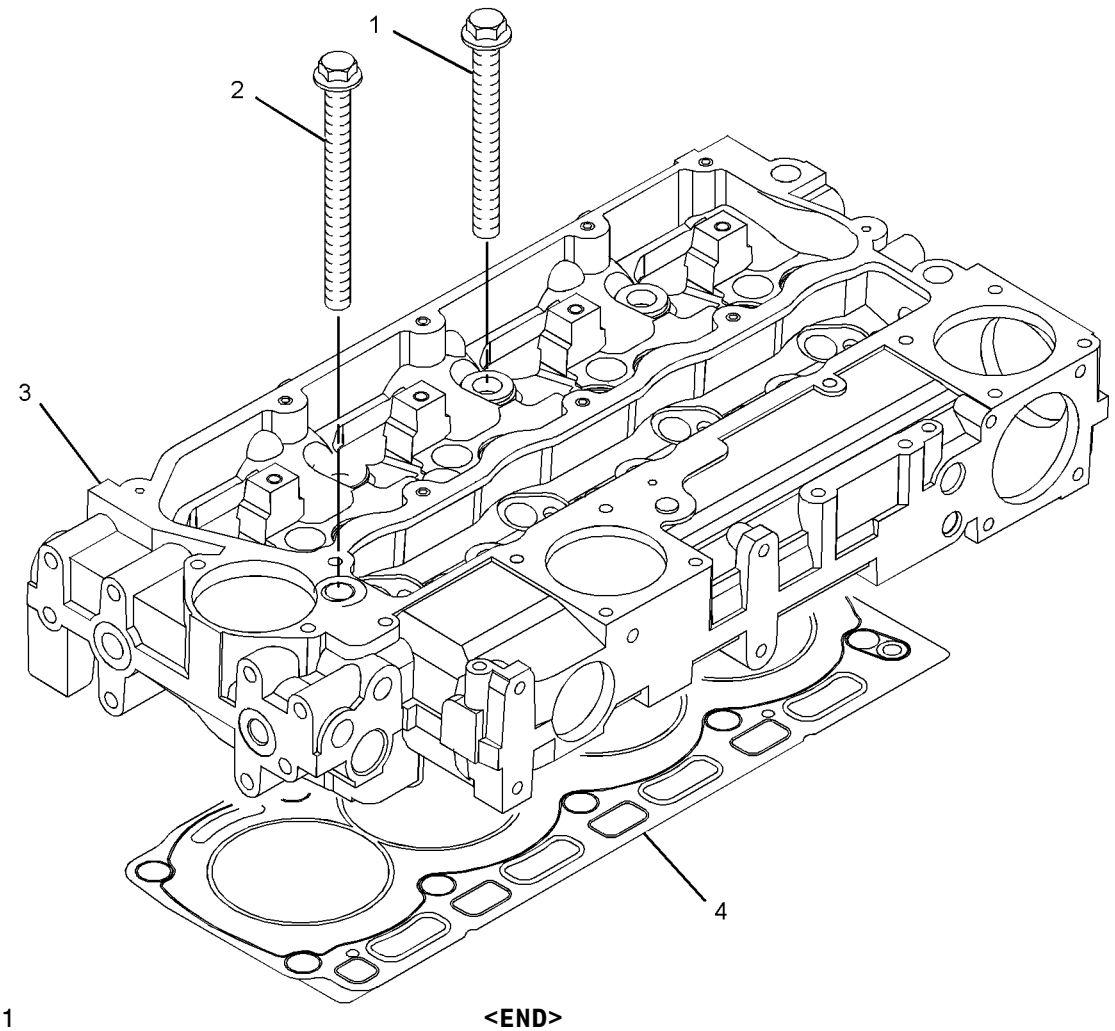

GRAPHIC #1

<END>

g01367488

BASIC ENGINE

251-2432 DRIVE GP-FAN

S/N: CRS1-1238

PART OF 319-2122 ENGINE AR, 245-6842, 320-8415, 325-5122 ENGINE AR-PRIMARY

ALSO AN ATTACHMENT

SMCS-1357, 1358, 1359, 1390 **i02100116**

NOTE	REF NO	GRAPHIC REF	PART NUMBER	QTY	PART NAME 1 2 3 4 5 6 (PRODUCT LEVEL)	SEE PAGE
	1	1	**111-0859**	1	BOLT (M10X1.5X35-MM)	
	2	1	**123-2899**	4	BOLT (M10X1.5X40-MM)	
	3	1	**251-2436**	1	HOUSING AS	
	3A	1	**225-5959**	1	CLIP	
	4	1	**251-2437**	1	PLATE	

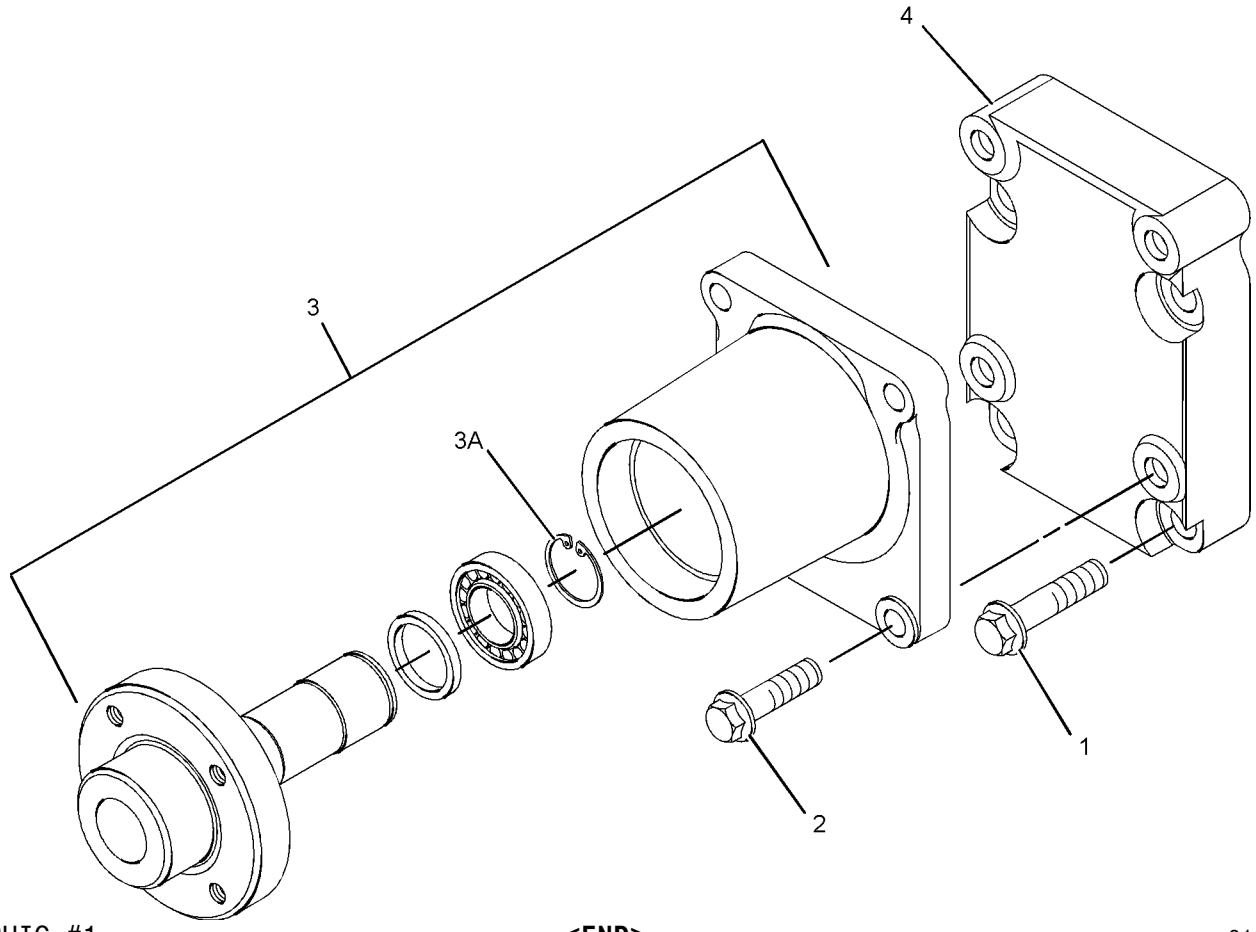

GRAPHIC #1 **<END>** g01085998

230-7300 FLYWHEEL GP

S/N: CRS1-1238

PART OF 319-2122 ENGINE AR, 245-6842, 320-8415, 325-5122 ENGINE AR-PRIMARY ALSO AN ATTACHMENT

SMCS-1156, 1158 **i02004993**

NOTE	REF NO	GRAPHIC REF	PART NUMBER	QTY	PART NAME 1 2 3 4 5 6 (PRODUCT LEVEL)	SEE PAGE
	1	1	**0S-1603**	6	BOLT (1/2-20X1.5-IN)	
	2	1	**5P-8245**	6	WASHER-HARD (13.5X25.5X3-MM THK)	
	3	1	**245-9828**	1	FLYWHEEL AS	
	4	1	**033-7687**	1	RING-STARTING MOTOR (126-TEETH)	

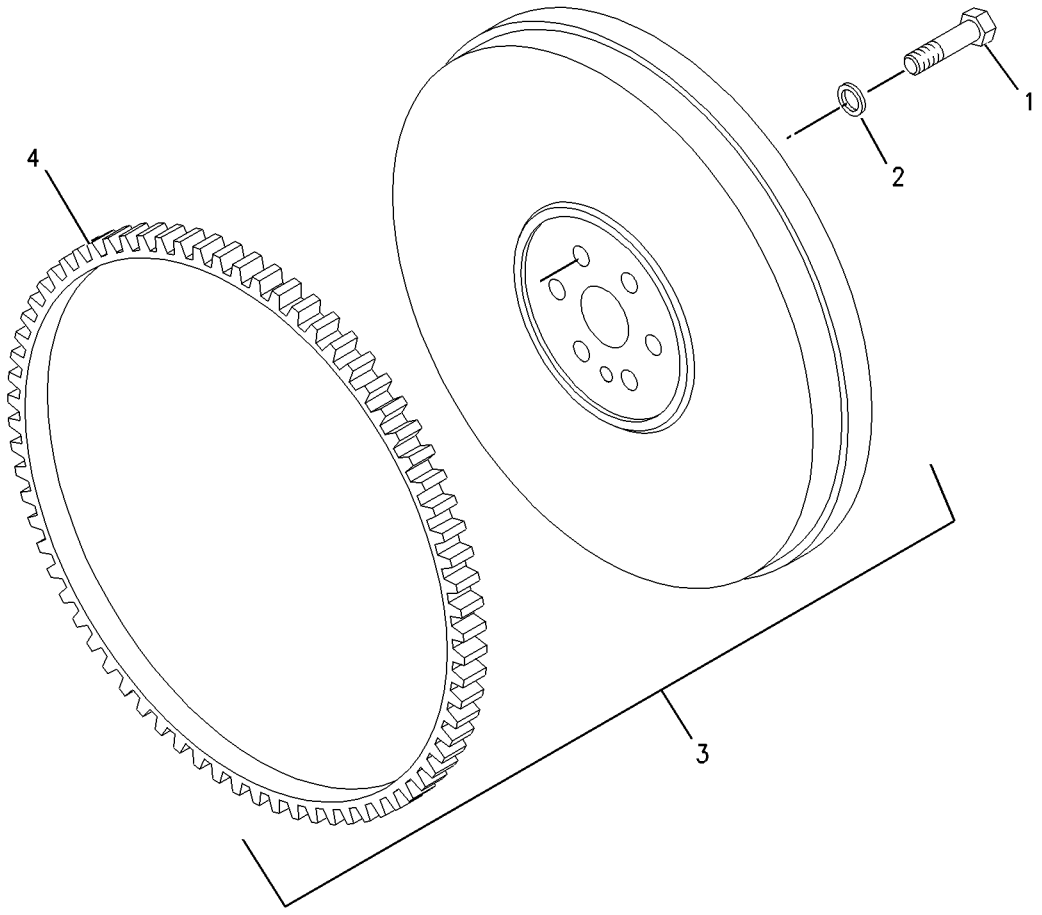

GRAPHIC #1 **<END>** g00955555

BASIC ENGINE

236-8238 HOUSING GP-FLYWHEEL

S/N: CRS1-1238

PART OF 319-2122 ENGINE AR, 245-6842, 320-8415, 325-5122 ENGINE AR-PRIMARY

ALSO AN ATTACHMENT

SMCS-1157 **i02527254**

NOTE	REF NO	GRAPHIC REF	PART NUMBER	QTY	PART NAME 1 2 3 4 5 6 (PRODUCT LEVEL)	SEE PAGE
M	1	1	**6I-0423**	2	BOLT (M12X1.75X30-MM)	
	2	1	**6I-0847**	2	PLUG	
	3	1	**7W-1176**	1	PLATE-COVER	
	4	1	**7W-4642**	1	SHIELD-DUST	
	5	1	**287-8597**	2	DOWEL	
	6	1	**114-4363**	2	BOLT (M8X1.25X12-MM)	
	7	1	**101-3617**	3	PLUG	
M	8	1	**121-0883**	6	BOLT (M10X1.5X30-MM)	
	9	1	**220-8631**	1	HOUSING-FLYWHEEL	

M-METRIC PART

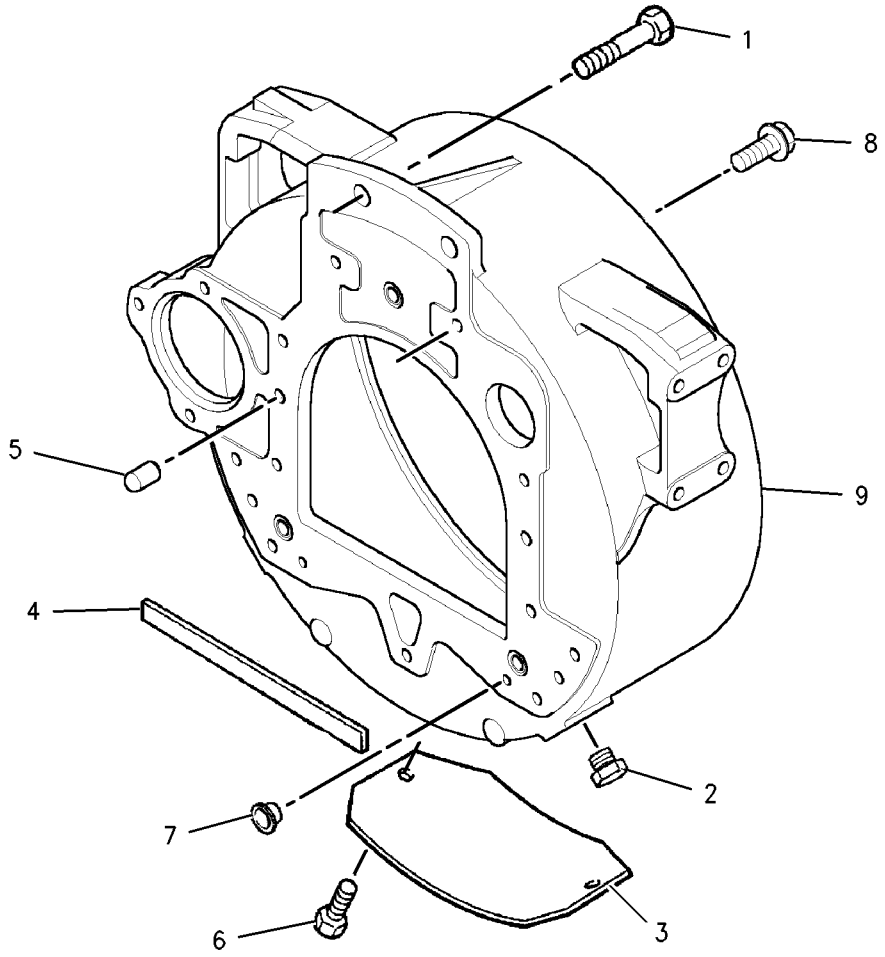

GRAPHIC #1 **<END>** g00902549

313-1380 HOUSING GP-FRONT

S/N: CRS1-1238

PART OF 319-2122 ENGINE AR, 245-6842, 320-8415, 325-5122 ENGINE AR-PRIMARY
ALSO AN ATTACHMENT

SMCS-1151, 1162, 1166, 1206 **i02918676**

NOTE	REF NO	GRAPHIC REF	PART NUMBER	QTY	PART NAME 1 2 3 4 5 6 (PRODUCT LEVEL)	SEE PAGE
	1	1	**1B-8736**	1	KEY-WOODRUFF	
M	2	1	**6I-0217**	8	BOLT (M8X1.25X20-MM)	
M	3	1	**6I-0645**	4	BOLT (M8X1.25X25-MM)	
M	4	1	**6I-0650**	3	BOLT (M10X1.5X65-MM)	
	5	1	**7C-4616**	1	BOLT (M12X1.75X45-MM)	
	6	1	**067-6179**	1	DOWEL	
M	7	1	**100-3751**	5	BOLT (M8X1.25X65-MM)	
M	8	1	**124-3815**	10	BOLT (M8X16X1.25-MM)	
	9	1	**133-1011**	1	WASHER	
	10	1	**216-8634**	1	GEAR-CAMSHAFT (68-TEETH)	
	11	1	**232-3657**	1	COVER AS-FRONT	
	11A	1	**225-8287**	1	GASKET	
	12	1	**232-3666**	1	WASHER-THRUST	
	13	1	**251-4336**	1	GEAR AS-IDLER (73-TEETH)	
	14	1	**277-3012**	1	GASKET-COVER (HOUSING)	
	15	1	**324-0444**	1	HUB-IDLER GEAR	
	16	1	**288-0422**	1	SEAL-OIL	
	17	1	**294-0288**	1	HOUSING-FRONT	
	18	1	**295-1711**	1	PLATE-RETAINING	

M-METRIC PART

313-1380 **HOUSING GP-FRONT** *(contd.)* **i02918676**

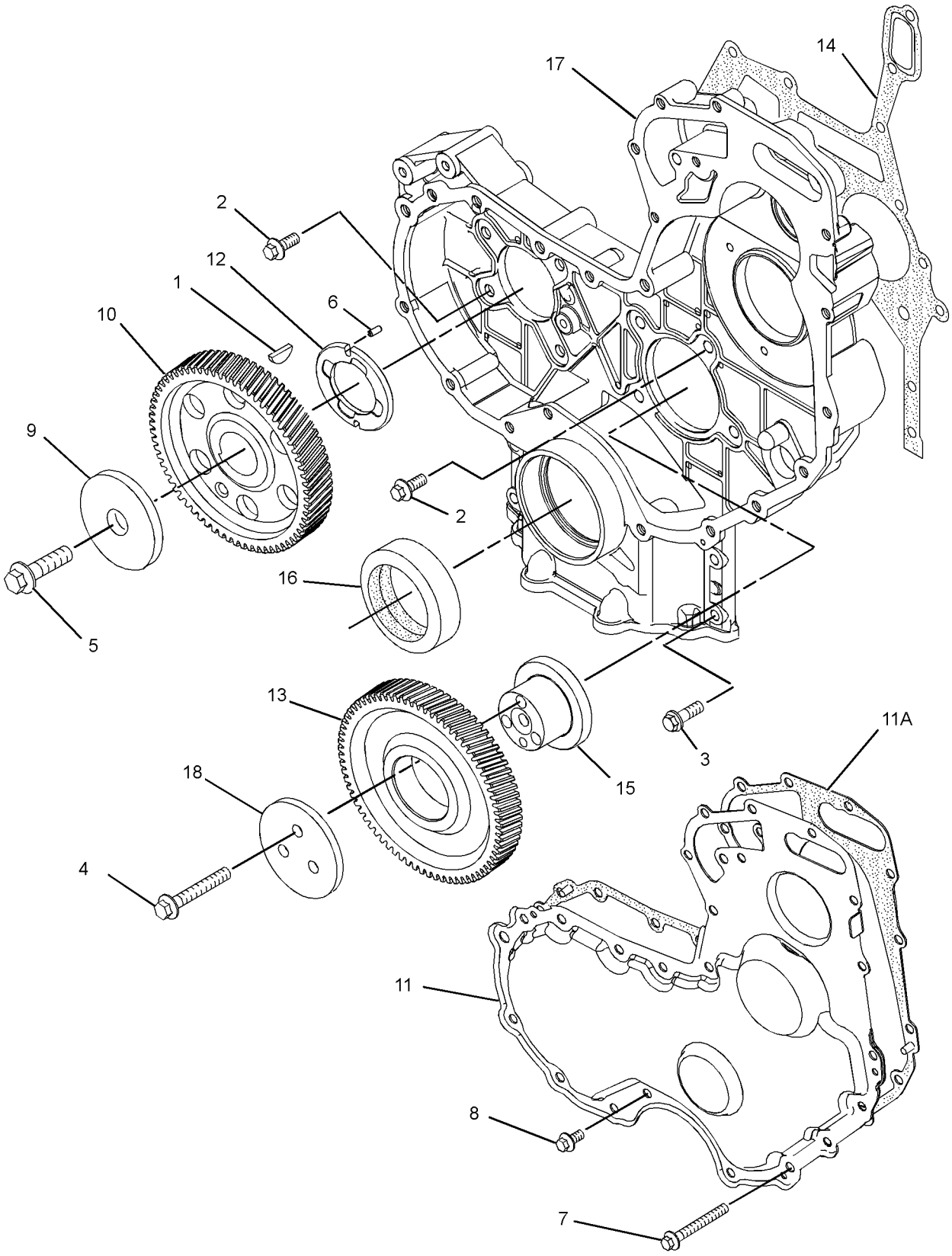

GRAPHIC #1 **<END>** g01394373

233-7432 LIFTING GP-ENGINE

S/N: CRS1-1238
PART OF 319-2122 ENGINE AR, 245-6842, 320-8415, 325-5122 ENGINE AR-PRIMARY
ALSO AN ATTACHMENT

SMCS-1122 **i01876830**

NOTE	REF NO	GRAPHIC REF	PART NUMBER	QTY	PART NAME 1 2 3 4 5 6 (PRODUCT LEVEL)	SEE PAGE
M	1	1	**100-4830**	4	BOLT (M10X1.5X20-MM)	
	2	1	**225-8848**	2	PLATE-LIFTING	

M-METRIC PART

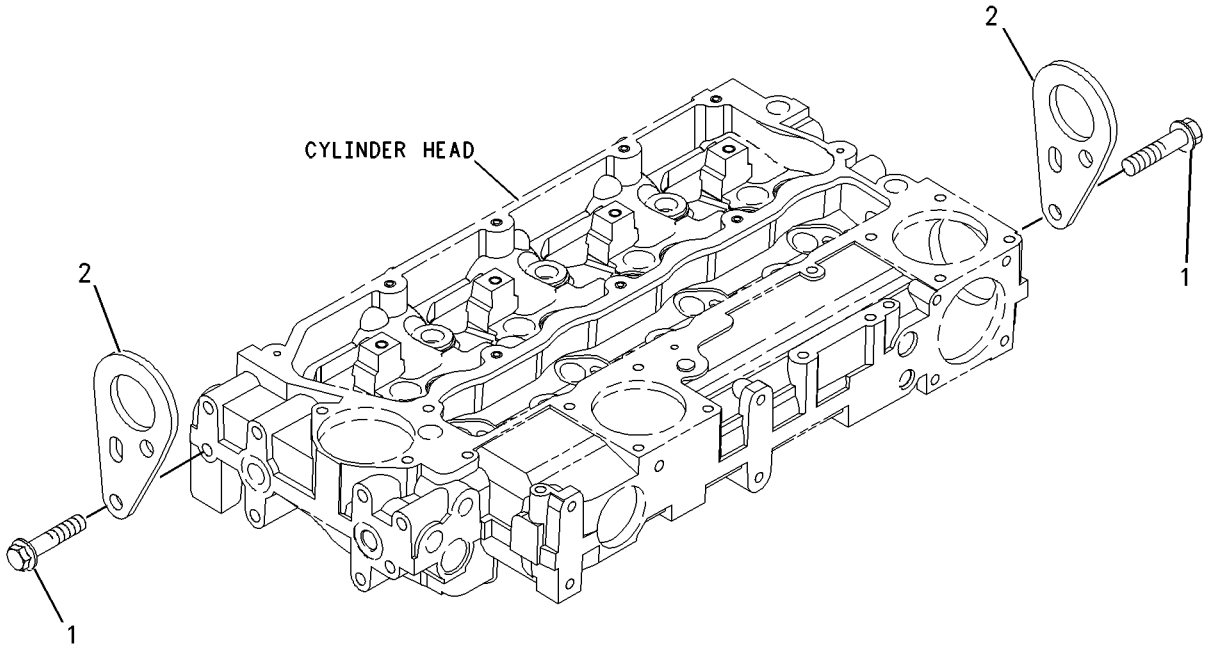

GRAPHIC #1 **<END>** g00955299

237-3658 MOUNTING GP-ENGINE

S/N: CRS1-1238

PART OF 319-2122 ENGINE AR, 245-6842, 320-8415, 325-5122 ENGINE AR-PRIMARY

ALSO AN ATTACHMENT

SMCS-1152, 1153, 1154 **i01925958**

NOTE	REF NO	GRAPHIC REF	PART NUMBER	QTY	PART NAME 1 2 3 4 5 6 (PRODUCT LEVEL)	SEE PAGE
	1	1	**101-2987**	6	PLUG	
	2	1	**6H-3616**	3	PLUG-PROTECTION	
	3	1	**195-2132**	1	SUPPORT-FRONT	
	4	1	**195-2134**	1	SUPPORT-FRONT	
	5	1	**195-2136**	8	STUD	
	6	1	**195-2221**	8	NUT	

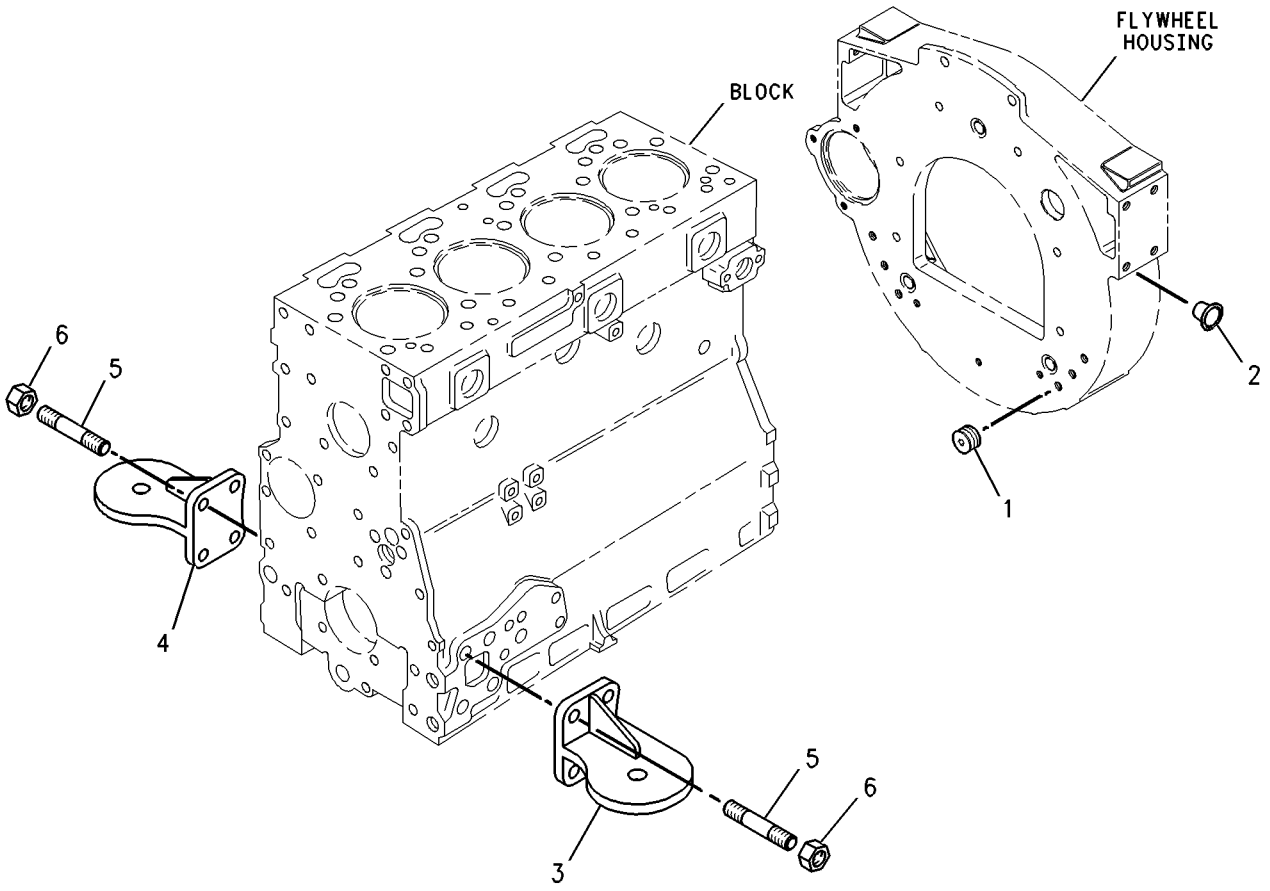

GRAPHIC #1 **<END>** g00738284

214-0973 MOUNTING GP-ENGINE & XMSN

S/N: EAT1-UP

PART OF 214-6903 ENGINE AR

SMCS-1152, 1153, 1154 **i02116930**

NOTE	REF NO	GRAPHIC REF	PART NUMBER	QTY	PART NAME 1 2 3 4 5 6 (PRODUCT LEVEL)	SEE PAGE
	1	1	**9W-9910**	2	MOUNT AS	
	2	1	**9W-9915**	2	MOUNT AS	
	3	1	**9W-9953**	4	SLEEVE	
	4	1	**8T-4121**	12	WASHER-HARD (11X21X2.5-MM THK)	
	5	1	**8T-4122**	8	WASHER-HARD (17X32X3.5-MM THK)	
M	6	1	**8T-4132**	4	NUT (M16X2-THD)	
M	7	1	**8T-4174**	4	BOLT (M16X2X120-MM)	
M	8	1	**8T-4196**	12	BOLT (M10X1.5X35-MM)	
	9	1	**9W-9952**	4	WASHER (16.75X86X8-MM THK)	

M-METRIC PART

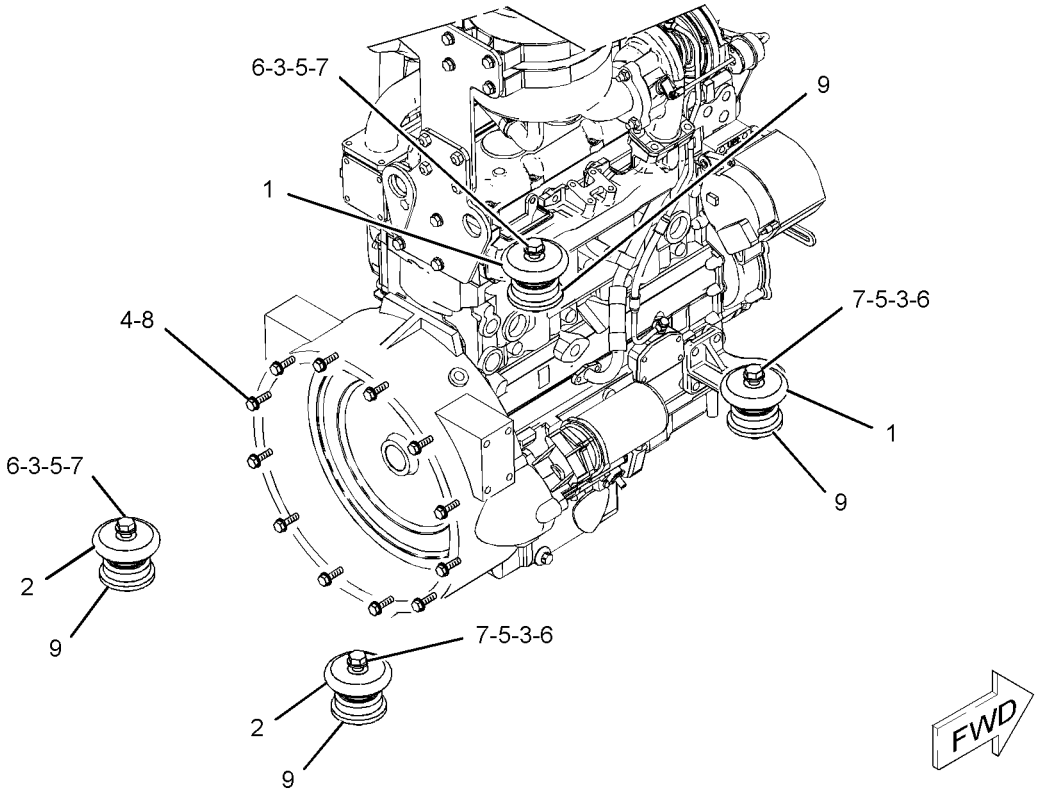

GRAPHIC #1 **<END>** g01079533

BASIC ENGINE

237-0025 PAN GP-OIL

S/N: CRS1-1238

PART OF 245-6842, 320-8415, 325-5122 ENGINE AR-PRIMARY

ALSO AN ATTACHMENT

SMCS-1302 **i02668913**

NOTE	REF NO	GRAPHIC REF	PART NUMBER	QTY	PART NAME 1 2 3 4 5 6 (PRODUCT LEVEL)	SEE PAGE
	1	1	**275-9883**	2	SEAL (ENGINE OIL DRAIN)	
M	2	1	**6I-0217**	12	BOLT (M8X1.25X20-MM)	
M	3	1	**6I-0260**	2	BOLT (M8X1.25X25-MM)	
	4	1	**6I-0289**	1	PLUG	
M	5	1	**6I-0363**	2	BOLT (M6X1X20-MM)	
	6	1	**6I-0572**	2	BOLT (M8X1.25X20-MM)	
	7	1	**7C-0351**	2	PLUG-DRAIN (ENGINE OIL)	
	8	1	**067-6213**	1	GASKET	
	9	1	**101-3771**	6	BOLT	
	10	1	**304-8764**	1	PAN AS-OIL (ENGINE) (ENGINE)	
	10A	1	**7C-1224**	2	INSERT	
	11	1	**225-6005**	1	GASKET	
	12	1	**225-6041**	1	TUBE	
	13	1	**230-8094**	1	BRIDGE	

M-METRIC PART

237-0025 **PAN GP-OIL** *(contd.)* **i02668913**

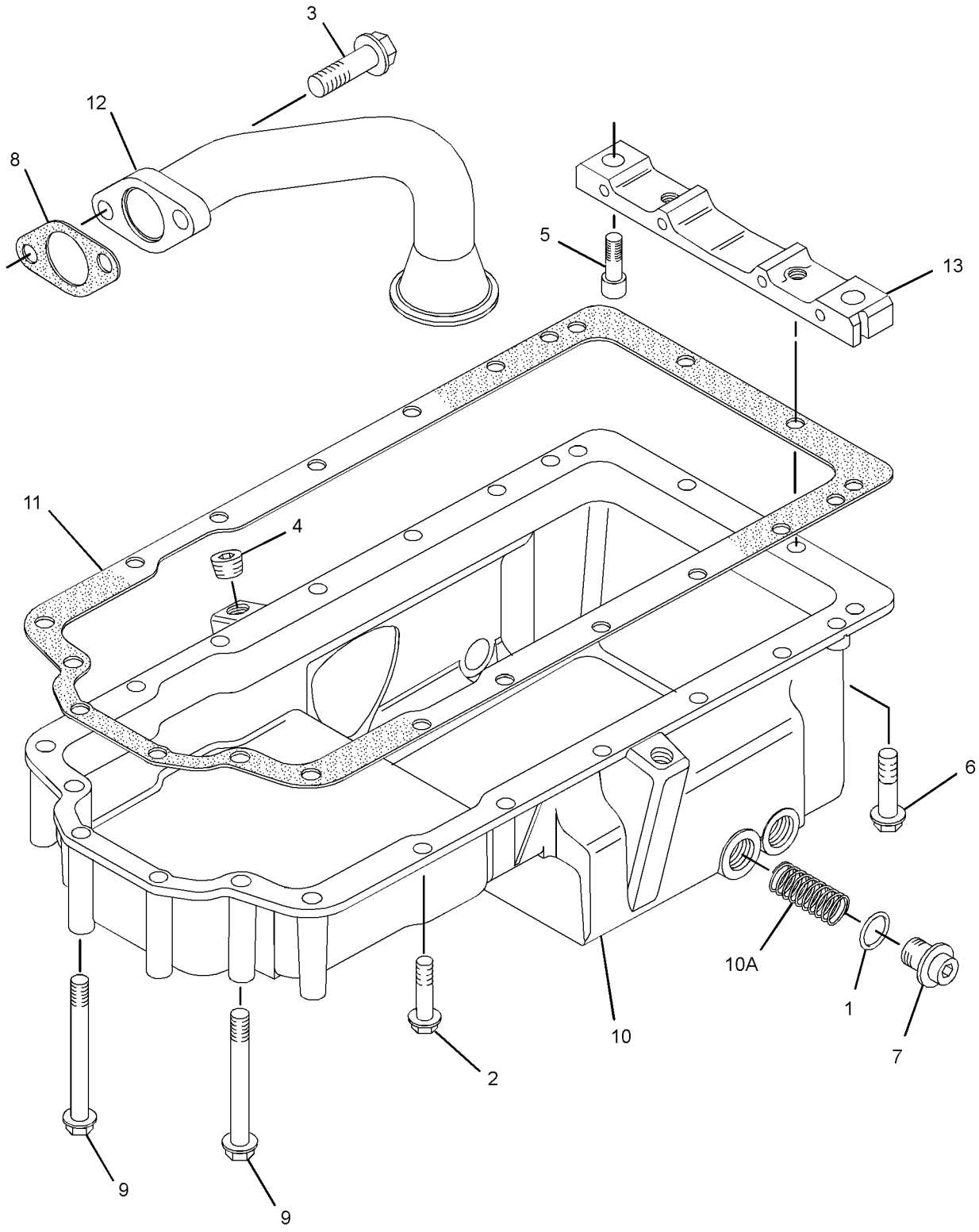

GRAPHIC #1 **<END>** g01382092

BASIC ENGINE

335-9799 PAN GP-OIL

S/N: CRS1-UP
PART OF 319-2122 ENGINE AR
AN ATTACHMENT

SMCS-1302 **i03354263**

NOTE	REF NO	GRAPHIC REF	PART NUMBER	QTY	PART NAME 1 2 3 4 5 6 (PRODUCT LEVEL)	SEE PAGE
M	1	1	**6I-0217**	14	BOLT (M8X1.25X20-MM)	
M	2	1	**6I-0260**	2	BOLT (M8X1.25X25-MM)	
	3	1	**6I-0289**	2	PLUG	
M	4	1	**6I-0363**	2	BOLT (M6X1X20-MM)	
	5	1	**6I-0572**	2	BOLT (M8X1.25X20-MM)	
	6	1	**7C-0351**	2	PLUG-DRAIN (ENGINE OIL)	
	7	1	**067-6213**	1	GASKET	
	8	1	**101-3771**	4	BOLT	
	9	1	**225-6005**	1	GASKET	
	10	1	**225-6041**	1	TUBE	
	11	1	**230-8094**	1	BRIDGE	
	12	1	**275-9883**	2	SEAL (DRAIN PLUG)	
	13	1	**304-8764**	1	PAN AS-OIL (ENGINE)	
	13A	1	**7C-1224**	2	INSERT	

M-METRIC PART

335-9799 **PAN GP-OIL** *(contd.)* **i03354263**

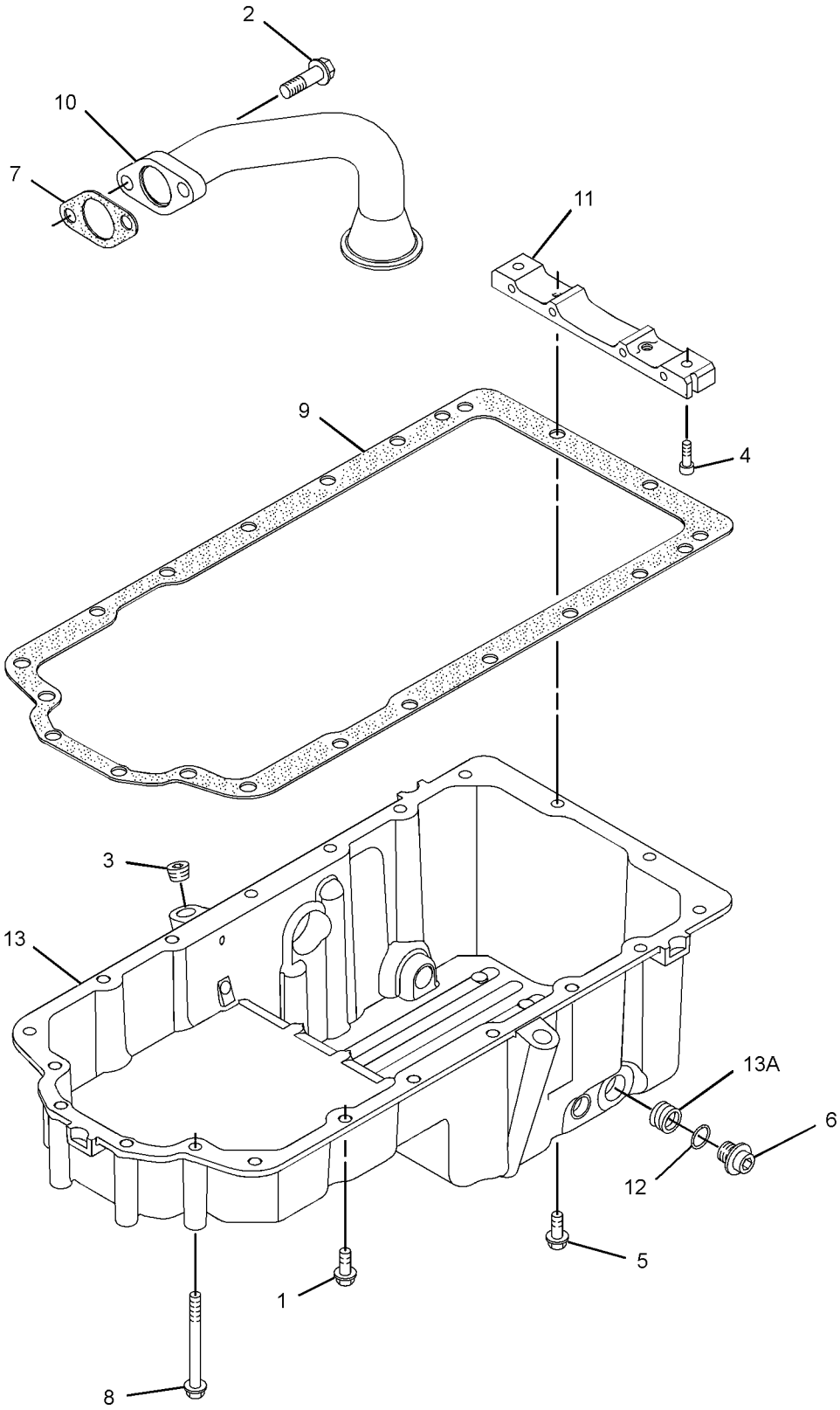

GRAPHIC #1 **<END>** g01653214

BASIC ENGINE

308-4730 PISTON & ROD GP

S/N: CRS1-1238

PART OF 319-2122 ENGINE AR, 245-6842, 320-8415, 325-5122 ENGINE AR-PRIMARY
ALSO AN ATTACHMENT

SMCS-1213, 1214, 1215, 1218, 1219, 1225, 1239 **i02719129**

NOTE	REF NO	GRAPHIC REF	PART NUMBER	QTY	PART NAME 1 2 3 4 5 6 (PRODUCT LEVEL)	SEE PAGE
	1	1	**225-5437**	4	PISTON AS	
					(EACH PISTON AS INCLUDES)	
	1A	1	**124-3536**	2	RING-RETAINING	
	1B	1	**225-5436**	1	KIT-PISTON RING	
BJ	2	1	**225-5441**	4	ROD AS-CONNECTING (LENGTH L)	
					—OR—	
BJ		1	**225-5451**	4	ROD AS-CONNECTING (LENGTH K)	
					—OR—	
BJ		1	**225-5453**	4	ROD AS-CONNECTING (LENGTH J)	
					—OR—	
BJ		1	**225-5454**	4	ROD AS-CONNECTING (LENGTH H)	
					—OR—	
BJ		1	**225-5458**	4	ROD AS-CONNECTING (LENGTH G)	
					—OR—	
BJ		1	**225-5459**	4	ROD AS-CONNECTING (LENGTH F)	
					(EACH ROD AS INCLUDES)	
	2A	1	**225-5438**	1	BUSHING	
	2B	1	**225-5439**	2	BOLT-SPECIAL (CONNECTING ROD)	

B-USE AS REQUIRED
J-ENSURE THAT CORRECT ROD LENGTH IS FITTED

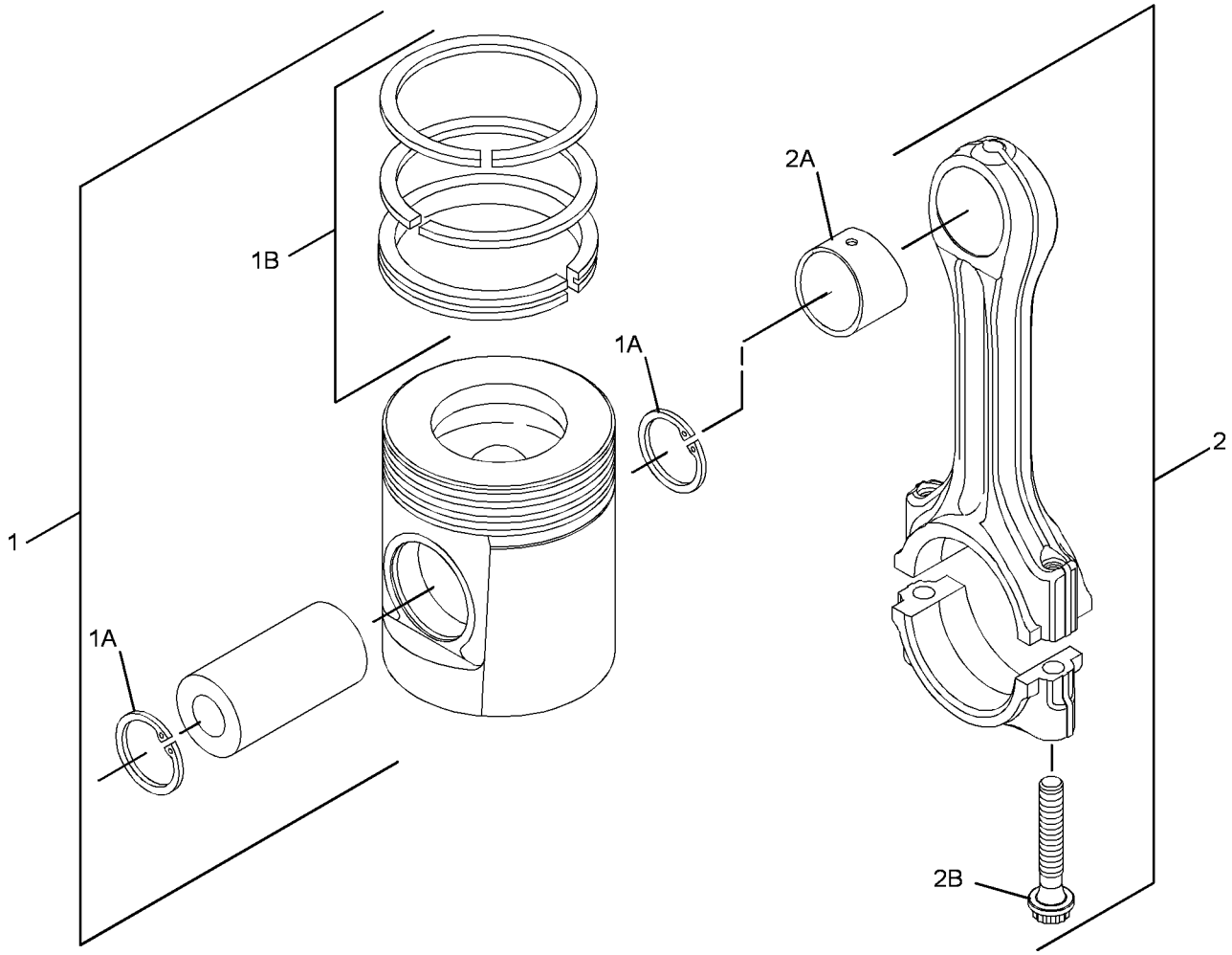

GRAPHIC #1 **<END>** g01374535

225-4317 PLUG GP-ENGINE

S/N: CRS1-1238
FRONT HOUSING,CYLINDER HEAD
PART OF 319-2122 ENGINE AR, 245-6842, 320-8415, 325-5122 ENGINE AR-PRIMARY
ALSO AN ATTACHMENT

SMCS-1000 **i01862406**

NOTE	REF NO	GRAPHIC REF	PART NUMBER	QTY	PART NAME 1 2 3 4 5 6 (PRODUCT LEVEL)	SEE PAGE
	1	1	**2B-0858**	3	PLUG-PIPE	

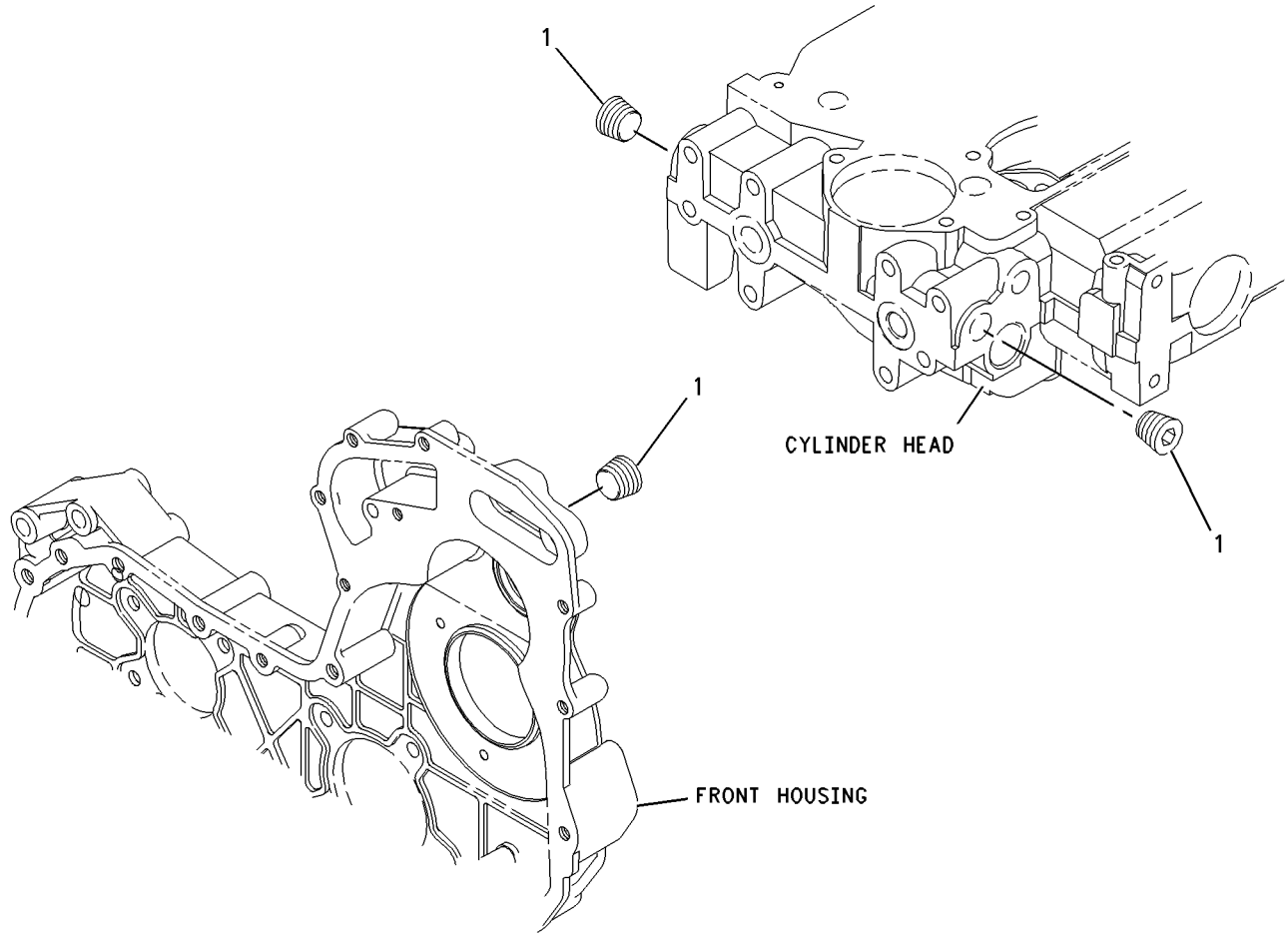

GRAPHIC #1 **<END>** g00911937

230-7569 PLUG GP-ENGINE

S/N: CRS1-1238

PART OF 319-2122 ENGINE AR, 245-6842, 320-8415, 325-5122 ENGINE AR-PRIMARY

ALSO AN ATTACHMENT

SMCS-1000 **i01876806**

NOTE	REF NO	GRAPHIC REF	PART NUMBER	QTY	PART NAME 1 2 3 4 5 6 (PRODUCT LEVEL)	SEE PAGE
	1	1	**231-0046**	1	PLUG	

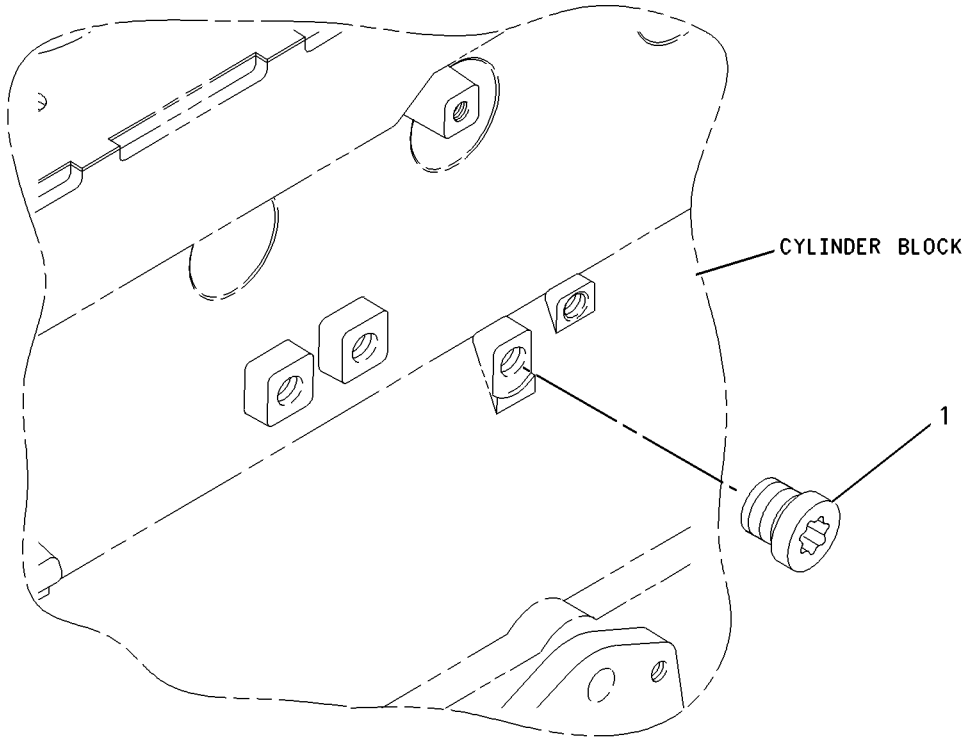

GRAPHIC #1 **<END>** g00911955

232-6204 PLUG GP-ENGINE

S/N: CRS1-1238
CYLINDER HEAD
PART OF 319-2122 ENGINE AR, 245-6842, 320-8415, 325-5122 ENGINE AR-PRIMARY
ALSO AN ATTACHMENT

SMCS-1000 **i01863022**

NOTE	REF NO	GRAPHIC REF	PART NUMBER	QTY	PART NAME 1 2 3 4 5 6 (PRODUCT LEVEL)	SEE PAGE
	1	1	**199-9751**	1	SEAL-O-RING	
	2	1	**232-1322**	1	PLUG	

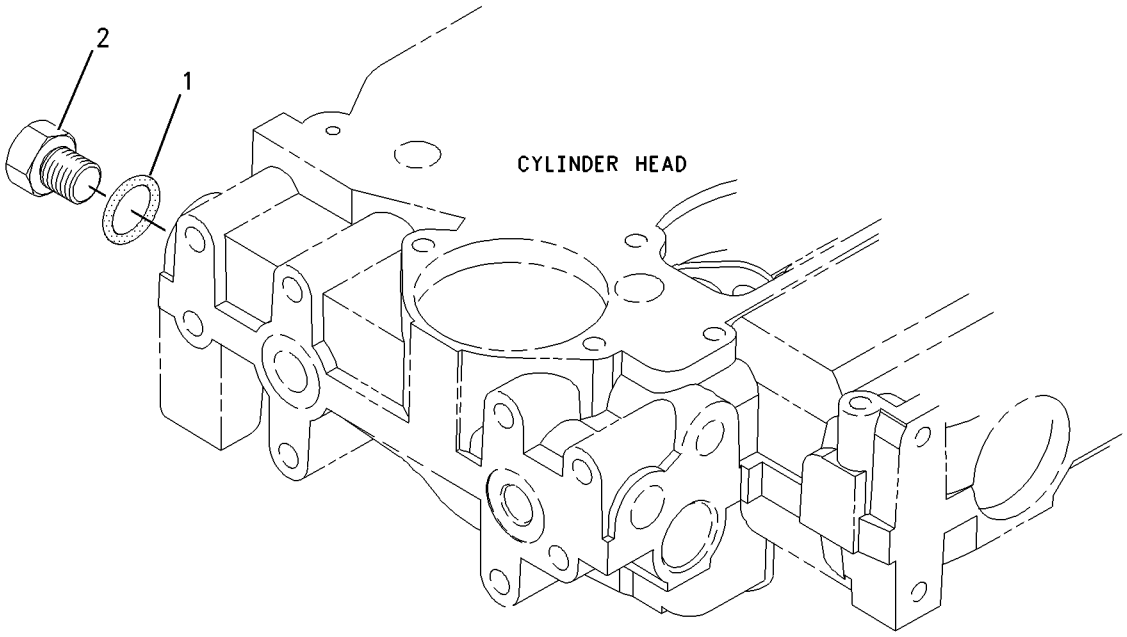

GRAPHIC #1 **<END>** g00950934

230-7353 PULLEY GP-CRANKSHAFT

S/N: CRS1-1238

PART OF 319-2122 ENGINE AR, 245-6842, 320-8415, 325-5122 ENGINE AR-PRIMARY

ALSO AN ATTACHMENT

SMCS-1205 **i02009617**

NOTE	REF NO	GRAPHIC REF	PART NUMBER	QTY	PART NAME 1 2 3 4 5 6 (PRODUCT LEVEL)	SEE PAGE
	1	1	**6I-0501**	1	BLOCK	
	2	1	**6I-0502**	1	PULLEY	
	3	1	**7W-4634**	3	BOLT (7/16-20X1.5 IN)	

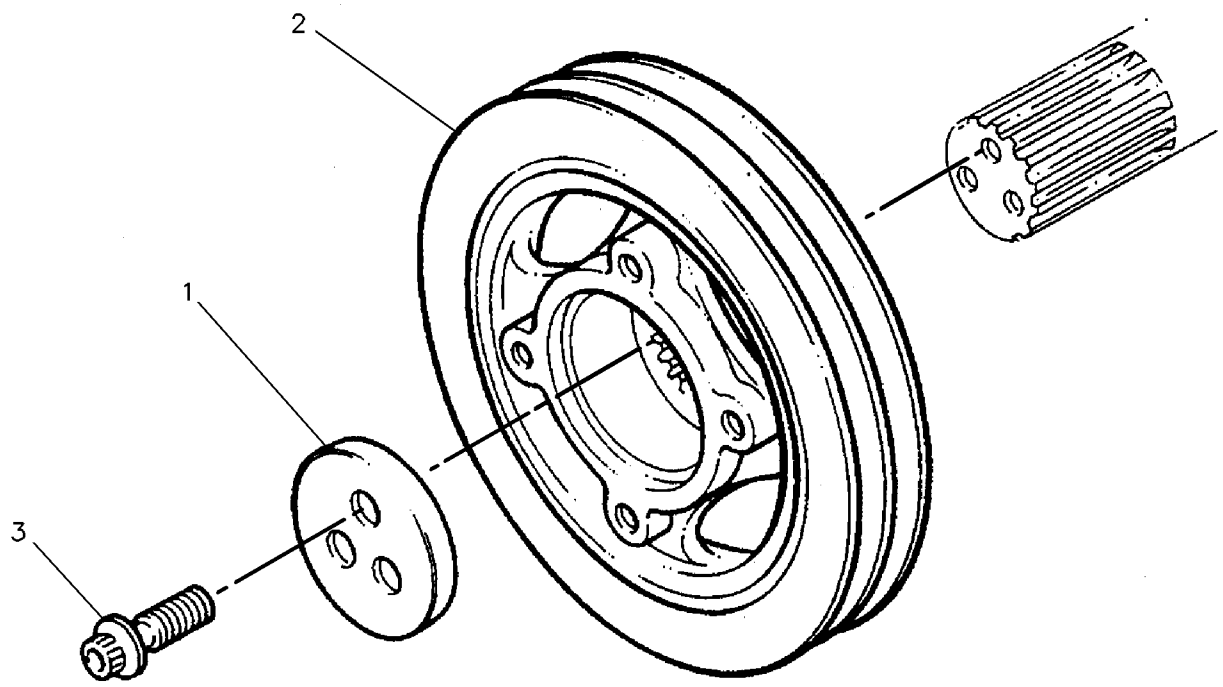

GRAPHIC #1 **<END>** g00130941

225-5963 ROCKER ARM GP

S/N: CRS1-1238
PART OF 308-4732 VALVE MECHANISM GP
ALSO AN ATTACHMENT

SMCS-1102, 1123 **i03255454**

NOTE	REF NO	GRAPHIC REF	PART NUMBER	QTY	PART NAME 1 2 3 4 5 6 (PRODUCT LEVEL)	SEE PAGE
	1	1	**225-5625**	4	LEVER AS	
					(EACH INCLUDES)	
	1A	1	**5B-9079**	1	NUT-JAM (3/8-24-THD)	
	1B	1	**185-1546**	1	SCREW	
	2	1	**225-5634**	1	SHAFT AS	
	2A	1	**225-5629**	2	PLUG	
	3	1	**225-5638**	3	SPRING	
	4	1	**225-5640**	4	LEVER AS	
					(EACH INCLUDES)	
	4A	1	**5B-9079**	1	NUT-JAM (3/8-24-THD)	
	4B	1	**185-1546**	1	SCREW	
	5	1	**225-5959**	2	CLIP	
	6	1	**225-5960**	1	BOLT (M8X1.25X60-MM)	
	7	1	**225-5961**	2	WASHER (26.7X34.32X0.38-MM THK)	
	8	1	**225-5962**	3	BOLT (M8X1.25X30-MM)	

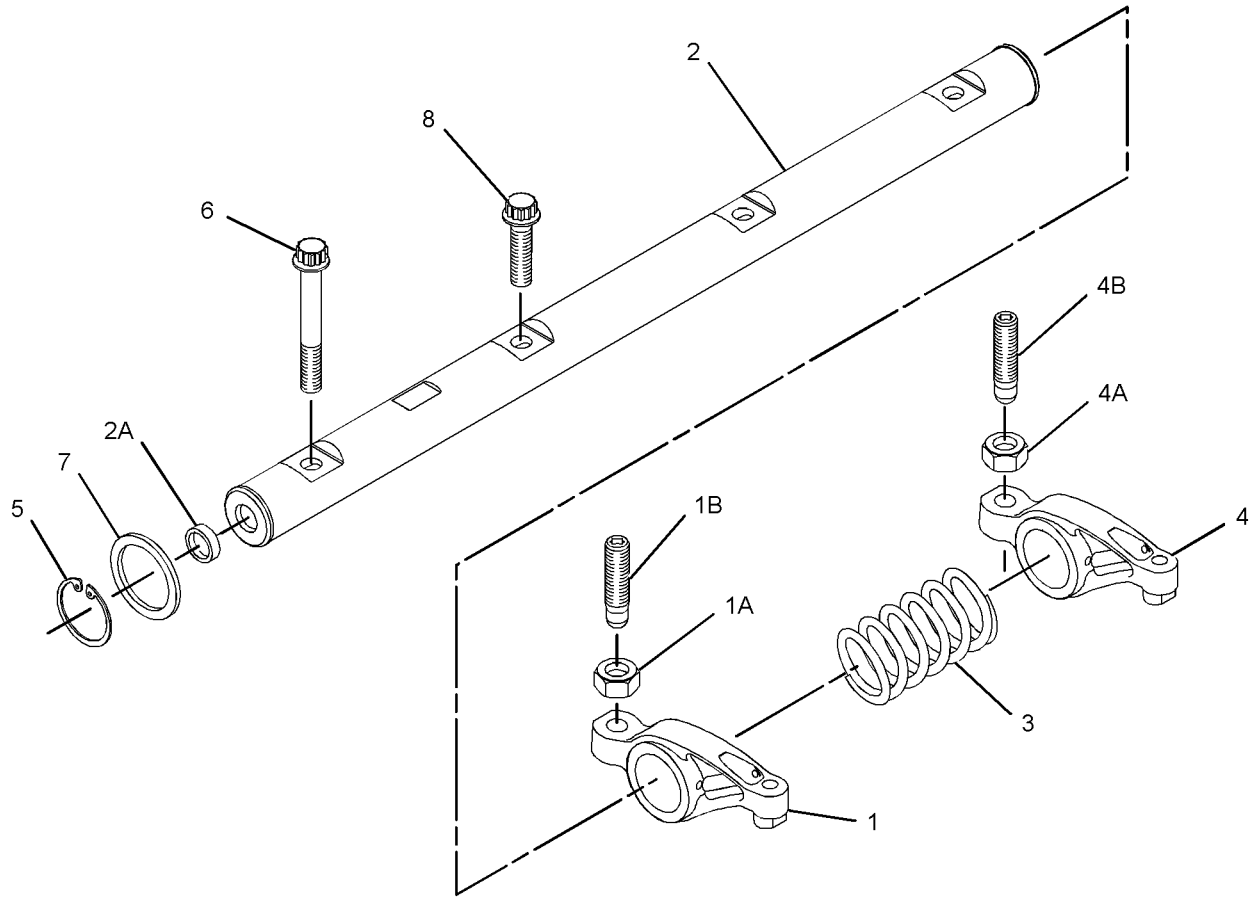

GRAPHIC #1 **<END>** g01368510

BASIC ENGINE

308-4732 VALVE MECHANISM GP

S/N: CRS1-1238

PART OF 319-2122 ENGINE AR, 245-6842, 320-8415, 325-5122 ENGINE AR-PRIMARY

ALSO AN ATTACHMENT

SMCS-1102, 1112, 1121, 1123, 1208, 1209 **i02719187**

NOTE	REF NO	GRAPHIC REF	PART NUMBER	QTY	PART NAME 1 2 3 4 5 6 (PRODUCT LEVEL)	SEE PAGE
	1	1	**067-6095**	8	ROD	
	2	1	**138-2053**	8	TAPPET	
Y	3	1	**225-5963**	1	ROCKER ARM GP	47
	4	1	**225-5967**	1	CAMSHAFT	

Y-SEPARATE ILLUSTRATION

308-4732 **VALVE MECHANISM GP** *(contd.)* **i02719187**

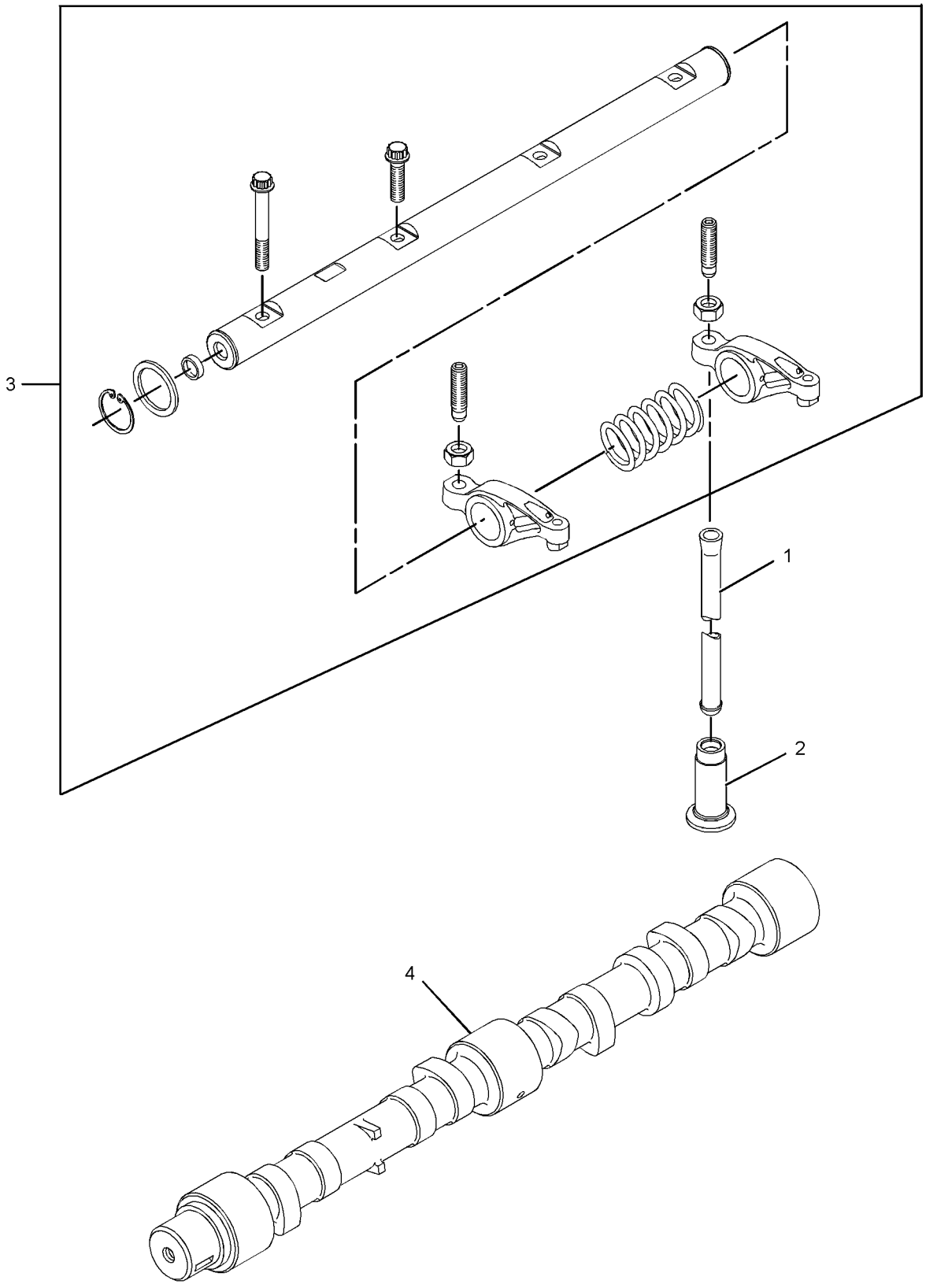

GRAPHIC #1 **<END>** g01368563

LUBRICATION SYSTEM

250-7963 BREATHER GP–TURBO

S/N: EAT1-UP

AN ATTACHMENT

SMCS-1317 **i03502063**

NOTE	REF NO	GRAPHIC REF	PART NUMBER	QTY	PART NAME 1 2 3 4 5 6 (PRODUCT LEVEL)	SEE PAGE
	1	1	**6G-2263**	1	SPACER (10.5X19X28.5-MM THK)	
	2	1	**6I-1497**	1	SEAL	
	3	1	**6S-8620**	2	CLAMP-HOSE	
	4	1	**8T-9402**	3	CLAMP-HOSE	
	5	1	**165-4021**	1	CANISTER AS-BREATHER (CRANKCASE)	
		1	**185-6643**	1	SEAL (BREATHER)	
	6	1	**202-5909**	1	TUBE AS-OIL	
	7	1	**254-4418**	1	HOSE	
	8	1	**254-4419**	1	PLATE AS	
M		1	**6V-9632**	4	NUT-WELD (M6X1-THD)	
	9	1	**5P-4116**	2	WASHER-HARD (8.8X20.5X2-MM THK)	
	10	1	**6D-4246**	1	CLIP	
M	11	1	**8C-3798**	2	BOLT-LOCKING (M6X1X30-MM)	
	12	1	**8T-4121**	1	WASHER-HARD (11X21X2.5-MM THK)	
M	13	1	**8T-4138**	2	BOLT (M6X1X20-MM)	
M	14	1	**8T-4185**	1	BOLT (M10X1.5X50-MM)	
M	15	1	**8T-4189**	2	BOLT (M8X1.25X20-MM)	
	16	1	**8T-4205**	4	WASHER-HARD (7.2X14.5X2-MM THK)	
	17	1	**8T-7529**	2	CLIP	
E	18	1	**136-1955**		HOSE (82-CM)	
E	19	1	**5P-1505**		HOSE (73-CM)	

E-ORDER BY THE CENTIMETER
M-METRIC PART

250-7963 **BREATHER GP** ***(contd.)*** **i03502063**

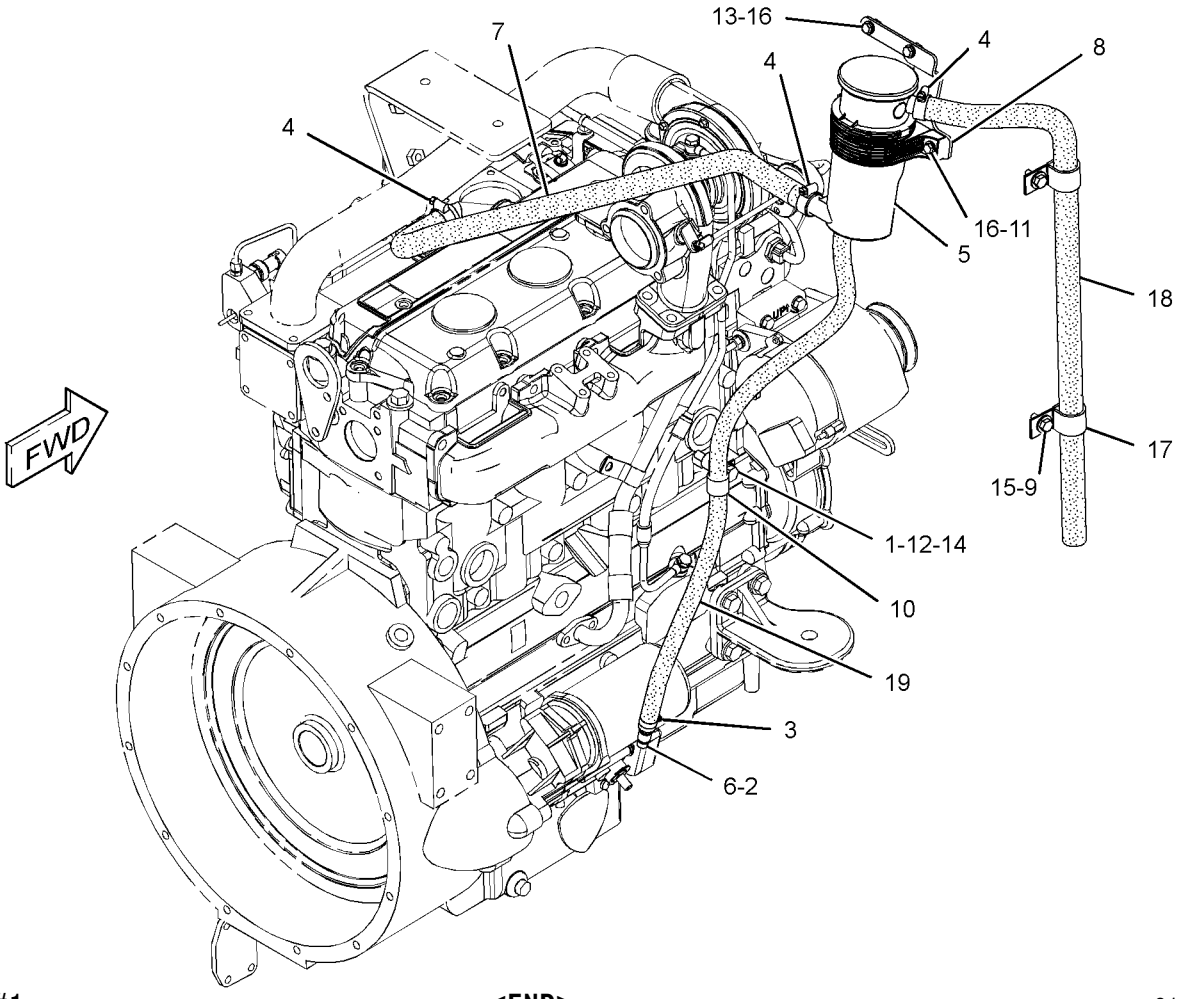

GRAPHIC #1 **<END>** g01231422

LUBRICATION SYSTEM

222-7091 GAUGE GP-OIL LEVEL & FILLER—WITH FILTER

S/N: EAT1-UP

PART OF 214-6903 ENGINE AR

SMCS-1316, 1326 **i03502082**

NOTE	REF NO	GRAPHIC REF	PART NUMBER	QTY	PART NAME 1 2 3 4 5 6 (PRODUCT LEVEL)	SEE PAGE
	1	1	**6I-1497**	1	SEAL	
	2	1	**7W-2326**	1	FILTER AS-ENGINE OIL	
	3	1	**9M-7958**	1	CLAMP-HOSE	
	4	1	**127-4471**	1	CLAMP-HOSE	
	5	1	**236-6651**	1	CAP AS (ENGINE OIL FILLER)	
	6	1	**249-5046**	1	TUBE AS	
	7	1	**249-5295**	1	HOSE (OIL FILLER)	
	8	1	**249-5297**	1	BRACKET AS	
M	9	1	**8T-4195**	2	BOLT (M10X1.5X30-MM)	
	10	1	**256-0143**	1	TUBE AS	
	11	1	**261-3572**	1	GAUGE-OIL LEVEL (ENGINE DIPSTICK)	
	12	1	**033-8248**	2	CLIP	
	13	1	**7D-7233**	1	CLIP	
	14	1	**7X-7729**	3	WASHER (11X25X3-MM THK)	
	15	1	**8T-4121**	5	WASHER-HARD (11X21X2.5-MM THK)	
M	16	1	**8T-4133**	2	NUT (M10X1.5-THD)	
M	17	1	**8T-4136**	1	BOLT (M10X1.5X25-MM)	
M	18	1	**8T-4196**	3	BOLT (M10X1.5X35-MM)	

M-METRIC PART

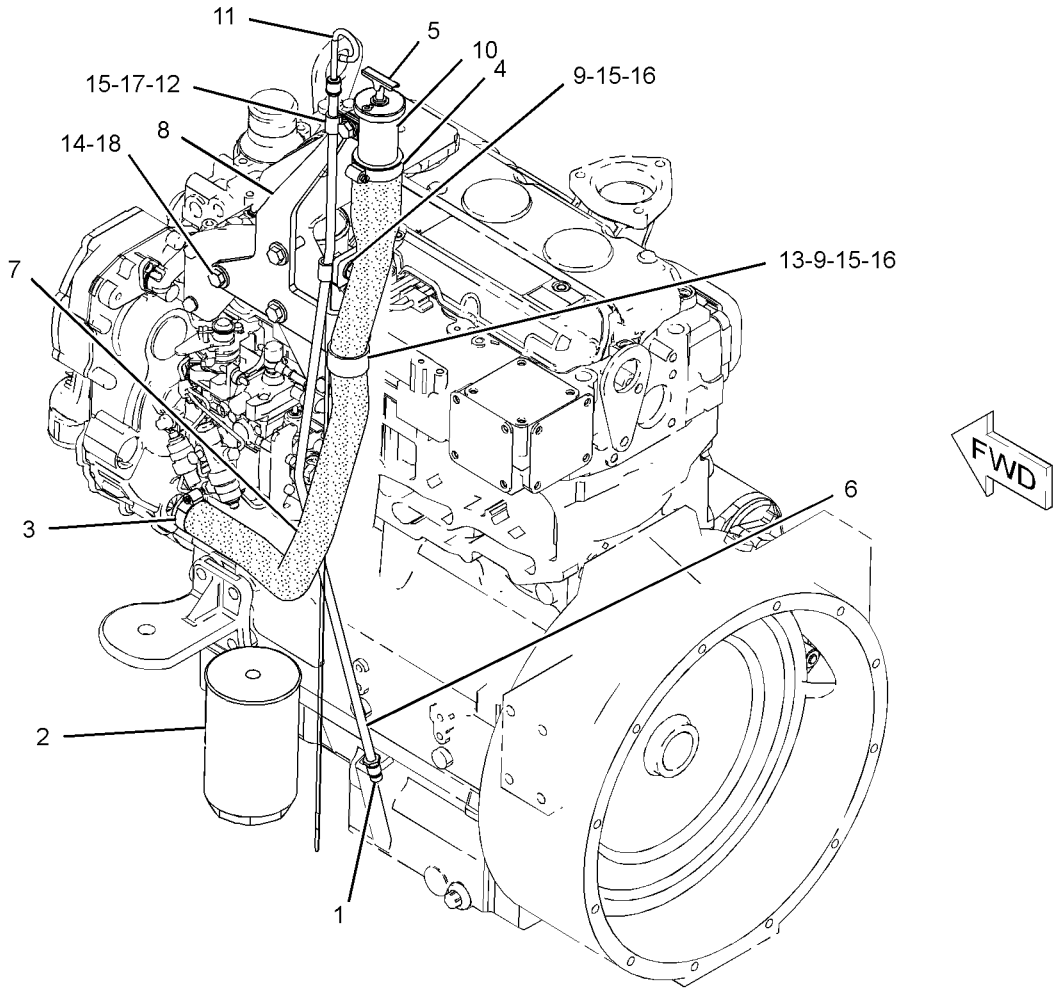

GRAPHIC #1 **<END>** g01231281

230-7578 PUMP GP-ENGINE OIL

S/N: CRS1-1238

PART OF 319-2122 ENGINE AR, 245-6842, 320-8415, 325-5122 ENGINE AR-PRIMARY

ALSO AN ATTACHMENT

SMCS-1304, 1315 **i01862499**

NOTE	REF NO	GRAPHIC REF	PART NUMBER	QTY	PART NAME 1 2 3 4 5 6 (PRODUCT LEVEL)	SEE PAGE
M	1	1	**100-4461**	5	BOLT (M10X1.50X50-MM)	
	2	1	**225-8329**	1	PUMP AS-ENGINE OIL	

M-METRIC PART

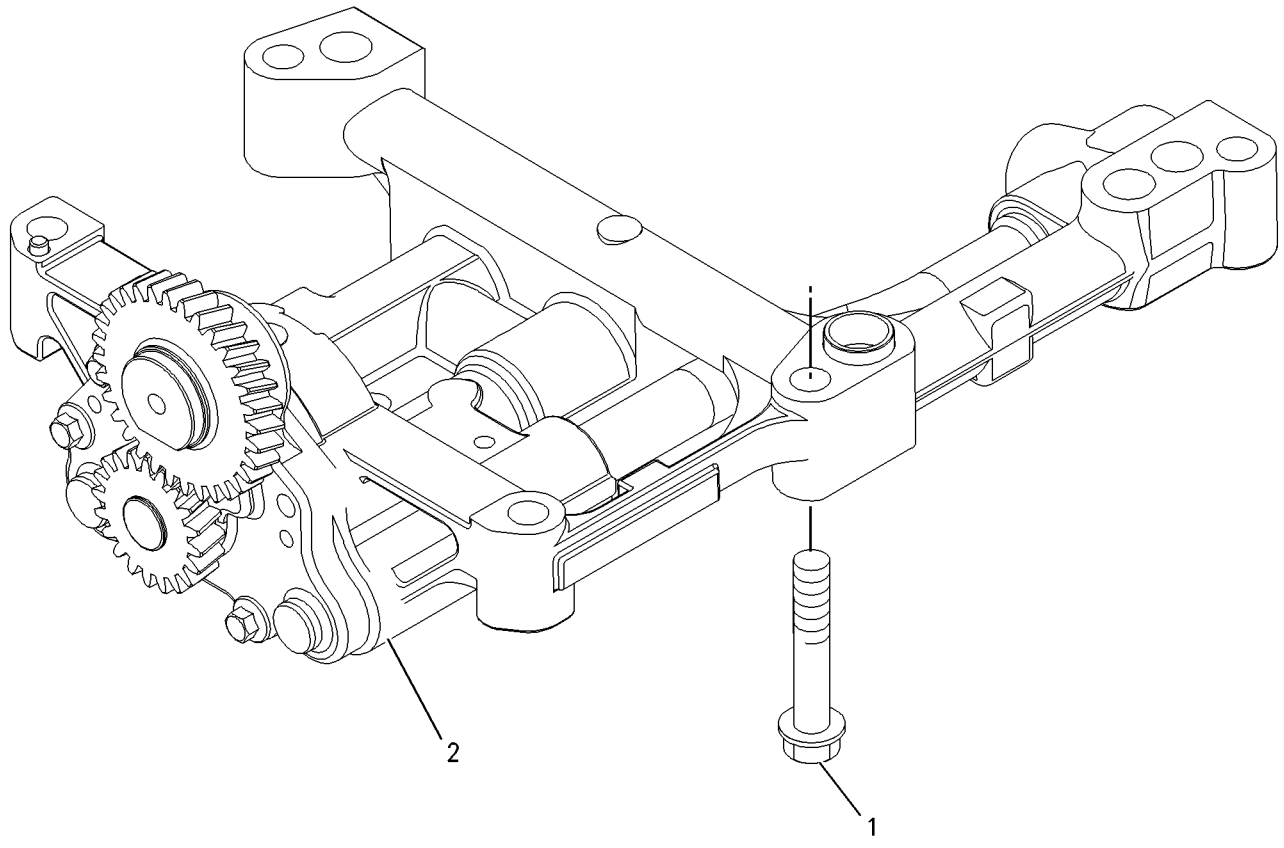

GRAPHIC #1 **<END>** g00911993

231-0033 CONNECTION GP-WATER

S/N: CRS1-1238

PART OF 319-2122 ENGINE AR, 245-6842, 320-8415, 325-5122 ENGINE AR-PRIMARY
ALSO AN ATTACHMENT

SMCS-1380 **i02597614**

NOTE	REF NO	GRAPHIC REF	PART NUMBER	QTY	PART NAME 1 2 3 4 5 6 (PRODUCT LEVEL)	SEE PAGE
M	1	1	**6I-0260**	2	BOLT (M8X1.25X25-MM)	
	2	1	**254-2267**	1	REGULATOR GP-TEMPERATURE (INCLUDES CONNECTOR) (WATER)	
	2A	1	**254-2270**	1	SEAL-O-RING (WATER TEMPERATURE REGULATOR)	

M-METRIC PART

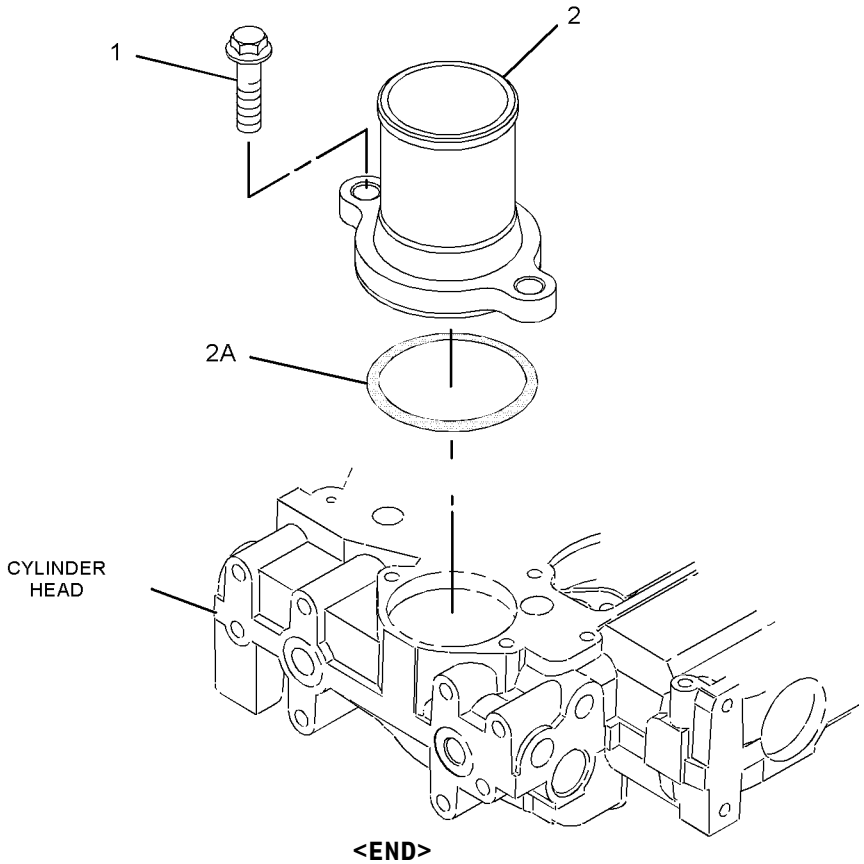

GRAPHIC #1 **<END>** g01081626

232-3722 COOLER GP-ENGINE OIL

S/N: CRS1-UP

PART OF 238-2799 COOLER GP-FLTR BASE & ENG OIL

ALSO AN ATTACHMENT

SMCS-1378 **i02525143**

NOTE	REF NO	GRAPHIC REF	PART NUMBER	QTY	PART NAME 1 2 3 4 5 6 (PRODUCT LEVEL)	SEE PAGE
M	1	1	**6I-0260**	10	BOLT (M8X1.25X25-MM)	
	2	1	**6I-4374**	3	BOLT (M8X1.25X60-MM)	
M	3	1	**101-3895**	4	BOLT (M8X1.25X35-MM)	
	4	1	**225-6817**	1	COOLER-OIL (ENGINE)	
	5	1	**225-6818**	2	SEAL	
	6	1	**272-2265**	1	SEAL	

M-METRIC PART

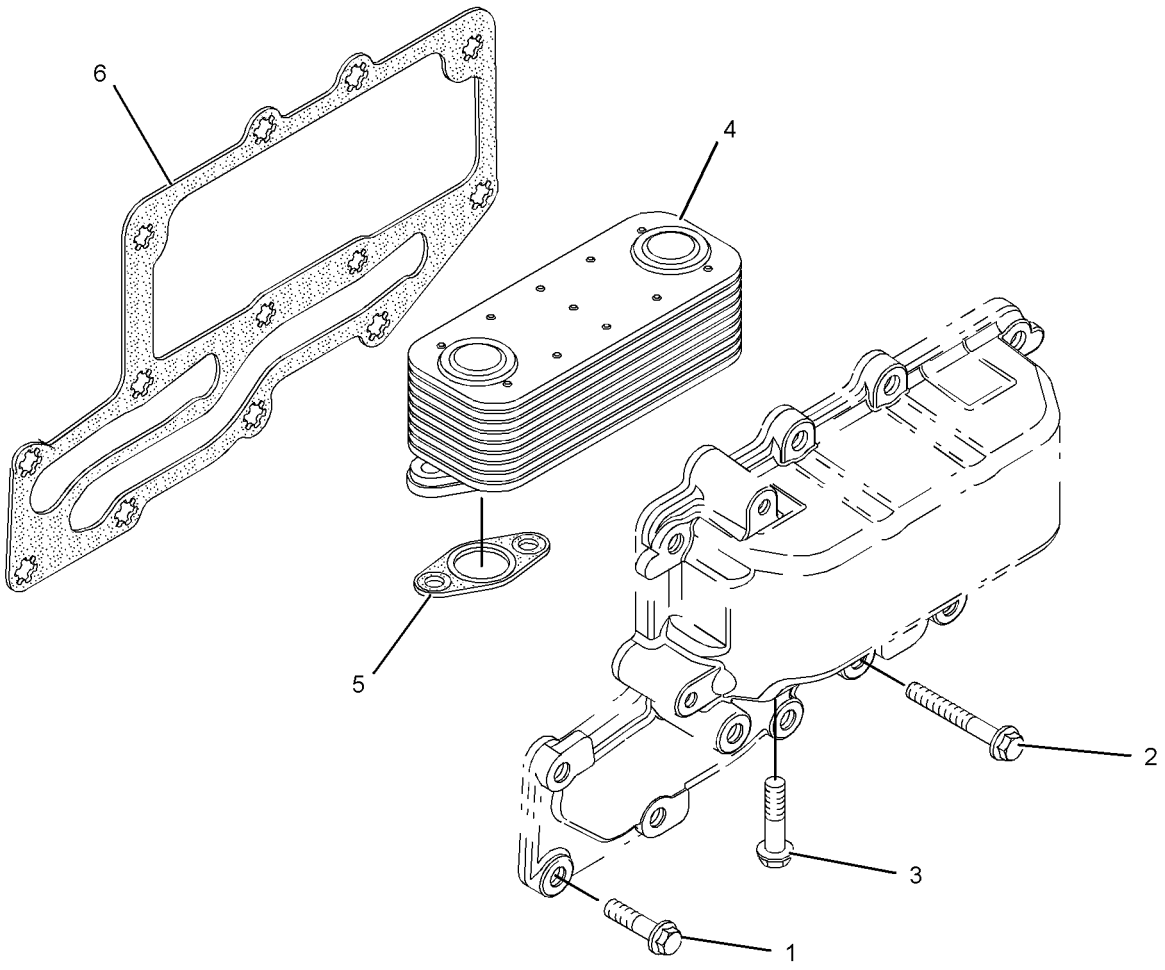

GRAPHIC #1 **<END>** g01111678

296-5616 COOLER GP-ENGINE OIL

S/N: CRS1-UP

PART OF 238-2799 COOLER GP-FLTR BASE & ENG OIL

AN ATTACHMENT

SMCS-1378 **i02654739**

NOTE	REF NO	GRAPHIC REF	PART NUMBER	QTY	PART NAME 1 2 3 4 5 6 (PRODUCT LEVEL)	SEE PAGE
	1	1	**6I-0218**	2	BOLT (M8X1.25X25-MM)	
M	2	1	**6I-0260**	8	BOLT (M8X1.25X25-MM)	
	3	1	**6I-4374**	3	BOLT (M8X1.25X60-MM)	
M	4	1	**101-3895**	4	BOLT (M8X1.25X35-MM)	
	5	1	**225-6817**	1	COOLER-OIL	
	6	1	**225-6818**	2	SEAL	
	7	1	**272-2265**	1	SEAL	

M-METRIC PART

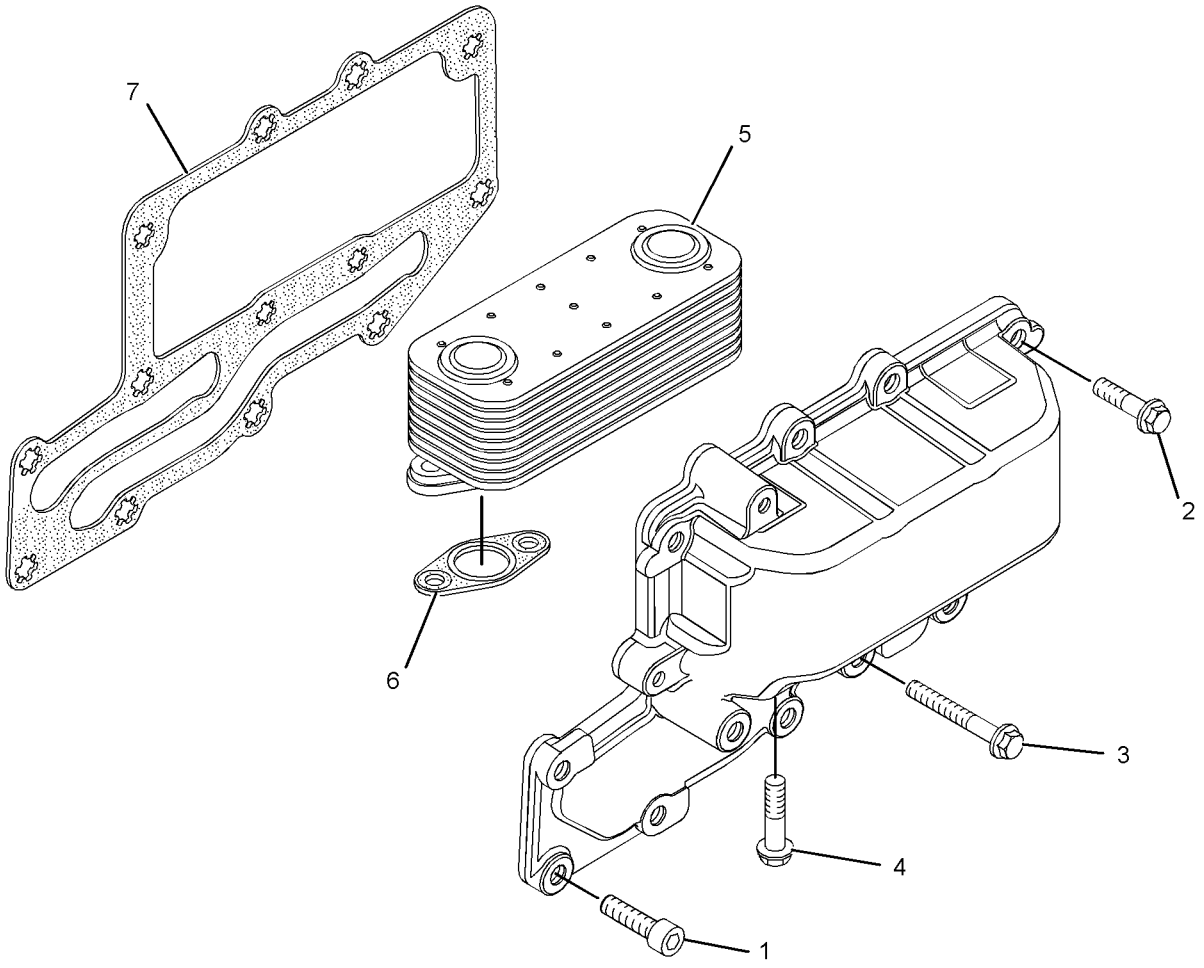

GRAPHIC #1 **<END>** g01318786

238-2799 COOLER GP-FLTR BASE & ENG OIL

S/N: CRS1-1238

PART OF 319-2122 ENGINE AR, 245-6842, 320-8415 ENGINE AR-PRIMARY

ALSO AN ATTACHMENT

SMCS-1306, 1378 **i02574011**

NOTE	REF NO	GRAPHIC REF	PART NUMBER	QTY	PART NAME 1 2 3 4 5 6 (PRODUCT LEVEL)	SEE PAGE
	1	1	**6I-0572**	4	BOLT (M8X1.25X20-MM)	
M	2	1	**6I-0645**	4	BOLT (M8X1.25X25-MM)	
	3	1	**8T-7876**	1	SEAL-O-RING	
	4	1	**225-7941**	1	PLUG	
	5	1	**225-7944**	2	GASKET	
	6	1	**249-0974**	1	HEAD AS-OIL FILTER	
Y	7	1	**232-3722**	1	COOLER GP-ENGINE OIL	55
	8	1	**232-3751**	1	PLATE	

M-METRIC PART
Y-SEPARATE ILLUSTRATION

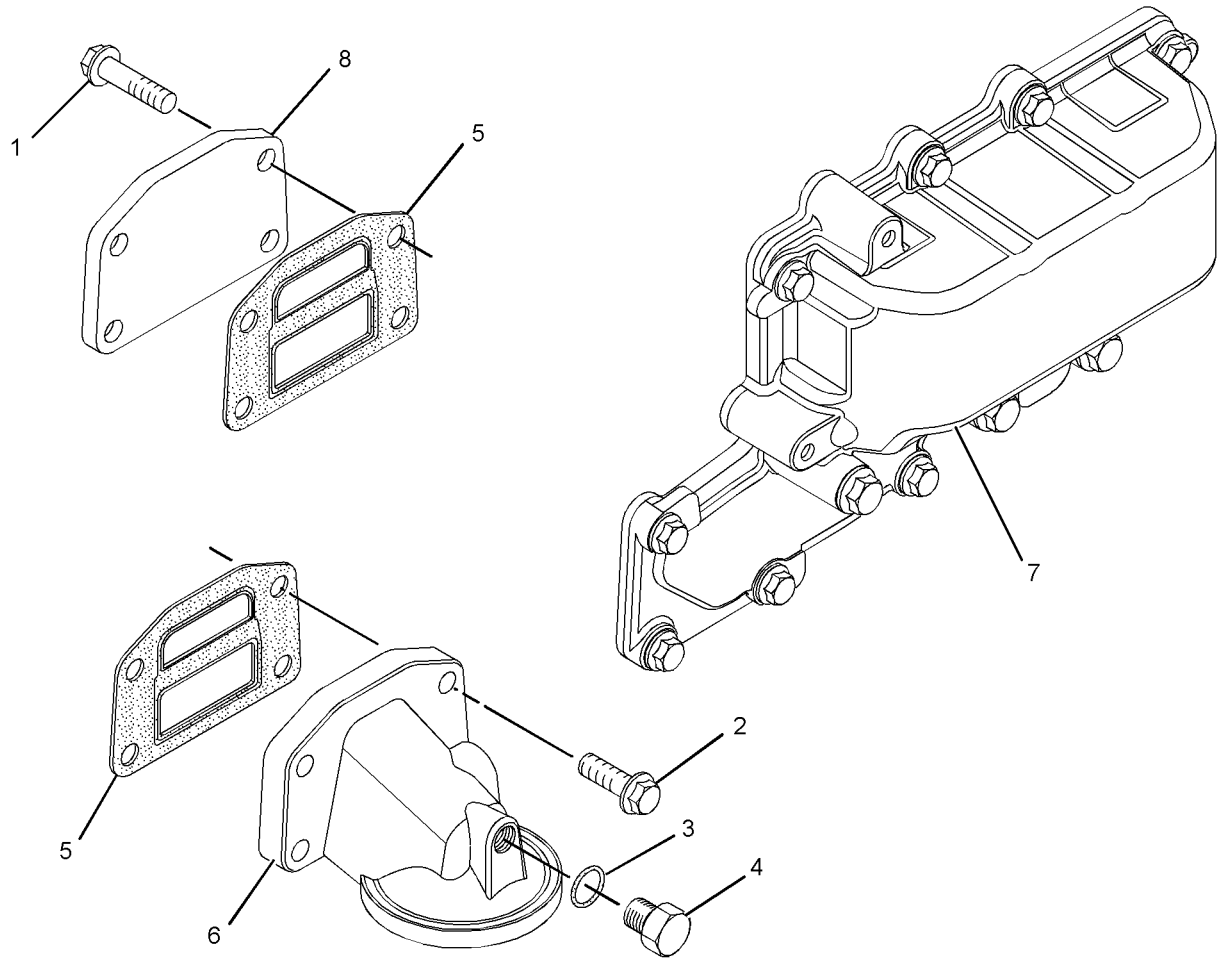

GRAPHIC #1 **<END>** g01289551

238-2799 COOLER GP-FLTR BASE & ENG OIL

S/N: CRS1-UP

PART OF 319-2122 ENGINE AR, 320-8415, 325-5122 ENGINE AR-PRIMARY

AN ATTACHMENT

SMCS-1306, 1378 **i03244621**

NOTE	REF NO	GRAPHIC REF	PART NUMBER	QTY	PART NAME 1 2 3 4 5 6 (PRODUCT LEVEL)	SEE PAGE
	1	1	**6I-0572**	4	BOLT (M8X1.25X20-MM)	
M	2	1	**6I-0645**	4	BOLT (M8X1.25X25-MM)	
	3	1	**8T-7876**	1	SEAL-O-RING	
	4	1	**225-7941**	1	PLUG	
	5	1	**225-7944**	2	GASKET	
	6	1	**249-0974**	1	HEAD AS-OIL FILTER	
CY	7	1	**296-5616**	1	COOLER GP-ENGINE OIL	56
	8	1	**232-3751**	1	PLATE	

C-CHANGE FROM PREVIOUS TYPE
M-METRIC PART
Y-SEPARATE ILLUSTRATION

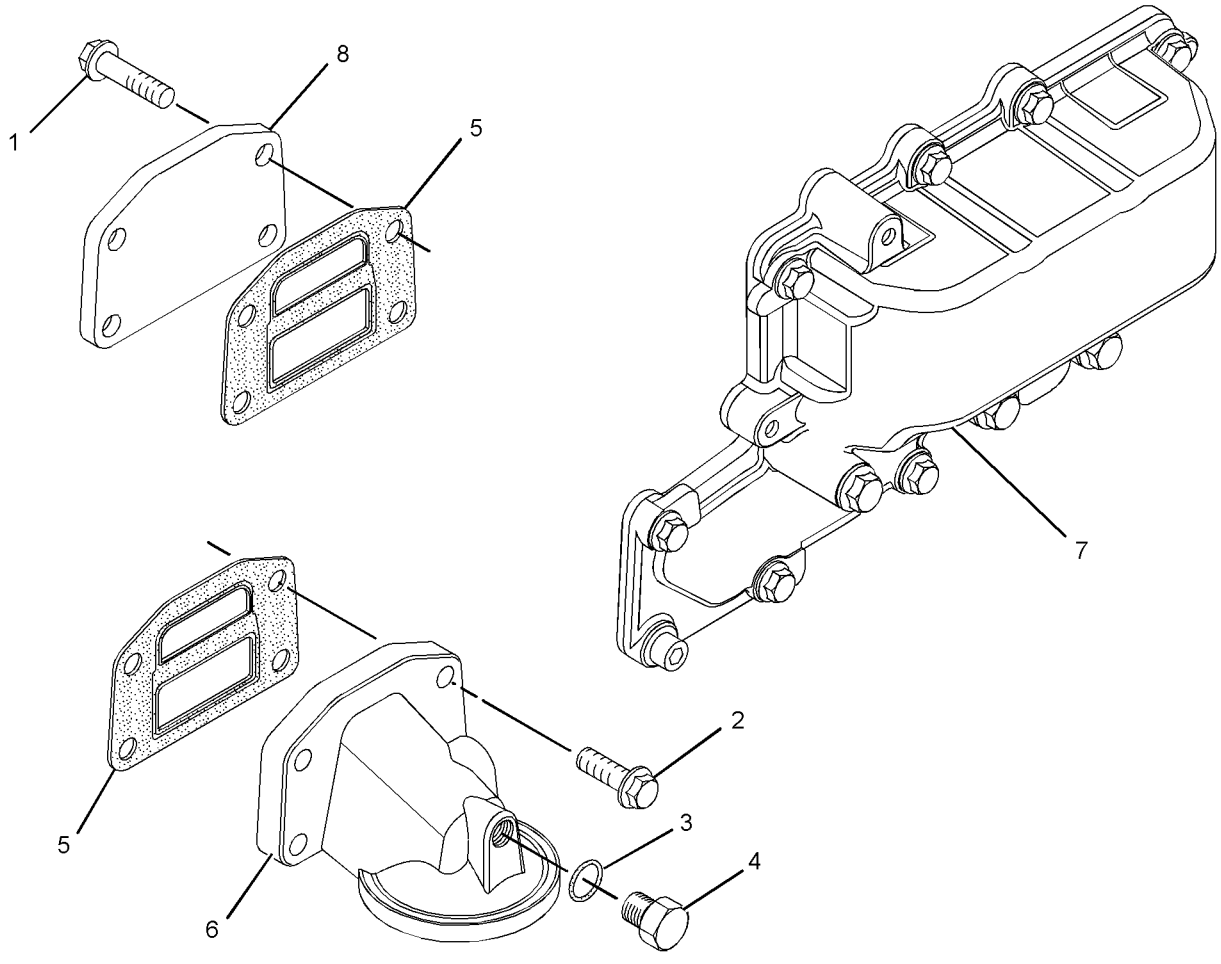

GRAPHIC #1 **<END>** g01621027

213-9314 FAN GP-SUCTION—WITH AIR CONDITIONER

S/N: EAT1-1237
PART OF 269-2127 CAB AR-ENCLOSED ROPS
AN ATTACHMENT

SMCS-1356, 1360 **i02838415**

NOTE	REF NO	GRAPHIC REF	PART NUMBER	QTY	PART NAME 1 2 3 4 5 6 (PRODUCT LEVEL)	SEE PAGE
	1	1	**3S-8447**	1	V-BELT SET (INCLUDES 2-BELTS)	
	2	1	**142-3388**	1	SPACER-FAN	
	3	1	**142-3391**	1	SPIDER AS (9-BLADE)	
	4	1	**215-3507**	1	PULLEY-FAN	
	5	1	**242-9751**	1	GUARD AS	
M	6	1	**153-3061**	4	BOLT (M8X1.25X130-MM)	
	7	1	**5P-4116**	4	WASHER-HARD (8.8X20.5X2-MM THK)	
	8	1	**8T-4224**	4	WASHER-HARD (8.8X16X2-MM THK)	
M	9	1	**8T-4908**	4	BOLT (M8X1.25X25-MM)	
	10	1	**1W-2934**	1	V-BELT (AIR CONDITIONER)	

M-METRIC PART

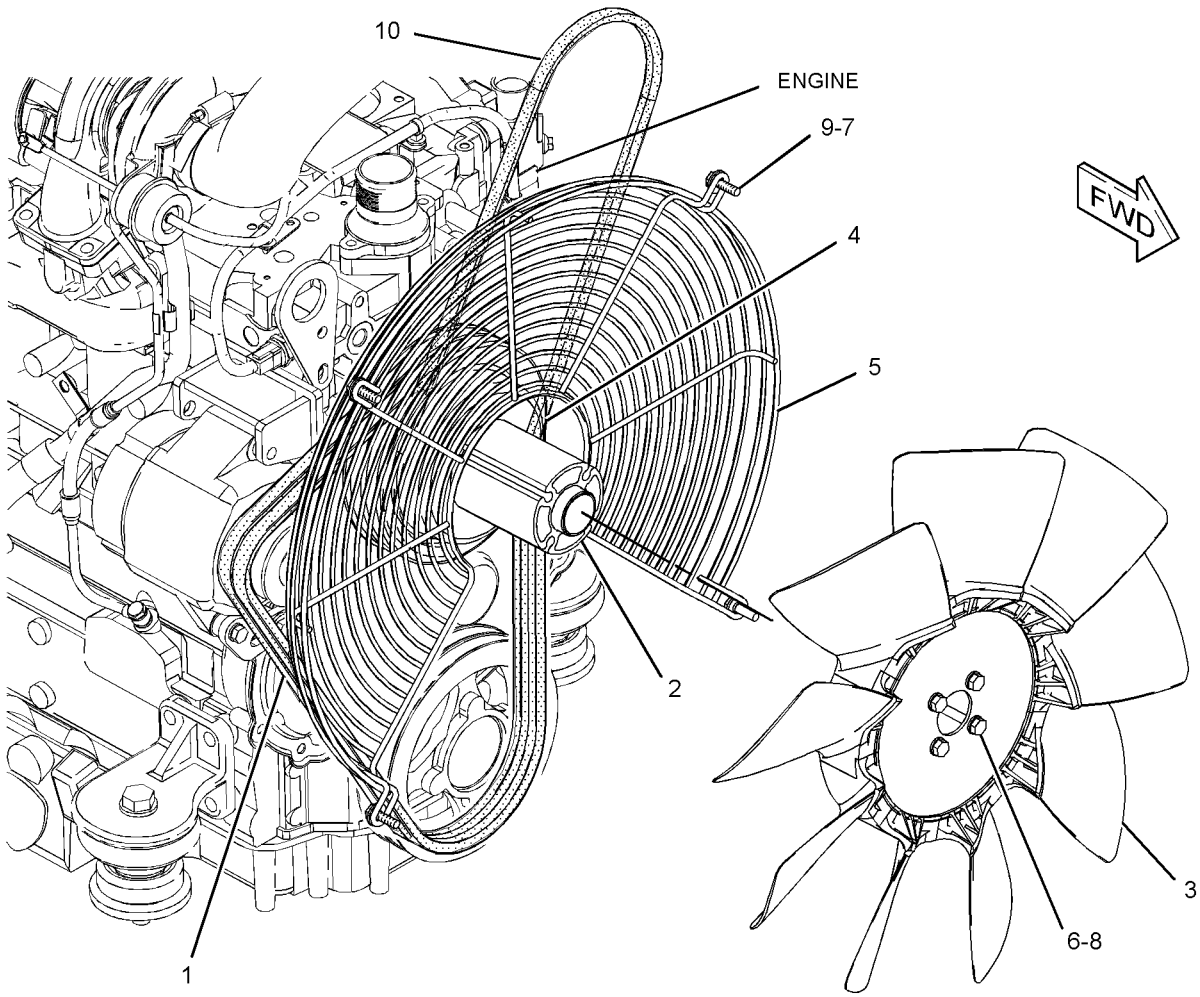

GRAPHIC #1 **<END>** g01211950

213-9314 FAN GP-SUCTION—WITH AIR CONDITIONER

S/N: EAT1238-UP
PART OF 269-2127 CAB AR-ENCLOSED ROPS
AN ATTACHMENT

SMCS-1356, 1360 **i03318481**

NOTE	REF NO	GRAPHIC REF	PART NUMBER	QTY	PART NAME 1 2 3 4 5 6 (PRODUCT LEVEL)	SEE PAGE
	1	1	**3S-8447**	1	V-BELT SET (INCLUDES 2-BELTS)	
	2	1	**142-3388**	1	SPACER-FAN	
	3	1	**142-3391**	1	SPIDER AS (9-BLADE)	
	4	1	**215-3507**	1	PULLEY-FAN	
	5	1	**242-9751**	1	GUARD AS	
M	6	1	**153-3061**	4	BOLT (M8X1.25X130-MM)	
	7	1	**5P-4116**	4	WASHER-HARD (8.8X20.5X2-MM THK)	
	8	1	**8T-4224**	4	WASHER-HARD (8.8X16X2-MM THK)	
M	9	1	**8T-4908**	4	BOLT (M8X1.25X25-MM)	
C	10	1	**2P-6818**	1	V-BELT (AIR CONDITIONER)	

C-CHANGE FROM PREVIOUS TYPE
M-METRIC PART

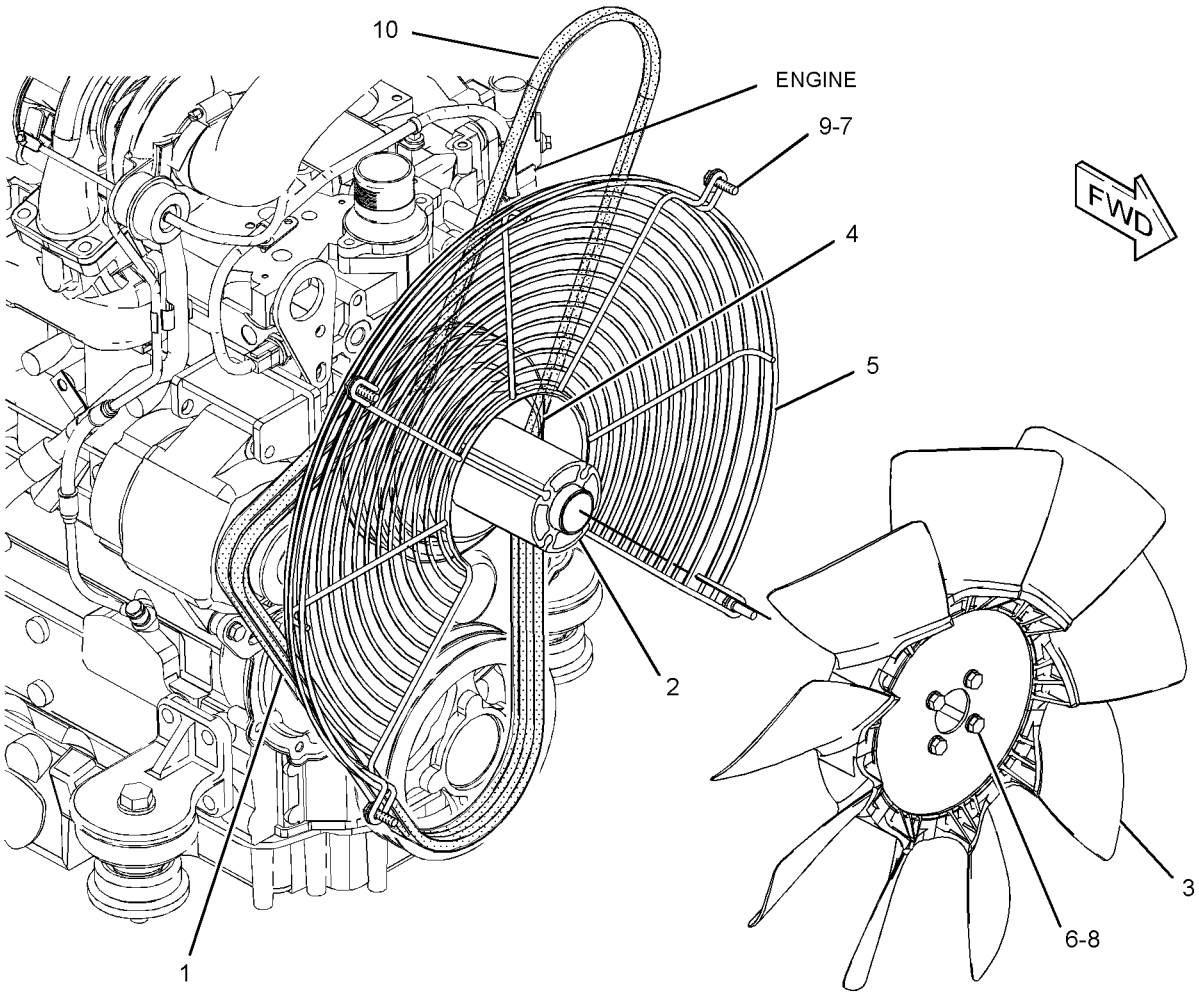

GRAPHIC #1 **<END>** g01211950

254-6101 FAN GP-SUCTION—WITHOUT AIR CONDITIONER

S/N: EAT1-UP

PART OF 269-2125, 269-2126 CAB AR-ENCLOSED ROPS, 269-2123, 269-2124 CANOPY AR-OPEN ROPS AN ATTACHMENT

SMCS-1356, 1360 **i02446411**

NOTE	REF NO	GRAPHIC REF	PART NUMBER	QTY	PART NAME 1 2 3 4 5 6 (PRODUCT LEVEL)	SEE PAGE
	1	1	**3S-8447**	1	V-BELT SET (INCLUDES 2-BELTS)	
	2	1	**130-3879**	1	PULLEY-FAN DRIVE	
	3	1	**142-3388**	1	SPACER-FAN	
	4	1	**142-3391**	1	SPIDER AS (9-BLADE)	
	5	1	**242-9751**	1	GUARD AS	
M	6	1	**153-3061**	4	BOLT (M8X1.25X130-MM)	
	7	1	**5P-4116**	4	WASHER-HARD (8.8X20.5X2-MM THK)	
	8	1	**8T-4224**	4	WASHER-HARD (8.8X16X2-MM THK)	
M	9	1	**8T-4908**	4	BOLT (M8X1.25X25-MM)	

M-METRIC PART

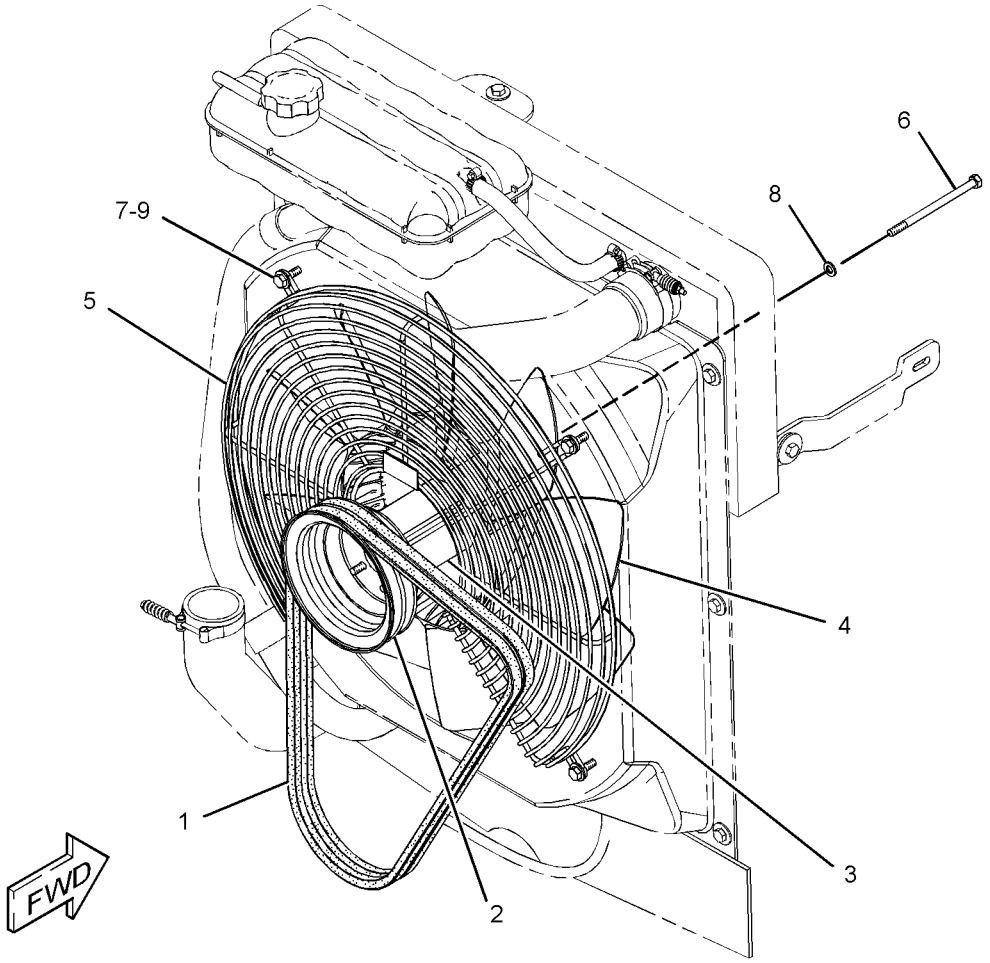

GRAPHIC #1 **<END>** g01208867

214-3751 LINES GP-TRANSMISSION COOLER

S/N: EAT1-1028

PART OF 214-2202 MOUNTING & LINES GP-RADIATOR

ALSO AN ATTACHMENT

SMCS-1375 **i02673258**

NOTE	REF NO	GRAPHIC REF	PART NUMBER	QTY	PART NAME 1 2 3 4 5 6 (PRODUCT LEVEL)	SEE PAGE
	1	1	**118-7286**	1	BRACKET AS	
	2	1	**130-9984**	2	CLIP	
	3	1	**159-1503**	2	CLAMP-HOSE	
I	4	1	**214-3753**	1	HOSE AS	
I	5	1	**250-4337**	1	HOSE AS	
	6	1	*148-8339*	1	CONNECTOR AS	
		1	**6V-8716**	1	CONNECTOR	
		1	**6V-9746**	1	SEAL-O-RING	
		1	**7M-8485**	1	SEAL-O-RING	
	7	1	*148-8360*	1	ELBOW AS	
		1	**6V-9182**	1	ELBOW	
		1	**6V-9746**	1	SEAL-O-RING	
		1	**7M-8485**	1	SEAL-O-RING	
	8	1	**5P-4116**	2	WASHER-HARD (8.8X20.5X2-MM THK)	
	9	1	**8T-4121**	2	WASHER-HARD (11X21X2.5-MM THK)	
M	10	1	**8T-4136**	2	BOLT (M10X1.5X25-MM)	
M	11	1	**8T-4189**	2	BOLT (M8X1.25X20-MM)	
M	12	1	**8T-4192**	2	BOLT (M12X1.75X25-MM)	
	13	1	**8T-4223**	2	WASHER-HARD (13.5X25.5X3-MM THK)	
	14	1	**8T-7529**	3	CLIP	
G	15	1	**160-2246**		SLEEVE-ABRASION (10-IN)	

G-ORDER BY THE INCH
I-REFER TO HYDRAULIC INFORMATION SYSTEM
M-METRIC PART

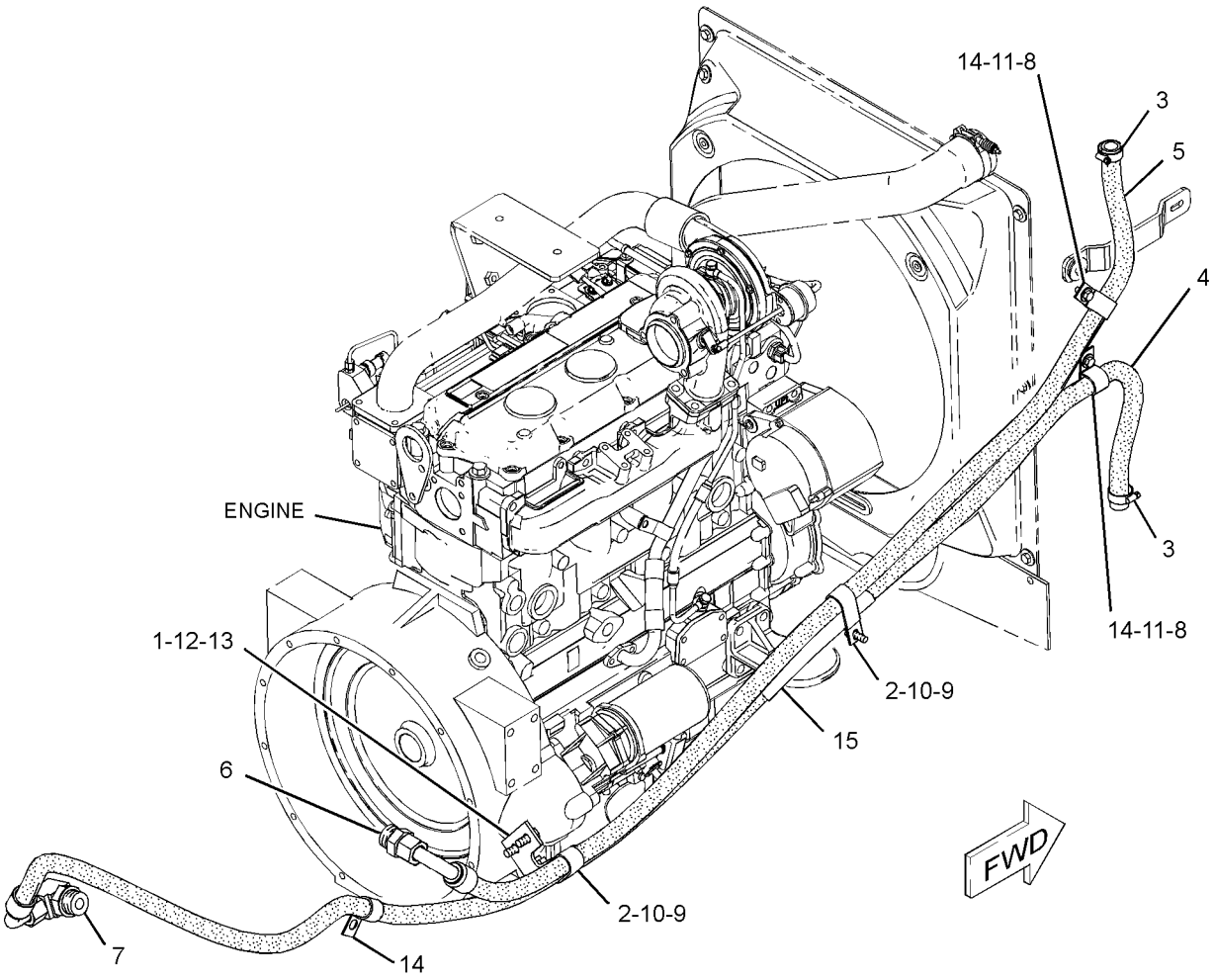

GRAPHIC #1 **<END>** g01343993

COOLING SYSTEM

214-3751 LINES GP-TRANSMISSION COOLER

S/N: EAT1029-UP

PART OF 214-2202 MOUNTING & LINES GP-RADIATOR

ALSO AN ATTACHMENT

SMCS-1375 **i02857462**

NOTE	REF NO	GRAPHIC REF	PART NUMBER	QTY	PART NAME 1 2 3 4 5 6 (PRODUCT LEVEL)	SEE PAGE
	1	1	**118-7286**	1	BRACKET AS	
	2	1	**130-9984**	2	CLIP	
	3	1	**159-1503**	2	CLAMP-HOSE	
I	4	1	**214-3753**	1	HOSE AS	
	5	1	**250-4337**	1	HOSE AS	
	6	1	*148-8339*	1	CONNECTOR AS	
		1	**6V-8716**	1	CONNECTOR	
		1	**6V-9746**	1	SEAL-O-RING	
		1	**7M-8485**	1	SEAL-O-RING	
	7	1	*148-8360*	1	ELBOW AS	
		1	**6V-9182**	1	ELBOW	
		1	**6V-9746**	1	SEAL-O-RING	
		1	**7M-8485**	1	SEAL-O-RING	
	8	1	**5P-4116**	2	WASHER-HARD (8.8X20.5X2-MM THK)	
	9	1	**8T-4121**	2	WASHER-HARD (11X21X2.5-MM THK)	
M	10	1	**8T-4136**	2	BOLT (M10X1.5X25-MM)	
M	11	1	**8T-4189**	2	BOLT (M8X1.25X20-MM)	
M	12	1	**8T-4192**	2	BOLT (M12X1.75X25-MM)	
	13	1	**8T-4223**	2	WASHER-HARD (13.5X25.5X3-MM THK)	
	14	1	**8T-7529**	3	CLIP	

I-REFER TO HYDRAULIC INFORMATION SYSTEM
M-METRIC PART

214-3751 **LINES GP-TRANSMISSION COOLER** *(contd.)* **i02857462**

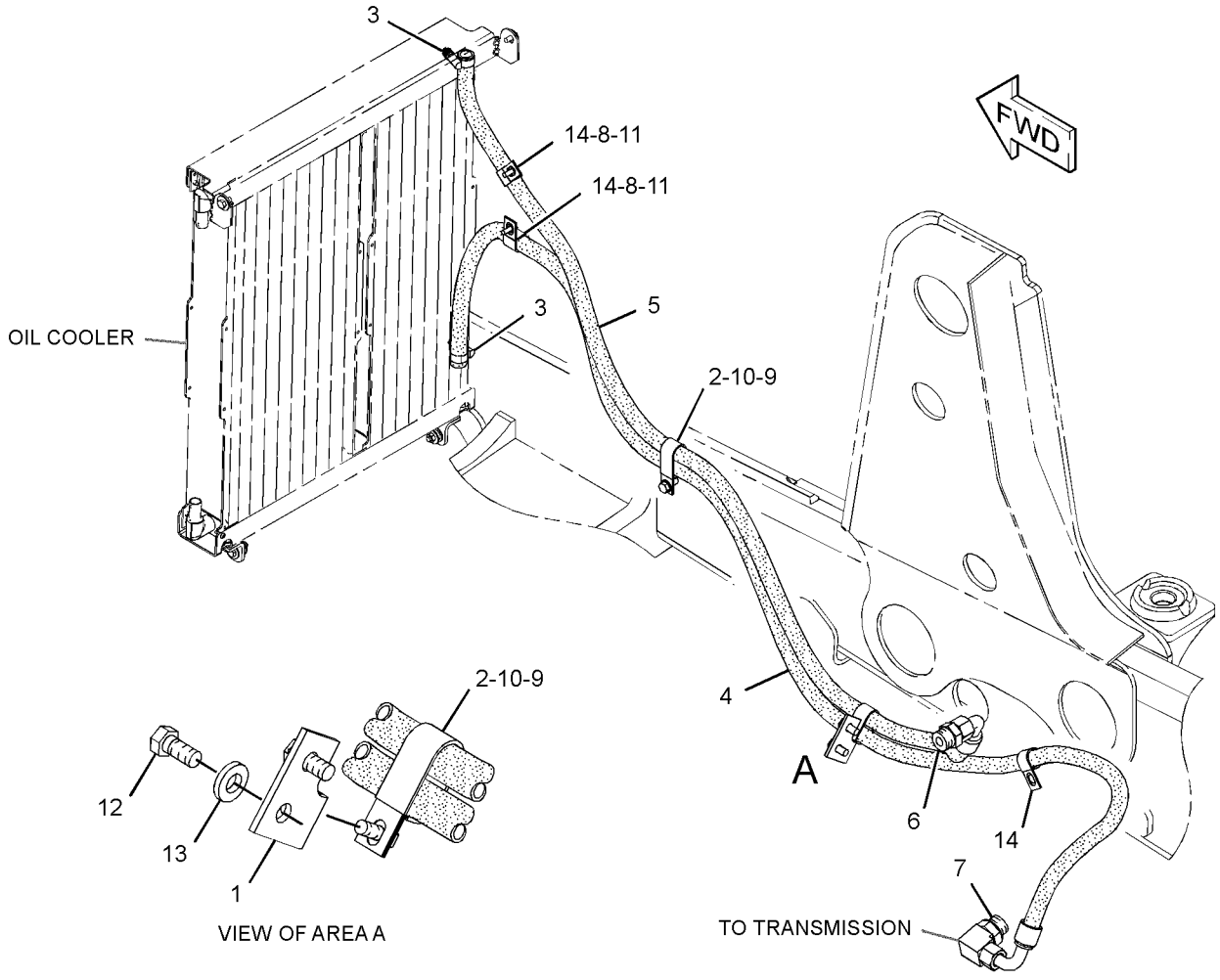

GRAPHIC #1 **<END>** g01522675

214-2202 MOUNTING & LINES GP-RADIATOR–TRANSMISSION, HYDRAULIC OIL

S/N: EAT1-UP
PART OF 213-9275 COMMON AR
FOR USE WITH AIR CONDITIONER
ALSO AN ATTACHMENT

SMCS-1353, 1354, 1375 **i02838012**

NOTE	PART NUMBER	QTY	PART NAME 1 2 3 4 5 6 (PRODUCT LEVEL)	SEE PAGE
Y	*214-3751*	1	LINES GP-TRANSMISSION COOLER	62
Y	*210-5951*	1	MOUNTING GP-RAD & OIL COOLER (TRANSMISSION, HYDRAULIC OIL)	67

Y-SEPARATE ILLUSTRATION

<END>

210-5951 MOUNTING GP-RAD & OIL COOLER–

TRANSMISSION, HYDRAULIC OIL

S/N: EAT1-UP

PART OF 214-2202 MOUNTING & LINES GP-RADIATOR

ALSO AN ATTACHMENT

SMCS-1353, 1374 **i02366621**

NOTE	REF NO	GRAPHIC REF	PART NUMBER	QTY	PART NAME 1 2 3 4 5 6 (PRODUCT LEVEL)	SEE PAGE
	1	1	**2W-9710**	4	MOUNT AS	
	2	1	**6N-6984**	2	MOUNT-RUBBER	
	3	1	**123-4065**	6	RIVET-POP	
	4	1	**140-3640**	2	PLATE	
	5	1	**210-6139**	1	HOSE-RADIATOR (LOWER)	
	6	1	**210-6141**	1	HOSE-RADIATOR (UPPER)	
	7	1	**214-3647**	1	BAFFLE	
Y	8	1	*214-7407*	1	TANK GP-EXPANSION (COOLANT)	73
	9	1	**214-7457**	1	CLAMP	
	10	1	**214-7458**	1	CLAMP-HOSE	
	11	1	**216-6945**	2	CLAMP-HOSE	
	12	1	**217-2308**	1	SHROUD AS	
	13	1	**7X-0579**	14	WASHER-HARD (8.8X25.5X2-MM THK)	
	14	1	**7X-0603**	4	WASHER-HARD (9.9X35X2.5-MM THK)	
M	15	1	**8T-4133**	4	NUT (M10X1.5-THD)	
M	16	1	**8T-4182**	4	BOLT (M10X1.5X45-MM)	
M	17	1	**8T-4189**	4	BOLT (M8X1.25X20-MM)	
M	18	1	**8T-4200**	10	BOLT (M8X1.25X16-MM)	
	19	1	**8T-4222**	8	WASHER-PLATED (11X32X2.5-MM THK)	
M	20	1	**8T-4908**	4	BOLT (M8X1.25X25-MM)	
E	21	1	**8C-3681**		HOSE (36-CM)	
J	22	1	**136-7728**		SEAL-COMPOSITE (4.45-DM EACH)	

E-ORDER BY THE CENTIMETER
J-ORDER BY THE DECIMETER
M-METRIC PART
Y-SEPARATE ILLUSTRATION

210-5951 **MOUNTING GP-RAD & OIL COOLER** *(contd.)* **i02366621**

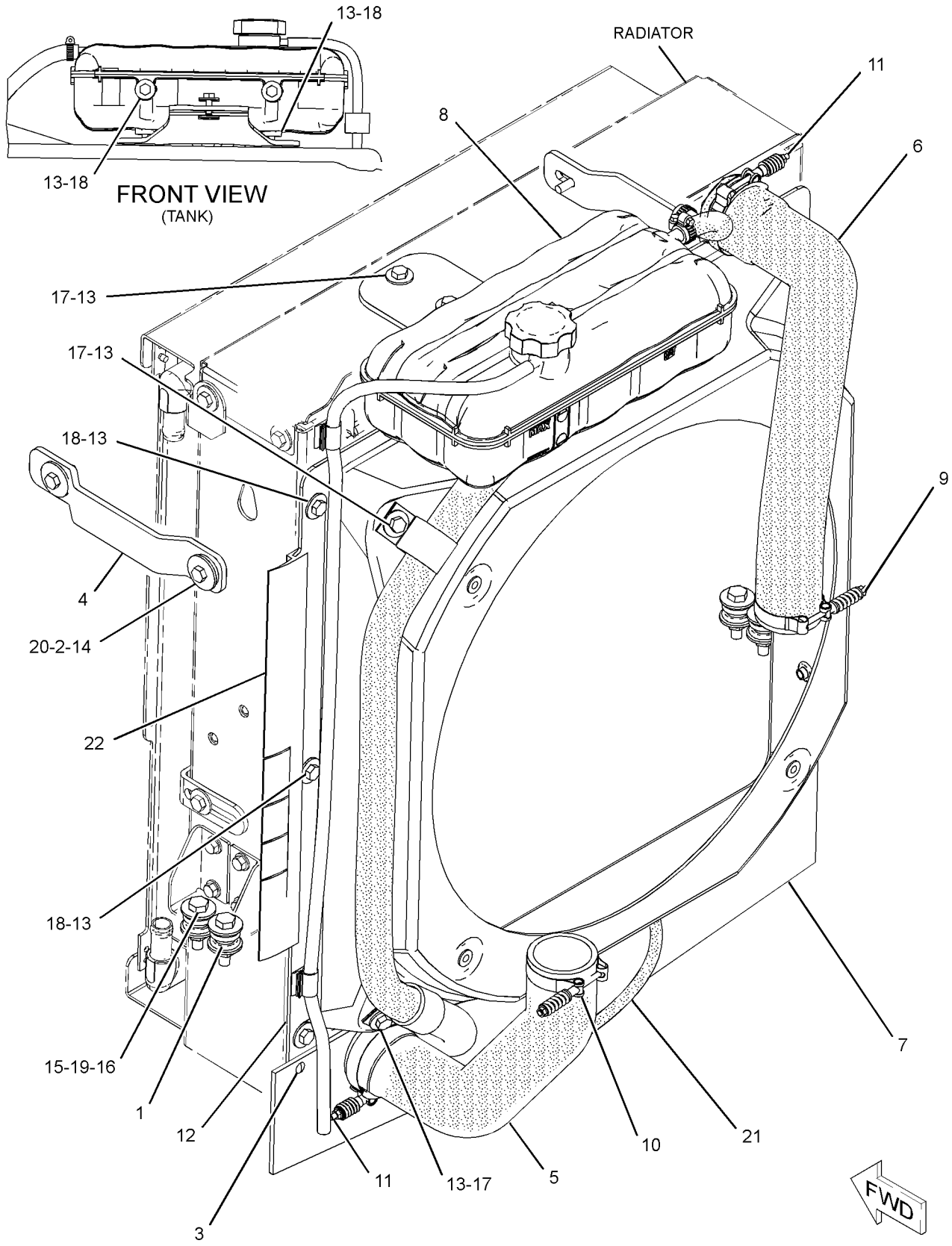

GRAPHIC #1 **<END>** g01183008

COOLING SYSTEM

230-7355 PUMP GP-WATER

S/N: CRS1-1238

PART OF 319-2122 ENGINE AR, 245-6842, 320-8415, 325-5122 ENGINE AR-PRIMARY
ALSO AN ATTACHMENT

SMCS-1361 **i02883542**

NOTE	REF NO	GRAPHIC REF	PART NUMBER	QTY	PART NAME 1 2 3 4 5 6 (PRODUCT LEVEL)	SEE PAGE
M	1	1	**6I-0217**	2	BOLT (M8X1.25X20-MM)	
M	2	1	**6I-0254**	2	BOLT (M8X1.25X30-MM)	
M	3	1	**100-3751**	5	BOLT (M8X1.25X65-MM)	
	4	1	**113-8129**	2	BOLT (M8X75-MM)	
	5	1	**225-7741**	1	CONNECTION AS	
	6	1	**225-7738**	1	SEAL-O-RING	
	7	1	**225-7739**	1	SEAL-O-RING	
	8	1	**225-8016**	1	PUMP GP-WATER	
	8A	1	**225-8019**	1	GASKET	
		1	**286-3592**	1	PUMP-GEAR	
					AVAILABLE REPAIR KIT(S):	
			247-0144	1	KIT-WATER PUMP	
					(INCLUDES 2 DIFFERENT GASKETS)	

M-METRIC PART

230-7355 **PUMP GP-WATER** *(contd.)* **i02883542**

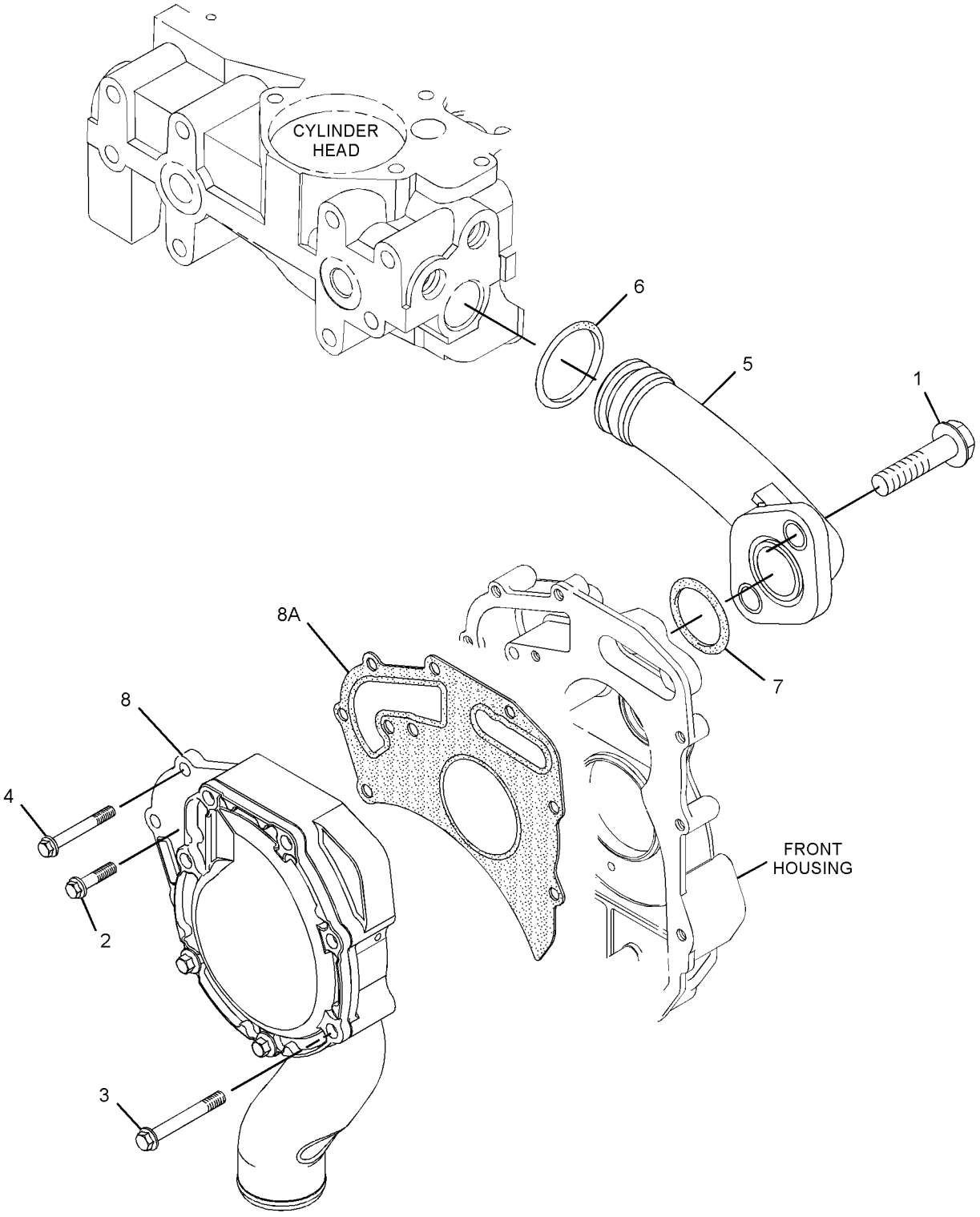

GRAPHIC #1 **<END>** g01435412

210-5949 RADIATOR & OIL COOLER GP–
HYDRAULIC, TRANSMISSION
S/N: EAT1-UP
AN ATTACHMENT

SMCS-1351 **i03514605**

NOTE	REF NO	GRAPHIC REF	PART NUMBER	QTY	PART NAME 1 2 3 4 5 6 (PRODUCT LEVEL)	SEE PAGE
	1	1	**210-5948**	1	RADIATOR GP	
		1	**1V-6585**	1	VALVE-SHUTOFF	
	2	1	**210-5953**	1	COOLER AS-OIL (HYDRAULIC, TRANSMISSION)	
	2A	1	**210-5955**	1	CORE AS-OIL COOLER (TRANSMISSION)	
	2B	1	**210-5954**	1	CORE AS-OIL COOLER (HYDRAULIC)	
	3	1	**8C-0572**	2	WASHER (8.8X25.5X2-MM THK)	
M	4	1	**8T-4200**	2	BOLT (M8X1.25X16-MM)	

M-METRIC PART

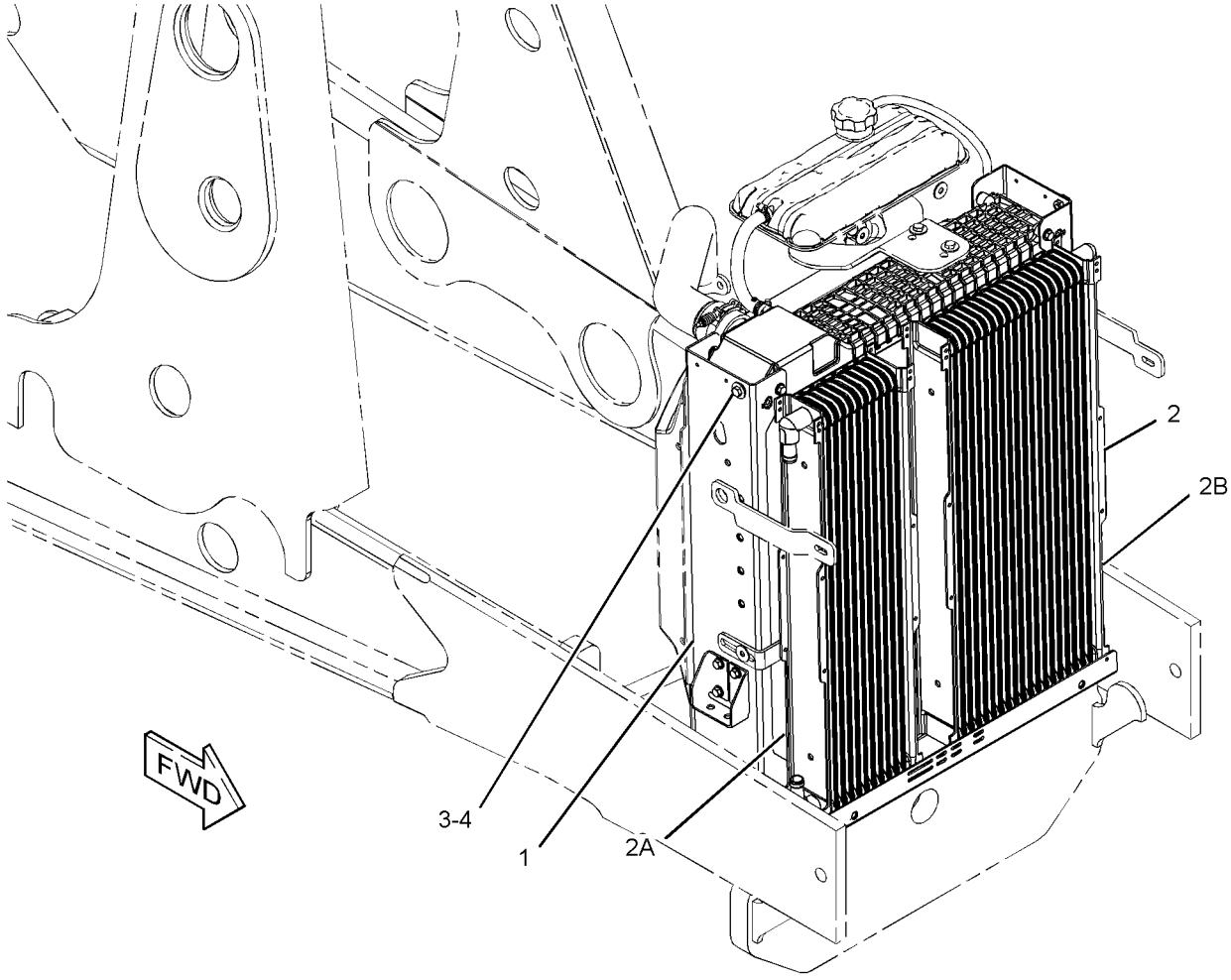

GRAPHIC #1 **<END>** g01341095

214-4749 RADIATOR & OIL COOLER GP–
HYDRAULIC, TRANSMISSION
S/N: EAT1-UP
AN ATTACHMENT

SMCS-1351 **i03514610**

NOTE	REF NO	GRAPHIC REF	PART NUMBER	QTY	PART NAME 1 2 3 4 5 6 (PRODUCT LEVEL)	SEE PAGE
	1	1	**214-4740**	1	RADIATOR GP	
		1	**1V-6585**	1	VALVE-SHUTOFF	
	2	1	**214-4745**	1	COOLER AS-OIL (HYDRAULIC, TRANSMISSION)	
		1	**214-4746**	1	CORE AS-OIL COOLER (HYDRAULIC)	
		1	**214-4747**	1	CORE AS-OIL COOLER (TRANSMISSION)	
	3	1	**8C-0572**	2	WASHER (8.8X25.5X2-MM THK)	
M	4	1	**8T-4200**	2	BOLT (M8X1.25X16-MM)	

M-METRIC PART

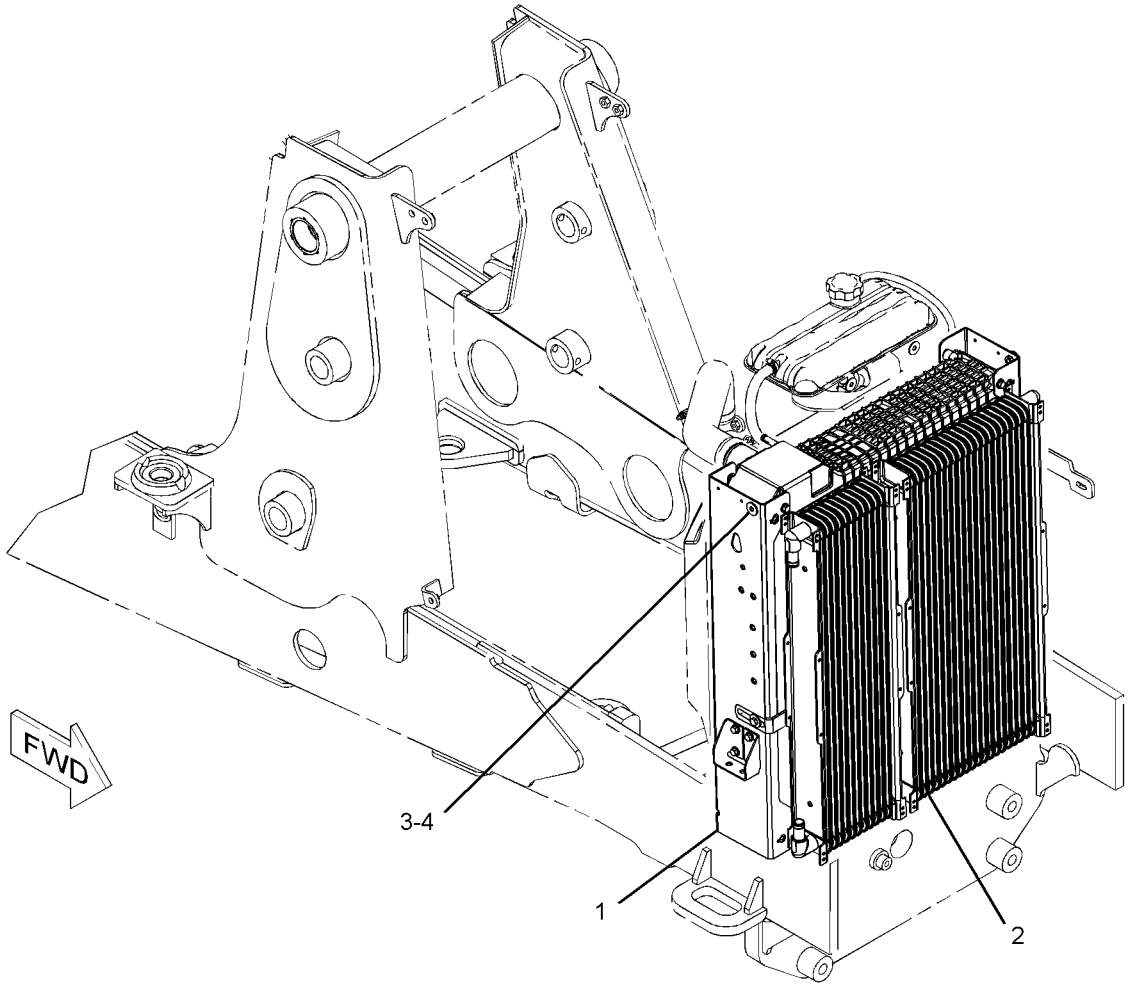

GRAPHIC #1 **<END>** g01205438

214-7407 TANK GP-EXPANSION–COOLANT

S/N: EAT1-UP

PART OF 210-5951 MOUNTING GP-RAD & OIL COOLER

ALSO AN ATTACHMENT

SMCS-1354 **i02658756**

NOTE	REF NO	GRAPHIC REF	PART NUMBER	QTY	PART NAME 1 2 3 4 5 6 (PRODUCT LEVEL)	SEE PAGE
	1	1	**6S-8620**	2	CLAMP-HOSE	
	2	1	**9M-7958**	2	CLAMP-HOSE	
	3	1	**031-5644**	1	CLIP	
	4	1	**247-1385**	1	TANK GP-EXPANSION	
		1	**251-3227**	1	CAP AS-COOLANT TANK	
	5	1	**250-2314**	1	BRACKET AS	
M		1	**8T-3612**	2	NUT-WELD (M8X1.25-THD)	
	6	1	**4D-7388**	2	CLIP	
E	7	1	**9X-2133**		HOSE (23-CM)	
E	8	1	**8C-3681**		HOSE (96-CM)	
	9	1	**259-8417**	1	HOSE	
	10	1	**4B-0418**	1	CLIP	

E-ORDER BY THE CENTIMETER
M-METRIC PART

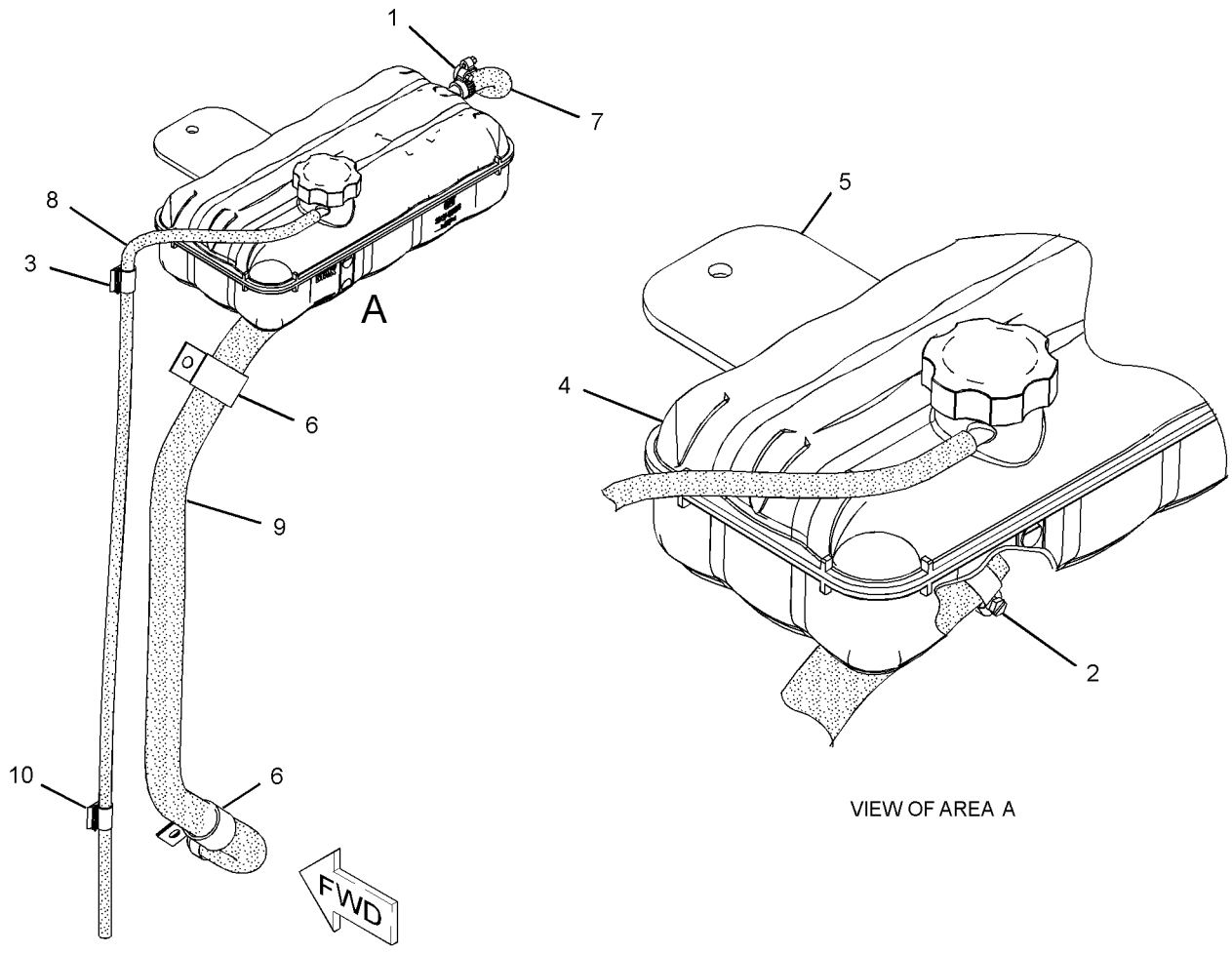

GRAPHIC #1 **<END>** g01340033

AIR INLET AND EXHAUST SYSTEM

224-9473 AIR CLEANER GP

S/N: EAT1-UP

PART OF 214-6903 ENGINE AR

SMCS-1051, 1054 **i03502160**

NOTE	REF NO	GRAPHIC REF	PART NUMBER	QTY	PART NAME 1 2 3 4 5 6 (PRODUCT LEVEL)	SEE PAGE
	1	1	**8T-6726**	1	CLAMP-HOSE	
	2	1	**110-2445**	1	CLAMP-HOSE	
	3	1	**127-4471**	1	CLAMP-HOSE	
	4	1	**223-8995**	1	HOSE	
Y	5	1	**234-1981**	1	AIR CLEANER GP	76
	6	1	**234-2622**	1	HOSE-AIR	
	7	1	**248-3231**	1	DUCT-AIR	
	8	1	**249-5512**	1	SEAL	
	9	1	**253-4137**	1	SEAL	
	10	1	**253-4138**	1	STUD	
	11	1	**288-6954**	1	PLATE AS	
M		1	**8T-3490**	3	NUT-WELD (M10X1.5-THD)	
		1	**2K-7069**	3	SPACER (0.406X0.75X2-IN THK)	
M		1	**9R-2672**	1	BOSS (M10X1.5X20-MM)	
M	12	1	**096-5866**	4	BOLT (M8X1.25X75-MM)	
M	13	1	**129-3178**	1	LOCKNUT (M6X1-THD)	
	14	1	**226-0449**	1	CLAMP-HOSE	
	15	1	**7X-0586**	2	WASHER-HARD (7.2X32X2-MM THK)	
M	16	1	**8T-4189**	2	BOLT (M8X1.25X20-MM)	
	17	1	**8T-4224**	6	WASHER-HARD (8.8X16X2-MM THK)	

M-METRIC PART
Y-SEPARATE ILLUSTRATION

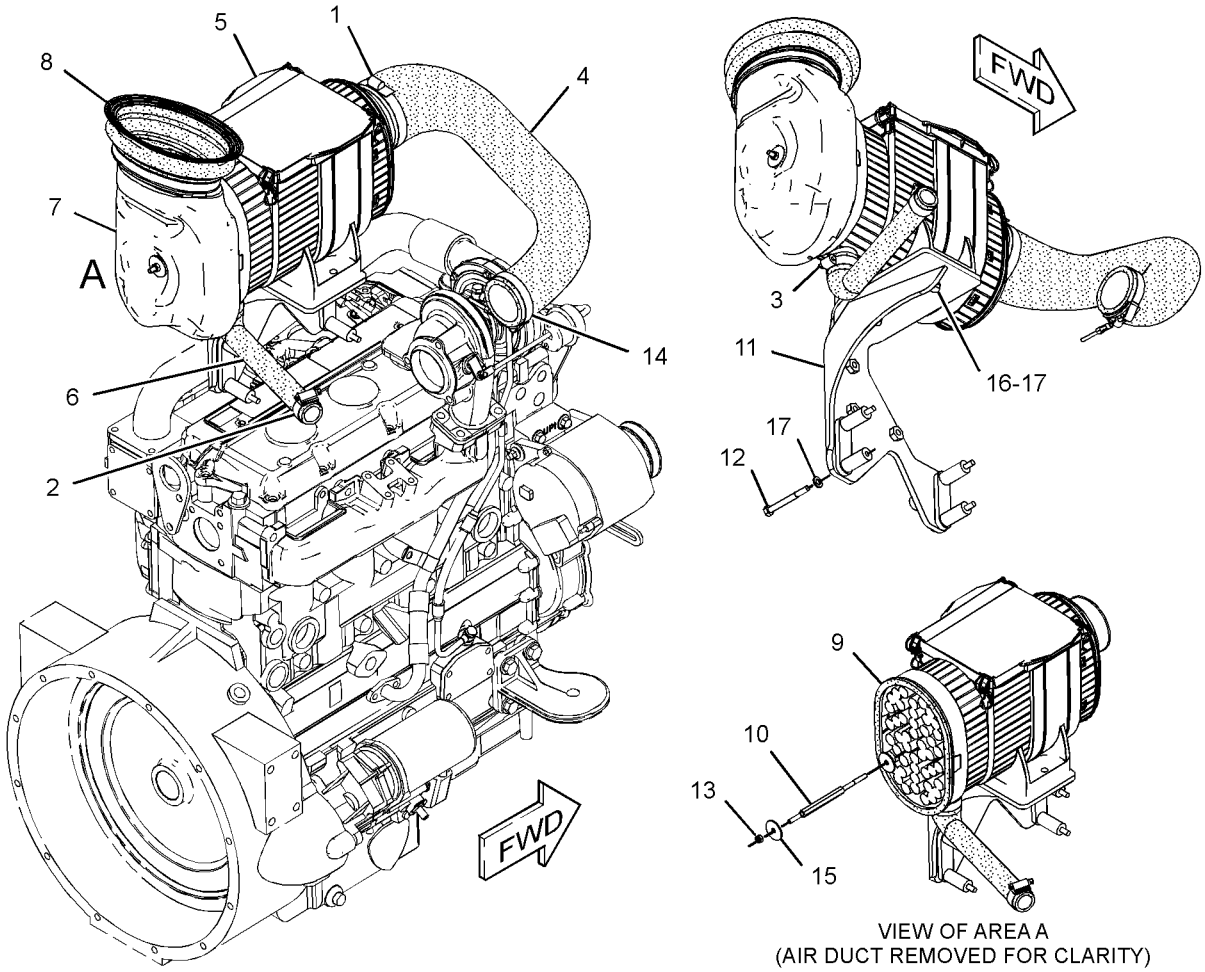

GRAPHIC #1 **<END>** g01310441

AIR INLET AND EXHAUST SYSTEM

234-1981 AIR CLEANER GP

S/N: EAT1-UP
PART OF 224-9473 AIR CLEANER GP
TYPE 1

SMCS-1051, 1054 **i02249485**

NOTE	REF NO	GRAPHIC REF	PART NUMBER	QTY	PART NAME 1 2 3 4 5 6 (PRODUCT LEVEL)	SEE PAGE
	1	1	**262-9786**	1	FRAME	
	2	1	**227-7448**	1	FILTER ELEMENT AS-AIR (PRIMARY)	
	3	1	**227-7449**	1	FILTER ELEMENT-AIR (SECONDARY)	
	4	1	**237-4157**	1	COVER	

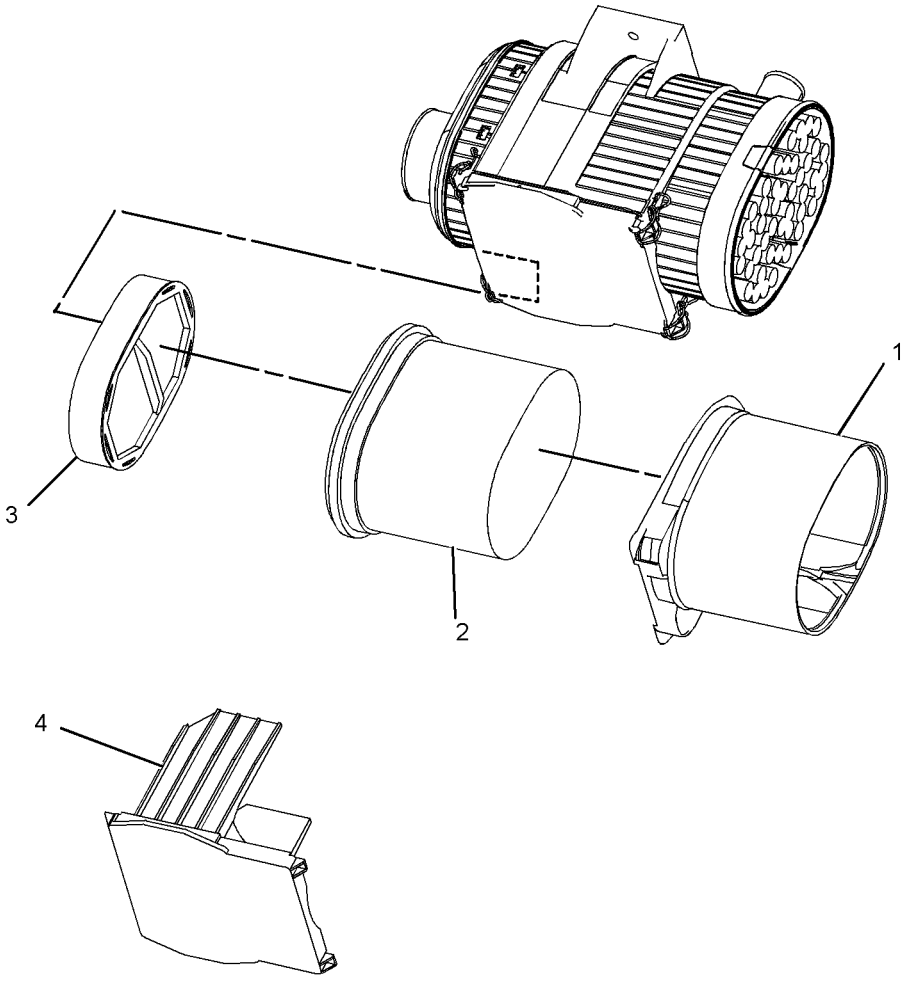

GRAPHIC #1 **<END>** g01134691

234-1981 AIR CLEANER GP

S/N: EAT1-UP

PART OF 224-9473 AIR CLEANER GP

TYPE 2

SMCS-1051, 1054 **i02717830**

NOTE	REF NO	GRAPHIC REF	PART NUMBER	QTY	PART NAME 1 2 3 4 5 6 (PRODUCT LEVEL)	SEE PAGE
	1	1	**262-9786**	1	FRAME	
C	2	1	**293-4053**	1	FILTER ELEMENT-AIR (PRIMARY)	
	3	1	**227-7449**	1	FILTER ELEMENT-AIR (SECONDARY)	
	4	1	**237-4157**	1	COVER	

C-CHANGE FROM PREVIOUS TYPE

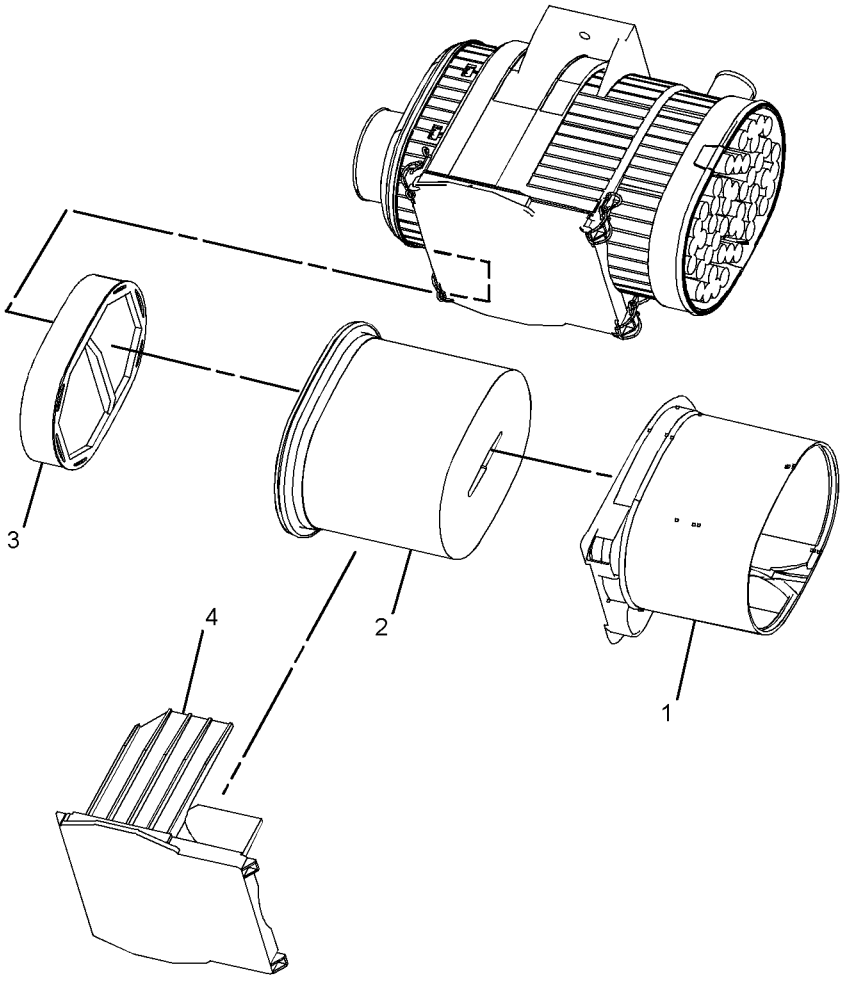

GRAPHIC #1 **<END>** g01376131

AIR INLET AND EXHAUST SYSTEM

210-6807 EXTENSION GP-EXHAUST

S/N: EAT1239-UP

PART OF 214-6903 ENGINE AR

SMCS-1061 **i02972342**

NOTE	REF NO	GRAPHIC REF	PART NUMBER	QTY	PART NAME 1 2 3 4 5 6 (PRODUCT LEVEL)	SEE PAGE
	1	1	**7E-3870**	1	CLAMP-MUFFLER	
	2	1	**239-2270**	1	PIPE-EXTENSION	

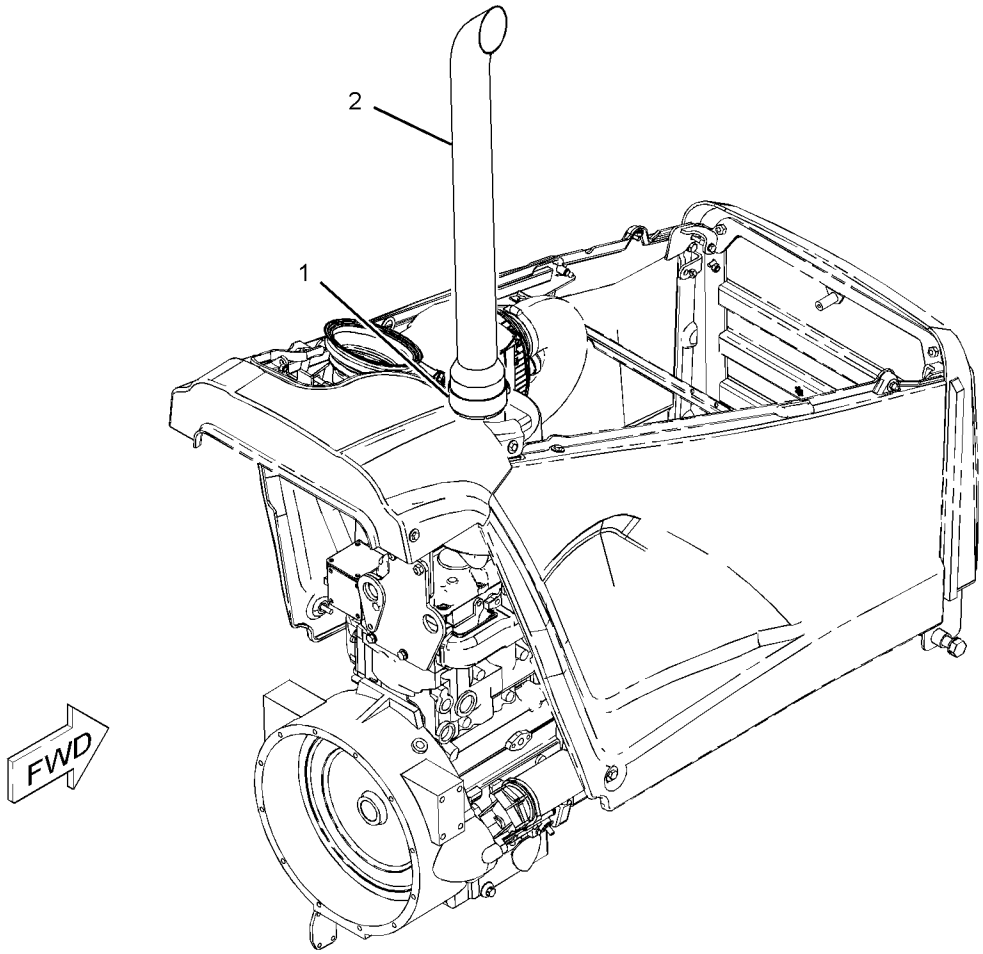

GRAPHIC #1 **<END>** g01098165

255-2279 INDICATOR GP-AIR FILTER CHANGE

S/N: EAT1-UP

PART OF 269-2125, 269-2126, 269-2127 CAB AR-ENCLOSED ROPS, 269-2123, 269-2124 CANOPY AR-OPEN ROPS

AN ATTACHMENT

SMCS-7452 **i02492180**

NOTE	REF NO	GRAPHIC REF	PART NUMBER	QTY	PART NAME 1 2 3 4 5 6 (PRODUCT LEVEL)	SEE PAGE
	1	1	**255-4692**	1	CONNECTOR-FILTER	
	2	1	**260-1336**	1	INDICATOR GP-AIR FILTER CHANGE	
		1	**205-1627**	1	BRACKET	
		1	**260-3122**	1	INDICATOR-AIR FILTER SERVICE	
	3	1	**4B-4863**	4	WASHER (4.7X11X1.2-MM THK)	
M	4	1	**5C-8312**	2	NUT (M4X0.7-THD)	
M	5	1	**8T-9405**	2	BOLT-SOCKET HEAD (M4X0.7X16-MM)	
D	6	1	**6V-1363**		HOSE (0.3-M)	

D-ORDER BY THE METER
M-METRIC PART

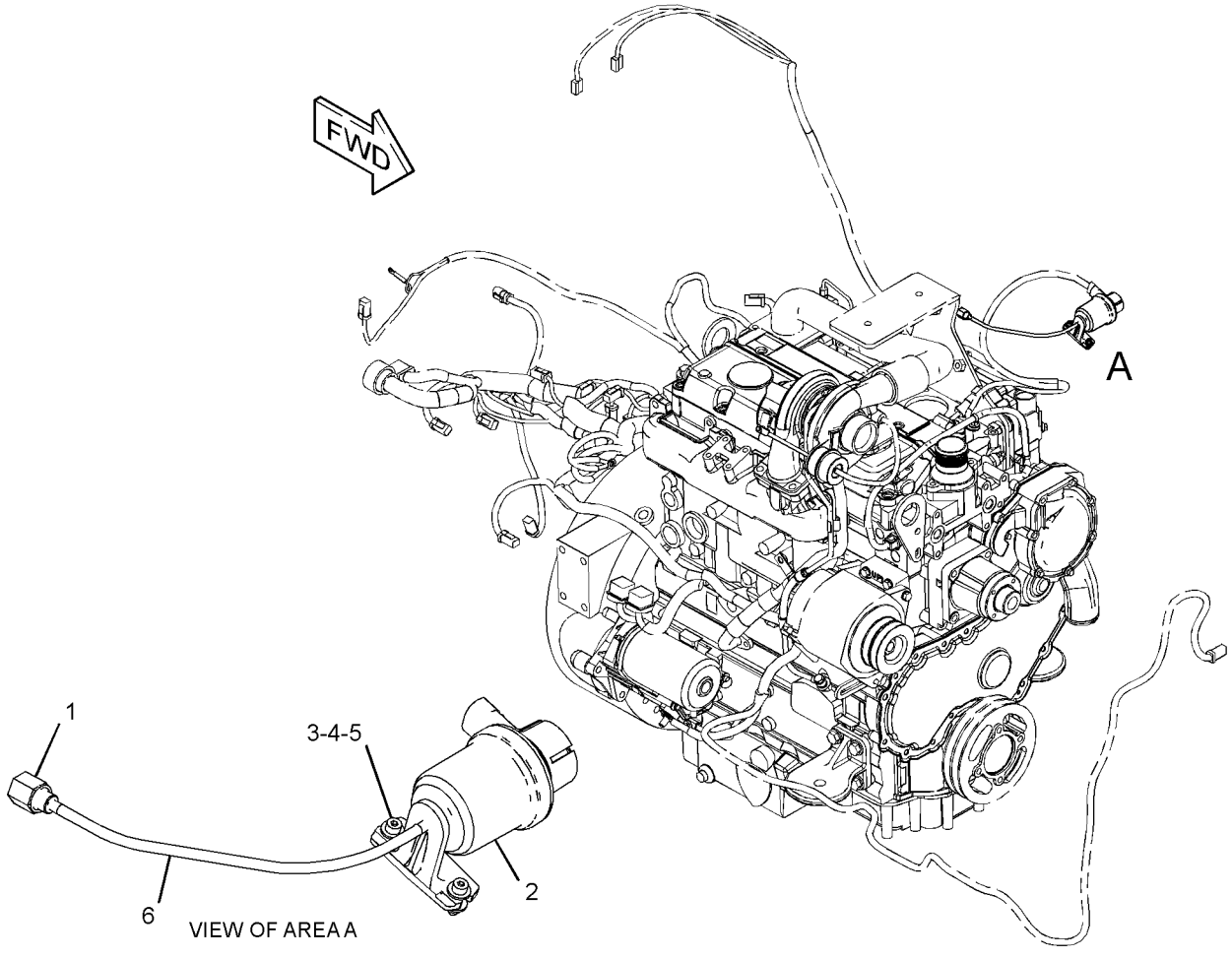

GRAPHIC #1 **<END>** g01233668

AIR INLET AND EXHAUST SYSTEM

223-4960 MUFFLER GP

S/N: EAT1-UP

PART OF 214-6903 ENGINE AR

SMCS-1062 **i02510878**

NOTE	REF NO	GRAPHIC REF	PART NUMBER	QTY	PART NAME 1 2 3 4 5 6 (PRODUCT LEVEL)	SEE PAGE
	1	1	**6I-0364**	3	STUD (M10X1.5X30-MM)	
	2	1	**6I-0563**	3	NUT (M10X1.15-THD)	
	3	1	**235-5363**	1	MUFFLER AS (TURBOCHARGED)	
	4	1	**237-0975**	1	PLATE AS	
M		1	**8T-3490**	4	NUT-WELD (M10X1.5-THD)	
	5	1	**247-4001**	1	PLATE AS	
	6	1	**254-2187**	2	CLAMP AS	
	7	1	**8T-4121**	16	WASHER-HARD (11X21X2.5-MM THK)	
M	8	1	**8T-4133**	4	NUT (M10X1.5-THD)	
M	9	1	**8T-4136**	4	BOLT (M10X1.5X25-MM)	
M	10	1	**8T-4195**	8	BOLT (M10X1.5X30-MM)	

M-METRIC PART

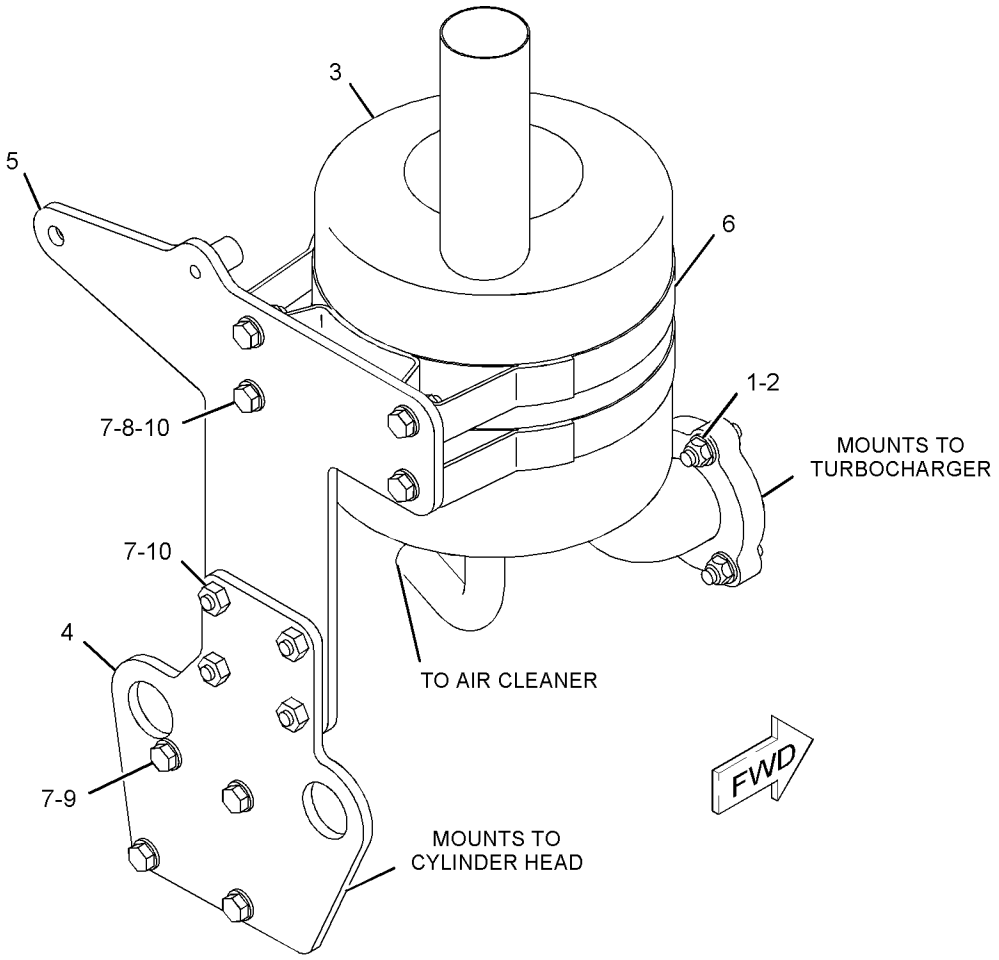

GRAPHIC #1 **<END>** g01078673

AIR INLET AND EXHAUST SYSTEM

317-3111 TURBOCHARGER GP

S/N: CRS1-1238

PART OF 319-2122 ENGINE AR, 245-6842, 320-8415, 325-5122 ENGINE AR-PRIMARY ALSO AN ATTACHMENT

SMCS-1052, 1053 **i02912402**

NOTE	REF NO	GRAPHIC REF	PART NUMBER	QTY	PART NAME 1 2 3 4 5 6 (PRODUCT LEVEL)	SEE PAGE
M	1	1	**6I-0217**	2	BOLT (M8X1.25X20-MM)	
	2	1	**6I-0563**	4	NUT (M10X1.15-THD)	
	3	1	**6I-0572**	4	BOLT (M8X1.25X20-MM)	
	4	1	**106-8916**	2	BOLT (M6X16-MM)	
	5	1	**141-1667**	2	CLAMP-HOSE	
	6	1	**147-5553**	4	STUD	
	7	1	**174-9638**	8	BOLT	
	8	1	**194-5390**	1	GASKET-MANIFOLD	
	10	1	**225-8533**	1	GASKET (TURBOCHARGER)	
	11	1	**225-8534**	1	GASKET (TURBOCHARGER)	
	12	1	**225-8536**	1	GASKET (MANIFOLD)	
	13	1	**263-5376**	1	HOSE	
	14	1	**234-3030**	1	GASKET	
	15	1	**322-9616**	1	TUBE AS-TURBOCHARGER	
	15A	1	**225-8524**	2	BOLT-SPECIAL (BANJO)	
	15B	1	**225-8526**	4	WASHER (10.4X13.75X1.37-MM THK)	
	16	1	**237-3786**	1	TURBOCHARGER GP	
	17	1	**322-9615**	1	TUBE-TURBOCHARGER	
	18	1	**237-3794**	1	BOLT	
	19	1	**237-3921**	1	CLIP	
	20	1	**237-3922**	1	TUBE	
	21	1	**255-3447**	1	MANIFOLD-EXHAUST	

M-METRIC PART

317-3111 **TURBOCHARGER GP** *(contd.)* **i02912402**

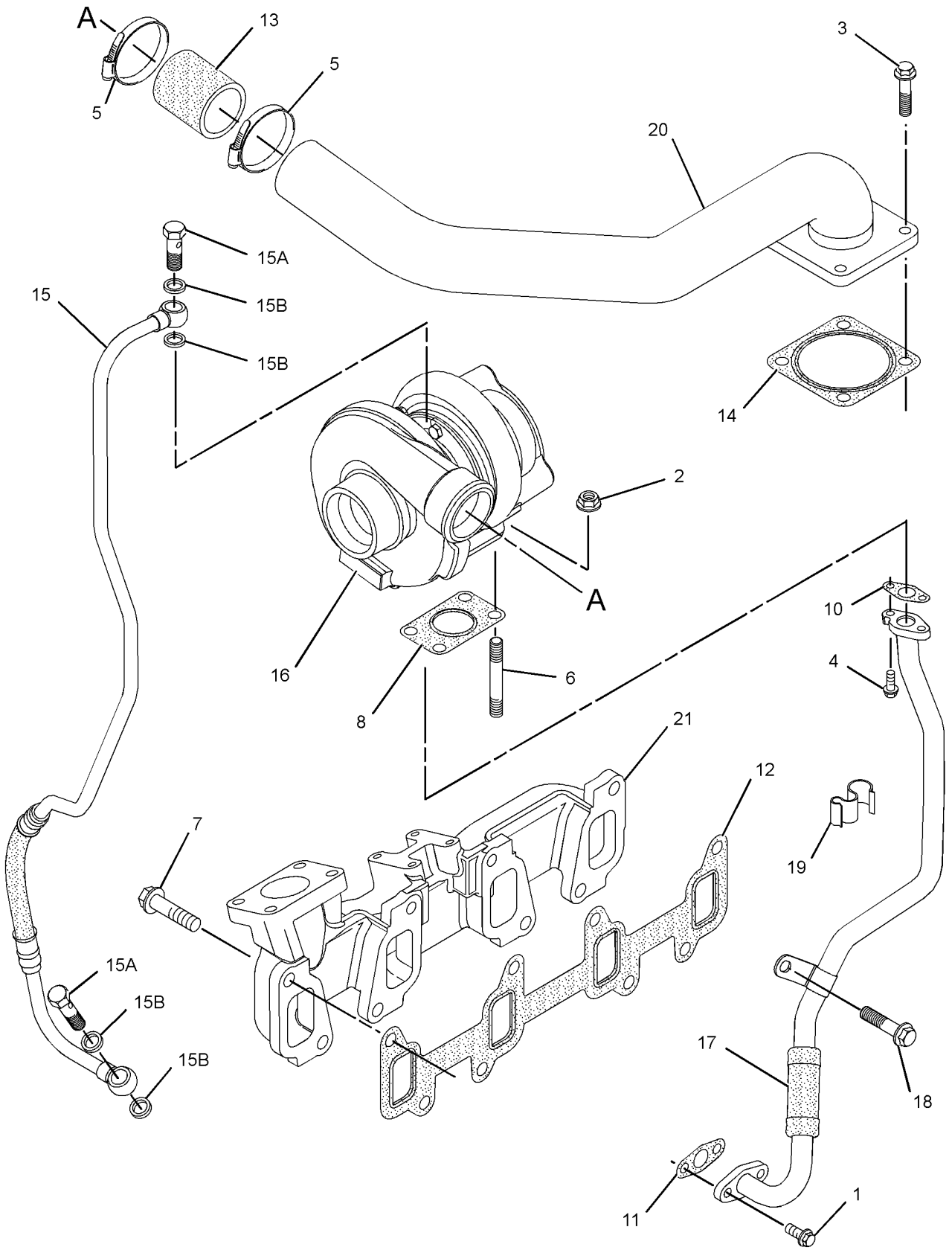

GRAPHIC #1 **<END>** g01450880

206-1640 CONTROL GP-GOVERNOR

S/N: EAT1-808

PART OF 214-6903 ENGINE AR

SMCS-1265 **i03527960**

NOTE	REF NO	GRAPHIC REF	PART NUMBER	QTY	PART NAME 1 2 3 4 5 6 (PRODUCT LEVEL)	SEE PAGE
	1	1	**151-4841**	3	BLOCK	
Y	2	1	**209-3378**	1	PEDAL GP-GOVERNOR	875
	3	1	**235-0128**	1	CABLE AS	
M		1	**5C-2890**	2	NUT (M6X1-THD)	
	4	1	**239-1434**	1	PLATE	
	5	1	**239-1435**	1	BRACKET AS	
	6	1	**248-2707**	1	GROMMET	
M	7	1	**119-5025**	3	SCREW-FLAT HEAD (M6X1X25-MM)	
	8	1	**164-1395**	1	KNOB	
Y	9	1	**209-3367**	1	LEVER GP-GOVERNOR (HANDHELD)	859
	10	1	**3S-2093**	1	STRAP-CABLE	
	11	1	**7K-1181**	3	STRAP-CABLE	
M	12	1	**8T-4138**	3	BOLT (M6X1X20-MM)	
	13	1	**8T-4205**	3	WASHER-HARD (7.2X14.5X2-MM THK)	
	14	1	**8T-4224**	4	WASHER-HARD (8.8X16X2-MM THK)	
M	15	1	**8T-4908**	4	BOLT (M8X1.25X25-MM)	

M-METRIC PART
Y-SEPARATE ILLUSTRATION

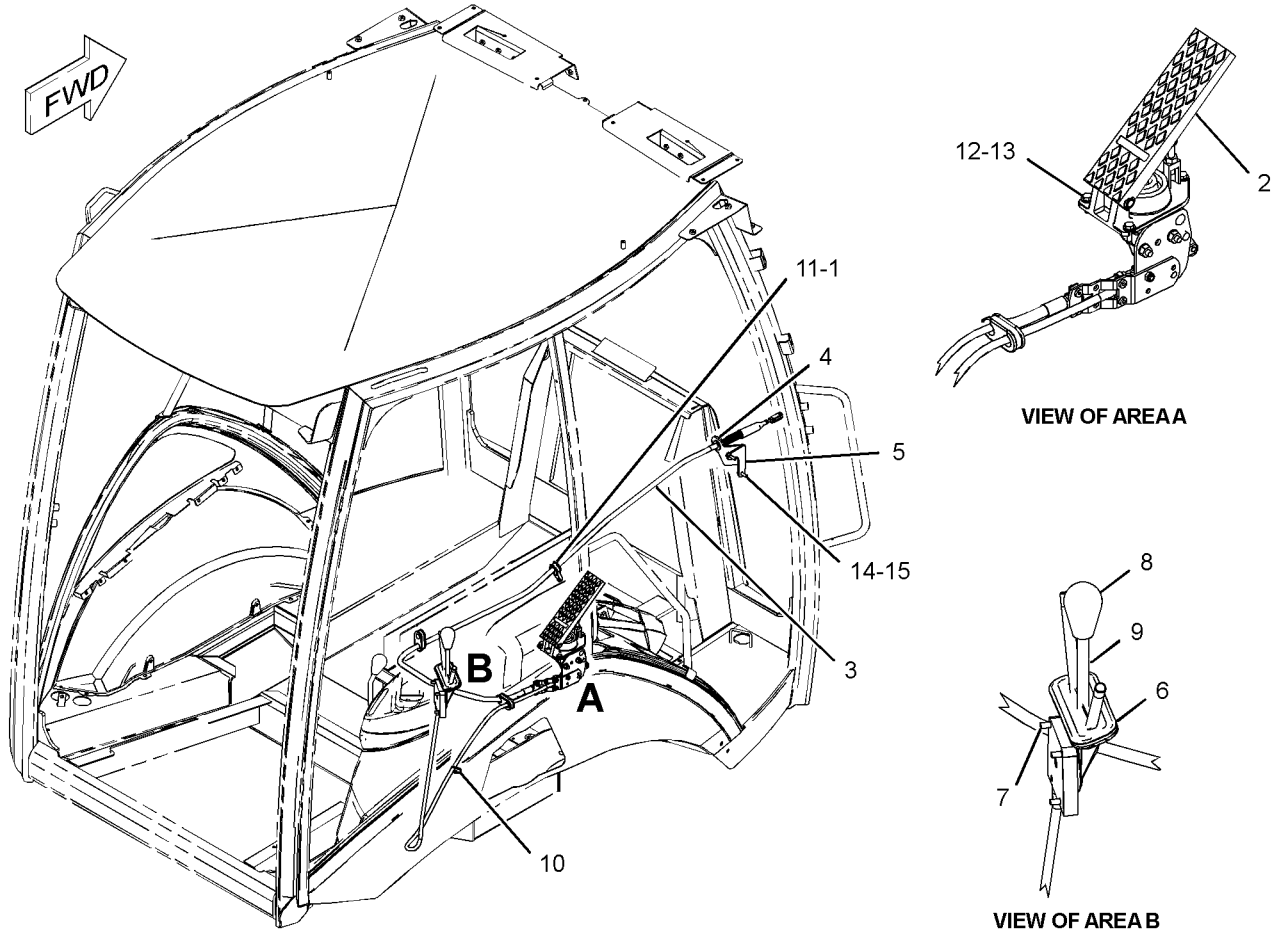

GRAPHIC #1 **<END>** g01183916

FUEL SYSTEM

206-1640 CONTROL GP-GOVERNOR

S/N: EAT809-UP

PART OF 214-6903 ENGINE AR

SMCS-1265 **i03527938**

NOTE	REF NO	GRAPHIC REF	PART NUMBER	QTY	PART NAME 1 2 3 4 5 6 (PRODUCT LEVEL)	SEE PAGE
	1	1	**151-4841**	3	BLOCK	
Y	2	1	**209-3378**	1	PEDAL GP-GOVERNOR	875
	3	1	**235-0128**	1	CABLE AS	
M		1	**5C-2890**	2	NUT (M6X1-THD)	
		1	**8T-4742**	2	END-YOKE ROD	
		1	**8T-4744**	2	PIN AS-SPRING	
		1	**222-2690**	1	CLIP	
	4	1	**239-1434**	1	PLATE	
CM	5	1	**7X-0818**	1	BOLT (M8X1.25X45-MM)	
	6	1	**248-2707**	1	GROMMET	
M	7	1	**119-5025**	3	SCREW-FLAT HEAD (M6X1X25-MM)	
	8	1	**164-1395**	1	KNOB	
Y	9	1	**209-3367**	1	LEVER GP-GOVERNOR (HANDHELD)	859
C	10	1	**300-1702**	1	BRACKET AS	
		1	**6T-5017**	1	SPACER (2.11X12.7X24-MM THK)	
M		1	**8T-3612**	2	NUT-WELD (M8X1.25-THD)	
C	11	1	**7K-1181**	4	STRAP-CABLE	
M	12	1	**8T-4138**	3	BOLT (M6X1X20-MM)	
	13	1	**8T-4205**	3	WASHER-HARD (7.2X14.5X2-MM THK)	
	14	1	**8T-4224**	4	WASHER-HARD (8.8X16X2-MM THK)	
CM	15	1	**8T-4908**	3	BOLT (M8X1.25X25-MM)	

C-CHANGE FROM PREVIOUS TYPE
M-METRIC PART
Y-SEPARATE ILLUSTRATION

206-1640 **CONTROL GP-GOVERNOR** *(contd.)* **i03527938**

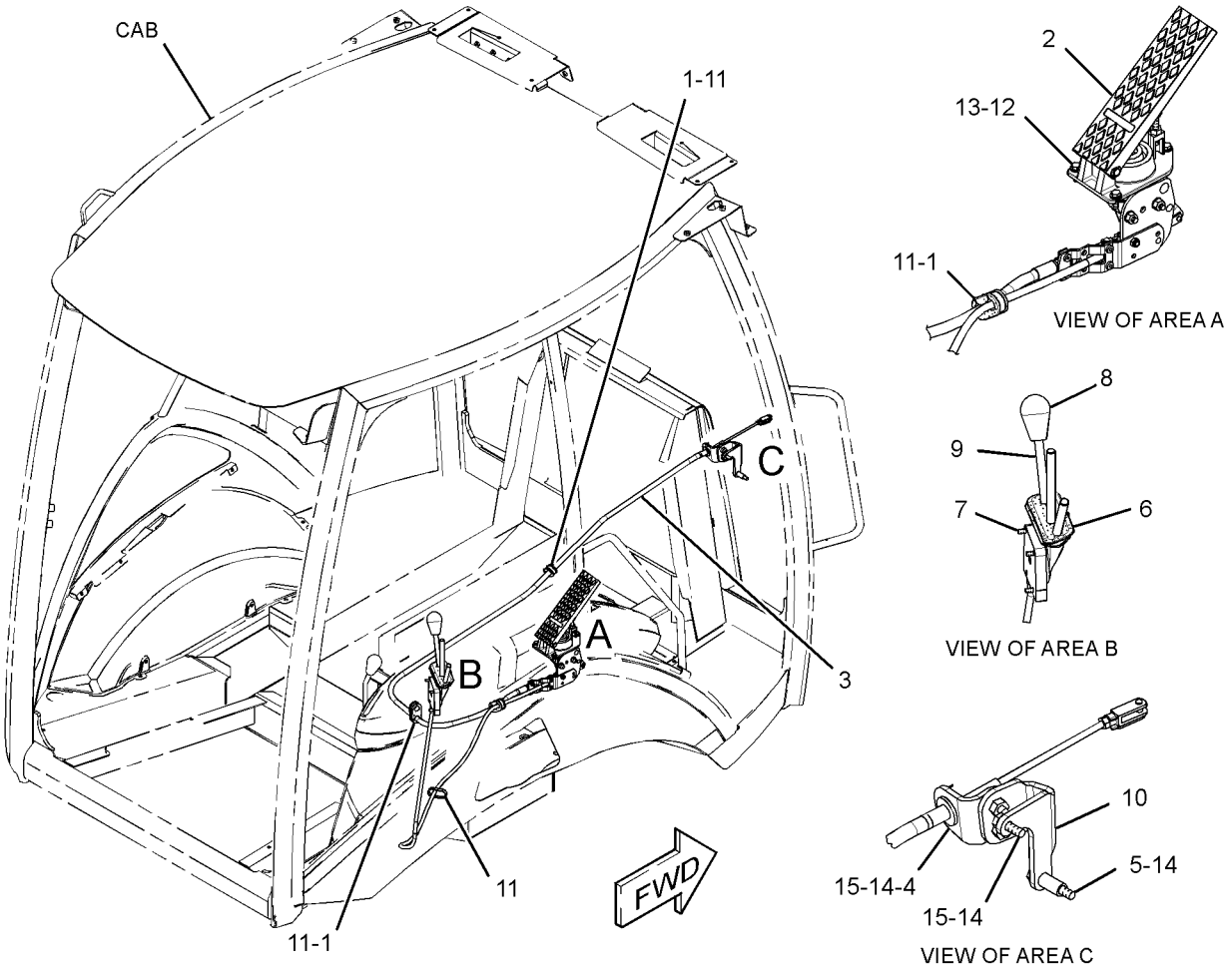

GRAPHIC #1 **<END>** g01417014

285-3605 FILTER GP-WATER SEP & FUEL

S/N: EAT1-UP

PART OF 214-6903 ENGINE AR

SMCS-1261, 1263 **i02520613**

NOTE	REF NO	GRAPHIC REF	PART NUMBER	QTY	PART NAME 1 2 3 4 5 6 (PRODUCT LEVEL)	SEE PAGE
	1	1	**151-1975**	2	CONNECTOR	
	2	1	**285-5098**	1	FILTER GP-FUEL	
		1	**118-8118**	1	RING-RETAINING	
		1	**118-8119**	1	NUT	
		1	**149-3516**	1	BASE AS	
		1	**156-1200**	1	FILTER ELEMENT-FUEL (WATER SEPARATOR)	
	3	1	*169-5861*	2	PLUG AS	
					(EACH INCLUDES)	
		1	**3K-8460**	1	PLUG	
		1	**5P-7814**	1	SEAL-O-RING	
	4	1	**5P-7814**	2	SEAL-O-RING	
	5	1	**8T-4121**	2	WASHER-HARD (11X21X2.5-MM THK)	
M	6	1	**8T-4195**	2	BOLT (M10X1.5X30-MM)	

M-METRIC PART

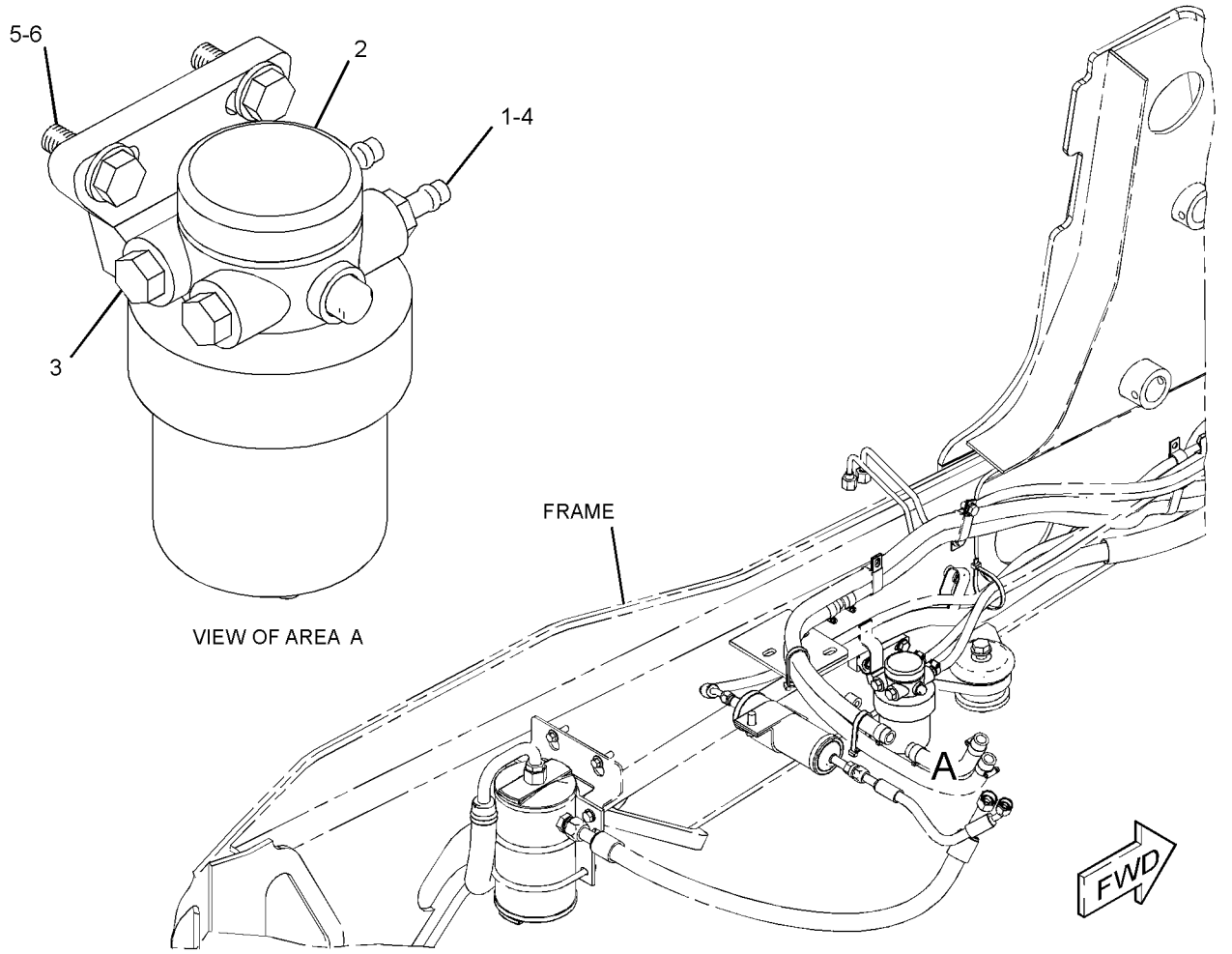

GRAPHIC #1 **<END>** g01262187

247-5361 LINES GP-FUEL

S/N: EAT1-UP

PART OF 214-6903 ENGINE AR

SMCS-1274 **i03527964**

NOTE	REF NO	GRAPHIC REF	PART NUMBER	QTY	PART NAME 1 2 3 4 5 6 (PRODUCT LEVEL)	SEE PAGE
	1	1	**1P-4278**	12	CLAMP-HOSE	
	2	1	**7S-1912**	2	CLIP	
	3	1	**215-9515**	1	CONNECTOR-HOSE (QUICK DISCONNECT)	
	4	1	**216-6891**	1	TUBE AS	
	5	1	**216-6892**	1	TUBE AS	
	6	1	**224-5917**	1	CONNECTOR-SPECIAL	
	7	1	**241-4275**	1	TEE-SPECIAL	
	8	1	**5P-9085**	1	CLIP	
	9	1	**6K-8178**	1	CLIP	
	10	1	**7C-4354**	1	CLIP	
	11	1	**7N-3718**	1	CLIP	
	12	1	**7X-7729**	1	WASHER (11X25X3-MM THK)	
	13	1	**8M-2773**	1	CLIP	
	14	1	**8T-4121**	2	WASHER-HARD (11X21X2.5-MM THK)	
M	15	1	**8T-4133**	1	NUT (M10X1.5-THD)	
M	16	1	**8T-4136**	2	BOLT (M10X1.5X25-MM)	
M	17	1	**8T-4192**	1	BOLT (M12X1.75X25-MM)	
M	18	1	**8T-4189**	1	BOLT (M8X1.25X20-MM)	
	19	1	**8T-4223**	1	WASHER-HARD (13.5X25.5X3-MM THK)	
	20	1	**8T-4224**	1	WASHER-HARD (8.8X16X2-MM THK)	
	21	1	**9M-8406**	1	CLIP	
E	22	1	**5P-1442**		HOSE (76-CM)	
E	22A	1	**5P-1420**		HOSE (55-CM)	
E	22B	1	**5P-1420**		HOSE (12-CM)	
E	22C	1	**5P-1420**		HOSE (114-CM)	
E	22D	1	**5P-1420**		HOSE (91-CM)	
E	22E	1	**5P-1420**		HOSE (76-CM)	
	28	1	**7K-1181**	1	STRAP-CABLE	

E-ORDER BY THE CENTIMETER
M-METRIC PART

247-5361 **LINES GP-FUEL** *(contd.)* **i03527964**

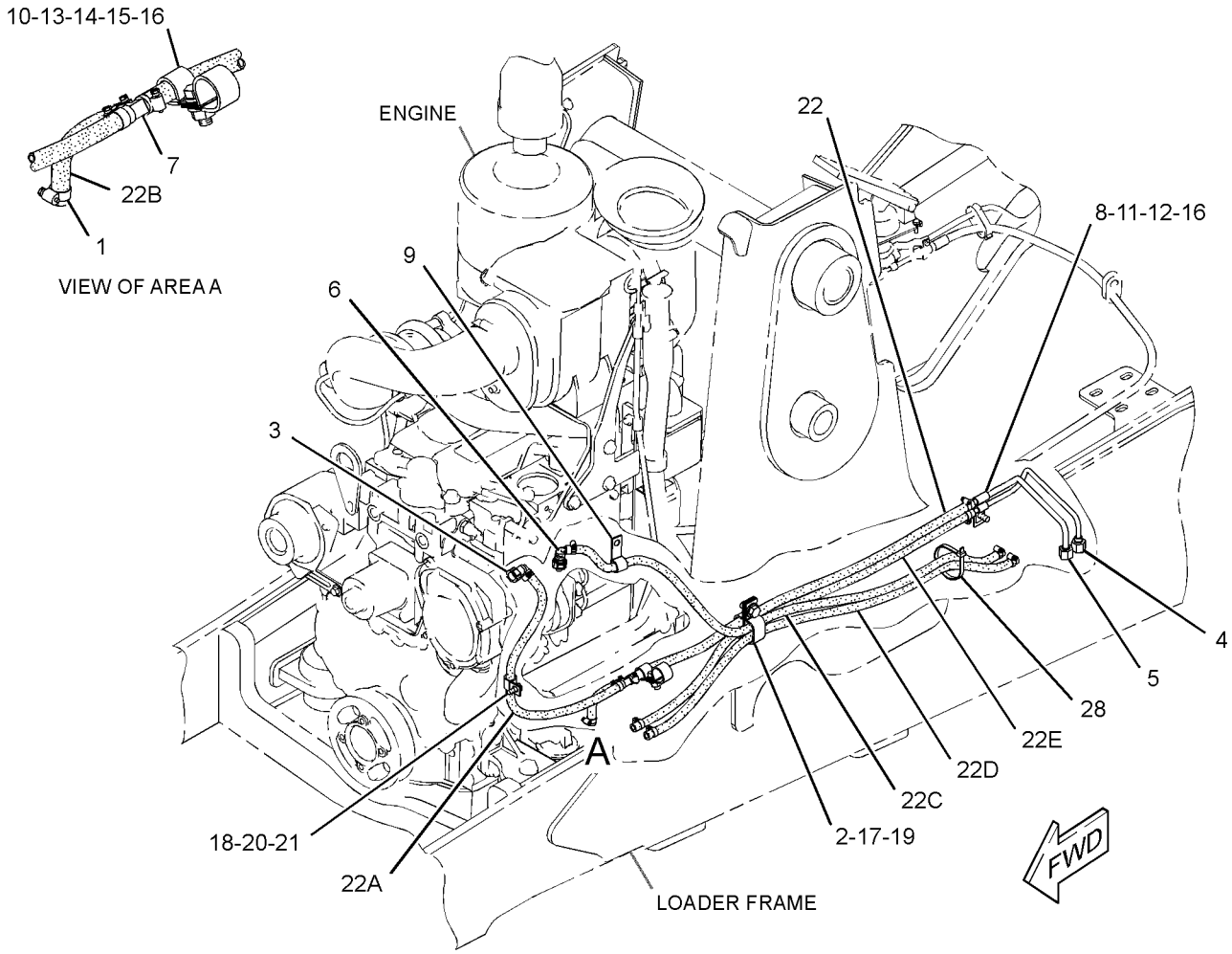

GRAPHIC #1 **<END>** g01857039

247-4885 LINES GP-FUEL FILTER

S/N: CRS1-1238

PART OF 319-2122 ENGINE AR, 245-6842, 320-8415, 325-5122 ENGINE AR-PRIMARY

ALSO AN ATTACHMENT

SMCS-1261, 1274 **i02225715**

NOTE	REF NO	GRAPHIC REF	PART NUMBER	QTY	PART NAME 1 2 3 4 5 6 (PRODUCT LEVEL)	SEE PAGE
	1	1	**247-4884**	1	TUBE AS	
	2	1	**232-3126**	1	CLIP	

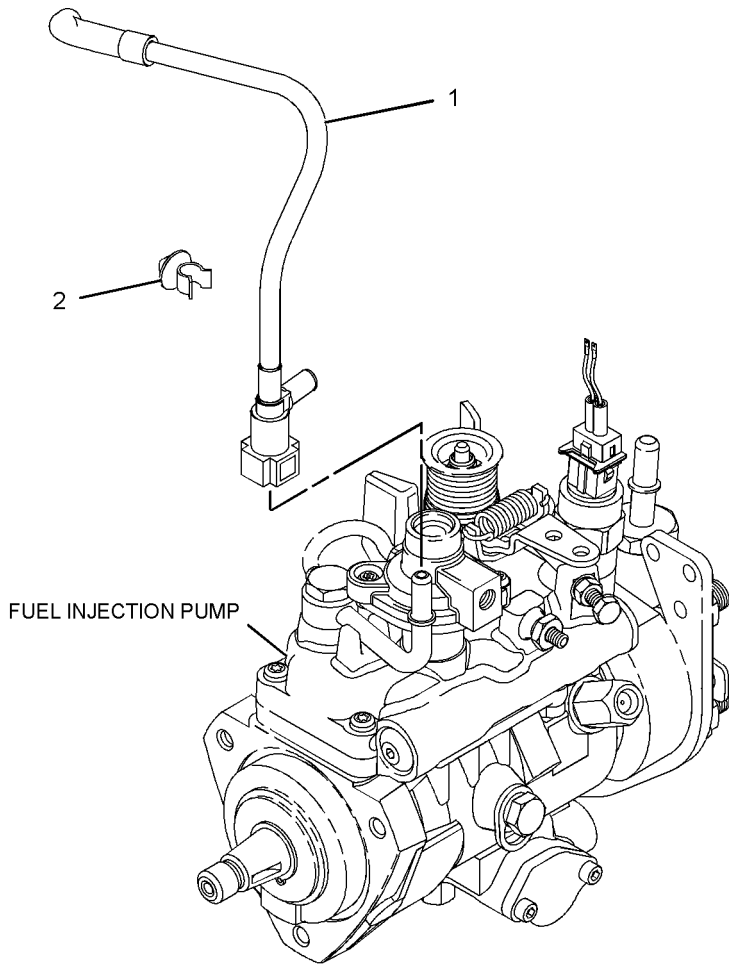

GRAPHIC #1

<END>

g01123693

236-8228 PUMP GP-FUEL INJECTION

S/N: CRS1-UP

PART OF 313-1371, 328-7358 PUMP GP-FUEL INJECTION

FIELD REPLACEMENT ORDER 248-2356—PAGE 91, 248-2357—PAGE 92, 248-2358—PAGE 93

ALSO AN ATTACHMENT

SMCS-1251, 1290 **i02138766**

NOTE	REF NO	GRAPHIC REF	PART NUMBER	QTY	PART NAME 1 2 3 4 5 6 (PRODUCT LEVEL)	SEE PAGE
	1	1	**152-3968**	1	SEAL-O-RING	
	2	1	**176-6219**	1	VALVE GP-SOLENOID (12-VOLT) (FUEL SHUTOFF)	

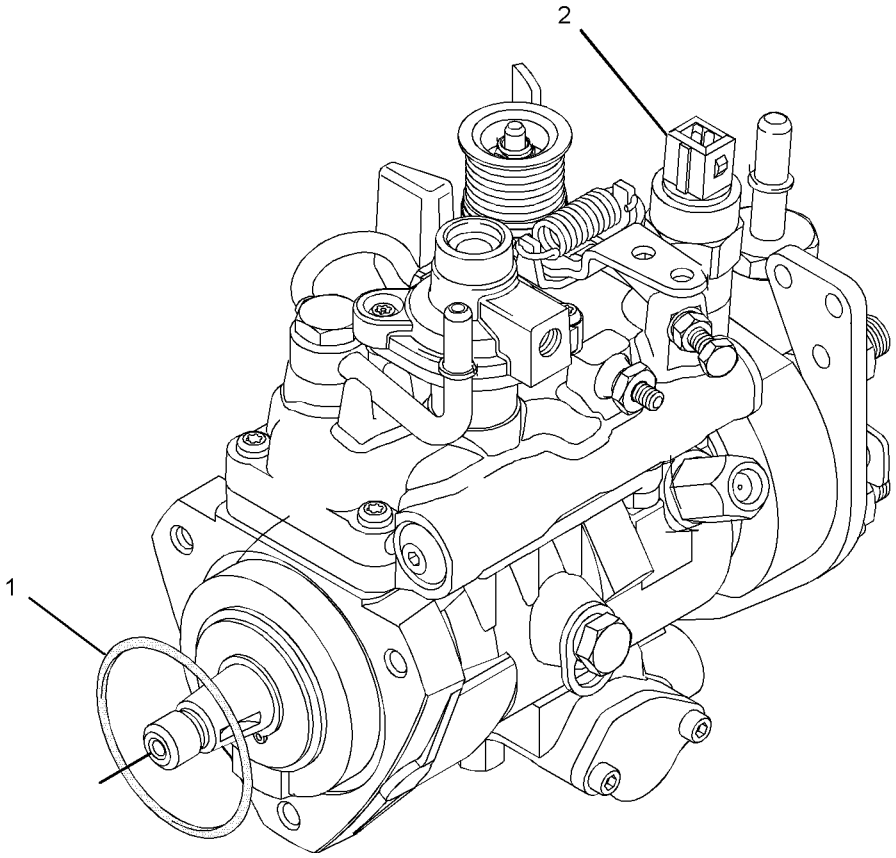

GRAPHIC #1 **<END>** g01085467

248-2356 PUMP GP-FUEL INJECTION

S/N: CRS1-UP

FIELD REPLACEMENT FOR 236-8228—PAGE 90. FOR USE WITH 2200 RPM RATED ENGINES

SMCS-1251, 1290 **i02100164**

NOTE	REF NO	GRAPHIC REF	PART NUMBER	QTY	PART NAME 1 2 3 4 5 6 (PRODUCT LEVEL)	SEE PAGE
	1	1	**176-6219**	1	VALVE GP-SOLENOID (12-VOLT) (FUEL SHUTOFF)	
	2	1	**152-3968**	1	SEAL-O-RING	

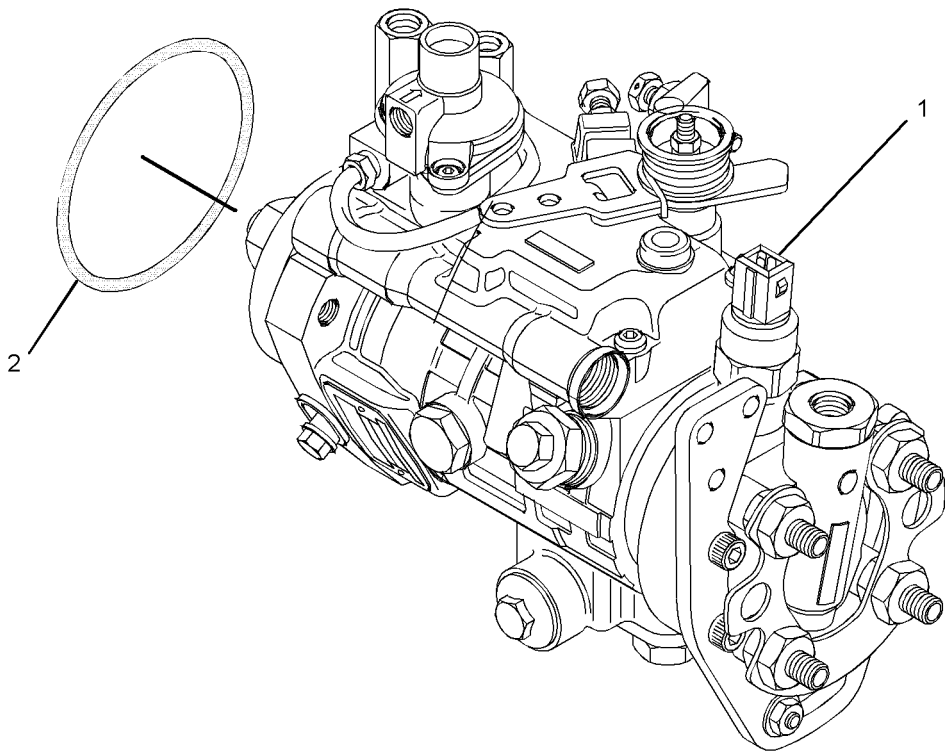

GRAPHIC #1 **<END>** g01072427

248-2357 PUMP GP-FUEL INJECTION

S/N: CRS1-UP

FIELD REPLACEMENT FOR 236-8228—PAGE 90. FOR USE WITH 2100 RPM RATED ENGINES

SMCS-1251, 1290 **i02100173**

NOTE	REF NO	GRAPHIC REF	PART NUMBER	QTY	PART NAME 1 2 3 4 5 6 (PRODUCT LEVEL)	SEE PAGE
	1	1	**176-6219**	1	VALVE GP-SOLENOID (12-VOLT) (FUEL SHUTOFF)	
	2	1	**152-3968**	1	SEAL-O-RING	

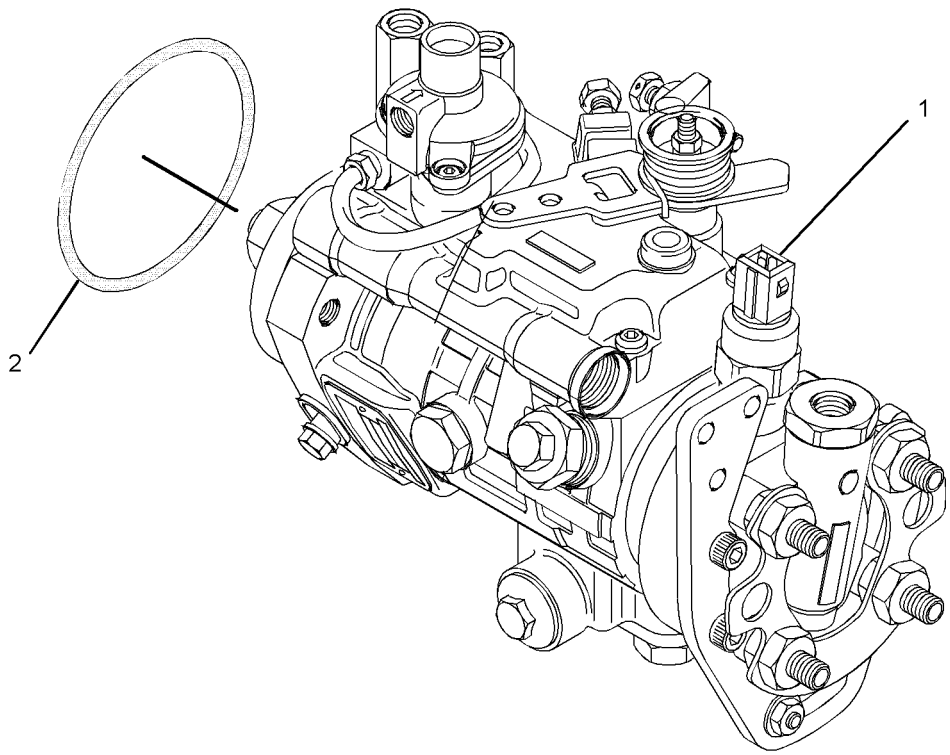

GRAPHIC #1 **<END>** g01072427

248-2358 PUMP GP-FUEL INJECTION

S/N: CRS1-UP

FIELD REPLACEMENT FOR 236-8228—PAGE 90. FOR USE WITH 2000 RPM RATED ENGINES

SMCS-1251, 1290 **i02100182**

NOTE	REF NO	GRAPHIC REF	PART NUMBER	QTY	PART NAME 1 2 3 4 5 6 (PRODUCT LEVEL)	SEE PAGE
	1	1	**176-6219**	1	VALVE GP-SOLENOID (12-VOLT) (FUEL SHUTOFF)	
	2	1	**152-3968**	1	SEAL-O-RING	

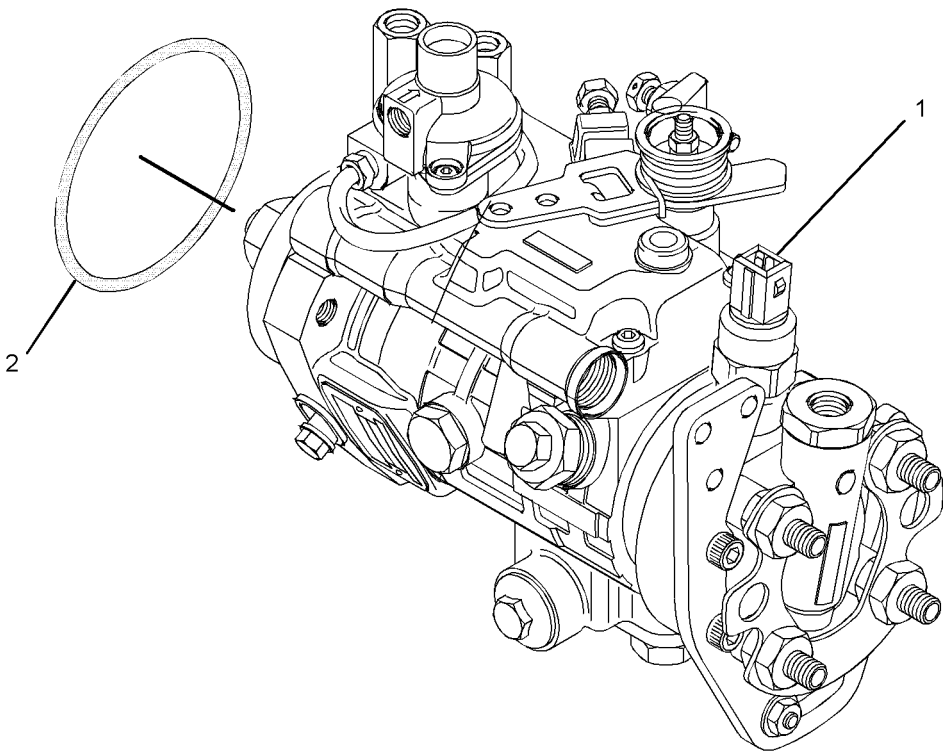

GRAPHIC #1 **<END>** g01072427

FUEL SYSTEM

313-1371 PUMP GP-FUEL INJECTION

S/N: CRS1-1238

PART OF 319-2122 ENGINE AR, 245-6842, 320-8415 ENGINE AR-PRIMARY

ALSO AN ATTACHMENT

SMCS-1251, 1290 **i03198061**

NOTE	REF NO	GRAPHIC REF	PART NUMBER	QTY	PART NAME 1 2 3 4 5 6 (PRODUCT LEVEL)	SEE PAGE
M	1	1	**6I-0217**	1	BOLT (M8X1.25X20-MM)	
M	2	1	**6I-0260**	3	BOLT (M8X1.25X25-MM)	
	3	1	**6I-0291**	1	NUT (M8X1.25-THD)	
	4	1	**035-8017**	1	UNION	
	5	1	**067-6264**	1	FITTING-FLARED	
	6	1	**067-6265**	1	FITTING-BRASS	
M	7	1	**100-4830**	1	BOLT (M10X1.5X20-MM)	
M	8	1	**124-3815**	1	BOLT (M8X16X1.25-MM)	
	9	1	**140-8714**	1	CLIP	
	10	1	**318-2365**	1	CLIP	
	11	1	**230-8989**	1	GEAR-FUEL PUMP (68-TEETH)	
	12	1	**230-8995**	1	TUBE AS (CYL NO.1)	
	13	1	**230-8996**	1	TUBE AS (CYL NO.2)	
	14	1	**230-8997**	1	TUBE AS (CYL NO.3)	
	15	1	**230-8998**	1	TUBE AS (CYL NO.4)	
	16	2	**232-1323**	1	PLUG-CUP	
	17	1	**232-1328**	1	CAP	
	18	2	**232-1793**	1	CABLE	
	19	1	**232-1794**	3	HOSE	
	20	1	**232-2725**	2	CLIP	
	21	1	**232-2726**	1	CLIP	
	22	1	**232-3126**	1	CLIP	
	23	1	**232-3149**	3	WASHER (8.35X16.85X1.55-MM THK)	
	24	1	**232-3157**	1	BRACKET	
	25	1	**232-3274**	4	BOLT (M8X1.25X48.1-MM)	
	26	2	**235-1790**	1	SWITCH-TEMPERATURE (FUEL)	
	27	1	**236-1674**	4	INJECTOR AS-FUEL	
					(EACH INCLUDES)	
		1	**275-1038**	1	SEAL-O-RING	
		1	**236-1673**	1	NOZZLE	
	27A	1	**140-8718**	1	WASHER	
	28	1	**236-2144**	1	TUBE AS	
	28A	1	**067-6999**	1	FERRULE	
Y	29	1	**236-8228**	1	PUMP GP-FUEL INJECTION	90
	30	1	**238-8671**	4	CLAMP-INJECTOR	
	31	1	**240-5571**	1	BRACKET	

M-METRIC PART
Y-SEPARATE ILLUSTRATION

313-1371 **PUMP GP-FUEL INJECTION** *(contd.)* **i03198061**

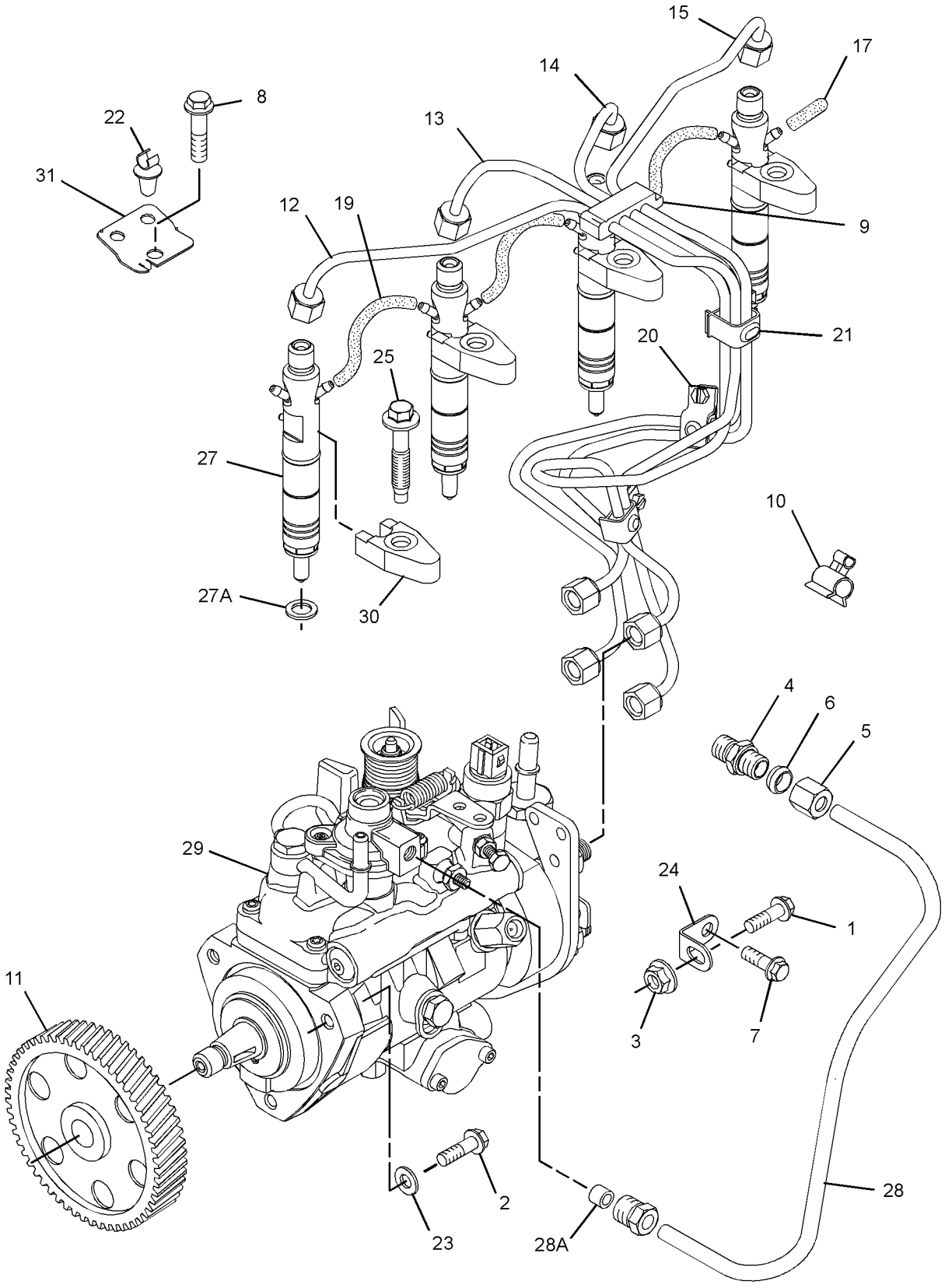

GRAPHIC #1 g01633557

313-1371 **PUMP GP-FUEL INJECTION** *(contd.)* **i03198061**

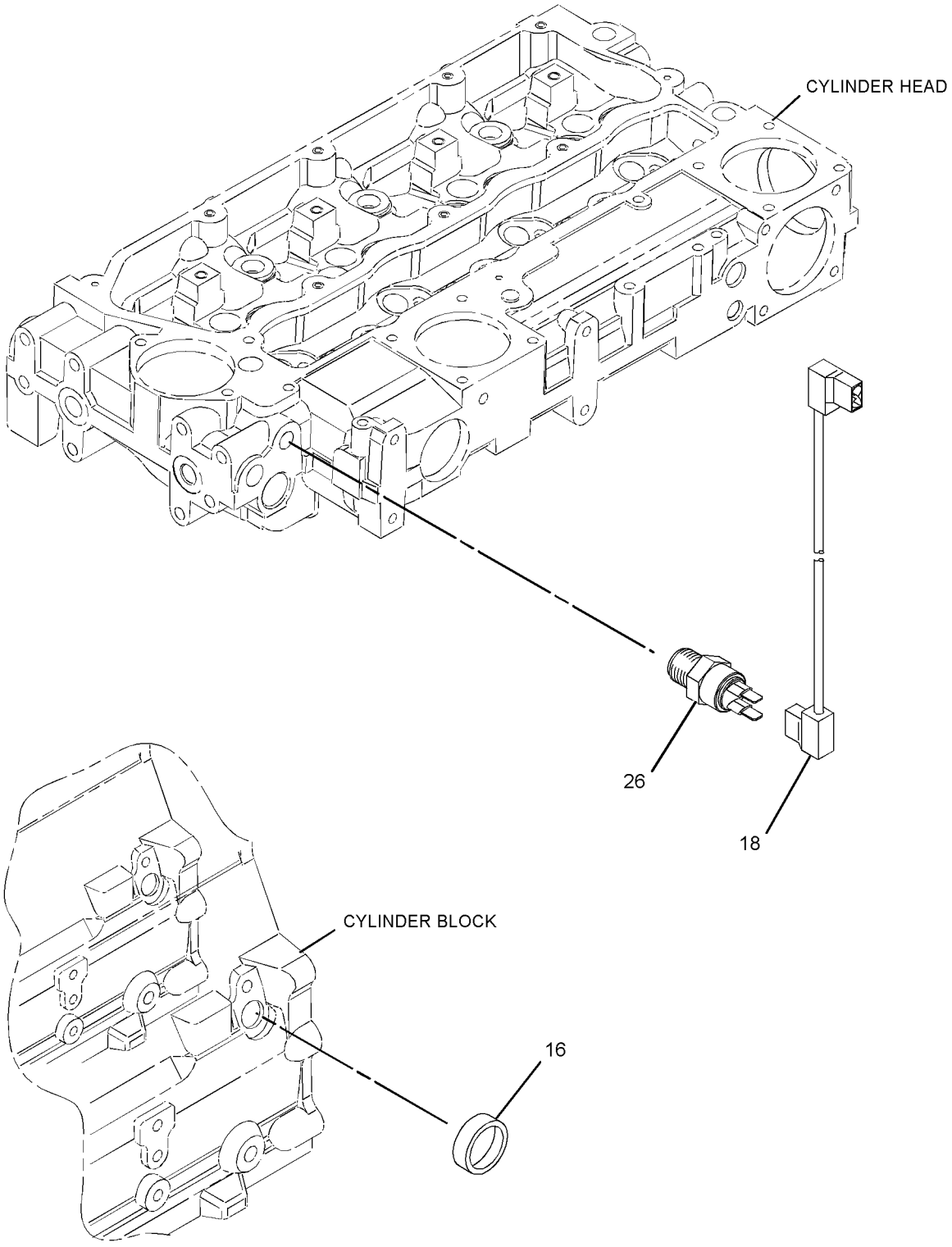

GRAPHIC #2 **<END>** g01397533

328-7358 PUMP GP-FUEL INJECTION

S/N: CRS1-UP
PART OF 325-5122 ENGINE AR-PRIMARY
AN ATTACHMENT

SMCS-1251, 1290 **i03527742**

NOTE	REF NO	GRAPHIC REF	PART NUMBER	QTY	PART NAME 1 2 3 4 5 6 (PRODUCT LEVEL)	SEE PAGE
M	1	1	**6I-0217**	1	BOLT (M8X1.25X20-MM)	
M	2	1	**6I-0260**	3	BOLT (M8X1.25X25-MM)	
	3	1	**6I-0291**	1	NUT (M8X1.25-THD)	
	4	1	**035-8017**	1	UNION	
	5	1	**067-6264**	1	FITTING-FLARED	
	6	1	**067-6265**	1	FITTING-BRASS	
M	7	1	**100-4830**	1	BOLT (M10X1.5X20-MM)	
M	8	1	**124-3815**	1	BOLT (M8X16X1.25-MM)	
	9	1	**140-8714**	1	CLIP	
	10	1	**318-2365**	1	CLIP	
	11	1	**230-8989**	1	GEAR-FUEL PUMP (68-TEETH)	
	12	1	**230-8995**	1	TUBE AS (CYL NO.1)	
	13	1	**230-8996**	1	TUBE AS (CYL NO.2)	
	14	1	**230-8997**	1	TUBE AS (CYL NO.3)	
	15	1	**230-8998**	1	TUBE AS (CYL NO.4)	
	16	2	**232-1323**	1	PLUG-CUP	
	17	1	**232-1328**	1	CAP (FUEL INJECTOR)	
	18	2	**232-1793**	1	CABLE	
	19	1	**232-1794**	3	HOSE	
	20	1	**232-2725**	2	CLIP	
	21	1	**232-2726**	1	CLIP	
	22	1	**232-3126**	1	CLIP	
	23	1	**232-3149**	3	WASHER (8.35X16.85X1.55-MM THK)	
	24	1	**232-3157**	1	BRACKET	
	25	1	**232-3274**	4	BOLT (M8X1.25X48.1-MM)	
	26	2	**235-1790**	1	SWITCH-TEMPERATURE (FUEL)	
	27	1	**236-1674**	4	INJECTOR AS-FUEL	
					(EACH INCLUDES)	
	27A	1	**140-8718**	1	WASHER	
	27B	1	**275-1038**	1	SEAL-O-RING	
	27C	1	**236-1673**	1	NOZZLE	
	28	1	**236-2144**	1	TUBE AS	
	28A	1	**067-6999**	1	FERRULE	
Y	29	1	**236-8228**	1	PUMP GP-FUEL INJECTION	90
	30	1	**238-8671**	4	CLAMP-INJECTOR	
	31	1	**240-5571**	1	BRACKET	

M-METRIC PART
Y-SEPARATE ILLUSTRATION

328-7358 **PUMP GP-FUEL INJECTION** *(contd.)* **i03527742**

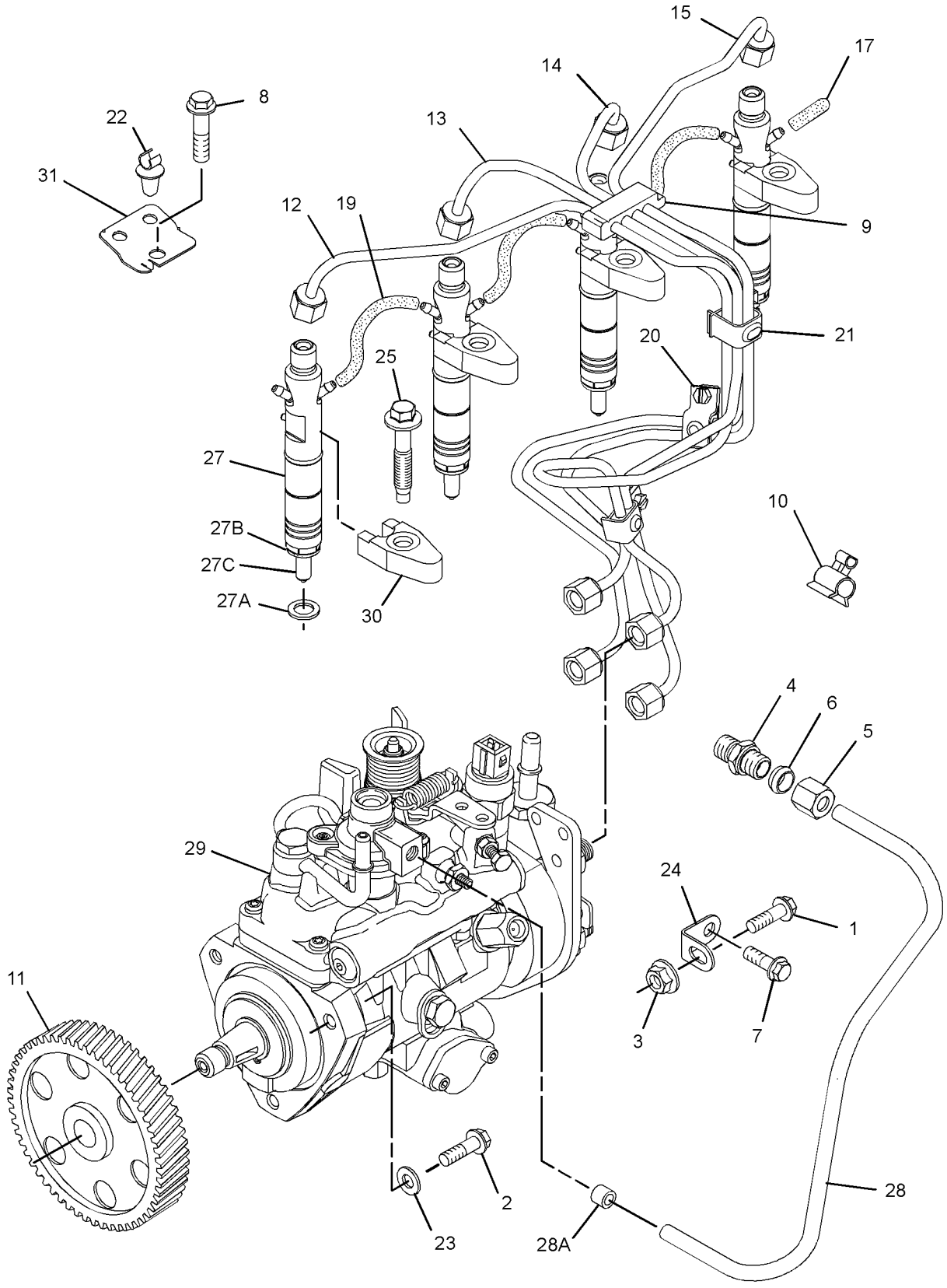

GRAPHIC #1 g01664795

328-7358 **PUMP GP-FUEL INJECTION** *(contd.)* **i03527742**

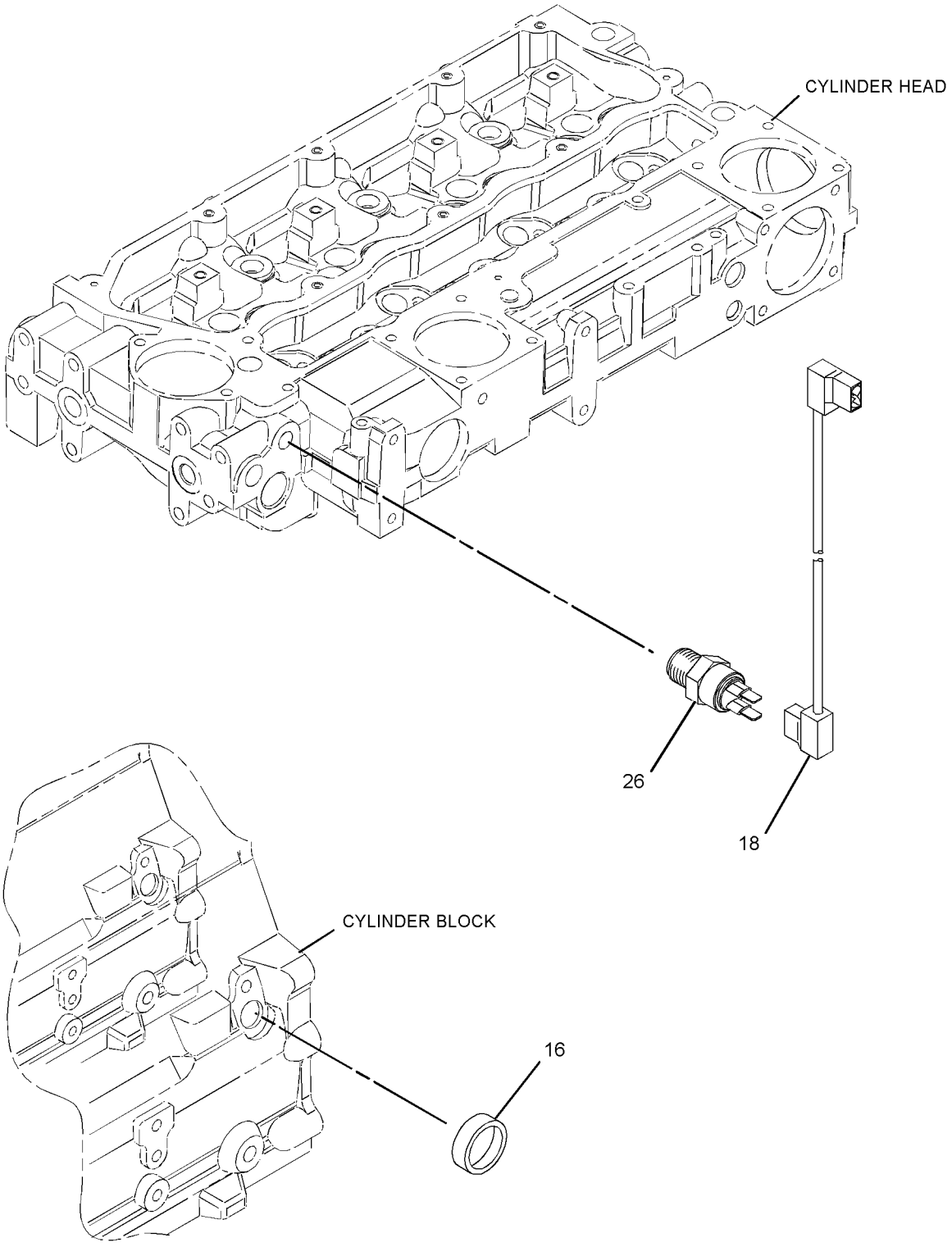

GRAPHIC #2 **<END>** g01397533

228-9129 PUMP GP-FUEL PRM & PRIM FILTER–
WITH WATER SEPARATOR
S/N: EAT1-UP
PART OF 253-0352 PUMP GP-FUEL PRM & PRIM FILTER

SMCS-1258, 1260, 1261 **i02249241**

NOTE	REF NO	GRAPHIC REF	PART NUMBER	QTY	PART NAME 1 2 3 4 5 6 (PRODUCT LEVEL)	SEE PAGE
	1	1	**118-8118**	1	RING-RETAINING	
	2	1	**228-9130**	1	FILTER AS-WATER SEP & FUEL	
	3	1	**228-9132**	1	FITTING	
	4	1	**193-0618**	1	SENSOR GP-MOISTURE (WATER SEPARATOR)	
	5	1	**149-9954**	1	DRAIN AS (WATER SEPARATOR)	

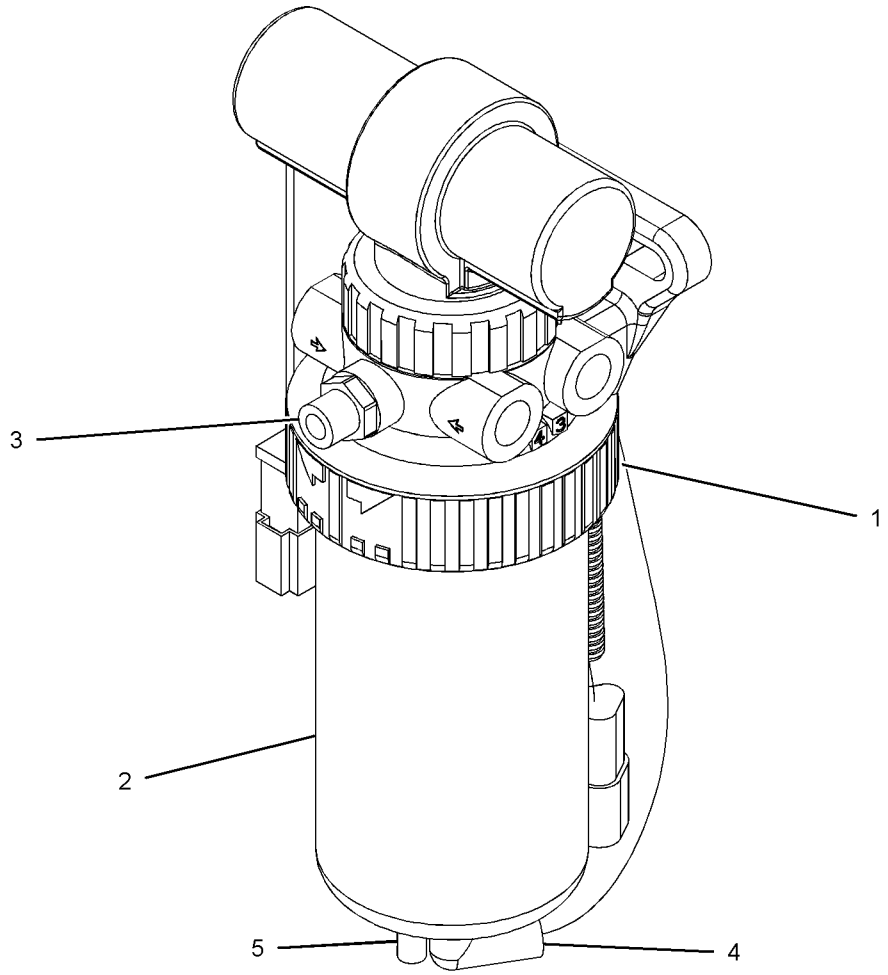

GRAPHIC #1 **<END>** g01093427

253-0352 PUMP GP-FUEL PRM & PRIM FILTER–
WITH MOUNTING
S/N: EAT1-1403
PART OF 214-6903 ENGINE AR

SMCS-1258, 1260, 1261 **i02513514**

NOTE	REF NO	GRAPHIC REF	PART NUMBER	QTY	PART NAME 1 2 3 4 5 6 (PRODUCT LEVEL)	SEE PAGE
	1	1	**3S-2093**	1	STRAP-CABLE	
	2	1	**069-4080**	1	FITTING	
	3	1	*165-7951*	2	CONNECTOR AS	
					(EACH INCLUDES)	
		1	**3J-1907**	1	SEAL-O-RING	
		1	**157-1669**	1	CONNECTOR	
Y	4	1	**228-9129**	1	PUMP GP-FUEL PRM & PRIM FILTER (WITH WATER SEPARATOR)	100
	5	1	**253-0354**	1	BRACKET AS	
	6	1	**3J-1907**	2	SEAL-O-RING	
	7	1	**8T-4121**	4	WASHER-HARD (11X21X2.5-MM THK)	
M	8	1	**8T-4196**	2	BOLT (M10X1.5X35-MM)	
M	9	1	**8T-8894**	2	BOLT-SOCKET HEAD (M10X1.5X20-MM)	
	10	1	**9S-4191**	2	PLUG-O-RING	

M-METRIC PART
Y-SEPARATE ILLUSTRATION

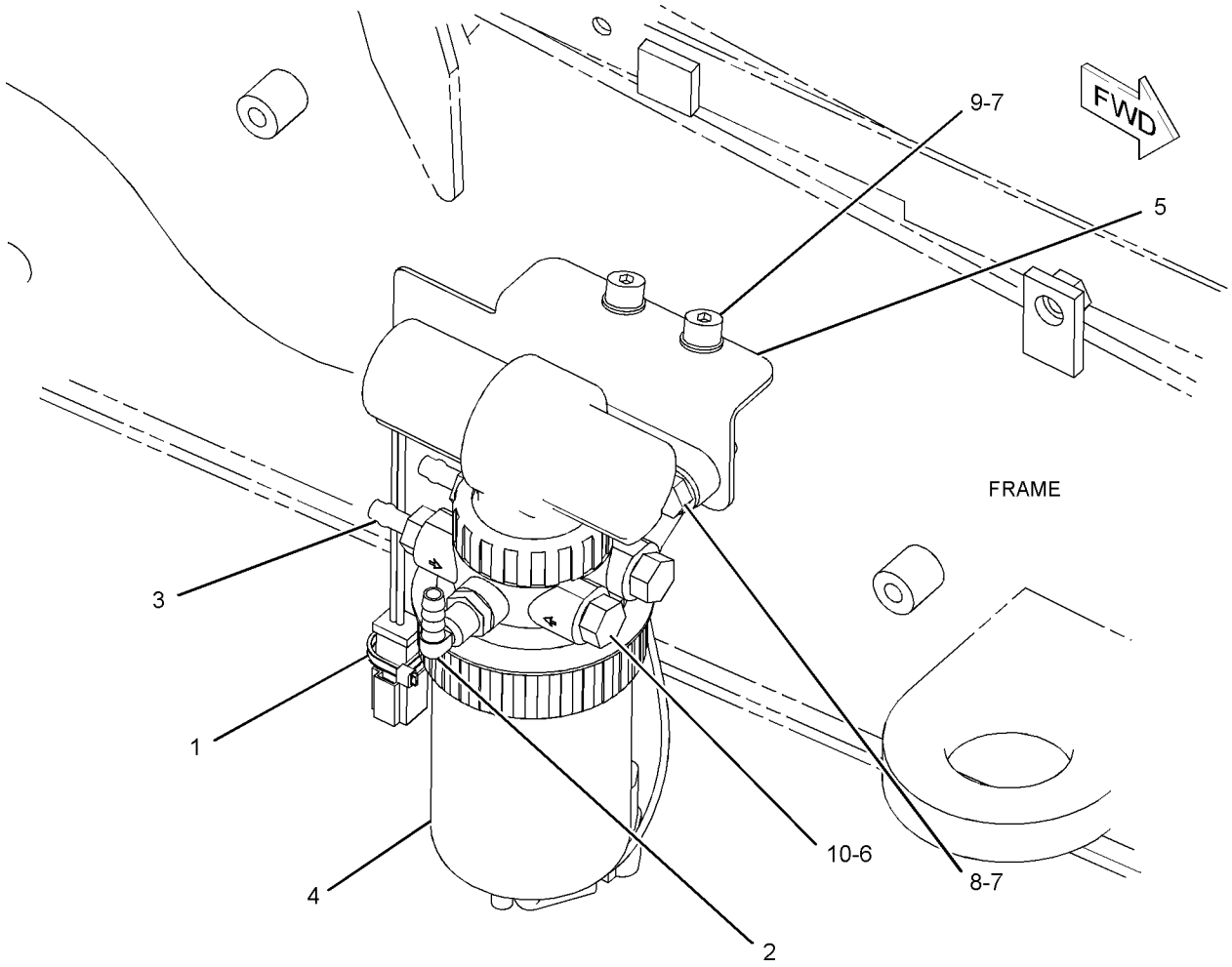

GRAPHIC #1 **<END>** g01078481

253-0352 PUMP GP-FUEL PRM & PRIM FILTER–
WITH MOUNTING
S/N: EAT1404-UP
PART OF 214-6903 ENGINE AR

SMCS-1258, 1260, 1261 **i03158703**

NOTE	REF NO	GRAPHIC REF	PART NUMBER	QTY	PART NAME 1 2 3 4 5 6 (PRODUCT LEVEL)	SEE PAGE
C	1	1	**3S-2093**	2	STRAP-CABLE	
	2	1	**069-4080**	1	FITTING	
	3	1	*165-7951*	2	CONNECTOR AS	
					(EACH INCLUDES)	
		1	**3J-1907**	1	SEAL-O-RING	
		1	**157-1669**	1	CONNECTOR	
Y	4	1	**228-9129**	1	PUMP GP-FUEL PRM & PRIM FILTER (WITH WATER SEPARATOR)	100
	5	1	**253-0354**	1	BRACKET AS	
	6	1	**3J-1907**	2	SEAL-O-RING	
	7	1	**8T-4121**	4	WASHER-HARD (11X21X2.5-MM THK)	
CM	8	1	**8T-4195**	2	BOLT (M10X1.5X30-MM)	
M	9	1	**8T-8894**	2	BOLT-SOCKET HEAD (M10X1.5X20-MM)	
	10	1	**9S-4191**	2	PLUG-O-RING	

C-CHANGE FROM PREVIOUS TYPE
M-METRIC PART
Y-SEPARATE ILLUSTRATION

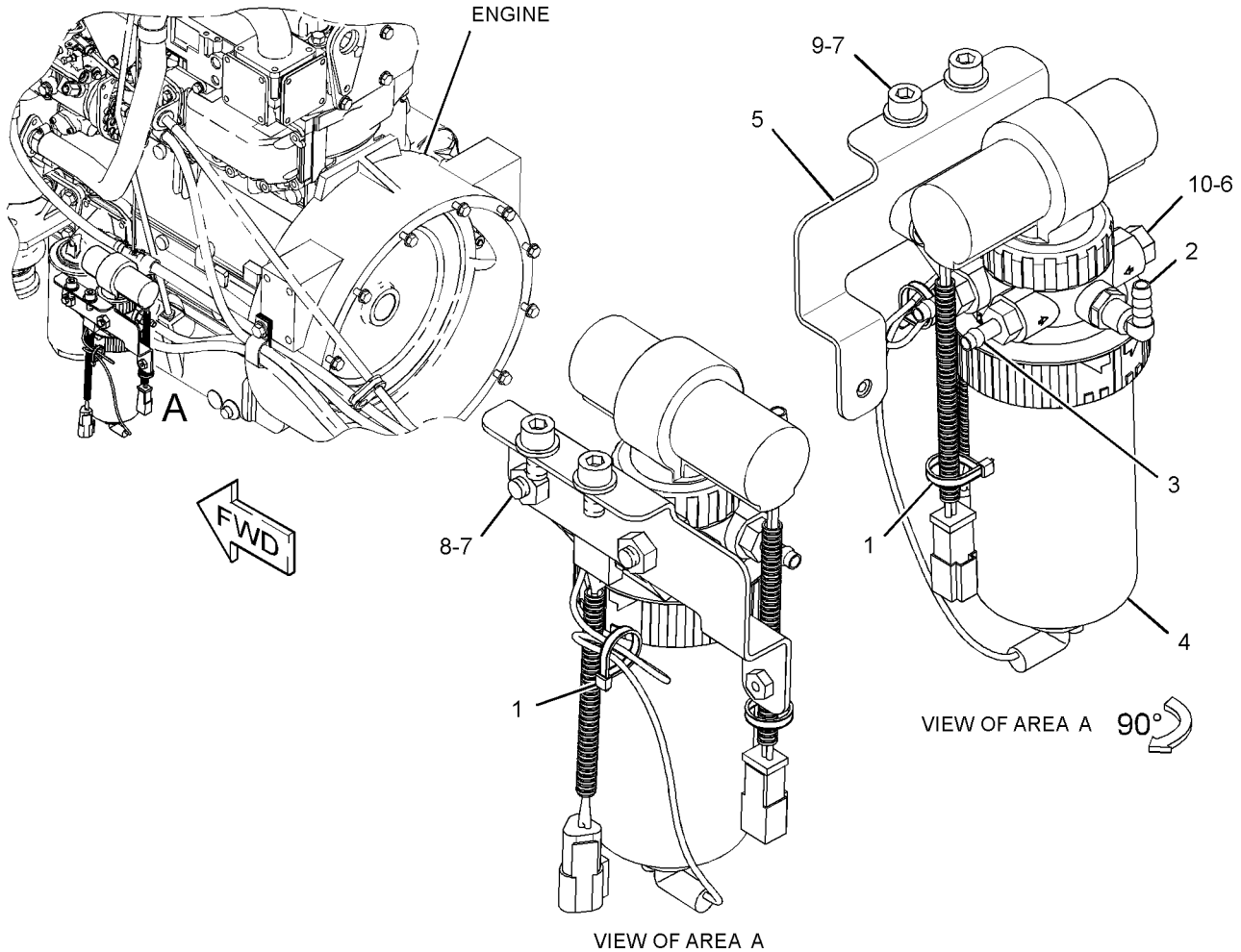

GRAPHIC #1 **<END>** g01662794

FUEL SYSTEM

245-6098 TANK & MTG GP-FUEL—INCLUDES STEP

S/N: EAT1-UP

PART OF 213-9289 CHASSIS AR

SMCS-1273 **i02431123**

NOTE	REF NO	GRAPHIC REF	PART NUMBER	QTY	PART NAME 1 2 3 4 5 6 (PRODUCT LEVEL)	SEE PAGE
	1	1	**245-6101**	1	TREAD	
	2	1	**245-6103**	1	STEP AS	
Y	3	1	*245-6104*	1	TANK GP-FUEL	104
	4	1	**245-6108**	1	PLATE AS	
	5	1	**5P-4116**	7	WASHER-HARD (8.8X20.5X2-MM THK)	
M	6	1	**8T-4193**	4	BOLT (M16X2X50-MM)	
	7	1	**8T-4122**	4	WASHER-HARD (17X32X3.5-MM THK)	
M	8	1	**8T-4189**	7	BOLT (M8X1.25X20-MM)	
M	9	1	**8T-4200**	4	BOLT (M8X1.25X16-MM)	
	10	1	**8T-4224**	4	WASHER-HARD (8.8X16X2-MM THK)	

M-METRIC PART
Y-SEPARATE ILLUSTRATION

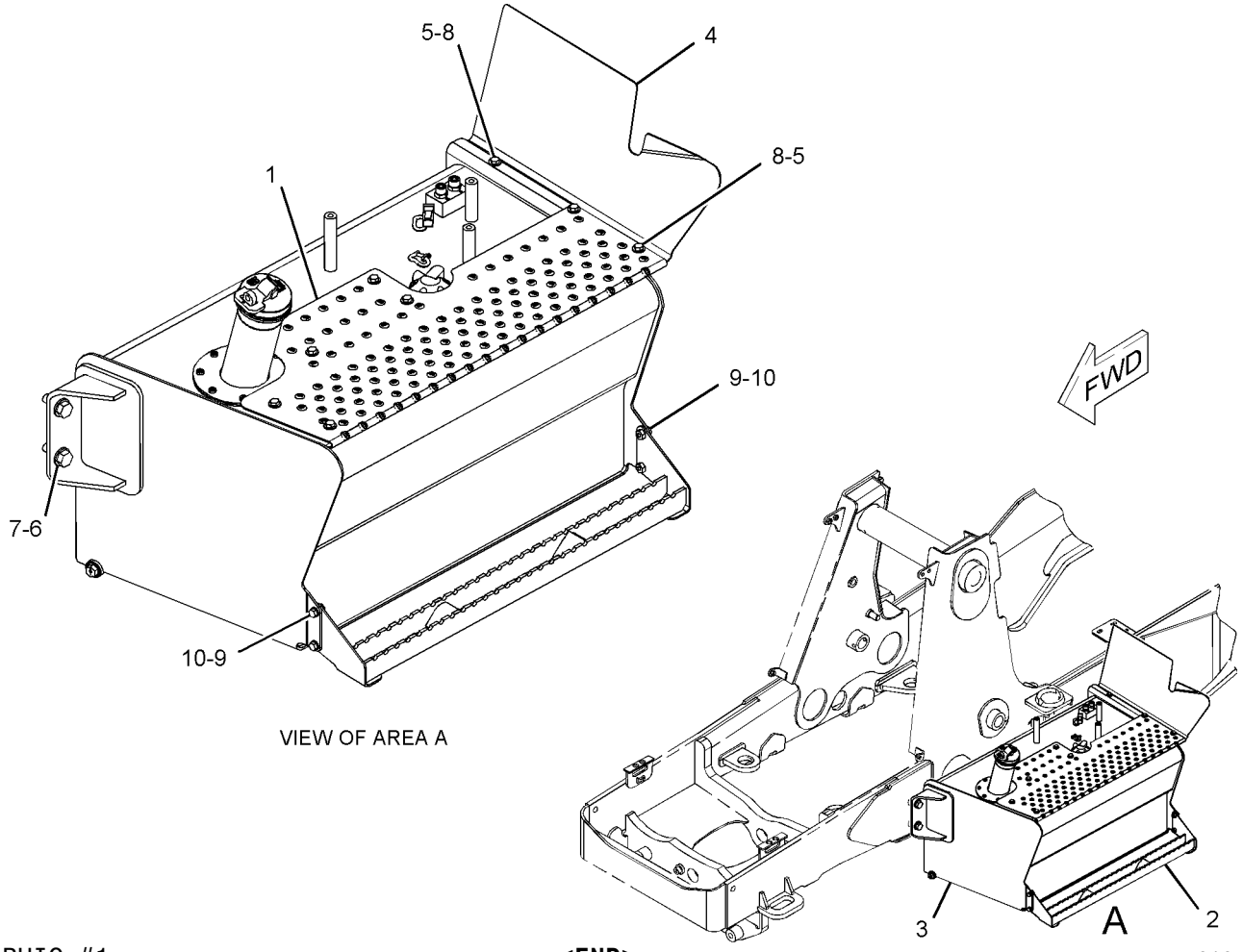

VIEW OF AREA A

GRAPHIC #1 **<END>** g01077507

FUEL SYSTEM

245-6104 TANK GP-FUEL

S/N: EAT1-UP

PART OF 245-6098 TANK & MTG GP-FUEL

SMCS-1273 **i02864273**

NOTE	REF NO	GRAPHIC REF	PART NUMBER	QTY	PART NAME 1 2 3 4 5 6 (PRODUCT LEVEL)	SEE PAGE
	1	1	**8L-8413**	1	STRAP-CABLE	
	2	1	**9R-7240**	1	GASKET	
	3	1	**131-0232**	1	COVER	
	4	1	**251-3231**	1	SENDER AS-FUEL LEVEL	
		1	**186-3735**	2	PIN-CONNECTOR (16-GA TO 18-GA)	
		1	**102-8802**	1	KIT-RECEPTACLE (2-PIN)	
					(INCLUDES RECEPTACLE AS & WEDGE)	
Y	5	1	**245-6105**	1	TANK GP-FUEL	105
M	6	1	**184-0982**	5	SCREW-PAN HEAD (M6X1X16-MM)	

M-METRIC PART
Y-SEPARATE ILLUSTRATION

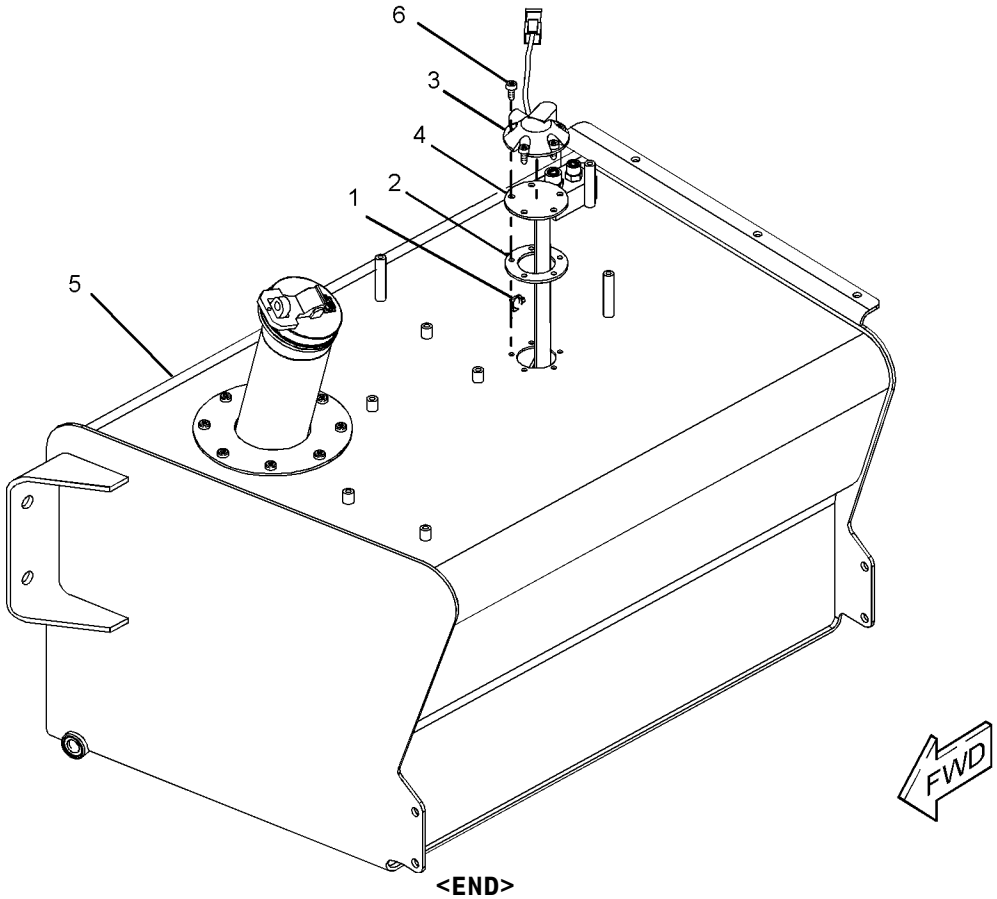

GRAPHIC #1 **<END>** g01089650

FUEL SYSTEM

245-6105 TANK GP-FUEL

S/N: EAT1-UP

PART OF 245-6104 TANK GP-FUEL

SMCS-1273 **i03502265**

NOTE	REF NO	GRAPHIC REF	PART NUMBER	QTY	PART NAME 1 2 3 4 5 6 (PRODUCT LEVEL)	SEE PAGE
	1	1	**284-9039**	1	CAP-FUEL	
	2	1	**201-1835**	1	TUBE AS	
	3	1	**272-0537**	1	PLUG AS	
		1	**190-7634**	1	SEAL-O-RING	
	4	1	**245-6107**	1	TANK AS-FUEL	
		1	**5C-9855**	4	BOSS (M8X1.25X19-MM)	
		1	**7T-1099**	2	LINK	
	5	1	**106-8020**	1	GASKET	
M	6	1	**184-0982**	8	SCREW-PAN HEAD (M6X1X16-MM)	
	7	1	*148-8326*	2	CONNECTOR AS	
					(EACH INCLUDES)	
		1	**3J-7354**	1	SEAL-O-RING	
		1	**6V-8397**	1	SEAL-O-RING	
		1	**6V-9872**	1	CONNECTOR	
F			**180-3730**	1	STRAINER-FUEL (FILLER NECK SCREEN)	

F-NOT SHOWN
M-METRIC PART

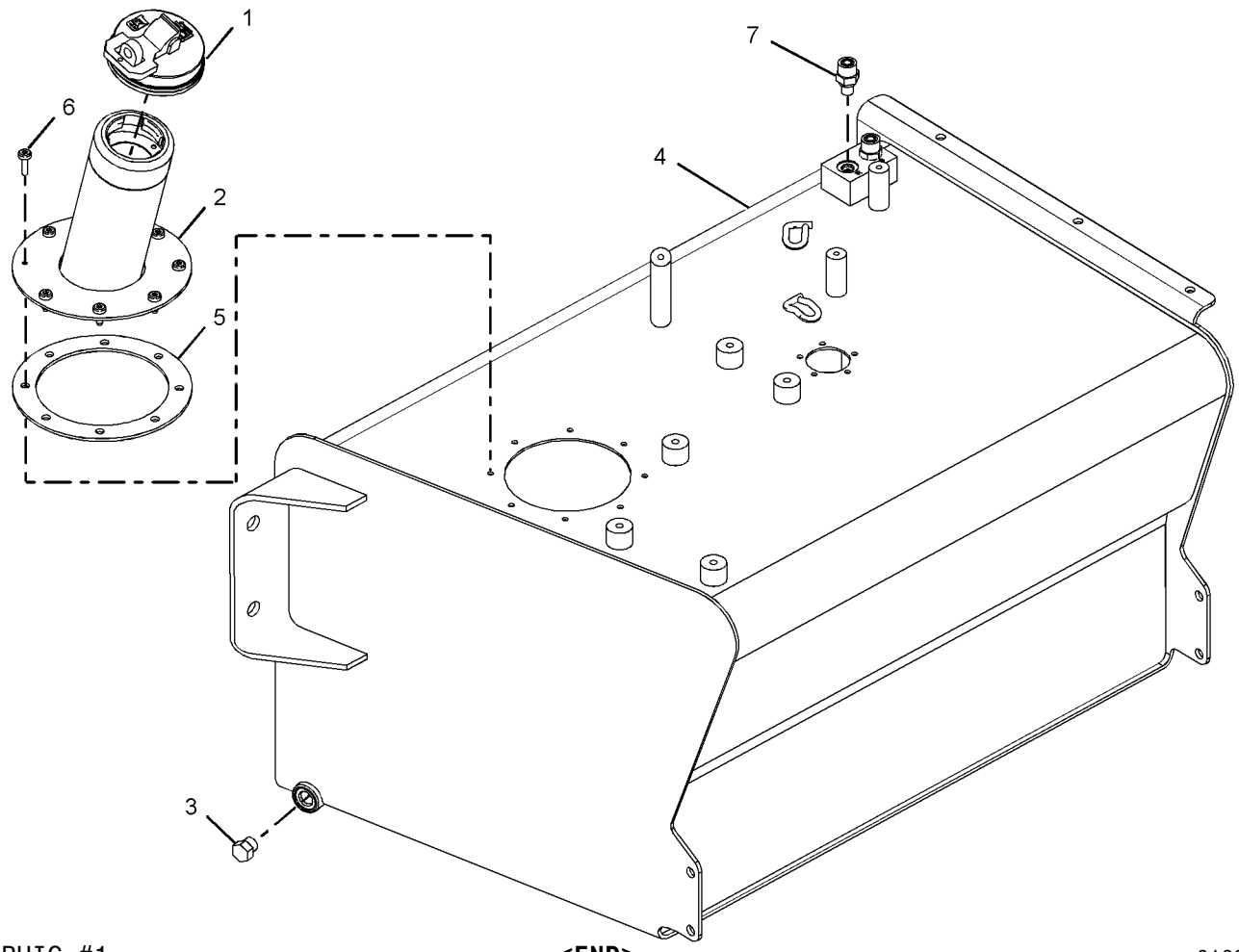

GRAPHIC #1 **<END>** g01086993

252-6256 ALTERNATOR GP-CHARGING–

120-AMPERE, WITH MOUNTING

S/N: CRS1-1238

PART OF 319-2122 ENGINE AR, 245-6842, 320-8415, 325-5122 ENGINE AR-PRIMARY

ALSO AN ATTACHMENT

SMCS-1405, 1425 **i03481600**

NOTE	REF NO	GRAPHIC REF	PART NUMBER	QTY	PART NAME 1 2 3 4 5 6 (PRODUCT LEVEL)	SEE PAGE
	1	1	**6B-0933**	1	SPACER (10.31X19.05X6.35-MM THK)	
M	2	1	**6I-0260**	1	BOLT (M8X1.25X25-MM)	
M	3	1	**6I-0454**	1	BOLT (M10X1.5X70-MM)	
	4	1	**6I-0594**	1	NUT (M10X1.15-THD)	
	5	1	**228-7391**	1	PULLEY-ALTERNATOR	
	6	1	**067-6366**	1	WASHER	
	7	1	**100-8451**	1	BOLT (M8X1.25X130-MM)	
	8	1	**113-6349**	1	NUT (M12X1.75X93-MM)	
M	9	1	**140-8783**	2	BOLT (M10X45-THD)	
	10	1	**225-3145**	1	ALTERNATOR GP-CHARGING (120-AMPERE)	
	11	1	**233-9530**	1	BRACKET	
	12	1	**233-9531**	1	LEVER-ADJUSTING	

M-METRIC PART

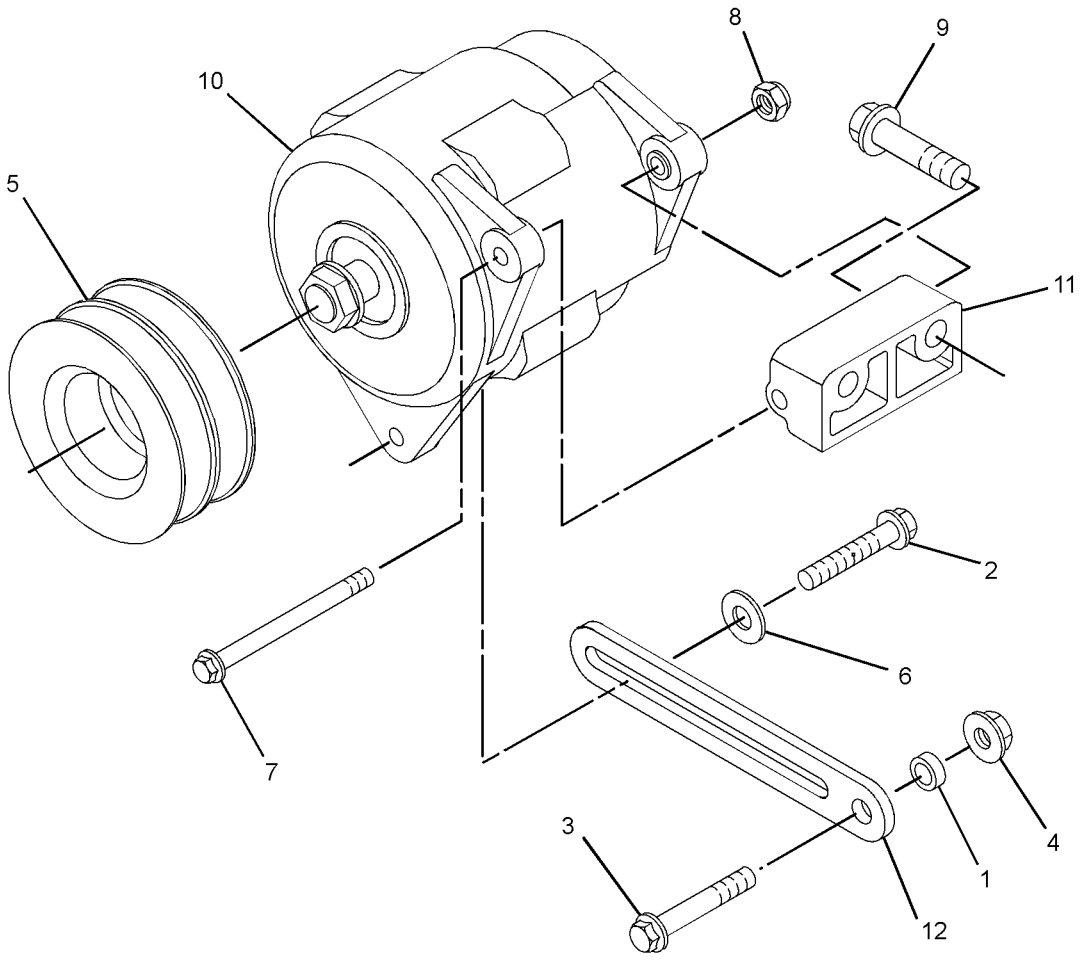

GRAPHIC #1 **<END>** g01828414

211-4285 BATTERY & WIRING GP–STANDARD

S/N: EAT1-UP

PART OF 213-9289 CHASSIS AR

SMCS-1401, 1402, 1408, 1411 **i03502300**

NOTE	REF NO	GRAPHIC REF	PART NUMBER	QTY	PART NAME 1 2 3 4 5 6 (PRODUCT LEVEL)	SEE PAGE
	1	1	**6T-0465**	1	COVER-TERMINAL (BLACK)	
	2	1	**7K-1181**	7	STRAP-CABLE	
	3	1	**038-9317**	1	TREAD-NONSKID	
	4	1	**178-1781**	1	CLIP	
	5	1	**213-6088**	1	CABLE AS-BATTERY (NEGATIVE)	
		1	**1S-7251**	1	TERMINAL-CABLE (00-GA, 1/2-IN BOLT)	
E		1	**5P-0747**		CABLE (00-GA, BLACK) (61-CM)	
	6	1	**213-6089**	1	CABLE AS-POWER	
E		1	**8C-3056**		CABLE (02-GA, RED) (230-CM)	
		1	**8T-8799**	1	BOOT	
E		1	**135-5009**		TUBE-HEAT SHRINK (32-MM DIA) (5-CM)	
E		1	**319-0755**		TUBE-CONVOLUTED (225-CM)	
	7	1	**213-6094**	1	CABLE AS (ALTERNATOR)	
		1	**8T-8799**	1	BOOT	
E		1	**125-7876**		TUBE-HEAT SHRINK (17.78-MM DIA) (7-CM)	
	8	1	**230-6368**	1	BATTERY (12-VOLT, MAINTENANCE FREE)	
	9	1	**240-4639**	1	BRACKET AS	
	10	1	**246-8053**	1	CABLE AS-BATTERY (POSITIVE)	
E		1	**5P-0761**		CABLE (00-GA, RED) (110-CM)	
		1	**8N-0869**	1	COVER-TERMINAL (RED)	
E		1	**8Y-8081**		TUBE-CONVOLUTED (105-CM)	
		1	**3S-2093**	2	STRAP-CABLE	
	11	1	**243-5027**	1	NUT AS (M6X1-THD)	
	12	1	**156-6175**	2	CLIP	
	13	1	**4D-6466**	2	CLIP	
	14	1	**8T-4224**	1	WASHER-HARD (8.8X16X2-MM THK)	
	15	1	**4P-7581**	1	CLIP	
M	16	1	**5C-2890**	2	NUT (M6X1-THD)	
M	17	1	**5C-7261**	1	NUT (M8X1.25-THD)	
	18	1	**7X-7729**	2	WASHER (11X25X3-MM THK)	
	19	1	**8T-4121**	3	WASHER-HARD (11X21X2.5-MM THK)	
M	20	1	**8T-4133**	1	NUT (M10X1.5-THD)	
M	21	1	**8T-4137**	4	BOLT (M10X1.5X20-MM)	
M	22	1	**5C-9553**	2	BOLT (M6X1X16-MM)	
M	23	1	**8T-4185**	1	BOLT (M10X1.5X50-MM)	
	24	1	**8T-4205**	4	WASHER-HARD (7.2X14.5X2-MM THK)	
	25	1	**9G-4191**	1	GROMMET	
	26	1	**4P-8134**	1	CLIP	

E-ORDER BY THE CENTIMETER
M-METRIC PART

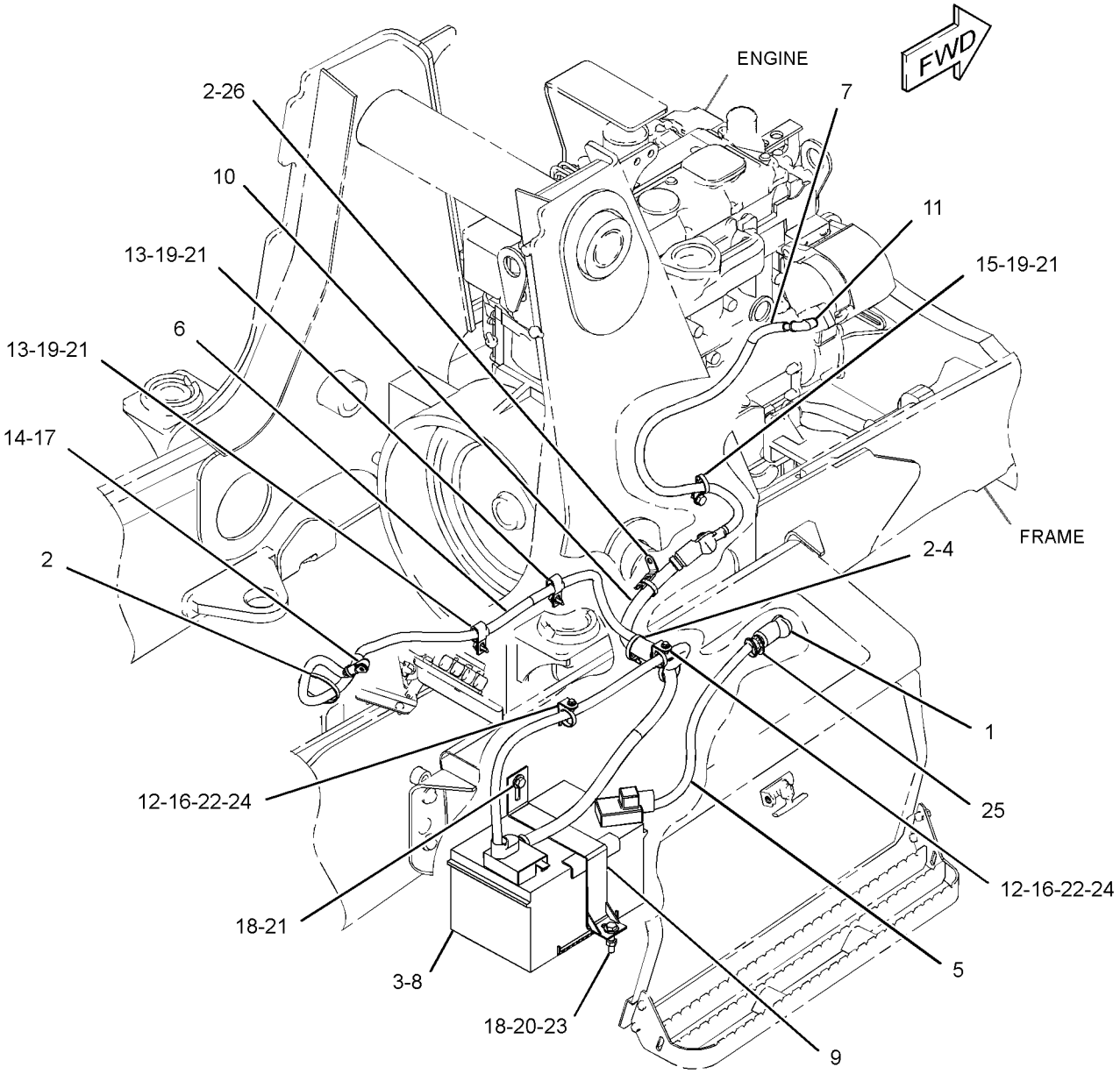

GRAPHIC #1 **<END>** g01386954

211-4286 BATTERY & WIRING GP

S/N: EAT1-UP

AN ATTACHMENT

SMCS-1401, 1402, 1408, 1411 **i03503680**

NOTE	REF NO	GRAPHIC REF	PART NUMBER	QTY	PART NAME 1 2 3 4 5 6 (PRODUCT LEVEL)	SEE PAGE
	1	1	**038-9317**	1	TREAD-NONSKID	
	2	1	**213-6091**	1	CABLE AS-BATTERY (POSITIVE)	
		1	**3S-2093**	1	STRAP-CABLE	
E		1	**5P-0761**		CABLE (00-GA, RED) (36-CM)	
		1	**7T-9987**	1	COVER-TERMINAL (RED)	
		1	**8S-3020**	1	TERMINAL-CABLE (00-GA, 3/8-IN BOLT)	
E		1	**8Y-8081**		TUBE-CONVOLUTED (36-CM)	
		1	**3S-6049**	1	TERMINAL AS-BATTERY (POSITIVE)	
	3	1	**213-6092**	1	CABLE AS-BATTERY (NEGATIVE)	
		1	**1S-7252**	1	TERMINAL-CABLE (00-GA, 3/8-IN BOLT)	
E		1	**5P-0747**		CABLE (00-GA, BLACK) (44-CM)	
		1	**7N-5274**	1	COVER-TERMINAL (BLACK)	
		1	**3S-6050**	1	TERMINAL AS-BATTERY (NEGATIVE)	
	4	1	**230-6368**	1	BATTERY (12-VOLT, MAINTENANCE FREE)	
	5	1	**240-4639**	1	BRACKET AS	
	6	1	**7X-7729**	2	WASHER (11X25X3-MM THK)	
M	7	1	**8T-4133**	1	NUT (M10X1.5-THD)	
M	8	1	**8T-4137**	1	BOLT (M10X1.5X20-MM)	
M	9	1	**8T-4185**	1	BOLT (M10X1.5X50-MM)	

E-ORDER BY THE CENTIMETER
M-METRIC PART

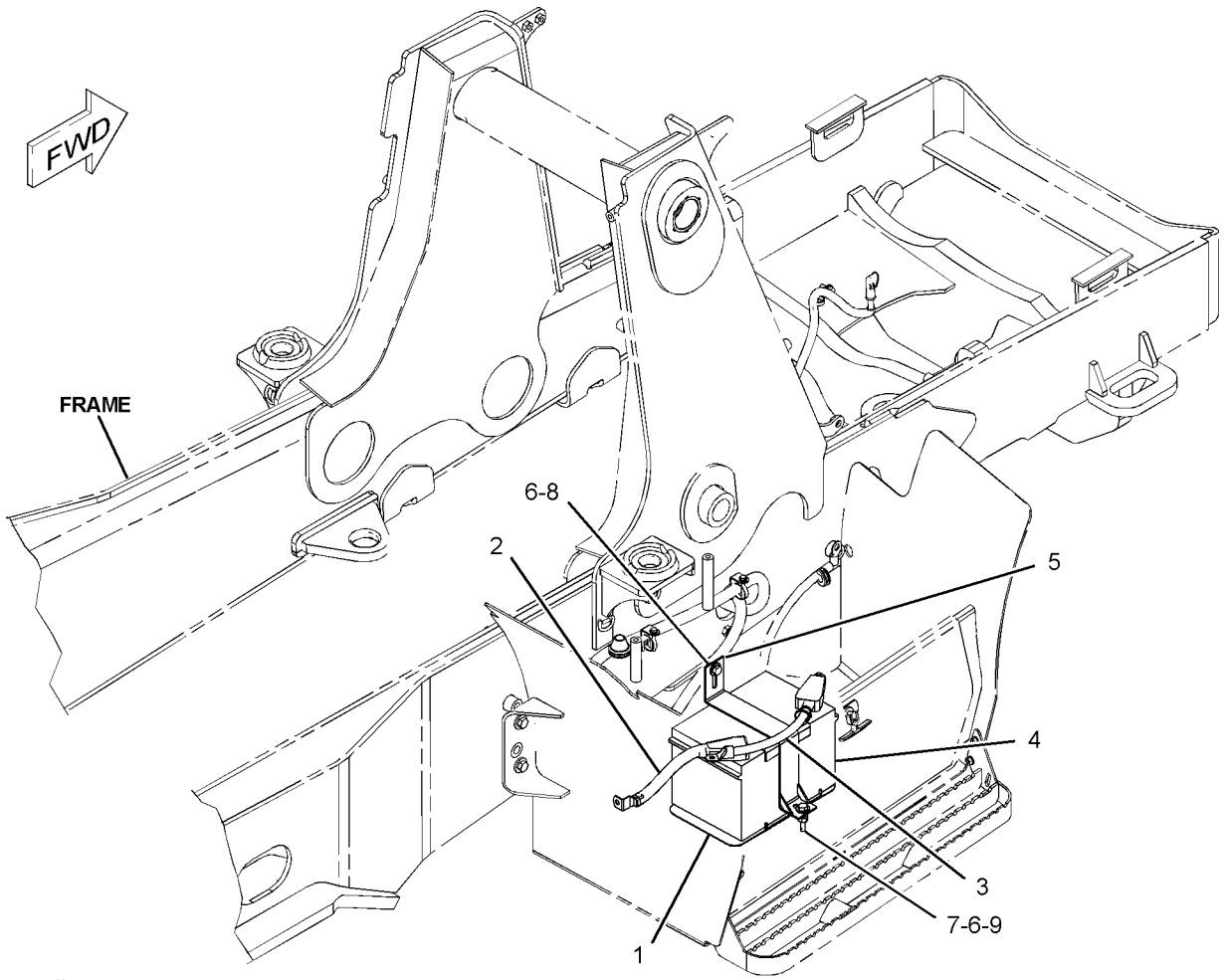

GRAPHIC #1 **<END>** g01082047

ELECTRICAL AND STARTING SYSTEM

290-6790 BATTERY & WIRING GP–STANDARD

S/N: EAT1-1030

PART OF 213-9289 CHASSIS AR

SMCS-1401, 1402, 1408, 1411 **i03527991**

NOTE	REF NO	GRAPHIC REF	PART NUMBER	QTY	PART NAME 1 2 3 4 5 6 (PRODUCT LEVEL)	SEE PAGE
	1	1	**3E-8320**	1	PLATE-INSTRUCTION (BATTERY) (DISCONNECT SWITCH)	
M	2	1	**5C-9553**	2	BOLT (M6X1X16-MM)	
	3	1	**6T-0465**	1	COVER-TERMINAL (BLACK)	
	4	1	**7K-1181**	6	STRAP-CABLE	
Y	5	1	**7N-0718**	1	SWITCH GP-DISCONNECT (BATTERY) (12-VOLT)	149
	6	1	**038-9317**	1	TREAD-NONSKID	
	7	1	**178-1781**	1	CLIP	
	8	1	**213-6089**	1	CABLE AS-POWER	
E		1	**8C-3056**		CABLE (02-GA, RED) (230-CM)	
E		1	**8Y-8080**		TUBE-CONVOLUTED (225-CM)	
E		1	**1P-0810**		TAPE-ELECTRICAL (42-CM)	
	9	1	**213-6094**	1	CABLE AS (ALTERNATOR)	
	10	1	**230-6368**	1	BATTERY (12-VOLT, MAINTENANCE FREE)	
	11	1	**240-4639**	1	BRACKET AS	
	12	1	**243-5027**	1	NUT AS (M6X1-THD)	
	13	1	**246-8053**	1	CABLE AS-BATTERY (POSITIVE)	
		1	**3S-2093**	2	STRAP-CABLE	
	14	1	**290-6791**	1	CABLE AS	
		1	**8S-3020**	1	TERMINAL-CABLE (00-GA, 3/8-IN BOLT)	
E		1	**159-8050**		CABLE (00-GA, BLACK) (44-CM)	
	15	1	**290-6792**	1	CABLE AS	
		1	**1S-7251**	1	TERMINAL-CABLE (00-GA, 1/2-IN BOLT)	
		1	**8S-3020**	1	TERMINAL-CABLE (00-GA, 3/8-IN BOLT)	
E		1	**159-8050**		CABLE (00-GA, BLACK) (6-CM)	
	16	1	**156-6175**	2	CLIP	
	17	1	**4D-6466**	2	CLIP	
	18	1	**4P-7581**	1	CLIP	
M	19	1	**5C-2890**	2	NUT (M6X1-THD)	
	20	1	**7X-7729**	2	WASHER (11X25X3-MM THK)	
	21	1	**8T-4121**	5	WASHER-HARD (11X21X2.5-MM THK)	
M	22	1	**8T-4133**	1	NUT (M10X1.5-THD)	
M	23	1	**8T-4137**	4	BOLT (M10X1.5X20-MM)	
M	24	1	**8T-4185**	1	BOLT (M10X1.5X50-MM)	
	25	1	**8T-4205**	4	WASHER-HARD (7.2X14.5X2-MM THK)	
	26	1	**9G-4191**	1	GROMMET	
E	27	1	**3E-8299**		SEAL (2-CM)	
E	27A	1	**3E-8299**		SEAL (11-CM)	
E	27B	1	**3E-8299**		SEAL (7-CM)	

E-ORDER BY THE CENTIMETER
M-METRIC PART
Y-SEPARATE ILLUSTRATION

290-6790 **BATTERY & WIRING GP** *(contd.)* **i03527991**

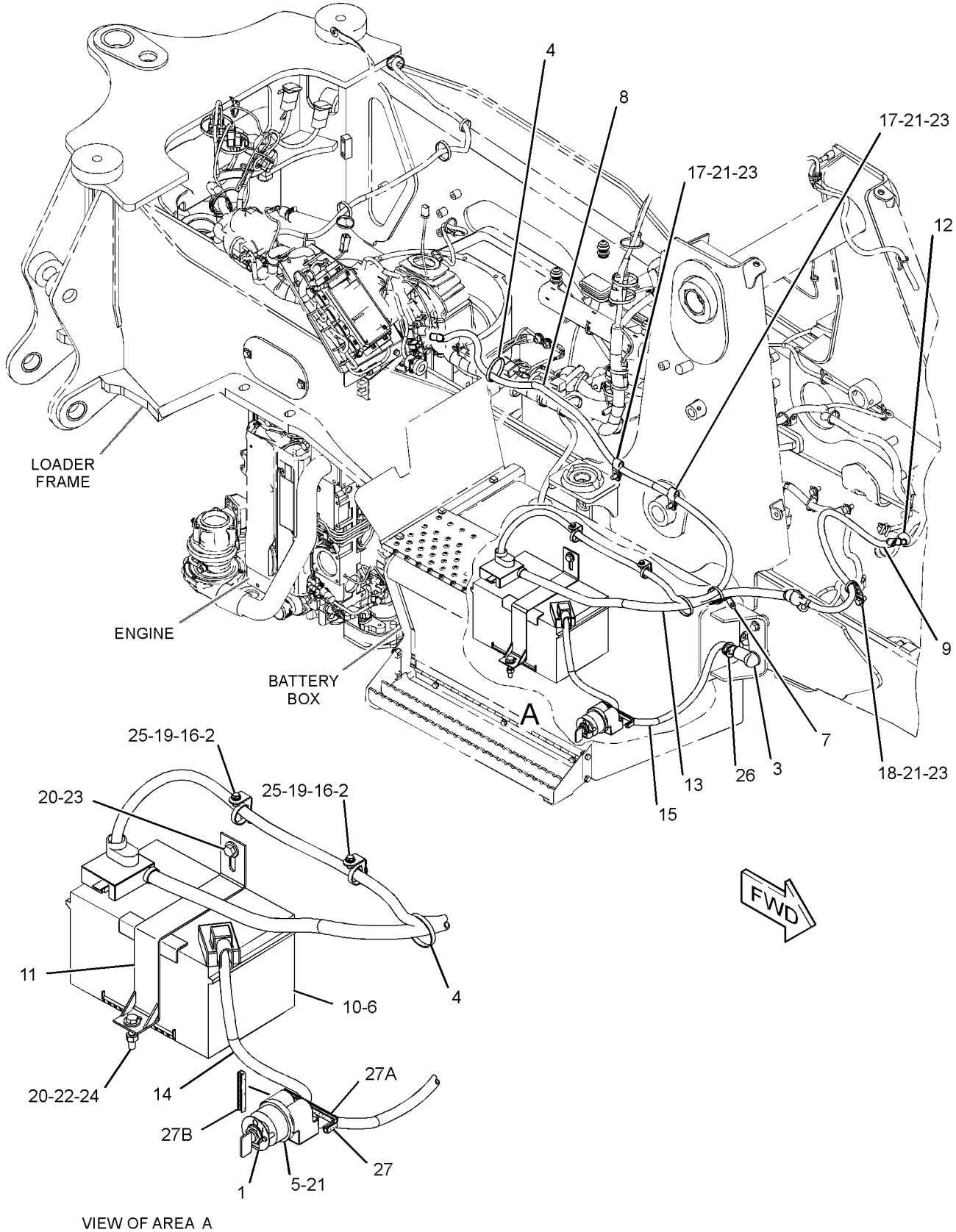

VIEW OF AREA A

GRAPHIC #1 **<END>** g01389707

290-6790 BATTERY & WIRING GP–STANDARD

S/N: EAT1031-UP

PART OF 213-9289 CHASSIS AR

SMCS-1401, 1402, 1408, 1411 **i03527990**

NOTE	REF NO	GRAPHIC REF	PART NUMBER	QTY	PART NAME 1 2 3 4 5 6 (PRODUCT LEVEL)	SEE PAGE
	1	1	**3E-8320**	1	PLATE-INSTRUCTION (BATTERY) (DISCONNECT SWITCH)	
M	2	1	**5C-9553**	2	BOLT (M6X1X16-MM)	
	3	1	**6T-0465**	1	COVER-TERMINAL (BLACK)	
C	4	1	**7K-1181**	8	STRAP-CABLE	
Y	5	1	**7N-0718**	1	SWITCH GP-DISCONNECT (BATTERY) (12-VOLT)	149
	6	1	**038-9317**	1	TREAD-NONSKID	
C	7	1	**277-1873**	2	CLIP	
	8	1	**213-6089**	1	CABLE AS-POWER	
		1	**8T-8799**	1	BOOT	
E		1	**135-5009**		TUBE-HEAT SHRINK (32-MM DIA) (5-CM)	
E		1	**1P-0810**		TAPE-ELECTRICAL (42-CM)	
E		1	**8C-3056**		CABLE (02-GA, RED) (230-CM)	
E		1	**319-0755**		TUBE-CONVOLUTED (225-CM)	
	9	1	**213-6094**	1	CABLE AS (ALTERNATOR)	
		1	**8T-8799**	1	BOOT	
E		1	**125-7876**		TUBE-HEAT SHRINK (17.78-MM DIA) (7-CM)	
	10	1	**230-6368**	1	BATTERY (12-VOLT, MAINTENANCE FREE)	
	11	1	**240-4639**	1	BRACKET AS	
	12	1	**243-5027**	1	NUT AS (M6X1-THD)	
	13	1	**246-8053**	1	CABLE AS-BATTERY (POSITIVE)	
		1	**1S-7251**	1	TERMINAL-CABLE (00-GA, 1/2-IN BOLT)	
		1	**8N-0869**	1	COVER-TERMINAL (RED)	
E		1	**5P-0761**		CABLE (00-GA, RED) (110-CM)	
E		1	**8Y-8081**		TUBE-CONVOLUTED (105-CM)	
		1	**3S-2093**	2	STRAP-CABLE	
	14	1	**290-6791**	1	CABLE AS	
		1	**8S-3020**	1	TERMINAL-CABLE (00-GA, 3/8-IN BOLT)	
E		1	**159-8050**		CABLE (00-GA, BLACK) (44-CM)	
	15	1	**290-6792**	1	CABLE AS	
		1	**1S-7251**	1	TERMINAL-CABLE (00-GA, 1/2-IN BOLT)	
		1	**8S-3020**	1	TERMINAL-CABLE (00-GA, 3/8-IN BOLT)	
E		1	**159-8050**		CABLE (00-GA, BLACK) (6-CM)	
	16	1	**156-6175**	2	CLIP	
	17	1	**4D-6466**	2	CLIP	
	18	1	**4P-7581**	1	CLIP	
M	19	1	**5C-2890**	2	NUT (M6X1-THD)	
	20	1	**7X-7729**	2	WASHER (11X25X3-MM THK)	
C	21	1	**8T-4121**	7	WASHER-HARD (11X21X2.5-MM THK)	
M	22	1	**8T-4133**	1	NUT (M10X1.5-THD)	
CM	23	1	**8T-4137**	6	BOLT (M10X1.5X20-MM)	
M	24	1	**8T-4185**	1	BOLT (M10X1.5X50-MM)	
	25	1	**8T-4205**	4	WASHER-HARD (7.2X14.5X2-MM THK)	
	26	1	**9G-4191**	1	GROMMET	
C	27	1	**4P-8134**	1	CLIP	

C-CHANGE FROM PREVIOUS TYPE
E-ORDER BY THE CENTIMETER
M-METRIC PART
Y-SEPARATE ILLUSTRATION

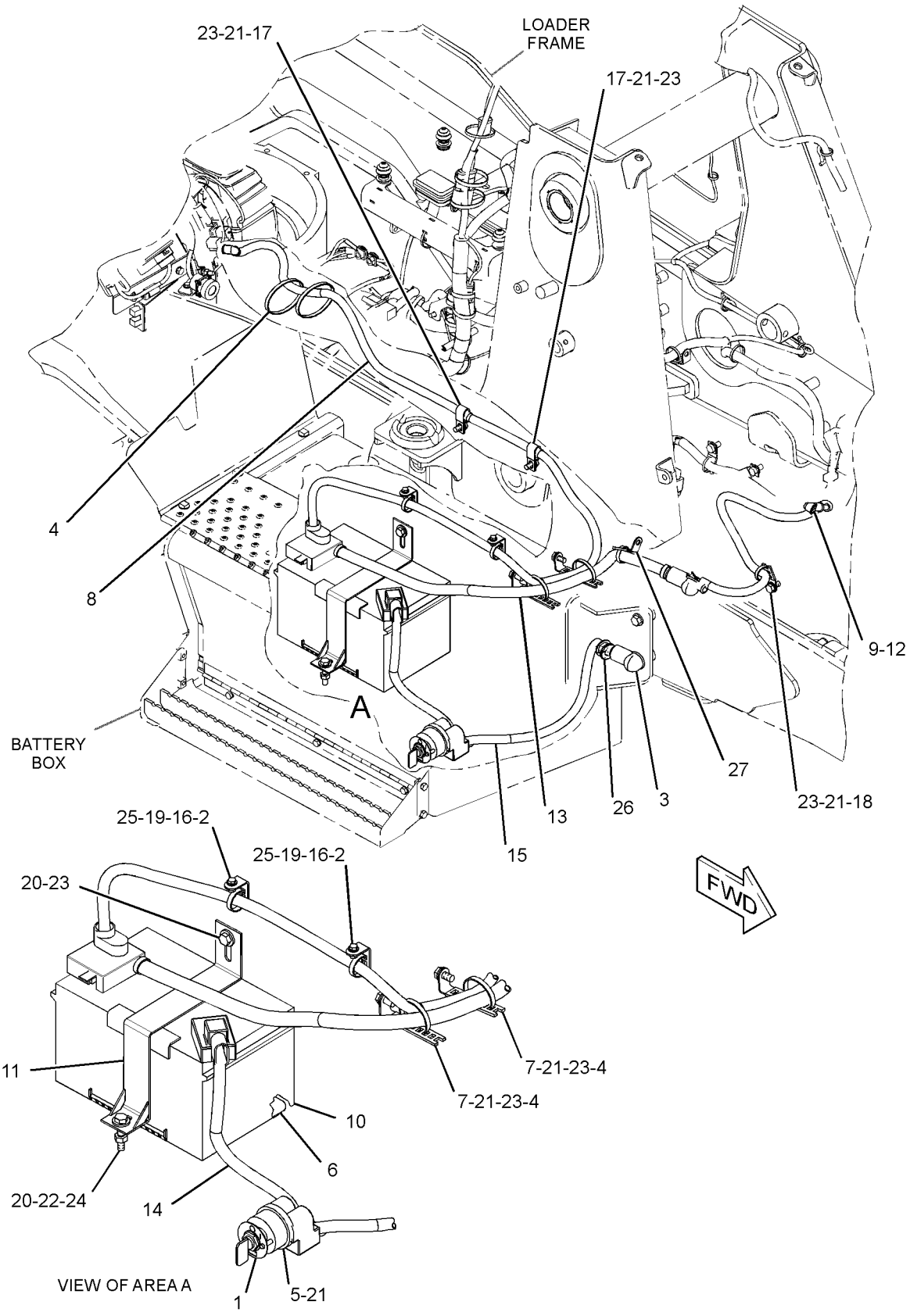

GRAPHIC #1 **<END>** g01446074

262-1421 ELECTRONICS GP-COMMUNICATION–

PRODUCT LINK 300
S/N: EAT1-UP
PART OF 225-7995 INSTALLATION GP-COMMUNICATION
AN ATTACHMENT

SMCS-7606, 7610, 7620 **i03171663**

NOTE	PART NUMBER	QTY	PART NAME 1 2 3 4 5 6 (PRODUCT LEVEL)	SEE PAGE
	330-3409	1	SOFTWARE GP-COMMUNICATION (PRODUCT LINK 300)	
			-OR-	
	330-3410	1	SERVICE GP-COMMUNICATION (PRODUCT LINK 300)	
			(OPTIONAL SERVICE REPLACEMENT)(INCLUDES CONTROL GP & SOFTWARE)	
	7X-6315	1	STRAP AS-GROUND	
	126-7574	1	SCREW-PAN HEAD (8-32X9.52-MM)	
	134-4126	1	WASHER (4.52X8.28X0.76-MM THK)	

<END>

225-8017 ELECTRONICS GP-MACHINE

S/N: EAT1-UP
PART OF 213-9304 BACKHOE AR-EXTENDABLE STICK, 213-9301 BACKHOE AR-STANDARD STICK
AN ATTACHMENT

SMCS-7610, 7620 **i03137562**

NOTE	PART NUMBER	QTY	PART NAME 1 2 3 4 5 6 (PRODUCT LEVEL)	SEE PAGE
	331-0907	1	SOFTWARE GP-MACHINE	
			-OR-	
	304-5691	1	CONTROL GP-UNPROGRAMMED (MACHINE)	
			-OR-	
	331-0921	1	SERVICE GP-MACHINE	
			(OPTIONAL SERVICE REPLACEMENT)(INCLUDES CONTROL GP & SOFTWARE)	

<END>

227-7373 ELECTRONICS GP-MACHINE

S/N: EAT1-UP
PART OF 213-9309, 291-9207 BACKHOE AR-EXTENDABLE STICK, 213-9306, 291-9206 BACKHOE AR-STANDARD STICK
AN ATTACHMENT

SMCS-7610, 7620 **i03097644**

NOTE	PART NUMBER	QTY	PART NAME 1 2 3 4 5 6 (PRODUCT LEVEL)	SEE PAGE
	331-0907	1	SOFTWARE GP-MACHINE	
			-OR-	
R	**304-5687**	1	CONTROL GP-UNPROGRAMMED (MACHINE)	
			-OR-	
	331-0920	1	SERVICE GP-MACHINE	
			(OPTIONAL SERVICE REPLACEMENT)(INCLUDES CONTROL GP & SOFTWARE)	

R-REMFG PART MAY BE AVAILABLE

<END>

ELECTRICAL AND STARTING SYSTEM

307-1496 ELECTRONICS GP-MACHINE

S/N: EAT1-UP

AN ATTACHMENT

SMCS-7610, 7620 **i02848408**

NOTE	REF NO	GRAPHIC REF	PART NUMBER	QTY	PART NAME 1 2 3 4 5 6 (PRODUCT LEVEL)	SEE PAGE
R	1	1	**252-2422**	1	CONTROL GP-UNPROGRAMMED (MACHINE)	

R-REMFG PART MAY BE AVAILABLE

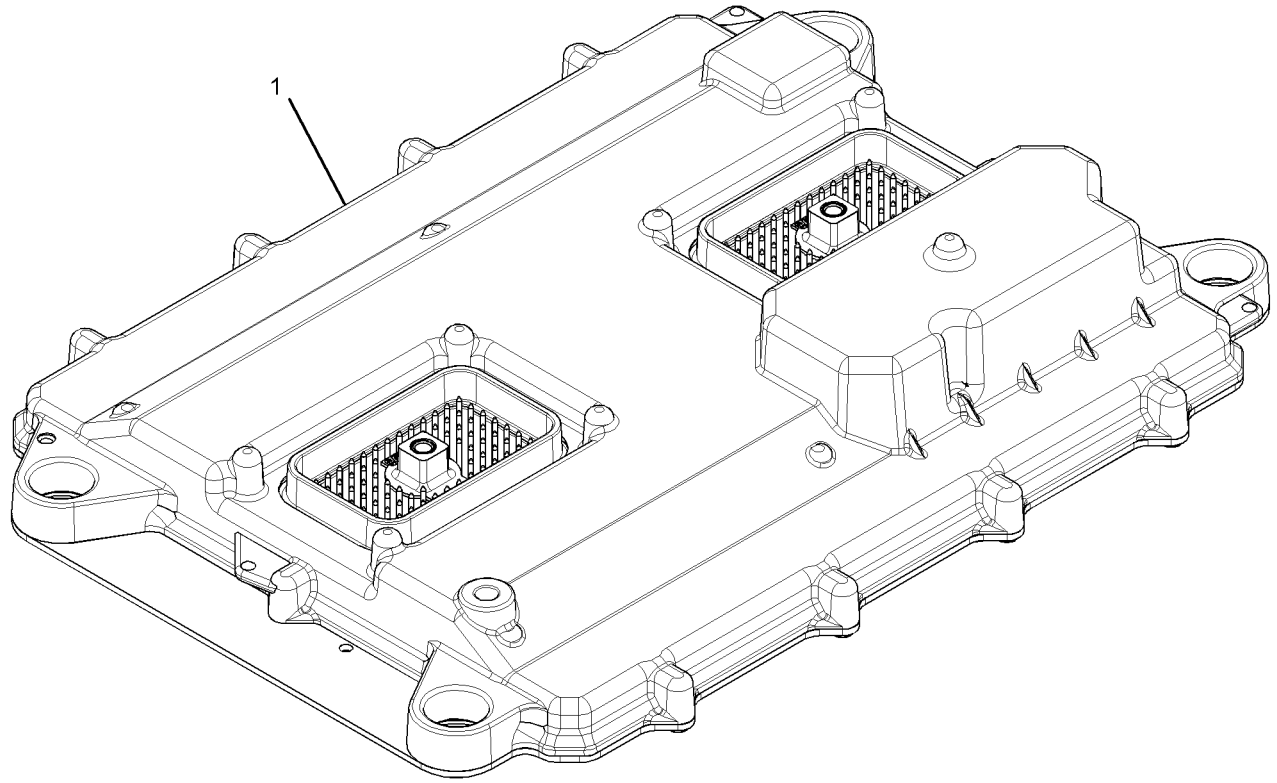

GRAPHIC #1 **<END>** g01533613

227-7374 ELECTRONICS GP-MONITOR–ADVISOR

S/N: EAT1-UP

PART OF 211-4253 INSTALLATION GP-MONITOR

AN ATTACHMENT

SMCS-7490, 7610, 7620 **i03097661**

NOTE	PART NUMBER	QTY	PART NAME 1 2 3 4 5 6 (PRODUCT LEVEL)	SEE PAGE
	330-4554	1	SOFTWARE GP-MONITOR	
			–OR–	
	284-8905	1	CONTROL GP-UNPRGMED MONITOR (ADVISOR)	
			-OR-	
	330-4555	1	SERVICE GP-MONITOR	
			(OPTIONAL SERVICE REPLACEMENT)(INCLUDES CONTROL GP & SOFTWARE)	

<END>

232-6661 GLOW PLUG GP

S/N: CRS1-1238
PART OF 245-6842 ENGINE AR-PRIMARY
TYPE 1

SMCS-1412 **i02757556**

NOTE	REF NO	GRAPHIC REF	PART NUMBER	QTY	PART NAME 1 2 3 4 5 6 (PRODUCT LEVEL)	SEE PAGE
	1	1	**232-7399**	1	SUPPORT-PLUG	
	2	1	**232-6662**	4	GLOW PLUG (12-VOLT)	
	3	1	**232-3126**	1	CLIP	

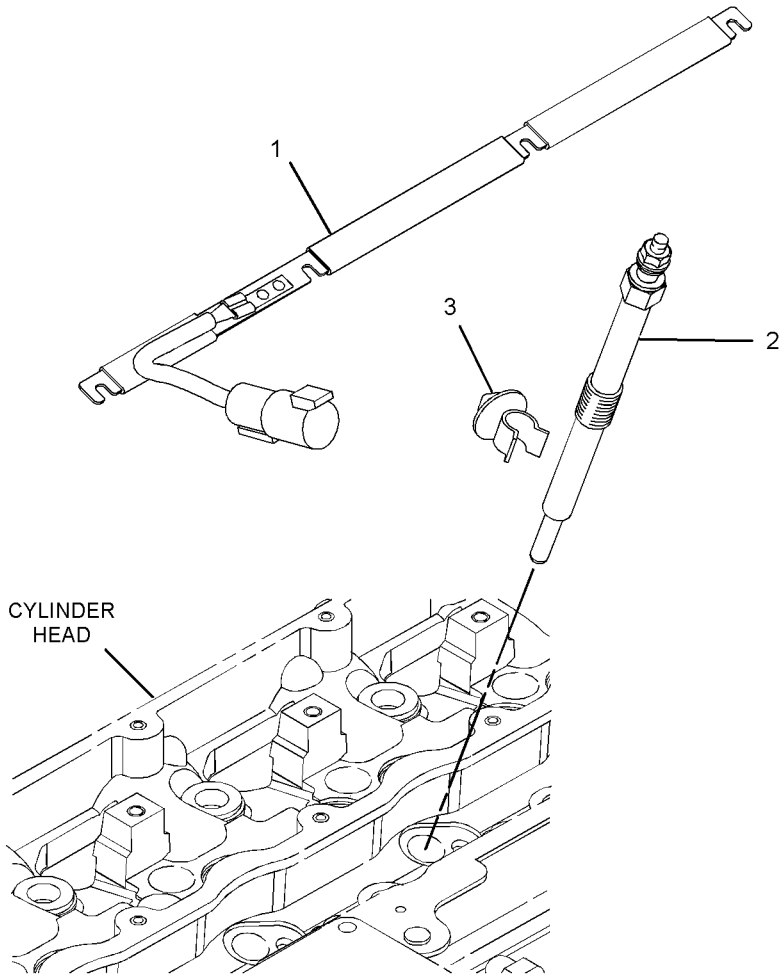

GRAPHIC #1 **<END>** g01392976

232-6661 GLOW PLUG GP

S/N: CRS1-1238
PART OF 319-2122 ENGINE AR, 245-6842, 320-8415, 325-5122 ENGINE AR-PRIMARY
ALSO AN ATTACHMENT
TYPE 2

SMCS-1412 **i02757150**

NOTE	REF NO	GRAPHIC REF	PART NUMBER	QTY	PART NAME 1 2 3 4 5 6 (PRODUCT LEVEL)	SEE PAGE
	1	1	**286-4880**	1	BAR	
	2	1	**232-6662**	4	GLOW PLUG (12-VOLT)	
	3	1	**232-3126**	1	CLIP	

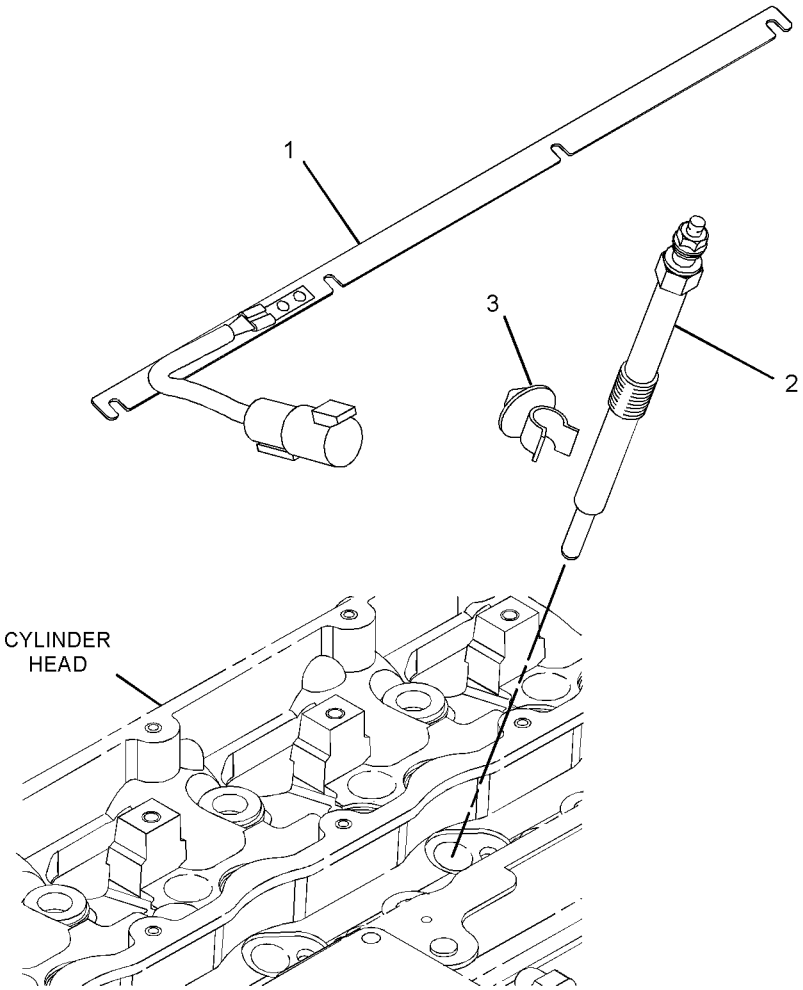

GRAPHIC #1 **<END>** g01392990

246-8045 GRADE CONTROL AR-LASER—ACCUGRADE, MAST

S/N: EAT1-UP

AN ATTACHMENT

SMCS-7220 **i03514611**

NOTE	REF NO	GRAPHIC REF	PART NUMBER	QTY	PART NAME 1 2 3 4 5 6 (PRODUCT LEVEL)	SEE PAGE
	1	1	**115-1615**	1	RELAY AS (12-VOLT) (ACCUGRADE, MAST)	
Y	2	1	*211-4253*	1	INSTALLATION GP-MONITOR (ADVISOR)	854
Y	3	1	*225-4323*	1	MOUNTING GP-MAST (GRADE CONTROL)	745
Y	4	1	**226-2333**	1	MAST GP (ELECTRIC)	136
	5	1	**226-2334**	1	RECEIVER GP-LASER (LR400C)	
		1	**239-9272**	1	SOFTWARE (RECEIVER)	
	6	1	**226-9167**	1	ADAPTER (RECEIVER)	
	7	1	**226-9169**	1	MODULE AS-POWER SUPPLY	
	8	1	**226-9270**	1	CABLE-COILED (RECEIVER)	
	9	1	**246-8044**	1	HARNESS AS-WIRING (MAST)	
	10	1	**3S-2093**	15	STRAP-CABLE	
M	11	1	**8T-4138**	1	BOLT (M6X1X20-MM)	
	12	1	**8T-4205**	1	WASHER-HARD (7.2X14.5X2-MM THK)	

M-METRIC PART
Y-SEPARATE ILLUSTRATION

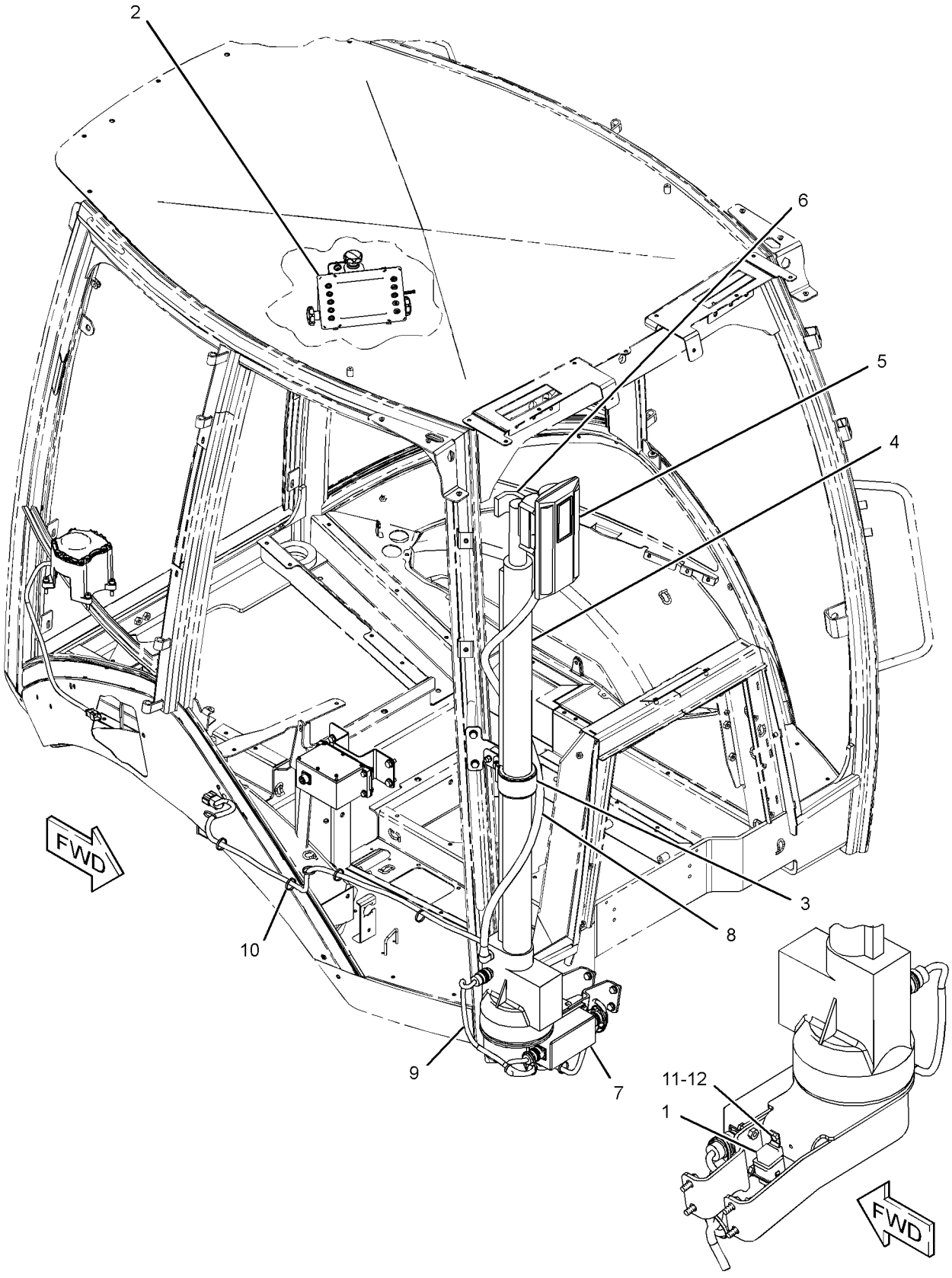

GRAPHIC #1 **<END>** g01233594

295-3179 GRADE CONTROL AR-LASER—ACCUGRADE

S/N: EAT1-UP

FOR USE WITH 291-9206—PAGE 5, 291-9207—PAGE 3

FIELD INSTALLATION

SMCS-7220 **i03527995**

NOTE	PART NUMBER	QTY	PART NAME 1 2 3 4 5 6 (PRODUCT LEVEL)	SEE PAGE
Y	*314-4029*	1	GRADE CONTROL AR-LASER (ACCUGRADE)	121
Y	**226-2333**	1	MAST GP	136
Y	*225-4323*	1	MOUNTING GP-MAST (GRADE CONTROL)	745
Y	**239-9950**	1	RECEIVER GP-LASER (SINGLE)	139

Y-SEPARATE ILLUSTRATION

<END>

314-4029 GRADE CONTROL AR-LASER—ACCUGRADE

S/N: EAT1-UP

PART OF 295-3179 GRADE CONTROL AR-LASER

SMCS-7220 **i03255482**

NOTE	PART NUMBER	QTY	PART NAME 1 2 3 4 5 6 (PRODUCT LEVEL)	SEE PAGE
M	**8T-4138**	1	BOLT (M6X1X20-MM)	
	246-8044	1	HARNESS AS-WIRING (MAST)	
	226-9169	1	MODULE AS-POWER SUPPLY	
	134-2540	1	RECEPTACLE AS (3-PIN)	
	115-1615	1	RELAY AS (12-VOLT) (ACCUGRADE)	
	3S-2093	18	STRAP-CABLE	
	7K-1181	6	STRAP-CABLE	
	8T-4121	2	WASHER-HARD (11X21X2.5-MM THK)	
	8T-4205	1	WASHER-HARD (7.2X14.5X2-MM THK)	

M-METRIC PART

<END>

248-2214 HEATER GP-JACKET WATER

S/N: EAT1-UP
AN ATTACHMENT

SMCS-1383 **i02886260**

NOTE	REF NO	GRAPHIC REF	PART NUMBER	QTY	PART NAME 1 2 3 4 5 6 (PRODUCT LEVEL)	SEE PAGE
	1	1	**3S-2093**	2	STRAP-CABLE	
	2	1	**130-0165**	1	RECEPTACLE AS	
		1	**1M-1230**	2	NUT & LOCK AS (10-32-THD)	
		1	**168-4511**	2	SCREW-PAN HEAD (10-32X1-IN)	
	3	1	**165-8357**	1	BRACKET AS	
M		1	**8T-3612**	2	NUT-WELD (M8X1.25-THD)	
	4	1	*231-3054*	1	HEATER GP-JACKET WATER	
J		1	**219-3273**	1	ELEMENT AS-JACKET WATER HEATER (120-VOLT, 1000-WATT)	
		1	**133-6517**		CAP AS-DUST	
		1	**231-3052**	1	CORD AS	
M	5	1	**8T-4189**	2	BOLT (M8X1.25X20-MM)	
	6	1	**8T-4224**	2	WASHER-HARD (8.8X16X2-MM THK)	
					AVAILABLE REPAIR KIT(S):	
J			**133-3413**	1	KIT-SEAL	
					(INCLUDES SEAL, SPACER & RINGS)	

J-KIT MARKED J AVAILABLE FOR PART MARKED J
M-METRIC PART

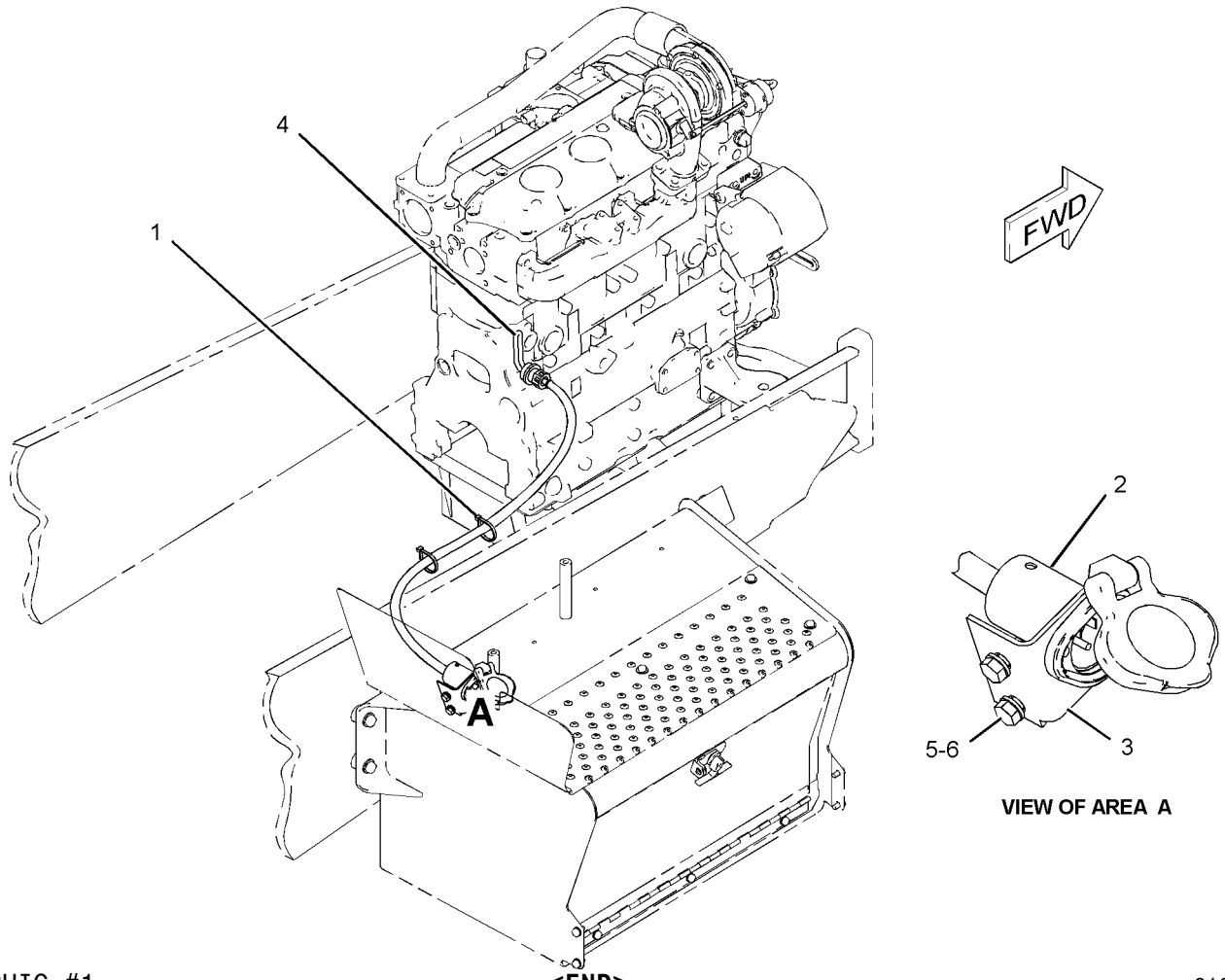

VIEW OF AREA A

GRAPHIC #1 **<END>** g01083542

225-7994 INSTALLATION GP-COMMUNICATION–

PRODUCT LINK 121SR
S/N: EAT1-UP
PART OF 225-7995 INSTALLATION GP-COMMUNICATION
AN ATTACHMENT
TYPE 1

SMCS-7606 **i03374680**

NOTE	REF NO	GRAPHIC REF	PART NUMBER	QTY	PART NAME 1 2 3 4 5 6 (PRODUCT LEVEL)	SEE PAGE
	1	1	**7K-1181**	3	STRAP-CABLE	
	2	1	**263-7802**	1	ANTENNA AS (MAGNETIC MOUNT, PRODUCT LINK)	
	3	1	**260-7652**	1	FILM-WARNING (PRODUCT LINK 300, U.S.)	
	4	1	**256-6803**	1	HARNESS AS-RADIO (PRODUCT LINK)	
Y	5	1	**263-9088**	1	RADIO GP-COMMUNICATION (PRODUCT LINK 121SR)	876
M	6	1	**129-3178**	4	LOCKNUT (M6X1-THD)	
	7	1	**156-6175**	1	CLIP	
	8	1	**170-9360**	1	GROMMET	
	9	1	**3S-2093**	2	STRAP-CABLE	
	10	1	**6P-6591**	1	GROMMET	
M	11	1	**8T-4138**	4	BOLT (M6X1X20-MM)	
	12	1	**8T-4205**	7	WASHER-HARD (7.2X14.5X2-MM THK)	

M-METRIC PART
Y-SEPARATE ILLUSTRATION

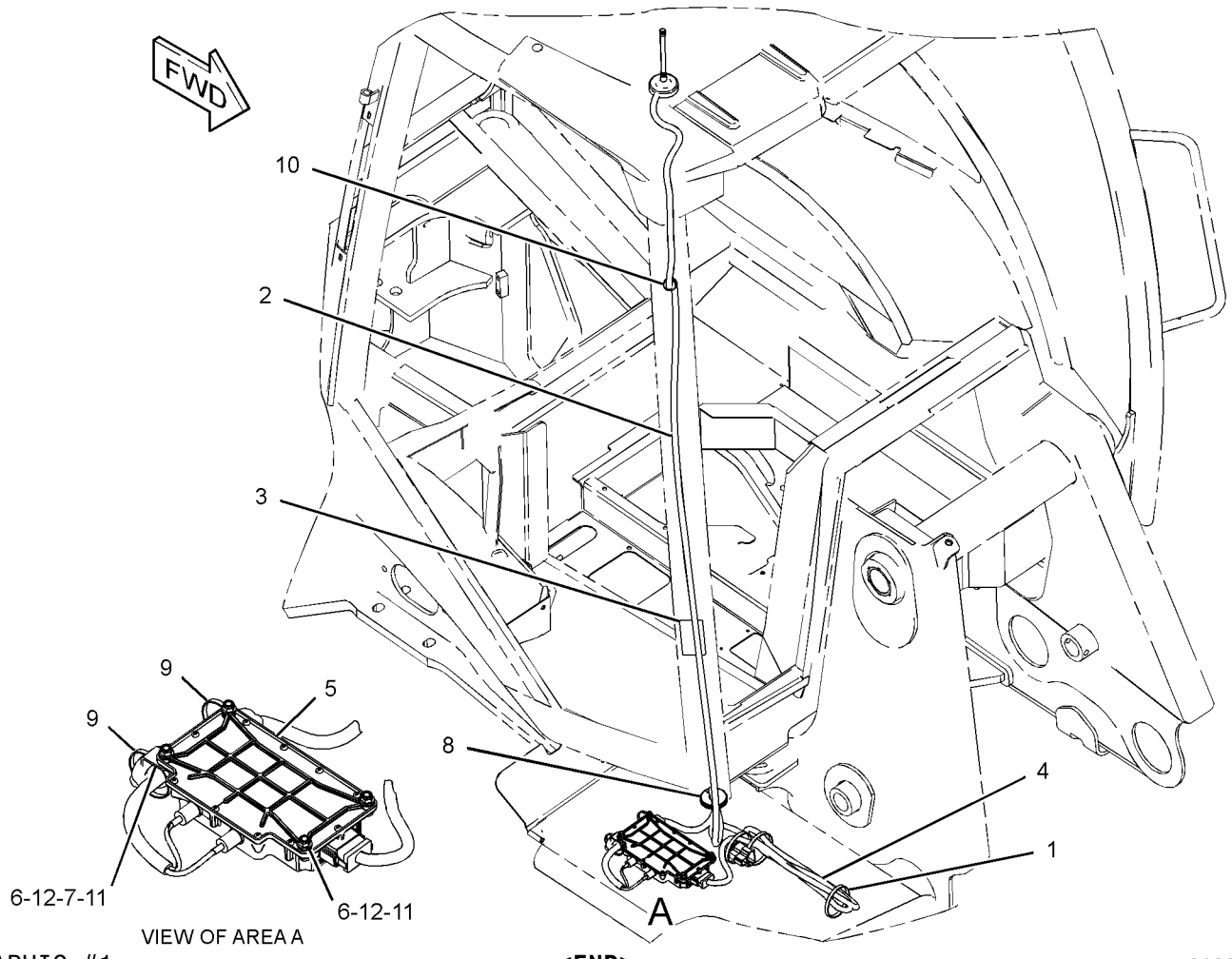

GRAPHIC #1 **<END>** g01238339

225-7994 INSTALLATION GP-COMMUNICATION–

PRODUCT LINK 121SR
S/N: EAT1-UP
PART OF 225-7995 INSTALLATION GP-COMMUNICATION
AN ATTACHMENT
TYPE 2

SMCS-7606 **i02984826**

NOTE	REF NO	GRAPHIC REF	PART NUMBER	QTY	PART NAME 1 2 3 4 5 6 (PRODUCT LEVEL)	SEE PAGE
C	1	1	**7K-1181**	10	STRAP-CABLE	
C	2	1	**249-9076**	4	CLIP	
	3	1	**256-6803**	1	HARNESS AS-RADIO (PRODUCT LINK)	
	4	1	**260-7652**	1	FILM-WARNING (PRODUCT LINK 300, U.S.)	
Y	5	1	**263-9088**	1	RADIO GP-COMMUNICATION (PRODUCT LINK 121SR)	876
C	6	1	**284-8531**	1	ANTENNA AS (MAGNETIC MOUNT, PRODUCT LINK)	
M	7	1	**129-3178**	4	LOCKNUT (M6X1-THD)	
C	8	1	**156-6175**	2	CLIP	
	9	1	**170-9360**	1	GROMMET	
	10	1	**6P-6591**	1	GROMMET	
CM	11	1	**6V-7357**	4	BOLT (M6X1X25-MM)	
C	12	1	**8T-4205**	6	WASHER-HARD (7.2X14.5X2-MM THK)	

C-CHANGE FROM PREVIOUS TYPE
M-METRIC PART
Y-SEPARATE ILLUSTRATION

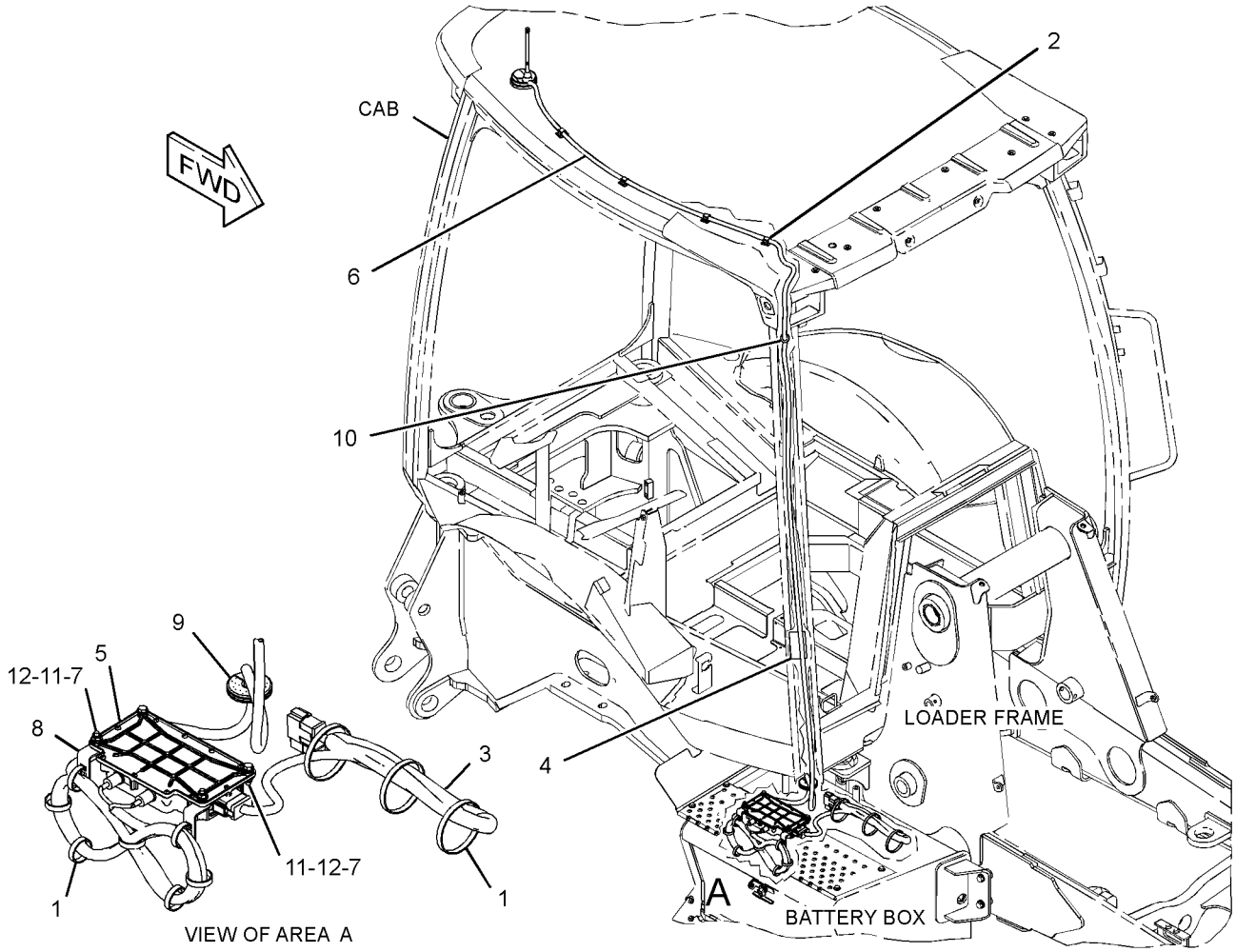

GRAPHIC #1 **<END>** g01522350

225-7995 INSTALLATION GP-COMMUNICATION–

PRODUCT LINK 300

S/N: EAT1-UP

AN ATTACHMENT

SMCS-7606 **i02843746**

NOTE	REF NO	GRAPHIC REF	PART NUMBER	QTY	PART NAME 1 2 3 4 5 6 (PRODUCT LEVEL)	SEE PAGE
	1	1	**8T-4205**	5	WASHER-HARD (7.2X14.5X2-MM THK)	
	2	1	**8C-5607**	8	MOUNT-ISOLATION	
	3	1	**8C-5608**	4	SPACER (6.5X9.5X25.4-MM THK)	
	4	1	**9X-6165**	8	WASHER (6.5X22X2.5-MM THK)	
Y	5	1	*225-7994*	1	INSTALLATION GP-COMMUNICATION (PRODUCT LINK 121SR)	123
	6	1	**256-6804**	1	HARNESS AS-CONTROL (PRODUCT LINK)	
Y	7	1	*262-1421*	1	ELECTRONICS GP-COMMUNICATION (PRODUCT LINK 300)	114
M	8	1	**129-3178**	4	LOCKNUT (M6X1-THD)	
M	9	1	**9X-2480**	4	BOLT (M6X1X45-MM)	

M-METRIC PART
Y-SEPARATE ILLUSTRATION

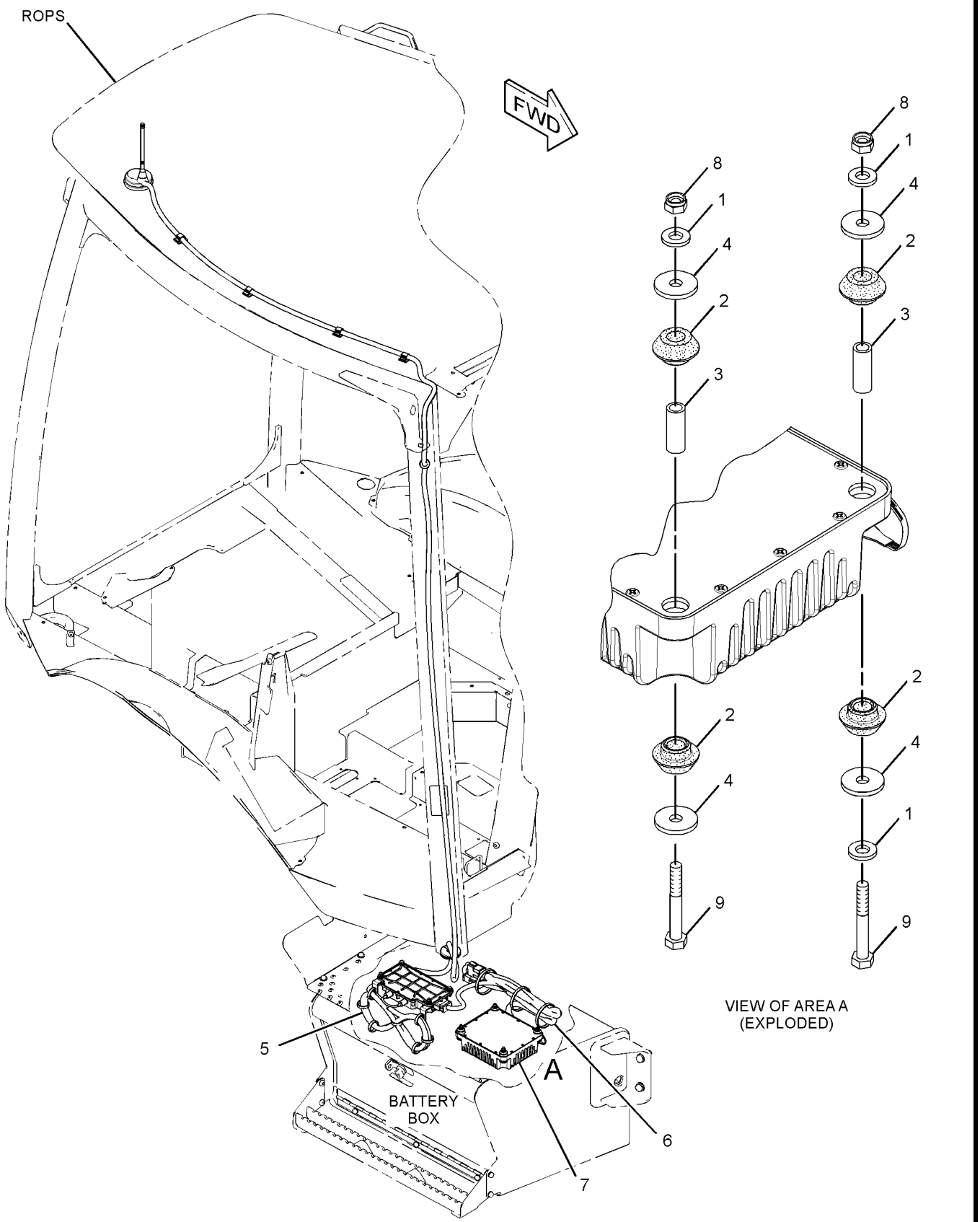

GRAPHIC #1

<END>

g01421875

234-4328 LAMP GP-FLOOD

S/N: EAT1-UP
12-VOLT
PART OF 211-4277 LIGHTING GP-FLOOD & SIGNAL
AN ATTACHMENT

SMCS-1429, 1434 **i03505280**

NOTE	REF NO	GRAPHIC REF	PART NUMBER	QTY	PART NAME 1 2 3 4 5 6 (PRODUCT LEVEL)	SEE PAGE
	1	1	**9W-0607**	1	LAMP (12-VOLT, 55-WATT) (FLOODLIGHT)	
M	2	1	**8T-0389**	1	LOCKNUT (M10X1.5-THD)	
	3	1	**9X-4244**	2	SCREW-SPECIAL (M4X1.79X25-MM)	
	4	1	**202-6614**	1	LENS AS	
	5	1	**234-7730**	1	BODY AS	
	6	1	**164-7556**	1	BRACKET (LAMP RETAINING)	
	7	1	**234-7731**	1	BRACKET AS	
	8	1	**8T-4121**	1	WASHER-HARD (11X21X2.5-MM THK)	

M-METRIC PART

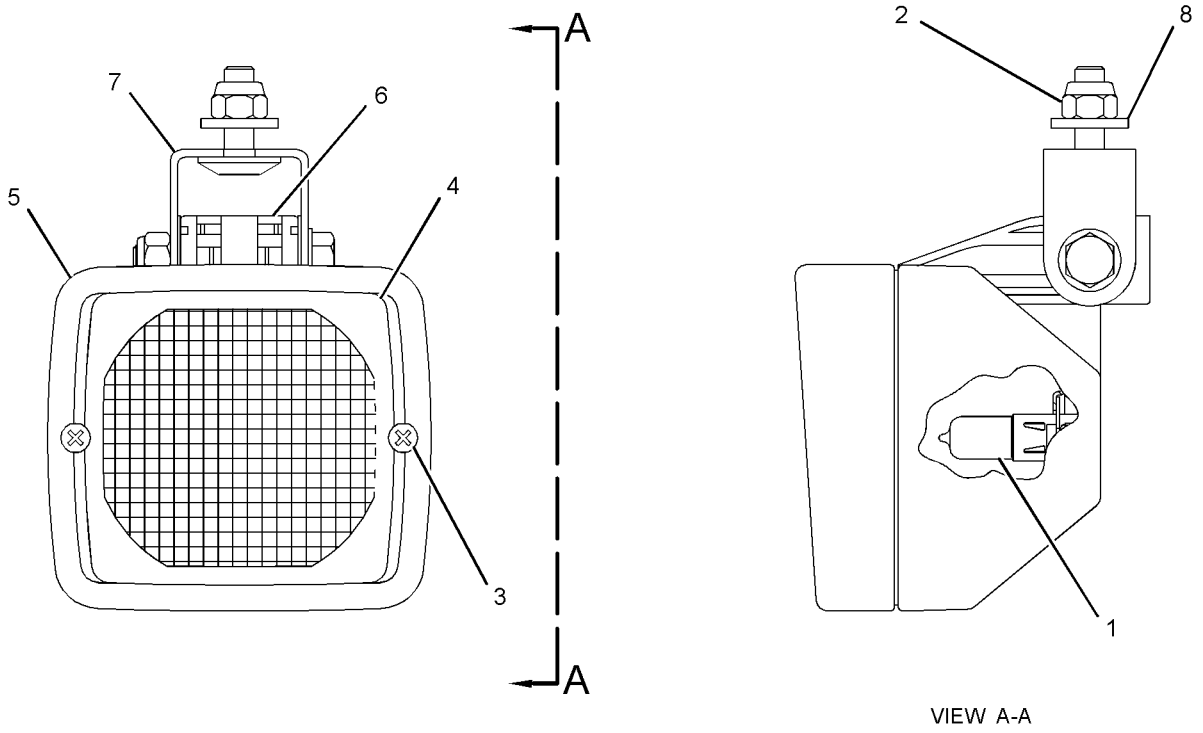

GRAPHIC #1 **<END>** g01283627

234-4329 LAMP GP-FLOOD

S/N: EAT1-UP
12-VOLT
PART OF 211-4277 LIGHTING GP-FLOOD & SIGNAL
AN ATTACHMENT

SMCS-1429, 1434 **i02532633**

NOTE	REF NO	GRAPHIC REF	PART NUMBER	QTY	PART NAME 1 2 3 4 5 6 (PRODUCT LEVEL)	SEE PAGE
	1	1	**9W-0607**	1	LAMP (12-VOLT, 55-WATT)	
M	2	1	**8T-0389**	1	LOCKNUT (M10X1.5-THD)	
	3	1	**9X-4244**	2	SCREW-SPECIAL	
	4	1	**202-6611**	1	LENS AS	
	5	1	**234-7730**	1	BODY AS	
	6	1	**164-7556**	1	BRACKET (LAMP RETAINING)	
	7	1	**234-7731**	1	BRACKET AS	
	8	1	**8T-4121**	1	WASHER-HARD (11X21X2.5-MM THK)	

M-METRIC PART

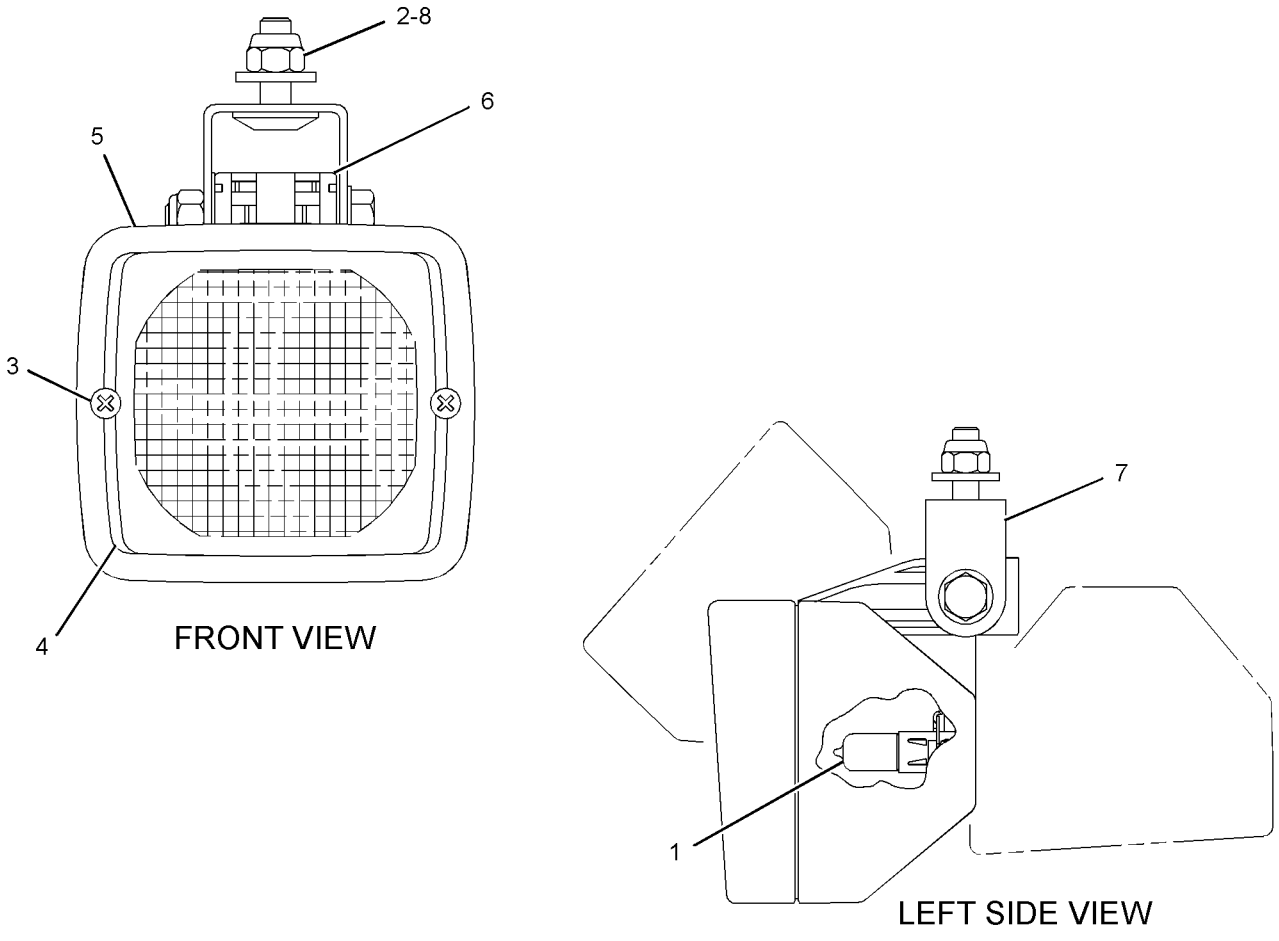

GRAPHIC #1 **<END>** g01254669

290-5760 LAMP GP-FLOOD

S/N: EAT582-UP
12-VOLT
PART OF 211-4277 LIGHTING GP-FLOOD & SIGNAL
AN ATTACHMENT

SMCS-1429, 1434 **i03511165**

NOTE	REF NO	GRAPHIC REF	PART NUMBER	QTY	PART NAME 1 2 3 4 5 6 (PRODUCT LEVEL)	SEE PAGE
	1	1	**9W-0607**	1	LAMP (12-VOLT, 55-WATT)	
	2	1	**9X-4244**	2	SCREW-SPECIAL (M4X1.79X25-MM)	
	3	1	**202-6611**	1	LENS AS	
	4	1	**234-7730**	1	BODY AS (FLOODLIGHT)	
	5	1	**164-7556**	1	BRACKET (LAMP RETAINING)	
M	6	1	**8T-0389**	1	LOCKNUT (M10X1.5-THD)	
	7	1	**234-7731**	1	BRACKET AS	
	8	1	**8T-4121**	1	WASHER-HARD (11X21X2.5-MM THK)	

M-METRIC PART

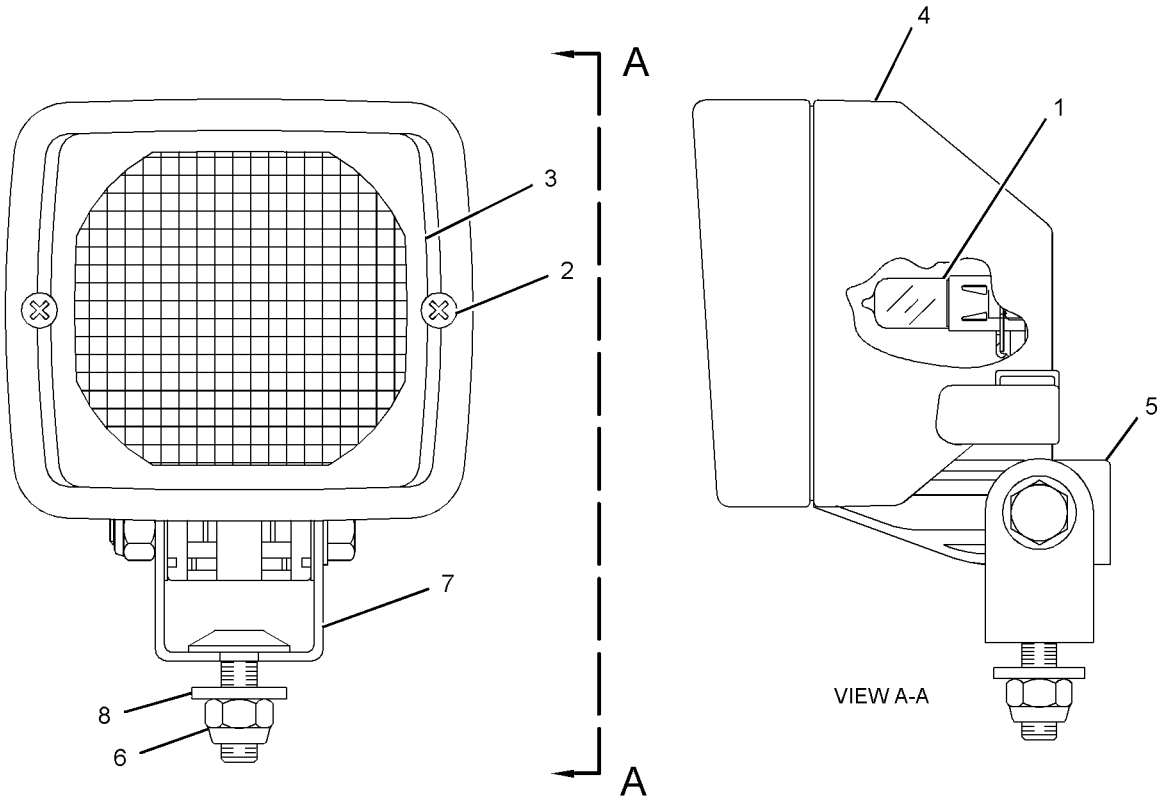

GRAPHIC #1 **<END>** g01349258

180-3664 LAMP GP-WARNING BEACON–

AMBER, MAGNETIC MOUNT, ROTATING
S/N: EAT1-UP
12-VOLT
PART OF 211-4292 LIGHTING GP-WARNING BEACON
AN ATTACHMENT

SMCS-1431 **i02887711**

NOTE	REF NO	GRAPHIC REF	PART NUMBER	QTY	PART NAME 1 2 3 4 5 6 (PRODUCT LEVEL)	SEE PAGE
	1	1	**272-9800**	1	LENS (AMBER)	
	2	1	**179-5434**	1	PLUG AS	
		1	**3K-8782**	1	FUSE (10-AMPERE)	
	3	1	**9X-8118**	1	LAMP (12-VOLT, 55-WATT)	
	4	1	**9X-8139**	1	BELT-DRIVE	
	5	1	**3K-8782**	1	FUSE (10-AMPERE)	

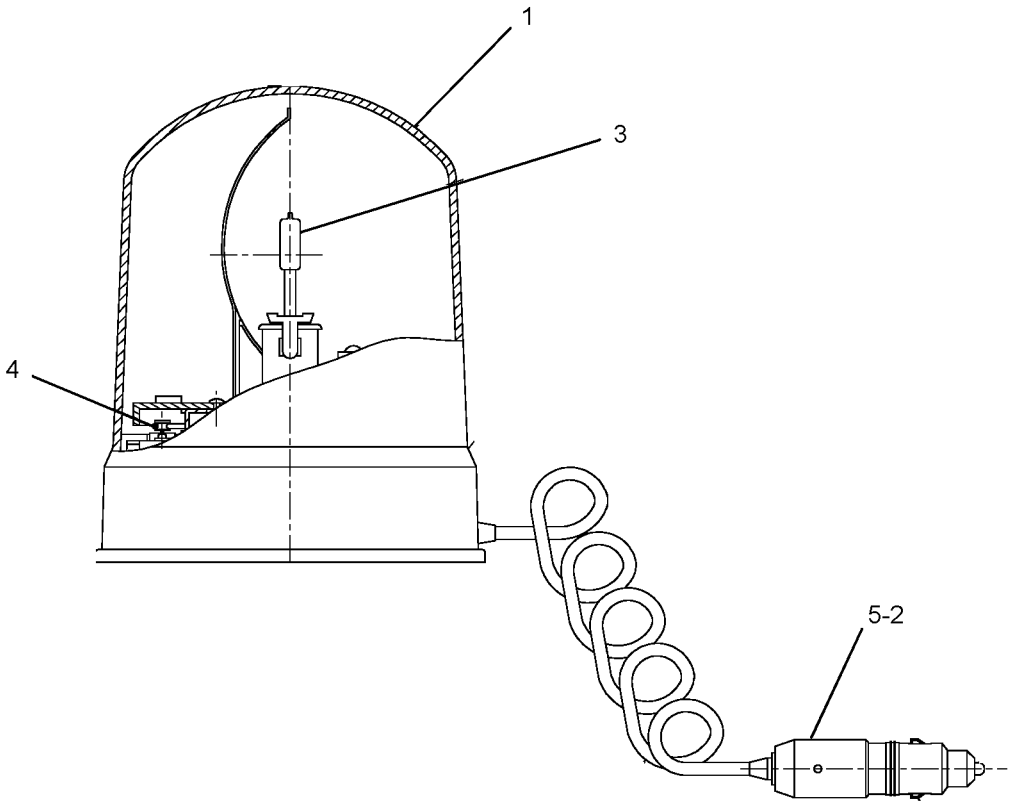

GRAPHIC #1 **<END>** g01230468

211-4277 LIGHTING GP-FLOOD & SIGNAL—NACD, OPTIONAL

S/N: EAT1-581

PART OF 269-2125, 269-2126, 269-2127 CAB AR-ENCLOSED ROPS, 269-2123, 269-2124 CANOPY AR-OPEN ROPS

AN ATTACHMENT

SMCS-1429, 1430, 1432, 1434 **i03530180**

NOTE	REF NO	GRAPHIC REF	PART NUMBER	QTY	PART NAME 1 2 3 4 5 6 (PRODUCT LEVEL)	SEE PAGE
	1	1	**9R-1499**	2	REFLECTOR	
	2	1	**178-7539**	1	RECEPTACLE AS (POWER SUPPLY)	
	3	1	**213-6049**	1	HARNESS AS-LIGHTING (ROOF)	
		1	**8L-8413**	19	STRAP-CABLE	
E		1	**125-7874**		TUBE-HEAT SHRINK (5.72-MM DIA) (35-CM)	
E		1	**125-7875**		TUBE-HEAT SHRINK (7.44-MM DIA) (15-CM)	
		1	**155-2271**	2	KIT-CONNECTING PLUG (4-PIN)	
		1	**155-2270**	10	KIT-CONNECTING PLUG (2-PIN)	
					(EACH PLUG KIT INCLUDES PLUG AS, WEDGE & INTERFACE SEAL)	
		1	**102-8805**	1	KIT-RECEPTACLE (6-PIN)	
		1	**102-8806**	1	KIT-RECEPTACLE (8-PIN)	
					(EACH RECEPTACLE KIT INCLUDES RECEPTACLE AS & WEDGE)	
	4	1	**214-4698**	1	SWITCH AS-ROCKER (FLOODLIGHTS, FRONT)	
		1	**111-7899**	1	GASKET	
	5	1	**214-4700**	1	SWITCH AS-ROCKER (FLOODLIGHTS, REAR)	
		1	**111-7899**	1	GASKET	
Y	6	1	**234-4328**	4	LAMP GP-FLOOD (12-VOLT) (FRONT, REAR, WIDE RANGE)	127
Y	7	1	**234-4329**	4	LAMP GP-FLOOD (12-VOLT) (FRONT, SIDE, LONG RANGE)	128
	8	1	**282-7833**	1	GROMMET	
	9	1	**282-7835**	1	PLATE	
	10	1	**172-6489**	2	LAMP GP-HEAD & SIGNAL (DIRECTIONAL)	
					(EACH INCLUDES)	
		1	**3C-4883**	1	LAMP (12-VOLT, 21-WATT)	
		1	**176-0348**	1	LENS	
	11	1	**172-6490**	2	LAMP GP-SIGNAL (STOP, TAIL, TURN)	
					(EACH INCLUDES)	
		1	**9W-3326**	1	LAMP (12-VOLT, 21-WATT)	
		1	**084-4348**	1	LAMP (12-VOLT, 5-WATT)	
		1	**186-3735**	4	PIN-CONNECTOR (16-GA TO 18-GA)	
		1	**267-2809**	1	LENS	
	12	1	**3S-2093**	25	STRAP-CABLE	
	13	1	**8T-4121**	10	WASHER-HARD (11X21X2.5-MM THK)	
M	14	1	**8T-4133**	9	NUT (M10X1.5-THD)	
M	15	1	**8T-4181**	2	BOLT (M6X1X20-MM)	
	16	1	**9X-8256**	2	WASHER (6.6X12X2-MM THK)	

E-ORDER BY THE CENTIMETER
M-METRIC PART
Y-SEPARATE ILLUSTRATION

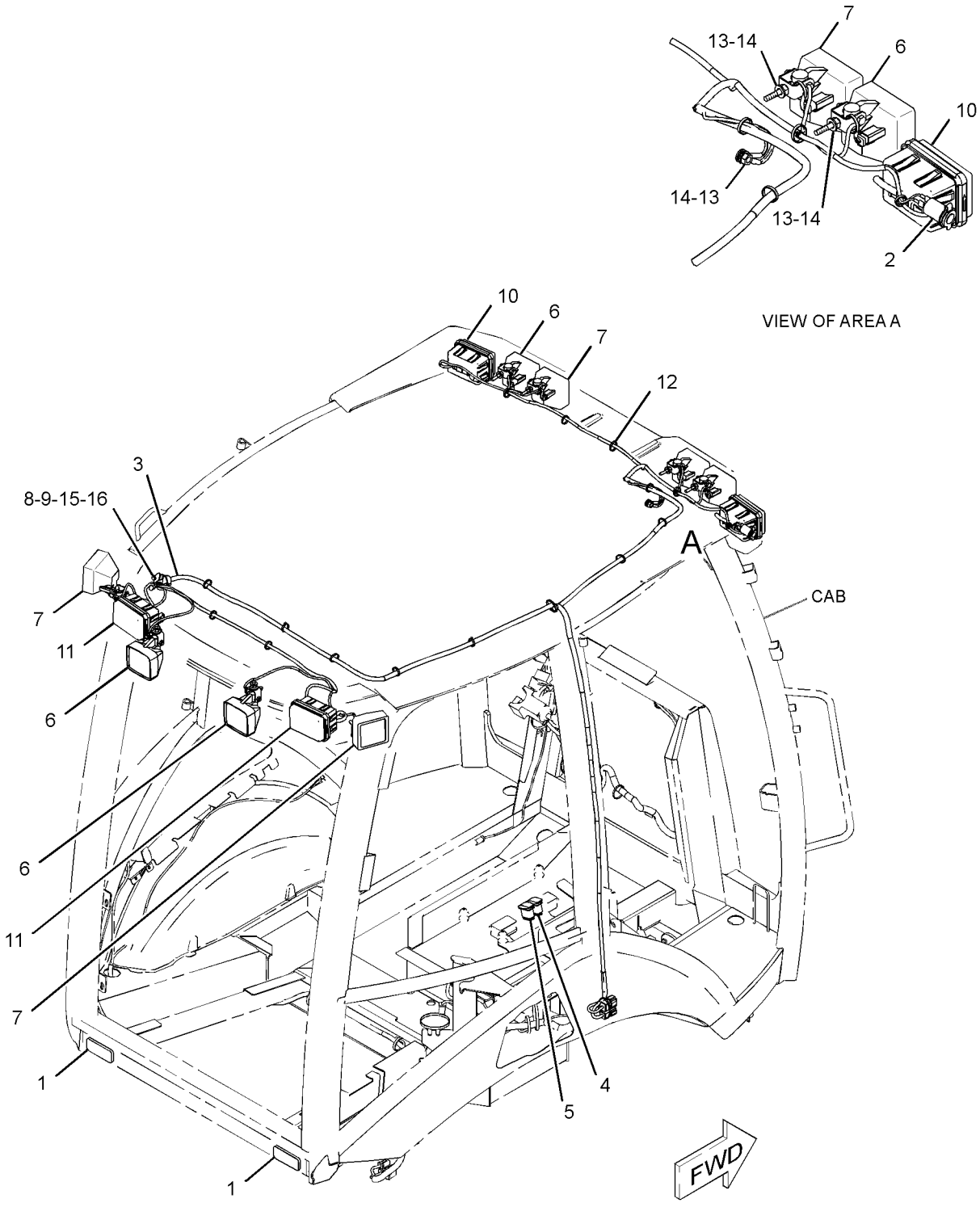

GRAPHIC #1 **<END>** g01273073

211-4277 LIGHTING GP-FLOOD & SIGNAL—NACD, OPTIONAL

S/N: EAT582-UP

PART OF 269-2125, 269-2126, 269-2127 CAB AR-ENCLOSED ROPS, 269-2123, 269-2124 CANOPY AR-OPEN ROPS AN ATTACHMENT

SMCS-1429, 1430, 1432, 1434 **i03503823**

NOTE	REF NO	GRAPHIC REF	PART NUMBER	QTY	PART NAME 1 2 3 4 5 6 (PRODUCT LEVEL)	SEE PAGE
	1	1	**9R-1499**	2	REFLECTOR	
	2	1	**178-7539**	1	RECEPTACLE AS (POWER SUPPLY)	
	3	1	**290-6799**	1	HARNESS AS-LIGHTING (ROOF)	
	4	1	**300-4995**	1	SWITCH AS-ROCKER (FLOODLIGHT, FRONT)	
		1	**111-7899**	1	GASKET	
	5	1	**300-4996**	1	SWITCH AS-ROCKER (FLOODLIGHT, REAR)	
		1	**111-7899**	1	GASKET	
Y	6	1	**234-4328**	4	LAMP GP-FLOOD (12-VOLT) (FRONT, REAR, WIDE RANGE)	127
CY	7	1	**234-4329**	2	LAMP GP-FLOOD (12-VOLT) (FRONT, SIDE, LONG RANGE)	128
	8	1	**282-7833**	1	GROMMET	
	9	1	**282-7835**	1	PLATE	
	10	1	**172-6489**	2	LAMP GP-HEAD & SIGNAL (DIRECTIONAL)	
					(EACH INCLUDES)	
		1	**102-8802**	1	KIT-RECEPTACLE (2-PIN)	
					(INCLUDES RECEPTACLE AS & WEDGE)	
		1	**3C-4883**	1	LAMP (12-VOLT, 21-WATT)	
		1	**176-0348**	1	LENS	
	11	1	**172-6490**	2	LAMP GP-SIGNAL (STOP, TAIL, TURN)	
					(EACH INCLUDES)	
		1	**102-8804**	1	KIT-RECEPTACLE (4-PIN)	
					(INCLUDES RECEPTACLE AS & WEDGE)	
		1	**9W-3326**	1	LAMP (12-VOLT, 21-WATT)	
		1	**084-4348**	1	LAMP (12-VOLT, 5-WATT)	
		1	**267-2809**	1	LENS	
		1	**186-3735**	4	PIN-CONNECTOR (16-GA TO 18-GA)	
	12	1	**3S-2093**	24	STRAP-CABLE	
	13	1	**8T-4121**	10	WASHER-HARD (11X21X2.5-MM THK)	
M	14	1	**8T-4133**	9	NUT (M10X1.5-THD)	
CM	15	1	**8C-3798**	2	BOLT-LOCKING (M6X1X30-MM)	
	16	1	**9X-8256**	2	WASHER (6.6X12X2-MM THK)	
CY	17	1	**290-5760**	2	LAMP GP-FLOOD (12-VOLT) (REAR OUTER)	129
C	18	1	**8F-3590**	1	LOCKWASHER	
E	19	1	**3E-6600**		SEAL (5-CM)	

C-CHANGE FROM PREVIOUS TYPE
E-ORDER BY THE CENTIMETER
M-METRIC PART
Y-SEPARATE ILLUSTRATION

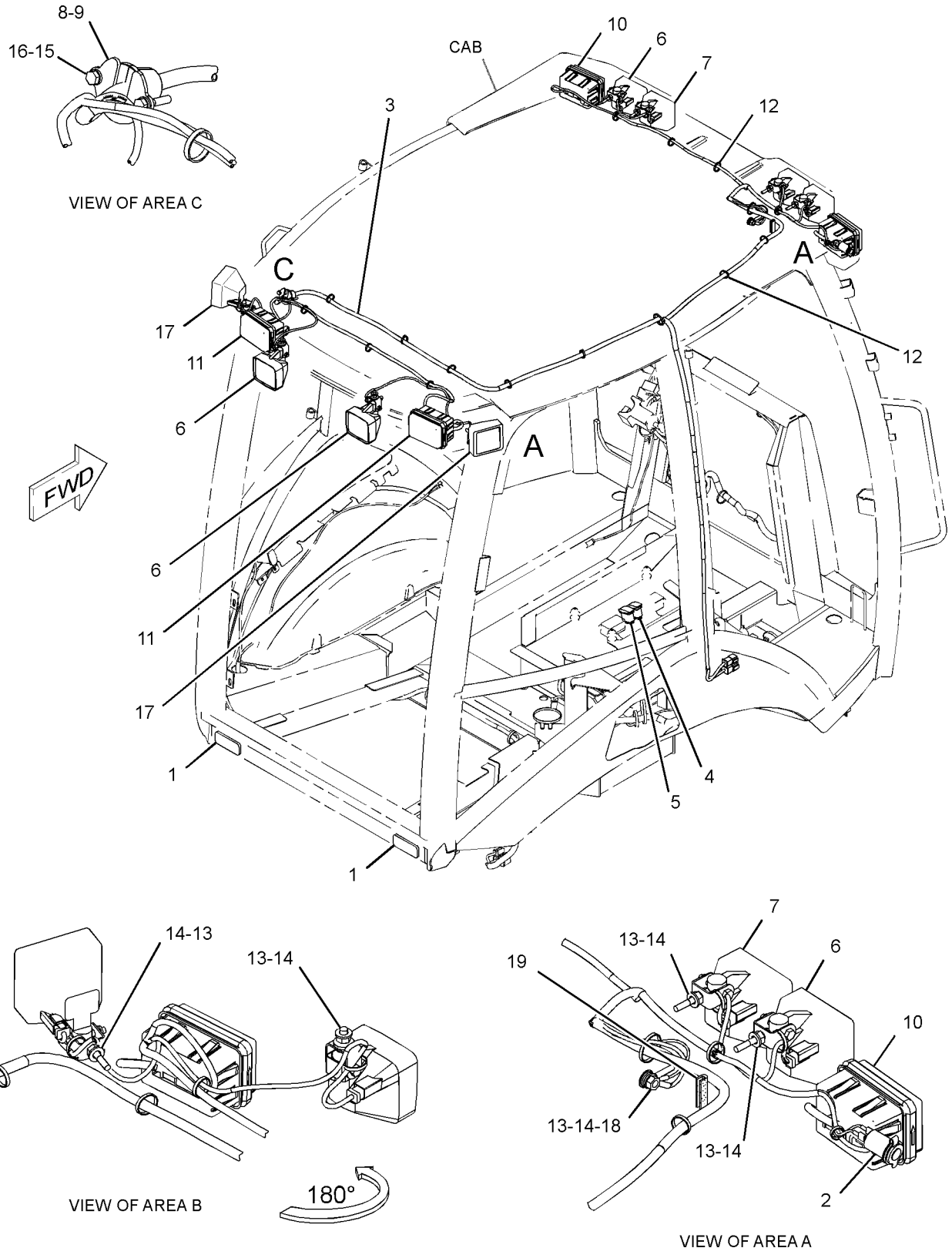

GRAPHIC #1 **<END>** g01405458

211-4292 LIGHTING GP-WARNING BEACON–
AMBER, MAGNETIC MOUNT, ROTATING
S/N: EAT1-UP
AN ATTACHMENT

SMCS-1431 **i02467098**

NOTE	REF NO	GRAPHIC REF	PART NUMBER	QTY	PART NAME 1 2 3 4 5 6 (PRODUCT LEVEL)	SEE PAGE
	1	1	**031-5644**	1	CLIP	
Y	2	1	**180-3664**	1	LAMP GP-WARNING BEACON (12-VOLT, AMBER)	130

Y-SEPARATE ILLUSTRATION

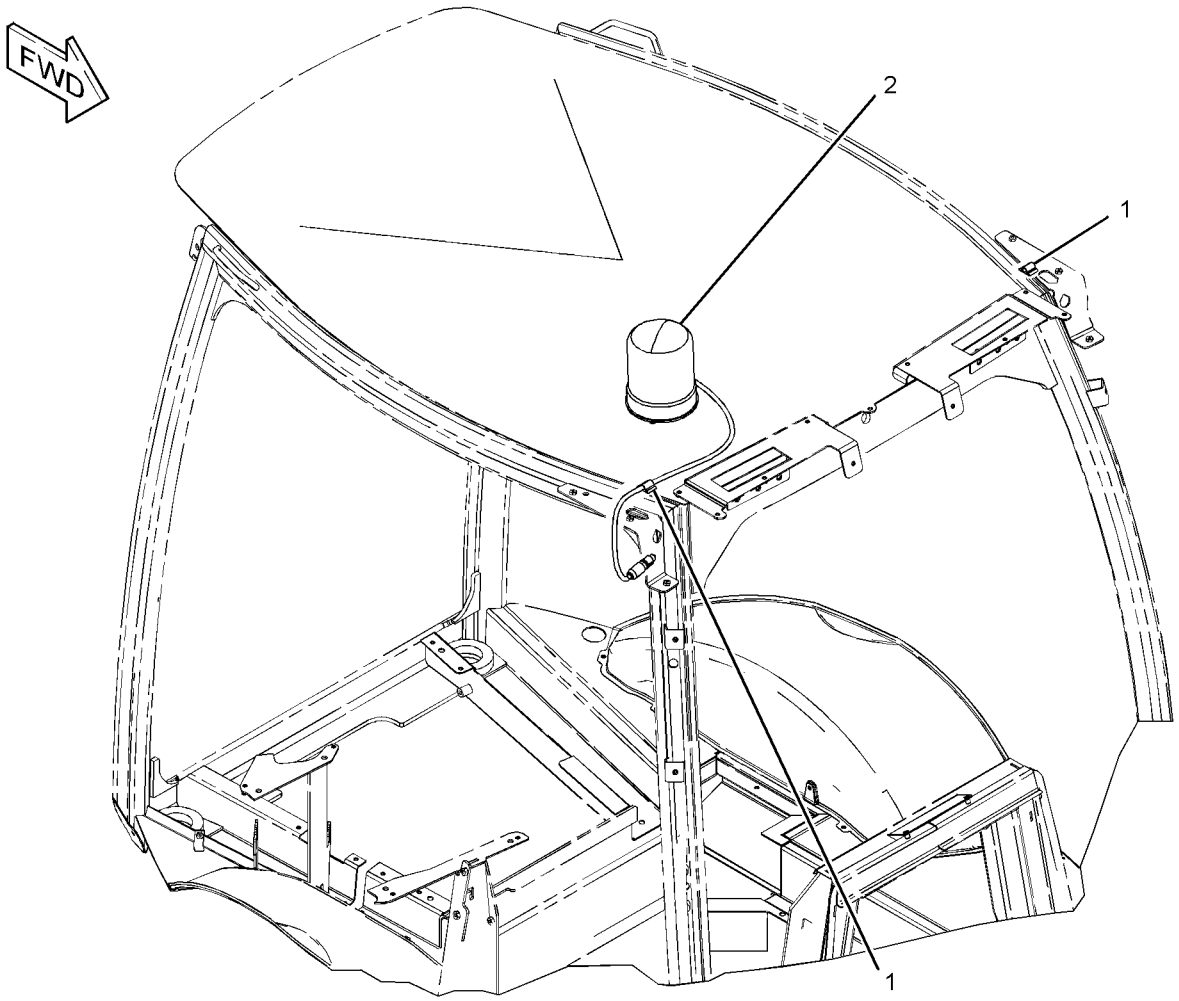

GRAPHIC #1 **<END>** g01233454

226-2333 MAST GP–LASER RECEIVER

S/N: EAT1-UP

PART OF 246-8045, 295-3179 GRADE CONTROL AR-LASER AN ATTACHMENT

SMCS-7220, 79NS **i03128384**

NOTE	PART NUMBER	QTY	PART NAME 1 2 3 4 5 6 (PRODUCT LEVEL)	SEE PAGE
	256-5732	1	HARNESS AS-WIRING (MAST)	
	256-4580	1	MOTOR AS	
	256-4579	1	SCREW AS	
	256-5720	1	SWITCH AS (UPPER LIMIT)	
	256-5721	1	SWITCH AS (LOWER LIMIT)	
	256-4581	1	BUSHING	
	256-4582	1	GEAR (141-TEETH)	
	256-5722	1	GEAR (15-TEETH)	
	260-6480	1	RING-SNAP	
	260-6478	1	SEAL-O-RING	
	256-5719	1	SEAL-WIPER	
	295-8930	1	KIT-CIRCUIT BOARD	
			(INCLUDES BOARD AS, SCREWS, LOCKWASHERS, LOCTITE, & GREASE)	
A	**245-4747**		KIT-ADAPTER (MAST)	
			(INCLUDES ADAPTER, BOLTS, & WASHER)	
			(FOR USE WITH LR400 RECEIVER)	

A-NOT PART OF THIS GROUP

<END>

251-3200 MOUNTING GP-SENSOR–ANGLE

S/N: EAT1-UP

PART OF 211-4253 INSTALLATION GP-MONITOR

AN ATTACHMENT

SMCS-5736 **i02440898**

NOTE	REF NO	GRAPHIC REF	PART NUMBER	QTY	PART NAME 1 2 3 4 5 6 (PRODUCT LEVEL)	SEE PAGE
	1	1	**264-3756**	1	PLATE AS	
	4	1	**8T-4121**	3	WASHER-HARD (11X21X2.5-MM THK)	
M	5	1	**8T-4137**	3	BOLT (M10X1.5X20-MM)	
	6	1	**8T-4224**	4	WASHER-HARD (8.8X16X2-MM THK)	
M	7	1	**8T-7547**	4	BOLT (M8X1.25X30-MM)	

M-METRIC PART

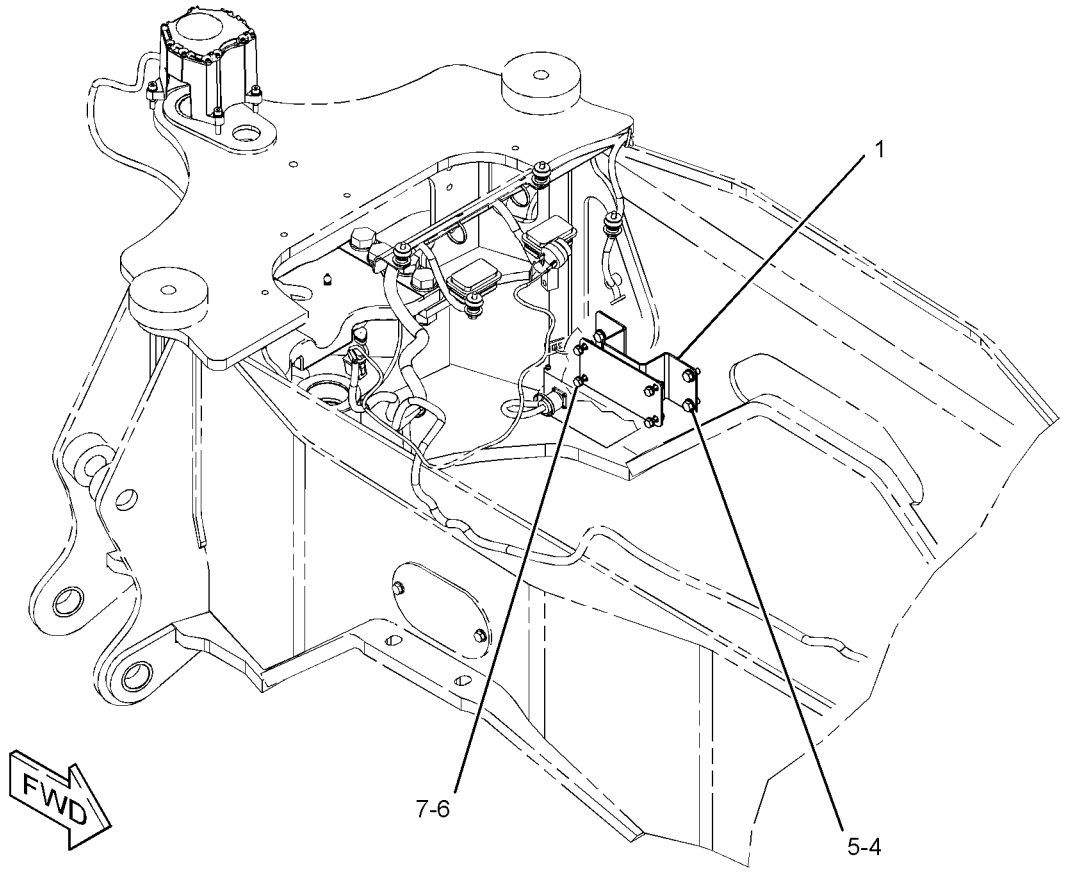

GRAPHIC #1 **<END>** g01205531

247-8199 PANEL GP-FUSE–INCLUDES RELAY

S/N: EAT1-UP

PART OF 211-4240, 290-6802 WIRING GP-PLATFORM

AN ATTACHMENT

SMCS-1417, 1422 **i02650179**

NOTE	REF NO	GRAPHIC REF	PART NUMBER	QTY	PART NAME 1 2 3 4 5 6 (PRODUCT LEVEL)	SEE PAGE
	1	1	**113-8490**	11	FUSE (10-AMPERE)	
	2	1	**113-8491**	13	FUSE (15-AMPERE)	
	3	1	**113-8492**	10	FUSE (20-AMPERE)	
	4	1	**265-8182**	1	COVER-FUSE BLOCK	
M	6	1	**5C-7261**	4	NUT (M8X1.25-THD)	
	7	1	**9F-5644**	4	LOCKWASHER	
	8	1	**7X-0608**	4	WASHER-HARD (10.2X16X2-MM THK)	

M-METRIC PART

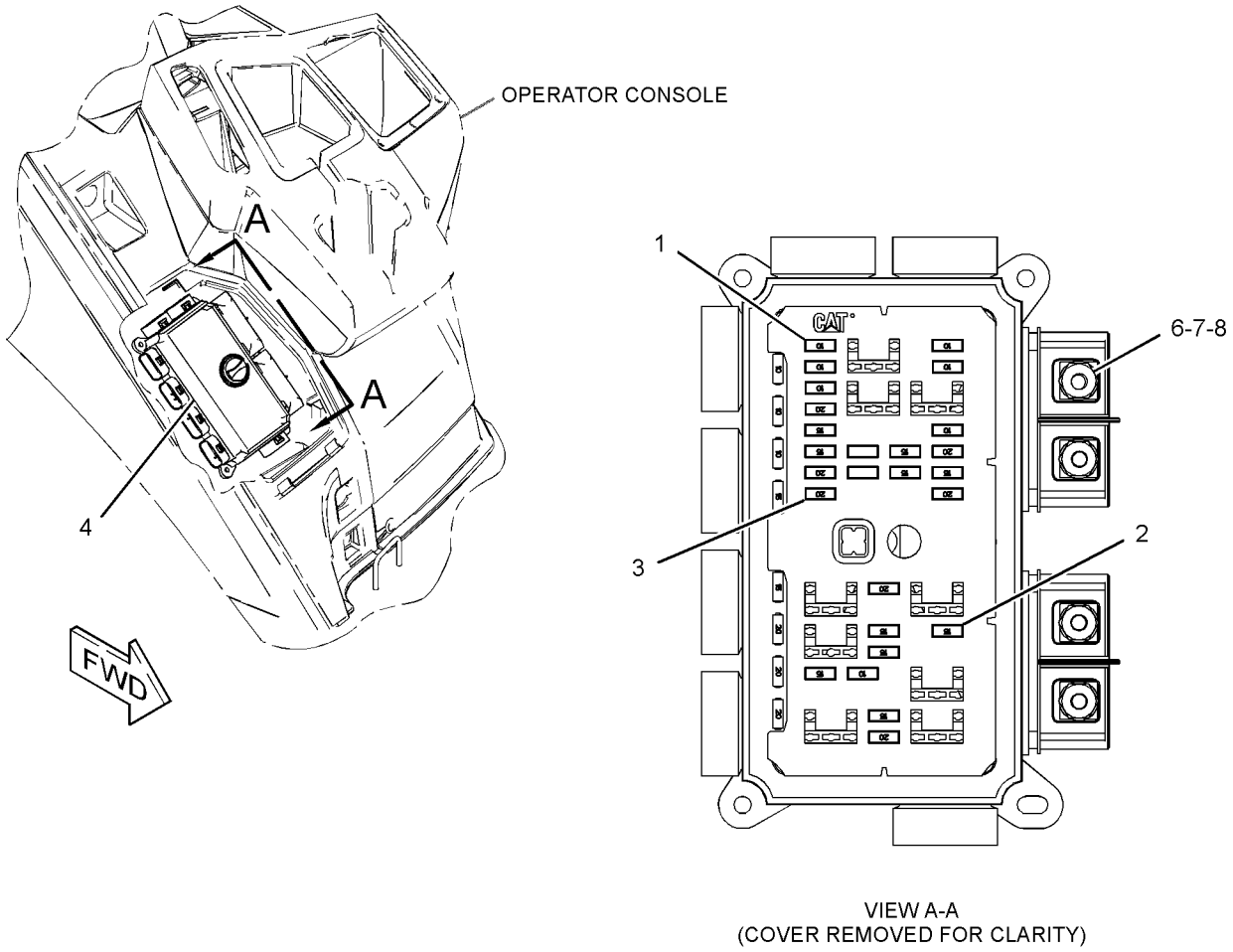

VIEW A-A
(COVER REMOVED FOR CLARITY)

GRAPHIC #1 **<END>** g01331615

239-9950 RECEIVER GP-LASER—SINGLE

S/N: EAT1-UP

PART OF 295-3179 GRADE CONTROL AR-LASER

SMCS-7009 **i03122065**

NOTE	PART NUMBER	QTY	PART NAME 1 2 3 4 5 6 (PRODUCT LEVEL)	SEE PAGE
	253-8329	1	RECEIVER GP-LASER (LR410)	
	276-0764	1	CABLE-COILED (LASER RECEIVER)	
	257-1729	1	CASE-CARRYING	

<END>

276-7287 RELAY GP—POWER DISTRIBUTION

S/N: EAT1-UP
12-VOLT
PART OF 211-4268 WIRING GP-AIR CONDITIONER, 211-4269 WIRING GP-HEATER
AN ATTACHMENT

SMCS-1422, 4493 **i02532899**

NOTE	REF NO	GRAPHIC REF	PART NUMBER	QTY	PART NAME 1 2 3 4 5 6 (PRODUCT LEVEL)	SEE PAGE
M	1	1	**5C-2890**	2	NUT (M6X1-THD)	
	2	1	**8T-4205**	2	WASHER-HARD (7.2X14.5X2-MM THK)	
	3	1	**1H-3244**	2	LOCKWASHER	
M	4	1	**5C-7261**	1	NUT (M8X1.25-THD)	
	5	1	**8T-4224**	1	WASHER-HARD (8.8X16X2-MM THK)	
	6	1	**267-5213**	1	COVER	
	7	1	**267-5211**	1	SEAL	
	8	1	**278-6377**	1	FUSE (40-AMPERE)	

M-METRIC PART

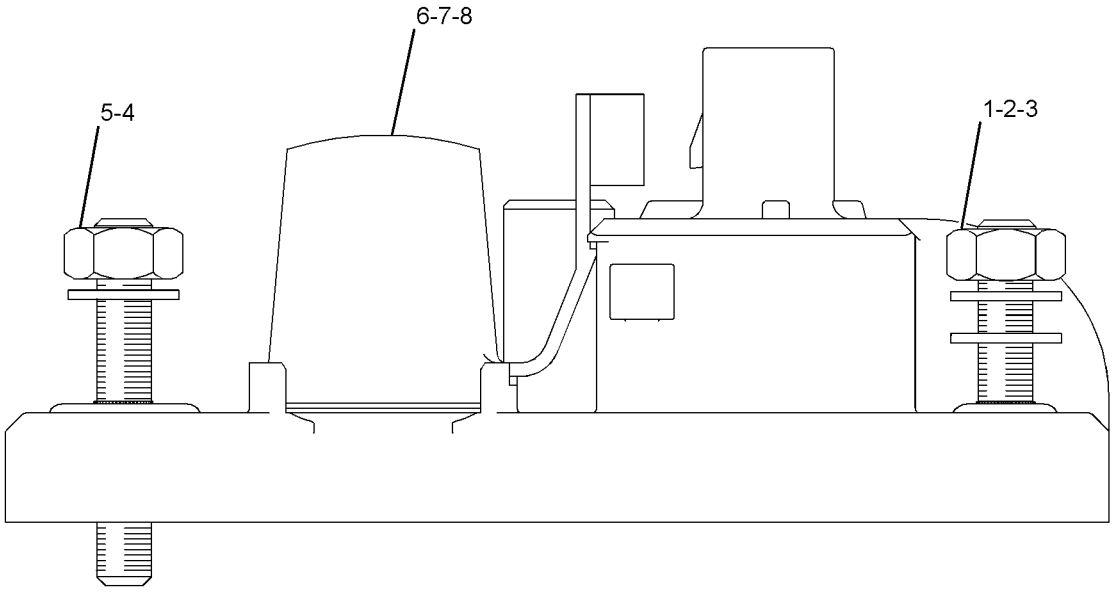

GRAPHIC #1 **<END>** g01290616

276-7290 RELAY GP–POWER, 1

S/N: EAT1-UP
12-VOLT
PART OF 211-4240, 290-6802 WIRING GP-PLATFORM
AN ATTACHMENT

SMCS-1422, 4493 **i02532900**

NOTE	REF NO	GRAPHIC REF	PART NUMBER	QTY	PART NAME 1 2 3 4 5 6 (PRODUCT LEVEL)	SEE PAGE
M	1	1	**5C-2890**	2	NUT (M6X1-THD)	
	2	1	**8T-4205**	2	WASHER-HARD (7.2X14.5X2-MM THK)	
	3	1	**1H-3244**	2	LOCKWASHER	
M	4	1	**5C-7261**	1	NUT (M8X1.25-THD)	
	5	1	**8T-4224**	1	WASHER-HARD (8.8X16X2-MM THK)	
	6	1	**267-5213**	1	COVER	
	7	1	**267-5211**	1	SEAL	
	8	1	**267-2701**	2	FUSE (60-AMPERE)	

M-METRIC PART

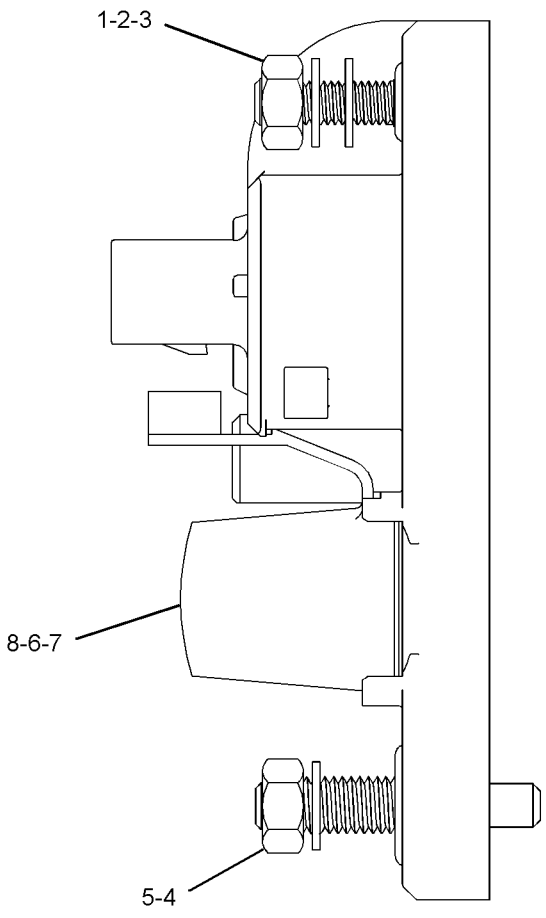

GRAPHIC #1 **<END>** g01278211

276-7291 RELAY GP–POWER, 2

S/N: EAT1-UP
12-VOLT
PART OF 211-4240, 290-6802 WIRING GP-PLATFORM
AN ATTACHMENT

SMCS-1422, 4493 **i02532901**

NOTE	REF NO	GRAPHIC REF	PART NUMBER	QTY	PART NAME 1 2 3 4 5 6 (PRODUCT LEVEL)	SEE PAGE
M	1	1	**5C-2890**	2	NUT (M6X1-THD)	
	2	1	**8T-4205**	2	WASHER-HARD (7.2X14.5X2-MM THK)	
	3	1	**1H-3244**	2	LOCKWASHER	
M	4	1	**5C-7261**	1	NUT (M8X1.25-THD)	
	5	1	**8T-4224**	1	WASHER-HARD (8.8X16X2-MM THK)	
	6	1	**267-5213**	1	COVER	
	7	1	**267-5211**	1	SEAL	
	8	1	**267-2701**	1	FUSE (60-AMPERE)	

M-METRIC PART

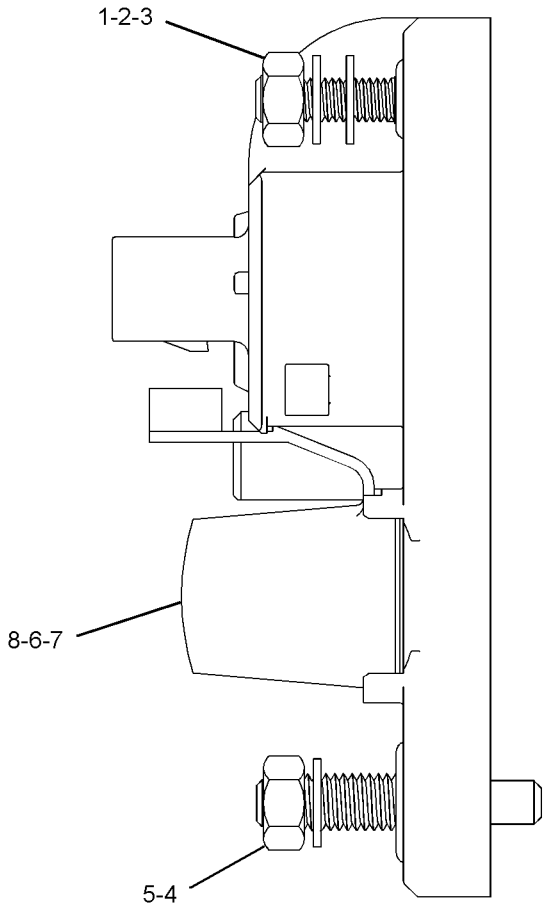

GRAPHIC #1 **<END>** g01278256

189-5746 SENSOR GP-SPEED–OUTPUT–TORQUE CONVERTER

S/N: BYC1-UP; EAT1-UP

PART OF 271-3773, 271-3774 TRANSMISSION GP-DIRECT DRIVE AN ATTACHMENT

SMCS-3175 **i03276881**

NOTE	REF NO	GRAPHIC REF	PART NUMBER	QTY	PART NAME 1 2 3 4 5 6 (PRODUCT LEVEL)	SEE PAGE
	1	1	**171-5349**	1	STRAP-MARKER	
	2	1	**102-8802**	1	KIT-RECEPTACLE (2-PIN)	
					(INCLUDES RECEPTACLE AS & WEDGE)	
	3	1	**144-1636**	2	PIN-CONNECTOR (14-GA TO 18-GA)	
E	4	1	**9X-1386**		SLEEVE (14-CM)	

E-ORDER BY THE CENTIMETER

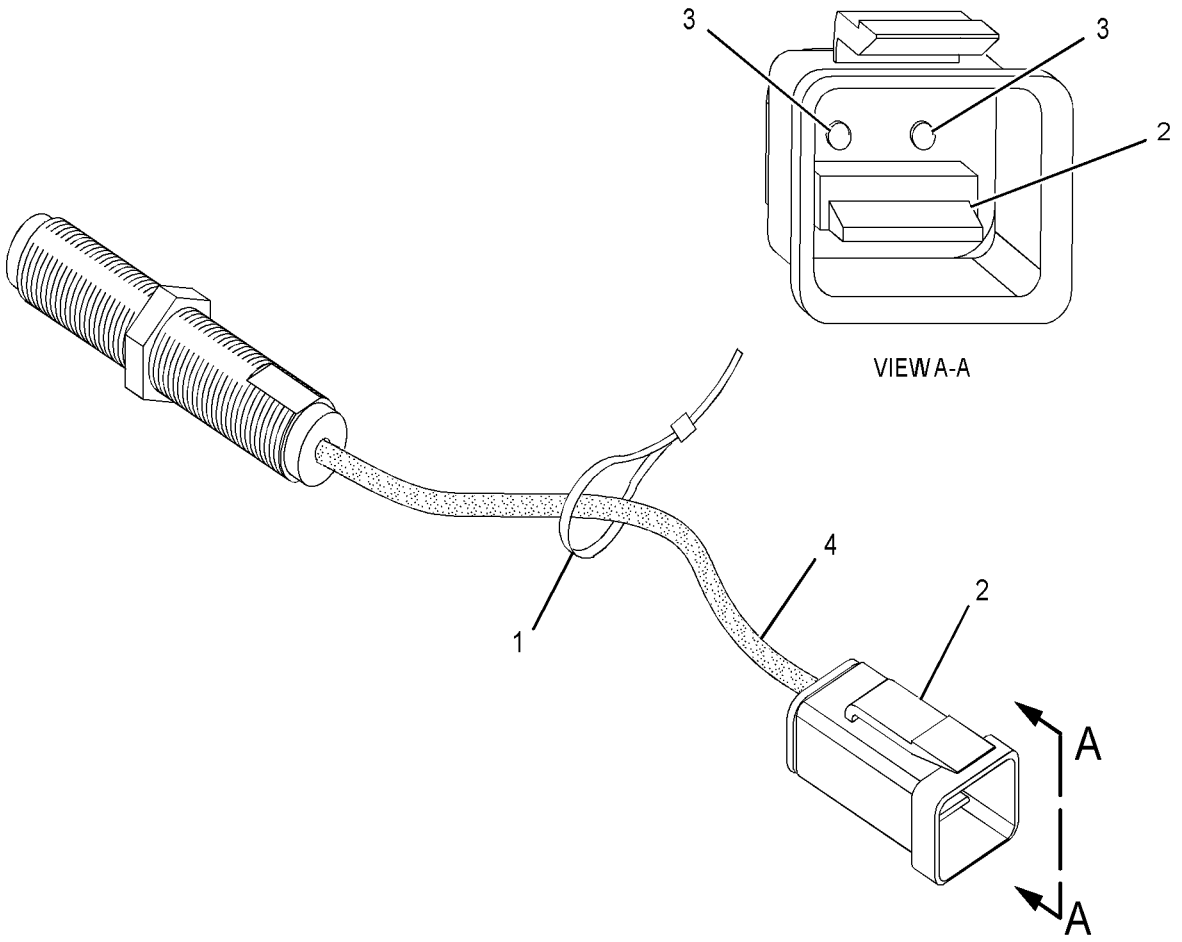

GRAPHIC #1 **<END>** g01353977

ELECTRICAL AND STARTING SYSTEM

143-0539 STARTING MOTOR GP-ELECTRIC*R

S/N: CRS1-UP
12-VOLT
PART OF 237-0024 STARTING MOTOR GP-ELECTRIC
ALSO AN ATTACHMENT

SMCS-1453 **i02712964**

NOTE	REF NO	GRAPHIC REF	PART NUMBER	QTY	PART NAME 1 2 3 4 5 6 (PRODUCT LEVEL)	SEE PAGE
	1	1	**8C-9778**	1	PLUNGER AS	
	2	1	**8C-9783**	1	GASKET	
	3	1	**2P-8104**	1	BEARING	
	4	1	**7T-6092**	1	HOLDER AS-BRUSH	
M	5	1	**8T-4133**	2	NUT (M10X1.5-THD)	
	6	1	**7T-6088**	1	BEARING AS	
	7	1	**7T-6087**	1	WASHER (15.2X40X0.5-MM THK)	
	8	1	**7T-6093**	1	CLUTCH AS	
	9	1	**8J-4455**	1	BALL	
	10	1	**7T-6090**	1	SPRING	
	11	1	**8T-4121**	2	WASHER-HARD (11X21X2.5-MM THK)	
	12	1	**3E-5153**	1	COVER-STARTING MOTOR	
M	13	1	**9X-2036**	1	SCREW-PAN HEAD	
	14	1	**8F-1434**	1	LOCKWASHER	
	15	1	**100-4113**	1	SWITCH AS (STARTING MOTOR)(12-VOLT)	
	16	1	**100-4119**	1	ARMATURE AS	
	17	1	**100-4118**	1	CASE AS-STARTING MOTOR	
	18	1	**100-4115**	1	HOUSING-STARTING MOTOR	
	19	1	**143-1344**	1	FRAME-STARTER	
	20	1	**100-3685**	1	CAP	
	21	1	**3E-5154**	1	BUSHING-STARTING MOTOR	
					AVAILABLE REPAIR KIT(S):	
			7T-6099	1	KIT-GEAR (STARTING MOTOR)	
					(INCLUDES RETAINER, PINION & ROLLERS)	
			146-6729	1	KIT-HARDWARE (STARTING MOTOR)	
					(INCLUDES BOLTS, SCREWS, SCREW ASSEMBLIES & PLATE)	
			100-4112	1	KIT-CONTACT (STARTING MOTOR)	
					(INCLUDES NUT, WASHERS, SEAL, BUSHINGS, PLATE & BOLT)	

M-METRIC PART

143-0539 **STARTING MOTOR GP-ELECTRIC** *(contd.)* **i02712964**

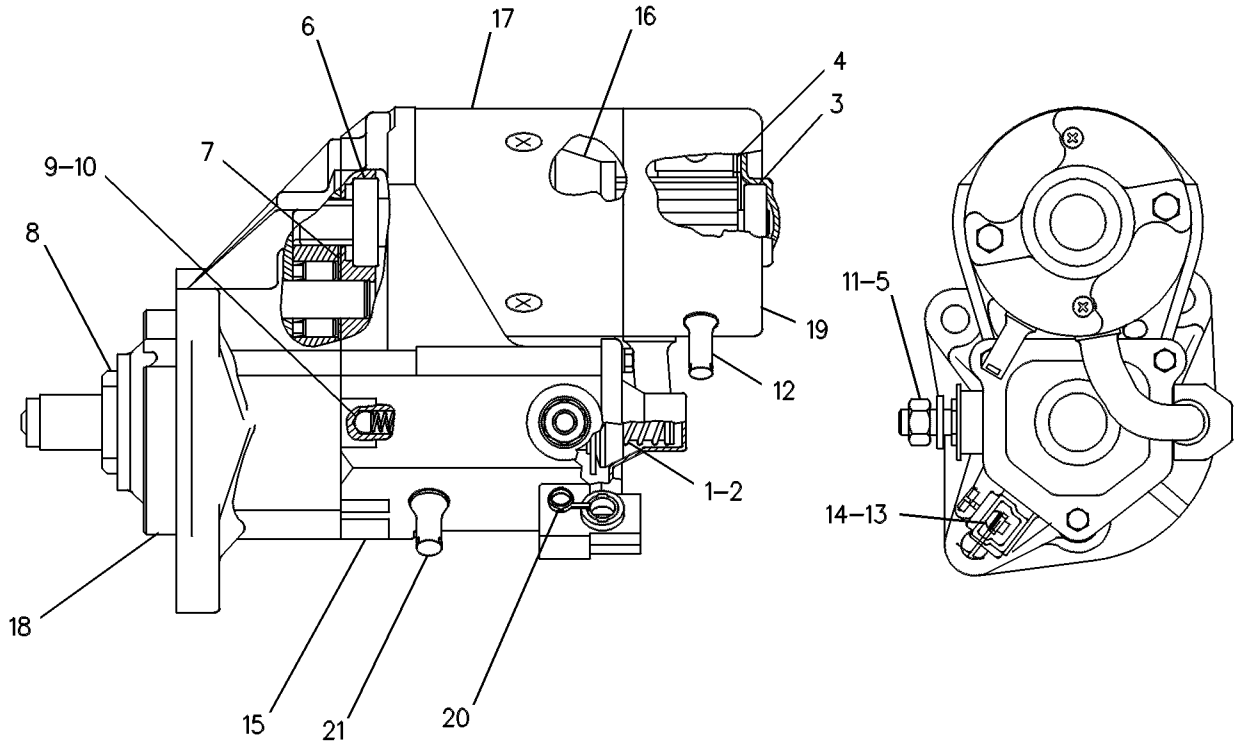

GRAPHIC #1 **<END>** g00131126

237-0024 STARTING MOTOR GP-ELECTRIC—12-VOLT

S/N: CRS1-1238

PART OF 319-2122 ENGINE AR, 245-6842, 320-8415, 325-5122 ENGINE AR-PRIMARY

ALSO AN ATTACHMENT

SMCS-1453 **i01991979**

NOTE	REF NO	GRAPHIC REF	PART NUMBER	QTY	PART NAME 1 2 3 4 5 6 (PRODUCT LEVEL)	SEE PAGE
	1	1	**6I-0364**	3	STUD (M10X1.5X30MM)	
	2	1	**6I-0594**	3	NUT (M10X1.5)	
YR	3	1	**143-0539**	1	STARTING MOTOR GP-ELECTRIC	144

R-REMFG PART MAY BE AVAILABLE
Y-SEPARATE ILLUSTRATION

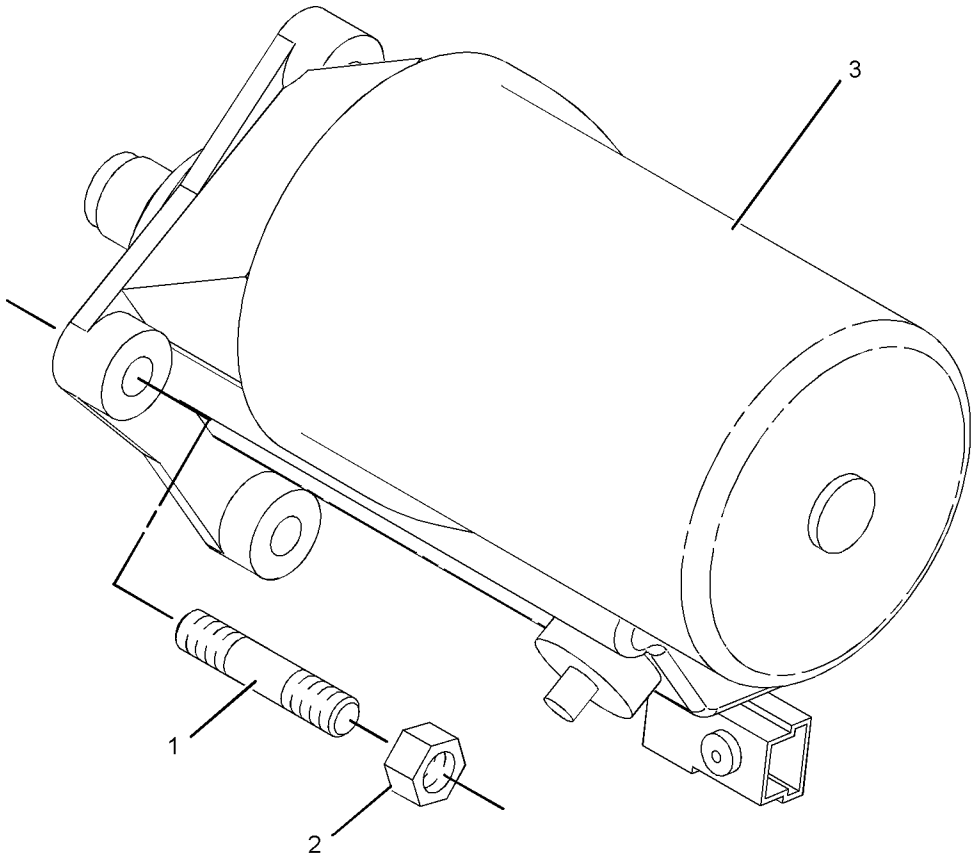

GRAPHIC #1 **<END>** g01039910

211-4267 SWITCH GP-ALL WHEEL DRIVE–INCLUDES RELAY

S/N: EAT1-UP

PART OF 216-4740 DRIVE AR-BACKHOE LOADER

AN ATTACHMENT

SMCS-1435, 4493 **i03530200**

NOTE	REF NO	GRAPHIC REF	PART NUMBER	QTY	PART NAME 1 2 3 4 5 6 (PRODUCT LEVEL)	SEE PAGE
	1	1	**146-9439**	1	RELAY AS (12-VOLT) (ALL WHEEL DRIVE)	
	2	1	**214-4692**	1	SWITCH AS-ROCKER (ALL WHEEL DRIVE)	
		1	**111-7899**	1	GASKET	

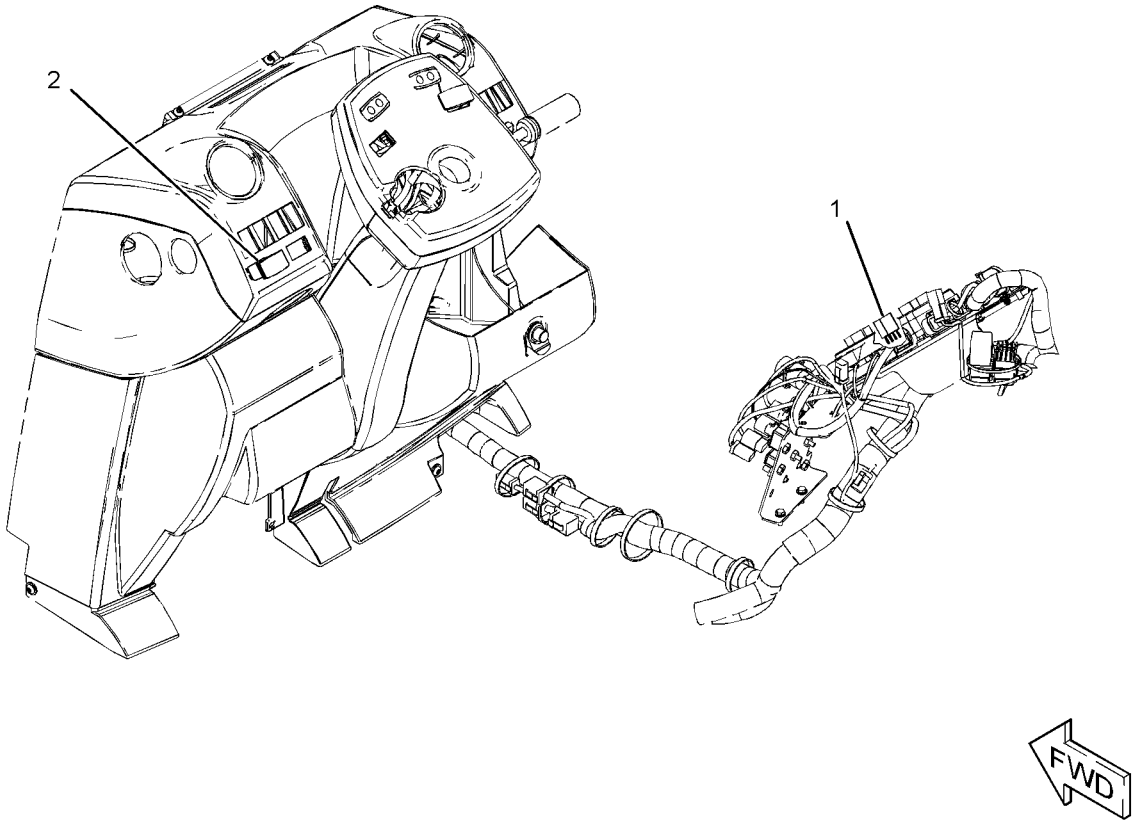

GRAPHIC #1 **<END>** g01211965

202-6010 SWITCH GP-DIFFERENTIAL LOCK–

CENTER PIVOT MACHINE
S/N: BYC1-UP; EAT1-UP
PART OF 218-5148, 218-5149, 293-2986 POWER TRAIN AR
AN ATTACHMENT

SMCS-1435, 3264 **i03375129**

NOTE	REF NO	GRAPHIC REF	PART NUMBER	QTY	PART NAME 1 2 3 4 5 6 (PRODUCT LEVEL)	SEE PAGE
	1	1	**201-9459**	1	BOOT	
	2	1	**204-0775**	1	SWITCH AS-FOOT (DIFFERENTIAL LOCK ON, OFF)	
	3	1	**205-6298**	1	ACTUATOR	
	4	1	**213-6060**	1	HARNESS AS-WIRING (DIFFERENTIAL LOCK)	

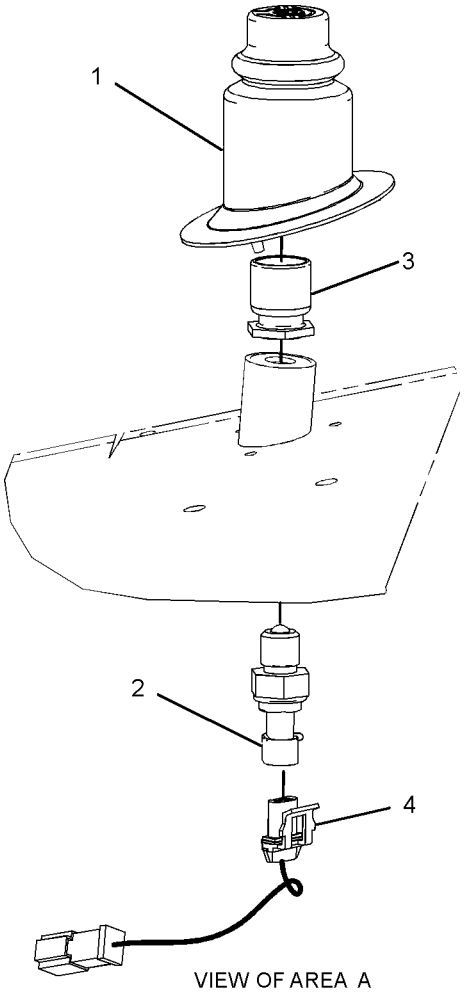

VIEW OF AREA A

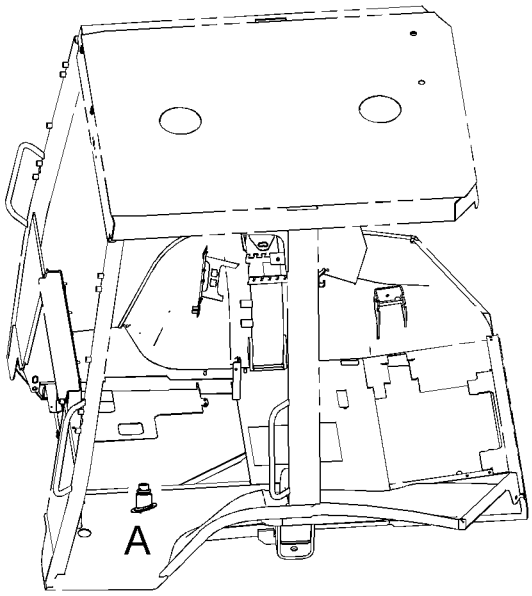

LEFT SIDE VIEW
(UPPER FRONT)

GRAPHIC #1 **<END>** g01230746

7N-0718 SWITCH GP-DISCONNECT–BATTERY

S/N: EAT1-UP
12-VOLT
PART OF 290-6790 BATTERY & WIRING GP

SMCS-1411 **i02459121**

NOTE	REF NO	GRAPHIC REF	PART NUMBER	QTY	PART NAME 1 2 3 4 5 6 (PRODUCT LEVEL)	SEE PAGE
	1	1	**8H-5306**	1	KEY (BATTERY DISCONNECT)	
	2	1	**8H-5303**	1	NUT (3/4-16-THD)	
	3	1	**2H-3922**	2	LOCKWASHER	
	4	1	**9F-5644**	2	LOCKWASHER	
	5	1	**6F-7045**	2	NUT-FULL (3/8-24-THD)	

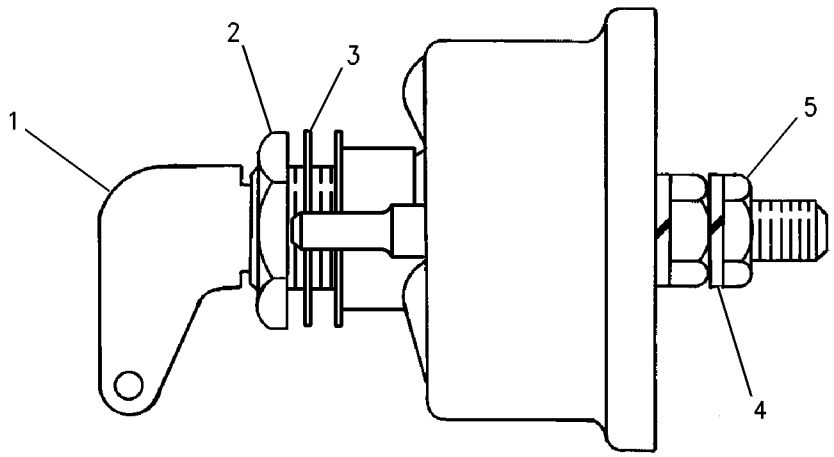

GRAPHIC #1 **<END>** g00715584

237-4896 SWITCH GP-PRESSURE–ENGINE OIL

S/N: CRS1-1238

PART OF 319-2122 ENGINE AR, 245-6842, 320-8415, 325-5122 ENGINE AR-PRIMARY

ALSO AN ATTACHMENT

SMCS-1435 **i02437894**

NOTE	REF NO	GRAPHIC REF	PART NUMBER	QTY	PART NAME 1 2 3 4 5 6 (PRODUCT LEVEL)	SEE PAGE
	1	1	**237-4894**	1	SWITCH AS-PRESSURE (ENGINE OIL)	
	2	1	**199-9267**	1	SEAL-O-RING	

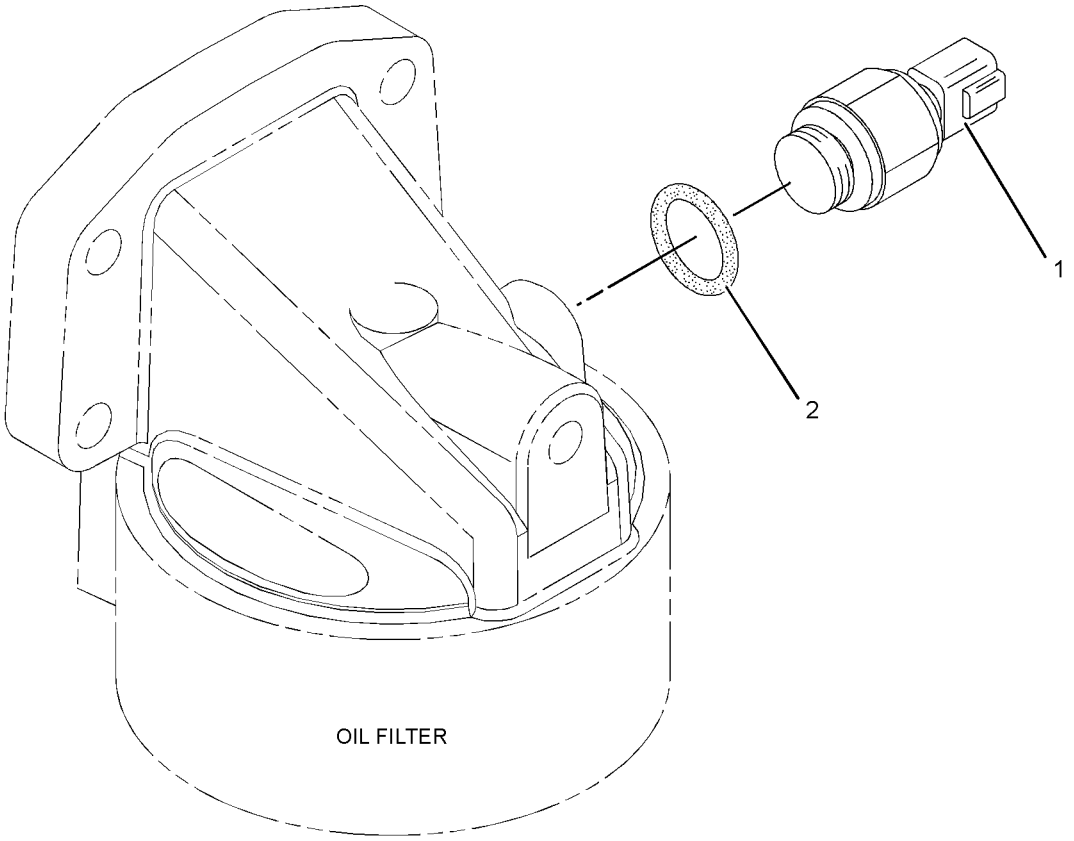

GRAPHIC #1 **<END>** g01218504

211-4268 WIRING GP-AIR CONDITIONER

S/N: EAT1-1237
PART OF 269-2127 CAB AR-ENCLOSED ROPS
AN ATTACHMENT

SMCS-1408, 7320 **i03530222**

NOTE	REF NO	GRAPHIC REF	PART NUMBER	QTY	PART NAME 1 2 3 4 5 6 (PRODUCT LEVEL)	SEE PAGE
	1	1	**3E-9362**	1	RELAY AS (12-VOLT) (HEATER, A/C POWER)	
	2	1	**6K-0806**	2	STRAP-CABLE	
	3	1	**9X-7378**	1	SEAL-O-RING	
	4	1	**106-8704**	1	SUPPRESSOR AS-ARC	
		1	**102-8802**	1	KIT-RECEPTACLE (2-PIN)	
					(INCLUDES RECEPTACLE AS & WEDGE)	
		1	**186-3735**	2	PIN-CONNECTOR (16-GA TO 18-GA)	
	5	1	**202-6108**	1	HARNESS AS-HEATER & AIR COND (POWER)	
	6	1	**213-6055**	1	HARNESS AS-HEATER & AIR COND	
	7	1	**214-4695**	1	SWITCH AS-ROCKER (BLOWER FAN SPEED)	
		1	**111-7899**	1	GASKET	
	8	1	**214-4718**	1	SWITCH AS-ROCKER (AIR CONDITIONER, HEATER SELECT)	
		1	**111-7899**	1	GASKET	
	9	1	**236-6923**	1	SWITCH AS-PRESSURE (REFRIGERANT)	
	10	1	**238-7492**	1	HARNESS AS-HEATER & AIR COND (COMPRESSOR)	
	11	1	**275-0570**	1	BAR-BUS	
Y	12	1	**276-7287**	1	RELAY GP (12-VOLT) (POWER DISTRIBUTION)	140
	13	1	**115-1615**	1	RELAY AS (12-VOLT) (AIR CONDITIONER)	
	14	1	**4P-8134**	2	CLIP	
	15	1	**3S-2093**	11	STRAP-CABLE	
M	16	1	**5C-2890**	1	NUT (M6X1-THD)	
M	17	1	**5C-7261**	1	NUT (M8X1.25-THD)	
M	18	1	**7X-2534**	1	BOLT (M6X1X50-MM)	
	19	1	**8T-4205**	1	WASHER-HARD (7.2X14.5X2-MM THK)	
	20	1	**8T-4224**	1	WASHER-HARD (8.8X16X2-MM THK)	
	21	1	**7K-1181**	1	STRAP-CABLE	
	22	1	**8T-8799**	1	BOOT	

M-METRIC PART
Y-SEPARATE ILLUSTRATION

211-4268 **WIRING GP-AIR CONDITIONER** *(contd.)* **i03530222**

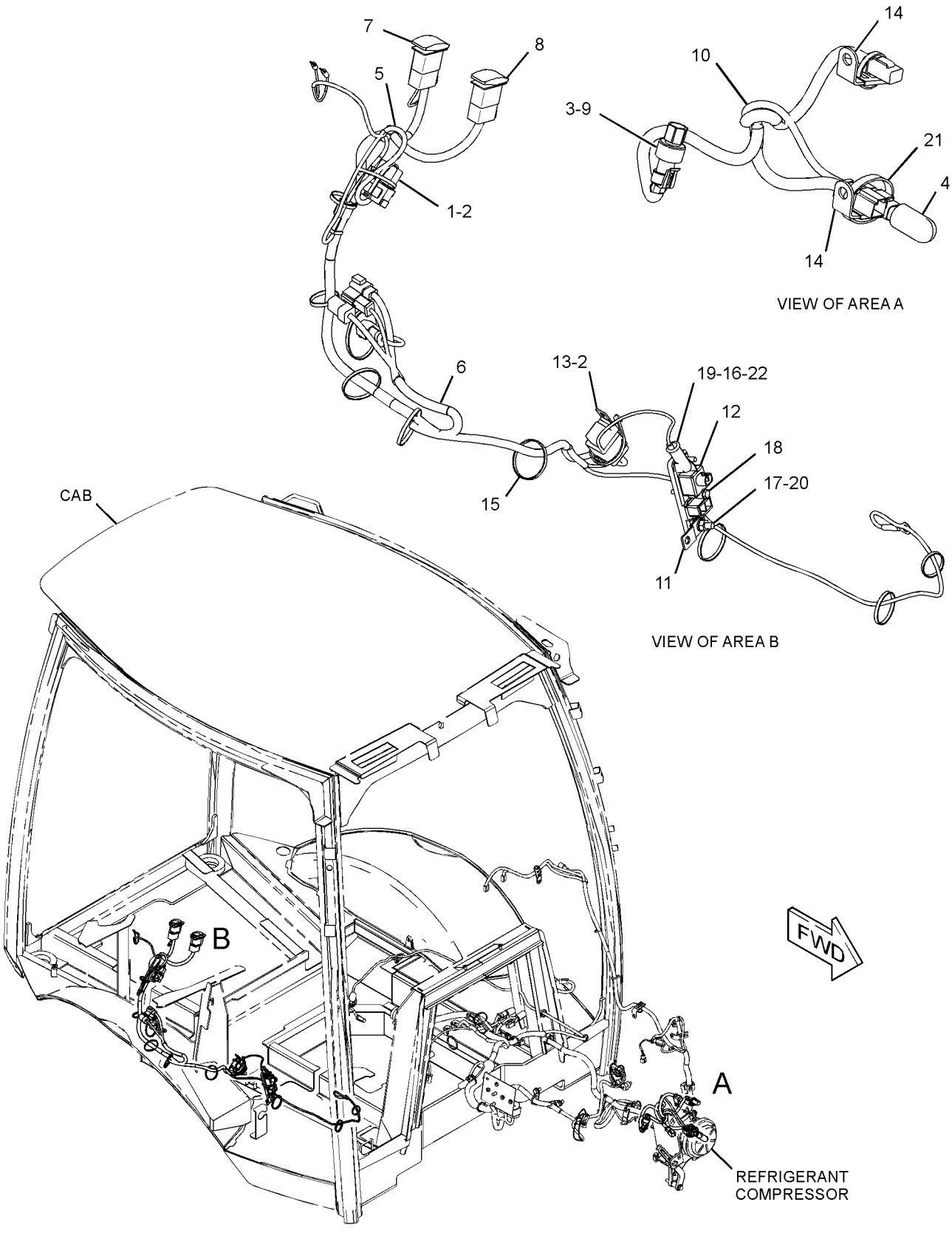

GRAPHIC #1 **<END>** g01282625

211-4268 WIRING GP-AIR CONDITIONER

S/N: EAT1238-UP
PART OF 269-2127 CAB AR-ENCLOSED ROPS
AN ATTACHMENT

SMCS-1408, 7320 **i03530224**

NOTE	REF NO	GRAPHIC REF	PART NUMBER	QTY	PART NAME 1 2 3 4 5 6 (PRODUCT LEVEL)	SEE PAGE
	1	1	**3E-9362**	1	RELAY AS (12-VOLT) (HEATER, A/C POWER)	
	2	1	**6K-0806**	1	STRAP-CABLE	
	3	1	**9X-7378**	1	SEAL-O-RING	
	4	1	**189-3158**	1	SUPPRESSOR-ARC	
	5	1	**202-6108**	1	HARNESS AS-HEATER & AIR COND (POWER)	
	6	1	**213-6055**	1	HARNESS AS-HEATER & AIR COND (PLATFORM)	
	7	1	**214-4695**	1	SWITCH AS-ROCKER (BLOWER FAN SPEED)	
		1	**111-7899**	1	GASKET	
	8	1	**214-4718**	1	SWITCH AS-ROCKER (AIR CONDITIONER, HEATER SELECT)	
		1	**111-7899**	1	GASKET	
	9	1	**236-6923**	1	SWITCH AS-PRESSURE (REFRIGERANT)	
	10	1	**238-7492**	1	HARNESS AS-HEATER & AIR COND (COMPRESSOR)	
	11	1	**275-0570**	1	BAR-BUS	
Y	12	1	**276-7287**	1	RELAY GP (12-VOLT) (POWER DISTRIBUTION)	140
	13	1	**115-1615**	1	RELAY AS (12-VOLT) (AIR CONDITIONER)	
	14	1	**4P-8134**	2	CLIP	
	15	1	**3S-2093**	11	STRAP-CABLE	
M	16	1	**5C-2890**	1	NUT (M6X1-THD)	
M	17	1	**5C-7261**	1	NUT (M8X1.25-THD)	
M	18	1	**8T-4171**	1	BOLT (M6X1X12-MM)	
	19	1	**8T-4205**	2	WASHER-HARD (7.2X14.5X2-MM THK)	
	20	1	**8T-4224**	1	WASHER-HARD (8.8X16X2-MM THK)	
	21	1	**7K-1181**	1	STRAP-CABLE	
	22	1	**8T-8799**	1	BOOT	
	23	1	**197-5107**	1	SCREW-TRUSS HEAD (M6X1X60-MM)	

M-METRIC PART
Y-SEPARATE ILLUSTRATION

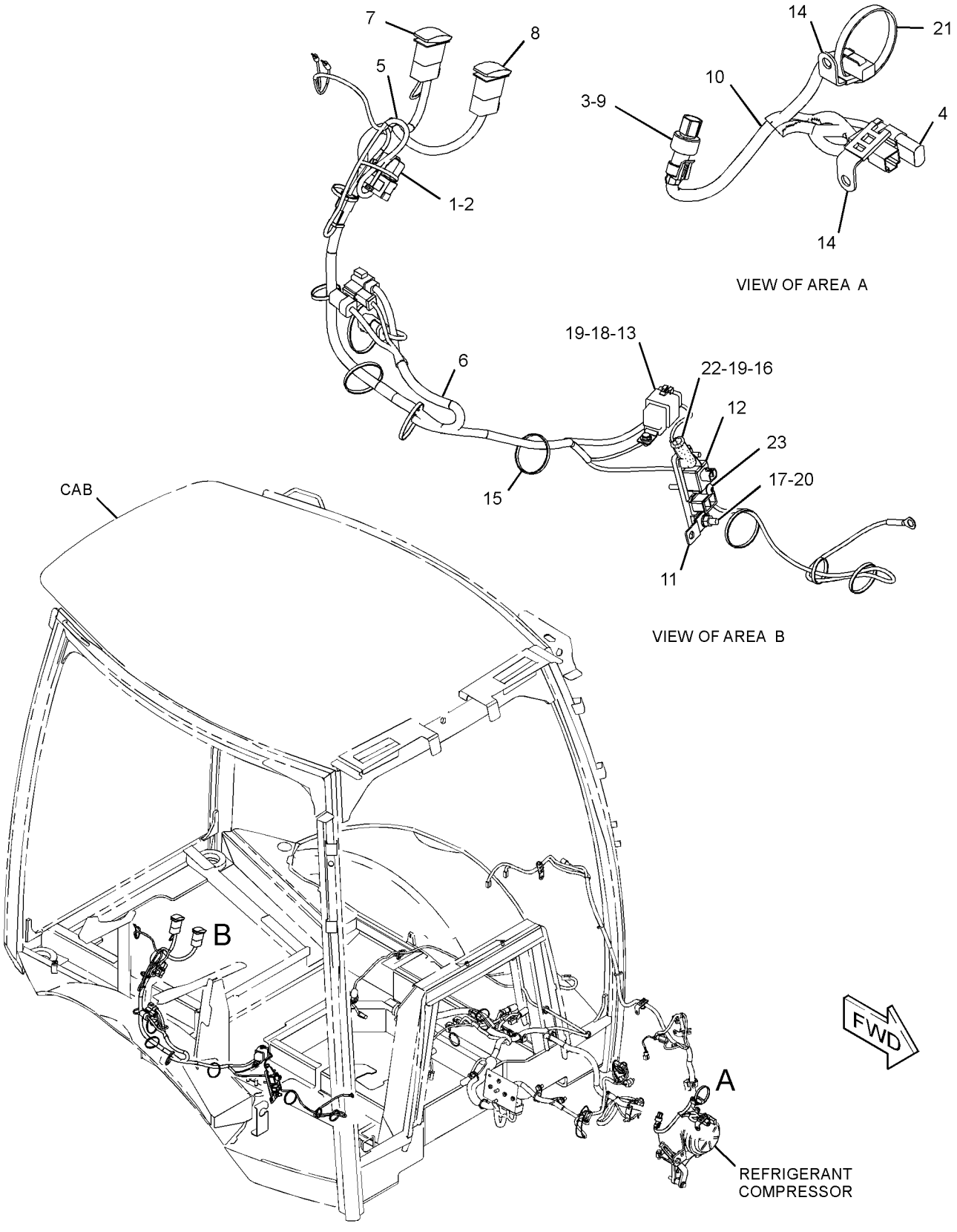

GRAPHIC #1 **<END>** g01522201

211-4241 WIRING GP-CONSOLE–SIDE

S/N: EAT1-1230
PART OF 269-2125, 269-2126, 269-2127 CAB AR-ENCLOSED ROPS, 269-2123, 269-2124 CANOPY AR-OPEN ROPS
AN ATTACHMENT

SMCS-1408 **i03530241**

NOTE	REF NO	GRAPHIC REF	PART NUMBER	QTY	PART NAME 1 2 3 4 5 6 (PRODUCT LEVEL)	SEE PAGE
J	1	1	**110-7887**	1	SWITCH AS-START (KEY)	
		1	**7T-6799**	1	NUT-MOUNTING (1-32-THD)	
		1	**186-3735**	4	PIN-CONNECTOR (16-GA TO 18-GA)	
		1	**102-8804**	1	KIT-RECEPTACLE (4-PIN)	
					(INCLUDES RECEPTACLE AS & WEDGE)	
M	2	1	**197-7499**	2	BOLT (M4X0.7X25-MM)	
	3	1	**206-1345**	3	STRAP-CABLE	
	6	1	**214-4693**	1	SWITCH AS-ROCKER (WARNING BEACON)	
		1	**111-7899**	1	GASKET	
	7	1	**300-4994**	1	SWITCH AS-ROCKER (HYDRAULIC LOCKOUT) (IMPLEMENT DISABLE)	
		1	**111-7899**	1	GASKET	
	8	1	**214-4722**	1	SWITCH AS-ROCKER (STARTING AID)	
		1	**111-7899**	1	GASKET	
	10	1	**226-7164**	1	GAUGE GP-COOLANT TEMPERATURE	
		1	**4B-2043**	6	NUT (8-32-THD)	
		1	**9B-7233**	3	LOCKWASHER	
		1	**7X-9065**	1	LAMP (12-VOLT)	
B	11	1	**227-1057**	6	PLUG-HOLE	
	12	1	**231-9356**	1	FILM-IDENTIFICATION (CONSOLE, RH)	
	13	1	**268-7758**	1	HARNESS AS-CONSOLE (SIDE)	
	14	1	**270-2729**	1	MODULE GP-WARNING INDICATOR (WITH ALARM, FUNCTION LIGHTS)	
		1	**102-8801**	1	KIT-RECEPTACLE (12-PIN)	
					(INCLUDES RECEPTACLE AS & WEDGE)	
		1	**232-4706**	1	GASKET	
		1	**186-3735**	10	PIN-CONNECTOR (16-GA TO 18-GA)	
		1	**8T-8737**	2	PLUG-SEAL	
	15	1	**131-1424**	1	SEAL	
	16	1	**170-6305**	1	GAUGE GP-FUEL LEVEL	
		1	**4B-2043**	3	NUT (8-32-THD)	
		1	**9B-7233**	3	LOCKWASHER	
		1	**7X-9065**	1	LAMP (12-VOLT)	
	17	1	**170-6542**	1	GAUGE GP-OIL TEMPERATURE (TORQUE CONVERTER)	
		1	**4B-2043**	3	NUT (8-32-THD)	
		1	**9B-7233**	3	LOCKWASHER	
		1	**7X-9065**	1	LAMP (12-VOLT)	
Y	18	1	**239-1080**	1	TACHOMETER GP-ELECTRIC	897
	19	1	**3S-2093**	5	STRAP-CABLE	
	20	1	**6V-3507**	3	SEAL-RECTANGULAR	
M	21	1	**8T-2659**	2	LOCKNUT (M4X0.7-THD)	

B-USE AS REQUIRED
J-REQUIRES CORPORATE KEY
M-METRIC PART
Y-SEPARATE ILLUSTRATION

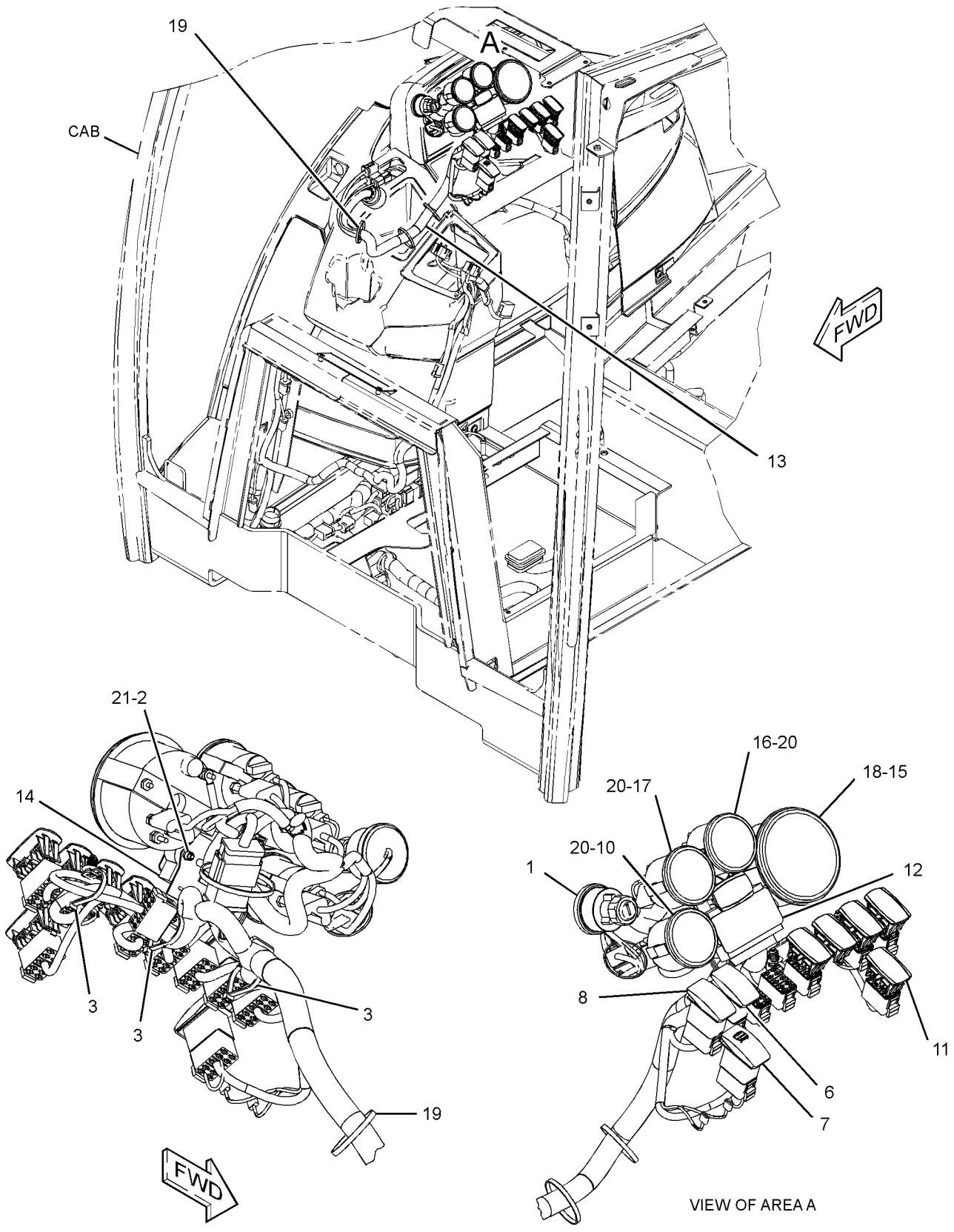

GRAPHIC #1 **<END>** g01813555

211-4245 WIRING GP-CONSOLE–FRONT

S/N: EAT1-UP

PART OF 269-2125, 269-2126, 269-2127 CAB AR-ENCLOSED ROPS, 269-2123, 269-2124 CANOPY AR-OPEN ROPS

AN ATTACHMENT

SMCS-1408 **i03530281**

NOTE	REF NO	GRAPHIC REF	PART NUMBER	QTY	PART NAME 1 2 3 4 5 6 (PRODUCT LEVEL)	SEE PAGE
	1	1	**7K-1181**	3	STRAP-CABLE	
	2	1	**268-1964**	1	KIT-SERVICE METER	
					(INCLUDES METER & FILM)	
	3	1	**213-6040**	1	HARNESS AS-CONSOLE (FRONT)	
	4	1	**214-4716**	1	SWITCH AS-ROCKER (TRANSMISSION NEUTRAL LOCK)	
		1	**111-7899**	1	GASKET	
B	5	1	**227-1057**	10	PLUG-HOLE	
	6	1	**3S-2093**	4	STRAP-CABLE	

B-USE AS REQUIRED

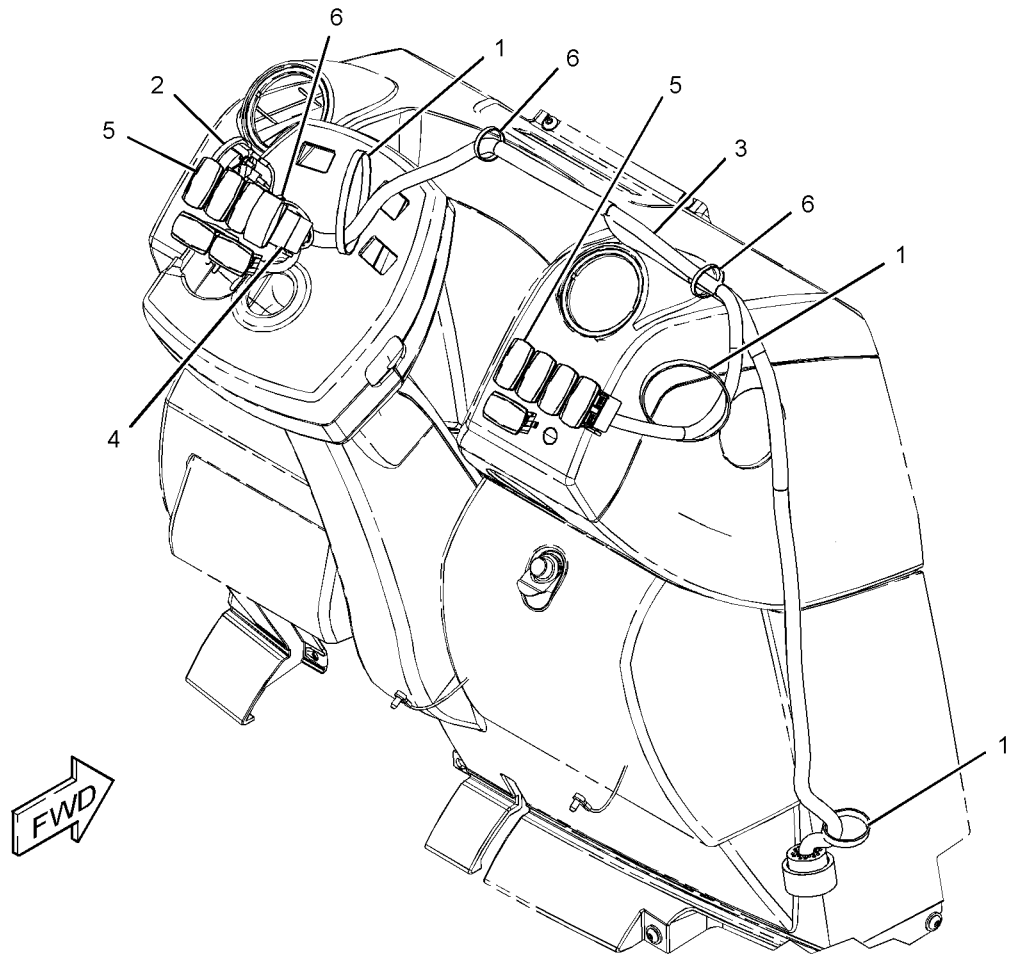

GRAPHIC #1 **<END>** g01190392

290-6803 WIRING GP-CONSOLE–SIDE

S/N: EAT1231-UP
PART OF 269-2125, 269-2126, 269-2127 CAB AR-ENCLOSED ROPS, 269-2123, 269-2124 CANOPY AR-OPEN ROPS
AN ATTACHMENT

SMCS-1408 **i03530305**

NOTE	REF NO	GRAPHIC REF	PART NUMBER	QTY	PART NAME 1 2 3 4 5 6 (PRODUCT LEVEL)	SEE PAGE
	1	1	**110-7887**	1	SWITCH AS-START (KEY)	
		1	**7T-6799**	1	NUT-MOUNTING (1-32-THD)	
		1	**186-3735**	4	PIN-CONNECTOR (16-GA TO 18-GA)	
		1	**102-8804**	1	KIT-RECEPTACLE (4-PIN)	
					(INCLUDES RECEPTACLE AS & WEDGE)	
	2	1	**131-1424**	1	SEAL	
	3	1	**170-6542**	1	GAUGE GP-OIL TEMPERATURE (TORQUE CONVERTER)	
		1	**4B-2043**	3	NUT (8-32-THD)	
		1	**7X-9065**	1	LAMP (12-VOLT)	
		1	**9B-7233**	3	LOCKWASHER	
M	4	1	**197-7499**	2	BOLT (M4X0.7X25-MM)	
	5	1	**206-1345**	3	STRAP-CABLE	
	6	1	**214-4693**	1	SWITCH AS-ROCKER (WARNING BEACON)	
		1	**111-7899**	1	GASKET	
	7	1	**214-4722**	1	SWITCH AS-ROCKER (STARTING AID)	
		1	**111-7899**	1	GASKET	
	8	1	**226-7164**	1	GAUGE GP-COOLANT TEMPERATURE	
		1	**4B-2043**	6	NUT (8-32-THD)	
		1	**7X-9065**	1	LAMP (12-VOLT)	
		1	**9B-7233**	3	LOCKWASHER	
B	9	1	**227-1057**	4	PLUG-HOLE	
	10	1	**231-9356**	1	FILM-IDENTIFICATION (CONSOLE, RH)	
Y	11	1	**239-1080**	1	TACHOMETER GP-ELECTRIC	897
	12	1	**268-7762**	1	HARNESS AS-CONSOLE (SIDE)	
	13	1	**300-4994**	1	SWITCH AS-ROCKER (HYDRAULIC LOCKOUT)	
	14	1	**311-6609**	1	MODULE GP-WARNING INDICATOR (WITH ALARM, FUNCTION LIGHTS)	
		1	**102-8801**	1	KIT-RECEPTACLE (12-PIN)	
					(INCLUDES RECEPTACLE AS & WEDGE)	
		1	**232-4706**	1	GASKET	
		1	**186-3735**	10	PIN-CONNECTOR (16-GA TO 18-GA)	
		1	**8T-8737**	2	PLUG-SEAL	
	15	1	**170-6305**	1	GAUGE GP-FUEL LEVEL	
		1	**4B-2043**	3	NUT (8-32-THD)	
		1	**7X-9065**	1	LAMP (12-VOLT)	
		1	**9B-7233**	3	LOCKWASHER	
	16	1	**3S-2093**	5	STRAP-CABLE	
	17	1	**6V-3507**	3	SEAL-RECTANGULAR	
M	18	1	**8T-2659**	2	LOCKNUT (M4X0.7-THD)	

B-USE AS REQUIRED
M-METRIC PART
Y-SEPARATE ILLUSTRATION

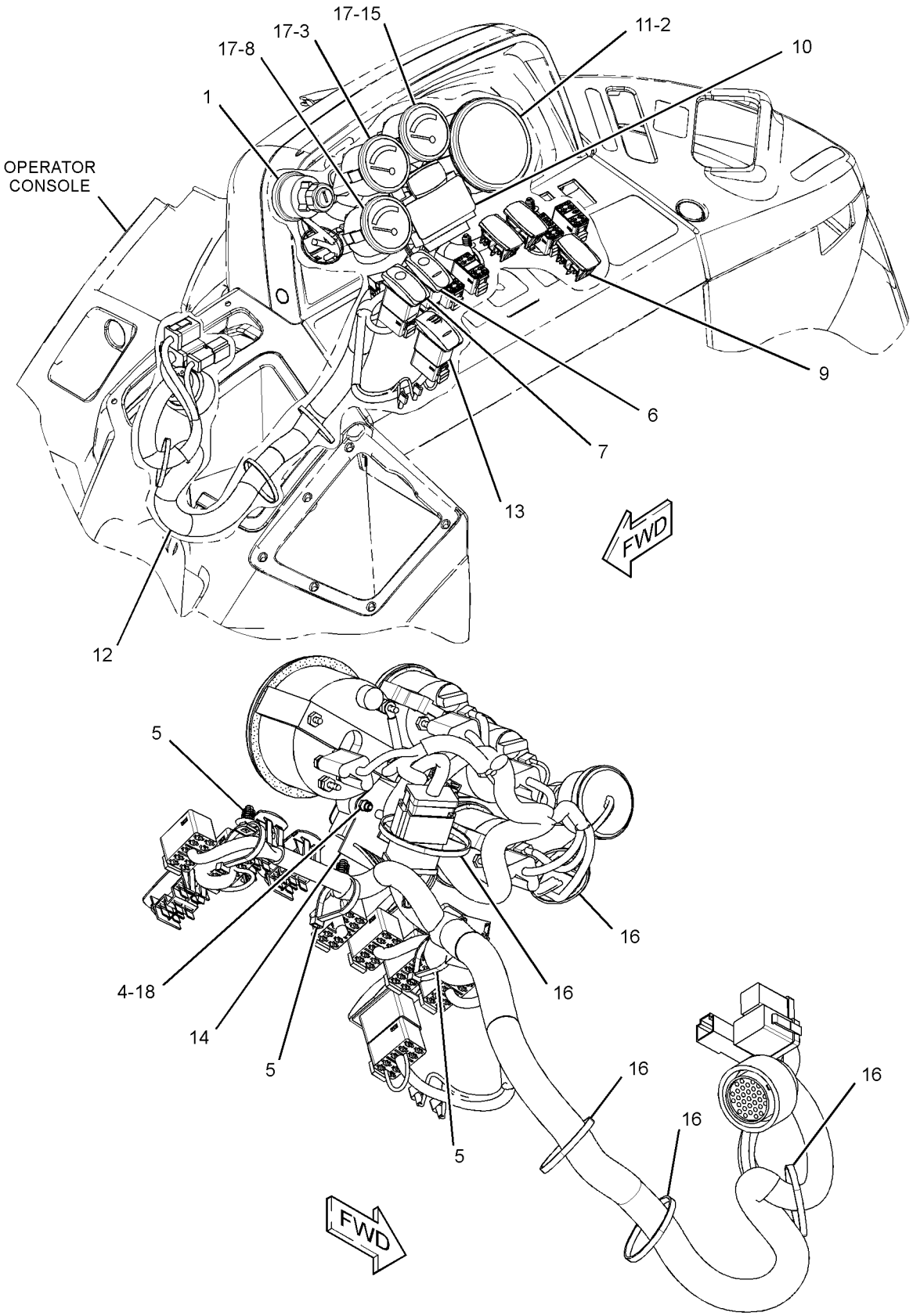

GRAPHIC #1 **<END>** g01587394

267-5633 WIRING GP-CONTROL–JOYSTICK, RH

S/N: EAT1-UP

PART OF 269-2147 VALVE AR-BANK 7, 269-2148 VALVE AR-BANK 8

AN ATTACHMENT

SMCS-1408 **i03527782**

NOTE	REF NO	GRAPHIC REF	PART NUMBER	QTY	PART NAME 1 2 3 4 5 6 (PRODUCT LEVEL)	SEE PAGE
	1	1	**206-2423**	3	SADDLE	
	2	1	**268-7756**	1	HARNESS AS-AUXILIARY (REAR)	
	3	1	**3S-2093**	8	STRAP-CABLE	
	4	1	**6K-0806**	2	STRAP-CABLE	

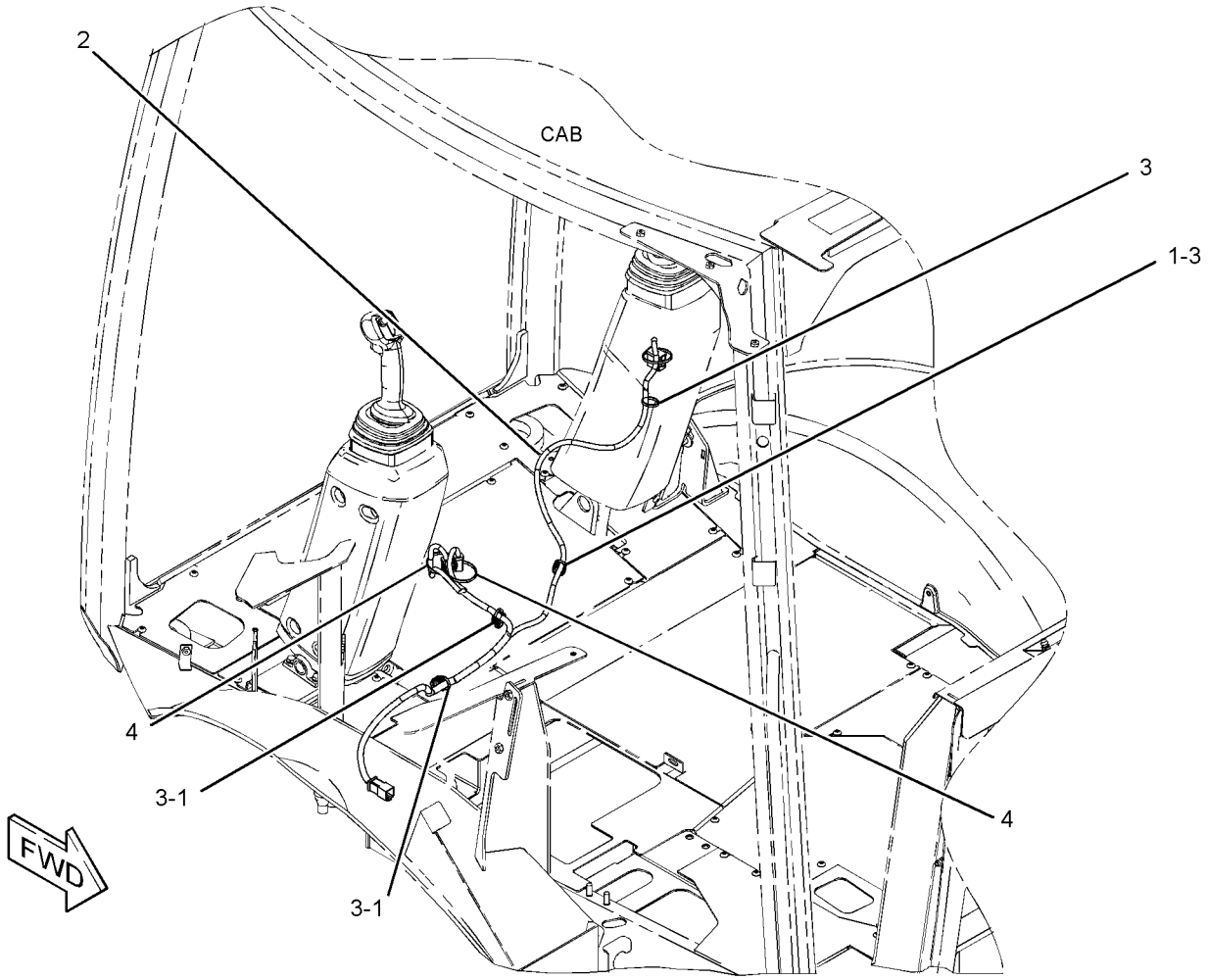

GRAPHIC #1 **<END>** g01366212

267-5634 WIRING GP-CONTROL—JOYSTICK, LH

S/N: EAT1-UP
PART OF 269-2148 VALVE AR-BANK 8
AN ATTACHMENT

SMCS-1408 **i03527785**

NOTE	REF NO	GRAPHIC REF	PART NUMBER	QTY	PART NAME 1 2 3 4 5 6 (PRODUCT LEVEL)	SEE PAGE
	1	1	**206-2423**	1	SADDLE	
	2	1	**268-7757**	1	HARNESS AS-AUXILIARY (REAR)	
	3	1	**3S-2093**	5	STRAP-CABLE	
	4	1	**6K-0806**	2	STRAP-CABLE	

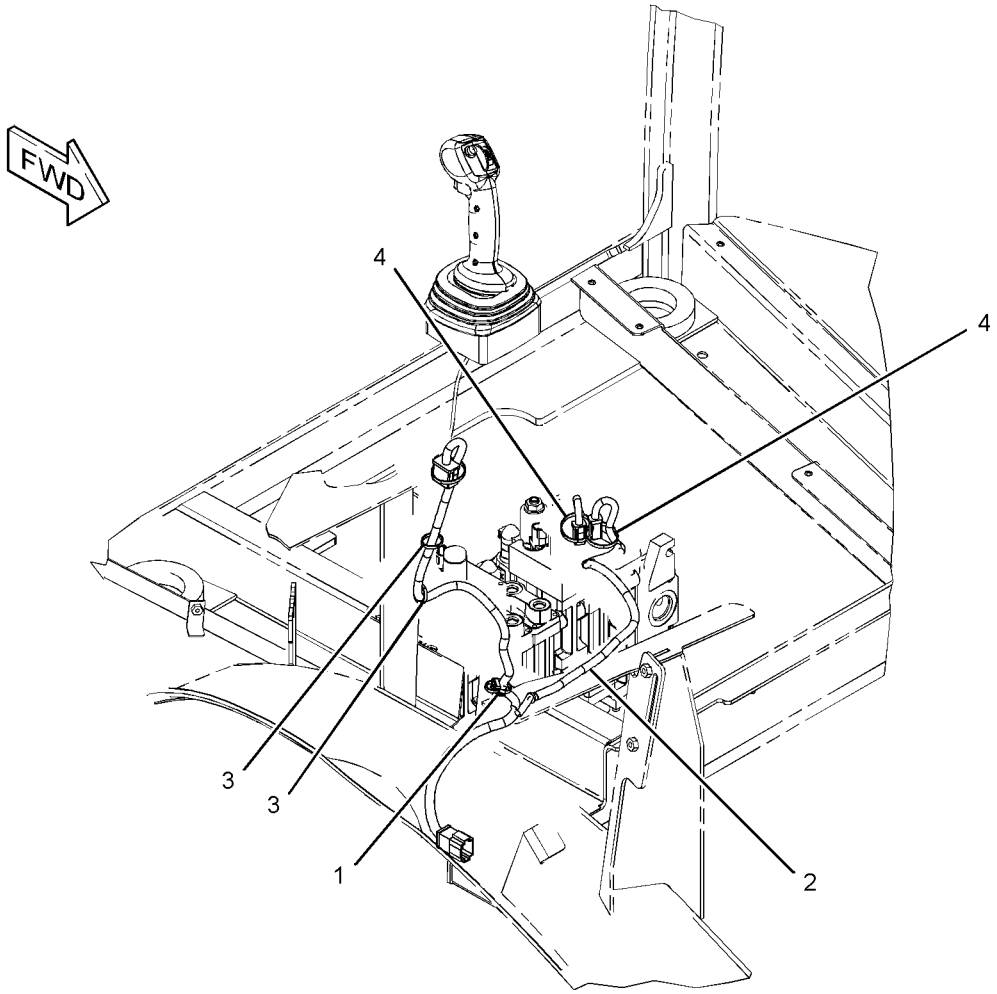

GRAPHIC #1 **<END>** g01366249

267-5635 WIRING GP-CONTROL–JOYSTICK, LH

S/N: EAT1-UP

PART OF 269-2146 VALVE AR-BANK 6, 269-2147 VALVE AR-BANK 7

AN ATTACHMENT

SMCS-1408 **i03527786**

NOTE	REF NO	GRAPHIC REF	PART NUMBER	QTY	PART NAME 1 2 3 4 5 6 (PRODUCT LEVEL)	SEE PAGE
	1	1	**206-2423**	1	SADDLE	
	2	1	**225-7988**	1	HARNESS AS-AUXILIARY (HORN)	
	3	1	**3S-2093**	5	STRAP-CABLE	

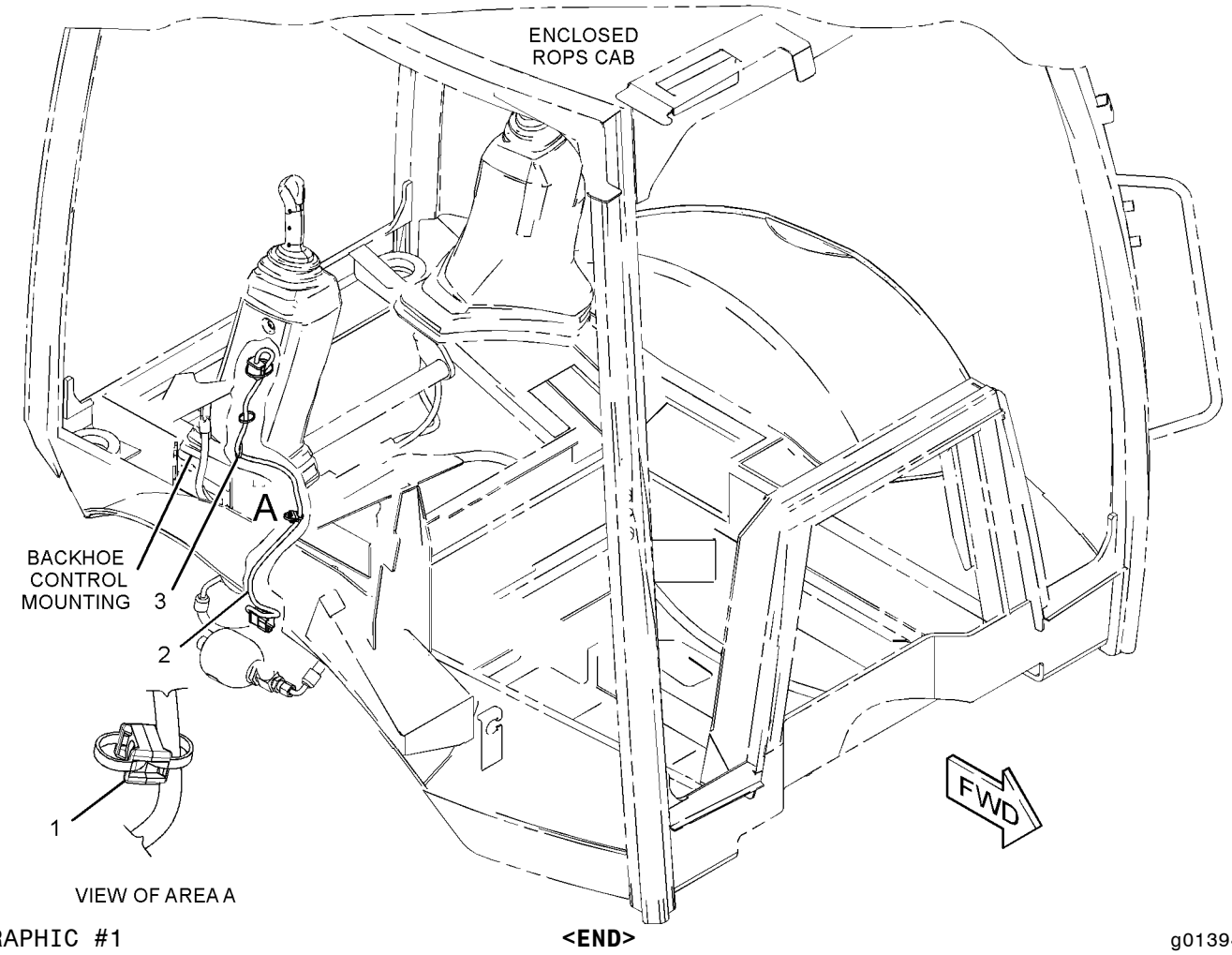

GRAPHIC #1 **<END>** g01394927

211-4248 WIRING GP-ENGINE

S/N: EAT1-UP
PART OF 213-9275 COMMON AR
TYPE 1

SMCS-1408 **i02901375**

NOTE	REF NO	GRAPHIC REF	PART NUMBER	QTY	PART NAME 1 2 3 4 5 6 (PRODUCT LEVEL)	SEE PAGE
	1	1	**3J-4818**	1	LOCKWASHER	
	2	1	**7K-1181**	16	STRAP-CABLE	
	3	1	**7Y-3883**	1	CABLE AS	
		1	**1S-7251**	2	TERMINAL-CABLE (00-GA, 1/2-IN BOLT)	
E		1	**5P-0747**		CABLE (00-GA, BLACK) (40-CM)	
	4	1	**189-3158**	4	SUPPRESSOR-ARC	
	5	1	**164-9425**	1	HORN AS (24-VOLT, LOW TONE)	
	6	1	**235-8747**	1	SWITCH-TEMPERATURE (ENGINE COOLANT)	
	7	1	**238-9397**	1	RESISTOR AS	
	8	1	**244-3106**	1	SENDER AS-TEMPERATURE (ENGINE COOLANT)	
		1	**102-8802**	1	KIT-RECEPTACLE (2-PIN)	
					(INCLUDES RECEPTACLE AS & WEDGE)	
		1	**186-3735**	2	PIN-CONNECTOR (16-GA TO 18-GA)	
	9	1	**246-8051**	1	HARNESS AS-ENGINE	
	10	1	**251-9570**	1	PLATE AS	
	11	1	**274-3774**	2	CAP-CONNECTOR	
	12	1	**115-1615**	1	RELAY AS (12-VOLT) (FUEL PUMP)	
	12A	1	**115-1615**	1	RELAY AS (12-VOLT) (START)	
	12B	1	**115-1615**	1	RELAY AS (12-VOLT) (STARTING AID)	
	13	1	**199-9751**	1	SEAL-O-RING	
	14	1	**3S-2093**	24	STRAP-CABLE	
	15	1	**4P-7581**	9	CLIP	
	16	1	**4P-8134**	7	CLIP	
M	17	1	**5C-2874**	2	NUT (M5X0.8-THD)	
	18	1	**8F-1434**	2	LOCKWASHER	
	19	1	**8F-3590**	1	LOCKWASHER	
	20	1	**8T-0328**	2	WASHER-HARD (5.5X10X1-MM THK)	
	21	1	**8T-4121**	10	WASHER-HARD (11X21X2.5-MM THK)	
M	22	1	**8T-4136**	2	BOLT (M10X1.5X25-MM)	
M	23	1	**8T-4137**	7	BOLT (M10X1.5X20-MM)	
M	24	1	**8T-4139**	1	BOLT (M12X1.75X30-MM)	
M	25	1	**8T-4171**	3	BOLT (M6X1X12-MM)	
M	26	1	**8T-4189**	3	BOLT (M8X1.25X20-MM)	
	27	1	**8T-4205**	3	WASHER-HARD (7.2X14.5X2-MM THK)	
	28	1	**8T-4223**	2	WASHER-HARD (13.5X25.5X3-MM THK)	
	29	1	**8T-4224**	4	WASHER-HARD (8.8X16X2-MM THK)	
M	30	1	**8T-5093**	1	BOLT-LOCKING (M8X1.25X25-MM)	

E-ORDER BY THE CENTIMETER
M-METRIC PART

211-4248 **WIRING GP-ENGINE** *(contd.)* **i02901375**

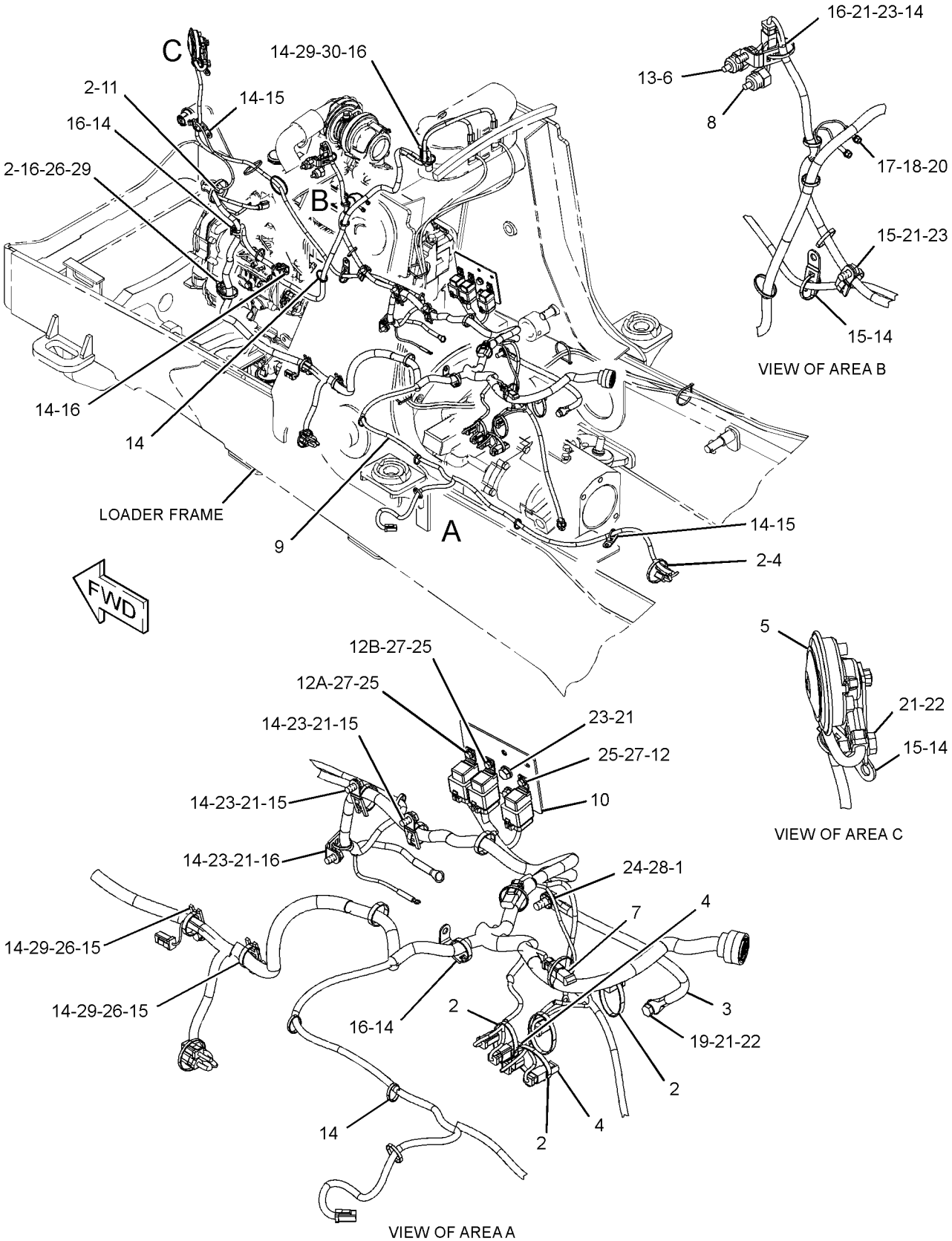

GRAPHIC #1

<END>

g01526756

211-4248 WIRING GP-ENGINE

S/N: EAT1-UP
PART OF 213-9275 COMMON AR
TYPE 2

SMCS-1408 **i03384084**

NOTE	REF NO	GRAPHIC REF	PART NUMBER	QTY	PART NAME 1 2 3 4 5 6 (PRODUCT LEVEL)	SEE PAGE
C	1	1	**7K-1181**	14	STRAP-CABLE	
	2	1	**7Y-3883**	1	CABLE AS	
		1	**1S-7251**	2	TERMINAL-CABLE (00-GA, 1/2-IN BOLT)	
E		1	**5P-0747**		CABLE (00-GA, BLACK) (40-CM)	
	3	1	**164-9425**	1	HORN AS (24-VOLT, LOW TONE)	
C	4	1	**189-3158**	1	SUPPRESSOR-ARC	
	5	1	**235-8747**	1	SWITCH-TEMPERATURE (ENGINE COOLANT)	
	6	1	**244-3106**	1	SENDER AS-TEMPERATURE (ENGINE COOLANT)	
		1	**102-8802**	1	KIT-RECEPTACLE (2-PIN)	
					(INCLUDES RECEPTACLE AS & WEDGE)	
		1	**186-3735**	2	PIN-CONNECTOR (16-GA TO 18-GA)	
	7	1	**246-8051**	1	HARNESS AS-ENGINE	
	8	1	**251-9570**	1	PLATE AS	
	9	1	**115-1615**	1	RELAY AS (12-VOLT) (FUEL PUMP)	
	9A	1	**115-1615**	1	RELAY AS (12-VOLT) (START)	
	9B	1	**115-1615**	1	RELAY AS (12-VOLT) (STARTING AID)	
	10	1	**199-9751**	1	SEAL-O-RING	
	11	1	**3J-4818**	1	LOCKWASHER	
C	12	1	**3S-2093**	29	STRAP-CABLE	
	13	1	**4P-7581**	9	CLIP	
	14	1	**4P-8134**	7	CLIP	
M	15	1	**5C-2874**	2	NUT (M5X0.8-THD)	
	16	1	**8F-1434**	2	LOCKWASHER	
	17	1	**8F-3590**	1	LOCKWASHER	
	18	1	**8T-0328**	2	WASHER-HARD (5.5X10X1-MM THK)	
	19	1	**8T-4121**	10	WASHER-HARD (11X21X2.5-MM THK)	
M	20	1	**8T-4136**	2	BOLT (M10X1.5X25-MM)	
M	21	1	**8T-4137**	7	BOLT (M10X1.5X20-MM)	
M	22	1	**8T-4139**	1	BOLT (M12X1.75X30-MM)	
M	23	1	**8T-4171**	3	BOLT (M6X1X12-MM)	
M	24	1	**8T-4189**	3	BOLT (M8X1.25X20-MM)	
	25	1	**8T-4205**	3	WASHER-HARD (7.2X14.5X2-MM THK)	
	26	1	**8T-4223**	2	WASHER-HARD (13.5X25.5X3-MM THK)	
	27	1	**8T-4224**	4	WASHER-HARD (8.8X16X2-MM THK)	
M	28	1	**8T-5093**	1	BOLT-LOCKING (M8X1.25X25-MM)	

C-CHANGE FROM PREVIOUS TYPE
E-ORDER BY THE CENTIMETER
M-METRIC PART

211-4248 **WIRING GP-ENGINE** *(contd.)* **i03384084**

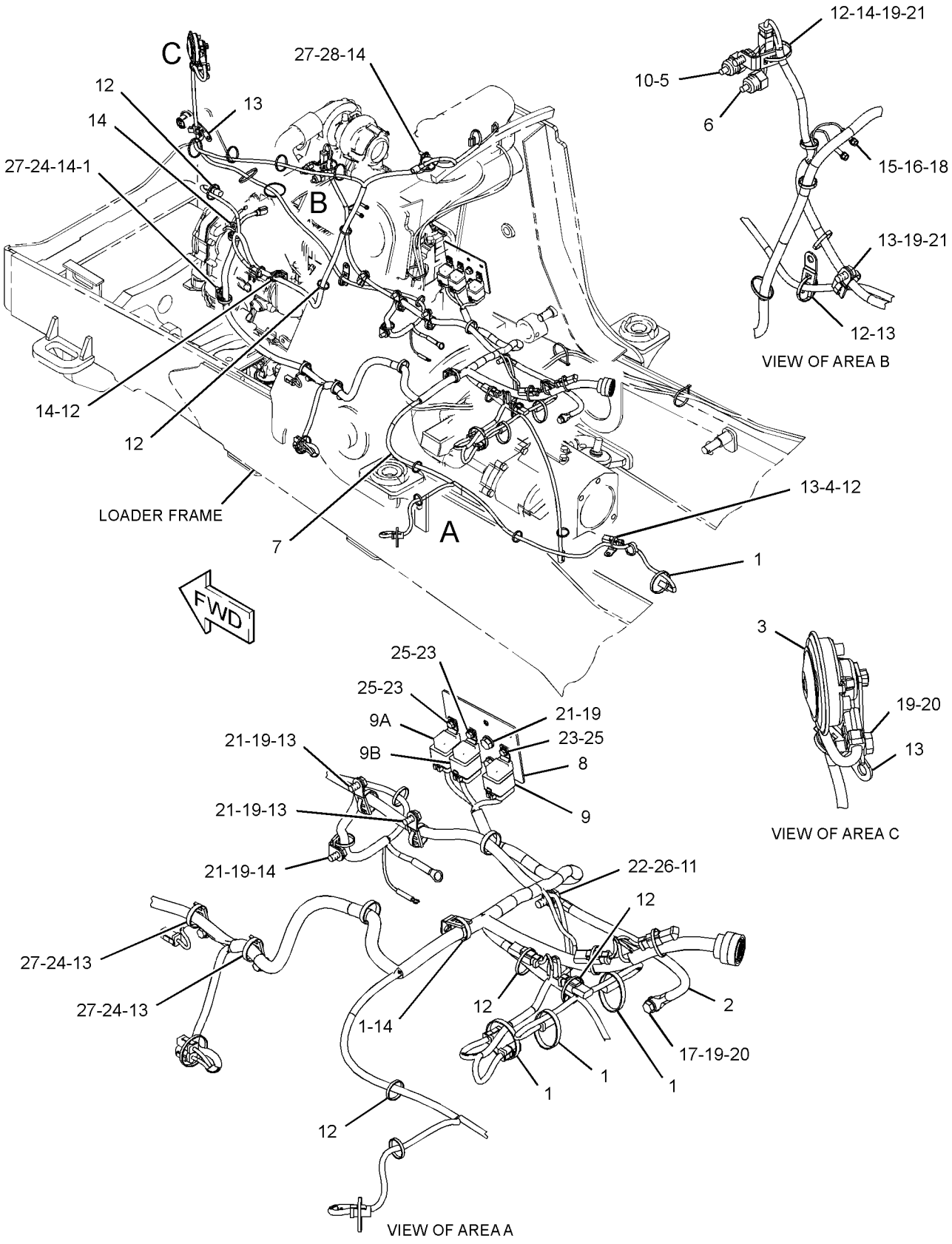

GRAPHIC #1

<END>

g01820073

263-9483 WIRING GP-ENGINE

S/N: EAT1-UP
PART OF 269-2126, 269-2127 CAB AR-ENCLOSED ROPS
AN ATTACHMENT

SMCS-1408 **i03514614**

NOTE	REF NO	GRAPHIC REF	PART NUMBER	QTY	PART NAME 1 2 3 4 5 6 (PRODUCT LEVEL)	SEE PAGE
	1	1	**134-0404**	1	SWITCH AS-PRESSURE (HYDRAULIC OIL FILTER BYPASS)	
	2	1	**250-1448**	1	CONNECTOR	
	3	1	**263-9484**	1	HARNESS AS-SENSOR (PLATFORM)	
	4	1	**264-4297**	1	SENSOR GP-TEMPERATURE (HYDRAULIC OIL)	
		1	**137-6645**	1	PAD	
	5	1	**273-3284**	1	INDICATOR AS (HYD OIL TEMP, FILTER)	
		1	**111-7899**	1	GASKET	
	6	1	**3J-1907**	1	SEAL-O-RING	
	7	1	**3K-0360**	1	SEAL-O-RING	
	8	1	**3S-2093**	4	STRAP-CABLE	
	9	1	**4P-7581**	1	CLIP	

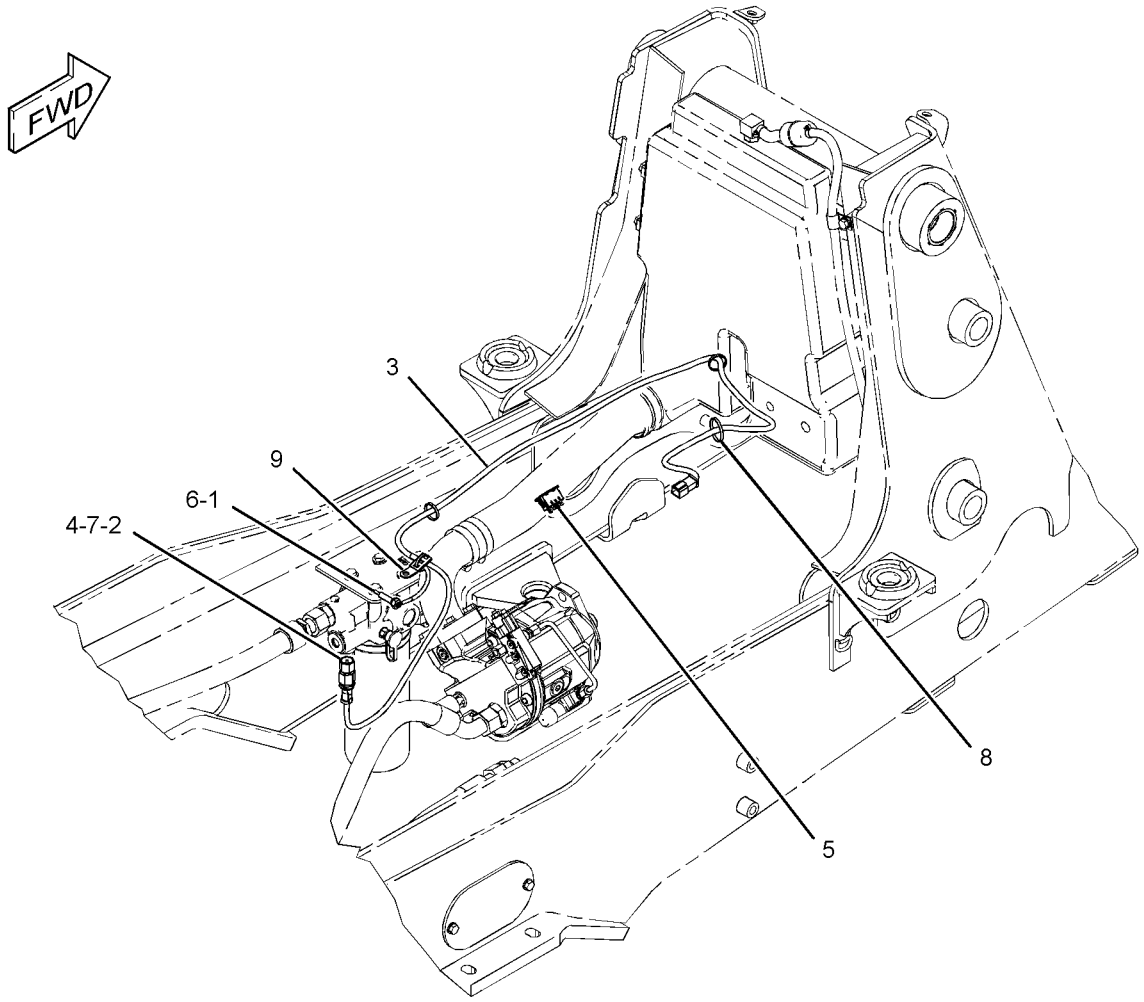

GRAPHIC #1 **<END>** g01228147

230-7514 WIRING GP-EXTENDABLE STICK

S/N: EAT1-UP
PART OF 271-1403 STICK GP-EXTENDABLE
AN ATTACHMENT

SMCS-1408 **i02595955**

NOTE	REF NO	GRAPHIC REF	PART NUMBER	QTY	PART NAME 1 2 3 4 5 6 (PRODUCT LEVEL)	SEE PAGE
	1	1	**290-6811**	1	HARNESS AS-WIRING (EXTENDABLE STICK)	
		1	**102-8804**	1	KIT-RECEPTACLE (4-PIN)	
					(INCLUDES RECEPTACLE AS AND WEDGE)	
		1	**155-2260**	1	KIT-CONNECTING PLUG (3-PIN)	
					(INCLUDES PLUG AS AND WEDGE)	
E		1	**6V-8523**		HOSE (255-CM)	
D		1	**6V-2722**		TUBE-HEAT SHRINK (25.4-MM DIA) (0.1-M)	
	2	1	**3S-2093**	4	STRAP-CABLE	

D-ORDER BY THE METER
E-ORDER BY THE CENTIMETER

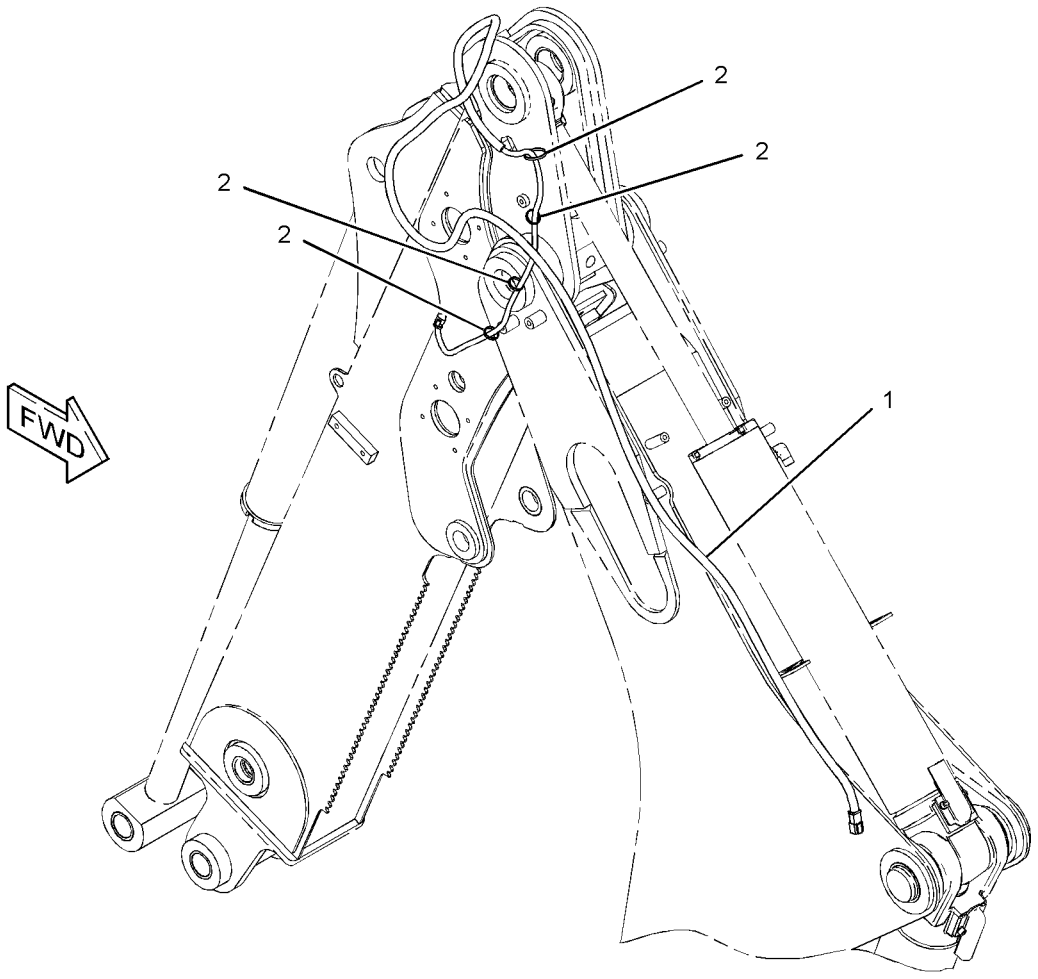

GRAPHIC #1 **<END>** g01211928

246-8042 WIRING GP-GRADE CONTROL

S/N: EAT1-1304

PART OF 213-9309, 291-9207 BACKHOE AR-EXTENDABLE STICK, 213-9306, 291-9206 BACKHOE AR-STANDARD STICK

AN ATTACHMENT

SMCS-1408 **i03045121**

NOTE	REF NO	GRAPHIC REF	PART NUMBER	QTY	PART NAME 1 2 3 4 5 6 (PRODUCT LEVEL)	SEE PAGE
	1	1	**5P-0599**	1	CLAMP-BAND	
	2	1	**5P-3860**	2	CLAMP-HOSE	
	3	1	**9R-2053**	3	BLOCK	
B	4	1	**177-2215**	11	STRAP-DUAL CLAMP	
	5	1	**268-7761**	1	HARNESS AS-PLATFORM (DISPLAY)	
	6	1	**1S-6420**	1	CLIP	
	7	1	**3S-2093**	24	STRAP-CABLE	
	9	1	**4P-7581**	1	CLIP	
	10	1	**7K-1181**	12	STRAP-CABLE	
	12	1	**232-1792**	1	HORN	
	13	1	**290-6804**	1	HARNESS AS-SENSOR (SWING)	
	14	1	**290-6805**	1	HARNESS AS-SENSOR (BOOM, STICK, BUCKET)	
	15	1	**305-3103**	1	GUARD	
	16	1	**305-3104**	2	SLEEVE-ABRASION	
B	17	1	**305-3102**	6	GUARD	

B-USE AS REQUIRED

246-8042 **WIRING GP-GRADE CONTROL** *(contd.)* **i03045121**

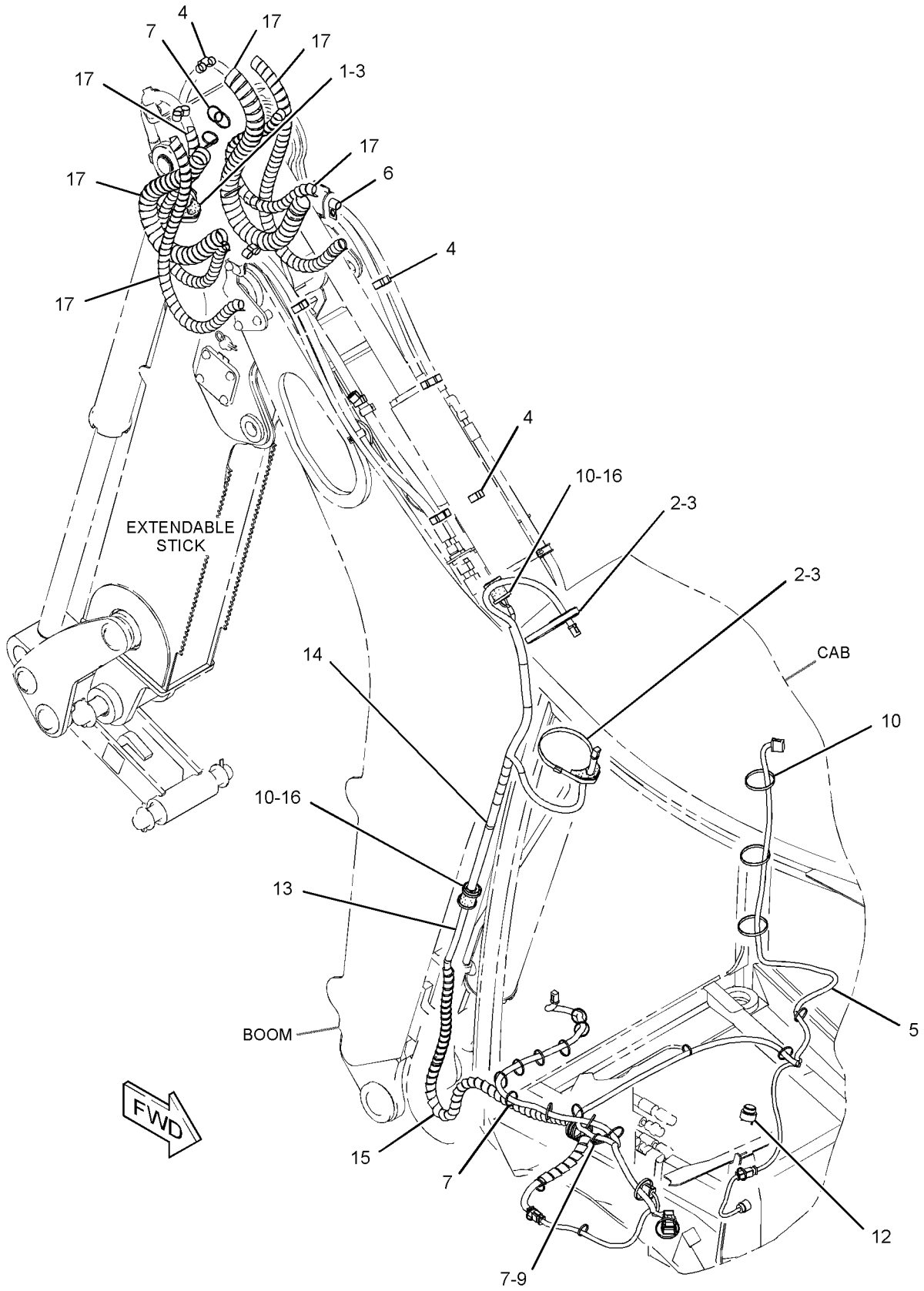

GRAPHIC #1 **<END>** g01565293

246-8042 WIRING GP-GRADE CONTROL

S/N: EAT1305-UP

PART OF 213-9309, 291-9207 BACKHOE AR-EXTENDABLE STICK, 213-9306, 291-9206 BACKHOE AR-STANDARD STICK AN ATTACHMENT

SMCS-1408 **i03097760**

NOTE	REF NO	GRAPHIC REF	PART NUMBER	QTY	PART NAME 1 2 3 4 5 6 (PRODUCT LEVEL)	SEE PAGE
	1	1	**5P-0599**	1	CLAMP-BAND	
	2	1	**5P-3860**	2	CLAMP-HOSE	
	3	1	**9R-2053**	3	BLOCK	
B	4	1	**177-2215**	11	STRAP-DUAL CLAMP	
	5	1	**268-7761**	1	HARNESS AS-PLATFORM (DISPLAY)	
	6	1	**1S-6420**	1	CLIP	
	7	1	**3S-2093**	24	STRAP-CABLE	
	9	1	**4P-7581**	1	CLIP	
	10	1	**7K-1181**	12	STRAP-CABLE	
	12	1	**232-1792**	1	HORN	
	13	1	**290-6804**	1	HARNESS AS-SENSOR (SWING)	
	14	1	**290-6805**	1	HARNESS AS-SENSOR (BOOM, STICK, BUCKET)	
	16	1	**305-3104**	2	SLEEVE-ABRASION	
B	17	1	**305-3102**	6	GUARD	
C	18	1	**212-3416**	3	SCREW-PAN HEAD (8-16XO.5-IN)	
C	19	1	**206-1649**	1	BRACKET	

B-USE AS REQUIRED
C-CHANGE FROM PREVIOUS TYPE

246-8042 **WIRING GP-GRADE CONTROL** *(contd.)* **i03097760**

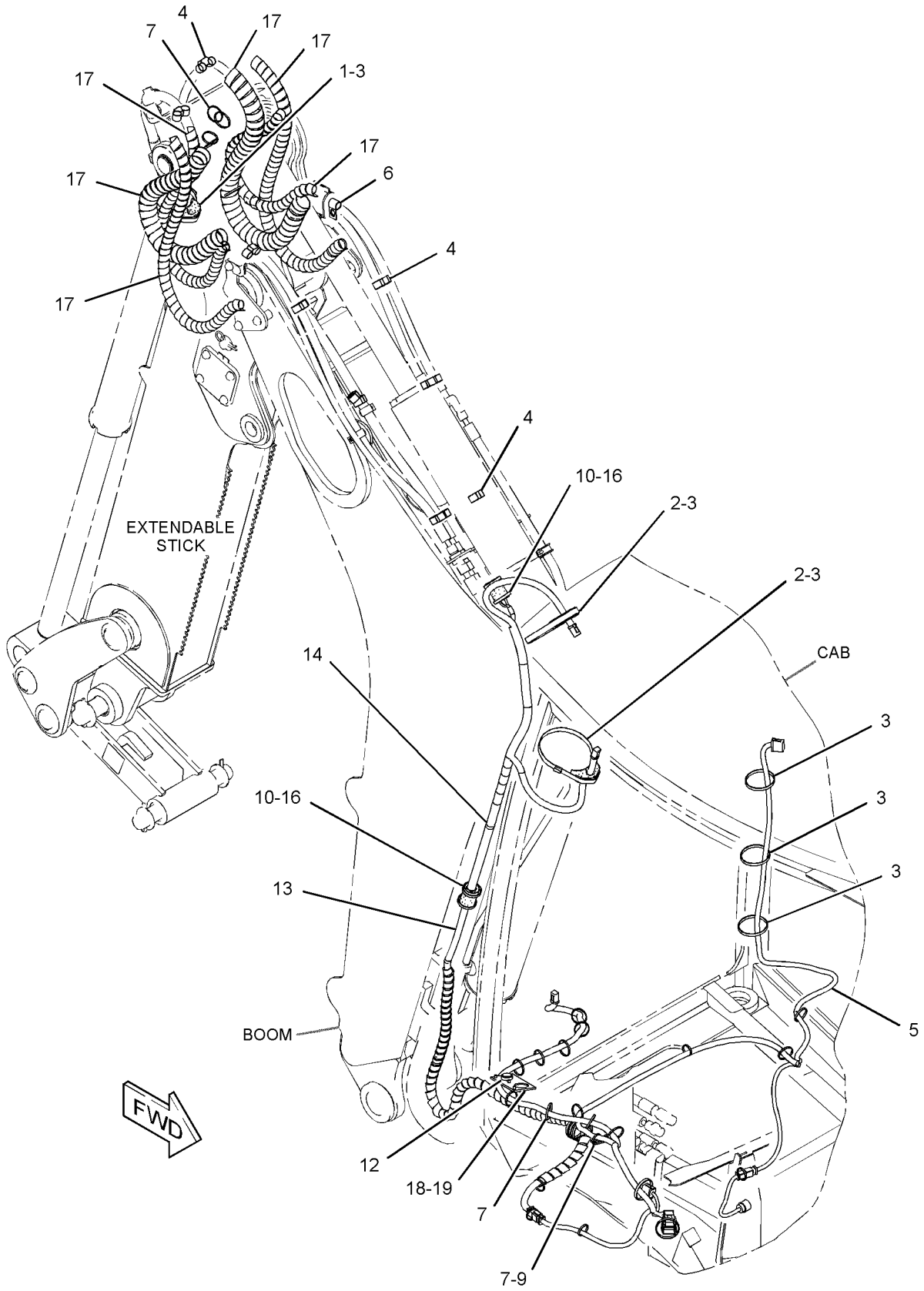

GRAPHIC #1 **<END>** g01584115

211-4269 WIRING GP-HEATER

S/N: EAT1-UP
PART OF 269-2125, 269-2126 CAB AR-ENCLOSED ROPS
AN ATTACHMENT

SMCS-1408, 7304 **i03530340**

NOTE	REF NO	GRAPHIC REF	PART NUMBER	QTY	PART NAME 1 2 3 4 5 6 (PRODUCT LEVEL)	SEE PAGE
	1	1	**213-6055**	1	HARNESS AS-HEATER & AIR COND (PLATFORM)	
	2	1	**214-4695**	1	SWITCH AS-ROCKER (BLOWER FAN SPEED)	
		1	**111-7899**	1	GASKET	
	3	1	**214-4703**	1	SWITCH AS-ROCKER (HEATER)	
		1	**111-7899**	1	GASKET	
	4	1	**275-0570**	1	BAR-BUS	
Y	5	1	**276-7287**	1	RELAY GP (12-VOLT) (POWER DISTRIBUTION)	140
	6	1	**115-1615**	1	RELAY AS (12-VOLT) (AIR CONDITIONER)	
	7	1	**3S-2093**	8	STRAP-CABLE	
M	8	1	**5C-2890**	1	NUT (M6X1-THD)	
M	9	1	**5C-7261**	1	NUT (M8X1.25-THD)	
	10	1	**197-5107**	1	SCREW-TRUSS HEAD (M6X1X60-MM)	
	11	1	**8T-4205**	2	WASHER-HARD (7.2X14.5X2-MM THK)	
	12	1	**8T-4224**	1	WASHER-HARD (8.8X16X2-MM THK)	
	13	1	**8T-8799**	1	BOOT	
M	14	1	**8T-4171**	1	BOLT (M6X1X12-MM)	

M-METRIC PART
Y-SEPARATE ILLUSTRATION

211-4269 **WIRING GP-HEATER** *(contd.)* **i03530340**

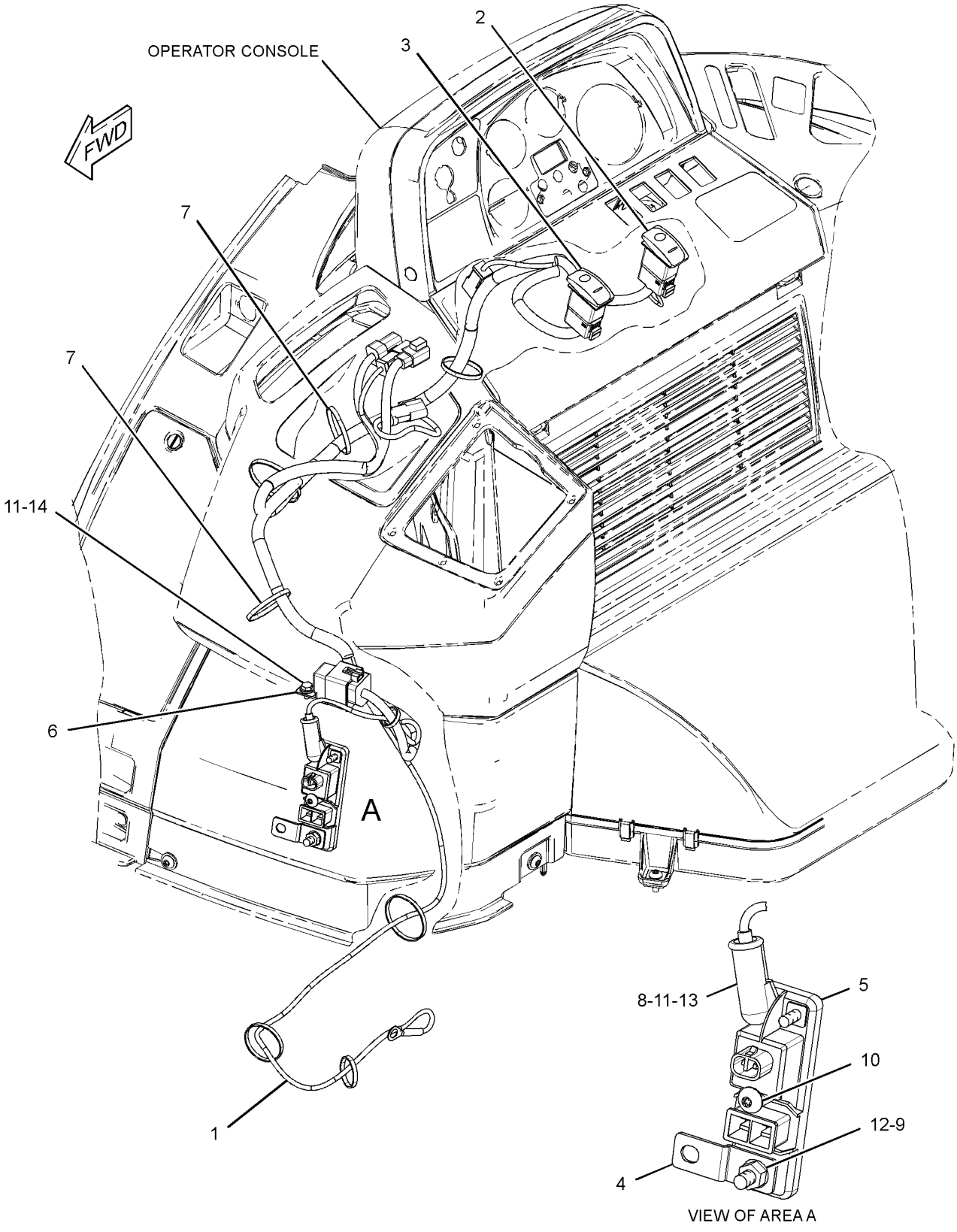

GRAPHIC #1 **<END>** g01442009

211-4262 WIRING GP-KICKOUT & POSITIONER

S/N: EAT1-UP
PART OF 213-9300 LOADER AR
TYPE 1

SMCS-5109, 5112, 5734 **i03375791**

NOTE	REF NO	GRAPHIC REF	PART NUMBER	QTY	PART NAME 1 2 3 4 5 6 (PRODUCT LEVEL)	SEE PAGE
	1	1	**118-7790**	1	BRACKET AS	
	2	1	**206-1486**	1	SWITCH AS-ROLLER (KICKOUT, POSITIONER)	
		1	**2H-3922**	1	LOCKWASHER	
		1	**6V-8363**	2	SCREW (10-32X0.312-IN)	
		1	**6V-8370**	1	NUT-HEX (3/4-32-THD)	
		1	**8F-1434**	2	LOCKWASHER	
		1	**9X-0199**	1	BOOT-SWITCH	
	3	1	**233-7977**	1	HARNESS AS-WIRING (KICKOUT, POSITIONER)	
	4	1	**3S-2093**	31	STRAP-CABLE	
M	5	1	**8T-4138**	2	BOLT (M6X1X20-MM)	
	6	1	**8T-4205**	2	WASHER-HARD (7.2X14.5X2-MM THK)	
	7	1	**225-7992**	1	HARNESS AS-WIRING (KICKOUT, POSITIONER)	
	8	1	**9X-7344**	1	GROMMET	
G	9	1	**160-2245**		SLEEVE-ABRASION (12-IN)	

G-ORDER BY THE INCH
M-METRIC PART

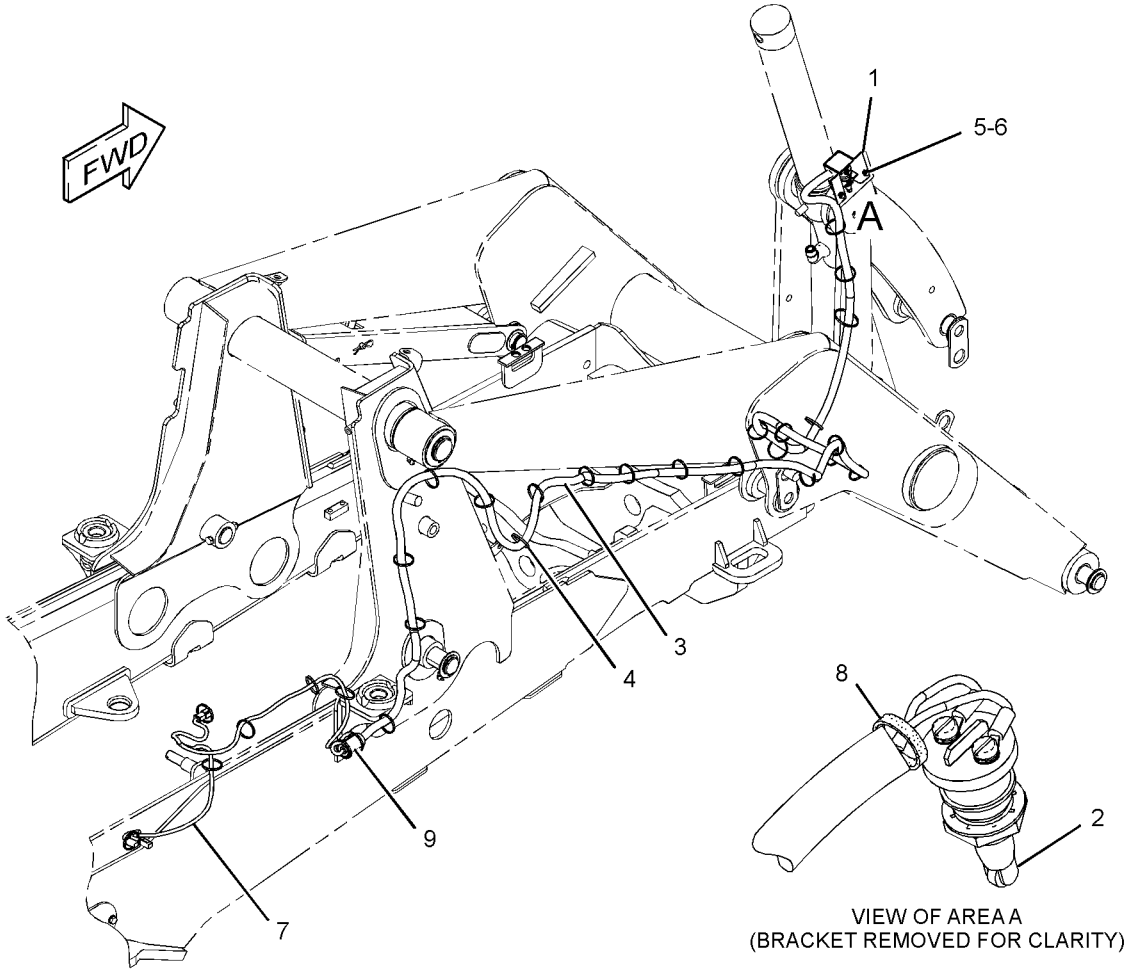

GRAPHIC #1 **<END>** g01233398

211-4262 WIRING GP-KICKOUT & POSITIONER

S/N: EAT1-UP
PART OF 213-9300 LOADER AR
TYPE 2

SMCS-5109, 5112, 5734 **i03375880**

NOTE	REF NO	GRAPHIC REF	PART NUMBER	QTY	PART NAME 1 2 3 4 5 6 (PRODUCT LEVEL)	SEE PAGE
	1	1	**118-7790**	1	BRACKET AS	
	2	1	**206-1486**	1	SWITCH AS-ROLLER (KICKOUT, POSITIONER)	
		1	**2H-3922**	1	LOCKWASHER	
		1	**6V-8363**	2	SCREW (10-32X0.312-IN)	
		1	**6V-8370**	1	NUT-HEX (3/4-32-THD)	
		1	**8F-1434**	2	LOCKWASHER	
		1	**9X-0199**	1	BOOT-SWITCH	
	3	1	**233-7977**	1	HARNESS AS-WIRING (KICKOUT, POSITIONER)	
	4	1	**3S-2093**	31	STRAP-CABLE	
M	5	1	**8T-4138**	2	BOLT (M6X1X20-MM)	
	6	1	**8T-4205**	2	WASHER-HARD (7.2X14.5X2-MM THK)	
	7	1	**225-7992**	1	HARNESS AS-WIRING (KICKOUT, POSITIONER)	
	8	1	**9X-7344**	1	GROMMET	
CG	9	1	**160-2246**		SLEEVE-ABRASION (12-IN)	

C-CHANGE FROM PREVIOUS TYPE
G-ORDER BY THE INCH
M-METRIC PART

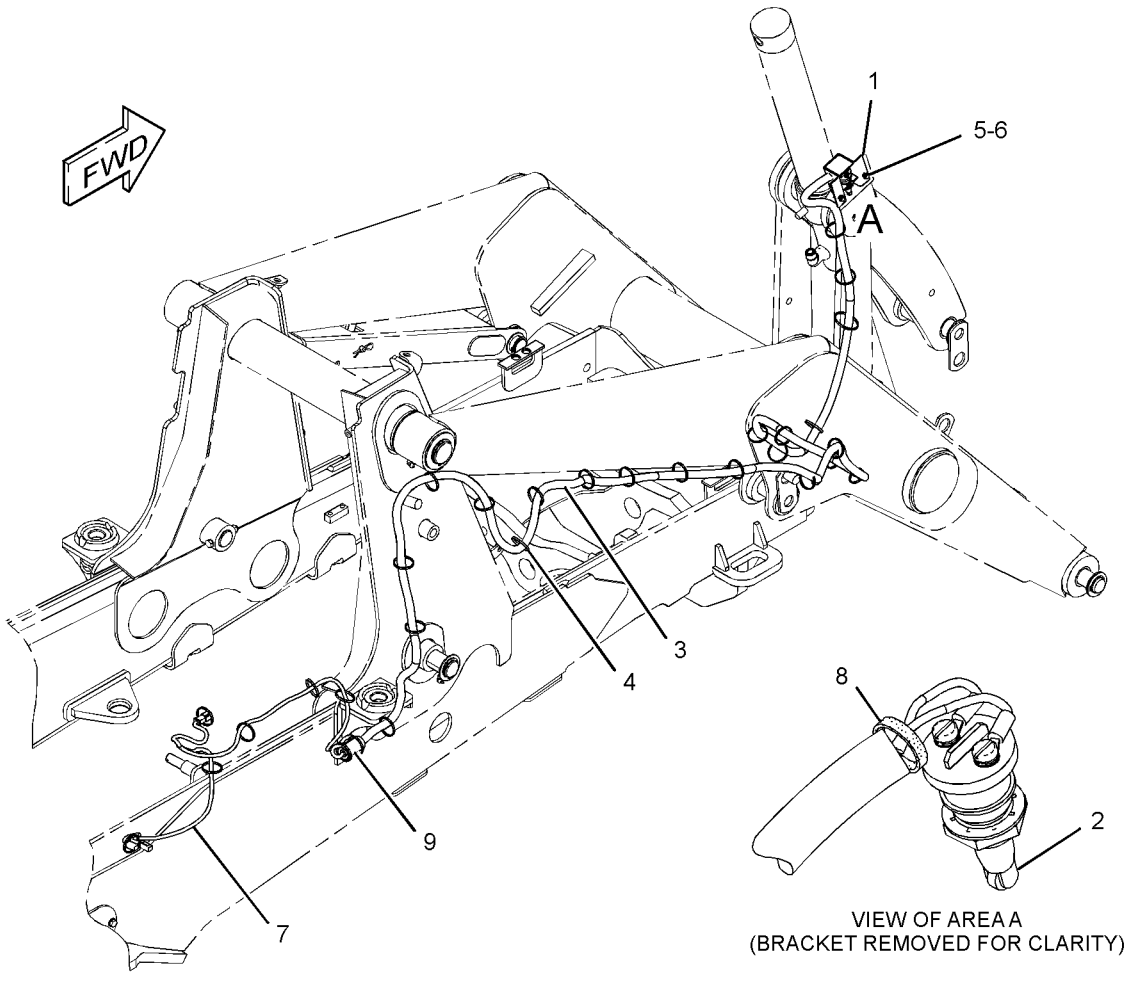

VIEW OF AREA A
(BRACKET REMOVED FOR CLARITY)

GRAPHIC #1 **<END>** g01233398

211-4262 WIRING GP-KICKOUT & POSITIONER

S/N: EAT1-UP
PART OF 213-9300 LOADER AR
TYPE 3

SMCS-5109, 5112, 5734 **i03208761**

NOTE	REF NO	GRAPHIC REF	PART NUMBER	QTY	PART NAME 1 2 3 4 5 6 (PRODUCT LEVEL)	SEE PAGE
	1	1	**118-7790**	1	BRACKET AS	
	2	1	**206-1486**	1	SWITCH AS-ROLLER (KICKOUT, POSITIONER)	
		1	**2H-3922**	1	LOCKWASHER	
		1	**6V-8363**	2	SCREW (10-32X0.312-IN)	
		1	**6V-8370**	1	NUT-HEX (3/4-32-THD)	
		1	**8F-1434**	2	LOCKWASHER	
		1	**9X-0199**	1	BOOT-SWITCH	
	3	1	**233-7977**	1	HARNESS AS-WIRING (KICKOUT, POSITIONER)	
	4	1	**3S-2093**	35	STRAP-CABLE	
M	5	1	**8T-4138**	2	BOLT (M6X1X20-MM)	
	6	1	**8T-4205**	2	WASHER-HARD (7.2X14.5X2-MM THK)	
C	7	1	**290-6801**	1	HARNESS AS-WIRING	
	8	1	**9X-7344**	1	GROMMET	
G	9	1	**160-2246**		SLEEVE-ABRASION (11.9-IN)	
C	10	1	**7K-1181**	1	STRAP-CABLE	
	11	1	**6K-0806**	2	STRAP-CABLE	

C-CHANGE FROM PREVIOUS TYPE
G-ORDER BY THE INCH
M-METRIC PART

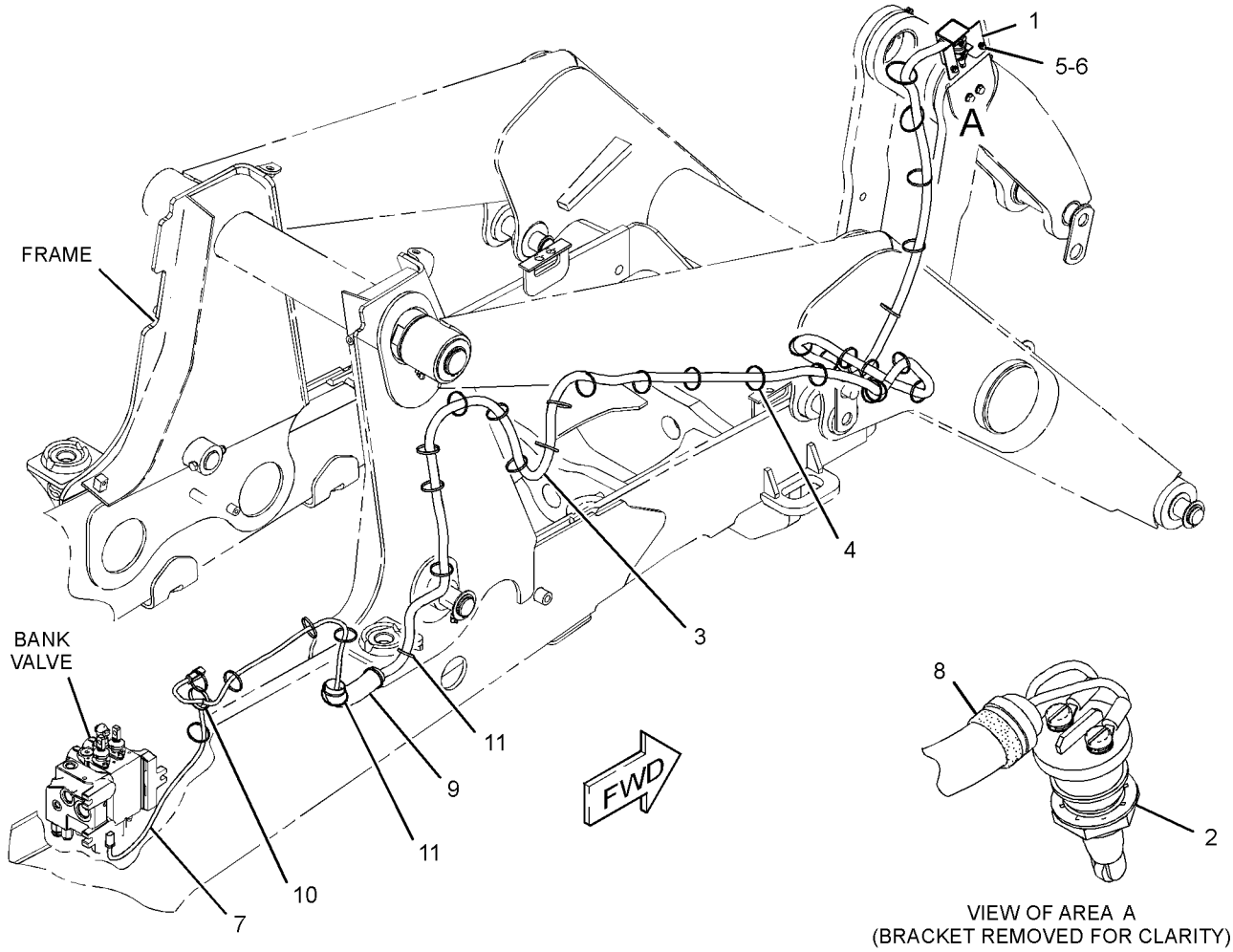

VIEW OF AREA A
(BRACKET REMOVED FOR CLARITY)

GRAPHIC #1 **<END>** g01640362

211-4240 WIRING GP-PLATFORM

S/N: EAT1-927

PART OF 269-2125, 269-2126, 269-2127 CAB AR-ENCLOSED ROPS, 269-2123, 269-2124 CANOPY AR-OPEN ROPS

AN ATTACHMENT

SMCS-1408 **i03510967**

NOTE	REF NO	GRAPHIC REF	PART NUMBER	QTY	PART NAME 1 2 3 4 5 6 (PRODUCT LEVEL)	SEE PAGE
E	1	2	**3E-8299**		SEAL (9-CM)	
E	1A	1	**3E-8299**		SEAL (3-CM EACH)	
E	2	1	**103-2543**		SEAL (1-CM)	
	3	1	**4I-3038**	8	WASHER (3.3X8X0.5-MM THK)	
	4	2	**6I-1418**	4	SPACER (8.2X12.7X28.7-MM THK)	
	5	1	**7G-1060**	1	STRAP AS-GROUND	
	6	2	**7K-1181**	34	STRAP-CABLE	
	7	2	**7T-4848**	1	FLASHER AS (12-VOLT)	
	8	1	**8T-8799**	3	BOOT	
	9	2	**8T-9655**	8	MOUNT-ISOLATION	
	10	1	**106-8704**	1	SUPPRESSOR AS-ARC	
	10A	1	**106-8704**	1	SUPPRESSOR AS-ARC	
	10B	1	**106-8704**	1	SUPPRESSOR AS-ARC	
					(EACH SUPPRESSOR AS INCLUDES)	
		1	**102-8802**	1	KIT-RECEPTACLE (2-PIN)	
					(INCLUDES RECEPTACLE AS & WEDGE)	
		1	**186-3735**	2	PIN-CONNECTOR (16-GA TO 18-GA)	
	11	1	**146-9439**	1	RELAY AS (12-VOLT) (IMPLEMENT DISABLE)	
	11A	1	**146-9439**	1	RELAY AS (12-VOLT) (HORN)	
	11B	1	**146-9439**	1	RELAY AS (12-VOLT) (DIFFERENTIAL LOCK)	
	11C	1	**146-9439**	1	RELAY AS (12-VOLT) (BACKUP ALARM)	
	11D	1	**146-9439**	1	RELAY AS (12-VOLT) (POSITION LAMP)	
	12	2	**178-7539**	1	RECEPTACLE AS (POWER SUPPLY)	
	13	1,2	**179-6401**	5	SCREW-PAN HEAD (6-32X0.5-IN)	
	14	1	**201-1024**	2	BRACKET	
	15	1	**206-1345**	3	STRAP-CABLE	
	16	1	**206-1718**	1	BRACKET AS	
	17	2	**212-0862**	3	CLAMP-CABLE	
	18	2	**214-4694**	1	SWITCH AS-ROCKER (MODE SELECT)	
		1	**111-7899**	1	GASKET	
	19	1	**214-4702**	1	SWITCH AS-ROCKER (HAZARD WARNING LIGHTS)	
		1	**111-7899**	1	GASKET	
	20	1	**214-4717**	1	INDICATOR AS (TURN SIGNAL LH, PARKING BRAKE)	
		1	**111-7899**	1	GASKET	
	21	1	**214-4723**	1	INDICATOR AS (HIGH BEAM, TURN SIGNAL RH)	
		1	**111-7899**	1	GASKET	
	22	2	**216-9069**	1	BRACKET AS	
M		1	**6V-9632**	1	NUT-WELD (M6X1-THD)	
	23	1	**225-7970**	1	BRACKET AS	
M		1	**6V-9632**	1	NUT-WELD (M6X1-THD)	
	24	2	**225-7997**	1	HARNESS AS-REAR (STABILIZER, AUTO UP)	
	25	1	**227-1057**	1	PLUG-HOLE	
	26	1	**246-2671**	1	SWITCH AS-MULTIFUNCTION (HD LIGHT, TURN SIG, WDO WIPER)	
M	27	1	**8T-4137**	1	BOLT (M10X1.5X20-MM)	
	28	1	**267-2701**	1	FUSE (60-AMPERE)	
	29	1	**268-7759**	1	HARNESS AS-POWER (DISTRIBUTION)	
	30	2	**268-7760**	1	HARNESS AS-CAB	
	31	2	**274-7409**	4	SCREW-TRUSS HEAD (M8X1.25X45-MM)	
	32	1	**275-0553**	1	BAR-BUS	
Y	33	1	**276-7290**	1	RELAY GP (12-VOLT) (POWER, 1)	141
Y	34	1	**276-7291**	1	RELAY GP (12-VOLT) (POWER, 2)	142
	35	2	**278-0461**	1	RELAY AS (12-VOLT) (TORQUE LIMITER)	
	36	1	**156-6175**	1	CLIP	

211-4240 **WIRING GP-PLATFORM** ***(contd.)*** **i03510967**

NOTE	REF NO	GRAPHIC REF	PART NUMBER	QTY	PART NAME 1 2 3 4 5 6 (PRODUCT LEVEL)	SEE PAGE
	37	1	**172-9200**	1	SUPPRESSOR-ARC	
Y	38	1	**247-8199**	1	PANEL GP-FUSE (INCLUDES RELAY)	138
	39	2	**170-9360**	1	GROMMET	
	40	2	**3S-2093**	32	STRAP-CABLE	
	41	2	**4B-4863**	1	WASHER (4.7X11X1.2-MM THK)	
	42	2	**263-9498**	1	HARNESS AS-WIRING (RESISTOR) (LADDER)	
	43	1,1,2	**4P-8134**	3	CLIP	
M	44	1	**5C-2890**	4	NUT (M6X1-THD)	
M	45	1,2	**5C-7261**	10	NUT (M8X1.25-THD)	
	46	2	**7X-0579**	8	WASHER-HARD (8.8X25.5X2-MM THK)	
M	47	1	**7X-2534**	2	BOLT (M6X1X50-MM)	
	48	1	**7X-7729**	3	WASHER (11X25X3-MM THK)	
	49	1,2	**8C-3398**	1	LOCKWASHER	
M	50	1	**8T-0352**	2	BOLT (M5X0.8X45-MM)	
	51	1	**8T-4121**	4	WASHER-HARD (11X21X2.5-MM THK)	
M	52	1	**8T-4133**	2	NUT (M10X1.5-THD)	
M	53	1	**8T-4136**	2	BOLT (M10X1.5X25-MM)	
M	54	1	**8T-4138**	7	BOLT (M6X1X20-MM)	
M	55	1,2	**8T-4200**	6	BOLT (M8X1.25X16-MM)	
	56	1,2	**8T-4205**	14	WASHER-HARD (7.2X14.5X2-MM THK)	
	57	1,2	**8T-4224**	12	WASHER-HARD (8.8X16X2-MM THK)	
	58	1,2	**6K-0806**	2	STRAP-CABLE	
	59	1	**8C-6354**	1	CAP-RECEPTACLE	

E-ORDER BY THE CENTIMETER
M-METRIC PART
Y-SEPARATE ILLUSTRATION

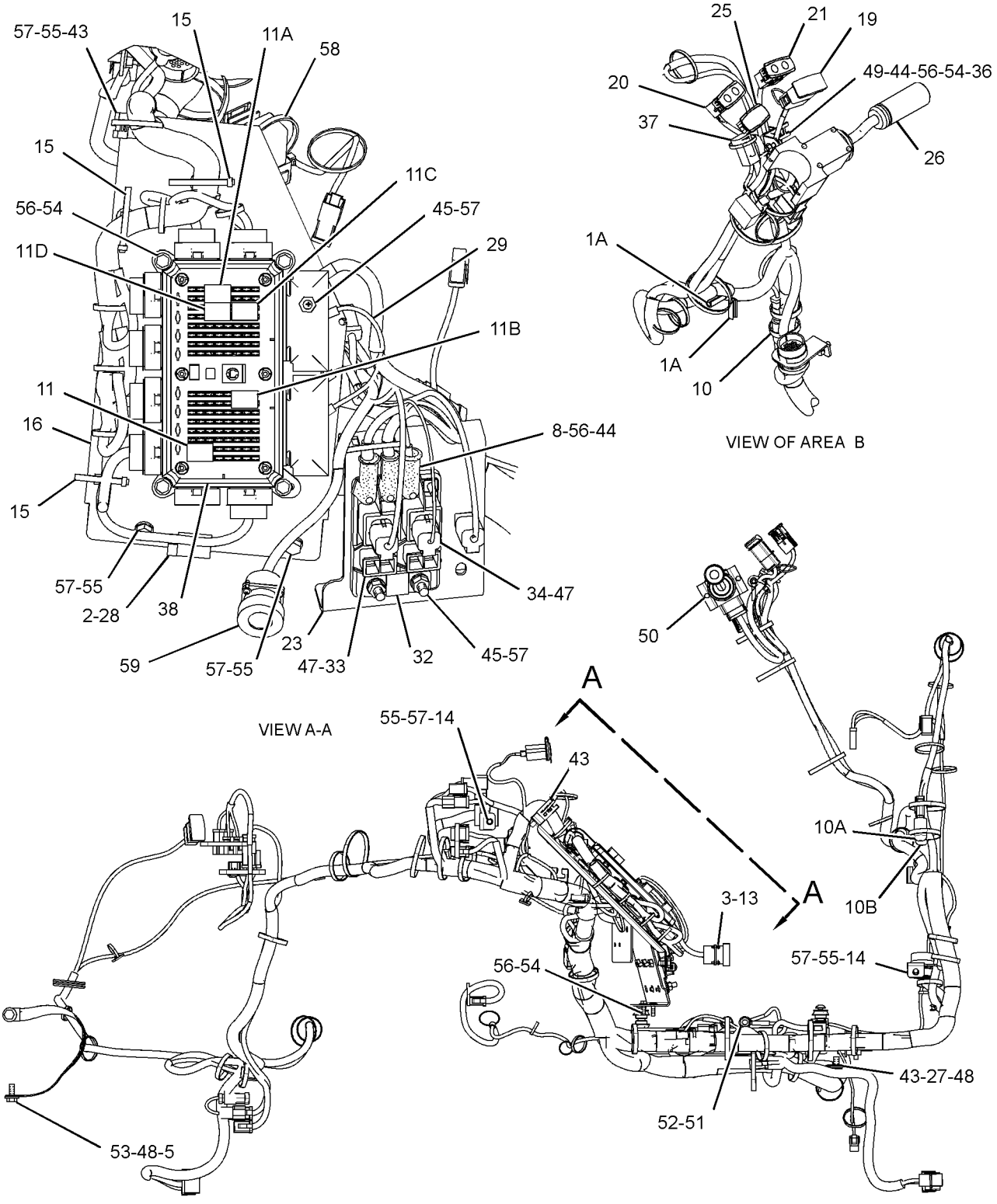

RIGHT SIDE VIEW

GRAPHIC #1 g01272610

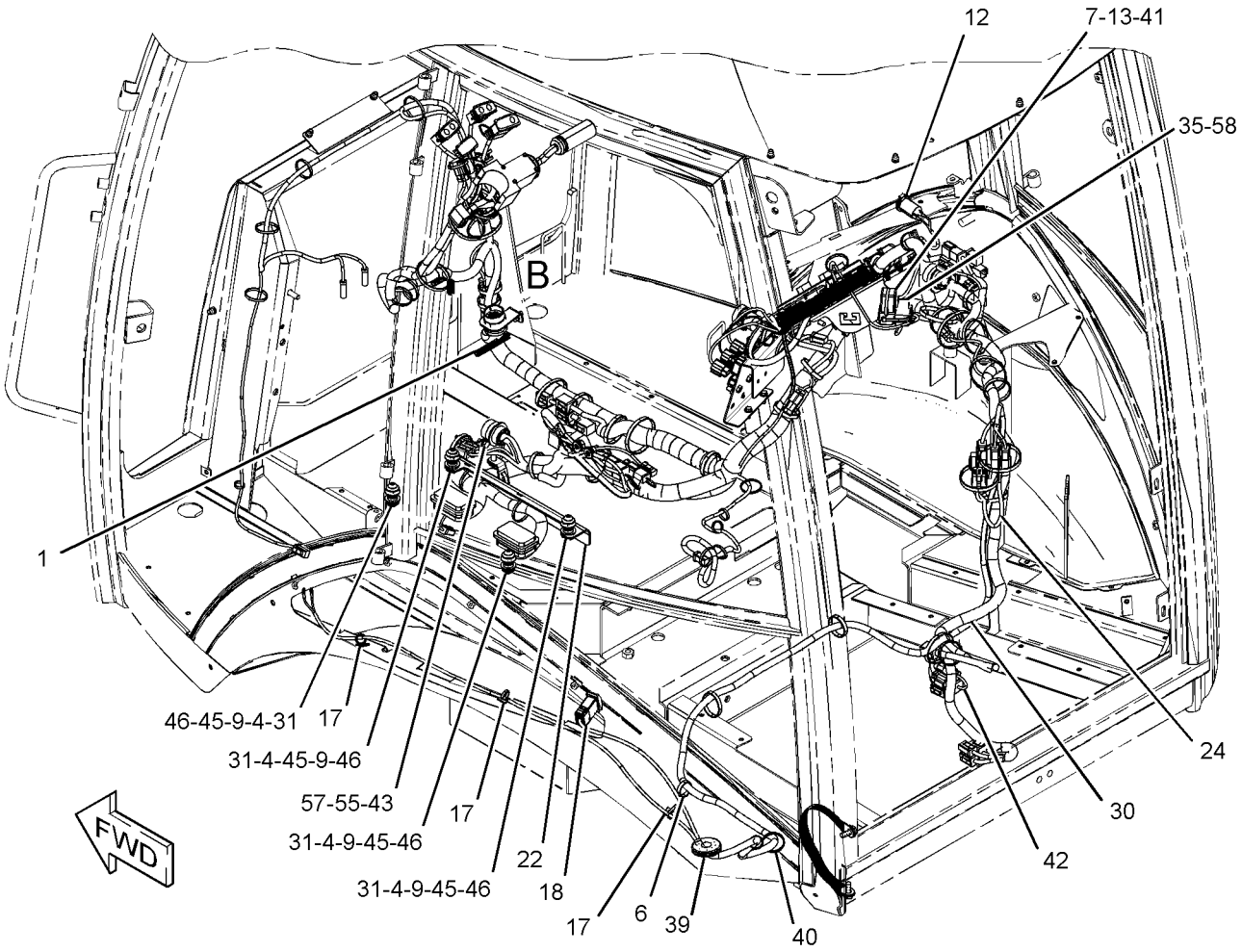

REFER TO ALL ILLUSTRATIONS OF
THIS GROUP FOR AUXILIARY VIEWS

GRAPHIC #2 **<END>** g01272609

211-4240 WIRING GP-PLATFORM

S/N: EAT928-1080

PART OF 269-2125, 269-2126, 269-2127 CAB AR-ENCLOSED ROPS, 269-2123, 269-2124 CANOPY AR-OPEN ROPS

AN ATTACHMENT

SMCS-1408 **i03530360**

NOTE	REF NO	GRAPHIC REF	PART NUMBER	QTY	PART NAME 1 2 3 4 5 6 (PRODUCT LEVEL)	SEE PAGE
E	1	2	**103-2543**		SEAL (1-CM)	
C	2	1	**1S-9593**	3	STRAP-CABLE	
	3	1	**6I-1418**	4	SPACER (8.2X12.7X28.7-MM THK)	
	4	1	**6K-0806**	2	STRAP-CABLE	
	5	1	**7G-1060**	1	STRAP AS-GROUND	
C	6	1	**7K-1181**	33	STRAP-CABLE	
	7	1	**7T-4848**	1	FLASHER AS (12-VOLT)	
	8	2	**8C-6354**	1	CAP-RECEPTACLE	
	9	2	**8T-8799**	3	BOOT	
	10	1	**8T-9655**	8	MOUNT-ISOLATION	
C	11	2	**096-6166**	8	WASHER-HARD (4.5X9X1-MM THK)	
C	12	2	**100-5805**	1	CAP-RECEPTACLE	
	13	1	**106-8704**	3	SUPPRESSOR AS-ARC	
	14	2	**146-9439**	1	RELAY AS (12-VOLT) (IMPLEMENT DISABLE)	
	14A	2	**146-9439**	1	RELAY AS (12-VOLT) (HORN)	
	14B	2	**146-9439**	1	RELAY AS (12-VOLT) (DIFFERENTIAL LOCK)	
	14C	2	**146-9439**	1	RELAY AS (12-VOLT) (BACKUP ALARM)	
	14D	2	**146-9439**	1	RELAY AS (12-VOLT) (POSITION LAMP)	
	15	2	**172-9200**	1	SUPPRESSOR-ARC	
	16	1	**178-7539**	1	RECEPTACLE AS (POWER SUPPLY)	
	17	1,2	**179-6401**	5	SCREW-PAN HEAD (6-32X0.5-IN)	
	18	1,2	**201-1024**	2	BRACKET	
	19	2	**206-1345**	3	STRAP-CABLE	
	20	2	**206-1718**	1	BRACKET AS	
	21	1	**212-0862**	3	CLAMP-CABLE	
	22	1	**214-4694**	1	SWITCH AS-ROCKER (MODE SELECT)	
		1	**111-7899**	1	GASKET	
	23	2	**214-4702**	1	SWITCH AS-ROCKER (HAZARD WARNING LIGHTS)	
		1	**111-7899**	1	GASKET	
	24	2	**214-4717**	1	INDICATOR AS (TURN SIGNAL LH, PARKING BRAKE)	
		1	**111-7899**	1	GASKET	
	25	2	**214-4723**	1	INDICATOR AS (HIGH BEAM, TURN SIGNAL RH)	
		1	**111-7899**	1	GASKET	
	26	1	**216-9069**	1	BRACKET AS	
	27	2	**225-7970**	1	BRACKET AS	
	28	1	**225-7997**	1	HARNESS AS-REAR (STABILIZER, AUTO UP)	
	29	2	**227-1057**	1	PLUG-HOLE	
	30	2	**246-2671**	1	SWITCH AS-MULTIFUNCTION (HD LIGHT, TURN SIG, WDO WIPER)	
Y	31	2	**247-8199**	1	PANEL GP-FUSE (INCLUDES RELAY)	138
	32	1	**263-9498**	1	HARNESS AS-WIRING (RESISTOR) (LADDER)	
	33	2	**267-2701**	1	FUSE (60-AMPERE)	
	34	2	**268-7759**	1	HARNESS AS-POWER (DISTRIBUTION)	
	35	1	**268-7760**	1	HARNESS AS-CAB	
C	36	1,2	**274-3774**	5	CAP-CONNECTOR	
C	37	1	**274-3775**	2	CAP-CONNECTOR	
C	38	1,2	**274-3776**	4	CAP-SEAL	
C	39	1	**274-3777**	4	CAP-CONNECTOR	
C	40	1	**274-3778**	2	CAP-SEAL	
C	41	1,2	**274-3779**	3	CAP-SEAL	
C	42	2	**274-3780**	1	CAP	
	43	1	**274-7409**	4	SCREW-TRUSS HEAD (M8X1.25X45-MM)	
	44	2	**275-0553**	1	BAR-BUS	
Y	45	2	**276-7290**	1	RELAY GP (12-VOLT) (POWER, 1)	141

211-4240 **WIRING GP-PLATFORM** *(contd.)* **i03530360**

NOTE	REF NO	GRAPHIC REF	PART NUMBER	QTY	PART NAME 1 2 3 4 5 6 (PRODUCT LEVEL)	SEE PAGE
Y	46	2	**276-7291**	1	RELAY GP (12-VOLT) (POWER, 2)	142
	47	1	**278-0461**	1	RELAY AS (12-VOLT) (TORQUE LIMITER)	
C	48	2	**297-6899**	1	CHAIN AS	
		2	**297-6898**	1	RING	
D		2	**6V-1361**		CHAIN (0.2-M)	
C	49	1	**155-2271**	1	KIT-CONNECTING PLUG (4-PIN)	
					(INCLUDES PLUG AS & WEDGE)	
	50	2	**156-6175**	1	CLIP	
	51	1	**170-9360**	1	GROMMET	
C	52	2	**197-5107**	2	SCREW-TRUSS HEAD (M6X1X60-MM)	
C	53	1	**3S-2093**	27	STRAP-CABLE	
	54	1	**4B-4863**	1	WASHER (4.7X11X1.2-MM THK)	
	55	1,2	**4P-8134**	3	CLIP	
M	56	2	**5C-2890**	4	NUT (M6X1-THD)	
M	57	1,2	**5C-7261**	10	NUT (M8X1.25-THD)	
	58	1	**7X-0579**	8	WASHER-HARD (8.8X25.5X2-MM THK)	
C	59	1	**7X-7729**	5	WASHER (11X25X3-MM THK)	
	60	2	**8C-3398**	1	LOCKWASHER	
C	61	1	**8F-3590**	4	LOCKWASHER	
M	62	2	**8T-0352**	2	BOLT (M5X0.8X45-MM)	
	63	1	**8T-4121**	4	WASHER-HARD (11X21X2.5-MM THK)	
M	64	1	**8T-4133**	2	NUT (M10X1.5-THD)	
M	65	1	**8T-4136**	2	BOLT (M10X1.5X25-MM)	
M	66	1	**8T-4137**	1	BOLT (M10X1.5X20-MM)	
M	67	1,2	**8T-4138**	7	BOLT (M6X1X20-MM)	
M	68	1,2	**8T-4200**	6	BOLT (M8X1.25X16-MM)	
	69	1,2	**8T-4205**	14	WASHER-HARD (7.2X14.5X2-MM THK)	
	70	1,2	**8T-4224**	12	WASHER-HARD (8.8X16X2-MM THK)	
E	71	1	**3E-8299**		SEAL (9-CM)	
E	71A	1	**3E-8299**		SEAL (3-CM EACH)	
C	72	1	**8T-8737**	4	PLUG-SEAL	

C-CHANGE FROM PREVIOUS TYPE
D-ORDER BY THE METER
E-ORDER BY THE CENTIMETER
M-METRIC PART
Y-SEPARATE ILLUSTRATION

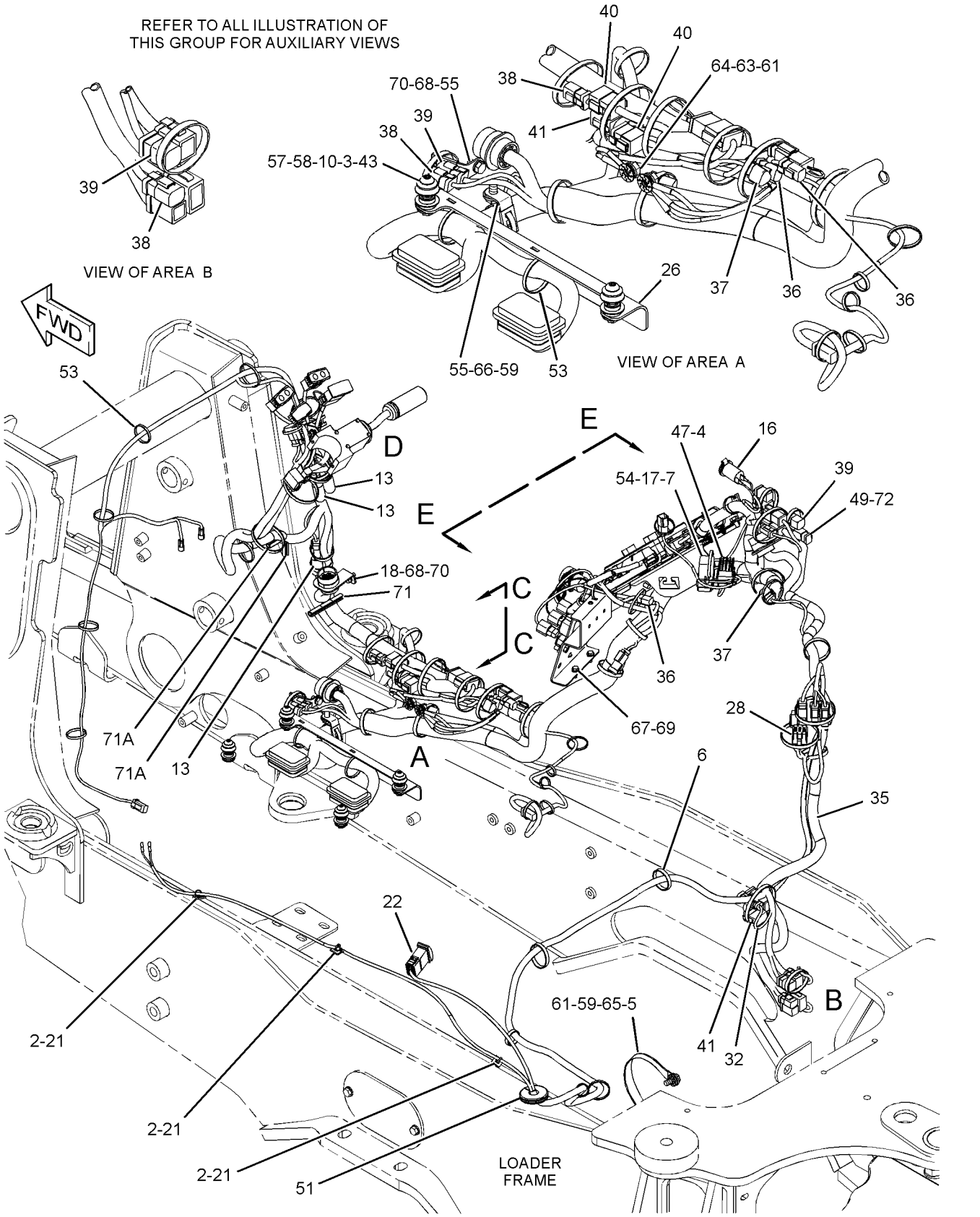

GRAPHIC #1 g01412054

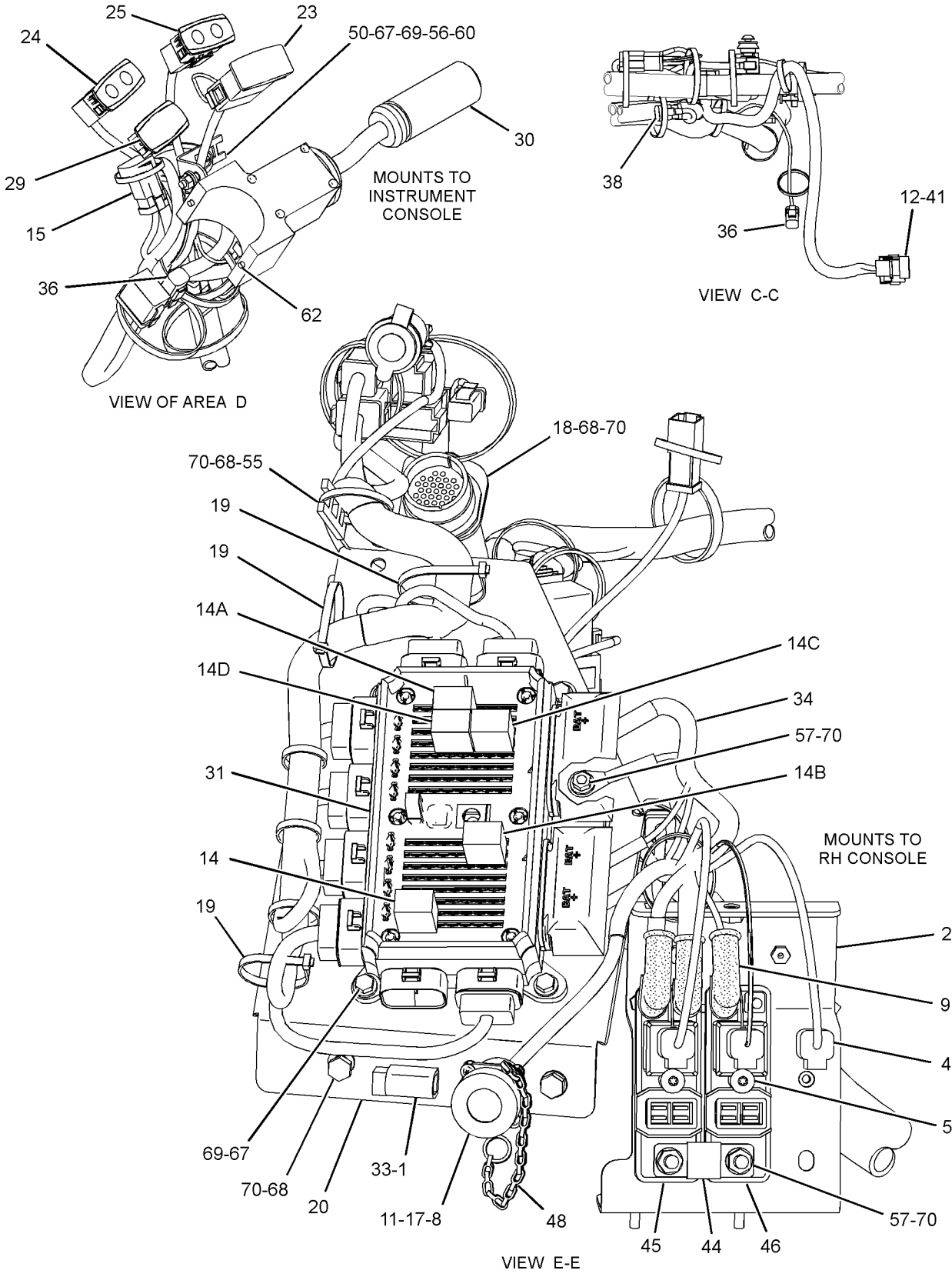

GRAPHIC #2 **<END>** g01412055

211-4240 WIRING GP-PLATFORM

S/N: EAT1081-1230

PART OF 269-2125, 269-2126, 269-2127 CAB AR-ENCLOSED ROPS, 269-2123, 269-2124 CANOPY AR-OPEN ROPS

AN ATTACHMENT

SMCS-1408 **i03527789**

NOTE	REF NO	GRAPHIC REF	PART NUMBER	QTY	PART NAME 1 2 3 4 5 6 (PRODUCT LEVEL)	SEE PAGE
E	1	3	**103-2543**		SEAL (1-CM)	
	2	1	**1S-9593**	3	STRAP-CABLE	
	3	1	**6I-1418**	4	SPACER (8.2X12.7X28.7-MM THK)	
	4	2	**6K-0806**	2	STRAP-CABLE	
	5	1	**7G-1060**	1	STRAP AS-GROUND	
C	6	1,2	**7K-1181**	31	STRAP-CABLE	
	7	2	**7T-4848**	1	FLASHER AS (12-VOLT)	
	9	3	**8T-8799**	3	BOOT	
	10	1	**8T-9655**	8	MOUNT-ISOLATION	
	11	3	**096-6166**	8	WASHER-HARD (4.5X9X1-MM THK)	
	12	3	**100-5805**	1	CAP-RECEPTACLE	
C	13	1,2	**189-3158**	3	SUPPRESSOR-ARC	
	14	3	**146-9439**	1	RELAY AS (12-VOLT) (IMPLEMENT DISABLE)	
	14A	3	**146-9439**	1	RELAY AS (12-VOLT) (HORN)	
	14B	3	**146-9439**	1	RELAY AS (12-VOLT) (DIFFERENTIAL LOCK)	
	14C	3	**146-9439**	1	RELAY AS (12-VOLT) (BACKUP ALARM)	
	14D	3	**146-9439**	1	RELAY AS (12-VOLT) (POSITION LAMP)	
	15	2	**172-9200**	1	SUPPRESSOR-ARC	
	16	2	**178-7539**	1	RECEPTACLE AS (POWER SUPPLY)	
	17	2,3	**179-6401**	5	SCREW-PAN HEAD (6-32X0.5-IN)	
	18	1,2	**201-1024**	2	BRACKET	
	19	3	**206-1345**	3	STRAP-CABLE	
	20	3	**206-1718**	1	BRACKET AS	
	21	1	**212-0862**	3	CLAMP-CABLE	
	22	1	**214-4694**	1	SWITCH AS-ROCKER (MODE SELECT)	
		1	**111-7899**	1	GASKET	
	23	2	**214-4702**	1	SWITCH AS-ROCKER (HAZARD WARNING LIGHTS)	
		1	**111-7899**	1	GASKET	
	24	2	**214-4717**	1	INDICATOR AS (TURN SIGNAL LH, PARKING BRAKE)	
		1	**111-7899**	1	GASKET	
	25	2	**214-4723**	1	INDICATOR AS (HIGH BEAM, TURN SIGNAL RH)	
		1	**111-7899**	1	GASKET	
	26	1	**216-9069**	1	BRACKET AS	
M		1	**6V-9632**	1	NUT-WELD (M6X1-THD)	
	27	3	**225-7970**	1	BRACKET AS	
	29	2	**227-1057**	1	PLUG-HOLE	
	30	2	**246-2671**	1	SWITCH AS-MULTIFUNCTION (HD LIGHT, TURN SIG, WDO WIPER)	
Y	31	3	**247-8199**	1	PANEL GP-FUSE (INCLUDES RELAY)	138
	32	1	**263-9498**	1	HARNESS AS-WIRING (RESISTOR) (LADDER)	
	33	3	**267-2701**	1	FUSE (60-AMPERE)	
	34	3	**268-7759**	1	HARNESS AS-POWER (DISTRIBUTION)	
	35	1	**268-7760**	1	HARNESS AS-CAB	
	36	1,2,3	**274-3774**	5	CAP-CONNECTOR	
	37	1,2	**274-3775**	2	CAP-CONNECTOR	
C	38	1,2	**274-3776**	5	CAP-SEAL	
	39	2	**274-3777**	4	CAP-CONNECTOR	
	40	1	**274-3778**	2	CAP-SEAL	
	41	1,3	**274-3779**	3	CAP-SEAL	
	42	3	**274-3780**	1	CAP	
	43	1	**274-7409**	4	SCREW-TRUSS HEAD (M8X1.25X45-MM)	
	44	3	**275-0553**	1	BAR-BUS	
Y	45	3	**276-7290**	1	RELAY GP (12-VOLT) (POWER, 1)	141
Y	46	3	**276-7291**	1	RELAY GP (12-VOLT) (POWER, 2)	142

211-4240 **WIRING GP-PLATFORM** *(contd.)* **i03527789**

NOTE	REF NO	GRAPHIC REF	PART NUMBER	QTY	PART NAME 1 2 3 4 5 6 (PRODUCT LEVEL)	SEE PAGE
	47	2	**278-0461**	1	RELAY AS (12-VOLT) (TORQUE LIMITER)	
C	48	3	**180-9900**	1	CAP AS	
		3	**5P-7958**	1	SLEEVE-CABLE SPLICE	
		3	**8C-6354**	1	CAP-RECEPTACLE	
		3	**179-9392**	1	LANYARD	
	49	2	**155-2271**	1	KIT-CONNECTING PLUG (4-PIN)	
					(INCLUDES PLUG AS & WEDGE)	
	50	2	**156-6175**	1	CLIP	
	51	1	**170-9360**	1	GROMMET	
	52	3	**197-5107**	2	SCREW-TRUSS HEAD (M6X1X60-MM)	
C	53	1,2,3	**3S-2093**	28	STRAP-CABLE	
	54	2	**4B-4863**	1	WASHER (4.7X11X1.2-MM THK)	
	55	1,3	**4P-8134**	3	CLIP	
M	56	2,3	**5C-2890**	4	NUT (M6X1-THD)	
M	57	1,3	**5C-7261**	10	NUT (M8X1.25-THD)	
	58	1	**7X-0579**	8	WASHER-HARD (8.8X25.5X2-MM THK)	
	59	1	**7X-7729**	5	WASHER (11X25X3-MM THK)	
	60	2	**8C-3398**	1	LOCKWASHER	
	61	1,3	**8F-3590**	4	LOCKWASHER	
M	62	2	**8T-0352**	2	BOLT (M5X0.8X45-MM)	
	63	3	**8T-4121**	4	WASHER-HARD (11X21X2.5-MM THK)	
M	64	3	**8T-4133**	2	NUT (M10X1.5-THD)	
M	65	1	**8T-4136**	2	BOLT (M10X1.5X25-MM)	
M	66	1	**8T-4137**	1	BOLT (M10X1.5X20-MM)	
M	67	2,3	**8T-4138**	7	BOLT (M6X1X20-MM)	
M	68	1,2,3	**8T-4200**	6	BOLT (M8X1.25X16-MM)	
	69	2,3	**8T-4205**	14	WASHER-HARD (7.2X14.5X2-MM THK)	
	70	1,2,3	**8T-4224**	12	WASHER-HARD (8.8X16X2-MM THK)	
CE	71	1	**3E-6600**		SEAL (9-CM)	
CE	71A	2	**3E-6600**		SEAL (3-CM EACH)	
	72	2	**8T-8737**	4	PLUG-SEAL	
C	73	3	**9F-5644**	4	LOCKWASHER	

C-CHANGE FROM PREVIOUS TYPE
E-ORDER BY THE CENTIMETER
M-METRIC PART
Y-SEPARATE ILLUSTRATION

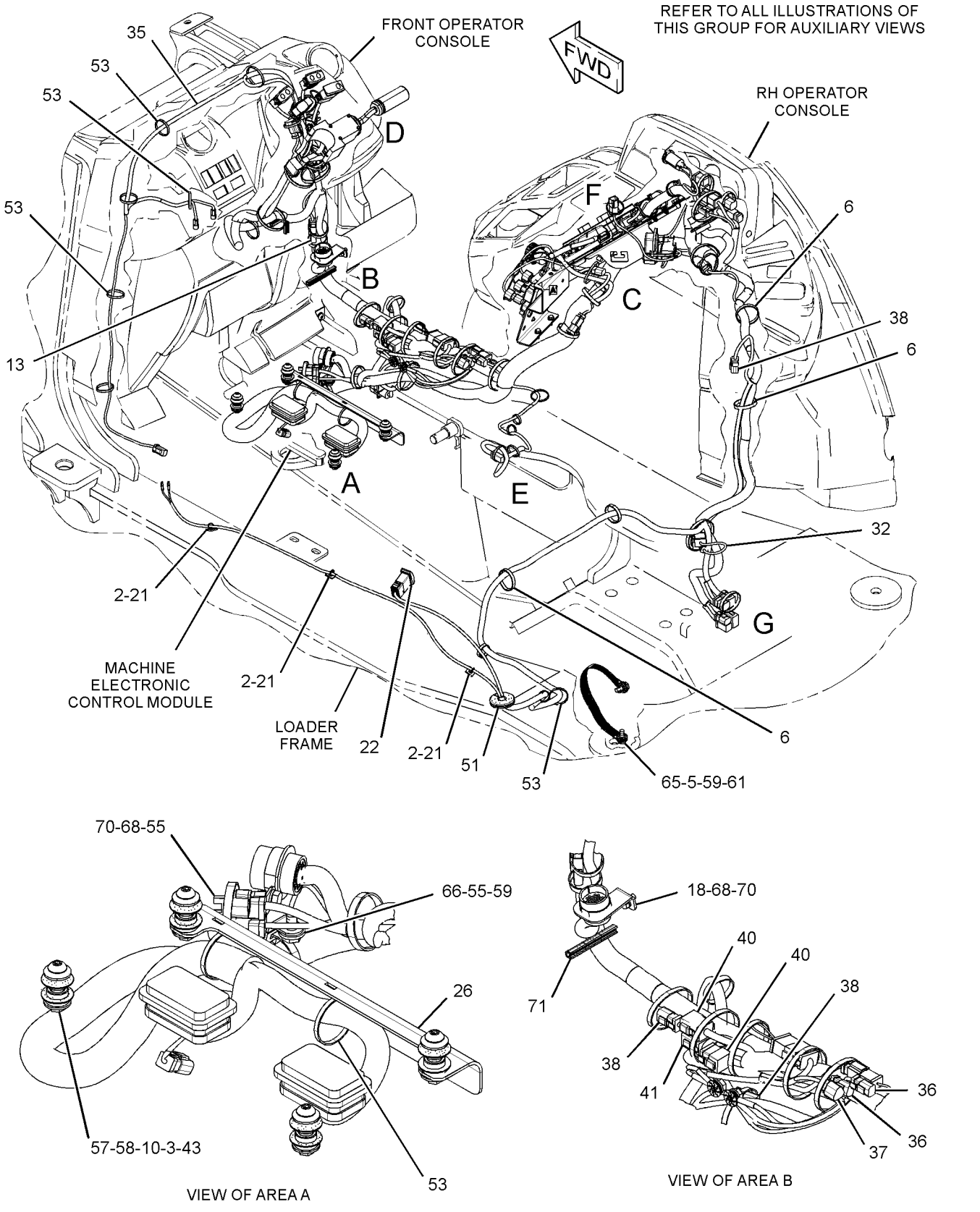

GRAPHIC #1

g01636700

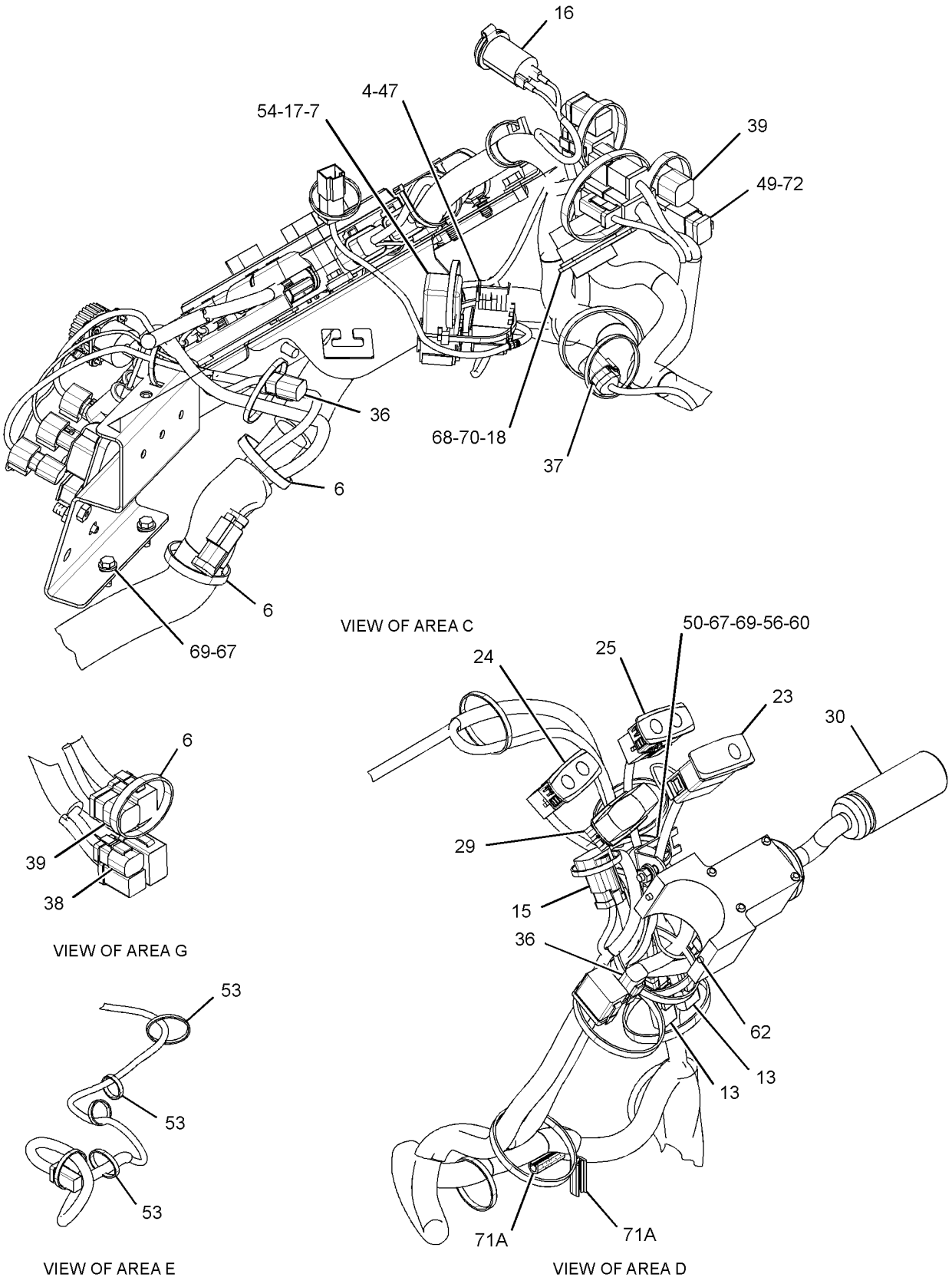

GRAPHIC #2

g01636701

211-4240 **WIRING GP-PLATFORM** *(contd.)* **i03527789**

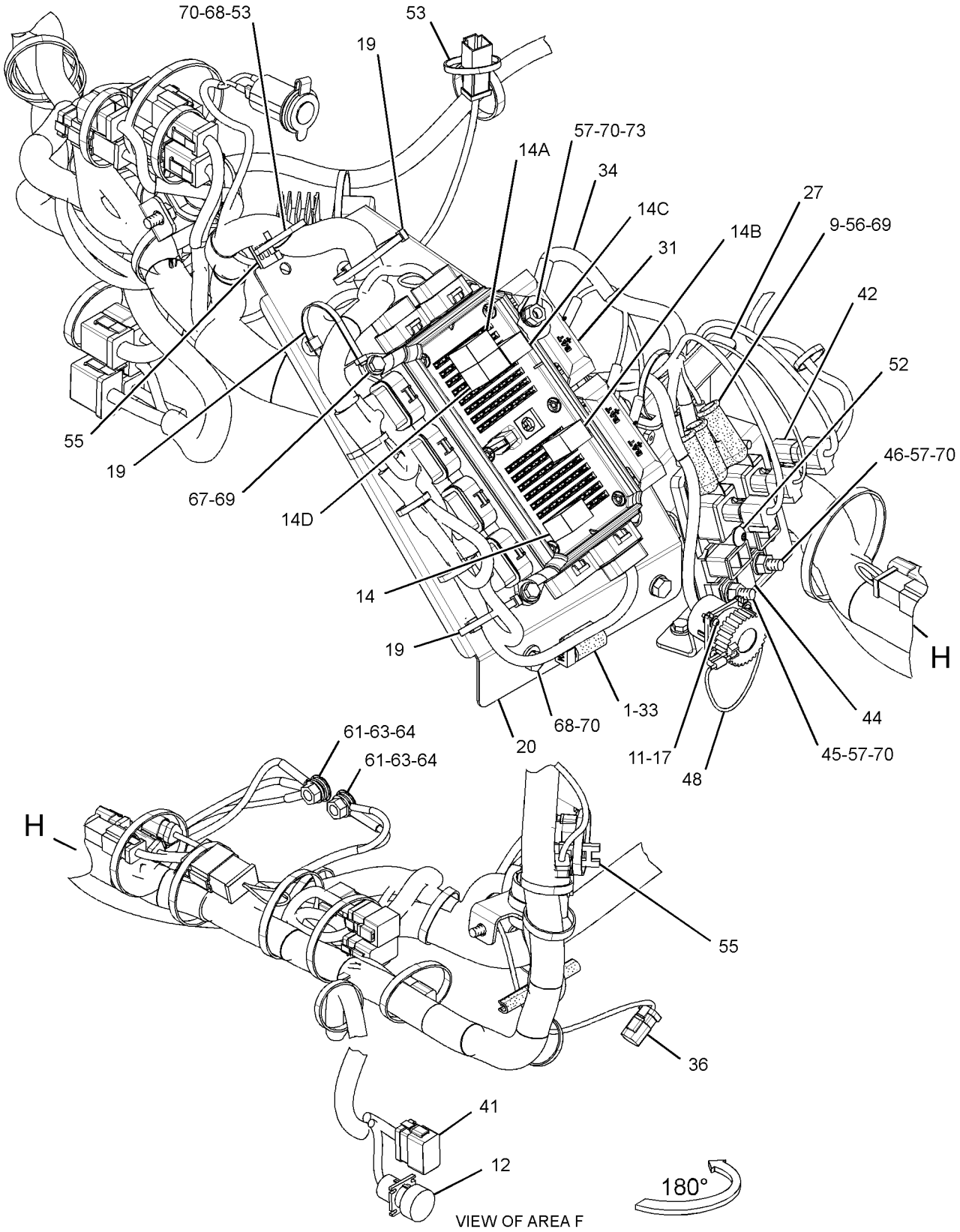

GRAPHIC #3 **<END>** g01636702

ELECTRICAL AND STARTING SYSTEM

290-6802 WIRING GP-PLATFORM

S/N: EAT1231-UP

PART OF 269-2125, 269-2126, 269-2127 CAB AR-ENCLOSED ROPS, 269-2123, 269-2124 CANOPY AR-OPEN ROPS

AN ATTACHMENT

SMCS-1408 **i03530381**

NOTE	REF NO	GRAPHIC REF	PART NUMBER	QTY	PART NAME 1 2 3 4 5 6 (PRODUCT LEVEL)	SEE PAGE
E	1	3	**103-2543**		SEAL (1-CM)	
	2	1	**1S-9593**	3	STRAP-CABLE	
	3	1	**6I-1418**	4	SPACER (8.2X12.7X28.7-MM THK)	
	4	1,2	**7K-1181**	41	STRAP-CABLE	
	5	2	**7T-4848**	1	FLASHER AS (12-VOLT) (HAZARD & TURN)	
	6	3	**8T-8799**	3	BOOT	
	7	1	**8T-9655**	8	MOUNT-ISOLATION	
	8	3	**100-5805**	1	CAP-RECEPTACLE	
	9	3	**146-9439**	1	RELAY AS (12-VOLT) (IMPLEMENT DISABLE)	
	9A	3	**146-9439**	1	RELAY AS (12-VOLT) (HORN)	
	9B	3	**146-9439**	1	RELAY AS (12-VOLT) (POSITION LAMP)	
	9C	3	**146-9439**	1	RELAY AS (12-VOLT) (BACKUP ALARM)	
	9D	3	**146-9439**	1	RELAY AS (12-VOLT) (DIFFERENTIAL LOCK)	
	10	2	**172-9200**	1	SUPPRESSOR-ARC	
	11	2	**178-7539**	1	RECEPTACLE AS (POWER SUPPLY)	
	12	3	**179-6401**	4	SCREW-PAN HEAD (6-32X0.5-IN)	
	13	3	**180-9900**	1	CAP AS	
		3	**5P-7958**	1	SLEEVE-CABLE SPLICE	
		3	**8C-6354**	1	CAP-RECEPTACLE	
		3	**179-9392**	1	LANYARD	
	14	1	**189-3158**	2	SUPPRESSOR-ARC	
	15	2,3	**201-1024**	2	BRACKET	
	16	3	**206-1345**	3	STRAP-CABLE	
	17	3	**206-1718**	1	BRACKET AS	
	18	1	**212-0862**	3	CLAMP-CABLE	
	19	1	**214-4694**	1	SWITCH AS-ROCKER (MODE SELECT)	
		1	**111-7899**	1	GASKET	
	20	2	**214-4702**	1	SWITCH AS-ROCKER (HAZARD WARNING LIGHTS)	
		1	**111-7899**	1	GASKET	
	21	2	**214-4717**	1	INDICATOR AS (TURN SIGNAL LH, PARKING BRAKE)	
	22	2	**214-4723**	1	INDICATOR AS (HIGH BEAM, TURN SIGNAL RH)	
	23	1	**216-9069**	1	BRACKET AS	
	24	2	**225-7970**	1	BRACKET AS	
	25	2	**227-1057**	1	PLUG-HOLE	
	26	2	**246-2671**	1	SWITCH AS-MULTIFUNCTION (HD LIGHT, TURN SIG, WDO WIPER)	
Y	27	3	**247-8199**	1	PANEL GP-FUSE (INCLUDES RELAY)	138
	28	2	**263-9498**	1	HARNESS AS-WIRING (RESISTOR)	
	29	1	**264-4362**	1	HARNESS AS-PLATFORM	
	30	3	**267-2701**	1	FUSE (60-AMPERE)	
	31	3	**268-7759**	1	HARNESS AS-POWER (DISTRIBUTION)	
	32	1,3	**274-3774**	3	CAP-CONNECTOR	
	33	1,2	**274-3775**	2	CAP-CONNECTOR	
	34	3	**274-3776**	1	CAP-SEAL	
	35	2,3	**274-3777**	5	CAP-CONNECTOR	
	36	1	**274-3778**	1	CAP-SEAL	
	37	1,2,3	**274-3779**	3	CAP-SEAL	
	38	3	**274-3780**	1	CAP	
	39	1	**274-7409**	4	SCREW-TRUSS HEAD (M8X1.25X45-MM)	
	40	3	**275-0553**	1	BAR-BUS	
Y	41	3	**276-7290**	1	RELAY GP (12-VOLT) (POWER, 1)	141
Y	42	3	**276-7291**	1	RELAY GP (12-VOLT) (POWER, 2)	142
	43	2	**278-0461**	1	RELAY AS (12-VOLT) (TORQUE LIMITER)	
	44	3	**096-6166**	8	WASHER-HARD (4.5X9X1-MM THK)	

290-6802 **WIRING GP-PLATFORM** *(contd.)* **i03530381**

NOTE	REF NO	GRAPHIC REF	PART NUMBER	QTY	PART NAME 1 2 3 4 5 6 (PRODUCT LEVEL)	SEE PAGE
	45	1	**132-5789**	2	CLIP	
M	46	2	**138-8454**	2	SCREW-TRUSS HEAD (M4X0.7X10-MM)	
	47	2	**155-2271**	1	KIT-CONNECTING PLUG (4-PIN)	
	48	2	**155-2274**	1	KIT-CONNECTING PLUG (6-PIN)	
					(EACH PLUG KIT INCLUDES PLUG AS, WEDGE & INTERFACE SEAL)	
	49	2	**156-6175**	1	CLIP	
	50	1	**170-9360**	1	GROMMET	
	51	3	**197-5107**	2	SCREW-TRUSS HEAD (M6X1X60-MM)	
	52	1,2,3	**3S-2093**	17	STRAP-CABLE	
	53	2	**4B-4863**	2	WASHER (4.7X11X1.2-MM THK)	
	54	3	**4P-8134**	1	CLIP	
M	55	2,3	**5C-2890**	4	NUT (M6X1-THD)	
M	56	1,3	**5C-7261**	10	NUT (M8X1.25-THD)	
	57	1	**7X-0579**	8	WASHER-HARD (8.8X25.5X2-MM THK)	
	58	1	**7X-7729**	5	WASHER (11X25X3-MM THK)	
	59	2	**8C-3398**	1	LOCKWASHER	
	60	1,3	**8F-3590**	8	LOCKWASHER	
M	61	2	**8T-0352**	2	BOLT (M5X0.8X45-MM)	
	62	3	**8T-4121**	4	WASHER-HARD (11X21X2.5-MM THK)	
M	63	3	**8T-4133**	2	NUT (M10X1.5-THD)	
M	64	1	**8T-4136**	2	BOLT (M10X1.5X25-MM)	
M	65	1	**8T-4137**	1	BOLT (M10X1.5X20-MM)	
M	66	2,3	**8T-4138**	7	BOLT (M6X1X20-MM)	
M	67	1,2,3	**8T-4200**	6	BOLT (M8X1.25X16-MM)	
	68	2,3	**8T-4205**	14	WASHER-HARD (7.2X14.5X2-MM THK)	
	69	1,2,3	**8T-4224**	12	WASHER-HARD (8.8X16X2-MM THK)	
	70	1	**8X-9618**	1	STRAP AS-GROUND	
E	71	2	**3E-6600**		SEAL (3-CM EACH)	
E	71A	1	**3E-6600**		SEAL (9-CM)	
	72	2	**8T-8737**	10	PLUG-SEAL	

E-ORDER BY THE CENTIMETER
M-METRIC PART
Y-SEPARATE ILLUSTRATION

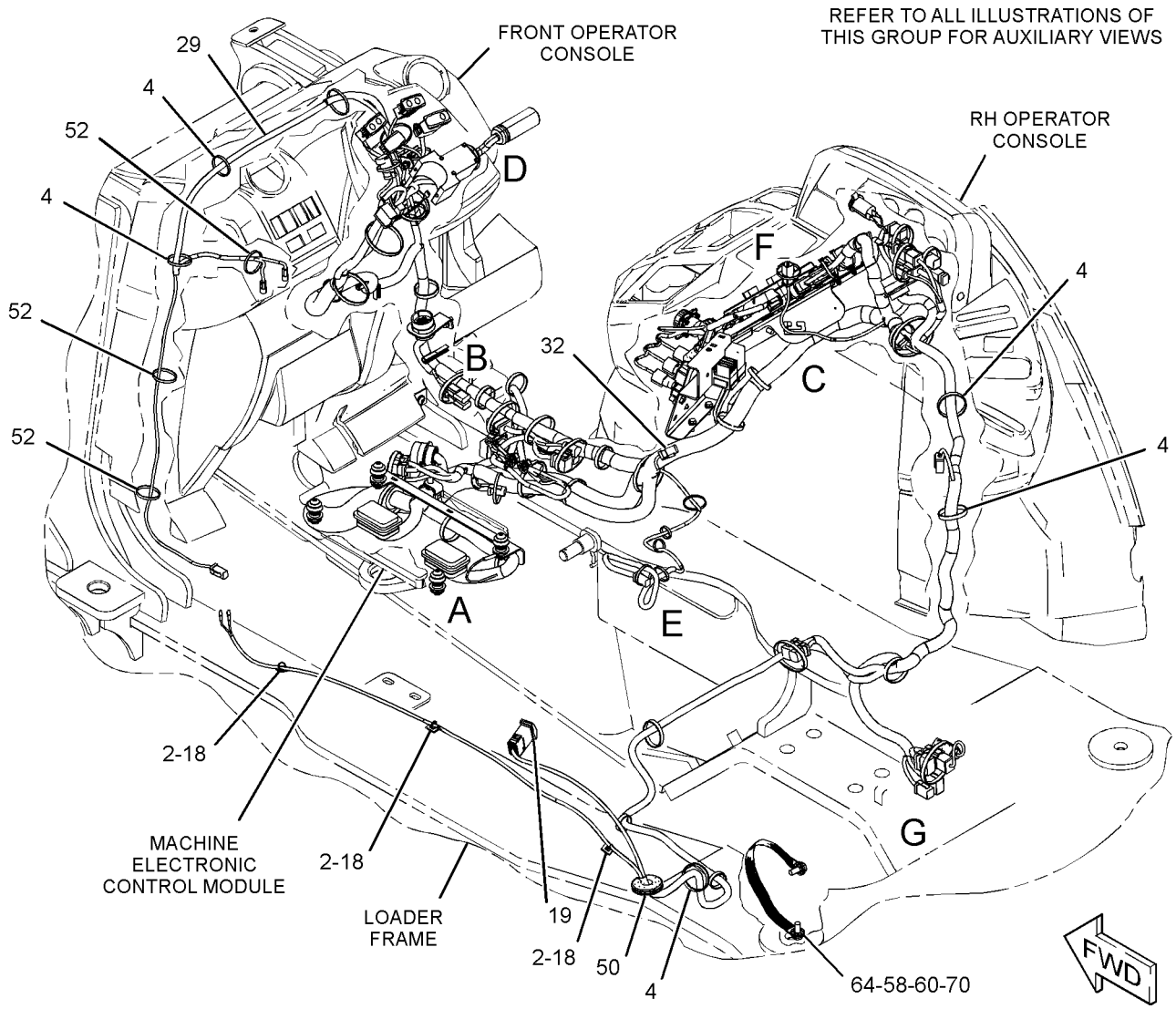

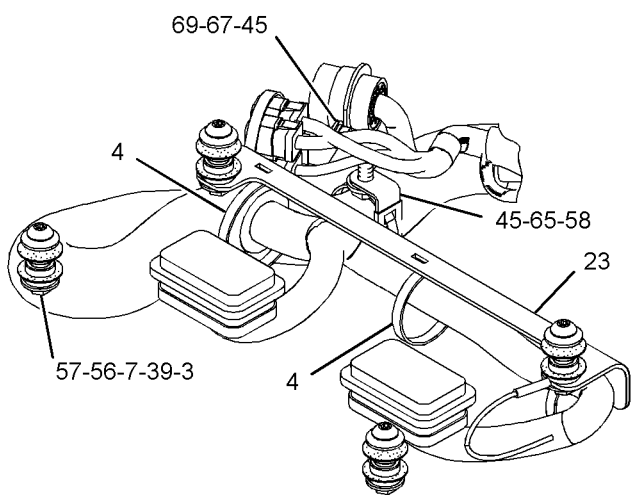

VIEW OF AREA A

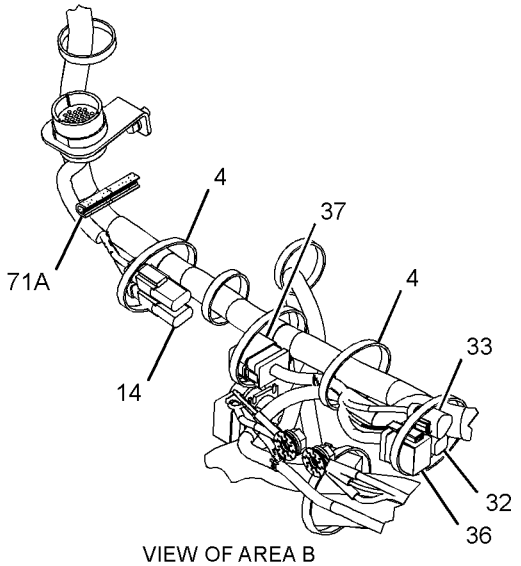

VIEW OF AREA B

GRAPHIC #1

g01618734

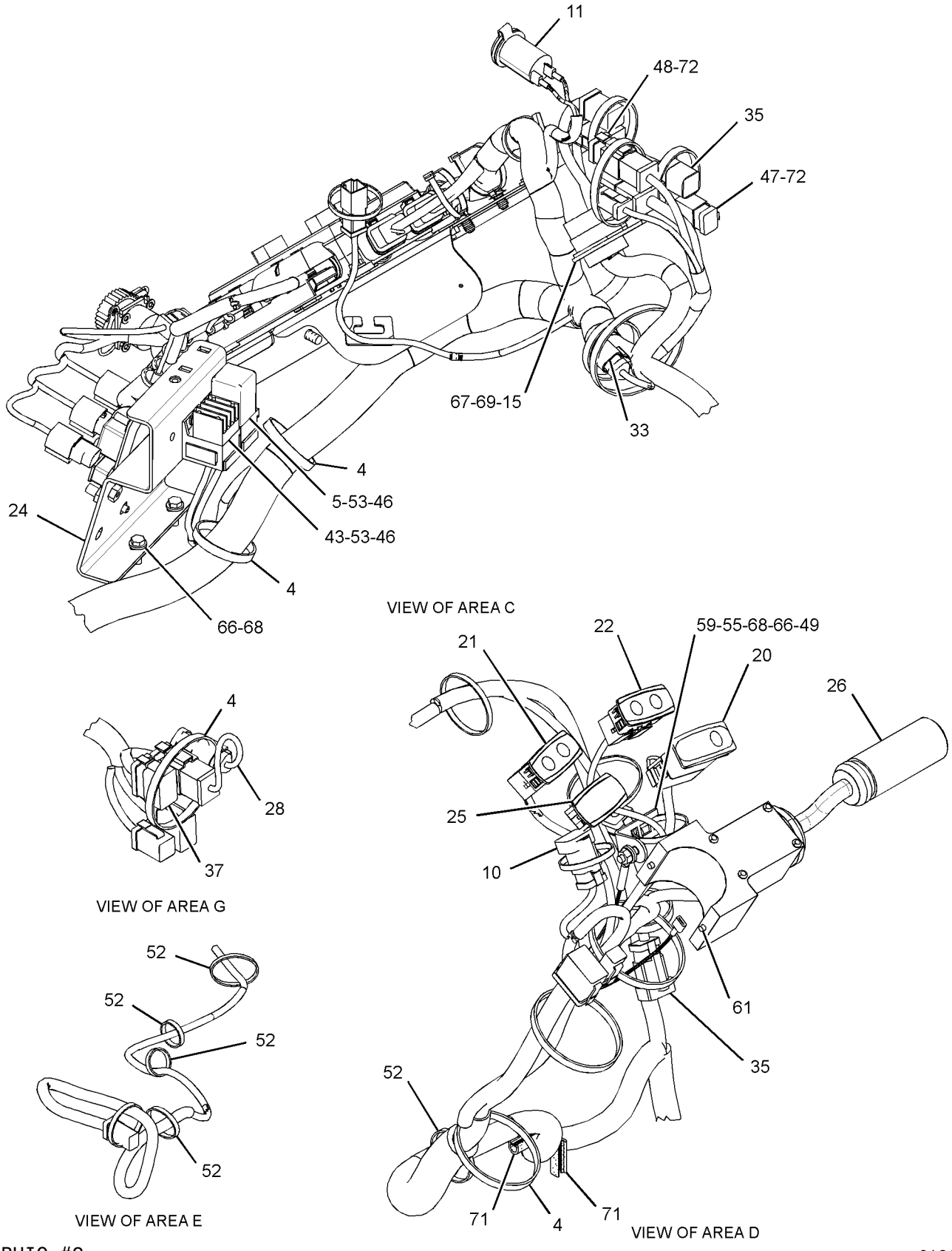

GRAPHIC #2

g01618794

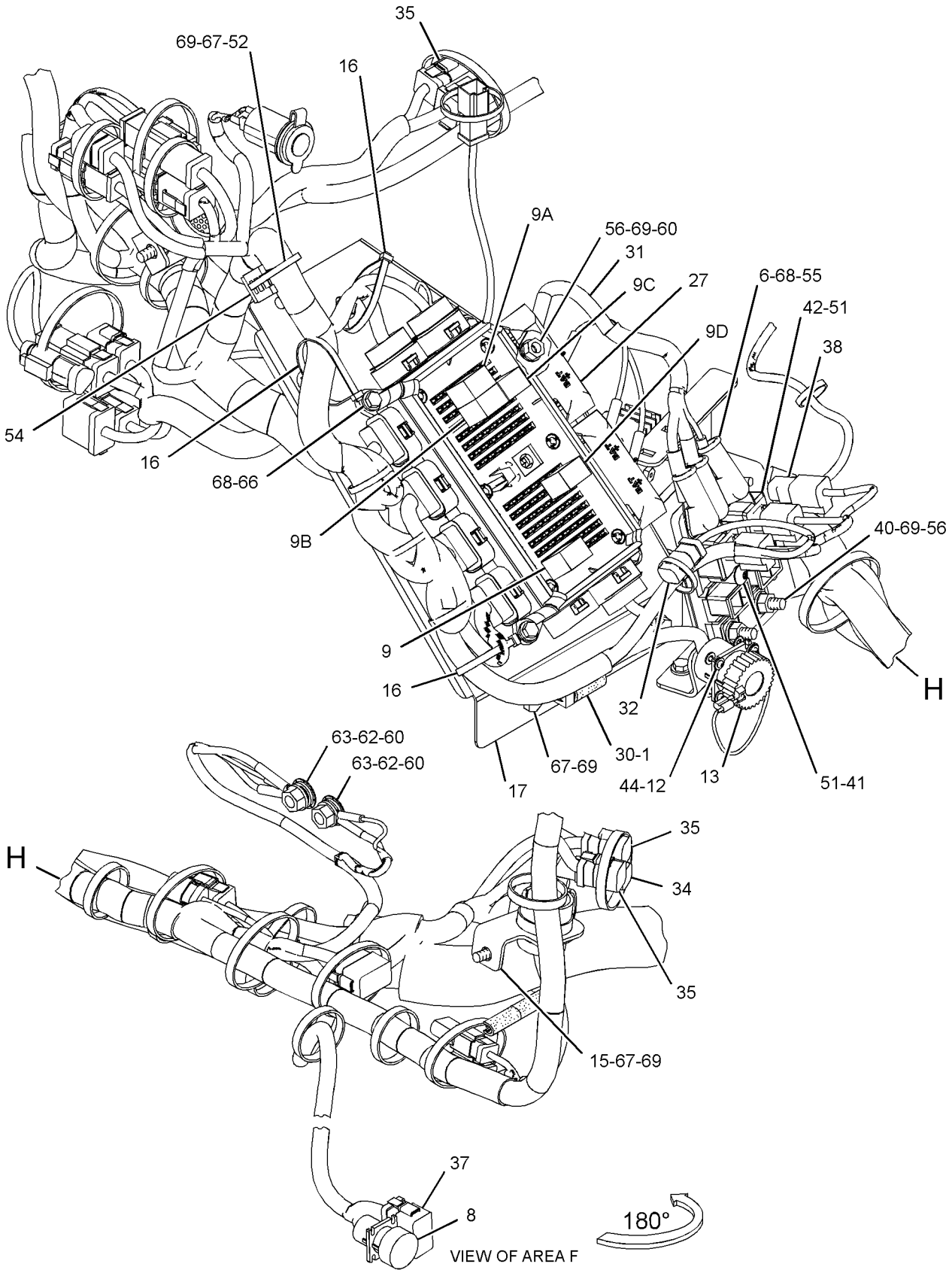

GRAPHIC #3

<END>

g01618907

211-4271 WIRING GP-POWER RECEPTACLE

S/N: EAT1-UP
PART OF 269-2126, 269-2127 CAB AR-ENCLOSED ROPS, 269-2123, 269-2124 CANOPY AR-OPEN ROPS AN ATTACHMENT

SMCS-1408, 7301 **i02973128**

NOTE	REF NO	GRAPHIC REF	PART NUMBER	QTY	PART NAME 1 2 3 4 5 6 (PRODUCT LEVEL)	SEE PAGE
	1	1	**178-7539**	1	RECEPTACLE AS (POWER SUPPLY)	

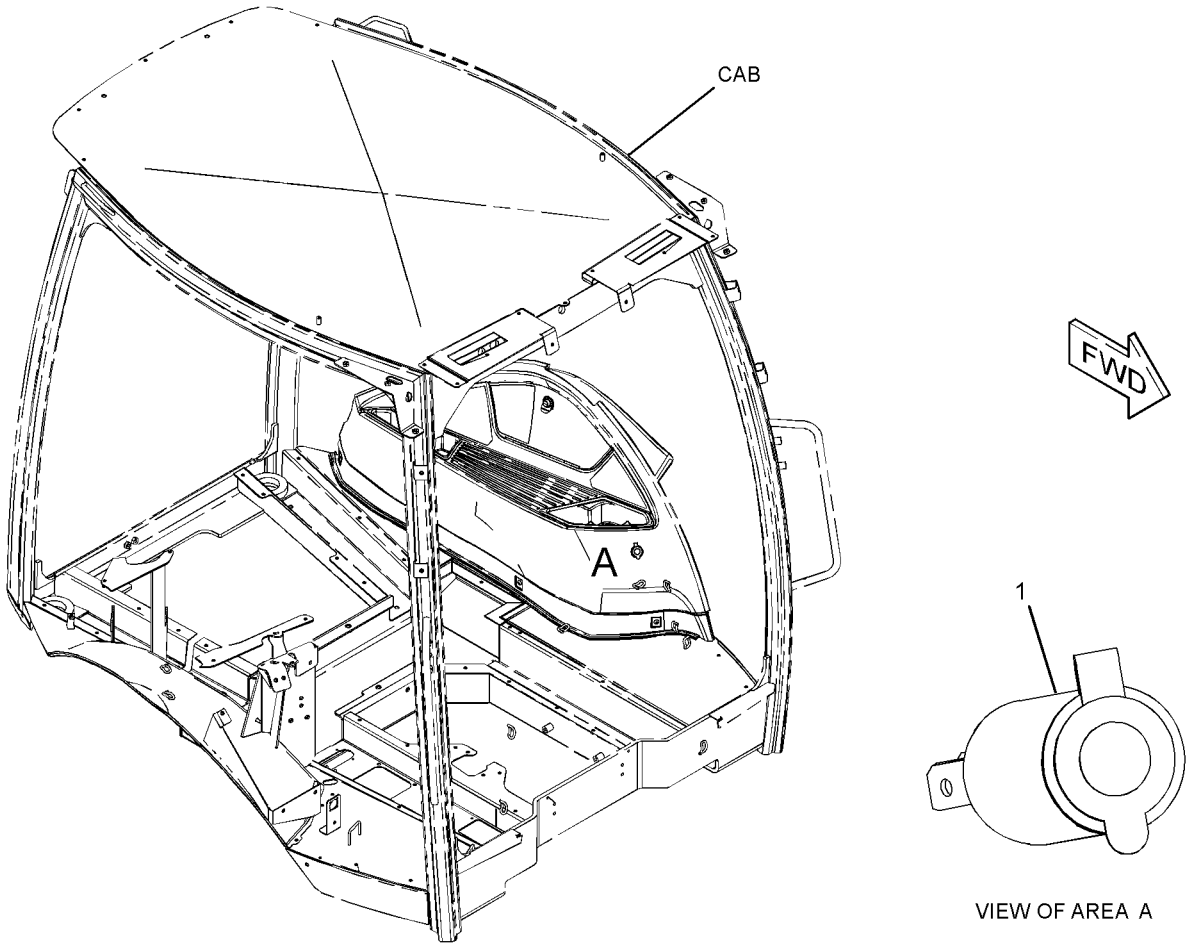

VIEW OF AREA A

GRAPHIC #1 **<END>** g01520595

211-4251 WIRING GP-REAR–BACKUP ALARM

S/N: EAT1-1260

PART OF 213-9289 CHASSIS AR

SMCS-1408 **i03527800**

NOTE	REF NO	GRAPHIC REF	PART NUMBER	QTY	PART NAME 1 2 3 4 5 6 (PRODUCT LEVEL)	SEE PAGE
	1	1	**7K-1181**	1	STRAP-CABLE	
	2	1	**9U-2277**	1	CLIP AS	
		1	**8C-3334**	1	RIVET-TUBULAR	
	3	1	**106-8704**	3	SUPPRESSOR AS-ARC	
	4	1	**154-5428**	1	ALARM AS	
		1	**102-8802**	1	KIT-RECEPTACLE (2-PIN)	
					(INCLUDES RECEPTACLE AS & WEDGE)	
	5	1	**263-9499**	1	HARNESS AS-REAR (PLATFORM)	
M	6	1	**111-4627**	2	SCREW-MACHINE (M6X1X30-MM)	
	7	1	**3S-2093**	7	STRAP-CABLE	
	8	1	**4P-7581**	1	CLIP	
	9	1	**8T-4121**	1	WASHER-HARD (11X21X2.5-MM THK)	
M	10	1	**8T-4134**	1	NUT (M6X1-THD)	
M	11	1	**8T-4137**	1	BOLT (M10X1.5X20-MM)	
	12	1	**9X-6165**	1	WASHER (6.5X22X2.5-MM THK)	

M-METRIC PART

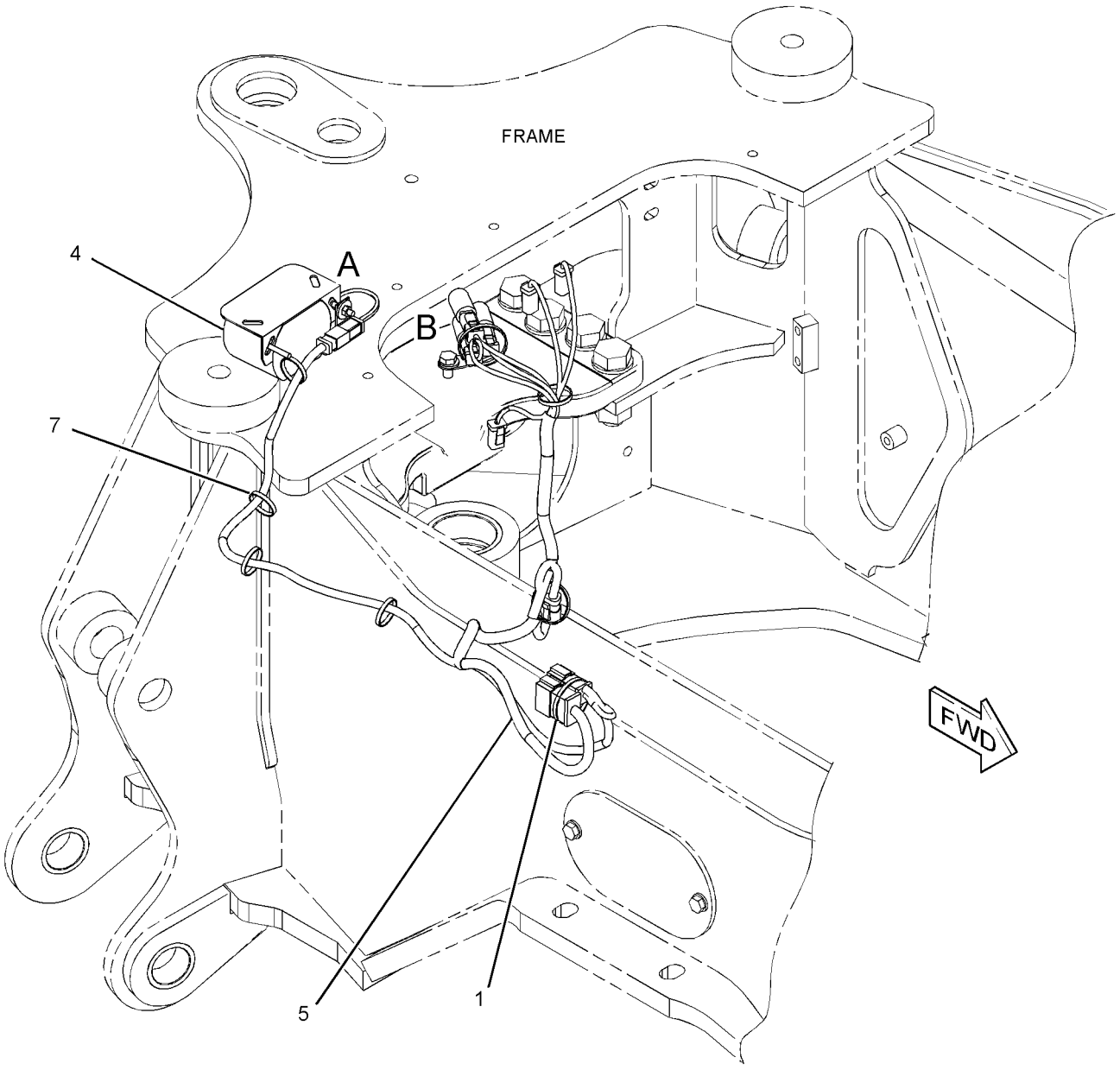

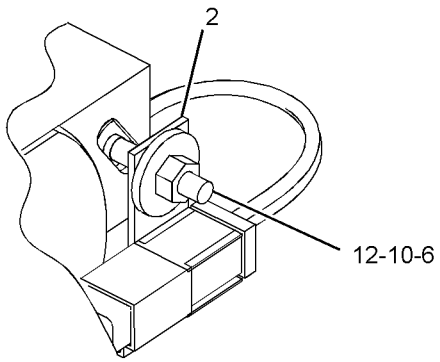

VIEW OF AREA A

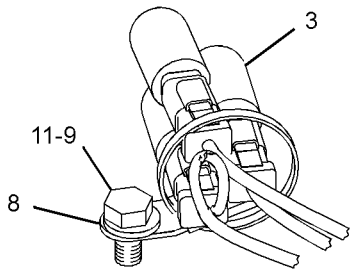

VIEW OF AREA B

GRAPHIC #1 **<END>** g01231213

211-4251 WIRING GP-REAR–BACKUP ALARM

S/N: EAT1261-UP

PART OF 213-9289 CHASSIS AR

SMCS-1408 **i03330301**

NOTE	REF NO	GRAPHIC REF	PART NUMBER	QTY	PART NAME 1 2 3 4 5 6 (PRODUCT LEVEL)	SEE PAGE
C	1	1	**7K-1181**	3	STRAP-CABLE	
	2	1	**9U-2277**	1	CLIP AS	
	3	1	**154-5428**	1	ALARM AS	
		1	**186-3735**	2	PIN-CONNECTOR (16-GA TO 18-GA)	
		1	**102-8802**	1	KIT-RECEPTACLE (2-PIN)	
					(INCLUDES RECEPTACLE AS & WEDGE)	
C	4	1	**189-3158**	2	SUPPRESSOR-ARC	
	5	1	**263-9499**	1	HARNESS AS-REAR (PLATFORM)	
M	6	1	**111-4627**	2	SCREW-MACHINE (M6X1X30-MM)	
C	7	1	**3S-2093**	5	STRAP-CABLE	
	8	1	**4P-7581**	1	CLIP	
	9	1	**8T-4121**	1	WASHER-HARD (11X21X2.5-MM THK)	
M	10	1	**8T-4134**	1	NUT (M6X1-THD)	
M	11	1	**8T-4137**	1	BOLT (M10X1.5X20-MM)	
	12	1	**9X-6165**	1	WASHER (6.5X22X2.5-MM THK)	

C-CHANGE FROM PREVIOUS TYPE
M-METRIC PART

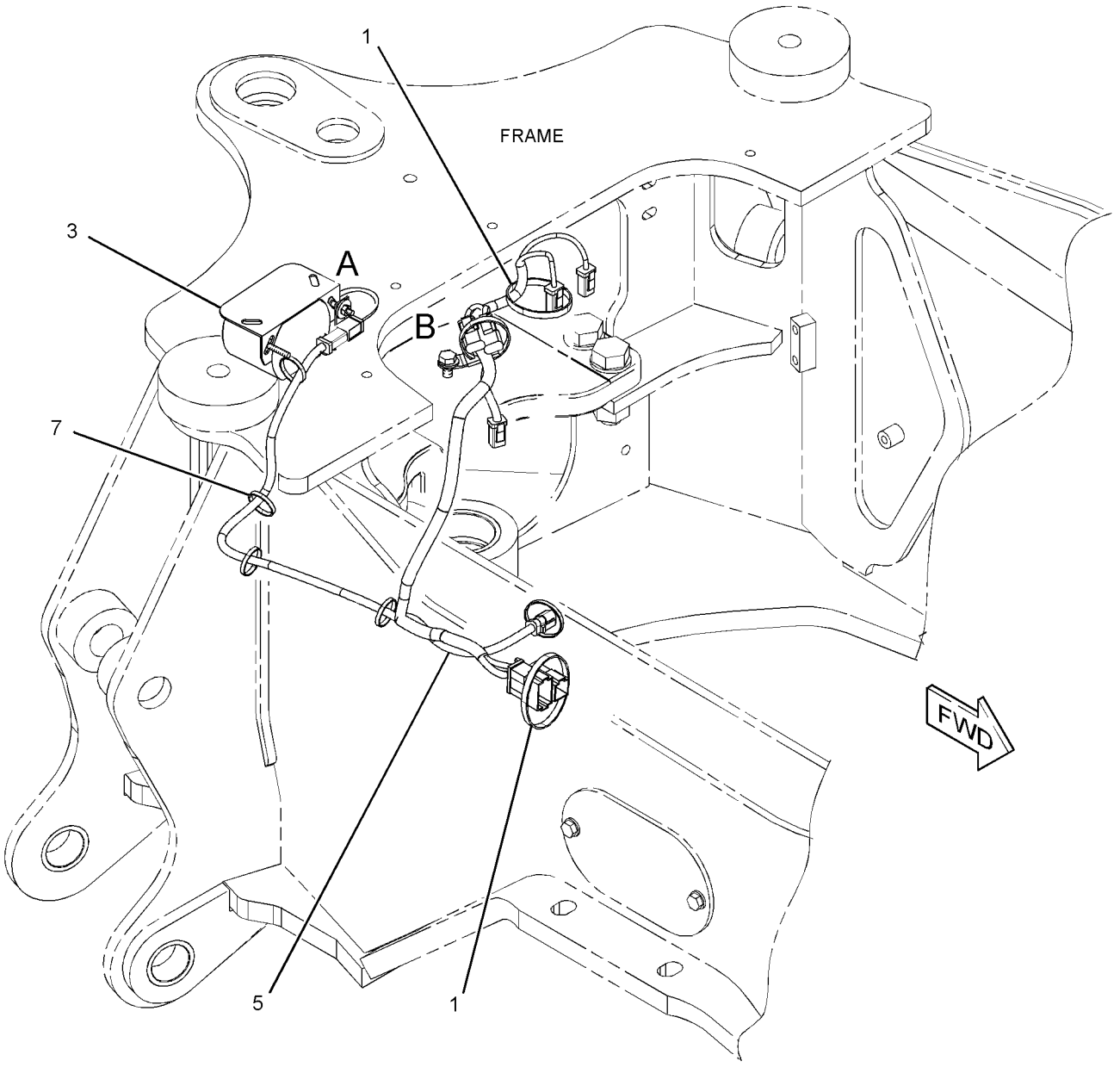

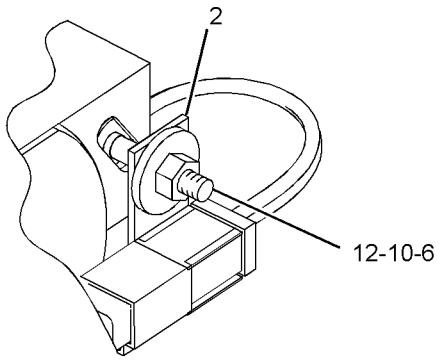

VIEW OF AREA A

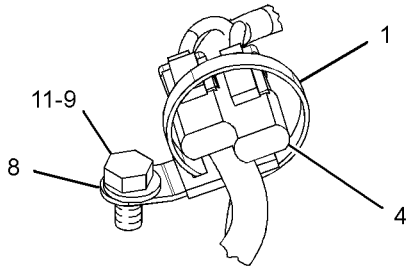

VIEW OF AREA B

GRAPHIC #1 **<END>** g01517220

211-4259 WIRING GP-RIDE CONTROL

S/N: EAT1-UP
PART OF 209-9937 CONTROL AR-RIDE
AN ATTACHMENT

SMCS-1408 **i03530383**

NOTE	REF NO	GRAPHIC REF	PART NUMBER	QTY	PART NAME 1 2 3 4 5 6 (PRODUCT LEVEL)	SEE PAGE
	1	1	**146-9439**	1	RELAY AS (12-VOLT) (RIDE CONTROL)	
	2	1	**246-8038**	1	HARNESS AS-RIDE CONTROL	
	3	1	**214-4710**	1	SWITCH AS-ROCKER (RIDE CONTROL)	
		1	**111-7899**	1	GASKET	
	4	1	**3S-2093**	4	STRAP-CABLE	
	5	1	**3J-1907**	1	SEAL-O-RING	
	6	1	**4P-7581**	1	CLIP	
	7	1	**106-8704**	1	SUPPRESSOR AS-ARC	
	8	1	**304-5696**	1	SWITCH AS-PRESSURE (RIDE CONTROL)	
		1	**186-3735**	3	PIN-CONNECTOR (16-GA TO 18-GA)	
		1	**102-8803**	1	KIT-RECEPTACLE (3-PIN)	
					(INCLUDES RECEPTACLE AS & WEDGE)	

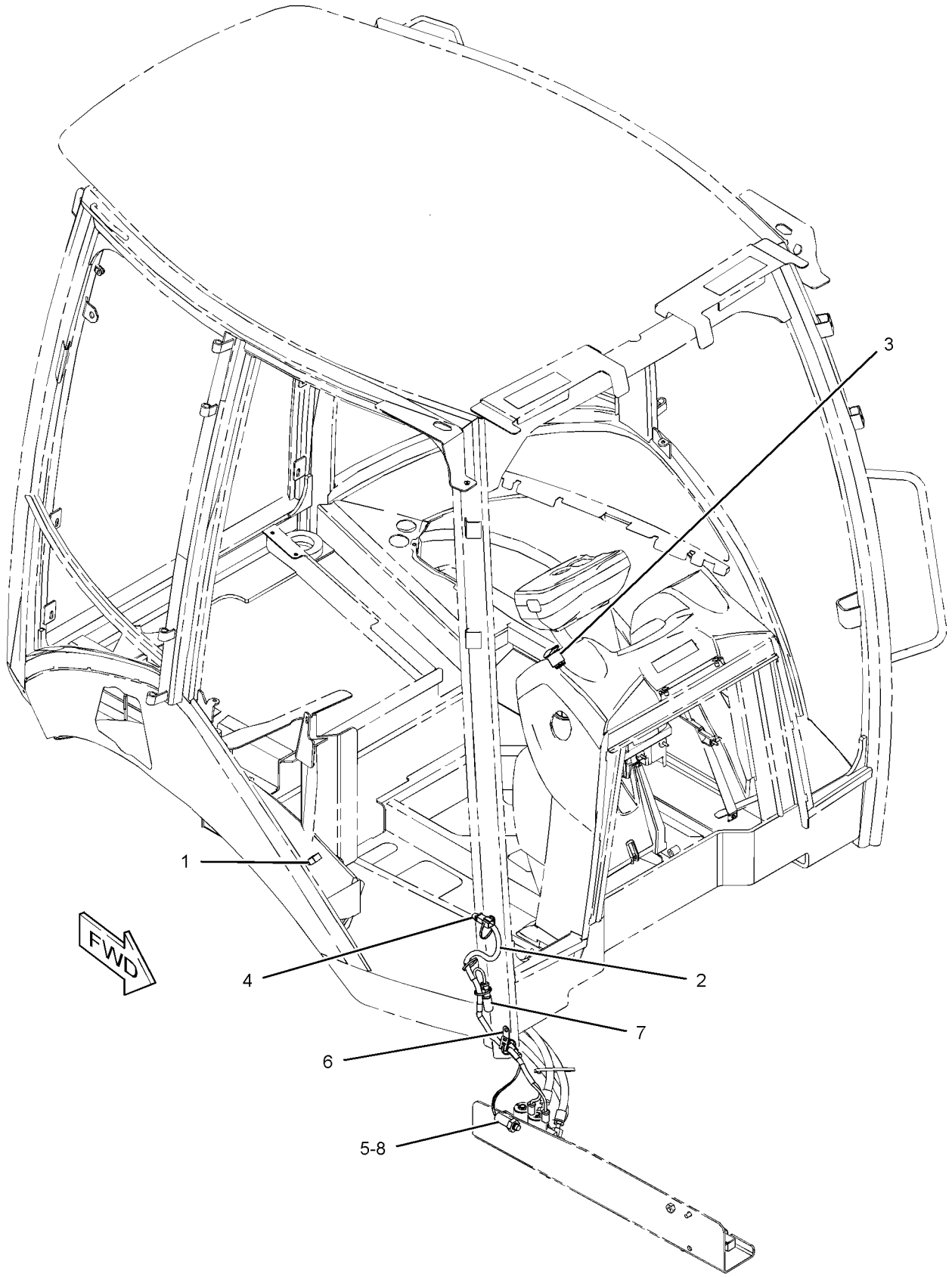

GRAPHIC #1 **<END>** g01208447

225-7996 WIRING GP-STABILIZER

S/N: EAT1-1080
PART OF 269-2126, 269-2127 CAB AR-ENCLOSED ROPS
AN ATTACHMENT

SMCS-1408, 5734 **i03527802**

NOTE	REF NO	GRAPHIC REF	PART NUMBER	QTY	PART NAME 1 2 3 4 5 6 (PRODUCT LEVEL)	SEE PAGE
	1	1	**8Y-7833**	1	WIRE AS	
	2	1	**173-7003**	1	RELAY AS-TIMER (STABILIZER, AUTO UP, 12-VOLT)	

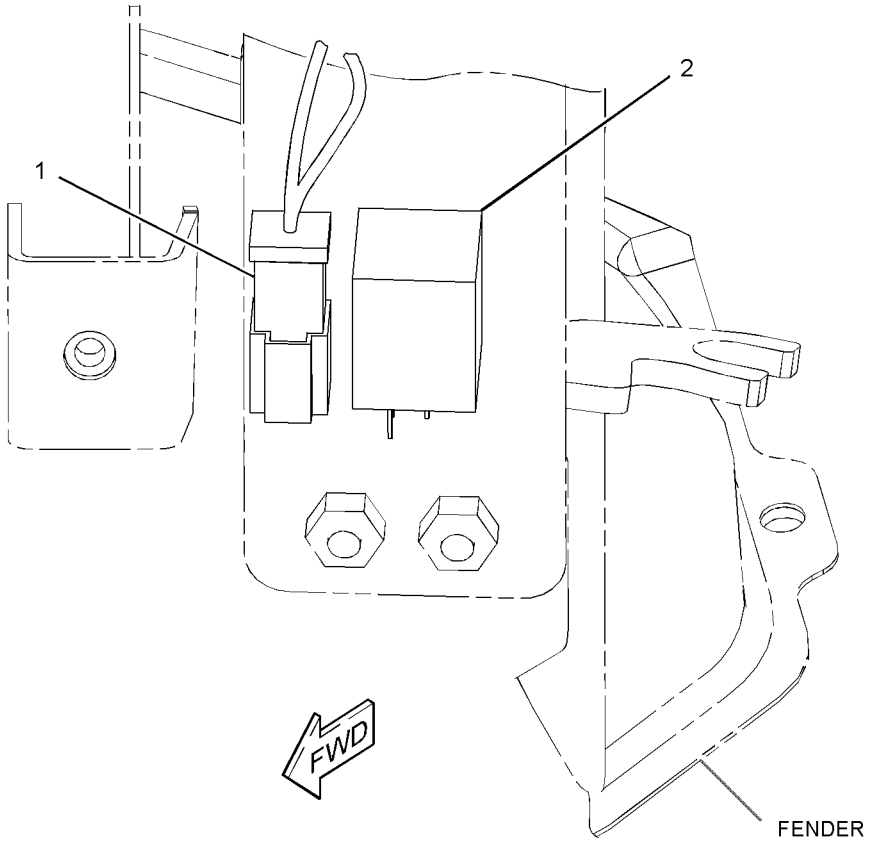

GRAPHIC #1 **<END>** g01231627

225-7996 WIRING GP-STABILIZER

S/N: EAT1081-UP

PART OF 269-2126, 269-2127 CAB AR-ENCLOSED ROPS

AN ATTACHMENT

SMCS-1408, 5734 **i03530385**

NOTE	REF NO	GRAPHIC REF	PART NUMBER	QTY	PART NAME 1 2 3 4 5 6 (PRODUCT LEVEL)	SEE PAGE
C	1	1	**7K-1181**	2	STRAP-CABLE	
	2	1	**8Y-7833**	1	WIRE AS	
	3	1	**173-7003**	1	RELAY AS-TIMER (STABILIZER, AUTO UP, 12-VOLT)	
C	4	1	**225-7997**	1	HARNESS AS-REAR (STABILIZER, AUTO UP)	
C	5	1	**6K-0806**	1	STRAP-CABLE	

C-CHANGE FROM PREVIOUS TYPE

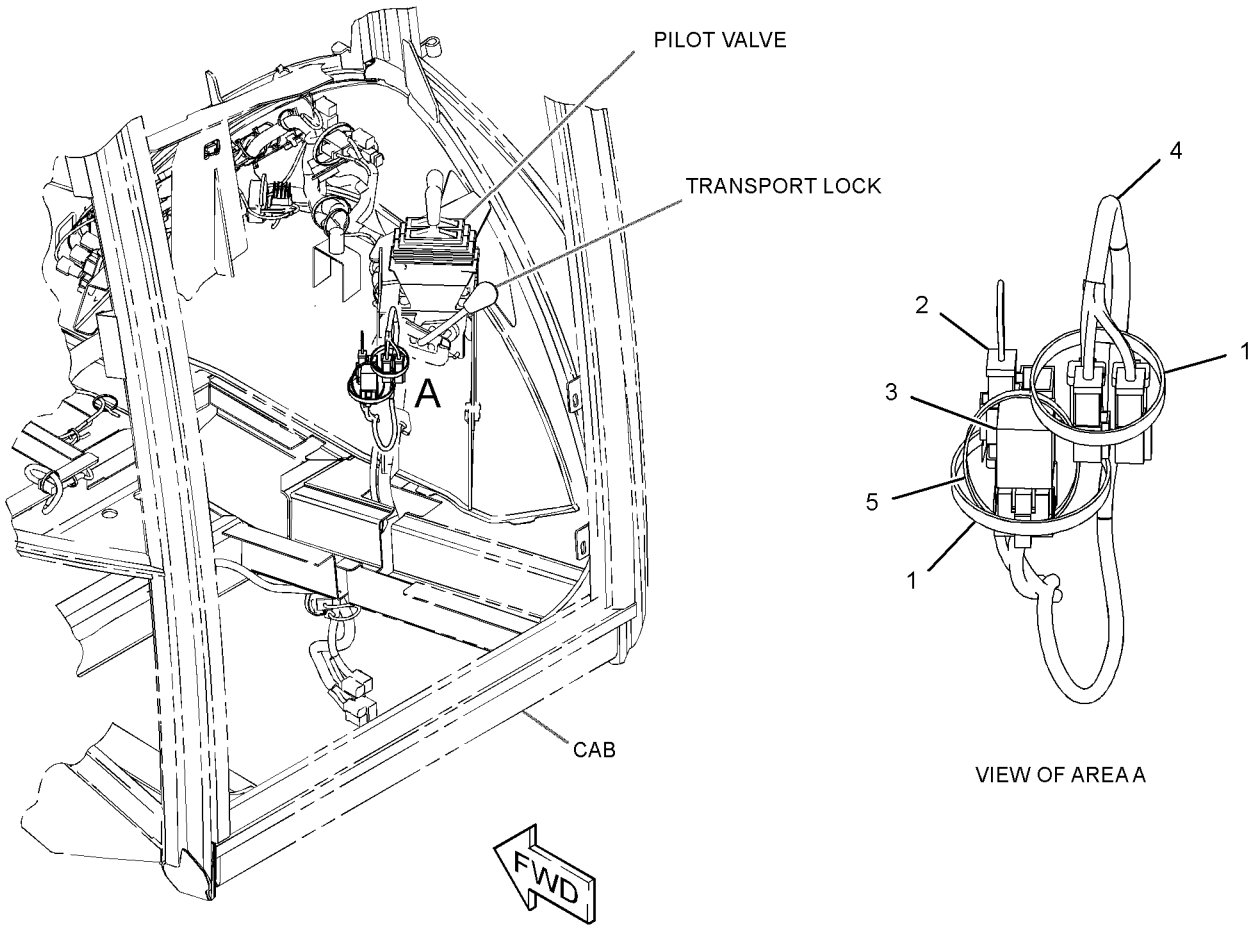

GRAPHIC #1 **<END>** g01432978

211-4254 WIRING GP-TRANSMISSION CONTROL–
AUTOSHIFT, STANDARD SHIFT
S/N: EAT1-UP
PART OF 218-5149 POWER TRAIN AR
AN ATTACHMENT

SMCS-1408, 3168 **i03530401**

NOTE	REF NO	GRAPHIC REF	PART NUMBER	QTY	PART NAME 1 2 3 4 5 6 (PRODUCT LEVEL)	SEE PAGE
	1	1	**7K-1181**	9	STRAP-CABLE	
	2	1	**164-1368**	8	FASTENER-PANEL	
	3	1	**206-2423**	1	SADDLE	
	4	1	**213-6096**	1	HARNESS AS-PANEL (AUTOSHIFT, STAND SHIFT SWITCH)	
	5	1	**214-4691**	1	SWITCH AS-ROCKER (AUTOSHIFT, STANDARD SHIFT)	
		1	**111-7899**	1	GASKET	
	6	1	**225-7959**	1	HARNESS AS-WIRING (AUTOSHIFT)	
	7	1	**232-1545**	1	PLATE AS	
	8	1	**246-8052**	1	HARNESS AS-TRANSMISSION	
	9	1	**261-2208**	1	CONTROL GP-TRANSMISSION (FORWARD, NEUTRAL, REVERSE)	
	10	1	**274-9993**	1	PLATE	
M	11	1	**095-0756**	4	SCREW-MACHINE (M5X0.8X16-MM)	
	12	1	**3S-2093**	5	STRAP-CABLE	

M-METRIC PART

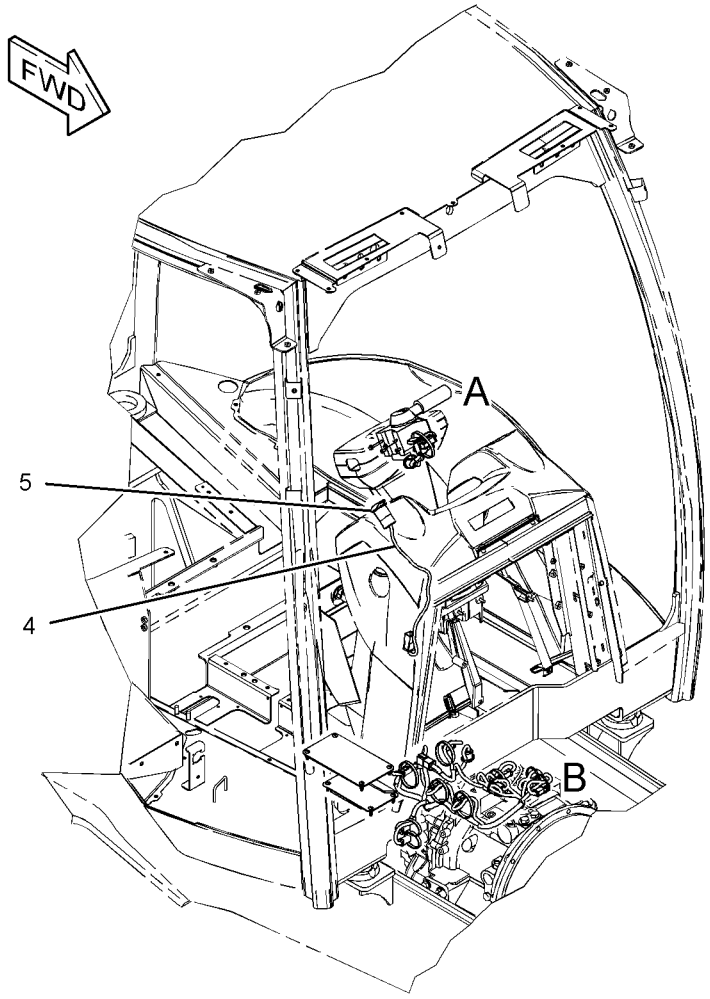

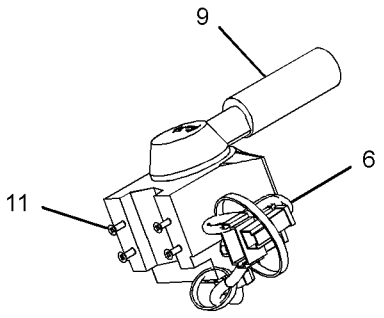

VIEW OF AREA A

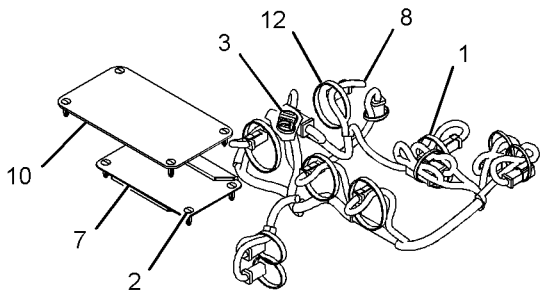

VIEW OF AREA B

GRAPHIC #1 **<END>** g01209126

POWER TRAIN

230-5743 AXLE GP-DRIVE & STEERING—FRONT

S/N: EAT1-UP

PART OF 216-4740 DRIVE AR-BACKHOE LOADER

AN ATTACHMENT

SMCS-3020, 3250, 3258, 3259, 3260, 3264, 3278, 4050, 4303, 4313

i03510980

NOTE	REF NO	GRAPHIC REF	PART NUMBER	QTY	PART NAME 1 2 3 4 5 6 (PRODUCT LEVEL)	SEE PAGE
M	1	1	**8C-7505**	4	SCREW-FLAT HEAD (M8X1.25X20-MM)	
	2	1	**290-4164**	6	BOLT (M20X1.5X80-MM)	
	3	1	**207-4258**	2	NUT (M20X1.5-THD)	
	4	1	**219-8798**	2	SEAL-LIP TYPE	
	5	1	**219-8795**	1	CAP	
	6	1	**209-9875**	2	DOWEL	
	7	1	**209-7456**	2	BUSHING	
	8	1	**152-6144**	4	PLUG AS-DRAIN (MAGNETIC)	
					(EACH INCLUDES)	
		1	**6V-6228**	1	SEAL-O-RING	
	9	1	**208-0321**	11	BOLT-FLANGE HEAD (M12X1.75X33-MM)	
	10	1	**209-7464**	2	SEAL	
M	11	1	**199-0683**	16	BOLT (M16X2X38-MM)	
	12	1	**210-5937**	2	WASHER (46X66X3-MM THK)	
Y	13	1	**209-9882**	1	DIFFERENTIAL & BEVEL GEAR GP	219
	14	1	**210-5942**	2	RING	
	15	1	**209-9883**	1	HOUSING	
J	16	1	**210-5946**	2	SHAFT GP-AXLE	
					(EACH INCLUDES)	
		1	**174-4671**	1	YOKE	
	17	1	**209-9886**	2	TIE ROD GP	
					(EACH INCLUDES)	
		1	**204-3080**	1	BALL JOINT	
		1	**217-2883**	1	TIE ROD	
		1	**217-2885**	1	NUT	
	18	1	**209-9887**	1	BUSHING	
	19	1	**210-5947**	2	WASHER-THRUST (44.6X58X7-MM THK)	
	20	1	*216-7473*	4	PIN AS (UPPER)	
					(EACH INCLUDES)	
		1	**198-7823**	1	BEARING AS	
		1	**198-7825**	1	SEAL	
		1	**198-7838**	1	PIN	
Y	21	1	**210-5924**	2	PLANETARY GP-FINAL DRIVE	243
Y	22	1	**209-9884**	1	HOUSING & FLANGE GP-AXLE (RH)	232
Y	23	1	**209-9885**	1	HOUSING & FLANGE GP-AXLE (LH)	233
	24	1	**1H-8278**	2	SEAL-O-RING	
L	25	1	**214-5097**	1	CYLINDER GP-STEERING	
		1	**238-5254**	1	ROD	
		1	**238-5255**	2	CYLINDER HEAD	
	26	1	**253-5024**	1	BREATHER (FRONT AXLE)	
	27	1	**069-4707**	1	SEALANT (GASKET)	
	28	1	**154-5404**	2	BEARING	
B	29	1	**198-7841**	8	SHIM (0.15-MM THK)	
B	30	1	**198-7842**	4	SHIM (0.2-MM THK)	
B	31	1	**198-7843**	4	SHIM (0.5-MM THK)	
	32	1	**5P-2931**	1	SEAL-O-RING	
					AVAILABLE REPAIR KIT(S):	
J			**174-4643**	2	KIT-SPIDER	
					(EACH INCLUDES SPIDER & RINGS)	
L			**215-2023**	1	KIT-SEAL	
					(INCLUDES RINGS, SEALS & WASHERS)	

230-5743 AXLE GP-DRIVE & STEERING *(contd.)* i03510980

B-USE AS REQUIRED
J-KIT MARKED J AVAILABLE FOR PART MARKED J
L-KIT MARKED L AVAILABLE FOR PART MARKED L
M-METRIC PART
Y-SEPARATE ILLUSTRATION

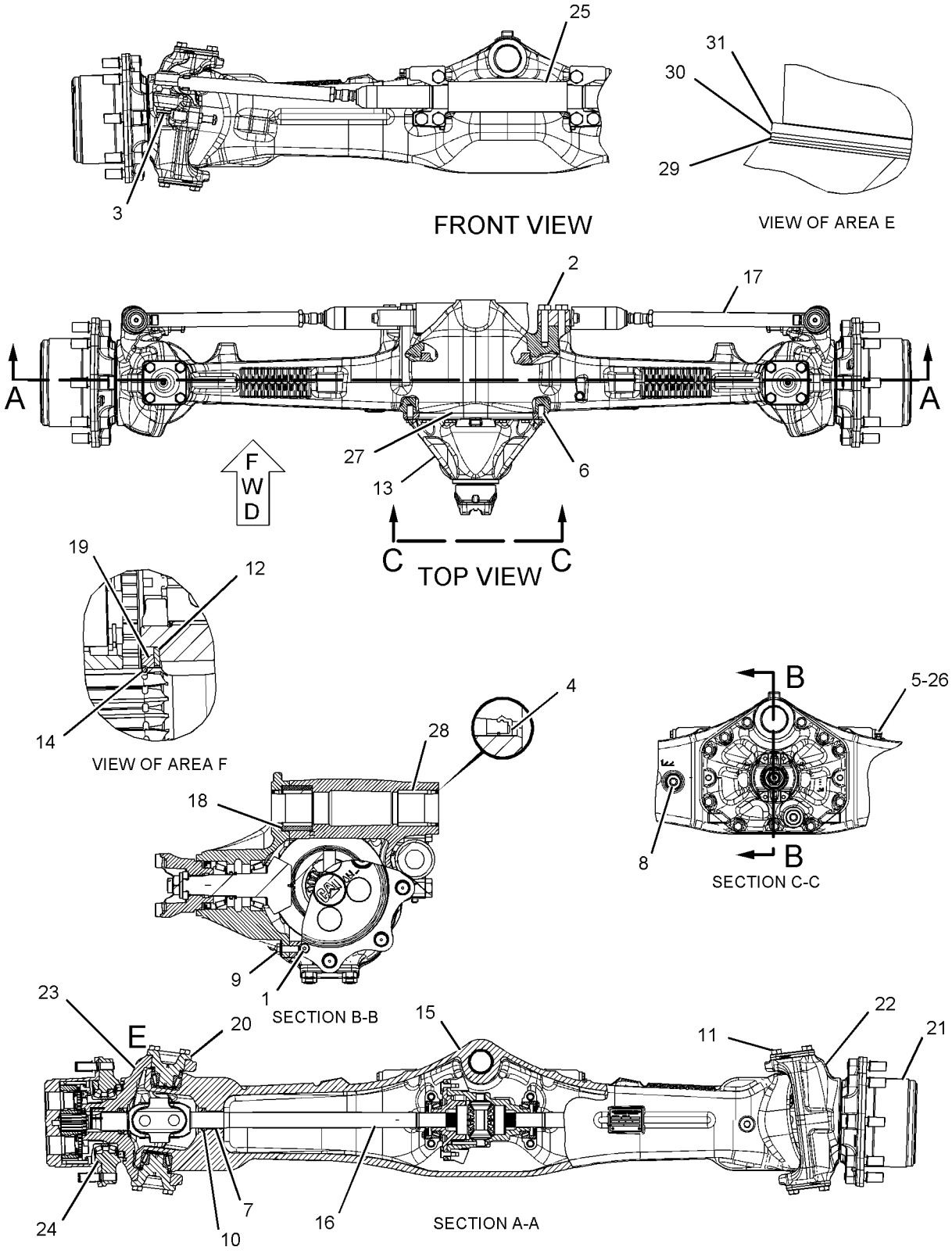

GRAPHIC #1 **<END>** g01094314

POWER TRAIN

230-5739 AXLE GP-REAR

S/N: BYC1-UP; EAT1-UP
PART OF 216-4739, 216-4740 DRIVE AR-BACKHOE LOADER
AN ATTACHMENT

SMCS-3278, 3282 **i03495280**

NOTE	REF NO	GRAPHIC REF	PART NUMBER	QTY	PART NAME 1 2 3 4 5 6 (PRODUCT LEVEL)	SEE PAGE
M	1	2	**8C-7505**	4	SCREW-FLAT HEAD (M8X1.25X20-MM)	
M	2	1	**6V-3940**	2	BOLT (M8X1.25X25-MM)	
	3	1	**199-0652**	2	CLIP-PIN	
	4	1	**9X-6378**	2	RING-RETAINING	
	5	1	**210-3098**	2	SEAL	
	6	1	**199-0668**	2	BRACKET	
	7	2	**197-9155**	1	BREATHER (AXLE)	
	8	2	**199-0670**	2	SCREW-PURGE	
	9	2	**198-7811**	2	DOWEL	
	10	1	**152-6144**	4	PLUG AS-DRAIN (MAGNETIC) (AXLE)	
	11	1	**199-0676**	2	SPRING	
M	12	1	**199-0679**	2	BOLT (M16X2X95-MM)	
	13	1	**210-3099**	2	SLEEVE	
	14	1	**210-3100**	2	BUSHING	
	15	1	**199-0706**	1	PISTON	
	16	2	**199-0786**	8	PLATE	
	17	2	**199-0787**	6	PIN	
	18	1	**210-7305**	2	SHAFT	
	19	2	**210-3106**	1	BRACKET	
	20	2	**212-5713**	2	PLUG	
	21	1	*216-1608*	2	GEAR GP-RING (REAR AXLE)	
					(EACH INCLUDES)	
		1	**199-0778**	1	RING-SNAP	
		1	**210-7302**	1	GEAR-RING (81-TEETH)	
		1	**226-4364**	1	HUB	
Y	22	1	*216-1609*	2	FLANGE GP-WHEEL	230
Y	23	1	**216-1610**	2	PLANETARY GP-FINAL DRIVE (AXLE)	244
	24	1	**217-2914**	1	COVER (DIFFERENTIAL LOCK)	
	25	1	**231-0699**	1	COVER (DIFFERENTIAL LOCK)	
	26	1	**219-8839**	1	ROD	
	27	1	**174-4647**	1	BUSHING	
	28	1	**174-4650**	1	SPACER (20X32X8-MM THK)	
	29	2	**231-0698**	2	SHAFT-AXLE	
	30	2	**226-4366**	2	NUT-SPANNER	
	31	2	**226-4365**	2	WASHER-TAB	
	32	1	**226-4367**	2	SPACER (110X123X22.99-MM THK)	
	33	2	**226-4370**	6	BOLT-SELF-LOCKING	
	34	2	**238-5291**	6	DISC-BRAKE (REAR AXLE)	
	35	2	**238-5292**	2	HUB-BRAKE (REAR AXLE)	
	36	2	**238-5293**	1	HOUSING-AXLE (LH)	
	37	2	**238-5294**	1	HOUSING-AXLE (RH)	
Y	38	2	*238-5289*	1	HOUSING GP-AXLE	236
	39	1	**4F-9029**	2	SEAL	
	40	1	**9X-7684**	2	SEAL-O-RING	
	41	1	**5H-4909**	2	SEAL-O-RING	
M	42	1	**8T-0292**	2	BOLT (M8X1.25X90-MM)	
	43	2	**130-7282**	1	BRACKET	
M	44	2	**7X-2559**	26	BOLT (M16X2X160-MM)	
	45	1,2	**3J-1907**	1	SEAL-O-RING	
	46	1	**9S-8004**	1	PLUG-O-RING	
	47	2	**069-4707**	1	SEALANT (GASKET)	
J	48	2	**259-0127**	1	BRAKE GP-HYDRAULIC CALIPER	
	49	2	**4L-6454**	2	BOLT (3/8-16X1-IN)	
	50	2	**219-8795**	1	CAP	

230-5739 **AXLE GP-REAR** *(contd.)* **i03495280**

NOTE	REF NO	GRAPHIC REF	PART NUMBER	QTY	PART NAME 1 2 3 4 5 6 (PRODUCT LEVEL)	SEE PAGE
					AVAILABLE REPAIR KIT(S):	
J			**259-0129**	1	KIT-BRAKE CALIPER	
					(INCLUDES SLEEVE KIT, SLEEVE PROTECTORS, WASHERS & NUT)	
J			**259-0128**	1	KIT-BRAKE LINING	
					(INCLUDES LINING ASSEMBLY, SPRING, GREASE, CORRUGATED 2-WALL & INSTRUCTION SHEET)	
J			**166-9413**	1	KIT-CAM (COUNTERCLOCKWISE)	
					(INCLUDES CAMS, BALL BEARINGS & BALL RETAINERS)	

J-KITS MARKED J SERVICE PART MARKED J
M-METRIC PART
Y-SEPARATE ILLUSTRATION

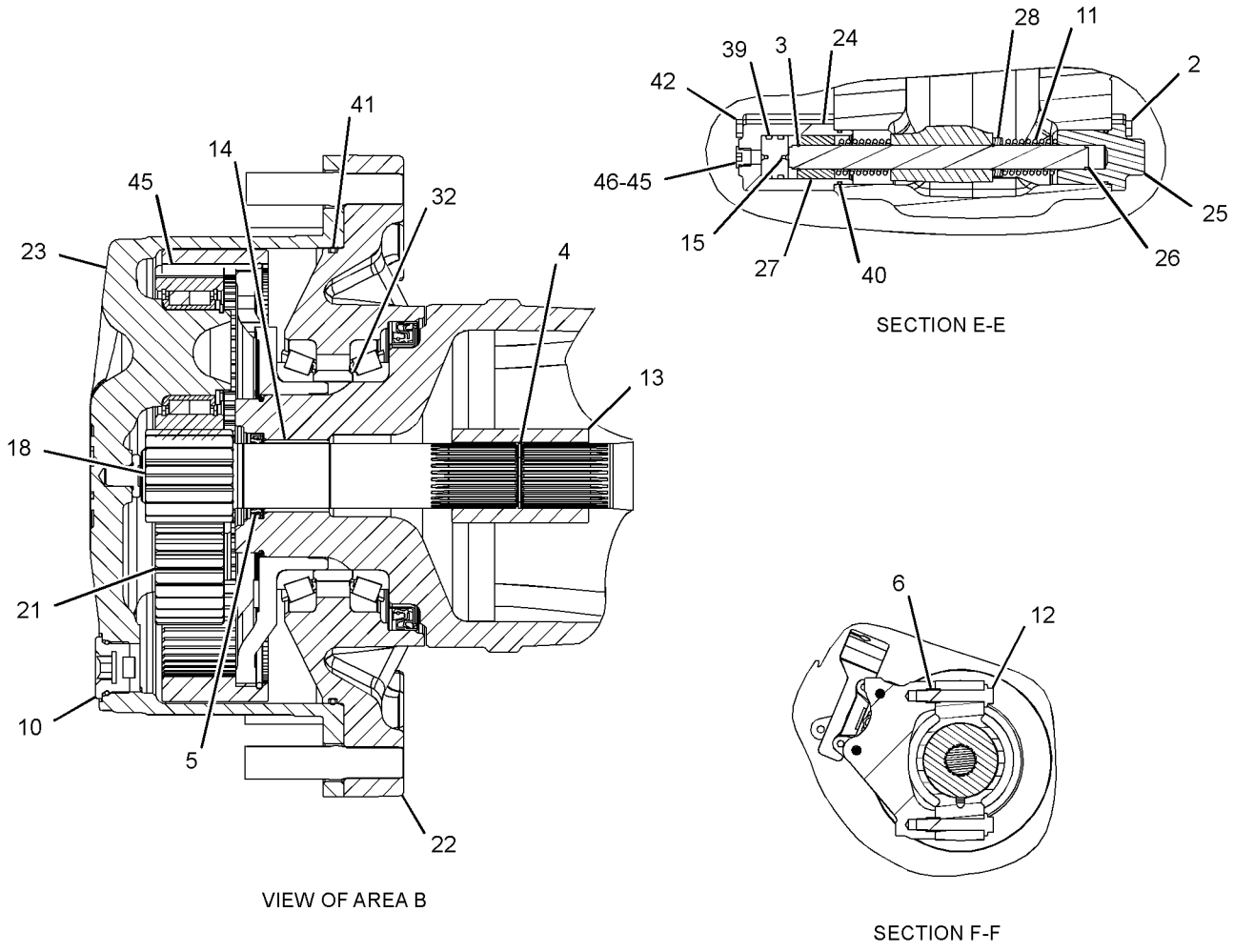

GRAPHIC #1 g01263547

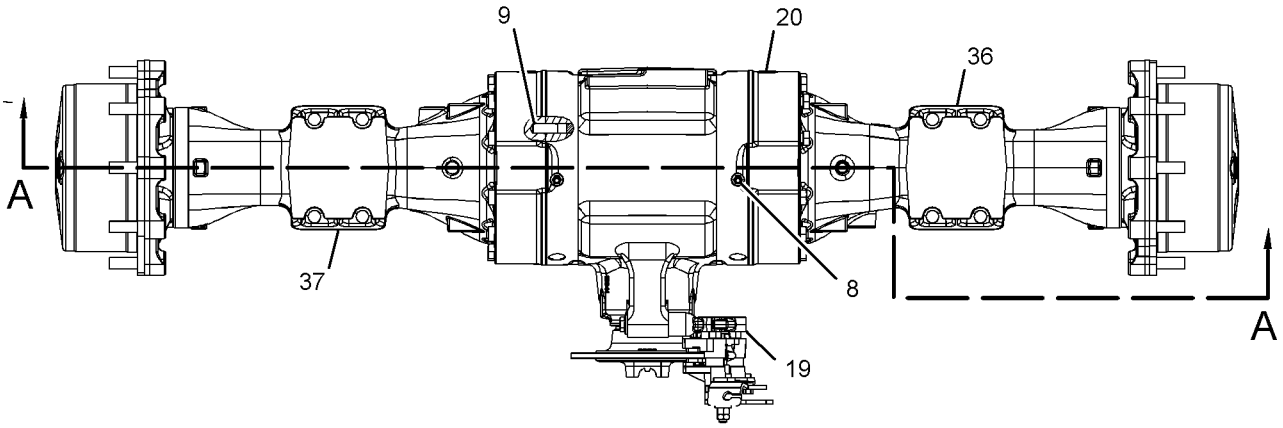

TOP VIEW

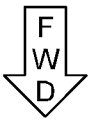

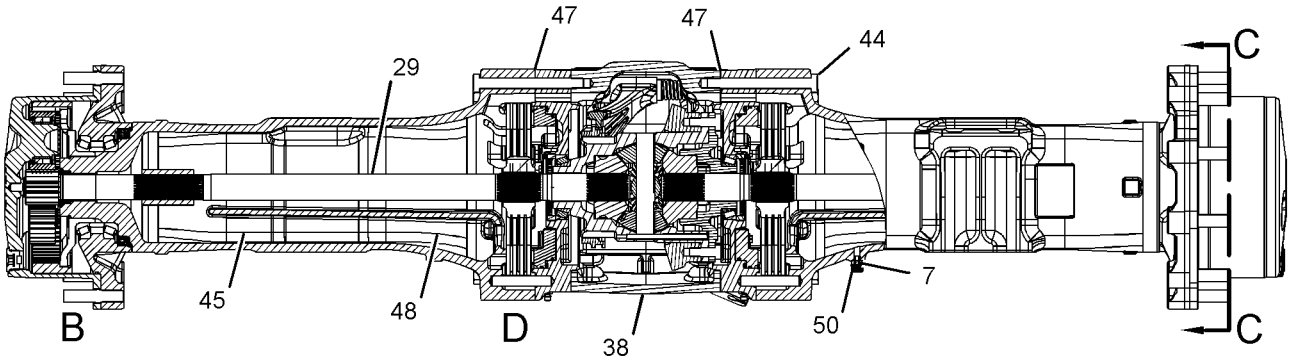

SECTION A-A

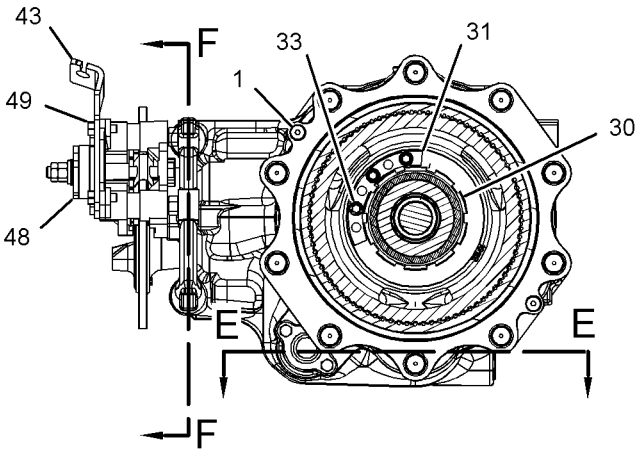

SECTION C-C

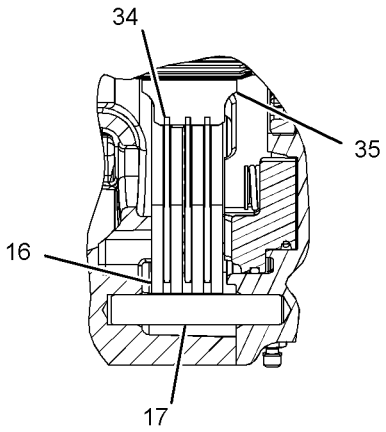

VIEW OF AREA D

REFER TO ALL ILLUSTRATIONS OF THIS GROUP FOR AUXILIARY VIEWS

GRAPHIC #2 **<END>** g01263548

275-0468 CASE AS-TRANSMISSION–FRONT

S/N: EAT1-UP

PART OF 271-3774 TRANSMISSION GP-DIRECT DRIVE

AN ATTACHMENT

SMCS-3030, 3064 **i03091844**

NOTE	REF NO	GRAPHIC REF	PART NUMBER	QTY	PART NAME 1 2 3 4 5 6 (PRODUCT LEVEL)	SEE PAGE
	1	1	**120-9762**	4	SEAL-O-RING	
M	2	1	**6V-5215**	2	BOLT (M8X1.25X16-MM)	
	3	1	**7T-2651**	1	STRAINER (SUCTION)	
	4	1	**106-9861**	1	PLATE-COVER	
	5	1	**7T-3051**	1	PLUG	
	6	1	**005-0469**	1	CUP-BEARING	
	7	1	**8T-1580**	1	CUP	
	8	1	**6Y-2737**	1	CUP-BEARING	
	9	1	**123-8906**	2	CUP-TAPERED ROLLER	
	10	1	**9W-5460**	1	RING	
	11	1	**4J-0522**	1	SEAL-O-RING	
	12	1	**275-0469**	1	CASE AS-FRONT	
		1	**122-3652**	2	PLUG	
		1	**123-2920**	3	PLUG	
		1	**237-5188**	1	PLUG-EXPANSION	
	13	1	**7T-3253**	2	DOWEL	

M-METRIC PART

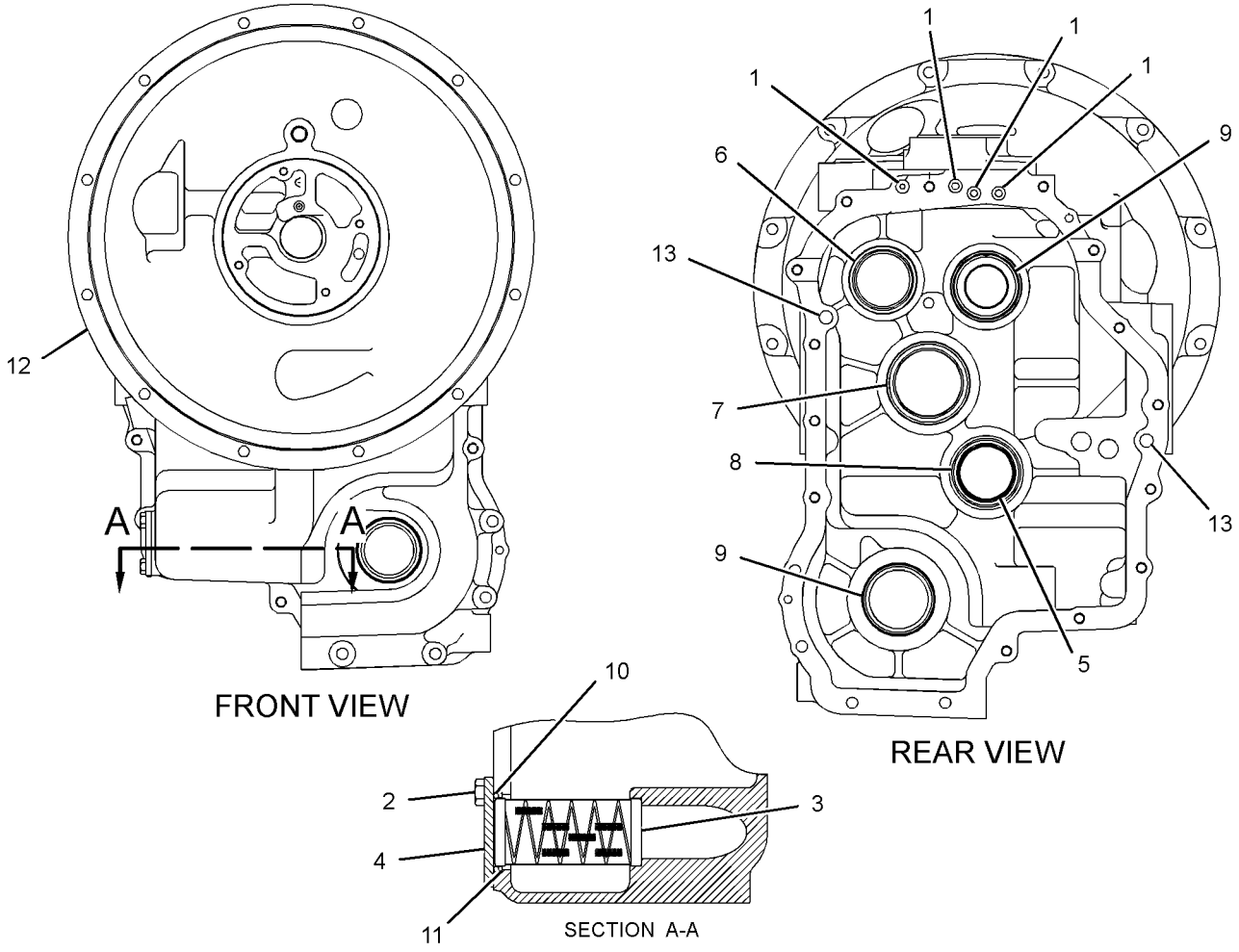

GRAPHIC #1 **<END>** g01220674

275-0470 CASE AS-TRANSMISSION–REAR

S/N: EAT1-UP
PART OF 271-3774 TRANSMISSION GP-DIRECT DRIVE
AN ATTACHMENT

SMCS-3030, 3064 **i02909070**

NOTE	REF NO	GRAPHIC REF	PART NUMBER	QTY	PART NAME 1 2 3 4 5 6 (PRODUCT LEVEL)	SEE PAGE
	1	1	**123-8906**	1	CUP-TAPERED ROLLER	
B	2	1	**6T-9144**	1	SHIM (0.051-MM THK)	
B	3	1	**6T-9147**	1	SHIM (0.076-MM THK)	
B	4	1	**6T-9146**	1	SHIM (0.127-MM THK)	
B	5	1	**6T-9145**	1	SHIM (0.178-MM THK)	
B	6	1	**6T-9143**	1	SHIM (0.381-MM THK)	
B	7	1	**6T-9142**	1	SHIM (0.508-MM THK)	
	8	1	**7T-3034**	1	SPACER (56.9X64.5X1.98-MM)	
	9	1	**7T-2646**	2	SPACER (66X79.5X2.02-MM THK)	
B	10	1	**6T-9166**	2	SHIM (0.051-MM THK)	
B	11	1	**6T-9165**	2	SHIM (0.076-MM THK)	
B	12	1	**6T-9164**	2	SHIM (0.178-MM THK)	
B	13	1	**6T-9163**	2	SHIM (0.599-MM THK)	
B	14	1	**121-7399**	1	SHIM (0.05-MM THK)	
B	15	1	**121-7400**	1	SHIM (0.08-MM THK)	
B	16	1	**121-7401**	1	SHIM (0.18-MM THK)	
B	17	1	**121-7402**	1	SHIM (0.6-MM THK)	
	18	1	**121-7398**	1	SPACER (70X79.5X2-MM THK)	
	19	1	**005-0469**	1	CUP-BEARING	
	20	1	**123-8908**	2	CUP-TAPERED ROLLER	
	21	1	**123-8910**	1	CUP-TAPERED ROLLER	
	22	1	**274-8630**	1	CASE-REAR	
	23	1	**122-1879**	1	SPACER (58X67.5X2-MM THK)	
B	24	1	**104-3288**	1	SHIM (0.05-MM THK)	
B	25	1	**121-2059**	1	SHIM (0.08-MM THK)	
B	26	1	**121-2060**	1	SHIM (0.18-MM THK)	
B	27	1	**121-2061**	1	SHIM (0.6-MM THK)	

B-USE AS REQUIRED

275-0470 CASE AS-TRANSMISSION *(contd.)* **i02909070**

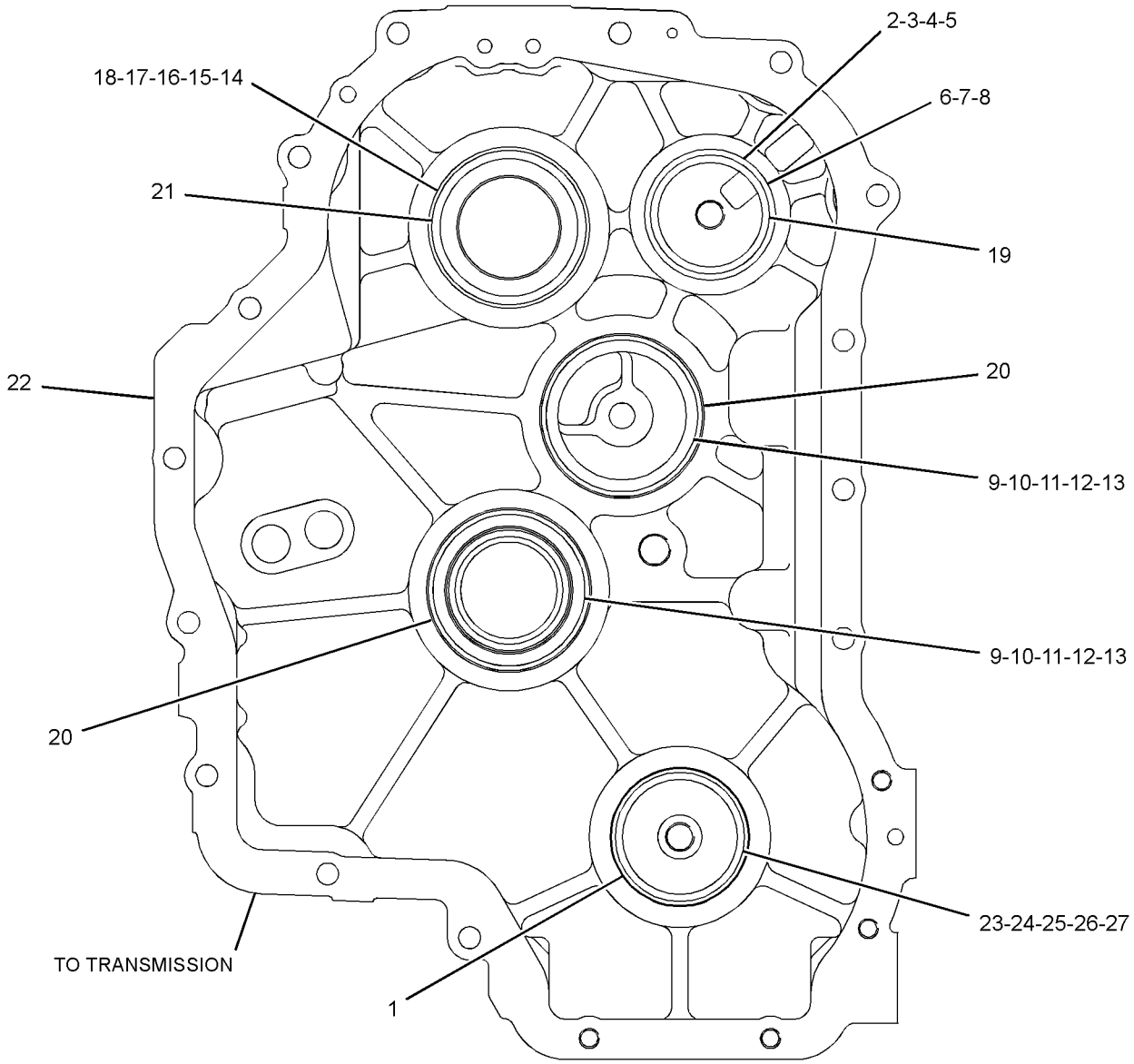

FRONT VIEW

GRAPHIC #1 **<END>** g01448510

275-0472 CASE GP-TRANSMISSION–FRONT

S/N: BYC1-UP; EAT1-UP
PART OF 271-3773 TRANSMISSION GP-DIRECT DRIVE
AN ATTACHMENT

SMCS-3030, 3064 **i03097420**

NOTE	REF NO	GRAPHIC REF	PART NUMBER	QTY	PART NAME 1 2 3 4 5 6 (PRODUCT LEVEL)	SEE PAGE
M	1	1	**6V-5215**	2	BOLT (M8X1.25X16-MM)	
	2	1	**7T-2651**	1	STRAINER (SUCTION)	
	3	1	**106-9861**	1	PLATE-COVER	
	4	1	**7T-3051**	1	PLUG	
	5	1	**005-0469**	1	CUP-BEARING	
	6	1	**8T-1580**	1	CUP	
	7	1	**6Y-2737**	1	CUP-BEARING	
	8	1	**123-8906**	1	CUP-TAPERED ROLLER	
	9	1	**9W-5460**	1	RING	
	10	1	**4J-0522**	1	SEAL-O-RING	
	11	1	**275-0471**	1	CASE AS-FRONT	
		1	**122-3652**	2	PLUG	
		1	**123-2920**	2	PLUG	
		1	**237-5188**	1	PLUG-EXPANSION	
	12	1	**7T-3253**	2	DOWEL	
	13	1	**120-9762**	3	SEAL-O-RING	

M-METRIC PART

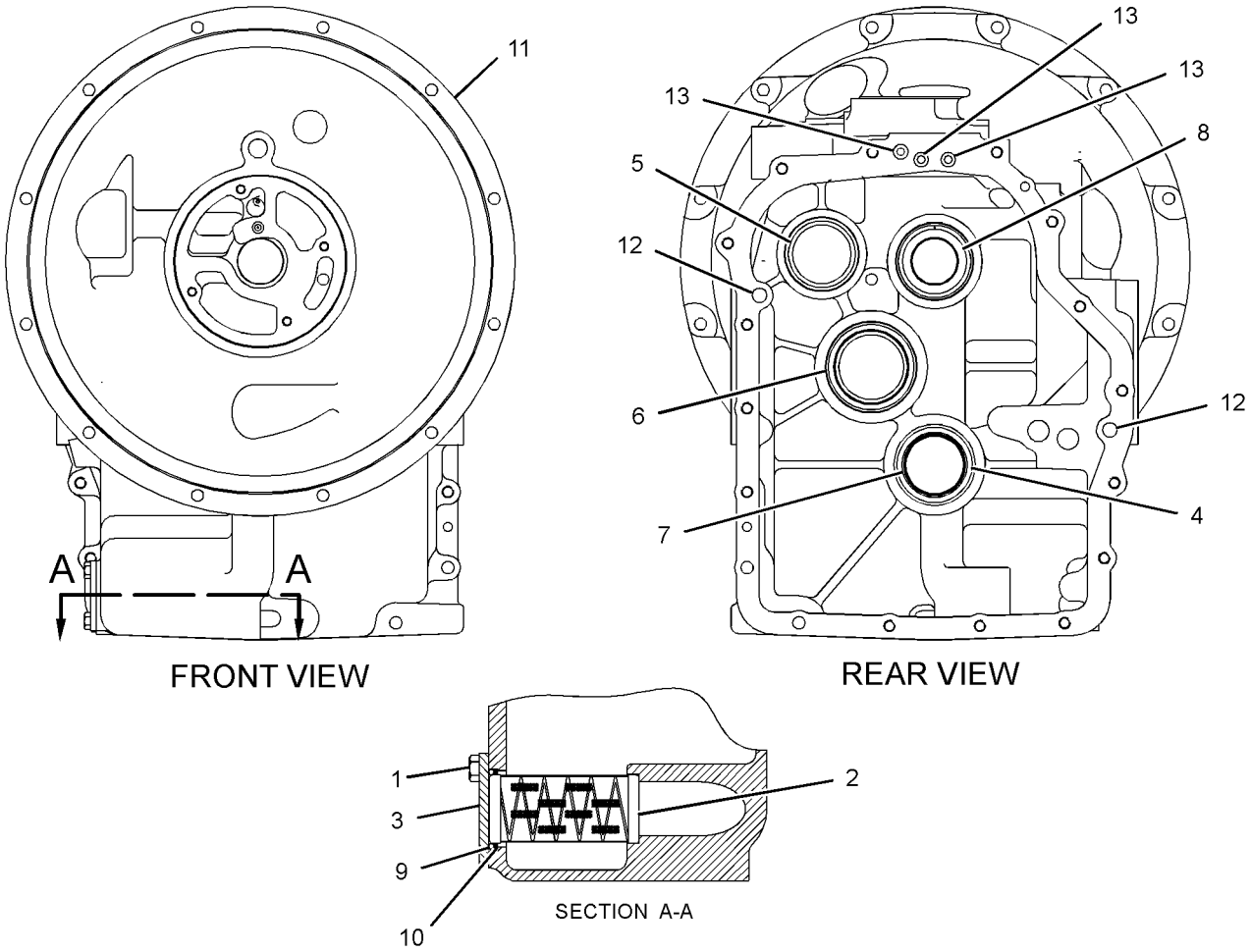

GRAPHIC #1 **<END>** g01220682

275-0474 CASE GP-TRANSMISSION–REAR

S/N: BYC1-UP; EAT1-UP
PART OF 271-3773 TRANSMISSION GP-DIRECT DRIVE
AN ATTACHMENT

SMCS-3030, 3064 **i03001554**

NOTE	REF NO	GRAPHIC REF	PART NUMBER	QTY	PART NAME 1 2 3 4 5 6 (PRODUCT LEVEL)	SEE PAGE
	1	1	**274-8632**	1	CASE-REAR	
B	2	1	**6T-9144**	1	SHIM (0.051-MM THK)	
B	3	1	**6T-9147**	1	SHIM (0.076-MM THK)	
B	4	1	**6T-9146**	1	SHIM (0.127-MM THK)	
B	5	1	**6T-9145**	1	SHIM (0.178-MM THK)	
B	6	1	**6T-9143**	1	SHIM (0.381-MM THK)	
B	7	1	**6T-9142**	1	SHIM (0.508-MM THK)	
	8	1	**7T-3034**	1	SPACER (56.9X64.5X1.98-MM)	
	9	1	**7T-2646**	2	SPACER (66X79.5X2.02-MM THK)	
B	10	1	**6T-9166**	2	SHIM (0.051-MM THK)	
B	11	1	**6T-9165**	2	SHIM (0.076-MM THK)	
B	12	1	**6T-9164**	2	SHIM (0.178-MM THK)	
B	13	1	**6T-9163**	2	SHIM (0.599-MM THK)	
B	14	1	**121-7399**	1	SHIM (0.05-MM THK)	
B	15	1	**121-7400**	1	SHIM (0.08-MM THK)	
B	16	1	**121-7401**	1	SHIM (0.18-MM THK)	
B	17	1	**121-7402**	1	SHIM (0.6-MM THK)	
	18	1	**121-7398**	1	SPACER (70X79.5X2-MM THK)	
	19	1	**005-0469**	1	CUP-BEARING	
	20	1	**123-8908**	2	CUP-TAPERED ROLLER	
	21	1	**123-8910**	1	CUP-TAPERED ROLLER	

B-USE AS REQUIRED

275-0474 CASE GP-TRANSMISSION *(contd.)* **i03001554**

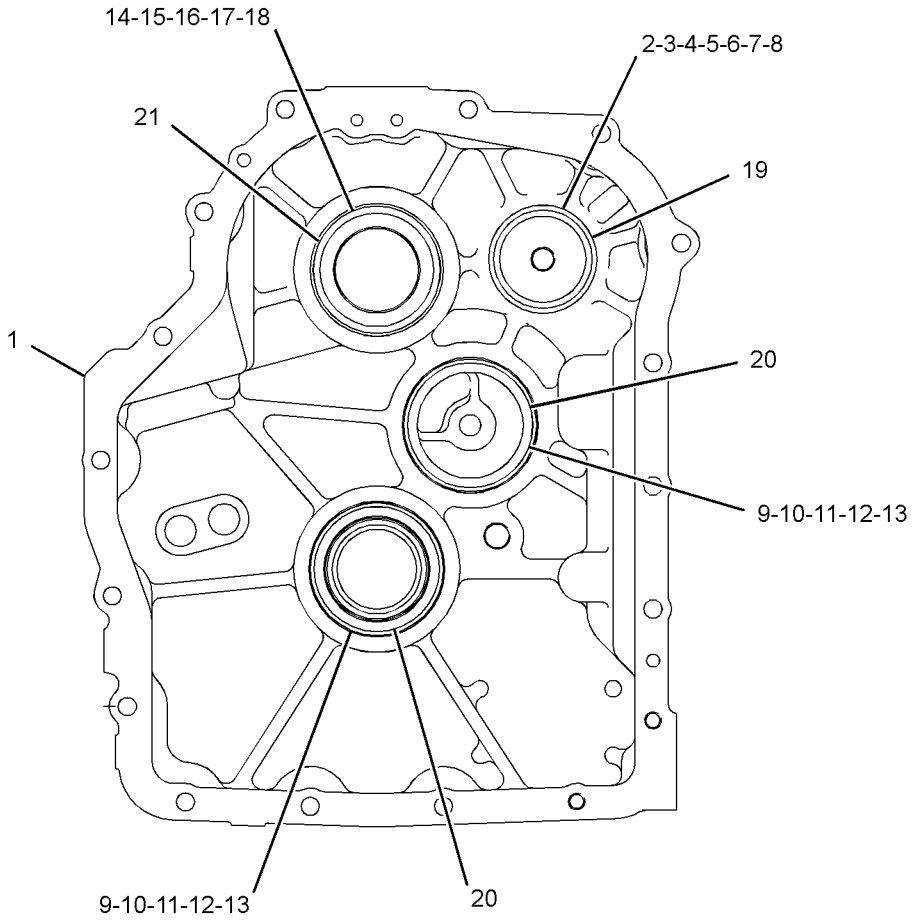

FRONT VIEW

GRAPHIC #1 **<END>** g01388814

294-9809 CASE GP-TRANSMISSION–FRONT

S/N: EAT1-UP

PART OF 271-3773 TRANSMISSION GP-DIRECT DRIVE

AN ATTACHMENT

SMCS-3030, 3064 **i02740653**

NOTE	REF NO	GRAPHIC REF	PART NUMBER	QTY	PART NAME 1 2 3 4 5 6 (PRODUCT LEVEL)	SEE PAGE
M	1	1	**6V-8210**	2	BOLT (M8X1.25X16-MM)	
	2	1	**7T-2651**	1	STRAINER (SUCTION)	
	3	1	**106-9861**	1	PLATE-COVER	
	4	1	**7T-3051**	1	PLUG	
	5	1	**005-0469**	1	CUP-BEARING	
	6	1	**8T-1580**	1	CUP (TAPERED ROLLER)	
	7	1	**6Y-2737**	1	CUP-BEARING	
	8	1	**123-8906**	1	CUP-TAPERED ROLLER	
	9	1	**4F-7952**	1	SEAL-O-RING	
	10	1	**9W-5460**	1	RING	
	11	1	*294-9808*	1	CASE AS-FRONT	
		1	**122-3652**	3	PLUG	
		1	**123-2920**	2	PLUG	
		1	**237-5188**	1	PLUG-EXPANSION	
	12	1	**7T-3253**	2	DOWEL	
	13	1	**120-9762**	3	SEAL-O-RING	

M-METRIC PART

294-9809 CASE GP-TRANSMISSION *(contd.)* i02740653

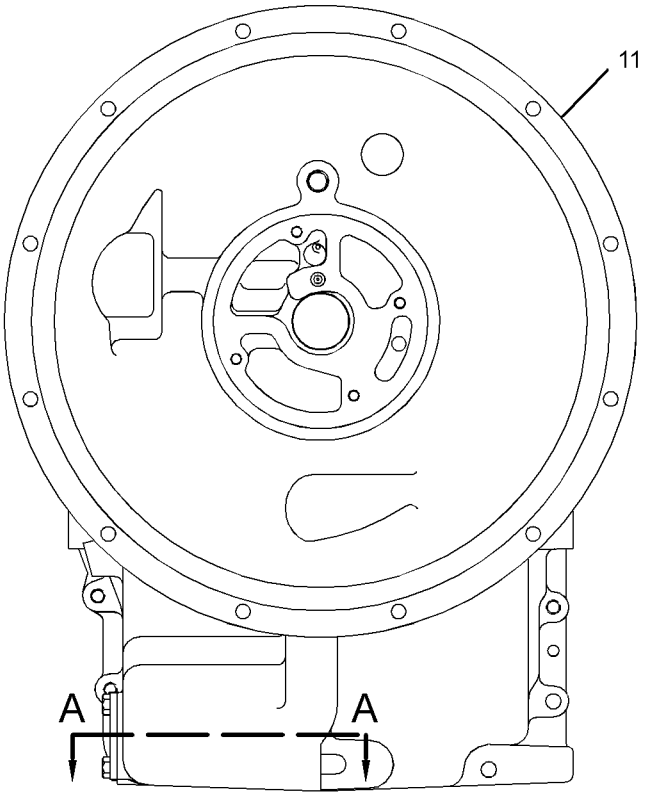

FRONT VIEW

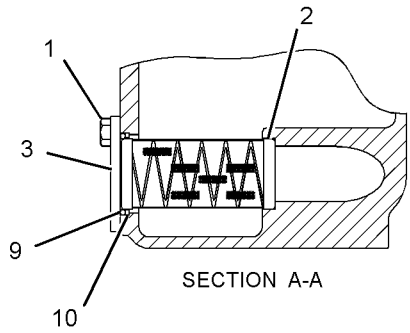

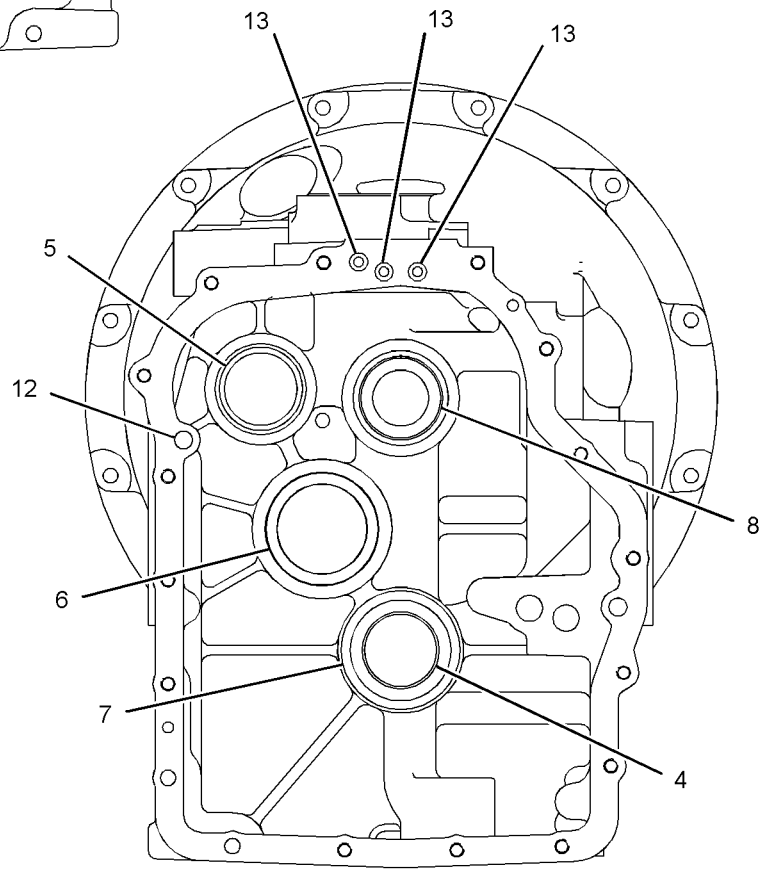

REAR VIEW

GRAPHIC #1 **<END>** g01383783

209-9882 DIFFERENTIAL & BEVEL GEAR GP

S/N: EAT1-UP
PART OF 230-5743 AXLE GP-DRIVE & STEERING
AN ATTACHMENT

SMCS-3256, 3258, 3281, 3283, 3284 **i03503960**

NOTE	REF NO	GRAPHIC REF	PART NUMBER	QTY	PART NAME 1 2 3 4 5 6 (PRODUCT LEVEL)	SEE PAGE
	1	1	**216-4457**	1	SEAL	
	2	1	**216-4458**	2	BEARING	
	3	1	**136-7808**	1	BEARING AS-TAPERED ROLLER	
	4	1	**216-4461**	1	BEARING	
	5	1	**209-7454**	2	NUT (M94X2-THD)	
	6	1	**152-6144**	1	PLUG AS-DRAIN (MAGNETIC)	
		1	**6V-6228**	1	SEAL-O-RING	
	7	1	**209-7462**	2	WASHER (40X50X2-MM THK)	
	8	1	**209-7463**	1	SLEEVE (COLLAPSIBLE)	
M	9	1	**199-0695**	2	BOLT (M6X1X14-MM)	
M	10	1	**209-7472**	1	NUT (M24X1.5-THD)	
	11	1	**216-4465**	1	WASHER (24.5X52X10-MM THK)	
	12	1	**216-4464**	1	YOKE	
	13	1	**199-0858**	2	RETAINER	
	14	1	**217-2868**	1	GEAR GP-BEVEL & PINION	
Y	15	1	**216-9498**	1	DIFFERENTIAL GP	221
	16	1	**4J-0520**	1	SEAL-O-RING	
	17	1	**216-5515**	1	CARRIER AS-DIFFERENTIAL	
	17A	1	**208-0322**	4	BOLT-FLANGE HEAD (M14X2X75-MM)	
	17B	1	**217-2880**	4	DOWEL	
B	18	1	**209-7473**	1	SHIM (2.5-MM THK)	
B			**219-8751**	1	SHIM (2.6-MM THK)	
B			**219-8752**	1	SHIM (2.7-MM THK)	
B			**219-8753**	1	SHIM (2.8-MM THK)	
B			**219-8754**	1	SHIM (2.9-MM THK)	
B			**219-8755**	1	SHIM (3-MM THK)	
B			**219-8756**	1	SHIM (3.1-MM THK)	
B			**219-8757**	1	SHIM (3.2-MM THK)	
B			**219-8758**	1	SHIM (3.3-MM THK)	
B			**219-8759**	1	SHIM (3.4-MM THK)	

B-USE AS REQUIRED
M-METRIC PART
Y-SEPARATE ILLUSTRATION

209-9882 DIFFERENTIAL & BEVEL GEAR GP *(contd.)* i03503960

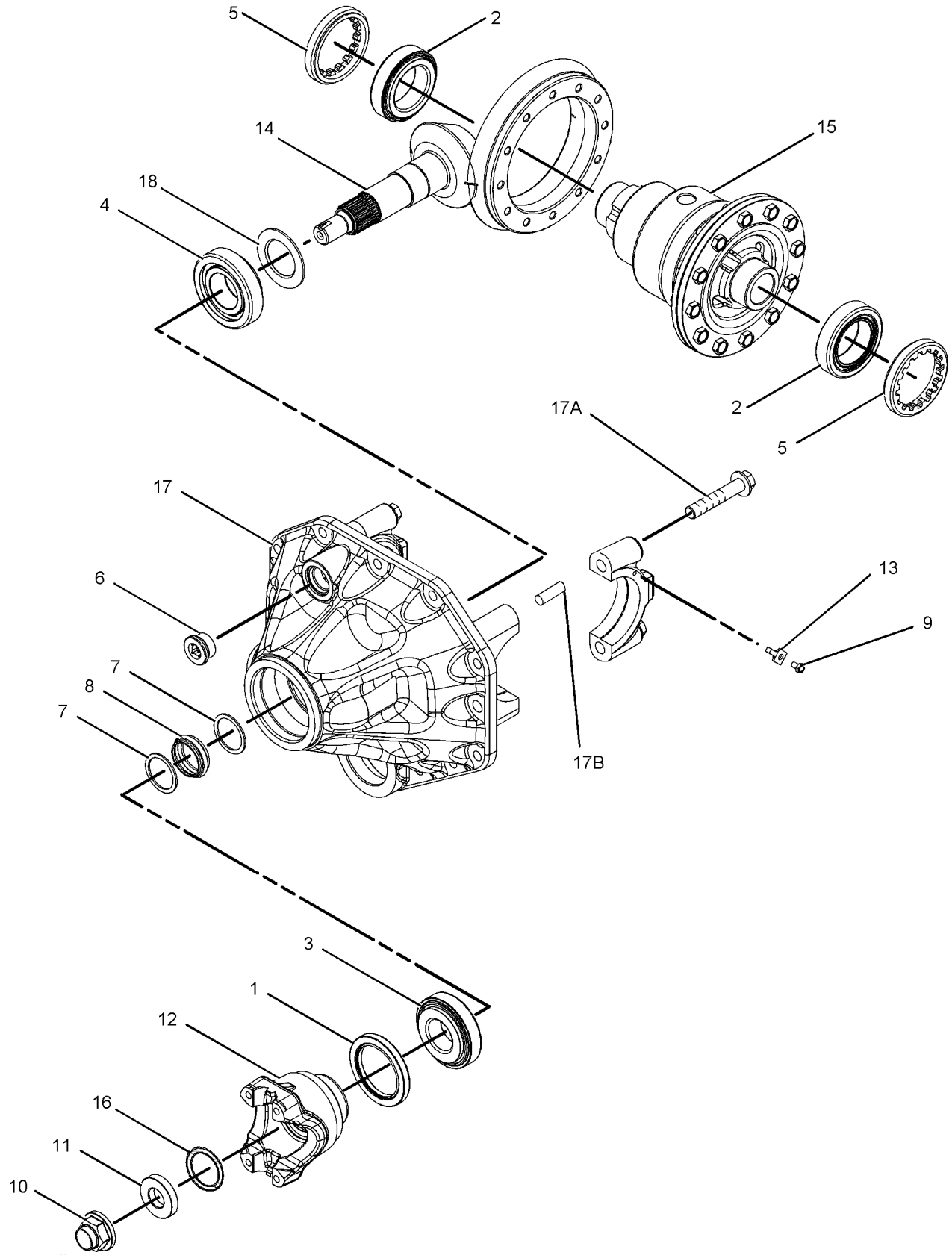

GRAPHIC #1 **<END>** g01062316

216-9498 DIFFERENTIAL GP

S/N: EAT1-UP

PART OF 209-9882 DIFFERENTIAL & BEVEL GEAR GP

AN ATTACHMENT

SMCS-3258 **i03510982**

NOTE	REF NO	GRAPHIC REF	PART NUMBER	QTY	PART NAME 1 2 3 4 5 6 (PRODUCT LEVEL)	SEE PAGE
	1	1	**216-8687**	1	COVER (DIFFERENTIAL CASE)	
	2	1	**216-8689**	1	HOUSING-DIFFERENTIAL	
J	3	1	**229-5093**	2	WASHER-THRUST (49X72X1.5-MM THK)	
M	4	1	**266-4360**	12	BOLT (M10X1.5X30-MM)	
J	5	1	**211-0092**	2	WASHER-THRUST (22X42X2-MM THK)	
J	6	1	**209-7455**	1	PIN	
J	7	1	**216-8691**	1	RETAINER	
J	8	1	**216-9497**	1	GEAR GP-DIFFERENTIAL & BEVEL	
					AVAILABLE REPAIR KIT(S):	
J			**216-8700**	1	KIT-DIFFERENTIAL	
					(INCLUDES WASHERS, PINS & GEARS)	

J-KIT MARKED J SERVICES PARTS MARKED J
M-METRIC PART

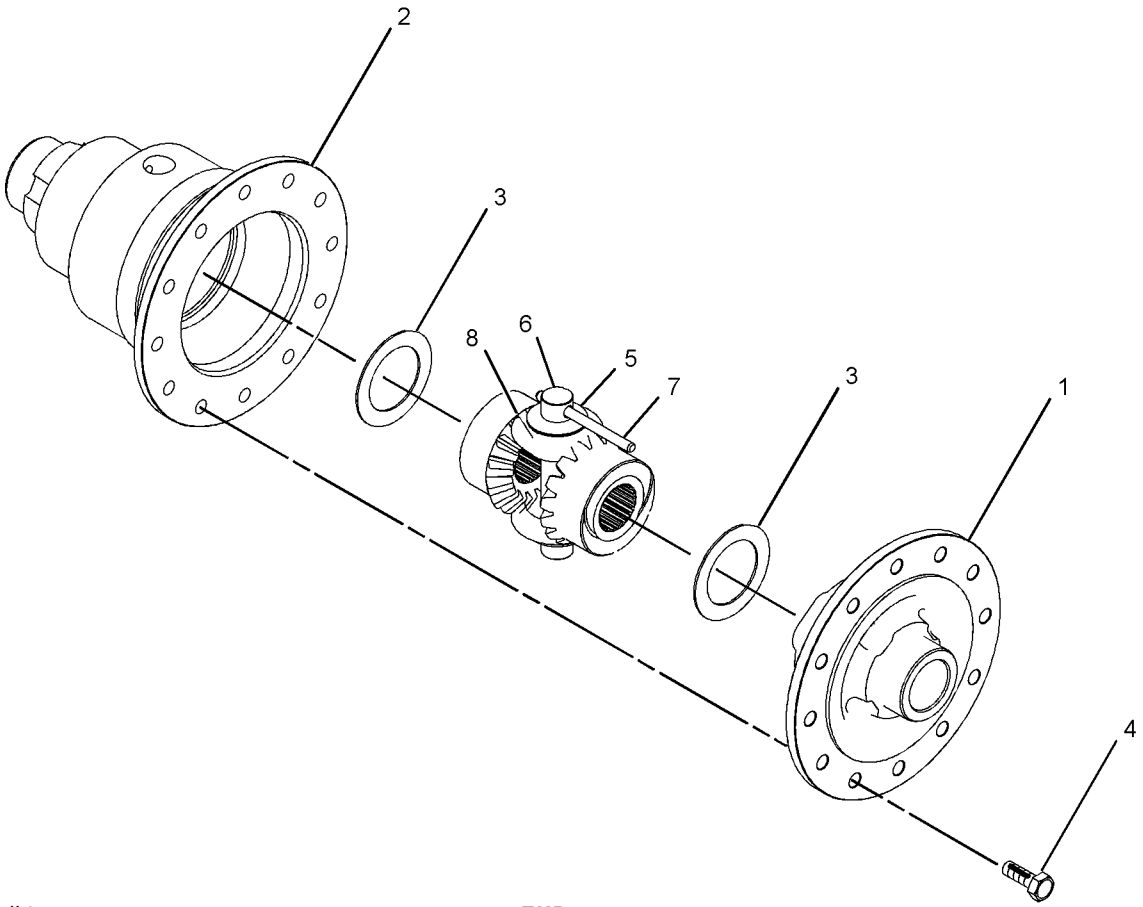

GRAPHIC #1 **<END>** g01043312

231-0692 DIFFERENTIAL GP

S/N: BYC1-UP; EAT1-UP
PART OF 238-5289 HOUSING GP-AXLE
AN ATTACHMENT

SMCS-3258 **i02196803**

NOTE	REF NO	GRAPHIC REF	PART NUMBER	QTY	PART NAME 1 2 3 4 5 6 (PRODUCT LEVEL)	SEE PAGE
	1	1	**199-0673**	2	BUSHING	
	2	1	**199-0694**	12	BOLT (M14X2X40-MM)	
	3	1	**199-0756**	1	COLLAR	
	4	1	**199-0784**	1	COVER-DIFFERENTIAL	
	5	1	**199-0807**	4	PIN	
	6	1	**199-0808**	3	PIN	
	7	1	**231-0670**	1	SHAFT	
	8	1	**231-0671**	4	WASHER-THRUST	
	9	1	**231-0695**	2	WASHER-THRUST	
	10	1	**231-0693**	1	CASE-DIFFERENTIAL	
	11	1	**231-0696**	2	SHAFT	
	12	1	**231-0697**	1	RETAINER	
	13	1	**231-0694**	1	GEAR AS	
	14	1	**199-0659**	4	SEAL-PIN	

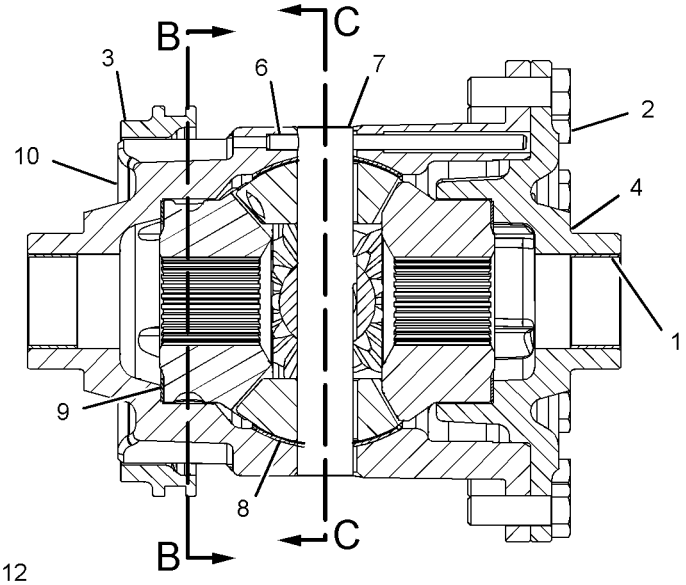

FRONT VIEW
(SECTIONED)

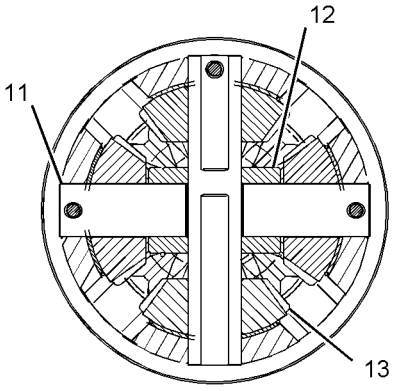

SECTION C-C

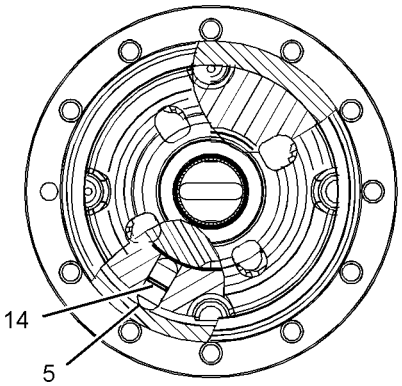

SECTION B-B

GRAPHIC #1 **<END>** g01107764

111-7907 DRIVE GP-FLEXIBLE COUPLING

S/N: BYC1-UP; EAT1-UP
PART OF 214-7527, 272-0752 TRANSMISSION AR-DIRECT DRIVE, 251-6355 TRANSMISSION AR-POWER SHIFT
AN ATTACHMENT

SMCS-3252 **i02790044**

NOTE	REF NO	GRAPHIC REF	PART NUMBER	QTY	PART NAME 1 2 3 4 5 6 (PRODUCT LEVEL)	SEE PAGE
M	1	1	**8T-4200**	8	BOLT (M8X1.25X16-MM)	
M	2	1	**6V-8455**	6	BOLT (M10X1.5X16-MM)	
	3	1	**117-9713**	1	PLATE-CONVERTER REINFORCEMENT	
	4	1	**8T-4224**	8	WASHER-HARD (8.8X16X2-MM THK)	
	5	1	**111-7906**	1	PLATE-CONVERTER DRIVE	

M-METRIC PART

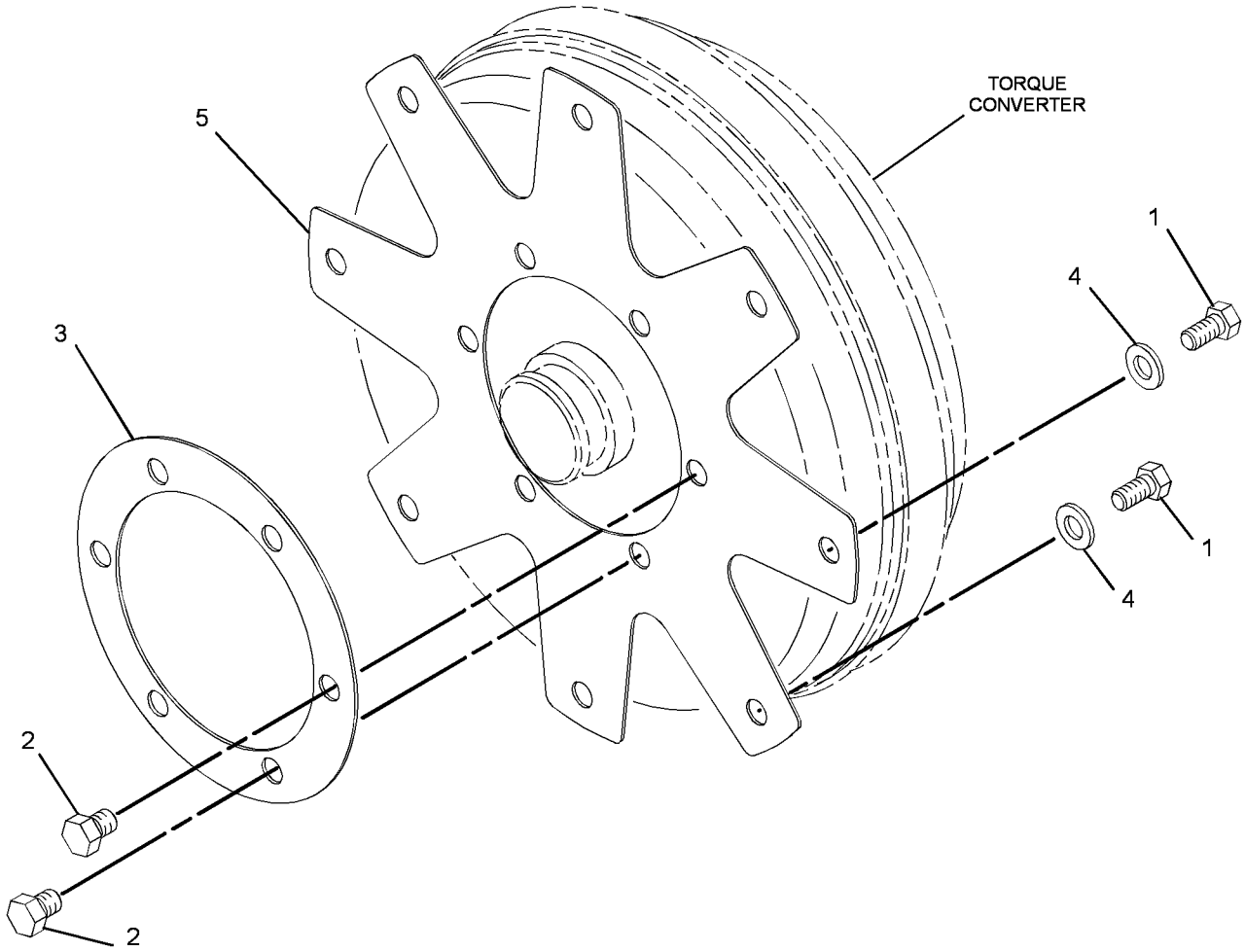

GRAPHIC #1 **<END>** g01393781

211-0073 FILLER GP-POWER TRAIN OIL

S/N: EAT1-UP
PART OF 218-5149 POWER TRAIN AR
AN ATTACHMENT

SMCS-3005, 3081 **i03503962**

NOTE	REF NO	GRAPHIC REF	PART NUMBER	QTY	PART NAME 1 2 3 4 5 6 (PRODUCT LEVEL)	SEE PAGE
	1	1	**2B-0941**	1	SPACER (10.5X19X19-MM THK)	
	2	1	**6V-0852**	2	CAP-DUST	
	3	1	*164-5567*	2	COUPLER AS-QUICK DISCONNECT	
					(EACH INCLUDES)	
		1	**214-7568**	1	SEAL-O-RING	
		1	**6V-3965**	1	FITTING (QUICK DISCONNECT)	
	4	1	**214-3745**	1	TUBE AS	
	5	1	**218-9984**	1	GAUGE AS-OIL LEVEL (DIPSTICK)	
	6	1	**236-1583**	1	BOSS	
	7	1	*148-8368*	2	ELBOW AS	
					(EACH INCLUDES)	
		1	**3J-1907**	1	SEAL-O-RING	
		1	**4J-5477**	1	SEAL-O-RING	
		1	**6V-8627**	1	ELBOW	
	9	1	**4J-0522**	1	SEAL-O-RING	
	10	1	**5P-4116**	1	WASHER-HARD (8.8X20.5X2-MM THK)	
M	11	1	**7X-0818**	1	BOLT (M8X1.25X45-MM)	
	12	1	**8S-0023**	3	CLIP (SLOT)	
	13	1	**8S-0024**	3	CLIP (TAB)	
	14	1	**8T-4121**	1	WASHER-HARD (11X21X2.5-MM THK)	
M	15	1	**8T-4136**	1	BOLT (M10X1.5X25-MM)	
M	16	1	**8T-4176**	1	BOLT (M12X1.75X90-MM)	
	17	1	**8T-4223**	3	WASHER-HARD (13.5X25.5X3-MM THK)	
M	18	1	**8T-4956**	2	BOLT (M12X1.75X35-MM)	

M-METRIC PART

211-0073 **FILLER GP-POWER TRAIN OIL** *(contd.)* **i03503962**

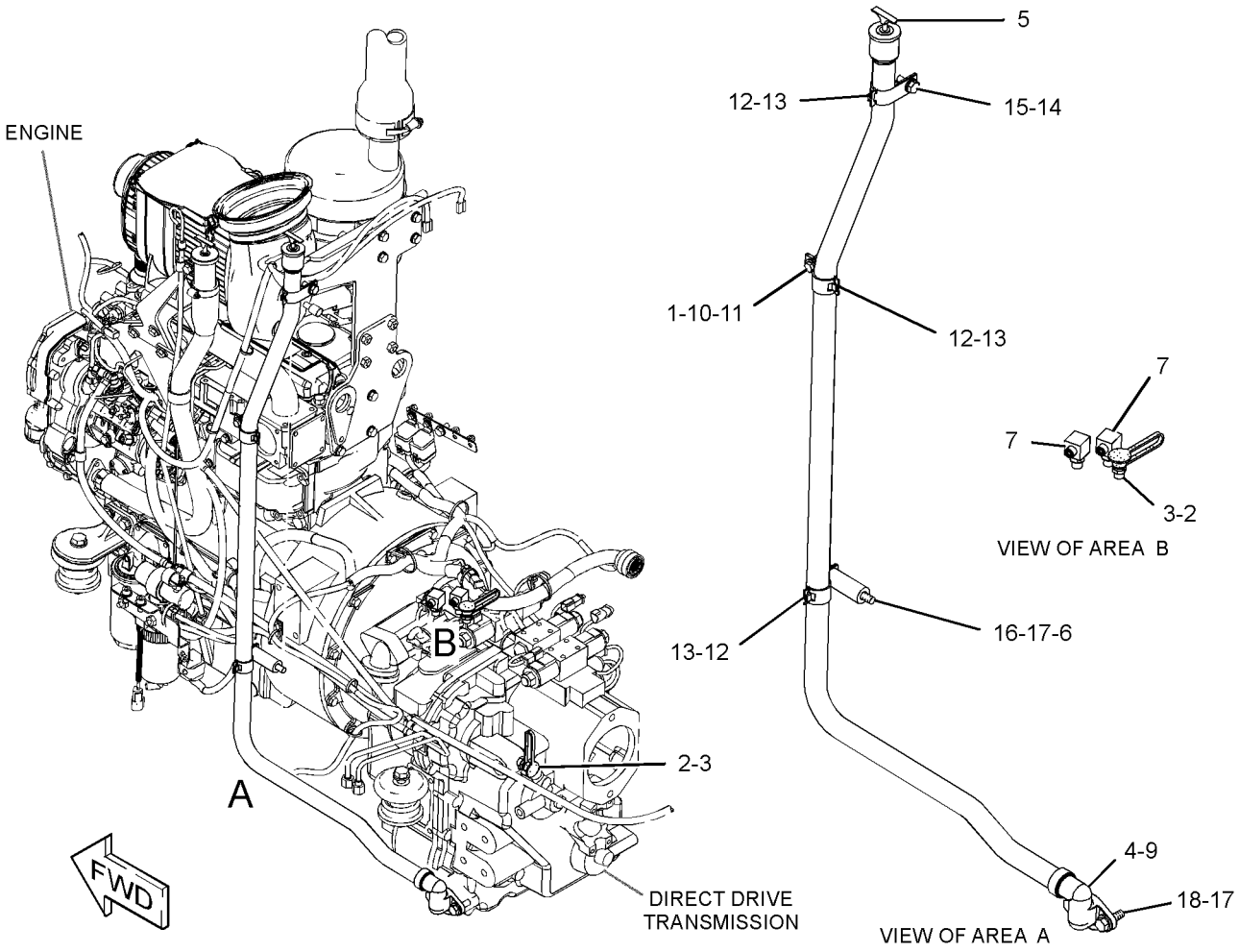

GRAPHIC #1 **<END>** g01522401

214-3740 FILLER GP-POWER TRAIN OIL–

ALL WHEEL DRIVE, STANDARD SHIFT

S/N: EAT1-UP

PART OF 218-5148 POWER TRAIN AR

AN ATTACHMENT

SMCS-3005, 3081 **i03503980**

NOTE	REF NO	GRAPHIC REF	PART NUMBER	QTY	PART NAME 1 2 3 4 5 6 (PRODUCT LEVEL)	SEE PAGE
	1	1	**6V-0852**	2	CAP-DUST	
	2	1	*164-5567*	2	COUPLER AS-QUICK DISCONNECT	
					(EACH INCLUDES)	
		1	**214-7568**	1	SEAL-O-RING	
		1	**6V-3965**	1	FITTING (QUICK DISCONNECT)	
	3	1	**2B-0941**	1	SPACER (10.5X19X19-MM THK)	
	4	1	**271-7167**	1	GAUGE-OIL LEVEL (DIPSTICK)	
	5	1	**230-2610**	1	TUBE AS	
	6	1	*165-4931*	1	ELBOW AS	
		1	**3J-1907**	1	SEAL-O-RING	
		1	**6V-8077**	1	ELBOW	
	8	1	**4J-0522**	1	SEAL-O-RING	
	9	1	**236-1583**	1	BOSS	
	10	1	**8S-0023**	3	CLIP (SLOT)	
	11	1	**8S-0024**	3	CLIP (TAB)	
	12	1	**8T-4121**	1	WASHER-HARD (11X21X2.5-MM THK)	
M	13	1	**8T-4136**	1	BOLT (M10X1.5X25-MM)	
	14	1	**8T-4223**	3	WASHER-HARD (13.5X25.5X3-MM THK)	
M	15	1	**8T-4956**	2	BOLT (M12X1.75X35-MM)	
M	16	1	**8T-4176**	1	BOLT (M12X1.75X90-MM)	
	17	1	**5P-4116**	1	WASHER-HARD (8.8X20.5X2-MM THK)	
M	18	1	**7X-0818**	1	BOLT (M8X1.25X45-MM)	

M-METRIC PART

214-3740 **FILLER GP-POWER TRAIN OIL** *(contd.)* **i03503980**

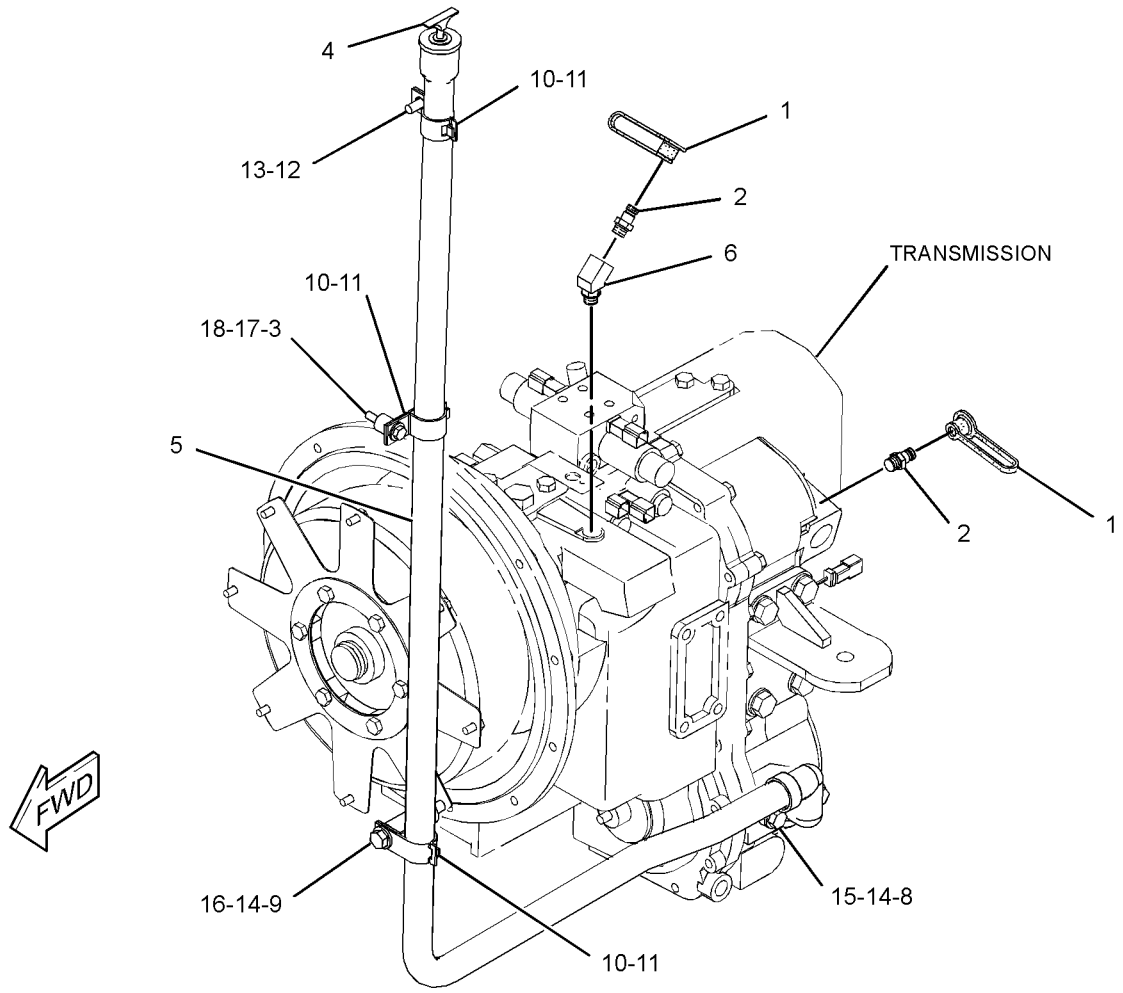

GRAPHIC #1 **<END>** g01569834

256-0551 FILLER GP-POWER TRAIN OIL–

2-WHEEL DRIVE, STANDARD SHIFT

S/N: BYC1-UP; EAT1-UP

PART OF 293-2986 POWER TRAIN AR

AN ATTACHMENT

SMCS-3005, 3081 **i03503981**

NOTE	REF NO	GRAPHIC REF	PART NUMBER	QTY	PART NAME 1 2 3 4 5 6 (PRODUCT LEVEL)	SEE PAGE
	1	1	**2B-0941**	1	SPACER (10.5X19X19-MM THK)	
	2	1	**6V-0852**	2	CAP-DUST	
	3	1	*164-5567*	2	COUPLER AS-QUICK DISCONNECT	
					(EACH INCLUDES)	
		1	**214-7568**	1	SEAL-O-RING	
		1	**6V-3965**	1	FITTING (QUICK DISCONNECT)	
	4	1	**136-3112**	1	SPACER	
	5	1	**230-2610**	1	TUBE AS	
	6	1	**236-1583**	1	BOSS	
	7	1	**271-7167**	1	GAUGE-OIL LEVEL (DIPSTICK)	
	8	1	*165-4931*	1	ELBOW AS	
		1	**3J-1907**	1	SEAL-O-RING	
		1	**6V-8077**	1	ELBOW	
	10	1	**4J-0522**	2	SEAL-O-RING	
	11	1	**5P-4116**	1	WASHER-HARD (8.8X20.5X2-MM THK)	
M	12	1	**7X-0818**	1	BOLT (M8X1.25X45-MM)	
	13	1	**8S-0023**	3	CLIP (SLOT)	
	14	1	**8S-0024**	3	CLIP (TAB)	
	15	1	**8T-4121**	1	WASHER-HARD (11X21X2.5-MM THK)	
M	16	1	**8T-4136**	1	BOLT (M10X1.5X25-MM)	
M	17	1	**8T-4176**	1	BOLT (M12X1.75X90-MM)	
M	18	1	**8T-4194**	2	BOLT (M12X1.75X50-MM)	
	19	1	**8T-4223**	3	WASHER-HARD (13.5X25.5X3-MM THK)	

M-METRIC PART

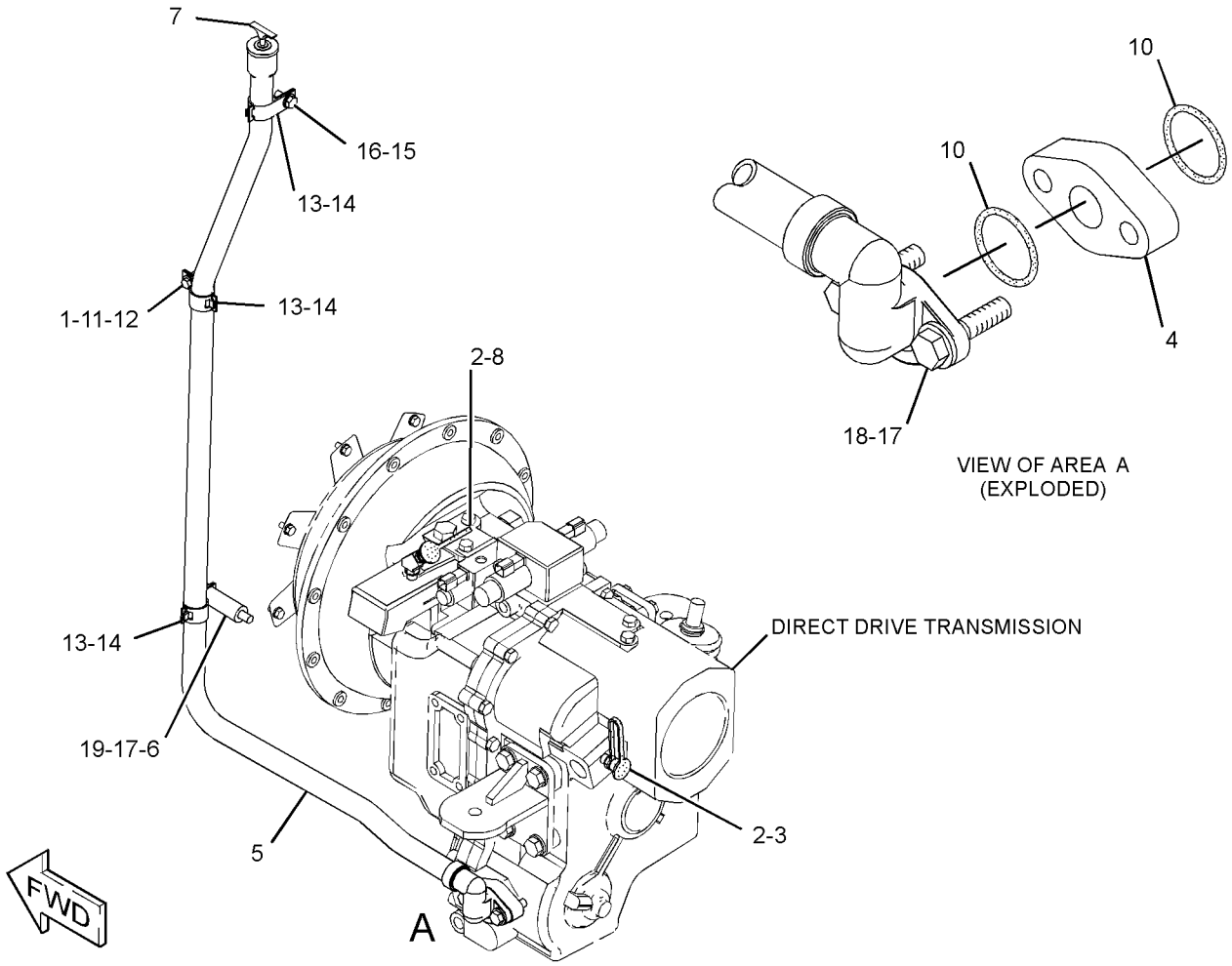

GRAPHIC #1

<END>

g01521851

216-1609 FLANGE GP-WHEEL

S/N: BYC1-UP; EAT1-UP
PART OF 230-5739 AXLE GP-REAR
AN ATTACHMENT

SMCS-4057 **i03136177**

NOTE	REF NO	GRAPHIC REF	PART NUMBER	QTY	PART NAME 1 2 3 4 5 6 (PRODUCT LEVEL)	SEE PAGE
	1	1	**210-5932**	2	BEARING-WHEEL	
J	2	1	**226-4346**	10	STUD	
	3	1	**229-5092**	1	SEAL	
					AVAILABLE REPAIR KIT(S):	
J			**231-0719**	1	FLANGE GP-WHEEL	

J-KIT MARKED J SERVICES PARTS MARKED J

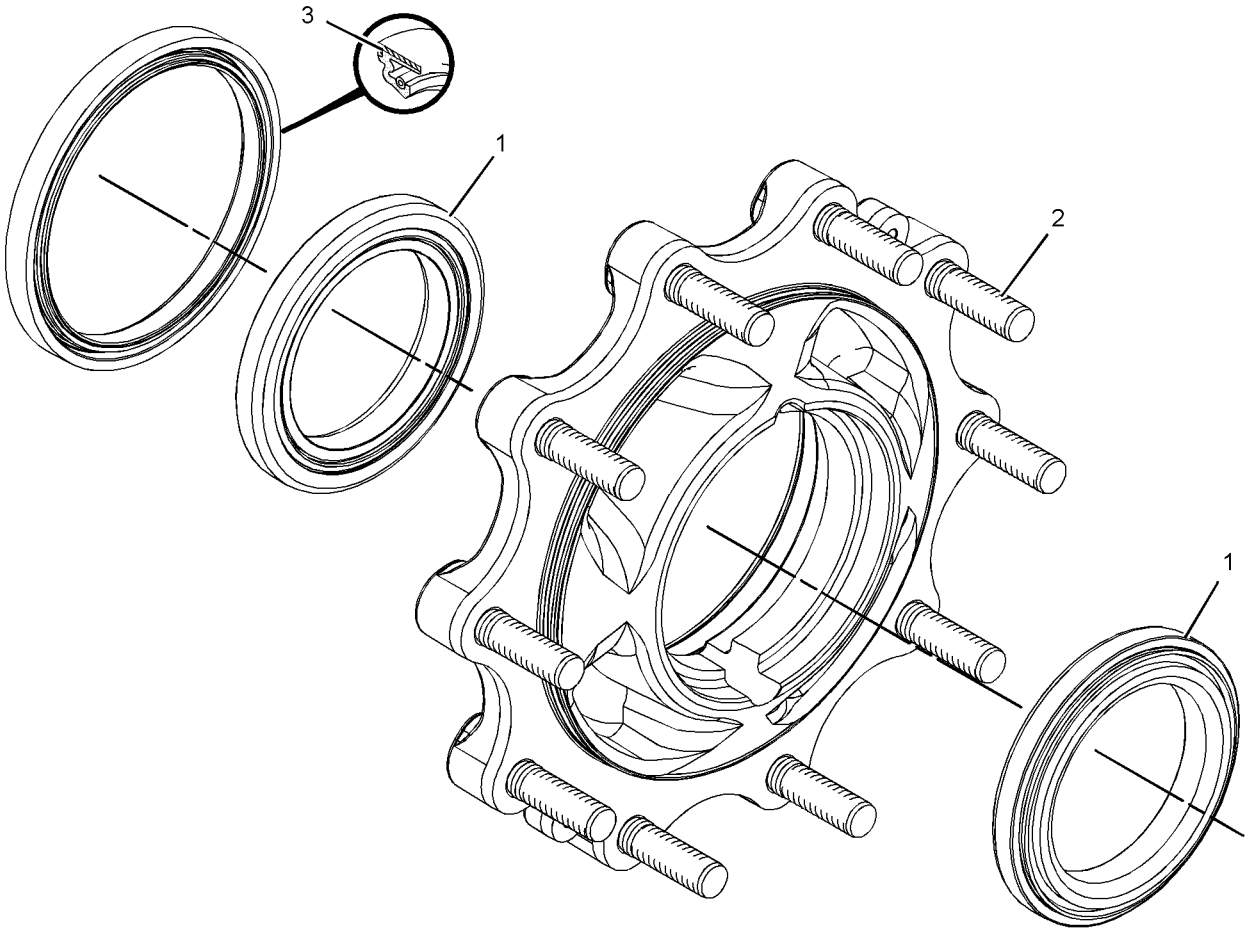

GRAPHIC #1 **<END>** g01614178

231-0683 FLANGE GP-WHEEL

S/N: BYC1-UP; EAT1-UP
PART OF 230-5745 AXLE GP-FRONT
AN ATTACHMENT

SMCS-4057 **i02581942**

NOTE	REF NO	GRAPHIC REF	PART NUMBER	QTY	PART NAME 1 2 3 4 5 6 (PRODUCT LEVEL)	SEE PAGE
	1	1	**207-4263**	1	BEARING AS	
	2	1	**207-4267**	1	BEARING AS	
	3	1	**238-5228**	1	KIT-HUB	
		1	**231-0687**	8	STUD	
	4	1	**231-0688**	1	SEAL	

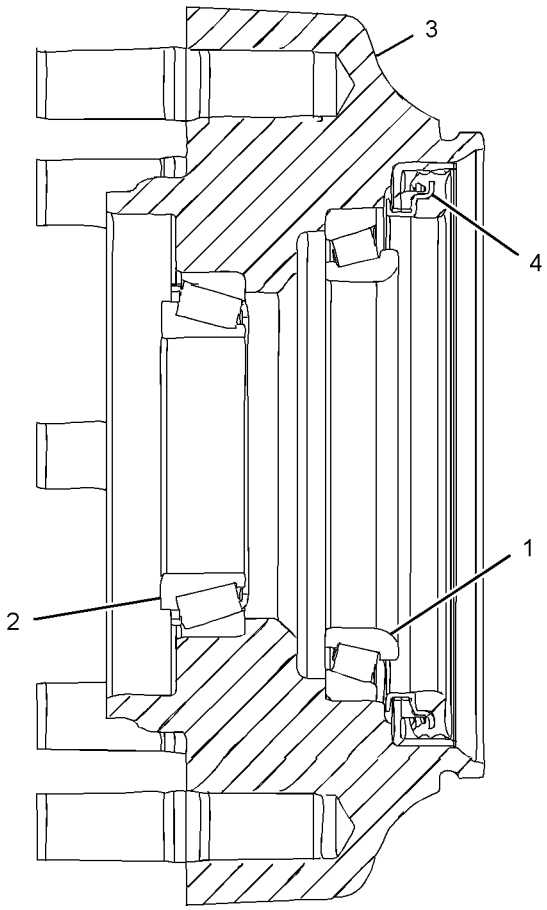

GRAPHIC #1

<END>

g01132035

209-9884 HOUSING & FLANGE GP-AXLE–RH

S/N: EAT1-UP
PART OF 230-5743 AXLE GP-DRIVE & STEERING
AN ATTACHMENT

SMCS-4057, 4234 **i03530482**

NOTE	REF NO	GRAPHIC REF	PART NUMBER	QTY	PART NAME 1 2 3 4 5 6 (PRODUCT LEVEL)	SEE PAGE
Y	1	1	**217-2877**	1	HOUSING GP-AXLE (RH)	234
J	2	1	**231-0703**	1	FLANGE AS	
	2A	1	**210-5932**	2	BEARING-WHEEL	
	2B	1	**226-4346**	8	STUD	
	2C	1	**229-5092**	1	SEAL	
	3	1	**226-4366**	1	NUT-SPANNER	
	4	1	**226-4370**	3	BOLT-SELF-LOCKING	
	5	1	**229-5085**	1	SPACER (110X123X18.36-MM THK)	
	6	1	**217-2879**	1	GEAR GP-RING	
		1	**209-7459**	1	RETAINER	
		1	**209-7461**	1	GEAR-RING	
		1	**231-0745**	1	HUB-RING GEAR	
	7	1	**226-4365**	1	WASHER-TAB	
					AVAILABLE REPAIR KIT(S):	
J			**238-5256**	1	KIT-FLANGE	
					(INCLUDES WHEEL FLANGE & STUDS)	

J-KIT MARKED J AVAILABLE FOR PART MARKED J
Y-SEPARATE ILLUSTRATION

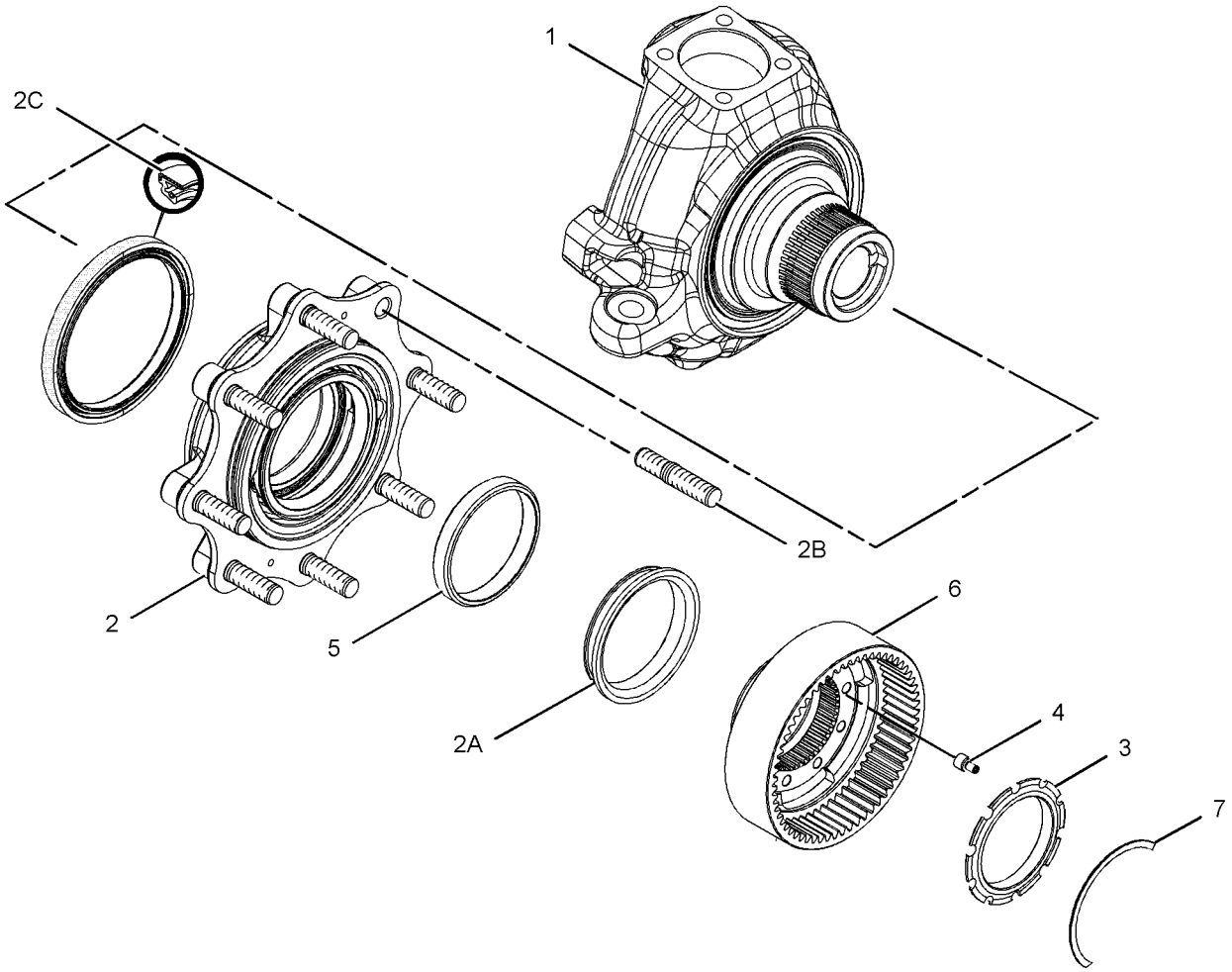

GRAPHIC #1 **<END>** g01181019

209-9885 HOUSING & FLANGE GP-AXLE–LH

S/N: EAT1-UP
PART OF 230-5743 AXLE GP-DRIVE & STEERING
AN ATTACHMENT

SMCS-4057, 4234 **i03530502**

NOTE	REF NO	GRAPHIC REF	PART NUMBER	QTY	PART NAME 1 2 3 4 5 6 (PRODUCT LEVEL)	SEE PAGE
Y	1	1	**217-2878**	1	HOUSING GP-AXLE (LH)	235
J	2	1	**231-0703**	1	FLANGE AS	
	2A	1	**210-5932**	2	BEARING-WHEEL	
	2B	1	**226-4346**	8	STUD	
	2C	1	**229-5092**	1	SEAL	
C	3	1	**226-4366**	1	NUT-SPANNER	
C	4	1	**226-4370**	3	BOLT-SELF-LOCKING	
	5	1	**229-5085**	1	SPACER (110X123X18.36-MM THK)	
C	6	1	**217-2879**	1	GEAR GP-RING	
		1	**209-7459**	1	RETAINER	
		1	**209-7461**	1	GEAR-RING	
		1	**231-0745**	1	HUB-RING GEAR	
C	7	1	**226-4365**	1	WASHER-TAB	
					AVAILABLE REPAIR KIT(S):	
J			**238-5256**	1	KIT-FLANGE	
					(INCLUDES WHEEL FLANGE & STUDS)	

C-CHANGE FROM PREVIOUS TYPE
J-KIT MARKED J AVAILABLE FOR PART MARKED J
Y-SEPARATE ILLUSTRATION

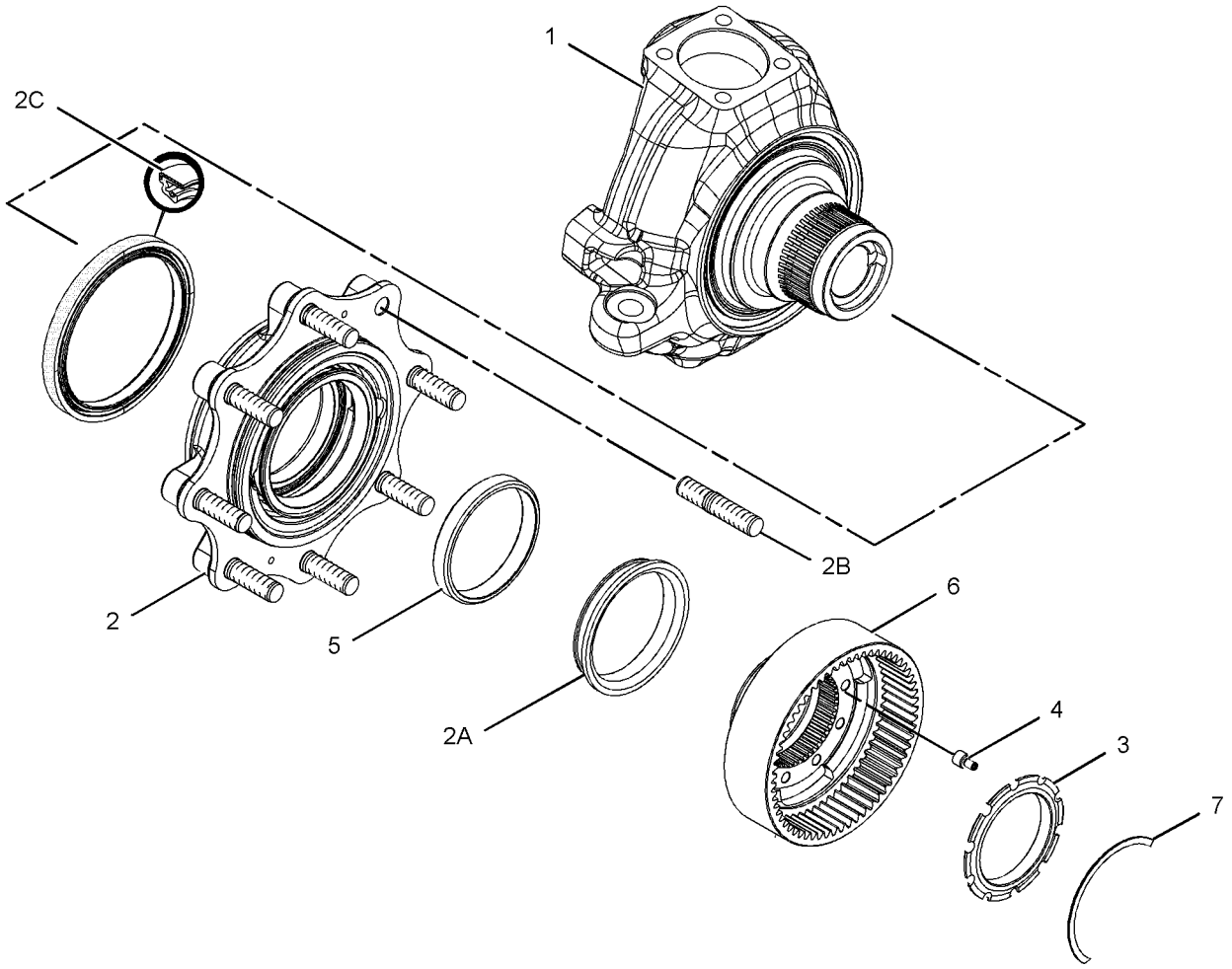

GRAPHIC #1 **<END>** g01180841

217-2877 HOUSING GP-AXLE–RH

S/N: EAT1-UP

PART OF 209-9884 HOUSING & FLANGE GP-AXLE

AN ATTACHMENT

SMCS-3256, 3258, 3260, 4251 **i02365010**

NOTE	REF NO	GRAPHIC REF	PART NUMBER	QTY	PART NAME 1 2 3 4 5 6 (PRODUCT LEVEL)	SEE PAGE
	1	1	**199-0648**	1	NUT-JAM (M16X2-THD)	
	2	1	**198-7814**	1	BOLT (M16X100-MM)	
	3	1	**209-7460**	1	BUSHING	
	4	1	**209-7465**	1	SEAL	
	5	1	**231-0700**	1	HOUSING	

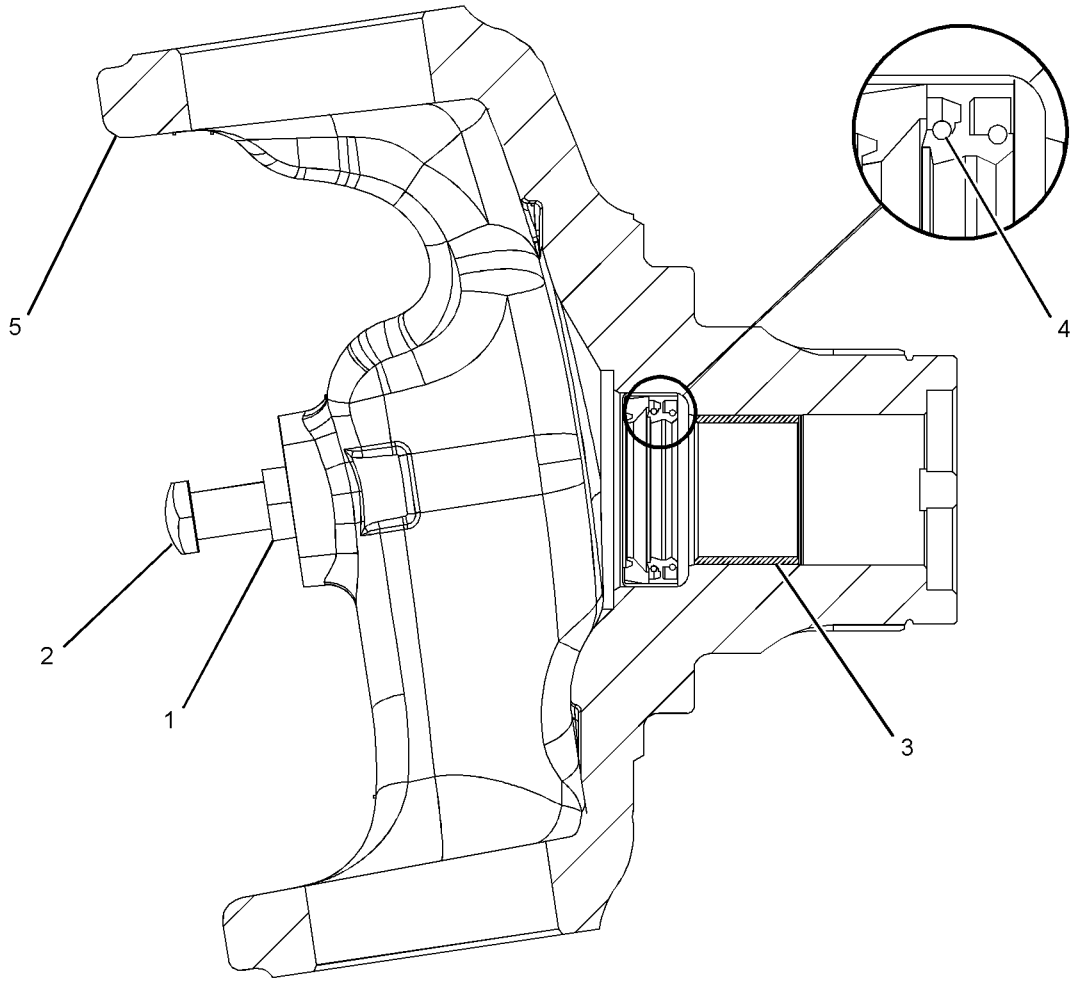

GRAPHIC #1 **<END>** g01181175

POWER TRAIN

217-2878 HOUSING GP-AXLE–LH

S/N: EAT1-UP
PART OF 209-9885 HOUSING & FLANGE GP-AXLE
AN ATTACHMENT

SMCS-3256, 3258, 3260, 4251 **i03018924**

NOTE	REF NO	GRAPHIC REF	PART NUMBER	QTY	PART NAME 1 2 3 4 5 6 (PRODUCT LEVEL)	SEE PAGE
	1	1	**199-0648**	1	NUT-JAM (M16X2-THD)	
	2	1	**198-7814**	1	BOLT (M16X100-MM)	
	3	1	**209-7460**	1	BUSHING	
	4	1	**209-7465**	1	SEAL	
	5	1	**231-0701**	1	HOUSING	

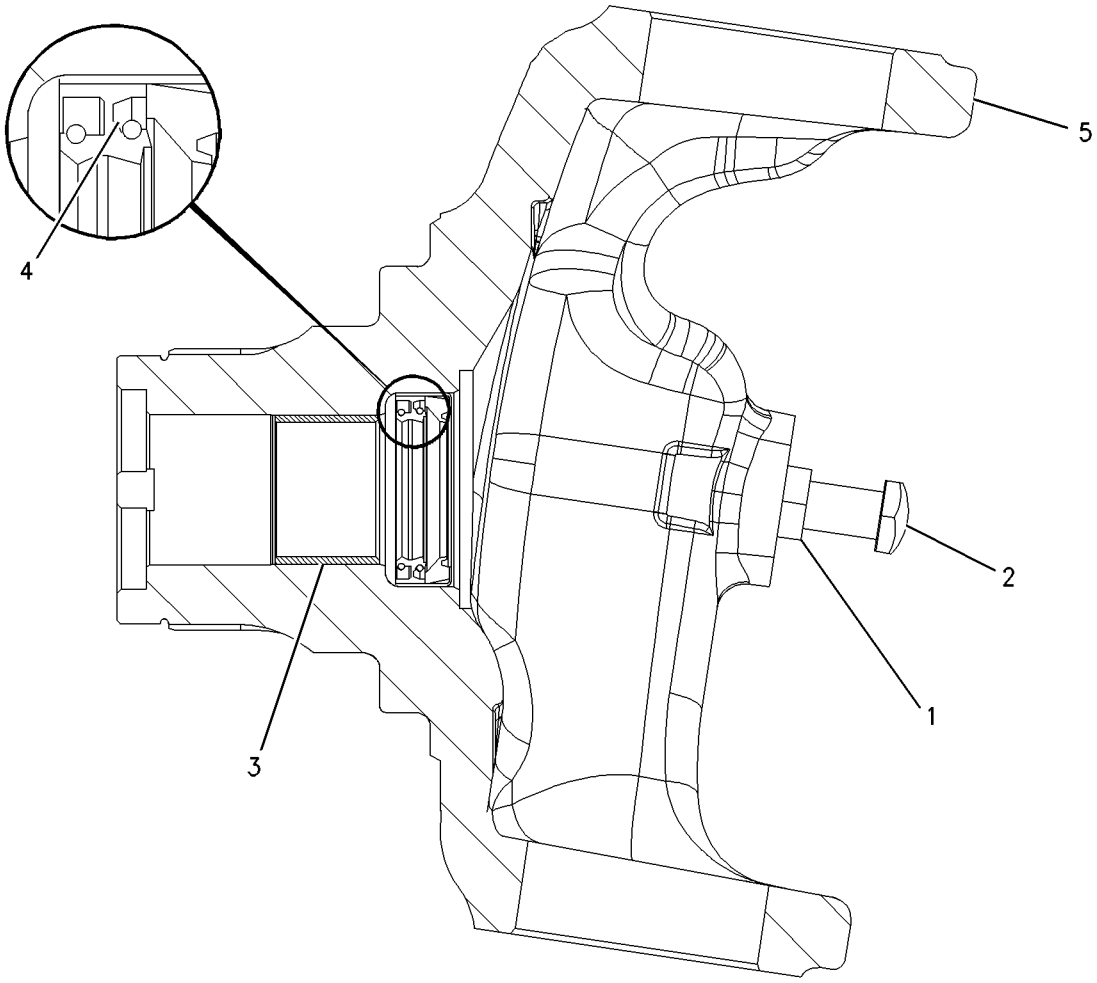

GRAPHIC #1 **<END>** g00926639

238-5289 HOUSING GP-AXLE–REAR

S/N: BYC1-UP; EAT1-UP
PART OF 230-5739 AXLE GP-REAR
AN ATTACHMENT

SMCS-3256, 3258, 3260, 4251 **i03514623**

NOTE	REF NO	GRAPHIC REF	PART NUMBER	QTY	PART NAME 1 2 3 4 5 6 (PRODUCT LEVEL)	SEE PAGE
M	1	1	**095-0674**	4	BOLT-SOCKET HEAD (M12X1.75X65-MM)	
	2	1	**199-0656**	2	BEARING	
	3	1	**199-0663**	1	SEAL-O-RING	
	4	1	**198-7811**	2	DOWEL	
	5	1	**199-0675**	2	NUT	
	6	1	**199-0678**	2	WASHER (45.5X55X2-MM THK)	
	7	1	**199-0680**	1	SPACER (47X50X19.2-MM THK)	
M	8	1	**199-0695**	2	BOLT (M6X1X14-MM)	
	9	1	**199-0697**	1	SEAL	
	10	1	**199-0785**	1	WASHER (30.5X58X10-MM THK)	
	11	1	**199-0858**	2	RETAINER	
	12	1	**217-2876**	1	KIT-BEVEL GEAR & PINION	
					(INCLUDES WASHER, SPACER. PINION, GEAR-BEVEL, NUT & SEAL-O-RING)	
	13	1	**212-5702**	1	NUT (M30X2-THD)	
	14	1	**216-1600**	1	DISC-BRAKE	
	15	1	**095-1041**	1	BEARING AS	
	16	1	**093-8828**	1	BEARING AS	
Y	17	1	**216-1612**	1	CYLINDER GP-BRAKE (RH)	338
Y	18	1	**216-1613**	1	CYLINDER GP-BRAKE (LH)	339
	19	1	**219-8836**	1	FORK	
Y	20	1	**231-0692**	1	DIFFERENTIAL GP	222
	21	1	**238-5290**	1	HOUSING-CENTER	
	22	1	**069-4707**	1	SEALANT (GASKET)	
B	23	1	**199-0684**	1	SHIM (2.5-MM THK)	
B	24	1	**199-0685**	1	SHIM (2.6-MM THK)	
B	25	1	**199-0686**	1	SHIM (2.7-MM THK)	
B	26	1	**199-0687**	1	SHIM (2.8-MM THK)	
B	27	1	**199-0688**	1	SHIM (2.9-MM THK)	
B	28	1	**199-0689**	1	SHIM (3-MM THK)	
B	29	1	**199-0690**	1	SHIM (3.1-MM THK)	
B	30	1	**199-0691**	1	SHIM (3.2-MM THK)	
B	31	1	**199-0692**	1	SHIM (3.3-MM THK)	
B	32	1	**199-0693**	1	SHIM (3.4-MM THK)	
					AVAILABLE REPAIR KIT(S):	
			217-2876	1	KIT-BEVEL GEAR & PINION	
					(INCLUDES WASHER-SPACERS, SPACER, PINNION-WASHER, PINION, GEAR-BEVEL, NUT & SEAL-O-RING)	
			217-2345	1	KIT-DIFFERENTIAL	
					(INCLUDES SPIDER GEARS, WASHER-THRUSTS, DIFFERENTIAL GEARS PIN, GEAR-SIDE, DIFFERENTIAL GEAR WASHERS, SIDE GEAR & PIN)	

B-USE AS REQUIRED
M-METRIC PART
Y-SEPARATE ILLUSTRATION

238-5289 **HOUSING GP-AXLE** *(contd.)* **i03514623**

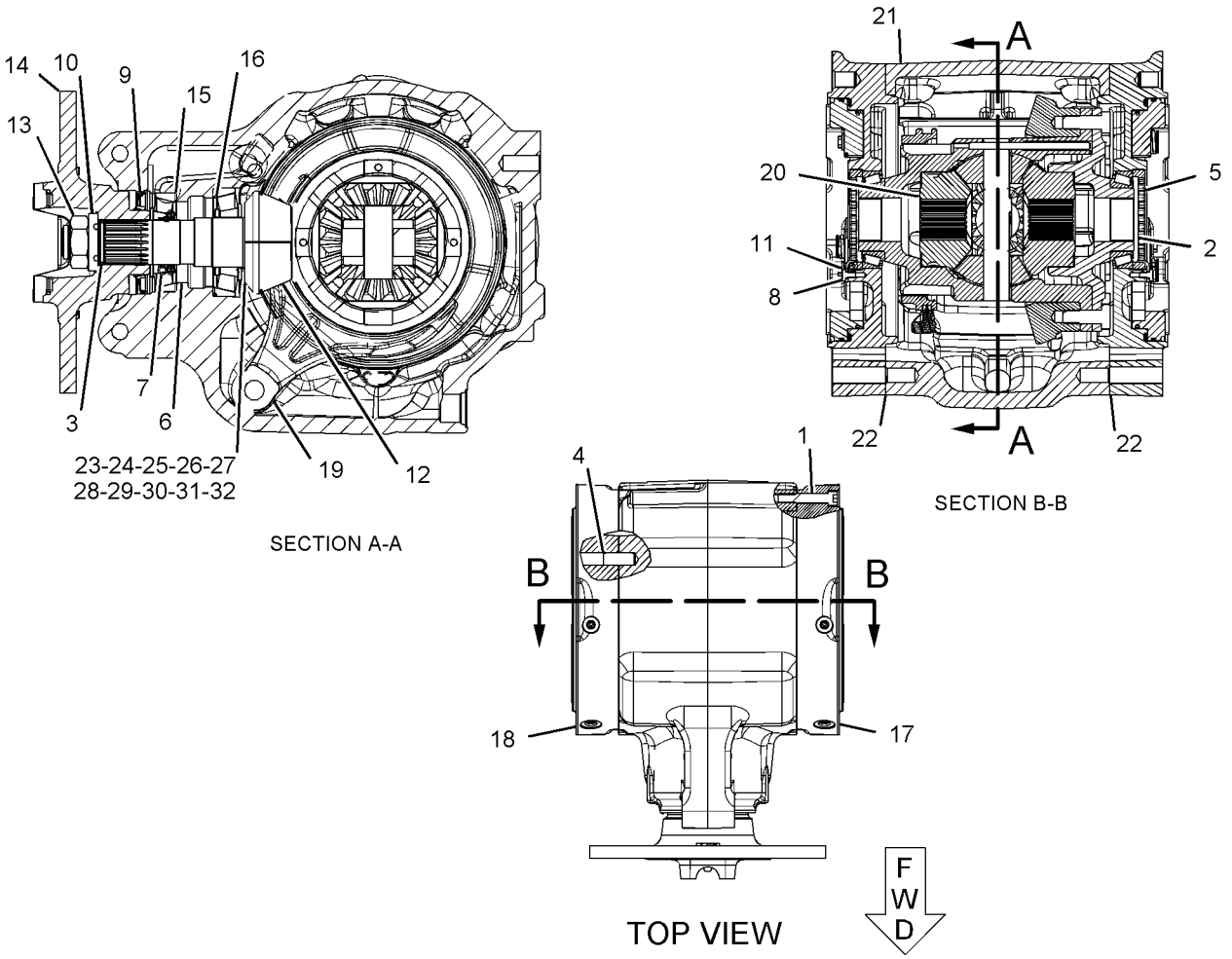

GRAPHIC #1 **<END>** g01135243

262-6227 KIT-WHEEL SPACER

S/N: EAT1-UP

FOR USE WITH REAR AXLES TO ALLOW FOR SNOW CHAINS. CANNOT BE USED WITH AWS OR COUNTRIES WITH ROADING WIDTH RESTRICTIONS

AN ATTACHMENT

SMCS-3278, 4201 **i03033083**

NOTE	REF NO	GRAPHIC REF	PART NUMBER	QTY	PART NAME 1 2 3 4 5 6 (PRODUCT LEVEL)	SEE PAGE
	1	1	**262-6204**	20	STUD	
	2	1	**267-9385**	2	SPACER-WHEEL	

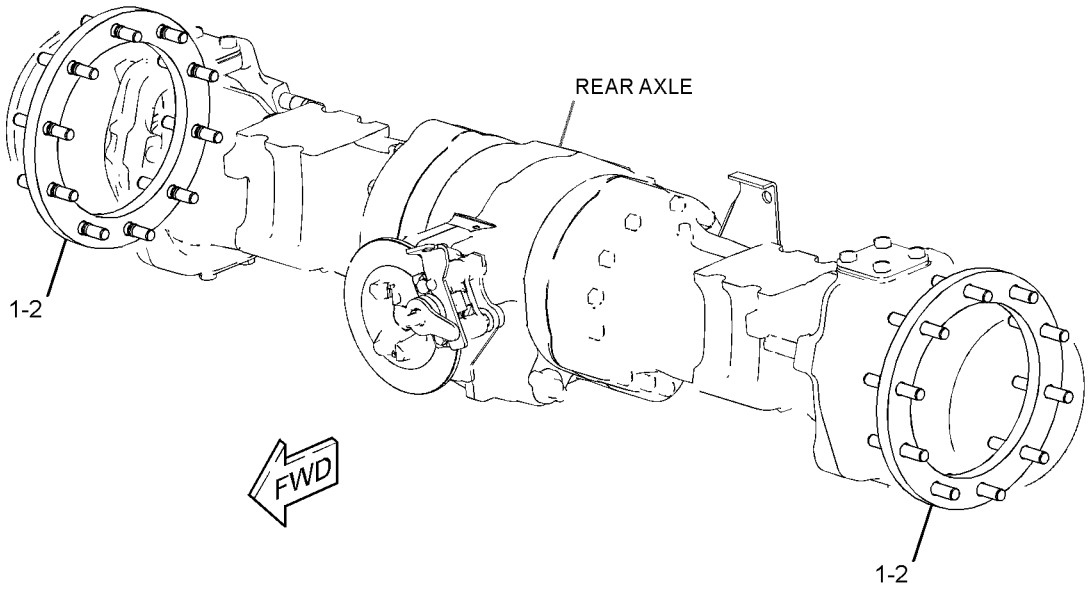

GRAPHIC #1 **<END>** g01539534

256-0546 LINES GP-POWER TRAIN OIL–DIFFERENTIAL LOCK

S/N: BYC1-UP; EAT1-UP
PART OF 218-5148, 293-2986 POWER TRAIN AR
AN ATTACHMENT

SMCS-3016, 3154 **i02356720**

NOTE	REF NO	GRAPHIC REF	PART NUMBER	QTY	PART NAME 1 2 3 4 5 6 (PRODUCT LEVEL)	SEE PAGE
	1	1	*148-8325*	1	CONNECTOR AS	
		1	**3J-1907**	1	SEAL-O-RING	
		1	**4J-5477**	1	SEAL-O-RING	
		1	**6V-8641**	1	CONNECTOR	
I	2	1	**256-0550**	1	HOSE AS	
	3	1	*148-8368*	1	ELBOW AS	
		1	**3J-1907**	1	SEAL-O-RING	
		1	**4J-5477**	1	SEAL-O-RING	
		1	**6V-8627**	1	ELBOW	
	4	1	**151-4841**	1	BLOCK	
	5	1	**7K-1181**	1	STRAP-CABLE	

I-REFER TO HYDRAULIC INFORMATION SYSTEM

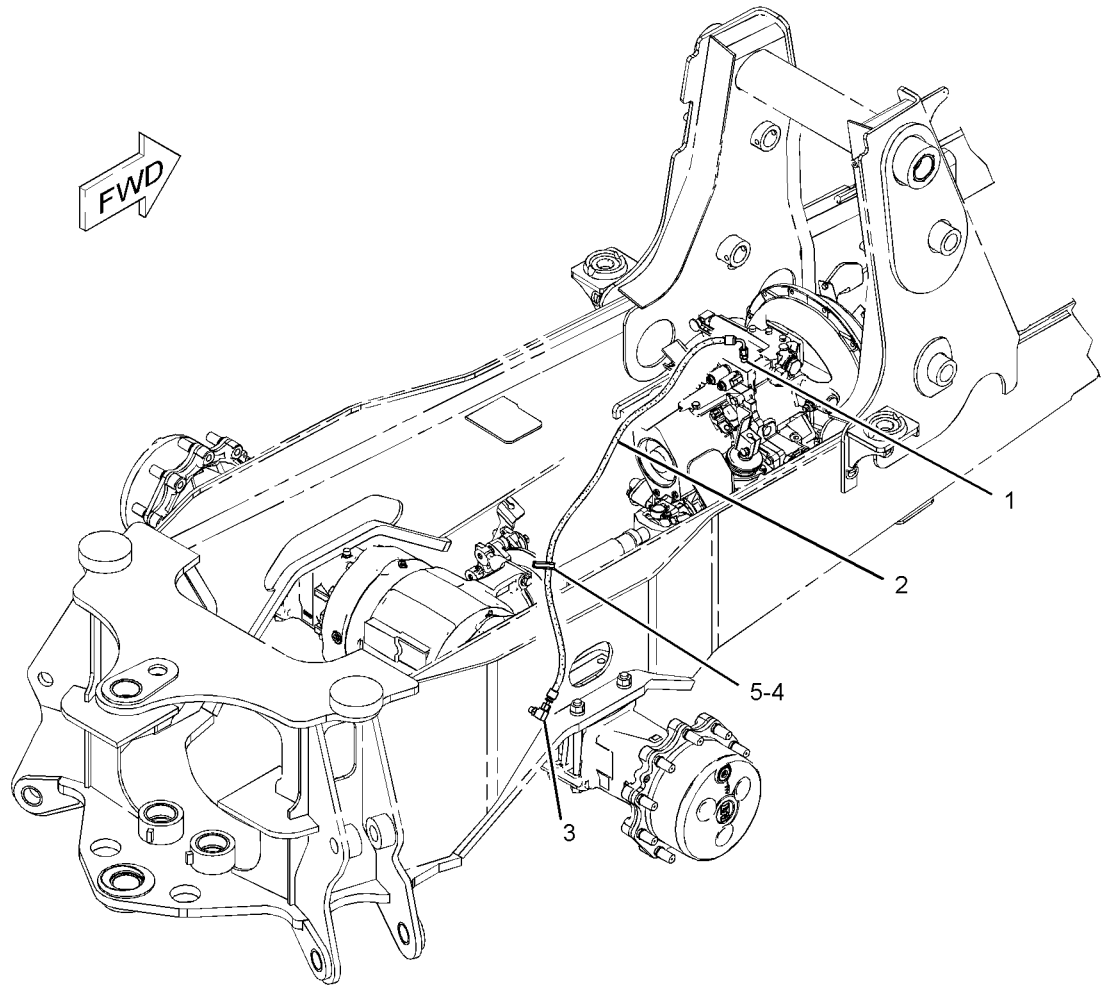

GRAPHIC #1 **<END>** g01238239

221-0811 MOUNTING GP-AXLE

S/N: BYC1-UP; EAT1-UP
PART OF 216-4739, 216-4740 DRIVE AR-BACKHOE LOADER
AN ATTACHMENT

SMCS-3268 **i02355759**

NOTE	REF NO	GRAPHIC REF	PART NUMBER	QTY	PART NAME 1 2 3 4 5 6 (PRODUCT LEVEL)	SEE PAGE
B	1	1	**1K-7082**	1	WASHER (2.266X4X0.031-IN THK)	
B	2	1	**9R-9702**	2	WASHER (56X100X1.6-MM THK)	
	3	1	**165-8996**	2	WASHER-THRUST (55.5X100.5X5-MM THK)	
	4	1	**211-9286**	1	PIN AS	
	5	1	**212-0770**	2	PLATE	
M	6	1	**089-7990**	8	BOLT (M20X2.5X250-MM)	
	7	1	**226-4192**	12	WASHER-HARD (21.5X35X8-MM THK)	
	8	1	**7X-0618**	1	WASHER-HARD (13.5X40X5-MM THK)	
M	9	1	**8T-4131**	4	NUT (M20X2.5-THD)	
M	10	1	**8T-4192**	1	BOLT (M12X1.75X25-MM)	

B-USE AS REQUIRED
M-METRIC PART

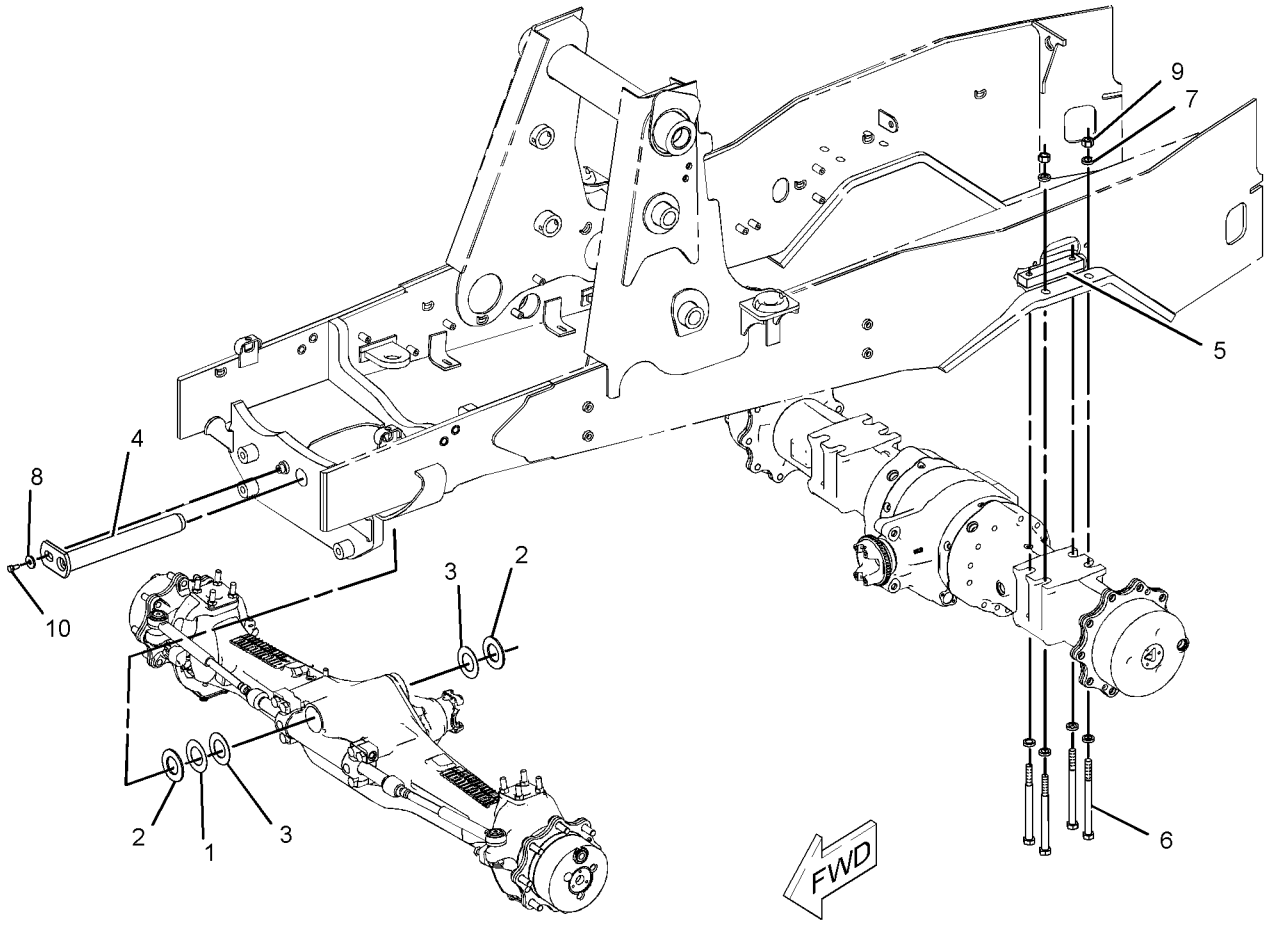

GRAPHIC #1 **<END>** g01200213

254-5703 MOUNTING GP-TRANSMISSION

S/N: EAT1-UP
PART OF 202-6009 TRANSMISSION & MOUNTING GP
AN ATTACHMENT

SMCS-3082 **i02444698**

NOTE	REF NO	GRAPHIC REF	PART NUMBER	QTY	PART NAME 1 2 3 4 5 6 (PRODUCT LEVEL)	SEE PAGE
	1	1	**271-7308**	1	SUPPORT AS (LH)	
	2	1	**245-4827**	1	SUPPORT AS (RH)	
M	3	1	**7X-2553**	4	BOLT (M16X2X40-MM)	
	4	1	**8T-4223**	4	WASHER-HARD (13.5X25.5X3-MM THK)	
M	5	1	**8T-4956**	4	BOLT (M12X1.75X35-MM)	
	6	1	**9X-8257**	4	WASHER (17.5X30X3.5-MM THK)	

M-METRIC PART

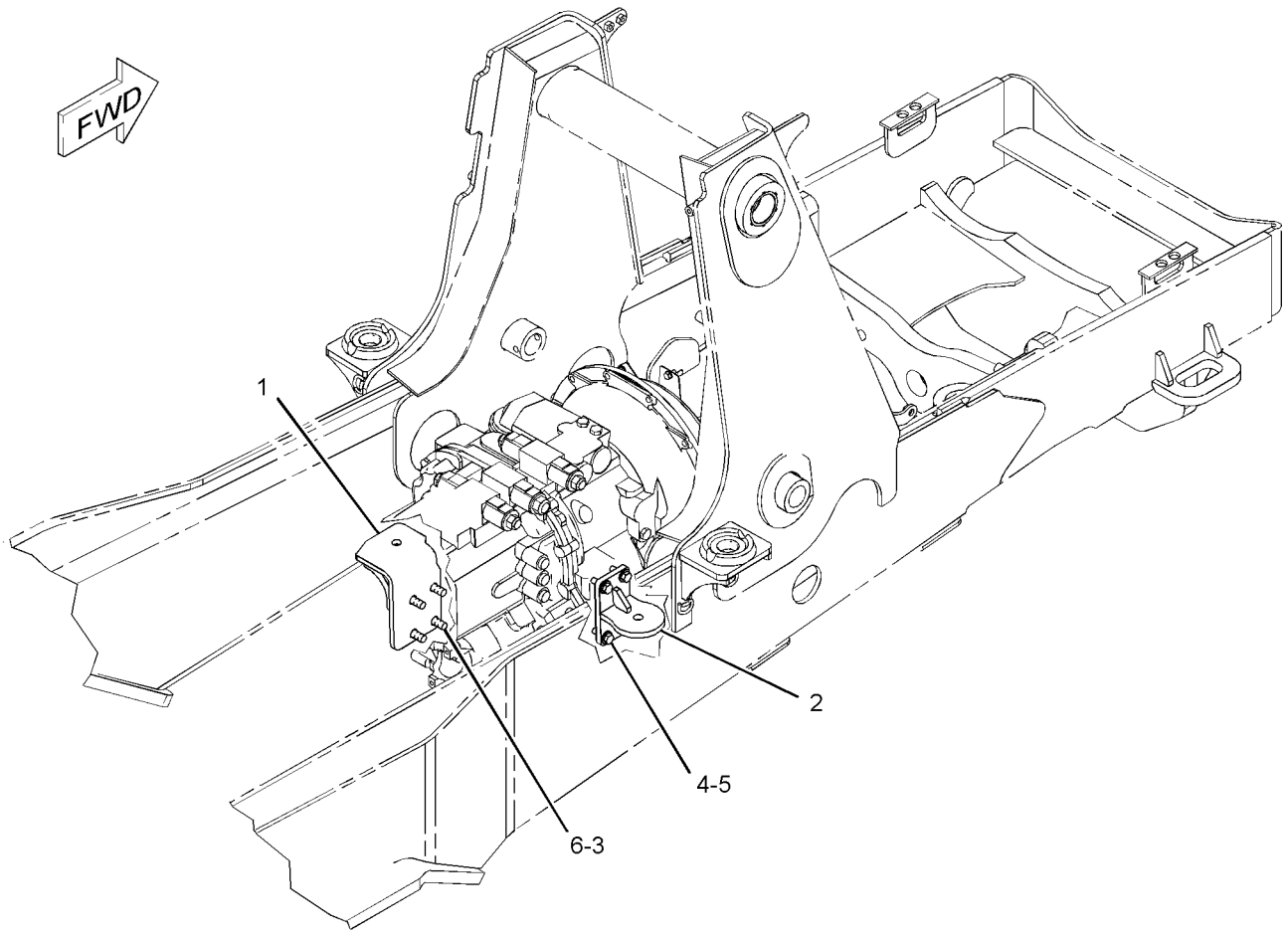

GRAPHIC #1 **<END>** g01216019

271-4487 MOUNTING GP-TRANSMISSION

S/N: BYC1-UP; EAT1-UP
PART OF 271-2405, 271-2406 TRANSMISSION & MOUNTING GP
AN ATTACHMENT

SMCS-3082 **i02354354**

NOTE	REF NO	GRAPHIC REF	PART NUMBER	QTY	PART NAME 1 2 3 4 5 6 (PRODUCT LEVEL)	SEE PAGE
	1	1	**245-4827**	1	SUPPORT AS (RH)	
	2	1	**271-7309**	1	SUPPORT AS (LH)	
M	3	1	**7X-2553**	4	BOLT (M16X2X40-MM)	
	4	1	**8T-4223**	4	WASHER-HARD (13.5X25.5X3-MM THK)	
M	5	1	**8T-4956**	4	BOLT (M12X1.75X35-MM)	
	6	1	**9X-8257**	4	WASHER (17.5X30X3.5-MM THK)	

M-METRIC PART

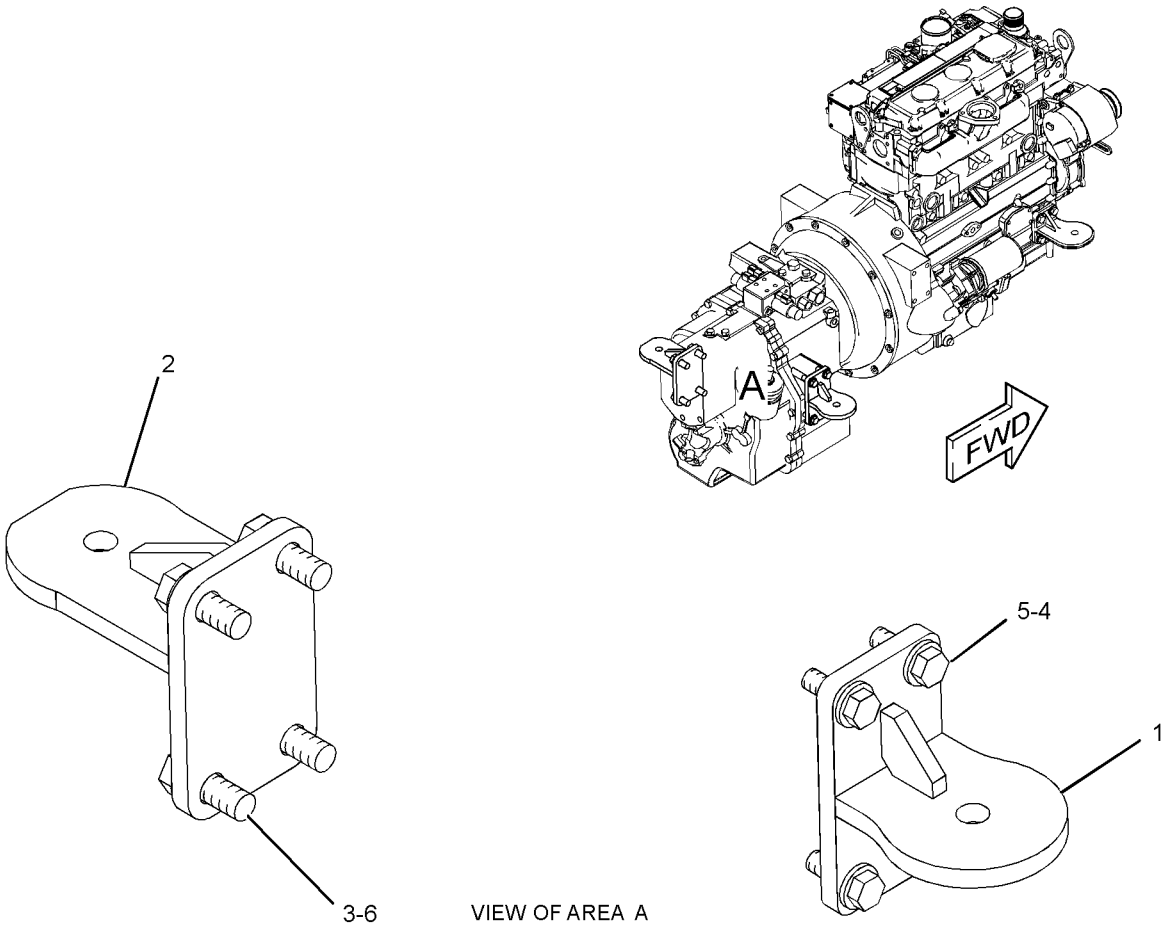

VIEW OF AREA A

GRAPHIC #1 **<END>** g01231911

210-5924 PLANETARY GP-FINAL DRIVE

S/N: EAT1-UP

PART OF 230-5743 AXLE GP-DRIVE & STEERING

AN ATTACHMENT

SMCS-4050 **i03156025**

NOTE	REF NO	GRAPHIC REF	PART NUMBER	QTY	PART NAME 1 2 3 4 5 6 (PRODUCT LEVEL)	SEE PAGE
	1	1	**210-5931**	4	RETAINER	
	2	1	**209-4157**	4	GEAR (23-TEETH)	
	3	1	**095-0924**	4	RING-RETAINING	
					AVAILABLE REPAIR KIT(S):	
			209-7466	1	KIT-PLANETARY CARRIER	
					(INCLUDES THRUST PLUG, SUN GEAR SHAFT & PLANET CARRIER)	
			219-8783	23	KIT-ROLLER BEARING	
					(EACH INCLUDES 10 NEEDLES)	
					(SERVICED IN QUANITY OF 10, EACH GEAR REQUIRES 56 ROLLERS OR 6 KITS, EACH WHEEL END AS. REQUIRES 224 ROLLERS OR 23 KITS)	

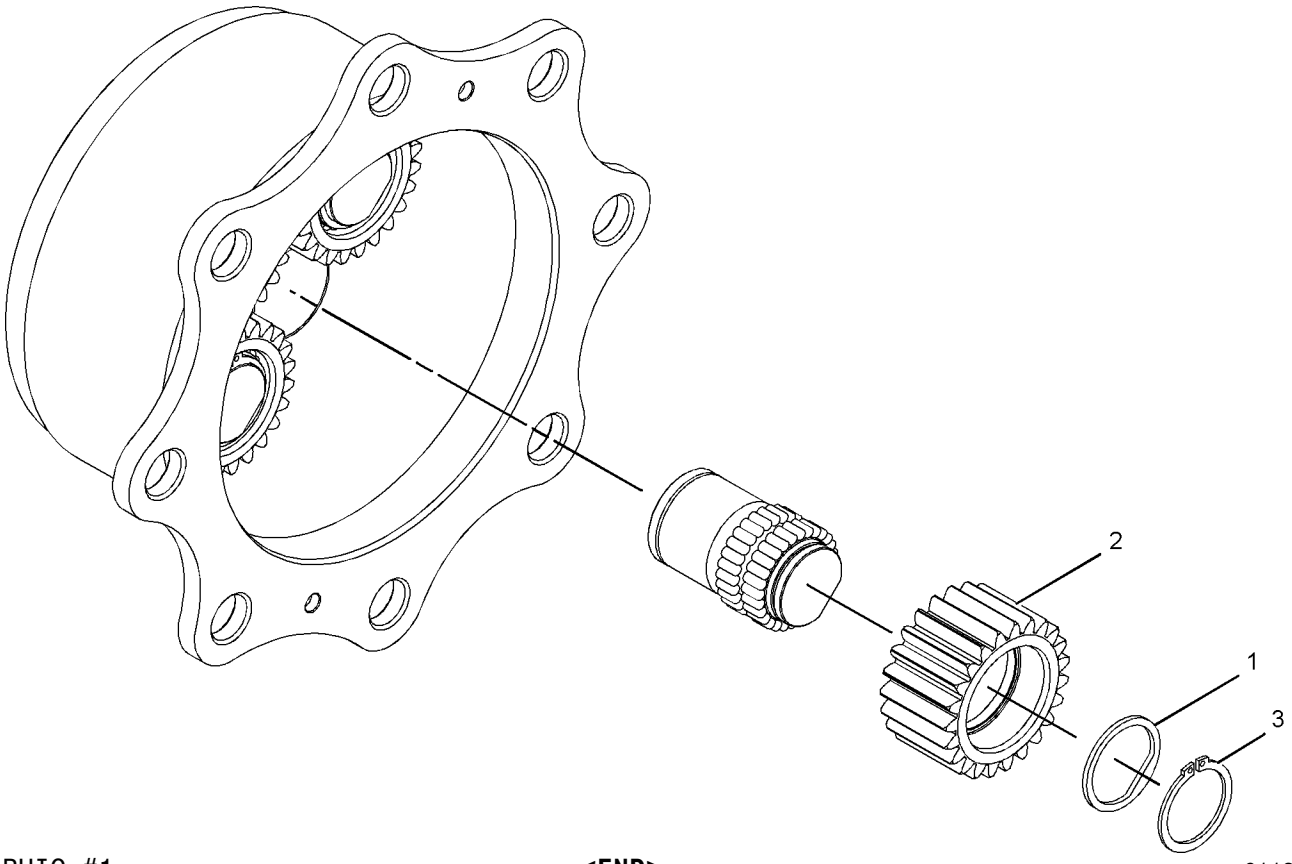

GRAPHIC #1 **<END>** g01132397

216-1610 PLANETARY GP-FINAL DRIVE

S/N: BYC1-UP; EAT1-UP
PART OF 230-5739 AXLE GP-REAR
AN ATTACHMENT

SMCS-4050 **i03511205**

NOTE	REF NO	GRAPHIC REF	PART NUMBER	QTY	PART NAME 1 2 3 4 5 6 (PRODUCT LEVEL)	SEE PAGE
	1	1	**199-0653**	3	RING-RETAINING	
	2	1	**207-4257**	6	RING-RETAINER	
	3	1	**199-0669**	1	PLUG (THRUST)	
	4	1	**199-0760**	3	BEARING	
	5	1	**213-4222**	3	WASHER (50.1X61X2.5-MM THK)	
	6	1	**207-5962**	6	WASHER (65X72X2-MM THK)	
	7	1	**216-1606**	3	GEAR-PLANETARY (31-TEETH)	
	8	1	**216-1601**	1	CARRIER	

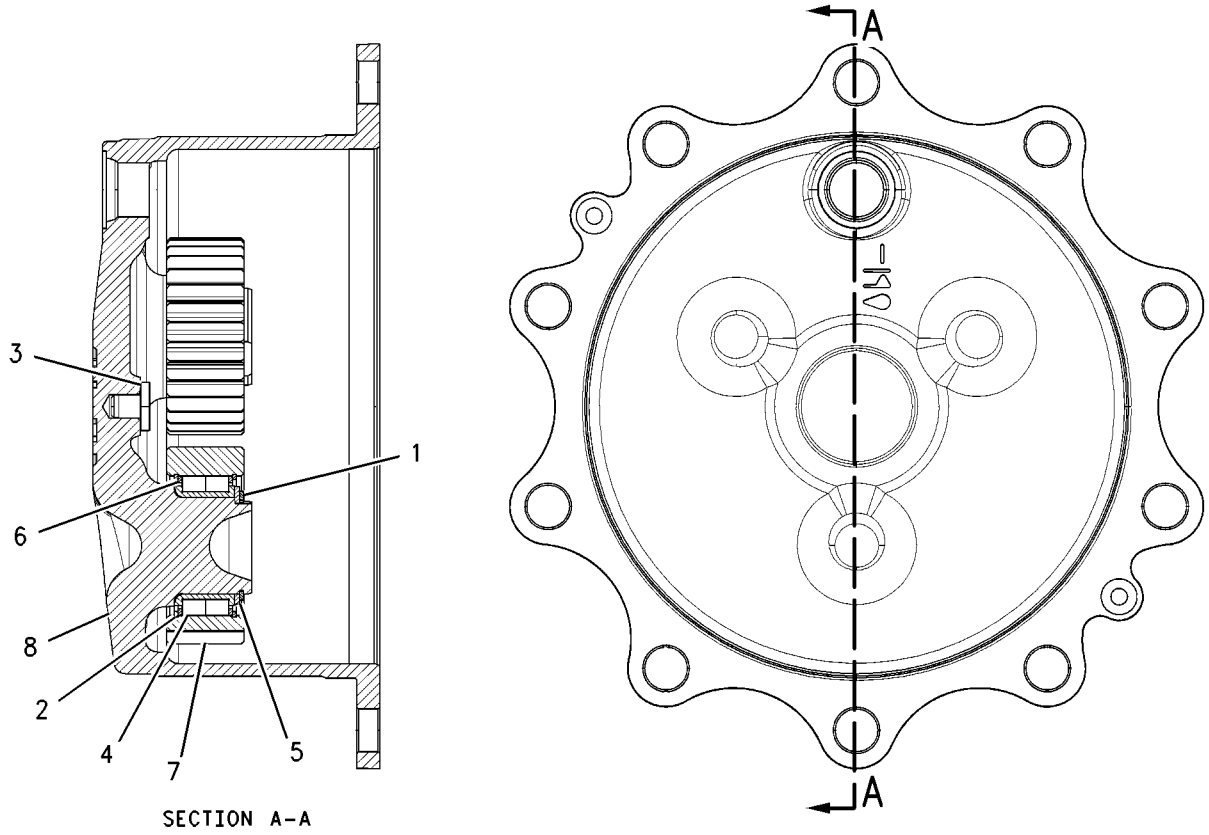

SECTION A-A

GRAPHIC #1 **<END>** g00873301

218-5148 POWER TRAIN AR–
ALL WHEEL DRIVE, 2-WHEEL STEER, STD SHIFT
S/N: EAT1-UP
AN ATTACHMENT

SMCS-3000, 4000 **i02485215**

NOTE	PART NUMBER	QTY	PART NAME 1 2 3 4 5 6 (PRODUCT LEVEL)	SEE PAGE
Y	*206-1642*	1	CONTROL GP-PARKING BRAKE	330
Y	*206-1639*	1	CONTROL GP-SERVICE BRAKE (STANDARD SHIFT)	332
Y	*206-1643*	1	CONTROL GP-TRANSMISSION	831
Y	*112-1826*	1	DRIVE & MTG GP-PUMP	418
Y	*216-4740*	1	DRIVE AR-BACKHOE LOADER (ALL WHEEL DRIVE, 2-WHEEL STEER)	7
Y	*214-3740*	1	FILLER GP-POWER TRAIN OIL	226
Y	*256-0546*	1	LINES GP-POWER TRAIN OIL (DIFFERENTIAL LOCK)	239
Y	*216-4476*	1	SHAFT GP-DRIVE (FRONT)	249
Y	*202-6010*	1	SWITCH GP-DIFFERENTIAL LOCK (CENTER PIVOT MACHINE)	148
Y	*214-7527*	1	TRANSMISSION AR-DIRECT DRIVE	263
	119-4740	1	FILTER-OIL (STANDARD EFFICIENCY) (HYDRAULIC)	

Y-SEPARATE ILLUSTRATION

<END>

218-5149 POWER TRAIN AR–
ALL WHEEL DRIVE, 2-WHEEL STEER, AUTOSHIFT
S/N: EAT1-UP
AN ATTACHMENT

SMCS-3000, 4000 **i02485221**

NOTE	PART NUMBER	QTY	PART NAME 1 2 3 4 5 6 (PRODUCT LEVEL)	SEE PAGE
Y	*206-1642*	1	CONTROL GP-PARKING BRAKE	330
Y	*206-1639*	1	CONTROL GP-SERVICE BRAKE (STANDARD SHIFT)	332
Y	*112-1826*	1	DRIVE & MTG GP-PUMP	418
Y	*216-4740*	1	DRIVE AR-BACKHOE LOADER (ALL WHEEL DRIVE, 2-WHEEL STEER)	7
Y	*211-0073*	1	FILLER GP-POWER TRAIN OIL	224
Y	*233-6738*	1	SHAFT GP-DRIVE (FRONT)	249
Y	*202-6010*	1	SWITCH GP-DIFFERENTIAL LOCK (CENTER PIVOT MACHINE)	148
Y	*251-6355*	1	TRANSMISSION AR-POWER SHIFT	264
Y	*256-0545*	1	VALVE & LINES GP-DIFF LOCK	308
Y	*211-4254*	1	WIRING GP-TRANSMISSION CONTROL (AUTOSHIFT, STANDARD SHIFT)	205
	119-4740	1	FILTER-OIL (STANDARD EFFICIENCY) (HYDRAULIC)	

Y-SEPARATE ILLUSTRATION

<END>

293-2986 POWER TRAIN AR–
2-WHEEL DRIVE, 2-WHEEL STEER, STD SHIFT
S/N: BYC1-UP; EAT1-UP
AN ATTACHMENT

SMCS-3000, 4000 **i02899997**

NOTE	PART NUMBER	QTY	PART NAME 1 2 3 4 5 6 (PRODUCT LEVEL)	SEE PAGE
Y	*206-1642*	1	CONTROL GP-PARKING BRAKE	330
Y	*206-1639*	1	CONTROL GP-SERVICE BRAKE (STANDARD SHIFT)	332
Y	*206-1643*	1	CONTROL GP-TRANSMISSION	831
Y	*112-1826*	1	DRIVE & MTG GP-PUMP	418
Y	*216-4739*	1	DRIVE AR-BACKHOE LOADER (2-WHEEL DRIVE, 2-WHEEL STEER)	6
Y	*256-0551*	1	FILLER GP-POWER TRAIN OIL (2-WHEEL DRIVE, STANDARD SHIFT)	228
Y	*256-0546*	1	LINES GP-POWER TRAIN OIL (DIFFERENTIAL LOCK)	239
Y	*202-6010*	1	SWITCH GP-DIFFERENTIAL LOCK (CENTER PIVOT MACHINE)	148
Y	*272-0752*	1	TRANSMISSION AR-DIRECT DRIVE (2-WHEEL DRIVE, STANDARD SHIFT)	264
	119-4740	1	FILTER-OIL (STANDARD EFFICIENCY) (HYDRAULIC)	

Y-SEPARATE ILLUSTRATION

<END>

274-4580 SHAFT GP-COUNTER

S/N: EAT1-UP

PART OF 274-8641 TRANSMISSION GP-POWER SHIFT

AN ATTACHMENT

SMCS-3053, 3063 **i02787723**

NOTE	REF NO	GRAPHIC REF	PART NUMBER	QTY	PART NAME 1 2 3 4 5 6 (PRODUCT LEVEL)	SEE PAGE
	1	1	**294-9812**	1	RETAINER-SPRING	
	3	1	**6V-8757**	1	RING-RETAINING	
	4	1	**6Y-1192**	2	RING-SEAL	
	5	1	**6Y-7929**	8	DISC-FRICTION	
	6	1	**8E-5707**	1	PLATE-END	
	7	1	**122-1877**	1	WASHER-THRUST (40X65X4-MM THK)	
	8	1	**123-8907**	2	CONE-BEARING	
	9	1	**123-8908**	2	CUP-TAPERED ROLLER	
	10	1	**123-8912**	2	BEARING-ROLLER	
	11	1	**147-0203**	1	WASHER-THRUST (45.3X65X5-MM THK)	
	12	1	**147-0215**	1	GEAR (45/19-TEETH)	
	13	1	**147-0216**	1	GEAR (38-TEETH)	
	14	1	**294-9810**	1	PISTON	
	15	1	**147-0238**	1	SPRING AS	
	16	1	**147-0258**	1	SPACER (46X50X16-MM THK)	
	17	1	**172-6050**	2	BEARING-SPECIAL	
	18	1	**173-0332**	1	SHAFT AS	
		1	**163-9091**	1	PLUG	
	19	1	**211-6752**	1	GEAR (46-TEETH)	
	20	1	**274-4553**	8	DISC-CLUTCH	
	21	1	**274-8638**	1	RING-RETAINING	

274-4580 SHAFT GP-COUNTER *(contd.)* **i02787723**

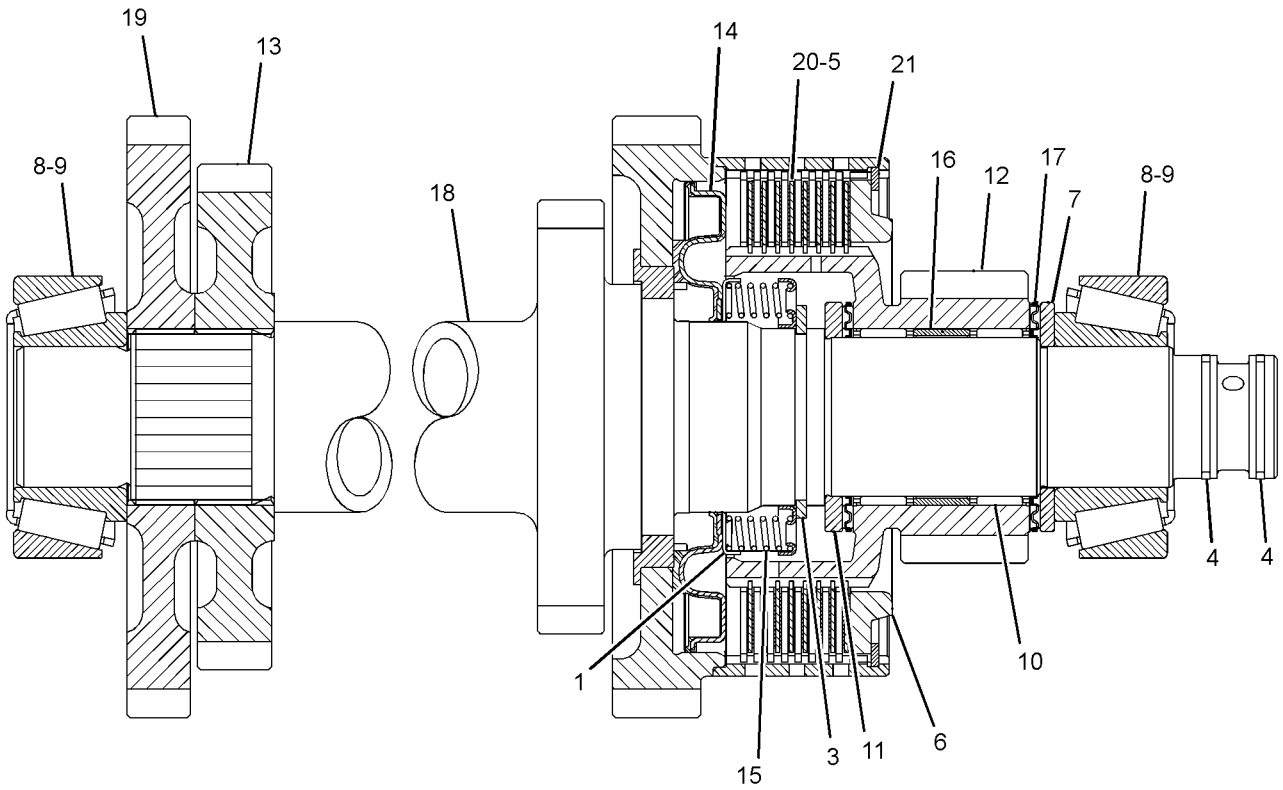

GRAPHIC #1 **<END>** g01405943

216-4475 SHAFT GP-DRIVE–REAR

S/N: BYC1-UP; EAT1-UP
PART OF 216-4739, 216-4740 DRIVE AR-BACKHOE LOADER
AN ATTACHMENT

SMCS-3253 **i03330464**

NOTE	PART NUMBER	QTY	PART NAME 1 2 3 4 5 6 (PRODUCT LEVEL)	SEE PAGE
J	**304-3269**	1	SHAFT AS (REAR)	
M	**107-6826**	8	BOLT (M24X19.1-MM)	
	5V-2545	4	STRAP	
			AVAILABLE REPAIR KIT(S):	
J	**117-9887**	2	KIT-SPIDER & BEARING (DRIVE SHAFT)	
			(EACH INCLUDES RINGS & SPIDER)	

J-KIT MARKED J AVAILABLE FOR PART MARKED J
M-METRIC PART

<END>

216-4476 SHAFT GP-DRIVE–FRONT

S/N: EAT1-UP
PART OF 218-5148 POWER TRAIN AR
AN ATTACHMENT

SMCS-3253 **i02863506**

NOTE	PART NUMBER	QTY	PART NAME 1 2 3 4 5 6 (PRODUCT LEVEL)	SEE PAGE
J	**304-3266**	1	SHAFT AS (FRONT)	
M	**107-6826**	8	BOLT (M24X19.1-MM)	
	5V-2545	4	STRAP	
			AVAILABLE REPAIR KIT(S):	
J	**117-9887**	2	KIT-SPIDER & BEARING (DRIVE SHAFT)	
			(EACH INCLUDES RINGS & SPIDER)	

J-KIT MARKED J AVAILABLE FOR PART MARKED J
M-METRIC PART

<END>

233-6738 SHAFT GP-DRIVE–FRONT

S/N: EAT1-UP
PART OF 218-5149 POWER TRAIN AR
AN ATTACHMENT

SMCS-3253 **i03530520**

NOTE	PART NUMBER	QTY	PART NAME 1 2 3 4 5 6 (PRODUCT LEVEL)	SEE PAGE
J	**304-3262**	1	SHAFT AS (FRONT)	
M	**107-6826**	8	BOLT (M24X19.1-MM)	
	5V-2545	4	STRAP	
			AVAILABLE REPAIR KIT(S):	
J	**117-9887**	2	KIT-SPIDER & BEARING (DRIVE SHAFT)	
			(EACH INCLUDES RINGS & SPIDER)	

J-KIT MARKED J SERVICES PART MARKED J
M-METRIC PART

<END>

274-4561 SHAFT GP-IDLER

S/N: EAT1-UP

PART OF 274-8641 TRANSMISSION GP-POWER SHIFT

AN ATTACHMENT

SMCS-3063 **i03504101**

NOTE	REF NO	GRAPHIC REF	PART NUMBER	QTY	PART NAME 1 2 3 4 5 6 (PRODUCT LEVEL)	SEE PAGE
	1	1	**147-0256**	1	SHAFT AS-REVERSE	
		1	**163-9091**	1	PLUG	
		1	**147-0270**	1	ORIFICE	
	2	1	**147-0202**	1	GEAR (45/24-TEETH)	
	3	1	**123-8905**	2	CUP-TAPERED ROLLER	
	4	1	**294-9810**	1	PISTON	
	5	1	**294-9812**	1	RETAINER-SPRING	
	7	1	**147-0238**	1	SPRING AS	
	8	1	**274-4553**	5	DISC-CLUTCH	
	9	1	**6Y-7929**	5	DISC-FRICTION	
	10	1	**147-0259**	1	SPACER (51.1X54.9X18.7-MM THK)	
	11	1	**6V-8757**	1	RING-RETAINING	
	12	1	**121-2500**	1	WASHER-THRUST (50X70X4-MM THK)	
	13	1	**172-5317**	2	BEARING-SPECIAL	
	14	1	**121-0694**	1	WASHER-THRUST (40X70X4-MM THK)	
	15	1	**6Y-1192**	2	RING-SEAL	
	16	1	**8E-5707**	1	PLATE-END	
	17	1	**274-8638**	1	RING-RETAINING	
	18	1	**7T-6655**	2	BEARING	
	19	1	**123-8906**	2	CUP-TAPERED ROLLER	

274-4561 SHAFT GP-IDLER *(contd.)* **i03504101**

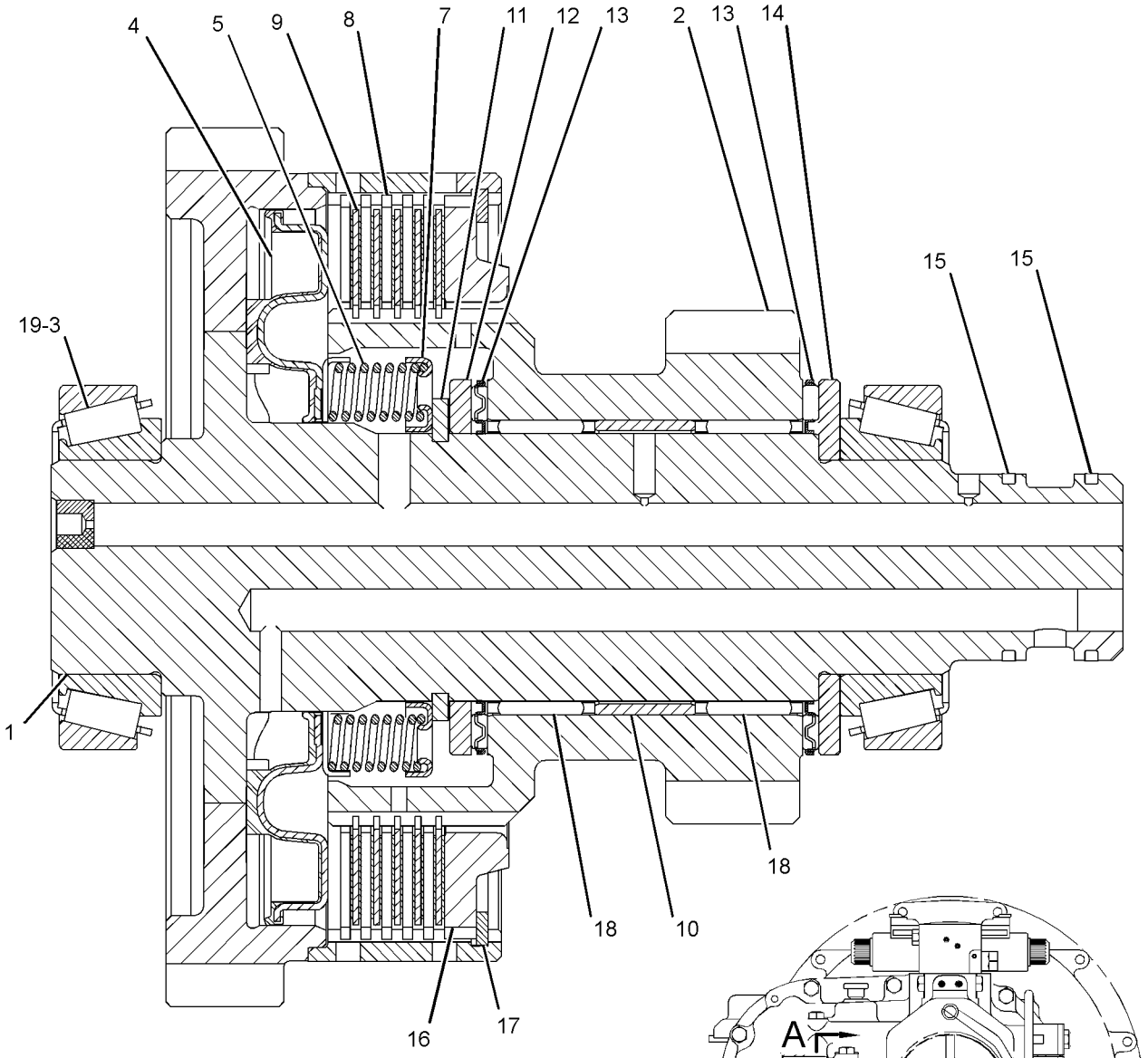

SECTION A-A

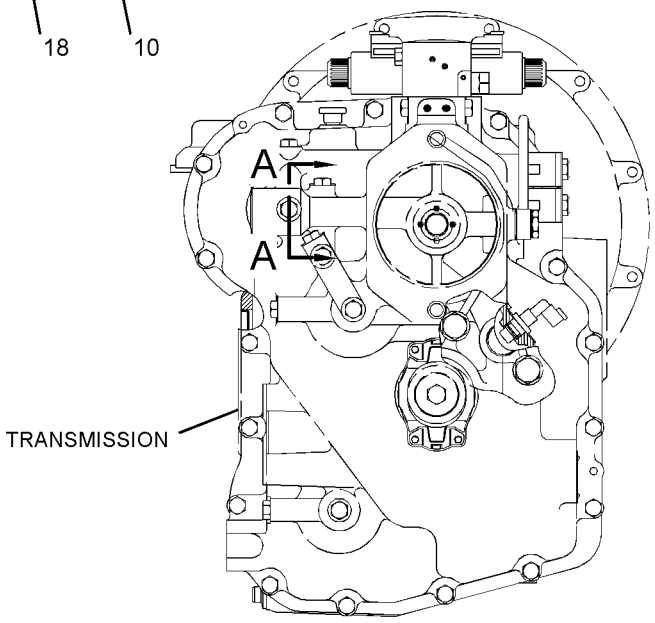

REAR VIEW

GRAPHIC #1 **<END>** g01406552

274-4578 SHAFT GP-INPUT

S/N: EAT1-UP

PART OF 274-8641 TRANSMISSION GP-POWER SHIFT

AN ATTACHMENT

SMCS-3053, 3063 **i02787722**

NOTE	REF NO	GRAPHIC REF	PART NUMBER	QTY	PART NAME 1 2 3 4 5 6 (PRODUCT LEVEL)	SEE PAGE
	1	1	**294-9812**	2	RETAINER-SPRING	
	3	1	**6V-8757**	3	RING-RETAINING	
	4	1	**6Y-7929**	11	DISC-FRICTION	
	5	1	**7T-6655**	2	BEARING	
	6	1	**8E-5707**	2	PLATE-END	
	7	1	**9U-8886**	4	RING-SEAL	
	8	1	**121-0694**	1	WASHER-THRUST (40X70X4-MM THK)	
	9	1	**121-2500**	3	WASHER-THRUST (50X70X4-MM THK)	
	10	1	**122-1886**	1	RING-SEAL	
	11	1	**123-8905**	1	CUP-TAPERED ROLLER	
	12	1	**123-8906**	1	CUP-TAPERED ROLLER	
	13	1	**123-8909**	1	CONE-BEARING	
	14	1	**123-8910**	1	CUP-TAPERED ROLLER	
	15	1	**123-8913**	2	BEARING-ROLLER	
	16	1	**147-0202**	1	GEAR (45/24-TEETH)	
	17	1	**147-0224**	1	GEAR (45/32-TEETH)	
	18	1	**294-9810**	2	PISTON	
	19	1	**147-0238**	2	SPRING AS	
	20	1	**147-0257**	1	SHAFT AS-INPUT	
		1	**123-2920**	3	PLUG	
	21	1	**147-0259**	1	SPACER (51.1X54.9X18.7-MM THK)	
	22	1	**172-5317**	4	BEARING-SPECIAL	
	23	1	**274-4553**	11	DISC-CLUTCH	
	24	1	**274-8638**	2	RING-RETAINING	

274-4578 SHAFT GP-INPUT *(contd.)* **i02787722**

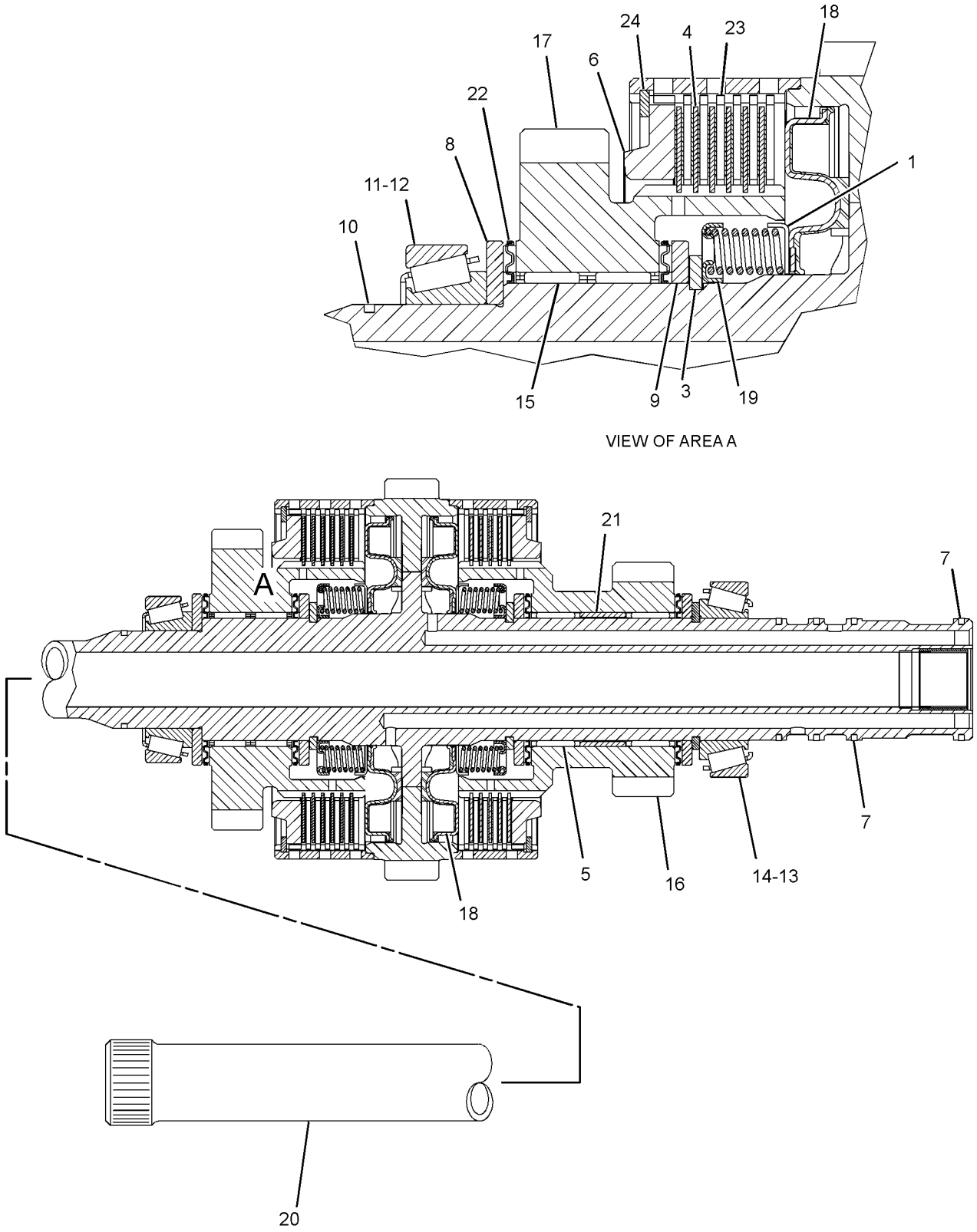

GRAPHIC #1 **<END>** g01406554

275-0476 SHAFT GP-INPUT

S/N: BYC1-UP; EAT1-UP
PART OF 271-3773, 271-3774 TRANSMISSION GP-DIRECT DRIVE
AN ATTACHMENT

SMCS-3053, 3063 **i03073141**

NOTE	REF NO	GRAPHIC REF	PART NUMBER	QTY	PART NAME 1 2 3 4 5 6 (PRODUCT LEVEL)	SEE PAGE
	1	1	**9U-8875**	2	RING-RETAINING	
	2	1	**6T-9196**	2	SEAL	
	3	1	**172-5317**	1	BEARING-SPECIAL	
	4	1	**172-6050**	1	BEARING-SPECIAL	
	5	1	**6V-5100**	2	SEAL-O-RING	
	6	1	**9U-8886**	4	RING-SEAL	
	7	1	**274-4553**	10	DISC-CLUTCH	
	8	1	**122-1886**	1	RING-SEAL	
	9	1	**6V-8757**	3	RING-RETAINING	
	10	1	**121-2500**	2	WASHER-THRUST (50X70X4-MM THK)	
	11	1	**123-8905**	1	CUP-TAPERED ROLLER	
	12	1	**123-8909**	1	CONE-BEARING	
	13	1	**147-0227**	2	PISTON-CLUTCH	
	14	1	**147-0238**	2	SPRING AS	
	15	1	**147-0203**	2	WASHER-THRUST (45.3X65X5-MM THK)	
	16	1	**6Y-7929**	10	DISC-FRICTION	
	17	1	**274-8616**	1	GEAR-FORWARD (24-TEETH)	
	18	1	**274-8617**	1	GEAR-REVERSE (27-TEETH)	
	19	1	**274-8628**	1	BEARING-NEEDLE	
	20	1	**274-8629**	1	BEARING-NEEDLE	
	21	1	**294-9821**	1	SPACER	
	22	1	**274-8636**	1	SHAFT AS (PLUG)	
	22A	1	**123-2920**	3	PLUG	
	22B	1	**123-0714**	2	BEARING	
	23	1	**8E-5707**	2	PLATE-END	

275-0476 SHAFT GP-INPUT *(contd.)* **i03073141**

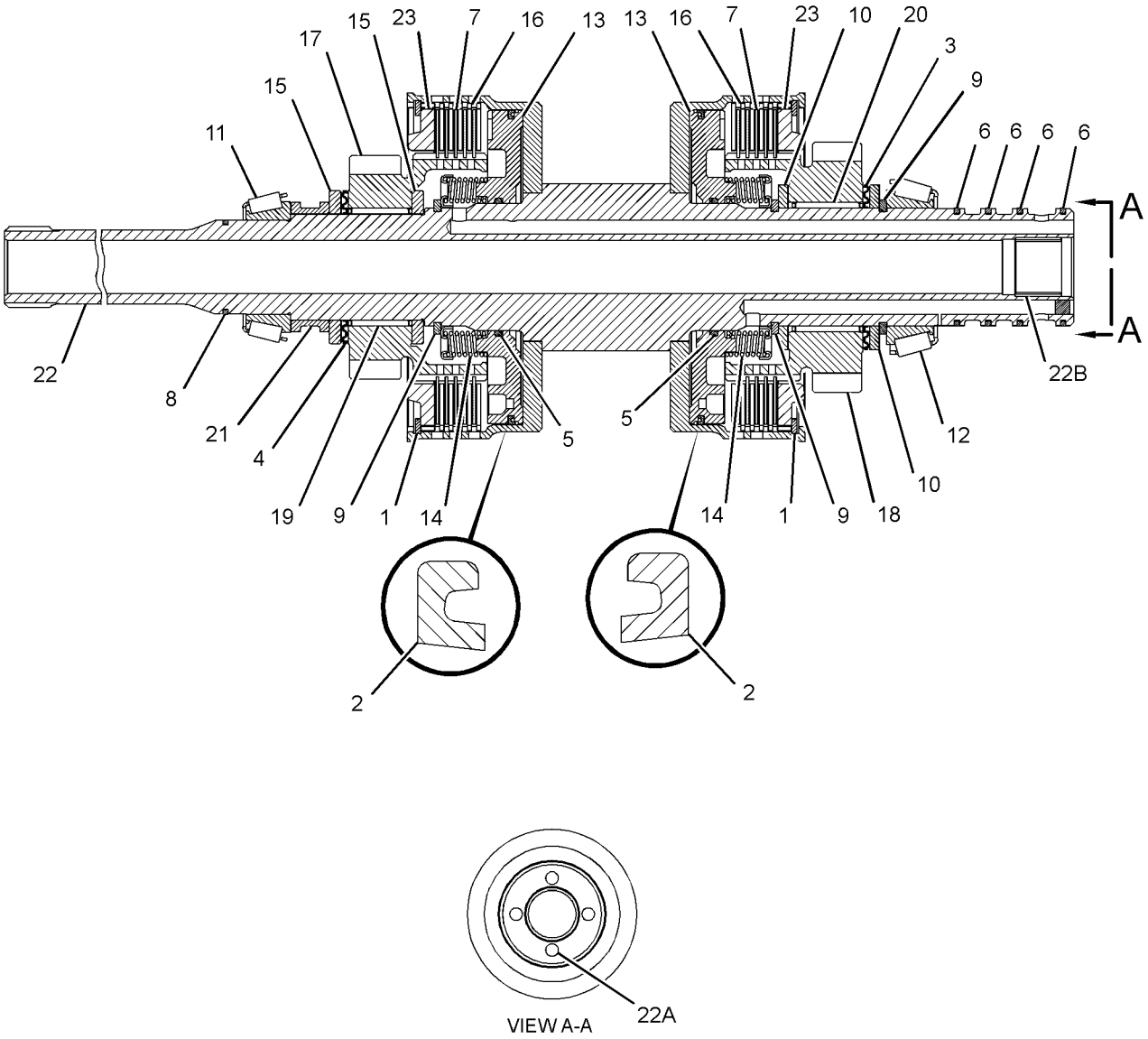

GRAPHIC #1 **<END>** g01436061

274-4582 SHAFT GP-OUTPUT–MAIN

S/N: EAT1-UP

PART OF 274-8641 TRANSMISSION GP-POWER SHIFT

AN ATTACHMENT

SMCS-3053, 3063 **i02787724**

NOTE	REF NO	GRAPHIC REF	PART NUMBER	QTY	PART NAME 1 2 3 4 5 6 (PRODUCT LEVEL)	SEE PAGE
	1	1	**274-8638**	2	RING-RETAINING	
	2	1	**6Y-1192**	3	RING-SEAL	
	3	1	**6Y-7929**	13	DISC-FRICTION	
	4	1	**8E-5707**	2	PLATE-END	
	5	1	**8T-1580**	1	CUP	
	6	1	**8T-1581**	1	CONE	
	8	1	**095-0927**	1	RING-RETAINING	
	9	1	**095-0928**	1	RING-RETAINING (EXTERNAL)	
	10	1	**121-0885**	1	RETAINER	
	11	1	**122-1877**	1	WASHER-THRUST (40X65X4-MM THK)	
	12	1	**123-8907**	1	CONE-BEARING	
	13	1	**123-8908**	1	CUP-TAPERED ROLLER	
	14	1	**123-8912**	2	BEARING-ROLLER	
	15	1	**147-0203**	1	WASHER-THRUST (45.3X65X5-MM THK)	
	16	1	**147-0205**	2	WASHER (55X78X5-MM THK)	
	17	1	**147-0242**	1	GEAR (48-TEETH)	
	18	1	**147-0248**	1	SPACER (56.2X60X15.8-MM THK)	
	19	1	**147-0260**	1	RETAINER-SPRING	
	20	1	**147-0261**	1	SHAFT AS-OUTPUT (REAR)	
		1	**9W-0717**	2	PLUG	
	21	1	**150-3757**	2	BEARING	
	22	1	**294-9811**	2	PISTON	
	23	1	**157-2090**	1	GEAR (38-TEETH)	
	24	1	**172-6050**	2	BEARING-SPECIAL	
	25	1	**172-6743**	2	BEARING-SPECIAL	
	26	1	**294-9813**	2	SPRING-WAVE	
	27	1	**211-6753**	1	GEAR (24-TEETH)	
	28	1	**274-4553**	13	DISC-CLUTCH	

274-4582 SHAFT GP-OUTPUT *(contd.)* **i02787724**

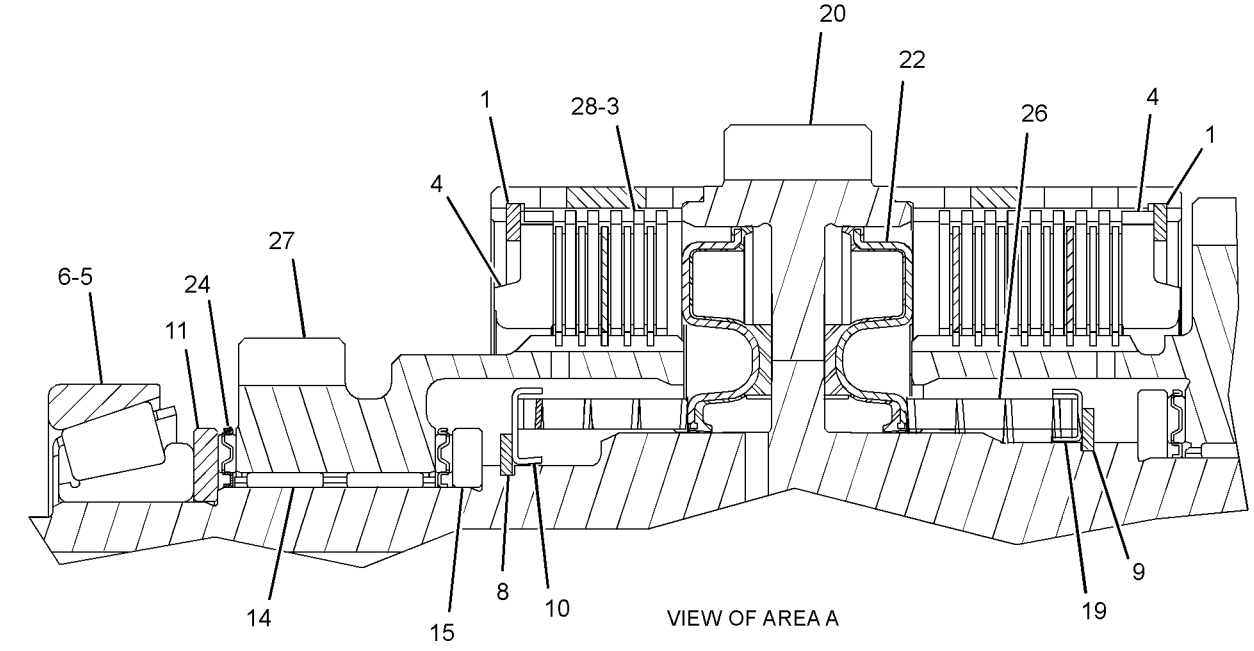

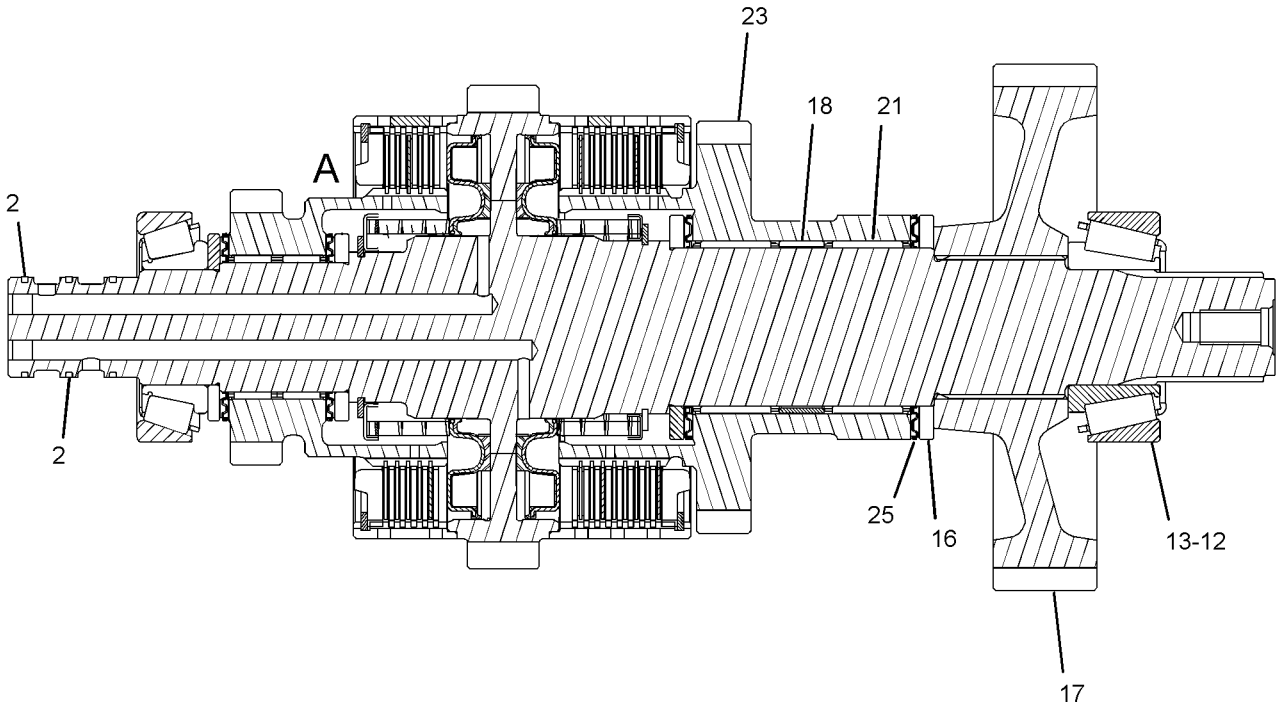

GRAPHIC #1 **<END>** g01405588

275-0478 SHAFT GP-OUTPUT–REAR

S/N: EAT1-UP

PART OF 271-3773, 271-3774 TRANSMISSION GP-DIRECT DRIVE

AN ATTACHMENT

SMCS-3053, 3063 **i02928301**

NOTE	REF NO	GRAPHIC REF	PART NUMBER	QTY	PART NAME 1 2 3 4 5 6 (PRODUCT LEVEL)	SEE PAGE
	1	1	**7T-3022**	2	SLEEVE	
	2	1	**6V-8500**	4	BEARING	
	3	1	**6T-9160**	1	GEAR (43-TEETH)	
	4	1	**7T-3017**	1	SPACER (52.5X59X9.6-MM THK)	
	5	1	**7T-3021**	2	SYNCHRONIZER GP	
	6	1	**096-5516**	1	RING-RETAINING	
	7	1	**259-1831**	1	GEAR (37-TEETH)	
	8	1	**6Y-2736**	1	CONE-BEARING	
	9	1	**123-8907**	1	CONE-BEARING	
	11	1	**274-8620**	1	GEAR-OUTPUT (37-TEETH)	
	12	1	**274-8621**	1	GEAR-OUTPUT (28-TEETH)	
	13	1	**274-8637**	1	SPACER-BEARING	
	14	1	**278-0215**	1	SHAFT-OUTPUT	
	15	1	**278-0216**	1	GEAR-OUTPUT (17-TEETH)	
	16	1	**278-0217**	1	BEARING-NEEDLE	
	17	1	**278-0218**	2	WASHER-THRUST	
	18	1	**178-8214**	1	CLIP	
	19	1	**7T-3018**	1	SLEEVE	
	20	1	**150-3757**	1	BEARING	
	21	1	**293-8761**	1	BEARING-NEEDLE	

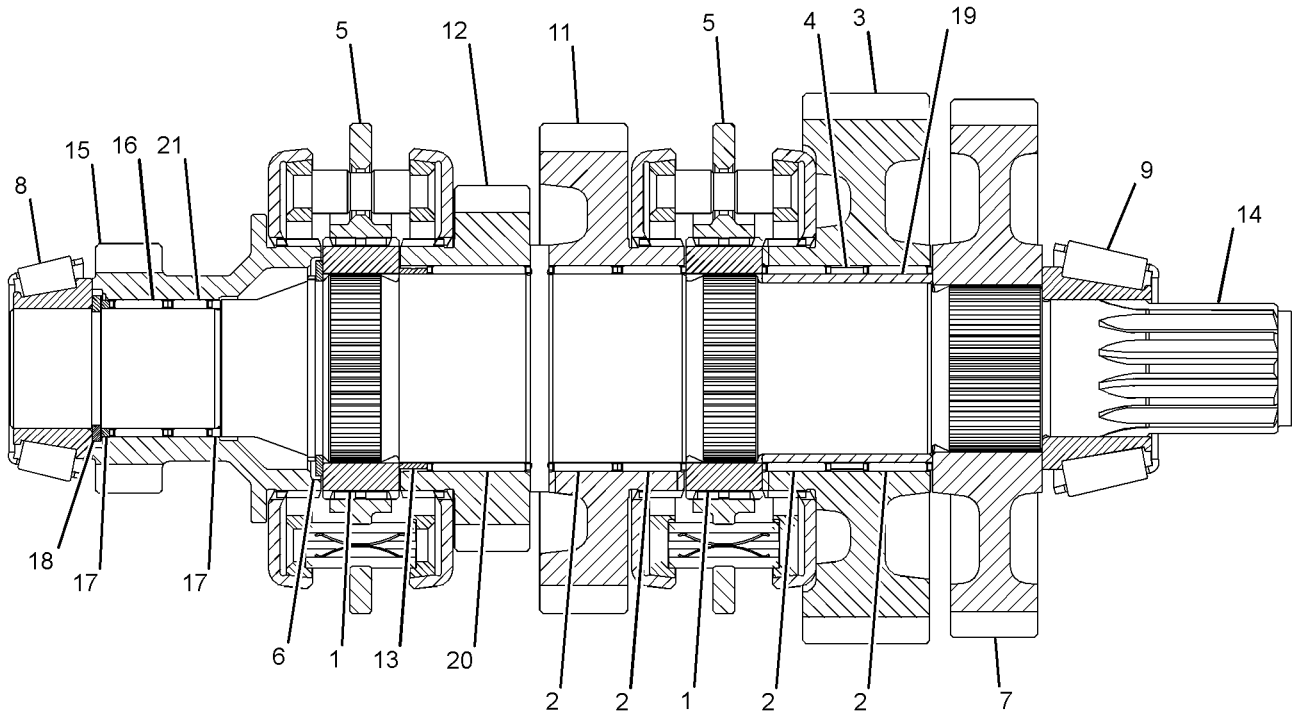

GRAPHIC #1 **<END>** g01508474

276-5337 SHAFT GP-OUTPUT–FRONT

S/N: EAT1-UP
PART OF 271-3774 TRANSMISSION GP-DIRECT DRIVE
AN ATTACHMENT

SMCS-3053, 3063 **i02445143**

NOTE	REF NO	GRAPHIC REF	PART NUMBER	QTY	PART NAME 1 2 3 4 5 6 (PRODUCT LEVEL)	SEE PAGE
	1	1	**095-0927**	1	RING-RETAINING	
	2	1	**274-4553**	8	DISC-CLUTCH	
	3	1	**6T-9196**	1	SEAL	
	4	1	**6Y-7957**	8	DISC-FRICTION	
	5	1	**121-0697**	1	WASHER-THRUST (45X65X5-MM THK)	
	6	1	**172-6050**	2	BEARING-SPECIAL	
	7	1	**6V-5100**	1	SEAL-O-RING	
	8	1	**122-1878**	1	RING-SEAL	
	9	1	**122-1877**	1	WASHER-THRUST (40X65X4-MM THK)	
	10	1	**122-1884**	1	SPACER (45X49X8-MM THK)	
	11	1	**121-0885**	1	RETAINER	
	12	1	**121-0714**	1	PISTON	
	13	1	**123-8905**	2	CUP-TAPERED ROLLER	
	14	1	**178-9566**	1	SPRING-PISTON	
	15	1	**161-3249**	1	RING-RETAINING	
	16	1	**123-8912**	2	BEARING-ROLLER	
	17	1	**190-9767**	1	SHAFT AS (OUTPUT)	
	18	1	**121-0904**	1	GEAR AS (36-TEETH)	
	19	1	**8E-5707**	1	PLATE-END	

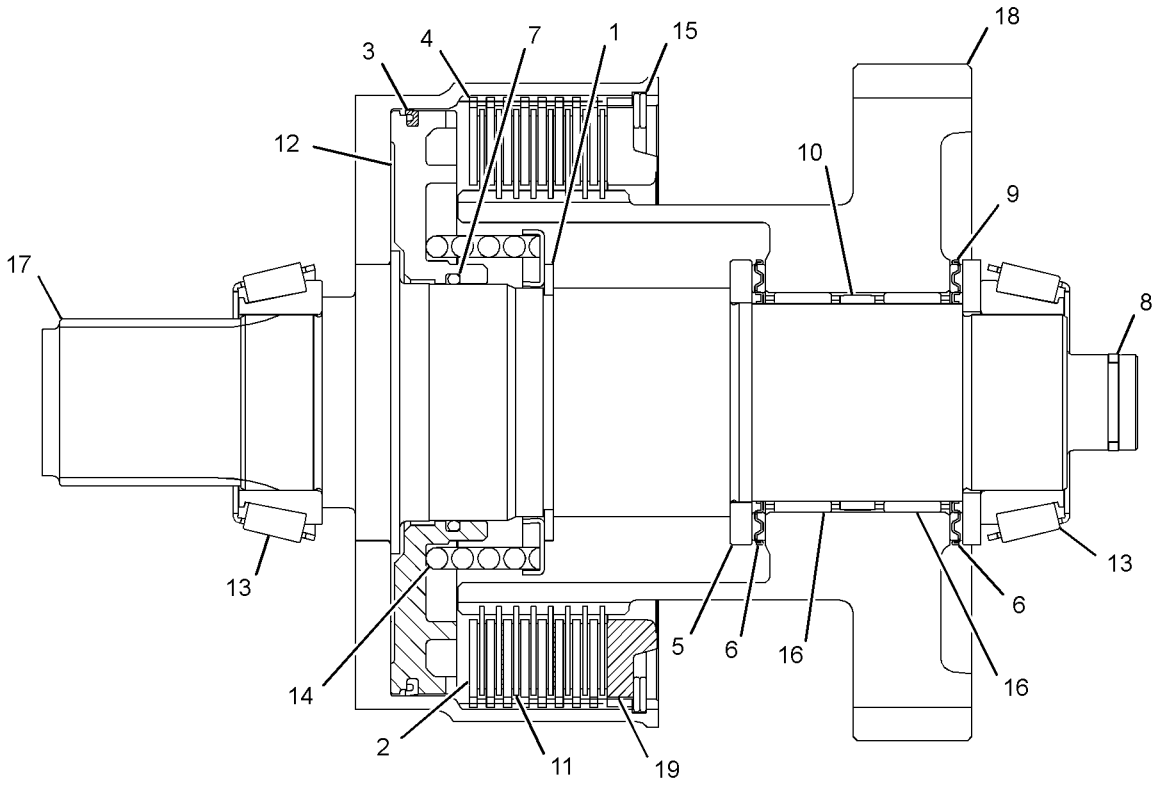

GRAPHIC #1 **<END>** g01233297

276-5339 SHAFT GP-OUTPUT–REAR

S/N: BYC1-UP; EAT1-UP
PART OF 271-3773 TRANSMISSION GP-DIRECT DRIVE
AN ATTACHMENT

SMCS-3053, 3063 **i02770380**

NOTE	REF NO	GRAPHIC REF	PART NUMBER	QTY	PART NAME 1 2 3 4 5 6 (PRODUCT LEVEL)	SEE PAGE
	1	1	**7T-3022**	2	SLEEVE	
	2	1	**6V-8500**	4	BEARING	
	3	1	**6T-9160**	1	GEAR (43-TEETH)	
	4	1	**259-1832**	1	SPACER-SPECIAL	
	5	1	**7T-3017**	1	SPACER (52.5X59X9.6-MM THK)	
	6	1	**7T-3021**	2	SYNCHRONIZER GP	
	7	1	**096-5516**	1	RING-RETAINING	
	8	1	**6Y-2736**	1	CONE-BEARING	
	9	1	**123-8907**	1	CONE-BEARING	
	10	1	**150-3757**	1	BEARING	
	11	1	**274-8620**	1	GEAR-OUTPUT (37-TEETH)	
	12	1	**274-8621**	1	GEAR-OUTPUT (28-TEETH)	
	13	1	**274-8637**	1	SPACER-BEARING	
	14	1	**278-0215**	1	SHAFT-OUTPUT	
	15	1	**278-0216**	1	GEAR-OUTPUT (17-TEETH)	
	16	1	**278-0217**	2	BEARING-NEEDLE	
	17	1	**278-0218**	1	WASHER-THRUST	
	18	1	**178-8214**	1	CLIP	

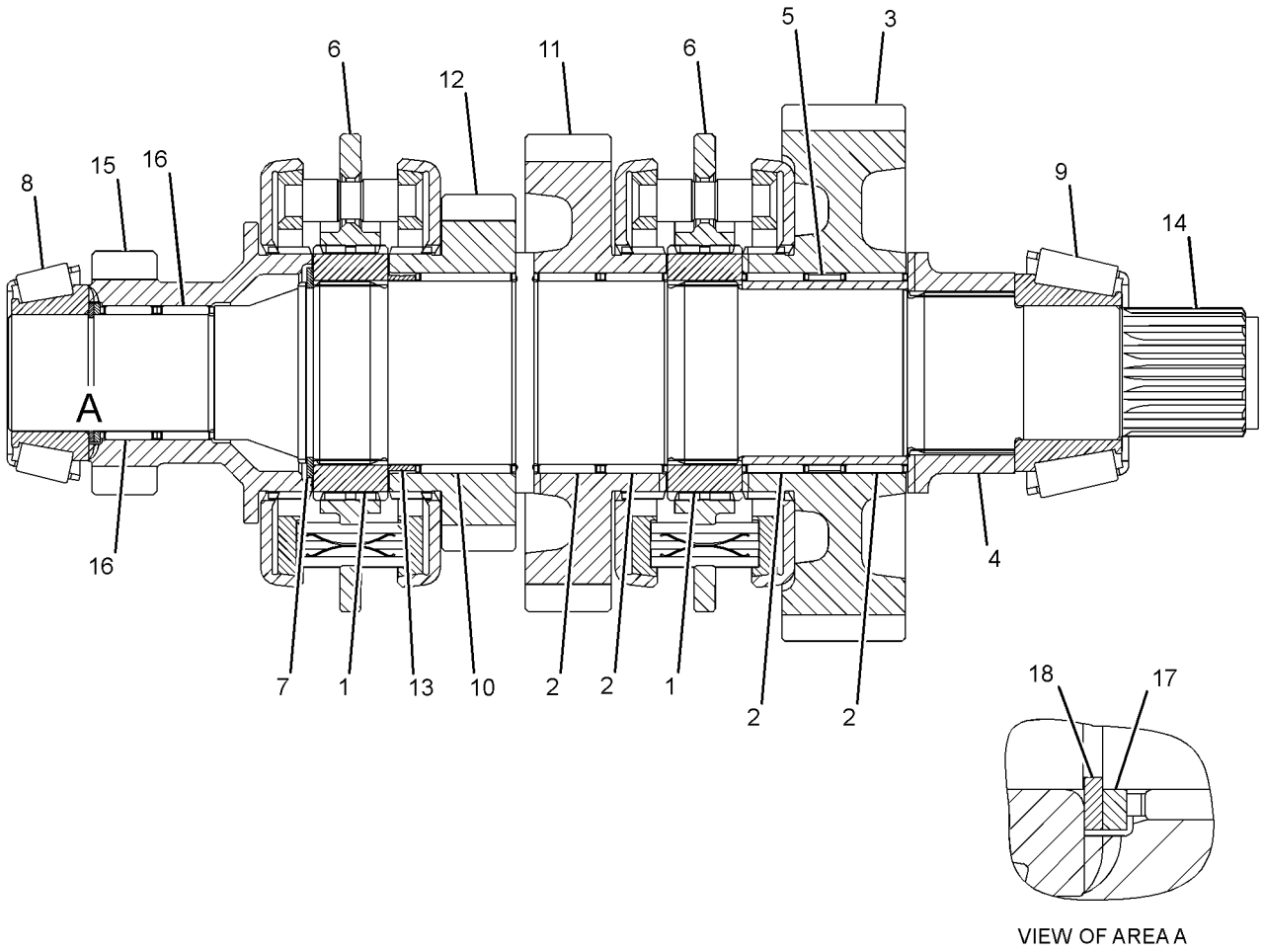

VIEW OF AREA A

GRAPHIC #1 **<END>** g01226076

280-7007 SHAFT GP-OUTPUT–FRONT

S/N: EAT1-UP
PART OF 274-8641 TRANSMISSION GP-POWER SHIFT
AN ATTACHMENT

SMCS-3053, 3063 **i02787726**

NOTE	REF NO	GRAPHIC REF	PART NUMBER	QTY	PART NAME 1 2 3 4 5 6 (PRODUCT LEVEL)	SEE PAGE
	1	1	**294-9812**	1	RETAINER-SPRING	
	3	1	**6V-8757**	1	RING-RETAINING	
	4	1	**6Y-7957**	8	DISC-FRICTION	
	5	1	**8E-5707**	1	PLATE-END	
	6	1	**122-1877**	1	WASHER-THRUST (40X65X4-MM THK)	
	7	1	**122-1878**	1	RING-SEAL	
	8	1	**122-1884**	1	SPACER (45X49X8-MM THK)	
	9	1	**123-8905**	2	CUP-TAPERED ROLLER	
	10	1	**123-8906**	2	CUP-TAPERED ROLLER	
	11	1	**123-8912**	2	BEARING-ROLLER	
	12	1	**147-0203**	1	WASHER-THRUST (45.3X65X5-MM THK)	
	13	1	**147-0207**	1	SHAFT AS-OUTPUT (FRONT)	
	14	1	**147-0210**	1	GEAR (45/36-TEETH)	
	15	1	**305-3431**	1	PISTON	
	16	1	**147-0238**	1	SPRING AS	
	17	1	**161-3249**	1	RING-RETAINING	
	18	1	**172-6050**	2	BEARING-SPECIAL	
	19	1	**274-4553**	8	DISC-CLUTCH	

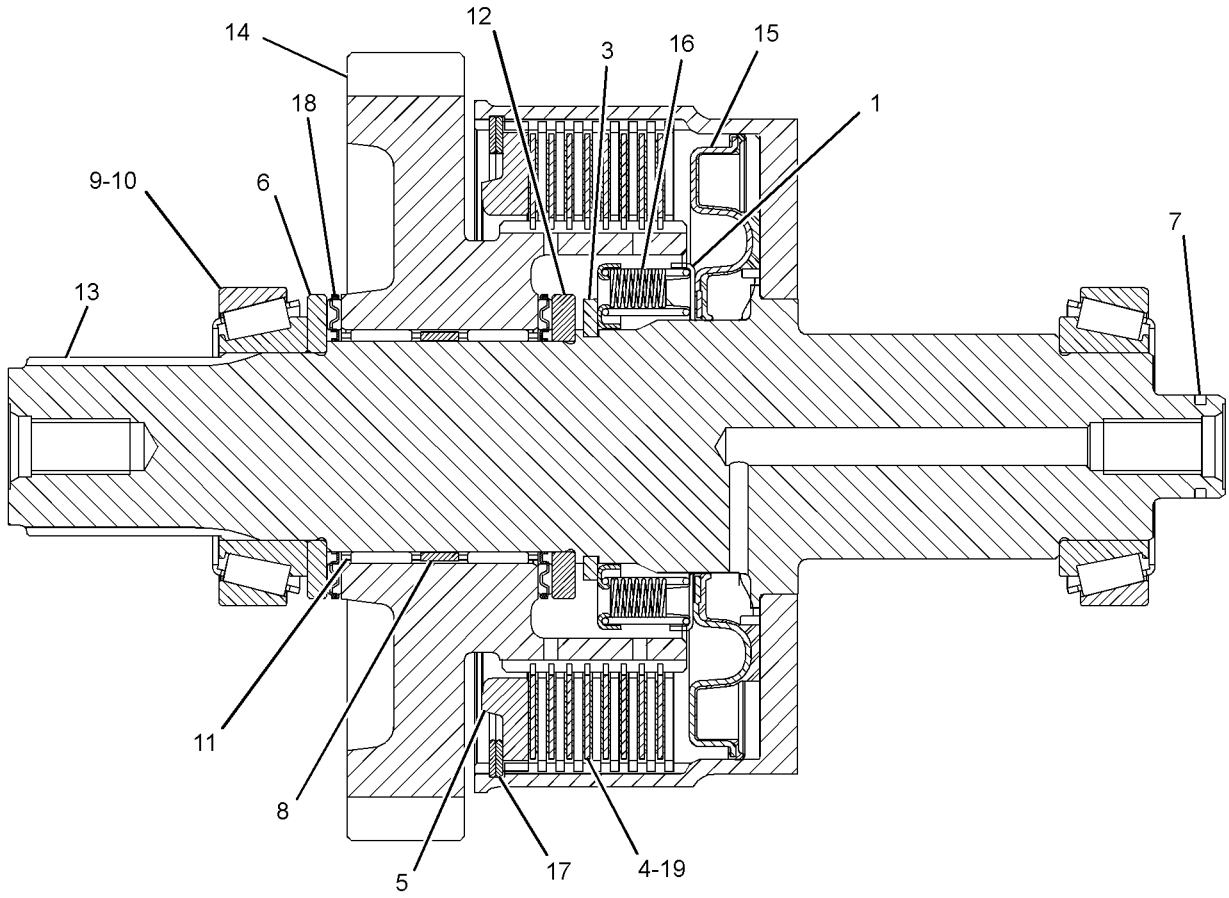

LEFT SIDE VIEW

GRAPHIC #1 **<END>** g01405501

202-6009 TRANSMISSION & MOUNTING GP–

ALL WHEEL DRIVE, AUTOSHIFT

S/N: EAT1-UP

PART OF 251-6355 TRANSMISSION AR-POWER SHIFT

AN ATTACHMENT

SMCS-3030 **i02444691**

NOTE	REF NO	GRAPHIC REF	PART NUMBER	QTY	PART NAME 1 2 3 4 5 6 (PRODUCT LEVEL)	SEE PAGE
Y	1	1	*254-5703*	1	MOUNTING GP-TRANSMISSION	241
Y	2	1	**274-8641**	1	TRANSMISSION GP-POWER SHIFT	296

Y-SEPARATE ILLUSTRATION

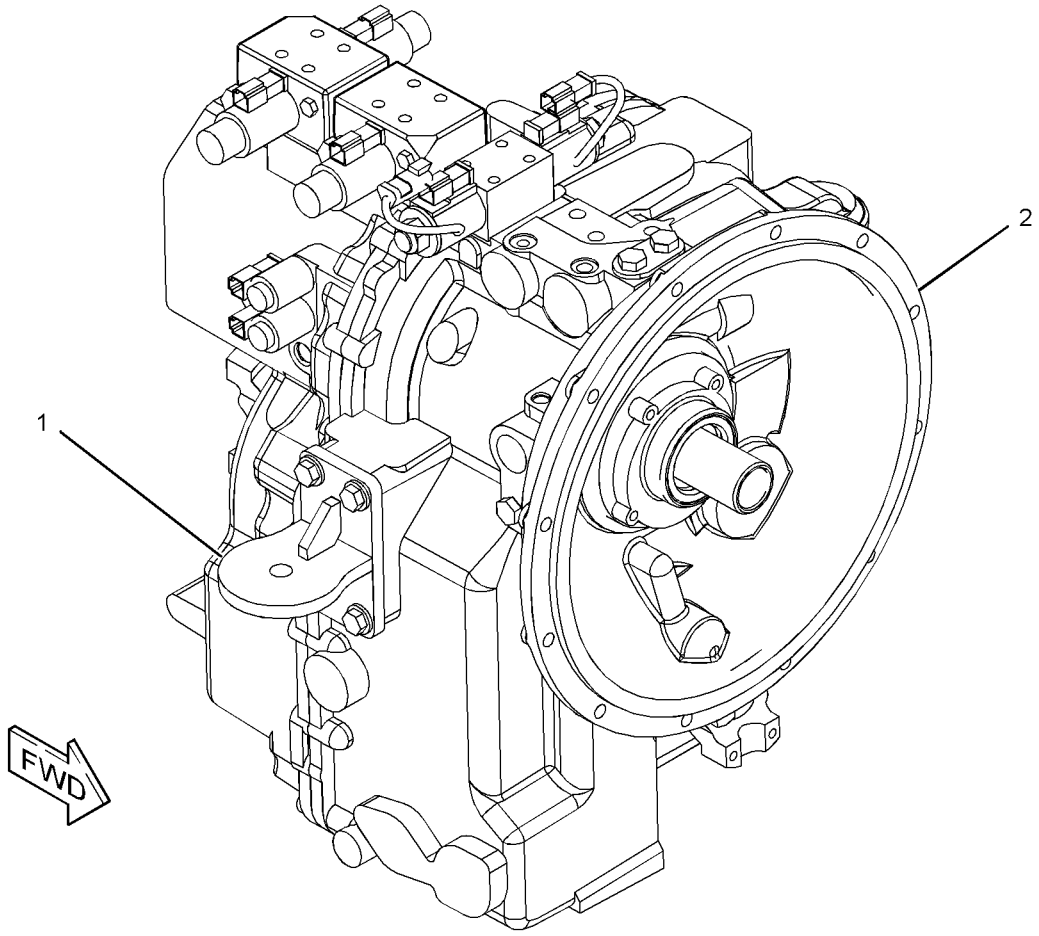

GRAPHIC #1 **<END>** g01233469

271-2405 TRANSMISSION & MOUNTING GP–
2-WHEEL DRIVE, STANDARD SHIFT
S/N: BYC1-UP; EAT1-UP
PART OF 272-0752 TRANSMISSION AR-DIRECT DRIVE
AN ATTACHMENT

SMCS-3030 **i02354348**

NOTE	PART NUMBER	QTY	PART NAME 1 2 3 4 5 6 (PRODUCT LEVEL)	SEE PAGE
Y	*271-4487*	1	MOUNTING GP-TRANSMISSION	242
Y	*271-3773*	1	TRANSMISSION GP-DIRECT DRIVE	265
Y-SEPARATE ILLUSTRATION				

<END>

271-2406 TRANSMISSION & MOUNTING GP–
ALL WHEEL DRIVE, STANDARD SHIFT
S/N: EAT1-UP
PART OF 214-7527 TRANSMISSION AR-DIRECT DRIVE
AN ATTACHMENT

SMCS-3030 **i02354600**

NOTE	PART NUMBER	QTY	PART NAME 1 2 3 4 5 6 (PRODUCT LEVEL)	SEE PAGE
Y	*271-4487*	1	MOUNTING GP-TRANSMISSION	242
Y	**271-3774**	1	TRANSMISSION GP-DIRECT DRIVE	285
Y-SEPARATE ILLUSTRATION				

<END>

214-7527 TRANSMISSION AR-DIRECT DRIVE–
ALL WHEEL DRIVE, STANDARD SHIFT
S/N: EAT1-UP
PART OF 218-5148 POWER TRAIN AR
AN ATTACHMENT

SMCS-3030 **i02354598**

NOTE	PART NUMBER	QTY	PART NAME 1 2 3 4 5 6 (PRODUCT LEVEL)	SEE PAGE
Y	*111-7907*	1	DRIVE GP-FLEXIBLE COUPLING	223
Y	*271-2406*	1	TRANSMISSION & MOUNTING GP	263
	212-6216	1	TORQUE CONVERTER AS	
Y-SEPARATE ILLUSTRATION				

<END>

272-0752 TRANSMISSION AR-DIRECT DRIVE–
2-WHEEL DRIVE, STANDARD SHIFT
S/N: BYC1-UP; EAT1-UP
PART OF 293-2986 POWER TRAIN AR
AN ATTACHMENT

SMCS-3030 **i02900034**

NOTE	PART NUMBER	QTY	PART NAME 1 2 3 4 5 6 (PRODUCT LEVEL)	SEE PAGE
Y	*111-7907*	1	DRIVE GP-FLEXIBLE COUPLING	223
Y	*271-2405*	1	TRANSMISSION & MOUNTING GP	263
	293-4993	1	TORQUE CONVERTER AS	

Y-SEPARATE ILLUSTRATION

<END>

251-6355 TRANSMISSION AR-POWER SHIFT–
ALL WHEEL DRIVE
S/N: EAT1-UP
PART OF 218-5149 POWER TRAIN AR
AN ATTACHMENT

SMCS-3030 **i02444693**

NOTE	PART NUMBER	QTY	PART NAME 1 2 3 4 5 6 (PRODUCT LEVEL)	SEE PAGE
Y	*111-7907*	1	DRIVE GP-FLEXIBLE COUPLING	223
Y	*202-6009*	1	TRANSMISSION & MOUNTING GP	262
	212-6216	1	TORQUE CONVERTER AS	

Y-SEPARATE ILLUSTRATION

<END>

271-3773 TRANSMISSION GP-DIRECT DRIVE

S/N: BYC1-UP; EAT1-UP
PART OF 271-2405 TRANSMISSION & MOUNTING GP
AN ATTACHMENT

SMCS-3030 **i03256245**

NOTE	REF NO	GRAPHIC REF	PART NUMBER	QTY	PART NAME 1 2 3 4 5 6 (PRODUCT LEVEL)	SEE PAGE
Y	1	4	**275-0472**	1	CASE GP-TRANSMISSION (FRONT)	214
Y	2	4	**275-0474**	1	CASE GP-TRANSMISSION (REAR)	215
	3	4	**121-7385**	1	PUMP GP-TRANSMISSION	
	4	1	**121-7391**	1	LEVER	
	5	4	**216-2267**	1	SEAL-LIP TYPE	
	6	1	**9P-9150**	4	WASHER (8.25X18X0.84-MM THK)	
	7	4	**275-0475**	1	SHAFT GP-IDLER	
		4	**005-0471**	2	CONE-BEARING	
		4	**274-8623**	1	SHAFT-REVERSE	
Y	8	4	**275-0476**	1	SHAFT GP-INPUT	254
	9	4	**275-0477**	1	SHAFT GP-COUNTER	
		4	**8T-1581**	1	CONE	
		4	**123-8907**	1	CONE-BEARING	
		4	**274-8614**	1	GEAR-COUNTERSHAFT (37-TEETH)	
		4	**274-8625**	1	GEAR-COUNTERSHAFT (38-TEETH)	
Y	10	4	**276-5339**	1	SHAFT GP-OUTPUT (REAR)	260
	11	4	**121-7403**	1	FORK-SHIFT	
	12	4	**121-7404**	1	FORK-SHIFT	
	13	4	**121-7389**	1	ROD AS-GEARSHIFT	
	14	4	**121-7390**	1	ROD AS-GEARSHIFT	
	15	4	**6Y-1341**	2	SPRING	
	16	4	**014-5645**	3	BALL	
	17	1	**9M-1974**	3	WASHER-HARD (8.8X16X2-MM THK)	
	18	1	**7T-3109**	1	PIN	
	19	4	**7T-3249**	2	SCREW (3/8-24X0.75-IN)	
	20	1,2,3	**9S-4191**	7	PLUG-O-RING	
	21	4	**127-3017**	1	SEAT AS	
	22	3,4	**122-6785**	4	PLUG AS	
	23	1	**175-0054**	1	SEAL-O-RING	
	24	1	**174-9711**	1	GASKET	
	25	2	**278-0205**	1	VALVE GP-SOLENOID (FORWARD, REVERSE)	
		2	**8L-2779**	4	SEAL-O-RING	
		2	**274-4557**	1	PLUG-ORIFICE	
		2	**274-4560**	2	NUT-SELF LOCKING	
		2	**280-7009**	2	COIL AS	
M	26	2	**9X-6615**	4	BOLT (M5X0.8X30-MM)	
	27	2	**248-3290**	1	VALVE GP-SOLENOID (DIFFERENTIAL LOCK)	
	28	2	**121-7396**	1	VALVE GP-RELIEF (TORQUE CONVERTER INLET)	
Y	29	2	**147-0209**	1	VALVE GP-RELIEF (PUMP PRESSURE)	311
Y	30	3	**189-5746**	1	SENSOR GP-SPEED (TORQUE CONVERTER OUTPUT)	143
M	31	1	**8C-5748**	7	BOLT (M8X1.25X55-MM)	
M	32	3	**6V-8335**	17	BOLT-SELF-LOCKING (M10X1.5X40-MM)	
M	33	4	**6V-8097**	1	BOLT (M12X1.75X30-MM)	
	34	2	**7T-3251**	1	BREATHER (TRANSMISSION)	
	35	2	**7T-3119**	1	HOUSING	
M	36	2	**6V-7731**	2	BOLT (M10X1.5X70-MM)	
	37	4	**7T-3195**	1	WASHER (12.3X47X6.35-MM THK)	
	38	3	**6Y-1896**	1	PLUG AS	
	39	2	**6Y-2035**	1	GASKET	
	40	4	**5P-8066**	1	SEAL-O-RING	
	41	4	**122-6787**	1	YOKE AS	
	42	4	**4W-9972**	1	SENDER AS-TEMPERATURE (12-VOLT)	
		4	**6V-8378**	1	NUT (10-32-THD)	
		4	**8T-0328**	1	WASHER-HARD (5.5X10X1-MM THK)	
		4	**8F-1434**	1	LOCKWASHER	

271-3773 TRANSMISSION GP-DIRECT DRIVE *(contd.)* i03256245

NOTE	REF NO	GRAPHIC REF	PART NUMBER	QTY	PART NAME 1 2 3 4 5 6 (PRODUCT LEVEL)	SEE PAGE
	43	1,2,3, 4	**3J-1907**	8	SEAL-O-RING	
	44	1	**7T-3111**	1	COVER	
	45	1	**3S-2093**	1	STRAP-CABLE	
	46	1	**6K-0806**	1	STRAP-CABLE	

M-METRIC PART
Y-SEPARATE ILLUSTRATION

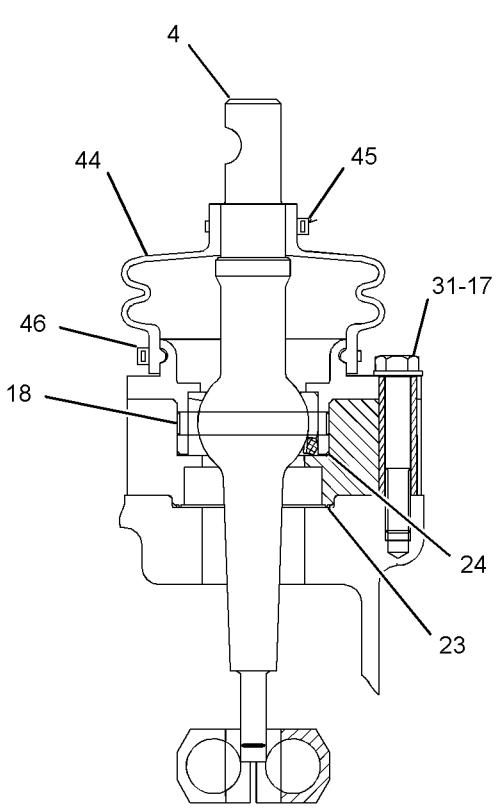

SECTION D-D

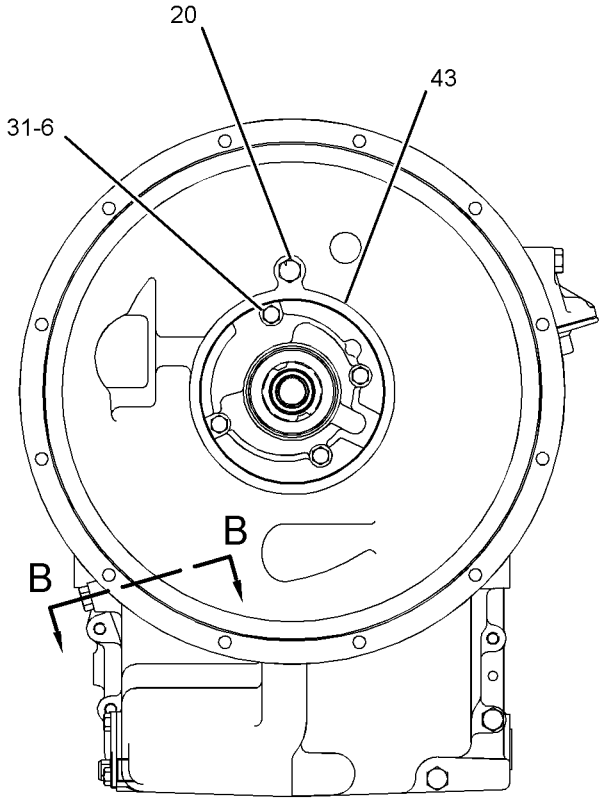

FRONT VIEW

REFER TO ALL ILLUSTRATION OF
THIS GROU PFOR AUXILIARY VIEWS

GRAPHIC #1

g01231463

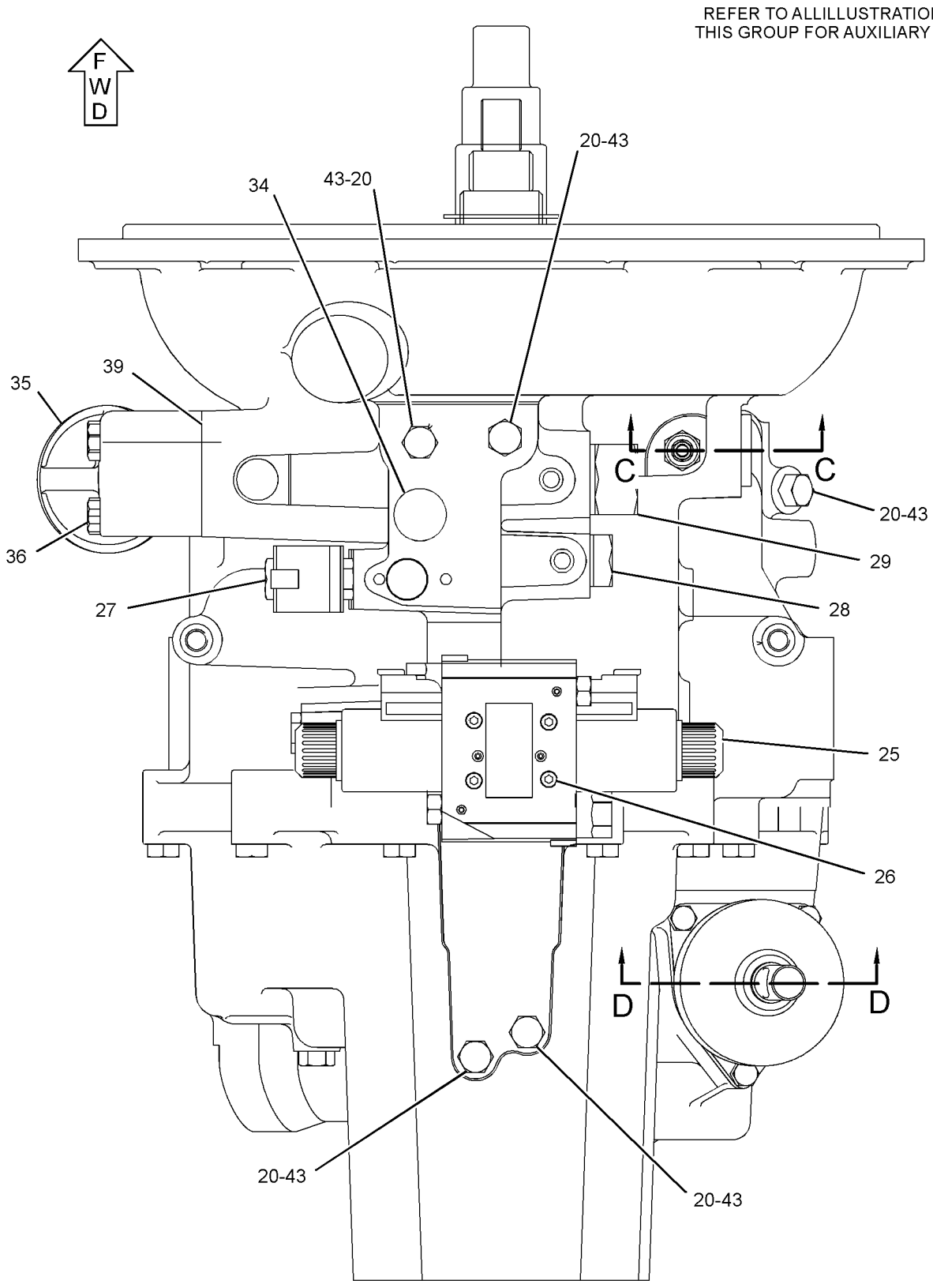

TOP VIEW

GRAPHIC #2

g01231464

REFER TO ALL ILLUSTRATION SOF
THIS GROUP FOR AUXILIARY VIEWS

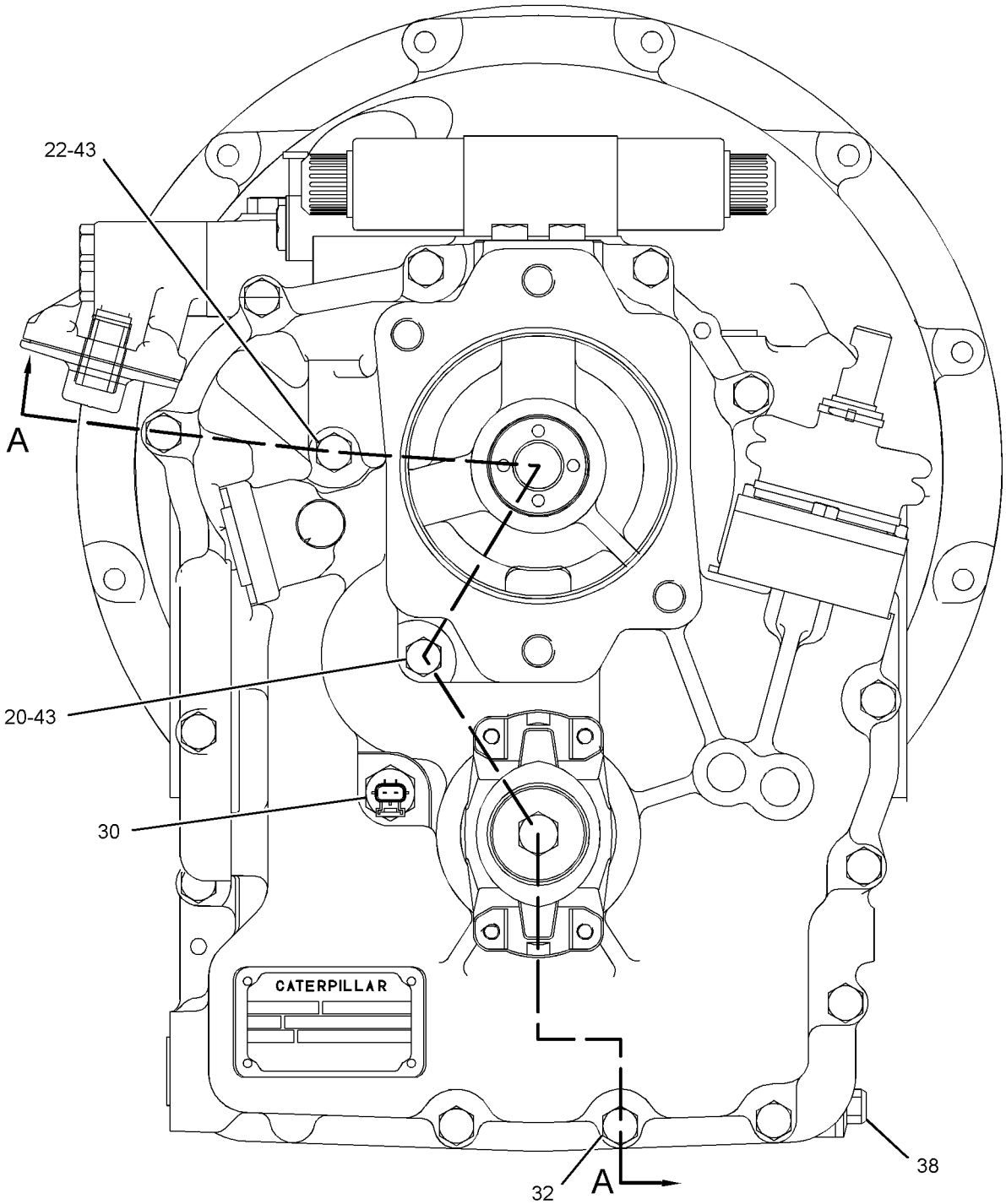

REAR VIEW

GRAPHIC #3

g01231465

271-3773 TRANSMISSION GP-DIRECT DRIVE *(contd.)* **i03256245**

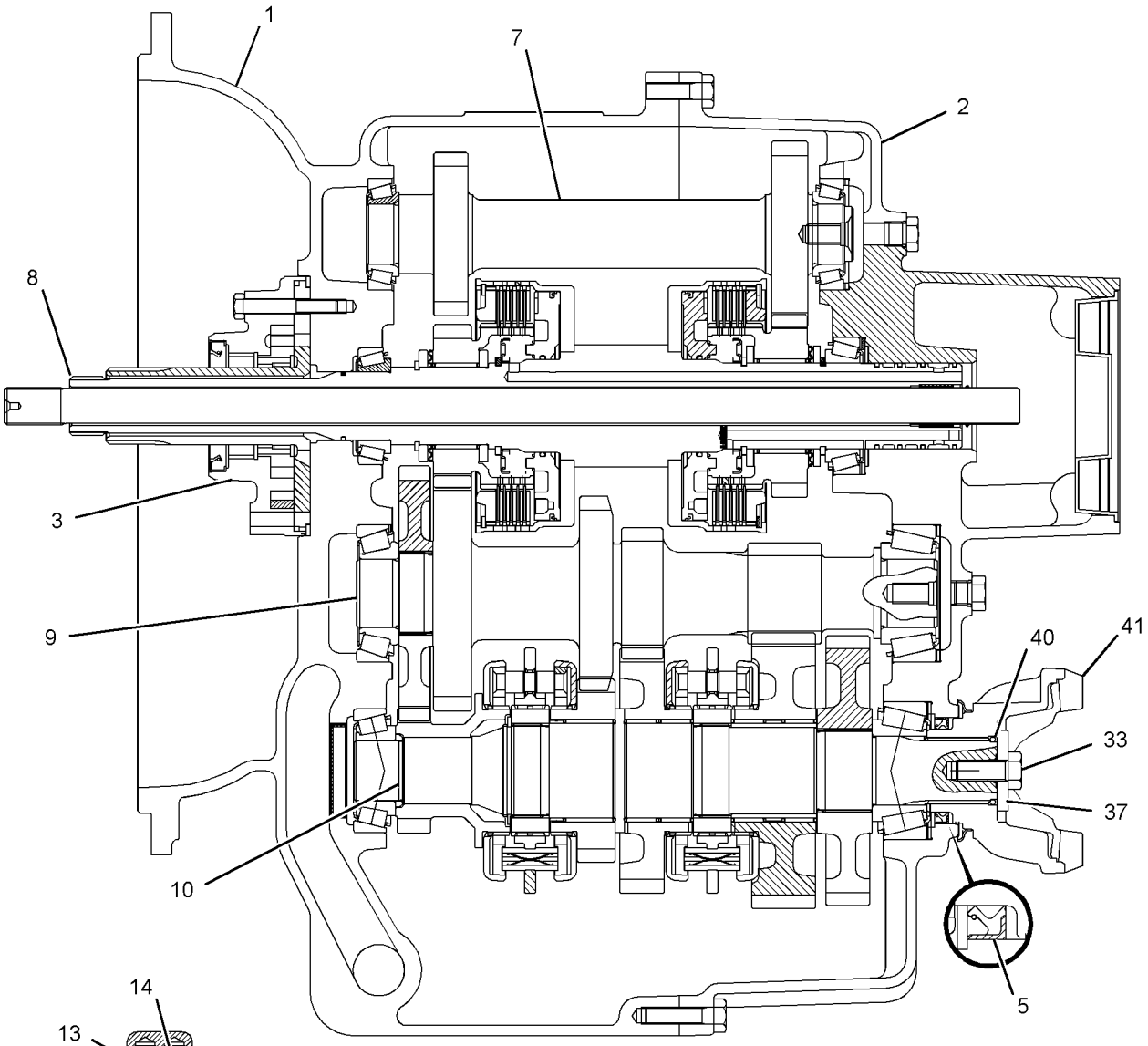

SECTION A-A

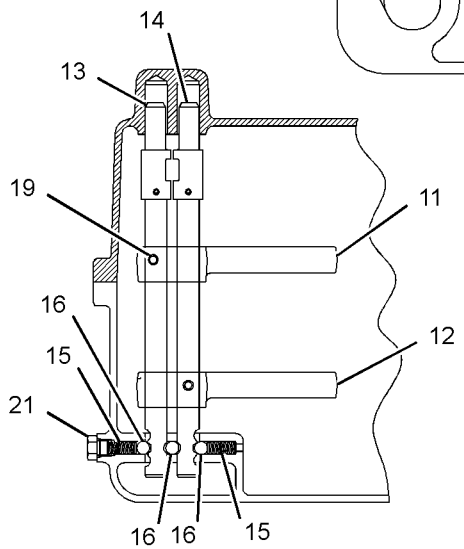

SECTION B-B

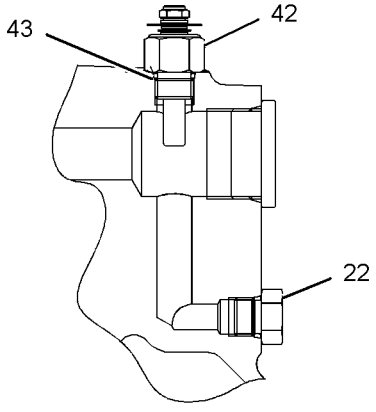

SECTION C-C

GRAPHIC #4 **<END>** g01231466

POWER TRAIN

271-3773 TRANSMISSION GP-DIRECT DRIVE

S/N: EAT1-UP
PART OF 271-2405 TRANSMISSION & MOUNTING GP
AN ATTACHMENT
TYPE 1

SMCS-3030 **i03527825**

NOTE	REF NO	GRAPHIC REF	PART NUMBER	QTY	PART NAME 1 2 3 4 5 6 (PRODUCT LEVEL)	SEE PAGE
CY	1	4	**294-9809**	1	CASE GP-TRANSMISSION (FRONT)	217
Y	2	4	**275-0474**	1	CASE GP-TRANSMISSION (REAR)	215
	3	4	**121-7385**	1	PUMP GP-TRANSMISSION	
	4	1	**121-7391**	1	LEVER	
	5	4	**216-2267**	1	SEAL-LIP TYPE	
	6	1	**9P-9150**	4	WASHER (8.25X18X0.84-MM THK)	
	7	4	**275-0475**	1	SHAFT GP-IDLER	
		4	**005-0471**	2	CONE-BEARING	
		4	**274-8623**	1	SHAFT-REVERSE	
Y	8	4	**275-0476**	1	SHAFT GP-INPUT	254
	9	4	**275-0477**	1	SHAFT GP-COUNTER	
		4	**8T-1581**	1	CONE	
		4	**123-8907**	1	CONE-BEARING	
		4	**274-8614**	1	GEAR-COUNTERSHAFT (37-TEETH)	
		4	**274-8625**	1	GEAR-COUNTERSHAFT (38-TEETH)	
CY	10	4	**275-0478**	1	SHAFT GP-OUTPUT (REAR)	258
	11	3	**121-7403**	1	FORK-SHIFT	
	12	3	**121-7404**	1	FORK-SHIFT	
	13	3	**121-7389**	1	ROD AS-GEARSHIFT	
	14	3	**121-7390**	1	ROD AS-GEARSHIFT	
	15	3	**6Y-1341**	2	SPRING	
	16	3	**014-5645**	3	BALL	
	17	1	**9M-1974**	3	WASHER-HARD (8.8X16X2-MM THK)	
	18	1	**7T-3109**	1	PIN	
	19	3	**7T-3249**	2	SCREW (3/8-24X0.75-IN)	
C	20	1,2,3, 4	**9S-4191**	9	PLUG-O-RING	
	21	1	**127-3017**	1	SEAT AS	
	23	1	**175-0054**	1	SEAL-O-RING	
	24	1	**174-9711**	1	GASKET	
	25	2	**278-0205**	1	VALVE GP-SOLENOID (FORWARD, REVERSE)	
		2	**8L-2779**	4	SEAL-O-RING	
		2	**274-4557**	1	PLUG-ORIFICE	
		2	**274-4560**	2	NUT-SELF LOCKING	
		2	**280-7009**	2	COIL AS	
M	26	2	**9X-6615**	4	BOLT (M5X0.8X30-MM)	
	27	2	**248-3290**	1	VALVE GP-SOLENOID (DIFFERENTIAL LOCK)	
	28	2	**121-7396**	1	VALVE GP-RELIEF (TORQUE CONVERTER INLET)	
Y	29	2	**147-0209**	1	VALVE GP-RELIEF (PUMP PRESSURE)	311
Y	30	3	**189-5746**	1	SENSOR GP-SPEED (TORQUE CONVERTER OUTPUT)	143
M	31	1	**8C-5748**	7	BOLT (M8X1.25X55-MM)	
M	32	3	**6V-8335**	17	BOLT-SELF-LOCKING (M10X1.5X40-MM)	
M	33	4	**6V-8097**	1	BOLT (M12X1.75X30-MM)	
C	34	3	**294-9822**	1	BREATHER AS (TRANSMISSION)	
		3	**7T-3251**	1	BREATHER (TRANSMISSION)	
		3	**250-6855**	2	WASHER (14.5X18X1.5-MM THK)	
		3	**294-9823**	1	PLUG-BREATHER	
		3	**294-9824**	1	TUBE-BREATHER	
	35	2	**7T-3119**	1	HOUSING	
M	36	2	**6V-7731**	2	BOLT (M10X1.5X70-MM)	
	37	4	**7T-3195**	1	WASHER (12.3X47X6.35-MM THK)	
	38	3	**6Y-1896**	1	PLUG AS	
	39	2	**6Y-2035**	1	GASKET	
	40	4	**5P-8066**	1	SEAL-O-RING	

271-3773 TRANSMISSION GP-DIRECT DRIVE *(contd.)* i03527825

NOTE	REF NO	GRAPHIC REF	PART NUMBER	QTY	PART NAME 1 2 3 4 5 6 (PRODUCT LEVEL)	SEE PAGE
	41	4	**122-6787**	1	YOKE AS	
	42	4	**4W-9972**	1	SENDER AS-TEMPERATURE (12-VOLT)	
		4	**6V-8378**	1	NUT (10-32-THD)	
		4	**8T-0328**	1	WASHER-HARD (5.5X10X1-MM THK)	
		4	**8F-1434**	1	LOCKWASHER	
C	43	1,2,3, 4	**3J-1907**	11	SEAL-O-RING	
	44	1	**7T-3111**	1	COVER	
C	45	1,3	**3S-2093**	2	STRAP-CABLE	
	46	1	**6K-0806**	1	STRAP-CABLE	
C	47	3	**274-8622**	1	PLUG	
C	48	4	**208-8240**	1	SEAL-LIP TYPE	
C	49	4	**7X-4741**	1	SEAL	

C-CHANGE FROM PREVIOUS TYPE
M-METRIC PART
Y-SEPARATE ILLUSTRATION

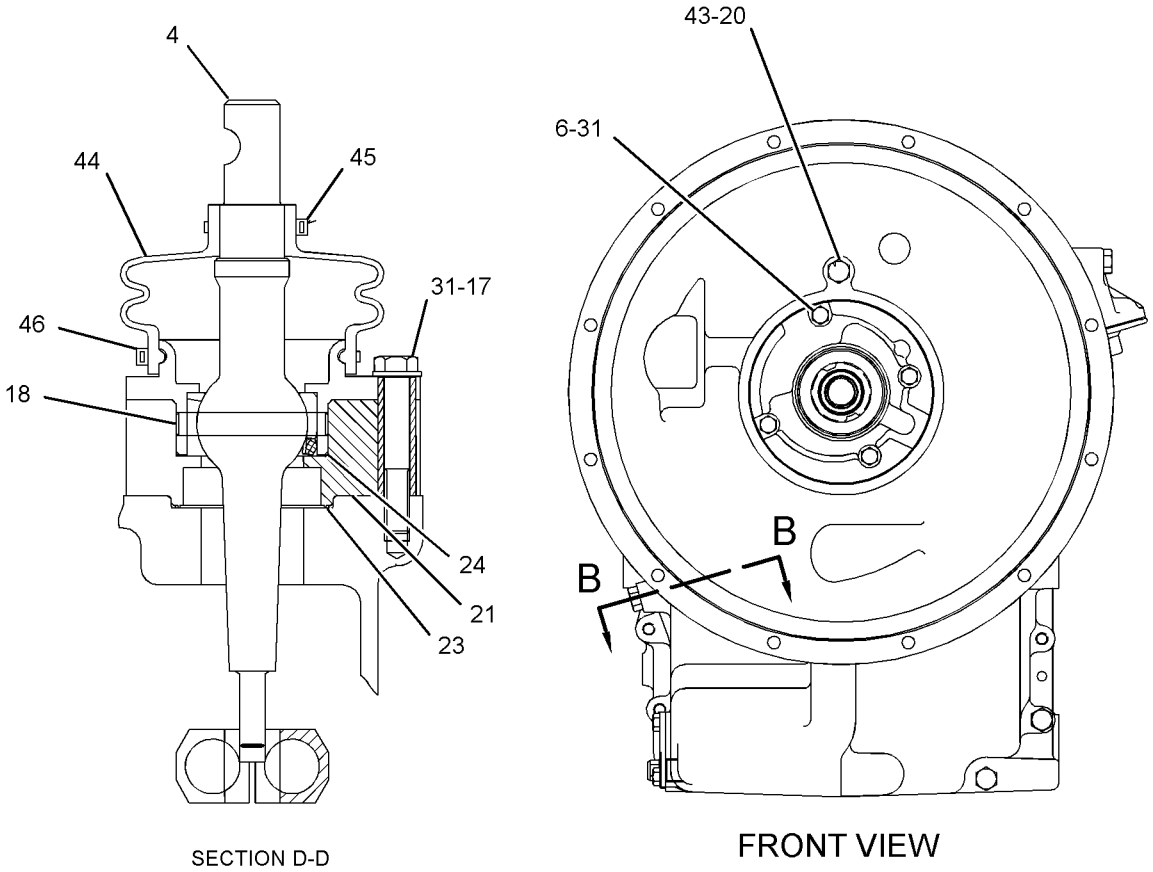

SECTION D-D

FRONT VIEW

REFER TO ALL ILLUSTRATION OF
THIS GROU PFOR AUXILIARY VIEWS

GRAPHIC #1

g01398155

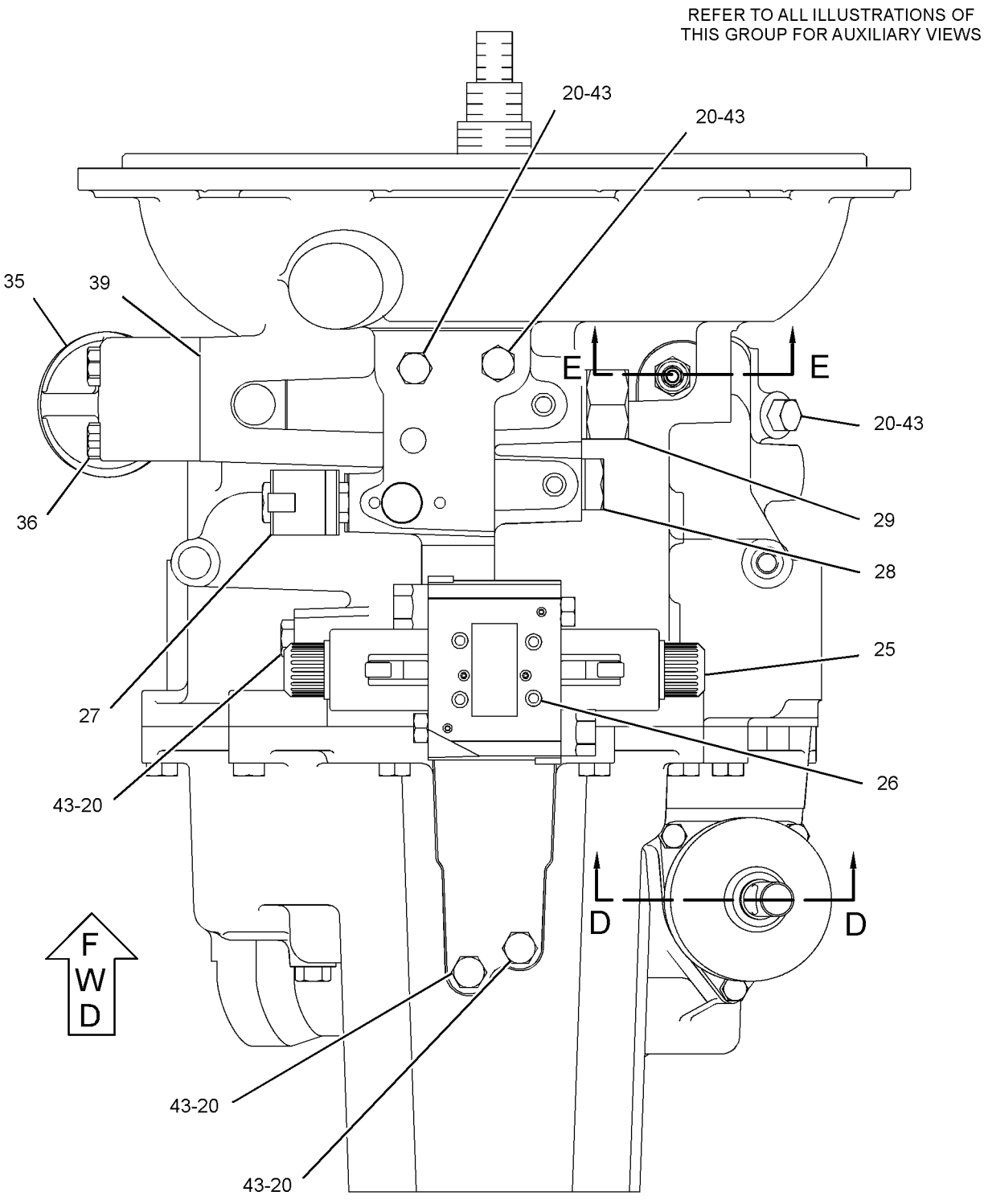

TOP VIEW

GRAPHIC #2

g01398154

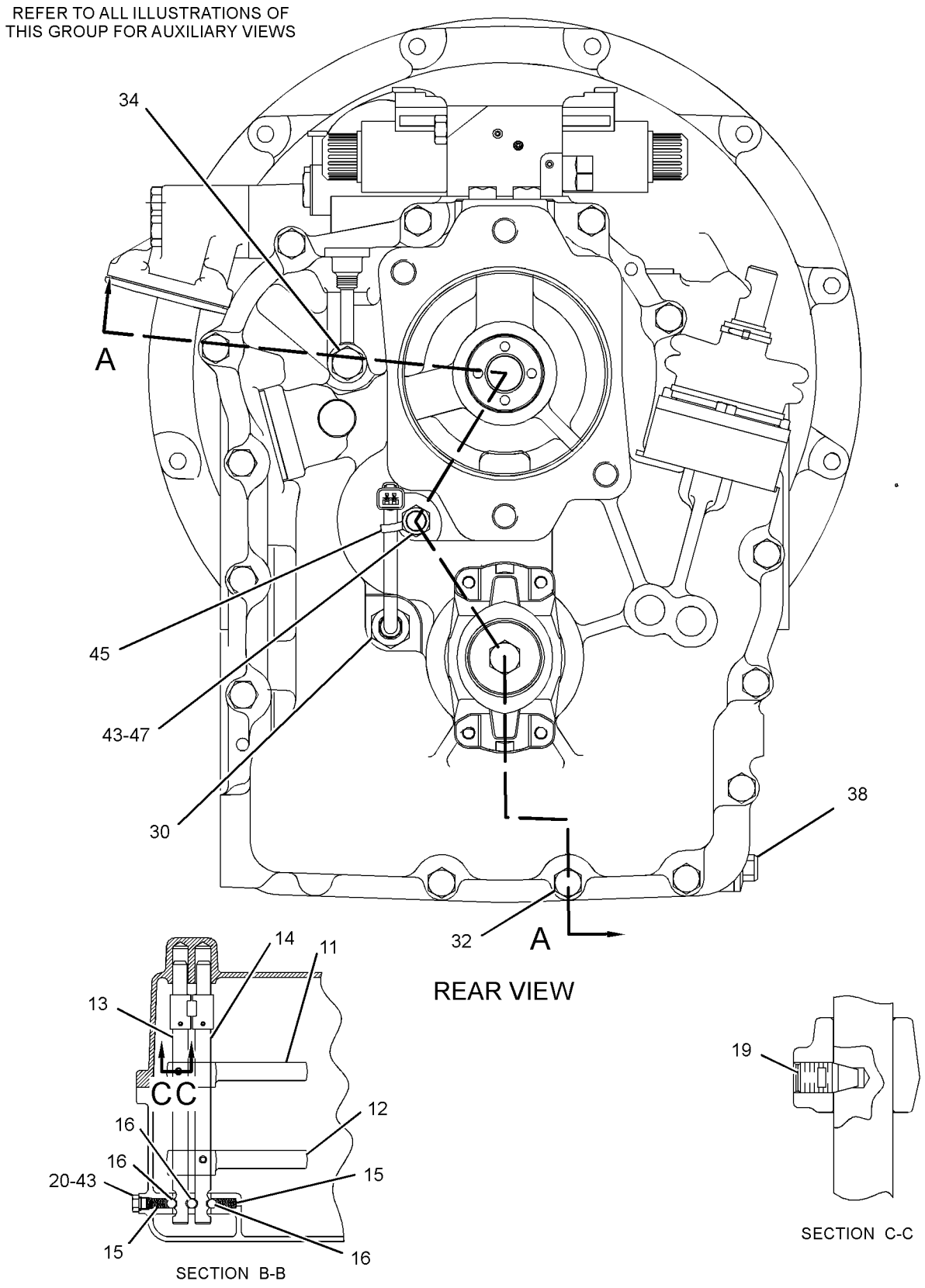

GRAPHIC #3

g01398156

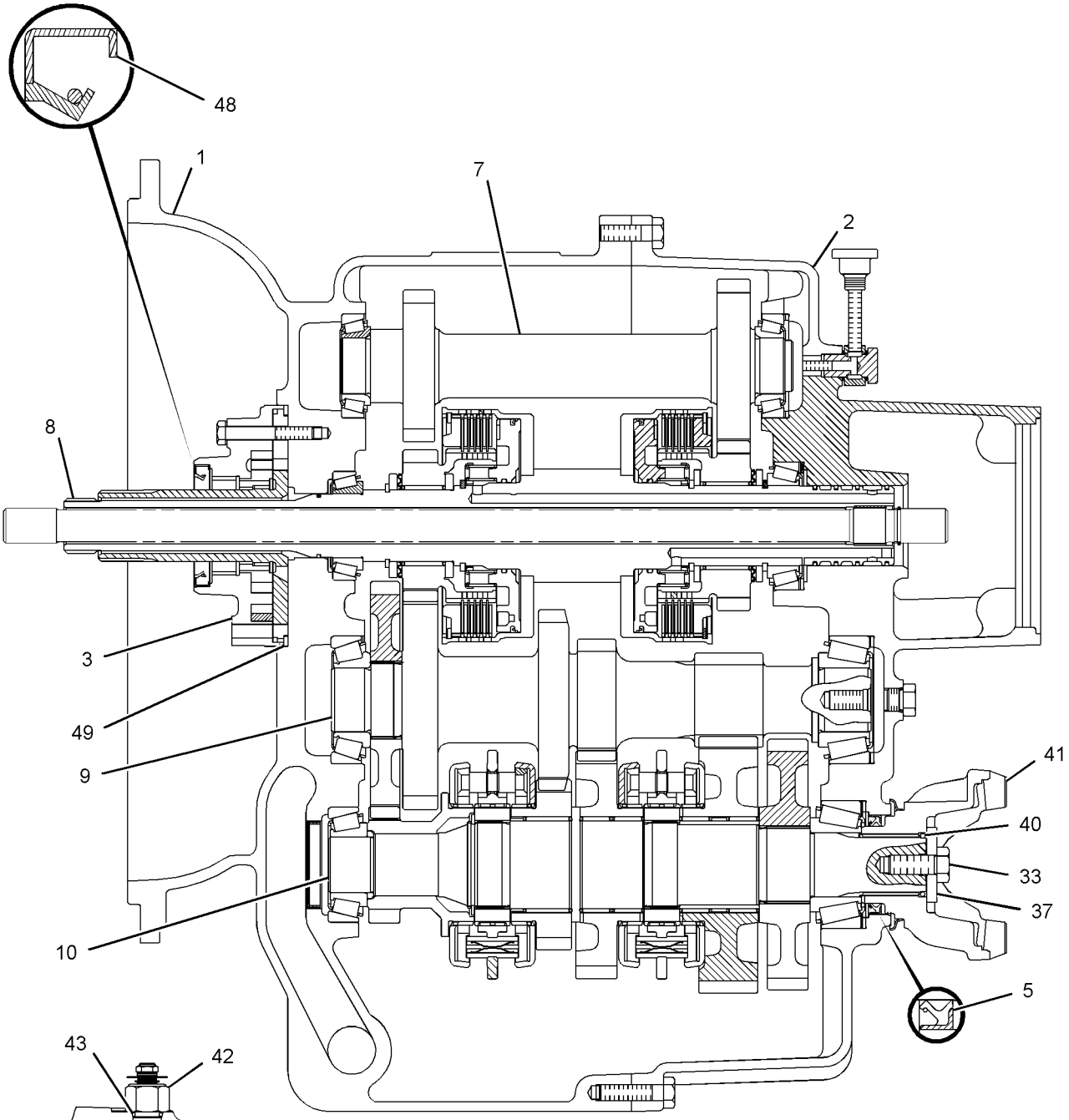

SECTION A-A

SECTION E-E

GRAPHIC #4 **<END>** g01398157

POWER TRAIN

271-3773 TRANSMISSION GP-DIRECT DRIVE

S/N: EAT1-UP
PART OF 271-2405 TRANSMISSION & MOUNTING GP
AN ATTACHMENT
TYPE 2

SMCS-3030 **i03256248**

NOTE	REF NO	GRAPHIC REF	PART NUMBER	QTY	PART NAME 1 2 3 4 5 6 (PRODUCT LEVEL)	SEE PAGE
CY	1	4	**275-0472**	1	CASE GP-TRANSMISSION (FRONT)	214
Y	2	4	**275-0474**	1	CASE GP-TRANSMISSION (REAR)	215
	3	4	**121-7385**	1	PUMP GP-TRANSMISSION	
		4	**208-8240**	1	SEAL-LIP TYPE	
	4	1	**121-7391**	1	LEVER	
	5	4	**302-8432**	1	SEAL-LIP TYPE	
	6	1	**9P-9150**	4	WASHER (8.25X18X0.84-MM THK)	
	7	4	**275-0475**	1	SHAFT GP-IDLER	
		4	**005-0471**	2	CONE-BEARING	
		4	**274-8623**	1	SHAFT-REVERSE	
Y	8	4	**275-0476**	1	SHAFT GP-INPUT	254
	9	4	**275-0477**	1	SHAFT GP-COUNTER	
		4	**8T-1581**	1	CONE	
		4	**123-8907**	1	CONE-BEARING	
		4	**274-8614**	1	GEAR-COUNTERSHAFT (37-TEETH)	
		4	**274-8625**	1	GEAR-COUNTERSHAFT (38-TEETH)	
Y	10	4	**275-0478**	1	SHAFT GP-OUTPUT (REAR)	258
	11	3	**121-7403**	1	FORK-SHIFT	
	12	3	**121-7404**	1	FORK-SHIFT	
	13	3	**121-7389**	1	ROD AS-GEARSHIFT	
	14	3	**121-7390**	1	ROD AS-GEARSHIFT	
	15	3	**6Y-1341**	2	SPRING	
	16	3	**014-5645**	3	BALL	
	17	1	**9M-1974**	3	WASHER-HARD (8.8X16X2-MM THK)	
	18	1	**7T-3109**	1	PIN	
	19	3	**7T-3249**	2	SCREW (3/8-24X0.75-IN)	
C	20	1,2,3, 4	**9S-4191**	13	PLUG-O-RING	
	21	1	**127-3017**	1	SEAT AS	
	23	1	**175-0054**	1	SEAL-O-RING	
	24	1	**174-9711**	1	GASKET	
	25	2	**278-0205**	1	VALVE GP-SOLENOID (FORWARD, REVERSE)	
		2	**8L-2779**	4	SEAL-O-RING	
		2	**280-7012**	2	TUBE AS	
		2	**280-7009**	2	COIL AS	
M	26	2	**9X-6615**	4	BOLT (M5X0.8X30-MM)	
	27	2	**248-3290**	1	VALVE GP-SOLENOID (DIFFERENTIAL LOCK)	
	28	2	**121-7396**	1	VALVE GP-RELIEF (TORQUE CONVERTER INLET)	
Y	29	2	**147-0209**	1	VALVE GP-RELIEF (PUMP PRESSURE)	311
Y	30	3	**189-5746**	1	SENSOR GP-SPEED (TORQUE CONVERTER OUTPUT)	143
M	31	1	**8C-5748**	7	BOLT (M8X1.25X55-MM)	
M	32	3	**6V-8335**	17	BOLT-SELF-LOCKING (M10X1.5X40-MM)	
M	33	3,4	**6V-8097**	1	BOLT (M12X1.75X30-MM)	
C	34	3	**293-2147**	1	BREATHER AS (TRANSMISSION)	
		3	**3J-1907**	1	SEAL-O-RING	
		3	**122-6785**	1	PLUG AS	
	35	2	**7T-3119**	1	HOUSING	
M	36	2	**6V-7731**	2	BOLT (M10X1.5X70-MM)	
	37	4	**7T-3195**	1	WASHER (12.3X47X6.35-MM THK)	
	38	3	**6Y-1896**	1	PLUG AS	
	39	2	**6Y-2035**	1	GASKET	
	40	4	**5P-8066**	1	SEAL-O-RING	
	41	4	**122-6787**	1	YOKE AS	
		4	**123-1377**	1	GUARD	

271-3773 TRANSMISSION GP-DIRECT DRIVE *(contd.)* i03256248

NOTE	REF NO	GRAPHIC REF	PART NUMBER	QTY	PART NAME 1 2 3 4 5 6 (PRODUCT LEVEL)	SEE PAGE
	42	4	**4W-9972**	1	SENDER AS-TEMPERATURE (12-VOLT)	
		4	**6V-8378**	1	NUT (10-32-THD)	
		4	**8T-0328**	1	WASHER-HARD (5.5X10X1-MM THK)	
		4	**8F-1434**	1	LOCKWASHER	
C	43	1,2,3, 4	**3J-1907**	14	SEAL-O-RING	
	44	1	**7T-3111**	1	COVER	
	45	1,3	**3S-2093**	2	STRAP-CABLE	
	46	1	**6K-0806**	1	STRAP-CABLE	
	48	4	**208-8240**	1	SEAL-LIP TYPE	
	49	4	**7X-4741**	1	SEAL	
C	50	2	**7T-3251**	1	BREATHER (TRANSMISSION)	

C-CHANGE FROM PREVIOUS TYPE
M-METRIC PART
Y-SEPARATE ILLUSTRATION

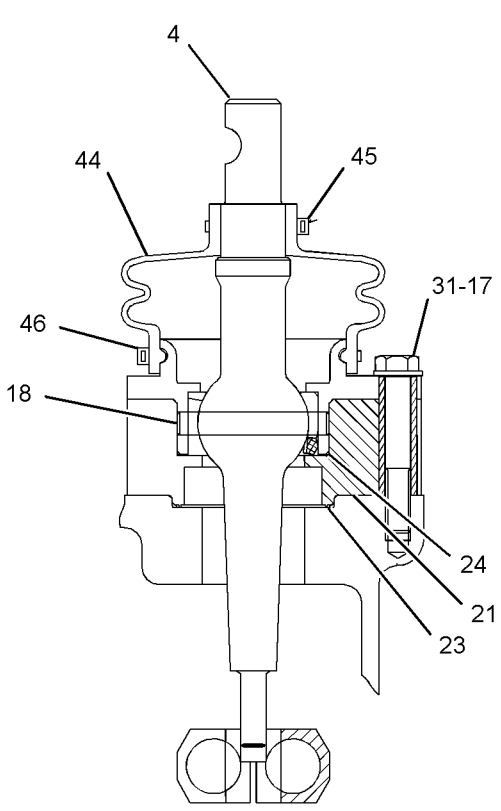

SECTION D-D

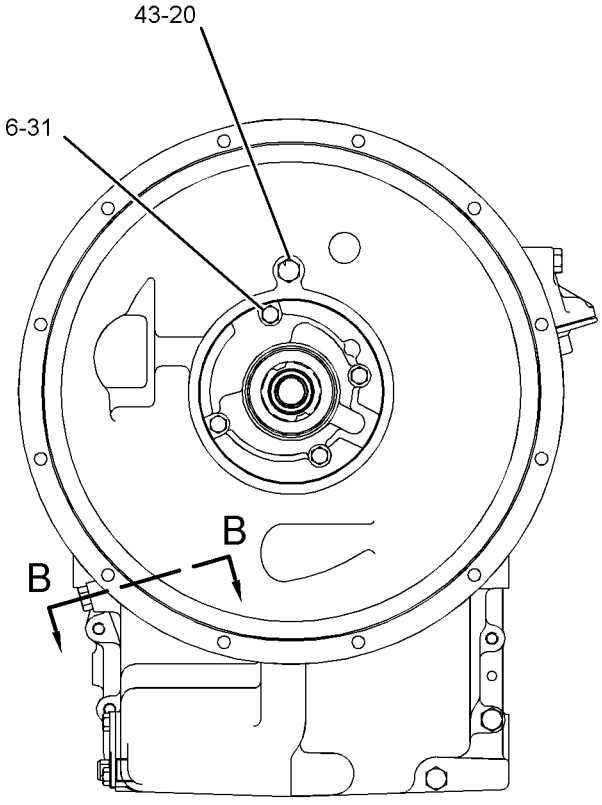

FRONT VIEW

REFER TO ALL ILLUSTRATION OF
THIS GROU PFOR AUXILIARY VIEWS

GRAPHIC #1

g01398155

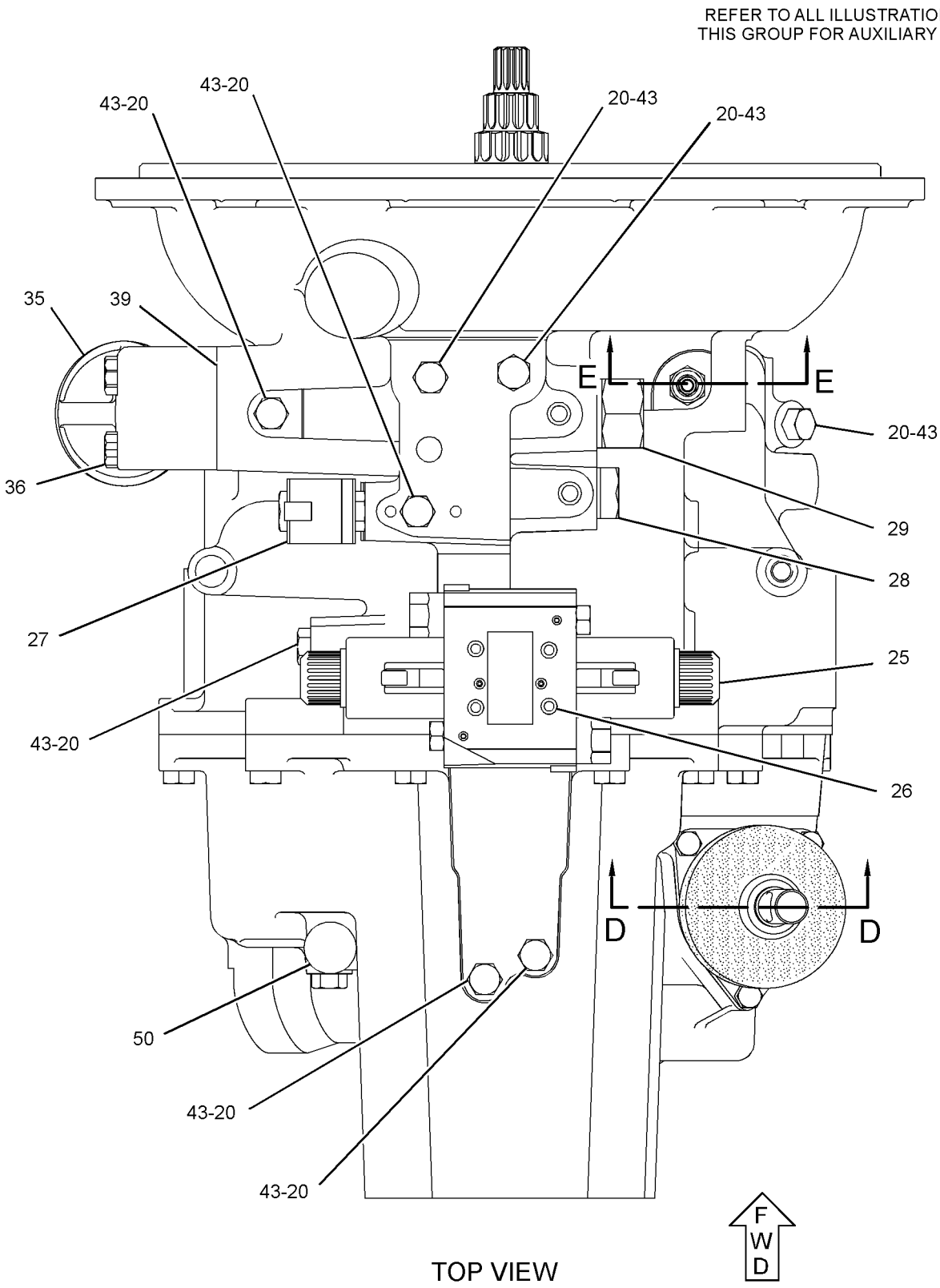

GRAPHIC #2

g01522589

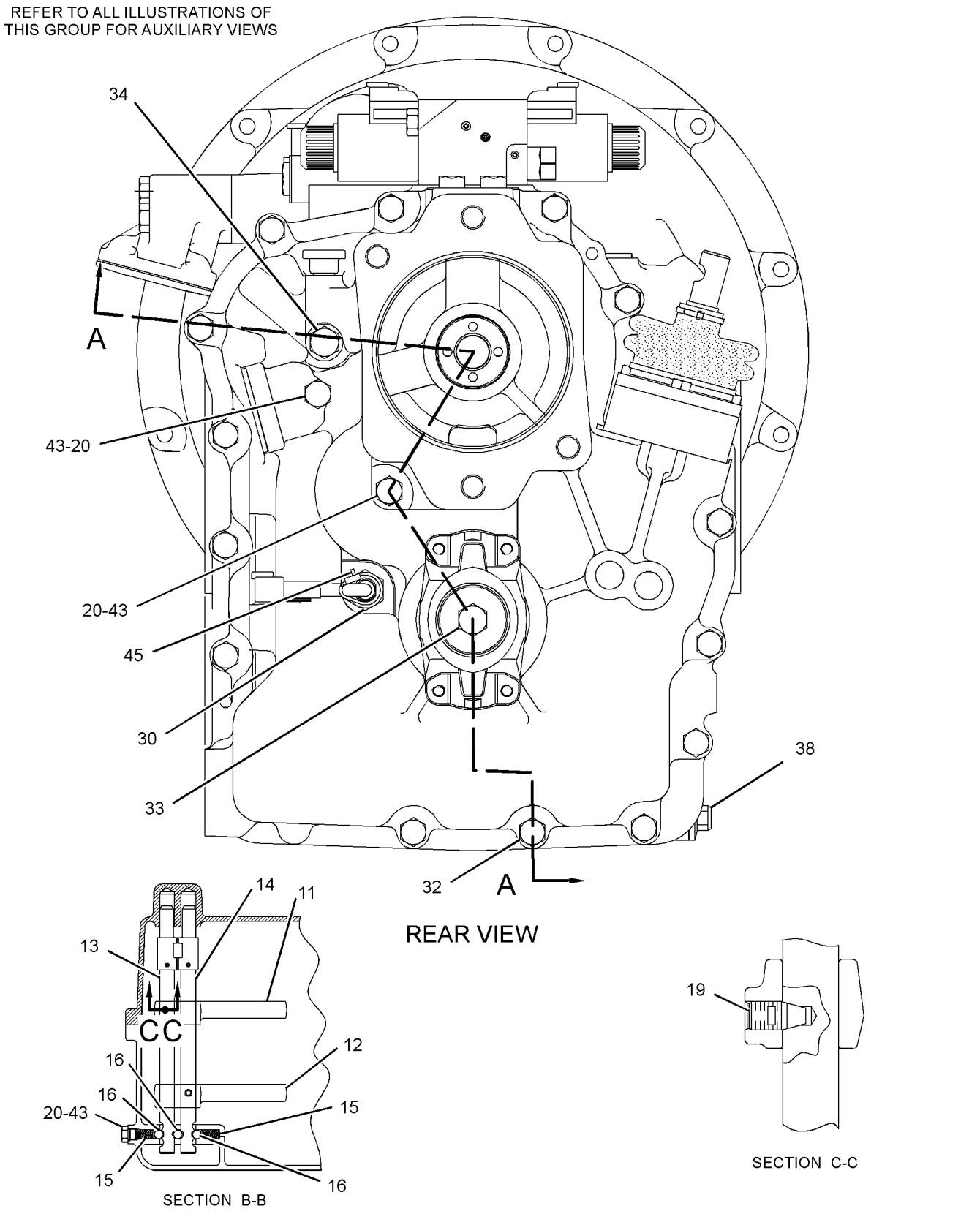

GRAPHIC #3

g01522591

271-3773 TRANSMISSION GP-DIRECT DRIVE *(contd.)* i03256248

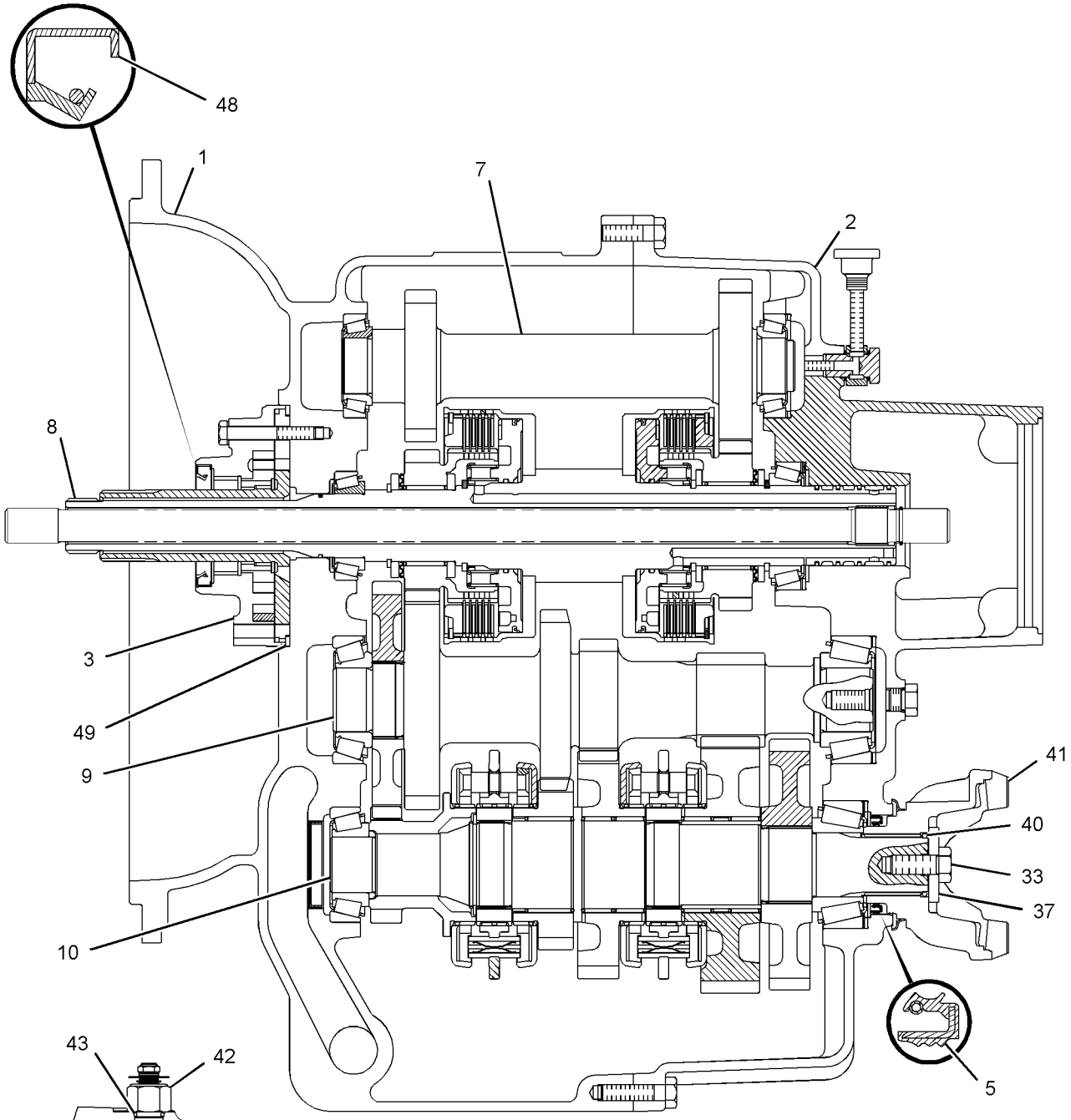

SECTION A-A

SECTION E-E

GRAPHIC #4 **<END>** g01587133

271-3773 TRANSMISSION GP-DIRECT DRIVE

S/N: EAT1-UP
PART OF 271-2405 TRANSMISSION & MOUNTING GP
AN ATTACHMENT
TYPE 3

SMCS-3030 **i03256247**

NOTE	REF NO	GRAPHIC REF	PART NUMBER	QTY	PART NAME 1 2 3 4 5 6 (PRODUCT LEVEL)	SEE PAGE
Y	1	4	**275-0472**	1	CASE GP-TRANSMISSION (FRONT)	214
Y	2	4	**275-0474**	1	CASE GP-TRANSMISSION (REAR)	215
	3	4	**121-7385**	1	PUMP GP-TRANSMISSION	
		4	**208-8240**	1	SEAL-LIP TYPE	
	4	1	**121-7391**	1	LEVER	
	5	4	**302-8432**	1	SEAL-LIP TYPE	
	6	1	**9P-9150**	4	WASHER (8.25X18X0.84-MM THK)	
	7	4	**275-0475**	1	SHAFT GP-IDLER	
		4	**005-0471**	2	CONE-BEARING	
		4	**274-8623**	1	SHAFT-REVERSE	
Y	8	4	**275-0476**	1	SHAFT GP-INPUT	254
	9	4	**275-0477**	1	SHAFT GP-COUNTER	
		4	**8T-1581**	1	CONE	
		4	**123-8907**	1	CONE-BEARING	
		4	**274-8614**	1	GEAR-COUNTERSHAFT (37-TEETH)	
		4	**274-8625**	1	GEAR-COUNTERSHAFT (38-TEETH)	
Y	10	4	**275-0478**	1	SHAFT GP-OUTPUT (REAR)	258
	11	3	**121-7403**	1	FORK-SHIFT	
	12	3	**121-7404**	1	FORK-SHIFT	
	13	3	**121-7389**	1	ROD AS-GEARSHIFT	
	14	3	**121-7390**	1	ROD AS-GEARSHIFT	
	15	3	**6Y-1341**	2	SPRING	
	16	3	**014-5645**	3	BALL	
	17	1	**9M-1974**	3	WASHER-HARD (8.8X16X2-MM THK)	
	18	1	**7T-3109**	1	PIN	
	19	3	**7T-3249**	2	SCREW (3/8-24X0.75-IN)	
C	20	1,2,3,4	*148-8407*	13	PLUG AS	
					(EACH INCLUDES)	
		1,2,3,4	**3J-1907**	1	SEAL-O-RING	
		1,2,3,4	**9S-4191**	1	PLUG-O-RING	
	21	1	**127-3017**	1	SEAT AS	
	23	1	**175-0054**	1	SEAL-O-RING	
	24	1	**174-9711**	1	GASKET	
	25	2	**278-0205**	1	VALVE GP-SOLENOID (FORWARD, REVERSE)	
		2	**8L-2779**	4	SEAL-O-RING	
		2	**280-7012**	2	TUBE AS	
		2	**280-7009**	2	COIL AS	
M	26	2	**9X-6615**	4	BOLT (M5X0.8X30-MM)	
	27	2	**248-3290**	1	VALVE GP-SOLENOID (DIFFERENTIAL LOCK)	
	28	2	**121-7396**	1	VALVE GP-RELIEF (TORQUE CONVERTER INLET)	
Y	29	2	**147-0209**	1	VALVE GP-RELIEF (PUMP PRESSURE)	311
Y	30	3	**189-5746**	1	SENSOR GP-SPEED (TORQUE CONVERTER OUTPUT)	143
M	31	1	**8C-5748**	7	BOLT (M8X1.25X55-MM)	
CM	32	3	**6V-5842**	17	BOLT (M10X1.5X40-MM)	
M	33	3,4	**6V-8097**	1	BOLT (M12X1.75X30-MM)	
	34	3	**293-2147**	1	BREATHER AS (TRANSMISSION)	
		3	**3J-1907**	1	SEAL-O-RING	
		3	**122-6785**	1	PLUG AS	
	35	2	**7T-3119**	1	HOUSING	
CM	36	2	**6V-7981**	2	BOLT (M10X1.5X70-MM)	
	37	4	**7T-3195**	1	WASHER (12.3X47X6.35-MM THK)	

271-3773 TRANSMISSION GP-DIRECT DRIVE *(contd.)* i03256247

NOTE	REF NO	GRAPHIC REF	PART NUMBER	QTY	PART NAME 1 2 3 4 5 6 (PRODUCT LEVEL)	SEE PAGE
	38	3	**6Y-1896**	1	PLUG AS	
	39	2	**6Y-2035**	1	GASKET	
	40	4	**5P-8066**	1	SEAL-O-RING	
	41	4	**122-6787**	1	YOKE AS	
		4	**123-1377**	1	GUARD	
	42	4	**4W-9972**	1	SENDER AS-TEMPERATURE (12-VOLT)	
		4	**6V-8378**	1	NUT (10-32-THD)	
		4	**8T-0328**	1	WASHER-HARD (5.5X10X1-MM THK)	
		4	**8F-1434**	1	LOCKWASHER	
C	43	4	**3J-1907**	1	SEAL-O-RING	
	44	1	**7T-3111**	1	COVER	
	45	1,3	**3S-2093**	2	STRAP-CABLE	
	46	1	**6K-0806**	1	STRAP-CABLE	
	49	4	**7X-4741**	1	SEAL	
	50	2	**7T-3251**	1	BREATHER (TRANSMISSION)	

C-CHANGE FROM PREVIOUS TYPE
M-METRIC PART
Y-SEPARATE ILLUSTRATION

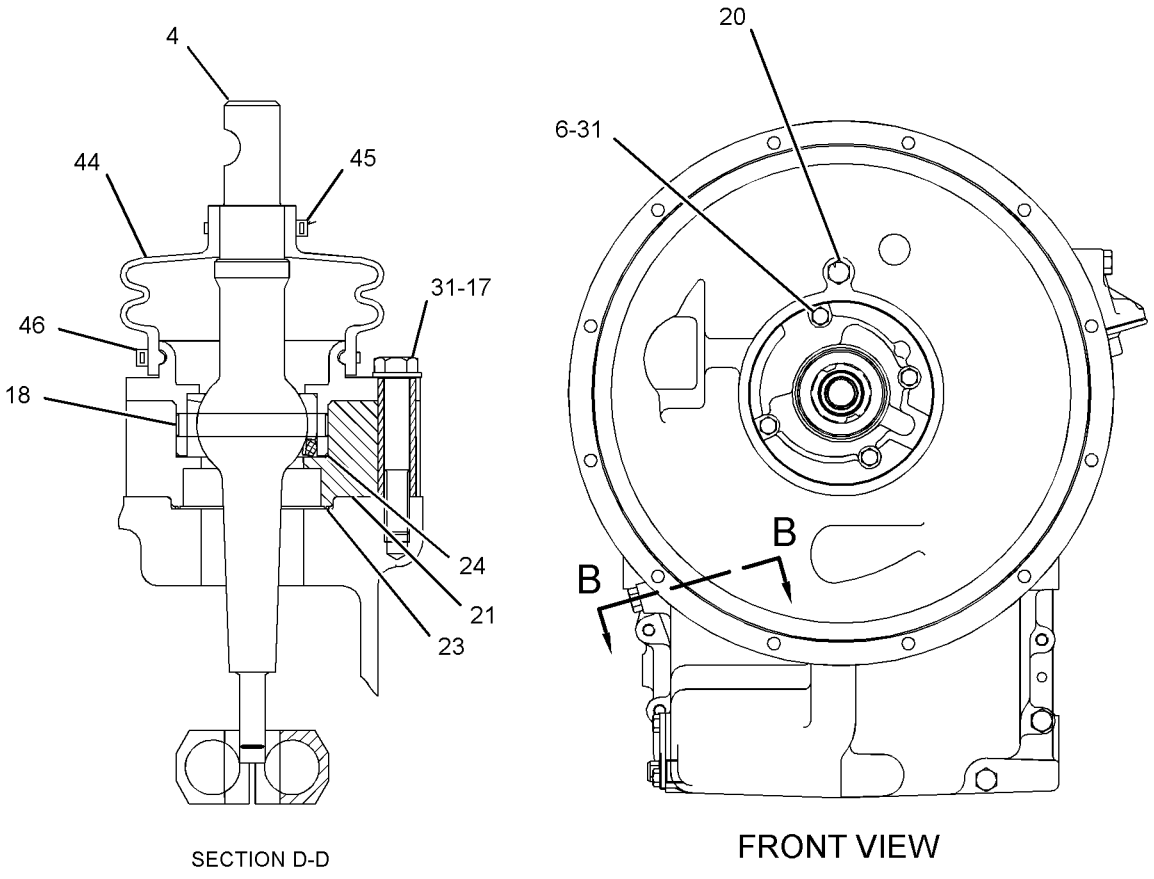

REFER TO ALL ILLUSTRATION OF
THIS GROU PFOR AUXILIARY VIEWS

GRAPHIC #1

g01626663

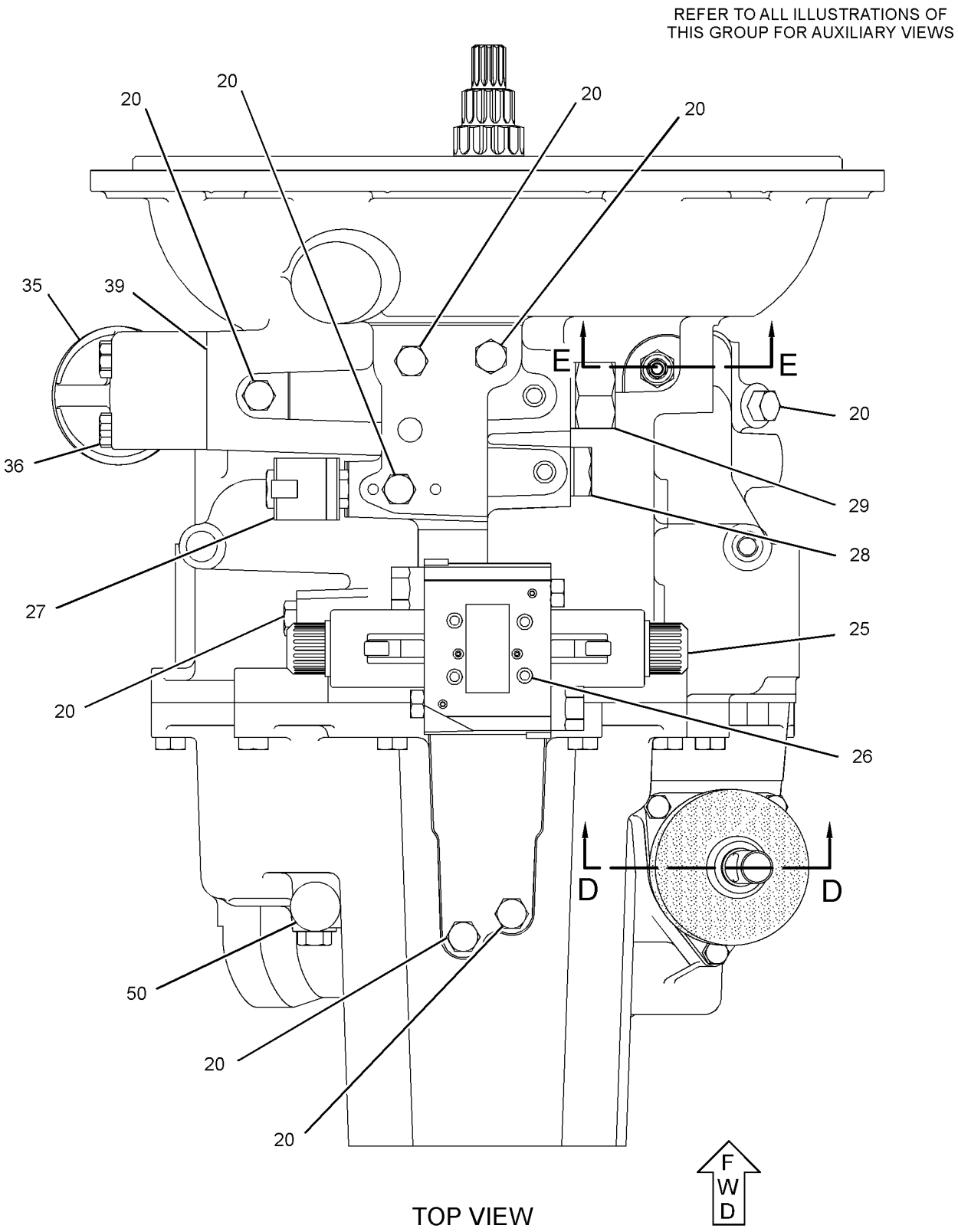

TOP VIEW

GRAPHIC #2

g01626667

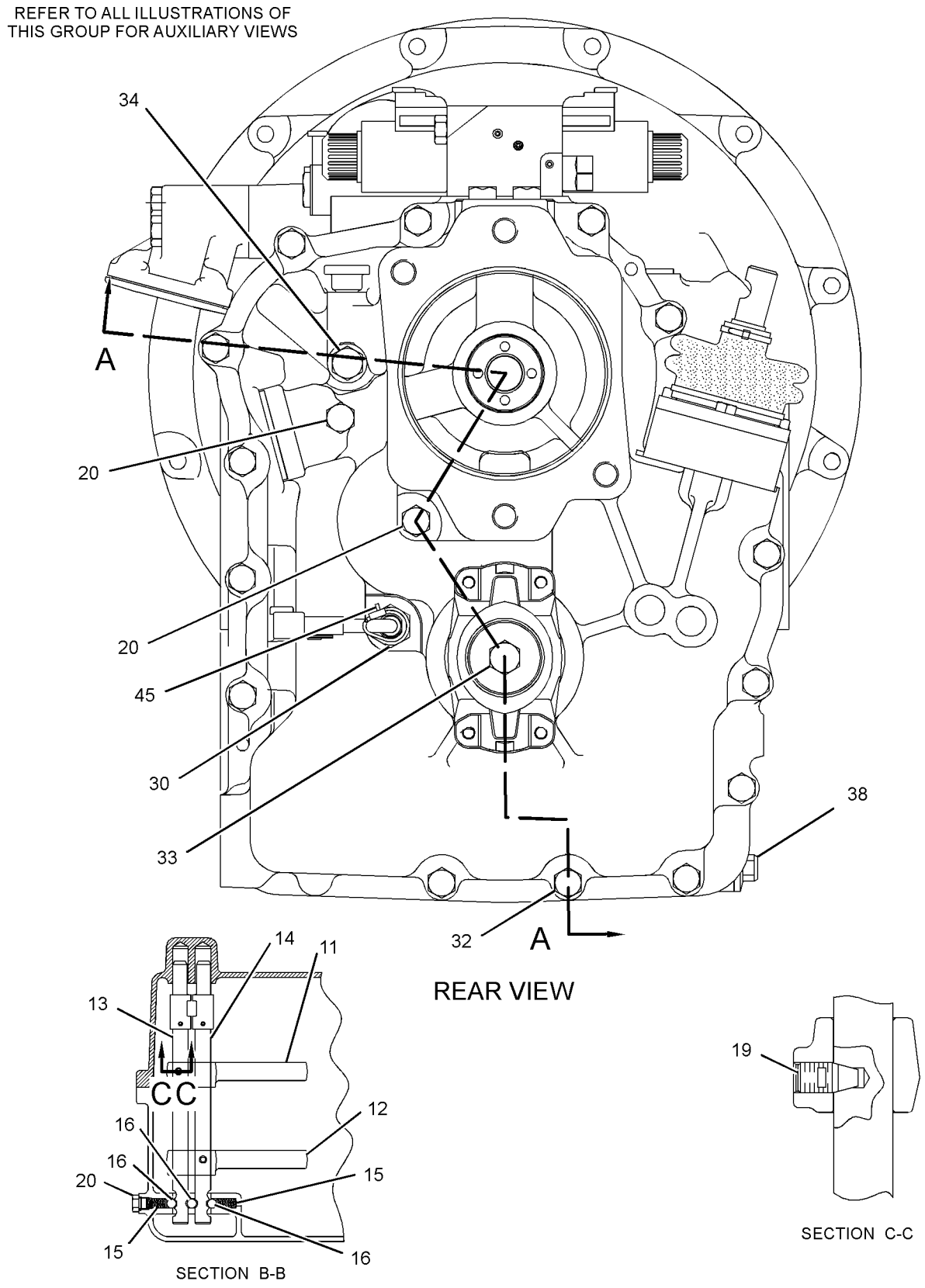

GRAPHIC #3

g01626659

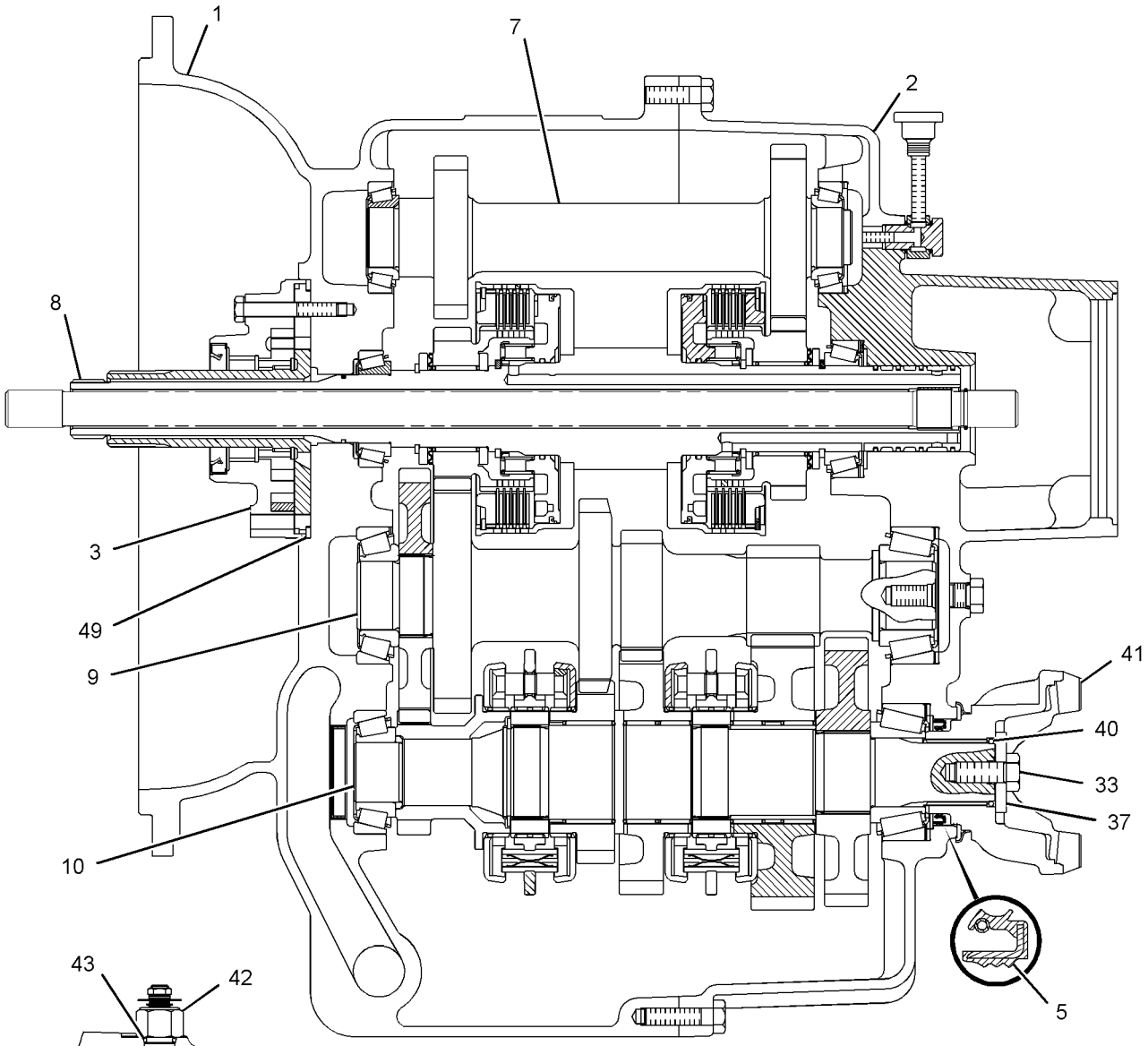

SECTION A-A

SECTION E-E

GRAPHIC #4 **<END>** g01626669

271-3774 TRANSMISSION GP-DIRECT DRIVE

S/N: EAT1-UP
PART OF 271-2406 TRANSMISSION & MOUNTING GP
AN ATTACHMENT
TYPE 1

SMCS-3030 **i03256342**

NOTE	REF NO	GRAPHIC REF	PART NUMBER	QTY	PART NAME 1 2 3 4 5 6 (PRODUCT LEVEL)	SEE PAGE
Y	1	4	**275-0468**	1	CASE AS-TRANSMISSION (FRONT)	211
Y	2	4	**275-0470**	1	CASE AS-TRANSMISSION (REAR)	212
	3	4	**121-7385**	1	PUMP GP-TRANSMISSION	
	4	4	**302-8432**	2	SEAL-LIP TYPE	
M	5	3,4	**8C-5748**	7	BOLT (M8X1.25X55-MM)	
	6	4	**7X-4741**	1	SEAL	
	7	4	**9P-9150**	4	WASHER (8.25X18X0.84-MM THK)	
	8	4	**275-0475**	1	SHAFT GP-IDLER (TRANSMISSION)	
		4	**005-0471**	2	CONE-BEARING	
		4	**274-8623**	1	SHAFT-REVERSE	
	9	4	**275-0477**	1	SHAFT GP-COUNTER (TRANSMISSION)	
		4	**8T-1581**	1	CONE	
		4	**123-8907**	1	CONE-BEARING	
		4	**274-8614**	1	GEAR-COUNTERSHAFT (37-TEETH)	
		4	**274-8625**	1	GEAR-COUNTERSHAFT (38-TEETH)	
Y	10	4	**275-0478**	1	SHAFT GP-OUTPUT (REAR)	258
Y	11	4	**276-5337**	1	SHAFT GP-OUTPUT (FRONT)	259
	12	1	**121-7403**	1	FORK-SHIFT (FIRST, SECOND)	
	13	1	**121-7404**	1	FORK-SHIFT (THIRD, FOURTH)	
	14	1	**121-7389**	1	ROD AS-GEARSHIFT (FIRST, SECOND)	
	15	1	**121-7390**	1	ROD AS-GEARSHIFT (THIRD, FOURTH)	
	16	1	**6Y-1341**	2	SPRING	
	17	1	**014-5645**	3	BALL	
	18	3	**9M-1974**	3	WASHER-HARD (8.8X16X2-MM THK)	
	19	3	**7T-3109**	1	PIN	
	20	1	**7T-3249**	2	SCREW (3/8-24X0.75-IN)	
	21	1,2,3	**9S-4191**	13	PLUG-O-RING	
	22	3	**127-3017**	1	SEAT AS	
	23	3	**121-7391**	1	LEVER	
	24	3	**175-0054**	1	SEAL-O-RING	
	25	3	**174-9711**	1	GASKET	
	27	3	**278-0205**	1	VALVE GP-SOLENOID (FORWARD, REVERSE)	
		3	**8L-2779**	4	SEAL-O-RING	
		3	**280-7012**	2	TUBE AS	
		3	**280-7009**	2	COIL AS	
M	28	3	**9X-6615**	4	BOLT (M5X0.8X30-MM)	
	29	3	**248-3290**	2	VALVE GP-SOLENOID (DIFFERENTIAL LOCK)	
	30	3	**121-7396**	1	VALVE GP-RELIEF (TORQUE CONVERTER INLET)	
Y	31	3	**147-0209**	1	VALVE GP-RELIEF (PRESSURE REGULATOR)	311
	32	3	**6K-0806**	1	STRAP-CABLE	
M	34	2	**6V-8335**	14	BOLT-SELF-LOCKING (M10X1.5X40-MM)	
M	35	1	**121-9875**	4	BOLT (M10X1.5X55-MM)	
M	36	3	**6V-7731**	2	BOLT (M10X1.5X70-MM)	
M	37	1,2	**6V-8097**	2	BOLT (M12X1.75X30-MM)	
	38	2	**293-2147**	1	BREATHER AS (SIDE)	
		2	**3J-1907**	1	SEAL-O-RING	
		2	**122-6785**	1	PLUG AS	
	39	3	**7T-3119**	1	HOUSING	
	41	4	**7T-3195**	2	WASHER (12.3X47X6.35-MM THK)	
	42	3	**6Y-2035**	1	GASKET	
	43	4	**5P-8066**	2	SEAL-O-RING	
	44	2	**294-9820**	1	TUBE	
	45	4	**122-1883**	1	SPACER (38X45X5-MM THK)	
	46	4	**122-6787**	2	YOKE AS	

271-3774 TRANSMISSION GP-DIRECT DRIVE *(contd.)* i03256342

NOTE	REF NO	GRAPHIC REF	PART NUMBER	QTY	PART NAME 1 2 3 4 5 6 (PRODUCT LEVEL)	SEE PAGE
	47	2	**6Y-1896**	1	PLUG AS	
	48	2	**4W-9972**	1	SENDER AS-TEMPERATURE (12-VOLT) (TRANSMISSION OIL)	
		2	**6V-8378**	1	NUT (10-32-THD)	
		2	**8T-0328**	1	WASHER-HARD (5.5X10X1-MM THK)	
		2	**8F-1434**	1	LOCKWASHER	
	49	1,2,3	**3J-1907**	14	SEAL-O-RING	
Y	50	4	**275-0476**	1	SHAFT GP-INPUT	254
	51	3	**7T-3111**	1	COVER	
	52	2,3	**3S-2093**	2	STRAP-CABLE	
	53	4	**208-8240**	1	SEAL-LIP TYPE	
	54	2	**123-2918**	2	SLEEVE	
	55	2	**123-2919**	2	NUT (M11X1-THD)	
	56	3	**7T-3251**	1	BREATHER (TRANSMISSION)	
Y	57	2	**189-5746**	1	SENSOR GP-SPEED (TORQUE CONVERTER OUTPUT)	143

M-METRIC PART
Y-SEPARATE ILLUSTRATION

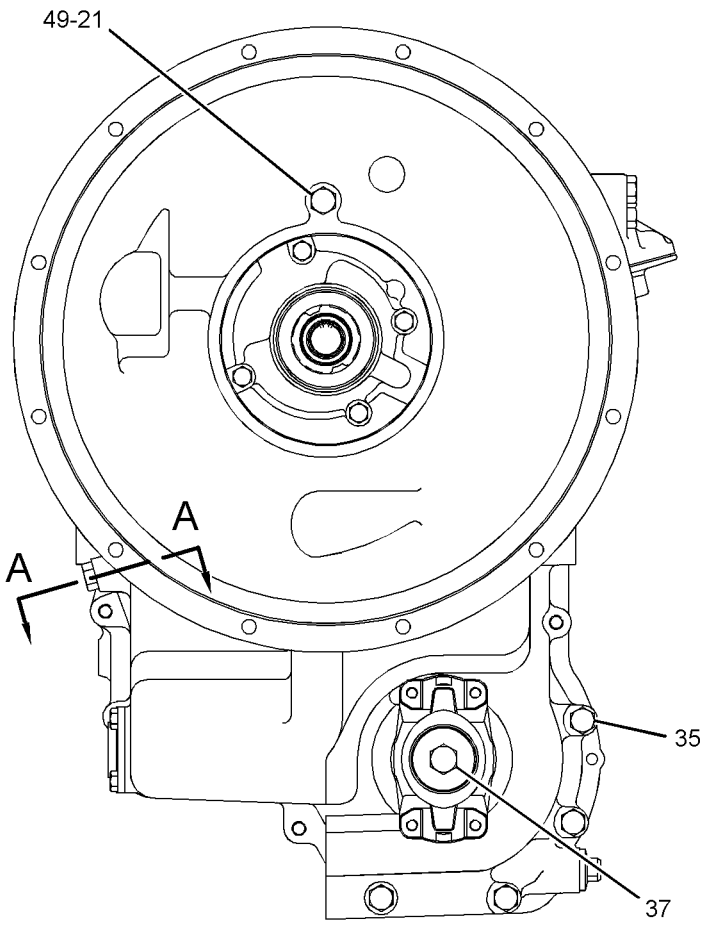

FRONT VIEW

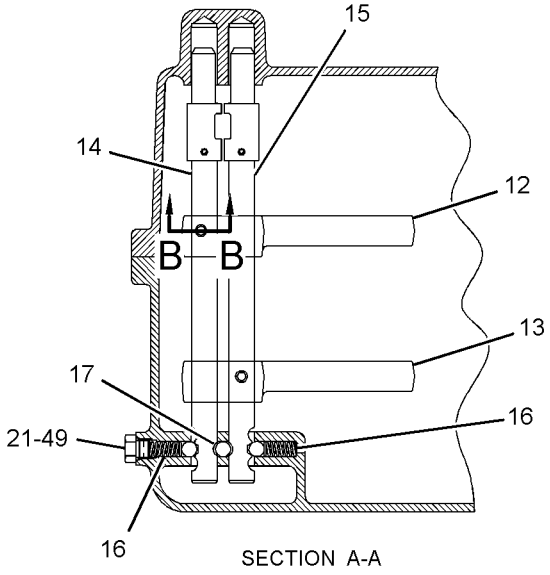

SECTION A-A

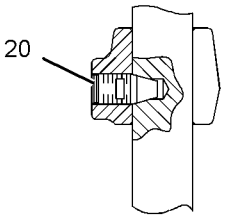

SECTION B-B

REFER TO ALL ILLUSTRATION OF THIS GROU PFOR AUXILIARY VIEWS

GRAPHIC #1

g01408855

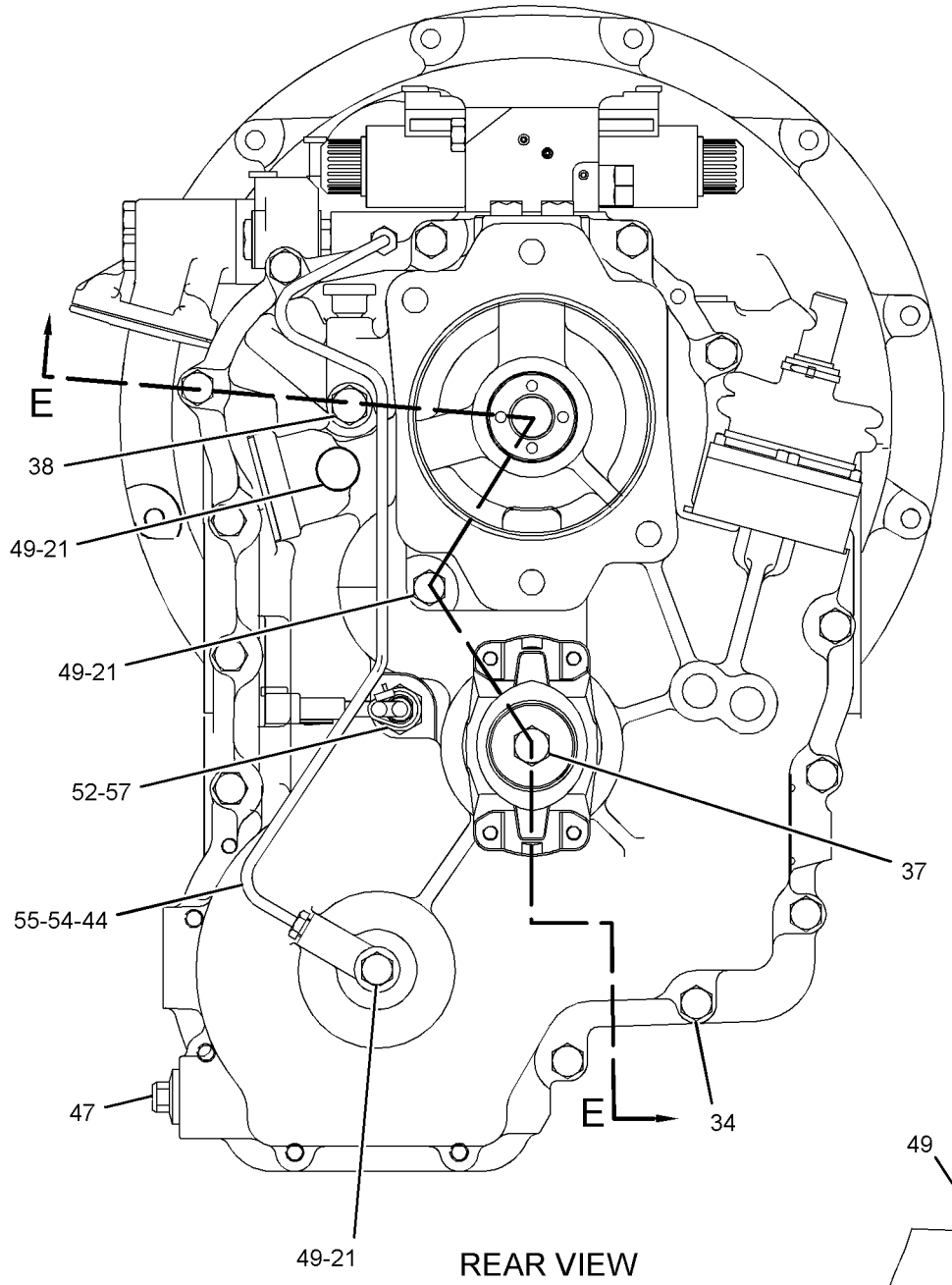

REAR VIEW

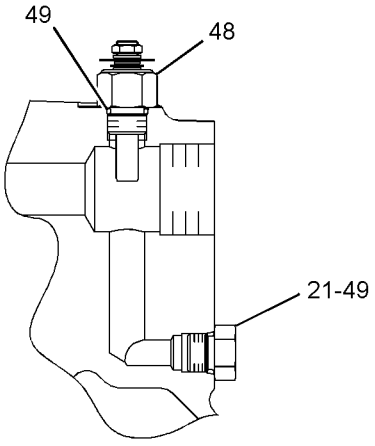

SECTION D-D

REFER TO ALL ILLUSTRATIONS OF
THIS GROUP FOR AUXILIARY VIEWS

GRAPHIC #2

g01405999

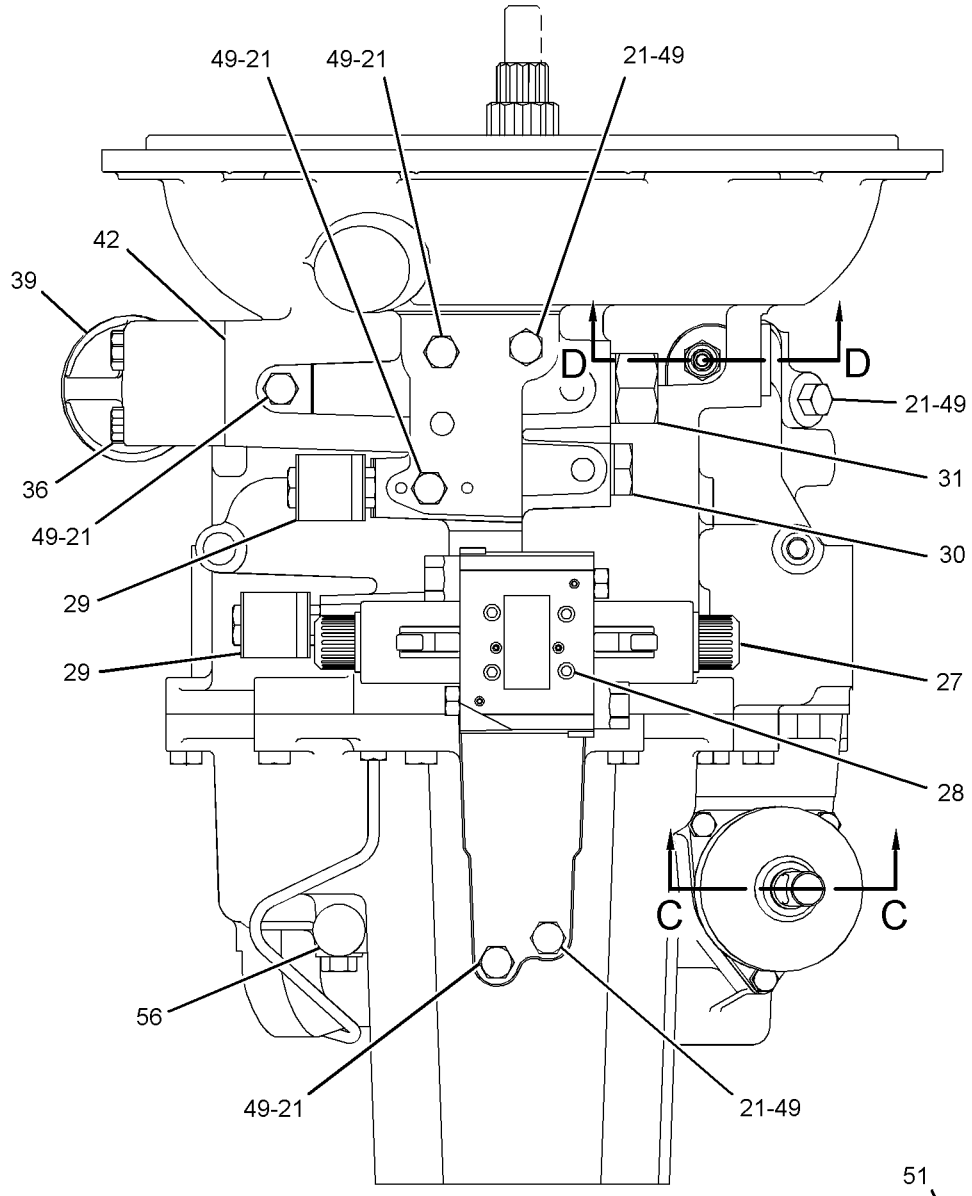

TOP VIEW

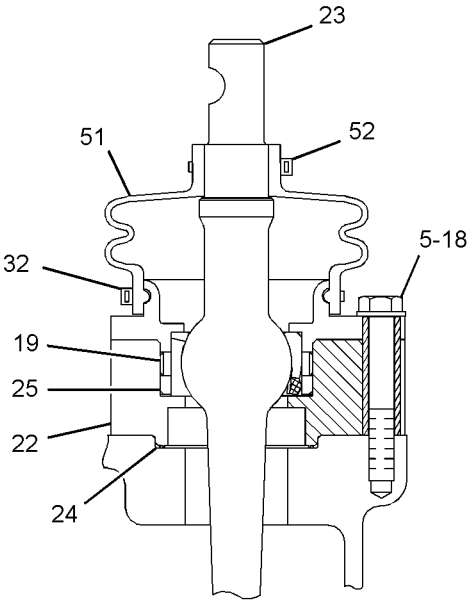

SECTION E-E

REFER TO ALL ILLUSTRATIONS OF
THIS GROUP FOR AUXILIARY VIEWS

GRAPHIC #3

g01405998

271-3774 TRANSMISSION GP-DIRECT DRIVE *(contd.)* i03256342

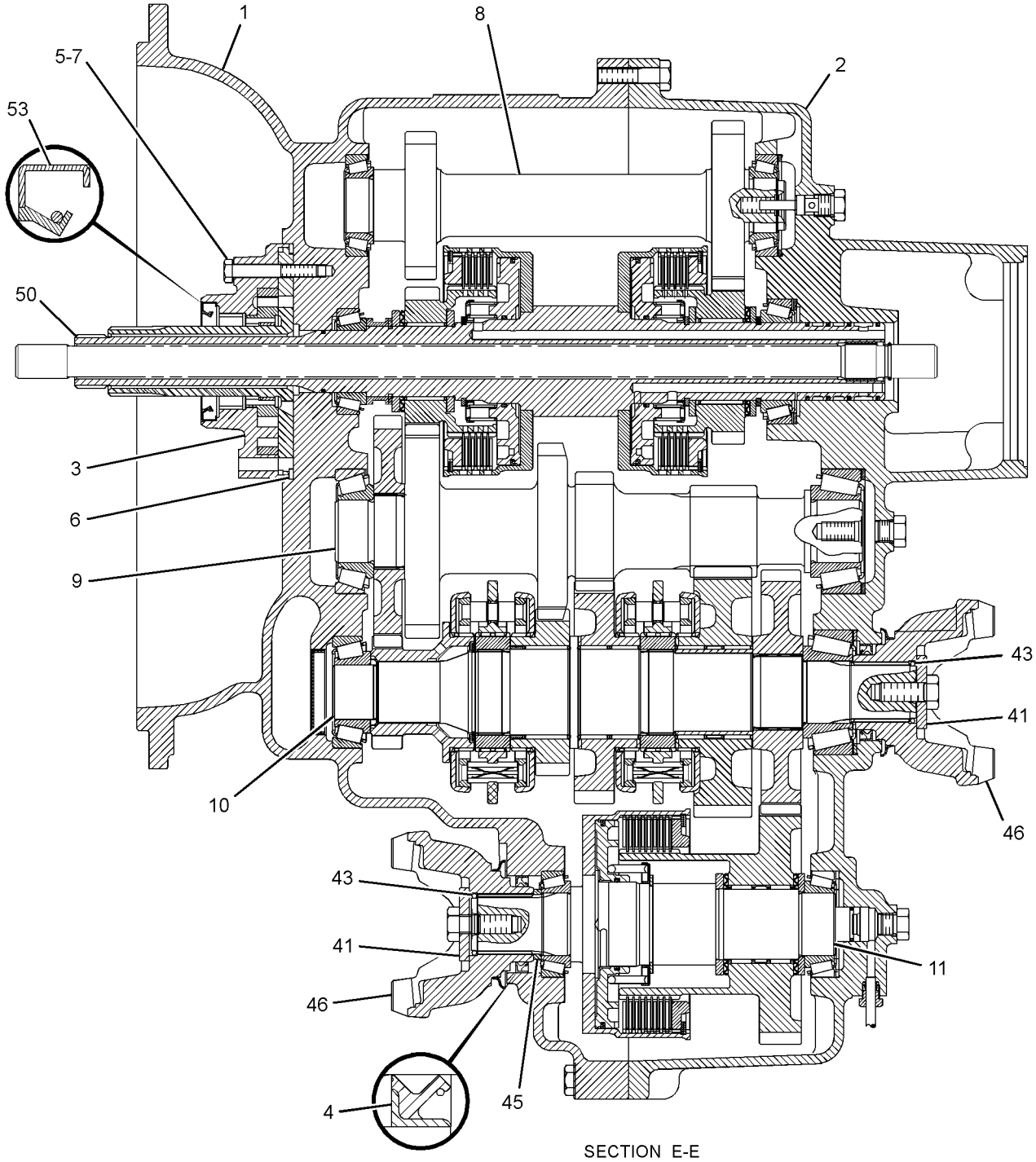

SECTION E-E

GRAPHIC #4 **<END>** g01406000

POWER TRAIN

271-3774 TRANSMISSION GP-DIRECT DRIVE

S/N: EAT1-UP
PART OF 271-2406 TRANSMISSION & MOUNTING GP
AN ATTACHMENT
TYPE 2

SMCS-3030 **i03256341**

NOTE	REF NO	GRAPHIC REF	PART NUMBER	QTY	PART NAME 1 2 3 4 5 6 (PRODUCT LEVEL)	SEE PAGE
Y	1	4	**275-0468**	1	CASE AS-TRANSMISSION (FRONT)	211
Y	2	4	**275-0470**	1	CASE AS-TRANSMISSION (REAR)	212
	3	4	**121-7385**	1	PUMP GP-TRANSMISSION	
		4	**208-8240**	1	SEAL-LIP TYPE	
	4	4	**302-8432**	2	SEAL-LIP TYPE	
M	5	2,4	**8C-5748**	7	BOLT (M8X1.25X55-MM)	
	6	4	**7X-4741**	1	SEAL	
	7	4	**9P-9150**	4	WASHER (8.25X18X0.84-MM THK)	
	8	4	**275-0475**	1	SHAFT GP-IDLER (TRANSMISSION)	
		4	**005-0471**	2	CONE-BEARING	
		4	**274-8623**	1	SHAFT-REVERSE	
	9	4	**275-0477**	1	SHAFT GP-COUNTER (TRANSMISSION)	
		4	**8T-1581**	1	CONE (TAPERED ROLLER)	
		4	**123-8907**	1	CONE-BEARING	
		4	**274-8614**	1	GEAR-COUNTERSHAFT (37-TEETH)	
		4	**274-8625**	1	GEAR-COUNTERSHAFT (38-TEETH)	
Y	10	4	**275-0478**	1	SHAFT GP-OUTPUT (REAR)	258
Y	11	4	**276-5337**	1	SHAFT GP-OUTPUT (FRONT)	259
	12	1	**121-7403**	1	FORK-SHIFT (FIRST, SECOND)	
	13	1	**121-7404**	1	FORK-SHIFT (THIRD, FOURTH)	
	14	1	**121-7389**	1	ROD AS-GEARSHIFT (FIRST, SECOND)	
	15	1	**121-7390**	1	ROD AS-GEARSHIFT (THIRD, FOURTH)	
	16	1	**6Y-1341**	2	SPRING	
	17	1	**014-5645**	3	BALL	
	18	2	**9M-1974**	3	WASHER-HARD (8.8X16X2-MM THK)	
	19	2	**7T-3109**	1	PIN	
	20	1	**7T-3249**	2	SCREW (3/8-24X0.75-IN)	
C	21	1,2,3	*148-8407*	13	PLUG AS (STORAGE)	
					(EACH INCLUDES)	
		1,2,3	**3J-1907**	1	SEAL-O-RING	
		1,2,3	**9S-4191**	1	PLUG-O-RING	
	22	2	**127-3017**	1	SEAT AS (BALL)	
	23	2	**121-7391**	1	LEVER	
	24	2	**175-0054**	1	SEAL-O-RING	
	25	2	**174-9711**	1	GASKET	
	27	2	**278-0205**	1	VALVE GP-SOLENOID (FORWARD, REVERSE)	
		2	**8L-2779**	4	SEAL-O-RING	
		2	**280-7012**	2	TUBE AS	
		2	**6V-8399**	1	SEAL-O-RING	
		2	**274-4560**	1	NUT-SELF LOCKING	
		2	**280-7009**	2	COIL AS (12-VOLT)	
M	28	2	**9X-6615**	4	BOLT (M5X0.8X30-MM)	
	29	2	**248-3290**	2	VALVE GP-SOLENOID (DIFFERENTIAL LOCK)	
	30	2	**121-7396**	1	VALVE GP-RELIEF (TORQUE CONVERTER INLET)	
		2	**8L-2746**	1	SEAL-O-RING	
		2	**6V-4589**	1	SEAL-O-RING	
Y	31	2	**147-0209**	1	VALVE GP-RELIEF (PRESSURE REGULATOR)	311
	32	2	**6K-0806**	1	STRAP-CABLE	
CM	34	3	**6V-5842**	14	BOLT (M10X1.5X40-MM)	
M	35	1	**121-9875**	4	BOLT (M10X1.5X55-MM)	
CM	36	2	**6V-7981**	2	BOLT (M10X1.5X70-MM)	
M	37	1,3	**6V-8097**	2	BOLT (M12X1.75X30-MM)	
	38	3	**293-2147**	1	BREATHER AS (SIDE)	
		3	**3J-1907**	1	SEAL-O-RING	

271-3774 TRANSMISSION GP-DIRECT DRIVE *(contd.)* i03256341

NOTE	REF NO	GRAPHIC REF	PART NUMBER	QTY	PART NAME 1 2 3 4 5 6 (PRODUCT LEVEL)	SEE PAGE
		3	**122-6785**	1	PLUG AS	
	39	2	**7T-3119**	1	HOUSING (FILTER)	
	41	4	**7T-3195**	2	WASHER (12.3X47X6.35-MM THK)	
	42	2	**6Y-2035**	1	GASKET	
	43	4	**5P-8066**	2	SEAL-O-RING	
	44	3	**294-9820**	1	TUBE	
	45	4	**122-1883**	1	SPACER (38X45X5-MM THK)	
	46	4	**122-6787**	2	YOKE AS	
					(EACH INCLUDES)	
		4	**123-1377**	1	GUARD	
	47	3	**6Y-1896**	1	PLUG AS (TRANSMISSION DRAIN)	
		3	**5P-6718**	1	SEAL-O-RING	
	48	3	**4W-9972**	1	SENDER AS-TEMPERATURE (12-VOLT) (TRANSMISSION OIL)	
		3	**6V-8378**	1	NUT (10-32-THD)	
		3	**8T-0328**	1	WASHER-HARD (5.5X10X1-MM THK)	
		3	**8F-1434**	1	LOCKWASHER	
C	49	3	**3J-1907**	1	SEAL-O-RING	
Y	50	4	**275-0476**	1	SHAFT GP-INPUT	254
	51	2	**7T-3111**	1	COVER	
	52	2,3	**3S-2093**	2	STRAP-CABLE	
	54	3	**123-2918**	2	SLEEVE	
	55	3	**123-2919**	2	NUT (M11X1-THD)	
	56	2	**7T-3251**	1	BREATHER (TRANSMISSION)	
Y	57	3	**189-5746**	1	SENSOR GP-SPEED (TORQUE CONVERTER OUTPUT)	143

C-CHANGE FROM PREVIOUS TYPE
M-METRIC PART
Y-SEPARATE ILLUSTRATION

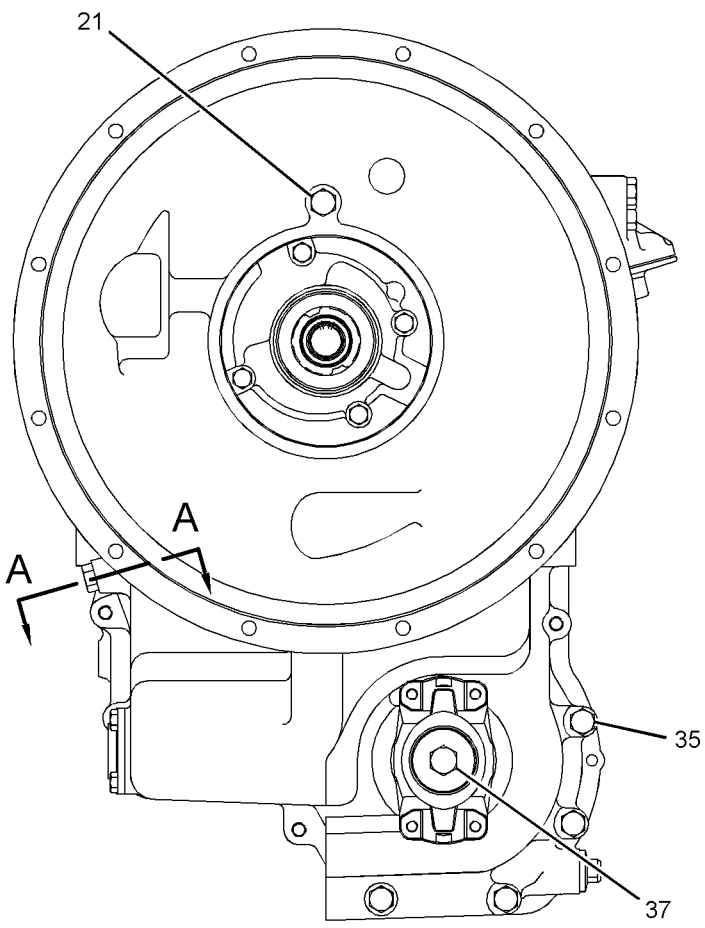

FRONT VIEW

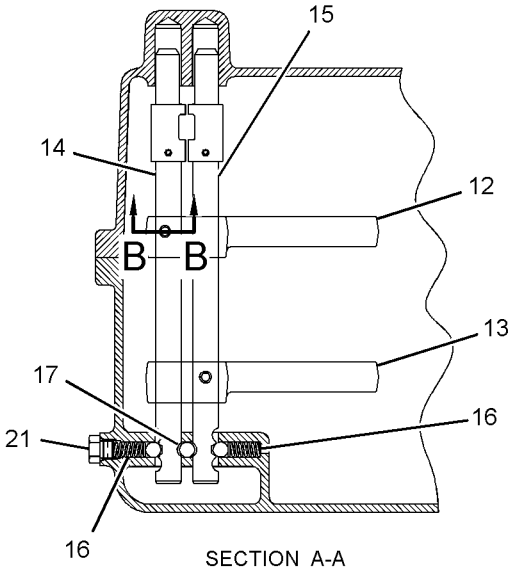

SECTION A-A

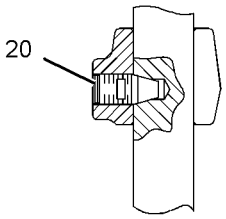

SECTION B-B

GRAPHIC #1 g01567794

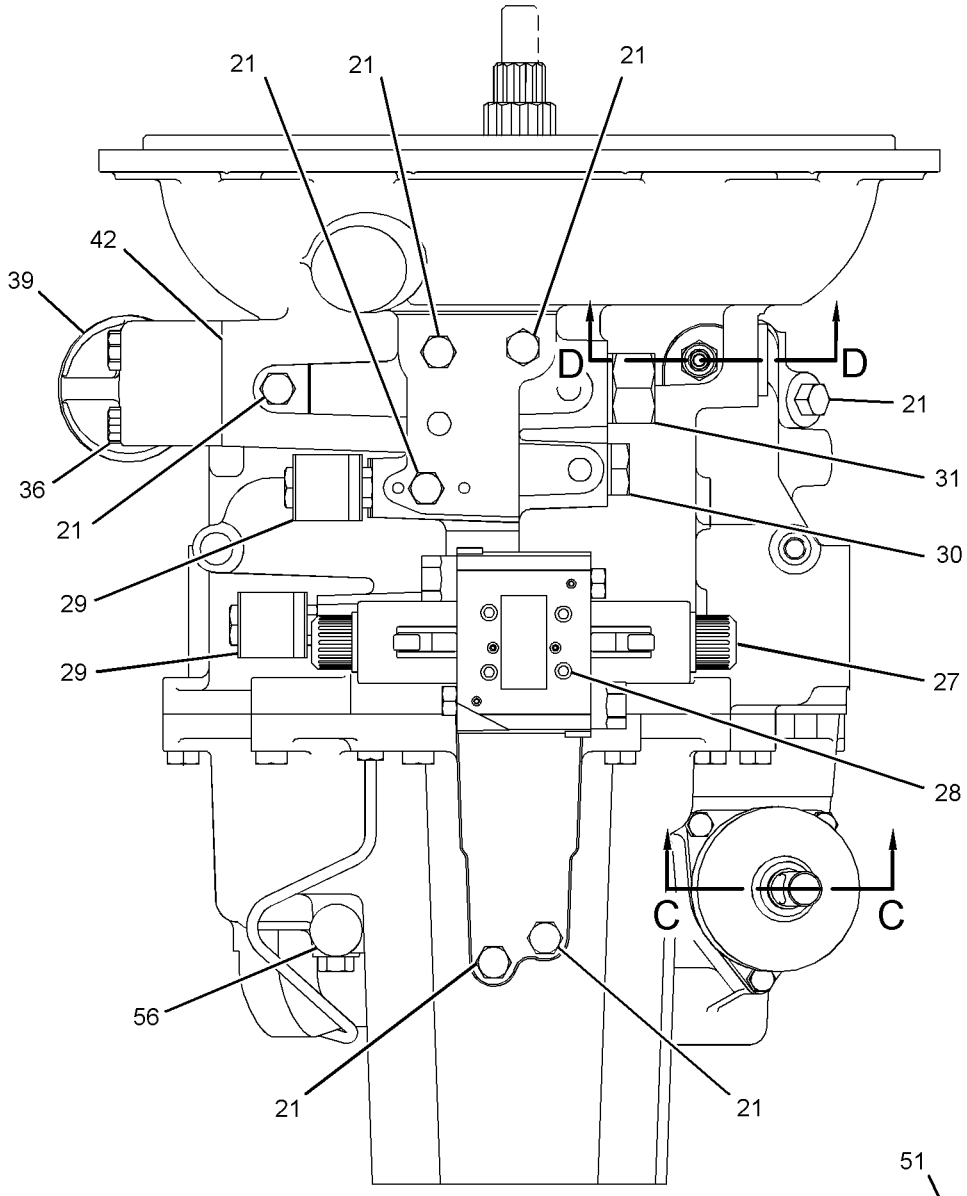

TOP VIEW

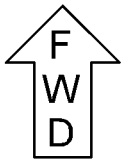

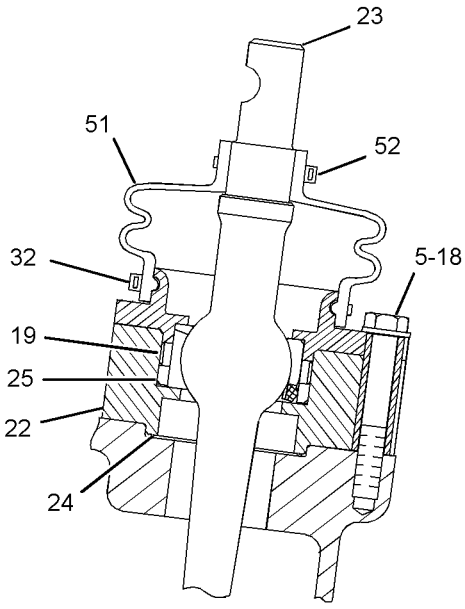

SECTION C-C

REFER TO ALL ILLUSTRATIONS OF
THIS GROUP FOR AUXILIARY VIEWS

GRAPHIC #2

g01567795

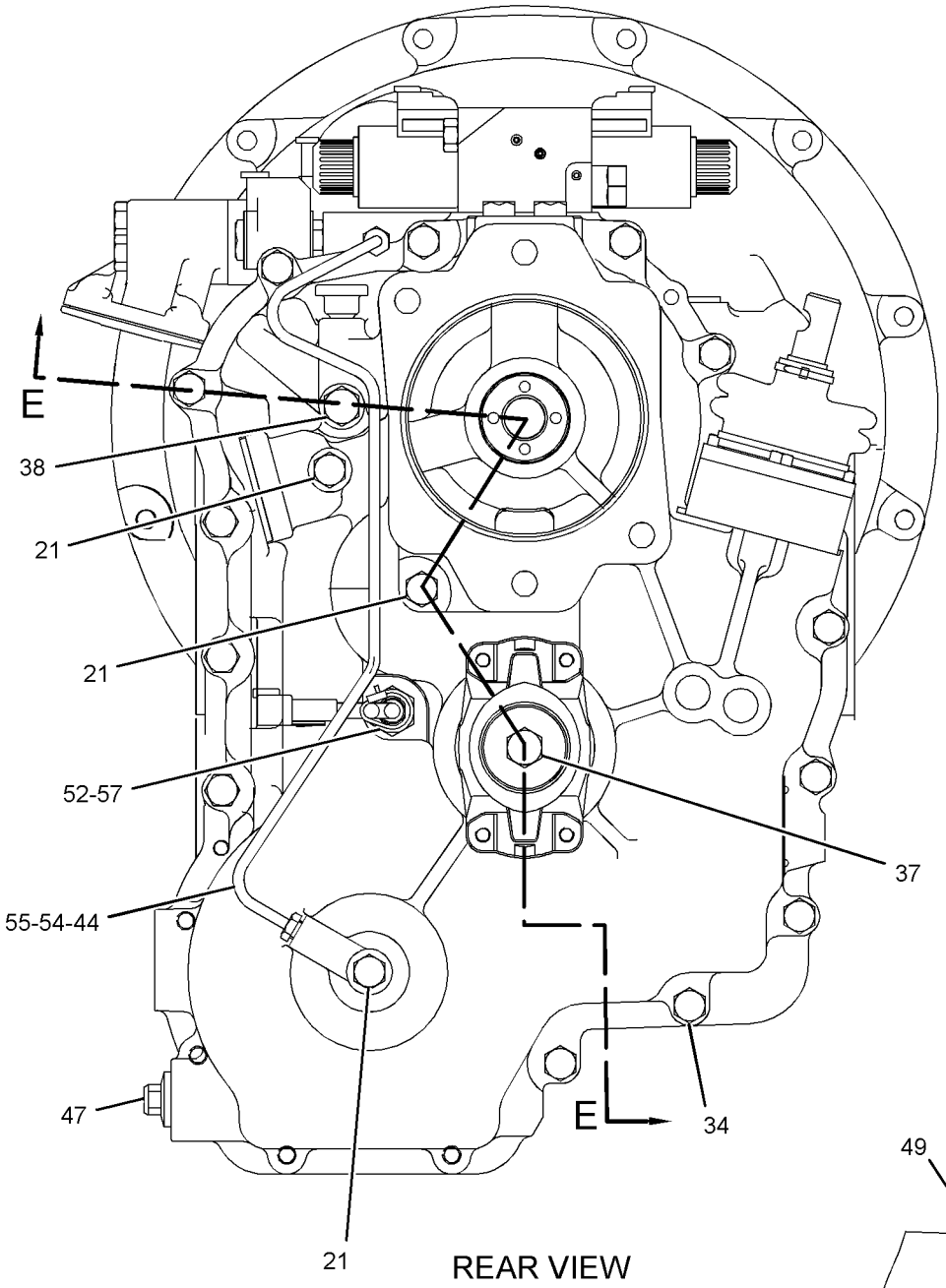

REAR VIEW

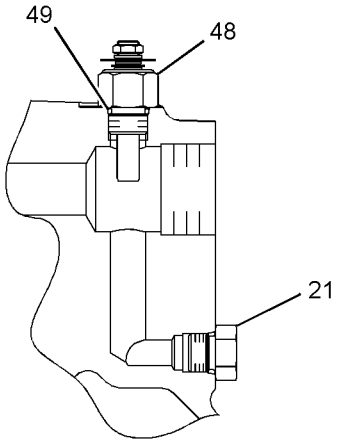

SECTION D-D

REFER TO ALL ILLUSTRATIONS OF
THIS GROUP FOR AUXILIARY VIEWS

GRAPHIC #3

g01567796

271-3774 TRANSMISSION GP-DIRECT DRIVE *(contd.)* i03256341

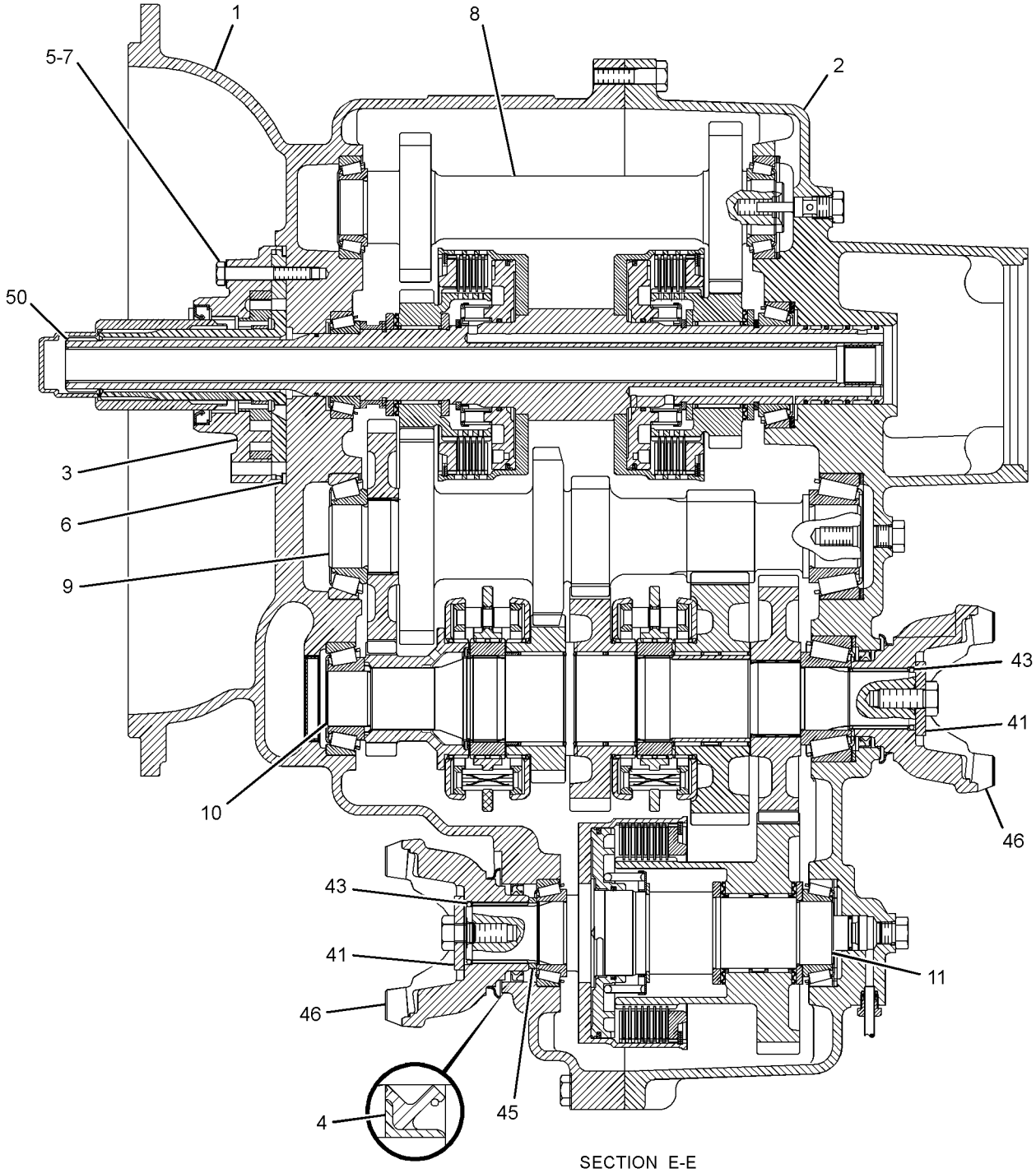

SECTION E-E

GRAPHIC #4 **<END>** g01567797

POWER TRAIN

274-8641 TRANSMISSION GP-POWER SHIFT

S/N: EAT1-UP
PART OF 202-6009 TRANSMISSION & MOUNTING GP
AN ATTACHMENT
TYPE 1

SMCS-3030 **i03256351**

NOTE	REF NO	GRAPHIC REF	PART NUMBER	QTY	PART NAME 1 2 3 4 5 6 (PRODUCT LEVEL)	SEE PAGE
	1	3	**3J-1907**	1	SEAL-O-RING	
	2	3	**4J-0522**	1	SEAL-O-RING	
	3	3	**4W-9972**	1	SENDER AS-TEMPERATURE (12-VOLT) (TRANSMISSION OIL)	
		3	**6V-8378**	1	NUT (10-32-THD)	
		3	**8F-1434**	1	LOCKWASHER	
		3	**8T-0328**	1	WASHER-HARD (5.5X10X1-MM THK)	
	4	2	**5P-8066**	2	SEAL-O-RING	
B	5	2	**6T-9163**	2	SHIM (0.599-MM THK)	
B	6	2	**6T-9164**	2	SHIM (0.178-MM THK)	
B	7	2	**6T-9165**	2	SHIM (0.076-MM THK)	
B	8	2	**6T-9166**	2	SHIM (0.051-MM THK)	
	9	3	**6T-9202**	2	PLUG	
M	10	1,3	**6V-5215**	3	BOLT (M8X1.25X16-MM)	
M	11	1,4	**6V-5842**	16	BOLT (M10X1.5X40-MM)	
M	12	2	**6V-8097**	2	BOLT (M12X1.75X30-MM)	
	13	1	**6Y-1896**	1	PLUG AS	
	14	2	**7T-2646**	2	SPACER (66X79.5X2.02-MM THK)	
	15	3	**7T-2651**	1	STRAINER (SUCTION)	
	16	2	**7T-3195**	2	WASHER (12.3X47X6.35-MM THK)	
	17	1	**7T-3251**	1	BREATHER (TRANSMISSION)	
	18	1	**7T-3253**	2	DOWEL	
	19	2,3	**7W-3556**	12	WASHER (14.27X20.57X1.5-MM THK)	
	20	2	**7X-4741**	1	SEAL	
M	21	2	**8C-5748**	4	BOLT (M8X1.25X55-MM)	
M	22	1	**8C-8545**	2	BOLT-SOCKET HEAD (M5X0.8X20-MM)	
M	23	4	**8T-0271**	2	BOLT-SOCKET HEAD (M10X1.5X35-MM)	
M	24	1	**8T-0643**	1	BOLT (M10X1.5X80-MM)	
	25	2	**9P-9150**	4	WASHER (8.25X18X0.84-MM THK)	
	26	3	**9W-5460**	1	RING	
M	27	4	**9X-6615**	12	BOLT (M5X0.8X30-MM)	
B	28	1	**104-3288**	2	SHIM (0.05-MM THK)	
	29	3	**106-9861**	1	PLATE-COVER	
	30	1	**117-1385**	1	SEAL-O-RING	
	31	1	**120-9762**	5	SEAL-O-RING	
B	32	1	**121-2059**	2	SHIM (0.08-MM THK)	
B	33	1	**121-2060**	2	SHIM (0.18-MM THK)	
B	34	1	**121-2061**	2	SHIM (0.6-MM THK)	
	35	2	**121-7385**	1	PUMP GP-TRANSMISSION	
	36	3	**121-7396**	1	VALVE GP-RELIEF (TORQUE CONVERTER INLET)	
	37	2	**121-7398**	1	SPACER (70X79.5X2-MM THK)	
B	38	2	**121-7399**	1	SHIM (0.05-MM THK)	
B	39	2	**121-7400**	1	SHIM (0.08-MM THK)	
B	40	2	**121-7401**	1	SHIM (0.18-MM THK)	
B	41	2	**121-7402**	1	SHIM (0.6-MM THK)	
	42	1	**122-1879**	2	SPACER (58X67.5X2-MM THK)	
	43	1	**122-1883**	1	SPACER (38X45X5-MM THK)	
	44	2	**122-6787**	2	YOKE AS	
					(EACH INCLUDES)	
		2	**123-1377**	1	GUARD	
	45	2	**147-0201**	1	TUBE AS	
Y	46	3	**147-0209**	1	VALVE GP-RELIEF (PUMP PRESSURE)	311
	47	4	**147-0211**	1	ELBOW AS	
		4	**3G-6927**	1	ADAPTER	

274-8641 TRANSMISSION GP-POWER SHIFT *(contd.)* i03256351

NOTE	REF NO	GRAPHIC REF	PART NUMBER	QTY	PART NAME 1 2 3 4 5 6 (PRODUCT LEVEL)	SEE PAGE
	48	1	**147-0218**	1	TUBE AS-TRANSFER	
	49	3	**147-0226**	1	TUBE AS	
	50	2,3	**147-0234**	6	BOLT (9/16-18X0.83-IN)	
	51	3	**147-0236**	1	TUBE AS-TRANSFER	
	52	1,3	**147-0262**	4	WASHER (19.1X24.1X1.5-MM THK)	
	53	1,3	**147-0266**	2	BOLT (3/4-16X1.417-IN)	
	54	1,3,4	*148-8407*	15	PLUG AS	
					(EACH INCLUDES)	
		1,3,4	**3J-1907**	1	SEAL-O-RING	
		1,3,4	**9S-4191**	1	PLUG-O-RING	
	55	4	**150-7732**	2	SEAL-O-RING	
	56	1	**191-8304**	1	SENSOR GP-SPEED (TRANSMISSION OUTPUT)	
		1	**137-6645**	1	PAD	
	57	1,4	**205-9244**	4	PLUG	
	58	1	**302-8432**	2	SEAL-LIP TYPE	
	59	1	**248-3290**	2	VALVE GP-SOLENOID (ALL WHEEL DRIVE, CLUTCH ONE)	
	60	2	**274-4554**	1	CASE AS-FRONT	
	61	2,4	*274-4556*	3	PLUG AS	
					(EACH INCLUDES)	
		2,4	**8L-2786**	1	SEAL-O-RING	
		2,4	**9S-4185**	1	PLUG-O-RING	
Y	62	3	**274-4561**	1	SHAFT GP-IDLER	250
	63	2	**274-4569**	1	CASE AS-REAR	
Y	64	2	**274-4578**	1	SHAFT GP-INPUT	252
Y	65	2	**274-4580**	1	SHAFT GP-COUNTER	247
Y	66	2	**274-4582**	1	SHAFT GP-OUTPUT (MAIN)	256
	67	2	**280-7010**	1	VALVE GP-SOLENOID (FORWARD)	
	68	2	**278-0209**	1	VALVE GP-SOLENOID (REVERSE)	
					(EACH VALVE GP INCLUDES)	
		1	**8L-2779**	4	SEAL-O-RING	
		1	**280-7012**	1	TUBE AS	
		1	**280-7009**	1	COIL AS	
	69	2	**278-0213**	1	VALVE GP-SOLENOID (CLUTCH)	
		1	**8L-2779**	4	SEAL-O-RING	
		1	**218-3597**	1	PLUG-ORIFICE	
		1	**280-7009**	2	COIL AS	
		1	**286-0867**	2	TUBE AS	
Y	70	2	**280-7007**	1	SHAFT GP-OUTPUT (FRONT)	261

B-USE AS REQUIRED
M-METRIC PART
Y-SEPARATE ILLUSTRATION

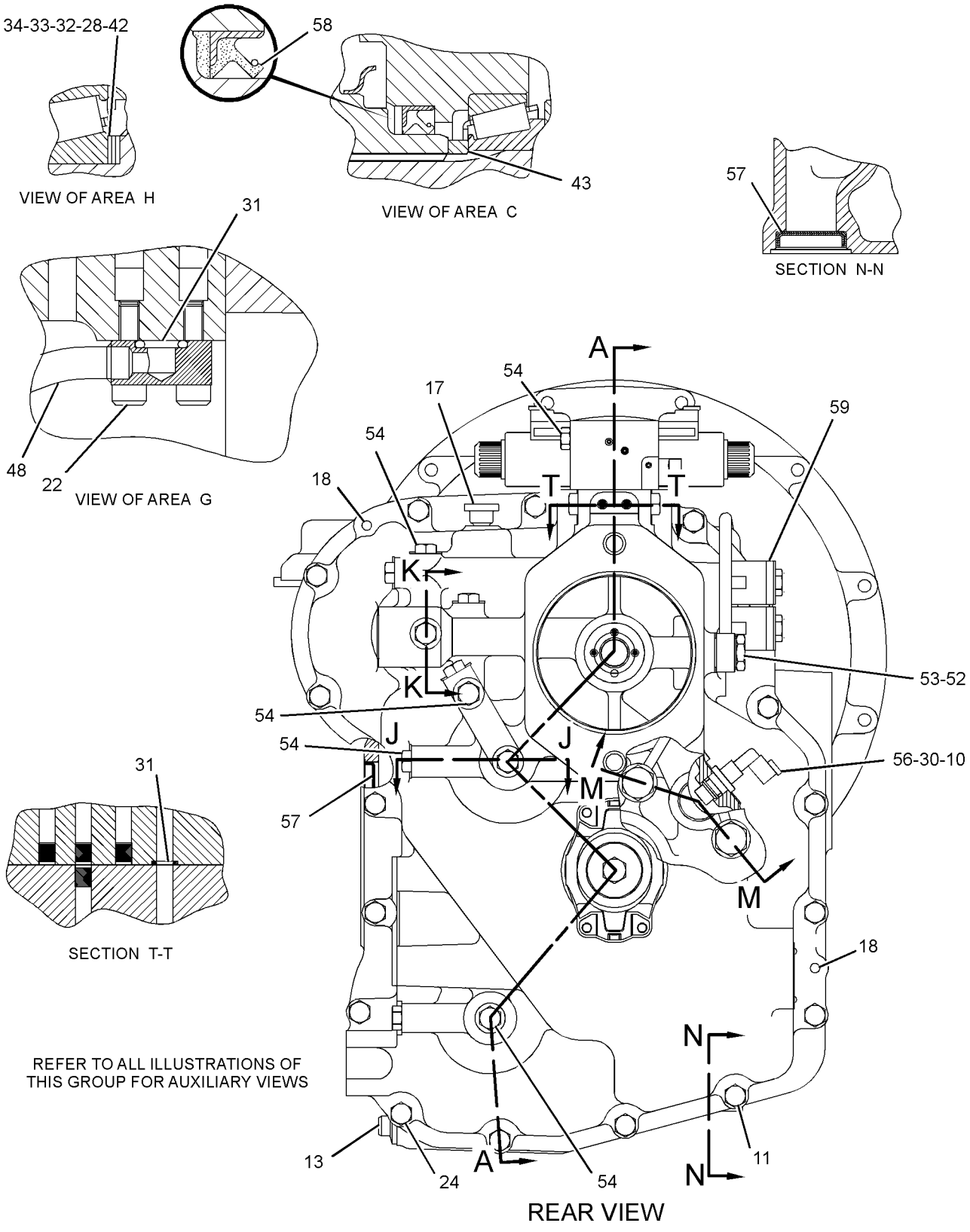

GRAPHIC #1

g01216562

274-8641 TRANSMISSION GP-POWER SHIFT *(contd.)* i03256351

REFER TO ALL ILLUSTRATIONS OF
THIS GROUP FOR AUXILIARY VIEWS

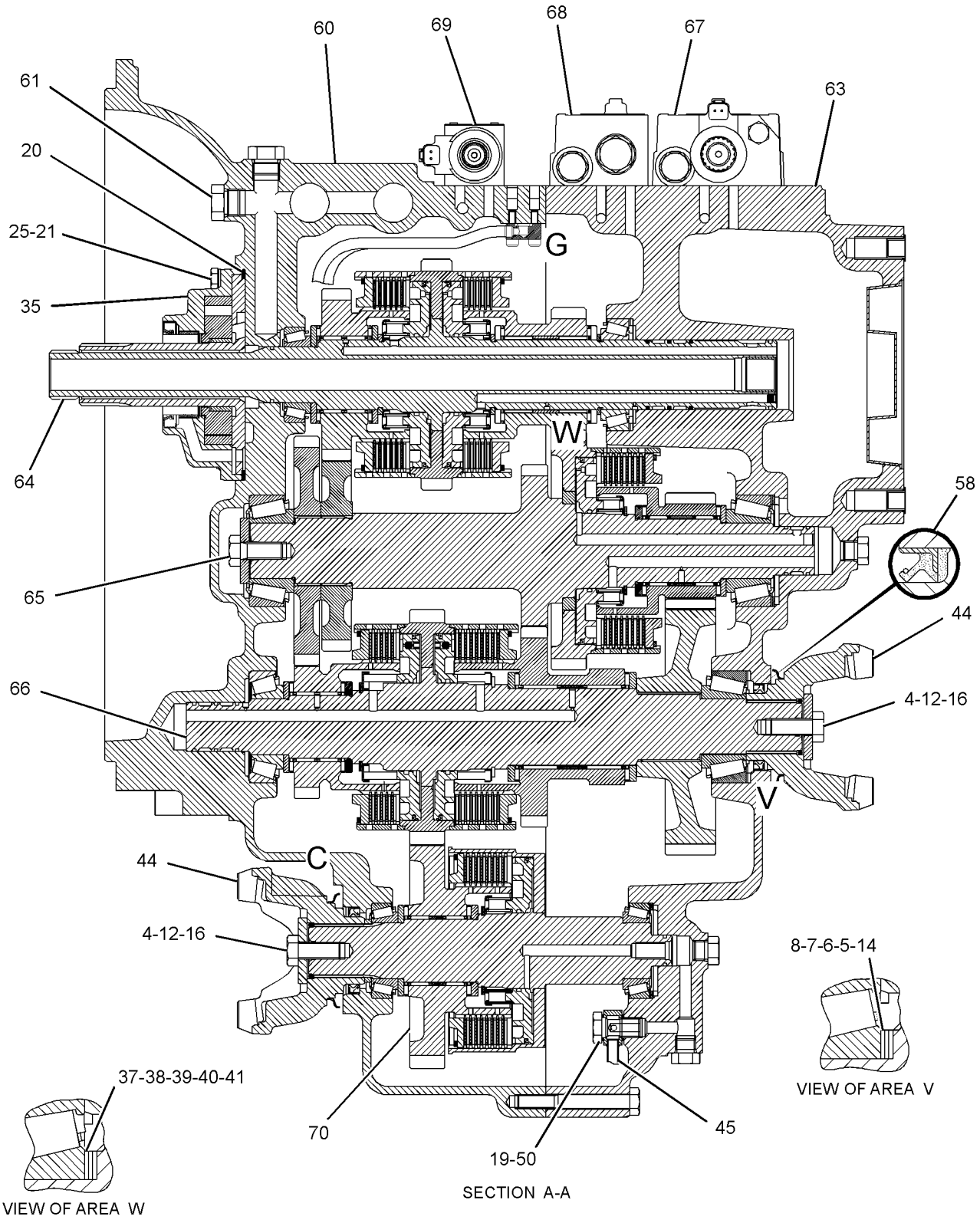

GRAPHIC #2

g01216481

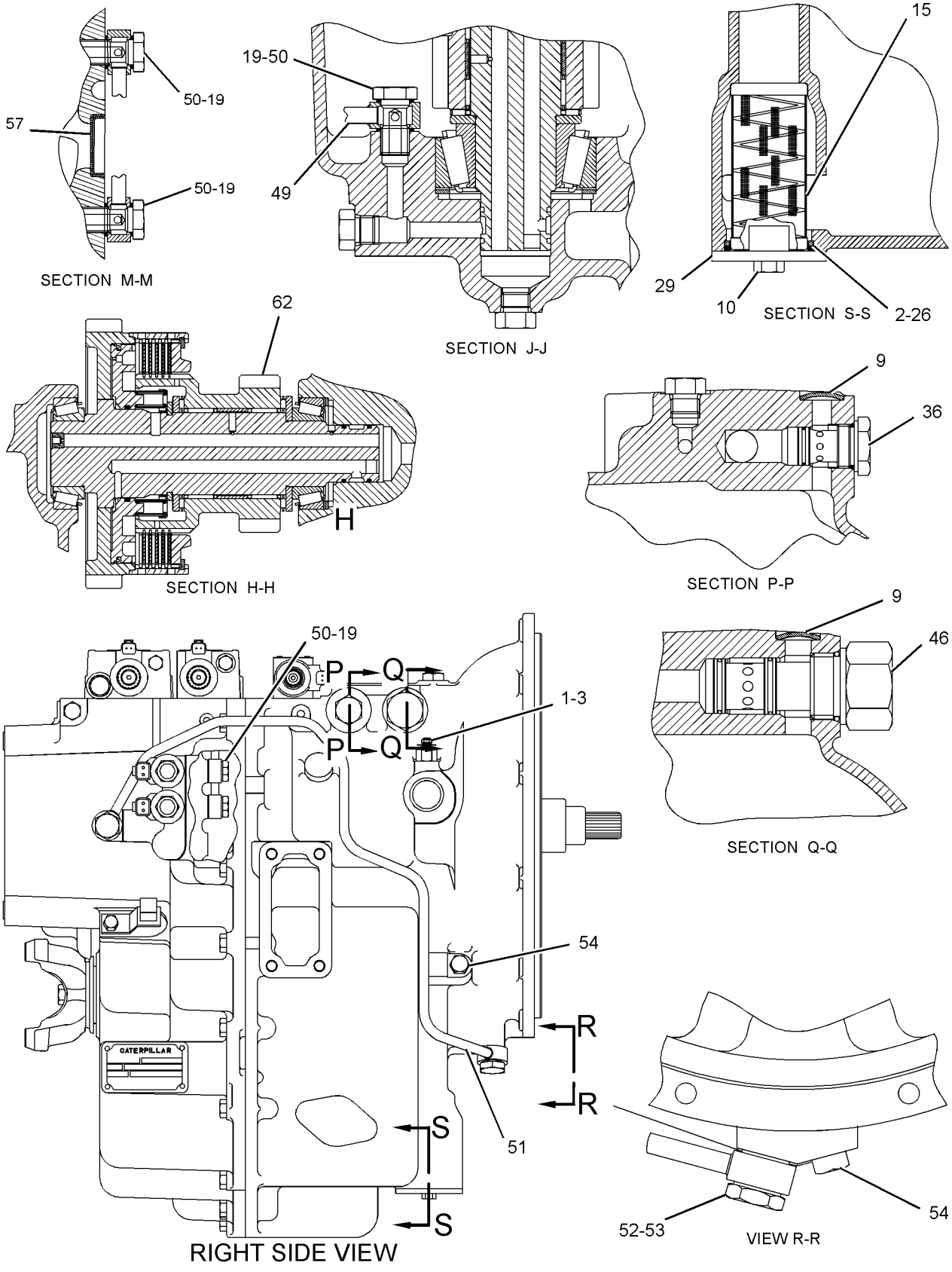

GRAPHIC #3

g01216605

274-8641 TRANSMISSION GP-POWER SHIFT *(contd.)* **i03256351**

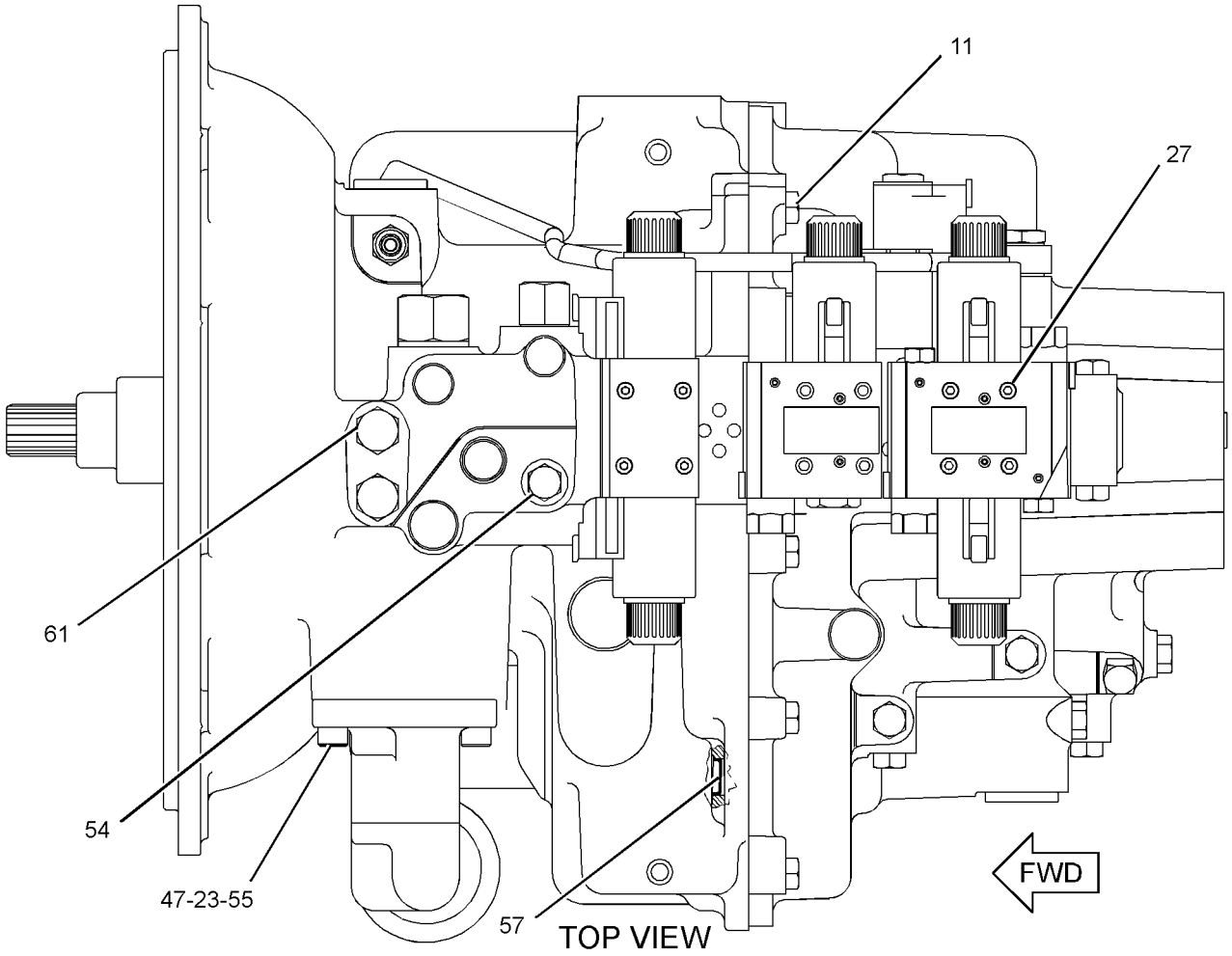

GRAPHIC #4

<END>

g01216654

274-8641 TRANSMISSION GP-POWER SHIFT

S/N: EAT1-UP
PART OF 202-6009 TRANSMISSION & MOUNTING GP
AN ATTACHMENT
TYPE 2

SMCS-3030 **i03256352**

NOTE	REF NO	GRAPHIC REF	PART NUMBER	QTY	PART NAME 1 2 3 4 5 6 (PRODUCT LEVEL)	SEE PAGE
	1	3	**3J-1907**	1	SEAL-O-RING	
	2	3	**4J-0522**	1	SEAL-O-RING	
	3	3	**4W-9972**	1	SENDER AS-TEMPERATURE (12-VOLT) (TRANSMISSION OIL)	
		3	**6V-8378**	1	NUT (10-32-THD)	
		3	**8F-1434**	1	LOCKWASHER	
		3	**8T-0328**	1	WASHER-HARD (5.5X10X1-MM THK)	
	4	2	**5P-8066**	2	SEAL-O-RING	
B	5	2	**6T-9163**	2	SHIM (0.599-MM THK)	
B	6	2	**6T-9164**	2	SHIM (0.178-MM THK)	
B	7	2	**6T-9165**	2	SHIM (0.076-MM THK)	
B	8	2	**6T-9166**	2	SHIM (0.051-MM THK)	
	9	3	**6T-9202**	2	PLUG	
M	10	1,3	**6V-5215**	3	BOLT (M8X1.25X16-MM)	
M	11	1,4	**6V-5842**	16	BOLT (M10X1.5X40-MM)	
M	12	2	**6V-8097**	2	BOLT (M12X1.75X30-MM)	
	13	1	**6Y-1896**	1	PLUG AS	
	14	2	**7T-2646**	2	SPACER (66X79.5X2.02-MM THK)	
	15	3	**7T-2651**	1	STRAINER (SUCTION)	
	16	2	**7T-3195**	2	WASHER (12.3X47X6.35-MM THK)	
	17	1	**7T-3251**	1	BREATHER (TRANSMISSION)	
	18	1	**7T-3253**	2	DOWEL	
	19	2,3	**7W-3556**	12	WASHER (14.27X20.57X1.5-MM THK)	
	20	2	**7X-4741**	1	SEAL	
M	21	2	**8C-5748**	4	BOLT (M8X1.25X55-MM)	
M	22	1	**8C-8545**	2	BOLT-SOCKET HEAD (M5X0.8X20-MM)	
M	23	4	**8T-0271**	2	BOLT-SOCKET HEAD (M10X1.5X35-MM)	
M	24	1	**8T-0643**	1	BOLT (M10X1.5X80-MM)	
	25	2	**9P-9150**	4	WASHER (8.25X18X0.84-MM THK)	
	26	3	**9W-5460**	1	RING	
M	27	4	**9X-6615**	12	BOLT (M5X0.8X30-MM)	
B	28	1	**104-3288**	2	SHIM (0.05-MM THK)	
	29	3	**106-9861**	1	PLATE-COVER	
	30	1	**117-1385**	1	SEAL-O-RING	
C	31	1	**120-9762**	3	SEAL-O-RING	
B	32	1	**121-2059**	2	SHIM (0.08-MM THK)	
B	33	1	**121-2060**	2	SHIM (0.18-MM THK)	
B	34	1	**121-2061**	2	SHIM (0.6-MM THK)	
	35	2	**121-7385**	1	PUMP GP-TRANSMISSION	
		2	**208-8240**	1	SEAL-LIP TYPE	
	36	3	**121-7396**	1	VALVE GP-RELIEF (TORQUE CONVERTER INLET)	
	37	2	**121-7398**	1	SPACER (70X79.5X2-MM THK)	
B	38	2	**121-7399**	1	SHIM (0.05-MM THK)	
B	39	2	**121-7400**	1	SHIM (0.08-MM THK)	
B	40	2	**121-7401**	1	SHIM (0.18-MM THK)	
B	41	2	**121-7402**	1	SHIM (0.6-MM THK)	
	42	1	**122-1879**	2	SPACER (58X67.5X2-MM THK)	
	43	1	**122-1883**	1	SPACER (38X45X5-MM THK)	
	44	2	**122-6787**	2	YOKE AS	
					(EACH INCLUDES)	
		2	**123-1377**	1	GUARD	
	45	2	**147-0201**	1	TUBE AS	
Y	46	3	**147-0209**	1	VALVE GP-RELIEF (PUMP PRESSURE)	311
	47	4	**147-0211**	1	ELBOW AS	

274-8641 TRANSMISSION GP-POWER SHIFT *(contd.)* i03256352

NOTE	REF NO	GRAPHIC REF	PART NUMBER	QTY	PART NAME 1 2 3 4 5 6 (PRODUCT LEVEL)	SEE PAGE
		4	**3G-6927**	1	ADAPTER	
	48	1	**147-0218**	1	TUBE AS-TRANSFER	
	49	3	**147-0226**	1	TUBE AS	
	50	2,3	**147-0234**	6	BOLT (9/16-18X0.83-IN)	
	51	3	**147-0236**	1	TUBE AS-TRANSFER	
	52	1,3	**147-0262**	4	WASHER (19.1X24.1X1.5-MM THK)	
	53	1,3	**147-0266**	2	BOLT (3/4-16X1.417-IN)	
	54	1,3,4	*148-8407*	15	PLUG AS	
					(EACH INCLUDES)	
		1,3,4	**3J-1907**	1	SEAL-O-RING	
		1,3,4	**9S-4191**	1	PLUG-O-RING	
	55	4	**150-7732**	2	SEAL-O-RING	
	56	1	**191-8304**	1	SENSOR GP-SPEED (TRANSMISSION OUTPUT)	
		1	**133-0261**	1	BRACKET	
		1	**137-6645**	1	PAD	
	57	1,4	**205-9244**	4	PLUG	
	58	1	**302-8432**	2	SEAL-LIP TYPE	
	59	1	**248-3290**	2	VALVE GP-SOLENOID (ALL WHEEL DRIVE, CLUTCH ONE)	
	60	2	**274-4554**	1	CASE AS-FRONT	
		2	**147-0268**	4	PLUG	
		2	**163-9091**	4	PLUG	
		2	**238-5261**	1	CASE-FRONT	
	61	2,4	*274-4556*	3	PLUG AS	
					(EACH INCLUDES)	
		2,4	**8L-2786**	1	SEAL-O-RING	
		2,4	**9S-4185**	1	PLUG-O-RING	
Y	62	3	**274-4561**	1	SHAFT GP-IDLER	250
	63	2	**274-4569**	1	CASE AS-REAR	
		2	**163-9091**	11	PLUG	
		2	**238-5260**	1	CASE (REAR)	
Y	64	2	**274-4578**	1	SHAFT GP-INPUT	252
Y	65	2	**274-4580**	1	SHAFT GP-COUNTER	247
Y	66	2	**274-4582**	1	SHAFT GP-OUTPUT (MAIN)	256
	67	2	**280-7010**	1	VALVE GP-SOLENOID (FORWARD)	
		2	**8L-2779**	4	SEAL-O-RING	
		2	**280-7009**	2	COIL AS	
		2	**280-7012**	2	TUBE AS	
	68	2	**278-0209**	1	VALVE GP-SOLENOID (REVERSE)	
		1	**8L-2779**	4	SEAL-O-RING	
		1	**280-7012**	1	TUBE AS	
		1	**280-7009**	1	COIL AS	
	69	2	**278-0213**	1	VALVE GP-SOLENOID (CLUTCH)	
		1	**8L-2779**	4	SEAL-O-RING	
		1	**218-3597**	1	PLUG-ORIFICE	
		1	**280-7009**	2	COIL AS	
		1	**286-0867**	2	TUBE AS	
Y	70	2	**280-7007**	1	SHAFT GP-OUTPUT (FRONT)	261

B-USE AS REQUIRED
C-CHANGE FROM PREVIOUS TYPE
M-METRIC PART
Y-SEPARATE ILLUSTRATION

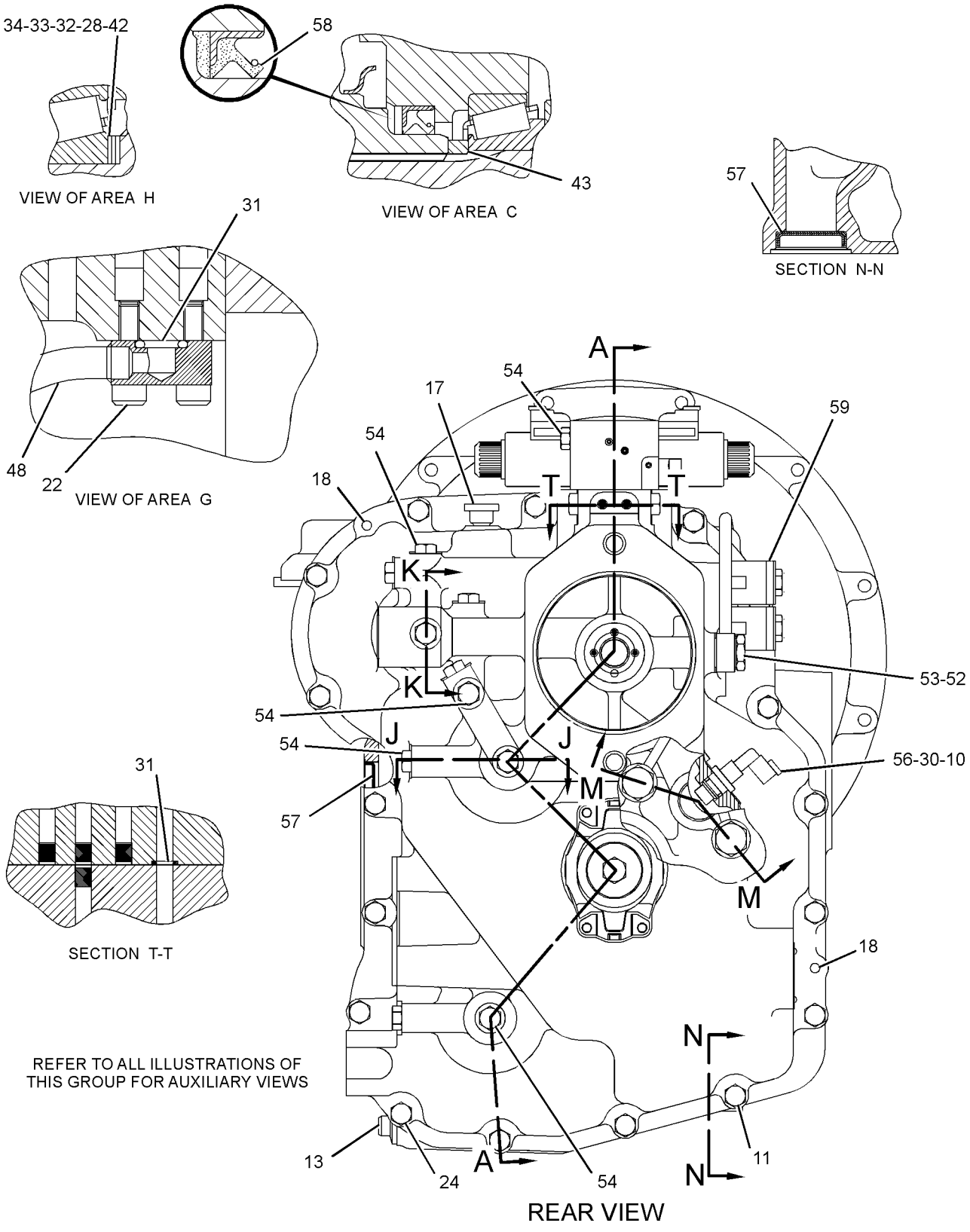

GRAPHIC #1

g01216562

274-8641 TRANSMISSION GP-POWER SHIFT *(contd.)* i03256352

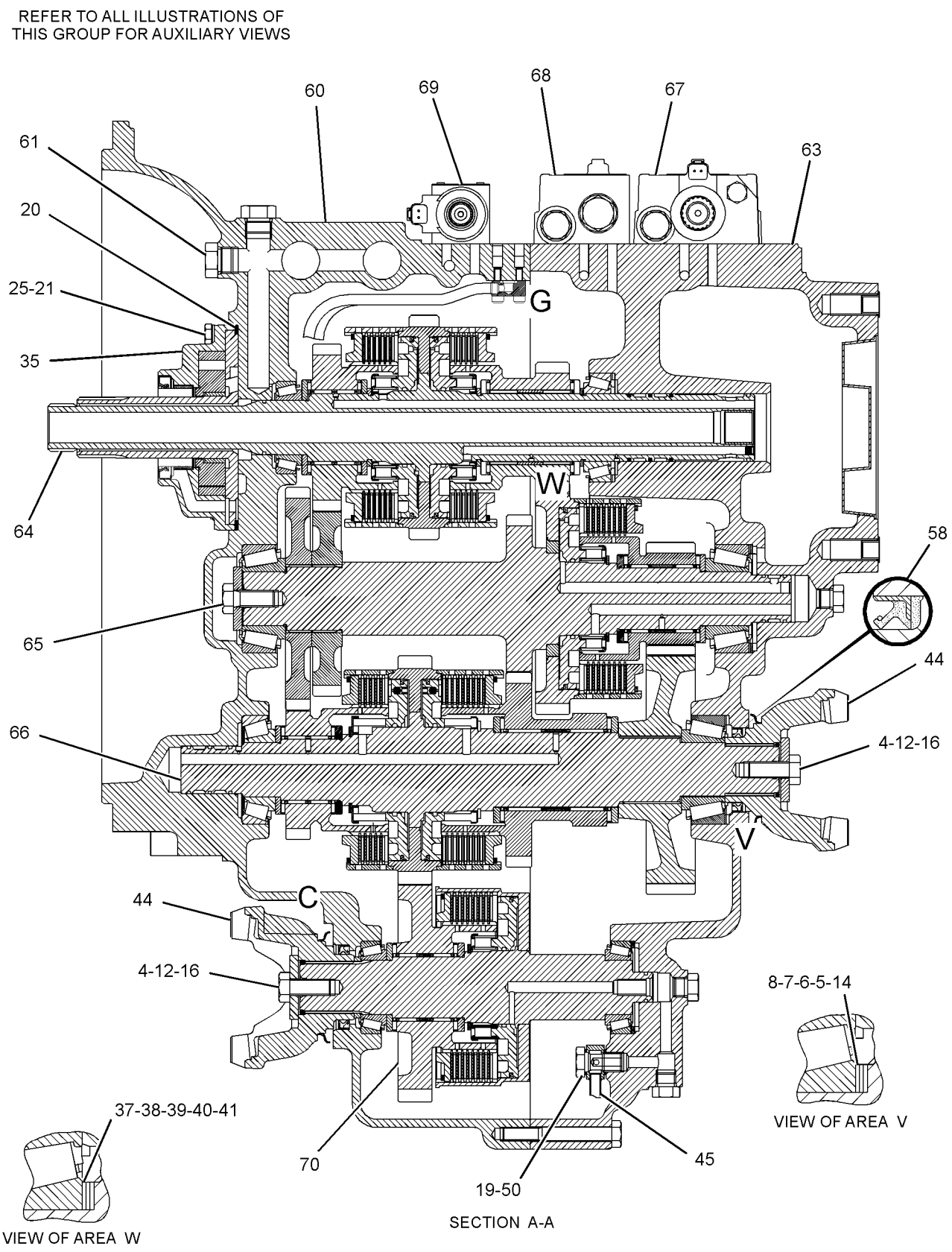

GRAPHIC #2 g01216481

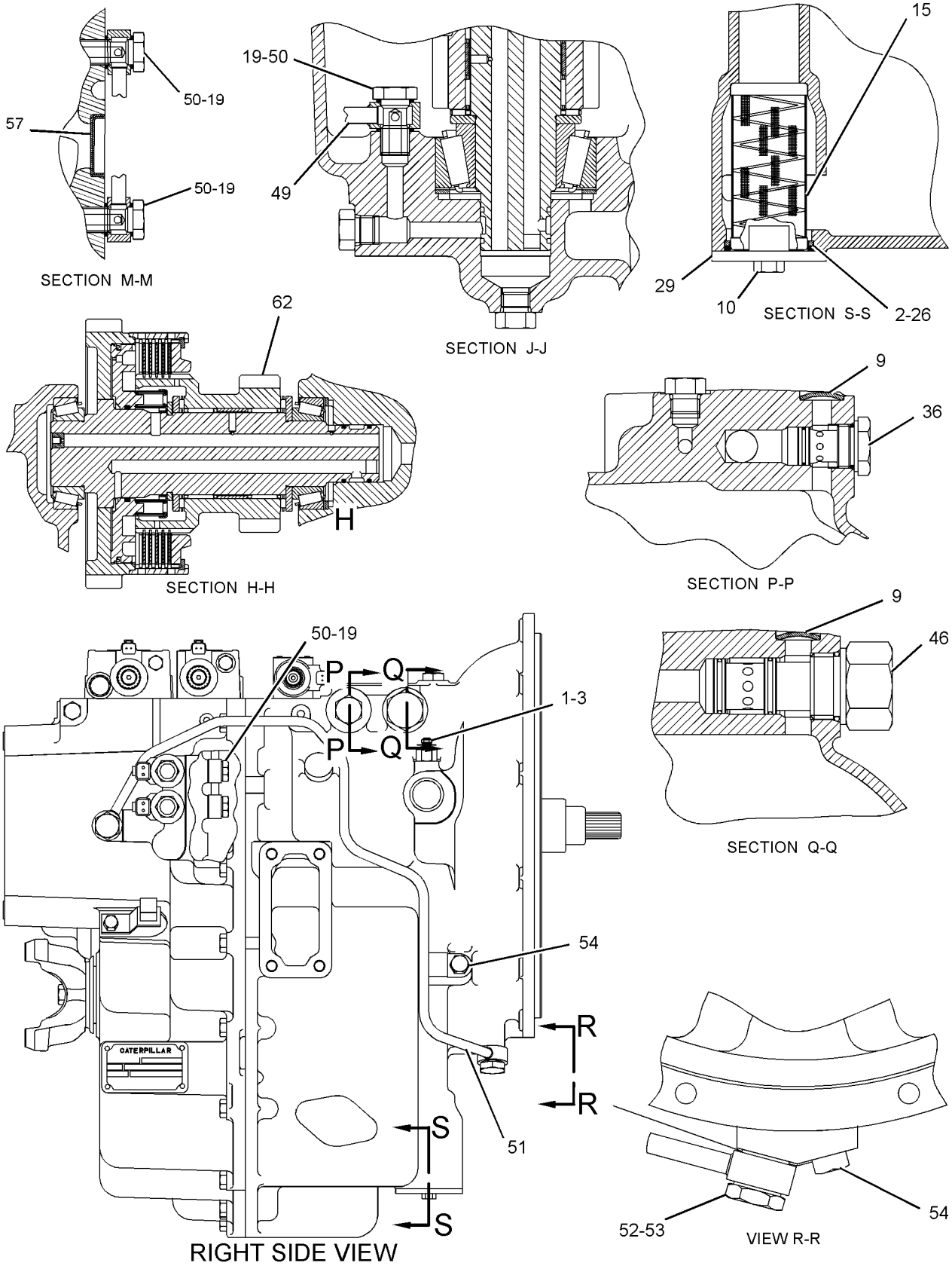

GRAPHIC #3

g01216605

274-8641 TRANSMISSION GP-POWER SHIFT *(contd.)* **i03256352**

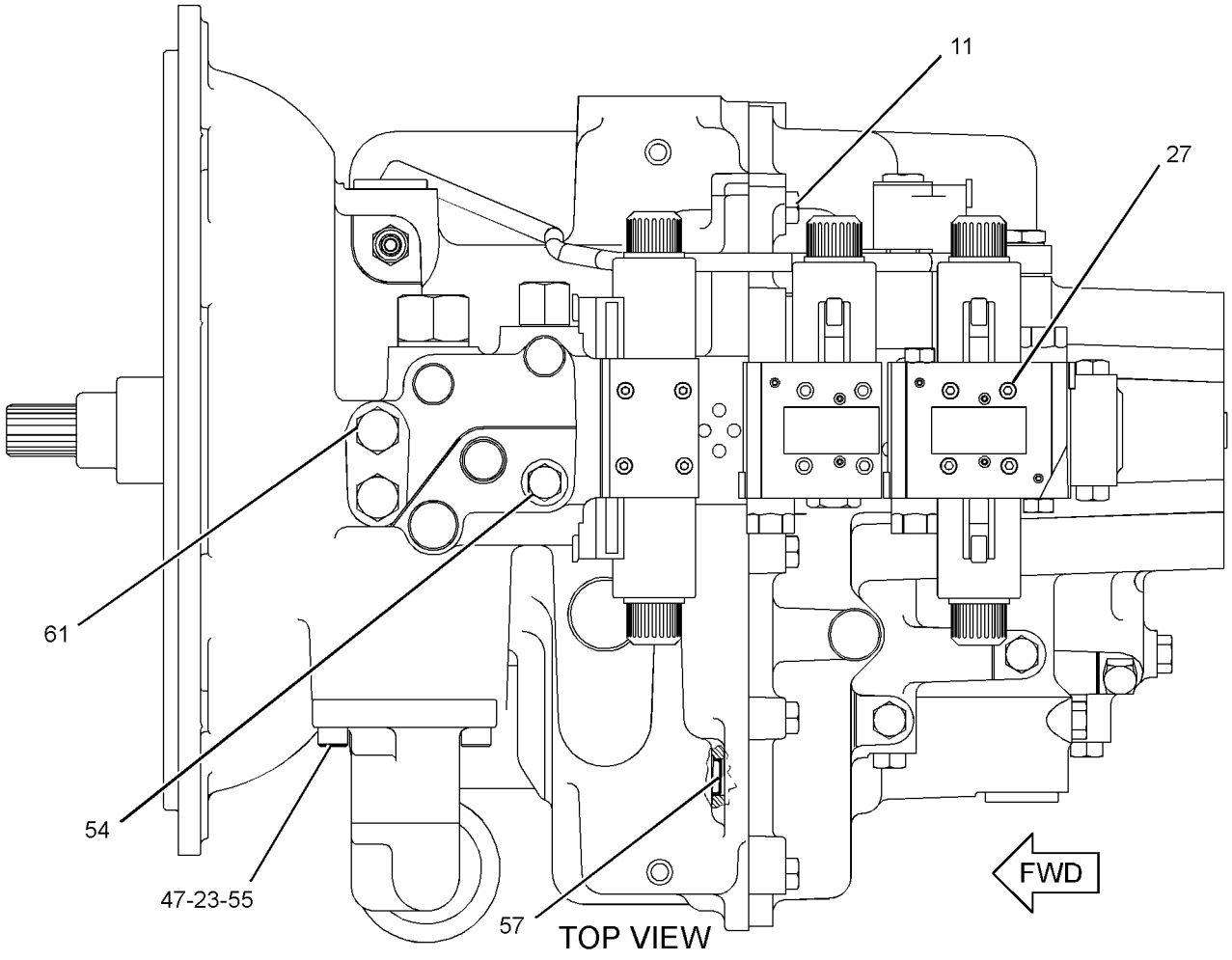

GRAPHIC #4

<END>

g01216654

256-0545 VALVE & LINES GP-DIFF LOCK

S/N: EAT1-UP
PART OF 218-5149 POWER TRAIN AR
AN ATTACHMENT

SMCS-3264, 5057, 5479 **i02445201**

NOTE	REF NO	GRAPHIC REF	PART NUMBER	QTY	PART NAME 1 2 3 4 5 6 (PRODUCT LEVEL)	SEE PAGE
	1	1	*150-3033*	1	ELBOW AS	
		1	**3J-1907**	1	SEAL-O-RING	
		1	**4J-5477**	1	SEAL-O-RING	
		1	**8T-0164**	1	ELBOW	
Y	2	1	**233-7132**	1	VALVE & MTG GP-SOLENOID (DIFFERENTIAL LOCK)	310
	3	1	**151-4841**	2	BLOCK	
I	4	1	**256-0548**	2	HOSE AS	
I	5	1	**256-0549**	1	HOSE AS	
	6	1	*148-8368*	3	ELBOW AS	
					(EACH INCLUDES)	
		1	**3J-1907**	1	SEAL-O-RING	
		1	**4J-5477**	1	SEAL-O-RING	
		1	**6V-8627**	1	ELBOW	
	7	1	**8T-4121**	4	WASHER-HARD (11X21X2.5-MM THK)	
M	8	1	**8T-5005**	2	BOLT (M10X1.5X70-MM)	
	9	1	**7K-1181**	2	STRAP-CABLE	
	10	1	**285-3557**	1	PLATE AS	
M	11	1	**8T-4137**	2	BOLT (M10X1.5X20-MM)	

I-REFER TO HYDRAULIC INFORMATION SYSTEM
M-METRIC PART
Y-SEPARATE ILLUSTRATION

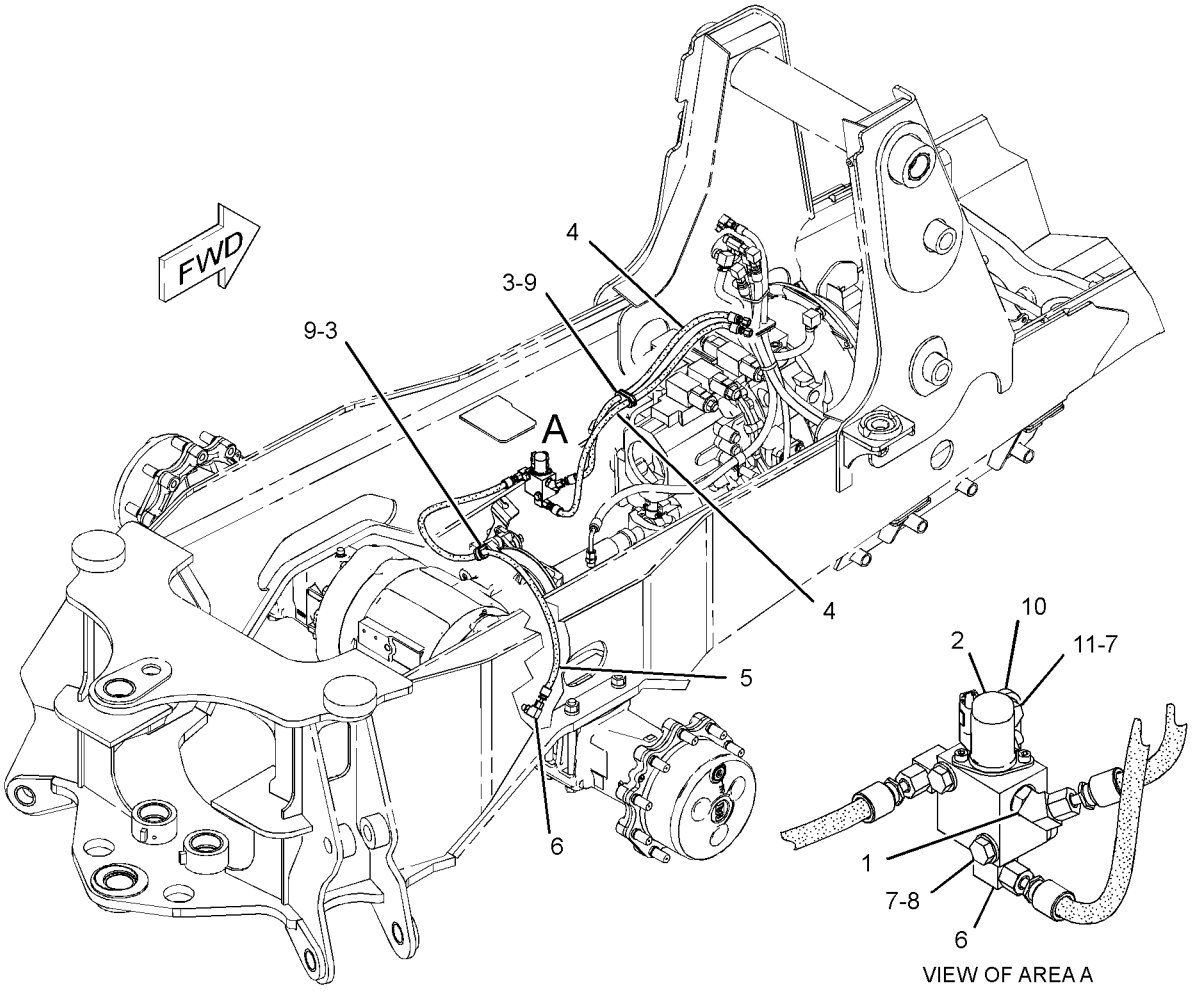

VIEW OF AREA A

GRAPHIC #1 **<END>** g01234223

233-7132 VALVE & MTG GP-SOLENOID—DIFFERENTIAL LOCK

S/N: EAT1-UP
PART OF 256-0545 VALVE & LINES GP-DIFF LOCK
AN ATTACHMENT

SMCS-5479 **i03330469**

NOTE	REF NO	GRAPHIC REF	PART NUMBER	QTY	PART NAME 1 2 3 4 5 6 (PRODUCT LEVEL)	SEE PAGE
J	1	1	**220-3398**	1	VALVE GP-SOLENOID (DIFFERENTIAL LOCK)	
M	2	1	**096-5968**	2	BOLT-SOCKET HEAD (M5X0.8X8-MM)	
					AVAILABLE REPAIR KIT(S):	
J			**250-8330**	1	KIT-SEAL	
					(INCLUDES RINGS)	

J-KIT MARKED J AVAILABLE FOR PART MARKED J
M-METRIC PART

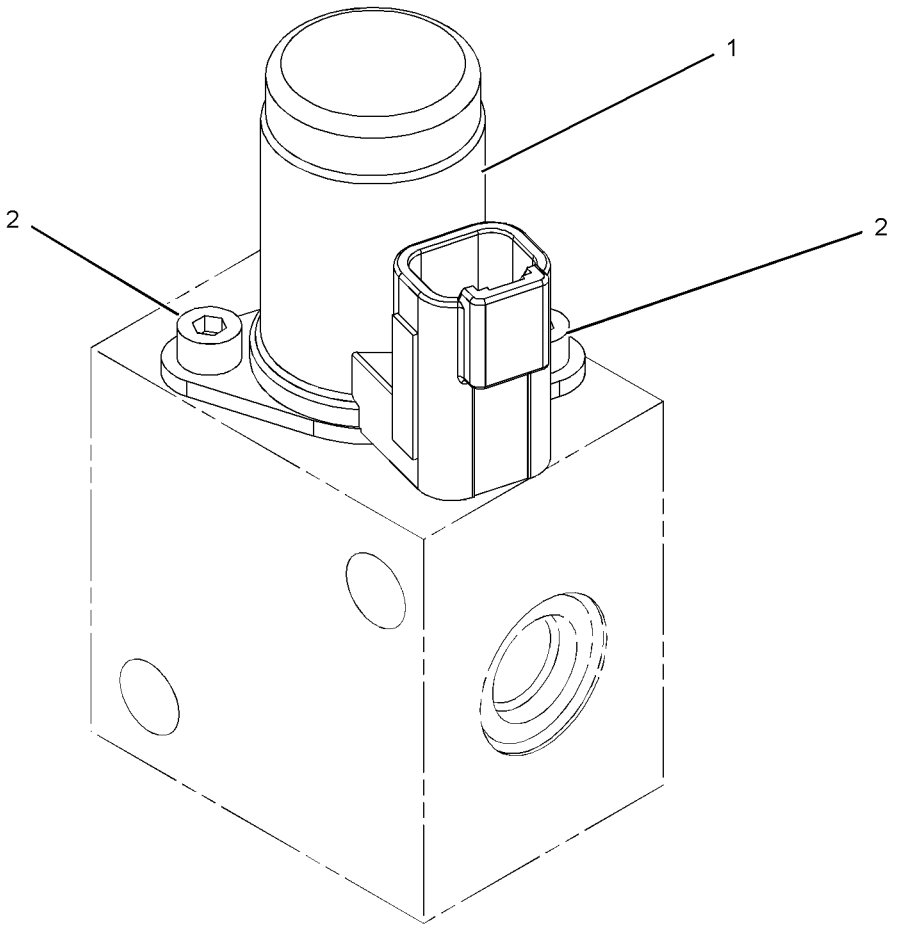

GRAPHIC #1 **<END>** g01240121

147-0209 VALVE GP-RELIEF–PUMP PRESSURE

S/N: BYC1-UP; EAT1-UP
PART OF 271-3773, 271-3774 TRANSMISSION GP-DIRECT DRIVE, 274-8641
TRANSMISSION GP-POWER SHIFT
AN ATTACHMENT

SMCS-3133, 3182, 3210, 3213 **i01980265**

NOTE	REF NO	GRAPHIC REF	PART NUMBER	QTY	PART NAME 1 2 3 4 5 6 (PRODUCT LEVEL)	SEE PAGE
	1	1	**7X-4744**	1	SEAL-O-RING	
	2	1	**6V-9178**	1	SEAL-O-RING	
	3	1	**106-9586**	1	SEAL-O-RING	

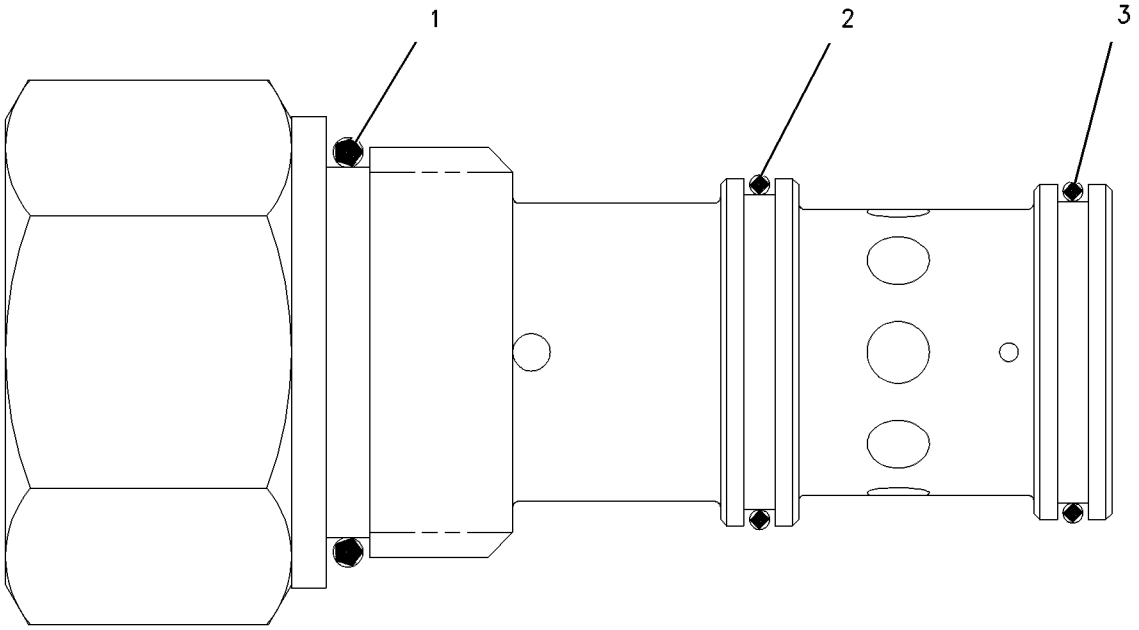

GRAPHIC #1 **<END>** g00304718

6D-0337 VALVE GP-TIRE

S/N: EAT1-UP
PART OF 201-1920 VALVE GP-TIRE
AN ATTACHMENT

SMCS-4203 **i02126852**

NOTE	REF NO	GRAPHIC REF	PART NUMBER	QTY	PART NAME 1 2 3 4 5 6 (PRODUCT LEVEL)	SEE PAGE
	1	1	**6D-0443**	1	HOUSING AS-CORE	
	2	1	**2D-2628**	1	CORE-VALVE	
	3	1	**2D-2633**	1	CAP	
	4	1	**8D-2707**	1	SPUD AS	
	5	1	**2D-2629**	1	GROMMET	
	6	1	**2D-2630**	1	WASHER	
	7	1	**2D-2631**	1	NUT (0.482-26-THD)	

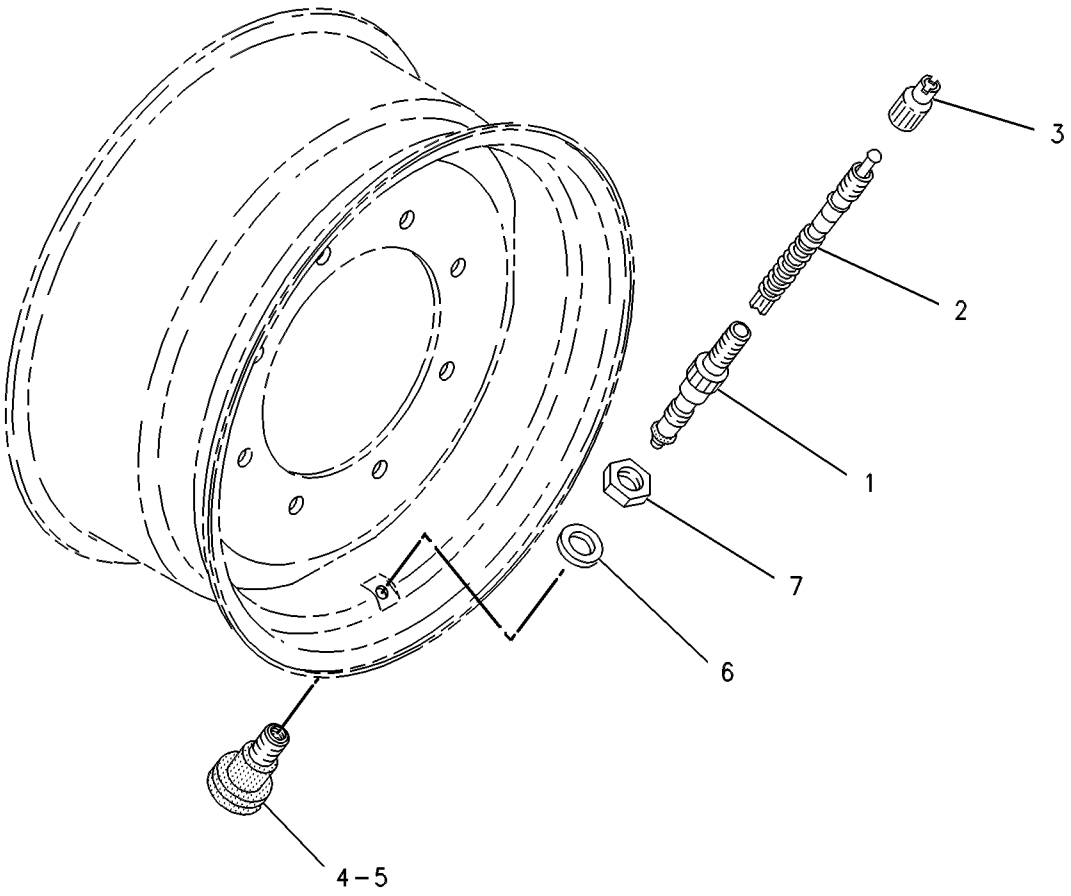

GRAPHIC #1 **<END>** g00121904

201-1920 VALVE GP-TIRE

S/N: EAT1-UP

PART OF 201-1863, 201-1864, 201-1875, 201-1876, 201-1882, 201-1883, 201-1911, 201-1912, 201-1942, 201-1943, 201-1960, 201-1961, 282-3860, 282-3861, 282-3863, 282-3864, 282-3866, 282-3867, 282-3869, 282-3870, 282-3872, 282-3873, 303-0428, 303-0429, 322-4572, 322-4573 WHEEL & TIRE GP

AN ATTACHMENT

SMCS-4203 **i02126869**

NOTE	PART NUMBER	QTY	PART NAME 1 2 3 4 5 6 (PRODUCT LEVEL)	SEE PAGE
Y	**6D-0337**	1	VALVE GP-TIRE	312

Y-SEPARATE ILLUSTRATION

<END>

201-1918 WHEEL & TIRE AR—ALL WHEEL DRIVE, BIAS

S/N: EAT1-UP

AN ATTACHMENT

SMCS-4201, 4202, 4203, 4208, 4209 **i01685047**

NOTE	PART NUMBER	QTY	PART NAME 1 2 3 4 5 6 (PRODUCT LEVEL)	SEE PAGE
Y	*201-1874*	1	WHEEL & TIRE GP (FRONT)	317
Y	*201-1913*	1	WHEEL & TIRE GP (REAR)	320

Y-SEPARATE ILLUSTRATION

<END>

201-1923 WHEEL & TIRE AR—ALL WHEEL DRIVE, RADIAL

S/N: EAT1-UP

AN ATTACHMENT

SMCS-4201, 4202, 4203, 4208, 4209 **i01589996**

NOTE	PART NUMBER	QTY	PART NAME 1 2 3 4 5 6 (PRODUCT LEVEL)	SEE PAGE
Y	*201-1862*	1	WHEEL & TIRE GP (FRONT)	316
Y	*201-1881*	1	WHEEL & TIRE GP (REAR)	318

Y-SEPARATE ILLUSTRATION

<END>

201-1940 WHEEL & TIRE AR—2-WHEEL DRIVE, BIAS FLOTATION

S/N: EAT1-UP

AN ATTACHMENT

SMCS-4201, 4202, 4203, 4208, 4209 **i02110529**

NOTE	PART NUMBER	QTY	PART NAME 1 2 3 4 5 6 (PRODUCT LEVEL)	SEE PAGE
Y	*201-1874*	1	WHEEL & TIRE GP (FRONT)	317
Y	*201-1941*	1	WHEEL & TIRE GP (REAR)	320

Y-SEPARATE ILLUSTRATION

<END>

201-1954 WHEEL & TIRE AR—ALL WHEEL DRIVE, RADIAL, BIAS

S/N: EAT1-UP
AN ATTACHMENT

SMCS-4201, 4202, 4203, 4208, 4209 **i01684120**

NOTE	PART NUMBER	QTY	PART NAME 1 2 3 4 5 6 (PRODUCT LEVEL)	SEE PAGE
Y	*201-1862*	1	WHEEL & TIRE GP (FRONT)	316
Y	*201-1913*	1	WHEEL & TIRE GP (REAR)	320

Y-SEPARATE ILLUSTRATION

<END>

282-3847 WHEEL & TIRE AR

S/N: EAT1-UP
AN ATTACHMENT

SMCS-4201, 4202, 4203, 4208, 4209 **i02452276**

NOTE	PART NUMBER	QTY	PART NAME 1 2 3 4 5 6 (PRODUCT LEVEL)	SEE PAGE
Y	*201-1949*	1	WHEEL & TIRE GP (FRONT)	321
Y	*282-3859*	1	WHEEL & TIRE GP (REAR)	322

Y-SEPARATE ILLUSTRATION

<END>

282-3853 WHEEL & TIRE AR—2-WHEEL DRIVE, BIAS

S/N: EAT1-UP
AN ATTACHMENT

SMCS-4201, 4202, 4203, 4208, 4209 **i02502831**

NOTE	PART NUMBER	QTY	PART NAME 1 2 3 4 5 6 (PRODUCT LEVEL)	SEE PAGE
Y	*282-3862*	1	WHEEL & TIRE GP (FRONT)	323
Y	*282-3865*	1	WHEEL & TIRE GP (REAR)	324

Y-SEPARATE ILLUSTRATION

<END>

282-3854 WHEEL & TIRE AR—ALL WHEEL DRIVE, BIAS

S/N: EAT1-UP
AN ATTACHMENT

SMCS-4201, 4202, 4203, 4208, 4209 **i02502983**

NOTE	PART NUMBER	QTY	PART NAME 1 2 3 4 5 6 (PRODUCT LEVEL)	SEE PAGE
Y	*282-3865*	1	WHEEL & TIRE GP (REAR)	324
Y	*282-3868*	1	WHEEL & TIRE GP (FRONT)	325

Y-SEPARATE ILLUSTRATION

<END>

282-3855 WHEEL & TIRE AR—4-WHEEL DRIVE

S/N: EAT1-UP
AN ATTACHMENT

SMCS-4201, 4202, 4203, 4208, 4209 **i02503000**

NOTE	PART NUMBER	QTY	PART NAME 1 2 3 4 5 6 (PRODUCT LEVEL)	SEE PAGE
Y	*282-3868*	1	WHEEL & TIRE GP (FRONT)	325
Y	*282-3871*	1	WHEEL & TIRE GP (REAR)	326

Y-SEPARATE ILLUSTRATION

<END>

282-3857 WHEEL & TIRE AR

S/N: EAT1-UP
AN ATTACHMENT

SMCS-4201, 4202, 4203, 4208, 4209 **i02502997**

NOTE	PART NUMBER	QTY	PART NAME 1 2 3 4 5 6 (PRODUCT LEVEL)	SEE PAGE
Y	*201-1949*	1	WHEEL & TIRE GP (FRONT)	321
Y	*282-3865*	1	WHEEL & TIRE GP (REAR)	324

Y-SEPARATE ILLUSTRATION

<END>

282-3858 WHEEL & TIRE AR

S/N: EAT1-UP
AN ATTACHMENT

SMCS-4201, 4202, 4203, 4208, 4209 **i02503060**

NOTE	PART NUMBER	QTY	PART NAME 1 2 3 4 5 6 (PRODUCT LEVEL)	SEE PAGE
Y	*201-1881*	1	WHEEL & TIRE GP (REAR)	318
Y	*201-1949*	1	WHEEL & TIRE GP (FRONT)	321

Y-SEPARATE ILLUSTRATION

<END>

320-2384 WHEEL & TIRE AR—4-WHEEL DRIVE

S/N: EAT1-UP
AN ATTACHMENT

SMCS-4201, 4202, 4203, 4208, 4209 **i03149764**

NOTE	PART NUMBER	QTY	PART NAME 1 2 3 4 5 6 (PRODUCT LEVEL)	SEE PAGE
Y	*303-0418*	1	WHEEL & TIRE GP (FRONT)	327
Y	*322-4571*	1	WHEEL & TIRE GP (REAR)	328

Y-SEPARATE ILLUSTRATION

<END>

320-2385 WHEEL & TIRE AR—4-WHEEL DRIVE

S/N: EAT1-UP
AN ATTACHMENT

SMCS-4201, 4202, 4203, 4208, 4209 **i03430400**

NOTE	PART NUMBER	QTY	PART NAME 1 2 3 4 5 6 (PRODUCT LEVEL)	SEE PAGE
Y	*303-0418*	1	WHEEL & TIRE GP (FRONT)	327
Y	*282-3865*	1	WHEEL & TIRE GP (REAR)	324

Y-SEPARATE ILLUSTRATION

<END>

201-1862 WHEEL & TIRE GP—FRONT

S/N: EAT1-UP
PART OF 201-1923, 201-1954 WHEEL & TIRE AR
AN ATTACHMENT

SMCS-4201, 4202, 4203, 4208, 4209 **i02242350**

NOTE	PART NUMBER	QTY	PART NAME 1 2 3 4 5 6 (PRODUCT LEVEL)	SEE PAGE
Y	*201-1863*	1	WHEEL & TIRE GP (LH)	316
Y	*201-1864*	1	WHEEL & TIRE GP (RH)	317
	201-1915	1	MOUNTING GP-WHEEL (FRONT)	
	8T-5439	16	WASHER-HARD (21.5X45X6-MM THK)	
M	**201-1919**	16	NUT (M20X1.5-THD)	

M-METRIC PART
Y-SEPARATE ILLUSTRATION

<END>

201-1863 WHEEL & TIRE GP—LH

S/N: EAT1-UP
10X18
PART OF 201-1862 WHEEL & TIRE GP
AN ATTACHMENT

SMCS-4201, 4202, 4203, 4208, 4209 **i02597582**

NOTE	PART NUMBER	QTY	PART NAME 1 2 3 4 5 6 (PRODUCT LEVEL)	SEE PAGE
Y	*201-1920*	1	VALVE GP-TIRE	313
	112-9338	1	TIRE (340/80-R18)	
	202-6186	1	WHEEL AS (FRONT)	

Y-SEPARATE ILLUSTRATION

<END>

201-1864 WHEEL & TIRE GP—RH

S/N: EAT1-UP
10X18
PART OF 201-1862 WHEEL & TIRE GP
AN ATTACHMENT

SMCS-4201, 4202, 4203, 4208, 4209 **i02597583**

NOTE	PART NUMBER	QTY	PART NAME 1 2 3 4 5 6 (PRODUCT LEVEL)	SEE PAGE
Y	*201-1920*	1	VALVE GP-TIRE	313
	112-9338	1	TIRE (340/80-R18)	
	202-6186	1	WHEEL AS (FRONT)	

Y-SEPARATE ILLUSTRATION

<END>

201-1874 WHEEL & TIRE GP—FRONT

S/N: EAT1-UP
PART OF 201-1918, 201-1940 WHEEL & TIRE AR
AN ATTACHMENT

SMCS-4201, 4202, 4203, 4208, 4209 **i02242353**

NOTE	PART NUMBER	QTY	PART NAME 1 2 3 4 5 6 (PRODUCT LEVEL)	SEE PAGE
Y	*201-1875*	1	WHEEL & TIRE GP (LH)	317
Y	*201-1876*	1	WHEEL & TIRE GP (RH)	318
	201-1915	1	MOUNTING GP-WHEEL (FRONT)	
	8T-5439	16	WASHER-HARD (21.5X45X6-MM THK)	
M	**178-1304**	16	NUT-HEX FLANGE (M20X1.5-THD)	

M-METRIC PART
Y-SEPARATE ILLUSTRATION

<END>

201-1875 WHEEL & TIRE GP—LH

S/N: EAT1-UP
10X18
PART OF 201-1874 WHEEL & TIRE GP
AN ATTACHMENT

SMCS-4201, 4202, 4203, 4208, 4209 **i02597584**

NOTE	PART NUMBER	QTY	PART NAME 1 2 3 4 5 6 (PRODUCT LEVEL)	SEE PAGE
Y	*201-1920*	1	VALVE GP-TIRE	313
	9R-6481	1	TIRE (12.5/80-18)	
	202-6186	1	WHEEL AS (FRONT)	

Y-SEPARATE ILLUSTRATION

<END>

201-1876 WHEEL & TIRE GP–RH

S/N: EAT1-UP
10X18
PART OF 201-1874 WHEEL & TIRE GP
AN ATTACHMENT

SMCS-4201, 4202, 4203, 4208, 4209 **i02597585**

NOTE	PART NUMBER	QTY	PART NAME 1 2 3 4 5 6 (PRODUCT LEVEL)	SEE PAGE
Y	*201-1920*	1	VALVE GP-TIRE	313
	9R-6481	1	TIRE (12.5/80-18)	
	202-6186	1	WHEEL AS (FRONT)	

Y-SEPARATE ILLUSTRATION

<END>

201-1881 WHEEL & TIRE GP–REAR

S/N: EAT1-UP
PART OF 201-1923, 282-3858 WHEEL & TIRE AR
AN ATTACHMENT

SMCS-4201, 4202, 4203, 4208, 4209 **i03527828**

NOTE	PART NUMBER	QTY	PART NAME 1 2 3 4 5 6 (PRODUCT LEVEL)	SEE PAGE
Y	*201-1882*	1	WHEEL & TIRE GP (LH)	318
Y	*201-1883*	1	WHEEL & TIRE GP (RH)	319
	201-1916	1	MOUNTING GP-WHEEL (REAR)	
	8T-5439	20	WASHER-HARD (21.5X45X6-MM THK)	
M	**201-1919**	20	NUT (M20X1.5-THD)	

M-METRIC PART
Y-SEPARATE ILLUSTRATION

<END>

201-1882 WHEEL & TIRE GP–LH

S/N: EAT1-UP
PART OF 201-1881 WHEEL & TIRE GP
AN ATTACHMENT

SMCS-4201, 4202, 4203, 4208, 4209 **i03510988**

NOTE	PART NUMBER	QTY	PART NAME 1 2 3 4 5 6 (PRODUCT LEVEL)	SEE PAGE
Y	*201-1920*	1	VALVE GP-TIRE	313
	195-6344	1	WHEEL AS (REAR)	
	127-4293	1	TIRE (19.5-R24)	

Y-SEPARATE ILLUSTRATION

<END>

201-1883 WHEEL & TIRE GP—RH

S/N: EAT1-UP
PART OF 201-1881 WHEEL & TIRE GP
AN ATTACHMENT

SMCS-4201, 4202, 4203, 4208, 4209 **i03510990**

NOTE	PART NUMBER	QTY	PART NAME 1 2 3 4 5 6 (PRODUCT LEVEL)	SEE PAGE
Y	*201-1920*	1	VALVE GP-TIRE	313
	195-6344	1	WHEEL AS (REAR)	
	127-4293	1	TIRE (19.5-R24)	

Y-SEPARATE ILLUSTRATION

<END>

201-1911 WHEEL & TIRE GP—LH

S/N: EAT1-UP
PART OF 201-1913 WHEEL & TIRE GP
AN ATTACHMENT

SMCS-4201, 4202, 4203, 4208, 4209 **i03510991**

NOTE	PART NUMBER	QTY	PART NAME 1 2 3 4 5 6 (PRODUCT LEVEL)	SEE PAGE
Y	*201-1920*	1	VALVE GP-TIRE	313
	195-6344	1	WHEEL AS (REAR)	
	201-1902	1	TIRE (19.5L-24)	

Y-SEPARATE ILLUSTRATION

<END>

201-1912 WHEEL & TIRE GP—RH

S/N: EAT1-UP
PART OF 201-1913 WHEEL & TIRE GP
AN ATTACHMENT

SMCS-4201, 4202, 4203, 4208, 4209 **i03510992**

NOTE	PART NUMBER	QTY	PART NAME 1 2 3 4 5 6 (PRODUCT LEVEL)	SEE PAGE
Y	*201-1920*	1	VALVE GP-TIRE	313
	195-6344	1	WHEEL AS (REAR)	
	201-1902	1	TIRE (19.5L-24)	

Y-SEPARATE ILLUSTRATION

<END>

201-1913 WHEEL & TIRE GP–REAR

S/N: EAT1-UP
PART OF 201-1918, 201-1954 WHEEL & TIRE AR
AN ATTACHMENT

SMCS-4201, 4202, 4203, 4208, 4209 **i03527861**

NOTE	PART NUMBER	QTY	PART NAME 1 2 3 4 5 6 (PRODUCT LEVEL)	SEE PAGE
Y	*201-1911*	1	WHEEL & TIRE GP (LH)	319
Y	*201-1912*	1	WHEEL & TIRE GP (RH)	319
	201-1916	1	MOUNTING GP-WHEEL (REAR)	
	8T-5439	20	WASHER-HARD (21.5X45X6-MM THK)	
M	**201-1919**	20	NUT (M20X1.5-THD)	

M-METRIC PART
Y-SEPARATE ILLUSTRATION

<END>

201-1941 WHEEL & TIRE GP–REAR

S/N: EAT1-UP
PART OF 201-1940 WHEEL & TIRE AR
AN ATTACHMENT

SMCS-4201, 4202, 4203, 4208, 4209 **i03527863**

NOTE	PART NUMBER	QTY	PART NAME 1 2 3 4 5 6 (PRODUCT LEVEL)	SEE PAGE
Y	*201-1942*	1	WHEEL & TIRE GP (LH)	320
Y	*201-1943*	1	WHEEL & TIRE GP (RH)	321
	201-1916	1	MOUNTING GP-WHEEL (REAR)	
	8T-5439	20	WASHER-HARD (21.5X45X6-MM THK)	
M	**201-1919**	20	NUT (M20X1.5-THD)	

M-METRIC PART
Y-SEPARATE ILLUSTRATION

<END>

201-1942 WHEEL & TIRE GP–LH

S/N: EAT1-UP
PART OF 201-1941 WHEEL & TIRE GP
AN ATTACHMENT

SMCS-4201, 4202, 4203, 4208, 4209 **i03386462**

NOTE	PART NUMBER	QTY	PART NAME 1 2 3 4 5 6 (PRODUCT LEVEL)	SEE PAGE
Y	*201-1920*	1	VALVE GP-TIRE	313
	272-5111	1	WHEEL AS (REAR)	
	9R-3659	1	TIRE (21-24)	

Y-SEPARATE ILLUSTRATION

<END>

201-1943 WHEEL & TIRE GP—RH

S/N: EAT1-UP
PART OF 201-1941 WHEEL & TIRE GP
AN ATTACHMENT

SMCS-4201, 4202, 4203, 4208, 4209 **i03397844**

NOTE	PART NUMBER	QTY	PART NAME 1 2 3 4 5 6 (PRODUCT LEVEL)	SEE PAGE
Y	*201-1920*	1	VALVE GP-TIRE	313
	272-5111	1	WHEEL AS (REAR)	
	9R-3659	1	TIRE (21-24)	

Y-SEPARATE ILLUSTRATION

<END>

201-1949 WHEEL & TIRE GP—FRONT

S/N: EAT1-UP
PART OF 282-3847, 282-3857, 282-3858 WHEEL & TIRE AR
AN ATTACHMENT

SMCS-4201, 4202, 4203, 4208, 4209 **i02430038**

NOTE	PART NUMBER	QTY	PART NAME 1 2 3 4 5 6 (PRODUCT LEVEL)	SEE PAGE
Y	*201-1960*	1	WHEEL & TIRE GP (LH)	321
Y	*201-1961*	1	WHEEL & TIRE GP (RH)	322
	201-1915	1	MOUNTING GP-WHEEL (FRONT)	
	8T-5439	16	WASHER-HARD (21.5X45X6-MM THK)	
M	**201-1919**	16	NUT (M20X1.5-THD)	

M-METRIC PART
Y-SEPARATE ILLUSTRATION

<END>

201-1960 WHEEL & TIRE GP—LH

S/N: EAT1-UP
10X18
PART OF 201-1949 WHEEL & TIRE GP
AN ATTACHMENT

SMCS-4201, 4202, 4203, 4208, 4209 **i02430050**

NOTE	PART NUMBER	QTY	PART NAME 1 2 3 4 5 6 (PRODUCT LEVEL)	SEE PAGE
Y	*201-1920*	1	VALVE GP-TIRE	313
	202-6186	1	WHEEL AS (FRONT)	
	201-1879	1	TIRE (12.5/80-R18)	

Y-SEPARATE ILLUSTRATION

<END>

201-1961 WHEEL & TIRE GP—RH

S/N: EAT1-UP
10X18
PART OF 201-1949 WHEEL & TIRE GP
AN ATTACHMENT

SMCS-4201, 4202, 4203, 4208, 4209 **i02430055**

NOTE	PART NUMBER	QTY	PART NAME 1 2 3 4 5 6 (PRODUCT LEVEL)	SEE PAGE
Y	*201-1920*	1	VALVE GP-TIRE	313
	202-6186	1	WHEEL AS (FRONT)	
	201-1879	1	TIRE (12.5/80-R18)	

Y-SEPARATE ILLUSTRATION

<END>

282-3859 WHEEL & TIRE GP—REAR

S/N: EAT1-UP
PART OF 282-3847 WHEEL & TIRE AR
AN ATTACHMENT

SMCS-4201, 4202, 4203, 4208, 4209 **i02452283**

NOTE	PART NUMBER	QTY	PART NAME 1 2 3 4 5 6 (PRODUCT LEVEL)	SEE PAGE
Y	*282-3860*	1	WHEEL & TIRE GP (LH)	322
Y	*282-3861*	1	WHEEL & TIRE GP (RH)	323
	201-1916	1	MOUNTING GP-WHEEL	

Y-SEPARATE ILLUSTRATION

<END>

282-3860 WHEEL & TIRE GP—REAR, LH

S/N: EAT1-UP
PART OF 282-3859 WHEEL & TIRE GP
AN ATTACHMENT

SMCS-4201, 4202, 4203, 4208, 4209 **i02452319**

NOTE	PART NUMBER	QTY	PART NAME 1 2 3 4 5 6 (PRODUCT LEVEL)	SEE PAGE
Y	*201-1920*	1	VALVE GP-TIRE	313
	195-6344	1	WHEEL AS (REAR)	
	276-5021	1	TIRE (19.5-LR24)	

Y-SEPARATE ILLUSTRATION

<END>

282-3861 WHEEL & TIRE GP—REAR, RH

S/N: EAT1-UP
PART OF 282-3859 WHEEL & TIRE GP
AN ATTACHMENT

SMCS-4201, 4202, 4203, 4208, 4209 **i02452324**

NOTE	PART NUMBER	QTY	PART NAME 1 2 3 4 5 6 (PRODUCT LEVEL)	SEE PAGE
Y	*201-1920*	1	VALVE GP-TIRE	313
	195-6344	1	WHEEL AS (REAR)	
	276-5021	1	TIRE (19.5-LR24)	

Y-SEPARATE ILLUSTRATION

<END>

282-3862 WHEEL & TIRE GP—FRONT

S/N: EAT1-UP
PART OF 282-3853 WHEEL & TIRE AR
AN ATTACHMENT

SMCS-4201, 4202, 4203, 4208, 4209 **i03514645**

NOTE	PART NUMBER	QTY	PART NAME 1 2 3 4 5 6 (PRODUCT LEVEL)	SEE PAGE
Y	*282-3863*	1	WHEEL & TIRE GP (FRONT, LH)	323
Y	*282-3864*	1	WHEEL & TIRE GP (FRONT, RH)	324
	201-1915	1	MOUNTING GP-WHEEL (FRONT)	
	8T-5439	16	WASHER-HARD (21.5X45X6-MM THK)	
M	**201-1919**	16	NUT (M20X1.5-THD)	

M-METRIC PART
Y-SEPARATE ILLUSTRATION

<END>

282-3863 WHEEL & TIRE GP—LH

S/N: EAT1-UP
PART OF 282-3862 WHEEL & TIRE GP
AN ATTACHMENT

SMCS-4201, 4202, 4203, 4208, 4209 **i03397847**

NOTE	PART NUMBER	QTY	PART NAME 1 2 3 4 5 6 (PRODUCT LEVEL)	SEE PAGE
Y	*201-1920*	1	VALVE GP-TIRE	313
	195-6341	1	WHEEL AS (FRONT)	
	276-8086	1	TIRE (11L-16)	

Y-SEPARATE ILLUSTRATION

<END>

282-3864 WHEEL & TIRE GP—RH

S/N: EAT1-UP
PART OF 282-3862 WHEEL & TIRE GP
AN ATTACHMENT

SMCS-4201, 4202, 4203, 4208, 4209 **i03397851**

NOTE	PART NUMBER	QTY	PART NAME 1 2 3 4 5 6 (PRODUCT LEVEL)	SEE PAGE
Y	*201-1920*	1	VALVE GP-TIRE	313
	195-6341	1	WHEEL AS (FRONT)	
	276-8086	1	TIRE (11L-16)	

Y-SEPARATE ILLUSTRATION

<END>

282-3865 WHEEL & TIRE GP—REAR

S/N: EAT1-UP
PART OF 282-3853, 282-3854, 282-3857, 320-2385 WHEEL & TIRE AR
AN ATTACHMENT

SMCS-4201, 4202, 4203, 4208, 4209 **i03514661**

NOTE	PART NUMBER	QTY	PART NAME 1 2 3 4 5 6 (PRODUCT LEVEL)	SEE PAGE
Y	*282-3866*	1	WHEEL & TIRE GP (LH)	324
Y	*282-3867*	1	WHEEL & TIRE GP (RH)	325
	201-1916	1	MOUNTING GP-WHEEL (REAR)	
	8T-5439	20	WASHER-HARD (21.5X45X6-MM THK)	
M	**201-1919**	20	NUT (M20X1.5-THD)	

M-METRIC PART
Y-SEPARATE ILLUSTRATION

<END>

282-3866 WHEEL & TIRE GP—LH

S/N: EAT1-UP
PART OF 282-3865 WHEEL & TIRE GP
AN ATTACHMENT

SMCS-4201, 4202, 4203, 4208, 4209 **i03397860**

NOTE	PART NUMBER	QTY	PART NAME 1 2 3 4 5 6 (PRODUCT LEVEL)	SEE PAGE
Y	*201-1920*	1	VALVE GP-TIRE	313
	195-6344	1	WHEEL AS (REAR)	
	276-6820	1	TIRE (19.5L-24)	

Y-SEPARATE ILLUSTRATION

<END>

282-3867 WHEEL & TIRE GP—RH

S/N: EAT1-UP
PART OF 282-3865 WHEEL & TIRE GP
AN ATTACHMENT

SMCS-4201, 4202, 4203, 4208, 4209 **i03397861**

NOTE	PART NUMBER	QTY	PART NAME 1 2 3 4 5 6 (PRODUCT LEVEL)	SEE PAGE
Y	*201-1920*	1	VALVE GP-TIRE	313
	195-6344	1	WHEEL AS (REAR)	
	276-6820	1	TIRE (19.5L-24)	

Y-SEPARATE ILLUSTRATION

<END>

282-3868 WHEEL & TIRE GP—REAR

S/N: EAT1-UP
PART OF 282-3854, 282-3855 WHEEL & TIRE AR
AN ATTACHMENT

SMCS-4201, 4202, 4203, 4208, 4209 **i03514665**

NOTE	PART NUMBER	QTY	PART NAME 1 2 3 4 5 6 (PRODUCT LEVEL)	SEE PAGE
Y	*282-3869*	1	WHEEL & TIRE GP (LH)	325
Y	*282-3870*	1	WHEEL & TIRE GP (RH)	326
	201-1915	1	MOUNTING GP-WHEEL (FRONT)	
	8T-5439	16	WASHER-HARD (21.5X45X6-MM THK)	
M	**201-1919**	16	NUT (M20X1.5-THD)	

M-METRIC PART
Y-SEPARATE ILLUSTRATION

<END>

282-3869 WHEEL & TIRE GP—LH

S/N: EAT1-UP
PART OF 282-3868 WHEEL & TIRE GP
AN ATTACHMENT

SMCS-4201, 4202, 4203, 4208, 4209 **i03397882**

NOTE	PART NUMBER	QTY	PART NAME 1 2 3 4 5 6 (PRODUCT LEVEL)	SEE PAGE
Y	*201-1920*	1	VALVE GP-TIRE	313
	202-6186	1	WHEEL AS (FRONT)	
	286-9087	1	TIRE (12.5/80-18)	

Y-SEPARATE ILLUSTRATION

<END>

282-3870 WHEEL & TIRE GP–RH

S/N: EAT1-UP
PART OF 282-3868 WHEEL & TIRE GP
AN ATTACHMENT

SMCS-4201, 4202, 4203, 4208, 4209 **i03514423**

NOTE	PART NUMBER	QTY	PART NAME 1 2 3 4 5 6 (PRODUCT LEVEL)	SEE PAGE
Y	*201-1920*	1	VALVE GP-TIRE	313
	202-6186	1	WHEEL AS (FRONT)	
	286-9087	1	TIRE (12.5/80-18)	

Y-SEPARATE ILLUSTRATION

<END>

282-3871 WHEEL & TIRE GP–REAR

S/N: EAT1-UP
PART OF 282-3855 WHEEL & TIRE AR
AN ATTACHMENT

SMCS-4201, 4202, 4203, 4208, 4209 **i03527868**

NOTE	PART NUMBER	QTY	PART NAME 1 2 3 4 5 6 (PRODUCT LEVEL)	SEE PAGE
Y	*282-3872*	1	WHEEL & TIRE GP (LH)	326
Y	*282-3873*	1	WHEEL & TIRE GP (RH)	327
	201-1916	1	MOUNTING GP-WHEEL (REAR)	
	8T-5439	20	WASHER-HARD (21.5X45X6-MM THK)	
M	**201-1919**	20	NUT (M20X1.5-THD)	

M-METRIC PART
Y-SEPARATE ILLUSTRATION

<END>

282-3872 WHEEL & TIRE GP–LH

S/N: EAT1-UP
PART OF 282-3871 WHEEL & TIRE GP
AN ATTACHMENT

SMCS-4201, 4202, 4203, 4208, 4209 **i03397900**

NOTE	PART NUMBER	QTY	PART NAME 1 2 3 4 5 6 (PRODUCT LEVEL)	SEE PAGE
Y	*201-1920*	1	VALVE GP-TIRE	313
	272-5111	1	WHEEL AS (REAR)	
	272-5116	1	TIRE (21L-24)	

Y-SEPARATE ILLUSTRATION

<END>

282-3873 WHEEL & TIRE GP—RH

S/N: EAT1-UP
18L X 24W
PART OF 282-3871 WHEEL & TIRE GP
AN ATTACHMENT

SMCS-4201, 4202, 4203, 4208, 4209 **i02650171**

NOTE	PART NUMBER	QTY	PART NAME 1 2 3 4 5 6 (PRODUCT LEVEL)	SEE PAGE
Y	*201-1920*	1	VALVE GP-TIRE	313
	272-5111	1	WHEEL AS (REAR)	
	272-5116	1	TIRE (21L-24)	

Y-SEPARATE ILLUSTRATION

<END>

303-0418 WHEEL & TIRE GP—FRONT

S/N: EAT1-UP
PART OF 320-2384, 320-2385 WHEEL & TIRE AR
AN ATTACHMENT

SMCS-4201, 4202, 4203, 4208, 4209 **i03514666**

NOTE	PART NUMBER	QTY	PART NAME 1 2 3 4 5 6 (PRODUCT LEVEL)	SEE PAGE
Y	*303-0428*	1	WHEEL & TIRE GP (FRONT, LH)	327
Y	*303-0429*	1	WHEEL & TIRE GP (FRONT, RH)	328
	201-1915	1	MOUNTING GP-WHEEL (FRONT)	
	8T-5439	16	WASHER-HARD (21.5X45X6-MM THK)	
M	**201-1919**	16	NUT (M20X1.5-THD)	

M-METRIC PART
Y-SEPARATE ILLUSTRATION

<END>

303-0428 WHEEL & TIRE GP—FRONT, LH

S/N: EAT1-UP
PART OF 303-0418 WHEEL & TIRE GP
AN ATTACHMENT

SMCS-4201, 4202, 4203, 4208, 4209 **i03149791**

NOTE	PART NUMBER	QTY	PART NAME 1 2 3 4 5 6 (PRODUCT LEVEL)	SEE PAGE
Y	*201-1920*	1	VALVE GP-TIRE	313
	259-2940	1	TIRE (340/80-R18)	
	202-6186	1	WHEEL AS (FRONT)	

Y-SEPARATE ILLUSTRATION

<END>

303-0429 WHEEL & TIRE GP—FRONT, RH

S/N: EAT1-UP
PART OF 303-0418 WHEEL & TIRE GP
AN ATTACHMENT

SMCS-4201, 4202, 4203, 4208, 4209 **i03149794**

NOTE	PART NUMBER	QTY	PART NAME 1 2 3 4 5 6 (PRODUCT LEVEL)	SEE PAGE
Y	*201-1920*	1	VALVE GP-TIRE	313
	259-2940	1	TIRE (340/80-R18)	
	202-6186	1	WHEEL AS (FRONT)	

Y-SEPARATE ILLUSTRATION

<END>

322-4571 WHEEL & TIRE GP—REAR

S/N: EAT1-UP
PART OF 320-2384 WHEEL & TIRE AR
AN ATTACHMENT

SMCS-4201, 4202, 4203, 4208, 4209 **i02954272**

NOTE	PART NUMBER	QTY	PART NAME 1 2 3 4 5 6 (PRODUCT LEVEL)	SEE PAGE
Y	*322-4572*	1	WHEEL & TIRE GP	328
Y	*322-4573*	1	WHEEL & TIRE GP	329
	201-1916	1	MOUNTING GP-WHEEL (REAR)	
	8T-5439	20	WASHER-HARD (21.5X45X6-MM THK)	
M	**201-1919**	20	NUT (M20X1.5-THD)	

M-METRIC PART
Y-SEPARATE ILLUSTRATION

<END>

322-4572 WHEEL & TIRE GP—REAR, LH

S/N: EAT1-UP
PART OF 322-4571 WHEEL & TIRE GP
AN ATTACHMENT

SMCS-4201, 4202, 4203, 4208, 4209 **i02954273**

NOTE	PART NUMBER	QTY	PART NAME 1 2 3 4 5 6 (PRODUCT LEVEL)	SEE PAGE
Y	*201-1920*	1	VALVE GP-TIRE	313
	322-4574	1	TIRE (500/70-R24)	
	195-6344	1	WHEEL AS (REAR)	

Y-SEPARATE ILLUSTRATION

<END>

322-4573 WHEEL & TIRE GP–REAR, RH

S/N: EAT1-UP

PART OF 322-4571 WHEEL & TIRE GP

AN ATTACHMENT

SMCS-4201, 4202, 4203, 4208, 4209 **i02954274**

NOTE	PART NUMBER	QTY	PART NAME 1 2 3 4 5 6 (PRODUCT LEVEL)	SEE PAGE
Y	*201-1920*	1	VALVE GP-TIRE	313
	322-4574	1	TIRE (500/70-R24)	
	195-6344	1	WHEEL AS (REAR)	

Y-SEPARATE ILLUSTRATION

<END>

206-1642 CONTROL GP-PARKING BRAKE

S/N: BYC1-UP; EAT1-UP
PART OF 218-5148, 218-5149, 293-2986 POWER TRAIN AR
AN ATTACHMENT

SMCS-4282, 4284 **i03530581**

NOTE	REF NO	GRAPHIC REF	PART NUMBER	QTY	PART NAME 1 2 3 4 5 6 (PRODUCT LEVEL)	SEE PAGE
	1	1	**7K-1181**	1	STRAP-CABLE	
	2	1	**9R-2806**	1	PIN	
	3	1	**9R-2807**	1	CLIP	
	4	1	**154-5416**	1	SWITCH AS (PARKING BRAKE)	
		1	**155-2270**	1	KIT-CONNECTING PLUG (2-PIN)	
					(INCLUDES WEDGE & PLUG AS)	
Y	5	1	**261-5517**	1	CONTROL GP-PARKING BRAKE	331
	6	1	**261-9635**	1	BOOT (PARKING BRAKE)	
	7	1	**8T-4224**	2	WASHER-HARD (8.8X16X2-MM THK)	
M	8	1	**8T-6912**	2	BOLT (M8X1.25X50-MM)	
	9	1	**164-1368**	2	FASTENER-PANEL	

M-METRIC PART
Y-SEPARATE ILLUSTRATION

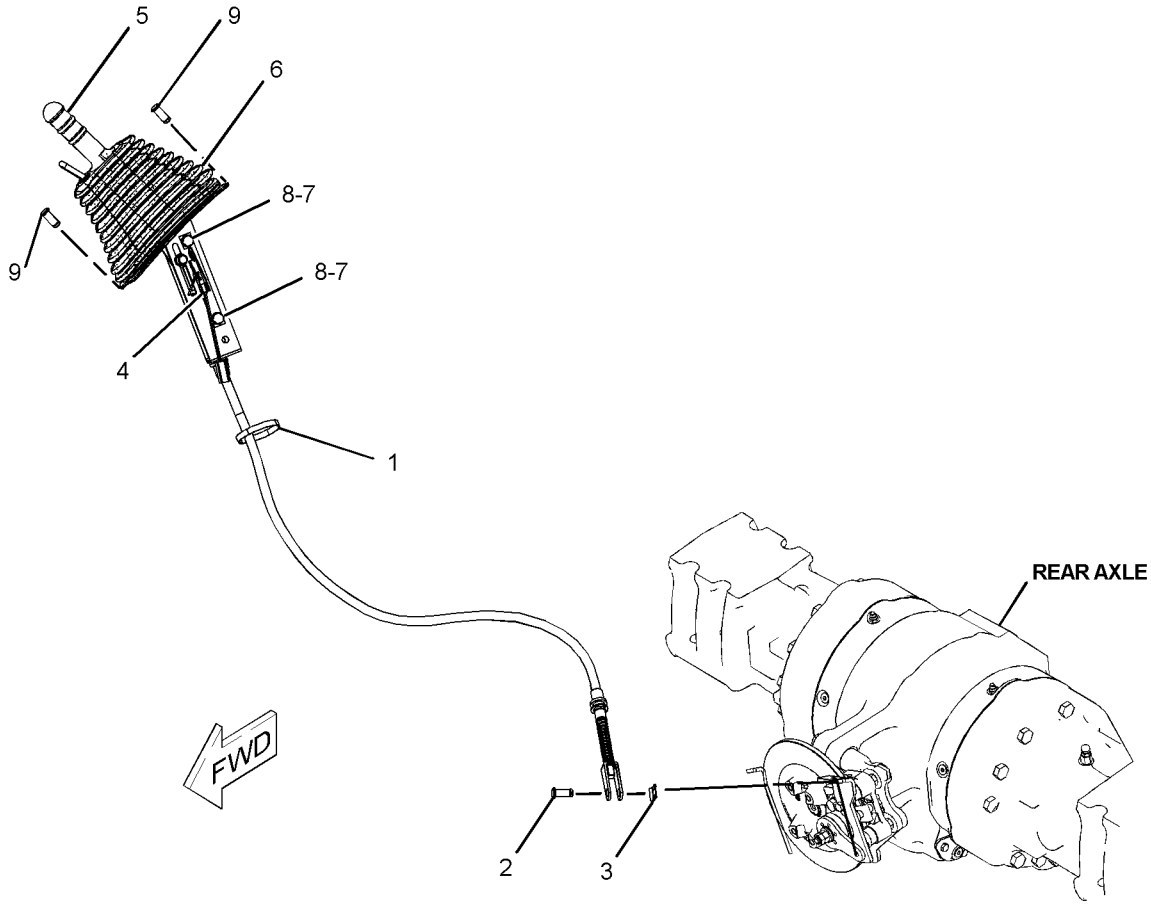

GRAPHIC #1 **<END>** g01228986

261-5517 CONTROL GP-PARKING BRAKE

S/N: BYC1-UP; EAT1-UP
PART OF 206-1642 CONTROL GP-PARKING BRAKE
AN ATTACHMENT

SMCS-4282, 4284 **i02472580**

NOTE	REF NO	GRAPHIC REF	PART NUMBER	QTY	PART NAME 1 2 3 4 5 6 (PRODUCT LEVEL)	SEE PAGE
Y	1	1	**163-0753**	1	LEVER GP-HAND CONTROL	340
	2	1	**261-5519**	1	CABLE AS	
		1	**6V-8759**	1	RING-RETAINING	

Y-SEPARATE ILLUSTRATION

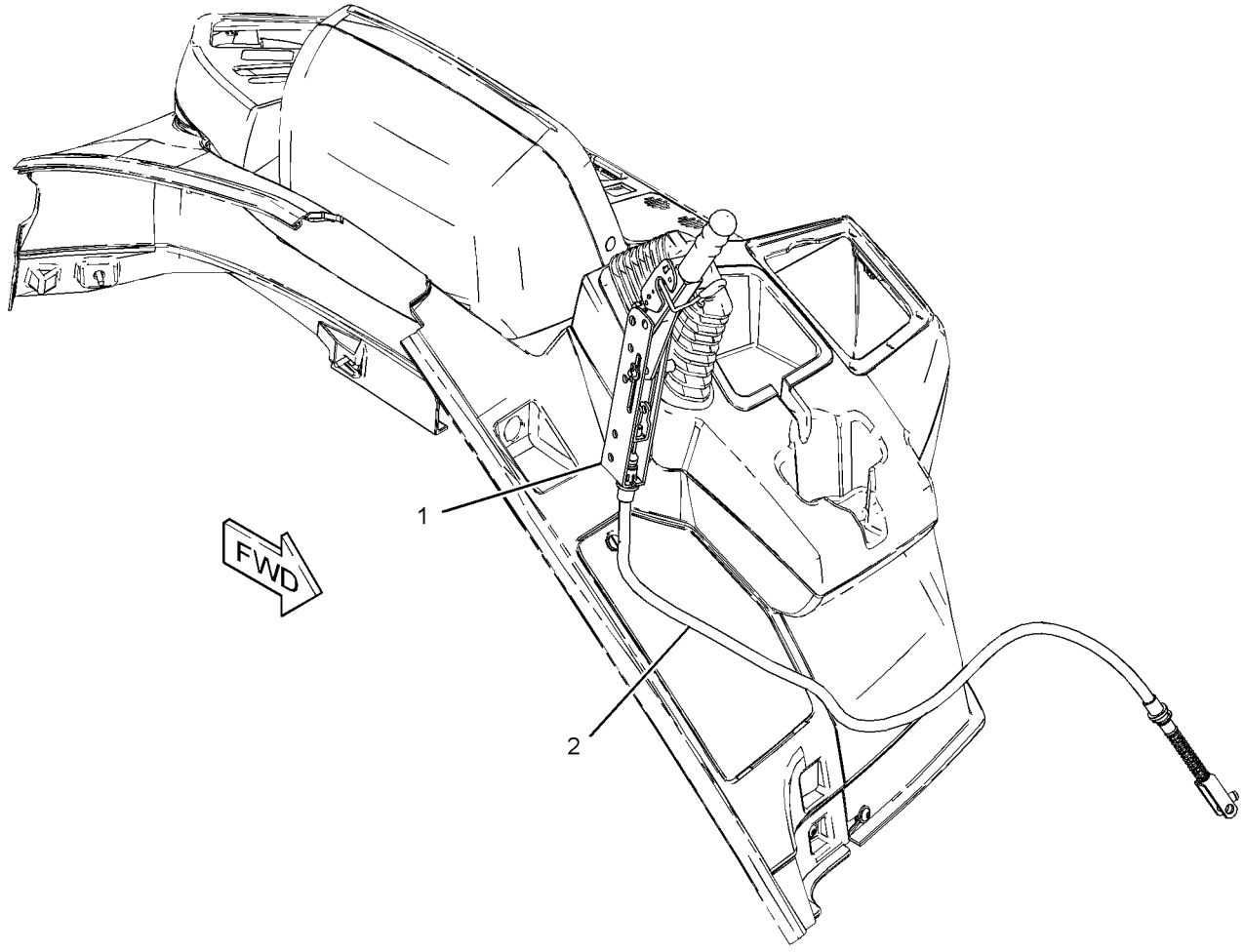

GRAPHIC #1 **<END>** g01210353

BRAKING SYSTEM

206-1639 CONTROL GP-SERVICE BRAKE—STANDARD SHIFT

S/N: BYC1-UP; EAT1-762

PART OF 218-5148, 218-5149, 293-2986 POWER TRAIN AR

AN ATTACHMENT

SMCS-4269 **i03378560**

NOTE	REF NO	GRAPHIC REF	PART NUMBER	QTY	PART NAME 1 2 3 4 5 6 (PRODUCT LEVEL)	SEE PAGE
	1	1	**2K-5986**	1	PIN-SPRING	
	2	1	**3E-7675**	1	SWITCH GP-PRESSURE	
		1	**102-8803**	1	KIT-RECEPTACLE (3-PIN)	
					(INCLUDES RECEPTACLE AS & WEDGE)	
		1	**186-3735**	3	PIN-CONNECTOR (16-GA TO 18-GA)	
	3	1	**7K-1181**	1	STRAP-CABLE	
	4	1	**8T-0131**	1	ELBOW	
	5	1	**8T-1889**	2	CLIP (SLOT)	
	6	1	**8T-1890**	2	CLIP (TAB)	
	7	1	**105-8034**	2	SWITCH AS-LIMIT (BRAKE PEDAL)	
	8	1	**151-4841**	1	BLOCK	
	9	1	**156-3600**	1	FITTING	
	10	1	**156-3631**	1	FITTING	
	11	1	**165-6595**	1	PIN AS	
	12	1	*194-2903*	1	ELBOW AS	
		1	**3K-0360**	1	SEAL-O-RING	
		1	**8T-0119**	1	ELBOW	
	13	1	**201-3652**	1	PLATE AS	
	14	1	**202-5993**	1	PLATE	
	15	1	**206-1634**	1	PLATE AS	
	16	1	**206-1650**	1	GROMMET	
	17	1	**291-8379**	1	COVER-BRAKE	
	18	1	**206-1752**	1	PLATE AS	
	19	1	**275-0652**	1	PEDAL AS (LH)	
		1	**202-6029**	2	BEARING-SLEEVE	
	20	1	**275-0653**	1	PEDAL AS (RH)	
		1	**202-6029**	2	BEARING-SLEEVE	
	21	1	**206-1766**	2	PIN	
	22	1	**206-1767**	1	SPRING (LH)	
	23	1	**206-1768**	1	SPRING (RH)	
	24	1	**220-8226**	1	VALVE AS-BRAKE	
		1	**262-4084**	1	BOOT	
	25	1	**298-3599**	1	PLATE AS	
	26	1	**253-1549**	2	HOSE AS	
I	27	1	**255-5461**	1	HOSE AS	
I	28	1	**255-8280**	1	HOSE AS	
	29	1	**262-4081**	2	END-YOKE ROD	
M	30	1	**142-0485**	2	NUT (M10X1.15-THD)	
	31	1	*148-8318*	1	CONNECTOR AS	
		1	**3K-0360**	1	SEAL-O-RING	
		1	**6V-8397**	1	SEAL-O-RING	
		1	**6V-8634**	1	CONNECTOR	
	32	1	*148-8325*	4	CONNECTOR AS	
					(EACH INCLUDES)	
		1	**3J-1907**	1	SEAL-O-RING	
		1	**4J-5477**	1	SEAL-O-RING	
		1	**6V-8641**	1	CONNECTOR	
	33	1	*148-8364*	1	ELBOW AS	
		1	**3K-0360**	1	SEAL-O-RING	
		1	**6V-8398**	1	SEAL-O-RING	
		1	**6V-8625**	1	ELBOW	
	34	1	*148-8378*	1	ELBOW AS	
		1	**3J-1907**	1	SEAL-O-RING	
		1	**6V-8397**	1	SEAL-O-RING	
		1	**6V-8724**	1	ELBOW	

206-1639 **CONTROL GP-SERVICE BRAKE** *(contd.)* **i03378560**

NOTE	REF NO	GRAPHIC REF	PART NUMBER	QTY	PART NAME 1 2 3 4 5 6 (PRODUCT LEVEL)	SEE PAGE
M	35	1	**9X-2045**	4	SCREW-TRUSS HEAD (M6X1X20-MM)	
	36	1	**3J-1907**	1	SEAL-O-RING	
	37	1	**3K-0360**	2	SEAL-O-RING	
M	38	1	**5C-7261**	6	NUT (M8X1.25-THD)	
	39	1	**5P-4116**	4	WASHER-HARD (8.8X20.5X2-MM THK)	
	40	1	**6V-0826**	2	GROMMET	
	41	1	**7J-9108**	1	SEAL-O-RING	
	42	1	**7X-7729**	6	WASHER (11X25X3-MM THK)	
	43	1	**8T-4121**	2	WASHER-HARD (11X21X2.5-MM THK)	
M	44	1	**8T-4133**	2	NUT (M10X1.5-THD)	
M	45	1	**8T-4136**	6	BOLT (M10X1.5X25-MM)	
M	46	1	**8T-4138**	1	BOLT (M6X1X20-MM)	
	47	1	**8T-4205**	1	WASHER-HARD (7.2X14.5X2-MM THK)	
	48	1	**8T-4224**	4	WASHER-HARD (8.8X16X2-MM THK)	
M	49	1	**8T-4908**	2	BOLT (M8X1.25X25-MM)	
	50	1	**9D-3767**	2	PLUG-BUTTON	
	51	1	**9R-2807**	2	CLIP	
M	52	1	**9X-2044**	2	SCREW-TRUSS HEAD (M6X1X16-MM)	
	53	1	**286-1930**	2	RING-RETAINING	
M	54	1	**5C-2890**	1	NUT (M6X1-THD)	
M	55	1	**6V-7357**	1	BOLT (M6X1X25-MM)	

I-REFER TO HYDRAULIC INFORMATION SYSTEM
M-METRIC PART

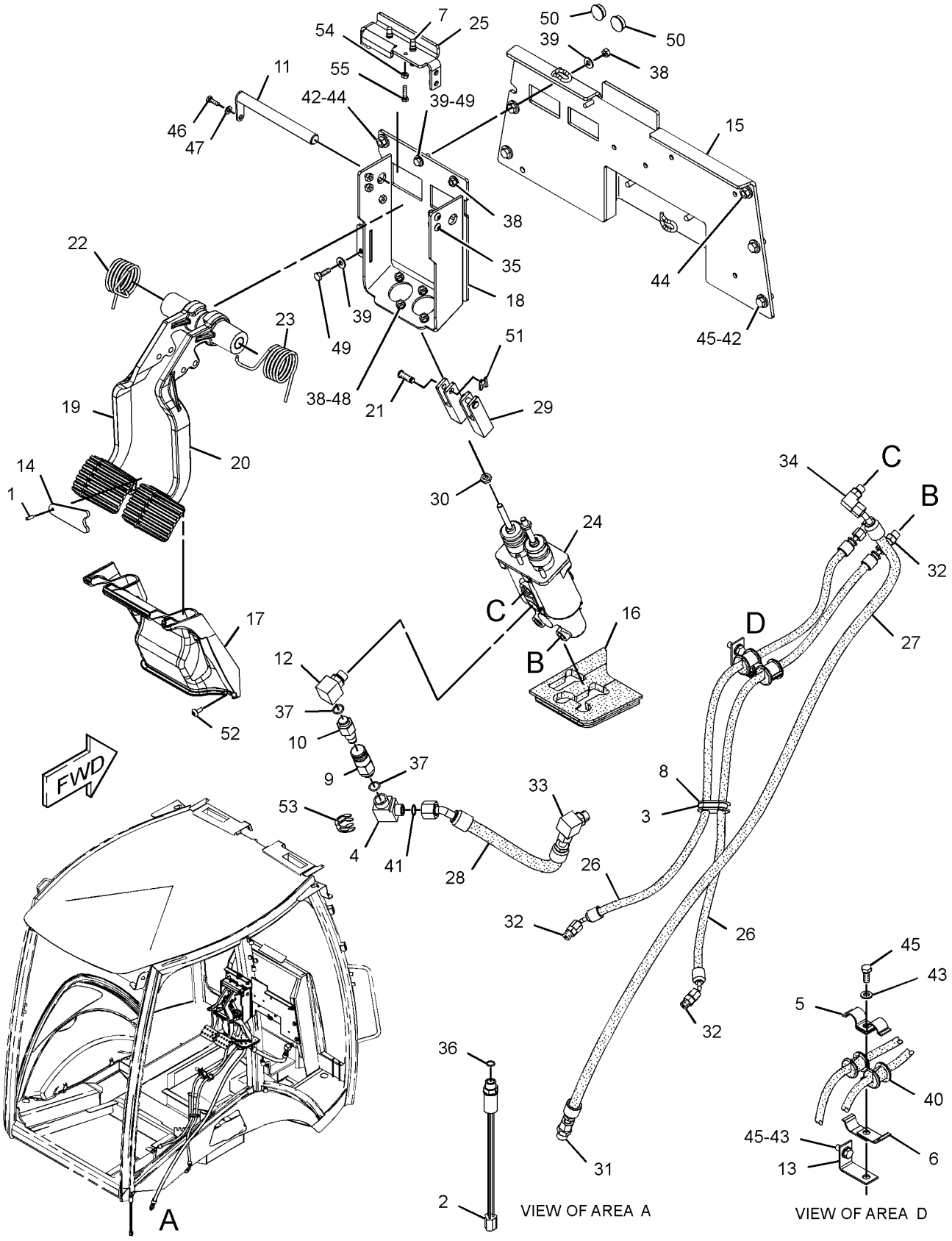

GRAPHIC #1

<END>

g01342024

206-1639 CONTROL GP-SERVICE BRAKE—STANDARD SHIFT

S/N: EAT763-UP

PART OF 218-5148, 218-5149, 293-2986 POWER TRAIN AR

AN ATTACHMENT

SMCS-4269 **i03330480**

NOTE	REF NO	GRAPHIC REF	PART NUMBER	QTY	PART NAME 1 2 3 4 5 6 (PRODUCT LEVEL)	SEE PAGE
	1	2	**2K-5986**	1	PIN-SPRING	
	2	1	**3E-7675**	1	SWITCH GP-PRESSURE (BRAKE)	
		1	**102-8803**	1	KIT-RECEPTACLE (3-PIN)	
					(INCLUDES RECEPTACLE AS AND WEDGE)	
		1	**186-3735**	3	PIN-CONNECTOR (16-GA TO 18-GA)	
	3	2	**7K-1181**	1	STRAP-CABLE	
	4	2	**8T-0131**	1	ELBOW	
	7	2	**105-8034**	2	SWITCH AS-LIMIT (BRAKE PEDAL)	
	8	2	**151-4841**	1	BLOCK	
	9	2	**156-3600**	1	FITTING	
	10	2	**156-3631**	1	FITTING	
	11	2	**165-6595**	1	PIN AS	
	12	2	*194-2903*	1	ELBOW AS	
		2	**3K-0360**	1	SEAL-O-RING	
		2	**8T-0119**	1	ELBOW	
	14	2	**202-5993**	1	PLATE	
	15	2	**206-1634**	1	PLATE AS	
	16	2	**206-1650**	1	GROMMET	
	17	2	**291-8379**	1	COVER-BRAKE	
	18	2	**206-1752**	1	PLATE AS	
	19	2	**275-0652**	1	PEDAL AS (LH)	
		2	**202-6029**	2	BEARING-SLEEVE	
	20	2	**275-0653**	1	PEDAL AS (RH)	
		2	**202-6029**	2	BEARING-SLEEVE	
	21	2	**206-1766**	2	PIN	
	22	2	**206-1767**	1	SPRING (LH)	
	23	2	**206-1768**	1	SPRING (RH)	
	24	2	**220-8226**	1	VALVE AS-BRAKE	
		2	**262-4084**	1	BOOT	
	25	2	**298-3599**	1	PLATE AS	
	26	2	**253-1549**	2	HOSE AS	
I	27	2	**255-5461**	1	HOSE AS	
I	28	2	**255-8280**	1	HOSE AS	
	29	2	**262-4081**	2	END-YOKE ROD	
M	30	2	**142-0485**	2	NUT (M10X1.15-THD)	
	31	2	*148-8318*	1	CONNECTOR AS	
		2	**3K-0360**	1	SEAL-O-RING	
		2	**6V-8397**	1	SEAL-O-RING	
		2	**6V-8634**	1	CONNECTOR	
	32	2	*148-8325*	4	CONNECTOR AS	
					(EACH INCLUDES)	
		2	**3J-1907**	1	SEAL-O-RING	
		2	**4J-5477**	1	SEAL-O-RING	
		2	**6V-8641**	1	CONNECTOR	
	33	2	*148-8364*	1	ELBOW AS	
		2	**3K-0360**	1	SEAL-O-RING	
		2	**6V-8398**	1	SEAL-O-RING	
		2	**6V-8625**	1	ELBOW	
	34	2	*148-8378*	1	ELBOW AS	
		2	**3J-1907**	1	SEAL-O-RING	
		2	**6V-8397**	1	SEAL-O-RING	
		2	**6V-8724**	1	ELBOW	
M	35	2	**9X-2045**	6	SCREW-TRUSS HEAD (M6X1X20-MM)	
	36	1	**3J-1907**	1	SEAL-O-RING	
	37	2	**3K-0360**	2	SEAL-O-RING	

206-1639 **CONTROL GP-SERVICE BRAKE** *(contd.)* **i03330480**

NOTE	REF NO	GRAPHIC REF	PART NUMBER	QTY	PART NAME 1 2 3 4 5 6 (PRODUCT LEVEL)	SEE PAGE
M	38	2	**5C-7261**	6	NUT (M8X1.25-THD)	
	39	2	**5P-4116**	4	WASHER-HARD (8.8X20.5X2-MM THK)	
	41	2	**7J-9108**	1	SEAL-O-RING	
	42	2	**7X-7729**	6	WASHER (11X25X3-MM THK)	
C	43	2	**8T-4121**	1	WASHER-HARD (11X21X2.5-MM THK)	
M	44	2	**8T-4133**	2	NUT (M10X1.5-THD)	
CM	45	2	**8T-4136**	5	BOLT (M10X1.5X25-MM)	
M	46	2	**8T-4138**	1	BOLT (M6X1X20-MM)	
	47	2	**8T-4205**	1	WASHER-HARD (7.2X14.5X2-MM THK)	
	48	2	**8T-4224**	4	WASHER-HARD (8.8X16X2-MM THK)	
M	49	2	**8T-4908**	2	BOLT (M8X1.25X25-MM)	
	50	2	**9D-3767**	2	PLUG-BUTTON	
	51	2	**9R-2807**	2	CLIP	
	53	2	**286-1930**	2	RING-RETAINING	
M	54	2	**5C-2890**	1	NUT (M6X1-THD)	
M	55	2	**6V-7357**	1	BOLT (M6X1X25-MM)	
C	56	2	**4D-6466**	1	CLIP	
	57	2	**9X-2038**	4	WASHER (7X19X2-MM THK)	

C-CHANGE FROM PREVIOUS TYPE
I-REFER TO HYDRAULIC INFORMATION SYSTEM
M-METRIC PART

REFER TO ALL ILLUSTRATIONS OF THIS GROUP FOR AUXILIARY VIEWS

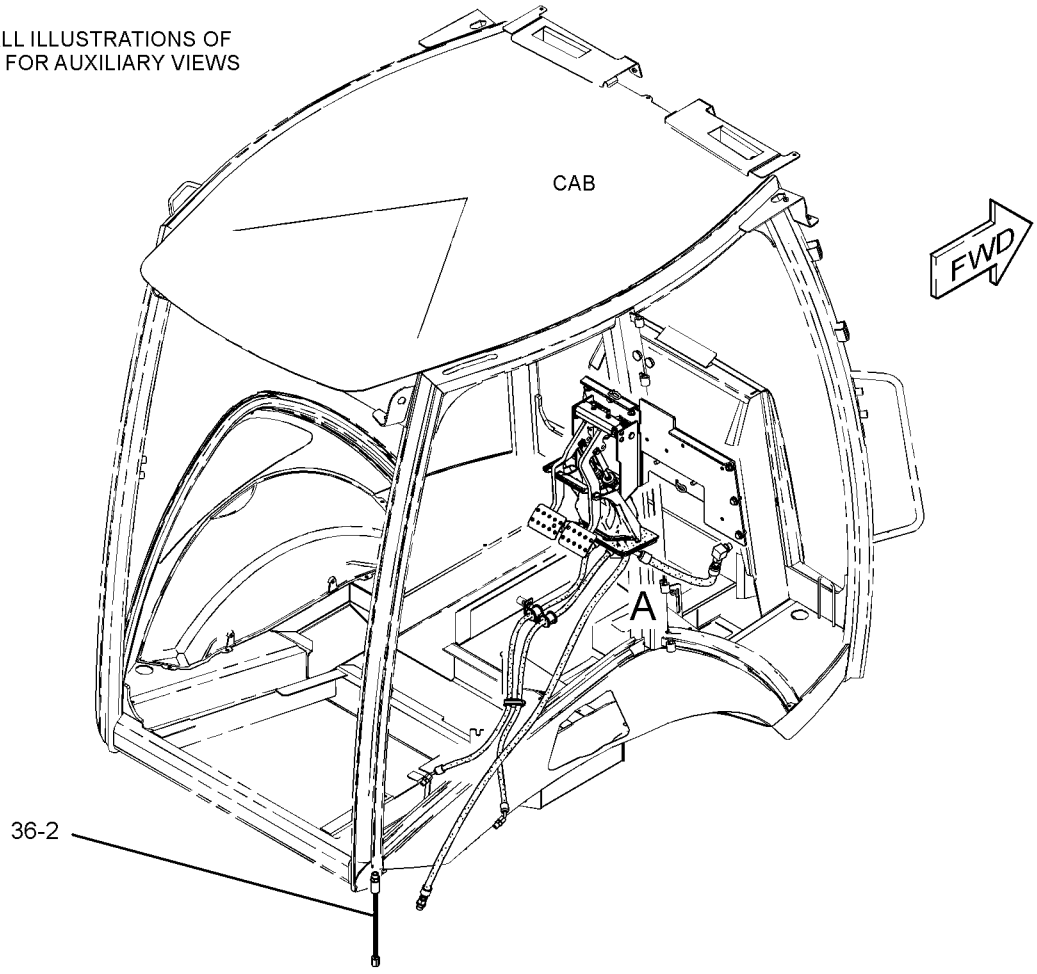

GRAPHIC #1 g01565438

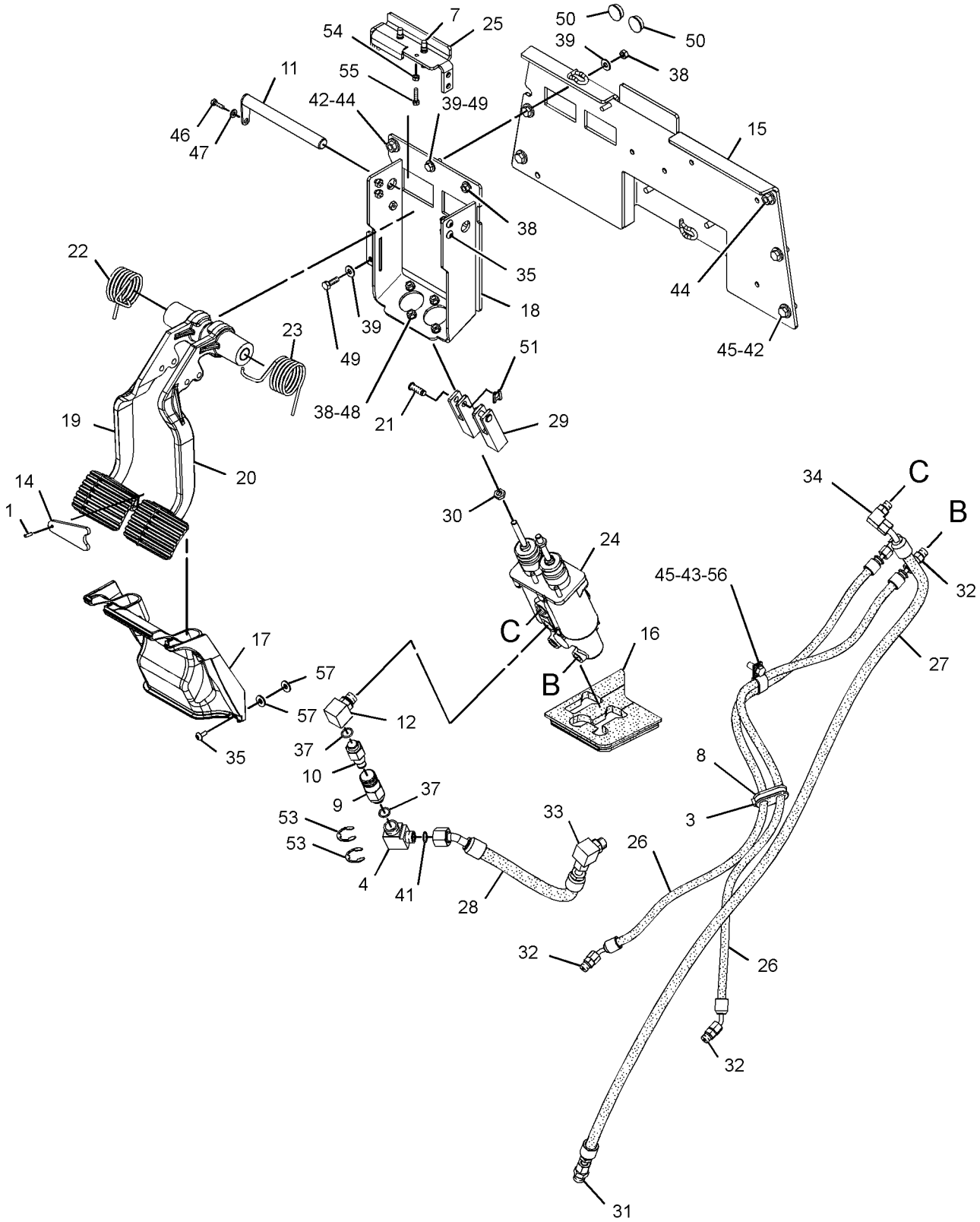

VIEW OF AREA A
(EXPLODED)

GRAPHIC #2 **<END>** g01565437

BRAKING SYSTEM

216-1612 CYLINDER GP-BRAKE

S/N: BYC1-UP; EAT1-UP
PART OF 238-5289 HOUSING GP-AXLE
AN ATTACHMENT

SMCS-4262 **i01873014**

NOTE	REF NO	GRAPHIC REF	PART NUMBER	QTY	PART NAME 1 2 3 4 5 6 (PRODUCT LEVEL)	SEE PAGE
J	1	1	**199-0640**	3	BOLT	
L	2	1	**199-0645**	3	BOLT	
J	3	1	**199-0672**	3	SPACER-SPECIAL	
J	4	1	**199-0681**	3	WASHER (6.2X16.5X2-MM THK)	
L	5	1	**199-0701**	3	BRAKE-COVER	
L	6	1	**199-0702**	3	SPRING (INNER)	
L	7	1	**199-0703**	3	SPRING (OUTER)	
	8	1	**199-0752**	1	PISTON-BRAKE	
	9	1	**199-0759**	1	O-RING-INNER	
JL	10	1	**212-5712**	6	BUSHING	
	11	1	**219-8834**	1	CYLINDER-BRAKE (RH)	
	12	1	**199-0700**	1	O-RING-OUTER	
					AVAILABLE REPAIR KIT(S):	
J			**217-2347**	3	KIT-BRAKE CYLINDER (ADJUSTER)	
L			**217-2349**	3	KIT-BRAKE CYLINDER (SPRING RETENTION)	

J-KIT MARKED J SERVICES PARTS MARKED J
L-KIT MARKED L SERVICES PARTS MARKED L

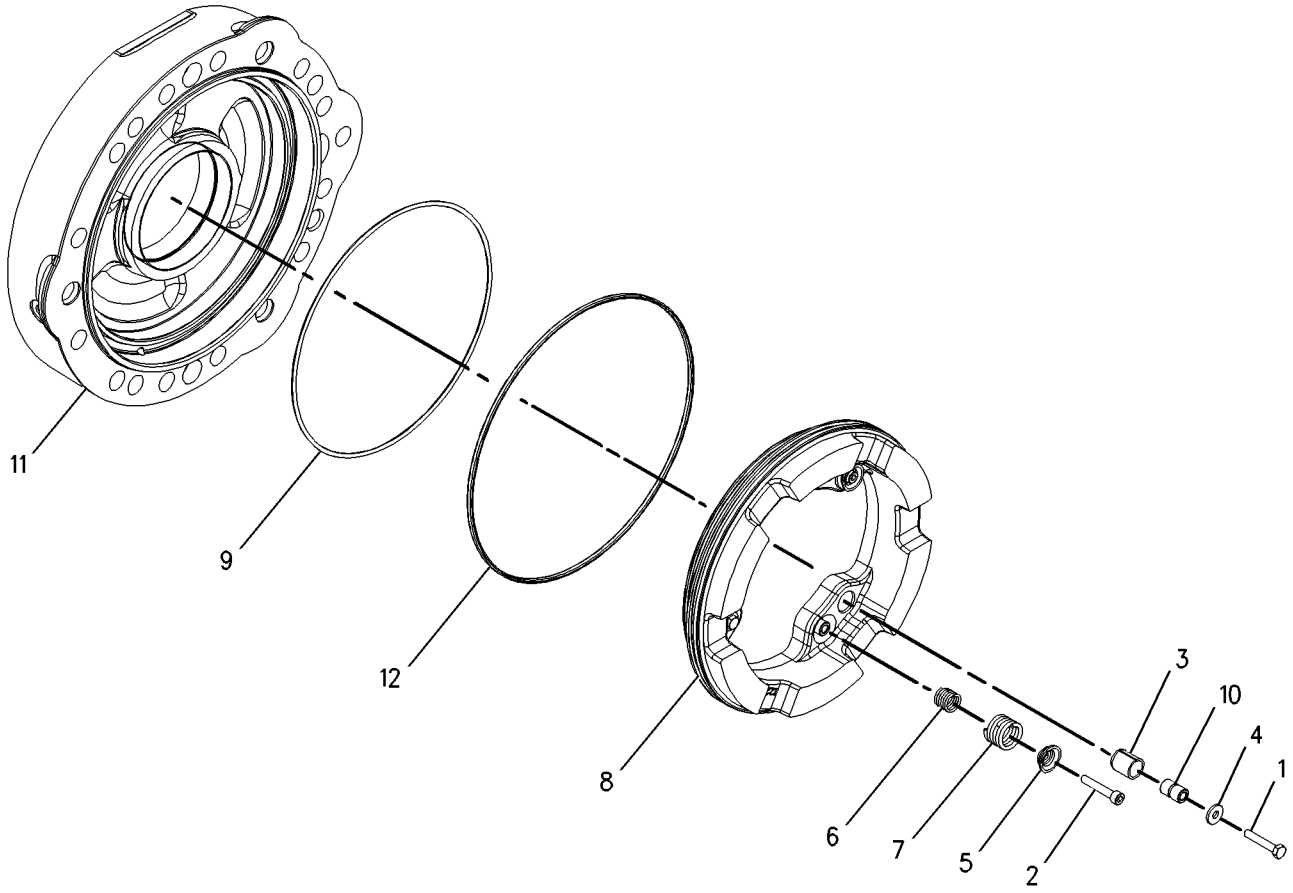

GRAPHIC #1 **<END>** g00953880

BRAKING SYSTEM

216-1613 CYLINDER GP-BRAKE

S/N: BYC1-UP; EAT1-UP
PART OF 238-5289 HOUSING GP-AXLE
AN ATTACHMENT

SMCS-4262 **i02449601**

NOTE	REF NO	GRAPHIC REF	PART NUMBER	QTY	PART NAME 1 2 3 4 5 6 (PRODUCT LEVEL)	SEE PAGE
M	1	1	**6V-2315**	3	BOLT (M6X1X35-MM)	
JLM	2	1	**1R-5396**	3	BOLT (M6X1X35-MM)	
J	3	1	**199-0672**	3	SPACER-SPECIAL	
J	4	1	**199-0681**	3	WASHER (6.2X16.5X2-MM THK)	
L	5	1	**199-0701**	3	BRAKE-COVER	
L	6	1	**199-0702**	3	SPRING (INNER)	
L	7	1	**199-0703**	3	SPRING (OUTER)	
	8	1	**199-0752**	1	PISTON-BRAKE	
	9	1	**199-0759**	1	O-RING-INNER	
JL	10	1	**212-5712**	6	BUSHING	
	11	1	**219-8835**	1	CYLINDER-BRAKE (LH)	
	12	1	**199-0700**	1	O-RING-OUTER	
					AVAILABLE REPAIR KIT(S):	
J			**217-2347**	3	KIT-BRAKE CYLINDER (ADJUSTER)	
L			**217-2349**	3	KIT-BRAKE CYLINDER (SPRING RETENTION)	

J-KIT MARKED J INCLUDES PARTS MARKED J
L-KIT MARKED L INCLUDES PARTS MARKED L
M-METRIC PART

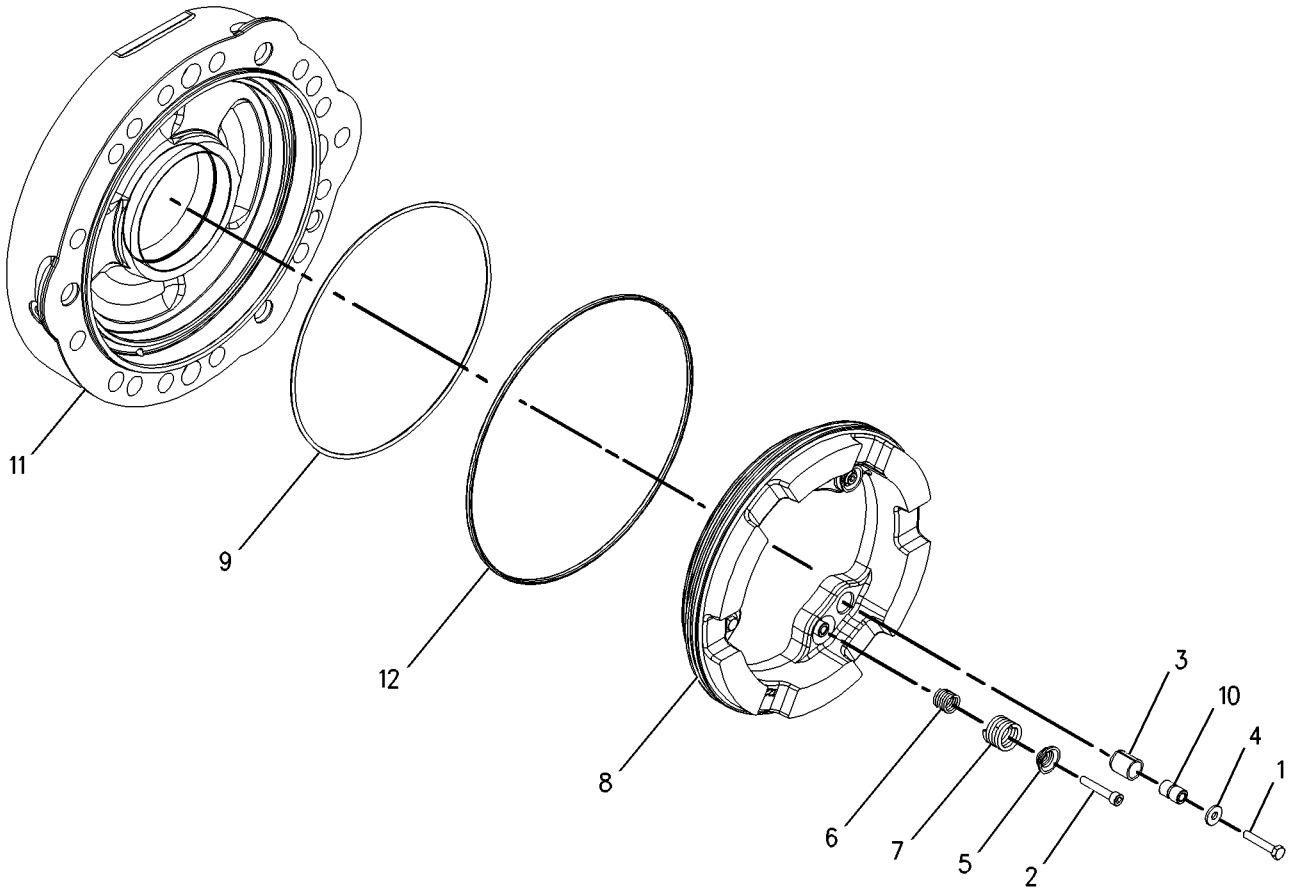

GRAPHIC #1 **<END>** g00995396

163-0753 LEVER GP-HAND CONTROL

S/N: BYC1-UP; EAT1-UP
PART OF 261-5517 CONTROL GP-PARKING BRAKE
AN ATTACHMENT

SMCS-4284 **i01548326**

NOTE	REF NO	GRAPHIC REF	PART NUMBER	QTY	PART NAME 1 2 3 4 5 6 (PRODUCT LEVEL)	SEE PAGE
	1	1	**7R-8239**	2	SPACER	
	2	1	**039-9133**	1	PIN	
	3	1	**164-9598**	1	GRIP	
	4	1	**164-9599**	1	COVER	
	5	1	**3B-4610**	1	PIN-COTTER	
	6	1	**8T-4224**	2	WASHER-HARD (8.8X16X2MM THK)	

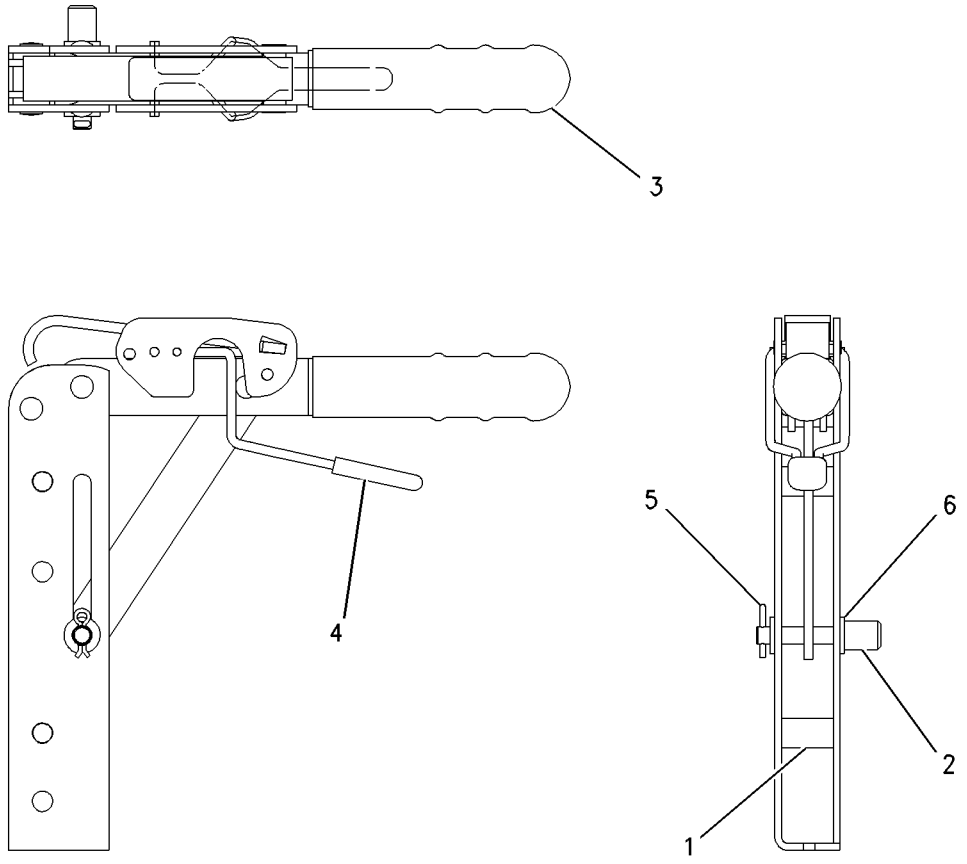

GRAPHIC #1 **<END>** g00729504

STEERING SYSTEM

230-5745 AXLE GP-FRONT

S/N: BYC1-UP; EAT1-UP
PART OF 216-4739 DRIVE AR-BACKHOE LOADER
AN ATTACHMENT

SMCS-3282, 4303 **i03505220**

NOTE	REF NO	GRAPHIC REF	PART NUMBER	QTY	PART NAME 1 2 3 4 5 6 (PRODUCT LEVEL)	SEE PAGE
	1	1	**207-4254**	6	BOLT (STEERING CYLINDER)	
	2	1	**207-4255**	2	PLUG	
	3	1	**199-0648**	2	NUT-JAM (M16X2-THD)	
	4	1	**207-4258**	2	NUT (M20X1.5-THD)	
	5	1	**207-4260**	2	SEAL-O-RING	
	6	1	**219-8798**	2	SEAL-LIP TYPE	
M	7	1	**199-0683**	16	BOLT (M16X2X38-MM)	
	8	1	**207-4262**	2	BOLT (STEERING STOP)	
	9	1	**198-7825**	4	SEAL	
	10	1	**207-4266**	2	RETAINER	
	11	1	**198-7838**	4	PIN	
	12	1	**207-4268**	1	BEAM	
	13	1	**207-4271**	2	COVER	
Y	14	1	**231-0683**	2	FLANGE GP-WHEEL	231
	15	1	**231-0684**	1	HOUSING (RH)	
	16	1	**231-0685**	1	HOUSING (LH)	
	17	1	**207-4272**	2	TIE ROD GP	
					(EACH INCLUDES)	
		1	**204-3080**	1	BALL JOINT	
		1	**216-4459**	1	TIE ROD	
		1	**243-5026**	1	NUT-SPECIAL	
	18	1	**154-5404**	2	BEARING	
M	19	1	**8T-4139**	6	BOLT (M12X1.75X30-MM)	
J	20	1	**214-5097**	1	CYLINDER GP-STEERING	
		1	**238-5254**	1	ROD	
		1	**238-5255**	2	CYLINDER HEAD	
	21	1	**198-7823**	4	BEARING AS	
B	22	1	**198-7841**	4	SHIM (0.15-MM THK)	
B	23	1	**198-7842**	4	SHIM (0.2-MM THK)	
B	24	1	**198-7843**	4	SHIM (0.5-MM THK)	
					AVAILABLE REPAIR KIT(S):	
J			**215-2023**	1	KIT-SEAL	
					(INCLUDES RINGS, SEALS, WASHERS & WIPERS)	

B-USE AS REQUIRED
J-KIT MARKED J AVAILABLE FOR PART MARKED J
M-METRIC PART
Y-SEPARATE ILLUSTRATION

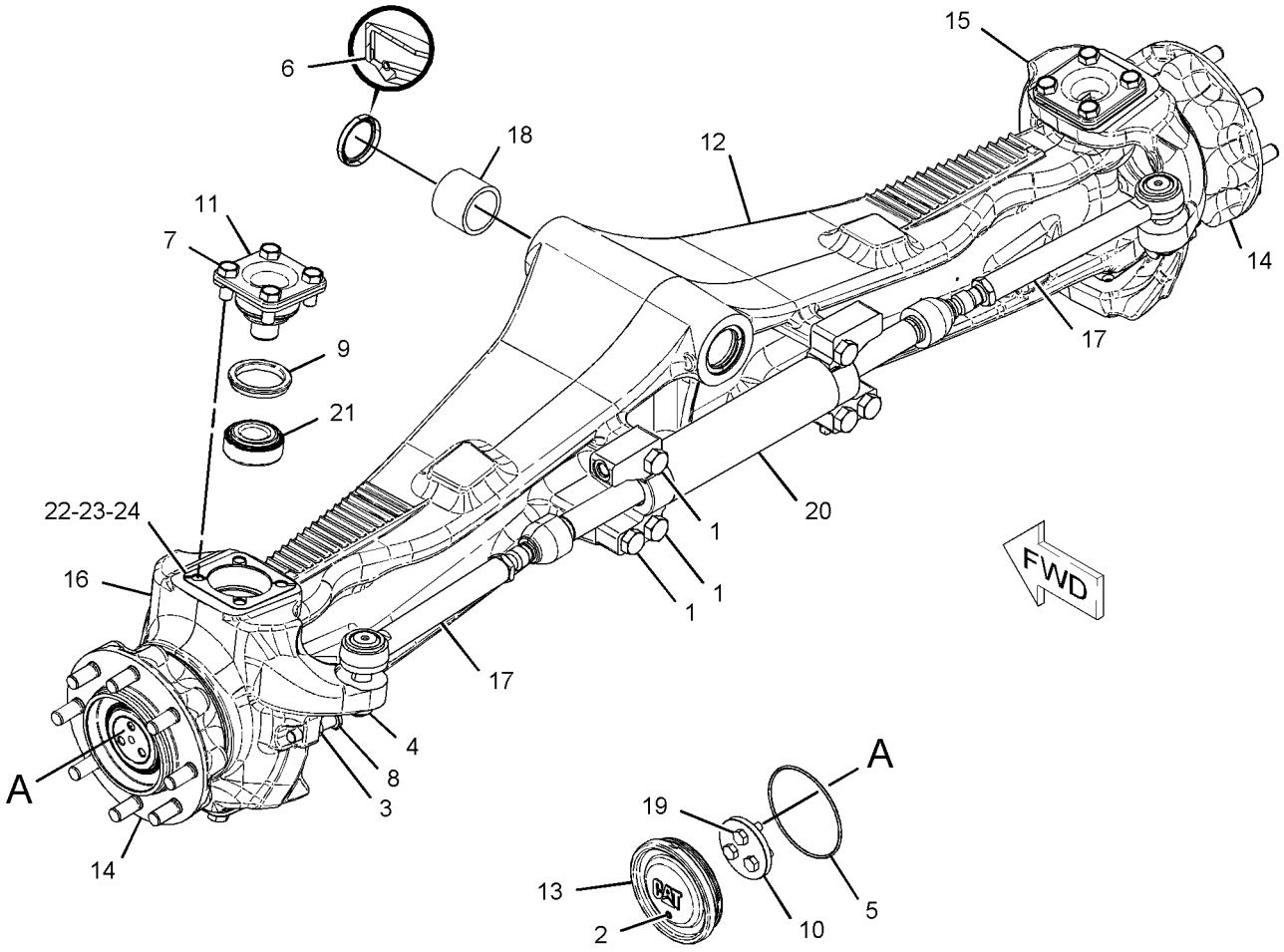

GRAPHIC #1 **<END>** g01118534

153-7369 KNOB GP-STEERING

S/N: EAT1-UP
STEERING WHEEL
PART OF 206-1633, 218-4453 CONTROL GP-STEERING
AN ATTACHMENT

SMCS-4309 **i03516163**

NOTE	REF NO	GRAPHIC REF	PART NUMBER	QTY	PART NAME 1 2 3 4 5 6 (PRODUCT LEVEL)	SEE PAGE
M	1	1	**8T-6869**	1	BOLT (M8X1.25X60-MM)	
	2	1	**8T-4224**	1	WASHER-HARD (8.8X16X2-MM THK)	
M	3	1	**5C-7261**	1	NUT (M8X1.25-THD)	

M-METRIC PART

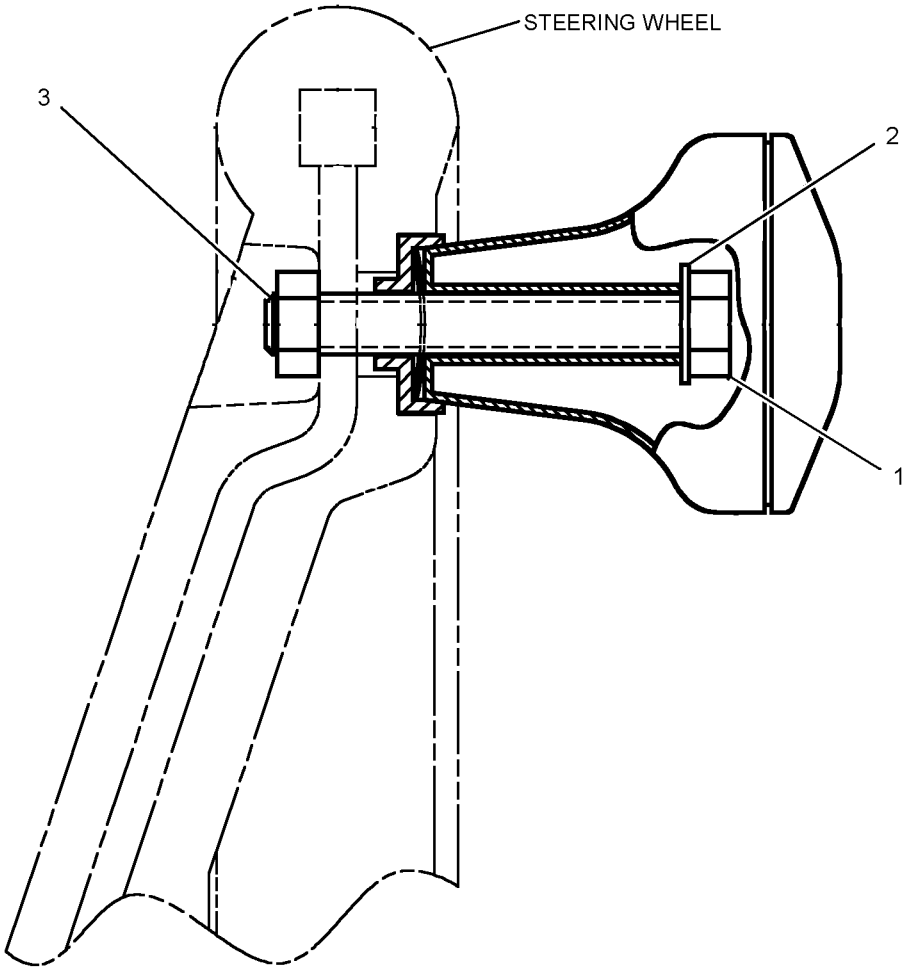

GRAPHIC #1 **<END>** g01847193

STEERING SYSTEM

211-6570 LINES GP-STEERING

S/N: BYC1-UP; EAT1-941
PART OF 216-4739 DRIVE AR-BACKHOE LOADER
AN ATTACHMENT

SMCS-4304 **i03514668**

NOTE	REF NO	GRAPHIC REF	PART NUMBER	QTY	PART NAME 1 2 3 4 5 6 (PRODUCT LEVEL)	SEE PAGE
E	1	1	**5P-1505**		HOSE (60-CM)	
	2	1	**5D-1026**	2	CLAMP-HOSE	
	3	1	**7K-1181**	2	STRAP-CABLE	
	4	1	**9R-3884**	1	SPACER (13X20X45-MM THK)	
M	5	1	**8T-6466**	1	BOLT (M10X1.5X60-MM)	
	6	1	*204-0317*	1	CONNECTOR AS	
		1	**3K-0360**	1	SEAL-O-RING	
		1	**6V-8397**	1	SEAL-O-RING	
		1	**092-3635**	1	CONNECTOR	
	7	1	**206-1652**	1	SEAL	
I	8	1	**215-3881**	1	HOSE AS	
I	9	1	**215-3882**	1	HOSE AS	
I	10	1	**215-3883**	1	HOSE AS	
I	11	1	**215-3884**	1	HOSE AS	
	12	1	*148-8318*	3	CONNECTOR AS	
					(EACH INCLUDES)	
		1	**3K-0360**	1	SEAL-O-RING	
		1	**6V-8397**	1	SEAL-O-RING	
		1	**6V-8634**	1	CONNECTOR	
	13	1	*148-8325*	1	CONNECTOR AS	
		1	**3J-1907**	1	SEAL-O-RING	
		1	**4J-5477**	1	SEAL-O-RING	
		1	**6V-8641**	1	CONNECTOR	
	14	1	*148-8367*	2	ELBOW AS	
					(EACH INCLUDES)	
		1	**6V-8397**	1	SEAL-O-RING	
		1	**6V-9850**	1	ELBOW	
	15	1	*148-8369*	1	ELBOW AS	
		1	**3J-7354**	1	SEAL-O-RING	
		1	**4J-5477**	1	SEAL-O-RING	
		1	**6V-8628**	1	ELBOW	
	16	1	*148-8374*	2	ELBOW AS	
					(EACH INCLUDES)	
		1	**3K-0360**	1	SEAL-O-RING	
		1	**6V-8397**	1	SEAL-O-RING	
		1	**6V-8723**	1	ELBOW	
	17	1	*150-3026*	1	ELBOW AS	
		1	**3K-0360**	1	SEAL-O-RING	
		1	**6V-4292**	1	ELBOW	
	18	1	**9M-8406**	1	CLIP	
	19	1	**5P-4295**	5	CLIP	
	20	1	**8T-4121**	4	WASHER-HARD (11X21X2.5-MM THK)	
M	21	1	**8T-4137**	1	BOLT (M10X1.5X20-MM)	
M	22	1	**8T-4196**	2	BOLT (M10X1.5X35-MM)	

E-ORDER BY THE CENTIMETER
I-REFER TO HYDRAULIC INFORMATION SYSTEM
M-METRIC PART

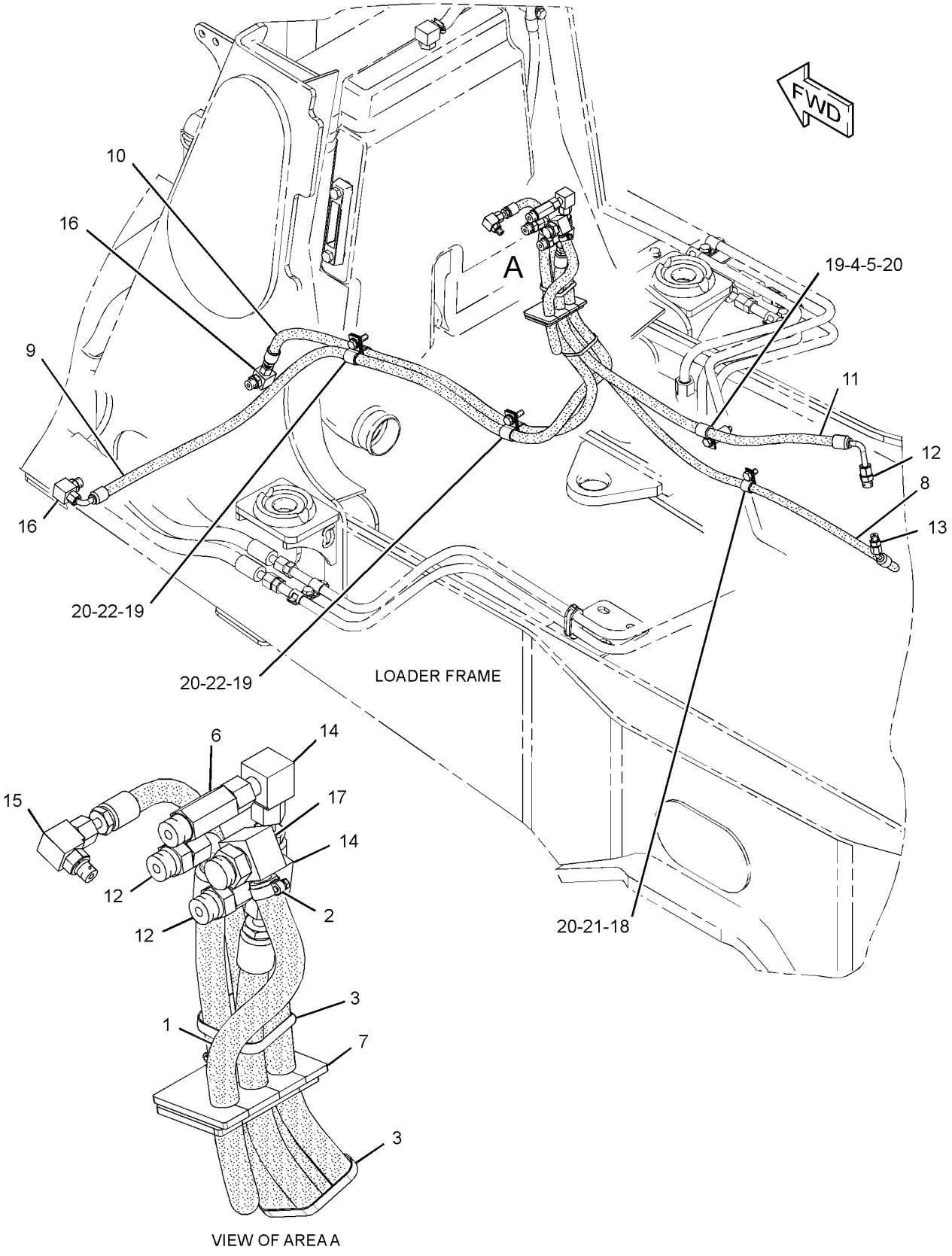

GRAPHIC #1 **<END>** g01339091

STEERING SYSTEM

211-6570 LINES GP-STEERING

S/N: BYC1-UP; EAT942-UP
PART OF 216-4739 DRIVE AR-BACKHOE LOADER
AN ATTACHMENT

SMCS-4304 **i02840350**

NOTE	REF NO	GRAPHIC REF	PART NUMBER	QTY	PART NAME 1 2 3 4 5 6 (PRODUCT LEVEL)	SEE PAGE
E	1	1	**5P-1505**		HOSE (60-CM)	
	2	1	**5D-1026**	2	CLAMP-HOSE	
	3	1	**7K-1181**	2	STRAP-CABLE	
C	4	1	**236-1583**	1	BOSS	
CM	5	1	**8T-4172**	1	BOLT (M10X1.5X80-MM)	
	6	1	*204-0317*	1	CONNECTOR AS	
		1	**3K-0360**	1	SEAL-O-RING	
		1	**6V-8397**	1	SEAL-O-RING	
		1	**092-3635**	1	CONNECTOR	
	7	1	**206-1652**	1	SEAL	
I	8	1	**215-3881**	1	HOSE AS	
I	9	1	**215-3882**	1	HOSE AS	
I	10	1	**215-3883**	1	HOSE AS	
I	11	1	**215-3884**	1	HOSE AS	
	12	1	*148-8318*	3	CONNECTOR AS	
					(EACH INCLUDES)	
		1	**3K-0360**	1	SEAL-O-RING	
		1	**6V-8397**	1	SEAL-O-RING	
		1	**6V-8634**	1	CONNECTOR	
	13	1	*148-8325*	1	CONNECTOR AS	
		1	**3J-1907**	1	SEAL-O-RING	
		1	**4J-5477**	1	SEAL-O-RING	
		1	**6V-8641**	1	CONNECTOR	
	14	1	*148-8367*	2	ELBOW AS	
					(EACH INCLUDES)	
		1	**6V-8397**	1	SEAL-O-RING	
		1	**6V-9850**	1	ELBOW	
	15	1	*148-8369*	1	ELBOW AS	
		1	**3J-7354**	1	SEAL-O-RING	
		1	**4J-5477**	1	SEAL-O-RING	
		1	**6V-8628**	1	ELBOW	
	16	1	*148-8374*	2	ELBOW AS	
					(EACH INCLUDES)	
		1	**3K-0360**	1	SEAL-O-RING	
		1	**6V-8397**	1	SEAL-O-RING	
		1	**6V-8723**	1	ELBOW	
	17	1	*150-3026*	1	ELBOW AS	
		1	**3K-0360**	1	SEAL-O-RING	
		1	**6V-4292**	1	ELBOW	
	18	1	**9M-8406**	1	CLIP	
	19	1	**5P-4295**	5	CLIP	
	20	1	**8T-4121**	4	WASHER-HARD (11X21X2.5-MM THK)	
M	21	1	**8T-4137**	1	BOLT (M10X1.5X20-MM)	
M	22	1	**8T-4196**	2	BOLT (M10X1.5X35-MM)	

C-CHANGE FROM PREVIOUS TYPE
E-ORDER BY THE CENTIMETER
I-REFER TO HYDRAULIC INFORMATION SYSTEM
M-METRIC PART

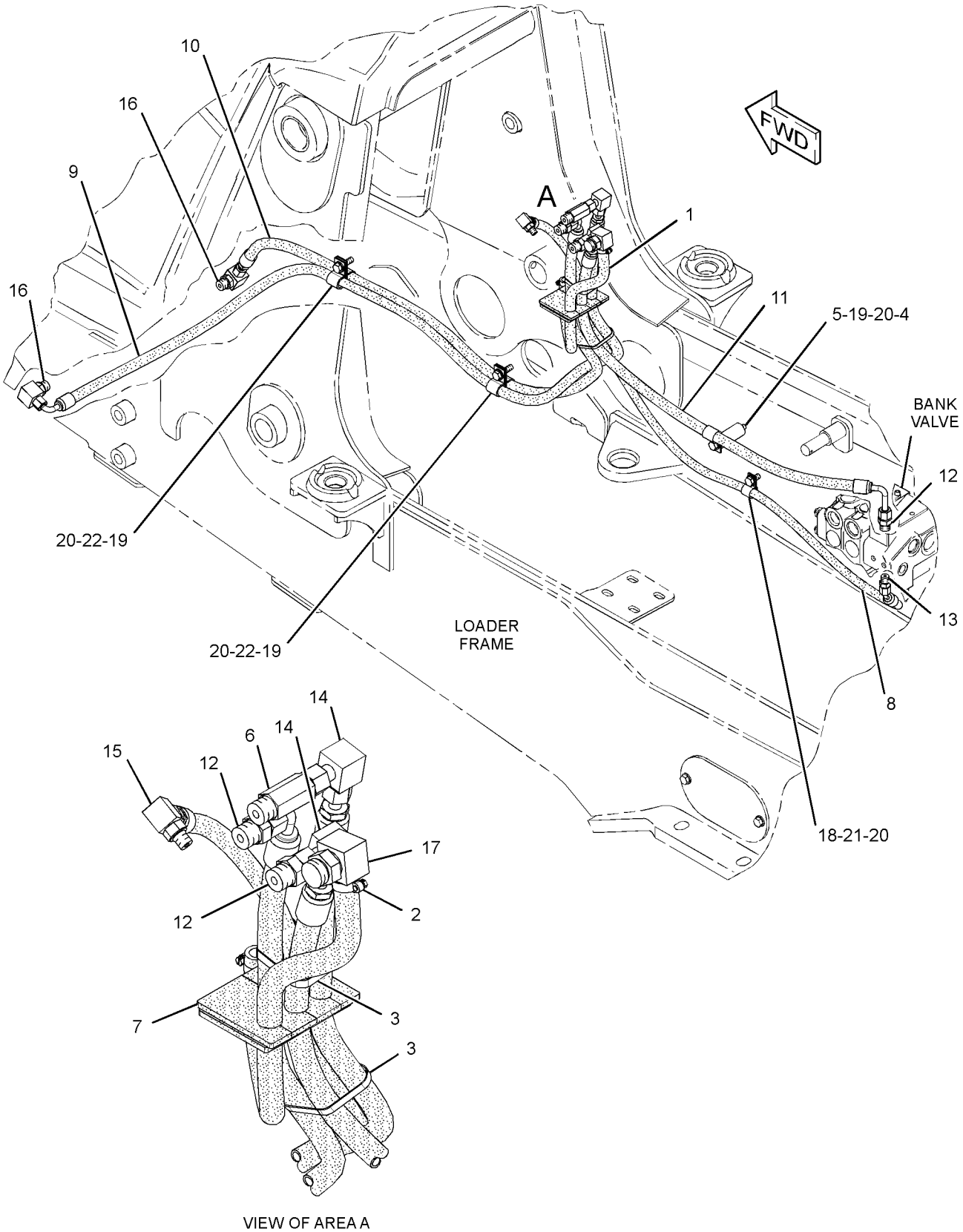

VIEW OF AREA A

GRAPHIC #1 **<END>** g01421865

STEERING SYSTEM

211-6571 LINES GP-STEERING

S/N: EAT1-941
PART OF 216-4740 DRIVE AR-BACKHOE LOADER
AN ATTACHMENT

SMCS-4304 **i02651005**

NOTE	REF NO	GRAPHIC REF	PART NUMBER	QTY	PART NAME 1 2 3 4 5 6 (PRODUCT LEVEL)	SEE PAGE
E	1	1	**5P-1505**		HOSE (60-CM)	
	2	1	**5D-1026**	2	CLAMP-HOSE	
	3	1	**7K-1181**	2	STRAP-CABLE	
	4	1	**9R-3884**	1	SPACER (13X20X45-MM THK)	
	5	1	*204-0317*	1	CONNECTOR AS	
		1	**3K-0360**	1	SEAL-O-RING	
		1	**6V-8397**	1	SEAL-O-RING	
		1	**092-3635**	1	CONNECTOR	
	6	1	**206-1652**	1	SEAL	
I	7	1	**215-3881**	1	HOSE AS	
I	8	1	**215-3884**	1	HOSE AS	
	9	1	**217-8195**	1	HOSE AS	
	10	1	**217-8197**	1	HOSE AS	
	11	1	**233-6592**	1	SPACER (13X20X24-MM THK)	
	12	1	*148-8318*	3	CONNECTOR AS	
					(EACH INCLUDES)	
		1	**3K-0360**	1	SEAL-O-RING	
		1	**6V-8397**	1	SEAL-O-RING	
		1	**6V-8634**	1	CONNECTOR	
	13	1	*148-8325*	1	CONNECTOR AS	
		1	**3J-1907**	1	SEAL-O-RING	
		1	**4J-5477**	1	SEAL-O-RING	
		1	**6V-8641**	1	CONNECTOR	
	14	1	*148-8367*	3	ELBOW AS	
					(EACH INCLUDES)	
		1	**6V-8397**	1	SEAL-O-RING	
		1	**6V-9850**	1	ELBOW	
	15	1	*148-8369*	1	ELBOW AS	
		1	**3J-7354**	1	SEAL-O-RING	
		1	**4J-5477**	1	SEAL-O-RING	
		1	**6V-8628**	1	ELBOW	
	16	1	*148-8383*	2	ELBOW AS	
					(EACH INCLUDES)	
		1	**3K-0360**	1	SEAL-O-RING	
		1	**6V-8397**	1	SEAL-O-RING	
		1	**8T-1683**	1	ELBOW	
	17	1	*150-3026*	1	ELBOW AS	
		1	**3K-0360**	1	SEAL-O-RING	
		1	**6V-4292**	1	ELBOW	
	18	1	**5P-4295**	5	CLIP	
	19	1	**5P-7462**	1	CLIP (SLOT)	
	20	1	**5P-7463**	1	CLIP (TAB)	
	21	1	**6V-0683**	1	GROMMET	
	22	1	**8T-4121**	5	WASHER-HARD (11X21X2.5-MM THK)	
M	23	1	**8T-4136**	1	BOLT (M10X1.5X25-MM)	
M	24	1	**8T-4182**	1	BOLT (M10X1.5X45-MM)	
M	25	1	**8T-4196**	2	BOLT (M10X1.5X35-MM)	
M	26	1	**8T-6466**	1	BOLT (M10X1.5X60-MM)	
	27	1	**9M-8406**	1	CLIP	

E-ORDER BY THE CENTIMETER
I-REFER TO HYDRAULIC INFORMATION SYSTEM
M-METRIC PART

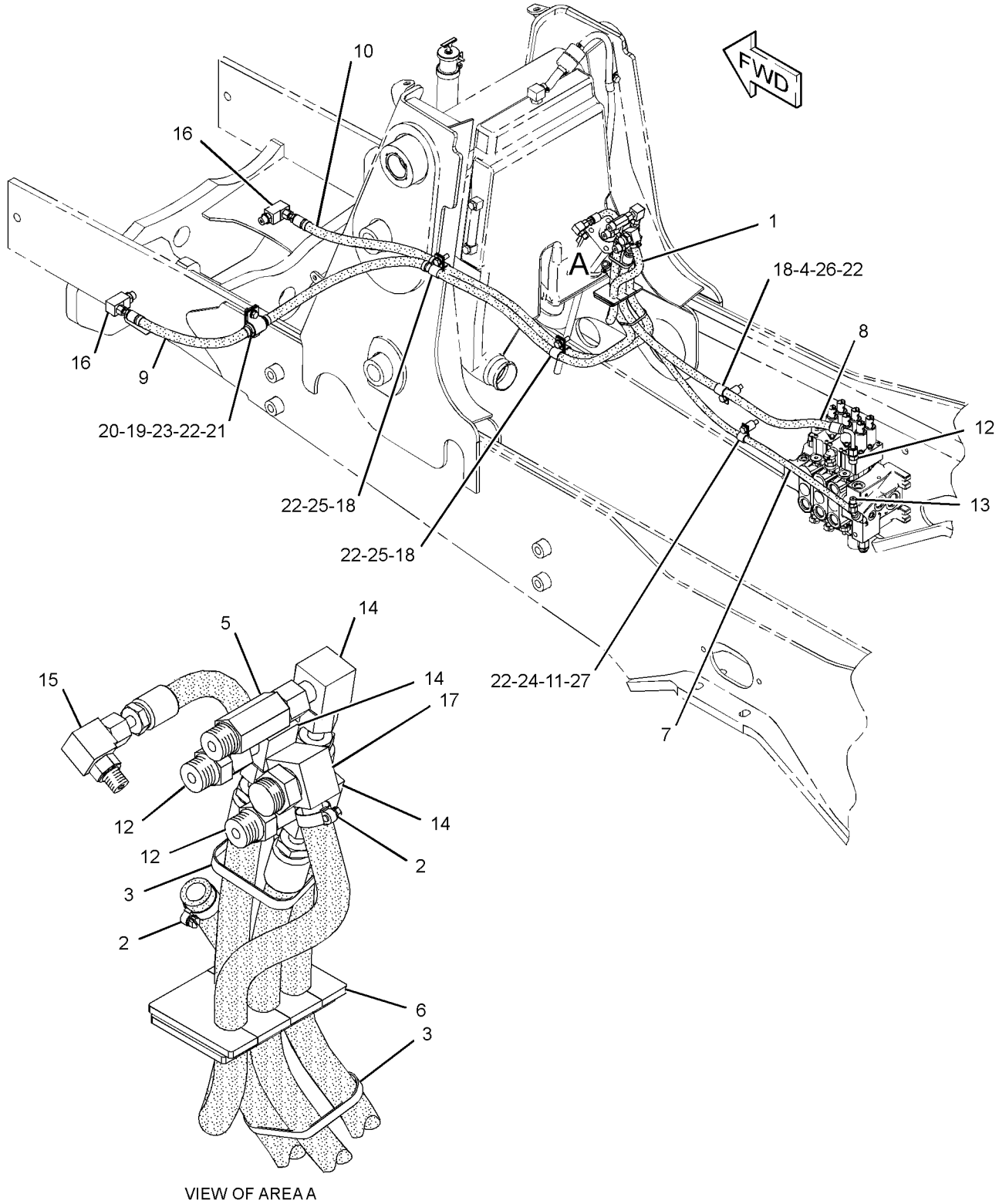

GRAPHIC #1 **<END>** g01335751

STEERING SYSTEM

211-6571 LINES GP-STEERING

S/N: EAT942-UP
PART OF 216-4740 DRIVE AR-BACKHOE LOADER
AN ATTACHMENT

SMCS-4304 **i02840352**

NOTE	REF NO	GRAPHIC REF	PART NUMBER	QTY	PART NAME 1 2 3 4 5 6 (PRODUCT LEVEL)	SEE PAGE
E	1	1	**5P-1505**		HOSE (60-CM)	
	2	1	**5D-1026**	2	CLAMP-HOSE	
	3	1	**7K-1181**	2	STRAP-CABLE	
C	4	1	**236-1583**	1	BOSS	
	5	1	*204-0317*	1	CONNECTOR AS	
		1	**3K-0360**	1	SEAL-O-RING	
		1	**6V-8397**	1	SEAL-O-RING	
		1	**092-3635**	1	CONNECTOR	
	6	1	**206-1652**	1	SEAL	
I	7	1	**215-3881**	1	HOSE AS	
I	8	1	**215-3884**	1	HOSE AS	
	9	1	**217-8195**	1	HOSE AS	
	10	1	**217-8197**	1	HOSE AS	
	11	1	**233-6592**	1	SPACER (13X20X24-MM THK)	
	12	1	*148-8318*	3	CONNECTOR AS	
					(EACH INCLUDES)	
		1	**3K-0360**	1	SEAL-O-RING	
		1	**6V-8397**	1	SEAL-O-RING	
		1	**6V-8634**	1	CONNECTOR	
	13	1	*148-8325*	1	CONNECTOR AS	
		1	**3J-1907**	1	SEAL-O-RING	
		1	**4J-5477**	1	SEAL-O-RING	
		1	**6V-8641**	1	CONNECTOR	
	14	1	*148-8367*	3	ELBOW AS	
					(EACH INCLUDES)	
		1	**6V-8397**	1	SEAL-O-RING	
		1	**6V-9850**	1	ELBOW	
	15	1	*148-8369*	1	ELBOW AS	
		1	**3J-7354**	1	SEAL-O-RING	
		1	**4J-5477**	1	SEAL-O-RING	
		1	**6V-8628**	1	ELBOW	
	16	1	*148-8383*	2	ELBOW AS	
					(EACH INCLUDES)	
		1	**3K-0360**	1	SEAL-O-RING	
		1	**6V-8397**	1	SEAL-O-RING	
		1	**8T-1683**	1	ELBOW	
	17	1	*150-3026*	1	ELBOW AS	
		1	**3K-0360**	1	SEAL-O-RING	
		1	**6V-4292**	1	ELBOW	
	18	1	**5P-4295**	5	CLIP	
	19	1	**5P-7462**	1	CLIP (SLOT)	
	20	1	**5P-7463**	1	CLIP (TAB)	
	21	1	**6V-0683**	1	GROMMET	
	22	1	**8T-4121**	5	WASHER-HARD (11X21X2.5-MM THK)	
M	23	1	**8T-4136**	1	BOLT (M10X1.5X25-MM)	
M	24	1	**8T-4182**	1	BOLT (M10X1.5X45-MM)	
M	25	1	**8T-4196**	2	BOLT (M10X1.5X35-MM)	
CM	26	1	**8T-4172**	1	BOLT (M10X1.5X80-MM)	
	27	1	**9M-8406**	1	CLIP	

C-CHANGE FROM PREVIOUS TYPE
E-ORDER BY THE CENTIMETER
I-REFER TO HYDRAULIC INFORMATION SYSTEM
M-METRIC PART

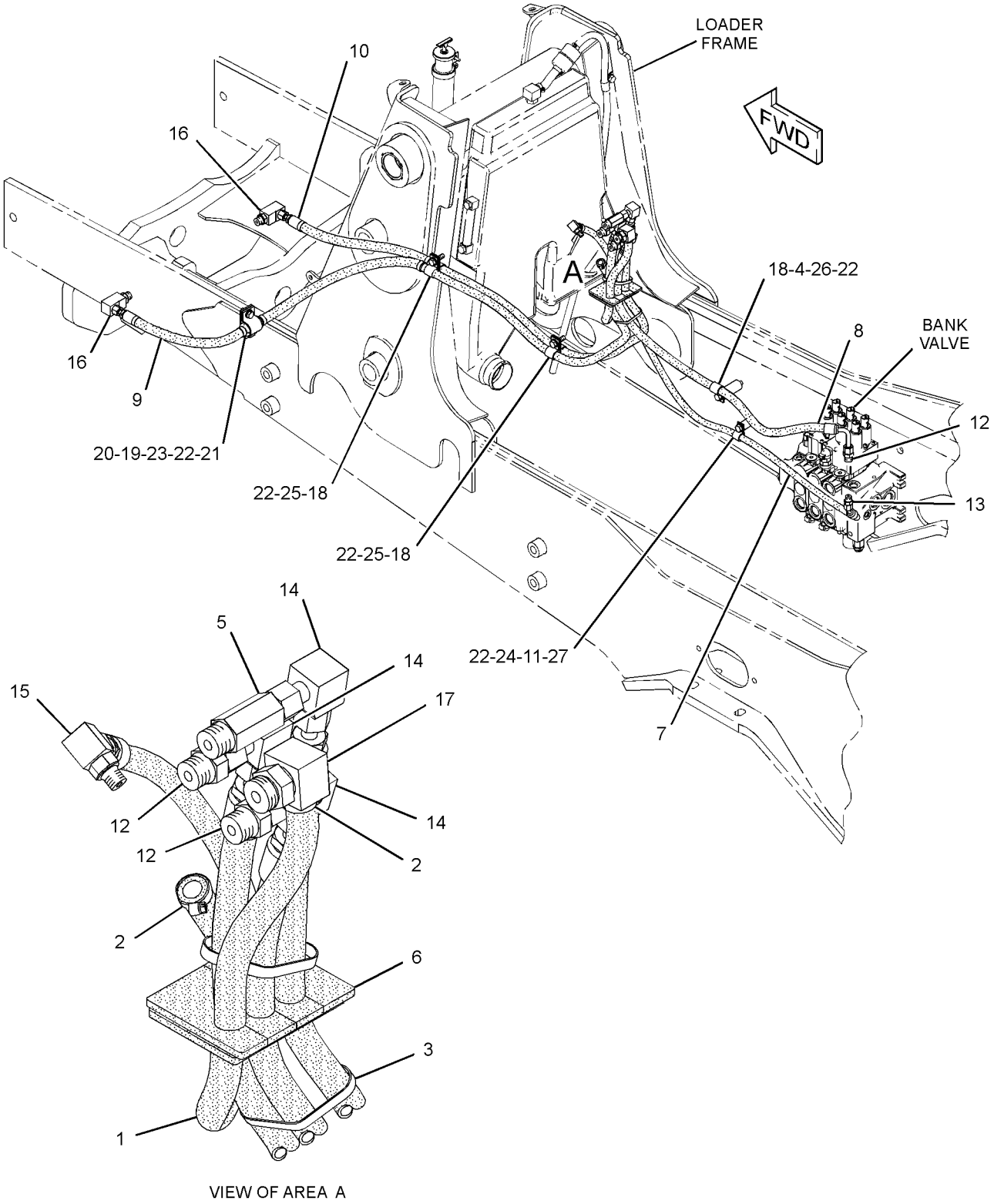

VIEW OF AREA A

GRAPHIC #1 **<END>** g01421446

STEERING SYSTEM

210-6240 PUMP GP-METERING—HMU

S/N: EAT1-UP

PART OF 268-6455 HYDRAULIC AR

SMCS-4312 **i02096817**

NOTE	REF NO	GRAPHIC REF	PART NUMBER	QTY	PART NAME 1 2 3 4 5 6 (PRODUCT LEVEL)	SEE PAGE
	1	1	**114-3928**	1	CAP - END	

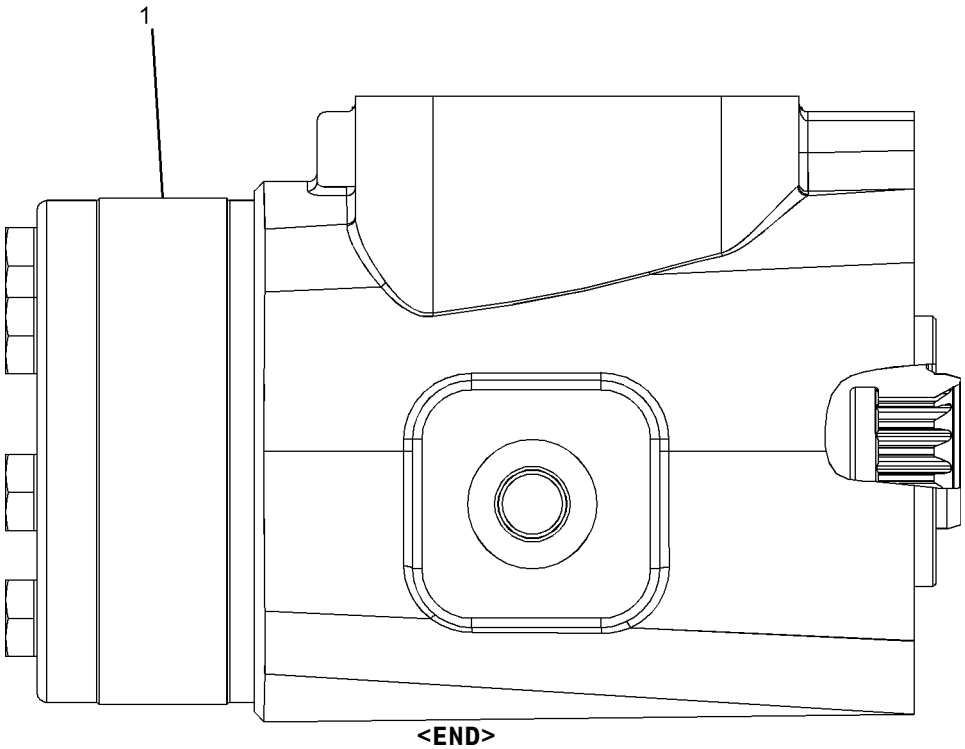

GRAPHIC #1 **<END>** g01072426

253-0784 BOX GP-BATTERY—WITH STORAGE

S/N: EAT1-UP

PART OF 213-9289 CHASSIS AR

SMCS-7257 **i02772589**

NOTE	REF NO	GRAPHIC REF	PART NUMBER	QTY	PART NAME 1 2 3 4 5 6 (PRODUCT LEVEL)	SEE PAGE
Y	1	1	**118-6842**	1	DOOR GP-BATTERY	358
	2	1	**118-6854**	1	TREAD	
	3	1	**164-3876**	1	STEP AS	
M		1	**8T-3612**	4	NUT-WELD (M8X1.25-THD)	
	4	1	**245-6109**	1	PLATE AS	
	5	1	**253-0783**	1	BOX AS-BATTERY	
	6	1	**5P-4116**	6	WASHER-HARD (8.8X20.5X2-MM THK)	
	7	1	**5G-2934**	1	PLUG	
M	8	1	**8T-4183**	4	BOLT (M12X1.75X40-MM)	
M	9	1	**8T-4189**	9	BOLT (M8X1.25X20-MM)	
M	10	1	**8T-4200**	7	BOLT (M8X1.25X16-MM)	
	11	1	**8T-4223**	5	WASHER-HARD (13.5X25.5X3-MM THK)	
	12	1	**8T-4224**	10	WASHER-HARD (8.8X16X2-MM THK)	
M	13	1	**8T-7963**	1	LOCKNUT (M8X1.25-THD)	
	14	1	**295-8472**	1	BRACKET AS	

M-METRIC PART
Y-SEPARATE ILLUSTRATION

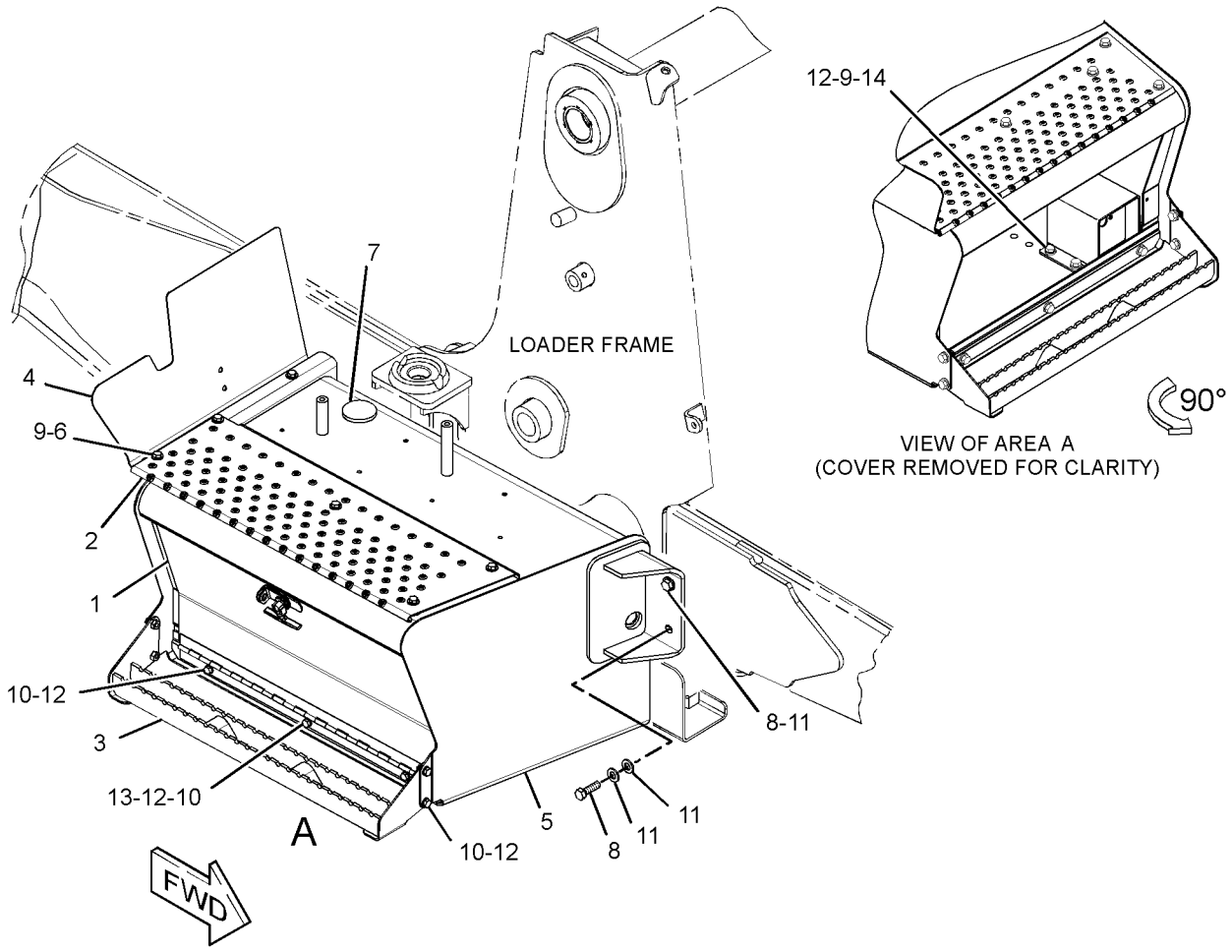

GRAPHIC #1 **<END>** g01388013

FRAME AND BODY

211-3649 COUNTERWEIGHT GP

S/N: EAT1-UP
115-KG (250-LB)
AN ATTACHMENT

SMCS-7056 **i03514442**

NOTE	REF NO	GRAPHIC REF	PART NUMBER	QTY	PART NAME 1 2 3 4 5 6 (PRODUCT LEVEL)	SEE PAGE
	1	1	**214-3254**	1	COUNTERWEIGHT (115-KG (250-LB))	
M	2	1	**8C-3290**	2	BOLT (M24X3X150-MM)	
	3	1	**8T-4167**	2	WASHER-HARD (26X44X4-MM THK)	

M-METRIC PART

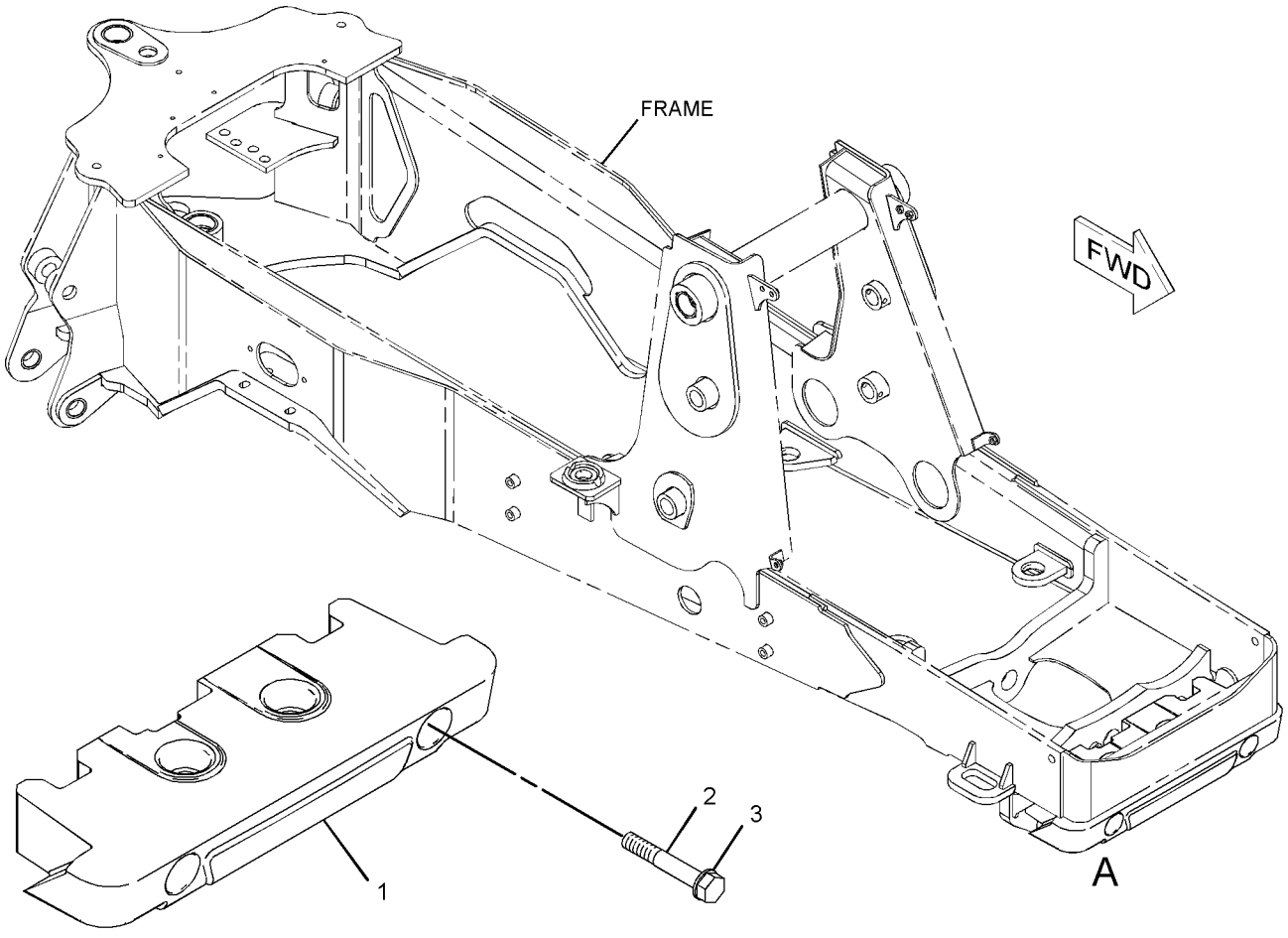

VIEW OF AREA A

GRAPHIC #1 **<END>** g01074968

FRAME AND BODY

252-9983 COUNTERWEIGHT GP

S/N: EAT1-UP
485-KG (1070-LB)
PART OF 252-9984 COUNTERWEIGHT GP
AN ATTACHMENT

SMCS-7056 **i03498381**

NOTE	REF NO	GRAPHIC REF	PART NUMBER	QTY	PART NAME 1 2 3 4 5 6 (PRODUCT LEVEL)	SEE PAGE
	1	1	**214-3255**	1	COUNTERWEIGHT (320-KG (700-LB))	
	2	1	**247-8222**	1	COUNTERWEIGHT (170-KG (375-LB))	
M	3	1	**127-4834**	2	BOLT (M24X3X340-MM)	
M	4	1	**8T-4001**	2	NUT (M24X3-THD)	
	5	1	**8T-4167**	2	WASHER-HARD (26X44X4-MM THK)	

M-METRIC PART

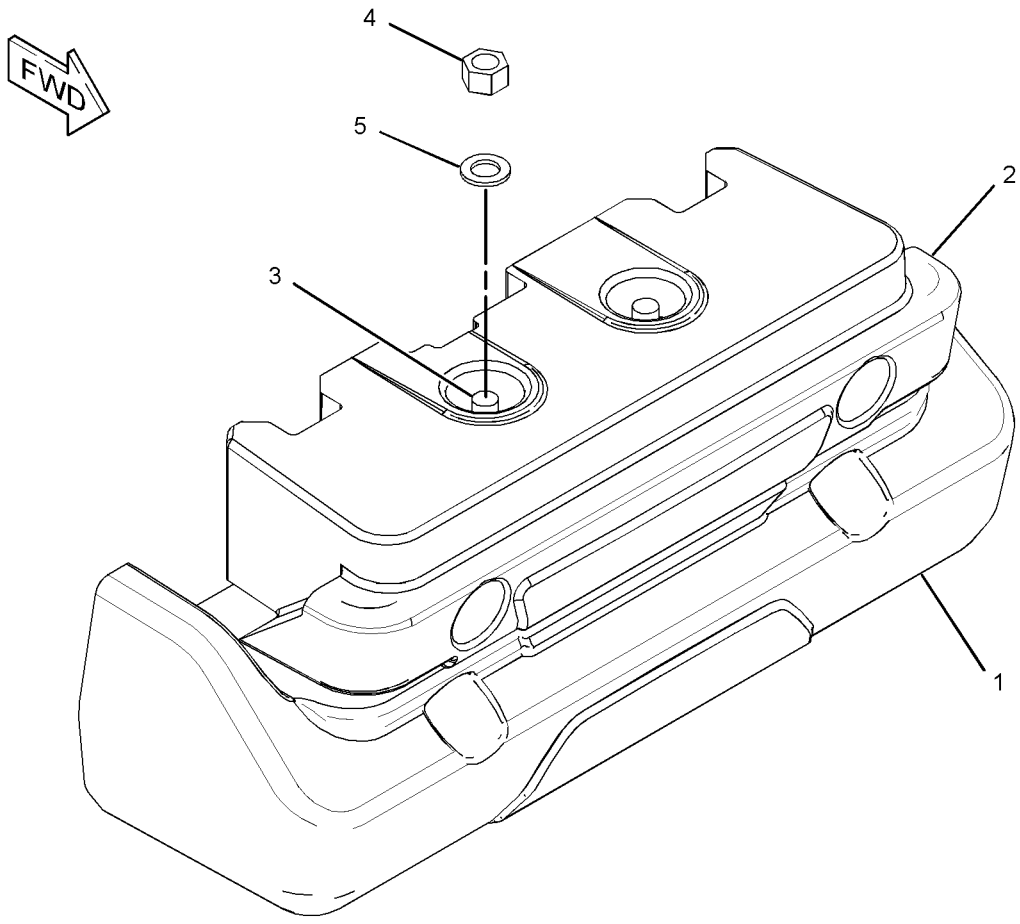

GRAPHIC #1 **<END>** g01834874

252-9984 COUNTERWEIGHT GP

S/N: EAT1-UP
485-KG (1070 LB)
AN ATTACHMENT

SMCS-7056 **i03498342**

NOTE	REF NO	GRAPHIC REF	PART NUMBER	QTY	PART NAME 1 2 3 4 5 6 (PRODUCT LEVEL)	SEE PAGE
Y	1	1	*252-9983*	1	COUNTERWEIGHT GP	355
M	2	1	**8C-3290**	4	BOLT (M24X3X150-MM)	
	3	1	**8T-4167**	4	WASHER-HARD (26X44X4-MM THK)	

M-METRIC PART
Y-SEPARATE ILLUSTRATION

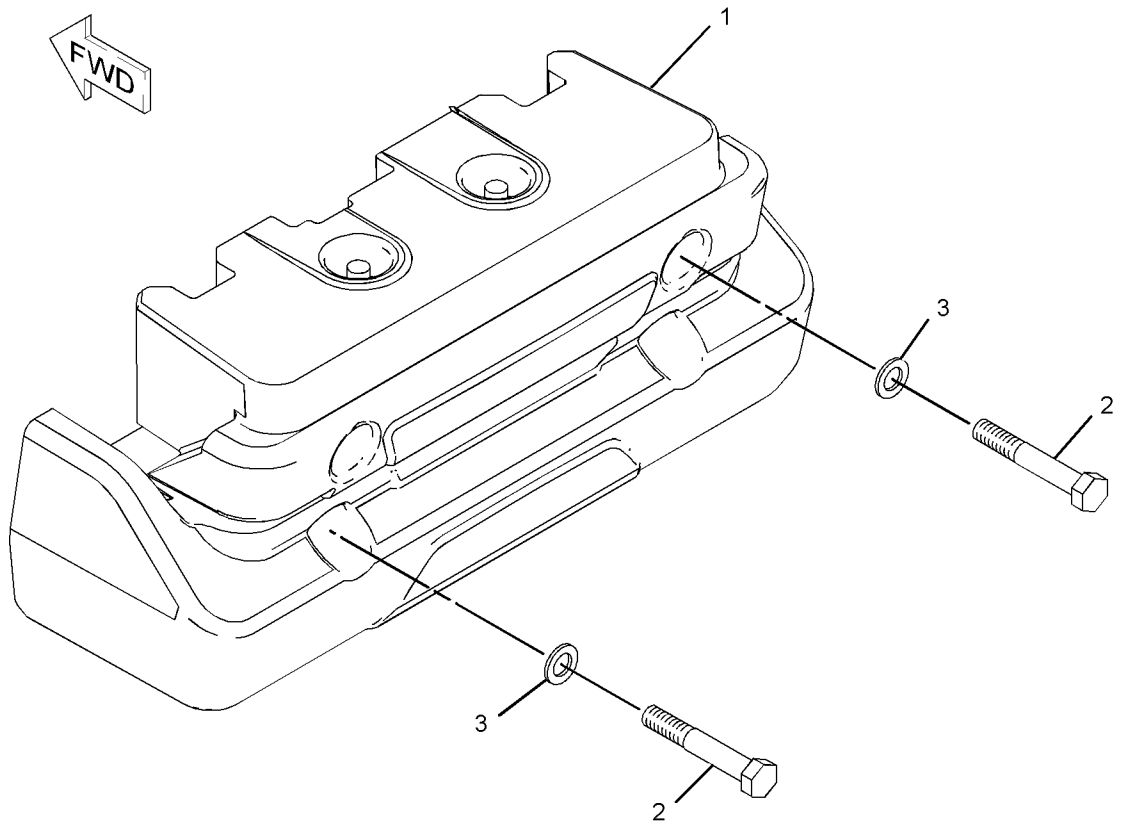

GRAPHIC #1 **<END>** g01084203

FRAME AND BODY

252-9986 COUNTERWEIGHT GP

S/N: EAT1-UP
235-KG (515-LB)
AN ATTACHMENT

SMCS-7056 **i03505240**

NOTE	REF NO	GRAPHIC REF	PART NUMBER	QTY	PART NAME 1 2 3 4 5 6 (PRODUCT LEVEL)	SEE PAGE
	1	1	*252-9985*	1	COUNTERWEIGHT GP	
M		1	**7X-2476**	2	BOLT (M24X3X220-MM)	
M		1	**8T-4001**	2	NUT (M24X3-THD)	
		1	**8T-4167**	2	WASHER-HARD (26X44X4-MM THK)	
		1	**214-3254**	2	COUNTERWEIGHT (115-KG (250-LB))	
M	2	1	**8C-3290**	4	BOLT (M24X3X150-MM)	
	3	1	**8T-4167**	4	WASHER-HARD (26X44X4-MM THK)	

M-METRIC PART

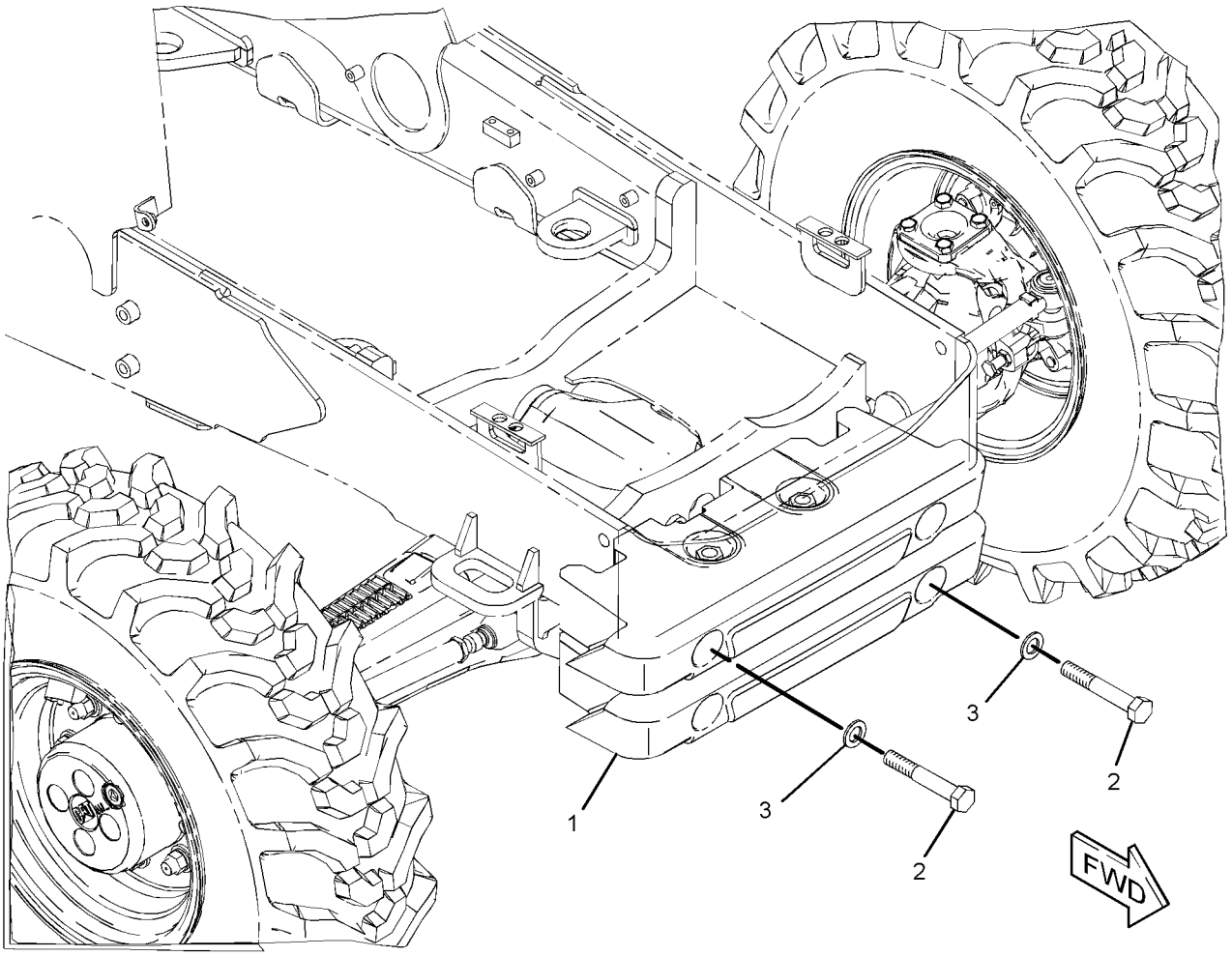

GRAPHIC #1 **<END>** g01202979

FRAME AND BODY

118-6842 DOOR GP-BATTERY

S/N: EAT1-UP

PART OF 253-0784 BOX GP-BATTERY

SMCS-7273 **i02249051**

NOTE	REF NO	GRAPHIC REF	PART NUMBER	QTY	PART NAME 1 2 3 4 5 6 (PRODUCT LEVEL)	SEE PAGE
	1	1	**8C-8522**	1	PAWL-LATCH	
	2	1	**129-4741**	1	LATCH AS-T-BAR	
	3	1	**151-2963**	1	DOOR AS	
M	4	1	**6V-7743**	2	LOCKNUT (M6X1-THD)	
M	5	1	**8T-4133**	2	NUT (M10X1.5-THD)	
	6	1	**8T-4205**	2	WASHER-HARD (7.2X14.5X2-MM THK)	

M-METRIC PART

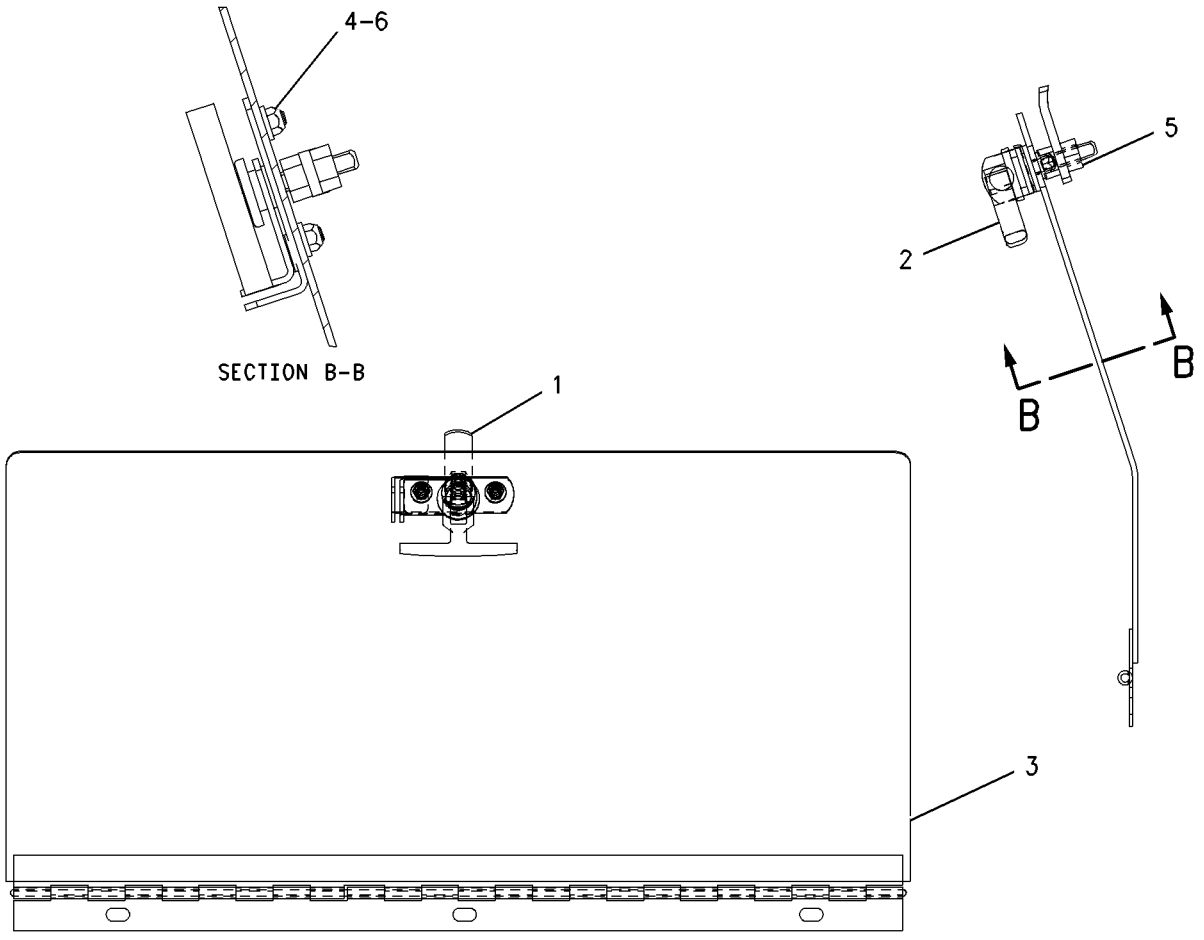

GRAPHIC #1 **<END>** g00739059

249-9328 EXTENSION GP-FENDER

S/N: EAT1-UP

AN ATTACHMENT

SMCS-7252 **i03511001**

NOTE	REF NO	GRAPHIC REF	PART NUMBER	QTY	PART NAME 1 2 3 4 5 6 (PRODUCT LEVEL)	SEE PAGE
	1	1	**249-9329**	1	EXTENSION-FENDER (LH)	
	2	1	**249-9330**	1	EXTENSION-FENDER (RH)	
	3	1	**251-4889**	8	WASHER-HARD (7.2X14.5X2-MM THK)	
	4	1	**251-4890**	4	SCREW-MACHINE (M6X1X25-MM)	
	5	1	**251-4891**	4	LOCKNUT (M6X1-THD)	

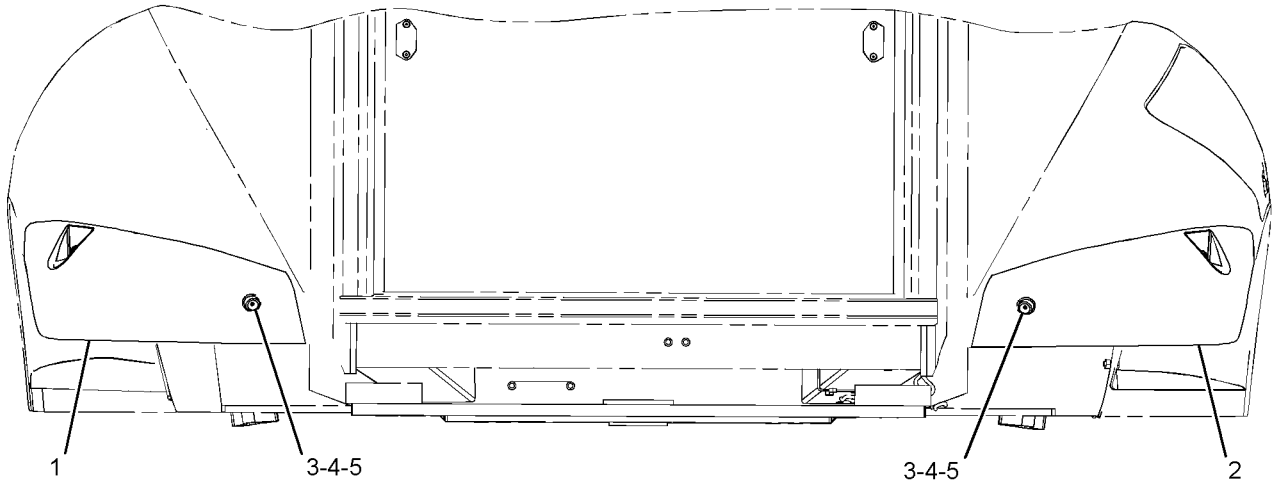

REAR VIEW

GRAPHIC #1 **<END>** g01231585

FRAME AND BODY

201-3954 FENDER GP-FRONT

S/N: EAT1-UP
FOR USE WITH AWD MACHINES ONLY
AN ATTACHMENT

SMCS-7252 **i02597587**

NOTE	REF NO	GRAPHIC REF	PART NUMBER	QTY	PART NAME 1 2 3 4 5 6 (PRODUCT LEVEL)	SEE PAGE
	1	1	**162-4004**	2	FENDER (FRONT)	
M	2	1	**199-0783**	4	BOLT (M16X2X38-MM)	
	3	1	**222-1801**	1	BRACKET AS (LH)	
	4	1	**222-1802**	1	BRACKET AS (RH)	
M	5	1	**6V-7744**	4	LOCKNUT (M10X1.5-THD)	
	6	1	**8T-4121**	4	WASHER-HARD (11X21X2.5-MM THK)	
	7	1	**8T-4122**	12	WASHER-HARD (17X32X3.5-MM THK)	
M	8	1	**8T-4195**	4	BOLT (M10X1.5X30-MM)	
	9	1	**8T-4222**	4	WASHER-PLATED (11X32X2.5-MM THK)	
M	10	1	**8T-4778**	4	LOCKNUT (M16X2-THD)	

M-METRIC PART

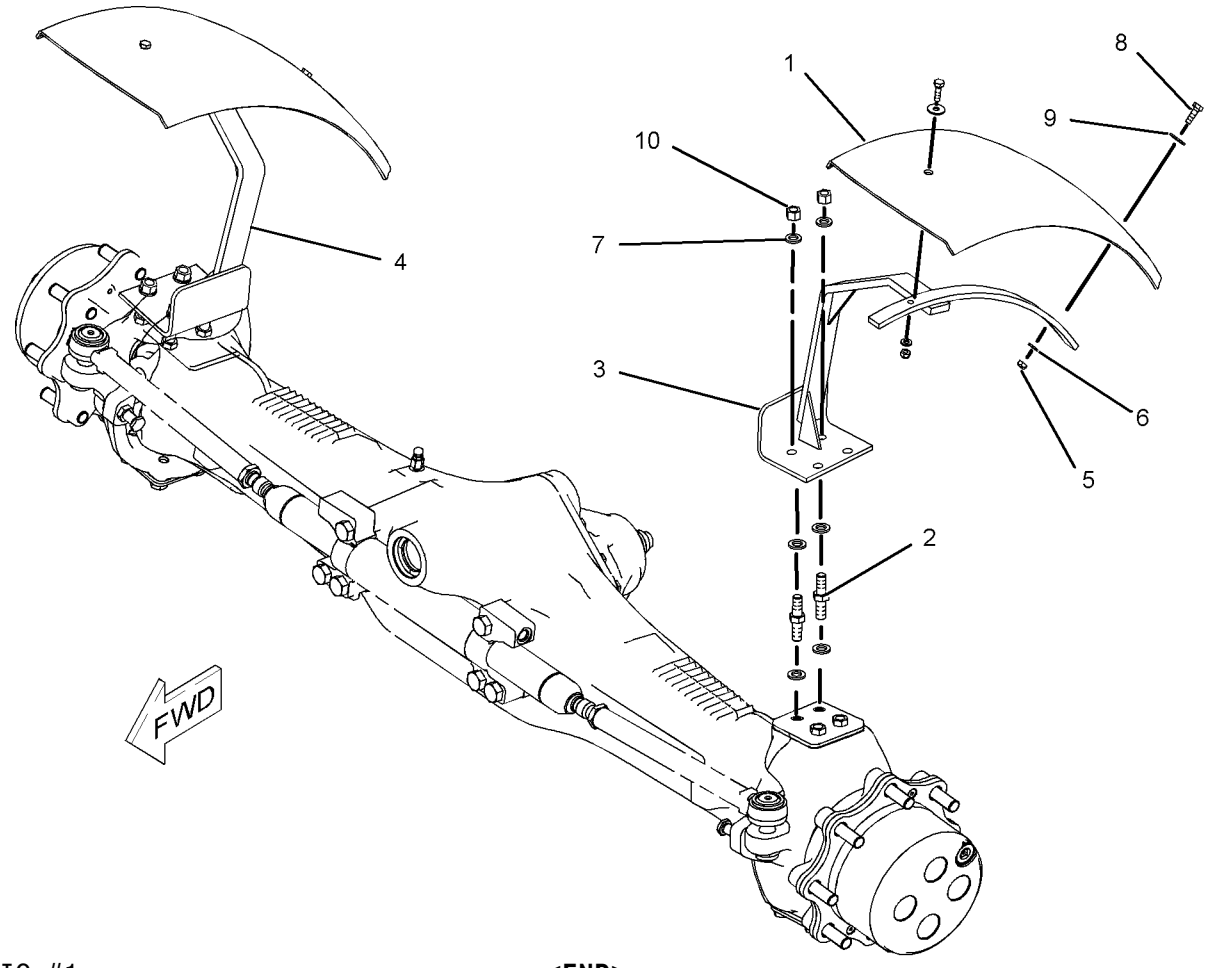

GRAPHIC #1 **<END>** g01027709

213-1891 FENDER GP-REAR

S/N: EAT1-UP
PART OF 269-2125, 269-2126, 269-2127 CAB AR-ENCLOSED ROPS, 269-2123, 269-2124 CANOPY AR-OPEN ROPS
AN ATTACHMENT

SMCS-7252 **i02815163**

NOTE	REF NO	GRAPHIC REF	PART NUMBER	QTY	PART NAME 1 2 3 4 5 6 (PRODUCT LEVEL)	SEE PAGE
M	1	1	**8T-5093**	4	BOLT-LOCKING (M8X1.25X25-MM)	
E	2	1	**244-3113**		SEAL (210-CM EACH)	
	3	1	**116-5763**	1	CLIP-SPRING	
M	4	1	**193-9055**	4	SCREW-HEX FLANGE (M4X1.79X17-MM)	
	5	1	**211-3783**	1	FENDER-REAR (LH)	
	6	1	**213-1881**	1	FENDER-REAR (RH)	
	7	1	**213-1884**	1	CLIP	
	8	1	**213-1887**	1	COVER-FENDER	
	9	1	**213-1889**	1	PLATE	
	10	1	**225-0060**	1	GUARD	
J	11	1	**226-0291**	1	LOCK AS (PROTECTION)	
	12	1	**227-5556**	1	PLATE	
M	13	1	**7Y-9099**	1	SCREW-TRUSS HEAD (M8X1.25X25-MM)	
	14	1	**156-0283**	20	WASHER-HARD (8.4X35X2.5-MM THK)	
M	15	1	**5C-7261**	4	NUT (M8X1.25-THD)	
M	16	1	**8T-5091**	12	BOLT (M8X1.25X20-MM)	
L	17	1	**5P-0805**		SEAL (8-DM)	
E	18	1	**220-0738**		SEAL (118-CM)	

E-ORDER BY THE CENTIMETER
J-REQUIRES 5P8500 KEY
L-ORDER BY THE DECIMETER
M-METRIC PART

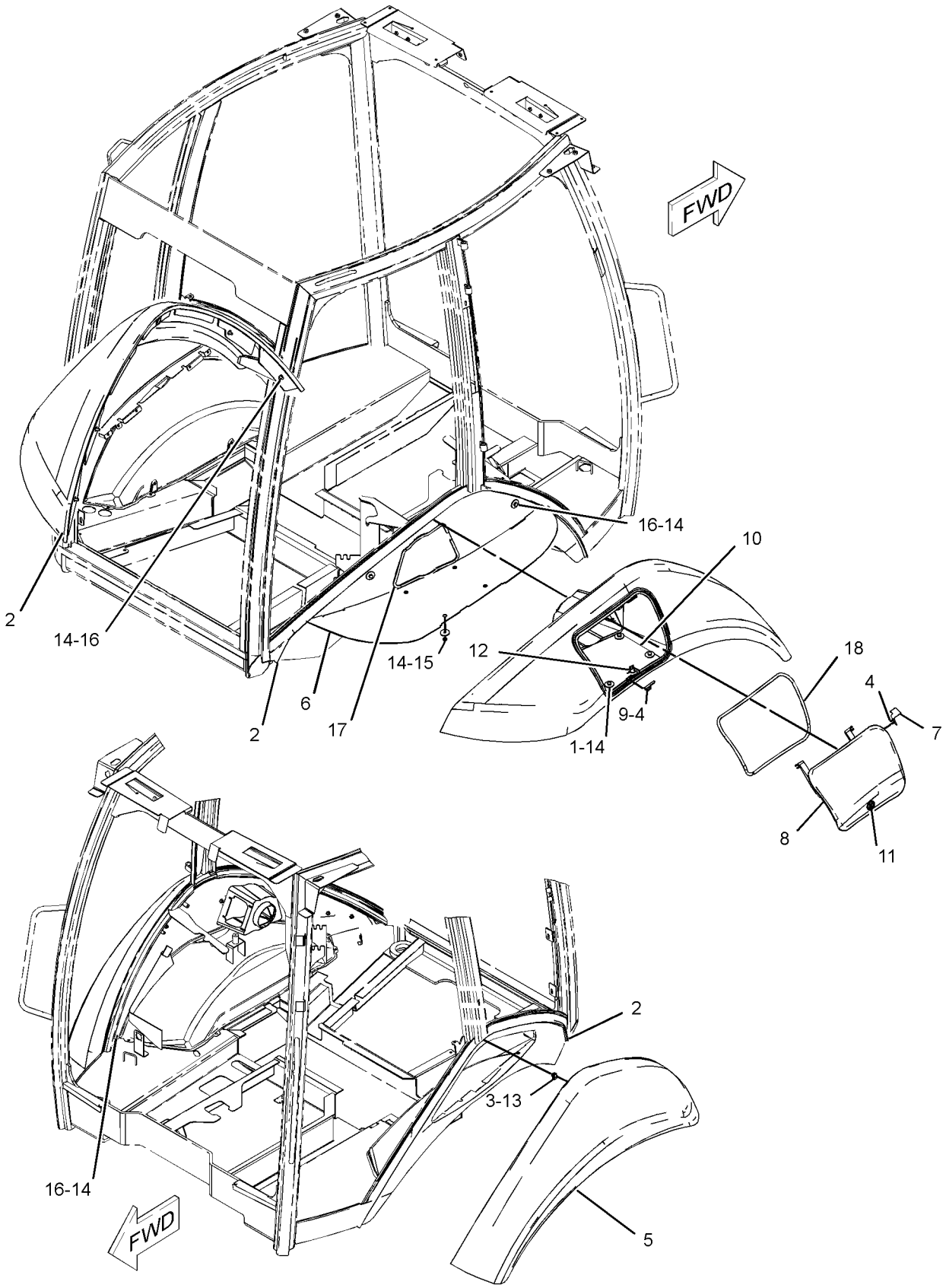

GRAPHIC #1 **<END>** g01275112

223-3965 FLOORPLATE GP

S/N: EAT1-1142
PART OF 269-2123, 269-2124 CANOPY AR-OPEN ROPS
AN ATTACHMENT

SMCS-7265 **i02446406**

NOTE	REF NO	GRAPHIC REF	PART NUMBER	QTY	PART NAME 1 2 3 4 5 6 (PRODUCT LEVEL)	SEE PAGE
	1	1	**206-1832**	1	PLATE AS	
	2	1	**223-3962**	1	PLATE AS	
	3	1	**223-4546**	1	PLATE AS	
	4	1	**232-2865**	1	PLATE AS	
	5	1	**232-2869**	1	PLATE AS	
	6	1	**232-2870**	1	PLATE AS	
	7	1	**269-3269**	1	PLATE AS	
	8	1	**283-8562**	1	PLATE AS	
	9	1	**283-8563**	1	PLATE AS	
	10	1	**9X-2038**	40	WASHER (7X19X2-MM THK)	
M	11	1	**9X-2043**	40	SCREW-TRUSS HEAD (M6X1X14-MM)	

M-METRIC PART

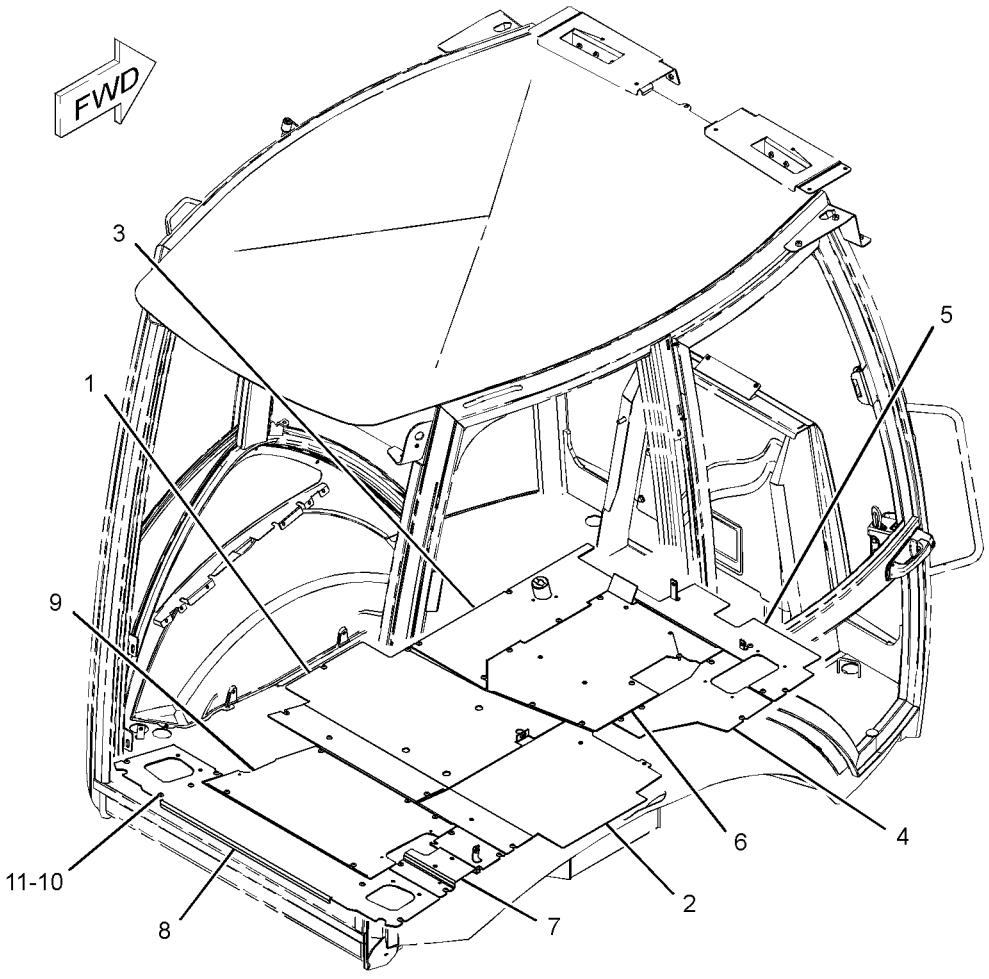

GRAPHIC #1 **<END>** g01234300

223-3966 FLOORPLATE GP

S/N: EAT1-1145
PART OF 269-2125, 269-2126, 269-2127 CAB AR-ENCLOSED ROPS
AN ATTACHMENT

SMCS-7265 **i02447122**

NOTE	REF NO	GRAPHIC REF	PART NUMBER	QTY	PART NAME 1 2 3 4 5 6 (PRODUCT LEVEL)	SEE PAGE
	1	1	**206-1832**	1	PLATE AS	
	2	1	**269-3269**	1	PLATE AS	
	3	1	**283-8562**	1	PLATE AS	
	4	1	**206-1850**	1	PLATE AS	
	5	1	**232-2865**	1	PLATE AS	
	6	1	**223-3964**	1	PLATE AS	
	7	1	**232-2869**	1	PLATE AS	
	8	1	**223-4546**	1	PLATE AS	
	9	1	**283-8563**	1	PLATE AS	
	10	1	**9X-2038**	40	WASHER (7X19X2-MM THK)	
	11	1	**232-2870**	1	PLATE AS	
M	12	1	**9X-2043**	44	SCREW-TRUSS HEAD (M6X1X14-MM)	

M-METRIC PART

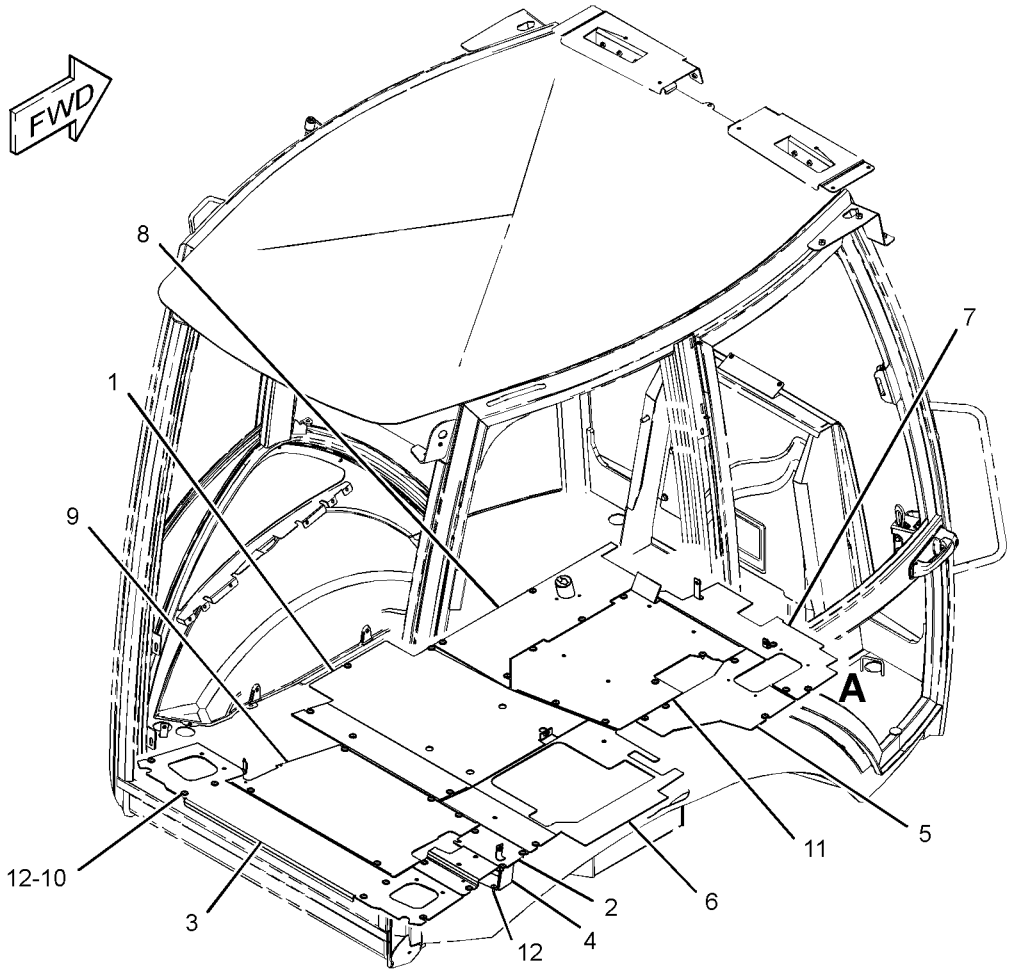

GRAPHIC #1 **<END>** g01231889

284-2757 FLOORPLATE GP

S/N: EAT1141-UP
PART OF 269-2125, 269-2126, 269-2127 CAB AR-ENCLOSED ROPS, 269-2123, 269-2124 CANOPY AR-OPEN ROPS
AN ATTACHMENT

SMCS-7265 **i02818626**

NOTE	REF NO	GRAPHIC REF	PART NUMBER	QTY	PART NAME 1 2 3 4 5 6 (PRODUCT LEVEL)	SEE PAGE
	1	1	**206-1832**	1	PLATE AS	
	2	1	**223-4546**	1	PLATE AS	
	3	1	**232-2865**	1	PLATE AS	
	4	1	**232-2869**	1	PLATE AS	
	5	1	**232-2870**	1	PLATE AS	
	6	1	**269-3269**	1	PLATE AS	
	7	1	**275-9907**	1	PLATE AS	
M		1	**6V-9632**	6	NUT-WELD (M6X1-THD)	
	8	1	**283-8563**	1	PLATE AS	
	9	1	**299-3442**	1	PLATE AS	
M		1	**6V-9632**	6	NUT-WELD (M6X1-THD)	
	10	1	**299-4777**	1	PLATE AS	
	11	1	**9X-2038**	39	WASHER (7X19X2-MM THK)	
M	12	1	**9X-2043**	43	SCREW-TRUSS HEAD (M6X1X14-MM)	

M-METRIC PART

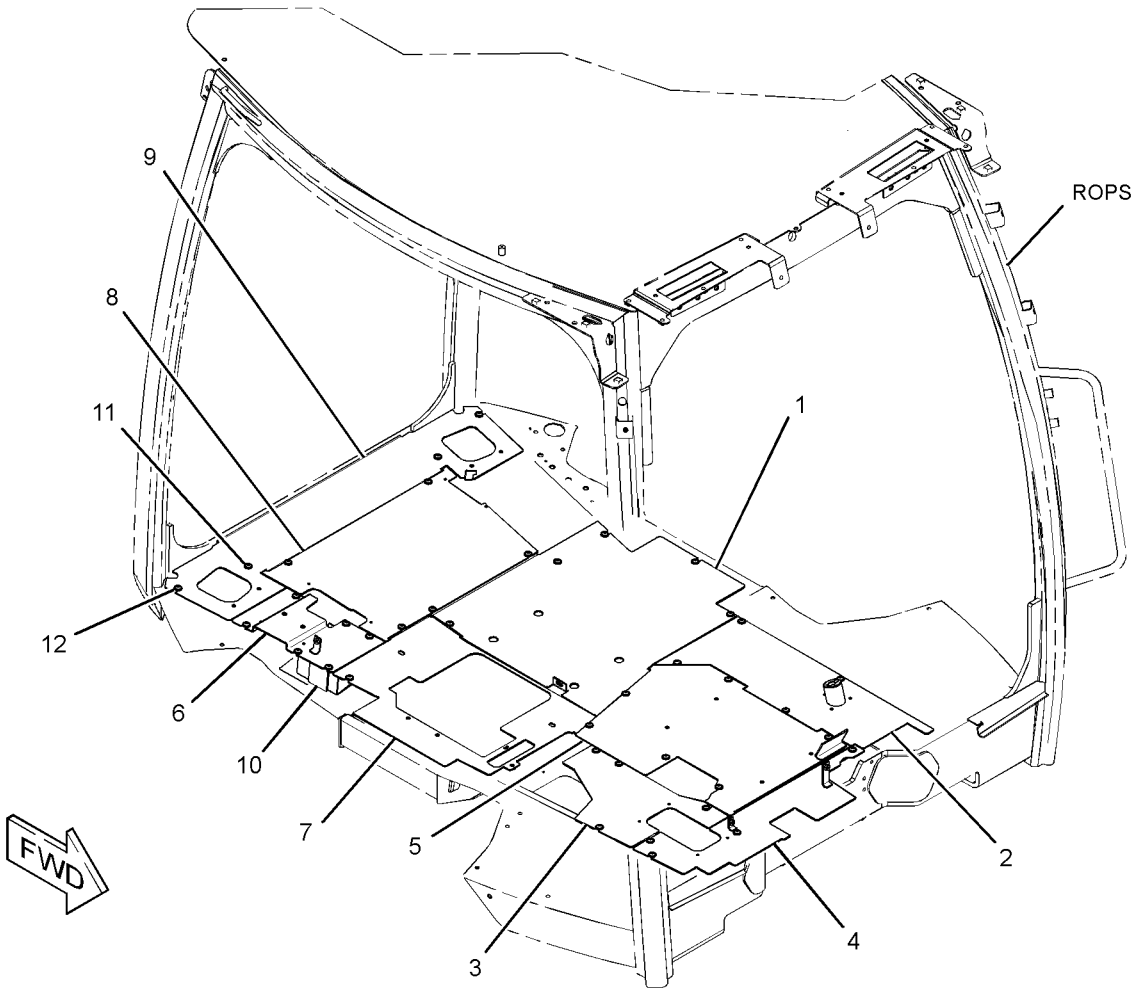

GRAPHIC #1 **<END>** g01414043

214-2000 FRAME GP-LOADER—SINGLE TILT

S/N: EAT1-UP

PART OF 213-9289 CHASSIS AR

SMCS-7054 **i02894977**

NOTE	REF NO	GRAPHIC REF	PART NUMBER	QTY	PART NAME 1 2 3 4 5 6 (PRODUCT LEVEL)	SEE PAGE
	1	1	**9R-0481**	2	WASHER (71X110X4-MM THK)	
	2	1	**209-4777**	1	CAP & BEARING AS	
		1	**9R-4110**	2	BEARING-SLEEVE	
	3	1	**214-2001**	1	FRAME AS	
	3A	1	**278-7695**	1	BEARING-SLEEVE	
	3B	1	**9R-0431**	4	BEARING-SLEEVE	
	3C	1	**9R-0431**	4	BEARING-SLEEVE	
	3D	1	**278-7066**	4	BEARING	
	3E	1	**262-7044**	1	BEARING	
	4	1	**214-4754**	2	PLATE	
M	5	1	**114-6099**	8	BOLT (M24X3X80-MM)	
	6	1	**3B-8488**	3	FITTING-GREASE	
	7	1	**3B-8489**	2	FITTING-GREASE	
M	8	1	**8T-4001**	8	NUT (M24X3-THD)	
	9	1	**8T-4121**	4	WASHER-HARD (11X21X2.5-MM THK)	
	10	1	**8T-4167**	16	WASHER-HARD (26X44X4-MM THK)	
M	11	1	**8T-4195**	4	BOLT (M10X1.5X30-MM)	

M-METRIC PART

214-2000 **FRAME GP-LOADER** *(contd.)* **i02894977**

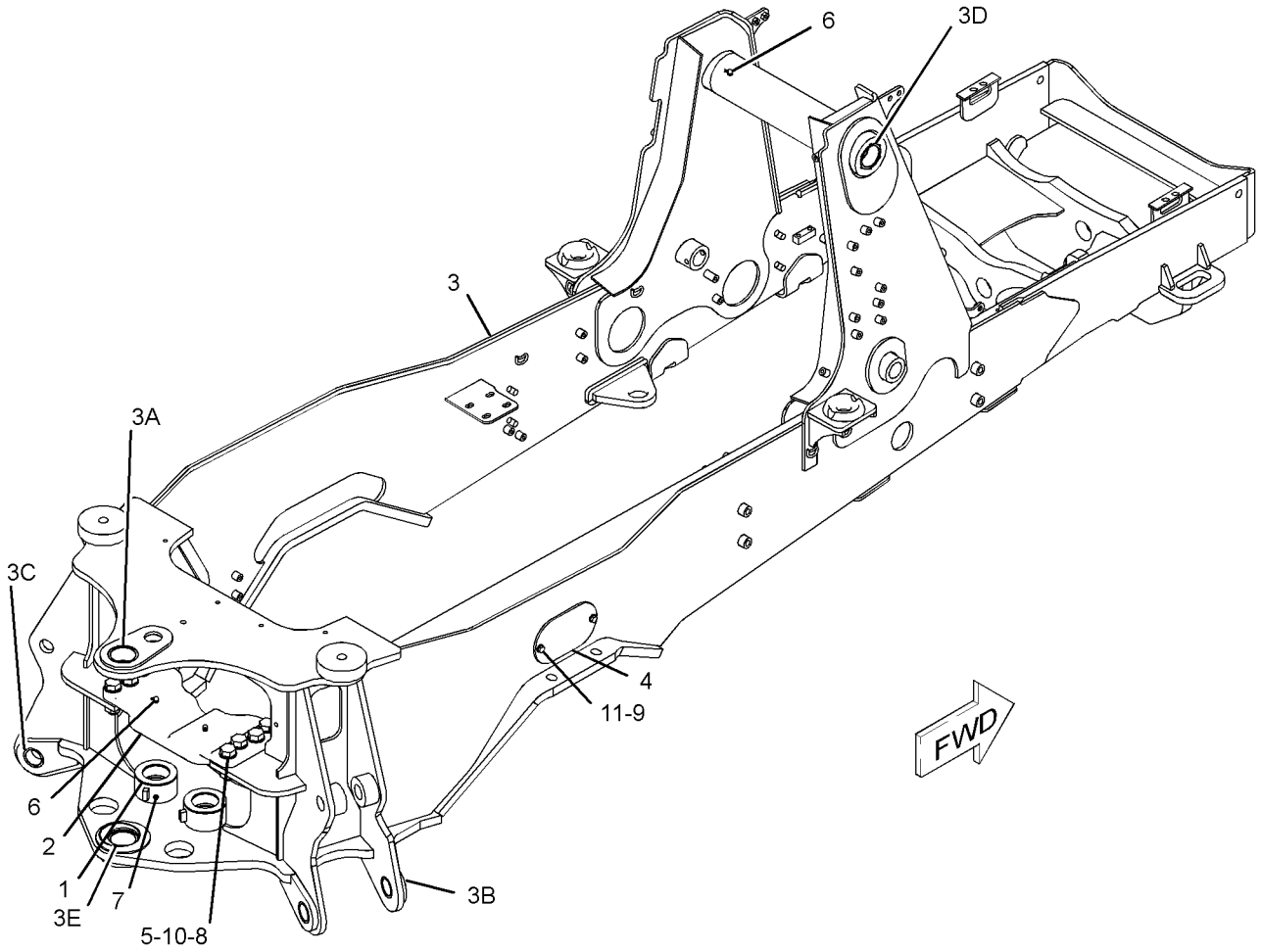

GRAPHIC #1 **<END>** g01376272

FRAME AND BODY

251-4520 FRAME GP-SWING

S/N: EAT1-1271

PART OF 213-9289 CHASSIS AR

SMCS-6506 **i02905452**

NOTE	REF NO	GRAPHIC REF	PART NUMBER	QTY	PART NAME 1 2 3 4 5 6 (PRODUCT LEVEL)	SEE PAGE
	1	1	**8T-4821**	5	WASHER (13.5X40X3-MM THK)	
	2	1	**8T-4837**	1	WASHER (48X85X6-MM THK)	
	3	1	**300-5440**	1	PIN	
B	4	1	**9R-5429**	2	SPACER (67.5X120X3-MM THK)	
	5	1	**9R-7882**	1	SPACER (14X25X7-MM THK)	
B	6	1	**9R-8291**	2	SPACER (66X125X1-MM THK)	
	7	1	**130-2533**	2	PIN	
	8	1	**209-6855**	2	PIN	
	9	1	**209-6863**	1	FRAME AS-SWING	
	9A	1	**9R-0366**	1	WASHER (80X140X5-MM THK)	
	9B	1	**236-8158**	2	BEARING-SLEEVE	
	9C	1	**262-7043**	2	BEARING	
	9D	1	**278-5455**	2	BEARING-SLEEVE	
	9E	1	**213-6702**	4	BEARING-SLEEVE	
	10	1	**213-6709**	1	PIN AS	
	11	1	**290-8156**	1	PIN AS	
		1	**9F-2049**	1	DOWEL	
	12	1	**250-0741**	1	LUG	
B	13	1	**136-7440**	2	SHIM (1-MM THK)	
	14	1	**270-5290**	1	BOLT-SOCKET HEAD (M12X1.75X300-MM)	
	15	1	**3B-8486**	1	FITTING-GREASE	
	16	1	**3B-8489**	3	FITTING-GREASE	
	17	1	**5P-1076**	4	WASHER-HARD (13.5X30X4-MM THK)	
M	18	1	**6V-7687**	4	LOCKNUT (M12X1.75-THD)	
M	19	1	**8T-6868**	1	BOLT (M12X1.75X80-MM)	
M	20	1	**8T-3652**	1	NUT (M42X25-THD)	
M	21	1	**8T-4139**	1	BOLT (M12X1.75X30-MM)	
M	23	1	**8T-7930**	2	BOLT (M12X1.75X160-MM)	

B-USE AS REQUIRED
M-METRIC PART

251-4520 **FRAME GP-SWING** *(contd.)* **i02905452**

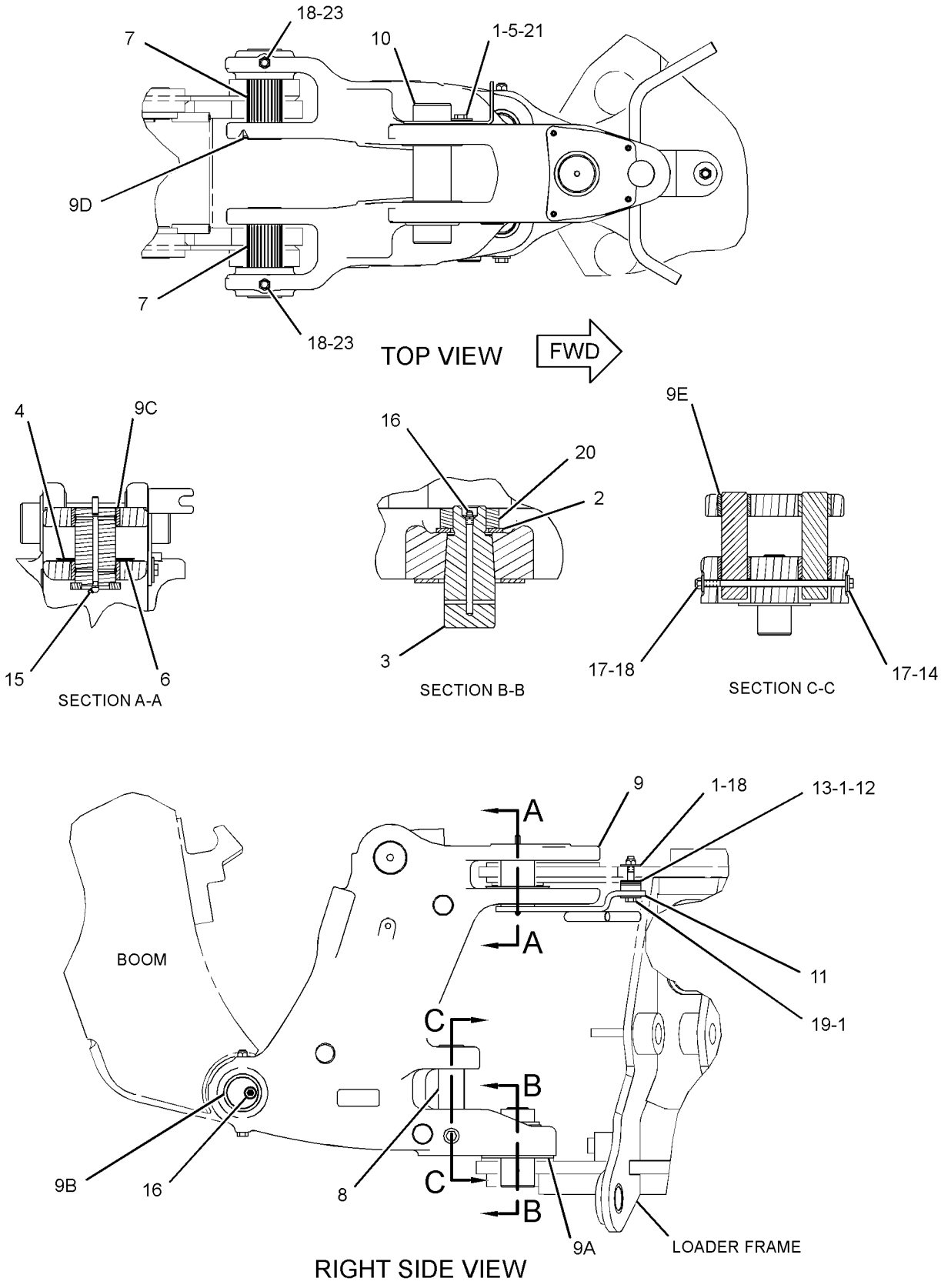

GRAPHIC #1 **<END>** g01470172

FRAME AND BODY

251-4520 FRAME GP-SWING

S/N: EAT1272-1449

PART OF 213-9289 CHASSIS AR

SMCS-6506 **i03015978**

NOTE	REF NO	GRAPHIC REF	PART NUMBER	QTY	PART NAME 1 2 3 4 5 6 (PRODUCT LEVEL)	SEE PAGE
B	1	1	**8T-4821**	5	WASHER (13.5X40X3-MM THK)	
	2	1	**8T-4837**	1	WASHER (48X85X6-MM THK)	
	3	1	**300-5440**	1	PIN	
BC	4	1	**176-0626**	2	WASHER (67.5X120X3-MM THK)	
	5	1	**9R-7882**	1	SPACER (14X25X7-MM THK)	
B	6	1	**9R-8291**	2	SPACER (66X125X1-MM THK)	
	7	1	**130-2533**	2	PIN	
	8	1	**209-6855**	2	PIN	
C	9	1	**316-1080**	1	FRAME AS	
	9A	1	**9R-0366**	1	WASHER (80X140X5-MM THK)	
	9B	1	**236-8158**	2	BEARING-SLEEVE	
	9C	1	**262-7043**	2	BEARING	
	9D	1	**278-5455**	2	BEARING-SLEEVE	
	9E	1	**213-6702**	4	BEARING-SLEEVE	
	10	1	**213-6709**	1	PIN AS	
	11	1	**290-8156**	1	PIN AS	
		1	**9F-2049**	1	DOWEL	
	12	1	**250-0741**	1	LUG	
B	13	1	**136-7440**	2	SHIM (1-MM THK)	
	14	1	**270-5290**	1	BOLT-SOCKET HEAD (M12X1.75X300-MM)	
	15	1	**3B-8486**	1	FITTING-GREASE	
	16	1	**3B-8489**	3	FITTING-GREASE	
C	17	1	**5P-1076**	3	WASHER-HARD (13.5X30X4-MM THK)	
M	18	1	**6V-7687**	4	LOCKNUT (M12X1.75-THD)	
M	19	1	**8T-6868**	1	BOLT (M12X1.75X80-MM)	
M	20	1	**8T-3652**	1	NUT (M42X25-THD)	
M	21	1	**8T-4139**	1	BOLT (M12X1.75X30-MM)	
M	23	1	**8T-7930**	2	BOLT (M12X1.75X160-MM)	

B-USE AS REQUIRED
C-CHANGE FROM PREVIOUS TYPE
M-METRIC PART

251-4520 **FRAME GP-SWING** *(contd.)* **i03015978**

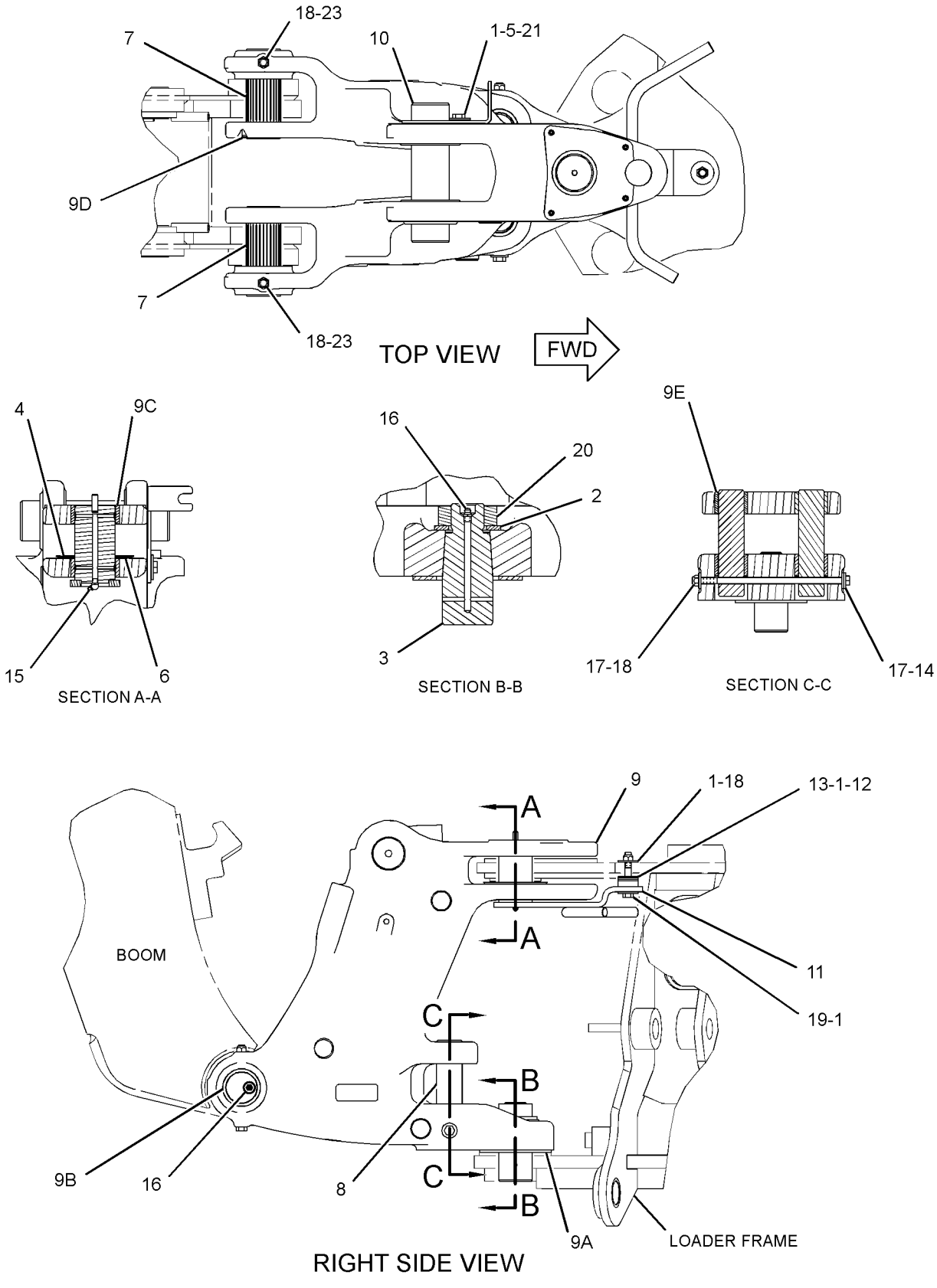

GRAPHIC #1 **<END>** g01470172

FRAME AND BODY

251-4520 FRAME GP-SWING

S/N: EAT1450-UP

PART OF 213-9289 CHASSIS AR

SMCS-6506 **i03248835**

NOTE	REF NO	GRAPHIC REF	PART NUMBER	QTY	PART NAME 1 2 3 4 5 6 (PRODUCT LEVEL)	SEE PAGE
B	1	1	**8T-4821**	5	WASHER (13.5X40X3-MM THK)	
	2	1	**8T-4837**	1	WASHER (48X85X6-MM THK)	
	3	1	**300-5440**	1	PIN	
B	4	1	**176-0626**	2	WASHER (67.5X120X3-MM THK)	
	5	1	**9R-7882**	1	SPACER (14X25X7-MM THK)	
B	6	1	**9R-8291**	2	SPACER (66X125X1-MM THK)	
	7	1	**130-2533**	2	PIN	
	8	1	**209-6855**	2	PIN	
	9	1	**316-1080**	1	FRAME AS	
	9A	1	**9R-0366**	1	WASHER (80X140X5-MM THK)	
	9B	1	**236-8158**	2	BEARING-SLEEVE	
	9C	1	**262-7043**	2	BEARING	
	9D	1	**278-5455**	2	BEARING-SLEEVE	
	9E	1	**213-6702**	4	BEARING-SLEEVE	
	10	1	**213-6709**	1	PIN AS	
C	11	1	**328-8776**	1	PIN AS	
		1	**9F-2049**	1	DOWEL	
	12	1	**250-0741**	1	LUG	
B	13	1	**136-7440**	2	SHIM (1-MM THK)	
	14	1	**270-5290**	1	BOLT-SOCKET HEAD (M12X1.75X300-MM)	
C	15	1	**3B-8486**	2	FITTING-GREASE	
	16	1	**3B-8489**	3	FITTING-GREASE	
	17	1	**5P-1076**	3	WASHER-HARD (13.5X30X4-MM THK)	
M	18	1	**6V-7687**	4	LOCKNUT (M12X1.75-THD)	
M	19	1	**8T-6868**	1	BOLT (M12X1.75X80-MM)	
M	20	1	**8T-3652**	1	NUT (M42X25-THD)	
M	21	1	**8T-4139**	1	BOLT (M12X1.75X30-MM)	
M	23	1	**8T-7930**	2	BOLT (M12X1.75X160-MM)	

B-USE AS REQUIRED
C-CHANGE FROM PREVIOUS TYPE
M-METRIC PART

251-4520 **FRAME GP-SWING** *(contd.)* **i03248835**

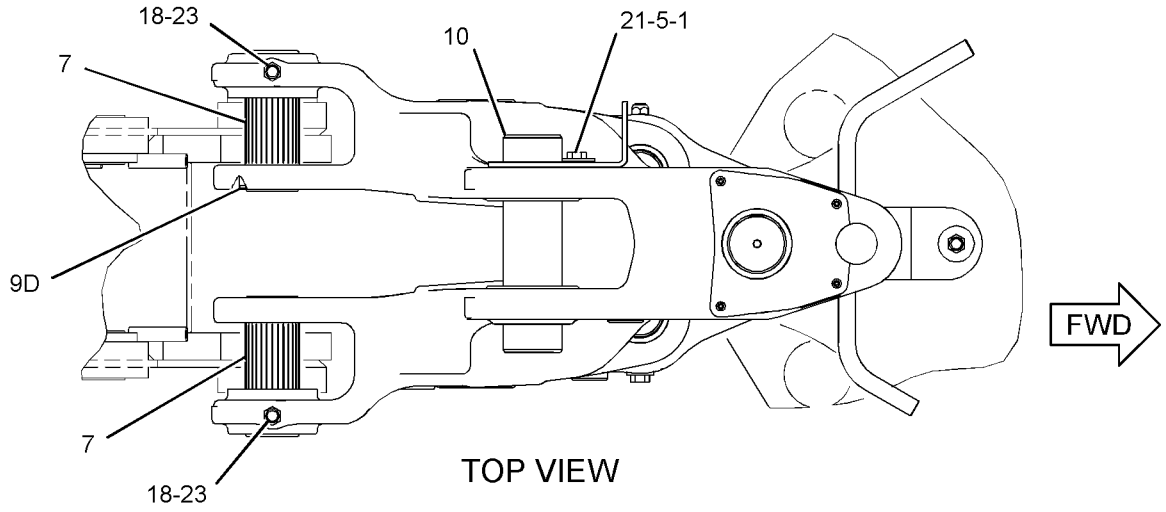

TOP VIEW

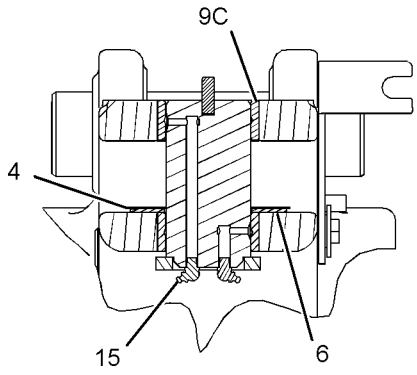

SECTION A-A

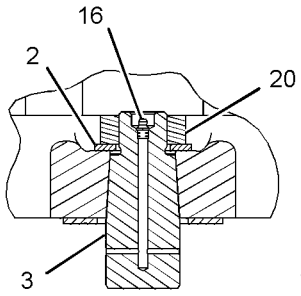

SECTION B-B

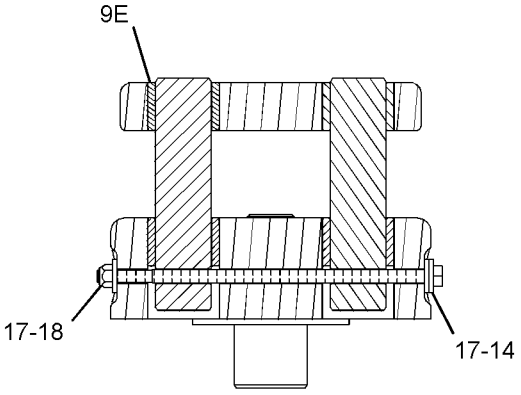

SECTION C-C

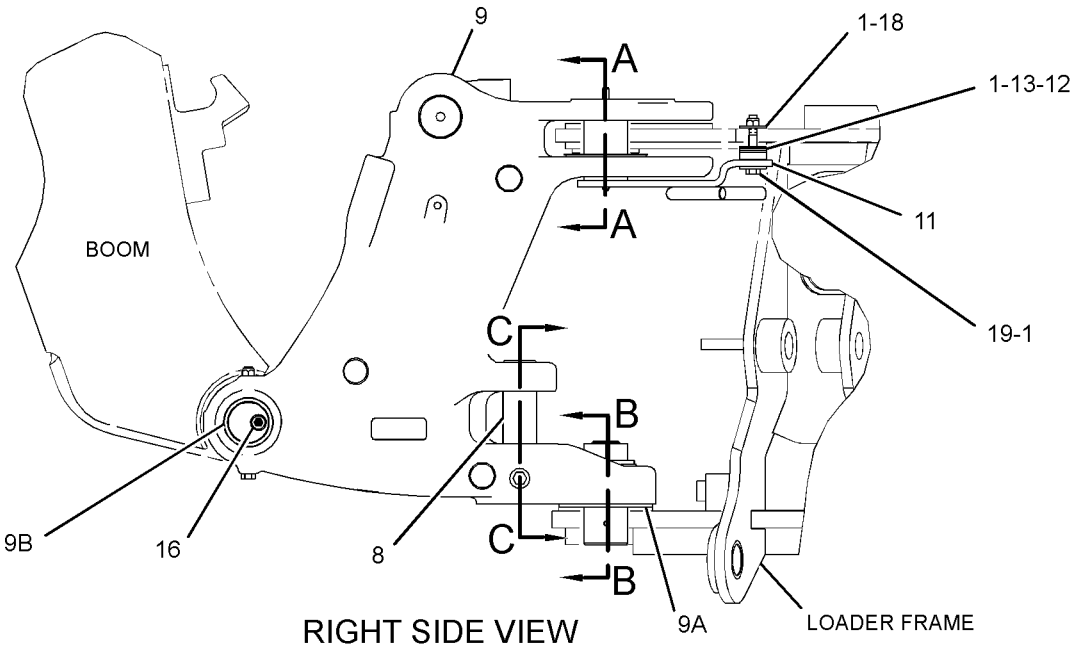

RIGHT SIDE VIEW

GRAPHIC #1

<END>

g01675190

FRAME AND BODY

254-2463 GRILL-RADIATOR—SCREEN

S/N: EAT1-UP

AN ATTACHMENT

SMCS-7170 **i03033002**

NOTE	PART NUMBER	QTY	PART NAME 1 2 3 4 5 6 (PRODUCT LEVEL)	SEE PAGE
			(NO SERVICED PARTS)	

<END>

217-9672 GUARD GP-DRIVE SHAFT

S/N: EAT1-UP
PART OF 216-4740 DRIVE AR-BACKHOE LOADER
AN ATTACHMENT

SMCS-7153 **i02531163**

NOTE	REF NO	GRAPHIC REF	PART NUMBER	QTY	PART NAME 1 2 3 4 5 6 (PRODUCT LEVEL)	SEE PAGE
	1	1	**216-5981**	1	GUARD AS	
M	2	1	**290-3347**	4	BOLT-CARRIAGE (M16X2X40-MM)	
	3	1	**8T-4122**	4	WASHER-HARD (17X32X3.5-MM THK)	
M	4	1	**8T-4132**	4	NUT (M16X2-THD)	

M-METRIC PART

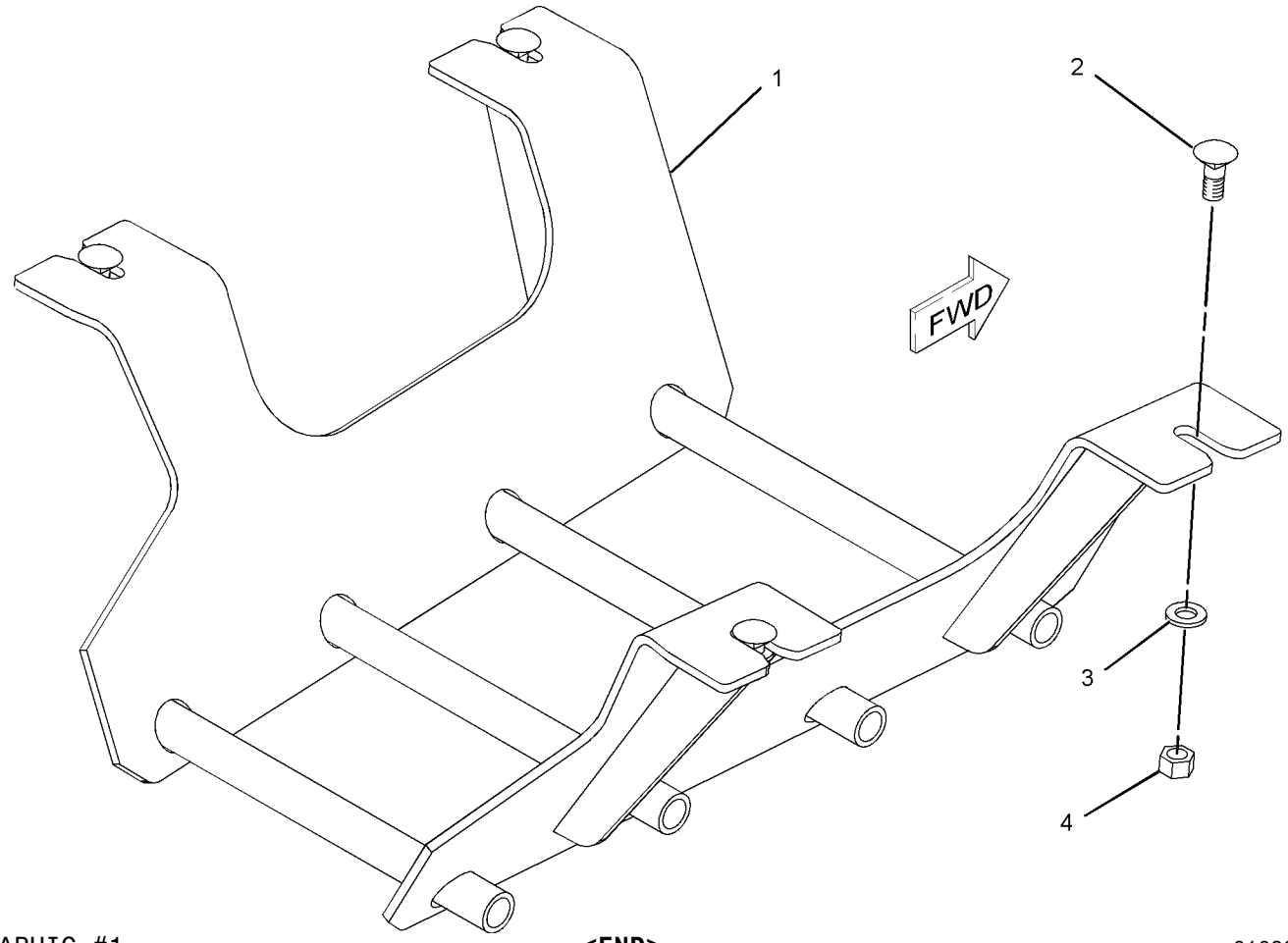

GRAPHIC #1 **<END>** g01083443

FRAME AND BODY

256-0324 GUARD GP-RADIATOR

S/N: EAT1-UP

AN ATTACHMENT

SMCS-7155 **i02446181**

NOTE	REF NO	GRAPHIC REF	PART NUMBER	QTY	PART NAME 1 2 3 4 5 6 (PRODUCT LEVEL)	SEE PAGE
	1	1	**256-0323**	1	COVER	
M	2	1	**7X-2572**	2	BOLT (M24X3X35-MM)	
	3	1	**8T-4167**	2	WASHER-HARD (26X44X4-MM THK)	

M-METRIC PART

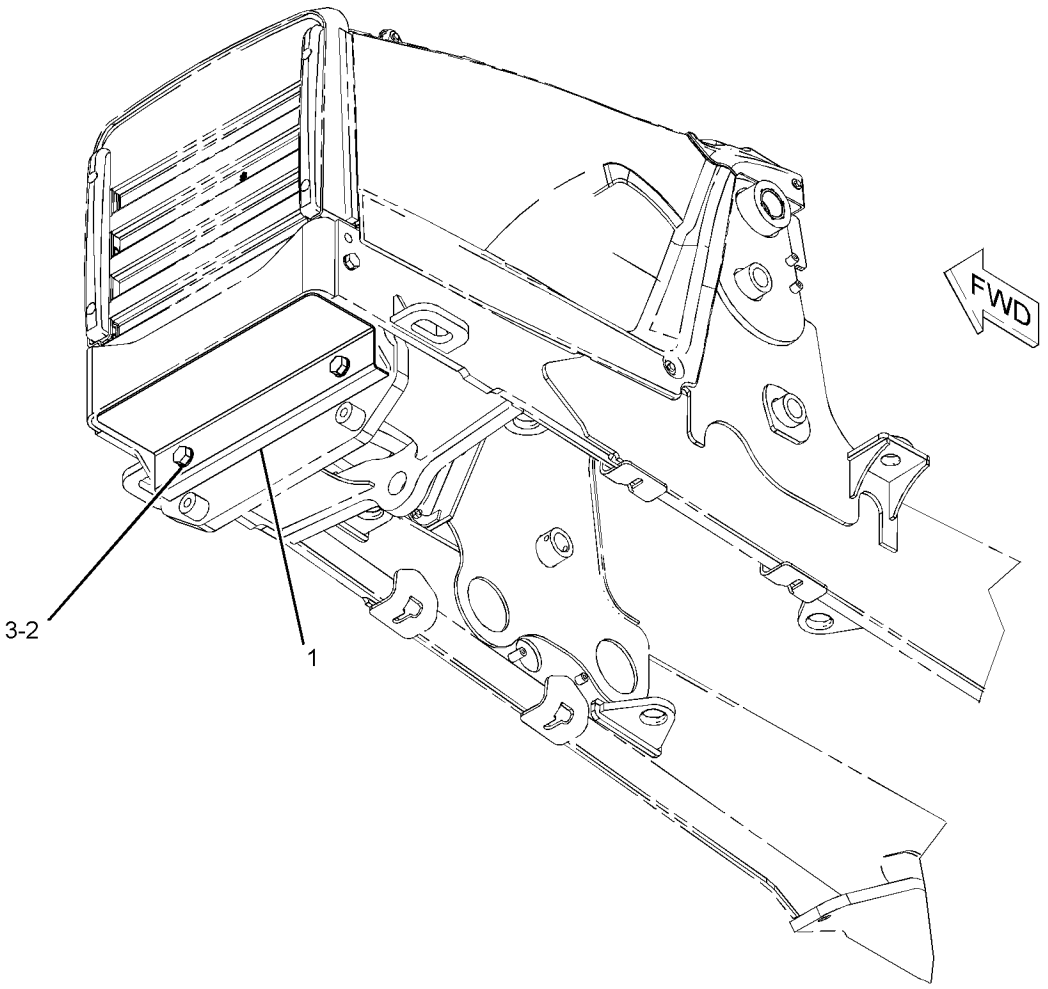

GRAPHIC #1 **<END>** g01096781

211-3546 HOOD & GUARD GP

S/N: EAT1-UP
PART OF 213-9289 CHASSIS AR
TYPE 1

SMCS-7150, 7170, 7251, 7263 **i03530623**

NOTE	REF NO	GRAPHIC REF	PART NUMBER	QTY	PART NAME 1 2 3 4 5 6 (PRODUCT LEVEL)	SEE PAGE
D	1	1	**6V-1580**		SEAL (0.4-M)	
	2	1	**123-0428**	2	BAR	
	3	1	**231-9363**	1	ENCLOSURE AS (RH)	
		1	**275-0002**	1	INSULATION	
		1	**244-1086**	1	ENCLOSURE (RH)	
	4	1	**244-1085**	1	ENCLOSURE (LH)	
	5	1	**244-7614**	1	GUARD AS	
Y	6	1	*245-5728*	1	HOOD GP-ENGINE	381
	7	1	**247-1080**	2	BUMPER AS	
	8	1	**247-6296**	1	GRILL	
	9	1	**250-3344**	1	COWLING AS	
		1	**250-3331**	1	FILM-STRIPE (YELLOW)	
	10	1	**252-9725**	1	BRACE	
	11	1	**7X-0579**	10	WASHER-HARD (8.8X25.5X2-MM THK)	
M	12	1	**7X-2564**	2	BOLT (M20X2.5X90-MM)	
	13	1	**8T-4121**	8	WASHER-HARD (11X21X2.5-MM THK)	
	14	1	**8T-4123**	2	WASHER (22X35X3.5-MM THK)	
M	15	1	**8T-4136**	2	BOLT (M10X1.5X25-MM)	
M	16	1	**8T-4137**	6	BOLT (M10X1.5X20-MM)	
M	17	1	**8T-4139**	2	BOLT (M12X1.75X30-MM)	
M	18	1	**8T-4189**	12	BOLT (M8X1.25X20-MM)	
	19	1	**8T-4223**	2	WASHER-HARD (13.5X25.5X3-MM THK)	
	20	1	**8T-4224**	7	WASHER-HARD (8.8X16X2-MM THK)	
M	21	1	**8T-7547**	5	BOLT (M8X1.25X30-MM)	

D-ORDER BY THE METER
M-METRIC PART
Y-SEPARATE ILLUSTRATION

211-3546 **HOOD & GUARD GP** *(contd.)* **i03530623**

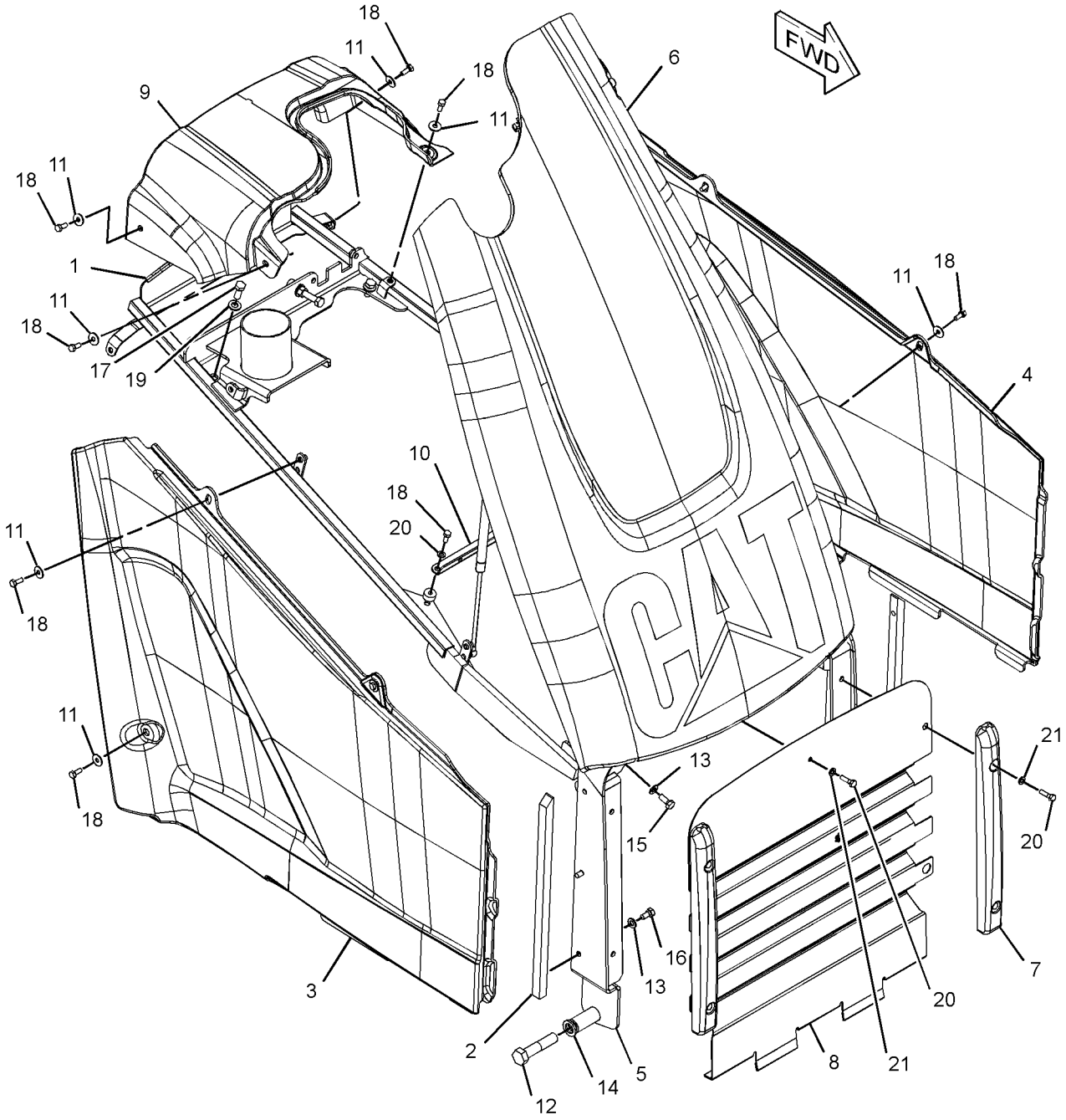

GRAPHIC #1 **<END>** g01214320

211-3546 HOOD & GUARD GP

S/N: EAT1-UP
PART OF 213-9289 CHASSIS AR
TYPE 2

SMCS-7150, 7170, 7251, 7263 **i03530624**

NOTE	REF NO	GRAPHIC REF	PART NUMBER	QTY	PART NAME 1 2 3 4 5 6 (PRODUCT LEVEL)	SEE PAGE
D	1	1	**6V-1580**		SEAL (0.4-M)	
	2	1	**123-0428**	2	BAR	
	3	1	**231-9363**	1	ENCLOSURE AS (RH)	
		1	**275-0002**	1	INSULATION	
		1	**244-1086**	1	ENCLOSURE (RH)	
	4	1	**244-1085**	1	ENCLOSURE (LH)	
	5	1	**244-7614**	1	GUARD AS	
Y	6	1	*245-5728*	1	HOOD GP-ENGINE	381
	7	1	**247-1080**	2	BUMPER AS	
	8	1	**247-6296**	1	GRILL	
	9	1	*250-3344*	1	COWLING AS	
		1	**250-3331**	1	FILM-STRIPE (YELLOW)	
C	10	1	**320-9655**	1	PLATE AS	
	11	1	**7X-0579**	10	WASHER-HARD (8.8X25.5X2-MM THK)	
M	12	1	**7X-2564**	2	BOLT (M20X2.5X90-MM)	
C	13	1	**8T-4121**	8	WASHER-HARD (11X21X2.5-MM THK)	
	14	1	**8T-4123**	2	WASHER (22X35X3.5-MM THK)	
M	15	1	**8T-4136**	2	BOLT (M10X1.5X25-MM)	
CM	16	1	**8T-4137**	6	BOLT (M10X1.5X20-MM)	
M	17	1	**8T-4139**	2	BOLT (M12X1.75X30-MM)	
CM	18	1	**8T-4189**	12	BOLT (M8X1.25X20-MM)	
	19	1	**8T-4223**	2	WASHER-HARD (13.5X25.5X3-MM THK)	
C	20	1	**8T-4224**	7	WASHER-HARD (8.8X16X2-MM THK)	
M	21	1	**8T-7547**	5	BOLT (M8X1.25X30-MM)	

C-CHANGE FROM PREVIOUS TYPE
D-ORDER BY THE METER
M-METRIC PART
Y-SEPARATE ILLUSTRATION

211-3546 **HOOD & GUARD GP** *(contd.)* **i03530624**

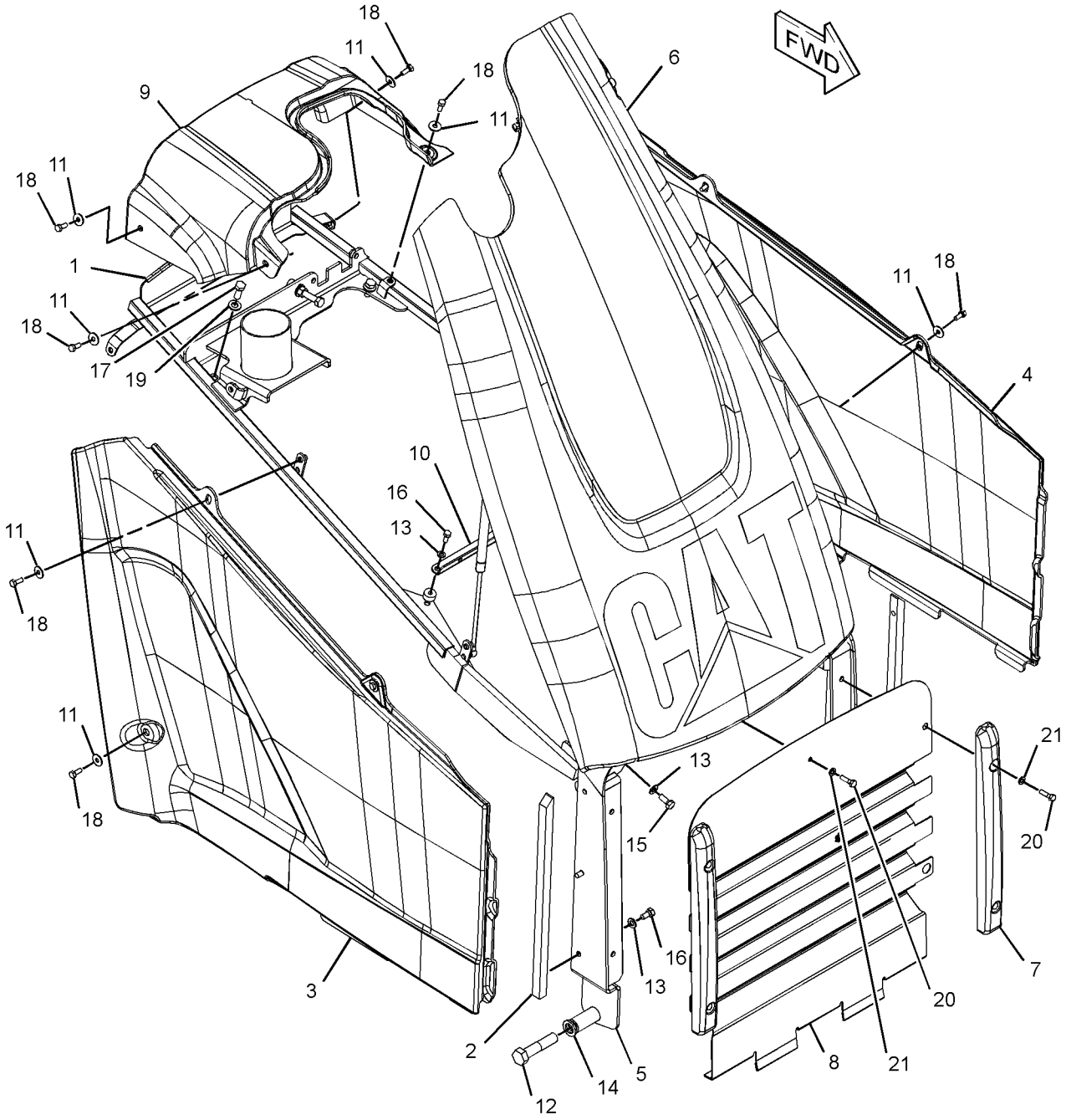

GRAPHIC #1 **<END>** g01560693

245-5728 HOOD GP-ENGINE

S/N: EAT1-UP

PART OF 211-3546 HOOD & GUARD GP

SMCS-7251 **i03160701**

NOTE	REF NO	GRAPHIC REF	PART NUMBER	QTY	PART NAME 1 2 3 4 5 6 (PRODUCT LEVEL)	SEE PAGE
	1	1	**318-9453**	1	FRAME AS	
J	2	1	**250-5881**	1	SPRING GP-GAS (RH)	
Y	3	1	*253-5384*	1	HOOD GP-ENGINE	382
J	4	1	**254-9301**	1	SPRING AS-GAS (LH)	
	5	1	**3B-4505**	2	LOCKWASHER	
	6	1	**8T-4223**	2	WASHER-HARD (13.5X25.5X3-MM THK)	
M	7	1	**8T-4244**	2	NUT (M12X1.75-THD)	
M	8	1	**8T-4648**	1	BOLT (M12X1.75X70-MM)	
M	9	1	**8T-6869**	2	BOLT (M8X1.25X60-MM)	
	10	1	**288-1157**	1	FILM-INSTRUCTION (UNLOCK)	
	11	1	**8T-4224**	4	WASHER-HARD (8.8X16X2-MM THK)	
					AVAILABLE REPAIR KIT(S):	
J			**275-0001**	2	KIT-GAS SPRING	
					(EACH INCLUDES STUDS & CLIPS)	

J-KIT MARKED J SERVICES PART(S) MARKED J
M-METRIC PART
Y-SEPARATE ILLUSTRATION

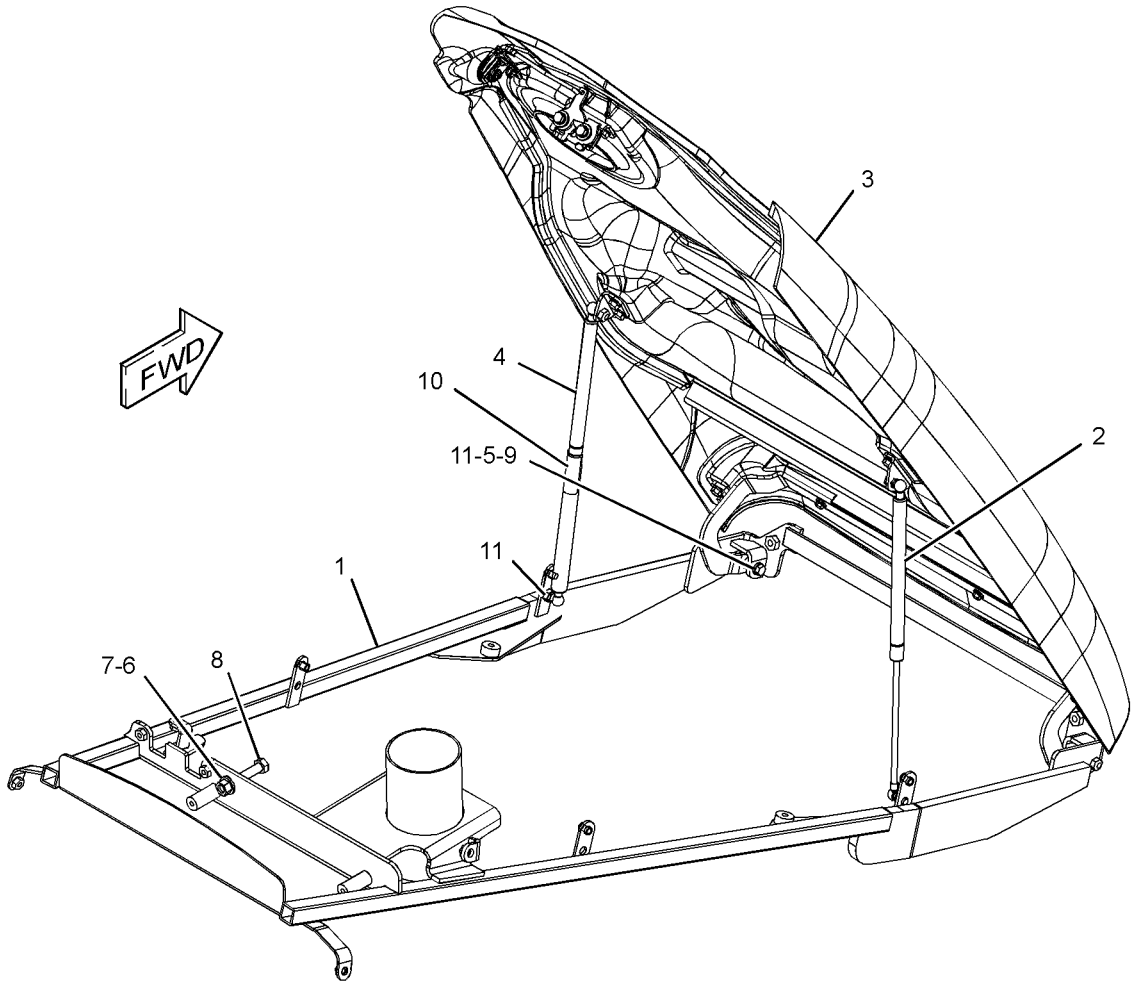

GRAPHIC #1 **<END>** g01281696

FRAME AND BODY

253-5384 HOOD GP-ENGINE

S/N: EAT1-UP
PART OF 245-5728 HOOD GP-ENGINE
TYPE 1

SMCS-7251 **i02707232**

NOTE	REF NO	GRAPHIC REF	PART NUMBER	QTY	PART NAME 1 2 3 4 5 6 (PRODUCT LEVEL)	SEE PAGE
	1	1	**5E-8557**	1	CLIP	
	2	1	**245-4914**	1	HINGE AS	
	3	1	**246-2718**	1	HOOD AS	
	4	1	**248-0395**	1	BRACKET AS	
	5	1	**250-1878**	1	FILM-IDENTIFICATION (CAT)	
	6	1	**250-3330**	1	FILM-STRIPE (YELLOW)	
	7	1	**250-6850**	2	BRACKET AS	
	8	1	**250-6858**	1	LATCH AS (HOOD)	
	9	1	**251-4374**	1	LOCK AS (HOOD)	
	10	1	**251-4375**	1	ROD	
	11	1	**6V-5834**	2	SCREW-HEAD (10-14X0.75-IN)	
M	12	1	**7X-2537**	2	BOLT (M8X1.25X35-MM)	
M	13	1	**8T-4189**	10	BOLT (M8X1.25X20-MM)	
	14	1	**8T-4224**	12	WASHER-HARD (8.8X16X2-MM THK)	
E	15	1	**9X-8699**		SEAL (70-CM)	
	16	1	**7X-0620**	2	WASHER-HARD (5.5X13X1.6-MM THK)	

E-ORDER BY THE CENTIMETER
M-METRIC PART

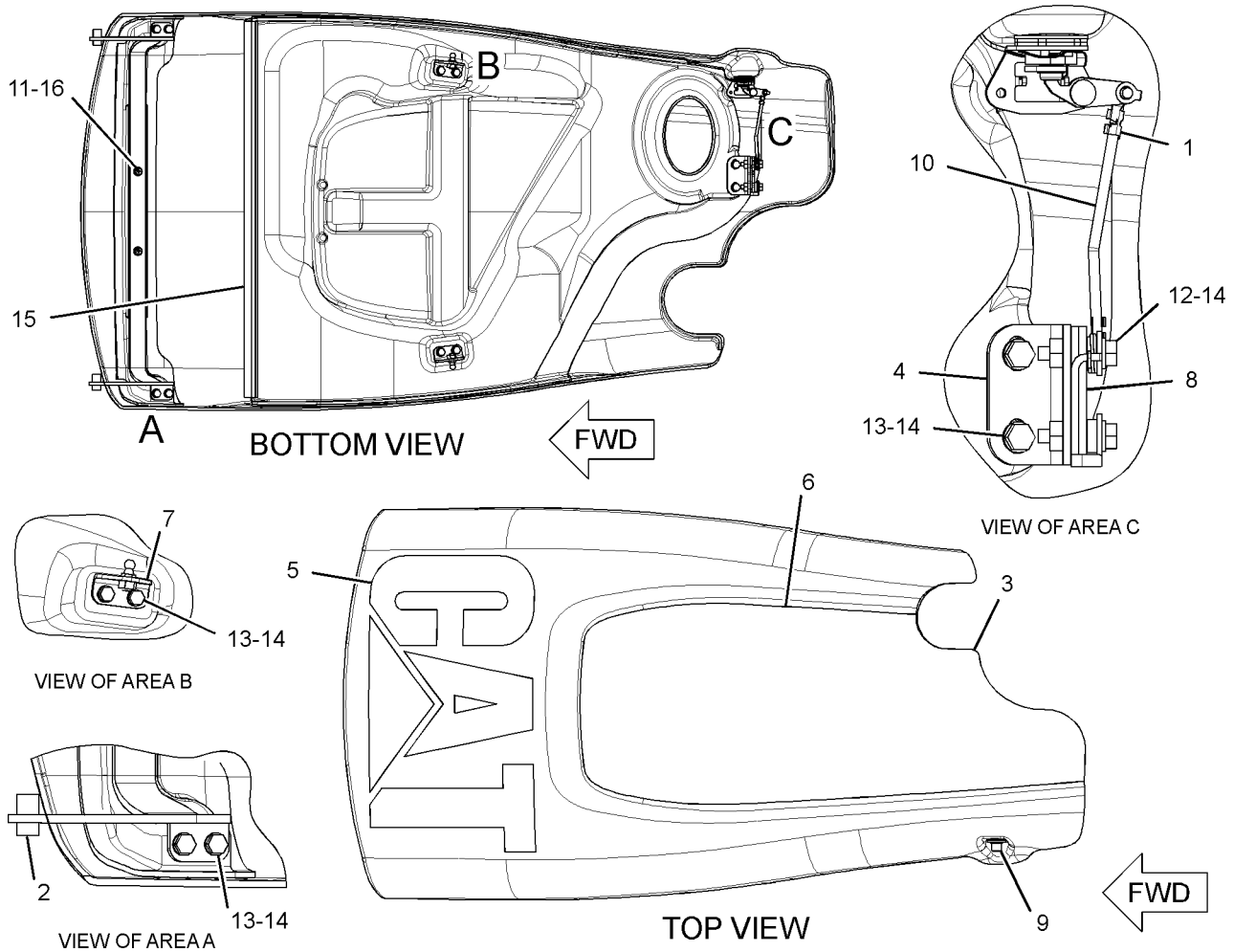

GRAPHIC #1

<END>

g01364466

FRAME AND BODY

253-5384 HOOD GP-ENGINE

S/N: EAT1-UP
PART OF 245-5728 HOOD GP-ENGINE
TYPE 2

SMCS-7251 **i03444002**

NOTE	REF NO	GRAPHIC REF	PART NUMBER	QTY	PART NAME 1 2 3 4 5 6 (PRODUCT LEVEL)	SEE PAGE
	1	1	**5E-8557**	1	CLIP	
C	2	1	**318-4217**	1	HINGE AS (RH)	
	3	1	**246-2718**	1	HOOD AS	
	4	1	**248-0395**	1	BRACKET AS	
	5	1	**250-1878**	1	FILM-IDENTIFICATION (CAT)	
E	6	1	**9X-8699**		SEAL (70-CM)	
	7	1	**250-6850**	2	BRACKET AS	
	8	1	**250-6858**	1	LATCH AS (HOOD)	
	9	1	**251-4374**	1	LOCK AS (HOOD)	
	10	1	**251-4375**	1	ROD	
C	11	1	**318-4222**	1	HINGE AS (LH)	
M	12	1	**7X-2537**	2	BOLT (M8X1.25X35-MM)	
M	13	1	**8T-4189**	10	BOLT (M8X1.25X20-MM)	
	14	1	**8T-4224**	12	WASHER-HARD (8.8X16X2-MM THK)	

C-CHANGE FROM PREVIOUS TYPE
E-ORDER BY THE CENTIMETER
M-METRIC PART

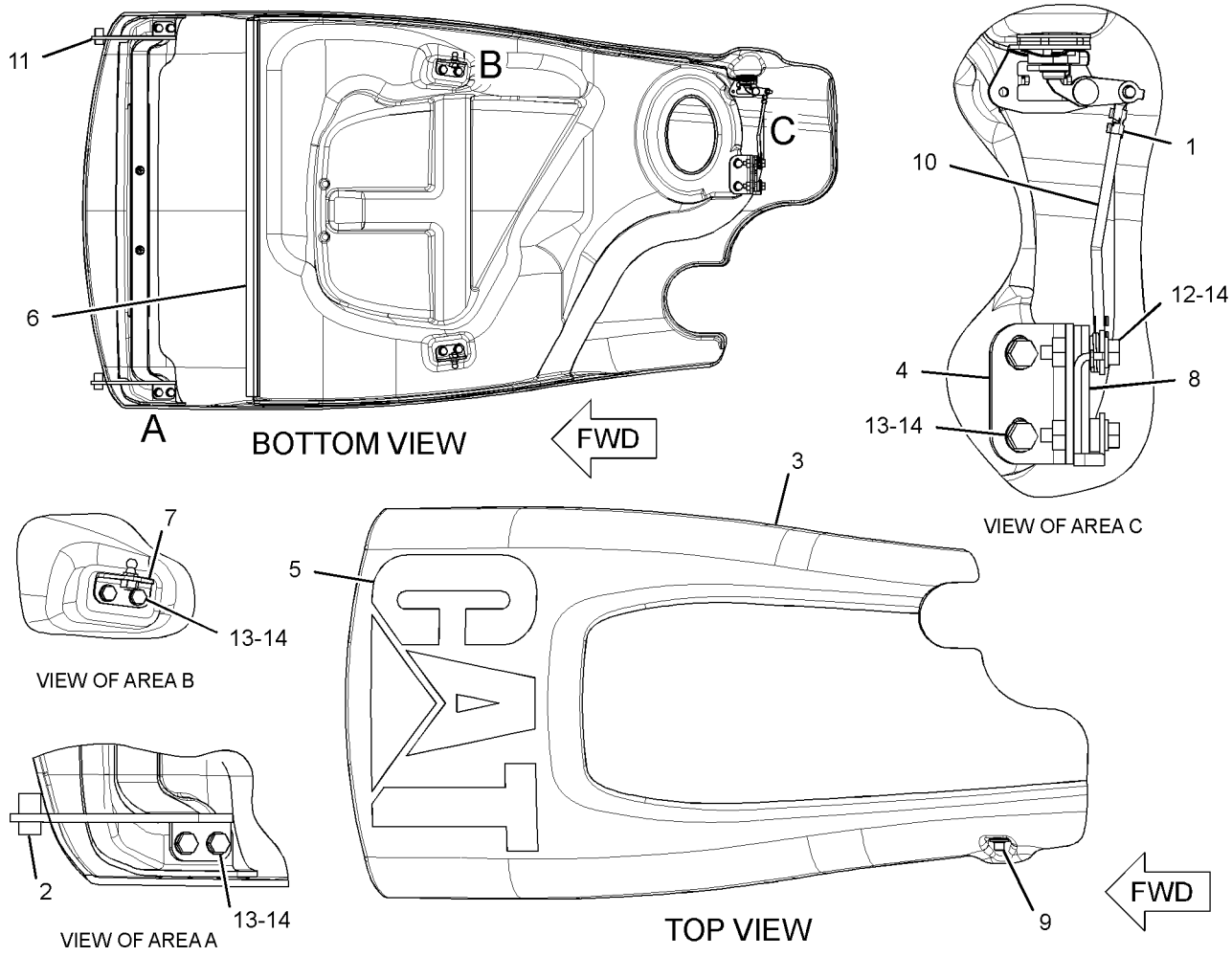

GRAPHIC #1

<END>

g01797993

HYDRAULIC SYSTEM

226-0420 ACCUMULATOR GP-PILOT OIL—CHARGED

S/N: EAT1-UP

PART OF 267-2765 LINES GP-PILOT

FIELD REPLACEMENT ORDER 230-3489—PAGE 385

SMCS-5077 **i02431359**

NOTE	REF NO	GRAPHIC REF	PART NUMBER	QTY	PART NAME 1 2 3 4 5 6 (PRODUCT LEVEL)	SEE PAGE
					(NO SERVICED PARTS)	

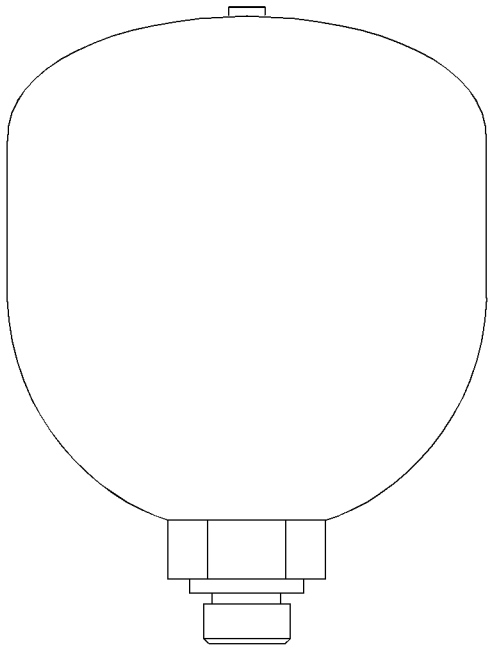

GRAPHIC #1 **<END>** g01214922

230-3489 ACCUMULATOR GP-PILOT OIL—UNCHARGED

S/N: EAT1-UP

FIELD REPLACEMENT FOR 226-0420—PAGE 384

SMCS-5077 **i02039724**

NOTE	REF NO	GRAPHIC REF	PART NUMBER	QTY	PART NAME 1 2 3 4 5 6 (PRODUCT LEVEL)	SEE PAGE
					(NO SERVICED PARTS)	

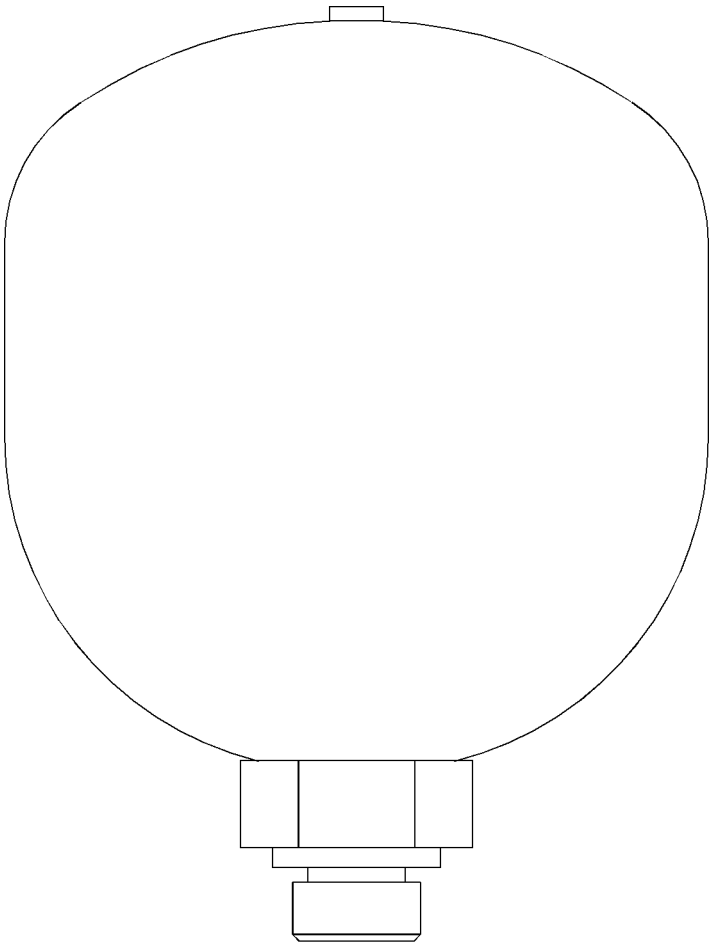

GRAPHIC #1

<END>

g01049358

162-3960 ACCUMULATOR GP-RIDE CONTROL–CHARGED

S/N: EAT1-UP

PART OF 162-3961 ACCUMULATOR GP-RIDE CONTROL, 264-0187 INSTALLATION GP-RIDE CONTROL, 246-9802 LINES GP-RIDE CONTROL

FIELD REPLACEMENT ORDER 162-3961–PAGE 387

AN ATTACHMENT

SMCS-5077 **i02886373**

NOTE	REF NO	GRAPHIC REF	PART NUMBER	QTY	PART NAME 1 2 3 4 5 6 (PRODUCT LEVEL)	SEE PAGE
	1	1	**158-2306**	1	VALVE-GAS	
	2	1	**241-0037**	1	FILM-WARNING (HIGH PRESSURE, READ OMM)	
	3	1	**170-0503**	1	FILM-WARNING (ACCUM, HIGH PRESS, READ OMM)	
					AVAILABLE REPAIR KIT(S):	
			160-0496	1	KIT-SEAL (ACCUMULATOR)	
					(INCLUDES SEALS)	

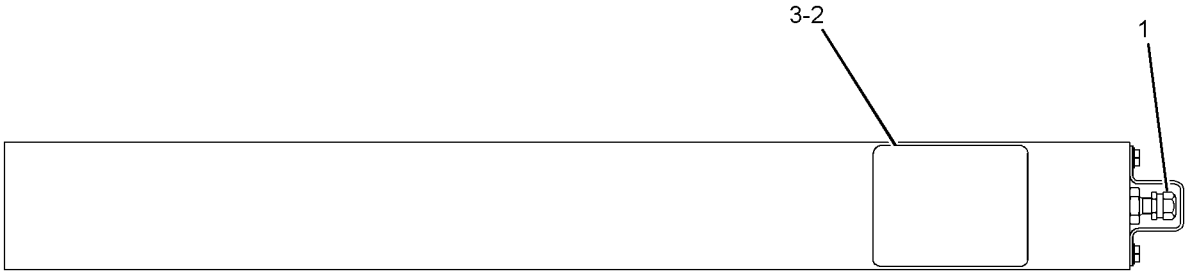

GRAPHIC #1 **<END>** g01220710

162-3961 ACCUMULATOR GP-RIDE CONTROL—UNCHARGED

S/N: EAT1-UP
PART OF 264-0187 INSTALLATION GP-RIDE CONTROL
FIELD REPLACEMENT FOR 162-3960—PAGE 386
AN ATTACHMENT

SMCS-5077 **i03511003**

NOTE	PART NUMBER	QTY	PART NAME 1 2 3 4 5 6 (PRODUCT LEVEL)	SEE PAGE
Y	**162-3960**	1	ACCUMULATOR GP-RIDE CONTROL (CHARGED)	386
Y-SEPARATE ILLUSTRATION				

<END>

209-9937 CONTROL AR-RIDE

S/N: EAT1-UP
AN ATTACHMENT

SMCS-5004 **i02105094**

NOTE	PART NUMBER	QTY	PART NAME 1 2 3 4 5 6 (PRODUCT LEVEL)	SEE PAGE
Y	*246-9802*	1	LINES GP-RIDE CONTROL	476
Y	*211-4259*	1	WIRING GP-RIDE CONTROL	201
Y-SEPARATE ILLUSTRATION				

<END>

HYDRAULIC SYSTEM

224-6237 CYLINDER & LINES GP-THUMB

S/N: EAT1-UP
PART OF 271-3024, 271-3025, 271-3026, 271-3027, 281-6716, 282-0865, 282-0866, 282-0887, 282-0888, 282-0889, 282-0890, 282-0891, 282-0892, 282-0893, 282-0894, 282-5409 THUMB AR
AN ATTACHMENT
TYPE 1

SMCS-5057, 5362 **i02501589**

NOTE	REF NO	GRAPHIC REF	PART NUMBER	QTY	PART NAME 1 2 3 4 5 6 (PRODUCT LEVEL)	SEE PAGE
	1	1	**106-0401**	1	FITTING (QUICK DISCONNECT, FEMALE)	
	2	1	**106-0406**	1	FITTING (QUICK DISCONNECT, MALE)	
I	3	1	**221-4314**	2	HOSE AS	
	4	1	**270-3409**	2	SPACER (45.24X63.5X10-MM THK)	
Y	5	1	**275-4243**	1	CYLINDER GP-THUMB	415
	6	1	*153-6252*	2	CONNECTOR AS	
					(EACH INCLUDES)	
		1	**6V-8398**	1	SEAL-O-RING	
		1	**7M-8485**	1	SEAL-O-RING	
		1	**9X-8408**	1	CONNECTOR	
	7	1	**6V-8398**	2	SEAL-O-RING	

I-REFER TO HYDRAULIC INFORMATION SYSTEM
Y-SEPARATE ILLUSTRATION

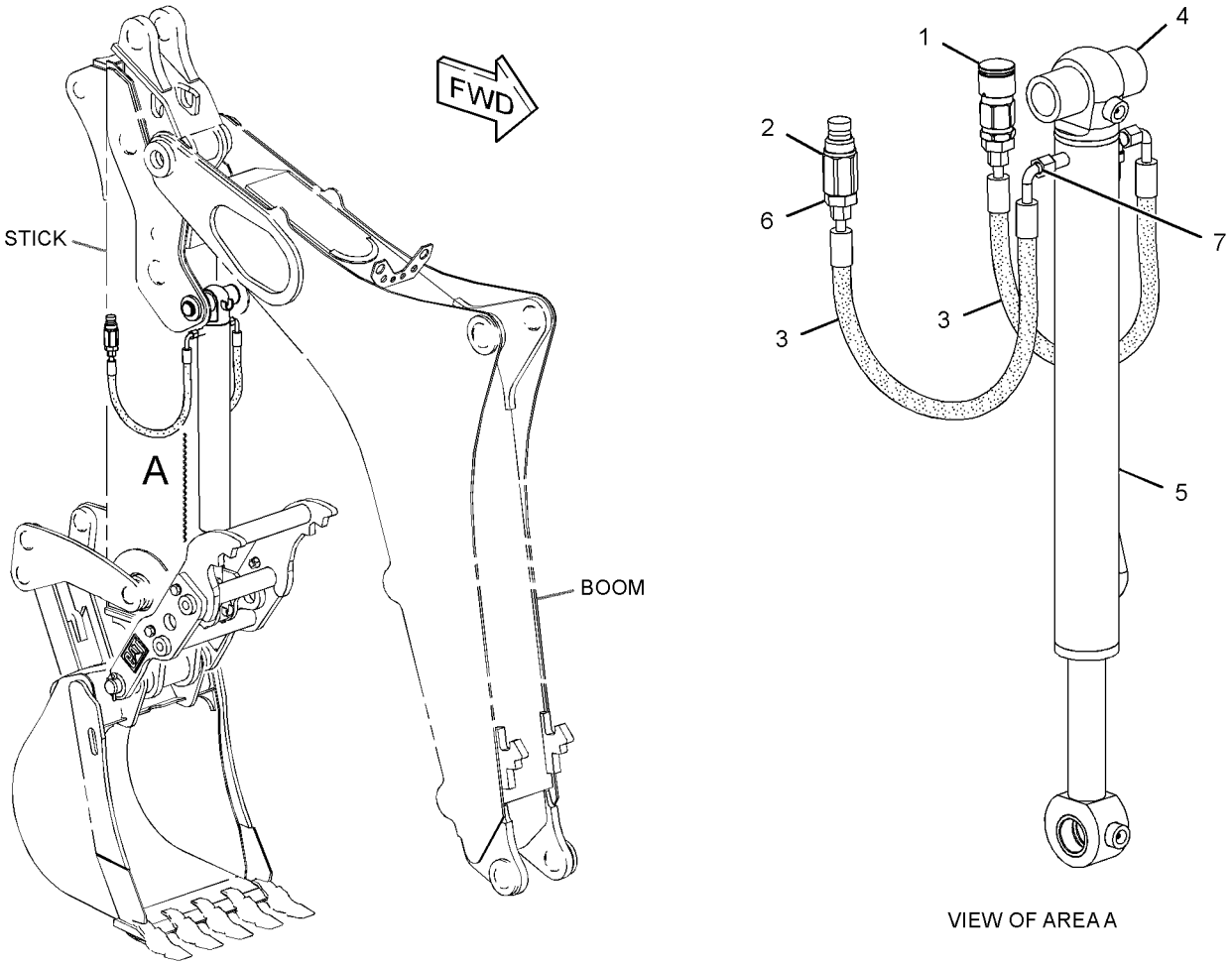

GRAPHIC #1 **<END>** g01290622

224-6237 CYLINDER & LINES GP-THUMB

S/N: EAT1-UP

PART OF 271-3024, 271-3025, 271-3026, 271-3027, 281-6716, 282-0865, 282-0866, 282-0887, 282-0888, 282-0889, 282-0890, 282-0891, 282-0892, 282-0893, 282-0894, 282-5409 THUMB AR

AN ATTACHMENT

TYPE 2

SMCS-5057, 5362 **i02783040**

NOTE	REF NO	GRAPHIC REF	PART NUMBER	QTY	PART NAME 1 2 3 4 5 6 (PRODUCT LEVEL)	SEE PAGE
I	1	1	**221-4314**	2	HOSE AS	
	2	1	**270-3409**	2	SPACER (45.24X63.5X10-MM THK)	
Y	3	1	**275-4243**	1	CYLINDER GP-THUMB	415
C	4	1	**278-4497**	1	BRACKET	
C	5	1	**278-4498**	1	BRACKET	
C	6	1	**280-2652**	2	VALVE-BALL	
C	7	1	**294-0973**	1	TOOL	
C	8	1	*148-8340*	2	CONNECTOR AS	
					(EACH INCLUDES)	
		1	**3K-0360**	1	SEAL-O-RING	
		1	**6V-8398**	1	SEAL-O-RING	
		1	**6V-8639**	1	CONNECTOR	
C	9	1	*148-8392*	2	ELBOW AS	
					(EACH INCLUDES)	
		1	**6V-9746**	1	SEAL-O-RING	
		1	**6V-9853**	1	ELBOW	
C	10	1	*148-8449*	2	TEE AS-SWIVEL	
					(EACH INCLUDES)	
		1	**6V-9746**	2	SEAL-O-RING	
		1	**6V-9839**	1	TEE-SWIVEL	
C	11	1	**3K-0360**	2	SEAL-O-RING	
	12	1	**6V-8398**	2	SEAL-O-RING	
C	13	1	**7C-4354**	2	CLIP	
C	14	1	**7I-1036**	2	COUPLING AS	
C	15	1	**8T-4121**	8	WASHER-HARD (11X21X2.5-MM THK)	
CM	16	1	**8T-4133**	2	NUT (M10X1.5-THD)	
CM	17	1	**8T-4136**	6	BOLT (M10X1.5X25-MM)	

C-CHANGE FROM PREVIOUS TYPE
I-REFER TO HYDRAULIC INFORMATION SYSTEM
M-METRIC PART
Y-SEPARATE ILLUSTRATION

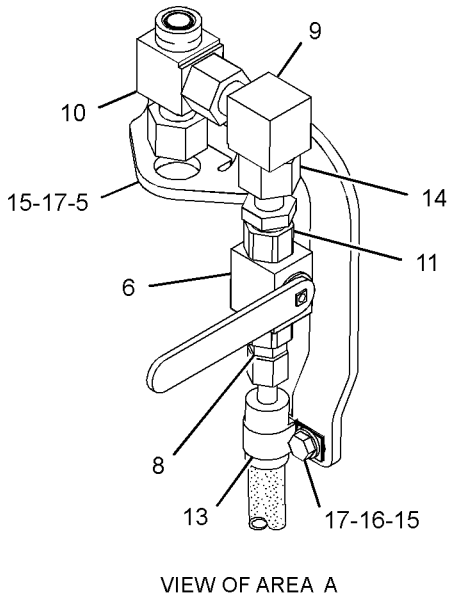

VIEW OF AREA A

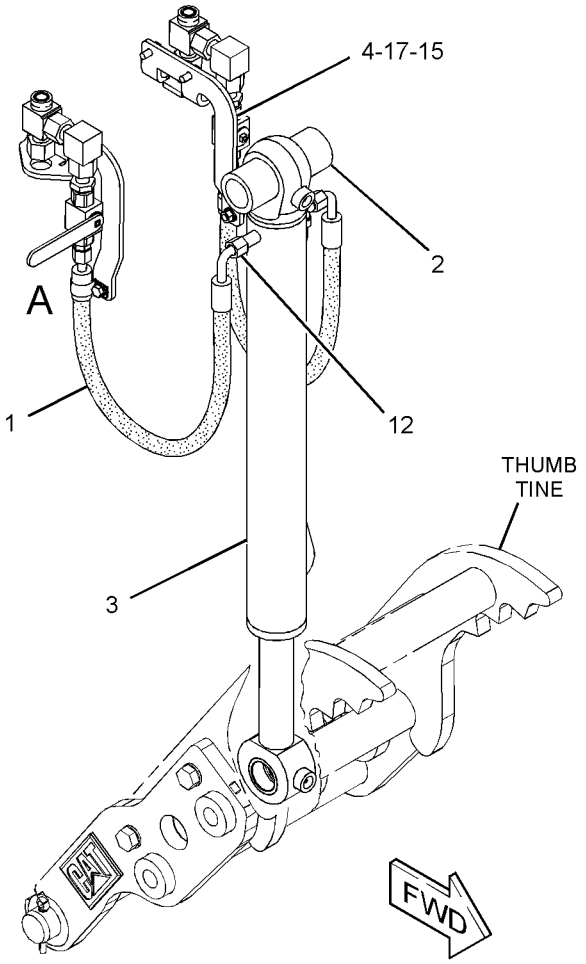

GRAPHIC #1 **<END>** g01392330

HYDRAULIC SYSTEM

299-5362 CYLINDER & LINES GP-THUMB

S/N: EAT1-UP
PART OF 282-5409 THUMB AR
AN ATTACHMENT

SMCS-5057, 5362 **i03517920**

NOTE	REF NO	GRAPHIC REF	PART NUMBER	QTY	PART NAME 1 2 3 4 5 6 (PRODUCT LEVEL)	SEE PAGE
I	1	1	**221-4314**	2	HOSE AS	
	2	1	**270-3409**	2	SPACER (45.24X63.5X10-MM THK)	
Y	3	1	**275-4243**	1	CYLINDER GP-THUMB	415
	4	1	**278-4497**	1	BRACKET	
	5	1	**278-4498**	1	BRACKET	
	6	1	**280-2652**	2	VALVE-BALL	
	7	1	**294-0973**	1	TOOL	
	8	1	*148-8340*	2	CONNECTOR AS	
					(EACH INCLUDES)	
		1	**3K-0360**	1	SEAL-O-RING	
		1	**6V-8398**	1	SEAL-O-RING	
		1	**6V-8639**	1	CONNECTOR	
	9	1	*148-8392*	2	ELBOW AS	
					(EACH INCLUDES)	
		1	**6V-9746**	1	SEAL-O-RING	
		1	**6V-9853**	1	ELBOW	
	10	1	*148-8449*	2	TEE AS-SWIVEL	
					(EACH INCLUDES)	
		1	**6V-9746**	2	SEAL-O-RING	
		1	**6V-9839**	1	TEE-SWIVEL	
	11	1	**3K-0360**	2	SEAL-O-RING	
	12	1	**6V-8398**	2	SEAL-O-RING	
	13	1	**6V-1889**	2	CLIP	
	14	1	**7I-1036**	2	COUPLING AS	
	15	1	**8T-4121**	8	WASHER-HARD (11X21X2.5-MM THK)	
M	16	1	**8T-4133**	2	NUT (M10X1.5-THD)	
M	17	1	**8T-4136**	4	BOLT (M10X1.5X25-MM)	
M	18	1	**8T-4195**	2	BOLT (M10X1.5X30-MM)	

I-REFER TO HYDRAULIC INFORMATION SYSTEM
M-METRIC PART
Y-SEPARATE ILLUSTRATION

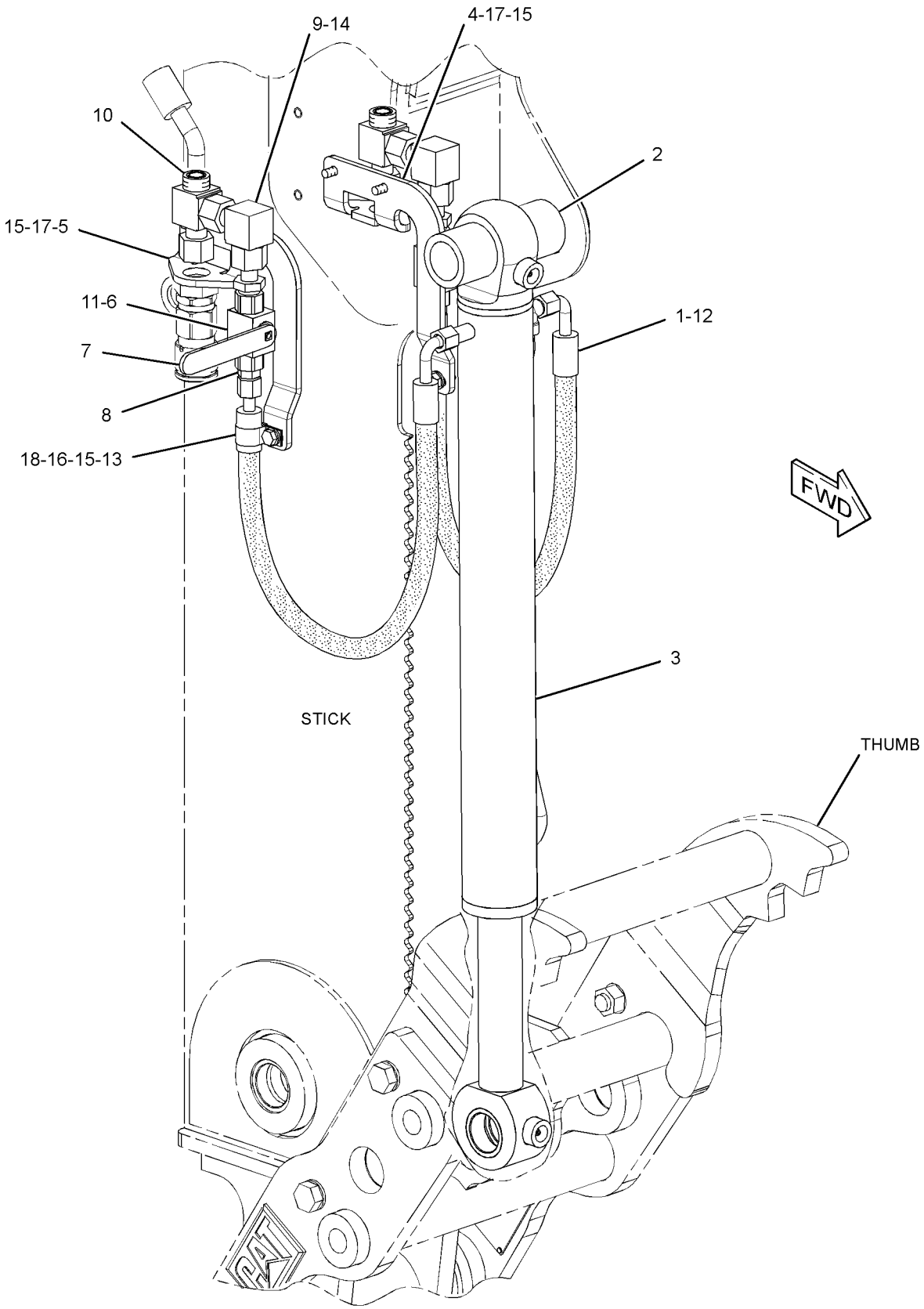

GRAPHIC #1 **<END>** g01456457

HYDRAULIC SYSTEM

210-7095 CYLINDER GP-BACKHOE BUCKET

S/N: EAT1-UP
95-MM (3.7-IN) BORE X 852-MM (33.5-IN) STROKE
PART OF 213-9309, 291-9207 BACKHOE AR-EXTENDABLE STICK, 213-9306, 291-9206 BACKHOE AR-STANDARD STICK
AN ATTACHMENT

SMCS-5457 **i03356103**

NOTE	REF NO	GRAPHIC REF	PART NUMBER	QTY	PART NAME 1 2 3 4 5 6 (PRODUCT LEVEL)	SEE PAGE
	1	1	**5J-7036**	1	WIPER-ROD	
	2	1	**8T-8737**	1	PLUG-SEAL	
	3	1	**212-0907**	1	PLATE-CONNECTOR	
	4	1	**214-6667**	1	ROD AS	
		1	**9R-0162**	2	BEARING-SLEEVE	
	5	1	**214-6670**	1	CYLINDER AS	
		1	**6V-8398**	1	SEAL-O-RING	
		1	*214-6669*	1	CAP AS	
		1	**9R-0139**	2	BEARING-SLEEVE	
		1	**095-0879**	1	PIN-SPRING	
	6	1	**217-8763**	1	COVER-PROTECTION	
	7	1	**222-1395**	1	BOLT AS	
	8	1	**228-3473**	1	PISTON	
	9	1	**102-8804**	1	KIT-RECEPTACLE (4-PIN)	
					(INCLUDES RECEPTACLE AS & WEDGE)	
	10	1	**106-1251**	1	WASHER (36.7X66X6-MM THK)	
	11	1	**167-2207**	1	SEAL AS-BUFFER	
	12	1	**167-2317**	1	SEAL-U-CUP	
	13	1	**188-2199**	1	SEAL-O-RING	
	14	1	**191-6191**	1	HEAD	
	15	1	**1H-8128**	1	SEAL-O-RING	
	16	1	**1S-0669**	1	RING (BACKUP)	
	17	1	**213-2491**	1	SENSOR GP-POSITION	
	18	1	**215-1942**	1	RING-BACKUP	
	19	1	**8T-5070**	1	SETSCREW-SOCKET (3/8-16X0.5-IN)	
	20	1	**6R-0365**	1	SEAL-O-RING	
	21	1	**3V-2431**	2	WASHER (10.2X16X2-MM THK)	
	22	1	**4S-5565**	2	BOLT (3/8-16X0.875-IN)	
E	23	1	**9X-1386**		SLEEVE (3-CM)	
E	23A	1	**9X-1386**		SLEEVE (9-CM)	
	24	1	**8C-9200**	1	RING-WEAR	
	25	1	**223-3357**	1	RING-WEAR	
	26	1	**5J-8009**	1	SEAL	
	27	1	**5J-8010**	1	RING-EXPANDER	
	28	1	**102-2244**	1	GROMMET	

E-ORDER BY THE CENTIMETER

210-7095 CYLINDER GP-BACKHOE BUCKET *(contd.)* i03356103

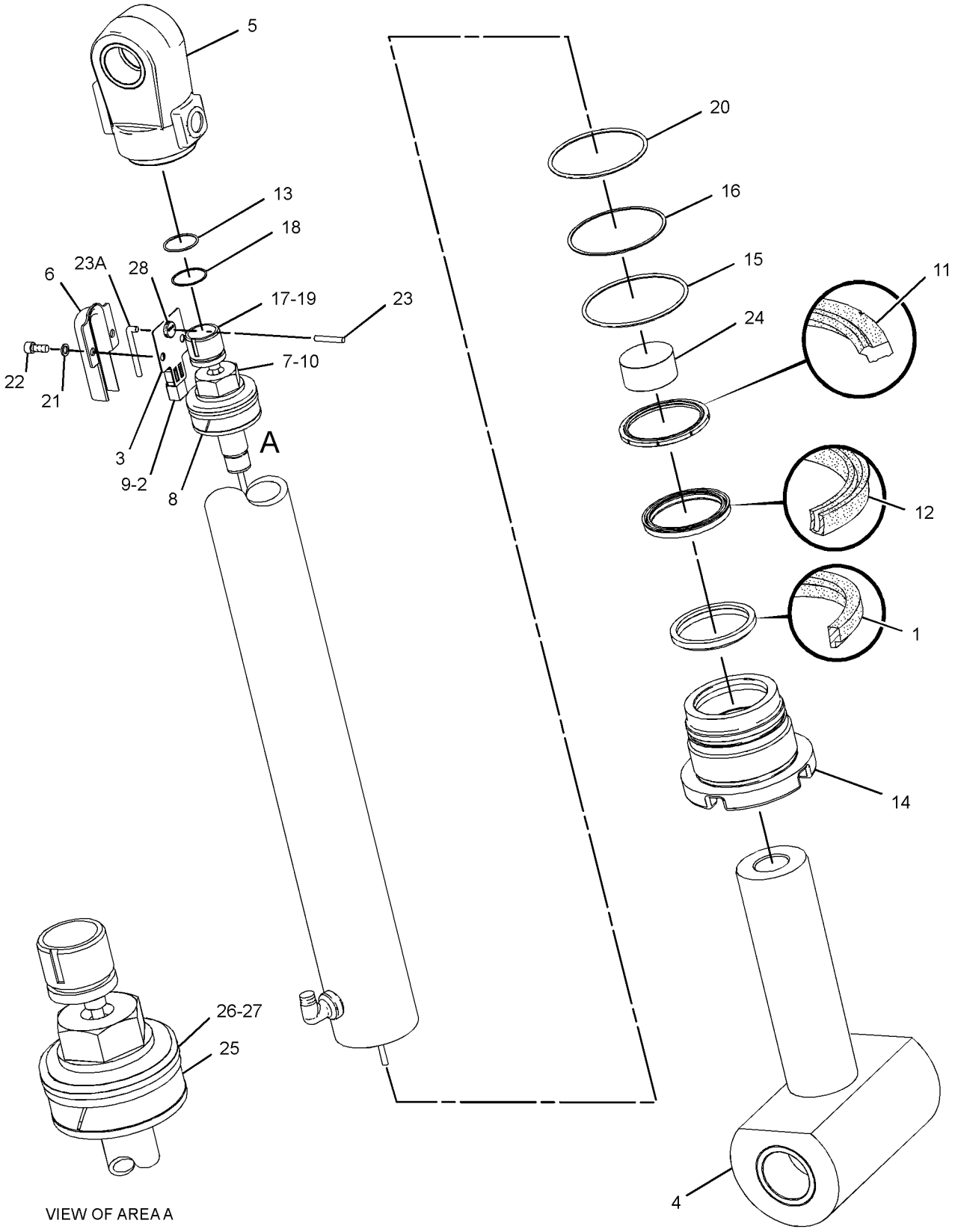

VIEW OF AREA A

GRAPHIC #1 **<END>** g01730433

HYDRAULIC SYSTEM

210-7096 CYLINDER GP-BACKHOE BUCKET

S/N: EAT1-UP

95.25-MM (3.7-IN) BORE X 852-MM (33.5-IN) STROKE

PART OF 213-9304 BACKHOE AR-EXTENDABLE STICK, 213-9301 BACKHOE AR-STANDARD STICK

AN ATTACHMENT

SMCS-5457 **i03455780**

NOTE	REF NO	GRAPHIC REF	PART NUMBER	QTY	PART NAME 1 2 3 4 5 6 (PRODUCT LEVEL)	SEE PAGE
	1	1	**5J-7036**	1	WIPER-ROD	
	2	1	**214-6397**	1	ROD AS	
	2A	1	**9R-0162**	2	BEARING-SLEEVE	
	3	1	**214-6401**	1	CYLINDER AS	
	3A	1	**6V-8398**	1	SEAL-O-RING	
	3B	1	**9R-0139**	1	BEARING-SLEEVE	
	4	1	**228-3473**	1	PISTON	
	5	1	**106-1251**	1	WASHER (36.7X66X6-MM THK)	
	6	1	**167-2207**	1	SEAL AS-BUFFER	
	7	1	**167-2317**	1	SEAL-U-CUP	
M	8	1	**173-9682**	1	BOLT (M36X4X100-MM)	
	9	1	**191-6191**	1	HEAD	
	10	1	**1H-8128**	1	SEAL-O-RING	
	11	1	**1S-0669**	1	RING (BACKUP)	
	12	1	**223-3357**	1	RING-WEAR	
	13	1	**6R-0365**	1	SEAL-O-RING	
	14	1	**5J-8009**	1	SEAL	
	15	1	**5J-8010**	1	RING-EXPANDER	
	16	1	**8C-9200**	1	RING-WEAR	

M-METRIC PART

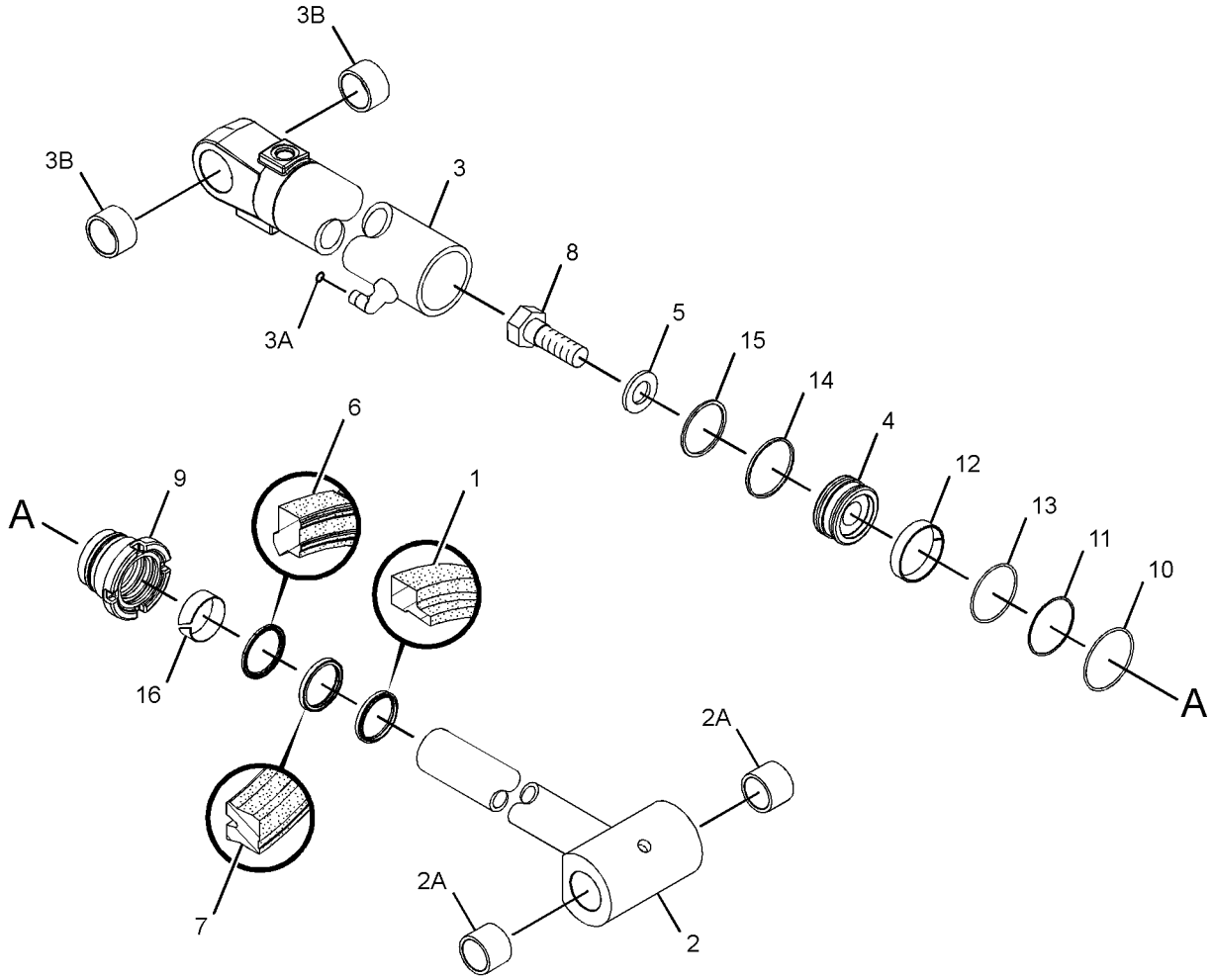

GRAPHIC #1 **<END>** g01804535

246-9884 CYLINDER GP-BOOM

S/N: EAT1-UP
133-MM (5.2-IN) BORE X 1032-MM (40.6-IN) STROKE
PART OF 213-9304 BACKHOE AR-EXTENDABLE STICK, 213-9301 BACKHOE AR-STANDARD STICK
AN ATTACHMENT

SMCS-5456 **i03505261**

NOTE	REF NO	GRAPHIC REF	PART NUMBER	QTY	PART NAME 1 2 3 4 5 6 (PRODUCT LEVEL)	SEE PAGE
J	1	1	**225-3284**	1	SEAL-WIPER	
	2	1	**250-1556**	1	PISTON	
	3	1	**250-1560**	1	ROD AS	
		1	**250-1561**	2	BEARING	
		1	**276-6623**	1	PLUNGER	
		1	**2Y-5821**	1	RING	
		1	**9T-2178**	1	SPRING	
	4	1	**274-2071**	1	HEAD	
	5	1	**276-7235**	1	CYLINDER AS	
		1	**6V-9746**	1	SEAL-O-RING	
		1	**203-7807**	1	ELBOW	
J	6	1	**167-2208**	1	SEAL AS-BUFFER	
J	7	1	**167-2319**	1	SEAL-U-CUP	
J	8	1	**2D-0714**	1	RING-WEAR	
J	9	1	**2H-9247**	1	SEAL-O-RING	
	10	1	**2J-0564**	1	LOCKNUT (2-12-THD)	
J	11	1	**2J-7767**	1	RING-BACKUP	
J	12	1	**5F-3106**	1	SEAL-O-RING	
	13	1	**5J-7232**	1	SEAL	
	14	1	**5J-7233**	1	RING-EXPANDER	
J	15	1	**8C-9161**	1	RING-WEAR	
					AVAILABLE REPAIR KIT(S):	
J			**295-9887**	1	KIT-SEAL	
					(ALSO INCLUDES SEAL AS)	

J-KIT MARKED J SERVICES PARTS MARKED J

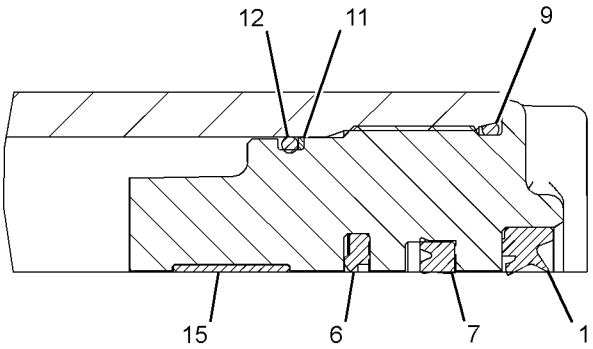

VIEW OF AREA A

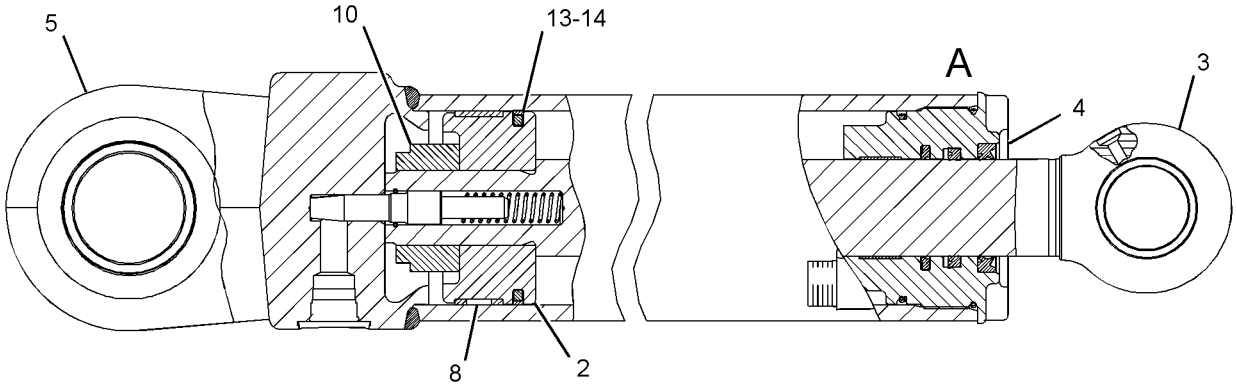

GRAPHIC #1 **<END>** g01211932

268-9051 CYLINDER GP-BOOM

S/N: EAT1-UP
133-MM(5.2-IN) BORE X 1026-MM(40.39-IN) STROKE
PART OF 213-9309, 291-9207 BACKHOE AR-EXTENDABLE STICK, 213-9306, 291-9206 BACKHOE AR-STANDARD STICK
AN ATTACHMENT

SMCS-5456 **i03505287**

NOTE	REF NO	GRAPHIC REF	PART NUMBER	QTY	PART NAME 1 2 3 4 5 6 (PRODUCT LEVEL)	SEE PAGE
	1	1	**102-2244**	1	GROMMET	
	3	1	**212-0907**	1	PLATE-CONNECTOR	
	4	1	**217-3312**	1	MAGNET	
	5	1	**225-3284**	1	SEAL-WIPER	
	6	1	**246-9113**	1	RETAINER	
	7	1	**274-1640**	1	SENSOR GP-POSITION	
		1	**9X-3401**	3	PIN-CONNECTOR (16-GA TO 18-GA)	
	8	1	**274-2071**	1	HEAD	
	9	1	**274-2072**	1	PISTON	
	10	1	**274-2075**	1	ROD AS	
		1	**250-1561**	2	BEARING	
	11	1	**274-2077**	1	CYLINDER AS	
		1	**6V-9746**	1	SEAL-O-RING	
		1	**203-7807**	1	ELBOW	
	12	1	**274-5232**	1	PLUNGER	
	13	1	**276-1816**	1	GUARD	
	14	1	**300-7930**	1	RING-RETAINING	
	15	1	**305-0042**	1	SETSCREW	
	16	1	**309-6232**	1	COVER	
	17	1	**095-1608**	1	SEAL-O-RING	
	18	1	**167-2208**	1	SEAL AS-BUFFER	
	19	1	**167-2319**	1	SEAL-U-CUP	
	20	1	**188-2199**	1	SEAL-O-RING	
	21	1	**215-1942**	1	RING-BACKUP	
	22	1	**2D-0714**	1	RING-WEAR	
	23	1	**2H-9247**	1	SEAL-O-RING	
	24	1	**2J-7767**	1	RING-BACKUP	
	25	1	**102-8804**	1	KIT-RECEPTACLE (4-PIN)	
					(INCLUDES RECEPTACLE AS & WEDGE)	
	26	1	**3V-2431**	10	WASHER (10.2X16X2-MM THK)	
	27	1	**4S-5565**	10	BOLT (3/8-16X0.875-IN)	
	28	1	**5F-3106**	1	SEAL-O-RING	
	29	1	**5J-7232**	1	SEAL	
	30	1	**5J-7233**	1	RING-EXPANDER	
	31	1	**6S-3146**	1	WASHER-DISC	
	32	1	**8C-9161**	1	RING-WEAR	
	33	1	**8F-6711**	1	SEAL-O-RING	
	34	1	**8T-8737**	1	PLUG-SEAL	
E	35	1	**9X-1386**		SLEEVE (14-CM)	

E-ORDER BY THE CENTIMETER

268-9051 CYLINDER GP-BOOM *(contd.)* **i03505287**

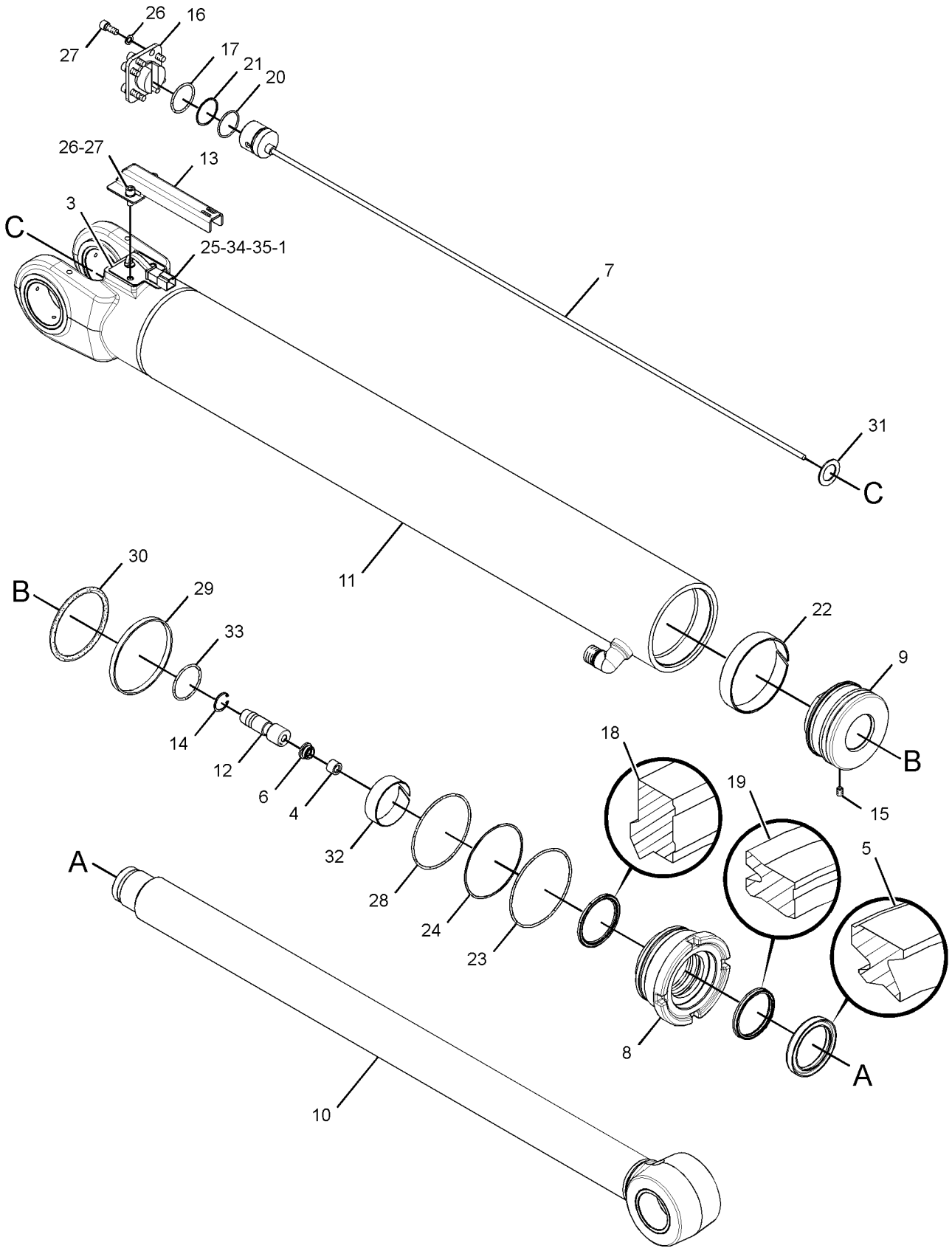

GRAPHIC #1 **<END>** g01387333

210-7097 CYLINDER GP-EXTENDABLE STICK

S/N: EAT1-UP
76-MM (3-IN) BORE X 1164-MM (45.8-IN) STROKE
PART OF 271-1403 STICK GP-EXTENDABLE
AN ATTACHMENT

SMCS-5486 **i03462730**

NOTE	REF NO	GRAPHIC REF	PART NUMBER	QTY	PART NAME 1 2 3 4 5 6 (PRODUCT LEVEL)	SEE PAGE
E	1	1	**9X-1386**		SLEEVE (1-CM)	
	2	1	**102-2244**	1	GROMMET	
	3	1	**155-2260**	1	KIT-CONNECTING PLUG (3-PIN)	
					(INCLUDES PLUG ASSEMBLY & WEDGE)	
	4	1	**191-6159**	1	HEAD	
	5	1	**214-6471**	1	CYLINDER AS	
		1	**6V-8398**	1	SEAL-O-RING	
	6	1	**214-6475**	1	ROD AS	
	7	1	**214-6480**	1	PISTON	
	8	1	**214-6879**	1	COVER	
	9	1	**214-6897**	1	PLATE	
	10	1	**217-3311**	1	MAGNET	
	11	1	**230-5579**	1	SCREW-BUTTON HEAD	
	12	1	**230-5580**	1	SCREW-BUTTON HEAD	
	13	1	**242-9514**	1	CARRIER	
	14	1	**242-9515**	1	RING-RETAINING	
	15	1	**167-2186**	1	SEAL AS-BUFFER	
	16	1	**167-2294**	1	SEAL-U-CUP	
	17	1	**188-2199**	1	SEAL-O-RING	
	18	1	**1H-7339**	1	SEAL-O-RING	
	19	1	**215-1942**	1	RING-BACKUP	
	20	1	**215-8934**	1	SENSOR GP-POSITION	
	21	1	**223-3353**	1	RING-WEAR	
	22	1	**226-8202**	1	SEAL-WIPER	
	23	1	**102-8803**	1	KIT-RECEPTACLE (3-PIN)	
					(INCLUDES RECEPTACLE ASSEMBLY & WEDGE)	
	24	1	**4T-6780**	1	RING-WEAR	
	25	1	**6J-2680**	1	SEAL-O-RING	
	26	1	**5J-4561**	1	LOCKNUT (1-14-THD)	
	27	1	**6J-1972**	1	SEAL AS	
	28	1	**6J-5731**	1	RING-BACKUP	
	29	1	**8T-5070**	1	SETSCREW-SOCKET (3/8-16XO.5-IN)	
	30	1	**8T-8737**	3	PLUG-SEAL	

E-ORDER BY THE CENTIMETER

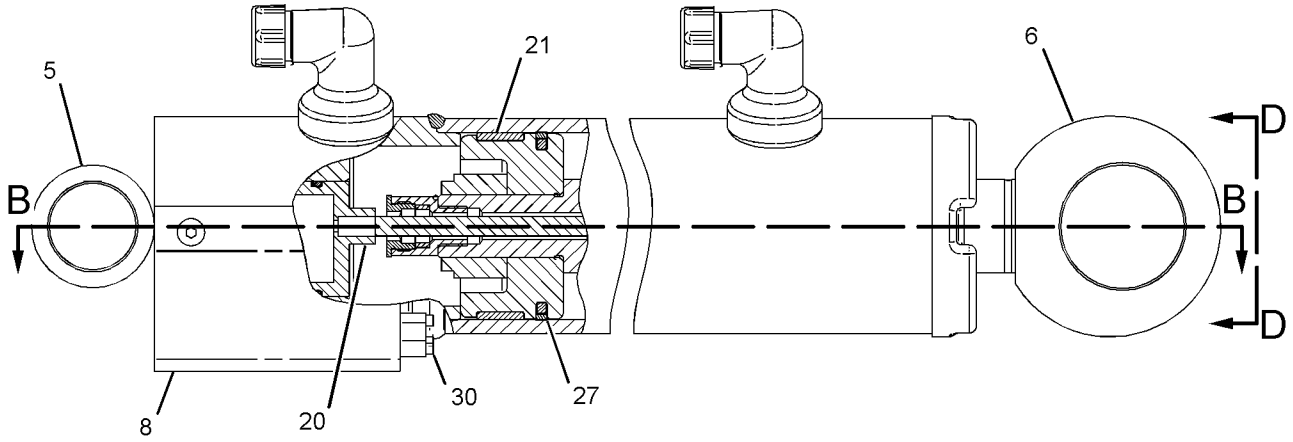

RIGHT SIDE VIEW

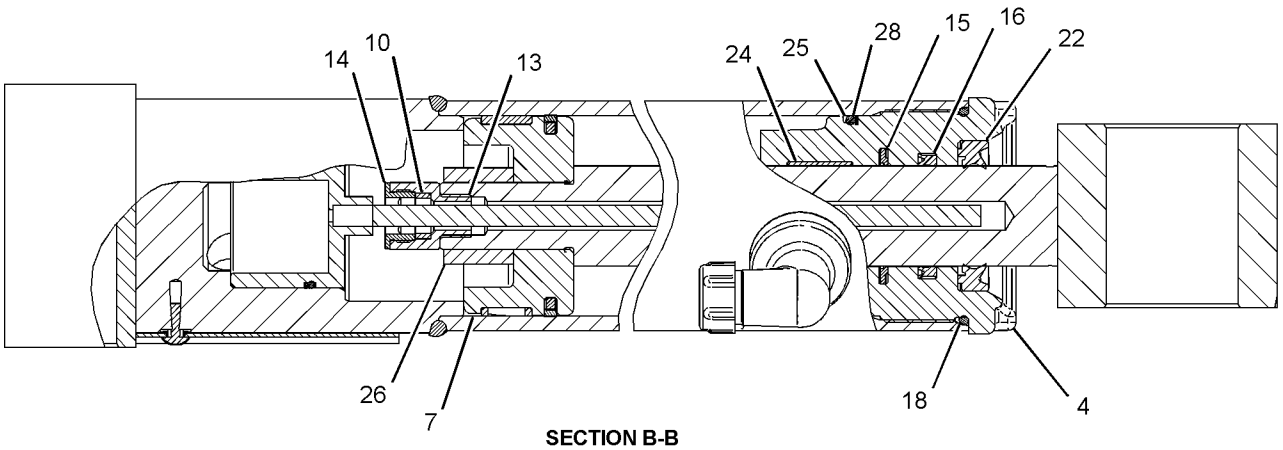

SECTION B-B

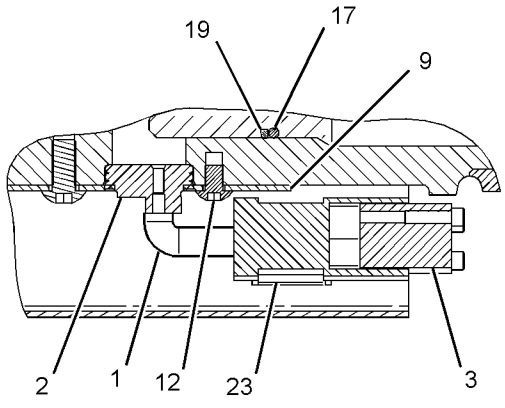

SECTION C-C

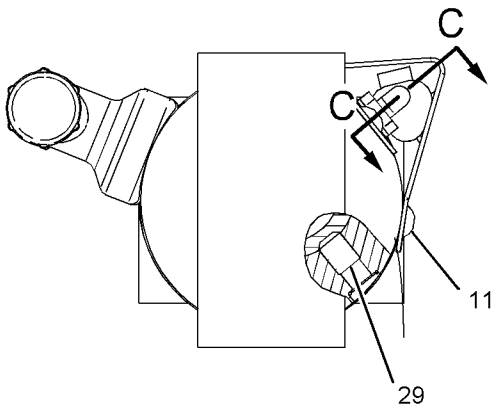

VIEW D-D

GRAPHIC #1 **<END>** g01081080

228-3509 CYLINDER GP-LIFT

S/N: EAT1-UP
85-MM (3.3-IN) BORE X 705-MM (27.8-IN) STROKE
PART OF 213-9300 LOADER AR

SMCS-5102 **i03505304**

NOTE	REF NO	GRAPHIC REF	PART NUMBER	QTY	PART NAME 1 2 3 4 5 6 (PRODUCT LEVEL)	SEE PAGE
J	1	1	**151-2565**	1	RING-WEAR	
	2	1	**233-2571**	1	ROD AS	
	3	1	**233-2579**	1	PISTON	
J	4	1	**233-2584**	1	SEAL AS	
J	5	1	**233-2606**	1	SEAL-WIPER	
J	6	1	**233-2610**	1	SEAL-U-CUP	
	7	1	**244-3837**	1	HEAD AS	
		1	**233-2613**	1	BEARING	
J	8	1	**244-3838**	1	RING-BACKUP	
	9	1	**252-9206**	1	CYLINDER AS	
J	10	1	**107-6279**	1	SEAL-O-RING	
	11	1	**3B-8489**	2	FITTING-GREASE	
J	12	1	**3E-6732**	1	SEAL-O-RING	
	13	1	**9R-0153**	2	BEARING-SLEEVE	
	14	1	**9R-0321**	2	BEARING-SLEEVE	
JM	15	1	**9X-6611**	1	SETSCREW-SOCKET (M10X1.5X16-MM)	
					AVAILABLE REPAIR KIT(S):	
J			**243-2276**	1	KIT-SEAL	

J-KIT MARKED J SERVICES PARTS MARKED J
M-METRIC PART

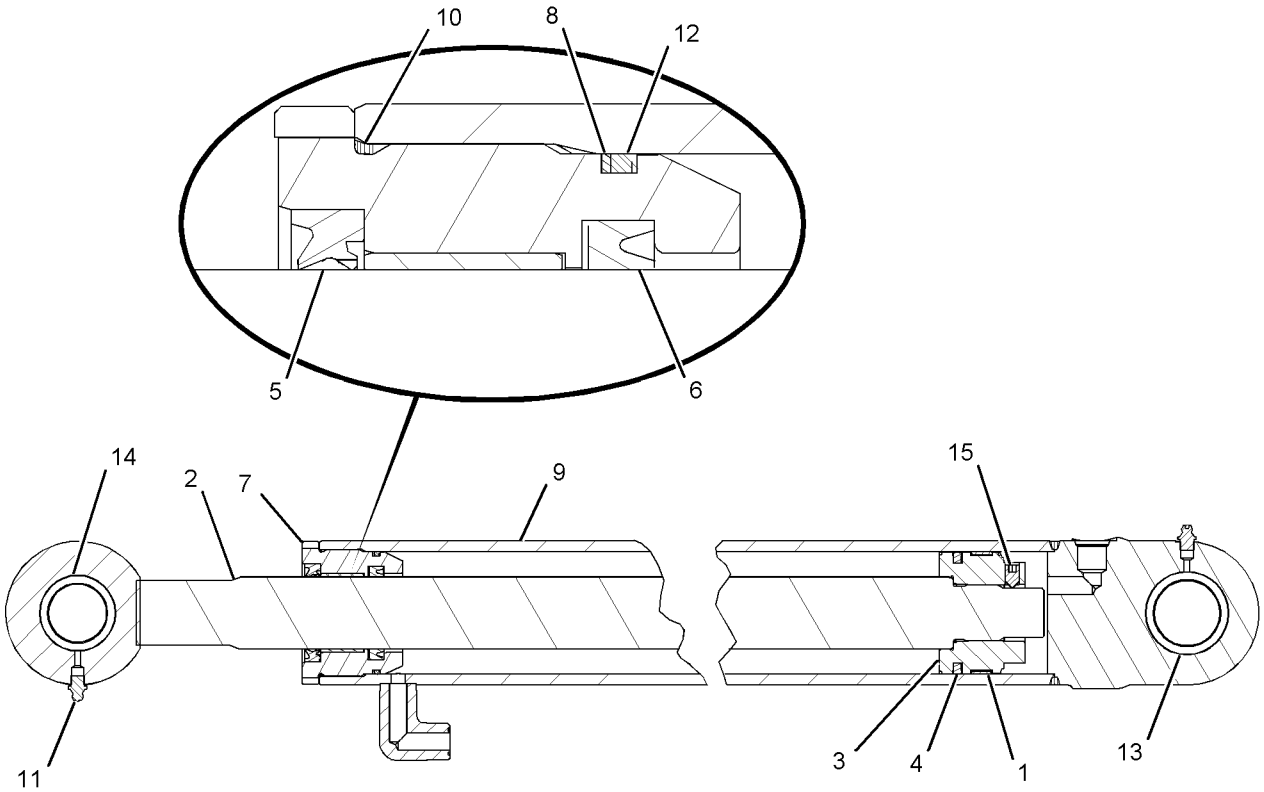

GRAPHIC #1 **<END>** g01081781

226-5540 CYLINDER GP-MULTIPURPOSE BUKT

S/N: EAT1-UP
76-MM (2.99-IN) BORE X 262-MM (10.31-IN) STROKE
PART OF 216-8800, 216-8801, 216-8820, 216-8821 BUCKET GP-MULTIPURPOSE AN ATTACHMENT

SMCS-5457 **i02597612**

NOTE	REF NO	GRAPHIC REF	PART NUMBER	QTY	PART NAME 1 2 3 4 5 6 (PRODUCT LEVEL)	SEE PAGE
	1	1	**3B-8489**	2	FITTING-GREASE	
	2	1	**9S-8004**	2	PLUG-O-RING	
	3	1	**3J-1907**	2	SEAL-O-RING	
	4	1	**9T-4007**	2	BEARING	
					AVAILABLE REPAIR KIT(S):	
			230-9357	1	KIT-SEAL	
					(INCLUDES WIPER SEAL, O-RINGS, MOISTURE EXCLUDER & POLYPAK)	

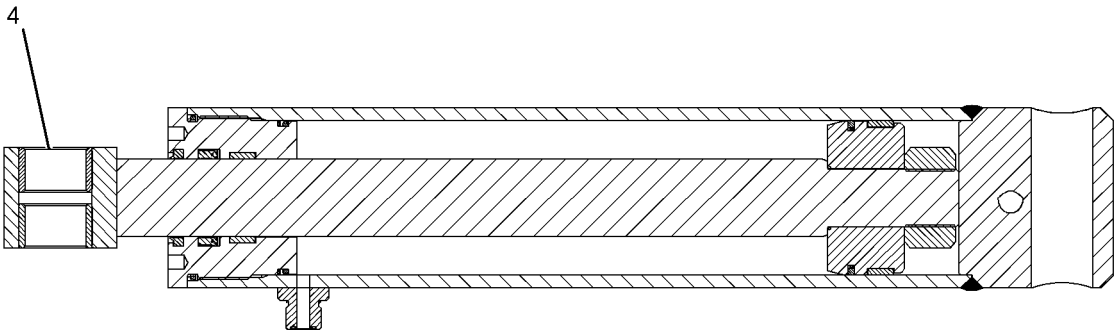

SECTION A-A

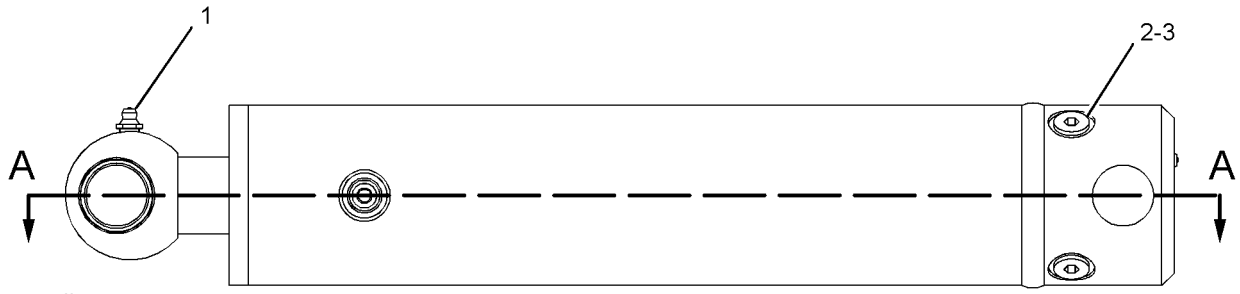

GRAPHIC #1 **<END>** g01086486

262-7049 CYLINDER GP-STABILIZER–LH

S/N: EAT1-UP
100-MM (3.9-IN) BORE X 541-MM (21.3-IN) STROKE
PART OF 268-6455 HYDRAULIC AR

SMCS-5468 **i03317247**

NOTE	REF NO	GRAPHIC REF	PART NUMBER	QTY	PART NAME 1 2 3 4 5 6 (PRODUCT LEVEL)	SEE PAGE
	1	1	**233-2576**	1	ROD AS	
	2	1	**233-2582**	1	PISTON	
J	3	1	**233-2585**	1	SEAL AS	
J	4	1	**233-2588**	1	RING-WEAR	
	5	1	**233-2594**	1	HEAD AS	
		1	**233-2614**	1	RING-WEAR	
J	6	1	**233-2603**	1	SEAL-O-RING	
J	7	1	**233-2607**	1	SEAL AS	
J	8	1	**233-2611**	1	SEAL-U-CUP	
J	9	1	**233-2615**	1	SEAL	
J	10	1	**244-8826**	1	RING-BACKUP	
	11	1	**262-7051**	1	CYLINDER AS	
	12	1	**3B-8489**	2	FITTING-GREASE	
J	13	1	**3E-6735**	1	SEAL-O-RING	
J	14	1	**4J-0526**	1	SEAL-O-RING	
	15	1	**9R-0321**	4	BEARING-SLEEVE	
JM	16	1	**9X-6611**	1	SETSCREW-SOCKET (M10X1.5X16-MM)	
					AVAILABLE REPAIR KIT(S):	
J			**233-2623**	1	KIT-SEAL	

J-KIT(S) MARKED J SERVICES PART(S) MARKED J
M-METRIC PART

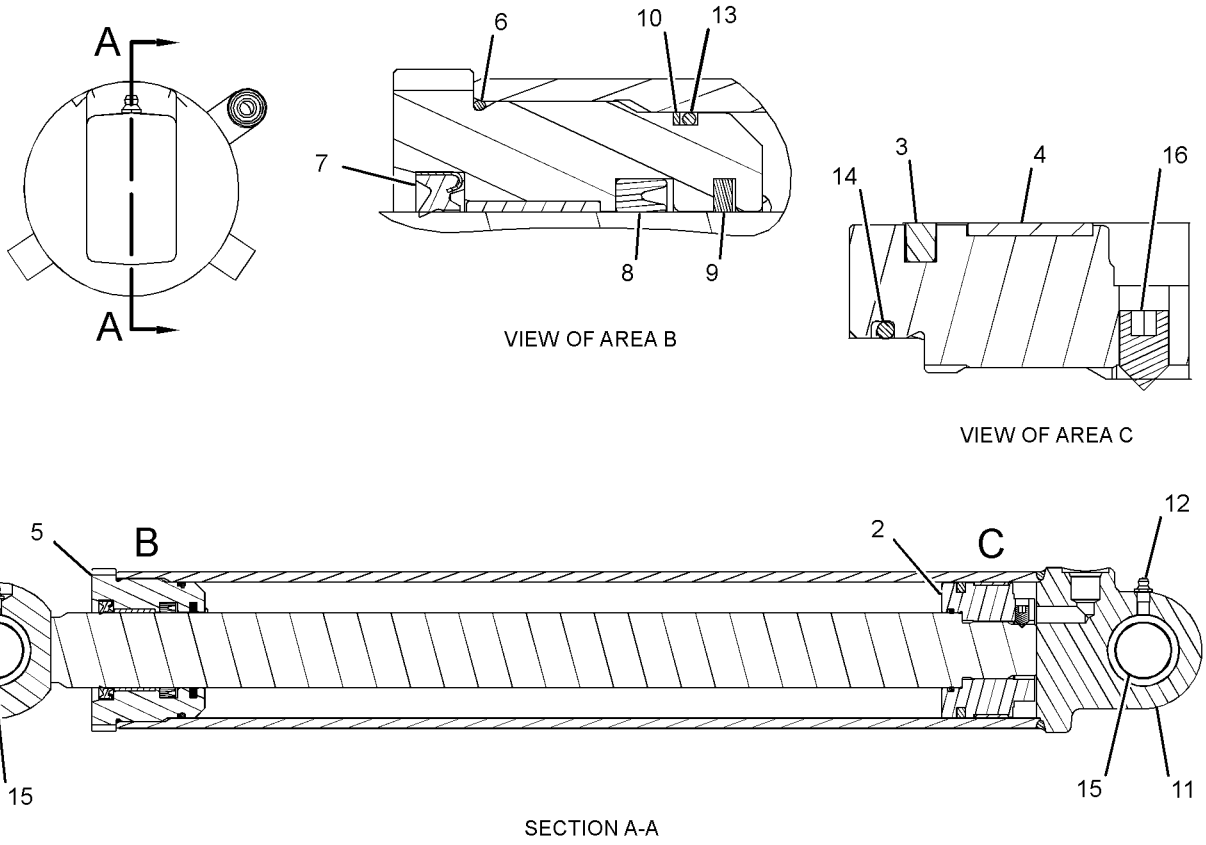

GRAPHIC #1 **<END>** g01201682

262-7050 CYLINDER GP-STABILIZER—RH

S/N: EAT1-UP
100-MM (3.9-IN) BORE X 541-MM (21.3-IN) STROKE
PART OF 268-6455 HYDRAULIC AR

SMCS-5468 **i02510963**

NOTE	REF NO	GRAPHIC REF	PART NUMBER	QTY	PART NAME 1 2 3 4 5 6 (PRODUCT LEVEL)	SEE PAGE
	1	1	**233-2576**	1	ROD AS	
	2	1	**233-2582**	1	PISTON	
J	3	1	**233-2585**	1	SEAL AS	
J	4	1	**233-2588**	1	RING-WEAR	
	5	1	**233-2594**	1	HEAD AS	
		1	**233-2614**	1	RING-WEAR	
J	6	1	**233-2603**	1	SEAL-O-RING	
J	7	1	**233-2607**	1	SEAL AS	
J	8	1	**233-2611**	1	SEAL-U-CUP	
J	9	1	**233-2615**	1	SEAL	
J	10	1	**244-8826**	1	RING-BACKUP	
	11	1	**262-7052**	1	CYLINDER AS	
	12	1	**3B-8489**	2	FITTING-GREASE	
J	13	1	**3E-6735**	1	SEAL-O-RING	
J	14	1	**4J-0526**	1	SEAL-O-RING	
	15	1	**9R-0321**	4	BEARING-SLEEVE	
JM	16	1	**9X-6611**	1	SETSCREW-SOCKET (M10X1.5X16-MM)	
					AVAILABLE REPAIR KIT(S):	
J			**233-2623**	1	KIT-SEAL	

J-KIT MARKED J SERVICES PART(S) MARKED J)
M-METRIC PART

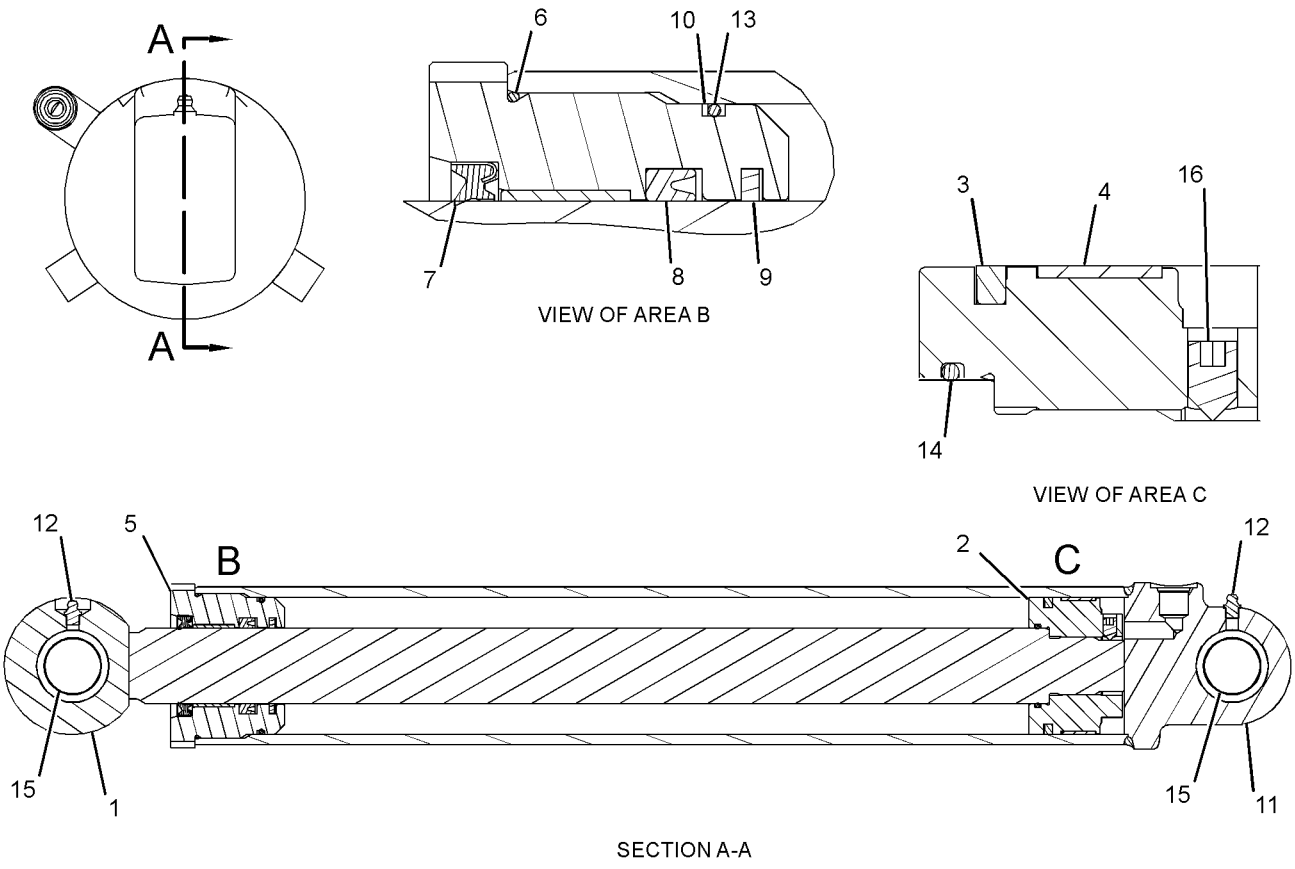

GRAPHIC #1 **<END>** g01201741

HYDRAULIC SYSTEM

210-7091 CYLINDER GP-STICK

S/N: EAT1-UP
127-MM (5-IN) BORE X 672-MM (26.5-IN) STROKE
PART OF 213-9309, 291-9207 BACKHOE AR-EXTENDABLE STICK, 213-9306, 291-9206 BACKHOE AR-STANDARD STICK
AN ATTACHMENT

SMCS-5458 **i02501581**

NOTE	REF NO	GRAPHIC REF	PART NUMBER	QTY	PART NAME 1 2 3 4 5 6 (PRODUCT LEVEL)	SEE PAGE
	1	1	**5U-6605**	1	PLUG	
	3	1	**212-0907**	1	PLATE-CONNECTOR	
	4	1	**217-3312**	1	MAGNET	
	5	1	**217-5778**	1	HEAD	
	6	1	**217-6238**	1	CYLINDER AS	
		1	**6V-8398**	1	SEAL-O-RING	
		1	**095-0879**	1	PIN-SPRING	
		1	**217-6046**	2	BEARING-SLEEVE	
	7	1	**276-1816**	1	GUARD	
	8	1	**229-0932**	1	ROD AS	
		1	**213-6719**	2	BEARING-SLEEVE	
	9	1	**246-9113**	1	RETAINER	
	10	1	**253-4619**	1	PISTON	
	11	1	**102-8804**	1	KIT-RECEPTACLE (4-PIN)	
					(INCLUDES RECEPTACLE AS & WEDGE)	
	12	1	**167-2201**	1	SEAL AS-BUFFER	
	13	1	**167-2312**	1	SEAL-U-CUP	
	14	1	**188-2199**	1	SEAL-O-RING	
	15	1	**215-1942**	1	RING-BACKUP	
	16	1	**217-5776**	1	SENSOR GP-POSITION (LINEAR)	
	17	1	**225-3281**	1	SEAL-WIPER	
	18	1	**226-3860**	1	RING-WEAR	
	19	1	**2K-4096**	1	RING-BACKUP	
	20	1	**3V-2431**	2	WASHER (10.2X16X2-MM THK)	
	21	1	**4S-5565**	2	BOLT (3/8-16X0.875-IN)	
	22	1	**5F-3106**	1	SEAL-O-RING	
	23	1	**5F-3144**	1	SEAL-O-RING	
	24	1	**5J-4973**	1	RING-EXPANDER	
	25	1	**5J-4974**	1	SEAL	
	26	1	**8T-0785**	1	RING-WEAR	
	27	1	**8T-5070**	1	SETSCREW-SOCKET (3/8-16X0.5-IN)	
	28	1	**8T-8737**	1	PLUG-SEAL	
E	29	1	**9X-1386**		SLEEVE (9-CM)	
E	29A	1	**9X-1386**		SLEEVE (4-CM)	

E-ORDER BY THE CENTIMETER

210-7091 CYLINDER GP-STICK *(contd.)* i02501581

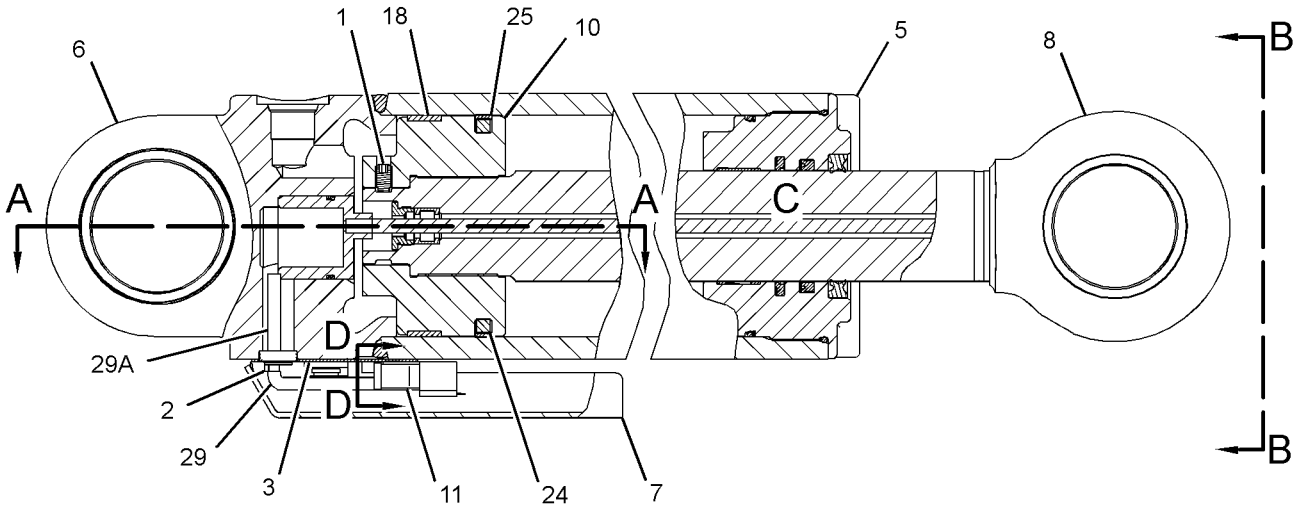

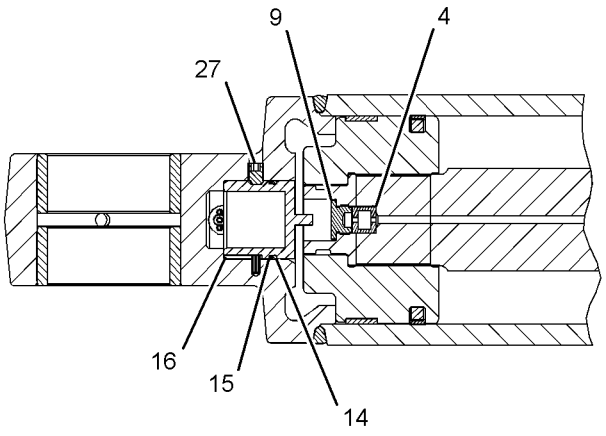

SECTION A-A

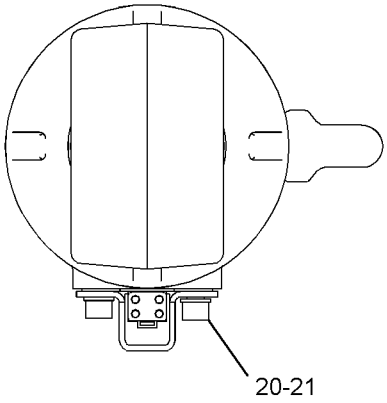

VIEW B-B

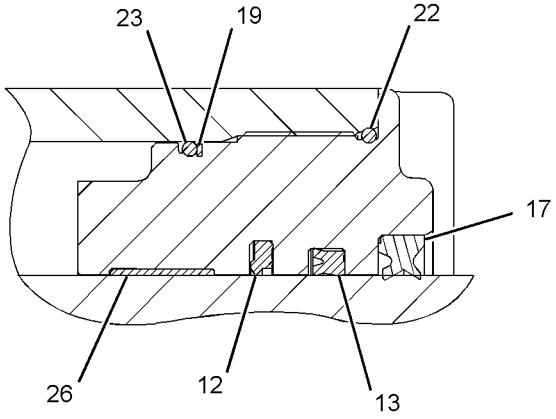

VIEW OF AREA C

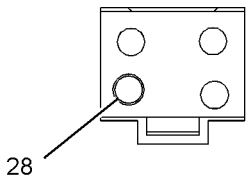

VIEW D-D

GRAPHIC #1 **<END>** g01410695

210-7092 CYLINDER GP-STICK

S/N: EAT1-UP
127-MM (5-IN) BORE X 672-MM (26.5-IN) STROKE
PART OF 213-9304 BACKHOE AR-EXTENDABLE STICK, 213-9301 BACKHOE AR-STANDARD STICK
AN ATTACHMENT

SMCS-5458 **i02120310**

NOTE	REF NO	GRAPHIC REF	PART NUMBER	QTY	PART NAME 1 2 3 4 5 6 (PRODUCT LEVEL)	SEE PAGE
	1	1	**217-5778**	1	HEAD	
	2	1	**217-6244**	1	CYLINDER AS	
	2A	1	**6V-8398**	1	SEAL-O-RING	
	2B	1	**217-6046**	2	BEARING-SLEEVE	
	3	1	**229-0923**	1	PISTON	
	4	1	**229-0925**	1	ROD AS	
	4A	1	**213-6719**	2	BEARING-SLEEVE	
	5	1	**167-2201**	1	SEAL AS-BUFFER	
	6	1	**167-2312**	1	SEAL-U-CUP	
	7	1	**225-3281**	1	SEAL-WIPER	
	8	1	**226-3860**	1	RING-WEAR	
	9	1	**2J-0564**	1	LOCKNUT (2-12-THD)	
	10	1	**2K-4096**	1	RING-BACKUP	
	11	1	**5F-3106**	1	SEAL-O-RING	
	12	1	**5F-3144**	1	SEAL-O-RING	
	13	1	**5J-4973**	1	RING-EXPANDER	
	14	1	**5J-4974**	1	SEAL	
	15	1	**8T-0785**	1	RING-WEAR	

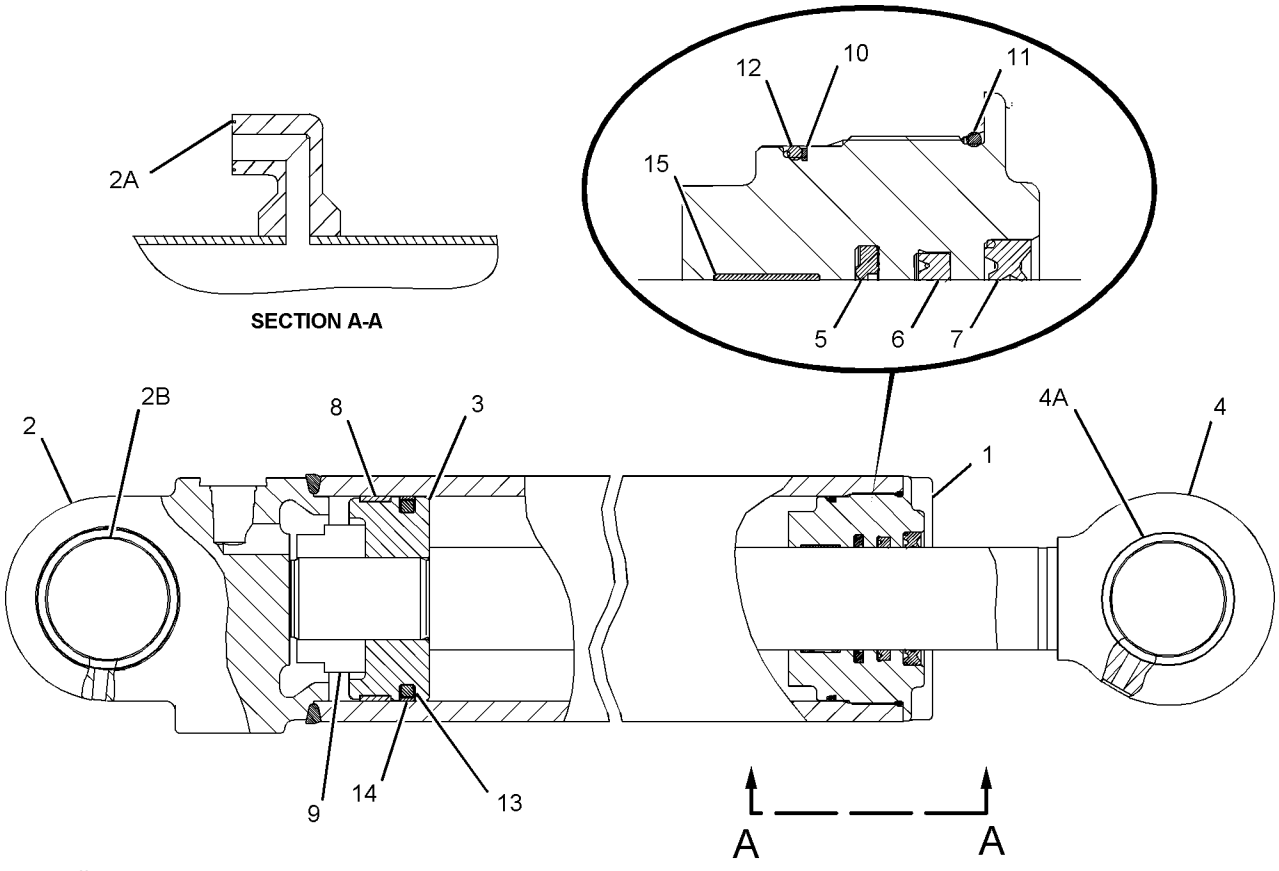

GRAPHIC #1 **<END>** g01081424

HYDRAULIC SYSTEM

210-7098 CYLINDER GP-STICK

S/N: EAT1-UP
76.2-MM (3-IN) BORE X 1164-MM (45.8-IN) STROKE
PART OF 271-1406 STICK GP-EXTENDABLE
AN ATTACHMENT

SMCS-5458 **i03266245**

NOTE	REF NO	GRAPHIC REF	PART NUMBER	QTY	PART NAME 1 2 3 4 5 6 (PRODUCT LEVEL)	SEE PAGE
	1	1	**191-6159**	1	HEAD	
	2	1	**215-7457**	1	ROD AS	
	3	1	**215-7460**	1	CYLINDER AS	
		1	**6V-8398**	1	SEAL-O-RING	
	4	1	**229-8911**	1	PISTON	
	5	1	**167-2186**	1	SEAL AS-BUFFER	
	6	1	**167-2294**	1	SEAL-U-CUP	
M	7	1	**173-9779**	1	BOLT (M24X3X80-MM)	
	8	1	**1H-7339**	1	SEAL-O-RING	
	9	1	**223-3353**	1	RING-WEAR	
	10	1	**226-8202**	1	SEAL-WIPER	
	11	1	**4T-6780**	1	RING-WEAR	
	12	1	**6J-2680**	1	SEAL-O-RING	
	13	1	**6J-1972**	1	SEAL AS	
	14	1	**6J-5731**	1	RING-BACKUP	
	15	1	**6V-8237**	1	WASHER (26X44X4-MM THK)	

M-METRIC PART

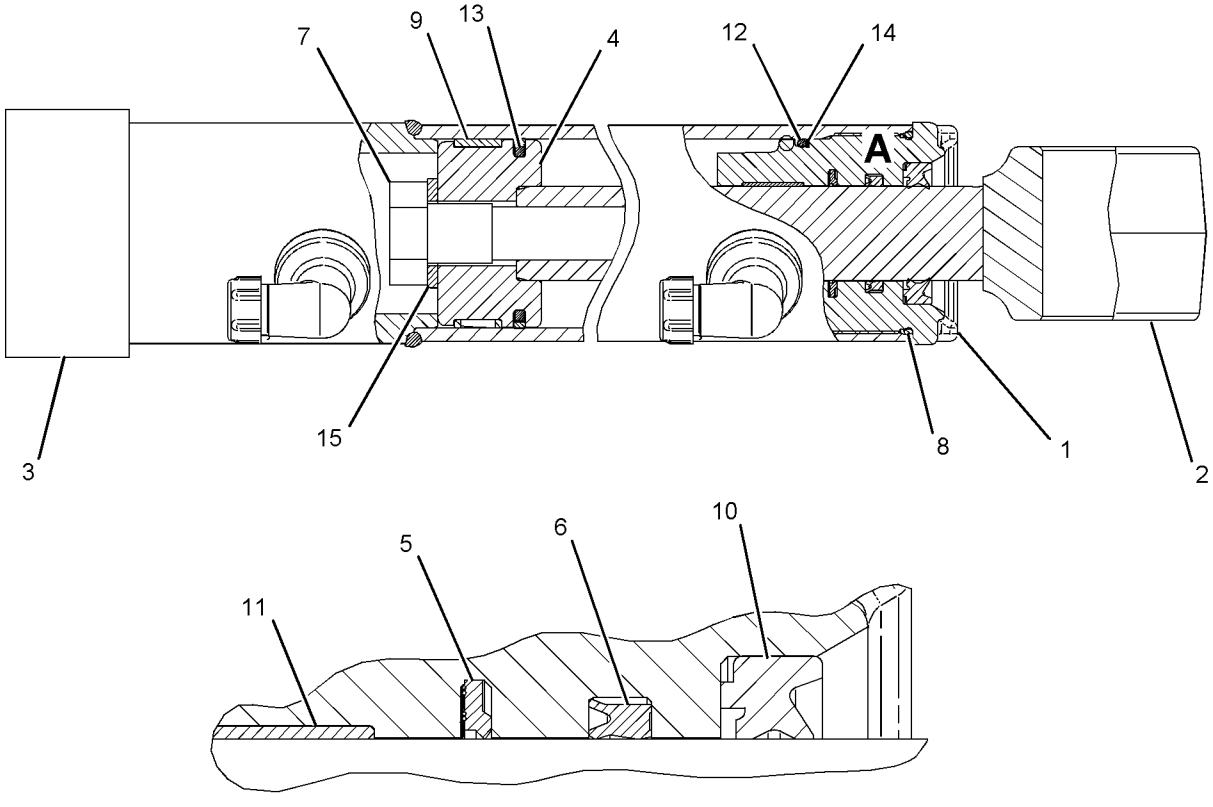

VIEW OF AREA A

GRAPHIC #1 **<END>** g01089695

278-1971 CYLINDER GP-SWING

S/N: EAT1-UP
100-MM (3.9-IN) BORE X 254-MM (10-IN) STROKE. RH
PART OF 268-6455 HYDRAULIC AR

SMCS-5105 **i03379020**

NOTE	REF NO	GRAPHIC REF	PART NUMBER	QTY	PART NAME 1 2 3 4 5 6 (PRODUCT LEVEL)	SEE PAGE
	1	1	**2Y-5821**	1	RING	
	2	1	**3N-5739**	1	SPRING	
	3	1	**6E-1478**	1	PLUNGER	
	4	1	**9T-2883**	2	BEARING	
	5	1	**102-3582**	1	WASHER (11X19.5X2.5-MM THK)	
	6	1	**233-2583**	1	PISTON	
J	7	1	**233-2585**	1	SEAL AS	
J	8	1	**233-2589**	1	RING-WEAR	
	9	1	**233-2595**	1	HEAD AS	
	9A	1	**233-2613**	1	BEARING	
J	10	1	**233-2603**	1	SEAL-O-RING	
J	11	1	**233-2606**	1	SEAL-WIPER	
J	12	1	**233-2610**	1	SEAL-U-CUP	
J	13	1	**233-2616**	1	SEAL	
	14	1	**233-2631**	1	ROD AS	
J	15	1	**244-8826**	1	RING-BACKUP	
	16	1	**274-4274**	1	BEARING-SLEEVE	
	17	1	**278-1972**	1	CYLINDER AS	
	18	1	**3B-8489**	1	FITTING-GREASE	
J	19	1	**3E-6735**	1	SEAL-O-RING	
JM	20	1	**9X-6611**	1	SETSCREW-SOCKET (M10X1.5X16-MM)	
					AVAILABLE REPAIR KIT(S):	
J			**233-2622**	1	KIT-SEAL	

J-KIT MARKED J SERVICES PARTS MARKED J
M-METRIC PART

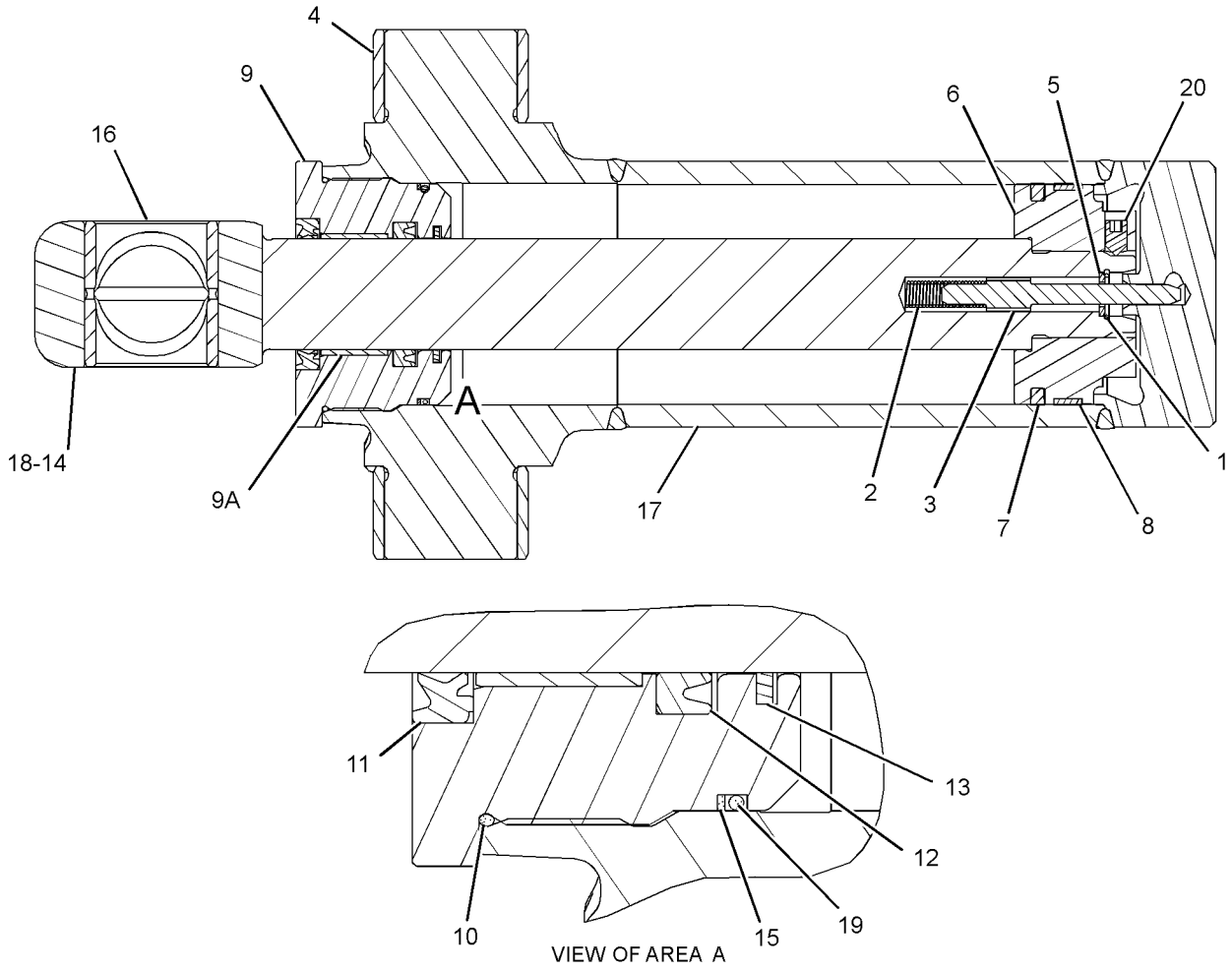

GRAPHIC #1 **<END>** g01746113

275-4243 CYLINDER GP-THUMB

S/N: EAT1-UP
70-MM (2.75-IN) BORE X 595-MM (23.4-IN) STROKE
PART OF 224-6237, 299-5362 CYLINDER & LINES GP-THUMB
AN ATTACHMENT

SMCS-5362 **i02598424**

NOTE	REF NO	GRAPHIC REF	PART NUMBER	QTY	PART NAME 1 2 3 4 5 6 (PRODUCT LEVEL)	SEE PAGE
	1	1	**276-4168**	1	CYLINDER AS	
	2	1	**276-4169**	1	ROD AS	
	3	1	**276-4170**	1	PISTON	
	4	1	**276-4171**	1	HEAD	
	5	1	**282-6836**	1	STOP	
	6	1	**3B-8489**	2	FITTING-GREASE	
	7	1	**9R-0320**	4	BEARING-SLEEVE	
					AVAILABLE REPAIR KIT(S):	
			276-4172	1	KIT-SEAL	
					(INCLUDES SEALS, RINGS & SETSCREW)	

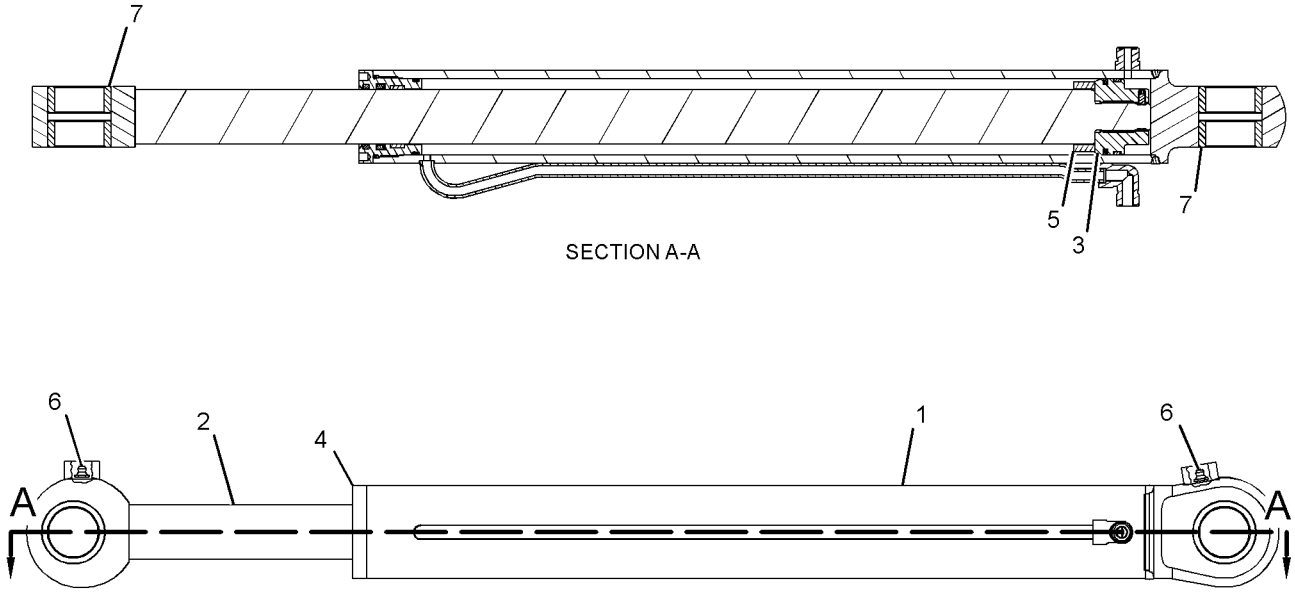

GRAPHIC #1 **<END>** g01234167

HYDRAULIC SYSTEM

200-7128 CYLINDER GP-TILT

S/N: EAT1-UP
101.6-MM (4-IN) BORE X 642.1-MM (25.28-IN) STROKE
PART OF 213-9300 LOADER AR

SMCS-5104 **i03505381**

NOTE	REF NO	GRAPHIC REF	PART NUMBER	QTY	PART NAME 1 2 3 4 5 6 (PRODUCT LEVEL)	SEE PAGE
	1	1	**112-1773**	1	PISTON	
	2	1	**201-4826**	1	HEAD	
	3	1	**201-4899**	1	CYLINDER AS	
	3A	1	**6V-9746**	1	SEAL-O-RING	
	3B	1	**9T-3165**	2	BEARING	
	3C	1	**201-7659**	2	SPACER	
	4	1	**201-4902**	1	ROD AS	
	4A	1	**9R-0320**	2	BEARING-SLEEVE	
J	5	1	**229-9382**	1	SEAL-WIPER	
J	6	1	**167-2195**	1	SEAL AS-BUFFER	
J	7	1	**167-2304**	1	SEAL-U-CUP	
	8	1	**2J-3950**	1	LOCKNUT (1-1/2-12-THD)	
J	9	1	**2K-6830**	1	RING-BACKUP	
J	10	1	**4T-5613**	1	RING-WEAR	
J	11	1	**5J-5402**	1	SEAL AS	
J	12	1	**9X-4611**	1	SEAL-O-RING	
J	13	1	**6J-2797**	1	RING-WEAR	
J	14	1	**8H-7521**	1	SEAL-O-RING	
					AVAILABLE REPAIR KIT(S):	
J			**261-8625**	1	KIT-SEAL	

J-KIT MARKED J SERVICES PART(S) MARKED J

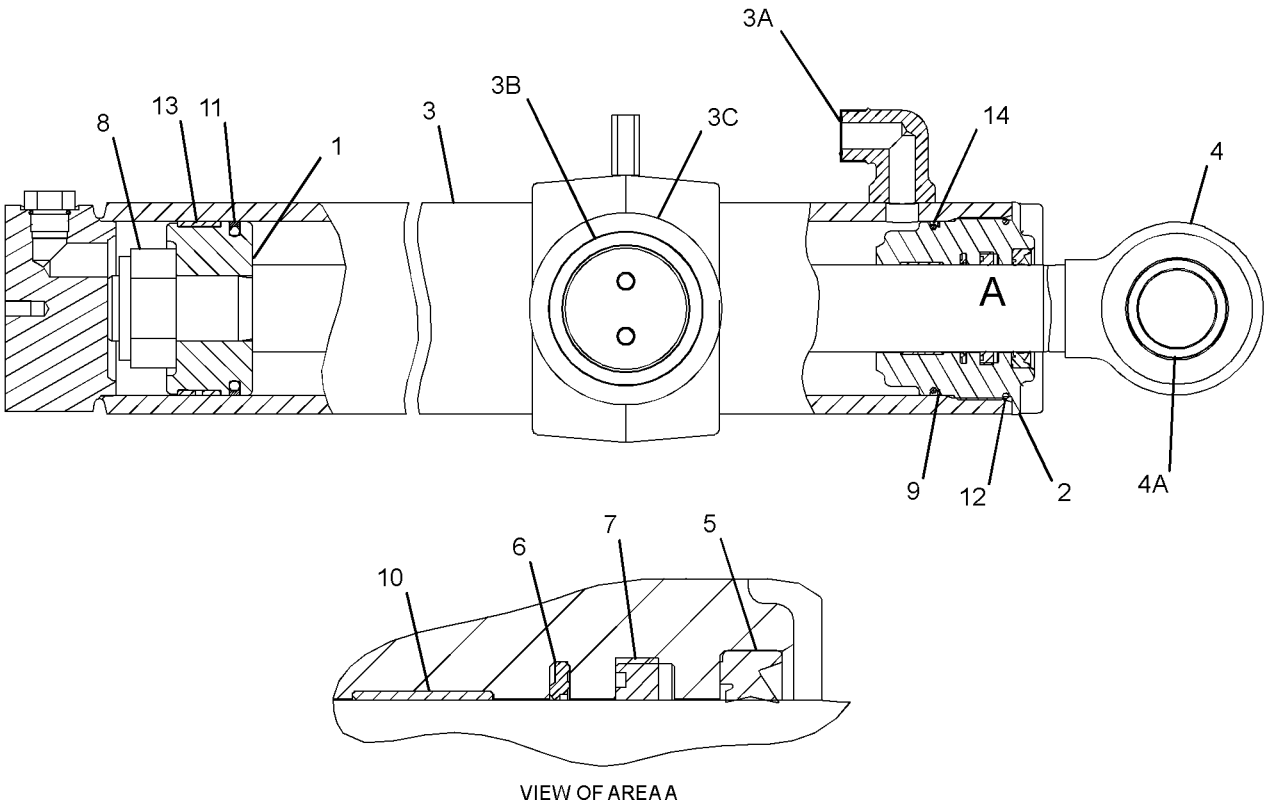

GRAPHIC #1 **<END>** g01183312

HYDRAULIC SYSTEM

112-1826 DRIVE & MTG GP-PUMP

S/N: BYC1-UP; EAT1-UP
PART OF 218-5148, 218-5149, 293-2986 POWER TRAIN AR
AN ATTACHMENT

SMCS-3108, 5070 **i03477528**

NOTE	REF NO	GRAPHIC REF	PART NUMBER	QTY	PART NAME 1 2 3 4 5 6 (PRODUCT LEVEL)	SEE PAGE
M	1	1	**8T-9405**	4	BOLT-SOCKET HEAD (M4X0.7X16-MM)	
	2	1	**9U-8886**	1	RING-SEAL	
	3	1	**115-1918**	1	PLATE	
	4	1	**117-3534**	1	ADAPTER	
	5	1	**274-4555**	1	HUB	
Y	6	1	**128-5596**	1	SHAFT GP-PUMP DRIVE	522
	7	1	**175-7904**	1	SEAL-O-RING	
	8	1	**8T-4122**	2	WASHER-HARD (17X32X3.5-MM THK)	
M	9	1	**8T-7338**	2	BOLT (M16X2X45-MM)	

M-METRIC PART
Y-SEPARATE ILLUSTRATION

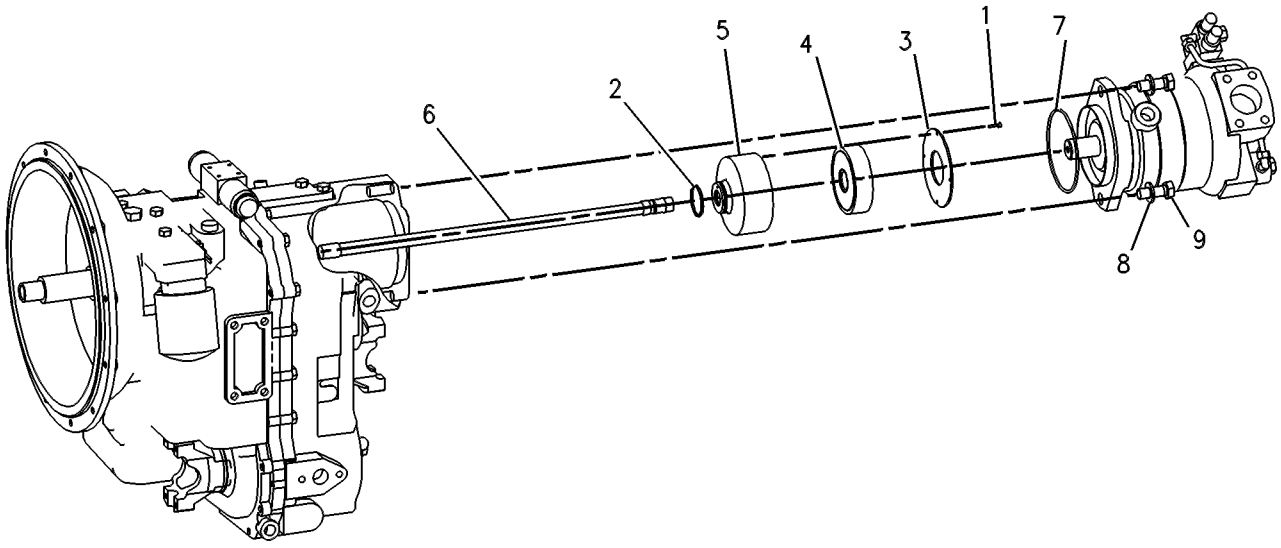

GRAPHIC #1 **<END>** g00131524

HYDRAULIC SYSTEM

245-8769 FASTENER GP-VALVE–BANK

S/N: EAT1-UP

PART OF 269-2144 VALVE AR-BANK 2, 269-2145 VALVE AR-BANK 3

AN ATTACHMENT

SMCS-5051 **i02096782**

NOTE	REF NO	GRAPHIC REF	PART NUMBER	QTY	PART NAME 1 2 3 4 5 6 (PRODUCT LEVEL)	SEE PAGE
	1	1	**8T-4121**	3	WASHER-HARD (11X21X2.5-MM THK)	
M	2	1	**8T-4186**	3	BOLT (M10X1.5X40-MM)	

M-METRIC PART

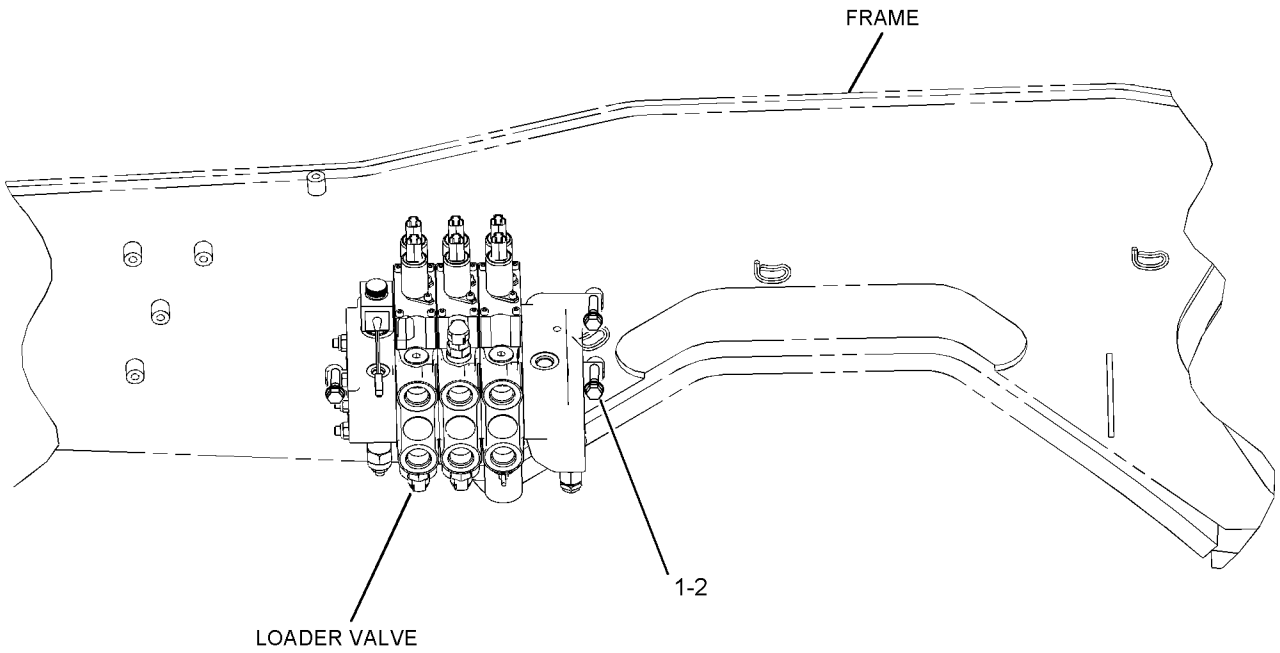

LEFT SIDE VIEW

GRAPHIC #1 **<END>** g01070282

226-9747 FILTER GP-OIL–HYDRAULIC

S/N: EAT1-UP

PART OF 268-6455 HYDRAULIC AR

SMCS-5068 **i03018507**

NOTE	REF NO	GRAPHIC REF	PART NUMBER	QTY	PART NAME 1 2 3 4 5 6 (PRODUCT LEVEL)	SEE PAGE
	1	1	**227-3703**	1	BASE AS-FILTER (HYDRAULIC)	
	2	1	*148-8335*	1	CONNECTOR AS	
		1	**5K-9090**	1	SEAL-O-RING	
		1	**6V-8635**	1	CONNECTOR	
		1	**7M-8485**	1	SEAL-O-RING	
	3	1	*148-8407*	1	PLUG AS	
		1	**3J-1907**	1	SEAL-O-RING	
		1	**9S-4191**	1	PLUG-O-RING	
	4	1	**6V-9830**	2	CAP AS	
	5	1	**6V-9833**	1	CAP AS	
	6	1	**8C-3451**	1	CAP-DUST	
	7	1	**126-1817**	1	FILTER-OIL (ULTRA HIGH EFFICIENCY)	
	8	1	**8C-3446**	1	VALVE-FLUID SAMPLING (HYDRAULIC OIL)	
F			**134-3014**	1	FILTER-OIL (FIRE RESISTANT)	

F-NOT SHOWN

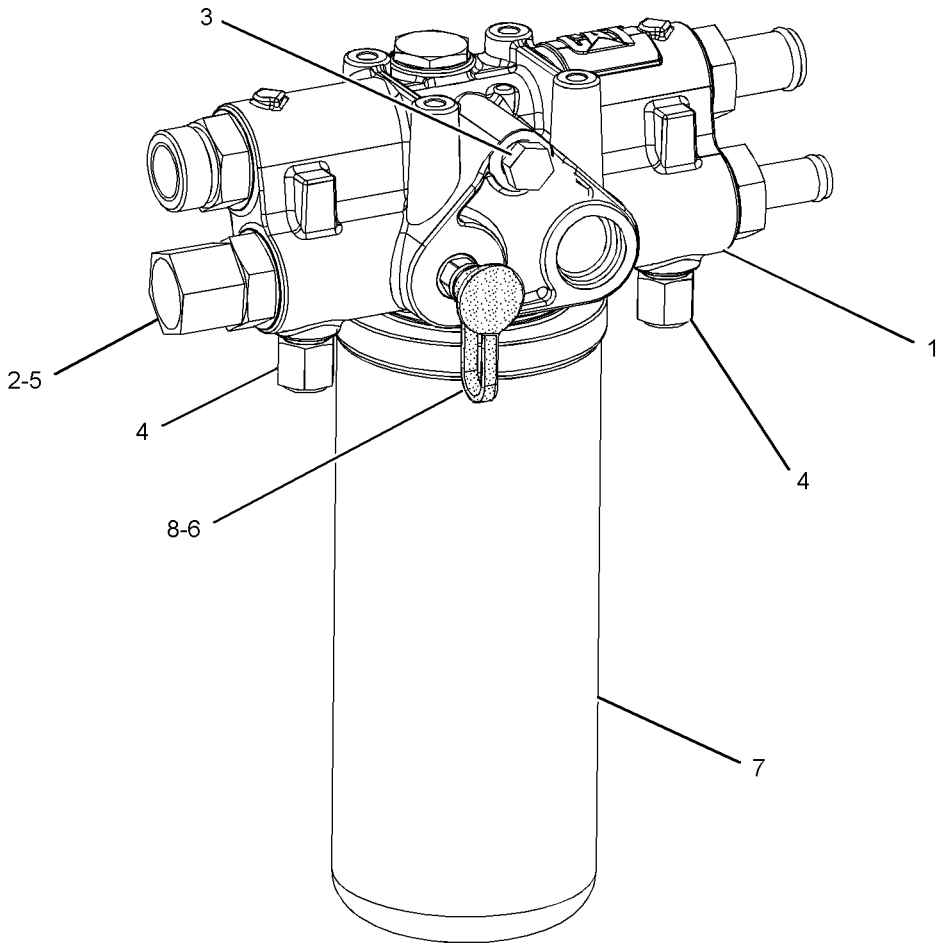

GRAPHIC #1 **<END>** g01234430

132-8769 FITTING GP-HYDRAULIC

S/N: EAT1-UP
AN ATTACHMENT

SMCS-5057 **i02249052**

NOTE	REF NO	GRAPHIC REF	PART NUMBER	QTY	PART NAME 1 2 3 4 5 6 (PRODUCT LEVEL)	SEE PAGE
	1	1	**106-0406**	1	FITTING (QUICK DISCONNECT, MALE)	
	2	1	**106-0401**	1	FITTING (QUICK DISCONNECT, FEMALE)	

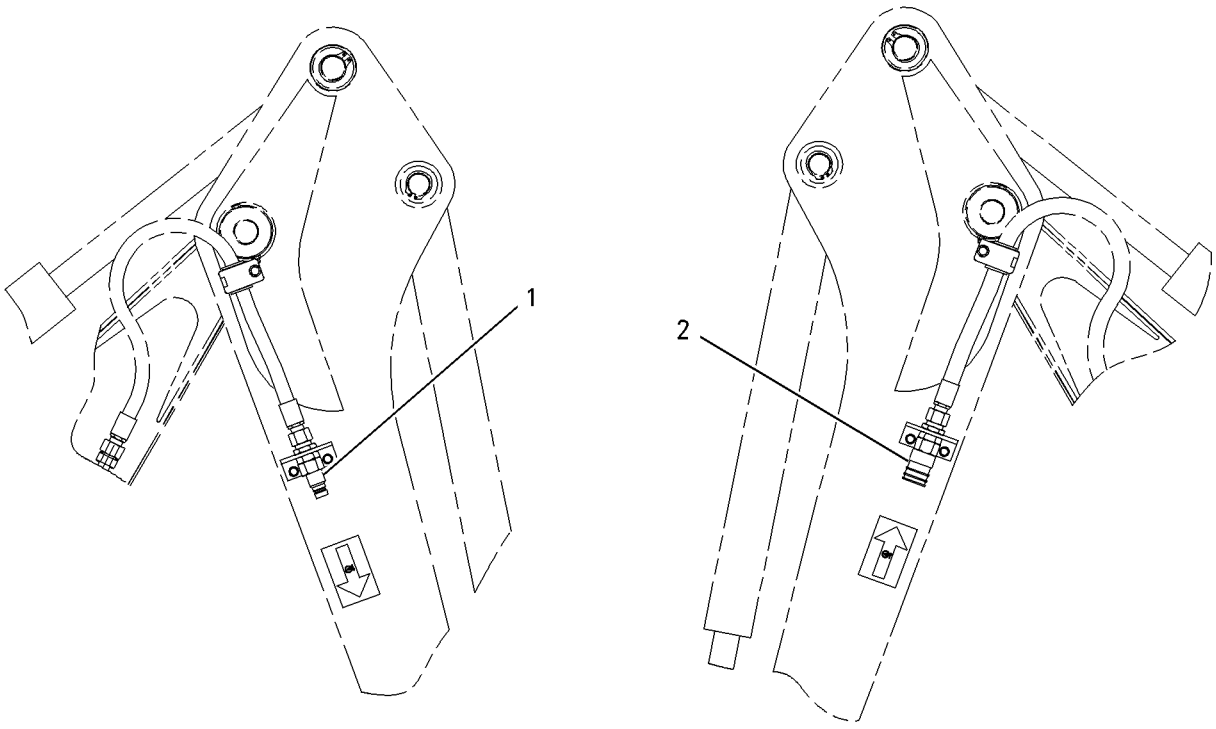

GRAPHIC #1 **<END>** g00759123

HYDRAULIC SYSTEM

268-6455 HYDRAULIC AR

S/N: EAT1-UP

PART OF 213-9275 COMMON AR

SMCS-5050 **i02521334**

NOTE	PART NUMBER	QTY	PART NAME 1 2 3 4 5 6 (PRODUCT LEVEL)	SEE PAGE
Y	**262-7050**	1	CYLINDER GP-STABILIZER (RH)	407
Y	**262-7049**	1	CYLINDER GP-STABILIZER (LH)	405
Y	**278-1971**	2	CYLINDER GP-SWING	413
Y	**226-9747**	1	FILTER GP-OIL (HYDRAULIC)	420
Y	*216-5332*	1	LINES GP-DRAIN	456
Y	*257-3160*	1	LINES GP-HYDRAULIC OIL COOLER	459
Y	*267-2765*	1	LINES GP-PILOT (WITH ACCUMULATOR)	470
Y	*267-2766*	1	LINES GP-PILOT (STABILIZER)	473
Y	*211-3607*	1	LINES GP-PUMP	474
Y	*267-2764*	1	LINES GP-SWING	501
Y	**210-6240**	1	PUMP GP-METERING (HMU)	352
Y	**267-2755**	1	PUMP GP-PISTON	519
Y	*245-8777*	1	TANK & MTG GP-HYDRAULIC	523
Y	*267-2770*	1	VALVE & LINES GP-PILOT (BACKHOE)	527

Y-SEPARATE ILLUSTRATION

<END>

264-0187 INSTALLATION GP-RIDE CONTROL–AUTOSHIFT

S/N: EAT1-UP
AN ATTACHMENT
TYPE 1

SMCS-1408, 5004, 5057, 5077 **i03530645**

NOTE	REF NO	GRAPHIC REF	PART NUMBER	QTY	PART NAME 1 2 3 4 5 6 (PRODUCT LEVEL)	SEE PAGE
	1	1	**7K-1181**	2	STRAP-CABLE	
	2	1	**106-8704**	1	SUPPRESSOR AS-ARC	
		1	**102-8802**	1	KIT-RECEPTACLE (2-PIN)	
					(INCLUDES RECEPTACLE AS & WEDGE)	
		1	**186-3735**	2	PIN-CONNECTOR (16-GA TO 18-GA)	
	3	1	**146-9439**	1	RELAY AS (12-VOLT) (RIDE CONTROL)	
Y	4	1	*162-3960*	1	ACCUMULATOR GP-RIDE CONTROL (CHARGED)	386
	5	1	**214-4710**	1	SWITCH AS-ROCKER (RIDE CONTROL)	
		1	**111-7899**	1	GASKET	
	6	1	**224-7830**	1	FILM-WARNING (HIGH PRESSURE, READ OMM, U.S.)	
Y	7	1	**245-8780**	1	MANIFOLD GP-RIDE CONTROL	510
	8	1	**246-8038**	1	HARNESS AS-RIDE CONTROL	
	9	1	**247-0320**	1	BRACKET AS	
I	10	1	**252-1221**	1	HOSE AS	
I	11	1	**265-0868**	1	HOSE AS	
M	12	1	**096-5866**	2	BOLT (M8X1.25X75-MM)	
	13	1	**109-1633**	2	CLIP (SLOT)	
	14	1	**109-1634**	2	CLIP (TAB)	
	15	1	**131-9203**	1	SWITCH AS-PRESSURE (RIDE CONTROL)	
		1	**102-8803**	1	KIT-RECEPTACLE (3-PIN)	
					(INCLUDES RECEPTACLE AS & WEDGE)	
		1	**8T-8729**	3	PIN-CONNECTOR (16-GA TO 18-GA)	
	16	1	*148-8318*	1	CONNECTOR AS	
		1	**3K-0360**	1	SEAL-O-RING	
		1	**6V-8397**	1	SEAL-O-RING	
		1	**6V-8634**	1	CONNECTOR	
	17	1	*148-8340*	1	CONNECTOR AS	
		1	**3K-0360**	1	SEAL-O-RING	
		1	**6V-8398**	1	SEAL-O-RING	
		1	**6V-8639**	1	CONNECTOR	
	18	1	*148-8358*	2	ELBOW AS	
					(EACH INCLUDES)	
		1	**2M-9780**	1	SEAL-O-RING	
		1	**6V-8398**	1	SEAL-O-RING	
		1	**6V-8624**	1	ELBOW	
	19	1	*153-6241*	1	ELBOW AS	
		1	**6V-8398**	1	SEAL-O-RING	
		1	**8C-8989**	1	ELBOW	
	20	1	*164-5549*	1	COUPLING AS	
		1	**3J-1907**	1	SEAL-O-RING	
		1	**4I-6287**	1	COUPLING	
	21	1	**3J-1907**	1	SEAL-O-RING	
	22	1	**3S-2093**	5	STRAP-CABLE	
	23	1	**4P-7581**	2	CLIP	
	24	1	**8T-4121**	4	WASHER-HARD (11X21X2.5-MM THK)	
M	25	1	**8T-4137**	4	BOLT (M10X1.5X20-MM)	
M	26	1	**8T-4139**	2	BOLT (M12X1.75X30-MM)	
	27	1	**8T-4223**	2	WASHER-HARD (13.5X25.5X3-MM THK)	
	28	1	**8T-4224**	2	WASHER-HARD (8.8X16X2-MM THK)	

I-REFER TO HYDRAULIC INFORMATION SYSTEM
M-METRIC PART
Y-SEPARATE ILLUSTRATION

264-0187 **INSTALLATION GP-RIDE CONTROL** *(contd.)* **i03530645**

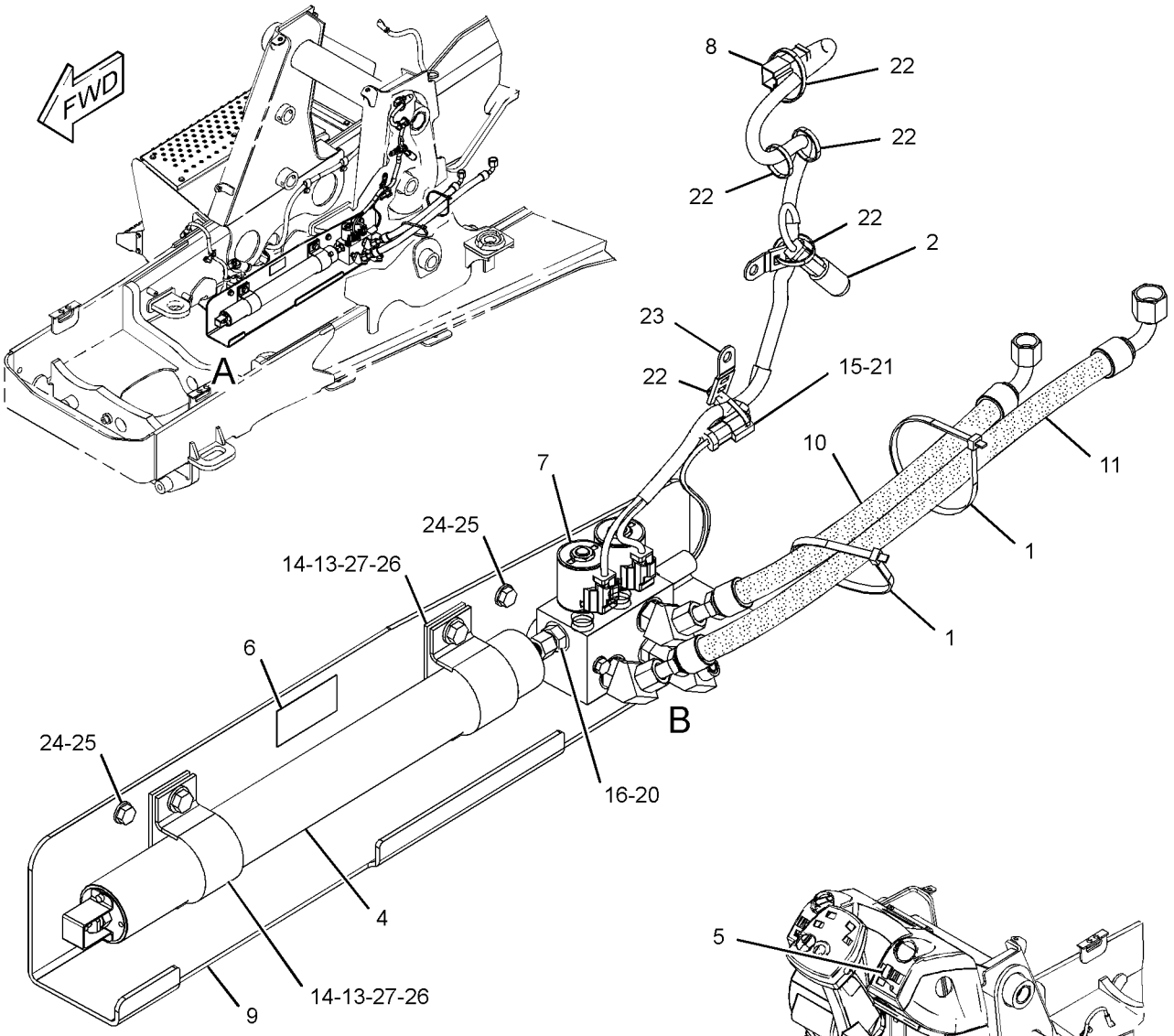

VIEW OF AREA A

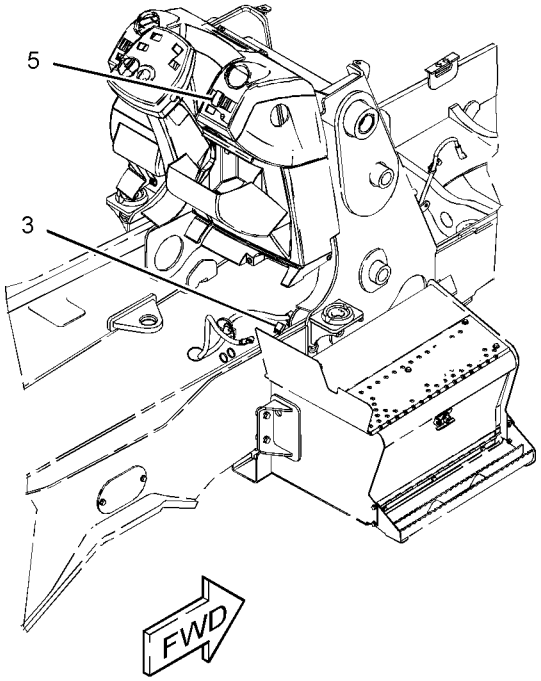

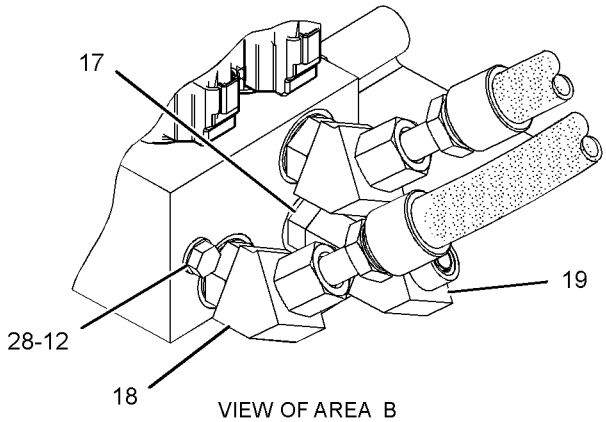

VIEW OF AREA B

GRAPHIC #1 **<END>** g01236619

264-0187 INSTALLATION GP-RIDE CONTROL–AUTOSHIFT

S/N: EAT1-UP
AN ATTACHMENT
TYPE 2

SMCS-1408, 5004, 5057, 5077 **i03514460**

NOTE	REF NO	GRAPHIC REF	PART NUMBER	QTY	PART NAME 1 2 3 4 5 6 (PRODUCT LEVEL)	SEE PAGE
	1	2	**7K-1181**	2	STRAP-CABLE	
	2	1	**106-8704**	1	SUPPRESSOR AS-ARC	
	3	2	**146-9439**	1	RELAY AS (12-VOLT) (RIDE CONTROL)	
Y	4	1	*162-3960*	1	ACCUMULATOR GP-RIDE CONTROL (CHARGED)	386
	5	2	**214-4710**	1	SWITCH AS-ROCKER (RIDE CONTROL)	
		2	**111-7899**	1	GASKET	
C	6	1	**279-5016**	1	FILM-WARNING (HIGH PRESS CYLINDER, READ OMM)	
Y	7	2	**245-8780**	1	MANIFOLD GP-RIDE CONTROL	510
	8	2	**246-8038**	1	HARNESS AS-RIDE CONTROL	
	9	1	**247-0320**	1	BRACKET AS	
I	10	2	**252-1221**	1	HOSE AS	
I	11	2	**265-0868**	1	HOSE AS	
M	12	2	**096-5866**	2	BOLT (M8X1.25X75-MM)	
	13	1	**109-1633**	2	CLIP (SLOT)	
	14	1	**109-1634**	2	CLIP (TAB)	
	15	2	**131-9203**	1	SWITCH AS-PRESSURE (RIDE CONTROL)	
		2	**102-8803**	1	KIT-RECEPTACLE (3-PIN)	
					(INCLUDES RECEPTACLE AS & WEDGE)	
		2	**186-3735**	3	PIN-CONNECTOR (16-GA TO 18-GA)	
C	16	1	*148-8354*	1	ELBOW AS	
		1	**3K-0360**	1	SEAL-O-RING	
		1	**6V-8398**	1	SEAL-O-RING	
		1	**6V-9002**	1	ELBOW	
	17	2	*148-8340*	1	CONNECTOR AS	
		2	**3K-0360**	1	SEAL-O-RING	
		2	**6V-8398**	1	SEAL-O-RING	
		2	**6V-8639**	1	CONNECTOR	
	18	2	*148-8358*	2	ELBOW AS	
					(EACH INCLUDES)	
		2	**2M-9780**	1	SEAL-O-RING	
		2	**6V-8398**	1	SEAL-O-RING	
		2	**6V-8624**	1	ELBOW	
	19	2	*153-6241*	1	ELBOW AS	
		2	**6V-8398**	1	SEAL-O-RING	
		2	**8C-8989**	1	ELBOW	
C	20	2	*148-8365*	1	ELBOW AS	
		2	**8T-6876**	1	ELBOW	
		2	**3J-1907**	1	SEAL-O-RING	
		2	**6V-8398**	1	SEAL-O-RING	
	21	2	**3J-1907**	1	SEAL-O-RING	
	22	1,2	**3S-2093**	5	STRAP-CABLE	
	23	1,2	**4P-7581**	2	CLIP	
C	24	1,2	**8T-4121**	3	WASHER-HARD (11X21X2.5-MM THK)	
CM	25	1,2	**8T-4137**	2	BOLT (M10X1.5X20-MM)	
M	26	1	**8T-4139**	2	BOLT (M12X1.75X30-MM)	
	27	1	**8T-4223**	2	WASHER-HARD (13.5X25.5X3-MM THK)	
	28	2	**8T-4224**	2	WASHER-HARD (8.8X16X2-MM THK)	
C	29	1	**292-8222**	1	TUBE AS	
CM	30	2	**8T-7004**	1	STUD-TAPERLOCK (M10X1.5X35-MM)	
CM	31	2	**8T-4133**	1	NUT (M10X1.5-THD)	

C-CHANGE FROM PREVIOUS TYPE
I-REFER TO HYDRAULIC INFORMATION SYSTEM
M-METRIC PART
Y-SEPARATE ILLUSTRATION

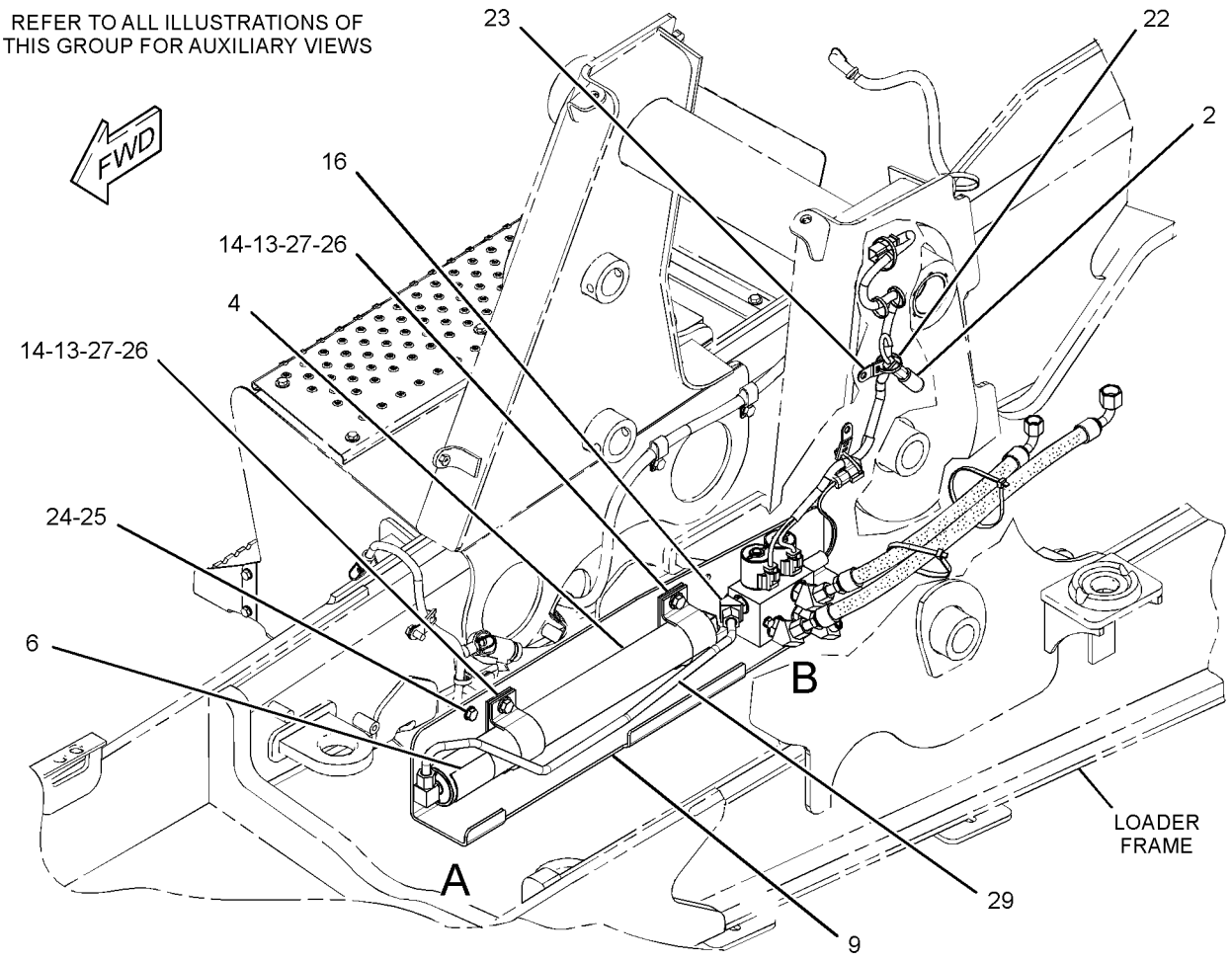

GRAPHIC #1 g01515795

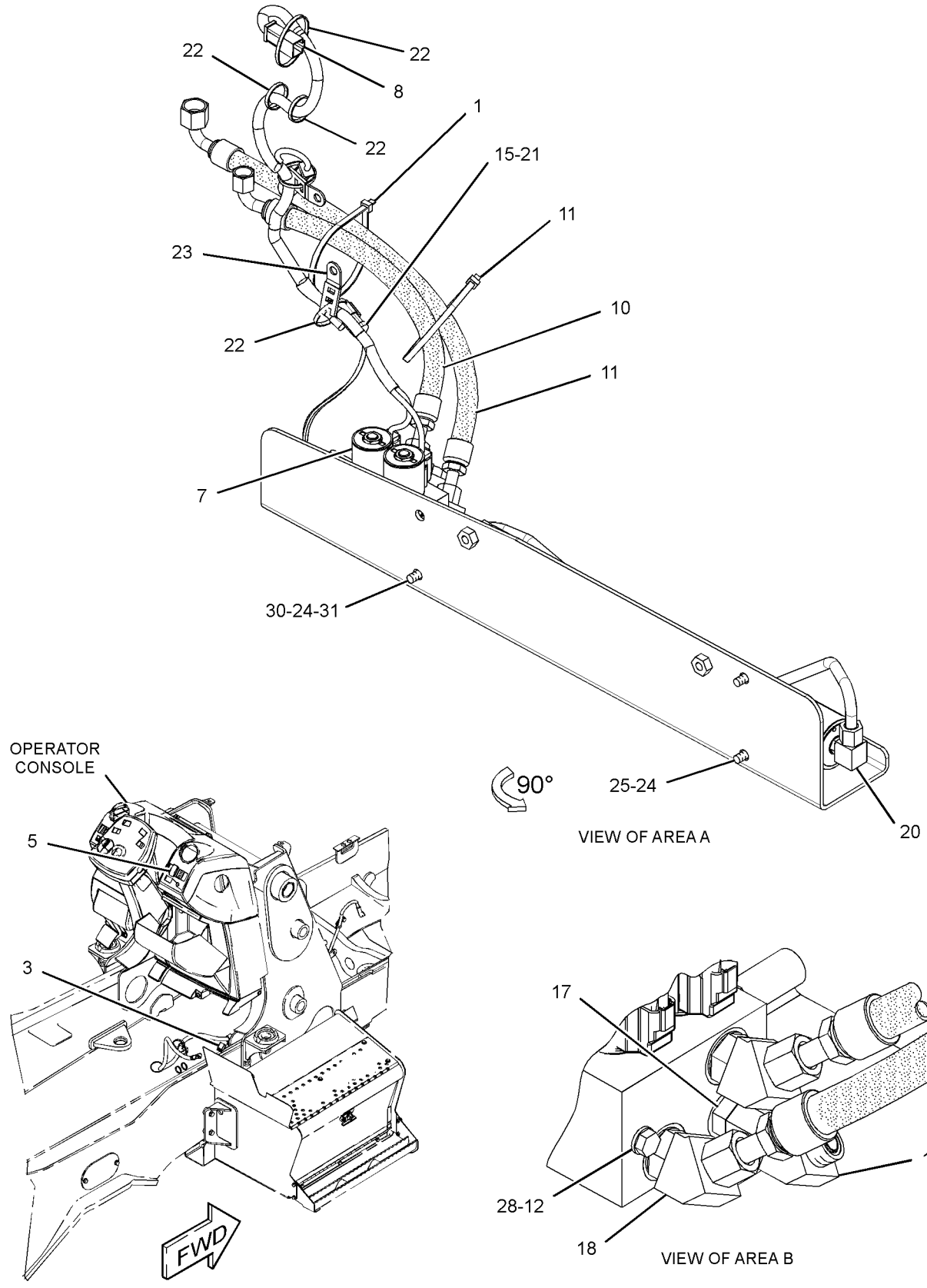

GRAPHIC #2 **<END>** g01516442

HYDRAULIC SYSTEM

264-0187 INSTALLATION GP-RIDE CONTROL–AUTOSHIFT

S/N: EAT1-UP
AN ATTACHMENT
TYPE 3

SMCS-1408, 5004, 5057, 5077 **i03530660**

NOTE	REF NO	GRAPHIC REF	PART NUMBER	QTY	PART NAME 1 2 3 4 5 6 (PRODUCT LEVEL)	SEE PAGE
	1	1,2	**7K-1181**	3	STRAP-CABLE	
	2	1	**189-3158**	1	SUPPRESSOR-ARC	
	3	2	**146-9439**	1	RELAY AS (12-VOLT) (RIDE CONTROL)	
CY	4	1	**162-3961**	1	ACCUMULATOR GP-RIDE CONTROL (UNCHARGED)	387
	5	2	**214-4710**	1	SWITCH AS-ROCKER (RIDE CONTROL)	
		1	**111-7899**	1	GASKET	
	6	1	**279-5016**	1	FILM-WARNING (HIGH PRESS CYLINDER, READ OMM)	
Y	7	2	**245-8780**	1	MANIFOLD GP-RIDE CONTROL	510
	8	2	**246-8038**	1	HARNESS AS-RIDE CONTROL	
	9	1	**247-0320**	1	BRACKET AS	
I	10	2	**252-1221**	1	HOSE AS	
I	11	2	**265-0868**	1	HOSE AS	
M	12	2	**096-5866**	2	BOLT (M8X1.25X75-MM)	
	13	1	**109-1633**	2	CLIP (SLOT)	
	14	1	**109-1634**	2	CLIP (TAB)	
	15	2	**304-5696**	1	SWITCH AS-PRESSURE (RIDE CONTROL)	
		2	**102-8803**	1	KIT-RECEPTACLE (3-PIN)	
					(INCLUDES RECEPTACLE AS & WEDGE)	
		2	**186-3735**	3	PIN-CONNECTOR (16-GA TO 18-GA)	
	16	1	*148-8354*	1	ELBOW AS	
		1	**3K-0360**	1	SEAL-O-RING	
		1	**6V-8398**	1	SEAL-O-RING	
		1	**6V-9002**	1	ELBOW	
	17	2	*148-8340*	1	CONNECTOR AS	
		2	**3K-0360**	1	SEAL-O-RING	
		2	**6V-8398**	1	SEAL-O-RING	
		2	**6V-8639**	1	CONNECTOR	
	18	2	*148-8358*	2	ELBOW AS	
					(EACH INCLUDES)	
		2	**2M-9780**	1	SEAL-O-RING	
		2	**6V-8398**	1	SEAL-O-RING	
		2	**6V-8624**	1	ELBOW	
	19	2	*153-6241*	1	ELBOW AS	
		2	**6V-8398**	1	SEAL-O-RING	
		2	**8C-8989**	1	ELBOW	
	20	2	*148-8365*	1	ELBOW AS	
		2	**8T-6876**	1	ELBOW	
		2	**3J-1907**	1	SEAL-O-RING	
		2	**6V-8398**	1	SEAL-O-RING	
	21	2	**3J-1907**	1	SEAL-O-RING	
	22	1,2	**3S-2093**	5	STRAP-CABLE	
	23	1,2	**4P-7581**	2	CLIP	
	24	1,2	**8T-4121**	3	WASHER-HARD (11X21X2.5-MM THK)	
M	25	1,2	**8T-4137**	3	BOLT (M10X1.5X20-MM)	
M	26	1	**8T-4139**	2	BOLT (M12X1.75X30-MM)	
	27	1	**8T-4223**	2	WASHER-HARD (13.5X25.5X3-MM THK)	
	28	2	**8T-4224**	2	WASHER-HARD (8.8X16X2-MM THK)	
	29	1	**292-8222**	1	TUBE AS	
	30	1	*148-8370*	1	ELBOW AS	
		1	**6V-8398**	1	SEAL-O-RING	
		1	**6V-9851**	1	ELBOW	
I	31	1	**141-7684**	1	HOSE AS	

264-0187 **INSTALLATION GP-RIDE CONTROL** *(contd.)* **i03530660**

C-CHANGE FROM PREVIOUS TYPE
I-REFER TO HYDRAULIC INFORMATION SYSTEM
M-METRIC PART
Y-SEPARATE ILLUSTRATION

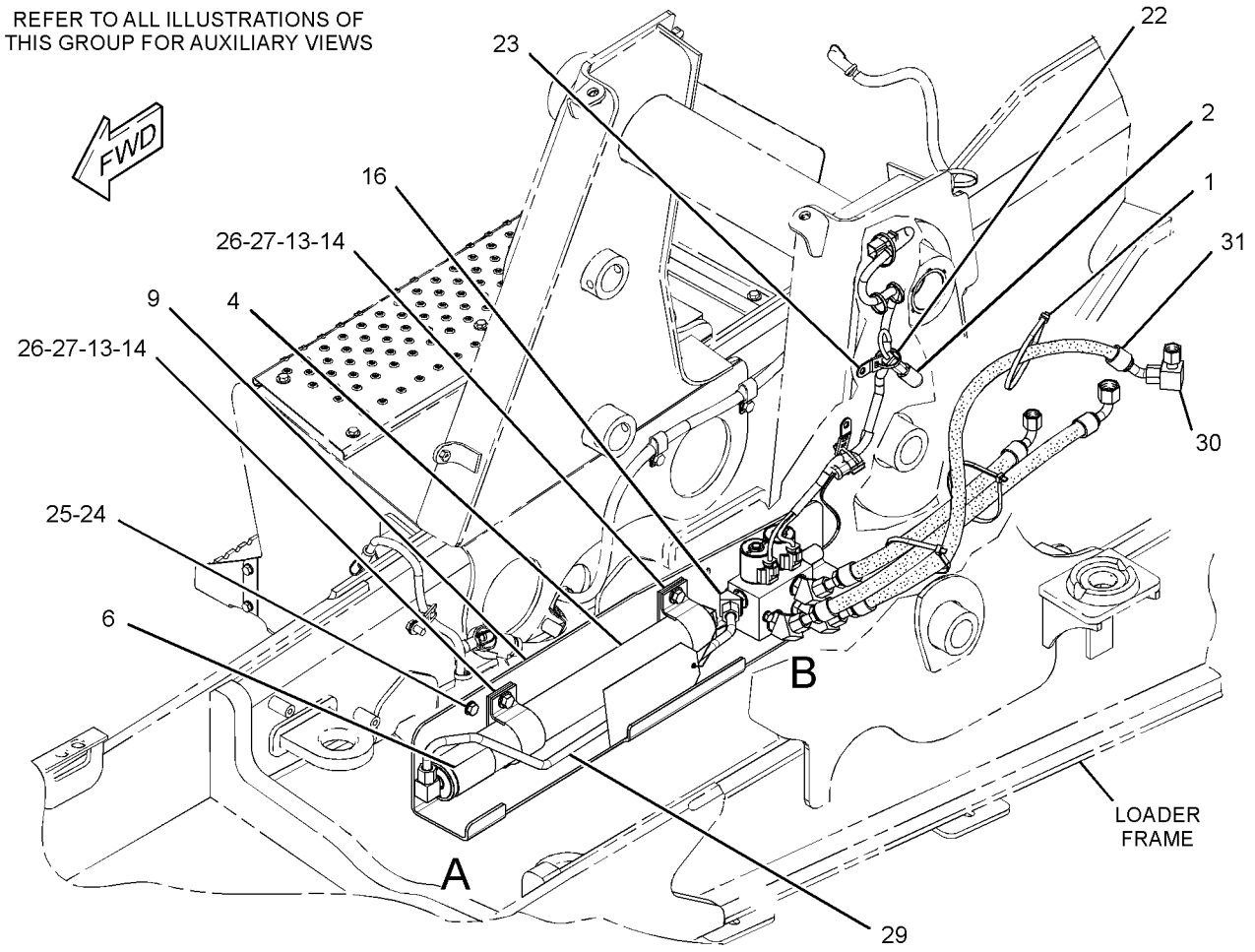

GRAPHIC #1 g01584453

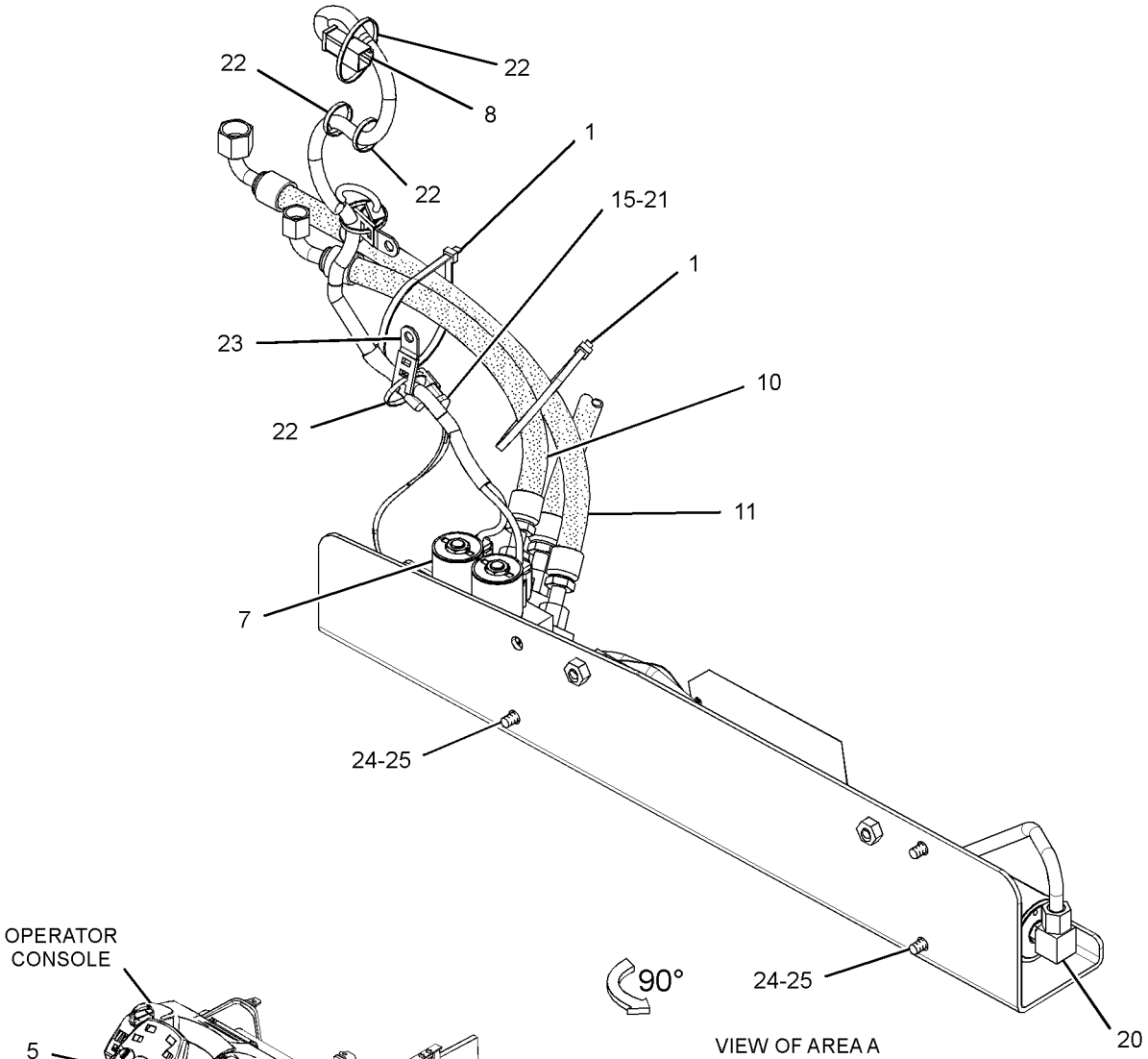

GRAPHIC #2 **<END>** g01584455

220-5973 KICKOUT & POSITIONER GP

S/N: EAT938-UP

PART OF 213-9300 LOADER AR

SMCS-5109, 5112 **i02808587**

NOTE	REF NO	GRAPHIC REF	PART NUMBER	QTY	PART NAME 1 2 3 4 5 6 (PRODUCT LEVEL)	SEE PAGE
	1	1	**290-8140**	1	LEVER AS	
		1	**7Y-0336**	1	SPACER (24.5X44X24-MM THK)	
		1	**9R-2614**	1	BEARING	
M	2	1	**8T-4189**	2	BOLT (M8X1.25X20-MM)	
C	3	1	**268-5689**	1	FILM-IDENTIFICATION (BUCKET LEVEL)	
	4	1	**8T-0706**	1	RING-RETAINING	
	5	1	**8T-5063**	1	ROD END	
	6	1	**9R-3255**	1	LEVER	
	7	1	**9R-5301**	2	PIN-COTTER	
	8	1	**128-7902**	1	SPACER (60.25X75X6-MM THK)	
B	9	1	**128-7903**	1	SPACER (61X114.3X3-MM THK)	
B	10	1	**128-7905**	1	SPACER (61X114.3X1-MM THK)	
	11	1	**279-6052**	1	LINK AS	
	12	1	**130-5891**	1	LEVER AS	
	13	1	**130-7952**	1	PLATE	
	14	1	**140-6009**	1	LEVER AS	
	15	1	**141-6343**	1	SPRING	
	16	1	**290-8139**	1	PLATE AS	
		1	**220-5974**	1	PLATE	
	17	1	**106-7301**	1	ROD AS	
C	18	1	**297-2831**	1	PIPE AS	
	19	1	**272-0555**	1	PIVOT AS	
	20	1	**1B-8736**	1	KEY-WOODRUFF	
	21	1	**3B-8489**	2	FITTING-GREASE	
	22	1	**272-0557**	1	PLATE AS	
	23	1	**8C-6955**	1	END-YOKE ROD	
	24	1	**8T-4123**	8	WASHER (22X35X3.5-MM THK)	
M	25	1	**8T-4133**	2	NUT (M10X1.5-THD)	
M	26	1	**8T-4182**	1	BOLT (M10X1.5X45-MM)	
	27	1	**9R-2806**	2	PIN	
	28	1	**9R-2807**	4	CLIP	
	29	1	**8T-4224**	2	WASHER-HARD (8.8X16X2-MM THK)	

B-USE AS REQUIRED
C-CHANGE FROM PREVIOUS TYPE
M-METRIC PART

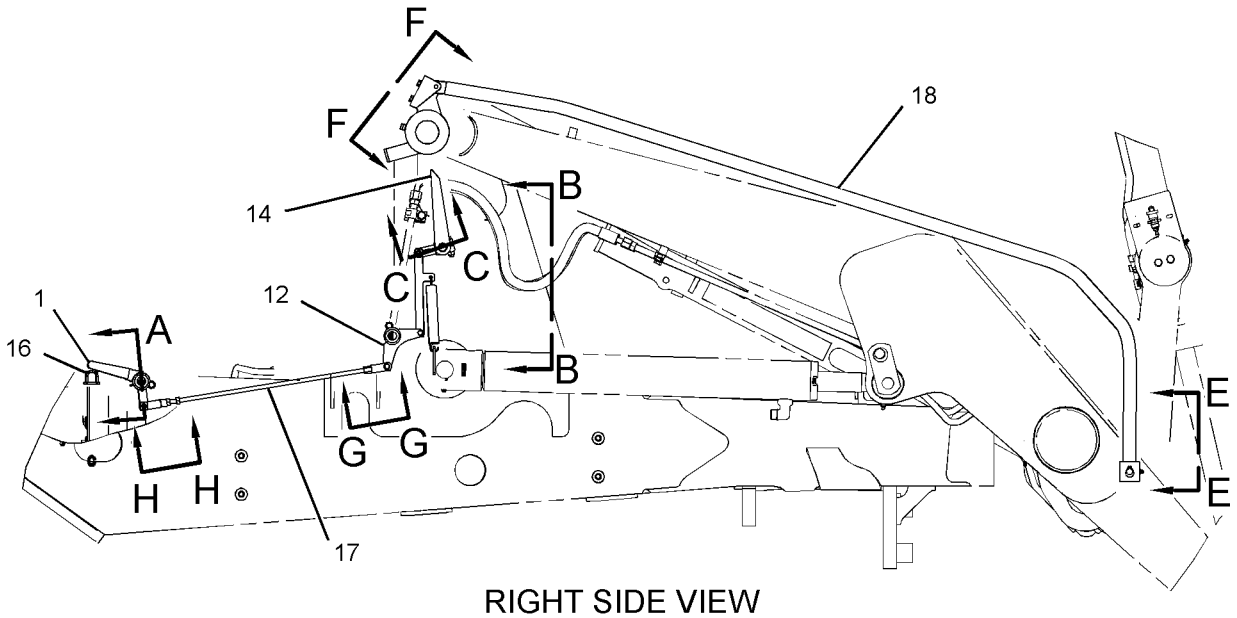

RIGHT SIDE VIEW

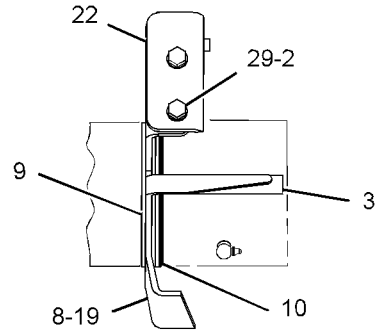

VIEW F-F

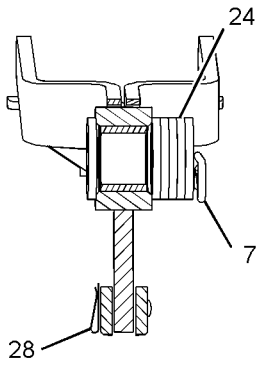

SECTION A

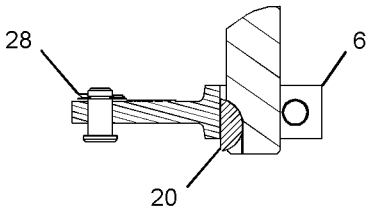

SECTION C-C

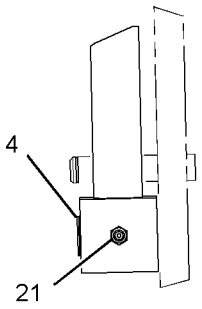

VIEW E-E

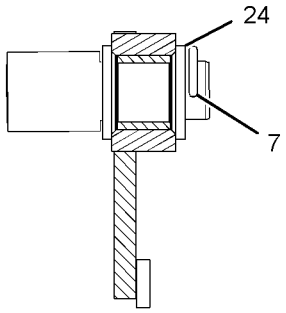

SECTION D-D

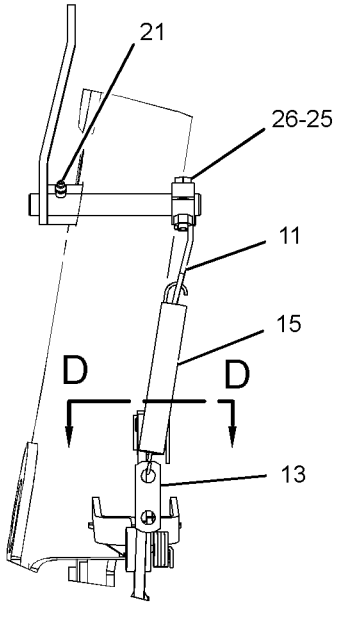

VIEW B-B

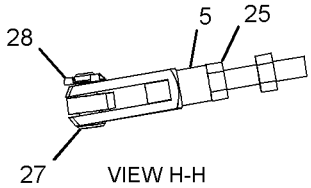

VIEW H-H

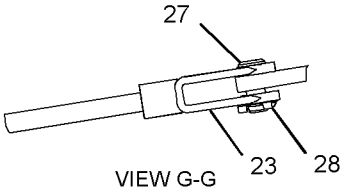

VIEW G-G

GRAPHIC #1

<END>

g01398339

268-9418 KICKOUT & POSITIONER GP

S/N: EAT1-937

PART OF 213-9300 LOADER AR

SMCS-5109, 5112 **i02523407**

NOTE	REF NO	GRAPHIC REF	PART NUMBER	QTY	PART NAME 1 2 3 4 5 6 (PRODUCT LEVEL)	SEE PAGE
	1	1	**8T-0706**	1	RING-RETAINING	
	2	1	**8T-5063**	1	ROD END	
	3	1	**9R-3255**	1	LEVER	
	4	1	**106-7301**	1	ROD AS	
	5	1	**290-8140**	1	LEVER AS	
		1	**7Y-0336**	1	SPACER (24.5X44X24-MM THK)	
		1	**9R-2614**	1	BEARING	
	6	1	**128-7902**	1	SPACER (60.25X75X6-MM THK)	
	7	1	**128-7903**	1	SPACER (61X114.3X3-MM THK)	
	8	1	**128-7905**	1	SPACER (61X114.3X1-MM THK)	
	9	1	**130-5891**	1	LEVER AS	
		1	**7Y-0336**	1	SPACER (24.5X44X24-MM THK)	
		1	**9R-2614**	1	BEARING	
		1	**9R-3135**	1	PIN	
	10	1	**130-7952**	1	PLATE	
	11	1	**134-5930**	1	SPACER (19X41X12.7-MM THK)	
	12	1	**140-6009**	1	LEVER AS	
	13	1	**141-6343**	1	SPRING	
	14	1	**290-8139**	1	PLATE AS	
	15	1	**227-5571**	1	TUBE AS	
	16	1	**268-5689**	1	FILM-IDENTIFICATION (BUCKET LEVEL)	
					(ALIGN FILM WITH POINTER WITH BUCKET ON GROUND)	
	17	1	**272-0555**	1	PIVOT AS	
	18	1	**272-0557**	1	PLATE AS	
	19	1	**279-6052**	1	LINK AS	
	20	1	**1B-8736**	1	KEY-WOODRUFF	
	21	1	**3B-8489**	2	FITTING-GREASE	
	22	1	**8C-6955**	1	END-YOKE ROD	
	23	1	**8T-4123**	8	WASHER (22X35X3.5-MM THK)	
M	24	1	**8T-4133**	2	NUT (M10X1.5-THD)	
M	25	1	**8T-4182**	1	BOLT (M10X1.5X45-MM)	
M	26	1	**8T-4189**	2	BOLT (M8X1.25X20-MM)	
	27	1	**8T-4224**	2	WASHER-HARD (8.8X16X2-MM THK)	
	28	1	**9R-2806**	2	PIN	
	29	1	**9R-2807**	4	CLIP	
	30	1	**9R-5301**	2	PIN-COTTER	

M-METRIC PART

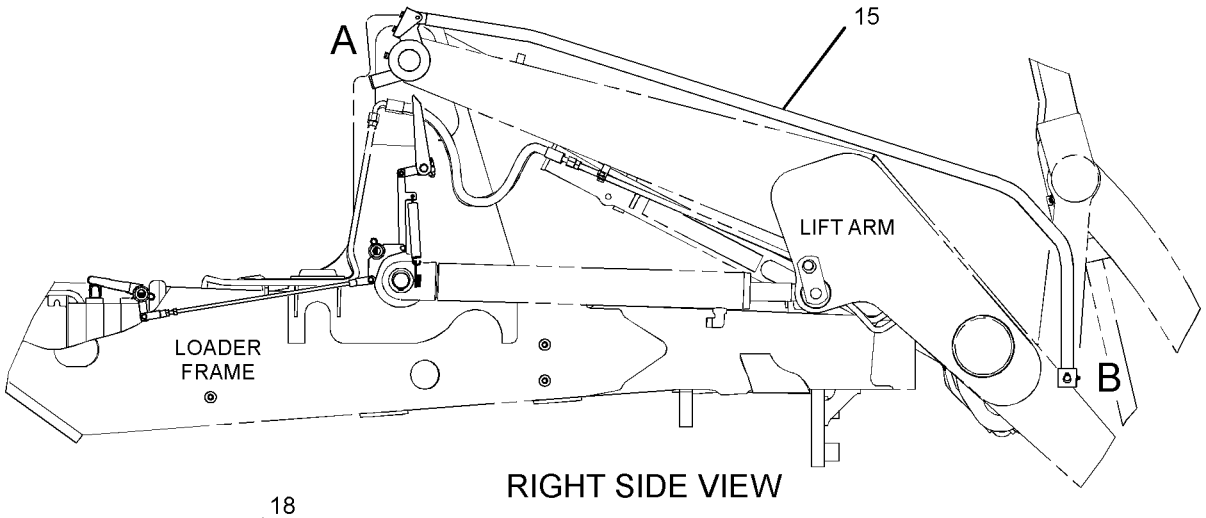

RIGHT SIDE VIEW

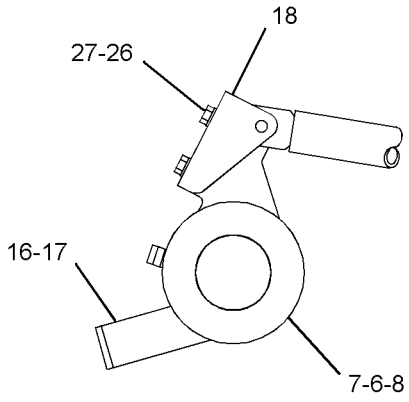

VIEW OF AREA A

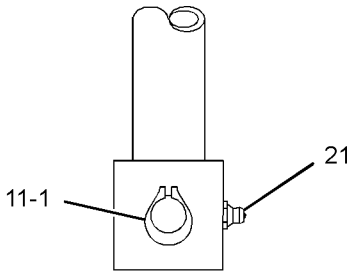

VIEW OF AREA B

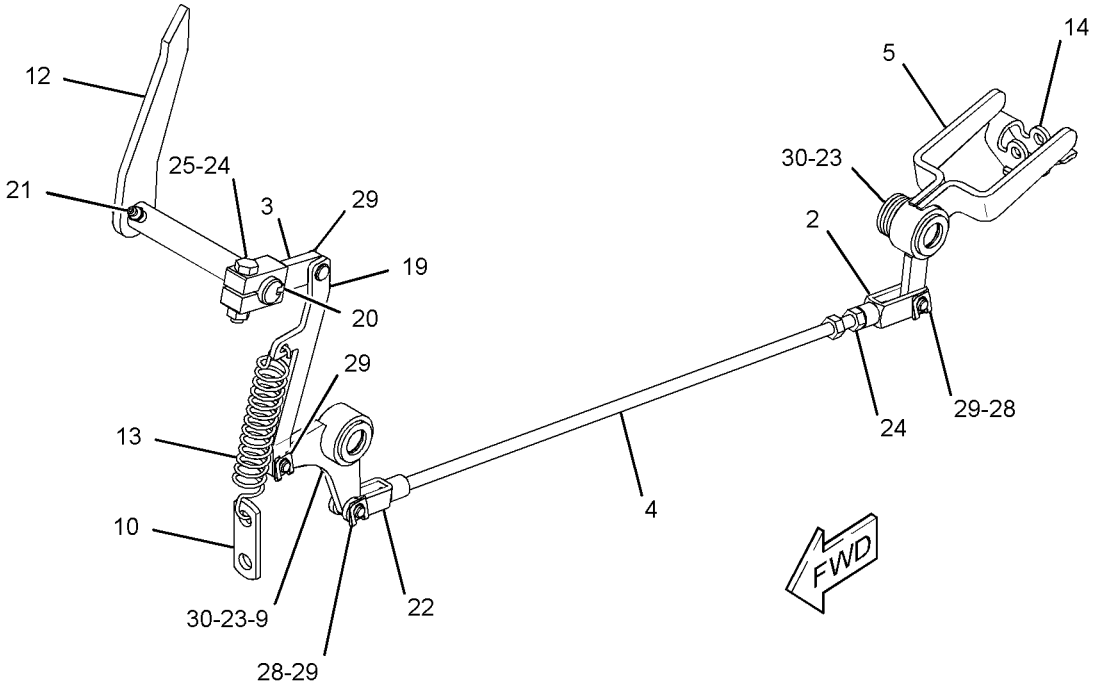

GRAPHIC #1 **<END>** g01289837

HYDRAULIC SYSTEM

249-7915 LINES GP-BACKHOE AUXILIARY

S/N: EAT1-UP

AN ATTACHMENT

SMCS-5057 **i03347867**

NOTE	REF NO	GRAPHIC REF	PART NUMBER	QTY	PART NAME 1 2 3 4 5 6 (PRODUCT LEVEL)	SEE PAGE
	1	1	**4W-3753**	2	SPACER (13.5X25X38.1-MM THK)	
	2	1	**106-0401**	1	FITTING (QUICK DISCONNECT, FEMALE)	
	3	1	**106-0406**	1	FITTING (QUICK DISCONNECT, MALE)	
	4	1	**109-1260**	2	BRACKET	
	5	1	**144-8344**	1	SPACER (11X19X20-MM THK)	
	6	1	*155-2026*	1	UNION AS	
		1	**5K-9090**	2	SEAL-O-RING	
		1	**6V-8998**	1	UNION	
	7	1	**217-2617**	1	TUBE AS	
I	8	1	**217-2699**	1	HOSE AS	
	9	1	*241-6226*	1	TEE AS	
		1	**6V-8398**	1	SEAL-O-RING	
		1	**6V-9746**	1	SEAL-O-RING	
		1	**7J-9108**	1	SEAL-O-RING	
		1	**241-6225**	1	TEE	
	10	1	**241-8448**	2	FILM-WARNING (HYD PRESS, READ OMM, U.S.)	
					—OR—	
		1	**241-8450**	2	FILM-WARNING (HYD PRESS, READ OMM, INTL)	
	11	1	**8S-0024**	1	CLIP (TAB)	
I	12	1	**262-2067**	1	HOSE AS	
	13	1	**262-3043**	1	TUBE AS	
I	14	1	**262-3049**	1	HOSE AS	
	15	1	**277-4543**	1	BRACKET AS	
	16	1	**281-4726**	2	FILM-INSTRUCTION (OIL FLOW DIRECTION)	
	17	1	*148-8392*	1	ELBOW AS	
		1	**6V-9853**	1	ELBOW	
		1	**6V-9746**	1	SEAL-O-RING	
	18	1	*150-3053*	2	CONNECTOR AS	
					(EACH INCLUDES)	
		1	**6V-9746**	1	SEAL-O-RING	
		1	**7M-8485**	1	SEAL-O-RING	
		1	**108-3872**	1	CONNECTOR	
	19	1	**2P-1293**	2	LOCKNUT (1-3/16-12-THD)	
	20	1	**5K-9090**	2	SEAL-O-RING	
	21	1	**5P-7466**	4	CLIP (SLOT)	
	22	1	**5P-7467**	4	CLIP (TAB)	
	23	1	**5P-8112**	4	GROMMET	
	24	1	**8S-0023**	1	CLIP (SLOT)	
	25	1	**6V-9170**	1	NUT-BULKHEAD (1-14-THD)	
	26	1	**6V-9172**	1	NUT (1-7/16-12-THD)	
	27	1	**6V-9746**	1	SEAL-O-RING	
	28	1	**7X-7729**	2	WASHER (11X25X3-MM THK)	
	29	1	**8T-1889**	3	CLIP (SLOT)	
	30	1	**8T-1890**	3	CLIP (TAB)	
	31	1	**8T-4121**	8	WASHER-HARD (11X21X2.5-MM THK)	
M	32	1	**8T-4133**	1	NUT (M10X1.5-THD)	
M	33	1	**8T-4136**	5	BOLT (M10X1.5X25-MM)	
M	34	1	**7X-2549**	2	BOLT (M12X1.75X100-MM)	
M	35	1	**8T-4185**	1	BOLT (M10X1.5X50-MM)	
M	36	1	**8T-4196**	2	BOLT (M10X1.5X35-MM)	
	37	1	**8T-4223**	2	WASHER-HARD (13.5X25.5X3-MM THK)	
I	38	1	**290-6713**	1	HOSE AS	

I-REFER TO HYDRAULIC INFORMATION SYSTEM
M-METRIC PART

249-7915 **LINES GP-BACKHOE AUXILIARY** *(contd.)* **i03347867**

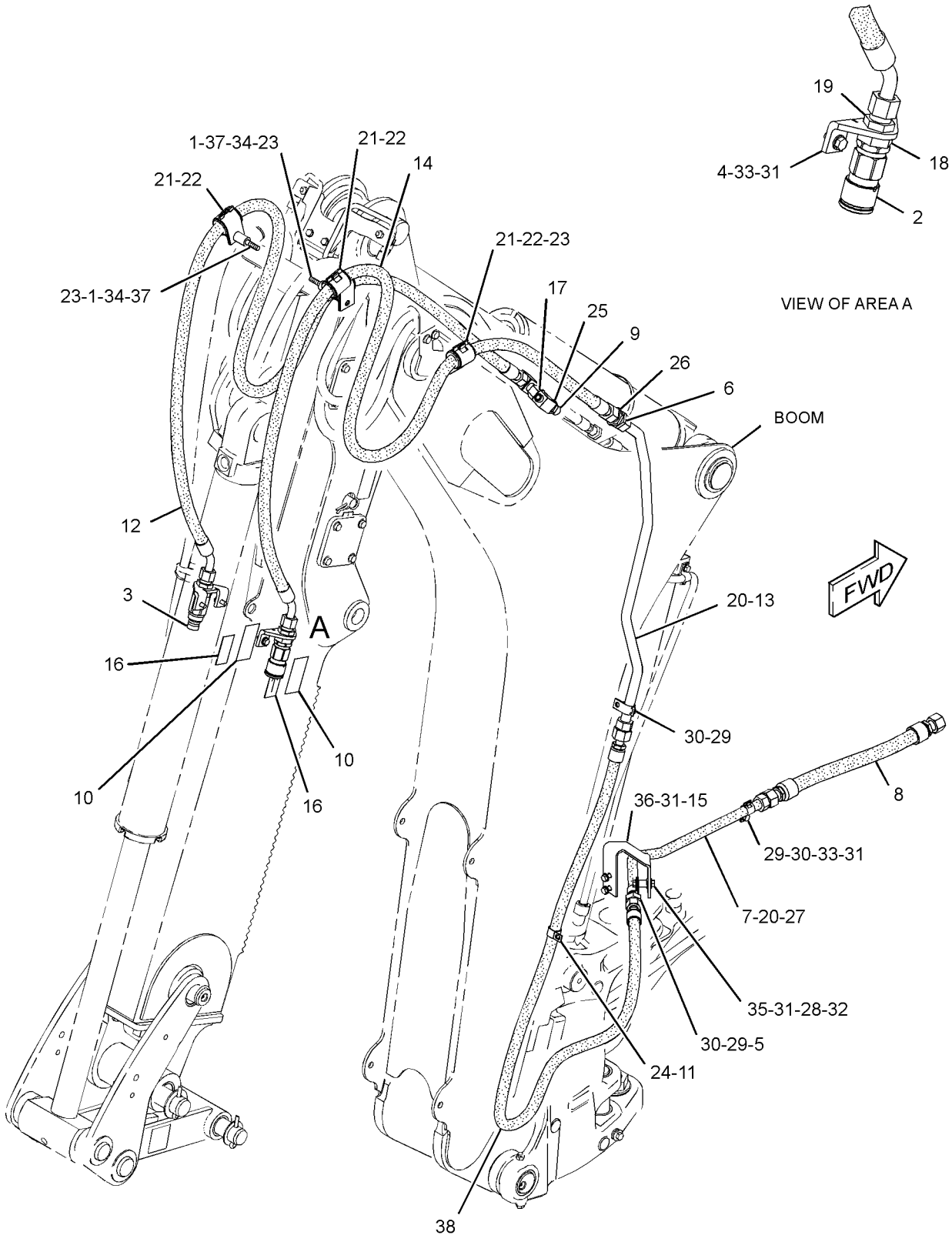

GRAPHIC #1 **<END>** g01821136

HYDRAULIC SYSTEM

262-3046 LINES GP-BACKHOE AUXILIARY

S/N: EAT1-UP

AN ATTACHMENT

SMCS-5057 **i03347866**

NOTE	REF NO	GRAPHIC REF	PART NUMBER	QTY	PART NAME 1 2 3 4 5 6 (PRODUCT LEVEL)	SEE PAGE
	1	1	**106-0401**	1	FITTING (QUICK DISCONNECT, FEMALE)	
	2	1	**106-0406**	1	FITTING (QUICK DISCONNECT, MALE)	
	3	1	**278-4497**	1	BRACKET	
	4	1	**144-8344**	1	SPACER (11X19X20-MM THK)	
	5	1	**235-5729**	1	VALVE AS-MANUAL (DIRECTIONAL FLOW)	
	6	1	**241-8448**	2	FILM-WARNING (HYD PRESS, READ OMM, U.S.)	
	7	1	**257-0475**	1	VALVE GP-RELIEF	
		1	**8J-2413**	1	SEAL-O-RING	
		1	**095-1751**	1	SEAL-O-RING	
		1	**169-1616**	1	RING-BACKUP	
	8	1	**262-3036**	1	BRACKET	
I	9	1	**262-3038**	1	HOSE AS	
	10	1	**262-3039**	1	TUBE AS	
	11	1	**262-3042**	1	TUBE AS	
	12	1	**262-3043**	1	TUBE AS	
	13	1	**277-4543**	1	BRACKET AS	
	14	1	**286-0689**	1	TUBE AS	
	15	1	*148-8327*	2	CONNECTOR AS	
					(EACH INCLUDES)	
		1	**3D-2824**	1	SEAL-O-RING	
		1	**6V-8637**	1	CONNECTOR	
		1	**6V-9746**	1	SEAL-O-RING	
	16	1	*148-8335*	1	CONNECTOR AS	
		1	**5K-9090**	1	SEAL-O-RING	
		1	**6V-8635**	1	CONNECTOR	
		1	**7M-8485**	1	SEAL-O-RING	
	17	1	*150-3053*	2	CONNECTOR AS	
					(EACH INCLUDES)	
		1	**6V-9746**	1	SEAL-O-RING	
		1	**7M-8485**	1	SEAL-O-RING	
		1	**108-3872**	1	CONNECTOR	
	18	1	*155-2026*	2	UNION AS	
					(EACH INCLUDES)	
		1	**5K-9090**	2	SEAL-O-RING	
		1	**6V-8998**	1	UNION	
	19	1	*260-9143*	2	ELBOW AS	
					(EACH INCLUDES)	
		1	**6V-9746**	1	SEAL-O-RING	
		1	**109-5825**	1	ELBOW	
I	20	1	**262-3044**	2	HOSE AS	
I	21	1	**290-6713**	1	HOSE AS	
I	22	1	**290-6714**	1	HOSE AS	
	23	1	**2P-1293**	2	LOCKNUT (1-3/16-12-THD)	
	24	1	**5K-9090**	2	SEAL-O-RING	
	25	1	**5P-4116**	2	WASHER-HARD (8.8X20.5X2-MM THK)	
	26	1	**5P-7466**	2	CLIP (SLOT)	
	27	1	**5P-7467**	2	CLIP (TAB)	
	28	1	**5P-8112**	2	GROMMET	
	29	1	**6V-9172**	2	NUT (1-7/16-12-THD)	
	30	1	**6V-9746**	1	SEAL-O-RING	
	31	1	**8S-0023**	2	CLIP (SLOT)	
	32	1	**8S-0024**	2	CLIP (TAB)	
	33	1	**8T-1887**	1	CLIP (SLOT)	
	34	1	**8T-1888**	1	CLIP (TAB)	
	35	1	**8T-1889**	2	CLIP (SLOT)	
	36	1	**8T-1890**	2	CLIP (TAB)	

262-3046 **LINES GP-BACKHOE AUXILIARY** *(contd.)* **i03347866**

NOTE	REF NO	GRAPHIC REF	PART NUMBER	QTY	PART NAME 1 2 3 4 5 6 (PRODUCT LEVEL)	SEE PAGE
	37	1	**8T-4121**	12	WASHER-HARD (11X21X2.5-MM THK)	
M	38	1	**8T-4133**	1	NUT (M10X1.5-THD)	
M	39	1	**8T-4136**	4	BOLT (M10X1.5X25-MM)	
M	40	1	**8T-4137**	2	BOLT (M10X1.5X20-MM)	
M	41	1	**8T-4185**	1	BOLT (M10X1.5X50-MM)	
M	42	1	**8T-4189**	2	BOLT (M8X1.25X20-MM)	
M	43	1	**8T-4196**	2	BOLT (M10X1.5X35-MM)	
BM	44	1	**8T-4910**	2	BOLT (M12X1.75X60-MM)	
	45	1	**278-4498**	1	BRACKET	
	46	1	**6V-9832**	2	CAP AS	
	47	1	*148-8449*	2	TEE AS-SWIVEL	
					(EACH INCLUDES)	
		1	**6V-9746**	2	SEAL-O-RING	
		1	**6V-9839**	1	TEE-SWIVEL	
	48	1	**204-2281**	1	STRAP-TIE	
	49	1	**241-8450**	2	FILM-WARNING (HYD PRESS, READ OMM, INTL)	

B-USE AS REQUIRED
I-REFER TO HYDRAULIC INFORMATION SYSTEM
M-METRIC PART

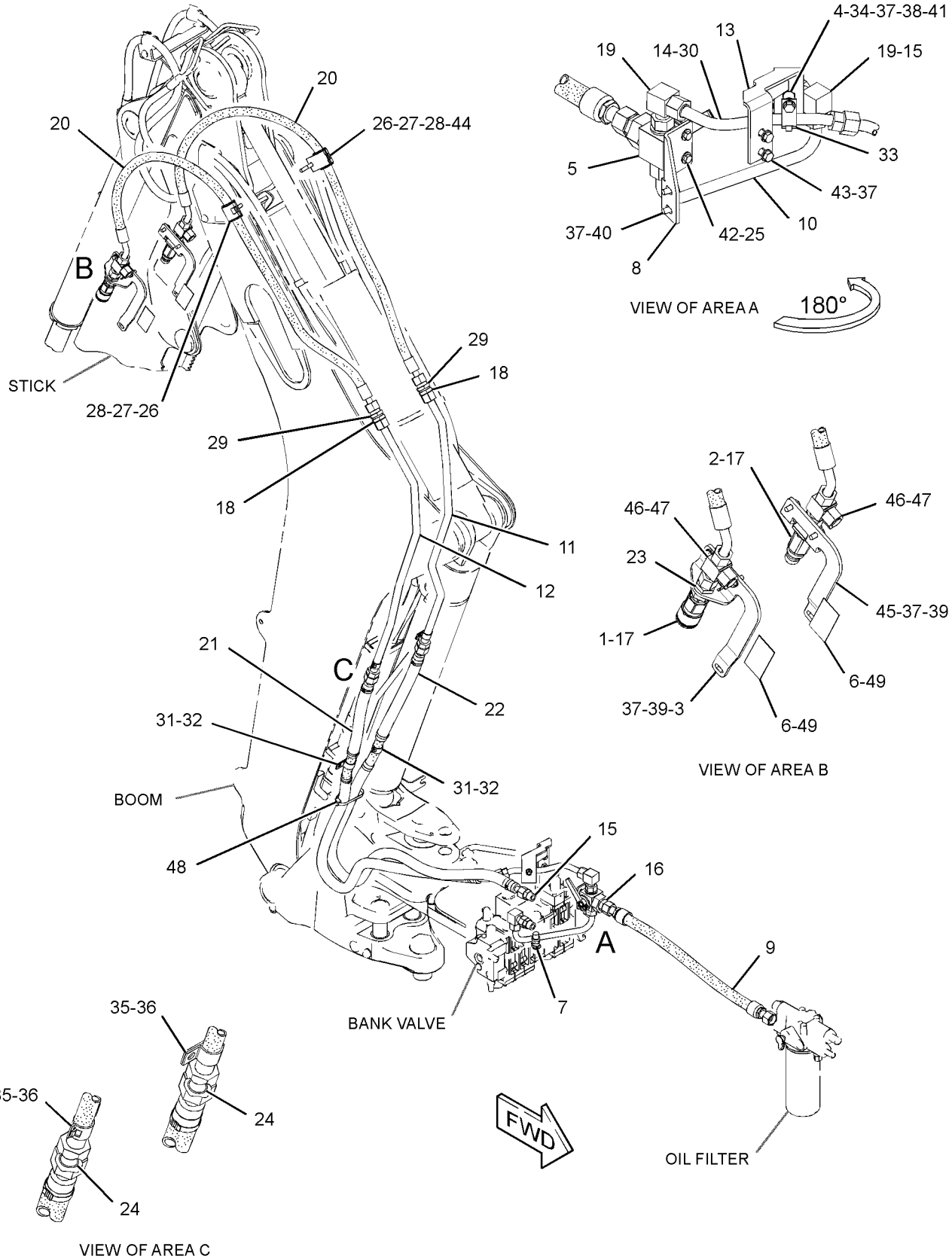

GRAPHIC #1 **<END>** g01813655

HYDRAULIC SYSTEM

262-3047 LINES GP-BACKHOE AUXILIARY

S/N: EAT1-UP

AN ATTACHMENT

SMCS-5057 **i03486542**

NOTE	REF NO	GRAPHIC REF	PART NUMBER	QTY	PART NAME 1 2 3 4 5 6 (PRODUCT LEVEL)	SEE PAGE
	1	1	**4W-3753**	2	SPACER (13.5X25X38.1-MM THK)	
	2	1	**106-0401**	1	FITTING (QUICK DISCONNECT, FEMALE)	
	3	1	**106-0406**	1	FITTING (QUICK DISCONNECT, MALE)	
	4	1	**278-4498**	1	BRACKET	
	5	1	**278-4497**	1	BRACKET	
	6	1	**235-5729**	1	VALVE AS-MANUAL (DIRECTIONAL FLOW)	
		1	**281-4022**	1	HANDLE AS	
		1	**6V-9746**	2	SEAL-O-RING	
B	7	1	**241-8448**	2	FILM-WARNING (HYD PRESS, READ OMM, U.S.)	
					—OR—	
B		1	**241-8450**	2	FILM-WARNING (HYD PRESS, READ OMM, INTL)	
	8	1	**262-3036**	1	BRACKET	
I	9	1	**262-3038**	1	HOSE AS	
	10	1	**5P-4116**	2	WASHER-HARD (8.8X20.5X2-MM THK)	
	11	1	**262-3042**	1	TUBE AS	
	12	1	**262-3043**	1	TUBE AS	
	13	1	**204-2281**	1	STRAP-TIE	
I	14	1	**262-3049**	2	HOSE AS	
	15	1	**262-4211**	1	TUBE AS	
	16	1	**277-4543**	1	BRACKET AS	
	17	1	*148-8327*	2	CONNECTOR AS	
					(EACH INCLUDES)	
		1	**3D-2824**	1	SEAL-O-RING	
		1	**6V-8637**	1	CONNECTOR	
		1	**6V-9746**	1	SEAL-O-RING	
	18	1	*148-8335*	1	CONNECTOR AS	
		1	**5K-9090**	1	SEAL-O-RING	
		1	**6V-8635**	1	CONNECTOR	
		1	**7M-8485**	1	SEAL-O-RING	
	19	1	*150-3053*	2	CONNECTOR AS	
					(EACH INCLUDES)	
		1	**6V-9746**	1	SEAL-O-RING	
		1	**7M-8485**	1	SEAL-O-RING	
		1	**108-3872**	1	CONNECTOR	
	20	1	*155-2026*	2	UNION AS	
					(EACH INCLUDES)	
		1	**5K-9090**	2	SEAL-O-RING	
		1	**6V-8998**	1	UNION	
	21	1	**2P-1293**	2	LOCKNUT (1-3/16-12-THD)	
	22	1	**5K-9090**	2	SEAL-O-RING	
	23	1	**5P-7466**	4	CLIP (SLOT)	
	24	1	**5P-7467**	2	CLIP (TAB)	
	25	1	**5P-8112**	4	GROMMET	
	26	1	*148-8449*	2	TEE AS-SWIVEL	
					(EACH INCLUDES)	
		1	**6V-9746**	2	SEAL-O-RING	
		1	**6V-9839**	1	TEE-SWIVEL	
	27	1	**6V-9172**	2	NUT (1-7/16-12-THD)	
	28	1	**6V-9746**	1	SEAL-O-RING	
	29	1	**6V-9832**	2	CAP AS (AUX HYD FUNCTION)	
	30	1	**8T-1889**	2	CLIP (SLOT)	
	31	1	**8T-1890**	2	CLIP (TAB)	
	32	1	**8T-4121**	12	WASHER-HARD (11X21X2.5-MM THK)	
M	33	1	**8T-4136**	4	BOLT (M10X1.5X25-MM)	
M	34	1	**8T-4137**	2	BOLT (M10X1.5X20-MM)	
M	35	1	**7X-2549**	2	BOLT (M12X1.75X100-MM)	

262-3047 LINES GP-BACKHOE AUXILIARY *(contd.)* i03486542

NOTE	REF NO	GRAPHIC REF	PART NUMBER	QTY	PART NAME 1 2 3 4 5 6 (PRODUCT LEVEL)	SEE PAGE
M	36	1	**8T-4189**	2	BOLT (M8X1.25X20-MM)	
M	37	1	**8T-4196**	2	BOLT (M10X1.5X35-MM)	
	38	1	**8T-4223**	2	WASHER-HARD (13.5X25.5X3-MM THK)	
	39	1	**286-0689**	1	TUBE AS	
I	40	1	**290-6713**	1	HOSE AS	
I	41	1	**290-6714**	1	HOSE AS	
	42	1	*260-9143*	2	ELBOW AS	
					(EACH INCLUDES)	
		1	**6V-9746**	1	SEAL-O-RING	
		1	**109-5824**	1	ELBOW	
	43	1	**144-8344**	1	SPACER (11X19X20-MM THK)	
M	44	1	**8T-4185**	1	BOLT (M10X1.5X50-MM)	
M	45	1	**8T-4133**	1	NUT (M10X1.5-THD)	
	46	1	**8T-1888**	1	CLIP (TAB)	
	47	1	**8S-0024**	2	CLIP (TAB)	
	48	1	**8S-0023**	2	CLIP (SLOT)	
	49	1	**8T-1887**	1	CLIP (SLOT)	
	50	1	**330-9416**	2	CLIP (SLOT)	

B-USE AS REQUIRED
I-REFER TO HYDRAULIC INFORMATION SYSTEM
M-METRIC PART

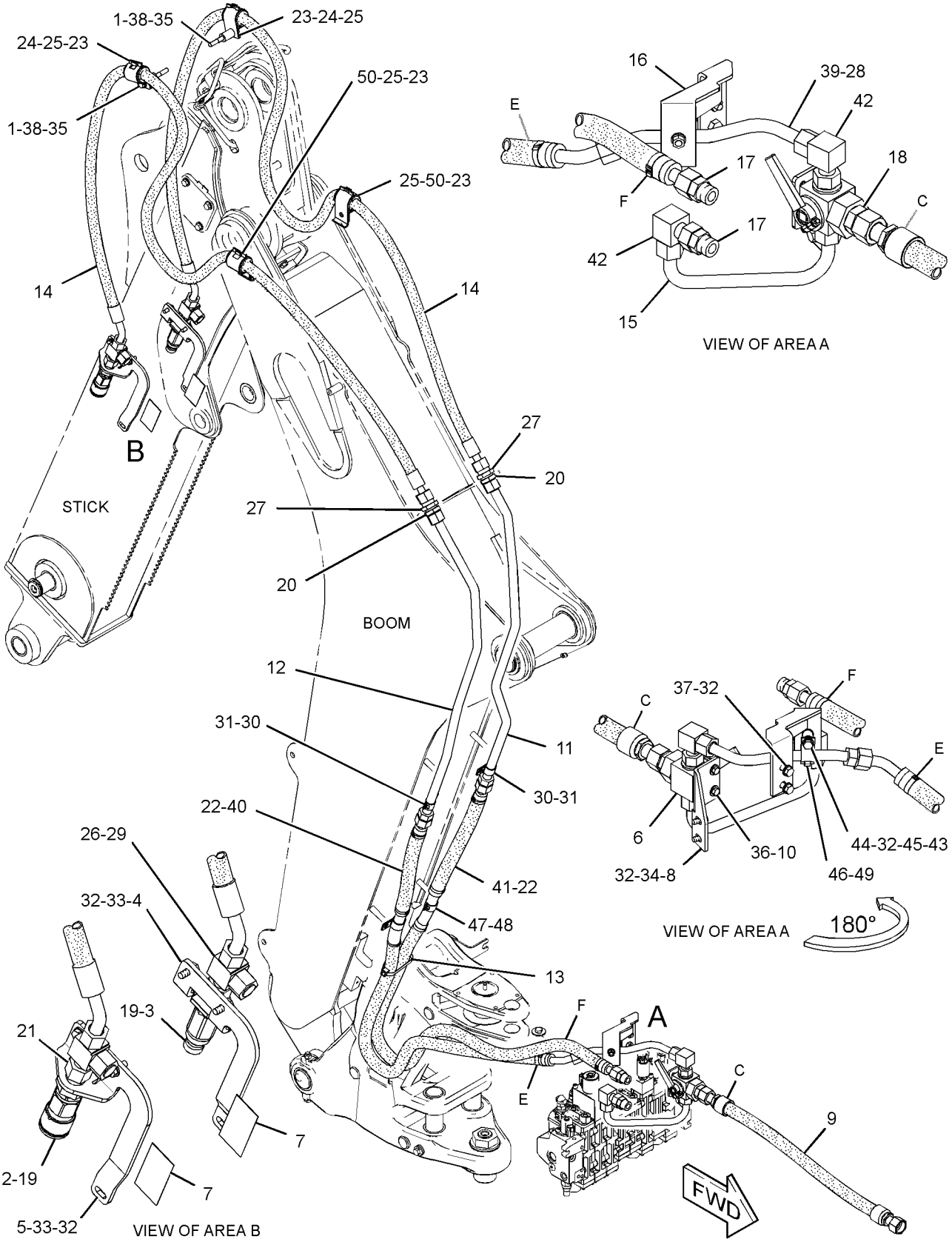

GRAPHIC #1 **<END>** g01839936

HYDRAULIC SYSTEM

211-7629 LINES GP-BOOM

S/N: EAT1-937

PART OF 213-9304, 213-9309, 291-9207 BACKHOE AR-EXTENDABLE STICK, 213-9301, 213-9306, 291-9206 BACKHOE AR-STANDARD STICK AN ATTACHMENT

SMCS-5057, 5456 **i02634426**

NOTE	REF NO	GRAPHIC REF	PART NUMBER	QTY	PART NAME 1 2 3 4 5 6 (PRODUCT LEVEL)	SEE PAGE
	1	1	**5P-3860**	1	CLAMP-HOSE	
	2	1	**9R-4619**	1	SUPPORT AS	
M		1	**6V-8224**	1	NUT-WELD (M10X1.15-THD)	
I	3	1	**297-1229**	1	HOSE AS	
I	4	1	**290-6705**	1	HOSE AS	
	5	1	**248-4283**	1	TUBE AS	
	6	1	*148-8341*	2	CONNECTOR AS	
					(EACH INCLUDES)	
		1	**3D-2824**	1	SEAL-O-RING	
		1	**6V-8713**	1	CONNECTOR	
		1	**7J-9108**	1	SEAL-O-RING	
	7	1	*148-8382*	1	ELBOW AS	
		1	**3D-2824**	1	SEAL-O-RING	
		1	**7J-9108**	1	SEAL-O-RING	
		1	**8T-0404**	1	ELBOW (90-DEG)	
	8	1	**7J-9108**	1	SEAL-O-RING	
	9	1	**8T-1887**	1	CLIP (SLOT)	
	10	1	**8T-1888**	1	CLIP (TAB)	
	11	1	**8T-4121**	1	WASHER-HARD (11X21X2.5-MM THK)	
M	12	1	**8T-4137**	1	BOLT (M10X1.5X20-MM)	

I-REFER TO HYDRAULIC INFORMATION SYSTEM
M-METRIC PART

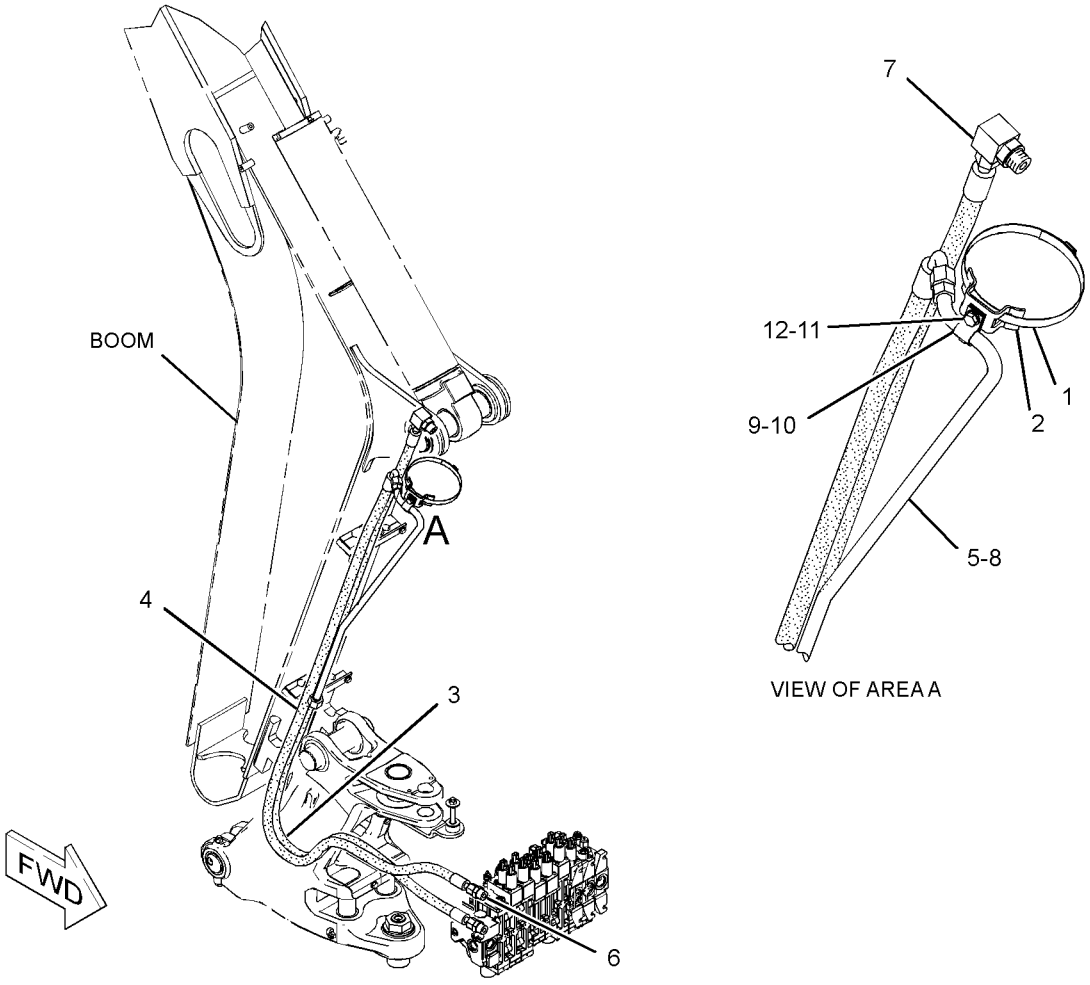

GRAPHIC #1 **<END>** g01234281

HYDRAULIC SYSTEM

211-7629 LINES GP-BOOM

S/N: EAT938-UP

PART OF 213-9304, 213-9309, 291-9207 BACKHOE AR-EXTENDABLE STICK, 213-9301, 213-9306, 291-9206 BACKHOE AR-STANDARD STICK AN ATTACHMENT

SMCS-5057, 5456 **i02885643**

NOTE	REF NO	GRAPHIC REF	PART NUMBER	QTY	PART NAME 1 2 3 4 5 6 (PRODUCT LEVEL)	SEE PAGE
	1	1	**5P-3860**	1	CLAMP-HOSE	
CI	2	1	**8Y-7751**	1	HOSE AS	
	3	1	**9R-4619**	1	SUPPORT AS	
M		1	**6V-8224**	1	NUT-WELD (M10X1.15-THD)	
	5	1	**248-4283**	1	TUBE AS	
C	6	1	**311-2508**	1	LINES GP-HYDRAULIC	
I		1	**311-2500**	2	HOSE AS	
		1	**6R-2050**	1	SLEEVE	
		1	**163-8811**	1	CLAMP	
CI	7	1	**311-2512**	1	HOSE AS	
	8	1	*148-8341*	2	CONNECTOR AS	
					(EACH INCLUDES)	
		1	**3D-2824**	1	SEAL-O-RING	
		1	**6V-8713**	1	CONNECTOR	
C		1	**7J-9108**	1	SEAL-O-RING	
	9	1	*148-8382*	1	ELBOW AS	
		1	**3D-2824**	1	SEAL-O-RING	
		1	**7J-9108**	1	SEAL-O-RING	
		1	**8T-0404**	1	ELBOW (90-DEG)	
	10	1	**7J-9108**	3	SEAL-O-RING	
	11	1	**8T-1887**	1	CLIP (SLOT)	
	12	1	**8T-1888**	1	CLIP (TAB)	
	13	1	**8T-4121**	1	WASHER-HARD (11X21X2.5-MM THK)	
M	14	1	**8T-4137**	1	BOLT (M10X1.5X20-MM)	

C-CHANGE FROM PREVIOUS TYPE
I-REFER TO HYDRAULIC INFORMATION SYSTEM
M-METRIC PART

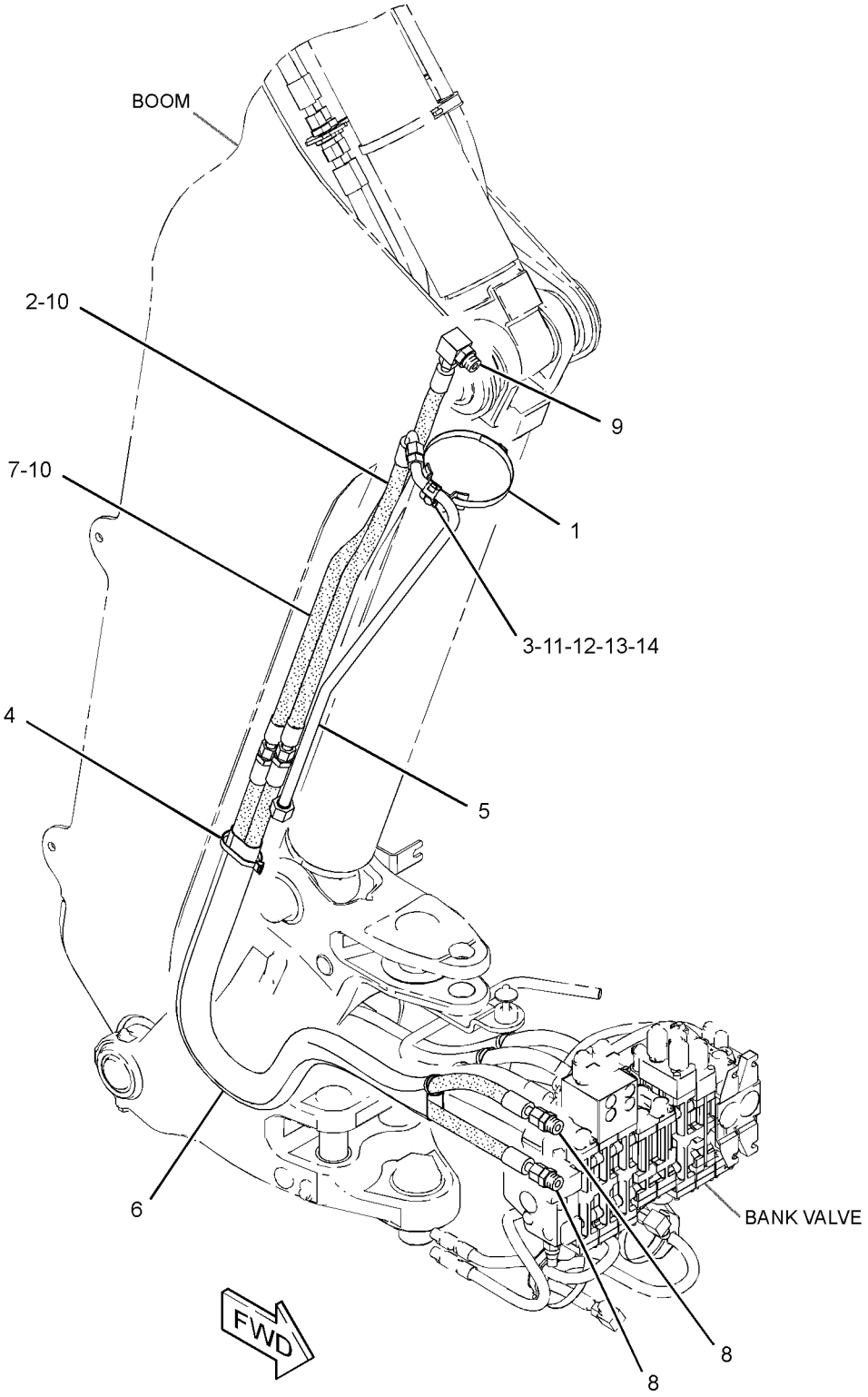

GRAPHIC #1 **<END>** g01412097

HYDRAULIC SYSTEM

246-9323 LINES GP-BUCKET

S/N: EAT1-937

PART OF 213-9301, 213-9306, 291-9206 BACKHOE AR-STANDARD STICK AN ATTACHMENT

SMCS-5057, 5457 **i02527628**

NOTE	REF NO	GRAPHIC REF	PART NUMBER	QTY	PART NAME 1 2 3 4 5 6 (PRODUCT LEVEL)	SEE PAGE
	1	1	**5P-0599**	1	CLAMP-BAND	
	2	1	**9R-5948**	1	BLOCK	
I	3	1	**229-0700**	1	HOSE AS	
I	4	1	**247-7754**	1	HOSE AS	
I	5	1	**247-7756**	1	HOSE AS	
	6	1	**248-5547**	2	PLATE	
	7	1	**251-1541**	1	PLATE AS	
I	8	1	**251-3291**	1	HOSE AS	
	9	1	*148-8328*	1	CONNECTOR AS (WATER LINES)	
		1	**3D-2824**	1	SEAL-O-RING	
		1	**6V-8398**	1	SEAL-O-RING	
		1	**6V-8633**	1	CONNECTOR	
	10	1	*148-8341*	1	CONNECTOR AS	
		1	**3D-2824**	1	SEAL-O-RING	
		1	**6V-8713**	1	CONNECTOR	
		1	**7J-9108**	1	SEAL-O-RING	
	11	1	*148-8382*	1	ELBOW AS	
		1	**3D-2824**	1	SEAL-O-RING	
		1	**7J-9108**	1	SEAL-O-RING	
		1	**8T-0404**	1	ELBOW (90-DEG)	
	12	1	*148-8457*	1	UNION AS (ORFS)	
		1	**6V-8398**	2	SEAL-O-RING	
		1	**6V-8995**	1	UNION (BULKHEAD)	
	13	1	*169-7409*	1	UNION AS	
		1	**6V-8996**	1	UNION	
		1	**7J-9108**	2	SEAL-O-RING	
	14	1	**5P-7464**	4	CLIP (SLOT) (USE WITH 37-MM OD GROMMET)	
	15	1	**5P-7465**	4	CLIP (TAB) (USE WITH 37-MM OD GROMMET)	
	16	1	**6V-1249**	2	GROMMET	
	17	1	**6V-1889**	1	CLIP	
	18	1	**6V-7359**	2	GROMMET (25-MM ID,37-MM OD)	
	19	1	**6V-9169**	1	NUT-BULKHEAD (13/16-16-THD)	
	20	1	**6V-9170**	1	NUT-BULKHEAD (1-14-THD)	
	21	1	**8T-4121**	2	WASHER-HARD (11X21X2.5-MM THK)	
M	22	1	**8T-4136**	2	BOLT (M10X1.5X25-MM)	
M	23	1	**8T-4139**	4	BOLT (M12X1.75X30-MM)	
M	24	1	**8T-4183**	2	BOLT (M12X1.75X40-MM)	
	25	1	**8T-4223**	8	WASHER-HARD (13.5X25.5X3-MM THK)	
M	26	1	**8T-4244**	2	NUT (M12X1.75-THD)	
	27	1	**7C-4354**	1	CLIP	
M	28	1	**8T-4195**	4	BOLT (M10X1.5X30-MM)	
	29	1	**7X-7729**	4	WASHER (11X25X3-MM THK)	

I-REFER TO HYDRAULIC INFORMATION SYSTEM
M-METRIC PART

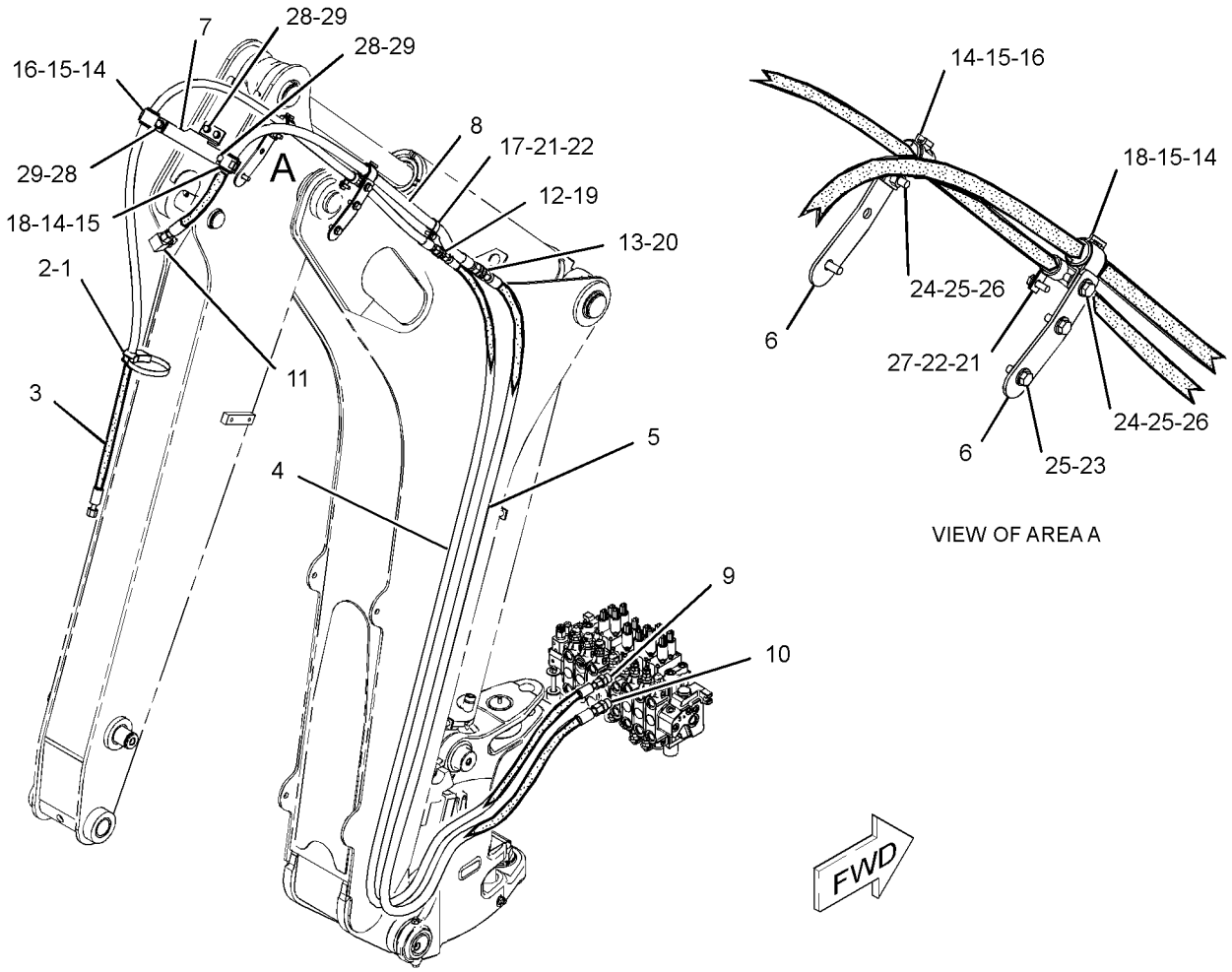

GRAPHIC #1 **<END>** g01361954

HYDRAULIC SYSTEM

246-9323 LINES GP-BUCKET

S/N: EAT938-UP

PART OF 213-9301, 213-9306, 291-9206 BACKHOE AR-STANDARD STICK AN ATTACHMENT

SMCS-5057, 5457 **i02896719**

NOTE	REF NO	GRAPHIC REF	PART NUMBER	QTY	PART NAME 1 2 3 4 5 6 (PRODUCT LEVEL)	SEE PAGE
	1	1	**5P-0599**	1	CLAMP-BAND	
	2	1	**9R-5948**	1	BLOCK	
I	3	1	**229-0700**	1	HOSE AS	
C	4	1	**311-2508**	1	LINES GP-HYDRAULIC	
I		1	**311-2517**	1	HOSE AS	
I		1	**311-2500**	1	HOSE AS	
C	5	1	**7J-9108**	2	SEAL-O-RING	
	6	1	**248-5547**	2	PLATE	
	7	1	**251-1541**	1	PLATE AS	
I	8	1	**251-3291**	1	HOSE AS	
CI	9	1	**311-2497**	1	HOSE AS	
C	10	1	*268-1548*	1	CONNECTOR AS	
		1	**6V-8398**	1	SEAL-O-RING	
		1	**7J-9108**	1	SEAL-O-RING	
		1	**268-1547**	1	CONNECTOR	
CI	12	1	**166-7302**	1	HOSE AS	
C	13	1	*148-8341*	2	CONNECTOR AS	
					(EACH INCLUDES)	
		1	**3D-2824**	1	SEAL-O-RING	
		1	**6V-8713**	1	CONNECTOR	
		1	**7J-9108**	1	SEAL-O-RING	
	14	1	*148-8382*	1	ELBOW AS	
		1	**3D-2824**	1	SEAL-O-RING	
		1	**7J-9108**	1	SEAL-O-RING	
		1	**8T-0404**	1	ELBOW	
	15	1	*169-7409*	1	UNION AS	
		1	**6V-8996**	1	UNION	
		1	**7J-9108**	2	SEAL-O-RING	
	16	1	**5P-7464**	4	CLIP (SLOT)	
	17	1	**5P-7465**	4	CLIP (TAB)	
	18	1	**6V-1249**	2	GROMMET	
	19	1	**6V-1889**	1	CLIP	
	20	1	**6V-7359**	2	GROMMET	
C	21	1	**6V-9170**	2	NUT-BULKHEAD (1-14-THD)	
	22	1	**8T-4121**	2	WASHER-HARD (11X21X2.5-MM THK)	
M	23	1	**8T-4136**	2	BOLT (M10X1.5X25-MM)	
M	24	1	**8T-4139**	4	BOLT (M12X1.75X30-MM)	
M	25	1	**8T-4183**	2	BOLT (M12X1.75X40-MM)	
	26	1	**8T-4223**	8	WASHER-HARD (13.5X25.5X3-MM THK)	
M	27	1	**8T-4244**	2	NUT (M12X1.75-THD)	
	28	1	**7C-4354**	1	CLIP	
M	29	1	**8T-4195**	4	BOLT (M10X1.5X30-MM)	
	30	1	**7X-7729**	4	WASHER (11X25X3-MM THK)	

C-CHANGE FROM PREVIOUS TYPE
I-REFER TO HYDRAULIC INFORMATION SYSTEM
M-METRIC PART

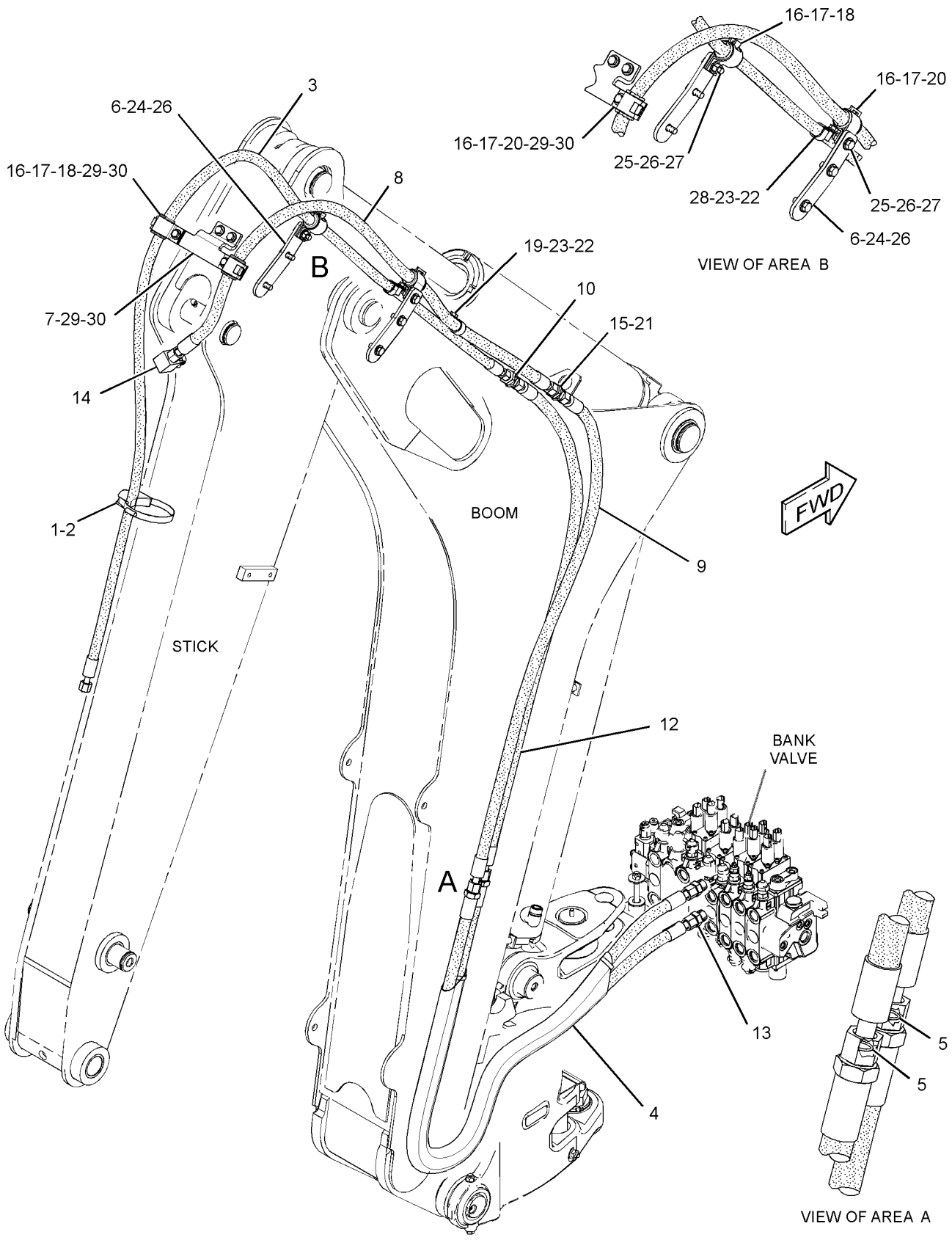

GRAPHIC #1

<END>

g01469761

HYDRAULIC SYSTEM

246-9325 LINES GP-BUCKET

S/N: EAT1-937

PART OF 213-9304, 213-9309, 291-9207 BACKHOE AR-EXTENDABLE STICK AN ATTACHMENT

SMCS-5057, 5457 **i02502672**

NOTE	REF NO	GRAPHIC REF	PART NUMBER	QTY	PART NAME 1 2 3 4 5 6 (PRODUCT LEVEL)	SEE PAGE
	1	1	**5P-0599**	1	CLAMP-BAND	
	2	1	**9R-5948**	1	BLOCK	
I	5	2	**247-7752**	1	HOSE AS	
I	6	2	**247-7754**	1	HOSE AS	
I	7	1	**247-7756**	2	HOSE AS	
I	8	2	**248-4285**	2	HOSE AS	
	9	1	**262-1315**	1	PLATE	
	10	2	*268-1548*	2	CONNECTOR AS	
					(EACH INCLUDES)	
		2	**268-1547**	1	CONNECTOR	
		2	**6V-8398**	1	SEAL-O-RING	
		2	**7J-9108**	1	SEAL-O-RING	
	11	2	**281-4618**	1	PLATE AS	
	12	1	**281-4770**	1	PLATE AS	
I	13	2	**283-5618**	1	HOSE AS	
I	14	1	**283-5622**	1	HOSE AS	
	15	2	*148-8328*	1	CONNECTOR AS	
		2	**3D-2824**	1	SEAL-O-RING	
		2	**6V-8398**	1	SEAL-O-RING	
		2	**6V-8633**	1	CONNECTOR	
	16	1,2	*148-8341*	3	CONNECTOR AS	
					(EACH INCLUDES)	
		1,2	**3D-2824**	1	SEAL-O-RING	
		1,2	**6V-8713**	1	CONNECTOR	
		1,2	**7J-9108**	1	SEAL-O-RING	
	17	1	*148-8382*	1	ELBOW AS	
		1	**3D-2824**	1	SEAL-O-RING	
		1	**7J-9108**	1	SEAL-O-RING	
		1	**8T-0404**	1	ELBOW	
	18	2	*148-8457*	1	UNION AS	
		2	**6V-8398**	2	SEAL-O-RING	
		2	**6V-8995**	1	UNION	
	19	2	*169-7409*	1	UNION AS	
		2	**6V-8996**	1	UNION	
		2	**7J-9108**	2	SEAL-O-RING	
	20	1	**3G-8047**	1	GROMMET	
	21	1,2	**3G-8054**	2	CLIP (TAB)	
	22	1,2	**3G-8057**	2	CLIP (SLOT)	
	23	1,2	**5P-7464**	2	CLIP (SLOT)	
	24	1,2	**5P-7465**	2	CLIP (TAB)	
	25	1	**6V-1249**	1	GROMMET	
	26	2	**6V-1889**	1	CLIP	
	27	2	**6V-7359**	1	GROMMET	
	28	2	**6V-9169**	1	NUT-BULKHEAD (13/16-16-THD)	
	29	2	**6V-9170**	3	NUT-BULKHEAD (1-14-THD)	
	30	2	**6V-9990**	1	GROMMET	
	31	2	**7C-4354**	3	CLIP	
	32	2	**8T-4121**	2	WASHER-HARD (11X21X2.5-MM THK)	
M	33	2	**8T-4136**	2	BOLT (M10X1.5X25-MM)	
M	34	1,2	**8T-4139**	7	BOLT (M12X1.75X30-MM)	
M	35	2	**8T-4183**	2	BOLT (M12X1.75X40-MM)	
M	36	1	**8T-4194**	4	BOLT (M12X1.75X50-MM)	
	37	1,2	**8T-4223**	19	WASHER-HARD (13.5X25.5X3-MM THK)	
M	38	1,2	**8T-4244**	6	NUT (M12X1.75-THD)	

246-9325 **LINES GP-BUCKET** *(contd.)* **i02502672**

I-REFER TO HYDRAULIC INFORMATION SYSTEM
M-METRIC PART

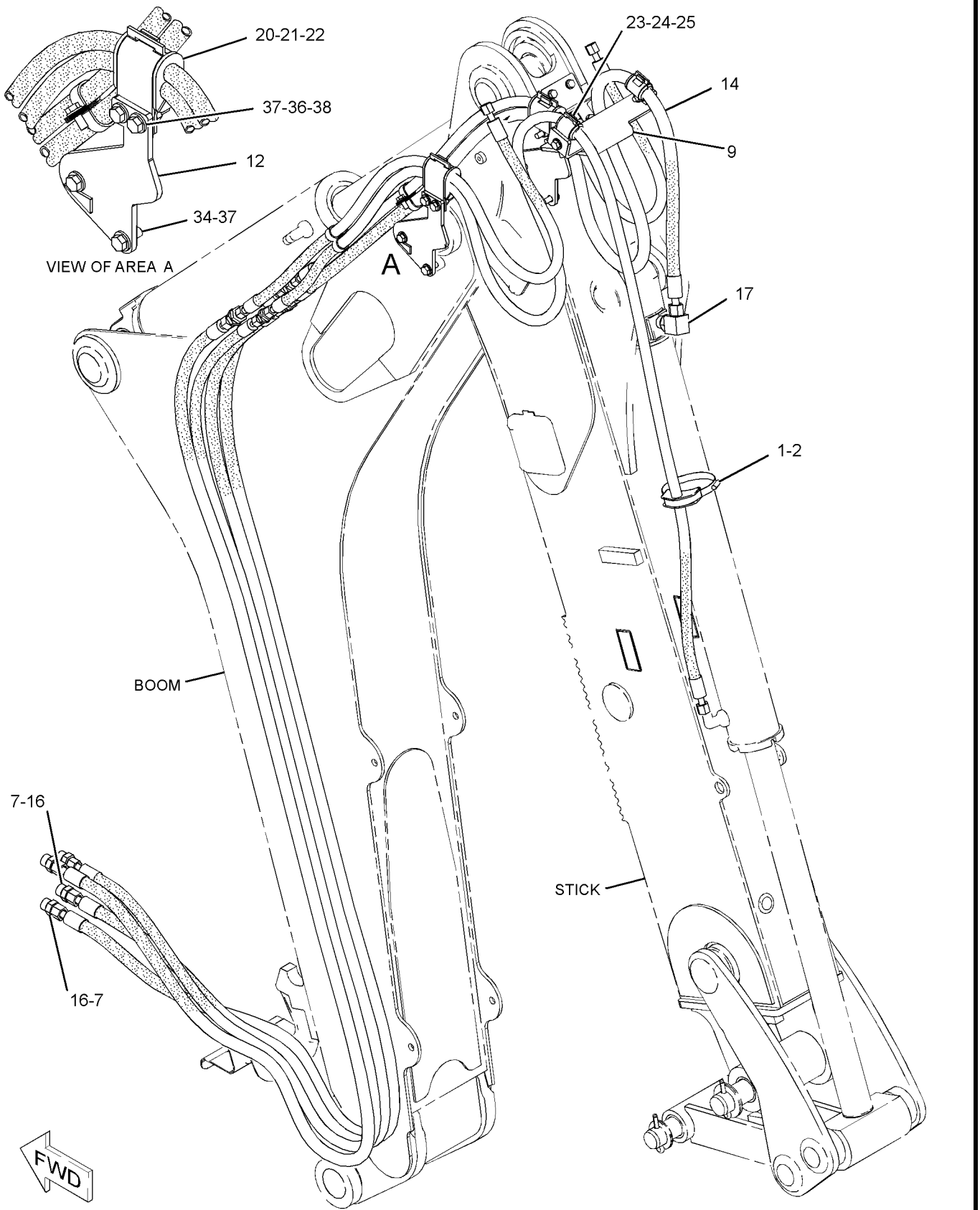

GRAPHIC #1 g01322586

246-9325 **LINES GP-BUCKET** *(contd.)* **i02502672**

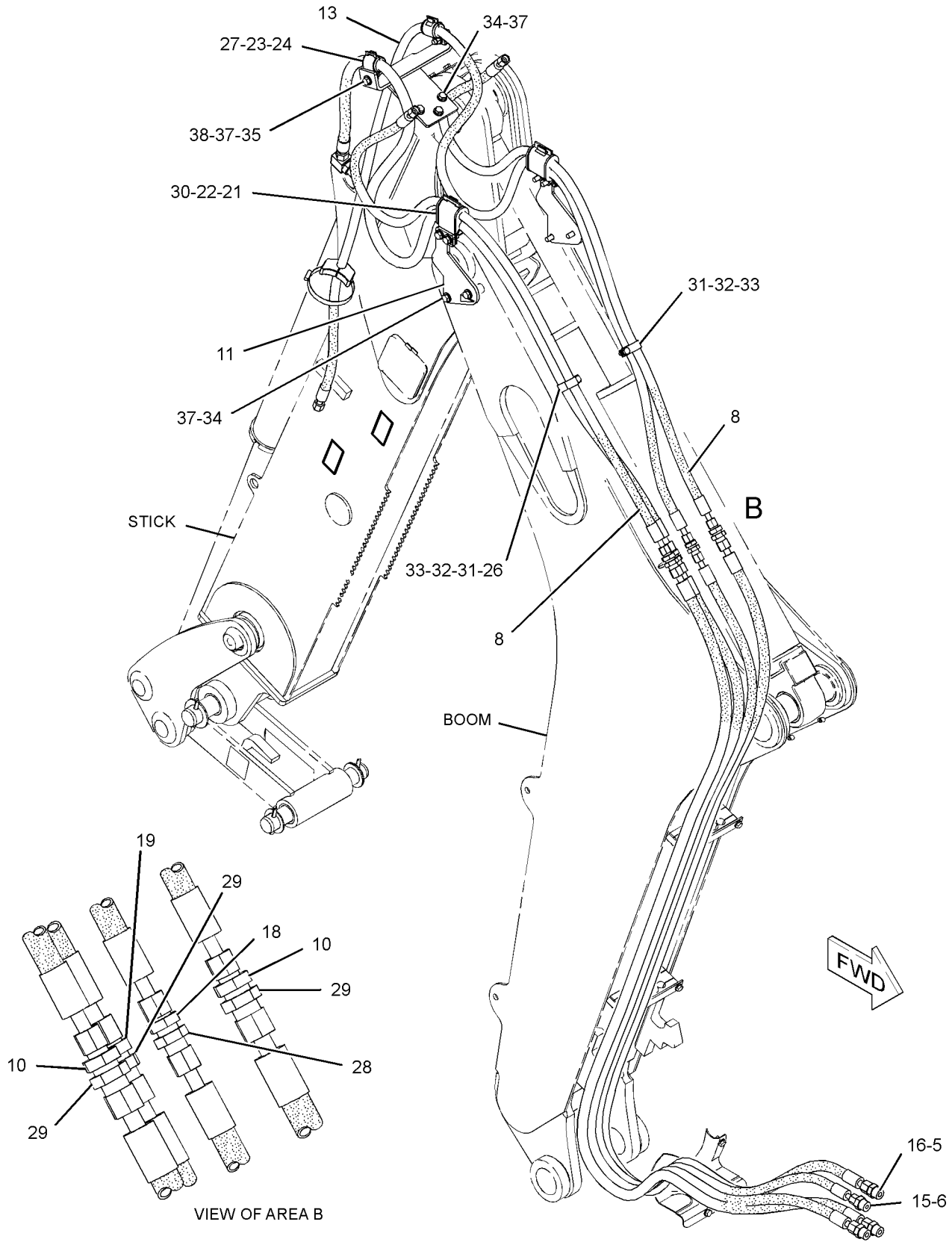

GRAPHIC #2 **<END>** g01233633

HYDRAULIC SYSTEM

246-9325 LINES GP-BUCKET

S/N: EAT938-UP

PART OF 213-9304, 213-9309, 291-9207 BACKHOE AR-EXTENDABLE STICK

AN ATTACHMENT

SMCS-5057, 5457 **i03530681**

NOTE	REF NO	GRAPHIC REF	PART NUMBER	QTY	PART NAME 1 2 3 4 5 6 (PRODUCT LEVEL)	SEE PAGE
	1	1	**5P-0599**	1	CLAMP-BAND	
	2	1	**9R-5948**	1	BLOCK	
C	3	1	**7J-9108**	4	SEAL-O-RING	
CI	4	1	**166-7302**	2	HOSE AS	
	6	1	**8T-4223**	19	WASHER-HARD (13.5X25.5X3-MM THK)	
M	7	1	**8T-4244**	6	NUT (M12X1.75-THD)	
I	8	1	**248-4285**	2	HOSE AS	
	9	1	**262-1315**	1	PLATE	
C	10	1	*268-1548*	3	CONNECTOR AS	
					(EACH INCLUDES)	
		1	**268-1547**	1	CONNECTOR	
		1	**6V-8398**	1	SEAL-O-RING	
		1	**7J-9108**	1	SEAL-O-RING	
	11	1	**323-7311**	2	PLATE	
I	13	1	**283-5618**	1	HOSE AS	
I	14	1	**283-5622**	1	HOSE AS	
I	15	1	**311-2497**	2	HOSE AS	
C	16	1	*148-8341*	4	CONNECTOR AS	
					(EACH INCLUDES)	
		1	**3D-2824**	1	SEAL-O-RING	
		1	**6V-8713**	1	CONNECTOR	
		1	**7J-9108**	1	SEAL-O-RING	
	17	1	*148-8382*	1	ELBOW AS	
		1	**3D-2824**	1	SEAL-O-RING	
		1	**7J-9108**	1	SEAL-O-RING	
		1	**8T-0404**	1	ELBOW	
C	18	1	**311-2508**	2	LINES GP-HYDRAULIC	
					(EACH INCLUDES)	
I		1	**311-2500**	2	HOSE AS	
I		1	**311-2517**	1	HOSE AS	
	19	1	*169-7409*	1	UNION AS	
		1	**6V-8996**	1	UNION	
		1	**7J-9108**	2	SEAL-O-RING	
	20	1	**3G-8047**	1	GROMMET	
	21	1	**3G-8054**	2	CLIP (TAB)	
	22	1	**3G-8057**	2	CLIP (SLOT)	
	23	1	**5P-7464**	2	CLIP (SLOT)	
	24	1	**5P-7465**	2	CLIP (TAB)	
	25	1	**6V-1249**	1	GROMMET	
	26	1	**6V-1889**	1	CLIP (SLOT)	
	27	1	**6V-7359**	1	GROMMET	
M	28	1	**8T-4194**	4	BOLT (M12X1.75X50-MM)	
C	29	1	**6V-9170**	4	NUT-BULKHEAD (1-14-THD)	
	30	1	**6V-9990**	1	GROMMET	
	31	1	**7C-4354**	3	CLIP (SLOT)	
	32	1	**8T-4121**	2	WASHER-HARD (11X21X2.5-MM THK)	
M	33	1	**8T-4136**	2	BOLT (M10X1.5X25-MM)	
M	34	1	**8T-4139**	7	BOLT (M12X1.75X30-MM)	
M	35	1	**8T-4183**	2	BOLT (M12X1.75X40-MM)	

C-CHANGE FROM PREVIOUS TYPE
I-REFER TO HYDRAULIC INFORMATION SYSTEM
M-METRIC PART

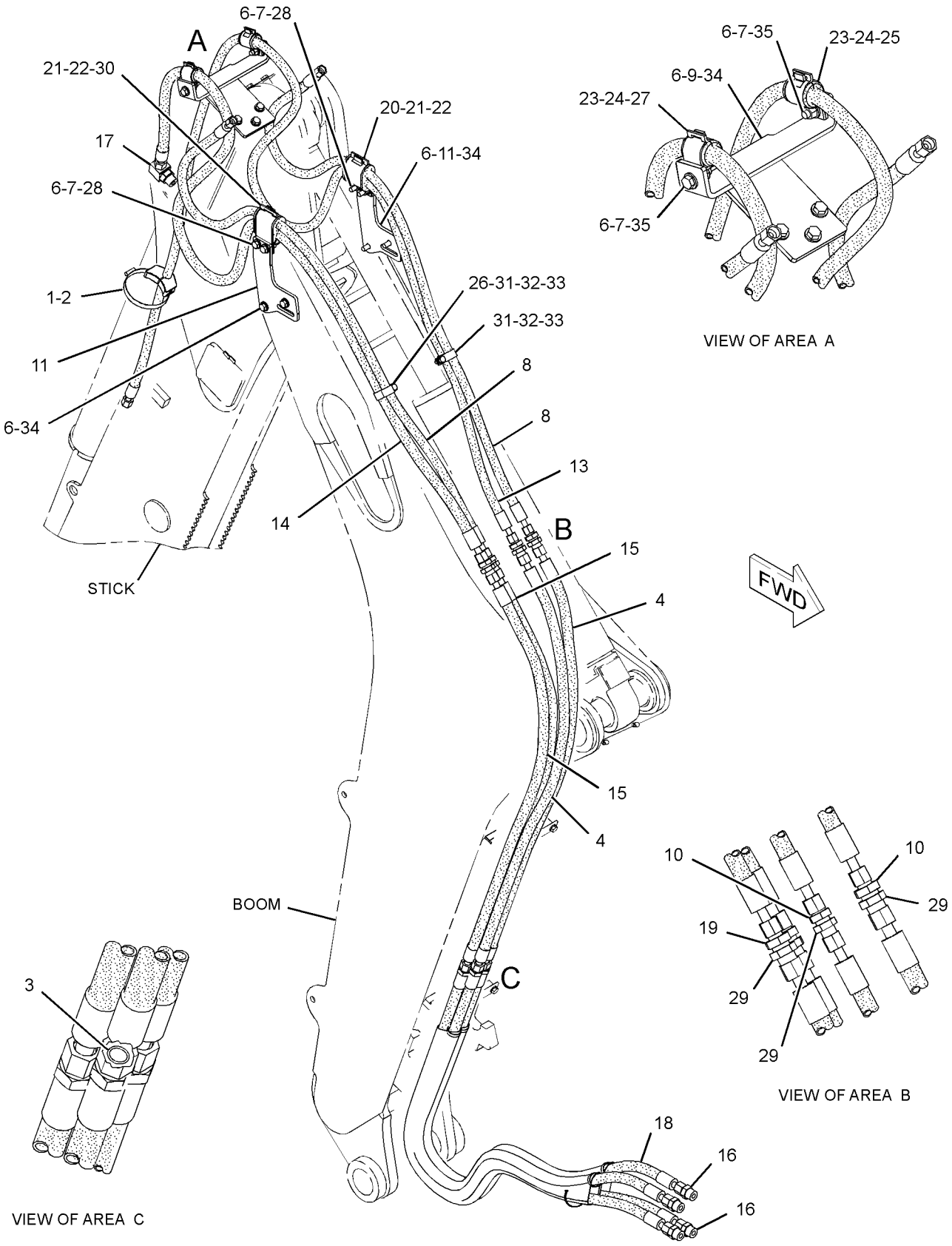

GRAPHIC #1 **<END>** g01831950

HYDRAULIC SYSTEM

216-5332 LINES GP-DRAIN

S/N: EAT1-UP

PART OF 268-6455 HYDRAULIC AR

SMCS-5057 **i03505400**

NOTE	REF NO	GRAPHIC REF	PART NUMBER	QTY	PART NAME 1 2 3 4 5 6 (PRODUCT LEVEL)	SEE PAGE
	1	1	**8T-0154**	1	CLAMP-HOSE	
	2	1	*165-2273*	1	VALVE GP-SHUTOFF	
		1	**3K-0360**	1	SEAL-O-RING	
		1	**6V-7238**	1	VALVE-SHUTOFF	
E	3	1	**5P-0743**		HOSE (35-CM)	

E-ORDER BY THE CENTIMETER

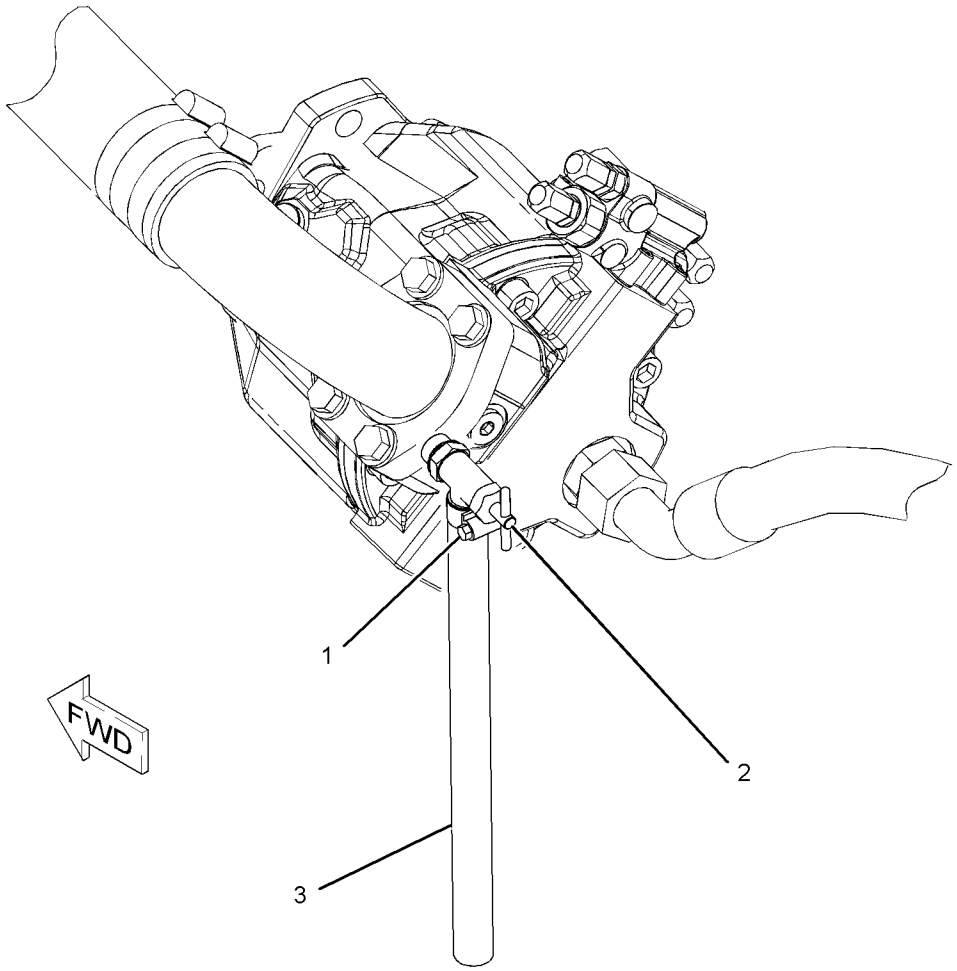

GRAPHIC #1 **<END>** g01087946

HYDRAULIC SYSTEM

247-3268 LINES GP-EXTENDABLE STICK

S/N: EAT1-UP

PART OF 271-1403, 271-1406 STICK GP-EXTENDABLE

AN ATTACHMENT

SMCS-5057 **i02560404**

NOTE	REF NO	GRAPHIC REF	PART NUMBER	QTY	PART NAME 1 2 3 4 5 6 (PRODUCT LEVEL)	SEE PAGE
	1	1	**8T-6726**	3	CLAMP-HOSE	
	2	1	**9R-2053**	3	BLOCK	
I	3	1	**8I-0668**	1	HOSE AS	
I	4	1	**207-2626**	1	HOSE AS	
	5	1	**291-8451**	1	TUBE AS	
	6	1	**291-8452**	1	TUBE AS	
	7	1	**262-7314**	1	PLATE AS	
	8	1	*148-8364*	1	ELBOW AS	
		1	**3K-0360**	1	SEAL-O-RING	
		1	**6V-8398**	1	SEAL-O-RING	
		1	**6V-8625**	1	ELBOW	
	9	1	**6V-8398**	4	SEAL-O-RING	
	10	1	**8T-1885**	2	CLIP (SLOT)	
	11	1	**8T-1886**	2	CLIP (TAB)	
	12	1	**8T-4121**	6	WASHER-HARD (11X21X2.5-MM THK)	
M	13	1	**8T-4136**	2	BOLT (M10X1.5X25-MM)	
M	14	1	**8T-4195**	4	BOLT (M10X1.5X30-MM)	
	15	1	**8T-1892**	2	CLIP (TAB)	
	16	1	**8T-1891**	2	CLIP (SLOT)	

I-REFER TO HYDRAULIC INFORMATION SYSTEM
M-METRIC PART

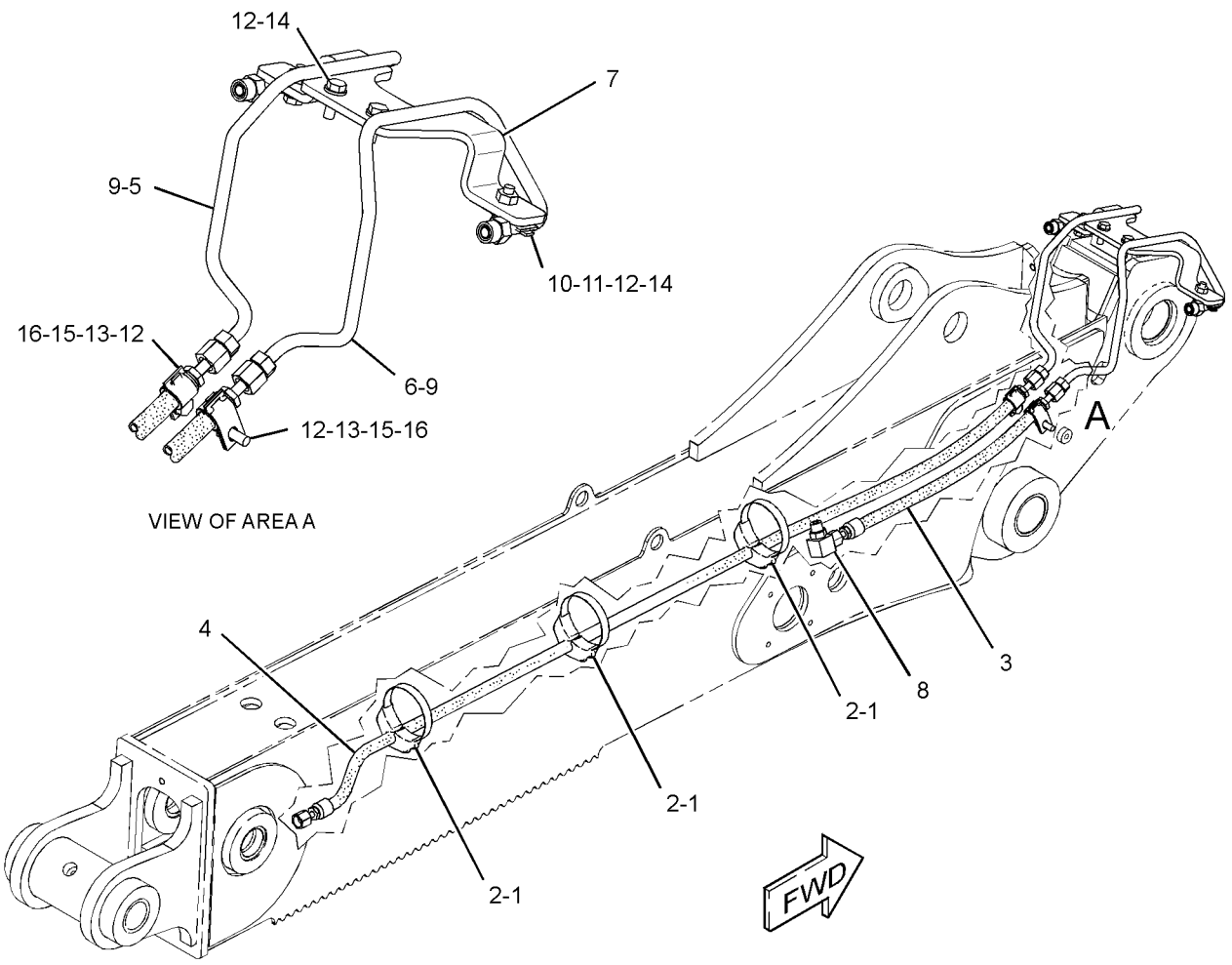

GRAPHIC #1 **<END>** g01316964

257-3160 LINES GP-HYDRAULIC OIL COOLER

S/N: EAT1-UP

PART OF 268-6455 HYDRAULIC AR

SMCS-1374, 5057 **i03528251**

NOTE	REF NO	GRAPHIC REF	PART NUMBER	QTY	PART NAME 1 2 3 4 5 6 (PRODUCT LEVEL)	SEE PAGE
E	1	1	**5P-1506**		HOSE (92-CM)	
	2	1	**7K-1181**	4	STRAP-CABLE	
	3	1	**130-9984**	1	CLIP	
	4	1	**159-1503**	4	CLAMP-HOSE	
	5	1	**7X-7729**	1	WASHER (11X25X3-MM THK)	
	6	1	**232-0252**	1	TEE	
	7	1	**235-7091**	1	HOSE	
E	8	1	**262-8088**		HOSE (223-CM)	
E	8A	1	**262-8088**		HOSE (126-CM)	
	10	1	**3S-8536**	1	SPACER (0.406X0.656X0.38-IN THK)	
E	11	1	**149-7372**		SLEEVE-ABRASION (55-CM)	
	13	1	**5P-4116**	2	WASHER-HARD (8.8X20.5X2-MM THK)	
	14	1	**7D-7233**	2	CLIP	
	15	1	**7X-7958**	4	CLAMP-HOSE	
	16	1	**8T-4121**	1	WASHER-HARD (11X21X2.5-MM THK)	
M	17	1	**8T-4136**	1	BOLT (M10X1.5X25-MM)	
M	18	1	**8T-4195**	1	BOLT (M10X1.5X30-MM)	
M	19	1	**8T-4189**	2	BOLT (M8X1.25X20-MM)	
	20	1	**8T-7529**	3	CLIP	

E-ORDER BY THE CENTIMETER
M-METRIC PART

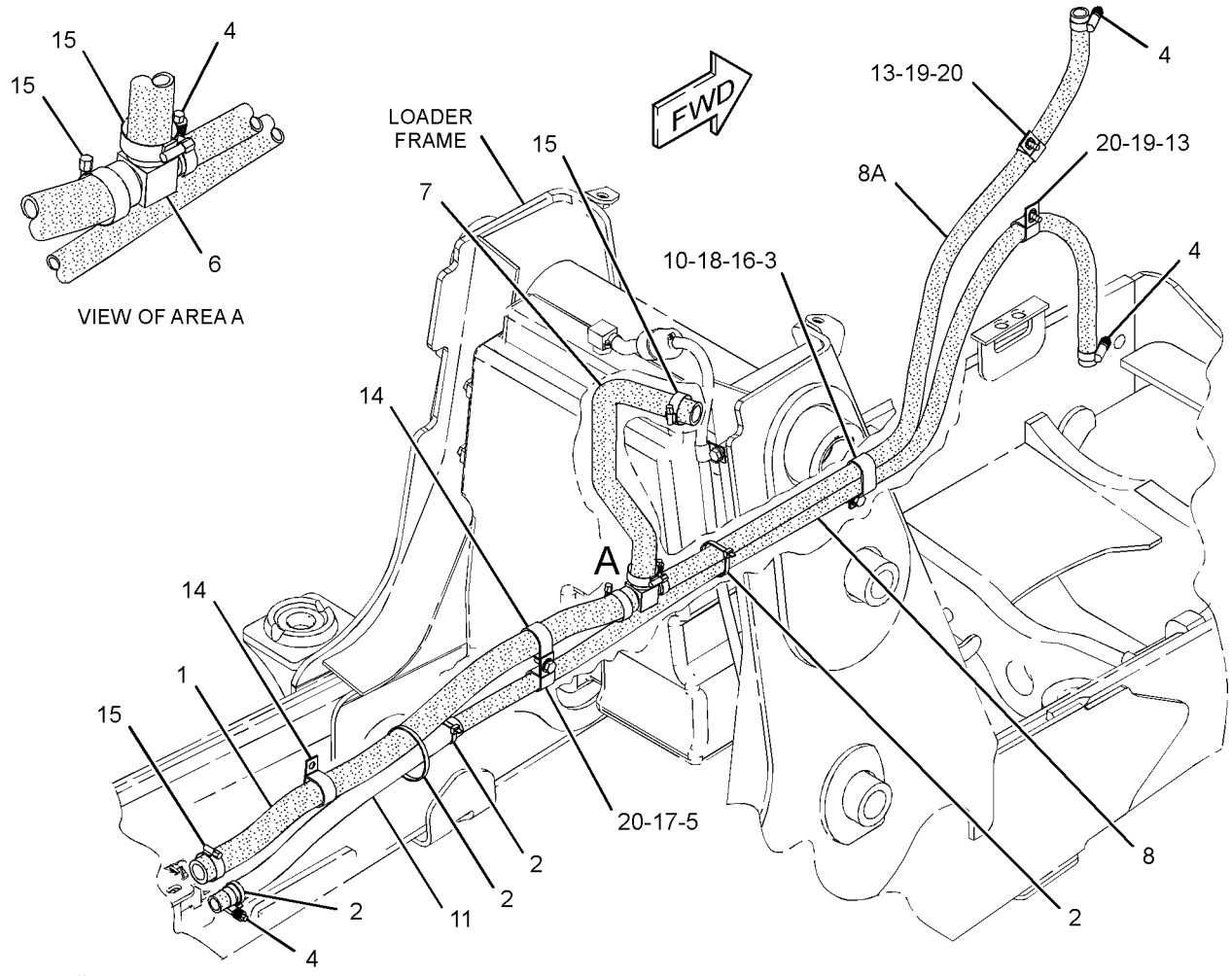

GRAPHIC #1 **<END>** g01865794

HYDRAULIC SYSTEM

246-5293 LINES GP-LIFT CYLINDER

S/N: EAT1-UP

PART OF 213-9300 LOADER AR

SMCS-5057, 5102 **i02592184**

NOTE	REF NO	GRAPHIC REF	PART NUMBER	QTY	PART NAME 1 2 3 4 5 6 (PRODUCT LEVEL)	SEE PAGE
	1	1	**7K-1181**	2	STRAP-CABLE	
	2	1	**8T-6726**	4	CLAMP-HOSE	
	3	1	**143-0777**	1	PLATE AS	
	4	1	**143-0779**	1	PLATE AS	
	5	1	**151-4841**	2	BLOCK	
	6	1	**158-3412**	10	CLIP (SLOT)	
	7	1	**211-3207**	1	TUBE AS	
	8	1	**211-3208**	1	TUBE AS	
	9	1	**231-2808**	1	TUBE AS	
	10	1	**231-2809**	1	TUBE AS	
I	11	1	**231-4784**	2	HOSE AS	
I	12	1	**231-4785**	2	HOSE AS	
	13	1	**249-4020**	1	TUBE AS	
	14	1	**249-4021**	1	TUBE AS	
	15	1	**249-4022**	1	TUBE AS	
	16	1	**249-4023**	1	TUBE AS	
	17	1	**249-4024**	1	TUBE AS	
	18	1	*148-8341*	1	CONNECTOR AS	
		1	**3D-2824**	1	SEAL-O-RING	
		1	**6V-8713**	1	CONNECTOR	
		1	**7J-9108**	1	SEAL-O-RING	
	19	1	*148-8390*	2	ELBOW AS	
					(EACH INCLUDES)	
		1	**2M-9780**	1	SEAL-O-RING	
		1	**6V-8626**	1	ELBOW	
		1	**7J-9108**	1	SEAL-O-RING	
	20	1	*148-8446*	2	TEE AS-SWIVEL	
					(EACH INCLUDES)	
		1	**6V-9838**	1	TEE-SWIVEL	
		1	**7J-9108**	2	SEAL-O-RING	
	21	1	*150-3063*	1	TEE AS	
		1	**3D-2824**	1	SEAL-O-RING	
		1	**7J-9108**	2	SEAL-O-RING	
		1	**120-9809**	1	TEE	
	22	1	*222-4732*	1	TEE AS	
		1	**6V-8398**	1	SEAL-O-RING	
		1	**6V-9031**	1	TEE-UNION	
		1	**7J-9108**	2	SEAL-O-RING	
	23	1	**6V-8398**	8	SEAL-O-RING	
	24	1	**6V-9830**	1	CAP AS	
	25	1	**6V-9831**	1	CAP AS	
	26	1	**8T-4121**	6	WASHER-HARD (11X21X2.5-MM THK)	
M	28	1	**8T-4136**	5	BOLT (M10X1.5X25-MM)	
	32	1	**9R-7803**	5	CLIP (TAB)	
M	33	1	**8T-4133**	1	NUT (M10X1.5-THD)	

I-REFER TO HYDRAULIC INFORMATION SYSTEM
M-METRIC PART

246-5293 **LINES GP-LIFT CYLINDER** *(contd.)* **i02592184**

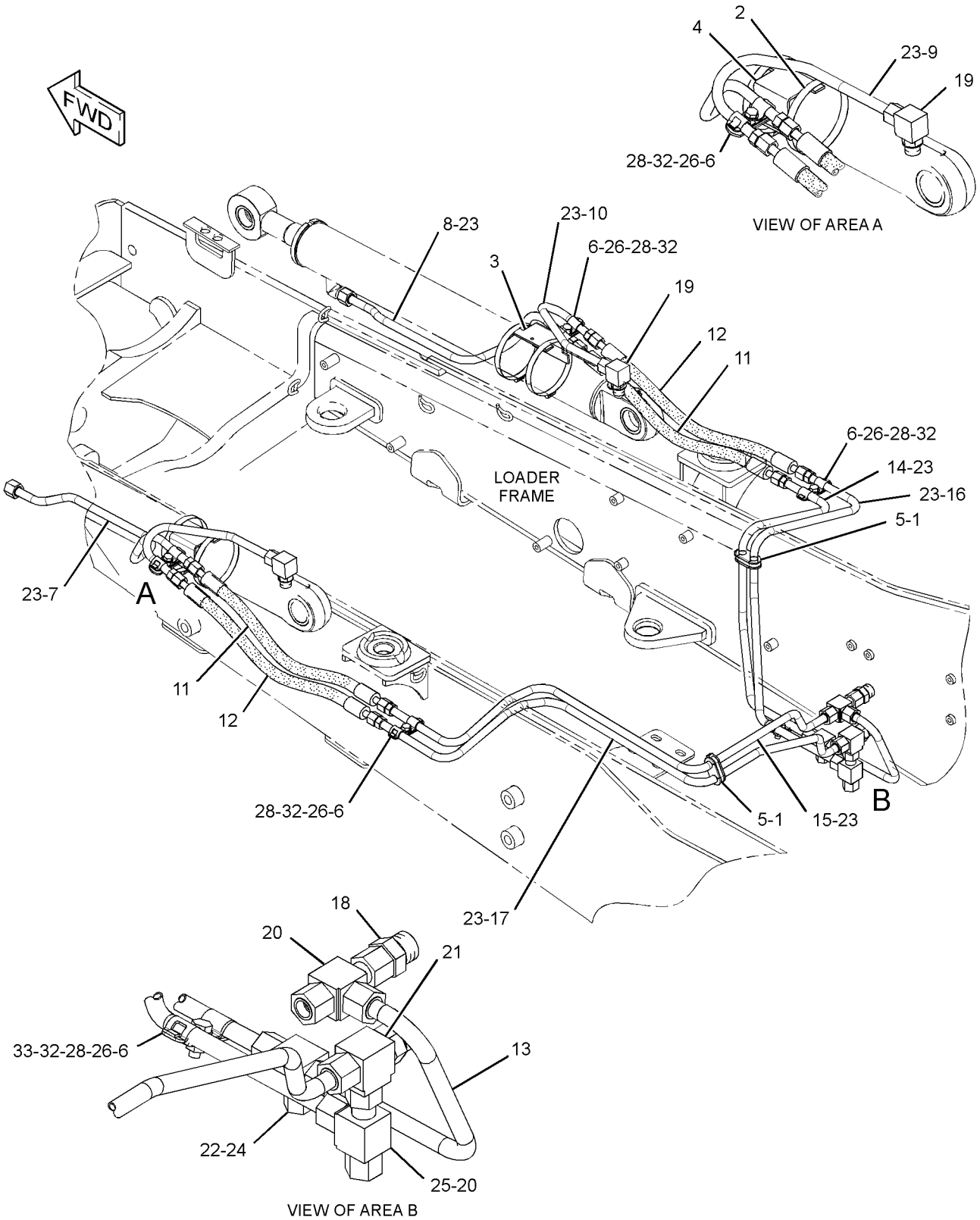

GRAPHIC #1 **<END>** g01310476

HYDRAULIC SYSTEM

246-8478 LINES GP-LOADER AUXILIARY

S/N: EAT1-UP
PART OF 269-2145 VALVE AR-BANK 3
AN ATTACHMENT

SMCS-5057 **i02273118**

NOTE	REF NO	GRAPHIC REF	PART NUMBER	QTY	PART NAME 1 2 3 4 5 6 (PRODUCT LEVEL)	SEE PAGE
	1	1	**7K-1181**	1	STRAP-CABLE	
	2	1	**151-4841**	1	BLOCK	
	3	1	**158-3412**	8	CLIP (SLOT)	
I	4	1	**215-7453**	2	HOSE AS	
	5	1	**215-7454**	1	TUBE AS	
	6	1	**215-7619**	1	TUBE AS	
	7	1	**231-3528**	1	BRACKET AS	
M		1	**8T-3490**	1	NUT-WELD (M10X1.5-THD)	
	8	1	**249-4034**	1	TUBE AS	
	9	1	**249-4035**	1	TUBE AS	
	10	1	**254-7271**	1	PLATE AS	
	11	1	*148-8382*	2	ELBOW AS	
					(EACH INCLUDES)	
		1	**3D-2824**	1	SEAL-O-RING	
		1	**7J-9108**	1	SEAL-O-RING	
		1	**8T-0404**	1	ELBOW	
	12	1	**6V-8398**	6	SEAL-O-RING	
	13	1	**6V-9830**	2	CAP AS	
	14	1	**8T-4121**	6	WASHER-HARD (11X21X2.5-MM THK)	
M	15	1	**8T-4136**	5	BOLT (M10X1.5X25-MM)	
M	16	1	**8T-4137**	1	BOLT (M10X1.5X20-MM)	
	17	1	**9R-7803**	4	CLIP (TAB)	

I-REFER TO HYDRAULIC INFORMATION SYSTEM
M-METRIC PART

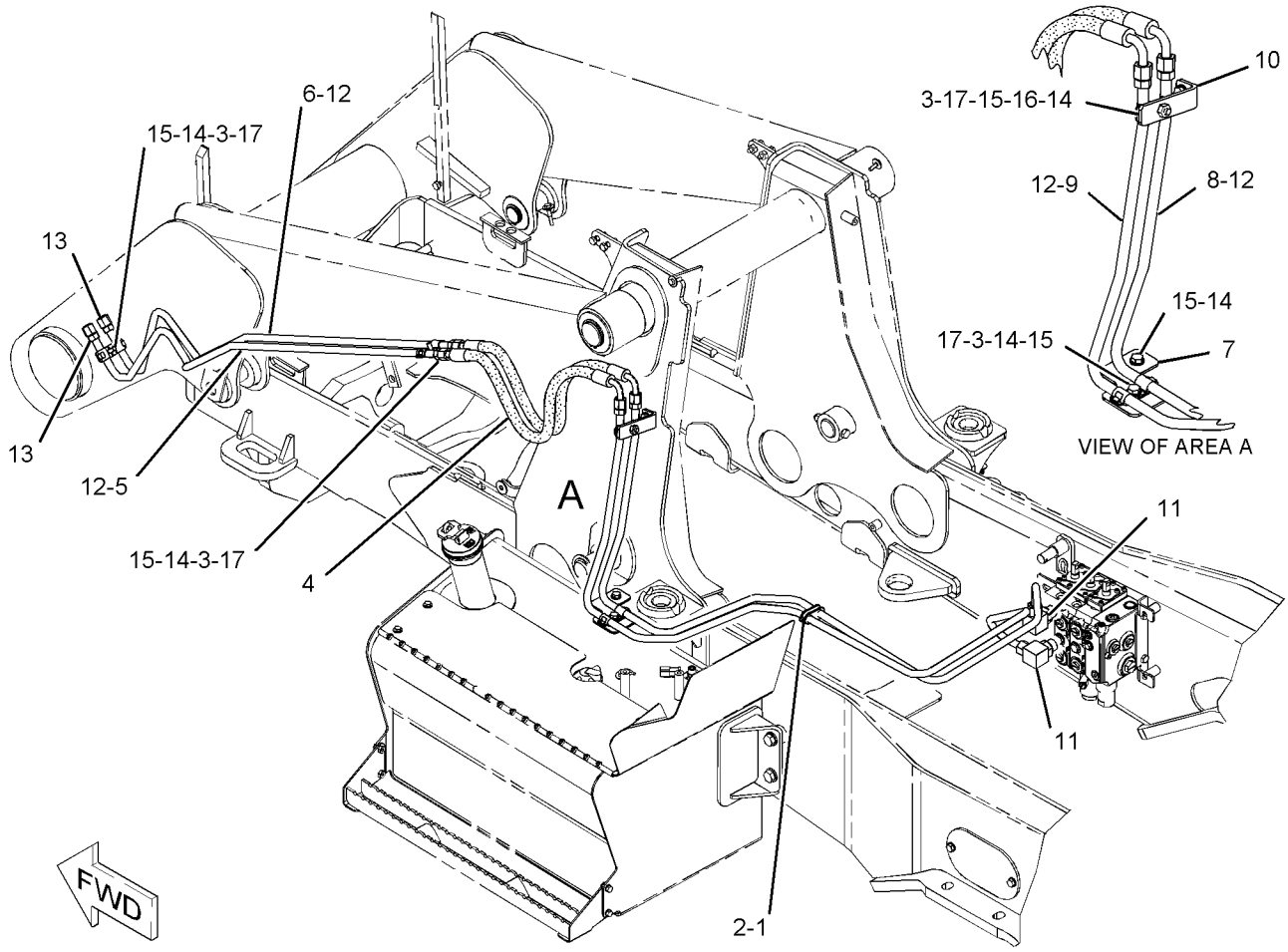

GRAPHIC #1

<END>

g01094033

HYDRAULIC SYSTEM

251-5854 LINES GP-MULTIPURPOSE BUCKET

S/N: EAT1-UP

PART OF 216-8800, 216-8801 BUCKET GP-MULTIPURPOSE

AN ATTACHMENT

SMCS-5057 **i03488600**

NOTE	REF NO	GRAPHIC REF	PART NUMBER	QTY	PART NAME 1 2 3 4 5 6 (PRODUCT LEVEL)	SEE PAGE
	1	1	**8T-6726**	2	CLAMP-HOSE	
I	2	1	**8W-9230**	1	HOSE AS	
I	3	1	**9R-0418**	2	HOSE AS	
	4	1	**9R-8870**	2	BLOCK	
I	5	1	**122-0668**	1	HOSE AS	
I	6	1	**152-0816**	1	HOSE AS	
I	7	1	**251-5859**	1	HOSE AS	
	8	1	*148-8378*	2	ELBOW AS	
					(EACH INCLUDES)	
		1	**3J-1907**	1	SEAL-O-RING	
		1	**6V-8397**	1	SEAL-O-RING	
		1	**6V-8724**	1	ELBOW	
	9	1	*150-3060*	2	TEE AS	
					(EACH INCLUDES)	
		1	**6V-8397**	2	SEAL-O-RING	
		1	**6V-8398**	1	SEAL-O-RING	
		1	**8T-3444**	1	TEE-UNION	
	10	1	**6V-3341**	2	GROMMET	
	11	1	**6V-8397**	2	SEAL-O-RING	
	12	1	**121-8004**	8	CLAMP	
	13	1	**4V-0612**	4	PLATE	
	14	1	**8T-1899**	2	CLIP (SLOT)	
	15	1	**8T-1900**	2	CLIP (TAB)	
	16	1	**8T-4121**	2	WASHER-HARD (11X21X2.5-MM THK)	
M	17	1	**8T-4136**	2	BOLT (M10X1.5X25-MM)	
	18	1	**7X-0440**	4	BOLT (5/16-18X1.75-IN)	

I-REFER TO HYDRAULIC INFORMATION SYSTEM
M-METRIC PART

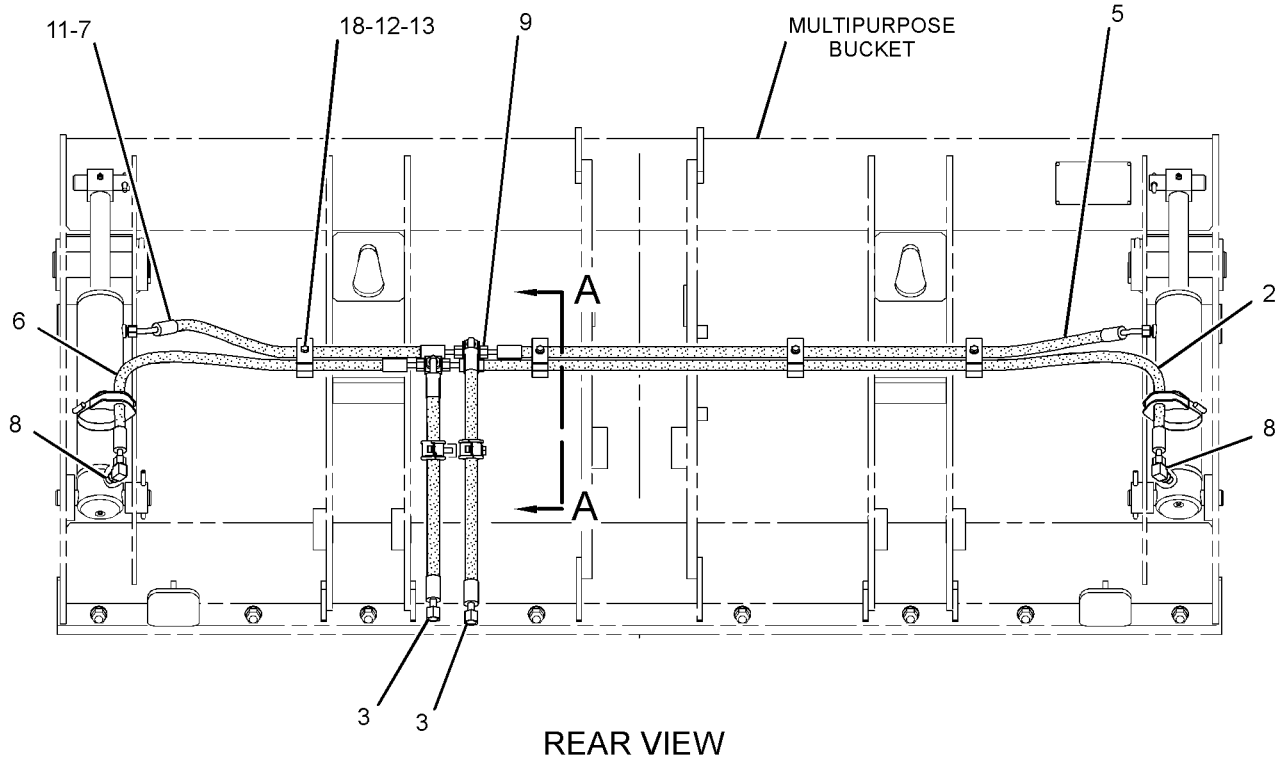

REAR VIEW

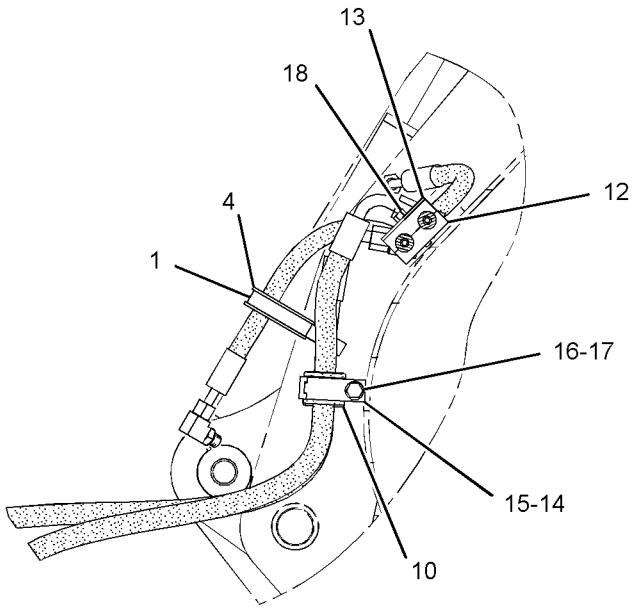

SECTION A-A

GRAPHIC #1 **<END>** g01476453

HYDRAULIC SYSTEM

251-5855 LINES GP-MULTIPURPOSE BUCKET

S/N: EAT1-UP

PART OF 216-8820, 216-8821 BUCKET GP-MULTIPURPOSE

AN ATTACHMENT

SMCS-5057 **i03488622**

NOTE	REF NO	GRAPHIC REF	PART NUMBER	QTY	PART NAME 1 2 3 4 5 6 (PRODUCT LEVEL)	SEE PAGE
I	1	1	**271-7389**	1	HOSE AS	
	2	1	**8T-6726**	2	CLAMP-HOSE	
I	3	1	**141-8437**	1	HOSE AS	
I	4	1	**9R-0418**	2	HOSE AS	
	5	1	**9R-8870**	2	BLOCK	
I	6	1	**270-9176**	1	HOSE AS	
I	7	1	**272-1750**	1	HOSE AS	
	8	1	*148-8378*	2	ELBOW AS	
					(EACH INCLUDES)	
		1	**3J-1907**	1	SEAL-O-RING	
		1	**6V-8397**	1	SEAL-O-RING	
		1	**6V-8724**	1	ELBOW	
	9	1	*150-3060*	2	TEE AS	
					(EACH INCLUDES)	
		1	**6V-8397**	2	SEAL-O-RING	
		1	**6V-8398**	1	SEAL-O-RING	
		1	**8T-3444**	1	TEE-UNION	
	10	1	**6V-3341**	2	GROMMET	
	11	1	**6V-8397**	2	SEAL-O-RING	
	14	1	**8T-1899**	2	CLIP (SLOT)	
	15	1	**8T-1900**	2	CLIP (TAB)	
	16	1	**8T-4121**	2	WASHER-HARD (11X21X2.5-MM THK)	
M	17	1	**8T-4136**	2	BOLT (M10X1.5X25-MM)	
	19	1	**7X-0440**	4	BOLT (5/16-18X1.75-IN)	
	20	1	**4V-0612**	4	PLATE	
	21	1	**121-8004**	8	CLAMP	

I-REFER TO HYDRAULIC INFORMATION SYSTEM
M-METRIC PART

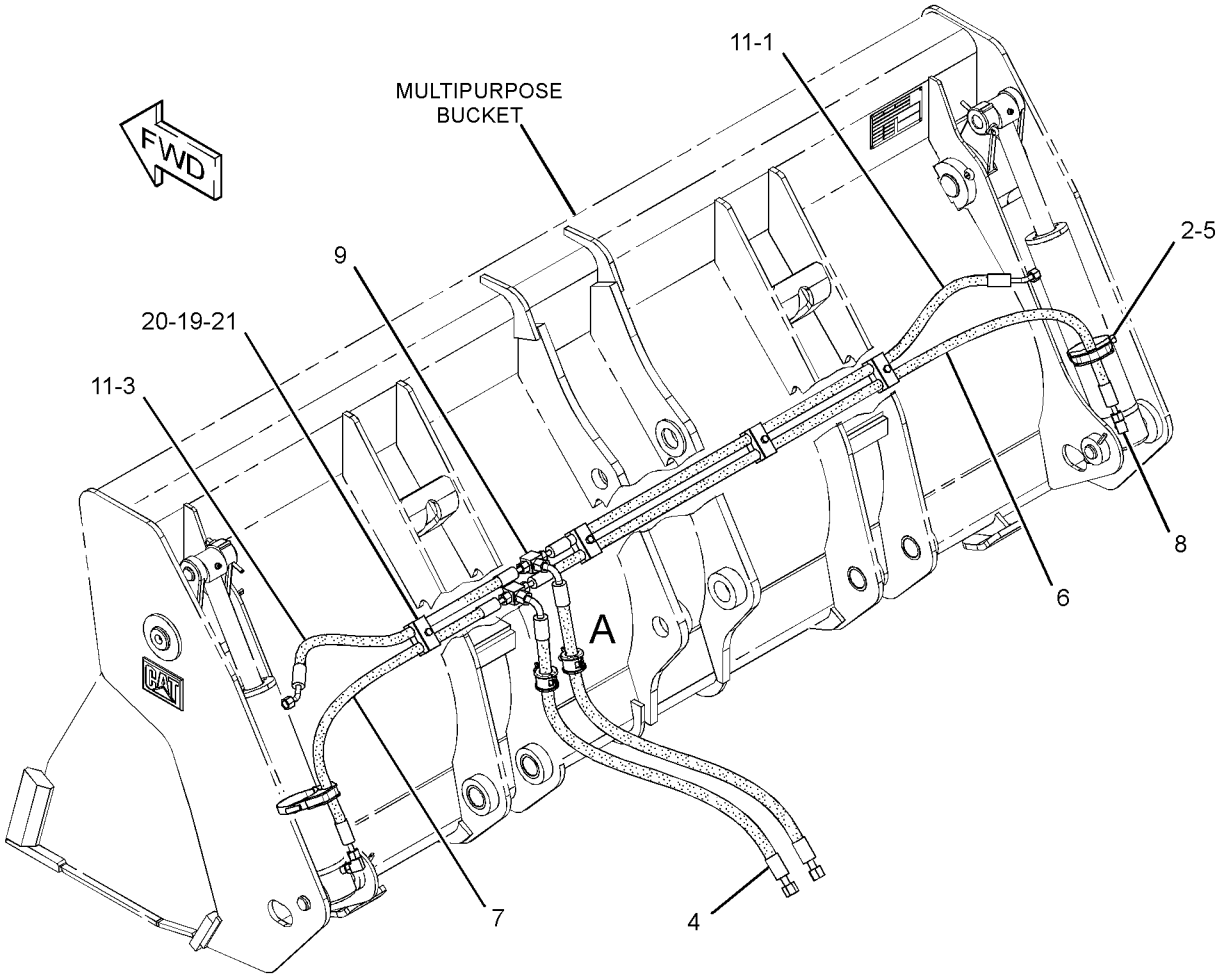

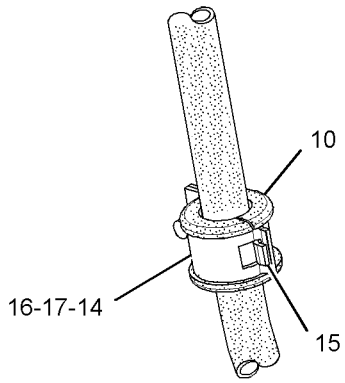

VIEW OF AREA A

GRAPHIC #1 **<END>** g01476493

HYDRAULIC SYSTEM

214-5950 LINES GP-PILOT–SIGNAL

S/N: EAT1-UP

PART OF 213-9300 LOADER AR

SMCS-5057, 5059 **i02737334**

NOTE	REF NO	GRAPHIC REF	PART NUMBER	QTY	PART NAME 1 2 3 4 5 6 (PRODUCT LEVEL)	SEE PAGE
E	1	1	**5P-1505**		HOSE (73-CM)	
	2	1	**5D-1026**	2	CLAMP-HOSE	
	3	1	**6V-0852**	2	CAP-DUST	
	4	1	**7K-1181**	3	STRAP-CABLE	
I	5	1	**211-3688**	1	HOSE AS	
I	6	1	**211-3689**	1	HOSE AS	
	7	1	*150-4044*	1	CONNECTOR AS	
		1	**3J-1907**	1	SEAL-O-RING	
		1	**6V-8397**	1	SEAL-O-RING	
		1	**8T-1779**	1	CONNECTOR	
	8	1	*148-8325*	2	CONNECTOR AS	
					(EACH INCLUDES)	
		1	**3J-1907**	1	SEAL-O-RING	
		1	**4J-5477**	1	SEAL-O-RING	
		1	**6V-8641**	1	CONNECTOR	
	9	1	*148-8351*	1	ELBOW AS	
		1	**4J-5477**	1	SEAL-O-RING	
		1	**6V-9849**	1	ELBOW	
	10	1	*150-3027*	2	ELBOW AS	
					(EACH INCLUDES)	
		1	**2M-9780**	1	SEAL-O-RING	
		1	**6V-5653**	1	ELBOW	
	11	1	*150-3062*	1	TEE AS	
		1	**3J-7354**	1	SEAL-O-RING	
		1	**4J-5477**	1	SEAL-O-RING	
		1	**101-1787**	1	TEE AS	
	12	1	*164-5567*	2	COUPLER AS-QUICK DISCONNECT	
					(EACH INCLUDES)	
		1	**3J-1907**	1	SEAL-O-RING	
		1	**6V-3965**	1	FITTING (QUICK DISCONNECT)	
	13	1	*165-4931*	1	ELBOW AS	
		1	**3J-1907**	1	SEAL-O-RING	
		1	**6V-8077**	1	ELBOW	

E-ORDER BY THE CENTIMETER
I-REFER TO HYDRAULIC INFORMATION SYSTEM

214-5950 **LINES GP-PILOT** *(contd.)* **i02737334**

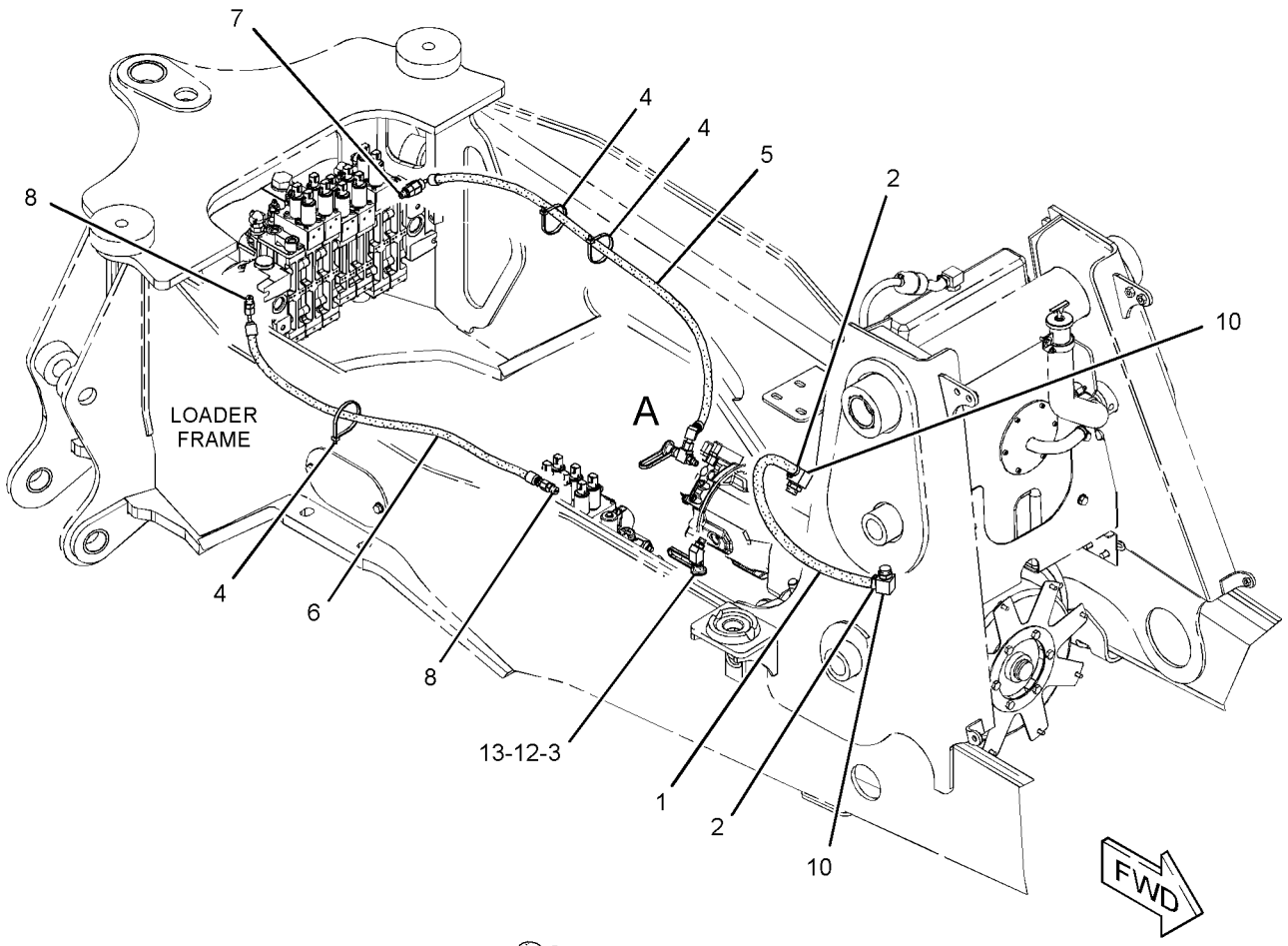

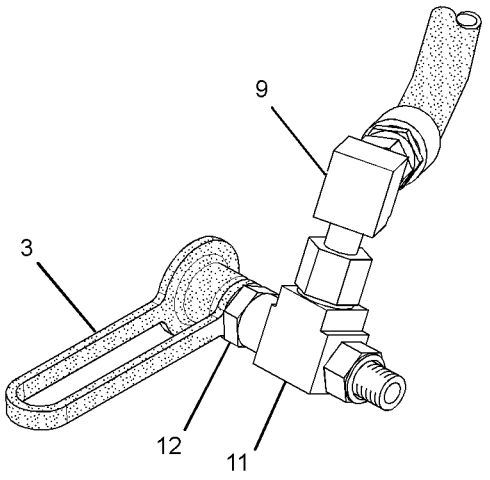

VIEW OF AREA A

GRAPHIC #1 **<END>** g01376425

HYDRAULIC SYSTEM

267-2765 LINES GP-PILOT—WITH ACCUMULATOR

S/N: EAT1-UP

PART OF 268-6455 HYDRAULIC AR

SMCS-5057, 5059 **i02730903**

NOTE	REF NO	GRAPHIC REF	PART NUMBER	QTY	PART NAME 1 2 3 4 5 6 (PRODUCT LEVEL)	SEE PAGE
	1	1	**5D-1026**	2	CLAMP-HOSE	
E	2	1	**5P-1505**		HOSE (239-CM)	
	3	1	**6V-0852**	1	CAP-DUST	
	4	1	**7K-1181**	2	STRAP-CABLE	
	5	1	**133-5813**	6	BAND-MARKER (GRAY, P)	
	6	1	**143-3158**	1	CONNECTOR	
I	7	1	**159-3313**	1	HOSE AS	
	8	1	*164-5567*	1	COUPLER AS-QUICK DISCONNECT	
		1	**3J-1907**	1	SEAL-O-RING	
		1	**6V-3965**	1	FITTING (QUICK DISCONNECT)	
	9	1	*164-5586*	1	TEE AS	
		1	**6V-8398**	1	SEAL-O-RING	
		1	**7X-0871**	1	TEE	
	10	1	*164-9640*	1	CONNECTOR AS	
		1	**3J-1907**	1	SEAL-O-RING	
		1	**4J-5477**	1	SEAL-O-RING	
		1	**145-2237**	1	CONNECTOR	
	11	1	*174-6740*	1	TEE AS	
		1	**2M-9780**	1	SEAL-O-RING	
		1	**122-1113**	1	TEE-O-RING	
	12	1	**205-3126**	1	HOSE AS	
I	13	1	**218-6091**	1	HOSE AS	
Y	14	1	*226-0420*	1	ACCUMULATOR GP-PILOT OIL (CHARGED)	384
	15	1	**268-0094**	1	MANIFOLD (RETURN)	
I	16	1	**268-0097**	1	HOSE AS	
I	17	1	**268-0099**	1	HOSE AS	
	18	1	**268-0106**	1	HOSE AS	
	19	1	**268-0107**	1	HOSE AS	
	20	1	**268-0108**	1	HOSE AS	
	21	1	*273-4211*	1	TEE AS	
		1	**6V-8398**	1	SEAL-O-RING	
		1	**273-4210**	1	TEE	
	22	1	**277-9708**	1	FILM-WARNING (ACCUM, HIGH PRESS, READ OMM)	
I	23	1	**144-8242**	1	HOSE AS	
	24	1	*148-8325*	6	CONNECTOR AS	
					(EACH INCLUDES)	
		1	**3J-1907**	1	SEAL-O-RING	
		1	**4J-5477**	1	SEAL-O-RING	
		1	**6V-8641**	1	CONNECTOR	
	25	1	*148-8336*	5	CONNECTOR AS	
					(EACH INCLUDES)	
		1	**3J-1907**	1	SEAL-O-RING	
		1	**6V-8397**	1	SEAL-O-RING	
		1	**6V-8636**	1	CONNECTOR	
	26	1	*148-8368*	1	ELBOW AS	
		1	**3J-1907**	1	SEAL-O-RING	
		1	**4J-5477**	1	SEAL-O-RING	
		1	**6V-8627**	1	ELBOW	
	27	1	*148-8378*	2	ELBOW AS	
					(EACH INCLUDES)	
		1	**3J-1907**	1	SEAL-O-RING	
		1	**6V-8397**	1	SEAL-O-RING	
		1	**6V-8724**	1	ELBOW	
	28	1	*148-8407*	3	PLUG AS	
					(EACH INCLUDES)	
		1	**3J-1907**	1	SEAL-O-RING	

267-2765 **LINES GP-PILOT** *(contd.)* **i02730903**

NOTE	REF NO	GRAPHIC REF	PART NUMBER	QTY	PART NAME 1 2 3 4 5 6 (PRODUCT LEVEL)	SEE PAGE
		1	**9S-4191**	1	PLUG-O-RING	
	29	1	*148-8433*	1	TEE AS	
		1	**6V-8397**	2	SEAL-O-RING	
		1	**6V-9836**	1	TEE-SWIVEL	
	30	1	*153-6258*	1	CONNECTOR AS	
		1	**3J-1907**	1	SEAL-O-RING	
		1	**6V-8398**	1	SEAL-O-RING	
		1	**8T-5050**	1	CONNECTOR	
	31	1	**2M-9780**	1	SEAL-O-RING	
	32	1	**3K-0360**	1	SEAL-O-RING	
	33	1	**6V-9169**	1	NUT-BULKHEAD (13/16-16-THD)	
	34	1	**8S-0948**	1	CLIP	
	35	1	**8T-4205**	2	WASHER-HARD (7.2X14.5X2-MM THK)	
M	36	1	**8T-6974**	2	BOLT (M6X1X80-MM)	

E-ORDER BY THE CENTIMETER
I-REFER TO HYDRAULIC INFORMATION SYSTEM
M-METRIC PART
Y-SEPARATE ILLUSTRATION

267-2765 **LINES GP-PILOT** *(contd.)* **i02730903**

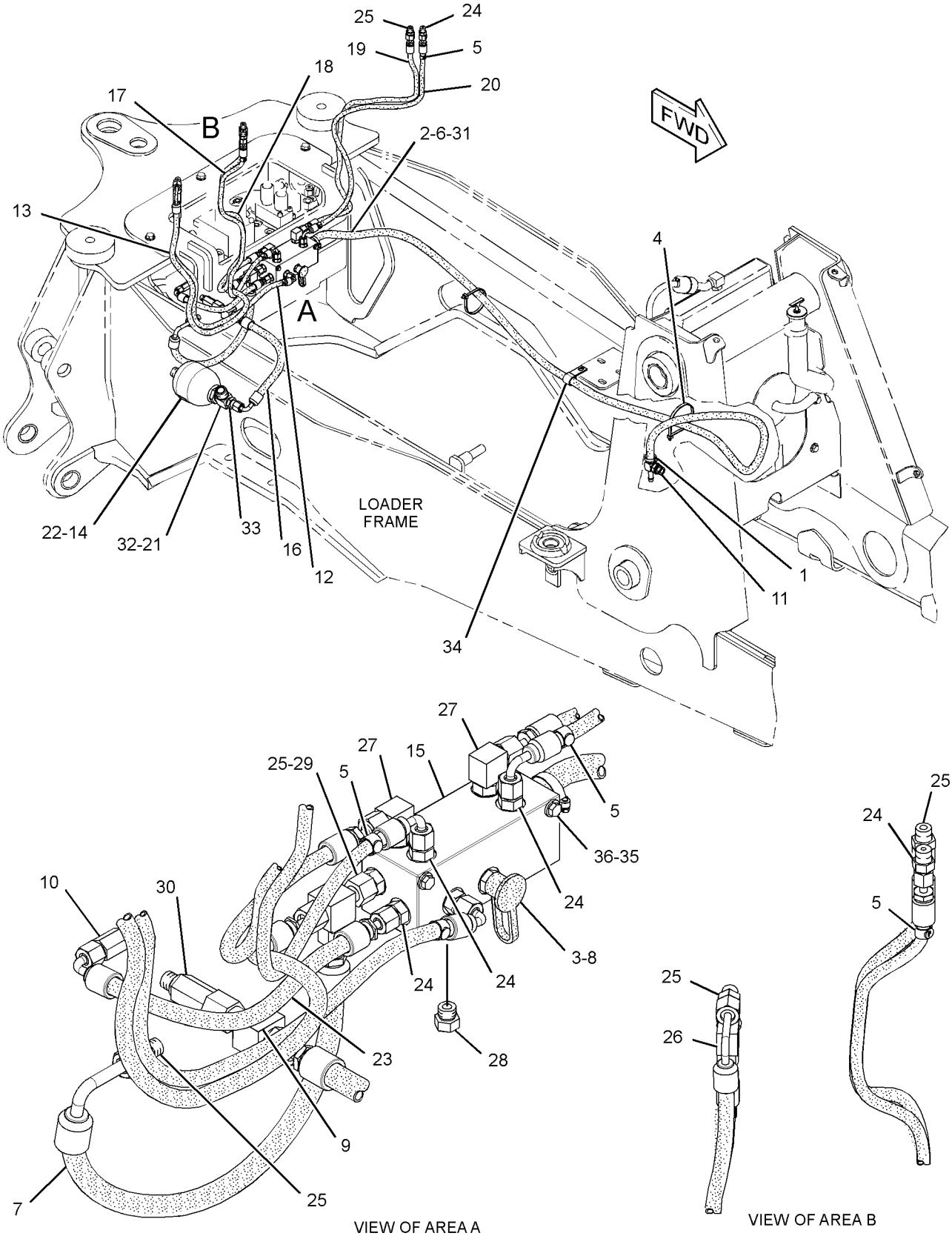

GRAPHIC #1 **<END>** g01394929

HYDRAULIC SYSTEM

267-2766 LINES GP-PILOT–STABILIZER

S/N: EAT1-UP

PART OF 268-6455 HYDRAULIC AR

SMCS-5057, 5059 **i03018509**

NOTE	REF NO	GRAPHIC REF	PART NUMBER	QTY	PART NAME 1 2 3 4 5 6 (PRODUCT LEVEL)	SEE PAGE
	1	1	**7K-1181**	2	STRAP-CABLE	
	2	1	**195-0260**	2	MARKER (BEIGE, L1)	
	3	1	**195-0261**	2	BAND-MARKER (BLACK, L2)	
	4	1	**195-0262**	2	BAND-MARKER (GREEN, R1)	
	5	1	**195-0263**	2	BAND-MARKER (PINK, R2)	
	6	1	**206-1851**	1	SEAL	
	7	1	**210-0074**	1	HOSE AS	
	8	1	**210-0075**	1	HOSE AS	
	9	1	**210-0082**	1	HOSE AS	
	10	1	**210-0079**	1	HOSE AS	
	11	1	*148-8325*	8	CONNECTOR AS	
					(EACH INCLUDES)	
		1	**3J-1907**	1	SEAL-O-RING	
		1	**4J-5477**	1	SEAL-O-RING	
		1	**6V-8641**	1	CONNECTOR	
G	12	1	**160-2248**		SLEEVE-ABRASION (8.3-IN)	

G-ORDER BY THE INCH

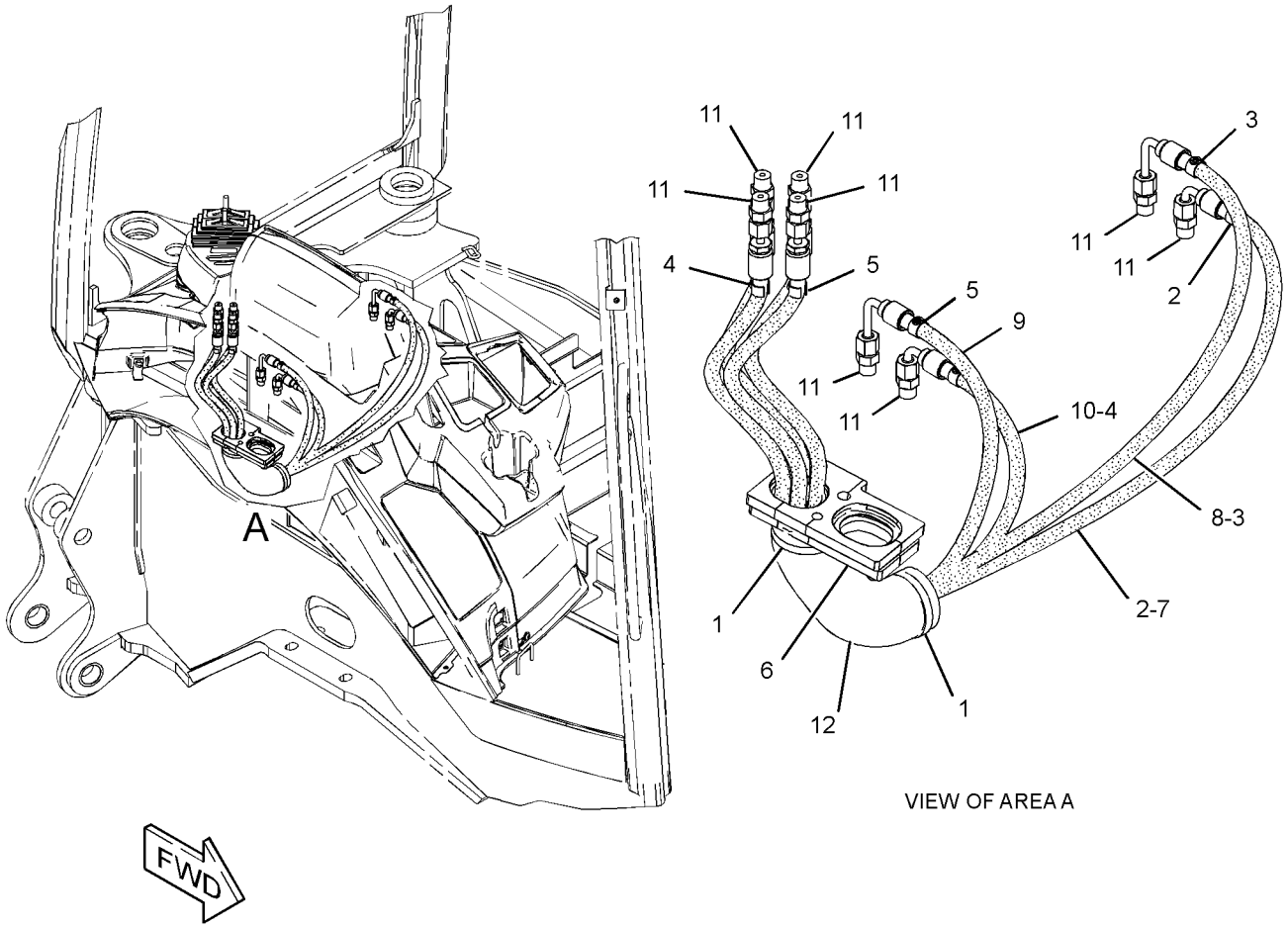

VIEW OF AREA A

GRAPHIC #1 **<END>** g01414836

HYDRAULIC SYSTEM

211-3607 LINES GP-PUMP

S/N: EAT1-UP

PART OF 268-6455 HYDRAULIC AR

SMCS-5057 **i02433841**

NOTE	REF NO	GRAPHIC REF	PART NUMBER	QTY	PART NAME 1 2 3 4 5 6 (PRODUCT LEVEL)	SEE PAGE
	1	1	**5P-4868**	2	CLAMP-HOSE	
	2	1	**144-0367**	1	CLAMP-HOSE	
I	3	1	**176-9294**	1	HOSE AS	
I	4	1	**211-3580**	1	HOSE AS	
I	5	1	**211-3581**	1	HOSE AS	
I	6	1	**211-3583**	1	HOSE AS	
	7	1	**211-4348**	1	ELBOW AS	
	8	1	**235-8528**	1	HOSE	
	9	1	*148-8317*	1	CONNECTOR AS	
		1	**3D-2824**	1	SEAL-O-RING	
		1	**5K-9090**	1	SEAL-O-RING	
		1	**6V-8714**	1	CONNECTOR	
	10	1	*148-8335*	3	CONNECTOR AS	
					(EACH INCLUDES)	
		1	**5K-9090**	1	SEAL-O-RING	
		1	**6V-8635**	1	CONNECTOR	
		1	**7M-8485**	1	SEAL-O-RING	
	11	1	*148-8362*	1	ELBOW AS	
		1	**5K-9090**	1	SEAL-O-RING	
		1	**3D-2824**	1	SEAL-O-RING	
		1	**8T-6684**	1	ELBOW	
	12	1	*148-8429*	2	TEE AS	
					(EACH INCLUDES)	
		1	**5K-9090**	2	SEAL-O-RING	
		1	**6V-9840**	1	TEE-SWIVEL	
	13	1	**1P-4584**	2	FLANGE-HALF	
	14	1	**6J-2680**	1	SEAL-O-RING	
	15	1	**7X-7729**	4	WASHER (11X25X3-MM THK)	
M	16	1	**8T-4136**	4	BOLT (M10X1.5X25-MM)	
M	17	1	**8T-4183**	4	BOLT (M12X1.75X40-MM)	
	18	1	**8T-4223**	4	WASHER-HARD (13.5X25.5X3-MM THK)	

I-REFER TO HYDRAULIC INFORMATION SYSTEM
M-METRIC PART

211-3607 **LINES GP-PUMP** ***(contd.)*** **i02433841**

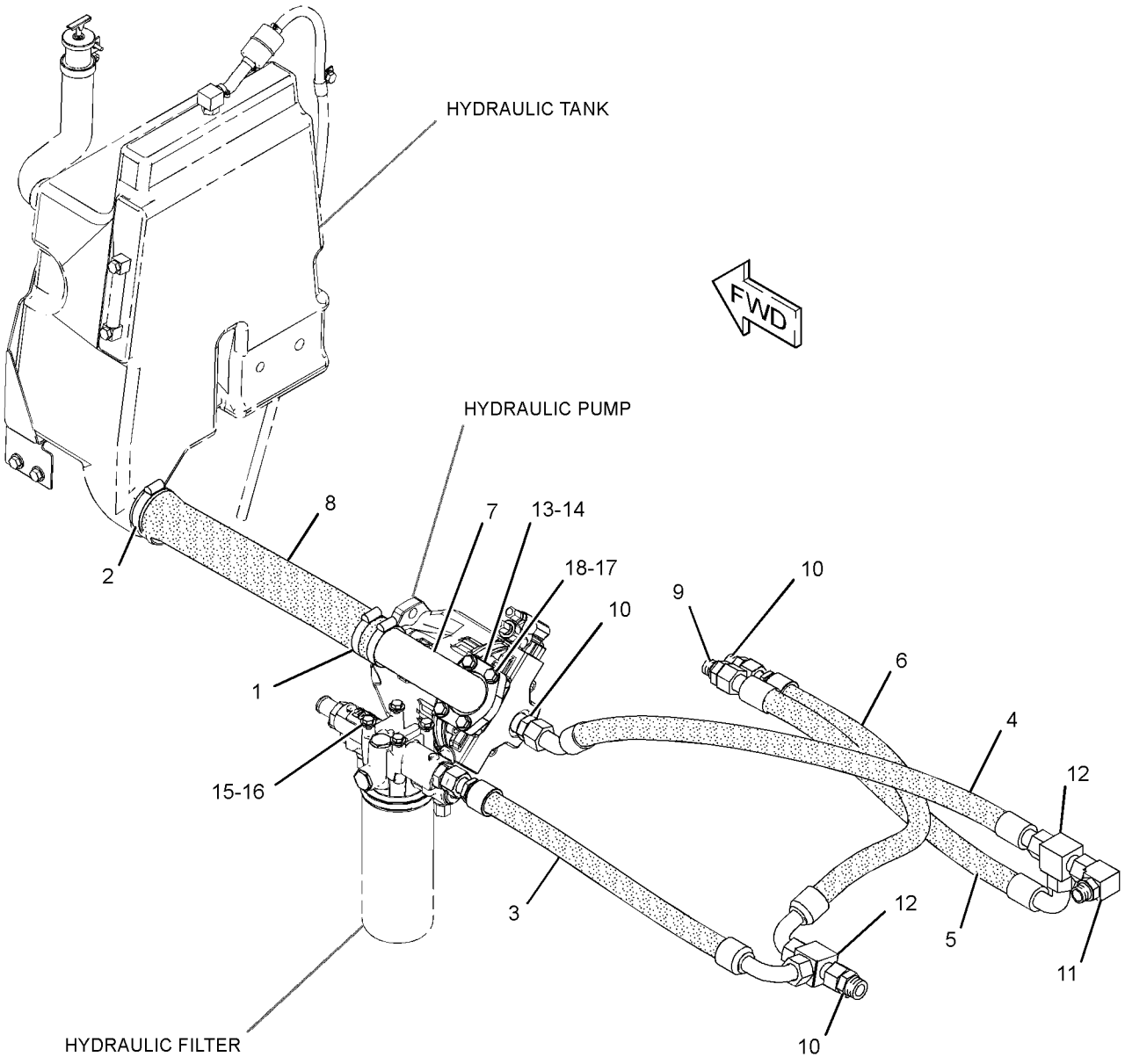

GRAPHIC #1 **<END>** g01186966

HYDRAULIC SYSTEM

246-9802 LINES GP-RIDE CONTROL

S/N: EAT1-695

PART OF 209-9937 CONTROL AR-RIDE

AN ATTACHMENT

SMCS-5057, 5077, 5264 **i02545872**

NOTE	REF NO	GRAPHIC REF	PART NUMBER	QTY	PART NAME 1 2 3 4 5 6 (PRODUCT LEVEL)	SEE PAGE
	1	1	**7K-1181**	2	STRAP-CABLE	
Y	2	1	*162-3960*	1	ACCUMULATOR GP-RIDE CONTROL (CHARGED)	386
	3	1	**279-5016**	1	FILM-WARNING (HIGH PRESS CYLINDER, READ OMM)	
Y	4	1	**245-8780**	1	MANIFOLD GP-RIDE CONTROL	510
	5	1	**247-0320**	1	BRACKET AS	
I	6	1	**252-1221**	1	HOSE AS	
I	7	1	**265-0868**	1	HOSE AS	
M	8	1	**096-5866**	2	BOLT (M8X1.25X75-MM)	
	9	1	**109-1633**	2	CLIP (SLOT)	
	10	1	**109-1634**	2	CLIP (TAB)	
	11	1	*148-8318*	1	CONNECTOR AS	
		1	**3K-0360**	1	SEAL-O-RING	
		1	**6V-8397**	1	SEAL-O-RING	
		1	**6V-8634**	1	CONNECTOR	
	12	1	*148-8340*	1	CONNECTOR AS	
		1	**3K-0360**	1	SEAL-O-RING	
		1	**6V-8398**	1	SEAL-O-RING	
		1	**6V-8639**	1	CONNECTOR	
	13	1	*148-8358*	2	ELBOW AS	
					(EACH INCLUDES)	
		1	**2M-9780**	1	SEAL-O-RING	
		1	**6V-8398**	1	SEAL-O-RING	
		1	**6V-8624**	1	ELBOW	
	14	1	*153-6241*	1	ELBOW AS	
		1	**6V-8398**	1	SEAL-O-RING	
		1	**8C-8989**	1	ELBOW	
	15	1	*164-5549*	1	COUPLING AS	
		1	**3J-1907**	1	SEAL-O-RING	
		1	**4I-6287**	1	COUPLING	
	16	1	**8T-4121**	4	WASHER-HARD (11X21X2.5-MM THK)	
M	17	1	**8T-4137**	4	BOLT (M10X1.5X20-MM)	
M	18	1	**8T-4956**	2	BOLT (M12X1.75X35-MM)	
	19	1	**8T-4223**	8	WASHER-HARD (13.5X25.5X3-MM THK)	
	20	1	**8T-4224**	2	WASHER-HARD (8.8X16X2-MM THK)	

I-REFER TO HYDRAULIC INFORMATION SYSTEM
M-METRIC PART
Y-SEPARATE ILLUSTRATION

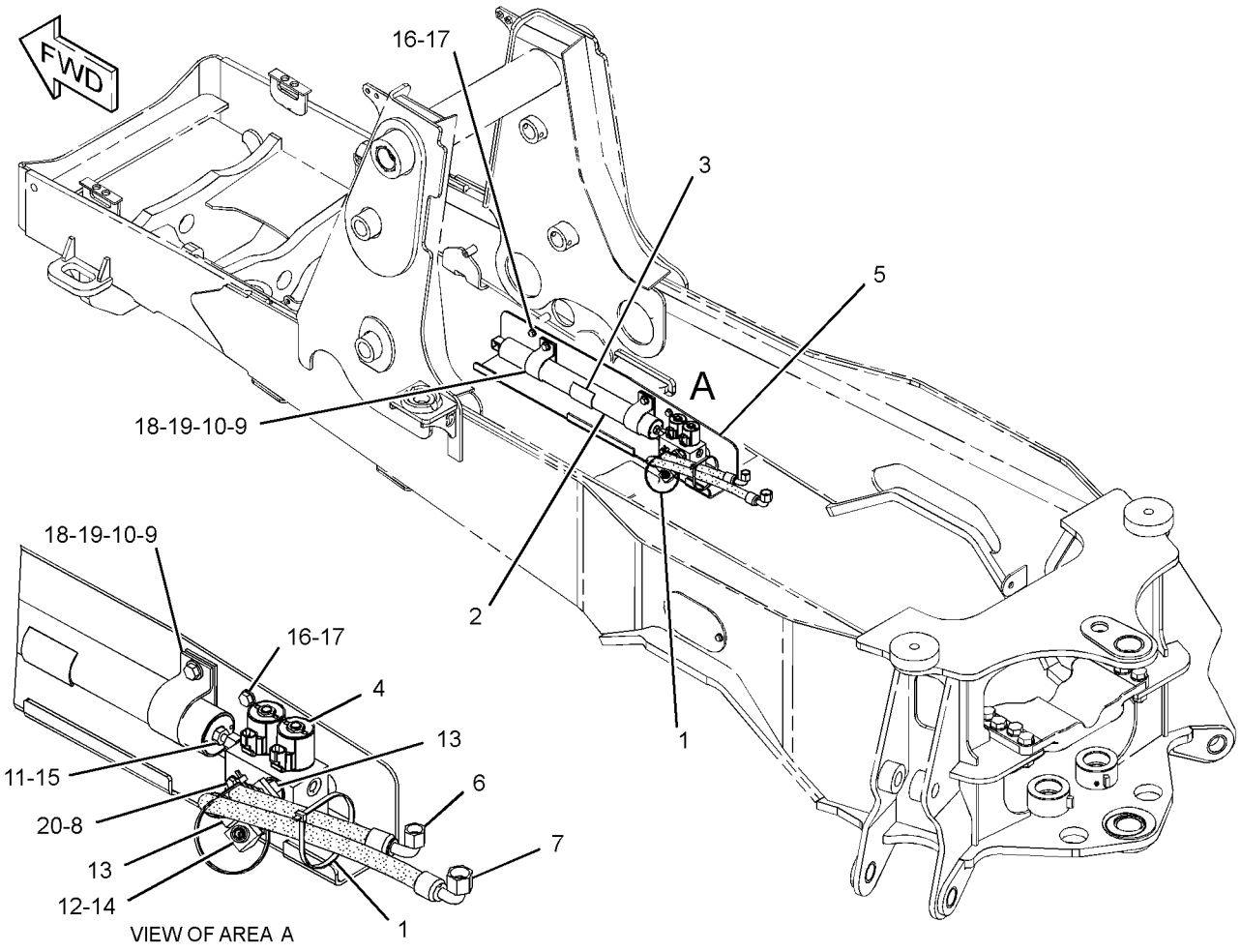

GRAPHIC #1 **<END>** g01260995

HYDRAULIC SYSTEM

246-9802 LINES GP-RIDE CONTROL

S/N: EAT696-UP
PART OF 209-9937 CONTROL AR-RIDE
AN ATTACHMENT

SMCS-5057, 5077, 5264 **i03345660**

NOTE	REF NO	GRAPHIC REF	PART NUMBER	QTY	PART NAME 1 2 3 4 5 6 (PRODUCT LEVEL)	SEE PAGE
	1	1	**7K-1181**	3	STRAP-CABLE	
Y	2	1	*162-3960*	1	ACCUMULATOR GP-RIDE CONTROL (CHARGED)	386
B	3	1	**279-5016**	1	FILM-WARNING (HIGH PRESS CYLINDER, READ OMM) (U.S.)	
Y	4	1	**245-8780**	1	MANIFOLD GP-RIDE CONTROL	510
	5	1	**247-0320**	1	BRACKET AS	
I	6	1	**252-1221**	1	HOSE AS	
I	7	1	**265-0868**	1	HOSE AS	
M	8	1	**096-5866**	2	BOLT (M8X1.25X75-MM)	
	9	1	**109-1633**	2	CLIP (SLOT)	
	10	1	**109-1634**	2	CLIP (TAB)	
	11	1	**276-2334**	1	FILM-WARNING (HIGH PRESS CYLINDER, READ OMM) (INTL)	
	12	1	*148-8340*	1	CONNECTOR AS	
		1	**3K-0360**	1	SEAL-O-RING	
		1	**6V-8398**	1	SEAL-O-RING	
		1	**6V-8639**	1	CONNECTOR	
	13	1	*148-8358*	2	ELBOW AS	
					(EACH INCLUDES)	
		1	**2M-9780**	1	SEAL-O-RING	
		1	**6V-8398**	1	SEAL-O-RING	
		1	**6V-8624**	1	ELBOW	
	14	1	*153-6241*	1	ELBOW AS	
		1	**6V-8398**	1	SEAL-O-RING	
		1	**8C-8989**	1	ELBOW	
C	16	1	**8T-4121**	3	WASHER-HARD (11X21X2.5-MM THK)	
CM	17	1	**8T-4137**	3	BOLT (M10X1.5X20-MM)	
M	18	1	**8T-4139**	2	BOLT (M12X1.75X30-MM)	
C	19	1	**8T-4223**	2	WASHER-HARD (13.5X25.5X3-MM THK)	
	20	1	**8T-4224**	2	WASHER-HARD (8.8X16X2-MM THK)	
C	21	1	**292-8222**	1	TUBE AS	
C	22	1	*148-8365*	1	ELBOW AS	
		1	**3J-1907**	1	SEAL-O-RING	
		1	**6V-8398**	1	SEAL-O-RING	
		1	**8T-6876**	1	ELBOW	
C	23	1	*148-8354*	1	ELBOW AS	
		1	**3K-0360**	1	SEAL-O-RING	
		1	**6V-8398**	1	SEAL-O-RING	
		1	**6V-9002**	1	ELBOW	
	24	1	*148-8370*	1	ELBOW AS	
		1	**6V-8398**	1	SEAL-O-RING	
		1	**6V-9851**	1	ELBOW	
I	25	1	**194-4334**	1	HOSE AS	

B-USE AS REQUIRED
C-CHANGE FROM PREVIOUS TYPE
I-REFER TO HYDRAULIC INFORMATION SYSTEM
M-METRIC PART
Y-SEPARATE ILLUSTRATION

246-9802 **LINES GP-RIDE CONTROL** *(contd.)* **i03345660**

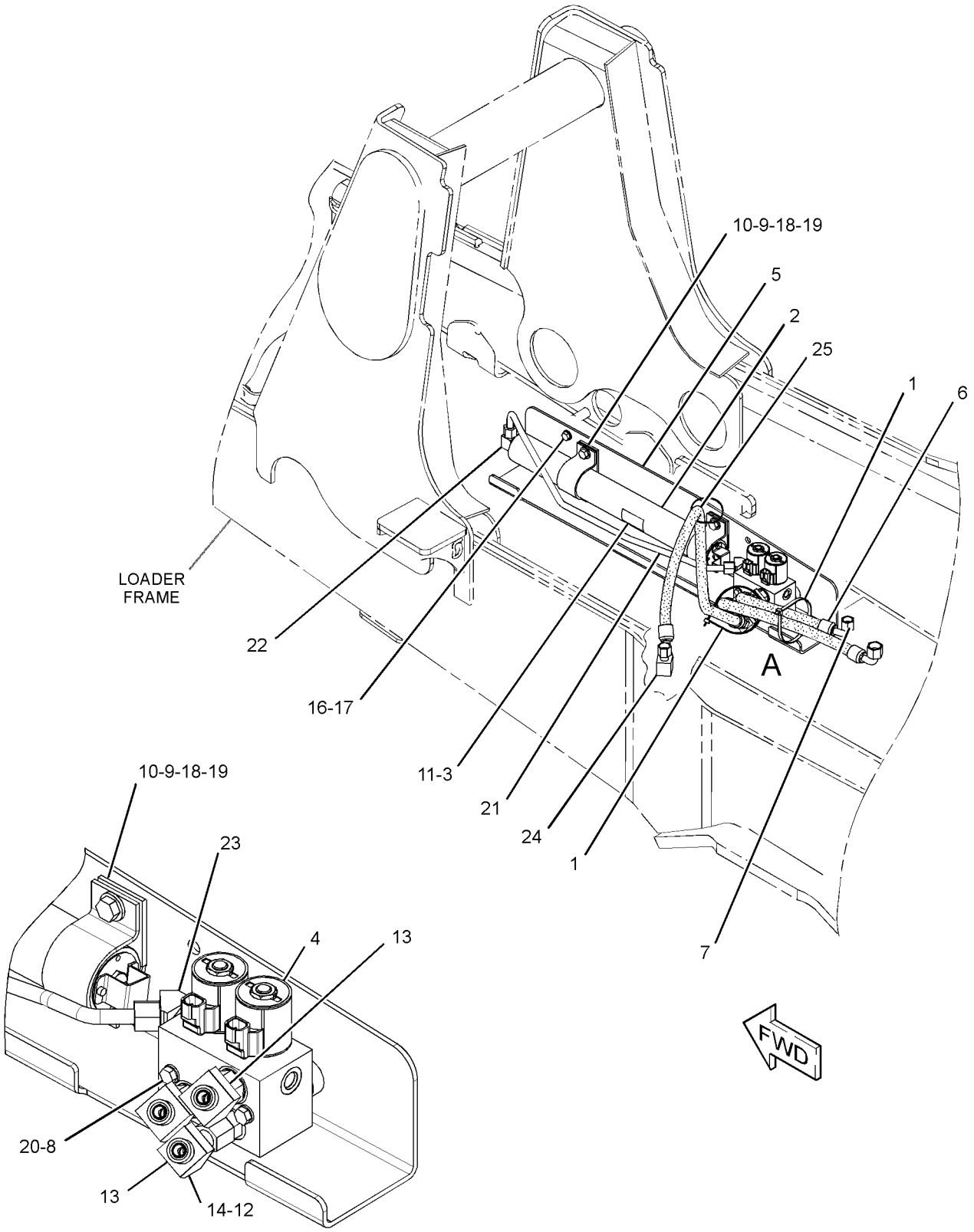

VIEW OF AREA A
(HOSES REMOVED FOR CLARITY)

GRAPHIC #1 **<END>** g01805193

HYDRAULIC SYSTEM

215-2445 LINES GP-STABILIZER

S/N: EAT1-871
PART OF 269-2148 VALVE AR-BANK 8
AN ATTACHMENT

SMCS-5057, 5468 **i02505738**

NOTE	REF NO	GRAPHIC REF	PART NUMBER	QTY	PART NAME 1 2 3 4 5 6 (PRODUCT LEVEL)	SEE PAGE
	1	1	**201-3621**	1	TUBE AS	
	2	1	**201-3622**	1	TUBE AS	
	3	1	**201-3623**	1	TUBE AS	
	4	1	**201-3624**	1	TUBE AS	
	5	1	*205-2357*	2	CONNECTOR AS	
					(EACH INCLUDES)	
		1	**3D-2824**	1	SEAL-O-RING	
		1	**6V-8398**	1	SEAL-O-RING	
		1	**8T-7968**	1	CONNECTOR	
I	6	1	**252-5355**	2	HOSE AS	
I	7	1	**252-5358**	2	HOSE AS	
	8	1	*148-8328*	2	CONNECTOR AS	
					(EACH INCLUDES)	
		1	**3D-2824**	1	SEAL-O-RING	
		1	**6V-8398**	1	SEAL-O-RING	
		1	**6V-8633**	1	CONNECTOR	
	9	1	*148-8372*	2	ELBOW AS	
					(EACH INCLUDES)	
		1	**2M-9780**	1	SEAL-O-RING	
		1	**6V-8398**	1	SEAL-O-RING	
		1	**6V-8721**	1	ELBOW	
	10	1	*148-8415*	4	REDUCER AS	
					(EACH INCLUDES)	
		1	**6V-8397**	1	SEAL-O-RING	
		1	**6V-8936**	1	REDUCER	
	11	1	**5P-7462**	4	CLIP (SLOT)	
	12	1	**5P-7463**	4	CLIP (TAB)	
	13	1	**6V-0683**	4	GROMMET	
	14	1	**6V-8397**	4	SEAL-O-RING	
	15	1	**8T-1885**	4	CLIP (SLOT)	
	16	1	**8T-1886**	4	CLIP (TAB)	
	17	1	**8T-4121**	6	WASHER-HARD (11X21X2.5-MM THK)	
M	18	1	**8T-4137**	4	BOLT (M10X1.5X20-MM)	
M	19	1	**8T-4196**	2	BOLT (M10X1.5X35-MM)	

I-REFER TO HYDRAULIC INFORMATION SYSTEM
M-METRIC PART

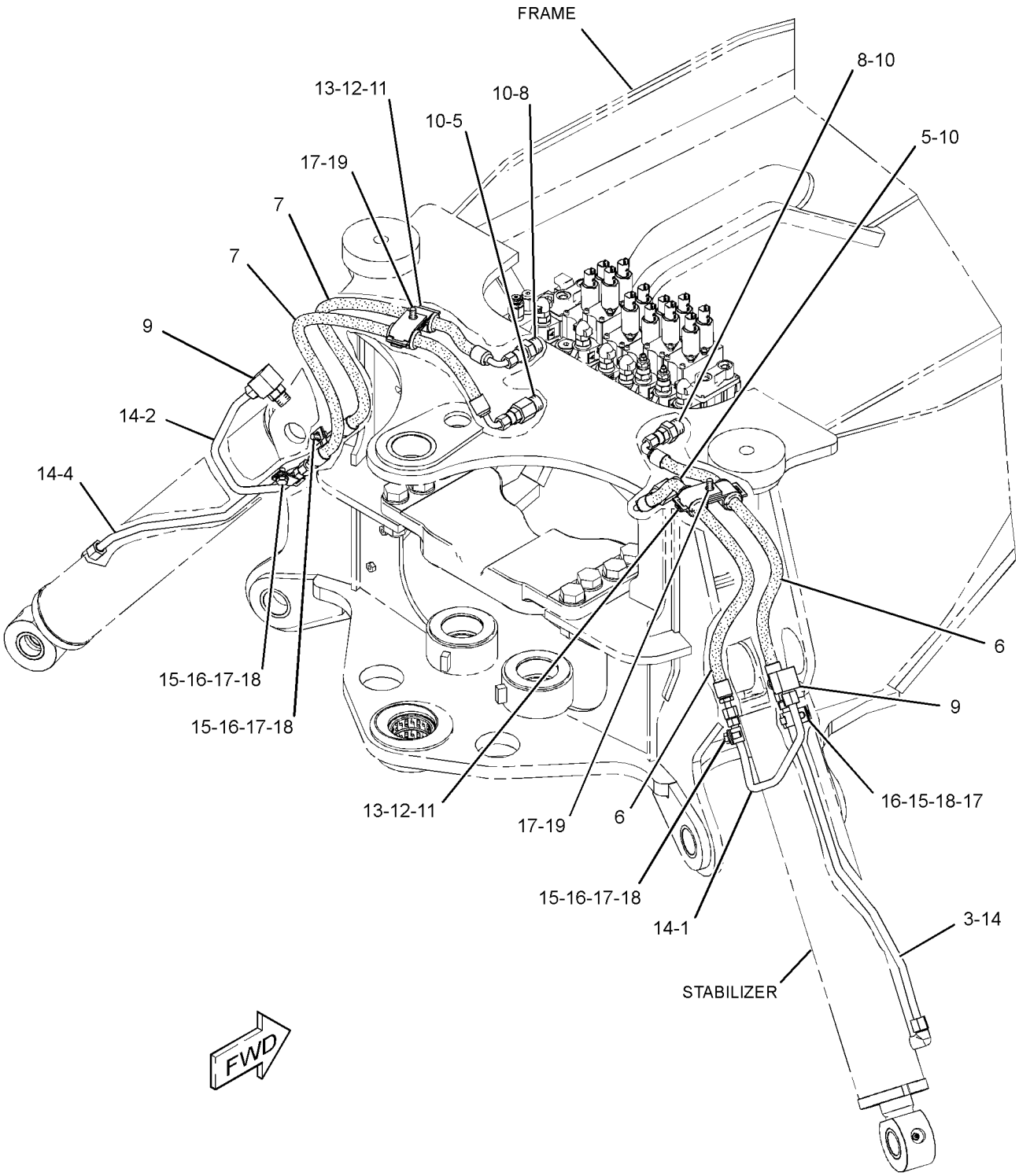

GRAPHIC #1 **<END>** g01271186

HYDRAULIC SYSTEM

215-2445 LINES GP-STABILIZER

S/N: EAT872-1224
PART OF 269-2148 VALVE AR-BANK 8
AN ATTACHMENT

SMCS-5057, 5468 **i02772637**

NOTE	REF NO	GRAPHIC REF	PART NUMBER	QTY	PART NAME 1 2 3 4 5 6 (PRODUCT LEVEL)	SEE PAGE
	1	1	**201-3621**	1	TUBE AS	
	2	1	**201-3622**	1	TUBE AS	
	3	1	**201-3623**	1	TUBE AS	
	4	1	**201-3624**	1	TUBE AS	
	5	1	*205-2357*	2	CONNECTOR AS	
					(EACH INCLUDES)	
		1	**3D-2824**	1	SEAL-O-RING	
		1	**6V-8398**	1	SEAL-O-RING	
		1	**8T-7968**	1	CONNECTOR	
CI	6	1	**252-5355**	1	HOSE AS	
I	7	1	**252-5358**	2	HOSE AS	
	8	1	*148-8328*	2	CONNECTOR AS	
					(EACH INCLUDES)	
		1	**3D-2824**	1	SEAL-O-RING	
		1	**6V-8398**	1	SEAL-O-RING	
		1	**6V-8633**	1	CONNECTOR	
	9	1	*148-8372*	2	ELBOW AS	
					(EACH INCLUDES)	
		1	**2M-9780**	1	SEAL-O-RING	
		1	**6V-8398**	1	SEAL-O-RING	
		1	**6V-8721**	1	ELBOW	
	10	1	*148-8415*	4	REDUCER AS	
					(EACH INCLUDES)	
		1	**6V-8397**	1	SEAL-O-RING	
		1	**6V-8936**	1	REDUCER	
	11	1	**5P-7462**	4	CLIP (SLOT)	
	12	1	**5P-7463**	4	CLIP (TAB)	
	13	1	**6V-0683**	4	GROMMET	
	14	1	**6V-8397**	4	SEAL-O-RING	
	15	1	**8T-1885**	4	CLIP (SLOT)	
	16	1	**8T-1886**	4	CLIP (TAB)	
	17	1	**8T-4121**	6	WASHER-HARD (11X21X2.5-MM THK)	
M	18	1	**8T-4137**	4	BOLT (M10X1.5X20-MM)	
M	19	1	**8T-4196**	2	BOLT (M10X1.5X35-MM)	
CI	20	1	**308-7376**	1	HOSE AS	

C-CHANGE FROM PREVIOUS TYPE
I-REFER TO HYDRAULIC INFORMATION SYSTEM
M-METRIC PART

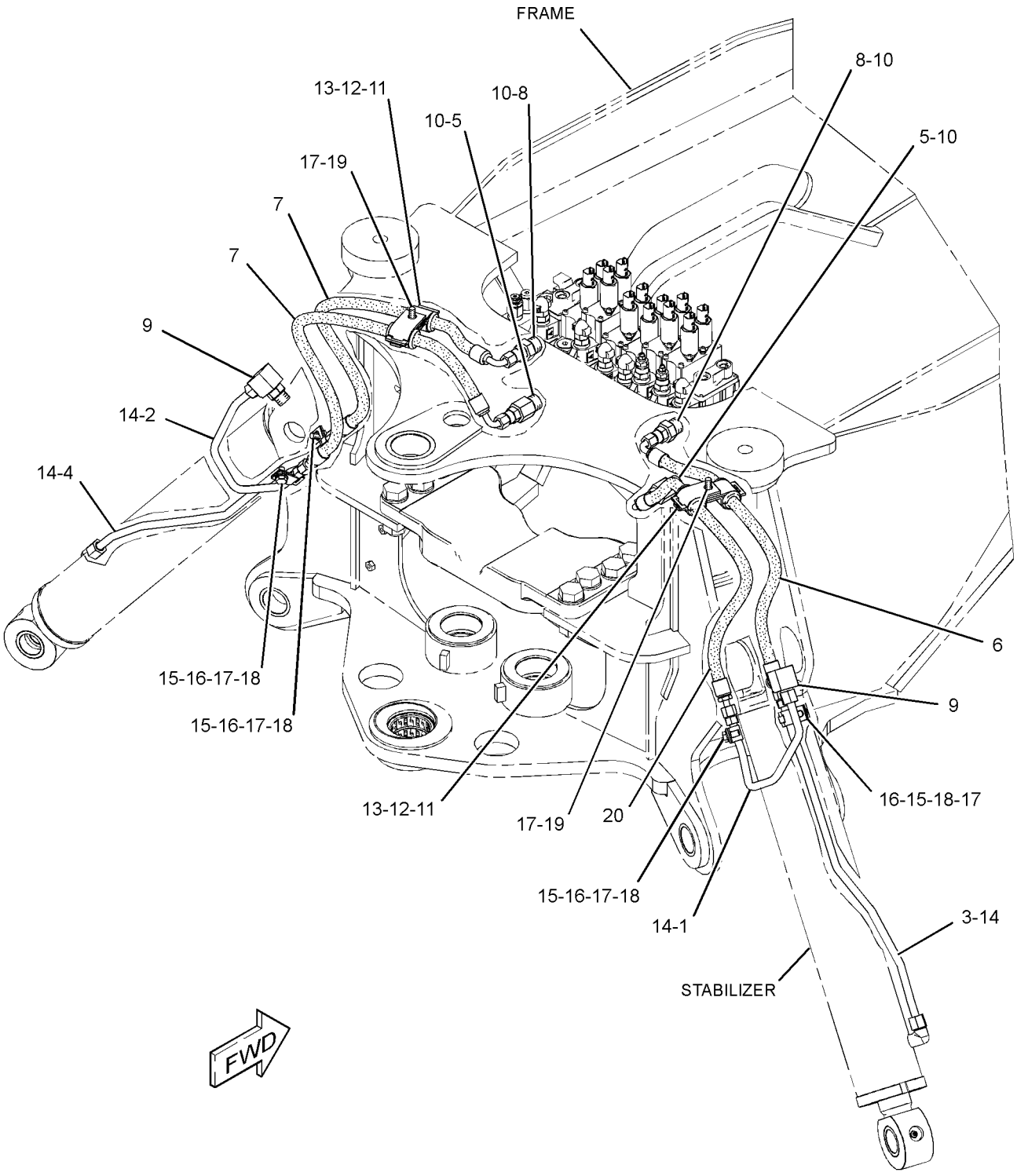

GRAPHIC #1 **<END>** g01390093

HYDRAULIC SYSTEM

215-2445 LINES GP-STABILIZER

S/N: EAT1225-UP
PART OF 269-2148 VALVE AR-BANK 8
AN ATTACHMENT

SMCS-5057, 5468 **i03021264**

NOTE	REF NO	GRAPHIC REF	PART NUMBER	QTY	PART NAME 1 2 3 4 5 6 (PRODUCT LEVEL)	SEE PAGE
	1	1	**201-3621**	1	TUBE AS	
	2	1	**201-3622**	1	TUBE AS	
	3	1	**201-3623**	1	TUBE AS	
	4	1	**201-3624**	1	TUBE AS	
C	5	1	*205-2357*	1	CONNECTOR AS	
		1	**3D-2824**	1	SEAL-O-RING	
		1	**6V-8398**	1	SEAL-O-RING	
		1	**8T-7968**	1	CONNECTOR	
CI	6	1	**317-2129**	2	HOSE AS	
CI	7	1	**317-2130**	1	HOSE AS	
CI	8	1	**317-2168**	1	HOSE AS	
	9	1	*148-8372*	2	ELBOW AS	
					(EACH INCLUDES)	
		1	**2M-9780**	1	SEAL-O-RING	
		1	**6V-8398**	1	SEAL-O-RING	
		1	**6V-8721**	1	ELBOW	
C	10	1	*148-8381*	2	ELBOW AS	
					(EACH INCLUDES)	
		1	**3D-2824**	1	SEAL-O-RING	
		1	**6V-8398**	1	SEAL-O-RING	
		1	**8T-5429**	1	ELBOW	
C	11	1	*155-6258*	1	ELBOW AS	
		1	**3D-2824**	1	SEAL-O-RING	
		1	**6V-8398**	1	SEAL-O-RING	
		1	**127-1647**	1	ELBOW	
	12	1	**5P-7462**	4	CLIP (SLOT)	
	13	1	**5P-7463**	4	CLIP (TAB)	
	14	1	**6V-0683**	4	GROMMET	
	15	1	**6V-8397**	4	SEAL-O-RING	
	16	1	**8T-1885**	4	CLIP (SLOT)	
	17	1	**8T-1886**	4	CLIP (TAB)	
	18	1	**8T-4121**	6	WASHER-HARD (11X21X2.5-MM THK)	
M	19	1	**8T-4137**	4	BOLT (M10X1.5X20-MM)	
M	20	1	**8T-4196**	2	BOLT (M10X1.5X35-MM)	

C-CHANGE FROM PREVIOUS TYPE
I-REFER TO HYDRAULIC INFORMATION SYSTEM
M-METRIC PART

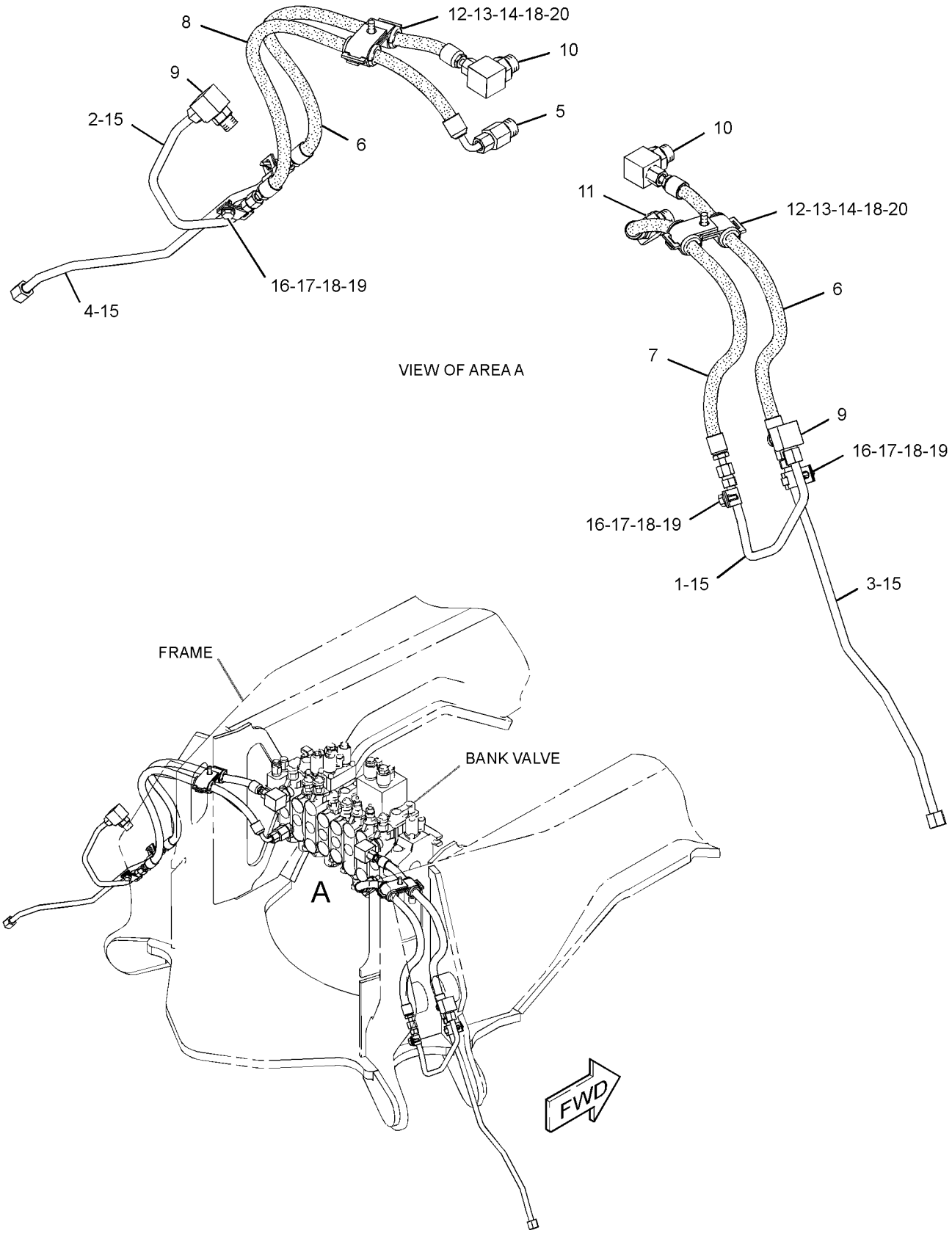

GRAPHIC #1 **<END>** g01567759

HYDRAULIC SYSTEM

222-5622 LINES GP-STABILIZER–7-BANK

S/N: EAT1-871
PART OF 269-2147 VALVE AR-BANK 7
AN ATTACHMENT

SMCS-5057, 5468 **i02505739**

NOTE	REF NO	GRAPHIC REF	PART NUMBER	QTY	PART NAME 1 2 3 4 5 6 (PRODUCT LEVEL)	SEE PAGE
	1	1	**201-3621**	1	TUBE AS	
	2	1	**201-3622**	1	TUBE AS	
	3	1	**201-3623**	1	TUBE AS	
	4	1	**201-3624**	1	TUBE AS	
	5	1	*205-2357*	2	CONNECTOR AS	
					(EACH INCLUDES)	
		1	**3D-2824**	1	SEAL-O-RING	
		1	**6V-8398**	1	SEAL-O-RING	
		1	**8T-7968**	1	CONNECTOR	
I	6	1	**252-5355**	2	HOSE AS	
I	7	1	**252-5357**	2	HOSE AS	
	8	1	*148-8328*	2	CONNECTOR AS	
					(EACH INCLUDES)	
		1	**3D-2824**	1	SEAL-O-RING	
		1	**6V-8398**	1	SEAL-O-RING	
		1	**6V-8633**	1	CONNECTOR	
	9	1	*148-8372*	2	ELBOW AS	
					(EACH INCLUDES)	
		1	**2M-9780**	1	SEAL-O-RING	
		1	**6V-8398**	1	SEAL-O-RING	
		1	**6V-8721**	1	ELBOW	
	10	1	*148-8415*	4	REDUCER AS	
					(EACH INCLUDES)	
		1	**6V-8397**	1	SEAL-O-RING	
		1	**6V-8936**	1	REDUCER	
	11	1	**5P-7462**	4	CLIP (SLOT)	
	12	1	**5P-7463**	4	CLIP (TAB)	
	13	1	**6V-0683**	4	GROMMET	
	14	1	**6V-8397**	4	SEAL-O-RING	
	15	1	**8T-1885**	4	CLIP (SLOT)	
	16	1	**8T-1886**	4	CLIP (TAB)	
	17	1	**8T-4121**	6	WASHER-HARD (11X21X2.5-MM THK)	
M	18	1	**8T-4137**	4	BOLT (M10X1.5X20-MM)	
M	19	1	**8T-4196**	2	BOLT (M10X1.5X35-MM)	

I-REFER TO HYDRAULIC INFORMATION SYSTEM
M-METRIC PART

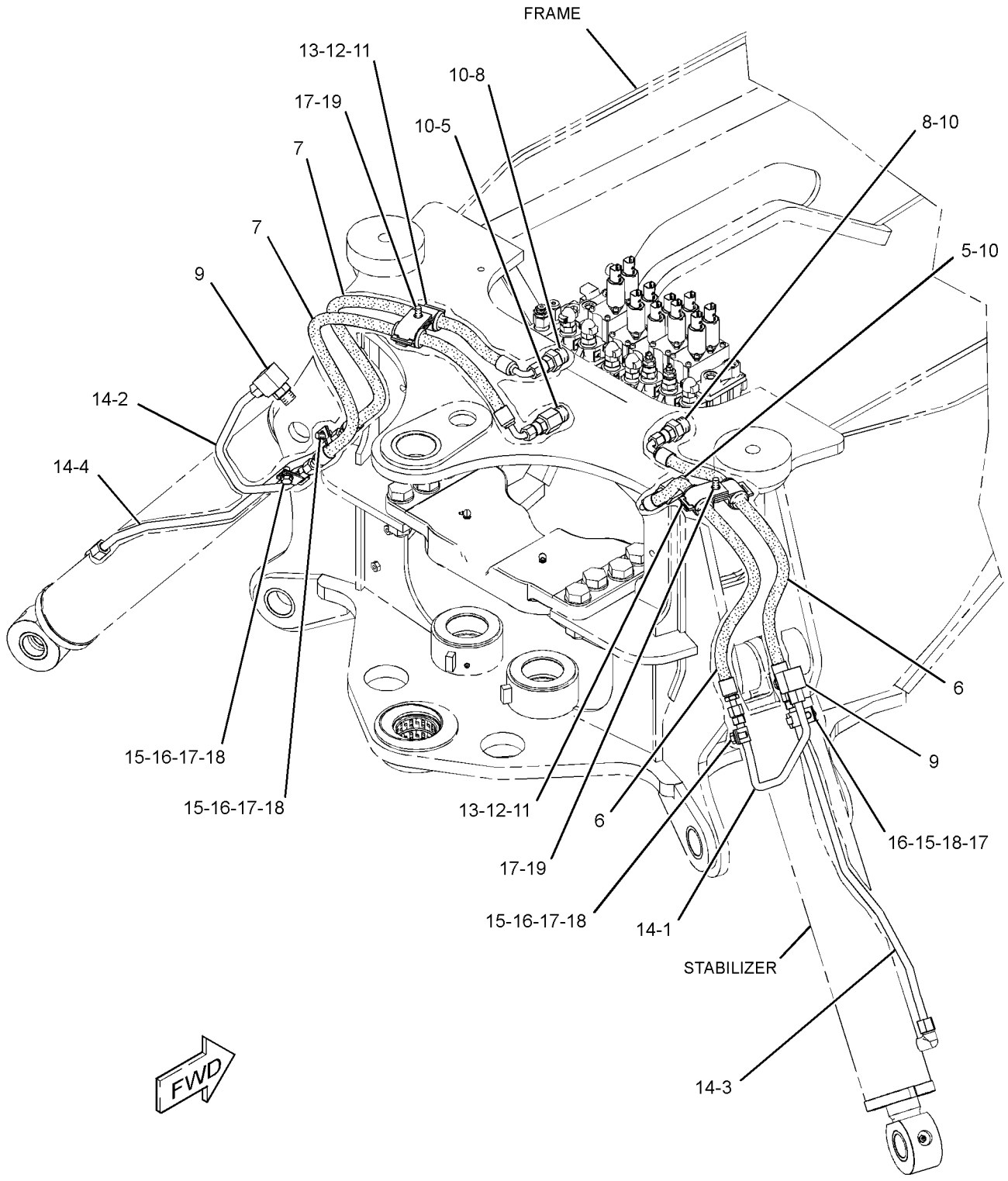

GRAPHIC #1 **<END>** g01271350

HYDRAULIC SYSTEM

222-5622 LINES GP-STABILIZER–7-BANK

S/N: EAT872-1224
PART OF 269-2147 VALVE AR-BANK 7
AN ATTACHMENT

SMCS-5057, 5468 **i02772639**

NOTE	REF NO	GRAPHIC REF	PART NUMBER	QTY	PART NAME 1 2 3 4 5 6 (PRODUCT LEVEL)	SEE PAGE
	1	1	**201-3621**	1	TUBE AS	
	2	1	**201-3622**	1	TUBE AS	
	3	1	**201-3623**	1	TUBE AS	
	4	1	**201-3624**	1	TUBE AS	
	5	1	*205-2357*	2	CONNECTOR AS	
					(EACH INCLUDES)	
		1	**3D-2824**	1	SEAL-O-RING	
		1	**6V-8398**	1	SEAL-O-RING	
		1	**8T-7968**	1	CONNECTOR	
CI	6	1	**252-5355**	1	HOSE AS	
I	7	1	**252-5357**	2	HOSE AS	
	8	1	*148-8328*	2	CONNECTOR AS	
					(EACH INCLUDES)	
		1	**3D-2824**	1	SEAL-O-RING	
		1	**6V-8398**	1	SEAL-O-RING	
		1	**6V-8633**	1	CONNECTOR	
	9	1	*148-8372*	2	ELBOW AS	
					(EACH INCLUDES)	
		1	**2M-9780**	1	SEAL-O-RING	
		1	**6V-8398**	1	SEAL-O-RING	
		1	**6V-8721**	1	ELBOW	
	10	1	*148-8415*	4	REDUCER AS	
					(EACH INCLUDES)	
		1	**6V-8397**	1	SEAL-O-RING	
		1	**6V-8936**	1	REDUCER	
	11	1	**5P-7462**	4	CLIP (SLOT)	
	12	1	**5P-7463**	4	CLIP (TAB)	
	13	1	**6V-0683**	4	GROMMET	
	14	1	**6V-8397**	4	SEAL-O-RING	
	15	1	**8T-1885**	4	CLIP (SLOT)	
	16	1	**8T-1886**	4	CLIP (TAB)	
	17	1	**8T-4121**	6	WASHER-HARD (11X21X2.5-MM THK)	
M	18	1	**8T-4137**	4	BOLT (M10X1.5X20-MM)	
M	19	1	**8T-4196**	2	BOLT (M10X1.5X35-MM)	
CI	20	1	**308-7376**	1	HOSE AS	

C-CHANGE FROM PREVIOUS TYPE
I-REFER TO HYDRAULIC INFORMATION SYSTEM
M-METRIC PART

222-5622 **LINES GP-STABILIZER** *(contd.)* **i02772639**

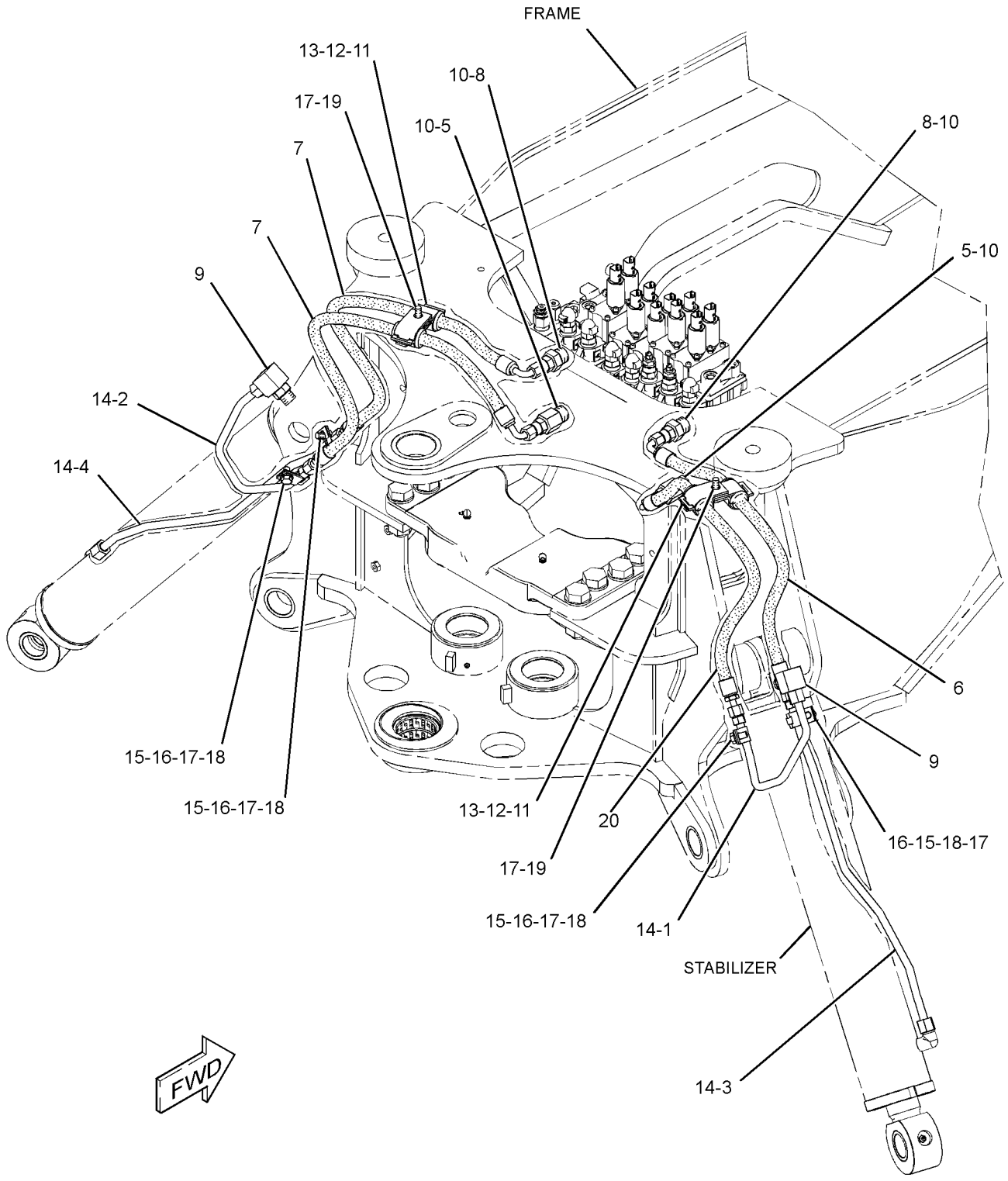

GRAPHIC #1 **<END>** g01388082

HYDRAULIC SYSTEM

222-5622 LINES GP-STABILIZER–7-BANK

S/N: EAT1225-UP
PART OF 269-2147 VALVE AR-BANK 7
AN ATTACHMENT

SMCS-5057, 5468 **i03021265**

NOTE	REF NO	GRAPHIC REF	PART NUMBER	QTY	PART NAME 1 2 3 4 5 6 (PRODUCT LEVEL)	SEE PAGE
	1	1	**201-3621**	1	TUBE AS	
	2	1	**201-3622**	1	TUBE AS	
	3	1	**201-3623**	1	TUBE AS	
	4	1	**201-3624**	1	TUBE AS	
C	5	1	*205-2357*	1	CONNECTOR AS	
		1	**3D-2824**	1	SEAL-O-RING	
		1	**6V-8398**	1	SEAL-O-RING	
		1	**8T-7968**	1	CONNECTOR	
CI	6	1	**317-2129**	1	HOSE AS	
CI	7	1	**317-2130**	2	HOSE AS	
CI	8	1	**317-2131**	1	HOSE AS	
	9	1	*148-8372*	2	ELBOW AS	
					(EACH INCLUDES)	
		1	**2M-9780**	1	SEAL-O-RING	
		1	**6V-8398**	1	SEAL-O-RING	
		1	**6V-8721**	1	ELBOW	
C	10	1	*148-8381*	2	ELBOW AS	
					(EACH INCLUDES)	
		1	**3D-2824**	1	SEAL-O-RING	
		1	**6V-8398**	1	SEAL-O-RING	
		1	**8T-5429**	1	ELBOW	
C	11	1	*155-6258*	1	ELBOW AS	
		1	**3D-2824**	1	SEAL-O-RING	
		1	**6V-8398**	1	SEAL-O-RING	
		1	**127-1647**	1	ELBOW	
	12	1	**5P-7462**	4	CLIP (SLOT)	
	13	1	**5P-7463**	4	CLIP (TAB)	
	14	1	**6V-0683**	4	GROMMET	
	15	1	**6V-8397**	4	SEAL-O-RING	
	16	1	**8T-1885**	4	CLIP (SLOT)	
	17	1	**8T-1886**	4	CLIP (TAB)	
	18	1	**8T-4121**	6	WASHER-HARD (11X21X2.5-MM THK)	
M	19	1	**8T-4137**	4	BOLT (M10X1.5X20-MM)	
M	20	1	**8T-4196**	2	BOLT (M10X1.5X35-MM)	

C-CHANGE FROM PREVIOUS TYPE
I-REFER TO HYDRAULIC INFORMATION SYSTEM
M-METRIC PART

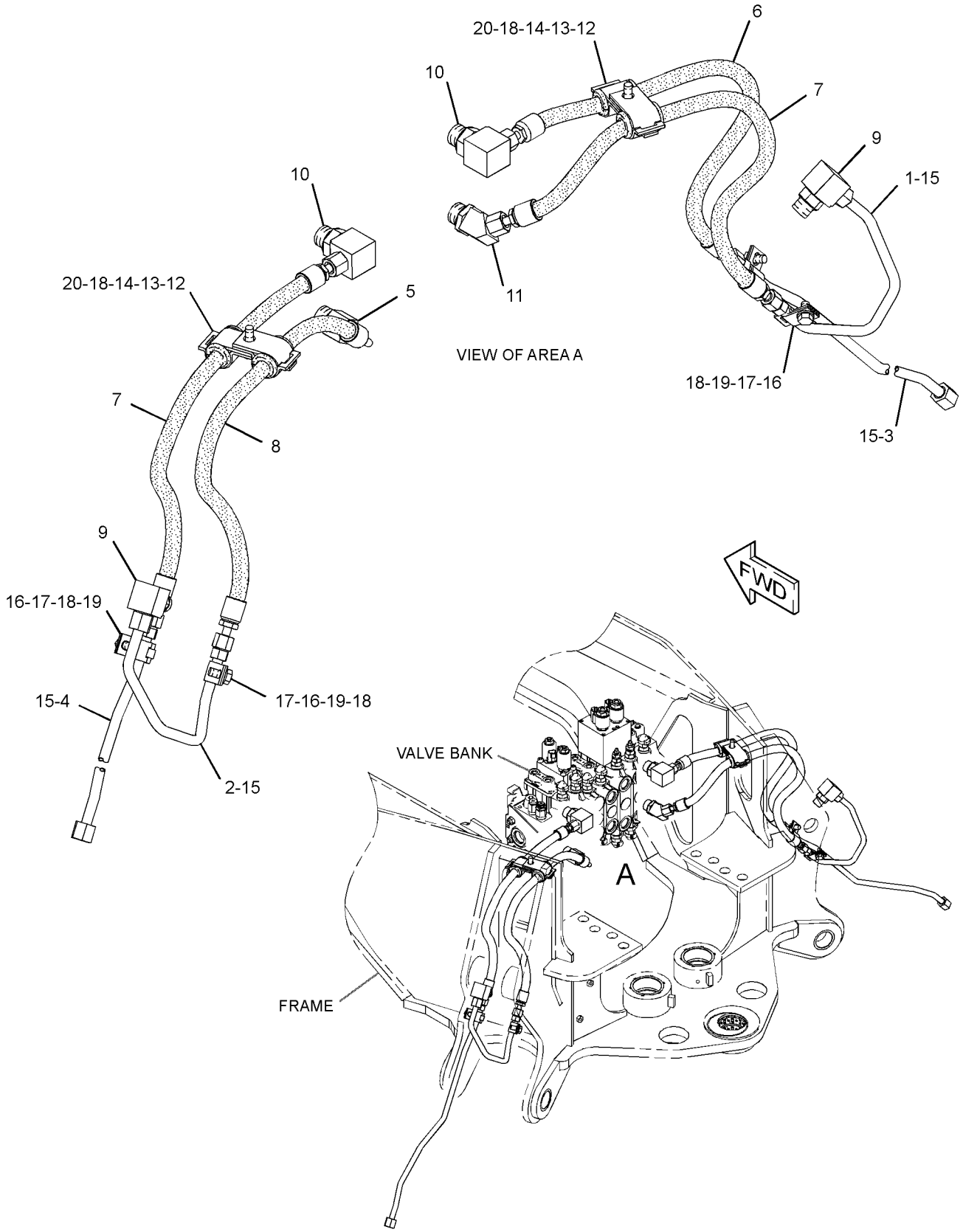

GRAPHIC #1 **<END>** g01567703

HYDRAULIC SYSTEM

222-5623 LINES GP-STABILIZER—6-BANK

S/N: EAT1-871
PART OF 269-2146 VALVE AR-BANK 6
AN ATTACHMENT

SMCS-5057, 5468 **i02509403**

NOTE	REF NO	GRAPHIC REF	PART NUMBER	QTY	PART NAME 1 2 3 4 5 6 (PRODUCT LEVEL)	SEE PAGE
M	1	1	**8T-4196**	2	BOLT (M10X1.5X35-MM)	
	2	1	**201-3621**	1	TUBE AS	
	3	1	**201-3622**	1	TUBE AS	
	4	1	**201-3623**	1	TUBE AS	
	5	1	**201-3624**	1	TUBE AS	
	6	1	*205-2357*	2	CONNECTOR AS	
					(EACH INCLUDES)	
		1	**3D-2824**	1	SEAL-O-RING	
		1	**6V-8398**	1	SEAL-O-RING	
		1	**8T-7968**	1	CONNECTOR	
M	7	1	**8T-4137**	4	BOLT (M10X1.5X20-MM)	
I	8	1	**252-5355**	2	HOSE AS	
I	9	1	**252-5356**	2	HOSE AS	
	10	1	*148-8328*	2	CONNECTOR AS	
					(EACH INCLUDES)	
		1	**3D-2824**	1	SEAL-O-RING	
		1	**6V-8398**	1	SEAL-O-RING	
		1	**6V-8633**	1	CONNECTOR	
	11	1	*148-8372*	2	ELBOW AS	
					(EACH INCLUDES)	
		1	**2M-9780**	1	SEAL-O-RING	
		1	**6V-8398**	1	SEAL-O-RING	
		1	**6V-8721**	1	ELBOW	
	12	1	*148-8415*	4	REDUCER AS	
					(EACH INCLUDES)	
		1	**6V-8397**	1	SEAL-O-RING	
		1	**6V-8936**	1	REDUCER	
	13	1	**5P-7462**	4	CLIP (SLOT)	
	14	1	**5P-7463**	4	CLIP (TAB)	
	15	1	**6V-0683**	4	GROMMET	
	16	1	**6V-8397**	4	SEAL-O-RING	
	17	1	**8T-1885**	4	CLIP (SLOT)	
	18	1	**8T-1886**	4	CLIP (TAB)	
	19	1	**8T-4121**	6	WASHER-HARD (11X21X2.5-MM THK)	

I-REFER TO HYDRAULIC INFORMATION SYSTEM
M-METRIC PART

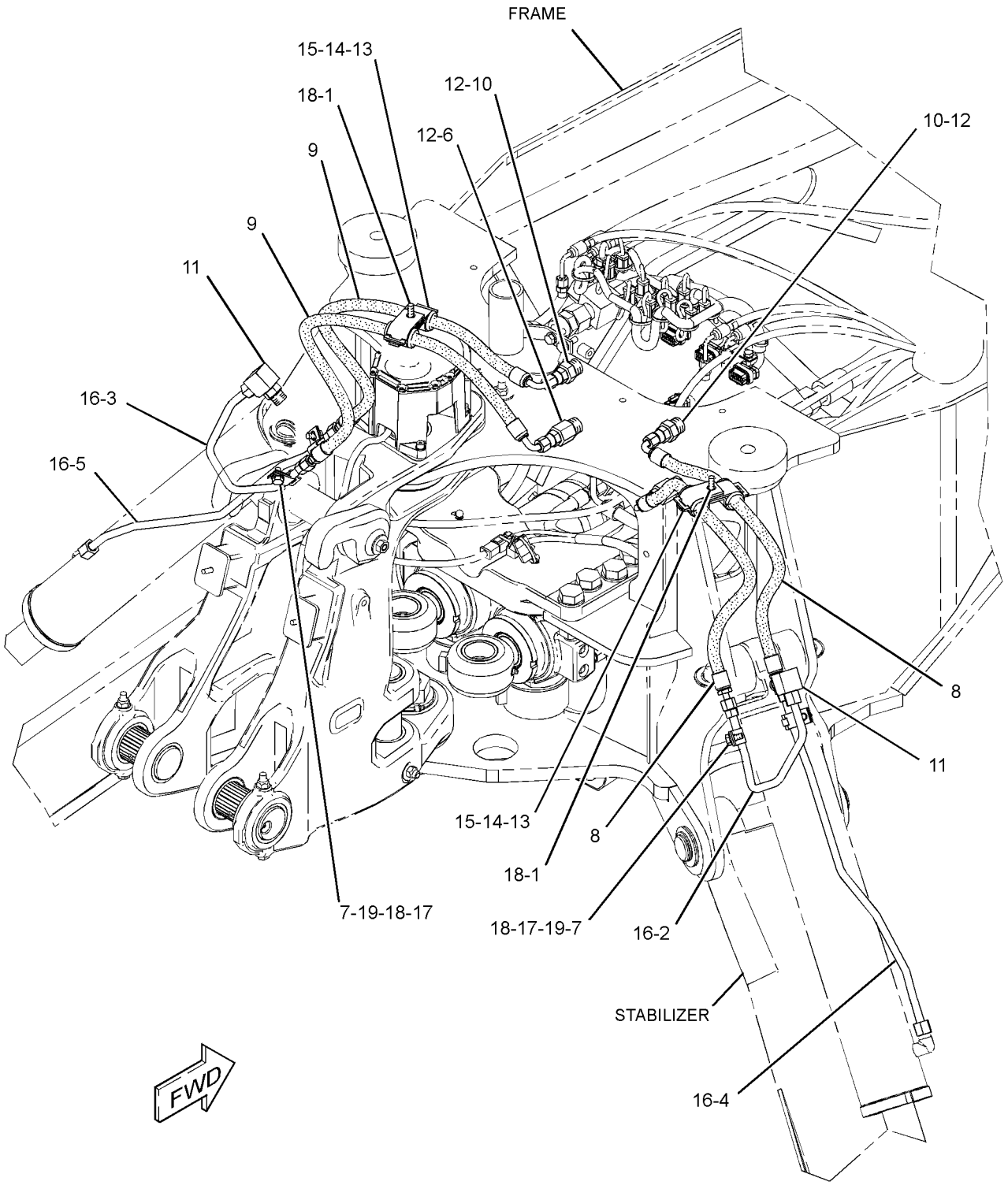

GRAPHIC #1 **<END>** g01231285

HYDRAULIC SYSTEM

222-5623 LINES GP-STABILIZER—6-BANK

S/N: EAT872-1224
PART OF 269-2146 VALVE AR-BANK 6
AN ATTACHMENT

SMCS-5057, 5468 **i02772641**

NOTE	REF NO	GRAPHIC REF	PART NUMBER	QTY	PART NAME 1 2 3 4 5 6 (PRODUCT LEVEL)	SEE PAGE
M	1	1	**8T-4196**	2	BOLT (M10X1.5X35-MM)	
	2	1	**201-3621**	1	TUBE AS	
	3	1	**201-3622**	1	TUBE AS	
	4	1	**201-3623**	1	TUBE AS	
	5	1	**201-3624**	1	TUBE AS	
	6	1	*205-2357*	2	CONNECTOR AS	
					(EACH INCLUDES)	
		1	**3D-2824**	1	SEAL-O-RING	
		1	**6V-8398**	1	SEAL-O-RING	
		1	**8T-7968**	1	CONNECTOR	
M	7	1	**8T-4137**	4	BOLT (M10X1.5X20-MM)	
CI	8	1	**252-5355**	1	HOSE AS	
I	9	1	**252-5356**	2	HOSE AS	
	10	1	*148-8328*	2	CONNECTOR AS	
					(EACH INCLUDES)	
		1	**3D-2824**	1	SEAL-O-RING	
		1	**6V-8398**	1	SEAL-O-RING	
		1	**6V-8633**	1	CONNECTOR	
	11	1	*148-8372*	2	ELBOW AS	
					(EACH INCLUDES)	
		1	**2M-9780**	1	SEAL-O-RING	
		1	**6V-8398**	1	SEAL-O-RING	
		1	**6V-8721**	1	ELBOW	
	12	1	*148-8415*	4	REDUCER AS	
					(EACH INCLUDES)	
		1	**6V-8397**	1	SEAL-O-RING	
		1	**6V-8936**	1	REDUCER	
	13	1	**5P-7462**	4	CLIP (SLOT)	
	14	1	**5P-7463**	4	CLIP (TAB)	
	15	1	**6V-0683**	4	GROMMET	
	16	1	**6V-8397**	4	SEAL-O-RING	
	17	1	**8T-1885**	4	CLIP (SLOT)	
	18	1	**8T-1886**	4	CLIP (TAB)	
	19	1	**8T-4121**	6	WASHER-HARD (11X21X2.5-MM THK)	
CI	20	1	**308-7376**	1	HOSE AS	

C-CHANGE FROM PREVIOUS TYPE
I-REFER TO HYDRAULIC INFORMATION SYSTEM
M-METRIC PART

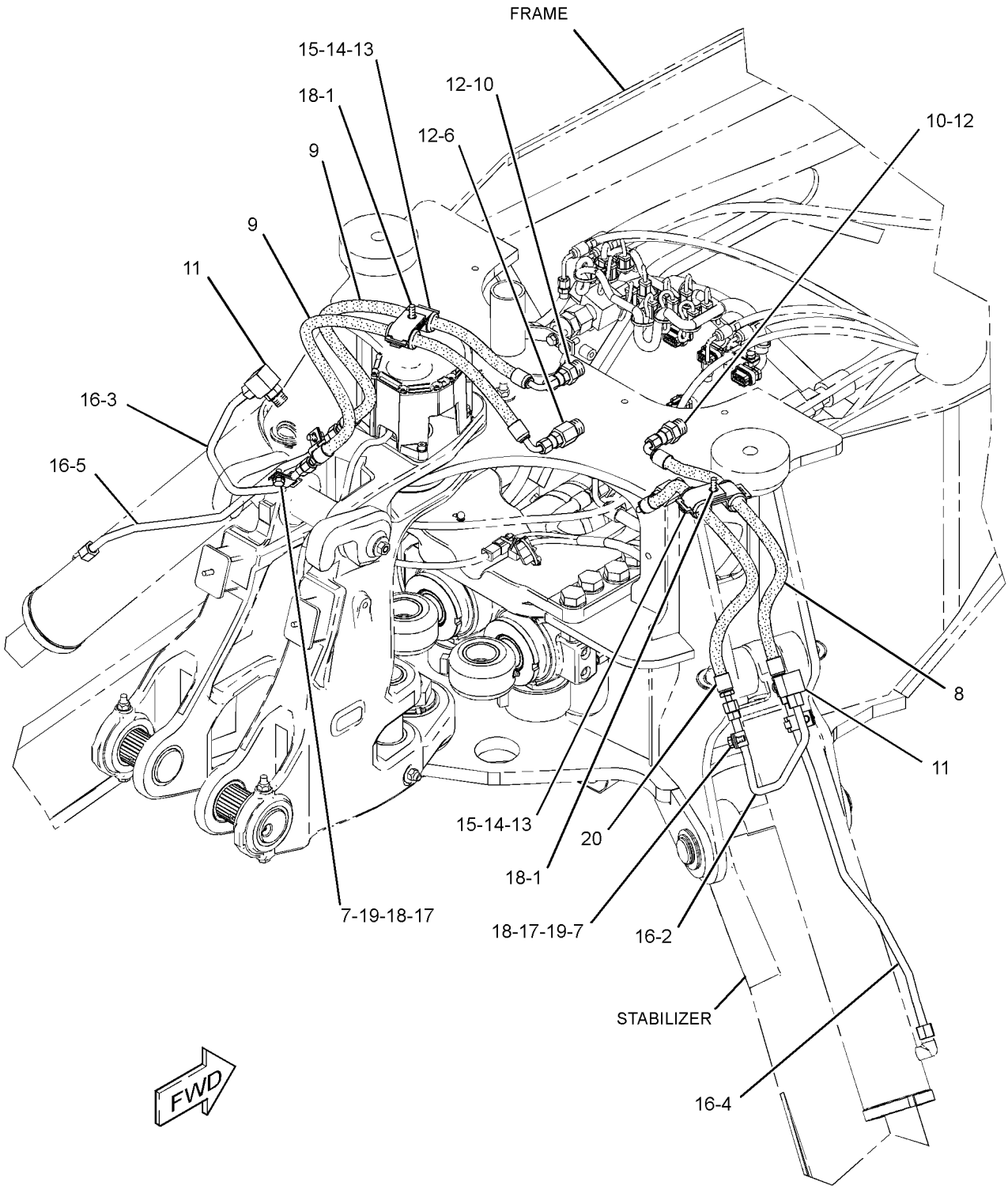

GRAPHIC #1 **<END>** g01388094

HYDRAULIC SYSTEM

222-5623 LINES GP-STABILIZER—6-BANK

S/N: EAT1225-UP
PART OF 269-2146 VALVE AR-BANK 6
AN ATTACHMENT

SMCS-5057, 5468 **i02965863**

NOTE	REF NO	GRAPHIC REF	PART NUMBER	QTY	PART NAME 1 2 3 4 5 6 (PRODUCT LEVEL)	SEE PAGE
M	1	1	**8T-4196**	2	BOLT (M10X1.5X35-MM)	
	2	1	**201-3621**	1	TUBE AS	
	3	1	**201-3622**	1	TUBE AS	
	4	1	**201-3623**	1	TUBE AS	
	5	1	**201-3624**	1	TUBE AS	
C	6	1	*205-2357*	1	CONNECTOR AS	
		1	**3D-2824**	1	SEAL-O-RING	
		1	**6V-8398**	1	SEAL-O-RING	
		1	**8T-7968**	1	CONNECTOR	
M	7	1	**8T-4137**	4	BOLT (M10X1.5X20-MM)	
CI	8	1	**317-2129**	1	HOSE AS	
CI	9	1	**317-2127**	1	HOSE AS	
C	10	1	*148-8381*	2	ELBOW AS	
					(EACH INCLUDES)	
		1	**3D-2824**	1	SEAL-O-RING	
		1	**6V-8398**	1	SEAL-O-RING	
		1	**8T-5429**	1	ELBOW	
	11	1	*148-8372*	2	ELBOW AS	
					(EACH INCLUDES)	
		1	**2M-9780**	1	SEAL-O-RING	
		1	**6V-8398**	1	SEAL-O-RING	
		1	**6V-8721**	1	ELBOW	
CI	12	1	**317-2128**	1	HOSE AS	
	13	1	**5P-7462**	4	CLIP (SLOT)	
	14	1	**5P-7463**	4	CLIP (TAB)	
	15	1	**6V-0683**	4	GROMMET	
	16	1	**6V-8397**	4	SEAL-O-RING	
	17	1	**8T-1885**	4	CLIP (SLOT)	
	18	1	**8T-1886**	4	CLIP (TAB)	
	19	1	**8T-4121**	6	WASHER-HARD (11X21X2.5-MM THK)	
CI	20	1	**317-2130**	1	HOSE AS	
C	21	1	*155-6258*	1	ELBOW AS	
		1	**3D-2824**	1	SEAL-O-RING	
		1	**6V-8398**	1	SEAL-O-RING	
		1	**127-1647**	1	ELBOW	

C-CHANGE FROM PREVIOUS TYPE
I-REFER TO HYDRAULIC INFORMATION SYSTEM
M-METRIC PART

222-5623 **LINES GP-STABILIZER** *(contd.)* **i02965863**

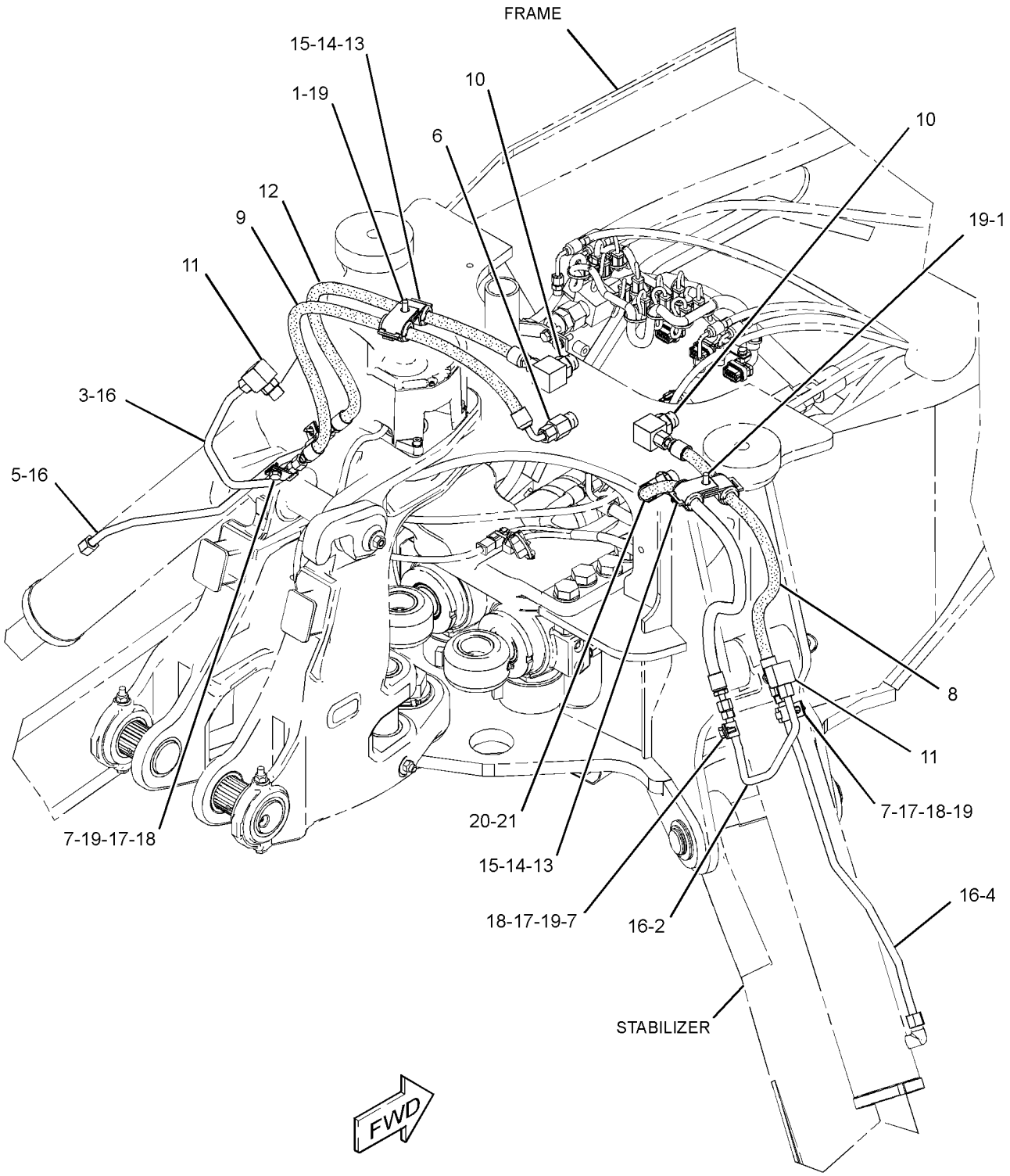

GRAPHIC #1 **<END>** g01498653

HYDRAULIC SYSTEM

211-7630 LINES GP-STICK

S/N: EAT1-937

PART OF 213-9304, 213-9309, 291-9207 BACKHOE AR-EXTENDABLE STICK, 213-9301, 213-9306, 291-9206 BACKHOE AR-STANDARD STICK AN ATTACHMENT

SMCS-5057 **i02634427**

NOTE	REF NO	GRAPHIC REF	PART NUMBER	QTY	PART NAME 1 2 3 4 5 6 (PRODUCT LEVEL)	SEE PAGE
	1	1	**5P-3860**	1	CLAMP-HOSE	
	2	1	**9R-5948**	1	BLOCK	
I	3	1	**219-9500**	1	HOSE AS	
I	4	1	**297-1231**	1	HOSE AS	
	5	1	*148-8328*	1	CONNECTOR AS (WATER LINES)	
		1	**3D-2824**	1	SEAL-O-RING	
		1	**6V-8398**	1	SEAL-O-RING	
		1	**6V-8633**	1	CONNECTOR	
	6	1	*148-8341*	1	CONNECTOR AS	
		1	**3D-2824**	1	SEAL-O-RING	
		1	**6V-8713**	1	CONNECTOR	
		1	**7J-9108**	1	SEAL-O-RING	
	7	1	*153-6232*	1	ELBOW AS	
		1	**3D-2824**	1	SEAL-O-RING	
		1	**7J-9108**	1	SEAL-O-RING	
		1	**8T-0120**	1	ELBOW (45-DEG)	

I-REFER TO HYDRAULIC INFORMATION SYSTEM

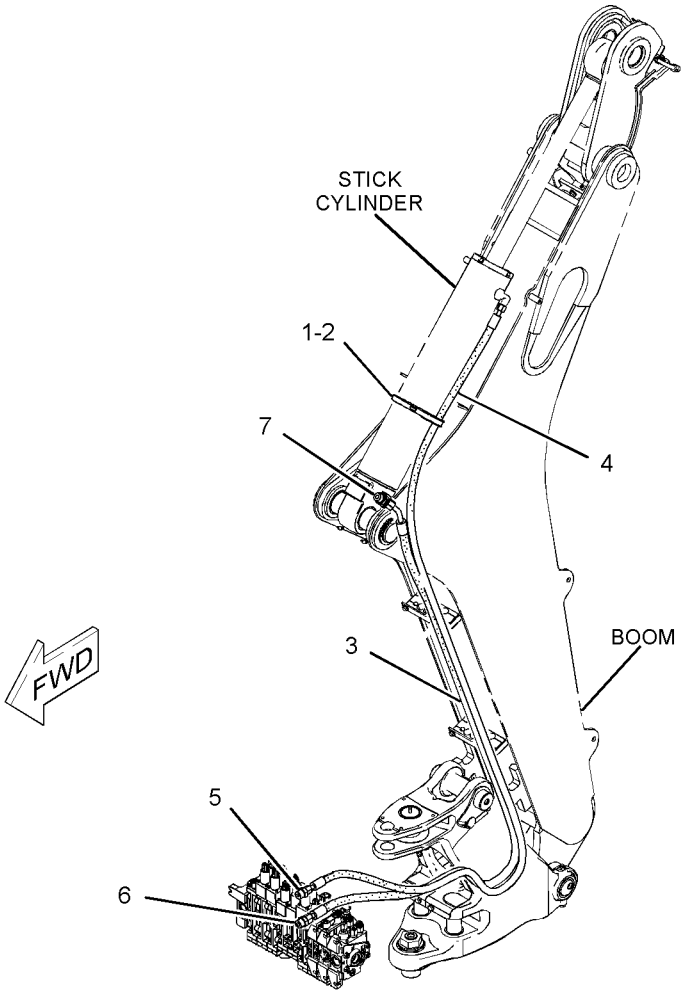

GRAPHIC #1

<END>

g01078737

HYDRAULIC SYSTEM

211-7630 LINES GP-STICK

S/N: EAT938-UP

PART OF 213-9304, 213-9309, 291-9207 BACKHOE AR-EXTENDABLE STICK, 213-9301, 213-9306, 291-9206 BACKHOE AR-STANDARD STICK AN ATTACHMENT

SMCS-5057 **i02887274**

NOTE	REF NO	GRAPHIC REF	PART NUMBER	QTY	PART NAME 1 2 3 4 5 6 (PRODUCT LEVEL)	SEE PAGE
	1	1	**5P-3860**	1	CLAMP-HOSE	
	2	1	**9R-5948**	1	BLOCK	
CI	4	1	**237-2920**	1	HOSE AS	
CI	5	1	**305-3269**	1	HOSE AS	
C	6	1	**311-2507**	1	LINES GP-HYDRAULIC	
I		1	**311-2500**	1	HOSE AS	
	7	1	*148-8328*	1	CONNECTOR AS (WATER LINES)	
		1	**3D-2824**	1	SEAL-O-RING	
		1	**6V-8398**	1	SEAL-O-RING	
		1	**6V-8633**	1	CONNECTOR	
	8	1	*148-8341*	1	CONNECTOR AS	
		1	**3D-2824**	1	SEAL-O-RING	
		1	**6V-8713**	1	CONNECTOR	
		1	**7J-9108**	1	SEAL-O-RING	
	9	1	*153-6232*	1	ELBOW AS	
		1	**3D-2824**	1	SEAL-O-RING	
		1	**7J-9108**	1	SEAL-O-RING	
		1	**8T-0120**	1	ELBOW (45-DEG)	
C	10	1	**6V-8398**	1	SEAL-O-RING	
C	11	1	**7J-9108**	1	SEAL-O-RING	

C-CHANGE FROM PREVIOUS TYPE
I-REFER TO HYDRAULIC INFORMATION SYSTEM

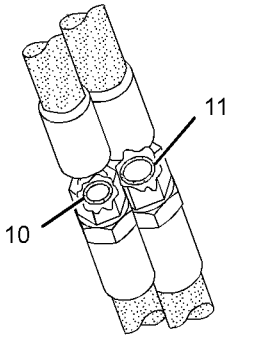

VIEW OF AREA A

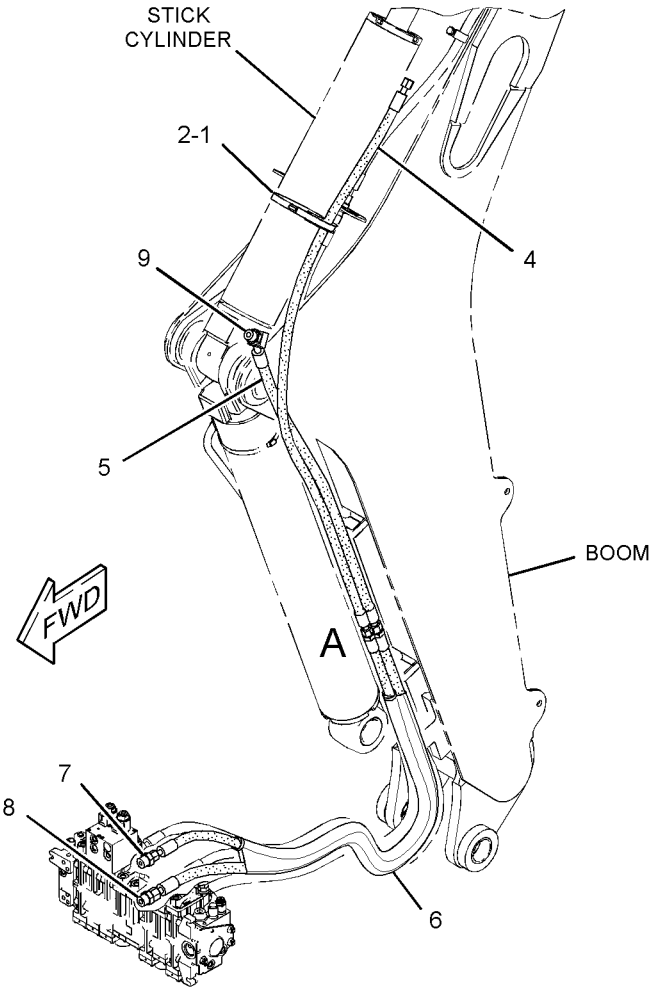

GRAPHIC #1

<END>

g01437503

HYDRAULIC SYSTEM

267-2764 LINES GP-SWING

S/N: EAT1-UP

PART OF 268-6455 HYDRAULIC AR

SMCS-5057, 5105 **i03505420**

NOTE	REF NO	GRAPHIC REF	PART NUMBER	QTY	PART NAME 1 2 3 4 5 6 (PRODUCT LEVEL)	SEE PAGE
	1	1	**5P-0599**	2	CLAMP-BAND	
	2	1	**9R-2053**	2	BLOCK	
I	3	1	**9R-9005**	2	HOSE AS	
	4	1	**206-3685**	1	VALVE GP-CUSHION CROSSOVER RLF	
		1	**7I-8084**	2	PLUG	
I	5	1	**216-2777**	1	HOSE AS	
I	6	1	**216-2778**	1	HOSE AS	
	7	1	**226-5634**	2	CONNECTOR AS	
					(EACH INCLUDES)	
		1	**3J-1907**	1	SEAL-O-RING	
		1	**4J-5477**	1	SEAL-O-RING	
		1	**167-0566**	1	CARTRIDGE	
		1	**226-5633**	1	CONNECTOR	
I	8	1	**269-0471**	1	HOSE AS	
I	9	1	**269-0472**	1	HOSE AS	
	10	1	*148-8340*	4	CONNECTOR AS	
					(EACH INCLUDES)	
		1	**3K-0360**	1	SEAL-O-RING	
		1	**6V-8398**	1	SEAL-O-RING	
		1	**6V-8639**	1	CONNECTOR	
	11	1	*148-8364*	2	ELBOW AS	
					(EACH INCLUDES)	
		1	**3K-0360**	1	SEAL-O-RING	
		1	**6V-8398**	1	SEAL-O-RING	
		1	**6V-8625**	1	ELBOW	
	12	1	*148-8428*	2	TEE AS	
					(EACH INCLUDES)	
		1	**3K-0360**	1	SEAL-O-RING	
		1	**6V-8398**	2	SEAL-O-RING	
		1	**6V-8782**	1	TEE	
	13	1	*155-7321*	2	ADAPTER AS	
					(EACH INCLUDES)	
		1	**3D-2824**	1	SEAL-O-RING	
		1	**6V-1722**	1	ADAPTER-O-RING	
M	14	1	**8T-6870**	2	BOLT (M8X1.25X70-MM)	
	15	1	*187-2120*	2	ELBOW AS	
					(EACH INCLUDES)	
		1	**4J-5477**	1	SEAL-O-RING	
		1	**8C-8408**	1	ELBOW	
	16	1	**7K-1181**	1	STRAP-CABLE	
	17	1	**8T-4224**	2	WASHER-HARD (8.8X16X2-MM THK)	

I-REFER TO HYDRAULIC INFORMATION SYSTEM
M-METRIC PART

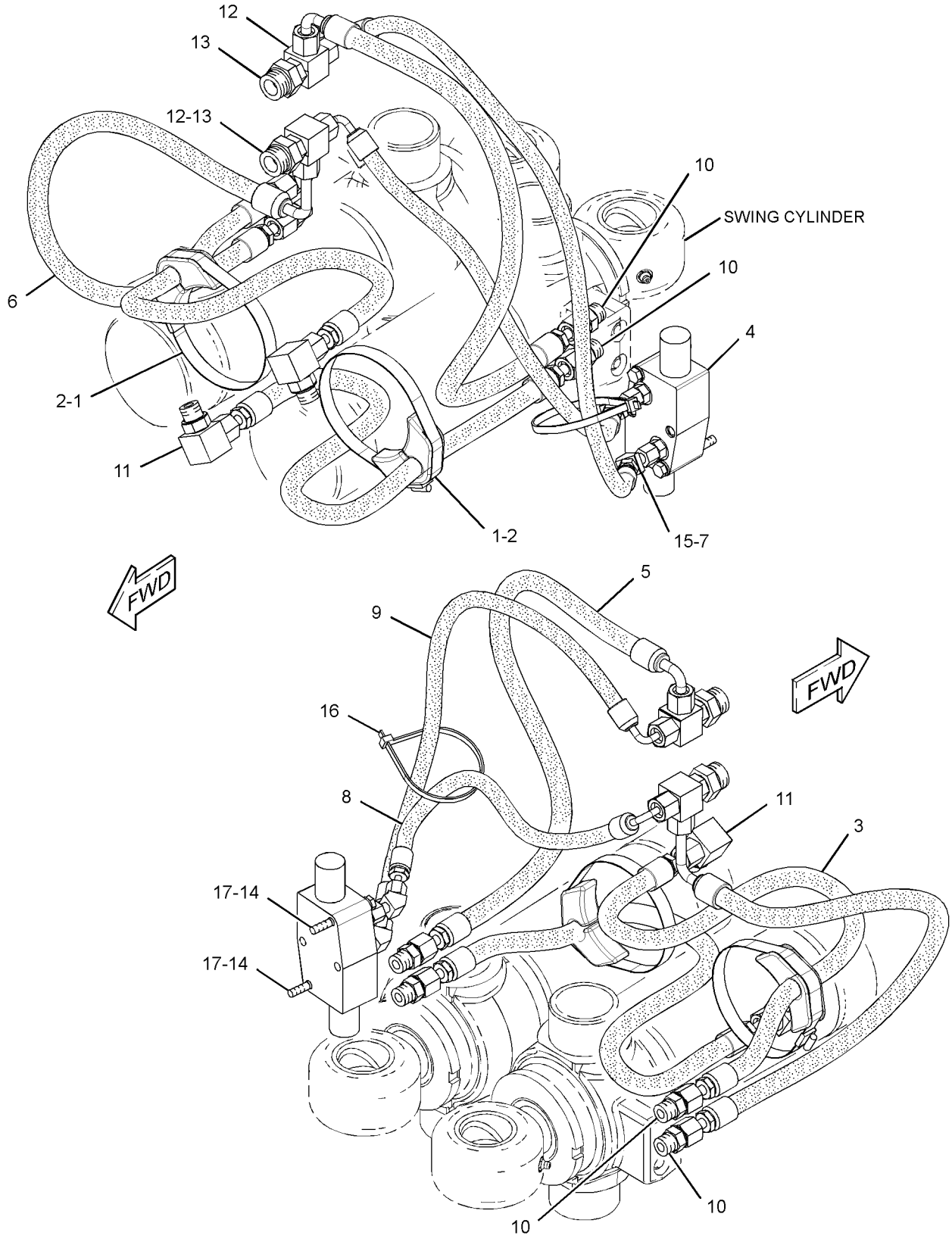

GRAPHIC #1 **<END>** g01376459

HYDRAULIC SYSTEM

246-5295 LINES GP-TILT CYLINDER

S/N: EAT1-UP

PART OF 213-9300 LOADER AR

SMCS-5057, 5104 **i03304162**

NOTE	REF NO	GRAPHIC REF	PART NUMBER	QTY	PART NAME 1 2 3 4 5 6 (PRODUCT LEVEL)	SEE PAGE
	1	1	**7K-1181**	1	STRAP-CABLE	
I	2	1	**201-3340**	2	HOSE AS	
I	3	1	**201-3341**	2	HOSE AS	
	4	1	**295-8495**	1	TUBE AS	
	5	1	**295-8496**	1	TUBE AS	
	6	1	**288-9954**	1	TUBE AS	
	7	1	**201-4756**	1	GROMMET	
	8	1	**232-3277**	1	BRACKET AS	
	9	1	**244-3957**	1	TUBE AS	
	10	1	**251-1746**	1	TUBE AS	
	11	1	**252-0096**	1	TUBE AS	
	12	1	**254-7271**	1	PLATE AS	
	13	1	*148-8341*	2	CONNECTOR AS	
					(EACH INCLUDES)	
		1	**3D-2824**	1	SEAL-O-RING	
		1	**6V-8713**	1	CONNECTOR	
		1	**7J-9108**	1	SEAL-O-RING	
	14	1	*148-8388*	1	ELBOW AS	
		1	**2M-9780**	1	SEAL-O-RING	
		1	**6V-8629**	1	ELBOW	
		1	**6V-9746**	1	SEAL-O-RING	
	15	1	*150-3035*	2	ELBOW AS	
					(EACH INCLUDES)	
		1	**6V-9746**	1	SEAL-O-RING	
		1	**8T-1718**	1	ELBOW	
	16	1	**239-4232**	4	CLIP (SLOT)	
	17	1	**239-4235**	2	CLIP (TAB)	
	18	1	**7J-9108**	8	SEAL-O-RING	
	19	1	**8T-1887**	8	CLIP (SLOT)	
	20	1	**8T-1888**	8	CLIP (TAB)	
	21	1	**8T-4121**	10	WASHER-HARD (11X21X2.5-MM THK)	
M	22	1	**8T-4136**	5	BOLT (M10X1.5X25-MM)	
M	23	1	**8T-4195**	2	BOLT (M10X1.5X30-MM)	
M	24	1	**8T-4196**	1	BOLT (M10X1.5X35-MM)	

I-REFER TO HYDRAULIC INFORMATION SYSTEM
M-METRIC PART

246-5295 **LINES GP-TILT CYLINDER** *(contd.)* **i03304162**

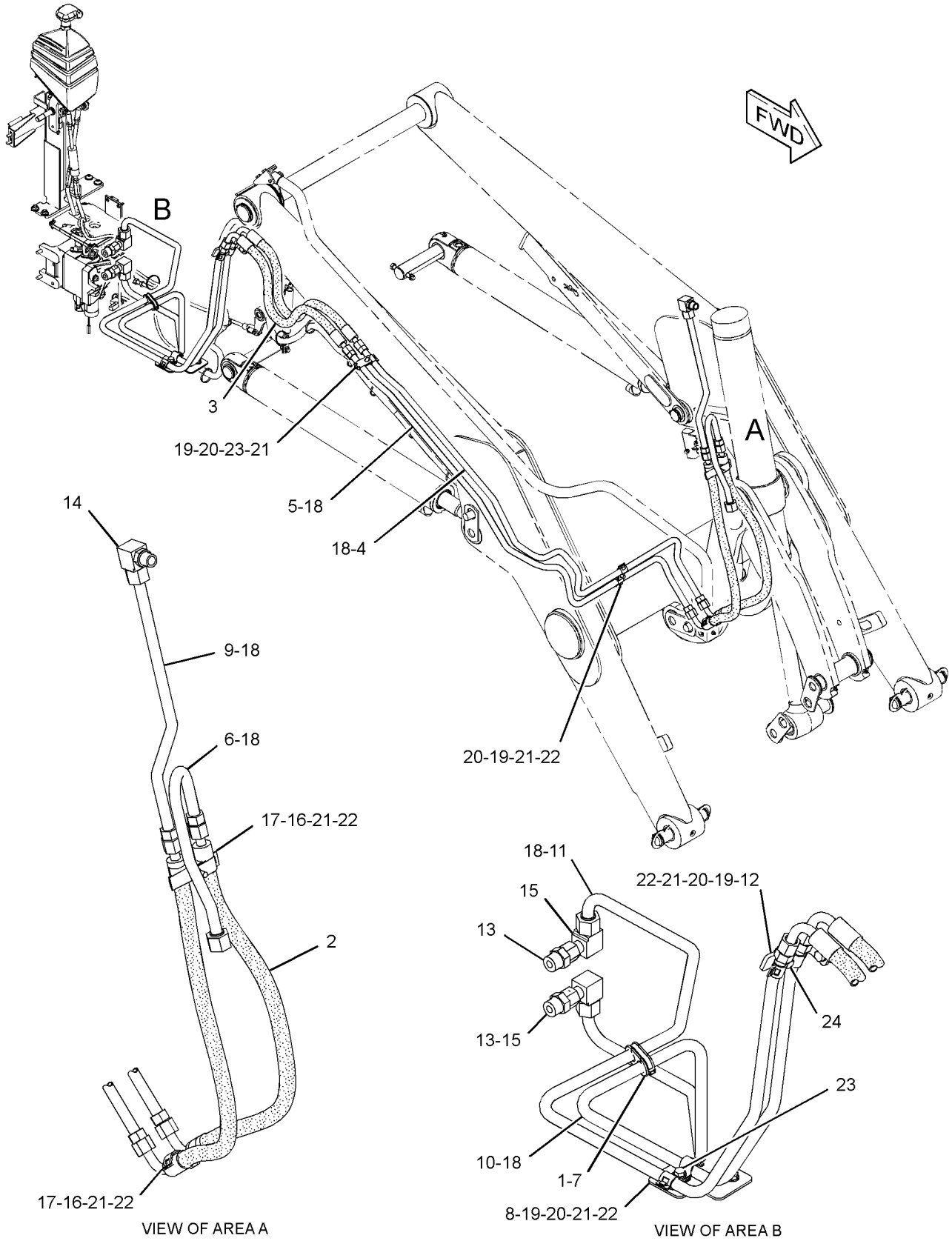

GRAPHIC #1 **<END>** g01336652

HYDRAULIC SYSTEM

179-3543 MANIFOLD & SOLENOID GP-CONTROL

S/N: EAT1-UP

PART OF 269-1066, 269-1067 VALVE GP-CONTROL

AN ATTACHMENT

SMCS-5264, 5479 **i03514722**

NOTE	REF NO	GRAPHIC REF	PART NUMBER	QTY	PART NAME 1 2 3 4 5 6 (PRODUCT LEVEL)	SEE PAGE
Y	1	1	**185-4254**	2	VALVE GP-SOLENOID (12-VOLT) (AUXILIARY)	560

Y-SEPARATE ILLUSTRATION

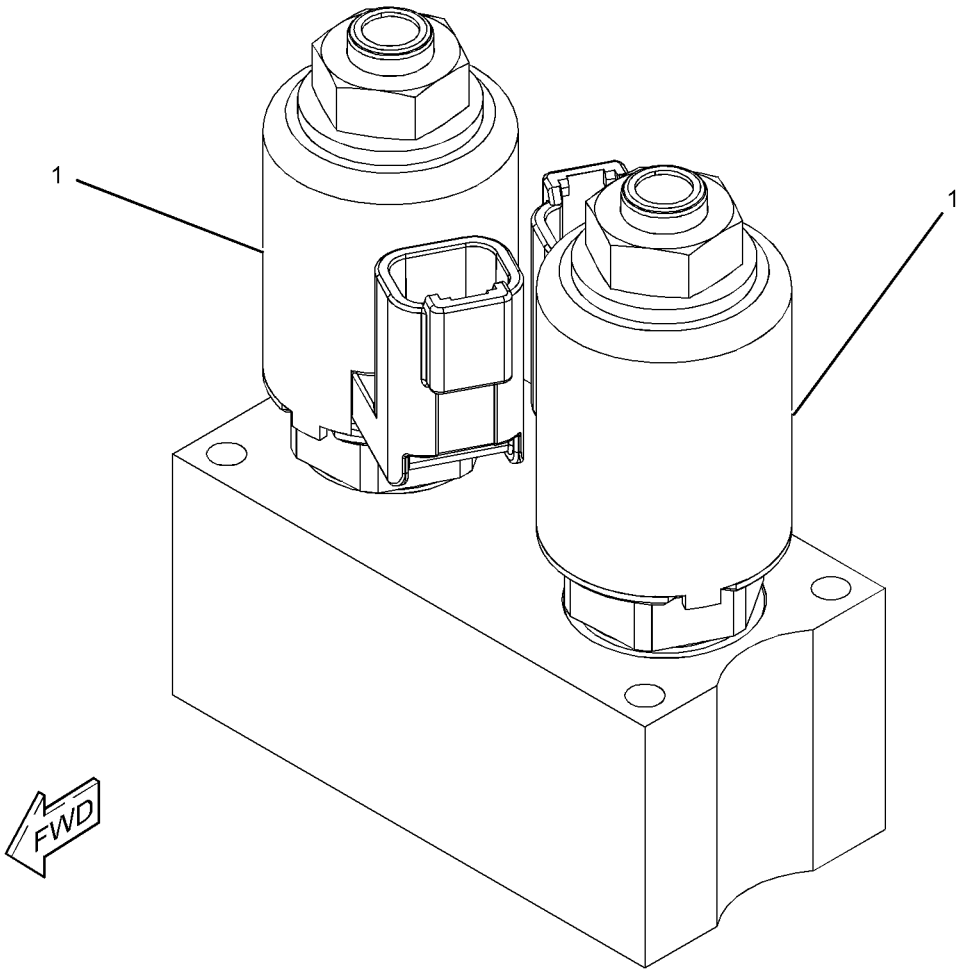

GRAPHIC #1 **<END>** g01220715

257-7724 MANIFOLD & SOLENOID GP-CONTROL–

BOOM, STICK, PATTERN SWITCH

S/N: EAT1-UP

PART OF 266-2556 VALVE GP-BANK 6, 266-2557 VALVE GP-BANK 7, 266-2558 VALVE GP-BANK 8

AN ATTACHMENT

SMCS-5264, 5479 **i02699083**

NOTE	REF NO	GRAPHIC REF	PART NUMBER	QTY	PART NAME 1 2 3 4 5 6 (PRODUCT LEVEL)	SEE PAGE
J	1	1	**240-6866**	2	VALVE GP-SOLENOID	
					(EACH INCLUDES)	
		1	**238-4626**	1	COIL AS	
M	2	1	**095-0642**	4	BOLT-SOCKET HEAD (M5X0.8X50-MM)	
	3	1	**3D-2992**	2	SEAL	
	4	1	**6M-5062**	2	SEAL-O-RING	
	5	1	**2D-6392**	4	SEAL-O-RING	
					AVAILABLE REPAIR KIT(S):	
J			**106-3108**	1	KIT-SEAL	

J-KIT MARKED J AVAILABLE FOR PART MARKED J
M-METRIC PART

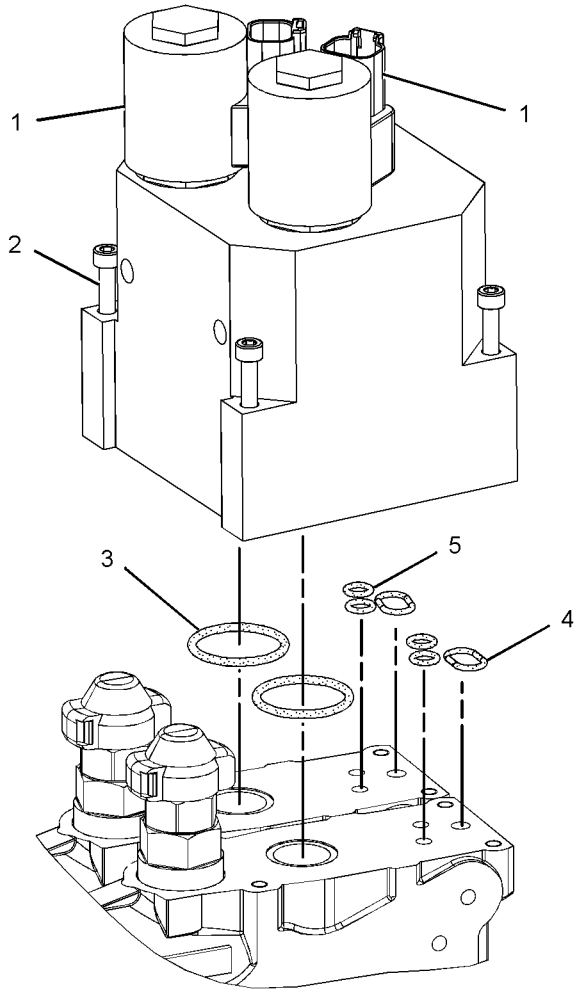

GRAPHIC #1 **<END>** g01356664

269-1060 MANIFOLD & SOLENOID GP-CONTROL–INLET

S/N: EAT1-UP

PART OF 266-2556 VALVE GP-BANK 6, 266-2557 VALVE GP-BANK 7, 266-2558 VALVE GP-BANK 8

AN ATTACHMENT

SMCS-5264, 5479 **i02841310**

NOTE	REF NO	GRAPHIC REF	PART NUMBER	QTY	PART NAME 1 2 3 4 5 6 (PRODUCT LEVEL)	SEE PAGE
J	1	1	**257-0464**	1	VALVE GP-PRESSURE REDUCING	
	1A	1	**257-0465**	1	CAP-PROTECTION	
	2	1	**257-0440**	1	MANIFOLD GP-CONTROL (INLET)	
	3	1	**227-1189**	1	SCREEN (PILOT)	
	4	1	**9S-8004**	2	PLUG-O-RING	
	5	1	**3J-1907**	2	SEAL-O-RING	
L	6	1	**200-6210**	1	VALVE GP-SOLENOID	
		1	**212-0061**	1	FLANGE	
M	7	1	**6V-8202**	1	BOLT-SOCKET HEAD (M8X1.25X16-MM)	
					AVAILABLE REPAIR KIT(S):	
J			**236-5753**	1	KIT-SEAL (HYDRAULIC VALVE)	
					(INCLUDES RINGS & SEALS)	
L			**200-2371**	1	KIT-SEAL (SOLENOID VALVE)	
					(INCLUDES SEALS)	

J-KIT MARKED J AVALIBLE FOR PART MARKED J
L-KIT MARKED L AVALIBLE FOR PART MARKED L
M-METRIC PART

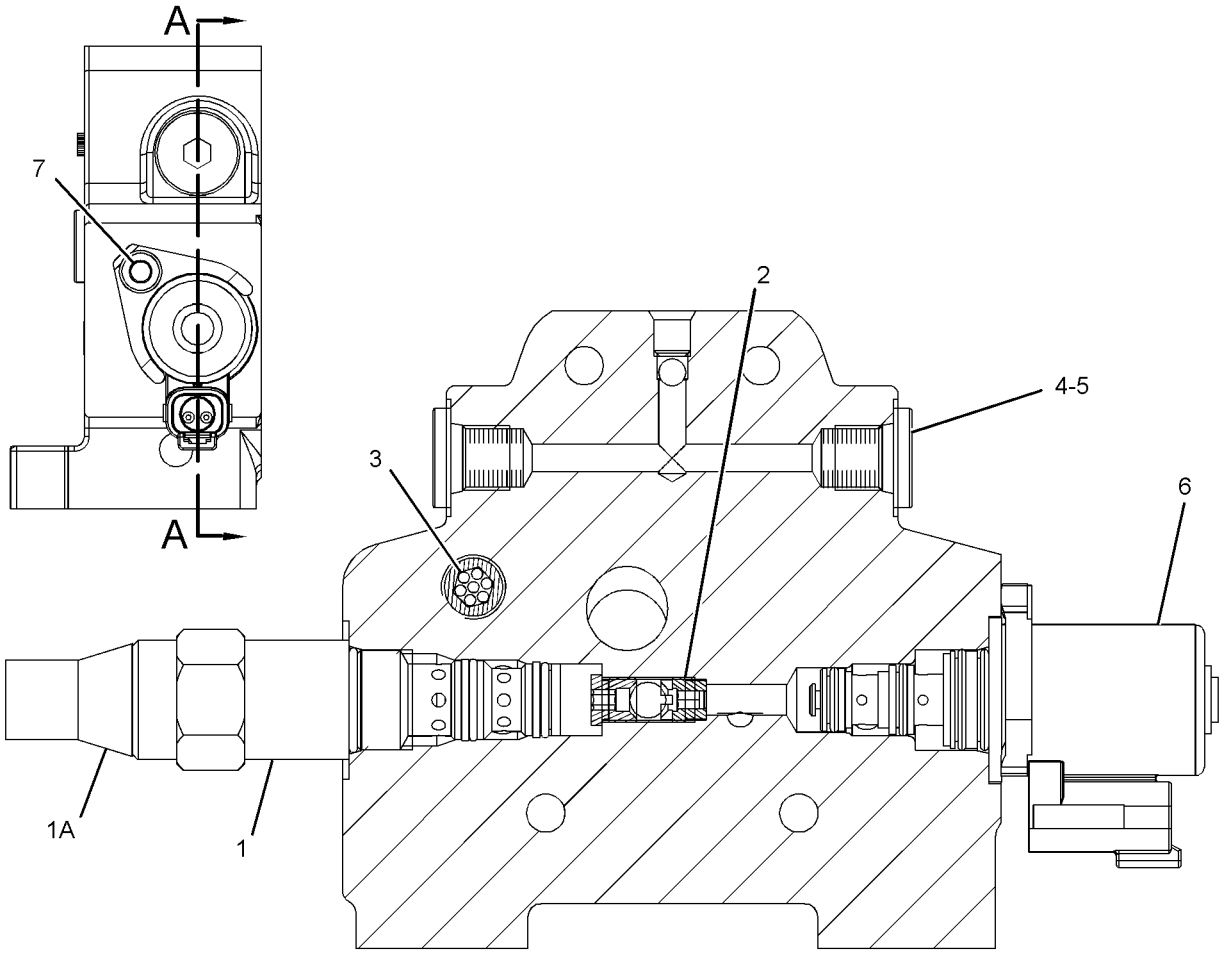

SECTION A-A

GRAPHIC #1 **<END>** g01424691

269-1059 MANIFOLD GP-CONTROL–OUTLET

S/N: EAT1-UP
PART OF 266-2556 VALVE GP-BANK 6, 266-2557 VALVE GP-BANK 7, 266-2558 VALVE GP-BANK 8
AN ATTACHMENT

SMCS-5264 **i03167362**

NOTE	REF NO	GRAPHIC REF	PART NUMBER	QTY	PART NAME 1 2 3 4 5 6 (PRODUCT LEVEL)	SEE PAGE
	1	1	**330-3979**	1	VALVE GP-RELIEF (OUTLET)	
	2	1	**227-1185**	1	VALVE GP-FLOW CONTROL (AUXILIARY, INLET)	
	3	1	**292-8989**	1	VALVE AS-RELIEF (FLUSHING)	
		1	**099-8232**	1	SEAL-O-RING	
	4	1	**257-7725**	1	PLUG GP-CONTROL MANIFOLD	
		1	**6F-4855**	1	SEAL-O-RING	
	5	1	**9S-8005**	2	PLUG-O-RING	
	6	1	**3K-0360**	2	SEAL-O-RING	
	7	1	**227-1197**	1	FILTER ELEMENT-OIL (FLOW REGULATOR)	
	8	1	**257-0468**	1	CAP-PROTECTION	

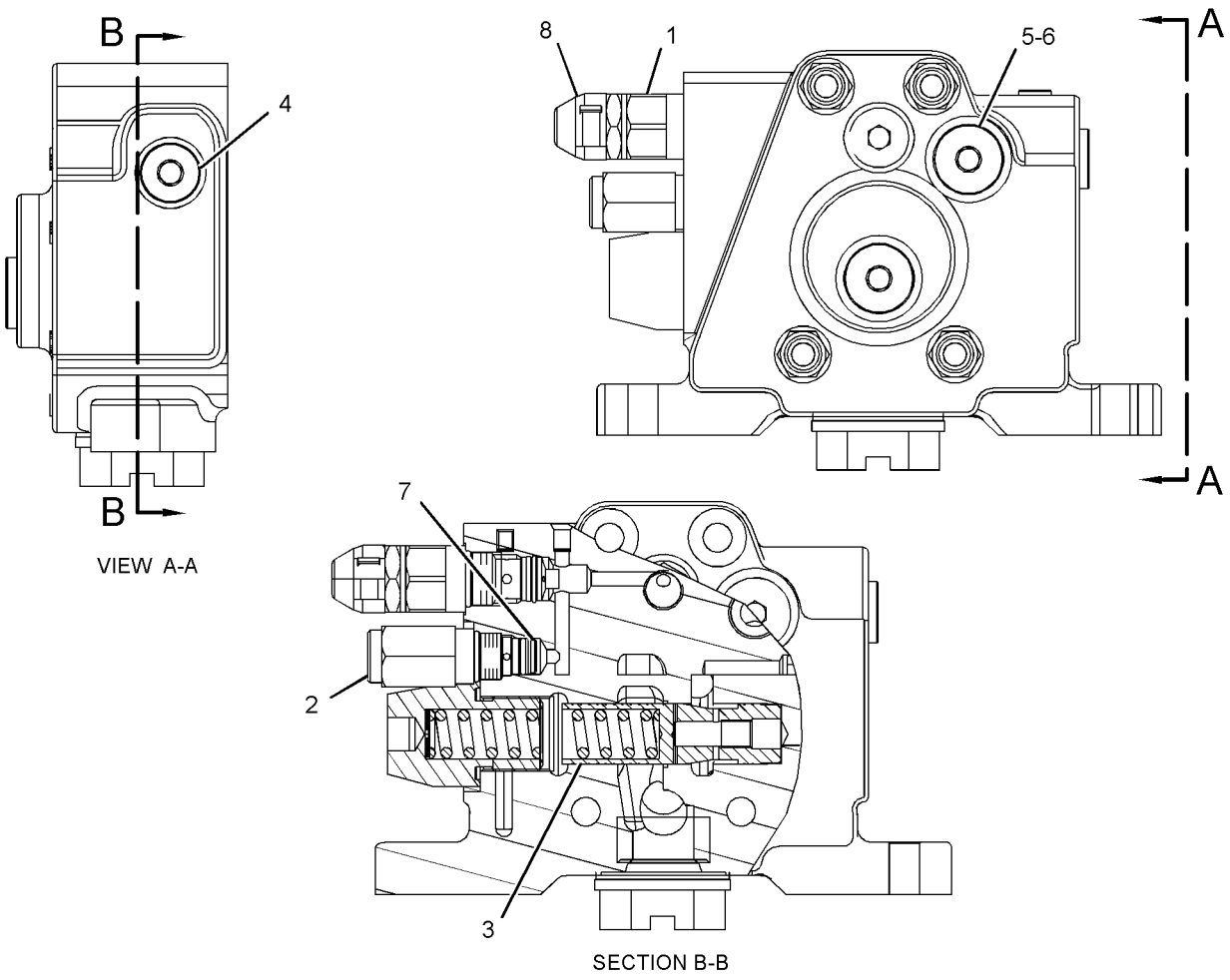

GRAPHIC #1 **<END>** g01341672

269-1080 MANIFOLD GP-CONTROL–INLET

S/N: EAT1-UP

PART OF 266-2552 VALVE GP-BANK 2, 266-2553 VALVE GP-BANK 3

AN ATTACHMENT

SMCS-5264 **i03516000**

NOTE	REF NO	GRAPHIC REF	PART NUMBER	QTY	PART NAME 1 2 3 4 5 6 (PRODUCT LEVEL)	SEE PAGE
	1	1	**227-1194**	1	KIT-VALVE (FLOW REGULATOR)	
					(INCLUDES SEAL-O-RING & KIT-VALVE)	
	2	1	**227-1192**	1	KIT-VALVE (SHUTTLE)	
	3	1	**330-3979**	1	VALVE GP-RELIEF (INLET)	
	4	1	**257-7721**	1	VALVE GP-CHECK	
	5	1	**257-0468**	1	CAP-PROTECTION	

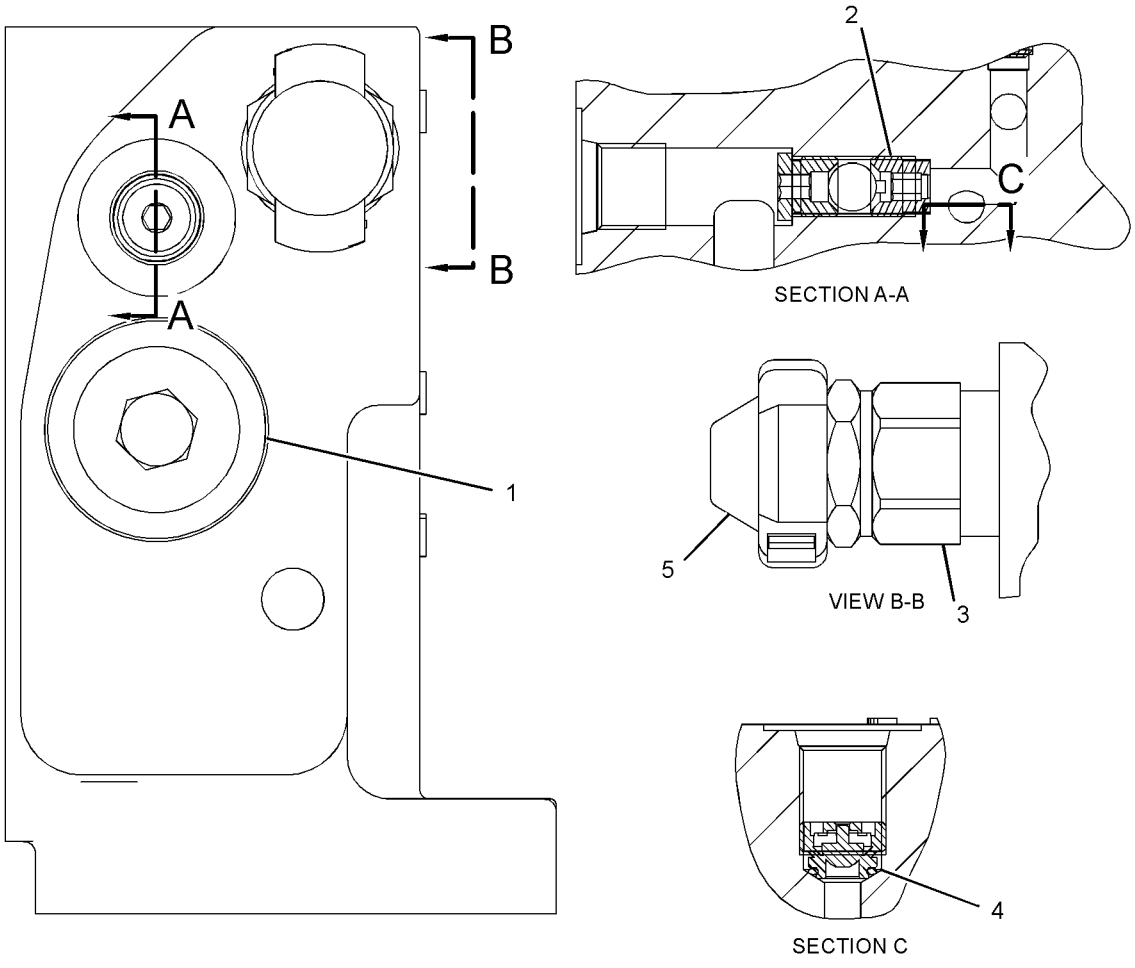

GRAPHIC #1 **<END>** g01226131

HYDRAULIC SYSTEM

245-8780 MANIFOLD GP-RIDE CONTROL

S/N: EAT1-UP

PART OF 264-0187 INSTALLATION GP-RIDE CONTROL, 246-9802 LINES GP-RIDE CONTROL

AN ATTACHMENT

SMCS-5264 **i02886387**

NOTE	REF NO	GRAPHIC REF	PART NUMBER	QTY	PART NAME 1 2 3 4 5 6 (PRODUCT LEVEL)	SEE PAGE
J	1	1	**249-3124**	1	VALVE GP-SOLENOID (RIDE CONTROL, SWITCH)	
L	2	1	**249-3125**	1	VALVE GP-SOLENOID (ACCUMULATOR)	
	3	1	**238-4628**	2	COIL AS	
					AVAILABLE REPAIR KIT(S):	
J			**141-0888**	1	KIT-SEAL	
L			**227-5509**	1	KIT-SEAL	

J-KIT MARKED J AVAILABLE FOR PART MARKED J
L-KIT MARKED L AVAILABLE FOR PART MARKED L

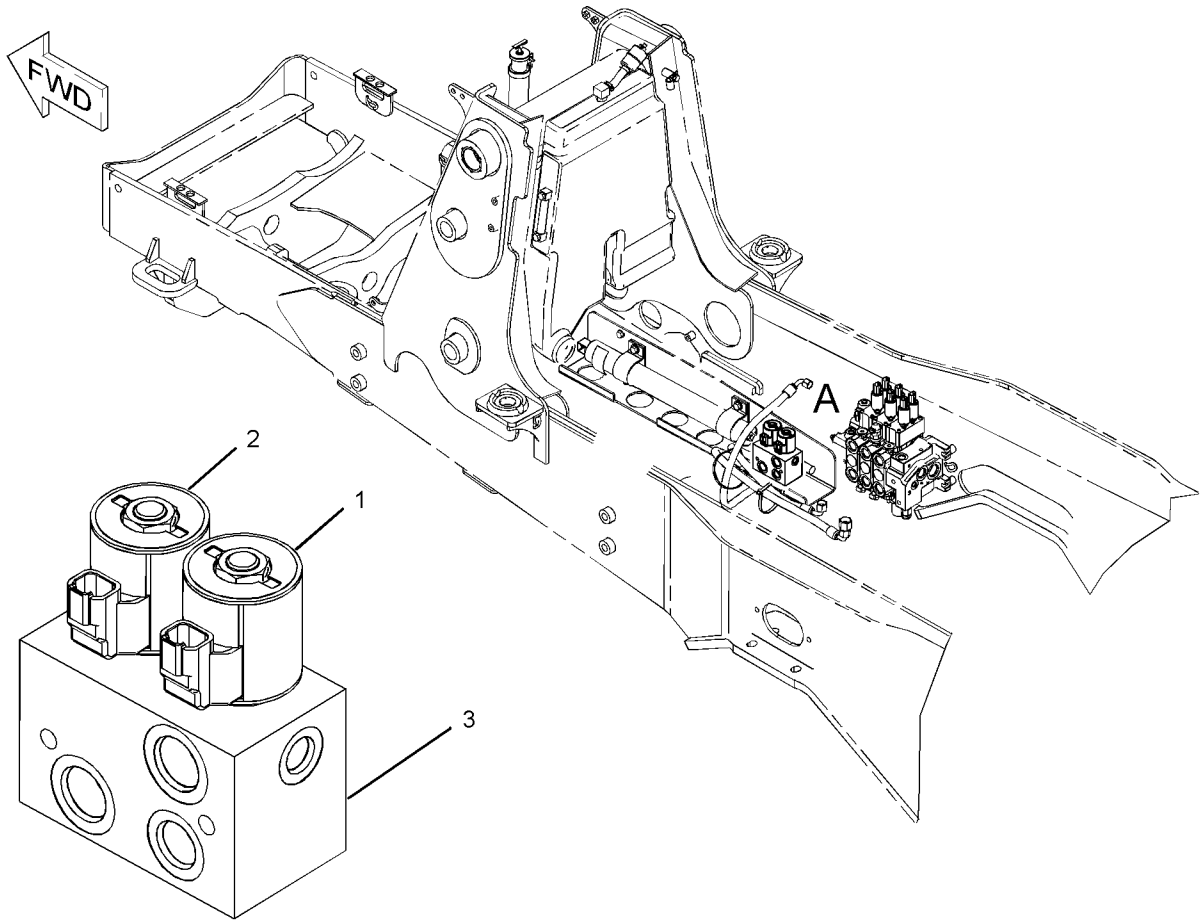

VIEW OF AREA A

GRAPHIC #1 **<END>** g01094840

245-8765 MOUNTING GP-BANK VALVE

S/N: EAT1-UP

PART OF 269-2146 VALVE AR-BANK 6, 269-2147 VALVE AR-BANK 7, 269-2148 VALVE AR-BANK 8

AN ATTACHMENT

SMCS-5051 **i02449641**

NOTE	REF NO	GRAPHIC REF	PART NUMBER	QTY	PART NAME 1 2 3 4 5 6 (PRODUCT LEVEL)	SEE PAGE
	1	1	**245-8766**	1	BRACKET AS	
	2	1	**8T-4121**	3	WASHER-HARD (11X21X2.5-MM THK)	
M	3	1	**8T-4182**	2	BOLT (M10X1.5X45-MM)	
M	4	1	**8T-4195**	1	BOLT (M10X1.5X30-MM)	
	5	1	**8T-4223**	3	WASHER-HARD (13.5X25.5X3-MM THK)	
M	6	1	**8T-4184**	3	BOLT (M12X1.75X45-MM)	

M-METRIC PART

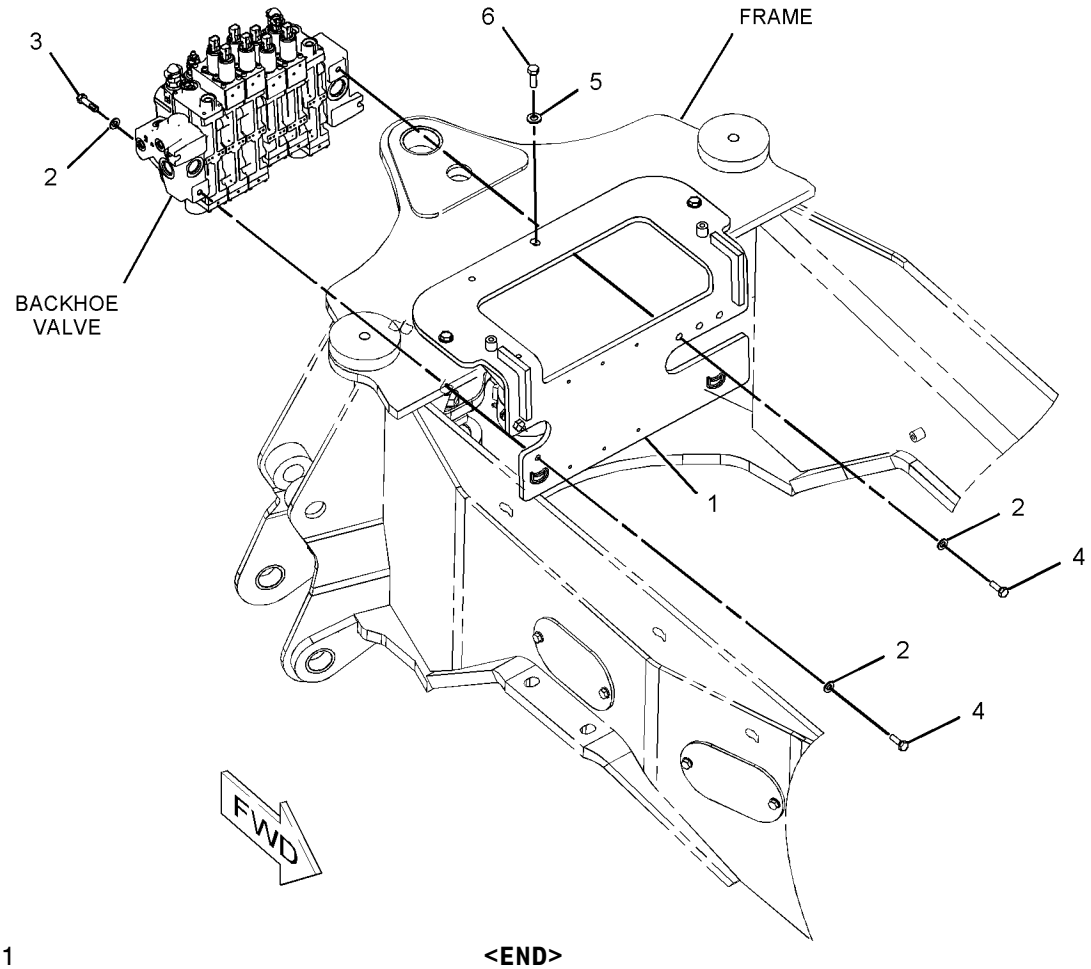

GRAPHIC #1 **<END>** g01077768

209-9939 MOUNTING GP-CYLINDER–EXTENDABLE STICK

S/N: EAT1-UP

PART OF 213-9304, 213-9309, 291-9207 BACKHOE AR-EXTENDABLE STICK AN ATTACHMENT

SMCS-5102, 6068, 7562 **i02501575**

NOTE	REF NO	GRAPHIC REF	PART NUMBER	QTY	PART NAME 1 2 3 4 5 6 (PRODUCT LEVEL)	SEE PAGE
B	1	1	**9R-0481**	4	WASHER (71X110X4-MM THK)	
B	2	1	**9R-5238**	6	SPACER (56X110X3-MM THK)	
B	3	1	**9R-1510**	3	WASHER (51X82X4-MM THK)	
B	4	1	**286-3088**	3	SPACER (66X145X1-MM THK)	
	5	1	**213-6718**	1	PIN	
	6	1	**213-6728**	1	PIN AS	
	7	1	**220-1019**	1	PIN	
	8	1	**095-7950**	2	RING-RETAINING	
	9	1	**3B-8488**	1	FITTING-GREASE	
	10	1	**3B-8489**	1	FITTING-GREASE	
	11	1	**6V-8344**	2	RING-RETAINING	

B-USE AS REQUIRED

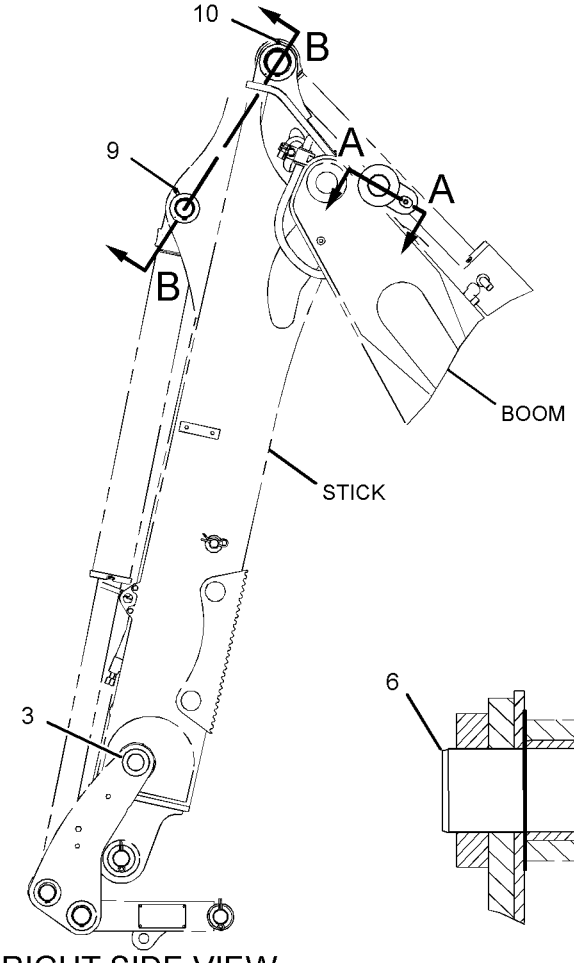

RIGHT SIDE VIEW

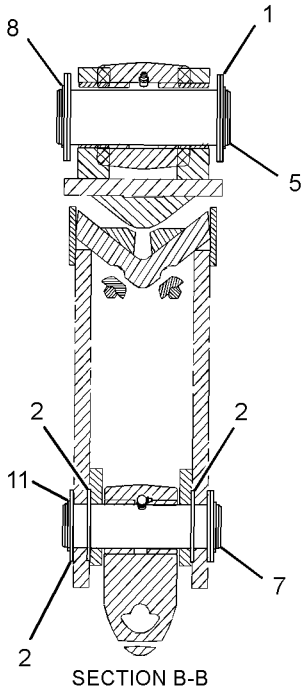

SECTION B-B

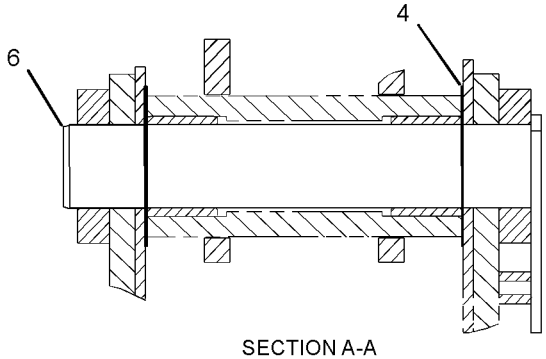

SECTION A-A

GRAPHIC #1

<END>

g01212145

221-4265 MOUNTING GP-CYLINDER–THUMB

S/N: EAT1-UP
PART OF 221-4260 THUMB AR
AN ATTACHMENT

SMCS-5102, 6068, 7562 **i02445754**

NOTE	REF NO	GRAPHIC REF	PART NUMBER	QTY	PART NAME 1 2 3 4 5 6 (PRODUCT LEVEL)	SEE PAGE
	1	1	**9R-1510**	8	WASHER (51X82X4-MM THK)	
	2	1	**221-4295**	1	PIN	
	3	1	**221-4296**	1	PIN	
	4	1	**221-4297**	1	PIN	
	5	1	**221-4315**	1	STOP AS	
	6	1	**221-4316**	1	BRACKET AS	
	7	1	**3B-5319**	2	PIN-COTTER	
	8	1	**6V-3213**	2	RING-RETAINING	
M	9	1	**6V-9189**	1	LOCKNUT (M8X1.25-THD)	
M	10	1	**8T-3647**	1	BOLT (M8X1.25X80-MM)	
	11	1	**9R-0158**	2	WASHER (46X69X3-MM THK)	

M-METRIC PART

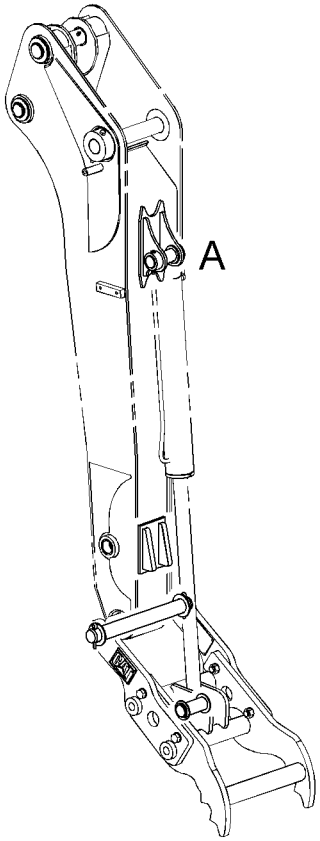

HYDRAULIC CYLINDER
STANDARD STICK

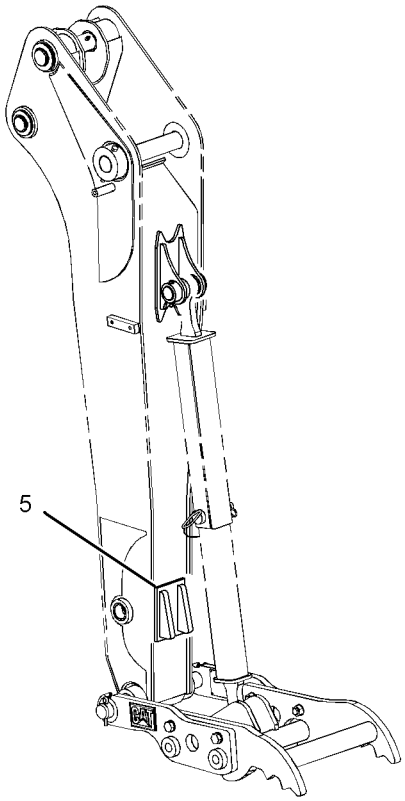

ADJUSTABLE LINK
STANDARD STICK

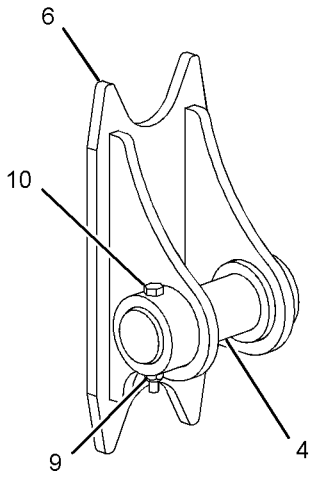

VIEW OF AREA A

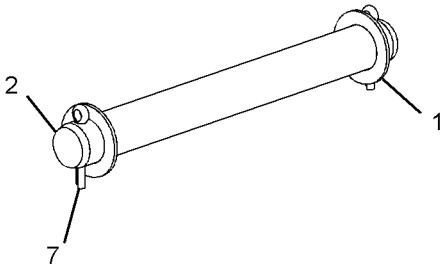

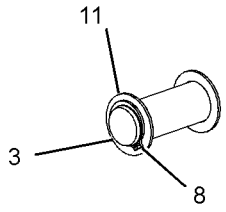

VIEW OF AREA B

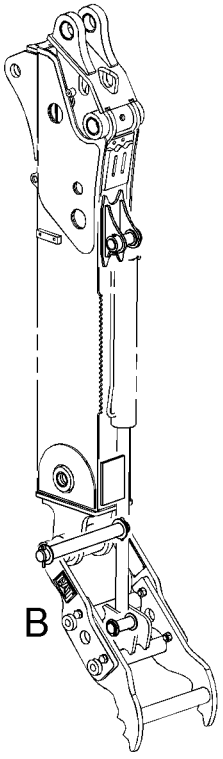

HYDRAULIC CYLINDER
EXTENDABLE STICK

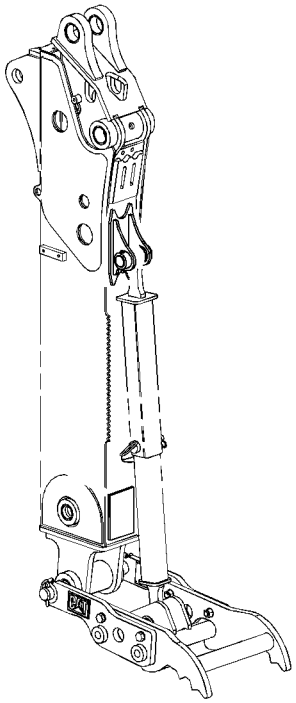

ADJUSTABLE LINK
EXTENDABLE STICK

GRAPHIC #1 **<END>** g01224751

263-8577 MOUNTING GP-CYLINDER–THUMB

S/N: EAT1-UP
PART OF 271-3023 THUMB GP
AN ATTACHMENT

SMCS-5102, 6068, 7562 **i02894715**

NOTE	REF NO	GRAPHIC REF	PART NUMBER	QTY	PART NAME 1 2 3 4 5 6 (PRODUCT LEVEL)	SEE PAGE
B	1	1	**9R-1510**	24	WASHER (51X82X4-MM THK)	
	2	1	**221-4295**	1	PIN	
	3	1	**221-4296**	1	PIN	
	4	1	**270-3410**	1	PIN	
	5	1	**3B-5319**	2	PIN-COTTER	
	6	1	**6V-3213**	4	RING-RETAINING (EXTERNAL)	
BM	7	1	**6V-7744**	1	LOCKNUT (M10X1.5-THD)	
BM	8	1	**8T-6685**	1	BOLT (M10X1.5X110-MM)	
B	9	1	**9R-0158**	6	WASHER (46X69X3-MM THK)	

B-USE AS REQUIRED
M-METRIC PART

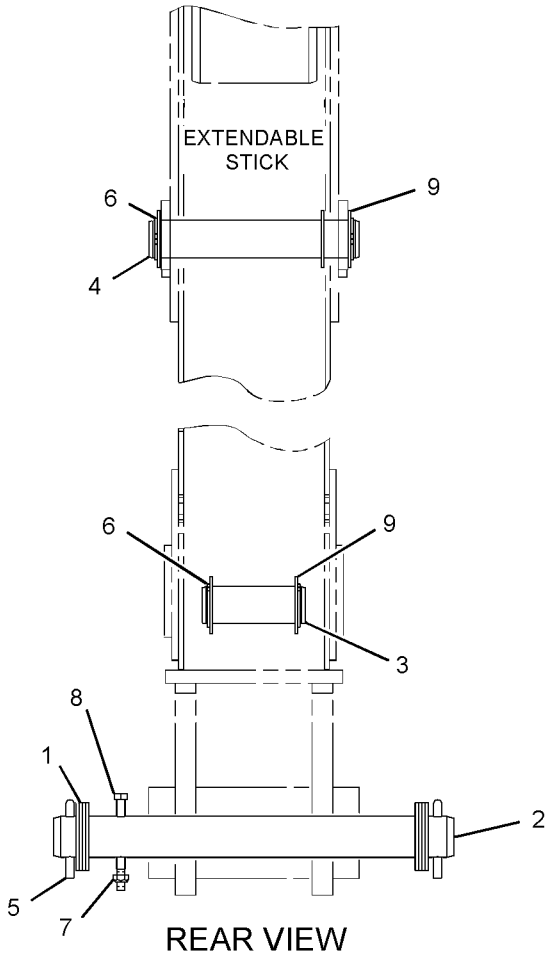

GRAPHIC #1 **<END>** g01445039

HYDRAULIC SYSTEM

246-9309 MOUNTING GP-LINES–BACKHOE

S/N: EAT1-UP

PART OF 213-9304, 213-9309, 291-9207 BACKHOE AR-EXTENDABLE STICK, 213-9301, 213-9306, 291-9206 BACKHOE AR-STANDARD STICK

AN ATTACHMENT

TYPE 1

SMCS-5057 **i02378922**

NOTE	REF NO	GRAPHIC REF	PART NUMBER	QTY	PART NAME 1 2 3 4 5 6 (PRODUCT LEVEL)	SEE PAGE
	1	1	**248-4274**	2	BLOCK	
	2	1	**248-4275**	2	BLOCK	
	3	1	**248-4276**	2	BLOCK	
	4	1	**248-4277**	2	PLATE	
	5	1	**8T-4121**	4	WASHER-HARD (11X21X2.5-MM THK)	
M	6	1	**8T-4196**	4	BOLT (M10X1.5X35-MM)	

M-METRIC PART

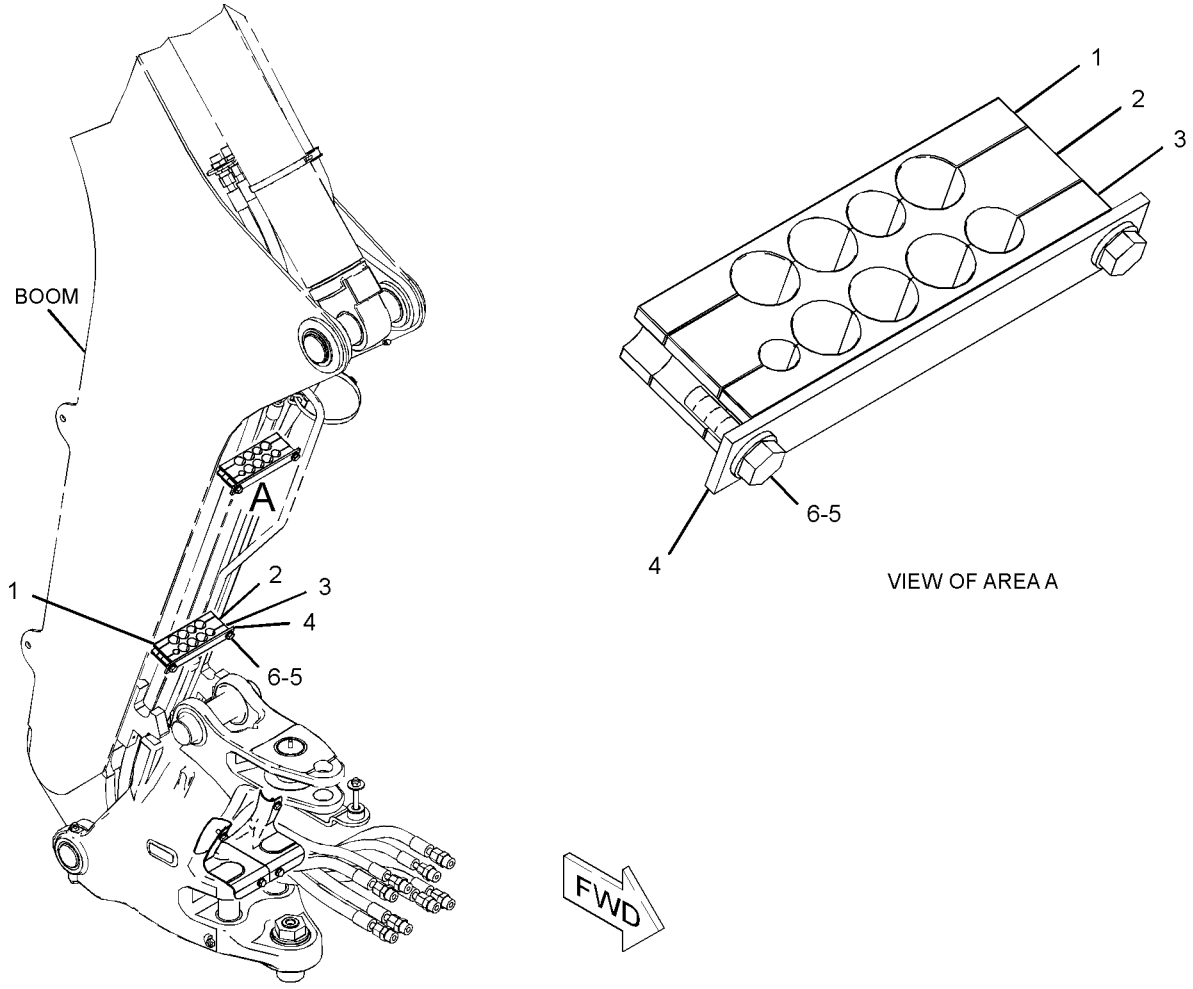

GRAPHIC #1 **<END>** g01190731

HYDRAULIC SYSTEM

246-9309 MOUNTING GP-LINES–BACKHOE

S/N: EAT1-UP
PART OF 213-9304, 213-9309, 291-9207 BACKHOE AR-EXTENDABLE STICK, 213-9301, 213-9306, 291-9206 BACKHOE AR-STANDARD STICK
AN ATTACHMENT
TYPE 2

SMCS-5057 **i03383080**

NOTE	REF NO	GRAPHIC REF	PART NUMBER	QTY	PART NAME 1 2 3 4 5 6 (PRODUCT LEVEL)	SEE PAGE
	1	1	**248-4277**	2	PLATE	
C	2	1	**311-2513**	2	BLOCK	
C	3	1	**311-2514**	2	BLOCK	
C	4	1	**311-2515**	2	BLOCK	
	5	1	**8T-4121**	4	WASHER-HARD (11X21X2.5-MM THK)	
M	6	1	**8T-4196**	4	BOLT (M10X1.5X35-MM)	

C-CHANGE FROM PREVIOUS TYPE
M-METRIC PART

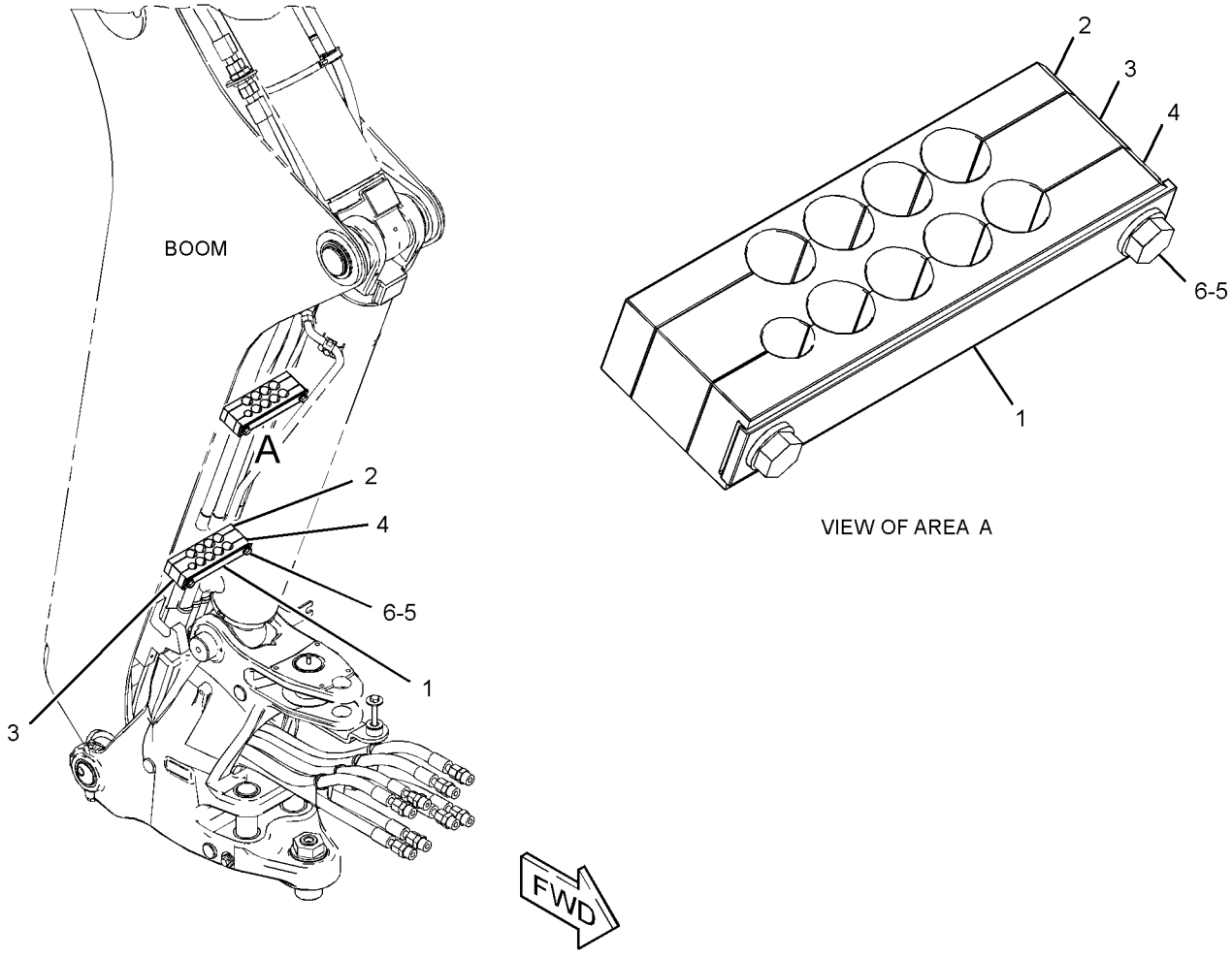

GRAPHIC #1 **<END>** g01807197

HYDRAULIC SYSTEM

267-2755 PUMP GP-PISTON*R

S/N: EAT1-UP

PART OF 268-6455 HYDRAULIC AR

SMCS-5070 **i03527874**

NOTE	REF NO	GRAPHIC REF	PART NUMBER	QTY	PART NAME 1 2 3 4 5 6 (PRODUCT LEVEL)	SEE PAGE
	1	1	**280-7869**	1	VALVE GP-PUMP CONTROL (PRESSURE, FLOW COMPENSATOR)	
		1	**6E-6528**	2	SEAL	
M		1	**8T-8442**	4	BOLT-SOCKET HEAD (M6X1X30-MM)	
		1	**033-6043**	2	SEAL-O-RING	
		1	**280-7870**	1	GASKET	
Y	2	1	**6E-4006**	1	ROTATING GP-PUMP	521
	3	1	**6E-4004**	2	SEAL-SHAFT	
	4	1	**180-6213**	1	RING-RETAINING	
	5	1	**162-1604**	1	SHAFT-DRIVE	
	6	1	**3B-5790**	1	CUP-BEARING	
	7	1	**6V-2323**	1	CONE-BEARING	
	8	1	**1P-6872**	1	CUP-BEARING	
	9	1	**109-1779**	1	CONE-BEARING	
	10	1	**6E-4003**	2	BEARING	
	11	1	**262-0347**	1	KIT-PUMP	
					(INCLUDES PISTONS, GUIDES & SPRING)	
	12	1	**173-0639**	1	SWASHPLATE AS	
	13	1	**033-6028**	1	SEAL-O-RING	
	14	1	**153-4906**	1	SEAL-O-RING	
	15	1	**9S-8004**	1	PLUG-O-RING	
	16	1	**2M-9780**	1	SEAL-O-RING	
	17	1	**3E-6770**	1	SEAL-O-RING	
	18	1	**3E-6769**	4	SEAL-O-RING	
	19	1	**263-5516**	1	VALVE GP-SOLENOID (LOAD SENSING PRESSURE)	
		1	**217-3875**	1	SEAL-O-RING	
		1	**247-7054**	1	COLLAR-LOCKING	
		1	**251-2429**	1	KIT-SEAL (SOLENOID VALVE)	
					(INCLUDES SEALS)	
		1	**282-6944**	1	COIL AS	
Y	20	1	**299-3932**	1	VALVE GP-PUMP CONTROL (POWER COMPENSATOR)	559
	21	1	**280-7868**	1	TUBE AS	
	22	1	**280-7872**	1	TUBE AS	
	23	1	**173-0641**	1	PLUG-FILTER	

M-METRIC PART
Y-SEPARATE ILLUSTRATION

267-2755 PUMP GP-PISTON *(contd.)* i03527874

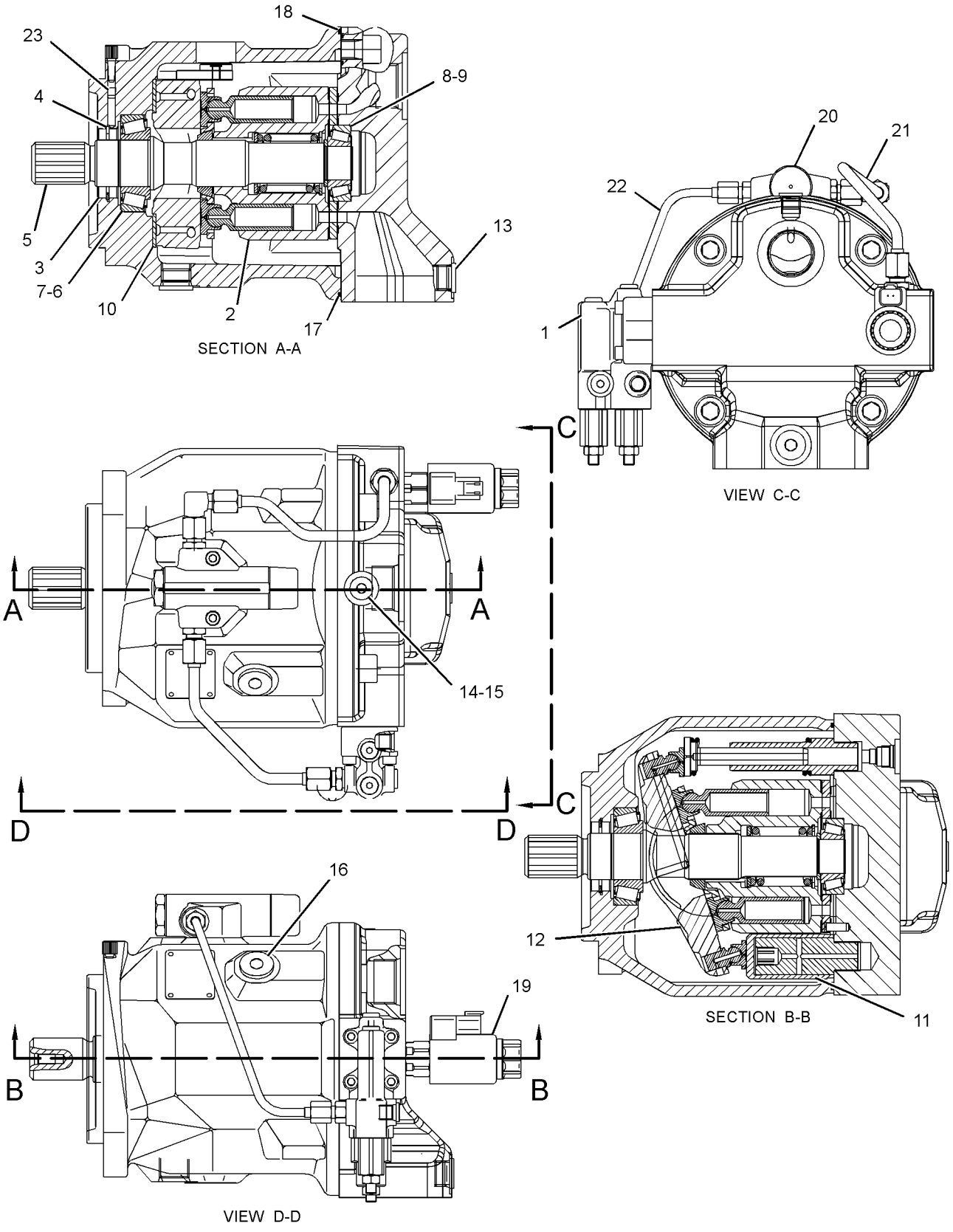

GRAPHIC #1 **<END>** g01231817

6E-4006 ROTATING GP-PUMP

S/N: EAT1-UP

PART OF 267-2755 PUMP GP-PISTON

SMCS-5070 **i03008659**

NOTE	REF NO	GRAPHIC REF	PART NUMBER	QTY	PART NAME 1 2 3 4 5 6 (PRODUCT LEVEL)	SEE PAGE
	1	1	**235-5767**	9	PISTON AS	
	2	1	**6E-6154**	1	PLATE-RETRACTION	
	3	1	**6E-6155**	1	BEARING	
	4	1	**196-0226**	1	BARREL	
	5	1	**6E-3341**	1	SEAT-SPRING	
	6	1	**6E-4009**	1	SPRING	
	7	1	**6E-6158**	1	RING	
	8	1	**120-5724**	1	PLATE-VALVE	
	9	1	**168-3379**	3	PIN	

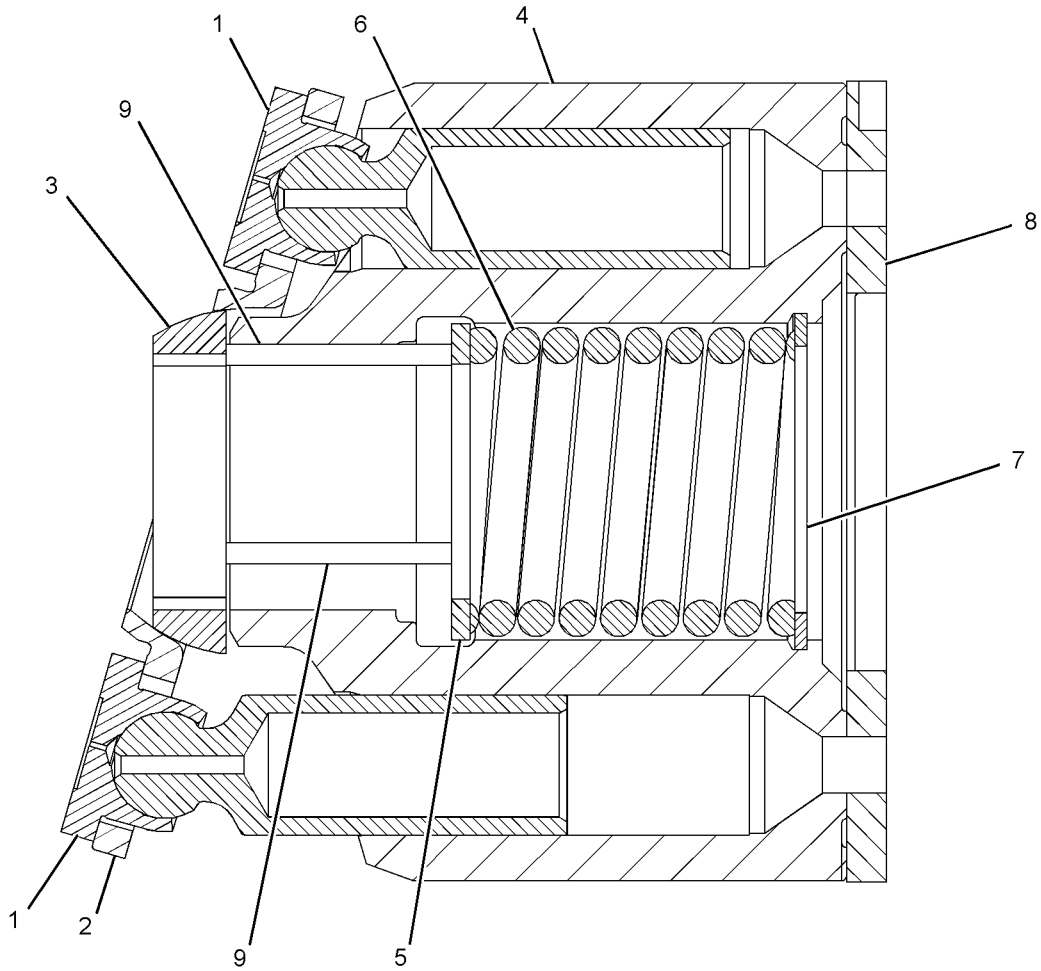

GRAPHIC #1 **<END>** g01441829

HYDRAULIC SYSTEM

128-5596 SHAFT GP-PUMP DRIVE

S/N: BYC1-UP; EAT1-UP
PART OF 112-1826 DRIVE & MTG GP-PUMP
AN ATTACHMENT

SMCS-3108 **i00512642**

NOTE	REF NO	GRAPHIC REF	PART NUMBER	QTY	PART NAME 1 2 3 4 5 6 (PRODUCT LEVEL)	SEE PAGE
	1	1	**130-8150**	1	RING-RETAINING	

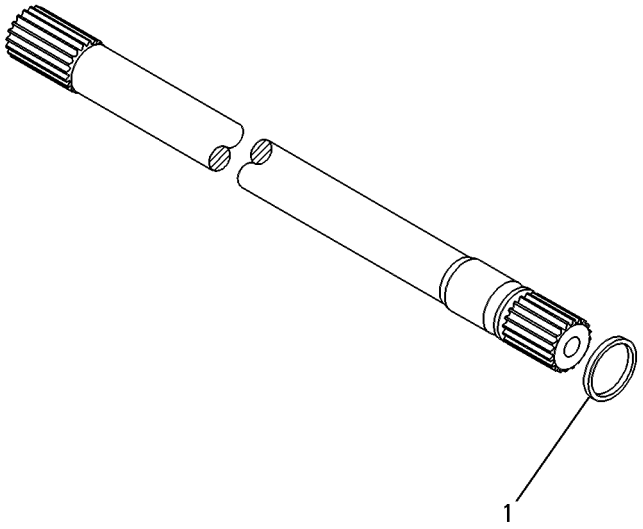

GRAPHIC #1 **<END>** g00131851

HYDRAULIC SYSTEM

245-8777 TANK & MTG GP-HYDRAULIC

S/N: EAT1-834

PART OF 268-6455 HYDRAULIC AR

SMCS-5056 **i03527878**

NOTE	REF NO	GRAPHIC REF	PART NUMBER	QTY	PART NAME 1 2 3 4 5 6 (PRODUCT LEVEL)	SEE PAGE
	1	1	**1P-4278**	1	CLAMP-HOSE	
	2	1	**5D-1026**	2	CLAMP-HOSE	
E	3	1	**5P-1442**		HOSE (124-CM)	
E	4	1	**5P-1505**		HOSE (8-CM)	
	5	1	**9M-0164**	1	CLAMP-HOSE	
	6	1	**9R-9925**	1	FILTER ELEMENT-BREATHER (HYDRAULIC TANK)	
	7	1	**127-4471**	1	CLAMP-HOSE	
	8	1	**132-3056**	1	SEAL-O-RING	
	9	1	**210-7773**	1	BRACKET AS	
	10	1	**222-4067**	6	BOLT-SOCKET HEAD (M5X0.8X14-MM)	
	11	1	**234-6927**	1	HOSE	
	12	1	**293-4671**	1	TUBE AS	
	13	1	**235-5843**	1	DIFFUSER AS	
	14	1	**237-3797**	1	CAP-FILL (HYDRAULIC OIL)	
	15	1	*245-8778*	1	TANK GP-HYDRAULIC	
		1	**246-5286**	1	TANK	
		1	**253-8295**	1	GAUGE-SIGHT (FLUID LEVEL)	
	16	1	*150-3026*	1	ELBOW AS	
		1	**3K-0360**	1	SEAL-O-RING	
		1	**6V-4292**	1	ELBOW	
	17	1	**6D-3479**	1	CLIP	
	18	1	**8T-4121**	2	WASHER-HARD (11X21X2.5-MM THK)	
M	19	1	**8T-4137**	2	BOLT (M10X1.5X20-MM)	
	20	1	**7X-7729**	4	WASHER (11X25X3-MM THK)	
M	21	1	**8T-4139**	1	BOLT (M12X1.75X30-MM)	
M	22	1	**8T-4179**	3	BOLT (M12X1.75X20-MM)	
M	23	1	**8T-4191**	4	BOLT (M10X1.5X16-MM)	
	24	1	**8T-4223**	4	WASHER-HARD (13.5X25.5X3-MM THK)	

E-ORDER BY THE CENTIMETER
M-METRIC PART

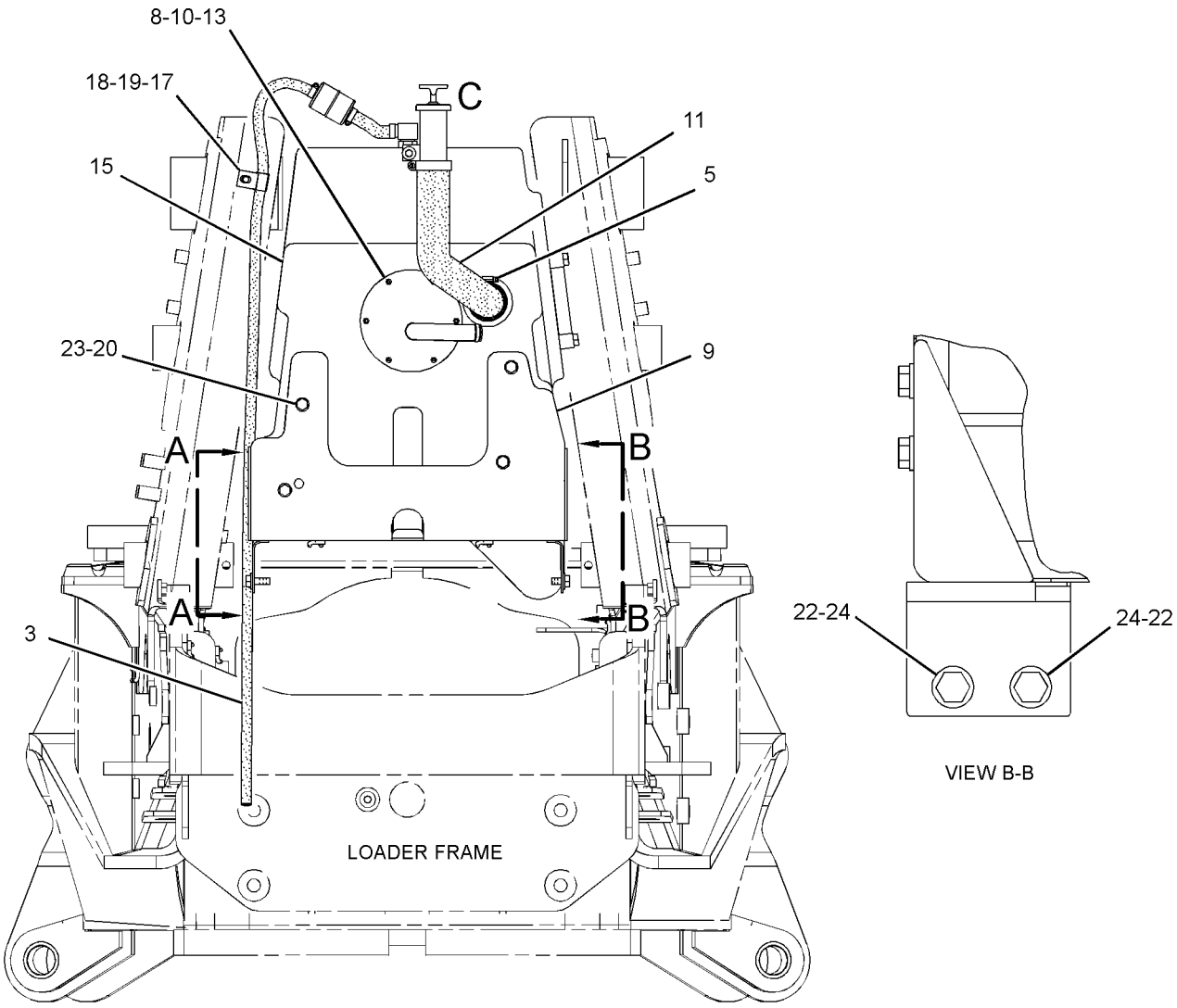

FRONT VIEW

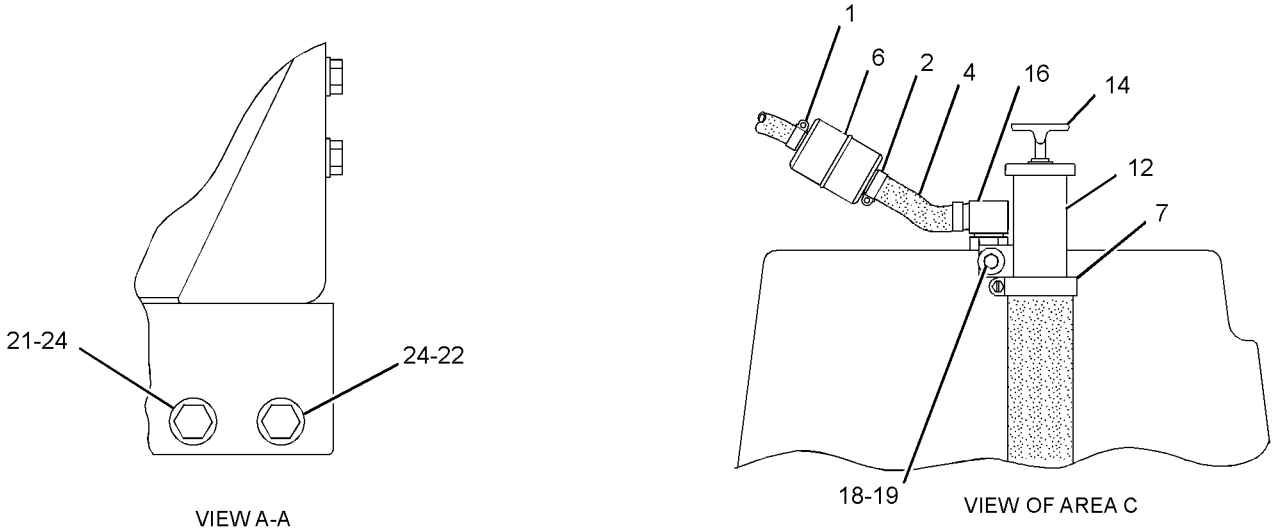

GRAPHIC #1 **<END>** g01343487

HYDRAULIC SYSTEM

245-8777 TANK & MTG GP-HYDRAULIC

S/N: EAT835-UP

PART OF 268-6455 HYDRAULIC AR

SMCS-5056 **i03505427**

NOTE	REF NO	GRAPHIC REF	PART NUMBER	QTY	PART NAME 1 2 3 4 5 6 (PRODUCT LEVEL)	SEE PAGE
C	1	1	**5P-4961**	3	CLAMP-HOSE	
CE	3	1	**5P-1442**		HOSE (8-CM)	
CE	3A	1	**5P-1442**		HOSE (124-CM)	
	5	1	**9M-0164**	1	CLAMP-HOSE	
	6	1	**9R-9925**	1	FILTER ELEMENT-BREATHER (HYDRAULIC TANK)	
	7	1	**127-4471**	1	CLAMP-HOSE	
	8	1	**132-3056**	1	SEAL-O-RING	
	9	1	**210-7773**	1	BRACKET AS	
	10	1	**222-4067**	6	BOLT-SOCKET HEAD (M5X0.8X14-MM)	
	11	1	**234-6927**	1	HOSE	
	12	1	**293-4671**	1	TUBE AS	
	13	1	**235-5843**	1	DIFFUSER AS	
	14	1	**237-3797**	1	CAP-FILL (HYDRAULIC OIL)	
	15	1	*245-8778*	1	TANK GP-HYDRAULIC	
		1	**246-5286**	1	TANK	
		1	**253-8295**	1	GAUGE-SIGHT (FLUID LEVEL)	
C	16	1	*217-8185*	1	ELBOW AS	
		1	**3K-0360**	1	SEAL-O-RING	
		1	**9X-3982**	1	ELBOW	
	17	1	**6D-3479**	1	CLIP	
	18	1	**8T-4121**	2	WASHER-HARD (11X21X2.5-MM THK)	
M	19	1	**8T-4137**	2	BOLT (M10X1.5X20-MM)	
	20	1	**7X-7729**	4	WASHER (11X25X3-MM THK)	
M	21	1	**8T-4139**	1	BOLT (M12X1.75X30-MM)	
M	22	1	**8T-4179**	3	BOLT (M12X1.75X20-MM)	
M	23	1	**8T-4191**	4	BOLT (M10X1.5X16-MM)	
	24	1	**8T-4223**	4	WASHER-HARD (13.5X25.5X3-MM THK)	
	25	1	**8T-0328**	6	WASHER-HARD (5.5X10X1-MM THK)	

C-CHANGE FROM PREVIOUS TYPE
E-ORDER BY THE CENTIMETER
M-METRIC PART

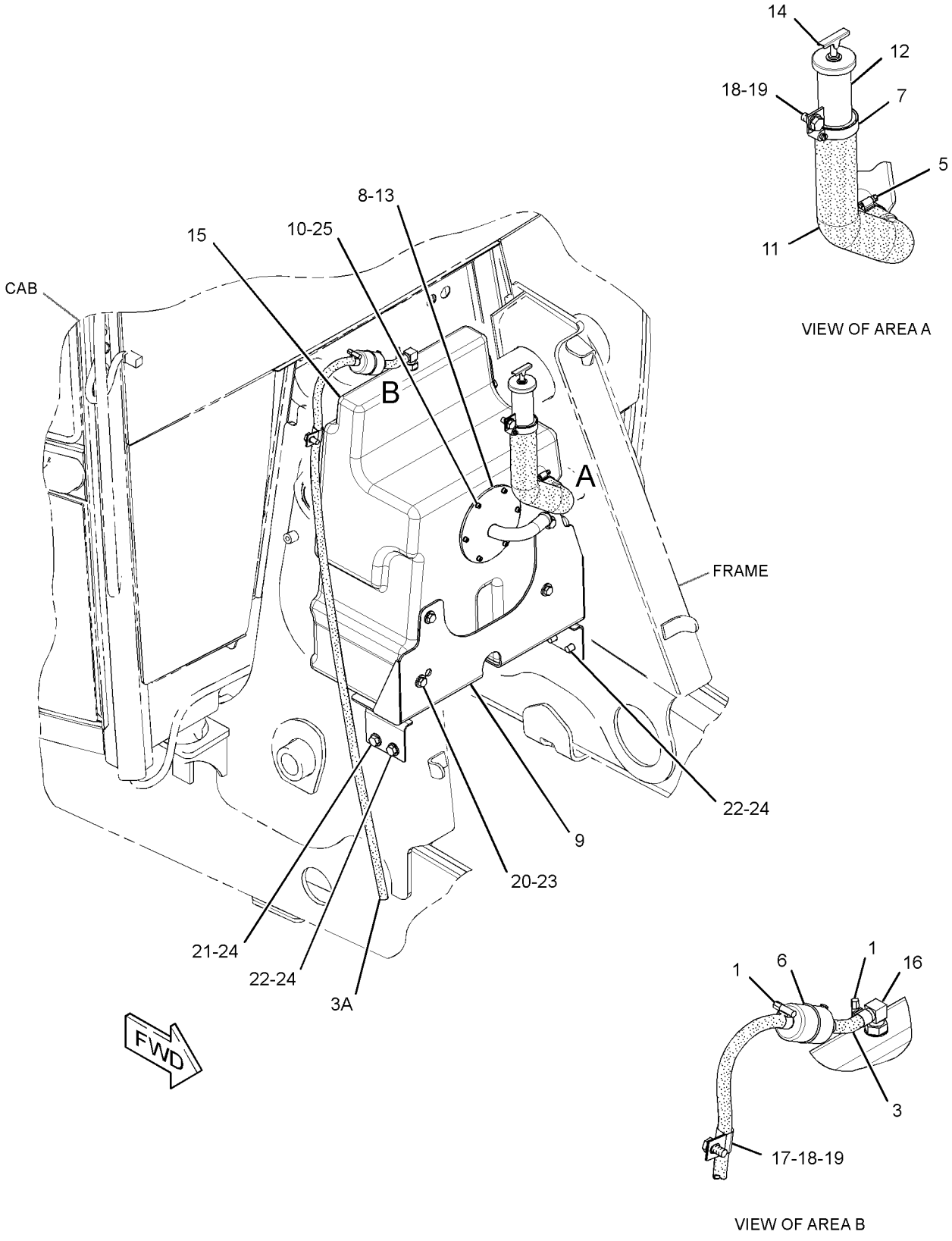

GRAPHIC #1 **<END>** g01818680

HYDRAULIC SYSTEM

267-2770 VALVE & LINES GP-PILOT—BACKHOE

S/N: EAT1-UP

PART OF 268-6455 HYDRAULIC AR

SMCS-5057, 5059 **i03120804**

NOTE	REF NO	GRAPHIC REF	PART NUMBER	QTY	PART NAME 1 2 3 4 5 6 (PRODUCT LEVEL)	SEE PAGE
	1	1	**4I-9521**	2	BAND-MARKER (RED, L1)	
	2	1	**4I-9522**	2	BAND-MARKER (YELLOW, L2)	
	3	1	**4I-9523**	2	BAND-MARKER (BLUE, L3)	
	4	1	**4I-9524**	2	BAND-MARKER (BROWN, L4)	
	5	1	**4I-9525**	2	BAND-MARKER (ORANGE, R1)	
	6	1	**4I-9526**	2	BAND-MARKER (WHITE, R2)	
	7	1	**4I-9527**	2	BAND-MARKER (GREEN, R3)	
	8	1	**4I-9528**	2	BAND-MARKER (PURPLE, R4)	
G	9	1	**160-2248**		SLEEVE-ABRASION (16-IN EACH)	
	10	1	**7K-1181**	6	STRAP-CABLE	
	11	1	*200-3947*	2	ADAPTER AS	
					(EACH INCLUDES)	
		1	**3J-1907**	1	SEAL-O-RING	
		1	**4J-5477**	1	SEAL-O-RING	
		1	**200-3946**	1	ADAPTER	
	12	1	**267-2758**	2	VALVE GP-PILOT	
	13	1	*268-1559*	4	ADAPTER AS	
					(EACH INCLUDES)	
		1	**3J-1907**	1	SEAL-O-RING	
		1	**4J-5477**	1	SEAL-O-RING	
		1	**209-0939**	1	ADAPTER	
	14	1	*148-8325*	10	CONNECTOR AS	
					(EACH INCLUDES)	
		1	**3J-1907**	1	SEAL-O-RING	
		1	**4J-5477**	1	SEAL-O-RING	
		1	**6V-8641**	1	CONNECTOR	
	15	1	**156-6175**	1	CLIP	
	16	1	**210-0074**	1	HOSE AS	
	17	1	**243-6523**	1	HOSE AS	
	18	1	**257-5605**	1	HOSE AS	
	19	1	**257-5606**	1	HOSE AS	
	20	1	**257-5607**	1	HOSE AS	
	21	1	**257-5608**	1	HOSE AS	
I	22	1	**268-0099**	1	HOSE AS	
	23	1	**268-0109**	1	HOSE AS	
	24	1	**9X-2038**	1	WASHER (7X19X2-MM THK)	
M	25	1	**9X-2043**	1	SCREW-TRUSS HEAD (M6X1X14-MM)	

G-ORDER BY THE INCH
I-REFER TO HYDRAULIC INFORMATION SYSTEM
M-METRIC PART

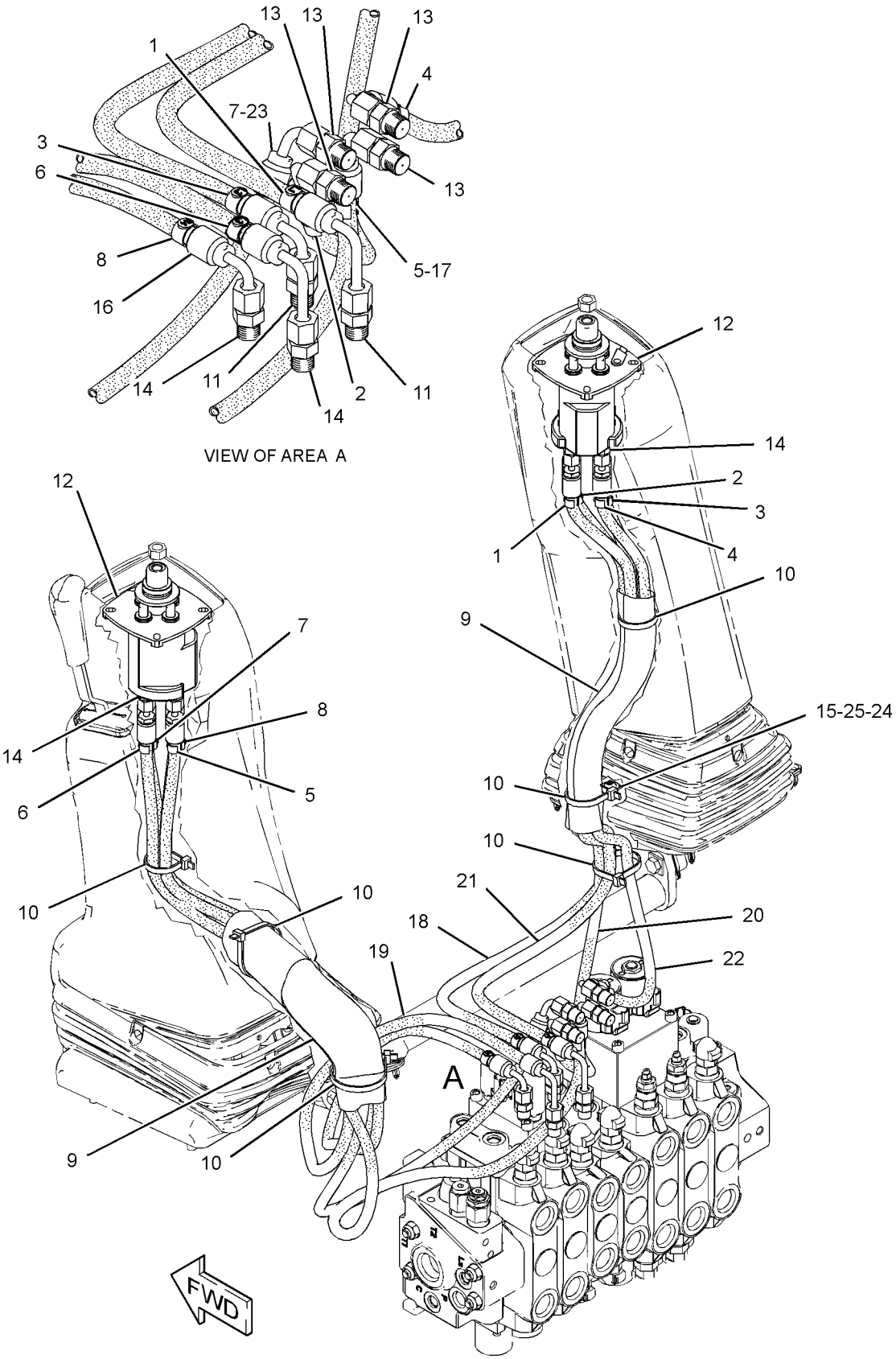

GRAPHIC #1 **<END>** g01597117

269-2144 VALVE AR-BANK 2

S/N: EAT1-UP
AN ATTACHMENT

SMCS-5051 **i02838057**

NOTE	PART NUMBER	QTY	PART NAME 1 2 3 4 5 6 (PRODUCT LEVEL)	SEE PAGE
Y	*206-1645*	1	CONTROL GP-HYDRAULIC HAND (LOADER)	818
Y	*245-8769*	1	FASTENER GP-VALVE (BANK)	419
Y	**266-2552**	1	VALVE GP-BANK 2	531
	251-5625	1	FILM-INSTRUCTION (BUCKET CONTROL)	
			(ON RH CONSOLE IN AREA PROVIDED)	

Y-SEPARATE ILLUSTRATION

<END>

269-2145 VALVE AR-BANK 3

S/N: EAT1-UP
AN ATTACHMENT

SMCS-5051 **i02838058**

NOTE	PART NUMBER	QTY	PART NAME 1 2 3 4 5 6 (PRODUCT LEVEL)	SEE PAGE
Y	*209-3364*	1	CONTROL GP-HYDRAULIC HAND (LOADER)	820
Y	*245-8769*	1	FASTENER GP-VALVE (BANK)	419
Y	*246-8478*	1	LINES GP-LOADER AUXILIARY	462
Y	**266-2553**	1	VALVE GP-BANK 3	532
	251-5626	1	FILM-INSTRUCTION (BUCKET CONTROL)	
			(ON RH CONSOLE IN AREA PROVIDED)	

Y-SEPARATE ILLUSTRATION

<END>

269-2146 VALVE AR-BANK 6

S/N: EAT1-UP
AN ATTACHMENT

SMCS-5051 **i02447159**

NOTE	PART NUMBER	QTY	PART NAME 1 2 3 4 5 6 (PRODUCT LEVEL)	SEE PAGE
Y	**271-3095**	1	CONTROL GP-JOYSTICK (RH)	823
Y	**271-3097**	1	CONTROL GP-JOYSTICK (LH)	825
Y	*222-5623*	1	LINES GP-STABILIZER	492
Y	*245-8765*	1	MOUNTING GP-BANK VALVE	511
Y	**266-2556**	1	VALVE GP-BANK 6	533
Y	*267-5635*	1	WIRING GP-CONTROL (JOYSTICK, LH)	162

Y-SEPARATE ILLUSTRATION

<END>

HYDRAULIC SYSTEM

269-2147 VALVE AR-BANK 7

S/N: EAT1-UP
AN ATTACHMENT

SMCS-5051 **i03530741**

NOTE	PART NUMBER	QTY	PART NAME 1 2 3 4 5 6 (PRODUCT LEVEL)	SEE PAGE
Y	**271-3096**	1	CONTROL GP-JOYSTICK (RH)	824
Y	**271-3097**	1	CONTROL GP-JOYSTICK (LH)	825
Y	*222-5622*	1	LINES GP-STABILIZER	486
Y	*245-8765*	1	MOUNTING GP-BANK VALVE	511
Y	**266-2557**	1	VALVE GP-BANK 7	534
Y	*267-5633*	1	WIRING GP-CONTROL (JOYSTICK, RH)	160
Y	*267-5635*	1	WIRING GP-CONTROL (JOYSTICK, LH)	162
B	**6V-9831**	2	CAP AS	
B	*148-8341*	2	CONNECTOR AS	
			(EACH INCLUDES)	
	3D-2824	1	SEAL-O-RING	
	6V-8713	1	CONNECTOR	
	7J-9108	1	SEAL-O-RING	
	214-4706	1	SWITCH AS-ROCKER (AUXILIARY HYDRAULIC FLOW)	
	111-7899	1	GASKET	

B-USE AS REQUIRED
Y-SEPARATE ILLUSTRATION

<END>

269-2148 VALVE AR-BANK 8

S/N: EAT1-UP
AN ATTACHMENT

SMCS-5051 **i03530742**

NOTE	PART NUMBER	QTY	PART NAME 1 2 3 4 5 6 (PRODUCT LEVEL)	SEE PAGE
Y	**271-3096**	1	CONTROL GP-JOYSTICK (RH)	824
Y	**271-3099**	1	CONTROL GP-JOYSTICK (LH)	826
Y	*215-2445*	1	LINES GP-STABILIZER	480
Y	*245-8765*	1	MOUNTING GP-BANK VALVE	511
Y	**266-2558**	1	VALVE GP-BANK 8	535
Y	*267-5633*	1	WIRING GP-CONTROL (JOYSTICK, RH)	160
Y	*267-5634*	1	WIRING GP-CONTROL (JOYSTICK, LH)	161
B	**6V-9831**	4	CAP AS	
B	*148-8341*	4	CONNECTOR AS	
			(EACH INCLUDES)	
	3D-2824	1	SEAL-O-RING	
	6V-8713	1	CONNECTOR	
	7J-9108	1	SEAL-O-RING	
	214-4706	1	SWITCH AS-ROCKER (AUXILIARY HYDRAULIC FLOW)	
	111-7899	1	GASKET	

B-USE AS REQUIRED
Y-SEPARATE ILLUSTRATION

<END>

266-2552 VALVE GP-BANK 2

S/N: EAT1-UP
PART OF 269-2144 VALVE AR-BANK 2
AN ATTACHMENT

SMCS-5051 **i02447471**

NOTE	REF NO	GRAPHIC REF	PART NUMBER	QTY	PART NAME 1 2 3 4 5 6 (PRODUCT LEVEL)	SEE PAGE
Y	1	1	**269-1080**	1	MANIFOLD GP-CONTROL (INLET)	509
Y	2	1	**269-1091**	1	VALVE GP-CONTROL (LIFT)	553
Y	3	1	**269-1092**	1	VALVE GP-CONTROL (TILT)	554
	4	1	**269-1079**	1	COVER GP (OUTLET)	
		1	**3J-1907**	2	SEAL-O-RING	
		1	**9S-8004**	2	PLUG-O-RING	
	5	1	**227-1202**	1	KIT-FASTENER	
					(INCLUDES LOCKNUTS & TIE RODS)	
	6	1	**4J-5309**	12	SEAL-O-RING	
	7	1	**6V-5326**	3	SEAL-O-RING	
	8	1	**6V-8978**	3	SEAL-O-RING	

Y-SEPARATE ILLUSTRATION

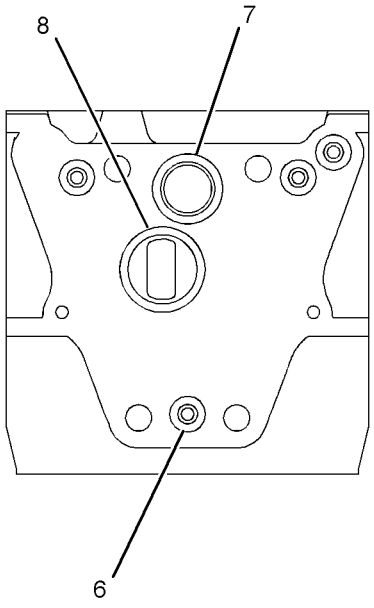

SECTION A-A

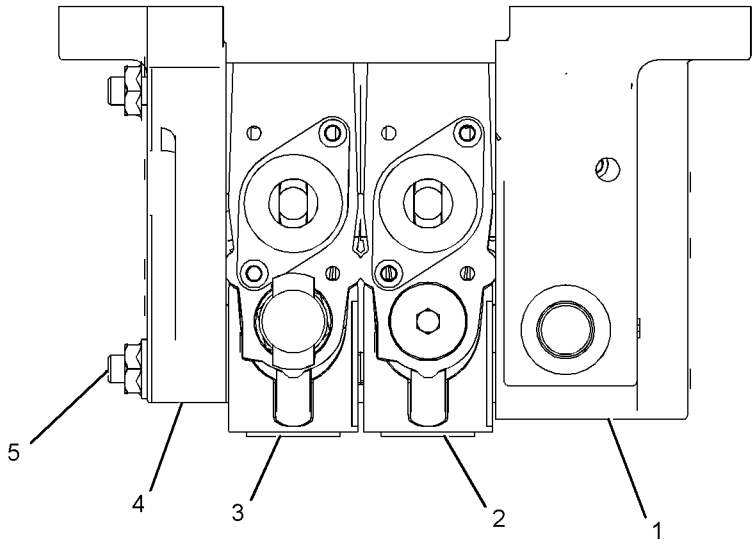

GRAPHIC #1 **<END>** g01231791

HYDRAULIC SYSTEM

266-2553 VALVE GP-BANK 3

S/N: EAT1-UP
PART OF 269-2145 VALVE AR-BANK 3
AN ATTACHMENT

SMCS-5051 **i02447487**

NOTE	REF NO	GRAPHIC REF	PART NUMBER	QTY	PART NAME 1 2 3 4 5 6 (PRODUCT LEVEL)	SEE PAGE
Y	1	1	**269-1080**	1	MANIFOLD GP-CONTROL (INLET)	509
Y	2	1	**269-1091**	1	VALVE GP-CONTROL (LIFT)	553
Y	3	1	**269-1092**	1	VALVE GP-CONTROL (TILT)	554
Y	4	1	**269-1093**	1	VALVE GP-CONTROL (AUXILIARY)	555
	5	1	**269-1079**	1	COVER GP (OUTLET)	
		1	**3J-1907**	2	SEAL-O-RING	
		1	**9S-8004**	2	PLUG-O-RING	
	6	1	**257-0453**	1	KIT-FASTENER	
					(INCLUDES LOCKNUTS & TIE RODS)	
	7	1	**4J-5309**	16	SEAL-O-RING	
	8	1	**6V-5326**	4	SEAL-O-RING	
	9	1	**6V-8978**	4	SEAL-O-RING	

Y-SEPARATE ILLUSTRATION

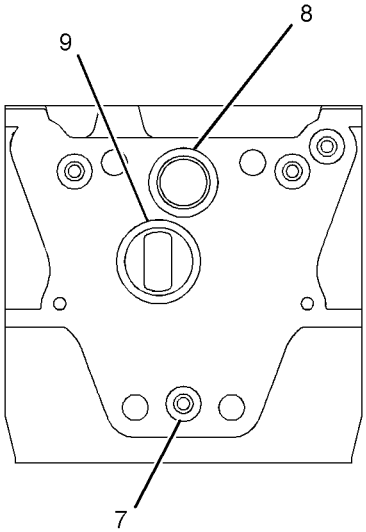

SECTION A-A

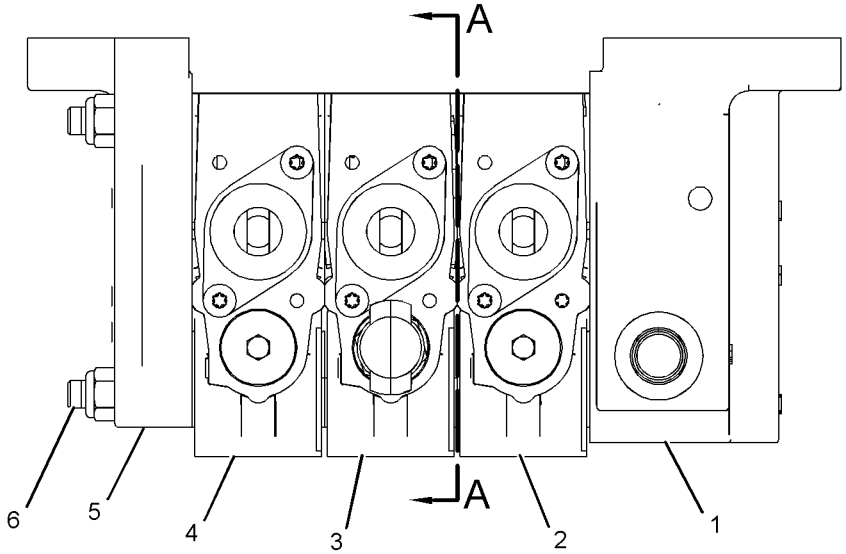

TOP VIEW

GRAPHIC #1 **<END>** g01231809

266-2556 VALVE GP-BANK 6

S/N: EAT1-UP
PART OF 269-2146 VALVE AR-BANK 6
AN ATTACHMENT

SMCS-5051 **i02447216**

NOTE	REF NO	GRAPHIC REF	PART NUMBER	QTY	PART NAME 1 2 3 4 5 6 (PRODUCT LEVEL)	SEE PAGE
Y	1	1	**269-1060**	1	MANIFOLD & SOLENOID GP-CONTROL (INLET)	507
Y	2	1	**269-1061**	2	VALVE GP-CONTROL (STABILIZER)	537
Y	3	1	**269-1062**	1	VALVE GP-CONTROL (BOOM)	541
Y	4	1	**269-1063**	1	VALVE GP-CONTROL (STICK)	545
Y	5	1	**269-1064**	1	VALVE GP-CONTROL (SWING)	548
Y	6	1	**269-1065**	1	VALVE GP-CONTROL (BUCKET)	549
Y	7	1	**269-1059**	1	MANIFOLD GP-CONTROL (OUTLET)	508
	8	1	**257-0446**	1	KIT-FASTENER	
					(INCLUDES LOCKNUTS & TIE RODS)	
	9	1	**4J-5309**	28	SEAL-O-RING	
	10	1	**6V-5326**	7	SEAL-O-RING	
	11	1	**6V-8978**	7	SEAL-O-RING	
Y	12	1	**257-7724**	1	MANIFOLD & SOLENOID GP-CONTROL (BOOM, STICK, PATTERN SWITCH)	506

Y-SEPARATE ILLUSTRATION

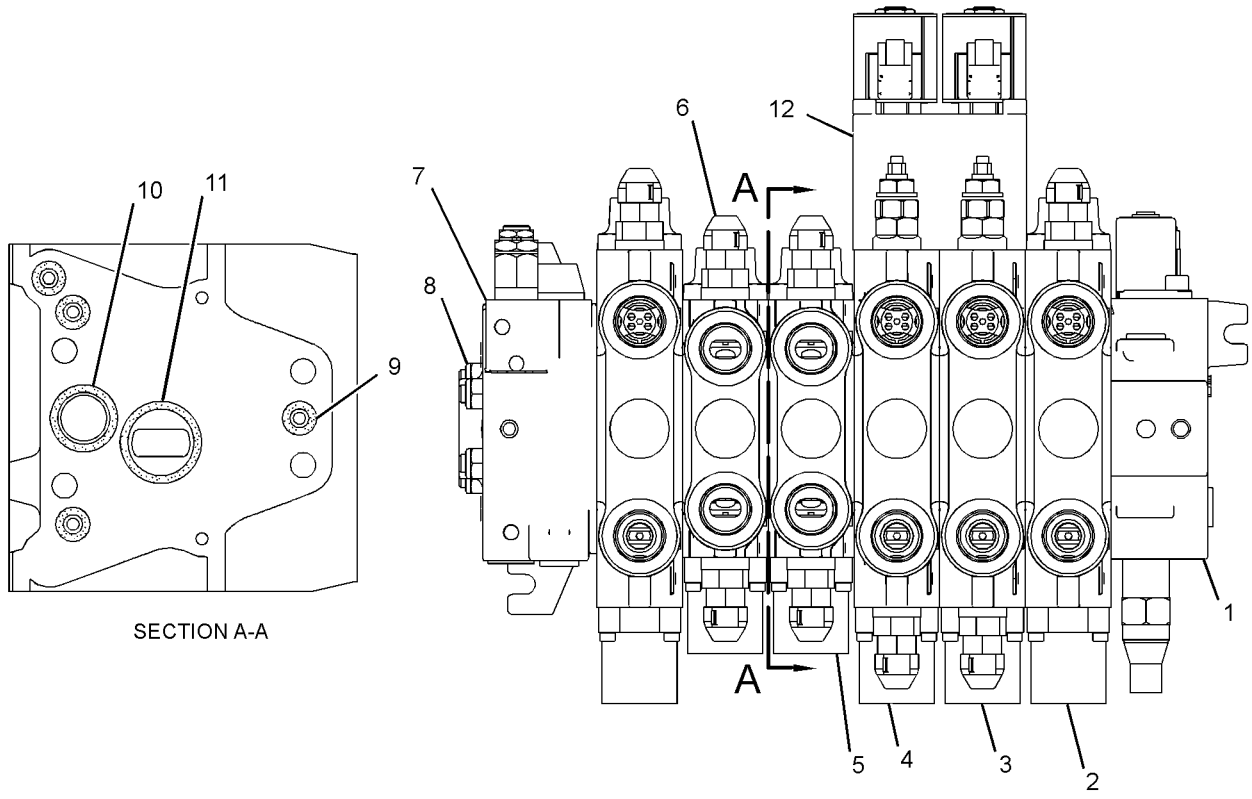

GRAPHIC #1 **<END>** g01231845

HYDRAULIC SYSTEM

266-2557 VALVE GP-BANK 7

S/N: EAT1-UP
PART OF 269-2147 VALVE AR-BANK 7
AN ATTACHMENT

SMCS-5051 **i02447365**

NOTE	REF NO	GRAPHIC REF	PART NUMBER	QTY	PART NAME 1 2 3 4 5 6 (PRODUCT LEVEL)	SEE PAGE
Y	1	1	**269-1060**	1	MANIFOLD & SOLENOID GP-CONTROL (INLET)	507
Y	2	1	**269-1061**	2	VALVE GP-CONTROL (STABILIZER)	537
Y	3	1	**269-1062**	1	VALVE GP-CONTROL (BOOM)	541
Y	4	1	**269-1063**	1	VALVE GP-CONTROL (STICK)	545
Y	5	1	**269-1064**	1	VALVE GP-CONTROL (SWING)	548
Y	6	1	**269-1065**	1	VALVE GP-CONTROL (BUCKET)	549
Y	7	1	**269-1066**	1	VALVE GP-CONTROL (EXTENDABLE STICK)	550
Y	8	1	**269-1059**	1	MANIFOLD GP-CONTROL (OUTLET)	508
	9	1	**257-0447**	1	KIT-FASTENER	
					(INCLUDES LOCKNUTS & TIE RODS)	
	10	1	**4J-5309**	32	SEAL-O-RING	
	11	1	**6V-5326**	8	SEAL-O-RING	
	12	1	**6V-8978**	8	SEAL-O-RING	
Y	13	1	**257-7724**	1	MANIFOLD & SOLENOID GP-CONTROL (BOOM, STICK, PATTERN SWITCH)	506

Y-SEPARATE ILLUSTRATION

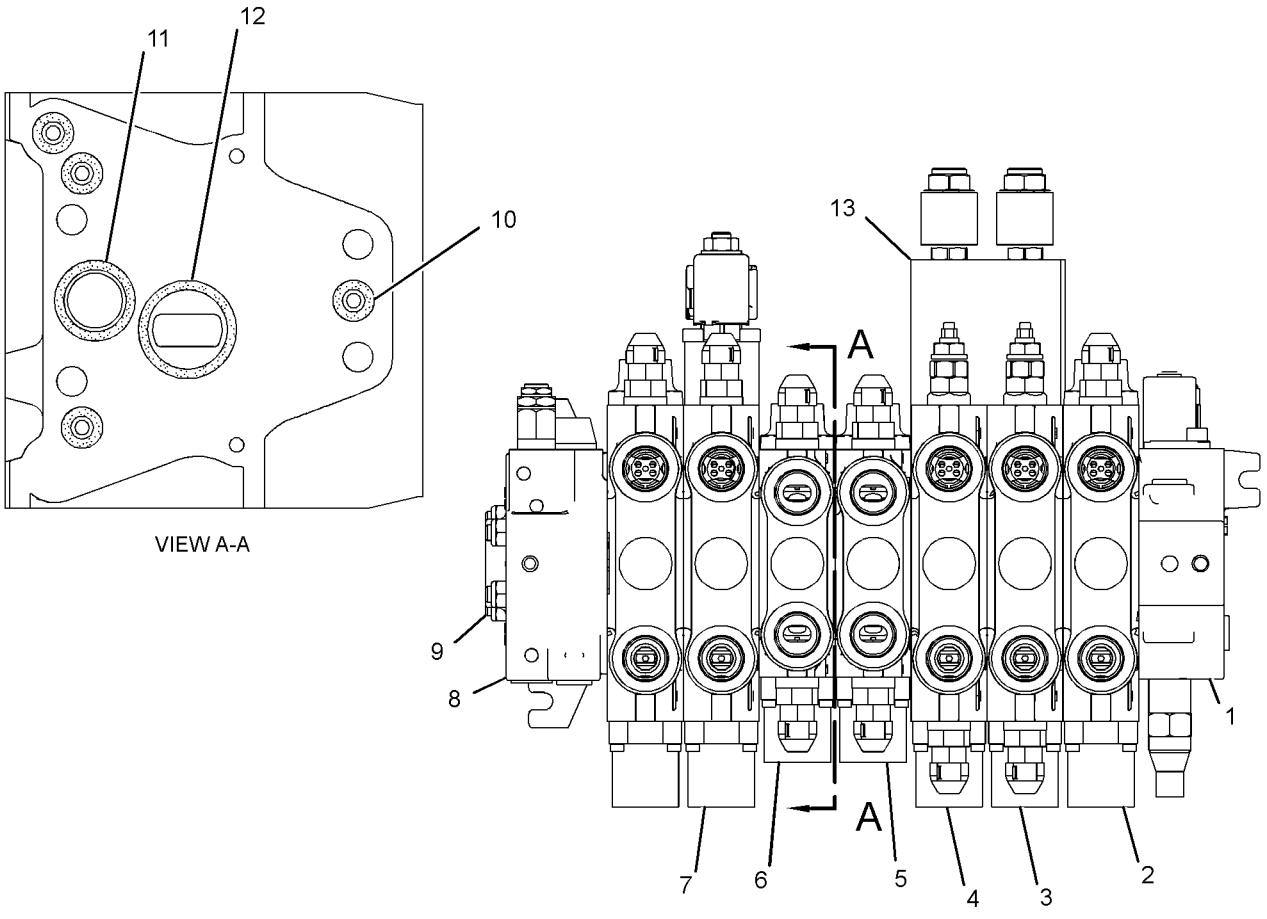

GRAPHIC #1 **<END>** g01233924

266-2558 VALVE GP-BANK 8

S/N: EAT1-UP
PART OF 269-2148 VALVE AR-BANK 8
AN ATTACHMENT

SMCS-5051 **i02447419**

NOTE	REF NO	GRAPHIC REF	PART NUMBER	QTY	PART NAME 1 2 3 4 5 6 (PRODUCT LEVEL)	SEE PAGE
Y	1	1	**269-1060**	1	MANIFOLD & SOLENOID GP-CONTROL (INLET)	507
Y	2	1	**269-1061**	2	VALVE GP-CONTROL (STABILIZER)	537
Y	3	1	**269-1062**	1	VALVE GP-CONTROL (BOOM)	541
Y	4	1	**269-1063**	1	VALVE GP-CONTROL (STICK)	545
Y	5	1	**269-1064**	1	VALVE GP-CONTROL (SWING)	548
Y	6	1	**269-1065**	1	VALVE GP-CONTROL (BUCKET)	549
Y	7	1	**269-1066**	1	VALVE GP-CONTROL (EXTENDABLE STICK)	550
Y	8	1	**269-1067**	1	VALVE GP-CONTROL (AUXILIARY)	552
Y	9	1	**269-1059**	1	MANIFOLD GP-CONTROL (OUTLET)	508
	10	1	**257-0448**	1	KIT-FASTENER	
					(INCLUDES LOCKNUTS & TIE RODS)	
	11	1	**4J-5309**	36	SEAL-O-RING	
	12	1	**6V-5326**	9	SEAL-O-RING	
	13	1	**6V-8978**	9	SEAL-O-RING	
Y	14	1	**257-7724**	1	MANIFOLD & SOLENOID GP-CONTROL (BOOM, STICK, PATTERN SWITCH)	506

Y-SEPARATE ILLUSTRATION

266-2558 VALVE GP-BANK 8 *(contd.)* **i02447419**

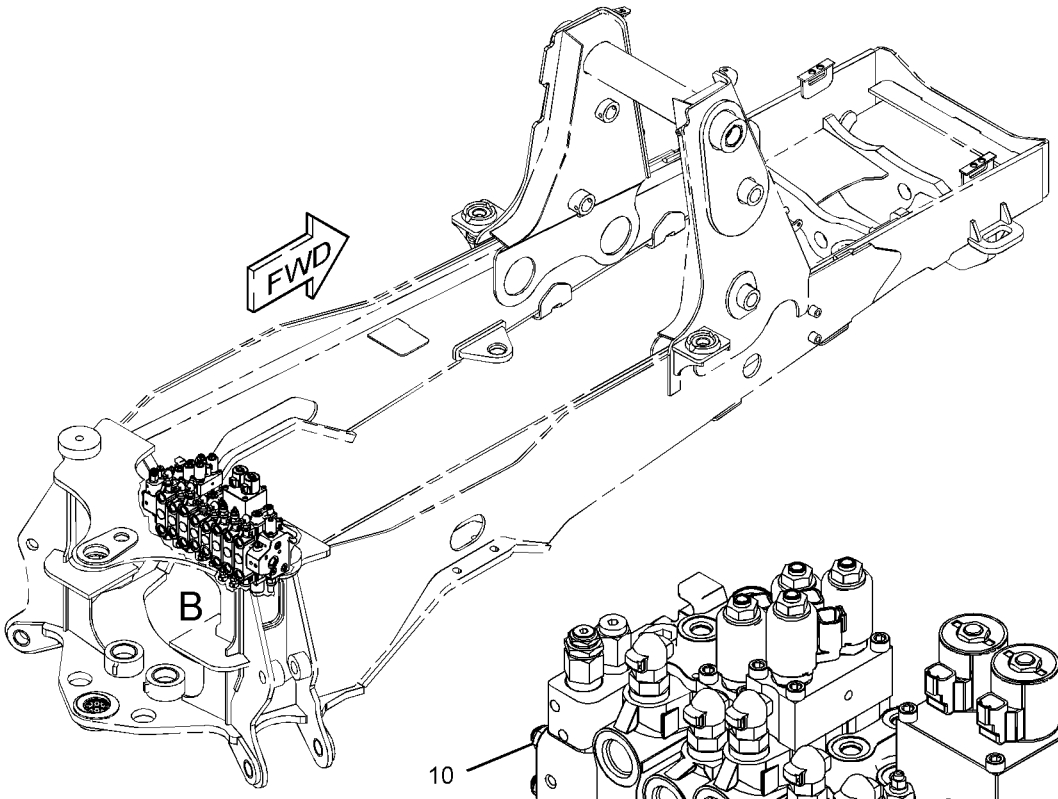

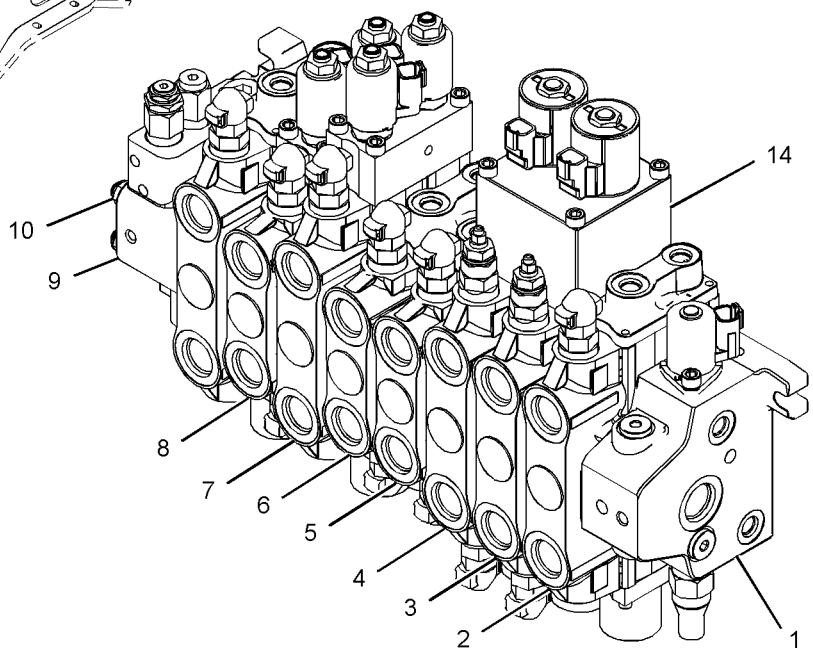

VIEW OF AREA B

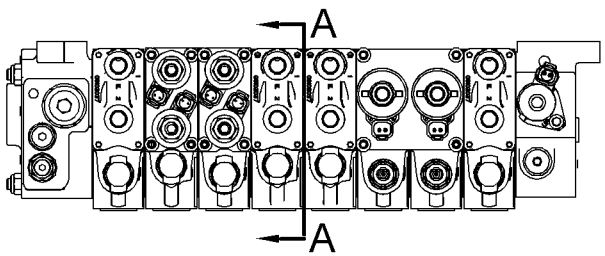

TOP VIEW

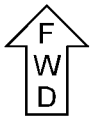

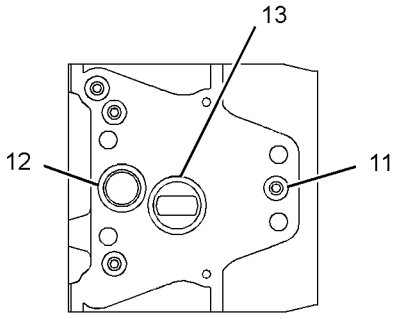

VIEW A-A

GRAPHIC #1 **<END>** g01234007

269-1061 VALVE GP-CONTROL–STABILIZER

S/N: EAT1-UP

PART OF 266-2556 VALVE GP-BANK 6, 266-2557 VALVE GP-BANK 7, 266-2558 VALVE GP-BANK 8

AN ATTACHMENT

TYPE 1

SMCS-5051 **i02447297**

NOTE	REF NO	GRAPHIC REF	PART NUMBER	QTY	PART NAME 1 2 3 4 5 6 (PRODUCT LEVEL)	SEE PAGE
	1	1	**257-7734**	1	KIT-COVER (CONTROL VALVE)	
					(INCLUDES BOLTS, SEAL, COVER, PLUG, SPRING & RETAINERS)	
	2	1	**227-1191**	1	PLUG AS	
		1	**8J-2413**	1	SEAL-O-RING	
		1	**095-1751**	1	SEAL-O-RING	
		1	**169-1616**	1	RING-BACKUP	
	3	1	**257-0476**	1	VALVE GP-RELIEF	
		1	**8J-2413**	1	SEAL-O-RING	
		1	**095-1751**	1	SEAL-O-RING	
		1	**169-1616**	1	RING-BACKUP	
	4	1	**257-7730**	2	KIT-POPPET (CONTROL VALVE)	
					(EACH INCLUDES POPPET AS & RODS)	
	5	1	**257-7729**	2	PLUG GP-CONTROL VALVE	
					(EACH INCLUDES)	
		1	**122-9250**	1	SEAL-O-RING	
	6	1	**257-7731**	1	MANIFOLD GP-HYDRAULIC	
		1	**5D-6543**	1	SEAL-O-RING	
		1	**5F-9144**	3	SEAL-O-RING	
M		1	**8C-8580**	4	BOLT-SOCKET HEAD (M5X0.8X16-MM)	
	7	1	**257-0468**	1	CAP-PROTECTION	

M-METRIC PART

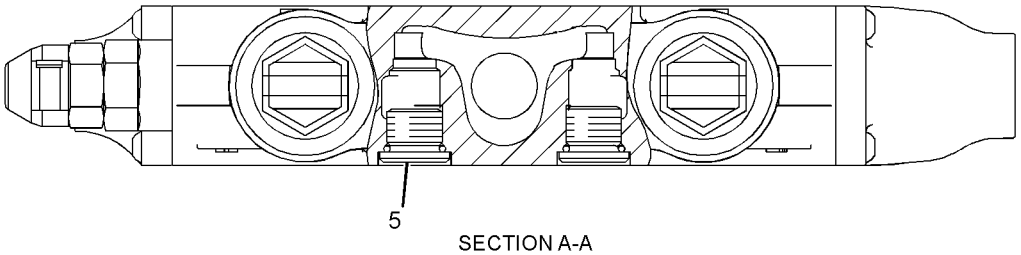

SECTION A-A

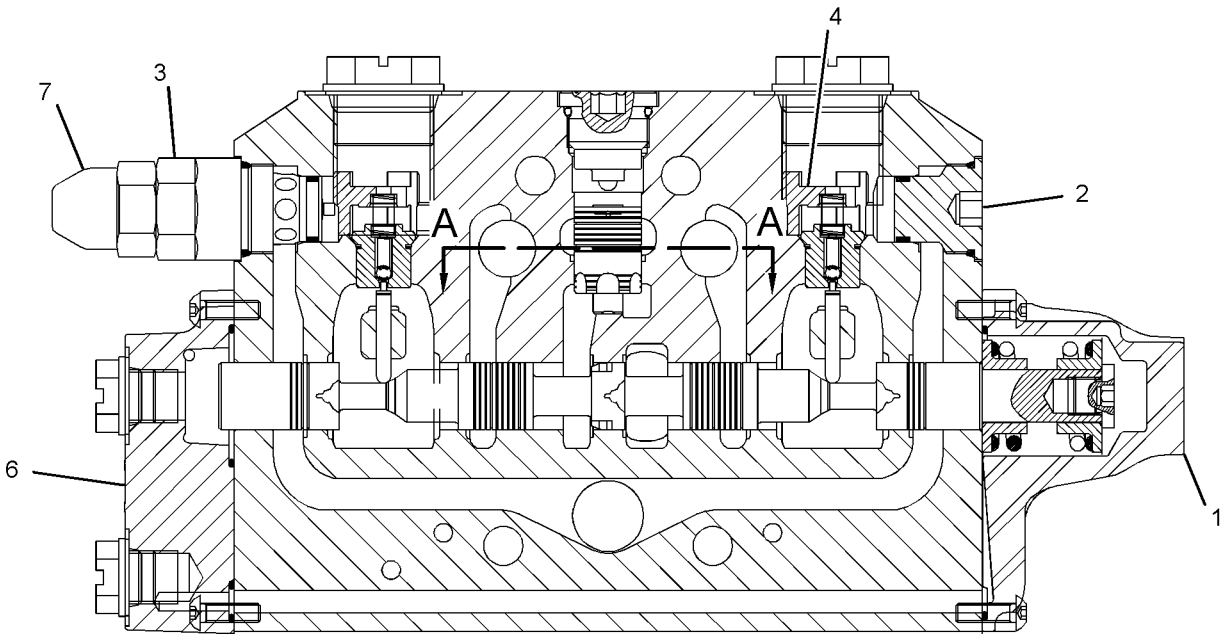

GRAPHIC #1 **<END>** g01225677

269-1061 VALVE GP-CONTROL–STABILIZER

S/N: EAT1-UP

PART OF 266-2556 VALVE GP-BANK 6, 266-2557 VALVE GP-BANK 7, 266-2558 VALVE GP-BANK 8

AN ATTACHMENT

TYPE 2

SMCS-5051 **i02658911**

NOTE	REF NO	GRAPHIC REF	PART NUMBER	QTY	PART NAME 1 2 3 4 5 6 (PRODUCT LEVEL)	SEE PAGE
	1	1	**257-7734**	1	KIT-COVER (CONTROL VALVE)	
					(INCLUDES BOLTS, SEAL-O-RING, COVER, PLUG, SPRING & RETAINERS)	
	2	1	**227-1191**	1	PLUG AS	
		1	**8J-2413**	1	SEAL-O-RING	
		1	**095-1751**	1	SEAL-O-RING	
		1	**169-1616**	1	RING-BACKUP	
C	3	1	**294-0933**	1	VALVE GP-RELIEF	
		1	**8J-2413**	1	SEAL-O-RING	
		1	**095-1751**	1	SEAL-O-RING	
		1	**169-1616**	1	RING-BACKUP	
	4	1	**257-7730**	2	KIT-POPPET (CONTROL VALVE)	
					(EACH INCLUDES POPPET AS & RODS)	
	5	1	**257-7729**	2	PLUG GP-CONTROL VALVE	
					(EACH INCLUDES)	
		1	**122-9250**	1	SEAL-O-RING	
	6	1	**257-7731**	1	MANIFOLD GP-HYDRAULIC	
		1	**5D-6543**	1	SEAL-O-RING	
		1	**5F-9144**	3	SEAL-O-RING	
M		1	**8C-8580**	4	BOLT-SOCKET HEAD (M5X0.8X16-MM)	
	7	1	**257-0468**	1	CAP-PROTECTION	

C-CHANGE FROM PREVIOUS TYPE
M-METRIC PART

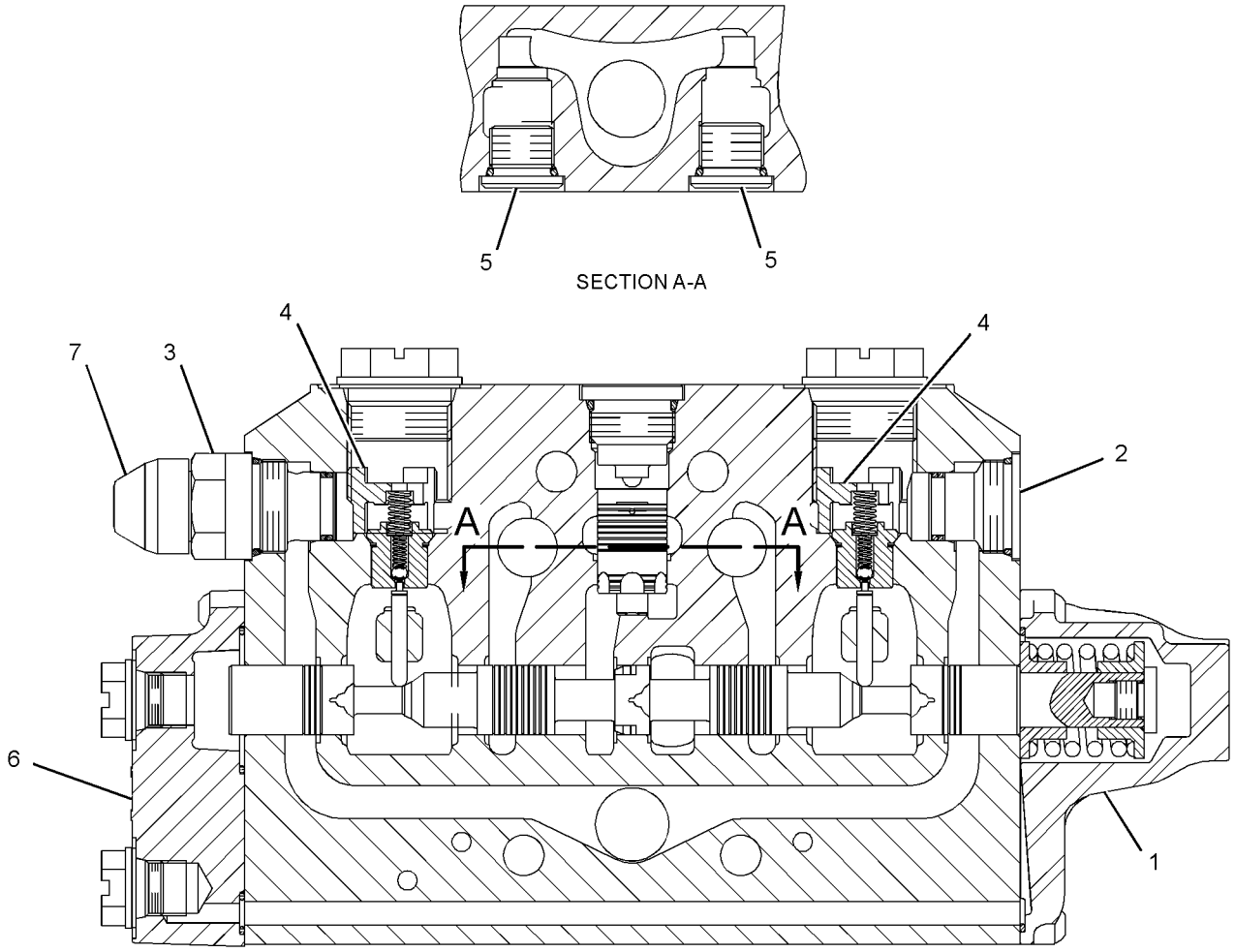

GRAPHIC #1 **<END>** g01340920

269-1062 VALVE GP-CONTROL–BOOM

S/N: EAT1-UP

PART OF 266-2556 VALVE GP-BANK 6, 266-2557 VALVE GP-BANK 7, 266-2558 VALVE GP-BANK 8

AN ATTACHMENT

TYPE 1

SMCS-5051 **i02502853**

NOTE	REF NO	GRAPHIC REF	PART NUMBER	QTY	PART NAME 1 2 3 4 5 6 (PRODUCT LEVEL)	SEE PAGE
	1	1	**257-7734**	1	KIT-COVER (CONTROL VALVE)	
					(INCLUDES BOLTS, SEAL-O-RING, COVER, PLUG, SPRING & RETAINERS)	
	2	1	**257-7730**	1	KIT-POPPET (CONTROL VALVE)	
					(INCLUDES POPPET AS & RODS)	
	3	1	**266-2585**	1	VALVE GP-RELIEF (LINE, BOOM CYLINDER HEAD END)	
		1	**8J-2413**	1	SEAL-O-RING	
		1	**095-1751**	1	SEAL-O-RING	
		1	**169-1616**	1	RING-BACKUP	
	4	1	**266-3591**	1	VALVE GP-RELIEF (LINE, BOOM CYLINDER ROD END)	
		1	**8J-2413**	1	SEAL-O-RING	
		1	**095-1751**	1	SEAL-O-RING	
		1	**169-1616**	1	RING-BACKUP	
	5	1	**257-7733**	1	VALVE GP-CHECK	
		1	**122-9250**	1	SEAL-O-RING	
	6	1	**257-7729**	1	PLUG GP-CONTROL VALVE	
		1	**122-9250**	1	SEAL-O-RING	
	7	1	**257-0468**	1	CAP-PROTECTION	
	8	1	**257-0466**	1	CAP-PROTECTION	

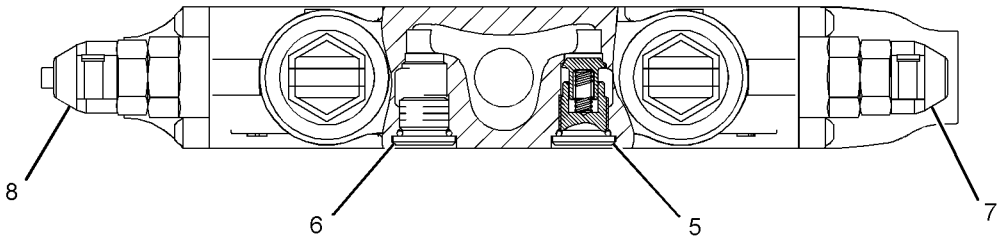

SECTION A-A

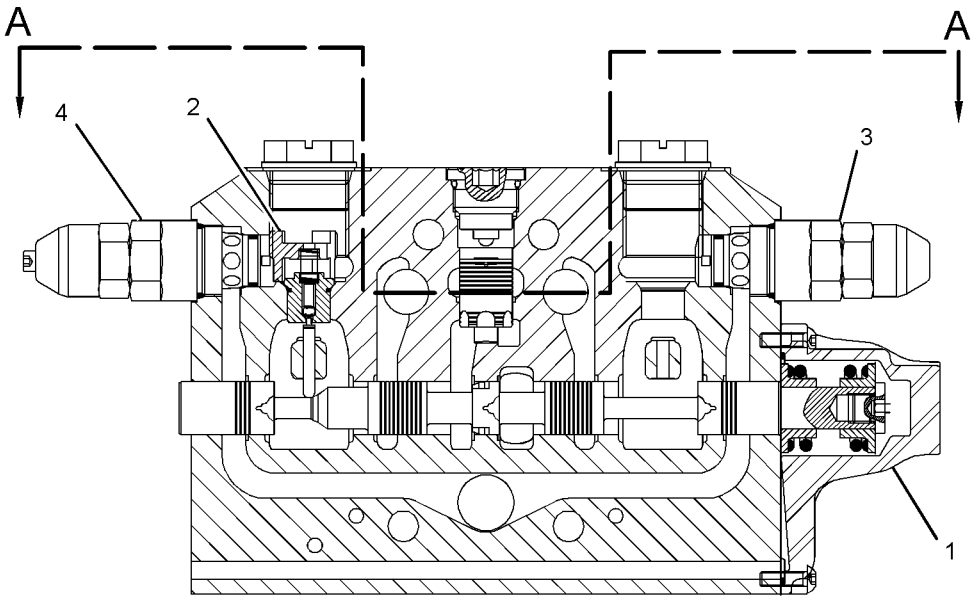

GRAPHIC #1 **<END>** g01290096

269-1062 VALVE GP-CONTROL–BOOM

S/N: EAT1-UP

PART OF 266-2556 VALVE GP-BANK 6, 266-2557 VALVE GP-BANK 7, 266-2558 VALVE GP-BANK 8

AN ATTACHMENT

TYPE 2

SMCS-5051 **i02650960**

NOTE	REF NO	GRAPHIC REF	PART NUMBER	QTY	PART NAME 1 2 3 4 5 6 (PRODUCT LEVEL)	SEE PAGE
	1	1	**257-7734**	1	KIT-COVER (CONTROL VALVE)	
					(INCLUDES BOLTS, SEAL-O-RING, COVER, PLUG, SPRING & RETAINERS)	
	2	1	**257-7730**	1	KIT-POPPET (CONTROL VALVE)	
					(INCLUDES POPPET AS & RODS)	
	3	1	**266-2585**	1	VALVE GP-RELIEF (LINE, BOOM CYLINDER HEAD END)	
		1	**8J-2413**	1	SEAL-O-RING	
		1	**095-1751**	1	SEAL-O-RING	
		1	**169-1616**	1	RING-BACKUP	
C	4	1	**266-3591**	1	VALVE GP-RELIEF (LINE, BOOM CYLINDER ROD END)	
		1	**8J-2413**	1	SEAL-O-RING	
		1	**095-1751**	1	SEAL-O-RING	
		1	**169-1616**	1	RING-BACKUP	
	5	1	**257-7733**	1	VALVE GP-CHECK	
		1	**122-9250**	1	SEAL-O-RING	
	6	1	**257-7729**	1	PLUG GP-CONTROL VALVE	
		1	**122-9250**	1	SEAL-O-RING	
C	7	1	**257-0468**	2	CAP-PROTECTION	

C-CHANGE FROM PREVIOUS TYPE

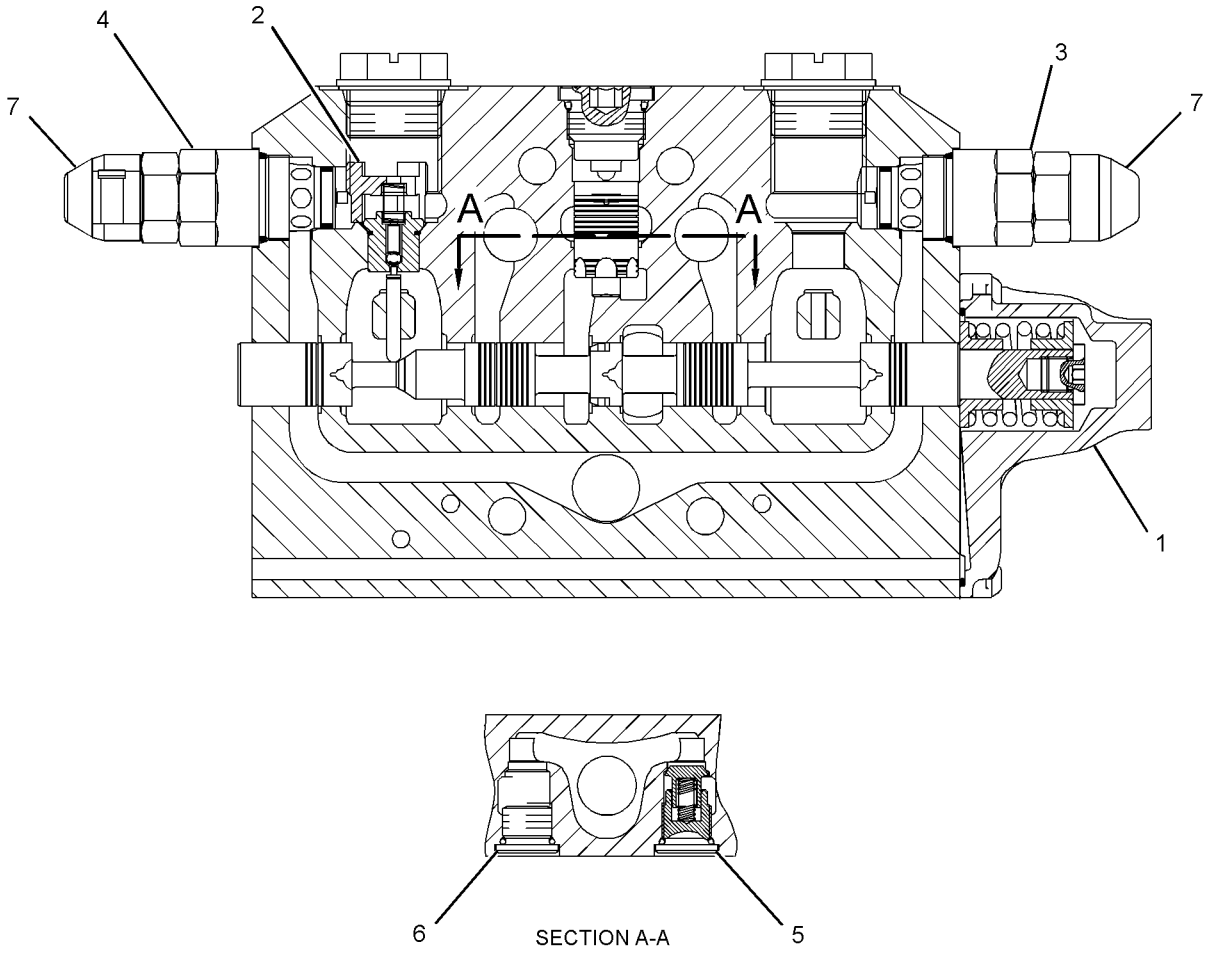

GRAPHIC #1 **<END>** g01342409

269-1063 VALVE GP-CONTROL–STICK

S/N: EAT1-UP

PART OF 266-2556 VALVE GP-BANK 6, 266-2557 VALVE GP-BANK 7, 266-2558 VALVE GP-BANK 8

AN ATTACHMENT

TYPE 1

SMCS-5051 **i02502854**

NOTE	REF NO	GRAPHIC REF	PART NUMBER	QTY	PART NAME 1 2 3 4 5 6 (PRODUCT LEVEL)	SEE PAGE
	1	1	**257-7734**	1	KIT-COVER (CONTROL VALVE)	
					(INCLUDES BOLTS, SEAL, COVER, PLUG, SPRING & RETAINERS)	
	2	1	**266-3590**	1	VALVE GP-RELIEF	
		1	**8J-2413**	1	SEAL-O-RING	
		1	**095-1751**	1	SEAL-O-RING	
		1	**169-1616**	1	RING-BACKUP	
	3	1	**257-7730**	1	KIT-POPPET (CONTROL VALVE)	
					(INCLUDES POPPET AS & RODS)	
	4	1	**269-1104**	1	VALVE GP-RELIEF	
		1	**8J-2413**	1	SEAL-O-RING	
		1	**095-1751**	1	SEAL-O-RING	
		1	**169-1616**	1	RING-BACKUP	
	5	1	**257-7733**	1	VALVE GP-CHECK	
		1	**122-9250**	1	SEAL-O-RING	
	6	1	**257-7729**	1	PLUG GP-CONTROL VALVE	
		1	**122-9250**	1	SEAL-O-RING	
	8	1	**257-0468**	1	CAP-PROTECTION	
	9	1	**257-0466**	1	CAP-PROTECTION	

269-1063 VALVE GP-CONTROL *(contd.)* i02502854

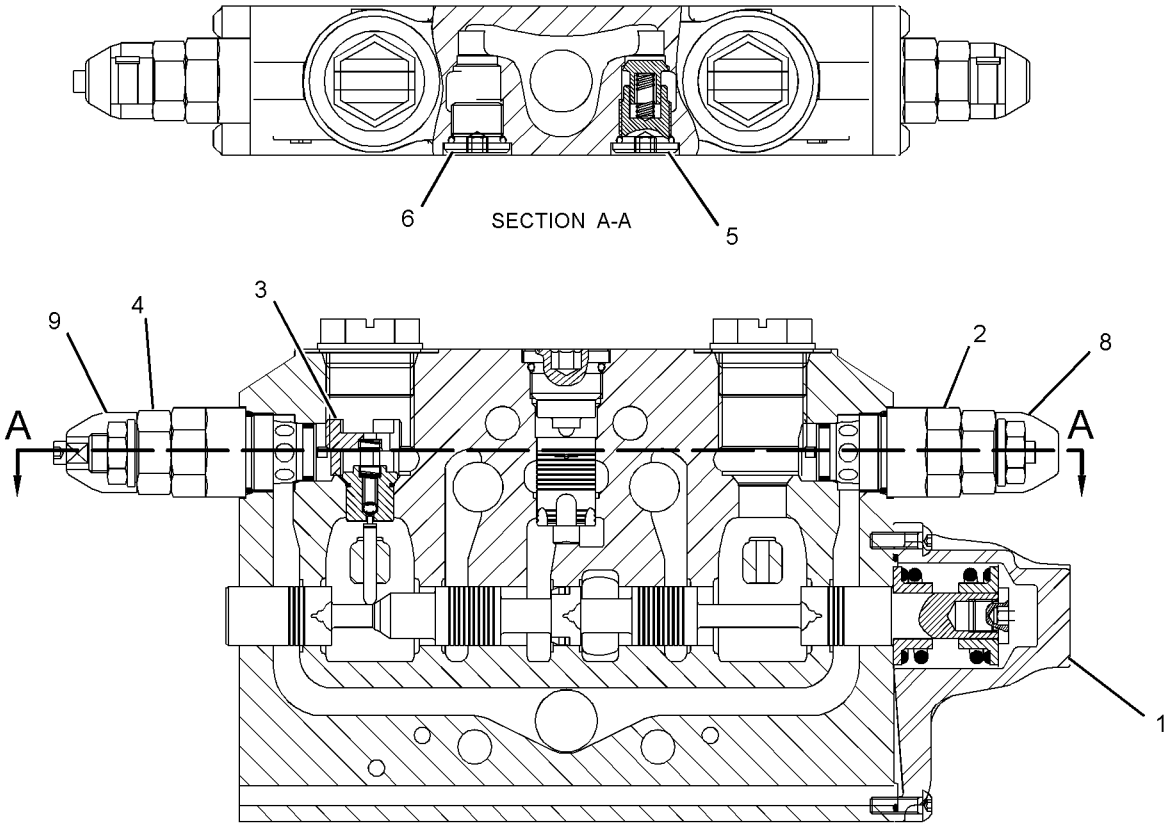

GRAPHIC #1 **<END>** g01301840

269-1063 VALVE GP-CONTROL–STICK

S/N: EAT1-UP

PART OF 266-2556 VALVE GP-BANK 6, 266-2557 VALVE GP-BANK 7, 266-2558 VALVE GP-BANK 8

AN ATTACHMENT

TYPE 2

SMCS-5051 **i02646100**

NOTE	REF NO	GRAPHIC REF	PART NUMBER	QTY	PART NAME 1 2 3 4 5 6 (PRODUCT LEVEL)	SEE PAGE
	1	1	**257-7734**	1	KIT-COVER (CONTROL VALVE)	
					(INCLUDES BOLTS, SEAL, COVER, PLUG, SPRING & RETAINERS)	
C	2	1	**266-3590**	2	VALVE GP-RELIEF	
					(EACH INCLUDES)	
		1	**8J-2413**	1	SEAL-O-RING	
		1	**095-1751**	1	SEAL-O-RING	
		1	**169-1616**	1	RING-BACKUP	
	3	1	**257-7730**	1	KIT-POPPET (CONTROL VALVE)	
					(INCLUDES POPPET AS & RODS)	
	5	1	**257-7733**	1	VALVE GP-CHECK	
		1	**122-9250**	1	SEAL-O-RING	
	6	1	**257-7729**	1	PLUG GP-CONTROL VALVE	
		1	**122-9250**	1	SEAL-O-RING	
C	8	1	**257-0468**	2	CAP-PROTECTION	

C-CHANGE FROM PREVIOUS TYPE

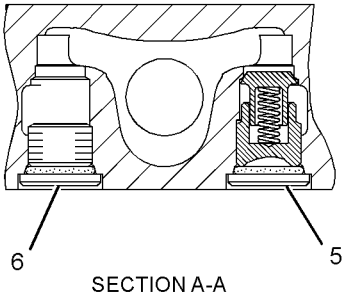

SECTION A-A

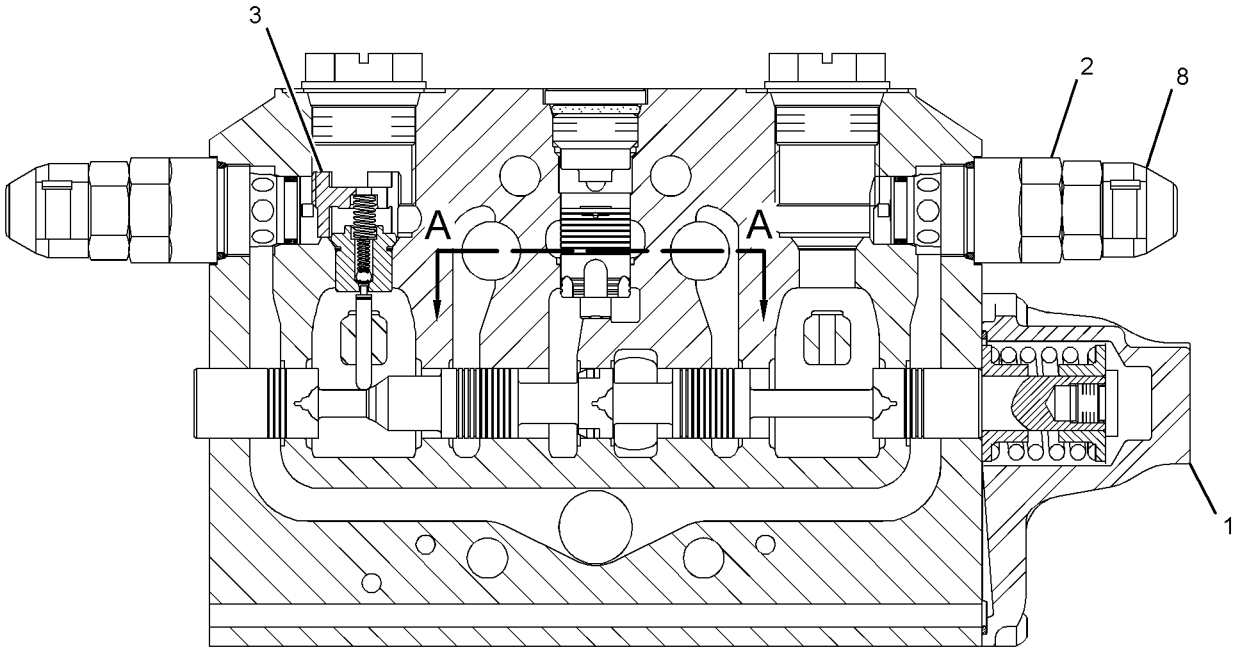

GRAPHIC #1 **<END>** g01338729

HYDRAULIC SYSTEM

269-1064 VALVE GP-CONTROL–SWING

S/N: EAT1-UP
PART OF 266-2556 VALVE GP-BANK 6, 266-2557 VALVE GP-BANK 7, 266-2558 VALVE GP-BANK 8
AN ATTACHMENT

SMCS-5051 **i02447301**

NOTE	REF NO	GRAPHIC REF	PART NUMBER	QTY	PART NAME 1 2 3 4 5 6 (PRODUCT LEVEL)	SEE PAGE
	1	1	**257-5571**	1	KIT-COVER	
					(INCLUDES BOLTS, SEALS, COVER, PLUG, SPRING & RETAINERS)	
	2	1	**266-2588**	2	VALVE GP-RELIEF	
					(EACH INCLUDES)	
		1	**8J-2413**	1	SEAL-O-RING	
		1	**095-1751**	1	SEAL-O-RING	
		1	**169-1616**	1	RING-BACKUP	
	3	1	**227-1186**	2	VALVE AS-CHECK	
	4	1	**257-7731**	1	MANIFOLD GP-HYDRAULIC	
		1	**5D-6543**	1	SEAL-O-RING	
		1	**5F-9144**	3	SEAL-O-RING	
M		1	**8C-8580**	4	BOLT-SOCKET HEAD (M5X0.8X16-MM)	
	5	1	**257-0468**	2	CAP-PROTECTION	

M-METRIC PART

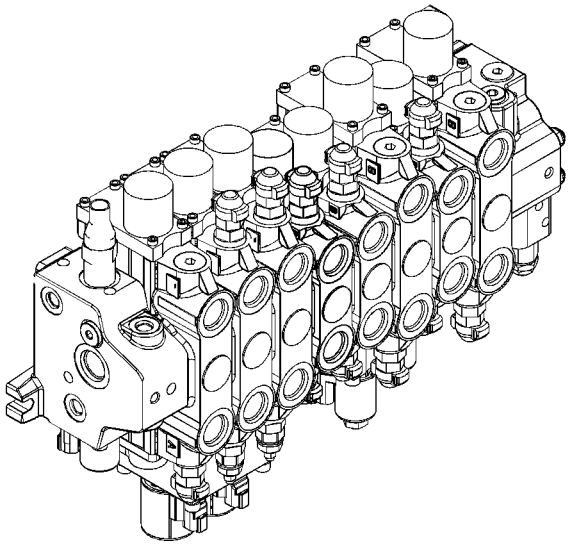

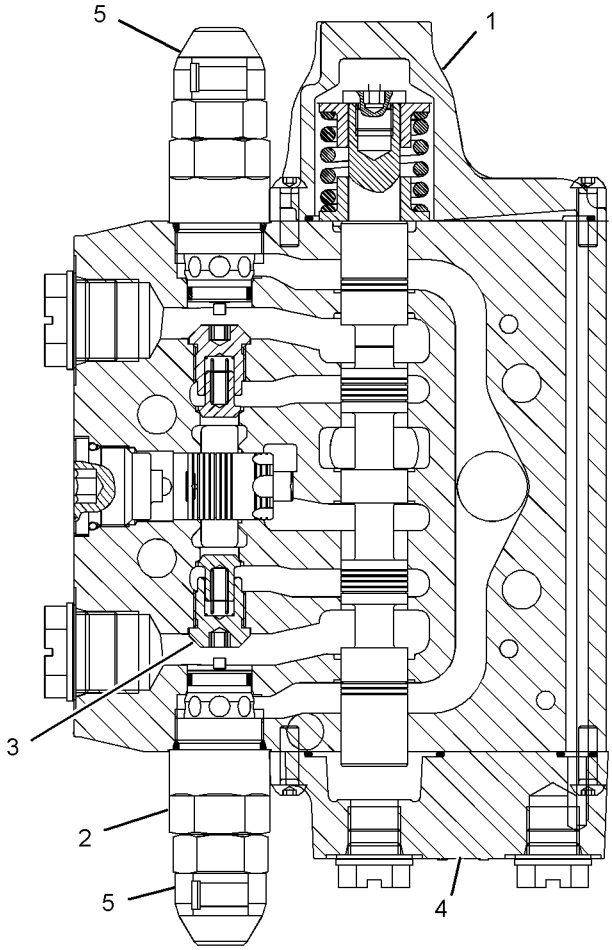

GRAPHIC #1 **<END>** g01225654

269-1065 VALVE GP-CONTROL–BUCKET

S/N: EAT1-UP

PART OF 266-2556 VALVE GP-BANK 6, 266-2557 VALVE GP-BANK 7, 266-2558 VALVE GP-BANK 8

AN ATTACHMENT

SMCS-5051 **i02447303**

NOTE	REF NO	GRAPHIC REF	PART NUMBER	QTY	PART NAME 1 2 3 4 5 6 (PRODUCT LEVEL)	SEE PAGE
	1	1	**257-7734**	1	KIT-COVER (CONTROL VALVE)	
					(INCLUDES BOLT, SEAL, COVER, PLUG, SPRING & RETAINERS)	
	2	1	**266-3591**	2	VALVE GP-RELIEF	
					(EACH INCLUDES)	
		1	**8J-2413**	1	SEAL-O-RING	
		1	**095-1751**	1	SEAL-O-RING	
		1	**169-1616**	1	RING-BACKUP	
	3	1	**227-1186**	2	VALVE AS-CHECK	
	4	1	**257-7731**	1	MANIFOLD GP-HYDRAULIC	
		1	**5D-6543**	1	SEAL-O-RING	
		1	**5F-9144**	3	SEAL-O-RING	
M		1	**8C-8580**	4	BOLT-SOCKET HEAD (M5X0.8X16-MM)	
	5	1	**257-0468**	2	CAP-PROTECTION	

M-METRIC PART

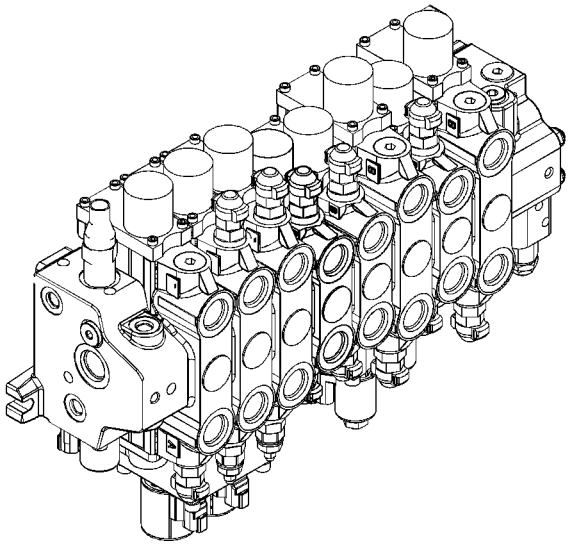

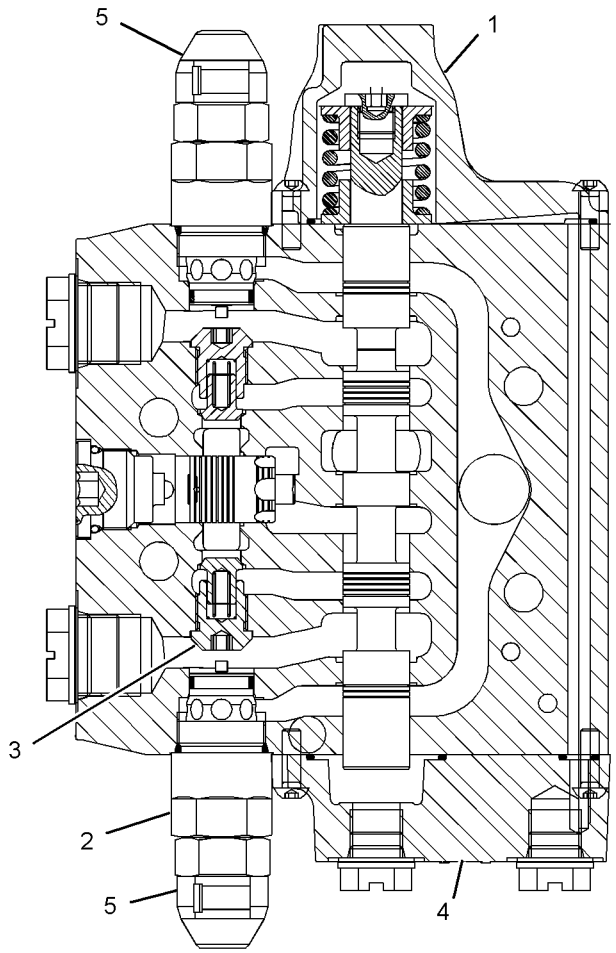

GRAPHIC #1 **<END>** g01225654

269-1066 VALVE GP-CONTROL—EXTENDABLE STICK

S/N: EAT1-UP

PART OF 266-2557 VALVE GP-BANK 7, 266-2558 VALVE GP-BANK 8 AN ATTACHMENT

SMCS-5051 **i02447366**

NOTE	REF NO	GRAPHIC REF	PART NUMBER	QTY	PART NAME 1 2 3 4 5 6 (PRODUCT LEVEL)	SEE PAGE
	1	1	**257-7734**	1	KIT-COVER (CONTROL VALVE)	
					(INCLUDES BOLTS, SEAL, COVER, PLUG, SPRING & RETAINERS)	
	2	1	**227-1191**	1	PLUG AS	
		1	**8J-2413**	1	SEAL-O-RING	
		1	**095-1751**	1	SEAL-O-RING	
		1	**169-1616**	1	RING-BACKUP	
	3	1	**257-7730**	1	KIT-POPPET (CONTROL VALVE)	
					(INCLUDES POPPET AS & RODS)	
	4	1	**257-0475**	1	VALVE GP-RELIEF	
		1	**8J-2413**	1	SEAL-O-RING	
		1	**095-1751**	1	SEAL-O-RING	
		1	**169-1616**	1	RING-BACKUP	
	5	1	**257-7733**	1	VALVE GP-CHECK	
		1	**122-9250**	1	SEAL-O-RING	
	6	1	**257-7729**	1	PLUG GP-CONTROL VALVE	
		1	**122-9250**	1	SEAL-O-RING	
Y	7	1	*179-3543*	1	MANIFOLD & SOLENOID GP-CONTROL	505
	8	1	**5F-9144**	3	SEAL-O-RING	
	9	1	**5D-6543**	1	SEAL-O-RING	
M	10	1	**095-0642**	4	BOLT-SOCKET HEAD (M5X0.8X50-MM)	
	11	1	**257-0468**	1	CAP-PROTECTION	

M-METRIC PART
Y-SEPARATE ILLUSTRATION

269-1066 VALVE GP-CONTROL *(contd.)* **i02447366**

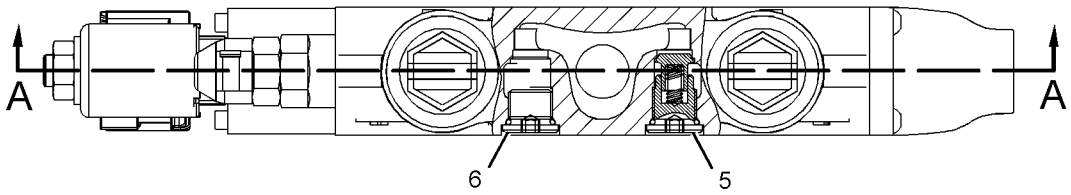

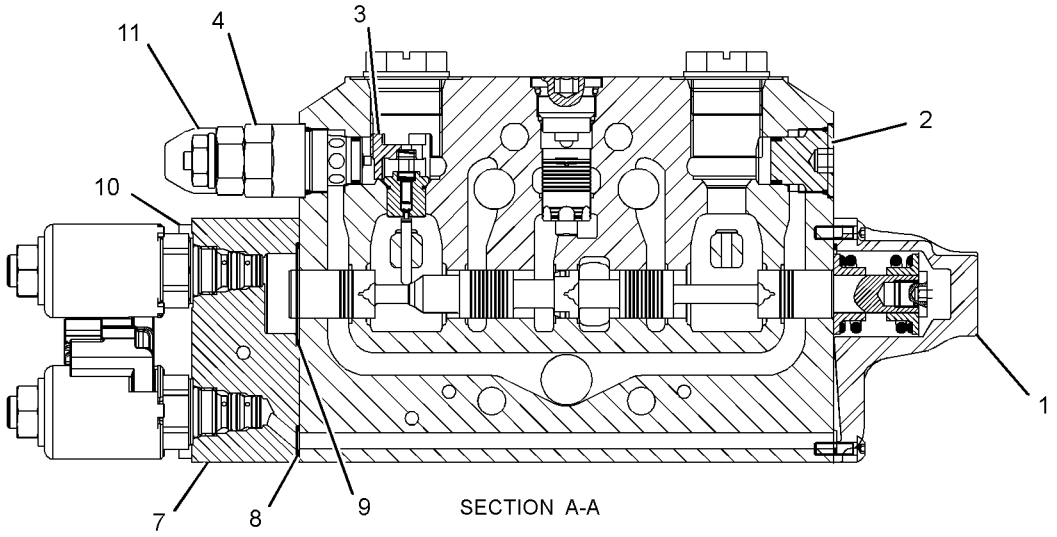

GRAPHIC #1 **<END>** g01234092

HYDRAULIC SYSTEM

269-1067 VALVE GP-CONTROL–AUXILIARY

S/N: EAT1-UP
PART OF 266-2558 VALVE GP-BANK 8
AN ATTACHMENT

SMCS-5051 **i02447424**

NOTE	REF NO	GRAPHIC REF	PART NUMBER	QTY	PART NAME 1 2 3 4 5 6 (PRODUCT LEVEL)	SEE PAGE
	1	1	**257-7734**	1	KIT-COVER (CONTROL VALVE)	
					(INCLUDES BOLTS, SEAL, COVER, PLUG, SPRING & RETAINERS)	
	2	1	**257-0475**	2	VALVE GP-RELIEF	
					(EACH INCLUDES)	
		1	**8J-2413**	1	SEAL-O-RING	
		1	**095-1751**	1	SEAL-O-RING	
		1	**169-1616**	1	RING-BACKUP	
	3	1	**227-1186**	2	VALVE AS-CHECK	
Y	4	1	*179-3543*	1	MANIFOLD & SOLENOID GP-CONTROL	505
	5	1	**5F-9144**	3	SEAL-O-RING	
	6	1	**5D-6543**	1	SEAL-O-RING	
M	7	1	**095-0642**	4	BOLT-SOCKET HEAD (M5X0.8X50-MM)	
	8	1	**257-0468**	2	CAP-PROTECTION	

M-METRIC PART
Y-SEPARATE ILLUSTRATION

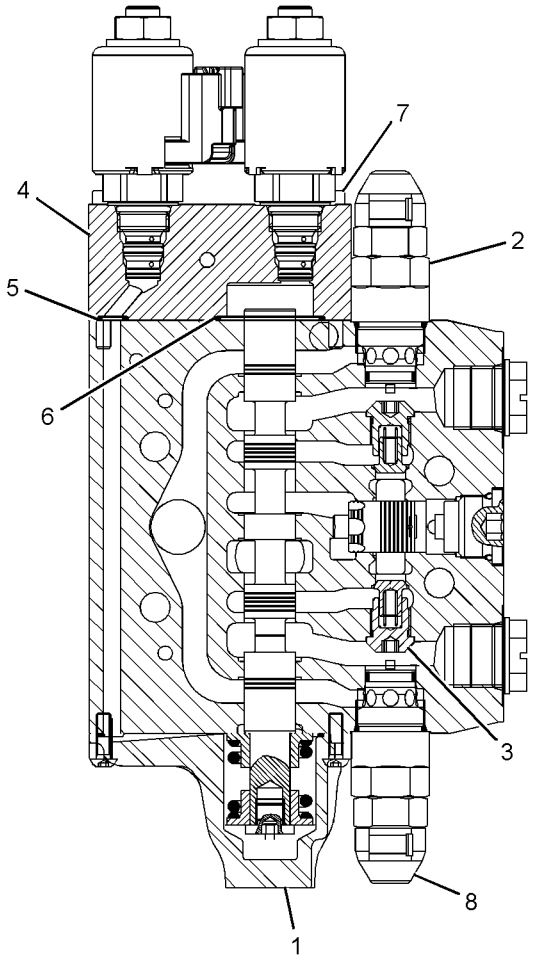

GRAPHIC #1 **<END>** g01225750

269-1091 VALVE GP-CONTROL–LIFT

S/N: EAT1-UP

PART OF 266-2552 VALVE GP-BANK 2, 266-2553 VALVE GP-BANK 3

AN ATTACHMENT

SMCS-5051 **i03514463**

NOTE	REF NO	GRAPHIC REF	PART NUMBER	QTY	PART NAME 1 2 3 4 5 6 (PRODUCT LEVEL)	SEE PAGE
	1	1	**252-5068**	1	KIT-COVER	
					(INCLUDES SEAL-LIP, SPACERS, RETAINERS, SEAL-O-RING, HOUSING, SPRINGS, HOUSING-BALL, BALLS, RINGS, COVER & BOLTS)	
J	2	1	**252-5069**	1	KIT-ACTUATOR	
					(INCLUDES BOOT, RETAINER, BOLTS, SPACER, SEAL-LIP & TANG)	
	3	1	**227-1191**	2	PLUG AS	
					(EACH INCLUDES)	
		1	**8J-2413**	1	SEAL-O-RING	
		1	**095-1751**	1	SEAL-O-RING	
		1	**169-1616**	1	RING-BACKUP	
	4	1	**227-1186**	2	VALVE AS-CHECK	
					AVAILABLE REPAIR KIT(S):	
J			**247-4981**	1	KIT-BOOT	
					(INCLUDES BOOT & RETAINER)	

J-(KIT MARKED J SERVICES PARTS MARKED J)

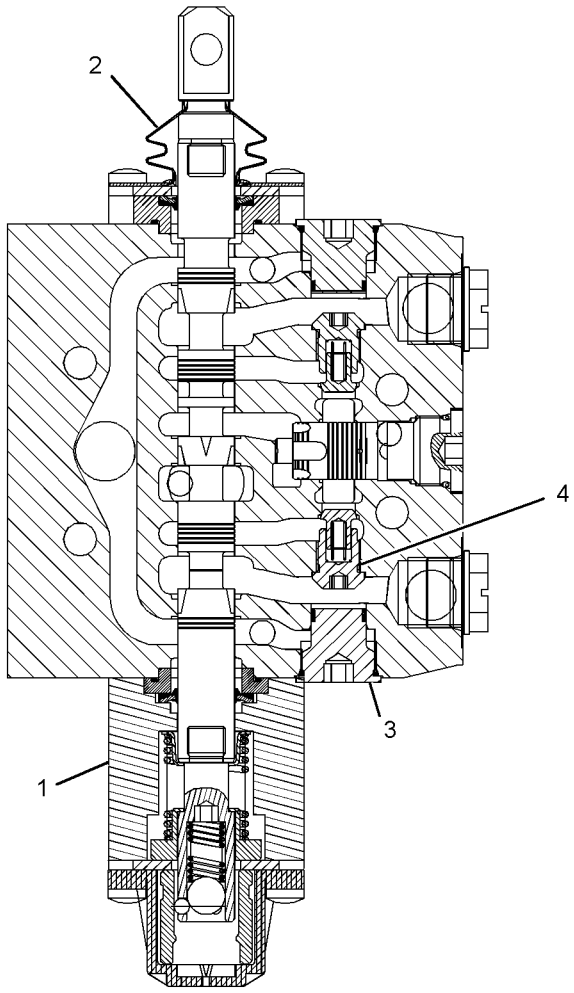

GRAPHIC #1 **<END>** g01232094

HYDRAULIC SYSTEM

269-1092 VALVE GP-CONTROL–TILT

S/N: EAT1-UP

PART OF 266-2552 VALVE GP-BANK 2, 266-2553 VALVE GP-BANK 3

AN ATTACHMENT

SMCS-5051 **i03514481**

NOTE	REF NO	GRAPHIC REF	PART NUMBER	QTY	PART NAME 1 2 3 4 5 6 (PRODUCT LEVEL)	SEE PAGE
	1	1	**257-7737**	1	KIT-SOLENOID	
					(INCLUDES SEAL, SPACER, RETAINER, SPRING, PLUNGER, COIL AS, SCREW, ARMATURE, SNAP-RING & COVER)	
	2	1	**257-7741**	1	KIT-ACTUATOR	
					(INCLUDES KIT-BOOT, SPACER, SEAL, BOLTS & TANG)	
	3	1	**266-2586**	1	VALVE GP-RELIEF	
		1	**8J-2413**	1	SEAL-O-RING	
		1	**095-1751**	1	SEAL-O-RING	
		1	**169-1616**	1	RING-BACKUP	
	4	1	**266-3590**	1	VALVE GP-RELIEF	
		1	**8J-2413**	1	SEAL-O-RING	
		1	**095-1751**	1	SEAL-O-RING	
		1	**169-1616**	1	RING-BACKUP	
	5	1	**227-1186**	2	VALVE AS-CHECK	
	6	1	**257-0468**	2	CAP-PROTECTION	

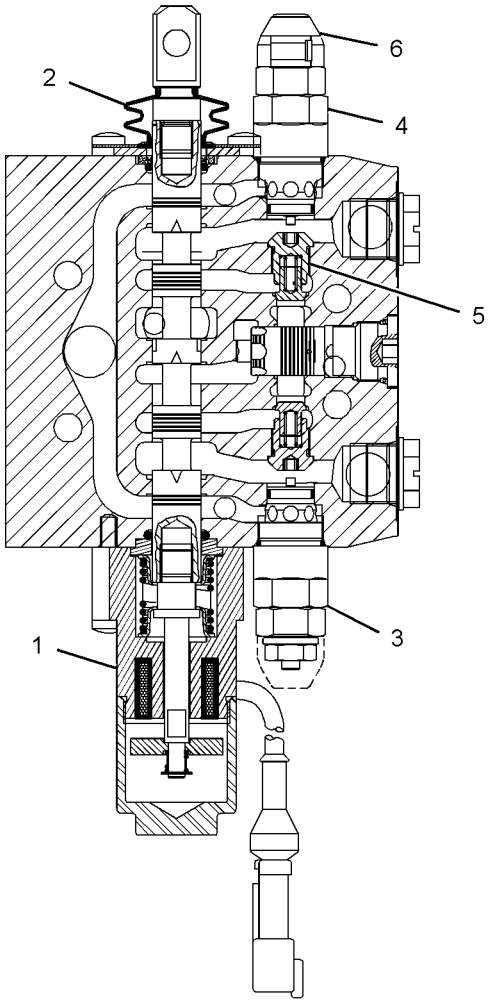

GRAPHIC #1 **<END>** g01234141

269-1093 VALVE GP-CONTROL–AUXILIARY

S/N: EAT1-UP
PART OF 266-2553 VALVE GP-BANK 3
AN ATTACHMENT

SMCS-5051 **i03514483**

NOTE	REF NO	GRAPHIC REF	PART NUMBER	QTY	PART NAME 1 2 3 4 5 6 (PRODUCT LEVEL)	SEE PAGE
	1	1	**257-7739**	1	KIT-COVER	
					(INCLUDES SEAL-LIP, SPACER, SPRING-CENTERING, RETAINER-SPRING, BOLT-RETENTION, COVER & BOLT)	
	2	1	**257-7741**	1	KIT-ACTUATOR	
					(INCLUDES KIT-BOOT, SPACER, SEAL-LIP,BOLT & TANG)	
	3	1	**266-2587**	1	VALVE GP-RELIEF	
		1	**8J-2413**	1	SEAL-O-RING	
		1	**095-1751**	1	SEAL-O-RING	
		1	**169-1616**	1	RING-BACKUP	
	4	1	**227-1191**	1	PLUG AS	
		1	**8J-2413**	1	SEAL-O-RING	
		1	**095-1751**	1	SEAL-O-RING	
		1	**169-1616**	1	RING-BACKUP	
	5	1	**227-1186**	2	VALVE AS-CHECK	
	6	1	**257-0468**	1	CAP-PROTECTION	

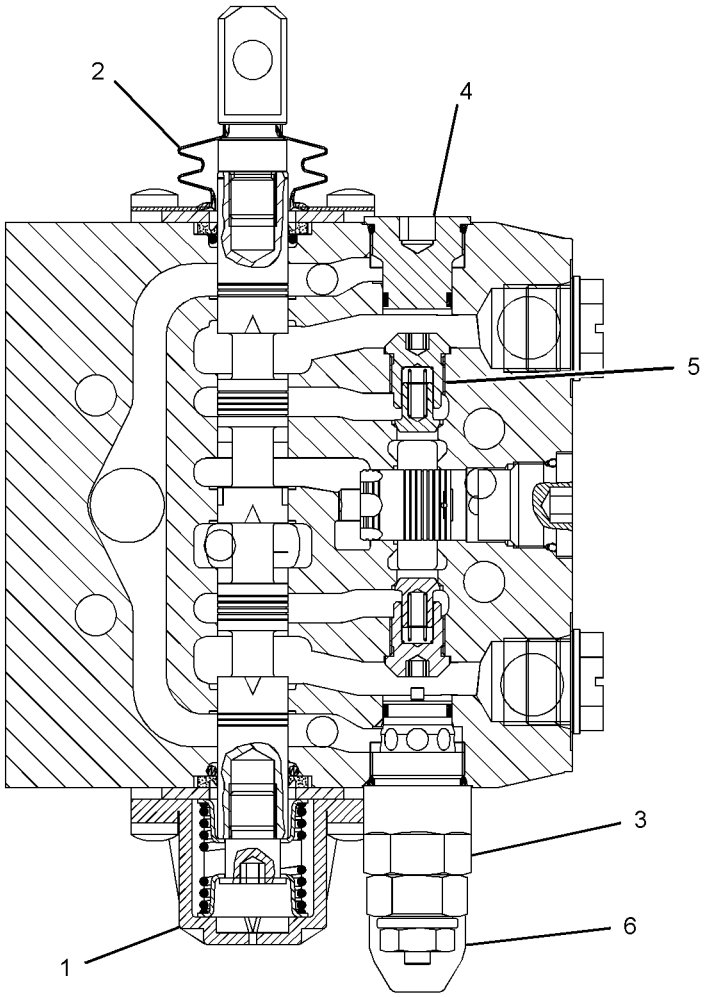

GRAPHIC #1 **<END>** g01233247

HYDRAULIC SYSTEM

223-4713 VALVE GP-PILOT–TRUCK BODY

S/N: EAT1-UP

PART OF 269-2125 CAB AR-ENCLOSED ROPS, 269-2123, 269-2124 CANOPY AR-OPEN ROPS

AN ATTACHMENT

SMCS-5059 **i03514484**

NOTE	REF NO	GRAPHIC REF	PART NUMBER	QTY	PART NAME 1 2 3 4 5 6 (PRODUCT LEVEL)	SEE PAGE
	1	1	**198-6498**	2	BOOT	
	2	1	**200-4023**	1	KIT-LEVER	
					(INCLUDES LEVER, CAM COVER, PIN & SCREWS)	
	3	1	**158-4466**	2	KIT-SPRING	
					(EACH KIT INCLUDES SPRINGS)	
	4	1	**116-4481**	2	PLATE	
	5	1	**8U-9427**	4	KIT-PLUNGER	
	6	1	**200-4022**	1	KIT-LEVER	
					(INCLUDES LEVER, CAM COVER, PIN & SCREWS)	
	7	1	**198-6515**	1	KIT-SEAL (PILOT VALVE)	
					(INLCUDES O-RINGS)	
M	8	1	**7I-8935**	2	BOLT-SOCKET HEAD (M8X1.25X75-MM)	
M	9	1	**176-8541**	2	NUT (M8X6.5-MM)	

M-METRIC PART

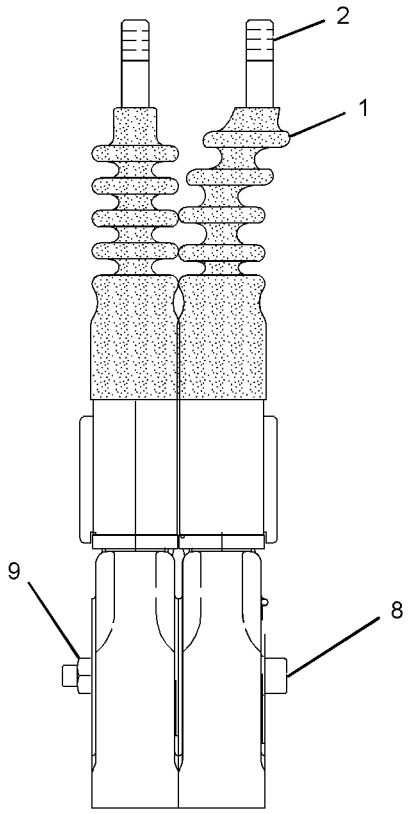

FRONT VIEW

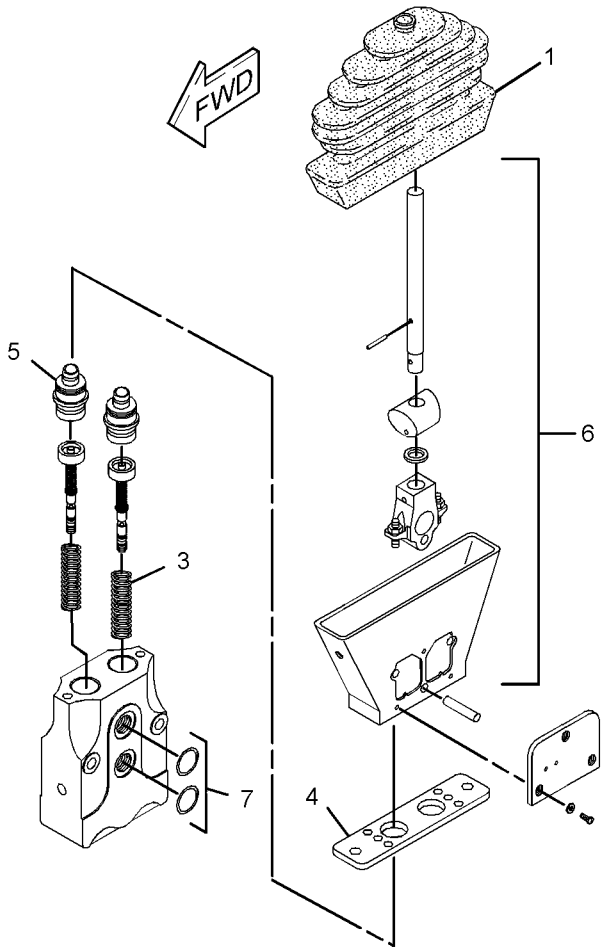

GRAPHIC #1 **<END>** g01233578

223-4715 VALVE GP-PILOT–TRUCK BODY

S/N: EAT1-UP

PART OF 269-2126, 269-2127 CAB AR-ENCLOSED ROPS

AN ATTACHMENT

SMCS-5059 **i02560445**

NOTE	REF NO	GRAPHIC REF	PART NUMBER	QTY	PART NAME 1 2 3 4 5 6 (PRODUCT LEVEL)	SEE PAGE
	1	1	**198-6498**	2	BOOT	
	2	1	**198-6522**	1	KIT-LEVER (PILOT VALVE)	
					(INCLUDES LEVER, CAM , COVER FOR MICROSWITCH, PIN, SCREWS, ARMATURE, SNAP RING & LOCKING PIN)	
	3	1	**198-6516**	2	KIT-SWITCH (PILOT VALVE)	
					(EACH INCLUDES MICROSWITCH, SUPPORT PLATE, SCREWS, WASHERS, CONNECTOR & SOCKETS)	
	4	1	**198-6505**	2	KIT-COIL (PILOT VALVE)	
					(EACH INCLUDES SOLENOID, BOLT & CONNECTOR KIT)	
	5	1	**198-6514**	2	KIT-SENSOR (PILOT VALVE)	
					(EACH INCLUDES SOCKET & SPRINGS)	
	6	1	**116-4481**	2	PLATE	
	7	1	**198-6506**	4	KIT-PLUNGER (PILOT VALVE)	
					(EACH INCLUDES PLUNGER GUIDE, FULL PLUNGER, SNAP RING & RELEASE SWITCH)	
	8	1	**198-6499**	1	KIT-LEVER (PILOT VALVE)	
					(INCLUDES LEVER, LOCKING PIN, CAM COVER FOR MICROSWITCH, PIN, SCREWS, ARMATURE & SNAP RING)	
	9	1	**158-4466**	2	KIT-SPRING (PILOT VALVE)	
					(EACH INCLUDES SPRINGS)	
	10	1	**198-6515**	1	KIT-SEAL (PILOT VALVE)	
					(INCLUDES O-RINGS)	
M	11	1	**7I-8935**	2	BOLT-SOCKET HEAD (M8X1.25X75-MM)	
M	12	1	**176-8541**	2	NUT (M8X6.5-MM)	

M-METRIC PART

223-4715 VALVE GP-PILOT *(contd.)* i02560445

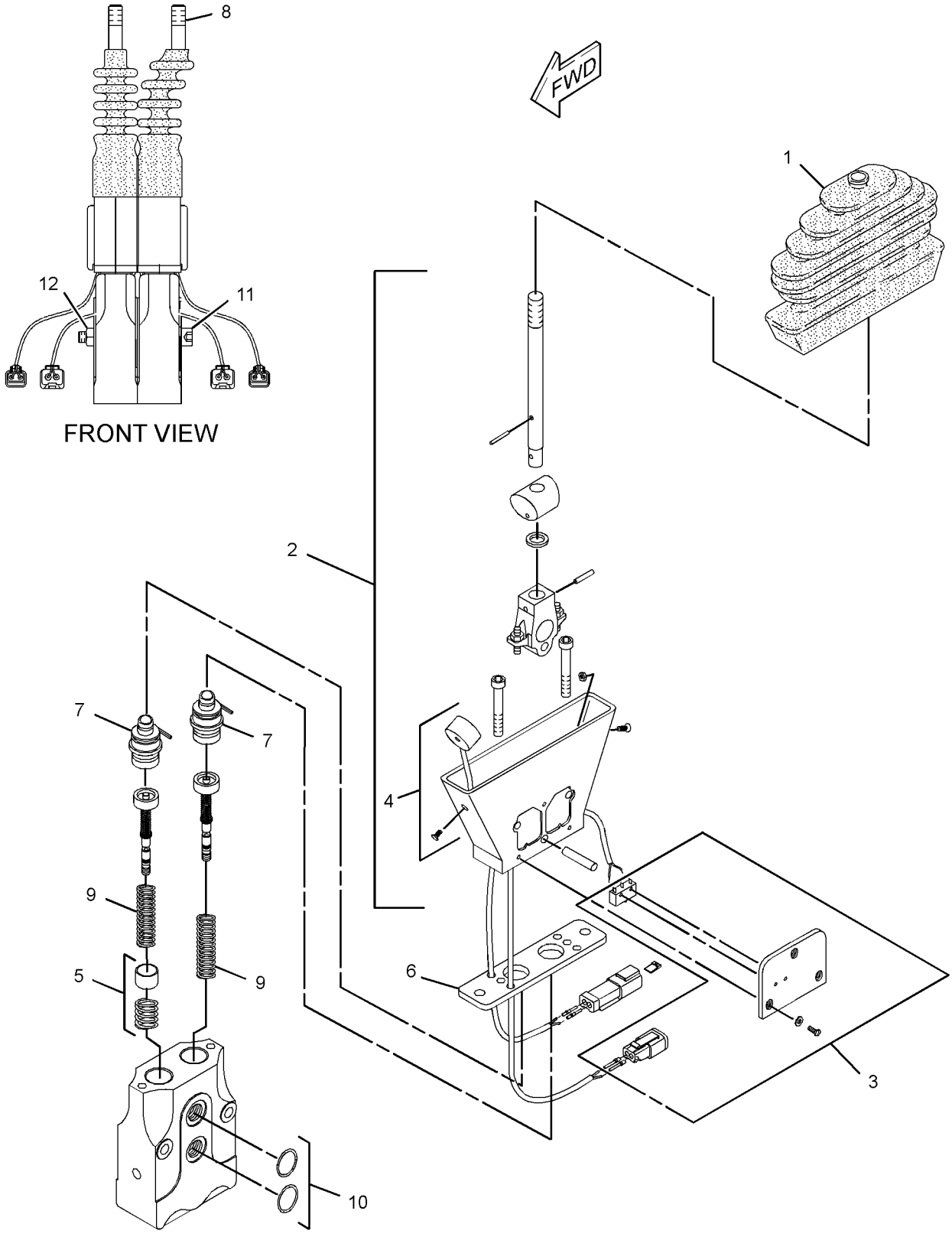

GRAPHIC #1 **<END>** g01268822

299-3932 VALVE GP-PUMP CONTROL–POWER COMPENSATOR

S/N: EAT1-UP

PART OF 267-2755 PUMP GP-PISTON

SMCS-5086, 5455 **i02952660**

NOTE	REF NO	GRAPHIC REF	PART NUMBER	QTY	PART NAME 1 2 3 4 5 6 (PRODUCT LEVEL)	SEE PAGE
	1	1	**103-5520**	1	CARRIER-PIN	
	2	1	**214-0592**	1	GASKET	
M	3	1	**6V-5683**	1	BOLT (M6X1X16-MM)	
M	4	1	**3T-0849**	2	BOLT-SOCKET HEAD (M6X1X25-MM)	
	5	1	**3C-8388**	1	PIN-ROLL	
	6	1	**6V-8236**	1	PIN-SPRING	
	7	1	**105-1440**	1	CAP	
	8	1	**6V-4589**	1	SEAL-O-RING	
	9	1	**033-6044**	1	SEAL-O-RING	

M-METRIC PART

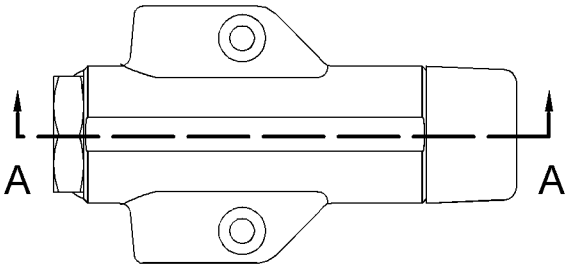

VIEW C-C

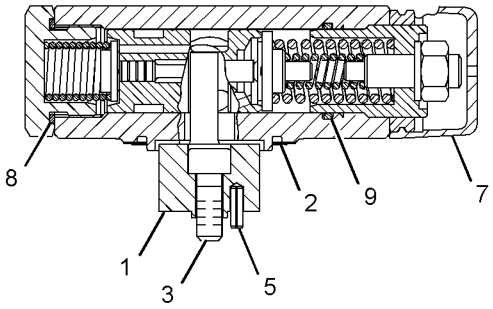

SECTION A-A

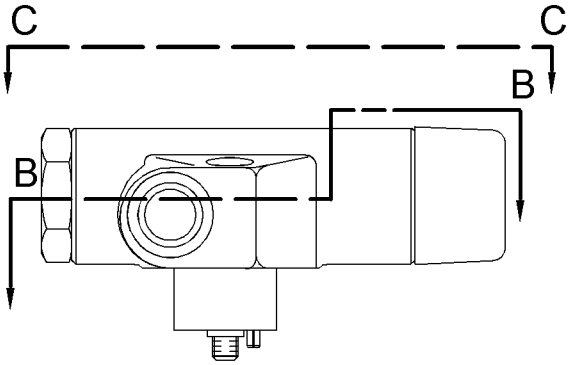

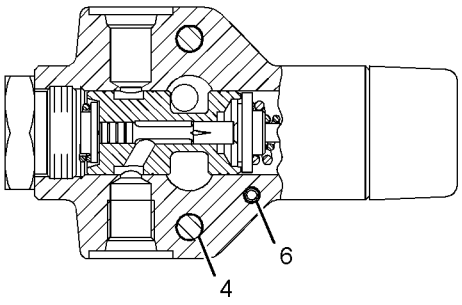

SECTION B-B

GRAPHIC #1 **<END>** g01514009

HYDRAULIC SYSTEM

185-4254 VALVE GP-SOLENOID–12-VOLT

S/N: EAT1-UP
PART OF 179-3543 MANIFOLD & SOLENOID GP-CONTROL
AN ATTACHMENT

SMCS-5132, 5479 **i03437588**

NOTE	REF NO	GRAPHIC REF	PART NUMBER	QTY	PART NAME 1 2 3 4 5 6 (PRODUCT LEVEL)	SEE PAGE
	1	1	**226-9629**	1	COIL AS-SOLENOID (12-VOLT)	
	2	1	**164-2108**	1	WASHER (13.03X25.4X2.38-MM THK)	
	3	1	**218-2373**	1	NUT (1/2-28-THD)	

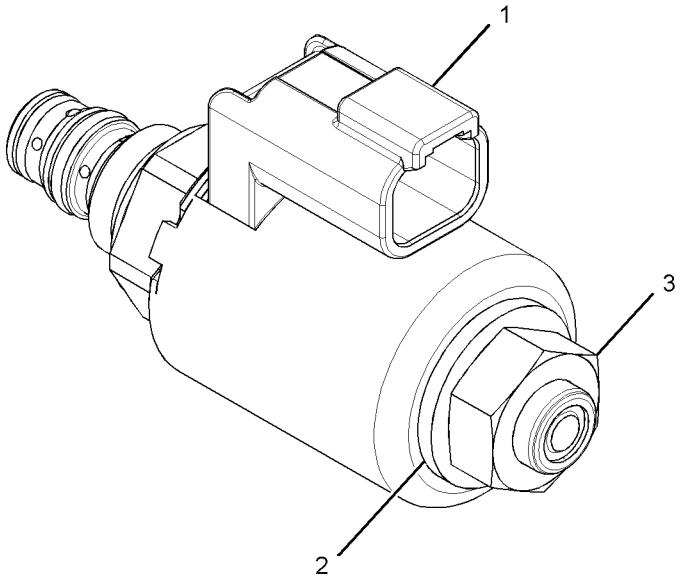

GRAPHIC #1 **<END>** g01794642

227-8378 ARM GP-LIFT

S/N: EAT1-UP

PART OF 213-9300 LOADER AR

SMCS-6118, 6119 **i02639431**

NOTE	REF NO	GRAPHIC REF	PART NUMBER	QTY	PART NAME 1 2 3 4 5 6 (PRODUCT LEVEL)	SEE PAGE
B	1	1	**9R-0109**	10	WASHER (41X64X3-MM THK)	
	2	1	**9R-0158**	2	WASHER (46X69X3-MM THK)	
	3	1	**9R-3182**	2	PIN	
B	4	1	**9R-4066**	2	WASHER (61X98X4-MM THK)	
B	5	1	**9R-8390**	2	SPACER (61X98X1-MM THK)	
	6	1	**9R-9373**	1	PIN AS	
	7	1	**127-8987**	2	RING-RETAINING	
	8	1	**128-5010**	1	PIN	
B	9	1	**128-7903**	2	SPACER (61X114.3X3-MM THK)	
B	10	1	**128-7905**	2	SPACER (61X114.3X1-MM THK)	
	11	1	**130-5451**	2	PIN	
	12	1	**132-6496**	1	PIN AS	
	13	1	**248-2257**	1	ARM AS-LIFT	
		1	*248-2272*	1	ARM AS (RH)	
		1	**9R-0111**	2	BEARING-SLEEVE	
		1	**9R-6690**	2	BEARING-SLEEVE	
		1	*248-2273*	1	ARM AS (LH)	
		1	**9R-0111**	2	BEARING-SLEEVE	
		1	**9R-6690**	2	BEARING-SLEEVE	
	14	1	**3B-8488**	4	FITTING-GREASE	
	15	1	**3B-8489**	5	FITTING-GREASE	
	16	1	**6V-3213**	2	RING-RETAINING	
M	17	1	**6V-7687**	2	LOCKNUT (M12X1.75-THD)	
	18	1	**6V-8144**	6	RING-RETAINING	
M	19	1	**8T-4176**	2	BOLT (M12X1.75X90-MM)	
B	20	1	**111-4337**	6	WASHER (46X70X1-MM THK)	
B	21	1	**119-4594**	4	WASHER (41X64X1-MM THK)	

B-USE AS REQUIRED
M-METRIC PART

227-8378 **ARM GP-LIFT** *(contd.)* **i02639431**

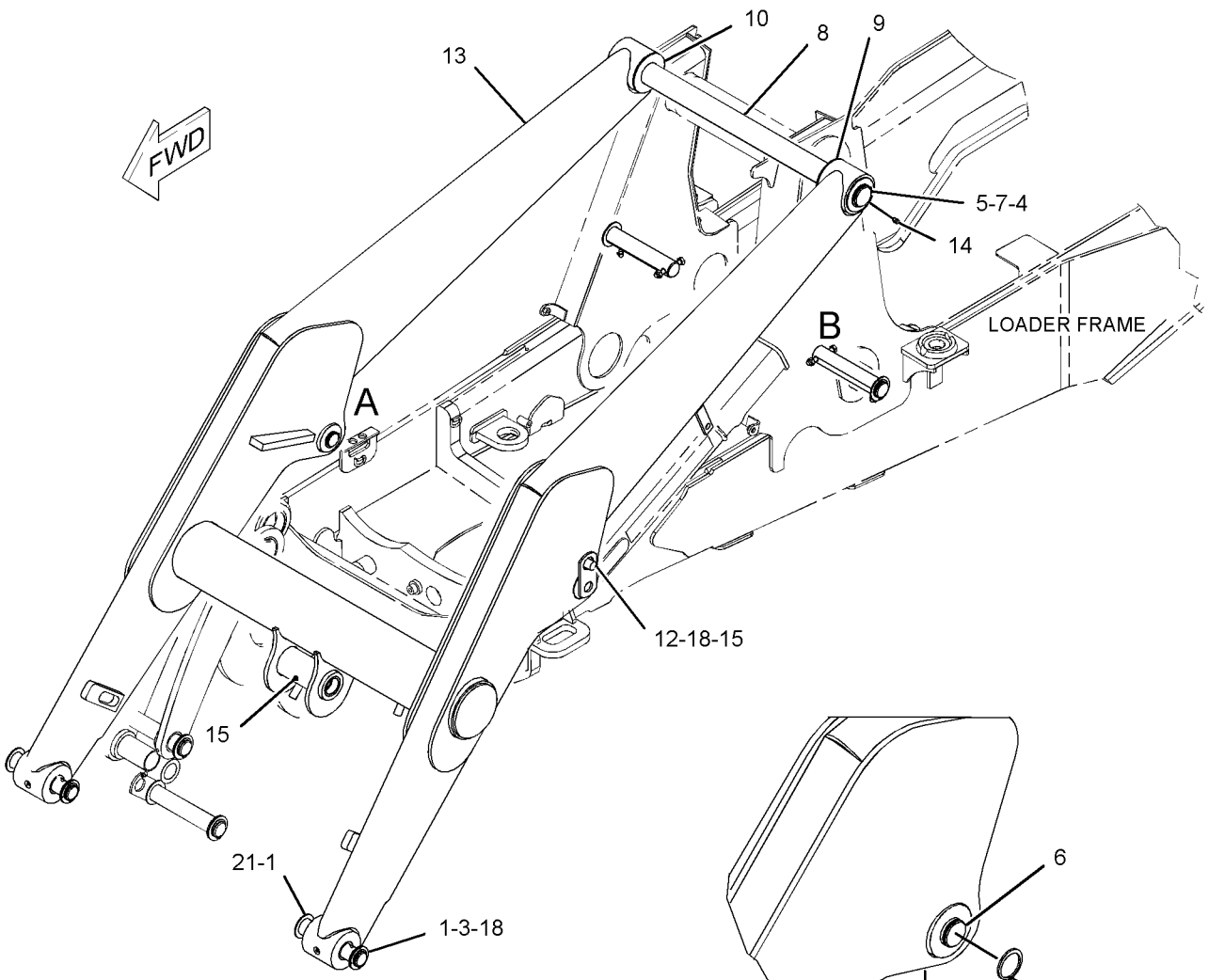

VIEW OF AREA A

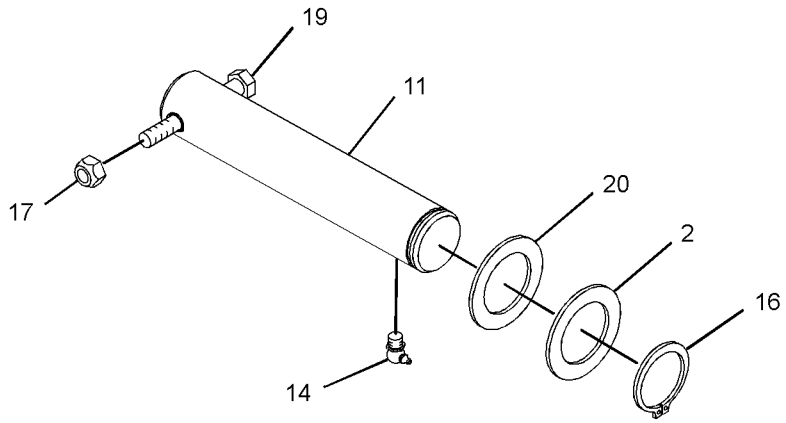

VIEW OF AREA B

GRAPHIC #1 **<END>** g01328523

IMPLEMENTS

209-9932 BOOM GP

S/N: EAT1-UP

PART OF 213-9304, 213-9309, 291-9207 BACKHOE AR-EXTENDABLE STICK, 213-9301, 213-9306, 291-9206 BACKHOE AR-STANDARD STICK AN ATTACHMENT

SMCS-6501 **i02942907**

NOTE	REF NO	GRAPHIC REF	PART NUMBER	QTY	PART NAME 1 2 3 4 5 6 (PRODUCT LEVEL)	SEE PAGE
B	1	1	**254-7211**	4	PLATE	
	2	1	**317-2486**	1	BOOM AS	
	2A	1	**217-1460**	2	BEARING-SLEEVE	
	2B	1	**220-1013**	2	BEARING-SLEEVE	
	3	1	**213-6717**	1	PIN	
	4	1	**095-0930**	2	RING-RETAINING (EXTERNAL)	
	5	1	**3B-8488**	3	FITTING-GREASE	
	6	1	**3B-8489**	1	FITTING-GREASE	

B-USE AS REQUIRED

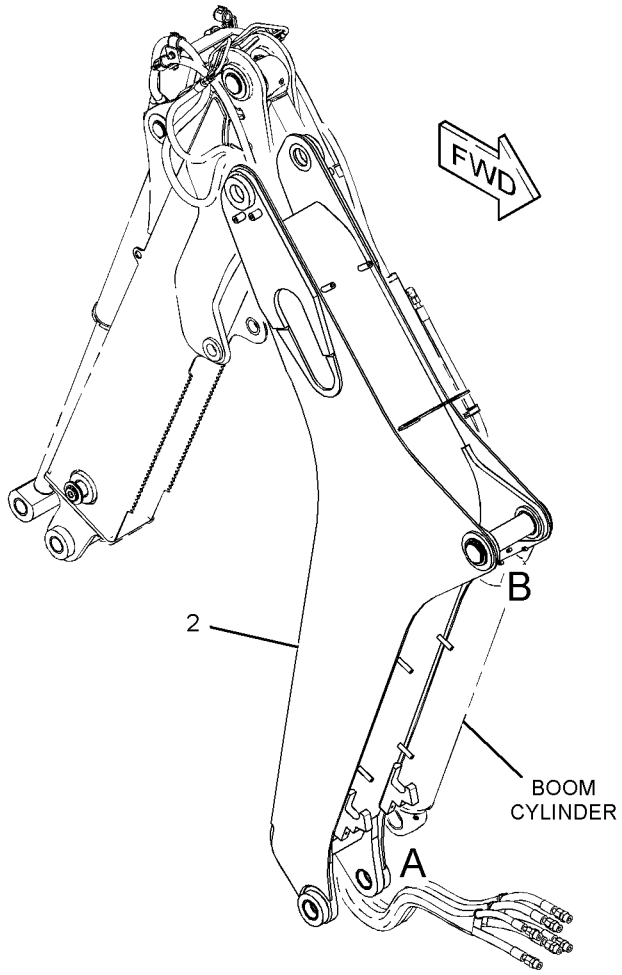

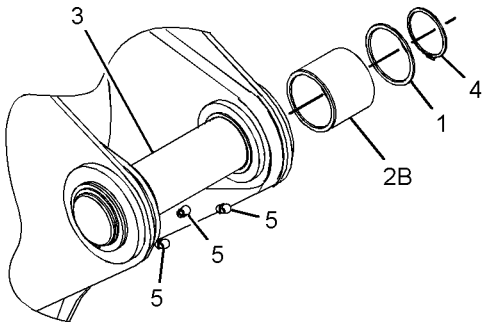

VIEW OF AREA B (EXPLODED)

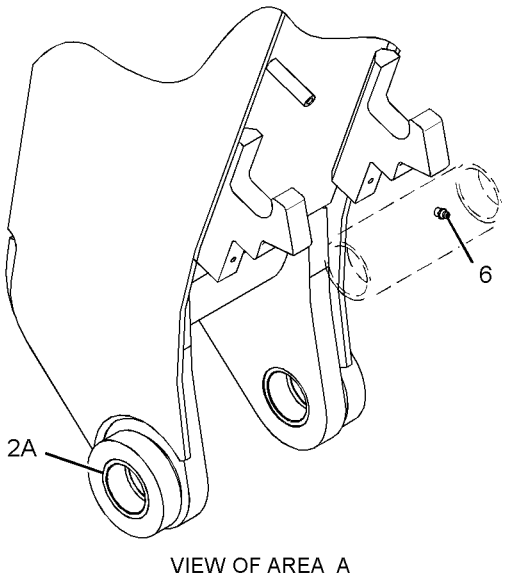

VIEW OF AREA A

GRAPHIC #1 **<END>** g01525269

218-0745 BRACE GP-LIFT CYLINDER

S/N: EAT1-UP

PART OF 213-9300 LOADER AR

SMCS-7507 **i02531165**

NOTE	REF NO	GRAPHIC REF	PART NUMBER	QTY	PART NAME 1 2 3 4 5 6 (PRODUCT LEVEL)	SEE PAGE
	1	1	**9R-0109**	1	WASHER (41X64X3-MM THK)	
	2	1	**9R-0189**	1	PIN	
	3	1	**132-6497**	1	BRACE AS (LIFT CYLINDER)	
	4	1	**9R-5301**	1	PIN-COTTER	

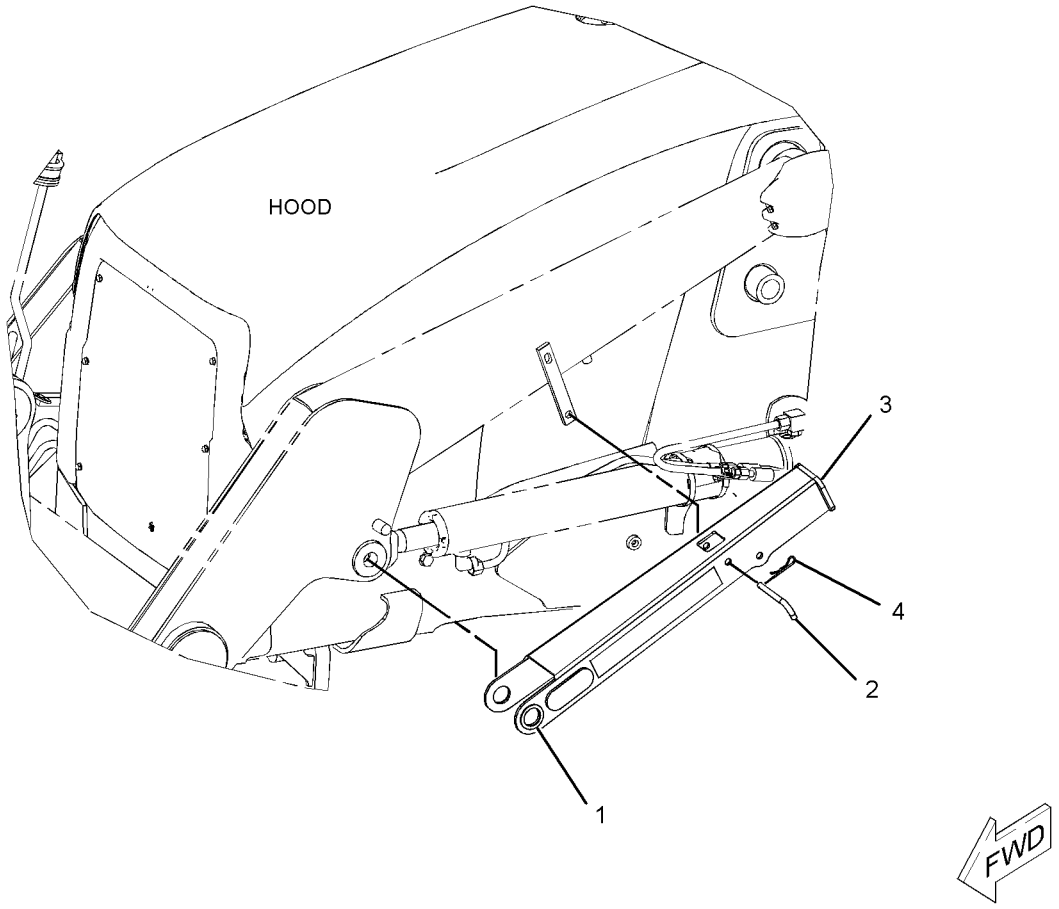

GRAPHIC #1 **<END>** g01183429

270-3204 GUARD GP-BOOM

S/N: EAT1-UP
AN ATTACHMENT
TYPE 1

SMCS-7150 **i02448779**

NOTE	REF NO	GRAPHIC REF	PART NUMBER	QTY	PART NAME 1 2 3 4 5 6 (PRODUCT LEVEL)	SEE PAGE
	1	1	**270-3205**	1	PLATE AS	
M	2	1	**8T-4184**	4	BOLT (M12X1.75X45-MM)	
	3	1	**8T-4223**	16	WASHER-HARD (13.5X25.5X3-MM THK)	

M-METRIC PART

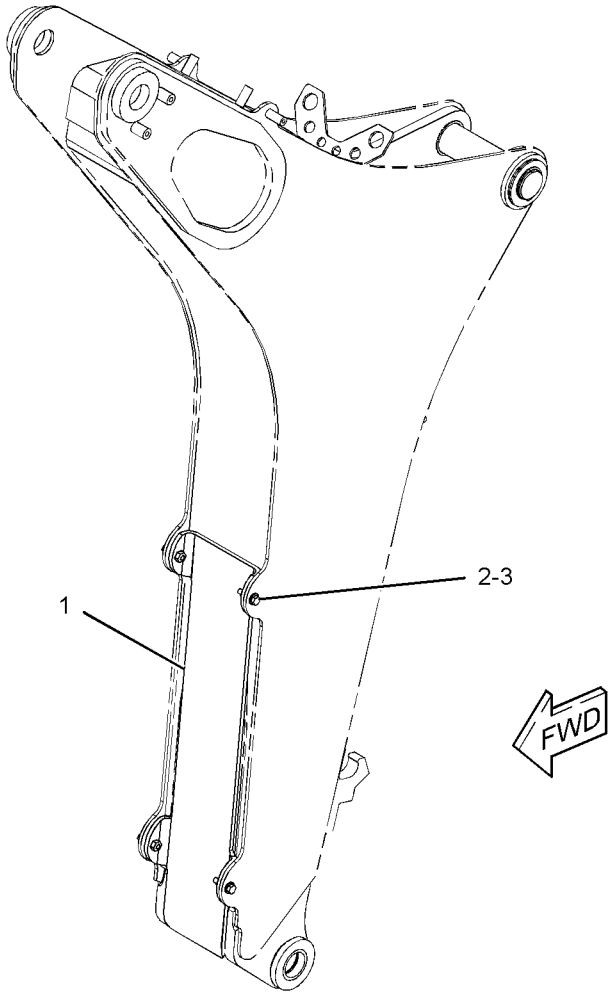

GRAPHIC #1 **<END>** g01230743

IMPLEMENTS

270-3204 GUARD GP-BOOM

S/N: EAT1-UP
AN ATTACHMENT
TYPE 2

SMCS-7150 **i02959805**

NOTE	REF NO	GRAPHIC REF	PART NUMBER	QTY	PART NAME 1 2 3 4 5 6 (PRODUCT LEVEL)	SEE PAGE
C	1	1	**294-5792**	1	PLATE AS	
CM	2	1	**8T-4139**	4	BOLT (M12X1.75X30-MM)	
C	3	1	**8T-4223**	4	WASHER-HARD (13.5X25.5X3-MM THK)	

C-CHANGE FROM PREVIOUS TYPE
M-METRIC PART

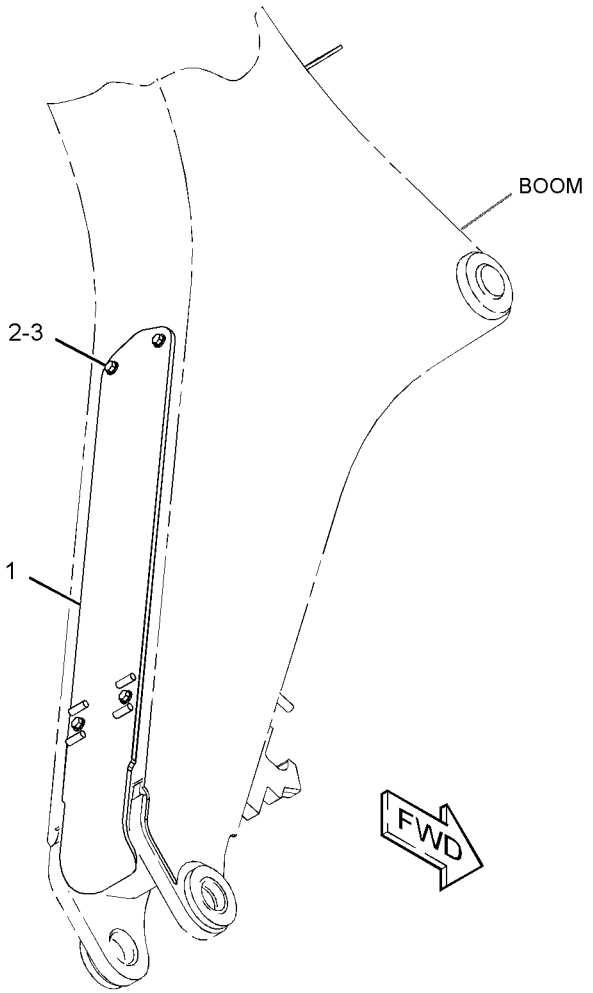

GRAPHIC #1 **<END>** g01514060

IMPLEMENTS

221-4276 LINK GP-THUMB—ADJUSTABLE

S/N: EAT1-UP

PART OF 224-6232, 224-6233, 224-6234, 224-6235 THUMB AR

AN ATTACHMENT

SMCS-6547 **i03514485**

NOTE	REF NO	GRAPHIC REF	PART NUMBER	QTY	PART NAME 1 2 3 4 5 6 (PRODUCT LEVEL)	SEE PAGE
	1	1	**221-4271**	1	LINK AS (OUTER)	
	2	1	**221-4272**	1	LINK AS (INNER)	
	3	1	**224-4527**	1	PIN AS	

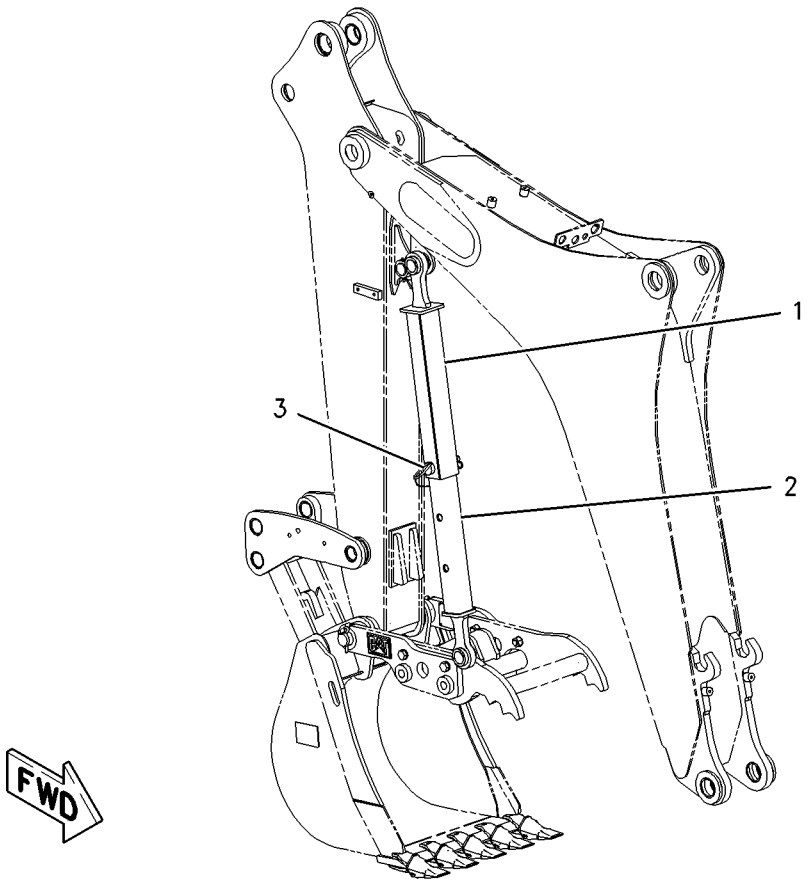

GRAPHIC #1 **<END>** g01003484

213-6692 LINKAGE GP-BACKHOE BUCKET

S/N: EAT1-UP

PART OF 213-9304, 213-9309, 291-9207 BACKHOE AR-EXTENDABLE STICK, 213-9301, 213-9306, 291-9206 BACKHOE AR-STANDARD STICK

AN ATTACHMENT

SMCS-6513 **i02098007**

NOTE	REF NO	GRAPHIC REF	PART NUMBER	QTY	PART NAME 1 2 3 4 5 6 (PRODUCT LEVEL)	SEE PAGE
B	1	1	**9R-0158**	5	WASHER (46X69X3-MM THK)	
B	2	1	**9R-1502**	4	WASHER (56X90X4-MM THK)	
B	3	1	**9R-1510**	9	WASHER (51X82X4-MM THK)	
	4	1	**154-5278**	1	PIN	
	5	1	**154-5279**	1	PIN	
	6	1	**154-5280**	1	PIN	
	7	1	**213-6690**	1	GUIDE AS (RH)	
		1	**9R-0162**	1	BEARING-SLEEVE	
		1	**9R-0170**	1	BEARING	
		1	**213-6687**	1	BEARING-SLEEVE	
	8	1	**213-6691**	1	GUIDE AS (LH)	
		1	**9R-0162**	1	BEARING-SLEEVE	
		1	**9R-0170**	1	BEARING	
		1	**213-6687**	1	BEARING-SLEEVE	
	9	1	**213-6698**	1	PIN	
	10	1	**213-6723**	1	LINK AS	
		1	**9R-0170**	2	BEARING	
		1	**213-6703**	2	BEARING	
	11	1	**239-9435**	1	FILM-INSTRUCTION (LINK)	
	12	1	**3B-5319**	4	PIN-COTTER	
	13	1	**3B-8489**	3	FITTING-GREASE	
	14	1	**6V-4364**	2	RING-RETAINING	
	15	1	**6V-8344**	2	RING-RETAINING	

B-USE AS REQUIRED

213-6692 **LINKAGE GP-BACKHOE BUCKET** *(contd.)* **i02098007**

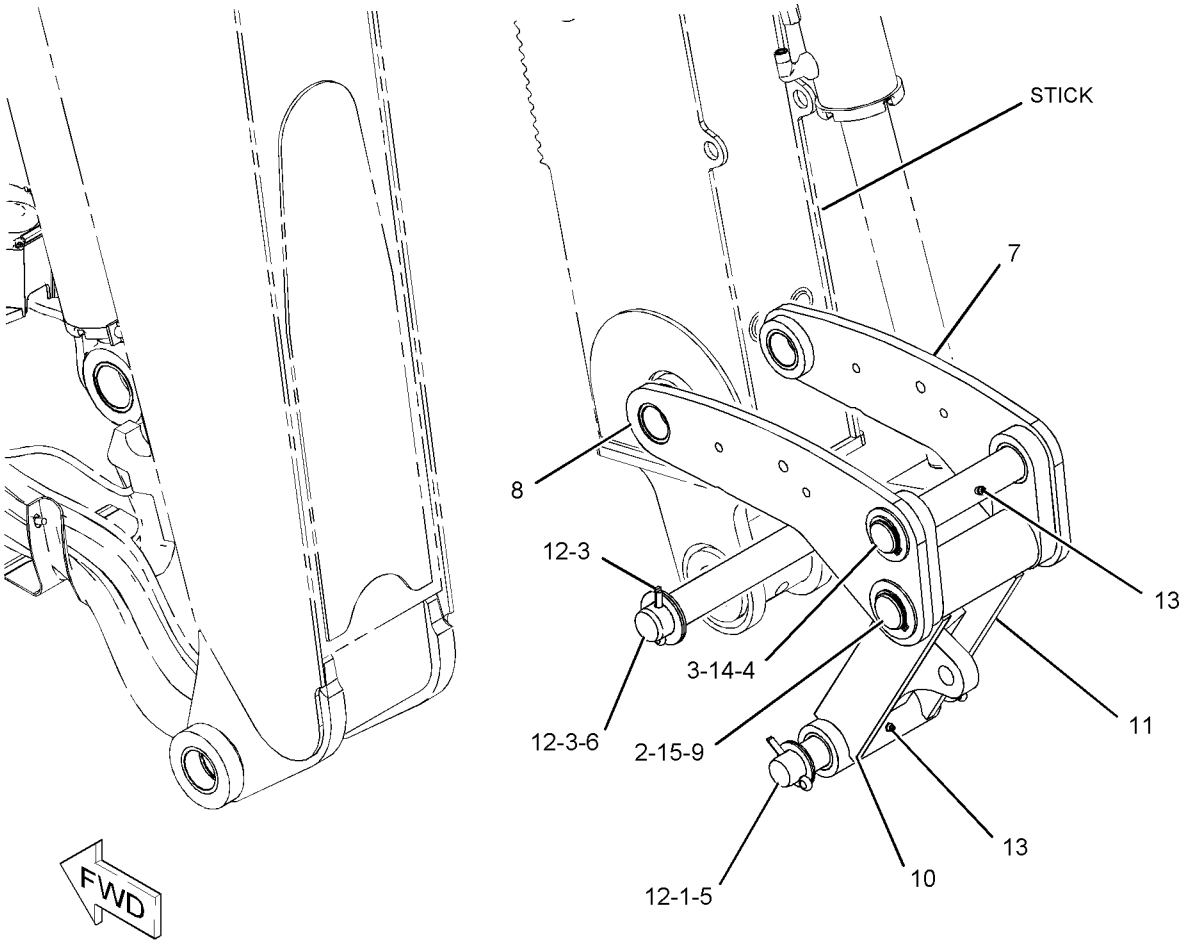

GRAPHIC #1

<END>

g01079508

IMPLEMENTS

202-5720 LINKAGE GP-LOADER BUCKET

S/N: EAT1-UP

PART OF 213-9300 LOADER AR

SMCS-6513 **i01643669**

NOTE	REF NO	GRAPHIC REF	PART NUMBER	QTY	PART NAME 1 2 3 4 5 6 (PRODUCT LEVEL)	SEE PAGE
B	1	1	**9R-0158**	8	WASHER (46X69X3-MM THK)	
	2	1	**9R-4482**	1	SPACER (52.7X60.3X99-MM)	
	3	1	**9R-4494**	2	PIN AS	
B	4	1	**111-4337**	10	WASHER (46X70X1-MM THK)	
	5	1	**200-8303**	1	LINK AS (RH)	
		1	**9R-3756**	1	BEARING-SLEEVE	
		1	**9R-5828**	1	BEARING-SLEEVE	
	6	1	**200-8306**	1	LINK AS (LH)	
		1	**9R-3756**	1	BEARING-SLEEVE	
		1	**9R-5828**	1	BEARING-SLEEVE	
	7	1	**200-8309**	1	GUIDE AS (RH)	
		1	**9R-3747**	1	BEARING-SLEEVE	
		1	**200-8308**	1	GUIDE	
		1	**200-8313**	1	PIN	
	8	1	**200-8310**	1	GUIDE AS (LH)	
		1	**9R-3747**	1	BEARING-SLEEVE	
	9	1	**200-8311**	1	PIN AS	
	10	1	**201-1838**	1	PLATE	
	11	1	**201-1840**	1	PLATE	
	12	1	**3B-8489**	7	FITTING-GREASE	
	13	1	**6V-3213**	3	RING-RETAINING	
	14	1	**8T-4121**	4	WASHER-HARD (11X21X2.5-MM THK)	
M	15	1	**8T-4137**	4	BOLT (M10X1.5X20-MM)	

B-USE AS REQUIRED
M-METRIC PART

202-5720 **LINKAGE GP-LOADER BUCKET** *(contd.)* **i01643669**

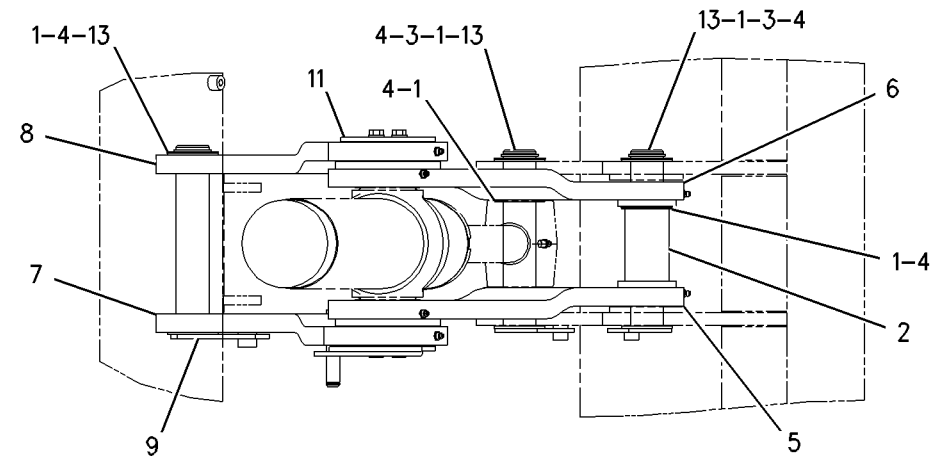

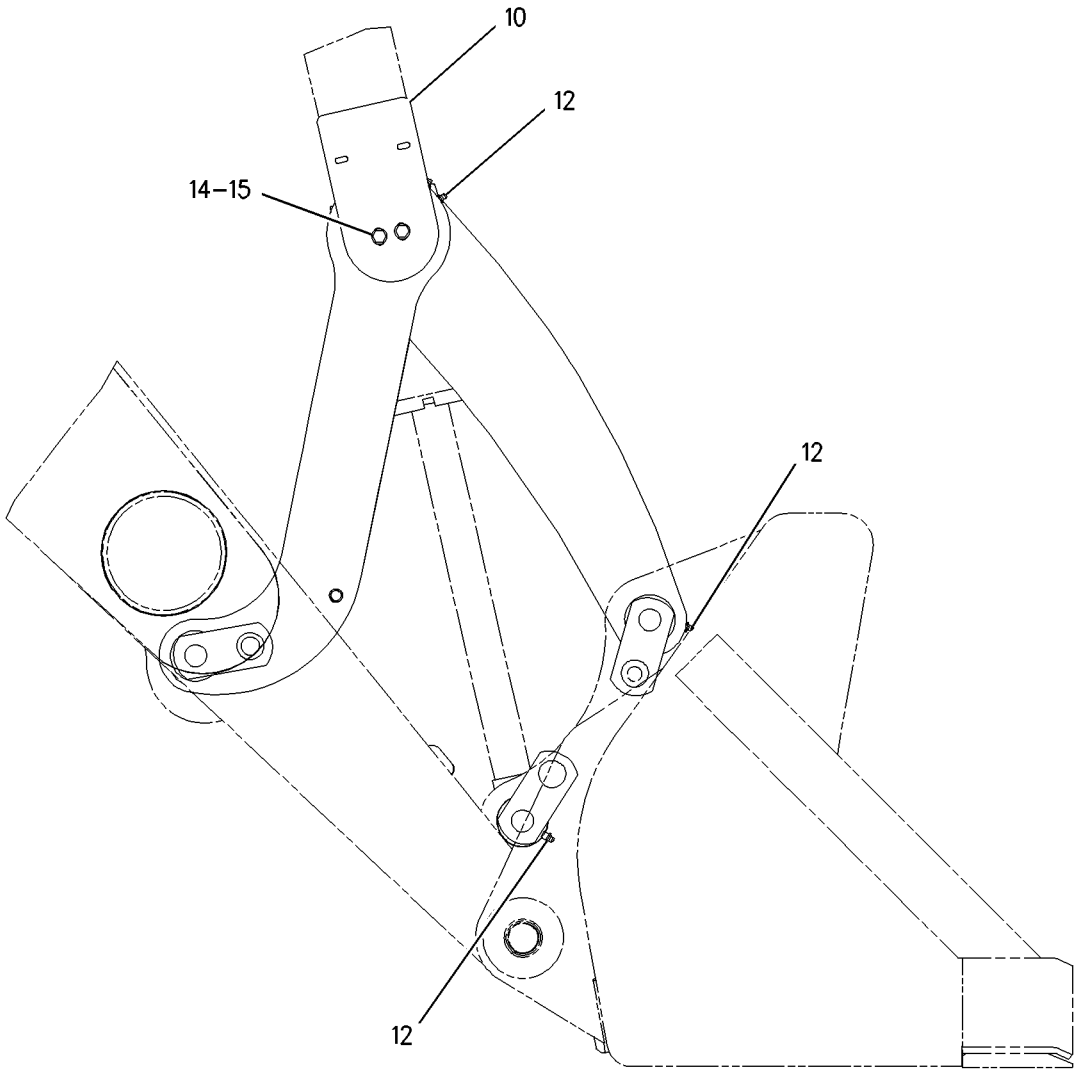

GRAPHIC #1 **<END>** g00849583

IMPLEMENTS

180-2316 LOCK GP-TRANSPORT

S/N: EAT1-UP

AN ATTACHMENT

SMCS-7505 **i01179781**

NOTE	PART NUMBER	QTY	PART NAME 1 2 3 4 5 6 (PRODUCT LEVEL)	SEE PAGE
	120-9286	2	PLATE	

<END>

206-1641 LOCK GP-TRANSPORT–STABILIZER

S/N: EAT1-UP

PART OF 213-9289 CHASSIS AR

SMCS-7505 **i02431475**

NOTE	REF NO	GRAPHIC REF	PART NUMBER	QTY	PART NAME 1 2 3 4 5 6 (PRODUCT LEVEL)	SEE PAGE
	1	1	**9R-8165**	1	BEARING	
	2	1	**164-1398**	2	KNOB	
	3	1	**183-6084**	1	BEARING	
	4	1	**206-1871**	1	BRACKET AS	
	5	1	**206-1874**	1	LEVER AS	
	6	1	**229-5745**	1	SPACER (8X15.875X11.6-MM THK)	
	7	1	**248-2710**	1	GROMMET	
	8	1	**164-1395**	1	KNOB	
	9	1	**5P-4116**	6	WASHER-HARD (8.8X20.5X2-MM THK)	
B	10	1	**6E-5431**	1	SHIM (0.5-MM THK)	
M	11	1	**8T-4138**	1	BOLT (M6X1X20-MM)	
M	12	1	**8T-4189**	8	BOLT (M8X1.25X20-MM)	
	13	1	**8T-4224**	4	WASHER-HARD (8.8X16X2-MM THK)	
	14	1	**8T-6902**	1	CLIP	
M	15	1	**8T-7547**	1	BOLT (M8X1.25X30-MM)	
	16	1	**9X-8256**	1	WASHER (6.6X12X2-MM THK)	

B-USE AS REQUIRED
M-METRIC PART

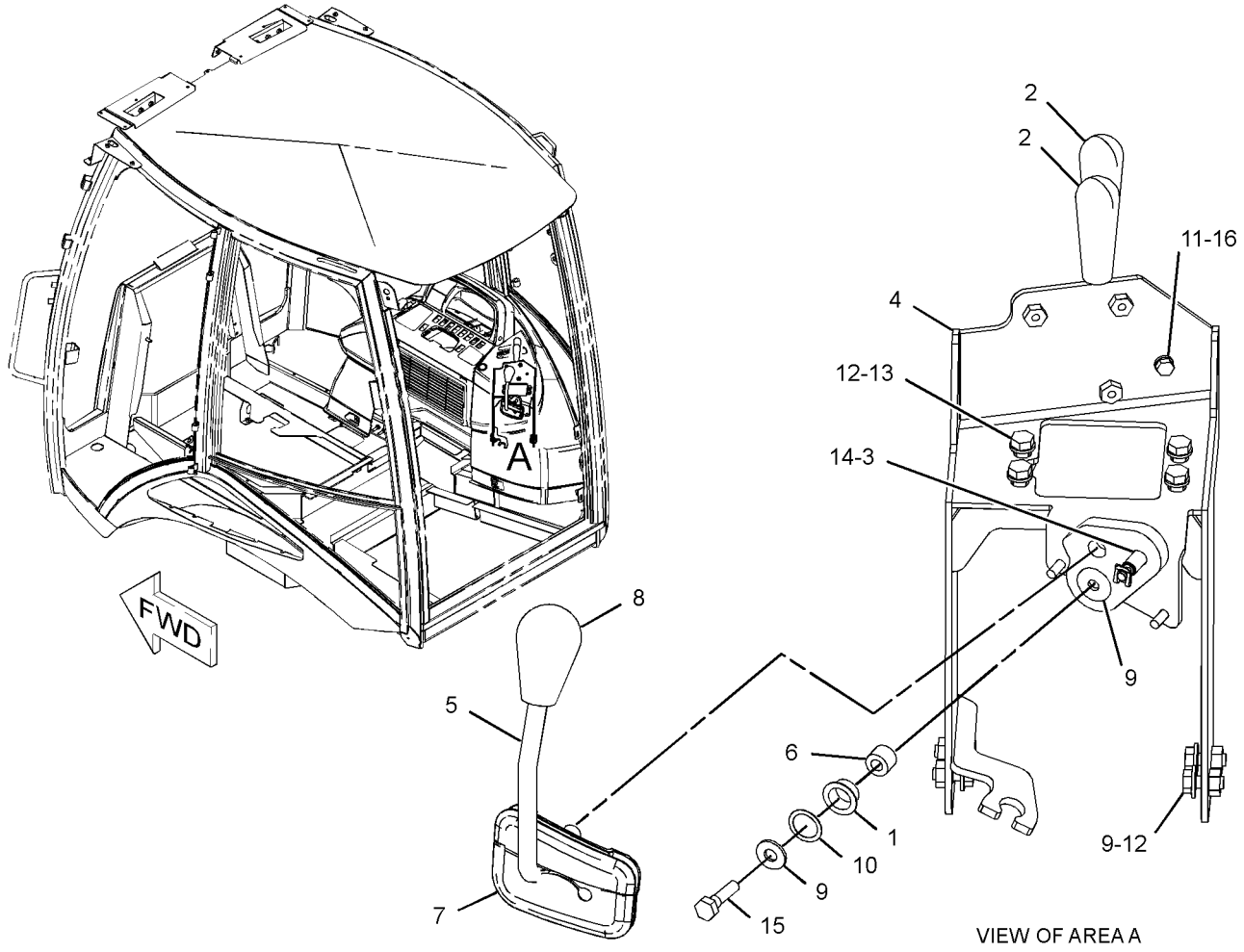

GRAPHIC #1 **<END>** g01207186

214-7035 LOCK GP-TRANSPORT–BOOM

S/N: EAT1-UP

PART OF 213-9289 CHASSIS AR

SMCS-7505 **i03468621**

NOTE	REF NO	GRAPHIC REF	PART NUMBER	QTY	PART NAME 1 2 3 4 5 6 (PRODUCT LEVEL)	SEE PAGE
	1	1	**5P-7958**	1	SLEEVE-CABLE SPLICE	
	2	1	**9R-8594**	1	PIN AS	
	3	1	**131-8775**	1	BRACKET AS	
	4	1	**134-0143**	1	CABLE (2.38-GA)	
	5	1	**214-4281**	1	PIN	
	6	1	**214-4285**	2	PAD AS	
	7	1	**214-7043**	1	SPACER (6.15X7.94X10-MM THK)	
	8	1	**230-4291**	1	HOOK (RH)	
	9	1	**230-4292**	1	HOOK (LH)	
	10	1	**276-2353**	1	CABLE AS (CENTER PIVOT, BOOM LOCK)	
		1	**2R-0364**	1	RING-RETAINING	
		1	**4D-9517**	1	CLIP	
		1	**6V-0826**	1	GROMMET	
		1	**279-9452**	1	CLIP	
	11	1	**3B-8489**	2	FITTING-GREASE	
M	12	1	**5A-3604**	2	BOLT-SOCKET HEAD (M8X1.25X25-MM)	
M	13	1	**5C-9553**	1	BOLT (M6X1X16-MM)	
	14	1	**6E-1135**	2	PIN	
	15	1	**8T-4121**	3	WASHER-HARD (11X21X2.5-MM THK)	
M	16	1	**8T-4137**	1	BOLT (M10X1.5X20-MM)	
M	17	1	**8T-4195**	2	BOLT (M10X1.5X30-MM)	
	18	1	**7K-1181**	1	STRAP-CABLE	
	19	1	**8T-4224**	1	WASHER-HARD (8.8X16X2-MM THK)	
M	20	1	**8T-4908**	1	BOLT (M8X1.25X25-MM)	

M-METRIC PART

214-7035 **LOCK GP-TRANSPORT** *(contd.)* **i03468621**

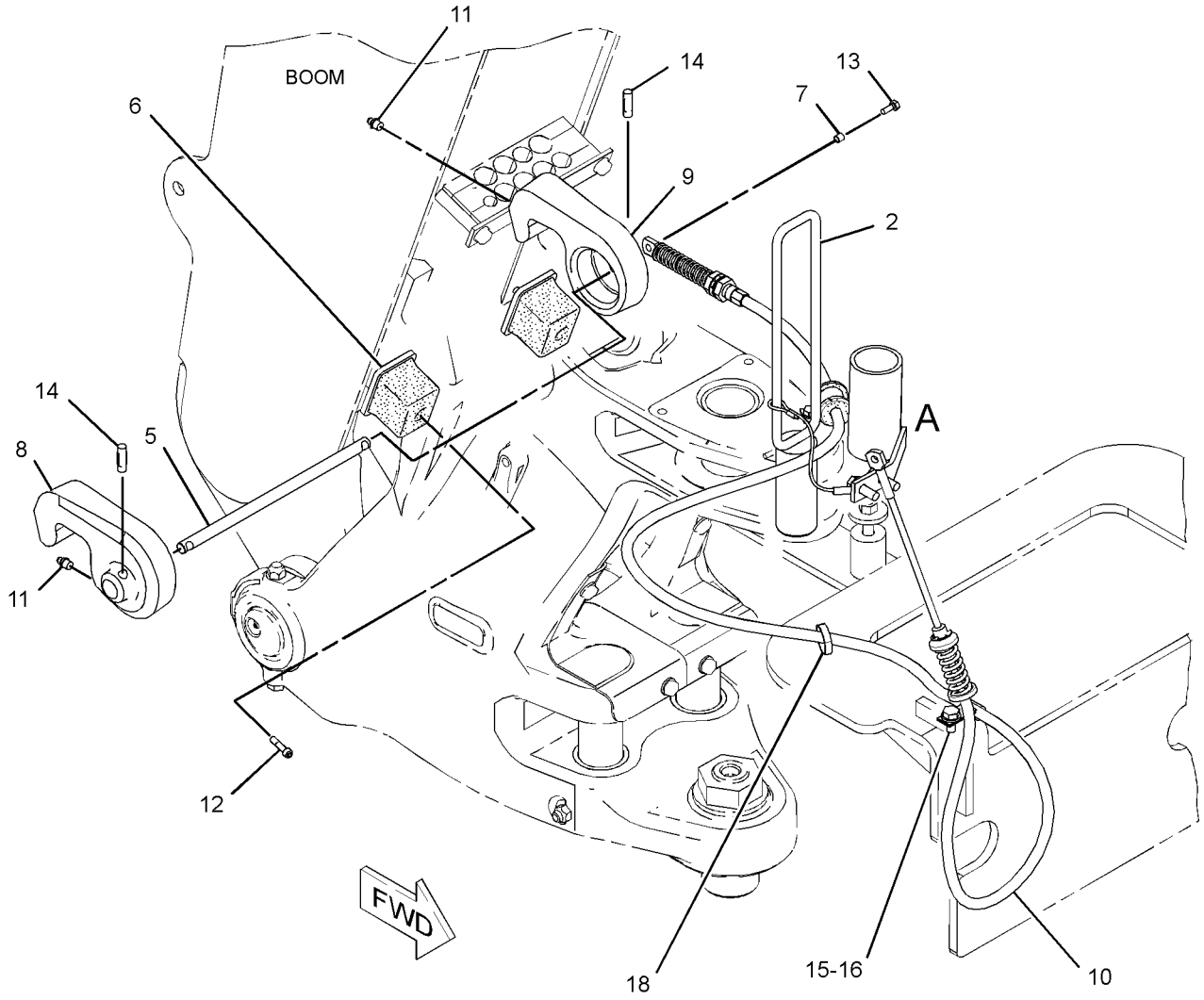

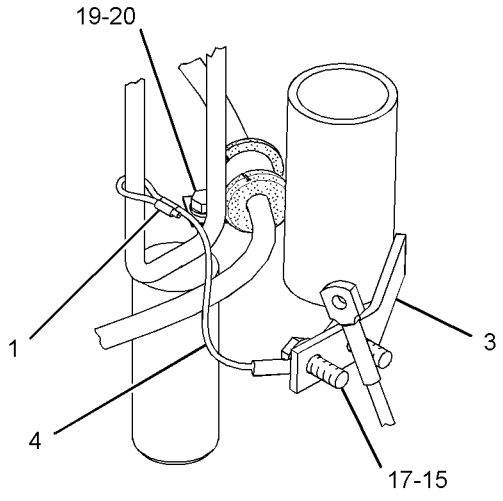

VIEW OF AREA A

GRAPHIC #1 **<END>** g01821083

252-4660 LOCK GP-TRANSPORT

S/N: EAT1-UP

AN ATTACHMENT

SMCS-7505 **i02333972**

NOTE	REF NO	GRAPHIC REF	PART NUMBER	QTY	PART NAME 1 2 3 4 5 6 (PRODUCT LEVEL)	SEE PAGE
	1	1	**9R-5301**	2	PIN-COTTER	
	2	1	**252-4659**	1	CABLE AS	
	3	1	**9R-9028**	1	PIN	

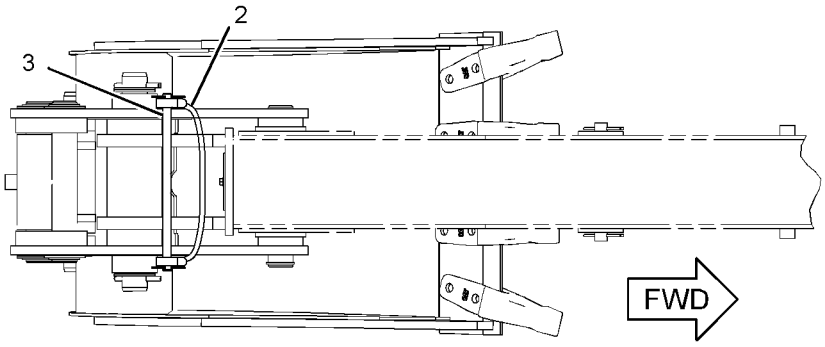

TOP VIEW

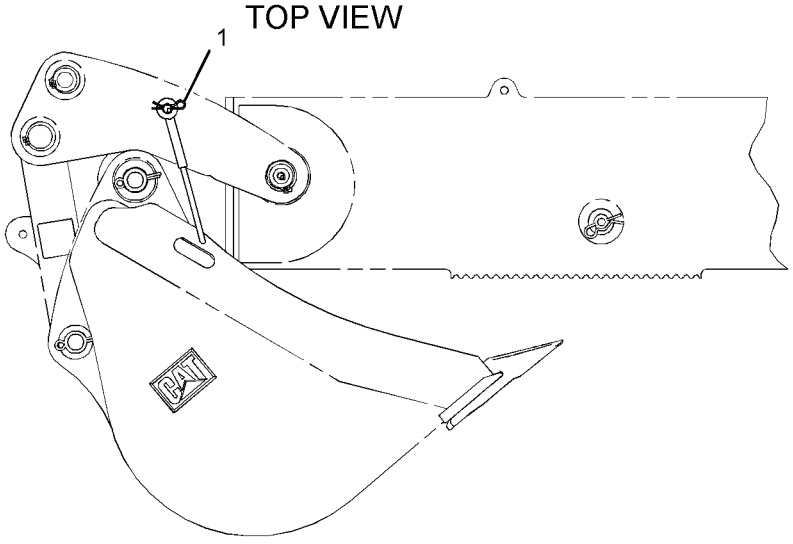

RIGHT SIDE VIEW

GRAPHIC #1 **<END>** g01178751

133-3362 PAD & GUARD GP-STABILIZER—STREET

S/N: EAT1-986
AN ATTACHMENT

SMCS-7222 **i02650971**

NOTE	REF NO	GRAPHIC REF	PART NUMBER	QTY	PART NAME 1 2 3 4 5 6 (PRODUCT LEVEL)	SEE PAGE
	1	1	**8T-4986**	4	CLAMP-HOSE	
B	2	1	**9R-0109**	12	WASHER (41X64X3-MM THK)	
BC	3	1	**9R-0158**	6	WASHER (46X69X3-MM THK)	
	4	1	**130-1638**	2	PIN	
	5	1	**188-3953**	2	PAD	
	6	1	**201-5810**	2	PLATE	
	7	1	**201-5812**	2	PLATE AS	
					(EACH INCLUDES)	
M		1	**8T-3612**	2	NUT-WELD (M8X1.25-THD)	
		1	**201-5810**	1	PLATE	
C	8	1	**203-7060**	2	SPACER (12.58X15.88X8-MM)	
C	9	1	**238-9546**	2	SHAFT	
CY	10	1	*238-9547*	2	PAD GP-STABILIZER (STREET)	598
C	11	1	**241-0888**	2	PLATE	
C	12	1	**241-0889**	2	GUARD AS	
					(EACH INCLUDES)	
M		1	**8T-3490**	2	NUT-WELD (M10X1.5-THD)	
	13	1	**5P-4116**	2	WASHER-HARD (8.8X20.5X2-MM THK)	
C	14	1	**6V-3213**	4	RING-RETAINING	
	15	1	**6V-8144**	4	RING-RETAINING	
M	16	1	**7X-2537**	2	BOLT (M8X1.25X35-MM)	
C	17	1	**7X-7729**	2	WASHER (11X25X3-MM THK)	
CM	18	1	**8T-4195**	2	BOLT (M10X1.5X30-MM)	
	19	1	**214-4285**	2	PAD AS	
M	20	1	**5A-3604**	2	BOLT-SOCKET HEAD (M8X1.25X25-MM)	

B-USE AS REQUIRED
C-CHANGE FROM PREVIOUS TYPE
M-METRIC PART
Y-SEPARATE ILLUSTRATION

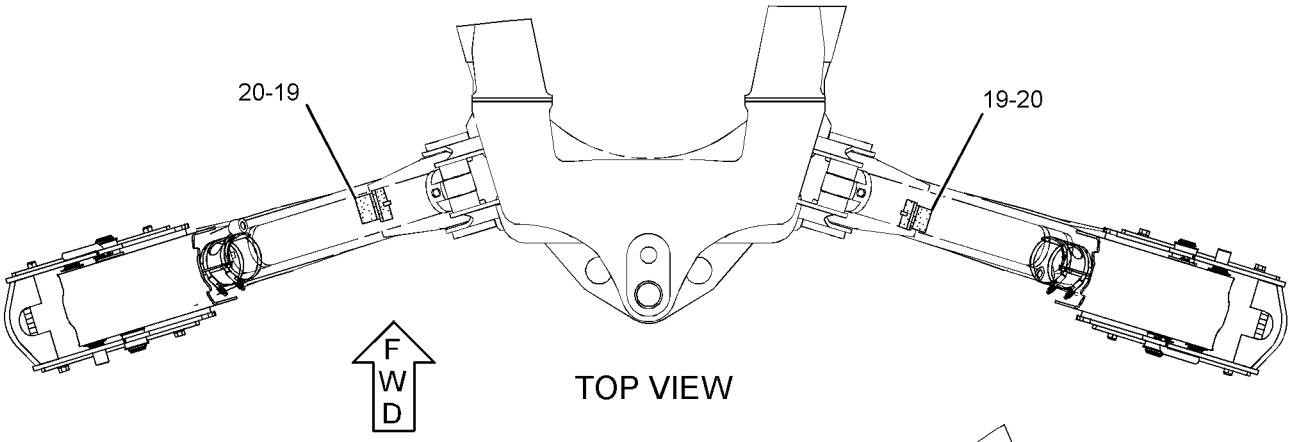

TOP VIEW

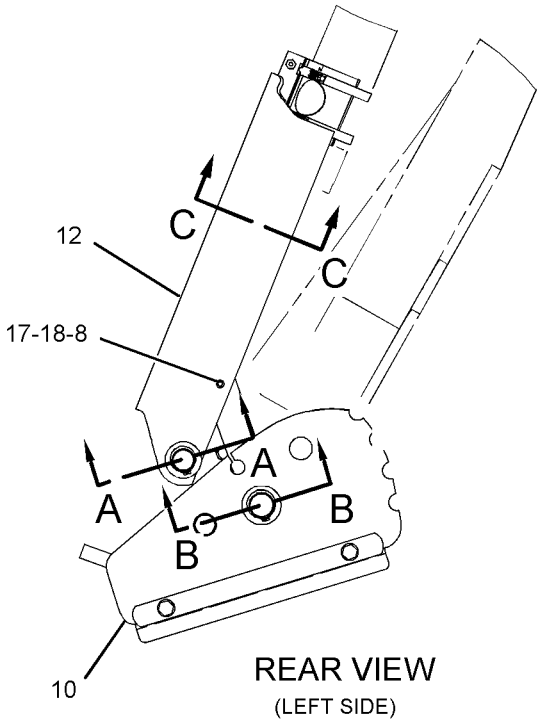

REAR VIEW
(LEFT SIDE)

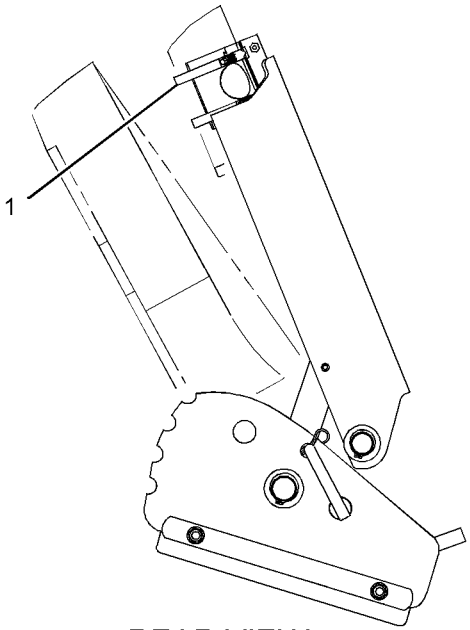

REAR VIEW
(RIGHT SIDE)

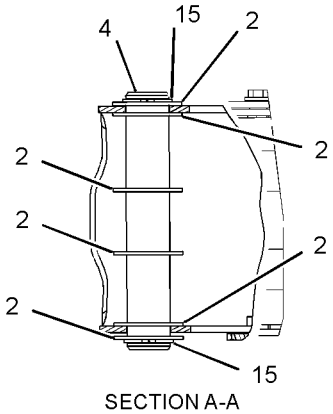

SECTION A-A

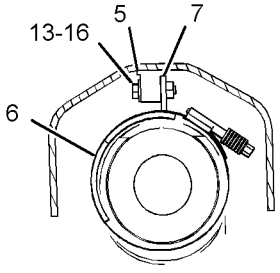

SECTION C-C

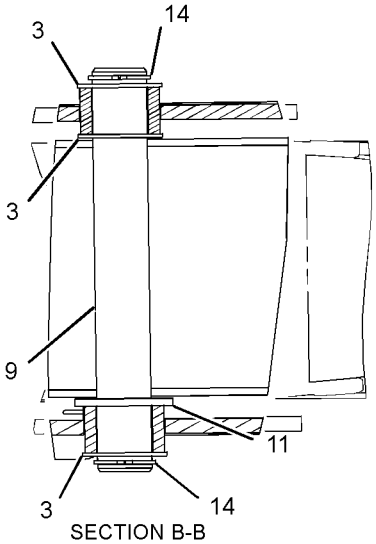

SECTION B-B

GRAPHIC #1

<END>

g01386905

133-3362 PAD & GUARD GP-STABILIZER–STREET

S/N: EAT987-UP
AN ATTACHMENT
TYPE 1

SMCS-7222 **i02877993**

NOTE	REF NO	GRAPHIC REF	PART NUMBER	QTY	PART NAME 1 2 3 4 5 6 (PRODUCT LEVEL)	SEE PAGE
	1	1	**8T-4986**	4	CLAMP-HOSE	
B	2	1	**9R-0109**	12	WASHER (41X64X3-MM THK)	
B	3	1	**9R-0158**	6	WASHER (46X69X3-MM THK)	
	4	1	**130-1638**	2	PIN	
	5	1	**188-3953**	2	PAD	
	6	1	**201-5810**	2	PLATE	
	7	1	**201-5812**	2	PLATE AS	
					(EACH INCLUDES)	
M		1	**8T-3612**	2	NUT-WELD (M8X1.25-THD)	
		1	**201-5810**	1	PLATE	
	8	1	**3S-8536**	2	SPACER (0.406X0.656X0.38-IN THK)	
	9	1	**238-9546**	2	SHAFT	
Y	10	1	*238-9547*	2	PAD GP-STABILIZER (STREET)	598
	11	1	**241-0888**	2	PLATE	
	12	1	**241-0889**	2	GUARD AS	
					(EACH INCLUDES)	
M		1	**8T-3490**	2	NUT-WELD (M10X1.5-THD)	
	13	1	**5P-4116**	2	WASHER-HARD (8.8X20.5X2-MM THK)	
	14	1	**6V-3213**	4	RING-RETAINING	
	15	1	**6V-8144**	4	RING-RETAINING	
M	16	1	**7X-2537**	2	BOLT (M8X1.25X35-MM)	
	17	1	**7X-7729**	2	WASHER (11X25X3-MM THK)	
M	18	1	**8T-4195**	2	BOLT (M10X1.5X30-MM)	
C	19	1	**194-9487**	2	BUMPER AS	

B-USE AS REQUIRED
C-CHANGE FROM PREVIOUS TYPE
M-METRIC PART
Y-SEPARATE ILLUSTRATION

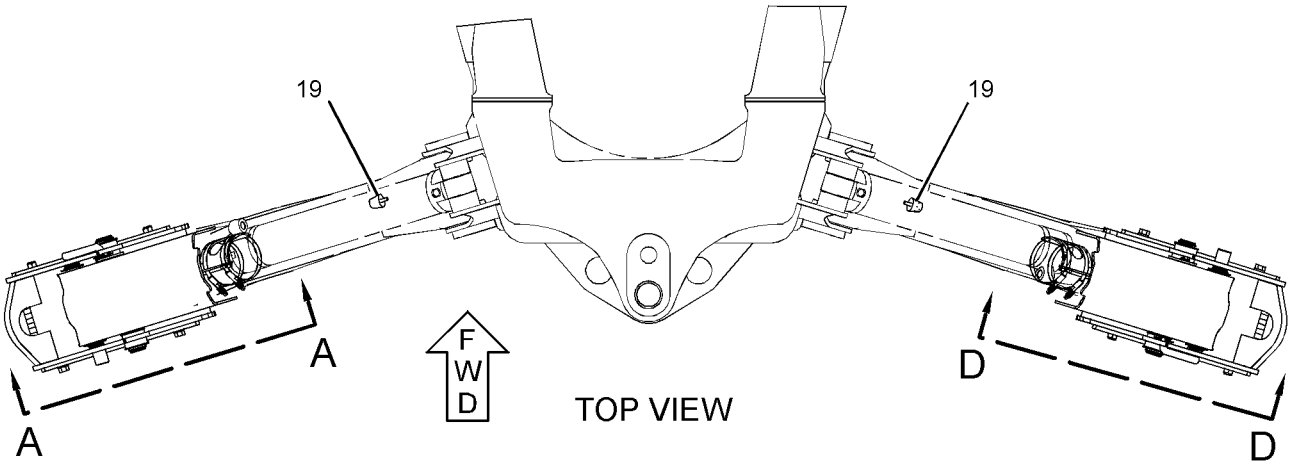

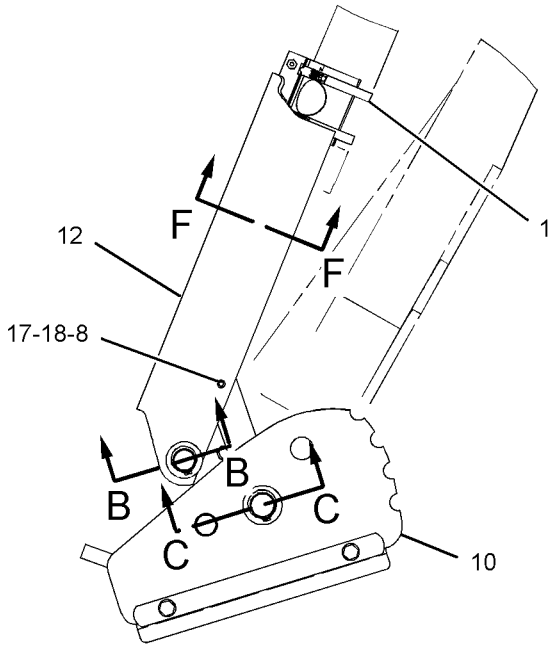

VIEW A-A

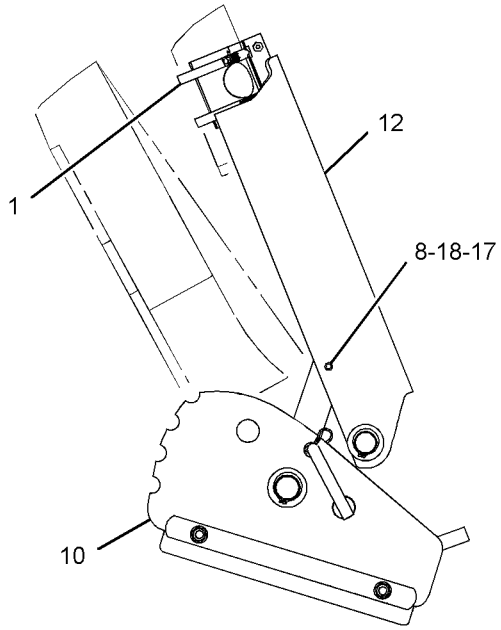

VIEW D-D

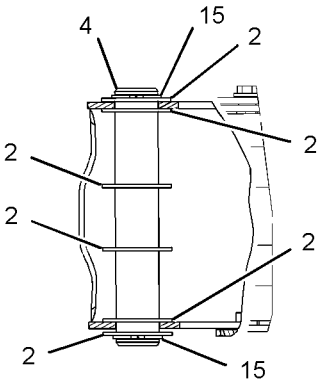

SECTION B-B

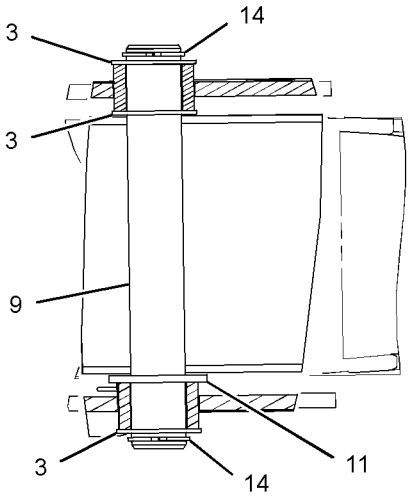

SECTION C-C

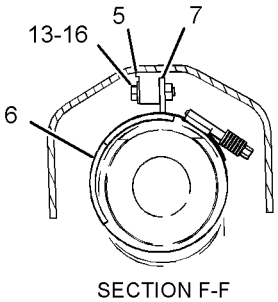

SECTION F-F

GRAPHIC #1

<END>

g01431964

133-3362 PAD & GUARD GP-STABILIZER—STREET

S/N: EAT987-UP
AN ATTACHMENT
TYPE 2

SMCS-7222 **i03337002**

NOTE	REF NO	GRAPHIC REF	PART NUMBER	QTY	PART NAME 1 2 3 4 5 6 (PRODUCT LEVEL)	SEE PAGE
	1	1	**8T-4986**	4	CLAMP-HOSE	
B	2	1	**9R-0109**	12	WASHER (41X64X3-MM THK)	
B	3	1	**9R-0158**	6	WASHER (46X69X3-MM THK)	
	4	1	**130-1638**	2	PIN	
	5	1	**188-3953**	2	PAD	
	6	1	**194-9487**	2	BUMPER AS	
C	7	1	**318-8228**	2	PLATE AS	
	8	1	**3S-8536**	2	SPACER (0.406X0.656X0.38-IN THK)	
	9	1	**238-9546**	2	SHAFT	
Y	10	1	*238-9547*	2	PAD GP-STABILIZER (STREET)	598
	11	1	**241-0888**	2	PLATE	
	12	1	**241-0889**	2	GUARD AS	
					(EACH INCLUDES)	
M		1	**8T-3490**	2	NUT-WELD (M10X1.5-THD)	
	13	1	**5P-4116**	2	WASHER-HARD (8.8X20.5X2-MM THK)	
	14	1	**6V-3213**	4	RING-RETAINING	
	15	1	**6V-8144**	4	RING-RETAINING	
M	16	1	**7X-2537**	2	BOLT (M8X1.25X35-MM)	
	17	1	**7X-7729**	2	WASHER (11X25X3-MM THK)	
M	18	1	**8T-4195**	2	BOLT (M10X1.5X30-MM)	

B-USE AS REQUIRED
C-CHANGE FROM PREVIOUS TYPE
M-METRIC PART
Y-SEPARATE ILLUSTRATION

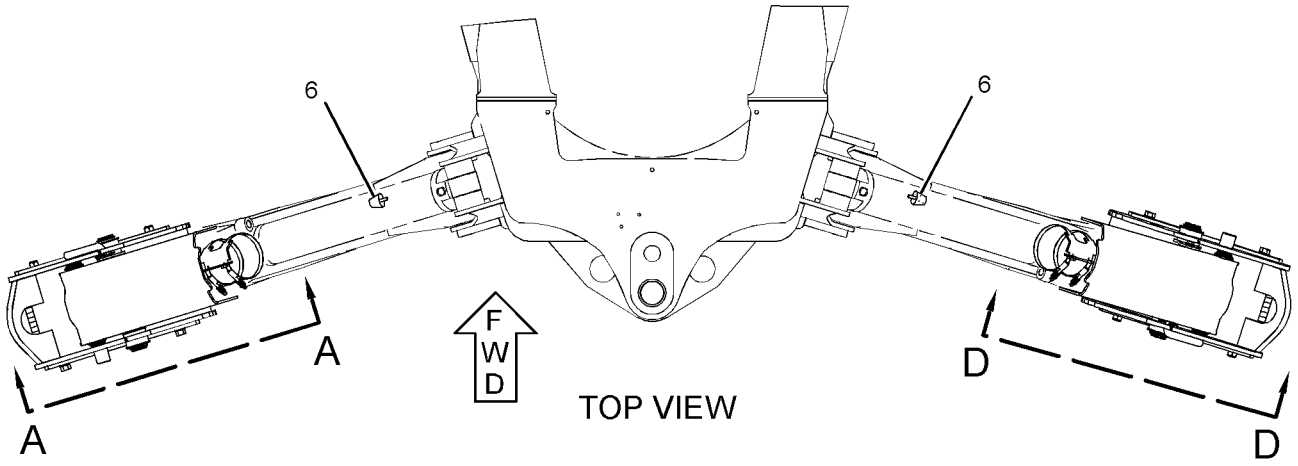

TOP VIEW

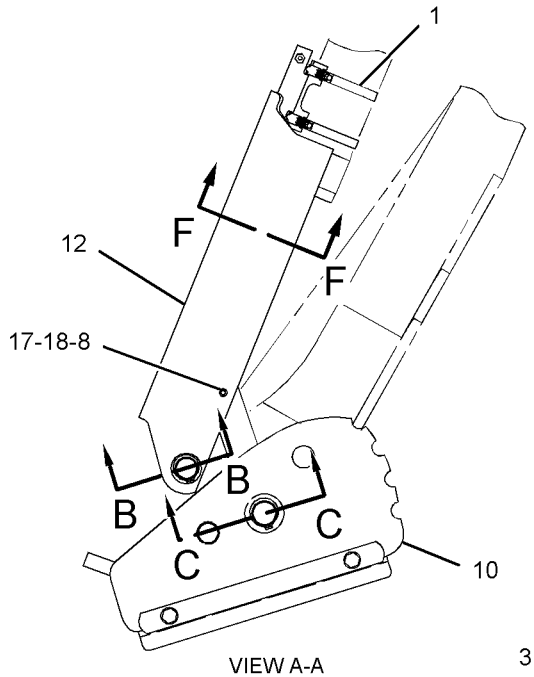

VIEW A-A

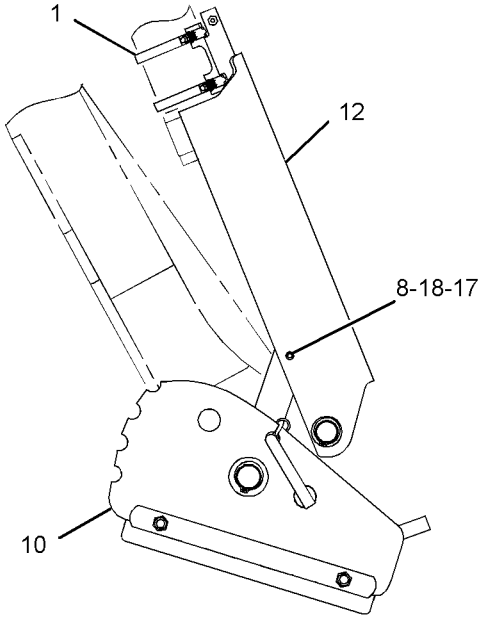

VIEW D-D

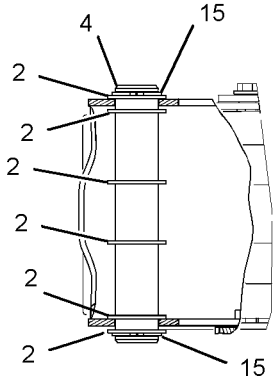

SECTION B-B

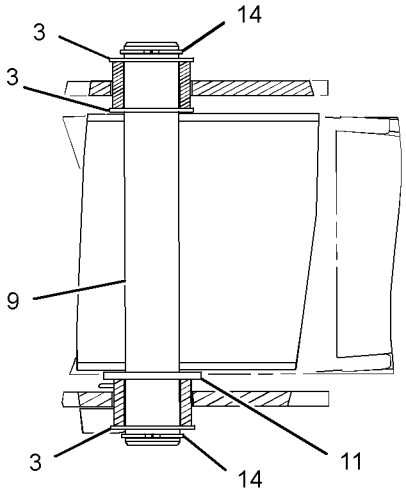

SECTION C-C

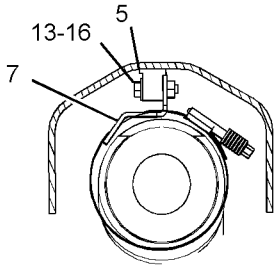

SECTION F-F

GRAPHIC #1

<END>

g01728069

133-3363 PAD & GUARD GP-STABILIZER

S/N: EAT1-986
AN ATTACHMENT

SMCS-7222 **i02650972**

NOTE	REF NO	GRAPHIC REF	PART NUMBER	QTY	PART NAME 1 2 3 4 5 6 (PRODUCT LEVEL)	SEE PAGE
	1	1	**8T-4986**	4	CLAMP-HOSE	
BC	2	1	**9R-0109**	12	WASHER (41X64X3-MM THK)	
BC	3	1	**9R-0158**	6	WASHER (46X69X3-MM THK)	
	4	1	**130-1638**	2	PIN	
	5	1	**188-3953**	2	PAD	
	6	1	**201-5810**	2	PLATE	
	7	1	**201-5812**	2	PLATE AS	
					(EACH INCLUDES)	
M		1	**8T-3612**	2	NUT-WELD (M8X1.25-THD)	
		1	**201-5810**	1	PLATE	
C	8	1	**203-7060**	2	SPACER (12.58X15.88X8-MM)	
C	9	1	**238-9546**	2	SHAFT	
C	10	1	**239-1416**	2	PAD AS	
C	11	1	**241-0888**	2	PLATE	
C	12	1	**241-0889**	2	GUARD AS	
					(EACH INCLUDES)	
M		1	**8T-3490**	2	NUT-WELD (M10X1.5-THD)	
	13	1	**5P-4116**	2	WASHER-HARD (8.8X20.5X2-MM THK)	
	14	1	**6V-3213**	4	RING-RETAINING	
	15	1	**6V-8144**	4	RING-RETAINING	
M	16	1	**7X-2537**	2	BOLT (M8X1.25X35-MM)	
C	17	1	**7X-7729**	2	WASHER (11X25X3-MM THK)	
CM	18	1	**8T-4195**	2	BOLT (M10X1.5X30-MM)	
	19	1	**214-4285**	2	PAD AS	
M	20	1	**5A-3604**	2	BOLT-SOCKET HEAD (M8X1.25X25-MM)	

B-USE AS REQUIRED
C-CHANGE FROM PREVIOUS TYPE
M-METRIC PART

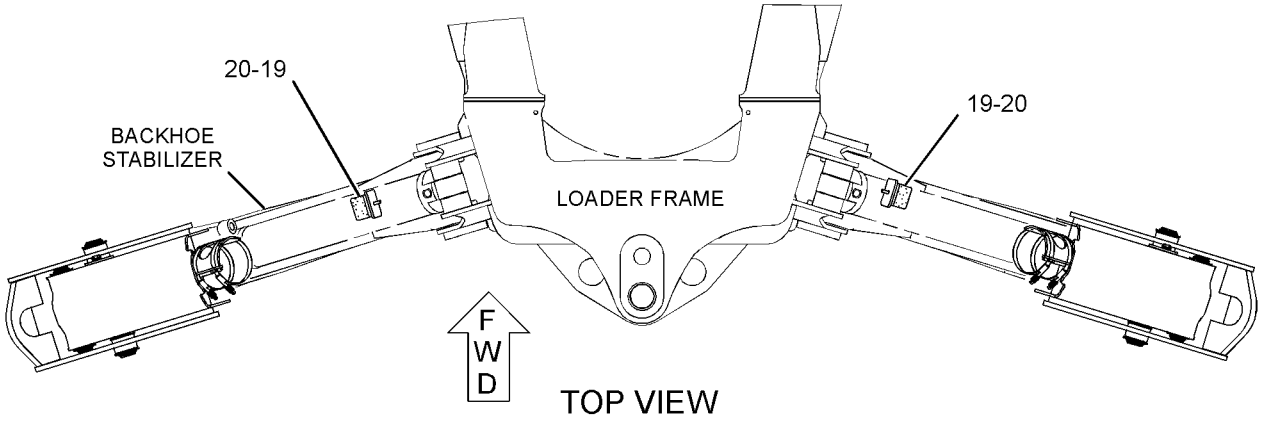

TOP VIEW

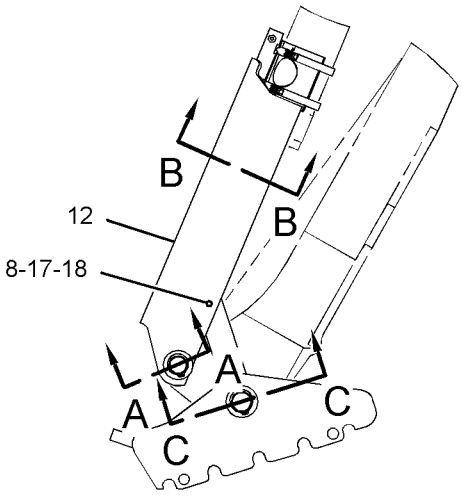

REAR VIEW
(LEFT SIDE)

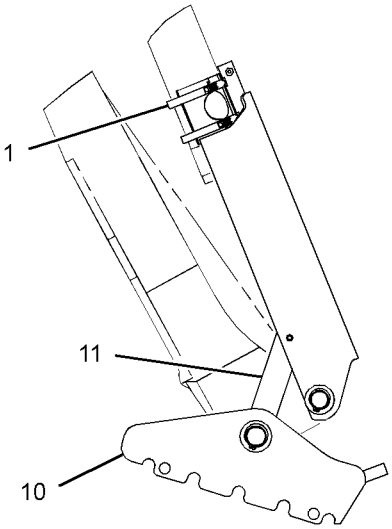

REAR VIEW
(RIGHT SIDE)

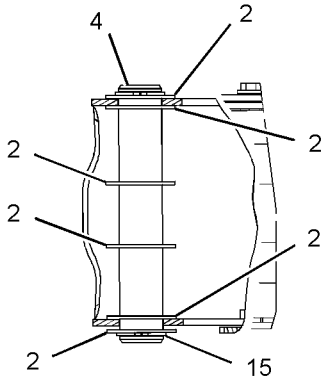

SECTION A-A

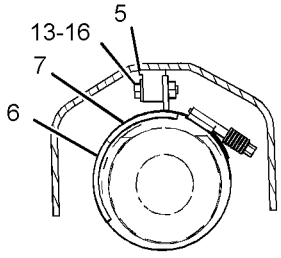

SECTION B-B

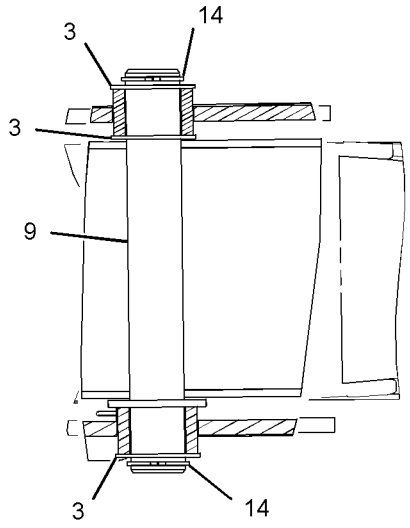

SECTION C-C

GRAPHIC #1

<END>

g01366814

133-3363 PAD & GUARD GP-STABILIZER

S/N: EAT987-UP
AN ATTACHMENT
TYPE 1

SMCS-7222 **i02875135**

NOTE	REF NO	GRAPHIC REF	PART NUMBER	QTY	PART NAME 1 2 3 4 5 6 (PRODUCT LEVEL)	SEE PAGE
	1	1	**8T-4986**	4	CLAMP-HOSE	
B	2	1	**9R-0109**	12	WASHER (41X64X3-MM THK)	
B	3	1	**9R-0158**	6	WASHER (46X69X3-MM THK)	
	4	1	**130-1638**	2	PIN	
	5	1	**188-3953**	2	PAD	
	6	1	**201-5810**	2	PLATE	
	7	1	**201-5812**	2	PLATE AS	
					(EACH INCLUDES)	
M		1	**8T-3612**	2	NUT-WELD (M8X1.25-THD)	
		1	**201-5810**	1	PLATE	
	8	1	**3S-8536**	2	SPACER (0.406X0.656X0.38-IN THK)	
	9	1	**238-9546**	2	SHAFT	
	10	1	**239-1416**	2	PAD AS	
	11	1	**241-0888**	2	PLATE	
	12	1	**241-0889**	2	GUARD AS	
					(EACH INCLUDES)	
M		1	**8T-3490**	2	NUT-WELD (M10X1.5-THD)	
	13	1	**5P-4116**	2	WASHER-HARD (8.8X20.5X2-MM THK)	
	14	1	**6V-3213**	4	RING-RETAINING	
	15	1	**6V-8144**	4	RING-RETAINING	
M	16	1	**7X-2537**	2	BOLT (M8X1.25X35-MM)	
	17	1	**7X-7729**	2	WASHER (11X25X3-MM THK)	
M	18	1	**8T-4195**	2	BOLT (M10X1.5X30-MM)	
C	19	1	**194-9487**	2	BUMPER AS	

B-USE AS REQUIRED
C-CHANGE FROM PREVIOUS TYPE
M-METRIC PART

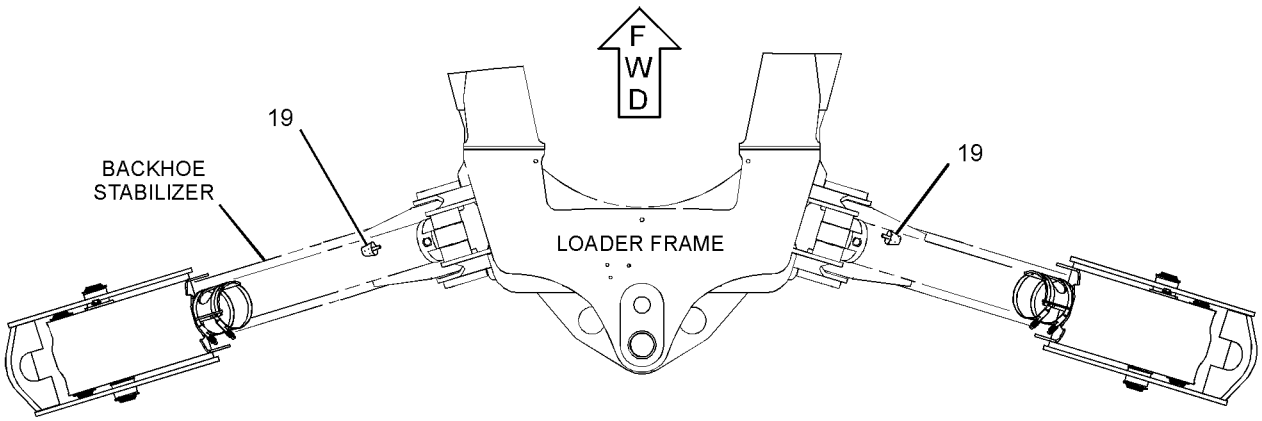

TOP VIEW

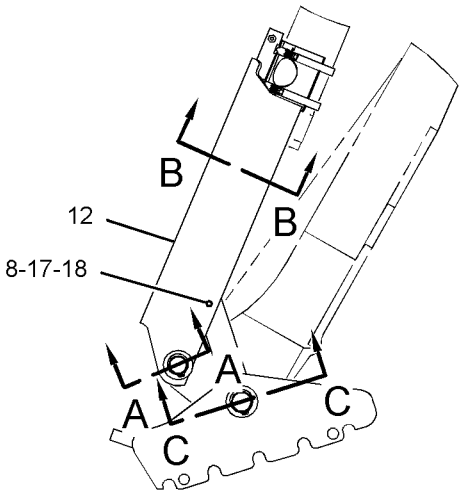

REAR VIEW
(LEFT SIDE)

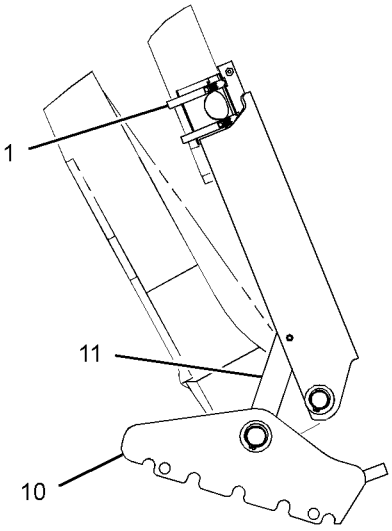

REAR VIEW
(RIGHT SIDE)

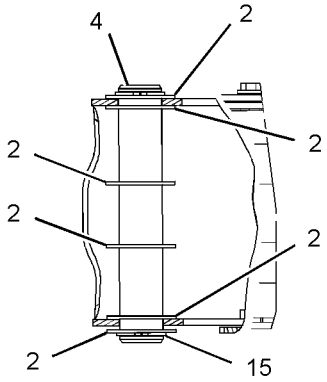

SECTION A-A

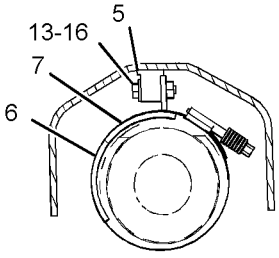

SECTION B-B

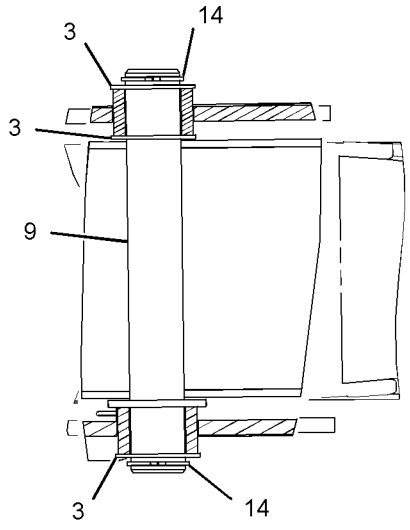

SECTION C-C

GRAPHIC #1

<END>

g01429711

133-3363 PAD & GUARD GP-STABILIZER

S/N: EAT987-UP
AN ATTACHMENT
TYPE 2

SMCS-7222 **i03337021**

NOTE	REF NO	GRAPHIC REF	PART NUMBER	QTY	PART NAME 1 2 3 4 5 6 (PRODUCT LEVEL)	SEE PAGE
	1	1	**8T-4986**	4	CLAMP-HOSE	
B	2	1	**9R-0109**	12	WASHER (41X64X3-MM THK)	
B	3	1	**9R-0158**	6	WASHER (46X69X3-MM THK)	
	4	1	**130-1638**	2	PIN	
	5	1	**188-3953**	2	PAD	
	6	1	**194-9487**	2	BUMPER AS	
C	7	1	**318-8228**	2	PLATE AS	
	8	1	**3S-8536**	2	SPACER (0.406X0.656X0.38-IN THK)	
	9	1	**238-9546**	2	SHAFT	
	10	1	**239-1416**	2	PAD AS	
	11	1	**241-0888**	2	PLATE	
	12	1	**241-0889**	2	GUARD AS	
	13	1	**5P-4116**	2	WASHER-HARD (8.8X20.5X2-MM THK)	
	14	1	**6V-3213**	4	RING-RETAINING	
	15	1	**6V-8144**	4	RING-RETAINING	
M	16	1	**7X-2537**	2	BOLT (M8X1.25X35-MM)	
	17	1	**7X-7729**	2	WASHER (11X25X3-MM THK)	
M	18	1	**8T-4195**	2	BOLT (M10X1.5X30-MM)	

B-USE AS REQUIRED
C-CHANGE FROM PREVIOUS TYPE
M-METRIC PART

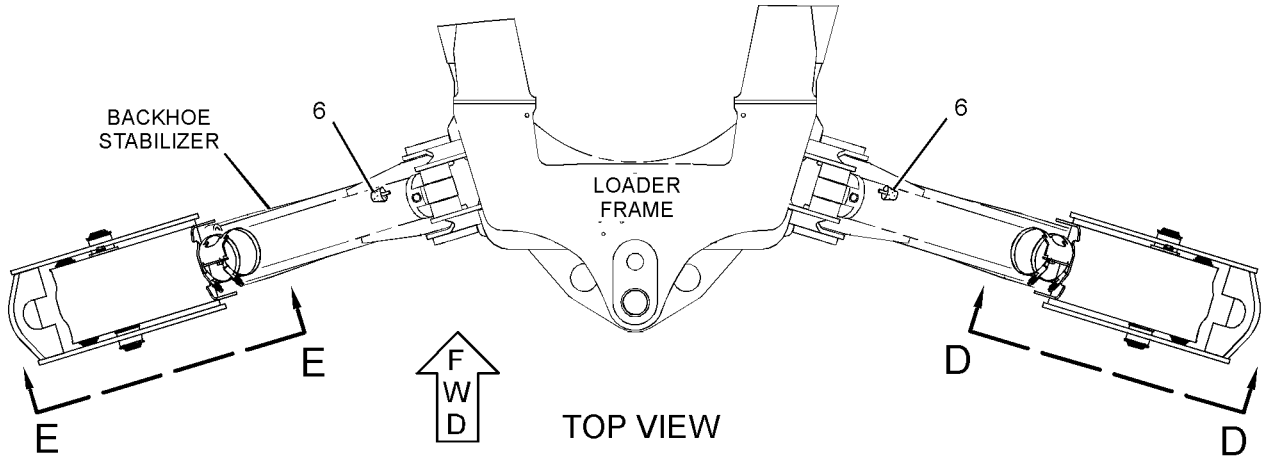

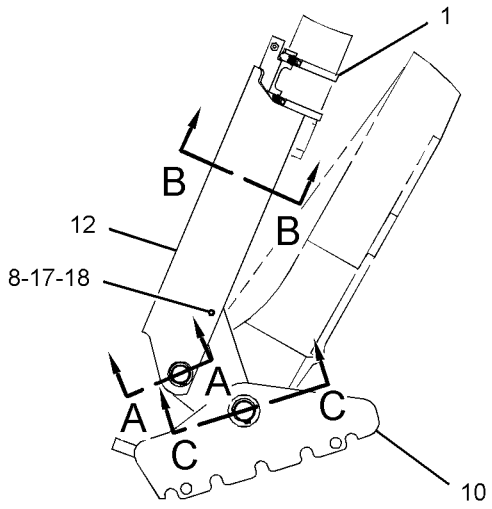

VIEW E-E

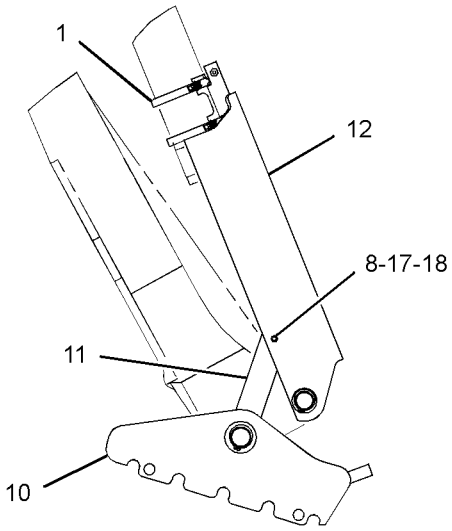

VIEW D-D

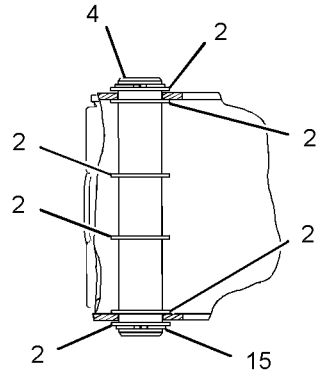

SECTION A-A

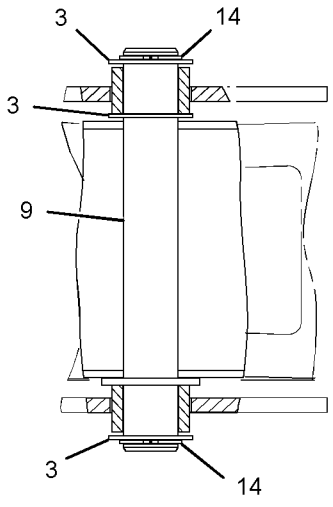

SECTION C-C

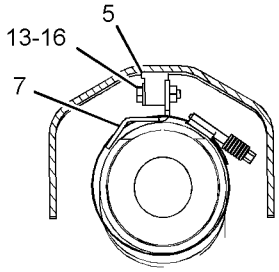

SECTION B-B

GRAPHIC #1

<END>

g01728244

133-3366 PAD & GUARD GP-STABILIZER—STREET

S/N: EAT1-835
AN ATTACHMENT

SMCS-7222 **i02650973**

NOTE	REF NO	GRAPHIC REF	PART NUMBER	QTY	PART NAME 1 2 3 4 5 6 (PRODUCT LEVEL)	SEE PAGE
	1	1	**8T-4986**	4	CLAMP-HOSE	
B	2	1	**9R-0109**	12	WASHER (41X64X3-MM THK)	
BC	3	1	**9R-0158**	6	WASHER (46X69X3-MM THK)	
	4	1	**130-1638**	2	PIN	
	5	1	**188-3953**	2	PAD	
	6	1	**201-5810**	2	PLATE	
	7	1	**201-5812**	2	PLATE AS	
					(EACH INCLUDES)	
M		1	**8T-3612**	2	NUT-WELD (M8X1.25-THD)	
		1	**201-5810**	1	PLATE	
C	8	1	**203-7060**	2	SPACER (12.58X15.88X8-MM)	
C	9	1	**238-9546**	2	SHAFT	
C	10	1	**241-0888**	2	PLATE	
C	11	1	**241-0889**	2	GUARD AS	
					(EACH INCLUDES)	
M		1	**8T-3490**	2	NUT-WELD (M10X1.5-THD)	
CY	12	1	*247-7555*	2	PAD GP-STABILIZER (STREET)	599
	13	1	**5P-4116**	2	WASHER-HARD (8.8X20.5X2-MM THK)	
	14	1	**6V-3213**	4	RING-RETAINING	
	15	1	**6V-8144**	4	RING-RETAINING	
M	16	1	**7X-2537**	2	BOLT (M8X1.25X35-MM)	
C	17	1	**7X-7729**	2	WASHER (11X25X3-MM THK)	
CM	18	1	**8T-4195**	2	BOLT (M10X1.5X30-MM)	
	19	1	**214-4285**	2	PAD AS	
M	20	1	**5A-3604**	2	BOLT-SOCKET HEAD (M8X1.25X25-MM)	

B-USE AS REQUIRED
C-CHANGE FROM PREVIOUS TYPE
M-METRIC PART
Y-SEPARATE ILLUSTRATION

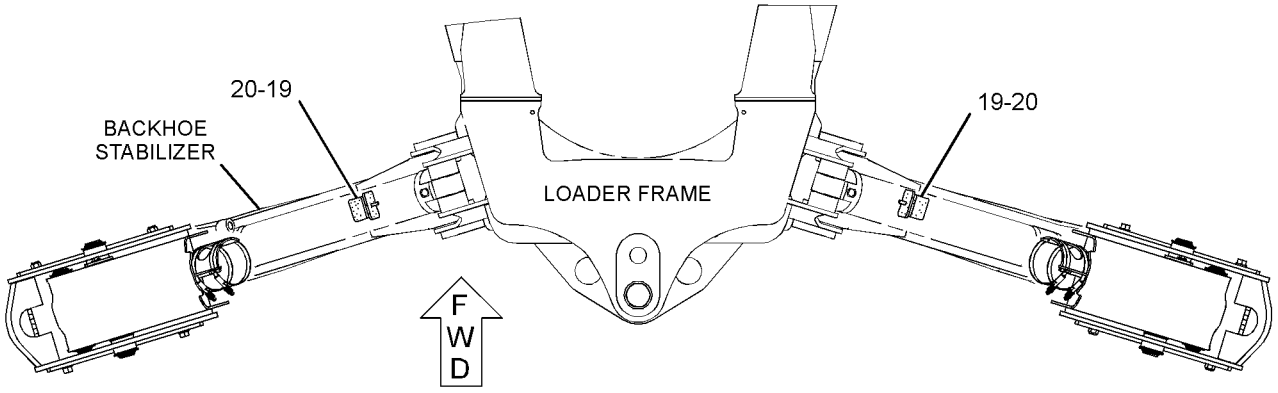

TOP VIEW

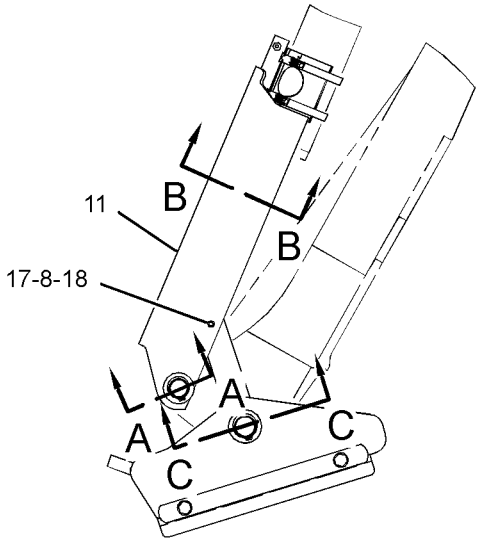

REAR VIEW
(LEFT SIDE)

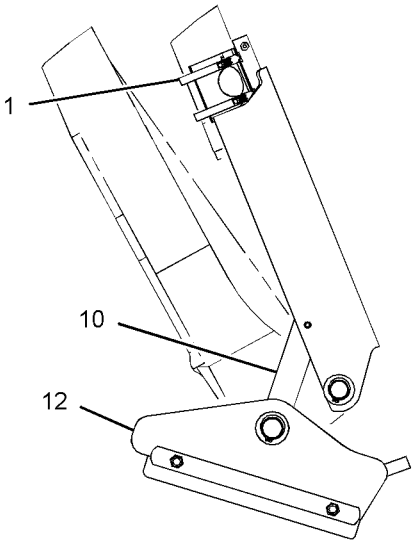

REAR VIEW
(RIGHT SIDE)

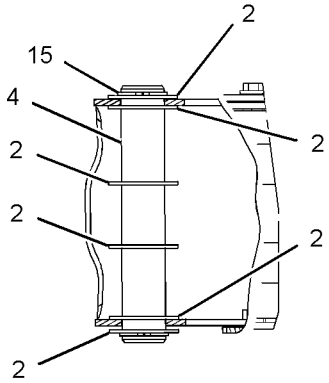

SECTION A-A

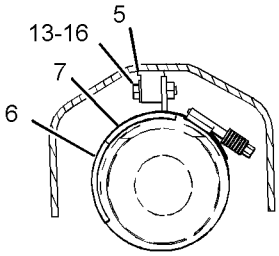

SECTION B-B

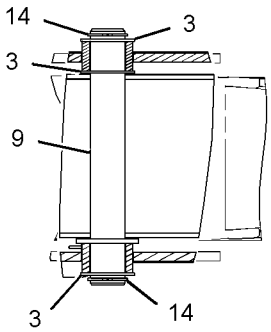

SECTION C-C

GRAPHIC #1 **<END>** g01367194

133-3366 PAD & GUARD GP-STABILIZER—STREET

S/N: EAT836-UP
AN ATTACHMENT
TYPE 1

SMCS-7222 **i02862463**

NOTE	REF NO	GRAPHIC REF	PART NUMBER	QTY	PART NAME 1 2 3 4 5 6 (PRODUCT LEVEL)	SEE PAGE
	1	1	**8T-4986**	4	CLAMP-HOSE	
B	2	1	**9R-0109**	12	WASHER (41X64X3-MM THK)	
B	3	1	**9R-0158**	6	WASHER (46X69X3-MM THK)	
	5	1	**130-1638**	2	PIN	
	6	1	**188-3953**	2	PAD	
	7	1	**201-5810**	2	PLATE	
	8	1	**201-5812**	2	PLATE AS	
					(EACH INCLUDES)	
M		1	**8T-3612**	2	NUT-WELD (M8X1.25-THD)	
		1	**201-5810**	1	PLATE	
	9	1	**3S-8536**	2	SPACER (0.406X0.656X0.38-IN THK)	
	10	1	**238-9546**	2	SHAFT	
	11	1	**241-0888**	2	PLATE	
	12	1	**241-0889**	2	GUARD AS (STABILIZER)	
					(EACH INCLUDES)	
M		1	**8T-3490**	2	NUT-WELD (M10X1.5-THD)	
Y	13	1	*247-7555*	2	PAD GP-STABILIZER (STREET)	599
	14	1	**5P-4116**	2	WASHER-HARD (8.8X20.5X2-MM THK)	
	15	1	**6V-3213**	4	RING-RETAINING	
	16	1	**6V-8144**	4	RING-RETAINING	
M	17	1	**7X-2537**	2	BOLT (M8X1.25X35-MM)	
	18	1	**7X-7729**	2	WASHER (11X25X3-MM THK)	
M	19	1	**8T-4195**	2	BOLT (M10X1.5X30-MM)	
C	20	1	**194-9487**	2	BUMPER AS	

B-USE AS REQUIRED
C-CHANGE FROM PREVIOUS TYPE
M-METRIC PART
Y-SEPARATE ILLUSTRATION

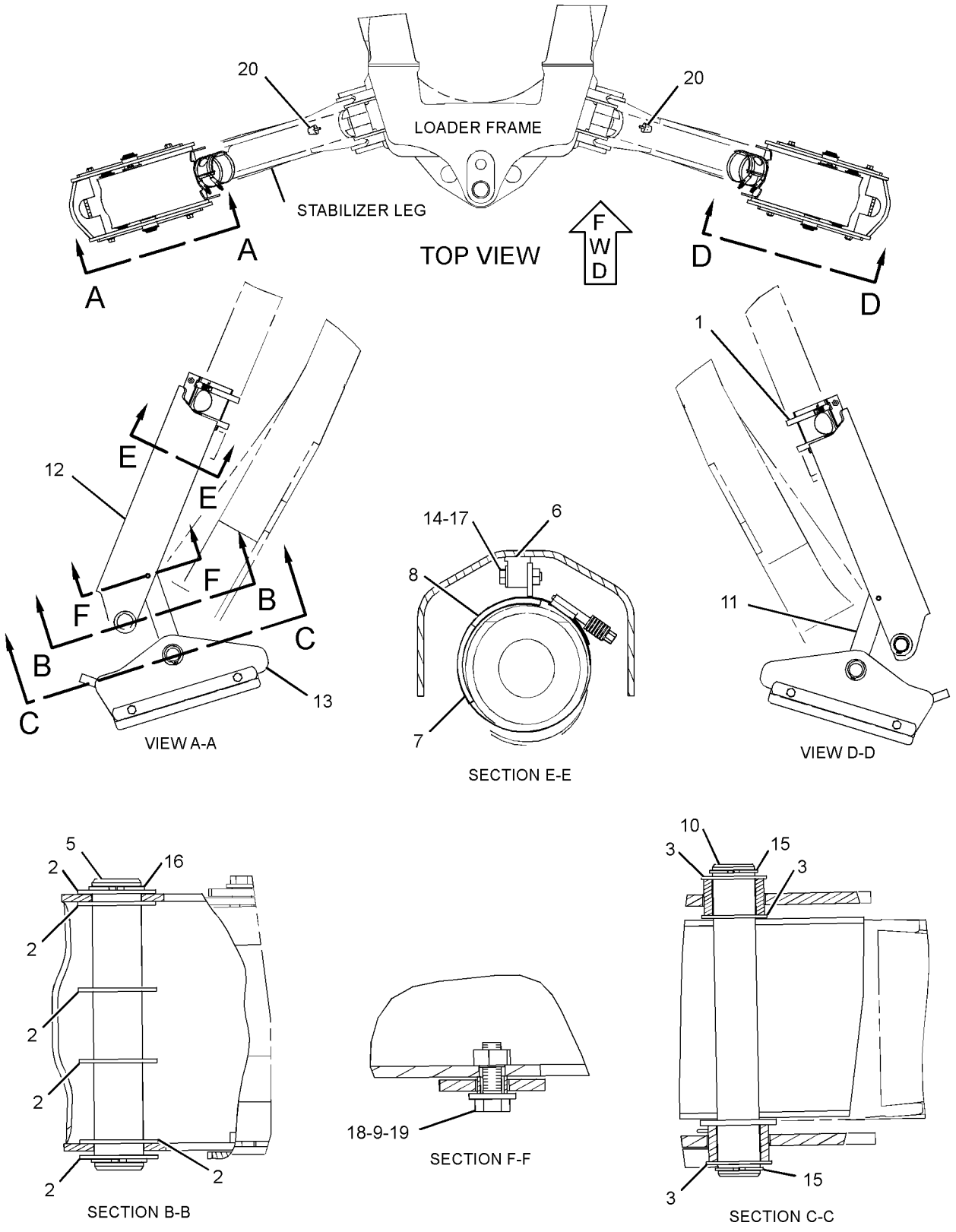

GRAPHIC #1 **<END>** g01428782

133-3366 PAD & GUARD GP-STABILIZER—STREET

S/N: EAT836-UP
AN ATTACHMENT
TYPE 2

SMCS-7222 **i03337042**

NOTE	REF NO	GRAPHIC REF	PART NUMBER	QTY	PART NAME 1 2 3 4 5 6 (PRODUCT LEVEL)	SEE PAGE
	1	1	**8T-4986**	4	CLAMP-HOSE	
B	2	1	**9R-0109**	12	WASHER (41X64X3-MM THK)	
B	3	1	**9R-0158**	6	WASHER (46X69X3-MM THK)	
	5	1	**130-1638**	2	PIN	
	6	1	**188-3953**	2	PAD	
C	8	1	**318-8228**	2	PLATE AS	
	9	1	**3S-8536**	2	SPACER (0.406X0.656X0.38-IN THK)	
	10	1	**238-9546**	2	SHAFT	
	11	1	**241-0888**	2	PLATE	
	12	1	**241-0889**	2	GUARD AS (STABILIZER)	
					(EACH INCLUDES)	
M		1	**8T-3490**	2	NUT-WELD (M10X1.5-THD)	
Y	13	1	*247-7555*	2	PAD GP-STABILIZER (STREET)	599
	14	1	**5P-4116**	2	WASHER-HARD (8.8X20.5X2-MM THK)	
	15	1	**6V-3213**	4	RING-RETAINING	
	16	1	**6V-8144**	4	RING-RETAINING	
M	17	1	**7X-2537**	2	BOLT (M8X1.25X35-MM)	
	18	1	**7X-7729**	2	WASHER (11X25X3-MM THK)	
M	19	1	**8T-4195**	2	BOLT (M10X1.5X30-MM)	
C	20	1	**194-9487**	2	BUMPER AS	

B-USE AS REQUIRED
C-CHANGE FROM PREVIOUS TYPE
M-METRIC PART
Y-SEPARATE ILLUSTRATION

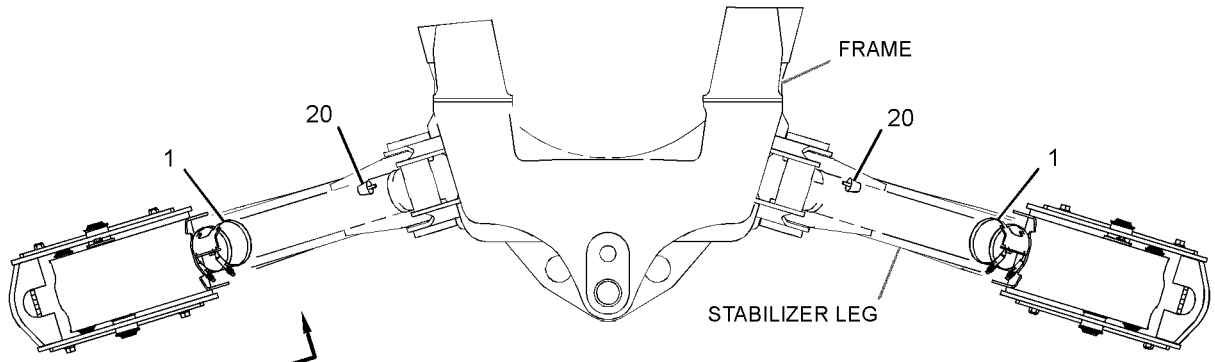

TOP VIEW

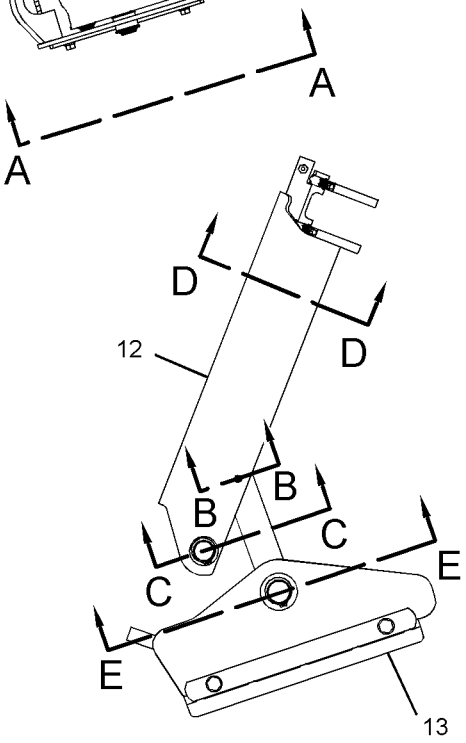

VIEW A-A

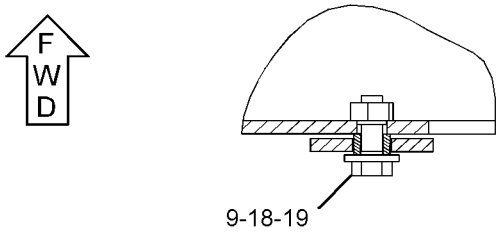

SECTION B-B

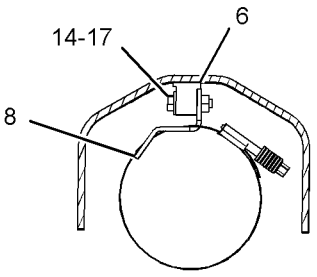

SECTION D-D

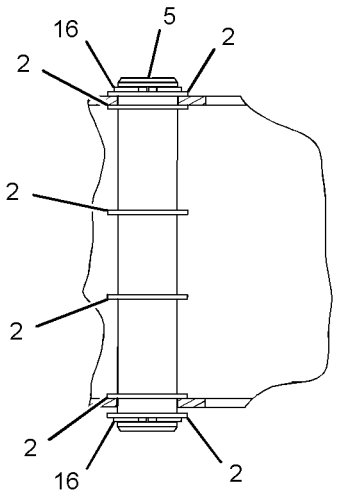

SECTION C-C

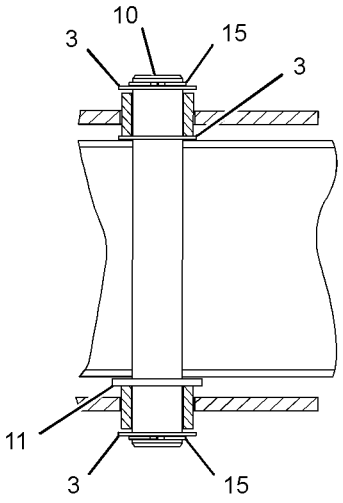

SECTION E-E

GRAPHIC #1 **<END>** g01785277

9R-1085 PAD & MTG GP-STABILIZER–STREET

S/N: EAT1-UP
AN ATTACHMENT

SMCS-7222 **i02593850**

NOTE	REF NO	GRAPHIC REF	PART NUMBER	QTY	PART NAME 1 2 3 4 5 6 (PRODUCT LEVEL)	SEE PAGE
	1	1	**9R-0422**	2	PIN	
C	2	1	**238-9546**	2	SHAFT	
CY	3	1	*247-7555*	2	PAD GP-STABILIZER (STREET)	599
	4	1	**6V-3213**	4	RING-RETAINING	
	5	1	**6V-8144**	4	RING-RETAINING	
B	6	1	**9R-0109**	8	WASHER (41X64X3-MM THK)	
BC	7	1	**9R-0158**	16	WASHER (46X69X3-MM THK)	

B-USE AS REQUIRED
C-CHANGE FROM PREVIOUS TYPE
Y-SEPARATE ILLUSTRATION

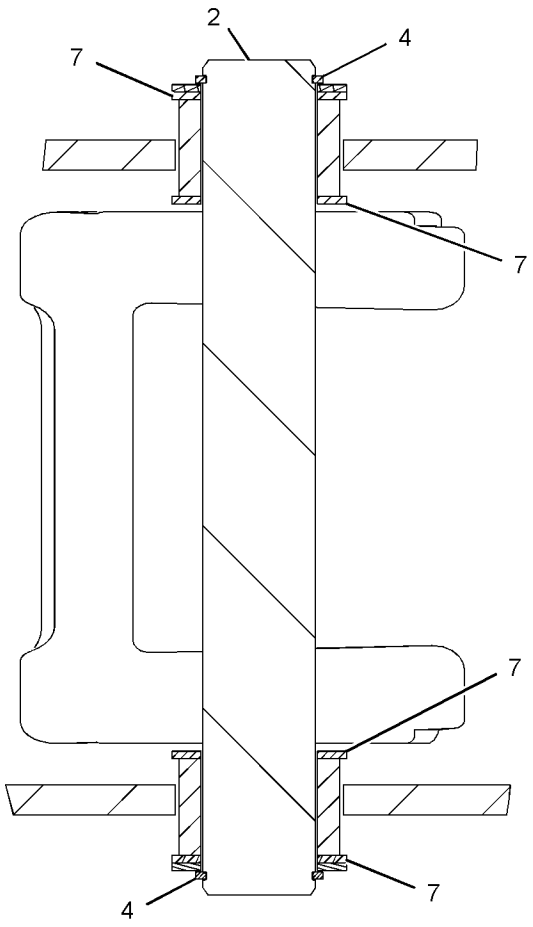

SECTION A-A

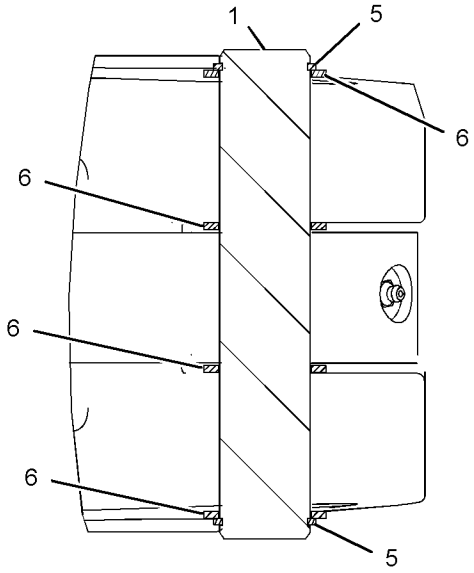

SECTION B-B

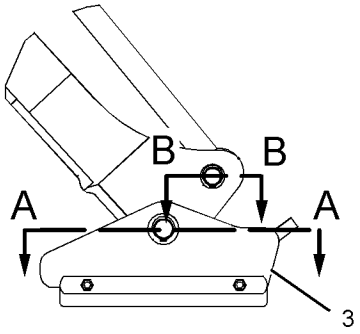

GRAPHIC #1 **<END>** g01084155

9R-6007 PAD & MTG GP-STABILIZER–STREET

S/N: EAT1-UP

AN ATTACHMENT

SMCS-7222 **i02127790**

NOTE	REF NO	GRAPHIC REF	PART NUMBER	QTY	PART NAME 1 2 3 4 5 6 (PRODUCT LEVEL)	SEE PAGE
BC	1	1	**9R-0109**	10	WASHER (41X64X3-MM THK)	
BC	2	1	**9R-0158**	16	WASHER (46X69X3-MM THK)	
C	3	1	**9R-0422**	2	PIN	
C	4	1	**238-9546**	2	SHAFT	
CY	5	1	*238-9547*	2	PAD GP-STABILIZER (STREET)	598
C	6	1	**6V-3213**	4	RING-RETAINING	
	7	1	**6V-8144**	4	RING-RETAINING	

B-USE AS REQUIRED
C-CHANGE FROM PREVIOUS TYPE
Y-SEPARATE ILLUSTRATION

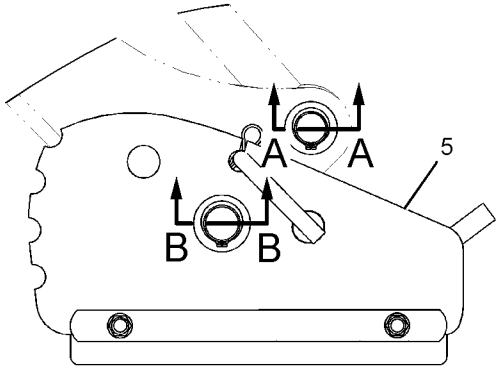

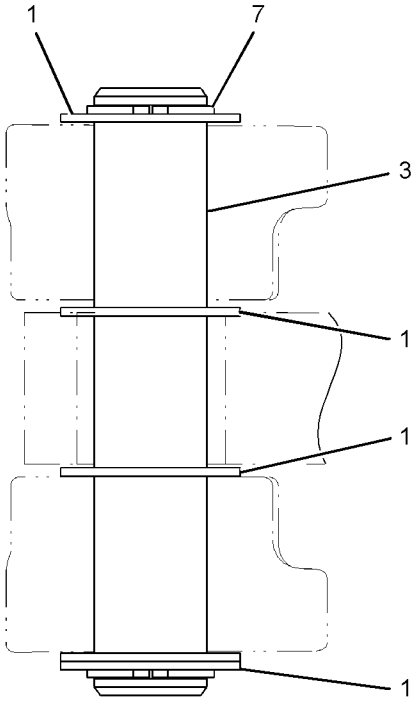

SECTION A-A

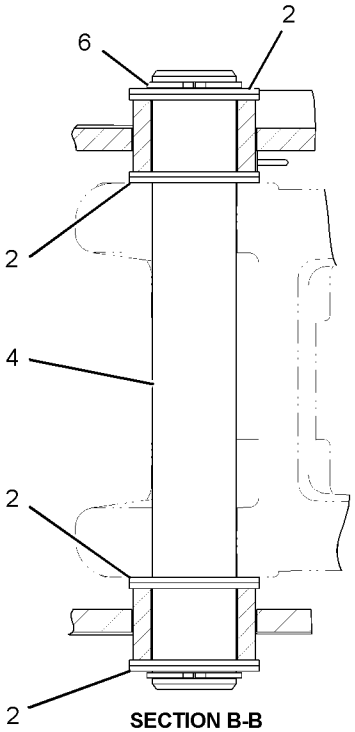

SECTION B-B

GRAPHIC #1

<END>

g01084460

116-4942 PAD & MTG GP-STABILIZER

S/N: EAT1-UP
AN ATTACHMENT

SMCS-7222 **i03291827**

NOTE	REF NO	GRAPHIC REF	PART NUMBER	QTY	PART NAME 1 2 3 4 5 6 (PRODUCT LEVEL)	SEE PAGE
B	1	1	**9R-0109**	8	WASHER (41X64X3-MM THK)	
B	2	1	**9R-0158**	14	WASHER (46X69X3-MM THK)	
	3	1	**9R-0422**	2	PIN	
C	4	1	**238-9546**	2	SHAFT	
C	5	1	**239-1416**	2	PAD AS	
	6	1	**6V-3213**	4	RING-RETAINING	
	7	1	**6V-8144**	4	RING-RETAINING	

B-USE AS REQUIRED
C-CHANGE FROM PREVIOUS TYPE

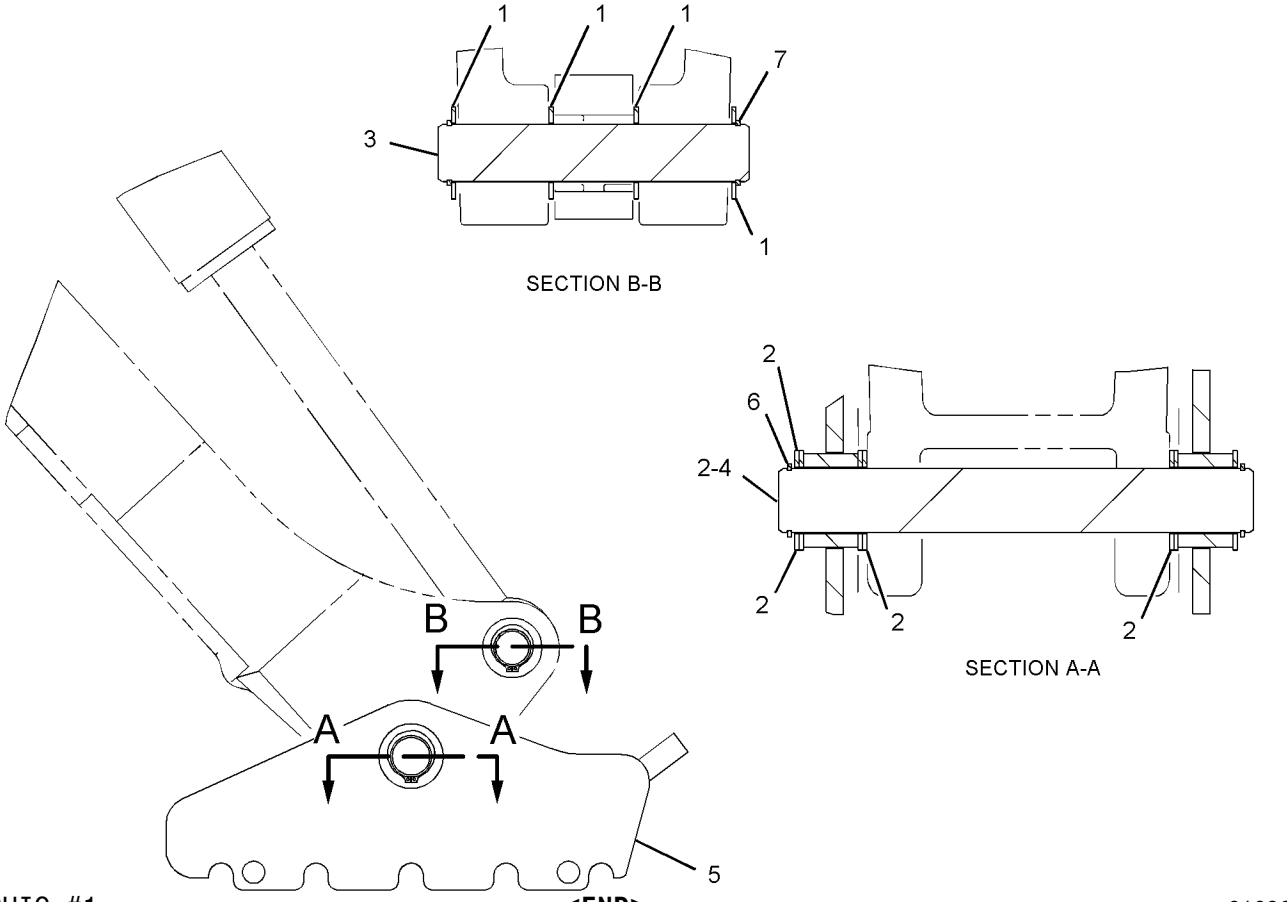

GRAPHIC #1 **<END>** g01096084

238-9547 PAD GP-STABILIZER–STREET

S/N: EAT1-UP

PART OF 133-3362 PAD & GUARD GP-STABILIZER, 9R-6007 PAD & MTG GP-STABILIZER

AN ATTACHMENT

SMCS-7222 **i02202299**

NOTE	REF NO	GRAPHIC REF	PART NUMBER	QTY	PART NAME 1 2 3 4 5 6 (PRODUCT LEVEL)	SEE PAGE
	1	1	**237-9349**	1	PAD AS	
	2	1	**237-9355**	1	PIN AS	
	3	1	**237-9356**	1	PAD AS	
	4	1	**241-0890**	2	SPACER (16.7X22.2X22.2-MM THK)	
	5	1	**241-0891**	2	PLATE	
	6	1	**241-0892**	1	PLATE	
	7	1	**5P-7971**	2	BOLT (5/8-11X12-IN)	
	8	1	**5P-0370**	1	LOCK PIN	
	9	1	**3K-2889**	2	LOCKNUT (5/8-11-THD)	
	10	1	**9X-8257**	2	WASHER (17.5X30X3.5-MM THK)	

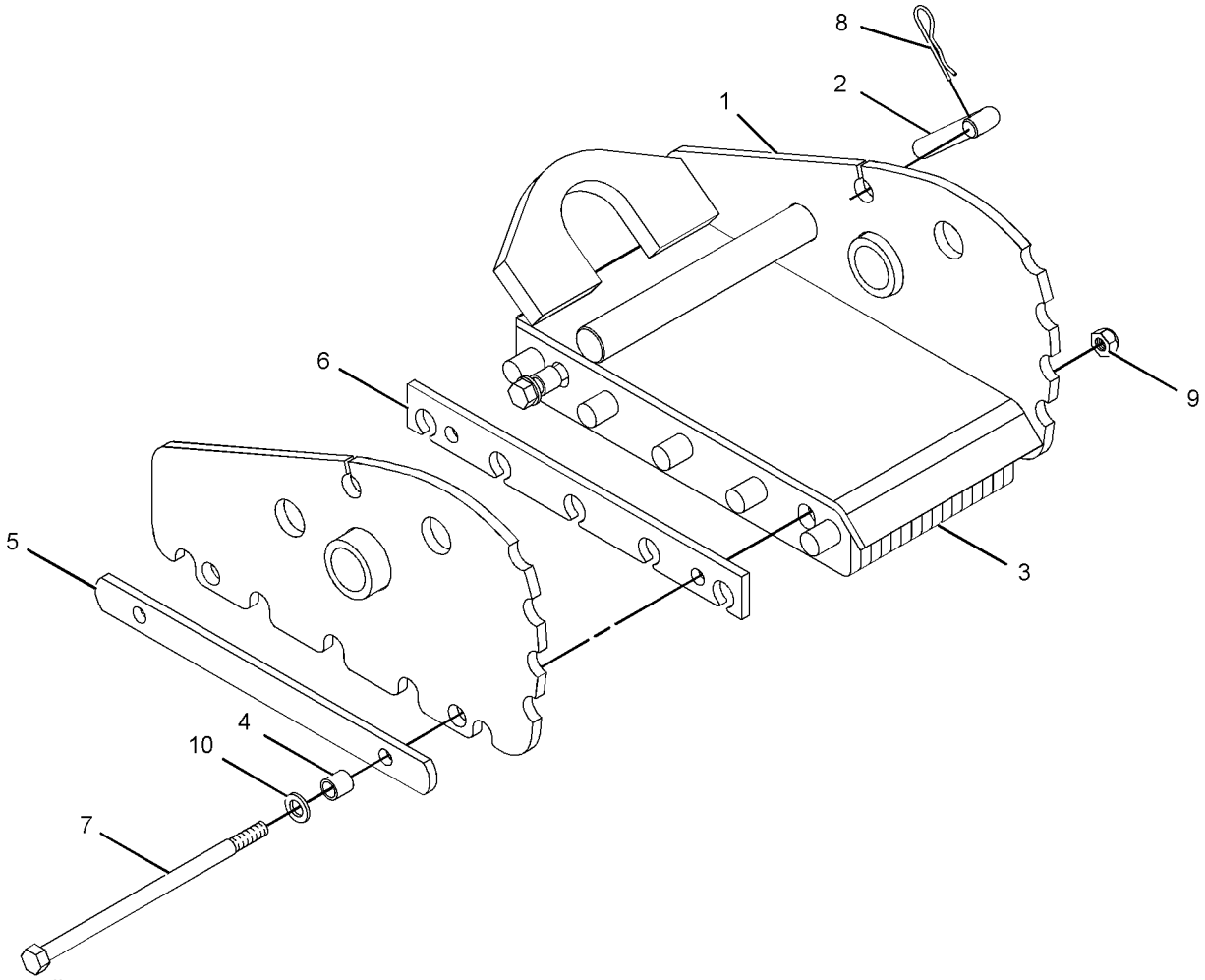

GRAPHIC #1 **<END>** g01084456

247-7555 PAD GP-STABILIZER–STREET

S/N: EAT1-UP

PART OF 133-3366 PAD & GUARD GP-STABILIZER, 9R-1085 PAD & MTG GP-STABILIZER

AN ATTACHMENT

SMCS-7222 **i02202704**

NOTE	REF NO	GRAPHIC REF	PART NUMBER	QTY	PART NAME 1 2 3 4 5 6 (PRODUCT LEVEL)	SEE PAGE
	1	1	**237-9356**	1	PAD AS	
	2	1	**239-1416**	1	PAD AS	
	3	1	**241-0890**	2	SPACER (16.7X22.2X22.2-MM THK)	
	4	1	**241-0891**	2	PLATE	
	5	1	**241-0892**	1	PLATE	
	6	1	**3K-2889**	2	LOCKNUT (5/8-11-THD)	
	7	1	**5P-7971**	2	BOLT (5/8-11X12-IN)	
	8	1	**9X-8257**	2	WASHER (17.5X30X3.5-MM THK)	

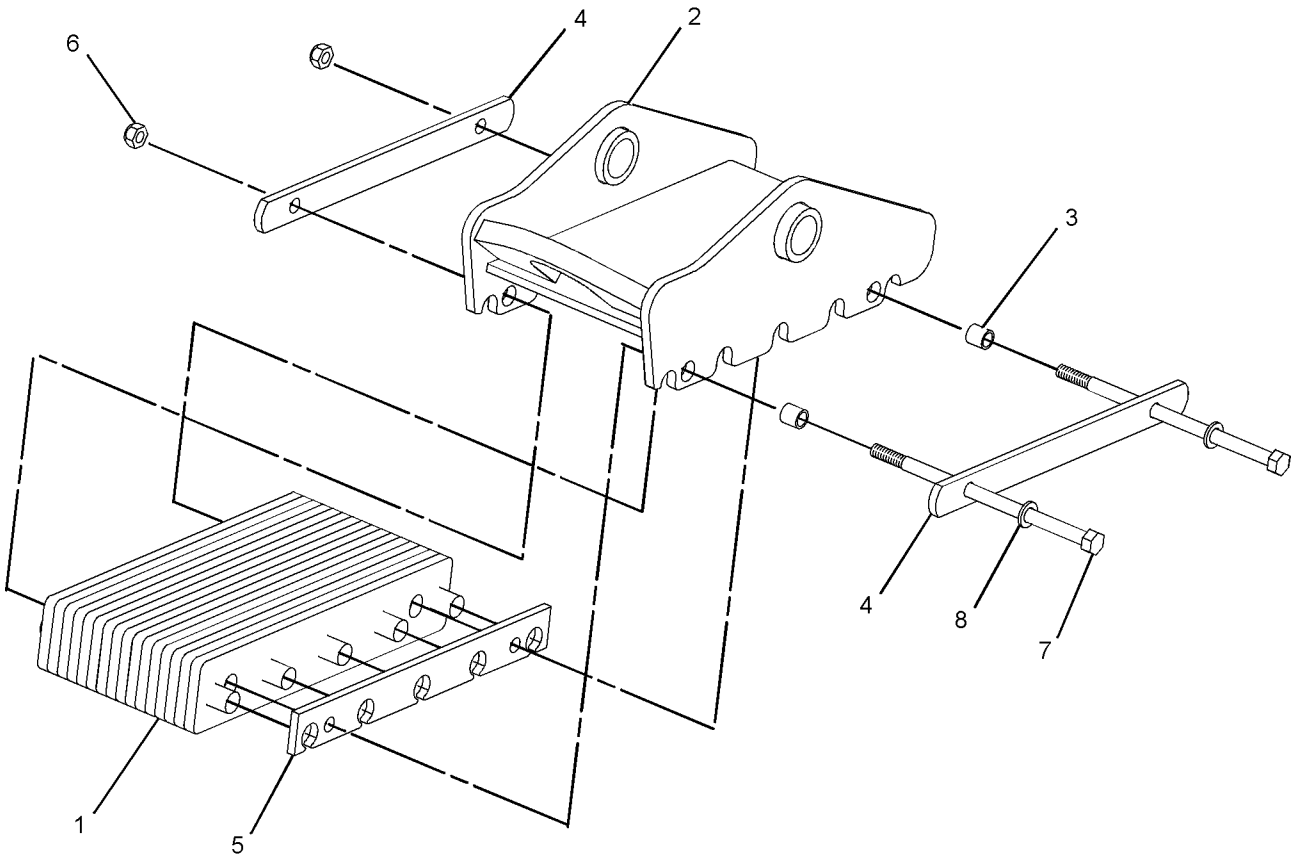

GRAPHIC #1 **<END>** g01113818

IMPLEMENTS

266-5834 STABILIZER GP-BACKHOE

S/N: EAT1-UP

PART OF 213-9289 CHASSIS AR

SMCS-7222 **i02646557**

NOTE	REF NO	GRAPHIC REF	PART NUMBER	QTY	PART NAME 1 2 3 4 5 6 (PRODUCT LEVEL)	SEE PAGE
	1	1	**293-7383**	2	PIN	
B	2	1	**111-4337**	2	WASHER (46X70X1-MM THK)	
B	3	1	**119-4594**	2	WASHER (41X64X1-MM THK)	
	4	1	**130-0777**	2	STABILIZER AS	
					(EACH INCLUDES)	
		1	**9R-0411**	2	BEARING-SLEEVE	
	5	1	**261-6703**	2	PIN	
	6	1	**6V-3213**	4	RING-RETAINING	
	7	1	**6V-8144**	4	RING-RETAINING	
B	8	1	**9R-0109**	8	WASHER (41X64X3-MM THK)	
B	9	1	**9R-0158**	14	WASHER (46X69X3-MM THK)	

B-USE AS REQUIRED

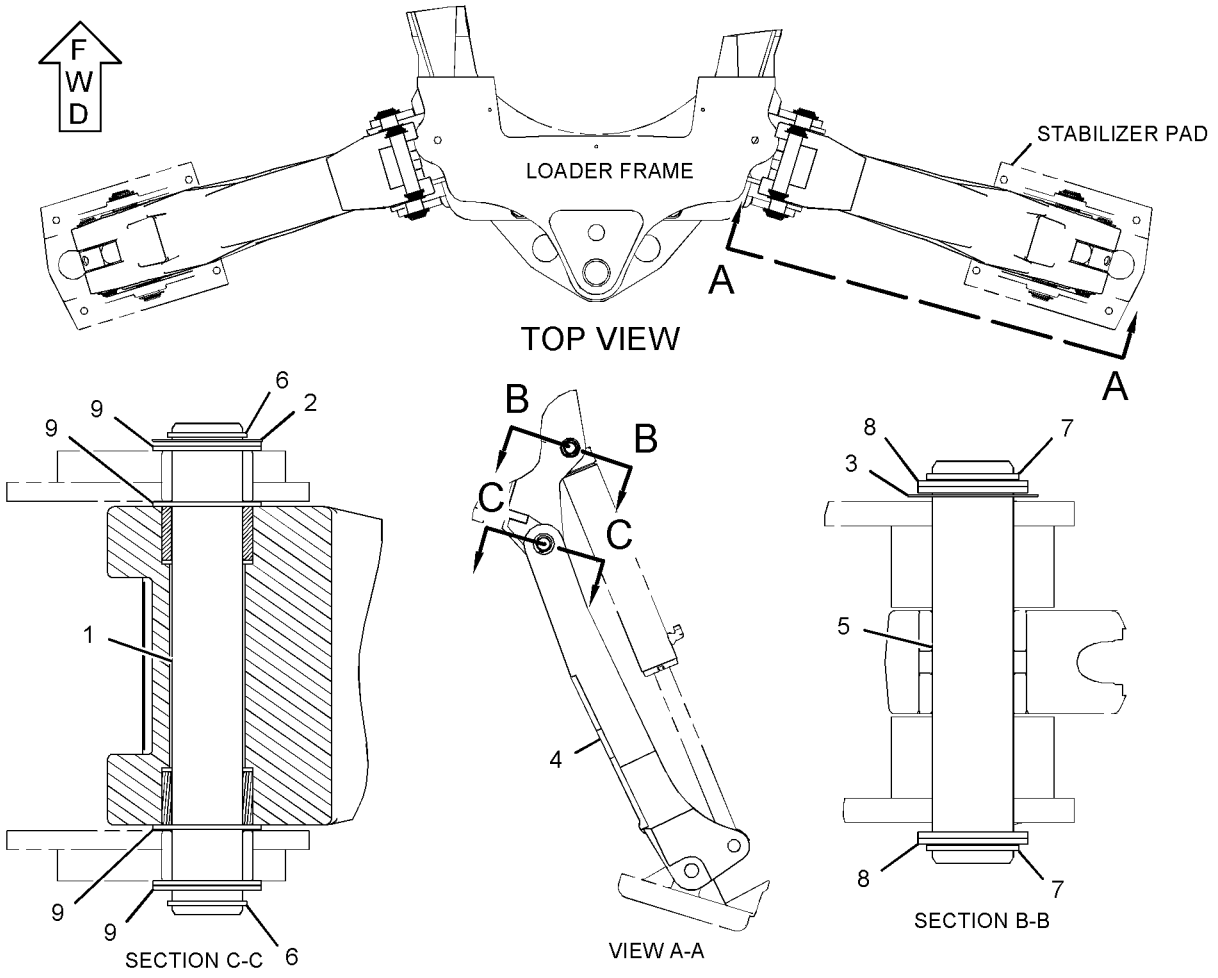

GRAPHIC #1 **<END>** g01335487

271-8671 STICK AS

S/N: EAT1-UP
PART OF 271-8668 STICK GP-HOE
AN ATTACHMENT

SMCS-6502 **i02647280**

NOTE	REF NO	GRAPHIC REF	PART NUMBER	QTY	PART NAME 1 2 3 4 5 6 (PRODUCT LEVEL)	SEE PAGE
	1	1	**213-6715**	2	BEARING-SLEEVE	
	2	1	**213-6719**	2	BEARING-SLEEVE	
	3	1	**221-4315**	1	STOP AS	
		1	**221-4322**	1	PLATE	
	4	1	**107-6711**	2	BLOCK	
	5	1	**9R-0162**	4	BEARING-SLEEVE	
M	6	1	**9R-2672**	2	BOSS (M10X1.5X20-MM)	
	7	1	**299-5422**	1	PLATE	
	8	1	**299-5538**	2	PLATE	

M-METRIC PART

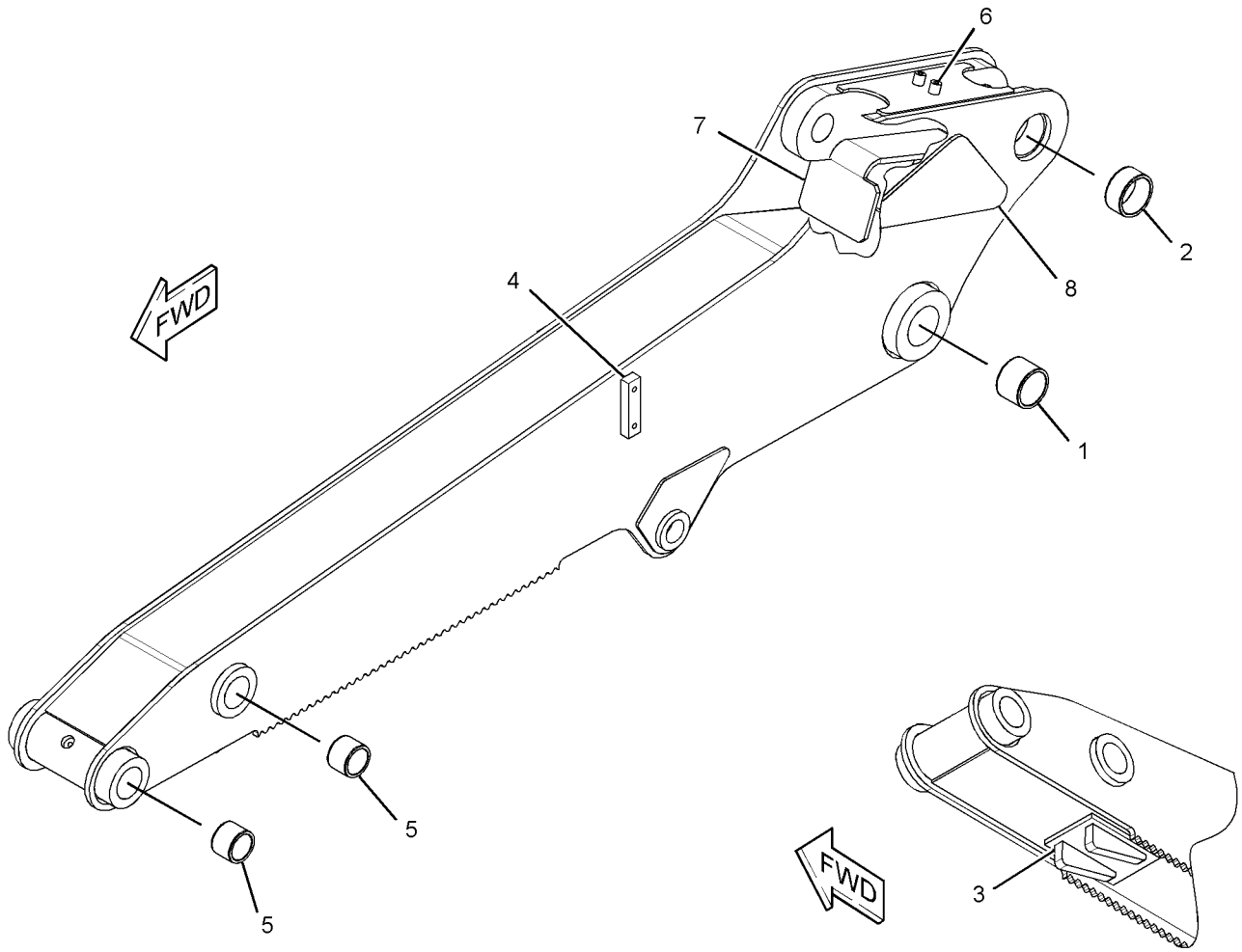

GRAPHIC #1 **<END>** g01329000

IMPLEMENTS

271-1403 STICK GP-EXTENDABLE

S/N: EAT1-UP

PART OF 213-9309, 291-9207 BACKHOE AR-EXTENDABLE STICK

AN ATTACHMENT

SMCS-6533 **i03257485**

NOTE	REF NO	GRAPHIC REF	PART NUMBER	QTY	PART NAME 1 2 3 4 5 6 (PRODUCT LEVEL)	SEE PAGE
	1	1	**3B-8489**	4	FITTING-GREASE	
	2	1	**9R-2959**	2	CLIP	
	3	1	**209-2435**	2	BLOCK	
Y	4	1	**210-7097**	1	CYLINDER GP-EXTENDABLE STICK	401
	5	1	**305-2697**	1	STICK AS (INNER)	
	5A	1	**213-6719**	1	BEARING-SLEEVE	
	5B	1	**213-6715**	2	BEARING-SLEEVE	
	6	1	**214-6143**	1	PIN	
	7	1	**216-6295**	1	PLATE	
	8	1	**217-0055**	1	PIN	
	9	1	**217-1577**	2	PAD AS	
	10	1	**220-1018**	1	PIN	
	11	1	**222-5171**	2	SCREW AS (ADJUSTER)	
	12	1	**223-3926**	1	PLATE	
	13	1	**226-9764**	2	PAD AS	
Y	14	1	*230-7514*	1	WIRING GP-EXTENDABLE STICK	168
	15	1	**233-5165**	4	PLATE	
B	16	1	**233-5166**	4	SHIM (1-MM THK)	
B	17	1	**233-5167**	12	SHIM (2-MM THK)	
	18	1	**233-5169**	4	PAD	
Y	19	1	*247-3268*	1	LINES GP-EXTENDABLE STICK	457
	20	1	**271-1409**	1	STICK AS (OUTER)	
	20A	1	**286-7166**	1	BEARING-SLEEVE	
	20B	1	**9R-0162**	2	BEARING-SLEEVE	
M	21	1	**297-5510**	16	SCREW-HEX SOCKET (M12X1.75X30-MM)	
	22	1	**1L-3768**	2	RING-RETAINING	
	23	1	**4F-8711**	2	BUTTON-PLUG	
	24	1	**5V-7190**	4	WASHER-HARD (10.5X45.2X6-MM THK)	
	25	1	**6V-4364**	2	RING-RETAINING	
B	26	1	**8T-4121**	12	WASHER-HARD (11X21X2.5-MM THK)	
M	27	1	**8T-4136**	2	BOLT (M10X1.5X25-MM)	
M	28	1	**8T-4139**	2	BOLT (M12X1.75X30-MM)	
M	29	1	**8T-4183**	2	BOLT (M12X1.75X40-MM)	
M	30	1	**8T-4194**	2	BOLT (M12X1.75X50-MM)	
M	31	1	**8T-4195**	2	BOLT (M10X1.5X30-MM)	
	32	1	**8T-4223**	26	WASHER-HARD (13.5X25.5X3-MM THK)	
M	33	1	**8T-4910**	4	BOLT (M12X1.75X60-MM)	
	34	1	**287-5667**	6	SHIM (1-MM THK)	
B	35	1	**293-9882**	4	SHIM (1-MM THK)	
B	36	1	**293-9884**	4	SHIM (0.25-MM THK)	
	37	1	**7X-0603**	2	WASHER-HARD (9.9X35X2.5-MM THK)	

B-USE AS REQUIRED
M-METRIC PART
Y-SEPARATE ILLUSTRATION

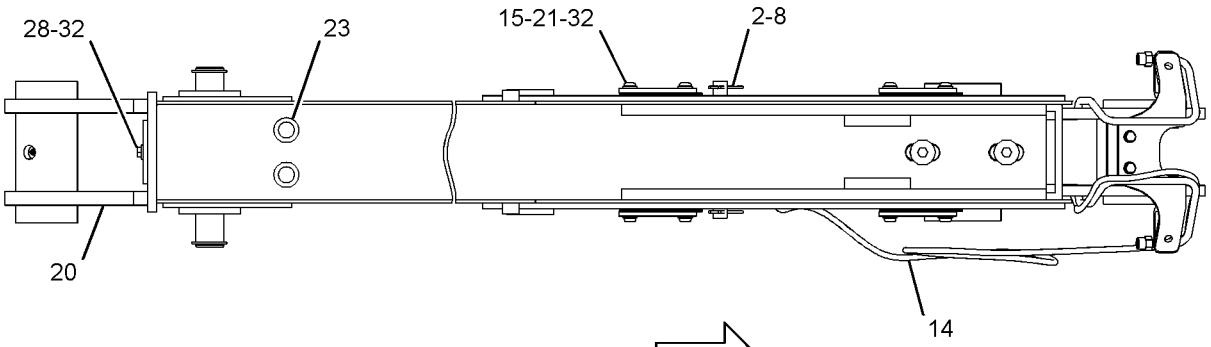

TOP VIEW FWD

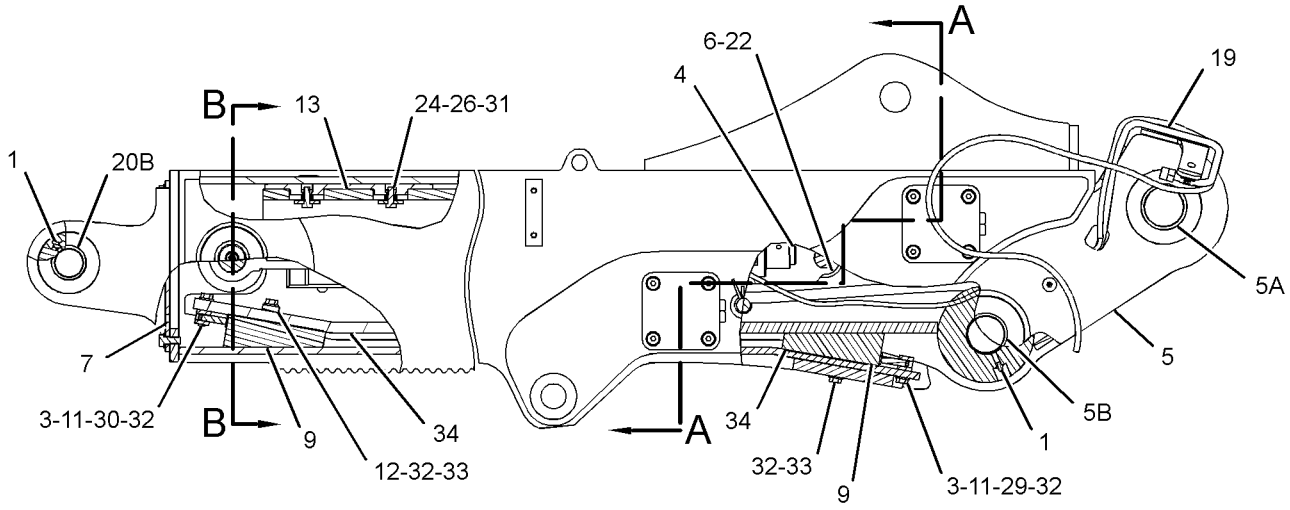

RIGHT SIDE VIEW

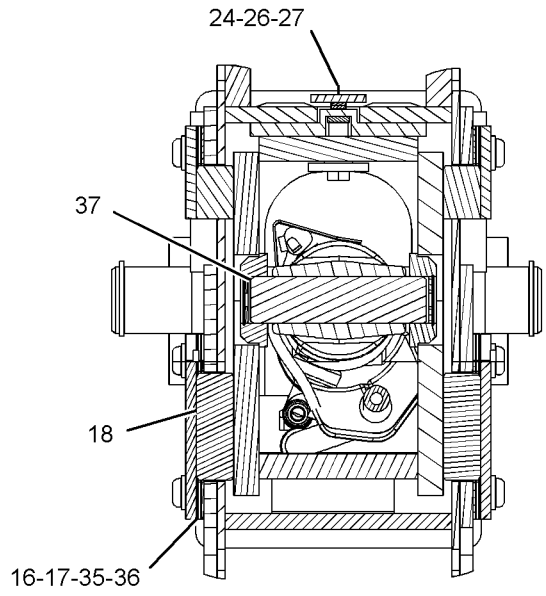

SECTION A-A

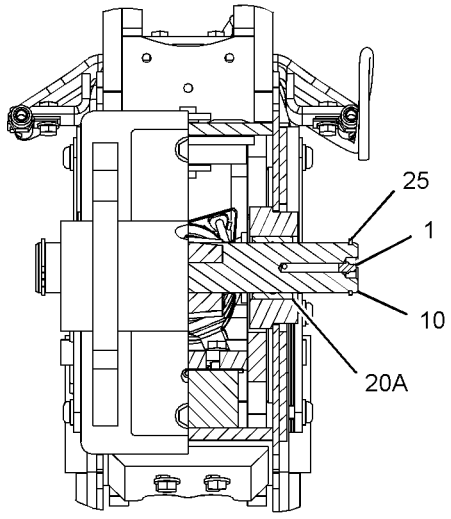

SECTION B-B

GRAPHIC #1 **<END>** g01606056

271-1406 STICK GP-EXTENDABLE

S/N: EAT1-UP

PART OF 213-9304 BACKHOE AR-EXTENDABLE STICK

AN ATTACHMENT

SMCS-6533 **i03532141**

NOTE	REF NO	GRAPHIC REF	PART NUMBER	QTY	PART NAME 1 2 3 4 5 6 (PRODUCT LEVEL)	SEE PAGE
	1	1	**3B-8489**	4	FITTING-GREASE	
	2	1	**9R-2959**	2	CLIP	
	3	1	**209-2435**	2	BLOCK	
Y	4	1	**210-7098**	1	CYLINDER GP-STICK	412
	5	1	**305-2697**	1	STICK AS (INNER)	
		1	**213-6715**	2	BEARING-SLEEVE	
		1	**213-6719**	1	BEARING-SLEEVE	
	6	1	**214-6143**	1	PIN	
	7	1	**216-6295**	1	PLATE	
	8	1	**217-0055**	1	PIN	
	9	1	**217-1577**	2	PAD AS	
	10	1	**220-1018**	1	PIN	
	11	1	**222-5171**	2	SCREW AS (ADJUSTER)	
	12	1	**223-3926**	1	PLATE	
	13	1	**226-9764**	2	PAD AS	
	14	1	**233-5165**	4	PLATE	
B	15	1	**233-5166**	4	SHIM (1-MM THK)	
B	16	1	**233-5167**	12	SHIM (2-MM THK)	
	17	1	**233-5169**	4	PAD	
Y	18	1	*247-3268*	1	LINES GP-EXTENDABLE STICK	457
	19	1	**271-1409**	1	STICK AS (OUTER)	
		1	**286-7166**	2	BEARING-SLEEVE	
	20	1	**1L-3768**	2	RING-RETAINING	
	21	1	**4F-8711**	2	BUTTON-PLUG	
	22	1	**5V-7190**	4	WASHER-HARD (10.5X45.2X6-MM THK)	
	23	1	**6V-4364**	2	RING-RETAINING	
B	24	1	**8T-4121**	12	WASHER-HARD (11X21X2.5-MM THK)	
M	25	1	**8T-4136**	2	BOLT (M10X1.5X25-MM)	
M	26	1	**8T-4139**	2	BOLT (M12X1.75X30-MM)	
M	27	1	**8T-4183**	2	BOLT (M12X1.75X40-MM)	
M	28	1	**8T-4194**	2	BOLT (M12X1.75X50-MM)	
M	29	1	**8T-4195**	2	BOLT (M10X1.5X30-MM)	
	30	1	**8T-4223**	26	WASHER-HARD (13.5X25.5X3-MM THK)	
M	31	1	**8T-4910**	4	BOLT (M12X1.75X60-MM)	
M	32	1	**297-5510**	16	SCREW-HEX SOCKET (M12X1.75X30-MM)	
	33	1	**287-5667**	6	SHIM (1-MM THK)	
B	34	1	**293-9882**	4	SHIM (1-MM THK)	
B	35	1	**293-9884**	4	SHIM (0.25-MM THK)	
	36	1	**7X-0603**	2	WASHER-HARD (9.9X35X2.5-MM THK)	

B-USE AS REQUIRED
M-METRIC PART
Y-SEPARATE ILLUSTRATION

271-1406 **STICK GP-EXTENDABLE** *(contd.)* **i03532141**

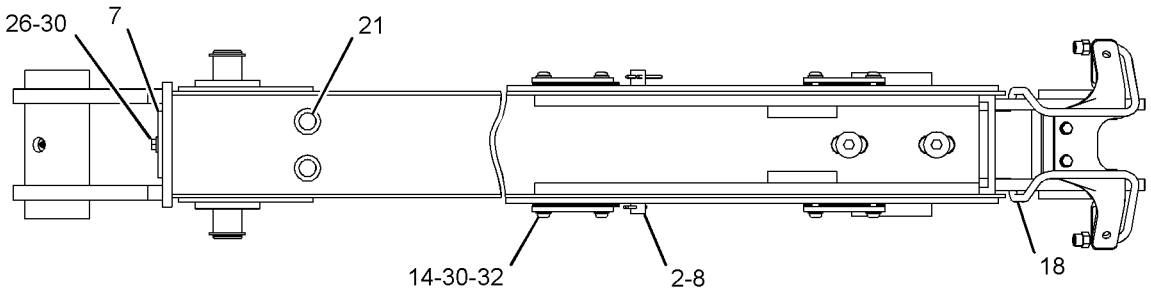

TOP VIEW FWD

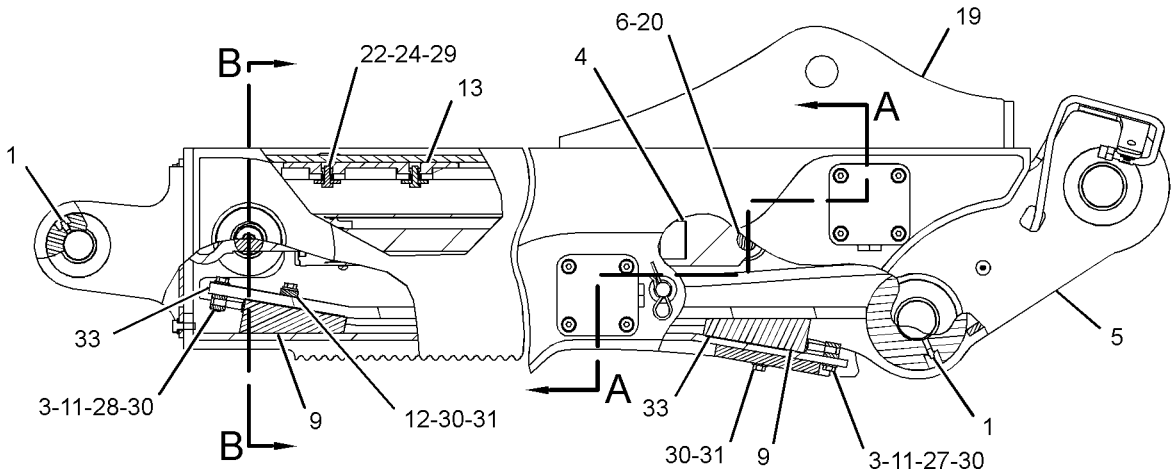

RIGHT SIDE VIEW

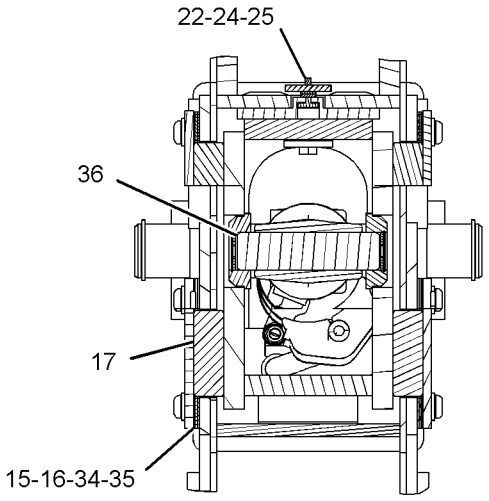

SECTION A-A

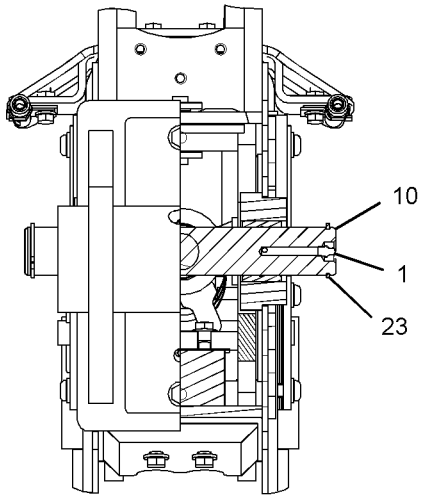

SECTION B-B

GRAPHIC #1 **<END>** g01640215

IMPLEMENTS

271-8668 STICK GP-HOE

S/N: EAT1-UP

PART OF 213-9301, 213-9306, 291-9206 BACKHOE AR-STANDARD STICK

AN ATTACHMENT

SMCS-6502 **i02502868**

NOTE	REF NO	GRAPHIC REF	PART NUMBER	QTY	PART NAME 1 2 3 4 5 6 (PRODUCT LEVEL)	SEE PAGE
B	1	1	**9R-0481**	4	WASHER (71X110X4-MM THK)	
B	2	1	**9R-1502**	4	WASHER (56X90X4-MM THK)	
B	3	1	**9R-1510**	4	WASHER (51X82X4-MM THK)	
B	4	1	**286-3088**	3	SPACER (66X145X1-MM THK)	
	5	1	**213-6696**	1	PIN	
	6	1	**213-6697**	1	PIN	
	7	1	**213-6718**	1	PIN	
	8	1	**213-6728**	1	PIN AS	
Y	9	1	**271-8671**	1	STICK AS	601
	10	1	**095-7950**	2	RING-RETAINING	
	11	1	**3B-8488**	1	FITTING-GREASE	
	12	1	**3B-8489**	5	FITTING-GREASE	
	13	1	**6V-4364**	2	RING-RETAINING	
	14	1	**6V-8344**	2	RING-RETAINING	

B-USE AS REQUIRED
Y-SEPARATE ILLUSTRATION

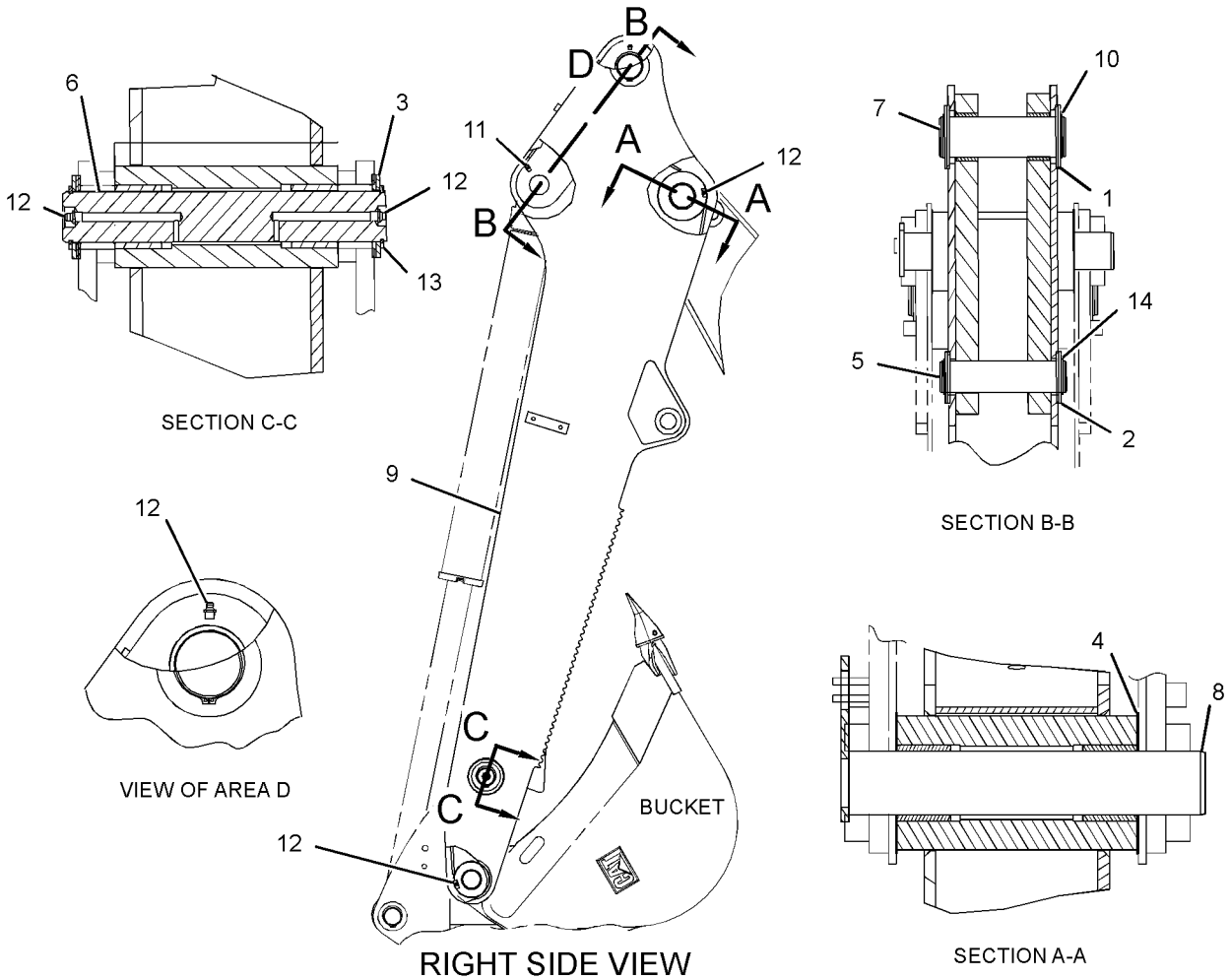

GRAPHIC #1

<END>

g01328147

WORK TOOLS

251-1776 BUCKET AR-GENERAL PURPOSE

S/N: EAT1-UP

AN ATTACHMENT

SMCS-6101 **i02105044**

NOTE	PART NUMBER	QTY	PART NAME 1 2 3 4 5 6 (PRODUCT LEVEL)	SEE PAGE
Y	**251-1777**	1	BUCKET GP-GENERAL PURPOSE	671
Y	*9R-5866*	1	TOOTH GP-UNI	786
Y-SEPARATE ILLUSTRATION				

<END>

232-2681 BUCKET AR-MULTIPURPOSE

S/N: EAT1-UP

AN ATTACHMENT

SMCS-6104 **i02218649**

NOTE	PART NUMBER	QTY	PART NAME 1 2 3 4 5 6 (PRODUCT LEVEL)	SEE PAGE
Y	**216-8800**	1	BUCKET GP-MULTIPURPOSE	721
Y	*9R-5321*	1	EDGE GP-CUTTING	740
Y-SEPARATE ILLUSTRATION				

<END>

232-2682 BUCKET AR-MULTIPURPOSE

S/N: EAT1-UP

AN ATTACHMENT

SMCS-6104 **i02207479**

NOTE	PART NUMBER	QTY	PART NAME 1 2 3 4 5 6 (PRODUCT LEVEL)	SEE PAGE
Y	**216-8800**	1	BUCKET GP-MULTIPURPOSE	721
Y	*9R-5866*	1	TOOTH GP-UNI	786
Y-SEPARATE ILLUSTRATION				

<END>

232-2683 BUCKET AR-MULTIPURPOSE

S/N: EAT1-UP

AN ATTACHMENT

SMCS-6104 **i02218657**

NOTE	PART NUMBER	QTY	PART NAME 1 2 3 4 5 6 (PRODUCT LEVEL)	SEE PAGE
Y	*232-2685*	1	BUCKET AR-MULTIPURPOSE	608
Y	*9R-5321*	1	EDGE GP-CUTTING	740
Y-SEPARATE ILLUSTRATION				

<END>

232-2684 BUCKET AR-MULTIPURPOSE

S/N: EAT1-UP
AN ATTACHMENT

SMCS-6104 **i02218679**

NOTE	PART NUMBER	QTY	PART NAME 1 2 3 4 5 6 (PRODUCT LEVEL)	SEE PAGE
Y	*232-2685*	1	BUCKET AR-MULTIPURPOSE	608
Y	*9R-5866*	1	TOOTH GP-UNI	786
Y-SEPARATE ILLUSTRATION				

<END>

232-2685 BUCKET AR-MULTIPURPOSE

S/N: EAT1-UP
PART OF 232-2683, 232-2684 BUCKET AR-MULTIPURPOSE
FOR USE WITH 269-2145—PAGE 529
AN ATTACHMENT

SMCS-6104 **i02218717**

NOTE	PART NUMBER	QTY	PART NAME 1 2 3 4 5 6 (PRODUCT LEVEL)	SEE PAGE
Y	**216-8801**	1	BUCKET GP-MULTIPURPOSE	723
Y	**104-6310**	1	FORK GP	742
Y-SEPARATE ILLUSTRATION				

<END>

232-2686 BUCKET AR-MULTIPURPOSE

S/N: EAT1-UP
AN ATTACHMENT

SMCS-6104 **i02218734**

NOTE	PART NUMBER	QTY	PART NAME 1 2 3 4 5 6 (PRODUCT LEVEL)	SEE PAGE
Y	**216-8820**	1	BUCKET GP-MULTIPURPOSE	724
Y	*9R-5320*	1	EDGE GP-CUTTING	739
Y-SEPARATE ILLUSTRATION				

<END>

232-2687 BUCKET AR-MULTIPURPOSE

S/N: EAT1-UP
AN ATTACHMENT

SMCS-6104 **i02218740**

NOTE	PART NUMBER	QTY	PART NAME 1 2 3 4 5 6 (PRODUCT LEVEL)	SEE PAGE
Y	**216-8820**	1	BUCKET GP-MULTIPURPOSE	724
Y	*9R-5866*	1	TOOTH GP-UNI	786
Y-SEPARATE ILLUSTRATION				

<END>

WORK TOOLS

232-2688 BUCKET AR-MULTIPURPOSE

S/N: EAT1-UP

AN ATTACHMENT

SMCS-6104 **i02218761**

NOTE	PART NUMBER	QTY	PART NAME 1 2 3 4 5 6 (PRODUCT LEVEL)	SEE PAGE
Y	*232-2690*	1	BUCKET AR-MULTIPURPOSE	609
Y	*9R-5320*	1	EDGE GP-CUTTING	739
Y-SEPARATE ILLUSTRATION				

<END>

232-2689 BUCKET AR-MULTIPURPOSE

S/N: EAT1-UP

AN ATTACHMENT

SMCS-6104 **i02218829**

NOTE	PART NUMBER	QTY	PART NAME 1 2 3 4 5 6 (PRODUCT LEVEL)	SEE PAGE
Y	*232-2690*	1	BUCKET AR-MULTIPURPOSE	609
Y	*9R-5866*	1	TOOTH GP-UNI	786
Y-SEPARATE ILLUSTRATION				

<END>

232-2690 BUCKET AR-MULTIPURPOSE

S/N: EAT1-UP

PART OF 232-2688, 232-2689 BUCKET AR-MULTIPURPOSE

AN ATTACHMENT

SMCS-6104 **i02218853**

NOTE	PART NUMBER	QTY	PART NAME 1 2 3 4 5 6 (PRODUCT LEVEL)	SEE PAGE
Y	*216-8821*	1	BUCKET GP-MULTIPURPOSE	725
Y	**104-6310**	1	FORK GP	742
Y-SEPARATE ILLUSTRATION				

<END>

WORK TOOLS

251-1156 BUCKET AS-GENERAL PURPOSE

S/N: EAT1-UP
1.25 CU M (1.5 CU YD)
PART OF 251-1777 BUCKET GP-GENERAL PURPOSE
AN ATTACHMENT

SMCS-6101 **i02793578**

NOTE	REF NO	GRAPHIC REF	PART NUMBER	QTY	PART NAME 1 2 3 4 5 6 (PRODUCT LEVEL)	SEE PAGE
	1	1	*251-1168*	2	BRACKET AS-LIFT (RH)	
					(EACH INCLUDES)	
	1A	1	**9R-0111**	1	BEARING-SLEEVE	
	2	1	*251-1169*	2	BRACKET AS-LIFT (LH)	
					(EACH INCLUDES)	
	2A	1	**9R-0111**	1	BEARING-SLEEVE	
	3	1	**9R-0376**	2	EDGE	
	4	1	**9R-5313**	1	EDGE	
	5	1	**9R-5205**	1	EDGE (LH)	
	6	1	**9R-5206**	1	EDGE (RH)	

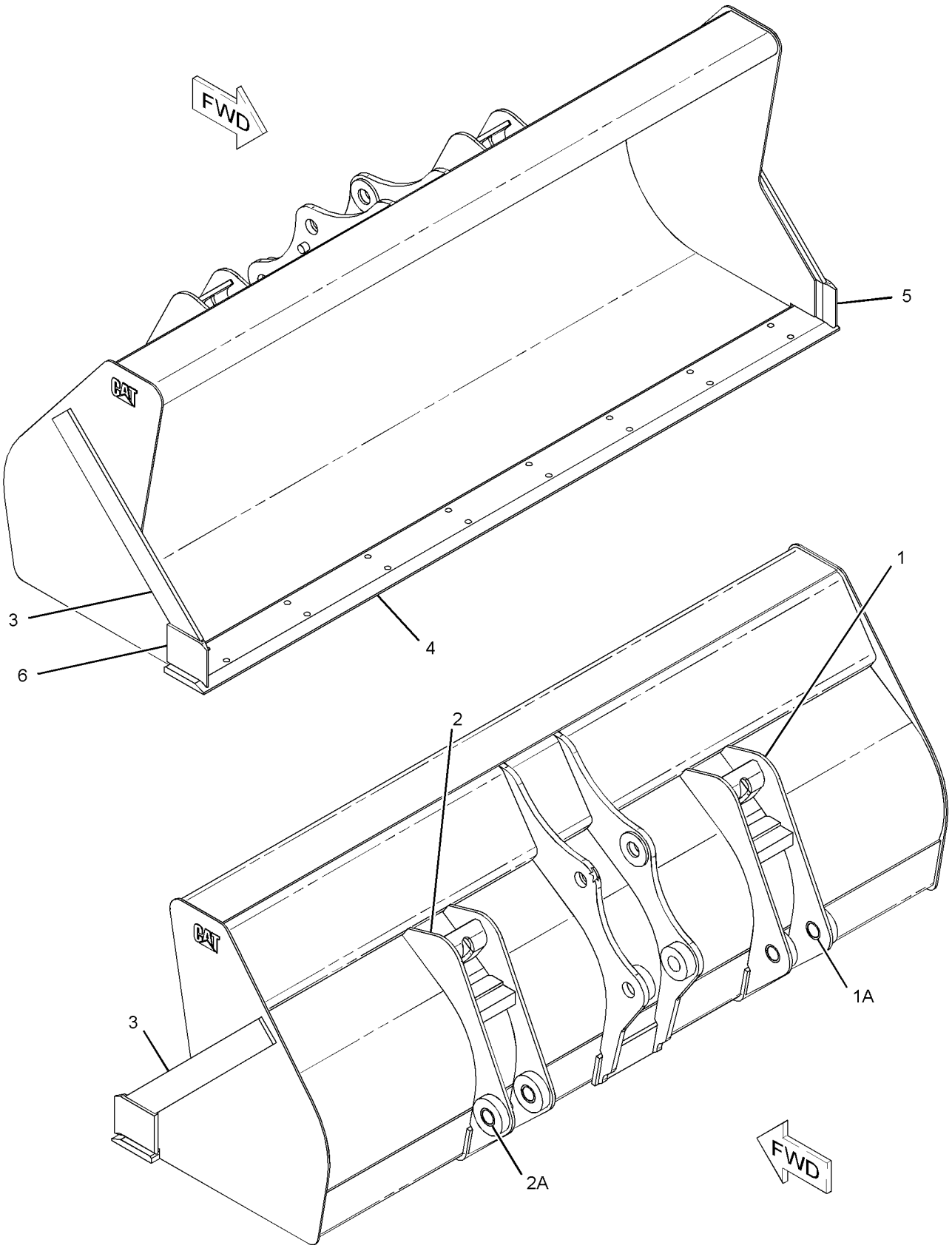

GRAPHIC #1 **<END>** g01395028

251-1157 BUCKET AS-GENERAL PURPOSE

S/N: EAT1-UP
0.76 CU M (1.00 CU YD)
PART OF 251-1780 BUCKET GP-GENERAL PURPOSE
AN ATTACHMENT

SMCS-6101 **i02660182**

NOTE	REF NO	GRAPHIC REF	PART NUMBER	QTY	PART NAME 1 2 3 4 5 6 (PRODUCT LEVEL)	SEE PAGE
	1	1	*251-1172*	2	BRACKET AS-LIFT (RH)	
					(EACH INCLUDES)	
	1A	1	**9R-0111**	1	BEARING-SLEEVE	
	2	1	*251-1173*	2	BRACKET AS-LIFT (LH)	
					(EACH INCLUDES)	
	2A	1	**9R-0111**	1	BEARING-SLEEVE	
	3	1	**9R-0347**	2	EDGE	
	4	1	**9R-4672**	1	EDGE	
	5	1	**9R-5205**	1	EDGE (LH)	
	6	1	**9R-5206**	1	EDGE (RH)	

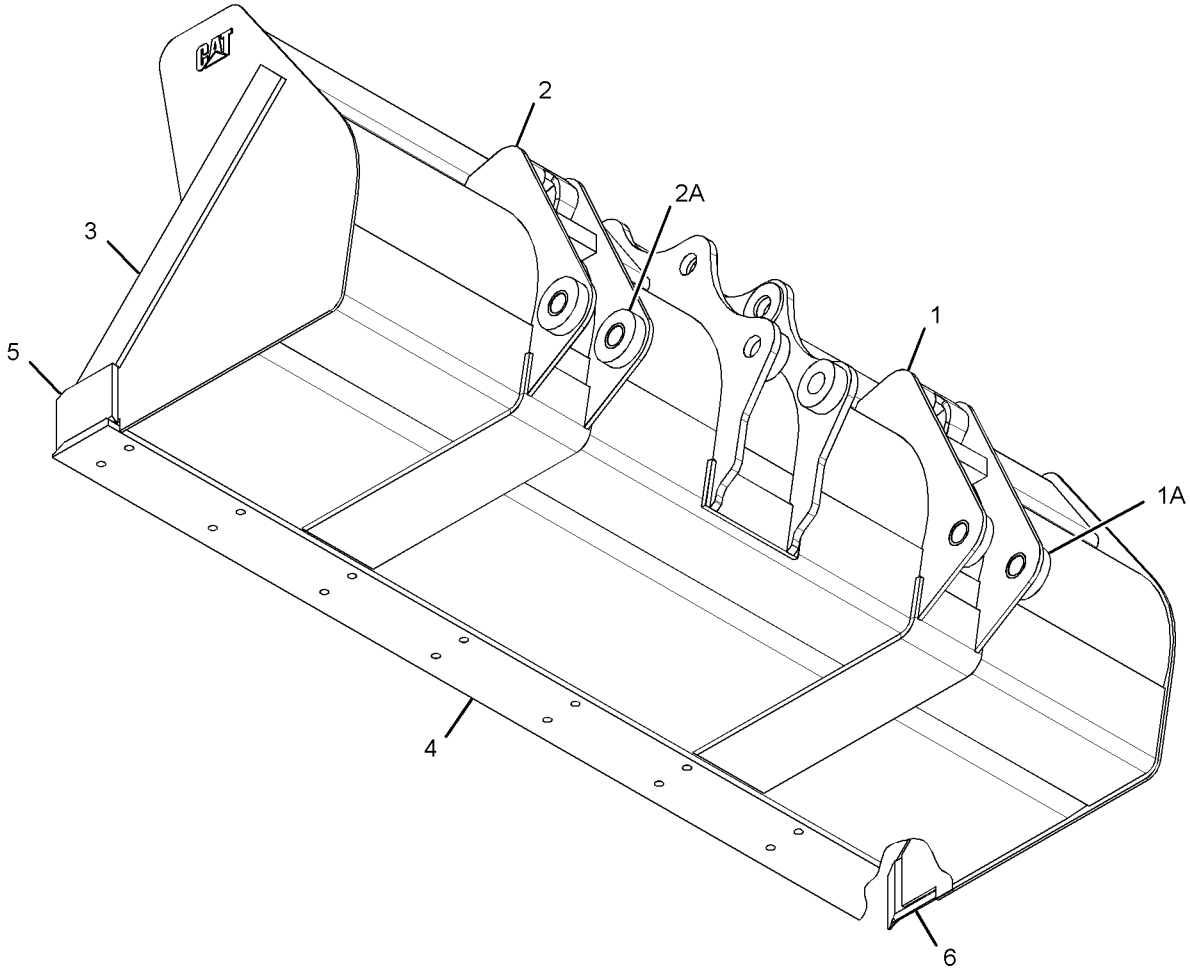

GRAPHIC #1 **<END>** g01342321

251-1158 BUCKET AS-GENERAL PURPOSE

S/N: EAT1-UP
1.0 CU M (1.131 CU YD)
PART OF 251-1783 BUCKET GP-GENERAL PURPOSE
AN ATTACHMENT

SMCS-6101 **i02111684**

NOTE	REF NO	GRAPHIC REF	PART NUMBER	QTY	PART NAME 1 2 3 4 5 6 (PRODUCT LEVEL)	SEE PAGE
	1	1	*9R-0371*	1	BRACKET AS-TILT (LH)	
	1A	1	**9R-4485**	1	BOSS	
	1B	1	**9R-4486**	1	BOSS	
	2	1	*9R-0372*	1	BRACKET AS-TILT (RH)	
	2A	1	**9R-4485**	1	BOSS	
	2B	1	**9R-4486**	1	BOSS	
	3	1	**9R-5832**	2	EDGE	
	4	1	**9R-5313**	1	EDGE	
	5	1	**9R-5205**	1	EDGE (LH)	
	6	1	**9R-5206**	1	EDGE (RH)	
	7	1	*251-1172*	2	BRACKET AS-LIFT (RH)	
					(EACH INCLUDES)	
	7A	1	**9R-0111**	1	BEARING-SLEEVE	
	8	1	*251-1173*	2	BRACKET AS-LIFT (LH)	
					(EACH INCLUDES)	
	8A	1	**9R-0111**	1	BEARING-SLEEVE	

251-1158 **BUCKET AS-GENERAL PURPOSE** *(contd.)* **i02111684**

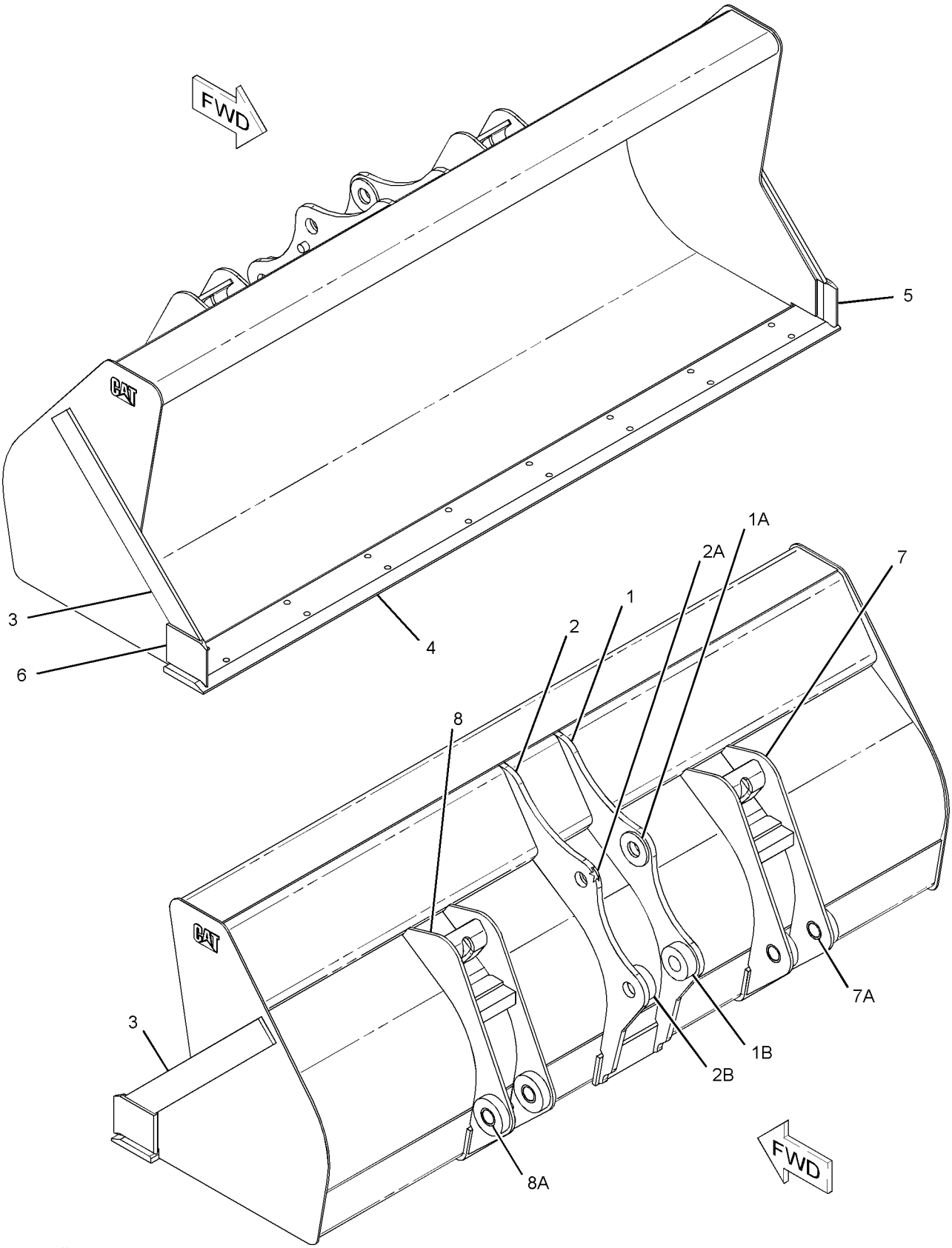

GRAPHIC #1 **<END>** g01074897

251-1159 BUCKET AS-GENERAL PURPOSE

S/N: EAT1-UP
1.17 CU M (1.4 CU YD)
PART OF 251-1786 BUCKET GP-GENERAL PURPOSE
AN ATTACHMENT

SMCS-6101 **i02108904**

NOTE	REF NO	GRAPHIC REF	PART NUMBER	QTY	PART NAME 1 2 3 4 5 6 (PRODUCT LEVEL)	SEE PAGE
	1	1	*9R-5901*	1	BRACKET AS-TILT (RH)	
	1A	1	**9R-4485**	1	BOSS	
	1B	1	**9R-4486**	1	BOSS	
	2	1	*9R-5902*	1	BRACKET AS-TILT (LH)	
	2A	1	**9R-4485**	1	BOSS	
	2B	1	**9R-4486**	1	BOSS	
	3	1	**9R-0376**	2	EDGE	
	4	1	**9R-4672**	1	EDGE	
	5	1	**9R-5205**	1	EDGE (LH)	
	6	1	**9R-5206**	1	EDGE (RH)	
	7	1	*251-1168*	2	BRACKET AS-LIFT (RH)	
					(EACH INCLUDES)	
	7A	1	**9R-0111**	1	BEARING-SLEEVE	
	8	1	*251-1169*	2	BRACKET AS-LIFT (LH)	
					(EACH INCLUDES)	
	8A	1	**9R-0111**	1	BEARING-SLEEVE	

251-1159 **BUCKET AS-GENERAL PURPOSE** *(contd.)* **i02108904**

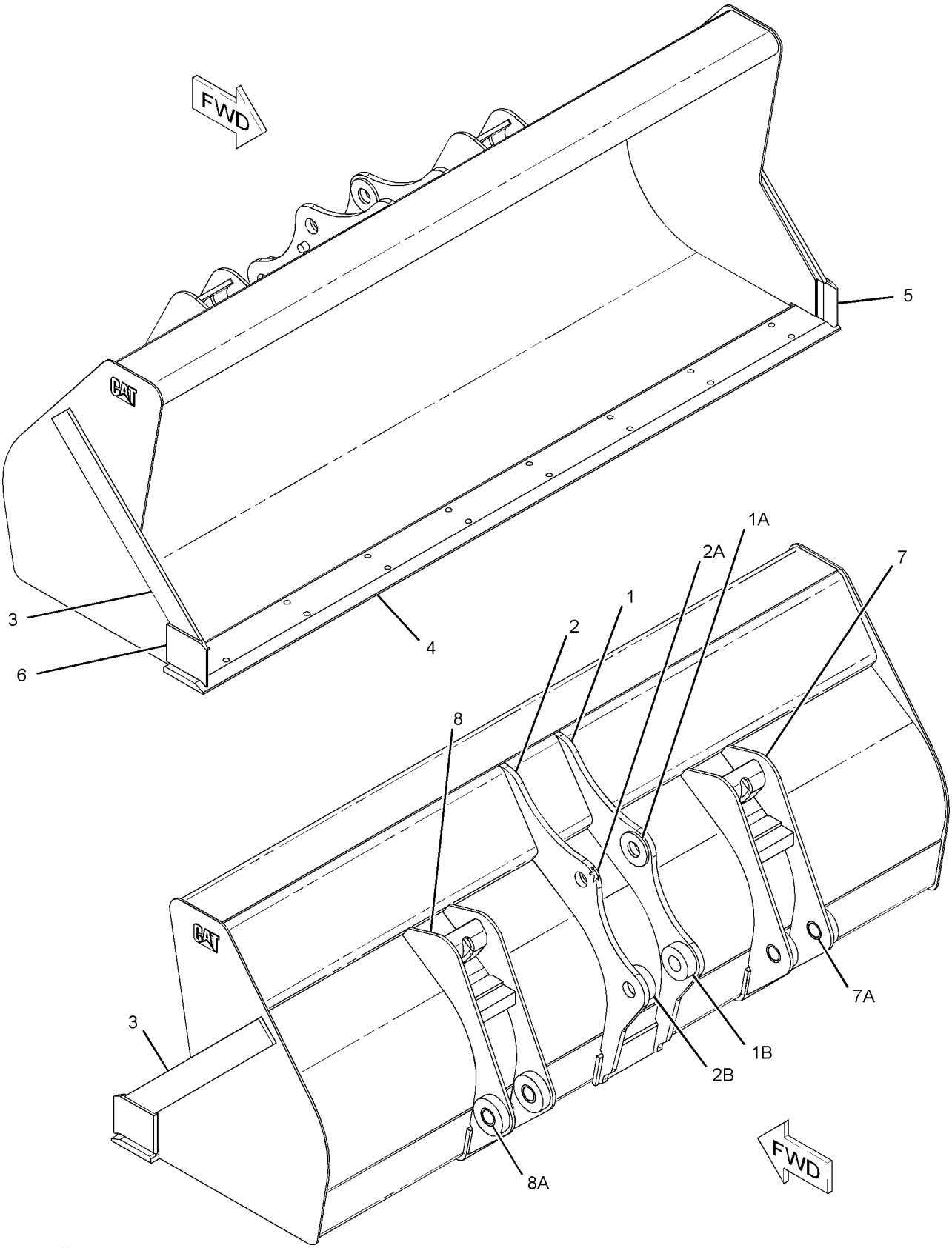

GRAPHIC #1 **<END>** g01074897

251-1160 BUCKET AS-GENERAL PURPOSE

S/N: EAT1-UP
0.96 CU M (1.25 CU YD)
PART OF 251-1789 BUCKET GP-GENERAL PURPOSE
AN ATTACHMENT

SMCS-6101 **i02660184**

NOTE	REF NO	GRAPHIC REF	PART NUMBER	QTY	PART NAME 1 2 3 4 5 6 (PRODUCT LEVEL)	SEE PAGE
	1	1	*251-1172*	2	BRACKET AS-LIFT (RH)	
					(EACH INCLUDES)	
	1A	1	**9R-0111**	1	BEARING-SLEEVE	
	2	1	*251-1173*	2	BRACKET AS-LIFT (LH)	
					(EACH INCLUDES)	
	2A	1	**9R-0111**	1	BEARING-SLEEVE	
	3	1	**9R-0376**	2	EDGE	
	4	1	**9R-4672**	1	EDGE	
	5	1	**9R-5205**	1	EDGE (LH)	
	6	1	**9R-5206**	1	EDGE (RH)	

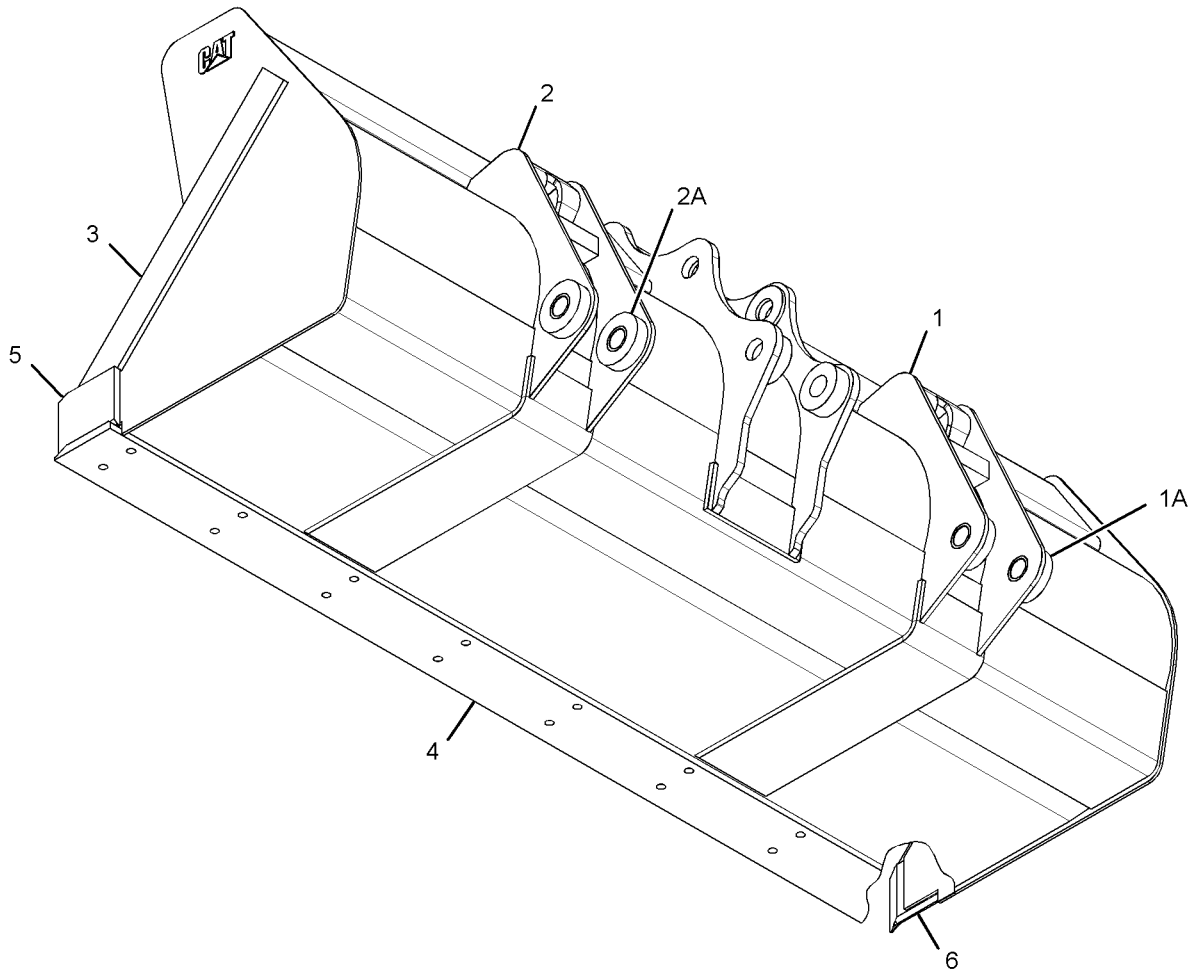

GRAPHIC #1 **<END>** g01342321

WORK TOOLS

219-3355 BUCKET AS-HOE

S/N: EAT1-UP
305-MM (12-IN)
PART OF 219-3379 BUCKET GP-HOE
AN ATTACHMENT
TYPE 1

SMCS-6503 **i02655055**

NOTE	REF NO	GRAPHIC REF	PART NUMBER	QTY	PART NAME 1 2 3 4 5 6 (PRODUCT LEVEL)	SEE PAGE
	1	1	*151-7929*	1	BRACKET AS (LH)	
	1A	1	**9R-0320**	1	BEARING-SLEEVE	
	1B	1	**154-5257**	1	BEARING-SLEEVE	
	3	1	*151-7930*	1	BRACKET AS (RH)	
	3A	1	**9R-0320**	1	BEARING-SLEEVE	
	3B	1	**154-5257**	1	BEARING-SLEEVE	
	4	1	**161-4130**	2	PLATE-IDENTIFICATION (CAT)	
	5	1	**201-1235**	3	ADAPTER (2-STRAP)	
	6	1	**219-9494**	1	EDGE	

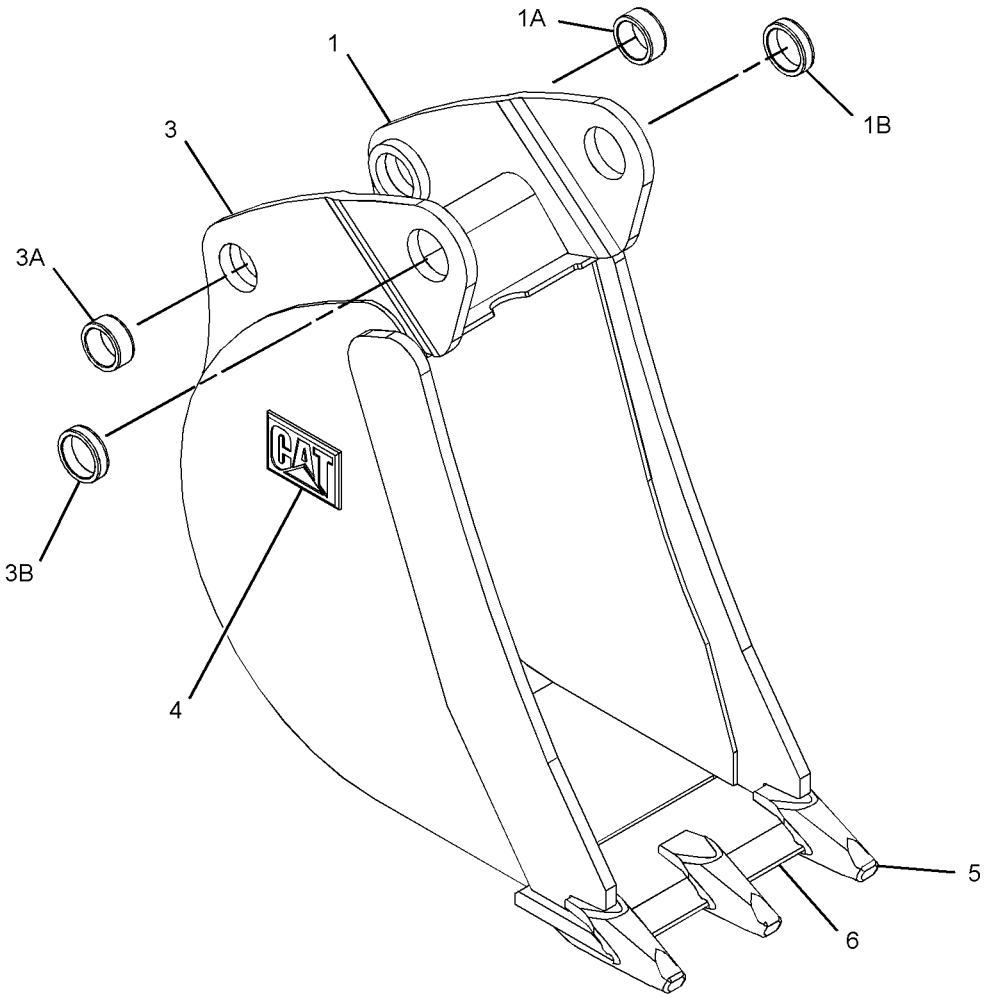

GRAPHIC #1 **<END>** g01341909

WORK TOOLS

219-3355 BUCKET AS-HOE

S/N: EAT1-UP
305-MM (12-IN)
PART OF 219-3379 BUCKET GP-HOE
AN ATTACHMENT
TYPE 2

SMCS-6503 **i03532147**

NOTE	REF NO	GRAPHIC REF	PART NUMBER	QTY	PART NAME 1 2 3 4 5 6 (PRODUCT LEVEL)	SEE PAGE
C	1	1	*286-9338*	1	BRACKET AS (RH)	
	1A	1	**9R-0320**	1	BEARING-SLEEVE	
	1B	1	**154-5257**	1	BEARING-SLEEVE	
C	2	1	*286-9340*	1	BRACKET AS (LH)	
	2A	1	**9R-0320**	1	BEARING-SLEEVE	
	2B	1	**154-5257**	1	BEARING-SLEEVE	
	3	1	*304-8424*	1	EDGE AS	
			201-1235	3	ADAPTER (2-STRAP)	
			219-9494	1	EDGE	

C-CHANGE FROM PREVIOUS TYPE

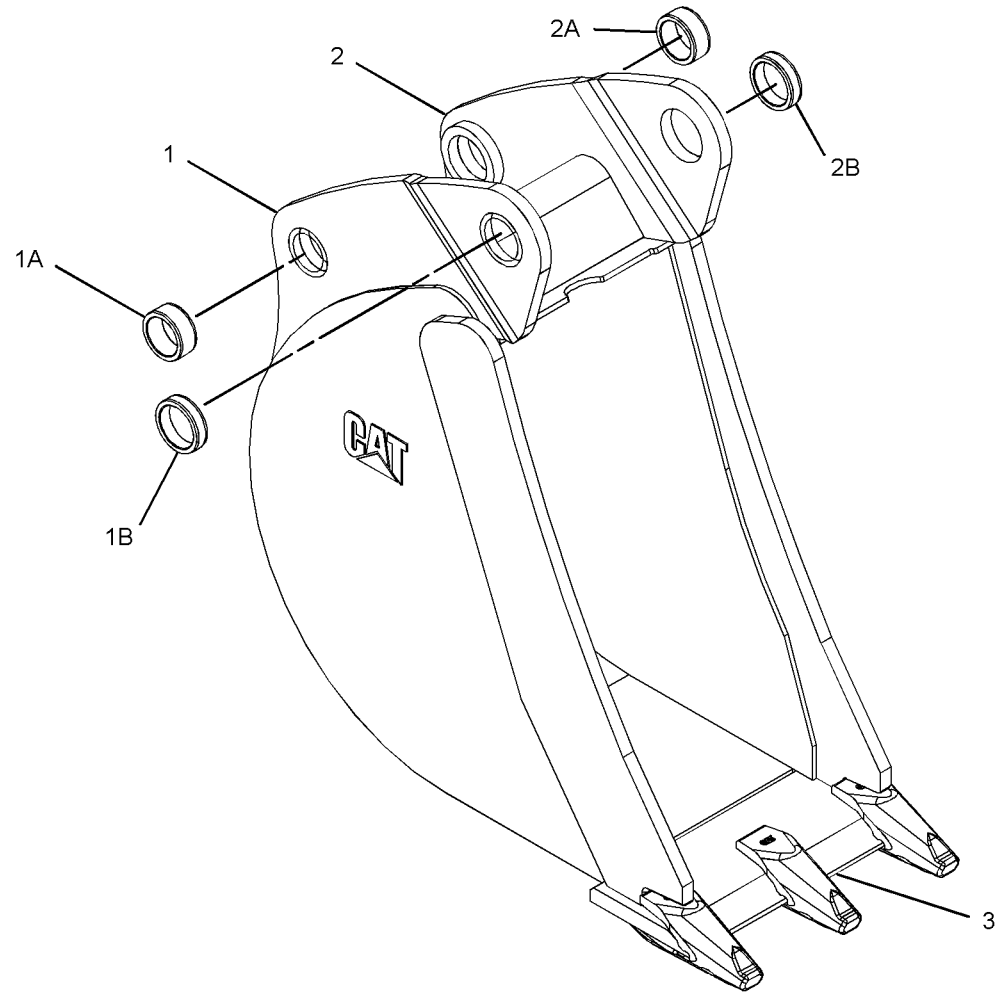

GRAPHIC #1 **<END>** g01381373

WORK TOOLS

219-3356 BUCKET AS-HOE

S/N: EAT1-UP
458-MM (18-IN)
PART OF 219-3380 BUCKET GP-HOE
AN ATTACHMENT
TYPE 1

SMCS-6503 **i02655122**

NOTE	REF NO	GRAPHIC REF	PART NUMBER	QTY	PART NAME 1 2 3 4 5 6 (PRODUCT LEVEL)	SEE PAGE
	1	1	*151-7902*	1	BRACKET AS (LH)	
	1A	1	**9R-0162**	1	BEARING-SLEEVE	
	1B	1	**168-0480**	1	BEARING-SLEEVE	
	2	1	*151-7903*	1	BRACKET AS (RH)	
	2A	1	**9R-0162**	1	BEARING-SLEEVE	
	2B	1	**168-0480**	1	BEARING-SLEEVE	
	3	1	**161-4130**	2	PLATE-IDENTIFICATION (CAT)	
	4	1	**201-1235**	4	ADAPTER (2-STRAP)	
	5	1	**219-9487**	1	EDGE	

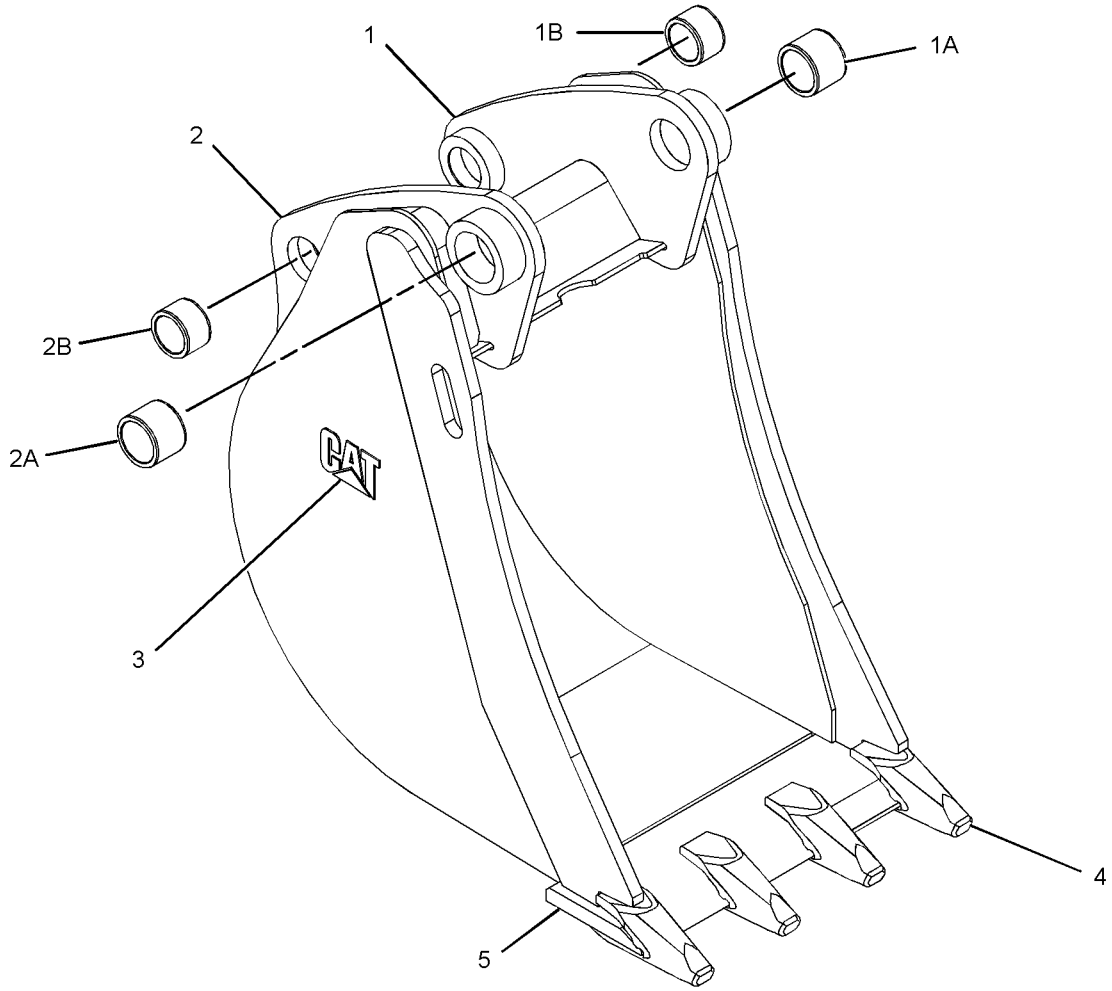

GRAPHIC #1 **<END>** g01335125

219-3356 BUCKET AS-HOE

S/N: EAT1-UP
458-MM (18-IN)
PART OF 219-3380 BUCKET GP-HOE
AN ATTACHMENT
TYPE 2

SMCS-6503 **i03532148**

NOTE	REF NO	GRAPHIC REF	PART NUMBER	QTY	PART NAME 1 2 3 4 5 6 (PRODUCT LEVEL)	SEE PAGE
C	1	1	*286-9336*	1	BRACKET AS (RH)	
	1A	1	**9R-0162**	1	BEARING-SLEEVE	
	1B	1	**168-0480**	1	BEARING-SLEEVE	
C	2	1	*286-9337*	1	BRACKET AS (LH)	
	2A	1	**9R-0162**	1	BEARING-SLEEVE	
	2B	1	**168-0480**	1	BEARING-SLEEVE	
	3	1	*300-4157*	1	EDGE AS	
			201-1235	4	ADAPTER (2-STRAP)	
			219-9487	1	EDGE	

C-CHANGE FROM PREVIOUS TYPE

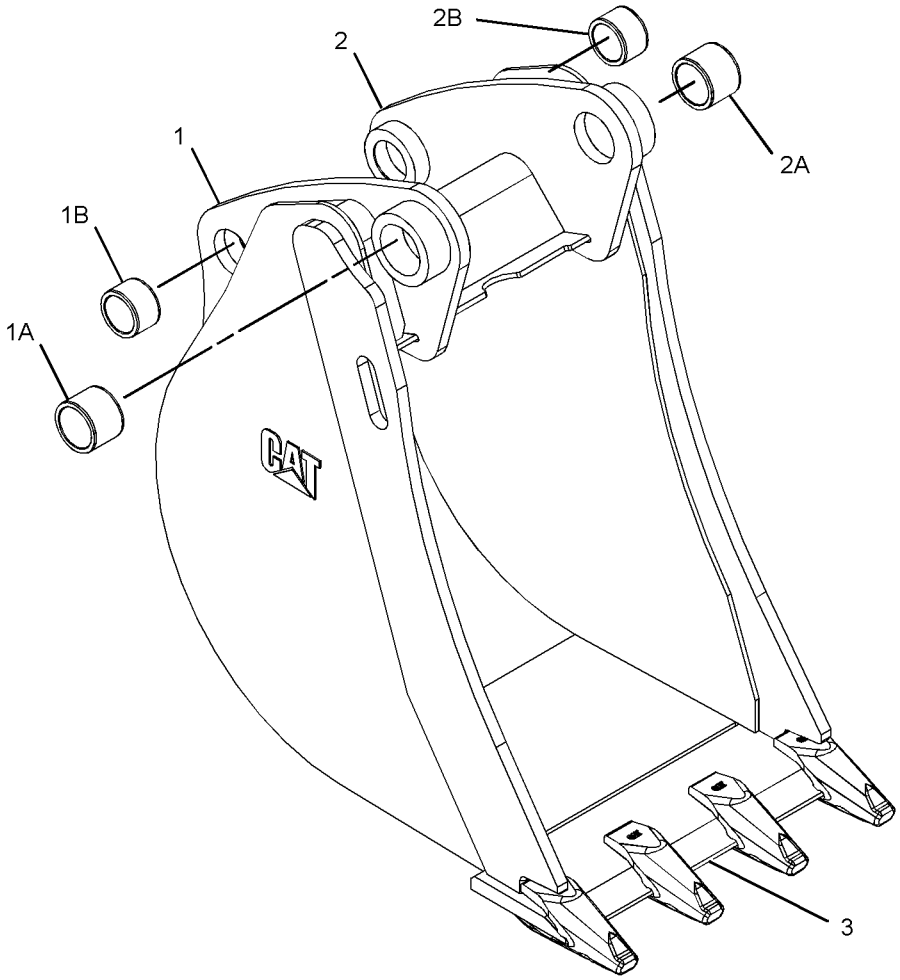

GRAPHIC #1 **<END>** g01382130

WORK TOOLS

219-3357 BUCKET AS-HOE

S/N: EAT1-UP
610-MM (24-IN)
PART OF 219-3381 BUCKET GP-HOE
AN ATTACHMENT
TYPE 1

SMCS-6503 **i02659641**

NOTE	REF NO	GRAPHIC REF	PART NUMBER	QTY	PART NAME 1 2 3 4 5 6 (PRODUCT LEVEL)	SEE PAGE
	1	1	*151-7902*	1	BRACKET AS (LH)	
	1A	1	**9R-0162**	1	BEARING-SLEEVE	
	1B	1	**168-0480**	1	BEARING-SLEEVE	
	2	1	*151-7903*	1	BRACKET AS (RH)	
	2A	1	**9R-0162**	1	BEARING-SLEEVE	
	2B	1	**168-0480**	1	BEARING-SLEEVE	
	3	1	**161-4130**	2	PLATE-IDENTIFICATION (CAT)	
	4	1	**201-1235**	5	ADAPTER (2-STRAP)	
	5	1	**219-9488**	1	EDGE	

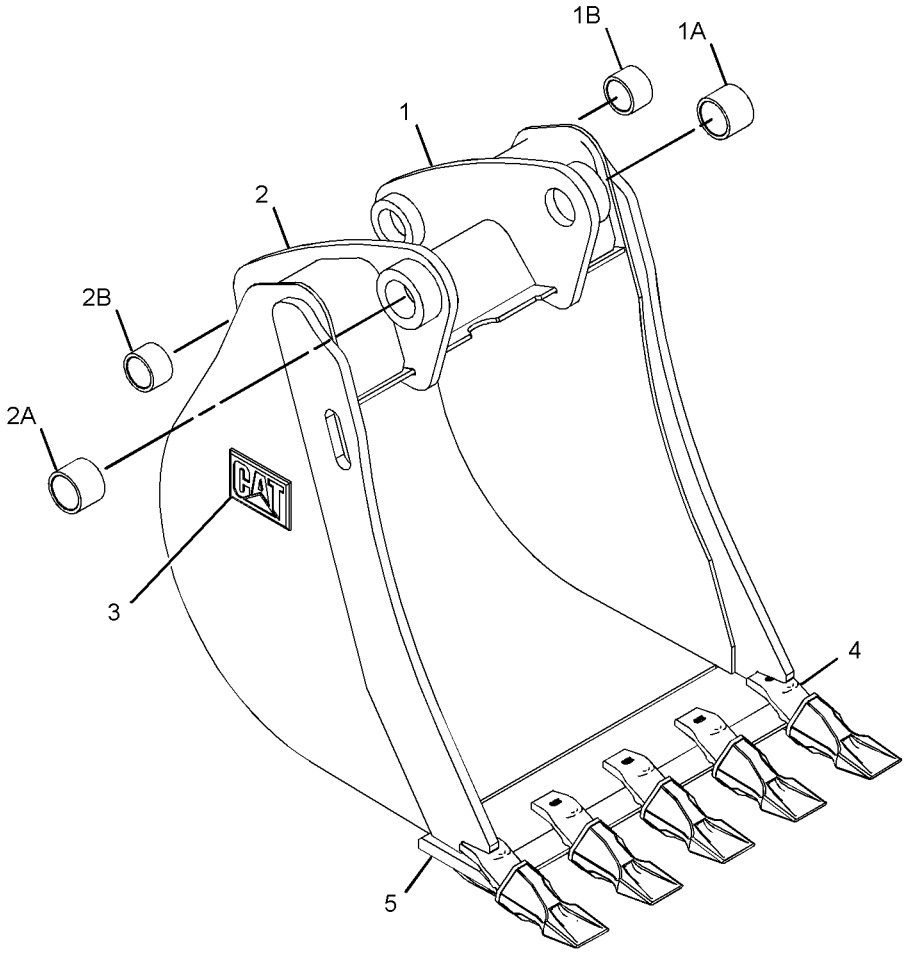

GRAPHIC #1 **<END>** g01336103

219-3357 BUCKET AS-HOE

S/N: EAT1-UP
610-MM (24-IN)
PART OF 219-3381 BUCKET GP-HOE
AN ATTACHMENT
TYPE 2

SMCS-6503 **i03532149**

NOTE	REF NO	GRAPHIC REF	PART NUMBER	QTY	PART NAME 1 2 3 4 5 6 (PRODUCT LEVEL)	SEE PAGE
C	1	1	*286-9336*	1	BRACKET AS (RH)	
	1A	1	**9R-0162**	1	BEARING-SLEEVE	
	1B	1	**168-0480**	1	BEARING-SLEEVE	
C	2	1	*286-9337*	1	BRACKET AS (LH)	
	2A	1	**9R-0162**	1	BEARING-SLEEVE	
	2B	1	**168-0480**	1	BEARING-SLEEVE	
	3	1	*300-4158*	1	EDGE AS	
		1	**201-1235**	5	ADAPTER (2-STRAP)	
		1	**219-9488**	1	EDGE	

C-CHANGE FROM PREVIOUS TYPE

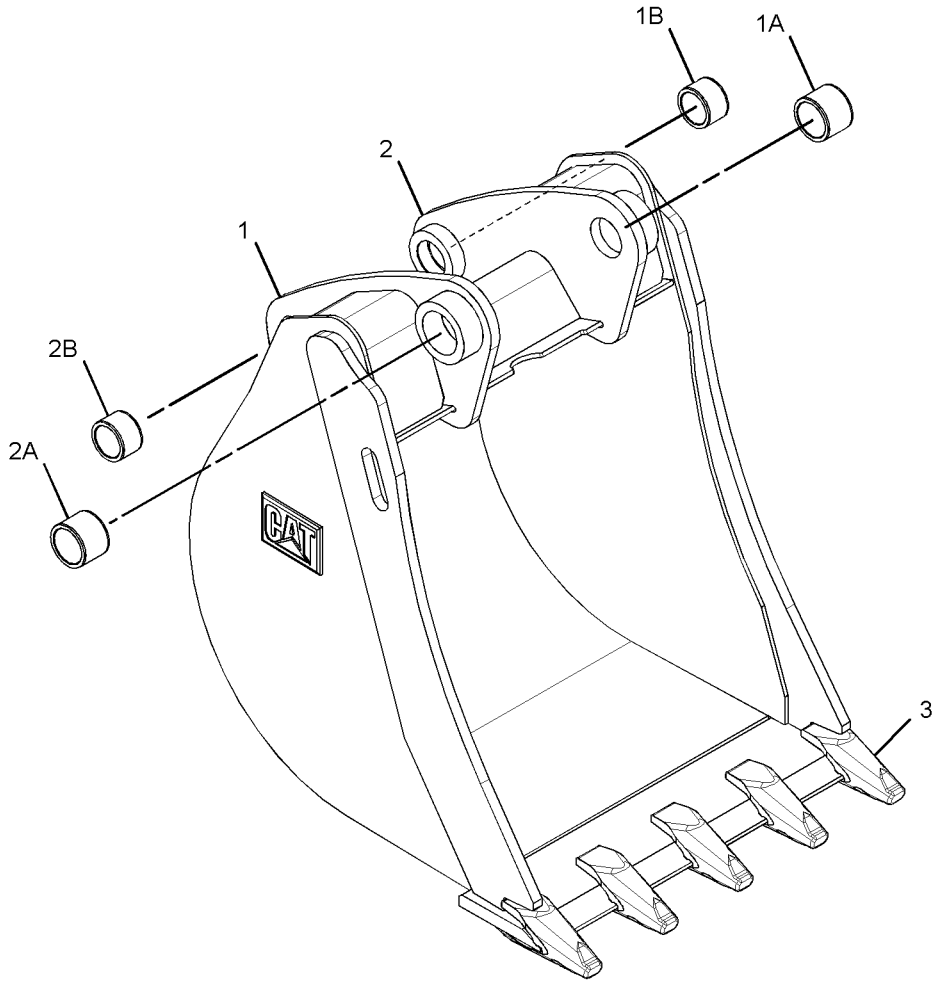

GRAPHIC #1 **<END>** g01382136

WORK TOOLS

219-3358 BUCKET AS-HOE

S/N: EAT1-UP
762-MM (30-IN)
PART OF 219-3382 BUCKET GP-HOE
AN ATTACHMENT
TYPE 1

SMCS-6503 **i02651247**

NOTE	REF NO	GRAPHIC REF	PART NUMBER	QTY	PART NAME 1 2 3 4 5 6 (PRODUCT LEVEL)	SEE PAGE
	1	1	*151-7902*	1	BRACKET AS (LH)	
	1A	1	**9R-0162**	1	BEARING-SLEEVE	
	1B	1	**168-0480**	1	BEARING-SLEEVE	
	2	1	*151-7903*	1	BRACKET AS (RH)	
	2A	1	**9R-0162**	1	BEARING-SLEEVE	
	2B	1	**168-0480**	1	BEARING-SLEEVE	
	3	1	**161-4130**	2	PLATE-IDENTIFICATION (CAT)	
	4	1	**201-1235**	5	ADAPTER (2-STRAP)	
	5	1	**219-9489**	1	EDGE	

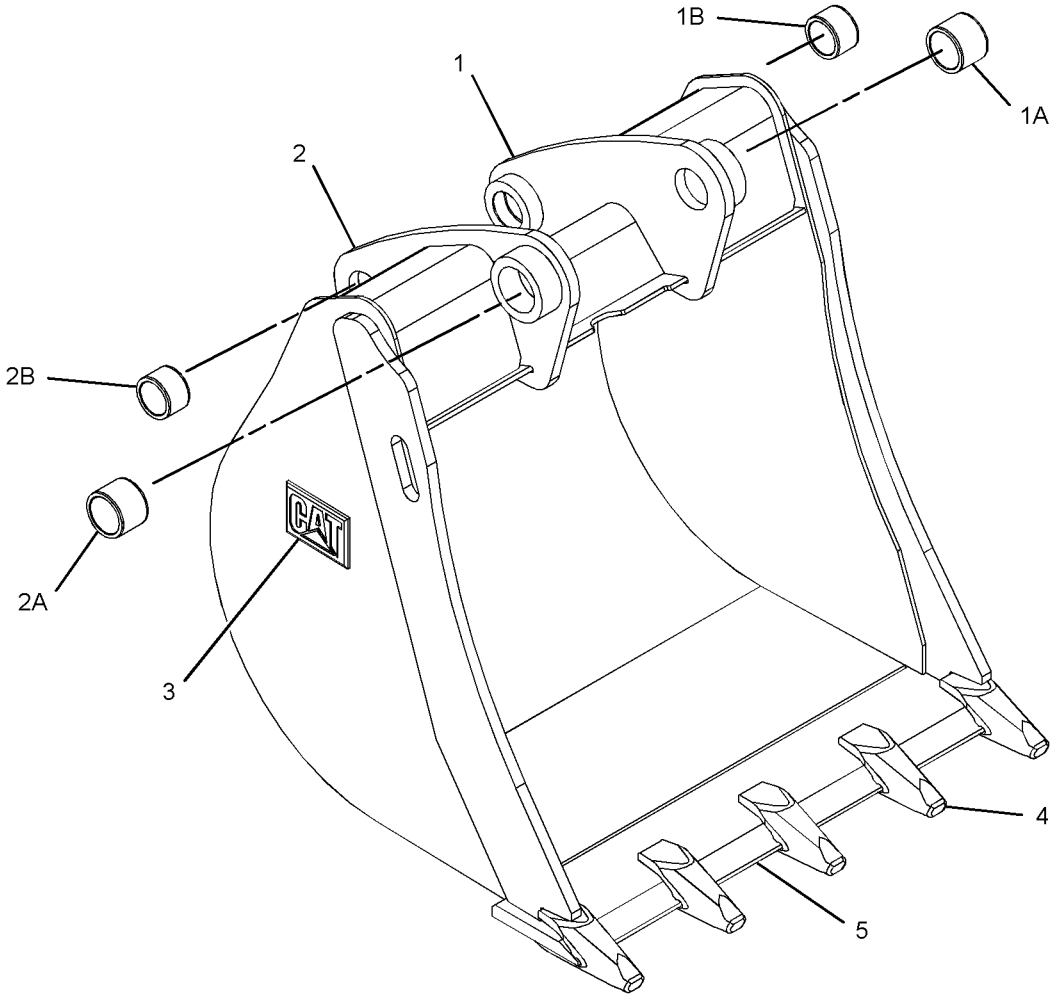

GRAPHIC #1 **<END>** g01341875

219-3358 BUCKET AS-HOE

S/N: EAT1-UP
762-MM (30-IN)
PART OF 219-3382 BUCKET GP-HOE
AN ATTACHMENT
TYPE 2

SMCS-6503 **i03532150**

NOTE	REF NO	GRAPHIC REF	PART NUMBER	QTY	PART NAME 1 2 3 4 5 6 (PRODUCT LEVEL)	SEE PAGE
C	1	1	*286-9336*	1	BRACKET AS (RH)	
	1A	1	**9R-0162**	1	BEARING-SLEEVE	
	1B	1	**168-0480**	1	BEARING-SLEEVE	
C	2	1	*286-9337*	1	BRACKET AS (LH)	
	2A	1	**9R-0162**	1	BEARING-SLEEVE	
	2B	1	**168-0480**	1	BEARING-SLEEVE	
	3	1	*300-4159*	1	EDGE AS	
		1	**201-1235**	5	ADAPTER (2-STRAP)	
		1	**219-9489**	1	EDGE	

C-CHANGE FROM PREVIOUS TYPE

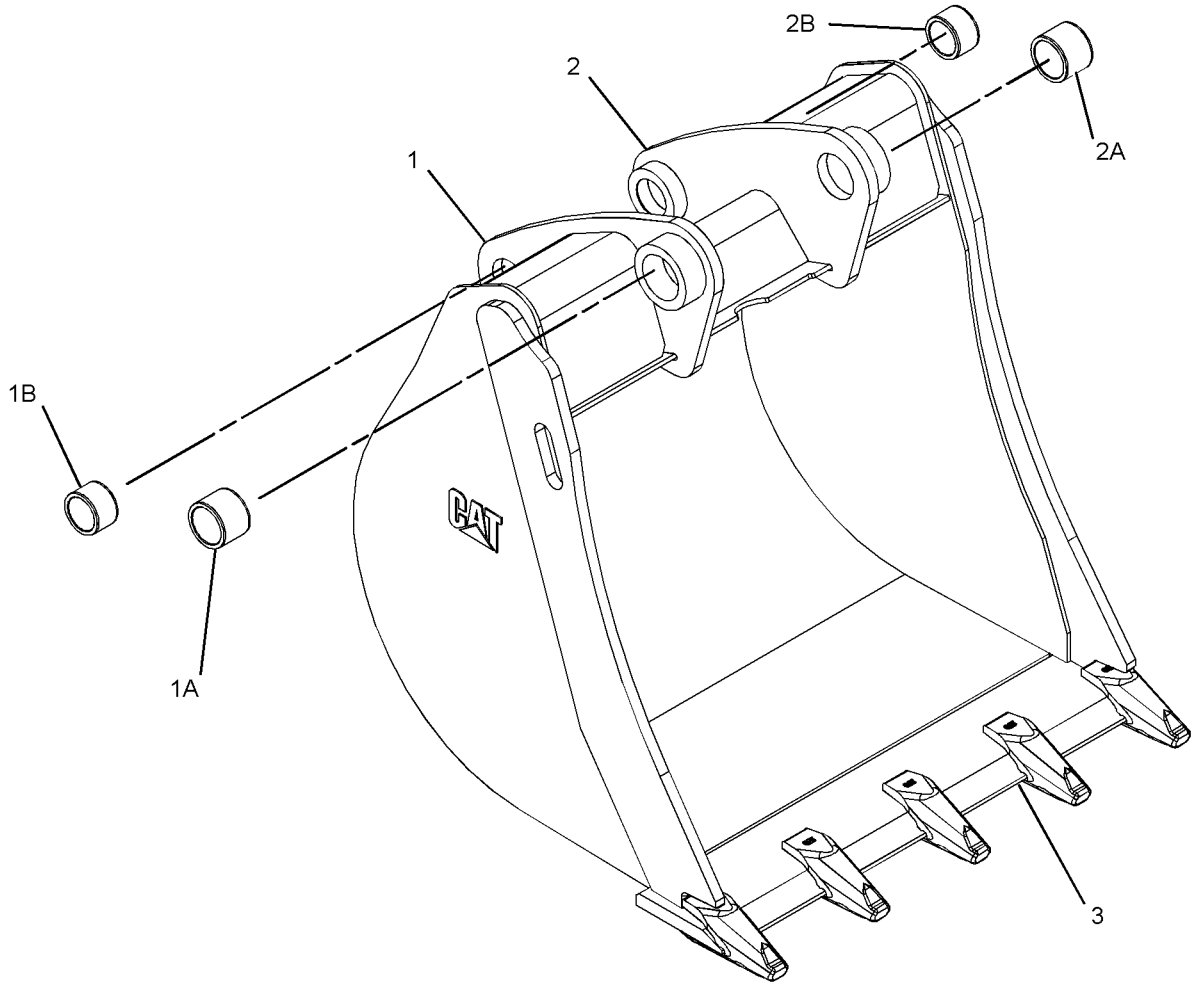

GRAPHIC #1 **<END>** g01382117

WORK TOOLS

219-3359 BUCKET AS-HOE

S/N: EAT1-UP
914-MM (36-IN)
PART OF 219-3383 BUCKET GP-HOE
AN ATTACHMENT
TYPE 1

SMCS-6503 **i02651453**

NOTE	REF NO	GRAPHIC REF	PART NUMBER	QTY	PART NAME 1 2 3 4 5 6 (PRODUCT LEVEL)	SEE PAGE
	1	1	*151-7902*	1	BRACKET AS (LH)	
	1A	1	**9R-0162**	1	BEARING-SLEEVE	
	1B	1	**168-0480**	1	BEARING-SLEEVE	
	2	1	*151-7903*	1	BRACKET AS (RH)	
	2A	1	**9R-0162**	1	BEARING-SLEEVE	
	2B	1	**168-0480**	1	BEARING-SLEEVE	
	3	1	**161-4130**	2	PLATE-IDENTIFICATION (CAT)	
	4	1	**201-1235**	6	ADAPTER (2-STRAP)	
	5	1	**219-9490**	1	EDGE	

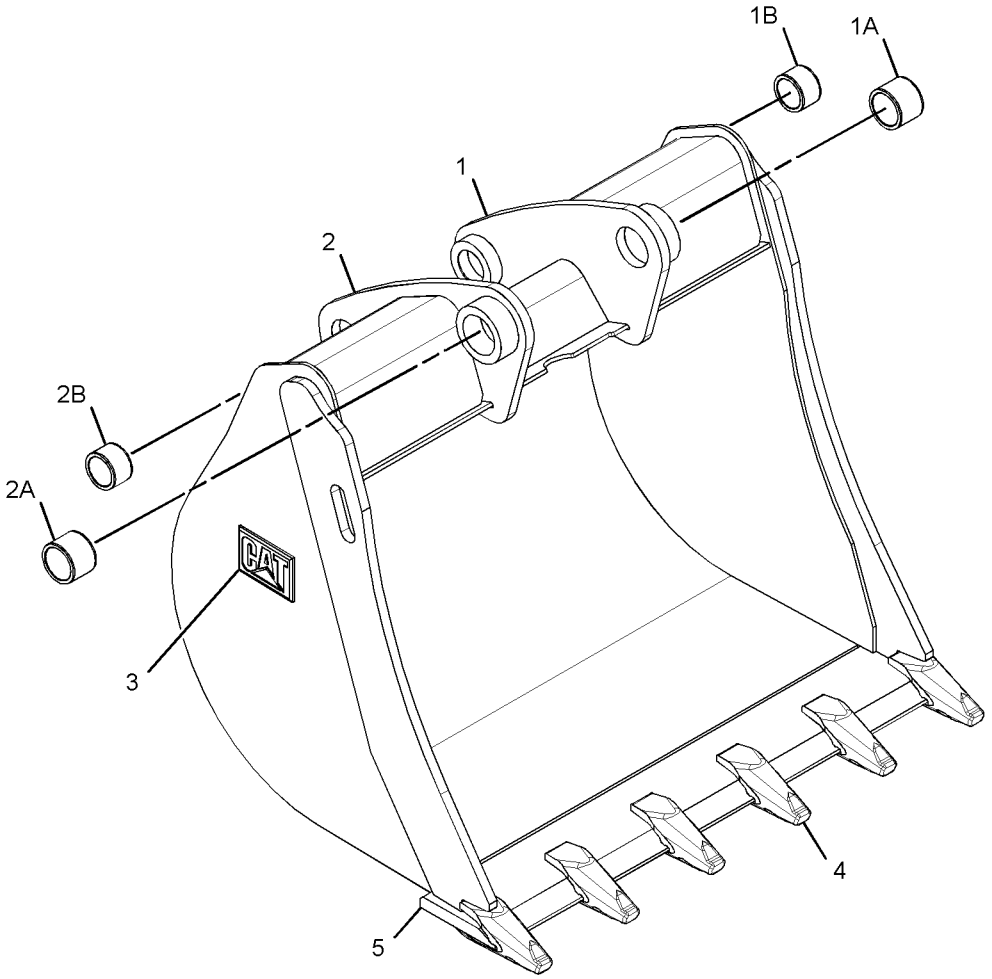

GRAPHIC #1 **<END>** g01341811

219-3359 BUCKET AS-HOE

S/N: EAT1-UP
914-MM (36-IN)
PART OF 219-3383 BUCKET GP-HOE
AN ATTACHMENT
TYPE 2

SMCS-6503 **i03532151**

NOTE	REF NO	GRAPHIC REF	PART NUMBER	QTY	PART NAME 1 2 3 4 5 6 (PRODUCT LEVEL)	SEE PAGE
C	1	1	*286-9336*	1	BRACKET AS (RH)	
	1A	1	**9R-0162**	1	BEARING-SLEEVE	
	1B	1	**168-0480**	1	BEARING-SLEEVE	
C	2	1	*286-9337*	1	BRACKET AS (LH)	
	2A	1	**9R-0162**	1	BEARING-SLEEVE	
	2B	1	**168-0480**	1	BEARING-SLEEVE	
	3	1	*300-4160*	1	EDGE AS	
			201-1235	6	ADAPTER (2-STRAP)	
			219-9490	1	EDGE	

C-CHANGE FROM PREVIOUS TYPE

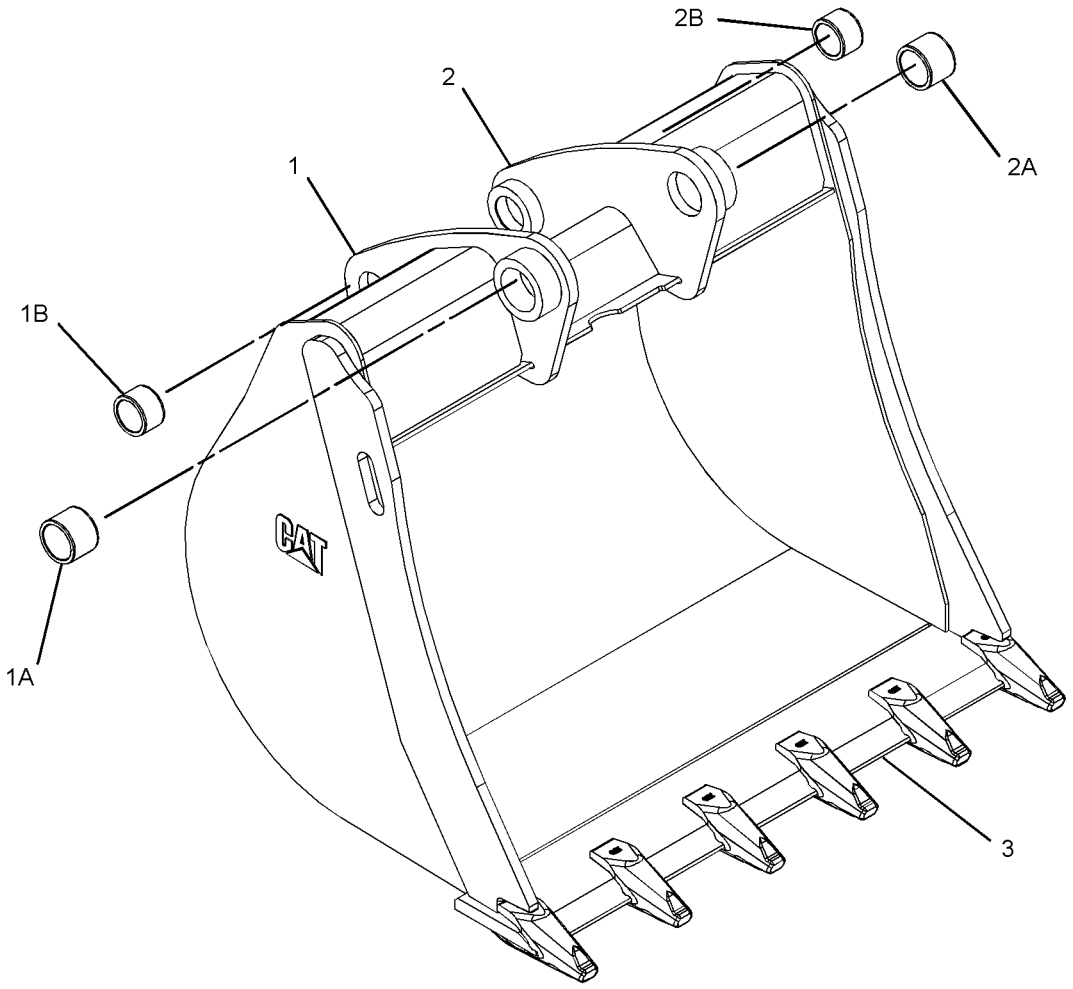

GRAPHIC #1 **<END>** g01382084

WORK TOOLS

219-3360 BUCKET AS-HOE—HEAVY-DUTY

S/N: EAT1-UP
305-MM (12-IN)
PART OF 219-3384 BUCKET GP-HOE
AN ATTACHMENT
TYPE 1

SMCS-6503 **i02651459**

NOTE	REF NO	GRAPHIC REF	PART NUMBER	QTY	PART NAME 1 2 3 4 5 6 (PRODUCT LEVEL)	SEE PAGE
	1	1	**134-5884**	1	EDGE (LH)	
	2	1	**134-5885**	1	EDGE (RH)	
	3	1	**151-7927**	2	PLATE	
	4	1	*151-7929*	1	BRACKET AS (LH)	
	4A	1	**9R-0320**	1	BEARING-SLEEVE	
	4B	1	**154-5257**	1	BEARING-SLEEVE	
	5	1	*151-7930*	1	BRACKET AS (RH)	
	5A	1	**9R-0320**	1	BEARING-SLEEVE	
	5B	1	**154-5257**	1	BEARING-SLEEVE	
	6	1	**161-4130**	2	PLATE-IDENTIFICATION (CAT)	
	7	1	**201-1234**	3	ADAPTER (2-STRAP)	
	8	1	**219-9493**	1	EDGE	

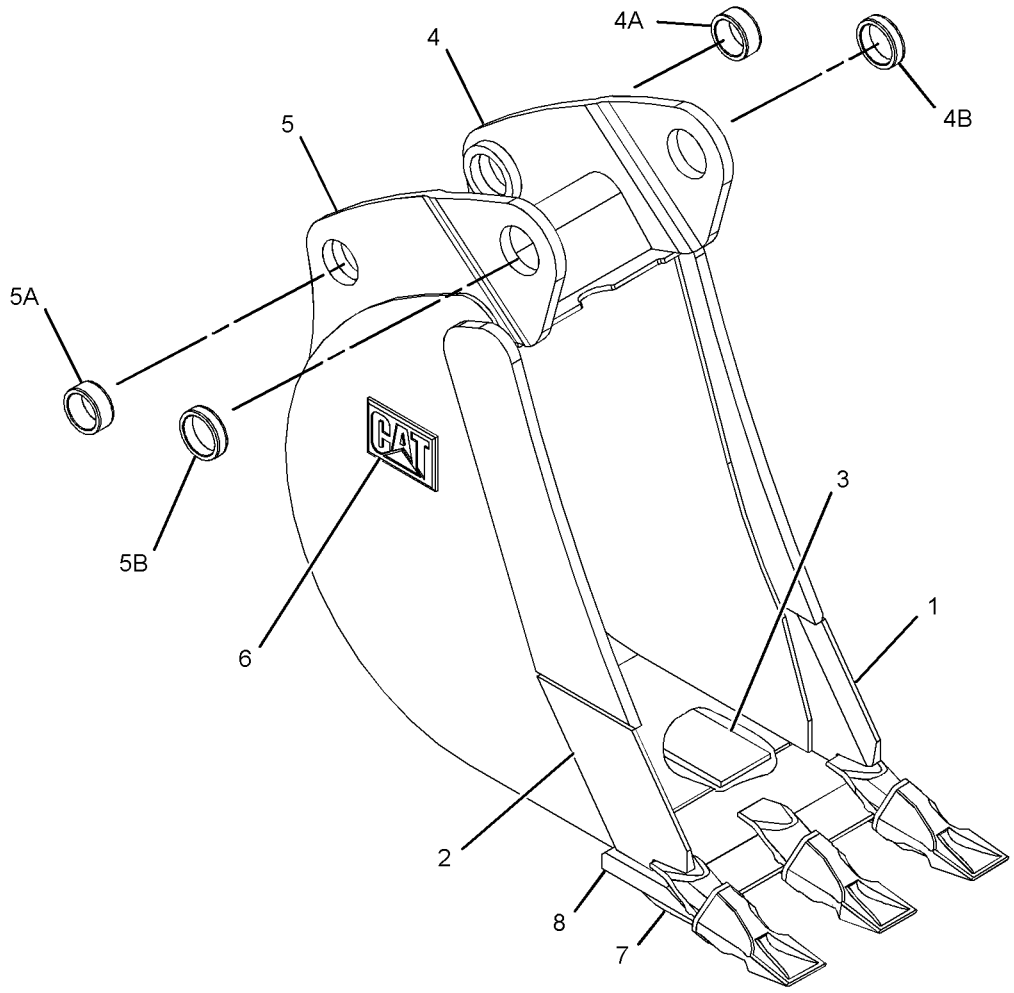

GRAPHIC #1 **<END>** g01335502

WORK TOOLS

219-3360 BUCKET AS-HOE—HEAVY-DUTY

S/N: EAT1-UP
305-MM (12-IN)
PART OF 219-3384 BUCKET GP-HOE
AN ATTACHMENT
TYPE 2

SMCS-6503 **i03532152**

NOTE	REF NO	GRAPHIC REF	PART NUMBER	QTY	PART NAME 1 2 3 4 5 6 (PRODUCT LEVEL)	SEE PAGE
	1	1	**174-3950**	5	PLATE	
C	2	1	*286-9338*	1	BRACKET AS (RH)	
C	3	1	*286-9340*	1	BRACKET AS (LH)	
					(EACH BRACKET AS INCUDES)	
		1	**9R-0320**	1	BEARING-SLEEVE	
		1	**154-5257**	1	BEARING-SLEEVE	
	4	1	*300-4161*	1	EDGE AS	
		1	**201-1234**	3	ADAPTER (2-STRAP)	
		1	**219-9493**	1	EDGE	
	5	1	**304-8420**	1	PLATE AS	
		1	**134-5885**	1	EDGE (RH)	
	6	1	**304-8421**	1	PLATE AS	
		1	**134-5884**	1	EDGE (LH)	

C-CHANGE FROM PREVIOUS TYPE

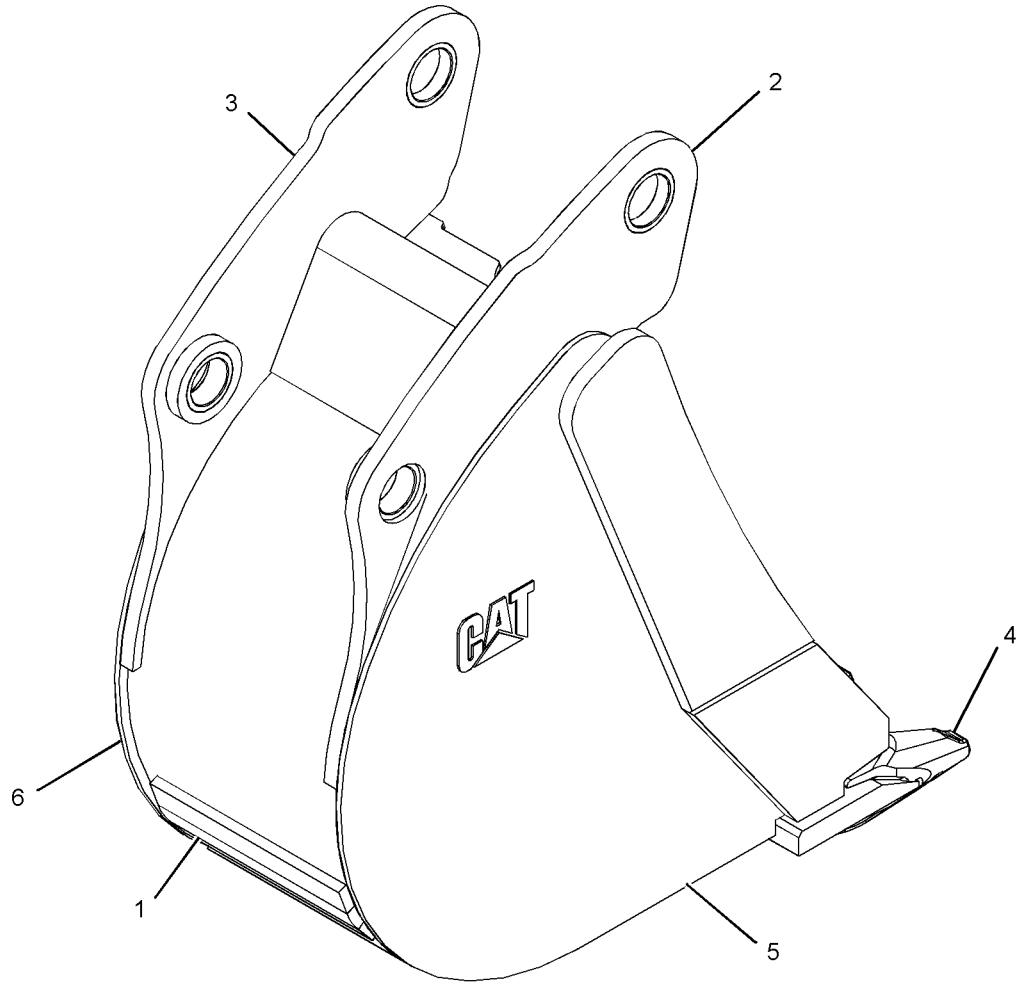

GRAPHIC #1 **<END>** g01860693

WORK TOOLS

219-3361 BUCKET AS-HOE—HEAVY-DUTY

S/N: EAT1-UP
407-MM (16-IN)
PART OF 219-3385 BUCKET GP-HOE
AN ATTACHMENT
TYPE 1

SMCS-6503 **i02651465**

NOTE	REF NO	GRAPHIC REF	PART NUMBER	QTY	PART NAME 1 2 3 4 5 6 (PRODUCT LEVEL)	SEE PAGE
	1	1	**134-5884**	1	EDGE (LH)	
	2	1	**134-5885**	1	EDGE (RH)	
	3	1	*151-7902*	1	BRACKET AS (LH)	
	3A	1	**9R-0162**	1	BEARING-SLEEVE	
	3B	1	**168-0480**	1	BEARING-SLEEVE	
	4	1	*151-7903*	1	BRACKET AS (RH)	
	4A	1	**9R-0162**	1	BEARING-SLEEVE	
	4B	1	**168-0480**	1	BEARING-SLEEVE	
	5	1	**151-7927**	3	PLATE	
	6	1	**161-4130**	2	PLATE-IDENTIFICATION (CAT)	
	7	1	**201-1234**	3	ADAPTER (2-STRAP)	
	8	1	**219-9482**	1	EDGE	

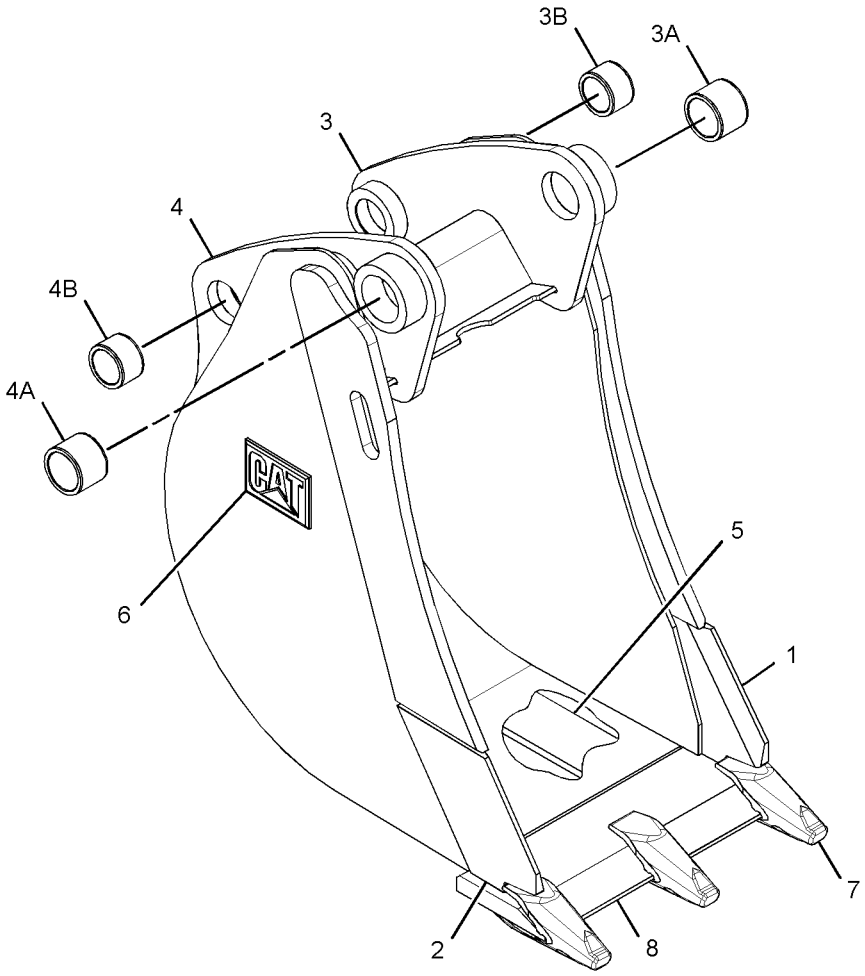

GRAPHIC #1 **<END>** g01341887

219-3361 BUCKET AS-HOE—HEAVY-DUTY

S/N: EAT1-UP
407-MM (16-IN)
PART OF 219-3385 BUCKET GP-HOE
AN ATTACHMENT
TYPE 2

SMCS-6503 **i03345645**

NOTE	REF NO	GRAPHIC REF	PART NUMBER	QTY	PART NAME 1 2 3 4 5 6 (PRODUCT LEVEL)	SEE PAGE
	1	1	**306-8128**	5	PLATE	
C	2	1	*286-9336*	1	BRACKET AS (RH)	
	2A	1	**9R-0162**	1	BEARING-SLEEVE	
	2B	1	**168-0480**	1	BEARING-SLEEVE	
C	3	1	*286-9337*	1	BRACKET AS (LH)	
	3A	1	**9R-0162**	1	BEARING-SLEEVE	
	3B	1	**168-0480**	1	BEARING-SLEEVE	
	4	1	*299-3342*	1	EDGE AS	
		1	**219-9482**	1	EDGE	
		1	**201-1234**	3	ADAPTER (2-STRAP)	
	5	1	*300-7049*	1	PLATE AS	
		1	**134-5885**	1	EDGE (RH)	
	6	1	*300-7051*	1	PLATE AS	
		1	**134-5884**	1	EDGE (LH)	

C-CHANGE FROM PREVIOUS TYPE

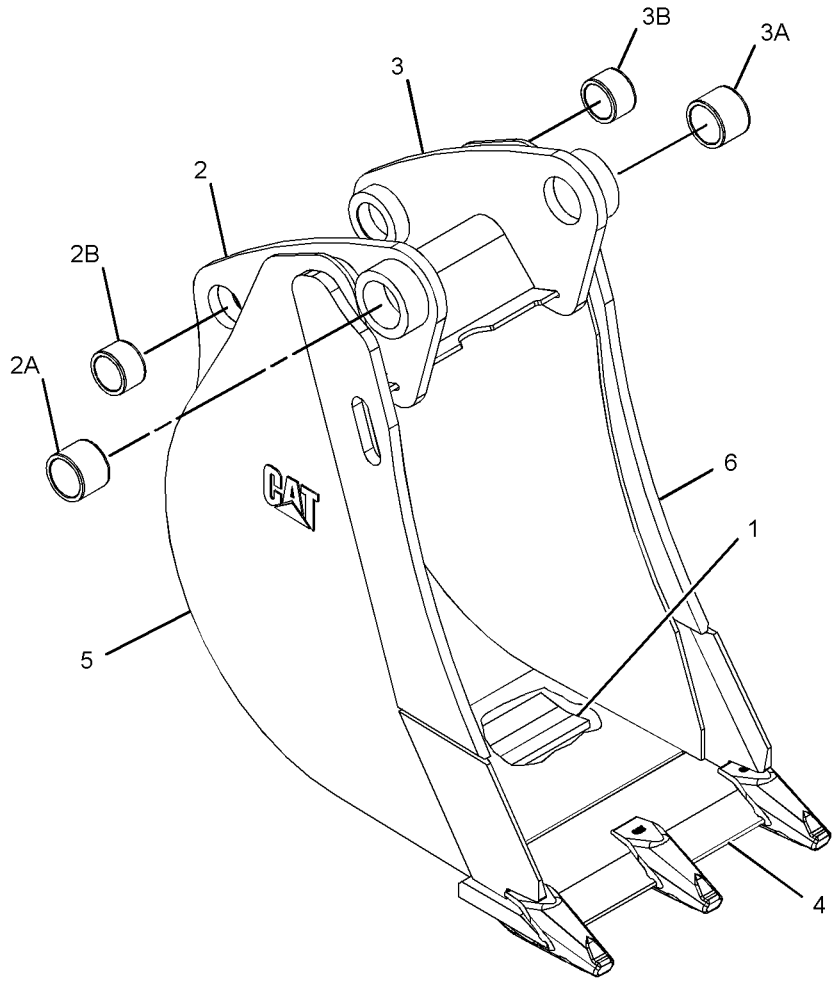

GRAPHIC #1 **<END>** g01381334

219-3362 BUCKET AS-HOE—HEAVY-DUTY

S/N: EAT1-UP
458-MM (18-IN)
PART OF 219-3386 BUCKET GP-HOE
AN ATTACHMENT
TYPE 1

SMCS-6503 **i02655171**

NOTE	REF NO	GRAPHIC REF	PART NUMBER	QTY	PART NAME 1 2 3 4 5 6 (PRODUCT LEVEL)	SEE PAGE
	1	1	**134-5884**	1	EDGE (LH)	
	2	1	**134-5885**	1	EDGE (RH)	
	3	1	*151-7902*	1	BRACKET AS (LH)	
	3A	1	**9R-0162**	1	BEARING-SLEEVE	
	3B	1	**168-0480**	1	BEARING-SLEEVE	
	4	1	*151-7903*	1	BRACKET AS (RH)	
	4A	1	**9R-0162**	1	BEARING-SLEEVE	
	4B	1	**168-0480**	1	BEARING-SLEEVE	
	5	1	**151-7927**	3	PLATE	
	6	1	**161-4130**	2	PLATE-IDENTIFICATION (CAT)	
	7	1	**201-1234**	4	ADAPTER (2-STRAP)	
	8	1	**219-9483**	1	EDGE	

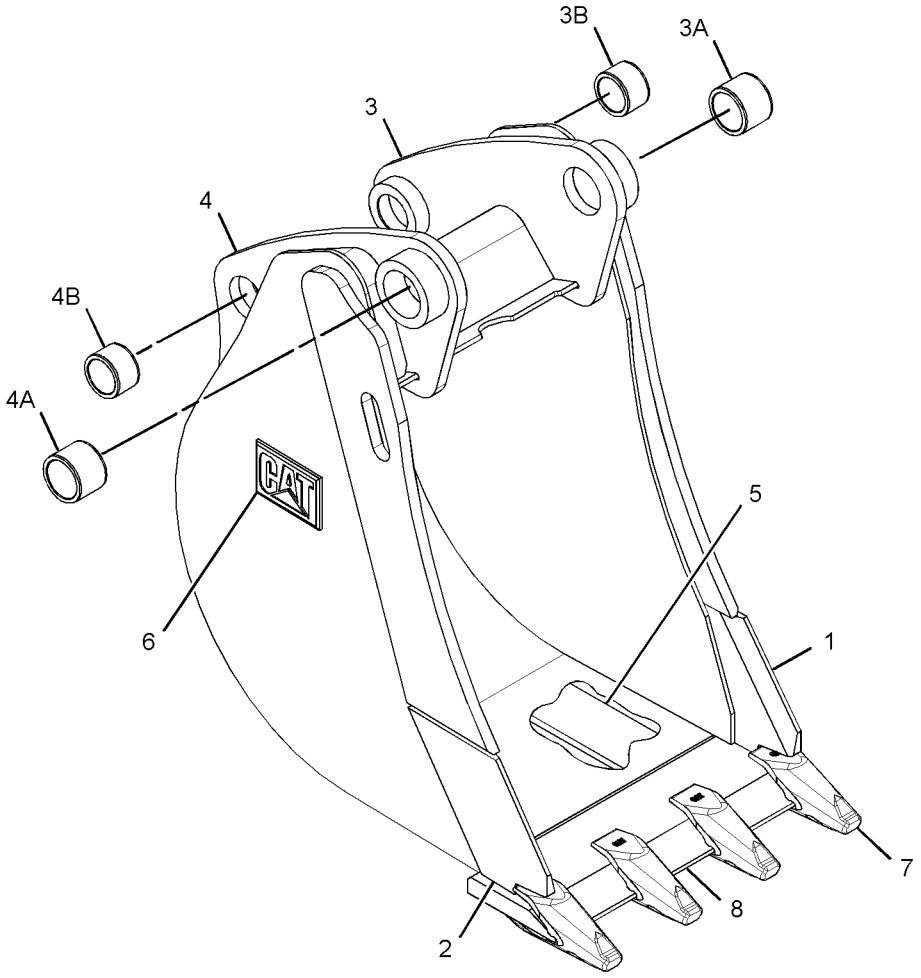

GRAPHIC #1 **<END>** g01341856

219-3362 BUCKET AS-HOE—HEAVY-DUTY

S/N: EAT1-UP
458-MM (18-IN)
PART OF 219-3386 BUCKET GP-HOE
AN ATTACHMENT
TYPE 2

SMCS-6503 **i03532154**

NOTE	REF NO	GRAPHIC REF	PART NUMBER	QTY	PART NAME 1 2 3 4 5 6 (PRODUCT LEVEL)	SEE PAGE
	1	1	**172-8279**	5	PLATE	
C	2	1	*286-9336*	1	BRACKET AS (RH)	
		1	**9R-0162**	1	BEARING-SLEEVE	
		1	**168-0480**	1	BEARING-SLEEVE	
C	3	1	*286-9337*	1	BRACKET AS (LH)	
		1	**9R-0162**	1	BEARING-SLEEVE	
		1	**168-0480**	1	BEARING-SLEEVE	
	4	1	*299-3344*	1	EDGE AS	
		1	**201-1234**	4	ADAPTER (2-STRAP)	
		1	**219-9483**	1	EDGE	
	5	1	*300-7049*	1	PLATE AS	
		1	**134-5885**	1	EDGE (RH)	
	6	1	*300-7051*	1	PLATE AS	
		1	**134-5884**	1	EDGE (LH)	

C-CHANGE FROM PREVIOUS TYPE

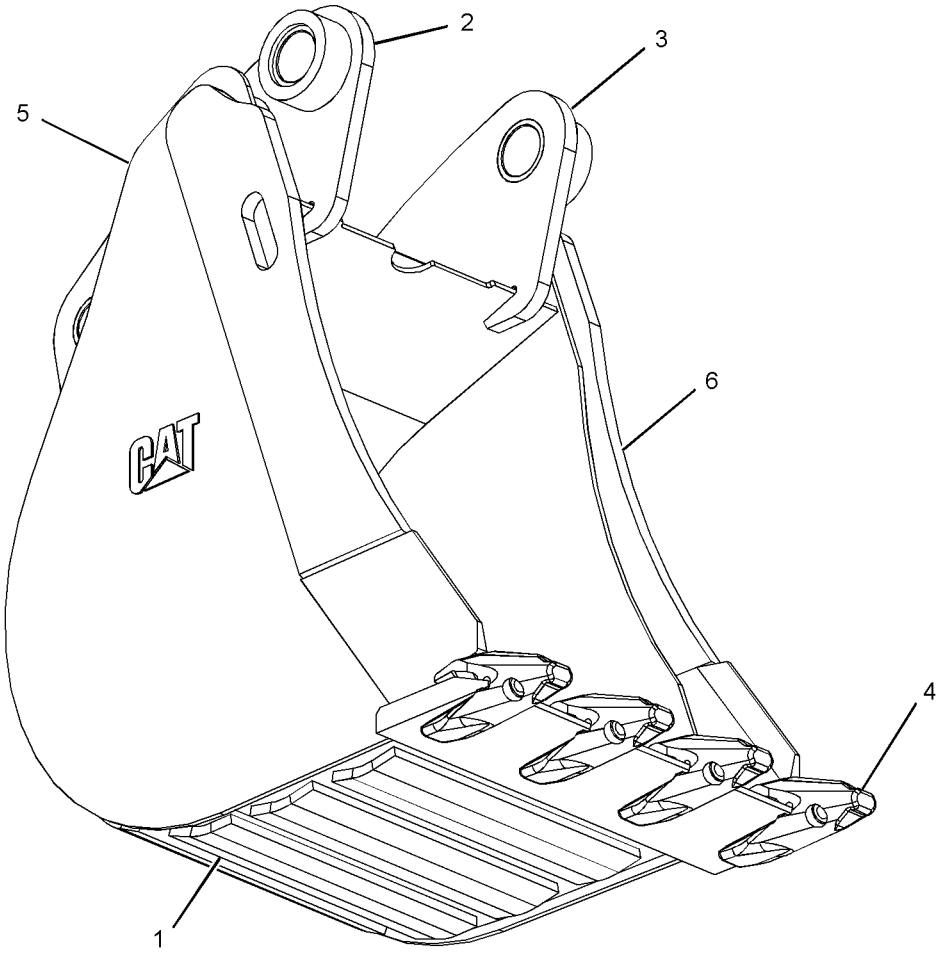

GRAPHIC #1 **<END>** g01381354

WORK TOOLS

219-3363 BUCKET AS-HOE—HEAVY-DUTY

S/N: EAT1-UP
610-MM (24-IN)
PART OF 219-3387 BUCKET GP-HOE
AN ATTACHMENT
TYPE 1

SMCS-6503 **i02655225**

NOTE	REF NO	GRAPHIC REF	PART NUMBER	QTY	PART NAME 1 2 3 4 5 6 (PRODUCT LEVEL)	SEE PAGE
	1	1	**134-5884**	1	EDGE (LH)	
	2	1	**134-5885**	1	EDGE (RH)	
	3	1	*151-7902*	1	BRACKET AS (LH)	
	3A	1	**9R-0162**	1	BEARING-SLEEVE	
	3B	1	**168-0480**	1	BEARING-SLEEVE	
	4	1	*151-7903*	1	BRACKET AS (RH)	
	4A	1	**9R-0162**	1	BEARING-SLEEVE	
	4B	1	**168-0480**	1	BEARING-SLEEVE	
	5	1	**151-7927**	4	PLATE	
	6	1	**161-4130**	2	PLATE-IDENTIFICATION (CAT)	
	7	1	**201-1234**	5	ADAPTER (2-STRAP)	
	8	1	**219-9484**	1	EDGE	

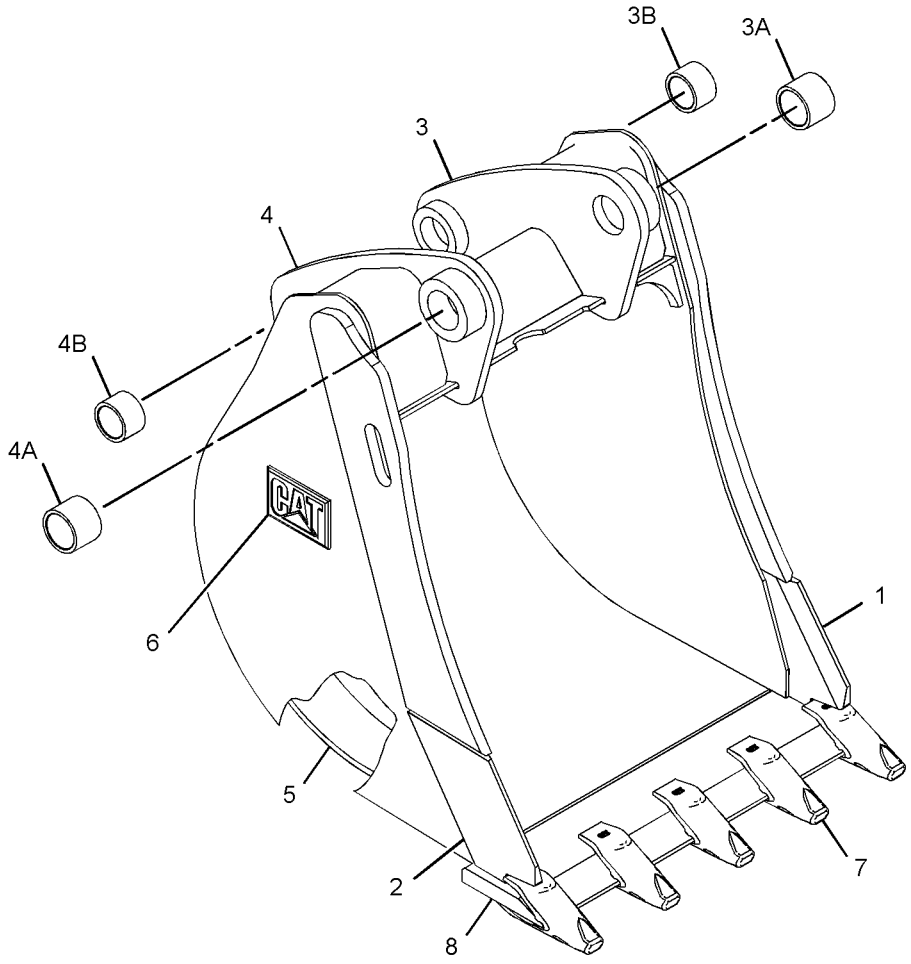

GRAPHIC #1 **<END>** g01335129

219-3363 BUCKET AS-HOE—HEAVY-DUTY

S/N: EAT1-UP
610-MM (24-IN)
PART OF 219-3387 BUCKET GP-HOE
AN ATTACHMENT
TYPE 2

SMCS-6503 **i02674429**

NOTE	REF NO	GRAPHIC REF	PART NUMBER	QTY	PART NAME 1 2 3 4 5 6 (PRODUCT LEVEL)	SEE PAGE
	1	1	**172-8280**	5	PLATE	
C	2	1	*286-9336*	1	BRACKET AS (RH)	
	2A	1	**9R-0162**	1	BEARING-SLEEVE	
	2B	1	**168-0480**	1	BEARING-SLEEVE	
C	3	1	*286-9337*	1	BRACKET AS (LH)	
	3A	1	**9R-0162**	1	BEARING-SLEEVE	
	3B	1	**168-0480**	1	BEARING-SLEEVE	
	4	1	*299-3348*	1	EDGE AS	
		1	**219-9484**	1	EDGE	
		1	**201-1234**	5	ADAPTER (2-STRAP)	
	5	1	*300-7049*	1	PLATE AS	
		1	**134-5885**	1	EDGE (RH)	
	6	1	*300-7051*	1	PLATE AS	
		1	**134-5884**	1	EDGE (LH)	

C-CHANGE FROM PREVIOUS TYPE

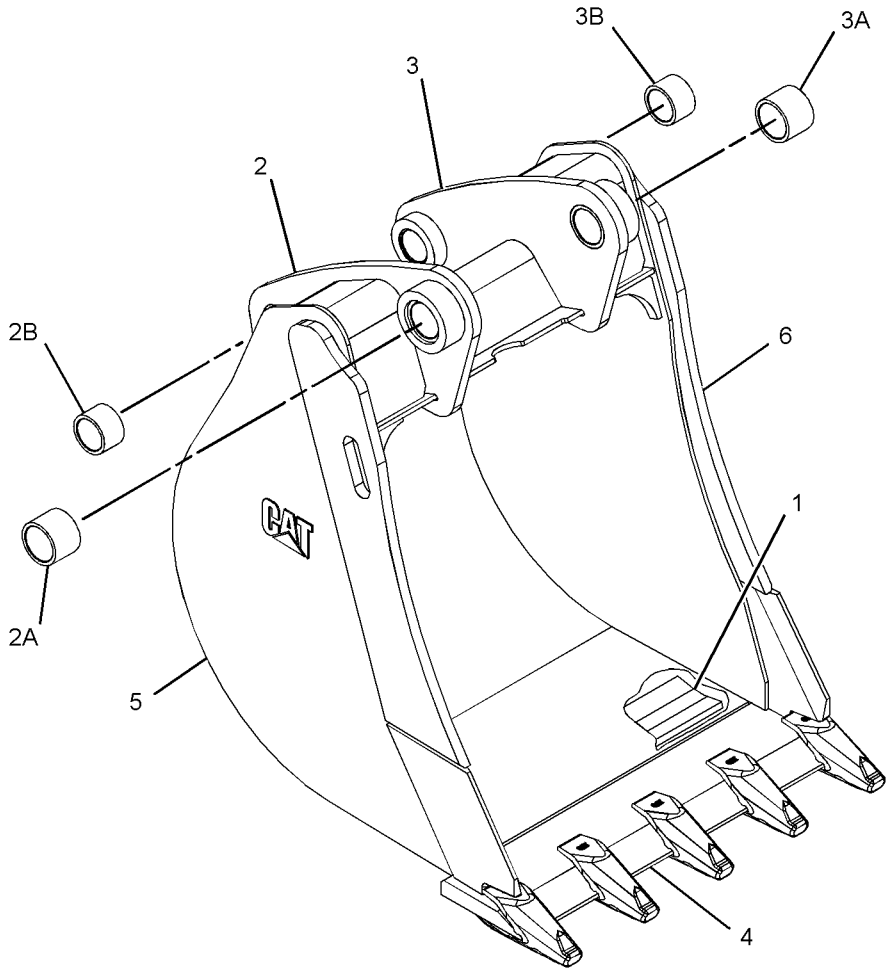

GRAPHIC #1 **<END>** g01381312

WORK TOOLS

219-3364 BUCKET AS-HOE—HEAVY-DUTY

S/N: EAT1-UP
762-MM (30-IN)
PART OF 219-3388 BUCKET GP-HOE
AN ATTACHMENT
TYPE 1

SMCS-6503 **i02651474**

NOTE	REF NO	GRAPHIC REF	PART NUMBER	QTY	PART NAME 1 2 3 4 5 6 (PRODUCT LEVEL)	SEE PAGE
	1	1	**134-5884**	1	EDGE (LH)	
	2	1	**134-5885**	1	EDGE (RH)	
	3	1	*151-7902*	1	BRACKET AS (LH)	
	3A	1	**9R-0162**	1	BEARING-SLEEVE	
	3B	1	**168-0480**	1	BEARING-SLEEVE	
	4	1	*151-7903*	1	BRACKET AS (RH)	
	4A	1	**9R-0162**	1	BEARING-SLEEVE	
	4B	1	**168-0480**	1	BEARING-SLEEVE	
	5	1	**151-7927**	4	PLATE	
	6	1	**161-4130**	2	PLATE-IDENTIFICATION (CAT)	
	7	1	**201-1234**	5	ADAPTER (2-STRAP)	
	8	1	**219-9485**	1	EDGE	

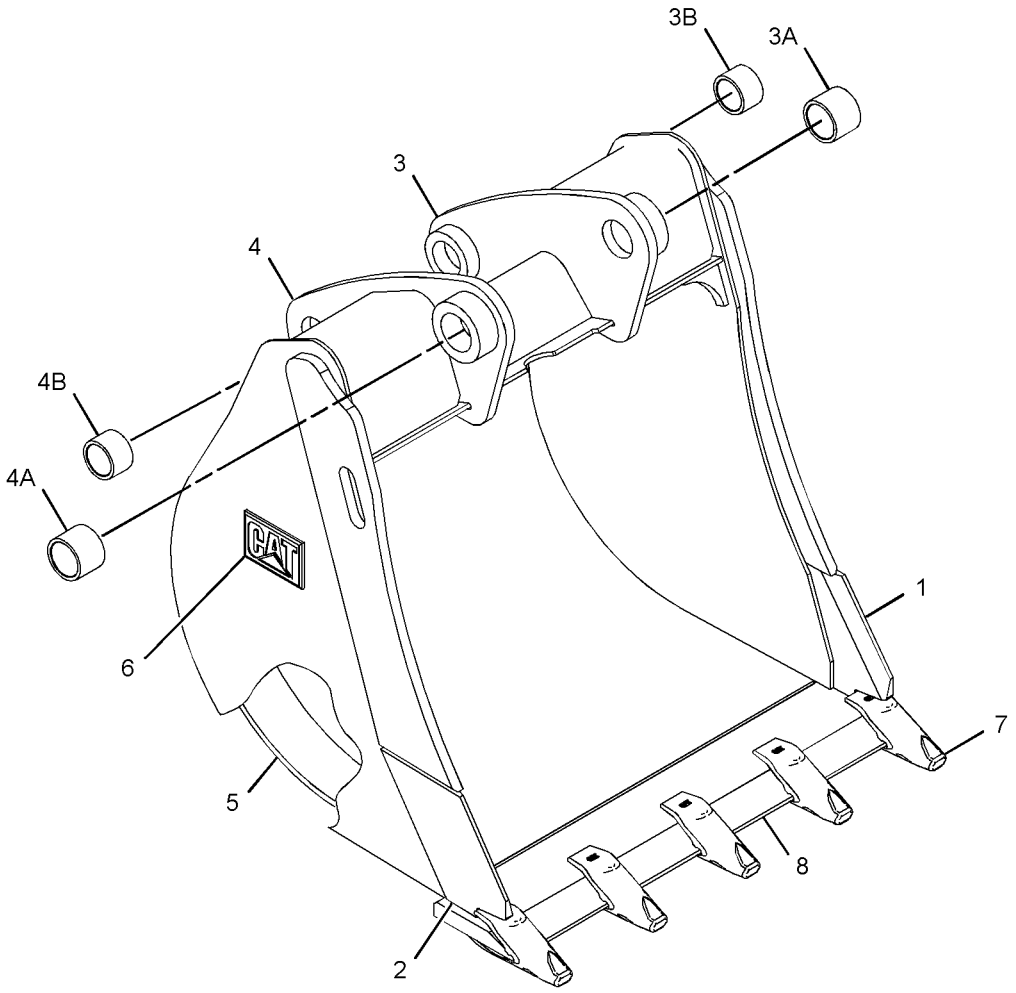

GRAPHIC #1 **<END>** g01337591

219-3364 BUCKET AS-HOE—HEAVY-DUTY

S/N: EAT1-UP
762-MM (30-IN)
PART OF 219-3388 BUCKET GP-HOE
AN ATTACHMENT
TYPE 2

SMCS-6503 **i03463045**

NOTE	REF NO	GRAPHIC REF	PART NUMBER	QTY	PART NAME 1 2 3 4 5 6 (PRODUCT LEVEL)	SEE PAGE
	1	1	**174-4765**	5	PLATE	
C	2	1	*286-9336*	1	BRACKET AS (RH)	
	2A	1	**9R-0162**	1	BEARING-SLEEVE	
	2B	1	**168-0480**	1	BEARING-SLEEVE	
C	3	1	*286-9337*	1	BRACKET AS (LH)	
	3A	1	**9R-0162**	1	BEARING-SLEEVE	
	3B	1	**168-0480**	1	BEARING-SLEEVE	
	4	1	*299-3351*	1	EDGE AS	
		1	**219-9485**	1	EDGE	
		1	**201-1234**	1	ADAPTER (2-STRAP)	
	5	1	*300-7049*	1	PLATE AS	
		1	**134-5885**	1	EDGE (RH)	
	6	1	*300-7051*	1	PLATE AS	
		1	**134-5884**	1	EDGE (LH)	

C-CHANGE FROM PREVIOUS TYPE

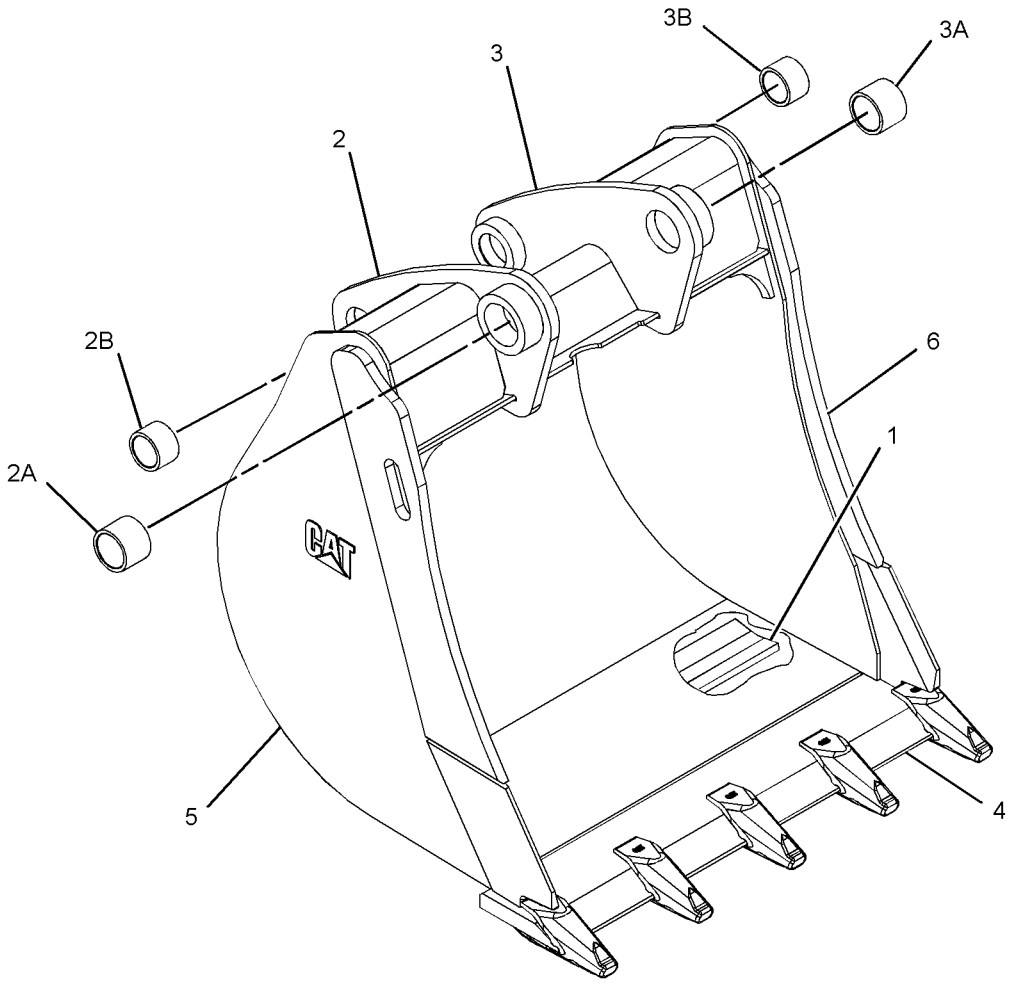

GRAPHIC #1 **<END>** g01381371

WORK TOOLS

219-3365 BUCKET AS-HOE—HEAVY-DUTY

S/N: EAT1-UP
914-MM (36-IN)
PART OF 219-3389 BUCKET GP-HOE
AN ATTACHMENT
TYPE 1

SMCS-6503 **i02655245**

NOTE	REF NO	GRAPHIC REF	PART NUMBER	QTY	PART NAME 1 2 3 4 5 6 (PRODUCT LEVEL)	SEE PAGE
	1	1	**134-5884**	1	EDGE (LH)	
	2	1	**134-5885**	1	EDGE (RH)	
	3	1	*151-7902*	1	BRACKET AS (LH)	
	3A	1	**9R-0162**	1	BEARING-SLEEVE	
	3B	1	**168-0480**	1	BEARING-SLEEVE	
	4	1	*151-7903*	1	BRACKET AS (RH)	
	4A	1	**9R-0162**	1	BEARING-SLEEVE	
	4B	1	**168-0480**	1	BEARING-SLEEVE	
	5	1	**151-7927**	5	PLATE	
	6	1	**161-4130**	2	PLATE-IDENTIFICATION (CAT)	
	7	1	**201-1234**	6	ADAPTER (2-STRAP)	
	8	1	**219-9486**	1	EDGE	

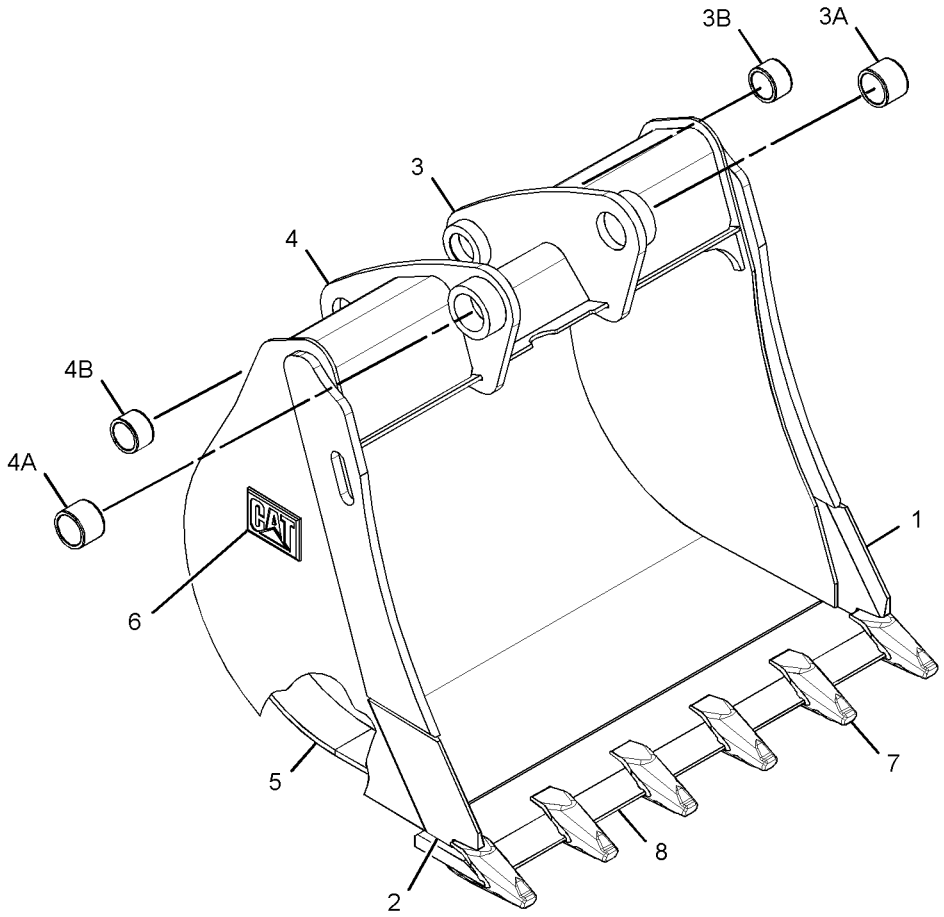

GRAPHIC #1 **<END>** g01341948

219-3365 BUCKET AS-HOE—HEAVY-DUTY

S/N: EAT1-UP
914-MM (36-IN)
PART OF 219-3389 BUCKET GP-HOE
AN ATTACHMENT
TYPE 2

SMCS-6503 **i03532155**

NOTE	REF NO	GRAPHIC REF	PART NUMBER	QTY	PART NAME 1 2 3 4 5 6 (PRODUCT LEVEL)	SEE PAGE
	1	1	**193-5416**	5	PLATE	
C	2	1	*286-9336*	1	BRACKET AS (RH)	
C	3	1	*286-9337*	1	BRACKET AS (LH)	
					(EACH BRACKET AS INCLUDES)	
		1	**9R-0162**	1	BEARING-SLEEVE	
		1	**168-0480**	1	BEARING-SLEEVE	
	4	1	*300-4154*	1	EDGE AS	
		1	**201-1234**	6	ADAPTER (2-STRAP)	
		1	**219-9486**	1	EDGE	
	5	1	*300-7049*	1	PLATE AS	
		1	**134-5885**	1	EDGE (RH)	
	6	1	*300-7051*	1	PLATE AS	
		1	**134-5884**	1	EDGE (LH)	

C-CHANGE FROM PREVIOUS TYPE

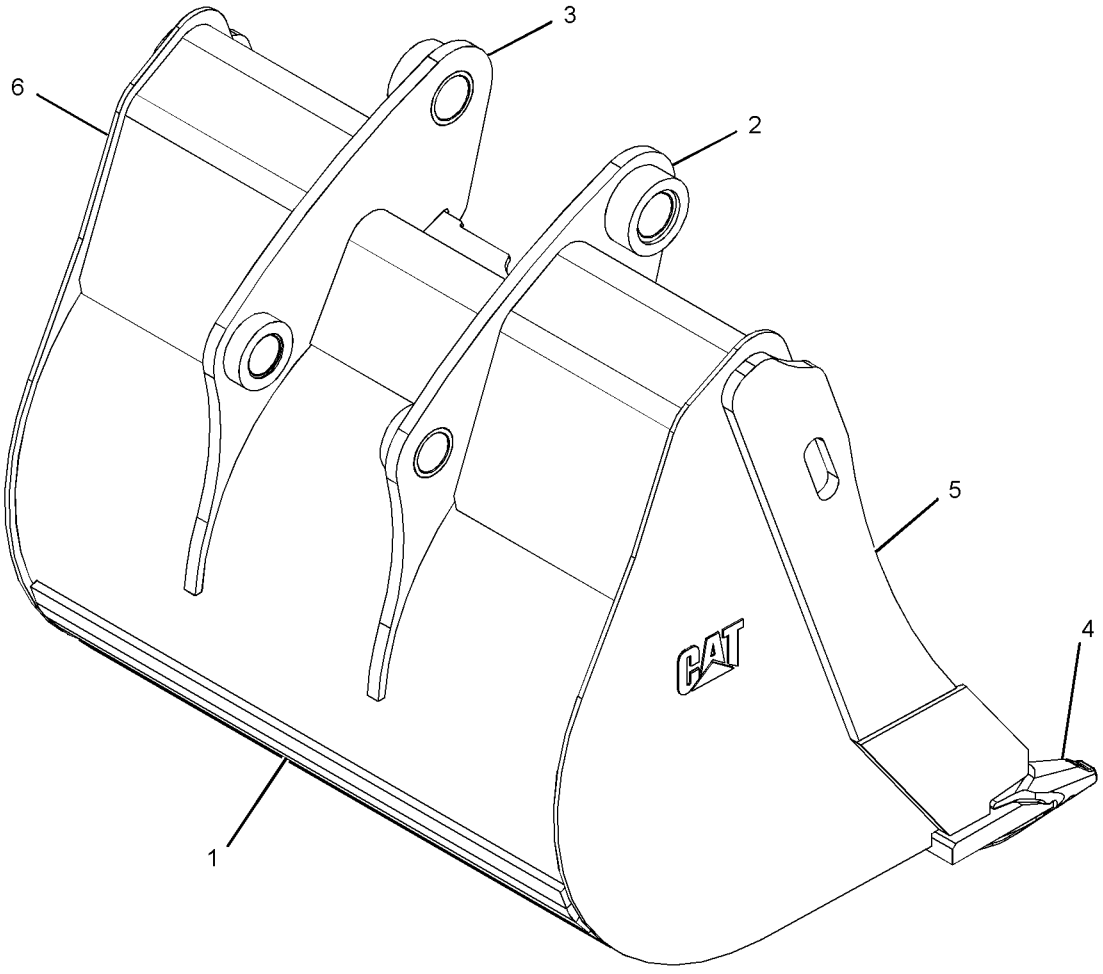

GRAPHIC #1 **<END>** g01381329

WORK TOOLS

219-3366 BUCKET AS-HOE—HIGH CAPACITY

S/N: EAT1-UP
458-MM (18-IN)
PART OF 219-3390 BUCKET GP-HOE
AN ATTACHMENT
TYPE 1

SMCS-6503 **i02651482**

NOTE	REF NO	GRAPHIC REF	PART NUMBER	QTY	PART NAME 1 2 3 4 5 6 (PRODUCT LEVEL)	SEE PAGE
	1	1	**134-5884**	1	EDGE (LH)	
	2	1	**134-5885**	1	EDGE (RH)	
	3	1	*151-7902*	1	BRACKET AS (LH)	
	3A	1	**9R-0162**	1	BEARING-SLEEVE	
	3B	1	**168-0480**	1	BEARING-SLEEVE	
	4	1	*151-7903*	1	BRACKET AS (RH)	
	4A	1	**9R-0162**	1	BEARING-SLEEVE	
	4B	1	**168-0480**	1	BEARING-SLEEVE	
	5	1	**161-4130**	2	PLATE-IDENTIFICATION (CAT)	
	6	1	**201-1234**	4	ADAPTER (2-STRAP)	
	7	1	**219-9483**	1	EDGE	

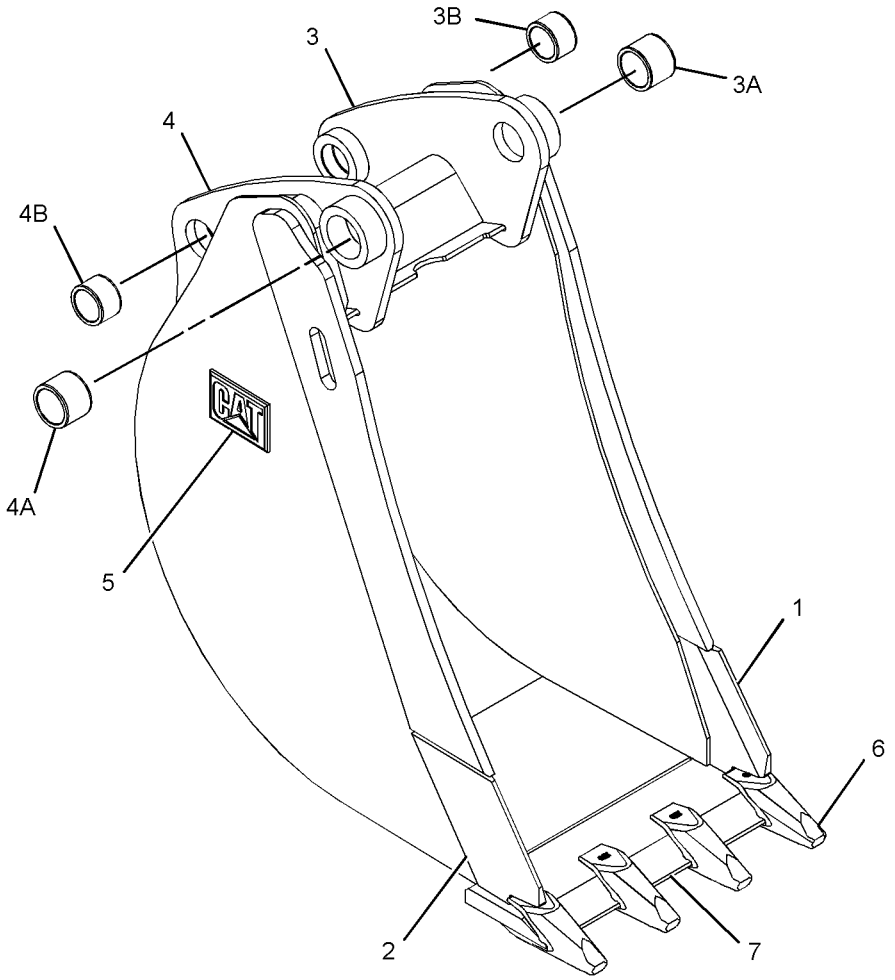

GRAPHIC #1 **<END>** g01334080

219-3366 BUCKET AS-HOE—HIGH CAPACITY

S/N: EAT1-UP
458-MM (18-IN)
PART OF 219-3390 BUCKET GP-HOE
AN ATTACHMENT
TYPE 2

SMCS-6503 **i03516003**

NOTE	REF NO	GRAPHIC REF	PART NUMBER	QTY	PART NAME 1 2 3 4 5 6 (PRODUCT LEVEL)	SEE PAGE
	1	1	**172-8279**	5	PLATE	
C	2	1	*286-9336*	1	BRACKET AS (RH)	
	2A	1	**9R-0162**	1	BEARING-SLEEVE	
	2B	1	**168-0480**	1	BEARING-SLEEVE	
C	3	1	*286-9337*	1	BRACKET AS (LH)	
	3A	1	**9R-0162**	1	BEARING-SLEEVE	
	3B	1	**168-0480**	1	BEARING-SLEEVE	
	4	1	*299-3344*	1	EDGE AS	
			201-1234	4	ADAPTER	
			219-9483	1	EDGE	
	5	1	*300-7054*	1	PLATE AS	
		1	**134-5885**	1	EDGE (RH)	
	6	1	*300-7055*	1	PLATE AS	
		1	**134-5884**	1	EDGE (LH)	

C-CHANGE FROM PREVIOUS TYPE

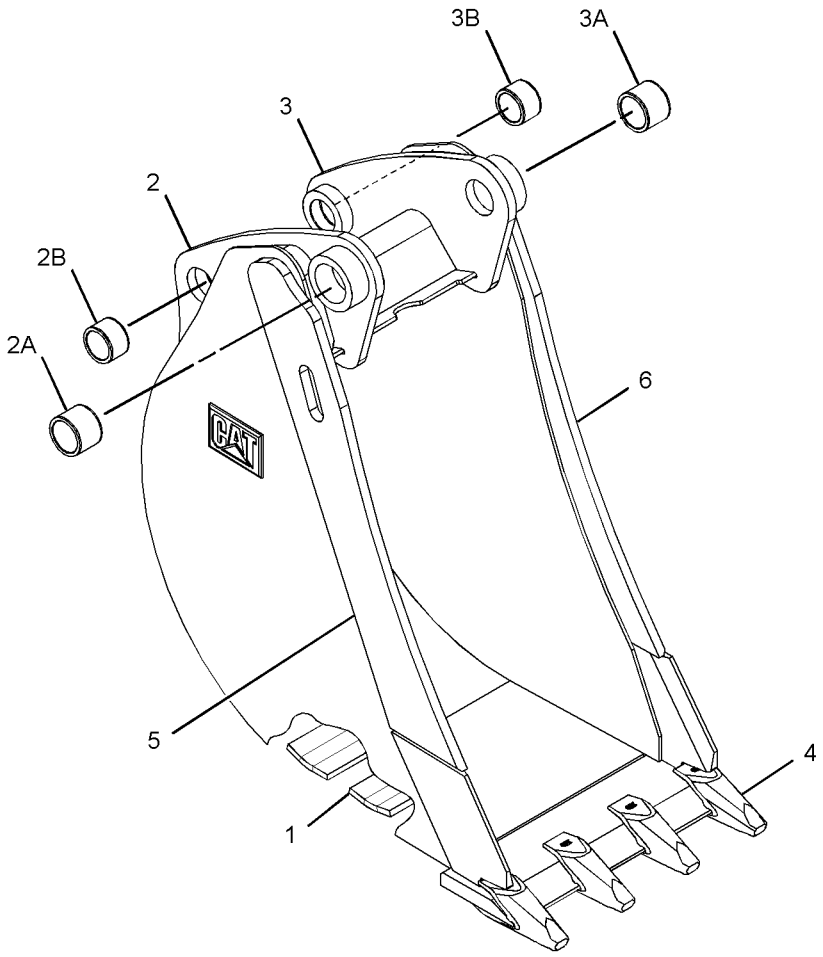

GRAPHIC #1 **<END>** g01381674

WORK TOOLS

219-3367 BUCKET AS-HOE—HIGH CAPACITY

S/N: EAT1-UP
610-MM (24-IN)
PART OF 219-3391 BUCKET GP-HOE
AN ATTACHMENT
TYPE 1

SMCS-6503 **i02651944**

NOTE	REF NO	GRAPHIC REF	PART NUMBER	QTY	PART NAME 1 2 3 4 5 6 (PRODUCT LEVEL)	SEE PAGE
	1	1	**134-5884**	1	EDGE (LH)	
	2	1	**134-5885**	1	EDGE (RH)	
	3	1	*151-7902*	1	BRACKET AS (LH)	
	3A	1	**9R-0162**	1	BEARING-SLEEVE	
	3B	1	**168-0480**	1	BEARING-SLEEVE	
	4	1	*151-7903*	1	BRACKET AS (RH)	
	4A	1	**9R-0162**	1	BEARING-SLEEVE	
	4B	1	**168-0480**	1	BEARING-SLEEVE	
	5	1	**151-7926**	2	PLATE	
	6	1	**161-4130**	2	PLATE-IDENTIFICATION (CAT)	
	7	1	**201-1234**	5	ADAPTER (2-STRAP)	
	8	1	**219-9486**	1	EDGE	

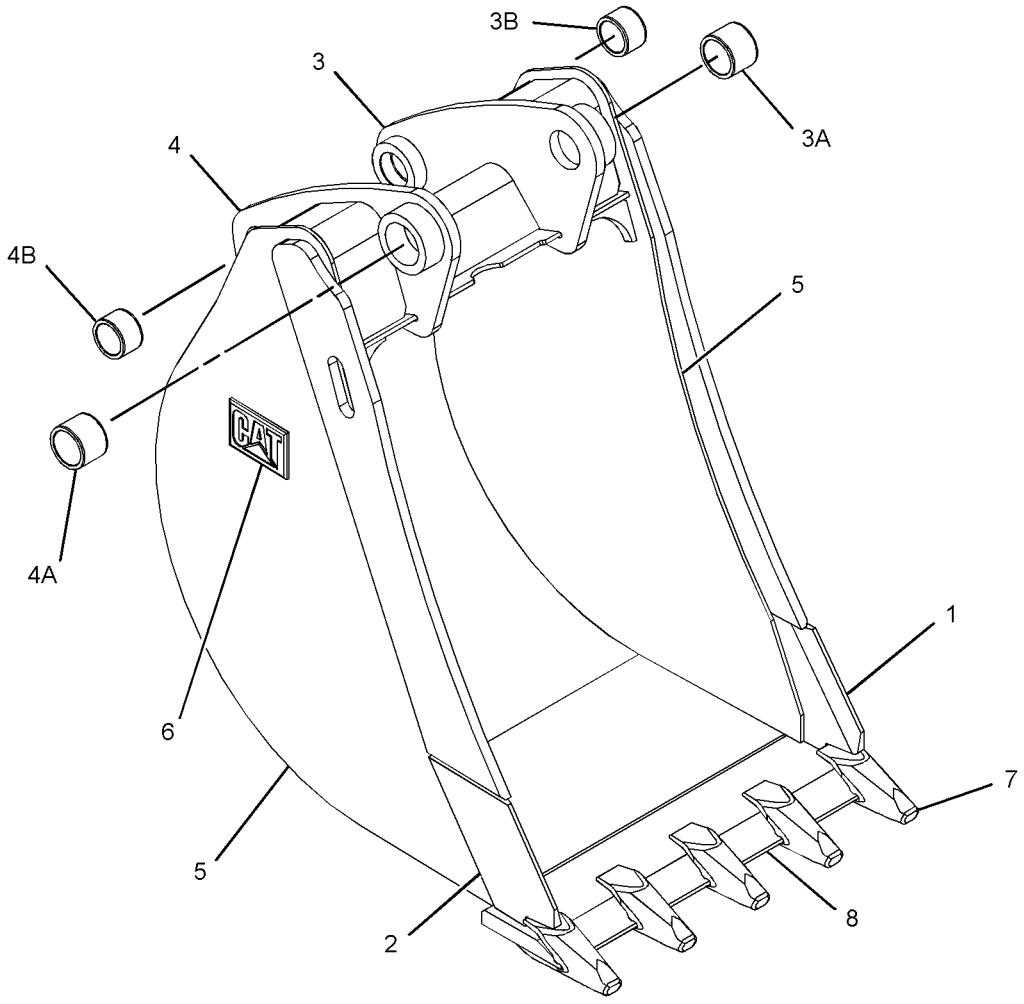

GRAPHIC #1 **<END>** g01342073

219-3367 BUCKET AS-HOE—HIGH CAPACITY

S/N: EAT1-UP
610-MM (24-IN)
PART OF 219-3391 BUCKET GP-HOE
AN ATTACHMENT
TYPE 2

SMCS-6503 **i03532158**

NOTE	REF NO	GRAPHIC REF	PART NUMBER	QTY	PART NAME 1 2 3 4 5 6 (PRODUCT LEVEL)	SEE PAGE
	1	1	**172-8280**	5	PLATE	
C	2	1	*286-9336*	1	BRACKET AS (RH)	
	2A	1	**9R-0162**	1	BEARING-SLEEVE	
	2B	1	**168-0480**	1	BEARING-SLEEVE	
C	3	1	*286-9337*	1	BRACKET AS (LH)	
	3A	1	**9R-0162**	1	BEARING-SLEEVE	
	3B	1	**168-0480**	1	BEARING-SLEEVE	
	4	1	*299-3348*	1	EDGE AS	
		1	**201-1234**	5	ADAPTER	
		1	**219-9483**	1	EDGE	
	5	1	*300-7054*	1	PLATE AS	
		1	**134-5885**	1	EDGE (RH)	
	6	1	*300-7055*	1	PLATE AS	
		1	**134-5884**	1	EDGE (LH)	

C-CHANGE FROM PREVIOUS TYPE

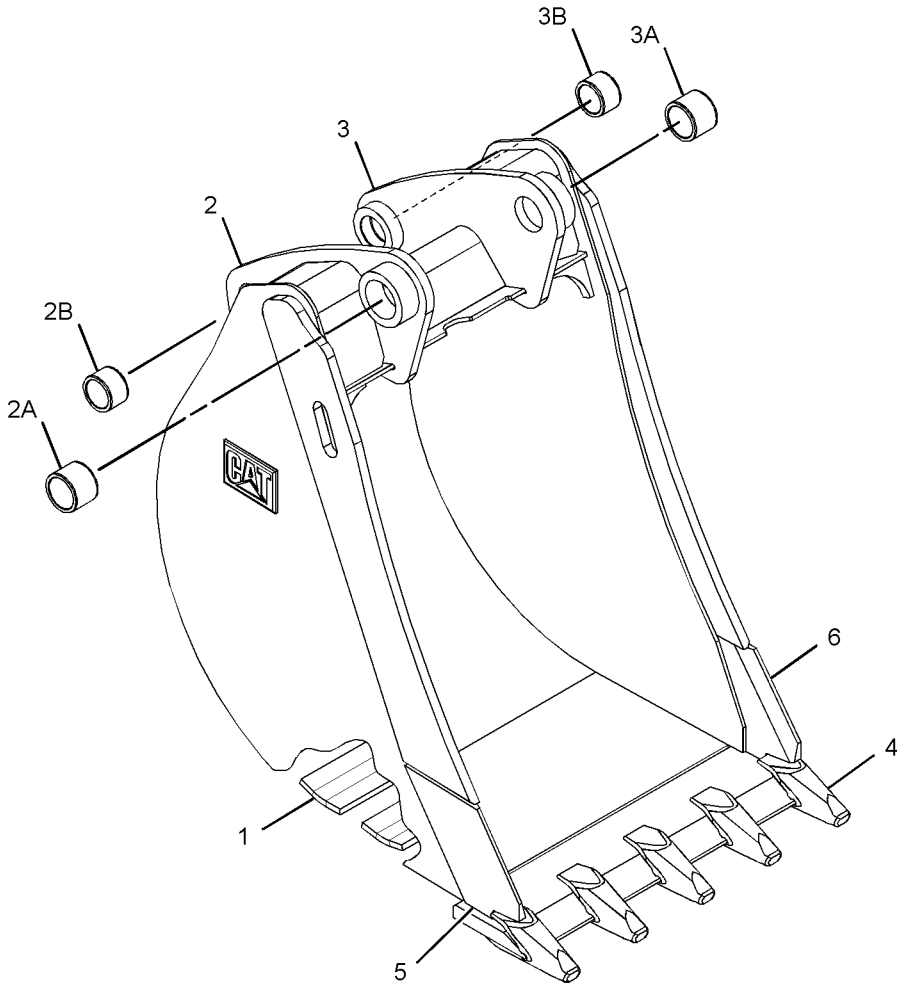

GRAPHIC #1 **<END>** g01382190

WORK TOOLS

219-3368 BUCKET AS-HOE—HIGH CAPACITY

S/N: EAT1-UP
762-MM (30-IN)
PART OF 219-3392 BUCKET GP-HOE
AN ATTACHMENT
TYPE 1

SMCS-6503 **i02651969**

NOTE	REF NO	GRAPHIC REF	PART NUMBER	QTY	PART NAME 1 2 3 4 5 6 (PRODUCT LEVEL)	SEE PAGE
	1	1	**134-5884**	1	EDGE (LH)	
	2	1	**134-5885**	1	EDGE (RH)	
	3	1	*151-7902*	1	BRACKET AS (LH)	
	3A	1	**9R-0162**	1	BEARING-SLEEVE	
	3B	1	**168-0480**	1	BEARING-SLEEVE	
	4	1	*151-7903*	1	BRACKET AS (RH)	
	4A	1	**9R-0162**	1	BEARING-SLEEVE	
	4B	1	**168-0480**	1	BEARING-SLEEVE	
	5	1	**161-4130**	2	PLATE-IDENTIFICATION (CAT)	
	6	1	**201-1234**	5	ADAPTER (2-STRAP)	
	7	1	**219-9485**	1	EDGE	

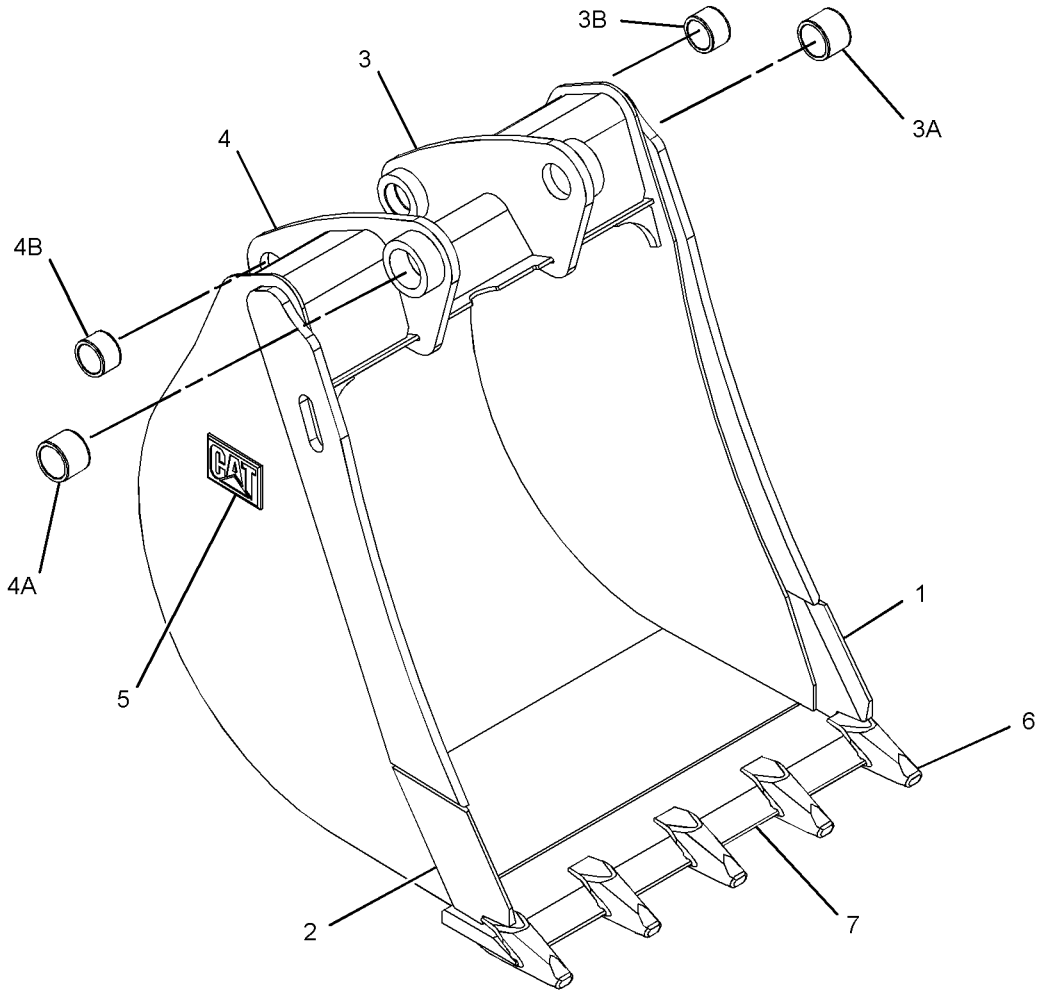

GRAPHIC #1 **<END>** g01341935

219-3368 BUCKET AS-HOE—HIGH CAPACITY

S/N: EAT1-UP
762-MM (30-IN)
PART OF 219-3392 BUCKET GP-HOE
AN ATTACHMENT
TYPE 2

SMCS-6503 **i03532159**

NOTE	REF NO	GRAPHIC REF	PART NUMBER	QTY	PART NAME 1 2 3 4 5 6 (PRODUCT LEVEL)	SEE PAGE
	1	1	**174-4765**	5	PLATE	
C	2	1	*286-9336*	1	BRACKET AS (RH)	
	2A	1	**9R-0162**	1	BEARING-SLEEVE	
	2B	1	**168-0480**	1	BEARING-SLEEVE	
C	3	1	*286-9337*	1	BRACKET AS (LH)	
	3A	1	**9R-0162**	1	BEARING-SLEEVE	
	3B	1	**168-0480**	1	BEARING-SLEEVE	
	4	1	*299-3351*	1	EDGE AS	
			201-1234	5	ADAPTER	
			219-9485	1	EDGE	
	5	1	*300-7054*	1	PLATE AS	
		1	**134-5885**	1	EDGE (RH)	
	6	1	*300-7055*	1	PLATE AS	
		1	**134-5884**	1	EDGE (LH)	

C-CHANGE FROM PREVIOUS TYPE

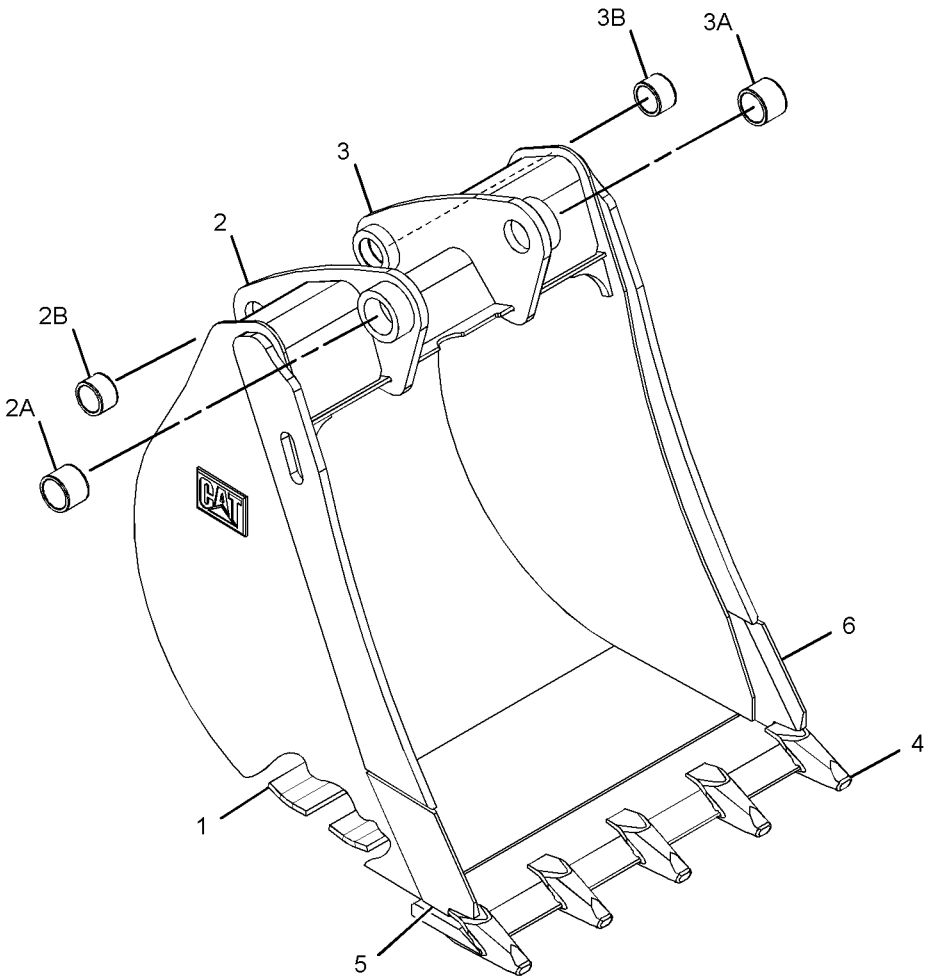

GRAPHIC #1 **<END>** g01381718

WORK TOOLS

219-3369 BUCKET AS-HOE—HIGH CAPACITY

S/N: EAT1-UP
914-MM (36-IN)
PART OF 219-3393 BUCKET GP-HOE
AN ATTACHMENT
TYPE 1

SMCS-6503 **i02651980**

NOTE	REF NO	GRAPHIC REF	PART NUMBER	QTY	PART NAME 1 2 3 4 5 6 (PRODUCT LEVEL)	SEE PAGE
	1	1	**134-5884**	1	EDGE (LH)	
	2	1	**134-5885**	1	EDGE (RH)	
	3	1	*151-7902*	1	BRACKET AS (LH)	
	3A	1	**9R-0162**	1	BEARING-SLEEVE	
	3B	1	**168-0480**	1	BEARING-SLEEVE	
	4	1	*151-7903*	1	BRACKET AS (RH)	
	4A	1	**9R-0162**	1	BEARING-SLEEVE	
	4B	1	**168-0480**	1	BEARING-SLEEVE	
	5	1	**161-4130**	2	PLATE-IDENTIFICATION (CAT)	
	6	1	**201-1234**	6	ADAPTER (2-STRAP)	
	7	1	**219-9486**	1	EDGE	

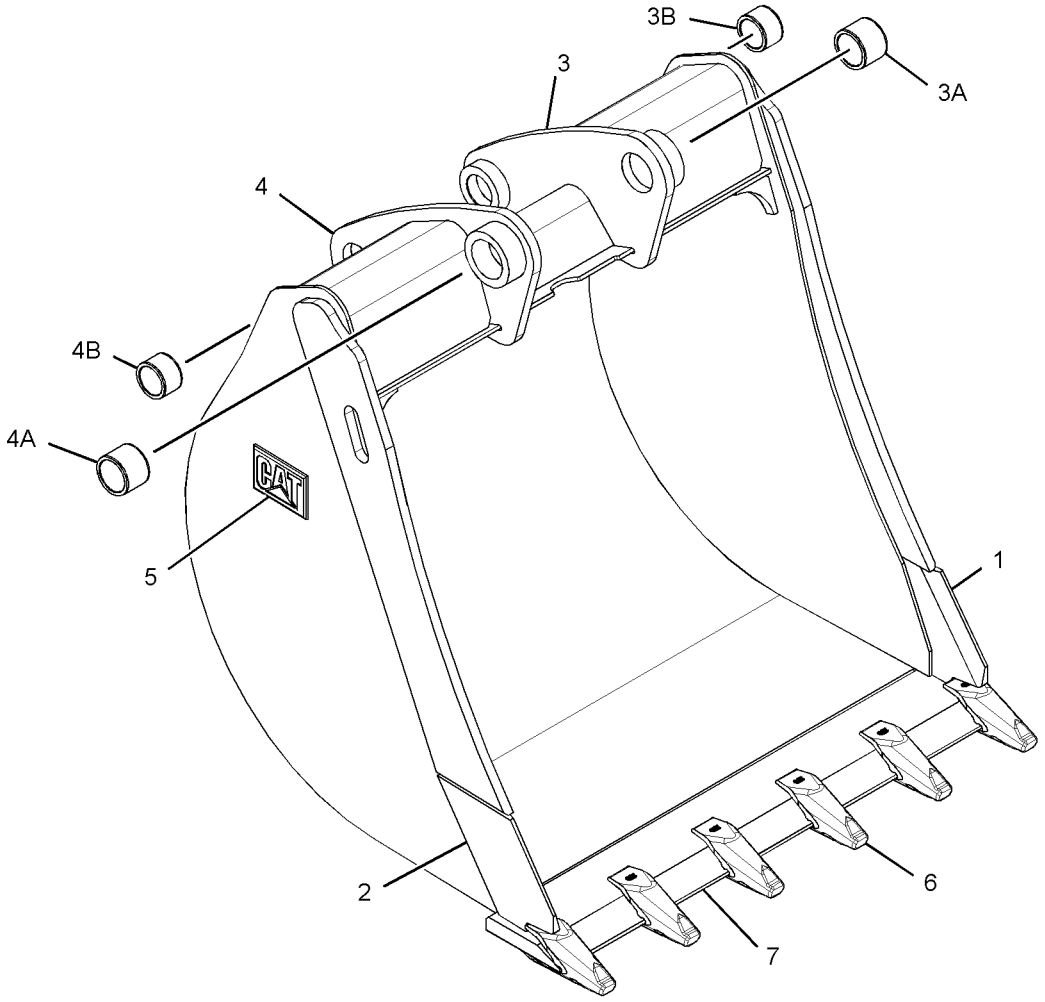

GRAPHIC #1 **<END>** g01335133

WORK TOOLS

219-3369 BUCKET AS-HOE—HIGH CAPACITY

S/N: EAT1-UP
914-MM (36-IN)
PART OF 219-3393 BUCKET GP-HOE
AN ATTACHMENT
TYPE 2

SMCS-6503 **i03516020**

NOTE	REF NO	GRAPHIC REF	PART NUMBER	QTY	PART NAME 1 2 3 4 5 6 (PRODUCT LEVEL)	SEE PAGE
	1	1	**193-5416**	5	PLATE	
C	2	1	*286-9336*	1	BRACKET AS (RH)	
	2A	1	**9R-0162**	1	BEARING-SLEEVE	
	2B	1	**168-0480**	1	BEARING-SLEEVE	
C	3	1	*286-9337*	1	BRACKET AS (LH)	
	3A	1	**9R-0162**	1	BEARING-SLEEVE	
	3B	1	**168-0480**	1	BEARING-SLEEVE	
	4	1	*300-4155*	1	EDGE AS	
		1	**201-1234**	6	ADAPTER	
		1	**219-9486**	1	EDGE	
	5	1	*300-7054*	1	PLATE AS	
		1	**134-5885**	1	EDGE (RH)	
	6	1	*300-7055*	1	PLATE AS	
		1	**134-5884**	1	EDGE (LH)	

C-CHANGE FROM PREVIOUS TYPE

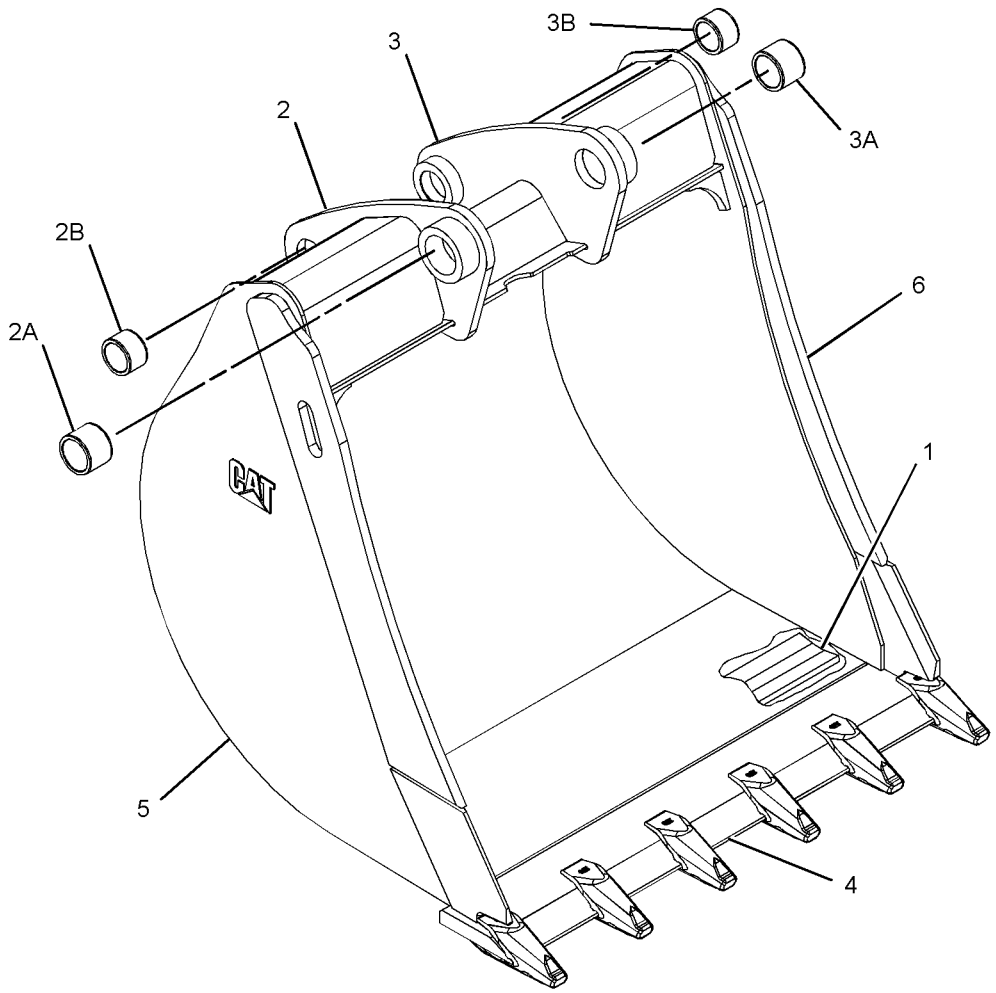

GRAPHIC #1 **<END>** g01382185

WORK TOOLS

219-3370 BUCKET AS-HOE–ROCK

S/N: EAT1-UP
305-MM (12-IN)
PART OF 219-3394 BUCKET GP-HOE
AN ATTACHMENT
TYPE 1

SMCS-6503 **i02659959**

NOTE	REF NO	GRAPHIC REF	PART NUMBER	QTY	PART NAME 1 2 3 4 5 6 (PRODUCT LEVEL)	SEE PAGE
	1	1	*151-7929*	1	BRACKET AS (LH)	
	1A	1	**9R-0320**	1	BEARING-SLEEVE	
	1B	1	**154-5257**	1	BEARING-SLEEVE	
	2	1	*151-7930*	1	BRACKET AS (RH)	
	2A	1	**9R-0320**	1	BEARING-SLEEVE	
	2B	1	**154-5257**	1	BEARING-SLEEVE	
	3	1	**161-4130**	2	PLATE-IDENTIFICATION (CAT)	
	4	1	**174-3949**	2	PLATE	
	5	1	**174-3950**	3	PLATE	
	6	1	**197-6258**	1	EDGE-RH	
	7	1	**197-6259**	1	EDGE-LH	
	8	1	**201-1234**	3	ADAPTER (2-STRAP)	
	9	1	**219-9493**	1	EDGE	

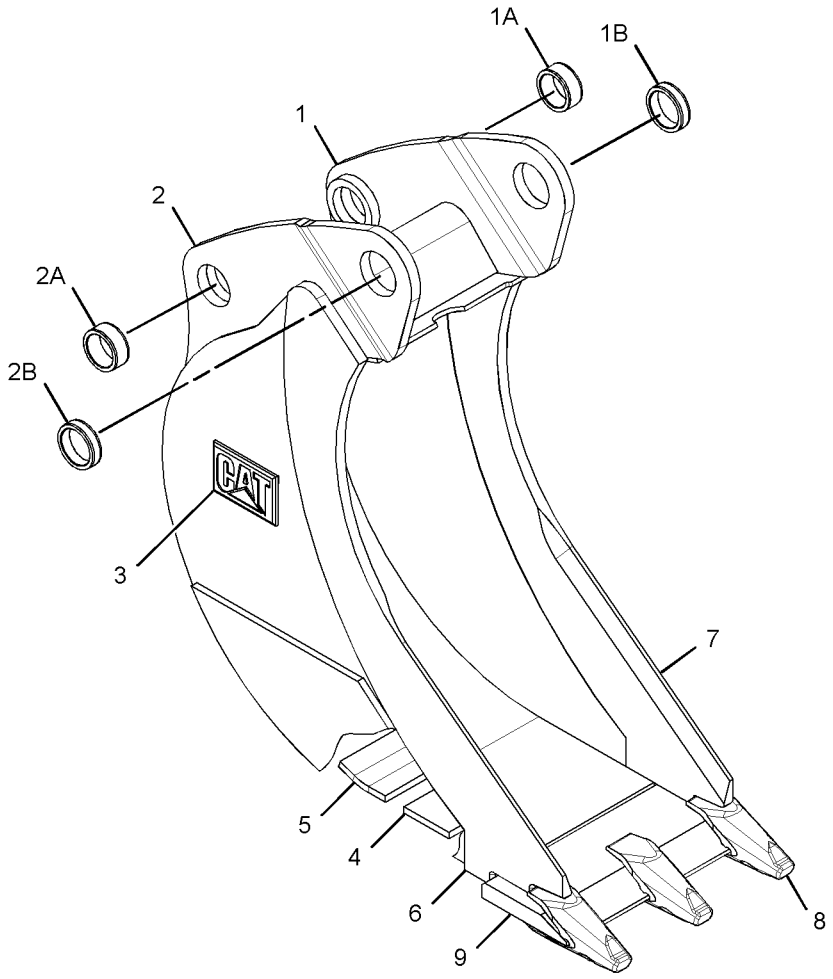

GRAPHIC #1 **<END>** g01342082

219-3370 BUCKET AS-HOE–ROCK

S/N: EAT1-UP
305-MM (12-IN)
PART OF 219-3394 BUCKET GP-HOE
AN ATTACHMENT
TYPE 2

SMCS-6503 **i03511022**

NOTE	REF NO	GRAPHIC REF	PART NUMBER	QTY	PART NAME 1 2 3 4 5 6 (PRODUCT LEVEL)	SEE PAGE
	1	1	**174-3950**	6	PLATE	
C	2	1	*286-9338*	1	BRACKET AS (RH)	
	2A	1	**9R-0320**	1	BEARING-SLEEVE	
	2B	1	**154-5257**	1	BEARING-SLEEVE	
C	3	1	*286-9340*	1	BRACKET AS (LH)	
	3A	1	**9R-0320**	1	BEARING-SLEEVE	
	3B	1	**154-5257**	1	BEARING-SLEEVE	
	4	1	*300-4161*	1	EDGE AS	
		1	**201-1234**	3	ADAPTER	
		1	**219-9485**	1	EDGE	
	5	1	*300-7059*	1	PLATE AS	
		1	**197-6258**	1	EDGE-RH	
	6	1	*300-7061*	1	PLATE AS	
		1	**197-6259**	1	EDGE-LH	

C-CHANGE FROM PREVIOUS TYPE

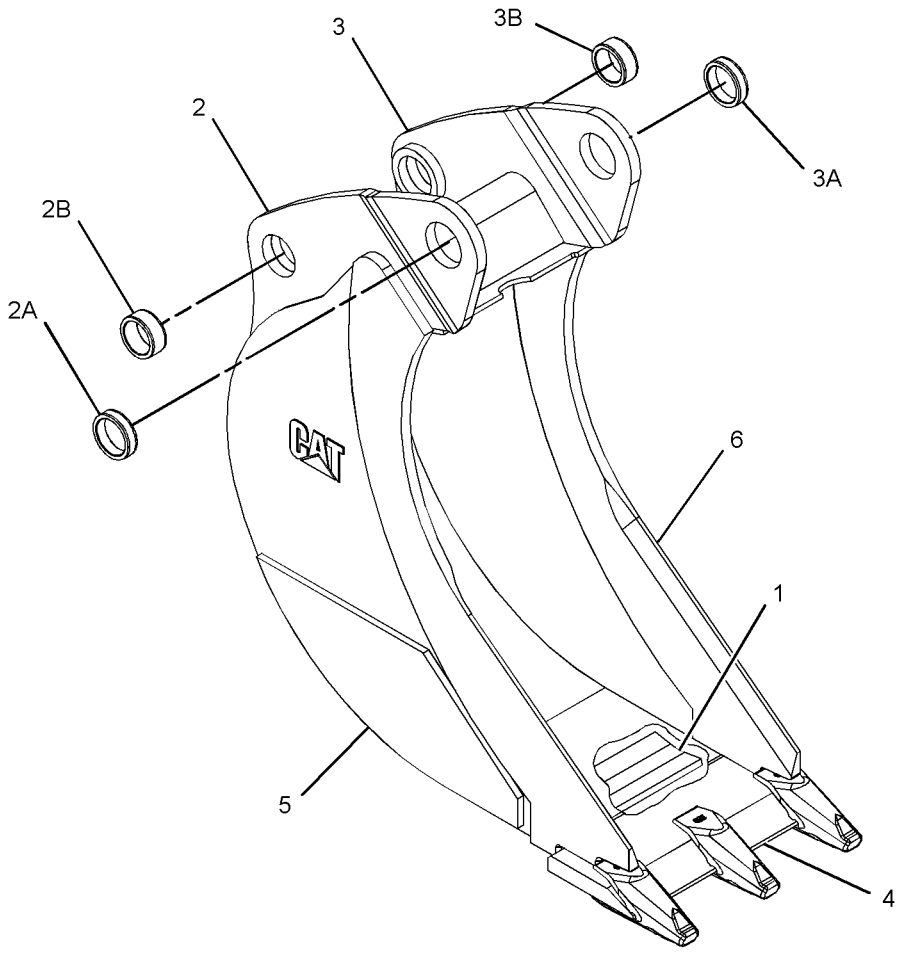

GRAPHIC #1 **<END>** g01382722

WORK TOOLS

219-3371 BUCKET AS-HOE–ROCK

S/N: EAT1-UP
458-MM (18-IN)
PART OF 219-3395 BUCKET GP-HOE
AN ATTACHMENT
TYPE 1

SMCS-6503 **i02651992**

NOTE	REF NO	GRAPHIC REF	PART NUMBER	QTY	PART NAME 1 2 3 4 5 6 (PRODUCT LEVEL)	SEE PAGE
	1	1	*151-7902*	1	BRACKET AS (LH)	
	1A	1	**9R-0162**	1	BEARING-SLEEVE	
	1B	1	**168-0480**	1	BEARING-SLEEVE	
	2	1	*151-7903*	1	BRACKET AS (RH)	
	2A	1	**9R-0162**	1	BEARING-SLEEVE	
	2B	1	**168-0480**	1	BEARING-SLEEVE	
	3	1	**161-4130**	2	PLATE-IDENTIFICATION (CAT)	
	4	1	**172-8276**	2	PLATE	
	5	1	**172-8279**	4	PLATE	
	6	1	**196-8921**	1	EDGE (RH)	
	7	1	**196-8922**	1	EDGE (LH)	
	8	1	**201-1234**	4	ADAPTER (2-STRAP)	
	9	1	**219-9483**	1	EDGE	

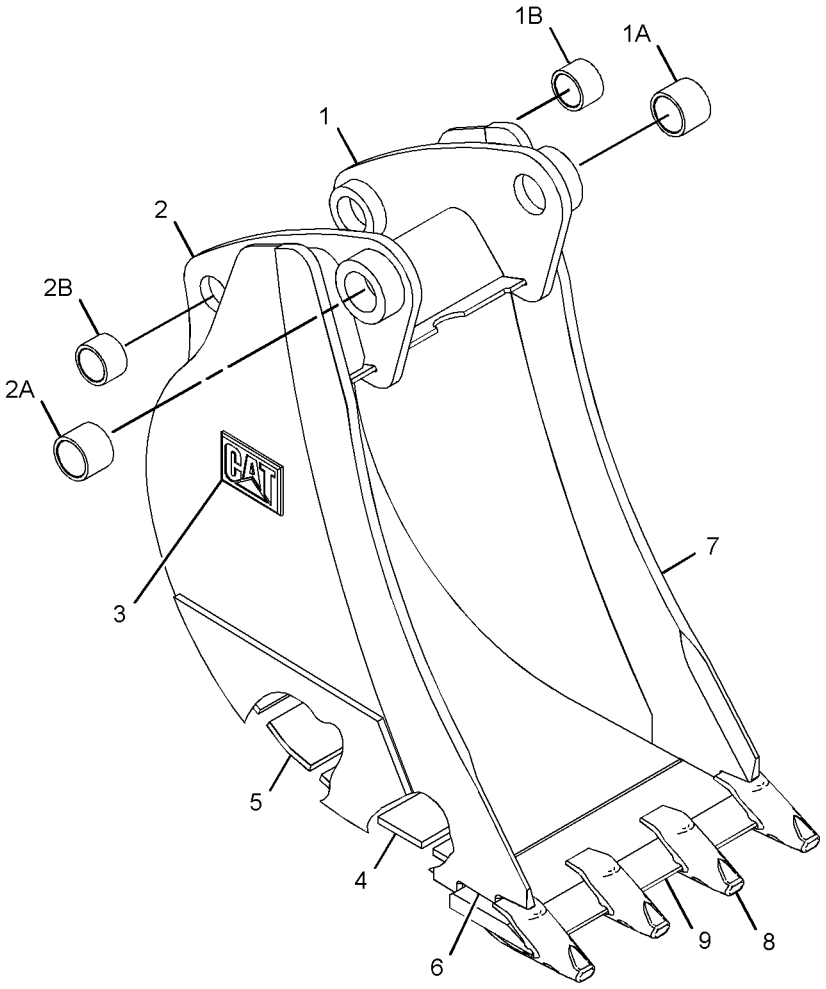

GRAPHIC #1 **<END>** g01340727

219-3371 BUCKET AS-HOE–ROCK

S/N: EAT1-UP
458-MM (18-IN)
PART OF 219-3395 BUCKET GP-HOE
AN ATTACHMENT
TYPE 2

SMCS-6503 **i02756741**

NOTE	REF NO	GRAPHIC REF	PART NUMBER	QTY	PART NAME 1 2 3 4 5 6 (PRODUCT LEVEL)	SEE PAGE
	1	1	**172-8279**	6	PLATE	
C	2	1	*286-9336*	1	BRACKET AS (RH)	
	2A	1	**9R-0162**	1	BEARING-SLEEVE	
	2B	1	**168-0480**	1	BEARING-SLEEVE	
C	3	1	*286-9337*	1	BRACKET AS (LH)	
	3A	1	**9R-0162**	1	BEARING-SLEEVE	
	3B	1	**168-0480**	1	BEARING-SLEEVE	
	4	1	*299-3344*	1	EDGE AS	
		1	**201-1234**	4	ADAPTER	
		1	**219-9483**	1	EDGE	
	5	1	*300-7056*	1	PLATE AS	
		1	**196-8921**	1	EDGE (RH)	
	6	1	*300-7057*	1	PLATE AS	
		1	**196-8922**	1	EDGE (LH)	

C-CHANGE FROM PREVIOUS TYPE

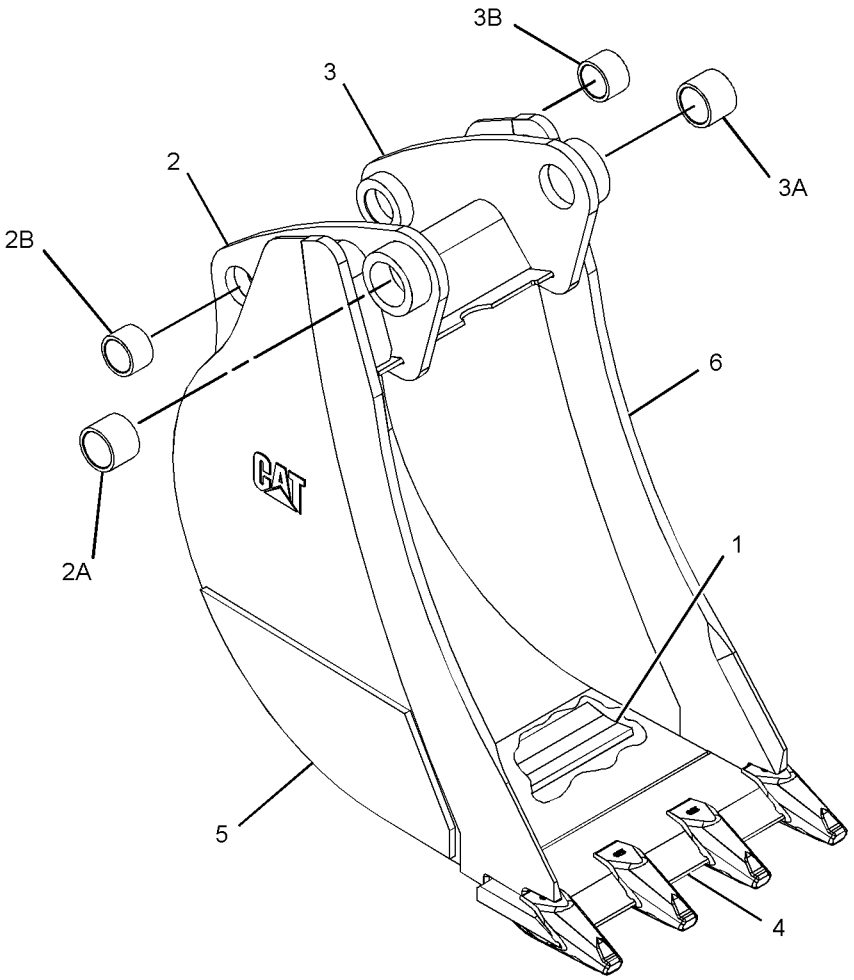

GRAPHIC #1 **<END>** g01382715

WORK TOOLS

219-3372 BUCKET AS-HOE–ROCK

S/N: EAT1-UP
610-MM (24-IN)
PART OF 219-3396 BUCKET GP-HOE
AN ATTACHMENT
TYPE 1

SMCS-6503 **i02652008**

NOTE	REF NO	GRAPHIC REF	PART NUMBER	QTY	PART NAME 1 2 3 4 5 6 (PRODUCT LEVEL)	SEE PAGE
	1	1	*151-7902*	1	BRACKET AS (LH)	
	1A	1	**168-0480**	1	BEARING-SLEEVE	
	1B	1	**9R-0162**	1	BEARING-SLEEVE	
	2	1	*151-7903*	1	BRACKET AS (RH)	
	2A	1	**168-0480**	1	BEARING-SLEEVE	
	2B	1	**9R-0162**	1	BEARING-SLEEVE	
	3	1	**161-4130**	2	PLATE-IDENTIFICATION (CAT)	
	4	1	**172-8277**	2	PLATE	
	5	1	**172-8280**	4	PLATE	
	6	1	**196-8921**	1	EDGE (RH)	
	7	1	**196-8922**	1	EDGE (LH)	
	8	1	**201-1234**	5	ADAPTER (2-STRAP)	
	9	1	**219-9484**	1	EDGE	

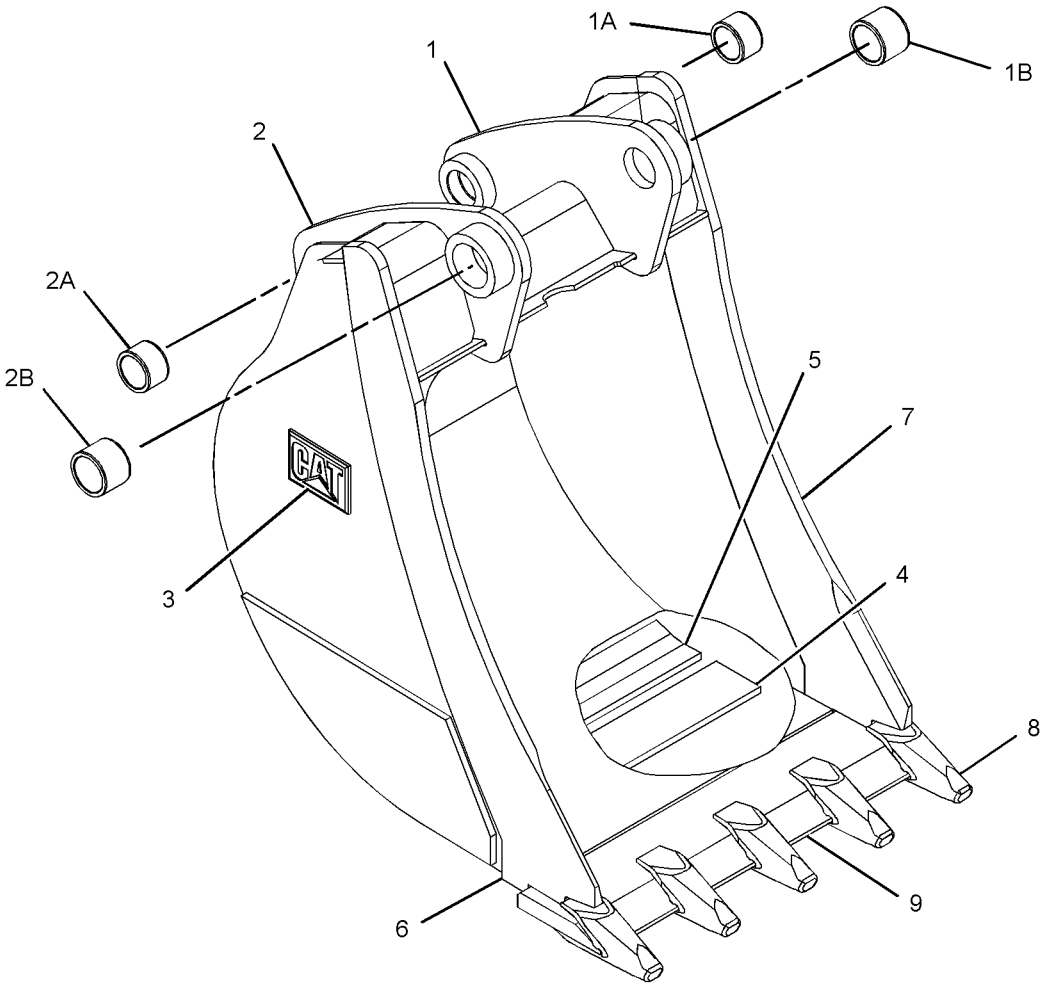

GRAPHIC #1 **<END>** g01341830

WORK TOOLS

219-3372 BUCKET AS-HOE–ROCK

S/N: EAT1-UP
610-MM (24-IN)
PART OF 219-3396 BUCKET GP-HOE
AN ATTACHMENT
TYPE 2

SMCS-6503 **i02756742**

NOTE	REF NO	GRAPHIC REF	PART NUMBER	QTY	PART NAME 1 2 3 4 5 6 (PRODUCT LEVEL)	SEE PAGE
	1	1	**172-8280**	6	PLATE	
C	2	1	*286-9336*	1	BRACKET AS (RH)	
	2A	1	**9R-0162**	1	BEARING-SLEEVE	
	2B	1	**168-0480**	1	BEARING-SLEEVE	
C	3	1	*286-9337*	1	BRACKET AS (LH)	
	3A	1	**9R-0162**	1	BEARING-SLEEVE	
	3B	1	**168-0480**	1	BEARING-SLEEVE	
	4	1	*299-3351*	1	EDGE AS	
		1	**201-1234**	5	ADAPTER	
		1	**219-9485**	1	EDGE	
	5	1	*300-7056*	1	PLATE AS	
		1	**196-8921**	1	EDGE (RH)	
	6	1	*300-7057*	1	PLATE AS	
		1	**196-8922**	1	EDGE (LH)	

C-CHANGE FROM PREVIOUS TYPE

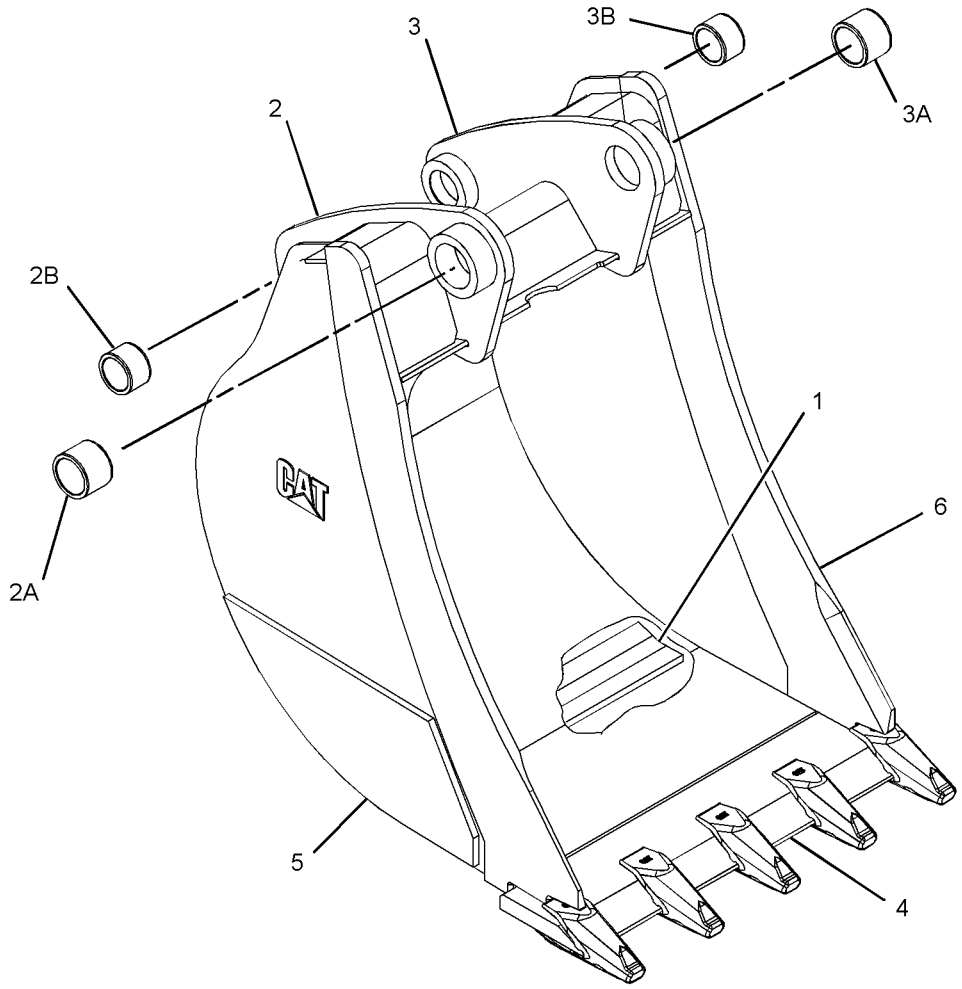

GRAPHIC #1 **<END>** g01382695

WORK TOOLS

219-3373 BUCKET AS-HOE—ROCK

S/N: EAT1-UP
762-MM (30-IN)
PART OF 219-3397 BUCKET GP-HOE
AN ATTACHMENT
TYPE 1

SMCS-6503 **i02652012**

NOTE	REF NO	GRAPHIC REF	PART NUMBER	QTY	PART NAME 1 2 3 4 5 6 (PRODUCT LEVEL)	SEE PAGE
	1	1	*151-7902*	1	BRACKET AS (LH)	
	1A	1	**9R-0162**	1	BEARING-SLEEVE	
	1B	1	**168-0480**	1	BEARING-SLEEVE	
	2	1	*151-7903*	1	BRACKET AS (RH)	
	2A	1	**9R-0162**	1	BEARING-SLEEVE	
	2B	1	**168-0480**	1	BEARING-SLEEVE	
	3	1	**161-4130**	2	PLATE-IDENTIFICATION (CAT)	
	4	1	**172-8278**	2	PLATE	
	5	1	**174-4765**	4	PLATE	
	6	1	**196-8921**	1	EDGE (RH)	
	7	1	**196-8922**	1	EDGE (LH)	
	8	1	**201-1234**	5	ADAPTER (2-STRAP)	
	9	1	**219-9485**	1	EDGE	

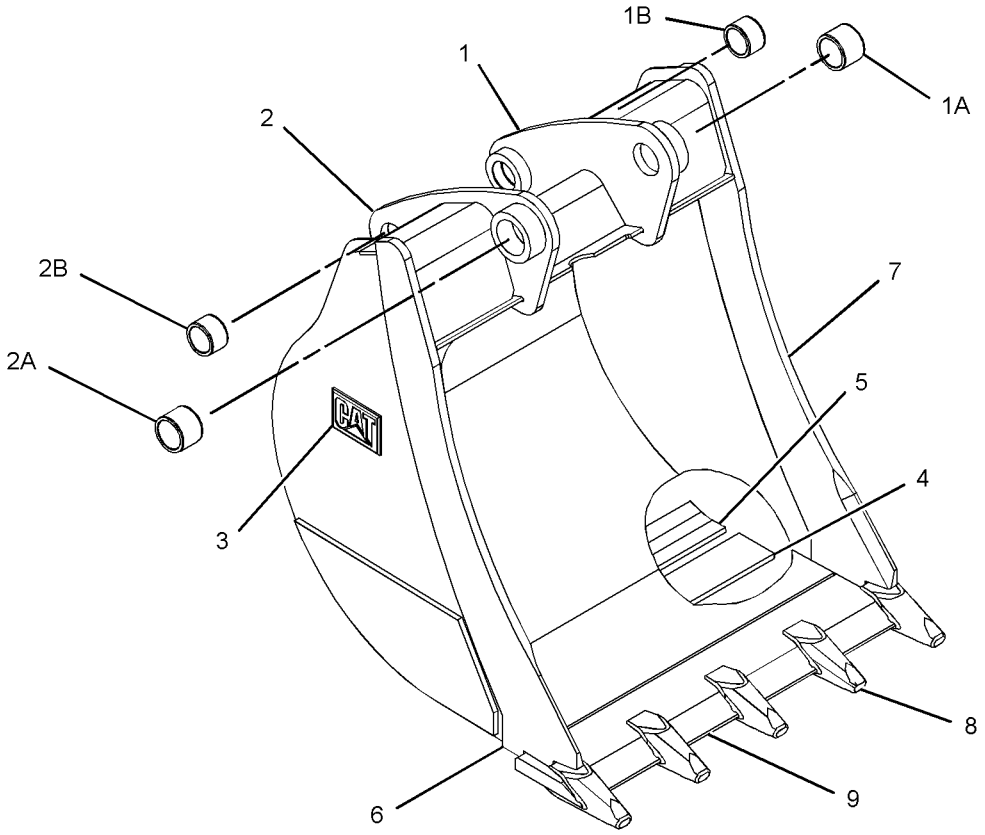

GRAPHIC #1 **<END>** g01334366

219-3373 BUCKET AS-HOE–ROCK

S/N: EAT1-UP
762-MM (30-IN)
PART OF 219-3397 BUCKET GP-HOE
AN ATTACHMENT
TYPE 2

SMCS-6503 **i03463048**

NOTE	REF NO	GRAPHIC REF	PART NUMBER	QTY	PART NAME 1 2 3 4 5 6 (PRODUCT LEVEL)	SEE PAGE
	1	1	**174-4765**	6	PLATE	
C	2	1	*286-9336*	1	BRACKET AS (RH)	
	2A	1	**9R-0162**	1	BEARING-SLEEVE	
	2B	1	**168-0480**	1	BEARING-SLEEVE	
C	3	1	*286-9337*	1	BRACKET AS (LH)	
	3A	1	**9R-0162**	1	BEARING-SLEEVE	
	3B	1	**168-0480**	1	BEARING-SLEEVE	
	4	1	*299-3351*	1	EDGE AS	
		1	**201-1234**	5	ADAPTER	
		1	**219-9485**	1	EDGE	
	5	1	*300-7056*	1	PLATE AS	
		1	**196-8921**	1	EDGE (RH)	
	6	1	*300-7057*	1	PLATE AS	
		1	**196-8922**	1	EDGE (LH)	

C-CHANGE FROM PREVIOUS TYPE

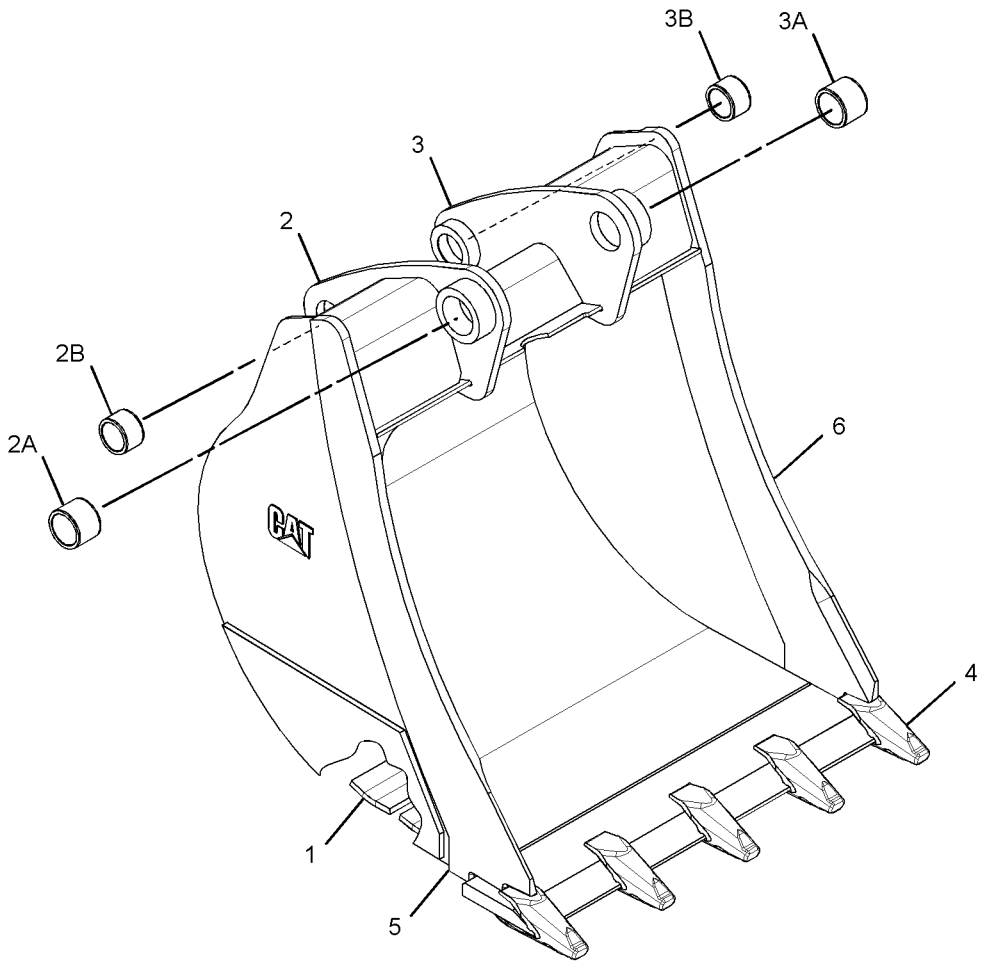

GRAPHIC #1 **<END>** g01383031

WORK TOOLS

219-3374 BUCKET AS-HOE–ROCK

S/N: EAT1-UP
914-MM (36-IN)
PART OF 219-3398 BUCKET GP-HOE
AN ATTACHMENT
TYPE 1

SMCS-6503 **i02660333**

NOTE	REF NO	GRAPHIC REF	PART NUMBER	QTY	PART NAME 1 2 3 4 5 6 (PRODUCT LEVEL)	SEE PAGE
	1	1	*151-7902*	1	BRACKET AS (LH)	
	1A	1	**9R-0162**	1	BEARING-SLEEVE	
	1B	1	**168-0480**	1	BEARING-SLEEVE	
	2	1	*151-7903*	1	BRACKET AS (RH)	
	2A	1	**9R-0162**	1	BEARING-SLEEVE	
	2B	1	**168-0480**	1	BEARING-SLEEVE	
	3	1	**161-4130**	2	PLATE-IDENTIFICATION (CAT)	
	4	1	**196-8921**	1	EDGE (RH)	
	5	1	**196-8922**	1	EDGE (LH)	
	6	1	**201-1234**	6	ADAPTER (2-STRAP)	
	7	1	**219-9486**	1	EDGE	

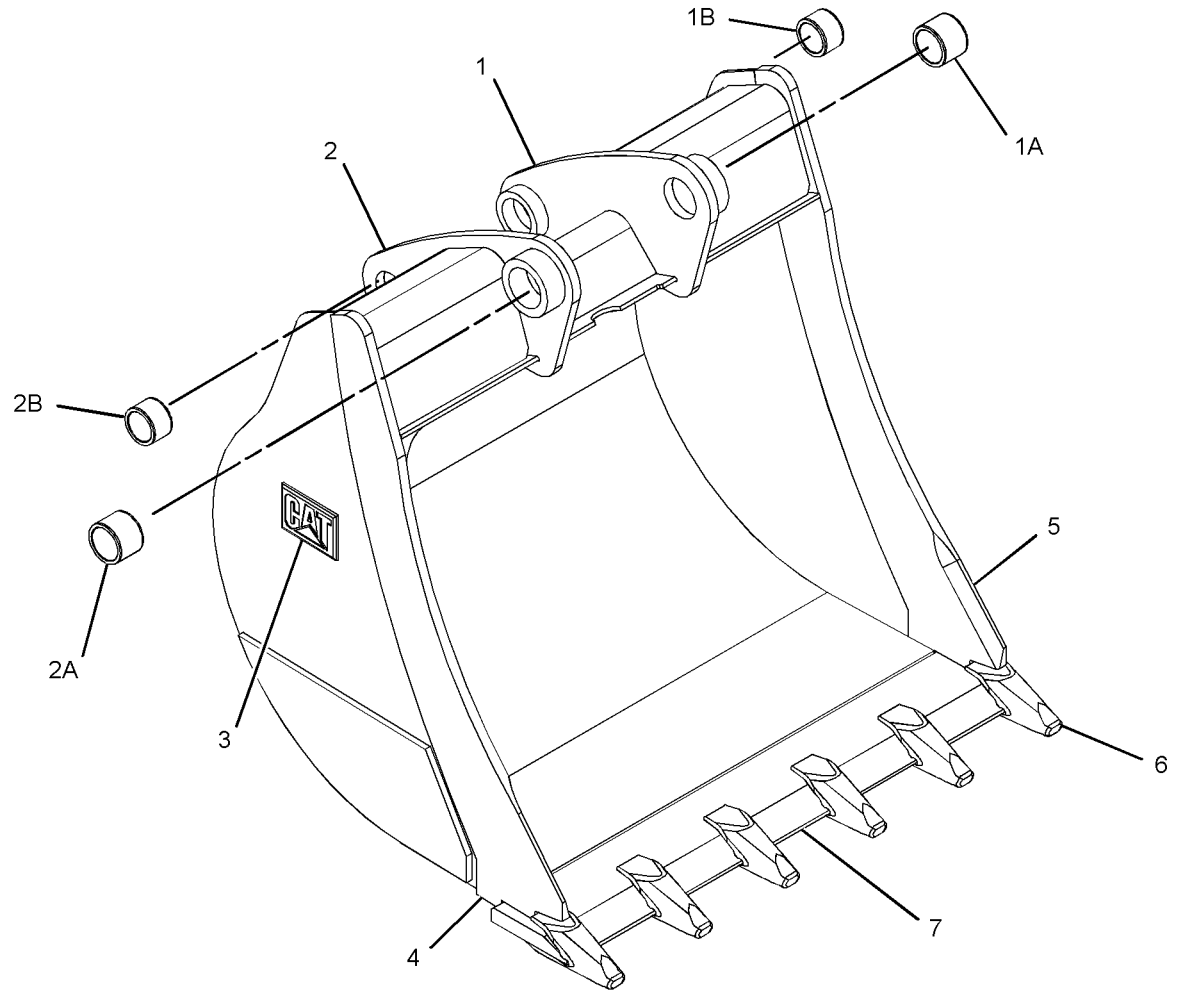

GRAPHIC #1 **<END>** g01342084

219-3374 BUCKET AS-HOE–ROCK

S/N: EAT1-UP
914-MM (36-IN)
PART OF 219-3398 BUCKET GP-HOE
AN ATTACHMENT
TYPE 2

SMCS-6503 **i03505446**

NOTE	REF NO	GRAPHIC REF	PART NUMBER	QTY	PART NAME 1 2 3 4 5 6 (PRODUCT LEVEL)	SEE PAGE
	1	1	**193-5416**	5	PLATE	
C	2	1	*286-9336*	1	BRACKET AS (RH)	
	2A	1	**9R-0162**	1	BEARING-SLEEVE	
	2B	1	**168-0480**	1	BEARING-SLEEVE	
C	3	1	*286-9337*	1	BRACKET AS (LH)	
	3A	1	**9R-0162**	1	BEARING-SLEEVE	
	3B	1	**168-0480**	1	BEARING-SLEEVE	
	4	1	*300-4154*	1	EDGE AS	
			201-1234	6	ADAPTER	
			219-9486	1	EDGE	
	5	1	*300-7054*	1	PLATE AS	
			134-5885	1	EDGE (RH)	
	6	1	*300-7055*	1	PLATE AS	
			134-5884	1	EDGE (LH)	

C-CHANGE FROM PREVIOUS TYPE

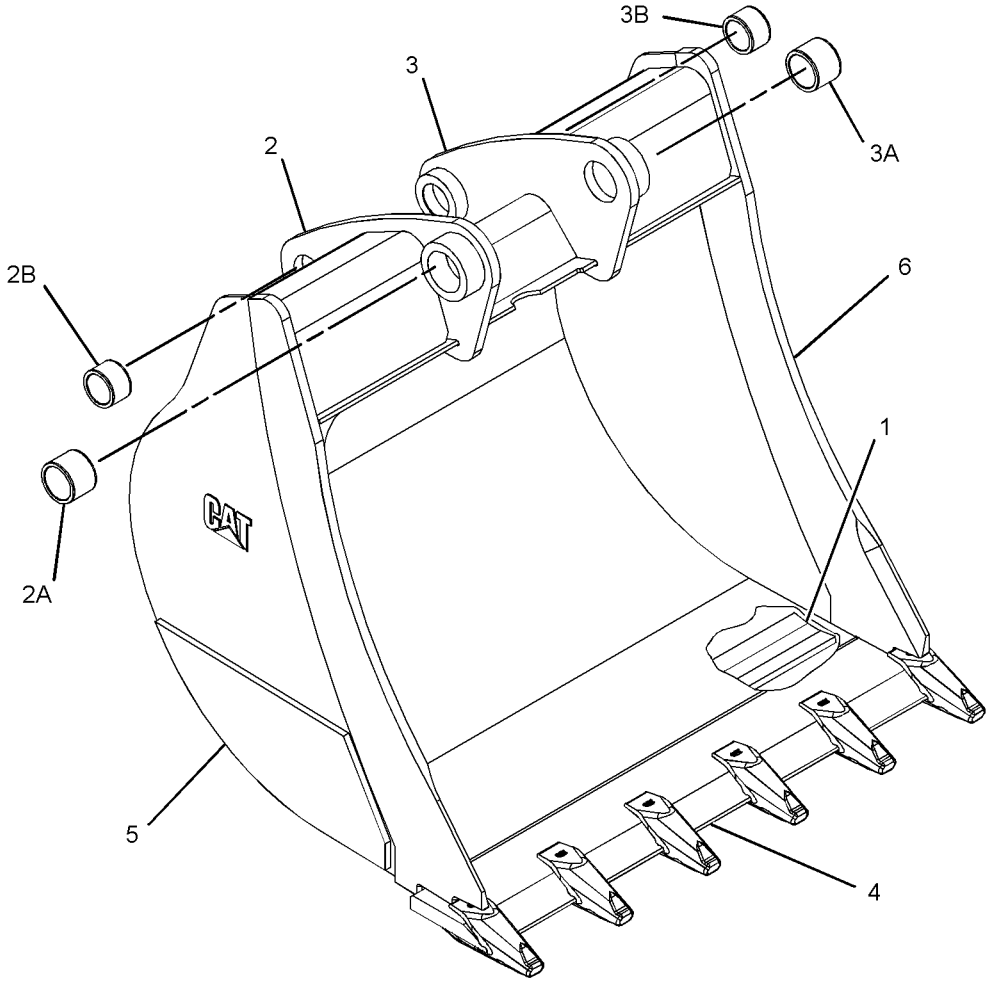

GRAPHIC #1 **<END>** g01382166

WORK TOOLS

219-3375 BUCKET AS-HOE–CORAL

S/N: EAT1-UP
305-MM (12-IN)
PART OF 219-3399 BUCKET GP-HOE
AN ATTACHMENT

SMCS-6503 **i02661574**

NOTE	REF NO	GRAPHIC REF	PART NUMBER	QTY	PART NAME 1 2 3 4 5 6 (PRODUCT LEVEL)	SEE PAGE
	1	1	**161-4130**	2	PLATE-IDENTIFICATION (CAT)	
	2	1	**174-3949**	2	PLATE	
	3	1	**174-3950**	1	PLATE	
	4	1	**197-8914**	1	EDGE-ROUTER (RH)	
	5	1	**197-8915**	1	EDGE-ROUTER (LH)	
	6	1	**201-1234**	4	ADAPTER (2-STRAP)	
	7	1	*202-4162*	1	BRACKET AS (LH)	
	7A	1	**9R-0320**	1	BEARING-SLEEVE	
	7B	1	**154-5257**	1	BEARING-SLEEVE	
	8	1	*202-4163*	1	BRACKET AS (RH)	
	8A	1	**9R-0320**	1	BEARING-SLEEVE	
	8B	1	**154-5257**	1	BEARING-SLEEVE	
	9	1	**219-9496**	1	EDGE	

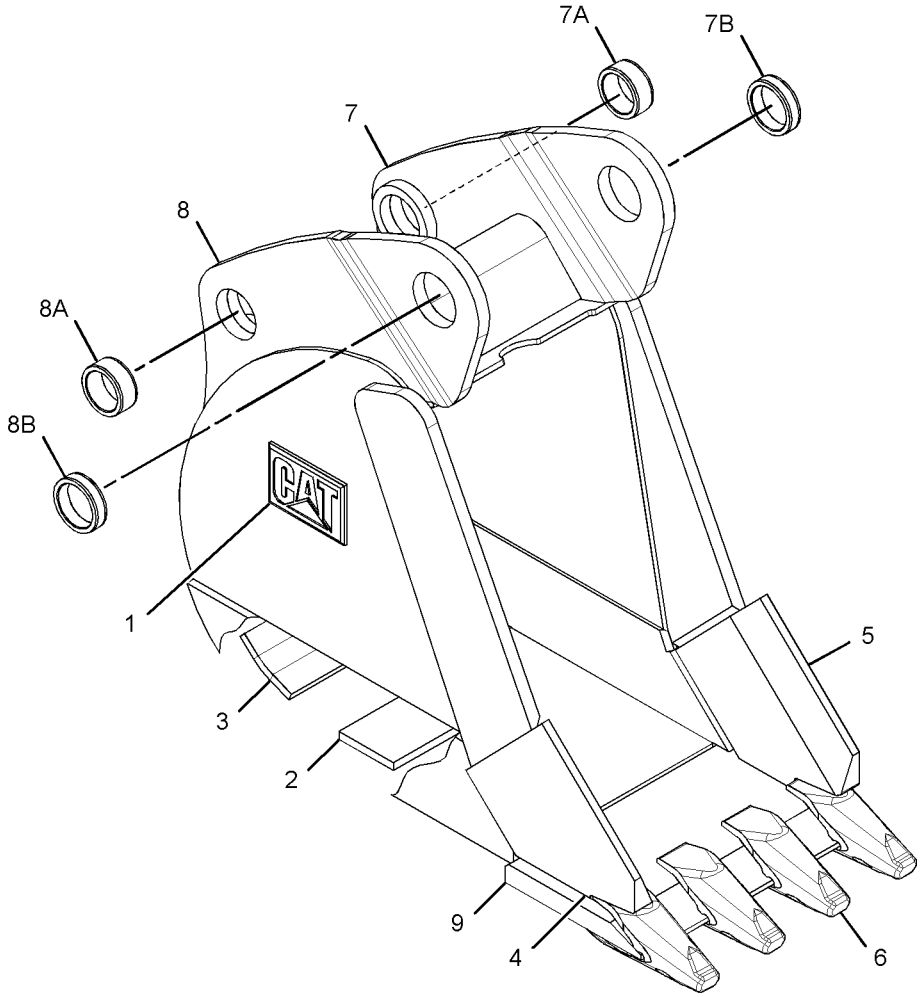

GRAPHIC #1 **<END>** g01342300

219-3376 BUCKET AS-HOE–CORAL

S/N: EAT1-UP
458-MM (18-IN)
PART OF 219-3400 BUCKET GP-HOE
AN ATTACHMENT

SMCS-6503 **i02661611**

NOTE	REF NO	GRAPHIC REF	PART NUMBER	QTY	PART NAME 1 2 3 4 5 6 (PRODUCT LEVEL)	SEE PAGE
	1	1	**136-7049**	1	BIT-ROUTER (LH)	
	2	1	**136-7051**	1	BIT-ROUTER (RH)	
	3	1	**172-8276**	2	PLATE	
	4	1	**161-4130**	2	PLATE-IDENTIFICATION (CAT)	
	5	1	**172-8279**	1	PLATE	
	6	1	**201-1234**	6	ADAPTER (2-STRAP)	
	7	1	*202-0596*	1	BRACKET AS (LH)	
	7A	1	**9R-0162**	1	BEARING-SLEEVE	
	7B	1	**168-0480**	1	BEARING-SLEEVE	
	8	1	*202-0597*	1	BRACKET AS (RH)	
	8A	1	**9R-0162**	1	BEARING-SLEEVE	
	8B	1	**168-0480**	1	BEARING-SLEEVE	
	9	1	**219-9491**	1	EDGE	

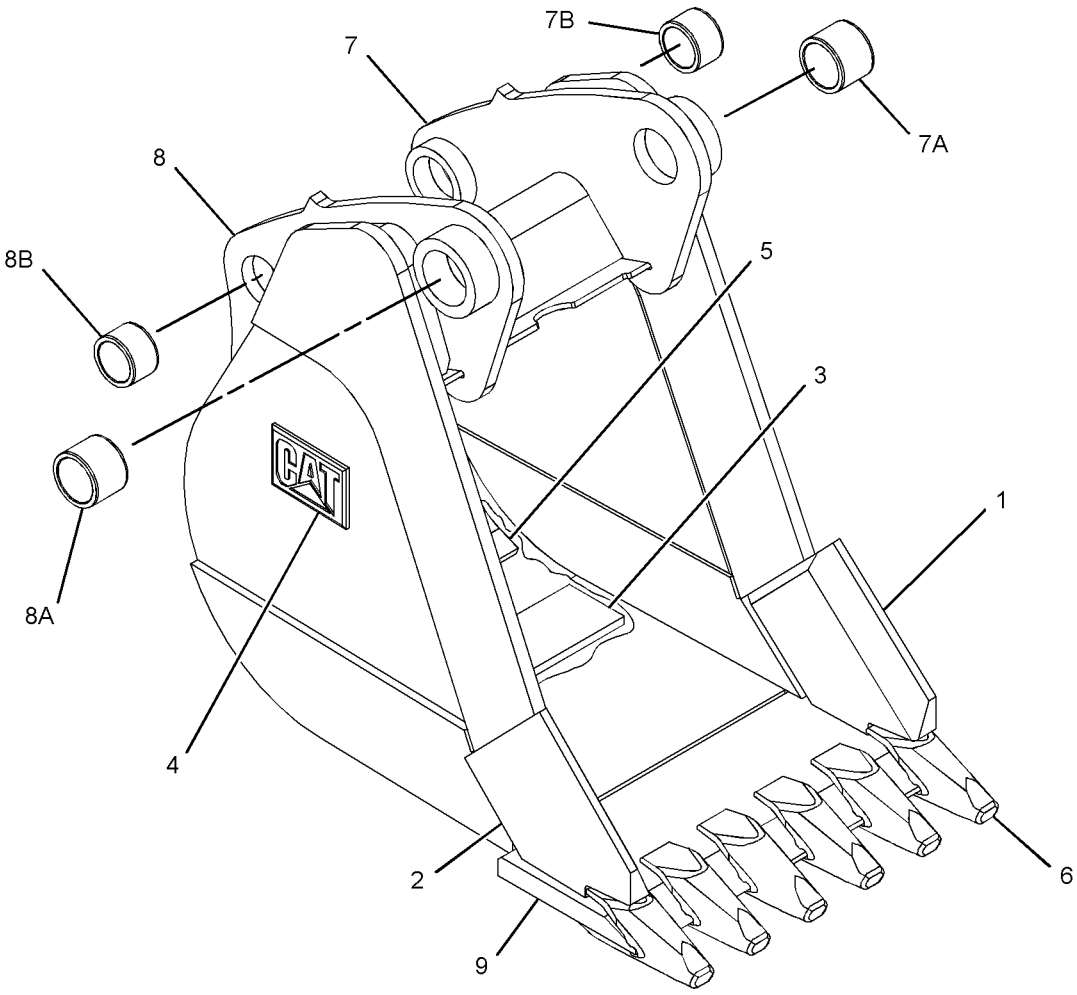

GRAPHIC #1 **<END>** g01342325

WORK TOOLS

219-3377 BUCKET AS-HOE–CORAL

S/N: EAT1-UP
610-MM (24-IN)
PART OF 219-3401 BUCKET GP-HOE
AN ATTACHMENT

SMCS-6503 **i02661614**

NOTE	REF NO	GRAPHIC REF	PART NUMBER	QTY	PART NAME 1 2 3 4 5 6 (PRODUCT LEVEL)	SEE PAGE
	1	1	**172-8277**	2	PLATE	
	2	1	**136-7049**	1	BIT-ROUTER (LH)	
	3	1	**136-7051**	1	BIT-ROUTER (RH)	
	4	1	**172-8280**	1	PLATE	
	5	1	**161-4130**	2	PLATE-IDENTIFICATION (CAT)	
	6	1	**201-1234**	8	ADAPTER (2-STRAP)	
	7	1	*202-0596*	1	BRACKET AS (LH)	
	7A	1	**9R-0162**	1	BEARING-SLEEVE	
	7B	1	**168-0480**	1	BEARING-SLEEVE	
	8	1	*202-0597*	1	BRACKET AS (RH)	
	8A	1	**9R-0162**	1	BEARING-SLEEVE	
	8B	1	**168-0480**	1	BEARING-SLEEVE	
	9	1	**219-9492**	1	EDGE	

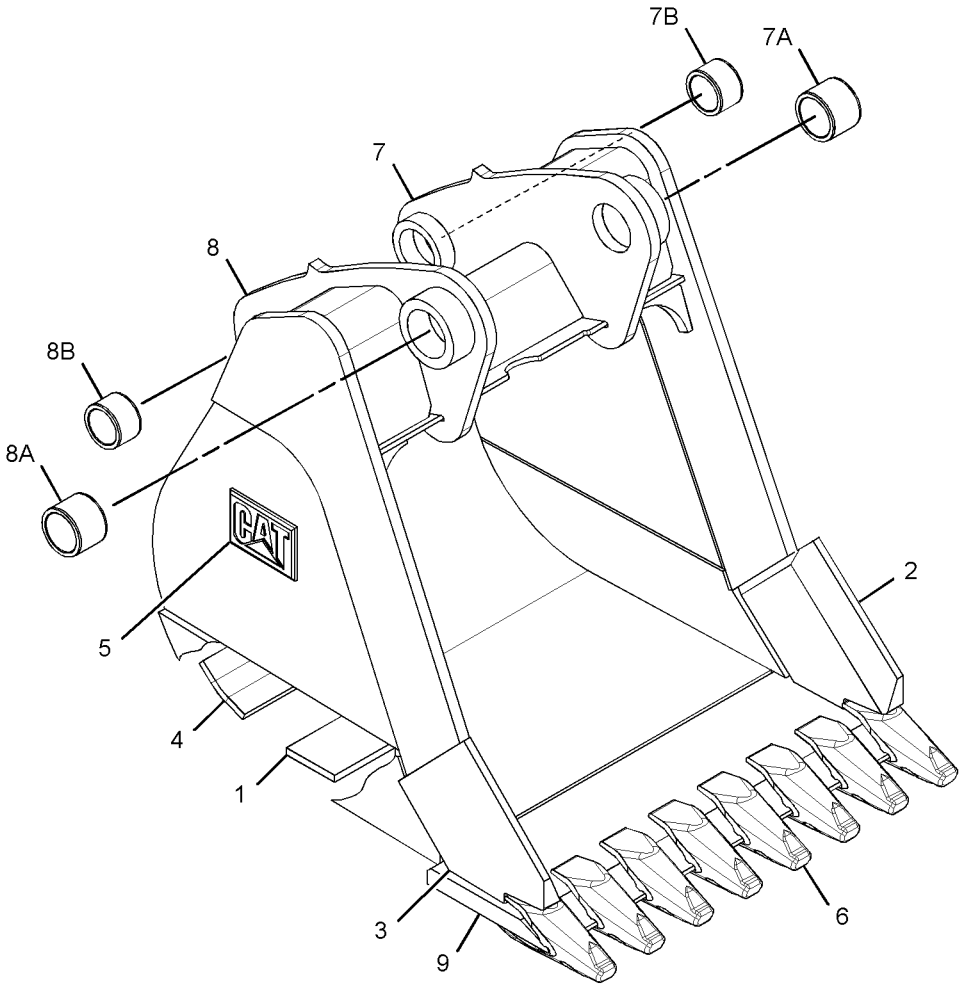

GRAPHIC #1 **<END>** g01342455

219-3378 BUCKET AS-HOE—CORAL

S/N: EAT1-UP
762-MM (30-IN)
PART OF 219-3402 BUCKET GP-HOE
AN ATTACHMENT

SMCS-6503 **i02661618**

NOTE	REF NO	GRAPHIC REF	PART NUMBER	QTY	PART NAME 1 2 3 4 5 6 (PRODUCT LEVEL)	SEE PAGE
	1	1	**136-7049**	1	BIT-ROUTER (LH)	
	2	1	**136-7051**	1	BIT-ROUTER (RH)	
	3	1	**161-4130**	2	PLATE-IDENTIFICATION (CAT)	
	4	1	**172-8278**	2	PLATE	
	5	1	**174-4765**	1	PLATE	
	6	1	**201-1234**	10	ADAPTER (2-STRAP)	
	7	1	*202-0596*	1	BRACKET AS (LH)	
	7A	1	**9R-0162**	1	BEARING-SLEEVE	
	7B	1	**168-0480**	1	BEARING-SLEEVE	
	8	1	*202-0597*	1	BRACKET AS (RH)	
	8A	1	**9R-0162**	1	BEARING-SLEEVE	
	8B	1	**168-0480**	1	BEARING-SLEEVE	
	9	1	**219-9495**	1	EDGE	

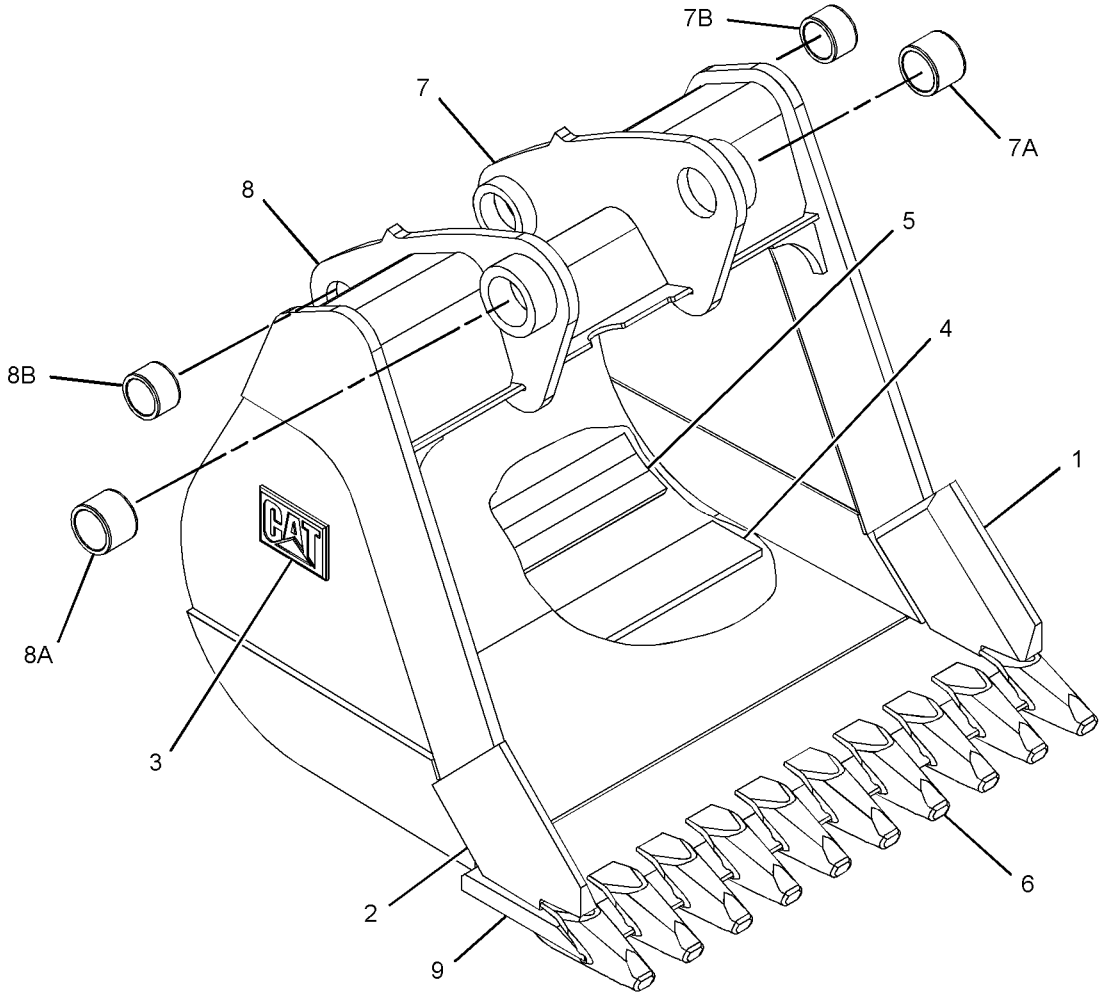

GRAPHIC #1 **<END>** g01342605

254-8939 BUCKET AS-HOE—HIGH CAPACITY, PIN-LOCK

S/N: EAT1-UP
458-MM (18-IN)
PART OF 254-8940 BUCKET GP-HOE
AN ATTACHMENT
TYPE 1

SMCS-6503 **i02284325**

NOTE	REF NO	GRAPHIC REF	PART NUMBER	QTY	PART NAME 1 2 3 4 5 6 (PRODUCT LEVEL)	SEE PAGE
	1	1	**134-5884**	1	EDGE (LH)	
	2	1	**134-5885**	1	EDGE (RH)	
	3	1	*151-7902*	1	BRACKET AS (LH)	
		1	**9R-0162**	1	BEARING-SLEEVE	
		1	**168-0480**	1	BEARING-SLEEVE	
	4	1	*151-7903*	1	BRACKET AS (RH)	
		1	**9R-0162**	1	BEARING-SLEEVE	
		1	**168-0480**	1	BEARING-SLEEVE	
	5	1	**161-4130**	2	PLATE-IDENTIFICATION (CAT)	
	6	1	**219-9483**	1	EDGE	
	7	1	**253-0234**	4	ADAPTER	

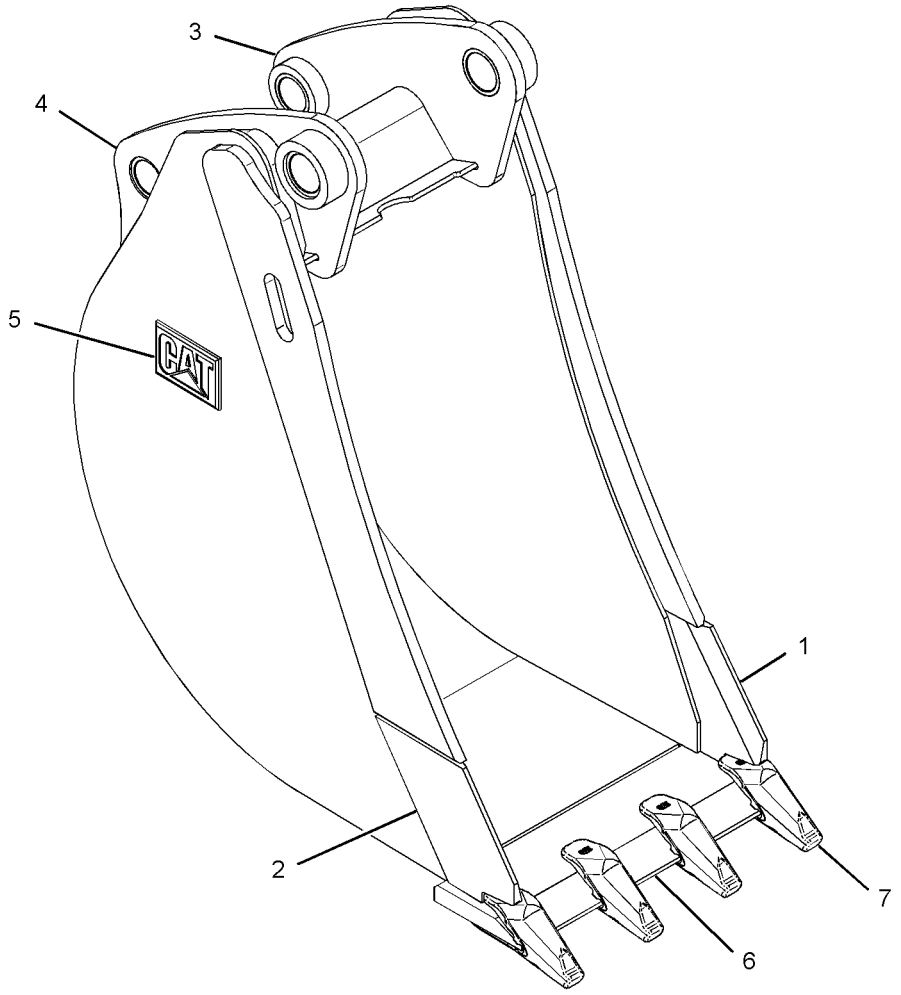

GRAPHIC #1 **<END>** g01150300

254-8939 BUCKET AS-HOE—HIGH CAPACITY, PIN-LOCK

S/N: EAT1-UP
458-MM (18-IN)
PART OF 254-8940 BUCKET GP-HOE
AN ATTACHMENT
TYPE 2

SMCS-6503 **i03505450**

NOTE	REF NO	GRAPHIC REF	PART NUMBER	QTY	PART NAME 1 2 3 4 5 6 (PRODUCT LEVEL)	SEE PAGE
	1	1	**172-8279**	5	PLATE	
C	2	1	*286-9336*	1	BRACKET AS (RH)	
	2A	1	**9R-0162**	1	BEARING-SLEEVE	
	2B	1	**168-0480**	1	BEARING-SLEEVE	
C	3	1	*286-9337*	1	BRACKET AS (LH)	
	3A	1	**9R-0162**	1	BEARING-SLEEVE	
	3B	1	**168-0480**	1	BEARING-SLEEVE	
	4	1	*299-3346*	1	EDGE AS	
		1	**219-9483**	1	EDGE	
		1	**253-0234**	4	ADAPTER	
	5	1	*300-7054*	1	PLATE AS	
		1	**134-5885**	1	EDGE (RH)	
	6	1	*300-7055*	1	PLATE AS	
		1	**134-5884**	1	EDGE (LH)	

C-CHANGE FROM PREVIOUS TYPE

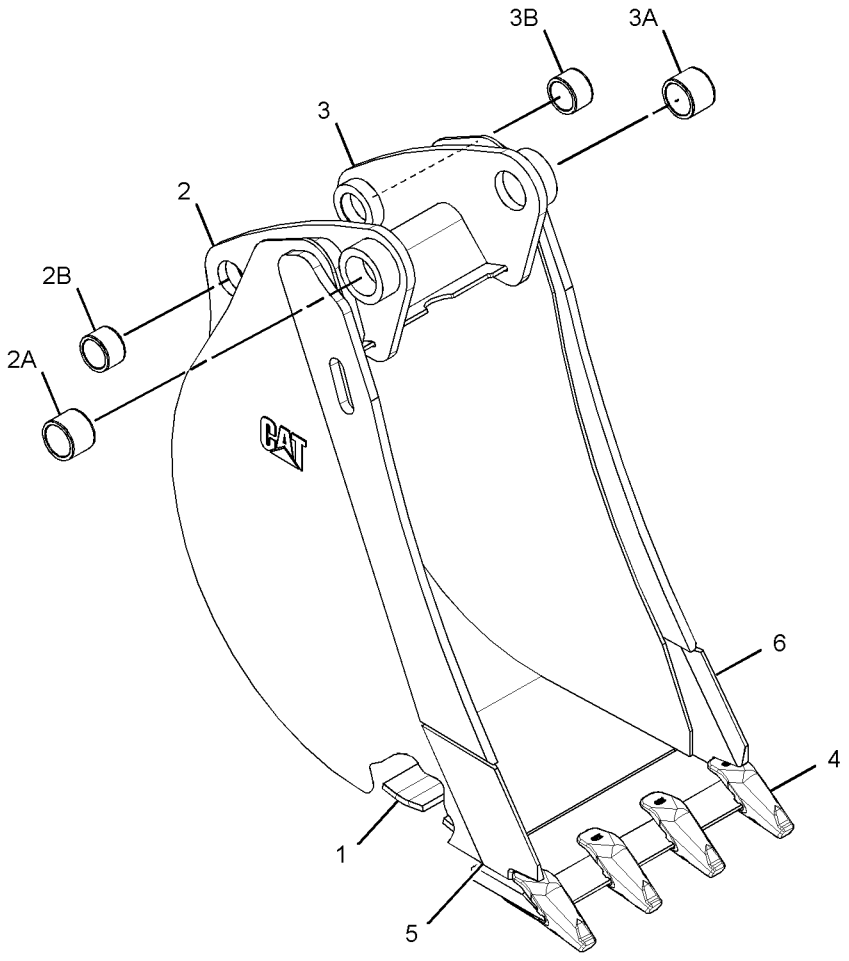

GRAPHIC #1 **<END>** g01382177

WORK TOOLS

254-8944 BUCKET AS-HOE—HIGH CAPACITY, PIN-LOCK

S/N: EAT1-UP
610-MM (24-IN)
PART OF 254-8941 BUCKET GP-HOE
AN ATTACHMENT
TYPE 1

SMCS-6503 **i02284375**

NOTE	REF NO	GRAPHIC REF	PART NUMBER	QTY	PART NAME 1 2 3 4 5 6 (PRODUCT LEVEL)	SEE PAGE
	1	1	**134-5884**	1	EDGE (LH)	
	2	1	**134-5885**	1	EDGE (RH)	
	3	1	*151-7902*	1	BRACKET AS (LH)	
		1	**9R-0162**	1	BEARING-SLEEVE	
		1	**168-0480**	1	BEARING-SLEEVE	
	4	1	*151-7903*	1	BRACKET AS (RH)	
		1	**9R-0162**	1	BEARING-SLEEVE	
		1	**168-0480**	1	BEARING-SLEEVE	
	5	1	**161-4130**	2	PLATE-IDENTIFICATION (CAT)	
	6	1	**219-9484**	1	EDGE	
	7	1	**253-0234**	5	ADAPTER	

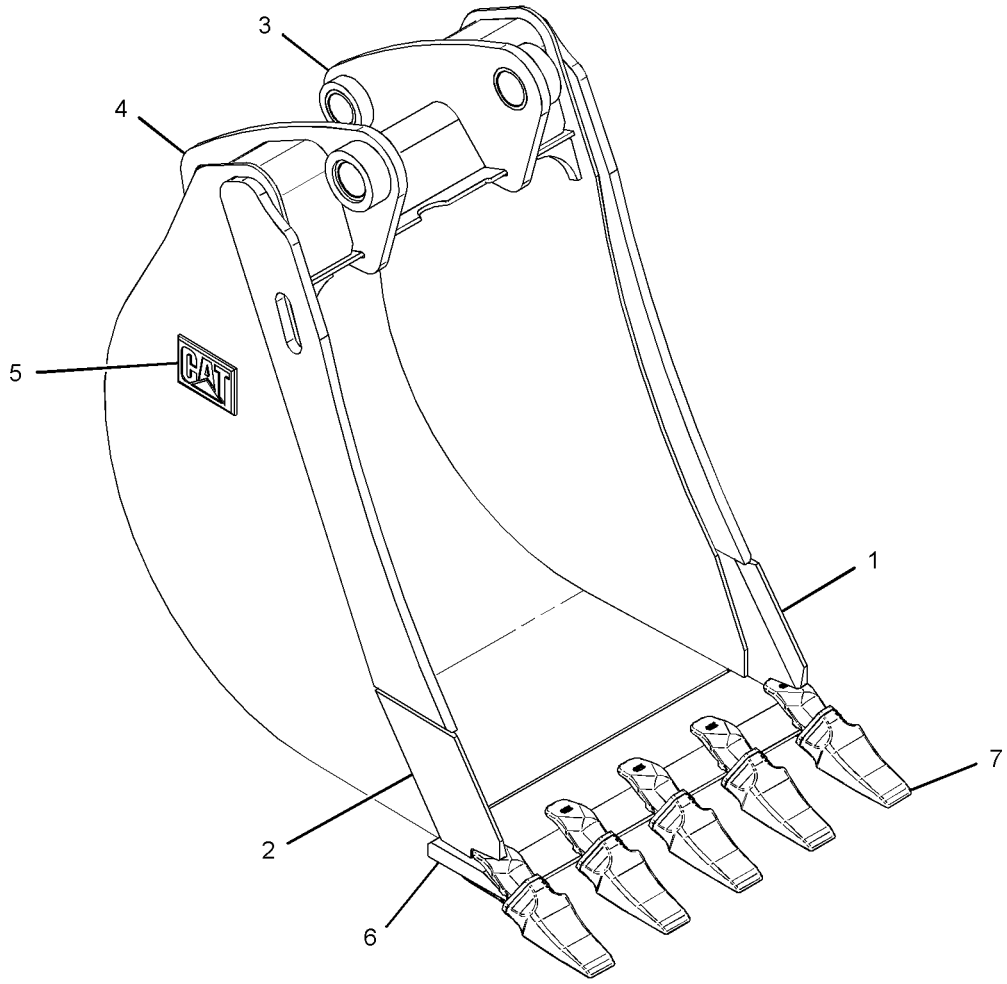

GRAPHIC #1 **<END>** g01150213

254-8944 BUCKET AS-HOE—HIGH CAPACITY, PIN-LOCK

S/N: EAT1-UP
610-MM (24-IN)
PART OF 254-8941 BUCKET GP-HOE
AN ATTACHMENT
TYPE 2

SMCS-6503 **i03505452**

NOTE	REF NO	GRAPHIC REF	PART NUMBER	QTY	PART NAME 1 2 3 4 5 6 (PRODUCT LEVEL)	SEE PAGE
	1	1	**172-8280**	5	PLATE	
C	2	1	*286-9336*	1	BRACKET AS (RH)	
	2A	1	**9R-0162**	1	BEARING-SLEEVE	
	2B	1	**168-0480**	1	BEARING-SLEEVE	
C	3	1	*286-9337*	1	BRACKET AS (LH)	
	3A	1	**9R-0162**	1	BEARING-SLEEVE	
	3B	1	**168-0480**	1	BEARING-SLEEVE	
	4	1	*300-4156*	1	EDGE AS	
			219-9486	1	EDGE	
			253-0234	6	ADAPTER	
	5	1	*300-7054*	1	PLATE AS	
			134-5885	1	EDGE (RH)	
	6	1	*300-7055*	1	PLATE AS	
			134-5884	1	EDGE (LH)	

C-CHANGE FROM PREVIOUS TYPE

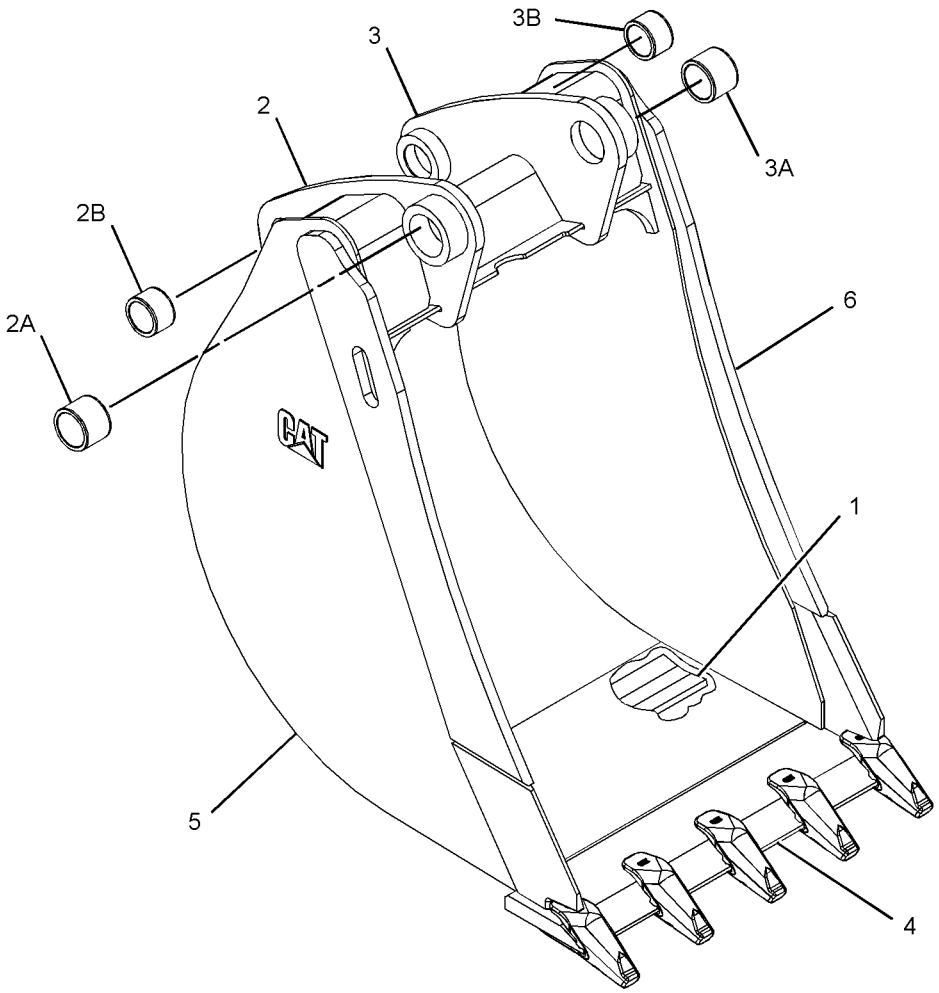

GRAPHIC #1 **<END>** g01382158

WORK TOOLS

254-8945 BUCKET AS-HOE—HIGH CAPACITY, PIN-LOCK

S/N: EAT1-UP
762-MM (30-IN)
PART OF 254-8942 BUCKET GP-HOE
AN ATTACHMENT
TYPE 1

SMCS-6503 **i02284391**

NOTE	REF NO	GRAPHIC REF	PART NUMBER	QTY	PART NAME 1 2 3 4 5 6 (PRODUCT LEVEL)	SEE PAGE
	1	1	**134-5884**	1	EDGE (LH)	
	2	1	**134-5885**	1	EDGE (RH)	
	3	1	*151-7902*	1	BRACKET AS (LH)	
		1	**9R-0162**	1	BEARING-SLEEVE	
		1	**168-0480**	1	BEARING-SLEEVE	
	4	1	*151-7903*	1	BRACKET AS (RH)	
		1	**9R-0162**	1	BEARING-SLEEVE	
		1	**168-0480**	1	BEARING-SLEEVE	
	5	1	**161-4130**	2	PLATE-IDENTIFICATION (CAT)	
	6	1	**219-9485**	1	EDGE	
	7	1	**253-0234**	5	ADAPTER	

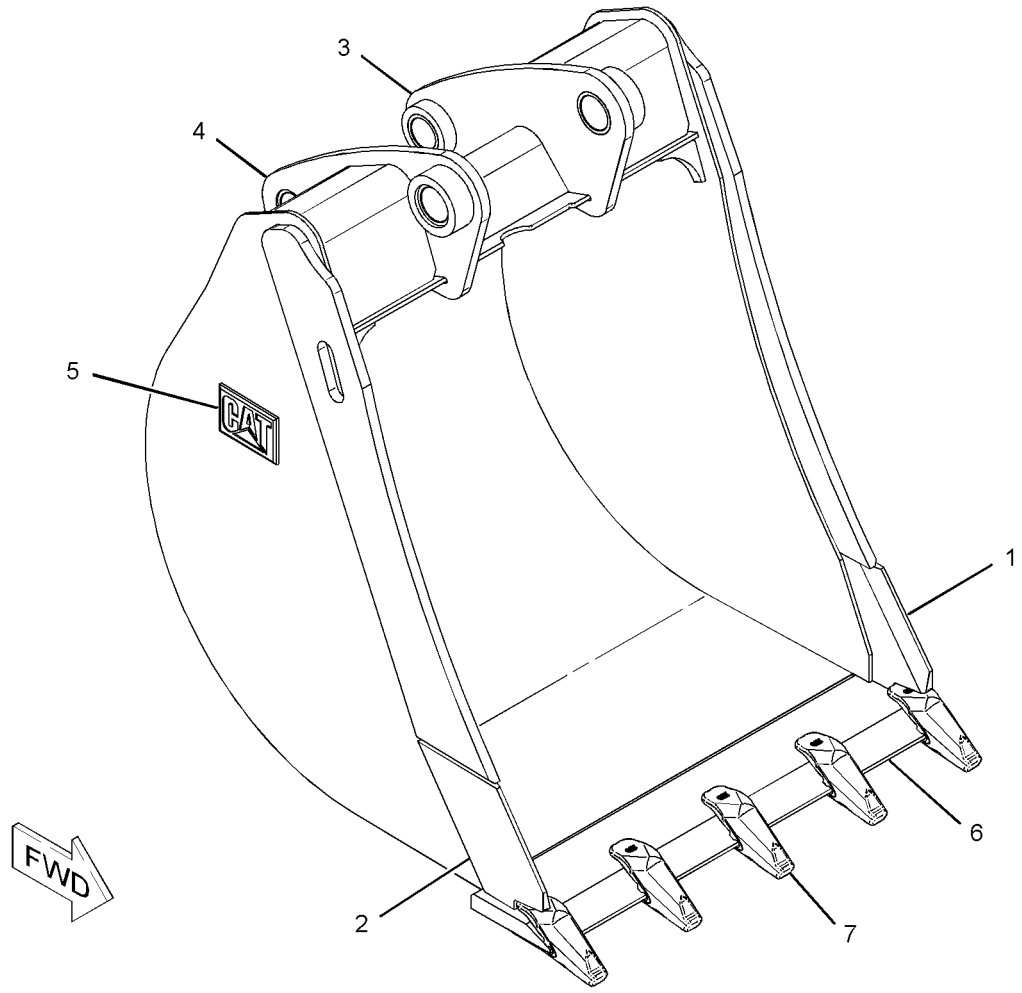

GRAPHIC #1 **<END>** g01144822

254-8945 BUCKET AS-HOE—HIGH CAPACITY, PIN-LOCK

S/N: EAT1-UP
762-MM (30-IN)
PART OF 254-8942 BUCKET GP-HOE
AN ATTACHMENT
TYPE 2

SMCS-6503 **i02503321**

NOTE	REF NO	GRAPHIC REF	PART NUMBER	QTY	PART NAME 1 2 3 4 5 6 (PRODUCT LEVEL)	SEE PAGE
	1	1	**134-5884**	1	EDGE (LH)	
	2	1	**134-5885**	1	EDGE (RH)	
C	3	1	*286-9337*	1	BRACKET AS (LH)	
		1	**9R-0162**	1	BEARING-SLEEVE	
		1	**168-0480**	1	BEARING-SLEEVE	
C	4	1	*286-9336*	1	BRACKET AS (RH)	
		1	**9R-0162**	1	BEARING-SLEEVE	
		1	**168-0480**	1	BEARING-SLEEVE	
	5	1	**161-4130**	2	PLATE-IDENTIFICATION (CAT)	
	6	1	**219-9485**	1	EDGE	
	7	1	**253-0234**	5	ADAPTER	

C-CHANGE FROM PREVIOUS TYPE

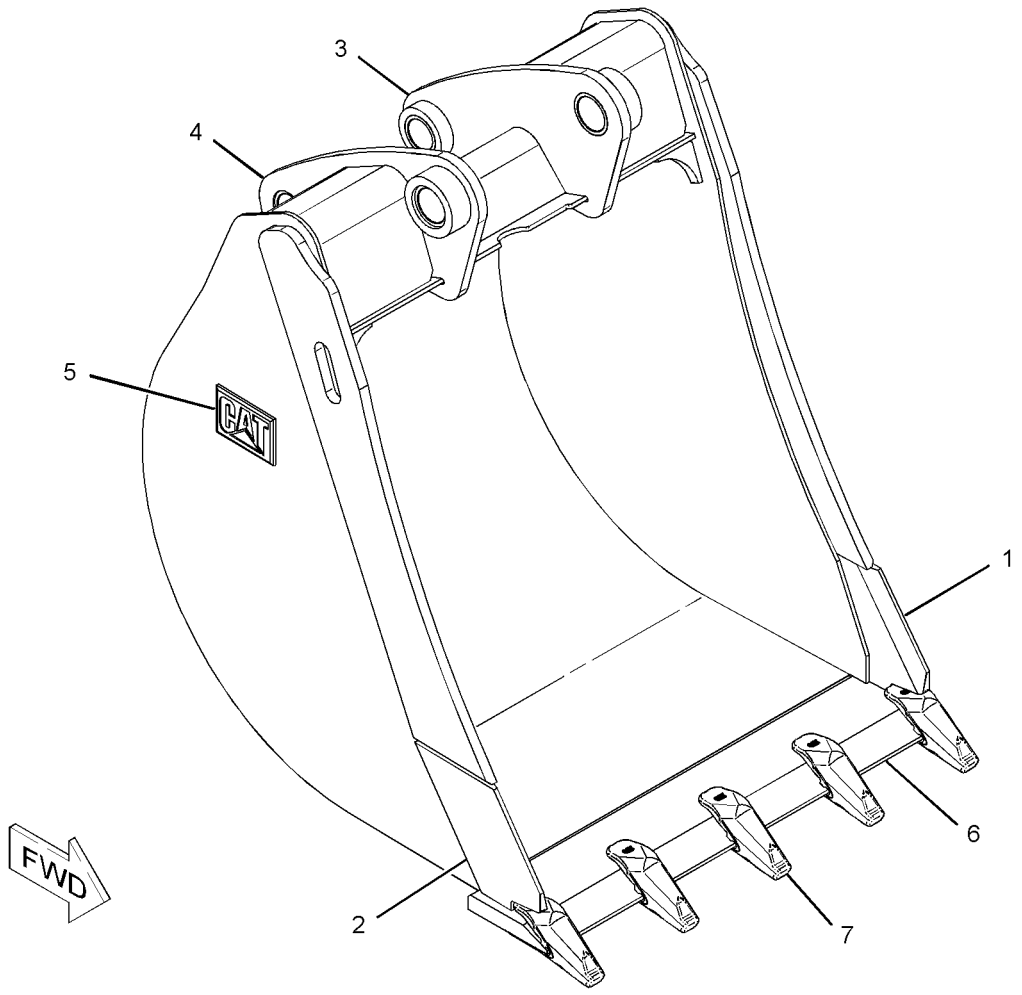

GRAPHIC #1 **<END>** g01144822

254-8946 BUCKET AS-HOE—HIGH CAPACITY, PIN-LOCK

S/N: EAT1-UP
914-MM (36-IN)
PART OF 254-8943 BUCKET GP-HOE
AN ATTACHMENT
TYPE 1

SMCS-6503 **i02284403**

NOTE	REF NO	GRAPHIC REF	PART NUMBER	QTY	PART NAME 1 2 3 4 5 6 (PRODUCT LEVEL)	SEE PAGE
	1	1	**134-5884**	1	EDGE (LH)	
	2	1	**134-5885**	1	EDGE (RH)	
	3	1	*151-7902*	1	BRACKET AS (LH)	
		1	**9R-0162**	1	BEARING-SLEEVE	
		1	**168-0480**	1	BEARING-SLEEVE	
	4	1	*151-7903*	1	BRACKET AS (RH)	
		1	**9R-0162**	1	BEARING-SLEEVE	
		1	**168-0480**	1	BEARING-SLEEVE	
	5	1	**161-4130**	2	PLATE-IDENTIFICATION (CAT)	
	6	1	**219-9486**	1	EDGE	
	7	1	**253-0234**	6	ADAPTER	

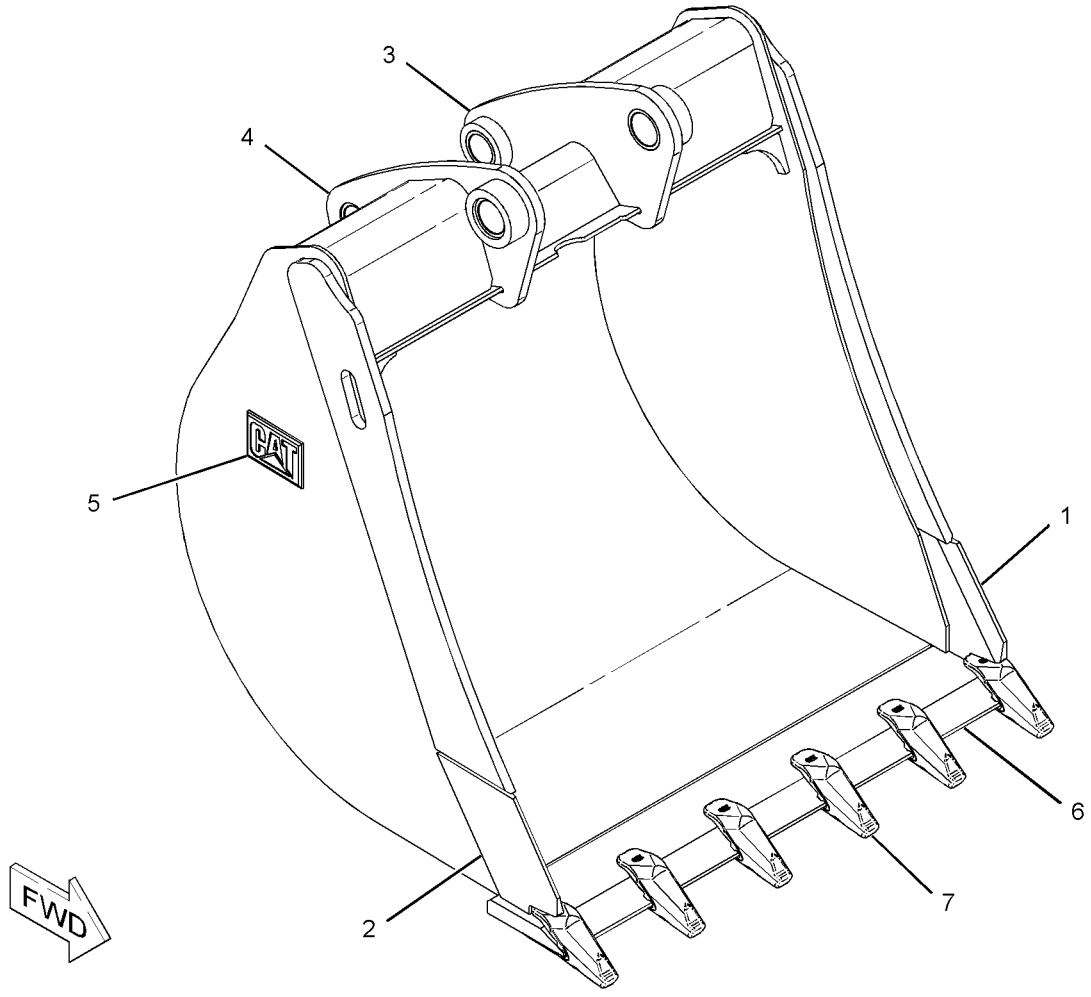

GRAPHIC #1 **<END>** g01144814

254-8946 BUCKET AS-HOE—HIGH CAPACITY, PIN-LOCK

S/N: EAT1-UP
914-MM (36-IN)
PART OF 254-8943 BUCKET GP-HOE
AN ATTACHMENT
TYPE 2

SMCS-6503 **i03505460**

NOTE	REF NO	GRAPHIC REF	PART NUMBER	QTY	PART NAME 1 2 3 4 5 6 (PRODUCT LEVEL)	SEE PAGE
	1	1	**193-5416**	5	PLATE	
C	2	1	*286-9336*	1	BRACKET AS (RH)	
	2A	1	**9R-0162**	1	BEARING-SLEEVE	
	2B	1	**168-0480**	1	BEARING-SLEEVE	
C	3	1	*286-9337*	1	BRACKET AS (LH)	
	3A	1	**9R-0162**	1	BEARING-SLEEVE	
	3B	1	**168-0480**	1	BEARING-SLEEVE	
	4	1	*300-4156*	1	EDGE AS	
		1	**219-9486**	1	EDGE	
		1	**253-0234**	6	ADAPTER	
	5	1	*300-7054*	1	PLATE AS	
		1	**134-5885**	1	EDGE (RH)	
	6	1	*300-7055*	1	PLATE AS	
		1	**134-5884**	1	EDGE (LH)	

C-CHANGE FROM PREVIOUS TYPE

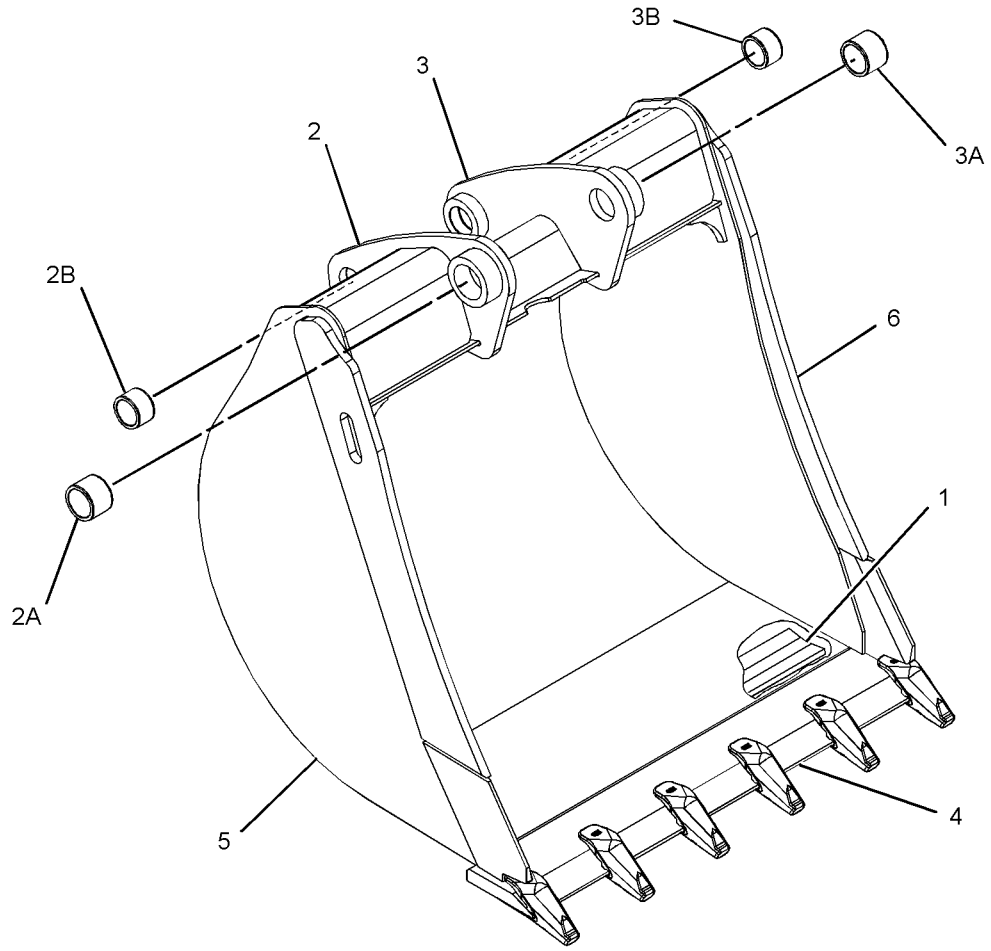

GRAPHIC #1 **<END>** g01382156

WORK TOOLS

251-1775 BUCKET GP-GENERAL PURPOSE

S/N: EAT1-UP

AN ATTACHMENT

SMCS-6101 **i02104816**

NOTE	PART NUMBER	QTY	PART NAME 1 2 3 4 5 6 (PRODUCT LEVEL)	SEE PAGE
Y	**251-1777**	1	BUCKET GP-GENERAL PURPOSE	671
Y	*9R-5320*	1	EDGE GP-CUTTING	739

Y-SEPARATE ILLUSTRATION

<END>

251-1777 BUCKET GP-GENERAL PURPOSE

S/N: EAT1-UP
1.25 CU M (1.5 CU YD)
PART OF 251-1776 BUCKET AR-GENERAL PURPOSE, 251-1775 BUCKET GP-GENERAL PURPOSE
AN ATTACHMENT

SMCS-6101 **i02206249**

NOTE	REF NO	GRAPHIC REF	PART NUMBER	QTY	PART NAME 1 2 3 4 5 6 (PRODUCT LEVEL)	SEE PAGE
	1	1	**137-4234**	1	PLATE-IDENTIFICATION (WORK TOOL)	
	2	1	**168-8389**	4	TACK-FASTENER	
Y	3	1	*251-1156*	1	BUCKET AS-GENERAL PURPOSE	610

Y-SEPARATE ILLUSTRATION

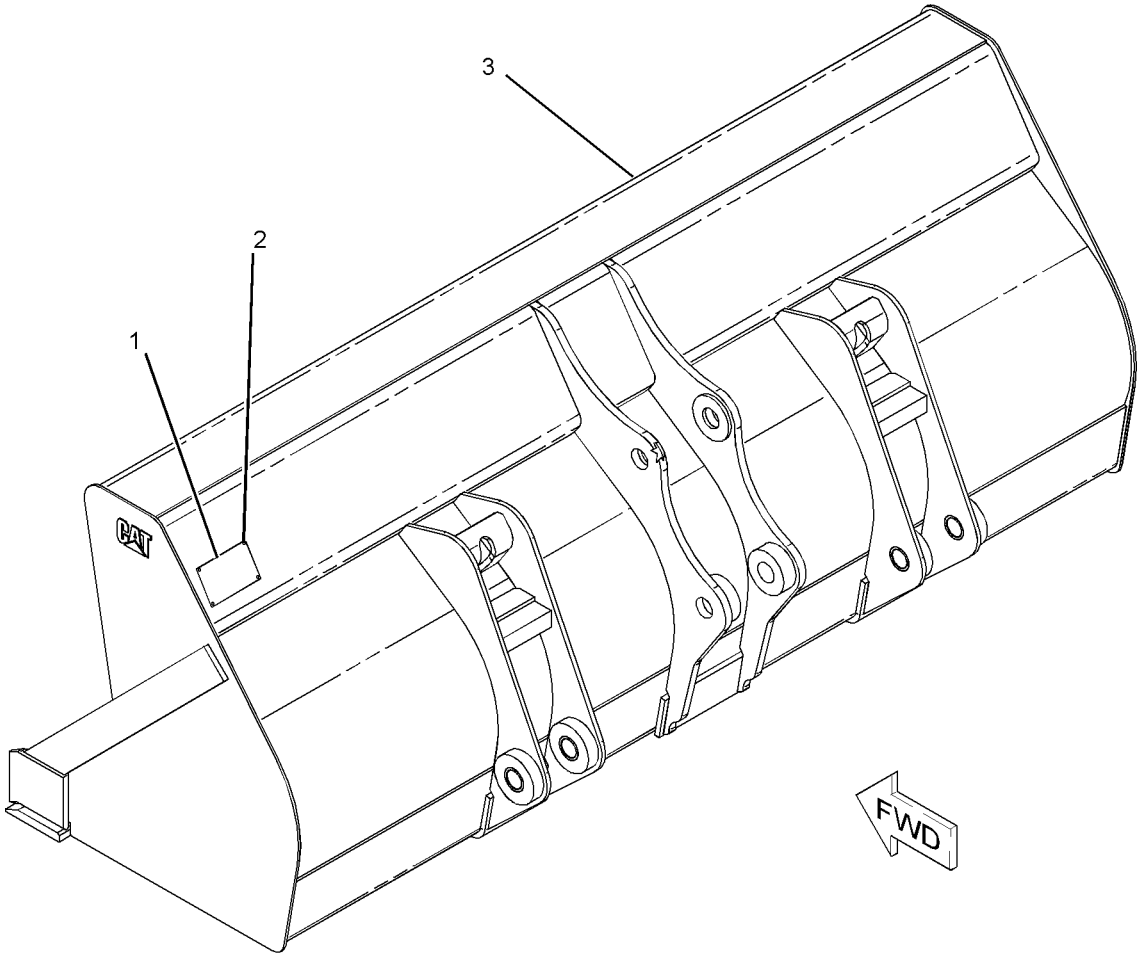

GRAPHIC #1 **<END>** g01114161

251-1778 BUCKET GP-GENERAL PURPOSE

S/N: EAT1-UP

AN ATTACHMENT

SMCS-6101 **i02105045**

NOTE	PART NUMBER	QTY	PART NAME 1 2 3 4 5 6 (PRODUCT LEVEL)	SEE PAGE
Y	**251-1780**	1	BUCKET GP-GENERAL PURPOSE	673
Y	*9R-5321*	1	EDGE GP-CUTTING	740

Y-SEPARATE ILLUSTRATION

<END>

251-1779 BUCKET GP-GENERAL PURPOSE

S/N: EAT1-UP

AN ATTACHMENT

SMCS-6101 **i02105046**

NOTE	PART NUMBER	QTY	PART NAME 1 2 3 4 5 6 (PRODUCT LEVEL)	SEE PAGE
Y	**251-1780**	1	BUCKET GP-GENERAL PURPOSE	673
Y	*9R-5866*	1	TOOTH GP-UNI	786

Y-SEPARATE ILLUSTRATION

<END>

251-1780 BUCKET GP-GENERAL PURPOSE

S/N: EAT1-UP
0.76 CU M (1.0 CU YD)
PART OF 251-1778, 251-1779 BUCKET GP-GENERAL PURPOSE
AN ATTACHMENT

SMCS-6101 **i02206792**

NOTE	REF NO	GRAPHIC REF	PART NUMBER	QTY	PART NAME 1 2 3 4 5 6 (PRODUCT LEVEL)	SEE PAGE
	1	1	**137-4234**	1	PLATE-IDENTIFICATION (WORK TOOL)	
	2	1	**168-8389**	4	TACK-FASTENER	
Y	3	1	*251-1157*	1	BUCKET AS-GENERAL PURPOSE	612

Y-SEPARATE ILLUSTRATION

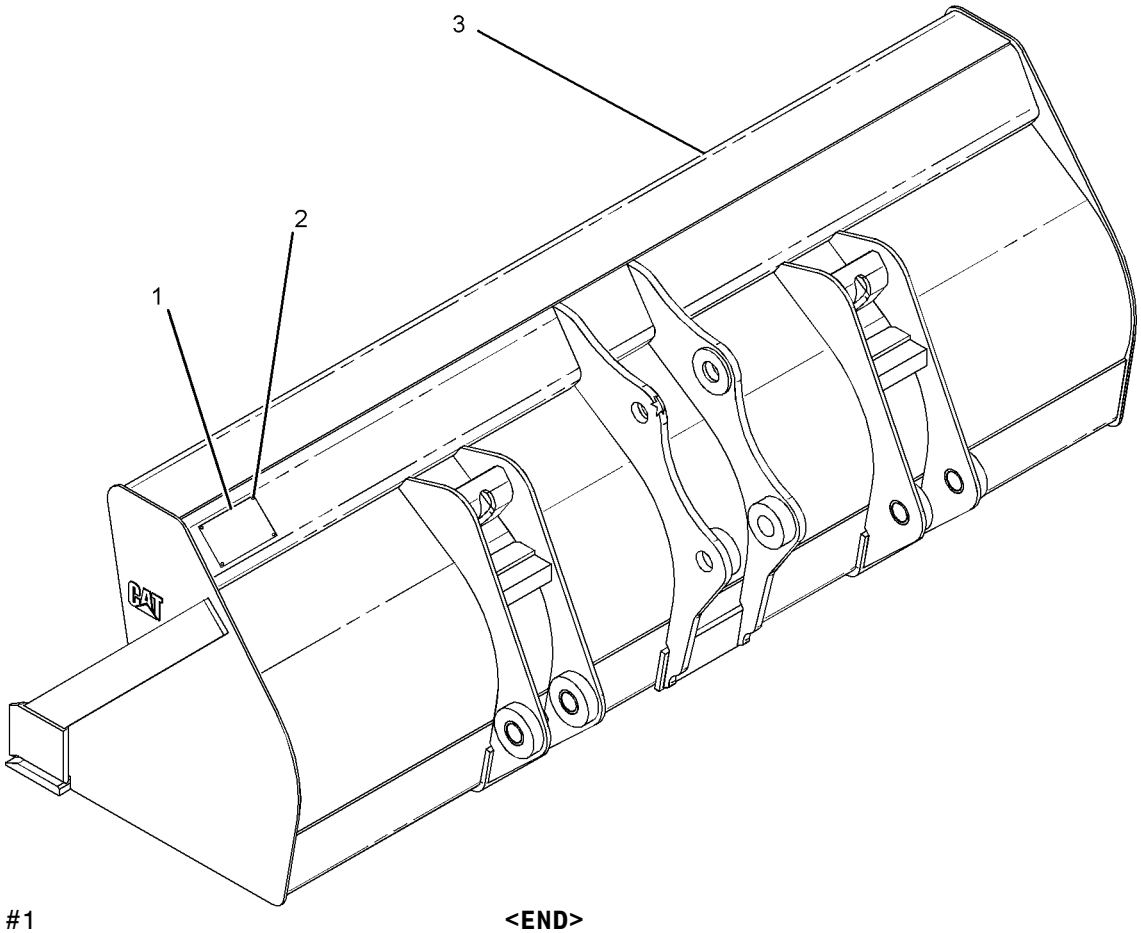

GRAPHIC #1 **<END>** g01114180

251-1781 BUCKET GP-GENERAL PURPOSE

S/N: EAT1-UP

AN ATTACHMENT

SMCS-6101 **i02105047**

NOTE	PART NUMBER	QTY	PART NAME 1 2 3 4 5 6 (PRODUCT LEVEL)	SEE PAGE
Y	**251-1783**	1	BUCKET GP-GENERAL PURPOSE	674
Y	*9R-5320*	1	EDGE GP-CUTTING	739

Y-SEPARATE ILLUSTRATION

<END>

251-1782 BUCKET GP-GENERAL PURPOSE

S/N: EAT1-UP

AN ATTACHMENT

SMCS-6101 **i02105048**

NOTE	PART NUMBER	QTY	PART NAME 1 2 3 4 5 6 (PRODUCT LEVEL)	SEE PAGE
Y	**251-1783**	1	BUCKET GP-GENERAL PURPOSE	674
Y	*9R-5866*	1	TOOTH GP-UNI	786

Y-SEPARATE ILLUSTRATION

<END>

251-1783 BUCKET GP-GENERAL PURPOSE

S/N: EAT1-UP

PART OF 251-1781, 251-1782 BUCKET GP-GENERAL PURPOSE

AN ATTACHMENT

SMCS-6101 **i02106209**

NOTE	PART NUMBER	QTY	PART NAME 1 2 3 4 5 6 (PRODUCT LEVEL)	SEE PAGE
Y	*251-1158*	1	BUCKET AS-GENERAL PURPOSE	613

Y-SEPARATE ILLUSTRATION

<END>

251-1784 BUCKET GP-GENERAL PURPOSE

S/N: EAT1-UP

AN ATTACHMENT

SMCS-6101 **i02105049**

NOTE	PART NUMBER	QTY	PART NAME 1 2 3 4 5 6 (PRODUCT LEVEL)	SEE PAGE
Y	**251-1786**	1	BUCKET GP-GENERAL PURPOSE	675
Y	*9R-5321*	1	EDGE GP-CUTTING	740

Y-SEPARATE ILLUSTRATION

<END>

251-1786 BUCKET GP-GENERAL PURPOSE

S/N: EAT1-UP
PART OF 251-1784, 251-1790 BUCKET GP-GENERAL PURPOSE
AN ATTACHMENT

SMCS-6101 **i02108903**

NOTE	PART NUMBER	QTY	PART NAME 1 2 3 4 5 6 (PRODUCT LEVEL)	SEE PAGE
Y	*251-1159*	1	BUCKET AS-GENERAL PURPOSE	615
Y-SEPARATE ILLUSTRATION				

<END>

251-1787 BUCKET GP-GENERAL PURPOSE

S/N: EAT1-UP
AN ATTACHMENT

SMCS-6101 **i02105050**

NOTE	PART NUMBER	QTY	PART NAME 1 2 3 4 5 6 (PRODUCT LEVEL)	SEE PAGE
Y	**251-1789**	1	BUCKET GP-GENERAL PURPOSE	675
Y	*9R-5321*	1	EDGE GP-CUTTING	740
Y-SEPARATE ILLUSTRATION				

<END>

251-1788 BUCKET GP-GENERAL PURPOSE

S/N: EAT1-UP
AN ATTACHMENT

SMCS-6101 **i02105051**

NOTE	PART NUMBER	QTY	PART NAME 1 2 3 4 5 6 (PRODUCT LEVEL)	SEE PAGE
Y	**251-1789**	1	BUCKET GP-GENERAL PURPOSE	675
Y	*9R-5866*	1	TOOTH GP-UNI	786
Y-SEPARATE ILLUSTRATION				

<END>

251-1789 BUCKET GP-GENERAL PURPOSE

S/N: EAT1-UP
PART OF 251-1787, 251-1788 BUCKET GP-GENERAL PURPOSE
AN ATTACHMENT

SMCS-6101 **i02106210**

NOTE	PART NUMBER	QTY	PART NAME 1 2 3 4 5 6 (PRODUCT LEVEL)	SEE PAGE
Y	*251-1160*	1	BUCKET AS-GENERAL PURPOSE	617
Y-SEPARATE ILLUSTRATION				

<END>

WORK TOOLS

251-1790 BUCKET GP-GENERAL PURPOSE

S/N: EAT1-UP

AN ATTACHMENT

SMCS-6101 **i02105052**

NOTE	PART NUMBER	QTY	PART NAME 1 2 3 4 5 6 (PRODUCT LEVEL)	SEE PAGE
Y	**251-1786**	1	BUCKET GP-GENERAL PURPOSE	675
Y	*9R-5866*	1	TOOTH GP-UNI	786

Y-SEPARATE ILLUSTRATION

<END>

WORK TOOLS

219-3379 BUCKET GP-HOE

S/N: EAT1-UP
PART OF 219-3410 BUCKET GP-HOE
AN ATTACHMENT

SMCS-6503 **i02655046**

NOTE	REF NO	GRAPHIC REF	PART NUMBER	QTY	PART NAME 1 2 3 4 5 6 (PRODUCT LEVEL)	SEE PAGE
	1	1	**137-4234**	1	PLATE-IDENTIFICATION (WORK TOOL)	
	2	1	**168-8389**	1	TACK-FASTENER	
	3	1	*208-5245*	3	TIP GP-PENETRATION	
					(EACH INCLUDES)	
		1	**201-1238**	1	PIN	
		1	**201-1239**	1	RETAINER AS	
		1	**208-5235**	1	TIP-PENETRATION	
Y	4	1	*219-3355*	1	BUCKET AS-HOE	618

Y-SEPARATE ILLUSTRATION

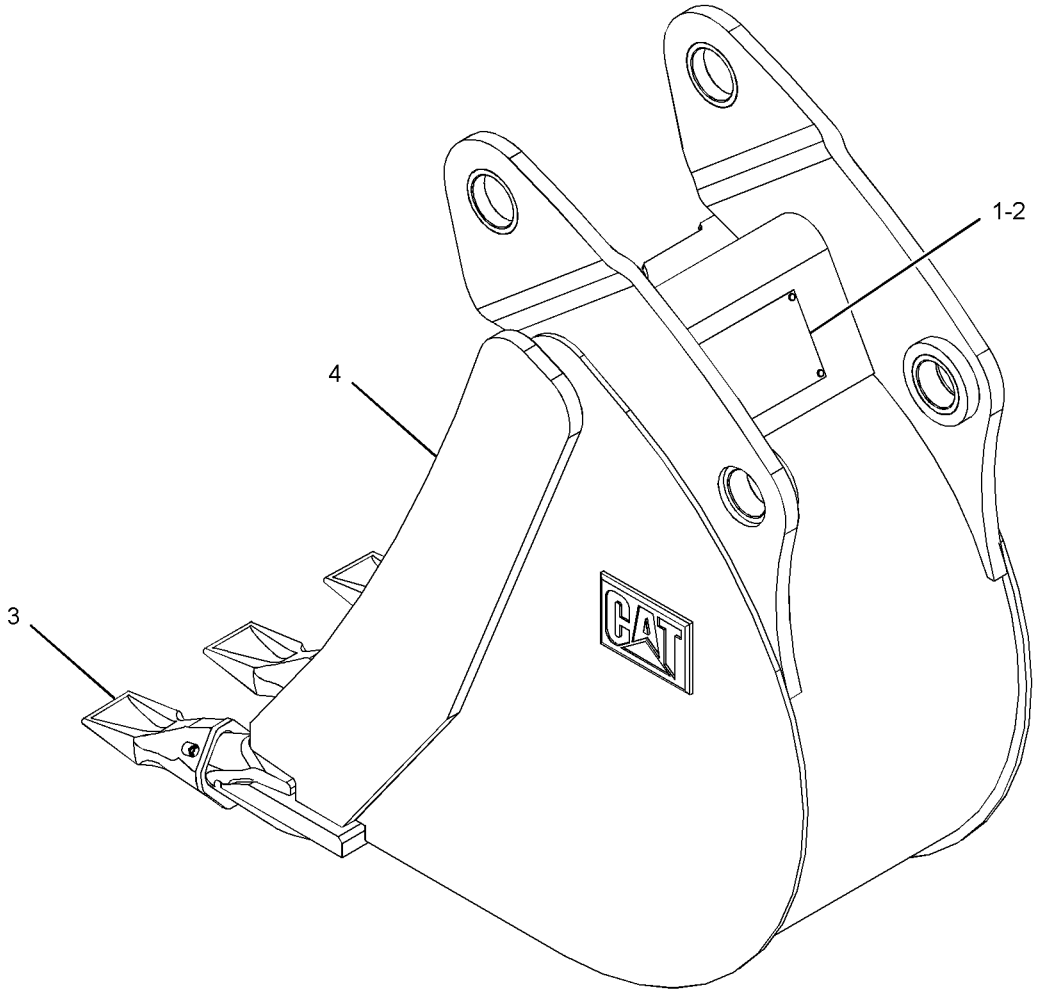

GRAPHIC #1 **<END>** g01341882

WORK TOOLS

219-3380 BUCKET GP-HOE

S/N: EAT1-UP

AN ATTACHMENT

SMCS-6503 **i02655101**

NOTE	REF NO	GRAPHIC REF	PART NUMBER	QTY	PART NAME 1 2 3 4 5 6 (PRODUCT LEVEL)	SEE PAGE
	1	1	**137-4234**	1	PLATE-IDENTIFICATION (WORK TOOL)	
	2	1	**168-8389**	4	TACK-FASTENER	
	3	1	*208-5245*	4	TIP GP-PENETRATION	
					(EACH INCLUDES)	
		1	**201-1238**	1	PIN	
		1	**201-1239**	1	RETAINER AS	
		1	**208-5235**	1	TIP-PENETRATION	
Y	4	1	*219-3356*	1	BUCKET AS-HOE	620

Y-SEPARATE ILLUSTRATION

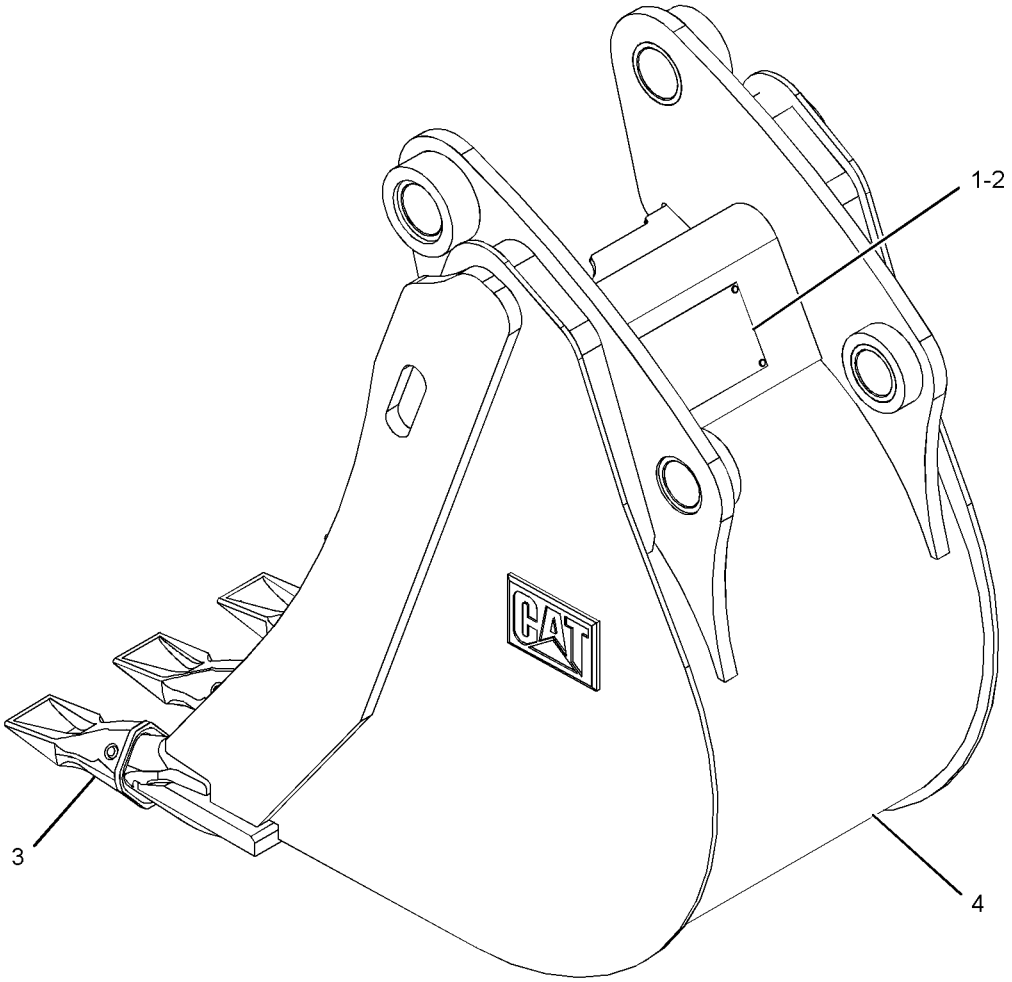

GRAPHIC #1 **<END>** g01339842

WORK TOOLS

219-3381 BUCKET GP-HOE

S/N: EAT1-UP

AN ATTACHMENT

SMCS-6503 **i02651121**

NOTE	REF NO	GRAPHIC REF	PART NUMBER	QTY	PART NAME 1 2 3 4 5 6 (PRODUCT LEVEL)	SEE PAGE
	1	1	**137-4234**	1	PLATE-IDENTIFICATION (WORK TOOL)	
	2	1	**168-8389**	4	TACK-FASTENER	
	3		*208-5245*	5	TIP GP-PENETRATION	
					(EACH INCLUDES)	
		1	**201-1238**	1	PIN	
		1	**201-1239**	1	RETAINER AS	
		1	**208-5235**	1	TIP-PENETRATION	
Y	4	1	*219-3357*	1	BUCKET AS-HOE	622

Y-SEPARATE ILLUSTRATION

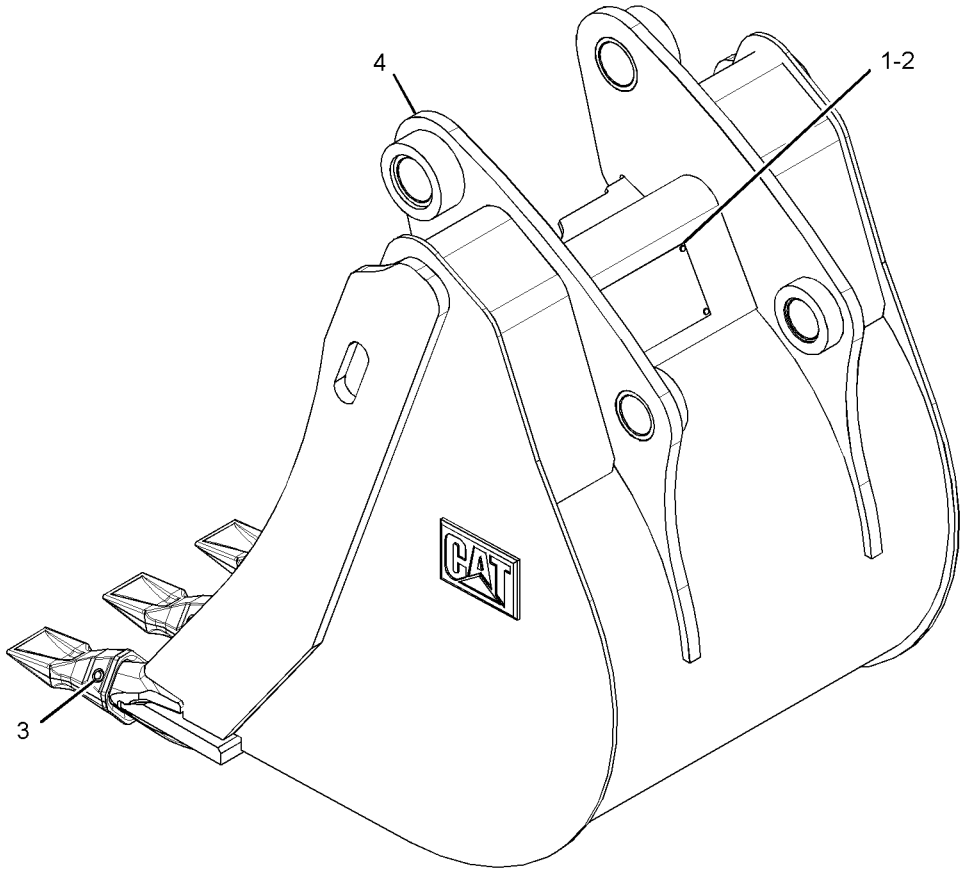

GRAPHIC #1 **<END>** g01340268

WORK TOOLS

219-3382 BUCKET GP-HOE

S/N: EAT1-UP

AN ATTACHMENT

SMCS-6503 **i02651191**

NOTE	REF NO	GRAPHIC REF	PART NUMBER	QTY	PART NAME 1 2 3 4 5 6 (PRODUCT LEVEL)	SEE PAGE
	1	1	**137-4234**	1	PLATE-IDENTIFICATION (WORK TOOL)	
	2	1	**168-8389**	4	TACK-FASTENER	
	3	1	*208-5245*	5	TIP GP-PENETRATION	
					(EACH INCLUDES)	
		1	**201-1238**	1	PIN	
		1	**201-1239**	1	RETAINER AS	
		1	**208-5235**	1	TIP-PENETRATION	
Y	4	1	*219-3358*	1	BUCKET AS-HOE	624

Y-SEPARATE ILLUSTRATION

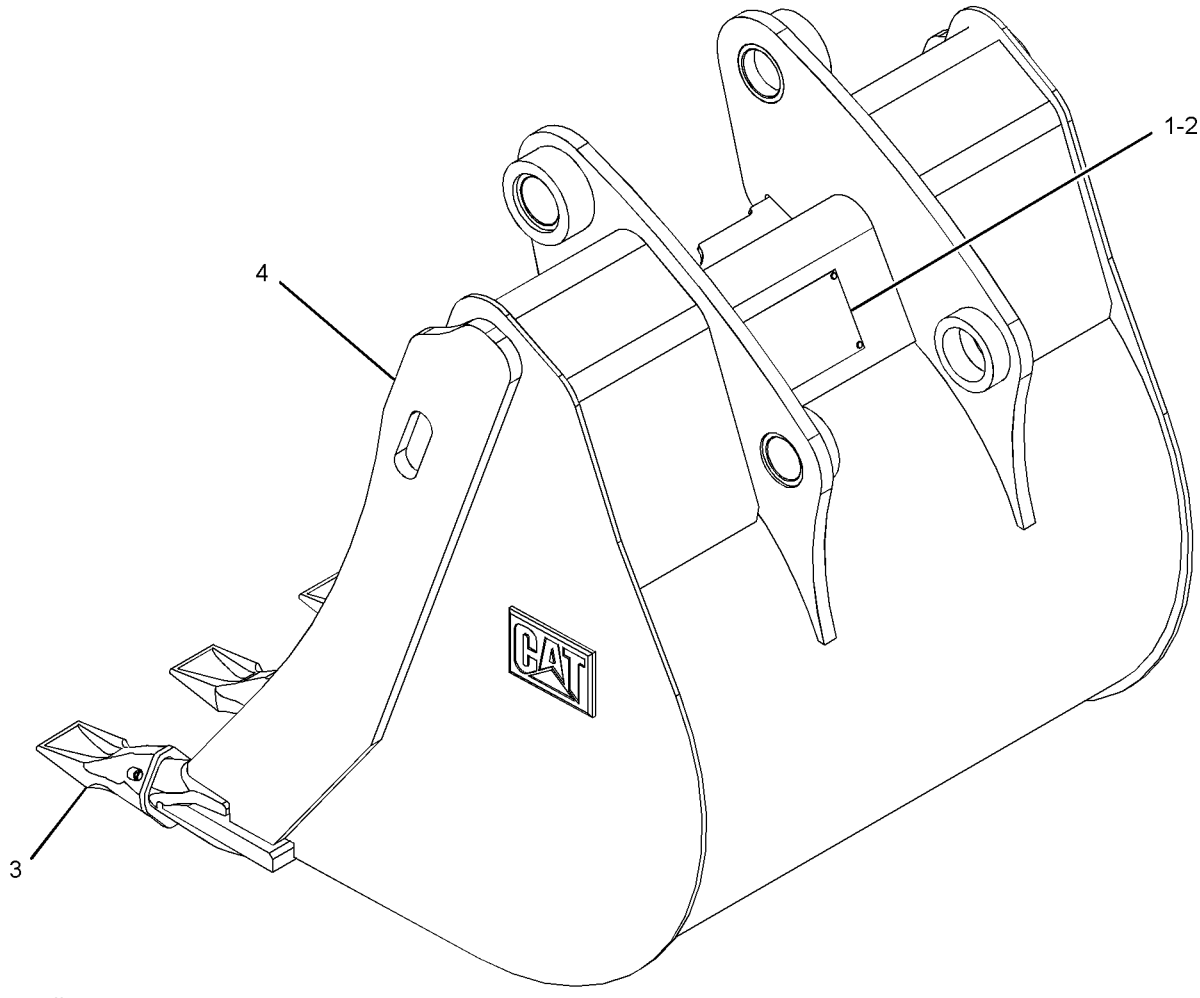

GRAPHIC #1 **<END>** g01341854

WORK TOOLS

219-3383 BUCKET GP-HOE

S/N: EAT1-UP
FOR USE WITH 222-7379—PAGE 732
AN ATTACHMENT

SMCS-6503 **i02651284**

NOTE	REF NO	GRAPHIC REF	PART NUMBER	QTY	PART NAME 1 2 3 4 5 6 (PRODUCT LEVEL)	SEE PAGE
	1	1	**137-4234**	1	PLATE-IDENTIFICATION (WORK TOOL)	
	2	1	**168-8389**	4	TACK-FASTENER	
	3	1	*208-5245*	6	TIP GP-PENETRATION	
					(EACH INCLUDES)	
		1	**201-1238**	1	PIN	
		1	**201-1239**	1	RETAINER AS	
		1	**208-5235**	1	TIP-PENETRATION	
Y	4	1	*219-3359*	1	BUCKET AS-HOE	626

Y-SEPARATE ILLUSTRATION

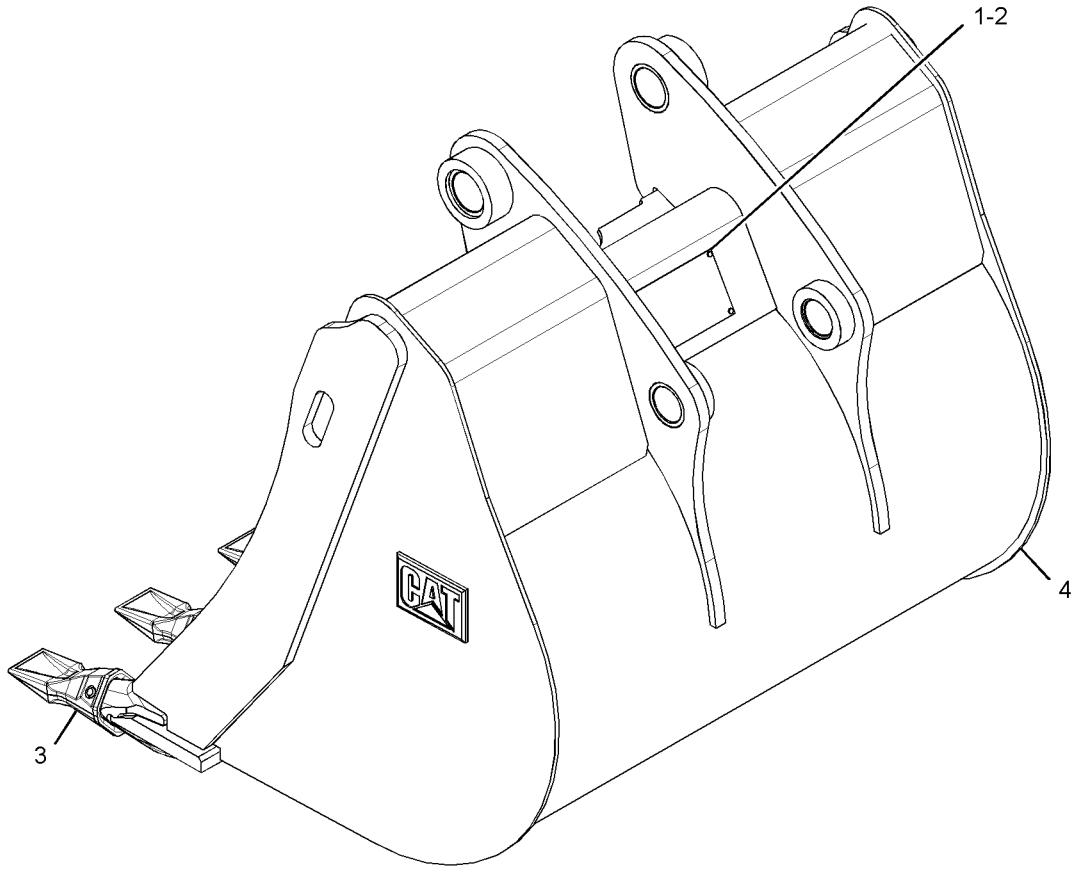

GRAPHIC #1 **<END>** g01341780

WORK TOOLS

219-3384 BUCKET GP-HOE—HEAVY-DUTY

S/N: EAT1-UP
PART OF 219-3411 BUCKET GP-HOE
AN ATTACHMENT

SMCS-6503 **i02837609**

NOTE	REF NO	GRAPHIC REF	PART NUMBER	QTY	PART NAME 1 2 3 4 5 6 (PRODUCT LEVEL)	SEE PAGE
	1	1	**137-4234**	1	PLATE-IDENTIFICATION (WORK TOOL)	
	2	1	**168-8389**	4	TACK-FASTENER	
	3	1	*208-5245*	3	TIP GP-PENETRATION	
					(EACH INCLUDES)	
		1	**201-1238**	1	PIN	
		1	**201-1239**	1	RETAINER AS	
		1	**208-5235**	1	TIP-PENETRATION	
Y	4	1	*219-3360*	1	BUCKET AS-HOE (HEAVY-DUTY)	628

Y-SEPARATE ILLUSTRATION

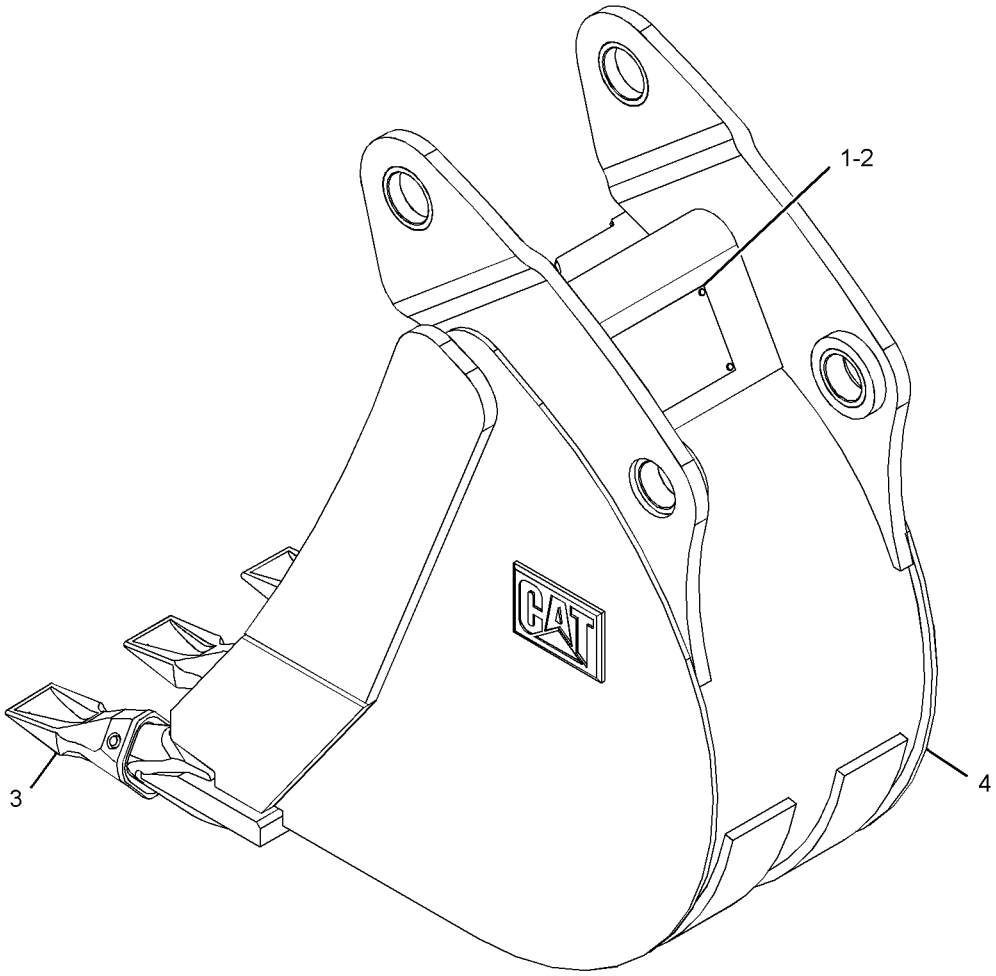

GRAPHIC #1 **<END>** g01335483

WORK TOOLS

219-3385 BUCKET GP-HOE—HEAVY-DUTY

S/N: EAT1-UP

AN ATTACHMENT

SMCS-6503 **i02837617**

NOTE	REF NO	GRAPHIC REF	PART NUMBER	QTY	PART NAME 1 2 3 4 5 6 (PRODUCT LEVEL)	SEE PAGE
	1	1	**137-4234**	1	PLATE-IDENTIFICATION (WORK TOOL)	
	2	1	**168-8389**	4	TACK-FASTENER	
	3	1	*208-5245*	3	TIP GP-PENETRATION	
					(EACH INCLUDES)	
		1	**201-1238**	1	PIN	
		1	**201-1239**	1	RETAINER AS	
		1	**208-5235**	1	TIP-PENETRATION	
Y	4	1	*219-3361*	1	BUCKET AS-HOE (HEAVY-DUTY)	630

Y-SEPARATE ILLUSTRATION

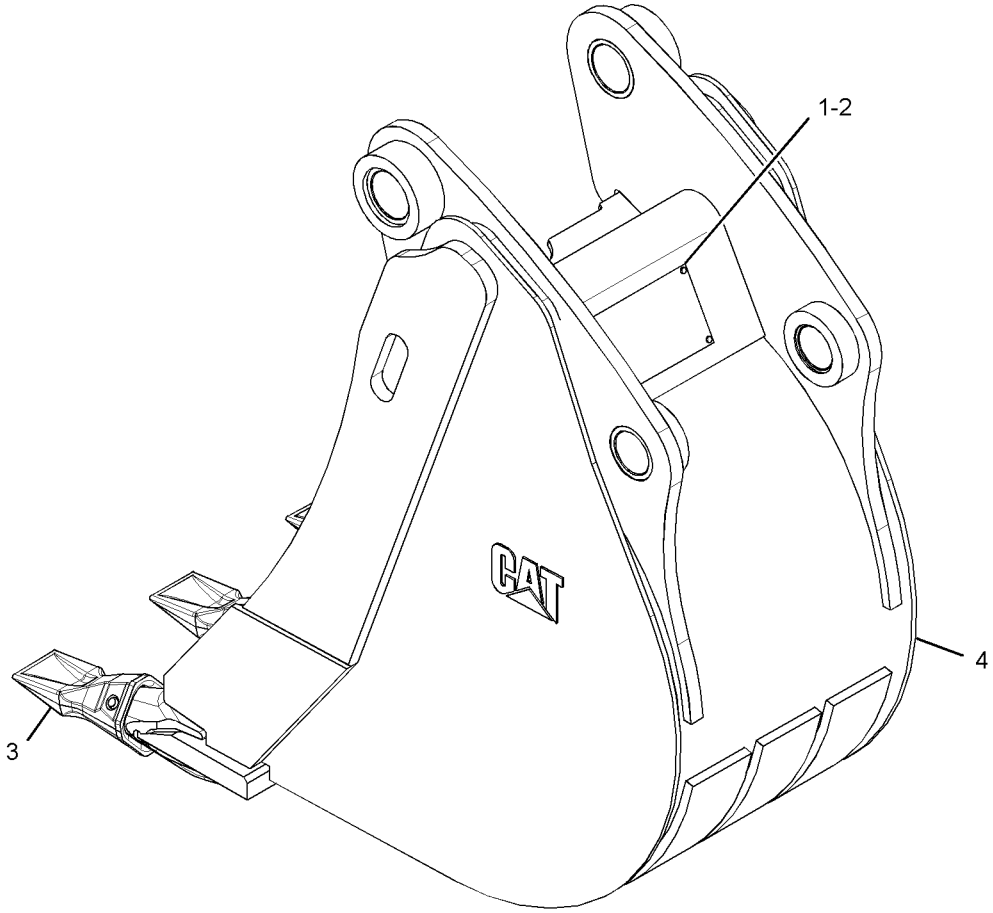

GRAPHIC #1 **<END>** g01341891

WORK TOOLS

219-3386 BUCKET GP-HOE—HEAVY-DUTY

S/N: EAT1-UP

AN ATTACHMENT

SMCS-6503 **i02837618**

NOTE	REF NO	GRAPHIC REF	PART NUMBER	QTY	PART NAME 1 2 3 4 5 6 (PRODUCT LEVEL)	SEE PAGE
	1	1	**137-4234**	1	PLATE-IDENTIFICATION (WORK TOOL)	
	2	1	**168-8389**	4	TACK-FASTENER	
	3	1	*208-5245*	4	TIP GP-PENETRATION	
					(EACH INCLUDES)	
		1	**201-1238**	1	PIN	
		1	**201-1239**	1	RETAINER AS	
		1	**208-5235**	1	TIP-PENETRATION	
Y	4	1	*219-3362*	1	BUCKET AS-HOE (HEAVY-DUTY)	632

Y-SEPARATE ILLUSTRATION

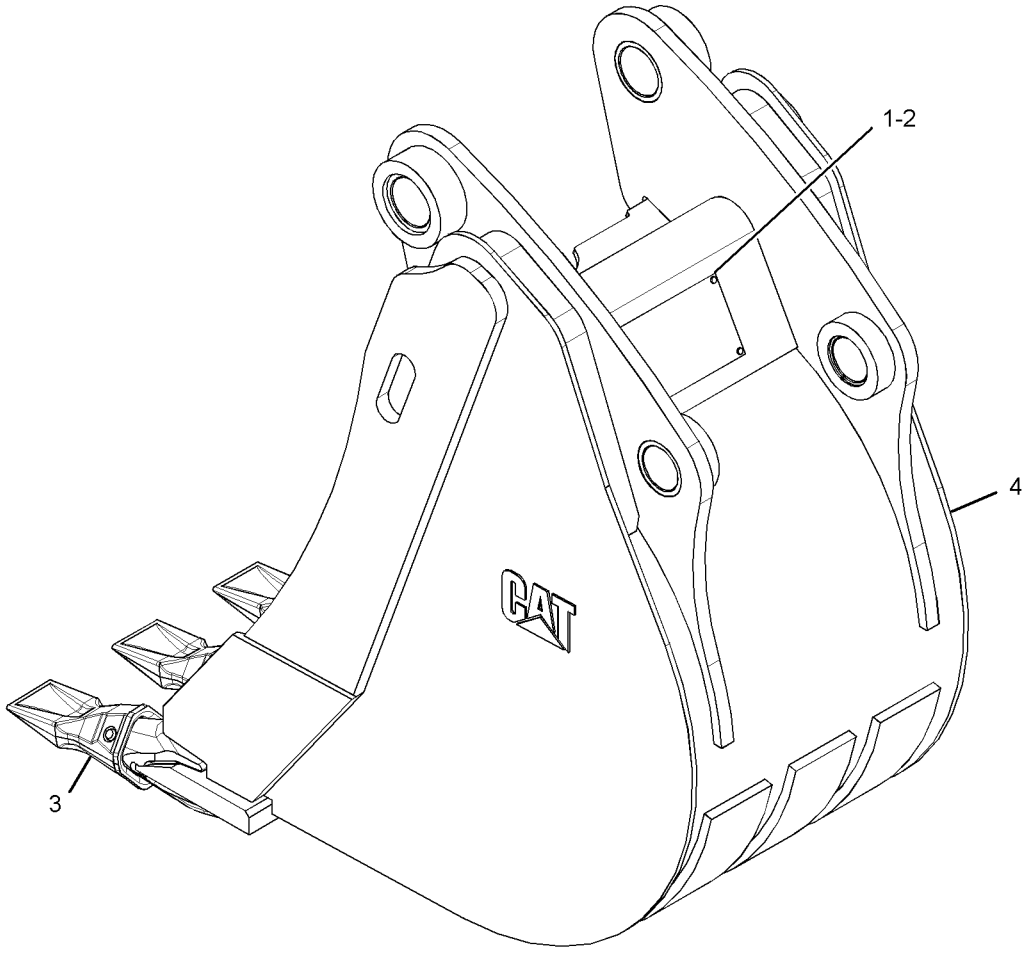

GRAPHIC #1 **<END>** g01341827

219-3387 BUCKET GP-HOE—HEAVY-DUTY

S/N: EAT1-UP

AN ATTACHMENT

SMCS-6503 **i02837622**

NOTE	REF NO	GRAPHIC REF	PART NUMBER	QTY	PART NAME 1 2 3 4 5 6 (PRODUCT LEVEL)	SEE PAGE
	1	1	**137-4234**	1	PLATE-IDENTIFICATION (WORK TOOL)	
	2	1	**168-8389**	4	TACK-FASTENER	
	3		*208-5245*	5	TIP GP-PENETRATION	
					(EACH INCLUDES)	
		1	**201-1238**	1	PIN	
		1	**201-1239**	1	RETAINER AS	
		1	**208-5235**	1	TIP-PENETRATION	
Y	4	1	*219-3363*	1	BUCKET AS-HOE (HEAVY-DUTY)	634

Y-SEPARATE ILLUSTRATION

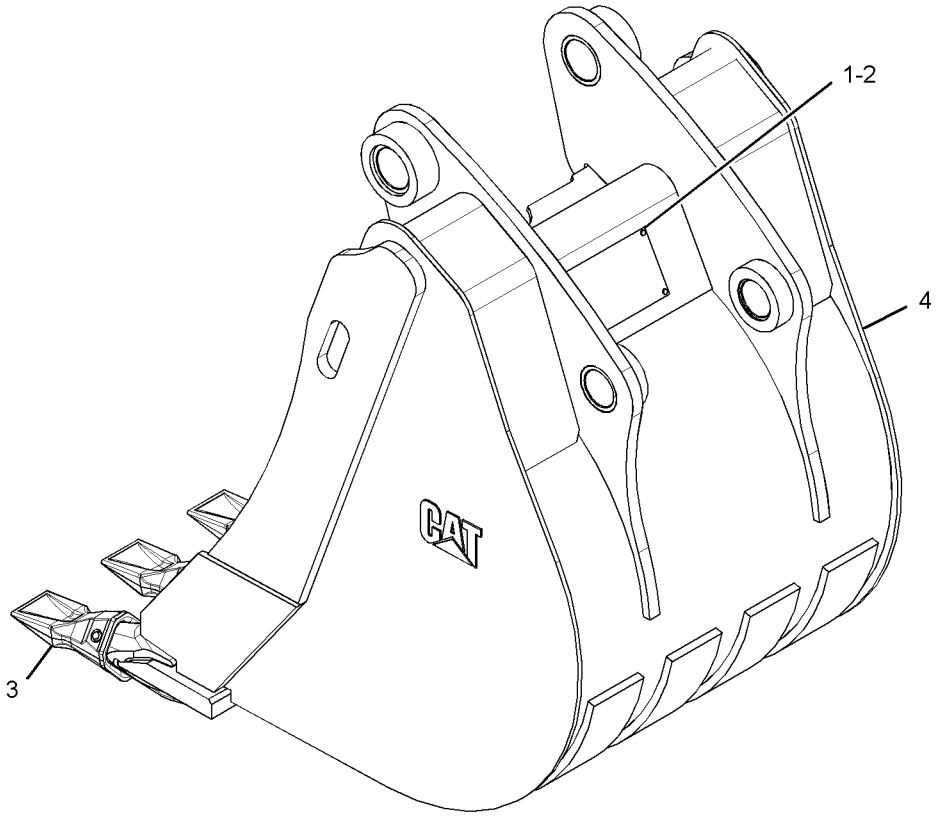

GRAPHIC #1 **<END>** g01336850

WORK TOOLS

219-3388 BUCKET GP-HOE—HEAVY-DUTY

S/N: EAT1-UP

AN ATTACHMENT

SMCS-6503 **i02837624**

NOTE	REF NO	GRAPHIC REF	PART NUMBER	QTY	PART NAME 1 2 3 4 5 6 (PRODUCT LEVEL)	SEE PAGE
	1	1	**137-4234**	1	PLATE-IDENTIFICATION (WORK TOOL)	
	2	1	**168-8389**	4	TACK-FASTENER	
	3	1	*208-5245*	5	TIP GP-PENETRATION	
					(EACH INCLUDES)	
		1	**201-1238**	1	PIN	
		1	**201-1239**	1	RETAINER AS	
		1	**208-5235**	1	TIP-PENETRATION	
Y	4	1	*219-3364*	1	BUCKET AS-HOE (HEAVY-DUTY)	636

Y-SEPARATE ILLUSTRATION

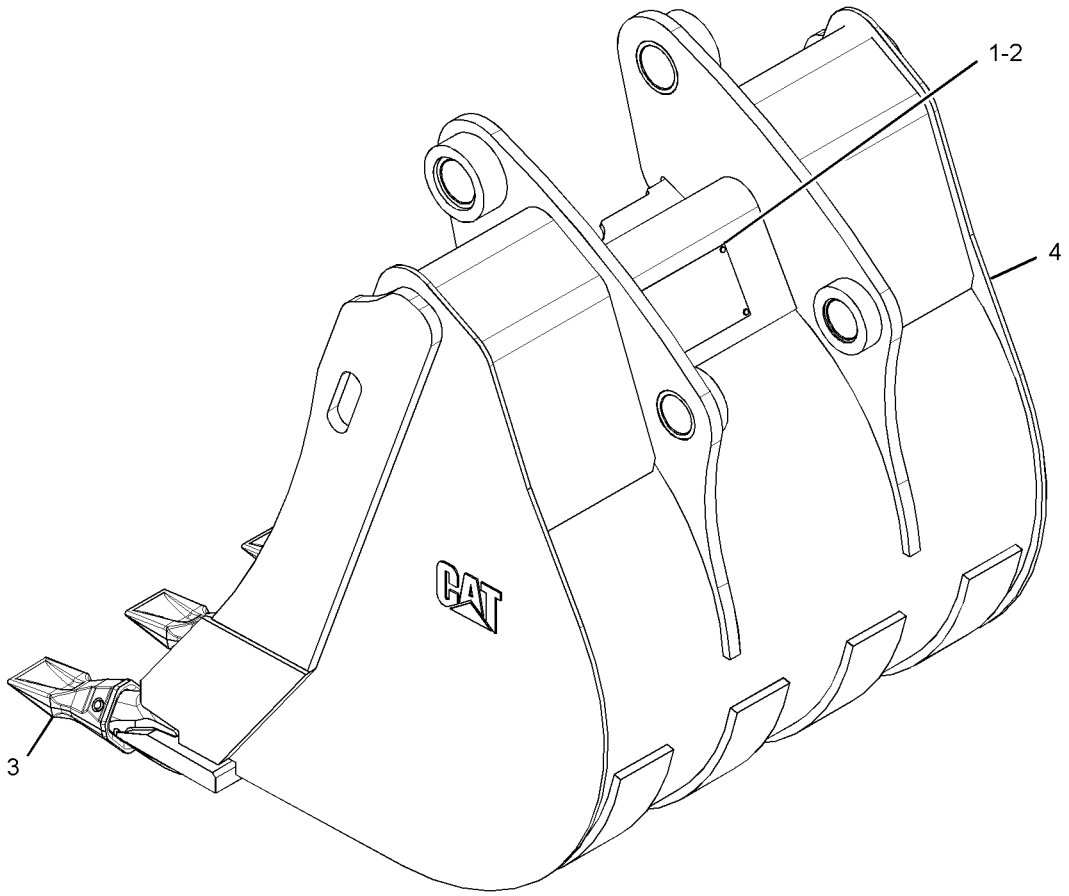

GRAPHIC #1 **<END>** g01337564

WORK TOOLS

219-3389 BUCKET GP-HOE—HEAVY-DUTY

S/N: EAT1-UP

AN ATTACHMENT

SMCS-6503 **i02837625**

NOTE	REF NO	GRAPHIC REF	PART NUMBER	QTY	PART NAME 1 2 3 4 5 6 (PRODUCT LEVEL)	SEE PAGE
	1	1	**137-4234**	1	PLATE-IDENTIFICATION (WORK TOOL)	
	2	1	**168-8389**	4	TACK-FASTENER	
	3	1	*208-5245*	6	TIP GP-PENETRATION	
					(EACH INCLUDES)	
		1	**201-1238**	1	PIN	
		1	**201-1239**	1	RETAINER AS	
		1	**208-5235**	1	TIP-PENETRATION	
Y	4	1	*219-3365*	1	BUCKET AS-HOE (HEAVY-DUTY)	638

Y-SEPARATE ILLUSTRATION

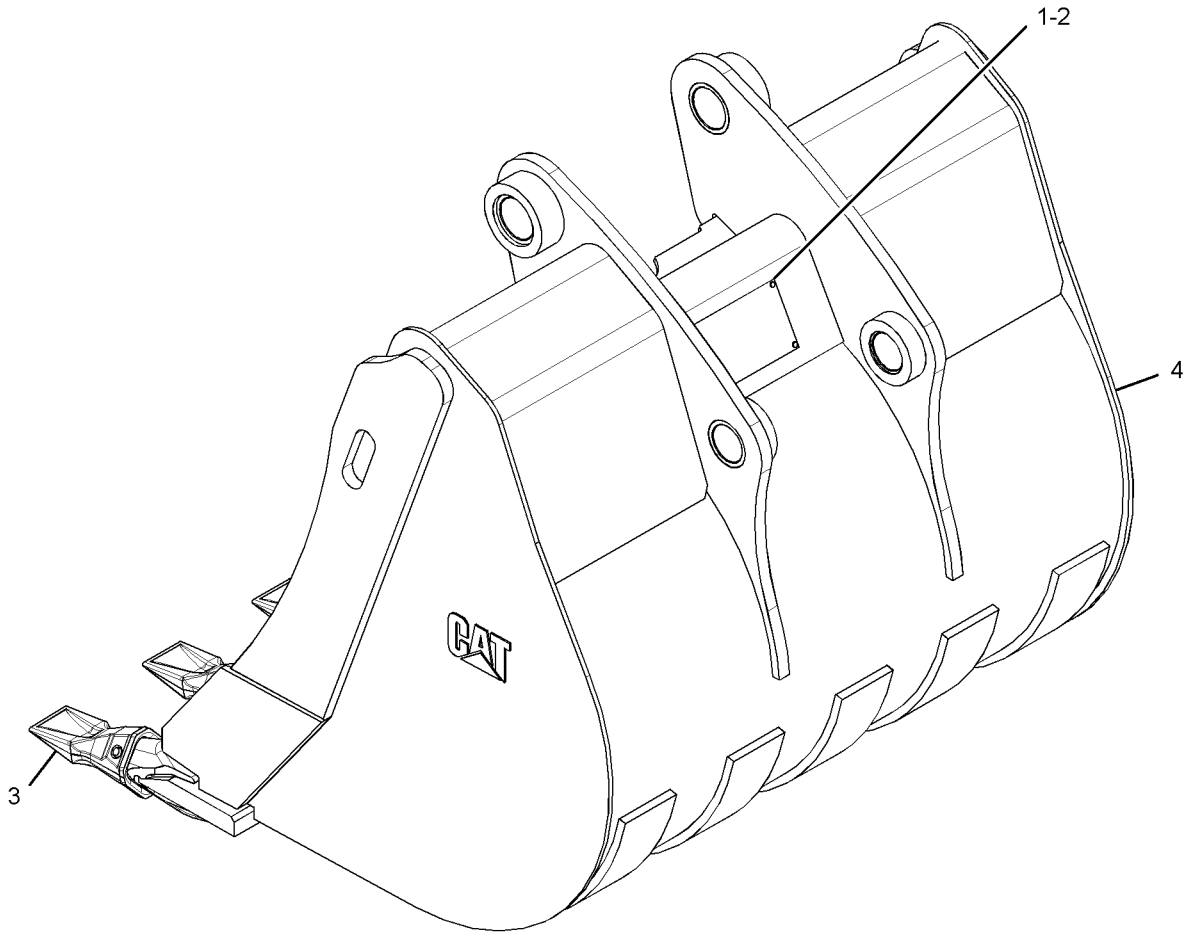

GRAPHIC #1 **<END>** g01341913

WORK TOOLS

219-3390 BUCKET GP-HOE—HIGH CAPACITY

S/N: EAT1-UP

AN ATTACHMENT

SMCS-6503 **i02837628**

NOTE	REF NO	GRAPHIC REF	PART NUMBER	QTY	PART NAME 1 2 3 4 5 6 (PRODUCT LEVEL)	SEE PAGE
	1	1	**137-4234**	1	PLATE-IDENTIFICATION (WORK TOOL)	
	2	1	**168-8389**	4	TACK-FASTENER	
	3		*208-5245*	4	TIP GP-PENETRATION	
					(EACH INCLUDES)	
		1	**201-1238**	1	PIN	
		1	**201-1239**	1	RETAINER AS	
		1	**208-5235**	1	TIP-PENETRATION	
Y	4	1	*219-3366*	1	BUCKET AS-HOE (HIGH CAPACITY)	640

Y-SEPARATE ILLUSTRATION

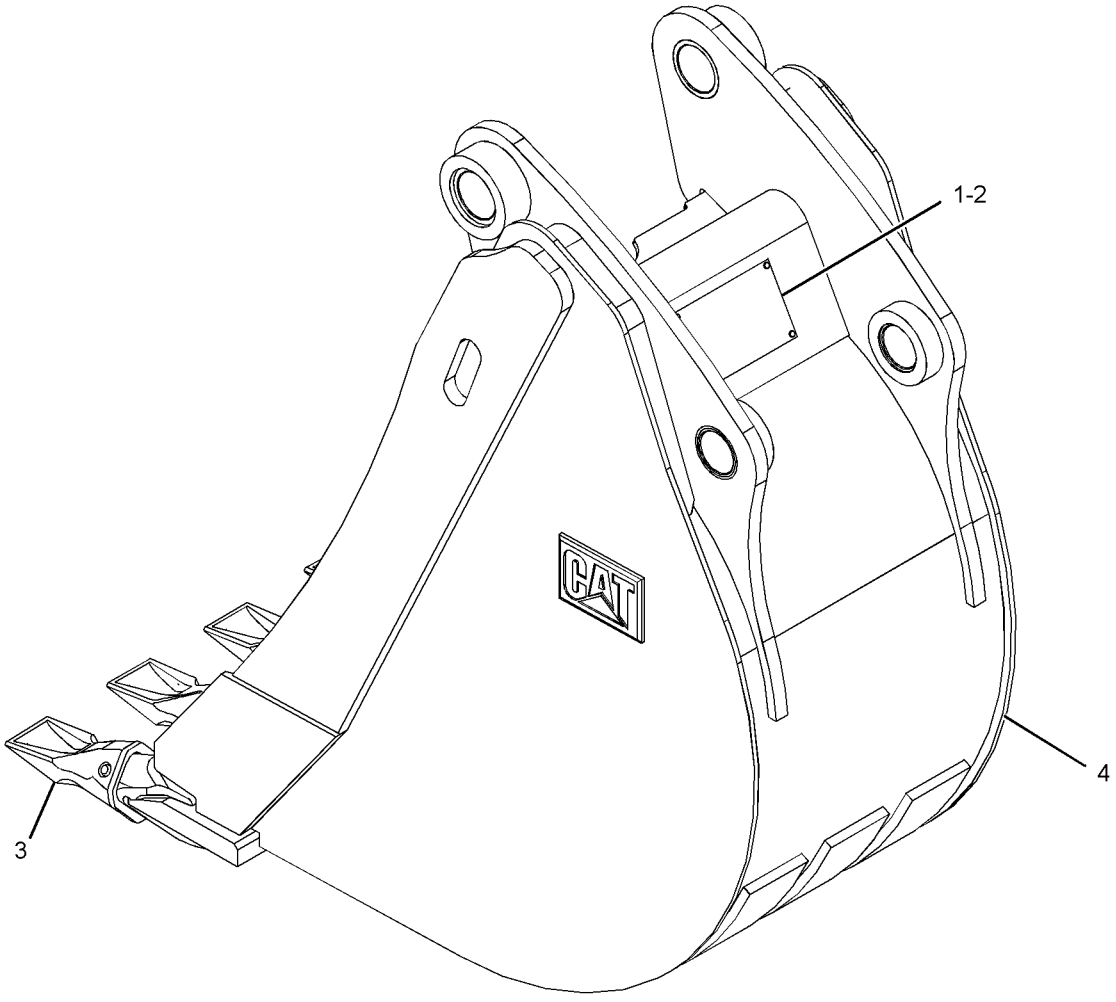

GRAPHIC #1 **<END>** g01337541

WORK TOOLS

219-3391 BUCKET GP-HOE—HIGH CAPACITY

S/N: EAT1-UP

AN ATTACHMENT

SMCS-6503 **i02837631**

NOTE	REF NO	GRAPHIC REF	PART NUMBER	QTY	PART NAME 1 2 3 4 5 6 (PRODUCT LEVEL)	SEE PAGE
	1	1	**137-4234**	1	PLATE-IDENTIFICATION (WORK TOOL)	
	2	1	**168-8389**	4	TACK-FASTENER	
	3	1	*208-5245*	5	TIP GP-PENETRATION	
					(EACH INCLUDES)	
		1	**201-1238**	1	PIN	
		1	**201-1239**	1	RETAINER AS	
		1	**208-5235**	1	TIP-PENETRATION	
Y	4	1	*219-3367*	1	BUCKET AS-HOE (HIGH CAPACITY)	642

Y-SEPARATE ILLUSTRATION

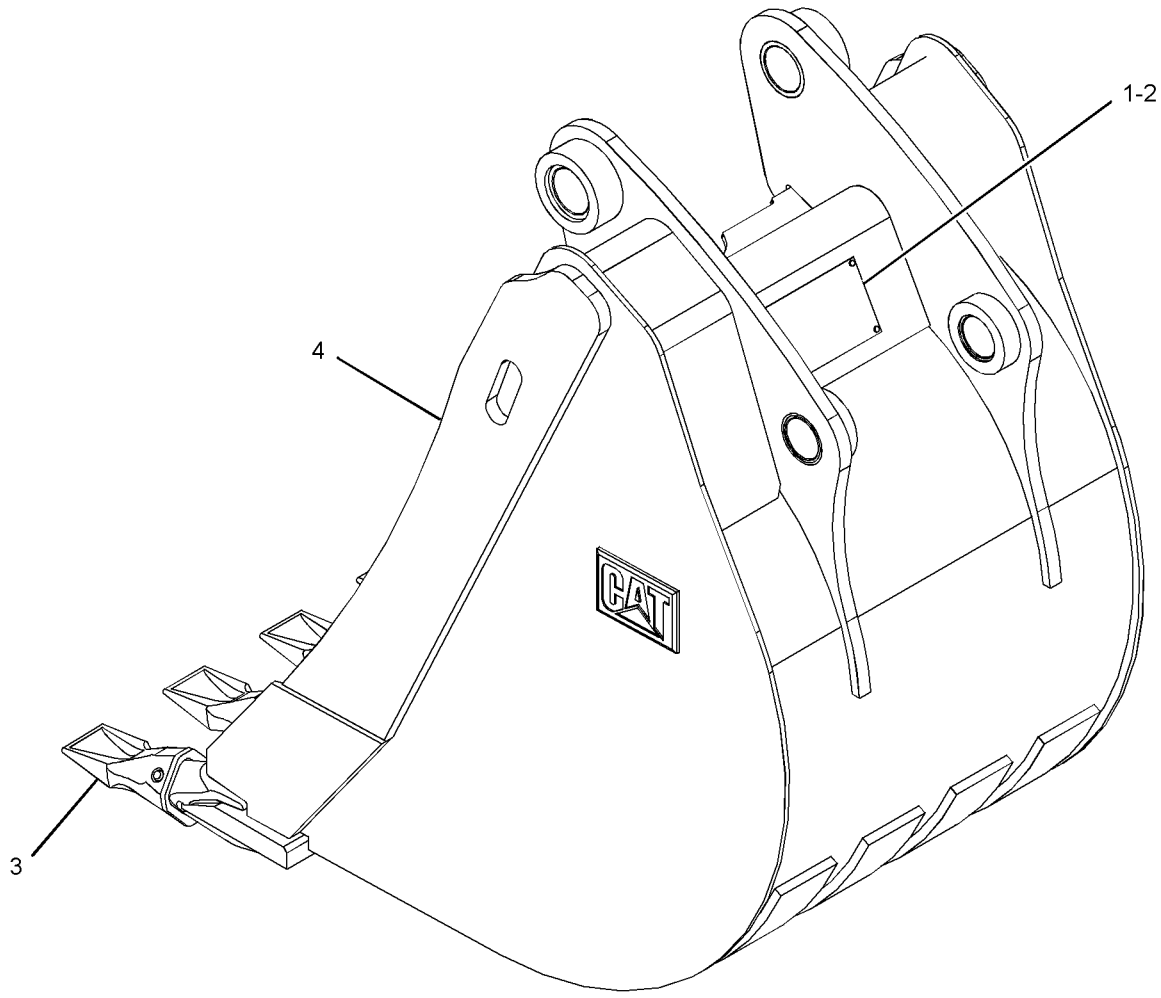

GRAPHIC #1 **<END>** g01341952

WORK TOOLS

219-3392 BUCKET GP-HOE—HIGH CAPACITY

S/N: EAT1-UP

AN ATTACHMENT

SMCS-6503 **i02837637**

NOTE	REF NO	GRAPHIC REF	PART NUMBER	QTY	PART NAME 1 2 3 4 5 6 (PRODUCT LEVEL)	SEE PAGE
	1	1	**137-4234**	1	PLATE-IDENTIFICATION (WORK TOOL)	
	2	1	**168-8389**	4	TACK-FASTENER	
	3	1	*208-5245*	5	TIP GP-PENETRATION	
					(EACH INCLUDES)	
		1	**201-1238**	1	PIN	
		1	**201-1239**	1	RETAINER AS	
		1	**208-5235**	1	TIP-PENETRATION	
Y	4	1	*219-3368*	1	BUCKET AS-HOE (HIGH CAPACITY)	644

Y-SEPARATE ILLUSTRATION

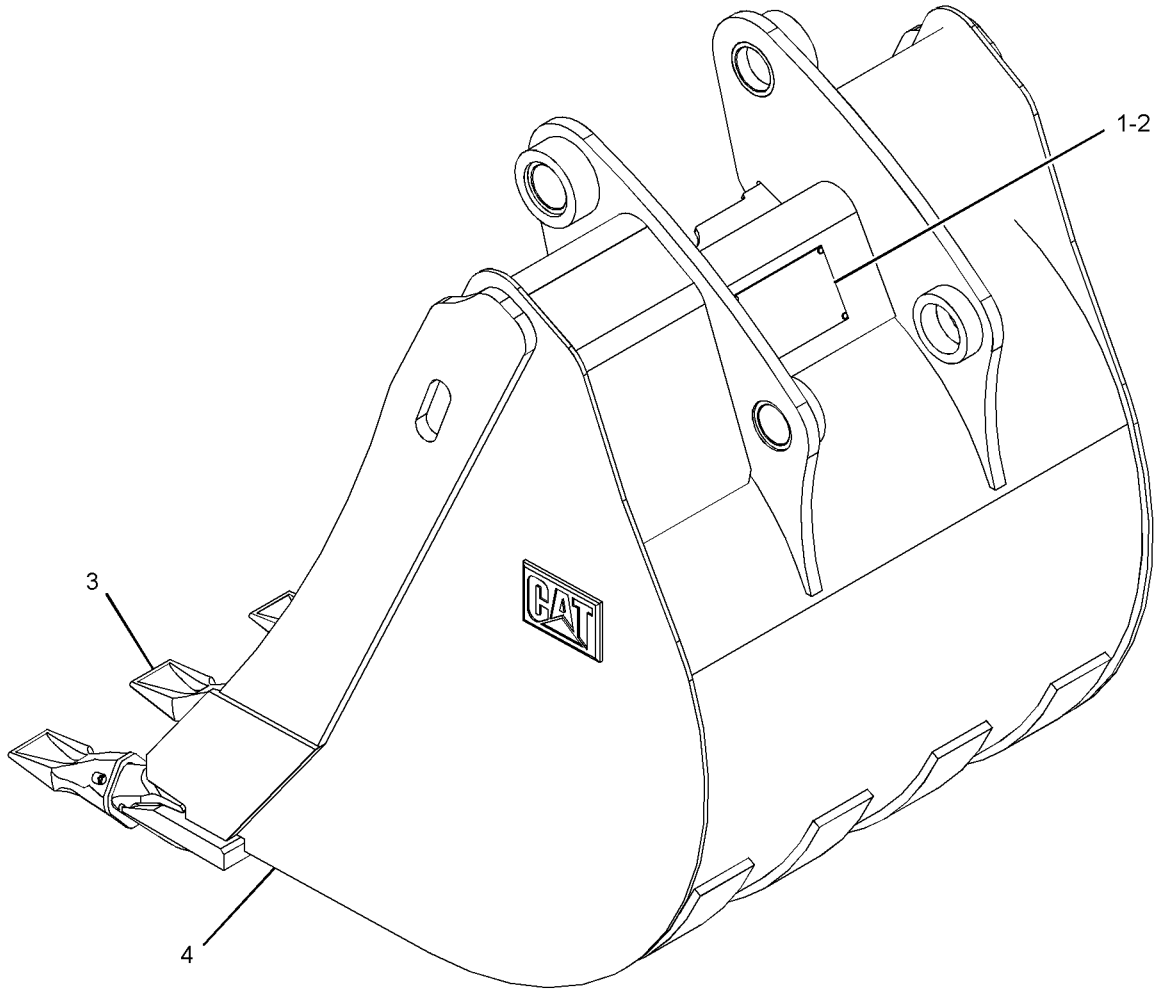

GRAPHIC #1 **<END>** g01341920

219-3393 BUCKET GP-HOE—HIGH CAPACITY

S/N: EAT1-UP
AN ATTACHMENT

SMCS-6503 **i02837640**

NOTE	REF NO	GRAPHIC REF	PART NUMBER	QTY	PART NAME 1 2 3 4 5 6 (PRODUCT LEVEL)	SEE PAGE
	1	1	**137-4234**	1	PLATE-IDENTIFICATION (WORK TOOL)	
	2	1	**168-8389**	4	TACK-FASTENER	
	3		*208-5245*	6	TIP GP-PENETRATION	
					(EACH INCLUDES)	
		1	**201-1238**	1	PIN	
		1	**201-1239**	1	RETAINER AS	
		1	**208-5235**	1	TIP-PENETRATION	
Y	4	1	*219-3369*	1	BUCKET AS-HOE (HIGH CAPACITY)	646

Y-SEPARATE ILLUSTRATION

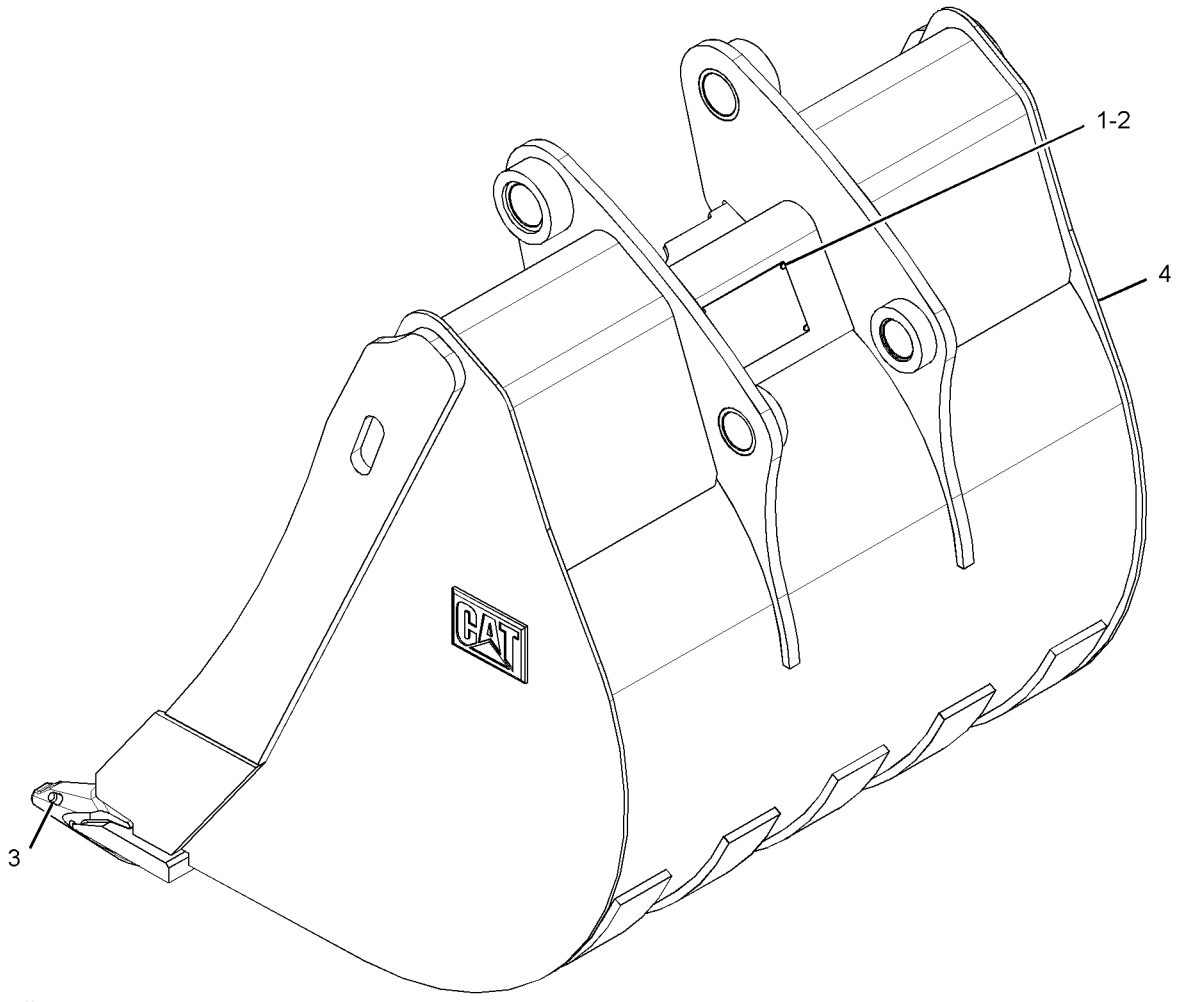

GRAPHIC #1 **<END>** g01336804

WORK TOOLS

219-3394 BUCKET GP-HOE—ROCK

S/N: EAT1-UP
PART OF 219-3412 BUCKET GP-HOE
AN ATTACHMENT

SMCS-6503 **i02659874**

NOTE	REF NO	GRAPHIC REF	PART NUMBER	QTY	PART NAME 1 2 3 4 5 6 (PRODUCT LEVEL)	SEE PAGE
	1	1	**137-4234**	1	PLATE-IDENTIFICATION (WORK TOOL)	
	2	1	**168-8389**	4	TACK-FASTENER	
	3	1	*208-5245*	4	TIP GP-PENETRATION	
					(EACH INCLUDES)	
		1	**201-1238**	1	PIN	
		1	**201-1239**	1	RETAINER AS	
		1	**208-5235**	1	TIP-PENETRATION	
Y	4	1	*219-3370*	1	BUCKET AS-HOE (ROCK)	648

Y-SEPARATE ILLUSTRATION

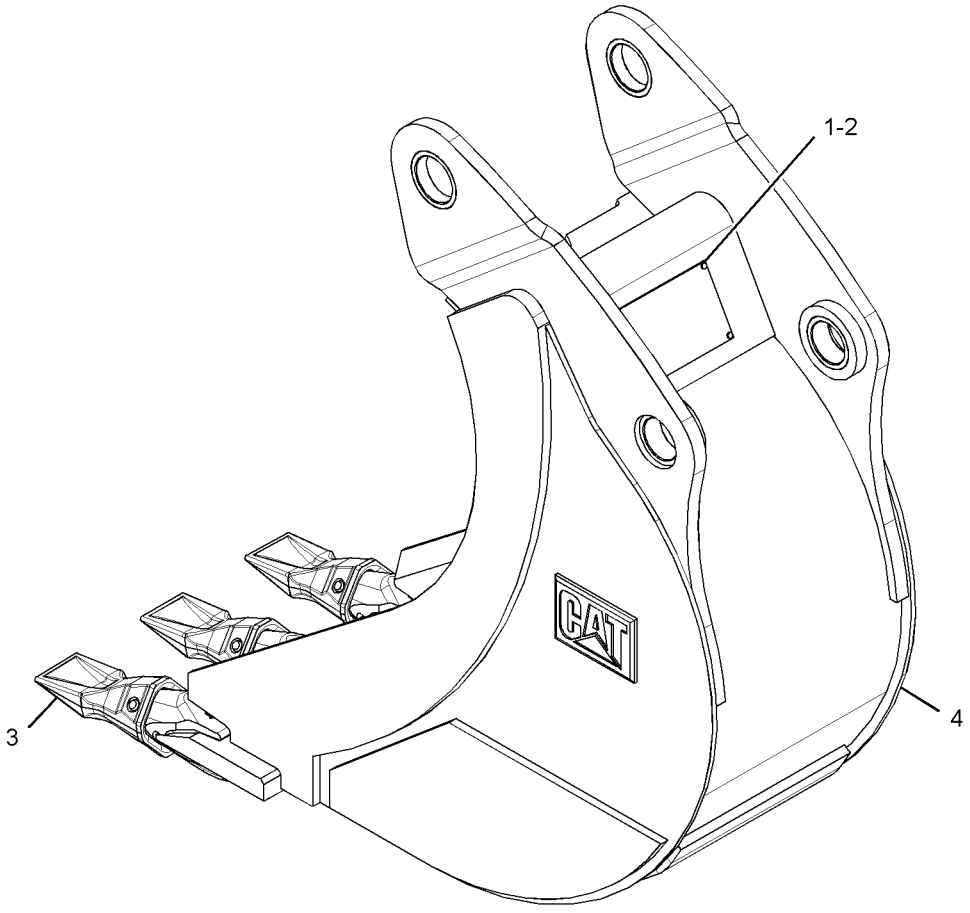

GRAPHIC #1 **<END>** g01342095

WORK TOOLS

219-3395 BUCKET GP-HOE–ROCK

S/N: EAT1-UP

AN ATTACHMENT

SMCS-6503 **i02651589**

NOTE	REF NO	GRAPHIC REF	PART NUMBER	QTY	PART NAME 1 2 3 4 5 6 (PRODUCT LEVEL)	SEE PAGE
	1	1	**137-4234**	1	PLATE-IDENTIFICATION (WORK TOOL)	
	2	1	**168-8389**	4	TACK-FASTENER	
	3	1	*208-5245*	4	TIP GP-PENETRATION	
					(EACH INCLUDES)	
		1	**201-1238**	1	PIN	
		1	**201-1239**	1	RETAINER AS	
		1	**208-5235**	1	TIP-PENETRATION	
Y	4	1	*219-3371*	1	BUCKET AS-HOE (ROCK)	650

Y-SEPARATE ILLUSTRATION

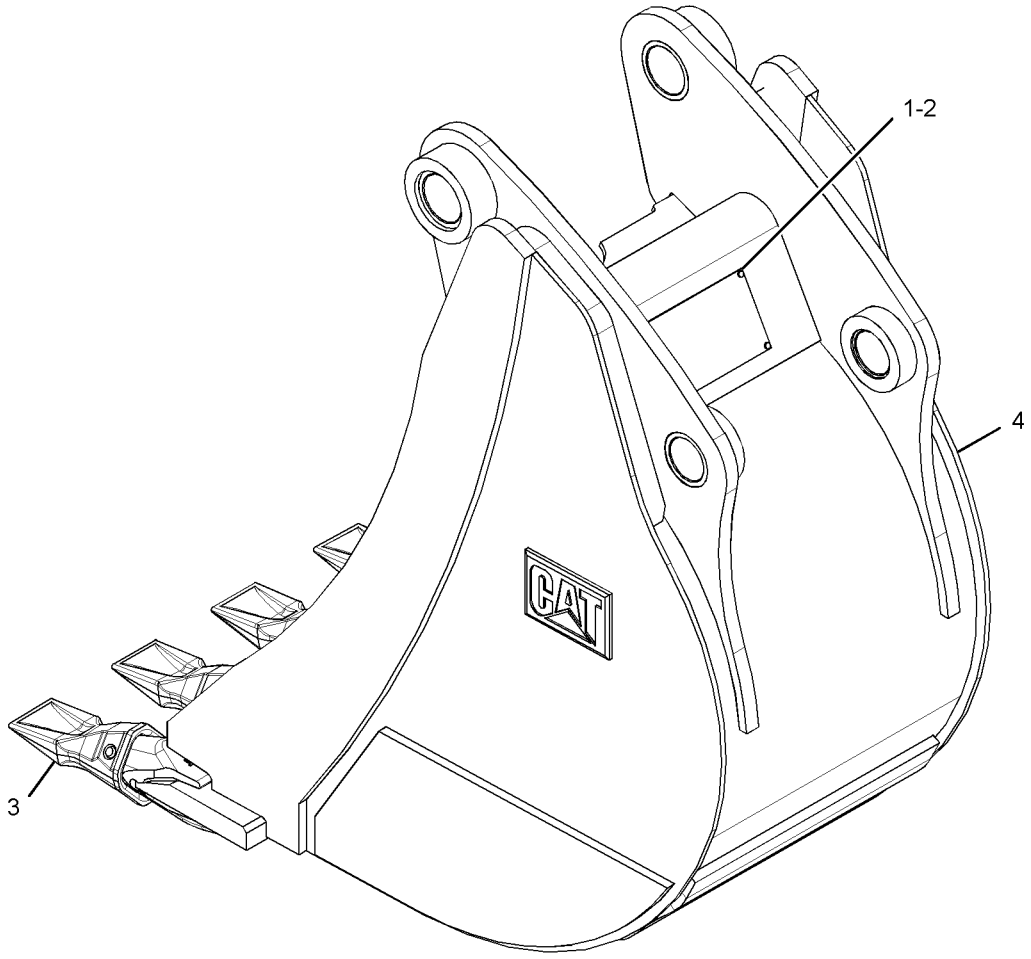

GRAPHIC #1 **<END>** g01340728

WORK TOOLS

219-3396 BUCKET GP-HOE—ROCK

S/N: EAT1-UP

AN ATTACHMENT

SMCS-6503 **i02651591**

NOTE	REF NO	GRAPHIC REF	PART NUMBER	QTY	PART NAME 1 2 3 4 5 6 (PRODUCT LEVEL)	SEE PAGE
	1	1	**137-4234**	1	PLATE-IDENTIFICATION (WORK TOOL)	
	2	1	**168-8389**	4	TACK-FASTENER	
	3	1	*208-5245*	5	TIP GP-PENETRATION	
					(EACH INCLUDES)	
		1	**201-1238**	1	PIN	
		1	**201-1239**	1	RETAINER AS	
		1	**208-5235**	1	TIP-PENETRATION	
Y	4	1	*219-3372*	1	BUCKET AS-HOE (ROCK)	652

Y-SEPARATE ILLUSTRATION

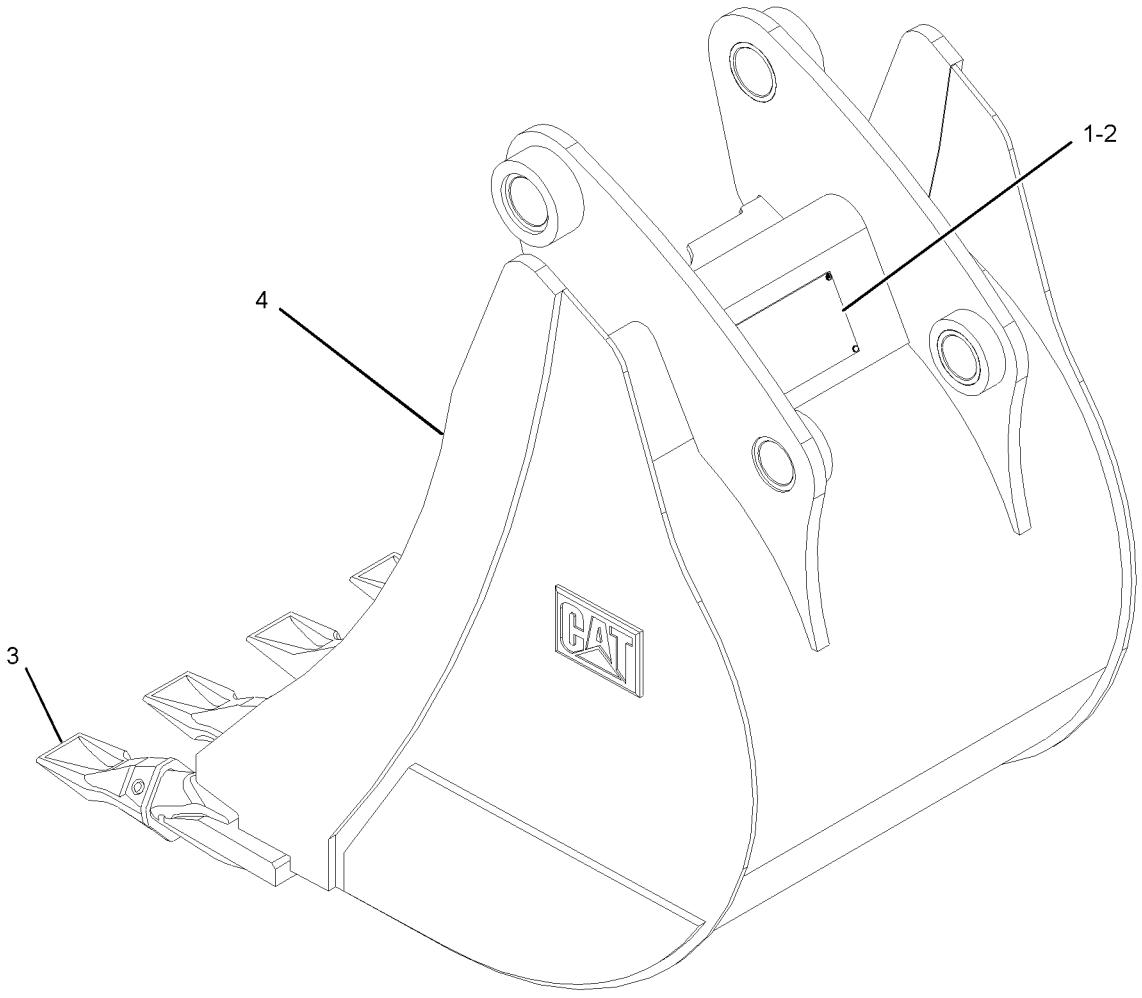

GRAPHIC #1 **<END>** g01341821

WORK TOOLS

219-3397 BUCKET GP-HOE–ROCK

S/N: EAT1-UP

AN ATTACHMENT

SMCS-6503 **i02939959**

NOTE	REF NO	GRAPHIC REF	PART NUMBER	QTY	PART NAME 1 2 3 4 5 6 (PRODUCT LEVEL)	SEE PAGE
	1	1	**137-4234**	1	PLATE-IDENTIFICATION (WORK TOOL)	
	2	1	**168-8389**	4	TACK-FASTENER	
	3	1	*208-5245*	5	TIP GP-PENETRATION	
					(EACH INCLUDES)	
		1	**201-1238**	1	PIN	
		1	**201-1239**	1	RETAINER AS	
		1	**208-5235**	1	TIP-PENETRATION	
Y	4		*219-3373*	1	BUCKET AS-HOE (ROCK)	654

Y-SEPARATE ILLUSTRATION

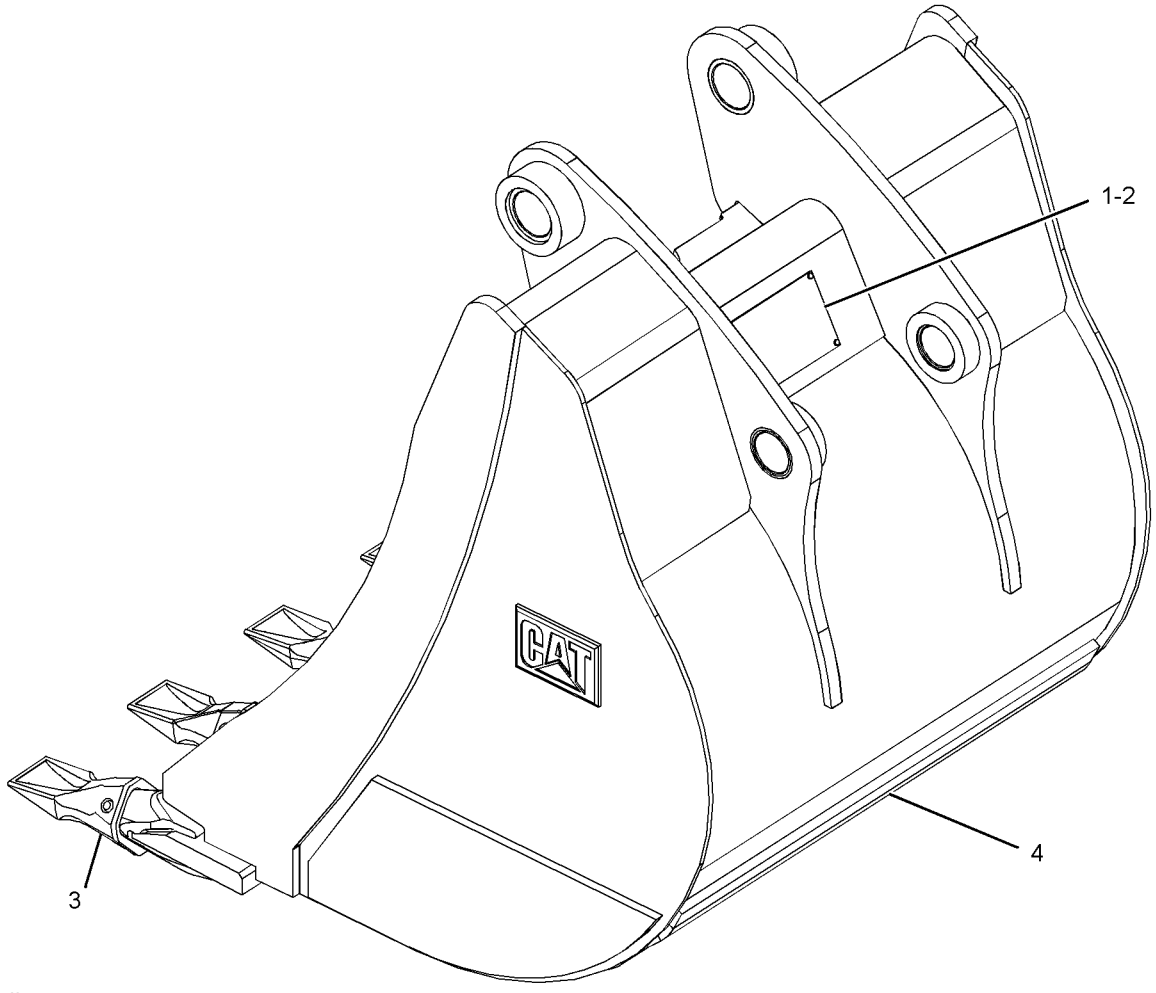

GRAPHIC #1

<END>

g01341885

WORK TOOLS

219-3398 BUCKET GP-HOE–ROCK

S/N: EAT1-UP
914-MM(36-IN)
AN ATTACHMENT

SMCS-6503 **i02660345**

NOTE	REF NO	GRAPHIC REF	PART NUMBER	QTY	PART NAME 1 2 3 4 5 6 (PRODUCT LEVEL)	SEE PAGE
	1	1	**137-4234**	1	PLATE-IDENTIFICATION (WORK TOOL)	
	2	1	**168-8389**	4	TACK-FASTENER	
	3	1	*208-5245*	6	TIP GP-PENETRATION	
					(EACH INCLUDES)	
		1	**201-1238**	1	PIN	
		1	**201-1239**	1	RETAINER AS	
		1	**208-5235**	1	TIP-PENETRATION	
Y	4	1	*219-3374*	1	BUCKET AS-HOE (ROCK)	656

Y-SEPARATE ILLUSTRATION

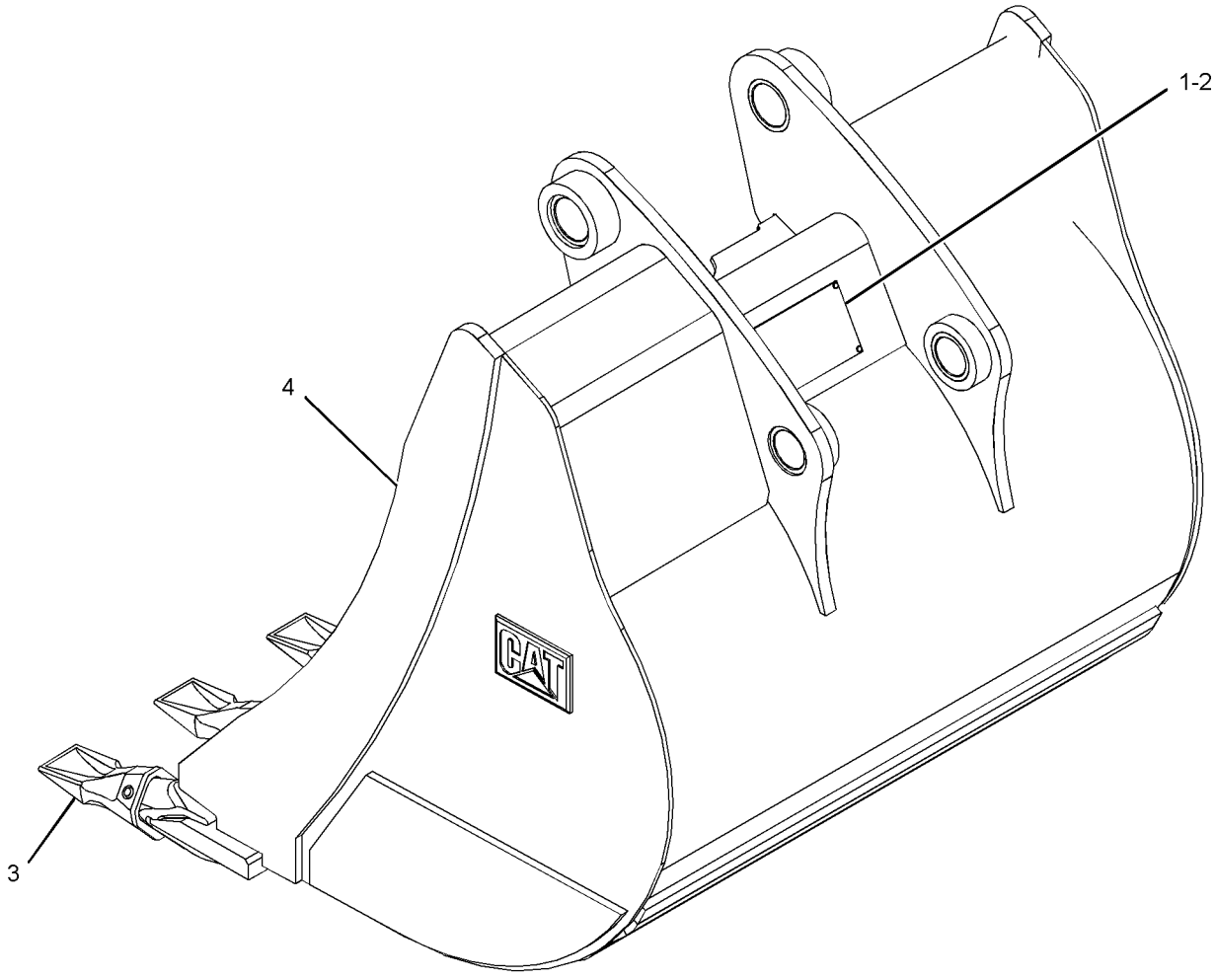

GRAPHIC #1 **<END>** g01342103

219-3399 BUCKET GP-HOE—CORAL

S/N: EAT1-UP
PART OF 219-3413 BUCKET GP-HOE
AN ATTACHMENT

SMCS-6503 **i02837649**

NOTE	REF NO	GRAPHIC REF	PART NUMBER	QTY	PART NAME 1 2 3 4 5 6 (PRODUCT LEVEL)	SEE PAGE
	1	1	**137-4234**	1	PLATE-IDENTIFICATION (WORK TOOL)	
	2	1	**168-8389**	4	TACK-FASTENER	
	3	1	*208-5242*	4	TIP GP-CHISEL	
					(EACH INCLUDES)	
		1	**201-1238**	1	PIN	
		1	**201-1239**	1	RETAINER AS	
		1	**208-5235**	1	TIP-PENETRATION	
Y	4	1	*219-3375*	1	BUCKET AS-HOE (CORAL)	658

Y-SEPARATE ILLUSTRATION

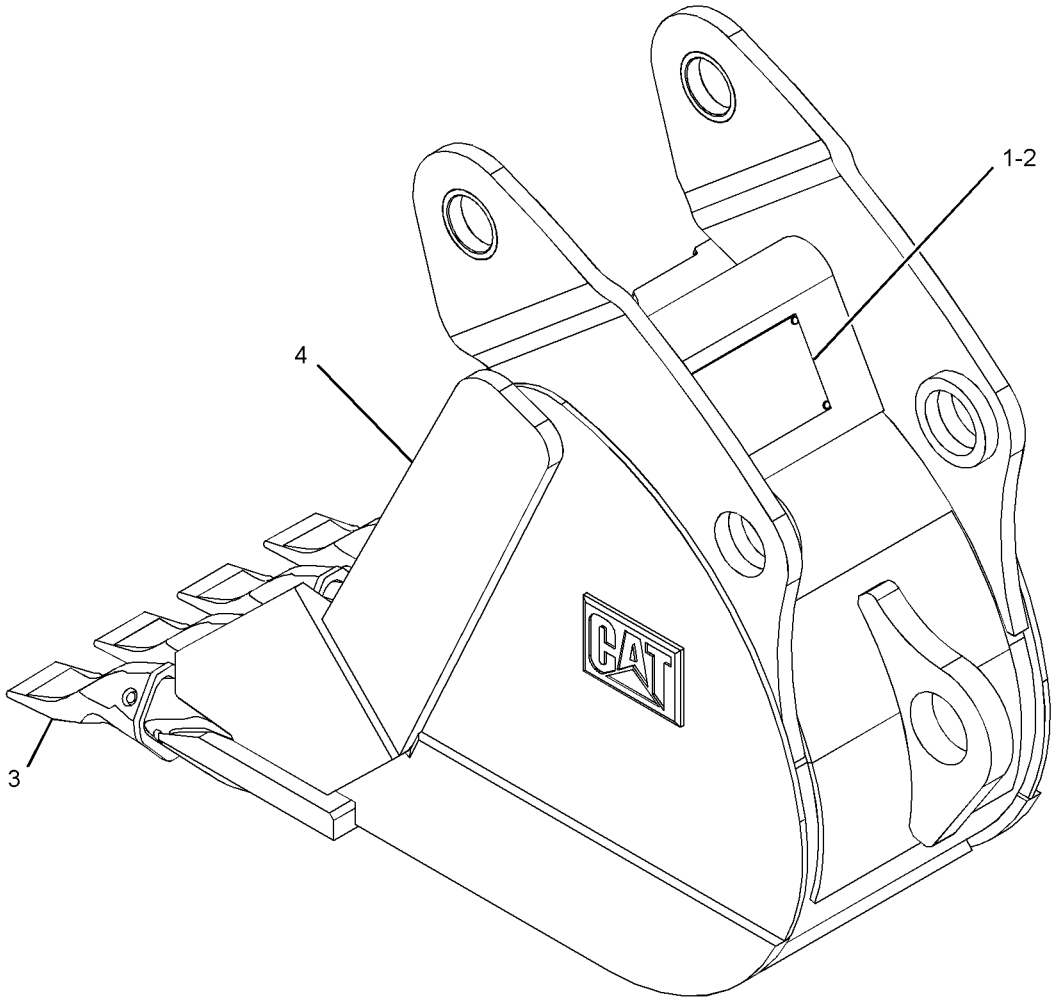

GRAPHIC #1 **<END>** g01342465

WORK TOOLS

219-3400 BUCKET GP-HOE–CORAL

S/N: EAT1-UP

AN ATTACHMENT

SMCS-6503 **i02837652**

NOTE	REF NO	GRAPHIC REF	PART NUMBER	QTY	PART NAME 1 2 3 4 5 6 (PRODUCT LEVEL)	SEE PAGE
	1	1	**137-4234**	1	PLATE-IDENTIFICATION (WORK TOOL)	
	2	1	**168-8389**	4	TACK-FASTENER	
	3	1	*208-5242*	6	TIP GP-CHISEL	
					(EACH INCLUDES)	
		1	**201-1238**	1	PIN	
		1	**201-1239**	1	RETAINER AS	
		1	**208-5232**	1	TIP-CHISEL	
Y	4	1	*219-3376*	1	BUCKET AS-HOE (CORAL)	659

Y-SEPARATE ILLUSTRATION

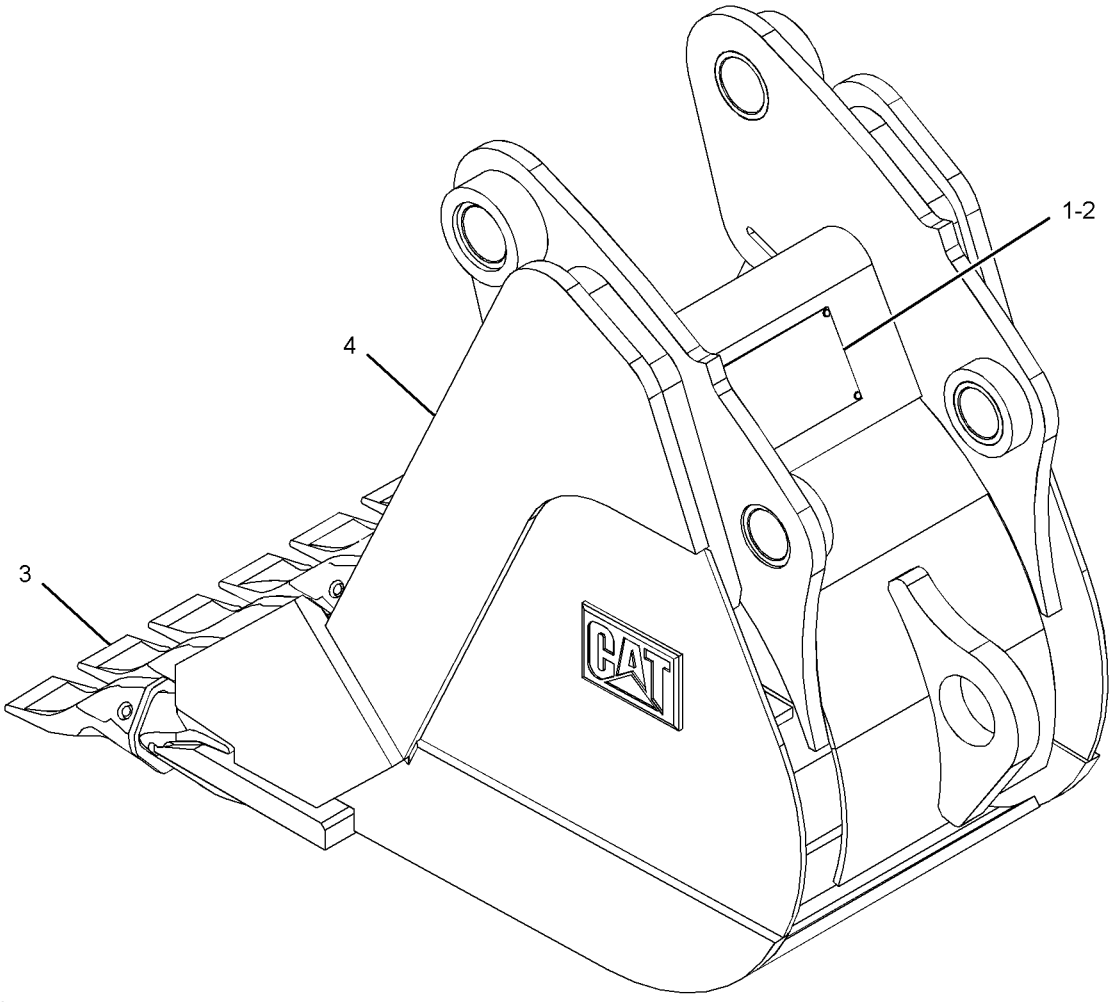

GRAPHIC #1 **<END>** g01342327

WORK TOOLS

219-3401 BUCKET GP-HOE–CORAL

S/N: EAT1-UP

AN ATTACHMENT

SMCS-6503 **i02837655**

NOTE	REF NO	GRAPHIC REF	PART NUMBER	QTY	PART NAME 1 2 3 4 5 6 (PRODUCT LEVEL)	SEE PAGE
	1	1	**137-4234**	1	PLATE-IDENTIFICATION (WORK TOOL)	
	2	1	**168-8389**	4	TACK-FASTENER	
	3	1	*208-5242*	8	TIP GP-CHISEL	
					(EACH INCLUDES)	
		1	**201-1238**	1	PIN	
		1	**201-1239**	1	RETAINER AS	
		1	**208-5232**	1	TIP-CHISEL	
Y	4	1	*219-3377*	1	BUCKET AS-HOE (CORAL)	660

Y-SEPARATE ILLUSTRATION

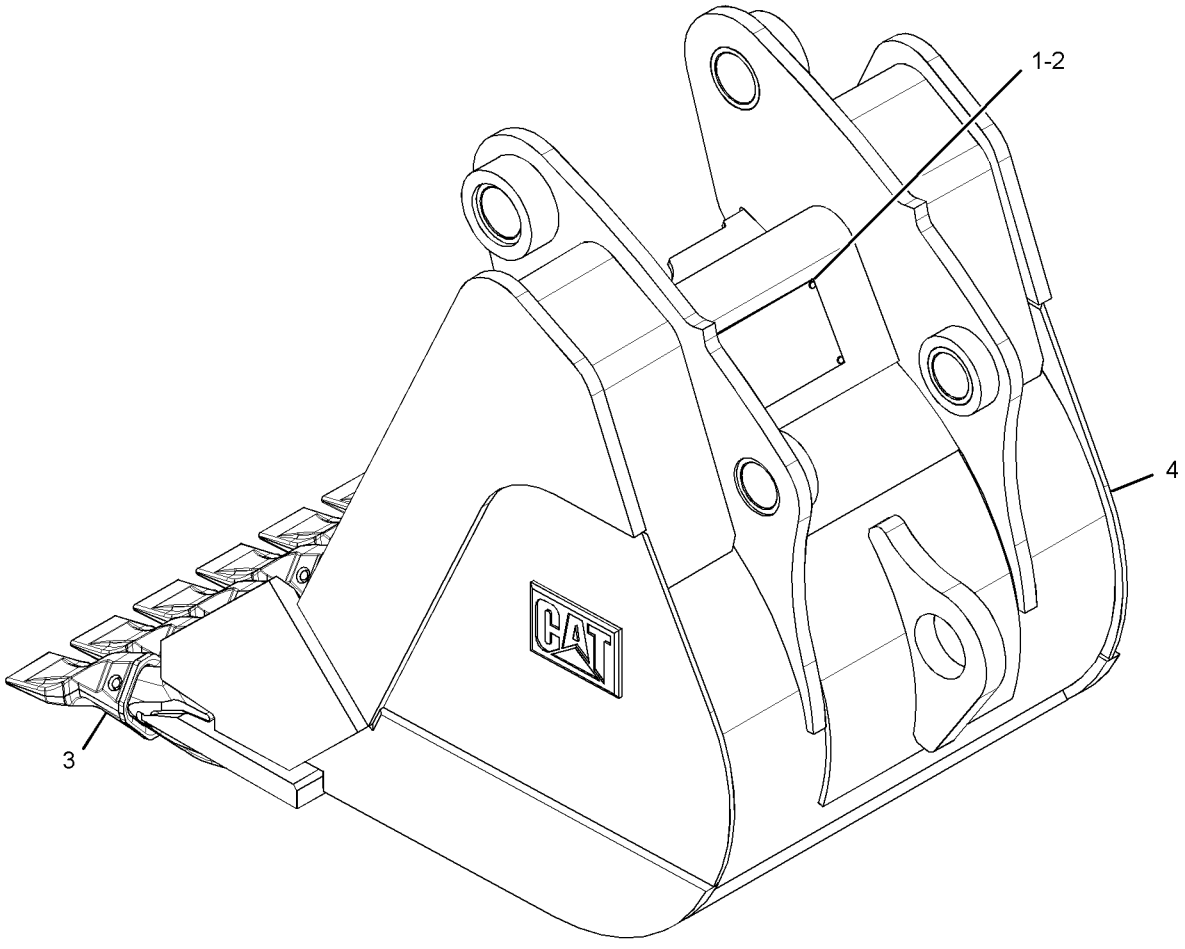

GRAPHIC #1 **<END>** g01342450

WORK TOOLS

219-3402 BUCKET GP-HOE–CORAL

S/N: EAT1-UP

AN ATTACHMENT

SMCS-6503 **i02661605**

NOTE	REF NO	GRAPHIC REF	PART NUMBER	QTY	PART NAME 1 2 3 4 5 6 (PRODUCT LEVEL)	SEE PAGE
	1	1	**137-4234**	1	PLATE-IDENTIFICATION (WORK TOOL)	
	2	1	**168-8389**	4	TACK-FASTENER	
	3	1	*208-5242*	10	TIP GP-CHISEL	
					(EACH INCLUDES)	
		1	**201-1238**	1	PIN	
		1	**201-1239**	1	RETAINER AS	
		1	**208-5235**	1	TIP-PENETRATION	
Y	4	1	*219-3378*	1	BUCKET AS-HOE (CORAL)	661

Y-SEPARATE ILLUSTRATION

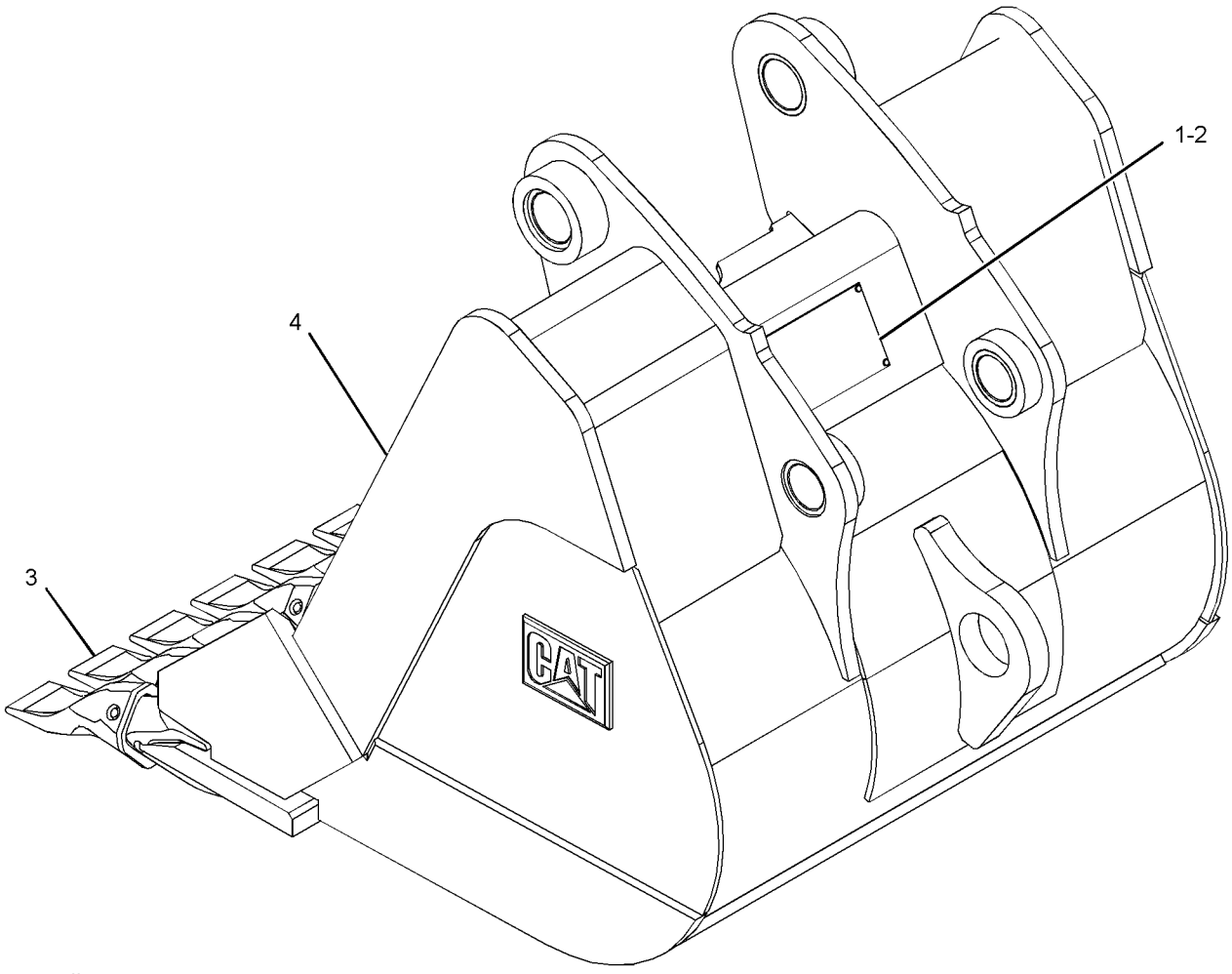

GRAPHIC #1 **<END>** g01342615

WORK TOOLS

219-3410 BUCKET GP-HOE

S/N: EAT1-UP
305-MM (12-IN)
AN ATTACHMENT

SMCS-6503 **i01916048**

NOTE	REF NO	GRAPHIC REF	PART NUMBER	QTY	PART NAME 1 2 3 4 5 6 (PRODUCT LEVEL)	SEE PAGE
	1	1	**6V-3213**	2	RING-RETAINING	
	2	1	**6V-4364**	2	RING-RETAINING	
	3	1	**9R-0158**	5	WASHER (46X69X3-MM THK)	
	4	1	**9R-1510**	3	WASHER (51X82X4-MM THK)	
	5	1	**168-0443**	1	PIN	
	6	1	**168-0444**	1	PIN	
Y	7	1	**219-3379**	1	BUCKET GP-HOE	677

Y-SEPARATE ILLUSTRATION

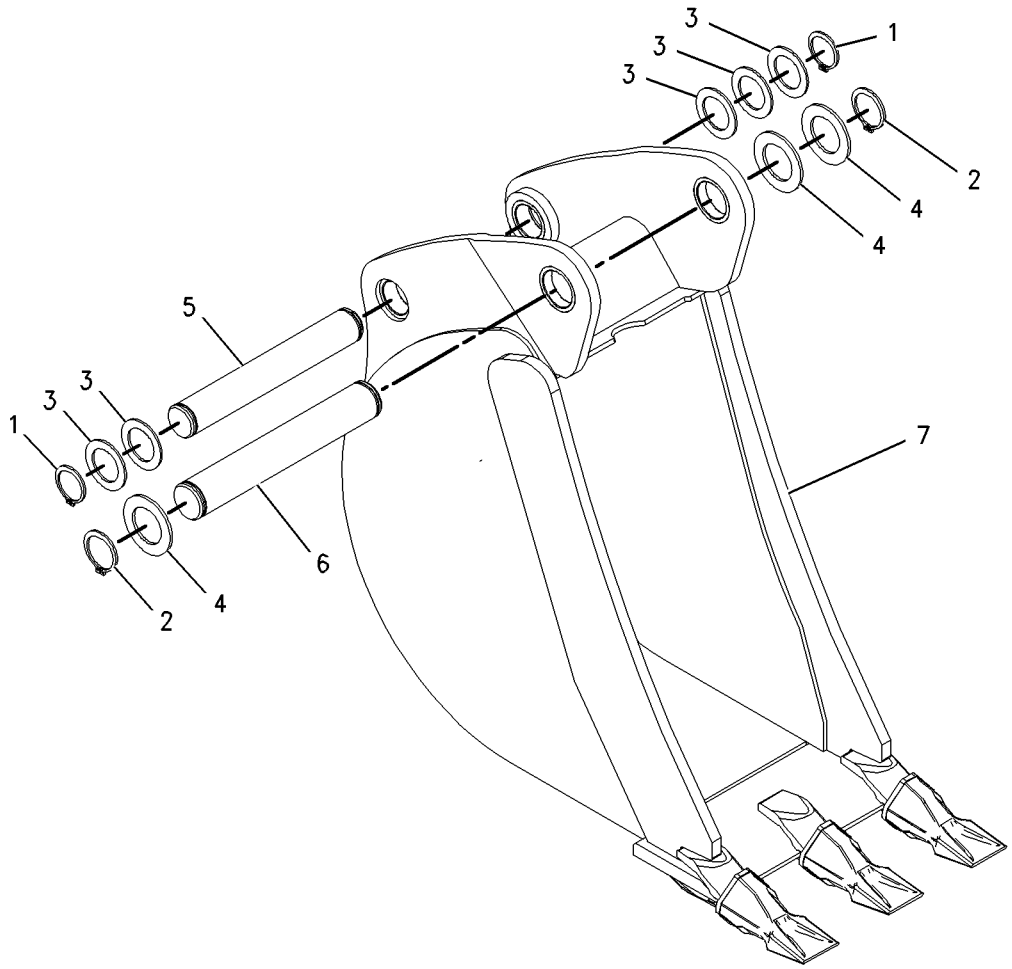

GRAPHIC #1 **<END>** g01001892

WORK TOOLS

219-3411 BUCKET GP-HOE—HEAVY DUTY

S/N: EAT1-UP
305-MM (12-IN)
AN ATTACHMENT

SMCS-6503 **i01916050**

NOTE	REF NO	GRAPHIC REF	PART NUMBER	QTY	PART NAME 1 2 3 4 5 6 (PRODUCT LEVEL)	SEE PAGE
	1	1	**6V-3213**	2	RING-RETAINING	
	2	1	**6V-4364**	2	RING-RETAINING	
	3	1	**9R-0158**	5	WASHER (46X69X3-MM THK)	
	4	1	**9R-1510**	3	WASHER (51X82X4-MM THK)	
	5	1	**168-0443**	1	PIN	
	6	1	**168-0444**	1	PIN	
Y	7	1	**219-3384**	1	BUCKET GP-HOE (HEAVY-DUTY)	682

Y-SEPARATE ILLUSTRATION

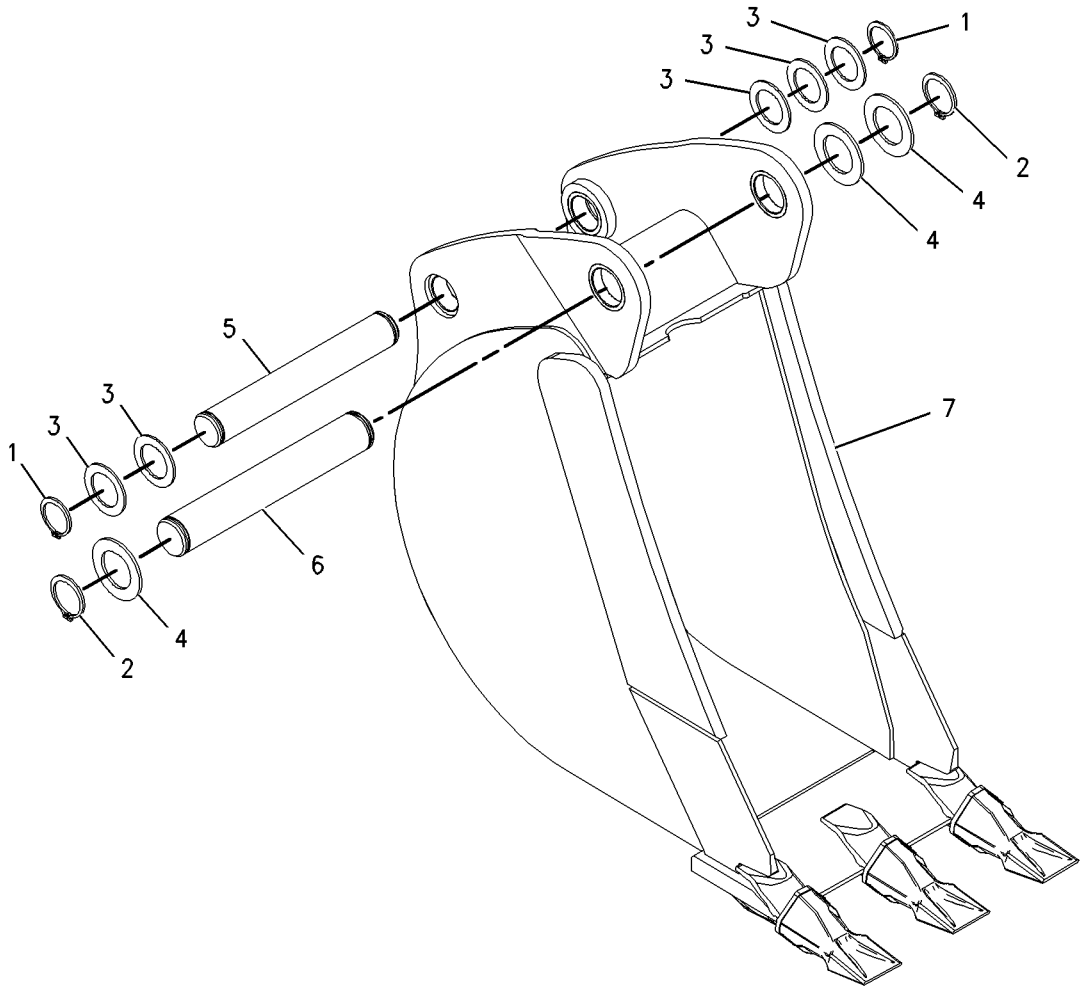

GRAPHIC #1 **<END>** g01001906

WORK TOOLS

219-3412 BUCKET GP-HOE–ROCK

S/N: EAT1-UP
305-MM (12-IN)
AN ATTACHMENT

SMCS-6503 **i02250023**

NOTE	REF NO	GRAPHIC REF	PART NUMBER	QTY	PART NAME 1 2 3 4 5 6 (PRODUCT LEVEL)	SEE PAGE
	1	1	**6V-3213**	2	RING-RETAINING	
	2	1	**6V-4364**	2	RING-RETAINING	
	3	1	**9R-0158**	4	WASHER (46X69X3-MM THK)	
	4	1	**9R-1510**	3	WASHER (51X82X4-MM THK)	
	5	1	**168-0443**	1	PIN	
	6	1	**168-0444**	1	PIN	
Y	7	1	**219-3394**	1	BUCKET GP-HOE (ROCK)	692

Y-SEPARATE ILLUSTRATION

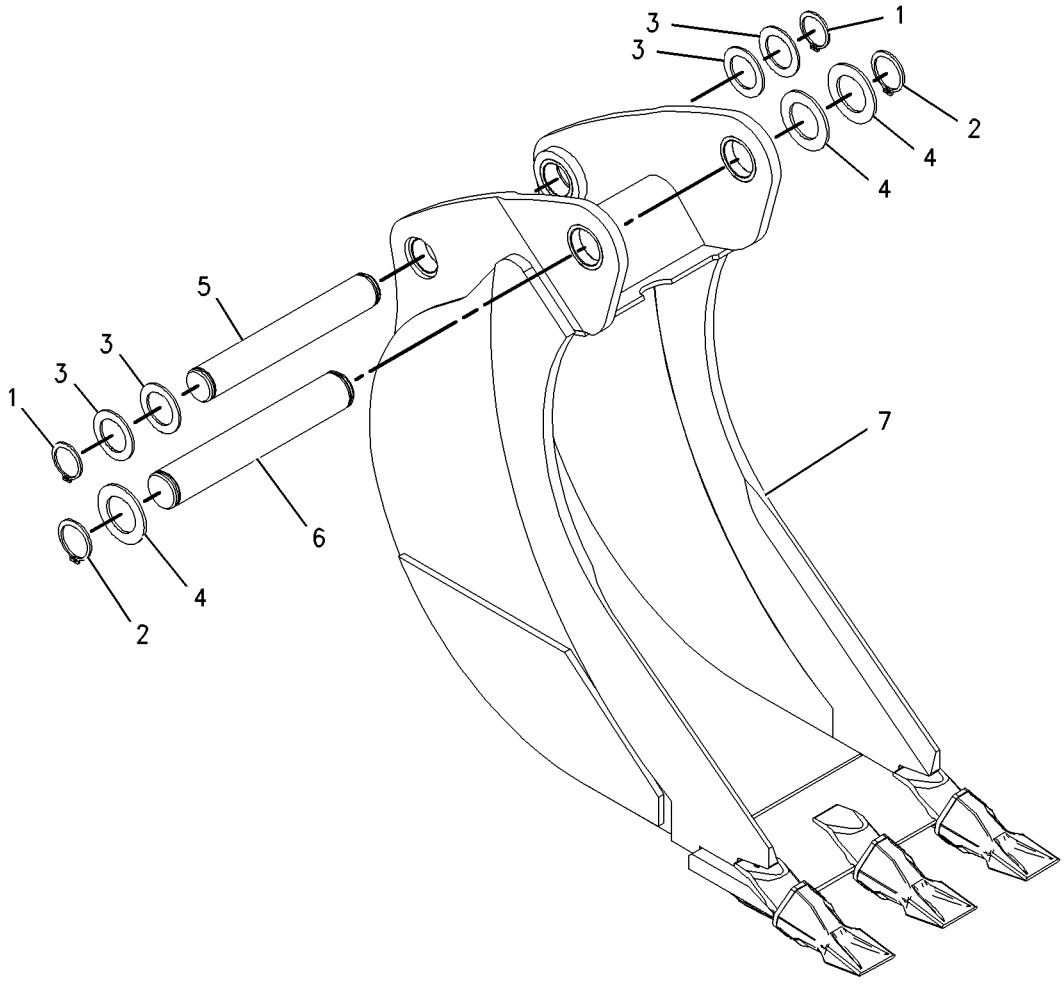

GRAPHIC #1 **<END>** g01001913

WORK TOOLS

219-3413 BUCKET GP-HOE–CORAL

S/N: EAT1-UP
305-MM (12-IN)
AN ATTACHMENT

SMCS-6503 **i02250031**

NOTE	REF NO	GRAPHIC REF	PART NUMBER	QTY	PART NAME 1 2 3 4 5 6 (PRODUCT LEVEL)	SEE PAGE
	1	1	**6V-3213**	2	RING-RETAINING	
	2	1	**6V-4364**	2	RING-RETAINING	
	3	1	**9R-0158**	4	WASHER (46X69X3-MM THK)	
	4	1	**9R-1510**	3	WASHER (51X82X4-MM THK)	
	5	1	**168-0443**	1	PIN	
	6	1	**168-0444**	1	PIN	
Y	7	1	**219-3399**	1	BUCKET GP-HOE (CORAL)	697

Y-SEPARATE ILLUSTRATION

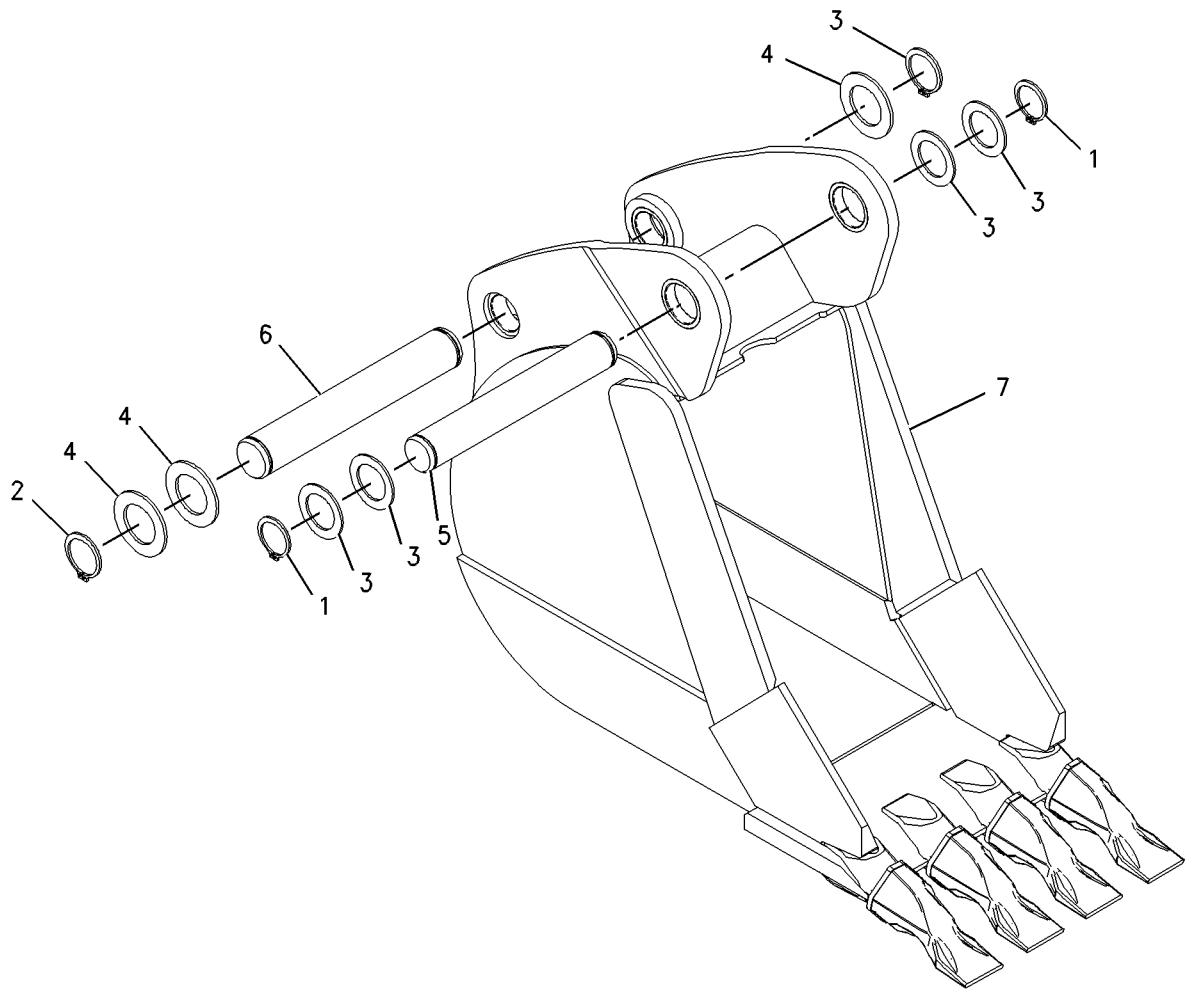

GRAPHIC #1 **<END>** g01001674

WORK TOOLS

247-1947 BUCKET GP-HOE—HEAVY-DUTY, PIN-LOCK

S/N: EAT1-UP
305-MM (12-IN)
AN ATTACHMENT

SMCS-6503 **i02044174**

NOTE	REF NO	GRAPHIC REF	PART NUMBER	QTY	PART NAME 1 2 3 4 5 6 (PRODUCT LEVEL)	SEE PAGE
	1	1	*208-5245*	3	TIP GP-PENETRATION	
					(EACH INCLUDES)	
	1A	1	**201-1238**	1	PIN	
	1B	1	**201-1239**	1	RETAINER AS	
	1C	1	**208-5235**	1	TIP-PENETRATION	
	2	1	*232-2752*	1	BUCKET AS	
	2A	1	**201-1234**	3	ADAPTER	
	2B	1	**9R-0431**	2	BEARING-SLEEVE	

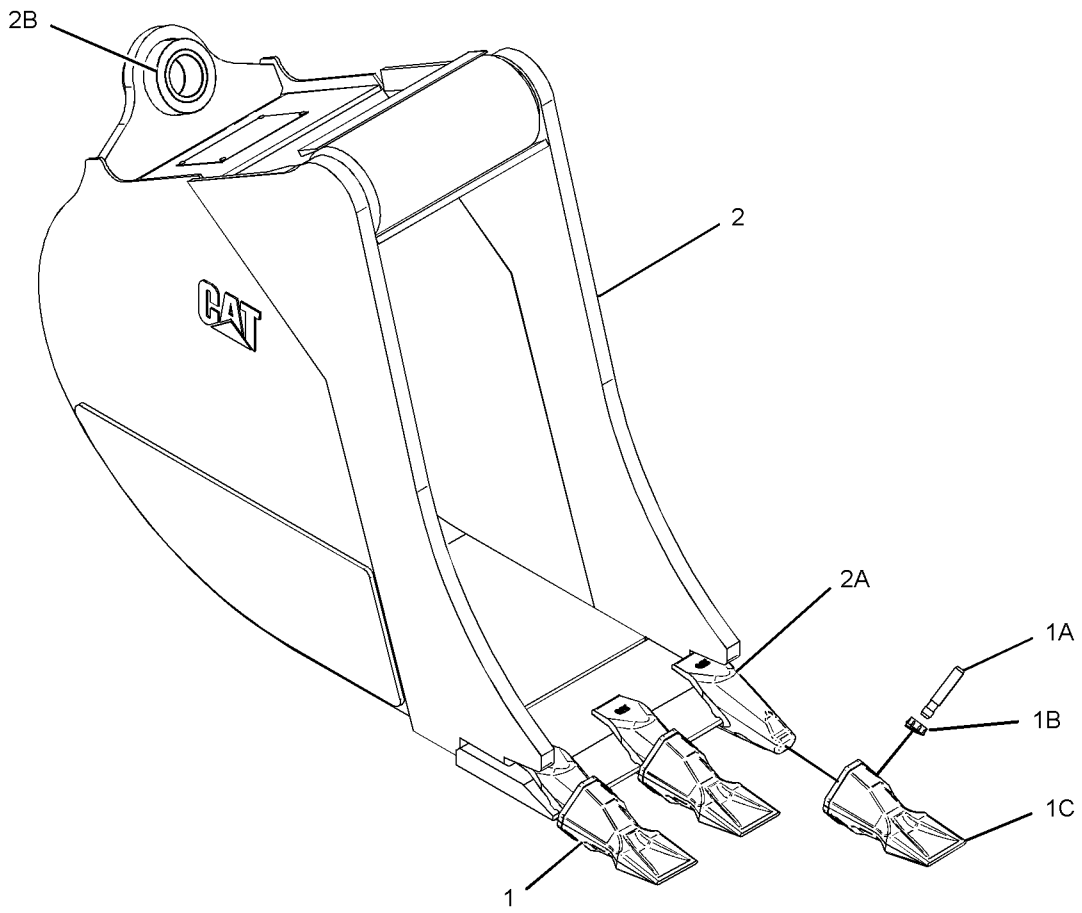

GRAPHIC #1 **<END>** g01071544

247-1948 BUCKET GP-HOE—HEAVY-DUTY, PIN-LOCK

S/N: EAT1-UP
406-MM (16-IN)
AN ATTACHMENT

SMCS-6503 **i02044171**

NOTE	REF NO	GRAPHIC REF	PART NUMBER	QTY	PART NAME 1 2 3 4 5 6 (PRODUCT LEVEL)	SEE PAGE
	1	1	*208-5245*	3	TIP GP-PENETRATION	
					(EACH INCLUDES)	
	1A	1	**201-1238**	1	PIN	
	1B	1	**201-1239**	1	RETAINER AS	
	1C	1	**208-5235**	1	TIP-PENETRATION	
	2	1	*232-2753*	1	BUCKET AS	
	2A	1	**201-1234**	3	ADAPTER	
	2B	1	**9R-0431**	2	BEARING-SLEEVE	

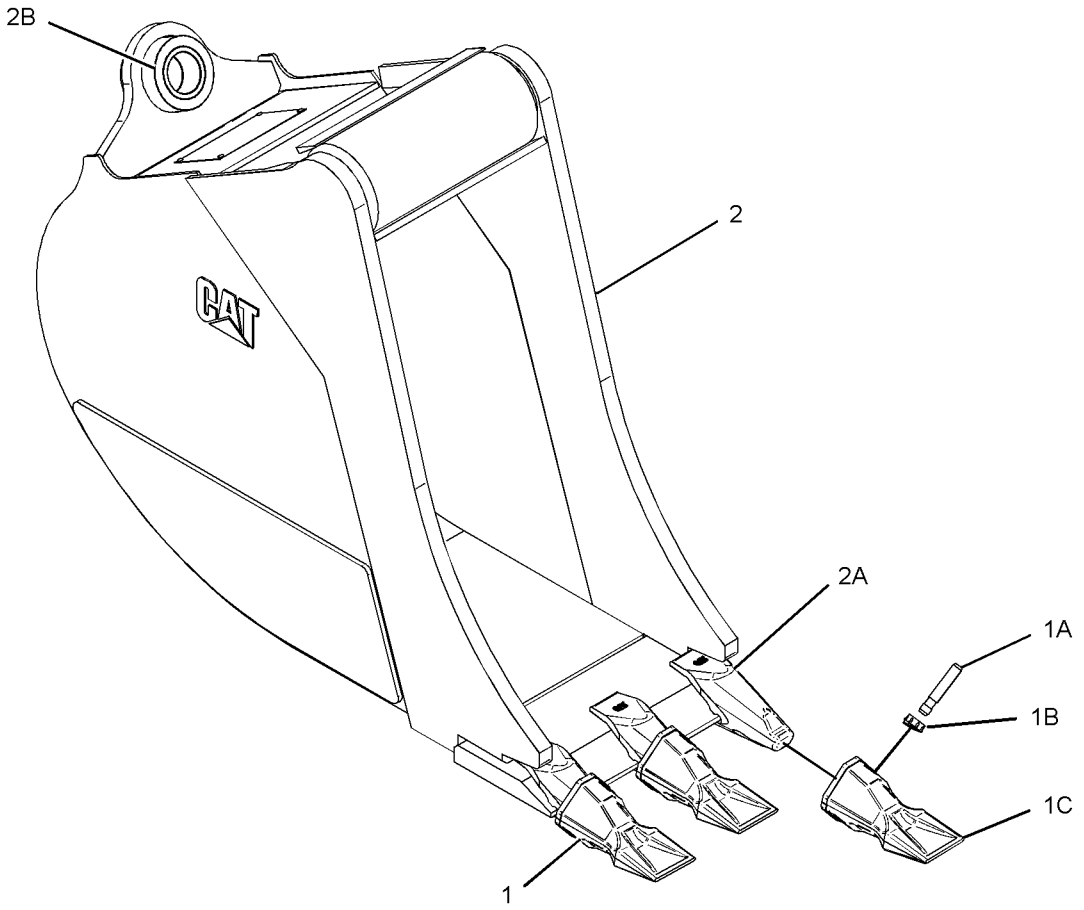

GRAPHIC #1 **<END>** g01071544

247-1949 BUCKET GP-HOE—HEAVY-DUTY, PIN-LOCK

S/N: EAT1-UP
458-MM (18-IN)
AN ATTACHMENT

SMCS-6503 **i02044168**

NOTE	REF NO	GRAPHIC REF	PART NUMBER	QTY	PART NAME 1 2 3 4 5 6 (PRODUCT LEVEL)	SEE PAGE
	1	1	*208-5245*	4	TIP GP-PENETRATION	
					(EACH INCLUDES)	
	1A	1	**201-1238**	1	PIN	
	1B	1	**201-1239**	1	RETAINER AS	
	1C	1	**208-5235**	1	TIP-PENETRATION	
	2	1	*232-2754*	1	BUCKET AS	
	2A	1	**201-1234**	4	ADAPTER	
	2B	1	**9R-0431**	2	BEARING-SLEEVE	
	2C	1	**219-9483**	1	EDGE	

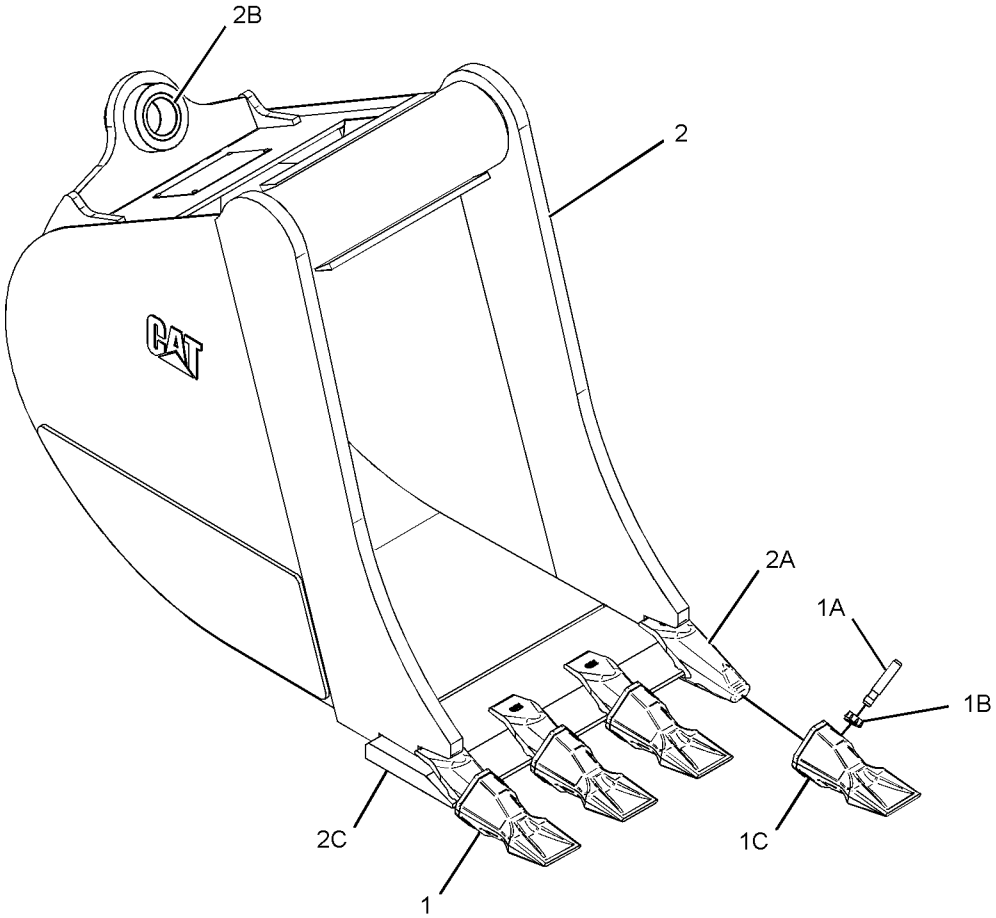

GRAPHIC #1 **<END>** g01071567

WORK TOOLS

247-1950 BUCKET GP-HOE—HEAVY-DUTY, PIN-LOCK

S/N: EAT1-UP
610-MM (24-IN)
AN ATTACHMENT

SMCS-6503 **i02044165**

NOTE	REF NO	GRAPHIC REF	PART NUMBER	QTY	PART NAME 1 2 3 4 5 6 (PRODUCT LEVEL)	SEE PAGE
	1	1	*208-5245*	5	TIP GP-PENETRATION	
					(EACH INCLUDES)	
	1A	1	**201-1238**	1	PIN	
	1B	1	**201-1239**	1	RETAINER AS	
	1C	1	**208-5235**	1	TIP-PENETRATION	
	2	1	*232-2755*	1	BUCKET AS	
	2A	1	**201-1234**	5	ADAPTER	
	2B	1	**9R-0431**	2	BEARING-SLEEVE	
	2C	1	**219-9484**	1	EDGE	

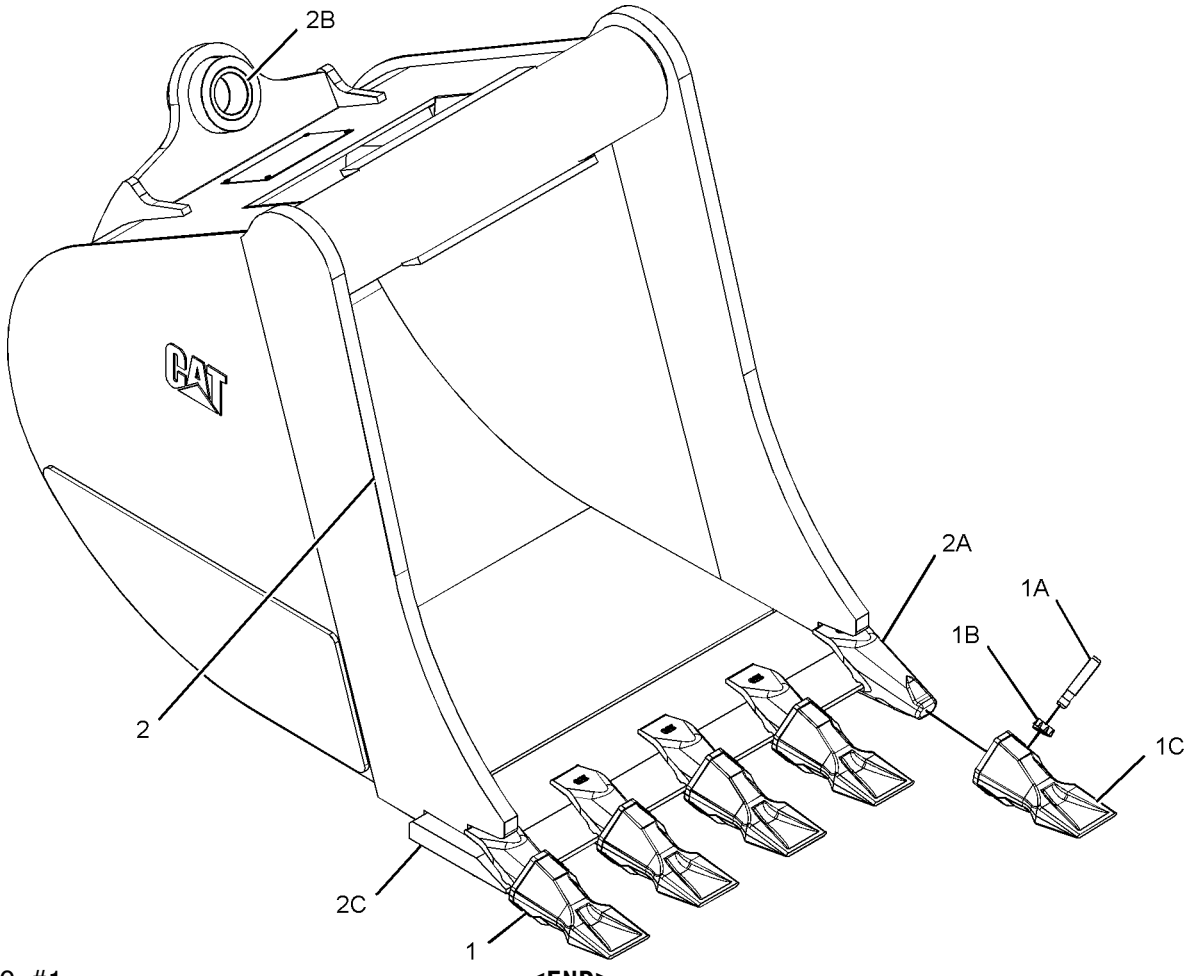

GRAPHIC #1 **<END>** g01071585

WORK TOOLS

247-1951 BUCKET GP-HOE—HEAVY-DUTY, PIN-LOCK

S/N: EAT1-UP
762-MM (30-IN)
AN ATTACHMENT

SMCS-6503 **i02044162**

NOTE	REF NO	GRAPHIC REF	PART NUMBER	QTY	PART NAME 1 2 3 4 5 6 (PRODUCT LEVEL)	SEE PAGE
	1	1	*208-5245*	5	TIP GP-PENETRATION	
					(EACH INCLUDES)	
	1A	1	**201-1238**	1	PIN	
	1B	1	**201-1239**	1	RETAINER AS	
	1C	1	**208-5235**	1	TIP-PENETRATION	
	2	1	*232-2756*	1	BUCKET AS	
	2A	1	**201-1234**	5	ADAPTER	
	2B	1	**9R-0431**	2	BEARING-SLEEVE	
	2C	1	**219-9485**	1	EDGE	

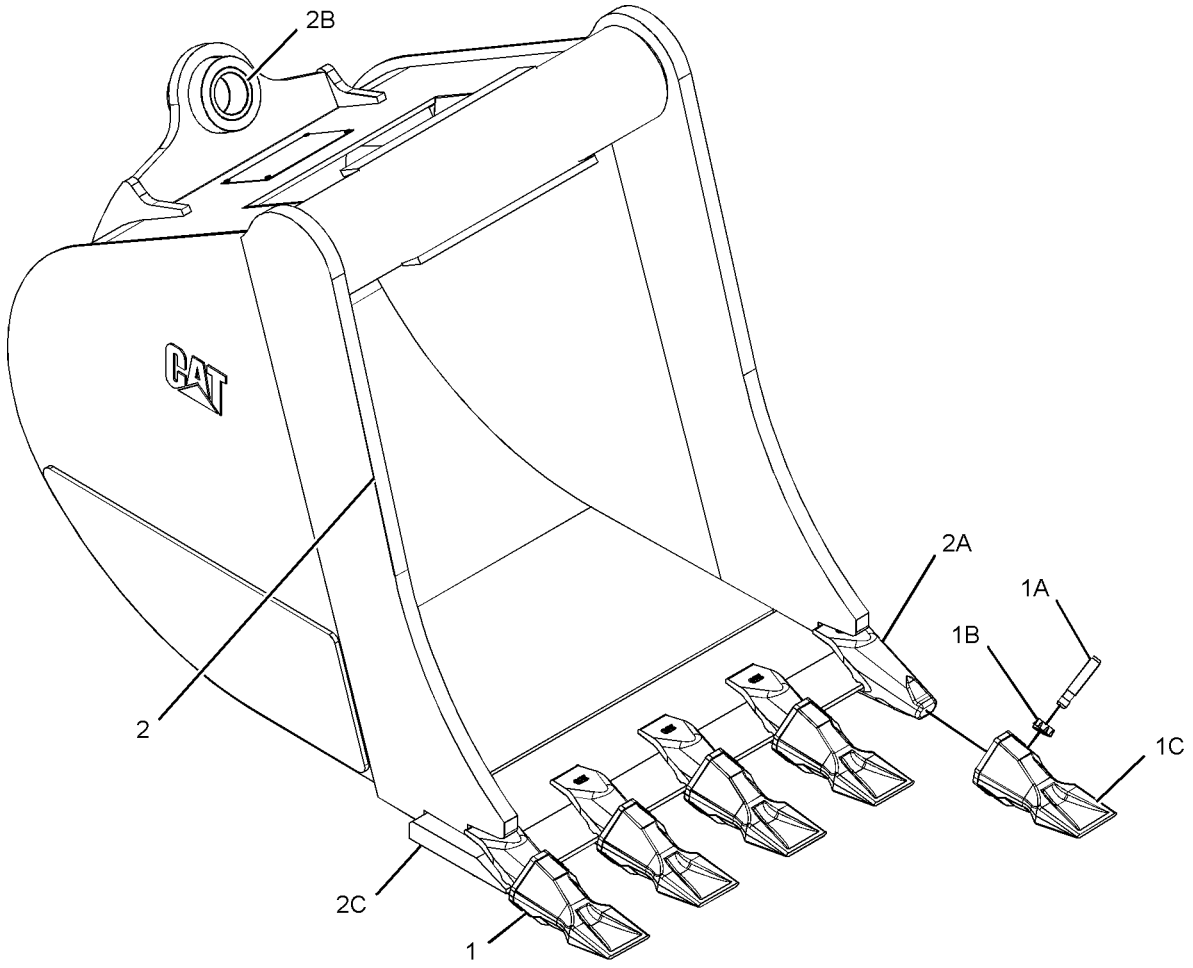

GRAPHIC #1 **<END>** g01071585

WORK TOOLS

247-1952 BUCKET GP-HOE—HEAVY-DUTY, PIN-LOCK

S/N: EAT1-UP
914-MM (36-IN)
AN ATTACHMENT

SMCS-6503 **i02044160**

NOTE	REF NO	GRAPHIC REF	PART NUMBER	QTY	PART NAME 1 2 3 4 5 6 (PRODUCT LEVEL)	SEE PAGE
	1	1	*208-5245*	6	TIP GP-PENETRATION	
					(EACH INCLUDES)	
	1A	1	**201-1238**	1	PIN	
	1B	1	**201-1239**	1	RETAINER AS	
	1C	1	**208-5235**	1	TIP-PENETRATION	
	2	1	*232-2757*	1	BUCKET AS	
	2A	1	**201-1234**	6	ADAPTER	
	2B	1	**9R-0431**	2	BEARING-SLEEVE	
	2C	1	**219-9486**	1	EDGE	

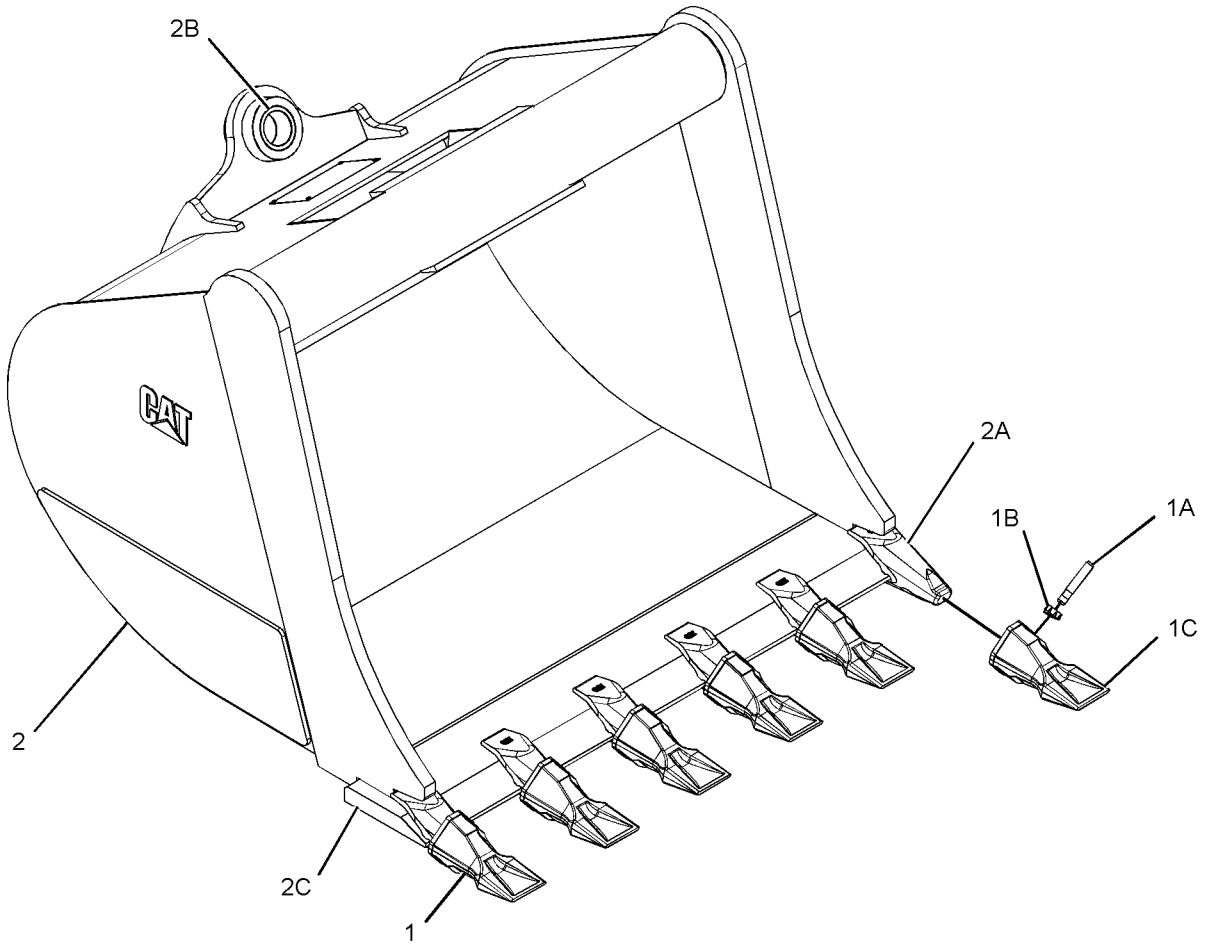

GRAPHIC #1 **<END>** g01071602

247-1953 BUCKET GP-HOE—HIGH CAPACITY, PIN-LOCK

S/N: EAT1-UP
305-MM (12-IN)
AN ATTACHMENT

SMCS-6503 **i02044151**

NOTE	REF NO	GRAPHIC REF	PART NUMBER	QTY	PART NAME 1 2 3 4 5 6 (PRODUCT LEVEL)	SEE PAGE
	1	1	*208-5245*	3	TIP GP-PENETRATION	
					(EACH INCLUDES)	
	1A	1	**201-1238**	1	PIN	
	1B	1	**201-1239**	1	RETAINER AS	
	1C	1	**208-5235**	1	TIP-PENETRATION	
	2	1	*232-2758*	1	BUCKET AS	
	2A	1	**201-1234**	3	ADAPTER	
	2B	1	**9R-0431**	2	BEARING-SLEEVE	

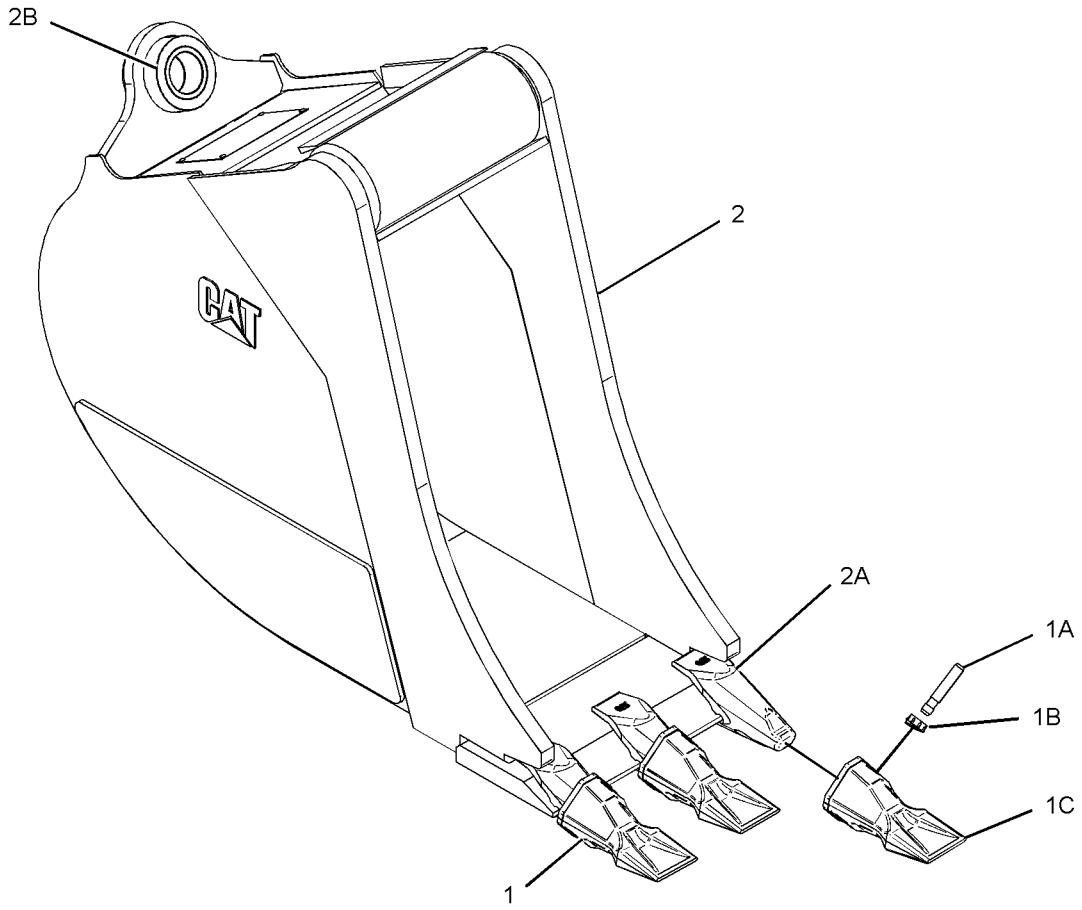

GRAPHIC #1 **<END>** g01071544

WORK TOOLS

247-1954 BUCKET GP-HOE—HIGH CAPACITY, PIN-LOCK

S/N: EAT1-UP
406-MM (16-IN)
AN ATTACHMENT

SMCS-6503 **i03256766**

NOTE	REF NO	GRAPHIC REF	PART NUMBER	QTY	PART NAME 1 2 3 4 5 6 (PRODUCT LEVEL)	SEE PAGE
	1	1	**137-4234**	1	PLATE-IDENTIFICATION (WORK TOOL)	
	2	1	**168-8389**	4	TACK-FASTENER	
	3	1	*208-5245*	3	TIP GP-PENETRATION	
					(EACH INCLUDES)	
	3A	1	**201-1238**	1	PIN	
	3B	1	**201-1239**	1	RETAINER AS	
	3C	1	**208-5235**	1	TIP-PENETRATION	
	4	1	*232-2759*	1	BUCKET AS	
		1	**248-2575**	1	EDGE	
		1	**201-1234**	3	ADAPTER	

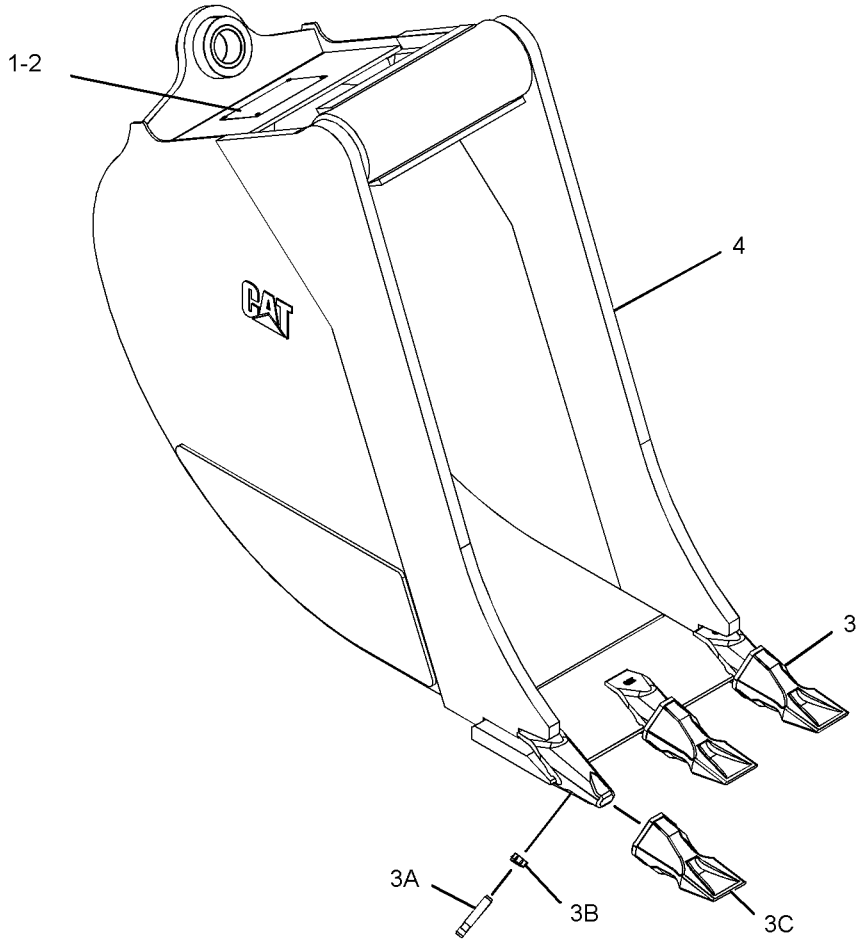

GRAPHIC #1 **<END>** g01161218

247-1955 BUCKET GP-HOE—HIGH CAPACITY, PIN-LOCK

S/N: EAT1-UP
458-MM (18-IN)
AN ATTACHMENT

SMCS-6503 **i02044147**

NOTE	REF NO	GRAPHIC REF	PART NUMBER	QTY	PART NAME 1 2 3 4 5 6 (PRODUCT LEVEL)	SEE PAGE
	1	1	*208-5245*	4	TIP GP-PENETRATION	
					(EACH INCLUDES)	
	1A	1	**201-1238**	1	PIN	
	1B	1	**201-1239**	1	RETAINER AS	
	1C	1	**208-5235**	1	TIP-PENETRATION	
	2	1	*232-2760*	1	BUCKET AS	
	2A	1	**201-1234**	4	ADAPTER	
	2B	1	**9R-0431**	2	BEARING-SLEEVE	
	2C	1	**219-9483**	1	EDGE	

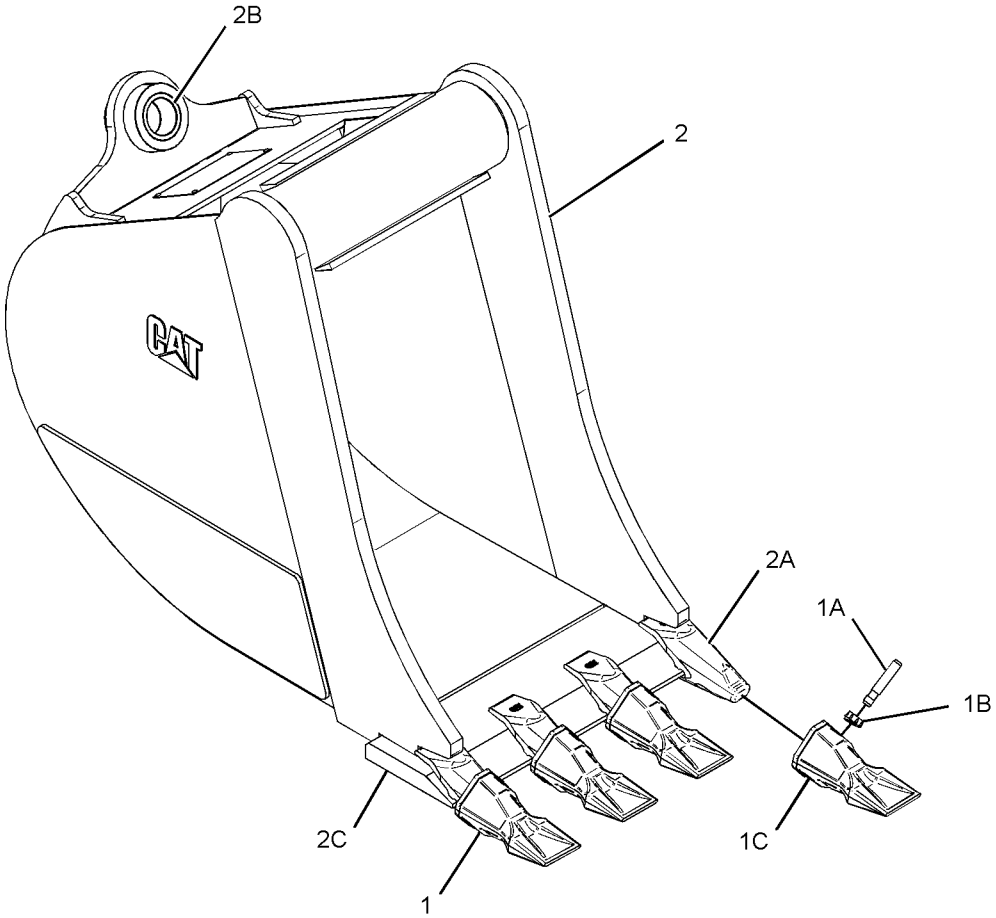

GRAPHIC #1 **<END>** g01071567

WORK TOOLS

247-1956 BUCKET GP-HOE—HIGH CAPACITY, PIN-LOCK

S/N: EAT1-UP
610-MM (24-IN)
AN ATTACHMENT

SMCS-6503 **i02044145**

NOTE	REF NO	GRAPHIC REF	PART NUMBER	QTY	PART NAME 1 2 3 4 5 6 (PRODUCT LEVEL)	SEE PAGE
	1	1	*208-5245*	5	TIP GP-PENETRATION	
					(EACH INCLUDES)	
	1A	1	**201-1238**	1	PIN	
	1B	1	**201-1239**	1	RETAINER AS	
	1C	1	**208-5235**	1	TIP-PENETRATION	
	2	1	*232-2761*	1	BUCKET AS	
	2A	1	**201-1234**	5	ADAPTER	
	2B	1	**9R-0431**	2	BEARING-SLEEVE	
	2C	1	**219-9484**	1	EDGE	

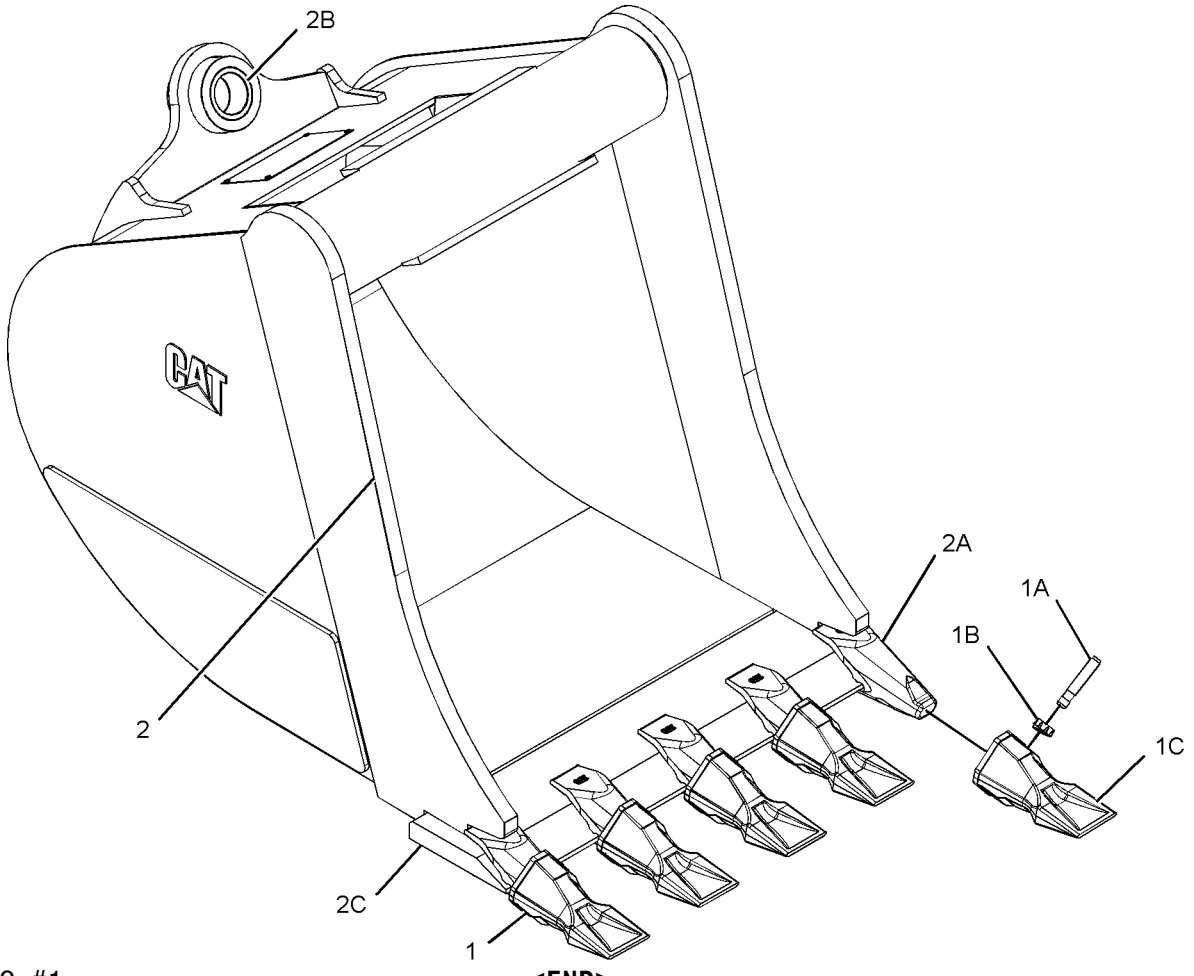

GRAPHIC #1 **<END>** g01071585

247-1957 BUCKET GP-HOE—HIGH CAPACITY, PIN-LOCK

S/N: EAT1-UP
762-MM (30-IN)
AN ATTACHMENT

SMCS-6503 **i02044144**

NOTE	REF NO	GRAPHIC REF	PART NUMBER	QTY	PART NAME 1 2 3 4 5 6 (PRODUCT LEVEL)	SEE PAGE
	1	1	*208-5245*	5	TIP GP-PENETRATION	
					(EACH INCLUDES)	
	1A	1	**201-1238**	1	PIN	
	1B	1	**201-1239**	1	RETAINER AS	
	1C	1	**208-5235**	1	TIP-PENETRATION	
	2	1	*232-2762*	1	BUCKET AS	
	2A	1	**201-1234**	5	ADAPTER	
	2B	1	**9R-0431**	2	BEARING-SLEEVE	
	2C	1	**219-9485**	1	EDGE	

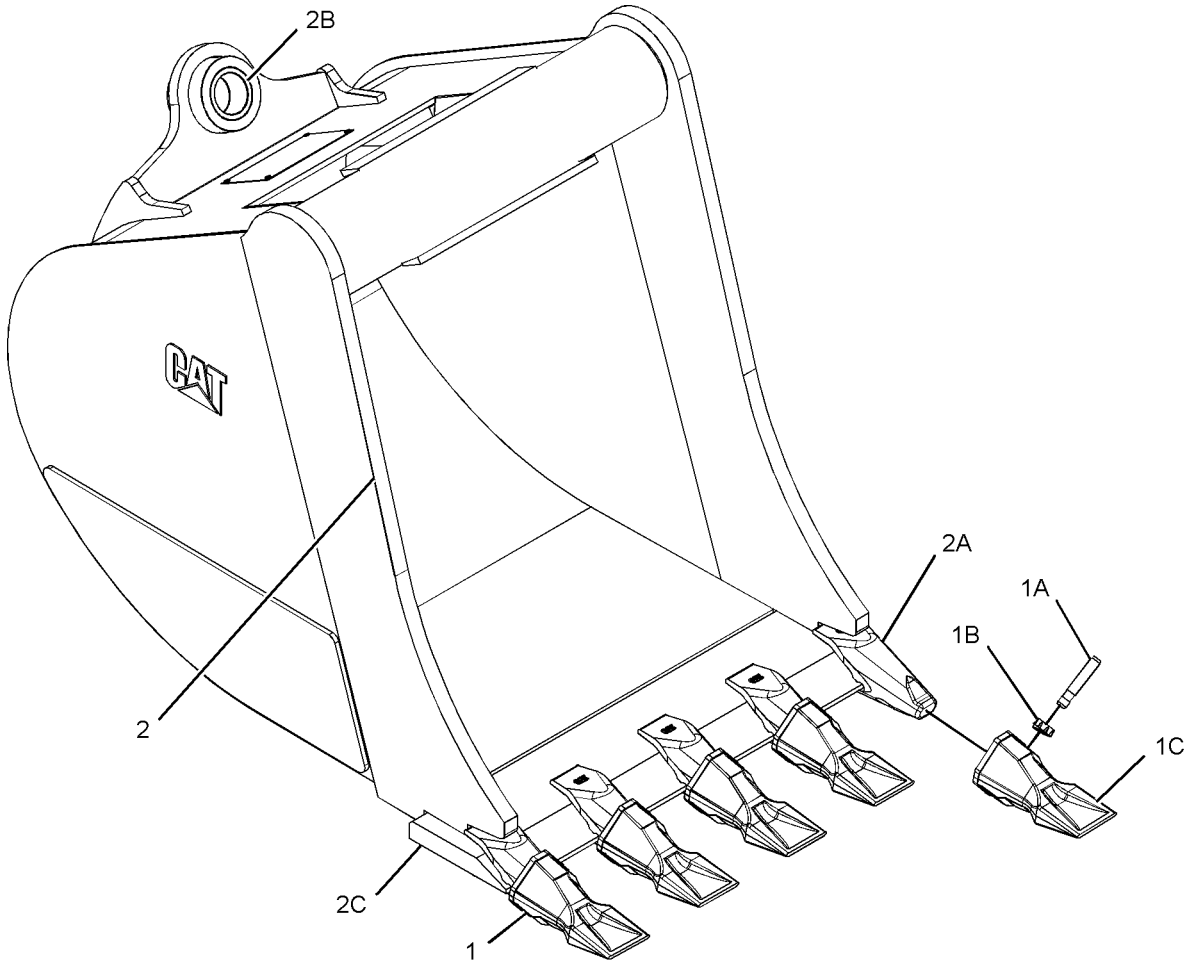

GRAPHIC #1 **<END>** g01071585

WORK TOOLS

247-1958 BUCKET GP-HOE—HIGH CAPACITY, PIN-LOCK

S/N: EAT1-UP
914-MM (36-IN)
AN ATTACHMENT

SMCS-6503 **i03214223**

NOTE	REF NO	GRAPHIC REF	PART NUMBER	QTY	PART NAME 1 2 3 4 5 6 (PRODUCT LEVEL)	SEE PAGE
	1	1	*208-5245*	6	TIP GP-PENETRATION	
					(EACH INCLUDES)	
	1A	1	**201-1238**	1	PIN	
	1B	1	**201-1239**	1	RETAINER AS	
	1C	1	**208-5235**	1	TIP-PENETRATION	
	2	1	*232-2763*	1	BUCKET AS	
	2A	1	**201-1234**	6	ADAPTER	
	2B	1	**9R-0431**	2	BEARING-SLEEVE	
	2C	1	**219-9486**	1	EDGE	

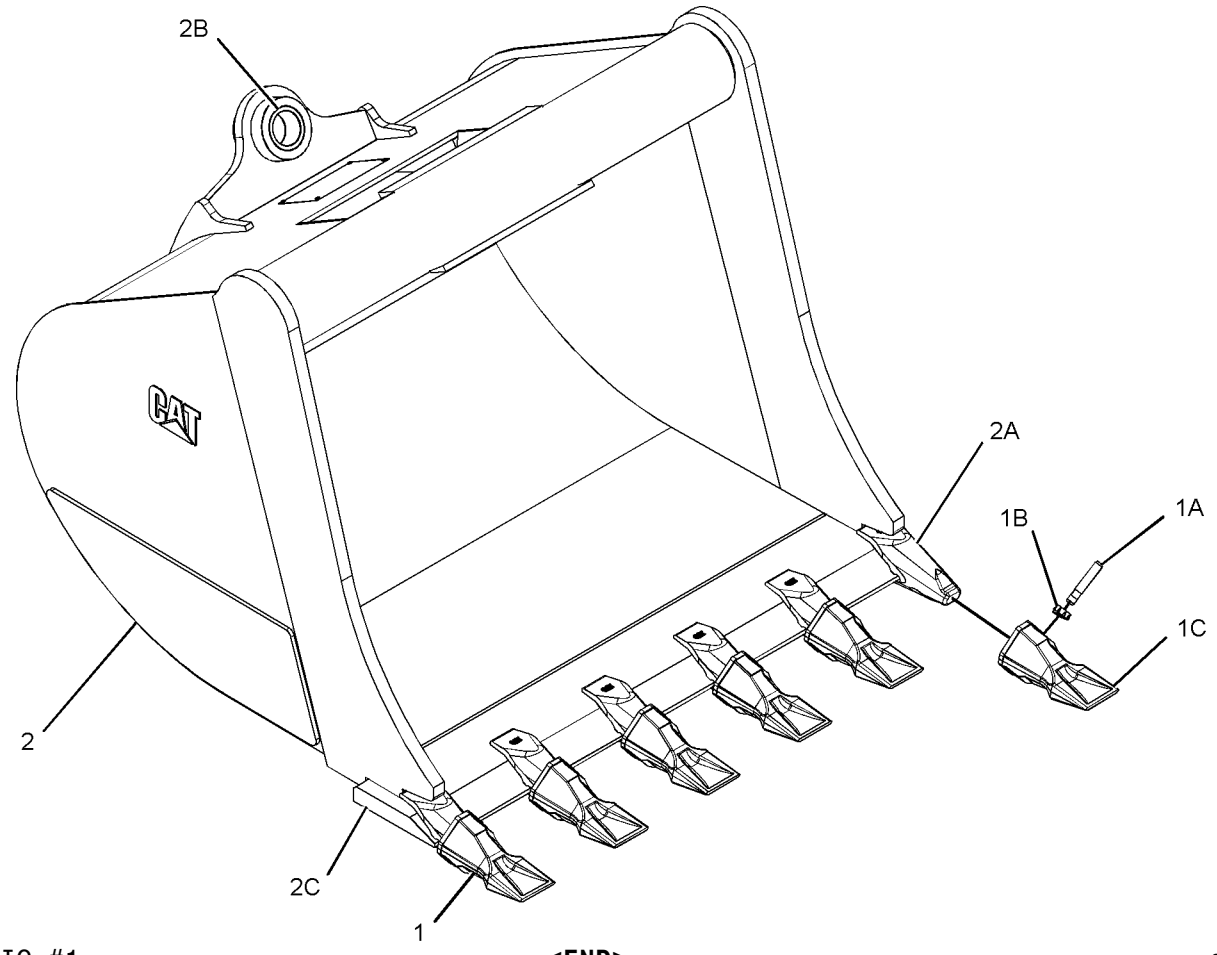

GRAPHIC #1 **<END>** g01071602

WORK TOOLS

254-8940 BUCKET GP-HOE—HIGH CAPACITY

S/N: EAT1-UP
458-MM (18-IN)
AN ATTACHMENT

SMCS-6503 **i02838064**

NOTE	REF NO	GRAPHIC REF	PART NUMBER	QTY	PART NAME 1 2 3 4 5 6 (PRODUCT LEVEL)	SEE PAGE
	1	1	**137-4234**	1	PLATE-IDENTIFICATION (WORK TOOL)	
	2	1	**168-8389**	4	TACK-FASTENER	
	3	1	*208-5244*	4	TIP GP-BUCKET (SOIL)	
					(EACH INCLUDES)	
		1	**201-1238**	1	PIN	
		1	**201-1239**	1	RETAINER AS	
		1	**208-5234**	1	TIP-BUCKET (SOIL)	
Y	4	1	*254-8939*	1	BUCKET AS-HOE (HIGH CAPACITY, PIN-LOCK)	662

Y-SEPARATE ILLUSTRATION

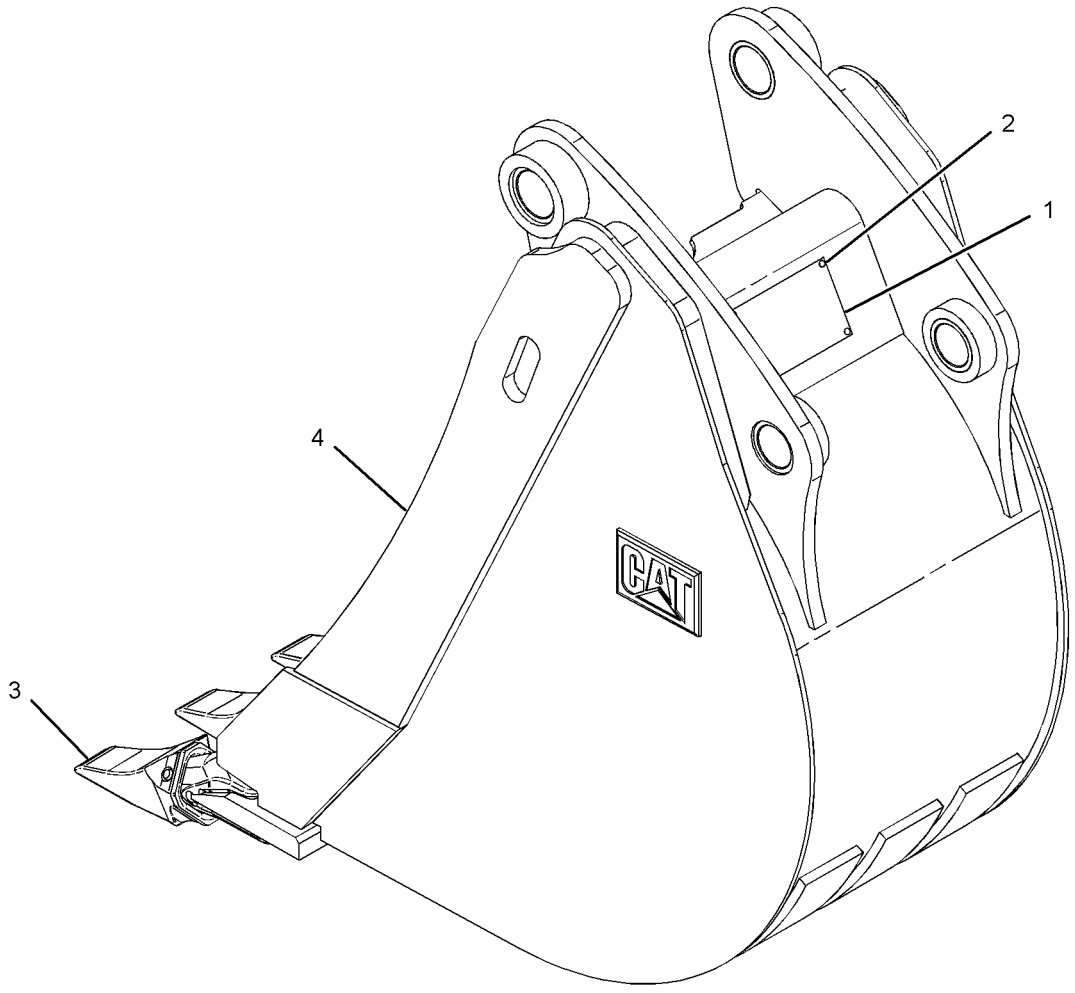

GRAPHIC #1 **<END>** g01150288

WORK TOOLS

254-8941 BUCKET GP-HOE—HIGH CAPACITY, PIN-LOCK

S/N: EAT1-UP
610-MM (24-IN)
AN ATTACHMENT

SMCS-6503 **i02284371**

NOTE	REF NO	GRAPHIC REF	PART NUMBER	QTY	PART NAME 1 2 3 4 5 6 (PRODUCT LEVEL)	SEE PAGE
	1	1	**137-4234**	1	PLATE-IDENTIFICATION (WORK TOOL)	
	2	1	**168-8389**	4	TACK-FASTENER	
	3	1	*208-5244*	5	TIP GP-BUCKET (SOIL)	
					(EACH INCLUDES)	
		1	**201-1238**	1	PIN	
		1	**201-1239**	1	RETAINER AS	
		1	**208-5234**	1	TIP-BUCKET (SOIL)	
Y	4	1	*254-8944*	1	BUCKET AS-HOE (HIGH CAPACITY, PIN-LOCK)	664

Y-SEPARATE ILLUSTRATION

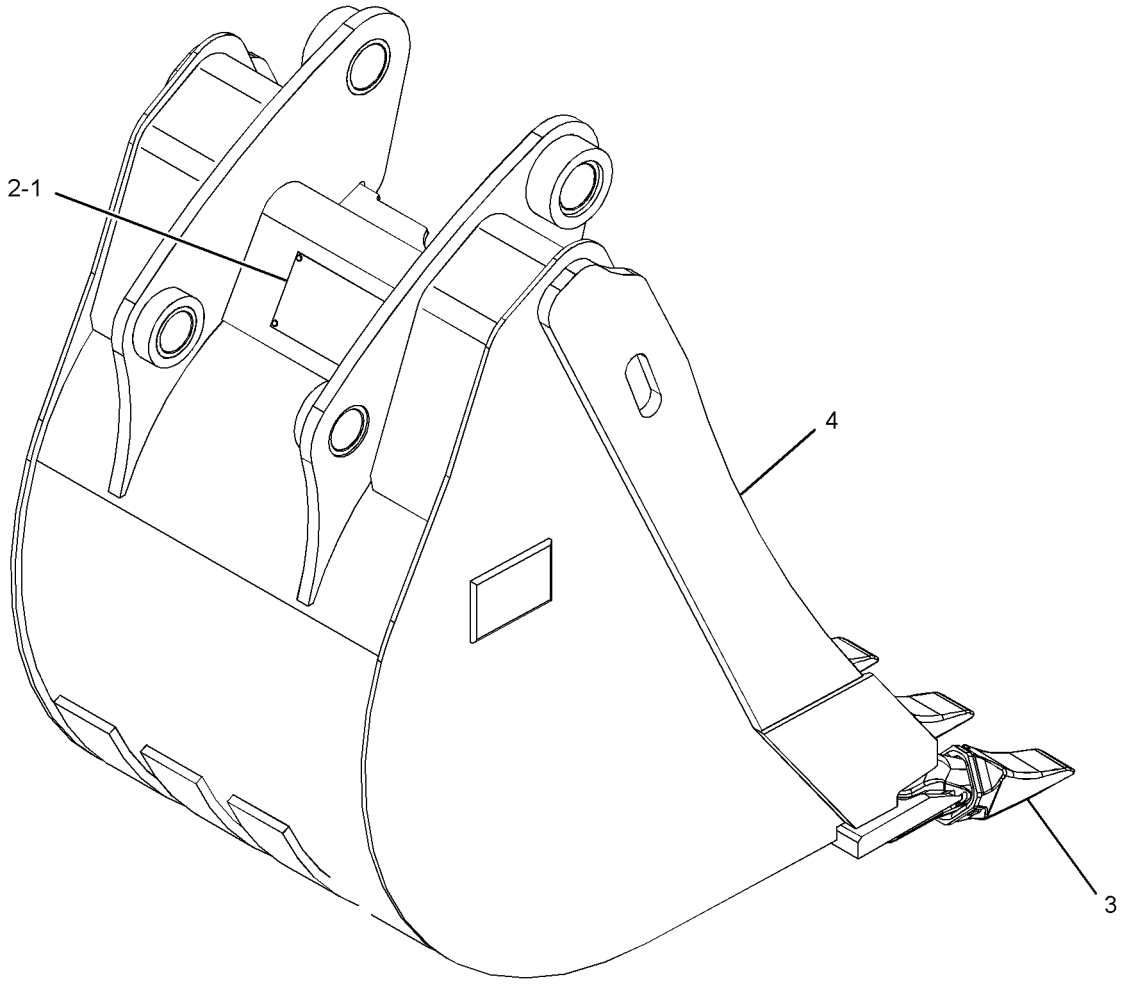

GRAPHIC #1 **<END>** g01150193

WORK TOOLS

254-8942 BUCKET GP-HOE—HIGH CAPACITY, PIN-LOCK

S/N: EAT1-UP
762-MM (30-IN)
AN ATTACHMENT

SMCS-6503 **i02290138**

NOTE	REF NO	GRAPHIC REF	PART NUMBER	QTY	PART NAME 1 2 3 4 5 6 (PRODUCT LEVEL)	SEE PAGE
	1	1	**137-4234**	1	PLATE-IDENTIFICATION (WORK TOOL)	
	2	1	**168-8389**	4	TACK-FASTENER	
	3	1	*208-5244*	5	TIP GP-BUCKET (SOIL)	
					(EACH INCLUDES)	
		1	**201-1238**	1	PIN	
		1	**201-1239**	1	RETAINER AS	
		1	**208-5234**	1	TIP-BUCKET (SOIL)	
Y	4	1	*254-8945*	1	BUCKET AS-HOE (HIGH CAPACITY, PIN-LOCK)	666

Y-SEPARATE ILLUSTRATION

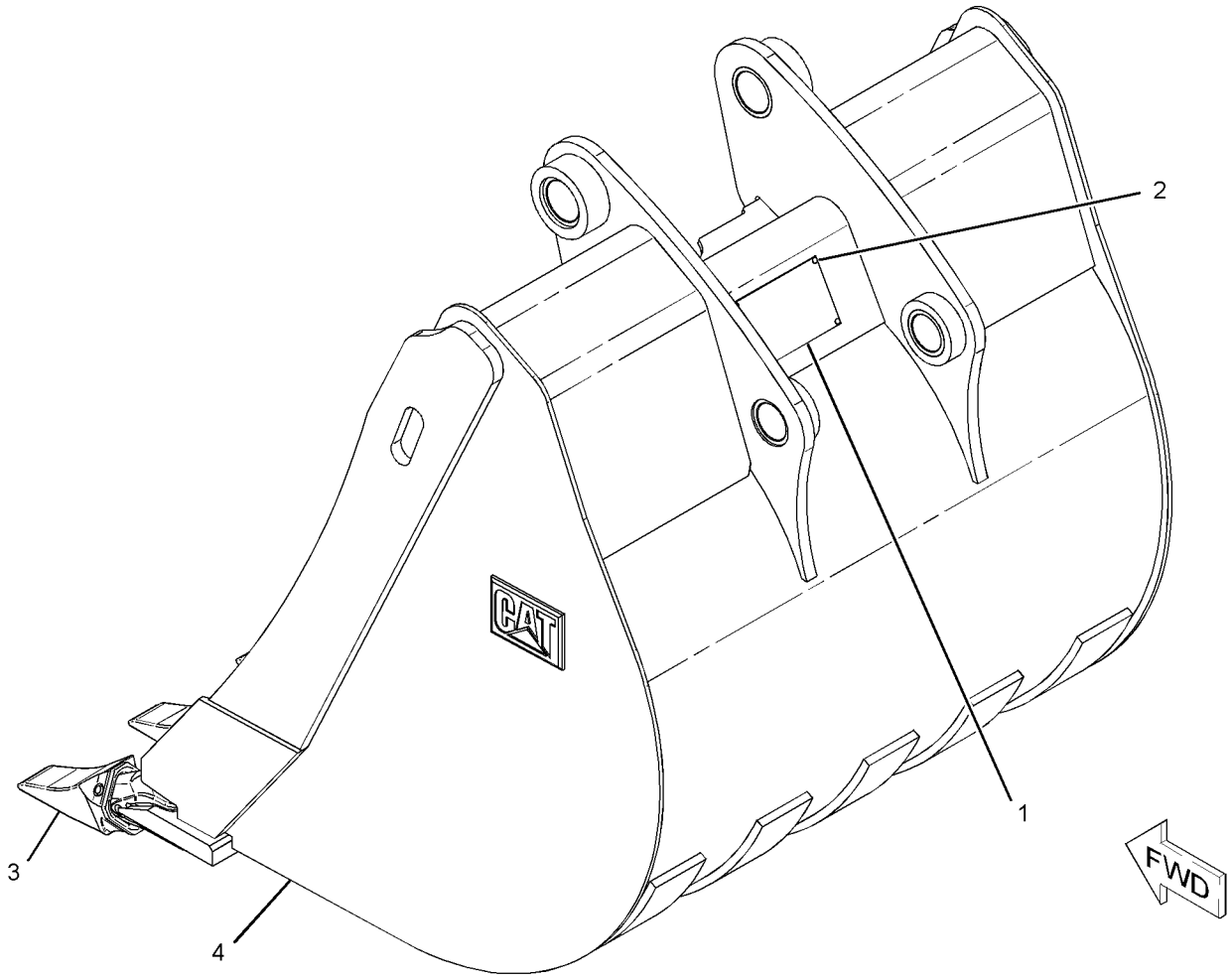

GRAPHIC #1 **<END>** g01144833

WORK TOOLS

254-8943 BUCKET GP-HOE—HIGH CAPACITY, PIN-LOCK

S/N: EAT1-UP
914-MM (36-IN)
AN ATTACHMENT

SMCS-6503 **i02284389**

NOTE	REF NO	GRAPHIC REF	PART NUMBER	QTY	PART NAME 1 2 3 4 5 6 (PRODUCT LEVEL)	SEE PAGE
	1	1	**137-4234**	1	PLATE-IDENTIFICATION (WORK TOOL)	
	2	1	**168-8389**	4	TACK-FASTENER	
	3	1	*208-5244*	6	TIP GP-BUCKET (SOIL)	
					(EACH INCLUDES)	
		1	**201-1238**		PIN	
		1	**201-1239**	1	RETAINER AS	
		1	**208-5234**	1	TIP-BUCKET (SOIL)	
Y	4	1	*254-8946*	1	BUCKET AS-HOE (HIGH CAPACITY, PIN-LOCK)	668

Y-SEPARATE ILLUSTRATION

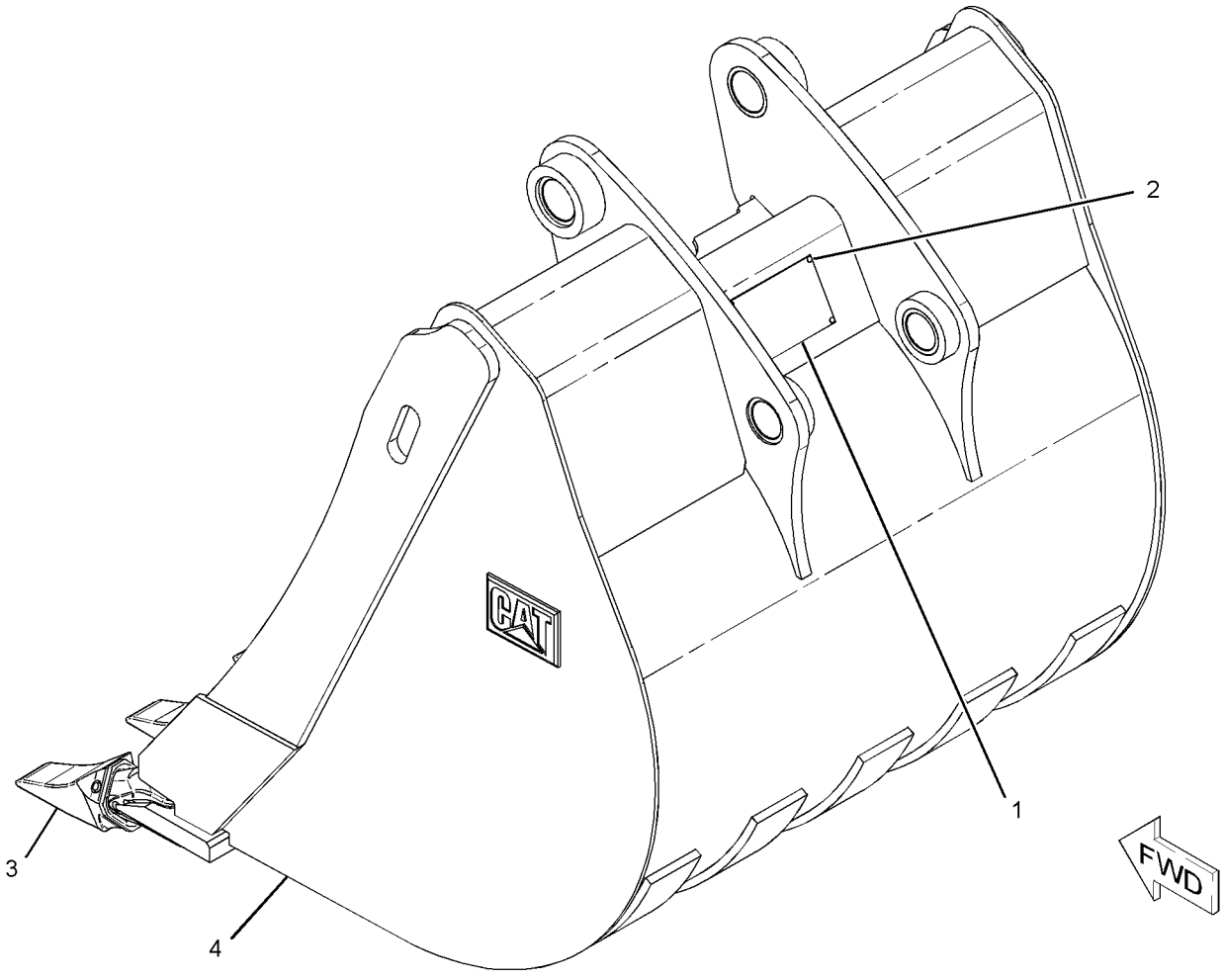

GRAPHIC #1 **<END>** g01144797

WORK TOOLS

216-8800 BUCKET GP-MULTIPURPOSE

S/N: EAT1-UP
1.0 CU(1.31 CU YD)
PART OF 232-2681, 232-2682 BUCKET AR-MULTIPURPOSE
FOR USE WITH 269-2145—PAGE 529
AN ATTACHMENT

SMCS-6104 **i02535101**

NOTE	REF NO	GRAPHIC REF	PART NUMBER	QTY	PART NAME 1 2 3 4 5 6 (PRODUCT LEVEL)	SEE PAGE
	1	1	**9R-4676**	2	PIN	
	2	1	**9R-4677**	2	PIN	
	3	1	**9R-4678**	2	PIN	
	4	1	**095-0865**	4	PIN-COTTER	
	5	1	**096-1820**	2	PIN-COTTER	
	6	1	**137-4234**	1	PLATE-IDENTIFICATION (WORK TOOL)	
	7	1	**168-8389**	4	TACK-FASTENER	
Y	8	1	**216-8802**	1	BULLDOZER AS	727
Y	9	1	**216-8803**	1	CLAM AS-MULTIPURPOSE BUCKET	730
Y	10	1	**226-5540**	2	CYLINDER GP-MULTIPURPOSE BUKT	404
	11	1	**233-3757**	1	EDGE	
Y	12	1	*251-5854*	1	LINES GP-MULTIPURPOSE BUCKET	464
	13	1	**3B-8489**	2	FITTING-GREASE	
	14	1	**3F-5108**	8	BOLT-PLOW (5/8-11X2.25-IN)	
	15	1	**4K-0367**	8	NUT-FULL (5/8-11-THD)	
	16	1	**8T-4122**	8	WASHER-HARD (17X32X3.5-MM THK)	

Y-SEPARATE ILLUSTRATION

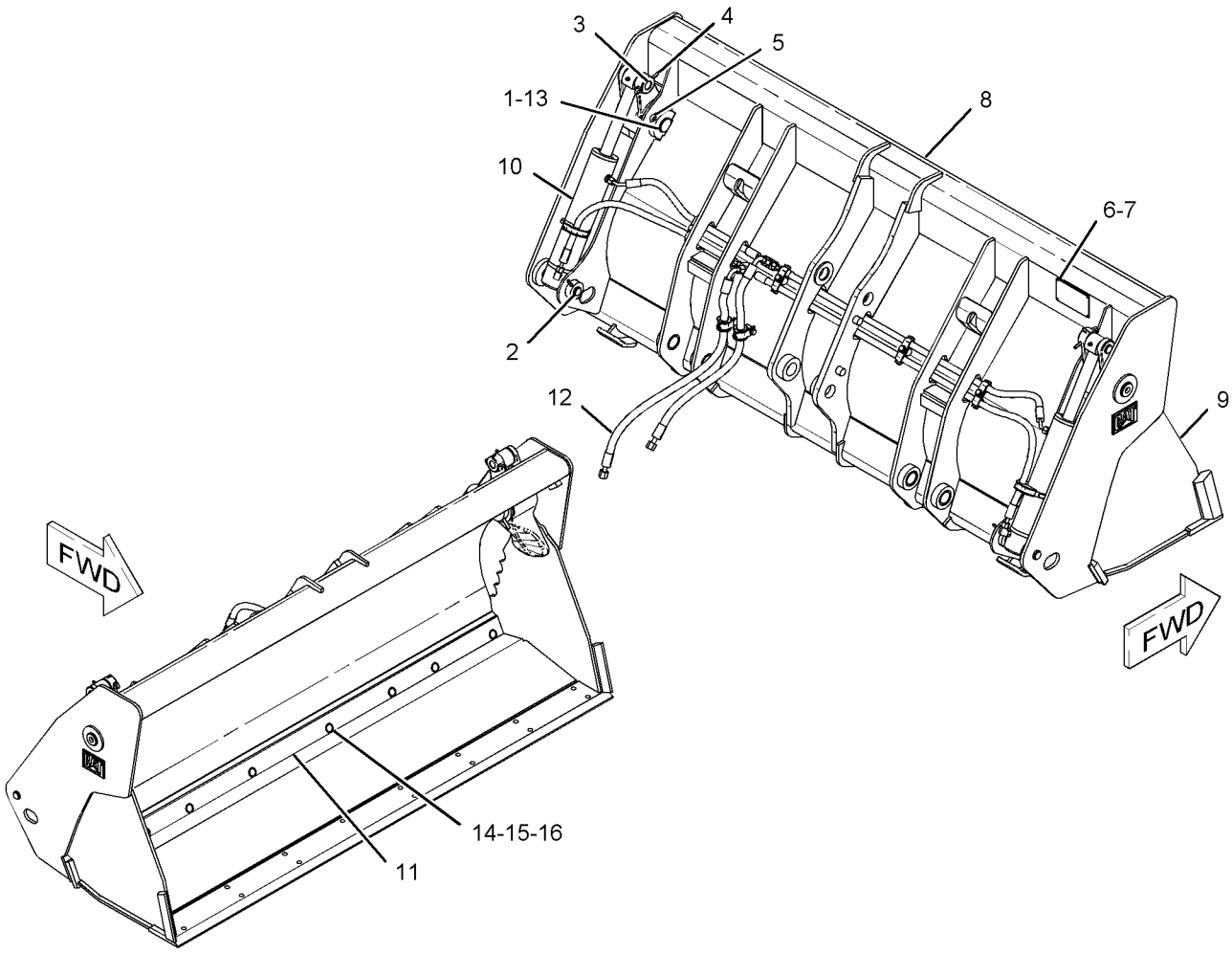

GRAPHIC #1 **<END>** g01131814

WORK TOOLS

216-8801 BUCKET GP-MULTIPURPOSE

S/N: EAT1-UP
1.0 CU M(1.31 CU YD)
PART OF 232-2685 BUCKET AR-MULTIPURPOSE
AN ATTACHMENT

SMCS-6104 **i02356568**

NOTE	REF NO	GRAPHIC REF	PART NUMBER	QTY	PART NAME 1 2 3 4 5 6 (PRODUCT LEVEL)	SEE PAGE
	1	1	**9R-4676**	2	PIN	
	2	1	**137-4234**	1	PLATE-IDENTIFICATION (WORK TOOL)	
	3	1	**168-8389**	4	TACK-FASTENER	
Y	4	1	**216-8803**	1	CLAM AS-MULTIPURPOSE BUCKET	730
Y	5	1	**216-8811**	1	BULLDOZER AS	728
Y	6	1	**226-5540**	2	CYLINDER GP-MULTIPURPOSE BUKT	404
	7	1	**233-3757**	1	EDGE	
Y	8	1	*251-5854*	1	LINES GP-MULTIPURPOSE BUCKET	464
	9	1	**095-0865**	4	PIN-COTTER	
	10	1	**096-1820**	2	PIN-COTTER	
	11	1	**3B-8489**	2	FITTING-GREASE	
	12	1	**3F-5108**	8	BOLT-PLOW (5/8-11X2.25-IN)	
	13	1	**4K-0367**	8	NUT-FULL (5/8-11-THD)	
	14	1	**8T-4122**	8	WASHER-HARD (17X32X3.5-MM THK)	
	15	1	**9R-4677**	2	PIN	
	16	1	**9R-4678**	2	PIN	
Y	17	1	*263-8591*	1	PLATE & FILM GP	928

Y-SEPARATE ILLUSTRATION

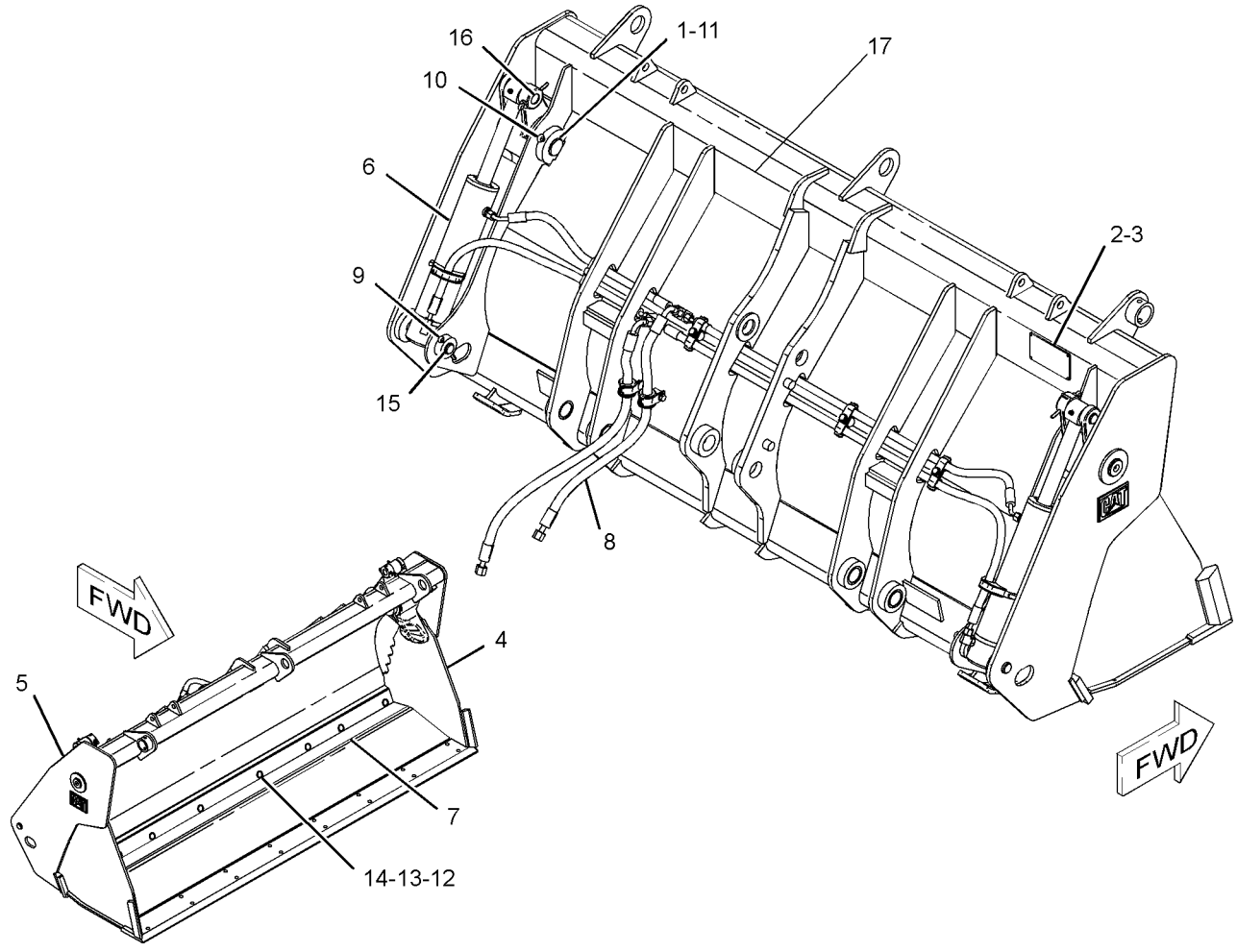

GRAPHIC #1 **<END>** g01239509

WORK TOOLS

216-8820 BUCKET GP-MULTIPURPOSE

S/N: EAT1-UP
1.1 CU M(1.4 CU YD)
PART OF 232-2686, 232-2687 BUCKET AR-MULTIPURPOSE
AN ATTACHMENT

SMCS-6104 **i02747036**

NOTE	REF NO	GRAPHIC REF	PART NUMBER	QTY	PART NAME 1 2 3 4 5 6 (PRODUCT LEVEL)	SEE PAGE
	1	1	**9R-4676**	2	PIN	
	2	1	**9R-4677**	2	PIN	
	3	1	**9R-4678**	2	PIN	
	4	1	**095-0865**	4	PIN-COTTER	
	5	1	**096-1820**	2	PIN-COTTER	
	6	1	**137-4234**	1	PLATE-IDENTIFICATION (WORK TOOL)	
	7	1	**168-8389**	4	TACK-FASTENER	
Y	8	1	**216-8822**	1	BULLDOZER AS	729
Y	9	1	**216-8826**	1	CLAM AS-MULTIPURPOSE BUCKET	731
Y	10	1	**226-5540**	2	CYLINDER GP-MULTIPURPOSE BUKT	404
	11	1	**233-0859**	1	EDGE	
Y	12	1	*251-5855*	1	LINES GP-MULTIPURPOSE BUCKET	466
	13	1	**3B-8489**	2	FITTING-GREASE	
	14	1	**3F-5108**	8	BOLT-PLOW (5/8-11X2.25-IN)	
	15	1	**4K-0367**	8	NUT-FULL (5/8-11-THD)	
	16	1	**8T-4122**	8	WASHER-HARD (17X32X3.5-MM THK)	

Y-SEPARATE ILLUSTRATION

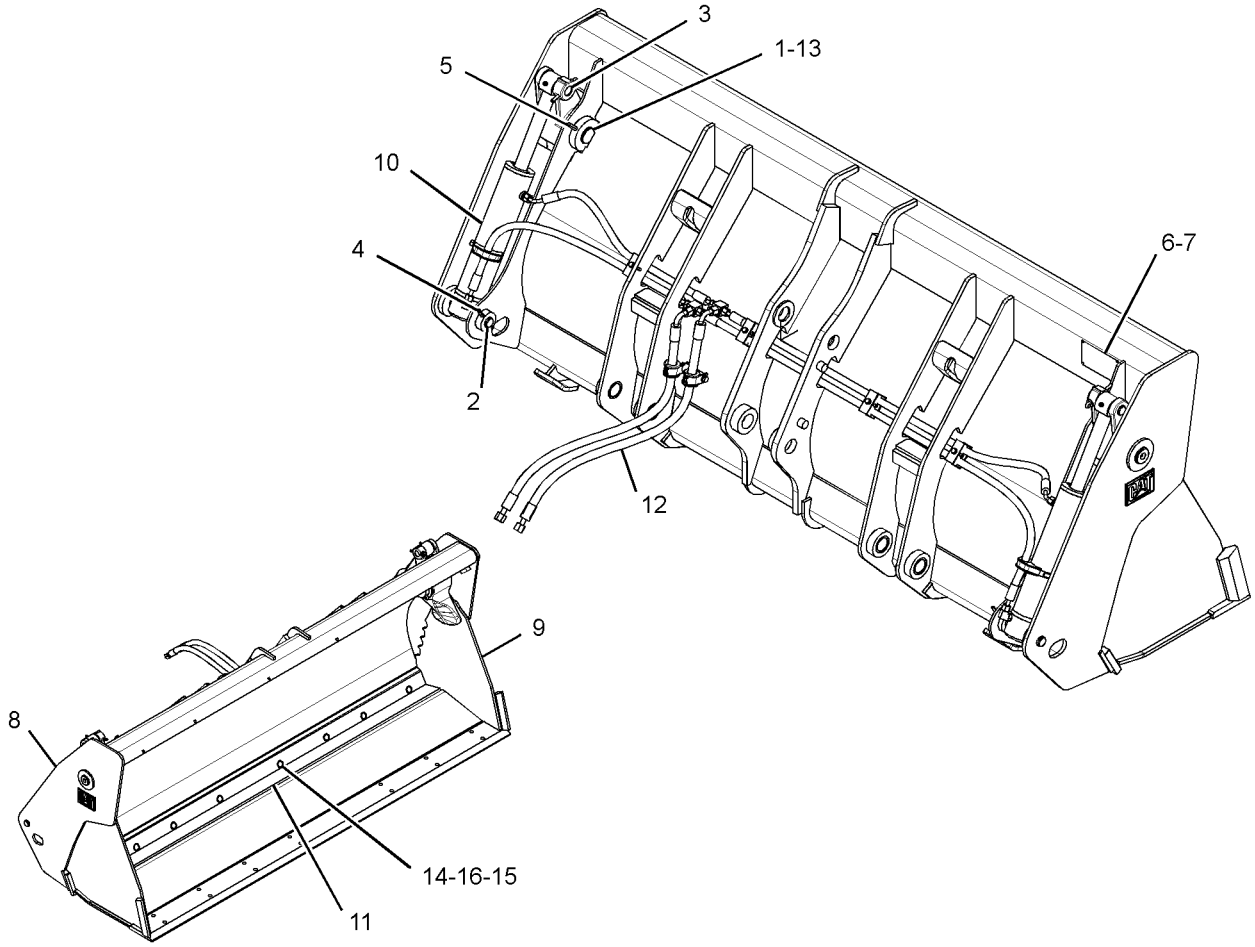

GRAPHIC #1 **<END>** g01392329

WORK TOOLS

216-8821 BUCKET GP-MULTIPURPOSE

S/N: EAT1-UP
1.1 CU M(1.4 CU YD)
PART OF 232-2690 BUCKET AR-MULTIPURPOSE
AN ATTACHMENT

SMCS-6104 **i02747035**

NOTE	REF NO	GRAPHIC REF	PART NUMBER	QTY	PART NAME 1 2 3 4 5 6 (PRODUCT LEVEL)	SEE PAGE
	1	1	**9R-4676**	2	PIN	
	2	1	**137-4234**	1	PLATE-IDENTIFICATION (WORK TOOL)	
	3	1	**168-8389**	4	TACK-FASTENER	
Y	4	1	**216-8762**	1	BULLDOZER AS (FORKS)	726
Y	5	1	**216-8826**	1	CLAM AS-MULTIPURPOSE BUCKET	731
Y	6	1	**226-5540**	2	CYLINDER GP-MULTIPURPOSE BUKT	404
	7	1	**233-0859**	1	EDGE	
Y	8	1	*251-5855*	1	LINES GP-MULTIPURPOSE BUCKET	466
	9	1	**095-0865**	4	PIN-COTTER	
	10	1	**096-1820**	2	PIN-COTTER	
	11	1	**3B-8489**	2	FITTING-GREASE	
	12	1	**3F-5108**	8	BOLT-PLOW (5/8-11X2.25-IN)	
	13	1	**4K-0367**	8	NUT-FULL (5/8-11-THD)	
	14	1	**8T-4122**	8	WASHER-HARD (17X32X3.5-MM THK)	
	15	1	**9R-4677**	2	PIN	
	16	1	**9R-4678**	2	PIN	
Y	17	1	*263-8591*	1	PLATE & FILM GP	928

Y-SEPARATE ILLUSTRATION

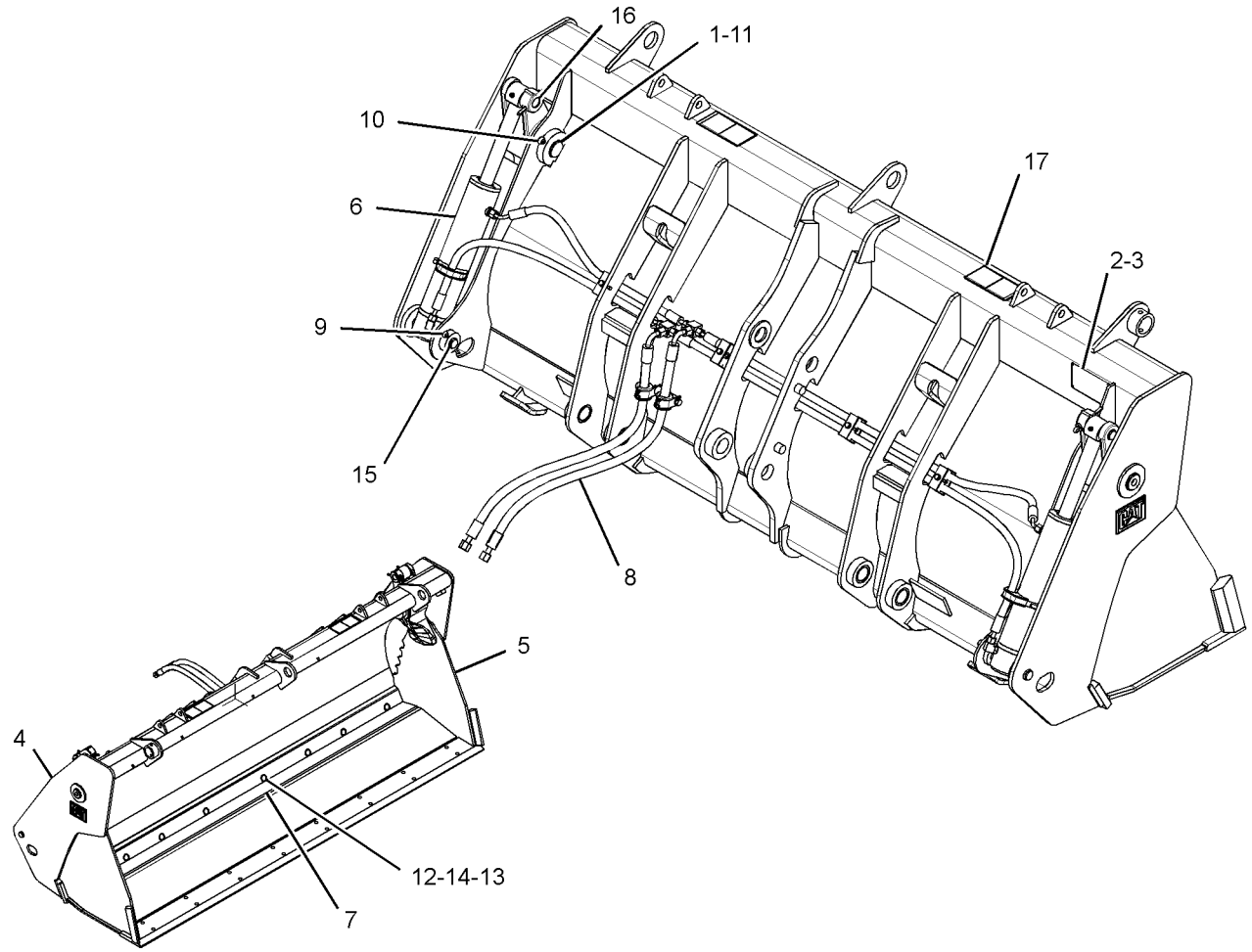

GRAPHIC #1 **<END>** g01392421

WORK TOOLS

216-8762 BULLDOZER AS

S/N: EAT1-UP
PART OF 216-8821 BUCKET GP-MULTIPURPOSE
FIELD REPLACEMENT FOR 216-8822—PAGE 729
AN ATTACHMENT

SMCS-6050 **i02747034**

NOTE	REF NO	GRAPHIC REF	PART NUMBER	QTY	PART NAME 1 2 3 4 5 6 (PRODUCT LEVEL)	SEE PAGE
	1	1	**216-8778**	2	BRACKET	
	2	1	**216-8780**	1	BRACKET AS	
	3	1	**216-8781**	4	BRACKET	
Y	4	1	**216-8822**	1	BULLDOZER AS	729
	5	1	**224-6250**	2	PLATE	

Y-SEPARATE ILLUSTRATION

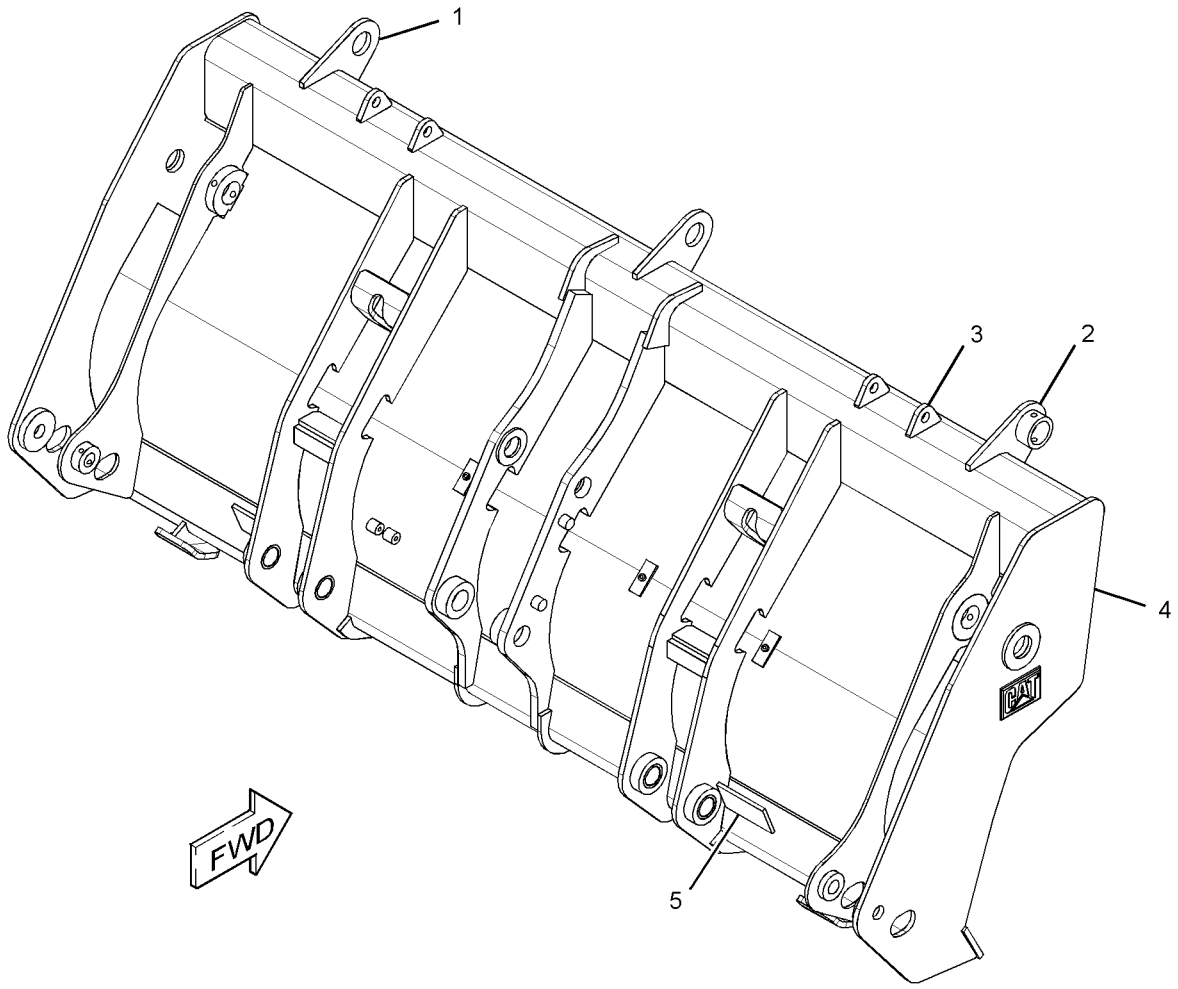

GRAPHIC #1 **<END>** g01384995

WORK TOOLS

216-8802 BULLDOZER AS

S/N: EAT1-UP
PART OF 216-8800 BUCKET GP-MULTIPURPOSE, 216-8811 BULLDOZER AS
FIELD REPLACEMENT ORDER 216-8811—PAGE 728
AN ATTACHMENT

SMCS-6050 **i03256762**

NOTE	REF NO	GRAPHIC REF	PART NUMBER	QTY	PART NAME 1 2 3 4 5 6 (PRODUCT LEVEL)	SEE PAGE
					(NO SERVICEABLE PARTS AT TIME OF PUBLICATION)	

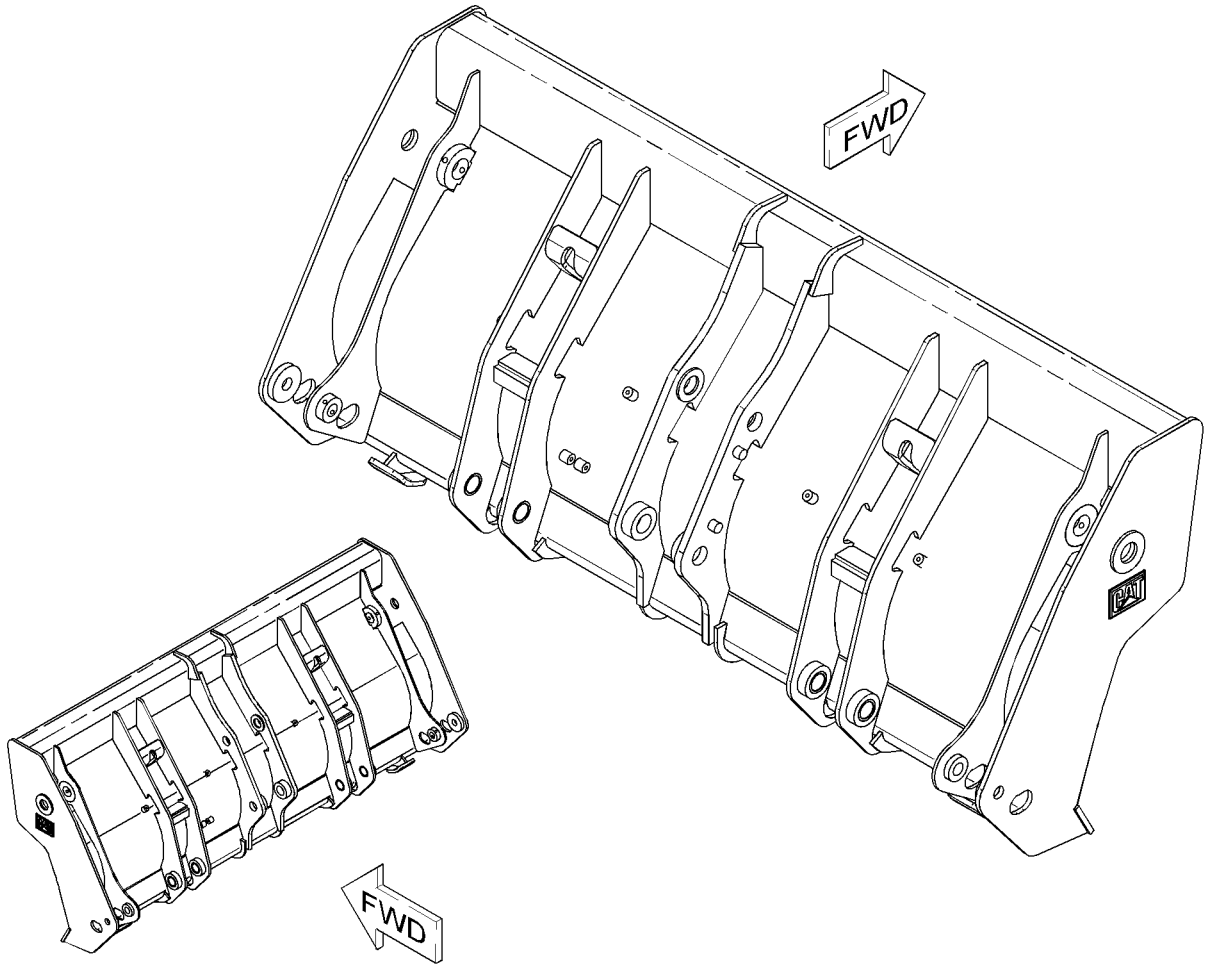

GRAPHIC #1 **<END>** g01657173

216-8811 BULLDOZER AS

S/N: EAT1-UP
PART OF 216-8801 BUCKET GP-MULTIPURPOSE
FIELD REPLACEMENT FOR 216-8802—PAGE 727
AN ATTACHMENT

SMCS-6050 **i02747048**

NOTE	REF NO	GRAPHIC REF	PART NUMBER	QTY	PART NAME 1 2 3 4 5 6 (PRODUCT LEVEL)	SEE PAGE
	1	1	**216-8778**	2	BRACKET	
	2	1	**216-8780**	1	BRACKET AS	
	3	1	**216-8781**	4	BRACKET	
Y	4	1	**216-8802**	1	BULLDOZER AS	727
	5	1	**224-6250**	2	PLATE	

Y-SEPARATE ILLUSTRATION

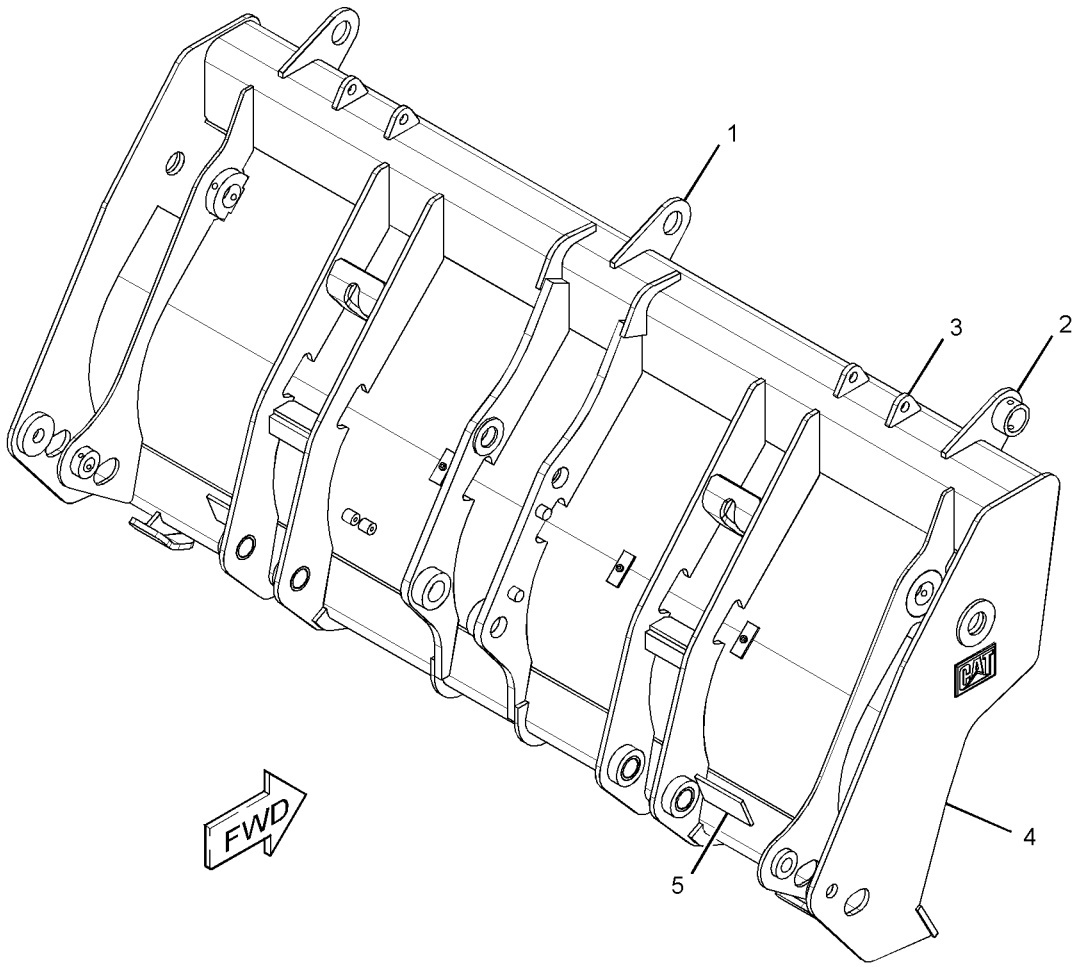

GRAPHIC #1 **<END>** g01385103

216-8822 BULLDOZER AS

S/N: EAT1-UP
PART OF 216-8820 BUCKET GP-MULTIPURPOSE, 216-8762 BULLDOZER AS
FIELD REPLACEMENT ORDER 216-8762—PAGE 726
AN ATTACHMENT

SMCS-6050 **i02236782**

NOTE	REF NO	GRAPHIC REF	PART NUMBER	QTY	PART NAME 1 2 3 4 5 6 (PRODUCT LEVEL)	SEE PAGE
	1	1	**9R-0111**	4	BEARING-SLEEVE	
	2	1	*216-8794*	1	BRACKET AS (LH)	
	2A	1	**161-4130**	1	PLATE-IDENTIFICATION (CAT)	
	3	1	*216-8796*	1	BRACKET AS (RH)	
	3A	1	**161-4130**	1	PLATE-IDENTIFICATION (CAT)	
M	4	1	**9R-5271**	6	BOSS (M10X1.5X25-MM)	

M-METRIC PART

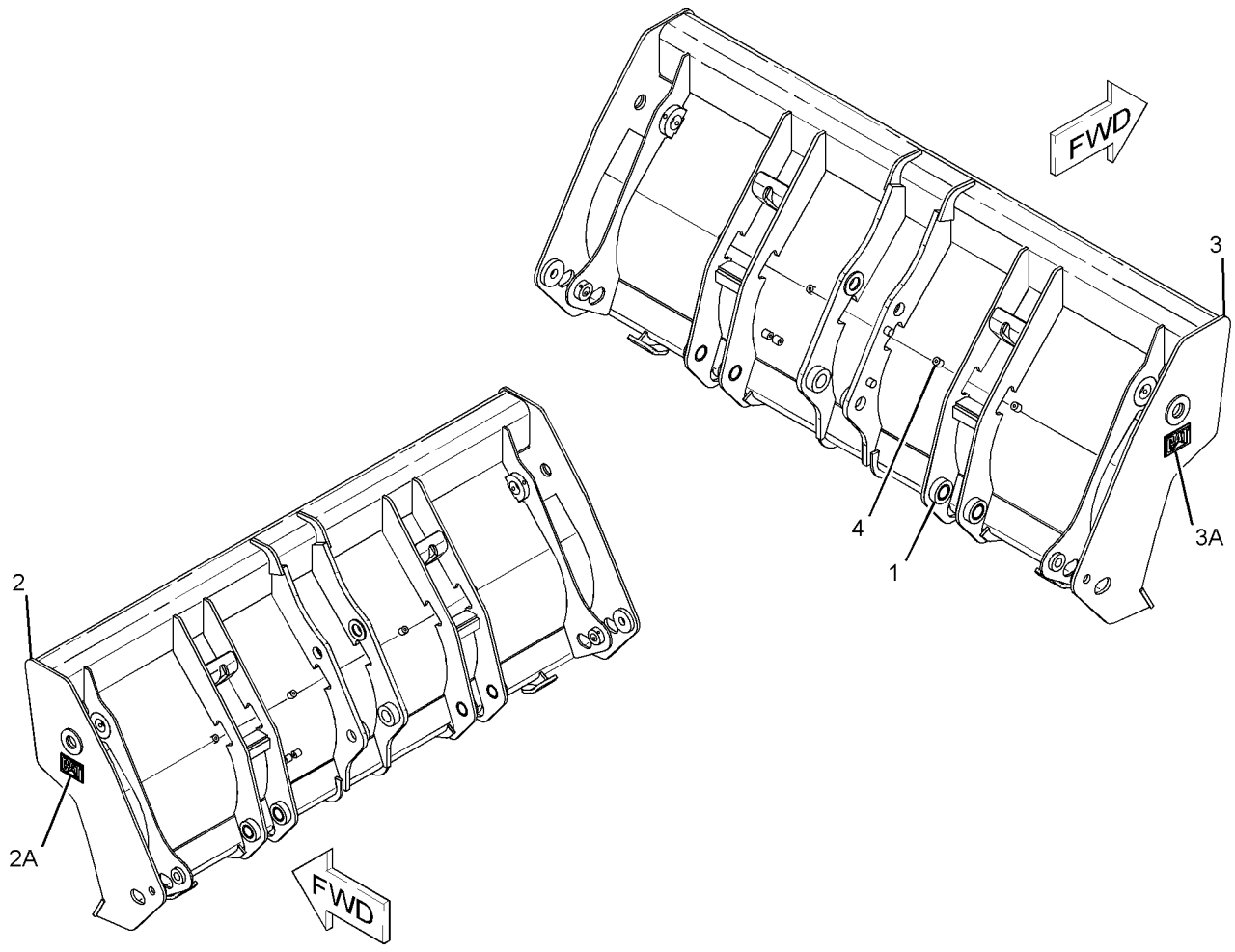

GRAPHIC #1 **<END>** g01134456

216-8803 CLAM AS-MULTIPURPOSE BUCKET

S/N: EAT1-UP

PART OF 216-8800, 216-8801 BUCKET GP-MULTIPURPOSE

AN ATTACHMENT

SMCS-6104 **i02236689**

NOTE	REF NO	GRAPHIC REF	PART NUMBER	QTY	PART NAME 1 2 3 4 5 6 (PRODUCT LEVEL)	SEE PAGE
	1	1	*216-8843*	1	PLATE AS	
		1	**216-8839**	1	PLATE (WEAR)	
		1	**9R-4672**	1	EDGE	

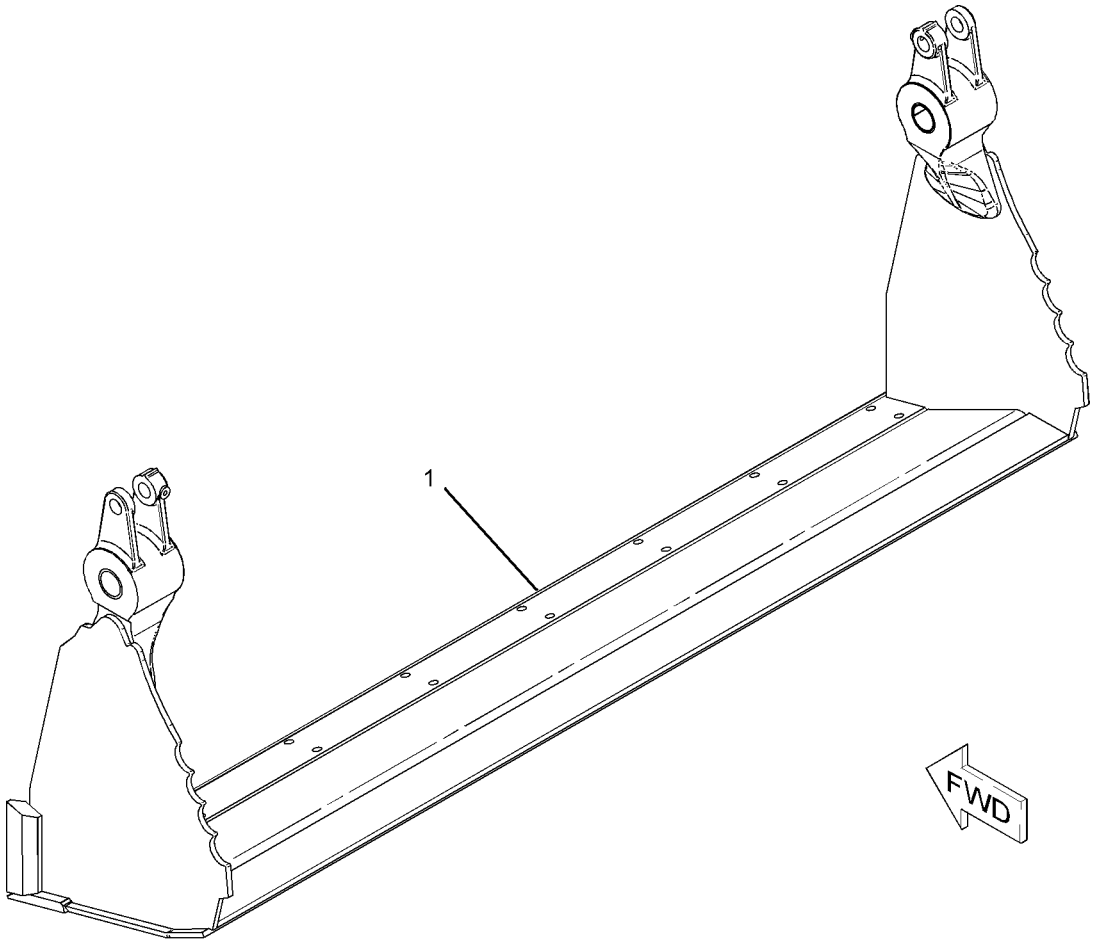

GRAPHIC #1 **<END>** g01134490

216-8826 CLAM AS-MULTIPURPOSE BUCKET

S/N: EAT1-UP

PART OF 216-8820, 216-8821 BUCKET GP-MULTIPURPOSE

AN ATTACHMENT

SMCS-6104 **i02236747**

NOTE	REF NO	GRAPHIC REF	PART NUMBER	QTY	PART NAME 1 2 3 4 5 6 (PRODUCT LEVEL)	SEE PAGE
	1	1	*216-8804*	1	PLATE AS (LH)	
		1	**9R-4675**	1	BUSHING-TERMINAL	
		1	**9R-5294**	1	HINGE	
	2	1	*216-8805*	1	PLATE AS (RH)	
		1	**9R-4675**	1	BUSHING-TERMINAL	
		1	**9R-5294**	1	HINGE	
	3	1	*216-8829*	1	PLATE AS	
		1	**9R-5313**	1	EDGE	

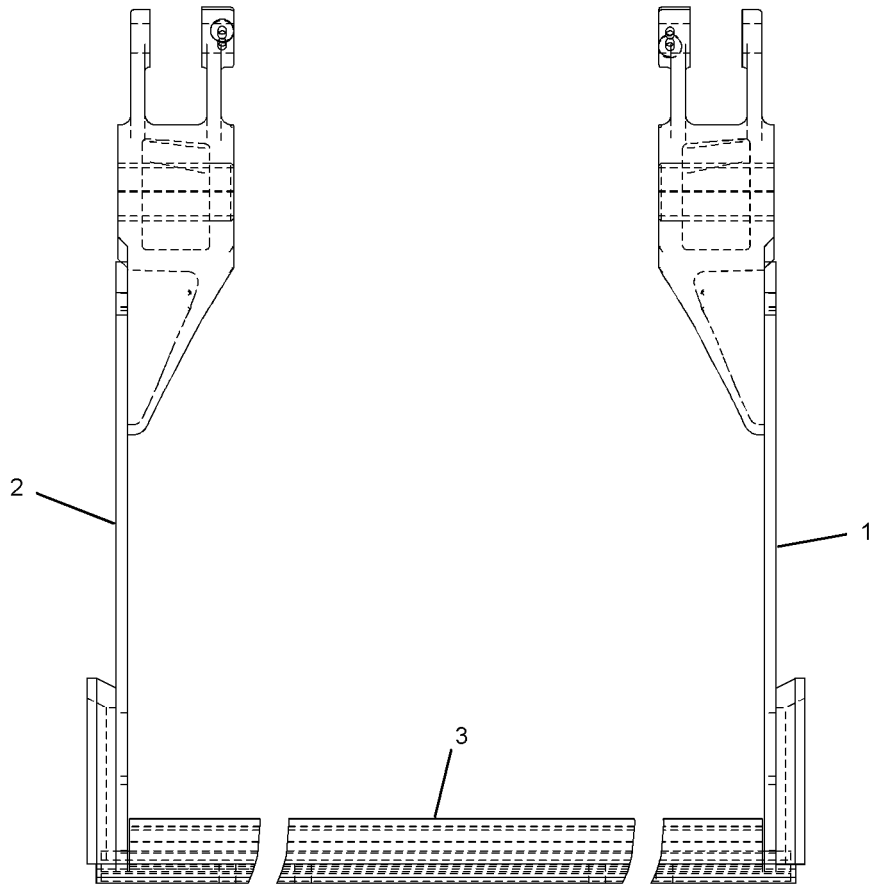

FRONT VIEW

GRAPHIC #1 **<END>** g01135645

222-7379 COUPLER AR-QUICK–PIN-LOCK

S/N: EAT1-UP

AN ATTACHMENT

SMCS-6129 **i03257505**

NOTE	PART NUMBER	QTY	PART NAME 1 2 3 4 5 6 (PRODUCT LEVEL)	SEE PAGE
Y	*222-7464*	1	COUPLER GP-QUICK (PIN-LOCK)	735
Y	*216-0928*	1	PIN GP-COUPLER (PIN-LOCK)	747
Y	*215-9478*	1	PIN GP-COUPLER (MACHINE)	746

Y-SEPARATE ILLUSTRATION

<END>

176-6251 COUPLER GP-QUICK–BACKHOE

S/N: EAT1-UP
PART OF 178-8850 COUPLER GP-QUICK
AN ATTACHMENT

SMCS-6129 **i02534983**

NOTE	REF NO	GRAPHIC REF	PART NUMBER	QTY	PART NAME 1 2 3 4 5 6 (PRODUCT LEVEL)	SEE PAGE
	1	1	**176-6252**	1	COUPLER	
	2	1	**200-5921**	1	HOOK	
	3	1	**132-3725**	1	SPRING	
	4	1	**132-3721**	1	PIN AS (HOOK)	
	5	1	**132-3723**	1	LOCK PIN	
	6	1	**091-5928**	1	FITTING-GREASE	
	7	1	**8T-0144**	1	PIN-SPRING	
F			**132-3821**	1	LEVER-ACTUATING	

F-NOT SHOWN

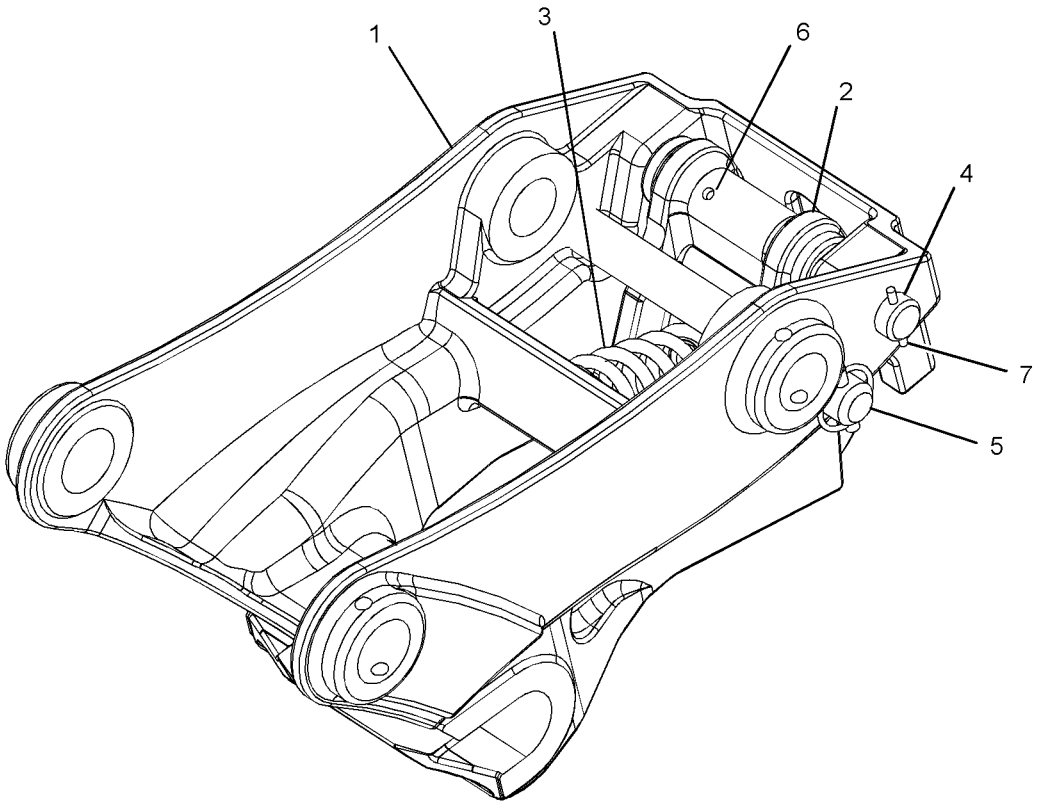

GRAPHIC #1 **<END>** g01268127

WORK TOOLS

178-8850 COUPLER GP-QUICK—BACKHOE

S/N: EAT1-UP

FOR USE WITH 178-3593—PAGE 744

AN ATTACHMENT

SMCS-6129 **i02593679**

NOTE	REF NO	GRAPHIC REF	PART NUMBER	QTY	PART NAME 1 2 3 4 5 6 (PRODUCT LEVEL)	SEE PAGE
	1	1	**4J-1888**	2	PIN-COTTER	
	2	1	**132-3777**	1	PIN	
	3	1	**132-3778**	1	PIN	
Y	4	1	**176-6251**	1	COUPLER GP-QUICK (BACKHOE)	733

Y-SEPARATE ILLUSTRATION

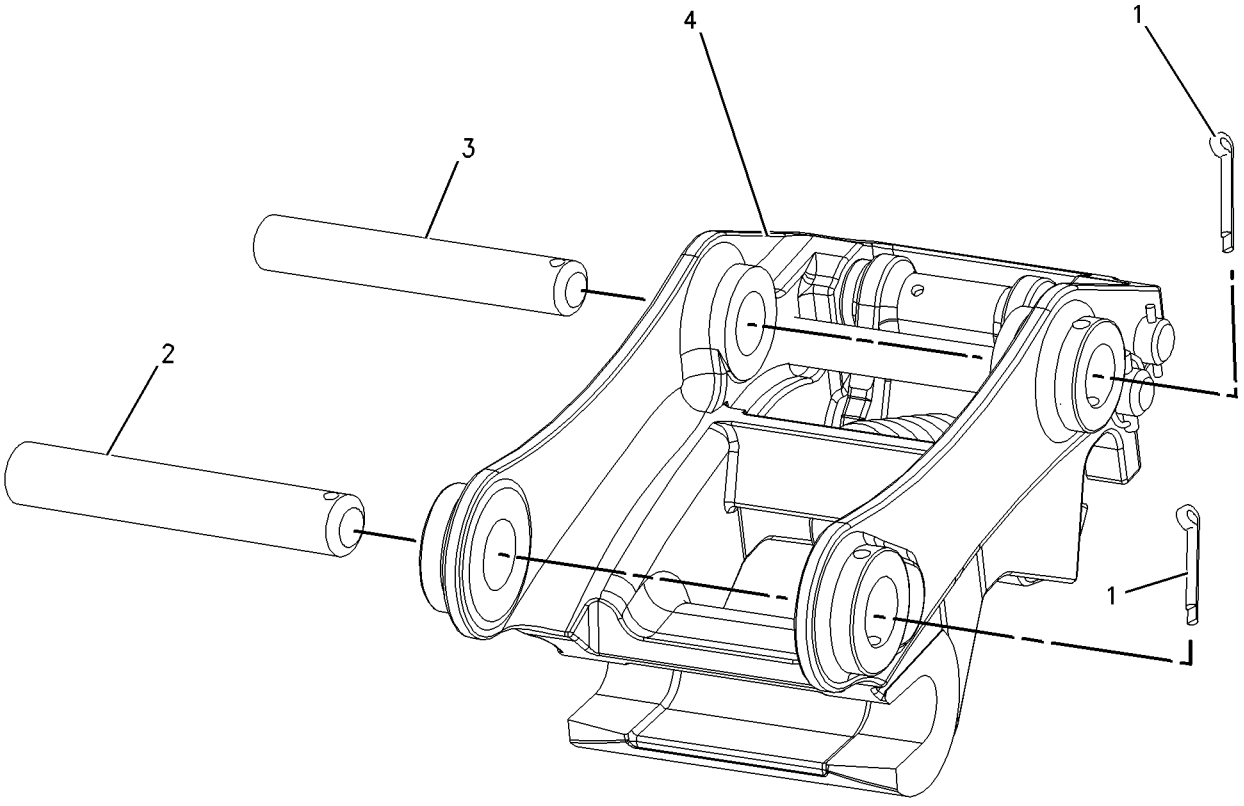

GRAPHIC #1 **<END>** g00904540

222-7464 COUPLER GP-QUICK–PIN-LOCK

S/N: EAT1-UP

PART OF 222-7379 COUPLER AR-QUICK

AN ATTACHMENT

SMCS-6129 **i02409083**

NOTE	REF NO	GRAPHIC REF	PART NUMBER	QTY	PART NAME 1 2 3 4 5 6 (PRODUCT LEVEL)	SEE PAGE
	1	1	**154-2704**	1	PLATE-INSTRUCTION (BUCKET SPECIFICATIONS)	
	2	1	**168-8389**	4	TACK-FASTENER	
	3	1	**276-1368**	2	BEARING-SLEEVE	
	4	1	**232-2735**	1	COUPLER AS	
	4A	1	**161-4130**	2	PLATE-IDENTIFICATION (CAT)	
	5	1	**3B-8489**	1	FITTING-GREASE	
	6	1	**9R-0320**	2	BEARING-SLEEVE	
	7	1	**9R-3700**	2	BEARING-SLEEVE	

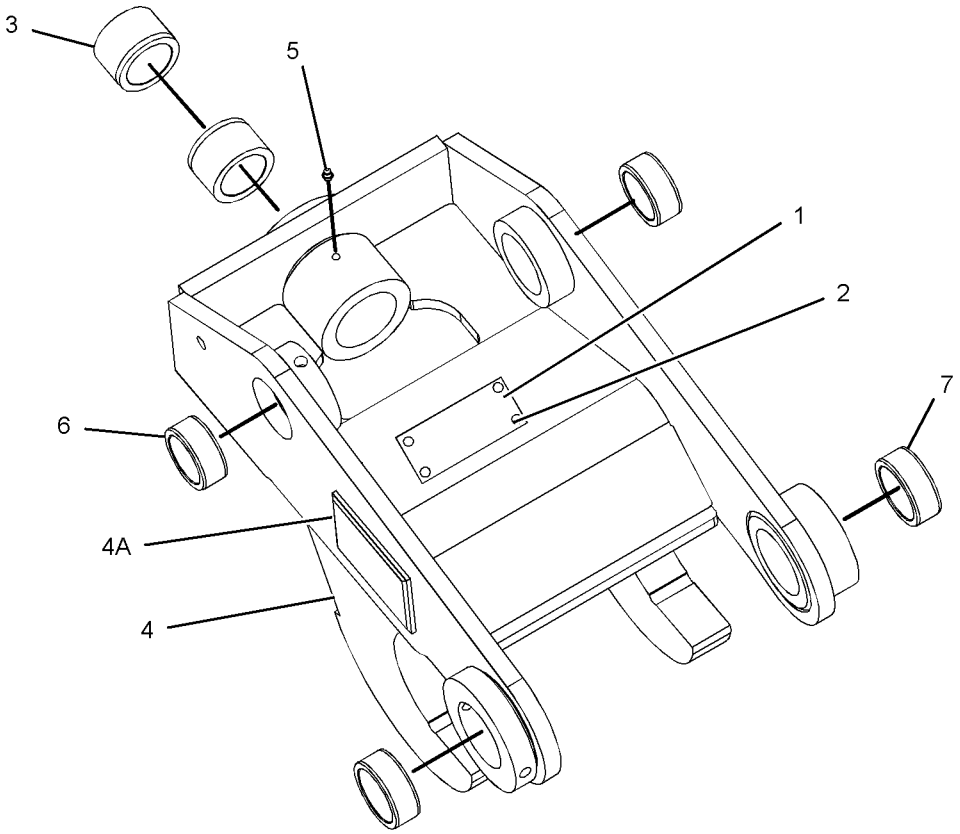

GRAPHIC #1 **<END>** g01072399

WORK TOOLS

229-7226 COUPLER GP-QUICK–CAT, CASE

S/N: EAT1-UP

AN ATTACHMENT

SMCS-6129 **i01889083**

NOTE	REF NO	GRAPHIC REF	PART NUMBER	QTY	PART NAME 1 2 3 4 5 6 (PRODUCT LEVEL)	SEE PAGE
B	1	1	**9R-0158**	15	WASHER (46X69X3-MM THK)	
	2	1	**145-8348**	1	PIN AS	
	3	1	**168-0425**	1	PIN	
	4	1	**168-0446**	1	PIN	
	5	1	**168-0475**	1	PIN AS	
B	6	1	**188-9592**	7	WASHER-THRUST (39X75X2.3-MM THK)	
	7	1	**229-5535**	1	COUPLER AS	
		1	**154-2704**	1	PLATE-INSTRUCTION (BUCKET SPECIFICATIONS)	
		1	**168-8389**	4	TACK-FASTENER	
	8	1	**096-1820**	1	PIN-COTTER	
	9	1	**3B-5319**	2	PIN-COTTER	
	10	1	**6V-3213**	2	RING-RETAINING	

B-USE AS REQUIRED

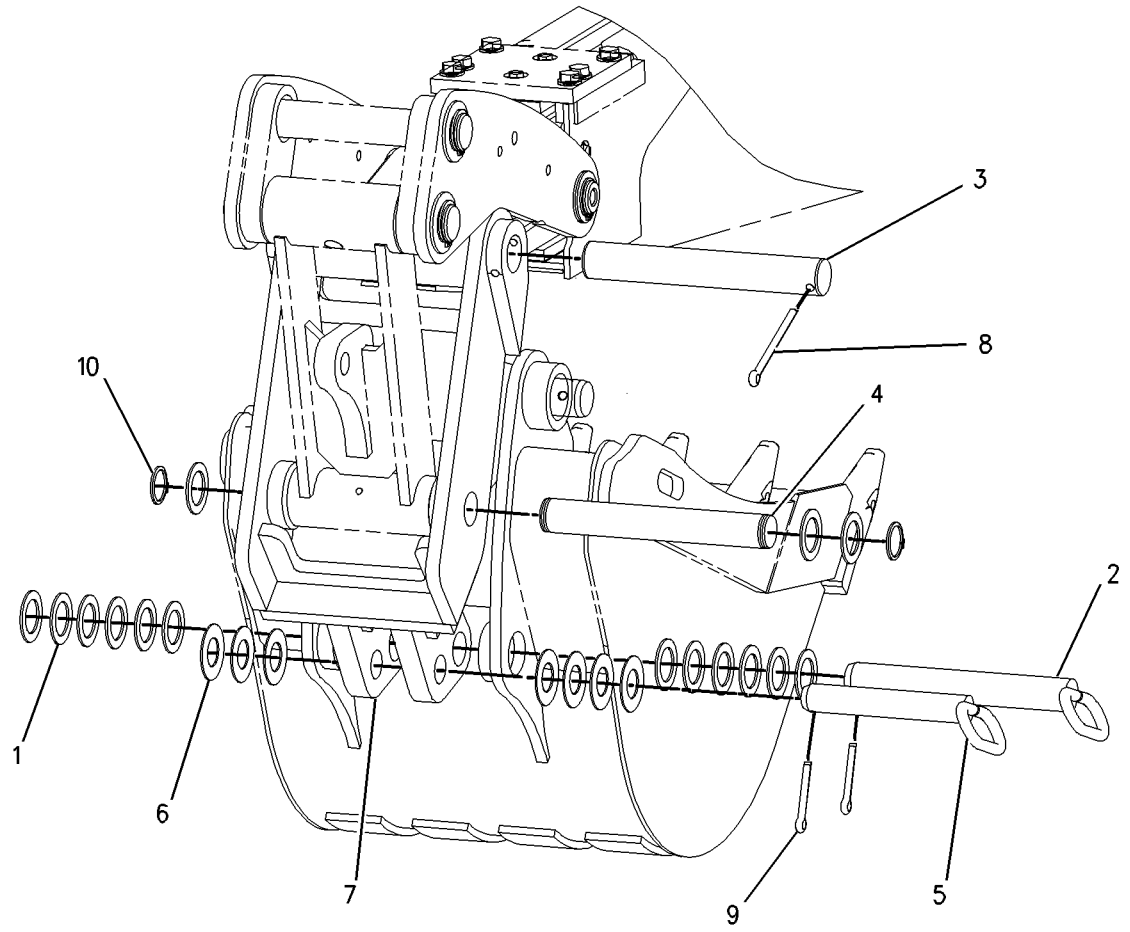

GRAPHIC #1 **<END>** g00981049

WORK TOOLS

229-7227 COUPLER GP-QUICK–CAT, DEERE

S/N: EAT1-UP

AN ATTACHMENT

SMCS-6129 **i02861524**

NOTE	REF NO	GRAPHIC REF	PART NUMBER	QTY	PART NAME 1 2 3 4 5 6 (PRODUCT LEVEL)	SEE PAGE
B	1	1	**9R-0158**	15	WASHER (46X69X3-MM THK)	
	2	1	**145-8348**	1	PIN AS	
	3	1	**168-0425**	1	PIN	
	4	1	**168-0446**	1	PIN	
	5	1	**168-0445**	1	PIN AS	
B	6	1	**9R-1510**	4	WASHER (51X82X4-MM THK)	
	7	1	**229-8253**	1	COUPLER AS	
	7A	1	**154-2704**	1	PLATE-INSTRUCTION (BUCKET SPECIFICATIONS)	
	7B	1	**168-8389**	4	TACK-FASTENER	
	8	1	**096-1820**	1	PIN-COTTER	
	9	1	**3B-5319**	2	PIN-COTTER	
	10	1	**6V-3213**	2	RING-RETAINING	

B-USE AS REQUIRED

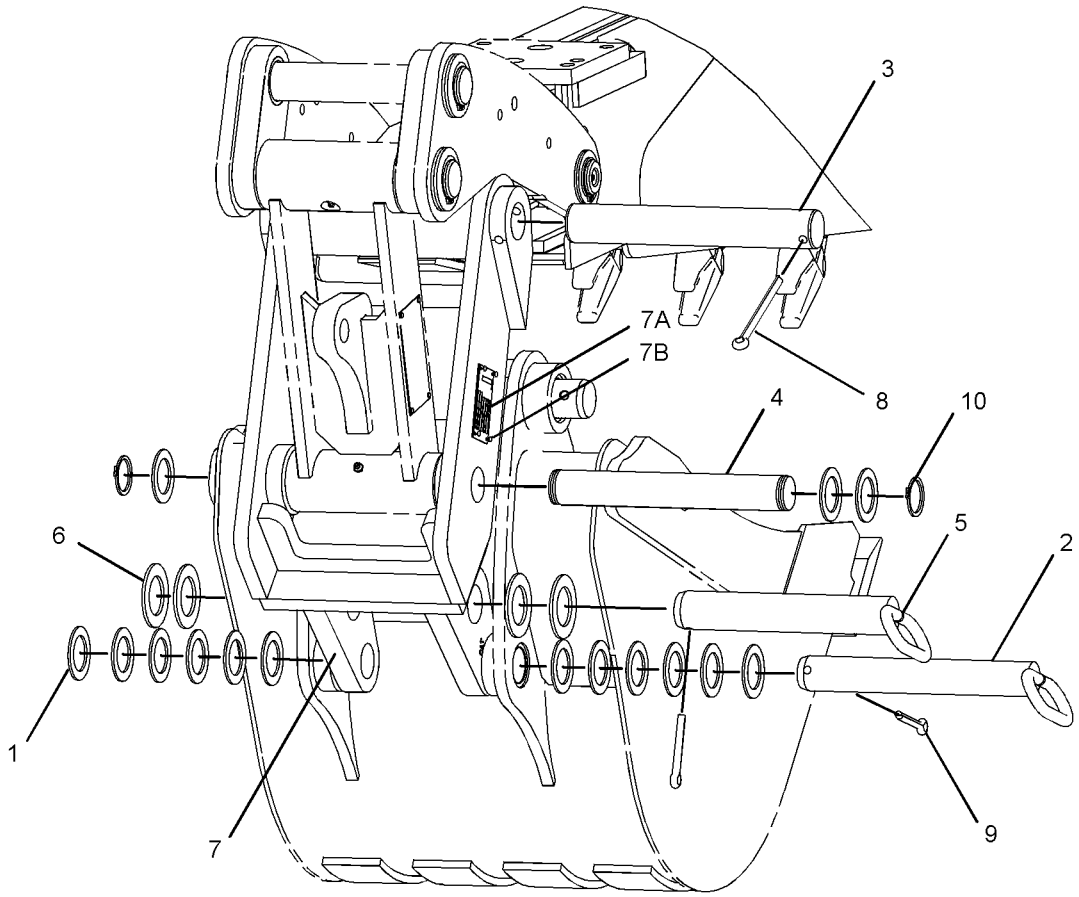

GRAPHIC #1 **<END>** g01425318

WORK TOOLS

9R-5320 EDGE GP-CUTTING

S/N: EAT1-UP

PART OF 232-2686, 232-2688 BUCKET AR-MULTIPURPOSE, 251-1775, 251-1781 BUCKET GP-GENERAL PURPOSE

FOR USE WITH 251-1783—PAGE 674, 216-8820—PAGE 724, 232-2690—PAGE 609, 251-1777—PAGE 671. CANNOT BE USED WITH 9R-5866—PAGE 786 AN ATTACHMENT

SMCS-6801 **i02238662**

NOTE	REF NO	GRAPHIC REF	PART NUMBER	QTY	PART NAME 1 2 3 4 5 6 (PRODUCT LEVEL)	SEE PAGE
	1	1	**118-7110**	2	EDGE-CUTTING	
	2	1	**4F-3657**	8	BOLT-PLOW (5/8-11X2.75-IN)	
	3	1	**4K-0367**	8	NUT-FULL (5/8-11-THD)	
	4	1	**8T-4122**	8	WASHER-HARD (17X32X3.5-MM THK)	

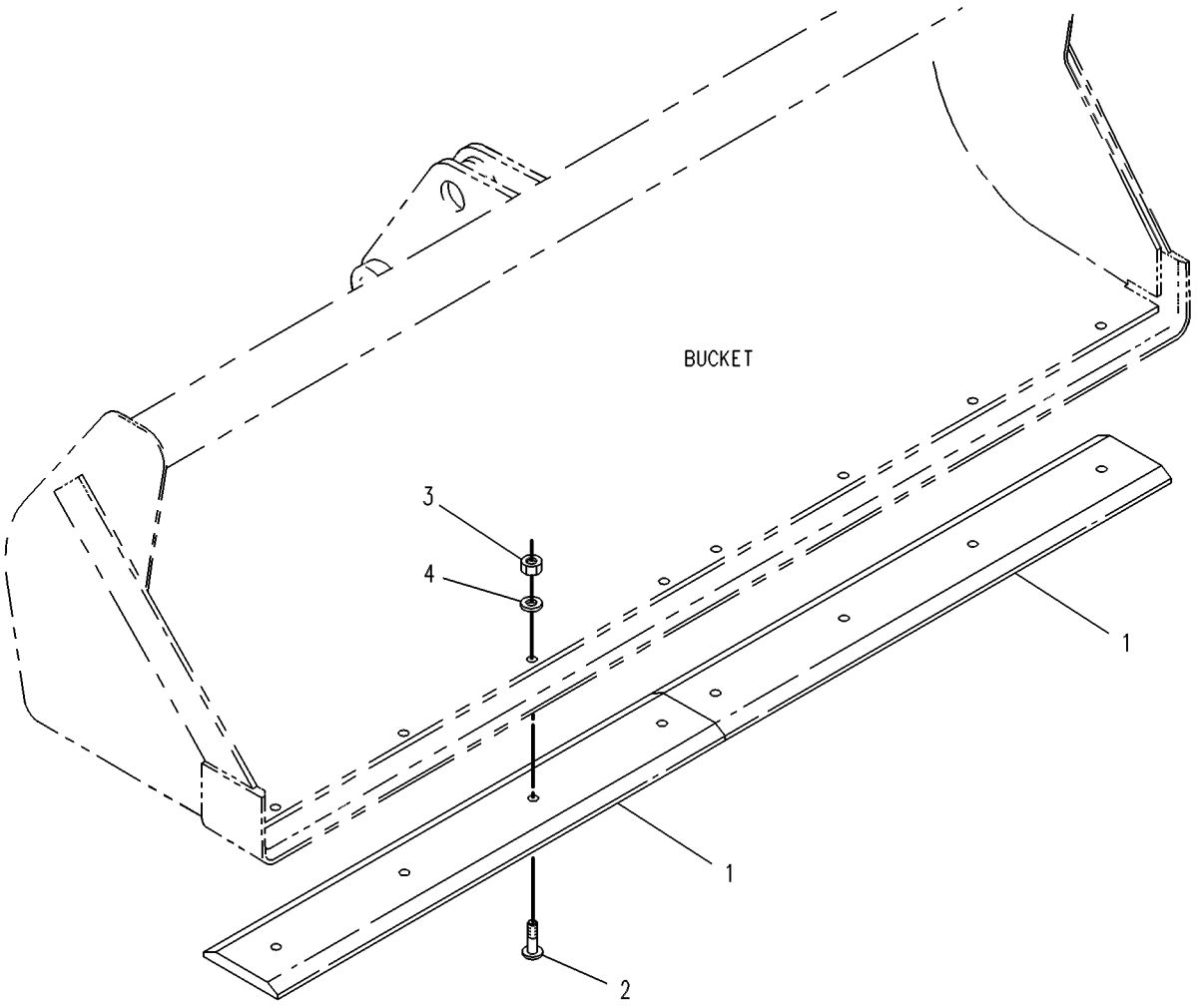

GRAPHIC #1 **<END>** g00131376

9R-5321 EDGE GP-CUTTING

S/N: EAT1-UP

PART OF 232-2681, 232-2683 BUCKET AR-MULTIPURPOSE, 251-1778, 251-1784, 251-1787 BUCKET GP-GENERAL PURPOSE

FOR USE WITH 232-2685—PAGE 608, 251-1789—PAGE 675, 216-8800—PAGE 721, 251-1786—PAGE 675. CANNOT BE USED WITH 9R-5866—PAGE 786

AN ATTACHMENT

SMCS-6801 **i02238663**

NOTE	REF NO	GRAPHIC REF	PART NUMBER	QTY	PART NAME 1 2 3 4 5 6 (PRODUCT LEVEL)	SEE PAGE
	1	1	**9W-8215**	2	EDGE-CUTTING	
	2	1	**3F-5108**	8	BOLT-PLOW (5/8-11X2.25-IN)	
	3	1	**4K-0367**	8	NUT-FULL (5/8-11-THD)	
	4	1	**8T-4122**	8	WASHER-HARD (17X32X3.5-MM THK)	

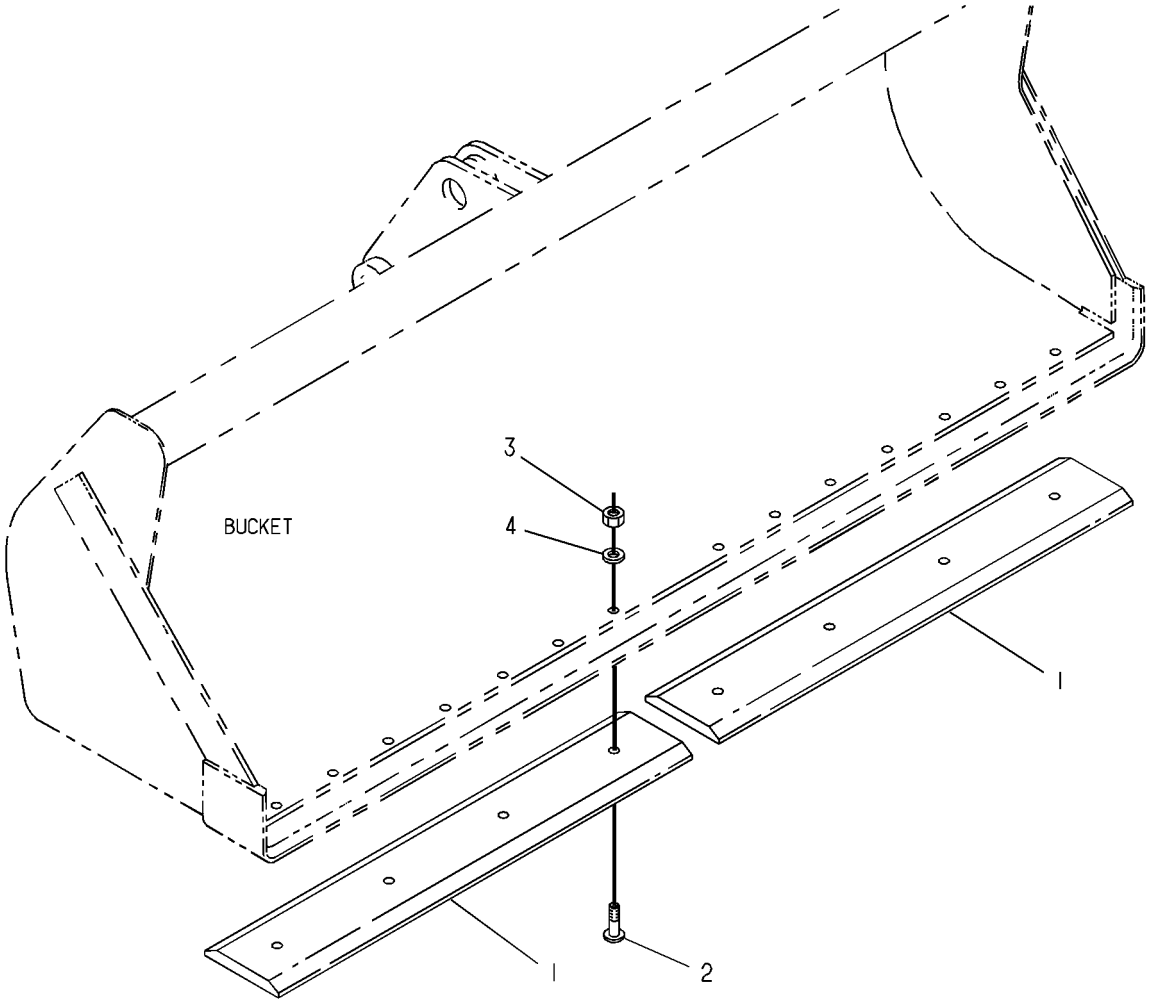

GRAPHIC #1 **<END>** g00130834

WORK TOOLS

286-2149 EDGE-CUTTING

S/N: EAT1-UP

FIELD INSTALLATION

SMCS-6801 **i02960480**

NOTE	REF NO	GRAPHIC REF	PART NUMBER	QTY	PART NAME 1 2 3 4 5 6 (PRODUCT LEVEL)	SEE PAGE
					(NO SERVICED PARTS)	

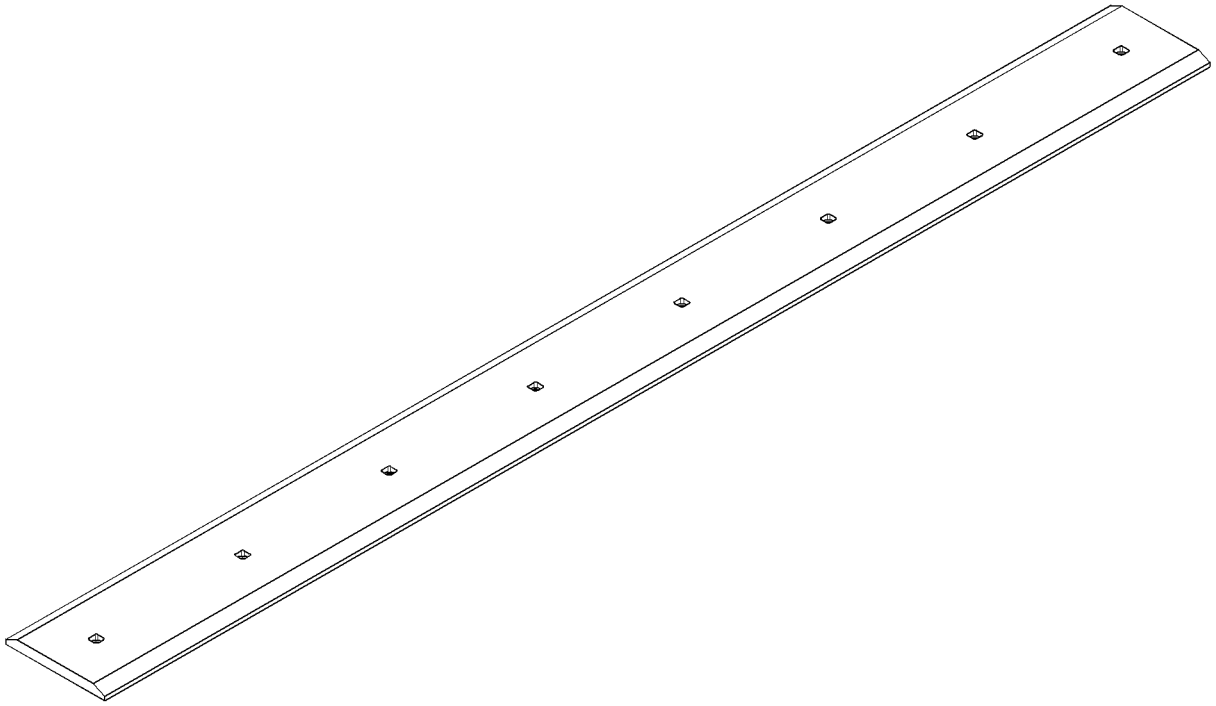

GRAPHIC #1 **<END>** g01501914

WORK TOOLS

104-6310 FORK GP

S/N: EAT1-UP
PART OF 232-2685, 232-2690 BUCKET AR-MULTIPURPOSE
AN ATTACHMENT

SMCS-6405 **i02238666**

NOTE	REF NO	GRAPHIC REF	PART NUMBER	QTY	PART NAME 1 2 3 4 5 6 (PRODUCT LEVEL)	SEE PAGE
	1	1	**104-6311**	2	BRACKET AS	
	2	1	**104-6312**	2	FORK AS	
	3	1	**104-6316**	1	PIN	
	4	1	**104-6317**	2	PIN	
	5	1	**4J-1888**	1	PIN-COTTER	
	6	1	**9R-0109**	4	WASHER (41X64X3-MM THK)	
	7	1	**112-1776**	2	PIN AS	
	8	1	**6V-8144**	4	RING-RETAINING	
	9	1	**5D-8159**	2	PIN AS	

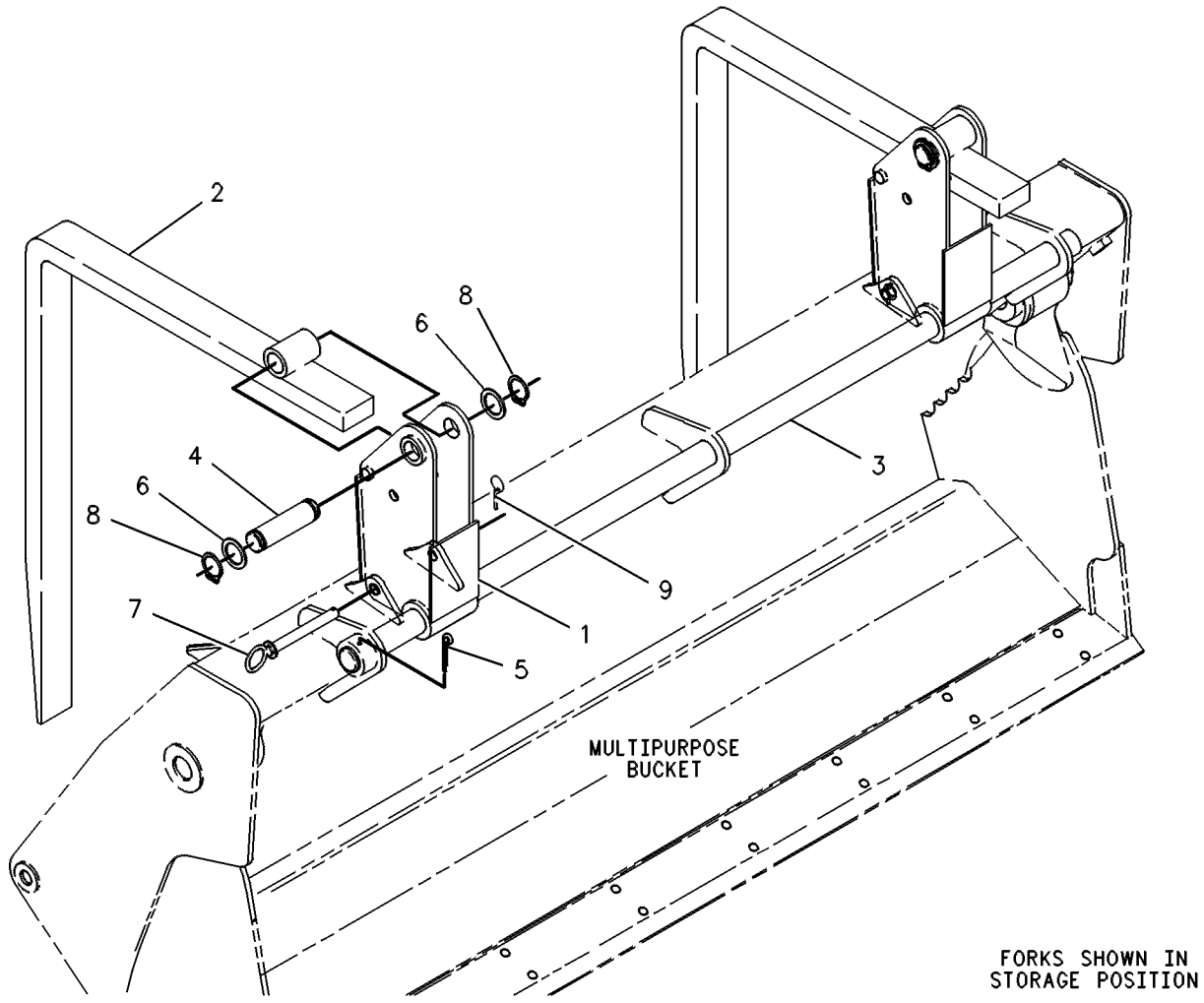

GRAPHIC #1 **<END>** g00131084

WORK TOOLS

270-3203 GUARD GP-WORK TOOL

S/N: EAT1-UP

AN ATTACHMENT

SMCS-6700, 6800 **i02448683**

NOTE	REF NO	GRAPHIC REF	PART NUMBER	QTY	PART NAME 1 2 3 4 5 6 (PRODUCT LEVEL)	SEE PAGE
	1	1	**270-3206**	1	PLATE AS	
M	2	1	**8T-4184**	4	BOLT (M12X1.75X45-MM)	
	3	1	**8T-4223**	16	WASHER-HARD (13.5X25.5X3-MM THK)	

M-METRIC PART

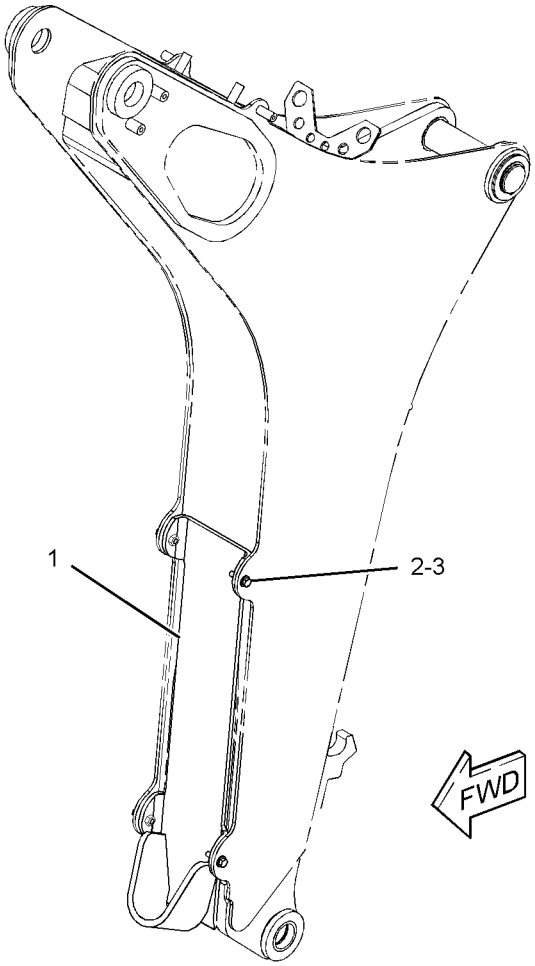

GRAPHIC #1 **<END>** g01230740

WORK TOOLS

178-3593 MOUNTING GP-BUCKET

S/N: EAT1-UP

QUICK COUPLER-BACKHOE

FOR USE WITH HIGH ROTATION BUCKETS, 178-8850—PAGE 734. CANNOT BE USED WITH 12" BUCKETS

AN ATTACHMENT

SMCS-6101 **i02597559**

NOTE	PART NUMBER	QTY	PART NAME 1 2 3 4 5 6 (PRODUCT LEVEL)	SEE PAGE
	154-5279	1	PIN	
	154-5280	1	PIN	
	3B-5319	4	PIN-COTTER	
B	**9R-0158**	5	WASHER (46X69X3-MM THK)	
B	**9R-1510**	5	WASHER (51X82X4-MM THK)	

B-USE AS REQUIRED

<END>

225-4323 MOUNTING GP-MAST—GRADE CONTROL

S/N: EAT1-UP

PART OF 246-8045, 295-3179 GRADE CONTROL AR-LASER

AN ATTACHMENT

SMCS-79NS **i02586808**

NOTE	REF NO	GRAPHIC REF	PART NUMBER	QTY	PART NAME 1 2 3 4 5 6 (PRODUCT LEVEL)	SEE PAGE
	1	1	**9W-4361**	1	MOUNT-FLEXIBLE	
	2	1	**225-4324**	1	PLATE AS	
M		1	**8T-3612**	4	NUT-WELD (M8X1.25-THD)	
		1	**091-4113**	1	SPACER	
	3	1	**225-4326**	1	PLATE	
	4	1	**251-6708**	1	PLATE	
	5	1	**2H-3740**	1	BOLT (3/4-16X1.25-IN)	
	6	1	**5P-8248**	1	WASHER-HARD (20X36.5X3.5-MM THK)	
	7	1	**6V-1869**	1	GROMMET	
	8	1	**6V-8801**	2	NUT (3/8-16-THD)	
	9	1	**8T-4121**	8	WASHER-HARD (11X21X2.5-MM THK)	
M	10	1	**8T-4133**	1	NUT (M10X1.5-THD)	
M	11	1	**8T-4136**	5	BOLT (M10X1.5X25-MM)	
M	12	1	**8T-4137**	2	BOLT (M10X1.5X20-MM)	
	13	1	**8T-4224**	6	WASHER-HARD (8.8X16X2-MM THK)	
M	14	1	**8T-4908**	4	BOLT (M8X1.25X25-MM)	

M-METRIC PART

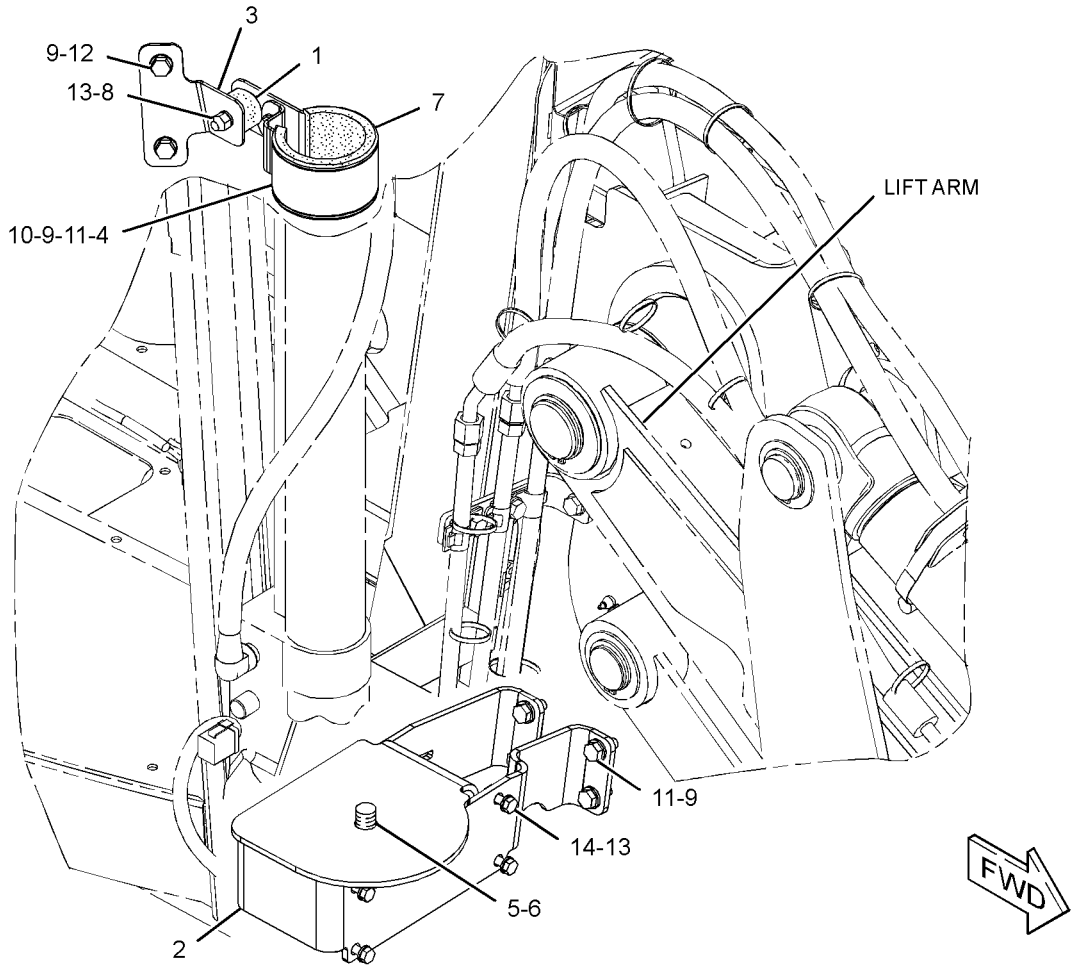

GRAPHIC #1 **<END>** g01302221

WORK TOOLS

215-9478 PIN GP-COUPLER—MACHINE

S/N: EAT1-UP

PART OF 222-7379 COUPLER AR-QUICK

AN ATTACHMENT

SMCS-6129 **i02445881**

NOTE	REF NO	GRAPHIC REF	PART NUMBER	QTY	PART NAME 1 2 3 4 5 6 (PRODUCT LEVEL)	SEE PAGE
	1	1	**215-3373**	1	PIN	
	2	1	**168-0425**	1	PIN	
M	3	1	**6V-7744**	2	LOCKNUT (M10X1.5-THD)	
M	4	1	**8T-4198**	2	BOLT (M10X1.5X100-MM)	

M-METRIC PART

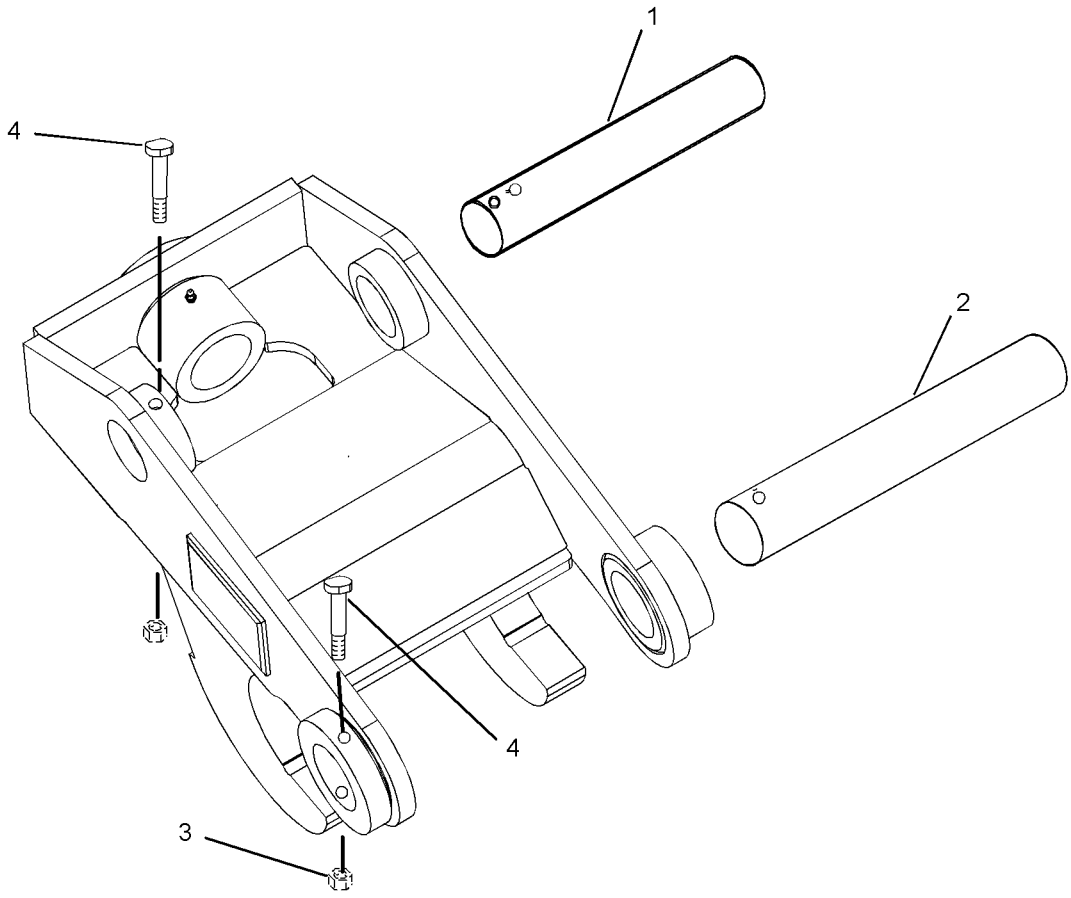

GRAPHIC #1 **<END>** g01224240

WORK TOOLS

216-0928 PIN GP-COUPLER—PIN-LOCK

S/N: EAT1-UP

PART OF 222-7379 COUPLER AR-QUICK

AN ATTACHMENT

SMCS-6129 **i02445882**

NOTE	REF NO	GRAPHIC REF	PART NUMBER	QTY	PART NAME 1 2 3 4 5 6 (PRODUCT LEVEL)	SEE PAGE
	1	1	**222-7411**	1	PIN AS	
	2	1	**216-3712**	1	PIN	

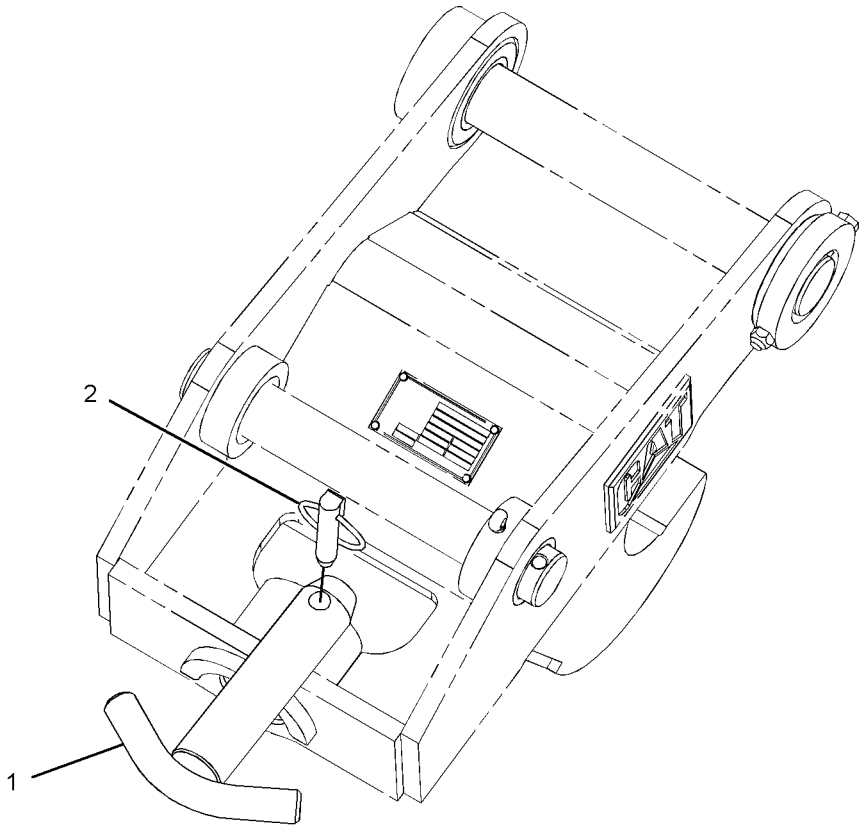

GRAPHIC #1 **<END>** g01239833

WORK TOOLS

221-4260 THUMB AR–BACKHOE

S/N: EAT1-UP
PART OF 224-6232, 224-6233, 224-6234, 224-6235 THUMB AR
AN ATTACHMENT

SMCS-6547 **i02837663**

NOTE	PART NUMBER	QTY	PART NAME 1 2 3 4 5 6 (PRODUCT LEVEL)	SEE PAGE
Y	*221-4265*	1	MOUNTING GP-CYLINDER (THUMB)	513
Y	*221-4267*	1	THUMB GP (BACKHOE)	784

Y-SEPARATE ILLUSTRATION

<END>

224-6232 THUMB AR–24-IN, MANUAL

S/N: EAT1-UP
AN ATTACHMENT

SMCS-6547 **i02837664**

NOTE	PART NUMBER	QTY	PART NAME 1 2 3 4 5 6 (PRODUCT LEVEL)	SEE PAGE
Y	**221-4276**	1	LINK GP-THUMB (ADJUSTABLE)	567
Y	**221-4260**	1	THUMB AR (BACKHOE)	748
	221-4282	1	TINE AS-THUMB (24-IN)	

Y-SEPARATE ILLUSTRATION

<END>

224-6233 THUMB AR–24-IN, MANUAL, WITH COUPLER

S/N: EAT1-UP
AN ATTACHMENT

SMCS-6547 **i02837667**

NOTE	PART NUMBER	QTY	PART NAME 1 2 3 4 5 6 (PRODUCT LEVEL)	SEE PAGE
Y	**221-4276**	1	LINK GP-THUMB (ADJUSTABLE)	567
Y	**221-4260**	1	THUMB AR (BACKHOE)	748
	221-4283	1	TINE AS-THUMB (24-IN)	

Y-SEPARATE ILLUSTRATION

<END>

224-6234 THUMB AR–24-IN, ROCK, MANUAL

S/N: EAT1-UP
AN ATTACHMENT

SMCS-6547 **i02837679**

NOTE	PART NUMBER	QTY	PART NAME 1 2 3 4 5 6 (PRODUCT LEVEL)	SEE PAGE
Y	**221-4276**	1	LINK GP-THUMB (ADJUSTABLE)	567
Y	**221-4260**	1	THUMB AR (BACKHOE)	748
	221-4284	1	TINE AS-THUMB (24-IN, ROCK)	

Y-SEPARATE ILLUSTRATION

<END>

224-6235 THUMB AR–24-IN, ROCK, MANUAL, WITH COUPLER

S/N: EAT1-UP

AN ATTACHMENT

SMCS-6547 **i02837670**

NOTE	PART NUMBER	QTY	PART NAME 1 2 3 4 5 6 (PRODUCT LEVEL)	SEE PAGE
Y	**221-4276**	1	LINK GP-THUMB (ADJUSTABLE)	567
Y	**221-4260**	1	THUMB AR (BACKHOE)	748
	221-4285	1	TINE AS-THUMB (24-IN, ROCK)	

Y-SEPARATE ILLUSTRATION

<END>

WORK TOOLS

271-3024 THUMB AR–24-IN, HYD, HEAVY-DUTY

S/N: EAT1-UP

AN ATTACHMENT

SMCS-6547 **i03527884**

NOTE	REF NO	GRAPHIC REF	PART NUMBER	QTY	PART NAME 1 2 3 4 5 6 (PRODUCT LEVEL)	SEE PAGE
	1	1	**221-4282**	1	TINE AS-THUMB (24-IN)	
Y	2	1	*224-6237*	1	CYLINDER & LINES GP-THUMB	388
Y	3	1	*271-3023*	1	THUMB GP (BACKHOE, COMMON)	785

Y-SEPARATE ILLUSTRATION

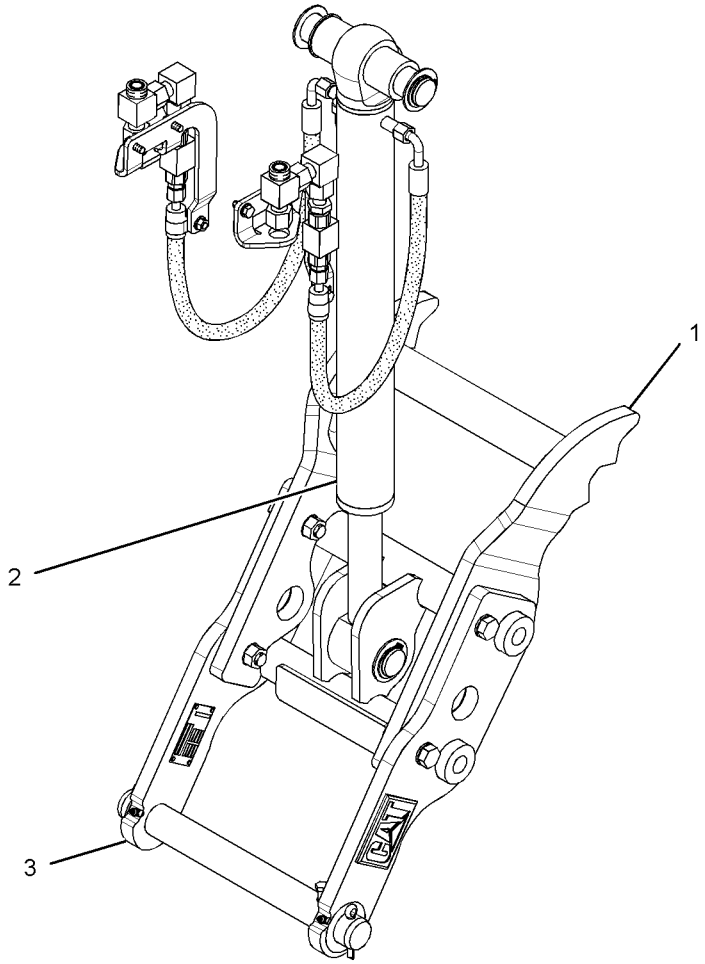

GRAPHIC #1 **<END>** g01383761

271-3025 THUMB AR–24-IN, HYD, HEAVY-DUTY, WITH COUPLER

S/N: EAT1-UP

AN ATTACHMENT

SMCS-6547 **i03527920**

NOTE	REF NO	GRAPHIC REF	PART NUMBER	QTY	PART NAME 1 2 3 4 5 6 (PRODUCT LEVEL)	SEE PAGE
	1	1	**221-4283**	1	TINE AS-THUMB (24-IN)	
Y	2	1	*224-6237*	1	CYLINDER & LINES GP-THUMB	388
Y	3	1	*271-3023*	1	THUMB GP (BACKHOE, COMMON)	785

Y-SEPARATE ILLUSTRATION

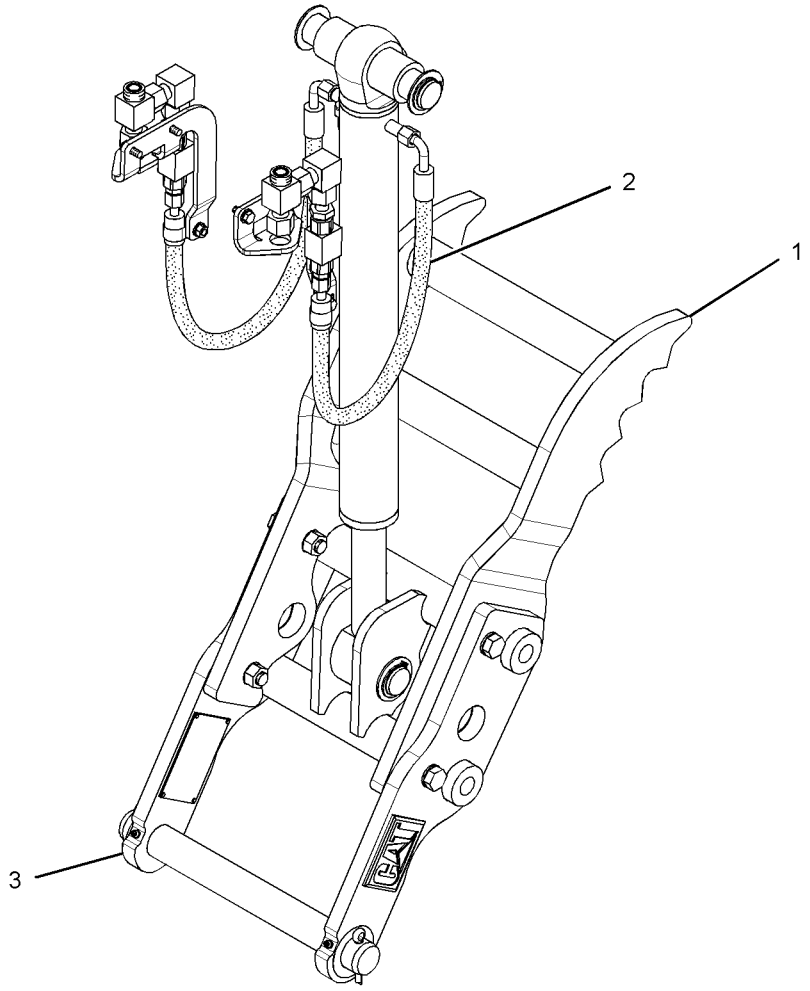

GRAPHIC #1 **<END>** g01384135

WORK TOOLS

271-3026 THUMB AR–24-IN, HYD, ROCK

S/N: EAT1-UP

AN ATTACHMENT

SMCS-6547 **i03527930**

NOTE	REF NO	GRAPHIC REF	PART NUMBER	QTY	PART NAME 1 2 3 4 5 6 (PRODUCT LEVEL)	SEE PAGE
	1	1	**221-4284**	1	TINE AS-THUMB (24-IN, ROCK)	
Y	2	1	*224-6237*	1	CYLINDER & LINES GP-THUMB	388
Y	3	1	*271-3023*	1	THUMB GP (BACKHOE, COMMON)	785

Y-SEPARATE ILLUSTRATION

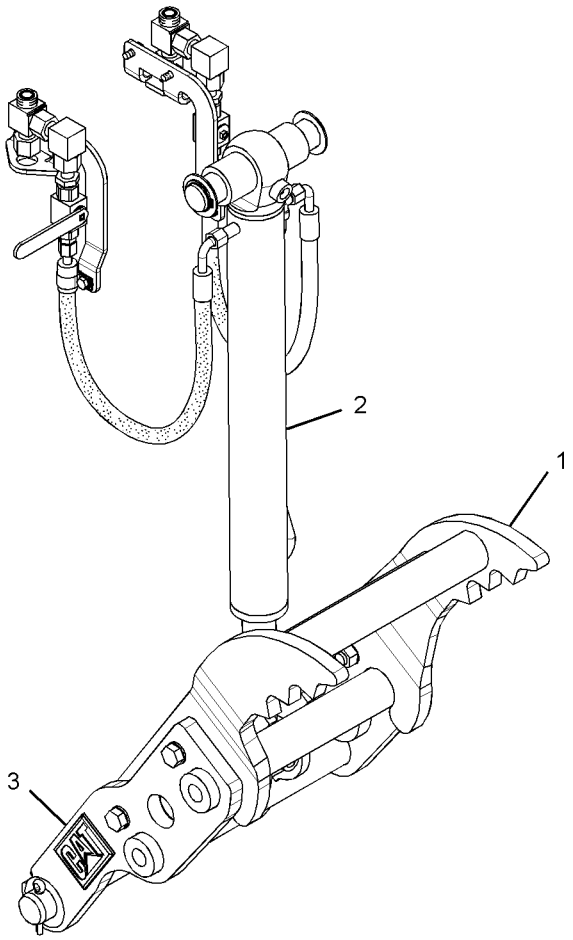

GRAPHIC #1 **<END>** g01370673

WORK TOOLS

271-3027 THUMB AR–24-IN, HYD, ROCK, WITH COUPLER

S/N: EAT1-UP

AN ATTACHMENT

SMCS-6547 **i03527940**

NOTE	REF NO	GRAPHIC REF	PART NUMBER	QTY	PART NAME 1 2 3 4 5 6 (PRODUCT LEVEL)	SEE PAGE
	1	1	**221-4285**	1	TINE AS-THUMB (24-IN, ROCK)	
Y	2	1	*224-6237*	1	CYLINDER & LINES GP-THUMB	388
Y	3	1	*271-3023*	1	THUMB GP (BACKHOE, COMMON)	785

Y-SEPARATE ILLUSTRATION

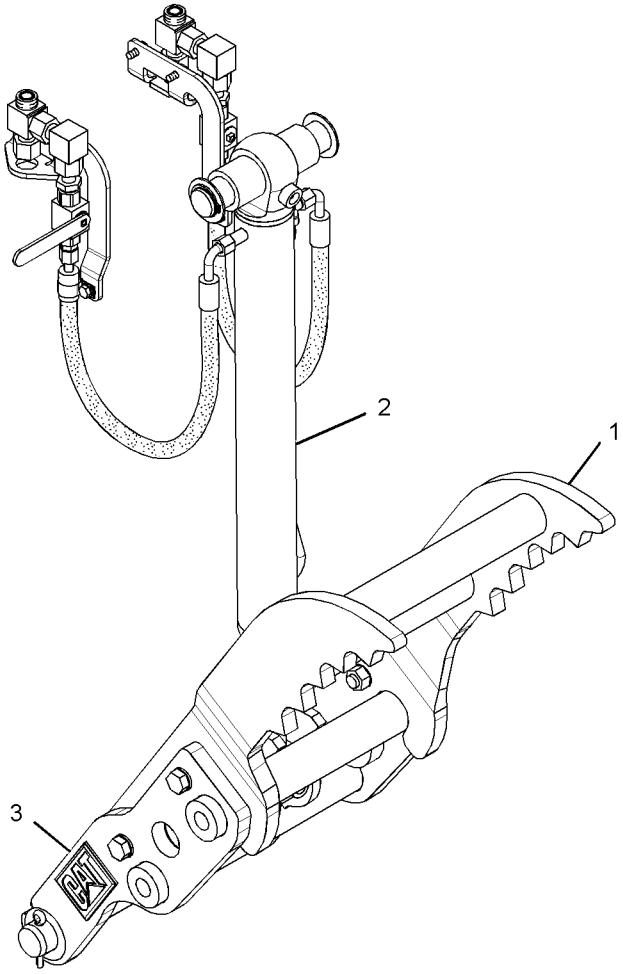

GRAPHIC #1 **<END>** g01370638

WORK TOOLS

271-3028 THUMB AR–24-IN, MANUAL, HEAVY-DUTY

S/N: EAT1-UP

AN ATTACHMENT

SMCS-6547 **i03514489**

NOTE	REF NO	GRAPHIC REF	PART NUMBER	QTY	PART NAME 1 2 3 4 5 6 (PRODUCT LEVEL)	SEE PAGE
	1	1	**221-4282**	1	TINE AS-THUMB (24-IN)	
	2	1	*263-8576*	1	LINK GP-THUMB	
		1	**221-4272**	1	LINK AS (INNER)	
		1	**224-4527**	1	PIN AS	
		1	**263-8575**	1	LINK AS (OUTER)	
Y	3	1	*271-3023*	1	THUMB GP (BACKHOE, COMMON)	785

Y-SEPARATE ILLUSTRATION

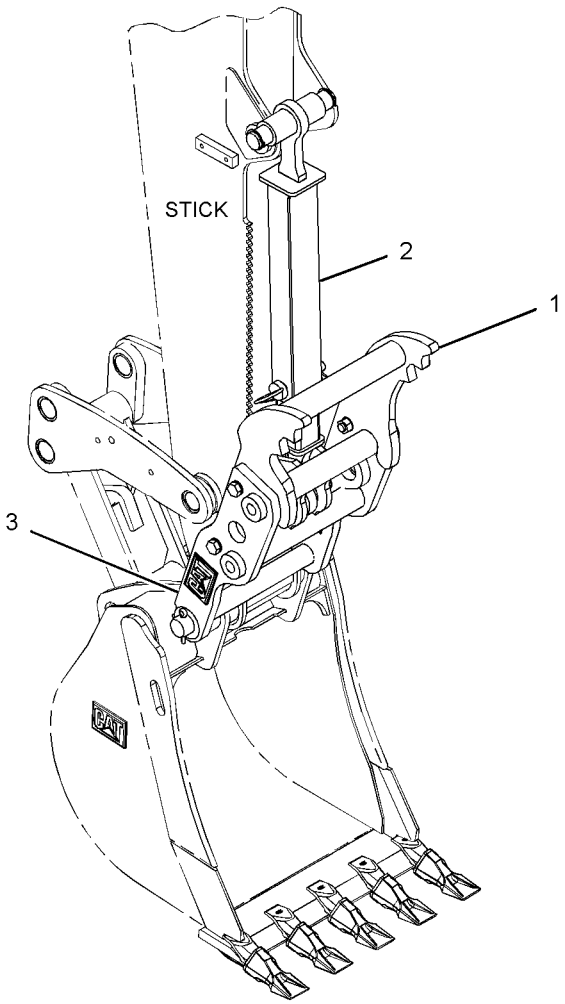

GRAPHIC #1 **<END>** g01230547

271-3029 THUMB AR–24-IN, MANUAL, HEAVY-DUTY, WITH COUPLER

S/N: EAT1-UP

AN ATTACHMENT

SMCS-6547 **i03514490**

NOTE	REF NO	GRAPHIC REF	PART NUMBER	QTY	PART NAME 1 2 3 4 5 6 (PRODUCT LEVEL)	SEE PAGE
	1	1	**221-4283**	1	TINE AS-THUMB (24-IN)	
	2	1	*263-8576*	1	LINK GP-THUMB	
		1	**221-4272**	1	LINK AS (INNER)	
		1	**224-4527**	1	PIN AS	
		1	**263-8575**	1	LINK AS (OUTER)	
Y	3	1	*271-3023*	1	THUMB GP (BACKHOE, COMMON)	785

Y-SEPARATE ILLUSTRATION

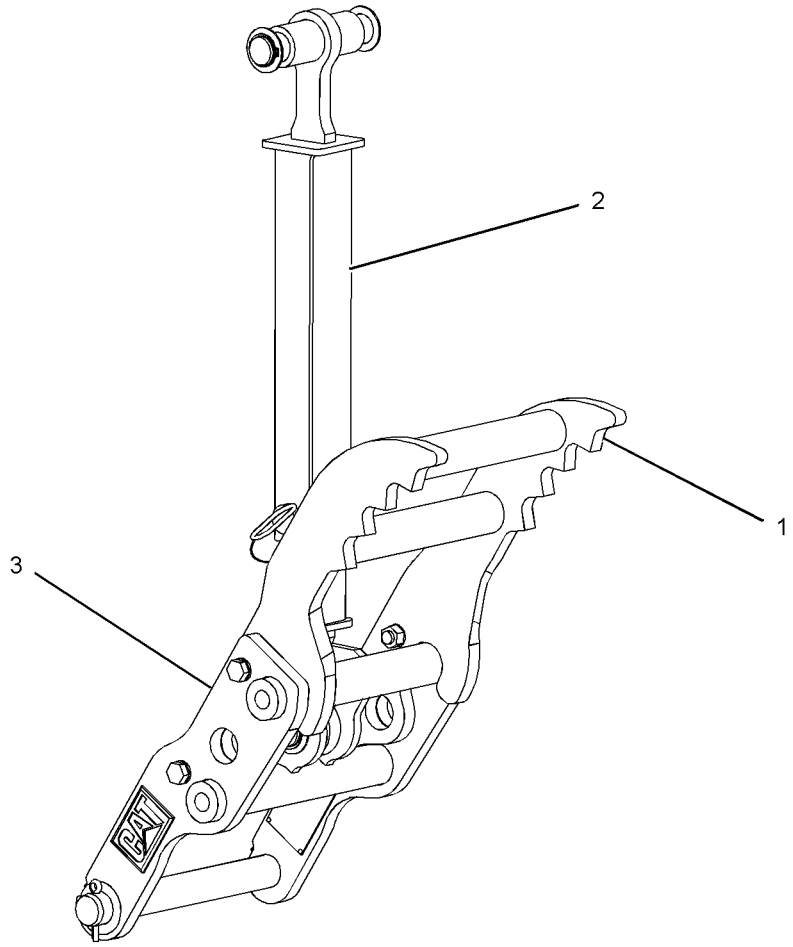

GRAPHIC #1 **<END>** g01230639

WORK TOOLS

271-3030 THUMB AR–24-IN, MANUAL, ROCK

S/N: EAT1-UP

AN ATTACHMENT

SMCS-6547 **i03514492**

NOTE	REF NO	GRAPHIC REF	PART NUMBER	QTY	PART NAME 1 2 3 4 5 6 (PRODUCT LEVEL)	SEE PAGE
	1	1	**221-4284**	1	TINE AS-THUMB (24-IN, ROCK)	
	2	1	*263-8576*	1	LINK GP-THUMB	
		1	**221-4272**	1	LINK AS (INNER)	
		1	**224-4527**	1	PIN AS	
		1	**263-8575**	1	LINK AS (OUTER)	
Y	3	1	*271-3023*	1	THUMB GP (BACKHOE, COMMON)	785

Y-SEPARATE ILLUSTRATION

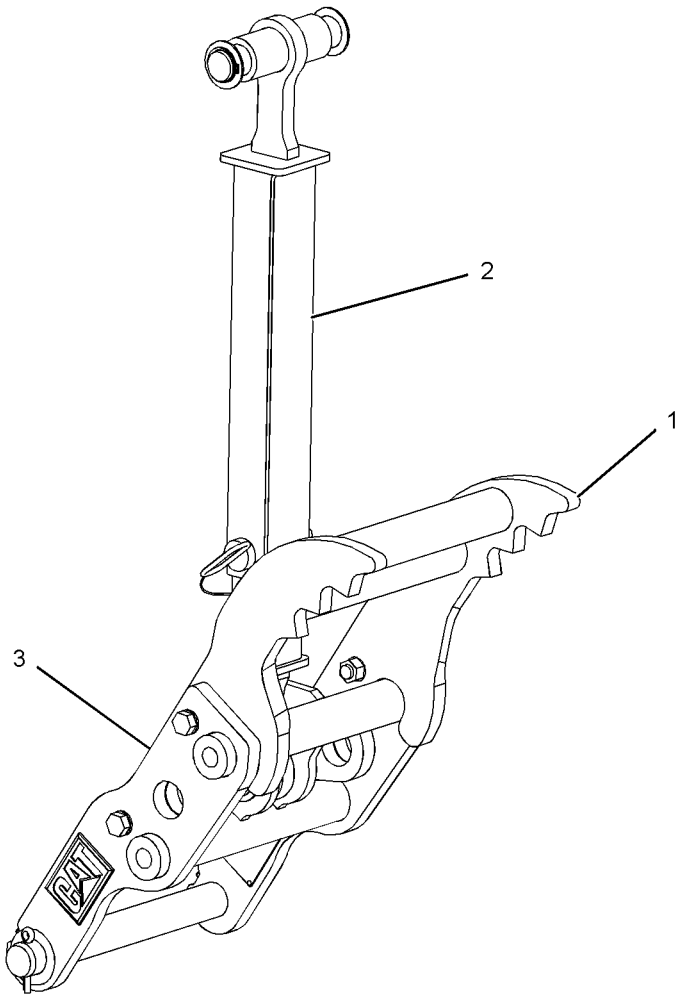

GRAPHIC #1 **<END>** g01232067

WORK TOOLS

271-3031 THUMB AR–24-IN, MANUAL, ROCK, WITH COUPLER

S/N: EAT1-UP

AN ATTACHMENT

SMCS-6547 **i03514493**

NOTE	REF NO	GRAPHIC REF	PART NUMBER	QTY	PART NAME 1 2 3 4 5 6 (PRODUCT LEVEL)	SEE PAGE
	1	1	**221-4285**	1	TINE AS-THUMB (24-IN, ROCK)	
	2	1	*263-8576*	1	LINK GP-THUMB	
		1	**221-4272**	1	LINK AS (INNER)	
		1	**224-4527**	1	PIN AS	
		1	**263-8575**	1	LINK AS (OUTER)	
Y	3	1	*271-3023*	1	THUMB GP (BACKHOE, COMMON)	785

Y-SEPARATE ILLUSTRATION

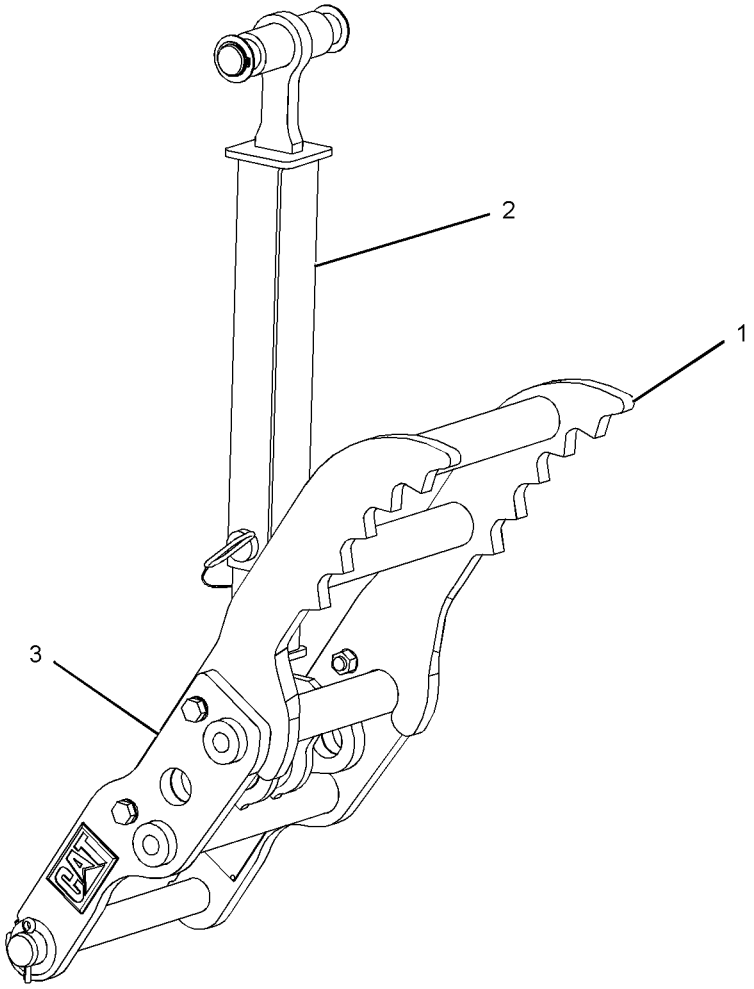

GRAPHIC #1 **<END>** g01232083

WORK TOOLS

281-6716 THUMB AR—24-IN, HYD, WITH COUPLER

S/N: EAT1-UP

AN ATTACHMENT

SMCS-6547 **i03527966**

NOTE	REF NO	GRAPHIC REF	PART NUMBER	QTY	PART NAME 1 2 3 4 5 6 (PRODUCT LEVEL)	SEE PAGE
Y	1	1	*224-6237*	1	CYLINDER & LINES GP-THUMB	388
Y	2	1	*271-3023*	1	THUMB GP (BACKHOE, COMMON)	785
	3	1	**281-6708**	1	TINE AS-THUMB (24-IN)	

Y-SEPARATE ILLUSTRATION

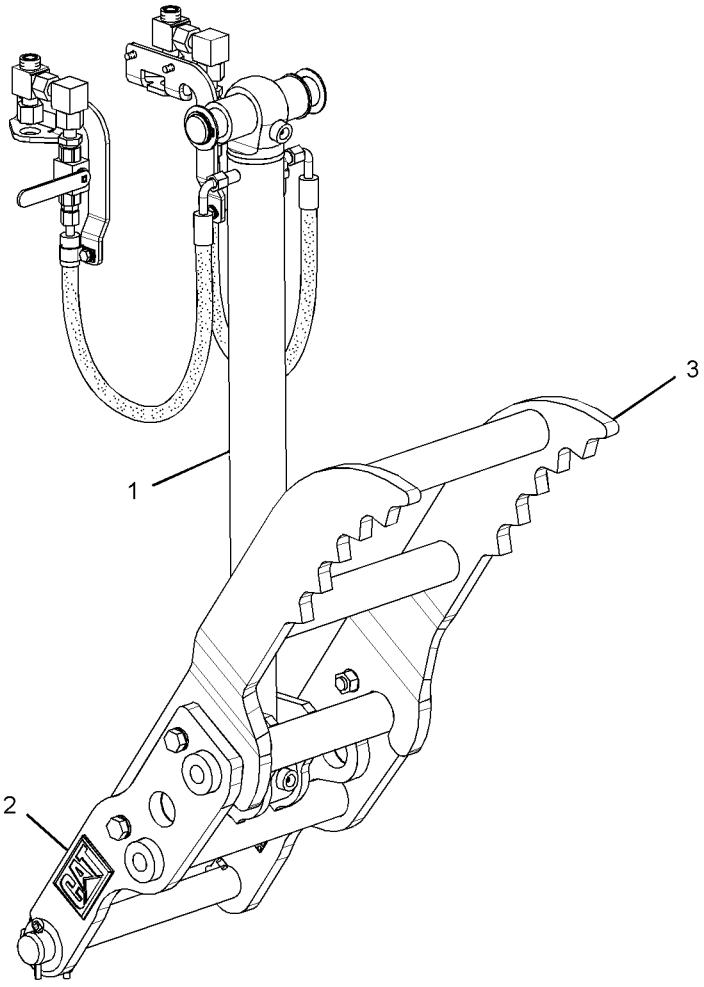

GRAPHIC #1 **<END>** g01370594

282-0865 THUMB AR–30-IN, HYD, WITH COUPLER

S/N: EAT1-UP

AN ATTACHMENT

SMCS-6547 **i03527980**

NOTE	REF NO	GRAPHIC REF	PART NUMBER	QTY	PART NAME 1 2 3 4 5 6 (PRODUCT LEVEL)	SEE PAGE
Y	1	1	*224-6237*	1	CYLINDER & LINES GP-THUMB	388
Y	2	1	*271-3023*	1	THUMB GP (BACKHOE, COMMON)	785
	3	1	**281-6711**	1	TINE AS-THUMB (30-IN)	

Y-SEPARATE ILLUSTRATION

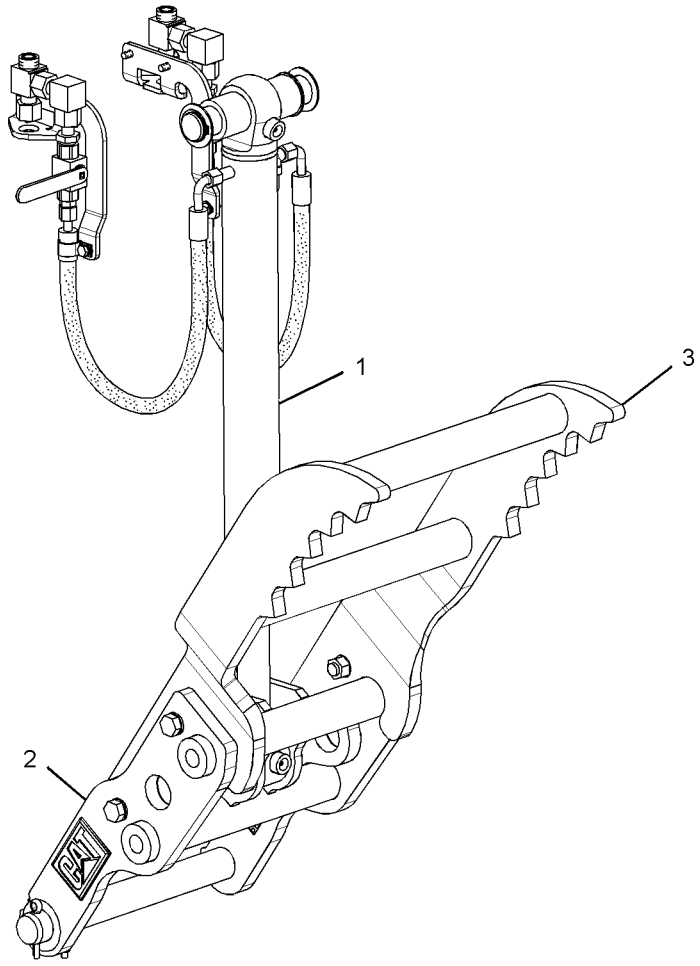

GRAPHIC #1 **<END>** g01371021

282-0866 THUMB AR—36-IN, HYD, WITH COUPLER

S/N: EAT1-UP

AN ATTACHMENT

SMCS-6547 **i03527982**

NOTE	REF NO	GRAPHIC REF	PART NUMBER	QTY	PART NAME 1 2 3 4 5 6 (PRODUCT LEVEL)	SEE PAGE
Y	1	1	*224-6237*	1	CYLINDER & LINES GP-THUMB	388
Y	2	1	*271-3023*	1	THUMB GP (BACKHOE, COMMON)	785
	3	1	**281-6714**	1	TINE AS-THUMB	

Y-SEPARATE ILLUSTRATION

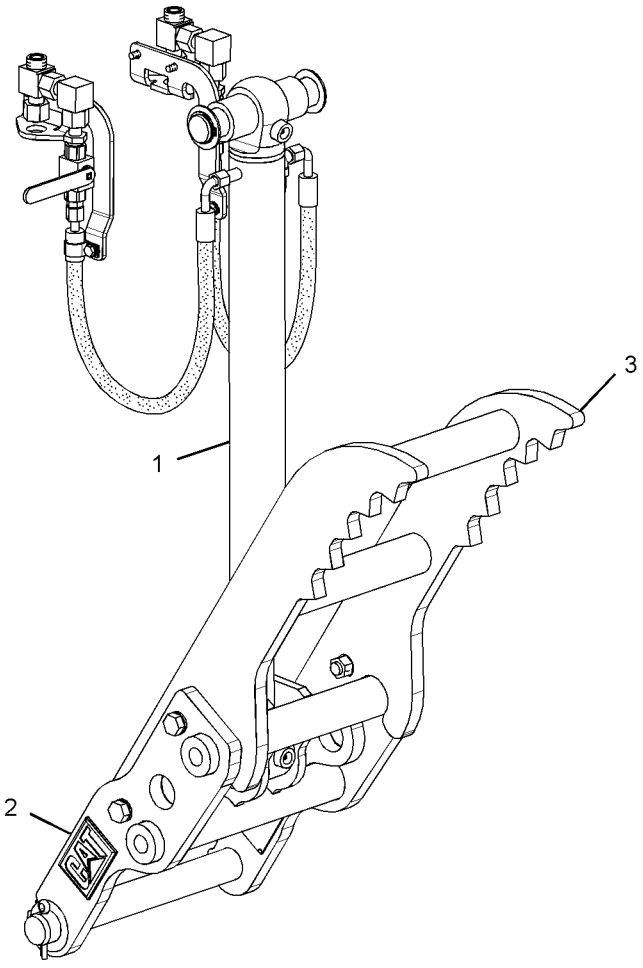

GRAPHIC #1 **<END>** g01370989

WORK TOOLS

282-0887 THUMB AR—30-IN, HYD, HEAVY-DUTY

S/N: EAT1-UP

AN ATTACHMENT

SMCS-6547 **i03527983**

NOTE	REF NO	GRAPHIC REF	PART NUMBER	QTY	PART NAME 1 2 3 4 5 6 (PRODUCT LEVEL)	SEE PAGE
Y	1	1	*224-6237*	1	CYLINDER & LINES GP-THUMB	388
Y	2	1	*271-3023*	1	THUMB GP (BACKHOE, COMMON)	785
	3	1	**274-5819**	1	TINE AS-THUMB (30-IN)	

Y-SEPARATE ILLUSTRATION

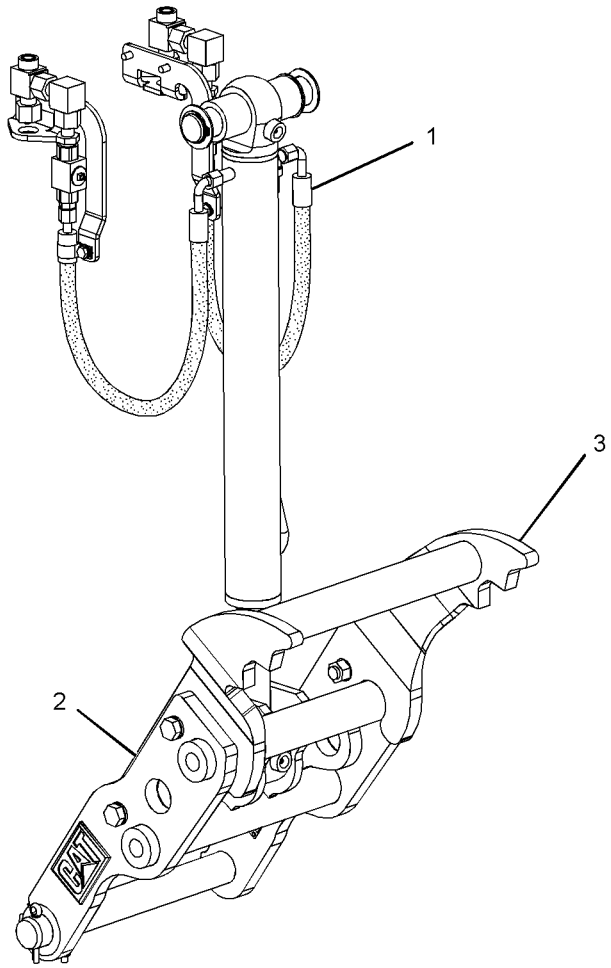

GRAPHIC #1 **<END>** g01370522

WORK TOOLS

282-0888 THUMB AR–30-IN, HYD, HEAVY-DUTY, WITH COUPLER

S/N: EAT1-UP

AN ATTACHMENT

SMCS-6547 **i03527985**

NOTE	REF NO	GRAPHIC REF	PART NUMBER	QTY	PART NAME 1 2 3 4 5 6 (PRODUCT LEVEL)	SEE PAGE
Y	1	1	*224-6237*	1	CYLINDER & LINES GP-THUMB	388
Y	2	1	*271-3023*	1	THUMB GP (BACKHOE, COMMON)	785
	3	1	**274-5823**	1	TINE AS-THUMB (30-IN)	

Y-SEPARATE ILLUSTRATION

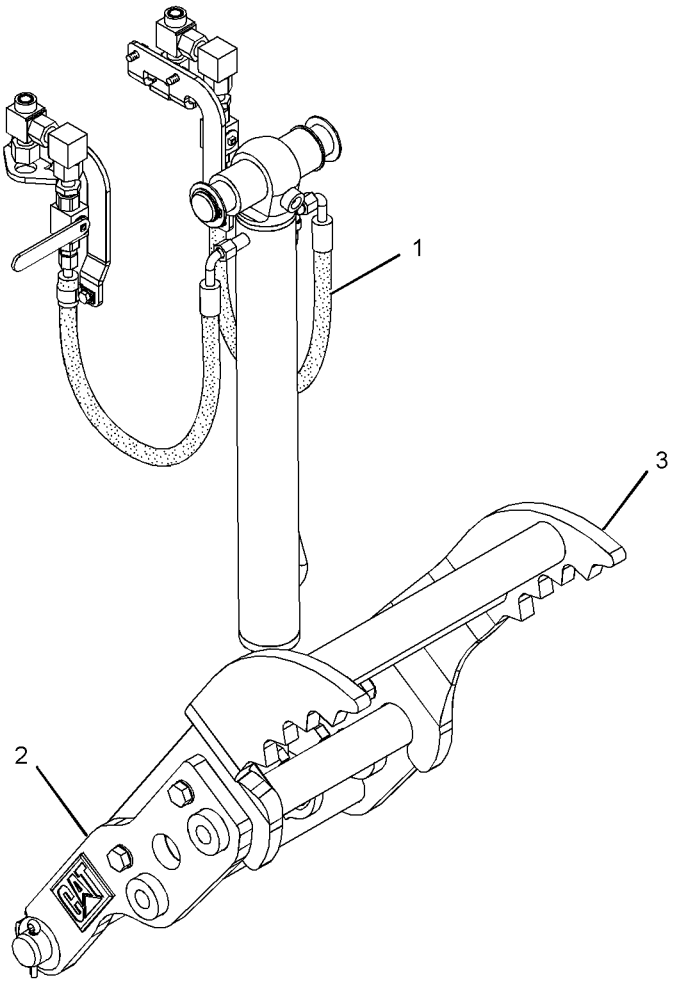

GRAPHIC #1 **<END>** g01370533

282-0889 THUMB AR—30-IN, HYD, ROCK

S/N: EAT1-UP

AN ATTACHMENT

SMCS-6547 **i03527989**

NOTE	REF NO	GRAPHIC REF	PART NUMBER	QTY	PART NAME 1 2 3 4 5 6 (PRODUCT LEVEL)	SEE PAGE
Y	1	1	*224-6237*	1	CYLINDER & LINES GP-THUMB	388
Y	2	1	*271-3023*	1	THUMB GP (BACKHOE, COMMON)	785
	3	1	**274-5826**	1	TINE AS-THUMB (30-IN, ROCK)	

Y-SEPARATE ILLUSTRATION

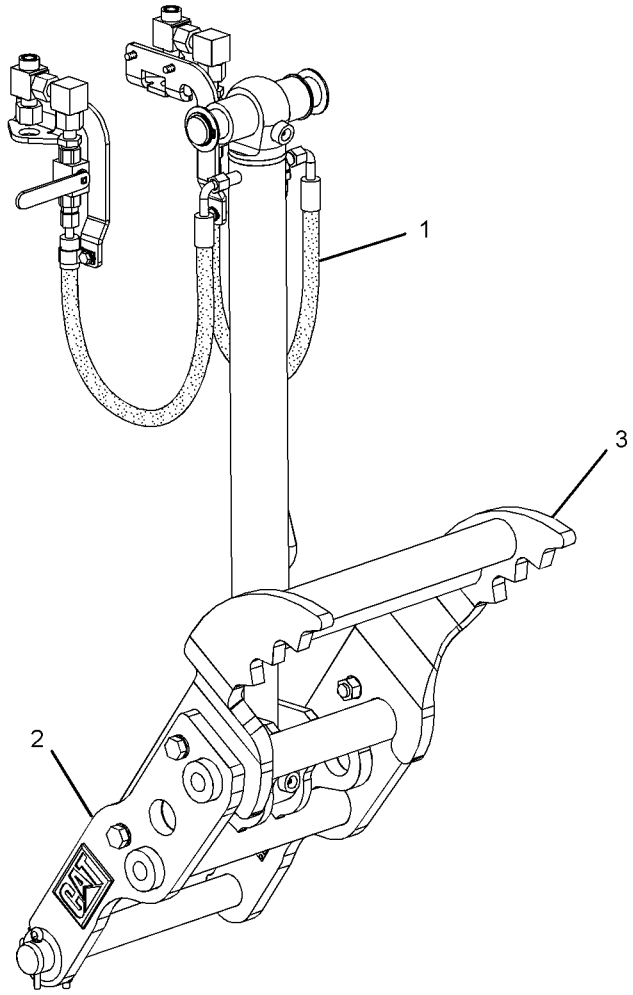

GRAPHIC #1 **<END>** g01370539

WORK TOOLS

282-0890 THUMB AR—30-IN, HYD, ROCK, WITH COUPLER

S/N: EAT1-UP

AN ATTACHMENT

SMCS-6547 **i03527994**

NOTE	REF NO	GRAPHIC REF	PART NUMBER	QTY	PART NAME 1 2 3 4 5 6 (PRODUCT LEVEL)	SEE PAGE
Y	1	1	*224-6237*	1	CYLINDER & LINES GP-THUMB	388
Y	2	1	*271-3023*	1	THUMB GP (BACKHOE, COMMON)	785
	3	1	**274-5829**	1	TINE AS-THUMB (30-IN, ROCK)	

Y-SEPARATE ILLUSTRATION

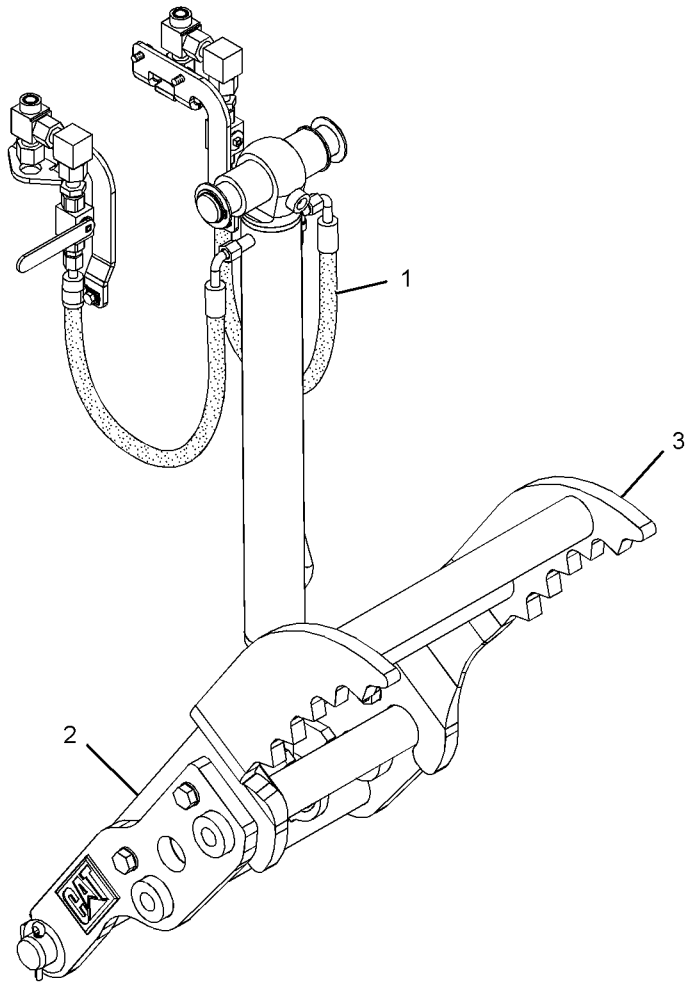

GRAPHIC #1 **<END>** g01370948

282-0891 THUMB AR—36-IN, HYD, HEAVY-DUTY

S/N: EAT1-UP

AN ATTACHMENT

SMCS-6547 **i03527996**

NOTE	REF NO	GRAPHIC REF	PART NUMBER	QTY	PART NAME 1 2 3 4 5 6 (PRODUCT LEVEL)	SEE PAGE
Y	1	1	*224-6237*	1	CYLINDER & LINES GP-THUMB	388
Y	2	1	*271-3023*	1	THUMB GP (BACKHOE, COMMON)	785
	3	1	**274-5832**	1	TINE AS-THUMB (36-IN)	

Y-SEPARATE ILLUSTRATION

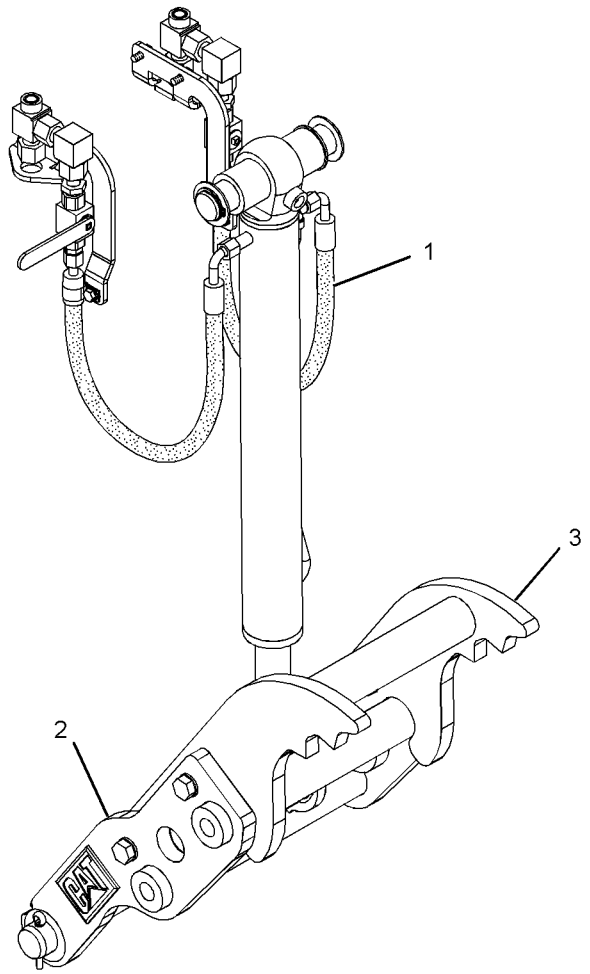

GRAPHIC #1 **<END>** g01370953

282-0892 THUMB AR–36-IN, HYD, HEAVY-DUTY, WITH COUPLER

S/N: EAT1-UP

AN ATTACHMENT

SMCS-6547 **i03527998**

NOTE	REF NO	GRAPHIC REF	PART NUMBER	QTY	PART NAME 1 2 3 4 5 6 (PRODUCT LEVEL)	SEE PAGE
Y	1	1	*224-6237*	1	CYLINDER & LINES GP-THUMB	388
Y	2	1	*271-3023*	1	THUMB GP (BACKHOE, COMMON)	785
	3	1	**274-5835**	1	TINE AS-THUMB (36-IN)	

Y-SEPARATE ILLUSTRATION

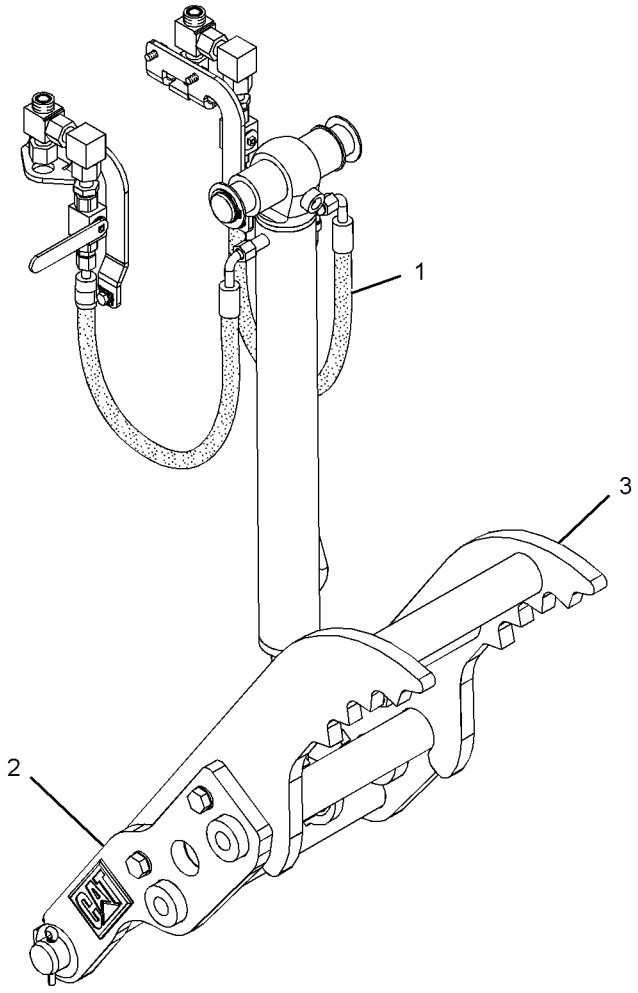

GRAPHIC #1 **<END>** g01370967

WORK TOOLS

282-0893 THUMB AR–36-IN, HYD, ROCK

S/N: EAT1-UP

AN ATTACHMENT

SMCS-6547 **i03528000**

NOTE	REF NO	GRAPHIC REF	PART NUMBER	QTY	PART NAME 1 2 3 4 5 6 (PRODUCT LEVEL)	SEE PAGE
Y	1	1	*224-6237*	1	CYLINDER & LINES GP-THUMB	388
Y	2	1	*271-3023*	1	THUMB GP (BACKHOE, COMMON)	785
	3	1	**274-5837**	1	TINE AS-THUMB (36-IN, ROCK)	

Y-SEPARATE ILLUSTRATION

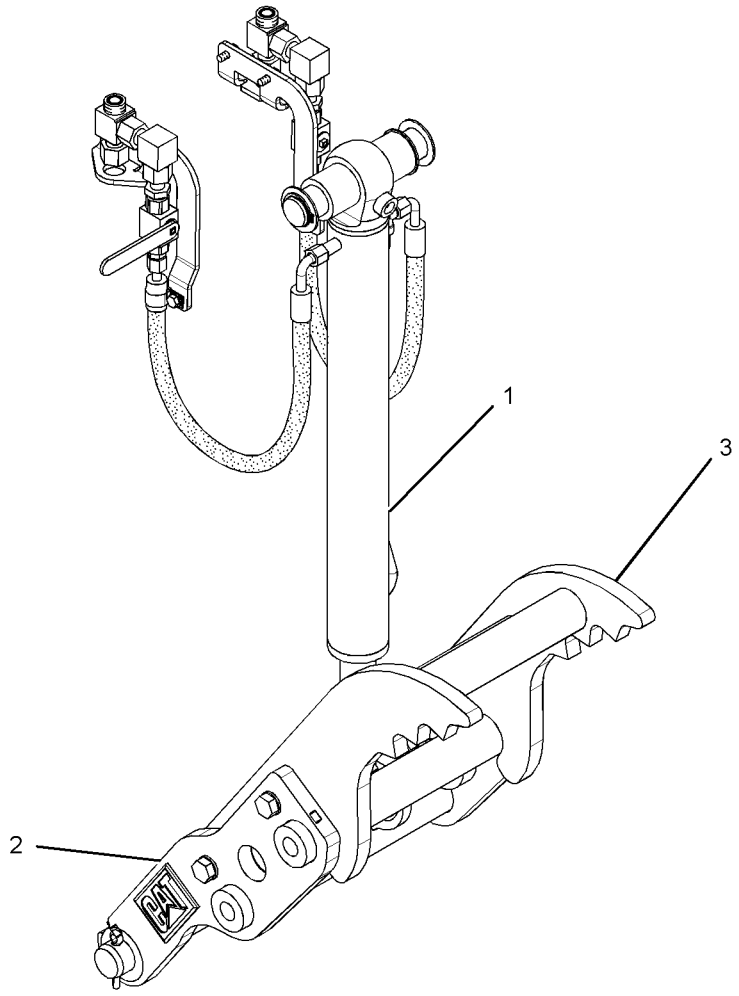

GRAPHIC #1 **<END>** g01370636

282-0894 THUMB AR—36-IN, HYD, ROCK, WITH COUPLER

S/N: EAT1-UP

AN ATTACHMENT

SMCS-6547 **i03528021**

NOTE	REF NO	GRAPHIC REF	PART NUMBER	QTY	PART NAME 1 2 3 4 5 6 (PRODUCT LEVEL)	SEE PAGE
Y	1	1	*224-6237*	1	CYLINDER & LINES GP-THUMB	388
Y	2	1	*271-3023*	1	THUMB GP (BACKHOE, COMMON)	785
	3	1	**274-5839**	1	TINE AS-THUMB (36-IN, ROCK)	

Y-SEPARATE ILLUSTRATION

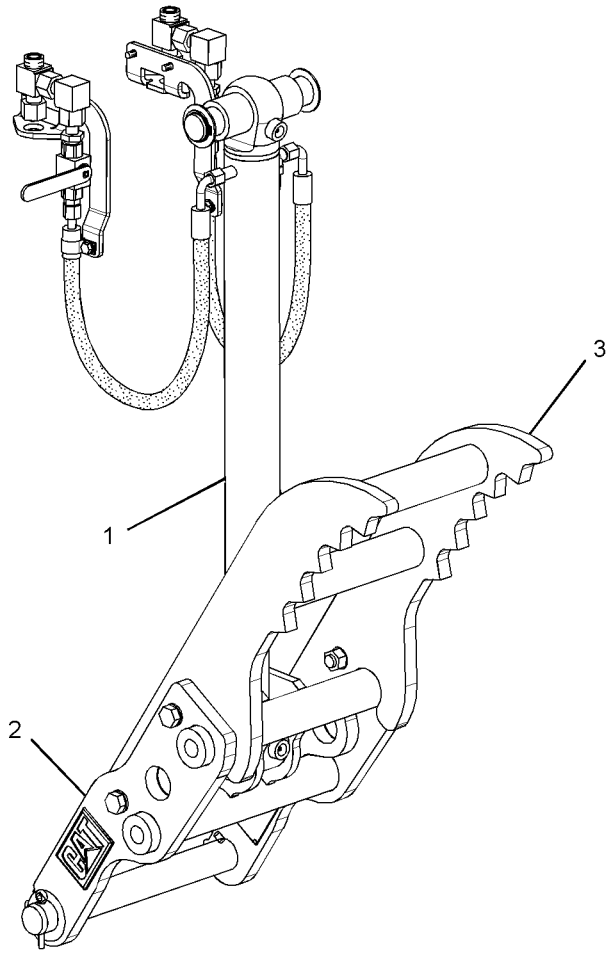

GRAPHIC #1 **<END>** g01371128

WORK TOOLS

282-5398 THUMB AR–24-IN, MANUAL, WITH COUPLER

S/N: EAT1-UP

AN ATTACHMENT

SMCS-6547 **i03514494**

NOTE	REF NO	GRAPHIC REF	PART NUMBER	QTY	PART NAME 1 2 3 4 5 6 (PRODUCT LEVEL)	SEE PAGE
	1	1	*263-8576*	1	LINK GP-THUMB	
		1	**221-4272**	1	LINK AS (INNER)	
		1	**224-4527**	1	PIN AS	
		1	**263-8575**	1	LINK AS (OUTER)	
Y	2	1	*271-3023*	1	THUMB GP (BACKHOE, COMMON)	785
	3	1	**281-6708**	1	TINE AS-THUMB (24-IN)	

Y-SEPARATE ILLUSTRATION

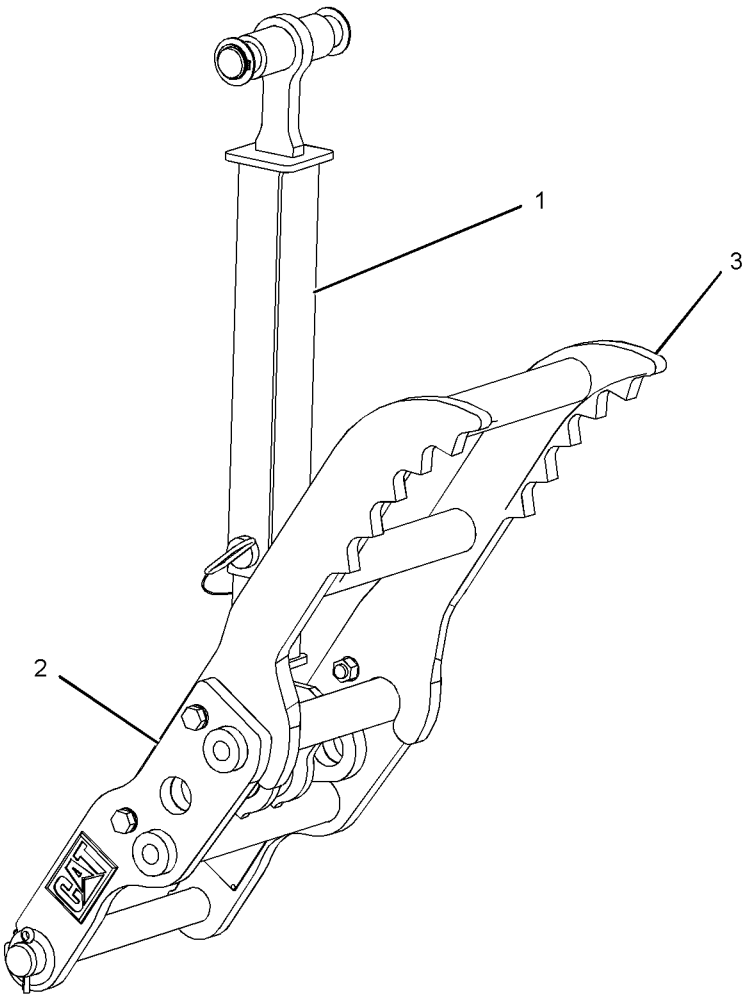

GRAPHIC #1 **<END>** g01232078

WORK TOOLS

282-5399 THUMB AR—30-IN, MANUAL, HEAVY-DUTY

S/N: EAT1-UP

AN ATTACHMENT

SMCS-6547 **i03517286**

NOTE	REF NO	GRAPHIC REF	PART NUMBER	QTY	PART NAME 1 2 3 4 5 6 (PRODUCT LEVEL)	SEE PAGE
	1	1	*263-8576*	1	LINK GP-THUMB	
		1	**221-4272**	1	LINK AS (INNER)	
		1	**224-4527**	1	PIN AS	
		1	**263-8575**	1	LINK AS (OUTER)	
Y	2	1	*271-3023*	1	THUMB GP (BACKHOE, COMMON)	785
	3	1	**274-5819**	1	TINE AS-THUMB (30-IN)	

Y-SEPARATE ILLUSTRATION

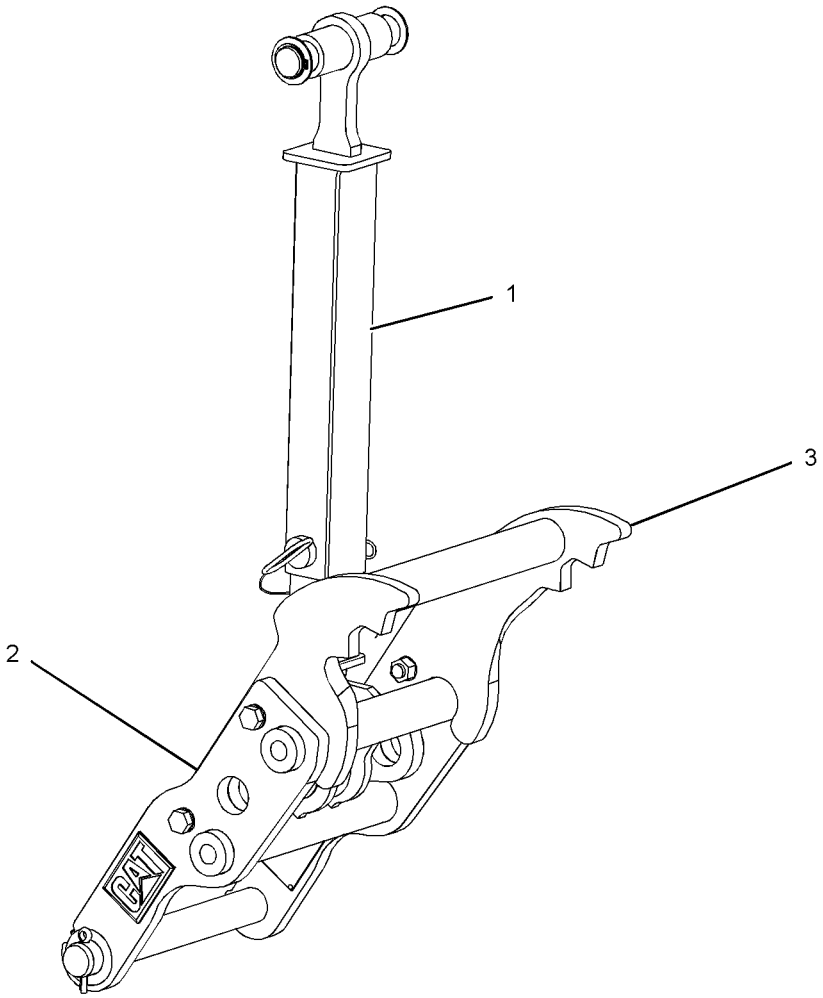

GRAPHIC #1 **<END>** g01232091

WORK TOOLS

282-5400 THUMB AR—30-IN, MANUAL, ROCK

S/N: EAT1-UP

AN ATTACHMENT

SMCS-6547 **i03517287**

NOTE	REF NO	GRAPHIC REF	PART NUMBER	QTY	PART NAME 1 2 3 4 5 6 (PRODUCT LEVEL)	SEE PAGE
	1	1	*263-8576*	1	LINK GP-THUMB	
		1	**221-4272**	1	LINK AS (INNER)	
		1	**224-4527**	1	PIN AS	
		1	**263-8575**	1	LINK AS (OUTER)	
Y	2	1	*271-3023*	1	THUMB GP (BACKHOE, COMMON)	785
	3	1	**274-5826**	1	TINE AS-THUMB (30-IN, ROCK)	

Y-SEPARATE ILLUSTRATION

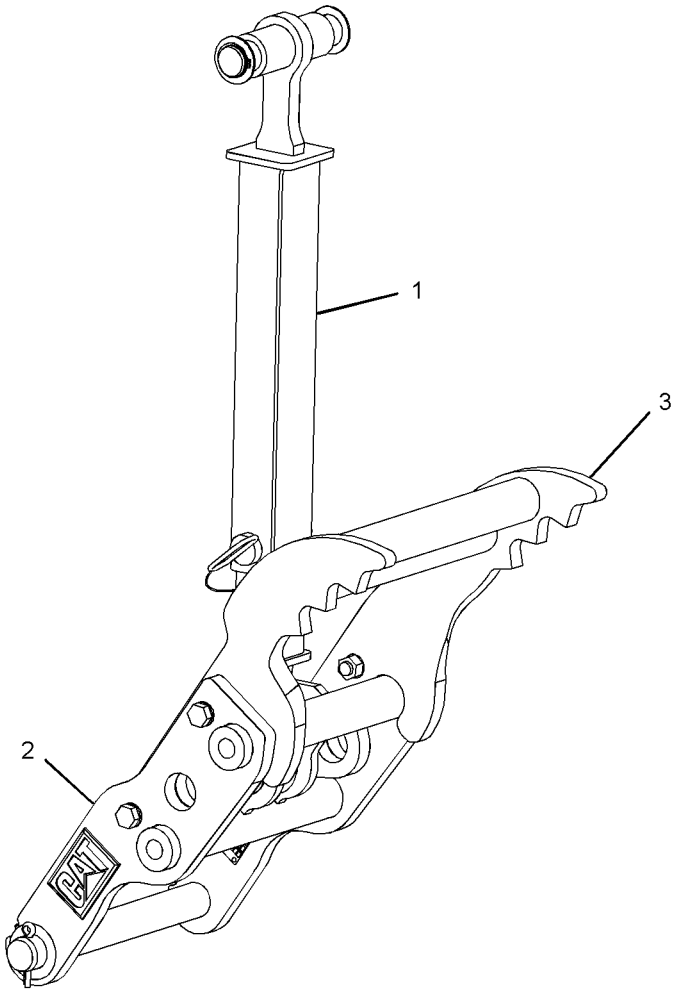

GRAPHIC #1 **<END>** g01234205

WORK TOOLS

282-5401 THUMB AR–30-IN, MANUAL, HEAVY-DUTY, WITH COUPLER

S/N: EAT1-UP

AN ATTACHMENT

SMCS-6547 **i03517316**

NOTE	REF NO	GRAPHIC REF	PART NUMBER	QTY	PART NAME 1 2 3 4 5 6 (PRODUCT LEVEL)	SEE PAGE
	1	1	*263-8576*	1	LINK GP-THUMB	
		1	**263-8575**		LINK AS (OUTER)	
		1	**221-4272**	1	LINK AS (INNER)	
		1	**224-4527**	1	PIN AS	
Y	2	1	*271-3023*	1	THUMB GP (BACKHOE, COMMON)	785
	3	1	**274-5823**	1	TINE AS-THUMB (30-IN)	

Y-SEPARATE ILLUSTRATION

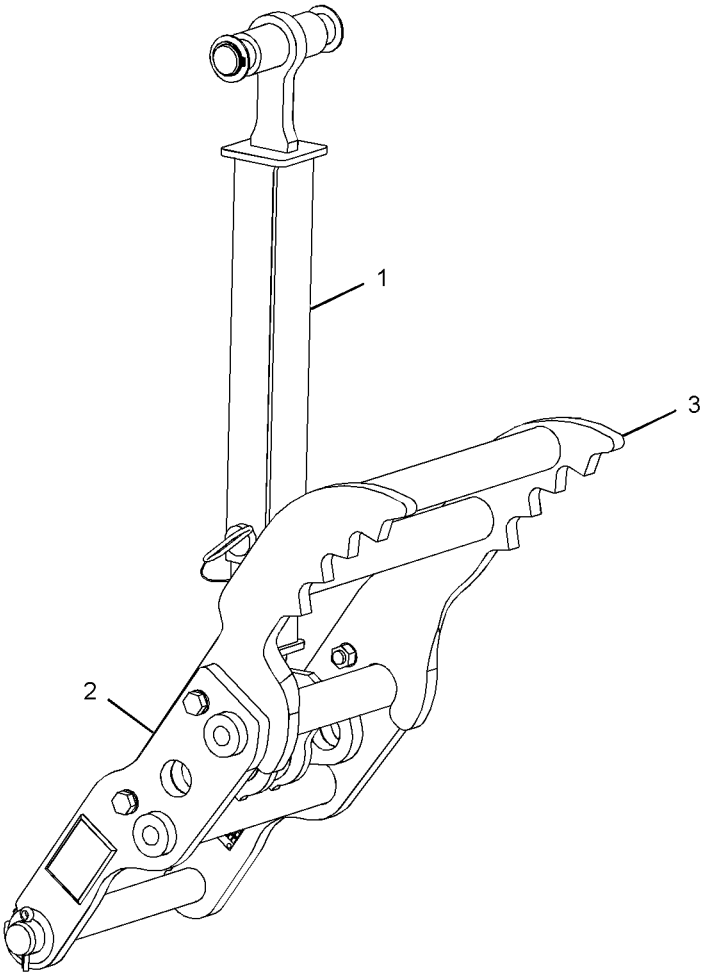

GRAPHIC #1 **<END>** g01234213

WORK TOOLS

282-5402 THUMB AR–30-IN, MANUAL, ROCK, WITH COUPLER

S/N: EAT1-UP

AN ATTACHMENT

SMCS-6547 **i03517288**

NOTE	REF NO	GRAPHIC REF	PART NUMBER	QTY	PART NAME 1 2 3 4 5 6 (PRODUCT LEVEL)	SEE PAGE
	1	1	*263-8576*	1	LINK GP-THUMB	
		1	**263-8575**	1	LINK AS (OUTER)	
		1	**221-4272**	1	LINK AS (INNER)	
		1	**224-4527**	1	PIN AS	
Y	2	1	*271-3023*	1	THUMB GP (BACKHOE, COMMON)	785
	3	1	**274-5829**	1	TINE AS-THUMB (30-IN, ROCK)	

Y-SEPARATE ILLUSTRATION

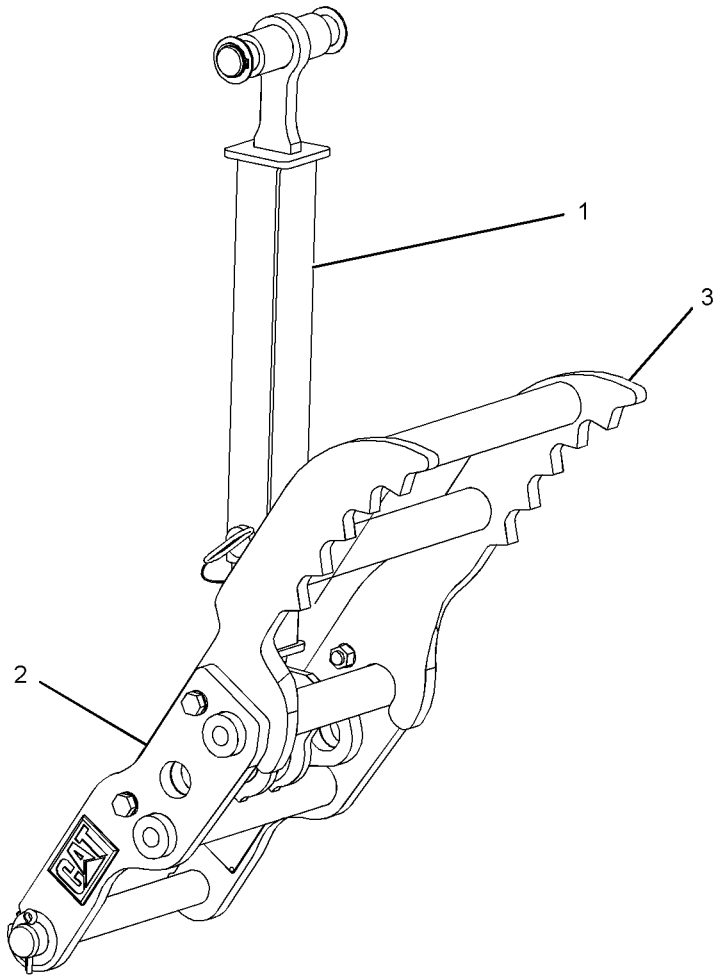

GRAPHIC #1 **<END>** g01234207

WORK TOOLS

282-5403 THUMB AR—30-IN, MANUAL, WITH COUPLER

S/N: EAT1-UP

AN ATTACHMENT

SMCS-6547 **i03514511**

NOTE	REF NO	GRAPHIC REF	PART NUMBER	QTY	PART NAME 1 2 3 4 5 6 (PRODUCT LEVEL)	SEE PAGE
	1	1	*263-8576*	1	LINK GP-THUMB	
		1	**221-4272**	1	LINK AS (INNER)	
		1	**224-4527**	1	PIN AS	
		1	**263-8575**	1	LINK AS (OUTER)	
Y	2	1	*271-3023*	1	THUMB GP (BACKHOE, COMMON)	785
	3	1	**281-6711**	1	TINE AS-THUMB (30-IN)	

Y-SEPARATE ILLUSTRATION

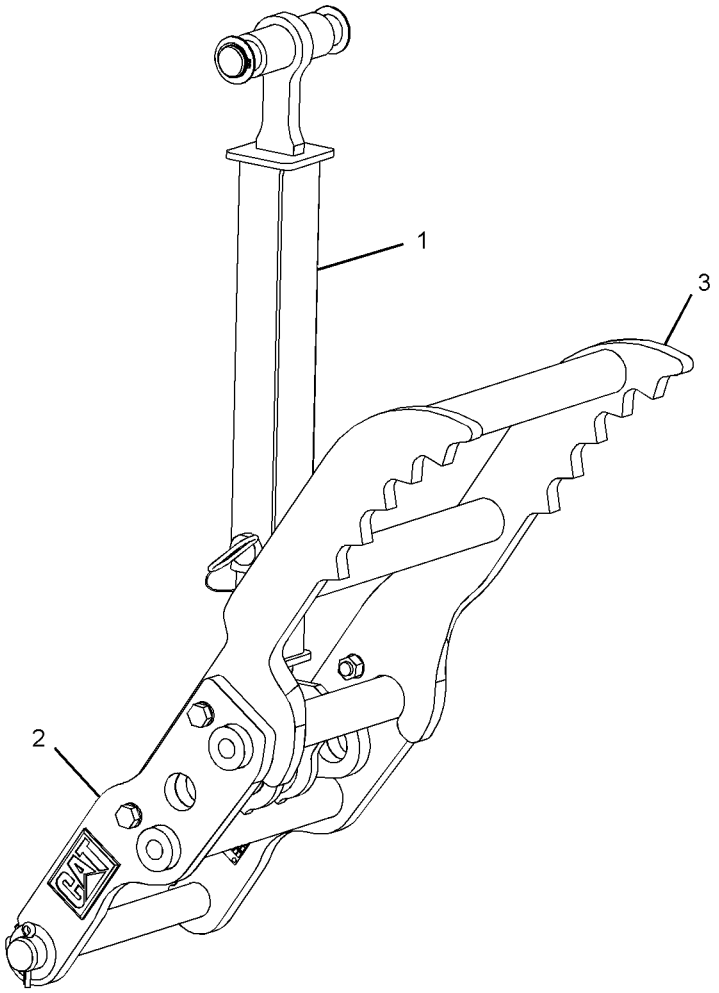

GRAPHIC #1 **<END>** g01234215

282-5404 THUMB AR—36-IN, MANUAL, HEAVY-DUTY

S/N: EAT1-UP

AN ATTACHMENT

SMCS-6547 **i03517289**

NOTE	REF NO	GRAPHIC REF	PART NUMBER	QTY	PART NAME 1 2 3 4 5 6 (PRODUCT LEVEL)	SEE PAGE
	1	1	*263-8576*	1	LINK GP-THUMB	
		1	**221-4272**	1	LINK AS (INNER)	
		1	**224-4527**	1	PIN AS	
		1	**263-8575**	1	LINK AS (OUTER)	
Y	2	1	*271-3023*	1	THUMB GP (BACKHOE, COMMON)	785
	3	1	**274-5832**	1	TINE AS-THUMB (36-IN)	

Y-SEPARATE ILLUSTRATION

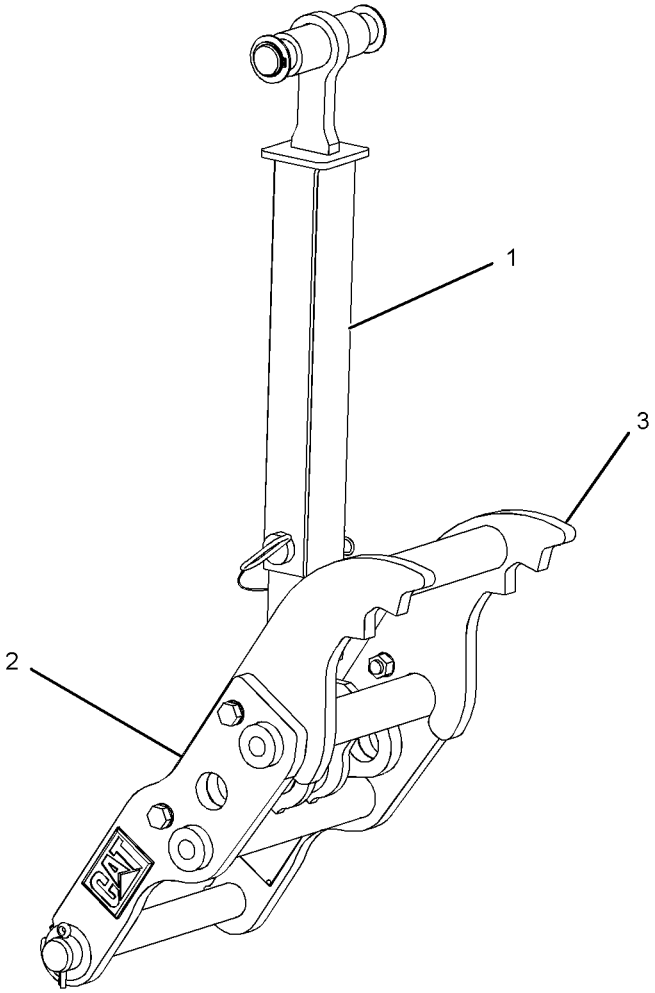

GRAPHIC #1 **<END>** g01232484

282-5405 THUMB AR–36-IN, MANUAL, ROCK

S/N: EAT1-UP

AN ATTACHMENT

SMCS-6547 **i03517290**

NOTE	REF NO	GRAPHIC REF	PART NUMBER	QTY	PART NAME 1 2 3 4 5 6 (PRODUCT LEVEL)	SEE PAGE
	1	1	*263-8576*	1	LINK GP-THUMB	
		1	**221-4272**	1	LINK AS (INNER)	
		1	**224-4527**	1	PIN AS	
		1	**263-8575**	1	LINK AS (OUTER)	
Y	2	1	*271-3023*	1	THUMB GP (BACKHOE, COMMON)	785
	3	1	**274-5837**	1	TINE AS-THUMB (36-IN, ROCK)	

Y-SEPARATE ILLUSTRATION

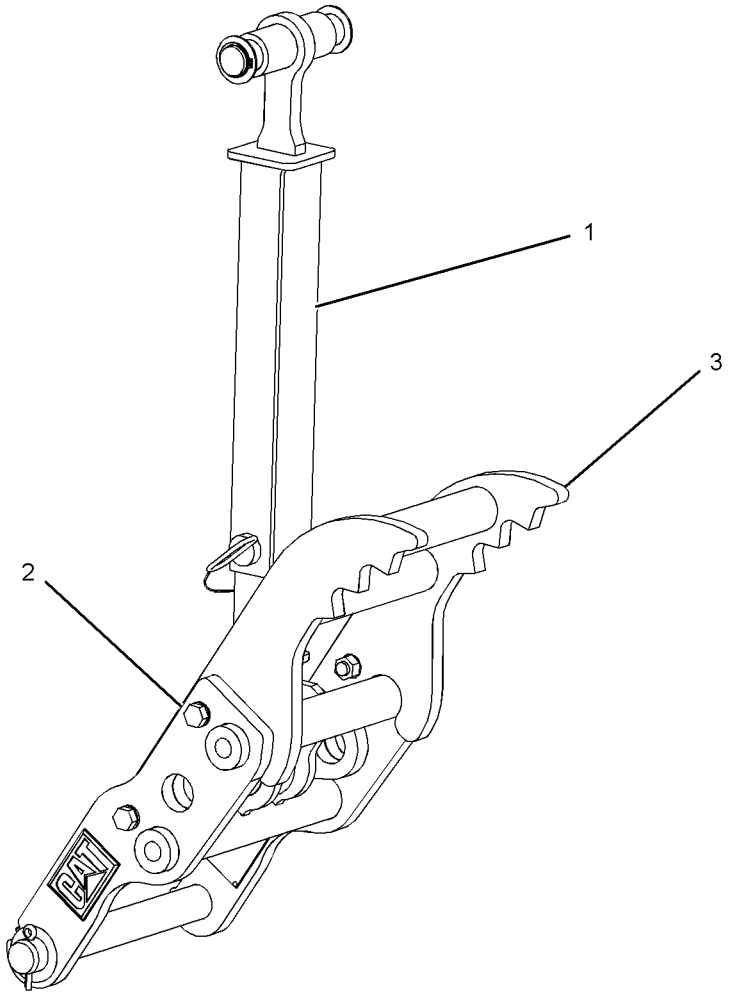

GRAPHIC #1 **<END>** g01232106

WORK TOOLS

282-5406 THUMB AR—36-IN, MANUAL, HEAVY-DUTY, WITH COUPLER

S/N: EAT1-UP

AN ATTACHMENT

SMCS-6547 **i03517291**

NOTE	REF NO	GRAPHIC REF	PART NUMBER	QTY	PART NAME 1 2 3 4 5 6 (PRODUCT LEVEL)	SEE PAGE
	1	1	*263-8576*	1	LINK GP-THUMB	
		1	**221-4272**	1	LINK AS (INNER)	
		1	**224-4527**	1	PIN AS	
		1	**263-8575**	1	LINK AS (OUTER)	
Y	2	1	*271-3023*	1	THUMB GP (BACKHOE, COMMON)	785
	3	1	**274-5835**	1	TINE AS-THUMB (36-IN)	

Y-SEPARATE ILLUSTRATION

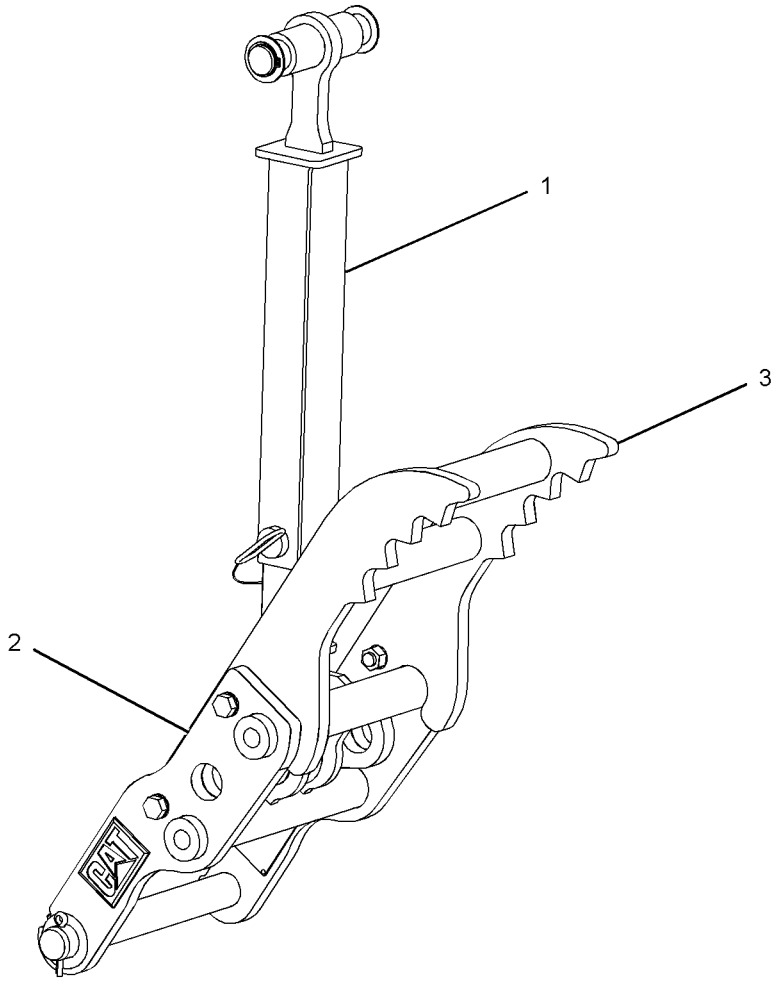

GRAPHIC #1 **<END>** g01230669

WORK TOOLS

282-5407 THUMB AR—36-IN, MANUAL, ROCK, WITH COUPLER

S/N: EAT1-UP

AN ATTACHMENT

SMCS-6547 **i03517292**

NOTE	REF NO	GRAPHIC REF	PART NUMBER	QTY	PART NAME 1 2 3 4 5 6 (PRODUCT LEVEL)	SEE PAGE
	1	1	*263-8576*	1	LINK GP-THUMB	
		1	**221-4272**	1	LINK AS (INNER)	
		1	**224-4527**	1	PIN AS	
		1	**263-8575**	1	LINK AS (OUTER)	
Y	2	1	*271-3023*	1	THUMB GP (BACKHOE, COMMON)	785
	3	1	**274-5839**	1	TINE AS-THUMB (36-IN, ROCK)	

Y-SEPARATE ILLUSTRATION

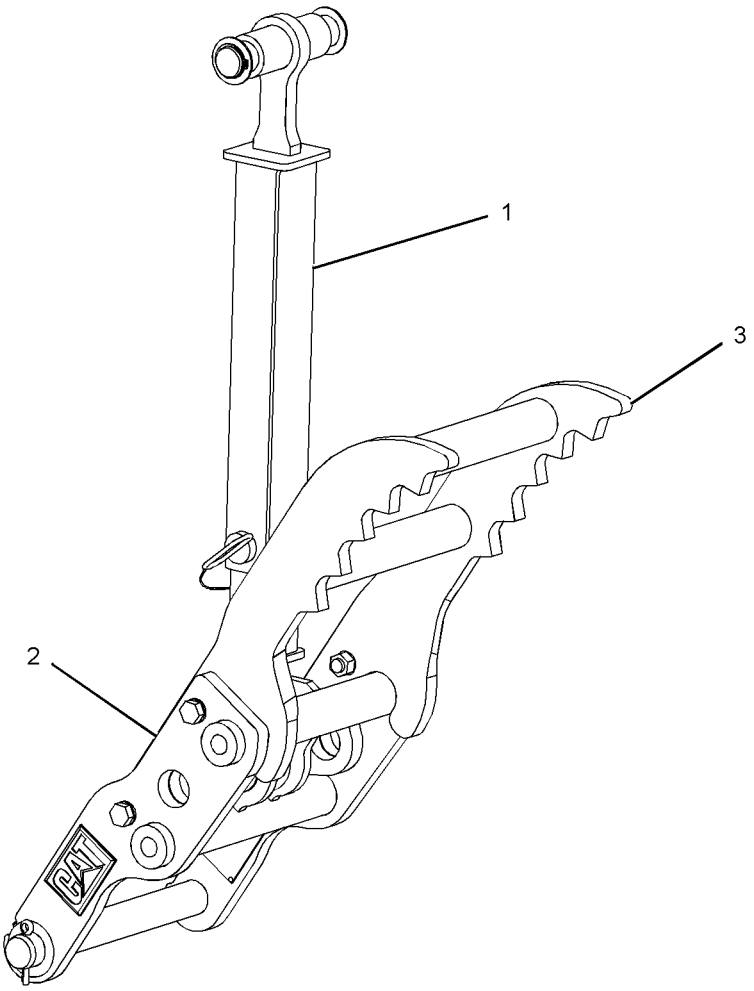

GRAPHIC #1 **<END>** g01232087

WORK TOOLS

282-5408 THUMB AR–36-IN, MANUAL, WITH COUPLER

S/N: EAT1-UP

AN ATTACHMENT

SMCS-6547 **i03514523**

NOTE	REF NO	GRAPHIC REF	PART NUMBER	QTY	PART NAME 1 2 3 4 5 6 (PRODUCT LEVEL)	SEE PAGE
	1	1	*263-8576*	1	LINK GP-THUMB	
		1	**221-4272**	1	LINK AS (INNER)	
		1	**224-4527**	1	PIN AS	
		1	**263-8575**	1	LINK AS (OUTER)	
Y	2	1	*271-3023*	1	THUMB GP (BACKHOE, COMMON)	785
	3	1	**281-6714**	1	TINE AS-THUMB	

Y-SEPARATE ILLUSTRATION

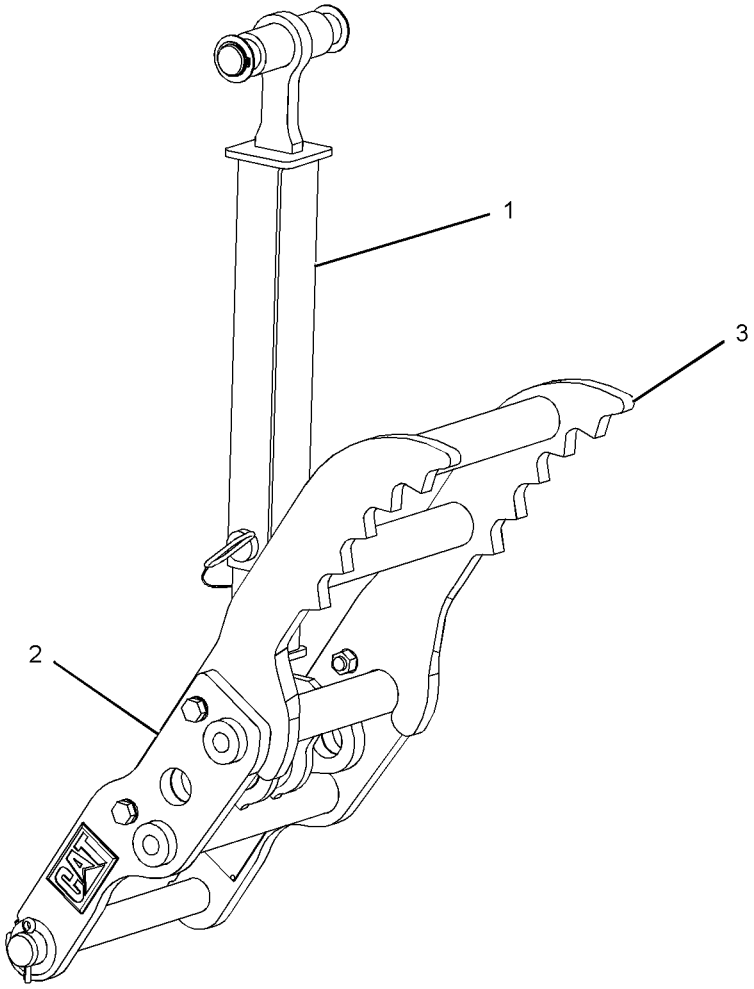

GRAPHIC #1 **<END>** g01232087

WORK TOOLS

282-5409 THUMB AR–BACKHOE, HYDRAULIC COMMON

S/N: EAT1-UP
AN ATTACHMENT
TYPE 1

SMCS-6547 **i02837777**

NOTE	REF NO	GRAPHIC REF	PART NUMBER	QTY	PART NAME 1 2 3 4 5 6 (PRODUCT LEVEL)	SEE PAGE
Y	1	1	*224-6237*	1	CYLINDER & LINES GP-THUMB	388
Y	2	1	*271-3023*	1	THUMB GP (BACKHOE, COMMON)	785

Y-SEPARATE ILLUSTRATION

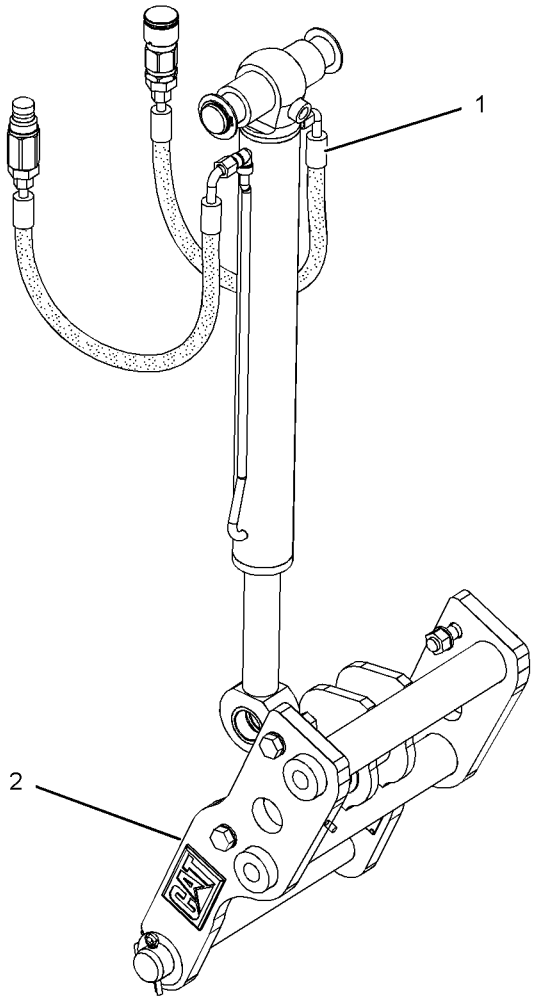

GRAPHIC #1 **<END>** g01232113

WORK TOOLS

282-5409 THUMB AR—BACKHOE, HYDRAULIC COMMON

S/N: EAT1-UP
AN ATTACHMENT
TYPE 2

SMCS-6547 **i02837778**

NOTE	REF NO	GRAPHIC REF	PART NUMBER	QTY	PART NAME 1 2 3 4 5 6 (PRODUCT LEVEL)	SEE PAGE
Y	1	1	*224-6237*	1	CYLINDER & LINES GP-THUMB	388
Y	2	1	*271-3023*	1	THUMB GP (BACKHOE, COMMON)	785

Y-SEPARATE ILLUSTRATION

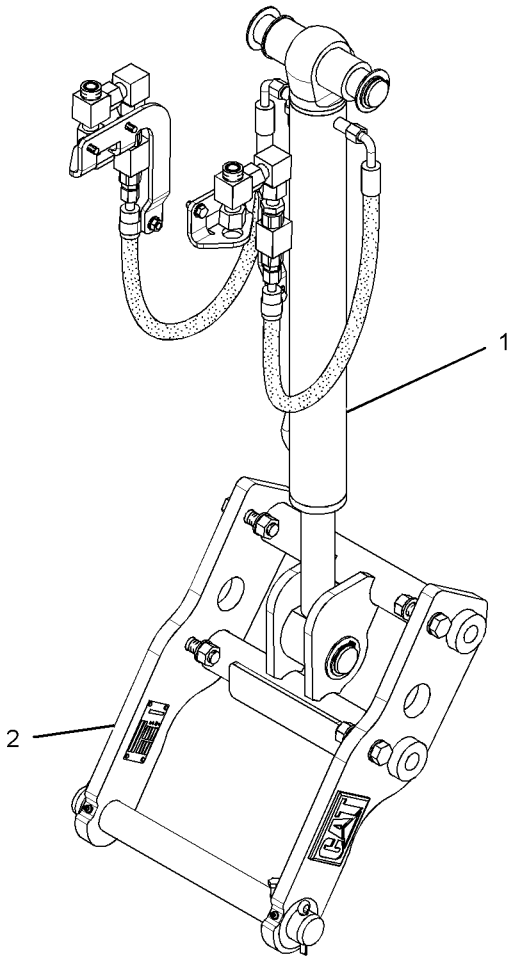

GRAPHIC #1 **<END>** g01379867

WORK TOOLS

282-5409 THUMB AR–BACKHOE, HYDRAULIC COMMON

S/N: EAT1-UP
AN ATTACHMENT
TYPE 3

SMCS-6547 **i02908602**

NOTE	REF NO	GRAPHIC REF	PART NUMBER	QTY	PART NAME 1 2 3 4 5 6 (PRODUCT LEVEL)	SEE PAGE
Y	1	1	*271-3023*	1	THUMB GP (BACKHOE, COMMON)	785
CY	2	1	*299-5362*	1	CYLINDER & LINES GP-THUMB	391

C-CHANGE FROM PREVIOUS TYPE
Y-SEPARATE ILLUSTRATION

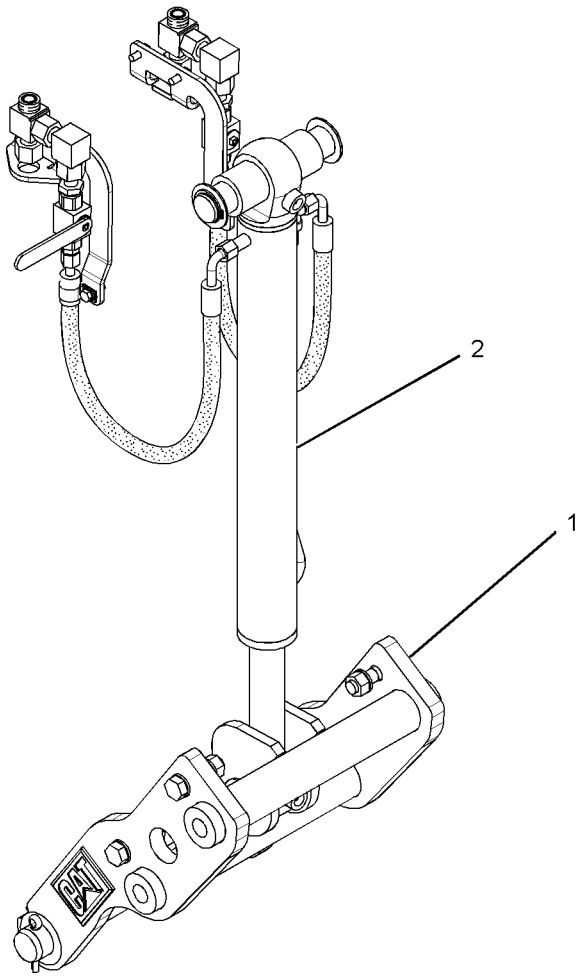

GRAPHIC #1 **<END>** g01454728

WORK TOOLS

282-5410 THUMB AR–BACKHOE, MANUAL COMMON

S/N: EAT1-UP

AN ATTACHMENT

SMCS-6547 **i03514524**

NOTE	REF NO	GRAPHIC REF	PART NUMBER	QTY	PART NAME 1 2 3 4 5 6 (PRODUCT LEVEL)	SEE PAGE
	1	1	*263-8576*	1	LINK GP-THUMB	
		1	**221-4272**	1	LINK AS (INNER)	
		1	**224-4527**	1	PIN AS	
		1	**263-8575**	1	LINK AS (OUTER)	
Y	2	1	*271-3023*	1	THUMB GP (BACKHOE, COMMON)	785

Y-SEPARATE ILLUSTRATION

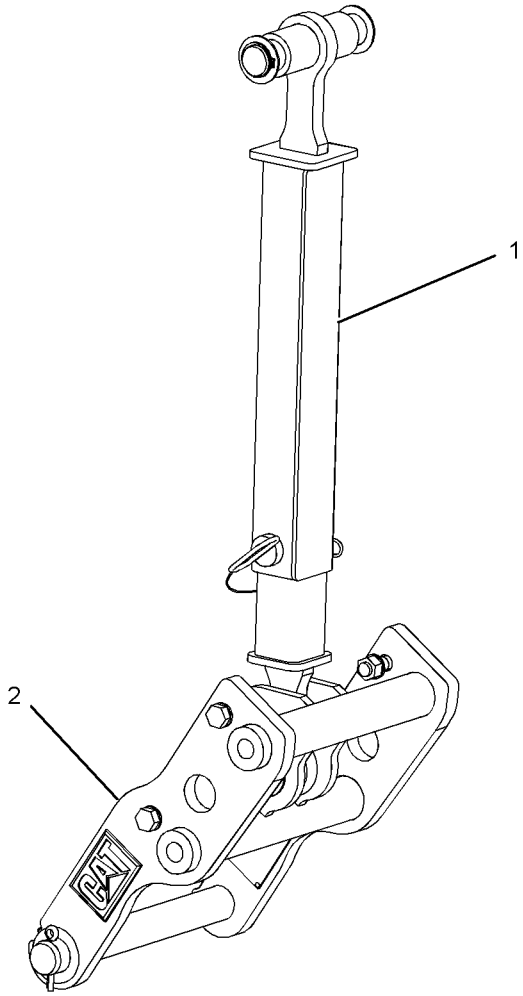

GRAPHIC #1 **<END>** g01232128

WORK TOOLS

221-4267 THUMB GP–BACKHOE

S/N: EAT1-UP
PART OF 221-4260 THUMB AR, 271-3023 THUMB GP
AN ATTACHMENT

SMCS-6547 **i02501588**

NOTE	REF NO	GRAPHIC REF	PART NUMBER	QTY	PART NAME 1 2 3 4 5 6 (PRODUCT LEVEL)	SEE PAGE
	1	1	**221-4263**	1	LINK AS	
	2	1	**3B-8489**	2	FITTING-GREASE	
	3	1	**8T-4123**	8	WASHER (22X35X3.5-MM THK)	
M	4	1	**8T-4131**	4	NUT (M20X2.5-THD)	
M	5	1	**8T-4187**	4	BOLT (M20X2.5X80-MM)	

M-METRIC PART

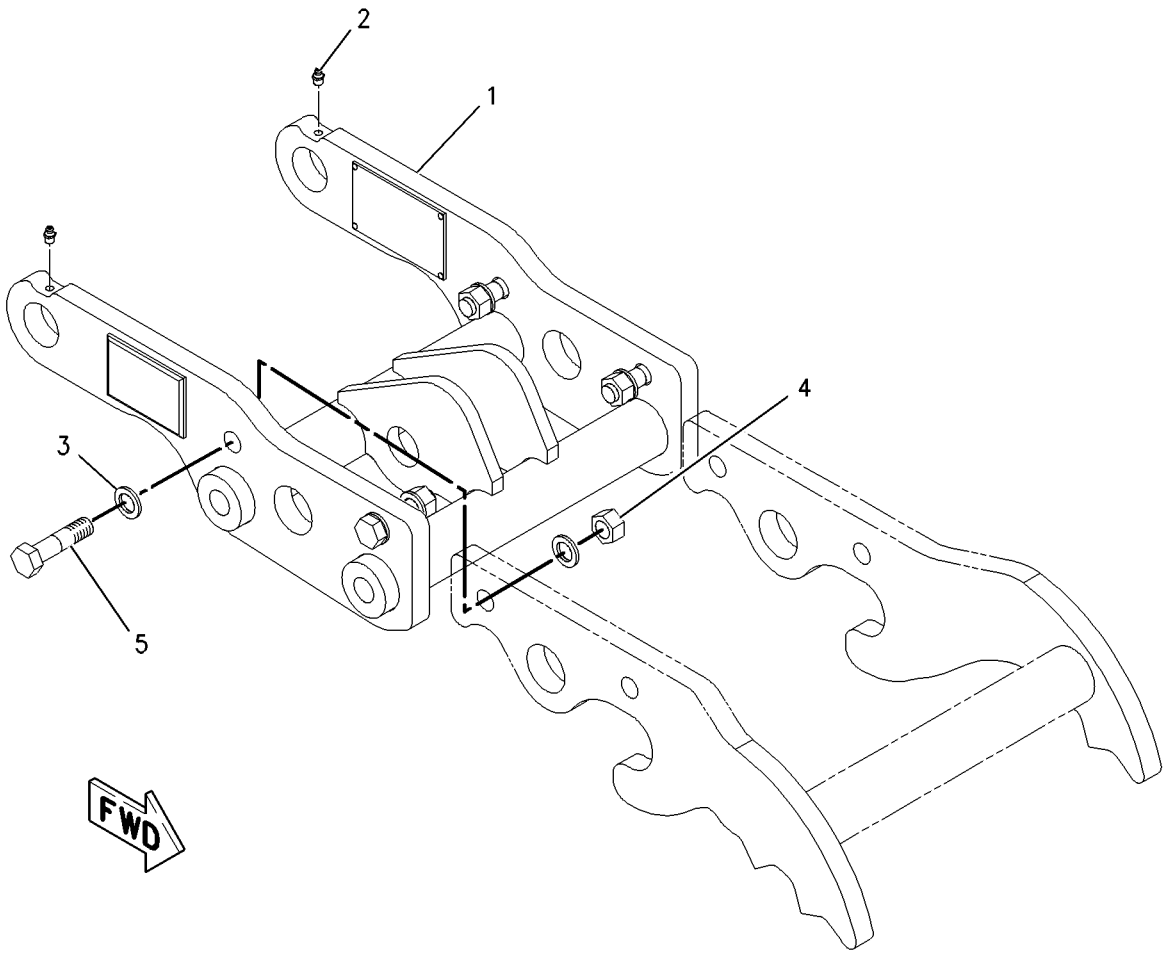

GRAPHIC #1 **<END>** g01003468

271-3023 THUMB GP—BACKHOE, COMMON

S/N: EAT1-UP

PART OF 271-3024, 271-3025, 271-3026, 271-3027, 271-3028, 271-3029, 271-3030, 271-3031, 281-6716, 282-0865, 282-0866, 282-0887, 282-0888, 282-0889, 282-0890, 282-0891, 282-0892, 282-0893, 282-0894, 282-5398, 282-5399, 282-5400, 282-5401, 282-5402, 282-5403, 282-5404, 282-5405, 282-5406, 282-5407, 282-5408, 282-5409, 282-5410 THUMB AR AN ATTACHMENT

SMCS-6547 **i02837681**

NOTE	REF NO	GRAPHIC REF	PART NUMBER	QTY	PART NAME 1 2 3 4 5 6 (PRODUCT LEVEL)	SEE PAGE
Y	1	1	*221-4267*	1	THUMB GP (BACKHOE)	784
Y	2	1	*263-8577*	1	MOUNTING GP-CYLINDER (THUMB)	515

Y-SEPARATE ILLUSTRATION

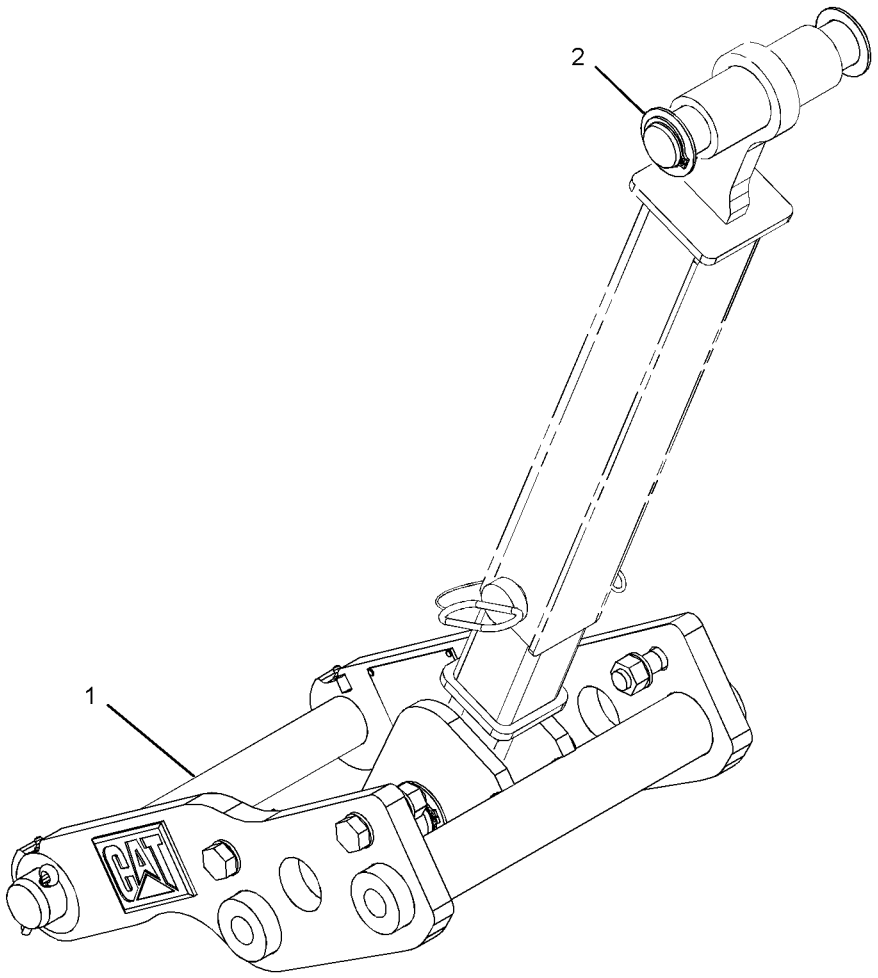

GRAPHIC #1 **<END>** g01234131

9R-5866 TOOTH GP-UNI

S/N: EAT1-UP

PART OF 251-1776 BUCKET AR-GENERAL PURPOSE, 232-2682, 232-2684, 232-2687, 232-2689 BUCKET AR-MULTIPURPOSE, 251-1779, 251-1782, 251-1788, 251-1790 BUCKET GP-GENERAL PURPOSE

FOR USE WITH LOADER BUCKETS. CANNOT BE USED WITH 9R-5321—PAGE 740, 9R-5320—PAGE 739 AN ATTACHMENT

SMCS-6822 **i02238664**

NOTE	REF NO	GRAPHIC REF	PART NUMBER	QTY	PART NAME 1 2 3 4 5 6 (PRODUCT LEVEL)	SEE PAGE
	1	1	**135-8203**	8	TOOTH-UNI	
	2	1	**4F-3657**	16	BOLT-PLOW (5/8-11X2.75-IN)	
	3	1	**4K-0367**	16	NUT-FULL (5/8-11-THD)	

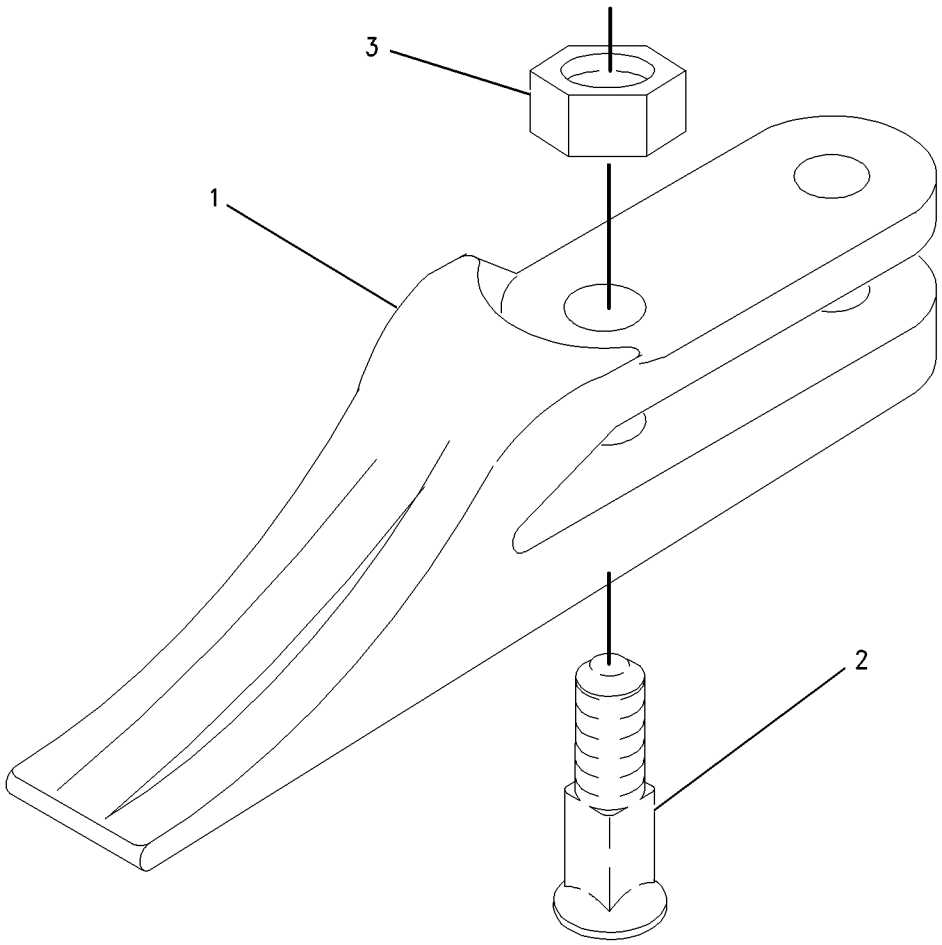

GRAPHIC #1 **<END>** g00915958

OPERATOR STATION

206-1801 AIR CONDITIONER & MOUNTING GP

S/N: EAT1-UP

PART OF 269-2127 CAB AR-ENCLOSED ROPS

AN ATTACHMENT

SMCS-7320 **i03070350**

NOTE	REF NO	GRAPHIC REF	PART NUMBER	QTY	PART NAME 1 2 3 4 5 6 (PRODUCT LEVEL)	SEE PAGE
	1	1	**221-2420**	2	HOSE-AIR	
E	2	1	**6V-6813**		HOSE (28-CM)	
	3	1	**6L-4725**	2	CLAMP-HOSE	
	4	1	**8Y-5737**	1	CLAMP	
	5	1	**8Y-6967**	6	LOUVER AS	
	6	1	**9M-7959**	4	CLAMP-HOSE	
	7	1	**9N-2231**	1	GROMMET AS	
	8	1	**110-6109**	1	KNOB-CONTROL (A/C)	
	9	1	**130-4832**	2	SCREW (8-18X10-MM)	
	10	1	**206-1684**	1	COVER (CAB FILTER)	
	11	1	**164-1368**	4	FASTENER-PANEL	
	12	1	**164-8474**	2	LOUVER AS-VENT	
	13	1	**189-0881**	1	CONTROL AS	
		1	**129-1831**	1	CLAMP	
	14	1	**193-3356**	1	CABLE AS	
	15	1	**194-5622**	1	VALVE AS-WATER	
		1	**6V-6717**	1	SCREW-WASHER HEAD (8-32X9.52-MM)	
		1	**124-0312**	2	SCREW-PAN HEAD (8-16X0.32-IN)	
	16	1	**206-1648**	1	LOUVER	
	17	1	**206-1653**	4	GASKET	
	18	1	**206-1682**	1	PANEL-CONTROL	
	19	1	**206-1803**	2	GASKET	
	20	1	**206-1804**	1	GASKET	
	21	1	**206-1805**	1	GASKET	
E	22	1	**220-0738**		SEAL (87-CM)	
	23	1	**206-1807**	1	GASKET	
	24	1	**206-1808**	1	PLATE	
	25	1	**206-1809**	1	ROD AS	
	26	1	**206-1810**	1	DUCT-AIR	
	27	1	**206-1812**	1	DUCT-AIR	
	28	1	**206-1814**	1	DUCT-AIR	
	29	1	**206-1815**	1	DUCT-AIR	
	30	1	**206-1816**	1	DUCT-AIR	
	31	1	**206-1817**	2	DUCT-AIR	
	32	1	**206-1818**	1	DUCT AS-AIR	
	33	1	**206-1846**	1	INSULATION	
	34	1	**206-1847**	1	INSULATION	
Y	35	1	*210-8363*	1	HEATER GP-CAB	846
	36	1	**211-2661**	1	FILTER ELEMENT AS-AIR (CAB HEATER)	
	37	1	**218-0666**	6	LOUVER AS	
D	38	1	**5P-6129**		TUBE (0.55-M EACH)	
	39	1	**255-0795**	1	FILM (TEMPERATURE CONTROL)	
	40	1	**5P-4116**	1	WASHER-HARD (8.8X20.5X2-MM THK)	
M	41	1	**111-4627**	3	SCREW-MACHINE (M6X1X30-MM)	
	42	1	**8Y-6352**	1	LOUVER AS	
	43	1	**7X-0579**	1	WASHER-HARD (8.8X25.5X2-MM THK)	
M	44	1	**8T-4200**	1	BOLT (M8X1.25X16-MM)	
	45	1	**9X-2038**	4	WASHER (7X19X2-MM THK)	
M	46	1	**9X-2045**	8	SCREW-TRUSS HEAD (M6X1X20-MM)	
	47	1	**3S-2093**	2	STRAP-CABLE	
	48	1	**4H-2558**	2	GROMMET	
	49	1	**8T-4205**	4	WASHER-HARD (7.2X14.5X2-MM THK)	

D-ORDER BY THE METER
E-ORDER BY THE CENTIMETER
M-METRIC PART
Y-SEPARATE ILLUSTRATION

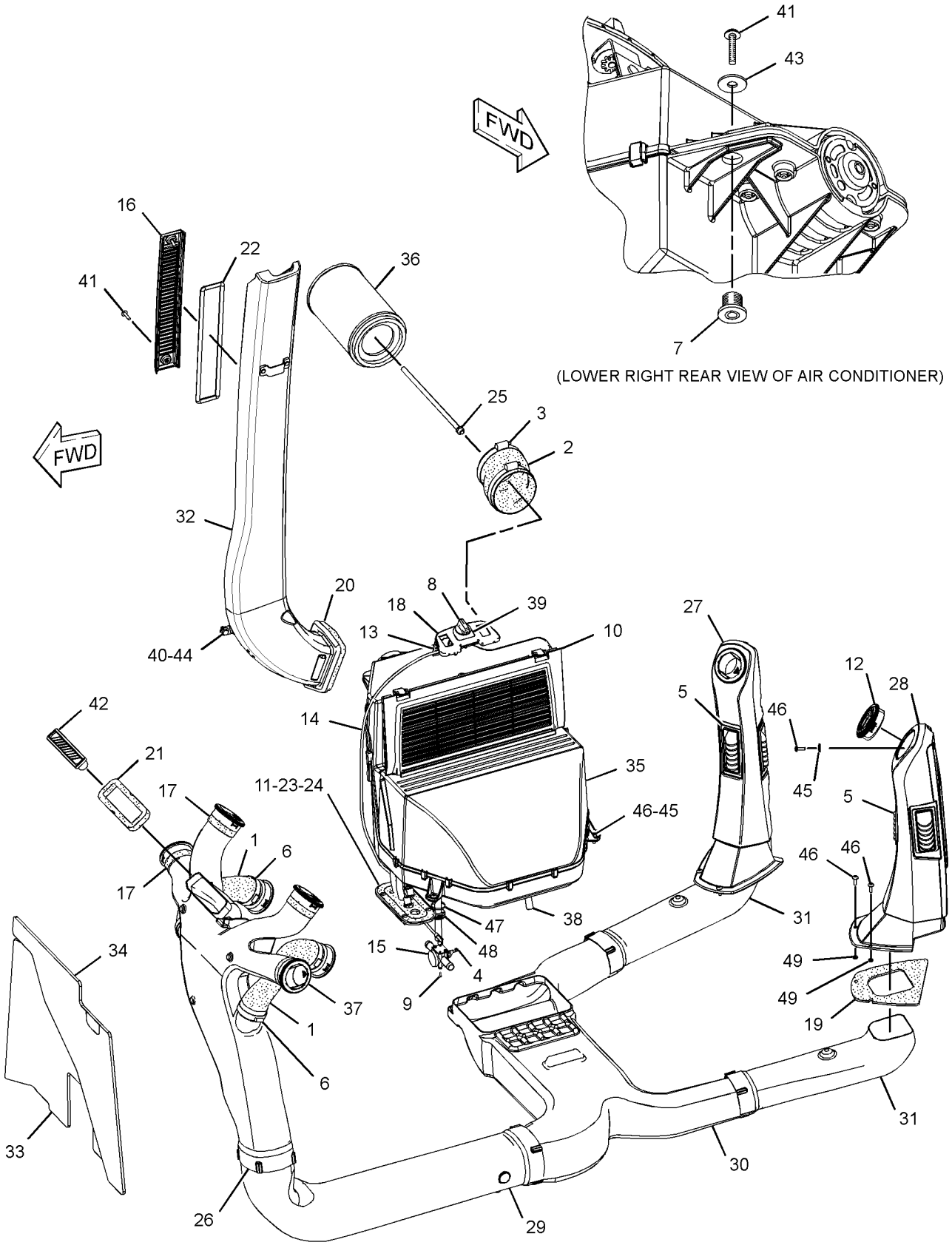

GRAPHIC #1 **<END>** g01576933

OPERATOR STATION

229-8743 BRACKET GP-MOUNTING—MONITOR

S/N: EAT1-UP
PART OF 211-4253 INSTALLATION GP-MONITOR
AN ATTACHMENT

SMCS-7301 **i02676133**

NOTE	REF NO	GRAPHIC REF	PART NUMBER	QTY	PART NAME 1 2 3 4 5 6 (PRODUCT LEVEL)	SEE PAGE
	1	1	**9R-8165**	1	BEARING	
	2	1	**7X-0510**	1	WASHER-HARD (15.5X29X3-MM THK)	
	3	1	**248-2284**	1	KNOB-CONTROL	
	4	1	**251-0075**	1	BRACKET	
	5	1	**251-0076**	1	BRACKET AS	
	6	1	**254-6826**	1	SPACER (10.5X14X8.8-MM THK)	
	7	1	**9K-6540**	1	WASHER-SPRING (0.63X1.25X0.04-IN THK)	
	8	1	**9X-2038**	2	WASHER (7X19X2-MM THK)	
M	9	1	**9X-2045**	2	SCREW-TRUSS HEAD (M6X1X20-MM)	
	10	1	**121-1029**	1	CLIP	

M-METRIC PART

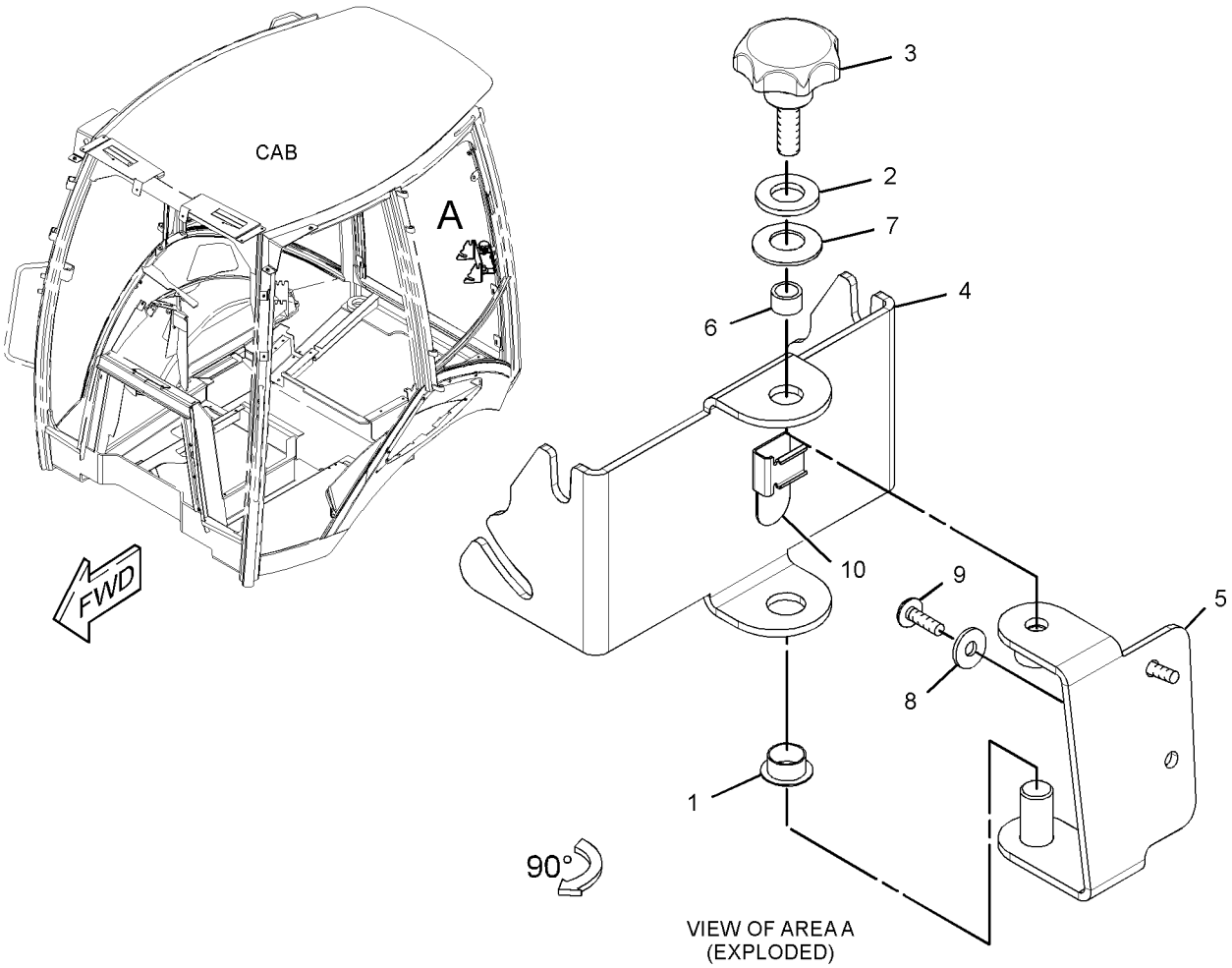

GRAPHIC #1 **<END>** g01350345

OPERATOR STATION

269-2125 CAB AR-ENCLOSED ROPS

S/N: EAT1-UP

AN ATTACHMENT

SMCS-7301, 7325 **i02987868**

NOTE	PART NUMBER	QTY	PART NAME 1 2 3 4 5 6 (PRODUCT LEVEL)	SEE PAGE
Y	**206-1889**	1	CAB GP-ENCLOSED ROPS	795
Y	*206-1700*	1	CONSOLE GP-OPERATOR (RH)	812
Y	*206-1702*	1	CONSOLE GP-OPERATOR (LH)	814
Y	*206-1703*	1	CONSOLE GP-OPERATOR (FRONT)	816
Y	*206-1633*	1	CONTROL GP-STEERING	827
			S/N: EAT1-1149	
Y	*218-4453*	1	CONTROL GP-STEERING	829
			S/N: EAT1150-UP	
Y	*254-6101*	1	FAN GP-SUCTION (WITHOUT AIR CONDITIONER)	61
Y	*213-1891*	1	FENDER GP-REAR	361
Y	*206-1618*	1	FLOOR MAT GP	843
Y	*223-3966*	1	FLOORPLATE GP	364
			S/N: EAT1-1145	
Y	*284-2757*	1	FLOORPLATE GP	365
			S/N: EAT1146-UP	
Y	*206-1800*	1	HEATER GP-CAB	844
Y	*255-2279*	1	INDICATOR GP-AIR FILTER CHANGE	79
Y	*211-4277*	1	LIGHTING GP-FLOOD & SIGNAL (NACD, OPTIONAL)	131
Y	*209-4703*	1	LINER GP-CAB	860
Y	*211-0072*	1	LINES GP-HEATER	864
Y	*205-9578*	1	MIRROR GP-REAR VIEW (INTERIOR)	867
Y	*269-3247*	1	MOUNTING GP-BACKHOE CONTROL (PILOT)	870
Y	*205-9560*	1	MOUNTING GP-CAB	873
Y	*205-9569*	1	ROOF GP-CAB	877
Y	*280-7365*	1	SEAT GP-SUSPENSION (CLOTH)	890
Y	**223-4713**	1	VALVE GP-PILOT (STABILIZER)	556
Y	*206-1727*	1	WASHER GP-WINDOW	902
Y	*206-1725*	1	WIPER GP-WINDOW	922
Y	*211-4240*	1	WIRING GP-PLATFORM	178
			S/N: EAT1150-1230	
Y	*290-6802*	1	WIRING GP-PLATFORM	191
			S/N: EAT1231-UP	
Y	*211-4241*	1	WIRING GP-CONSOLE (SIDE)	155
			S/N: EAT1150-1230	
Y	*290-6803*	1	WIRING GP-CONSOLE	158
			S/N: EAT1231-UP	
Y	*211-4245*	1	WIRING GP-CONSOLE (FRONT)	157
Y	*211-4269*	1	WIRING GP-HEATER	173
	272-5421	1	FILM-CONTROL (BACKHOE, JOYSTICK)	
			(ON LH CONSOLE AROUND PATTERN SWITCHER)	
	250-7912	1	FILM-IDENTIFICATION (CATERPILLAR, FRONT)	
			(ON FRONT WINDSHIELD)	
	251-5628	1	FILM-IDENTIFICATION (STABILIZER CONTROL)	
			(ON RH CONSOLE NEXT TO STABILIZER CONTROLS)	
	285-1207	1	MAT-PROTECTIVE	

Y-SEPARATE ILLUSTRATION

<END>

OPERATOR STATION

269-2126 CAB AR-ENCLOSED ROPS

S/N: EAT1-UP

AN ATTACHMENT

SMCS-7301, 7325 **i03007373**

NOTE	PART NUMBER	QTY	PART NAME 1 2 3 4 5 6 (PRODUCT LEVEL)	SEE PAGE
Y	**206-1889**	1	CAB GP-ENCLOSED ROPS	795
Y	*206-1700*	1	CONSOLE GP-OPERATOR (RH)	812
Y	*206-1702*	1	CONSOLE GP-OPERATOR (LH)	814
Y	*206-1703*	1	CONSOLE GP-OPERATOR (FRONT)	816
Y	*206-1633*	1	CONTROL GP-STEERING	827
			S/N: EAT1-1149	
Y	*218-4453*	1	CONTROL GP-STEERING	829
			S/N: EAT1150-UP	
Y	*254-6101*	1	FAN GP-SUCTION (WITHOUT AIR CONDITIONER)	61
Y	*213-1891*	1	FENDER GP-REAR	361
Y	*206-1618*	1	FLOOR MAT GP	843
Y	*223-3966*	1	FLOORPLATE GP	364
			S/N: EAT1-1145	
Y	*284-2757*	1	FLOORPLATE GP	365
			S/N: EAT1146-UP	
Y	*206-1800*	1	HEATER GP-CAB	844
Y	*255-2279*	1	INDICATOR GP-AIR FILTER CHANGE	79
Y	*211-4277*	1	LIGHTING GP-FLOOD & SIGNAL (NACD, OPTIONAL)	131
Y	*209-4703*	1	LINER GP-CAB	860
Y	*211-0072*	1	LINES GP-HEATER	864
Y	*205-9578*	1	MIRROR GP-REAR VIEW (INTERIOR)	867
Y	*269-3247*	1	MOUNTING GP-BACKHOE CONTROL (PILOT)	870
Y	*205-9560*	1	MOUNTING GP-CAB	873
Y	*205-9569*	1	ROOF GP-CAB	877
Y	*280-7366*	1	SEAT GP-SUSPENSION (DELUXE, CLOTH)	890
Y	**223-4715**	1	VALVE GP-PILOT (STABILIZER)	557
Y	*206-1857*	1	VISOR GP-CAB	900
Y	*206-1727*	1	WASHER GP-WINDOW	902
Y	*206-1725*	1	WIPER GP-WINDOW	922
Y	*211-4240*	1	WIRING GP-PLATFORM	178
			S/N: EAT1-1230	
Y	*290-6802*	1	WIRING GP-PLATFORM	191
			S/N: EAT1231-UP	
Y	*211-4241*	1	WIRING GP-CONSOLE (SIDE)	155
			S/N: EAT1-1230	
Y	*290-6803*	1	WIRING GP-CONSOLE	158
			S/N: EAT1231-UP	
Y	*211-4245*	1	WIRING GP-CONSOLE (FRONT)	157
Y	*263-9483*	1	WIRING GP-ENGINE	167
Y	*211-4269*	1	WIRING GP-HEATER	173
Y	*211-4271*	1	WIRING GP-POWER RECEPTACLE	196
Y	*225-7996*	1	WIRING GP-STABILIZER	203
	251-3306	1	FILM (STABILIZER, AUTO UP)	
			(RH CONSOLE NEXT TO STABILIZER CONTROLS)	
	272-5421	1	FILM-CONTROL (BACKHOE, JOYSTICK)	
			(LH CONSOLE AROUND PATTERN SWITCHER)	
	250-7912	1	FILM-IDENTIFICATION (CATERPILLAR, FRONT)	
			(FRONT WINDSHIELD)	
	285-1207	1	MAT-PROTECTIVE	

Y-SEPARATE ILLUSTRATION

<END>

OPERATOR STATION

269-2127 CAB AR-ENCLOSED ROPS

S/N: EAT1-UP

AN ATTACHMENT

SMCS-7301, 7325 **i03007386**

NOTE	PART NUMBER	QTY	PART NAME 1 2 3 4 5 6 (PRODUCT LEVEL)	SEE PAGE
Y	*206-1801*	1	AIR CONDITIONER & MOUNTING GP	787
Y	**206-1889**	1	CAB GP-ENCLOSED ROPS	795
Y	*248-5025*	1	COMPRESSOR & MTG GP-REFRIG	806
Y	*211-0705*	1	CONDENSER & MTG GP-REFRIGERANT	811
Y	*206-1703*	1	CONSOLE GP-OPERATOR (FRONT)	816
Y	*206-1702*	1	CONSOLE GP-OPERATOR (LH)	814
Y	*206-1700*	1	CONSOLE GP-OPERATOR (RH)	812
Y	*206-1633*	1	CONTROL GP-STEERING (TILT)	827
			S/N: EAT1-1149	
Y	*218-4453*	1	CONTROL GP-STEERING	829
			S/N: EAT1150-UP	
Y	*213-1891*	1	FENDER GP-REAR	361
Y	*213-9314*	1	FAN GP-SUCTION (WITH AIR CONDITIONER)	59
Y	*206-1618*	1	FLOOR MAT GP	843
Y	*223-3966*	1	FLOORPLATE GP	364
			S/N: EAT1-1145	
Y	*284-2757*	1	FLOORPLATE GP	365
			S/N: EAT1146-UP	
Y	*255-2279*	1	INDICATOR GP-AIR FILTER CHANGE	79
Y	*211-4277*	1	LIGHTING GP-FLOOD & SIGNAL (NACD, OPTIONAL)	131
Y	*209-4703*	1	LINER GP-CAB	860
Y	*211-0071*	1	LINES GP-HEATER & AIR COND	865
Y	*205-9578*	1	MIRROR GP-REAR VIEW (INTERIOR)	867
Y	*269-3247*	1	MOUNTING GP-BACKHOE CONTROL (PILOT)	870
Y	*205-9560*	1	MOUNTING GP-CAB	873
Y	*205-9569*	1	ROOF GP-CAB (NACD)	877
Y	*280-7366*	1	SEAT GP-SUSPENSION (DELUXE, CLOTH)	890
Y	**223-4715**	1	VALVE GP-PILOT (STABILIZER)	557
Y	*206-1857*	1	VISOR GP-CAB	900
Y	*206-1727*	1	WASHER GP-WINDOW	902
Y	*206-1725*	1	WIPER GP-WINDOW	922
Y	*211-4268*	1	WIRING GP-AIR CONDITIONER	151
Y	*211-4240*	1	WIRING GP-PLATFORM	178
			S/N: EAT1-1230	
Y	*290-6802*	1	WIRING GP-PLATFORM	191
			S/N: EAT1231-UP	
Y	*211-4245*	1	WIRING GP-CONSOLE (FRONT)	157
Y	*211-4241*	1	WIRING GP-CONSOLE (SIDE)	155
			S/N: EAT1-1230	
Y	*290-6803*	1	WIRING GP-CONSOLE	158
			S/N: EAT1231-UP	
Y	*263-9483*	1	WIRING GP-ENGINE	167
Y	*211-4271*	1	WIRING GP-POWER RECEPTACLE	196
Y	*225-7996*	1	WIRING GP-STABILIZER	203
	251-3306	1	FILM (STABILIZER, AUTO UP)	
			(RH CONSOLE NEXT TO STABILIZER CONTROLS)	
	272-5421	1	FILM-CONTROL (BACKHOE, JOYSTICK)	
			(LH CONSLOLE AROUND PATTERN SWITCHER)	
	250-7912	1	FILM-IDENTIFICATION (CATERPILLAR, FRONT)	
			(FRONT WINDSHIELD)	
	285-1207	1	MAT-PROTECTIVE	

Y-SEPARATE ILLUSTRATION

<END>

OPERATOR STATION

288-8044 CAB AS

S/N: EAT1-UP
PART OF 206-1889 CAB GP-ENCLOSED ROPS
AN ATTACHMENT

SMCS-7301 **i02980658**

NOTE	REF NO	GRAPHIC REF	PART NUMBER	QTY	PART NAME 1 2 3 4 5 6 (PRODUCT LEVEL)	SEE PAGE
	1	1	**5D-9629**	2	ROD	
	2	1	**204-4175**	1	ROPS AS	
	3	1	**205-9566**	1	POST AS	
	4	1	**205-9567**	1	POST AS	
	5	1	**206-1717**	1	BRACKET	
	6	1	**234-0095**	2	INSERT-THREADED (M6X1-THD)	
M	7	1	**6V-9632**	4	NUT-WELD (M6X1-THD)	
	8	1	**7T-1099**	28	LINK	
M	9	1	**8T-3612**	10	NUT-WELD (M8X1.25-THD)	

M-METRIC PART

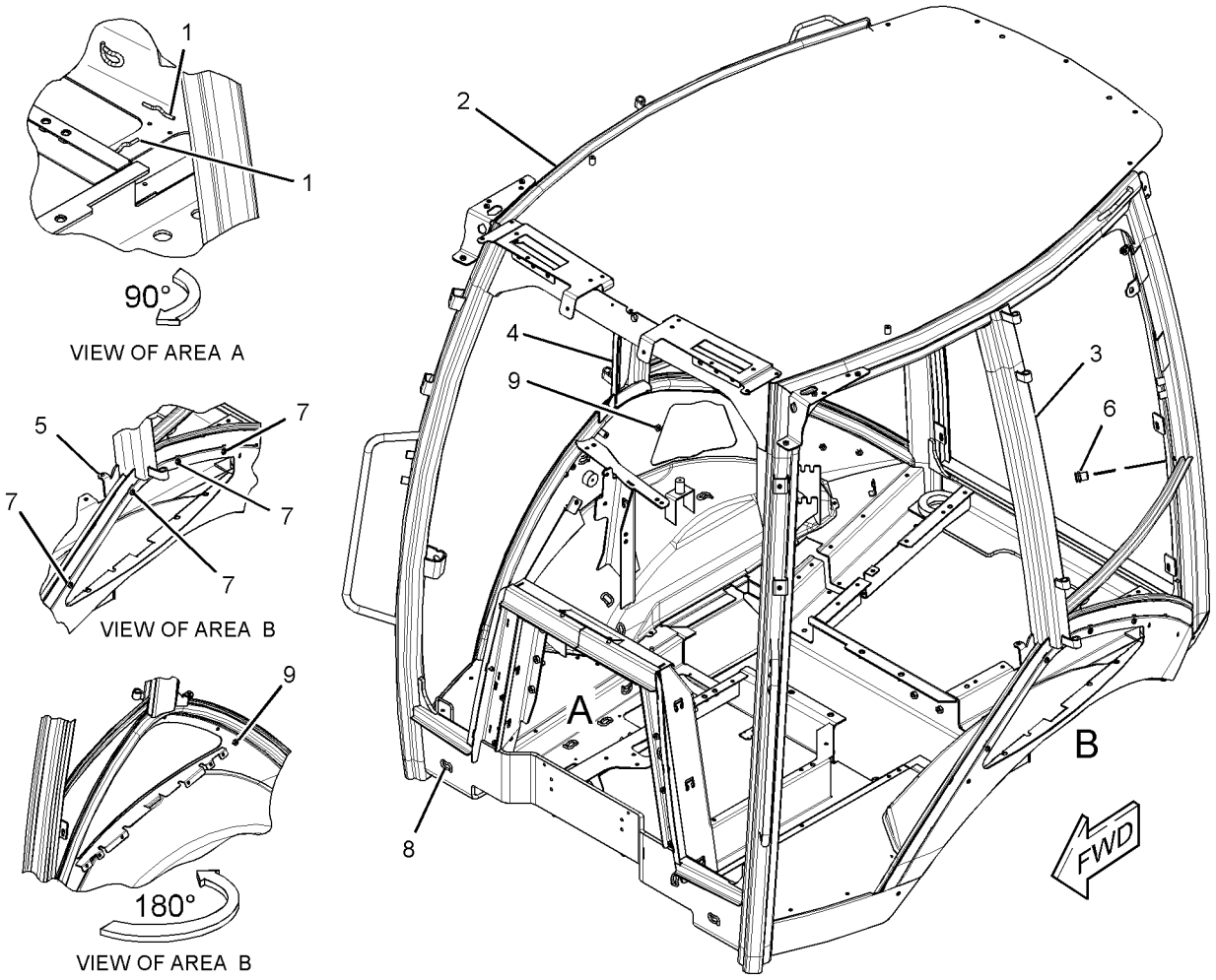

GRAPHIC #1 **<END>** g01352257

OPERATOR STATION

206-1889 CAB GP-ENCLOSED ROPS

S/N: EAT1-UP
PART OF 269-2125, 269-2126, 269-2127 CAB AR-ENCLOSED ROPS
AN ATTACHMENT
TYPE 1

SMCS-7301, 7325 **i02649744**

NOTE	REF NO	GRAPHIC REF	PART NUMBER	QTY	PART NAME 1 2 3 4 5 6 (PRODUCT LEVEL)	SEE PAGE
	1	1	**123-0380**	2	SHIELD-STRIKER	
B	2	1	**177-4877**	4	SHIM (1-MM THK)	
	3	1	**187-0413**	2	STRIKER	
	4	1	**204-4220**	1	CAB AS	
	5	1	**205-9605**	1	GLASS (FRONT, LH)	
	6	1	**205-9606**	1	GLASS (FRONT, RH)	
	7	1	**205-9607**	1	GLASS (FRONT)	
Y	8	1	**205-9619**	1	WINDOW GP-CAB (UPPER, LH)	906
	9	1	**205-9622**	1	GLASS (LOWER, LH)	
Y	10	2	**205-9628**	1	WINDOW GP-CAB (UPPER, RH)	908
	11	2	**205-9631**	1	GLASS (LOWER, RH)	
	12	2	**206-1590**	4	PIN	
Y	13	1	**206-1592**	1	DOOR GP-CAB (LH)	835
Y	14	2	**206-1593**	1	DOOR GP-CAB (RH)	839
	15	1	**206-1647**	1	PLATE	
	16	1	**210-6475**	2	PLATE	
Y	17	2	*229-0300*	1	WINDOW GP-CAB (REAR)	910
	18	2	**129-5256**	12	BUSHING	
	19	2	**129-5257**	8	BUSHING	
M	20	1	**131-3987**	8	SCREW (M4X0.7X12-MM)	
	21	1	**159-4945**	2	KEEPER	
	22	1	**159-4946**	2	KEEPER	
	23	1	**5P-4116**	11	WASHER-HARD (8.8X20.5X2-MM THK)	
	24	2	**8S-7803**	8	RING-RETAINING	
M	25	1	**8T-4189**	9	BOLT (M8X1.25X20-MM)	
M	26	1	**8T-4200**	2	BOLT (M8X1.25X16-MM)	
	27	1	**9R-5616**	3	PLUG	
BE	28	2	**201-1601**		SEAL (6-CM)	

B-USE AS REQUIRED
E-ORDER BY THE CENTIMETER
M-METRIC PART
Y-SEPARATE ILLUSTRATION

REFER TO ALL ILLUSTRATIONS OF THIS GROUP FOR AUXILIARY VIEWS

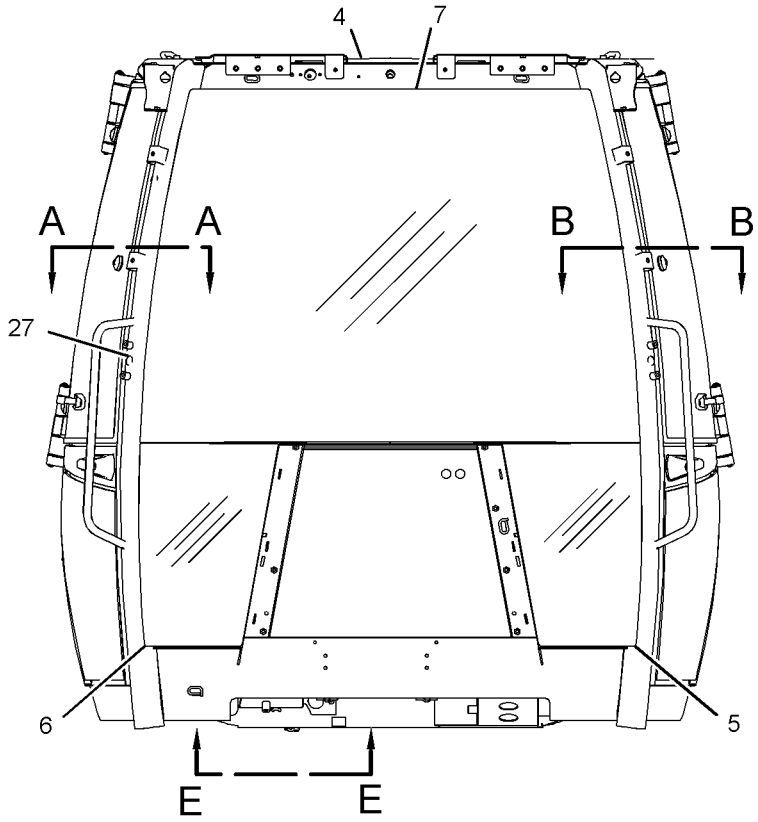

FRONT VIEW

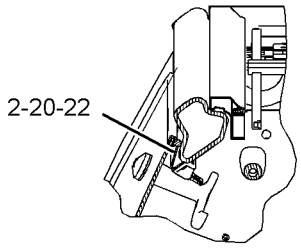

SECTION A-A

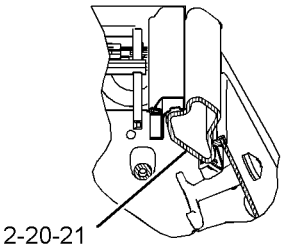

SECTION B-B

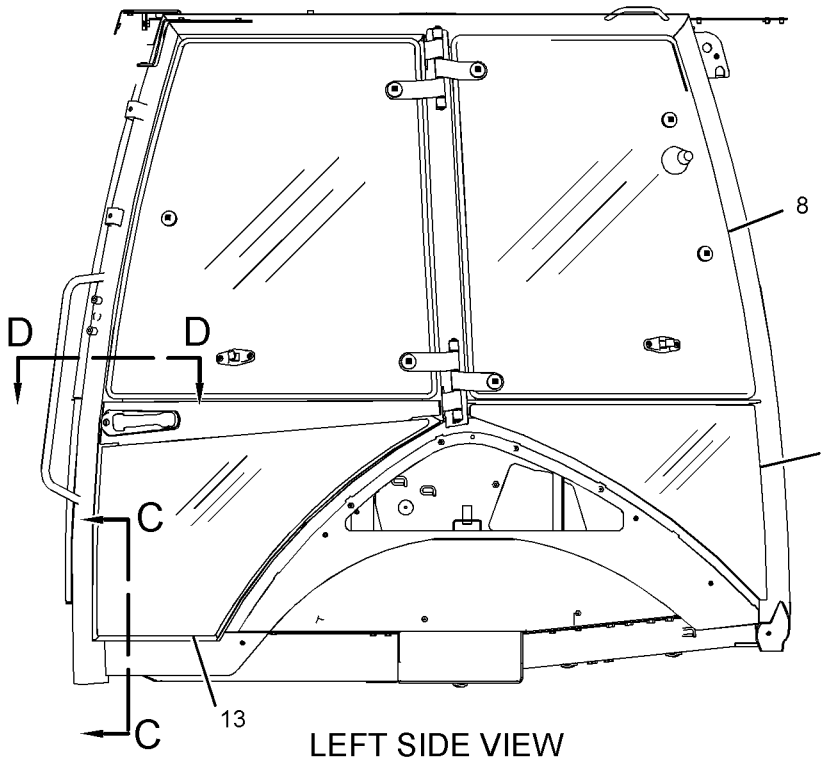

LEFT SIDE VIEW

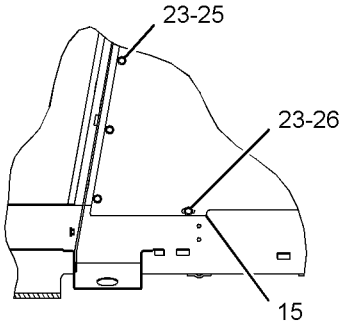

SECTION C-C

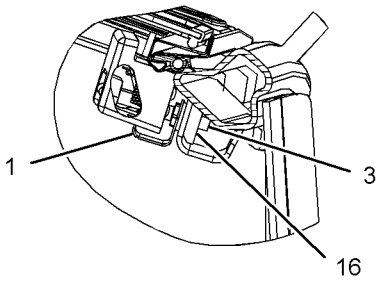

SECTION D-D

GRAPHIC #1

g01334063

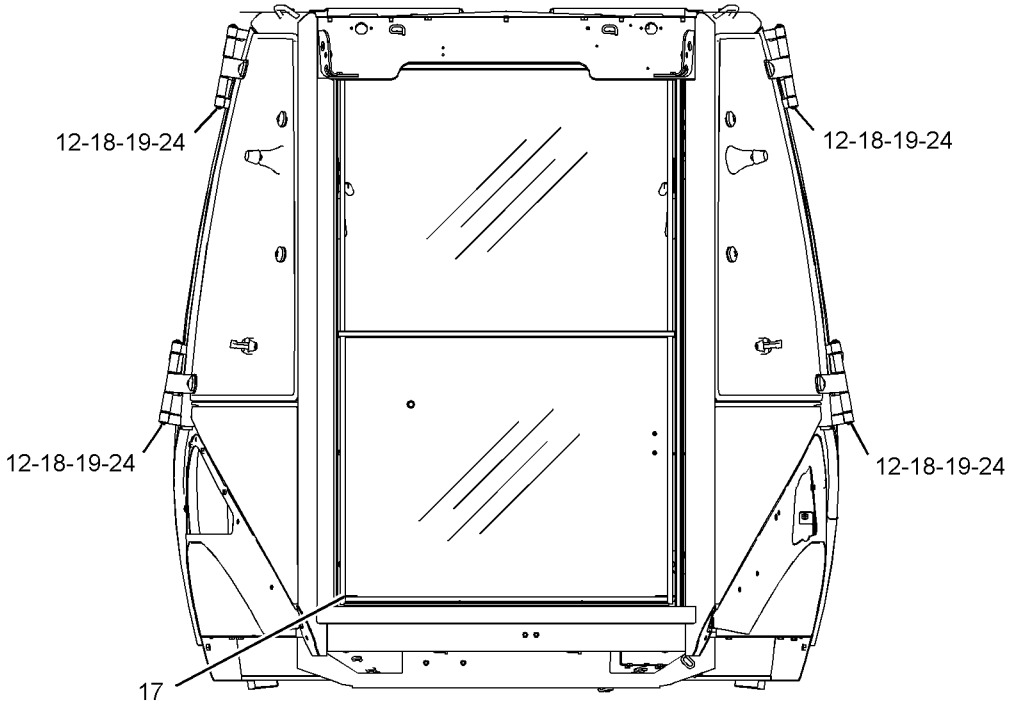

REAR VIEW

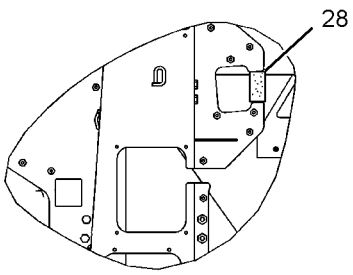

VIEW E-E

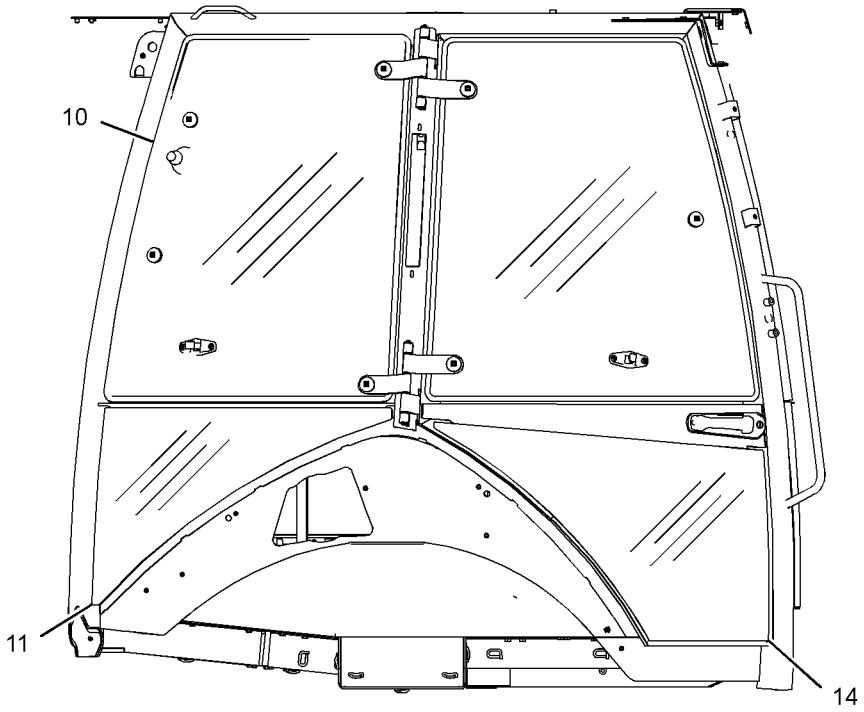

RIGHT SIDE VIEW

GRAPHIC #2 **<END>** g01334448

OPERATOR STATION

206-1889 CAB GP-ENCLOSED ROPS

S/N: EAT1-UP
PART OF 269-2125, 269-2126, 269-2127 CAB AR-ENCLOSED ROPS
AN ATTACHMENT
TYPE 2

SMCS-7301, 7325 **i02657542**

NOTE	REF NO	GRAPHIC REF	PART NUMBER	QTY	PART NAME 1 2 3 4 5 6 (PRODUCT LEVEL)	SEE PAGE
	1	1	**123-0380**	2	SHIELD-STRIKER	
B	2	1	**177-4877**	4	SHIM (1-MM THK)	
	3	1	**187-0413**	2	STRIKER	
CY	4	1	**288-8044**	1	CAB AS	794
	5	1	**205-9605**	1	GLASS (FRONT, LH)	
	6	1	**205-9606**	1	GLASS (FRONT, RH)	
	7	1	**205-9607**	1	GLASS (FRONT)	
Y	8	1	**205-9619**	1	WINDOW GP-CAB (UPPER, LH)	906
	9	1	**205-9622**	1	GLASS (LOWER, LH)	
Y	10	2	**205-9628**	1	WINDOW GP-CAB (UPPER, RH)	908
	11	2	**205-9631**	1	GLASS (LOWER, RH)	
	12	2	**206-1590**	4	PIN	
Y	13	1	**206-1592**	1	DOOR GP-CAB (LH)	835
Y	14	2	**206-1593**	1	DOOR GP-CAB (RH)	839
	15	1	**206-1647**	1	PLATE	
	16	1	**210-6475**	2	PLATE	
Y	17	2	*229-0300*	1	WINDOW GP-CAB (REAR)	910
	18	2	**129-5256**	12	BUSHING	
	19	2	**129-5257**	8	BUSHING	
M	20	1	**131-3987**	8	SCREW (M4X0.7X12-MM)	
	21	1	**159-4945**	2	KEEPER	
	22	1	**159-4946**	2	KEEPER	
	23	1	**5P-4116**	11	WASHER-HARD (8.8X20.5X2-MM THK)	
	24	2	**8S-7803**	8	RING-RETAINING	
CM	25	1	**8T-4200**	11	BOLT (M8X1.25X16-MM)	
	26	1	**9R-5616**	3	PLUG	

B-USE AS REQUIRED
C-CHANGE FROM PREVIOUS TYPE
M-METRIC PART
Y-SEPARATE ILLUSTRATION

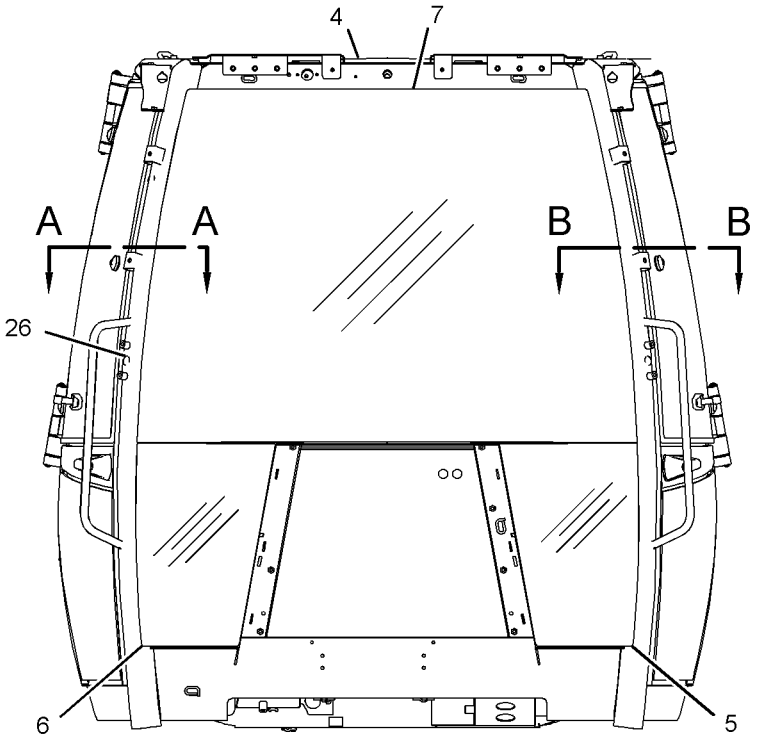

FRONT VIEW

REFER TO ALL ILLUSTRATIONS OF THIS GROUP FOR AUXILIARY VIEWS

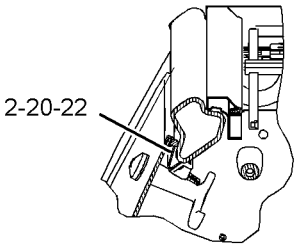

SECTION A-A

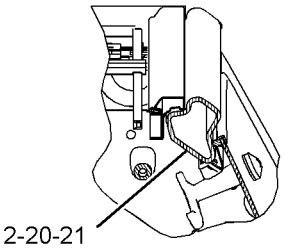

SECTION B-B

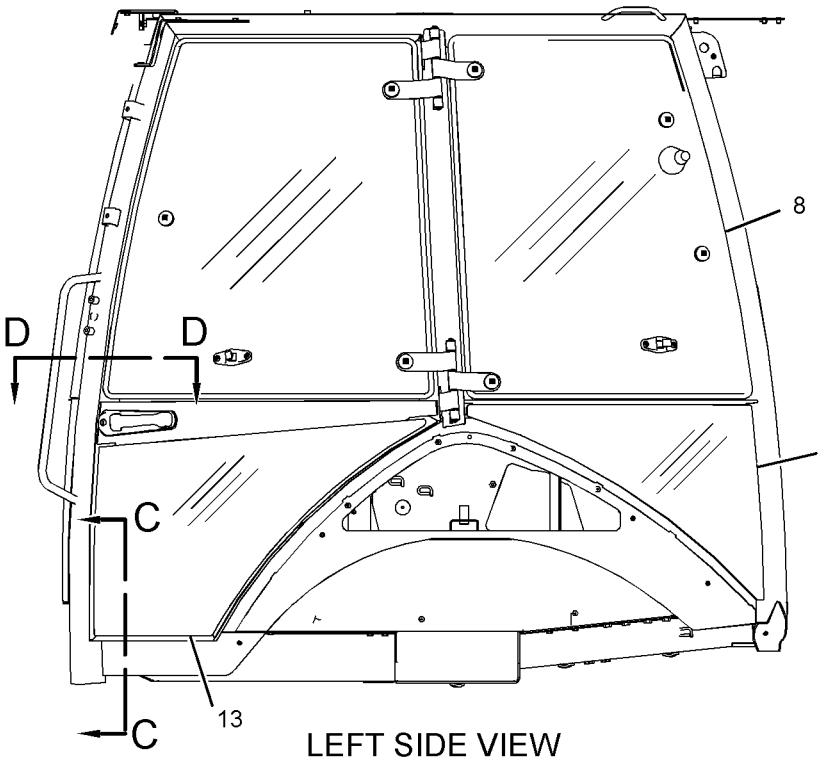

LEFT SIDE VIEW

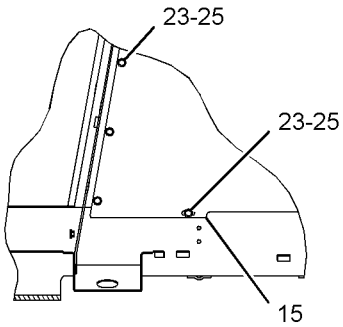

SECTION C-C

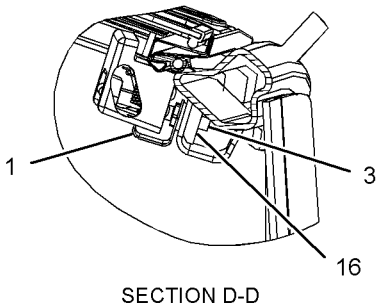

SECTION D-D

GRAPHIC #1

g01343514

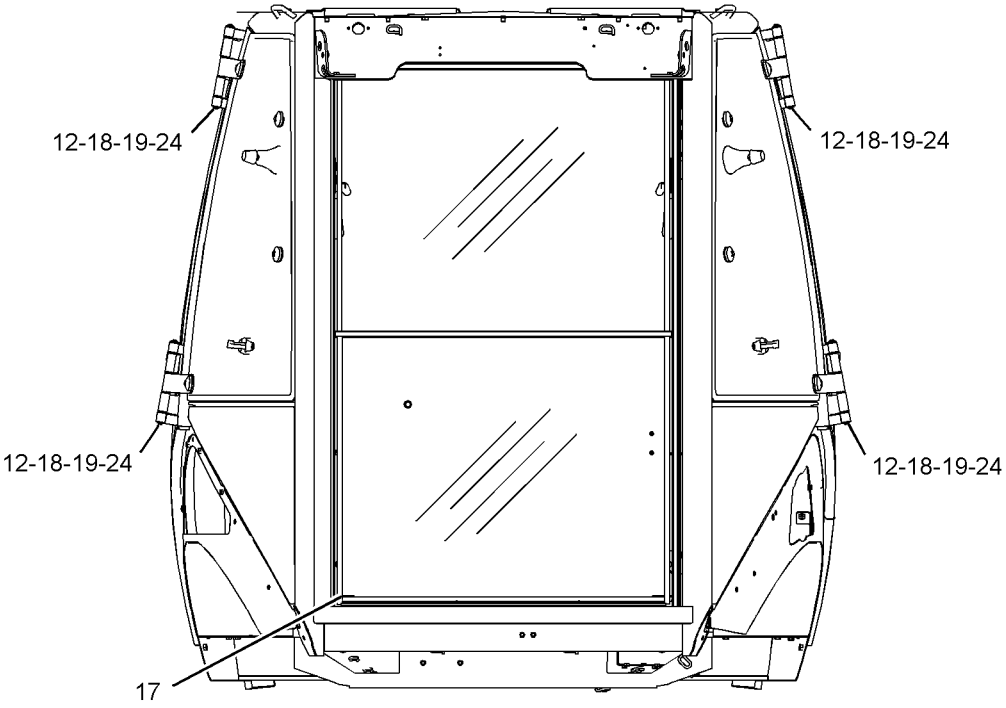

REAR VIEW

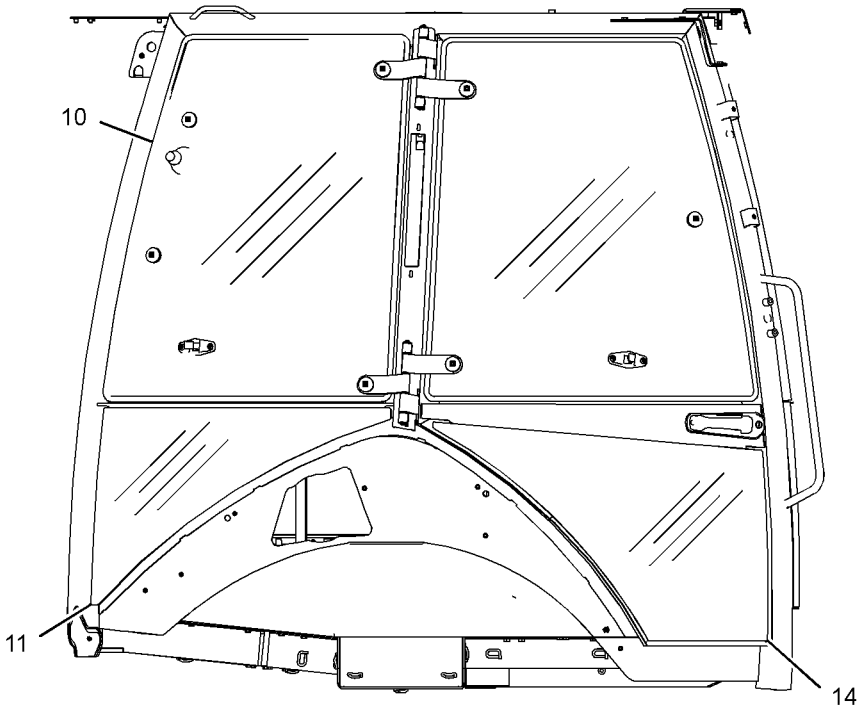

RIGHT SIDE VIEW

GRAPHIC #2 **<END>** g01343515

OPERATOR STATION

269-2123 CANOPY AR-OPEN ROPS

S/N: EAT1-UP

AN ATTACHMENT

SMCS-7302, 7323 **i03007502**

NOTE	PART NUMBER	QTY	PART NAME 1 2 3 4 5 6 (PRODUCT LEVEL)	SEE PAGE
Y	*206-1884*	1	CANOPY GP-OPEN ROPS (WITHOUT FRONT WINDOW)	803
Y	*206-1703*	1	CONSOLE GP-OPERATOR (FRONT)	816
Y	*206-1702*	1	CONSOLE GP-OPERATOR (LH)	814
Y	*206-1700*	1	CONSOLE GP-OPERATOR (RH)	812
Y	*206-1633*	1	CONTROL GP-STEERING (TILT)	827
			S/N: EAT1-1149	
Y	*218-4453*	1	CONTROL GP-STEERING	829
			S/N: EAT1150-UP	
Y	*276-8515*	1	COVER GP-CAB	833
			S/N: EAT1141-UP	
Y	*254-6101*	1	FAN GP-SUCTION (WITHOUT AIR CONDITIONER)	61
Y	*213-1891*	1	FENDER GP-REAR	361
Y	*206-1618*	1	FLOOR MAT GP	843
Y	*223-3965*	1	FLOORPLATE GP	363
			S/N: EAT1-1140	
Y	*284-2757*	1	FLOORPLATE GP	365
			S/N: EAT1141-UP	
Y	*255-2279*	1	INDICATOR GP-AIR FILTER CHANGE	79
Y	*211-4277*	1	LIGHTING GP-FLOOD & SIGNAL (NACD, OPTIONAL)	131
Y	*259-6276*	1	MIRROR GP-REAR VIEW (INTERIOR)	868
Y	*269-3247*	1	MOUNTING GP-BACKHOE CONTROL (PILOT)	870
Y	*205-9560*	1	MOUNTING GP-CAB	873
Y	*206-1701*	1	PROTECTION GP-VANDALISM (ROTATING GUARD)	929
Y	*205-9569*	1	ROOF GP-CAB	877
Y	*280-7364*	1	SEAT GP-SUSPENSION (VINYL)	890
Y	*206-1704*	1	TRIM GP-CAB	898
Y	**223-4713**	1	VALVE GP-PILOT (STABILIZER)	556
Y	*211-4240*	1	WIRING GP-PLATFORM	178
			S/N: EAT1-1230	
Y	*290-6802*	1	WIRING GP-PLATFORM	191
			S/N: EAT1231-UP	
Y	*211-4245*	1	WIRING GP-CONSOLE (FRONT)	157
Y	*211-4241*	1	WIRING GP-CONSOLE (SIDE)	155
			S/N: EAT1-1230	
Y	*290-6803*	1	WIRING GP-CONSOLE (SIDE)	158
			S/N: EAT1231-UP	
Y	*211-4271*	1	WIRING GP-POWER RECEPTACLE	196
	272-5421	1	FILM-CONTROL (BACKHOE, JOYSTICK)	
			(LH CONSOLE AROUND PATTERN SWITCHER)	
	256-5299	1	FILM-IDENTIFICATION (CATERPILLAR)	
			(ON CAB ROOF CENTERED HORIZONTALLY & VERTICALLY)	
	251-5628	1	FILM-IDENTIFICATION (STABILIZER CONTROL)	
			(RH CONSOLE NEXT TO STABILIZER CONTROLS)	
	227-1057	1	PLUG-HOLE	
	273-1474	1	SEAL (CONSOLE, LH)	

Y-SEPARATE ILLUSTRATION

<END>

OPERATOR STATION

269-2124 CANOPY AR-OPEN ROPS

S/N: EAT1-UP

AN ATTACHMENT

SMCS-7302, 7323 **i02987865**

NOTE	PART NUMBER	QTY	PART NAME 1 2 3 4 5 6 (PRODUCT LEVEL)	SEE PAGE
Y	*206-1885*	1	CANOPY GP-OPEN ROPS (WITH FRONT WINDOW)	805
Y	*206-1700*	1	CONSOLE GP-OPERATOR (RH)	812
Y	*206-1702*	1	CONSOLE GP-OPERATOR (LH)	814
Y	*206-1703*	1	CONSOLE GP-OPERATOR (FRONT)	816
Y	*206-1633*	1	CONTROL GP-STEERING (TILT)	827
			S/N: EAT1143-1149	
Y	*218-4453*	1	CONTROL GP-STEERING (TILT)	829
			S/N: EAT1150-UP	
Y	*276-8515*	1	COVER GP-CAB	833
Y	*220-3785*	1	COVER GP-WIPER MOTOR	834
Y	*254-6101*	1	FAN GP-SUCTION (WITHOUT AIR CONDITIONER)	61
Y	*213-1891*	1	FENDER GP-REAR	361
Y	*206-1618*	1	FLOOR MAT GP	843
Y	*223-3965*	1	FLOORPLATE GP	363
			S/N: EAT1-1142	
Y	*284-2757*	1	FLOORPLATE GP	365
			S/N: EAT1143-UP	
Y	*255-2279*	1	INDICATOR GP-AIR FILTER CHANGE	79
Y	*211-4277*	1	LIGHTING GP-FLOOD & SIGNAL (NACD, OPTIONAL)	131
Y	*259-6276*	1	MIRROR GP-REAR VIEW (INTERIOR)	868
Y	*269-3247*	1	MOUNTING GP-BACKHOE CONTROL (PILOT)	870
Y	*205-9560*	1	MOUNTING GP-CAB	873
Y	*206-1701*	1	PROTECTION GP-VANDALISM (ROTATING GUARD)	929
Y	*205-9569*	1	ROOF GP-CAB	877
Y	*280-7364*	1	SEAT GP-SUSPENSION (VINYL)	890
Y	*206-1704*	1	TRIM GP-CAB	898
Y	**223-4713**	1	VALVE GP-PILOT (STABILIZER)	556
Y	*206-1728*	1	WIPER & WASHER GP-WINDOW	918
Y	*211-4240*	1	WIRING GP-PLATFORM	178
			S/N: EAT1-1230	
Y	*290-6802*	1	WIRING GP-PLATFORM	191
			S/N: EAT1231-UP	
Y	*211-4241*	1	WIRING GP-CONSOLE (SIDE)	155
			S/N: EAT1-1230	
Y	*290-6803*	1	WIRING GP-CONSOLE (SIDE)	158
			S/N: EAT1231-UP	
Y	*211-4245*	1	WIRING GP-CONSOLE (FRONT)	157
Y	*211-4271*	1	WIRING GP-POWER RECEPTACLE	196
	272-5421	1	FILM-CONTROL (BACKHOE, JOYSTICK)	
			(ON LH CONSOLE AROUND PATTERN SWITCHER)	
	250-7912	1	FILM-IDENTIFICATION (CATERPILLAR, FRONT)	
			(ON FRONT WINDSHEILD)	
	251-5628	1	FILM-IDENTIFICATION (STABILIZER CONTROL)	
			(RH CONSOLE NEXT TO STABILIZER CONTROLS)	
	227-1057	1	PLUG-HOLE	
	273-1474	1	SEAL (CONSOLE, LH)	

Y-SEPARATE ILLUSTRATION

<END>

OPERATOR STATION

206-1884 CANOPY GP-OPEN ROPS—WITHOUT FRONT WINDOW

S/N: EAT1-UP

PART OF 269-2123 CANOPY AR-OPEN ROPS

AN ATTACHMENT

SMCS-7302, 7323 **i02527301**

NOTE	REF NO	GRAPHIC REF	PART NUMBER	QTY	PART NAME 1 2 3 4 5 6 (PRODUCT LEVEL)	SEE PAGE
E	1	1	**9X-2092**		TRIM-EDGE (40-CM EACH)	
	2	1	**204-4230**	1	CANOPY AS	
	3	1	**205-9605**	1	GLASS (FRONT, LH)	
	4	1	**205-9606**	1	GLASS (FRONT, RH)	
	5	1	**206-1647**	1	PLATE	
	6	1	**5P-4116**	11	WASHER-HARD (8.8X20.5X2-MM THK)	
M	7	1	**8T-4200**	11	BOLT (M8X1.25X16-MM)	
	8	1	**9R-5616**	3	PLUG	

E-ORDER BY THE CENTIMETER
M-METRIC PART

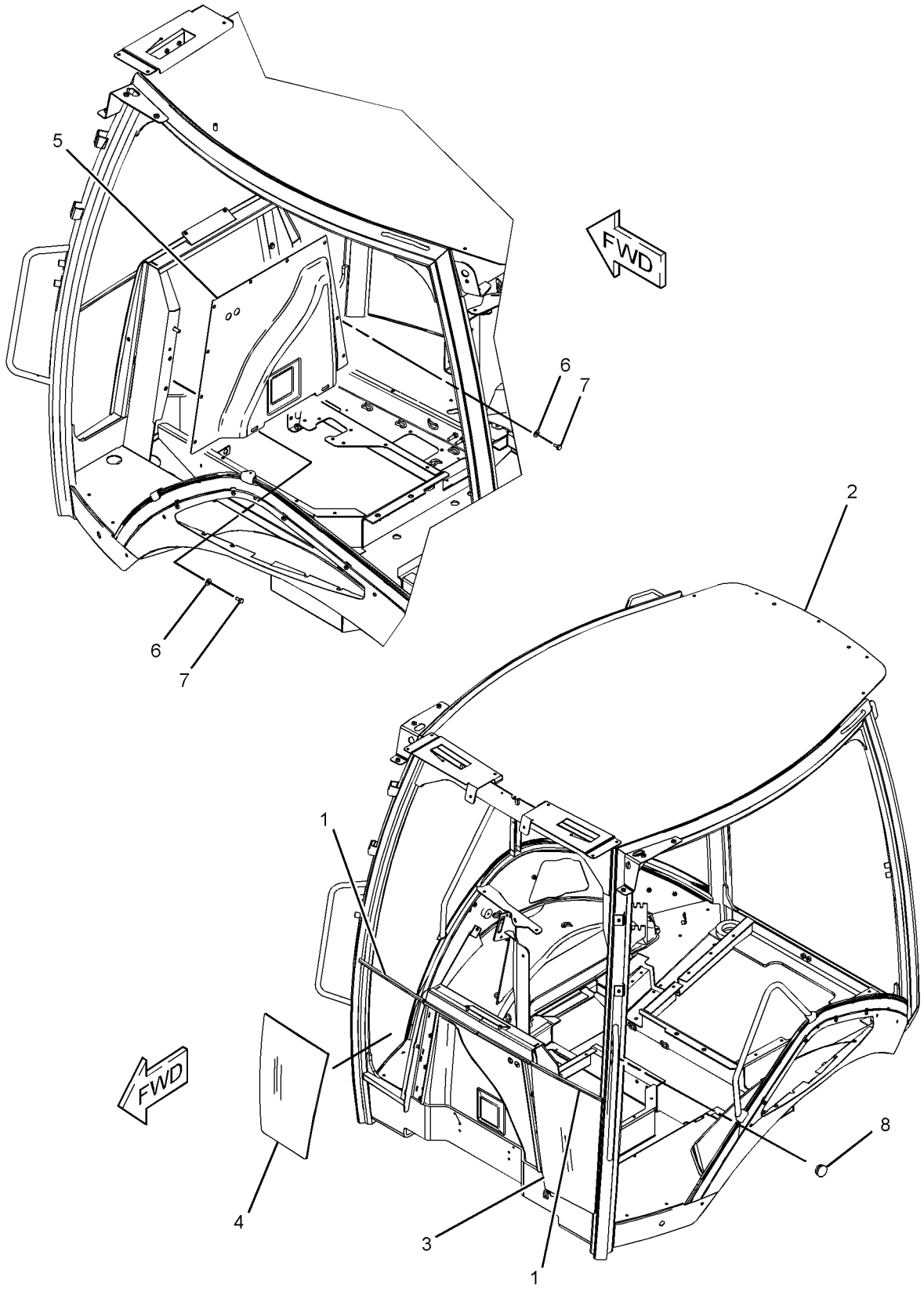

GRAPHIC #1 **<END>** g01272044

OPERATOR STATION

206-1885 CANOPY GP-OPEN ROPS—WITH FRONT WINDOW

S/N: EAT1-UP

PART OF 269-2124 CANOPY AR-OPEN ROPS

AN ATTACHMENT

SMCS-7302, 7323 **i02527302**

NOTE	REF NO	GRAPHIC REF	PART NUMBER	QTY	PART NAME 1 2 3 4 5 6 (PRODUCT LEVEL)	SEE PAGE
	1	1	**204-4240**	1	CANOPY AS	
	2	1	**205-9605**	1	GLASS (FRONT, LH)	
	3	1	**205-9606**	1	GLASS (FRONT, RH)	
	4	1	**205-9607**	1	GLASS (FRONT)	
	5	1	**206-1647**	1	PLATE	
	6	1	**5P-4116**	10	WASHER-HARD (8.8X20.5X2-MM THK)	
M	7	1	**8T-4200**	10	BOLT (M8X1.25X16-MM)	
	8	1	**9R-5616**	3	PLUG	

M-METRIC PART

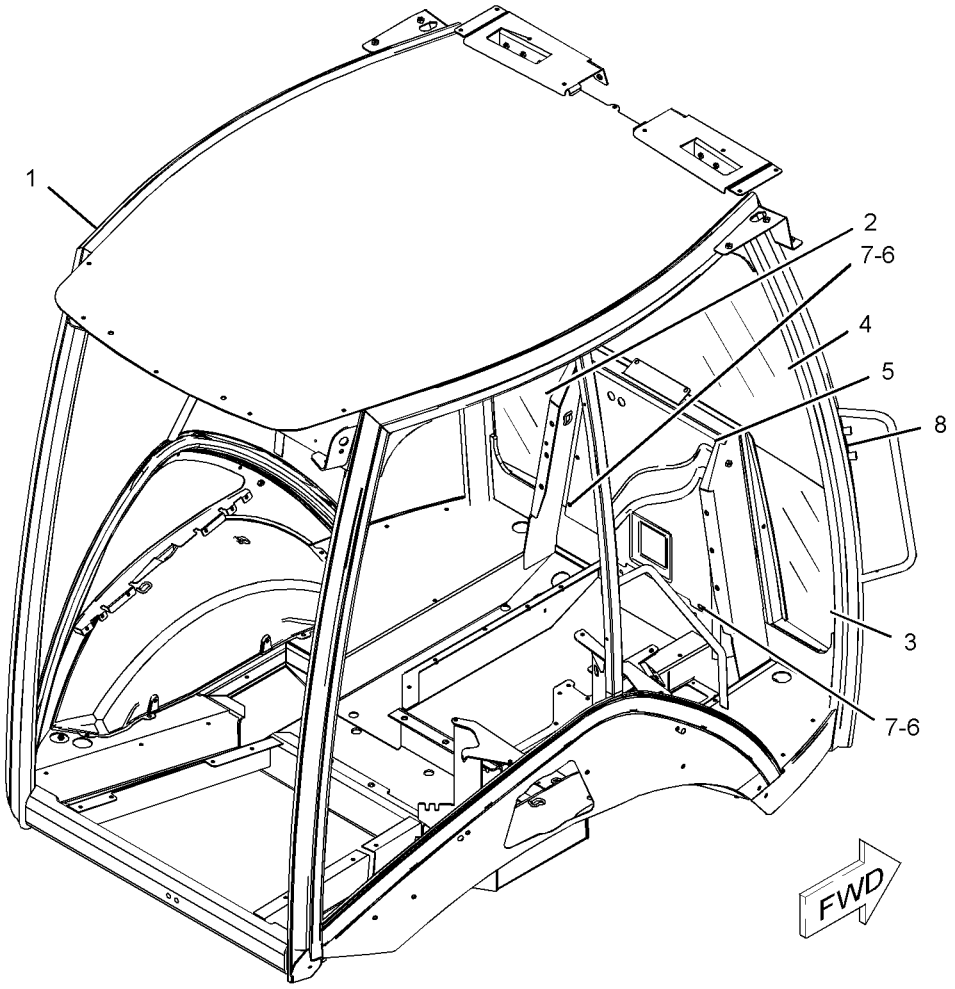

GRAPHIC #1 **<END>** g01272029

OPERATOR STATION

248-5025 COMPRESSOR & MTG GP-REFRIG

S/N: EAT1-1237
PART OF 269-2127 CAB AR-ENCLOSED ROPS
AN ATTACHMENT

SMCS-1802 **i03511041**

NOTE	REF NO	GRAPHIC REF	PART NUMBER	QTY	PART NAME 1 2 3 4 5 6 (PRODUCT LEVEL)	SEE PAGE
	1	1	**9R-5383**	1	BOSS (11X25X20-MM THK)	
Y	2	1	**214-4302**	1	COMPRESSOR GP-REFRIGERANT	810
	3	1	**296-3740**	1	BRACKET AS	
	4	1	**249-2707**	1	BRACKET	
	5	1	**249-9312**	1	PLATE	
	6	1	**5P-4116**	8	WASHER-HARD (8.8X20.5X2-MM THK)	
M	7	1	**6V-7744**	1	LOCKNUT (M10X1.5-THD)	
	8	1	**9Y-0083**	1	SPACER (14.3X16X10-MM THK)	
M	9	1	**108-2989**	2	BOLT (M8X1.25X130-MM)	
M	10	1	**7X-2541**	2	BOLT (M8X1.25X140-MM)	
	11	1	**8T-4121**	6	WASHER-HARD (11X21X2.5-MM THK)	
M	12	1	**8T-4195**	2	BOLT (M10X1.5X30-MM)	
	13	1	**8T-4224**	2	WASHER-HARD (8.8X16X2-MM THK)	
M	14	1	**8T-6466**	1	BOLT (M10X1.5X60-MM)	
M	15	1	**8T-5436**	1	BOLT (M10X1.5X130-MM)	
M	16	1	**8T-7547**	2	BOLT (M8X1.25X30-MM)	
B	17	1	**6J-6517**	3	SHIM (0.12-MM THK)	
B	18	1	**9G-3732**	3	SHIM (0.8-MM THK)	
B	19	1	**9G-3733**	3	SHIM (0.25-MM THK)	
M	20	1	**6V-9189**	4	LOCKNUT (M8X1.25-THD)	

B-USE AS REQUIRED
M-METRIC PART
Y-SEPARATE ILLUSTRATION

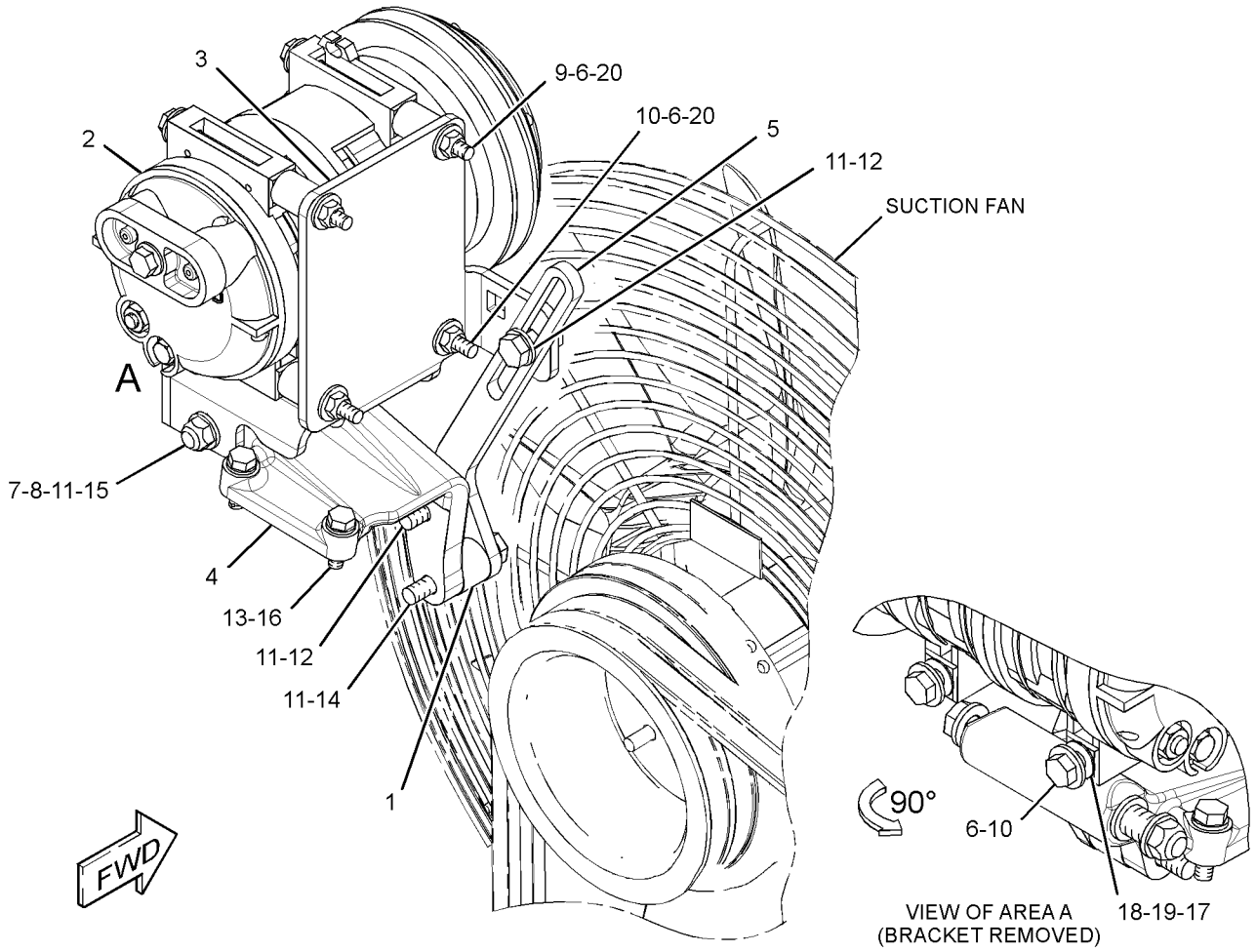

GRAPHIC #1 **<END>** g01342094

OPERATOR STATION

248-5025 COMPRESSOR & MTG GP-REFRIG

S/N: EAT1238-UP

PART OF 269-2127 CAB AR-ENCLOSED ROPS

AN ATTACHMENT

SMCS-1802 **i03532201**

NOTE	REF NO	GRAPHIC REF	PART NUMBER	QTY	PART NAME 1 2 3 4 5 6 (PRODUCT LEVEL)	SEE PAGE
	1	1	**9R-5383**	1	BOSS (11X25X20-MM THK)	
	2	1	**9Y-0083**	1	SPACER (14.3X16X10-MM THK)	
M	3	1	**108-2989**	2	BOLT (M8X1.25X130-MM)	
Y	4	1	**214-4302**	1	COMPRESSOR GP-REFRIGERANT	810
C	5	1	**249-2707**	1	BRACKET	
	6	1	**249-9312**	1	PLATE	
	7	1	**291-4781**	1	BRACKET AS	
	8	1	**291-4785**	1	PLATE	
	9	1	**291-4786**	1	PLATE	
M	10	1	**5C-7261**	4	NUT (M8X1.25-THD)	
	11	1	**5P-4116**	12	WASHER-HARD (8.8X20.5X2-MM THK)	
M	12	1	**6V-7744**	1	LOCKNUT (M10X1.5-THD)	
M	13	1	**7X-2541**	2	BOLT (M8X1.25X140-MM)	
	14	1	**8T-4121**	7	WASHER-HARD (11X21X2.5-MM THK)	
M	15	1	**8T-4195**	3	BOLT (M10X1.5X30-MM)	
M	16	1	**8T-4197**	1	BOLT (M8X1.25X40-MM)	
M	17	1	**8T-4908**	2	BOLT (M8X1.25X25-MM)	
M	18	1	**8T-5436**	1	BOLT (M10X1.5X130-MM)	
M	19	1	**8T-6466**	1	BOLT (M10X1.5X60-MM)	
M	20	1	**8T-7547**	1	BOLT (M8X1.25X30-MM)	

C-CHANGE FROM PREVIOUS TYPE
M-METRIC PART
Y-SEPARATE ILLUSTRATION

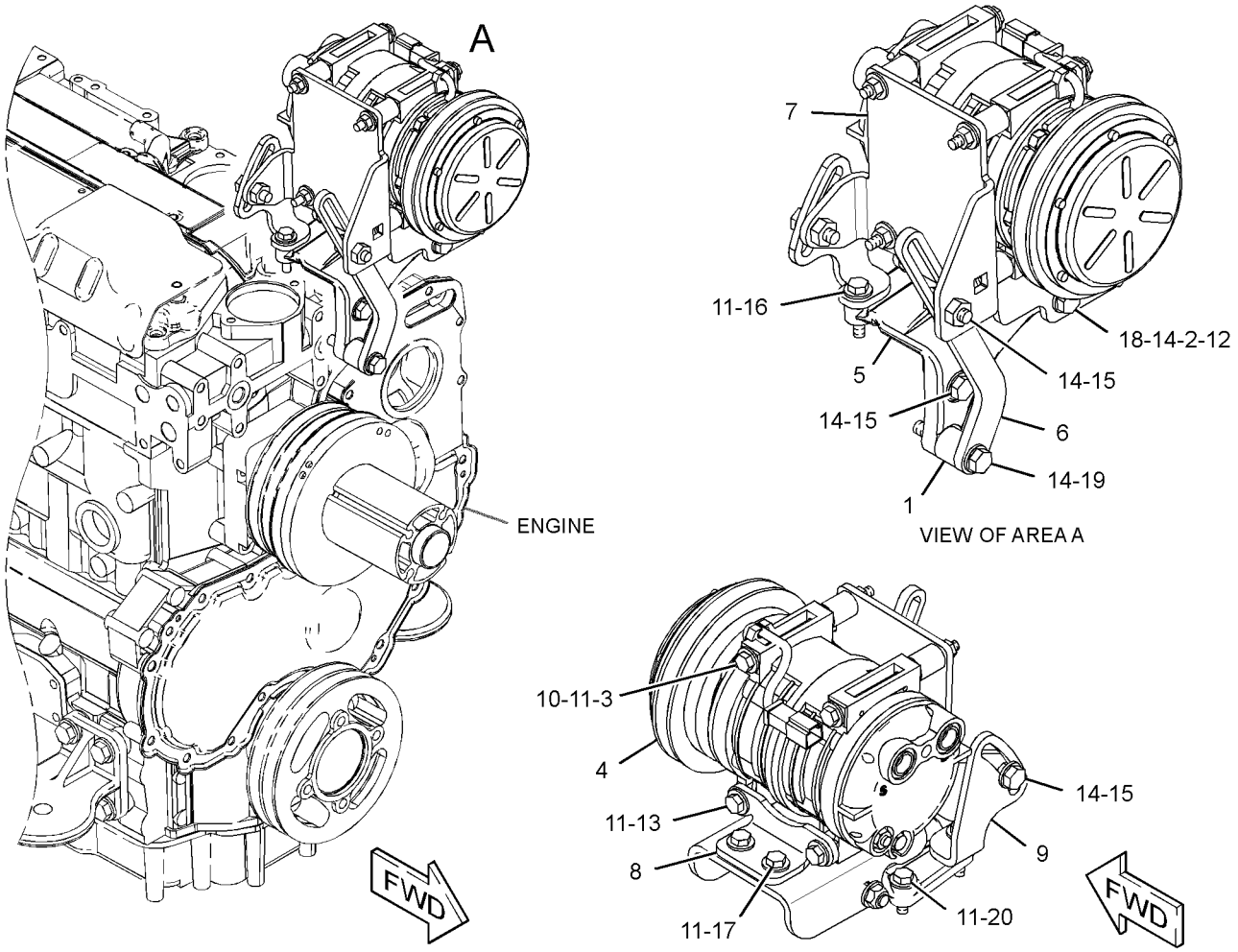

GRAPHIC #1

<END>

g01522167

OPERATOR STATION

214-4302 COMPRESSOR GP-REFRIGERANT

S/N: EAT1-UP
PART OF 248-5025 COMPRESSOR & MTG GP-REFRIG
AN ATTACHMENT

SMCS-1802 **i02504973**

NOTE	REF NO	GRAPHIC REF	PART NUMBER	QTY	PART NAME 1 2 3 4 5 6 (PRODUCT LEVEL)	SEE PAGE
	1	1	**102-8802**	1	KIT-RECEPTACLE (2-PIN)	
					(INCLUDES RECEPTACLE AS & WEDGE)	
	2	1	**229-4896**	2	SEAL-O-RING	
	3	1	**229-7356**	1	VALVE AS-RELIEF	
		1	**9X-7378**	1	SEAL-O-RING	

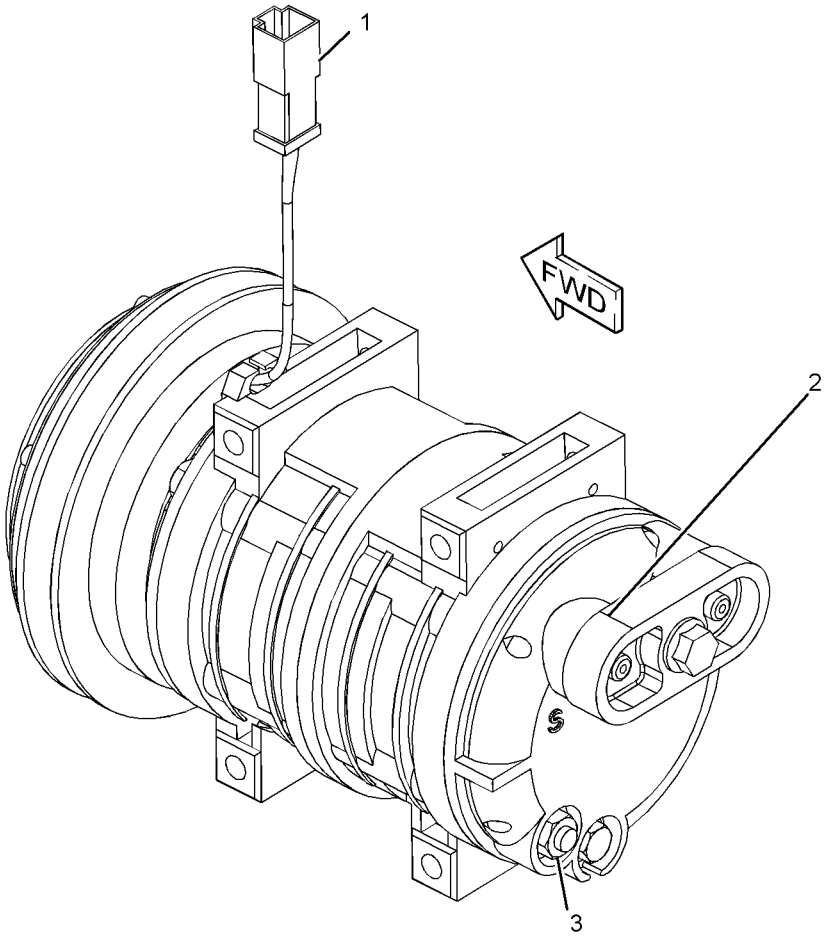

GRAPHIC #1 **<END>** g01239853

OPERATOR STATION

211-0705 CONDENSER & MTG GP-REFRIGERANT

S/N: EAT1-UP

PART OF 269-2127 CAB AR-ENCLOSED ROPS

AN ATTACHMENT

SMCS-1805 **i02445824**

NOTE	REF NO	GRAPHIC REF	PART NUMBER	QTY	PART NAME 1 2 3 4 5 6 (PRODUCT LEVEL)	SEE PAGE
	1	1	**211-1381**	1	CORE AS-CONDENSER	
	2	1	**7X-0579**	4	WASHER-HARD (8.8X25.5X2-MM THK)	
M	3	1	**8T-4189**	4	BOLT (M8X1.25X20-MM)	

M-METRIC PART

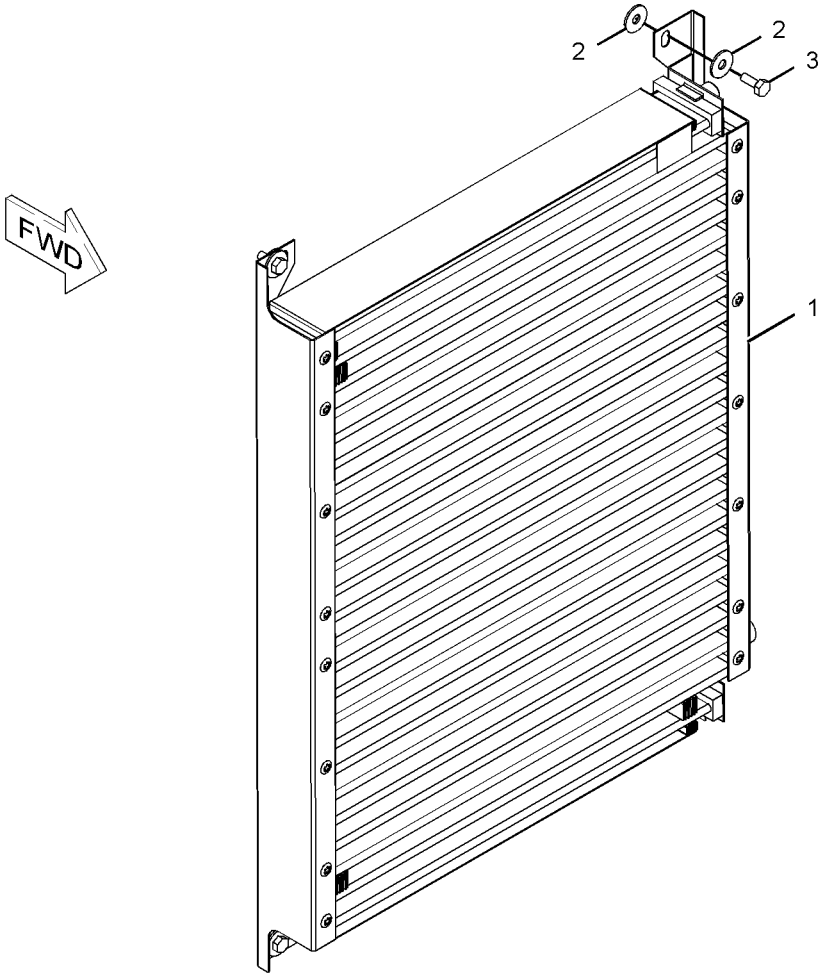

GRAPHIC #1 **<END>** g01080362

OPERATOR STATION

206-1700 CONSOLE GP-OPERATOR—RH

S/N: EAT1-UP
PART OF 269-2125, 269-2126, 269-2127 CAB AR-ENCLOSED ROPS, 269-2123, 269-2124 CANOPY AR-OPEN ROPS
AN ATTACHMENT

SMCS-5258, 7451 **i03532202**

NOTE	REF NO	GRAPHIC REF	PART NUMBER	QTY	PART NAME 1 2 3 4 5 6 (PRODUCT LEVEL)	SEE PAGE
B	1	1	**2S-3163**	1	PLUG	
	2	1	**164-1178**	1	CLIP	
	3	1	**167-8251**	1	FASTENER	
	4	1	**206-1678**	1	HOUSING AS (UPPER)	
	5	1	**206-1679**	1	PANEL AS (UPPER)	
		1	**206-1667**	2	CLIP	
	6	1	**206-1681**	1	PANEL AS (LOWER)	
		1	**172-8591**	5	NUT-SPRING	
	7	1	**261-9645**	1	COVER AS (CONTROLS, FRONT, UPPER)	
		1	**206-1667**	4	CLIP	
	8	1	**261-9644**	1	COVER AS (CONTROLS, FRONT, LOWER)	
		1	**206-1667**	1	CLIP	
	9	1	**269-9115**	1	COVER AS (FENDER, FRONT)	
		1	**172-8591**	1	NUT-SPRING	
	10	1	**206-1690**	1	COVER (FENDER, REAR)	
	11	1	**206-1692**	1	COVER AS (CONTROLS, REAR)	
		1	**206-1667**	3	CLIP	
M	12	1	**9X-2045**	16	SCREW-TRUSS HEAD (M6X1X20-MM)	
B	13	1	**248-2709**	2	PLUG	
	14	1	**9X-2038**	5	WASHER (7X19X2-MM THK)	
	15	1	**206-1687**	1	COVER-FUSE	
E	16	1	**293-1980**		SEAL (78-CM)	
E	16A	1	**293-1980**		SEAL (73-CM)	

B-USE AS REQUIRED
E-ORDER BY THE CENTIMETER
M-METRIC PART

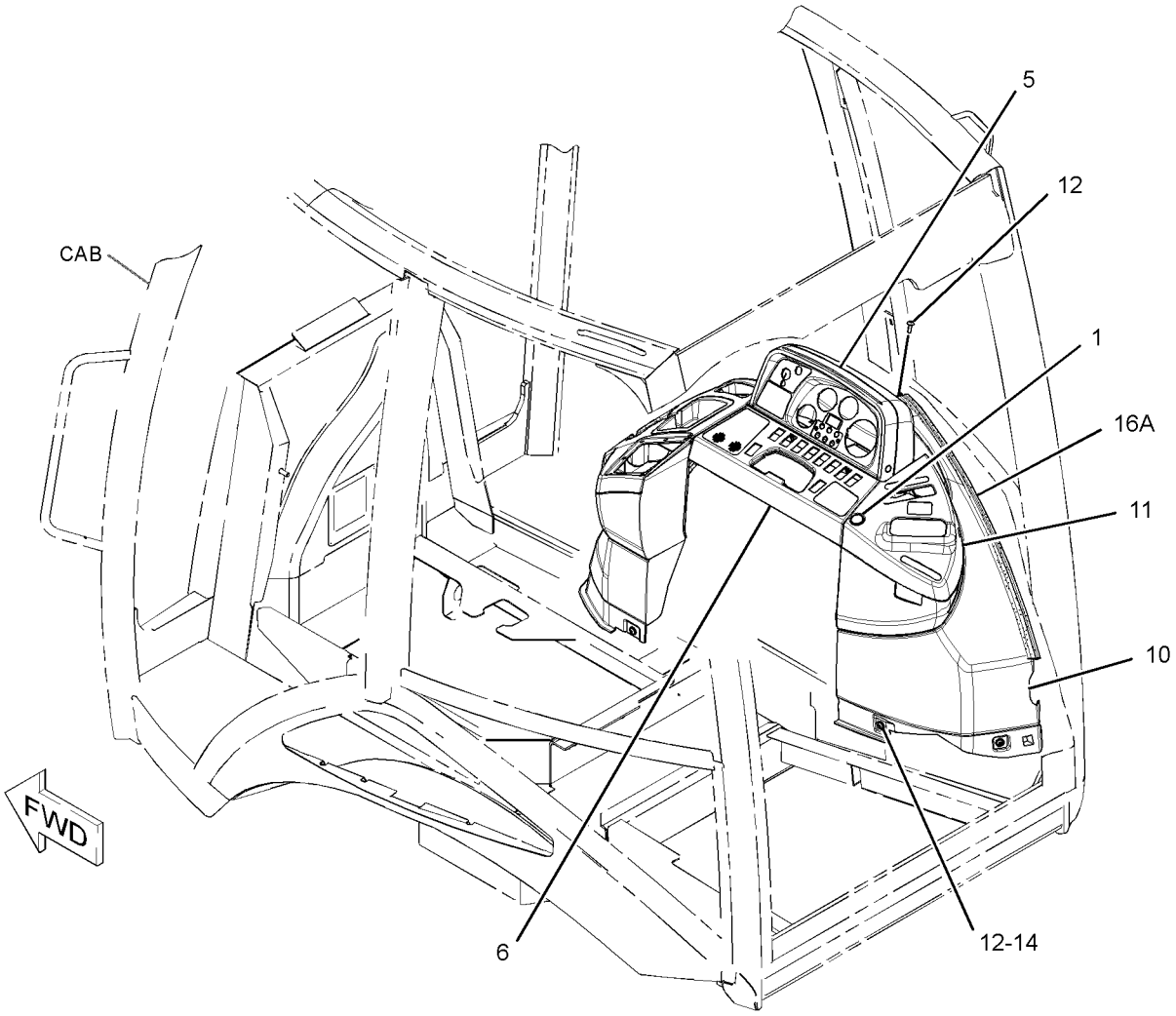

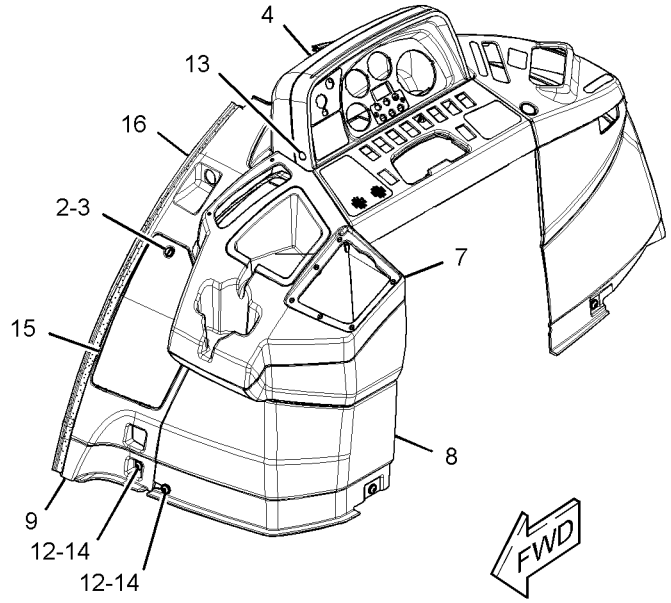

GRAPHIC #1 **<END>** g01860733

OPERATOR STATION

206-1702 CONSOLE GP-OPERATOR—LH

S/N: EAT1-UP
PART OF 269-2125, 269-2126, 269-2127 CAB AR-ENCLOSED ROPS, 269-2123, 269-2124 CANOPY AR-OPEN ROPS
AN ATTACHMENT

SMCS-5258, 7451 **i03122680**

NOTE	REF NO	GRAPHIC REF	PART NUMBER	QTY	PART NAME 1 2 3 4 5 6 (PRODUCT LEVEL)	SEE PAGE
E	1	1	**3E-6600**		SEAL (33-CM)	
D	2	1	**5P-5927**		SEAL (1.7-M)	
	3	1	**206-1696**	1	CONSOLE AS (LH)	
	4	1	**206-1698**	1	DOOR-STORAGE	
	5	1	**206-1699**	1	CUP HOLDER (FRONT)	
	6	1	**206-1706**	1	BOX AS-STORAGE	
J	7	1	**206-1708**	1	LOCK AS	
	8	1	**206-1712**	1	HINGE-DOOR	
	9	1	**210-6491**	1	CUP HOLDER (REAR)	
	10	1	**249-2482**	1	PLATE	
	11	1	**261-9636**	1	BRACKET-SUPPORT	
	12	1	**261-9637**	2	BRACKET AS	
	13	1	**261-9639**	3	SCREW-PAN HEAD (NO 12X0.5-IN)	
E	14	1	**293-1980**		SEAL (71.2-CM)	
E	14A	1	**293-1980**		SEAL (77.4-CM)	
M	15	1	**5C-2890**	3	NUT (M6X1-THD)	
	16	1	**8T-4205**	3	WASHER-HARD (7.2X14.5X2-MM THK)	
	17	1	**9X-2038**	6	WASHER (7X19X2-MM THK)	
M	18	1	**9X-2044**	19	SCREW-TRUSS HEAD (M6X1X16-MM)	

D-ORDER BY THE METER
E-ORDER BY THE CENTIMETER
J-REQUIRES CORPORATE KEY
M-METRIC PART

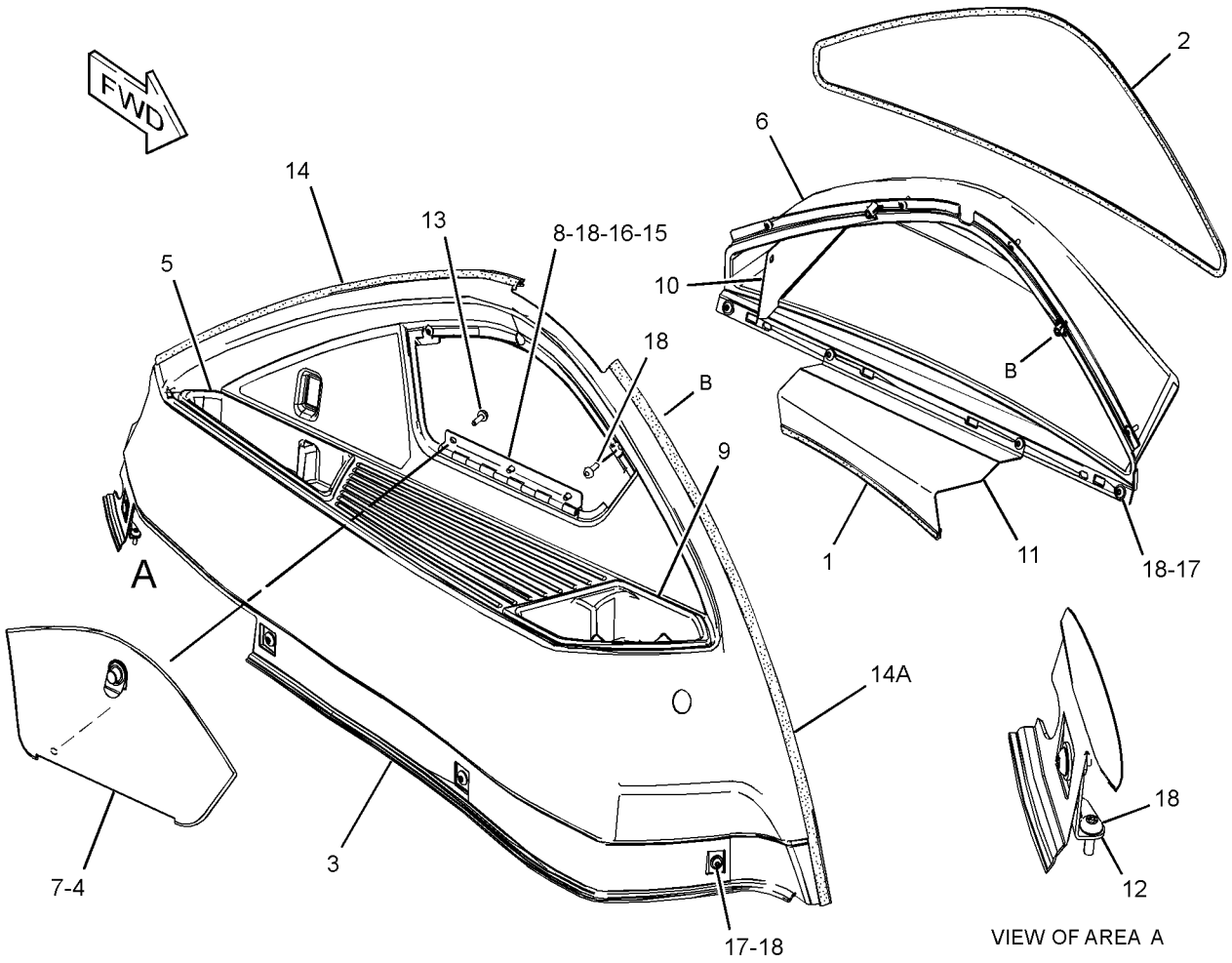

GRAPHIC #1 **<END>** g01520782

OPERATOR STATION

206-1703 CONSOLE GP-OPERATOR—FRONT

S/N: EAT1-UP
PART OF 269-2125, 269-2126, 269-2127 CAB AR-ENCLOSED ROPS, 269-2123, 269-2124 CANOPY AR-OPEN ROPS
AN ATTACHMENT

SMCS-5258, 7451 **i02928300**

NOTE	REF NO	GRAPHIC REF	PART NUMBER	QTY	PART NAME 1 2 3 4 5 6 (PRODUCT LEVEL)	SEE PAGE
B	1	1	**184-5293**	1	PLUG	
	2	1	**206-1658**	1	COVER AS-STEERING COLUMN (UPPER)	
		1	**206-1667**	2	CLIP	
	3	1	**206-1659**	1	DOOR-STORAGE	
	4	1	**206-1660**	1	COVER AS-STEERING COLUMN (FRONT)	
		1	**206-1667**	4	CLIP	
	5	1	**206-1661**	1	COVER AS-STEERING COLUMN (REAR)	
		1	**206-1667**	4	CLIP	
	6	1	**206-1662**	1	CONSOLE AS-FRONT (UPPER)	
		1	**206-1667**	8	CLIP	
	7	1	**206-1663**	1	CONSOLE-FRONT (MIDDLE)	
J	8	1	**206-1708**	1	LOCK AS	
	9	1	**261-9639**	10	SCREW-PAN HEAD (NO 12X0.5-IN)	
E	10	1	**220-0738**		SEAL (22-CM)	
	11	1	**224-2147**	1	CONSOLE AS-FRONT (LOWER, LH)	
	12	1	**224-2149**	1	CONSOLE AS-FRONT (LOWER, RH)	
	13	1	**233-5260**	2	LANYARD	
M	14	1	**120-9027**	2	SCREW-PAN HEAD (M3X0.5X16-MM)	
	15	1	**206-1854**	1	HINGE	
M	16	1	**8T-2658**	2	LOCKNUT (M3X0.5-THD)	
M	17	1	**9X-2044**	2	SCREW-TRUSS HEAD (M6X1X16-MM)	
M	18	1	**9X-2045**	16	SCREW-TRUSS HEAD (M6X1X20-MM)	
	19	1	**258-2354**	1	BRACKET-LATCH	
	20	1	**9X-2038**	3	WASHER (7X19X2-MM THK)	
	21	1	**4I-3038**	2	WASHER (3.3X8X0.5-MM THK)	
D	22	1	**5P-7070**		INSULATION-STRIP (0.03-M EACH)	

B-USE AS REQUIRED
D-ORDER BY THE METER
E-ORDER BY THE CENTIMETER
J-REQUIRES CORPORATE KEY
M-METRIC PART

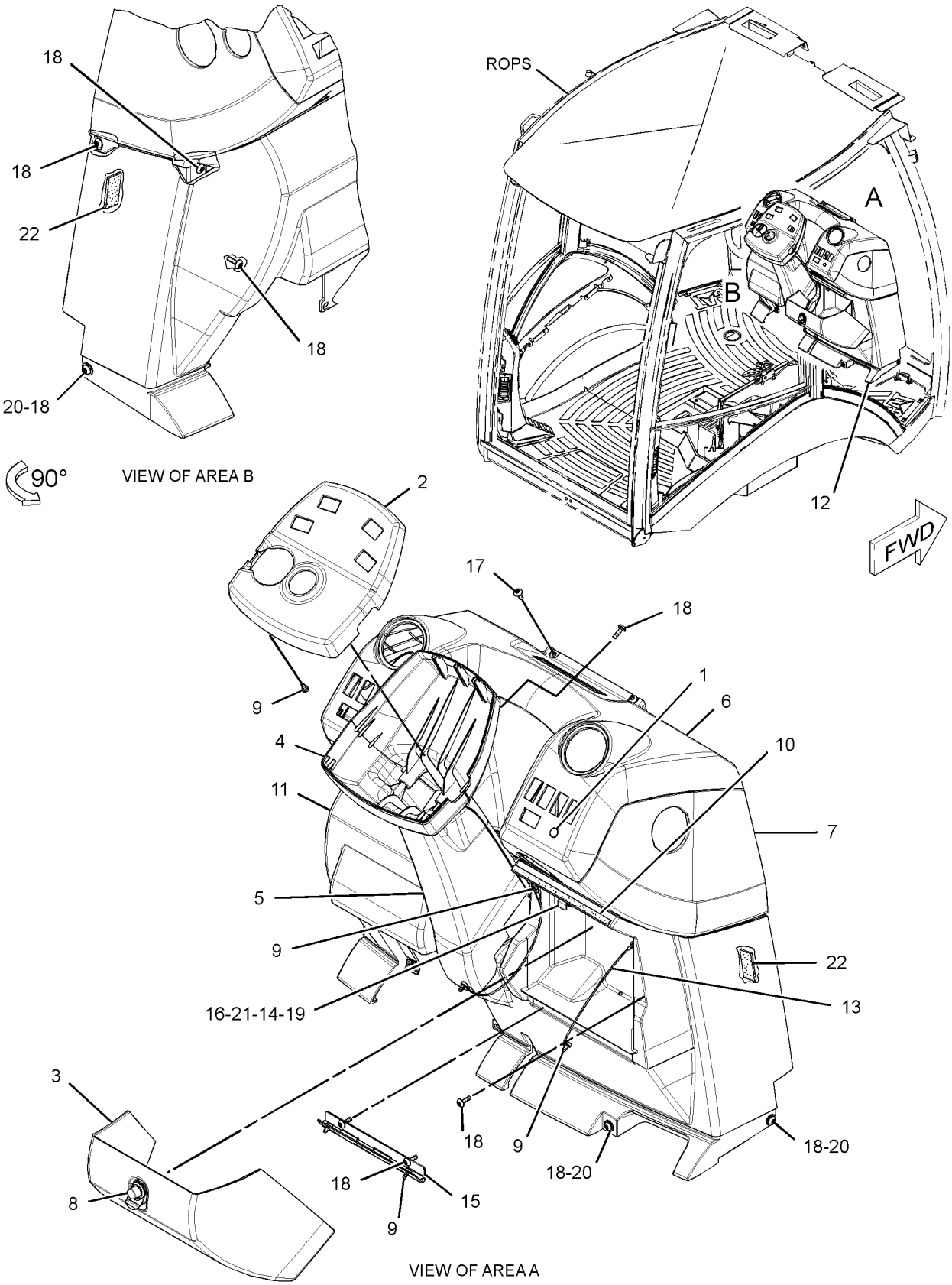

GRAPHIC #1 **<END>** g01522089

OPERATOR STATION

206-1645 CONTROL GP-HYDRAULIC HAND—LOADER

S/N: EAT1-UP
SINGLE TILT
PART OF 269-2144 VALVE AR-BANK 2
AN ATTACHMENT

SMCS-5063 **i03257741**

NOTE	REF NO	GRAPHIC REF	PART NUMBER	QTY	PART NAME 1 2 3 4 5 6 (PRODUCT LEVEL)	SEE PAGE
	1	1	**1K-0502**	7	WASHER (16.3X25.4X1.2-MM THK)	
	2	1	**2R-0364**	3	RING-RETAINING	
M	3	1	**9X-2040**	2	SCREW-TRUSS HEAD (M10X1.5X25-MM)	
	4	1	**5H-3193**	1	PIN-SPRING	
	5	1	**9R-1765**	1	COVER-TOP (TOP)	
	6	1	**9R-1766**	1	COVER-BOTTOM	
	7	1	**9R-1767**	1	BOOT	
	8	1	**9R-9868**	1	SWITCH GP-PUSH BUTTON (NEUTRALIZER, DOWNSHIFT)	
		1	**9W-0625**	1	SWITCH AS (PUSH BUTTON)	
		1	**9X-3401**	2	PIN-CONNECTOR (16-GA TO 18-GA)	
M	9	1	**9X-2065**	2	NUT (M10X1.5-THD, LH)	
	10	1	**107-5591**	1	NUT-JAM (3/4-16-THD)	
M	11	1	**134-0453**	2	TURNBUCKLE	
	12	1	**164-1368**	12	FASTENER-PANEL	
	13	1	**183-3135**	1	JOINT AS	
	14	1	**183-3137**	1	PIN	
	15	1	**206-1695**	1	BOOT	
	16	1	**209-3363**	1	ROD	
	17	1	**216-3351**	1	ROD	
	18	1	**216-3358**	1	DAMPER AS (SPRING)	
		1	**095-9230**	1	PIN-SPRING	
		1	**183-3132**	1	CYLINDER	
	19	1	**291-5108**	1	GASKET	
	20	1	**220-0269**	1	SHAFT	
	21	1	**230-2510**	1	LEVER AS	
	22	1	**269-8129**	1	BRACKET AS	
	23	1	**269-8817**	1	PLATE	
	24	1	**270-2795**	1	PLATE	
	25	1	**272-7104**	1	ROD	
	26	1	**275-8869**	1	BRACKET AS	
	27	1	**179-8235**	1	LOCK PIN	
	28	1	**102-8802**	1	KIT-RECEPTACLE (2-PIN)	
					(INCLUDES RECEPTACLE AS & WEDGE)	
M	29	1	**6V-7744**	4	LOCKNUT (M10X1.5-THD)	
	30	1	**7X-7729**	4	WASHER (11X25X3-MM THK)	
	31	1	**8C-4987**	1	PIN-CLEVIS	
	32	1	**8T-4121**	3	WASHER-HARD (11X21X2.5-MM THK)	
M	33	1,1	**8T-4133**	6	NUT (M10X1.5-THD)	
M	34	1	**8T-4136**	1	BOLT (M10X1.5X25-MM)	
M	35	1	**8T-4137**	2	BOLT (M10X1.5X20-MM)	
M	36	1	**8T-4189**	4	BOLT (M8X1.25X20-MM)	
	37	1	**5P-4116**	4	WASHER-HARD (8.8X20.5X2-MM THK)	
	38	1	**8T-4773**	2	BALL JOINT	
	39	1	**8T-4815**	2	ROD END	
	40	1	**8T-9501**	2	SCREW (10-16X0.75-IN)	
	41	1	**9R-2807**	1	CLIP	
	42	1	**9R-3067**	1	PIN	
E	43	1	**3E-6600**		SEAL (7-CM)	

E-ORDER BY THE CENTIMETER
M-METRIC PART

206-1645 **CONTROL GP-HYDRAULIC HAND** *(contd.)* **i03257741**

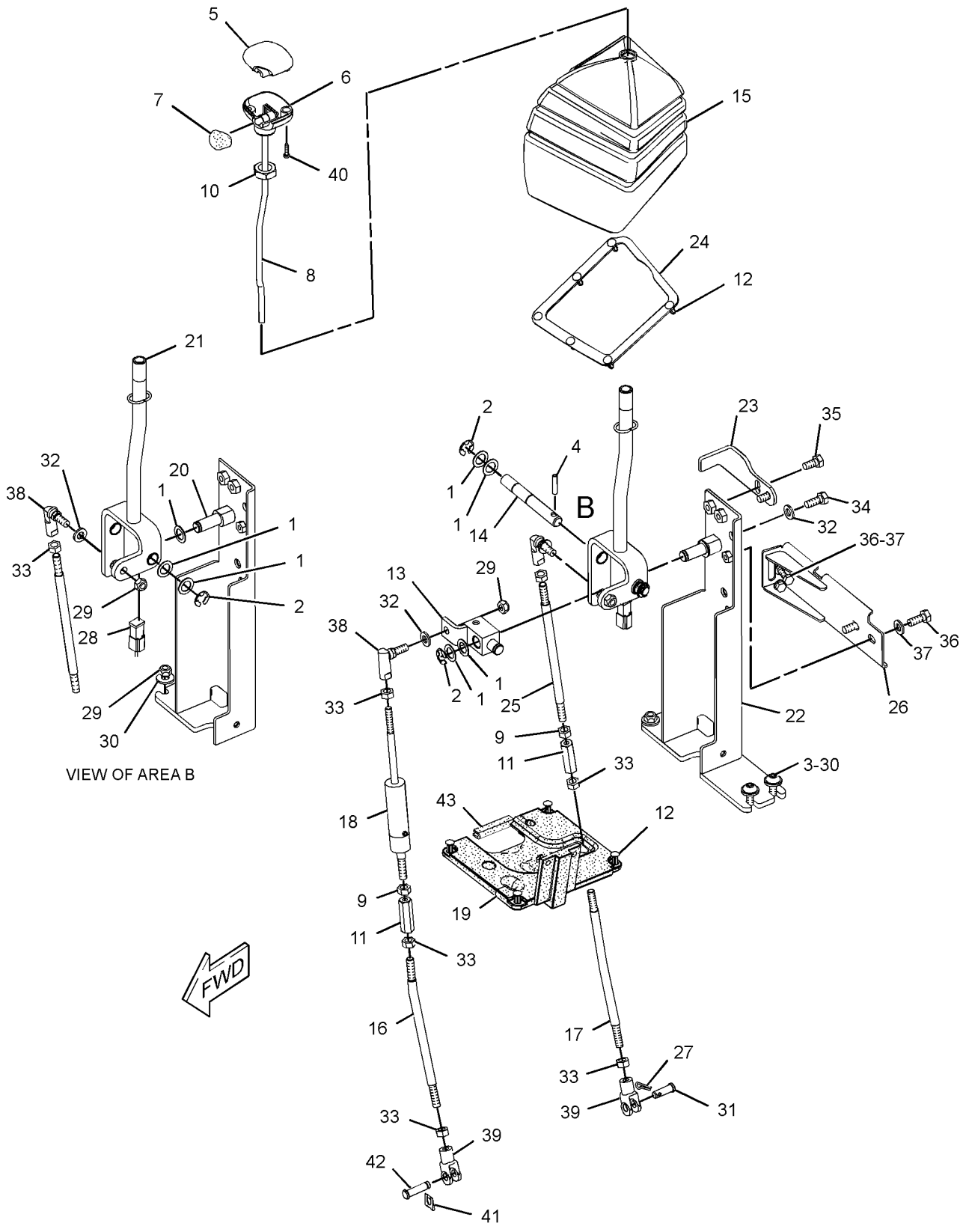

GRAPHIC #1 **<END>** g01312659

OPERATOR STATION

209-3364 CONTROL GP-HYDRAULIC HAND—LOADER

S/N: EAT1-UP
PART OF 269-2145 VALVE AR-BANK 3
AN ATTACHMENT

SMCS-5063 **i03514525**

NOTE	REF NO	GRAPHIC REF	PART NUMBER	QTY	PART NAME 1 2 3 4 5 6 (PRODUCT LEVEL)	SEE PAGE
B	1	1	**1K-0502**	10	WASHER (16.3X25.4X1.2-MM THK)	
	2	1	**2R-0364**	4	RING-RETAINING	
M	3	1	**9X-2040**	2	SCREW-TRUSS HEAD (M10X1.5X25-MM)	
	4	1	**5H-3193**	1	PIN-SPRING	
	5	1	**9R-1765**	1	COVER-TOP	
	6	1	**9R-1766**	1	COVER-BOTTOM	
	7	1	**9R-1767**	1	BOOT	
	8	1	**9R-9868**	1	SWITCH GP-PUSH BUTTON (NEUTRALIZER, DOWNSHIFT)	
BD		1	**6V-2689**		TUBE-HEAT SHRINK (6.35-MM DIA)	
		1	**9W-0625**	1	SWITCH AS (PUSH BUTTON)	
M	9	1	**9X-2065**	3	NUT (M10X1.5-THD, LH)	
	10	1	**107-5591**	1	NUT-JAM (3/4-16-THD)	
M	11	1	**134-0453**	3	TURNBUCKLE	
	12	1	**164-1368**	12	FASTENER-PANEL	
	13	1	**183-3135**	1	JOINT AS	
	14	1	**183-3137**	1	PIN	
	15	1	**206-1668**	1	BOOT	
	16	1	**209-3363**	1	ROD	
	17	1	**216-3350**	1	ROD	
	18	1	**216-3351**	1	ROD	
	19	1	**216-3358**	1	DAMPER AS (SPRING)	
		1	**095-9230**	1	PIN-SPRING	
		1	**183-3132**	1	CYLINDER	
	20	1	**291-5108**	1	GASKET	
	21	1	**220-0269**	1	SHAFT	
	22	1	**220-3251**	1	ROD	
	23	1	**230-2510**	1	LEVER AS	
	24	1	**230-3038**	1	LEVER AS	
	25	1	**269-8129**	1	BRACKET AS	
	26	1	**269-8817**	1	PLATE	
	27	1	**270-2795**	1	PLATE	
	28	1	**272-7104**	1	ROD	
	29	1	**275-8869**	1	BRACKET AS	
	30	1	**164-1395**	1	KNOB	
	31	1	**179-8235**	2	LOCK PIN	
	32	1	**102-8802**	1	KIT-RECEPTACLE (2-PIN)	
					(INCLUDES RECEPTACLE AS & WEDGE)	
M	33	1	**6V-7744**	4	LOCKNUT (M10X1.5-THD)	
	34	1	**7X-7729**	4	WASHER (11X25X3-MM THK)	
	35	1	**8C-4987**	2	PIN-CLEVIS	
	36	1	**8T-4121**	4	WASHER-HARD (11X21X2.5-MM THK)	
M	37	1	**8T-4133**	9	NUT (M10X1.5-THD)	
M	38	1	**8T-4136**	1	BOLT (M10X1.5X25-MM)	
M	39	1	**8T-4137**	2	BOLT (M10X1.5X20-MM)	
M	40	1	**8T-4189**	4	BOLT (M8X1.25X20-MM)	
	41	1	**5P-4116**	4	WASHER-HARD (8.8X20.5X2-MM THK)	
	42	1	**8T-4773**	3	BALL JOINT	
	43	1	**8T-4815**	3	ROD END	
	44	1	**8T-9501**	2	SCREW (10-16X0.75-IN)	
	45	1	**9R-2807**	1	CLIP	
	46	1	**9R-3067**	1	PIN	
E	47	1	**3E-6600**		SEAL (7-CM)	

B-USE AS REQUIRED
D-ORDER BY THE METER
E-ORDER BY THE CENTIMETER
M-METRIC PART

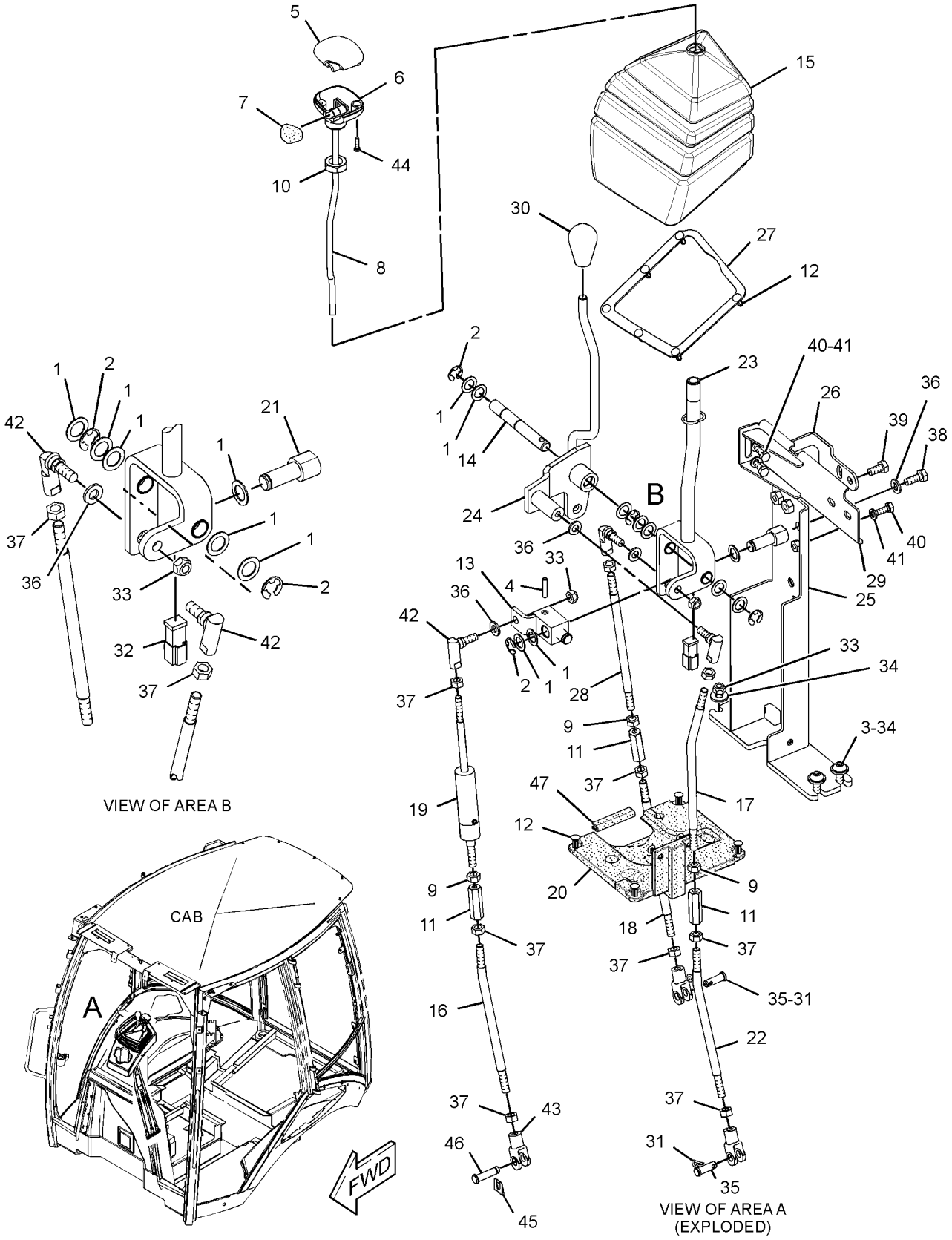

GRAPHIC #1 **<END>** g01314431

OPERATOR STATION

271-3095 CONTROL GP-JOYSTICK–RH

S/N: EAT1-UP
PART OF 269-2146 VALVE AR-BANK 6
AN ATTACHMENT

SMCS-5705 **i03256780**

NOTE	REF NO	GRAPHIC REF	PART NUMBER	QTY	PART NAME 1 2 3 4 5 6 (PRODUCT LEVEL)	SEE PAGE
	1	1	**271-3100**	1	HANDLE GP-MODULAR (RH)	
	2	1	**272-9701**	1	ADAPTER (RH)	
	3	1	**254-3437**	1	BOOT	

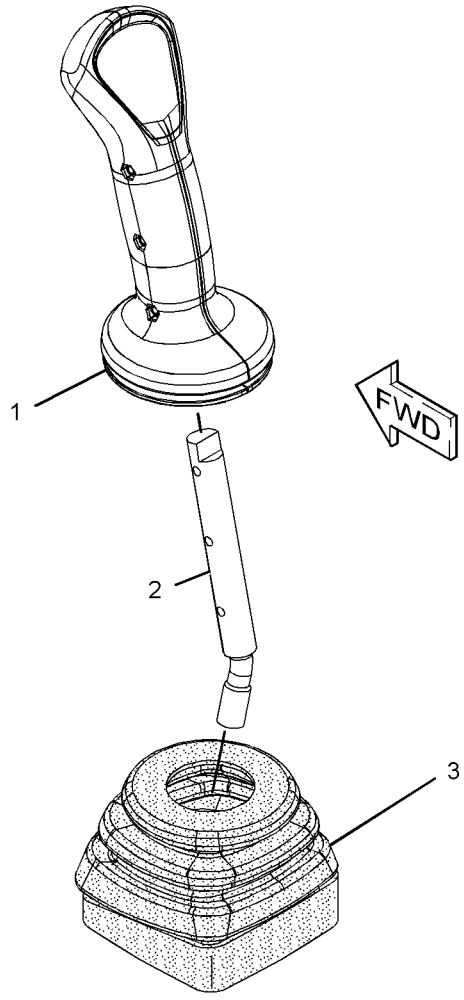

GRAPHIC #1 **<END>** g01214863

OPERATOR STATION

271-3096 CONTROL GP-JOYSTICK–RH

S/N: EAT1-UP
PART OF 269-2147 VALVE AR-BANK 7, 269-2148 VALVE AR-BANK 8
AN ATTACHMENT

SMCS-5705 **i02884598**

NOTE	REF NO	GRAPHIC REF	PART NUMBER	QTY	PART NAME 1 2 3 4 5 6 (PRODUCT LEVEL)	SEE PAGE
	1	1	**271-3101**	1	HANDLE GP-MODULAR (RH)	
		1	**8T-8737**	8	PLUG-SEAL	
		1	**174-3091**	1	KIT-RECEPTACLE (12-PIN)	
					(INCLUDES RECEPTACLE AS & WEDGE)	
		1	**186-3735**	4	PIN-CONNECTOR (16-GA TO 18-GA)	
	2	1	**272-9701**	1	ADAPTER (RH)	
	3	1	**254-3437**	1	BOOT	

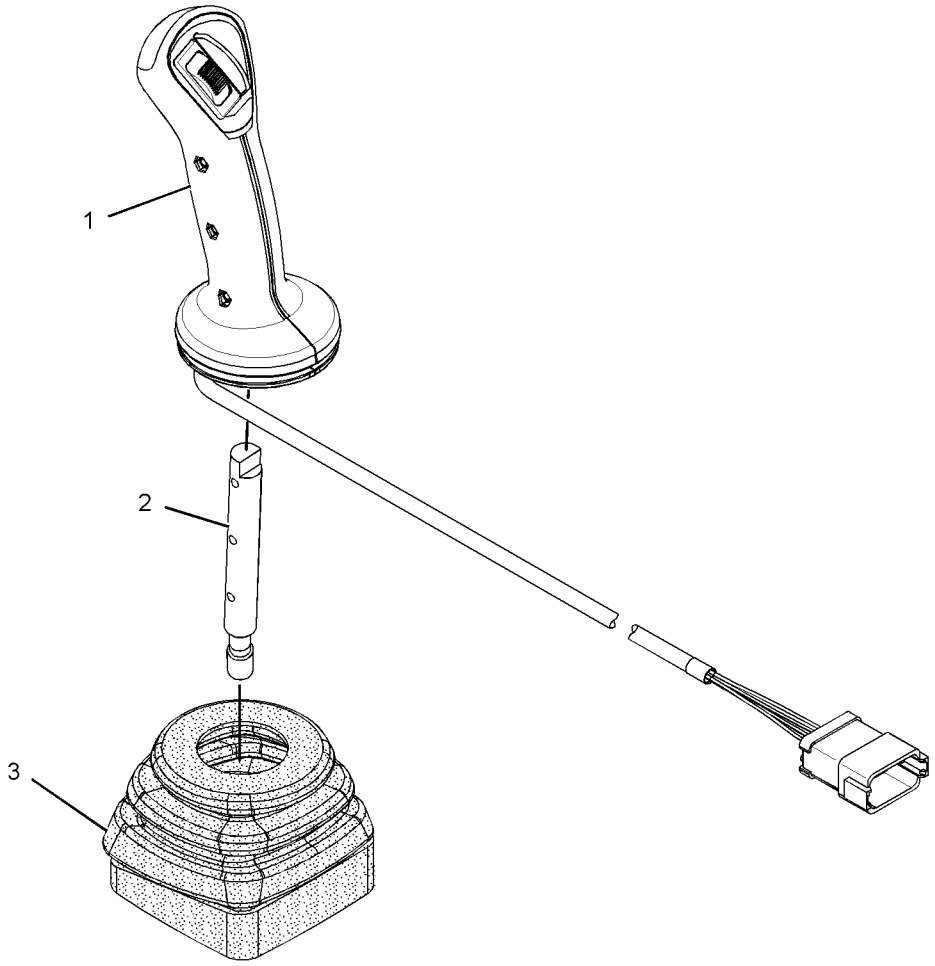

GRAPHIC #1 **<END>** g01436506

OPERATOR STATION

271-3097 CONTROL GP-JOYSTICK–LH

S/N: EAT1-UP

PART OF 269-2146 VALVE AR-BANK 6, 269-2147 VALVE AR-BANK 7

AN ATTACHMENT

SMCS-5705 **i03214242**

NOTE	REF NO	GRAPHIC REF	PART NUMBER	QTY	PART NAME 1 2 3 4 5 6 (PRODUCT LEVEL)	SEE PAGE
	1	1	**271-3103**	1	HANDLE GP-MODULAR (LH)	
		1	**8T-8737**	10	PLUG-SEAL	
		1	**174-3091**	1	KIT-RECEPTACLE (12-PIN)	
					(INCLUDES RECEPTACLE AS & WEDGE)	
		1	**186-3735**	2	PIN-CONNECTOR (16-GA TO 18-GA)	
	2	1	**278-7469**	1	ADAPTER (LH)	
	3	1	**254-3437**	1	BOOT	

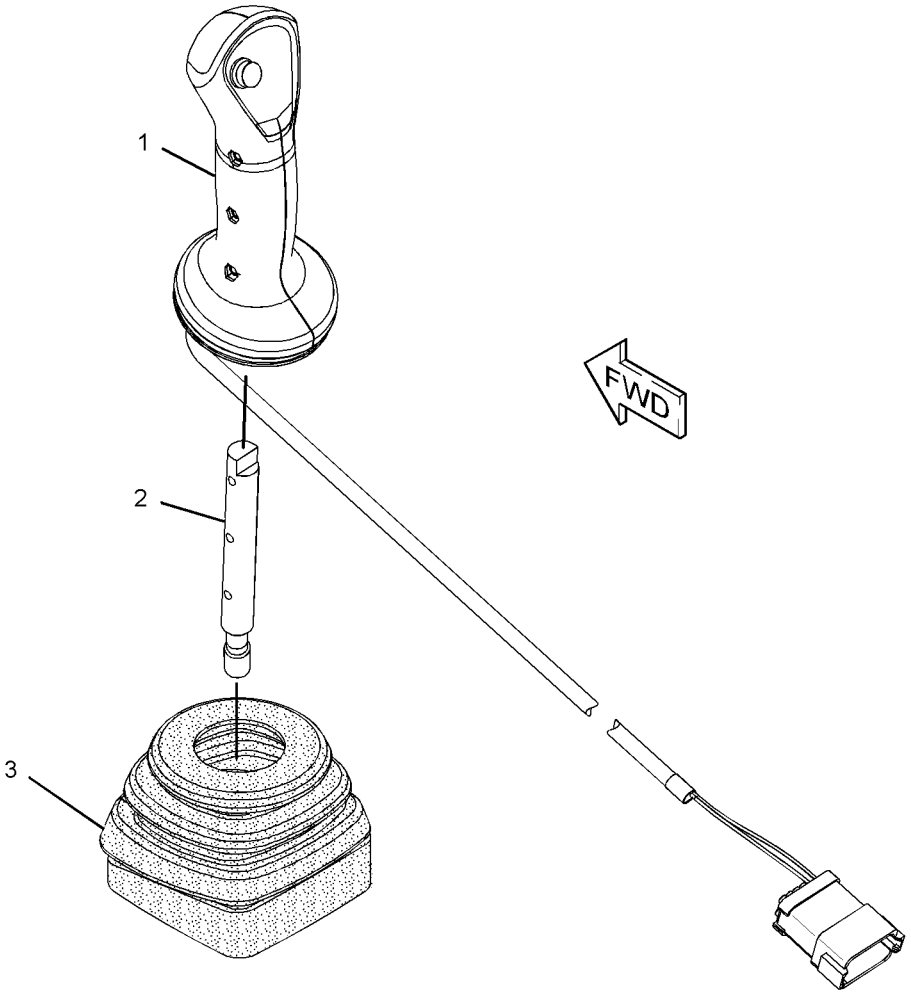

GRAPHIC #1 **<END>** g01432702

OPERATOR STATION

271-3099 CONTROL GP-JOYSTICK–LH

S/N: EAT1-UP
PART OF 269-2148 VALVE AR-BANK 8
AN ATTACHMENT

SMCS-5705 **i02875404**

NOTE	REF NO	GRAPHIC REF	PART NUMBER	QTY	PART NAME 1 2 3 4 5 6 (PRODUCT LEVEL)	SEE PAGE
	1	1	**271-3105**	1	HANDLE GP-MODULAR (LH)	
		1	**8T-8737**	6	PLUG-SEAL	
		1	**174-3091**	1	KIT-RECEPTACLE (12-PIN)	
					(INCLUDES RECEPTACLE AS & WEDGE)	
		1	**186-3735**	6	PIN-CONNECTOR (16-GA TO 18-GA)	
	2	1	**278-7469**	1	ADAPTER (LH)	
	3	1	**254-3437**	1	BOOT	

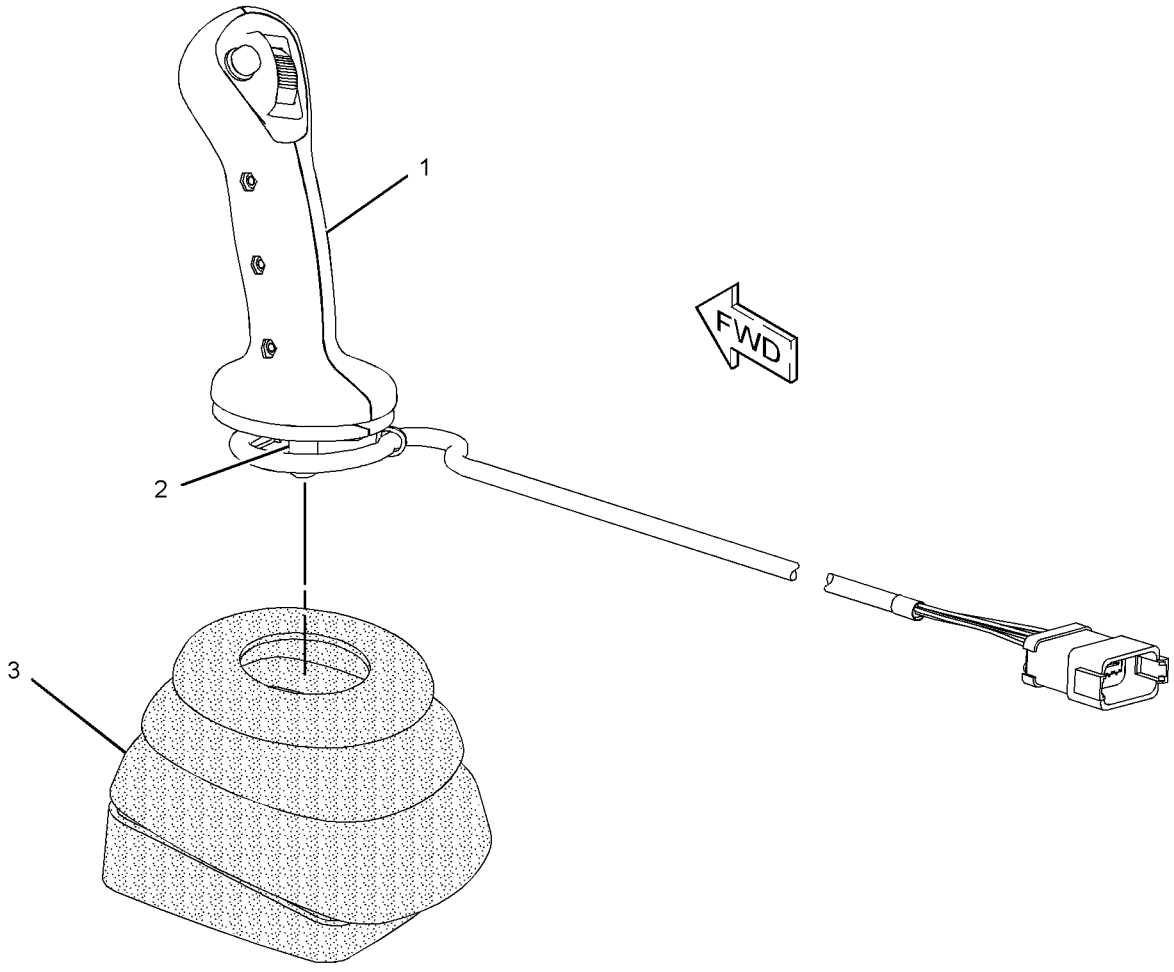

GRAPHIC #1 **<END>** g01433605

OPERATOR STATION

206-1633 CONTROL GP-STEERING–TILT

S/N: EAT1-1149
PART OF 269-2125, 269-2126, 269-2127 CAB AR-ENCLOSED ROPS, 269-2123, 269-2124 CANOPY AR-OPEN ROPS
AN ATTACHMENT

SMCS-4309, 4310, 4338 **i02515694**

NOTE	REF NO	GRAPHIC REF	PART NUMBER	QTY	PART NAME 1 2 3 4 5 6 (PRODUCT LEVEL)	SEE PAGE
	1	1	**2T-3360**	1	BUTTON AS-HORN	
	2	1	**153-7368**	1	PLUG	
Y	3	1	**153-7369**	1	KNOB GP-STEERING	343
	4	1	**206-1632**	1	PLATE AS	
J	5	1	**206-1635**	1	COLUMN AS-STEERING	
M		1	**6V-8227**	1	NUT (M18X1.5-THD)	
	6	1	**217-8058**	1	WIRE AS	
	7	1	**227-1057**	1	PLUG-HOLE	
	8	1	**145-9291**	1	STEERING WHEEL AS	
	9	1	**7X-7729**	6	WASHER (11X25X3-MM THK)	
	10	1	**8T-4121**	4	WASHER-HARD (11X21X2.5-MM THK)	
M	11	1	**8T-4133**	2	NUT (M10X1.5-THD)	
M	12	1	**8T-4136**	4	BOLT (M10X1.5X25-MM)	
M	13	1	**8T-4195**	4	BOLT (M10X1.5X30-MM)	
M	14	1	**8T-6411**	1	SCREW-MACHINE (M6X1X12-MM)	
M	15	1	**8T-8894**	1	BOLT-SOCKET HEAD (M10X1.5X20-MM)	
					AVAILABLE REPAIR KIT(S):	
J			**254-9926**	1	KIT-TILT PEDAL	
					(INCLUDES SPRING, RING, BOLT, NUT & TILT LEVER)	
J			**254-9927**	1	KIT-PIVOT	
					(INCLUDES BUSHINGS, NUTS, PINS & WASHERS)	
J			**254-9925**	1	KIT-GAS SPRING	
					(INCLUDES PINS, RINGS & SPRING AS)	
J			**252-8059**	1	KIT-HORN	
					(INCLUDES HORN CONTACT AS, SCREWS & LOCKWASHERS)	

J-KITS MARKED J AVAILABLE FOR PART(S) MARKED J
M-METRIC PART
Y-SEPARATE ILLUSTRATION

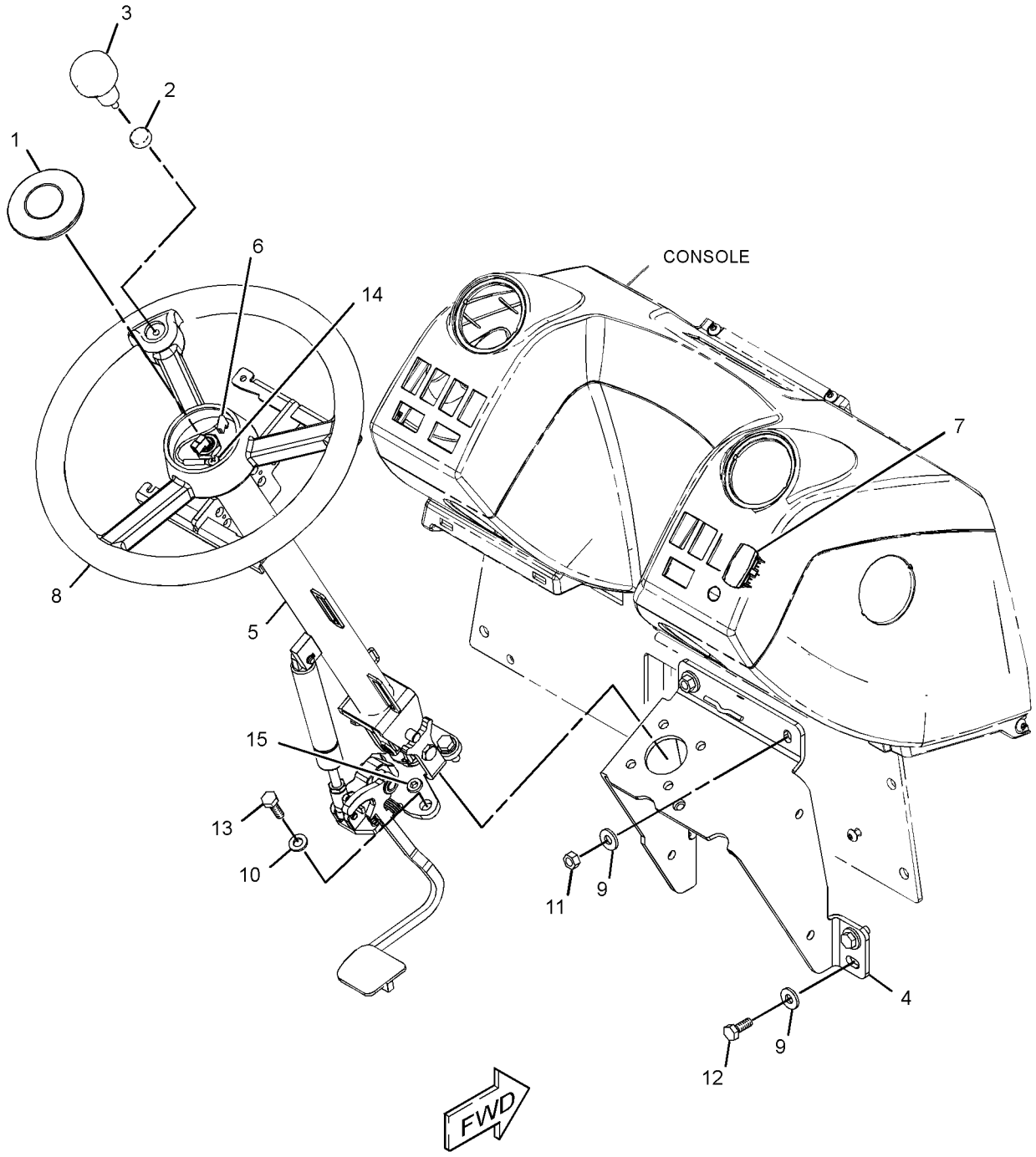

GRAPHIC #1 **<END>** g01233577

OPERATOR STATION

218-4453 CONTROL GP-STEERING–TILT

S/N: EAT1150-UP
PART OF 269-2125, 269-2126, 269-2127 CAB AR-ENCLOSED ROPS, 269-2123, 269-2124 CANOPY AR-OPEN ROPS
AN ATTACHMENT

SMCS-4309, 4310, 4338 **i03516060**

NOTE	REF NO	GRAPHIC REF	PART NUMBER	QTY	PART NAME 1 2 3 4 5 6 (PRODUCT LEVEL)	SEE PAGE
	1	1	**153-7368**	1	PLUG	
Y	2	1	**153-7369**	1	KNOB GP-STEERING	343
	3	1	**206-1632**	1	PLATE AS	
	4	1	**214-4701**	1	SWITCH AS-ROCKER (HORN)	
		1	**111-7899**	1	GASKET	
	5	1	**218-4454**	1	STEERING COLUMN GP (TILT)	
		1	**254-9925**	1	KIT-GAS SPRING	
					(INCLUDES RINGS, PINS, & SPRING AS)	
		1	**254-9927**	1	KIT-PIVOT	
					(INCLUDES BUSHINGS, NUTS, PINS, & WASHERS)	
		1	**254-9926**	1	KIT-TILT PEDAL	
					(INCLUDES SPRING. BOLT, RING, NUT & TILT LEVER)	
M		1	**6V-8227**	1	NUT (M18X1.5-THD)	
	6	1	**145-9291**	1	STEERING WHEEL AS	
	7	1	**7X-7729**	6	WASHER (11X25X3-MM THK)	
	8	1	**8R-2916**	1	COVER AS (CAT STEERING WHEEL)	
	9	1	**8T-4121**	4	WASHER-HARD (11X21X2.5-MM THK)	
M	10	1	**8T-4133**	2	NUT (M10X1.5-THD)	
M	11	1	**8T-4136**	4	BOLT (M10X1.5X25-MM)	
M	12	1	**8T-4195**	4	BOLT (M10X1.5X30-MM)	
M	13	1	**8T-8894**	1	BOLT-SOCKET HEAD (M10X1.5X20-MM)	

M-METRIC PART
Y-SEPARATE ILLUSTRATION

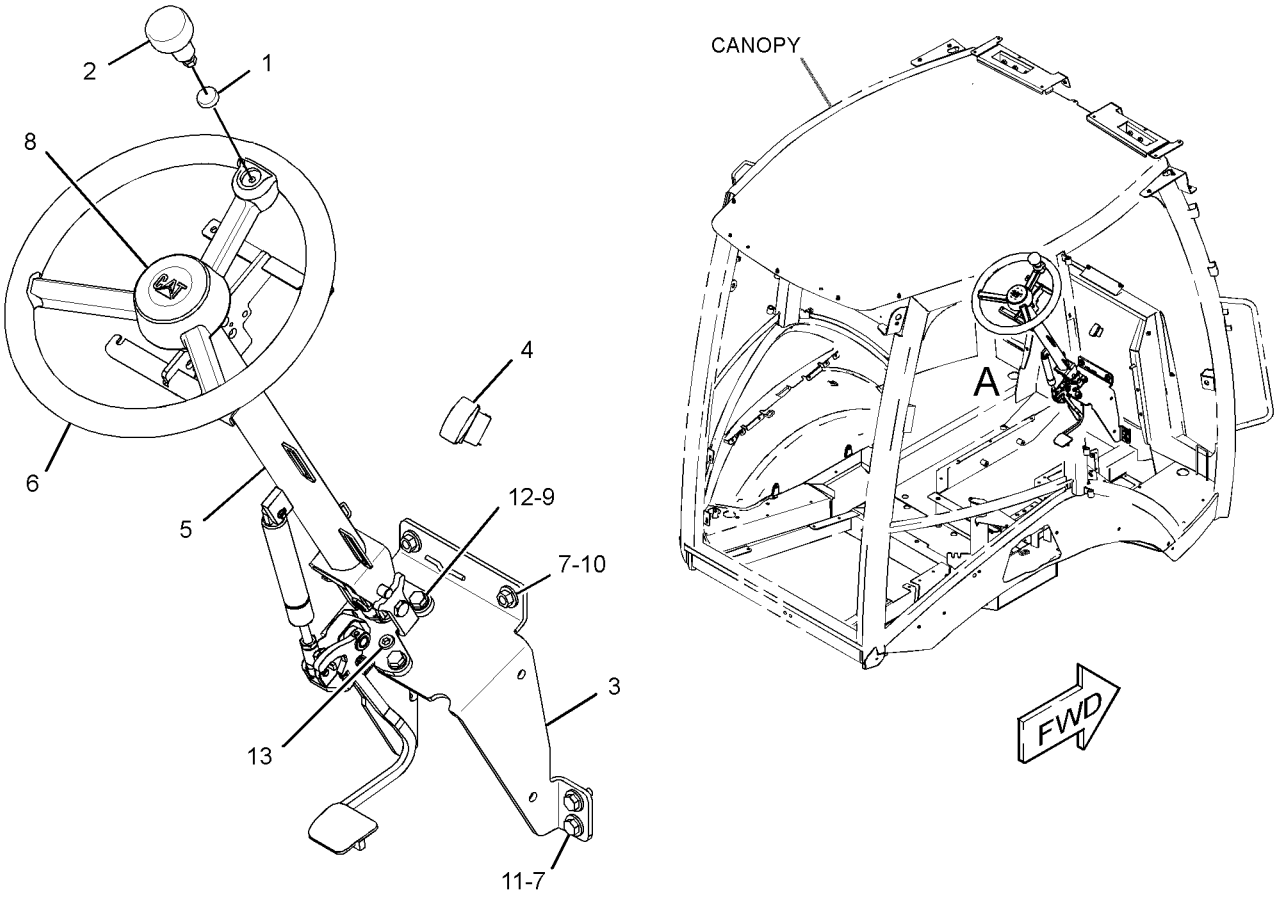

VIEW OF AREA A
(EXPLODED)

GRAPHIC #1 **<END>** g01433102

OPERATOR STATION

206-1643 CONTROL GP-TRANSMISSION

S/N: BYC1-UP; EAT1-UP
PART OF 218-5148, 293-2986 POWER TRAIN AR
AN ATTACHMENT

SMCS-3065, 3168 **i02512424**

NOTE	REF NO	GRAPHIC REF	PART NUMBER	QTY	PART NAME 1 2 3 4 5 6 (PRODUCT LEVEL)	SEE PAGE
	1	1	**102-8802**	1	KIT-RECEPTACLE (2-PIN)	
					(INCLUDES RECEPTACLE AS & WEDGE)	
	2	1	**9R-1766**	1	COVER-BOTTOM	
	3	1	**9R-1767**	1	BOOT	
	4	1	**107-5591**	1	NUT-JAM (3/4-16-THD)	
	5	1	**164-1153**	1	KNOB (UPPER)	
	6	1	**164-1368**	8	FASTENER-PANEL	
	7	1	**206-1669**	1	BOOT	
	8	1	**220-3469**	1	ROD AS	
	9	1	**220-3470**	1	BOOT-SEAL	
	10	1	**230-2389**	1	PLATE	
	11	1	**230-2390**	1	PLATE	
	12	1	**261-2207**	1	CONTROL GP-TRANSMISSION (FORWARD, NEUTRAL, REVERSE)	
	13	1	**263-7261**	1	SWITCH GP-PUSH BUTTON (NEUTRALIZER, DOWNSHIFT)	
M	14	1	**095-0756**	4	SCREW-MACHINE (M5X0.8X16-MM)	
	15	1	**8T-4223**	1	WASHER-HARD (13.5X25.5X3-MM THK)	
M	16	1	**8T-4956**	1	BOLT (M12X1.75X35-MM)	
	17	1	**8T-9501**	2	SCREW (10-16X0.75-IN)	

M-METRIC PART

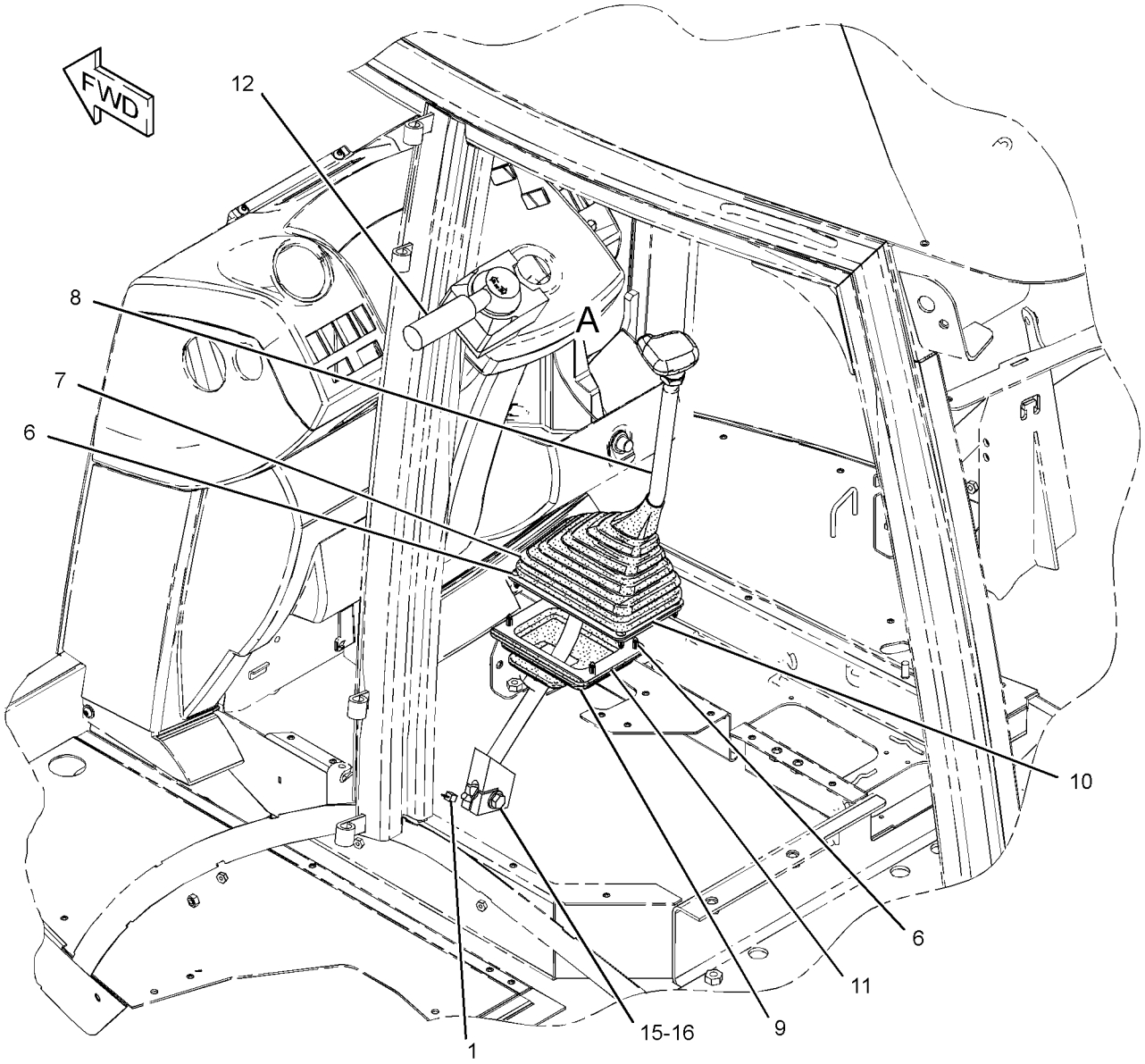

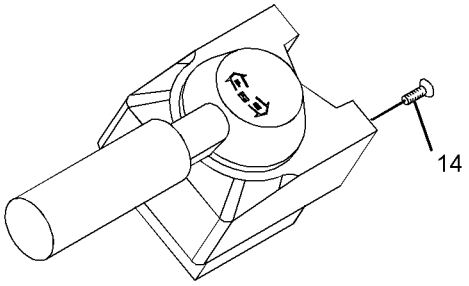

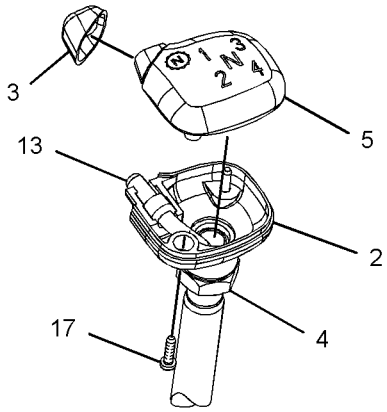

VIEW OF AREA A

GRAPHIC #1 **<END>** g01212489

276-8515 COVER GP-CAB

S/N: EAT1143-UP
PART OF 269-2123, 269-2124 CANOPY AR-OPEN ROPS
AN ATTACHMENT

SMCS-7301 **i02819560**

NOTE	REF NO	GRAPHIC REF	PART NUMBER	QTY	PART NAME 1 2 3 4 5 6 (PRODUCT LEVEL)	SEE PAGE
	1	1	**276-4070**	1	PLATE	
M	2	1	**9X-2042**	2	SCREW-TRUSS HEAD (M6X1X12-MM)	

M-METRIC PART

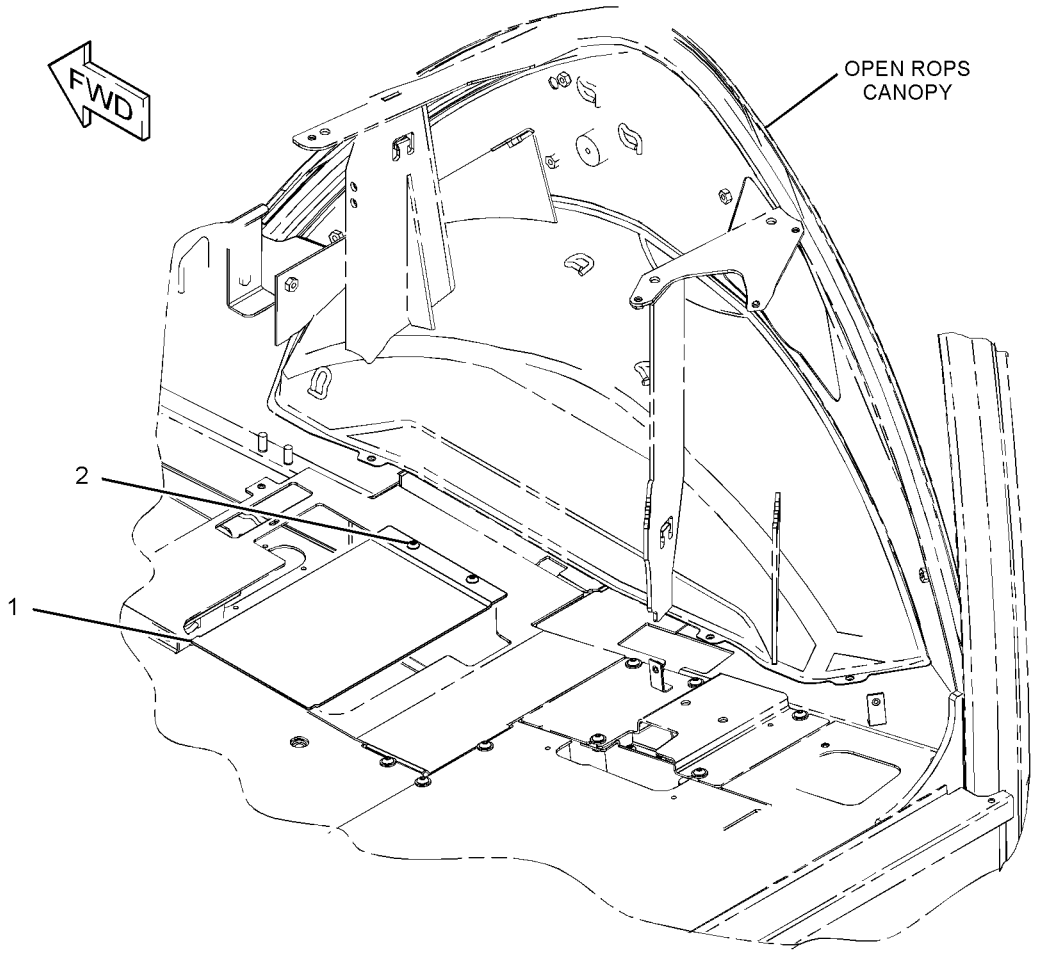

GRAPHIC #1 **<END>** g01413755

OPERATOR STATION

220-3785 COVER GP-WIPER MOTOR

S/N: EAT1-UP
PART OF 269-2124 CANOPY AR-OPEN ROPS
AN ATTACHMENT

SMCS-7305 **i02639355**

NOTE	REF NO	GRAPHIC REF	PART NUMBER	QTY	PART NAME 1 2 3 4 5 6 (PRODUCT LEVEL)	SEE PAGE
	1	1	**226-5635**	1	COVER	
M	2	1	**9X-2043**	3	SCREW-TRUSS HEAD (M6X1X14-MM)	
	3	1	**282-7835**	1	PLATE	
M	4	1	**8C-3798**	2	BOLT-LOCKING (M6X1X30)	
	5	1	**282-7833**	1	GROMMET	
	6	1	**9X-8256**	2	WASHER (6.6X12X2-MM THK)	
	7	1	**9X-2038**	3	WASHER (7X19X2-MM THK)	

M-METRIC PART

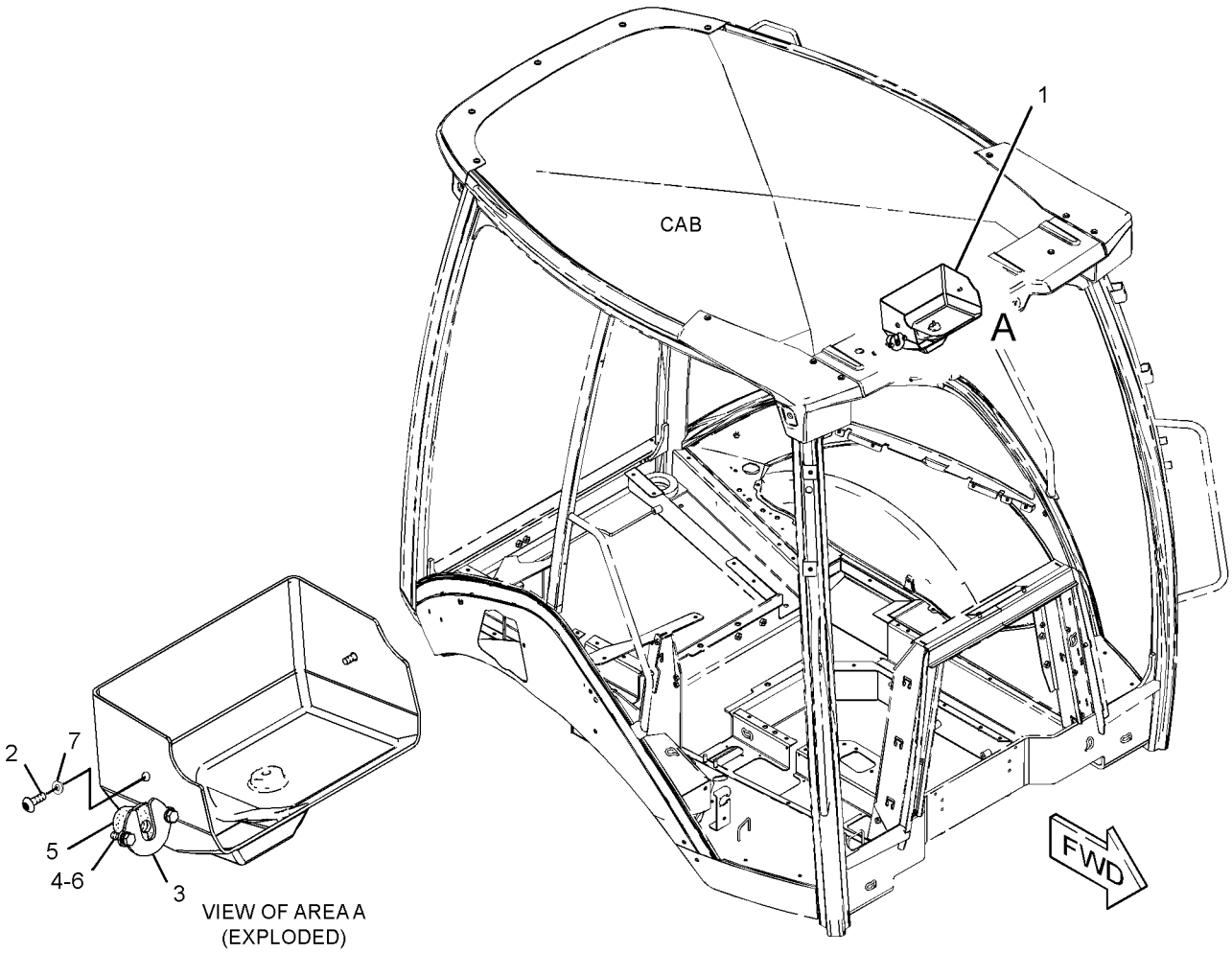

GRAPHIC #1 **<END>** g01328104

OPERATOR STATION

206-1592 DOOR GP-CAB—LH

S/N: EAT1-UP
PART OF 206-1889 CAB GP-ENCLOSED ROPS
AN ATTACHMENT
TYPE 1

SMCS-7308 **i02530997**

NOTE	REF NO	GRAPHIC REF	PART NUMBER	QTY	PART NAME 1 2 3 4 5 6 (PRODUCT LEVEL)	SEE PAGE
	1	1	**132-2249**	2	SPACER (7.4X12.7X24-MM THK)	
J	2	1	**159-4269**	1	SPRING GP-GAS	
B	3	1	**177-4877**	1	SHIM (1-MM THK)	
Y	4	1	**205-9585**	1	WINDOW GP-DOOR (LH)	916
	5	1	**205-9588**	1	GLASS (LH)	
	6	1	**206-1594**	1	DOOR AS (LH)	
	7	1	**223-2028**	1	SEAL AS (LH)	
	8	1	**248-2714**	2	NUT-ACORN	
L	9	1	**252-1862**	1	HANDLE AS	
	10	1	**252-1863**	1	GASKET	
	11	1	**252-1864**	1	LATCH AS (LH)	
	12	1	**253-1817**	1	SPACER (6.5X14.5X12-MM THK)	
	13	1	**253-1857**	1	PLATE	
	14	1	**253-1858**	1	COVER (LATCH)	
	15	1	**254-1126**	1	PLATE	
	16	1	**254-1127**	1	PLATE	
M	17	1	**131-3987**	2	SCREW (M4X0.7X12-MM)	
	18	1	**159-4946**	1	KEEPER (B)	
	19	1	**197-5107**	2	SCREW-TRUSS HEAD (M6X1X60-MM)	
	20	1	**205-7048**	2	INSERT-THREADED (M6X1-THD)	
M	21	1	**5C-9553**	3	BOLT (M6X1X16-MM)	
M	22	1	**5Y-0660**	1	NUT (M6X1-THD)	
	23	1	**287-8257**	1	BOLT (M6X1X65-MM)	
	24	1	**9X-2038**	4	WASHER (7X19X2-MM THK)	
M	25	1	**9X-2045**	4	SCREW-TRUSS HEAD (M6X1X20-MM)	
	26	1	**258-3697**	1	WASHER-NYLON (7X20X2-MM THK)	
					AVAILABLE REPAIR KIT(S):	
J			**161-9044**	1	KIT-FITTING (BALL STUD)	
					(INCLUDES NUT & FITTING AS)	

B-USE AS REQUIRED
J-KIT MARKED J AVAILABLE FOR PART MARKED J
L-REQUIRES 5P8500 KEY
M-METRIC PART
Y-SEPARATE ILLUSTRATION

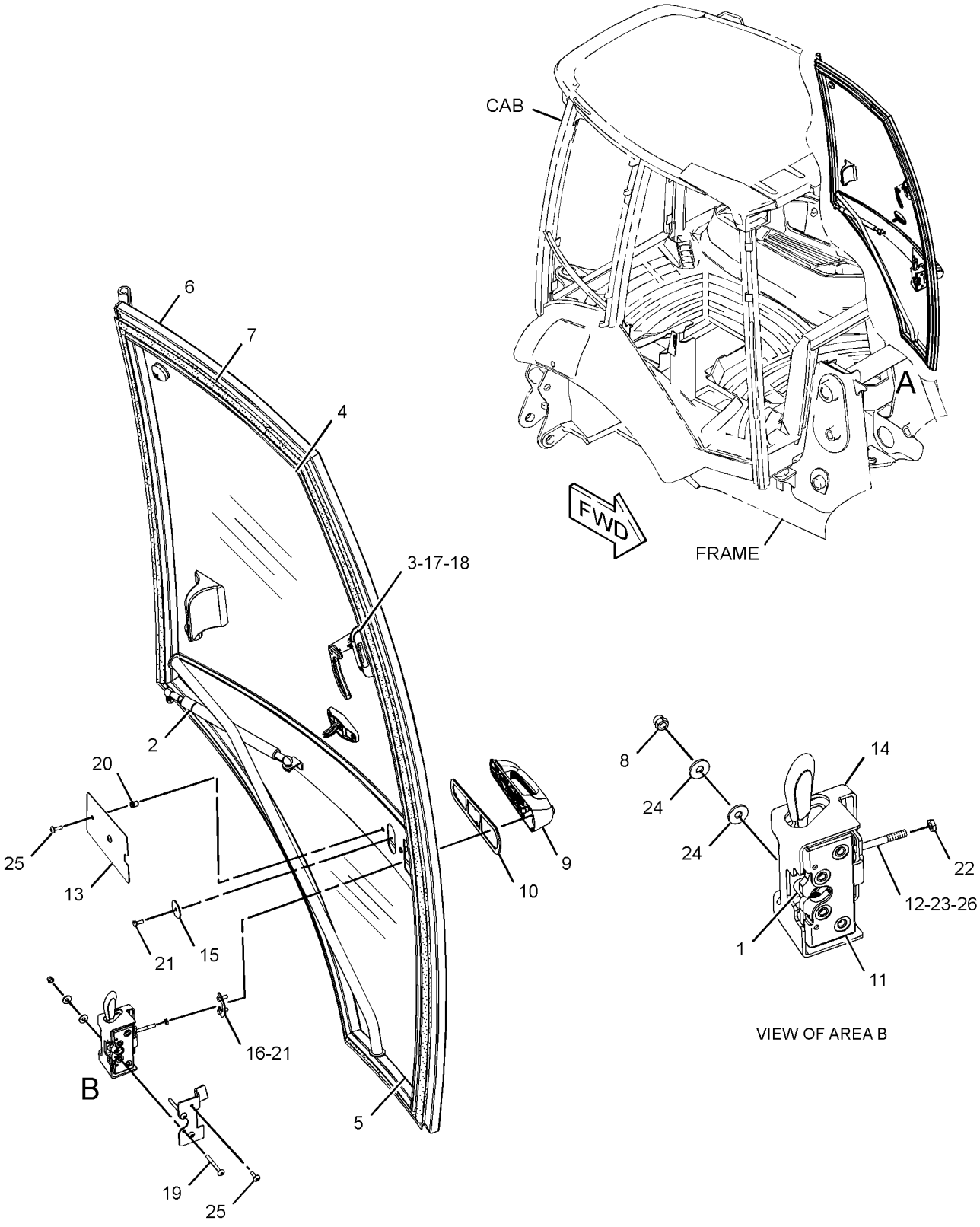

GRAPHIC #1

<END>

g01274276

OPERATOR STATION

206-1592 DOOR GP-CAB—LH

S/N: EAT1-UP
PART OF 206-1889 CAB GP-ENCLOSED ROPS
AN ATTACHMENT
TYPE 2

SMCS-7308 **i03405780**

NOTE	REF NO	GRAPHIC REF	PART NUMBER	QTY	PART NAME 1 2 3 4 5 6 (PRODUCT LEVEL)	SEE PAGE
	1	1	**132-2249**	2	SPACER (7.4X12.7X24-MM THK)	
J	2	1	**159-4269**	1	SPRING GP-GAS	
B	3	1	**177-4877**	1	SHIM (1-MM THK)	
Y	4	1	**205-9585**	1	WINDOW GP-DOOR (LH)	916
	5	1	**205-9588**	1	GLASS (LH)	
	6	1	**206-1594**	1	DOOR AS (LH)	
C	7	1	**307-9936**	1	SEAL AS (LH)	
E		1	**315-4123**		SEAL (463-CM)	
	8	1	**248-2714**	2	NUT-ACORN	
L	9	1	**252-1862**	1	HANDLE AS	
	10	1	**252-1863**	1	GASKET	
	11	1	**252-1864**	1	LATCH AS (LH)	
	12	1	**253-1817**	1	SPACER (6.5X14.5X12-MM THK)	
	13	1	**253-1857**	1	PLATE	
	14	1	**253-1858**	1	COVER (LATCH)	
	15	1	**254-1126**	1	PLATE	
	16	1	**254-1127**	1	PLATE	
M	17	1	**131-3987**	2	SCREW (M4X0.7X12-MM)	
	18	1	**159-4946**	1	KEEPER (B)	
	19	1	**197-5107**	2	SCREW-TRUSS HEAD (M6X1X60-MM)	
	20	1	**205-7048**	2	INSERT-THREADED (M6X1-THD)	
M	21	1	**5C-9553**	3	BOLT (M6X1X16-MM)	
M	22	1	**5Y-0660**	1	NUT (M6X1-THD)	
	23	1	**287-8257**	1	BOLT (M6X1X65-MM)	
	24	1	**9X-2038**	4	WASHER (7X19X2-MM THK)	
M	25	1	**9X-2045**	4	SCREW-TRUSS HEAD (M6X1X20-MM)	
	26	1	**258-3697**	1	WASHER-NYLON (7X20X2-MM THK)	
E	27	1	**9X-6383**		SEAL (60-CM)	
					AVAILABLE REPAIR KIT(S):	
J			**161-9044**	1	KIT-FITTING (BALL STUD)	
					(INCLUDES NUT & FITTING AS)	

B-USE AS REQUIRED
C-CHANGE FROM PREVIOUS TYPE
E-ORDER BY THE CENTIMETER
J-KIT MARKED J AVAILABLE FOR PART MARKED J
L-REQUIRES 5P8500 KEY
M-METRIC PART
Y-SEPARATE ILLUSTRATION

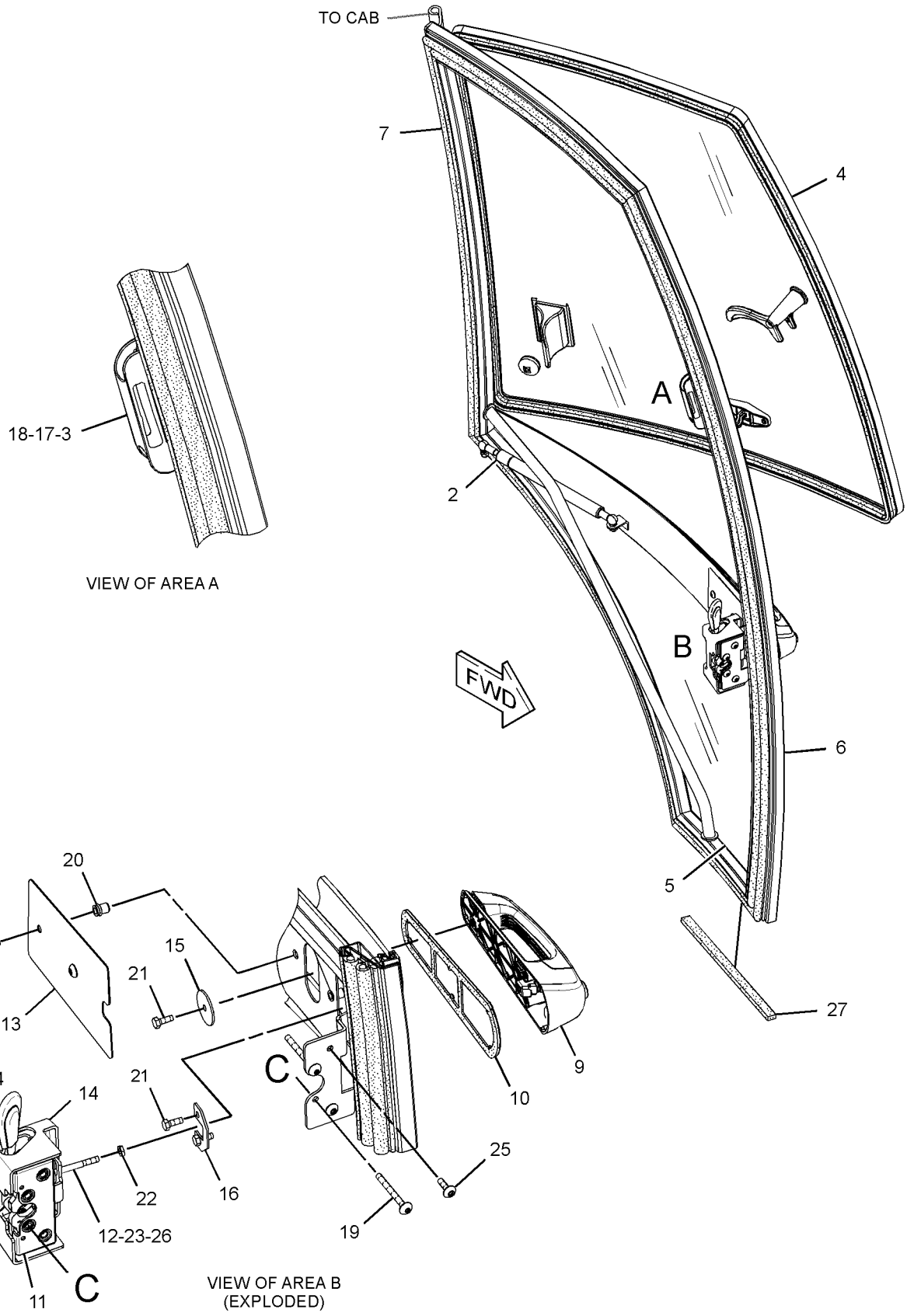

GRAPHIC #1 **<END>** g01778816

OPERATOR STATION

206-1593 DOOR GP-CAB—RH

S/N: EAT1-UP
PART OF 206-1889 CAB GP-ENCLOSED ROPS
AN ATTACHMENT
TYPE 1

SMCS-7308 **i02527227**

NOTE	REF NO	GRAPHIC REF	PART NUMBER	QTY	PART NAME 1 2 3 4 5 6 (PRODUCT LEVEL)	SEE PAGE
	1	1	**132-2249**	2	SPACER (7.4X12.7X24-MM THK)	
J	2	1	**159-4269**	1	SPRING GP-GAS	
B	3	1	**177-4877**	1	SHIM (1-MM THK)	
Y	4	1	**205-9595**	1	WINDOW GP-DOOR (RH)	917
	5	1	**205-9598**	1	GLASS (RH)	
	6	1	**206-1606**	1	DOOR AS (RH)	
	7	1	**223-2029**	1	SEAL AS (RH)	
	8	1	**248-2714**	2	NUT-ACORN	
L	9	1	**252-1862**	1	HANDLE AS	
	10	1	**252-1863**	1	GASKET	
	11	1	**252-1865**	1	LATCH AS (RH)	
	12	1	**253-1817**	1	SPACER (6.5X14.5X12-MM THK)	
	13	1	**253-1857**	1	PLATE	
	14	1	**253-1858**	1	COVER (LATCH)	
	15	1	**254-1126**	1	PLATE	
	16	1	**254-1127**	1	PLATE	
M	17	1	**131-3987**	2	SCREW (M4X0.7X12-MM)	
	18	1	**159-4945**	1	KEEPER	
	19	1	**197-5107**	2	SCREW-TRUSS HEAD (M6X1X60-MM)	
	20	1	**205-7048**	2	INSERT-THREADED (M6X1-THD)	
M	21	1	**5C-9553**	3	BOLT (M6X1X16-MM)	
M	22	1	**5Y-0660**	1	NUT (M6X1-THD)	
	23	1	**287-8257**	1	BOLT (M6X1X65-MM)	
	24	1	**9X-2038**	4	WASHER (7X19X2-MM THK)	
M	25	1	**9X-2045**	4	SCREW-TRUSS HEAD (M6X1X20-MM)	
	26	1	**258-3697**	1	WASHER-NYLON (7X20X2-MM THK)	
					AVAILABLE REPAIR KIT(S):	
J			**161-9044**	1	KIT-FITTING	
					(INCLUDES NUT & FITTING AS)	

B-USE AS REQUIRED
J-KIT MARKED J AVAILABLE FOR PART MARKED J
L-REQUIRES 5P8500 KEY
M-METRIC PART
Y-SEPARATE ILLUSTRATION

206-1593 DOOR GP-CAB *(contd.)* i02527227

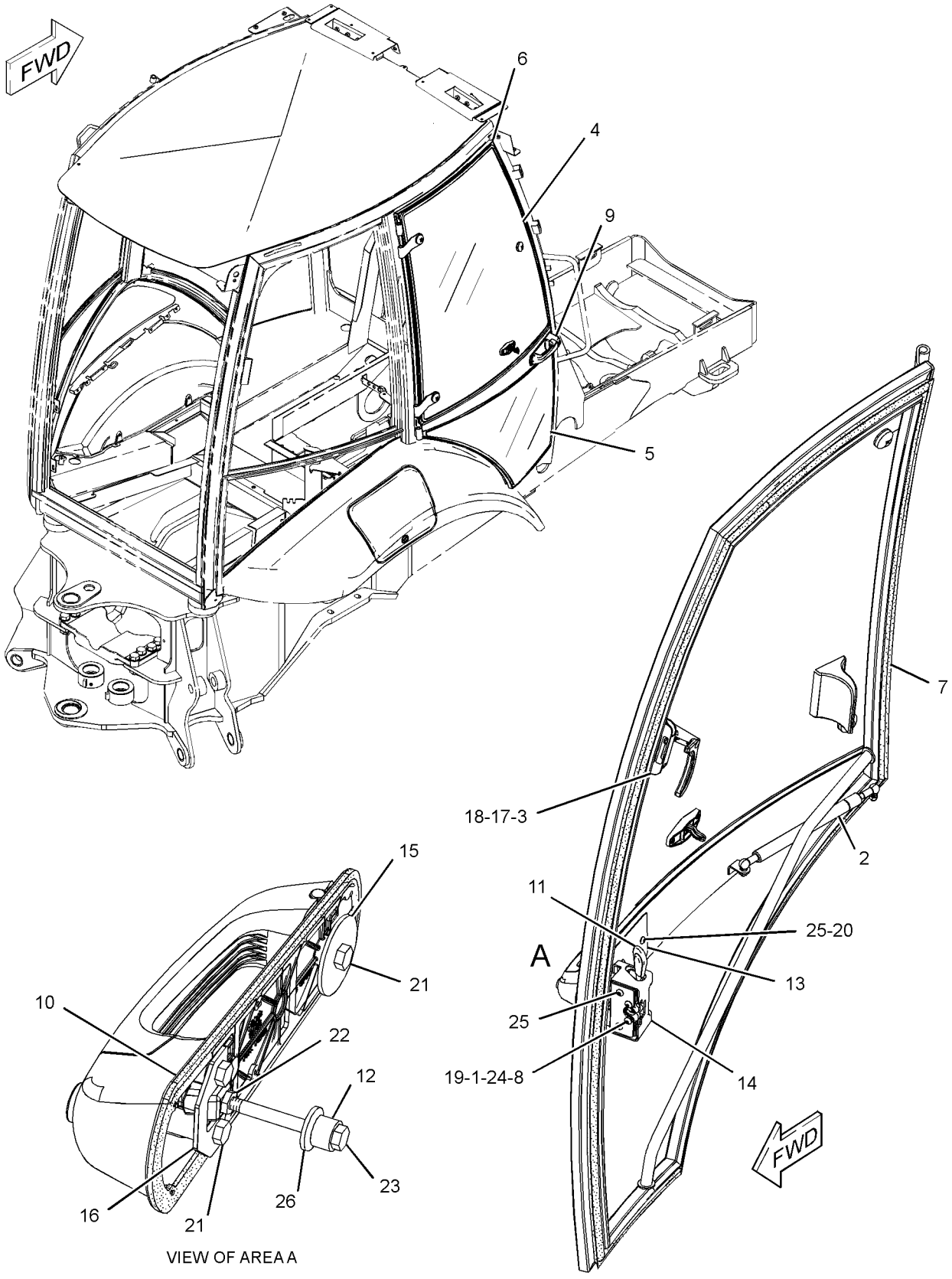

GRAPHIC #1 **<END>** g01270233

OPERATOR STATION

206-1593 DOOR GP-CAB—RH

S/N: EAT1-UP
PART OF 206-1889 CAB GP-ENCLOSED ROPS
AN ATTACHMENT
TYPE 2

SMCS-7308 **i03405800**

NOTE	REF NO	GRAPHIC REF	PART NUMBER	QTY	PART NAME 1 2 3 4 5 6 (PRODUCT LEVEL)	SEE PAGE
	1	1	**132-2249**	2	SPACER (7.4X12.7X24-MM THK)	
J	2	1	**159-4269**	1	SPRING GP-GAS	
B	3	1	**177-4877**	1	SHIM (1-MM THK)	
Y	4	1	**205-9595**	1	WINDOW GP-DOOR (RH)	917
	5	1	**205-9598**	1	GLASS (RH)	
	6	1	**206-1606**	1	DOOR AS (RH)	
C	7	1	**307-9937**	1	SEAL AS (RH)	
E		1	**315-4123**		SEAL (463-CM)	
	8	1	**248-2714**	2	NUT-ACORN	
L	9	1	**252-1862**	1	HANDLE AS	
	10	1	**252-1863**	1	GASKET	
	11	1	**252-1865**	1	LATCH AS (RH)	
	12	1	**253-1817**	1	SPACER (6.5X14.5X12-MM THK)	
	13	1	**253-1857**	1	PLATE	
	14	1	**253-1858**	1	COVER (LATCH)	
	15	1	**254-1126**	1	PLATE	
	16	1	**254-1127**	1	PLATE	
M	17	1	**131-3987**	2	SCREW (M4X0.7X12-MM)	
	18	1	**159-4945**	1	KEEPER	
	19	1	**197-5107**	2	SCREW-TRUSS HEAD (M6X1X60-MM)	
	20	1	**205-7048**	2	INSERT-THREADED (M6X1-THD)	
M	21	1	**5C-9553**	3	BOLT (M6X1X16-MM)	
M	22	1	**5Y-0660**	1	NUT (M6X1-THD)	
	23	1	**287-8257**	1	BOLT (M6X1X65-MM)	
	24	1	**9X-2038**	4	WASHER (7X19X2-MM THK)	
M	25	1	**9X-2045**	4	SCREW-TRUSS HEAD (M6X1X20-MM)	
	26	1	**258-3697**	1	WASHER-NYLON (7X20X2-MM THK)	
BE	27	1	**9X-6383**		SEAL (60-CM)	
					AVAILABLE REPAIR KIT(S):	
J			**161-9044**	1	KIT-FITTING	
					(INCLUDES FITTING AS & NUT)	

B-USE AS REQUIRED
C-CHANGE FROM PREVIOUS TYPE
E-ORDER BY THE CENTIMETER
J-KIT MARKED J AVAILABLE FOR PART MARKED J
L-REQUIRES 5P8500 KEY
M-METRIC PART
Y-SEPARATE ILLUSTRATION

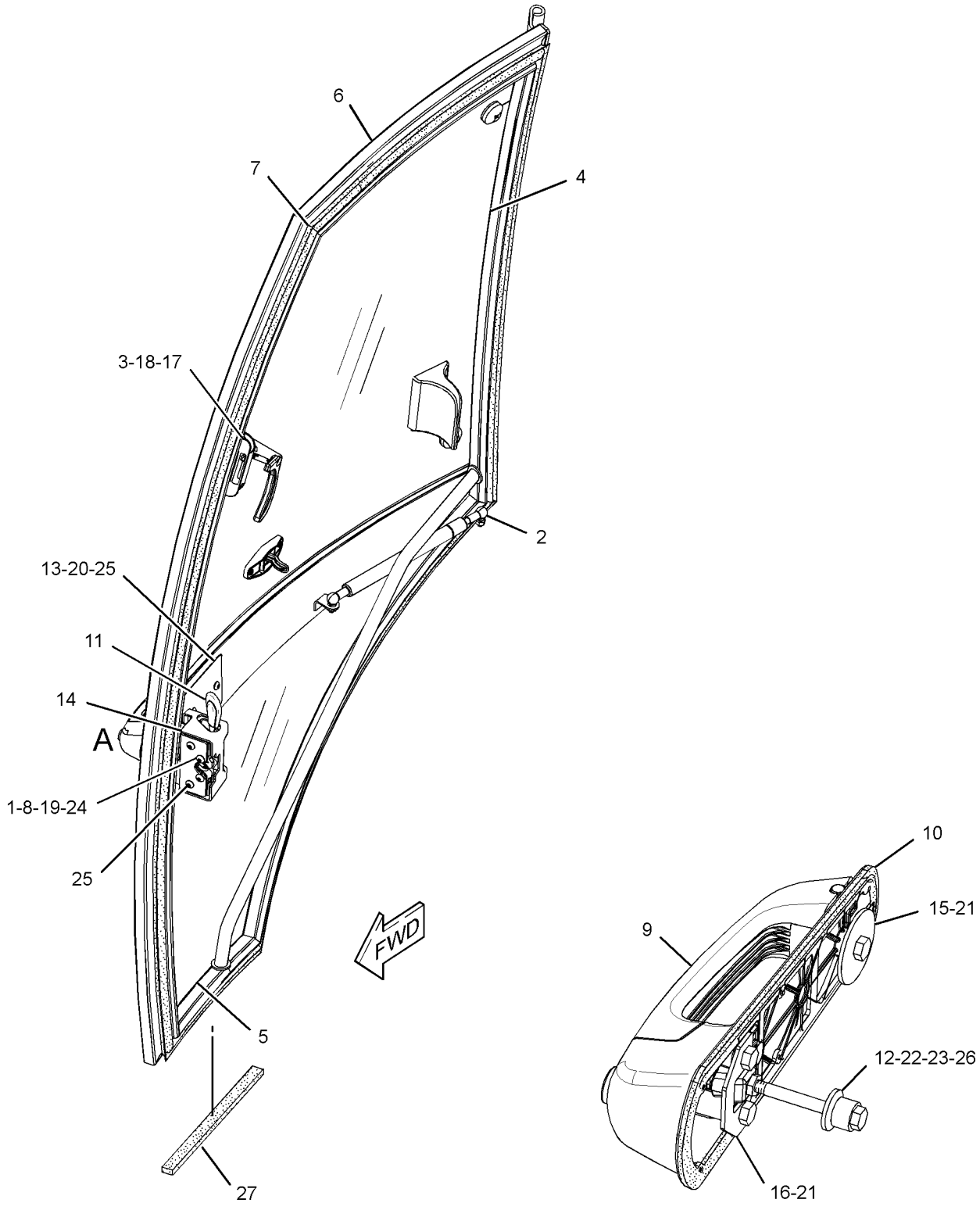

VIEW OF AREA A
(PARTS REMOVED FOR CLARITY)

GRAPHIC #1 **<END>** g01784733

206-1618 FLOOR MAT GP

S/N: EAT1-UP
PART OF 269-2125, 269-2126, 269-2127 CAB AR-ENCLOSED ROPS, 269-2123, 269-2124 CANOPY AR-OPEN ROPS
AN ATTACHMENT

SMCS-7265 **i02460066**

NOTE	REF NO	GRAPHIC REF	PART NUMBER	QTY	PART NAME 1 2 3 4 5 6 (PRODUCT LEVEL)	SEE PAGE
	1	1	**247-8179**	2	PLATE	
	2	1	**284-1602**	1	FLOOR MAT	
	3	1	**1H-3244**	4	LOCKWASHER	
M	4	1	**9X-2045**	4	SCREW-TRUSS HEAD (M6X1X20-MM)	

M-METRIC PART

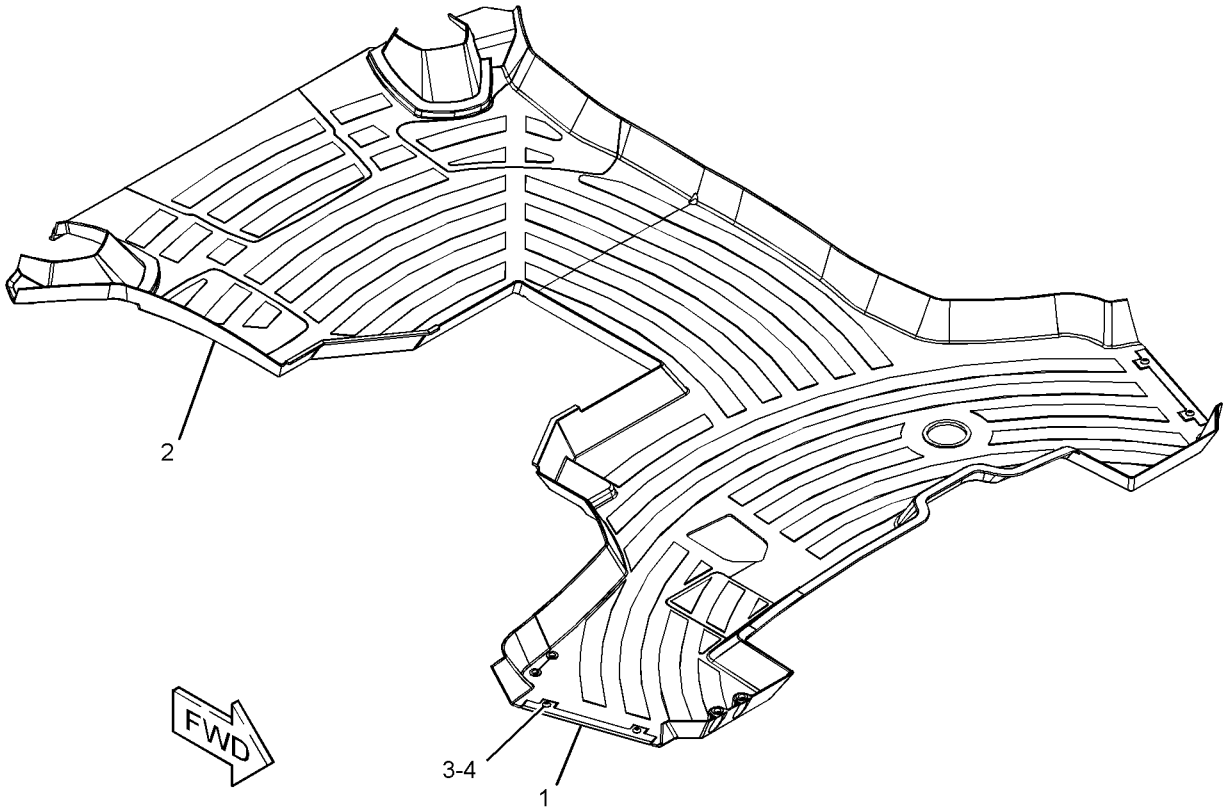

GRAPHIC #1 **<END>** g01228081

OPERATOR STATION

206-1800 HEATER GP-CAB

S/N: EAT1-UP
PART OF 269-2125, 269-2126 CAB AR-ENCLOSED ROPS
AN ATTACHMENT

SMCS-7304 **i02753190**

NOTE	REF NO	GRAPHIC REF	PART NUMBER	QTY	PART NAME 1 2 3 4 5 6 (PRODUCT LEVEL)	SEE PAGE
	1	1	**221-2420**	2	HOSE-AIR	
E	2	1	**6V-6813**		HOSE (28-CM)	
	3	1	**6L-4725**	2	CLAMP-HOSE	
	4	1	**8Y-5737**	1	CLAMP	
	5	1	**8Y-6967**	6	LOUVER AS	
	6	1	**9M-7959**	4	CLAMP-HOSE	
	7	1	**9N-2231**	1	GROMMET AS	
	8	1	**110-6109**	1	KNOB-CONTROL (TEMPERATURE)	
	9	1	**130-4832**	2	SCREW (8-18X10-MM)	
	10	1	**164-1368**	4	FASTENER-PANEL	
	11	1	**164-8474**	2	LOUVER AS-VENT	
	12	1	**189-0881**	1	CONTROL AS (PANEL)	
		1	**129-1831**	1	CLAMP	
	13	1	**193-3356**	1	CABLE AS	
	14	1	**194-5622**	1	VALVE AS-WATER	
		1	**6V-6717**	1	SCREW-WASHER HEAD (8-32X9.52-MM)	
		1	**124-0312**	2	SCREW-PAN HEAD (8-16X0.32-IN)	
	15	1	**206-1648**	1	LOUVER	
	16	1	**206-1653**	4	GASKET	
	17	1	**206-1682**	1	PANEL-CONTROL (INSERT)	
	18	1	**206-1684**	1	COVER (CAB FILTER)	
	19	1	**206-1803**	2	GASKET	
	20	1	**206-1804**	1	GASKET	
	21	1	**206-1805**	1	GASKET	
E	22	1	**220-0738**		SEAL (87-CM)	
	23	1	**206-1807**	1	GASKET	
	24	1	**206-1808**	1	PLATE	
	25	1	**206-1809**	1	ROD AS	
	26	1	**206-1810**	1	DUCT-AIR	
	27	1	**206-1812**	1	DUCT-AIR	
	28	1	**206-1814**	1	DUCT-AIR	
	29	1	**206-1815**	1	DUCT-AIR	
	30	1	**206-1816**	1	DUCT-AIR	
	31	1	**206-1817**	2	DUCT-AIR	
	32	1	**206-1818**	1	DUCT AS-AIR	
Y	33	1	*210-8364*	1	HEATER GP-CAB	850
	34	1	**211-2661**	1	FILTER ELEMENT AS-AIR (CAB HEATER)	
	35	1	**218-0666**	6	LOUVER AS	
	36	1	**255-0795**	1	FILM (TEMPERATURE CONTROL)	
M	37	1	**111-4627**	3	SCREW-MACHINE (M6X1X30-MM)	
	38	1	**5P-4116**	1	WASHER-HARD (8.8X20.5X2-MM THK)	
	39	1	**7X-0579**	1	WASHER-HARD (8.8X25.5X2-MM THK)	
M	40	1	**8T-4200**	1	BOLT (M8X1.25X16-MM)	
	41	1	**8Y-6352**	1	LOUVER AS	
	42	1	**9X-2038**	4	WASHER (7X19X2-MM THK)	
M	43	1	**9X-2045**	8	SCREW-TRUSS HEAD (M6X1X20-MM)	
	44	1	**8T-4205**	4	WASHER-HARD (7.2X14.5X2-MM THK)	

E-ORDER BY THE CENTIMETER
M-METRIC PART
Y-SEPARATE ILLUSTRATION

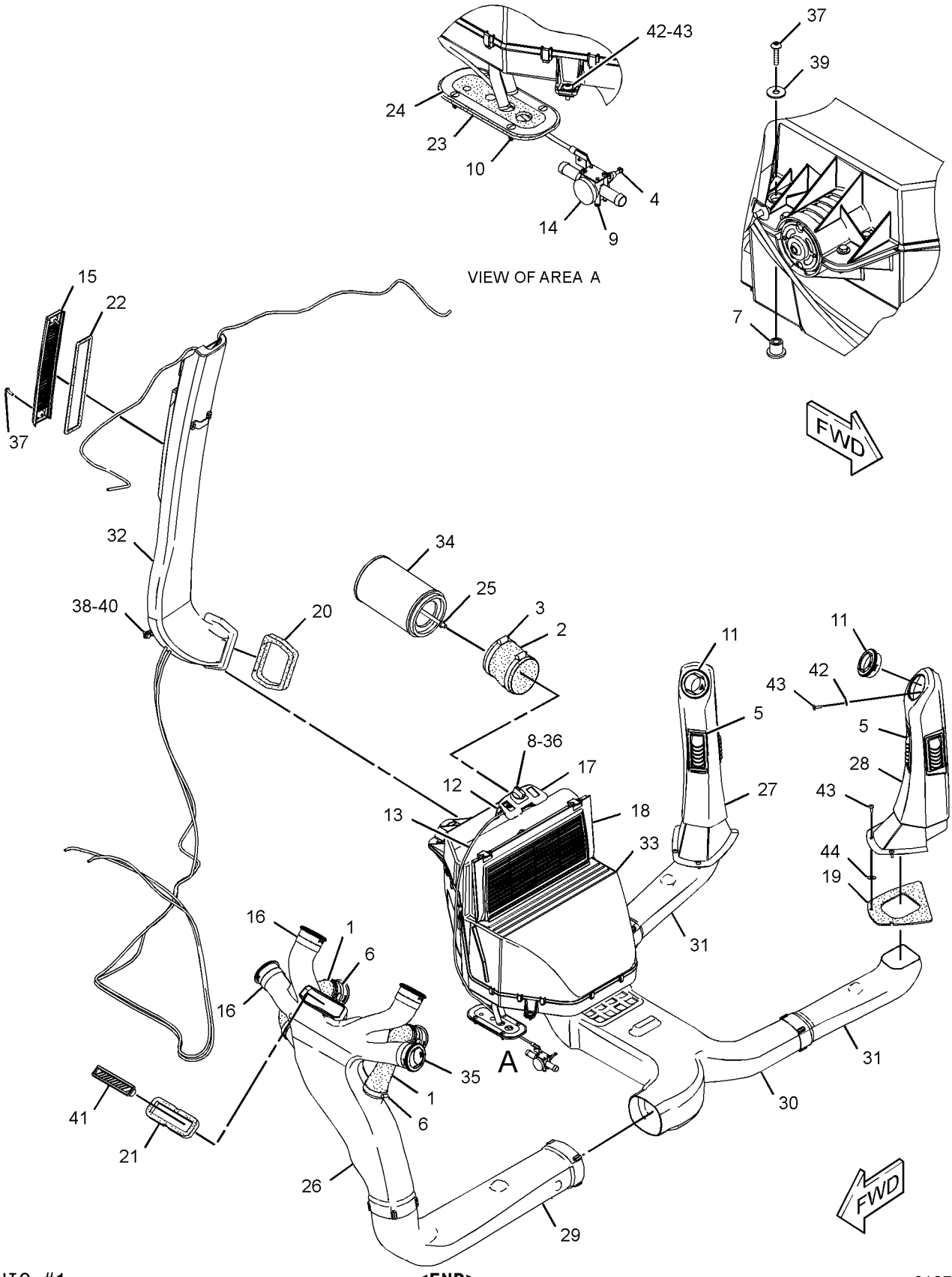

GRAPHIC #1

<END>

g01379893

OPERATOR STATION

210-8363 HEATER GP-CAB

S/N: EAT1-1010
PART OF 206-1801 AIR CONDITIONER & MOUNTING GP
AN ATTACHMENT

SMCS-7304 **i03532205**

NOTE	REF NO	GRAPHIC REF	PART NUMBER	QTY	PART NAME 1 2 3 4 5 6 (PRODUCT LEVEL)	SEE PAGE
	1	1	**8C-3756**	1	FILM-IDENTIFICATION (CATERPILLAR)	
	2	1	**119-9631**	1	SWITCH-TEMPERATURE (AIR CONDITIONER)	
	3	1	**168-2313**	1	BLOWER GP-CAB (HEATER)	
		1	**7T-0093**	2	PIN-CONNECTOR	
		1	**177-9645**	1	KIT-RECEPTACLE (2-PIN)	
					(INCLUDES RECEPTACLE AS & WEDGE)	
	4	1	**185-4015**	11	CLIP	
	5	1	**204-9921**	1	RESISTOR AS (HEATER)	
	6	1	**210-7665**	1	HOUSING-TOP	
	7	1	**210-7666**	1	BAFFLE	
	8	1	**210-8401**	1	COIL AS-EVAPORATOR	
J		1	**219-6288**	1	GASKET	
DJ		1	**5P-5688**		SEAL (1-M)	
	9	1	**211-2660**	1	FILTER ELEMENT-AIR (RECIRCULATION)	
	10	1	**212-3416**	1	SCREW-PAN HEAD (8-16X0.5-IN)	
	11	1	**219-6281**	1	COVER AS (FILTER)	
		1	**6C-3680**	1	RIVET-POP	
J	12	1	**219-6284**	2	GASKET	
J	13	1	**219-6285**	1	GASKET	
J	14	1	**219-6286**	1	GASKET	
J	15	1	**219-6287**	2	GASKET	
	16	1	**219-6292**	1	HOUSING AS (BOTTOM)	
		1	**7H-3937**	4	LOCKWASHER (2-M)	
M		1	**129-3178**	4	LOCKNUT (M6X1-THD)	
J	17	1	**219-6294**	2	SEAL (DRAIN TUBE)	
	18	1	**220-3762**	1	HARNESS AS-HEATER & AIR COND	
	19	1	**253-9510**	1	GUARD (RESISTOR)	
	20	1	**2S-3745**	4	SCREW-TAPPING (10-16X0.5-IN)	
M	21	1	**6V-7357**	4	BOLT (M6X1X25-MM)	
	22	1	**8T-4205**	5	WASHER-HARD (7.2X14.5X2-MM THK)	
D	23	1	**5P-5655**		SEAL (0.5-M)	
DJ	24	1	**5P-5637**		SEAL (0.8-M)	
EJ	25	1	**8C-7524**		SEAL (35-CM)	
					AVAILABLE REPAIR KIT(S):	
J			**285-9109**	1	KIT-SEAL (HVAC)	

D-ORDER BY THE METER
E-ORDER BY THE CENTIMETER
J-KIT MARKED J SERVICES PARTS MARKED J
M-METRIC PART

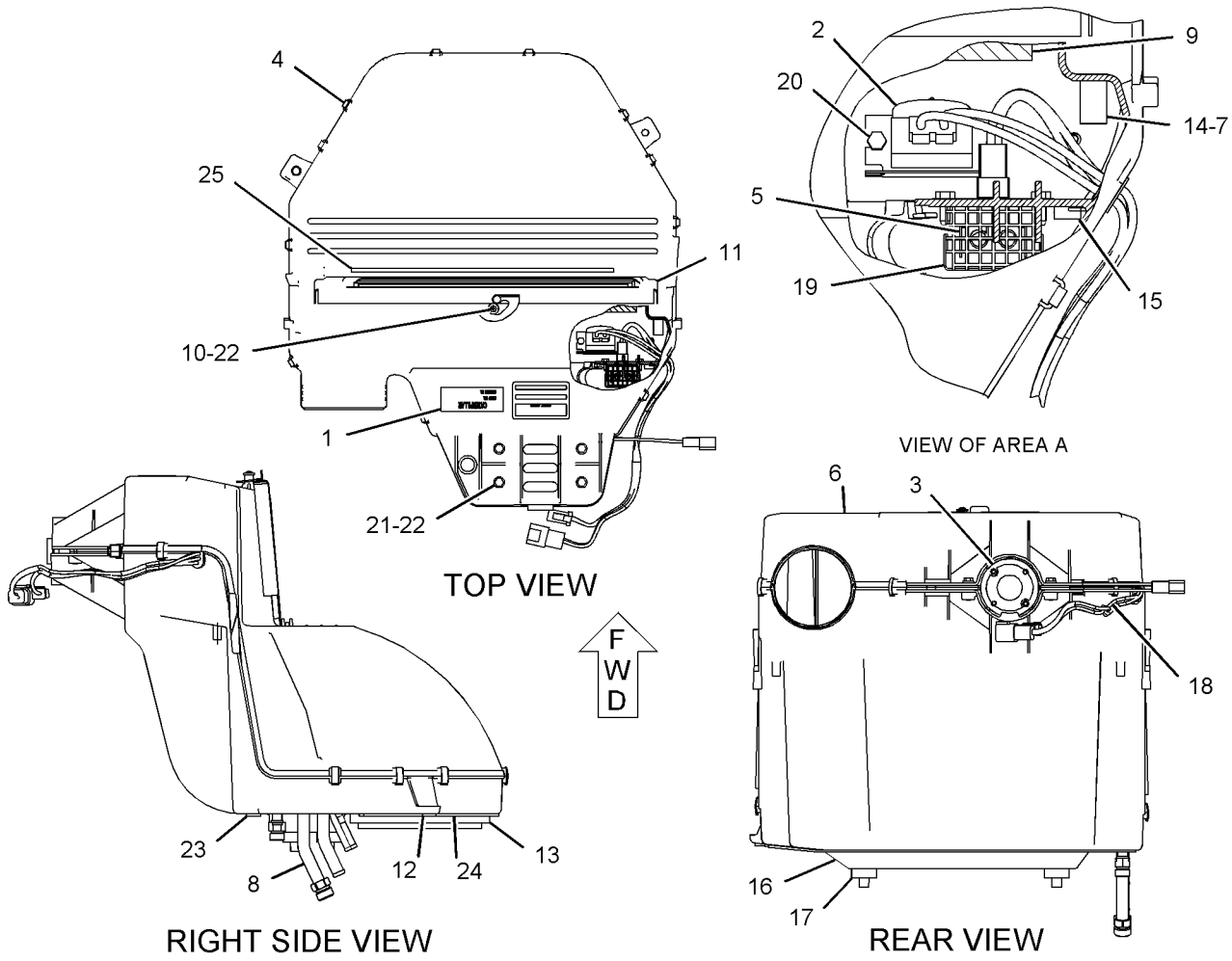

GRAPHIC #1 **<END>** g01095421

OPERATOR STATION

210-8363 HEATER GP-CAB

S/N: EAT1011-UP

PART OF 206-1801 AIR CONDITIONER & MOUNTING GP

AN ATTACHMENT

SMCS-7304 **i03256784**

NOTE	REF NO	GRAPHIC REF	PART NUMBER	QTY	PART NAME 1 2 3 4 5 6 (PRODUCT LEVEL)	SEE PAGE
	1	1	**8C-3756**	1	FILM-IDENTIFICATION (CATERPILLAR)	
	2	1	**119-9631**	1	SWITCH-TEMPERATURE (AIR CONDITIONER)	
C	3	1	**304-8965**	1	BLOWER GP-CAB (HEATER)	
		1	**7T-0093**	2	PIN-CONNECTOR	
		1	**177-9645**	1	KIT-RECEPTACLE (2-PIN)	
					(INCLUDES RECEPTACLE AS & WEDGE)	
	4	1	**185-4015**	11	CLIP	
	5	1	**204-9921**	1	RESISTOR AS (HEATER)	
	6	1	**210-7665**	1	HOUSING-TOP	
	7	1	**210-7666**	1	BAFFLE	
	8	1	**210-8401**	1	COIL AS-EVAPORATOR	
J		1	*219-6288*	1	GASKET	
DJ		1	**5P-5688**		SEAL (1-M)	
	9	1	**211-2660**	1	FILTER ELEMENT-AIR (RECIRCULATION)	
	10	1	**212-3416**	3	SCREW-PAN HEAD (8-16X0.5-IN)	
	11	1	**219-6281**	1	COVER AS (FILTER)	
		1	**6C-3680**	1	RIVET-POP	
J	12	1	*219-6284*	2	GASKET	
J	13	1	*219-6285*	1	GASKET	
J	14	1	*219-6286*	1	GASKET	
J	15	1	*219-6287*	2	GASKET	
	16	1	**219-6292**	1	HOUSING AS (BOTTOM)	
		1	**7H-3937**	4	LOCKWASHER	
M		1	**129-3178**	4	LOCKNUT (M6X1-THD)	
	18	1	**220-3762**	1	HARNESS AS-HEATER & AIR COND	
	19	1	**253-9510**	1	GUARD (RESISTOR)	
	20	1	**2S-3745**	4	SCREW-TAPPING (10-16X0.5-IN)	
M	21	1	**6V-7357**	4	BOLT (M6X1X25-MM)	
	22	1	**8T-4205**	5	WASHER-HARD (7.2X14.5X2-MM THK)	
D	23	1	**5P-5655**		SEAL (0.5-M)	
DJ	24	1	**5P-5637**		SEAL (0.8-M)	
EJ	25	1	**8C-7524**		SEAL (35-CM)	
					AVAILABLE REPAIR KIT(S):	
J			**285-9109**	1	KIT-SEAL (HVAC)	

C-CHANGE FROM PREVIOUS TYPE
D-ORDER BY THE METER
E-ORDER BY THE CENTIMETER
J-KIT MARKED J SERVICES PARTS MARKED J
M-METRIC PART

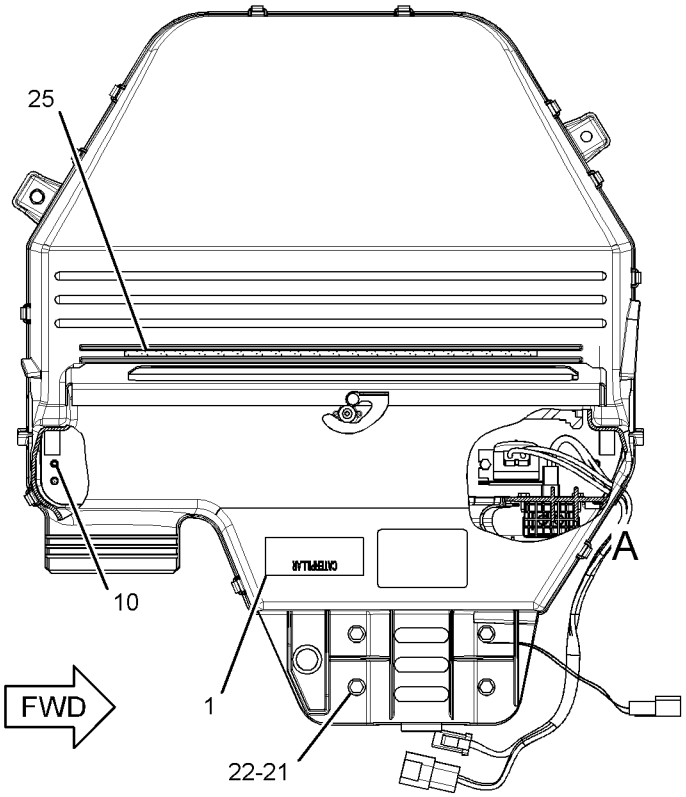

TOP VIEW

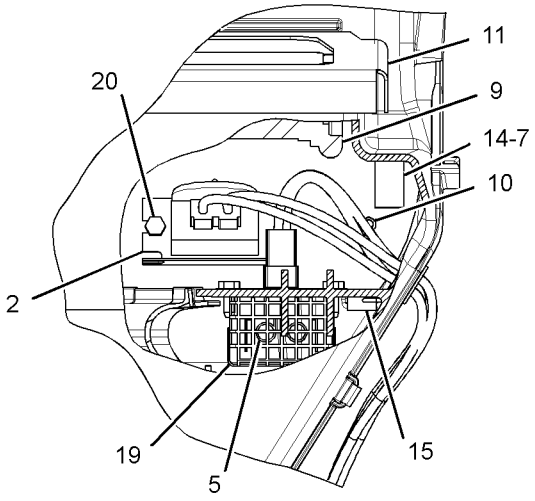

VIEW OF AREA A

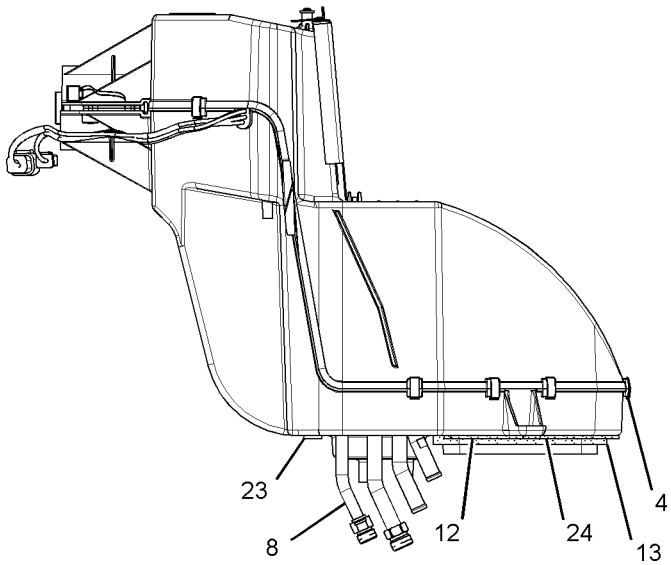

FRONT VIEW

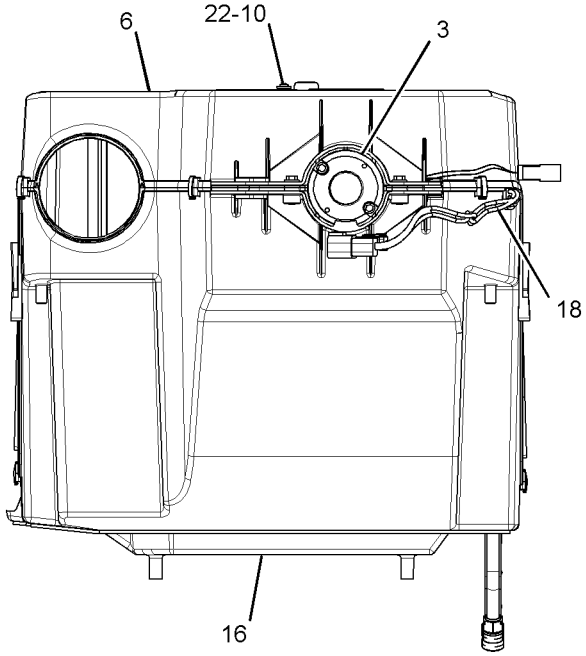

RIGHT SIDE VIEW

GRAPHIC #1 **<END>** g01460871

OPERATOR STATION

210-8364 HEATER GP-CAB

S/N: EAT1-1012
PART OF 206-1800 HEATER GP-CAB
AN ATTACHMENT

SMCS-7304 **i03516082**

NOTE	REF NO	GRAPHIC REF	PART NUMBER	QTY	PART NAME 1 2 3 4 5 6 (PRODUCT LEVEL)	SEE PAGE
	1	1	**8C-3756**	1	FILM-IDENTIFICATION (CATERPILLAR)	
	2	1	**168-2313**	1	BLOWER GP-CAB (HEATER)	
		1	**177-9645**	1	KIT-RECEPTACLE (2-PIN)	
					(INCLUDES RECEPTACLE AS & WEDGE)	
		1	**7T-0093**	2	PIN-CONNECTOR	
	3	1	**185-4015**	11	CLIP	
	4	1	**204-9921**	1	RESISTOR AS (HEATER)	
	5	1	**210-7665**	1	HOUSING-TOP	
	6	1	**210-7666**	1	BAFFLE	
	7	1	**210-8402**	1	COIL AS-HEATER	
JZ		1		1	GASKET	
DJ		1	**5P-5688**		SEAL (1-M)	
	8	1	**211-2660**	1	FILTER ELEMENT-AIR (RECIRCULATION)	
	9	1	**212-3416**	1	SCREW-PAN HEAD (8-16X0.5-IN)	
	10	1	**219-6281**	1	COVER AS (FILTER)	
		1	**6C-3680**	1	RIVET-POP	
JZ	11	1		2	GASKET	
JZ	12	1		1	GASKET	
JZ	13	1		1	GASKET	
JZ	14	1		2	GASKET	
	15	1	**219-6292**	1	HOUSING AS	
		1	**7H-3937**	4	LOCKWASHER	
M		1	**129-3178**	4	LOCKNUT (M6X1-THD)	
JZ	16	1		2	SEAL (DRAIN TUBE)	
	17	1	**253-2470**	1	HARNESS AS-HEATER	
	18	1	**253-9510**	1	GUARD	
	19	1	**2S-3745**	2	SCREW-TAPPING (10-16X0.5-IN)	
M	20	1	**6V-7357**	4	BOLT (M6X1X25-MM)	
	21	1	**8T-4205**	5	WASHER-HARD (7.2X14.5X2-MM THK)	
D	22	1	**5P-5655**		SEAL (0.5-M)	
DJ	23	1	**5P-5637**		SEAL (0.8-M)	
EJ	24	1	**8C-7524**		SEAL (35-CM)	
					AVAILABLE REPAIR KIT(S):	
J			**285-9109**	1	KIT-SEAL (HVAC)	

D-ORDER BY THE METER
E-ORDER BY THE CENTIMETER
J-KIT MARKED J SERVICES PARTS MARKED J
M-METRIC PART
Z-NOT SERVICED SEPARATELY

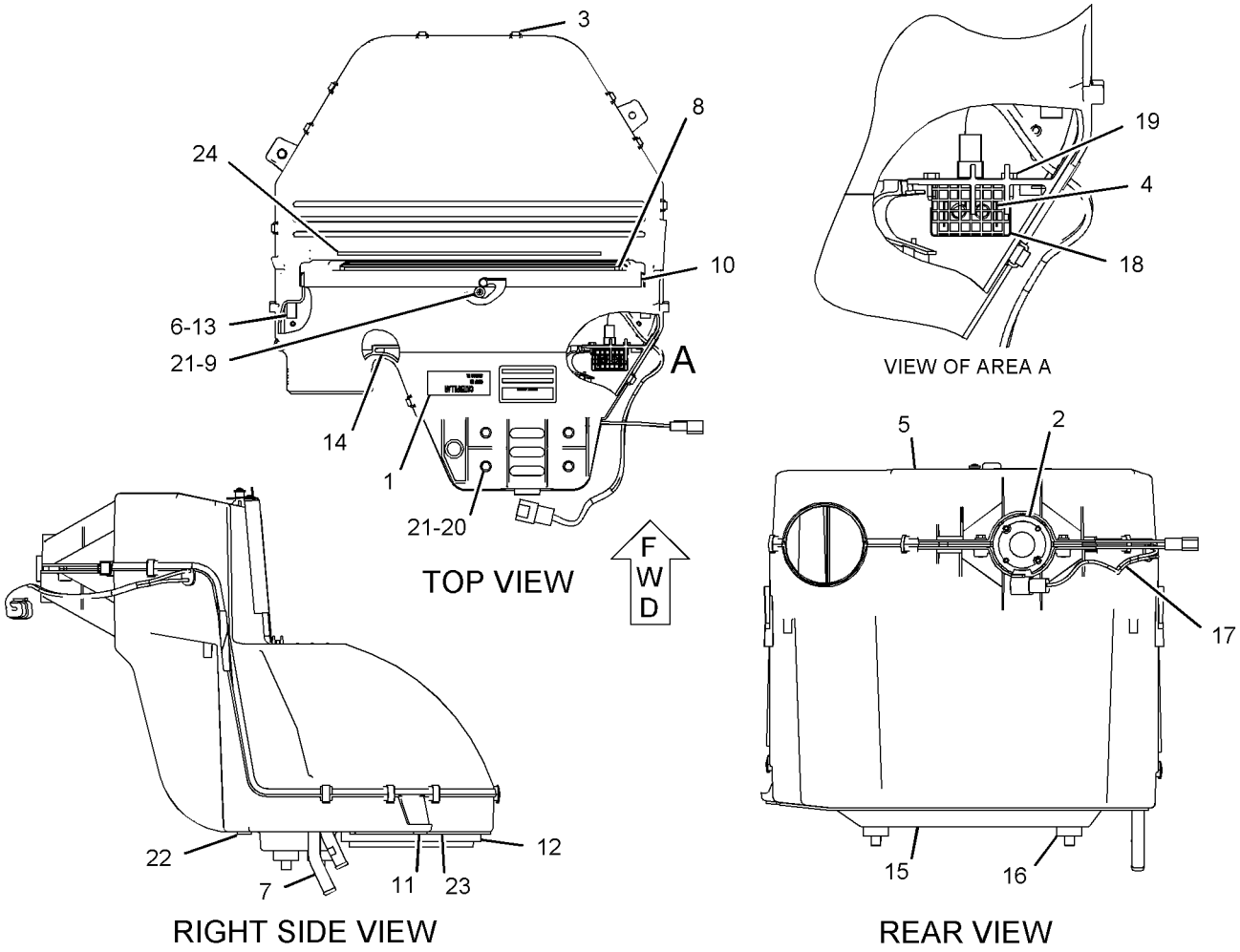

GRAPHIC #1 **<END>** g01091609

OPERATOR STATION

210-8364 HEATER GP-CAB

S/N: EAT1013-UP
PART OF 206-1800 HEATER GP-CAB
AN ATTACHMENT

SMCS-7304 **i03516083**

NOTE	REF NO	GRAPHIC REF	PART NUMBER	QTY	PART NAME 1 2 3 4 5 6 (PRODUCT LEVEL)	SEE PAGE
	1	1	**8C-3756**	1	FILM-IDENTIFICATION (CATERPILLAR)	
	2	1	**304-8965**	1	BLOWER GP-CAB	
		1	**177-9645**	1	KIT-RECEPTACLE (2-PIN)	
					(INCLUDES RECEPTACLE AS & WEDGE)	
		1	**7T-0093**	2	PIN-CONNECTOR	
	3	1	**185-4015**	11	CLIP	
	4	1	**204-9921**	1	RESISTOR AS	
	5	1	**210-7665**	1	HOUSING-TOP	
	6	1	**210-7666**	1	BAFFLE	
	7	1	**210-8402**	1	COIL AS-HEATER	
DJ		1	**5P-5688**		SEAL (1-M)	
J		1	*219-6288*	1	GASKET	
	8	1	**211-2660**	1	FILTER ELEMENT-AIR (RECIRCULATION)	
	9	1	**212-3416**	3	SCREW-PAN HEAD (8-16X0.5-IN)	
	10	1	**219-6281**	1	COVER AS	
		1	**219-6283**	1	LATCH	
		1	**6C-3680**	1	RIVET-POP	
J	11	1	*219-6284*	2	GASKET	
J	12	1	*219-6285*	1	GASKET	
J	13	1	*219-6286*	1	GASKET	
J	14	1	*219-6287*	2	GASKET	
	15	1	**219-6292**	1	HOUSING AS	
		1	**7H-3937**	4	LOCKWASHER	
M		1	**129-3178**	4	LOCKNUT (M6X1-THD)	
	17	1	**253-2470**	1	HARNESS AS-HEATER	
	18	1	**253-9510**	1	GUARD	
	19	1	**2S-3745**	2	SCREW-TAPPING (10-16X0.5-IN)	
M	20	1	**6V-7357**	4	BOLT (M6X1X25-MM)	
	21	1	**8T-4205**	5	WASHER-HARD (7.2X14.5X2-MM THK)	
D	22	1	**5P-5655**		SEAL (0.5-M)	
DJ	23	1	**5P-5637**		SEAL (0.8-M)	
EJ	24	1	**8C-7524**		SEAL (35-CM)	
					AVAILABLE REPAIR KIT(S):	
J			**285-9109**	1	KIT-SEAL (HVAC)	

D-ORDER BY THE METER
E-ORDER BY THE CENTIMETER
J-KIT MARKED J SERVICES PARTS MARKED J
M-METRIC PART

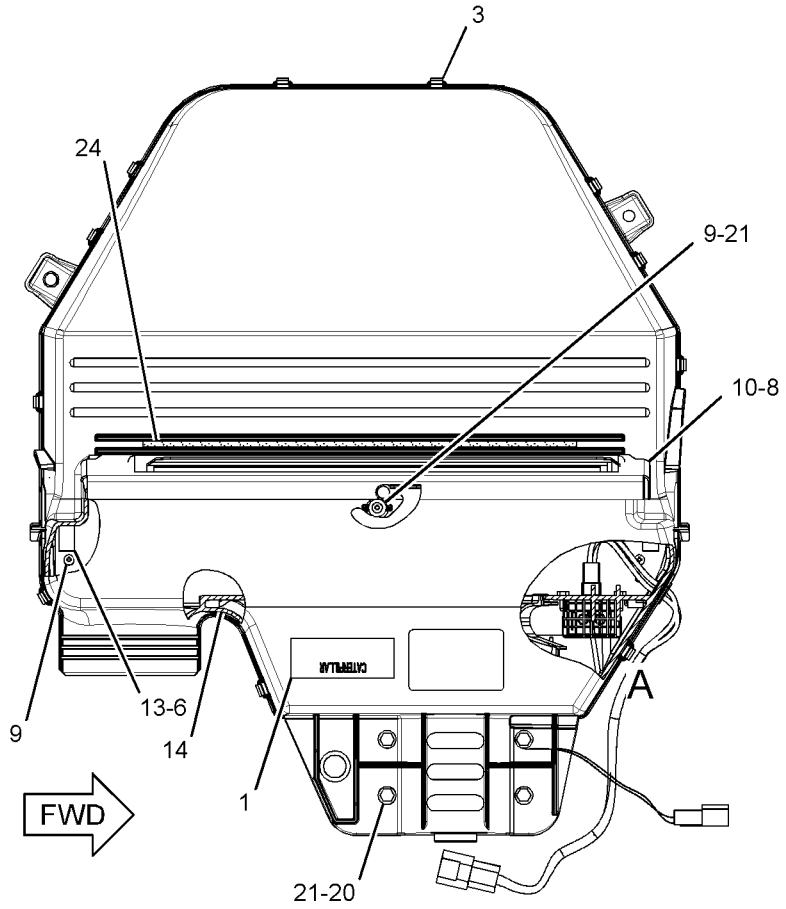

TOP VIEW

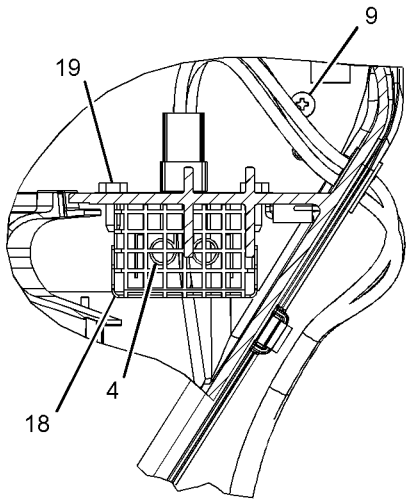

VIEW OF AREA A

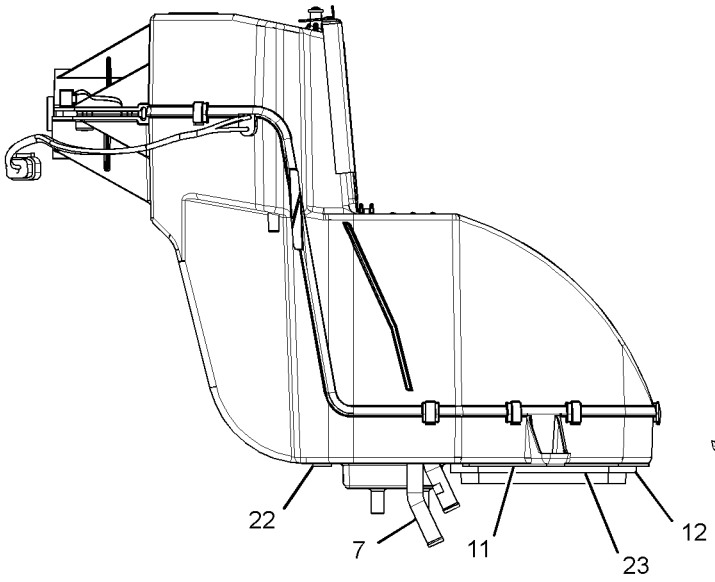

FRONT VIEW

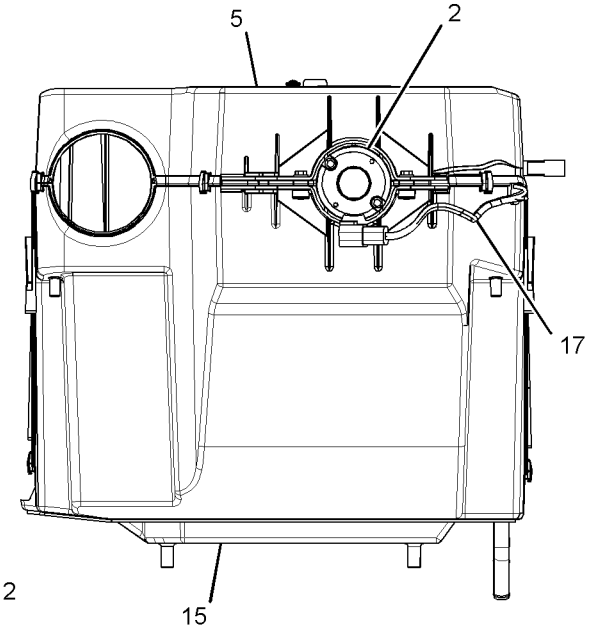

RIGHT SIDE VIEW

GRAPHIC #1 **<END>** g01460989

OPERATOR STATION

211-4253 INSTALLATION GP-MONITOR–ADVISOR

S/N: EAT1-UP

PART OF 291-9207 BACKHOE AR-EXTENDABLE STICK, 291-9206 BACKHOE AR-STANDARD STICK, 246-8045 GRADE CONTROL AR-LASER AN ATTACHMENT

SMCS-1408, 7490 **i03400770**

NOTE	REF NO	GRAPHIC REF	PART NUMBER	QTY	PART NAME 1 2 3 4 5 6 (PRODUCT LEVEL)	SEE PAGE
M	1	1	**136-4184**	4	BOLT-SOCKET HEAD (M8X1.25X40-MM)	
	3	1	**214-4293**	1	SENSOR AS-POSITION (BOOM SWING)	
	4	1	**217-8432**	1	COUPLING	
Y	5	1	*227-7374*	1	ELECTRONICS GP-MONITOR (ADVISOR)	116
Y	6	1	*229-8743*	1	BRACKET GP-MOUNTING (MONITOR)	790
	7	1	**246-8046**	1	HARNESS AS-CONTROL (ACCUGRADE, SITE REFERENCE)	
	8	1	**249-5652**	1	SENSOR AS-POSITION (ANGLE)	
Y	9	1	*251-1222*	1	MOUNTING GP-MONITOR (GRADE CONTROL)	874
Y	10	1	*251-3200*	1	MOUNTING GP-SENSOR (ANGLE)	137
	11	1	**3S-2093**	1	STRAP-CABLE	
M	12	1	**8T-4171**	4	BOLT (M6X1X12-MM)	
	13	1	**8T-4205**	4	WASHER-HARD (7.2X14.5X2-MM THK)	
	14	1	**8T-4224**	4	WASHER-HARD (8.8X16X2-MM THK)	
	16	1	**4P-8134**	1	CLIP	
	17	1	**5P-7958**	1	SLEEVE-CABLE SPLICE	
	18	1	**134-0143**	1	CABLE (2.38-GA)	
	19	1	**155-2255**	1	KIT-CONNECTING PLUG (12-PIN)	
					(INCLUDES PLUG AS & WEDGE)	
	20	1	**102-8801**	1	KIT-RECEPTACLE (12-PIN)	
					'(INCLUDES RECEPTACLE AS & WEDGE)	
	21	1	**8T-8737**	24	PLUG-SEAL	
FJ			*260-1447*	1	CONFIGURATION-PREMIUM	

F-NOT SHOWN
J-DLR INSTALL CONFIG:SEE IRM:EES03-01
M-METRIC PART
Y-SEPARATE ILLUSTRATION

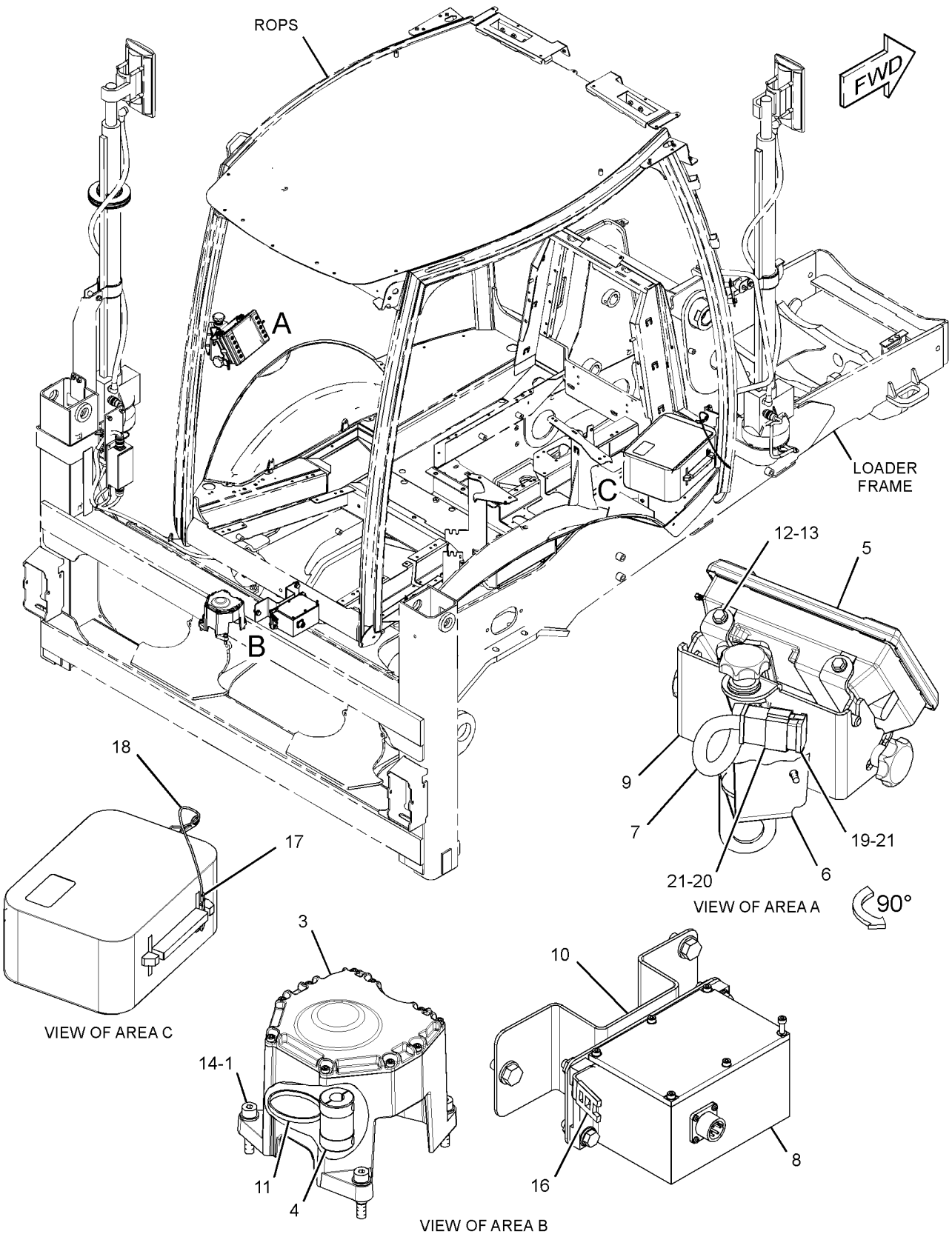

GRAPHIC #1

<END>

g01628096

OPERATOR STATION

299-6985 LATCH GP-CAB DOOR & WINDOW–RH

S/N: EAT1-UP

PART OF 205-9619, 205-9628 WINDOW GP-CAB, 205-9595 WINDOW GP-DOOR AN ATTACHMENT

SMCS-7308, 7310 **i02752222**

NOTE	REF NO	GRAPHIC REF	PART NUMBER	QTY	PART NAME 1 2 3 4 5 6 (PRODUCT LEVEL)	SEE PAGE
M	1	1	**161-6984**	1	SCREW-TRUSS HEAD (M5X0.8X20-MM)	
	2	1	**161-6987**	1	WASHER-HARD (5.2X16X1.5-MM THK)	
	3	1	**161-9294**	1	SPRING-FLAT WIRE	
M	4	1	**162-6556**	1	LOCKNUT (M6X1-THD)	
M	5	1	**5C-2874**	1	NUT (M5X0.8-THD)	
					PARTS SHOWN IN GRAPHIC(S) WITHOUT A REFERENCE NUMBER ARE NOT SERVICED SEPARATELY	

M-METRIC PART

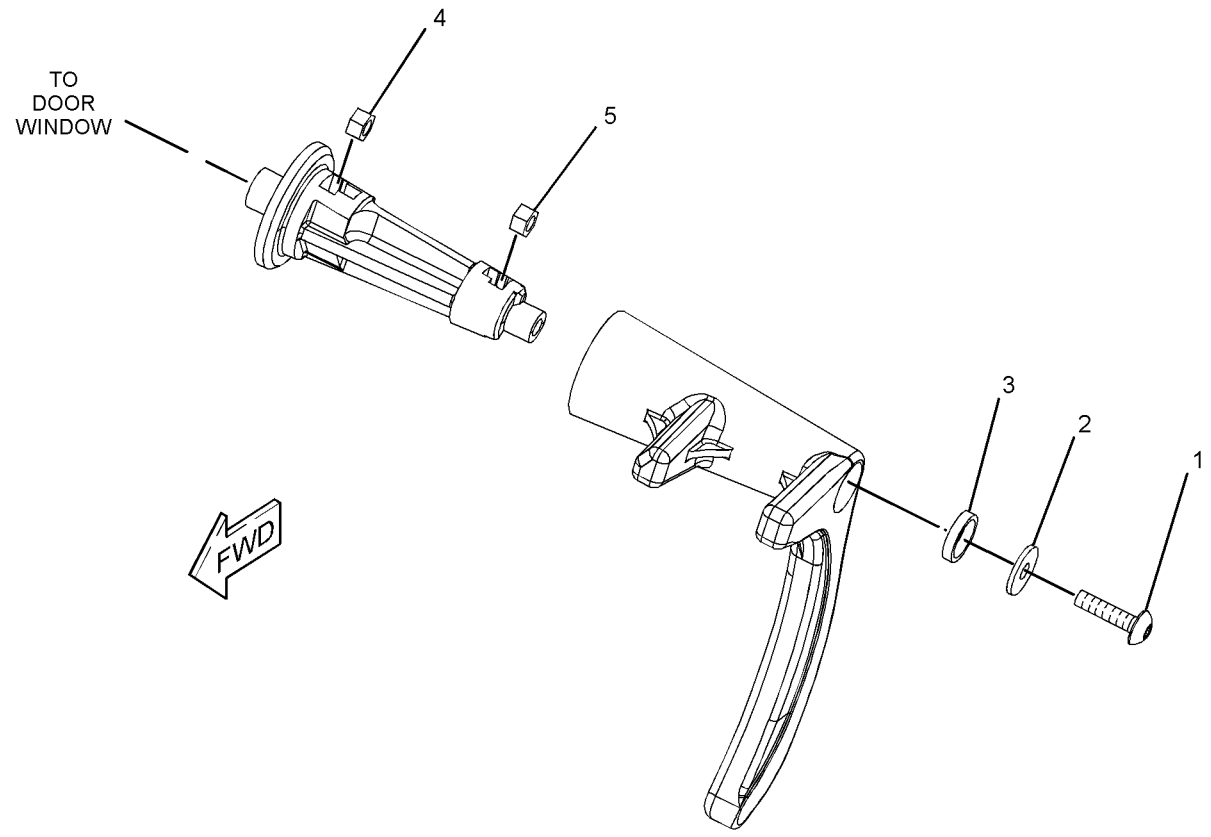

GRAPHIC #1 **<END>** g01384222

OPERATOR STATION

299-6986 LATCH GP-CAB DOOR & WINDOW

S/N: EAT1-UP

PART OF 205-9619, 205-9628 WINDOW GP-CAB, 205-9585 WINDOW GP-DOOR

AN ATTACHMENT

SMCS-7308, 7310 **i02752226**

NOTE	REF NO	GRAPHIC REF	PART NUMBER	QTY	PART NAME 1 2 3 4 5 6 (PRODUCT LEVEL)	SEE PAGE
M	1	1	**161-6984**	1	SCREW-TRUSS HEAD (M5X0.8X20-MM)	
	2	1	**161-6987**	1	WASHER-HARD (5.2X16X1.5-MM THK)	
	3	1	**161-9294**	1	SPRING-FLAT WIRE	
M	4	1	**162-6556**	1	LOCKNUT (M6X1-THD)	
M	5	1	**5C-2874**	1	NUT (M5X0.8-THD)	
					PARTS SHOWN IN GRAPHIC(S) WITHOUT A REFERENCE NUMBER ARE NOT SERVICED SEPARATELY	

M-METRIC PART

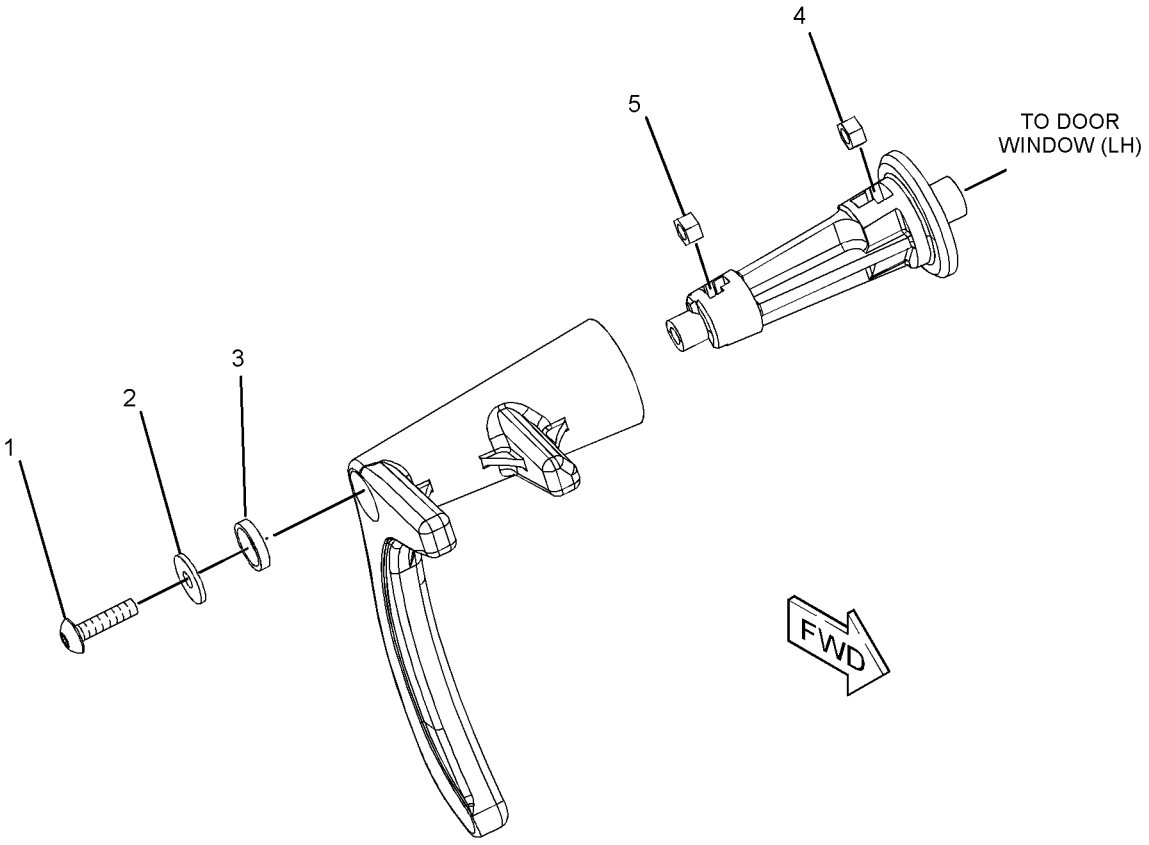

GRAPHIC #1 **<END>** g01384201

OPERATOR STATION

269-3248 LATCH GP-CONSOLE

S/N: EAT1-UP
PART OF 269-3247 MOUNTING GP-BACKHOE CONTROL
AN ATTACHMENT

SMCS-5258 **i02446496**

NOTE	REF NO	GRAPHIC REF	PART NUMBER	QTY	PART NAME 1 2 3 4 5 6 (PRODUCT LEVEL)	SEE PAGE
	1	1	**8T-4742**	2	END-YOKE ROD	
	2	1	**8T-4744**	2	PIN AS-SPRING	
	3	1	**110-5602**	1	KNOB	
	4	1	**180-9160**	1	LATCH AS	
	5	1	**183-4911**	2	PLATE	
	6	1	**183-5443**	1	LATCH AS	
	7	1	**183-6085**	2	BEARING	
	8	1	**268-5902**	1	LEVER AS	
	9	1	**268-5903**	2	ROD	
M	10	1	**099-3649**	1	BOLT (M8X1.25X40-MM)	
	11	1	**156-0283**	3	WASHER-HARD (8.4X35X2.5-MM THK)	
	12	1	**183-4912**	1	SLEEVE	
M	13	1	**5C-2890**	2	NUT (M6X1-THD)	

M-METRIC PART

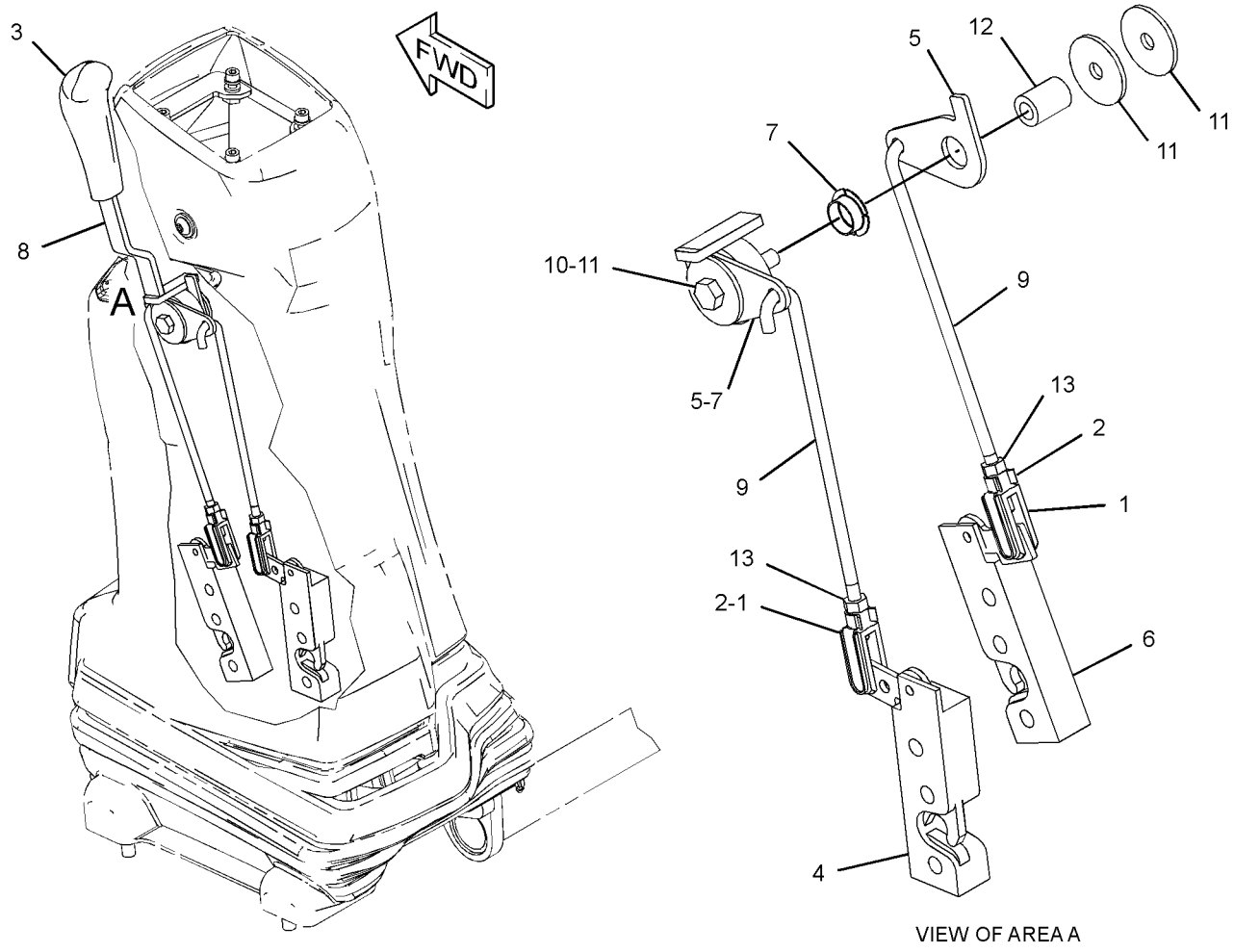

VIEW OF AREA A

GRAPHIC #1 **<END>** g01211340

OPERATOR STATION

209-3367 LEVER GP-GOVERNOR–HANDHELD

S/N: EAT1-UP

PART OF 206-1640 CONTROL GP-GOVERNOR

SMCS-1265 **i02124988**

NOTE	REF NO	GRAPHIC REF	PART NUMBER	QTY	PART NAME 1 2 3 4 5 6 (PRODUCT LEVEL)	SEE PAGE
	1	1	**8T-4742**	1	END-YOKE ROD	
	2	1	**8T-4744**	1	PIN AS-SPRING	
	3	1	**209-3366**	1	CABLE AS	
	4	1	**219-0343**	1	LEVER AS	
M	5	1	**8T-4971**	1	BOLT (M6X1X30-MM)	
M	6	1	**129-3178**	1	LOCKNUT (M6X1-THD)	

M-METRIC PART

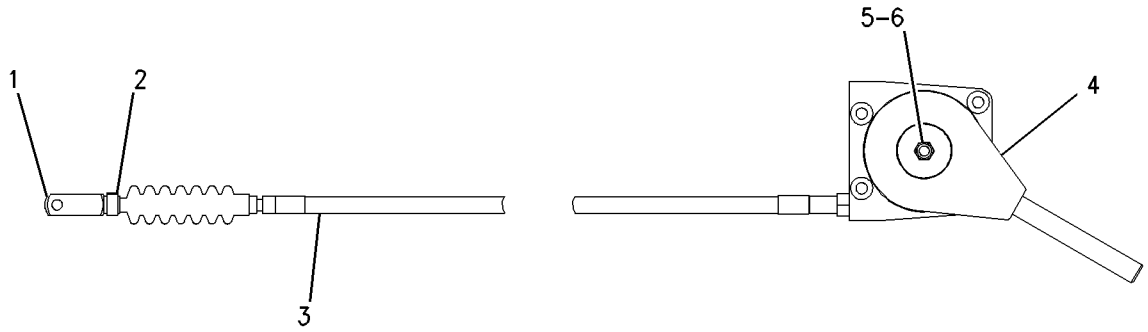

GRAPHIC #1 **<END>** g00743371

OPERATOR STATION

209-4703 LINER GP-CAB

S/N: EAT1-455

PART OF 269-2125, 269-2126, 269-2127 CAB AR-ENCLOSED ROPS

AN ATTACHMENT

SMCS-7329 **i03528069**

NOTE	REF NO	GRAPHIC REF	PART NUMBER	QTY	PART NAME 1 2 3 4 5 6 (PRODUCT LEVEL)	SEE PAGE
	1	1	**8E-1118**	1	ANTENNA AS	
	2	1	**8R-6111**	1	CABLE AS-COAXIAL	
	3	1	**9U-8263**	1	COVER	
	4	1	**084-4277**	1	LAMP GP-DOME (12-VOLT)	
		1	**210-8754**	1	LAMP (12-VOLT)	
M	5	1	**113-0920**	8	BOLT-SOCKET HEAD (M4X0.7X35-MM)	
	6	1	**169-7291**	2	COVER-SPEAKER	
	7	1	**209-4704**	1	LINER AS-CAB	
	8	1	**209-4705**	1	COVER	
	9	1	**209-4716**	2	PLATE	
	10	1	**229-6052**	2	SPACER (9.7X12.7X7.5-MM THK)	
	11	1	**262-9567**	2	SPEAKER	
	12	1	**282-7832**	1	GROMMET	
	13	1	**282-7835**	1	PLATE	
M	14	1	**121-9870**	5	SCREW-MACHINE (M6X1X40-MM)	
M	15	1	**123-0707**	8	SCREW-HEX SOCKET (M4X0.7X20-MM)	
M	16	1	**8T-4181**	2	BOLT (M6X1X20-MM)	
	17	1	**9X-2038**	2	WASHER (7X19X2-MM THK)	
	18	1	**9X-8256**	2	WASHER (6.6X12X2-MM THK)	
	19	1	**132-2249**	1	SPACER (7.4X12.7X24-MM THK)	

M-METRIC PART

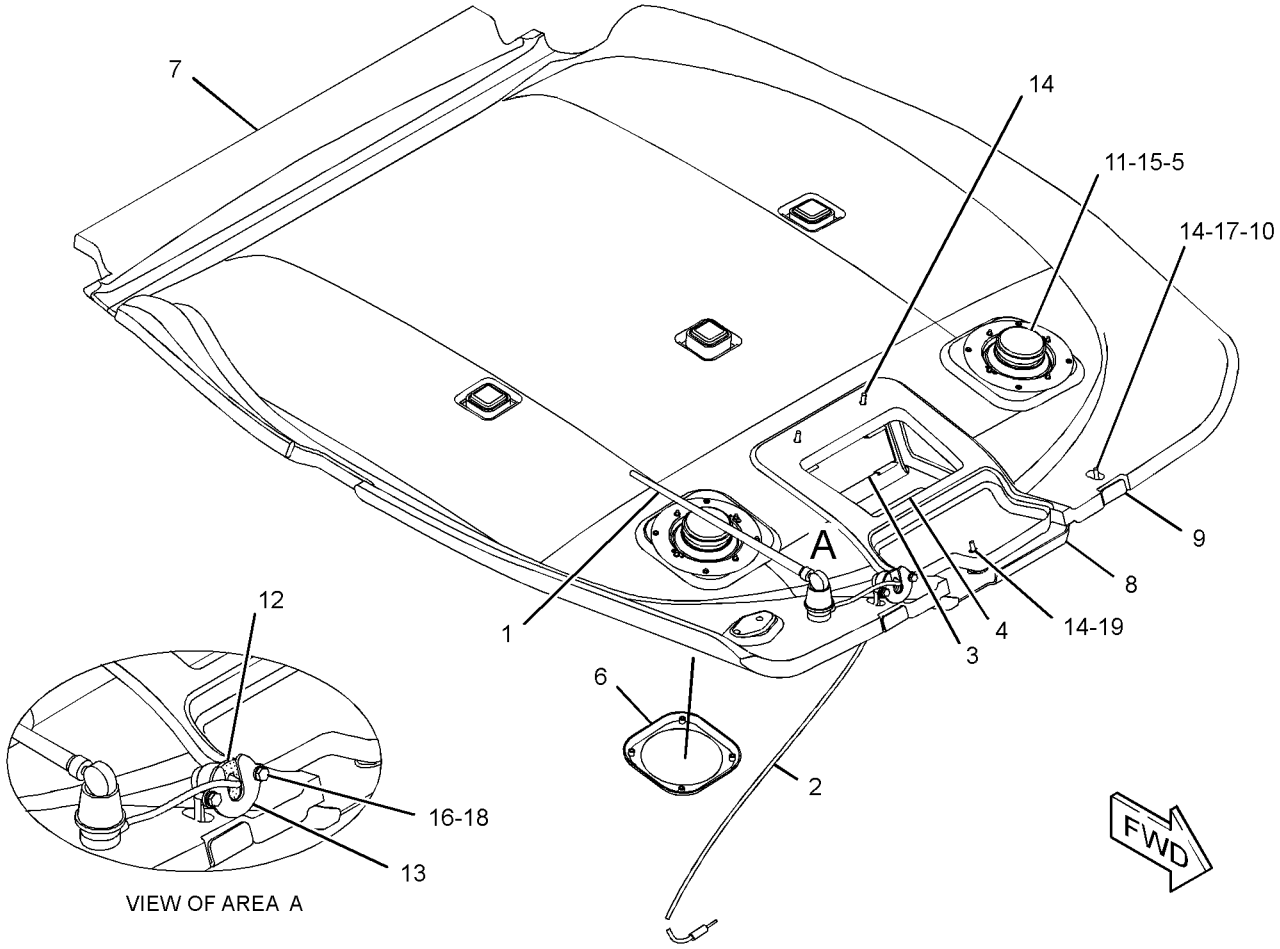

GRAPHIC #1 **<END>** g01282191

OPERATOR STATION

209-4703 LINER GP-CAB

S/N: EAT456-UP

PART OF 269-2125, 269-2126, 269-2127 CAB AR-ENCLOSED ROPS

AN ATTACHMENT

SMCS-7329 **i03070260**

NOTE	REF NO	GRAPHIC REF	PART NUMBER	QTY	PART NAME 1 2 3 4 5 6 (PRODUCT LEVEL)	SEE PAGE
	1	1	**8E-1118**	1	ANTENNA AS	
	2	1	**8R-6111**	1	CABLE AS-COAXIAL	
	3	1	**9U-8263**	1	COVER	
	4	1	**084-4277**	1	LAMP GP-DOME (12-VOLT)	
		1	**210-8754**	1	LAMP (12-VOLT)	
M	5	1	**113-0920**	8	BOLT-SOCKET HEAD (M4X0.7X35-MM)	
	6	1	**169-7291**	2	COVER-SPEAKER	
	7	1	**209-4704**	1	LINER AS-CAB	
		1	**263-5781**	2	PLATE AS	
					(EACH INCLUDES)	
		1	**205-7047**	8	INSERT-THREADED (M4X0.7-THD)	
C	8	1	**292-5773**	1	COVER	
	9	1	**209-4716**	2	PLATE	
C	10	1	**145-0981**	4	SPACER (8.5X12.7X18-MM)	
	11	1	**262-9567**	2	SPEAKER	
	12	1	**282-7832**	1	GROMMET	
	13	1	**282-7835**	1	PLATE	
M	14	1	**121-9870**	5	SCREW-MACHINE (M6X1X40-MM)	
M	15	1	**123-0707**	8	SCREW-HEX SOCKET (M4X0.7X20-MM)	
M	16	1	**8C-3798**	2	BOLT-LOCKING (M6X1X30-MM)	
	17	1	**9X-2038**	3	WASHER (7X19X2-MM THK)	
	18	1	**9X-8256**	2	WASHER (6.6X12X2-MM THK)	
	19	1	**132-2249**	1	SPACER (7.4X12.7X24-MM THK)	
	20	1	**124-6569**	1	FASTENER	

C-CHANGE FROM PREVIOUS TYPE
M-METRIC PART

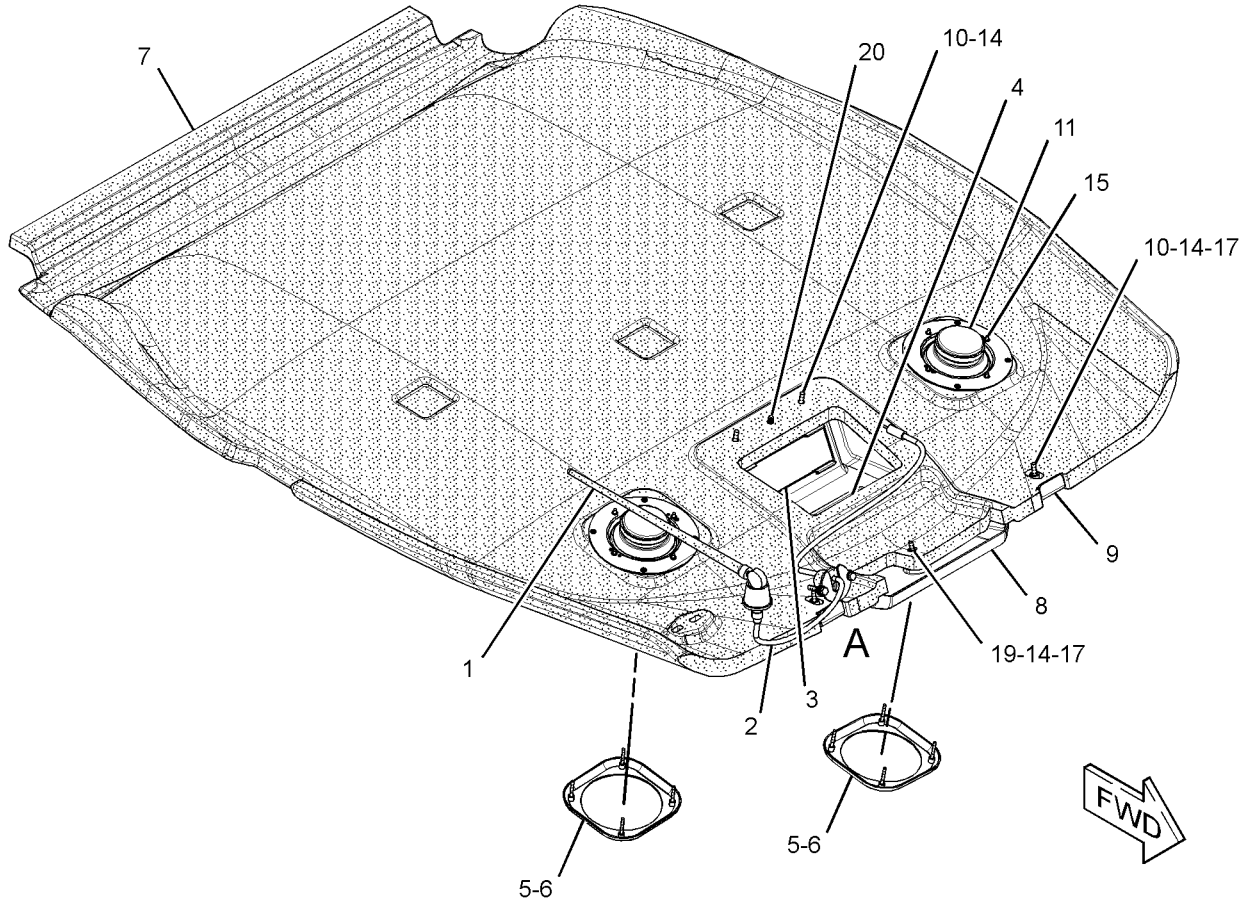

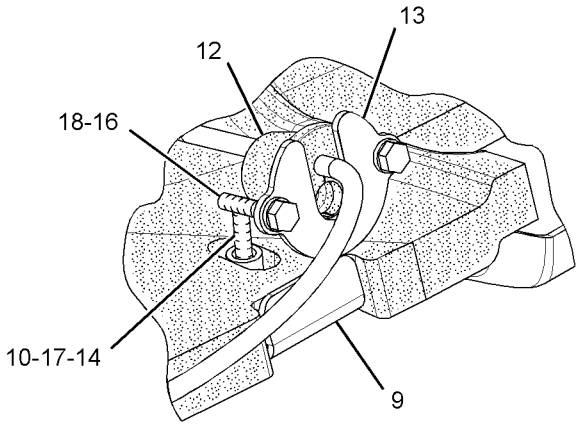

VIEW OF AREA A

GRAPHIC #1 **<END>** g01595675

OPERATOR STATION

211-0072 LINES GP-HEATER

S/N: EAT1-UP
PART OF 269-2125, 269-2126 CAB AR-ENCLOSED ROPS
AN ATTACHMENT

SMCS-1812 **i03532220**

NOTE	REF NO	GRAPHIC REF	PART NUMBER	QTY	PART NAME 1 2 3 4 5 6 (PRODUCT LEVEL)	SEE PAGE
M	1	1	**8T-4137**	3	BOLT (M10X1.5X20-MM)	
	2	1	**5D-1026**	8	CLAMP-HOSE	
	3	1	**6P-8855**	1	TUBE	
	4	1	**9M-4814**	1	CONNECTOR-HOSE	
	5	1	**134-3856**	1	ELBOW	
	6	1	**3E-4321**	4	CLIP	
	7	1	**7K-1181**	3	STRAP-CABLE	
	8	1	**8T-4121**	3	WASHER-HARD (11X21X2.5-MM THK)	
E	9	1	**5P-0767**		HOSE (22-CM)	
E	9A	1	**5P-0767**		HOSE (65-CM)	
E	9B	1	**5P-0767**		HOSE (205-CM)	
E	9C	1	**5P-0767**		HOSE (260-CM)	

E-ORDER BY THE CENTIMETER
M-METRIC PART

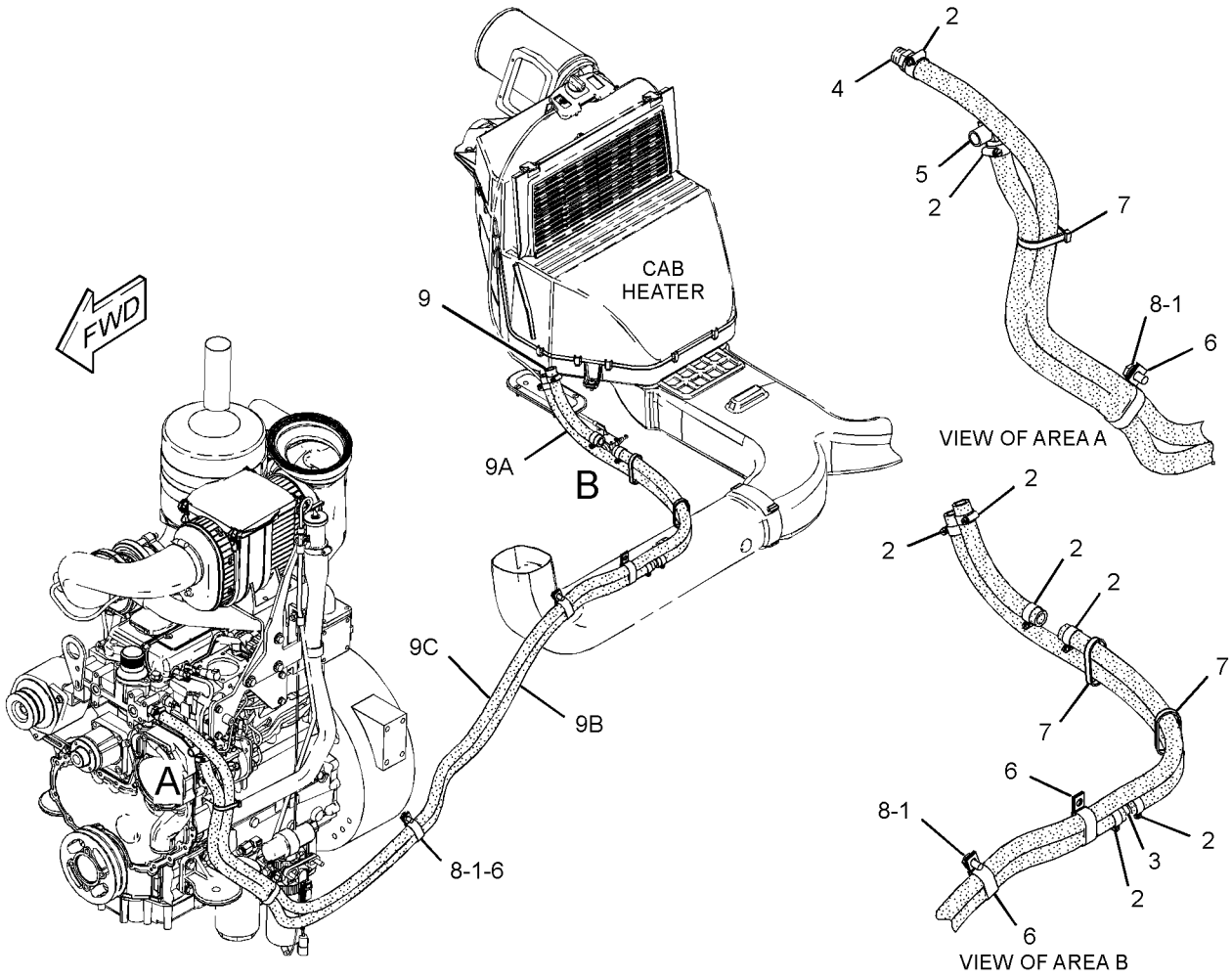

GRAPHIC #1 **<END>** g01860754

OPERATOR STATION

211-0071 LINES GP-HEATER & AIR COND

S/N: EAT1-UP

PART OF 269-2127 CAB AR-ENCLOSED ROPS

AN ATTACHMENT

SMCS-1380, 1808, 1812 **i03516084**

NOTE	REF NO	GRAPHIC REF	PART NUMBER	QTY	PART NAME 1 2 3 4 5 6 (PRODUCT LEVEL)	SEE PAGE
E	1	1	**5P-0767**		HOSE (22-CM)	
E	1A	1	**5P-0767**		HOSE (65-CM)	
E	1B	1	**5P-0767**		HOSE (205-CM)	
E	1C	1	**5P-0767**		HOSE (260-CM)	
	5	1	**3S-2093**	1	STRAP-CABLE	
	6	1	**6P-8855**	1	TUBE	
	7	1	**7K-1181**	8	STRAP-CABLE	
	8	1	**9M-4814**	1	CONNECTOR-HOSE	
	9	1	**105-9411**	1	SUPPORT	
	10	1	**130-9984**	2	CLIP	
	11	1	**134-3856**	1	ELBOW	
	12	1	**289-6021**	1	PLATE	
	13	1	**289-6018**	2	U-BOLT	
	14	1	**170-0235**	1	ACCUMULATOR-REFRIGERANT (AIR CONDITIONER)	
I	15	1	**214-3735**	1	HOSE AS	
I	16	1	**214-3736**	1	HOSE AS	
I	17	1	**214-3737**	1	HOSE AS	
I	18	1	**214-3738**	1	HOSE AS	
	19	1	**214-3739**	1	HOSE AS	
	21	1	**255-0800**	1	PLATE	
	22	1	**283-4237**	1	RECEIVER-REFRIGERANT DRYER	
		1	**3E-0068**	1	TUBE AS-REFRIGERANT ORIFICE	
	23	1	**109-1633**	1	CLIP (SLOT)	
	24	1	**109-1634**	1	CLIP (TAB)	
M	25	1	**208-9293**	2	BOLT-FLANGE HEAD (M10X1.5X30-MM)	
	26	1	**3E-4321**	4	CLIP	
	27	1	**5D-1026**	8	CLAMP-HOSE	
	28	1	**5K-5338**	1	CLIP	
	29	1	**2K-4973**	4	LOCKNUT (3/8-16-THD)	
	30	1	**8T-4121**	9	WASHER-HARD (11X21X2.5-MM THK)	
M	31	1	**8T-4136**	2	BOLT (M10X1.5X25-MM)	
M	32	1	**8T-4137**	3	BOLT (M10X1.5X20-MM)	
M	33	1	**8T-4139**	1	BOLT (M12X1.75X30-MM)	
M	34	1	**8T-4189**	1	BOLT (M8X1.25X20-MM)	
	35	1	**8T-4223**	1	WASHER-HARD (13.5X25.5X3-MM THK)	
	36	1	**8T-4224**	1	WASHER-HARD (8.8X16X2-MM THK)	
	37	1	**9M-8406**	1	CLIP	
	38	1	**9X-7380**	2	SEAL-O-RING	
	39	1	**9X-7381**	3	SEAL-O-RING	
	40	1	**9X-7382**	1	SEAL-O-RING	
	41	1	**9X-7383**	2	SEAL-O-RING	
	42	1	**132-5789**	1	CLIP	

E-ORDER BY THE CENTIMETER
I-REFER TO HYDRAULIC INFORMATION SYSTEM
M-METRIC PART

211-0071 LINES GP-HEATER & AIR COND *(contd.)* i03516084

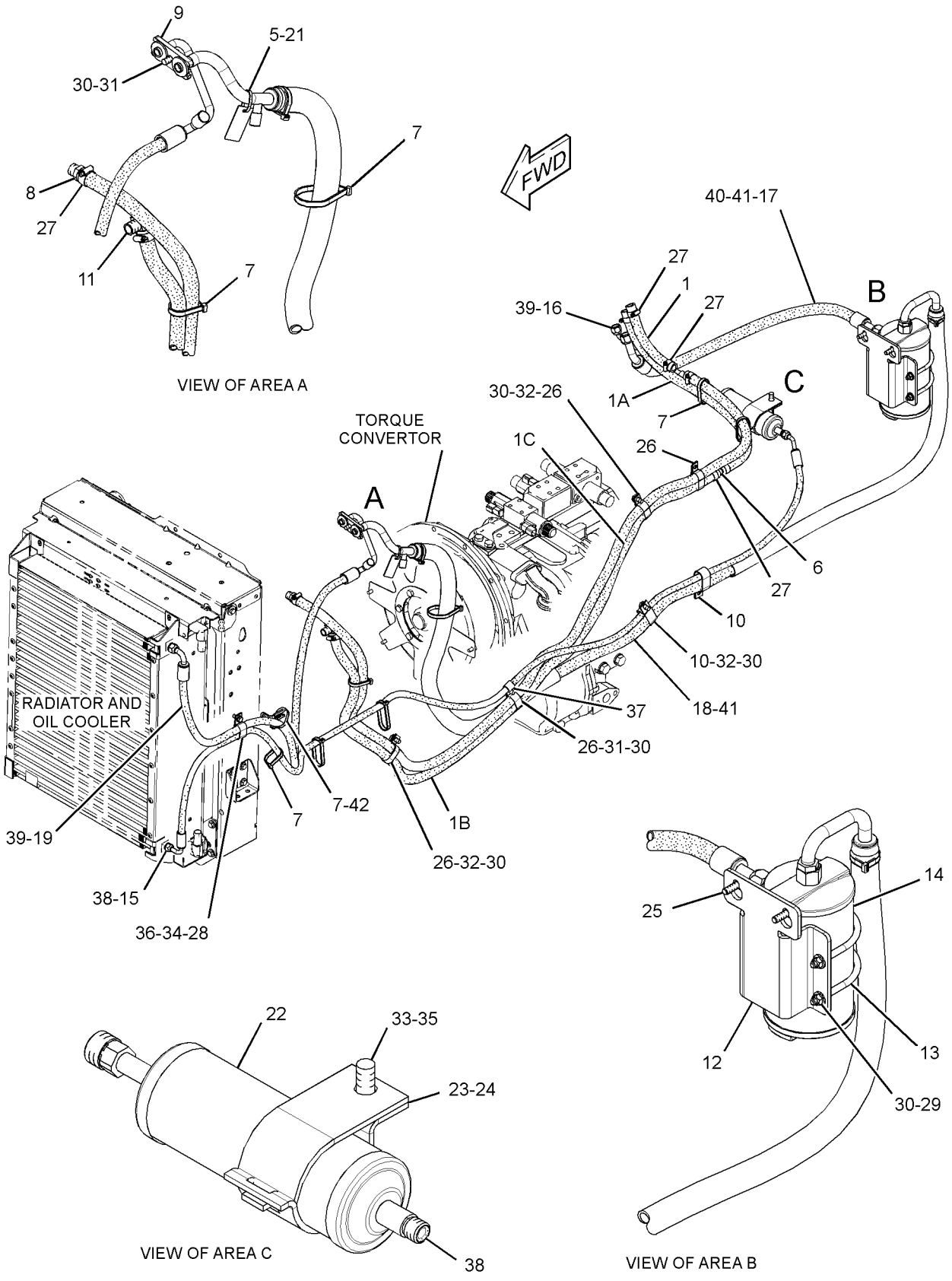

GRAPHIC #1 **<END>** g01343470

OPERATOR STATION

205-9578 MIRROR GP-REAR VIEW—INTERIOR

S/N: EAT1-UP

PART OF 269-2125, 269-2126, 269-2127 CAB AR-ENCLOSED ROPS

AN ATTACHMENT

SMCS-7319 **i02357018**

NOTE	REF NO	GRAPHIC REF	PART NUMBER	QTY	PART NAME 1 2 3 4 5 6 (PRODUCT LEVEL)	SEE PAGE
	1	1	**199-0929**	1	MIRROR AS	
	2	1	**096-6166**	2	WASHER-HARD (4.5X9X1-MM THK)	
M	3	1	**153-8004**	2	BOLT-SOCKET HEAD (M4X0.7X35-MM)	

M-METRIC PART

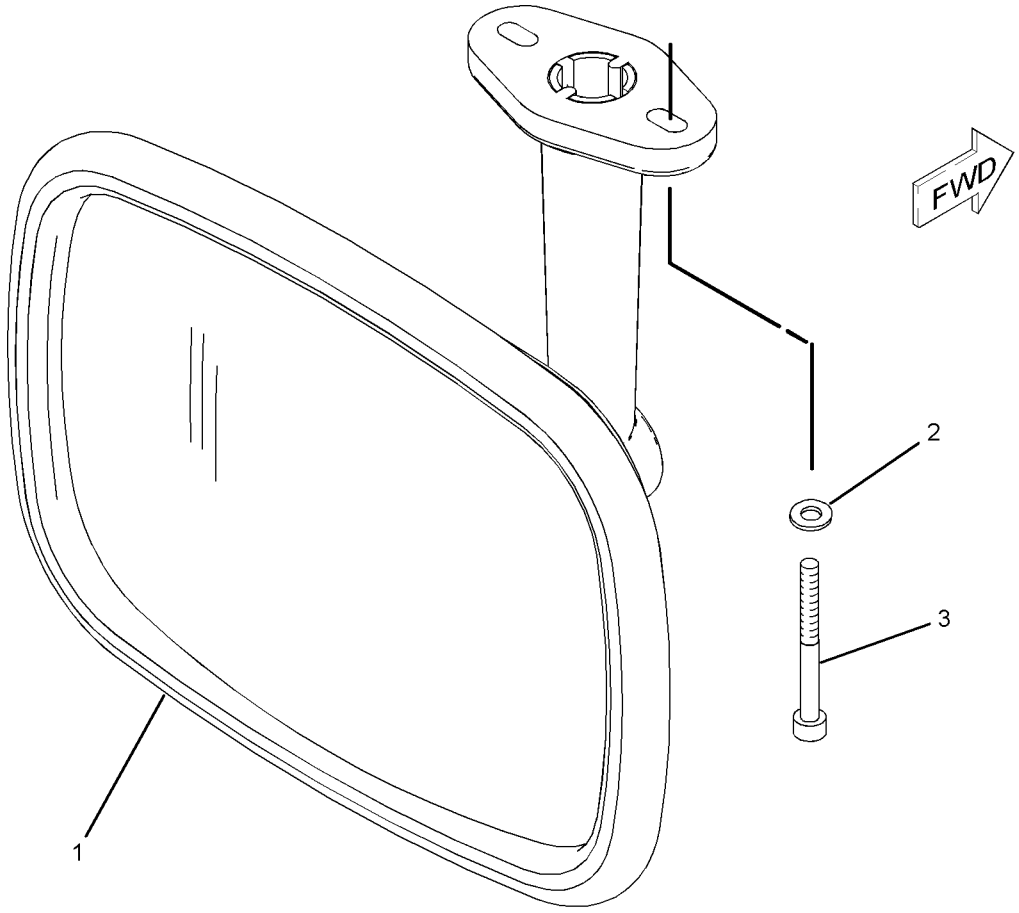

GRAPHIC #1 **<END>** g01080519

OPERATOR STATION

259-6276 MIRROR GP-REAR VIEW—INTERIOR

S/N: EAT1-UP
PART OF 269-2123, 269-2124 CANOPY AR-OPEN ROPS
AN ATTACHMENT

SMCS-7319 **i02380434**

NOTE	REF NO	GRAPHIC REF	PART NUMBER	QTY	PART NAME 1 2 3 4 5 6 (PRODUCT LEVEL)	SEE PAGE
M	1	1	**8C-4982**	2	BOLT-SOCKET HEAD (M4X0.7X20-MM)	
	2	1	**199-0929**	1	MIRROR AS	
	3	1	**096-6166**	2	WASHER-HARD (4.5X9X1-MM THK)	

M-METRIC PART

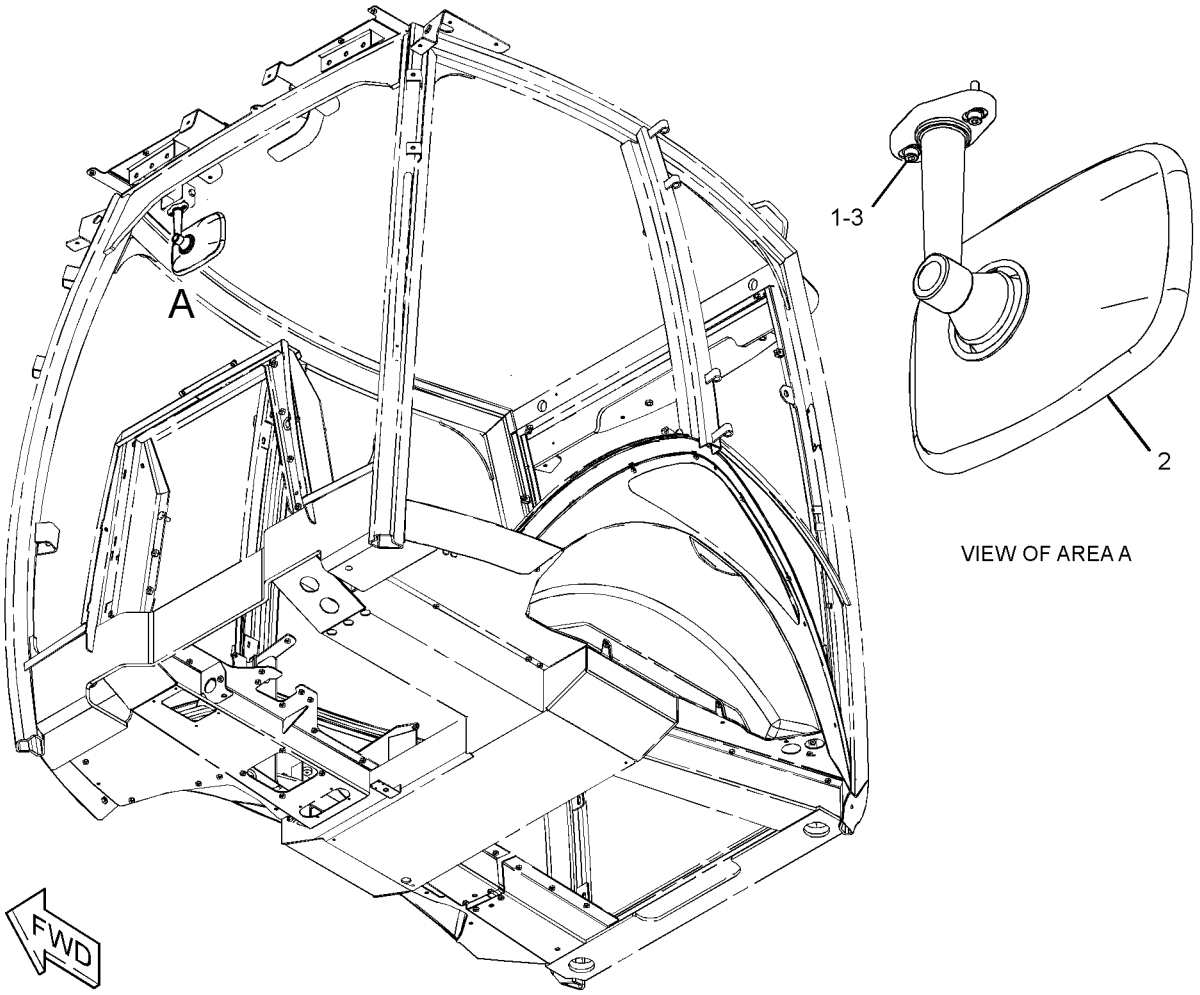

VIEW OF AREA A

GRAPHIC #1 **<END>** g01190426

OPERATOR STATION

186-2589 MOTOR GP-WINDOW WIPER—FRONT

S/N: EAT1-UP
12 VOLT
PART OF 206-1728 WIPER & WASHER GP-WINDOW, 206-1725 WIPER GP-WINDOW
AN ATTACHMENT

SMCS-7305 **i03257567**

NOTE	REF NO	GRAPHIC REF	PART NUMBER	QTY	PART NAME 1 2 3 4 5 6 (PRODUCT LEVEL)	SEE PAGE
M	1	1	**5C-7261**	1	NUT (M8X1.25-THD)	
	2	1	**3F-9556**	1	LOCKWASHER	
	3	1	**152-7691**	1	MOTOR GP-WINDOW WIPER (FRONT)	
		1	**9G-3695**	1	PLUG	
		1	**102-8805**	1	KIT-RECEPTACLE (6-PIN)	
					(INCLUDES RECEPTACLE AS & WEDGE)	
		1	**186-3735**	5	PIN-CONNECTOR (16-GA TO 18-GA)	
	4	1	**206-5823**	1	CAP	

M-METRIC PART

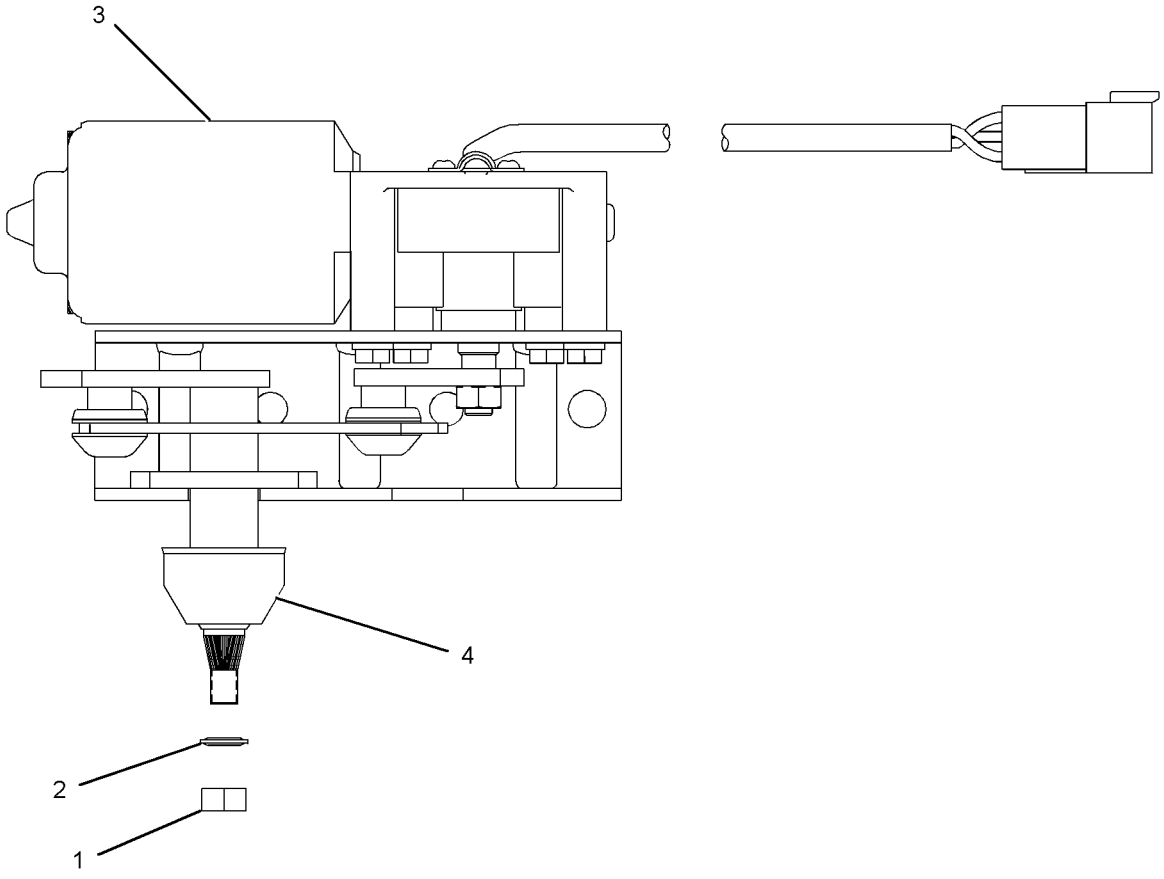

GRAPHIC #1 **<END>** g01120206

OPERATOR STATION

269-3247 MOUNTING GP-BACKHOE CONTROL—PILOT

S/N: EAT1-UP
PART OF 269-2125, 269-2126, 269-2127 CAB AR-ENCLOSED ROPS, 269-2123, 269-2124 CANOPY AR-OPEN ROPS
AN ATTACHMENT

SMCS-5063, 5258, 5705 **i02502858**

NOTE	REF NO	GRAPHIC REF	PART NUMBER	QTY	PART NAME 1 2 3 4 5 6 (PRODUCT LEVEL)	SEE PAGE
	1	1,2	**7K-1181**	2	STRAP-CABLE	
	2	1,2	**164-1368**	15	FASTENER-PANEL	
	3	1,2	**183-4934**	2	BEARING-SELF-ALIGNING	
B	4	1,2	**195-7602**	3	SHIM (1.6-MM THK)	
E	5	1	**261-9634**		SEAL-BULK (8.5-CM EACH)	
	6	2	**261-9642**	1	COVER-CONSOLE (LH)	
	7	2	**267-5225**	1	BOOT	
Y	8	1	*269-3248*	1	LATCH GP-CONSOLE	858
	9	2	**269-3254**	1	SUPPORT AS (LH)	
B	10	2	**269-3262**	4	SHIM (1-MM THK)	
	11	1,2	**270-2794**	2	INSULATION	
	12	2	**270-5161**	1	GASKET	
	13	2	**272-7079**	1	PLATE	
	14	1	**273-1473**	1	GROMMET	
	15	1	**273-1475**	1	COVER-CONSOLE (RH)	
	16	1	**273-1476**	1	BOOT	
	17	1	**273-1477**	1	PLATE	
	18	1	**273-1478**	1	BUMPER AS	
	19	1	**283-3467**	1	PLATE AS	
M		1	**6V-9632**	7	NUT-WELD (M6X1-THD)	
M		1	**8T-3490**	3	NUT-WELD (M10X1.5-THD)	
M		1	**8T-3612**	1	NUT-WELD (M8X1.25-THD)	
	20	2	**283-3477**	1	TUBE AS	
	21	1	**283-7981**	1	PLATE AS	
	22	1	**283-8053**	2	STRIKER	
	23	1	**039-8557**	2	WASHER (13X26X6-MM THK)	
M	24	1,2	**3T-0849**	8	BOLT-SOCKET HEAD (M6X1X25-MM)	
M	25	1	**7X-2533**	6	BOLT (M6X1X35-MM)	
	26	1,2	**8T-4121**	9	WASHER-HARD (11X21X2.5-MM THK)	
M	27	1	**8T-4134**	6	NUT (M6X1-THD)	
M	28	1,2	**8T-4138**	2	BOLT (M6X1X20-MM)	
M	29	2	**8T-4186**	5	BOLT (M10X1.5X40-MM)	
M	30	1	**8T-4189**	2	BOLT (M8X1.25X20-MM)	
M	31	1	**8T-4195**	4	BOLT (M10X1.5X30-MM)	
	32	1,2	**8T-4224**	4	WASHER-HARD (8.8X16X2-MM THK)	
M	33	1,2	**8T-4244**	2	NUT (M12X1.75-THD)	
M	34	1	**8T-4956**	2	BOLT (M12X1.75X35-MM)	
M	35	1	**8T-4971**	2	BOLT (M6X1X30-MM)	
M	36	2	**8T-7547**	2	BOLT (M8X1.25X30-MM)	
	37	1,2	**9X-2038**	14	WASHER (7X19X2-MM THK)	
M	38	1,2	**9X-2045**	8	SCREW-TRUSS HEAD (M6X1X20-MM)	
	39	1,2	**9X-8256**	26	WASHER (6.6X12X2-MM THK)	

B-USE AS REQUIRED
E-ORDER BY THE CENTIMETER
M-METRIC PART
Y-SEPARATE ILLUSTRATION

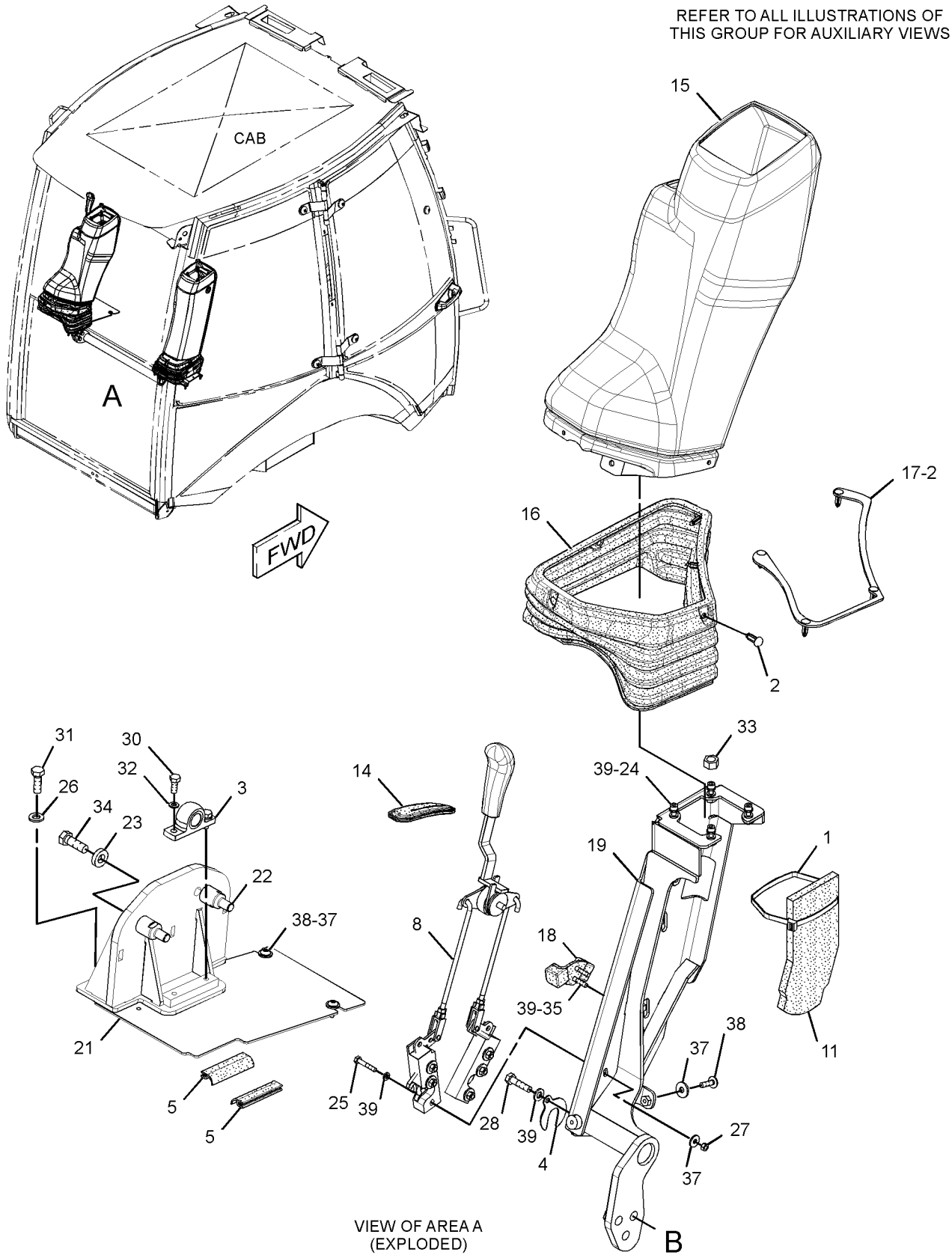

GRAPHIC #1

g01316012

269-3247 **MOUNTING GP-BACKHOE CONTROL** *(contd.)* **i02502858**

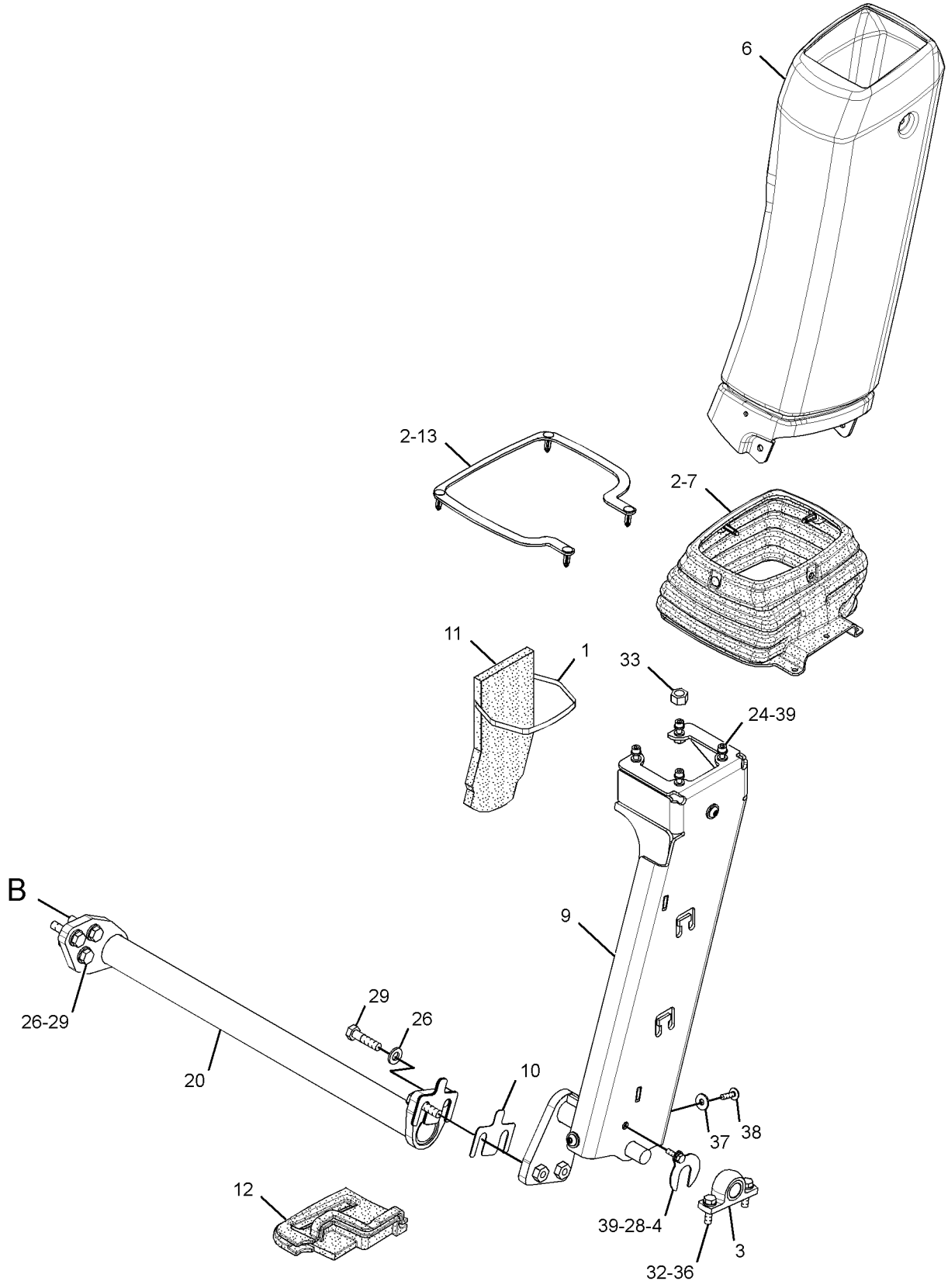

GRAPHIC #2 **<END>** g01316018

OPERATOR STATION

205-9560 MOUNTING GP-CAB

S/N: EAT1-UP

PART OF 269-2125, 269-2126, 269-2127 CAB AR-ENCLOSED ROPS, 269-2123, 269-2124 CANOPY AR-OPEN ROPS

AN ATTACHMENT

SMCS-7301 **i02700059**

NOTE	REF NO	GRAPHIC REF	PART NUMBER	QTY	PART NAME 1 2 3 4 5 6 (PRODUCT LEVEL)	SEE PAGE
	1	1	**6Y-9930**	2	MOUNT AS	
	2	1	**118-2990**	2	MOUNT AS	
	3	1	**9W-6582**	2	SLEEVE	
M	4	1	**7X-2568**	2	BOLT (M20X2.5X180-MM)	
	5	1	**297-5849**	2	WASHER-HARD (17X75X10-MM THK)	
	6	1	**8T-4123**	4	WASHER (22X35X3.5-MM THK)	
M	7	1	**8T-4131**	2	NUT (M20X2.5-THD)	
M	8	1	**8T-4132**	2	NUT (M16X2-THD)	
M	9	1	**8T-4173**	2	BOLT (M16X2X110-MM)	
	10	1	**9W-6584**	2	WASHER (20.5X114X10-MM THK)	
	11	1	**9X-8257**	4	WASHER (17.5X30X3.5-MM THK)	
	12	1	**1L-6377**	2	BUTTON-PLUG	

M-METRIC PART

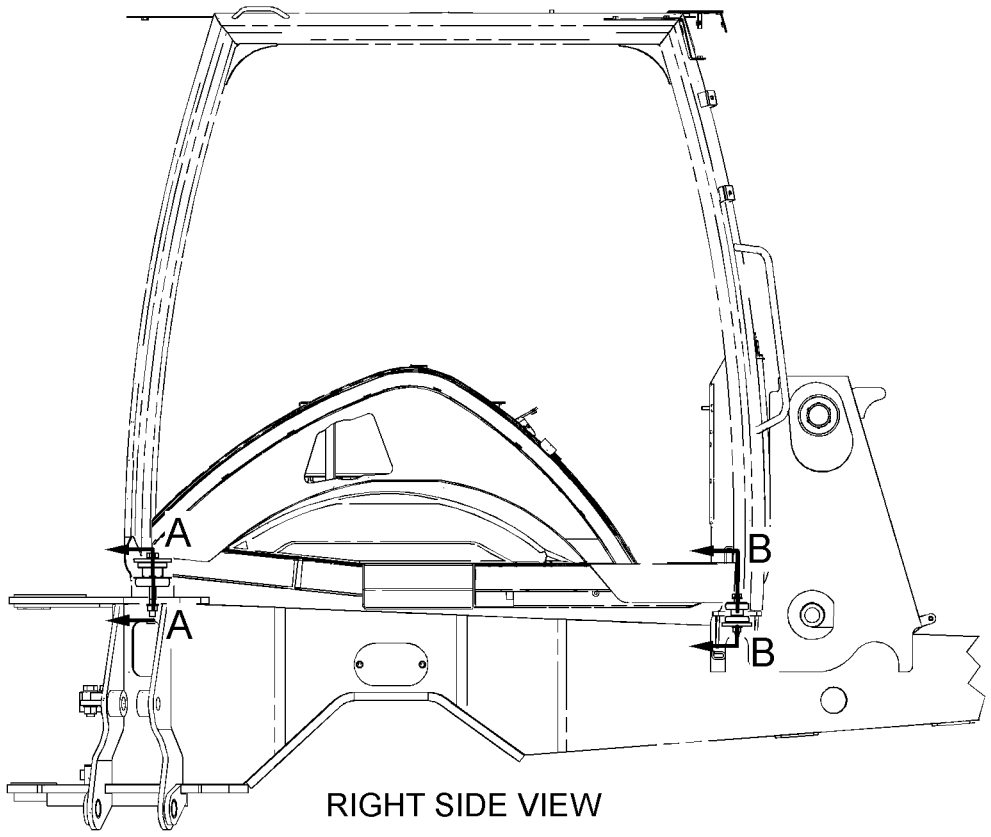

RIGHT SIDE VIEW

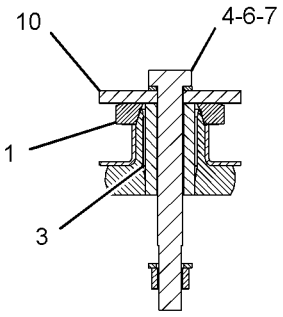

SECTION A-A

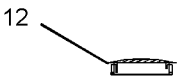

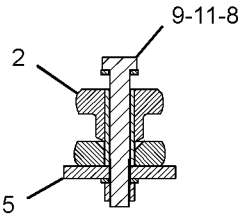

SECTION B-B

GRAPHIC #1 **<END>** g01189655

OPERATOR STATION

251-1222 MOUNTING GP-MONITOR–ACCUGRADE

S/N: EAT1-UP

PART OF 211-4253 INSTALLATION GP-MONITOR

AN ATTACHMENT

SMCS-7490 **i02755948**

NOTE	REF NO	GRAPHIC REF	PART NUMBER	QTY	PART NAME 1 2 3 4 5 6 (PRODUCT LEVEL)	SEE PAGE
	1	1	**248-2284**	2	KNOB-CONTROL	
	2	1	**251-0077**	1	BRACKET AS	
M		1	**8T-3490**	1	NUT-WELD (M10X1.5-THD)	
	3	1	**251-9571**	1	BRACKET AS	
M		1	**8T-3490**	1	NUT-WELD (M10X1.5-THD)	

M-METRIC PART

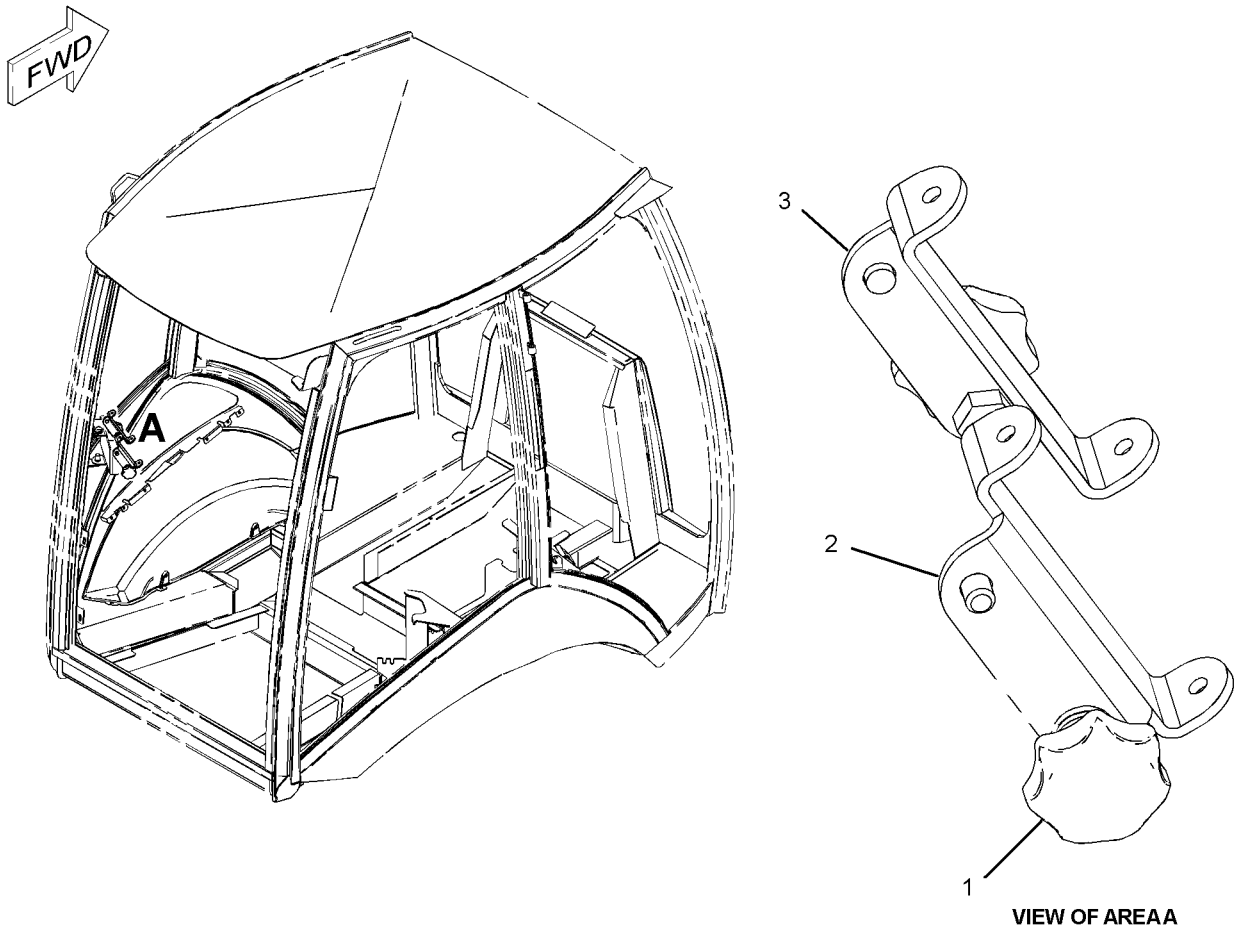

VIEW OF AREA A

GRAPHIC #1 **<END>** g01381138

OPERATOR STATION

209-3378 PEDAL GP-GOVERNOR

S/N: EAT1-UP

PART OF 206-1640 CONTROL GP-GOVERNOR

SMCS-1265 **i03528071**

NOTE	REF NO	GRAPHIC REF	PART NUMBER	QTY	PART NAME 1 2 3 4 5 6 (PRODUCT LEVEL)	SEE PAGE
M	1	1	**129-3178**	1	LOCKNUT (M6X1-THD)	
M	2	1	**5C-7261**	1	NUT (M8X1.25-THD)	
M	3	1	**5C-9553**	1	BOLT (M6X1X16-MM)	
	4	1	**8T-4205**	1	WASHER-HARD (7.2X14.5X2-MM THK)	
M	5	1	**095-0641**	4	BOLT-SOCKET HEAD (M4X0.7X10-MM)	
	6	1	**243-0063**	1	BOOT	
	7	1	**3F-9556**	2	LOCKWASHER	
	8	1	**6V-8186**	2	NUT-FULL (5/16-24-THD)	
	9	1	**8T-6902**	3	CLIP	
M	10	1	**9X-2842**	1	BOLT (M8X1.25X45-MM)	
					AVAILABLE REPAIR KIT(S):	
			164-1154	1	KIT-SERVICE	
					(INCLUDES CLAMP & SCREWS)	
			243-0062	1	KIT-REPAIR (GOVERNOR PEDAL)	
					(INCLUDES SHAFT, CLIPS & BEARINGS)	

M-METRIC PART

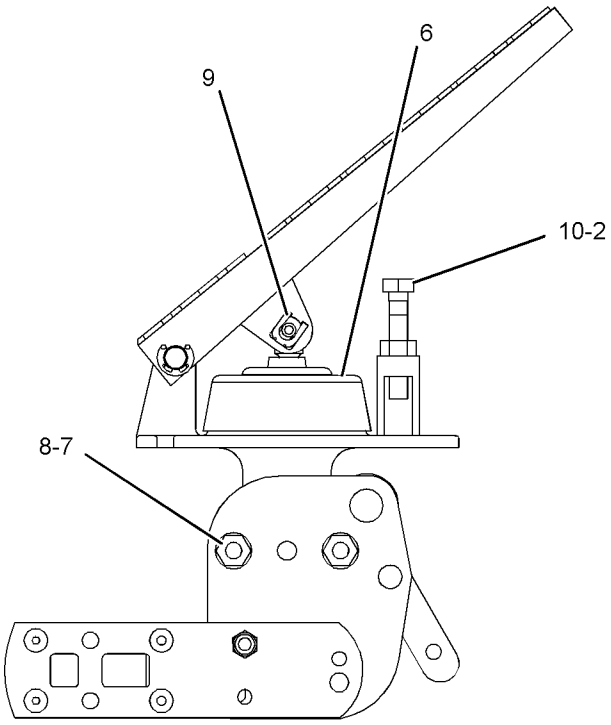

RIGHT SIDE VIEW

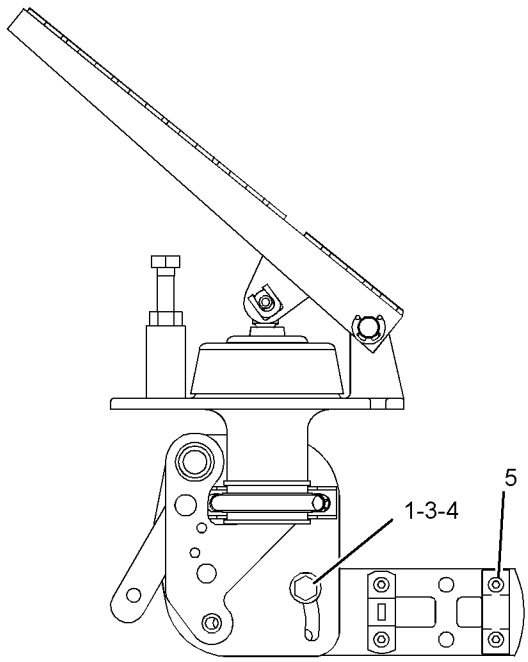

LEFT SIDE VIEW

GRAPHIC #1 **<END>** g01081364

OPERATOR STATION

263-9088 RADIO GP-COMMUNICATION—PRODUCT LINK 121SR

S/N: EAT1-UP

PART OF 225-7994 INSTALLATION GP-COMMUNICATION

AN ATTACHMENT

SMCS-733T **i03121722**

NOTE	PART NUMBER	QTY	PART NAME 1 2 3 4 5 6 (PRODUCT LEVEL)	SEE PAGE
			(NO SERVICED PARTS)	

<END>

OPERATOR STATION

205-9569 ROOF GP-CAB

S/N: EAT1-UP

PART OF 269-2125, 269-2126, 269-2127 CAB AR-ENCLOSED ROPS, 269-2123, 269-2124 CANOPY AR-OPEN ROPS

AN ATTACHMENT

SMCS-7301 **i02527226**

NOTE	REF NO	GRAPHIC REF	PART NUMBER	QTY	PART NAME 1 2 3 4 5 6 (PRODUCT LEVEL)	SEE PAGE
	1	1	**205-9570**	1	COVER-ROOF (CENTER)	
	2	1	**205-9571**	1	COVER-ROOF (REAR)	
	3	1	**205-9576**	1	COVER-ROOF (LH)	
	4	1	**205-9577**	1	COVER-ROOF (RH)	
	5	1	**9X-6165**	16	WASHER (6.5X22X2.5-MM THK)	
M	6	1	**8T-4138**	16	BOLT (M6X1X20-MM)	
	7	1	**9X-2038**	7	WASHER (7X19X2-MM THK)	
M	8	1	**9X-2045**	9	SCREW-TRUSS HEAD (M6X1X20-MM)	

M-METRIC PART

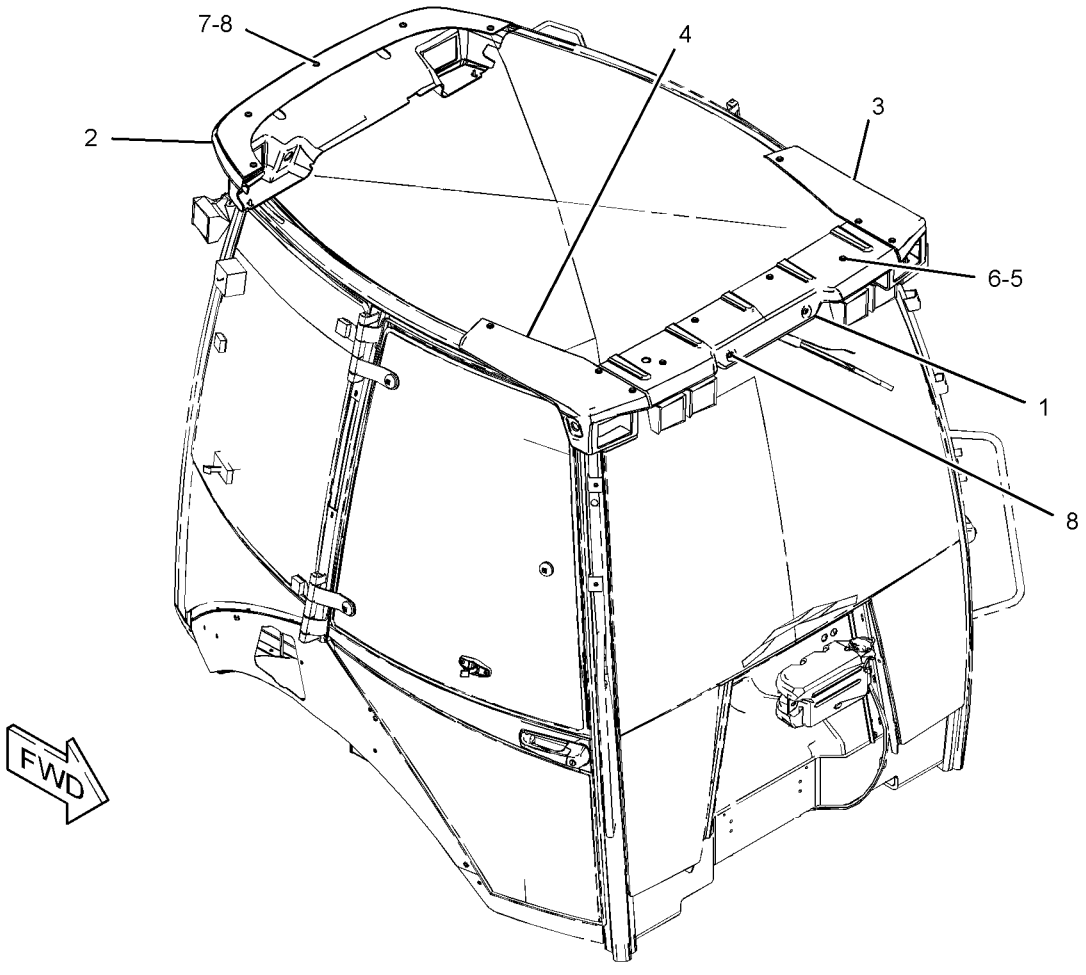

GRAPHIC #1 **<END>** g01233481

OPERATOR STATION

206-1747 SEAT BELT GP—RETRACTABLE, 2-IN

S/N: EAT1-UP

CANNOT BE USED IN CALIFORNIA, OREGON, OR BRITISH COLUMBIA

AN ATTACHMENT

SMCS-7327 **i03528080**

NOTE	REF NO	GRAPHIC REF	PART NUMBER	QTY	PART NAME 1 2 3 4 5 6 (PRODUCT LEVEL)	SEE PAGE
	1	1	**206-1749**	1	SEAT BELT (2-IN)	
	2	1	**8T-4223**	4	WASHER-HARD (13.5X25.5X3-MM THK)	
M	3	1	**8T-4956**	2	BOLT (M12X1.75X35-MM)	

M-METRIC PART

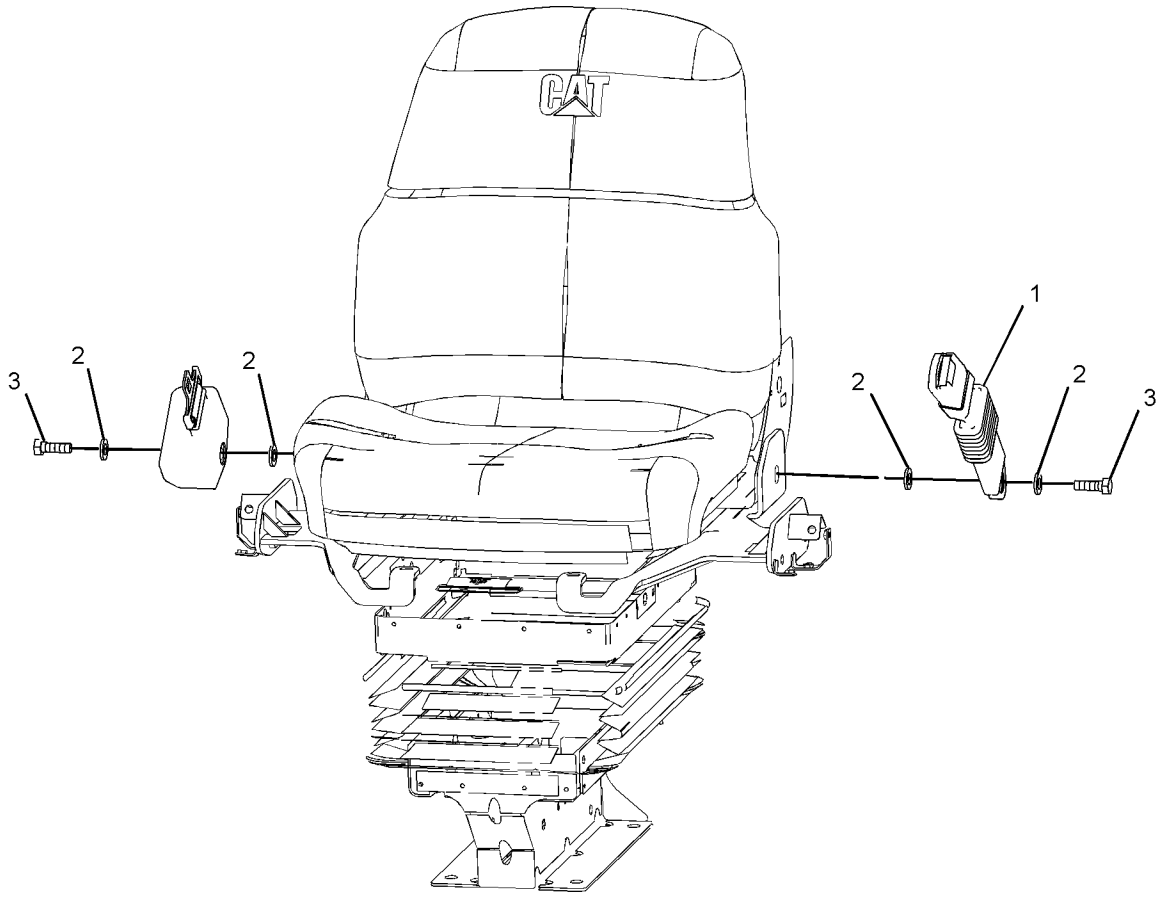

FRONT VIEW
(TOP LEFT)

GRAPHIC #1 **<END>** g01078751

206-1748 SEAT BELT GP—RETRACTABLE, 3-IN

S/N: EAT1-UP

FOR USE IN CALIFORNIA, OREGON, AND BRITISH COLUMBIA

AN ATTACHMENT

SMCS-7327 **i03516085**

NOTE	REF NO	GRAPHIC REF	PART NUMBER	QTY	PART NAME 1 2 3 4 5 6 (PRODUCT LEVEL)	SEE PAGE
	1	1	**206-1750**	1	SEAT BELT GP	
	2	1	**8T-4223**	4	WASHER-HARD (13.5X25.5X3-MM THK)	
M	3	1	**8T-4956**	2	BOLT (M12X1.75X35-MM)	

M-METRIC PART

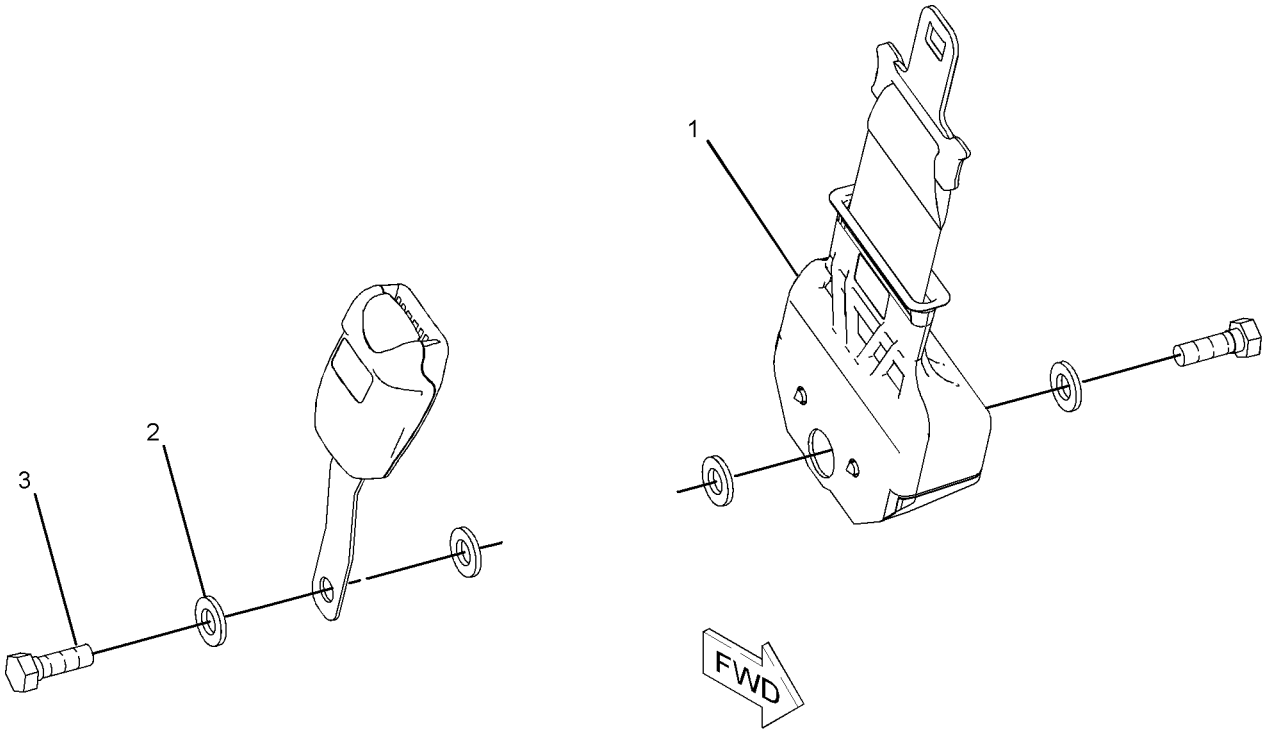

GRAPHIC #1 **<END>** g01078668

OPERATOR STATION

273-5905 SEAT GP–VINYL

S/N: EAT1-UP

PART OF 206-1791 SEAT GP-SUSPENSION

AN ATTACHMENT

SMCS-7312, 7321, 7324, 7336 **i02593694**

NOTE	REF NO	GRAPHIC REF	PART NUMBER	QTY	PART NAME 1 2 3 4 5 6 (PRODUCT LEVEL)	SEE PAGE
M	1	1	**105-3481**	2	BOLT-SOCKET HEAD (M8X1.25X20-MM)	
	2	1	**161-9283**	3	WASHER (19.8X31.8X1.6-MM THK)	
	3	1	**164-1249**	1	LEVER AS	
	4	1	**164-1250**	1	HANDLE	
	5	1	**164-1251**	1	SPRING	
	6	1	**164-1252**	1	SPRING	
M	7	1	**9X-6620**	1	LOCKNUT	
	8	1	**8T-9501**	2	SCREW (10-16X0.75-IN)	
M	9	1	**8T-4189**	2	BOLT (M8X1.25X20-MM)	
	10	1	**164-1258**	1	BRACKET AS (RH)	
	11	1	**164-1259**	1	BRACKET AS (LH)	
	12	1	**164-1266**	1	CUSHION AS-BACK	
	13	1	**5P-8245**	2	WASHER-HARD (13.5X25.5X3-MM THK)	
	14	1	**180-5795**	1	CUSHION AS-SEAT	
	15	1	**180-5797**	1	PAN AS	
	16	1	**195-9223**	2	SCREW-PAN HEAD	
	17	1	**260-0029**	1	PAN	
	18	1	**260-0045**	1	BOLT-SHOULDER (3/8-16X1.18-IN)	
M	19	1	**3T-0852**	8	LOCKNUT (M8X1.25-THD)	
M	20	1	**129-3180**	2	LOCKNUT (M12X1.75-THD)	

M-METRIC PART

273-5905 SEAT GP *(contd.)* **i02593694**

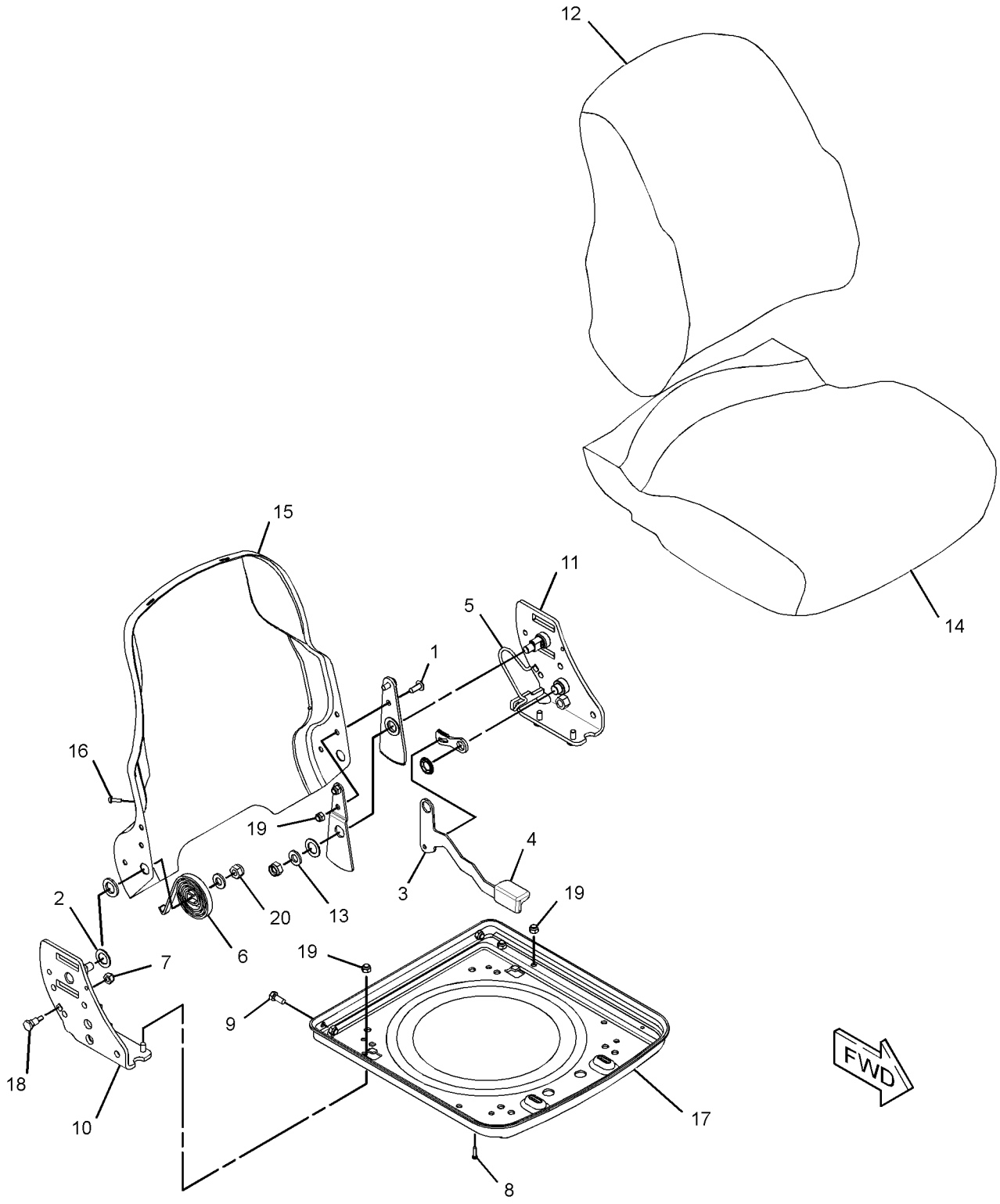

GRAPHIC #1 **<END>** g01283752

OPERATOR STATION

273-6036 SEAT GP—CLOTH

S/N: EAT1-UP

PART OF 206-1792 SEAT GP-SUSPENSION

AN ATTACHMENT

SMCS-7312, 7321, 7324, 7336 **i02593695**

NOTE	REF NO	GRAPHIC REF	PART NUMBER	QTY	PART NAME 1 2 3 4 5 6 (PRODUCT LEVEL)	SEE PAGE
M	1	1	**105-3481**	2	BOLT-SOCKET HEAD (M8X1.25X20-MM)	
	2	1	**161-9283**	3	WASHER (19.8X31.8X1.6-MM THK)	
	3	1	**164-1244**	1	CUSHION AS-BACK	
	4	1	**164-1249**	1	LEVER AS	
	5	1	**164-1250**	1	HANDLE	
	6	1	**164-1251**	1	SPRING	
	7	1	**164-1252**	1	SPRING	
M	8	1	**9X-6620**	1	LOCKNUT	
	9	1	**8T-9501**	2	SCREW (10-16X0.75-IN)	
M	10	1	**8T-4189**	2	BOLT (M8X1.25X20-MM)	
	11	1	**164-1258**	1	BRACKET AS (RH)	
	12	1	**164-1259**	1	BRACKET AS (LH)	
	13	1	**5P-8245**	2	WASHER-HARD (13.5X25.5X3-MM THK)	
	14	1	**180-5796**	1	CUSHION AS-SEAT	
	15	1	**180-5797**	1	PAN AS	
	16	1	**195-9223**	2	SCREW-PAN HEAD	
	17	1	**260-0029**	1	PAN	
	18	1	**260-0045**	1	BOLT-SHOULDER (3/8-16X1.18-IN)	
M	19	1	**3T-0852**	8	LOCKNUT (M8X1.25-THD)	
M	20	1	**129-3180**	2	LOCKNUT (M12X1.75-THD)	

M-METRIC PART

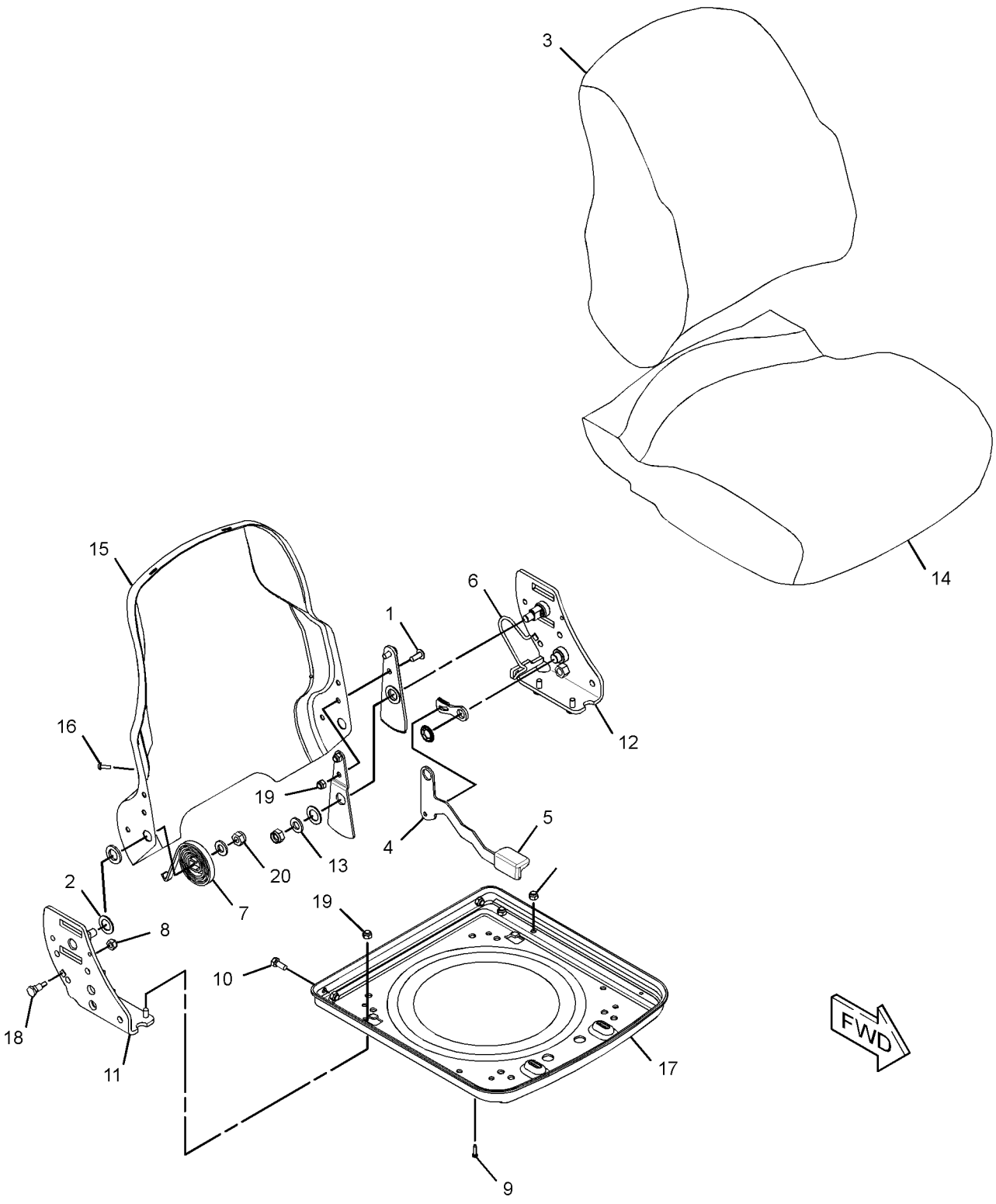

GRAPHIC #1 **<END>** g01283972

OPERATOR STATION

206-1791 SEAT GP-SUSPENSION—VINYL

S/N: EAT1-UP
PART OF 280-7364 SEAT GP-SUSPENSION
AN ATTACHMENT

SMCS-7324, 7336 **i03463081**

NOTE	REF NO	GRAPHIC REF	PART NUMBER	QTY	PART NAME 1 2 3 4 5 6 (PRODUCT LEVEL)	SEE PAGE
	1	1	**2K-4973**	4	LOCKNUT (3/8-16-THD)	
	2	1	**4L-6454**	4	BOLT (3/8-16X1-IN)	
	3	1	**195-7055**	4	WASHER-HARD (9.9X28.5X3.2-MM THK)	
Y	4	1	**273-5905**	1	SEAT GP (VINYL)	880
Y	5	1	**273-6372**	1	SUSPENSION GP-SEAT	891
	6	1	**164-1265**	4	BOLT (3/8-16X1.1-IN)	
	7	1	**4B-5271**	4	WASHER (25.5X11.2X2-MM THK)	
	8	1	**5T-7870**	4	KNOB	
	9	1	**164-1247**	1	BRACKET AS (RH)	
	10	1	**220-3790**	1	ARMREST AS (RH)	
M		1	**6A-9083**	1	SCREW-MACHINE (M6X1X15-MM)	
	11	1	**164-1261**	1	BRACKET AS (LH)	
	12	1	**220-3791**	1	ARMREST AS (LH)	
M		1	**6A-9083**	1	SCREW-MACHINE (M6X1X15-MM)	
	13	1	**1K-6872**	2	LOCKNUT (1/2-13-THD)	
	14	1	**0S-1595**	2	BOLT (1/2-13X1.25-IN)	
	15	1	**5P-8245**	2	WASHER-HARD (13.5X25.5X3-MM THK)	

M-METRIC PART
Y-SEPARATE ILLUSTRATION

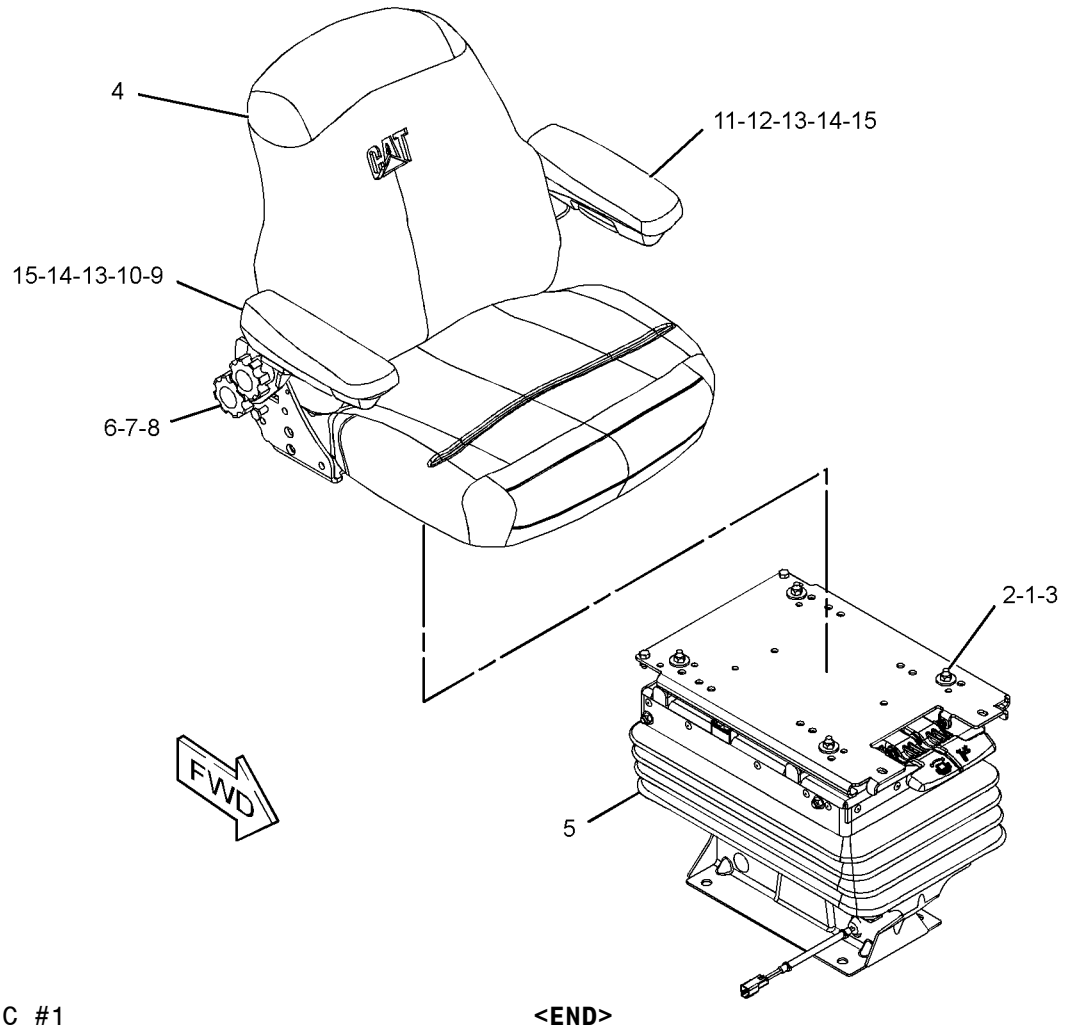

GRAPHIC #1 **<END>** g01298418

OPERATOR STATION

206-1792 SEAT GP-SUSPENSION—CLOTH

S/N: EAT1-UP
PART OF 280-7365 SEAT GP-SUSPENSION
AN ATTACHMENT

SMCS-7324, 7336 **i02838095**

NOTE	REF NO	GRAPHIC REF	PART NUMBER	QTY	PART NAME 1 2 3 4 5 6 (PRODUCT LEVEL)	SEE PAGE
	1	1	**2K-4973**	4	LOCKNUT (3/8-16-THD)	
	2	1	**4L-6454**	4	BOLT (3/8-16X1-IN)	
	3	1	**195-7055**	4	WASHER-HARD (9.9X28.5X3.2-MM THK)	
Y	4	1	**273-6036**	1	SEAT GP (CLOTH)	882
Y	5	1	**273-6372**	1	SUSPENSION GP-SEAT	891
	6	1	**164-1265**	4	BOLT (3/8-16X1.1-IN)	
	7	1	**4B-5271**	4	WASHER (25.5X11.2X2-MM THK)	
	8	1	**164-1214**	4	KNOB	
	9	1	**164-1247**	1	BRACKET AS (RH)	
	10	1	**220-3790**	1	ARMREST AS (RH)	
M		1	**6A-9083**	1	SCREW-MACHINE (M6X1X15-MM)	
	11	1	**164-1261**	1	BRACKET AS (LH)	
	12	1	**220-3791**	1	ARMREST AS (LH)	
M		1	**6A-9083**	1	SCREW-MACHINE (M6X1X15-MM)	
	13	1	**1K-6872**	2	LOCKNUT (1/2-13-THD)	
	14	1	**0S-1595**	2	BOLT (1/2-13X1.25-IN)	
	15	1	**5P-8245**	2	WASHER-HARD (13.5X25.5X3-MM THK)	

M-METRIC PART
Y-SEPARATE ILLUSTRATION

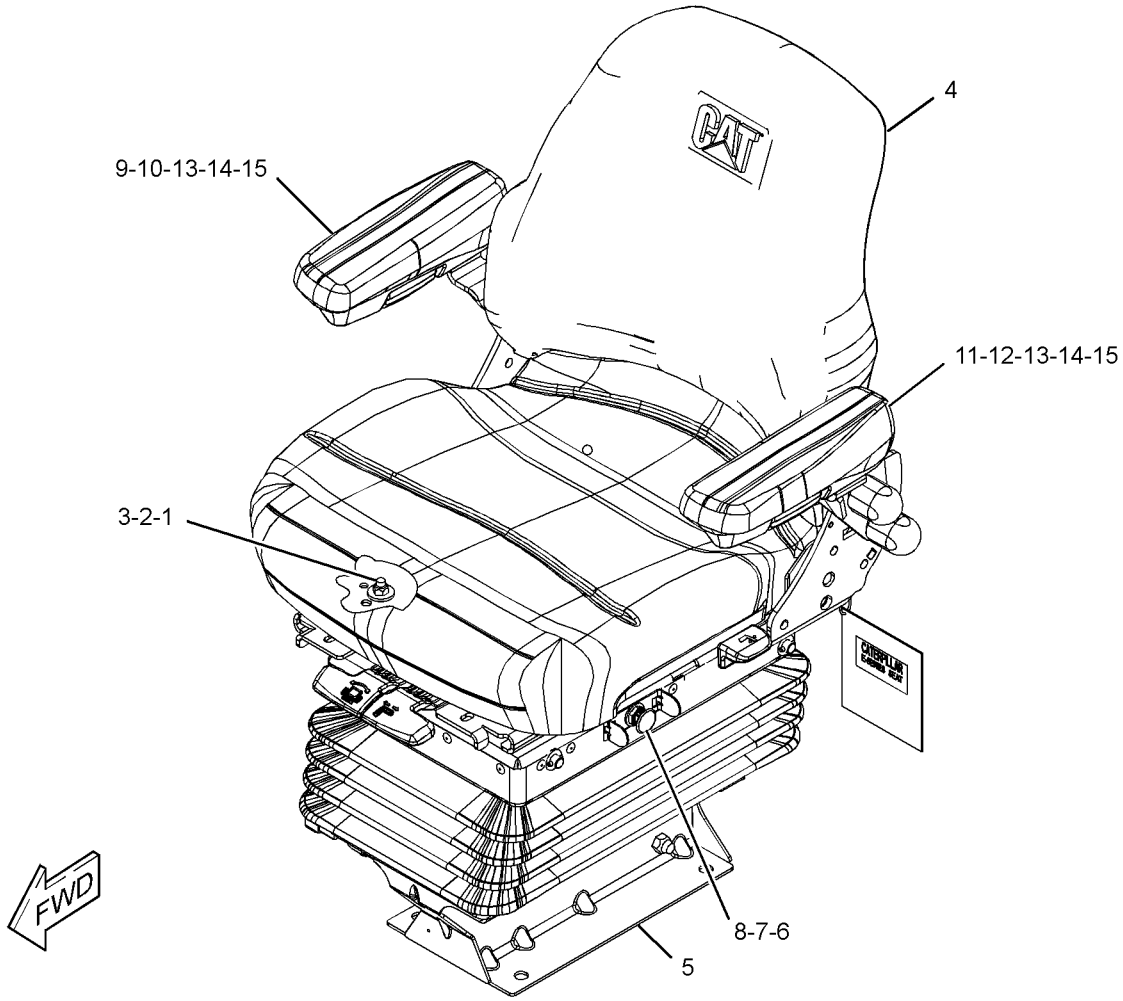

GRAPHIC #1 **<END>** g01225777

OPERATOR STATION

206-1796 SEAT GP-SUSPENSION—DELUXE, CLOTH

S/N: EAT1-UP
PART OF 280-7366 SEAT GP-SUSPENSION
AN ATTACHMENT

SMCS-7324, 7336 **i03505561**

NOTE	REF NO	GRAPHIC REF	PART NUMBER	QTY	PART NAME 1 2 3 4 5 6 (PRODUCT LEVEL)	SEE PAGE
	1	1	**2K-4973**	4	LOCKNUT (3/8-16-THD)	
	2	1	**4L-6454**	2	BOLT (3/8-16X1-IN)	
	3	1	**195-7055**	10	WASHER-HARD (9.9X28.5X3.2-MM THK)	
	4	1	**234-3017**	2	BOLT (3/8-16X0.875-IN)	
Y	5	1	**273-6037**	1	SEAT GP-SUSPENSION (DELUXE, CLOTH)	887
Y	6	1	**273-6372**	1	SUSPENSION GP-SEAT	891
	7	1	**164-1265**	4	BOLT (3/8-16X1.1-IN)	
	8	1	**4B-5271**	4	WASHER (25.5X11.2X2-MM THK)	
	9	1	**5T-7870**	4	KNOB	
	10	1	**164-1247**	1	BRACKET AS (RH)	
	11	1	**220-3790**	1	ARMREST AS (RH)	
M		1	**6A-9083**	1	SCREW-MACHINE (M6X1X15-MM)	
	12	1	**164-1261**	1	BRACKET AS (LH)	
	13	1	**220-3791**	1	ARMREST AS (LH)	
M		1	**6A-9083**	1	SCREW-MACHINE (M6X1X15-MM)	
	14	1	**1K-6872**	2	LOCKNUT (1/2-13-THD)	
	15	1	**0S-1595**	2	BOLT (1/2-13X1.25-IN)	
	16	1	**5P-8245**	2	WASHER-HARD (13.5X25.5X3-MM THK)	

M-METRIC PART
Y-SEPARATE ILLUSTRATION

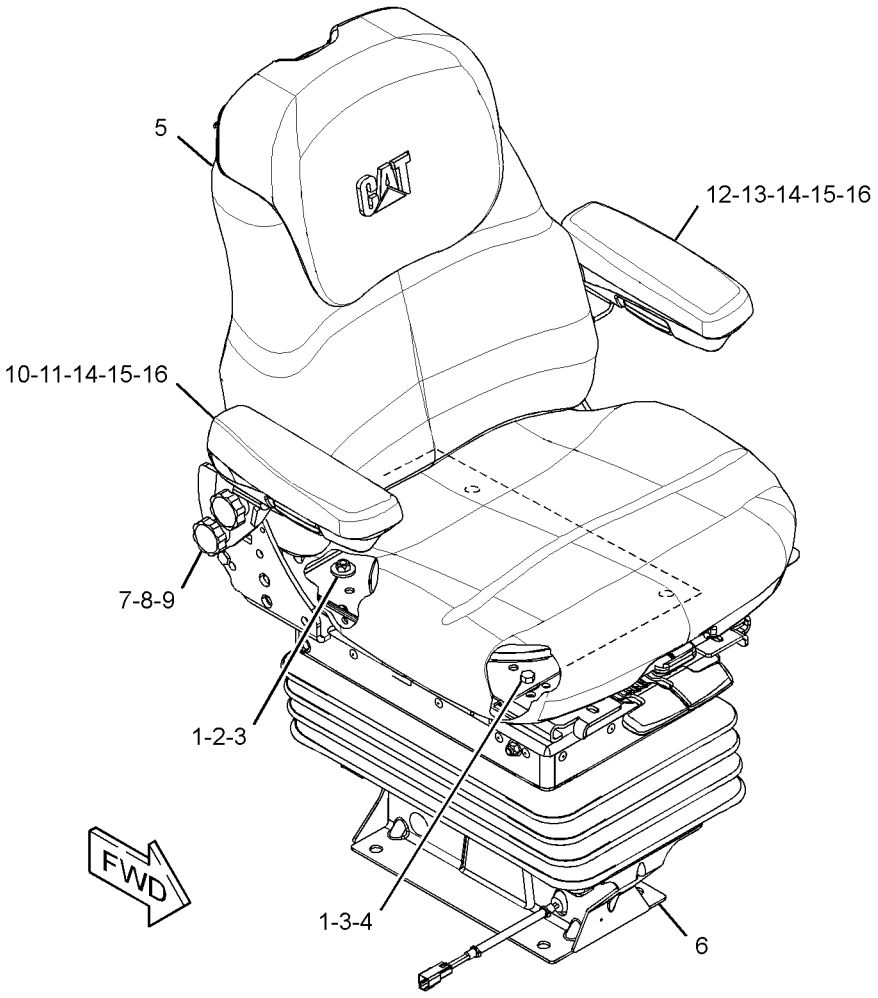

GRAPHIC #1 **<END>** g01309042

OPERATOR STATION

273-6037 SEAT GP-SUSPENSION—DELUXE, CLOTH

S/N: EAT1-UP

PART OF 206-1796 SEAT GP-SUSPENSION

AN ATTACHMENT

TYPE 1

SMCS-7324, 7336 **i03516089**

NOTE	PART NUMBER	QTY	PART NAME 1 2 3 4 5 6 (PRODUCT LEVEL)	SEE PAGE
	164-1275	1	BACKREST AS	
M	**2W-9499**	2	BOLT (M6X1X40-MM)	
	8C-0572	2	WASHER (8.8X25.5X2-MM THK)	
M	**8T-4189**	2	BOLT (M8X1.25X20-MM)	
	164-1265	1	BOLT (3/8-16X1.1-IN)	
	8T-8917	2	BOLT (1/2-13X1.25-IN)	
	260-0045	1	BOLT-SHOULDER (3/8-16X1.18-IN)	
M	**105-3481**	2	BOLT-SOCKET HEAD (M8X1.25X20-MM)	
	164-1259	1	BRACKET AS (LH)	
	164-1258	1	BRACKET AS (RH)	
	164-1244	1	CUSHION AS-BACK	
	260-0053	1	CUSHION GP-SEAT	
	260-0027	1	KNOB-SLIDE	
	164-1249	1	LEVER AS	
	260-0028	1	LEVER-TILT	
M	**3T-0852**	8	LOCKNUT (M8X1.25-THD)	
M	**129-3180**	2	LOCKNUT (M12X1.75-THD)	
M	**9X-6620**	1	LOCKNUT (M10X1.5-THD)	
	260-0029	1	PAN	
	260-0040	1	PAN	
	180-5797	1	PAN AS	
	164-1263	1	PAN AS	
	260-0062	1	PAN AS	
	260-0061	1	PAN AS	
	180-5781	1	ROD	
	8T-9501	2	SCREW (10-16X0.75-IN)	
M	**8T-6412**	2	SCREW-MACHINE (M6X1X20-MM)	
	195-9223	2	SCREW-PAN HEAD	
	164-1256	2	SPACER (19X25.4X12.5-MM THK)	
	164-1252	1	SPRING	
	164-1251	1	SPRING	
	164-1273	1	SPRING-EXTENSION	
	180-5791	1	SUPPORT AS-SEAT (LUMBAR)	
	164-1276	1	TUBE	
	161-9283	1	WASHER (19.8X31.8X1.6-MM THK)	
	5P-8245	2	WASHER-HARD (13.5X25.5X3-MM THK)	

M-METRIC PART

<END>

OPERATOR STATION

273-6037 SEAT GP-SUSPENSION—DELUXE, CLOTH

S/N: EAT1-UP
PART OF 206-1796 SEAT GP-SUSPENSION
AN ATTACHMENT
TYPE 2

SMCS-7324, 7336 **i03516090**

NOTE	REF NO	GRAPHIC REF	PART NUMBER	QTY	PART NAME 1 2 3 4 5 6 (PRODUCT LEVEL)	SEE PAGE
C	1	1	**2M-7819**	1	RING-RETAINING	
C	2	1	**4B-4278**	4	WASHER (10.2X20.5X1.6-MM THK)	
M	3	1	**105-3481**	2	BOLT-SOCKET HEAD (M8X1.25X20-MM)	
C	4	1	**111-5042**	3	FASTENER	
C	5	1	**121-3040**	6	FASTENER-PANEL	
	6	1	**161-9283**	1	WASHER (19.8X31.8X1.6-MM THK)	
C	7	1	**164-1245**	1	CUSHION GP-SEAT	
		1	**101-0003**	3	FASTENER	
		1	**164-1269**	1	BOOT	
		1	**164-1272**	1	ROD AS	
		1	**164-1273**	2	SPRING-EXTENSION	
C	8	1	**164-1246**	1	CUSHION AS (BACK)	
	9	1	**164-1249**	1	LEVER AS	
	10	1	**164-1251**	1	SPRING	
	11	1	**164-1252**	1	SPRING	
C	12	1	**2P-7864**	2	SCREW-TAPPING	
C	13	1	**4H-1641**	2	PIN-SPRING	
	14	1	**5P-8245**	2	WASHER-HARD (13.5X25.5X3-MM THK)	
	15	1	**164-1258**	1	BRACKET AS (RH)	
	16	1	**164-1259**	1	BRACKET AS (LH)	
	17	1	**164-1263**	1	PAN AS	
C	18	1	**164-1269**	1	BOOT	
C	19	1	**164-1271**	2	SPRING	
C	20	1	**164-1272**	1	ROD AS	
C	21	1	**164-1273**	2	SPRING-EXTENSION	
C	22	1	**164-1274**	2	BLOCK	
	23	1	**164-1275**	1	BACKREST AS	
M		1	**2W-9499**	2	BOLT (M6X1X40-MM)	
		1	**8C-0572**	2	WASHER (8.8X25.5X2-MM THK)	
C	24	1	**164-1276**	2	TUBE	
C	25	1	**164-1277**	2	CLIP-SPRING	
	26	1	**180-5781**	1	ROD	
C	27	1	**180-5782**	1	SPRING	
C	28	1	**180-5783**	1	FOLLOWER	
C	29	1	**180-5784**	1	LATCH AS	
C	30	1	**180-5785**	1	SPRING	
M	31	1	**129-3180**	2	LOCKNUT (M12X1.75-THD)	
C	32	1	**180-5787**	1	KNOB	
C	33	1	**180-5788**	1	BLOCK	
M	34	1	**8T-4189**	2	BOLT (M8X1.25X20-MM)	
	35	1	**180-5791**	1	SUPPORT AS-SEAT (LUMBAR)	
C	36	1	**195-9223**	4	SCREW-PAN HEAD	
	37	1	**260-0027**	1	KNOB-SLIDE	
	38	1	**260-0028**	1	LEVER-TILT	
	39	1	**260-0045**	1	BOLT-SHOULDER (3/8-16X1.18-IN)	
C	40	1	**8T-7566**	1	PIN-SPRING	
M	41	1	**9X-6620**	1	LOCKNUT (M10X1.5-THD)	
M	42	1	**3T-0852**	8	LOCKNUT (M8X1.25-THD)	

PARTS SHOWN IN GRAPHIC WITHOUT REFERENCE NUMBER ARE NOT SERVICED SEPARATELY

C-CHANGE FROM PREVIOUS TYPE
M-METRIC PART

273-6037 SEAT GP-SUSPENSION *(contd.)* **i03516090**

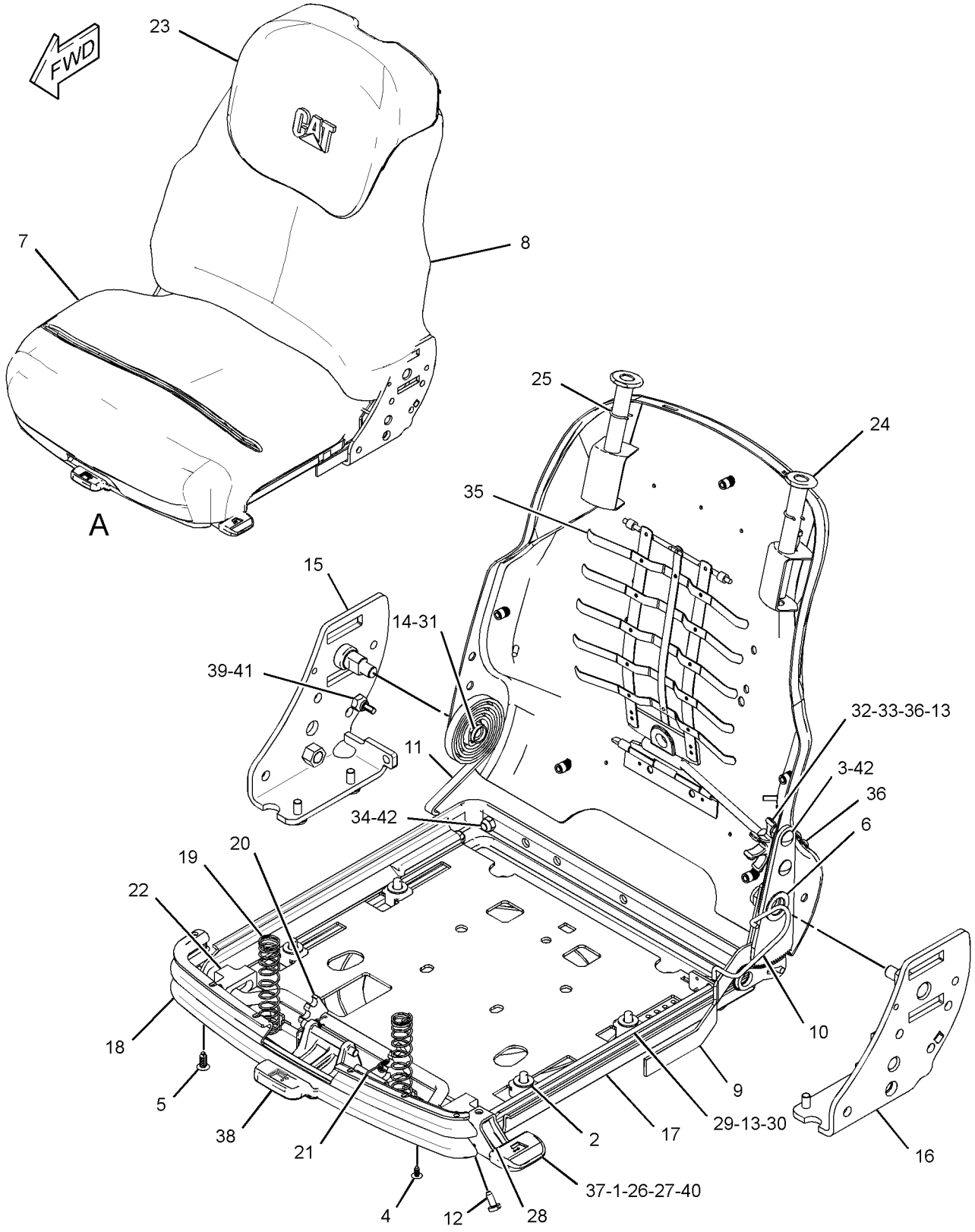

VIEW OF AREA A
(CUSHIONS REMOVED FOR CLARITY)

GRAPHIC #1

<END>

g01299261

280-7364 SEAT GP-SUSPENSION—VINYL

S/N: EAT1-UP
PART OF 269-2123, 269-2124 CANOPY AR-OPEN ROPS
AN ATTACHMENT

SMCS-7324, 7336 **i02837797**

NOTE	PART NUMBER	QTY	PART NAME 1 2 3 4 5 6 (PRODUCT LEVEL)	SEE PAGE
Y	**206-1791**	1	SEAT GP-SUSPENSION (VINYL)	884
M	**8T-4139**	4	BOLT (M12X1.75X30-MM)	
	3S-2093	1	STRAP-CABLE	
	8T-4223	4	WASHER-HARD (13.5X25.5X3-MM THK)	

M-METRIC PART
Y-SEPARATE ILLUSTRATION

<END>

280-7365 SEAT GP-SUSPENSION—CLOTH

S/N: EAT1-UP
PART OF 269-2125 CAB AR-ENCLOSED ROPS
AN ATTACHMENT

SMCS-7324, 7336 **i02837798**

NOTE	PART NUMBER	QTY	PART NAME 1 2 3 4 5 6 (PRODUCT LEVEL)	SEE PAGE
Y	**206-1792**	1	SEAT GP-SUSPENSION (CLOTH)	885
M	**8T-4139**	4	BOLT (M12X1.75X30-MM)	
	3S-2093	1	STRAP-CABLE	
	8T-4223	4	WASHER-HARD (13.5X25.5X3-MM THK)	

M-METRIC PART
Y-SEPARATE ILLUSTRATION

<END>

280-7366 SEAT GP-SUSPENSION—CLOTH

S/N: EAT1-UP
PART OF 269-2126, 269-2127 CAB AR-ENCLOSED ROPS
AN ATTACHMENT

SMCS-7324, 7336 **i02837799**

NOTE	PART NUMBER	QTY	PART NAME 1 2 3 4 5 6 (PRODUCT LEVEL)	SEE PAGE
Y	**206-1796**	1	SEAT GP-SUSPENSION (DELUXE, CLOTH)	886
M	**8T-4139**	4	BOLT (M12X1.75X30-MM)	
	3S-2093	1	STRAP-CABLE	
	8T-4223	4	WASHER-HARD (13.5X25.5X3-MM THK)	

M-METRIC PART
Y-SEPARATE ILLUSTRATION

<END>

OPERATOR STATION

273-6372 SUSPENSION GP-SEAT

S/N: EAT1-UP

PART OF 206-1791, 206-1792, 206-1796 SEAT GP-SUSPENSION

AN ATTACHMENT

TYPE 1

SMCS-7312, 7324 **i02838100**

NOTE	PART NUMBER	QTY	PART NAME 1 2 3 4 5 6 (PRODUCT LEVEL)	SEE PAGE
	260-0059	1	AIR COMPRESSOR GP (SUSPENSION SEAT)	
	164-1215	1	ABSORBER AS-SHOCK (SEAT)	
	164-1218	2	ARM AS-SUSPENSION (OUTER)	
	260-0060	1	ARM AS-SUSPENSION (INNER)	
	164-1219	1	BRACKET AS (FRONT)	
	164-1220	1	BRACKET AS (REAR)	
	260-0036	1	HARNESS AS-RIDE CONTROL	
	260-0057	1	LATCH AS-SLIDE	
	260-0052	1	PLATE AS-SLIDE	
	260-0051	1	PLATE AS-UPPER	
	102-8804	1	KIT-RECEPTACLE (4-PIN)	
			(INCLUDES RECEPTACLE AS & WEDGE)	
	260-0047	2	SHAFT AS	
	218-0235	2	SWITCH AS-LIMIT (SUSPENSION SEAT)	
			(EACH INCLUDES)	
	102-8803	1	KIT-RECEPTACLE (3-PIN)	
			(INCLUDES RECEPTACLE AS & WEDGE)	
	186-3735	3	PIN-CONNECTOR (16-GA TO 18-GA)	
	4B-9784	8	BALL	
	260-0063	1	BASE-SEAT	
	164-1230	12	BEARING	
	260-0067	2	BEARING	
	260-0042	1	BEARING-FLANGED	
	149-4745	2	KIT-SLIDER BLOCK (SUSPENSION SEAT)	
			(EACH INCLUDES BOLT & BLOCKS)	
	161-9289	2	BLOCK-SLIDER	
	260-0043	1	BLOCK-STOP	
	0S-0509	1	BOLT (3/8-16X0.75-IN)	
	1H-3337	4	BOLT (1/4-20X0.875-IN)	
	4M-0061	2	BOLT (5/16-18X0.75-IN)	
	7X-0481	1	BOLT (1/2-13X8-IN)	
	260-0041	1	BOLT (3/4-1-X1.42-IN)	
M	**197-6657**	1	BOLT-ROUND HEAD (M12X1.75X80-MM)	
	164-1240	1	BOOT	
	237-3943	1	BRACKET	
	164-1229	4	BUMPER	
	164-1237	1	BUSHING	
	111-5042	34	FASTENER	
	260-0046	1	HOUSING-UPPER	
	260-0031	1	LEVER	
	260-0032	1	LEVER	
	1K-6872	1	LOCKNUT (1/2-13-THD)	
	2D-6235	4	LOCKNUT (1/4-20-THD)	
	2K-4973	8	LOCKNUT (3/8-16-THD)	
M	**6V-7687**	1	LOCKNUT (M12X1.75-THD)	
M	**096-4882**	2	LOCKNUT (M8X1.25-THD)	
	142-2928	4	LOCKNUT (4-40-THD)	
	3B-4505	2	LOCKWASHER	
	3J-4818	2	LOCKWASHER	
	6V-8185	2	NUT (1/4-20-THD)	
	2L-5893	1	PIN-SPRING	
	4H-8380	4	PIN-SPRING	

273-6372 SUSPENSION GP-SEAT *(contd.)* i02838100

NOTE	PART NUMBER	QTY	PART NAME 1 2 3 4 5 6 (PRODUCT LEVEL)	SEE PAGE
	164-1232	1	PLATE	
	260-0044	1	PLATE-LATCH	
	5V-1497	2	RETAINER	
	215-1242	1	RING	
	8S-7803	3	RING-RETAINING	
	130-8343	1	SCREW-BUTTON HEAD (3/8-16X0.625-IN)	
	6L-7155	2	SCREW-MACHINE (1/4-20X0.5-IN)	
	173-5787	2	SETSCREW (1/4-20-THD)	
	164-1226	2	SHAFT	
	260-0049	2	SHAFT-LOWER	
	161-9288	1	SHAFT-PIVOT	
	260-0030	1	SHAFT-PIVOT	
	164-1233	2	SPACER (13X25.4X20.5-MM THK)	
	164-1238	1	SPACER (12.8X22.2X3.1-MM THK)	
	164-1239	2	SPACER (13.5X19X61.9-MM THK)	
	163-1135	1	SPRING	
	260-0034	1	SPRING-RETURN	
	260-0035	1	SPRING-RETURN	
	260-0033	1	SPRING-TORSION	
	7X-0622	6	WASHER (13X24X2.5-MM THK)	
	9X-1481	2	WASHER (13X25.4X1.6-MM THK)	

M-METRIC PART

<END>

OPERATOR STATION

273-6372 SUSPENSION GP-SEAT

S/N: EAT1-UP
PART OF 206-1791, 206-1792, 206-1796 SEAT GP-SUSPENSION
AN ATTACHMENT
TYPE 2

SMCS-7312, 7324 **i03463100**

NOTE	REF NO	GRAPHIC REF	PART NUMBER	QTY	PART NAME 1 2 3 4 5 6 (PRODUCT LEVEL)	SEE PAGE
C	1	2	**3S-2093**	2	STRAP-CABLE	
	2	1,2	**111-5042**	34	FASTENER	
	3	2	**243-3593**	1	SPRING AS-AIR	
		2	**130-8343**	1	SCREW-BUTTON HEAD (3/8-16X0.625-IN)	
		2	**163-1135**	1	SPRING	
		2	**164-1232**	1	PLATE	
D		2	**5P-6010**		TUBE (1-M)	
	4	1	**149-4745**	2	KIT-SLIDER BLOCK (SUSPENSION SEAT)	
					(EACH INCLUDES BOLT & BLOCKS)	
C	5	1	**161-9283**	1	WASHER (19.8X31.8X1.6-MM THK)	
C	6	1	**161-9285**	1	NUT (3/4-10-THD)	
	7	1	**161-9288**	1	SHAFT-PIVOT	
	8	1	**161-9289**	2	BLOCK-SLIDER	
	9	2	**180-5789**	2	NUT	
	10	2	**164-1215**	1	ABSORBER AS-SHOCK (SEAT)	
	11	2	**164-1218**	2	ARM AS-SUSPENSION (OUTER)	
	12	2	**164-1219**	1	BRACKET AS (FRONT)	
	13	2	**164-1220**	1	BRACKET AS (REAR)	
	14	2	**164-1226**	2	SHAFT	
C	15	2	**164-1228**	1	HARNESS AS-RIDE CONTROL	
	16	2	**164-1229**	4	BUMPER	
	17	2	**164-1230**	12	BEARING	
	19	2	**164-1233**	2	SPACER (13X25.4X20.5-MM THK)	
C	20	1	**164-1234**	1	PLATE	
C	21	1	**164-1235**	1	KNOB	
	22	2	**164-1237**	1	BUSHING	
	23	2	**164-1238**	1	SPACER (12.8X22.2X3.1-MM THK)	
	24	2	**164-1239**	2	SPACER (13.5X19X61.9-MM THK)	
	25	1	**164-1240**	1	BOOT	
	26	1	**173-5787**	2	SETSCREW (1/4-20-THD)	
C	28	2	**185-3890**	2	SCREW-PAN HEAD (8-32X33.3-MM)	
M	29	2	**197-6657**	1	BOLT-ROUND HEAD (M12X1.75X80-MM)	
C	30	1	**215-8196**	1	VALVE AS	
	31	2	**237-3943**	1	BRACKET	
	32	1	**260-0030**	1	SHAFT-PIVOT	
	33	1	**321-6337**	1	LEVER (HANDLE-SWIVEL)	
	34	1	**260-0032**	1	LEVER (HANDLE-SLIDE)	
	35	1	**260-0033**	1	SPRING-TORSION (SWIVEL LATCH)	
	36	1	**260-0034**	1	SPRING-RETURN (SWIVEL)	
	37	1	**260-0035**	1	SPRING-RETURN (SLIDE)	
	38	1	**260-0041**	1	BOLT (3/4-1-X1.42-IN)	
	40	1	**260-0043**	1	BLOCK-STOP	
	41	1	**260-0044**	1	PLATE-LATCH	
	42	1	**317-5309**	1	HOUSING AS	
		1	**260-0046**	1	HOUSING-UPPER	
M		1	**6V-9632**	2	NUT-WELD (M6X1-THD)	
	43	1	**260-0047**	2	SHAFT AS (UPPER)	
	44	2	**260-0049**	2	SHAFT-LOWER	
	45	1	**260-0051**	1	PLATE AS-UPPER	
	46	1	**260-0052**	1	PLATE AS-SLIDE	
	47	1	**260-0057**	1	LATCH AS-SLIDE	
	48	2	**260-0059**	1	AIR COMPRESSOR GP (SUSPENSION SEAT)	
	50	2	**260-0063**	1	BASE-SEAT	
	51	2	**260-0067**	2	BEARING	

273-6372 SUSPENSION GP-SEAT *(contd.)* i03463100

NOTE	REF NO	GRAPHIC REF	PART NUMBER	QTY	PART NAME 1 2 3 4 5 6 (PRODUCT LEVEL)	SEE PAGE
C	52	1	**289-1204**	1	RING	
M	53	1	**096-4882**	2	LOCKNUT (M8X1.25-THD)	
CM	54	2	**129-3180**	1	LOCKNUT (M12X1.75-THD)	
C	55	1,2	**153-0088**	4	WASHER-HARD (10.31X20X1.65-MM THK)	
	56	2	**0S-0509**	1	BOLT (3/8-16X0.75-IN)	
	57	2	**1H-3337**	4	BOLT (1/4-20X0.875-IN)	
	58	2	**1K-6872**	1	LOCKNUT (1/2-13-THD)	
	59	2	**2D-6235**	4	LOCKNUT (1/4-20-THD)	
	60	1,2	**2K-4973**	8	LOCKNUT (3/8-16-THD)	
	61	1	**2L-5893**	1	PIN-SPRING	
	62	1	**3B-4505**	2	LOCKWASHER	
C	63	1	**3B-4631**	1	PIN-COTTER	
	64	2	**3J-4818**	2	LOCKWASHER	
C	65	1	**4B-9784**	12	BALL	
	66	1,2	**4H-8380**	4	PIN-SPRING	
	67	1	**4M-0061**	2	BOLT (5/16-18X0.75-IN)	
	68	1	**6L-7155**	2	SCREW-MACHINE (1/4-20X0.5-IN)	
	69	2	**6V-8185**	4	NUT (1/4-20-THD)	
	70	2	**7X-0481**	1	BOLT (1/2-13X8-IN)	
	71	2	**7X-0622**	6	WASHER (13X24X2.5-MM THK)	
	72	1	**8S-7803**	3	RING-RETAINING	
	73	2	**9X-1481**	2	WASHER (13X25.4X1.6-MM THK)	
	74	1	**8Y-5946**	1	FASTENER	
	75	2	**260-0060**	1	ARM AS-SUSPENSION (INNER)	

C-CHANGE FROM PREVIOUS TYPE
D-ORDER BY THE METER
M-METRIC PART

273-6372 SUSPENSION GP-SEAT *(contd.)* i03463100

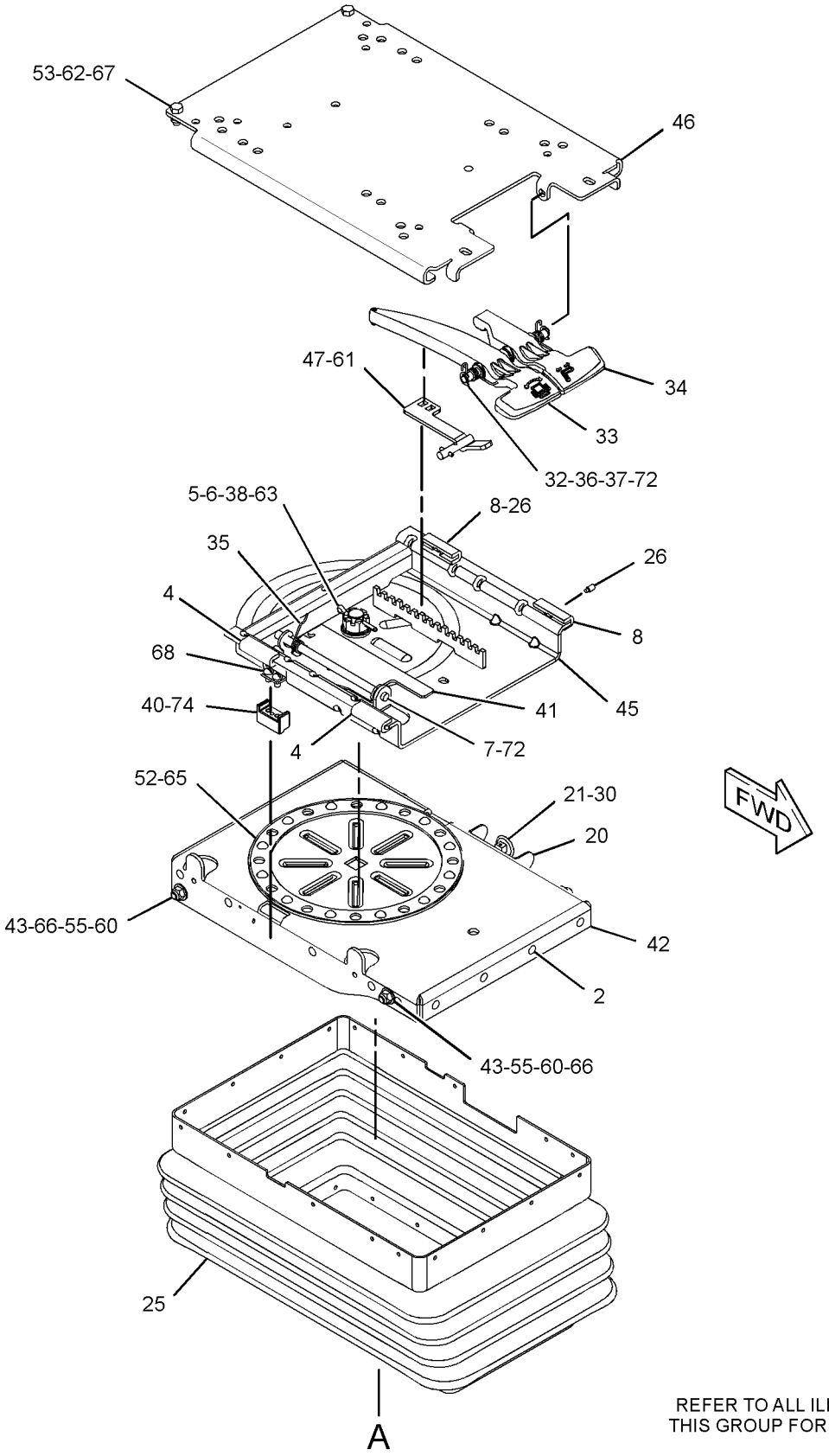

REFER TO ALL ILLUSTRATIONS OF THIS GROUP FOR AUXILIARY VIEWS

GRAPHIC #1 g01515019

273-6372 SUSPENSION GP-SEAT *(contd.)* i03463100

REFER TO ALL ILLUSTRATIONS OF
THIS GROUP FOR AUXILIARY VIEWS

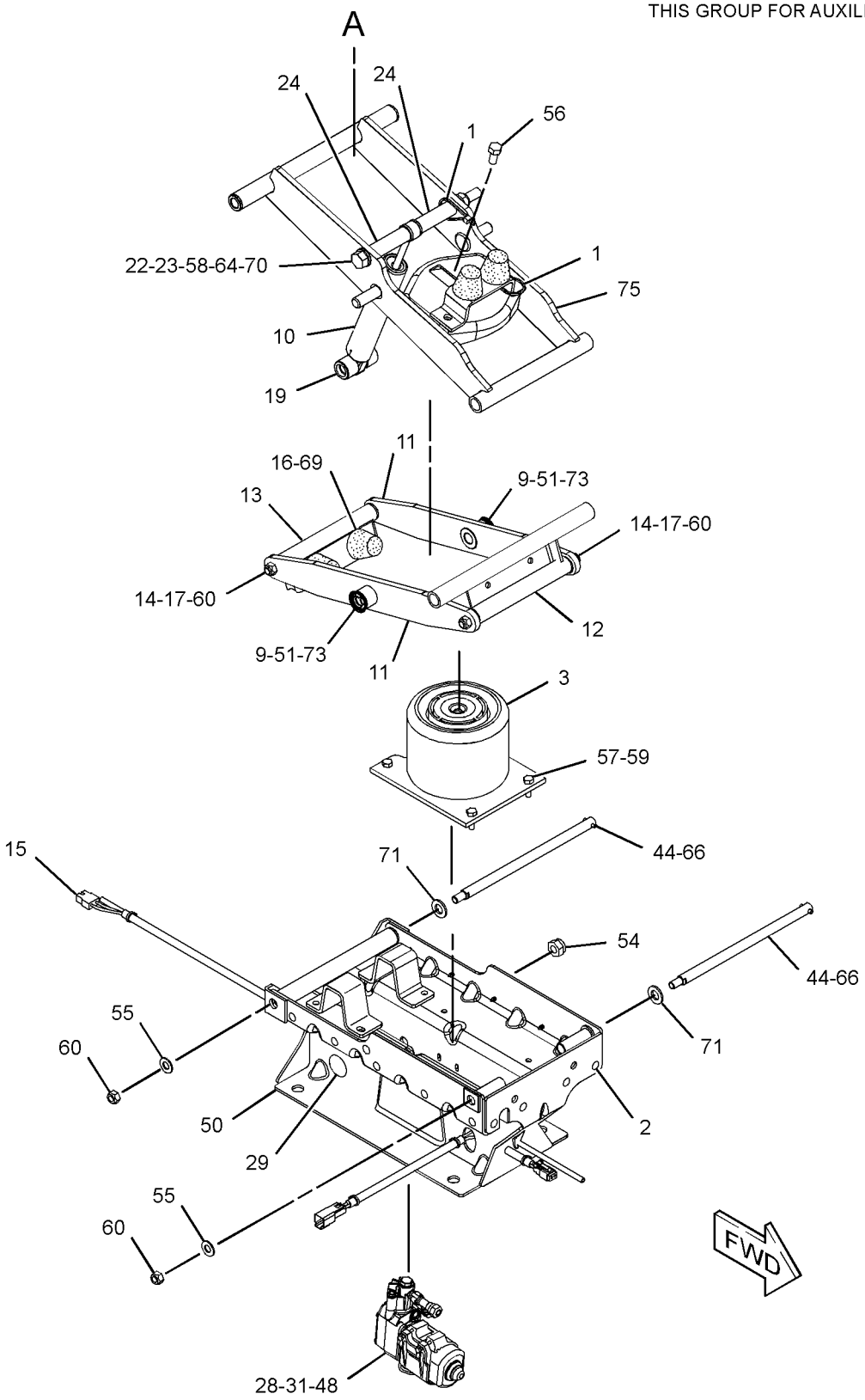

GRAPHIC #2 **<END>** g01517422

OPERATOR STATION

239-1080 TACHOMETER GP-ELECTRIC

S/N: EAT1-UP

PART OF 211-4241, 290-6803 WIRING GP-CONSOLE

AN ATTACHMENT

SMCS-7462 **i01986564**

NOTE	REF NO	GRAPHIC REF	PART NUMBER	QTY	PART NAME 1 2 3 4 5 6 (PRODUCT LEVEL)	SEE PAGE
	1	1	**4B-2043**	7	NUT (8-32-THD)	
	2	1	**9B-7233**	7	LOCKWASHER	
	3	1	**122-7137**	1	LAMP (12-VOLT)	
	4	1	**131-1424**	1	SEAL	

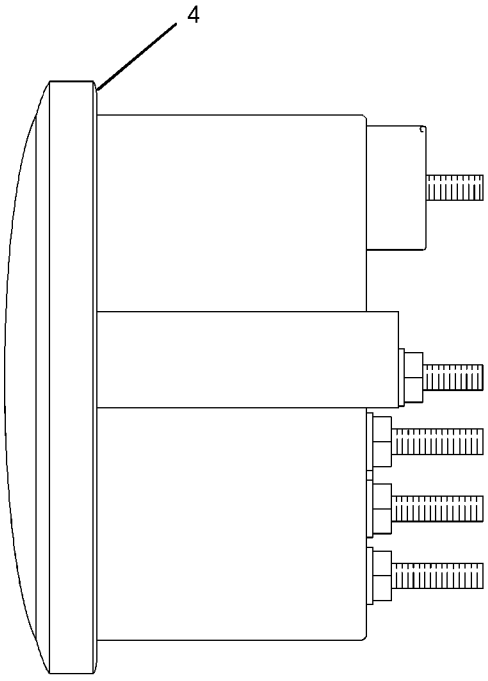

LEFT SIDE VIEW

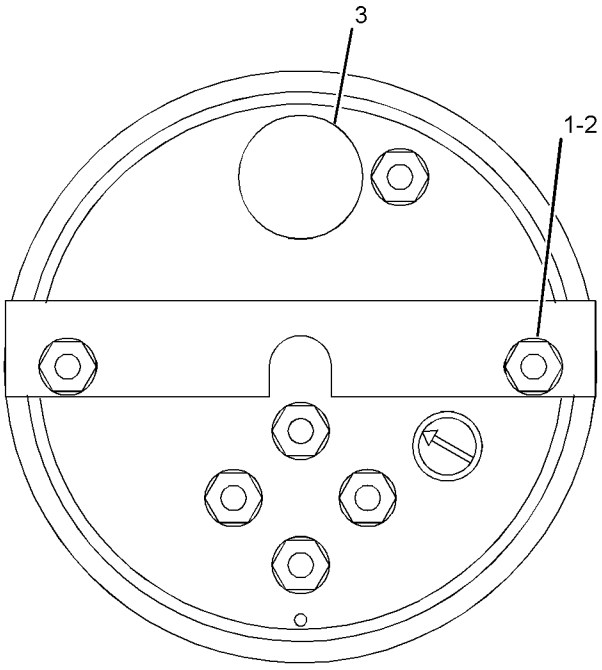

REAR VIEW

GRAPHIC #1 **<END>** g01030658

OPERATOR STATION

206-1704 TRIM GP-CAB

S/N: EAT1-UP

PART OF 269-2123, 269-2124 CANOPY AR-OPEN ROPS

AN ATTACHMENT

SMCS-7329, 7451 **i02787052**

NOTE	REF NO	GRAPHIC REF	PART NUMBER	QTY	PART NAME 1 2 3 4 5 6 (PRODUCT LEVEL)	SEE PAGE
	1	1	**6V-0292**	1	PLUG	
	2	1	**9C-4457**	4	FASTENER	
	3	1	**141-1762**	1	SPACER (21.2X25.4X20-MM THK)	
	4	1	**206-1623**	1	INSERT (LH)	
	5	1	**206-1625**	1	INSERT (RH)	
	6	1	**206-1637**	1	CONSOLE-STORAGE	
	7	1	**206-1665**	2	PLUG	
	8	1	**206-1666**	1	PLUG	
	9	1	**206-1683**	1	INSERT	
	10	1	**206-1798**	1	COVER-POST	
	11	1	**206-1799**	4	PLUG	
	12	1	**213-1888**	1	COVER-FENDER	
	13	1	**261-9632**	1	COVER AS	
		1	**206-1684**	1	COVER (CAB FILTER)	
	14	1	**282-7833**	1	GROMMET	
	15	1	**282-7835**	1	PLATE	
M	16	1	**6V-7744**	1	LOCKNUT (M10X1.5-THD)	
	17	1	**8T-4222**	1	WASHER-PLATED (11X32X2.5-MM THK)	
M	18	1	**8T-4178**	1	BOLT (M10X1.5X90-MM)	
M	19	1	**8C-3798**	2	BOLT-LOCKING (M6X1X30-MM)	
	20	1	**9X-2038**	3	WASHER (7X19X2-MM THK)	
M	21	1	**9X-2044**	7	SCREW-TRUSS HEAD (M6X1X16-MM)	
	22	1	**9X-8256**	2	WASHER (6.6X12X2-MM THK)	
E	23	1	**8C-7524**		SEAL (40-CM)	

E-ORDER BY THE CENTIMETER
M-METRIC PART

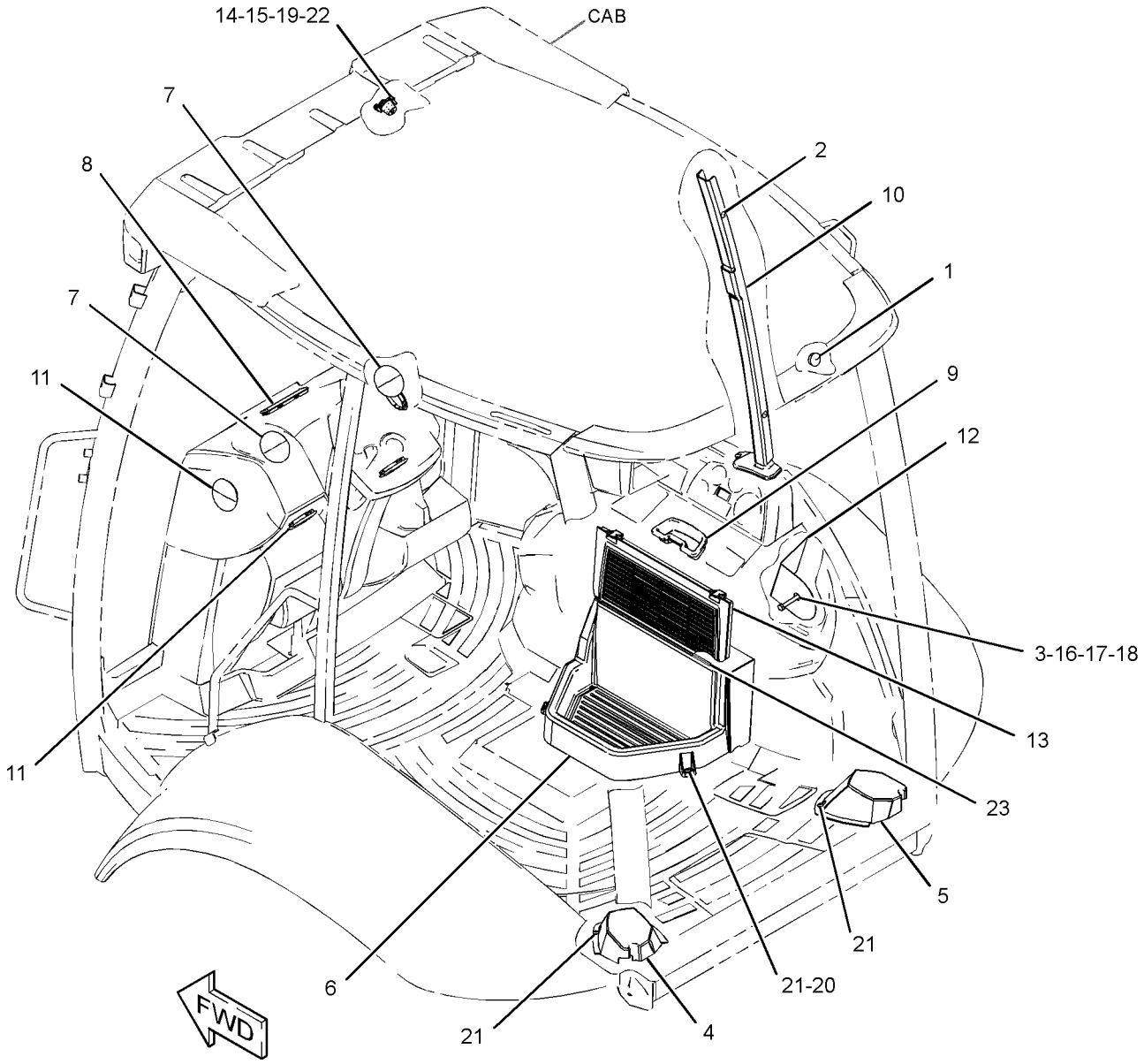

GRAPHIC #1 **<END>** g01274349

OPERATOR STATION

206-1857 VISOR GP-CAB

S/N: EAT1-722
PART OF 269-2126, 269-2127 CAB AR-ENCLOSED ROPS
AN ATTACHMENT

SMCS-7301 **i02114171**

NOTE	REF NO	GRAPHIC REF	PART NUMBER	QTY	PART NAME 1 2 3 4 5 6 (PRODUCT LEVEL)	SEE PAGE
	1	1	**9R-3205**	1	VISOR AS	
	2	1	**4N-9170**	2	CLIP	



GRAPHIC #1 **<END>** g01077278

OPERATOR STATION

206-1857 VISOR GP-CAB

S/N: EAT723-UP
PART OF 269-2126, 269-2127 CAB AR-ENCLOSED ROPS
AN ATTACHMENT

SMCS-7301 **i02704687**

NOTE	REF NO	GRAPHIC REF	PART NUMBER	QTY	PART NAME 1 2 3 4 5 6 (PRODUCT LEVEL)	SEE PAGE
CE	1	1	**8C-3681**		HOSE (2.5-CM EACH)	
	2	1	**9R-3205**	1	VISOR AS	
C	3	1	**5P-9297**	2	CLIP	

C-CHANGE FROM PREVIOUS TYPE
E-ORDER BY THE CENTIMETER

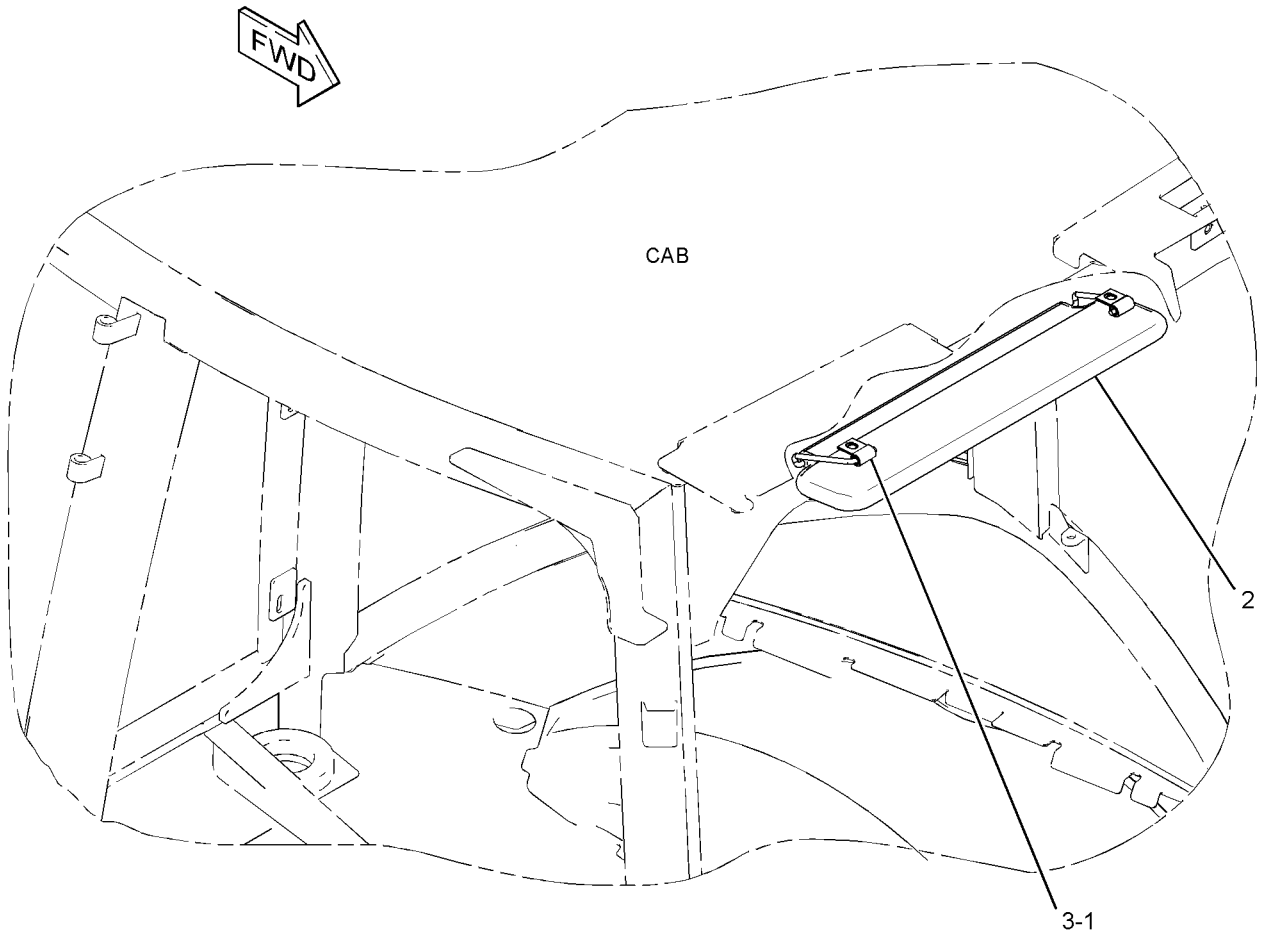

GRAPHIC #1 **<END>** g01384970

OPERATOR STATION

206-1727 WASHER GP-WINDOW

S/N: EAT1-UP
PART OF 269-2125, 269-2126, 269-2127 CAB AR-ENCLOSED ROPS
AN ATTACHMENT
TYPE 1

SMCS-7306 **i03516100**

NOTE	REF NO	GRAPHIC REF	PART NUMBER	QTY	PART NAME 1 2 3 4 5 6 (PRODUCT LEVEL)	SEE PAGE
	1	1	**282-7835**	1	PLATE	
D	2	1	**6V-0505**		SEAL (0.5-M)	
	3	1	**3S-2093**	11	STRAP-CABLE	
	4	1	**8T-1118**	1	NOZZLE AS-WASHER	
	5	1	**9R-3469**	2	DIAPHRAGM	
	6	1	**9X-8372**	1	FILM-INSTRUCTION (WASHER FILL)	
	7	1	**121-6936**	1	CONNECTOR	
	8	1	**213-6051**	1	HARNESS AS-CAB	
	9	1	**214-3763**	1	TANK GP-WINDOW WASHER	
		1	**254-5683**	1	CAP	
		1	**8E-8293**	2	GROMMET	
		1	**6T-1375**	2	PUMP AS-WASHER	
		1	**214-3742**	1	TANK-WASHER	
	10	1	**276-8791**	1	CLIP	
	11	1	**283-3451**	2	CONNECTOR AS	
	12	1	**156-0283**	2	WASHER-HARD (8.4X35X2.5-MM THK)	
M	13	1	**8T-5093**	2	BOLT-LOCKING (M8X1.25X25-MM)	
E	14	1	**144-0195**		HOSE (17-CM)	
E	14A	1	**144-0195**		HOSE (21-CM EACH)	
E	14B	1	**144-0195**		HOSE (81-CM)	
M	15	1	**8C-3798**	2	BOLT-LOCKING (M6X1X30-MM)	
	16	1	**282-7833**	1	GROMMET	
	17	1	**9X-8256**	2	WASHER (6.6X12X2-MM THK)	

D-ORDER BY THE METER
E-ORDER BY THE CENTIMETER
M-METRIC PART

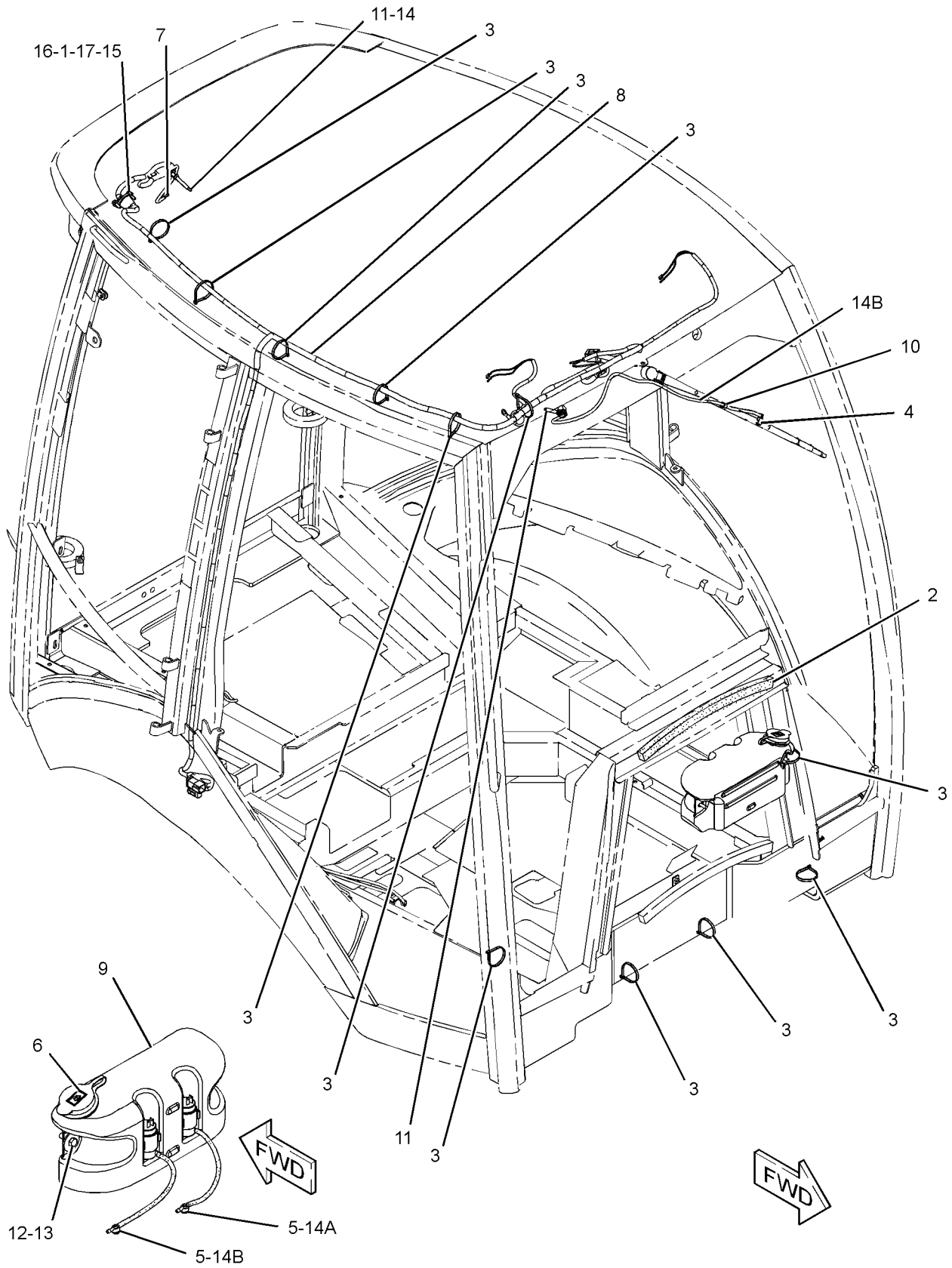

GRAPHIC #1 **<END>** g01847133

OPERATOR STATION

206-1727 WASHER GP-WINDOW

S/N: EAT1-UP
PART OF 269-2125, 269-2126, 269-2127 CAB AR-ENCLOSED ROPS
AN ATTACHMENT
TYPE 2

SMCS-7306 **i03399288**

NOTE	REF NO	GRAPHIC REF	PART NUMBER	QTY	PART NAME 1 2 3 4 5 6 (PRODUCT LEVEL)	SEE PAGE
E	1	1	**144-0195**		HOSE (17-CM)	
E	1A	1	**144-0195**		HOSE (21-CM EACH)	
E	1B	1	**144-0195**		HOSE (81-CM)	
	2	1	**3S-2093**	11	STRAP-CABLE	
	3	1	**8T-1118**	1	NOZZLE AS-WASHER	
	4	1	**9R-3469**	2	DIAPHRAGM	
	5	1	**9X-8372**	1	FILM-INSTRUCTION (WASHER FILL)	
	6	1	**121-6936**	1	CONNECTOR	
	7	1	**213-6051**	1	HARNESS AS-CAB	
	8	1	**214-3763**	1	TANK GP-WINDOW WASHER	
		1	**254-5683**	1	CAP	
		1	**8E-8293**	2	GROMMET	
		1	**6T-1375**	2	PUMP AS-WASHER	
		1	**214-3742**	1	TANK-WASHER	
	9	1	**276-8791**	1	CLIP	
	10	1	**282-7833**	1	GROMMET	
	11	1	**282-7835**	1	PLATE	
	12	1	**283-3451**	2	CONNECTOR AS	
	13	1	**156-0283**	2	WASHER-HARD (8.4X35X2.5-MM THK)	
M	14	1	**8C-3798**	2	BOLT-LOCKING (M6X1X30-MM)	
M	15	1	**8T-5093**	2	BOLT-LOCKING (M8X1.25X25-MM)	
	16	1	**9X-8256**	2	WASHER (6.6X12X2-MM THK)	

E-ORDER BY THE CENTIMETER
M-METRIC PART

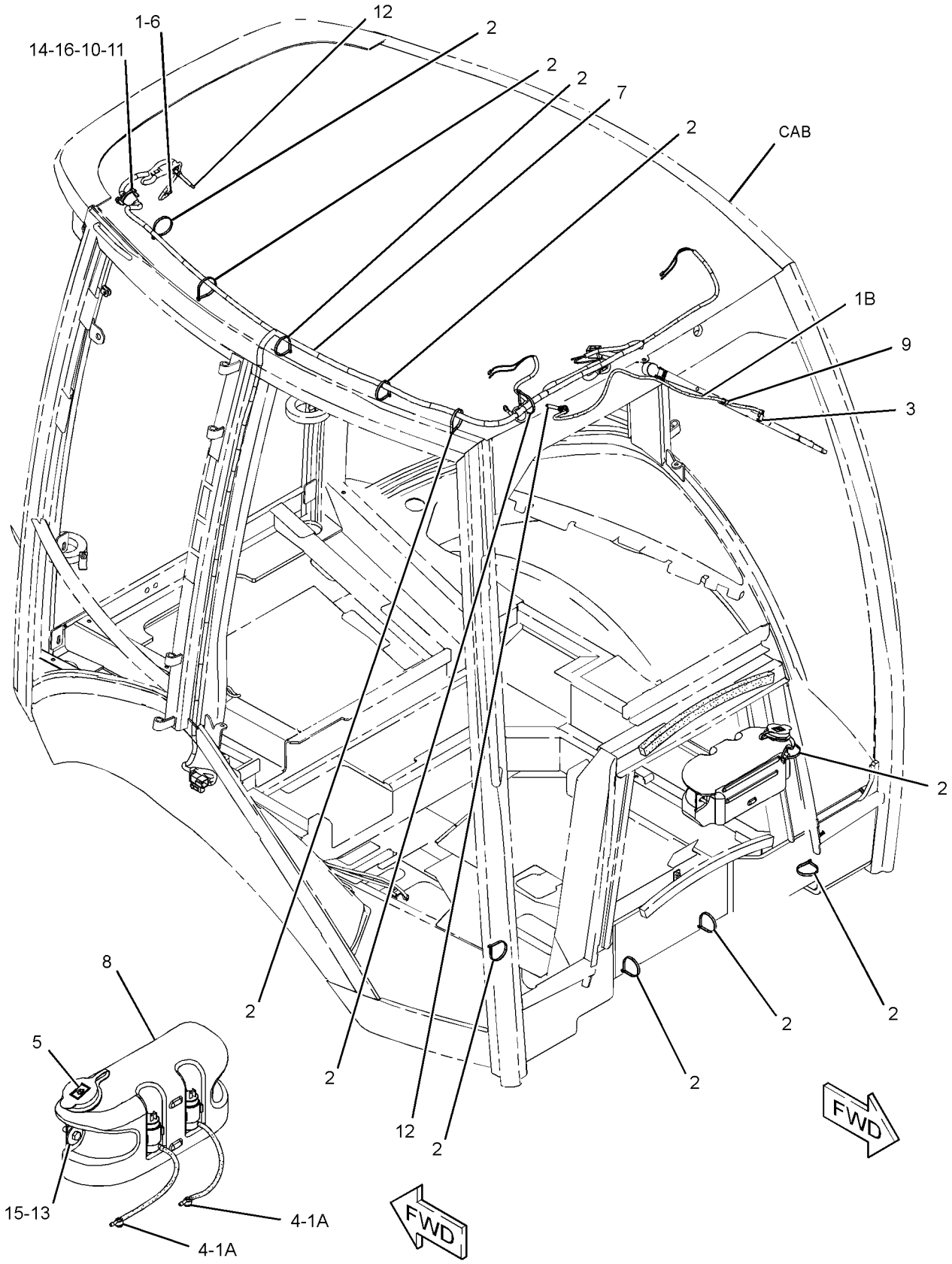

GRAPHIC #1 **<END>** g01794076

OPERATOR STATION

205-9619 WINDOW GP-CAB—UPPER, LH

S/N: EAT1-UP

PART OF 206-1889 CAB GP-ENCLOSED ROPS, 281-7219 WINDOW GP-CAB

AN ATTACHMENT

SMCS-7310 **i02940328**

NOTE	REF NO	GRAPHIC REF	PART NUMBER	QTY	PART NAME 1 2 3 4 5 6 (PRODUCT LEVEL)	SEE PAGE
E	1	1	**317-4423**		SEAL (342-CM)	
	2	1	**8Y-7309**	1	RETAINER	
	3	1	**100-7608**	1	HANDLE	
	4	1	**129-8542**	6	RETAINER (MOUNT)	
	5	1	**129-8545**	8	WASHER (13X40X3-MM THK)	
M	6	1	**136-4192**	4	BOLT (M6X1X35-MM)	
	7	1	**154-5423**	2	SPACER (6.6X12.7X17-MM THK)	
Y	8	1	**299-6985**	1	LATCH GP-CAB DOOR & WINDOW (RH)	856
Y	9	1	**299-6986**	1	LATCH GP-CAB DOOR & WINDOW (LH)	857
	10	1	**205-9621**	1	GLASS (UPPER, LH)	
	11	1	**205-9623**	1	HINGE (LOWER, LH)	
	12	1	**205-9624**	1	HINGE (UPPER, LH)	
	13	1	**223-2030**	1	LATCH AS (HOLD OPEN)	
M		1	**6V-7743**	2	LOCKNUT (M6X1-THD)	
M		1	**9X-2045**	2	SCREW-TRUSS HEAD (M6X1X20-MM)	
		1	**143-2827**	2	SPRING	
M	14	1	**5C-7261**	1	NUT (M8X1.25-THD)	
M	15	1	**6V-7743**	2	LOCKNUT (M6X1-THD)	
	16	1	**7X-2393**	1	BUMPER-CONICAL	

E-ORDER BY THE CENTIMETER
M-METRIC PART
Y-SEPARATE ILLUSTRATION

205-9619 WINDOW GP-CAB *(contd.)* **i02940328**

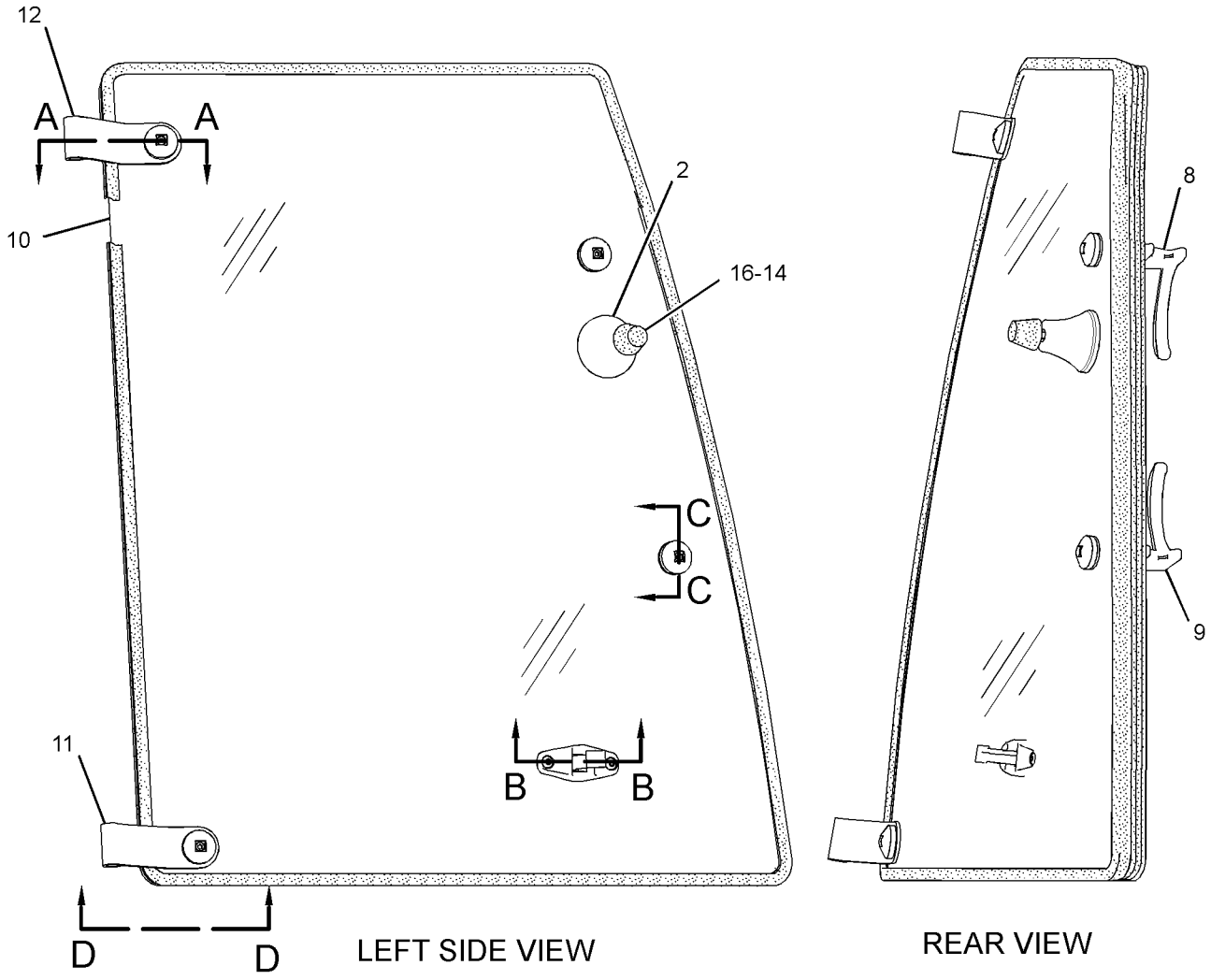

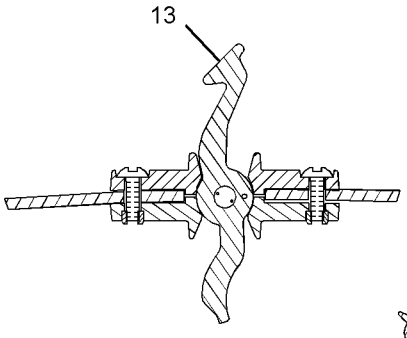

SECTION B-B

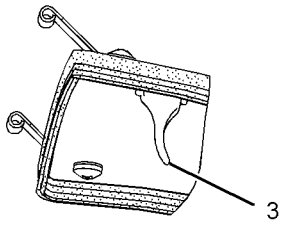

VIEW D-D

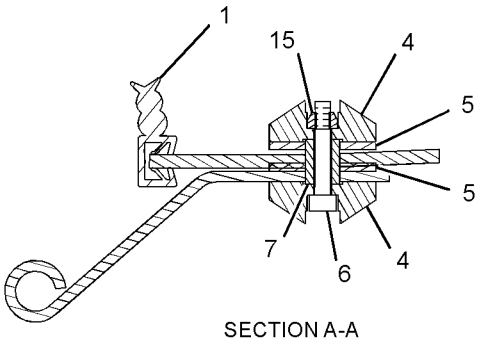

SECTION A-A

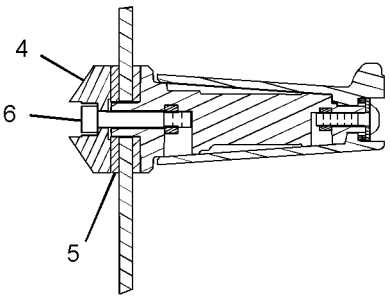

SECTION C-C

GRAPHIC #1

<END>

g01522082

OPERATOR STATION

205-9628 WINDOW GP-CAB—UPPER, RH

S/N: EAT1-UP

PART OF 206-1889 CAB GP-ENCLOSED ROPS, 281-7219 WINDOW GP-CAB

AN ATTACHMENT

SMCS-7310 **i02940329**

NOTE	REF NO	GRAPHIC REF	PART NUMBER	QTY	PART NAME 1 2 3 4 5 6 (PRODUCT LEVEL)	SEE PAGE
E	1	1	**317-4423**		SEAL (342-CM)	
	2	1	**8Y-7309**	1	RETAINER	
	3	1	**100-7608**	1	HANDLE	
	4	1	**129-8542**	6	RETAINER	
	5	1	**129-8545**	8	WASHER (13X40X3-MM THK)	
M	6	1	**136-4192**	4	BOLT (M6X1X35-MM)	
	7	1	**154-5423**	2	SPACER (6.6X12.7X17-MM THK)	
Y	8	1	**299-6985**	1	LATCH GP-CAB DOOR & WINDOW (RH)	856
Y	9	1	**299-6986**	1	LATCH GP-CAB DOOR & WINDOW (LH)	857
	10	1	**205-9630**	1	GLASS (UPPER, RH)	
	11	1	**205-9633**	1	HINGE (LOWER, RH)	
	12	1	**205-9634**	1	HINGE (UPPER, RH)	
	13	1	**223-2030**	1	LATCH AS (HOLD OPEN)	
M		1	**6V-7743**	2	LOCKNUT (M6X1-THD)	
M		1	**9X-2045**	2	SCREW-TRUSS HEAD (M6X1X20-MM)	
		1	**143-2827**	2	SPRING	
M	14	1	**5C-7261**	1	NUT (M8X1.25-THD)	
M	15	1	**6V-7743**	2	LOCKNUT (M6X1-THD)	
	16	1	**7X-2393**	1	BUMPER-CONICAL	

E-ORDER BY THE CENTIMETER
M-METRIC PART
Y-SEPARATE ILLUSTRATION

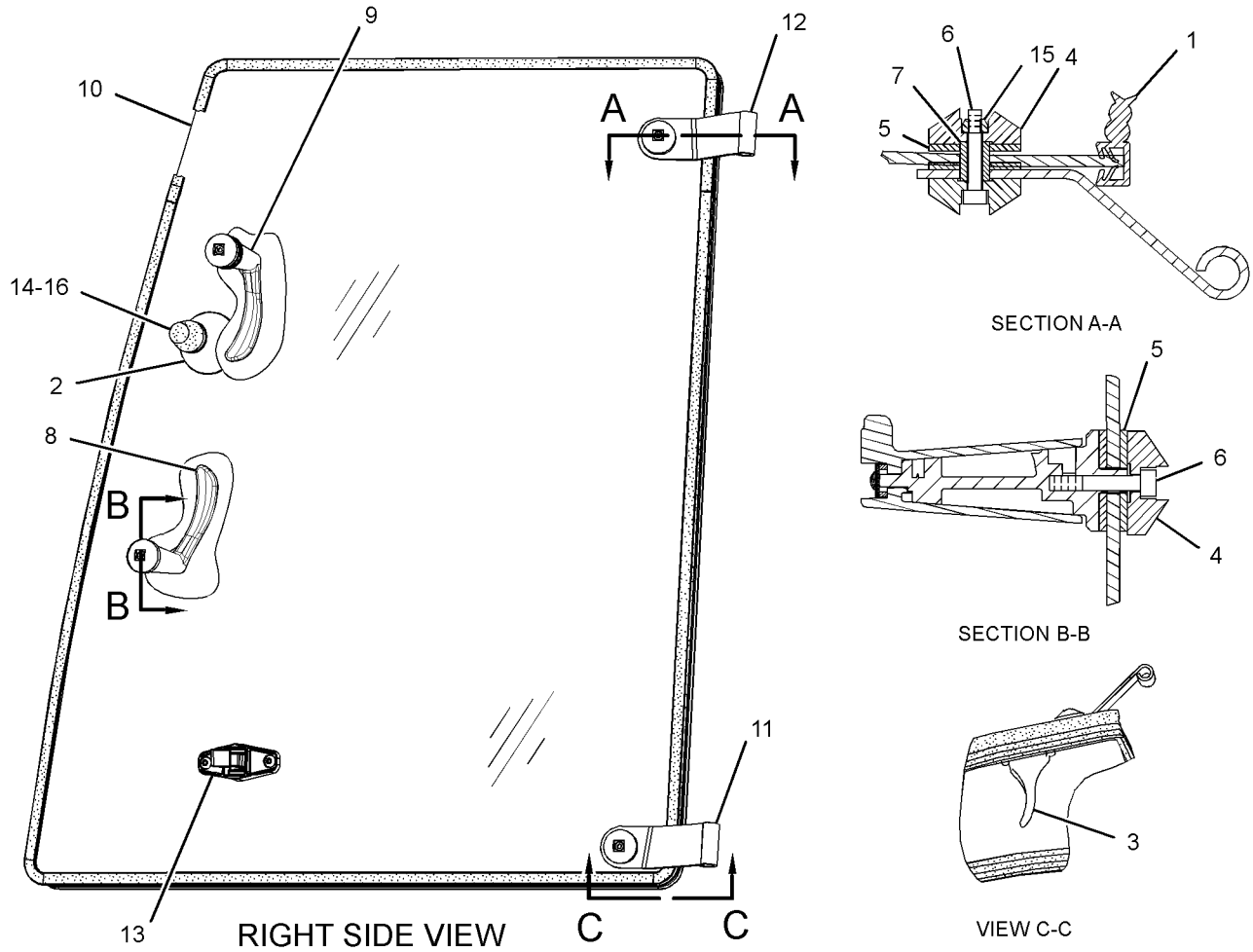

GRAPHIC #1 **<END>** g01522081

OPERATOR STATION

229-0300 WINDOW GP-CAB—REAR

S/N: EAT1-UP
PART OF 206-1889 CAB GP-ENCLOSED ROPS
AN ATTACHMENT
TYPE 1

SMCS-7310 **i03511043**

NOTE	REF NO	GRAPHIC REF	PART NUMBER	QTY	PART NAME 1 2 3 4 5 6 (PRODUCT LEVEL)	SEE PAGE
	1	1	**5P-4115**	6	WASHER-HARD (7.2X19X2-MM THK)	
M	2	1	**9X-2044**	4	SCREW-TRUSS HEAD (M6X1X16-MM)	
	3	1	**9X-2132**	4	RETAINER	
	4	1	**110-5602**	2	KNOB	
	5	1	**119-8349**	2	CAP	
	6	1	**121-9743**	1	SEAL	
M	7	1	**129-3180**	4	LOCKNUT (M12X1.75-THD)	
M	8	1	**131-8203**	4	SCREW-FLAT HEAD (M8X1.25X30-MM)	
	9	1	**146-7744**	1	KIT-LATCH (RH)	
	10	1	**146-7745**	1	KIT-LATCH (LH)	
	11	1	**164-1308**	2	ROLLER	
	12	1	**164-1328**	2	SPRING-GAS	
	13	1	**164-1342**	4	BOLT-SPECIAL	
	14	1	**164-1343**	4	WASHER-THRUST	
	15	1	**164-1344**	4	WASHER-THRUST	
	16	1	**164-1345**	4	BEARING	
	17	1	**164-1346**	4	STRIKER	
	18	1	**164-1351**	2	PIN	
	19	1	**164-1352**	1	LATCH AS (LH)	
	20	1	**164-1353**	1	LATCH AS (RH)	
	21	1	**167-8182**	2	BUMPER	
	22	1	**171-2870**	2	SPACER (7X10X5.4-MM THK)	
B	23	1	**201-9465**	4	SHIM (1-MM THK)	
	24	1	**218-4854**	1	PLATE AS	
	25	1	**218-4856**	1	PLATE AS	
	26	1	**229-0298**	1	LINKAGE AS	
	27	1	**229-0305**	1	FRAME AS	
	28	1	**229-0308**	1	GLASS	
	29	1	**229-0310**	1	WINDOW AS	
		1	**229-0309**	1	GLASS	
M	30	1	**5C-2890**	2	NUT (M6X1-THD)	
	31	1	**5P-4116**	4	WASHER-HARD (8.8X20.5X2-MM THK)	
M	32	1	**8T-4200**	4	BOLT (M8X1.25X16-MM)	
	33	1	**8T-4223**	4	WASHER-HARD (13.5X25.5X3-MM THK)	
D	34	1	**5P-5637**		SEAL (1-M)	
E	35	1	**9X-6383**		SEAL (88-CM)	
E	36	1	**164-1314**		SEAL-BULK (153-CM EACH)	
E	37	1	**164-1354**		CHANNEL-WINDOW (90-CM)	
E	37A	1	**164-1354**		CHANNEL-WINDOW (75-CM)	
E	37B	1	**164-1354**		CHANNEL-WINDOW (74-CM)	

B-USE AS REQUIRED
D-ORDER BY THE METER
E-ORDER BY THE CENTIMETER
M-METRIC PART

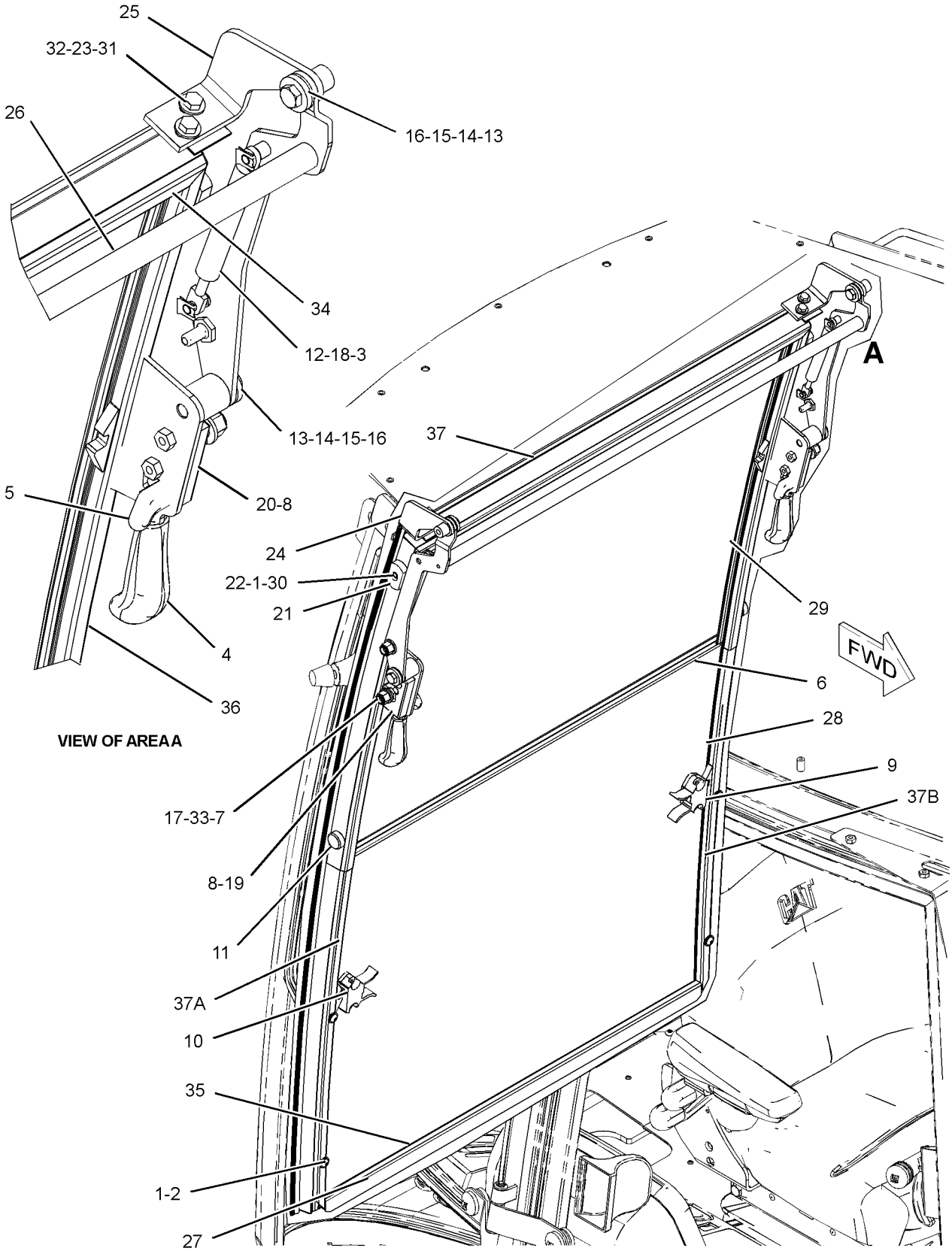

GRAPHIC #1

<END>

g01847073

OPERATOR STATION

229-0300 WINDOW GP-CAB—REAR

S/N: EAT1-UP
PART OF 206-1889 CAB GP-ENCLOSED ROPS, 281-7219 WINDOW GP-CAB
AN ATTACHMENT
TYPE 2

SMCS-7310 **i02962184**

NOTE	REF NO	GRAPHIC REF	PART NUMBER	QTY	PART NAME 1 2 3 4 5 6 (PRODUCT LEVEL)	SEE PAGE
	1	1	**5P-4115**	6	WASHER-HARD (7.2X19X2-MM THK)	
M	2	1	**9X-2044**	4	SCREW-TRUSS HEAD (M6X1X16-MM)	
	3	1	**9X-2132**	4	RETAINER	
	4	1	**110-5602**	2	KNOB	
	5	1	**119-8349**	2	CAP	
	6	1	**308-1273**	1	SEAL	
M	7	1	**129-3180**	4	LOCKNUT (M12X1.75-THD)	
CM	8	1	**179-7262**	4	SCREW-FLAT HEAD (M8X1.25X40-MM)	
	9	1	**146-7744**	1	KIT-LATCH (RH)	
	10	1	**146-7745**	1	KIT-LATCH (LH)	
	11	1	**164-1308**	2	ROLLER	
	12	1	**164-1328**	2	SPRING-GAS	
	13	1	**164-1342**	4	BOLT-SPECIAL	
	14	1	**164-1343**	4	WASHER-THRUST	
	15	1	**164-1344**	4	WASHER-THRUST	
	16	1	**164-1345**	4	BEARING	
	17	1	**164-1346**	4	STRIKER	
	18	1	**164-1351**	2	PIN	
	19	1	**164-1352**	1	LATCH AS (LH)	
	20	1	**164-1353**	1	LATCH AS (RH)	
	21	1	**167-8182**	2	BUMPER	
	22	1	**171-2870**	2	SPACER (7X10X5.4-MM THK)	
B	23	1	**201-9465**	4	SHIM (1-MM THK)	
	24	1	**218-4854**	1	PLATE AS	
	25	1	**218-4856**	1	PLATE AS	
	26	1	**229-0298**	1	LINKAGE AS	
C	27	1	**290-1273**	1	FRAME AS	
	28	1	**229-0308**	1	GLASS	
	29	1	**229-0310**	1	WINDOW AS	
		1	**229-0309**	1	GLASS	
M	30	1	**5C-2890**	2	NUT (M6X1-THD)	
	31	1	**5P-4116**	4	WASHER-HARD (8.8X20.5X2-MM THK)	
M	32	1	**8T-4200**	4	BOLT (M8X1.25X16-MM)	
	33	1	**8T-4223**	4	WASHER-HARD (13.5X25.5X3-MM THK)	
D	34	1	**5P-5637**		SEAL (1-M)	
E	35	1	**9X-6383**		SEAL (88-CM)	
E	36	1	**164-1314**		SEAL-BULK (153-CM EACH)	
CE	37	1	**164-1354**		CHANNEL-WINDOW (90-CM)	
CE	37A	1	**164-1354**		CHANNEL-WINDOW (75-CM EACH)	
CE	37B	1	**164-1354**		CHANNEL-WINDOW (74-CM EACH)	
C	38	1	**150-8015**	2	GASKET	

B-USE AS REQUIRED
C-CHANGE FROM PREVIOUS TYPE
D-ORDER BY THE METER
E-ORDER BY THE CENTIMETER
M-METRIC PART

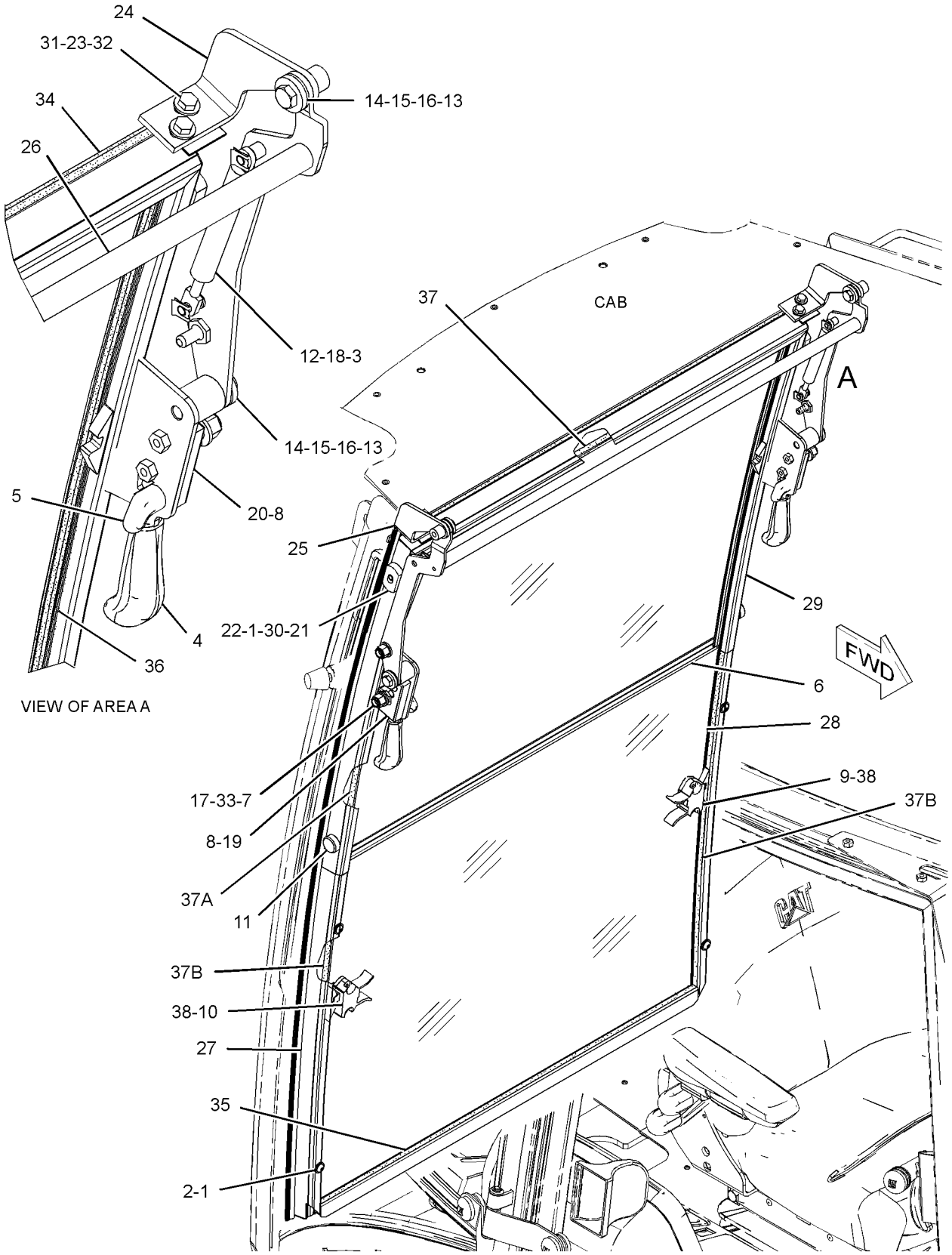

GRAPHIC #1

<END>

g01366206

OPERATOR STATION

281-7219 WINDOW GP-CAB

S/N: EAT1-UP

AN ATTACHMENT

SMCS-7310 **i03532243**

NOTE	REF NO	GRAPHIC REF	PART NUMBER	QTY	PART NAME 1 2 3 4 5 6 (PRODUCT LEVEL)	SEE PAGE
	1	1	**8S-7803**	2	RING-RETAINING	
	2	1	**172-4211**	8	SPACER (10.5X22X50.8-MM THK)	
Y	3	1	*229-0300*	1	WINDOW GP-CAB (REAR)	910
	4	1	**129-5256**	4	BUSHING	
	5	1	**129-5257**	8	BUSHING	
M	6	1	**131-3987**	8	SCREW (M4X0.7X12-MM)	
	7	1	**159-4945**	2	KEEPER	
Y	8	1	**205-9619**	1	WINDOW GP-CAB (UPPER, LH)	906
	9	1	**205-9622**	1	GLASS (LOWER, LH)	
Y	10	1	**205-9628**	1	WINDOW GP-CAB (UPPER, RH)	908
	11	1	**205-9631**	1	GLASS (LOWER, RH)	
	12	1	**206-1590**	4	PIN	
	13	1	**159-4946**	2	KEEPER	

M-METRIC PART
Y-SEPARATE ILLUSTRATION

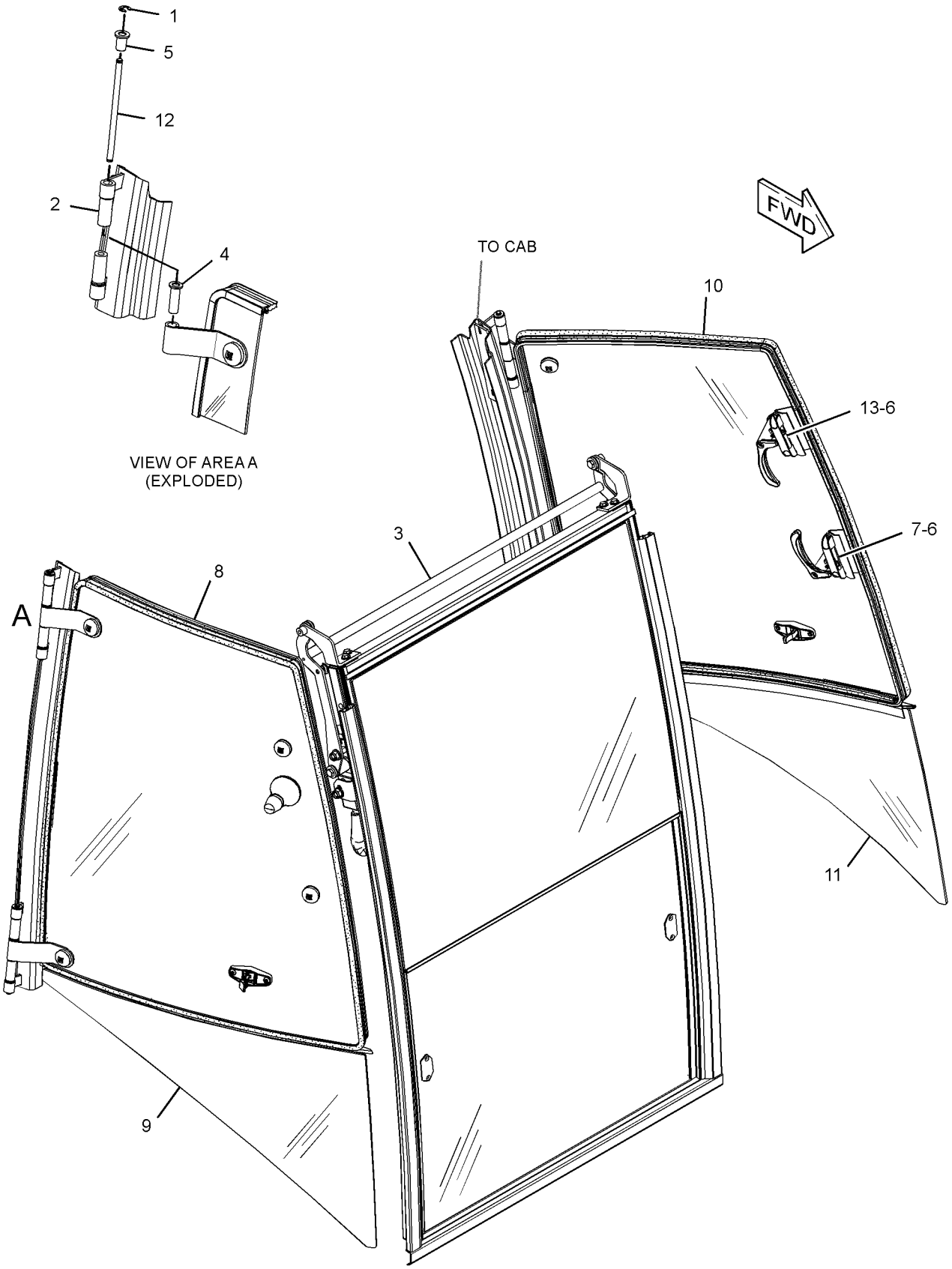

GRAPHIC #1

<END>

g01861653

OPERATOR STATION

205-9585 WINDOW GP-DOOR–LH

S/N: EAT1-UP
PART OF 206-1592 DOOR GP-CAB
AN ATTACHMENT

SMCS-7308, 7310 **i02940325**

NOTE	REF NO	GRAPHIC REF	PART NUMBER	QTY	PART NAME 1 2 3 4 5 6 (PRODUCT LEVEL)	SEE PAGE
E	1	1	**317-4423**		SEAL (354-CM)	
	2	1	**100-7608**	1	HANDLE	
	3	1	**129-8542**	5	RETAINER (MOUNT)	
	4	1	**129-8545**	6	WASHER (13X40X3-MM THK)	
M	5	1	**136-4192**	3	BOLT (M6X1X35-MM)	
	6	1	**154-5423**	2	SPACER (6.6X12.7X17-MM THK)	
Y	7	1	**299-6986**	1	LATCH GP-CAB DOOR & WINDOW (LH)	857
	8	1	**205-9587**	1	GLASS (LH)	
	9	1	**205-9590**	1	HINGE (UPPER)	
	10	1	**205-9591**	1	HINGE (LOWER)	
	11	1	**223-2030**	1	LATCH AS (HOLD OPEN)	
M		1	**6V-7743**	2	LOCKNUT (M6X1-THD)	
M		1	**9X-2045**	2	SCREW-TRUSS HEAD (M6X1X20-MM)	
		1	**143-2827**	2	SPRING	
M	12	1	**6V-7743**	2	LOCKNUT (M6X1-THD)	

E-ORDER BY THE CENTIMETER
M-METRIC PART
Y-SEPARATE ILLUSTRATION

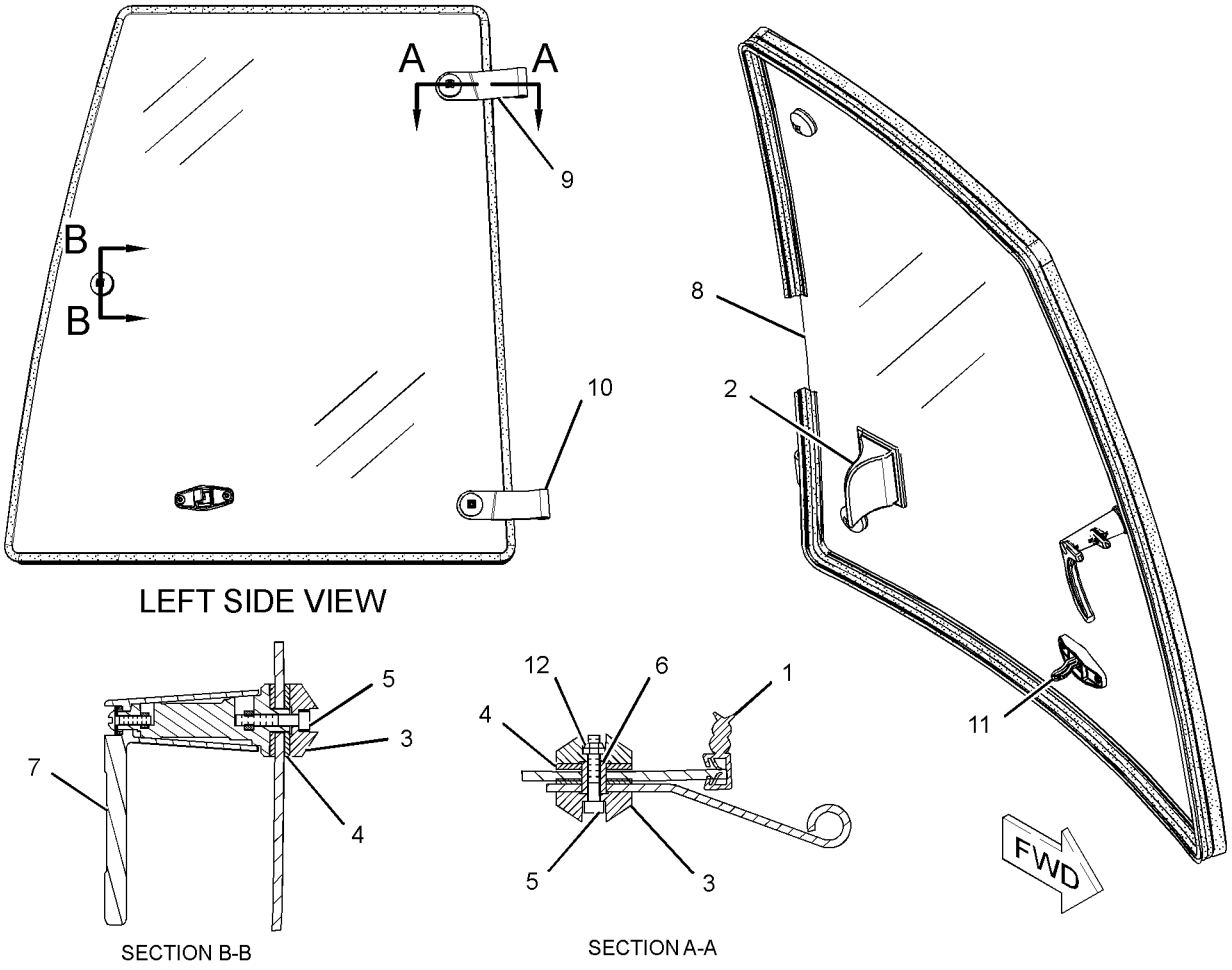

LEFT SIDE VIEW

SECTION B-B

SECTION A-A

GRAPHIC #1 **<END>** g01519599

OPERATOR STATION

205-9595 WINDOW GP-DOOR—RH

S/N: EAT1-UP
PART OF 206-1593 DOOR GP-CAB
AN ATTACHMENT

SMCS-7308, 7310 **i02940326**

NOTE	REF NO	GRAPHIC REF	PART NUMBER	QTY	PART NAME 1 2 3 4 5 6 (PRODUCT LEVEL)	SEE PAGE
E	1	1	**317-4423**		SEAL (354-CM)	
	2	1	**100-7608**	1	HANDLE	
	3	1	**129-8542**	5	RETAINER (MOUNT)	
	4	1	**129-8545**	6	WASHER (13X40X3-MM THK)	
M	5	1	**136-4192**	3	BOLT (M6X1X35-MM)	
	6	1	**154-5423**	2	SPACER (6.6X12.7X17-MM THK)	
Y	7	1	**299-6985**	1	LATCH GP-CAB DOOR & WINDOW (RH)	856
	8	1	**205-9597**	1	GLASS (RH)	
	9	1	**205-9614**	1	HINGE (LOWER)	
	10	1	**205-9615**	1	HINGE (UPPER)	
	11	1	**223-2030**	1	LATCH AS (HOLD OPEN)	
M		1	**6V-7743**	2	LOCKNUT (M6X1-THD)	
M		1	**9X-2045**	2	SCREW-TRUSS HEAD (M6X1X20-MM)	
		1	**143-2827**	2	SPRING	
M	12	1	**6V-7743**	2	LOCKNUT (M6X1-THD)	

E-ORDER BY THE CENTIMETER
M-METRIC PART
Y-SEPARATE ILLUSTRATION

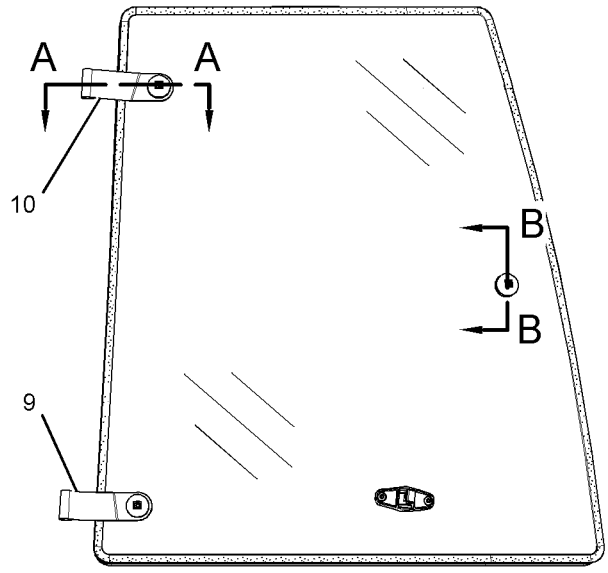

RIGHT SIDE VIEW

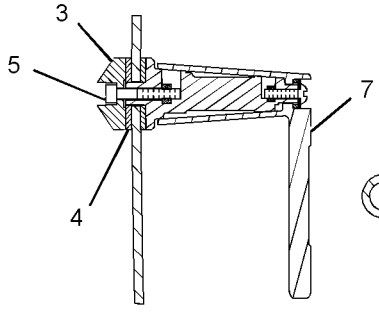

SECTION B-B

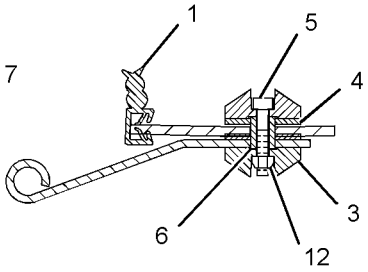

SECTION A-A

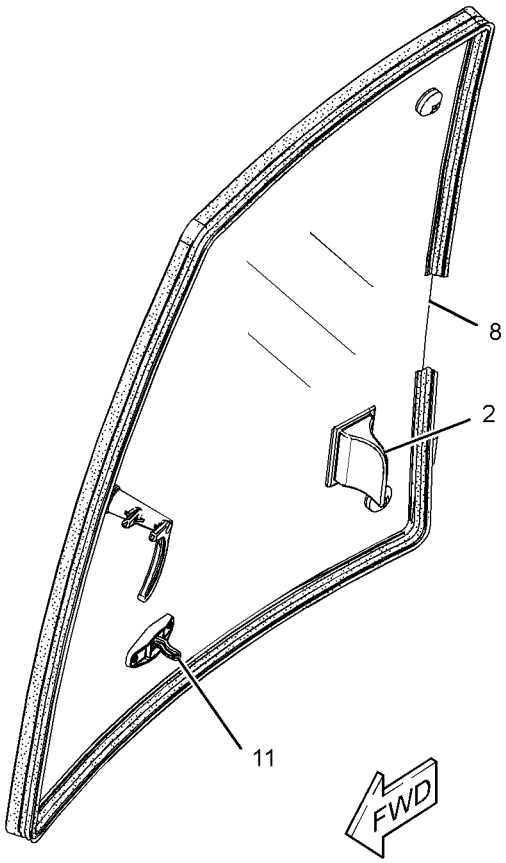

GRAPHIC #1 **<END>** g01521616

OPERATOR STATION

206-1728 WIPER & WASHER GP-WINDOW

S/N: EAT1-UP
PART OF 269-2124 CANOPY AR-OPEN ROPS
AN ATTACHMENT
TYPE 1

SMCS-7305, 7306 **i03505621**

NOTE	REF NO	GRAPHIC REF	PART NUMBER	QTY	PART NAME 1 2 3 4 5 6 (PRODUCT LEVEL)	SEE PAGE
	1	1	**3S-2093**	10	STRAP-CABLE	
	2	1	**276-8791**	1	CLIP	
	3	1	**8T-1118**	1	NOZZLE AS-WASHER	
	4	1	**9R-3469**	1	DIAPHRAGM	
	5	1	**101-0745**	1	BLADE AS-WIPER (600-MM) (FRONT)	
	6	1	**283-3451**	1	CONNECTOR AS	
	7	1	**213-6051**	1	HARNESS AS-CAB (WIPER MOTOR)	
	8	1	**154-5410**	1	ARM-WINDOW WIPER	
Y	9	1	**186-2589**	1	MOTOR GP-WINDOW WIPER (FRONT)	869
	10	1	**214-3763**	1	TANK GP-WINDOW WASHER	
		1	**6T-1375**	2	PUMP AS-WASHER	
		1	**8E-8293**	2	GROMMET	
		1	**214-3742**	1	TANK-WASHER	
		1	**254-5683**	1	CAP	
M	11	1	**6V-7357**	1	BOLT (M6X1X25-MM)	
	12	1	**8T-4205**	1	WASHER-HARD (7.2X14.5X2-MM THK)	
E	13	1	**144-0195**		HOSE (217-CM)	
E	13A	1	**144-0195**		HOSE (79-CM)	
E	13B	1	**144-0195**		HOSE (297-CM)	
E	13C	1	**144-0195**		HOSE (15-CM EACH)	
	16	1	**156-0283**	2	WASHER-HARD (8.4X35X2.5-MM THK)	
	17	1	**9X-8372**	1	FILM-INSTRUCTION (WASHER FILL)	
M	18	1	**8T-5093**	1	BOLT-LOCKING (M8X1.25X25-MM)	
D	19	1	**6V-0505**		SEAL (0.5-M)	
	20	1	**6K-9632**	1	TEE	

D-ORDER BY THE METER
E-ORDER BY THE CENTIMETER
M-METRIC PART
Y-SEPARATE ILLUSTRATION

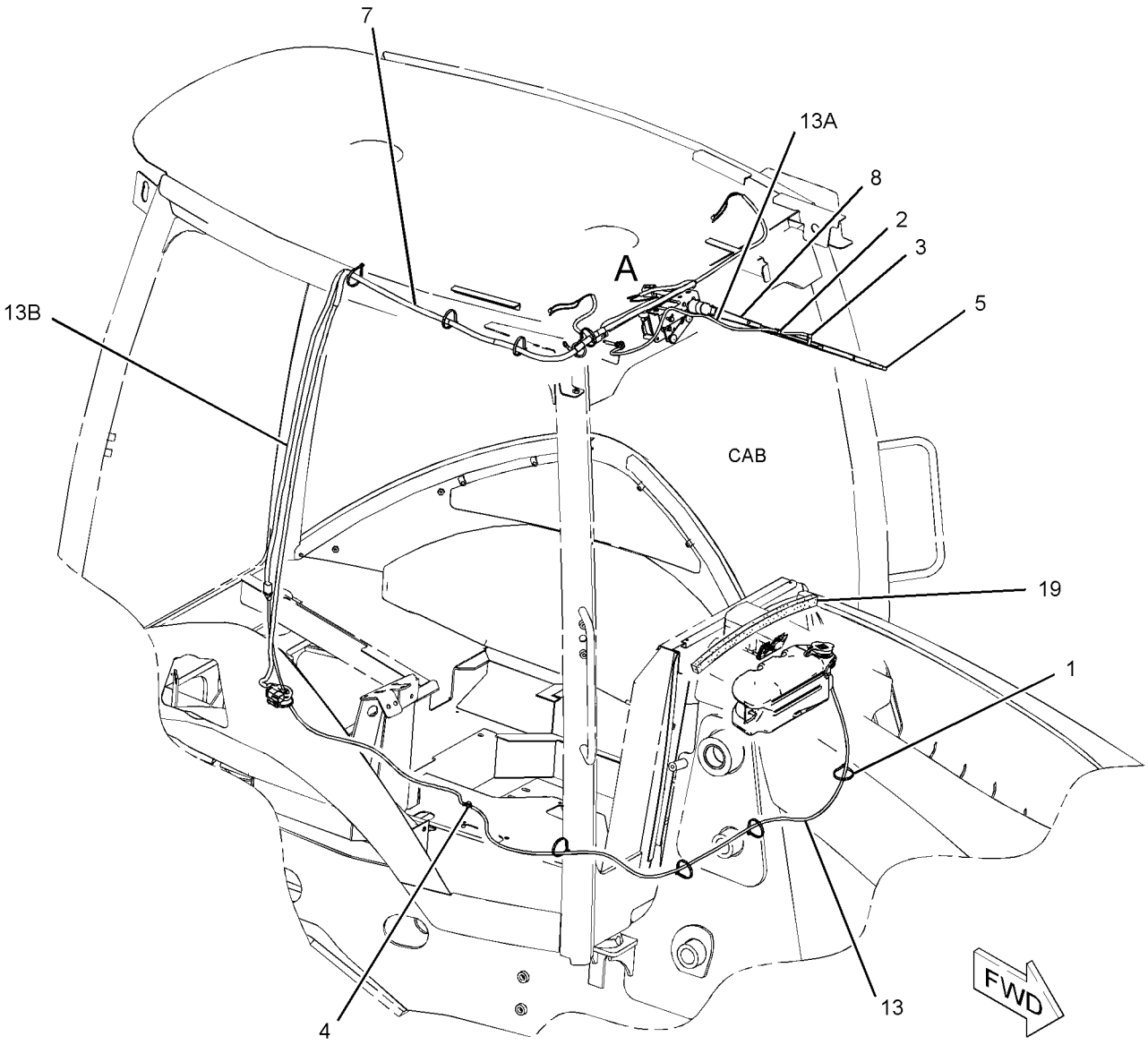

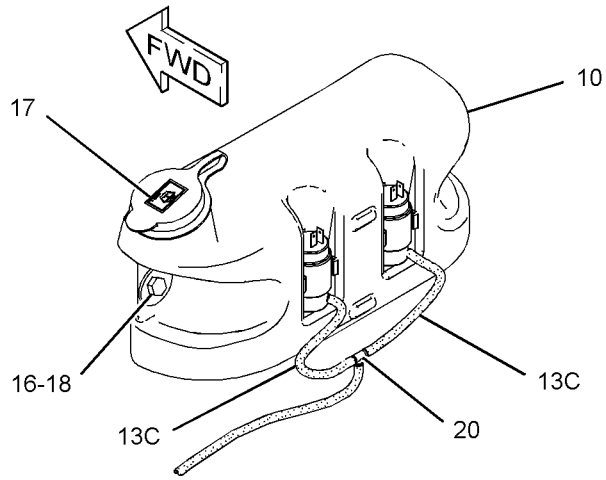

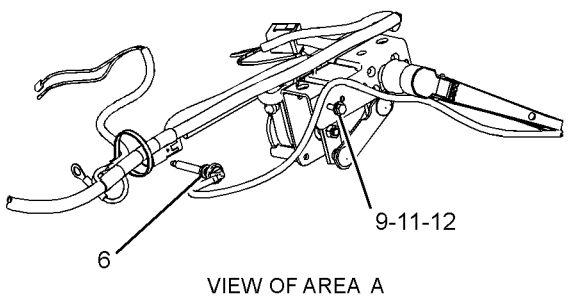

VIEW OF AREA A

GRAPHIC #1 **<END>** g01847053

OPERATOR STATION

206-1728 WIPER & WASHER GP-WINDOW

S/N: EAT1-UP
PART OF 269-2124 CANOPY AR-OPEN ROPS
AN ATTACHMENT
TYPE 2

SMCS-7305, 7306 **i03399321**

NOTE	REF NO	GRAPHIC REF	PART NUMBER	QTY	PART NAME 1 2 3 4 5 6 (PRODUCT LEVEL)	SEE PAGE
	1	1	**3S-2093**	10	STRAP-CABLE	
	2	1	**276-8791**	1	CLIP	
	3	1	**8T-1118**	1	NOZZLE AS-WASHER	
	4	1	**9R-3469**	1	DIAPHRAGM	
	5	1	**101-0745**	1	BLADE AS-WIPER (600-MM)	
	6	1	**283-3451**	1	CONNECTOR AS	
	7	1	**213-6051**	1	HARNESS AS-CAB (WIPER MOTOR)	
	8	1	**154-5410**	1	ARM-WINDOW WIPER	
Y	9	1	**186-2589**	1	MOTOR GP-WINDOW WIPER (FRONT)	869
	10	1	**214-3763**	1	TANK GP-WINDOW WASHER	
		1	**6T-1375**	2	PUMP AS-WASHER	
		1	**8E-8293**	2	GROMMET	
		1	**214-3742**	1	TANK-WASHER	
		1	**254-5683**	1	CAP	
M	11	1	**6V-7357**	1	BOLT (M6X1X25-MM)	
	12	1	**8T-4205**	1	WASHER-HARD (7.2X14.5X2-MM THK)	
E	13	1	**144-0195**		HOSE (217-CM)	
E	13A	1	**144-0195**		HOSE (79-CM)	
E	13B	1	**144-0195**		HOSE (297-CM)	
E	13C	1	**144-0195**		HOSE (15-CM EACH)	
	14	1	**156-0283**	2	WASHER-HARD (8.4X35X2.5-MM THK)	
	15	1	**9X-8372**	1	FILM-INSTRUCTION (WASHER FILL)	
M	16	1	**8T-5093**	1	BOLT-LOCKING (M8X1.25X25-MM)	
	17	1	**6K-9632**	1	TEE	

E-ORDER BY THE CENTIMETER
M-METRIC PART
Y-SEPARATE ILLUSTRATION

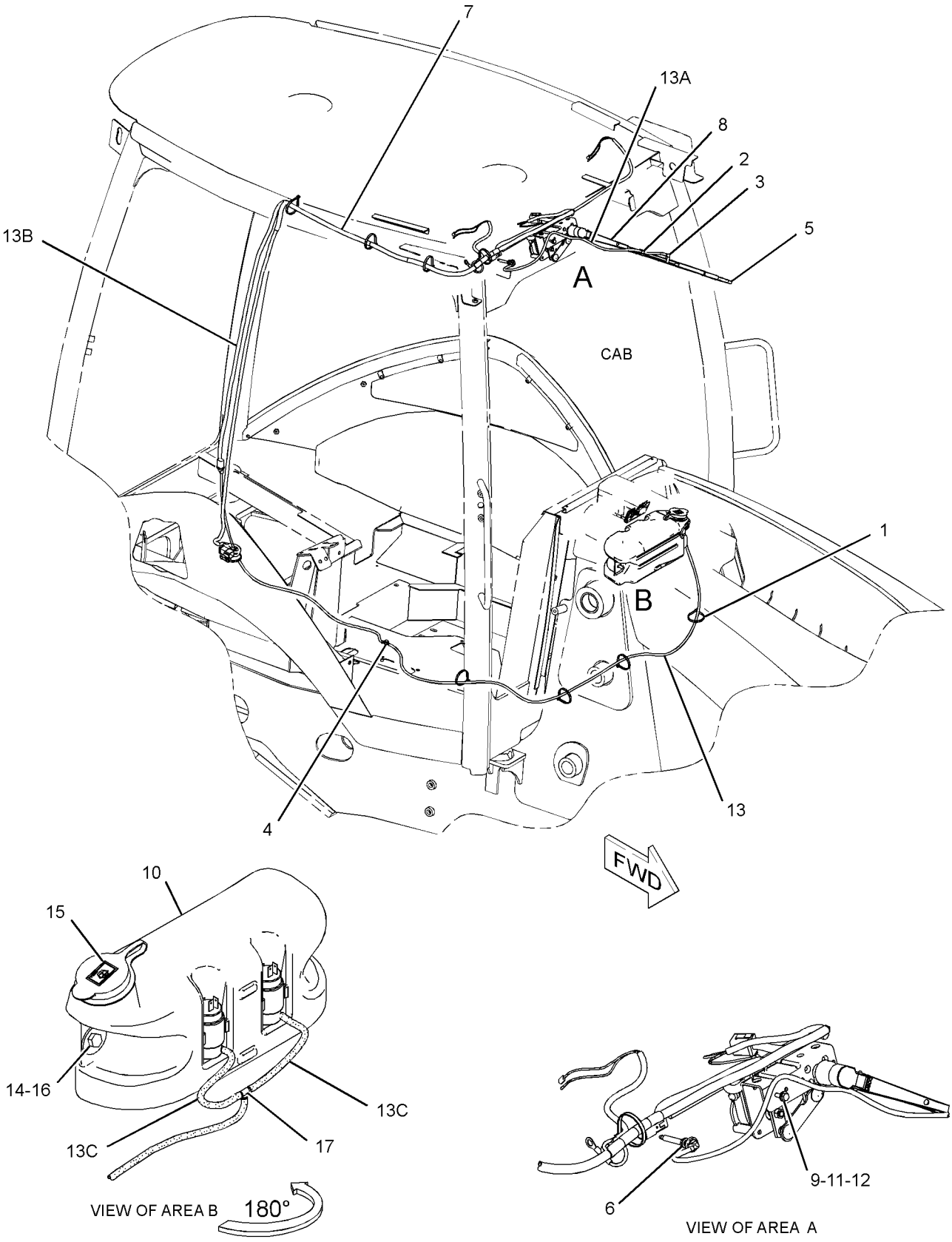

GRAPHIC #1 **<END>** g01761114

OPERATOR STATION

206-1725 WIPER GP-WINDOW

S/N: EAT1-UP
PART OF 269-2125, 269-2126, 269-2127 CAB AR-ENCLOSED ROPS
AN ATTACHMENT

SMCS-7305 **i03505604**

NOTE	REF NO	GRAPHIC REF	PART NUMBER	QTY	PART NAME 1 2 3 4 5 6 (PRODUCT LEVEL)	SEE PAGE
	1	1	**5C-8811**	1	BLADE AS-WIPER (500-MM) (REAR)	
	2	1	**101-0745**	1	BLADE AS-WIPER (600-MM) (FRONT)	
	3	1	**154-5410**	1	ARM-WINDOW WIPER (FRONT)	
	4	1	**160-2169**	2	SPACER (7X11X8.4-MM THK)	
Y	5	1	**186-2589**	1	MOTOR GP-WINDOW WIPER (FRONT)	869
	6	1	**214-4709**	1	SWITCH AS-ROCKER (WIPER, WASHER, REAR)	
		1	**111-7899**	1	GASKET	
	7	1	**220-2000**	1	MOTOR GP-WINDOW WIPER (REAR)	
		1	**186-3735**	5	PIN-CONNECTOR (16-GA TO 18-GA)	
		1	**102-8804**	1	KIT-RECEPTACLE (4-PIN)	
					(INCLUDES RECEPTACLE AS & WEDGE)	
	8	1	**220-2001**	1	ARM AS-WIPER (REAR)	
		1	**136-3194**	1	NOZZLE AS-WASHER	
E		1	**194-5171**		HOSE (35-CM)	
	9	1	**223-8263**	1	PLATE	
	10	1	**229-0306**	1	PLATE	
M	11	1	**6V-7357**	1	BOLT (M6X1X25-MM)	
M	12	1	**8T-4138**	2	BOLT (M6X1X20-MM)	
M	13	1	**8T-4171**	4	BOLT (M6X1X12-MM)	
	14	1	**8T-4205**	9	WASHER-HARD (7.2X14.5X2-MM THK)	
M	15	1	**5C-2890**	1	NUT (M6X1-THD)	
M	16	1	**8T-4971**	1	BOLT (M6X1X30-MM)	

E-ORDER BY THE CENTIMETER
M-METRIC PART
Y-SEPARATE ILLUSTRATION

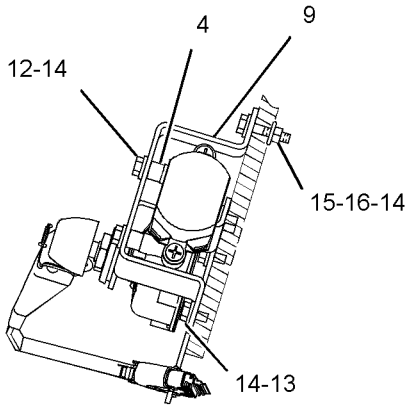

SECTION A-A

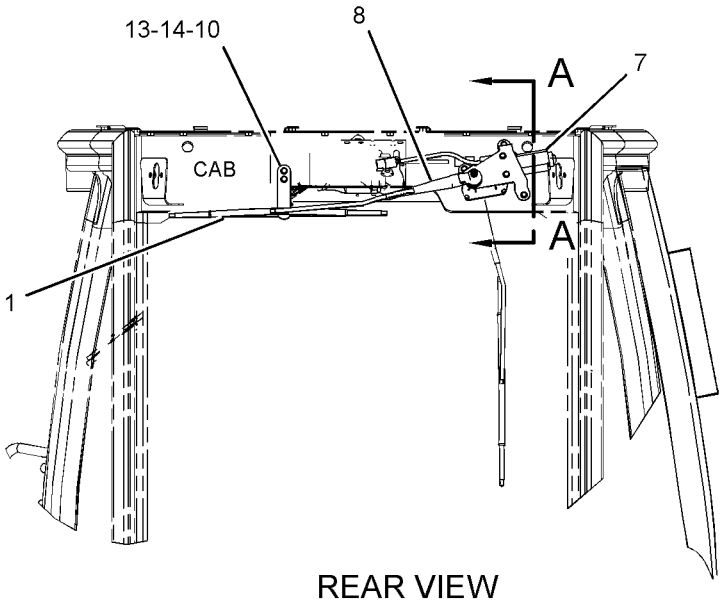

REAR VIEW

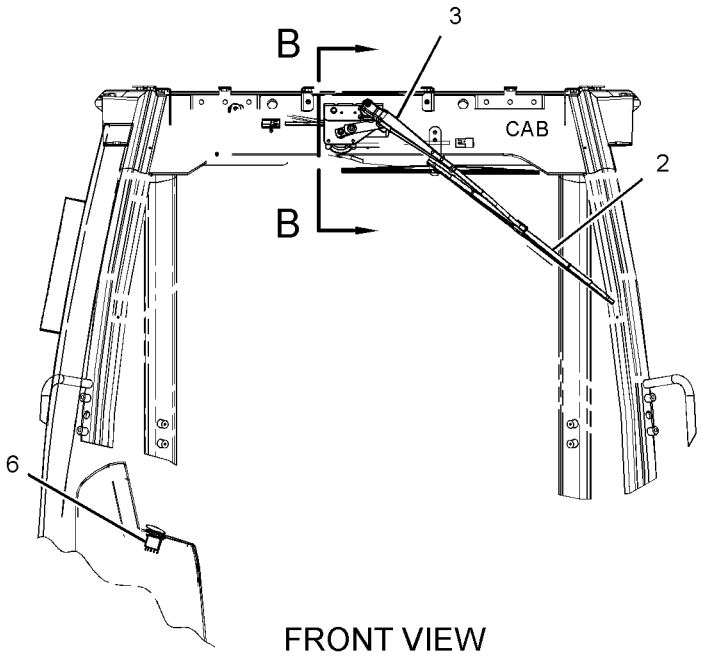

FRONT VIEW

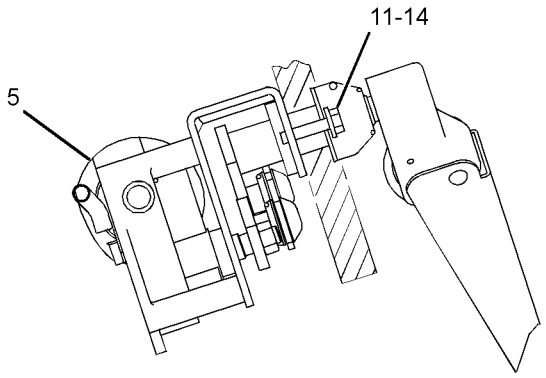

SECTION B-B

GRAPHIC #1 **<END>** g01328113

SERVICE EQUIPMENT AND SUPPLIES

250-7917 FILM GP–430E

S/N: EAT1-UP

PART OF 213-9289 CHASSIS AR

SMCS-7405, 7557 **i02700090**

NOTE	REF NO	GRAPHIC REF	PART NUMBER	QTY	PART NAME 1 2 3 4 5 6 (PRODUCT LEVEL)	SEE PAGE
	1	1	**295-5552**	1	FILM-IDENTIFICATION (430E, LH)	
	2	1	**292-2833**	1	FILM (BOOM, RH)	
	3	1	**295-5553**	1	FILM-IDENTIFICATION (430E, RH)	
	4	1	**292-2834**	1	FILM (BOOM, LH)	

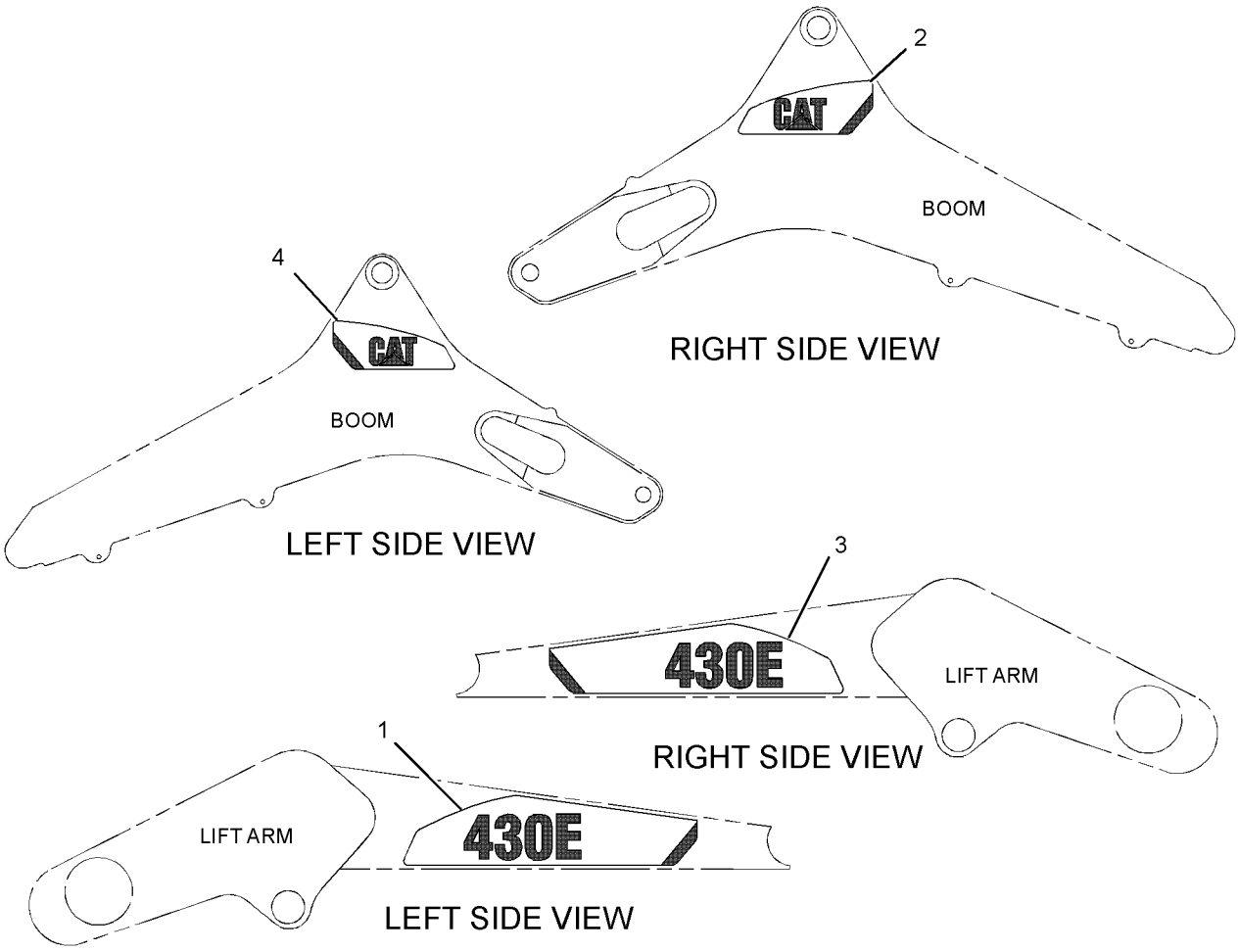

GRAPHIC #1 **<END>** g01384183

SERVICE EQUIPMENT AND SUPPLIES

216-0909 LOCK GP-VANDALISM

S/N: EAT1-UP
FOR USE WITH SINGLE TILT LOADER
AN ATTACHMENT

SMCS-7315 **i02485595**

NOTE	PART NUMBER	QTY	PART NAME 1 2 3 4 5 6 (PRODUCT LEVEL)	SEE PAGE
J	**246-2641**	1	PADLOCK GP (VANDALISM GUARD)	
J-REQUIRES 5P-8500 KEY				

<END>

248-5711 PLATE & FILM GP

S/N: EAT1-UP
PART OF 213-9289 CHASSIS AR

SMCS-7405 **i02532778**

NOTE	PART NUMBER	QTY	PART NAME 1 2 3 4 5 6 (PRODUCT LEVEL)	SEE PAGE
	225-4150	1	PLATE-SERVICE INFORMATION (MACHINE)	
			(ON SERVICE PLATE ON MAIN FRAME TOWER)	
	239-6989	1	PLATE-SERIAL NUMBER (MACHINE)	
			(ON MAIN FRAME TOWER)	
A	**4P-6236**	1	PLATE-SERIAL NUMBER (ENGINE)	
	231-9361	1	FILM-IDENTIFICATION (FUSE, RELAY)	
			(UNDER RH CONSOLE COVER THAT COVERS THE POWER DISTRUBUTION BLOCK. ORIENT FILM SUCH THAT IT CAN BE READ WHEN THE COVER	
			IS OPEN AND THE BLOCK IS EXPOSED)	
	250-7910	1	FILM (BOOM LOCK)	
			(NEXT TO BOOM LOCK ON RH CONSOLE)	
	250-7911	1	FILM (VARIABLE SPEED)	
			(ON RH CONSOLE NEXT TO GOVERNER CONTROL HANDLE)	
	252-2157	4	FILM-INFORMATION (TIE-DOWN)	
			(APPLY 2 FILMS, ONE ON EACH SIDE OF THE MACHINE ON THE MAIN FRAME ABOVE THE FRONT AXLE, ABOVE THE TIE DOWN MOUNTING	
			PLATE. APPLY THE OTHER 2 FILMS IN THE REAR OF THE MACHINE ON THE MAIN FRAME NEXT TO THE TIE DOWN HOLES UNDER THE	
			SWING CYLINDERS)	
	134-7258	1	FILM-INFORMATION (EXTENDED LIFE COOLANT,READ OMM)	
			(NEXT TO RADIATOR CAP. ORIENT FILM SUCH THAT IT CAN BE READ FROM THE LH SIDE OF THE MACHINE)	
	159-8033	1	FILM-IDENTIFICATION (12-VOLT)	
			(INSIDE BATTERY BOX DOOR 90 +/-5-MM FROM THE BOTTOM EDGE (SAME AS STACKING THE WARNING BATTERY FILM & THE 12 VOLT	
			FILM ON TOP OF EACH OTHER) & CENTERED BELOW THE WARNING BATTERY FILM)	
	226-1242	2	FILM-WARNING (CRUSH HAZARD, STAY BACK, U.S.)	
			(ON BOOM 700-MM +/-5 UP FROM CENTER LINE OF SWING & BOOM LOWER FOOT PIN & 65-MM +/-5 OVER FROM INSIDE OF THE REAR EDGE	
			OF BOOM WRAPPER PLATE)	
	239-9429	1	FILM-WARNING (ARM BRACE, READ OMM)	
			(ON LH SIDE OF THE MACHINE ON SAFETY BRACE CENTERED FROM TOP TO BOTTOM & FROM SIDE TO SIDE)	

248-5711 **PLATE & FILM GP** *(contd.)* **i02532778**

NOTE	PART NUMBER	QTY	PART NAME 1 2 3 4 5 6 (PRODUCT LEVEL)	SEE PAGE
	225-0313	1	FILM-WARNING (JUMP START, READ OMM, U.S.)	
			(INSIDE OF BATTERY BOX DOOR 150 +/-5-MM FROM THE BOTTOM EDGE (SAME AS STACKING THE NO STEP FILM ON TOP OF THE 12 VOLT	
			FILM) & THE RIGHT EDGE OF THE FILM 210 +/-5-MM FROM LEFT SIDE (SAME AS THE NO STEP FILM PLACED SIDE BY SIDE THE	
			WARNING BATTERY FILM)	
	255-0791	1	FILM-WARNING (READ OMM)	
			(ON RH CONSOLE UNDER KEYSWITCH IN AREA PROVIDED. UNIVERSAL FILM IS LOCATED ON THE UPPER HALF AND THE SEATBELT IS ON THE	
			THE LOWER HALF)	
	255-0792	1	FILM-WARNING (SEAT BELT)	
			(ON RH CONSOLE UNDER KEYSWITCH IN AREA PROVIDED. UNIVERSAL FILM IS LOCATED ON THE UPPER HALF AND THE SEATBELT IS ON THE	
			LOWER HALF)	
	219-0302	1	FILM-WARNING (NO WELD, NO DRILL, READ OMM)	
			(ON LH A-POST 350 +/-5-MM FROM THE FLOOR. THE UPPER FILM SHOULD BE THE NO WELD/NO DRILL & THE ROPS/FOPS FILM IN THE	
			LOWER POSITION)	
	225-0041	1	FILM-INFORMATION (ROPS, FOPS, READ OMM)	
			(ON LH A-POST 350 +/-5-MM FROM THE FLOOR. THE UPPER FILM SHOULD BE THE NO WELD/NO	
			DRILL & THE ROPS/FOPS FILM IN THE LOWER POSITION)	
	124-2456	1	FILM-INSTRUCTION (NO STEP)	
			(POSITION INSIDE BATTERY BOX DOOR 75 +/-5-MM FROM THE RIGHT EDGE & THE TOP EDGE IS EVEN WITH THE 12 VOLT FILM)	
	224-8945	1	FILM-WARNING (DO NOT USE ETHER, U.S)	
			(UNDER HOOD ON THE PRE-CLEANER UNDER THE SERVICE FILM. ORIENT FILM SUCH THAT IT CAN	
			BE READ FROM THE LEFT SIDE OF THE MACHINE)	
	258-9999	4	FILM (LIFT EYE LOCATION)	
			(APPLY A TOTAL OF 4 FILMS. THE FIRST 2 FILMS ARE TO BE APPLIED TO THE FRONT SIDE OF THE FRONT AXLE BETWEEN THE CHASSIS	
			& WHEEL ASSEMBLY ON THE LH & RH SIDE OF THE MACHINE. THE REMAINDER 2 FILMS ARE TO BE APPLIED TO THE STAB PAD CENTERED	
			UNDER THE LIFTING HOLE ORIENTED WITH THE ARROW POINTING UP WHEN THE STABILIZER IS IN THE UPPER WARD POSITION)	
	240-7094	2	FILM-WARNING (NO ENTRANCE, EXIT)	
			(ON THE REAR OF THE CAB STRUCTURE AT THE BOTTOM 50 +/-5-MM FROM THE RED REFLECTOR TOWARD THE CENTER OF THE MACHINE FOR)	
			BOTH FILMS, CENTERED FROM TOP TO BOTTOM)	
	159-3590	1	FILM-IDENTIFICATION (WATER SEPARATOR)	
			(ON LEFT SIDE OF THE MAIN FRAME NEXT TO THE FUEL TANK. 20-MM +/- 10-MM FROM THE FUEL	
			TANK BRACKET & UP FROM THE BOTTOM EDGE OF THE MAIN FRAME 50-MM +/- 10-MM)	
	231-9358	1	FILM-IDENTIFICATION (FUSE PANEL)	
			(INSIDE RH CONSOLE ACCESS PANEL. ORIENT FILM SUCH THAT IS CAN BE READ WHILE STANDING ON THE GROUND WITH THE ACCESS DOOR	
			OPEN & VIEWING FILM)	
	255-0796	1	FILM-IDENTIFICATION (LUBRICATION POINTS)	
			(UNDER THE HOOD ON PRE-CLEANER, REMOVE SUPPLIER FILM & ORIENT FILM SUCH THAT IT	

248-5711 **PLATE & FILM GP** ***(contd.)*** **i02532778**

NOTE	PART NUMBER	QTY	PART NAME 1 2 3 4 5 6 (PRODUCT LEVEL)	SEE PAGE
			CAN BE READ FROM THE LEFT SIDE OF THE MACHINE)	
	252-8435	1	FILM (START SWITCH, READ OMM)	
			(ON RH CONSOLE AROUND KEYSWITCH)	
	259-4401	1	FILM-WARNING (HOT FLUID UND PRESS, READ OMM)	
			(ON RADIATOR CAP ORIENTED SUCH THAT IT CAN BE READ FROM THE LH SIDE OF THE MACHINE)	
	289-3412	1	FILM-COVER	
			IN THE BATTERY BOX ON LEFT HAND SIDE. FILM SHOULD BE 150 +/- 5-MM UP FROM THE BOTTOM OF	
			THE BOX & LEVEL WITH THE BOTTOM OF BOX CENTERED FROM SIDE TO SIDE)	
A-NOT PART OF THIS GROUP				

<END>

SERVICE EQUIPMENT AND SUPPLIES

263-8591 PLATE & FILM GP

S/N: EAT1-UP
PART OF 216-8801, 216-8821 BUCKET GP-MULTIPURPOSE
AN ATTACHMENT

SMCS-7405 **i02444490**

NOTE	REF NO	GRAPHIC REF	PART NUMBER	QTY	PART NAME 1 2 3 4 5 6 (PRODUCT LEVEL)	SEE PAGE
	1	1	**247-6118**	2	FILM-WARNING (CRUSH HAZARD, STAY BACK)	

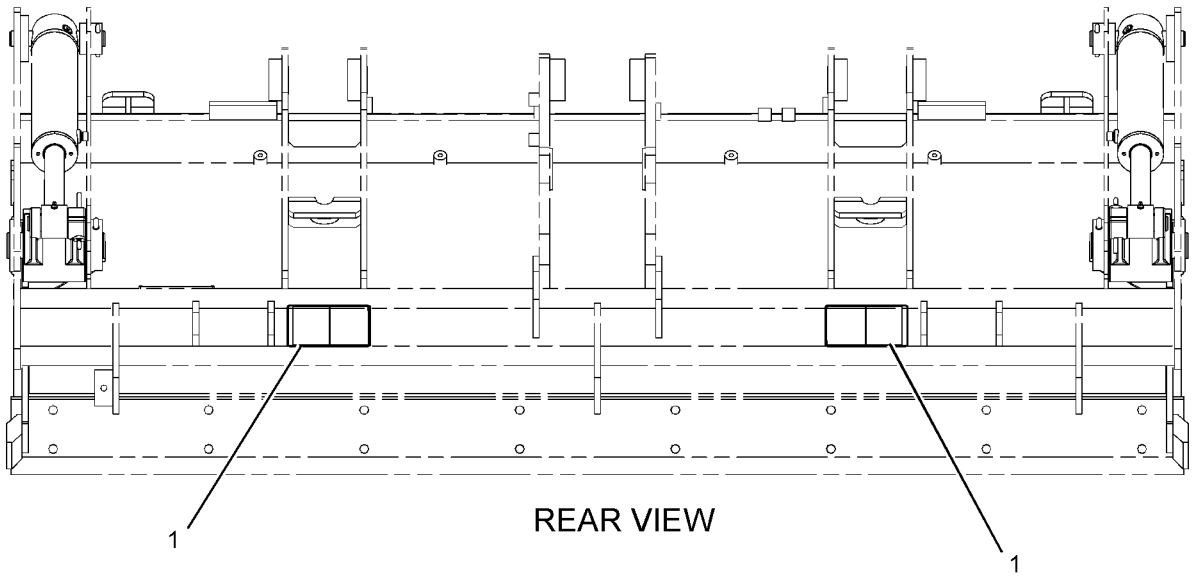

GRAPHIC #1 **<END>** g01231780

206-1701 PROTECTION GP-VANDALISM—ROTATING GUARD

S/N: EAT1-UP

PART OF 269-2123, 269-2124 CANOPY AR-OPEN ROPS

AN ATTACHMENT

SMCS-7315 **i02098370**

NOTE	REF NO	GRAPHIC REF	PART NUMBER	QTY	PART NAME 1 2 3 4 5 6 (PRODUCT LEVEL)	SEE PAGE
	1	1	**206-1852**	1	COVER-VANDALISM	
	2	1	**206-1853**	2	BUSHING	
	3	1	**206-1855**	1	PLATE	
	4	1	**206-1856**	1	BRACKET	
J	5	1	**226-0291**	1	LOCK AS	
M	6	1	**129-3178**	2	LOCKNUT (M6X1 THD)	
M	7	1	**174-8131**	1	SCREW-TRUSS HEAD (M4X0.7X12-MM)	
	8	1	**232-4636**	2	BOLT-CARRIAGE (M6X1-MM)	
	9	1	**8C-9660**	1	WASHER (4.6X7.9X0.8-MM THK)	
M	10	1	**8T-2659**	1	LOCKNUT (M4X0.7-THD)	
	11	1	**9X-2038**	2	WASHER (7X19X2-MM THK)	

J-REQUIRES 5P-8500 KEY
M-METRIC PART

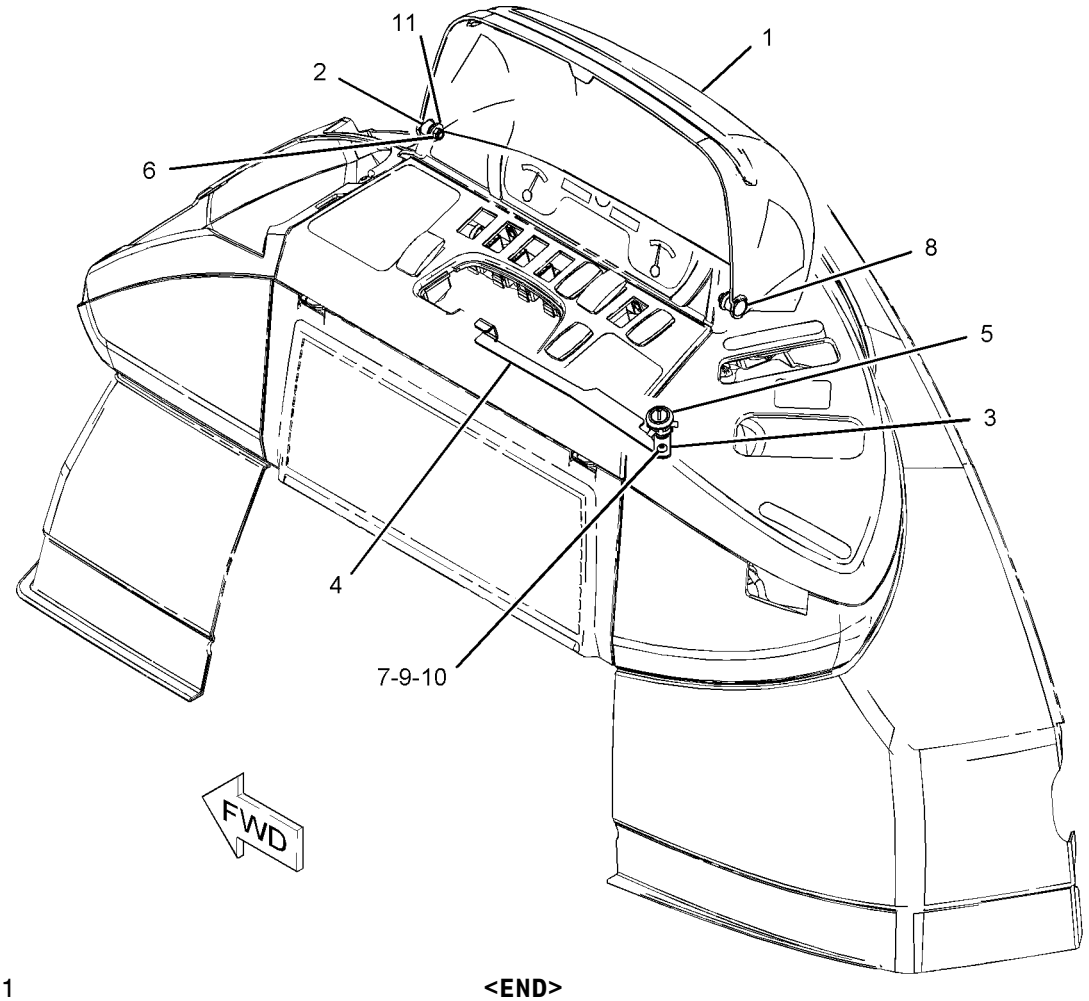

GRAPHIC #1 **<END>** g01083362

SERVICE EQUIPMENT AND SUPPLIES

119-1530 TRANSPORT AR-MACHINE

S/N: EAT1-UP
TRANSPORT (NO BUCKET OPTION)
CANNOT BE USED WITH PARALLEL LIFT LOADER CONFIGURATIONS
AN ATTACHMENT

SMCS-0355 **i00756012**

NOTE	PART NUMBER	QTY	PART NAME 1 2 3 4 5 6 (PRODUCT LEVEL)	SEE PAGE
Y	*120-9289*	1	TRANSPORT GP-MACHINE (WITHOUT BUCKET)	932
Y-SEPARATE ILLUSTRATION				

<END>

SERVICE EQUIPMENT AND SUPPLIES

325-5100 TRANSPORT AR-MACHINE

S/N: EAT1-UP

AN ATTACHMENT

SMCS-0355 **i03101783**

NOTE	REF NO	GRAPHIC REF	PART NUMBER	QTY	PART NAME 1 2 3 4 5 6 (PRODUCT LEVEL)	SEE PAGE
	1	1	**3B-5322**	2	PIN-COTTER	
	2	1	**9R-0109**	2	WASHER (41X64X3-MM THK)	
	3	1	**034-1432**	2	STRAP-CABLE	
	4	1	**120-9333**	1	TUBE	

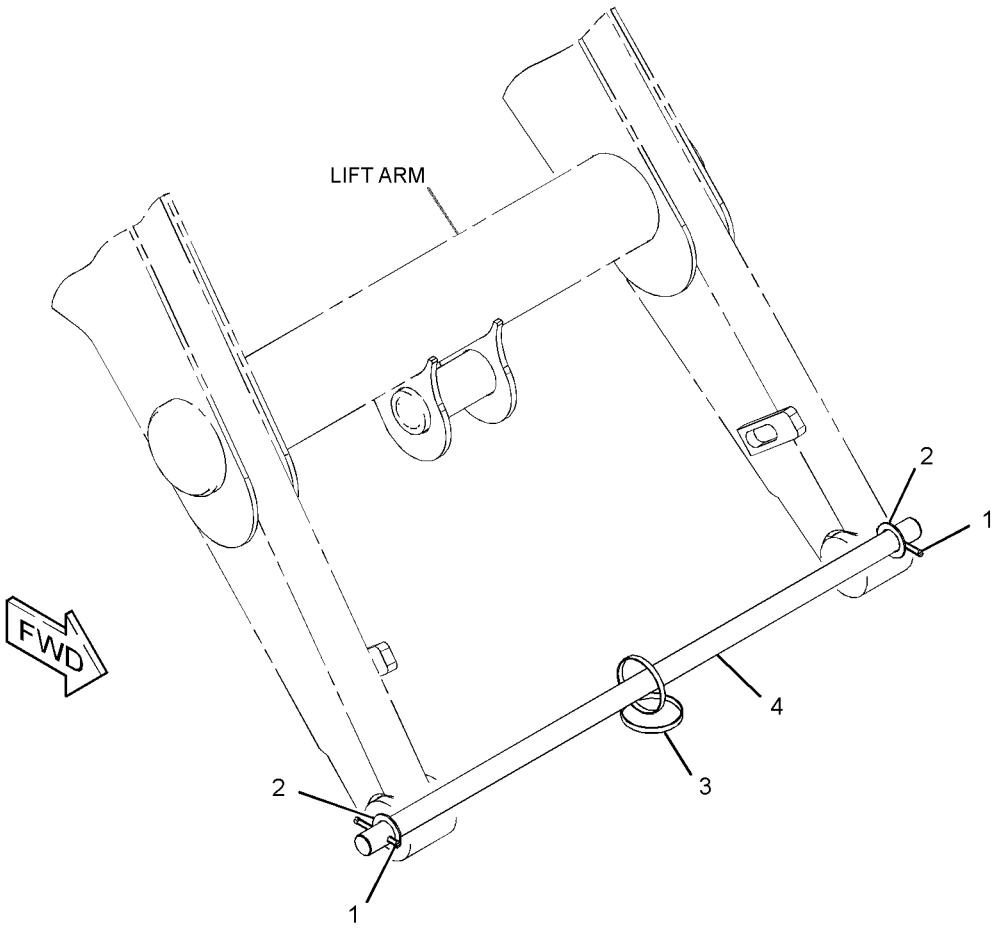

GRAPHIC #1 **<END>** g01584873

SERVICE EQUIPMENT AND SUPPLIES

120-9289 TRANSPORT GP-MACHINE

S/N: EAT1-UP
PART OF 119-1530 TRANSPORT AR-MACHINE
AN ATTACHMENT

SMCS-0355 **i02204843**

NOTE	REF NO	GRAPHIC REF	PART NUMBER	QTY	PART NAME 1 2 3 4 5 6 (PRODUCT LEVEL)	SEE PAGE
	1	1	**3B-5322**	2	PIN-COTTER	
	2	1	**9R-0109**	2	WASHER (41X64X3-MM THK)	
B	3	1	**9R-4066**	6	WASHER (61X98X4-MM THK)	
	4	1	**9R-6014**	4	TUBE	
	5	1	**034-1432**	2	STRAP-CABLE	
	6	1	**120-9332**	2	BLOCK	
	7	1	**120-9333**	1	TUBE	

B-USE AS REQUIRED

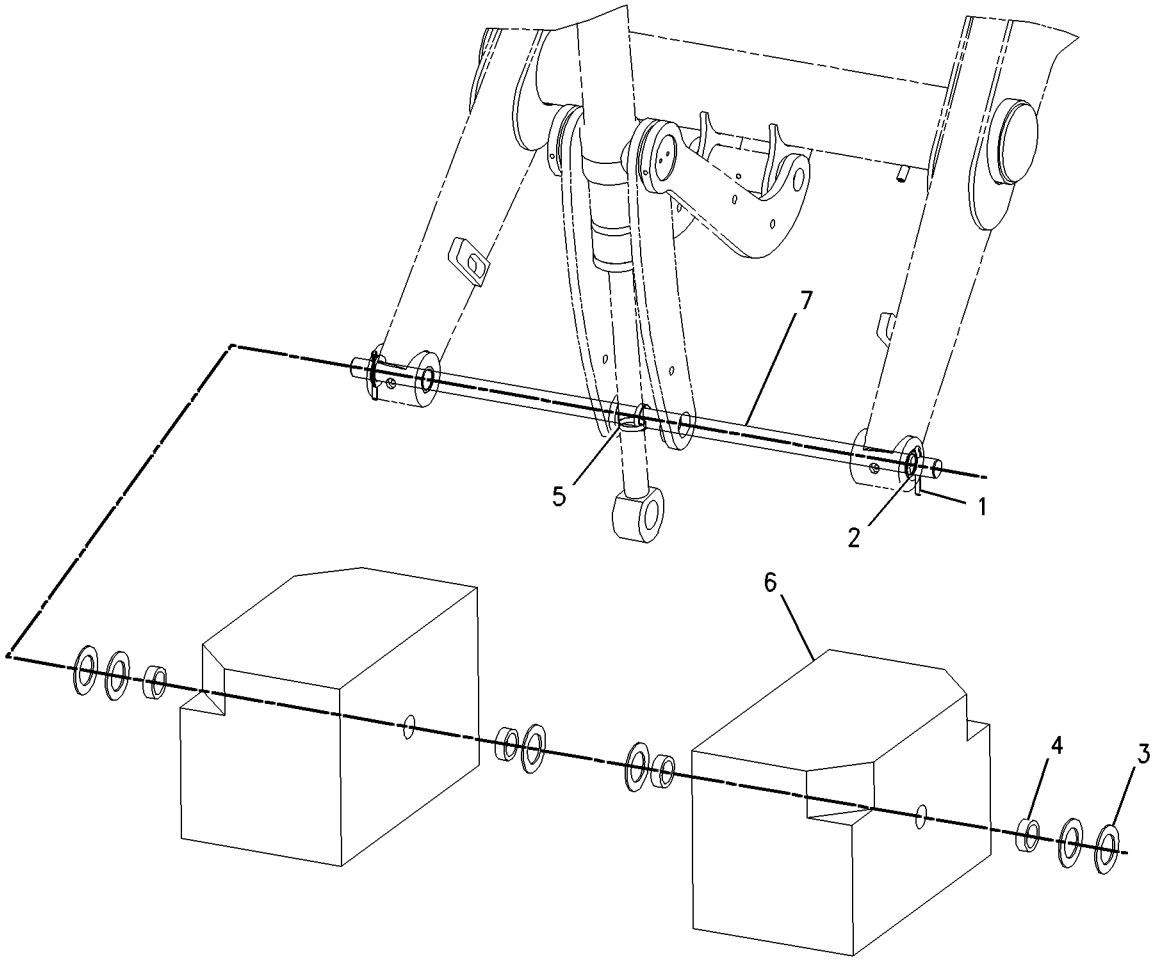

GRAPHIC #1 **<END>** g00778843

PART NUMBER INDEX

Part	Page
0	
0S-0509	891
	894
0S-1595	884
	885
	886
0S-1603	31
1	
1B-8736	22
	33
	431
	433
1H-3244	140
	141
	142
	843
1H-3337	891
	894
1H-7339	401
	412
1H-8128	393
	395
1H-8278	206
1K-0502	818
	820
1K-6872	884
	885
	886
	891
	894
1K-7082	240
1L-3768	602
	604
1L-6377	873
1M-1230	122
1P-0810	110
	112
1P-4278	87
	523
1P-4584	474
1P-6872	519
1R-5396	339
1S-0669	393
	395
1S-6420	169
	171
1S-7251	107
	110
	112
	163
	165
1S-7252	109
1S-9593	182
	186
	191
1V-6585	71
	72
1W-2934	59
2	
2B-0858	28
	43
2B-0941	224
	226
	228
2D-0714	397
	399
2D-2628	312
2D-2629	312
2D-2630	312
2D-2631	312
2D-2633	312
2D-6235	891
	894
2D-6392	506
2H-3740	745
2H-3922	149
	175
	176
	177
2H-9247	397
	399
2J-0564	397
	411
2J-3950	416
2J-7767	397
	399
2K-4096	409
	411
2K-4973	865
	884
	885
	886
	891
	894
2K-5986	332
	335
2K-6830	416
2K-7069	74
2L-5893	891
	894
2M-7819	888
2M-9780	423
	425
	428
	460
	468
	470
	471
	476
	478
	480
	482
	484
	486
	488
	490
	492
	494
	496
	503
	519
2P-1293	435
	437
	440
2P-6818	60
2P-7864	888
2P-8104	144
2R-0364	574
	818
	820
2S-3163	812
2S-3745	846
	848
	850
	852
2T-3360	827
2W-9499	887
	888
2W-9710	67
2Y-5821	397
	413
3	
3B-4505	381
	891
	894
3B-4610	340
3B-4631	894
3B-5319	513
	515
	568
	736
	737
	744
3B-5322	931
	932
3B-5790	519
3B-8486	368
	370
	372
3B-8488	366
	512
	561
	563
	606
3B-8489	366
	368
	370
	372
	403
	404
	405
	407
	413
	415
	431
	433
	512
	561
	563
	568
	570
	574
	602
	604
	606
	721
	723
	724
	725
	735
	784
3C-4883	131
	133
3C-8388	559
3D-2824	437
	440
	443
	445
	447
	449
	451
	454
	460
	462
	474
	480
	482
	484
	486
	488
	490
	492
	494
	496
	498
	499
	501
	503
	530
3D-2992	506
3E-0068	865
3E-4321	864
	865
3E-5153	144
3E-5154	144
3E-6600	133
	187
	192
	814
	818
	820
3E-6732	403
3E-6735	405
	407
	413
3E-6769	519
3E-6770	519
3E-7675	332
	335
3E-8299	110
	178
	183
3E-8320	110
	112
3E-9362	151
	153
3F-5108	721
	723
	724

► **PRIMARY REFERENCE**

PART NUMBER INDEX

Part	Page
	725
	740
3F-9556	869
	875
3G-6927	296
	303
3G-8047	451
	454
3G-8054	451
	454
3G-8057	451
	454
3J-1907	101
	102
	167
	201
	208
	224
	226
	228
	239
	266
	271
	275
	276
	280
	281
	285
	286
	290
	291
	296
	297
	302
	303
	308
	332
	333
	335
	344
	346
	348
	350
	404
	420
	423
	425
	428
	464
	466
	468
	470
	471
	473
	476
	478
	501
	507
	527
	531
	532
3J-4818	163
	165
	891
	894
3J-7354	105
	344
	346
	348
	350
	468
3K-0360	167
	332
	333
	335
	344
	346
	348
	350
	389
	391
	423
	425
	428
	456
	457
	471
	476
	478
	501
	508
	523
	525
3K-2889	598
	599
3K-8460	86
3K-8782	130
3N-5739	413
3S-2093	83
	101
	102
	107
	109
	110
	112
	119
	121
	122
	123
	131
	133
	151
	153
	155
	157
	158
	160
	161
	162
	163
	165
	167
	168
	169
	171
	173
	175
	176
	177
	179
	183
	187
	192
	197
	199
	201
	205
	266
	271
	276
	281
	286
	291
	423
	425
	428
	787
	854
	865
	890
	893
	902
	904
	918
	920
3S-6049	109
3S-6050	109
3S-8447	59
	60
	61
3S-8536	459
	579
	581
	585
	587
	591
	593
3T-0849	559
	870
3T-0852	880
	882
	887
	888
3V-2431	393
	399
	409
4	
4B-0418	73
4B-2043	155
	158
	897
4B-4278	888
4B-4863	79
	179
	183
	187
	192
4B-5271	884
	885
	886
4B-9784	891
	894
4D-6466	107
	110
	112
	336
4D-7388	73
4D-9517	574
4F-3657	739
	786
4F-7952	217
4F-8711	602
	604
4F-9029	208
4H-1641	888
4H-2558	787
4H-8380	891
	894
4I-3038	178
	816
4I-6287	423
	476
4I-9521	527
4I-9522	527
4I-9523	527
4I-9524	527
4I-9525	527
4I-9526	527
4I-9527	527
4I-9528	527
4J-0520	219
4J-0522	211
	214
	224
	226
	228
	296
	302
4J-0526	405
	407
4J-1888	734
	742
4J-5309	531
	532
	533
	534
	535
4J-5477	224
	239
	308
	332
	335
	344
	346
	348
	350
	468
	470
	473
	501
	527
4K-0367	721
	723
	724
	725
	739
	740

► **PRIMARY REFERENCE**

PART NUMBER INDEX

Part	Page
	786
4L-6454	208
	884
	885
	886
4M-0061	891
	894
4N-9170	900
4P-6236	925
4P-7581	107
	110
	112
	163
	165
	167
	169
	171
	197
	199
	201
	423
	425
	428
4P-8134	107
	112
	151
	153
	163
	165
	179
	183
	187
	192
	854
4S-5565	393
	399
	409
4T-5613	416
4T-6780	401
	412
4V-0612	464
	466
4W-3753	435
	440
4W-9972	265
	271
	276
	281
	286
	291
	296
	302

5

Part	Page
5A-3604	574
	577
	583
	589
5B-9079	47
5C-2874	163
	165
	856
	857
5C-2890	83
	84
	107
	110
	112
	140
	141
	142
	151
	153
	173
	179
	183
	187
	192
	333
	336
	814
	858
	910
	912
	922
5C-7261	107
	138
	140
	141
	142
	151
	153
	173
	179
	183
	187
	192
	333
	336
	343
	361
	808
	869
	875
	906
	908
5C-8312	79
5C-8811	922
5C-9553	107
	110
	112
	574
	835
	837
	839
	841
	875
5C-9855	105
5D-1026	14
	16
	18
	344
	346
	348
	350
	468
	470
	523
	864
	865
5D-6543	537
	539
	548
	549
	550
	552
5D-8159	742
5D-9629	794
5E-8557	382
	383
5F-3106	397
	399
	409
	411
5F-3144	409
	411
5F-9144	537
	539
	548
	549
	550
	552
5G-2934	353
5H-3193	818
	820
5H-4909	208
5J-4561	401
5J-4973	409
	411
5J-4974	409
	411
5J-5402	416
5J-7036	393
	395
5J-7232	397
	399
5J-7233	397
	399
5J-8009	393
	395
5J-8010	393
	395
5K-5338	865
5K-9090	420
	435
	437
	440
	474
5P-0370	598
5P-0599	169
	171
	447
	449
	451
	454
	501
5P-0743	456
5P-0747	107
	109
	163
	165
5P-0761	107
	109
5P-0767	2
	4
	864
	865
5P-0805	361
5P-1076	368
	370
	372
5P-1420	87
5P-1442	87
	523
	525
5P-1505	50
	344
	346
	348
	350
	468
	470
	523
5P-1506	459
5P-2931	206
5P-3860	169
	171
	443
	445
	498
	499
5P-4115	910
	912
5P-4116	50
	59
	60
	61
	62
	64
	103
	224
	226
	228
	333
	336
	353
	437
	440
	459
	573
	577
	579
	581
	583
	585
	587
	589
	591
	593
	787
	795
	798
	803
	805
	806
	808
	818

► **PRIMARY REFERENCE**

PART NUMBER INDEX

Part	Page
	820
	844
	910
	912
5P-4295	344
	346
	348
	350
5P-4868	474
5P-4961	525
5P-5637	846
	848
	850
	852
	910
	912
5P-5655	846
	848
	850
	852
5P-5688	846
	848
	850
	852
5P-5927	814
5P-6010	893
5P-6129	787
5P-6718	291
5P-7070	816
5P-7462	348
	350
	480
	482
	484
	486
	488
	490
	492
	494
	496
5P-7463	348
	350
	480
	482
	484
	486
	488
	490
	492
	494
	496
5P-7464	447
	449
	451
	454
5P-7465	447
	449
	451
	454
5P-7466	435
	437
	440
5P-7467	435
	437
	440
5P-7814	86
5P-7958	187
	191
	574
	854
5P-7971	598
	599
5P-8066	265
	270
	275
	281
	285
	291
	296
	302
5P-8112	435
	437
	440
5P-8245	31
	880
	882
	884
	885
	886
	887
	888
5P-8248	745
5P-9085	87
5P-9297	901
5T-7870	884
	886
5U-6605	409
5V-1497	892
5V-2545	249
5V-7190	602
	604
5Y-0660	835
	837
	839
	841
6A-9083	884
	885
	886
6B-0933	106
6C-3680	846
	848
	850
	852
6D-0337	▶312
	313
6D-0443	312
6D-3479	523
	525
6D-4246	50
6E-1135	574
6E-1478	413
6E-3341	521
6E-4003	519
6E-4004	519
6E-4006	519
	▶521
6E-4009	521
6E-5431	573
6E-6154	521
6E-6155	521
6E-6158	521
6E-6528	519
6F-4855	508
6F-7045	149
6G-2263	50
6H-3616	36
6I-0217	33
	38
	40
	69
	81
	94
	97
6I-0218	56
6I-0254	69
6I-0260	14
	16
	18
	20
	38
	40
	54
	55
	56
	94
	97
	106
6I-0289	38
	40
6I-0291	94
	97
6I-0363	38
	40
6I-0364	80
	146
6I-0423	32
6I-0454	106
6I-0501	46
6I-0502	46
6I-0563	80
	81
6I-0572	13
	25
	38
	40
	57
	58
	81
6I-0594	106
	146
6I-0645	33
	57
	58
6I-0650	33
6I-0846	14
	16
	18
	20
6I-0847	32
6I-0917	14
	16
	18
6I-1418	178
	182
	186
	191
6I-1497	50
	52
6I-4374	55
	56
6J-1972	401
	412
6J-2680	401
	412
	474
6J-2797	416
6J-5731	401
	412
6J-6517	806
6K-0806	151
	153
	160
	161
	177
	179
	182
	186
	204
	266
	271
	276
	281
	285
	290
6K-8178	87
6K-9632	918
	920
6L-4725	787
	844
6L-7155	892
	894
6M-5062	506
6N-6984	67
6P-6591	123
	124
6P-8855	864
	865
6R-0365	393
	395
6R-2050	445
6S-3146	399
6S-8620	50
	73
6T-0465	107
	110
	112
6T-1375	902
	904
	918
	920
6T-5017	84
6T-9142	212
	215
6T-9143	212
	215

6

▶ PRIMARY REFERENCE

PART NUMBER INDEX

Part	Page	Part	Page	Part	Page	Part	Page
6T-9144	212		454		533		302
	215	6V-2315	339		534	6V-8144	561
6T-9145	212	6V-2323	519		535		577
	215	6V-2689	820	6V-5653	468		579
6T-9146	212	6V-2722	2	6V-5683	559		581
	215		3	6V-5834	382		583
6T-9147	212		4	6V-5842	280		585
	215		5		290		587
6T-9160	258		168		296		589
	260	6V-3213	513		302		591
6T-9163	212		515	6V-6228	206		593
	215		561		219		595
	296		570	6V-6717	787		596
	302		577		844		597
6T-9164	212		579	6V-6813	787		600
	215		581		844		742
	296		583	6V-7238	456	6V-8185	891
	302		585	6V-7357	124		894
6T-9165	212		587		333	6V-8186	875
	215		589		336	6V-8202	507
	296		591		846	6V-8210	217
	302		593		848	6V-8224	443
6T-9166	212		595		850		445
	215		596		852	6V-8227	827
	296		597		918		829
	302		600		920	6V-8236	559
6T-9196	254		701		922	6V-8237	412
	259		702	6V-7359	447	6V-8335	265
6T-9202	296		703		449		270
	302		704		451		275
6V-0292	898		736		454		285
6V-0505	902		737	6V-7687	368	6V-8344	512
	918	6V-3341	464		370		568
6V-0683	348		466		372		606
	350	6V-3507	155		561	6V-8363	175
	480		158		891		176
	482	6V-3940	208	6V-7731	265		177
	484	6V-3965	224		270	6V-8370	175
	486		226		275		176
	488		228		285		177
	490		468	6V-7743	358	6V-8378	265
	492		470		906		271
	494	6V-4292	344		908		276
	496		346		916		281
6V-0826	333		348		917		286
	574		350	6V-7744	360		291
6V-0852	224		523		515		296
	226	6V-4364	568		746		302
	228		602		806	6V-8397	105
	468		604		808		332
	470		606		818		335
6V-1249	447		701		820		344
	449		702		898		346
	451		703	6V-7981	280		348
	454		704		290		350
6V-1361	183	6V-4589	290	6V-8077	226		423
6V-1363	79		559		228		464
6V-1580	377	6V-5100	254		468		466
	379		259	6V-8097	265		468
6V-1722	501	6V-5215	211		270		470
6V-1869	745		214		275		471
6V-1889	391		296		280		476
	447		302		285		480
	449	6V-5326	531		290		482
	451		532		296		484

► **PRIMARY REFERENCE**

PART NUMBER INDEX

Part	Page
	486
	488
	490
	492
	494
	496
6V-8398	332
	335
	388
	389
	391
	393
	395
	401
	409
	411
	412
	423
	425
	428
	435
	447
	449
	451
	454
	457
	460
	462
	464
	466
	470
	471
	476
	478
	480
	482
	484
	486
	488
	490
	492
	494
	496
	498
	499
	501
6V-8399	290
6V-8455	223
6V-8500	258
	260
6V-8523	2
	3
	4
	5
	168
6V-8624	423
	425
	428
	476
	478
6V-8625	332
	335
	457
	501
6V-8626	460
6V-8627	224
	239
	308
	470
6V-8628	344
	346
	348
	350
6V-8629	503
6V-8633	447
	451
	480
	482
	486
	488
	492
	494
	498
	499
6V-8634	332
	335
	344
	346
	348
	350
	423
	476
6V-8635	420
	437
	440
	474
6V-8636	470
6V-8637	437
	440
6V-8639	389
	391
	423
	425
	428
	476
	478
	501
6V-8641	239
	332
	335
	344
	346
	348
	350
	468
	470
	473
	527
6V-8713	443
	445
	447
	449
	451
	454
	460
	498
	499
	503
	530
6V-8714	474
6V-8716	62
	64
6V-8721	480
	482
	484
	486
	488
	490
	492
	494
	496
6V-8723	344
	346
6V-8724	332
	335
	464
	466
	470
6V-8757	247
	250
	252
	254
	261
6V-8759	331
6V-8782	501
6V-8801	745
6V-8936	480
	482
	486
	488
	492
	494
6V-8978	531
	532
	533
	534
	535
6V-8995	447
	451
6V-8996	447
	449
	451
	454
6V-8998	435
	437
	440
6V-9002	425
	428
	478
6V-9031	460
6V-9169	447
	451
	471
6V-9170	435
	447
	449
	451
	454
6V-9172	435
	437
	440
6V-9178	311
6V-9182	62
	64
6V-9189	513
	806
6V-9632	50
	178
	186
	365
	794
	870
	893
6V-9746	62
	64
	389
	391
	397
	399
	416
	435
	437
	438
	440
	441
	503
6V-9830	420
	460
	462
6V-9831	460
	530
6V-9832	438
	440
6V-9833	420
6V-9836	471
6V-9838	460
6V-9839	389
	391
	438
	440
6V-9840	474
6V-9849	468
6V-9850	344
	346
	348
	350
6V-9851	428
	478
6V-9853	389
	391
	435
6V-9872	105
6V-9990	451
	454
6Y-1192	247
	250
	256
6Y-1341	265
	270
	275
	280
	285
	290
6Y-1896	265
	270
	275
	281
	286
	291
	296

PART NUMBER INDEX

Part	Page
	302
6Y-2035	265
	270
	275
	281
	285
	291
6Y-2736	258
	260
6Y-2737	211
	214
	217
6Y-7929	247
	250
	252
	254
	256
6Y-7957	259
	261
6Y-9930	873

7

Part	Page
7C-0351	38
	40
7C-1224	38
	40
7C-1281	14
	16
	18
7C-4354	87
	389
	447
	449
	451
	454
7C-4616	33
7D-7233	52
	459
7E-3870	78
7G-1060	178
	182
	186
7H-3937	846
	848
	850
	852
7I-1036	389
	391
7I-8084	501
7I-8935	556
	557
7J-9108	333
	336
	435
	443
	445
	447
	449
	451
	454
	460
	462
	498
	499
	503
	530
7K-1181	83
	84
	87
	107
	110
	112
	121
	123
	124
	151
	153
	157
	163
	165
	169
	171
	177
	178
	182
	186
	191
	197
	199
	204
	205
	239
	308
	330
	332
	335
	344
	346
	348
	350
	423
	425
	428
	459
	460
	462
	468
	470
	473
	476
	478
	501
	503
	527
	574
	864
	865
	870
7M-8485	62
	64
	388
	420
	435
	437
	440
	474
7N-0718	110
	112
	▶149
7N-3718	87
7N-5274	109
7R-8239	340
7S-1912	87
7T-0093	846
	848
	850
	852
7T-1099	105
	794
7T-2646	212
	215
	296
	302
7T-2651	211
	214
	217
	296
	302
7T-3017	258
	260
7T-3018	258
7T-3021	258
	260
7T-3022	258
	260
7T-3034	212
	215
7T-3051	211
	214
	217
7T-3109	265
	270
	275
	280
	285
	290
7T-3111	266
	271
	276
	281
	286
	291
7T-3119	265
	270
	275
	280
	285
	291
7T-3195	265
	270
	275
	280
	285
	291
	296
	302
7T-3249	265
	270
	275
	280
	285
	290
7T-3251	265
	270
	276
	281
	286
	291
	296
	302
7T-3253	211
	214
	217
	296
	302
7T-4848	178
	182
	186
	191
7T-6087	144
7T-6088	144
7T-6090	144
7T-6092	144
7T-6093	144
7T-6099	144
7T-6655	250
	252
7T-6799	155
	158
7T-9987	109
7W-1176	32
7W-2326	10
	52
7W-3556	296
	302
7W-4634	46
7W-4642	32
7X-0440	464
	466
7X-0481	891
	894
7X-0510	790
7X-0579	67
	179
	183
	187
	192
	377
	379
	787
	811
	844
7X-0586	74
7X-0603	67
	602
	604
7X-0608	138
7X-0618	240
7X-0620	382
7X-0622	892
	894
7X-0818	84
	224
	226
	228
7X-0871	470
7X-2393	906
	908

▶ **PRIMARY REFERENCE**

PART NUMBER INDEX

Part	Page
7X-2476	357
7X-2533	870
7X-2534	151
	179
7X-2537	382
	383
	577
	579
	581
	583
	585
	587
	589
	591
	593
7X-2541	806
	808
7X-2549	435
	440
7X-2553	241
	242
7X-2559	208
7X-2564	377
	379
7X-2568	873
7X-2572	376
7X-4741	271
	276
	281
	285
	290
	296
	302
7X-4744	311
7X-6315	114
7X-7729	52
	87
	107
	109
	110
	112
	179
	183
	187
	192
	333
	336
	435
	447
	449
	459
	474
	523
	525
	577
	579
	581
	583
	585
	587
	589
	591
	593
	818
	820
	827
	829
7X-7958	459
7X-9065	155
	158
7Y-0336	431
	433
7Y-3883	163
	165
7Y-9099	361

8

Part	Page
8C-0572	71
	72
	887
	888
8C-3056	107
	110
	112
8C-3290	354
	356
	357
8C-3334	197
8C-3398	179
	183
	187
	192
8C-3446	420
8C-3451	420
8C-3681	67
	73
	901
8C-3756	846
	848
	850
	852
8C-3798	50
	133
	834
	862
	898
	902
	904
8C-4982	868
8C-4987	818
	820
8C-5607	125
8C-5608	125
8C-5748	265
	270
	275
	280
	285
	290
	296
	302
8C-6354	179
	182
	187
	191
8C-6955	431
	433
8C-7505	206
	208
8C-7524	846
	848
	850
	852
	898
8C-8408	501
8C-8522	358
8C-8545	296
	302
8C-8580	537
	539
	548
	549
8C-8989	423
	425
	428
	476
	478
8C-9161	397
	399
8C-9200	393
	395
8C-9660	929
8C-9778	144
8C-9783	144
8D-2707	312
8E-1118	860
	862
8E-5707	247
	250
	252
	254
	256
	259
	261
8E-8293	902
	904
	918
	920
8F-1434	144
	163
	165
	175
	176
	177
	265
	271
	276
	281
	286
	291
	296
	302
8F-3590	133
	163
	165
	183
	187
	192
8F-6711	399
8H-5303	149
8H-5306	149
8H-7521	416
8I-0668	457
8J-2413	437
	537
	539
	541
	543
	545
	547
	548
	549
	550
	552
	553
	554
	555
8J-4455	144
8L-2746	290
8L-2779	265
	270
	275
	280
	285
	290
	297
	303
8L-2786	297
	303
8L-8413	8
	104
	131
8M-2773	87
8N-0869	107
	112
8R-2916	829
8R-6111	860
	862
8S-0023	224
	226
	228
	435
	437
	441
8S-0024	224
	226
	228
	435
	437
	441
8S-0948	471
8S-3020	109
	110
	112
8S-7803	795
	798
	892
	894
	914
8T-0119	332
	335
8T-0120	498
	499
8T-0131	332
	335
8T-0144	733
8T-0154	456
8T-0164	308

PART NUMBER INDEX

Part	Page	Part	Page	Part	Page	Part	Page
8T-0271	296		482	8T-3652	368		459
	302		484		370		460
8T-0292	208		486		372		462
8T-0328	163		488	8T-4001	355		464
	165		490		357		466
	265		492		366		476
	271		494	8T-4121	37		478
	276		496		50		480
	281	8T-1887	437		52		482
	286		441		62		484
	291		443		64		486
	296		445		80		488
	302		503		86		490
	525	8T-1888	437		87		492
8T-0352	179		441		101		494
	183		443		102		496
	187		445		107		503
	192		503		110		511
8T-0389	127	8T-1889	332		112		516
	128		435		121		518
	129		437		127		523
8T-0404	443		440		128		525
	445	8T-1890	332		129		570
	447		435		131		574
	449		437		133		602
	451		440		137		604
	454	8T-1891	457		144		745
	462	8T-1892	457		163		806
8T-0643	296	8T-1899	464		165		808
	302		466		179		818
8T-0706	431	8T-1900	464		183		820
	433		466		187		827
8T-0785	409	8T-2658	816		192		829
	411	8T-2659	155		197		864
8T-1118	902		158		199		865
	904		929		224		870
	918	8T-3444	464		226	8T-4122	37
	920		466		228		103
8T-1580	211	8T-3490	74		308		360
	214		80		333		375
	217		462		336		418
	256		577		344		721
8T-1581	256		579		346		723
	265		581		348		724
	270		583		350		725
	275		585		360		739
	280		589		366		740
	285		591		377	8T-4123	377
	290		593		379		379
8T-1683	348		870		389		431
	350		874		391		433
8T-1718	503	8T-3612	73		419		784
8T-1779	468		84		423		873
8T-1885	457		122		425	8T-4131	240
	480		353		428		784
	482		577		435		873
	484		579		438	8T-4132	37
	486		583		440		375
	488		585		443		873
	490		589		445	8T-4133	52
	492		591		447		67
	494		745		449		80
	496		794		451		87
8T-1886	457		870		454		107
	480	8T-3647	513		457		109

► **PRIMARY REFERENCE**

PART NUMBER INDEX

Part	Page
	110
	112
	131
	133
	144
	179
	183
	187
	192
	333
	336
	358
	389
	391
	425
	431
	433
	435
	438
	441
	460
	745
	818
	820
	827
	829
8T-4134	197
	199
	870
8T-4136	52
	62
	64
	80
	87
	163
	165
	179
	183
	187
	192
	224
	226
	228
	333
	336
	348
	350
	377
	379
	389
	391
	435
	438
	440
	447
	449
	451
	454
	457
	459
	460
	462
	464
	466
	474
	503
	602
	604
	745
	818
	820
	827
	829
	865
8T-4137	107
	109
	110
	112
	137
	163
	165
	178
	183
	187
	192
	197
	199
	308
	344
	346
	377
	379
	423
	425
	428
	438
	440
	443
	445
	462
	476
	478
	480
	482
	484
	486
	488
	490
	492
	494
	496
	523
	525
	570
	574
	745
	818
	820
	864
	865
8T-4138	50
	83
	84
	119
	121
	123
	175
	176
	177
	179
	183
	187
	192
	333
	336
	573
	870
	877
	922
8T-4139	163
	165
	341
	368
	370
	372
	377
	379
	423
	425
	428
	447
	449
	451
	454
	478
	523
	525
	566
	602
	604
	865
	890
8T-4167	354
	355
	356
	357
	366
	376
8T-4171	153
	163
	165
	173
	854
	922
8T-4172	346
	350
8T-4173	873
8T-4174	37
8T-4176	224
	226
	228
	561
	898
8T-4178	523
8T-4179	525
	131
	860
8T-4181	67
	348
	350
	431
	433
	511
	353
	447
8T-4182	449
	451
	454
	474
	602
	604
8T-4184	511
	565
	743
8T-4185	50
	107
	109
	110
	112
	435
	438
	441
8T-4186	419
	870
8T-4187	784
8T-4189	50
	62
	64
	67
	74
	87
	103
	122
	163
	165
	353
	377
	379
	382
	383
	431
	433
	438
	441
	459
	573
	795
	811
	818
	820
	865
	870
	880
	882
	887
	888
8T-4191	523
	525
8T-4192	62
	64
	87
	240
8T-4193	103
8T-4194	228
	451
	454
	602
	604
8T-4195	52
	80

► **PRIMARY REFERENCE**

PART NUMBER INDEX

Part	Page	Part	Page	Part	Page	Part	Page
	86		803		425		433
	102		805		428		476
	360		844		435		478
	366		910		441		501
	391		912		447		573
	447	8T-4205	50		449		574
	449		83		451		745
	457		84		454		806
	459		107		474		854
	503		110		476		865
	511		112		478		870
	574		119		511	8T-4244	381
	577		121		523		447
	579		123		525		449
	581		124		565		451
	583		125		566		454
	585		140		602		870
	587		141		604	8T-4648	381
	589		142		743	8T-4742	84
	591		151		831		858
	593		153		865		859
	602		163		878	8T-4744	84
	604		165		879		858
	806		173		890		859
	808		175		910	8T-4773	818
	827		176		912		820
	829		177	8T-4224	59	8T-4778	360
	870		179		60	8T-4815	818
8T-4196	37		183		61		820
	52		187		74	8T-4821	368
	101		192		83		370
	344		333		84		372
	346		336		87	8T-4837	368
	348		358		103		370
	350		471		107		372
	435		787		122	8T-4908	59
	438		814		137		60
	441		844		140		61
	480		846		141		67
	482		848		142		83
	484		850		151		84
	486		852		153		333
	488		854		163		336
	490		875		165		574
	492		918		173		745
	494		920		179		808
	496		922		183	8T-4910	438
	503	8T-4222	67		187		602
	516		360		192		604
	518		898		223	8T-4956	224
8T-4197	808	8T-4223	62		330		226
8T-4198	746		64		333		241
8T-4200	67		87		336		242
	71		163		340		476
	72		165		343		831
	103		224		353		870
	179		226		377		878
	183		228		379		879
	187		241		381	8T-4971	859
	192		242		382		870
	223		353		383		922
	353		377		423	8T-4986	577
	787		379		425		579
	795		381		428		581
	798		423		431		583

► **PRIMARY REFERENCE**

PART NUMBER INDEX

Part	Page
	585
	587
	589
	591
	593
8T-5005	308
8T-5050	471
8T-5063	431
	433
8T-5070	393
	401
	409
8T-5091	361
8T-5093	163
	165
	361
	902
	904
	918
	920
8T-5429	484
	490
	496
8T-5436	806
	808
8T-5439	316
	317
	318
	320
	321
	323
	324
	325
	326
	327
	328
8T-6411	827
8T-6412	887
8T-6466	344
	348
	806
	808
8T-6684	474
8T-6685	515
8T-6726	74
	457
	460
	464
	466
8T-6868	368
	370
	372
8T-6869	343
	381
8T-6870	501
8T-6876	425
	428
	478
8T-6885	2
	4
8T-6902	573
	875
8T-6912	330
8T-6974	471
8T-7004	425
8T-7338	418
8T-7529	50
	62
	64
	459
8T-7547	137
	377
	379
	573
	806
	808
	870
8T-7566	888
8T-7876	57
	58
8T-7930	368
	370
	372
8T-7963	353
8T-7968	480
	482
	484
	486
	488
	490
	492
	494
	496
8T-8442	519
8T-8729	423
8T-8737	155
	158
	183
	187
	192
	393
	399
	401
	409
	824
	825
	826
	854
8T-8799	107
	112
	151
	153
	173
	178
	182
	186
	191
8T-8894	101
	102
	827
	829
8T-8917	887
8T-9402	50
8T-9405	79
	418
8T-9501	818
	820
	831
	880
	882
8T-9655	887
	178
	182
	186
	191
8U-9427	556
8W-9230	464
8X-9618	192
8Y-5737	787
	844
8Y-5946	894
8Y-6352	787
	844
8Y-6967	787
	844
8Y-7309	906
	908
8Y-7751	445
8Y-7833	203
	204
8Y-8080	110
8Y-8081	107
	109
	112
9	
9B-7233	155
	158
	897
9C-4457	898
9D-3767	333
	336
9F-2049	368
	370
	372
9F-5644	138
	149
	187
9G-3695	869
9G-3732	806
9G-3733	806
9G-4191	107
	110
	112
9K-6540	790
9M-0164	523
	525
9M-1974	265
	270
	275
	280
	285
	290
9M-4814	864
	865
9M-7958	52
	73
9M-7959	787
	844
9M-8406	87
	344
	346
	348
	350
	865
9N-2231	787
	844
9P-9150	265
	270
	275
	280
	285
	290
	296
	302
9R-0109	561
	564
	577
	579
	581
	583
	585
	587
	589
	591
	593
	595
	596
	597
	600
	742
	931
	932
9R-0111	561
	610
	612
	613
	615
	617
	729
9R-0139	393
	395
9R-0153	403
9R-0158	513
	515
	561
	568
	570
	577
	579
	581
	583
	585
	587
	589
	591
	593
	595
	596
	597
	600
	701
	702
	703
	704
	736
	737
	744

► **PRIMARY REFERENCE**

PART NUMBER INDEX

Part	Page	Part	Page	Part	Page	Part	Page
9R-0162	393	9R-0347	612	9R-2807	330		617
	395	9R-0366	368		333	9R-5238	512
	568		370		336	9R-5271	729
	601		372		431	9R-5294	731
	602	9R-0371	613		433	9R-5301	431
	620	9R-0372	613		818		433
	621	9R-0376	610		820		564
	622		615	9R-2959	602		576
	623		617		604	9R-5313	610
	624	9R-0411	600	9R-3067	818		613
	625	9R-0418	464		820		731
	626		466	9R-3135	433	9R-5320	608
	627	9R-0422	595	9R-3182	561		609
	630		596	9R-3205	900		670
	631		597		901		674
	632	9R-0431	366	9R-3255	431		▶739
	633		705		433	9R-5321	607
	634		706	9R-3469	902		672
	635		707		904		674
	636		708		918		675
	637		709		920		▶740
	638		710	9R-3659	320	9R-5383	806
	639		711		321		808
	640		713	9R-3700	735	9R-5429	368
	641		714	9R-3747	570	9R-5616	795
	642		715	9R-3756	570		798
	643		716	9R-3884	344		803
	644	9R-0481	366		348		805
	645		512	9R-4066	561	9R-5828	570
	646		606		932	9R-5832	613
	647	9R-1085	▶595	9R-4110	366	9R-5866	607
	650	9R-1499	131	9R-4482	570		608
	651		133	9R-4485	613		609
	652	9R-1502	568		615		672
	653		606	9R-4486	613		674
	654	9R-1510	512		615		675
	655		513	9R-4494	570		676
	656		515	9R-4619	443		▶786
	657		568		445	9R-5901	615
	659		606	9R-4672	612	9R-5902	615
	660		701		615	9R-5948	447
	661		702		617		449
	662		703		730		451
	663		704	9R-4675	731		454
	664		737	9R-4676	721		498
	665		744		723		499
	666	9R-1765	818		724	9R-6007	▶596
	667		820		725	9R-6014	932
	668	9R-1766	818	9R-4677	721	9R-6481	317
	669		820		723		318
9R-0170	568		831		724	9R-6690	561
9R-0189	564	9R-1767	818		725	9R-7240	104
9R-0320	415		820	9R-4678	721	9R-7803	460
	416		831		723		462
	618	9R-2053	169		724	9R-7882	368
	619		171		725		370
	628		457	9R-5205	610		372
	629		501		612	9R-8165	573
	648	9R-2614	431		613		790
	649		433		615	9R-8291	368
	658	9R-2672	74		617		370
	735		601	9R-5206	610		372
9R-0321	403	9R-2806	330		612	9R-8390	561
	405		431		613	9R-8594	574
	407		433		615	9R-8870	464

▶ **PRIMARY REFERENCE**

PART NUMBER INDEX

Part	Page
	466
9R-9005	501
9R-9028	576
9R-9373	561
9R-9702	240
9R-9868	818
	820
9R-9925	523
	525
9S-4185	297
	303
9S-4191	101
	102
	265
	270
	275
	280
	285
	290
	297
	303
	420
	471
9S-8004	208
	404
	507
	519
	531
	532
9S-8005	508
9T-2178	397
9T-2883	413
9T-3165	416
9T-4007	404
9U-2277	197
	199
9U-8263	860
	862
9U-8875	254
9U-8886	252
	254
	418
9W-0607	127
	128
	129
9W-0625	818
	820
9W-0717	256
9W-3326	131
	133
9W-4361	745
9W-5460	211
	214
	217
	296
	302
9W-6582	873
9W-6584	873
9W-8215	740
9W-9910	37
9W-9915	37
9W-9952	37
9W-9953	37
9X-0199	175
	176
	177
9X-1386	143
	393
	399
	401
	409
9X-1481	892
	894
9X-2036	144
9X-2038	336
	363
	364
	365
	527
	787
	790
	812
	814
	816
	834
	835
	837
	839
	841
	843
	844
	860
	862
	870
	877
	898
	929
9X-2040	818
	820
9X-2042	833
9X-2043	363
	364
	365
	527
	834
9X-2044	333
	814
	816
	898
	910
	912
9X-2045	333
	335
	787
	790
	812
	816
	835
	837
	841
	843
	844
	870
	877
	906
	908
	916
	917
9X-2065	818
	820
9X-2092	803
9X-2132	910
	912
9X-2133	73
9X-2480	125
9X-2842	875
9X-3401	399
	818
9X-3982	525
9X-4244	127
	128
	129
9X-4611	416
9X-6165	125
	197
	199
	877
9X-6378	208
9X-6383	837
	841
	910
	912
9X-6611	403
	405
	407
	413
9X-6615	265
	270
	275
	280
	285
	290
	296
	302
9X-6620	880
	882
	887
	888
9X-7344	175
	176
	177
9X-7378	151
	153
	810
9X-7380	865
9X-7381	865
9X-7382	865
9X-7383	865
9X-7684	208
9X-8118	130
9X-8139	130
9X-8256	131
	133
	573
	834
	860
	862
	870
	898
	902
9X-8257	241
	242
	598
	599
	873
9X-8372	902
	904
	918
	920
9X-8408	388
9X-8699	382
	383
9Y-0083	806
	808
9Y-5015	28

0

Part	Page
005-0469	211
	212
	214
	215
	217
005-0471	265
	270
	275
	280
	285
	290
014-5645	265
	270
	275
	280
	285
	290
031-5644	73
	135
032-9090	22
032-9091	22
033-6028	519
033-6043	519
033-6044	559
033-7687	31
033-8248	52
034-1432	931
	932
035-8017	94
	97
035-8068	25
038-9317	107
	109
	110
	112
039-8557	870
039-9133	340
067-6002	25
067-6006	25
	28
067-6043	25
067-6095	48
067-6179	33
067-6213	38
	40
067-6264	94
	97
067-6265	94
	97
067-6366	106

PART NUMBER INDEX

Part	Page
067-6873	22
067-6874	22
067-6999	94
	97
069-4080	101
	102
069-4707	206
	208
	236
084-4277	860
	862
084-4348	131
	133
089-7990	240
091-4113	745
091-5928	733
092-3635	344
	346
	348
	350
093-8828	236
095-0641	875
095-0642	506
	550
	552
095-0674	236
095-0756	205
	831
095-0865	721
	723
	724
	725
095-0879	393
	409
095-0924	243
095-0927	256
	259
095-0928	256
095-0930	563
095-1041	236
095-1608	399
095-1751	437
	537
	539
	541
	543
	545
	547
	548
	549
	550
	552
	553
	554
	555
095-7950	512
	606
095-9230	818
	820
096-1820	721
	723
	724
	725
	736
	737
096-4882	891
	894
096-5516	258
	260
096-5866	74
	423
	425
	428
	476
	478
096-5968	310
096-6166	182
	186
	191
	867
	868
099-3649	858
099-8232	508

1

Part	Page
100-3685	144
100-3751	33
	69
100-4112	144
100-4113	144
100-4115	144
100-4118	144
100-4119	144
100-4461	53
100-4830	35
	94
	97
100-4838	16
	18
	20
100-4841	14
	16
	18
	20
	25
100-5805	182
	186
	191
100-7608	906
	908
	916
	917
100-8451	106
101-0003	888
101-0745	918
	920
	922
101-1787	468
101-2987	36
101-3617	32
101-3771	38
	40
101-3895	55
	56
102-2244	393
	399
	401
102-3582	413
102-8801	155
	158
	854
102-8802	2
	4
	8
	104
	133
	143
	151
	163
	165
	178
	197
	199
	423
	810
	818
	820
	831
102-8803	201
	332
	335
	401
	423
	425
	428
	891
102-8804	3
	5
	133
	155
	158
	168
	393
	399
	409
	891
	922
102-8805	131
	869
102-8806	131
103-2543	178
	182
	186
	191
103-5520	559
104-3288	212
	296
	302
104-6310	608
	609
	▶742
104-6311	742
104-6312	742
104-6316	742
104-6317	742
105-1440	559
105-3481	880
	882
	887
	888
105-8034	332
	335
105-9411	865
106-0401	388
	421
	435
	437
	440
106-0406	388
	421
	435
	437
	440
106-1251	393
	395
106-3108	506
106-7301	431
	433
106-8020	105
106-8704	151
	178
	182
	197
	201
	423
	425
106-8916	81
106-9586	311
106-9861	211
	214
	217
	296
	302
107-5591	818
	820
	831
107-6279	403
107-6711	601
107-6826	249
108-2989	806
	808
108-3872	435
	437
	440
109-1260	435
109-1633	423
	425
	428
	476
	478
	865
109-1634	423
	425
	428
	476
	478
	865
109-1779	519
109-5824	441
109-5825	437
110-2445	74
110-5602	858
	910
	912
110-6109	787
	844
110-7887	155
	158

▶ **PRIMARY REFERENCE**

PART NUMBER INDEX

Part	Page
111-0859	30
111-4337	561
	570
	600
111-4627	197
	199
	787
	844
111-5042	888
	891
	893
111-7899	131
	133
	147
	151
	153
	155
	157
	158
	167
	173
	178
	182
	186
	191
	201
	205
	423
	425
	428
	530
	829
	922
111-7906	223
111-7907	▶223
	263
	264
112-1773	416
112-1776	742
112-1826	245
	246
	▶418
112-9338	316
	317
113-0920	860
	862
113-6349	106
113-8129	69
113-8490	138
113-8491	138
113-8492	138
114-2579	13
114-3928	352
114-4363	32
114-6099	366
115-1162	13
115-1615	119
	121
	151
	153
	163
	165
	173
115-1918	418
116-4481	556
	557
116-4942	▶597
116-5763	361
117-1385	296
	302
117-3534	418
117-9713	223
117-9887	249
118-2990	873
118-6842	353
	▶358
118-6854	353
118-7110	739
118-7286	62
	64
118-7790	175
	176
	177
118-8118	86
	100
118-8119	86
119-1530	▶930
119-3662	2
	4
119-4594	561
	600
119-4740	245
	246
119-5025	83
	84
119-8349	910
	912
119-9631	846
	848
120-5724	521
120-9027	816
120-9286	572
120-9289	930
	▶932
120-9332	932
120-9333	931
	932
120-9762	211
	214
	217
	296
	302
120-9809	460
121-0694	250
	252
121-0697	259
121-0714	259
121-0883	32
121-0885	256
	259
121-0904	259
121-1029	790
121-2059	212
	296
	302
121-2060	212
	296
	302
121-2061	212
	296
	302
121-2500	250
	252
	254
121-3040	888
121-6936	902
	904
121-7385	265
	270
	275
	280
	285
	290
121-7389	265
	270
	275
	280
	285
	290
121-7390	265
	270
	275
	280
	285
	290
121-7391	265
	270
	275
	280
	285
	290
121-7396	265
	270
	275
	280
	285
121-7398	212
	215
	296
	302
121-7399	212
	215
	296
	302
121-7400	212
	215
	296
121-7401	212
	215
	296
	302
121-7402	212
	215
	296
	302
121-7403	265
	270
	275
	280
121-7404	265
	270
	275
	280
	285
	290
121-8004	464
	466
121-9743	910
121-9870	860
	862
121-9875	285
	290
122-0668	464
122-1113	470
122-1877	247
	256
	259
	261
122-1878	259
	261
122-1879	212
	296
	302
122-1883	285
	291
	296
	302
122-1884	259
	261
122-1886	252
	254
122-3652	211
	214
	217
122-6785	265
	275
	280
	285
122-6787	265
	271
	275
	281
	285
	291
	296
	302
122-7137	897
122-9250	537
	539
	541
	543
	545
	547
	550
123-0380	795
	798
123-0428	377
	379
123-0707	860
	862
123-0714	254

▶ **PRIMARY REFERENCE**

PART NUMBER INDEX

Part	Page
123-1377	275
	281
	291
	296
	302
123-2899	30
123-2918	286
	291
123-2919	286
	291
123-2920	211
	214
	217
	252
	254
123-4065	67
123-8905	250
	252
	254
	259
	261
123-8906	211
	212
	214
	217
	250
	252
	261
123-8907	247
	256
	258
	260
	265
	270
	275
	280
	285
	290
123-8908	212
	215
	247
	256
123-8909	252
	254
123-8910	212
	215
	252
123-8912	247
	256
	259
	261
123-8913	252
124-0312	787
	844
124-2456	926
124-3536	42
124-3815	33
	94
	97
124-6569	862
125-7874	131
125-7875	131
125-7876	107
	112
126-1817	420
126-7574	114
127-1647	484
	490
	496
127-3017	265
	270
	275
	280
	285
	290
127-4293	318
	319
127-4471	52
	74
	523
	525
127-4834	355
127-8987	561
128-5010	561
128-5596	418
	▶522
128-7902	431
	433
128-7903	431
	433
	561
128-7905	431
	433
	561
129-1831	787
	844
129-3178	74
	123
	124
	125
	846
	848
	850
	852
	859
	875
	929
129-3180	880
	882
	887
	888
	894
	910
	912
129-4741	358
129-5256	795
	798
	914
129-5257	795
	798
	914
129-8542	906
	908
	916
	917
129-8545	906
	908
	916
	917
130-0165	122
130-0777	600
130-1638	577
	579
	581
	583
	585
	587
	589
	591
	593
130-2533	368
	370
	372
130-3879	61
130-4832	787
	844
130-5451	561
130-5891	431
	433
130-7282	208
130-7952	431
	433
130-8150	522
130-8343	892
	893
130-9984	62
	64
	459
	865
131-0232	104
131-1424	155
	158
	897
131-3987	795
	798
	835
	837
	839
	841
	914
131-8203	910
131-8775	574
131-9203	423
	425
132-2249	835
	837
	839
	841
	860
	862
132-3056	523
	525
132-3721	733
132-3723	733
132-3725	733
132-3777	734
132-3778	734
132-3821	733
132-5789	192
	865
132-6496	561
132-6497	564
132-8769	▶421
133-0261	303
133-1011	33
133-3362	▶577
	▶579
	▶581
133-3363	▶583
	▶585
	▶587
133-3366	▶589
	▶591
	▶593
133-3413	122
133-5813	470
133-6517	122
134-0143	574
	854
134-0404	167
134-0453	818
	820
134-2540	121
134-3014	420
134-3856	864
	865
134-4126	114
134-5884	628
	629
	630
	631
	632
	633
	634
	635
	636
	637
	638
	639
	640
	641
	642
	643
	644
	645
	646
	647
	657
	662
	663
	664
	665
	666
	667
	668
	669
134-5885	628
	629
	630
	631
	632
	633
	634
	635
	636
	637
	638
	639
	640
	641

▶ **PRIMARY REFERENCE**

PART NUMBER INDEX

Part	Page
	642
	643
	644
	645
	646
	647
	657
	662
	663
	664
	665
	666
	667
	668
	669
134-5930	433
134-7258	925
135-5009	107
	112
135-8203	786
136-1955	50
136-3112	228
136-3194	922
136-4184	854
136-4192	906
	908
	916
	917
136-7049	659
	660
	661
136-7051	659
	660
	661
136-7440	368
	370
	372
136-7728	67
136-7808	219
137-4234	671
	673
	677
	678
	679
	680
	681
	682
	683
	684
	685
	686
	687
	688
	689
	690
	691
	692
	693
	694
	695
	696
	697
	698
	699
	700
137-6645	167
138-2053	48
138-8454	192
140-3640	67
140-6009	431
	433
140-8714	94
	97
140-8718	94
	97
140-8783	106
141-0888	510
141-1667	81
141-1762	898
141-6343	431
	433
141-7684	428
141-8437	466
142-0485	332
	335
142-2928	891
142-3388	59
	60
	61
142-3391	59
	60
	61
143-0539	▶144
	146
143-0777	460
143-0779	460
143-1344	144
143-2827	906
	908
	916
	917
143-3158	470
144-0195	902
	904
	918
	920
144-0367	474
144-1636	143
144-8242	470
144-8344	435
	437
	441
145-0981	862
145-2237	470
145-8348	736
	737
145-9291	827
	829
146-6729	144
146-7744	910
	912
146-7745	910
	912
146-9439	147
	178
	182
	186
	191
	201
	423
	425
	428
147-0201	296
	302
147-0202	250
	252
147-0203	247
	254
	256
	261
147-0205	256
147-0207	261
147-0209	265
	270
	275
	280
	285
	290
	296
	302
	▶311
147-0210	261
147-0211	296
	302
147-0215	247
147-0216	247
147-0218	297
	303
147-0224	252
147-0226	297
	303
147-0227	254
147-0234	297
	303
147-0236	297
	303
147-0238	247
	250
	252
	254
	261
147-0242	256
147-0248	256
147-0256	250
147-0257	252
147-0258	247
147-0259	250
	252
147-0260	256
147-0261	256
147-0262	297
	303
147-0266	297
	303
147-0268	303
147-0270	250
147-1979	28
147-5553	81
148-8317	474
148-8318	332
	335
	344
	346
	348
	350
	423
	476
148-8325	239
	332
	335
	344
	346
	348
	350
	468
	470
	473
	527
148-8326	105
148-8327	437
	440
148-8328	447
	451
	480
	482
	486
	488
	492
	494
	498
	499
148-8335	420
	437
	440
	474
148-8336	470
148-8339	62
	64
148-8340	389
	391
	423
	425
	428
	476
	478
	501
148-8341	443
	445
	447
	449
	451
	454
	460
	498
	499
	503
	530
148-8351	468
148-8354	425

▶ **PRIMARY REFERENCE**

PART NUMBER INDEX

Part	Page	Part	Page	Part	Page	Part	Page
	428		290		632		499
	478		297		634	153-6241	423
148-8358	423		303		636		425
	425		420		638		428
	428		470		640		476
	476	148-8415	480		642		478
	478		482		644	153-6252	388
148-8360	62		486		646	153-6258	471
	64		488		650	153-7368	827
148-8362	474		492		652		829
148-8364	332		494		654	153-7369	▶343
	335	148-8428	501		656		827
	457	148-8429	474		662		829
	501	148-8433	471		664	153-8004	867
148-8365	425	148-8446	460		666	154-2704	735
	428	148-8449	389		668		736
	478		391	151-7903	620		737
148-8367	344		438		622	154-5257	618
	346		440		624		619
	348	148-8457	447		626		628
	350		451		630		629
148-8368	224	149-3516	86		632		648
	239	149-4745	891		634		649
	308		893		636		658
	470	149-7372	459		638	154-5278	568
148-8369	344	149-9954	100		640	154-5279	568
	346	150-3026	344		642		744
	348		346		644	154-5280	568
	350		348		646		744
148-8370	428		350		650	154-5404	206
	478		523		652		341
148-8372	480	150-3027	468		654	154-5410	918
	482	150-3033	308		656		920
	484	150-3035	503		662		922
	486	150-3053	435		664	154-5416	330
	488		437		666	154-5423	906
	490		440		668		908
	492	150-3060	464	151-7926	642		916
	494		466	151-7927	628		917
	496	150-3062	468		630	154-5428	197
148-8374	344	150-3063	460		632		199
	346	150-3757	256		634	155-2026	435
148-8378	332		258		636		437
	335		260		638		440
	464	150-4044	468	151-7929	618	155-2255	854
	466	150-7732	14		628	155-2260	168
	470		297		648		401
148-8381	484		303	151-7930	618	155-2270	131
	490	150-8015	912		628		330
	496	151-1975	86		648	155-2271	2
148-8382	443	151-2565	403	152-0816	464		3
	445	151-2963	358	152-3968	90		4
	447	151-4841	83		91		5
	449		84		92		131
	451		239		93		183
	454		308	152-6144	206		187
	462		332		208		192
148-8383	348		335		219	155-2274	192
	350		460	152-7691	869	155-6258	484
148-8388	503		462	153-0088	894		490
148-8390	460	151-7902	620	153-3061	59		496
148-8392	389		622		60	155-7321	501
	391		624		61	156-0283	361
	435		626	153-4906	519		858
148-8407	280		630	153-6232	498		902

▶ **PRIMARY REFERENCE**

PART NUMBER INDEX

Part	Page
	904
	918
	920
156-1200	86
156-3600	332
	335
156-3631	332
	335
156-6175	107
	110
	112
	123
	124
	178
	183
	187
	192
	527
157-1669	101
	102
157-2090	256
158-2306	386
158-3412	460
	462
158-4466	556
	557
159-1503	62
	64
	459
159-3313	470
159-3590	926
159-4269	835
	837
	839
	841
159-4945	795
	798
	839
	841
	914
159-4946	795
	798
	835
	837
	914
159-8033	925
159-8050	110
	112
160-0496	386
160-2169	922
160-2245	175
160-2246	62
	176
	177
160-2248	473
	527
161-3249	259
	261
161-4130	618
	620
	622
	624
	626
	628
	630
	632
	634
	636
	638
	640
	642
	644
	646
	648
	650
	652
	654
	656
	658
	659
	660
	661
	662
	664
	666
	667
	668
	729
	735
161-6984	856
	857
161-6987	856
	857
161-9044	835
	837
	839
	841
161-9283	880
	882
	887
	888
	893
161-9285	893
161-9288	892
	893
161-9289	891
	893
161-9294	856
	857
162-1565	14
	16
	18
162-1604	519
162-3960	▶386
	387
	423
	425
	476
	478
162-3961	▶387
	428
162-4004	360
162-6556	856
	857
163-0753	331
	▶340
163-1135	892
	893
163-8811	445
163-9091	247
	250
	303
164-1153	831
164-1154	875
164-1178	812
164-1214	885
164-1215	891
	893
164-1218	891
	893
164-1219	891
	893
164-1220	891
	893
164-1226	892
	893
164-1228	893
164-1229	891
	893
164-1230	891
	893
164-1232	892
	893
164-1233	892
	893
164-1234	893
164-1235	893
164-1237	891
	893
164-1238	892
	893
164-1239	892
	893
164-1240	891
	893
164-1244	882
	887
164-1245	888
164-1246	888
164-1247	884
	885
	886
164-1249	880
	882
	887
	888
164-1250	880
	882
164-1251	880
	882
	887
	888
164-1252	880
	882
	887
164-1256	887
164-1258	880
	882
	887
	888
164-1259	880
	882
	887
	888
164-1261	884
	885
	886
164-1263	887
	888
164-1265	884
	885
	886
	887
164-1266	880
164-1269	888
164-1271	888
164-1272	888
164-1273	887
	888
164-1274	888
164-1275	887
	888
164-1276	887
	888
164-1277	888
164-1308	910
	912
164-1314	910
	912
164-1328	910
	912
164-1342	910
	912
164-1343	910
	912
164-1344	910
	912
164-1345	910
	912
164-1346	910
	912
164-1351	910
	912
164-1352	910
	912
164-1353	910
	912
164-1354	910
	912
164-1368	205
	330
	787
	818
	820
	831
	844
	870
164-1395	83
	84
	573
	820
164-1398	573
164-2108	560
164-3876	353
164-5549	423
	476
164-5567	224
	226
	228

▶ **PRIMARY REFERENCE**

PART NUMBER INDEX

Part	Page	Part	Page	Part	Page	Part	Page
	468		621		692		261
	470		622		693	172-6489	131
164-5586	470		623		694		133
164-7556	127		624		695	172-6490	131
	128		625		696		133
	129		626		697	172-6743	256
164-8474	787		627		698	172-8276	650
	844		630		699		659
164-9425	163		631		700	172-8277	652
	165		632		712		660
164-9598	340		633		717	172-8278	654
164-9599	340		634		718		661
164-9640	470		635		719	172-8279	633
165-2273	456		636		720		641
165-4021	50		637		721		650
165-4931	226		638		723		651
	228		639		724		659
	468		640		725		663
165-6595	332		641		735	172-8280	635
	335		642		736		643
165-7951	101		643		737		652
	102		644	169-1616	437		653
165-8357	122		645		537		660
165-8996	240		646		539		665
166-7302	449		647		541	172-8591	812
	454		650		543	172-9200	179
166-9413	209		651		545		182
167-0566	501		652		547		186
167-2186	401		653		548		191
	412		654		549	173-0332	247
167-2195	416		655		550	173-0639	519
167-2201	409		656		552	173-0641	519
	411		657		553	173-5787	892
167-2207	393		659		554		893
	395		660		555	173-7003	203
167-2208	397		661	169-5861	86		204
	399		662	169-7291	860	173-9682	395
167-2294	401		663		862	173-9779	412
	412		664	169-7409	447	174-3091	824
167-2304	416		665		449		825
167-2312	409		666		451		826
	411		667		454	174-3949	648
167-2317	393		668	170-0235	865		658
	395		669	170-0503	386	174-3950	629
167-2319	397	168-2313	846	170-6305	155		648
	399		850		158		649
167-8182	910	168-3379	521	170-6542	155		658
	912	168-4511	122		158	174-4643	206
167-8251	812	168-8389	671	170-9360	123	174-4647	208
168-0425	736		673		124	174-4650	208
	737		677		179	174-4671	206
	746		678		183	174-4765	637
168-0443	701		679		187		645
	702		680		192		654
	703		681	171-2870	910		655
	704		682		912		661
168-0444	701		683	171-5349	143	174-6740	470
	702		684	172-4211	914	174-8131	929
	703		685	172-5317	250	174-9638	81
	704		686		252	174-9711	265
168-0445	737		687		254		270
168-0446	736		688	172-6050	247		275
	737		689		254		280
168-0475	736		690		256		285
168-0480	620		691		259		290

► **PRIMARY REFERENCE**

PART NUMBER INDEX

Part	Page
175-0054	265
	270
	275
	280
	285
	290
175-7904	418
176-0348	131
	133
176-0626	370
	372
176-1477	8
176-1522	8
176-6219	90
	91
	92
	93
176-6251	▶733
	734
176-6252	733
176-8541	556
	557
176-9294	474
177-2215	169
	171
177-4877	795
	798
	835
	837
	839
	841
177-9645	846
	848
	850
	852
178-1304	317
178-1781	107
	110
178-3593	▶744
178-7539	131
	133
	178
	182
	186
	191
	196
178-8214	258
	260
178-8465	8
178-8850	▶734
178-9566	259
179-3543	▶505
	550
	552
179-5434	130
179-6401	178
	182
	186
	191
179-7262	912
179-8235	818
	820
179-9392	187
	191
180-2316	▶572
180-3664	▶130
	135
180-3730	105
180-5781	887
	888
180-5782	888
180-5783	888
180-5784	888
180-5785	888
180-5787	888
180-5788	888
180-5789	893
180-5791	887
	888
180-5795	880
180-5796	882
180-5797	880
	882
	887
180-6213	519
180-9160	858
180-9900	187
	191
183-3132	818
	820
183-3135	818
	820
183-3137	818
	820
183-4911	858
183-4912	858
183-4934	870
183-5443	858
183-6084	573
183-6085	858
184-0982	104
	105
184-5293	816
185-0882	28
185-0884	25
185-1546	47
185-3890	893
185-4015	846
	848
	850
	852
185-4254	505
	▶560
185-6643	50
186-2589	▶869
	918
	920
	922
186-3735	104
	131
	133
	151
	155
	158
	163
	165
	178
	199
	201
	332
	335
	423
	425
	428
	824
	825
	826
	869
	891
	922
187-0413	795
	798
187-2120	501
188-2199	393
	399
	401
	409
188-3953	577
	579
	581
	583
	585
	587
	589
	591
	593
188-9592	736
189-0881	787
	844
189-3158	153
	163
	165
	186
	191
	199
	428
189-5746	▶143
	265
	270
	275
	280
	286
	291
190-7634	105
190-9767	259
191-6159	401
	412
191-6191	393
	395
191-8304	297
	303
193-0618	100
193-3356	787
	844
193-5416	639
	647
	657
	669
193-9055	361
194-2903	332
	335
194-4334	478
194-5171	922
194-5390	81
194-5622	787
	844
194-9487	579
	581
	585
	587
	591
	593
195-0260	473
195-0261	473
195-0262	473
195-0263	473
195-2132	36
195-2134	36
195-2136	36
195-2221	36
195-6341	323
	324
195-6344	318
	319
	322
	323
	324
	325
	328
	329
195-7055	884
	885
	886
195-7602	870
195-9223	880
	882
	887
	888
196-0226	521
196-8921	650
	651
	652
	653
	654
	655
	656
196-8922	650
	651
	652
	653
	654
	655
	656
197-5107	153
	173
	183
	187
	192
	835
	837
	839
	841
197-6258	648
	649
197-6259	648
	649
197-6657	891
	893
197-7499	155
	158

▶ **PRIMARY REFERENCE**

PART NUMBER INDEX

Part	Page	Part	Page	Part	Page	Part	Page
197-8914	658	199-0692	236		631		689
197-8915	658	199-0693	236		632		690
197-9155	208	199-0694	222		633		691
198-6498	556	199-0695	219		634		692
	557		236		635		693
198-6499	557	199-0697	236		636		694
198-6505	557	199-0700	338		637		695
198-6506	557		339		638		696
198-6514	557	199-0701	338		639		697
198-6515	556		339		640		698
	557	199-0702	338		641		699
198-6516	557		339		642		700
198-6522	557	199-0703	338		643		705
198-7811	208		339		644		706
	236	199-0706	208		645		707
198-7814	234	199-0752	338		646		708
	235		339		647		709
198-7823	206	199-0756	222		648		710
	341	199-0759	338		649		711
198-7825	206		339		650		712
	341	199-0760	244		651		713
198-7838	206	199-0778	208		652		714
	341	199-0783	360		653		715
198-7841	206	199-0784	222		654		716
	341	199-0785	236		655		717
198-7842	206	199-0786	208		656		718
	341	199-0787	208		657		719
198-7843	206	199-0807	222		658		720
	341	199-0808	222		659	201-1239	677
198-8645	14	199-0858	219		660		678
	16		236		661		679
	18	199-0929	867		705		680
199-0640	338		868		706		681
199-0645	338	199-9267	150		707		682
199-0648	234	199-9751	28		708		683
	235		45		709		684
	341		163		710		685
199-0652	208		165		711		686
199-0653	244				712		687
199-0656	236				713		688
199-0659	222	**2**			714		689
199-0663	236				715		690
199-0668	208	200-2371	507		716		691
199-0669	244	200-3946	527	201-1235	618		692
199-0670	208	200-3947	527		619		693
199-0672	338	200-4022	556		620		694
	339	200-4023	556		621		695
199-0673	222	200-5921	733		622		696
199-0675	236	200-6210	507		623		697
199-0676	208	200-7128	7		624		698
199-0678	236		▶416		625		699
199-0679	208	200-8303	570		626		700
199-0680	236	200-8306	570		627		705
199-0681	338	200-8308	570	201-1238	677		706
	339	200-8309	570		678		707
199-0683	206	200-8310	570		679		708
	341	200-8311	570		680		709
199-0684	236	200-8313	570		681		710
199-0685	236	201-1024	178		682		711
199-0686	236		182		683		712
199-0687	236		186		684		713
199-0688	236		191		685		714
199-0689	236	201-1234	628		686		715
199-0690	236		629		687		716
199-0691	236		630		688		717

▶ **PRIMARY REFERENCE**

PART NUMBER INDEX

Part	Page
	718
	719
	720
201-1601	795
201-1835	105
201-1838	570
201-1840	570
201-1862	313
	314
	▶316
201-1863	▶316
201-1864	316
	▶317
201-1874	313
	▶317
201-1875	▶317
201-1876	317
	▶318
201-1879	321
	322
201-1881	313
	315
	▶318
201-1882	▶318
201-1883	318
	▶319
201-1902	319
201-1911	▶319
	320
201-1912	▶319
	320
201-1913	313
	314
	▶320
201-1915	316
	317
	321
	323
	325
	327
201-1916	318
	320
	322
	324
	326
	328
201-1918	▶313
201-1919	316
	318
	320
	321
	323
	324
	325
	326
	327
	328
201-1920	▶313
	316
	317
	318
	319
	320
	321
	322
	323
	324
	325
	326
	327
	328
	▶313
	313
	▶313
	313
	▶320
	▶320
	320
	▶321
	314
	315
	▶321
	▶314
	▶321
	321
	▶322
	503
	503
	480
	482
	484
	486
	488
	490
	492
	494
	496
	480
	482
	484
	486
	488
	490
	492
	494
	496
	480
	482
	484
	486
	488
	490
	492
	494
	496
	332
	▶360
	503
	416
	416
	416
201-5810	577
	579
	583
	585
	589
	591
201-5812	577
	579
	583
	585
	589
	591
201-7659	416
201-9459	148
201-9465	910
	912
202-0596	659
	660
	661
202-0597	659
	660
	661
202-4162	658
202-4163	658
202-5720	7
	▶570
202-5909	50
202-5993	332
	335
202-6009	▶262
	264
202-6010	▶148
	245
	246
202-6029	332
	335
202-6108	151
	153
202-6186	316
	317
	318
	321
	322
	325
	326
	327
	328
202-6611	128
	129
202-6614	127
203-7060	577
	583
	589
203-7807	397
	399
204-0317	344
	346
	348
	350
204-0775	148
204-2281	438
	440
204-3080	206
	341
204-4175	794
204-4220	795
204-4230	803
204-4240	805
204-9921	846
	848
	850
	852
205-1627	79
205-2357	480
	482
	484
	486
	488
	490
	492
	494
	496
205-3126	470
205-6298	148
205-7047	862
205-7048	835
	837
	839
	841
205-9244	297
	303
205-9560	791
	792
	793
	801
	802
	▶873
205-9566	794
205-9567	794
205-9569	791
	792
	793
	801
	802
	▶877
205-9570	877
205-9571	877
205-9576	877
205-9577	877
205-9578	791
	792
	793
	▶867
205-9585	835
	837
	▶916
205-9587	916
205-9588	835
	837
205-9590	916
205-9591	916
205-9595	839
	841
	▶917
205-9597	917
205-9598	839
	841
205-9605	795
	798
	803

▶ **PRIMARY REFERENCE**

PART NUMBER INDEX

Part	Page	Part	Page	Part	Page	Part	Page
	805		792	206-1695	818	206-1796	▶886
205-9606	795		793	206-1696	814		890
	798		801	206-1698	814	206-1798	898
	803		802	206-1699	814	206-1799	898
	805		▶827	206-1700	791	206-1800	791
205-9607	795	206-1634	332		792		792
	798		335		793		▶844
	805	206-1635	827		801	206-1801	▶787
205-9614	917	206-1637	898		802		793
205-9615	917	206-1639	245		▶812	206-1803	787
205-9619	795		246	206-1701	801		844
	798		▶332		802	206-1804	787
	▶906		▶335		▶929		844
	914	206-1640	8	206-1702	791	206-1805	787
205-9621	906		▶83		792		844
205-9622	795		▶84		793	206-1807	787
	798	206-1641	5		801		844
	914		▶573		802	206-1808	787
205-9623	906	206-1642	245		▶814		844
205-9624	906		246	206-1703	791	206-1809	787
205-9628	795		▶330		792		844
	798	206-1643	245		793	206-1810	787
	▶908		246		801		844
	914		▶831		802	206-1812	787
205-9630	908	206-1645	529		▶816		844
205-9631	795		▶818	206-1704	801	206-1814	787
	798	206-1647	795		802		844
	914		798		▶898	206-1815	787
205-9633	908		803	206-1706	814		844
205-9634	908		805	206-1708	814	206-1816	787
206-1345	155	206-1648	787		816		844
	158		844	206-1712	814	206-1817	787
	178	206-1649	171	206-1717	794		844
	182	206-1650	332	206-1718	178	206-1818	787
	186		335		182		844
	191	206-1652	344		186	206-1832	363
206-1486	175		346		191		364
	176		348	206-1725	791		365
	177		350		792	206-1846	787
206-1590	795	206-1653	787		793	206-1847	787
	798		844		▶922	206-1850	364
	914	206-1658	816	206-1727	791	206-1851	473
206-1592	795	206-1659	816		792	206-1852	929
	798	206-1660	816		793	206-1853	929
	▶835	206-1661	816		▶902	206-1854	816
	▶837	206-1662	816		▶904	206-1855	929
206-1593	795	206-1663	816	206-1728	802	206-1856	929
	798	206-1665	898		▶918	206-1857	792
	▶839	206-1666	898		▶920		793
	▶841	206-1667	812	206-1747	▶878		▶900
206-1594	835		816	206-1748	▶879		▶901
	837	206-1668	820	206-1749	878	206-1871	573
206-1606	839	206-1669	831	206-1750	879	206-1874	573
	841	206-1678	812	206-1752	332	206-1884	801
206-1618	791	206-1679	812		335		▶803
	792	206-1681	812	206-1766	332	206-1885	802
	793	206-1682	787		335		▶805
	801		844	206-1767	332	206-1889	791
	802	206-1683	898		335		792
	▶843	206-1684	787	206-1768	332		793
206-1623	898		844		335		▶795
206-1625	898		898	206-1791	▶884		▶798
206-1632	827	206-1687	812		890	206-2423	160
	829	206-1690	812	206-1792	▶885		161
206-1633	791	206-1692	812		890		162

PART NUMBER INDEX

Part	Page	Part	Page	Part	Page	Part	Page
	205		718	209-4705	860	210-5947	206
206-3685	501		719	209-4716	860	210-5948	71
206-5823	869		720		862	210-5949	▶71
207-2626	457	208-5245	677	209-4777	366	210-5951	66
207-4254	341		678	209-6855	368		▶67
207-4255	341		679		370	210-5953	71
207-4257	244		680		372	210-5954	71
207-4258	206		681	209-6863	368	210-5955	71
	341		682	209-7454	219	210-6139	67
207-4260	341		683	209-7455	221	210-6141	67
207-4262	341		684	209-7456	206	210-6240	▶352
207-4263	231		685	209-7459	232		422
207-4266	341		686		233	210-6475	795
207-4267	231		687	209-7460	234		798
207-4268	341		688		235	210-6491	814
207-4271	341		689	209-7461	232	210-6807	8
207-4272	341		690		233		▶78
207-5962	244		691	209-7462	219	210-7091	2
208-0321	206		692	209-7463	219		3
208-0322	219		693	209-7464	206		4
208-5232	698		694	209-7465	234		5
	699		695		235		▶409
208-5234	717		696	209-7466	243	210-7092	1
	718		705	209-7472	219		3
	719		706	209-7473	219		▶411
	720		707	209-9219	27	210-7095	2
208-5235	677		708	209-9875	206		3
	678		709	209-9882	206		4
	679		710		▶219		5
	680		711	209-9883	206		▶393
	681		712	209-9884	206	210-7096	1
	682		713		▶232		3
	683		714	209-9885	206		▶395
	684		715		▶233	210-7097	▶401
	685		716	209-9886	206		602
	686	208-8240	271	209-9887	206	210-7098	▶412
	687		275	209-9932	1		604
	688		276		2	210-7302	208
	689		280		3	210-7305	208
	690		286		4	210-7665	846
	691		290		5		848
	692		302		▶563		850
	693	208-9293	865	209-9937	▶387		852
	694	209-0939	527	209-9939	1	210-7666	846
	695	209-2435	602		2		848
	696		604		3		850
	697	209-3363	818		▶512		852
	700		820	210-0074	473	210-7773	523
	705	209-3364	529		527		525
	706		▶820	210-0075	473	210-8363	787
	707	209-3366	859	210-0079	473		▶846
	708	209-3367	83	210-0082	473		▶848
	709		84	210-3098	208	210-8364	844
	710		▶859	210-3099	208		▶850
	711	209-3378	83	210-3100	208		▶852
	712		84	210-3106	208	210-8401	846
	713		▶875	210-5924	206		848
	714	209-4157	243		▶243	210-8402	850
	715	209-4703	791	210-5931	243		852
	716		792	210-5932	230	210-8754	860
208-5242	697		793		232		862
	698		▶860		233	211-0071	793
	699		▶862	210-5937	206		▶865
	700	209-4704	860	210-5942	206	211-0072	791
208-5244	717		862	210-5946	206		792

▶ **PRIMARY REFERENCE**

PART NUMBER INDEX

Part	Page	Part	Page	Part	Page	Part	Page
	▶864	211-4267	7	212-5713	208		604
211-0073	▶224		▶147	212-6216	263	213-6723	568
	245	211-4268	▶151		264	213-6728	512
211-0092	221		▶153	213-1881	361		606
211-0705	793		793	213-1884	361	213-9275	▶6
	▶811	211-4269	▶173	213-1887	361	213-9289	▶5
211-1381	811		791	213-1888	898		6
211-2660	846		792	213-1889	361	213-9300	6
	848	211-4271	▶196	213-1891	▶361		▶7
	850		792		791	213-9301	▶3
	852		793		792	213-9304	▶1
211-2661	787		801		793	213-9306	▶4
	844		802		801	213-9309	▶2
211-3207	460	211-4277	▶131		802	213-9314	▶59
211-3208	460		▶133	213-2491	393		▶60
211-3546	5		791	213-4222	244		793
	▶377		792	213-6040	157	214-0592	559
	▶379		793	213-6049	131	214-0973	8
211-3580	474		801	213-6051	902		▶37
211-3581	474		802		904	214-2000	5
211-3583	474	211-4285	5		918		▶366
211-3607	422		▶107		920	214-2001	366
	▶474	211-4286	▶109	213-6055	151	214-2202	6
211-3649	▶354	211-4292	▶135		153		▶66
211-3688	468	211-4348	474		173	214-3254	354
211-3689	468	211-6570	6	213-6060	148		357
211-3783	361		▶344	213-6088	107	214-3255	355
211-4240	▶178		▶346	213-6089	107	214-3647	67
	▶182	211-6571	7		110	214-3735	865
	▶186		▶348		112	214-3736	865
	791		▶350	213-6091	109	214-3737	865
	792	211-6752	247	213-6092	109	214-3738	865
	793	211-6753	256	213-6094	107	214-3739	865
	801	211-7629	1		110	214-3740	▶226
	802		2		112		245
211-4241	▶155		3	213-6096	205	214-3742	902
	791		4	213-6687	568		904
	792		5	213-6690	568		918
	793		▶443	213-6691	568		920
	801		▶445	213-6692	1	214-3745	224
	802	211-7630	1		2	214-3751	▶62
211-4245	▶157		2		3		▶64
	791		3		4		66
	792		4		5	214-3753	62
	793		5		▶568		64
	801		▶498	213-6696	606	214-3763	902
	802		▶499	213-6697	606		904
211-4248	6	211-9286	240	213-6698	568		918
	▶163	212-0061	507	213-6702	368		920
	▶165	212-0770	240		370	214-4281	574
211-4251	5	212-0862	178		372	214-4285	574
	▶197		182	213-6703	568		577
	▶199		186	213-6709	368		583
211-4253	3		191		370		589
	5	212-0907	393		372	214-4293	854
	119		399	213-6715	601	214-4302	806
	▶854		409		602		808
211-4254	▶205	212-3416	171		604		▶810
	245		846	213-6717	563	214-4691	205
211-4259	▶201		848	213-6718	512	214-4692	147
	387		850		606	214-4693	155
211-4262	7		852	213-6719	409		158
	▶175	212-5702	236		411	214-4694	178
	▶176	212-5712	338		601		182
	▶177		339		602		186

▶ **PRIMARY REFERENCE**

PART NUMBER INDEX

Part	Page	Part	Page	Part	Page	Part	Page
	191		226	216-4459	341	216-8843	730
214-4695	151		228	216-4461	219	216-9069	178
	153	215-1242	892	216-4464	219		182
	173	215-1942	393	216-4465	219		186
214-4698	131		399	216-4475	6		191
214-4700	131		401		7	216-9497	221
214-4701	829		409		▶249	216-9498	219
214-4702	178	215-2023	206	216-4476	245		▶221
	182		341		▶249	217-0055	602
	186	215-2445	▶480	216-4739	▶6		604
	191		▶482		246	217-1460	563
214-4703	173		▶484	216-4740	▶7	217-1577	602
214-4706	530		530		245		604
214-4709	922	215-3373	746	216-5332	422	217-2308	67
214-4710	201	215-3507	59		▶456	217-2345	236
	423		60	216-5515	219	217-2347	338
	425	215-3881	344	216-5981	375		339
	428		346	216-6295	602	217-2349	338
214-4716	157		348		604		339
214-4717	178		350	216-6891	87	217-2617	435
	182	215-3882	344	216-6892	87	217-2699	435
	186		346	216-6945	67	217-2868	219
	191	215-3883	344	216-7473	206	217-2876	236
214-4718	151		346	216-8314	24	217-2877	232
	153	215-3884	344	216-8634	33		▶234
214-4722	155		346	216-8687	221	217-2878	233
	158		348	216-8689	221		▶235
214-4723	178		350	216-8691	221	217-2879	232
	182	215-7453	462	216-8700	221		233
	186	215-7454	462	216-8762	725	217-2880	219
	191	215-7457	412		▶726	217-2883	206
214-4740	72	215-7460	412	216-8778	726	217-2885	206
214-4745	72	215-7619	462		728	217-2914	208
214-4746	72	215-8196	893	216-8780	726	217-3311	401
214-4747	72	215-8934	401		728	217-3312	399
214-4749	▶72	215-9478	732	216-8781	726		409
214-4754	366		▶746		728	217-3875	519
214-5097	206	215-9515	87	216-8794	729	217-5776	409
	341	216-0909	▶925	216-8796	729	217-5778	409
214-5950	7	216-0928	732	216-8800	607		411
	▶468		▶747		▶721	217-6046	409
214-6143	602	216-1600	236	216-8801	608		411
	604	216-1601	244		▶723	217-6238	409
214-6397	395	216-1606	244	216-8802	721	217-6244	411
214-6401	395	216-1608	208		▶727	217-8058	827
214-6471	401	216-1609	208		728	217-8185	525
214-6475	401		▶230	216-8803	721	217-8195	348
214-6480	401	216-1610	208		723		350
214-6667	393		▶244		▶730	217-8197	348
214-6669	393	216-1612	236	216-8804	731		350
214-6670	393		▶338	216-8805	731	217-8432	854
214-6879	401	216-1613	236	216-8811	723	217-8763	393
214-6897	401		▶339		▶728	217-9672	7
214-6903	6	216-2267	265	216-8820	608		▶375
	▶8		270		▶724	218-0235	891
214-7035	5	216-2777	501	216-8821	609	218-0666	787
	▶574	216-2778	501		▶725		844
214-7043	574	216-3350	820	216-8822	724	218-0745	7
214-7407	67	216-3351	818		726		▶564
	▶73		820		▶729	218-2373	560
214-7457	67	216-3358	818	216-8826	724	218-3597	297
214-7458	67		820		725		303
214-7527	245	216-3712	747		▶731	218-4453	791
	▶263	216-4457	219	216-8829	731		792
214-7568	224	216-4458	219	216-8839	730		793

▶ **PRIMARY REFERENCE**

PART NUMBER INDEX

Part	Page	Part	Page	Part	Page	Part	Page
	801		693		848		657
	802	219-3372	▶652		852		665
	▶829		▶653	219-6288	846		668
218-4454	829		694		848		669
218-4854	910	219-3373	▶654		852		710
	912		▶655	219-6292	846		716
218-4856	910		695		848	219-9487	620
	912	219-3374	▶656		850		621
218-5148	▶245		▶657		852	219-9488	622
218-5149	▶245		696	219-6294	846		623
218-6091	470	219-3375	▶658	219-8751	219	219-9489	624
218-9984	224		697	219-8752	219		625
219-0302	926	219-3376	▶659	219-8753	219	219-9490	626
219-0343	859		698	219-8754	219		627
219-3273	122	219-3377	▶660	219-8755	219	219-9491	659
219-3355	▶618		699	219-8756	219	219-9492	660
	▶619	219-3378	▶661	219-8757	219	219-9493	628
	677		700	219-8758	219		629
219-3356	▶620	219-3379	▶677	219-8759	219		648
	▶621		701	219-8783	243	219-9494	618
	678	219-3380	▶678	219-8795	206		619
219-3357	▶622	219-3381	▶679		208	219-9495	661
	▶623	219-3382	▶680	219-8798	206	219-9496	658
	679	219-3383	▶681		341	219-9500	498
219-3358	▶624	219-3384	▶682	219-8834	338	220-0269	818
	▶625		702	219-8835	339		820
	680	219-3385	▶683	219-8836	236	220-0738	361
219-3359	▶626	219-3386	▶684	219-8839	208		787
	▶627	219-3387	▶685	219-9482	630		816
	681	219-3388	▶686		631		844
219-3360	▶628	219-3389	▶687	219-9483	632	220-1013	563
	▶629	219-3390	▶688		633	220-1018	602
	682	219-3391	▶689		640		604
219-3361	▶630	219-3392	▶690		641	220-1019	512
	▶631	219-3393	▶691		643	220-2000	922
	683	219-3394	▶692		650	220-2001	922
219-3362	▶632		703		651	220-3251	820
	▶633	219-3395	▶693		662	220-3398	310
	684	219-3396	▶694		663	220-3469	831
219-3363	▶634	219-3397	▶695		707	220-3470	831
	▶635	219-3398	▶696		713	220-3762	846
	685	219-3399	▶697	219-9484	634		848
219-3364	▶636		704		635	220-3785	802
	▶637	219-3400	▶698		652		▶834
	686	219-3401	▶699		664	220-3790	884
219-3365	▶638	219-3402	▶700		708		885
	▶639	219-3410	▶701		714		886
	687	219-3411	▶702	219-9485	636	220-3791	884
219-3366	▶640	219-3412	▶703		637		885
	▶641	219-3413	▶704		644		886
	688	219-6281	846		645	220-5973	7
219-3367	▶642		848		649		▶431
	▶643		850		653	220-5974	431
	689		852		654	220-8226	332
219-3368	▶644	219-6283	852		655		335
	▶645	219-6284	846		666	220-8631	32
	690		848		667	221-0811	6
219-3369	▶646		852		709		7
	▶647	219-6285	846		715		▶240
	691		848	219-9486	638	221-2420	787
219-3370	▶648		852		639		844
	▶649	219-6286	846		642	221-4260	748
	692		848		646		749
219-3371	▶650		852		647	221-4263	784
	▶651	219-6287	846		656	221-4265	▶513

▶ **PRIMARY REFERENCE**

PART NUMBER INDEX

Part	Page	Part	Page	Part	Page	Part	Page
	748		529	224-6235	▶749	225-5640	47
221-4267	748	222-7091	8	224-6237	▶388	225-5959	30
	▶784		▶52		▶389		47
	785	222-7379	▶732		750	225-5960	47
221-4271	567	222-7411	747		751	225-5961	47
221-4272	567	222-7464	732		752	225-5962	47
	754		▶735		753	225-5963	▶47
	755	223-2028	835		758		48
	756	223-2029	839		759	225-5967	48
	757	223-2030	906		760	225-6005	38
	769		908		761		40
	770		916		762	225-6041	38
	771		917		763		40
	772	223-3353	401		764	225-6451	14
	773		412		765		16
	774	223-3357	393		766		18
	775		395		767		20
	776	223-3926	602		768	225-6455	14
	777		604		780		16
	778	223-3962	363		781	225-6456	14
	779	223-3964	364	224-6250	726		16
	783	223-3965	▶363		728		18
221-4276	▶567		801	224-7830	423		20
	748		802	224-8945	926	225-6461	14
	749	223-3966	▶364	224-9473	8		16
221-4282	748		791		▶74		18
	750		792	225-0041	926		20
	754		793	225-0060	361	225-6464	14
221-4283	748	223-4546	363	225-0313	926		16
	751		364	225-3145	106		18
	755		365	225-3281	409		20
221-4284	748	223-4713	▶556		411	225-6477	14
	752		791	225-3284	397		16
	756		801		399		18
221-4285	749		802	225-4150	925		20
	753	223-4715	▶557	225-4317	9	225-6478	14
	757		792		10		16
221-4295	513		793		11		18
	515	223-4960	8		12		20
221-4296	513		▶80		▶43	225-6479	14
	515	223-8263	922	225-4323	119		16
221-4297	513	223-8995	74		121		18
221-4314	388	224-2147	816		▶745		20
	389	224-2149	816	225-4324	745	225-6517	14
	391	224-4527	567	225-4326	745	225-6522	14
221-4315	513		754	225-5436	42		16
	601		755	225-5437	42		18
221-4316	513		756	225-5438	42		20
221-4322	601		757	225-5439	42	225-6817	55
222-1395	393		769	225-5441	42		56
222-1801	360		770	225-5451	42	225-6818	55
222-1802	360		771	225-5453	42		56
222-2690	84		772	225-5454	42	225-7738	69
222-4067	523		773	225-5458	42	225-7739	69
	525		774	225-5459	42	225-7741	69
222-4732	460		775	225-5495	28	225-7772	22
222-5171	602		776	225-5496	28	225-7941	57
	604		777	225-5498	28		58
222-5622	▶486		778	225-5499	28	225-7944	25
	▶488		779	225-5501	29		57
	▶490		783	225-5502	29		58
	530	224-5917	87	225-5625	47	225-7959	205
222-5623	▶492	224-6232	▶748	225-5629	47	225-7970	178
	▶494	224-6233	▶748	225-5634	47		182
	▶496	224-6234	▶748	225-5638	47		186

▶ **PRIMARY REFERENCE**

PART NUMBER INDEX

Part	Page	Part	Page	Part	Page	Part	Page
	191		158	229-0298	910	230-7300	9
225-7988	162	226-8202	401		912		10
225-7992	175		412	229-0300	795		11
	176	226-9167	119		798		12
225-7994	▶123	226-9169	119		▶910		▶31
	▶124		121		▶912	230-7353	9
	125	226-9270	119		914		10
225-7995	▶125	226-9629	560	229-0305	910		11
225-7996	▶203	226-9747	▶420	229-0306	922		12
	▶204		422	229-0308	910		▶46
	792	226-9764	602		912	230-7355	9
	793		604	229-0309	910		10
225-7997	178	227-1057	155		912		11
	182		157	229-0310	910		12
	204		158		912		▶69
225-8016	69		178	229-0700	447	230-7514	▶168
225-8017	1		182		449		602
	3		186	229-0923	411	230-7569	9
	▶114		191	229-0925	411		10
225-8019	69		801	229-0932	409		11
225-8287	33		802	229-4896	14		12
225-8329	53		827		16		▶44
225-8524	81	227-1185	508		18	230-7578	9
225-8526	81	227-1186	548		20		10
225-8533	81		549		810		11
225-8534	81		552	229-5085	232		12
225-8536	81		553		233		▶53
225-8848	35		554	229-5092	230	230-8094	38
225-8858	25		555		232		40
226-0291	361	227-1189	507		233	230-8989	94
	929	227-1191	537	229-5093	221		97
226-0420	▶384		539	229-5535	736	230-8995	94
	470		550	229-5745	573		97
226-0449	74		553	229-6052	860	230-8996	94
226-1242	925		555	229-7226	▶736		97
226-2333	119	227-1192	509	229-7227	▶737	230-8997	94
	121	227-1194	509	229-7356	810		97
	▶136	227-1197	508	229-8253	737	230-8998	94
226-2334	119	227-1202	531	229-8743	▶790		97
226-3860	409	227-3703	420		854	230-9127	14
	411	227-5509	510	229-8911	412		16
226-4192	240	227-5556	361	229-9382	416		18
226-4346	230	227-5571	433	230-2389	831		20
	232	227-7373	2	230-2390	831	230-9144	14
	233		3	230-2510	818	230-9357	404
226-4364	208		4		820	231-0033	9
226-4365	208		5	230-2610	226		10
	232		▶114		228		11
	233	227-7374	▶116	230-3038	820		12
226-4366	208		854	230-3489	▶385		▶54
	232	227-7448	76	230-4291	574	231-0046	44
	233	227-7449	76	230-4292	574	231-0149	9
226-4367	208		77	230-5579	401		10
226-4370	208	227-8378	7	230-5580	401		11
	232		▶561	230-5739	6		12
	233	228-3473	393		7		▶13
226-5540	▶404		395		▶208	231-0670	222
	721	228-3509	7	230-5743	7	231-0671	222
	723		▶403		▶206	231-0683	▶231
	724	228-7391	106	230-5745	6		341
	725	228-9129	▶100		▶341	231-0684	341
226-5633	501		101	230-6368	107	231-0685	341
226-5634	501		102		109	231-0687	231
226-5635	834	228-9130	100		110	231-0688	231
226-7164	155	228-9132	100		112	231-0692	▶222

▶ **PRIMARY REFERENCE**

PART NUMBER INDEX

Part	Page	Part	Page	Part	Page	Part	Page
	236	232-2759	712	233-2571	403		176
231-0693	222	232-2760	713	233-2576	405		177
231-0694	222	232-2761	714		407	233-9530	106
231-0695	222	232-2762	715	233-2579	403	233-9531	106
231-0696	222	232-2763	716	233-2582	405	234-0095	794
231-0697	222	232-2865	363		407	234-1981	74
231-0698	208		364	233-2583	413		▶76
231-0699	208		365	233-2584	403		▶77
231-0700	234	232-2869	363	233-2585	405	234-2622	74
231-0701	235		364		407	234-3017	886
231-0703	232		365		413	234-3030	81
	233	232-2870	363	233-2588	405	234-4328	▶127
231-0719	230		364		407		131
231-0745	232		365	233-2589	413		133
	233	232-3126	89	233-2594	405	234-4329	▶128
231-2808	460		94		407		131
231-2809	460		97	233-2595	413		133
231-3052	122		117	233-2603	405	234-6927	523
231-3054	122		118		407		525
231-3528	462	232-3149	94		413	234-7730	127
231-4784	460		97	233-2606	403		128
231-4785	460	232-3157	94		413		129
231-9356	155		97	233-2607	405	234-7731	127
	158	232-3274	94		407		128
231-9358	926		97	233-2610	403		129
231-9361	925	232-3277	503		413	235-0128	83
231-9363	377	232-3657	33	233-2611	405		84
	379	232-3666	33		407	235-1790	94
232-0252	459	232-3722	▶55	233-2613	403		97
232-1322	28		57		413	235-5363	80
	45	232-3751	25	233-2614	405	235-5729	437
232-1323	94		57		407		440
	97		58	233-2615	405	235-5767	521
232-1328	94	232-4636	929		407	235-5843	523
	97	232-4706	155	233-2616	413		525
232-1545	205		158	233-2622	413	235-7091	459
232-1792	169	232-6204	9	233-2623	405	235-8528	474
	171		10		407	235-8747	163
232-1793	94		11	233-2631	413		165
	97		12	233-3757	721	236-1583	224
232-1794	94		▶45		723		226
	97	232-6661	9	233-3784	22		228
232-2681	▶607		10	233-3785	22		346
232-2682	▶607		11	233-3786	22		350
232-2683	▶607		12	233-5165	602	236-1673	94
232-2684	▶608		▶117		604		97
232-2685	607		▶118	233-5166	602	236-1674	94
	▶608	232-6662	117		604		97
232-2686	▶608		118	233-5167	602	236-2144	94
232-2687	▶608	232-7399	117		604		97
232-2688	▶609	232-7400	▶22	233-5169	602	236-5753	507
232-2689	▶609		24		604	236-6651	52
232-2690	609	232-7440	25	233-5260	816	236-6923	151
232-2725	94	232-7449	27	233-6592	348		153
	97	232-7519	▶28		350	236-8158	368
232-2726	94		29	233-6738	245		370
	97	232-7596	25		▶249		372
232-2735	735	232-7597	25	233-7132	308	236-8228	▶90
232-2752	705	232-7599	25		▶310		94
232-2753	706	232-7600	25	233-7432	9		97
232-2754	707	232-7603	25		10	236-8238	9
232-2755	708	232-7604	▶25		11		10
232-2756	709		27		12		11
232-2757	710	233-0859	724		▶35		12
232-2758	711		725	233-7977	175		▶32

▶ **PRIMARY REFERENCE**

PART NUMBER INDEX

Part	Page
237-0022	16
	18
237-0024	9
	10
	11
	12
	▶146
237-0025	10
	11
	12
	▶38
237-0769	14
	16
	18
	20
237-0975	80
237-2920	499
237-3658	9
	10
	11
	12
	▶36
237-3786	81
237-3794	81
237-3797	523
	525
237-3921	81
237-3922	81
237-3943	891
	893
237-4157	76
	77
237-4894	150
237-4896	9
	10
	11
	12
	▶150
237-5188	211
	214
	217
237-9349	598
237-9355	598
237-9356	598
	599
238-2799	9
	10
	11
	12
	▶57
	▶58
238-4626	506
238-4628	510
238-5228	231
238-5254	206
	341
238-5255	206
	341
238-5256	232
	233
238-5260	303
238-5261	303
238-5289	208
	▶236
238-5290	236
238-5291	208
238-5292	208
238-5293	208
238-5294	208
238-7492	151
	153
238-8671	94
	97
238-9397	163
238-9546	577
	579
	581
	583
	585
	587
	589
	591
	593
	595
	596
	597
238-9547	577
	579
	581
	596
	▶598
239-1080	155
	158
	▶897
239-1416	583
	585
	587
	597
	599
239-1434	83
	84
239-1435	83
239-2270	78
239-4232	503
239-4235	503
239-6989	925
239-9272	119
239-9429	925
239-9435	568
239-9950	121
	▶139
240-4639	107
	109
	110
	112
240-5571	94
	97
240-6866	506
240-7094	926
241-0037	386
241-0888	577
	579
	581
	583
	585
	587
	589
	591
	593
241-0889	577
	579
	581
	583
	585
	587
	589
	591
	593
	595
	596
	597
	598
	599
241-0890	598
	599
241-0891	598
	599
241-0892	598
	599
241-4275	87
241-6225	435
241-6226	435
241-8448	435
	437
	440
241-8450	435
	438
	440
242-9514	401
242-9515	401
242-9751	59
	60
	61
243-0062	875
243-0063	875
243-2276	403
243-3593	893
243-5026	341
243-5027	107
	110
	112
243-6523	527
244-1085	377
	379
244-1086	377
	379
244-3106	163
	165
244-3113	361
244-3837	403
244-3838	403
244-3957	503
244-7614	377
	379
244-8826	405
	407
	413
245-4747	136
245-4827	241
	242
245-4914	382
245-5728	377
	379
	▶381
245-6098	5
	▶103
245-6101	103
245-6103	103
245-6104	103
	▶104
245-6105	104
	▶105
245-6107	105
245-6108	103
245-6109	353
245-6842	8
	▶10
245-8765	▶511
	529
	530
245-8766	511
245-8769	▶419
	529
245-8777	422
	▶523
	▶525
245-8778	523
	525
245-8780	423
	425
	428
	476
	478
	▶510
245-9828	31
246-1163	14
	16
	18
	20
246-2582	10
	11
	12
	▶14
	▶16
	▶18
246-2641	925
246-2671	178
	182
	186
	191
246-2718	382
	383
246-5286	523
	525
246-5293	7
	▶460
246-5295	7
	▶503
246-8038	201
	423
	425
	428
246-8042	2
	3
	4
	5
	▶169
	▶171
246-8044	119
	121
246-8045	▶119
246-8046	854
246-8051	163
	165
246-8052	205

▶ **PRIMARY REFERENCE**

PART NUMBER INDEX

Part	Page	Part	Page	Part	Page	Part	Page
246-8053	107		▶87	248-5547	447	251-0076	790
	110	247-6118	928		449	251-0077	874
	112	247-6296	377	248-5711	5	251-1156	▶610
246-8057	2		379		▶925		671
	4	247-7054	519	249-0974	57	251-1157	▶612
246-8478	▶462	247-7555	589		58		673
	529		591	249-2482	814	251-1158	▶613
246-9113	399		593	249-2707	806		674
	409		595		808	251-1159	▶615
246-9309	1		▶599	249-3124	510		675
	2	247-7752	451	249-3125	510	251-1160	▶617
	3	247-7754	447	249-4020	460		675
	4		451	249-4021	460	251-1168	610
	5	247-7756	447	249-4022	460		615
	▶516		451	249-4023	460	251-1169	610
	▶518	247-7798	14	249-4024	460		615
246-9323	3		16	249-4034	462	251-1172	612
	4	247-8179	843	249-4035	462		613
	5	247-8199	▶138	249-5046	52		617
	▶447		179	249-5295	52	251-1173	612
	▶449		182	249-5297	52		613
246-9325	1		186	249-5512	74		617
	2		191	249-5652	854	251-1222	854
	3	247-8222	355	249-7915	▶435		▶874
	▶451	248-0395	382	249-9076	124	251-1541	447
	▶454		383	249-9312	806		449
246-9802	387	248-2214	▶122		808	251-1746	503
	▶476	248-2257	561	249-9328	▶359	251-1775	▶670
	▶478	248-2272	561	249-9329	359	251-1776	▶607
246-9884	1	248-2273	561	249-9330	359	251-1777	607
	3	248-2284	790	250-0741	368		670
	▶397		874		370		▶671
247-0144	69	248-2356	▶91		372	251-1778	▶672
247-0320	423	248-2357	▶92	250-1448	167	251-1779	▶672
	425	248-2358	▶93	250-1556	397	251-1780	672
	428	248-2575	712	250-1560	397		▶673
	476	248-2707	83	250-1561	397	251-1781	▶674
	478		84		399	251-1782	▶674
247-1080	377	248-2709	812	250-1878	382	251-1783	674
	379	248-2710	573		383	251-1784	▶674
247-1385	73	248-2714	835	250-2314	73	251-1786	674
247-1947	▶705		837	250-3330	382		▶675
247-1948	▶706		839	250-3331	377		676
247-1949	▶707		841		379	251-1787	▶675
247-1950	▶708	248-3231	74	250-3344	377	251-1788	▶675
247-1951	▶709	248-3290	265		379	251-1789	▶675
247-1952	▶710		270	250-4337	62	251-1790	▶676
247-1953	▶711		275		64	251-2429	519
247-1954	▶712		280	250-5881	381	251-2432	9
247-1955	▶713		285	250-6850	382		10
247-1956	▶714		290		383		11
247-1957	▶715		297	250-6855	270		12
247-1958	▶716		303	250-6858	382		▶30
247-3268	▶457	248-4274	516		383	251-2436	30
	602	248-4275	516	250-7910	925	251-2437	30
	604	248-4276	516	250-7911	925	251-3200	▶137
247-4001	80	248-4277	516	250-7912	791		854
247-4884	89		518		792	251-3227	73
247-4885	9	248-4283	443		793	251-3231	104
	10		445		802	251-3291	447
	11	248-4285	451	250-7917	5		449
	12		454		▶924	251-3306	792
	▶89	248-5025	793	250-7963	▶50		793
247-4981	553		▶806	250-8330	310	251-4336	33
247-5361	8		▶808	251-0075	790	251-4374	382

▶ PRIMARY REFERENCE

PART NUMBER INDEX

Part	Page	Part	Page	Part	Page	Part	Page
	383		10		837	255-4692	79
251-4375	382		11		839	255-5461	332
	383		12		841		335
251-4520	5		▶106	254-2187	80	255-8280	332
	▶368	252-6438	28	254-2267	54		335
	▶370	252-8059	827	254-2270	54	256-0143	52
	▶372	252-8435	927	254-2463	▶374	256-0323	376
251-4889	359	252-9206	403	254-3437	823	256-0324	▶376
251-4890	359	252-9725	377		824	256-0545	245
251-4891	359	252-9983	▶355		825		▶308
251-5625	529		356		826	256-0546	▶239
251-5626	529	252-9984	▶356	254-3954	28		245
251-5628	791	252-9985	357	254-4418	50		246
	801	252-9986	▶357	254-4419	50	256-0548	308
	802	253-0234	662	254-5683	902	256-0549	308
251-5854	▶464		663		904	256-0550	239
	721		664		918	256-0551	▶228
	723		665		920		246
251-5855	▶466		666	254-5703	▶241	256-4579	136
	724		667		262	256-4580	136
	725		668	254-6101	▶61	256-4581	136
251-5859	464		669		791	256-4582	136
251-6355	245	253-0352	8		792	256-5299	801
	▶264		▶101		801	256-5719	136
251-6708	745		▶102		802	256-5720	136
251-9570	163	253-0354	101	254-6826	790	256-5721	136
	165		102	254-7211	563	256-5722	136
251-9571	874	253-0783	353	254-7271	462	256-5732	136
252-0096	503	253-0784	5		503	256-6803	123
252-1221	423		▶353	254-8939	▶662		124
	425	253-1549	332		▶663	256-6804	125
	428		335		717	257-0440	507
	476	253-1817	835	254-8940	▶717	257-0446	533
	478		837	254-8941	▶718	257-0447	534
252-1862	835		839	254-8942	▶719	257-0448	535
	837		841	254-8943	▶720	257-0453	532
	839	253-1857	835	254-8944	▶664	257-0464	507
	841		837		▶665	257-0465	507
252-1863	835		839		718	257-0466	541
	837		841	254-8945	▶666		545
	839	253-1858	835		▶667	257-0468	508
	841		837		719		509
252-1864	835		839	254-8946	▶668		537
	837		841		▶669		539
252-1865	839	253-2470	850		720		541
	841		852	254-9301	381		543
252-2157	925	253-4137	74	254-9925	827		545
252-2422	115	253-4138	74		829		547
252-4659	576	253-4619	409	254-9926	827		548
252-4660	▶576	253-5024	206		829		549
252-5068	553	253-5384	381	254-9927	827		550
252-5069	553		▶382		829		552
252-5355	480		▶383	255-0791	926		554
	482	253-8295	523	255-0792	926		555
	486		525	255-0795	787	257-0475	437
	488	253-8329	139		844		550
	492	253-9510	846	255-0796	926		552
	494		848	255-0800	865	257-0476	537
252-5356	492		850	255-2279	▶79	257-1729	139
	494		852		791	257-3160	422
252-5357	486	254-1126	835		792		▶459
	488		837		793	257-5571	548
252-5358	480		839		801	257-5605	527
	482		841		802	257-5606	527
252-6256	9	254-1127	835	255-3447	81	257-5607	527

▶ **PRIMARY REFERENCE**

PART NUMBER INDEX

Part	Page
257-5608	527
257-7721	509
257-7724	▶506
	533
	534
	535
257-7725	508
257-7729	537
	539
	541
	543
	545
	547
	550
257-7730	537
	539
	541
	543
	545
	547
	550
257-7731	537
	539
	548
	549
257-7733	541
	543
	545
	547
	550
257-7734	537
	539
	541
	543
	545
	547
	549
	550
	552
257-7737	554
257-7739	555
257-7741	554
	555
258-2354	816
258-3697	835
	837
	839
	841
258-4946	29
258-9999	926
259-0127	208
259-0128	209
259-0129	209
259-1802	1
	2
	3
259-1831	258
259-1832	260
259-2940	327
	328
259-4401	927
259-6276	801
	802
	▶868
259-8417	73
260-0027	887
	888
260-0028	887
	888
260-0029	880
	882
	887
260-0030	892
	893
260-0031	891
260-0032	891
	893
260-0033	892
	893
260-0034	892
	893
260-0035	892
	893
260-0036	891
260-0040	887
260-0041	891
	893
260-0042	891
260-0043	891
	893
260-0044	892
	893
260-0045	880
	882
	887
	888
260-0046	891
	893
260-0047	891
	893
260-0049	892
	893
260-0051	891
	893
260-0052	891
	893
260-0053	887
260-0057	891
	893
260-0059	891
	893
260-0060	891
	894
260-0061	887
260-0062	887
260-0063	891
	893
260-0067	891
	893
260-1336	79
260-1447	854
260-3122	79
260-6478	136
260-6480	136
260-7652	123
	124
260-9143	437
	441
261-2207	831
261-2208	205
261-3572	52
261-5517	330
	▶331
261-5519	331
261-6703	600
261-8625	416
261-9632	898
261-9634	870
261-9635	330
261-9636	814
261-9637	814
261-9639	814
	816
261-9642	870
261-9644	812
261-9645	812
262-0347	519
262-1315	451
	454
262-1421	▶114
	125
262-2067	435
262-3036	437
	440
262-3038	437
	440
262-3039	437
262-3042	437
	440
262-3043	435
	437
	440
262-3044	437
262-3046	▶437
262-3047	▶440
262-3049	435
	440
262-4081	332
	335
262-4084	332
	335
262-4211	440
262-6204	238
262-6227	▶238
262-7043	368
	370
	372
262-7044	366
262-7049	▶405
	422
262-7050	▶407
	422
262-7051	405
262-7052	407
262-7314	457
262-8088	459
262-9567	860
	862
262-9786	76
	77
263-5376	81
263-5516	519
263-5781	862
263-7261	831
263-7802	123
263-8575	754
	755
	756
	757
	769
	770
	771
	772
	773
	774
	775
	776
	777
	778
	779
	783
263-8576	754
	755
	756
	757
	769
	770
	771
	772
	773
	774
	775
	776
	777
	778
	779
	783
263-8577	▶515
	785
263-8591	723
	725
	▶928
263-9088	123
	124
	▶876
263-9483	▶167
	792
	793
263-9484	167
263-9498	179
	182
	186
	191
263-9499	197
	199
264-0187	▶423
	▶425
	▶428
264-3756	137
264-4297	167
264-4362	191
265-0868	423
	425
	428
	476
	478
265-8182	138
266-2552	529
	▶531
266-2553	529

▶ **PRIMARY REFERENCE**

PART NUMBER INDEX

Part	Page
	▶532
266-2556	529
	▶533
266-2557	530
	▶534
266-2558	530
	▶535
266-2585	541
	543
266-2586	554
266-2587	555
266-2588	548
266-3590	545
	547
	554
266-3591	541
	543
	549
266-4360	221
266-5834	5
	▶600
267-2701	141
	142
	178
	182
	186
	191
267-2755	422
	▶519
267-2758	527
267-2764	422
	▶501
267-2765	422
	▶470
267-2766	422
	▶473
267-2770	422
	▶527
267-2809	131
	133
267-5211	140
	141
	142
267-5213	140
	141
	142
267-5225	870
267-5633	▶160
	530
267-5634	▶161
	530
267-5635	▶162
	529
	530
267-9385	238
268-0094	470
268-0097	470
268-0099	470
	527
268-0106	470
268-0107	470
268-0108	470
268-0109	527
268-0867	9
	11
268-1547	449
	451
	454
268-1548	449
	451
	454
268-1559	527
268-1964	157
268-5689	431
	433
268-5902	858
268-5903	858
268-6455	6
	▶422
268-7756	160
268-7757	161
268-7758	155
268-7759	178
	182
	186
	191
268-7760	178
	182
	186
268-7761	169
	171
268-7762	158
268-9051	2
	3
	4
	5
	▶399
268-9418	7
	▶433
269-0471	501
269-0472	501
269-1059	▶508
	533
	534
	535
269-1060	▶507
	533
	534
	535
269-1061	533
	534
	535
	▶537
	▶539
269-1062	533
	534
	535
	▶541
	▶543
269-1063	533
	534
	535
	▶545
	▶547
269-1064	533
	534
	535
	▶548
269-1065	533
	534
	535
269-1066	534
	535
	▶550
269-1067	535
	▶552
269-1079	531
	532
269-1080	▶509
	531
	532
269-1091	531
	532
	▶553
269-1092	531
	532
	▶554
269-1093	532
	▶555
269-1104	545
269-2123	▶801
269-2124	▶802
269-2125	▶791
269-2126	▶792
269-2127	▶793
269-2144	▶529
269-2145	▶529
269-2146	▶529
269-2147	▶530
269-2148	▶530
269-3247	791
	792
	793
	801
	802
	▶870
269-3248	▶858
	870
269-3254	870
269-3262	870
269-3269	363
	364
	365
269-8129	818
	820
269-8817	818
	820
269-9115	812
270-2729	155
270-2794	870
270-2795	818
	820
270-3203	▶743
270-3204	▶565
	▶566
270-3205	565
270-3206	743
270-3409	388
	389
	391
270-3410	515
270-5161	870
270-5290	368
270-9176	466
271-1403	2
	3
	▶602
271-1406	1
	▶604
271-1409	602
	604
271-2405	▶263
	264
271-2406	▶263
271-3023	750
	751
	752
	753
	754
	755
	756
	757
	758
	759
	760
	761
	762
	763
	764
	765
	766
	767
	768
	769
	770
	771
	772
	773
	774
	775
	776
	777
	778
	779
	780
	781
	782
	783
	▶785
271-3024	▶750
271-3025	▶751
271-3026	▶752
271-3027	▶753
271-3028	▶754
271-3029	▶755
271-3030	▶756
271-3031	▶757
271-3095	529
	▶823
271-3096	530
	▶824
271-3097	529
	530
	▶825
271-3099	530
	▶826

▶ **PRIMARY REFERENCE**

PART NUMBER INDEX

Part	Page
271-3100	823
271-3101	824
271-3103	825
271-3105	826
271-3773	263
	▶265
	▶270
	▶275
	▶280
271-3774	263
	▶285
	▶290
271-4487	▶242
	263
271-7167	226
	228
271-7308	241
271-7309	242
271-7389	466
271-8668	3
	4
	5
	▶606
271-8671	▶601
	606
272-0537	105
272-0555	431
	433
272-0557	431
	433
272-0752	246
	▶264
272-1750	466
272-2232	9
	10
	11
	12
272-2265	55
	56
272-5111	320
	321
	326
	327
272-5116	326
	327
272-5421	791
	792
	793
	801
	802
272-7079	870
272-7104	818
	820
272-9701	823
	824
272-9800	130
273-1473	870
273-1474	801
	802
273-1475	870
273-1476	870
273-1477	870
273-1478	870
273-3284	167
273-4210	470
273-4211	470
273-5905	▶880
	884
273-6036	▶882
	885
273-6037	886
	▶887
	▶888
273-6372	884
	885
	886
	▶891
	▶893
274-1640	399
274-2071	397
	399
274-2072	399
274-2075	399
274-2077	399
274-3774	163
	182
	186
	191
274-3775	182
	186
	191
274-3776	182
	186
	191
274-3777	182
	186
	191
274-3778	182
	186
	191
274-3779	182
	186
	191
274-3780	182
	186
274-4274	413
274-4553	247
	250
	252
	254
	256
	259
	261
274-4554	297
	303
274-4555	418
274-4556	297
	303
274-4557	265
	270
274-4560	265
	270
	290
274-4561	▶250
	297
	303
274-4569	297
	303
274-4578	▶252
	297
	303
274-4580	▶247
	297
	303
274-4582	▶256
	297
	303
274-5232	399
274-5819	761
	770
274-5823	762
	772
274-5826	763
	771
274-5829	764
	773
274-5832	765
	775
274-5835	766
	777
274-5837	767
	776
274-5839	768
	778
274-7409	178
	182
	186
	191
274-8614	265
	270
	275
	280
	285
	290
274-8616	254
274-8617	254
274-8620	258
	260
274-8621	258
	260
274-8622	271
274-8623	265
	270
	275
	280
	285
	290
274-8625	265
	270
	275
	280
	285
	290
274-8628	254
274-8629	254
274-8630	212
274-8632	215
274-8636	254
274-8637	258
	260
274-8638	247
	250
	252
	256
274-8641	262
	▶296
	▶302
274-9993	205
275-0001	381
275-0002	377
	379
275-0468	▶211
	285
	290
275-0469	211
275-0470	▶212
	285
	290
275-0471	214
275-0472	▶214
	265
	275
	280
275-0474	▶215
	265
	270
	275
	280
275-0475	265
	270
	275
	280
	285
	290
275-0476	▶254
	265
	270
	275
	280
	285
	290
275-0477	265
	270
	275
	280
	285
	290
275-0478	▶258
	270
	275
	280
	285
	290
275-0553	178
	182
	186
	191
275-0570	151
	153
	173
275-0652	332
	335
275-0653	332
	335
275-1038	94
	97
275-4243	388
	389
	391

▶ **PRIMARY REFERENCE**

PART NUMBER INDEX

Part	Page
	▶415
275-8869	818
	820
275-9883	38
	40
275-9907	365
276-0764	139
276-1368	735
276-1816	399
	409
276-2334	478
276-2353	574
276-3420	10
276-4070	833
276-4168	415
276-4169	415
276-4170	415
276-4171	415
276-4172	415
276-5021	322
	323
276-5337	▶259
	285
	290
276-5339	▶260
	265
276-5605	25
276-6623	397
276-6820	324
	325
276-7235	397
276-7287	▶140
	151
	153
	173
276-7290	▶141
	178
	182
	186
	191
276-7291	▶142
	178
	183
	186
	191
276-7466	▶6
276-8086	323
	324
276-8515	801
	802
	▶833
276-8791	902
	904
	918
	920
277-1873	112
277-3012	33
277-4543	435
	437
	440
277-5156	9
	11
	12
277-9708	470
278-0205	265
	270
	275
	280
	285
	290
278-0209	297
	303
278-0213	297
	303
278-0215	258
	260
278-0216	258
	260
278-0217	258
	260
278-0218	258
	260
278-0461	178
	183
	187
	191
278-1971	▶413
	422
278-1972	413
278-4497	389
	391
	437
	440
278-4498	389
	391
	438
	440
278-5455	368
	370
	372
278-6377	140
278-7066	366
278-7469	825
	826
278-7695	366
279-5016	425
	428
	476
	478
279-6052	431
	433
279-9452	574
280-2652	389
	391
280-7007	▶261
	297
	303
280-7009	265
	270
	275
	280
	285
	290
280-7010	297
	303
280-7012	275
	280
	285
	290
280-7364	801
	802
	▶890
280-7365	791
	▶890
280-7366	792
	793
	▶890
280-7868	519
280-7869	519
280-7870	519
280-7872	519
281-4022	440
281-4618	451
281-4726	435
281-4770	451
281-6708	758
	769
281-6711	759
	774
281-6714	760
	779
281-6716	▶758
281-7219	▶914
282-0865	▶759
282-0866	▶760
282-0887	▶761
282-0888	▶762
282-0889	▶763
282-0890	▶764
282-0891	▶765
282-0892	▶766
282-0893	▶767
282-0894	▶768
282-3847	▶314
282-3853	▶314
282-3854	▶314
282-3855	▶315
282-3857	▶315
282-3858	▶315
282-3859	314
	▶322
282-3860	322
282-3861	322
	▶323
282-3862	314
	▶323
282-3863	▶323
282-3864	323
	▶324
282-3865	314
	315
	316
	▶324
282-3866	324
282-3867	324
	▶325
282-3868	314
	315
	▶325
282-3869	▶325
282-3870	325
	▶326
282-3871	315
	▶326
282-3872	326
282-3873	326
	▶327
282-5398	▶769
282-5399	▶770
282-5400	▶771
282-5401	▶772
282-5402	▶773
282-5403	▶774
282-5404	▶775
282-5405	▶776
282-5406	▶777
282-5407	▶778
282-5408	▶779
282-5409	▶780
	▶781
	▶782
282-5410	▶783
282-6836	415
282-6944	519
282-7832	860
	862
282-7833	131
	133
	834
	898
	902
	904
282-7835	131
	133
	834
	860
	862
	898
	902
	904
283-3451	902
	904
	918
	920
283-3467	870
283-3477	870
283-4237	865
283-5618	451
	454
283-5622	451
	454
283-7981	870
283-8053	870
283-8562	363
	364
283-8563	363
	364
	365
284-1602	843
284-2757	▶365
	791
	792
	793
	801
	802
284-8531	124

▶ **PRIMARY REFERENCE**

PART NUMBER INDEX

Part	Page
284-8905	116
284-9039	105
285-1207	791
	792
	793
285-3557	308
285-3605	8
	▶86
285-5098	86
285-9109	846
	848
	850
	852
286-0689	437
	441
286-0867	297
	303
286-1930	333
	336
286-2149	▶741
286-3088	512
	606
286-3592	69
286-4880	118
286-7166	602
	604
286-9087	325
	326
286-9336	621
	623
	625
	627
	631
	633
	635
	637
	639
	641
	643
	645
	647
	651
	653
	655
	657
	663
	665
	667
	669
286-9338	619
	629
	649
286-9340	619
	629
	649
287-5667	602
	604
287-8257	835
	837
	839
	841
287-8573	16
	18
	20
287-8597	32
288-0422	33
288-1157	381
288-6954	74
288-8044	▶794
	798
288-9954	503
289-1204	894
289-3412	927
289-6018	865
289-6021	865
290-1273	912
290-3347	375
290-4164	206
290-5760	▶129
	133
290-6705	443
290-6713	435
	437
	441
290-6714	437
	441
290-6790	5
	▶110
	▶112
290-6791	110
	112
290-6792	110
	112
290-6799	133
290-6801	177
290-6802	▶191
	791
	792
	793
	801
	802
290-6803	▶158
	791
	792
	793
	801
	802
290-6804	169
	171
290-6805	169
	171
290-6808	5
290-6810	3
290-6811	168
290-8139	431
	433
290-8140	431
	433
290-8156	368
	370
291-4781	808
291-4785	808
291-4786	808
291-5108	818
	820
291-8379	332
	335
291-8451	457
291-8452	457
291-9206	▶5
291-9207	▶3
292-2833	924
292-2834	924
292-5773	862
292-8222	425
	428
	478
292-8989	508
293-1980	812
	814
293-2147	275
	280
	285
	290
293-2986	▶246
293-4053	77
293-4671	523
	525
293-4993	264
293-7383	600
293-8761	258
293-9882	602
	604
293-9884	602
	604
294-0288	33
294-0933	539
294-0973	389
	391
294-5792	566
294-9808	217
294-9809	▶217
	270
294-9810	247
	250
	252
294-9811	256
294-9812	247
	250
	252
	261
294-9813	256
294-9820	285
	291
294-9821	254
294-9822	270
294-9823	270
294-9824	270
295-1711	33
295-3179	▶121
295-5552	924
295-5553	924
295-8472	353
295-8495	503
295-8496	503
295-8930	136
295-9887	397
296-3740	806
296-5616	▶56
	58
297-1229	443
297-1231	498
297-2831	431
297-5510	602
	604
297-5849	873
297-6898	183
297-6899	183
298-3599	332
	335
298-4524	22
299-3342	631
299-3344	633
	641
	651
299-3346	663
299-3348	635
	643
299-3351	637
	645
	653
	655
299-3442	365
299-3932	519
	▶559
299-4777	365
299-5362	▶391
	782
299-5422	601
299-5538	601
299-6985	▶856
	906
	908
	917
299-6986	▶857
	906
	908
	916
300-1702	84
300-4154	639
	657
300-4155	647
300-4156	665
	669
300-4157	621

3

PART NUMBER INDEX

Part	Page
300-4158	623
300-4159	625
300-4160	627
300-4161	629
	649
300-4994	155
	158
300-4995	133
300-4996	133
300-5440	368
	370
	372
300-7049	631
	633
	635
	637
	639
300-7051	631
	633
	635
	637
	639
300-7054	641
	643
	645
	647
	657
	663
	665
	669
300-7055	641
	643
	645
	647
	657
	663
	665
	669
300-7056	651
	653
	655
300-7057	651
	653
	655
300-7059	649
300-7061	649
300-7930	399
302-8432	275
	280
	285
	290
	297
	303
303-0418	315
	316
	▶327
303-0428	▶327
303-0429	327
	▶328
304-3262	249
304-3266	249
304-3269	249
304-5687	114
304-5691	114
304-5696	201
	428
304-8420	629
304-8421	629
304-8424	619
304-8764	38
	40
304-8965	848
	852
305-0042	399
305-2697	602
	604
305-3102	169
	171
305-3103	169
305-3104	169
	171
305-3269	499
305-3431	261
306-8128	631
307-1496	▶115
307-9936	837
307-9937	841
308-1273	912
308-1792	18
	20
308-4728	9
	10
	11
	12
	▶27
308-4729	9
	10
	11
	12
	▶24
308-4730	9
	10
	11
	12
	▶42
308-4731	9
	10
	11
	12
	▶29
308-4732	9
	10
	11
	12
	▶48
308-7376	482
	488
	494
309-6232	399
311-2497	449
	454
311-2500	445
	449
	454
311-2507	499
311-2508	445
	449
	454
311-2512	445
311-2513	518
311-2514	518
311-2515	518
311-2517	449
	454
311-6609	158
313-1371	9
	10
	11
	12
	▶94
313-1380	9
	10
	11
	12
	▶33
314-4029	▶121
315-3396	22
315-3397	22
315-3398	22
315-4123	837
	841
316-1080	370
	372
317-2127	496
317-2128	496
317-2129	484
	490
	496
317-2130	484
	490
	496
317-2131	490
317-2168	484
317-2486	563
317-3111	9
	10
	11
	12
	▶81
317-4423	906
	908
	916
	917
317-5309	893
318-2365	94
	97
318-4217	383
318-4222	383
318-8228	581
	587
	593
318-9453	381
319-0755	107
	112
319-2122	▶9
320-2384	▶315
320-2385	▶316
320-8415	▶11
320-9655	379
321-6337	893
322-4571	315
	▶328
322-4572	▶328
322-4573	328
	▶329
322-4574	328
	329
322-9615	81
322-9616	81
322-9663	28
323-7311	454
324-0444	33
325-5100	▶931
325-5122	▶12
328-7358	12
	▶97
328-8776	372
329-6655	28
330-3409	114
330-3410	114
330-3979	508
	509
330-4554	116
330-4555	116
330-9416	441
331-0907	114
331-0920	114
331-0921	114
335-9798	9
	▶20
335-9799	9
	▶40

▶ **PRIMARY REFERENCE**

MEMORANDA



© 2009 CATERPILLAR
ALL RIGHTS
RESERVED

CAT, CATERPILLAR, THEIR RESPECTIVE LOGOS, “CATERPILLAR YELLOW” AND THE POWER EDGE TRADE DRESS, AS WELL AS CORPORATE AND PRODUCT IDENTITY USED HEREIN, ARE TRADEMARKS OF CATERPILLAR AND MAY NOT BE USED WITHOUT PERMISSION.

PRINTED IN
U.S.A.