CATERPILLAR®

SEBP5080
October 2009

RUTHZIL TRATOR COMERCIAL DE PEÇAS LTDA 11 97083-6812 ROLANDO

Parts Manual

SIS

See "General Information" for New Parts Manual Features.

432E Backhoe Loader

JBA1-Up (Machine)
C4Z1-Up (Engine)
CRS1-Up (Engine)

Powered By C4.4 Engine, 3054C Engine

This Parts Manual is also available in .pdf Format on Compact Disc (CD - ROM) Caterpillar Form No. SERP5080.

KOPACZKA.PL

Product and Dealer Information

Note: For product identification plate locations, see the section “Product Identification Information” in the Operation and Maintenance Manual.

Delivery Date: _____

Product Information

Model: _____

Product Identification Number: _____

Engine Serial Number: _____

Transmission Serial Number: _____

Generator Serial Number: _____

Attachment Serial Numbers: _____

Attachment Information: _____

Customer Equipment Number: _____

Dealer Equipment Number: _____

Dealer Information

Name: _____ Branch: _____

Address: _____

_____

_____

	Dealer Contact	Phone Number	Hours
Sales:	_____	_____	_____
Parts:	_____	_____	_____
Service:	_____	_____	_____

MEMORANDA

KOPACZKA.PL

TABLE OF CONTENTS

Name	Page
GENERAL INFORMATION	A4
REPAIR ALTERNATIVES	A7
SUPPLEMENTAL COOLANT ADDITIVES	A8
MAINTENANCE PARTS	A9
INDEX	A12
MACHINE ARRANGEMENT	1
BACKHOE AR-EXTENDABLE STICK	1
BACKHOE AR-STANDARD STICK	4
CHASSIS AR	5
COMMON AR	5
CONVERSION AR-ROADING	5
DRIVE AR-BACKHOE LOADER	6
LOADER AR	6
OPTION AR	6
PREMIER AR	7
ENGINE ARRANGEMENT	8
ENGINE AR	8
ENGINE AR-PRIMARY	16
BASIC ENGINE	20
CAMSHAFT GP	20
COVER GP-VALVE MECHANISM	22
CRANKSHAFT GP	26
CYLINDER BLOCK GP	30
CYLINDER HEAD GP	36
DRIVE GP-AUXILIARY	40
DRIVE GP-FAN	42
FLYWHEEL GP	44
HOUSING GP-FLYWHEEL	46
HOUSING GP-FRONT	48
LIFTING GP-ENGINE	52
MOUNTING GP-ENGINE	54
MOUNTING GP-ENGINE & XMSN	56
PAN GP-OIL	57
PISTON & ROD GP	61
PLUG GP-CYLINDER HEAD	64
PLUG GP-ENGINE	65
ROCKER ARM GP	70
VALVE MECHANISM GP	72
LUBRICATION SYSTEM	74
BREATHER GP	74
FILLER GP-ENGINE OIL	75
GAUGE GP-OIL LEVEL & FILLER	76
PUMP GP-ENGINE OIL	77
COOLING SYSTEM	79
CONNECTION GP-WATER	79
COOLER GP-ENGINE OIL	81
COOLER GP-FLTR BASE & ENG OIL	83
FAN GP-SUCTION	84
LINES GP-POWER TRAIN COOLER	87
LINES GP-RADIATOR	89
PUMP GP-WATER	91
RADIATOR & HYD OIL COOLER GP	95
TANK & LINES GP-COOLANT	99
AIR INLET AND EXHAUST SYSTEM	101
AIR CLEANER GP	101
COVER GP-INLET MANIFOLD	106
EXTENSION GP-EXHAUST	109
LINES GP-AIR	110
MUFFLER GP	111
TURBOCHARGER GP	112
FUEL SYSTEM	118
CONTROL GP-GOVERNOR	118
FILTER GP-WATER SEP & FUEL	120
LINES GP-FUEL	122
LINES GP-FUEL FILTER	128
PUMP GP-FUEL INJECTION	129
PUMP GP-FUEL PRM & PRIM FILTER	144
TANK GP-FUEL	147
ELECTRICAL AND STARTING SYSTEM	149
ALTERNATOR GP-CHARGING	149
BATTERY & WIRING GP	151
ELECTRONICS GP-MACHINE	155
GLOW PLUG GP	156
HEATER GP-JACKET WATER	158
INSTALLATION GP-SECURITY	160
LAMP GP-FLOOD	167
LAMP GP-HEAD & SIGNAL	169
LAMP GP-REGISTRATION PLATE	173
LAMP GP-WARNING BEACON	175
LIGHTING GP-FLOOD	176
LIGHTING GP-ROADING	177
LIGHTING GP-WARNING BEACON	182
RELAY GP	183
SENSOR GP-SPEED	188
STARTING MOTOR GP-ELECTRIC	189
SWITCH GP-ALL WHEEL DRIVE	193
SWITCH GP-DIFFERENTIAL LOCK	194
SWITCH GP-PRESSURE	195
WARNING GP-BACKUP	197
WIRING GP-AIR CONDITIONER	198
WIRING GP-CAB	201
WIRING GP-CONSOLE	203
WIRING GP-CONTROL	205
WIRING GP-ENGINE	206
WIRING GP-HEATER	209
WIRING GP-KICKOUT & POSITIONER	211
WIRING GP-LOAD CONTROL	213
WIRING GP-MACHINE	215

TABLE OF CONTENTS

Name	Page
WIRING GP-PLATFORM	217
WIRING GP-POWER RECEPTACLE	222
WIRING GP-REAR	223
WIRING GP-RIDE CONTROL	225
WIRING GP-SENSOR	227
WIRING GP-TRANSMISSION CONTROL	231
WIRING GP-WIPER	233
WIRING GP-WORK TOOL	235
POWER TRAIN	239
AXLE GP-DRIVE & STEERING	239
AXLE GP-REAR	241
CASE AS-TRANSMISSION	244
CONTROL GP-DIFFERENTIAL LOCK	247
DIFFERENTIAL & BEVEL GEAR GP	248
DIFFERENTIAL GP	252
DRIVE GP-FLEXIBLE COUPLING	254
FILLER GP-POWER TRAIN OIL	255
FLANGE GP-WHEEL	258
HOUSING & FLANGE GP-AXLE	259
HOUSING GP-AXLE	262
LINES GP-POWER TRAIN OIL	263
MOUNTING GP-AXLE	264
MOUNTING GP-TRANSMISSION	265
PLANETARY GP-FINAL DRIVE	267
POWER TRAIN AR	269
SHAFT GP-COUNTER	270
SHAFT GP-DRIVE	272
SHAFT GP-IDLER	273
SHAFT GP-INPUT	275
SHAFT GP-OUTPUT	279
STOP GP-STEERING	285
TRANSMISSION AR-DIRECT DRIVE	286
TRANSMISSION AR-POWER SHIFT	286
TRANSMISSION GP-DIRECT DRIVE	287
TRANSMISSION GP-POWER SHIFT	292
VALVE & MTG GP-SOLENOID	298
VALVE GP-RELIEF	299
VALVE GP-TIRE	300
WHEEL & TIRE AR	301
WHEEL & TIRE GP	304
BRAKING SYSTEM	325
CONTROL GP-PARKING BRAKE	325
CONTROL GP-SERVICE BRAKE	327
CYLINDER GP-BRAKE	330
LEVER GP-HAND CONTROL	332
STEERING SYSTEM	333
LINES GP-STEERING	333
STEERING COLUMN GP	335
FRAME AND BODY	336
BOX GP-BATTERY	336
COUNTERWEIGHT GP	338
EXTENSION GP-FENDER	341
FENDER GP-FRONT	343
FENDER GP-REAR	345
FLOORPLATE GP	347
FRAME AR-LOADER	348
FRAME GP-LOADER	349
FRAME GP-SLIDING	353
FRAME GP-SWING	355
GUARD GP-DRIVE SHAFT	356
GUARD GP-LIGHTING	357
GUARD GP-RADIATOR	358
HOOD & GUARD GP	359
HOOD GP-ENGINE	361
LINER GP-SOUND SUPPRESSION	364
SUPPRESSION AR-SOUND	365
HYDRAULIC SYSTEM	366
ACCUMULATOR GP-HYDRAULIC	366
ACCUMULATOR GP-RIDE CONTROL	367
CONTROL AR-RIDE	369
COOLER GP-HYD & XMSN OIL	370
CYLINDER GP-BACKHOE BUCKET	372
CYLINDER GP-BOOM	373
CYLINDER GP-COUPLER	374
CYLINDER GP-HYDRAULIC	375
CYLINDER GP-LIFT	377
CYLINDER GP-MULTIPURPOSE BUKT	379
CYLINDER GP-STABILIZER	380
CYLINDER GP-STICK	381
CYLINDER GP-TILT	384
DRIVE & MTG GP-PUMP	385
FILTER GP-OIL	386
FITTING GP-HYDRAULIC	387
HYDRAULIC AR	389
LINES GP-AUXILIARY HYDRAULIC	390
LINES GP-BACKHOE	397
LINES GP-BACKHOE AUXILIARY	399
LINES GP-BOOM	402
LINES GP-BUCKET	403
LINES GP-BUCKET CYLINDER	407
LINES GP-CONNECTING	409
LINES GP-DRAIN	410
LINES GP-HYDRAULIC	411
LINES GP-LIFT & TILT	414
LINES GP-LIFT CYLINDER	416
LINES GP-LOAD CONTROL VALVE	420
LINES GP-MULTIPURPOSE BUCKET	423
LINES GP-PILOT	427
LINES GP-PUMP	437
LINES GP-RETURN	439
LINES GP-RIDE CONTROL	441
LINES GP-SIDESHIFT LOCK	443
LINES GP-STABILIZER	444

TABLE OF CONTENTS

Name	Page
LINES GP-STICK	447
LINES GP-SWING	448
MANIFOLD & SOLENOID GP-CONTROL	450
MANIFOLD GP-CONTROL	451
MANIFOLD GP-RIDE CONTROL	455
MOUNTING GP-CYLINDER	456
MOUNTING GP-LINES	457
PUMP GP-PISTON	458
ROTATING GP-PUMP	460
SHAFT GP-PUMP DRIVE	461
TANK & MTG GP-HYDRAULIC	462
TANK GP-HYDRAULIC	464
VALVE & MTG GP-BANK	465
VALVE AR-BANK 2	467
VALVE AR-BANK 3	467
VALVE GP-BANK 3	469
VALVE GP-BANK 7	470
VALVE GP-CONTROL	471
VALVE GP-LOAD CONTROL	480
VALVE GP-PILOT	481
VALVE GP-PUMP CONTROL	485
VALVE GP-SOLENOID	486
IMPLEMENTS	488
ARM GP-LIFT	488
BOOM GP	491
BRACE GP-LIFT CYLINDER	493
LINKAGE GP-BACKHOE BUCKET	494
LOCK GP-TRANSPORT	501
PAD GP-STABILIZER	506
STABILIZER GP-BACKHOE	507
STICK GP	508
STICK GP-EXTENDABLE	510
WORK TOOLS	514
BUCKET AR-MULTIPURPOSE	514
BUCKET AS-GENERAL PURPOSE	523
BUCKET AS-HOE	525
BUCKET GP-HOE	549
BUCKET GP-MULTIPURPOSE	574
BULLDOZER AS	578
CARRIAGE AS-FORK	584
CLAM AS-MULTIPURPOSE BUCKET	585
CONVERSION AR-QUICK COUPLER	587
COUPLER GP-QUICK	588
EDGE GP-CUTTING	594
FORK GP	596
FORK GP-PALLET	599
GUARD GP-BUCKET	600
MOUNTING GP-BUCKET	602
MOUNTING GP-FORK	606
TOOTH GP-UNI	608
OPERATOR STATION	609
CAB AR	609
CAB AR-ENCLOSED ROPS	612
CAB GP	613
COMPRESSOR GP-REFRIGERANT	617
CONDENSER & MTG GP-REFRIGERANT	619
CONSOLE GP-OPERATOR	620
CONTROL & MTG GP-JOYSTICK	626
CONTROL GP-HANDLE	627
CONTROL GP-JOYSTICK	628
CONTROL GP-STEERING	630
CONTROL GP-TRANSMISSION	632
DOOR GP-CAB	634
FLOOR MAT GP	638
HEATER & MTG GP-CAB	639
HEATER GP-CAB	644
HORN GP-ELECTRIC	648
INSTALLATION GP-RADIO	649
KIT-SEAT FRAME	650
KIT-SEAT PAN	651
KIT-SEAT SUSPENSION	653
LATCH GP-CAB DOOR & WINDOW	655
LATCH GP-CONSOLE	657
LEVER GP-GOVERNOR	658
LINER GP-CAB	659
LINES GP-HEATER	661
LINES GP-HEATER & AIR COND	662
MIRROR GP-REAR VIEW	664
MOTOR GP-WINDOW WIPER	666
MOUNTING GP-BACKHOE CONTROL	668
MOUNTING GP-CAB	671
PEDAL GP-GOVERNOR	672
ROOF GP-CAB	673
SEAT GP	674
SEAT GP-SUSPENSION	678
SUSPENSION GP-SEAT	683
SWIVEL GP-SEAT	685
VISOR GP-CAB	687
WASHER GP-WINDOW	688
WINDOW GP-CAB	690
WINDOW GP-DOOR	696
WIPER GP-WINDOW	698
SERVICE EQUIPMENT AND SUPPLIES	699
FILM GP	699
GREASE GUN GP	701
LINK GP-SHIPPING	702
LOCK GP-VANDALISM	703
PLATE & FILM GP	704
PROTECTION GP-VANDALISM	705
SERVICE GP-FILTER	706
PART NUMBER INDEX	B1

GENERAL INFORMATION

1. MACHINE IDENTIFICATION

Caterpillar machines are identified by Product Identification Numbers (PIN). Some components included in a machine may be identified by Serial Numbers (S/N). Typical components that will be serialized include engines, transmissions, bulldozers, and rippers. The machine and engine are further identified by arrangement numbers and in some cases modification numbers. These numbers are shown on the product identification plate(s) and on the master plate in the operator's compartment.

Caterpillar dealers need all of these numbers to determine accurate parts identification.

SIS *New Feature*

Effective First Quarter 2001 the Caterpillar Product Identification Number (PIN) changed from 8 to 17 characters. In an effort to provide uniform equipment identification, Caterpillar and other construction equipment manufacturers are moving to comply with the latest version of the product identification numbering standard. Non-road machine PINs are defined by ISO 10261. The new PIN format will apply to all Caterpillar machines and generator sets. The PIN plates and frame marking will display the 17 character PIN. The new format will look like the following:

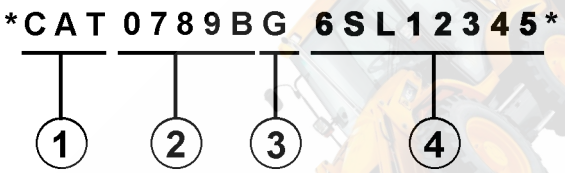

Where:

1. Caterpillar's World Manufacturing Code (characters 1-3)

2. Machine Descriptor (characters 4-8)

3. Check Character (character 9)

4. Machine Indicator Section (MIS) or Product Sequence Number (characters 10-17). These were previously referred to as the Serial Number.

Machines and generator sets produced before First Quarter 2001 will maintain their 8 character PIN format.

Components such as engines, transmissions, axles, etc. and work tools will continue to use an 8 character Serial Number (S/N).

2. ORDERING PARTS

⚠ WARNING

When replacement parts are required for this product Caterpillar recommends using Caterpillar replacement parts or parts with equivalent specifications including, but not limited to, physical dimensions, type, strength and material.

Failure to heed this warning can lead to premature failures, product damage, personal injury or death.

Quality Caterpillar replacement parts are available from Caterpillar dealers throughout the world. Their parts inventories are up to date and include all parts normally required to protect your investment in Caterpillar machines. Dealers may offer repair kits or remanufactured parts to allow selection of the most effective repair alternative for a particular situation. When ordering parts, your order should specify the quantity, part number, part name, and the serial number/product identification number of the machine for which the parts are needed.

3. PARTS MANUAL ORGANIZATION

Product information in this manual is presented as "information elements" that represent all of the components for the specific model. Engine Arrangement and Seat Group are examples of information elements. The information elements are organized alphabetically by part name and secondarily by part number within each major section of the manual.

4. TABLE OF CONTENTS

A table of contents (TOC) is found at the beginning of the manual. The TOC lists each section of the manual with a complete list of all information elements organized as they appear in the manual. Page numbers are provided for quick reference to detailed parts identification illustrations and serviceable consist lists.

5. MAINTENANCE PARTS INDEX

The Maintenance Parts Index, located near the beginning of the manual, references most frequently used maintenance part numbers, providing description, quantity, usage and page number. This information is organized alphabetically by part description.

6. INDEX

The index located near the front of the manual is an alphabetical listing of all information elements included in the manual. Page numbers are provided for quick reference to detailed parts identification illustrations and serviceable consist lists.

7. PART NUMBER INDEX

A numerical index listing all part numbers and the corresponding page number(s) appears at the back of the manual.

8. CAPTIONS

Captions located at the beginning of each information element identify the part number and part name along with additional descriptive information. PIN and S/N information found in each caption should be used to select correct information for a specific machine. Field replacement options, identification of optional attachment components, and where used ("part of") information is also provided.

The first line of a caption is shown in larger type font to indicate the beginning of an information element. Captions for additional pages that may be required to illustrate an information element will be shown in standard type font and will include the term *(contd.)* .

9. NON-SERVICED PARTS

In some instances it is necessary to display non-serviced parts that are a link to a lower level serviceable consist lists. These non-serviced part numbers are shown in *italic* type indicating that they are not available.

10. PARTS LIST REFERENCE NUMBERS

Numbers shown in the Ref No column correspond to numbers used in the associated graphic(s). An alphabetic suffix may be added to a reference number to identify lower level consist items. Numbers shown in the Graphic Ref column refer to the graphic number identifier displayed in the lower left corner of each illustration. The Graphic Ref number may be used in combination with the item Ref No to determine the correct part number. There may be intentional omission of a Ref No in a consist list as information is updated to reflect the latest serviceable part numbers.

11. INDENTED PART NAMES

When a part name is indented in a parts list, it is part of (included in) the group or assembly under which it is indented.

12. ILLUSTRATION REFERENCE LETTERS

When necessary, illustrations contain reference letters (A, B, C etc.) that are intended to track lines and harnesses from one point to another. They are also used to show where to reconnect illustrations that have been separated.

13. ABBREVIATIONS AND SYMBOLS

O.D. – Outside Diameter
I.D. – Inside Diameter
A – Not Part Of This Group
B – Use As Required
C – Change From Previous Type
D – Order By The Meter
E – Order By The Centimeter
F – Not Shown
G – Order By The Inch
I – Refer To Hydraulic Information System
M – Metric Part
R – Remfg Part May Be Available
Y – Separate Illustration
Z – Not Serviced Separately

SIS ***New Feature***

14. DESCRIPTION OF TYPE CHANGES

Type - A type is defined as any configuration change that requires an additional Information Element for an Arrangement, Group, or Assembly. If serial number breaks for types are not available, a type # (Type 1, Type 2, etc.) will be displayed in the caption. These "type" changes are identified with a "C" note (change from previous type) in the Parts List. Only the "types" that apply to this Parts Manual will be included. Additional types may exist causing "C" notes to appear on an Information Element when no other types are shown.

15.<END>

This symbol indicates the end of an information element.

NOTE:

Continuing improvement and advancement of product design may cause changes to your machine which may not be included in this publication. Whenever a question arises regarding your Caterpillar product or this publication, please consult your Caterpillar dealer for the latest available information.

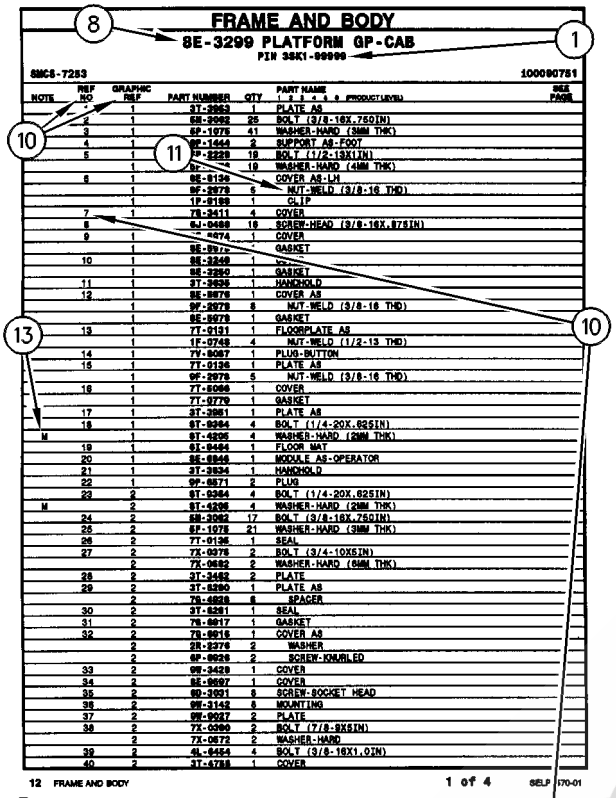

FRAME AND BODY
8E-3299 PLATFORM GP-CAB
PIN 3SK1-99999
SMCS-7283 100090751

NOTE	REF NO	GRAPHIC REF	PART NUMBER	QTY	PART NAME 1 2 3 4 5 6 (PRODUCT LEVEL)	SEE PAGE
	*	1	3T-3963	1	PLATE AS	
	2	1	6M-2062	25	BOLT (3/8-16X.750IN)	
	3	1	6P-1075	41	WASHER-HARD (3MM THK)	
	4	1	9E-1444	2	SUPPORT AS-FOOT	
	5	1	9P-2229	19	BOLT (1/2-13X1IN)	
		1	6P-[illegible]	19	WASHER-HARD (4MM THK)	
	6	1	9E-9136	*	COVER AS-LH	
		1	9F-2979	6	NUT-WELD (3/8-16 THD)	
		1	1P-0189	1	CLIP	
	7	1	7X-3411	4	COVER	
	8	1	6J-0468	18	SCREW-HEAD (3/8-16X.875IN)	
	9	1	[illegible]-4074	1	COVER	
		1	9E-9[illegible]	*	GASKET	
	10	1	9E-3249	1	[illegible]	
		1	9E-2250	1	GASKET	
	11	1	3T-3936	1	HANDHOLD	
	12	1	9E-9076	1	COVER AS	
		1	9F-2979	8	NUT-WELD (3/8-16 THD)	
		1	9E-9078	1	GASKET	
	13	1	7T-9131	1	FLOORPLATE AS	
		1	1F-0749	4	NUT-WELD (1/2-13 THD)	
	14	1	7Y-8067	1	PLUG-BUTTON	
	15	1	7T-0126	1	PLATE AS	
		1	9F-2979	5	NUT-WELD (3/8-16 THD)	
	16	1	7T-5066	1	COVER	
		1	7T-9779	1	GASKET	
	17	1	3T-3951	1	PLATE AS	
	18	1	9T-0264	4	BOLT (1/4-20X.625IN)	
M		1	9T-4295	4	WASHER-HARD (2MM THK)	
	19	1	9X-8464	1	FLOOR MAT	
	20	1	9E-6946	1	MODULE AS-OPERATOR	
	21	1	3T-3934	1	HANDHOLD	
	22	1	9F-8671	2	PLUG	
	23	2	9T-0264	4	BOLT (1/4-20X.625IN)	
M		2	9T-4295	4	WASHER-HARD (2MM THK)	
	24	2	6M-2062	17	BOLT (3/8-16X.750IN)	
	25	2	6P-1075	21	WASHER-HARD (3MM THK)	
	26	2	7T-0136	1	SEAL	
	27	2	7X-0078	2	BOLT (3/4-10X5IN)	
		2	7X-0682	2	WASHER-HARD (6MM THK)	
	28	2	3T-3482	2	PLATE	
	29	2	3T-5290	1	PLATE AS	
		2	7G-4828	6	SPACER	
	30	2	3T-5291	1	SEAL	
	31	2	7G-8617	1	GASKET	
	32	2	7G-8618	1	COVER AS	
		2	2R-2276	2	WASHER	
		2	9F-8626	2	SCREW-KNURLED	
	33	2	9M-3429	1	COVER	
	34	2	8E-9697	1	COVER	
	35	2	9D-3991	8	SCREW-SOCKET HEAD	
	36	2	9M-3142	8	MOUNTING	
	37	2	9M-9017	2	PLATE	
	38	2	7X-0360	2	BOLT (7/8-9X5IN)	
		2	7X-0672	2	WASHER-HARD	
	39	2	4L-6454	4	BOLT (3/8-16X1.0IN)	
	40	2	3T-4788	1	COVER	

12 FRAME AND BODY 1 of 4 SELP4570-01

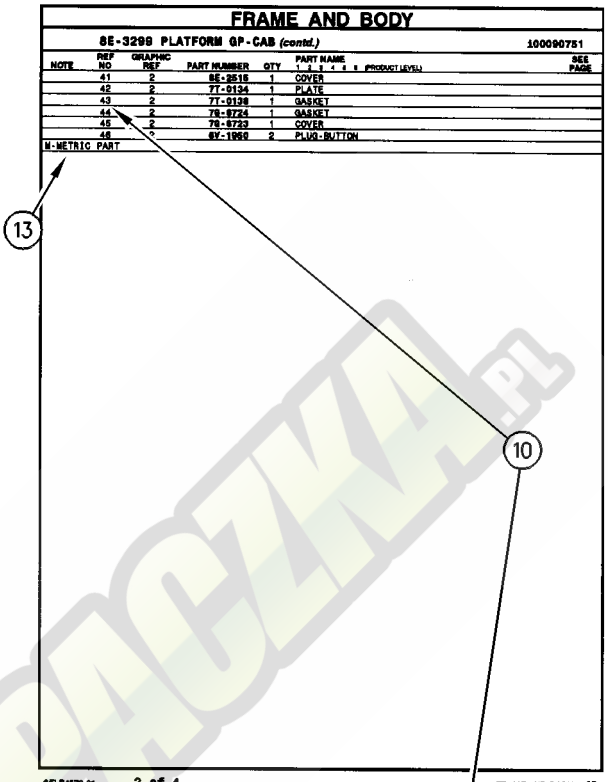

FRAME AND BODY
8E-3299 PLATFORM GP-CAB (contd.)
100090751

NOTE	REF NO	GRAPHIC REF	PART NUMBER	QTY	PART NAME 1 2 3 4 5 6 (PRODUCT LEVEL)	SEE PAGE
	41	2	8E-2515	1	COVER	
	42	2	7T-0134	1	PLATE	
	43	2	7T-0138	1	GASKET	
	44	2	7G-8724	1	GASKET	
	45	2	7G-8723	1	COVER	
	46	*	8Y-1950	2	PLUG-BUTTON	

M-METRIC PART

SELP4570-01 2 of 4 FRAME AND BODY 13

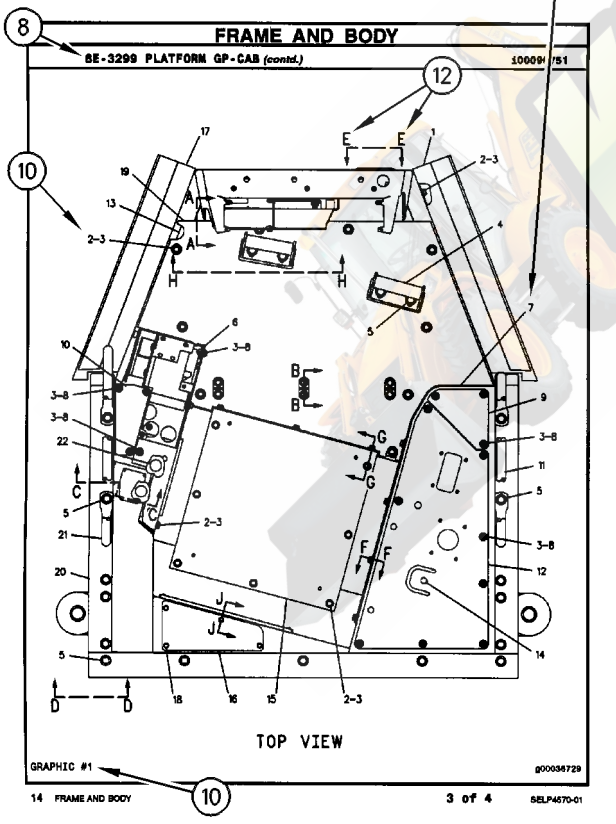

FRAME AND BODY
8E-3299 PLATFORM GP-CAB (contd.)
100090751

TOP VIEW

GRAPHIC #1 g00036729

14 FRAME AND BODY 3 of 4 SELP4570-01

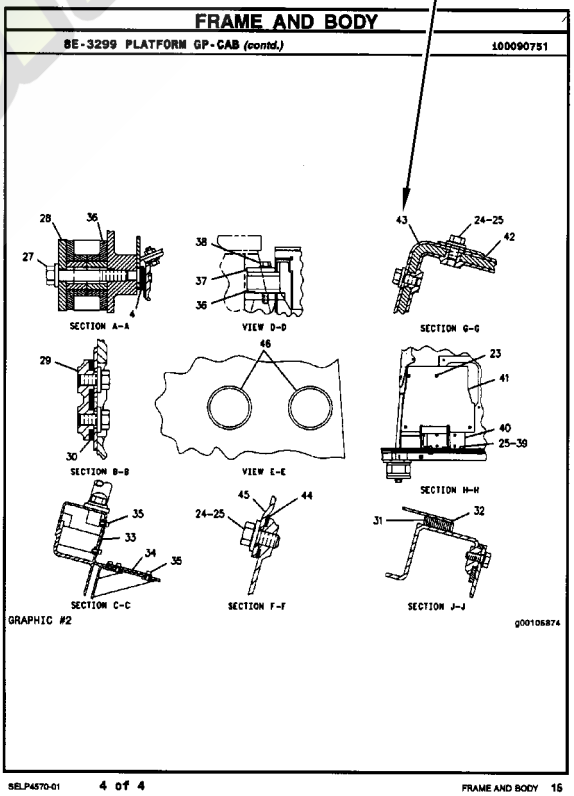

FRAME AND BODY
8E-3299 PLATFORM GP-CAB (contd.)
100090751

SECTION A-A
VIEW D-D
SECTION G-G
SECTION B-B
VIEW E-E
SECTION H-H
SECTION C-C
SECTION F-F
SECTION J-J

GRAPHIC #2 g00105874

SELP4570-01 4 of 4 FRAME AND BODY 15

REMANUFACTURED COMPONENTS

As an option when making repairs consider Caterpillar Remanufactured Components. Components that are available through the Caterpillar Remanufactured Program are identified three ways in the parts book:

- with the letter R in the note field of the parts list
- with an R* at the beginning of the first line of the caption
- with an *R at the end of the first line of the caption

Typical components included in the Remanufacturing Program include:

ALTERNATORS
CONNECTING RODS
CRANKSHAFTS - UNDERSIZE
CRANKSHAFTS - UPGRADE TO NEW
CYLINDER HEADS
ELECTRONIC CONTROL MODULES (ECM)
ELECTRONIC SENSORS
FUEL INJECTORS
FUEL NOZZLES
FUEL PUMPS
GOVERNORS
OIL PUMPS
PISTONS
SHORT BLOCKS
STARTERS
TURBOCHARGERS - COMPLETE
TURBOCHARGER CARTRIDGES
WATER PUMPS

Caterpillar Remanufactured engines for many engine arrangements are also available.

KOPACZKA.PL

SUPPLEMENTAL COOLANT ADDITIVES

CUSTOMER BENEFITS:

Protects against cavitation, foam, erosion, corrosion, and scale buildup in cooling systems.

- Provides measured coolant conditioner.

DESCRIPTION:

Additives deplete from the coolant with normal operation. For this reason, Supplemental Coolant Additives (SCA) must be added to all heavy duty coolants at regular intervals. In addition, when not using a fully formulated, pre-charged antifreeze, like Caterpillar's DEAC, an initial charge of SCA must be added to the cooling system. The amount of SCA added to the system is dependent on the capacity of the system.

The SCA for initial fill is provided as a liquid. SCA's for maintenance intervals are available in liquid form and as a spin-on element. (No Spin-on available for 3600 Family of Engines)

NOTE:

The amount of SCA added at initial fill is not the same as the amount added at maintenance intervals.

The coolant additive elements can be used with any ethylene or propylene glycol type antifreeze which meets ASTM D4985 or ASTM D5345 Specifications.

NOTE:

For use with standard heavy duty coolant only, not for use with Extended Life Coolant.

PARTS NEEDED:

Cooling System Capacity		Liquid SCA at Initial Fill	Liquid SCA at Maintenance*	Spin-on SCA Maintenance Element*
Liters	Gallons			
22-30	(6-8)	3P-2044 (1)	6V-3542 (1)	111-2370 (1)
30-38	(8-10)	3P-2044 (1) 6V-3542 (1)	111-2372 (1)	111-2369 (1)
38-49	(10-13)	3P-2044 (1) 8T-1589 (1)	111-2372 (1)	111-2369 (1)
49-64	(13-17)	3P-2044 (2)	8T-1589 (1)	9N-3368 (1)
64-83	(17-22)	3P-2044 (2) 8T-1589 (1)	111-2372 (1) 6V-3542 (1)	111-2371 (1)
83-114	(22-30)	3P-2044 (3) 8T-1589 (1)	3P-2044 (1)	9N-3718 (1)
114-163	(30-43)	3P-2044 (5)	3P-2044 (1) 6V-3542 (1)	111-2371 (2)
163-242	(43-64)	3P-2044 (8)	3P-2044 (2)	9N-3718 (2)

** Normal maintenance period is 250 hrs. See your Operation and Maintenance Manual for complete coolant maintenance instructions.*

( ) Indicates quantity required.

MAINTENANCE PARTS

DESCRIPTION	PART NUMBER	QTY	WHERE USED	PAGE
AIR INLET AND EXHAUST SYSTEM				
FILTER ELEMENT-AIR (PRIMARY)	293-4053	1	AIR CLEANER GP	101
FILTER ELEMENT-AIR (SECONDARY)	227-7449	1	AIR CLEANER GP	101
BASIC ENGINE				
GASKET (VALVE COVER)	225-6451	1	COVER GP-VALVE MECHANISM	22
		1	COVER GP-VALVE MECHANISM	24
PLUG-DRAIN (ENGINE OIL)	7C-0351	2	PAN GP-OIL	57
		2	PAN GP-OIL	59
COOLING SYSTEM				
BELT-SERPENTINE	212-9353	1	FAN GP-SUCTION	84
		1	FAN GP-SUCTION	86
	324-3408	1	FAN GP-SUCTION	85
CAP AS-COOLANT TANK	251-3227	1	LINES GP-RADIATOR	89
		1	TANK & LINES GP-COOLANT	99
HOSE-RADIATOR (LOWER)	210-6139	1	TANK & LINES GP-COOLANT	99
HOSE-RADIATOR (UPPER)	325-5855	1	LINES GP-RADIATOR	89
		1	TANK & LINES GP-COOLANT	99
REGULATOR GP-TEMPERATURE (INCLUDES CONNECTOR)	254-2267	1	CONNECTION GP-WATER	79
REGULATOR GP-TEMPERATURE (INCLUDES CONNECTOR) (WATER)	254-2267	1	CONNECTION GP-WATER	80

MAINTENANCE PARTS

DESCRIPTION	PART NUMBER	QTY	WHERE USED	PAGE
ELECTRICAL AND STARTING SYSTEM				
BATTERY (12-VOLT, MAINTENANCE FREE, WET)	3T-5760	1	BATTERY & WIRING GP	151
		1	BATTERY & WIRING GP	153
BELT-DRIVE (WARNING BEACON)	9X-8139	1	LAMP GP-WARNING BEACON	175
CAP AS-FILLER (BATTERY)	123-1373	6	BATTERY & WIRING GP	153
FLASHER AS (12-VOLT) (HAZARD)	7T-4848	1	WIRING GP-PLATFORM	217
FUSE (10-AMPERE)	113-8490	9	WIRING GP-PLATFORM	218
FUSE (15-AMPERE)	113-8491	10	WIRING GP-PLATFORM	218
FUSE (20-AMPERE)	113-8492	7	WIRING GP-PLATFORM	218
FUSE (30-AMPERE)	274-9872	1	RELAY GP	187
		1	WIRING GP-PLATFORM	217
FUSE (40-AMPERE)	278-6377	1	RELAY GP	183
		1	RELAY GP	187
		1	WIRING GP-PLATFORM	217
FUSE (60-AMPERE)	267-2701	2	RELAY GP	184
		1	RELAY GP	185
		1	WIRING GP-PLATFORM	217
GLOW PLUG (12-VOLT)	232-6662	4	GLOW PLUG GP	156
		4	GLOW PLUG GP	157
LAMP (12-VOLT, 10-WATT)	195-9712	1	LAMP GP-REGISTRATION PLATE	173
LAMP (12-VOLT, 21-WATT) (AMBER)	226-4560	1	LAMP GP-HEAD & SIGNAL	169
		1	LAMP GP-HEAD & SIGNAL	170
		1	LAMP GP-HEAD & SIGNAL	171
		1	LAMP GP-HEAD & SIGNAL	172
LAMP (12-VOLT, 21-WATT) (ROADING LIGHTS)	9W-3326	1	LIGHTING GP-ROADING	177
LAMP (12-VOLT, 5-WATT) (CLEAR)	226-4561	1	LAMP GP-HEAD & SIGNAL	169
		1	LAMP GP-HEAD & SIGNAL	170
		1	LAMP GP-HEAD & SIGNAL	171
		1	LAMP GP-HEAD & SIGNAL	172
LAMP (12-VOLT, 55-WATT) (FLOODLIGHT)	9W-0607	1	LAMP GP-FLOOD	167
		1	LAMP GP-FLOOD	168
LAMP (12-VOLT, 55-WATT) (WARNING BEACON)	9X-8118	1	LAMP GP-WARNING BEACON	175
LAMP GP-SIGNAL (12-VOLT) (STOP, TAIL, TURN)	336-9096	2	LIGHTING GP-ROADING	179
		2	LIGHTING GP-ROADING	181
LAMP-HEAD (12-VOLT, 60/55-WATT) (CLEAR)	9W-3324	1	LAMP GP-HEAD & SIGNAL	169
		1	LAMP GP-HEAD & SIGNAL	170
		1	LAMP GP-HEAD & SIGNAL	171
		1	LAMP GP-HEAD & SIGNAL	172
FUEL SYSTEM				
CAP-FUEL (LOCKABLE, VENTED)	284-9039	1	TANK GP-FUEL	147
DRAIN AS	149-9954	1	PUMP GP-FUEL PRM & PRIM FILTER	144
FILTER AS-WATER SEP & FUEL	228-9130	1	PUMP GP-FUEL PRM & PRIM FILTER	144
FILTER ELEMENT-FUEL (WATER SEPARATOR)	131-1812	1	FILTER GP-WATER SEP & FUEL	120
STRAINER (FUEL TANK)	311-6886	1	TANK GP-FUEL	147
STRAINER-FUEL (FILLER NECK SCREEN)	180-3730	1	TANK GP-FUEL	147

MAINTENANCE PARTS

DESCRIPTION	PART NUMBER	QTY	WHERE USED	PAGE
HYDRAULIC SYSTEM				
CAP-FILL (HYDRAULIC OIL)	237-3797	1	TANK & MTG GP-HYDRAULIC	462
FILTER ELEMENT-BREATHER (HYDRAULIC TANK)	9R-9925	1	TANK & MTG GP-HYDRAULIC	462
FILTER-OIL (FLOW REGULATOR)	227-1197	1	MANIFOLD GP-CONTROL	454
FILTER-OIL (ULTRA HIGH EFFICIENCY)	126-1817	1	FILTER GP-OIL	386
LUBRICATION SYSTEM				
FILTER AS-ENGINE OIL	7W-2326	1	GAUGE GP-OIL LEVEL & FILLER	76
OPERATOR STATION				
BLADE AS (WIPER, REAR)	315-1316	1	WIPER GP-WINDOW	698
BLADE AS-WIPER (600-MM) (FRONT)	101-0745	1	WASHER GP-WINDOW	688
FILTER ELEMENT AS-AIR (CAB HEATER)	211-2661	1	HEATER & MTG GP-CAB	639
		1	HEATER & MTG GP-CAB	641
FILTER ELEMENT-AIR (CAB HEATER, AIR CONDITIONER)	211-2660	1	HEATER GP-CAB	646
FILTER ELEMENT-AIR (RECIRCULATION)	211-2660	1	HEATER GP-CAB	644
LAMP (12-VOLT)	210-8754	1	LINER GP-CAB	659
POWER TRAIN				
BREATHER (AXLE)	197-9155	1	AXLE GP-REAR	241
BREATHER (FRONT AXLE)	253-5024	1	AXLE GP-DRIVE & STEERING	239
BREATHER (TRANSMISSION)	7T-3251	1	TRANSMISSION GP-DIRECT DRIVE	288
		1	TRANSMISSION GP-POWER SHIFT	292
BREATHER AS (SIDE)	293-2147	1	TRANSMISSION GP-DIRECT DRIVE	287
FILTER-OIL (STANDARD EFFICIENCY) (POWER TRAIN)	119-4740	1	POWER TRAIN AR	269
PLUG AS-DRAIN (MAGNETIC)	152-6144	4	AXLE GP-DRIVE & STEERING	239
		4	AXLE GP-REAR	241
		1	DIFFERENTIAL & BEVEL GEAR GP	248
STRAINER (SUCTION)	7T-2651	1	CASE AS-TRANSMISSION	244
		1	TRANSMISSION GP-POWER SHIFT	292
SERVICE EQUIPMENT AND SUPPLIES				
FILTER AS-ENGINE OIL	7W-2326	1	SERVICE GP-FILTER	706
FILTER AS-WATER SEP & FUEL	228-9130	1	SERVICE GP-FILTER	706
FILTER-OIL (STANDARD EFFICIENCY) (HYDRAULIC)	119-4740	1	SERVICE GP-FILTER	706
FILTER-OIL (ULTRA HIGH EFFICIENCY)	126-1817	1	SERVICE GP-FILTER	706

INDEX

Name	Page
A	
ACCUMULATOR GP-HYDRAULIC (UNCHARGED) (PILOT)	366
ACCUMULATOR GP-HYDRAULIC–CHARGED	366
ACCUMULATOR GP-HYDRAULIC–UNCHARGED	366
ACCUMULATOR GP-RIDE CONTROL–CHARGED	367
ACCUMULATOR GP-RIDE CONTROL–UNCHARGED	368
ACCUMULATOR-REFRIGERANT (AIR CONDITIONER)	662
AFTERCOOLER GP-AIR	96
AIR CLEANER GP–BASIC	101
AIR CLEANER GP–TURBO	102
	104
ALTERNATOR GP-CHARGING	149
	150
ARM GP-LIFT	488
ARM GP-WINDOW WIPER (REAR)	698
AXLE GP-DRIVE & STEERING–FRONT	239
AXLE GP-REAR	241
B	
BACKHOE AR-EXTENDABLE STICK	1
	2
	3
BACKHOE AR-STANDARD STICK	4
BATTERY & WIRING GP–HEAVY-DUTY	151
BATTERY & WIRING GP–STANDARD	153
BATTERY (12-VOLT, MAINTENANCE FREE, WET)	151
	153
BELT-DRIVE (WARNING BEACON)	175
BELT-SERPENTINE	84
	85
	86
BLADE AS (WIPER, REAR)	698
BLADE AS-WIPER (600-MM) (FRONT)	688
BLOWER GP-CAB (HEATER)	644
	646
BOOM GP	491
BOX GP-BATTERY	336
BRACE GP-LIFT CYLINDER	493
BRAKE GP-HYDRAULIC CALIPER	242
BREATHER (AXLE)	241
BREATHER (FRONT AXLE)	239
BREATHER (TRANSMISSION)	288
	292
BREATHER AS (SIDE)	287
BREATHER GP–ENGINE	74
BUCKET AR-MULTIPURPOSE	514
	515
	516
	517
	518
	519
	520
	521
	522
BUCKET AS-GENERAL PURPOSE	523
	524
BUCKET AS-HOE	543
	544
	545
	546
	548
BUCKET AS-HOE–DITCH CLEANING	529
BUCKET AS-HOE–HEAVY-DUTY	534
	535
	536
	537
	538
	539
	540
	541
	542
	547
BUCKET AS-HOE–HIGH CAPACITY	525
	526
	527
	528
	530
	531
	532
	533
BUCKET GP-HOE	566
	567
	568
	569
	572
	573
BUCKET GP-HOE–HEAVY-DUTY	557
	558
	559
	560
	561
	562
	563
	564
	565
	570
	571
BUCKET GP-HOE–HIGH CAPACITY	549
	550
	551
	552

INDEX

Name	Page
	553
	554
	555
	556
BUCKET GP-MULTIPURPOSE	574
	575
	576
	577
BULLDOZER AS	578
	579
BULLDOZER AS–MULTIPURPOSE BUCKET	580
	581
	582

C

CAB AR–DELUXE, WITH A/C	611
CAB AR–PILOT, AIR CONDITIONER	610
CAB AR–PILOT, NON-A/C	609
CAB AR-ENCLOSED ROPS–PILOT, NON-A/C	612
CAB GP–DELUXE	615
CAB GP–STANDARD	613
CAMSHAFT GP	20
	21
CAP AS-COOLANT TANK	89
	99
CAP AS-FILLER (BATTERY)	153
CAP-FILL (HYDRAULIC OIL)	462
CAP-FUEL (LOCKABLE, VENTED)	147
CARRIAGE AS-FORK–QUICK COUPLER	584
CASE AS-TRANSMISSION–FRONT	244
CASE AS-TRANSMISSION–REAR	245
CHASSIS AR	5
CLAM AS-MULTIPURPOSE BUCKET	585
	586
COMMON AR	5
COMPRESSOR GP-REFRIGERANT	617
	618
CONDENSER & MTG GP-REFRIGERANT	619
CONNECTION GP-WATER	79
	80
CONSOLE GP-OPERATOR–FRONT	622
CONSOLE GP-OPERATOR–LH	620
CONSOLE GP-OPERATOR–RH	624
CONTROL & MTG GP-JOYSTICK	626
CONTROL AR-RIDE–PILOT	369
CONTROL GP-DIFFERENTIAL LOCK–TRANSMISSION AUTOSHIFT	247
CONTROL GP-ELECTRONIC	203
CONTROL GP-GOVERNOR	118
CONTROL GP-HANDLE–RH, JOYSTICK	627
CONTROL GP-JOYSTICK–LH	629
CONTROL GP-JOYSTICK–RH	628
CONTROL GP-PARKING BRAKE	325
	326
CONTROL GP-SERVICE BRAKE–STANDARD SHIFT	327
CONTROL GP-STEERING–TILT	630
CONTROL GP-TRANSMISSION	231
	632
CONTROL GP-TRANSMISSION (FORWARD, NEUTRAL, REVERSE)	632
CONTROL GP-UNPROGRAMMED (MACHINE)	155
CONVERSION AR-QUICK COUPLER	587
CONVERSION AR-ROADING–UNITED KINGDOM	5
COOLER GP-ENGINE OIL	81
	82
COOLER GP-FLTR BASE & ENG OIL	83
COOLER GP-HYD & XMSN OIL	370
	371
CORE AS-OIL COOLER (11 PLATE)	371
CORE AS-OIL COOLER (12 PLATE)	370
CORE AS-OIL COOLER (19 PLATE)	370
CORE AS-OIL COOLER (HYDRAULIC) (18 PLATE)	371
COUNTERWEIGHT GP	338
	339
	340
COUPLER GP-QUICK	591
	592
COUPLER GP-QUICK–BACKHOE	588
	589
	592
COUPLER GP-QUICK–JCB	590
COUPLER GP-QUICK–PARALLEL LIFT	593
COVER GP	469
COVER GP-INLET MANIFOLD	106
	107
COVER GP-VALVE MECHANISM	22
	24
COWLING AS	359
CRANKSHAFT GP	26
	28
	29
CYLINDER BLOCK GP	30
	32
	33
	34
CYLINDER GP-BACKHOE BUCKET	372
CYLINDER GP-BOOM	373
CYLINDER GP-BRAKE–LH	331
CYLINDER GP-BRAKE–RH	330
CYLINDER GP-COUPLER	374
CYLINDER GP-HYDRAULIC	375
	376
CYLINDER GP-LIFT–LH	378
CYLINDER GP-LIFT–RH	377
CYLINDER GP-MULTIPURPOSE BUKT	379

INDEX

Name	Page
CYLINDER GP-STABILIZER	380
CYLINDER GP-STEERING	239
CYLINDER GP-STICK	381
	382
CYLINDER GP-TILT	384
CYLINDER HEAD GP	36
	37
	38
	39
D	
DIFFERENTIAL & BEVEL GEAR GP	250
DIFFERENTIAL & BEVEL GEAR GP–FRONT	248
DIFFERENTIAL GP–AXLE	253
DIFFERENTIAL GP–FRONT	252
DOOR GP-CAB–LH	636
DOOR GP-CAB–RH	634
DRAIN AS	144
DRIVE & MTG GP-PUMP	385
DRIVE AR-BACKHOE LOADER– ALL WHEEL DRIVE, 2-WHEEL STEER	6
DRIVE GP-AUXILIARY	40
	41
DRIVE GP-FAN	42
	43
DRIVE GP-FLEXIBLE COUPLING	254
E	
EDGE GP-CUTTING	594
	595
ELECTRONICS GP-MACHINE	155
ENGINE AR	8
	9
	10
	11
	12
	13
	14
	15
ENGINE AR-PRIMARY	16
	17
	18
	19
EXTENSION GP-EXHAUST	109
EXTENSION GP-FENDER	341
F	
FAN GP-SUCTION–WITH AIR CONDITIONER	84
	86
FAN GP-SUCTION– WITHOUT AIR CONDITIONER	85
FASTENER GP-VALVE	487
FENDER GP-FRONT	343
	344
FENDER GP-REAR	345
FILLER GP-ENGINE OIL	75
FILLER GP-POWER TRAIN OIL– ALL WHEEL DRIVE, STANDARD SHIFT	257
FILLER GP-POWER TRAIN OIL–AUTOSHIFT	255
FILM (REFLECTOR)	600
FILM (START SW, READ OMM, SECURITY)	164
FILM (TEMPERATURE CONTROL)	639
	641
FILM GP	700
FILM GP–HEWDEN	699
FILM-CERTIFICATION (OPS, READ OMM)	613
	615
FILM-CONTROL (BACKHOE, JOYSTICK)	609
	610
	611
	612
FILM-CONTROL (LOADER, JOYSTICK)	389
FILM-COVER (PROTECT)	336
FILM-IDENTIFICATION (12-VOLT)	336
FILM-IDENTIFICATION (CAT)	361
FILM-IDENTIFICATION (CATERPILLAR)	609
	610
FILM-IDENTIFICATION (CATERPILLAR, FRONT)	611
	612
FILM-IDENTIFICATION (EIGHT)	699
FILM-IDENTIFICATION (FIVE)	699
FILM-IDENTIFICATION (FOUR)	699
FILM-IDENTIFICATION (FUSE PANEL)	624
FILM-IDENTIFICATION (FUSE, RELAY)	624
FILM-IDENTIFICATION (GROUP NO., SEQUENCE NO.)	644
	646
FILM-IDENTIFICATION (NINE)	699
FILM-IDENTIFICATION (ONE)	699
FILM-IDENTIFICATION (PREMIER)	7
FILM-IDENTIFICATION (SEVEN)	699
FILM-IDENTIFICATION (SIX)	699
FILM-IDENTIFICATION (STABILIZER, AUTO UP)	481
FILM-IDENTIFICATION (START SWITCH, READ OMM)	160
FILM-IDENTIFICATION (THREE)	699
FILM-IDENTIFICATION (TWO)	699
FILM-IDENTIFICATION (WATER SEPARATOR)	349
	351
FILM-IDENTIFICATION (ZERO)	699
FILM-INFORMATION (HYDO ADVANCED 10)	462
FILM-INFORMATION (LIFT EYE, TIE-DOWN LOCATION)	349
	351

INDEX

Name	Page
FILM-INFORMATION (TIE-DOWN)	349, 351
FILM-INSTRUCTION (BOOM LOCK)	624
FILM-INSTRUCTION (EXTENDABLE STICK PIN, READ OMM)	510, 512
FILM-INSTRUCTION (FORWARD, NEUTRAL, REVERSE)	622
FILM-INSTRUCTION (MACHINE SECURITY, READ OMM)	160, 164
FILM-INSTRUCTION (NO STEP)	336
FILM-INSTRUCTION (OIL FLOW DIRECTION)	391, 395
FILM-INSTRUCTION (RELAY CONNECTION)	206
FILM-INSTRUCTION (STABILIZER, SIDESHIFT)	481
FILM-INSTRUCTION (START SWITCH)	624
FILM-INSTRUCTION (UNLOCK)	363
FILM-INSTRUCTION (VARIABLE SPEED)	624
FILM-INSTRUCTION (WASHER FILL)	688
FILM-NOTICE (BATTERY CABLES DISCONNECT)	336
FILM-NOTICE (ROADING HEIGHT)	5
FILM-STRIPE (YELLOW)	359, 361
FILM-WARNING (ARM BRACE, READ OMM)	493
FILM-WARNING (CRUSH HAZARD, STAY BACK, INTL)	491
FILM-WARNING (HIGH PRESS CYLINDER, READ OMM)	432, 441
FILM-WARNING (HIGH PRESSURE, READ OMM)	367, 368
FILM-WARNING (HYD PRESS, READ OMM, INTL)	391, 395
FILM-WARNING (JUMP START, READ OMM)	336
FILM-WARNING (NO WELD, NO DRILL, READ OMM)	613, 615
FILM-WARNING (QUICK COUPLER)	468, 587
FILM-WARNING (READ OMM)	624
FILM-WARNING (SEAT BELT)	624
FILM-WARNING (TIPPING HAZARD, READ OMM)	228
FILTER AS-ENGINE OIL	76, 706
FILTER AS-WATER SEP & FUEL	144, 706
FILTER BASE & ENG OIL COOLER	83
FILTER ELEMENT AS-AIR (CAB HEATER)	639, 641
FILTER ELEMENT-AIR (CAB HEATER, AIR CONDITIONER)	646
FILTER ELEMENT-AIR (PRIMARY)	101
FILTER ELEMENT-AIR (RECIRCULATION)	644
FILTER ELEMENT-AIR (SECONDARY)	101
FILTER ELEMENT-BREATHER (HYDRAULIC TANK)	462
FILTER ELEMENT-FUEL (WATER SEPARATOR)	120
FILTER GP-OIL	386
FILTER GP-WATER SEP & FUEL	120, 121
FILTER-OIL (FLOW REGULATOR)	454
FILTER-OIL (STANDARD EFFICIENCY) (HYDRAULIC)	706
FILTER-OIL (STANDARD EFFICIENCY) (POWER TRAIN)	269
FILTER-OIL (ULTRA HIGH EFFICIENCY)	386, 706
FITTING & MTG GP-HYDRAULIC	397
FITTING GP-HYDRAULIC (QUICK DISCONNECT)	6
FITTING GP-HYDRAULIC– QUICK DISCONNECT	387, 388
FLANGE GP-WHEEL	258
FLASHER AS (12-VOLT) (HAZARD)	217
FLOOR MAT	638
FLOOR MAT GP	638
FLOORPLATE GP	347
FLYWHEEL GP	44, 45
FORK GP	596, 597
FORK GP-PALLET	599
FRAME AR-LOADER–NARROW	348
FRAME AR-LOADER– STANDARD, SIDESHIFT	348
FRAME GP-LOADER–NARROW	351
FRAME GP-LOADER–STANDARD	349
FRAME GP-SLIDING	353
FRAME GP-SWING	355
FUSE (10-AMPERE)	218
FUSE (15-AMPERE)	218
FUSE (20-AMPERE)	218
FUSE (30-AMPERE)	187, 217
FUSE (40-AMPERE)	183, 187, 217
FUSE (60-AMPERE)	184, 185, 217

INDEX

Name	Page
G	
GASKET (VALVE COVER)	22, 24
GAUGE AS-OIL LEVEL (DIPSTICK) (POWER TRAIN)	255
GAUGE GP-OIL LEVEL & FILLER–ENGINE	76
GAUGE GP-PRESSURE (TIRE VALVE)	6
GAUGE-OIL LEVEL (DIPSTICK) (ENGINE)	76, 257
GAUGE-SIGHT (HYDRAULIC OIL LEVEL)	464
GEAR GP-RING	241, 259, 261
GLOW PLUG (12-VOLT)	156, 157
GLOW PLUG GP	156, 157
GREASE GUN GP	701
GUARD GP-BUCKET	600, 601
GUARD GP-DRIVE SHAFT	356
GUARD GP-LIGHTING	357
GUARD GP-RADIATOR	358
H	
HANDLE GP-DOOR (LH)	690
HANDLE GP-DOOR (RH)	690
HANDLE GP-MODULAR (LH)	629
HANDLE GP-MODULAR (RH)	627, 628
HARNESS AS-AUXILIARY	205
HARNESS AS-CAB	237
HARNESS AS-CHASSIS	201
HARNESS AS-CHASSIS (LOAD CONTROL)	213
HARNESS AS-CONSOLE	203, 228
HARNESS AS-CONTROL (MACHINE SECURITY SYSTEM)	164, 215
HARNESS AS-CONTROL (PLATFORM)	164, 215
HARNESS AS-ENGINE	206
HARNESS AS-FRONT	237
HARNESS AS-FUEL TANK (FUEL SHUTOFF)	8, 9, 10, 11, 12, 13, 14, 15
HARNESS AS-HEATER	646
HARNESS AS-HEATER & AIR COND	209, 644
HARNESS AS-HEATER & AIR COND (COMPRESSOR)	198
HARNESS AS-HEATER & AIR COND (POWER)	198
HARNESS AS-HEATER & AIR COND (VENT)	198
HARNESS AS-LIGHTING (REGISTRATION PLATE)	174
HARNESS AS-LIGHTING (ROADING)	613, 615
HARNESS AS-PLATFORM	217
HARNESS AS-RADIO	649
HARNESS AS-REAR	223
HARNESS AS-REAR LIGHTING	177
HARNESS AS-RIDE CONTROL	225
HARNESS AS-SENSOR	227
HARNESS AS-SWITCH (CAB)	228
HARNESS AS-SWITCH (HOE)	228
HARNESS AS-SWITCH (REAR)	228
HARNESS AS-TRANSMISSION	231
HARNESS AS-VALVE (SEAT AIR COMPRESSOR)	653
HARNESS AS-WINDOW WIPER	233
HARNESS AS-WIRING (KICKOUT, POSITIONER)	211
HARNESS AS-WIRING (SEAT AIR COMPRESSOR)	653
HARNESS AS-WORK TOOL (ANGLE BROOM)	235
HEATER & MTG GP-CAB	639, 641
HEATER GP-CAB	639, 644, 646
HEATER GP-JACKET WATER	158, 159
HOOD & GUARD GP	359
HOOD GP-ENGINE	361, 363
HORN GP-ELECTRIC–REAR	648
HOSE-RADIATOR (LOWER)	99
HOSE-RADIATOR (UPPER)	89, 99
HOUSING & FLANGE GP-AXLE–LH	261
HOUSING & FLANGE GP-AXLE–RH	259
HOUSING GP-AXLE–LH	262
HOUSING GP-FLYWHEEL	46, 47
HOUSING GP-FRONT	48, 50
HYDRAULIC AR	389

INDEX

Name	Page
I	
INDICATOR AS (HIGH BEAM, TURN SIGNAL RH)	217
INDICATOR AS (TURN SIGNAL LH, PARKING BRAKE)	217
INDICATOR GP-AIR FILTER CHANGE	102, 104
INSTALLATION GP-RADIO	649
INSTALLATION GP-SECURITY	160, 162
INSTALLATION GP-SECURITY–TURBO	164
K	
KIT-SEAT FRAME	650
KIT-SEAT PAN	651
KIT-SEAT SUSPENSION–AIR	653
L	
LAMP (12-VOLT)	659
LAMP (12-VOLT, 10-WATT)	173
LAMP (12-VOLT, 21-WATT) (AMBER)	169, 170, 171, 172
LAMP (12-VOLT, 21-WATT) (ROADING LIGHTS)	177
LAMP (12-VOLT, 5-WATT) (CLEAR)	169, 170, 171, 172
LAMP (12-VOLT, 55-WATT) (FLOODLIGHT)	167, 168
LAMP (12-VOLT, 55-WATT) (WARNING BEACON)	175
LAMP GP-DOME (12-VOLT)	659
LAMP GP-FLOOD	167, 168
LAMP GP-HEAD & SIGNAL–LH–HIGH, LOW BEAM	170, 172
LAMP GP-HEAD & SIGNAL–RH–HIGH, LOW BEAM	169, 171
LAMP GP-REGISTRATION PLATE	173, 174
LAMP GP-ROADING (FOG; RED, REAR)	177
LAMP GP-SIGNAL (12-VOLT) (STOP, TAIL, TURN)	179, 181
LAMP GP-WARNING BEACON–12-VOLT, AMBER	175
LAMP-HEAD (12-VOLT, 60/55-WATT) (CLEAR)	169, 170, 171, 172
LATCH GP-CAB DOOR & WINDOW	655, 656
LATCH GP-CONSOLE	657
LEVER GP-GOVERNOR (HANDHELD)	118
LEVER GP-GOVERNOR–HANDHELD	658
LEVER GP-HAND CONTROL–PARKING BRAKE	332
LIFTING GP-ENGINE	52, 53
LIGHTING GP-FLOOD–FRONT, REAR, COSA	176
LIGHTING GP-ROADING–DIPPED, LH	181
LIGHTING GP-ROADING–DIPPED, RH	179
LIGHTING GP-ROADING–FOG	177
LIGHTING GP-WARNING BEACON–AMBER, MAGNETIC MOUNT, ROTATING	182
LINER GP-CAB	659
LINER GP-SOUND SUPPRESSION	364
LINES GP-AIR	110
LINES GP-AUXILIARY HYDRAULIC	393
LINES GP-AUXILIARY HYDRAULIC–EXTENDABLE STICK	391
LINES GP-AUXILIARY HYDRAULIC–SIDESHIFT	390
LINES GP-AUXILIARY HYDRAULIC–STANDARD STICK, 1-WAY	395
LINES GP-BACKHOE	397
LINES GP-BACKHOE AUXILIARY–EXTENDABLE STICK, 1-WAY	401
LINES GP-BACKHOE AUXILIARY–EXTENDABLE STICK, 2-WAY	399
LINES GP-BACKHOE AUXILIARY–STANDARD STICK, 1-WAY	401
LINES GP-BOOM	402
LINES GP-BUCKET	403
LINES GP-BUCKET CYLINDER–STANDARD STICK	407
LINES GP-BUCKET–EXTENDABLE STICK	405
LINES GP-CONNECTING	409
LINES GP-DRAIN	410
LINES GP-FUEL	122, 124, 126
LINES GP-FUEL FILTER	128
LINES GP-HEATER	661
LINES GP-HEATER & AIR COND	662
LINES GP-HYDRAULIC–PARALLEL LIFT	411
LINES GP-LIFT & TILT	414
LINES GP-LIFT CYLINDER–PARALLEL LIFT	416, 417
LINES GP-LOAD CONTROL VALVE–PILOT	420

INDEX

Name	Page
LINES GP-MULTIPURPOSE BUCKET	423
	425
LINES GP-PILOT–AUXILIARY	427
LINES GP-PILOT–BACKHOE	430
LINES GP-PILOT–LOADER	428
LINES GP-PILOT–SIGNAL	435
LINES GP-PILOT–SUPPLY	432
LINES GP-POWER TRAIN COOLER	87
LINES GP-POWER TRAIN OIL–DIFFERENTIAL LOCK	263
LINES GP-PUMP	437
LINES GP-RADIATOR	89
LINES GP-RETURN	439
LINES GP-RIDE CONTROL	441
LINES GP-SIDESHIFT LOCK	443
LINES GP-STABILIZER	444
	445
LINES GP-STEERING–ALL WHEEL DRIVE, 2-WHEEL STEER	333
LINES GP-STICK	447
LINES GP-SWING	448
LINK GP-SHIPPING	702
LINKAGE GP-BACKHOE BUCKET	499
LINKAGE GP-BACKHOE BUCKET–LIFTING	494
LINKAGE GP-BACKHOE BUCKET–WITH LIFTING EYE	496
LINKAGE GP-BACKHOE BUCKET–WITHOUT LIFTING EYE	498
LINKAGE GP-BUCKET	499
LOADER AR	6
LOCK GP-TRANSPORT–BACKHOE BUCKET	503
LOCK GP-TRANSPORT–BOOM	504
LOCK GP-TRANSPORT–LOADER	501
LOCK GP-TRANSPORT–STABILIZER	502
LOCK GP-VANDALISM	703

M

MANIFOLD & SOLENOID GP-CONTROL	432
	450
MANIFOLD GP-CONTROL	451
	453
MANIFOLD GP-CONTROL–INLET	454
MANIFOLD GP-CONTROL–OUTLET	452
MANIFOLD GP-RIDE CONTROL	455
MIRROR GP-REAR VIEW–EXTERIOR	665
MIRROR GP-REAR VIEW–INTERIOR	664
MOTOR GP-WINDOW WIPER–12-VOLT	666
MOTOR GP-WINDOW WIPER–REAR	667
MOUNTING GP-AXLE	264
MOUNTING GP-BACKHOE CONTROL–PILOT	668
MOUNTING GP-BUCKET–BACKHOE	603
MOUNTING GP-BUCKET–BACKHOE, QUICK COUPLER	602
	604
MOUNTING GP-BUCKET–PARALLEL LIFT	605
MOUNTING GP-CAB	671
MOUNTING GP-CYLINDER–MULTIPURPOSE BUCKET	456
MOUNTING GP-ENGINE	54
	55
MOUNTING GP-ENGINE & XMSN	56
MOUNTING GP-FORK	607
MOUNTING GP-FORK–MULTIPURPOSE BUCKET	606
MOUNTING GP-LINES	457
MOUNTING GP-TRANSMISSION	265
	266
MOUNTING GP-WHEEL (FRONT)	304
	305
	306
	313
	316
	317
	320
	322
	323
MOUNTING GP-WHEEL (REAR)	310
	311
	312
	314
	315
	317
	321
MUFFLER GP	111

O

OPTION AR–HEWDEN	6

P

PAD GP-STABILIZER–STREET	506
PADLOCK GP	703
PAN GP-OIL	57
	59
PEDAL GP-GOVERNOR	672
PISTON & ROD GP	61
	62
PLANETARY GP-FINAL DRIVE	267
PLANETARY GP-FINAL DRIVE–AXLE	268
PLATE & FILM GP	704
PLATE GP-COVER	349
	351
PLATE-IDENTIFICATION (CAT)	530
	531
	532
	533
PLATE-IDENTIFICATION (WORK TOOL)	515

INDEX

Name	Page
	518
	519
	520
	521
	553
	554
	555
	556
	557
	558
	559
	560
	563
PLUG AS-DRAIN (MAGNETIC)	239
	241
	248
PLUG GP-CONTROL MANIFOLD	453
PLUG GP-CYLINDER HEAD	64
PLUG GP-ENGINE	65
	66
	67
	68
	69
PLUG-DRAIN (ENGINE OIL)	57
	59
POWER TRAIN AR–ALL WHEEL DRIVE, 2-WHEEL STEER, AUTOSHIFT	269
POWER TRAIN AR–ALL WHEEL DRIVE, 2-WHEEL STEER, STD SHIFT	269
PREMIER AR	7
PROTECTION GP-VANDALISM–ROTATING GUARD	705
PULLEY GP-ENGINE	40
	41
PUMP GP-ENGINE OIL	77
	78
PUMP GP-FUEL INJECTION	129
	130
	133
	136
	137
	140
	141
PUMP GP-FUEL PRM & PRIM FILTER–WITH MOUNTING	145
PUMP GP-FUEL PRM & PRIM FILTER–WITH WATER SEPARATOR	144
PUMP GP-METERING (STEERING LINES)	333
PUMP GP-PISTON	458
PUMP GP-TRANSMISSION	287
	292
PUMP GP-WATER	91
	93

R

Name	Page
RADIATOR & HYD OIL COOLER GP	95
	97
	98
RADIATOR & HYD OIL COOLER GP–INCLUDES AFTCLR, XMSN COOLER	96
RADIATOR GP	95
	96
REGULATOR GP-TEMPERATURE (INCLUDES CONNECTOR)	79
REGULATOR GP-TEMPERATURE (INCLUDES CONNECTOR) (WATER)	80
RELAY AS (12-VOLT) (AIR CONDITIONER)	209
RELAY AS (12-VOLT) (ALL WHEEL DRIVE)	193
RELAY AS (12-VOLT) (BACKUP ALARM)	197
RELAY AS (12-VOLT) (DEAD ENGINE LOWER)	213
RELAY AS (12-VOLT) (DIFFERENTIAL LOCK)	217
RELAY AS (12-VOLT) (DISABLE START)	164
	215
RELAY AS (12-VOLT) (FRONT HORN)	217
RELAY AS (12-VOLT) (FUEL PUMP)	217
RELAY AS (12-VOLT) (FUEL SHUTOFF)	164
	215
RELAY AS (12-VOLT) (HIGH SPEED)	199
RELAY AS (12-VOLT) (IMPLEMENT DISABLE)	217
RELAY AS (12-VOLT) (NEUTRAL START)	217
RELAY AS (12-VOLT) (QUICK COUPLER)	237
RELAY AS (12-VOLT) (REAR HORN)	217
RELAY AS (12-VOLT) (RIDE CONTROL)	225
RELAY AS (12-VOLT) (SHUTOFF)	198
RELAY AS (12-VOLT) (STARTING AID)	206
RELAY AS (12-VOLT) (TORQUE LIMITER)	217
RELAY AS-TIMER (12-VOLT, PLATFORM)	186
RELAY GP (12-VOLT) (STARTING MOTOR)	206
RELAY GP–POWER DISTRIBUTION	183
RELAY GP–POWER, 1	184
RELAY GP–POWER, 2	185
RELAY GP–STABILIZER, AUTO UP	186
RELAY GP–STARTING MOTOR	187
ROCKER ARM GP	70
	71
ROOF GP-CAB	673
ROTATING GP-PUMP	460

S

Name	Page
SEAT GP	674
SEAT GP–DELUXE	676
SEAT GP-SUSPENSION (DELUXE, CLOTH)	682
SEAT GP-SUSPENSION–CLOTH	678
	682
SEAT GP-SUSPENSION–DELUXE, CLOTH	680
	682

INDEX

Name	Page
SENDER AS-FUEL LEVEL	147
SENDER AS-TEMPERATURE (12-VOLT)	292
SENDER AS-TEMPERATURE (12-VOLT) (TRANSMISSION OIL)	288
SENDER AS-TEMPERATURE (ENGINE COOLANT)	206
SENSOR AS (KEY READER)	164
	215
SENSOR AS-POSITION (BUCKET)	211
SENSOR GP-MOISTURE (WATER SEPARATOR)	144
SENSOR GP-SPEED (LOW OUTPUT)	288
SENSOR GP-SPEED (TRANSMISSION OUTPUT, HIGH)	293
SENSOR GP-SPEED–OUTPUT	188
SENSOR GP-TEMPERATURE (HYDRAULIC OIL)	227
SERVICE GP-FILTER–KIT	706
SERVICE GP-FORK POSITIONER	599
SERVICE GP-MACHINE	155
SHAFT GP-AXLE	239
SHAFT GP-COUNTER	270
SHAFT GP-COUNTER (TRANSMISSION)	287
SHAFT GP-DRIVE–FRONT	272
SHAFT GP-DRIVE–REAR	272
SHAFT GP-IDLER	273
SHAFT GP-IDLER (TRANSMISSION)	287
SHAFT GP-INPUT	275
	277
SHAFT GP-OUTPUT–FRONT	282
	284
SHAFT GP-OUTPUT–MAIN	279
SHAFT GP-OUTPUT–REAR	281
SHAFT GP-PUMP DRIVE	461
SOFTWARE GP-MACHINE	155
SOLENOID AS (REMOTE CONTROL)	487
SPRING AS-GAS	363
SPRING AS-GAS (LOCKABLE)	363
SPRING GP-GAS (CAB DOOR)	634
	636
SPRING GP-GAS (STEERING COLUMN)	335
STABILIZER GP-BACKHOE	507
STARTING MOTOR GP-ELECTRIC–12-VOLT	189
	191
	192
STEERING COLUMN GP–TILT	335
STICK GP	508
STICK GP-EXTENDABLE	510
	512
STOP GP-STEERING	285
	303
STRAINER (FUEL TANK)	147
STRAINER (SUCTION)	244
	292
STRAINER-FUEL (FILLER NECK SCREEN)	147
SUN VISOR	687
SUPPRESSION AR-SOUND	365
SUSPENSION GP-SEAT	683
SWITCH AS (PARKING BRAKE)	325
SWITCH AS (STARTING MOTOR, 12-VOLT)	189
SWITCH AS-FOOT (DIFFERENTIAL LOCK ON, OFF)	194
SWITCH AS-LIMIT (BRAKE PEDAL)	327
SWITCH AS-MULTIFUNCTION (HD LIGHT, TURN SIG, WDO WIPER)	217
SWITCH AS-PRESSURE (ENGINE OIL)	195
	196
SWITCH AS-PRESSURE (HYDRAULIC OIL FILTER BYPASS)	227
SWITCH AS-PRESSURE (REFRIGERANT COMPR, HIGH SIDE)	198
SWITCH AS-PRESSURE (RIDE CONTROL)	225
SWITCH AS-PUSH BUTTON (BUCKET POSITIONER)	211
SWITCH AS-ROCKER (AIR CONDITIONER, HEATER SELECT)	198
SWITCH AS-ROCKER (ALL WHEEL DRIVE)	193
SWITCH AS-ROCKER (ANGLE BROOM)	235
SWITCH AS-ROCKER (AUTOSHIFT, STANDARD SHIFT)	231
SWITCH AS-ROCKER (AUXILIARY HYDRAULIC FLOW)	237
SWITCH AS-ROCKER (BLOWER FAN SPEED)	198
	209
SWITCH AS-ROCKER (ELECTRIC POWER)	237
SWITCH AS-ROCKER (FLOODLIGHTS, FRONT)	176
	201
SWITCH AS-ROCKER (FLOODLIGHTS, REAR)	176
	201
SWITCH AS-ROCKER (FOG LIGHT, REAR)	177
SWITCH AS-ROCKER (HAZARD WARNING LIGHTS)	217
SWITCH AS-ROCKER (HEATER)	209
SWITCH AS-ROCKER (HYDRAULIC LOCKOUT)	203
SWITCH AS-ROCKER (LOAD STABILITY, BUCKET)	228
SWITCH AS-ROCKER (MODE SELECT)	217
SWITCH AS-ROCKER (QUICK COUPLER PIN LOCK)	237
SWITCH AS-ROCKER (RIDE CONTROL)	225
SWITCH AS-ROCKER (RIDE CONTROL, LOAD CONTROL)	213
SWITCH AS-ROCKER (ROADING LIGHTS)	179
	181
SWITCH AS-ROCKER (SIDESHIFT, LOCK-UNLOCK)	223

INDEX

Name	Page
SWITCH AS-ROCKER (STARTING AID)	203
SWITCH AS-ROCKER (TRANSMISSION NEUTRAL LOCK)	217
SWITCH AS-ROCKER (WARNING BEACON)	203
SWITCH AS-ROCKER (WIPER, WASHER, REAR)	688
SWITCH AS-START (KEY)	203
SWITCH GP-ALL WHEEL DRIVE–INCLUDES RELAY	193
SWITCH GP-DIFFERENTIAL LOCK	194
SWITCH GP-PRESSURE	195
SWITCH GP-PRESSURE (BRAKE)	327
SWITCH GP-PRESSURE–ENGINE OIL	196
SWITCH GP-PUSH BUTTON (NEUTRALIZER, DOWNSHIFT)	632
SWITCH-TEMPERATURE (AIR CONDITIONER)	644
SWITCH-TEMPERATURE (ENGINE COOLANT)	206
SWITCH-TEMPERATURE (FUEL)	137
	141
SWITCH-TEMPERATURE (TIMING ADVANCE)	130
	133
SWITCH-TOGGLE (SUSPENSION SEAT)	683
SWIVEL GP-SEAT	685
SYNCHRONIZER GP	281

T

TANK & LINES GP-COOLANT–EXPANSION, RADIATOR	99
TANK & MTG GP-HYDRAULIC	462
TANK GP-EXPANSION (COOLANT)	89
	99
TANK GP-FUEL	147
	148
TANK GP-HYDRAULIC	464
TANK GP-WINDOW WASHER	688
TIE ROD GP	239
TIP GP-PENETRATION	553
	554
	555
	556
	557
	558
	559
	560
	563
TOOTH GP-UNI	549
	550
	551
	552
	561
	562
	564
	565
	566
	567
	568
	569
	571
	573
	608
TRANSMISSION AR-DIRECT DRIVE–ALL WHEEL DRIVE, STANDARD SHIFT	286
TRANSMISSION AR-POWER SHIFT–ALL WHEEL DRIVE, AUTOSHIFT	286
TRANSMISSION GP-DIRECT DRIVE	287
TRANSMISSION GP-POWER SHIFT	292
TURBOCHARGER GP	112
	114
	116

V

VALVE & MTG GP-BANK–PILOT	466
VALVE & MTG GP-BANK–PILOT CONTROL	465
VALVE & MTG GP-SOLENOID–DIFFERENTIAL LOCK	298
VALVE AR-BANK 2	467
VALVE AR-BANK 3	467
	468
VALVE AS-PRESSURE RELIEF (REFRIGERANT COMPRESSOR)	617
VALVE GP-BANK 3–PILOT CONTROL	469
VALVE GP-BANK 7–PILOT CONTROL	470
VALVE GP-CHECK (300-BAR)	430
VALVE GP-CHECK (BOOM CONTROL VALVE)	472
VALVE GP-CHECK (COUPLER CYLINDER)	374
VALVE GP-CHECK (PILOT CONTROL)	417
VALVE GP-CHECK (PILOT OPERATED HYDRAULIC)	411
VALVE GP-CHECK (REVERSING FAN)	450
VALVE GP-CHECK (STABILIZER CONTROL)	471
VALVE GP-CONTROL–AUXILIARY	479
VALVE GP-CONTROL–BOOM	472
VALVE GP-CONTROL–BUCKET	474
VALVE GP-CONTROL–EXTENDABLE STICK	476
VALVE GP-CONTROL–LIFT	477
VALVE GP-CONTROL–STABILIZER	471
VALVE GP-CONTROL–STICK	475
VALVE GP-CONTROL–SWING	473
VALVE GP-CONTROL–TILT	478
VALVE GP-FLOW CONTROL (AUXILIARY, INLET)	454
VALVE GP-LOAD CONTROL (BOOM)	420
VALVE GP-LOAD CONTROL (LIFT & TILT)	417
VALVE GP-LOAD CONTROL (STICK)	420

INDEX

Name	Page
VALVE GP-LOAD CONTROL–STABILIZER	480
VALVE GP-PILOT (BACKHOE)	430
VALVE GP-PILOT (LOADER)	428
VALVE GP-PILOT–STABILIZER	481
	482
	483
VALVE GP-PILOT–STABILIZER, SIDESHIFT, AUTO UP	481
VALVE GP-PRESSURE CONTROL (290-BAR)	448
VALVE GP-PRESSURE REDUCING (BRAKE)	450
VALVE GP-PUMP CONTROL (PRESSURE, FLOW COMPENSATOR)	458
VALVE GP-PUMP CONTROL–POWER COMPENSATOR	485
VALVE GP-RADIATOR DRAIN	95
	96
VALVE GP-RELIEF (160-BAR)	478
VALVE GP-RELIEF (165-BAR)	472
VALVE GP-RELIEF (240-BAR)	479
VALVE GP-RELIEF (270-BAR)	473
	475
	476
VALVE GP-RELIEF (290-BAR)	475
VALVE GP-RELIEF (300-BAR)	472
	474
	478
VALVE GP-RELIEF (LOAD SENSING SIGNAL)	454
VALVE GP-RELIEF (TORQUE CONVERTER INLET)	287
	292
VALVE GP-RELIEF–PRESSURE REGULATOR	299
VALVE GP-SHUTOFF (HYDRAULIC TANK DRAIN)	410
VALVE GP-SOLENOID (12-VDC) (ALL WHEEL DRIVE, CLUTCH ONE)	287
	293
VALVE GP-SOLENOID (ACCUMULATOR)	455
VALVE GP-SOLENOID (CLUTCH)	293
VALVE GP-SOLENOID (FLOW CONTROL)	451
VALVE GP-SOLENOID (FORWARD, REVERSE)	287
VALVE GP-SOLENOID (LOAD SENSING PRESSURE)	458
VALVE GP-SOLENOID (REVERSE)	293
VALVE GP-SOLENOID (RIDE CONTROL, SWITCH)	455
VALVE GP-SOLENOID (TRANSMISSION)	293
VALVE GP-SOLENOID–AUXILIARY	486
VALVE GP-SOLENOID–REMOTE CONTROL	487
VALVE GP-TIRE	300
	301
VALVE MECHANISM GP	72
	73
VISOR GP-CAB	687

W

Name	Page
WARNING GP-BACKUP	197
WASHER GP-WINDOW	688
WHEEL & TIRE AR–ALL WHEEL DRIVE	301
	302
	303
	304
WHEEL & TIRE AR–ALL WHEEL DRIVE, BIAS	303
	304
WHEEL & TIRE GP–FRONT	304
	305
	306
	313
	316
	317
	320
	322
	323
WHEEL & TIRE GP–FRONT, LH	305
	306
	307
	314
	318
	320
	321
	323
	324
WHEEL & TIRE GP–FRONT, RH	305
	306
	307
	314
	318
	320
	321
	323
	324
WHEEL & TIRE GP–REAR	310
	311
	312
	314
	315
	317
	321
WHEEL & TIRE GP–REAR, LH	307
	308
	309
	312
	313
	315
	316
	318
	319
	322
WHEEL & TIRE GP–REAR, RH	308

INDEX

Name	Page	Name	Page
	309		
	310		
	312		
	313		
	315		
	316		
	319		
	322		
WINDOW GP-CAB–LH	692		
WINDOW GP-CAB–REAR	690		
WINDOW GP-CAB–RH	694		
WINDOW GP-DOOR–LH	696		
WINDOW GP-DOOR–RH	697		
WIPER GP-WINDOW–REAR	698		
WIRING GP-AIR CONDITIONER	198		
WIRING GP-CAB–ROOF	201		
WIRING GP-CONSOLE–SIDE, PILOT	203		
WIRING GP-CONTROL–JOYSTICK, LH	205		
WIRING GP-ENGINE–PILOT	206		
WIRING GP-HEATER	209		
WIRING GP-KICKOUT & POSITIONER	211		
WIRING GP-LOAD CONTROL	213		
WIRING GP-MACHINE–MACHINE SECURITY SYSTEM	215		
WIRING GP-PLATFORM–EAME, PILOT	217		
WIRING GP-POWER RECEPTACLE	222		
WIRING GP-REAR–PILOT	223		
WIRING GP-RIDE CONTROL	225		
WIRING GP-SENSOR–DELUXE CAB	227		
WIRING GP-SENSOR–OBJECT HANDLING	228		
WIRING GP-TRANSMISSION CONTROL–POWERSHIFT	231		
WIRING GP-WIPER–REAR	233		
WIRING GP-WORK TOOL	237		
WIRING GP-WORK TOOL–ANGLE BROOM	235		

MEMORANDA

KOPACZKA.PL

MACHINE ARRANGEMENT

334-0686 BACKHOE AR-EXTENDABLE STICK

S/N: JBA1-UP

FOR USE WITH 338-0837—PAGE 420, 344-1303—PAGE 401, 321-7183—PAGE 399. CANNOT BE USED WITH 344-1302—PAGE 401

AN ATTACHMENT

SMCS-6504, 6533 **i03695640**

NOTE	PART NUMBER	QTY	PART NAME 1 2 3 4 5 6 (PRODUCT LEVEL)	SEE PAGE
Y	*324-0548*	1	BOOM GP	491
Y	**320-6520**	1	CYLINDER GP-BOOM	373
Y	**320-5937**	1	CYLINDER GP-BACKHOE BUCKET	372
Y	**320-6521**	1	CYLINDER GP-STICK	382
Y	*321-7178*	1	LINES GP-BOOM	402
Y	*321-7179*	1	LINES GP-BUCKET (EXTENDABLE STICK)	405
Y	*321-7192*	1	LINES GP-STICK	447
Y	*334-0751*	1	LINKAGE GP-BACKHOE BUCKET	494
Y	*323-2096*	1	MOUNTING GP-LINES	457
Y	*324-0550*	1	STICK GP-EXTENDABLE	510
Y-SEPARATE ILLUSTRATION				

<END>

334-0691 BACKHOE AR-EXTENDABLE STICK

S/N: JBA1-UP

FOR USE WITH 338-0837—PAGE 420, 344-1303—PAGE 401, 321-7183—PAGE 399. CANNOT BE USED WITH 344-1302—PAGE 401

AN ATTACHMENT

SMCS-6504, 6533 **i03695662**

NOTE	PART NUMBER	QTY	PART NAME 1 2 3 4 5 6 (PRODUCT LEVEL)	SEE PAGE
Y	*324-0548*	1	BOOM GP	491
Y	**320-6520**	1	CYLINDER GP-BOOM	373
Y	**320-5937**	1	CYLINDER GP-BACKHOE BUCKET	372
Y	**320-6521**	1	CYLINDER GP-STICK	382
Y	*321-7178*	1	LINES GP-BOOM	402
Y	*321-7179*	1	LINES GP-BUCKET (EXTENDABLE STICK)	405
Y	*321-7192*	1	LINES GP-STICK	447
Y	*334-0752*	1	LINKAGE GP-BACKHOE BUCKET	496
Y	*323-2096*	1	MOUNTING GP-LINES	457
Y	*329-9749*	1	STICK GP-EXTENDABLE	512
Y-SEPARATE ILLUSTRATION				

<END>

MACHINE ARRANGEMENT

350-6934 BACKHOE AR-EXTENDABLE STICK

S/N: JBA1-UP

FOR USE WITH 338-0837—PAGE 420, 344-1303—PAGE 401, 321-7183—PAGE 399. CANNOT BE USED WITH 344-1302—PAGE 401

AN ATTACHMENT

SMCS-6504, 6533 **i03695681**

NOTE	PART NUMBER	QTY	PART NAME 1 2 3 4 5 6 (PRODUCT LEVEL)	SEE PAGE
Y	*324-0548*	1	BOOM GP	491
Y	**320-6520**	1	CYLINDER GP-BOOM	373
Y	**320-5937**	1	CYLINDER GP-BACKHOE BUCKET	372
Y	**320-6521**	1	CYLINDER GP-STICK	382
Y	*321-7178*	1	LINES GP-BOOM	402
Y	*321-7179*	1	LINES GP-BUCKET (EXTENDABLE STICK)	405
Y	*321-7192*	1	LINES GP-STICK	447
Y	*348-5465*	1	LINKAGE GP-BACKHOE BUCKET	499
Y	*323-2096*	1	MOUNTING GP-LINES	457
Y	*324-0550*	1	STICK GP-EXTENDABLE	510
Y-SEPARATE ILLUSTRATION				

<END>

350-6935 BACKHOE AR-EXTENDABLE STICK

S/N: JBA1-UP

FOR USE WITH 338-0837—PAGE 420, 344-1303—PAGE 401, 321-7183—PAGE 399. CANNOT BE USED WITH 344-1302—PAGE 401

AN ATTACHMENT

SMCS-6504, 6533 **i03726587**

NOTE	PART NUMBER	QTY	PART NAME 1 2 3 4 5 6 (PRODUCT LEVEL)	SEE PAGE
Y	*324-0548*	1	BOOM GP	491
Y	**320-5937**	1	CYLINDER GP-BACKHOE BUCKET	372
Y	**320-6520**	1	CYLINDER GP-BOOM	373
Y	**320-6521**	1	CYLINDER GP-STICK	382
Y	*321-7178*	1	LINES GP-BOOM	402
Y	*321-7179*	1	LINES GP-BUCKET (EXTENDABLE STICK)	405
Y	*321-7192*	1	LINES GP-STICK	447
Y	*348-5464*	1	LINKAGE GP-BACKHOE BUCKET (WITHOUT LIFTING EYE)	498
Y	*323-2096*	1	MOUNTING GP-LINES	457
Y	*329-9749*	1	STICK GP-EXTENDABLE	512
Y-SEPARATE ILLUSTRATION				

<END>

MACHINE ARRANGEMENT

350-6944 BACKHOE AR-EXTENDABLE STICK

S/N: JBA1-UP

FOR USE WITH 338-0837—PAGE 420, 344-1303—PAGE 401, 321-7183—PAGE 399, 327-0112—PAGE 348, 327-0113—PAGE 348. CANNOT BE USED WITH 344-1302—PAGE 401, 112-1931—PAGE 523

AN ATTACHMENT

SMCS-6504, 6533 **i03695701**

NOTE	PART NUMBER	QTY	PART NAME 1 2 3 4 5 6 (PRODUCT LEVEL)	SEE PAGE
Y	*324-0548*	1	BOOM GP	491
Y	**320-6520**	1	CYLINDER GP-BOOM	373
Y	**320-5937**	1	CYLINDER GP-BACKHOE BUCKET	372
Y	**320-6521**	1	CYLINDER GP-STICK	382
Y	*321-7178*	1	LINES GP-BOOM	402
Y	*321-7179*	1	LINES GP-BUCKET (EXTENDABLE STICK)	405
Y	*338-0837*	1	LINES GP-LOAD CONTROL VALVE	420
Y	*321-7192*	1	LINES GP-STICK	447
Y	*334-0751*	1	LINKAGE GP-BACKHOE BUCKET	494
Y	*323-2096*	1	MOUNTING GP-LINES	457
Y	*324-0550*	1	STICK GP-EXTENDABLE	510
Y	*349-1101*	1	WIRING GP-SENSOR	228

Y-SEPARATE ILLUSTRATION

<END>

350-6945 BACKHOE AR-EXTENDABLE STICK

S/N: JBA1-UP

FOR USE WITH 338-0837—PAGE 420, 344-1303—PAGE 401, 321-7183—PAGE 399, 327-0112—PAGE 348, 327-0113—PAGE 348. CANNOT BE USED WITH 344-1302—PAGE 401, 112-1931—PAGE 523

AN ATTACHMENT

SMCS-6504, 6533 **i03695664**

NOTE	PART NUMBER	QTY	PART NAME 1 2 3 4 5 6 (PRODUCT LEVEL)	SEE PAGE
Y	*324-0548*	1	BOOM GP	491
Y	**320-6520**	1	CYLINDER GP-BOOM	373
Y	**320-5937**	1	CYLINDER GP-BACKHOE BUCKET	372
Y	**320-6521**	1	CYLINDER GP-STICK	382
Y	*321-7178*	1	LINES GP-BOOM	402
Y	*321-7179*	1	LINES GP-BUCKET (EXTENDABLE STICK)	405
Y	*338-0837*	1	LINES GP-LOAD CONTROL VALVE	420
Y	*321-7192*	1	LINES GP-STICK	447
Y	*334-0752*	1	LINKAGE GP-BACKHOE BUCKET	496
Y	*323-2096*	1	MOUNTING GP-LINES	457
Y	*329-9749*	1	STICK GP-EXTENDABLE	512
Y	*349-1101*	1	WIRING GP-SENSOR	228

Y-SEPARATE ILLUSTRATION

<END>

MACHINE ARRANGEMENT

334-0694 BACKHOE AR-STANDARD STICK

S/N: JBA1-UP

FOR USE WITH 344-1302—PAGE 401, 338-0837—PAGE 420. CANNOT BE USED WITH 344-1303—PAGE 401, 321-7183—PAGE 399 AN ATTACHMENT

SMCS-6502, 6504 **i03695680**

NOTE	PART NUMBER	QTY	PART NAME 1 2 3 4 5 6 (PRODUCT LEVEL)	SEE PAGE
Y	*324-0548*	1	BOOM GP	491
Y	**320-6520**	1	CYLINDER GP-BOOM	373
Y	**320-5937**	1	CYLINDER GP-BACKHOE BUCKET	372
Y	**320-6521**	1	CYLINDER GP-STICK	382
Y	*321-7178*	1	LINES GP-BOOM	402
Y	*323-2023*	1	LINES GP-BUCKET CYLINDER	407
Y	*321-7192*	1	LINES GP-STICK	447
Y	*334-0751*	1	LINKAGE GP-BACKHOE BUCKET	494
Y	*323-2096*	1	MOUNTING GP-LINES	457
Y	*324-0552*	1	STICK GP	508
Y-SEPARATE ILLUSTRATION				

<END>

350-6933 BACKHOE AR-STANDARD STICK

S/N: JBA1-UP

FOR USE WITH 338-0837—PAGE 420, 344-1302—PAGE 401. CANNOT BE USED WITH 344-1303—PAGE 401, 321-7183—PAGE 399 AN ATTACHMENT

SMCS-6502, 6504 **i03695720**

NOTE	PART NUMBER	QTY	PART NAME 1 2 3 4 5 6 (PRODUCT LEVEL)	SEE PAGE
Y	*324-0548*	1	BOOM GP	491
Y	**320-6520**	1	CYLINDER GP-BOOM	373
Y	**320-5937**	1	CYLINDER GP-BACKHOE BUCKET	372
Y	**320-6521**	1	CYLINDER GP-STICK	382
Y	*321-7178*	1	LINES GP-BOOM	402
Y	*323-2023*	1	LINES GP-BUCKET CYLINDER	407
Y	*321-7192*	1	LINES GP-STICK	447
Y	*348-5465*	1	LINKAGE GP-BACKHOE BUCKET	499
Y	*323-2096*	1	MOUNTING GP-LINES	457
Y	*324-0552*	1	STICK GP	508
Y-SEPARATE ILLUSTRATION				

<END>

MACHINE ARRANGEMENT

329-0294 CHASSIS AR

S/N: JBA1-UP

PART OF 329-0079 COMMON AR

SMCS-7000 **i03726402**

NOTE	PART NUMBER	QTY	PART NAME 1 2 3 4 5 6 (PRODUCT LEVEL)	SEE PAGE
Y	*313-3380*	1	BATTERY & WIRING GP (STANDARD)	153
Y	*341-0695*	1	BOX GP-BATTERY	336
Y	*343-7809*	1	FILM GP	700
Y	*320-5933*	1	FRAME GP-SLIDING	353
Y	*322-3764*	1	FRAME GP-SWING	355
Y	*311-8062*	1	HOOD & GUARD GP	359
Y	*175-7877*	1	LINK GP-SHIPPING	702
Y	*206-1641*	1	LOCK GP-TRANSPORT (STABILIZER)	502
Y	*329-1322*	1	LOCK GP-TRANSPORT (BOOM)	504
Y	*204-4248*	1	MOUNTING GP-CAB	671
Y	*342-8061*	1	PLATE & FILM GP	704
Y	*341-0696*	1	TANK GP-FUEL	148
Y	*338-5737*	1	WIRING GP-ENGINE (PILOT)	206
Y	*328-1942*	1	WIRING GP-REAR (PILOT)	223

Y-SEPARATE ILLUSTRATION

<END>

329-0079 COMMON AR

S/N: JBA1-UP

SMCS-7000 **i03694761**

NOTE	PART NUMBER	QTY	PART NAME 1 2 3 4 5 6 (PRODUCT LEVEL)	SEE PAGE
Y	*329-0294*	1	CHASSIS AR	5
Y	*329-0124*	1	HYDRAULIC AR	389
Y	*325-1021*	1	LOADER AR	6

Y-SEPARATE ILLUSTRATION

<END>

343-0656 CONVERSION AR-ROADING—UNITED KINGDOM

S/N: JBA1-UP

AN ATTACHMENT

SMCS-7000 **i03690262**

NOTE	PART NUMBER	QTY	PART NAME 1 2 3 4 5 6 (PRODUCT LEVEL)	SEE PAGE
	349-3644	1	FILM-NOTICE (ROADING HEIGHT)	
			(INSIDE OF THE FRONT WINDSCREEN IN THE TOP LH CORNER, BELOW THE SUN-VISOR)	
	160-7599	2	RESTRAINER-BUCKET	

<END>

MACHINE ARRANGEMENT

329-0319 DRIVE AR-BACKHOE LOADER–
ALL WHEEL DRIVE, 2-WHEEL STEER
S/N: JBA1-UP
PART OF 329-0306, 329-0307 POWER TRAIN AR
AN ATTACHMENT

SMCS-3268, 3278, 3282, 4304, 4313, 4334 **i03648051**

NOTE	PART NUMBER	QTY	PART NAME 1 2 3 4 5 6 (PRODUCT LEVEL)	SEE PAGE
Y	**230-5743**	1	AXLE GP-DRIVE & STEERING (FRONT)	239
Y	**230-5738**	1	AXLE GP-REAR	241
Y	*340-7030*	1	LINES GP-STEERING (ALL WHEEL DRIVE, 2-WHEEL STEER)	333
Y	*221-0811*	1	MOUNTING GP-AXLE	264
Y	*216-4475*	1	SHAFT GP-DRIVE (REAR)	272
Y	*305-3295*	1	SWITCH GP-ALL WHEEL DRIVE (INCLUDES RELAY)	193
Y-SEPARATE ILLUSTRATION				

<END>

325-1021 LOADER AR
S/N: JBA1-UP
PART OF 329-0079 COMMON AR

SMCS-6100 **i03694708**

NOTE	PART NUMBER	QTY	PART NAME 1 2 3 4 5 6 (PRODUCT LEVEL)	SEE PAGE
Y	*321-4060*	1	ARM GP-LIFT	488
Y	*325-1034*	1	BRACE GP-LIFT CYLINDER	493
Y	**320-5934**	1	CYLINDER GP-LIFT (RH)	377
Y	**351-9352**	1	CYLINDER GP-LIFT (LH)	378
Y	**333-5427**	2	CYLINDER GP-TILT	384
Y	*329-0058*	1	WIRING GP-KICKOUT & POSITIONER	211
Y-SEPARATE ILLUSTRATION				

<END>

234-9402 OPTION AR–HEWDEN
S/N: JBA1-UP
AN ATTACHMENT

SMCS-7000 **i03257791**

NOTE	PART NUMBER	QTY	PART NAME 1 2 3 4 5 6 (PRODUCT LEVEL)	SEE PAGE
Y	*252-8915*	1	FILM GP	699
Y	*263-7645*	1	FITTING GP-HYDRAULIC (QUICK DISCONNECT)	388
Y	**8F-9866**	1	GREASE GUN GP	701
Y	*259-6276*	1	MIRROR GP-REAR VIEW (INTERIOR)	664
	1P-0545	1	GAUGE GP-PRESSURE (TIRE VALVE)	
	241-6602	1	BRACE-WHEEL	
	241-6603	1	T-BAR	
Y-SEPARATE ILLUSTRATION				

<END>

MACHINE ARRANGEMENT

344-6354 PREMIER AR

S/N: JBA1-UP

FOR USE WITH 329-0306—PAGE 269, 335-3054—PAGE 612, 335-3055—PAGE 611. CANNOT BE USED WITH 344-5290—PAGE 369

AN ATTACHMENT

SMCS-7000 **i03662286**

NOTE	PART NUMBER	QTY	PART NAME 1 2 3 4 5 6 (PRODUCT LEVEL)	SEE PAGE
Y	*331-8676*	1	LINES GP-RIDE CONTROL	441
Y	*323-0991*	1	WIRING GP-RIDE CONTROL	225
	177-9600	2	FILM-IDENTIFICATION (PREMIER)	
			(ON CAB DOOR)	

Y-SEPARATE ILLUSTRATION

<END>

KOPACZKA.PL

ENGINE ARRANGEMENT

339-4986 ENGINE AR

S/N: JBA1-UP

CANNOT BE USED WITH 335-3053—PAGE 610, 335-3055—PAGE 611

AN ATTACHMENT

SMCS-1000 **i03726280**

NOTE	PART NUMBER	QTY	PART NAME 1 2 3 4 5 6 (PRODUCT LEVEL)	SEE PAGE
Y	*310-2644*	1	AIR CLEANER GP (TURBO)	102
Y	*206-1640*	1	CONTROL GP-GOVERNOR	118
Y	**322-1923**	1	ENGINE AR-PRIMARY	18
Y	*210-6807*	1	EXTENSION GP-EXHAUST	109
Y	*299-4729*	1	FAN GP-SUCTION (WITHOUT AIR CONDITIONER)	85
Y	*307-2033*	1	GAUGE GP-OIL LEVEL & FILLER (ENGINE)	76
Y	*345-7477*	1	LINES GP-FUEL	124
Y	*334-7152*	1	MOUNTING GP-ENGINE & XMSN	56
Y	*325-3036*	1	MUFFLER GP	111
Y	*314-6700*	1	PUMP GP-FUEL PRM & PRIM FILTER	145
Y	*309-9105*	1	RADIATOR & HYD OIL COOLER GP	97
Y	*324-6213*	1	TANK & LINES GP-COOLANT (EXPANSION, RADIATOR)	99
	178-8465	1	HARNESS AS-FUEL TANK (FUEL SHUTOFF)	
	9X-3401	2	PIN-CONNECTOR (16-GA TO 18-GA)	
	176-1477	1	PLUG AS (2-PIN)	
	102-8802	1	KIT-RECEPTACLE (2-PIN)	
			(INCLUDES RECEPTACLE AS & WEDGE)	
	185-1861	1	SEAL-WIRE	
	8L-8413	2	STRAP-CABLE	
	176-1521	2	TERMINAL	

Y-SEPARATE ILLUSTRATION

ENGINE ARRANGEMENT

339-4987 ENGINE AR

S/N: JBA1-UP

CANNOT BE USED WITH 335-3053—PAGE 610, 335-3055—PAGE 611

AN ATTACHMENT

SMCS-1000 **i03726440**

NOTE	PART NUMBER	QTY	PART NAME 1 2 3 4 5 6 (PRODUCT LEVEL)	SEE PAGE
Y	*310-2644*	1	AIR CLEANER GP (TURBO)	102
Y	*206-1640*	1	CONTROL GP-GOVERNOR	118
Y	**322-1924**	1	ENGINE AR-PRIMARY	19
Y	*210-6807*	1	EXTENSION GP-EXHAUST	109
Y	*299-4729*	1	FAN GP-SUCTION (WITHOUT AIR CONDITIONER)	85
Y	*307-2033*	1	GAUGE GP-OIL LEVEL & FILLER (ENGINE)	76
Y	*345-7477*	1	LINES GP-FUEL	124
Y	*334-7152*	1	MOUNTING GP-ENGINE & XMSN	56
Y	*325-3036*	1	MUFFLER GP	111
Y	*314-6700*	1	PUMP GP-FUEL PRM & PRIM FILTER	145
Y	*309-9105*	1	RADIATOR & HYD OIL COOLER GP	97
Y	*324-6213*	1	TANK & LINES GP-COOLANT (EXPANSION, RADIATOR)	99
	178-8465	1	HARNESS AS-FUEL TANK (FUEL SHUTOFF)	
	9X-3401	2	PIN-CONNECTOR (16-GA TO 18-GA)	
	176-1477	1	PLUG AS (2-PIN)	
	102-8802	1	KIT-RECEPTACLE (2-PIN) (INCLUDES RECEPTACEL AS & WEDGE)	
	185-1861	1	SEAL-WIRE	
	8L-8413	2	STRAP-CABLE	
	176-1521	2	TERMINAL	

Y-SEPARATE ILLUSTRATION

ENGINE ARRANGEMENT

339-4988 ENGINE AR

S/N: JBA1-UP

CANNOT BE USED WITH 335-3053—PAGE 610, 335-3055—PAGE 611

AN ATTACHMENT

SMCS-1000 **i03726441**

NOTE	PART NUMBER	QTY	PART NAME 1 2 3 4 5 6 (PRODUCT LEVEL)	SEE PAGE
Y	*332-6587*	1	AIR CLEANER GP (TURBO)	104
Y	*323-9307*	1	BREATHER GP (ENGINE)	74
Y	*206-1640*	1	CONTROL GP-GOVERNOR	118
Y	**321-7704**	1	ENGINE AR-PRIMARY	16
Y	*210-6807*	1	EXTENSION GP-EXHAUST	109
Y	*299-4729*	1	FAN GP-SUCTION (WITHOUT AIR CONDITIONER)	85
Y	*307-2033*	1	GAUGE GP-OIL LEVEL & FILLER (ENGINE)	76
Y	*304-3920*	1	LINES GP-AIR	110
Y	*345-7478*	1	LINES GP-FUEL	126
Y	*304-4022*	1	LINES GP-RADIATOR	89
Y	*334-7152*	1	MOUNTING GP-ENGINE & XMSN	56
Y	*325-3036*	1	MUFFLER GP	111
Y	*314-6700*	1	PUMP GP-FUEL PRM & PRIM FILTER	145
Y	*309-9106*	1	RADIATOR & HYD OIL COOLER GP	98
	178-8465	1	HARNESS AS-FUEL TANK (FUEL SHUTOFF)	
	9X-3401	2	PIN-CONNECTOR (16-GA TO 18-GA)	
	176-1477	1	PLUG AS (2-PIN)	
	102-8802	1	KIT-RECEPTACLE (2-PIN)	
			(INCLUDES RECEPTACEL AS & WEDGE)	
	185-1861	1	SEAL-WIRE	
	8L-8413	2	STRAP-CABLE	
	176-1521	2	TERMINAL	

Y-SEPARATE ILLUSTRATION

ENGINE ARRANGEMENT

339-4989 ENGINE AR

S/N: JBA1-UP

CANNOT BE USED WITH 335-3053—PAGE 610, 335-3055—PAGE 611

AN ATTACHMENT

SMCS-1000 **i03726442**

NOTE	PART NUMBER	QTY	PART NAME 1 2 3 4 5 6 (PRODUCT LEVEL)	SEE PAGE
Y	*332-6587*	1	AIR CLEANER GP (TURBO)	104
Y	*323-9307*	1	BREATHER GP (ENGINE)	74
Y	*206-1640*	1	CONTROL GP-GOVERNOR	118
Y	**321-7705**	1	ENGINE AR-PRIMARY	17
Y	*210-6807*	1	EXTENSION GP-EXHAUST	109
Y	*299-4729*	1	FAN GP-SUCTION (WITHOUT AIR CONDITIONER)	85
Y	*307-2033*	1	GAUGE GP-OIL LEVEL & FILLER (ENGINE)	76
Y	*304-3920*	1	LINES GP-AIR	110
Y	*345-7478*	1	LINES GP-FUEL	126
Y	*304-4022*	1	LINES GP-RADIATOR	89
Y	*334-7152*	1	MOUNTING GP-ENGINE & XMSN	56
Y	*325-3036*	1	MUFFLER GP	111
Y	*314-6700*	1	PUMP GP-FUEL PRM & PRIM FILTER	145
Y	*309-9106*	1	RADIATOR & HYD OIL COOLER GP	98
	178-8465	1	HARNESS AS-FUEL TANK (FUEL SHUTOFF)	
	9X-3401	2	PIN-CONNECTOR (16-GA TO 18-GA)	
	176-1477	1	PLUG AS (2-PIN)	
	102-8802	1	KIT-RECEPTACLE (2-PIN)	
			(INCLUDES RECEPTACEL AS & WEDGE)	
	185-1861	1	SEAL-WIRE	
	8L-8413	2	STRAP-CABLE	
	176-1521	2	TERMINAL	

Y-SEPARATE ILLUSTRATION

ENGINE ARRANGEMENT

339-4990 ENGINE AR

S/N: JBA1-UP

CANNOT BE USED WITH 335-3052—PAGE 609, 335-3054—PAGE 612

AN ATTACHMENT

SMCS-1000 **i03726451**

NOTE	PART NUMBER	QTY	PART NAME 1 2 3 4 5 6 (PRODUCT LEVEL)	SEE PAGE
Y	*310-2644*	1	AIR CLEANER GP (TURBO)	102
Y	*206-1640*	1	CONTROL GP-GOVERNOR	118
Y	**322-1923**	1	ENGINE AR-PRIMARY	18
Y	*210-6807*	1	EXTENSION GP-EXHAUST	109
Y	*299-4716*	1	FAN GP-SUCTION (WITH AIR CONDITIONER)	84
Y	*307-2033*	1	GAUGE GP-OIL LEVEL & FILLER (ENGINE)	76
Y	*345-7477*	1	LINES GP-FUEL	124
Y	*334-7152*	1	MOUNTING GP-ENGINE & XMSN	56
Y	*325-3036*	1	MUFFLER GP	111
Y	*314-6700*	1	PUMP GP-FUEL PRM & PRIM FILTER	145
Y	*309-9105*	1	RADIATOR & HYD OIL COOLER GP	97
Y	*324-6213*	1	TANK & LINES GP-COOLANT (EXPANSION, RADIATOR)	99
	178-8465	1	HARNESS AS-FUEL TANK (FUEL SHUTOFF)	
	9X-3401	2	PIN-CONNECTOR (16-GA TO 18-GA)	
	176-1477	1	PLUG AS (2-PIN)	
	102-8802	1	KIT-RECEPTACLE (2-PIN)	
			(INCLUDES RECEPTACEL AS & WEDGE)	
	185-1861	1	SEAL-WIRE	
	8L-8413	2	STRAP-CABLE	
	176-1521	2	TERMINAL	

Y-SEPARATE ILLUSTRATION

ENGINE ARRANGEMENT

339-4991 ENGINE AR

S/N: JBA1-UP

CANNOT BE USED WITH 335-3052—PAGE 609, 335-3054—PAGE 612

AN ATTACHMENT

SMCS-1000 **i03726452**

NOTE	PART NUMBER	QTY	PART NAME 1 2 3 4 5 6 (PRODUCT LEVEL)	SEE PAGE
Y	*310-2644*	1	AIR CLEANER GP (TURBO)	102
Y	*206-1640*	1	CONTROL GP-GOVERNOR	118
Y	**322-1924**	1	ENGINE AR-PRIMARY	19
Y	*210-6807*	1	EXTENSION GP-EXHAUST	109
Y	*299-4716*	1	FAN GP-SUCTION (WITH AIR CONDITIONER)	84
Y	*307-2033*	1	GAUGE GP-OIL LEVEL & FILLER (ENGINE)	76
Y	*345-7477*	1	LINES GP-FUEL	124
Y	*334-7152*	1	MOUNTING GP-ENGINE & XMSN	56
Y	*325-3036*	1	MUFFLER GP	111
Y	*314-6700*	1	PUMP GP-FUEL PRM & PRIM FILTER	145
Y	*309-9105*	1	RADIATOR & HYD OIL COOLER GP	97
Y	*324-6213*	1	TANK & LINES GP-COOLANT (EXPANSION, RADIATOR)	99
	178-8465	1	HARNESS AS-FUEL TANK (FUEL SHUTOFF)	
	9X-3401	2	PIN-CONNECTOR (16-GA TO 18-GA)	
	176-1477	1	PLUG AS (2-PIN)	
	102-8802	1	KIT-RECEPTACLE (2-PIN) (INCLUDES RECEPTACEL AS & WEDGE)	
	185-1861	1	SEAL-WIRE	
	8L-8413	2	STRAP-CABLE	
	176-1521	2	TERMINAL	

Y-SEPARATE ILLUSTRATION

ENGINE ARRANGEMENT

339-4992 ENGINE AR

S/N: JBA1-UP

CANNOT BE USED WITH 335-3052—PAGE 609, 335-3054—PAGE 612

AN ATTACHMENT

SMCS-1000 **i03726453**

NOTE	PART NUMBER	QTY	PART NAME 1 2 3 4 5 6 (PRODUCT LEVEL)	SEE PAGE
Y	*332-6587*	1	AIR CLEANER GP (TURBO)	104
Y	*323-9307*	1	BREATHER GP (ENGINE)	74
Y	*206-1640*	1	CONTROL GP-GOVERNOR	118
Y	**321-7704**	1	ENGINE AR-PRIMARY	16
Y	*210-6807*	1	EXTENSION GP-EXHAUST	109
Y	*299-4716*	1	FAN GP-SUCTION (WITH AIR CONDITIONER)	84
Y	*307-2033*	1	GAUGE GP-OIL LEVEL & FILLER (ENGINE)	76
Y	*304-3920*	1	LINES GP-AIR	110
Y	*345-7478*	1	LINES GP-FUEL	126
Y	*304-4022*	1	LINES GP-RADIATOR	89
Y	*334-7152*	1	MOUNTING GP-ENGINE & XMSN	56
Y	*325-3036*	1	MUFFLER GP	111
Y	*314-6700*	1	PUMP GP-FUEL PRM & PRIM FILTER	145
Y	*309-9106*	1	RADIATOR & HYD OIL COOLER GP	98
	178-8465	1	HARNESS AS-FUEL TANK (FUEL SHUTOFF)	
	9X-3401	2	PIN-CONNECTOR (16-GA TO 18-GA)	
	176-1477	1	PLUG AS (2-PIN)	
	102-8802	1	KIT-RECEPTACLE (2-PIN)	
			(INCLUDES RECEPTACEL AS & WEDGE)	
	185-1861	1	SEAL-WIRE	
	8L-8413	2	STRAP-CABLE	
	176-1521	2	TERMINAL	

Y-SEPARATE ILLUSTRATION

ENGINE ARRANGEMENT

339-4993 ENGINE AR

S/N: JBA1-UP

CANNOT BE USED WITH 335-3052—PAGE 609, 335-3054—PAGE 612

AN ATTACHMENT

SMCS-1000 **i03726460**

NOTE	PART NUMBER	QTY	PART NAME 1 2 3 4 5 6 (PRODUCT LEVEL)	SEE PAGE
Y	*332-6587*	1	AIR CLEANER GP (TURBO)	104
Y	*323-9307*	1	BREATHER GP (ENGINE)	74
Y	*206-1640*	1	CONTROL GP-GOVERNOR	118
Y	**321-7705**	1	ENGINE AR-PRIMARY	17
Y	*210-6807*	1	EXTENSION GP-EXHAUST	109
Y	*321-3113*	1	FAN GP-SUCTION (WITH AIR CONDITIONER)	86
Y	*307-2033*	1	GAUGE GP-OIL LEVEL & FILLER (ENGINE)	76
Y	*304-3920*	1	LINES GP-AIR	110
Y	*345-7478*	1	LINES GP-FUEL	126
Y	*304-4022*	1	LINES GP-RADIATOR	89
Y	*334-7152*	1	MOUNTING GP-ENGINE & XMSN	56
Y	*325-3036*	1	MUFFLER GP	111
Y	*314-6700*	1	PUMP GP-FUEL PRM & PRIM FILTER	145
Y	*309-9106*	1	RADIATOR & HYD OIL COOLER GP	98
	178-8465	1	HARNESS AS-FUEL TANK (FUEL SHUTOFF)	
	9X-3401	2	PIN-CONNECTOR (16-GA TO 18-GA)	
	176-1477	1	PLUG AS (2-PIN)	
	102-8802	1	KIT-RECEPTACLE (2-PIN)	
			(INCLUDES RECEPTACEL AS & WEDGE)	
	185-1861	1	SEAL-WIRE	
	8L-8413	2	STRAP-CABLE	
	176-1521	2	TERMINAL	

Y-SEPARATE ILLUSTRATION

ENGINE ARRANGEMENT

321-7704 ENGINE AR-PRIMARY

S/N: C4Z1-UP
70 BRAKE KW (94 BHP) AT 2200 RPM
PART OF 339-4988, 339-4992 ENGINE AR
AN ATTACHMENT

SMCS-1000 **i03427300**

NOTE	PART NUMBER	QTY	PART NAME 1 2 3 4 5 6 (PRODUCT LEVEL)	SEE PAGE
Y	*317-9776*	1	ALTERNATOR GP-CHARGING	149
Y	*326-9005*	1	CAMSHAFT GP	20
Y	*316-6941*	1	CONNECTION GP-WATER	80
Y	*316-6899*	1	COOLER GP-ENGINE OIL	82
Y	*329-0129*	1	COVER GP-INLET MANIFOLD	107
Y	*326-9008*	1	COVER GP-VALVE MECHANISM	22
Y	*326-9000*	1	CRANKSHAFT GP	28
Y	*326-8999*	1	CYLINDER BLOCK GP	32
Y	*326-9003*	1	CYLINDER HEAD GP	38
Y	*326-9009*	1	DRIVE GP-AUXILIARY	40
Y	*303-5770*	1	DRIVE GP-FAN	42
Y	*309-7555*	1	FILLER GP-ENGINE OIL	75
Y	*303-5768*	1	FLYWHEEL GP	45
Y	*315-3418*	1	GLOW PLUG GP	157
Y	*303-5767*	1	HOUSING GP-FLYWHEEL	47
Y	*304-8760*	1	HOUSING GP-FRONT	48
Y	*326-9013*	1	LIFTING GP-ENGINE	53
Y	*326-9012*	1	LINES GP-FUEL	122
Y	*303-5778*	1	MOUNTING GP-ENGINE	55
Y	*322-9476*	1	PAN GP-OIL	57
Y	*326-9002*	1	PISTON & ROD GP	61
Y	*298-5129*	1	PLUG GP-CYLINDER HEAD	64
Y	*298-5131*	1	PLUG GP-ENGINE (THREADED)	68
Y	*304-8761*	1	PLUG GP-ENGINE	69
Y	*298-5112*	1	PUMP GP-ENGINE OIL	78
Y	*326-9006*	1	PUMP GP-FUEL INJECTION	137
Y	*315-3411*	1	PUMP GP-WATER	93
Y	*303-5769*	1	STARTING MOTOR GP-ELECTRIC	192
Y	*316-6925*	1	SWITCH GP-PRESSURE	196
Y	*326-9010*	1	TURBOCHARGER GP	114
Y	*326-9004*	1	VALVE MECHANISM GP	72
	321-7782		CYLINDER BLOCK GP-SHORT	

Y-SEPARATE ILLUSTRATION

ENGINE ARRANGEMENT

321-7705 ENGINE AR-PRIMARY

S/N: C4Z1-UP
75 BRAKE KW (100 BHP) AT 2200 RPM
PART OF 339-4989, 339-4993 ENGINE AR
AN ATTACHMENT

SMCS-1000 **i03427301**

NOTE	PART NUMBER	QTY	PART NAME 1 2 3 4 5 6 (PRODUCT LEVEL)	SEE PAGE
Y	*317-9776*	1	ALTERNATOR GP-CHARGING	149
Y	*326-9005*	1	CAMSHAFT GP	20
Y	*316-6941*	1	CONNECTION GP-WATER	80
Y	*316-6899*	1	COOLER GP-ENGINE OIL	82
Y	*329-0129*	1	COVER GP-INLET MANIFOLD	107
Y	*326-9008*	1	COVER GP-VALVE MECHANISM	22
Y	*326-9000*	1	CRANKSHAFT GP	28
Y	*326-8999*	1	CYLINDER BLOCK GP	32
Y	*326-9003*	1	CYLINDER HEAD GP	38
Y	*326-9009*	1	DRIVE GP-AUXILIARY	40
Y	*303-5770*	1	DRIVE GP-FAN	42
Y	*309-7555*	1	FILLER GP-ENGINE OIL	75
Y	*303-5768*	1	FLYWHEEL GP	45
Y	*315-3418*	1	GLOW PLUG GP	157
Y	*303-5767*	1	HOUSING GP-FLYWHEEL	47
Y	*304-8760*	1	HOUSING GP-FRONT	48
Y	*326-9013*	1	LIFTING GP-ENGINE	53
Y	*326-9012*	1	LINES GP-FUEL	122
Y	*303-5778*	1	MOUNTING GP-ENGINE	55
Y	*322-9476*	1	PAN GP-OIL	57
Y	*326-9002*	1	PISTON & ROD GP	61
Y	*298-5129*	1	PLUG GP-CYLINDER HEAD	64
Y	*298-5131*	1	PLUG GP-ENGINE (THREADED)	68
Y	*304-8761*	1	PLUG GP-ENGINE	69
Y	*298-5112*	1	PUMP GP-ENGINE OIL	78
Y	*326-9149*	1	PUMP GP-FUEL INJECTION	141
Y	*315-3411*	1	PUMP GP-WATER	93
Y	*303-5769*	1	STARTING MOTOR GP-ELECTRIC	192
Y	*316-6925*	1	SWITCH GP-PRESSURE	196
Y	*326-9156*	1	TURBOCHARGER GP	116
Y	*326-9004*	1	VALVE MECHANISM GP	72
	321-7782	1	CYLINDER BLOCK GP-SHORT	

Y-SEPARATE ILLUSTRATION

ENGINE ARRANGEMENT

322-1923 ENGINE AR-PRIMARY

S/N: CRS1-UP
69 BRAKE KW (92 BHP) AT 2200 RPM
PART OF 339-4986, 339-4990 ENGINE AR
AN ATTACHMENT

SMCS-1000 **i03235956**

NOTE	PART NUMBER	QTY	PART NAME 1 2 3 4 5 6 (PRODUCT LEVEL)	SEE PAGE
Y	*334-3756*	1	ALTERNATOR GP-CHARGING	150
Y	*334-4208*	1	CAMSHAFT GP	21
Y	*231-0033*	1	CONNECTION GP-WATER	79
Y	*238-2799*	1	COOLER GP-FLTR BASE & ENG OIL	83
Y	*231-0149*	1	COVER GP-INLET MANIFOLD	106
Y	*335-9798*	1	COVER GP-VALVE MECHANISM	24
Y	*334-4203*	1	CRANKSHAFT GP	29
Y	*334-4202*	1	CYLINDER BLOCK GP	33
Y	*334-4205*	1	CYLINDER HEAD GP	39
Y	*334-3755*	1	DRIVE GP-AUXILIARY	41
Y	*334-3754*	1	DRIVE GP-FAN	43
Y	*230-7300*	1	FLYWHEEL GP	44
Y	*232-6661*	1	GLOW PLUG GP	156
Y	*236-8238*	1	HOUSING GP-FLYWHEEL	46
Y	*334-3757*	1	HOUSING GP-FRONT	50
Y	*233-7432*	1	LIFTING GP-ENGINE	52
Y	*247-4885*	1	LINES GP-FUEL FILTER	128
Y	*237-3658*	1	MOUNTING GP-ENGINE	54
Y	*335-9799*	1	PAN GP-OIL	59
Y	*334-4204*	1	PISTON & ROD GP	62
Y	*225-4317*	1	PLUG GP-ENGINE	65
Y	*230-7569*	1	PLUG GP-ENGINE	66
Y	*232-6204*	1	PLUG GP-ENGINE	67
Y	*230-7578*	1	PUMP GP-ENGINE OIL	77
Y	*237-5214*	1	PUMP GP-FUEL INJECTION	133
Y	*230-7355*	1	PUMP GP-WATER	91
Y	*237-0024*	1	STARTING MOTOR GP-ELECTRIC	191
Y	*237-4896*	1	SWITCH GP-PRESSURE	195
Y	*237-3924*	1	TURBOCHARGER GP	112
Y	*334-4207*	1	VALVE MECHANISM GP	73
	268-0867	1	CYLINDER BLOCK GP-SHORT	
			AVAILABLE GASKET KIT(S):	
	272-2232	1	KIT-GASKET (BOTTOM)	
	277-5156	1	KIT-GASKET (TOP)	

Y-SEPARATE ILLUSTRATION

ENGINE ARRANGEMENT

322-1924 ENGINE AR-PRIMARY

S/N: CRS1-UP
75 BRAKE KW (100 BHP) AT 2200 RPM
PART OF 339-4987, 339-4991 ENGINE AR
AN ATTACHMENT

SMCS-1000 **i03235801**

NOTE	PART NUMBER	QTY	PART NAME 1 2 3 4 5 6 (PRODUCT LEVEL)	SEE PAGE
Y	*334-3756*	1	ALTERNATOR GP-CHARGING	150
Y	*334-4208*	1	CAMSHAFT GP	21
Y	*231-0033*	1	CONNECTION GP-WATER	79
Y	*238-2799*	1	COOLER GP-FLTR BASE & ENG OIL	83
Y	*231-0149*	1	COVER GP-INLET MANIFOLD	106
Y	*335-9798*	1	COVER GP-VALVE MECHANISM	24
Y	*334-4203*	1	CRANKSHAFT GP	29
Y	*334-4202*	1	CYLINDER BLOCK GP	33
Y	*334-4205*	1	CYLINDER HEAD GP	39
Y	*334-3755*	1	DRIVE GP-AUXILIARY	41
Y	*334-3754*	1	DRIVE GP-FAN	43
Y	*230-7300*	1	FLYWHEEL GP	44
Y	*232-6661*	1	GLOW PLUG GP	156
Y	*236-8238*	1	HOUSING GP-FLYWHEEL	46
Y	*334-3757*	1	HOUSING GP-FRONT	50
Y	*233-7432*	1	LIFTING GP-ENGINE	52
Y	*247-4885*	1	LINES GP-FUEL FILTER	128
Y	*237-3658*	1	MOUNTING GP-ENGINE	54
Y	*335-9799*	1	PAN GP-OIL	59
Y	*334-4204*	1	PISTON & ROD GP	62
Y	*225-4317*	1	PLUG GP-ENGINE	65
Y	*230-7569*	1	PLUG GP-ENGINE	66
Y	*232-6204*	1	PLUG GP-ENGINE	67
Y	*230-7578*	1	PUMP GP-ENGINE OIL	77
Y	*236-8229*	1	PUMP GP-FUEL INJECTION	130
Y	*230-7355*	1	PUMP GP-WATER	91
Y	*237-0024*	1	STARTING MOTOR GP-ELECTRIC	191
Y	*237-4896*	1	SWITCH GP-PRESSURE	195
Y	*237-3924*	1	TURBOCHARGER GP	112
Y	*334-4207*	1	VALVE MECHANISM GP	73
	268-0867	1	CYLINDER BLOCK GP-SHORT	
			AVAILABLE GASKET KIT(S):	
	272-2232	1	KIT-GASKET (BOTTOM)	
	277-5156	1	KIT-GASKET (TOP)	

Y-SEPARATE ILLUSTRATION

326-9005 CAMSHAFT GP

S/N: C4Z1-UP
PART OF 321-7704, 321-7705 ENGINE AR-PRIMARY
AN ATTACHMENT

SMCS-1210, 1211, 1212 **i03127790**

NOTE	REF NO	GRAPHIC REF	PART NUMBER	QTY	PART NAME 1 2 3 4 5 6 (PRODUCT LEVEL)	SEE PAGE
	1	1	**278-5126**	8	PUSHROD	
	2	1	**315-3384**	8	TAPPET	
	3	1	**326-8992**	1	CAMSHAFT	
	3A	1	**1B-8736**	1	KEY-WOODRUFF	

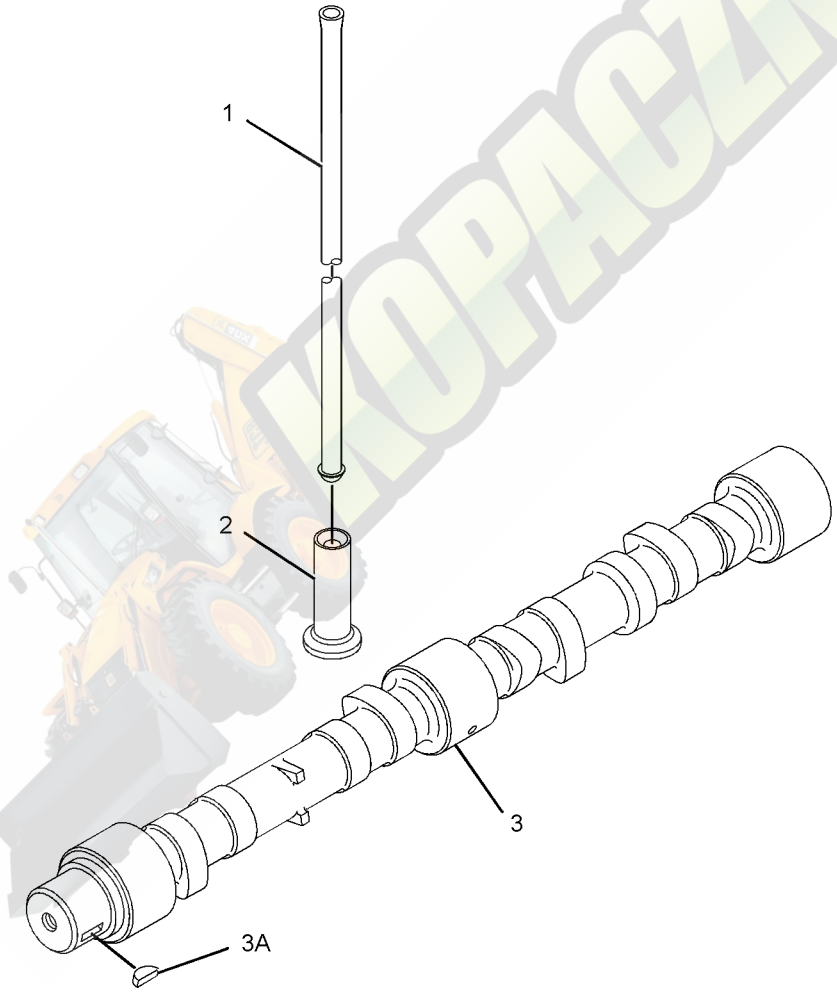

GRAPHIC #1 **<END>** g01611455

334-4208 CAMSHAFT GP

S/N: CRS1-UP
PART OF 322-1923, 322-1924 ENGINE AR-PRIMARY
AN ATTACHMENT

SMCS-1210, 1211, 1212 **i03653916**

NOTE	REF NO	GRAPHIC REF	PART NUMBER	QTY	PART NAME 1 2 3 4 5 6 (PRODUCT LEVEL)	SEE PAGE
	1	1	**067-6095**	8	ROD	
	2	1	**138-2053**	8	TAPPET	
	3	1	**350-2374**	1	CAMSHAFT AS	
	3A	1	**1B-8736**	1	KEY-WOODRUFF	

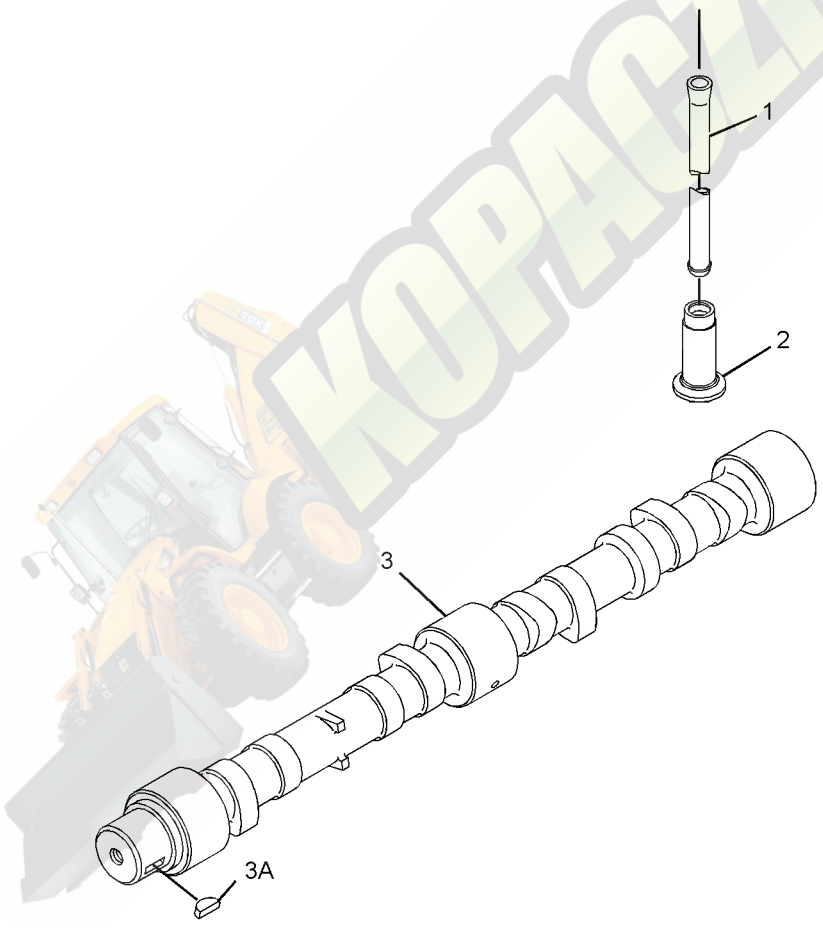

GRAPHIC #1 **<END>** g01964670

326-9008 COVER GP-VALVE MECHANISM

S/N: C4Z1-UP

PART OF 321-7704, 321-7705 ENGINE AR-PRIMARY

AN ATTACHMENT

SMCS-1107, 1120 **i03127792**

NOTE	REF NO	GRAPHIC REF	PART NUMBER	QTY	PART NAME 1 2 3 4 5 6 (PRODUCT LEVEL)	SEE PAGE
	1	1	**6I-0846**	3	BOLT (M6X1X14-MM)	
	2	1	**6I-0917**	1	BOLT (M6X1X25-MM)	
	3	1	**100-4838**	2	BOLT (M6X20-MM)	
M	4	1	**100-4841**	2	BOLT (M6X1X10-MM)	
	5	1	**230-9127**	1	COVER	
	6	1	**237-0769**	1	SHIELD-HEAT	
	7	1	**287-8573**	1	PIPE-BREATHER	
	8	1	**308-1792**	1	COVER GP-VALVE MECHANISM	
	8A	1	**225-6451**	1	GASKET (VALVE COVER)	
	8B	1	**225-6456**	1	SPRING	
	8C	1	**225-6461**	1	CAP	
	8D	1	**225-6464**	1	DIAPHRAGM (CRANKCASE PRESSURE CONTACTOR)	
	8E	1	**225-6477**	1	PLATE	
	8F	1	**225-6478**	4	SCREW-MACHINE	
	8G	1	**225-6479**	1	CAP	

M-METRIC PART

326-9008 **COVER GP-VALVE MECHANISM** *(contd.)* **i03127792**

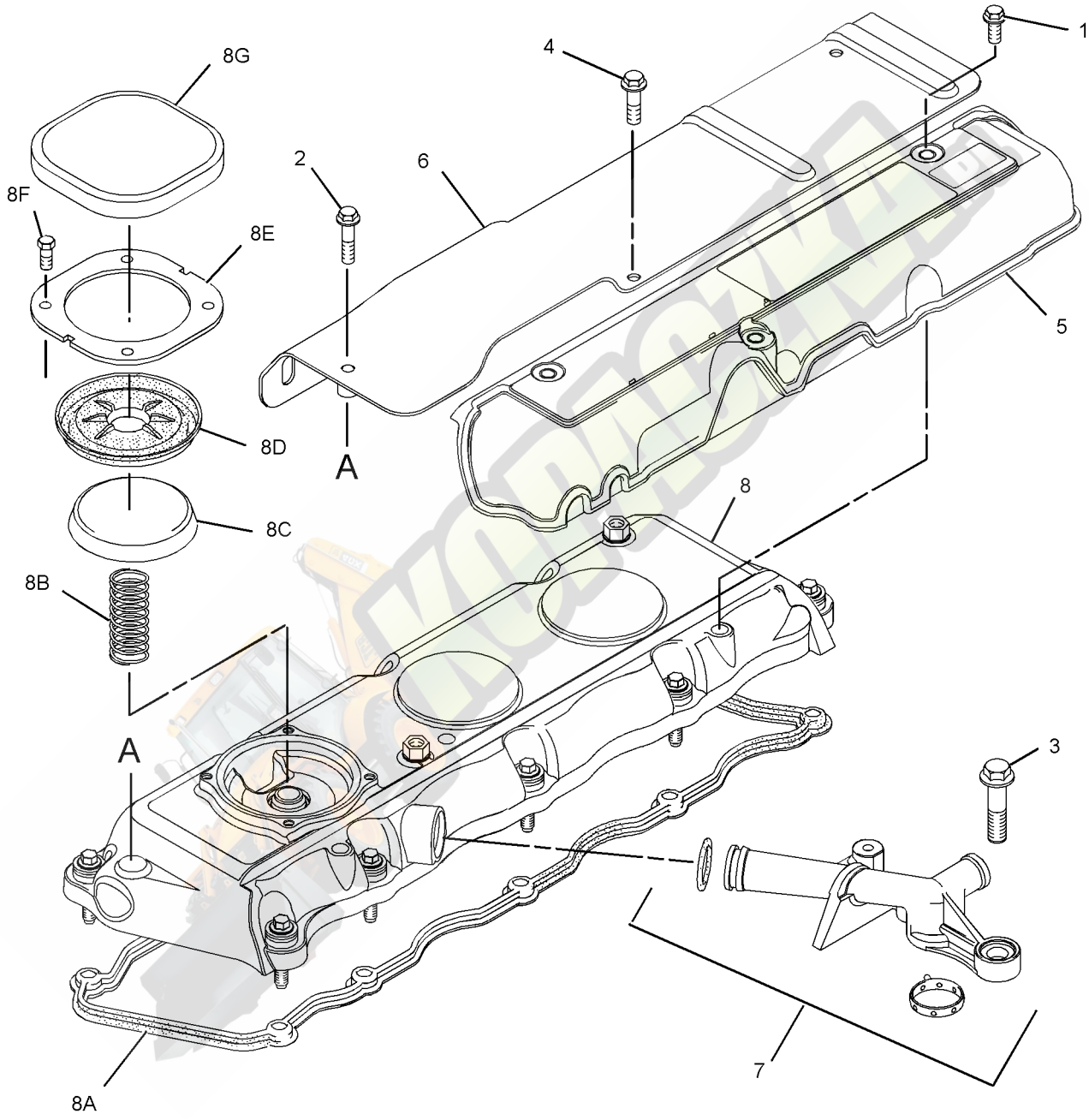

GRAPHIC #1 **<END>** g01615434

335-9798 COVER GP-VALVE MECHANISM

S/N: CRS1-UP

PART OF 322-1923, 322-1924 ENGINE AR-PRIMARY

AN ATTACHMENT

SMCS-1107, 1120 **i03325025**

NOTE	REF NO	GRAPHIC REF	PART NUMBER	QTY	PART NAME 1 2 3 4 5 6 (PRODUCT LEVEL)	SEE PAGE
M	1	1	**6I-0260**	2	BOLT (M8X1.25X25-MM)	
	2	1	**6I-0846**	3	BOLT (M6X1X14-MM)	
	3	1	**6I-0917**	1	BOLT (M6X1X25-MM)	
	4	1	**100-4838**	2	BOLT (M6X20-MM)	
M	5	1	**100-4841**	2	BOLT (M6X1X10-MM)	
	6	1	**225-6522**	1	PLUG-CUP	
	7	1	**230-9127**	1	COVER	
	8	1	**237-0769**	1	SHIELD-HEAT	
	9	1	**246-1163**	1	FILLER AS-OIL	
	9A	1	**229-4896**	1	SEAL-O-RING	
	10	1	**287-8573**	1	PIPE-BREATHER	
	11	1	**308-1792**	1	COVER GP-VALVE MECHANISM	
	11A	1	**225-6451**	1	GASKET (VALVE COVER)	
	11B	1	**225-6456**	1	SPRING	
	11C	1	**225-6461**	1	CAP (VALVE COVER)	
	11D	1	**225-6464**	1	DIAPHRAGM (CRANKCASE PRESSURE CONTACTOR)	
	11E	1	**225-6477**	1	PLATE	
	11F	1	**225-6478**	4	SCREW-MACHINE	
	11G	1	**225-6479**	1	CAP (VALVE COVER)	

M-METRIC PART

335-9798 **COVER GP-VALVE MECHANISM** *(contd.)* **i03325025**

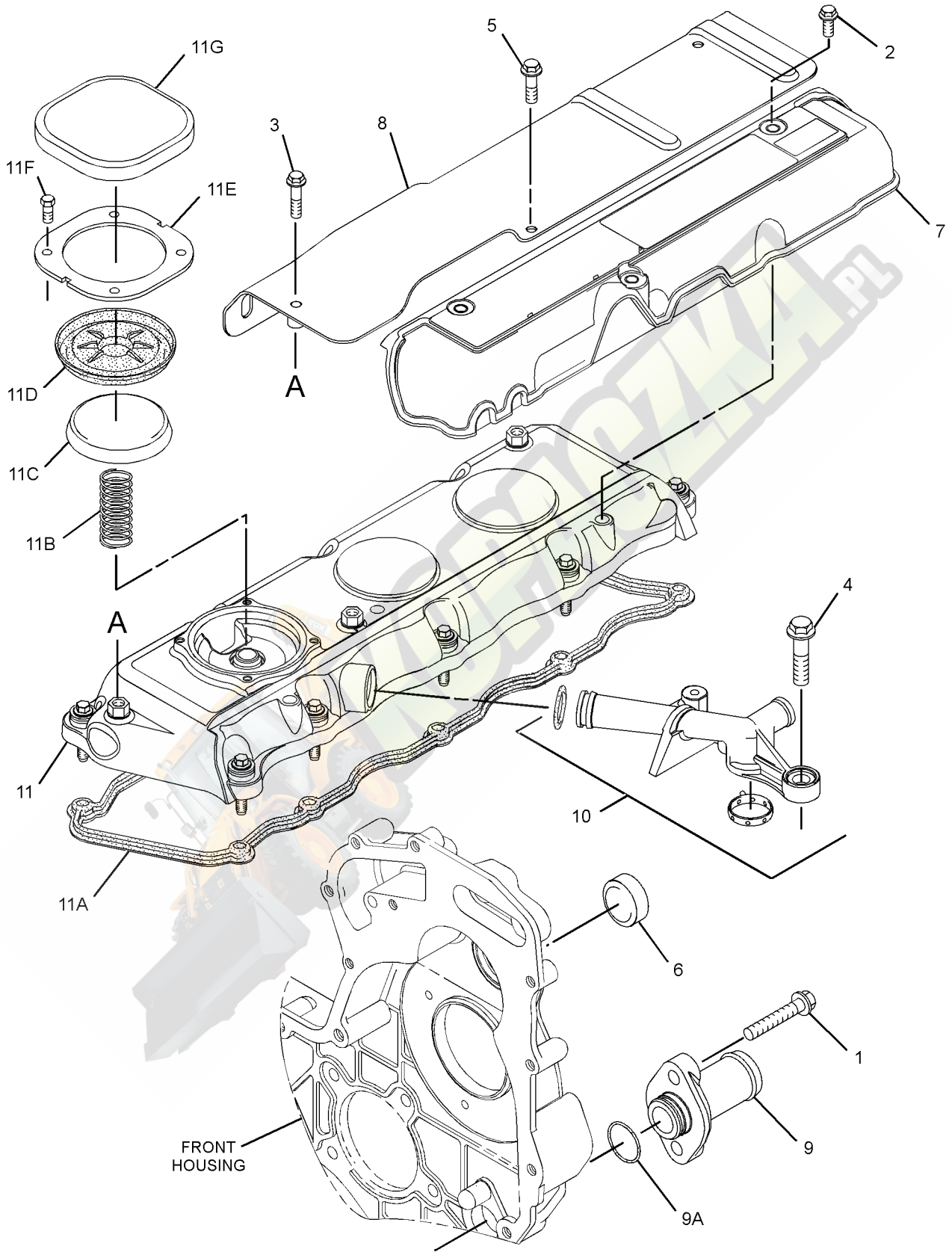

GRAPHIC #1

<END>

g01651288

BASIC ENGINE

232-7400 CRANKSHAFT GP

S/N: CRS1-UP; C4Z1-UP
PART OF 326-9000, 334-4203 CRANKSHAFT GP
AN ATTACHMENT

SMCS-1202, 1203, 1204, 1230, 1231, 1232 **i03331702**

NOTE	REF NO	GRAPHIC REF	PART NUMBER	QTY	PART NAME 1 2 3 4 5 6 (PRODUCT LEVEL)	SEE PAGE
	1	1	**1B-8736**	1	KEY-WOODRUFF	
	2	1	**225-7772**	1	BEARING SET-MAIN (STANDARD)	
AB		1	**233-3785**		KIT-CRANKSHAFT BEARING (0.020-IN US ID)	
AB		1	**233-3784**		KIT-CRANKSHAFT BEARING (0.010-IN US ID)	
AB		1	**233-3786**		KIT-CRANKSHAFT BEARING (0.030-IN US ID)	
	3	1	**032-9090**	2	WASHER-THRUST (STANDARD-UPPER)	
AB		1	**067-6873**		WASHER-THRUST (0.18-MM OS)	
	4	1	**032-9091**	2	WASHER-THRUST (STANDARD-LOWER)	
AB		1	**067-6874**		WASHER-THRUST (0.18-MM OS)	
	5	1	**298-4524**	1	KIT-BEARING	
AB		1	**315-3396**		KIT-BEARING (0.25-MM OS)	
AB		1	**315-3397**		KIT-BEARING (0.5-MM OS)	
AB		1	**315-3398**		KIT-BEARING (0.75-MM OS)	

A-NOT PART OF THIS GROUP
B-USE AS REQUIRED

232-7400 **CRANKSHAFT GP** *(contd.)* **i03331702**

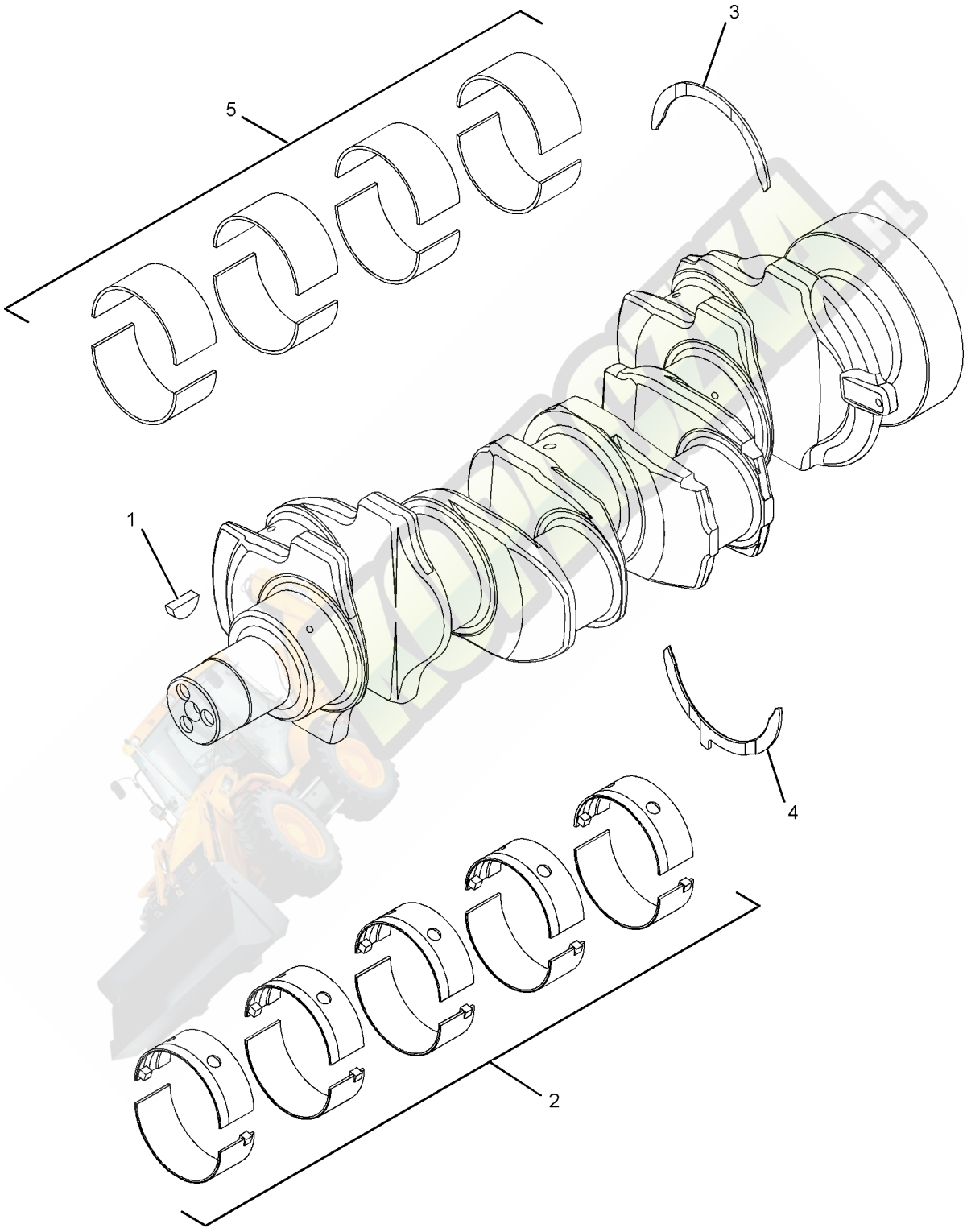

GRAPHIC #1 **<END>** g01369317

BASIC ENGINE

326-9000 CRANKSHAFT GP

S/N: C4Z1-UP

PART OF 321-7704, 321-7705 ENGINE AR-PRIMARY

AN ATTACHMENT

SMCS-1202, 1203, 1204, 1230, 1231, 1232 **i03631869**

NOTE	REF NO	GRAPHIC REF	PART NUMBER	QTY	PART NAME 1 2 3 4 5 6 (PRODUCT LEVEL)	SEE PAGE
	1	1	**216-8314**	1	GEAR-CRANKSHAFT (34-TEETH)	
Y	2	1	**232-7400**	1	CRANKSHAFT GP	26
					AVAILABLE REPAIR KIT(S):	
			274-4716	1	KIT-CRANKSHAFT	

Y-SEPARATE ILLUSTRATION

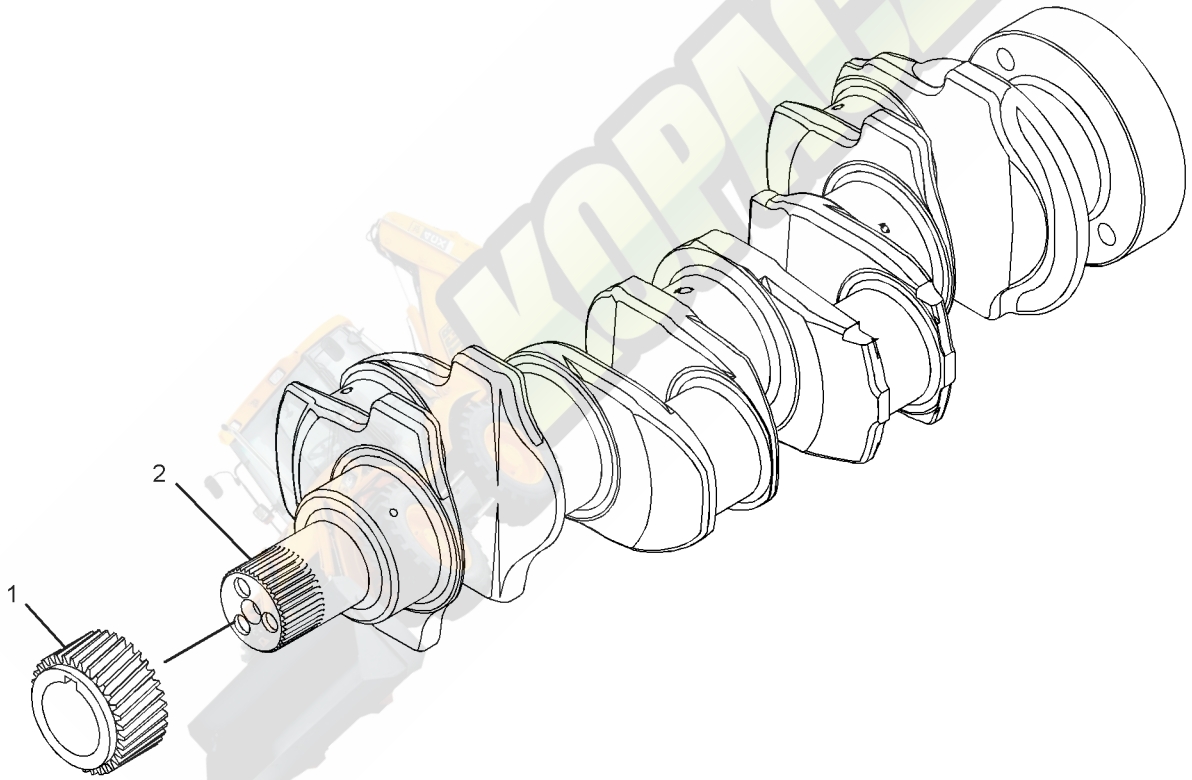

GRAPHIC #1 **<END>** g01420823

334-4203 CRANKSHAFT GP

S/N: CRS1-UP

PART OF 322-1923, 322-1924 ENGINE AR-PRIMARY

AN ATTACHMENT

SMCS-1202, 1203, 1204, 1230, 1231, 1232 **i03143142**

NOTE	REF NO	GRAPHIC REF	PART NUMBER	QTY	PART NAME 1 2 3 4 5 6 (PRODUCT LEVEL)	SEE PAGE
	1	1	**216-8314**	1	GEAR-CRANKSHAFT (34-TEETH)	
Y	2	1	**232-7400**	1	CRANKSHAFT GP	26

Y-SEPARATE ILLUSTRATION

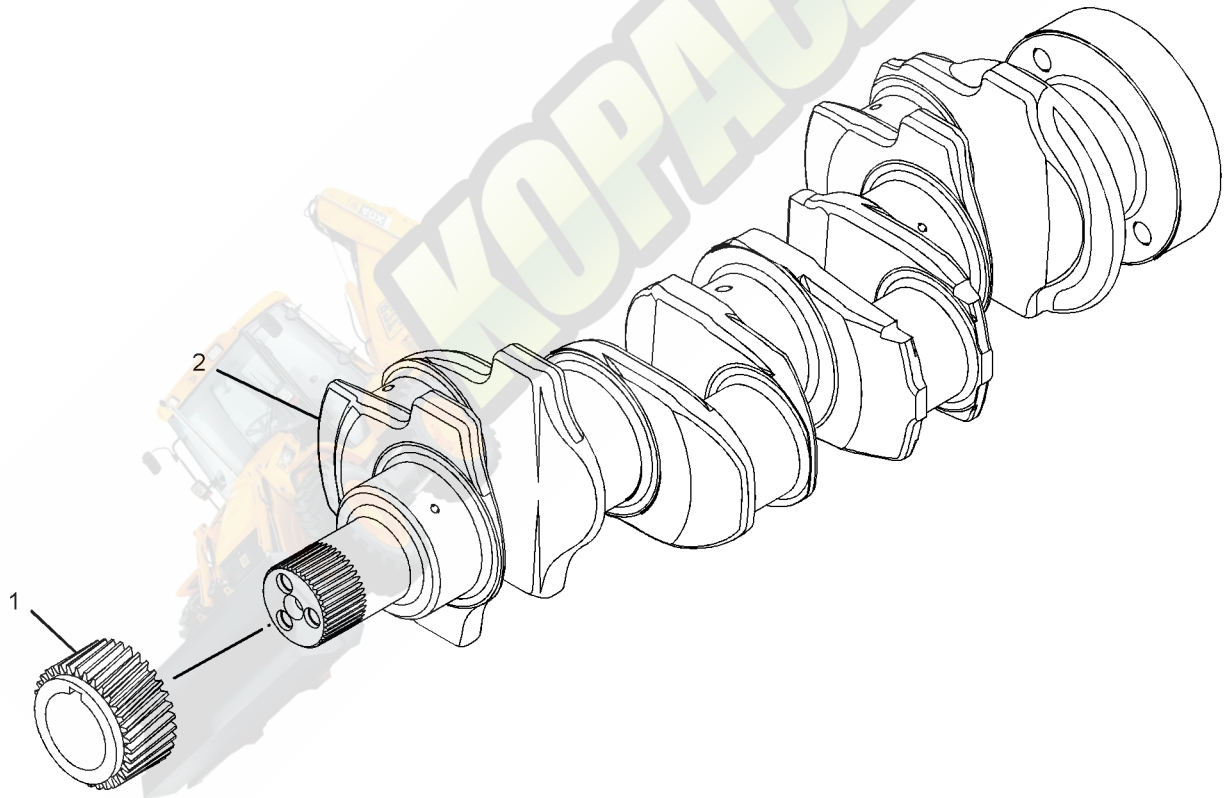

GRAPHIC #1 **<END>** g01402486

232-7604 CYLINDER BLOCK GP

S/N: CRS1-UP

PART OF 334-4202 CYLINDER BLOCK GP

AN ATTACHMENT

SMCS-1201 **i03251707**

NOTE	REF NO	GRAPHIC REF	PART NUMBER	QTY	PART NAME 1 2 3 4 5 6 (PRODUCT LEVEL)	SEE PAGE
	1	1	**6I-0572**	4	BOLT (M8X1.25X20-MM)	
	2	1	**035-8068**	10	BOLT (5/8-18X3.75-IN)	
	3	1	**067-6002**	10	DOWEL	
	4	1	**067-6006**	1	PLUG	
	5	1	**067-6043**	1	PLUG-SIDE	
M	6	1	**100-4841**	4	BOLT (M6X1X10-MM)	
	7	1	**185-0884**	2	DOWEL	
	8	1	**225-7944**	1	GASKET (ENGINE OIL FILTER BASE)	
	9	1	**225-8858**	2	PLUG	
	10	1	**232-3751**	1	PLATE	
	11	1	**232-7440**	1	BEARING	
	12	1	**276-5605**	4	JET AS-PISTON COOLING	
	13	1	**232-7596**	1	PLUG	
	14	1	**232-7597**	2	PLUG	
	15	1	**232-7599**	1	PLUG	
	16	1	**232-7600**	1	PLUG-CUP	
	17	1	**232-7603**	1	PLUG	

M-METRIC PART

232-7604 CYLINDER BLOCK GP *(contd.)* **i03251707**

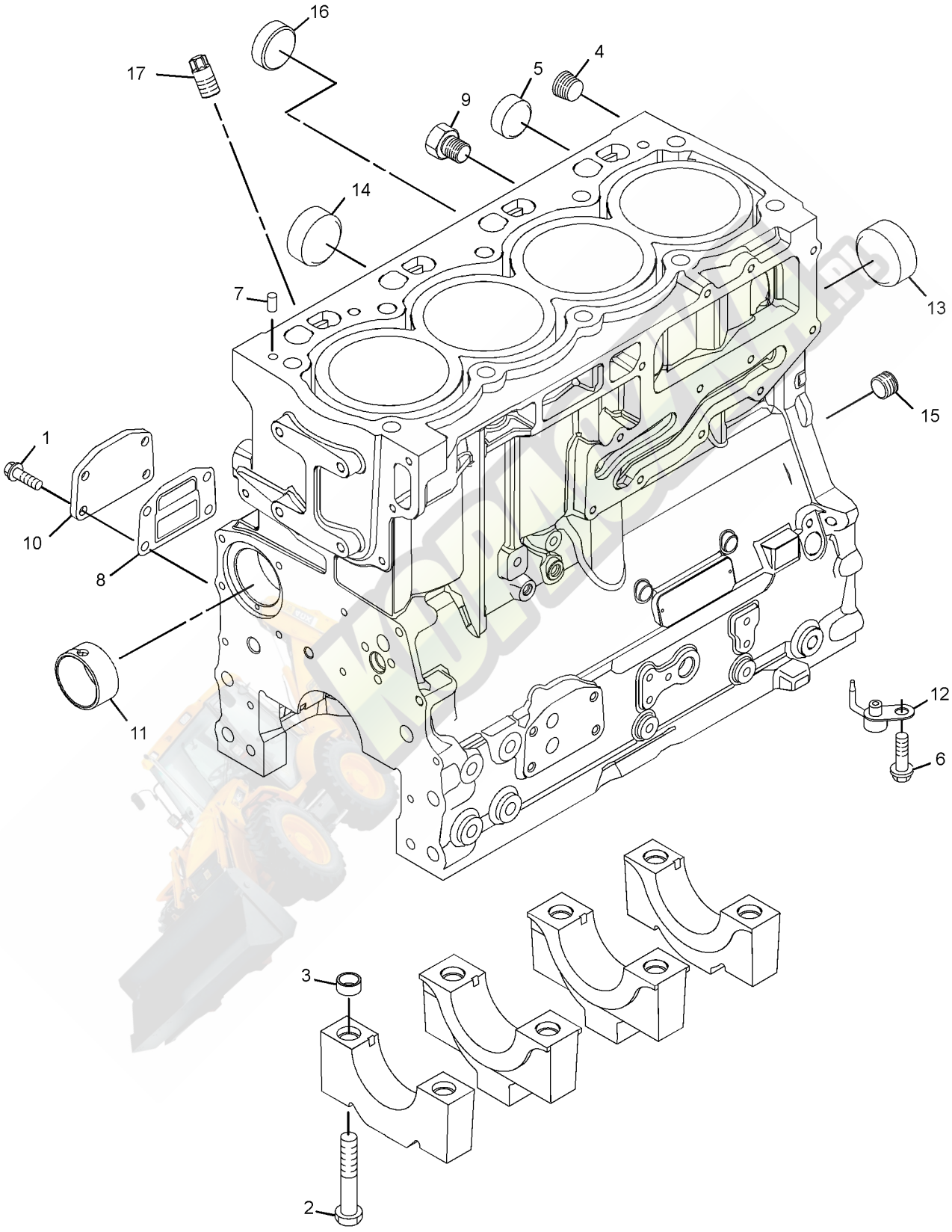

GRAPHIC #1 **<END>** g01652625

BASIC ENGINE

326-8999 CYLINDER BLOCK GP

S/N: C4Z1-UP
PART OF 321-7704, 321-7705 ENGINE AR-PRIMARY
AN ATTACHMENT

SMCS-1201 **i03410100**

NOTE	REF NO	GRAPHIC REF	PART NUMBER	QTY	PART NAME 1 2 3 4 5 6 (PRODUCT LEVEL)	SEE PAGE
M	1	1	**209-9219**	10	BOLT (M8X1.25X16-MM)	
	2	1	**232-7449**	1	HOUSING AS	
Y	3	1	**335-1584**	1	CYLINDER BLOCK GP	34

M-METRIC PART
Y-SEPARATE ILLUSTRATION

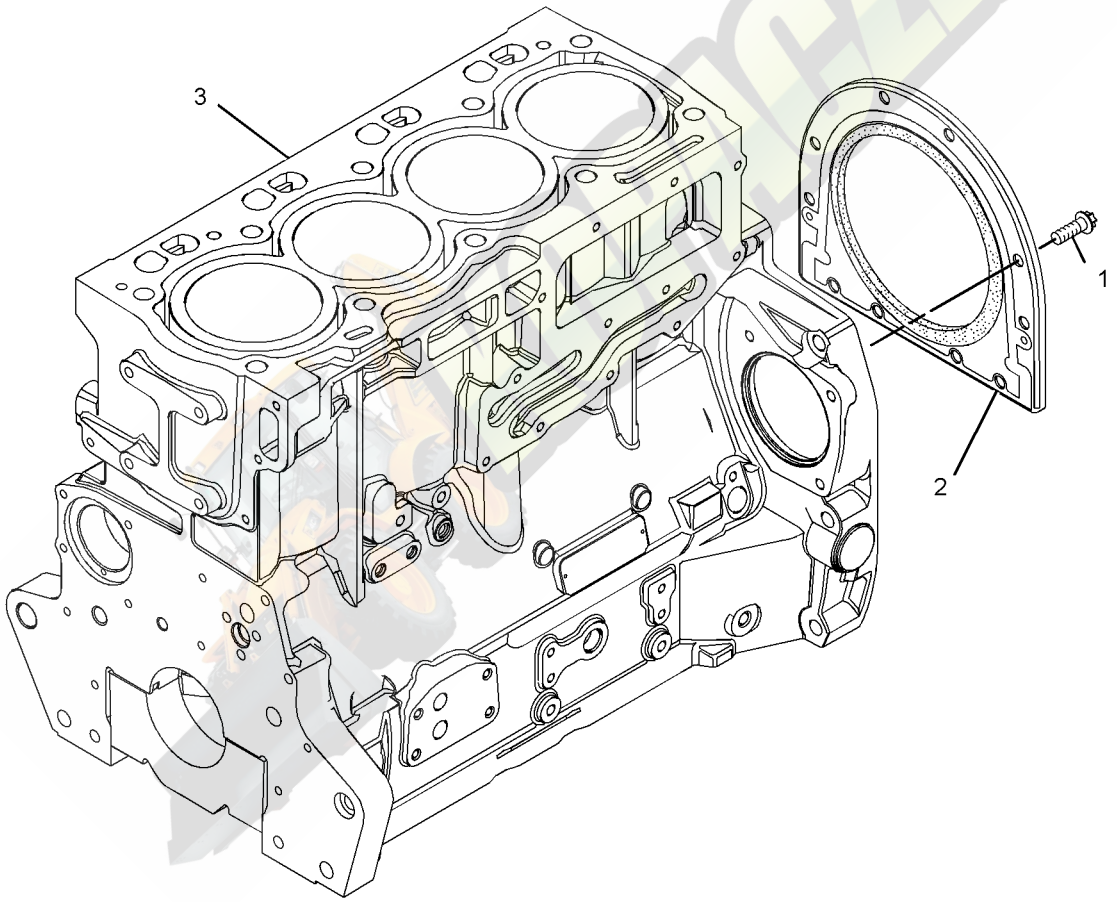

GRAPHIC #1 **<END>** g01770793

334-4202 CYLINDER BLOCK GP

S/N: CRS1-UP

PART OF 322-1923, 322-1924 ENGINE AR-PRIMARY

AN ATTACHMENT

SMCS-1201 **i03235927**

NOTE	REF NO	GRAPHIC REF	PART NUMBER	QTY	PART NAME 1 2 3 4 5 6 (PRODUCT LEVEL)	SEE PAGE
M	1	1	**209-9219**	10	BOLT (M8X1.25X16-MM)	
	2	1	**232-7449**	1	HOUSING AS	
Y	3	1	**232-7604**	1	CYLINDER BLOCK GP	30

M-METRIC PART
Y-SEPARATE ILLUSTRATION

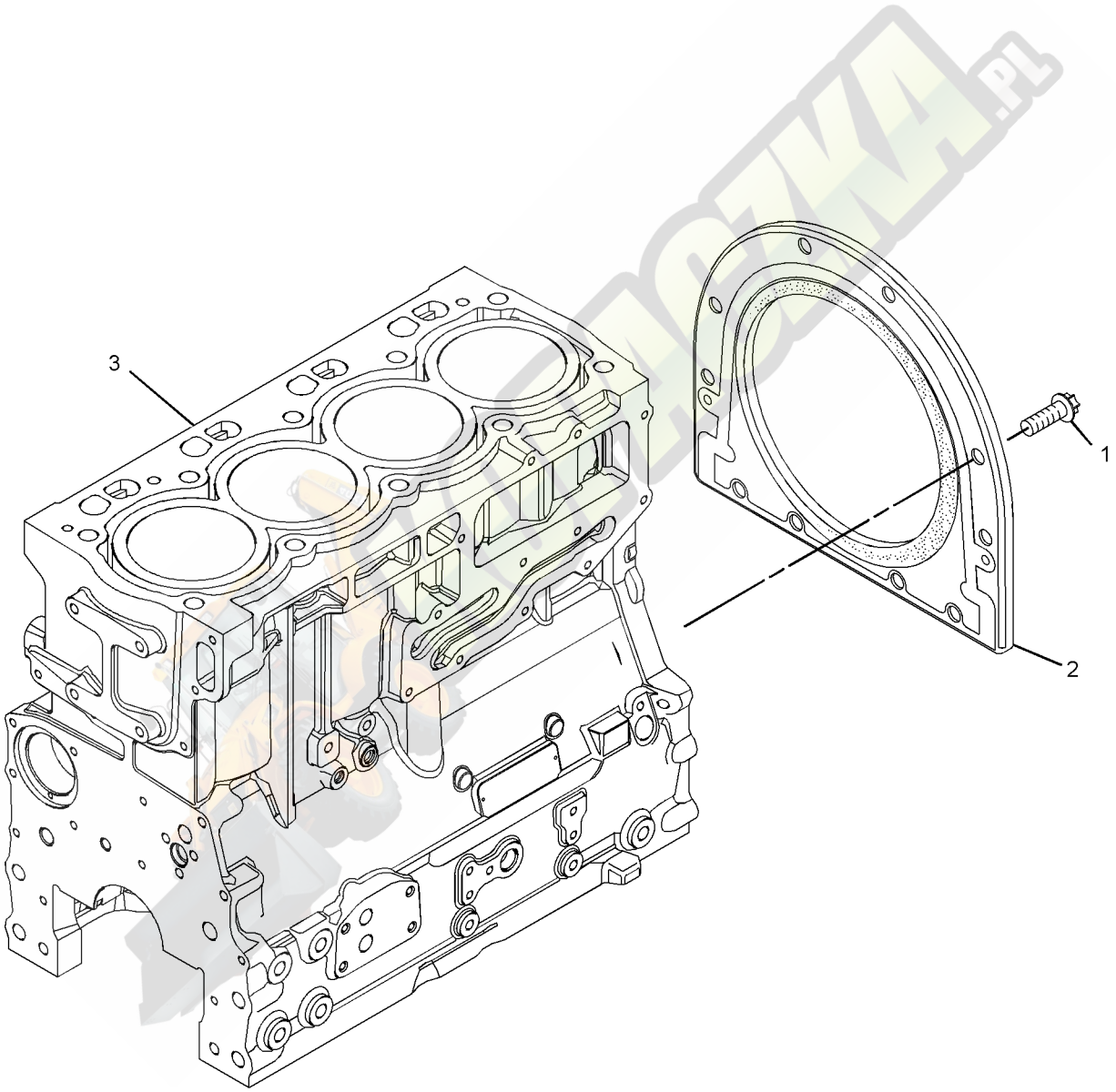

GRAPHIC #1 **<END>** g01652474

BASIC ENGINE

335-1584 CYLINDER BLOCK GP

S/N: C4Z1-UP

PART OF 326-8999 CYLINDER BLOCK GP

AN ATTACHMENT

SMCS-1201 **i03411464**

NOTE	REF NO	GRAPHIC REF	PART NUMBER	QTY	PART NAME 1 2 3 4 5 6 (PRODUCT LEVEL)	SEE PAGE
	1	1	**6I-0572**	4	BOLT (M8X1.25X20-MM)	
	2	1	**6I-0646**	1	BOLT (M10X1.5X14-MM)	
	3	1	**035-8063**	1	PLUG	
	4	1	**035-8068**	10	BOLT (5/8-18X3.75-IN)	
	5	1	**067-6002**	10	DOWEL	
	6	1	**067-6006**	1	PLUG	
	7	1	**067-6043**	1	PLUG-SIDE	
M	8	1	**100-4841**	4	BOLT (M6X1X10-MM)	
	9	1	**185-0884**	2	DOWEL	
	10	1	**214-3203**	1	WASHER (SEALING)	
	11	1	**225-7944**	1	GASKET	
	12	1	**225-8858**	2	PLUG	
	13	1	**232-3751**	1	PLATE	
	14	1	**232-7440**	1	BEARING	
	15	1	**232-7596**	1	PLUG	
	16	1	**232-7597**	2	PLUG	
	17	1	**232-7599**	1	PLUG	
	18	1	**276-5605**	4	JET AS-PISTON COOLING	

M-METRIC PART

335-1584 CYLINDER BLOCK GP *(contd.)* **i03411464**

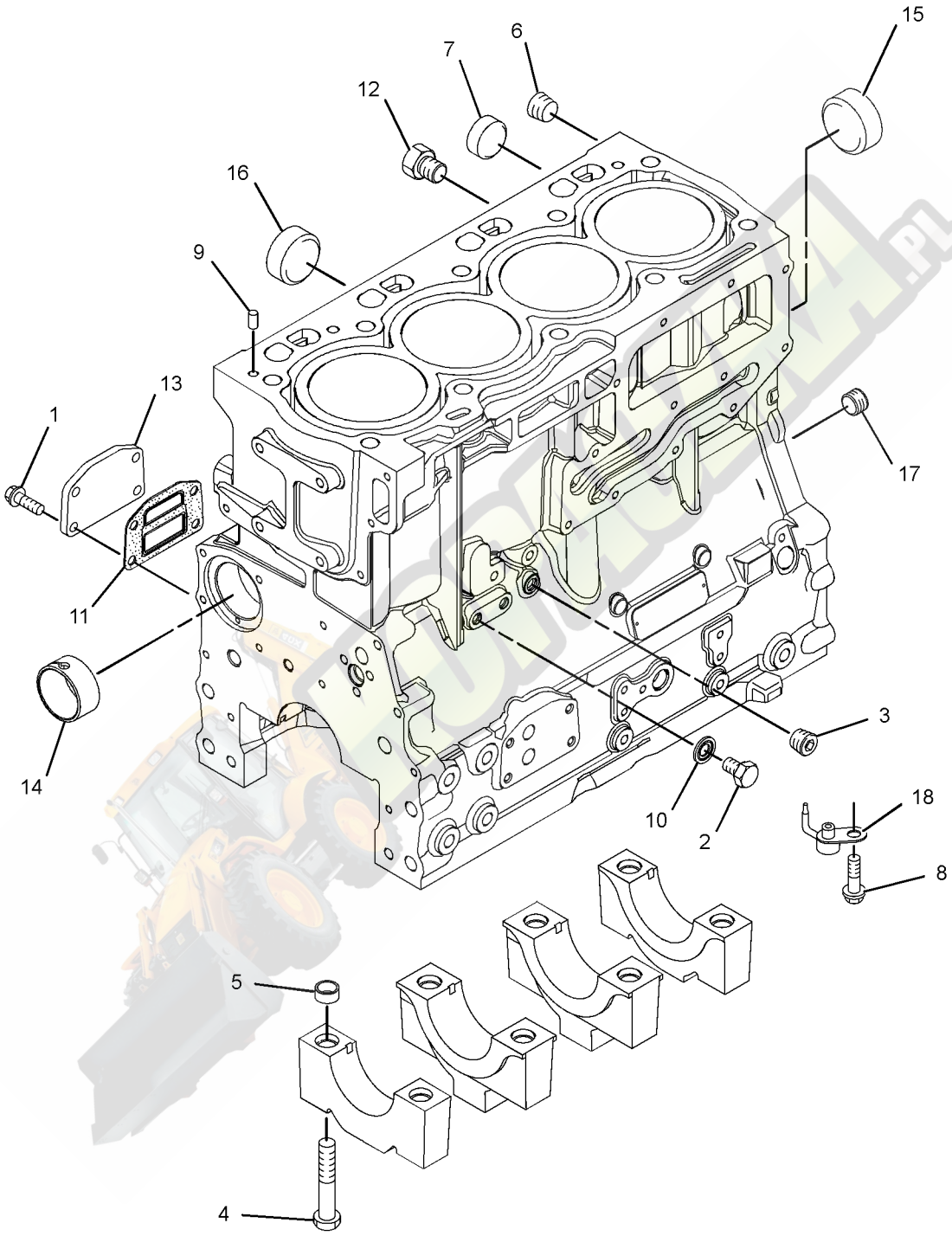

GRAPHIC #1 **<END>** g01769514

BASIC ENGINE

247-4868 CYLINDER HEAD GP

S/N: CRS1-UP
PART OF 334-4205 CYLINDER HEAD GP
AN ATTACHMENT

SMCS-1100, 1101, 1103, 1104, 1105, 1106, 1108, 1109, 1115, 1117, 1121, 1124, 1125 **i03304183**

NOTE	REF NO	GRAPHIC REF	PART NUMBER	QTY	PART NAME 1 2 3 4 5 6 (PRODUCT LEVEL)	SEE PAGE
	1	1	**2B-0858**	1	PLUG-PIPE	
	2	1	**9Y-5015**	2	PLUG-FREEZE	
	3	1	**067-6006**	4	PLUG	
	4	1	**147-1979**	16	RETAINER-VALVE SPRING	
	5	1	**185-0882**	8	GUIDE-VALVE (INTAKE)	
	6	1	**199-9751**	1	SEAL-O-RING	
	7	1	**329-6655**	4	INSERT-VALVE SEAT	
	8	1	**322-9663**	4	INSERT-VALVE SEAT (EXHAUST)	
	9	1	**225-5495**	8	VALVE-INLET	
	10	1	**225-5496**	8	SPRING-VALVE	
	11	1	**225-5498**	8	CAP	
	12	1	**225-5499**	4	VALVE-EXHAUST	
	13	1	**232-1322**	1	PLUG	
	14	1	**252-6438**	4	SEAL-INLET VALVE	
	15	1	**254-3954**	4	SEAL-EXHAUST VALVE	

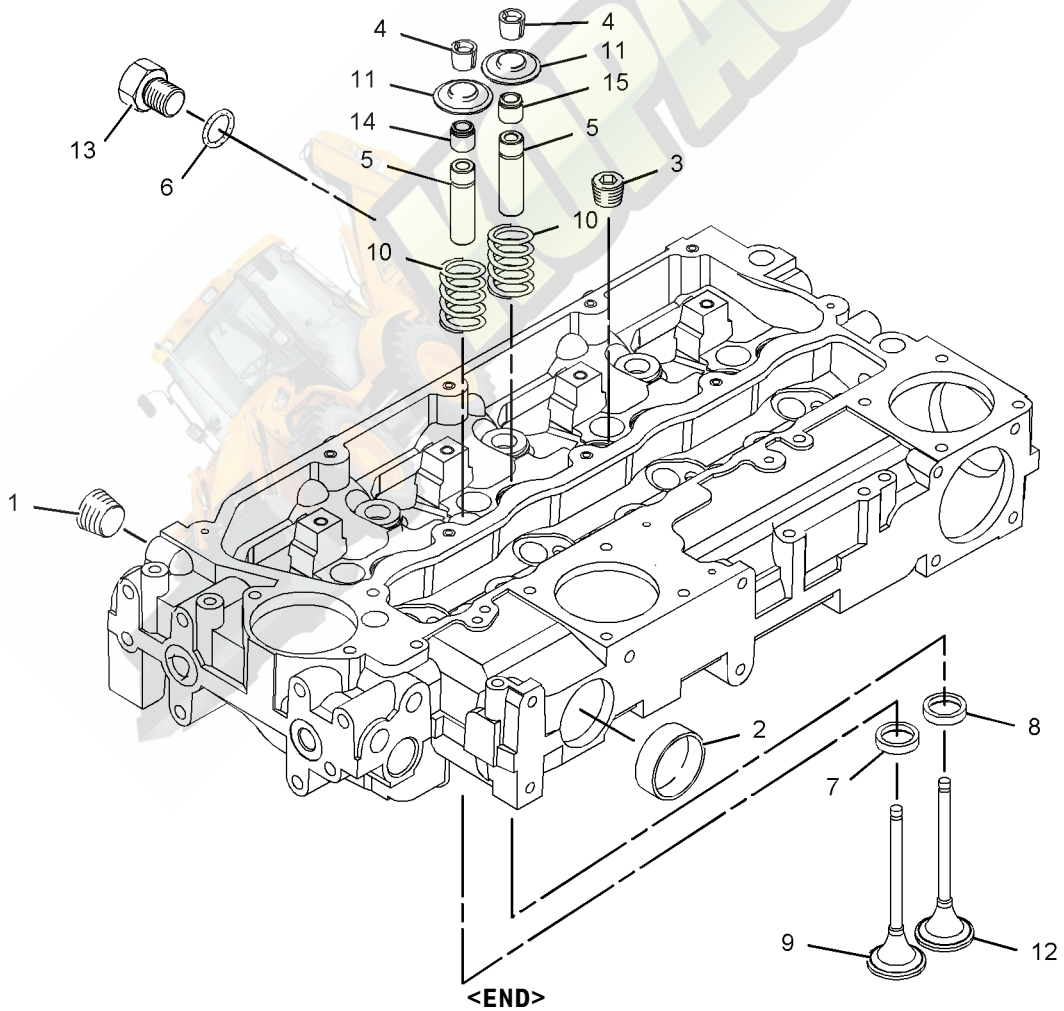

GRAPHIC #1

<END>

g01078948

316-7896 CYLINDER HEAD GP

S/N: C4Z1-UP

PART OF 326-9003 CYLINDER HEAD GP

AN ATTACHMENT

SMCS-1100, 1101, 1103, 1104, 1105, 1106, 1108, 1109, 1115, 1117, 1121, 1124, 1125

i03131134

NOTE	REF NO	GRAPHIC REF	PART NUMBER	QTY	PART NAME 1 2 3 4 5 6 (PRODUCT LEVEL)	SEE PAGE
	1	1	**2B-0858**	2	PLUG-PIPE	
	2	1	**9Y-5015**	2	PLUG-FREEZE	
	3	1	**067-6006**	4	PLUG	
	4	1	**185-0882**	8	GUIDE-VALVE (INTAKE)	
	5	1	**199-9751**	1	SEAL-O-RING	
	6	1	**232-1322**	1	PLUG	
	7	1	**315-3390**	4	VALVE-INLET	
	8	1	**315-3391**	8	SPRING	
	9	1	**315-3392**	8	CAP	
	10	1	**315-3393**	16	COLLET	
	11	1	**315-3394**	4	VALVE-EXHAUST	
	12	1	**252-6438**	4	SEAL-INLET VALVE (GREEN)	
	13	1	**254-3954**	4	SEAL-EXHAUST VALVE (BROWN)	
	14	1	**322-9663**	4	INSERT-VALVE SEAT	
	15	1	**322-9664**	4	SEAT-VALVE	

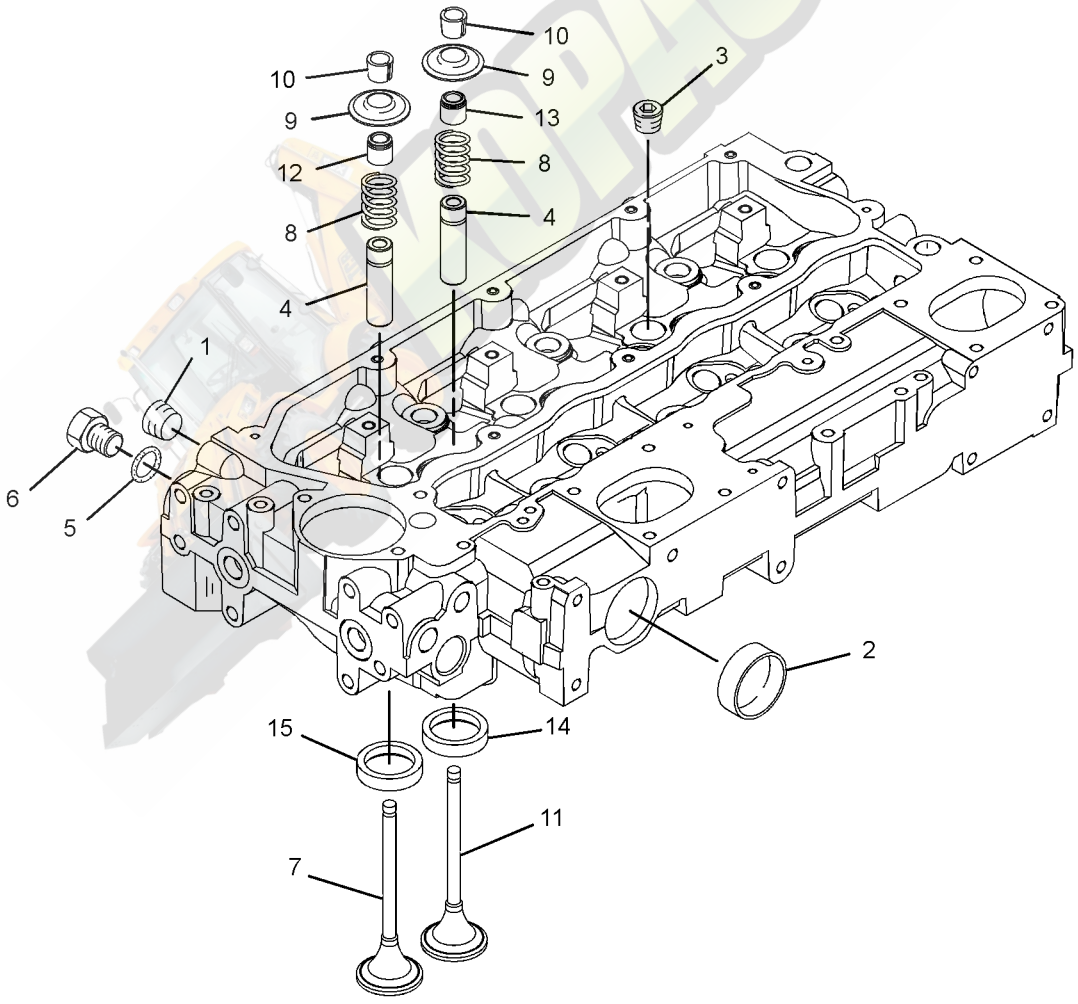

GRAPHIC #1

<END>

g01542313

326-9003 CYLINDER HEAD GP

S/N: C4Z1-UP
PART OF 321-7704, 321-7705 ENGINE AR-PRIMARY
AN ATTACHMENT

SMCS-1100, 1101, 1103, 1104, 1105, 1106, 1108, 1109, 1115, 1117, 1121, 1124, 1125

i03127782

NOTE	REF NO	GRAPHIC REF	PART NUMBER	QTY	PART NAME 1 2 3 4 5 6 (PRODUCT LEVEL)	SEE PAGE
	1	1	**225-5501**	7	BOLT (M15X1.5X137-MM)	
	2	1	**225-5502**	3	BOLT (M15X1.5X162-MM)	
	3	1	**258-4946**	1	GASKET-HEAD	
Y	4	1	**316-7896**	1	CYLINDER HEAD GP	37

Y-SEPARATE ILLUSTRATION

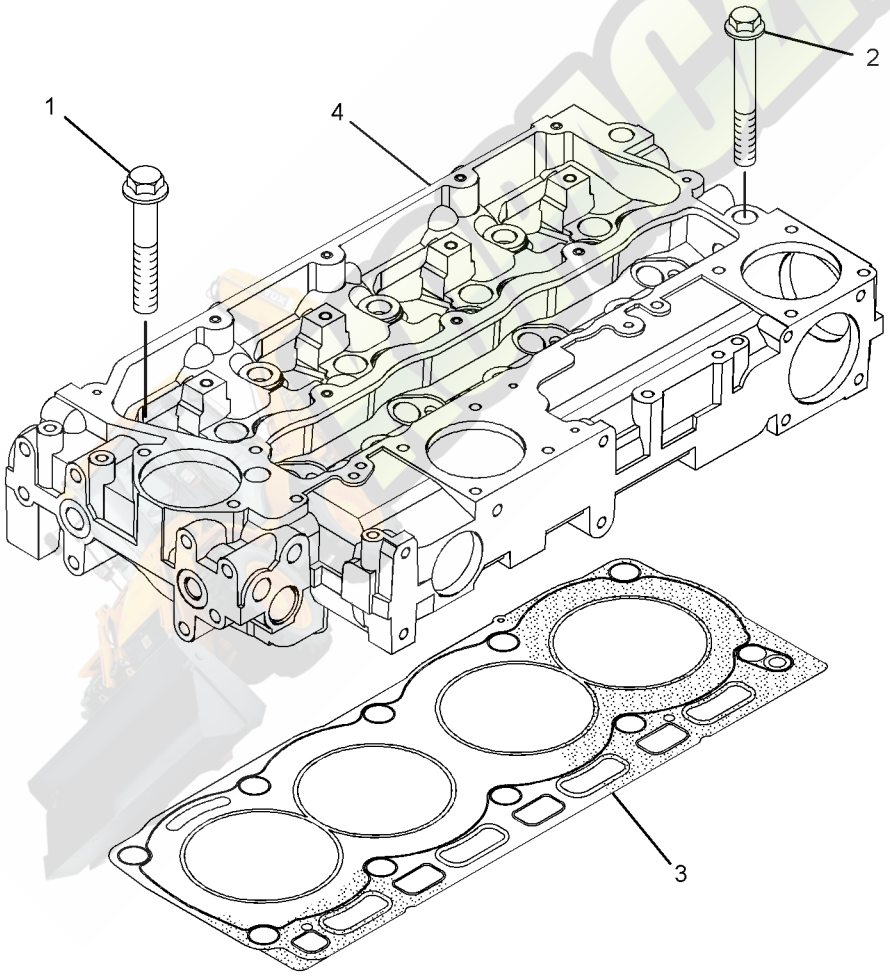

GRAPHIC #1

<END>

g01523242

334-4205 CYLINDER HEAD GP

S/N: CRS1-UP

PART OF 322-1923, 322-1924 ENGINE AR-PRIMARY

AN ATTACHMENT

SMCS-1100, 1101, 1103, 1104, 1105, 1106, 1108, 1109, 1115, 1117, 1121, 1124, 1125

i03143144

NOTE	REF NO	GRAPHIC REF	PART NUMBER	QTY	PART NAME 1 2 3 4 5 6 (PRODUCT LEVEL)	SEE PAGE
	1	1	**225-5501**	7	BOLT (M15X1.5X137-MM)	
	2	1	**225-5502**	3	BOLT (M15X1.5X162-MM)	
Y	3	1	**247-4868**	1	CYLINDER HEAD GP	36
	4	1	**258-4946**	1	GASKET-HEAD	

Y-SEPARATE ILLUSTRATION

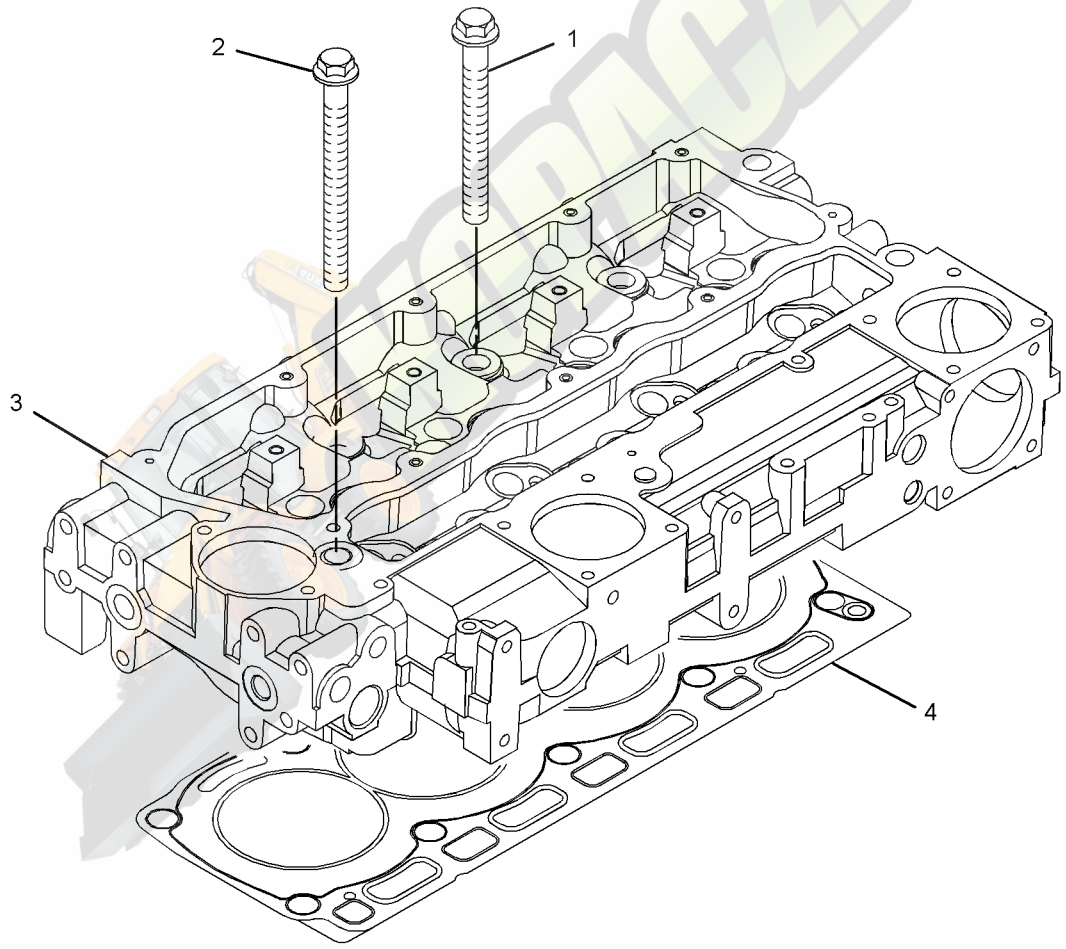

GRAPHIC #1

<END>

g01619771

BASIC ENGINE

326-9009 DRIVE GP-AUXILIARY

S/N: C4Z1-UP

PART OF 321-7704, 321-7705 ENGINE AR-PRIMARY

AN ATTACHMENT

SMCS-1207 **i03127787**

NOTE	REF NO	GRAPHIC REF	PART NUMBER	QTY	PART NAME 1 2 3 4 5 6 (PRODUCT LEVEL)	SEE PAGE
	1	1	**6I-0501**	1	BLOCK	
	2	1	**7W-4634**	3	BOLT (7/16-20X1.5-IN)	
M	3	1	**102-9941**	3	BOLT (M12X1.75X25-MM)	
	4	1	**286-7848**	1	PULLEY GP-ENGINE	
	5	1	**306-8857**	1	HUB	

M-METRIC PART

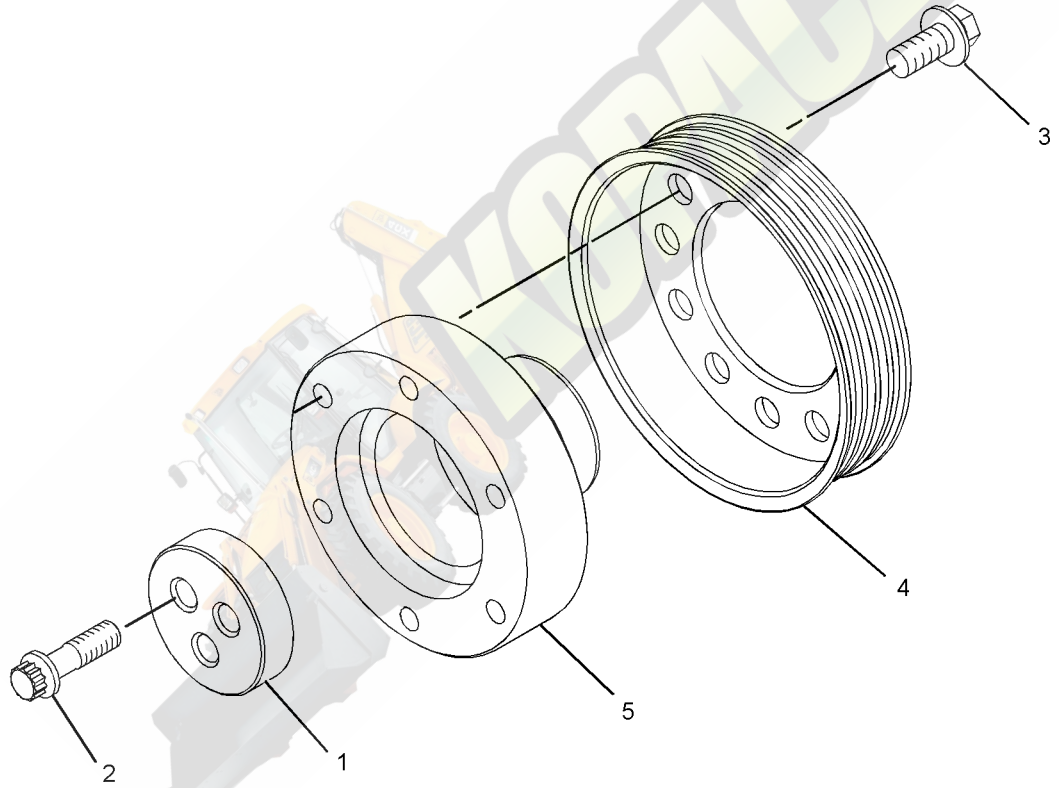

GRAPHIC #1 **<END>** g01615550

334-3755 DRIVE GP-AUXILIARY

S/N: CRS1-UP

PART OF 322-1923, 322-1924 ENGINE AR-PRIMARY

AN ATTACHMENT

SMCS-1207 **i03143104**

NOTE	REF NO	GRAPHIC REF	PART NUMBER	QTY	PART NAME 1 2 3 4 5 6 (PRODUCT LEVEL)	SEE PAGE
	1	1	**6I-0501**	1	BLOCK	
	2	1	**7W-4634**	3	BOLT (7/16-20X1.5-IN)	
M	3	1	**102-9941**	3	BOLT (M12X1.75X25-MM)	
	4	1	**286-7848**	1	PULLEY GP-ENGINE	
	5	1	**306-8857**	1	HUB	

M-METRIC PART

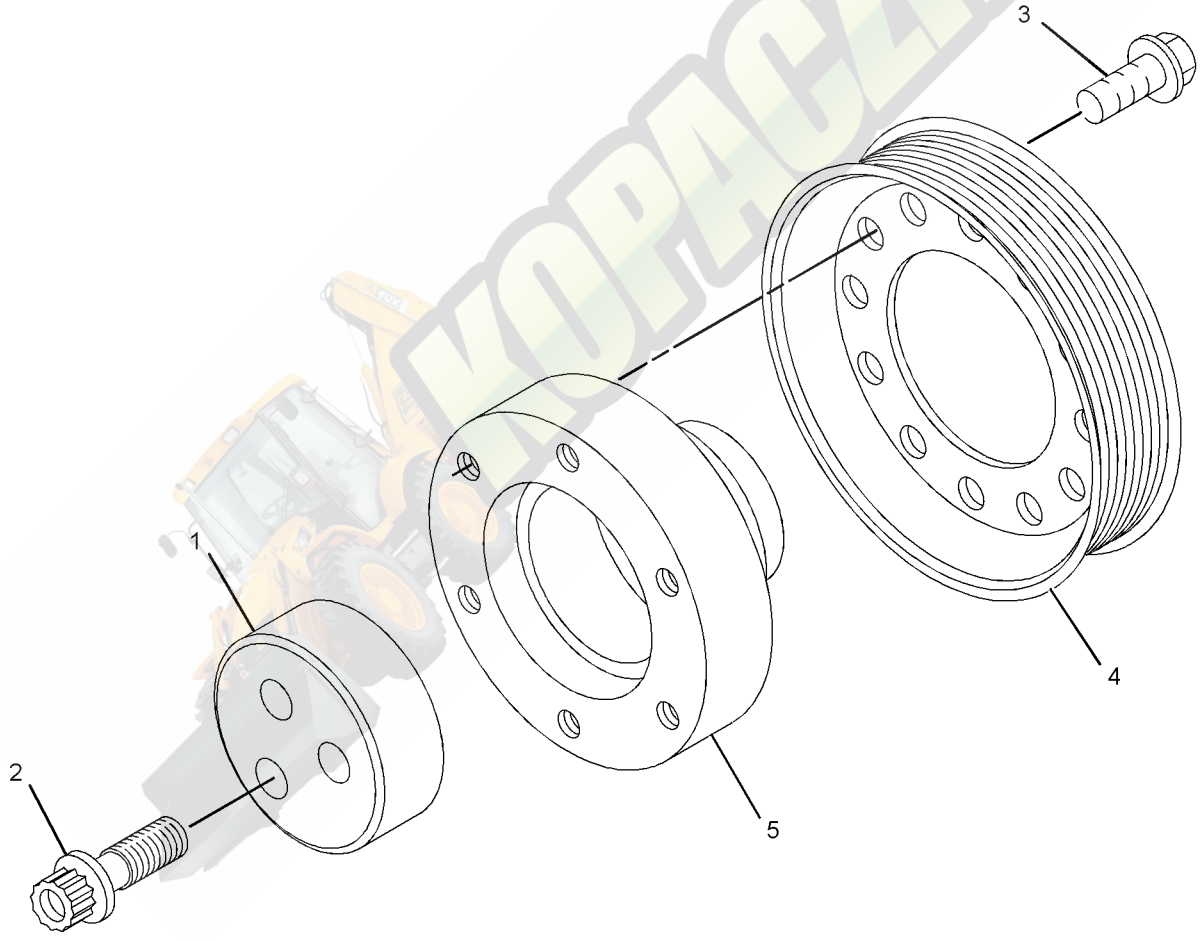

GRAPHIC #1 **<END>** g01619099

BASIC ENGINE

303-5770 DRIVE GP-FAN

S/N: C4Z1-UP
PART OF 321-7704, 321-7705 ENGINE AR-PRIMARY
AN ATTACHMENT

SMCS-1357, 1358, 1359, 1390 **i03128283**

NOTE	REF NO	GRAPHIC REF	PART NUMBER	QTY	PART NAME 1 2 3 4 5 6 (PRODUCT LEVEL)	SEE PAGE
	1	1	**326-1880**	1	HOUSING-FAN DRIVE	
	2	1	**251-2437**	1	PLATE	
	3	1	**111-0859**	8	BOLT (M10X1.5X35-MM)	

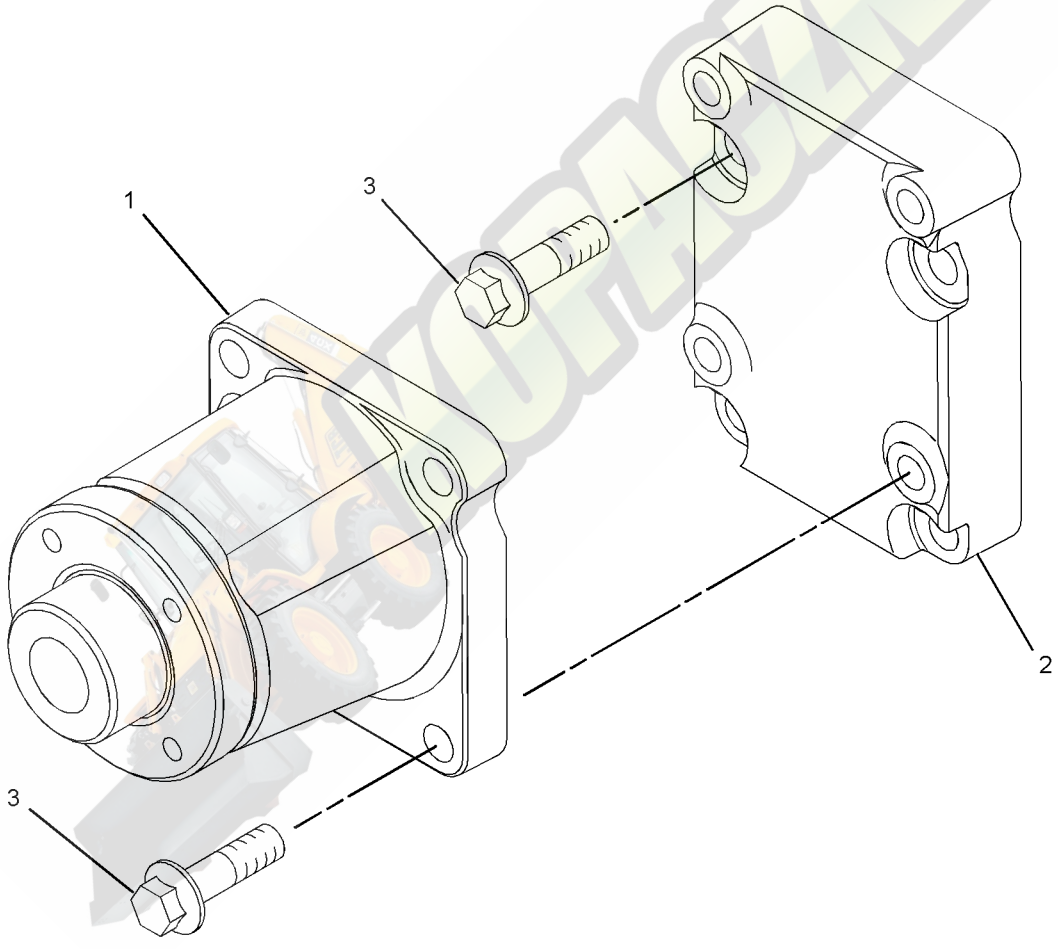

GRAPHIC #1 **<END>** g01340877

334-3754 DRIVE GP-FAN

S/N: CRS1-UP
PART OF 322-1923, 322-1924 ENGINE AR-PRIMARY
AN ATTACHMENT

SMCS-1357, 1358, 1359, 1390 **i03143103**

NOTE	REF NO	GRAPHIC REF	PART NUMBER	QTY	PART NAME 1 2 3 4 5 6 (PRODUCT LEVEL)	SEE PAGE
	1	1	**111-0859**	8	BOLT (M10X1.5X35-MM)	
	2	1	**251-2437**	1	PLATE	
	3	1	**326-1880**	1	HOUSING-FAN DRIVE	

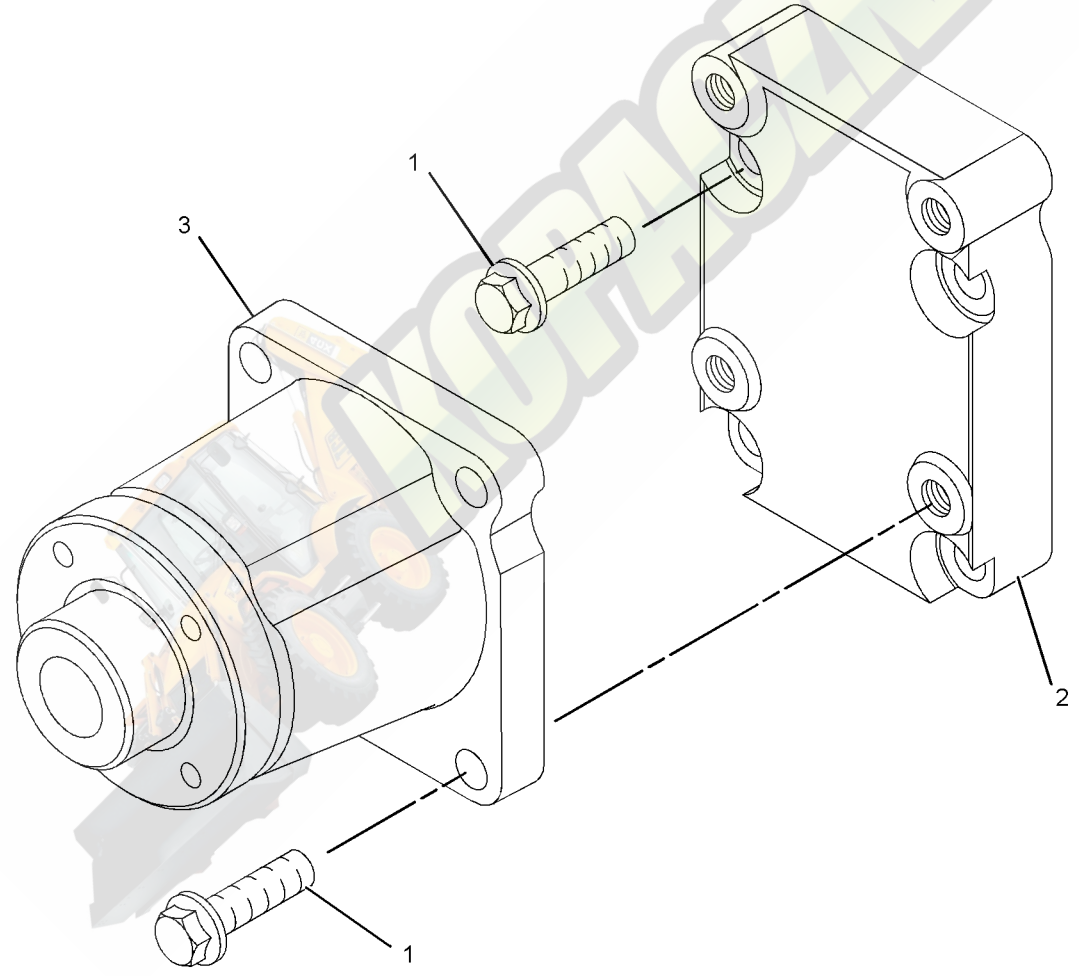

GRAPHIC #1 **<END>** g01619123

BASIC ENGINE

230-7300 FLYWHEEL GP

S/N: CRS1-UP
PART OF 322-1923, 322-1924 ENGINE AR-PRIMARY
AN ATTACHMENT

SMCS-1156, 1158 **i02004994**

NOTE	REF NO	GRAPHIC REF	PART NUMBER	QTY	PART NAME 1 2 3 4 5 6 (PRODUCT LEVEL)	SEE PAGE
	1	1	**0S-1603**	6	BOLT (1/2-20X1.5-IN)	
	2	1	**5P-8245**	6	WASHER-HARD (13.5X25.5X3-MM THK)	
	3	1	**245-9828**	1	FLYWHEEL AS	
	4	1	**033-7687**	1	RING-STARTING MOTOR (126-TEETH)	

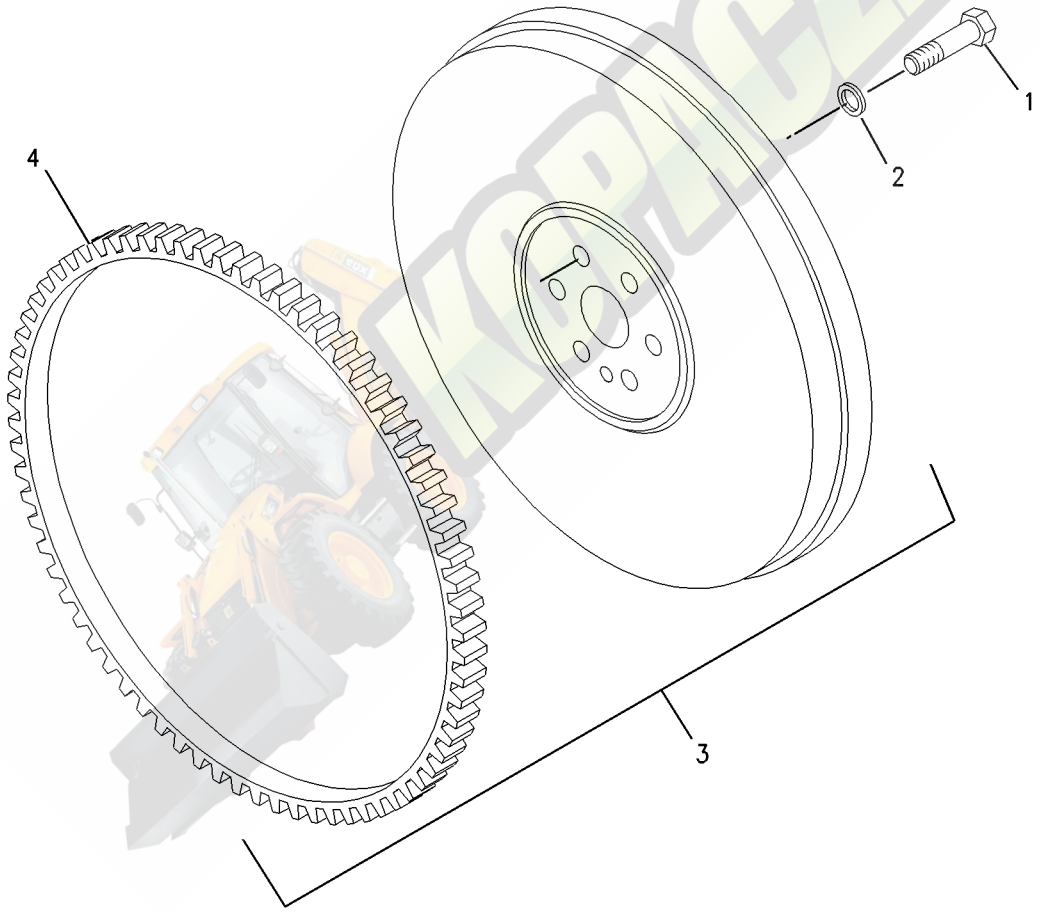

GRAPHIC #1 **<END>** g00955555

303-5768 FLYWHEEL GP

S/N: C4Z1-UP
PART OF 321-7704, 321-7705 ENGINE AR-PRIMARY
AN ATTACHMENT

SMCS-1156, 1158 **i03128301**

NOTE	REF NO	GRAPHIC REF	PART NUMBER	QTY	PART NAME 1 2 3 4 5 6 (PRODUCT LEVEL)	SEE PAGE
	1	1	**245-9828**	1	FLYWHEEL AS	
	1A	1	**033-7687**	1	RING-STARTING MOTOR (126-TEETH)	
	2	1	**0S-1603**	10	BOLT (1/2-20X1.5-IN)	
	3	1	**5P-8245**	10	WASHER-HARD (13.5X25.5X3-MM THK)	

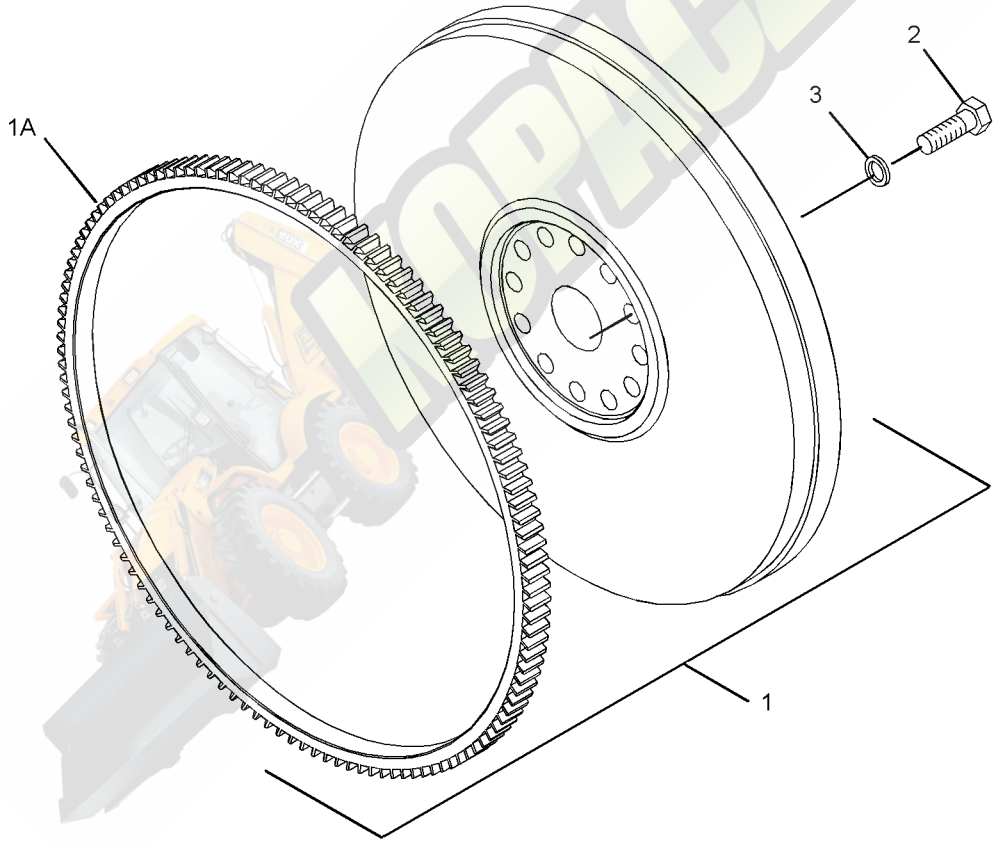

GRAPHIC #1 **<END>** g01372699

BASIC ENGINE

236-8238 HOUSING GP-FLYWHEEL

S/N: CRS1-UP
PART OF 322-1923, 322-1924 ENGINE AR-PRIMARY
AN ATTACHMENT

SMCS-1157 **i02527247**

NOTE	REF NO	GRAPHIC REF	PART NUMBER	QTY	PART NAME 1 2 3 4 5 6 (PRODUCT LEVEL)	SEE PAGE
M	1	1	**6I-0423**	2	BOLT (M12X1.75X30-MM)	
	2	1	**6I-0847**	2	PLUG	
	3	1	**7W-1176**	1	PLATE-COVER	
	4	1	**7W-4642**	1	SHIELD-DUST	
	5	1	**287-8597**	2	DOWEL	
	6	1	**114-4363**	2	BOLT (M8X1.25X12-MM)	
	7	1	**101-3617**	3	PLUG	
M	8	1	**121-0883**	6	BOLT (M10X1.5X30-MM)	
	9	1	**220-8631**	1	HOUSING-FLYWHEEL	

M-METRIC PART

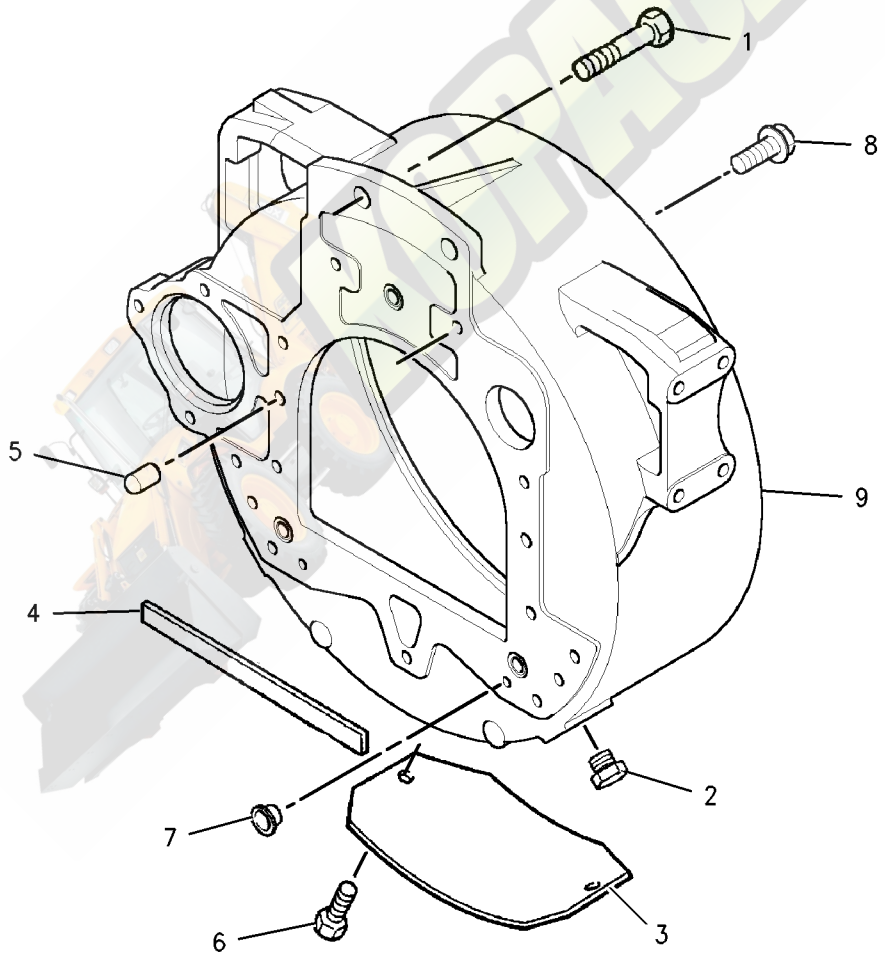

GRAPHIC #1 **<END>** g00902549

303-5767 HOUSING GP-FLYWHEEL

S/N: C4Z1-UP

PART OF 321-7704, 321-7705 ENGINE AR-PRIMARY

AN ATTACHMENT

SMCS-1157 **i03128293**

NOTE	REF NO	GRAPHIC REF	PART NUMBER	QTY	PART NAME 1 2 3 4 5 6 (PRODUCT LEVEL)	SEE PAGE
M	1	1	**6I-0423**	2	BOLT (M12X1.75X30-MM)	
	2	1	**6I-0847**	2	PLUG	
	3	1	**7W-1176**	1	PLATE-COVER	
	4	1	**7W-4642**	1	SHIELD-DUST	
	5	1	**287-8597**	2	DOWEL	
	6	1	**114-4363**	2	BOLT (M8X1.25X12-MM)	
	7	1	**4H-0408**	3	PLUG-PROTECTION	
M	8	1	**121-0883**	6	BOLT (M10X1.5X30-MM)	
	9	1	**220-8631**	1	HOUSING-FLYWHEEL	

M-METRIC PART

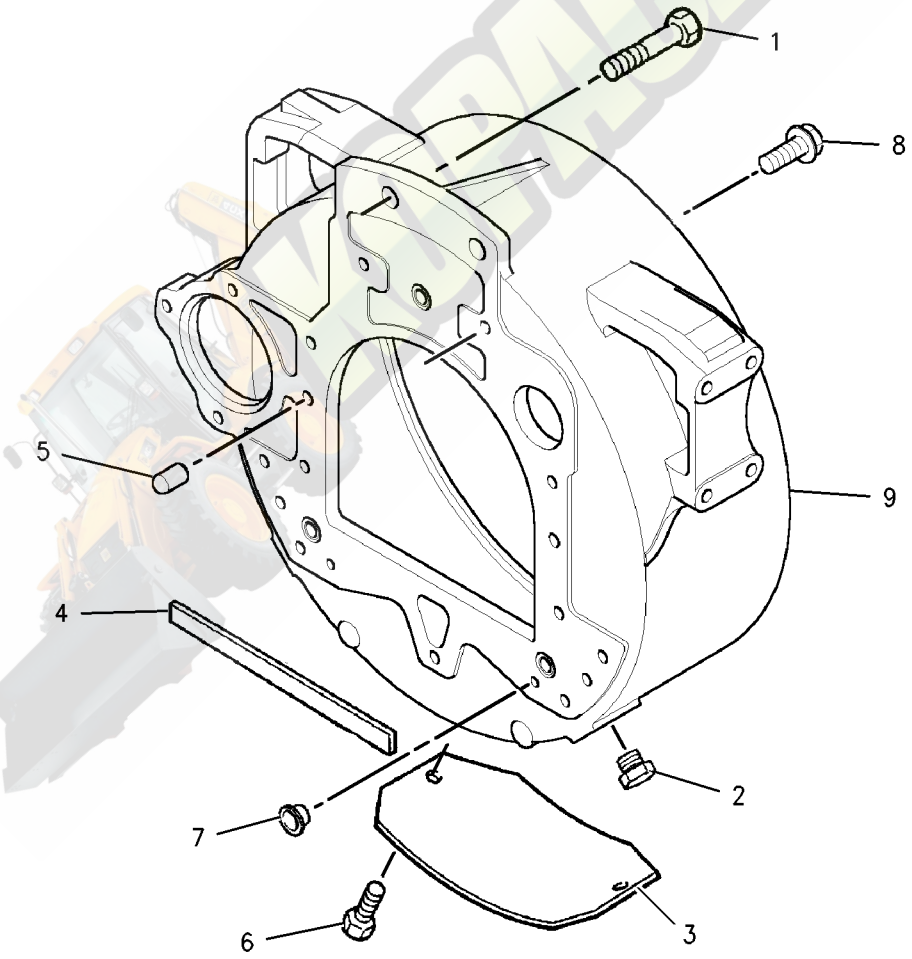

GRAPHIC #1 **<END>** g00902549

BASIC ENGINE

304-8760 HOUSING GP-FRONT

S/N: C4Z1-UP
PART OF 321-7704, 321-7705 ENGINE AR-PRIMARY
AN ATTACHMENT

SMCS-1151, 1162, 1166, 1206 **i03569721**

NOTE	REF NO	GRAPHIC REF	PART NUMBER	QTY	PART NAME 1 2 3 4 5 6 (PRODUCT LEVEL)	SEE PAGE
	1	1	**294-0288**	1	HOUSING-FRONT	
	2	1	**277-3012**	1	GASKET-COVER	
	3	1	**288-0422**	1	SEAL-OIL (FRONT)	
M	4	1	**6I-0217**	6	BOLT (M8X1.25X20-MM)	
M	5	1	**101-3895**	2	BOLT (M8X1.25X35-MM)	
M	6	1	**6I-0645**	4	BOLT (M8X1.25X25-MM)	
CJ	7	1	**346-0407**	1	GEAR-IDLER (73-TEETH)	
	8	1	**324-0444**	1	HUB-IDLER GEAR	
C	9	1	**346-0408**	1	PLATE	
M	10	1	**6I-0650**	3	BOLT (M10X1.5X65-MM)	
	11	1	**216-8634**	1	GEAR-CAMSHAFT (68-TEETH)	
	12	1	**133-1011**	1	WASHER	
	13	1	**067-6179**	1	DOWEL	
	14	1	**232-3666**	1	WASHER-THRUST	
	15	1	**7C-4616**	1	BOLT (M12X1.75X45-MM)	
	16	1	**232-3657**	1	COVER AS-FRONT	
	16A	1	**225-8287**	1	GASKET	
M	17	1	**124-3815**	10	BOLT (M8X16X1.25-MM)	
M	18	1	**100-3751**	5	BOLT (M8X1.25X65-MM)	

C-CHANGE FROM PREVIOUS TYPE
J-CAN ONLY BE USED IN CONJUNCTION WITH 346-0408 & 324-0444
M-METRIC PART

304-8760 **HOUSING GP-FRONT** *(contd.)* **i03569721**

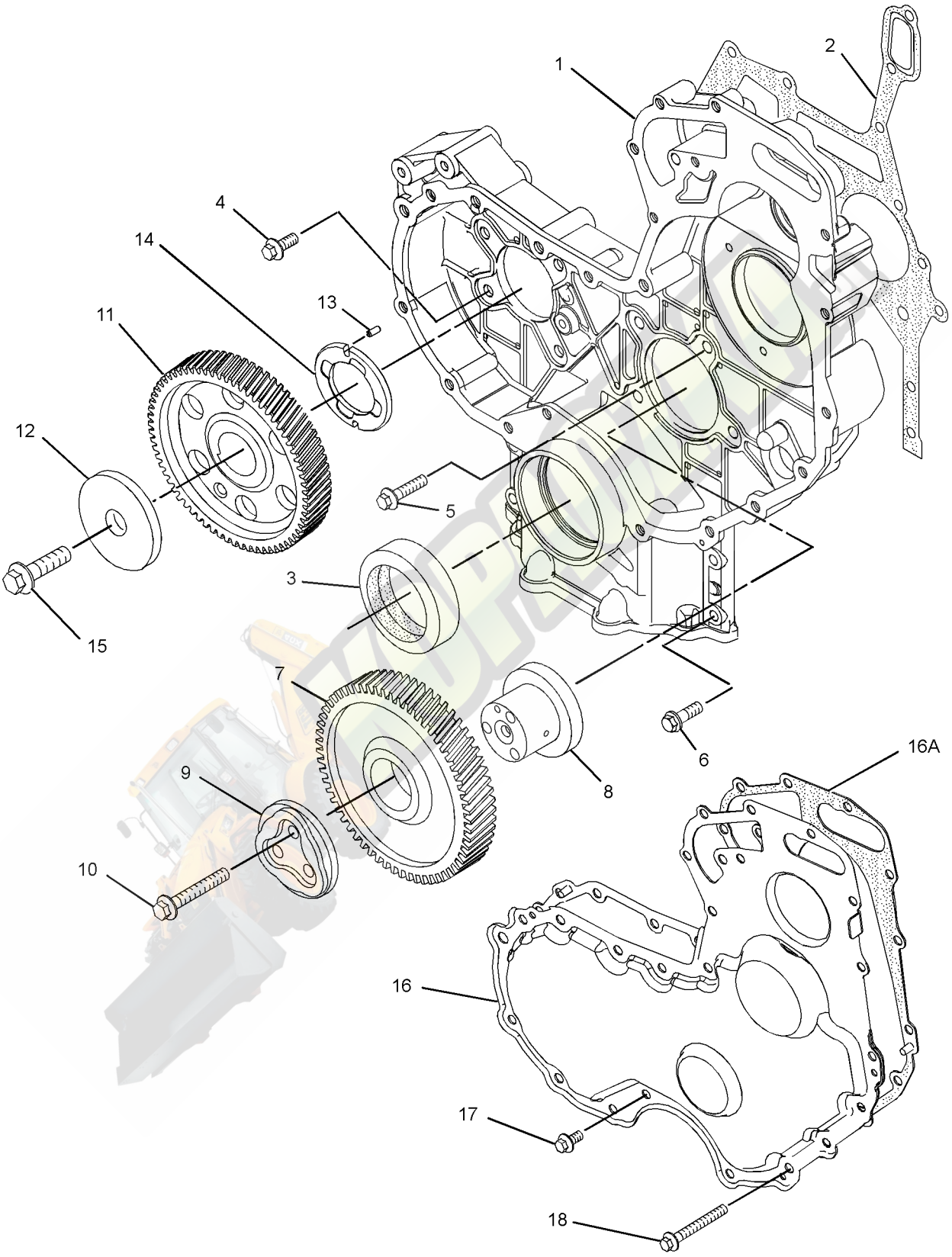

GRAPHIC #1 **<END>** g01900827

BASIC ENGINE

334-3757 HOUSING GP-FRONT

S/N: CRS1-UP
PART OF 322-1923, 322-1924 ENGINE AR-PRIMARY
AN ATTACHMENT

SMCS-1151, 1162, 1166, 1206 **i03570220**

NOTE	REF NO	GRAPHIC REF	PART NUMBER	QTY	PART NAME 1 2 3 4 5 6 (PRODUCT LEVEL)	SEE PAGE
	1	1	**1B-8736**	1	KEY-WOODRUFF	
M	2	1	**6I-0217**	6	BOLT (M8X1.25X20-MM)	
M	3	1	**6I-0645**	4	BOLT (M8X1.25X25-MM)	
M	4	1	**6I-0650**	3	BOLT (M10X1.5X65-MM)	
	5	1	**7C-4616**	1	BOLT (M12X1.75X45-MM)	
	6	1	**067-6179**	1	DOWEL	
M	7	1	**100-3751**	5	BOLT (M8X1.25X65-MM)	
M	8	1	**101-3895**	2	BOLT (M8X1.25X35-MM)	
M	9	1	**124-3815**	10	BOLT (M8X16X1.25-MM)	
	10	1	**133-1011**	1	WASHER	
	11	1	**216-8634**	1	GEAR-CAMSHAFT (68-TEETH)	
	12	1	**232-3657**	1	COVER AS-FRONT	
	12A	1	**225-8287**	1	GASKET	
	13	1	**232-3666**	1	WASHER-THRUST	
C	14	1	**346-0407**	1	GEAR-IDLER (73-TEETH)	
	15	1	**277-3012**	1	GASKET-COVER	
	16	1	**288-0422**	1	SEAL-OIL	
	17	1	**294-0288**	1	HOUSING-FRONT	
C	18	1	**346-0408**	1	PLATE	
	19	1	**324-0444**	1	HUB-IDLER GEAR	

C-CHANGE FROM PREVIOUS TYPE
M-METRIC PART

334-3757 **HOUSING GP-FRONT** *(contd.)* **i03570220**

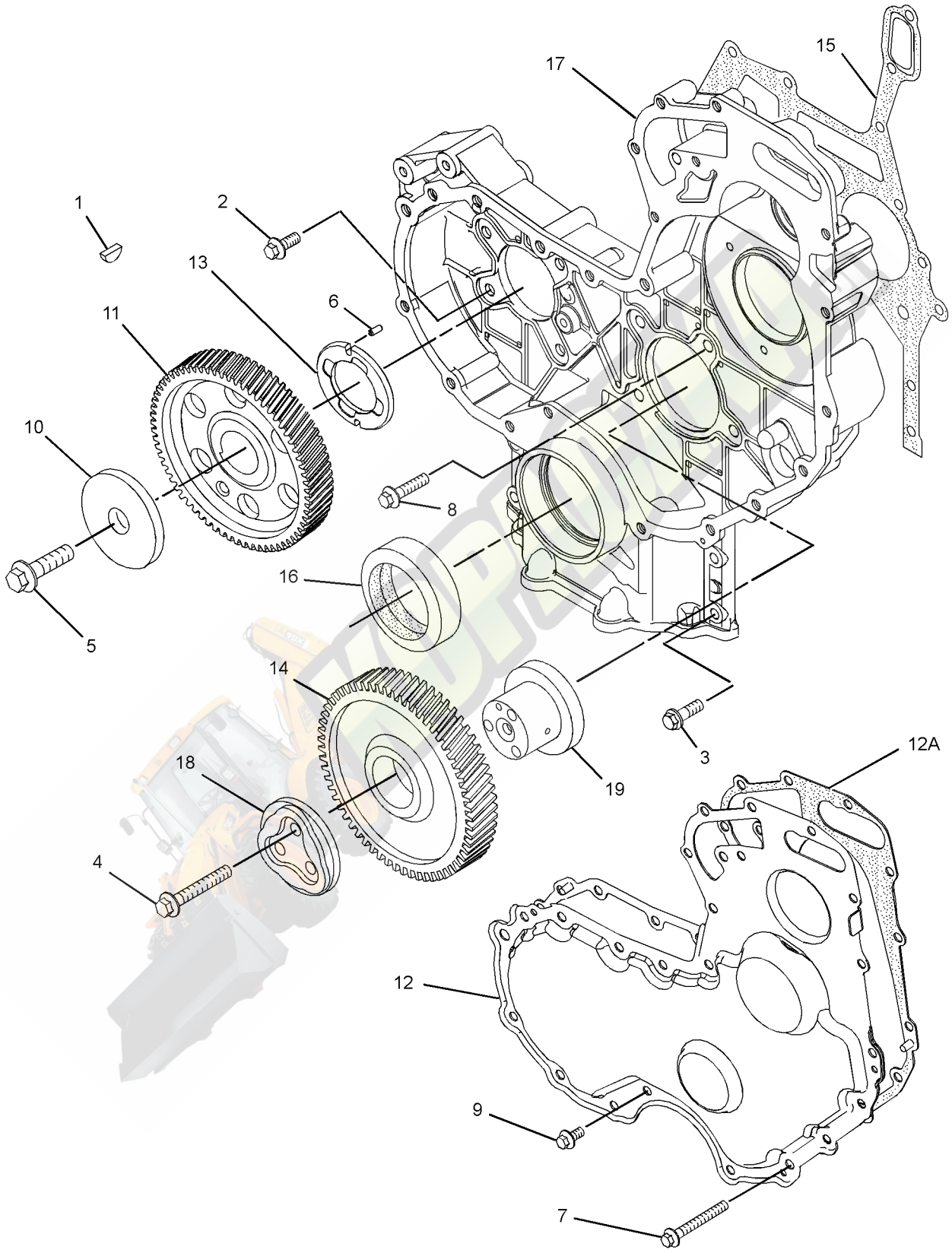

GRAPHIC #1 **<END>** g01932637

BASIC ENGINE

233-7432 LIFTING GP-ENGINE

S/N: CRS1-UP
PART OF 322-1923, 322-1924 ENGINE AR-PRIMARY
AN ATTACHMENT

SMCS-1122 **i01998680**

NOTE	REF NO	GRAPHIC REF	PART NUMBER	QTY	PART NAME 1 2 3 4 5 6 (PRODUCT LEVEL)	SEE PAGE
M	1	1	**100-4830**	4	BOLT (M10X1.5X20-MM)	
	2	1	**225-8848**	2	PLATE-LIFTING	

M-METRIC PART

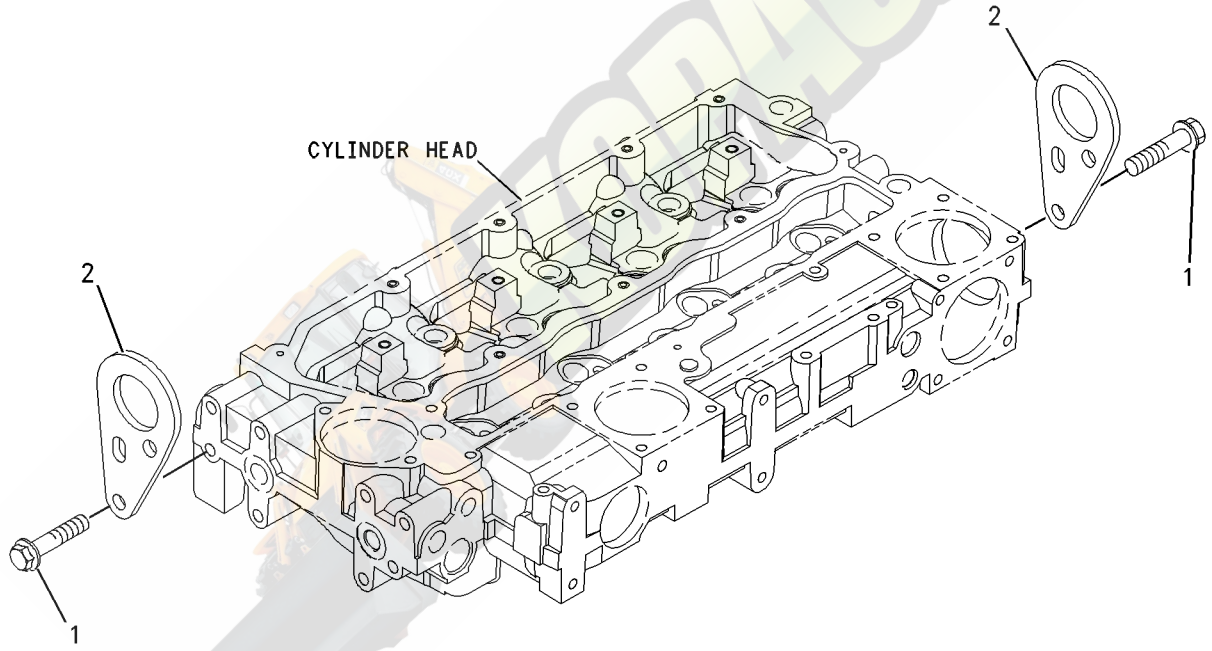

GRAPHIC #1 **<END>** g00955299

326-9013 LIFTING GP-ENGINE

S/N: C4Z1-UP

PART OF 321-7704, 321-7705 ENGINE AR-PRIMARY

AN ATTACHMENT

SMCS-1122 **i03124517**

NOTE	REF NO	GRAPHIC REF	PART NUMBER	QTY	PART NAME 1 2 3 4 5 6 (PRODUCT LEVEL)	SEE PAGE
M	1	1	**100-4830**	4	BOLT (M10X1.5X20-MM)	
	2	1	**225-8848**	2	PLATE-LIFTING	

M-METRIC PART

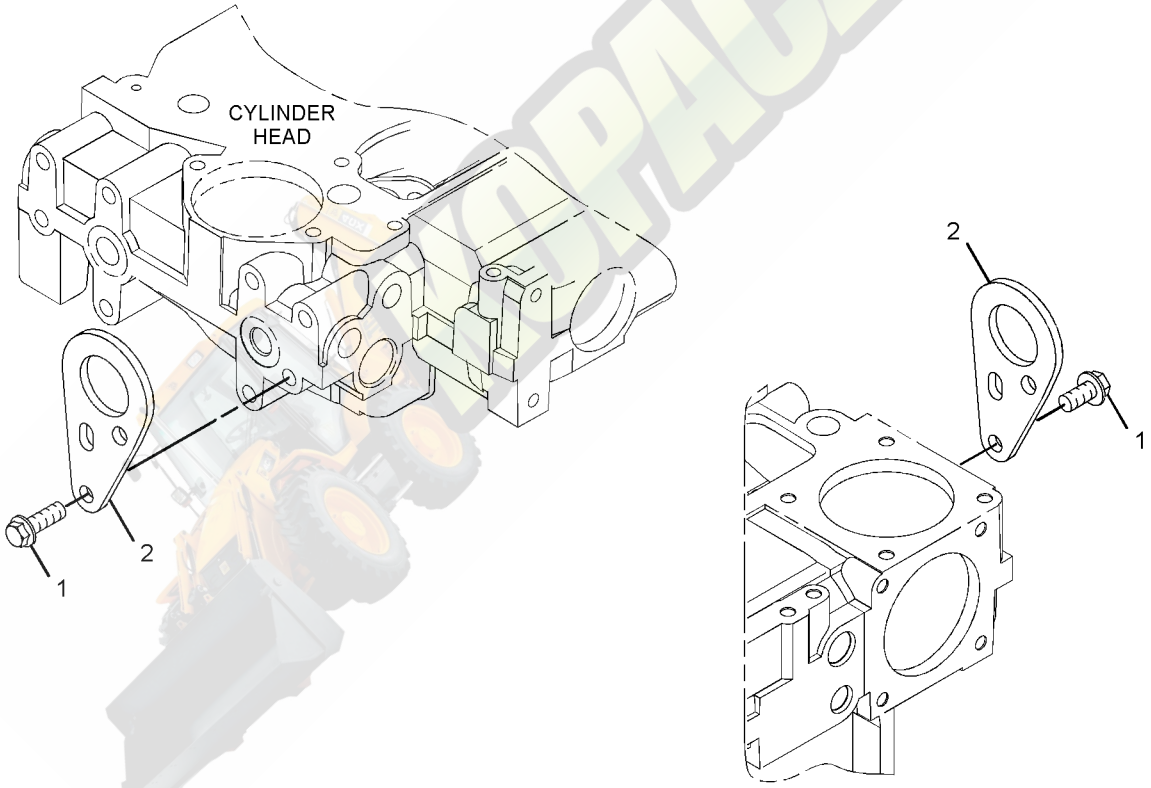

GRAPHIC #1 **<END>** g01636462

BASIC ENGINE

237-3658 MOUNTING GP-ENGINE

S/N: CRS1-UP
PART OF 322-1923, 322-1924 ENGINE AR-PRIMARY
AN ATTACHMENT

SMCS-1152, 1153, 1154 **i01998683**

NOTE	REF NO	GRAPHIC REF	PART NUMBER	QTY	PART NAME 1 2 3 4 5 6 (PRODUCT LEVEL)	SEE PAGE
	1	1	**101-2987**	6	PLUG	
	2	1	**6H-3616**	3	PLUG-PROTECTION	
	3	1	**195-2132**	1	SUPPORT-FRONT	
	4	1	**195-2134**	1	SUPPORT-FRONT	
	5	1	**195-2136**	8	STUD	
	6	1	**195-2221**	8	NUT	

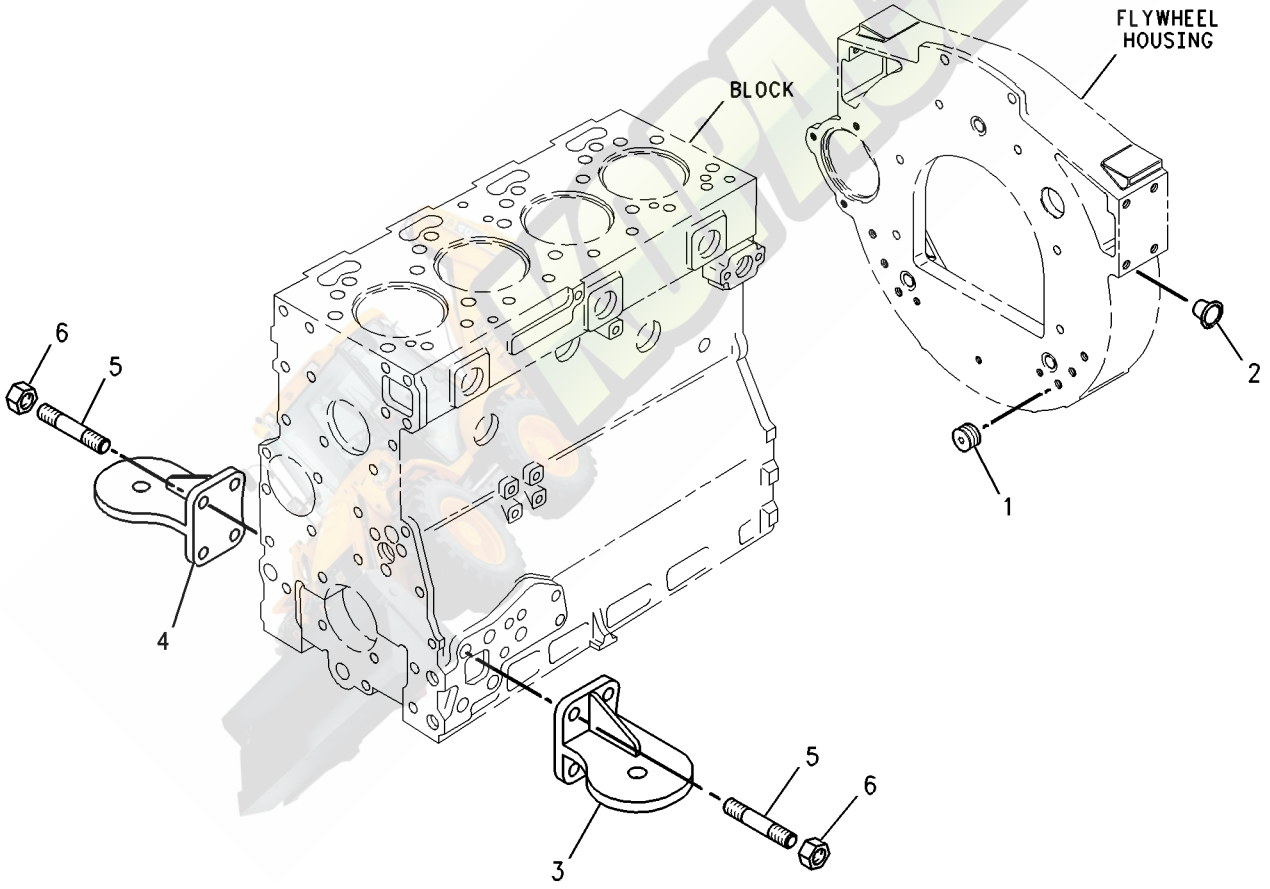

GRAPHIC #1 **<END>** g00738284

303-5778 MOUNTING GP-ENGINE

S/N: C4Z1-UP

PART OF 321-7704, 321-7705 ENGINE AR-PRIMARY

AN ATTACHMENT

SMCS-1152, 1153, 1154 **i03128292**

NOTE	REF NO	GRAPHIC REF	PART NUMBER	QTY	PART NAME 1 2 3 4 5 6 (PRODUCT LEVEL)	SEE PAGE
	1	1	**6H-3616**	3	PLUG-PROTECTION	
	2	1	**101-2987**	6	PLUG	
	3	1	**195-2132**	1	SUPPORT-FRONT	
	4	1	**195-2134**	1	SUPPORT-FRONT	
	5	1	**195-2136**	8	STUD	
	6	1	**195-2221**	8	NUT (M12X1.75-THD)	

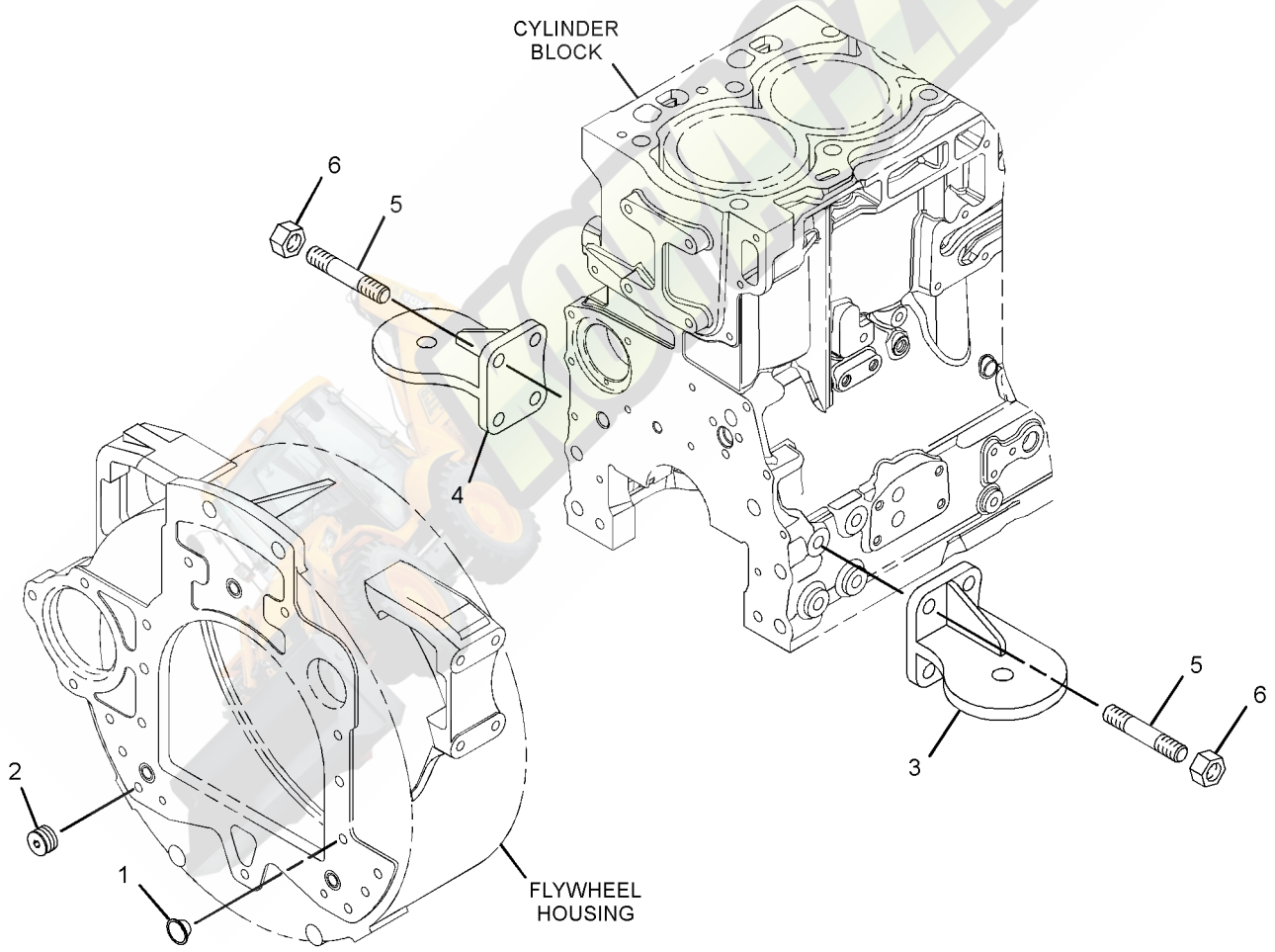

GRAPHIC #1 **<END>** g01378883

BASIC ENGINE

334-7152 MOUNTING GP-ENGINE & XMSN

S/N: JBA1-UP
PART OF 339-4986, 339-4987, 339-4988, 339-4989, 339-4990, 339-4991, 339-4992, 339-4993 ENGINE AR
AN ATTACHMENT

SMCS-1152, 1153, 1154 **i03288365**

NOTE	REF NO	GRAPHIC REF	PART NUMBER	QTY	PART NAME 1 2 3 4 5 6 (PRODUCT LEVEL)	SEE PAGE
	1	1	**9W-9910**	2	MOUNT AS	
	2	1	**9W-9915**	2	MOUNT AS	
	3	1	**9W-9952**	4	WASHER (16.75X86X8-MM THK)	
	4	1	**9W-9953**	4	SLEEVE	
	5	1	**335-1836**	4	BOLT	
	6	1	**8T-4121**	12	WASHER-HARD (11X21X2.5-MM THK)	
	7	1	**8T-4122**	8	WASHER-HARD (17X32X3.5-MM THK)	
M	8	1	**8T-4132**	4	NUT (M16X2-THD)	
M	9	1	**8T-4196**	12	BOLT (M10X1.5X35-MM)	

M-METRIC PART

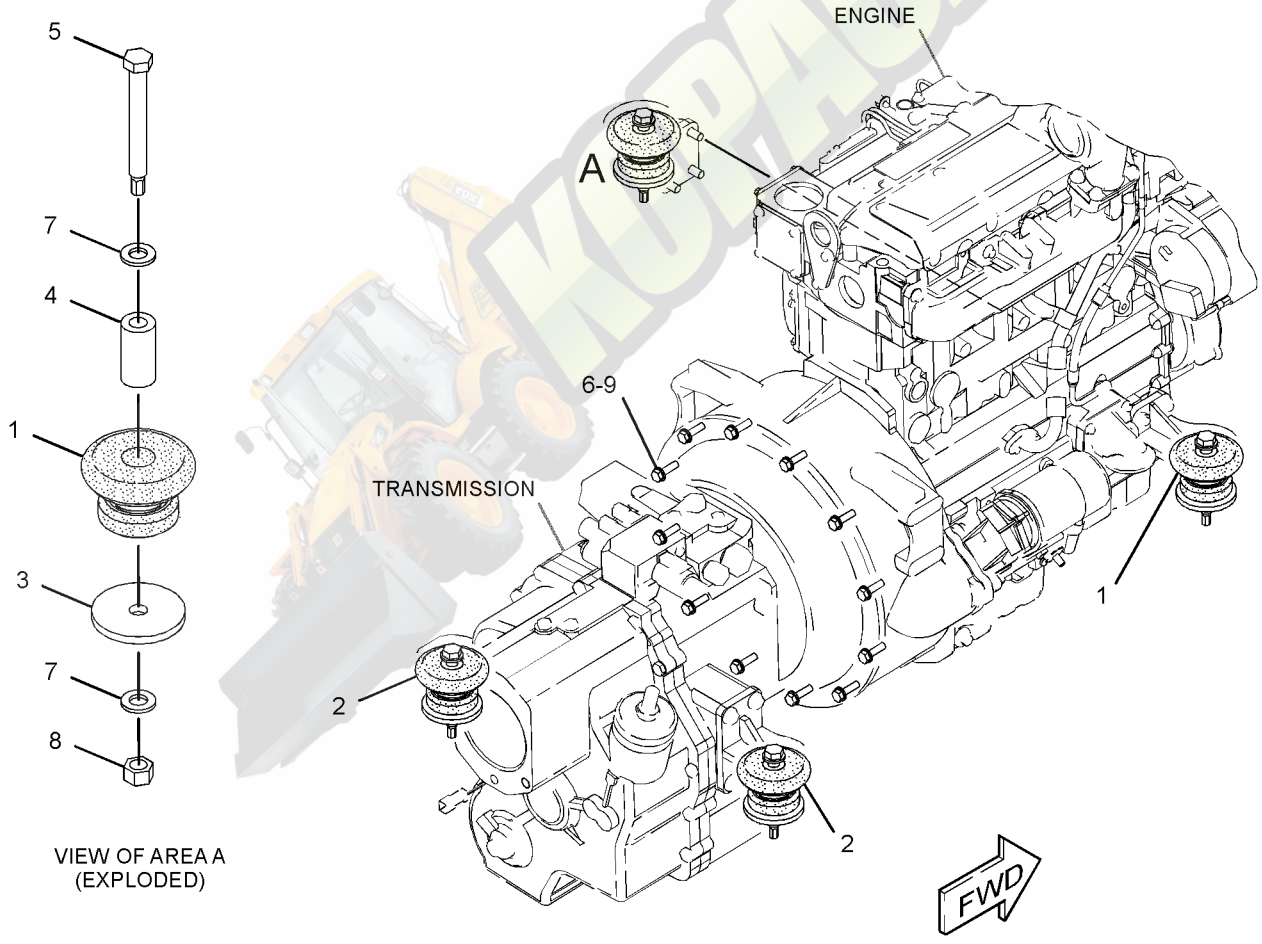

GRAPHIC #1 **<END>** g01682213

322-9476 PAN GP-OIL

S/N: C4Z1-UP

PART OF 321-7704, 321-7705 ENGINE AR-PRIMARY

AN ATTACHMENT

SMCS-1302 **i03728724**

NOTE	REF NO	GRAPHIC REF	PART NUMBER	QTY	PART NAME 1 2 3 4 5 6 (PRODUCT LEVEL)	SEE PAGE
M	1	1	**6I-0217**	14	BOLT (M8X1.25X20-MM)	
M	2	1	**6I-0260**	2	BOLT (M8X1.25X25-MM)	
	3	1	**6I-0289**	2	PLUG	
M	4	1	**6I-0363**	2	BOLT (M6X1X20-MM)	
	5	1	**6I-0572**	2	BOLT (M8X1.25X20-MM)	
	6	1	**7C-0351**	2	PLUG-DRAIN (ENGINE OIL)	
	7	1	**067-6213**	1	GASKET	
	8	1	**101-3771**	4	BOLT	
	9	1	**225-6005**	1	GASKET	
	10	1	**225-6041**	1	TUBE	
	11	1	**230-8094**	1	BRIDGE	
	12	1	**275-9883**	2	SEAL (DRAIN PLUG)	
	13	1	**304-8764**	1	PAN AS-OIL (ENGINE)	
	13A	1	**7C-1224**	2	INSERT	

M-METRIC PART

322-9476 **PAN GP-OIL** *(contd.)* **i03728724**

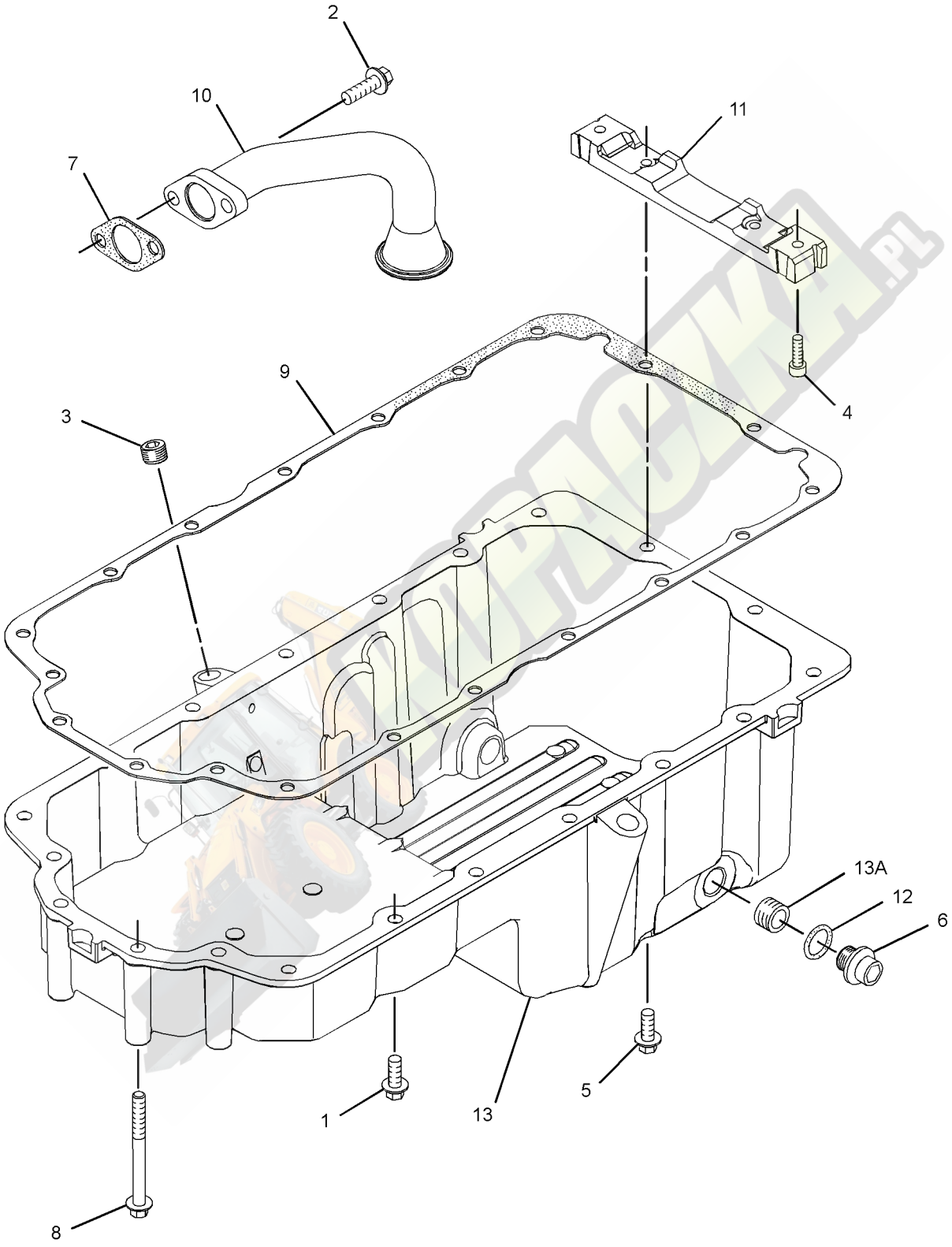

GRAPHIC #1 **<END>** g01442277

335-9799 PAN GP-OIL

S/N: CRS1-UP

PART OF 322-1923, 322-1924 ENGINE AR-PRIMARY

AN ATTACHMENT

SMCS-1302 **i03235802**

NOTE	REF NO	GRAPHIC REF	PART NUMBER	QTY	PART NAME 1 2 3 4 5 6 (PRODUCT LEVEL)	SEE PAGE
M	1	1	**6I-0217**	14	BOLT (M8X1.25X20-MM)	
M	2	1	**6I-0260**	2	BOLT (M8X1.25X25-MM)	
	3	1	**6I-0289**	2	PLUG	
M	4	1	**6I-0363**	2	BOLT (M6X1X20-MM)	
	5	1	**6I-0572**	2	BOLT (M8X1.25X20-MM)	
	6	1	**7C-0351**	2	PLUG-DRAIN (ENGINE OIL)	
	7	1	**067-6213**	1	GASKET	
	8	1	**101-3771**	4	BOLT	
	9	1	**225-6005**	1	GASKET	
	10	1	**225-6041**	1	TUBE	
	11	1	**230-8094**	1	BRIDGE	
	12	1	**275-9883**	2	SEAL (DRAIN PLUG)	
	13	1	**304-8764**	1	PAN AS-OIL (ENGINE)	
	13A	1	**7C-1224**	2	INSERT	

M-METRIC PART

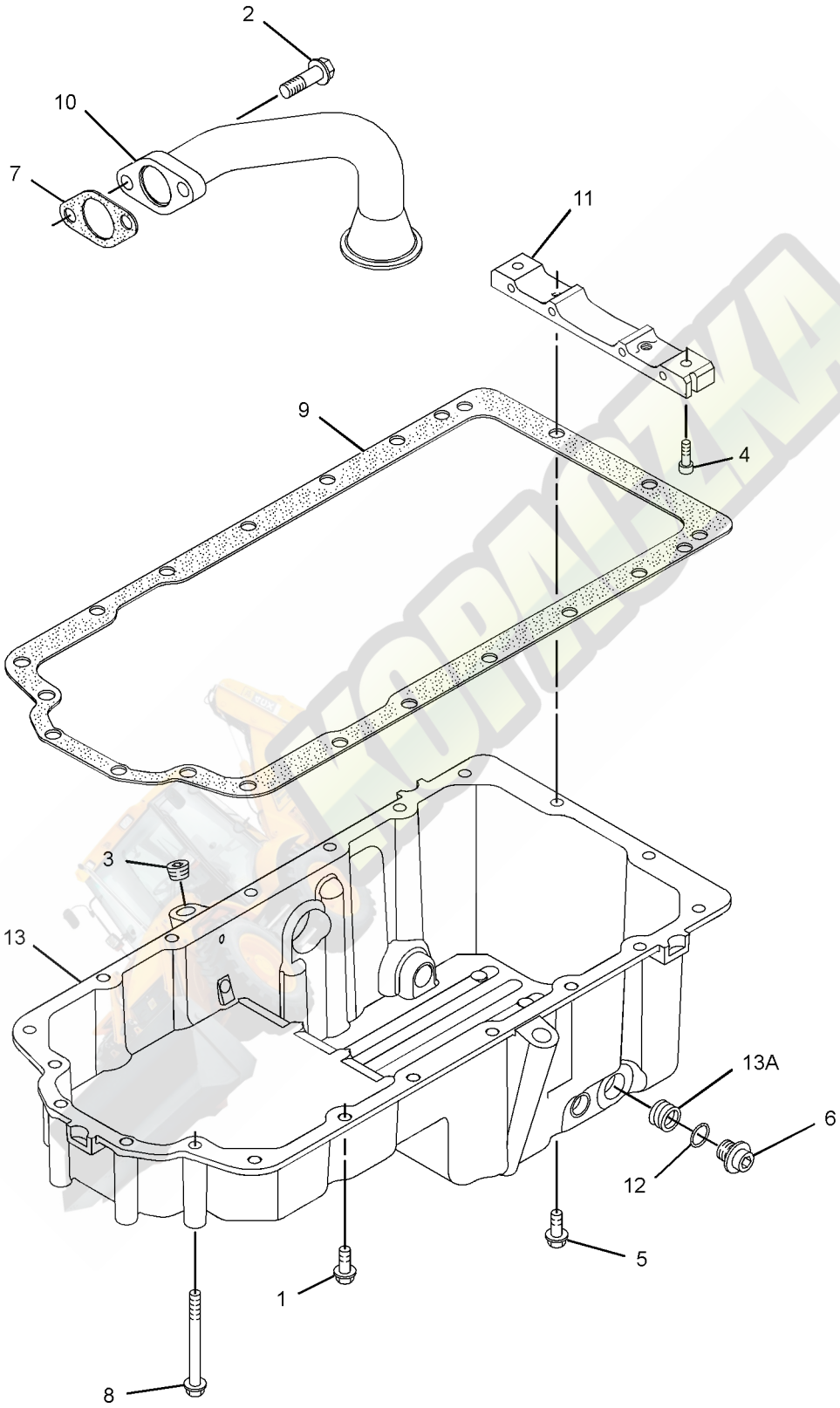

GRAPHIC #1 **<END>** g01653214

326-9002 PISTON & ROD GP

S/N: C4Z1-UP

PART OF 321-7704, 321-7705 ENGINE AR-PRIMARY

AN ATTACHMENT

SMCS-1213, 1214, 1215, 1218, 1219, 1225, 1239 **i03127789**

NOTE	REF NO	GRAPHIC REF	PART NUMBER	QTY	PART NAME 1 2 3 4 5 6 (PRODUCT LEVEL)	SEE PAGE
	1	1	**315-3395**	4	PISTON AS	
					(EACH INCLUDES)	
	1A	1	**124-3536**	2	RING-RETAINING	
	1B	1	**276-7476**	1	KIT-PISTON RING	
BJ	2	1	**225-5441**	1	ROD AS-CONNECTING (LENGTH L)	
					—OR—	
BJ		1	**225-5451**	4	ROD AS-CONNECTING (LENGTH K)	
					—OR—	
BJ		1	**225-5453**	4	ROD AS-CONNECTING (LENGTH J)	
					—OR—	
BJ		1	**225-5454**	4	ROD AS-CONNECTING (LENGTH H)	
					—OR—	
BJ		1	**225-5458**	4	ROD AS-CONNECTING (LENGTH G)	
					—OR—	
BJ		1	**225-5459**	4	ROD AS-CONNECTING (LENGTH F)	
					(EACH INCLUDES)	
	2A	1	**225-5438**	1	BUSHING	
	2B	1	**225-5439**	2	BOLT-SPECIAL (CONNECTING ROD)	

B-USE AS REQUIRED
J-ENSURE THAT CORRECT ROD LENGTH IS FITTED

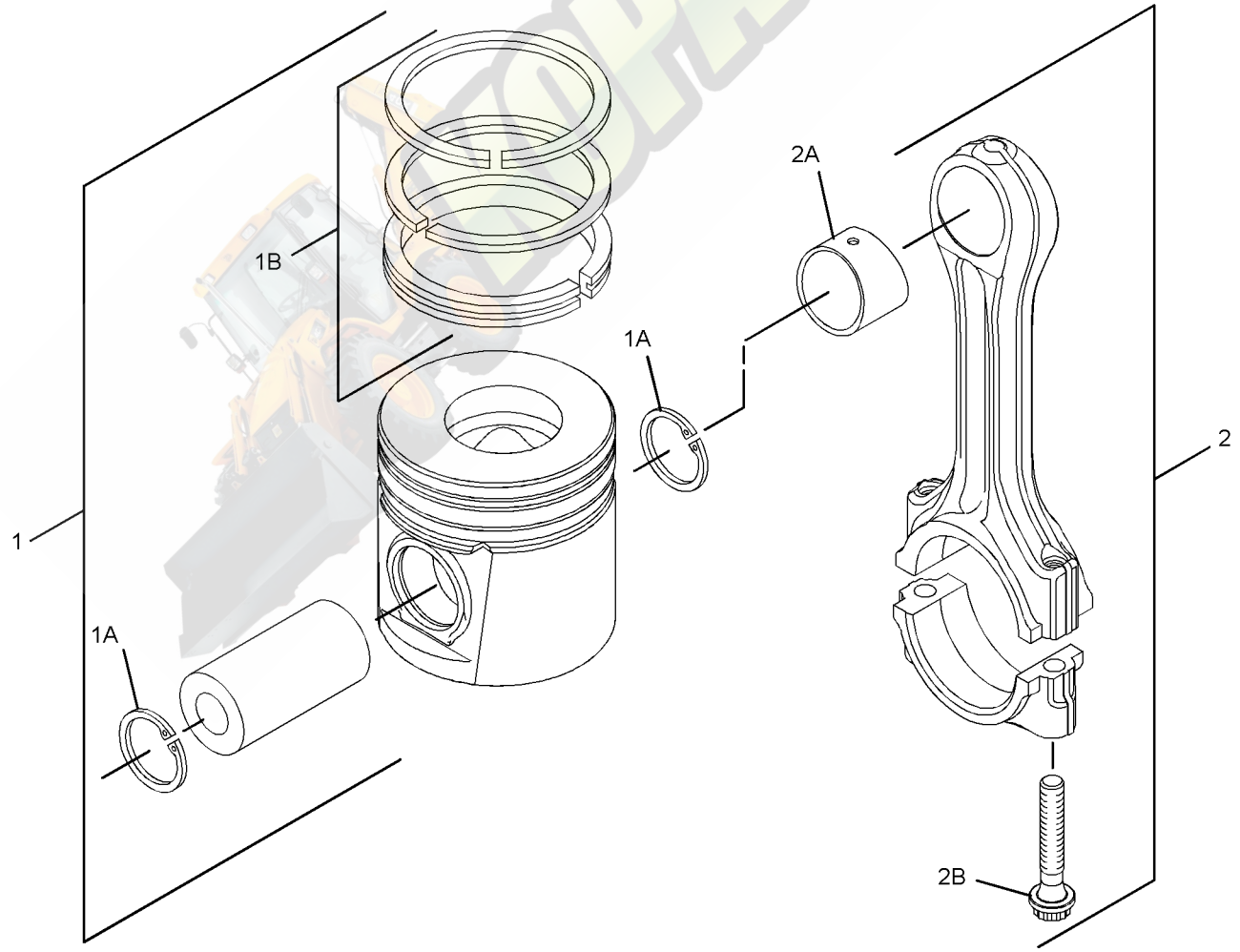

GRAPHIC #1 **<END>** g01523198

BASIC ENGINE

334-4204 PISTON & ROD GP

S/N: CRS1-UP

PART OF 322-1923, 322-1924 ENGINE AR-PRIMARY

AN ATTACHMENT

SMCS-1213, 1214, 1215, 1218, 1219, 1225, 1239 **i03143143**

NOTE	REF NO	GRAPHIC REF	PART NUMBER	QTY	PART NAME 1 2 3 4 5 6 (PRODUCT LEVEL)	SEE PAGE
	1	1	**225-5437**	4	PISTON AS	
					(EACH INCLUDES)	
AB		1	**288-1394**	1	PISTON AS (0.5-MM OS)	
AB		1	**288-1395**	1	PISTON AS (1.0-MM OS)	
	1A	1	**124-3536**	2	RING-RETAINING	
	1B	1	**225-5436**	1	KIT-PISTON RING	
AB		1	**334-2318**	1	KIT-PISTON RING (1.0-MM OS)	
AB		1	**334-2319**	1	KIT-PISTON RING (0.5-MM OS)	
BJ	2	1	**225-5441**	4	ROD AS-CONNECTING (LENGTH L)	
					—OR—	
BJ		1	**225-5451**	4	ROD AS-CONNECTING (LENGTH K)	
					—OR—	
BJ		1	**225-5453**	4	ROD AS-CONNECTING (LENGTH J)	
					—OR—	
BJ		1	**225-5454**	4	ROD AS-CONNECTING (LENGTH H)	
					—OR—	
BJ		1	**225-5458**	4	ROD AS-CONNECTING (LENGTH G)	
					—OR—	
BJ		1	**225-5459**	4	ROD AS-CONNECTING (LENGTH F)	
					(EACH ROD ASSEMBLY INCLUDES)	
	2A	1	**225-5438**	1	BUSHING	
	2B	1	**225-5439**	2	BOLT-SPECIAL (CONNECTING ROD)	

A-NOT PART OF THIS GROUP
B-USE AS REQUIRED
J-INSURE CORRECT ROD LENGTH IS FITTED

334-4204 **PISTON & ROD GP** *(contd.)* **i03143143**

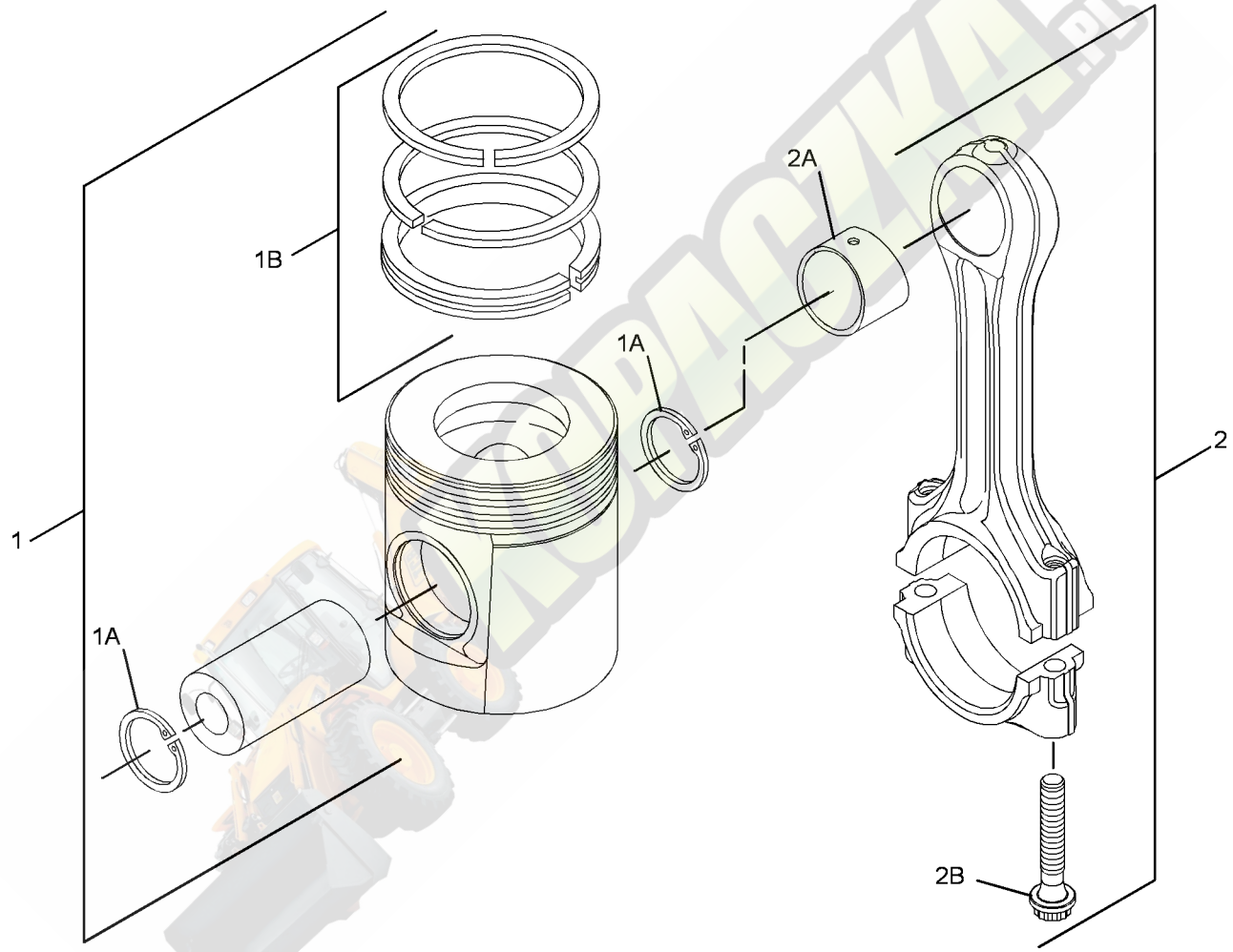

GRAPHIC #1 **<END>** g01374535

298-5129 PLUG GP-CYLINDER HEAD

S/N: C4Z1-UP
PART OF 321-7704, 321-7705 ENGINE AR-PRIMARY
AN ATTACHMENT

SMCS-1100 **i03128287**

NOTE	REF NO	GRAPHIC REF	PART NUMBER	QTY	PART NAME 1 2 3 4 5 6 (PRODUCT LEVEL)	SEE PAGE
	1	1	**232-1322**	1	PLUG	
	2	1	**199-9751**	1	SEAL-O-RING	

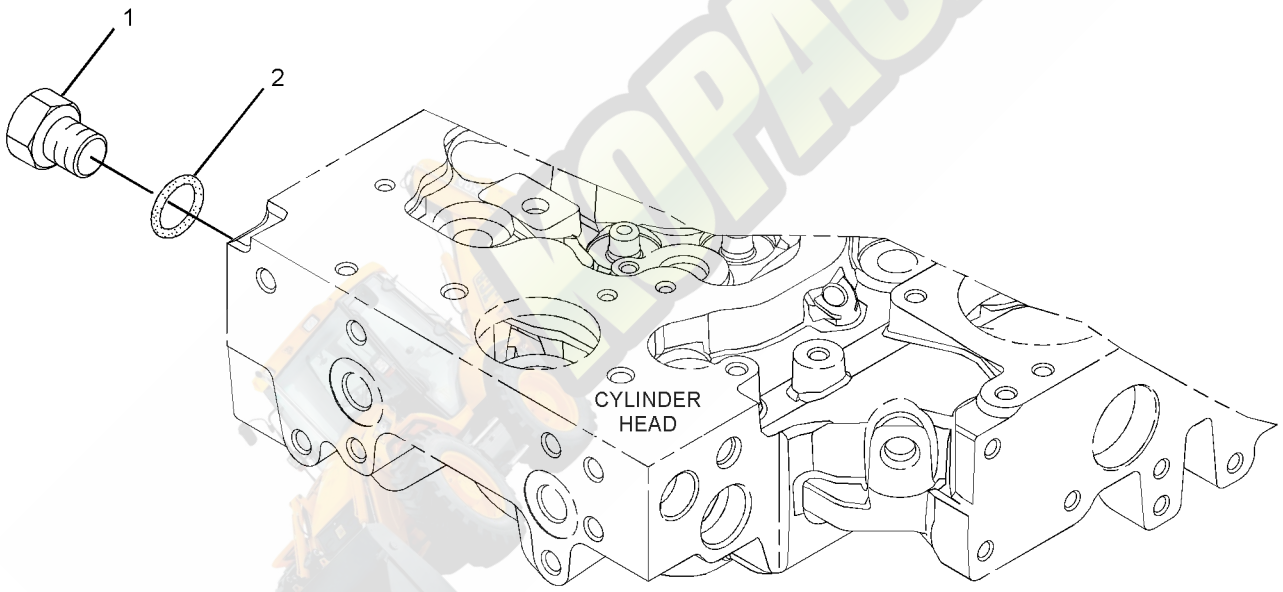

GRAPHIC #1 **<END>** g01305536

225-4317 PLUG GP-ENGINE

S/N: CRS1-UP
FRONT HOUSING, CYLINDER HEAD
PART OF 322-1923, 322-1924 ENGINE AR-PRIMARY
AN ATTACHMENT

SMCS-1000 **i01772005**

NOTE	REF NO	GRAPHIC REF	PART NUMBER	QTY	PART NAME 1 2 3 4 5 6 (PRODUCT LEVEL)	SEE PAGE
	1	1	**2B-0858**	3	PLUG-PIPE	

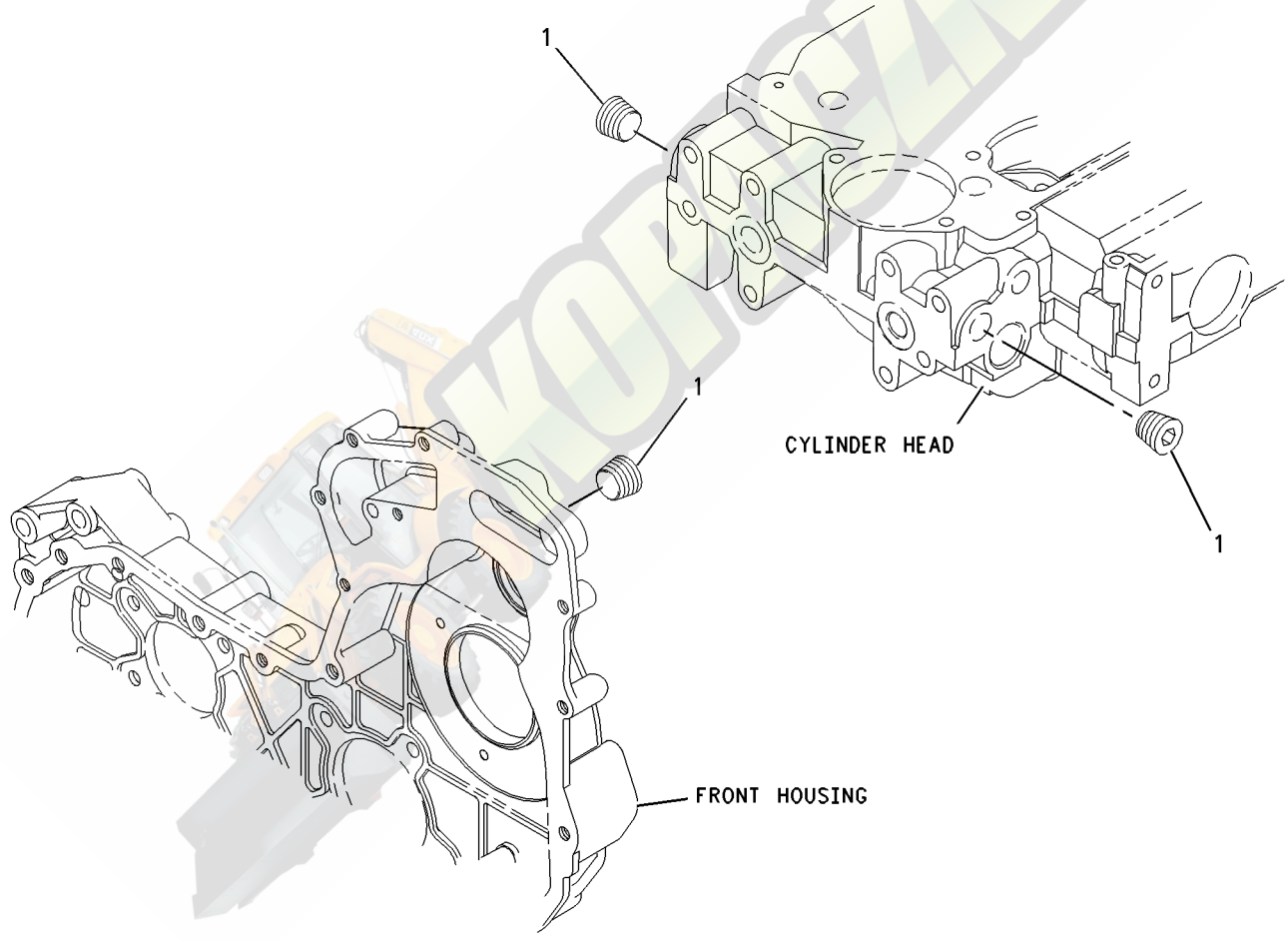

GRAPHIC #1 **<END>** g00911937

230-7569 PLUG GP-ENGINE

S/N: CRS1-UP
PART OF 322-1923, 322-1924 ENGINE AR-PRIMARY
AN ATTACHMENT

SMCS-1000 **i01896487**

NOTE	REF NO	GRAPHIC REF	PART NUMBER	QTY	PART NAME 1 2 3 4 5 6 (PRODUCT LEVEL)	SEE PAGE
	1	1	**231-0046**	1	PLUG	

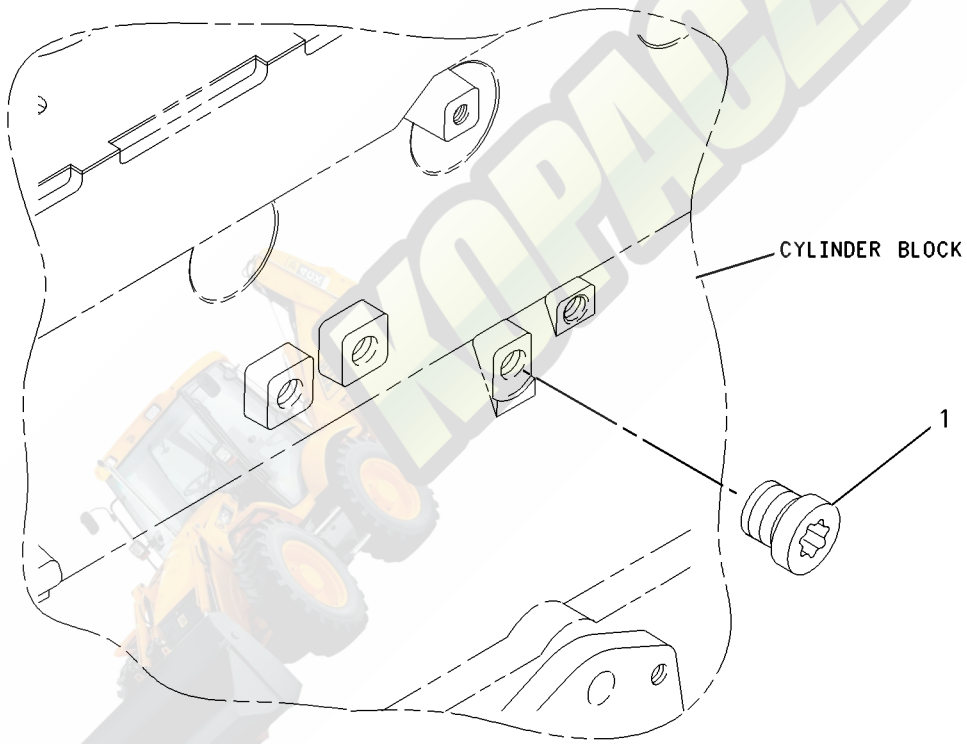

GRAPHIC #1 **<END>** g00911955

232-6204 PLUG GP-ENGINE

S/N: CRS1-UP
PART OF 322-1923, 322-1924 ENGINE AR-PRIMARY
AN ATTACHMENT

SMCS-1000 **i02160472**

NOTE	REF NO	GRAPHIC REF	PART NUMBER	QTY	PART NAME 1 2 3 4 5 6 (PRODUCT LEVEL)	SEE PAGE
	1	1	**199-9751**	1	SEAL-O-RING	
	2	1	**232-1322**	1	PLUG	

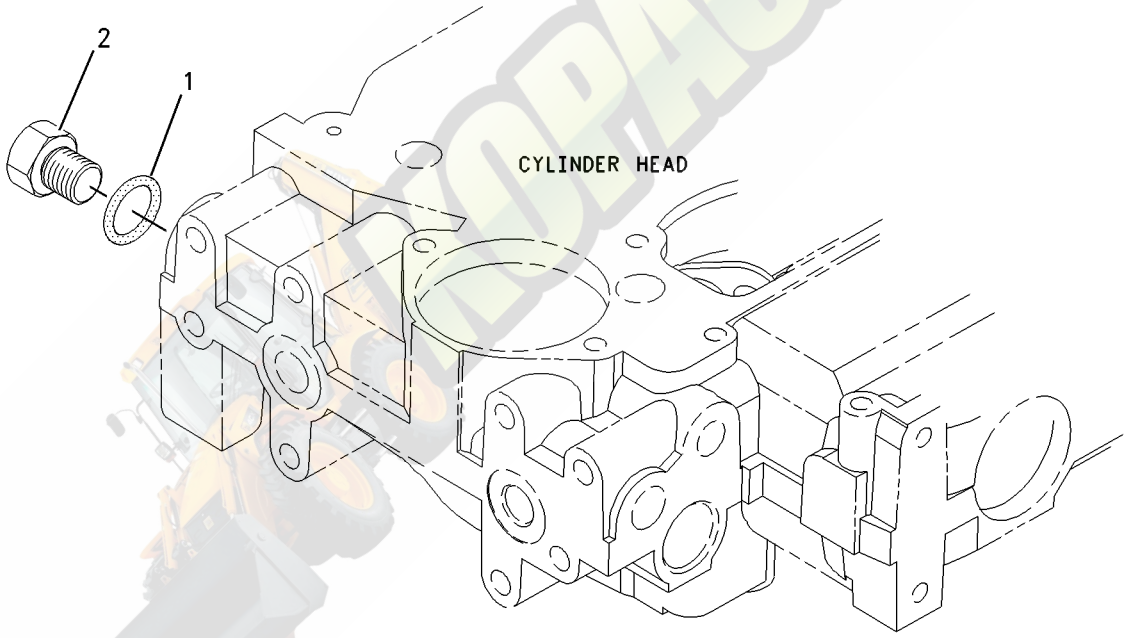

GRAPHIC #1 **<END>** g00950934

298-5131 PLUG GP-ENGINE

S/N: C4Z1-UP
PART OF 321-7704, 321-7705 ENGINE AR-PRIMARY
AN ATTACHMENT

SMCS-1000 **i03128286**

NOTE	REF NO	GRAPHIC REF	PART NUMBER	QTY	PART NAME 1 2 3 4 5 6 (PRODUCT LEVEL)	SEE PAGE
	1	1	**2B-0858**	3	PLUG-PIPE	

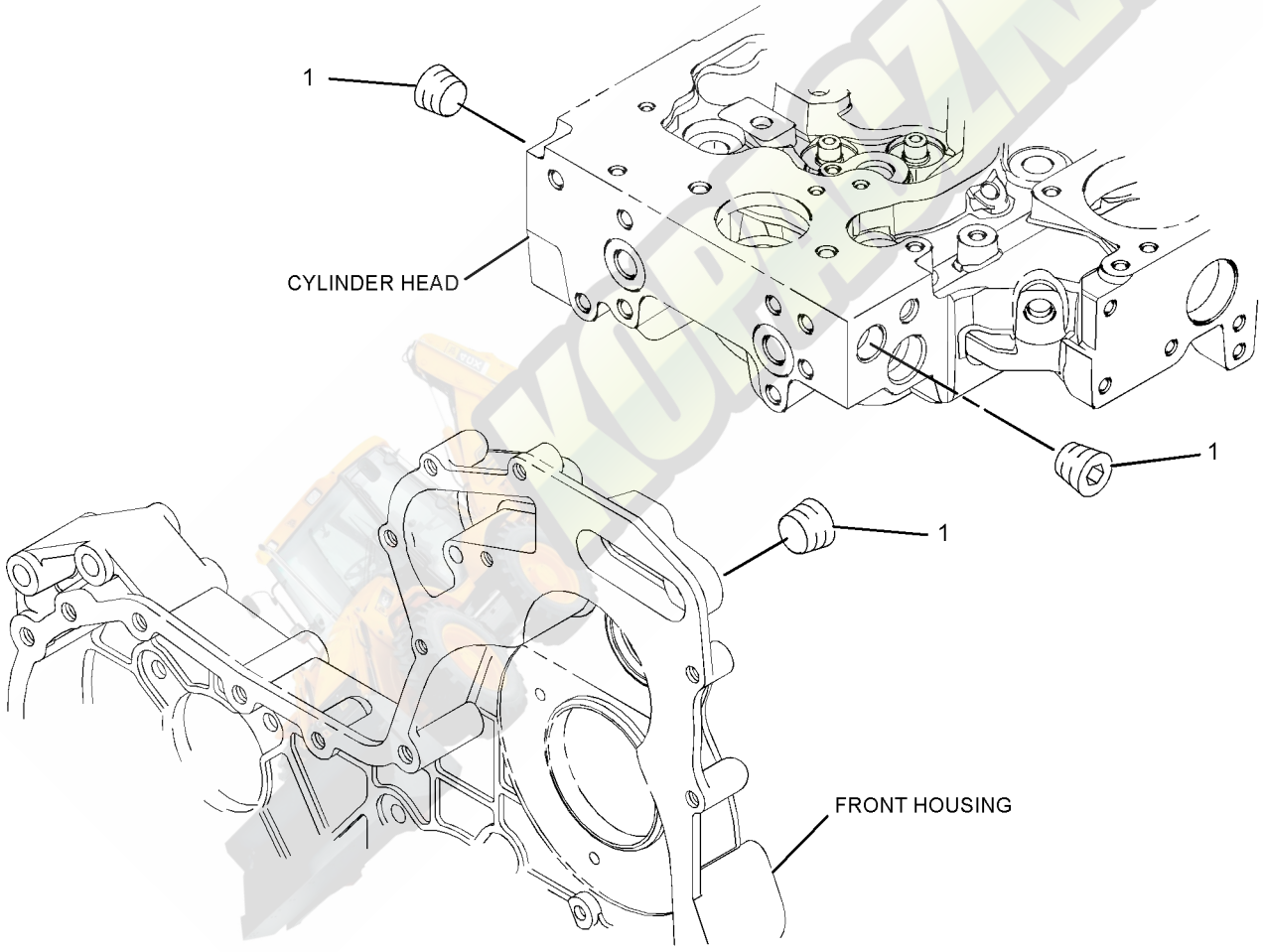

GRAPHIC #1 **<END>** g01305448

304-8761 PLUG GP-ENGINE

S/N: C4Z1-UP

PART OF 321-7704, 321-7705 ENGINE AR-PRIMARY

AN ATTACHMENT

SMCS-1000 **i03128290**

NOTE	REF NO	GRAPHIC REF	PART NUMBER	QTY	PART NAME 1 2 3 4 5 6 (PRODUCT LEVEL)	SEE PAGE
	1	1	**6I-0646**	1	BOLT (M10X1.5X14-MM)	
	2	1	**214-3203**	1	WASHER (SEALING)	

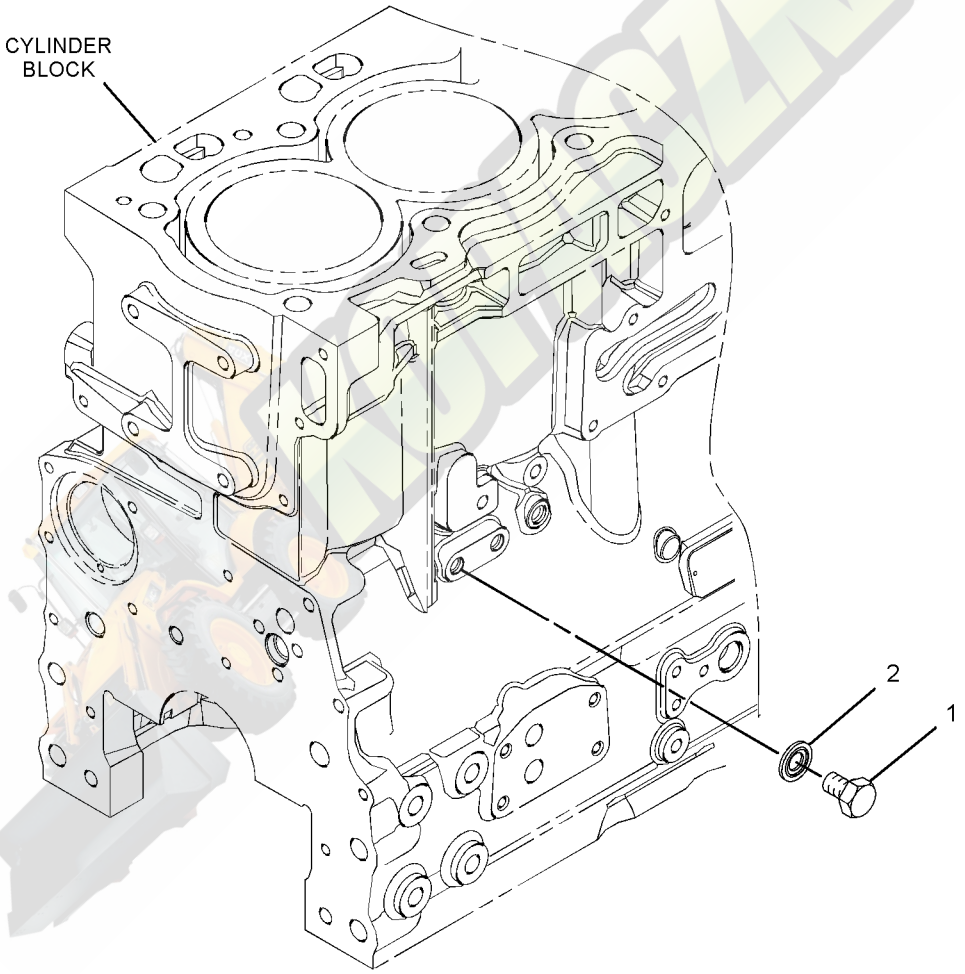

GRAPHIC #1 **<END>** g01373022

BASIC ENGINE

225-5963 ROCKER ARM GP

S/N: CRS1-UP
PART OF 334-4207 VALVE MECHANISM GP
AN ATTACHMENT

SMCS-1102, 1123 **i03304187**

NOTE	REF NO	GRAPHIC REF	PART NUMBER	QTY	PART NAME 1 2 3 4 5 6 (PRODUCT LEVEL)	SEE PAGE
	1	1	**225-5625**	4	LEVER AS	
					(EACH INCLUDES)	
	1A	1	**5B-9079**	1	NUT-JAM (3/8-24-THD)	
	1B	1	**185-1546**	1	SCREW	
	2	1	**225-5634**	1	SHAFT AS	
	2A	1	**225-5629**	2	PLUG	
	3	1	**225-5638**	3	SPRING	
	4	1	**225-5640**	4	LEVER AS	
					(EACH INCLUDES)	
	4A	1	**5B-9079**	1	NUT-JAM (3/8-24-THD)	
	4B	1	**185-1546**	1	SCREW	
	5	1	**225-5959**	2	CLIP	
	6	1	**225-5960**	1	BOLT (M8X1.25X60-MM)	
	7	1	**225-5961**	2	WASHER (26.7X34.32X0.38-MM THK)	
	8	1	**225-5962**	3	BOLT (M8X1.25X30-MM)	

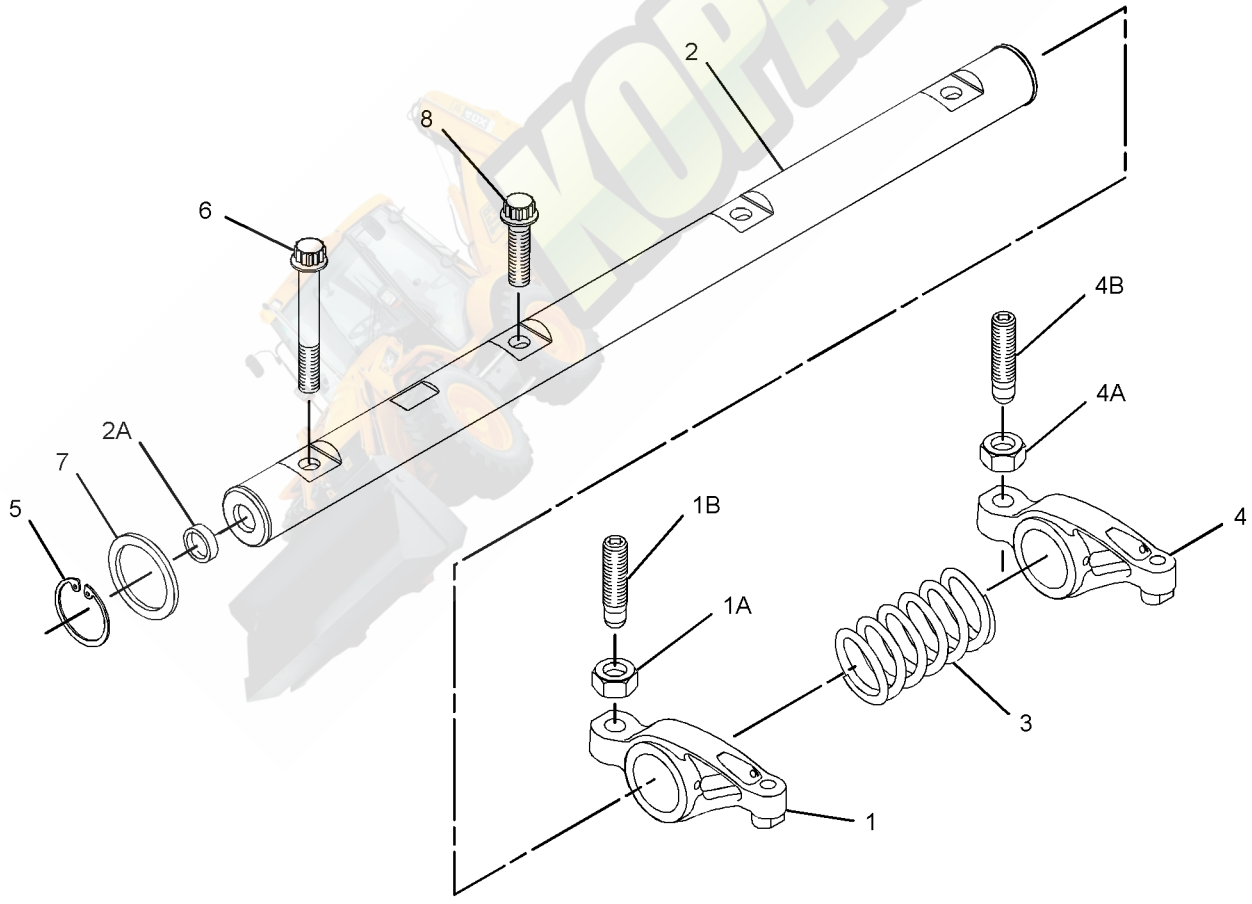

GRAPHIC #1 **<END>** g01368510

315-3385 ROCKER ARM GP

S/N: C4Z1-UP

PART OF 326-9004 VALVE MECHANISM GP

AN ATTACHMENT

SMCS-1102, 1123 **i03131135**

NOTE	REF NO	GRAPHIC REF	PART NUMBER	QTY	PART NAME 1 2 3 4 5 6 (PRODUCT LEVEL)	SEE PAGE
	1	1	**225-5634**	1	SHAFT AS	
	1A	1	**225-5629**	2	PLUG	
	2	1	**225-5638**	3	SPRING	
	3	1	**225-5959**	2	CLIP	
	4	1	**225-5960**	1	BOLT (M8X1.25X60-MM)	
	5	1	**225-5961**	2	WASHER (26.7X34.32X0.38-MM THK)	
	6	1	**225-5962**	3	BOLT (M8X1.25X30-MM)	
	7	1	**315-3386**	4	ROCKER ARM AS	
					(EACH INCLUDES)	
	7A	1	**278-5113**	1	ADJUSTING SCREW (TORX)	
	7B	1	**315-3387**	1	NUT	
	8	1	**315-3388**	4	ROCKER ARM AS	
					(EACH INCLUDES)	
	8A	1	**278-5113**	1	ADJUSTING SCREW (TORX)	
	8B	1	**315-3387**	1	NUT	

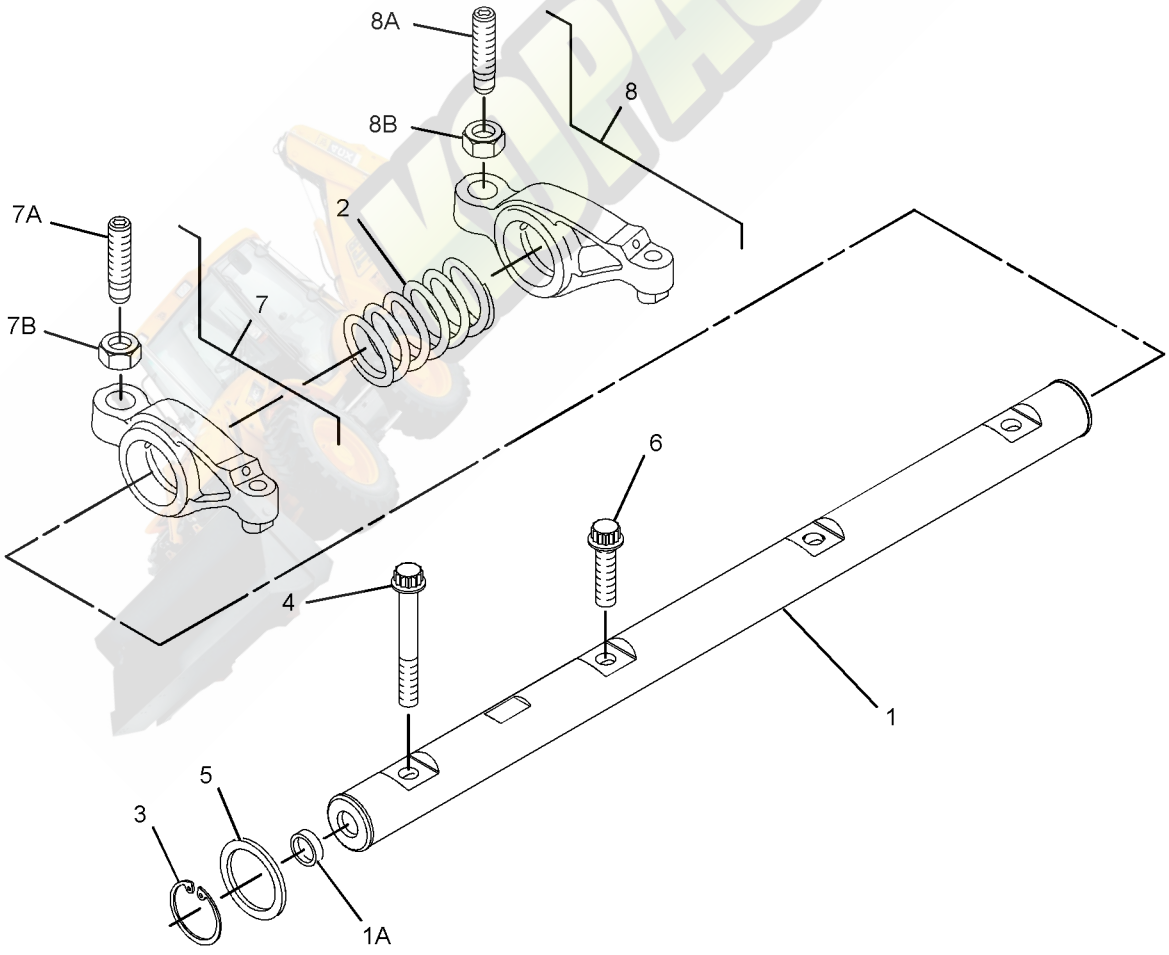

GRAPHIC #1 **<END>** g01399975

326-9004 VALVE MECHANISM GP

S/N: C4Z1-UP

PART OF 321-7704, 321-7705 ENGINE AR-PRIMARY

AN ATTACHMENT

SMCS-1102, 1112, 1121, 1123, 1208, 1209 **i03127783**

NOTE	REF NO	GRAPHIC REF	PART NUMBER	QTY	PART NAME 1 2 3 4 5 6 (PRODUCT LEVEL)	SEE PAGE
Y	1	1	**315-3385**	1	ROCKER ARM GP	71

Y-SEPARATE ILLUSTRATION

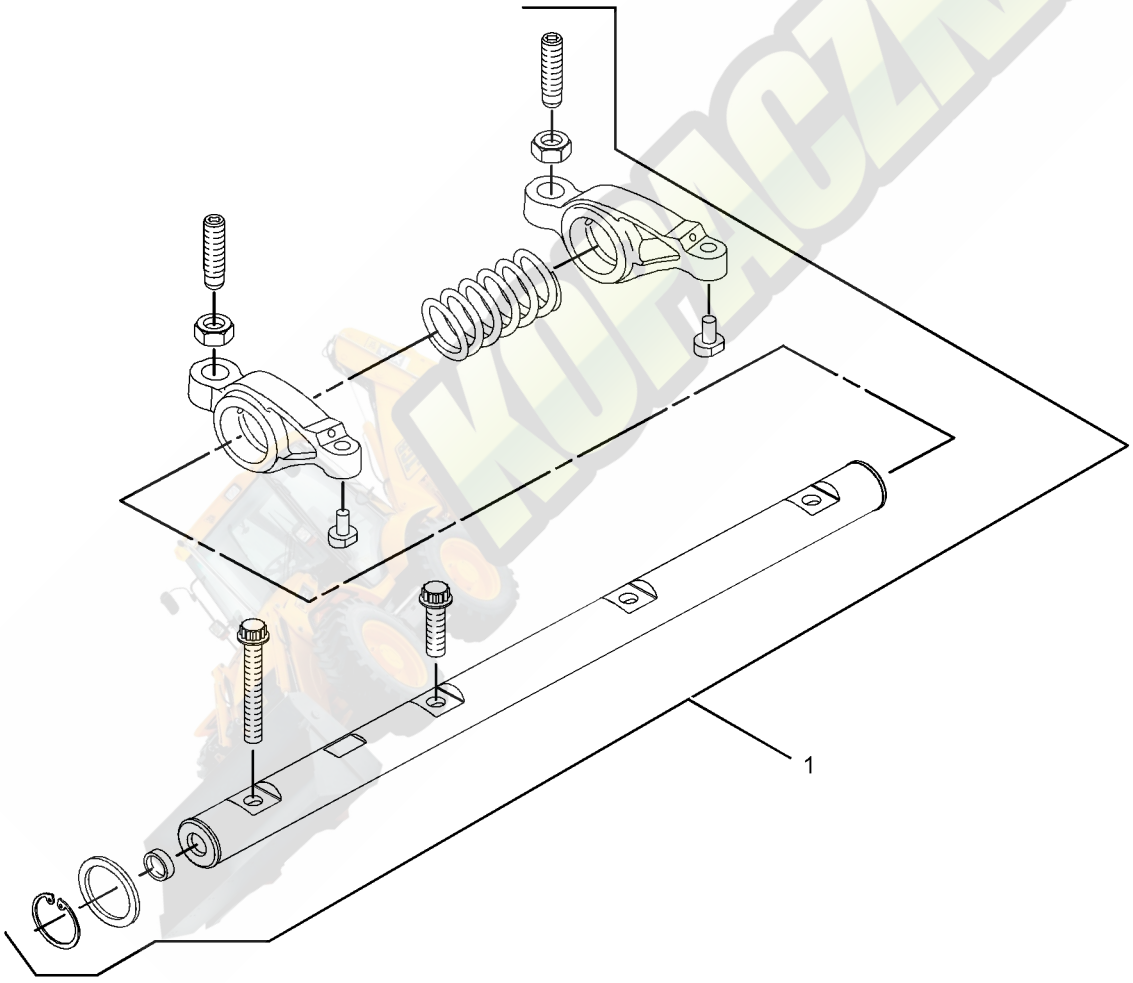

GRAPHIC #1 **<END>** g01611483

334-4207 VALVE MECHANISM GP

S/N: CRS1-UP

PART OF 322-1923, 322-1924 ENGINE AR-PRIMARY

AN ATTACHMENT

SMCS-1102, 1112, 1121, 1123, 1208, 1209 **i03143145**

NOTE	REF NO	GRAPHIC REF	PART NUMBER	QTY	PART NAME 1 2 3 4 5 6 (PRODUCT LEVEL)	SEE PAGE
Y	1	1	**225-5963**	1	ROCKER ARM GP	70

Y-SEPARATE ILLUSTRATION

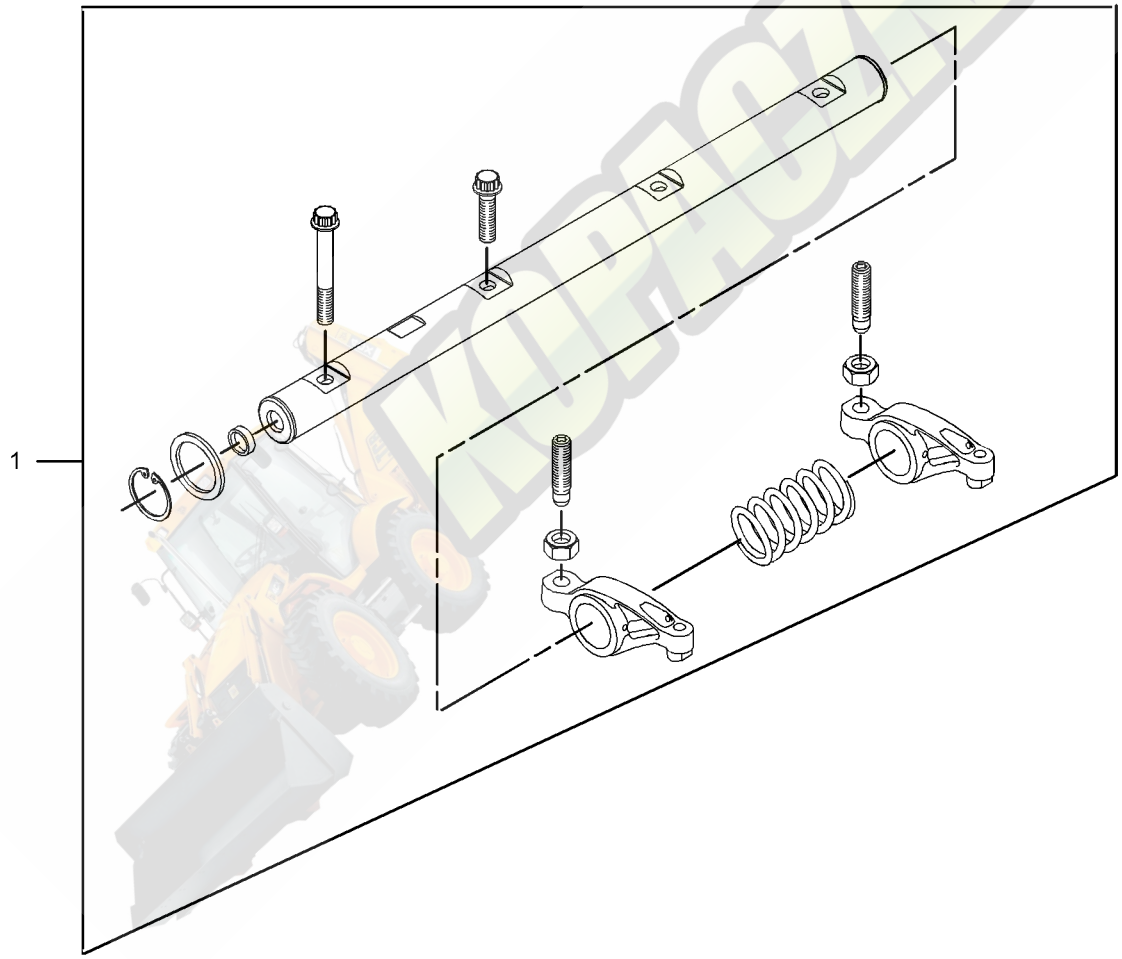

GRAPHIC #1 **<END>** g01619790

LUBRICATION SYSTEM

323-9307 BREATHER GP–ENGINE

S/N: JBA1-UP

PART OF 339-4988, 339-4989, 339-4992, 339-4993 ENGINE AR

AN ATTACHMENT

SMCS-1317 **i03564702**

NOTE	REF NO	GRAPHIC REF	PART NUMBER	QTY	PART NAME 1 2 3 4 5 6 (PRODUCT LEVEL)	SEE PAGE
	1	1	**6I-1497**	1	SEAL	
	2	1	**8T-9402**	3	CLAMP-HOSE	
	3	1	**165-4021**	1	CANISTER AS-BREATHER (CRANKCASE)	
		1	**185-6643**	1	SEAL (BREATHER)	
	4	1	**202-5909**	1	TUBE AS-OIL	
	5	1	**254-4418**	1	HOSE	
	6	1	**311-6094**	1	PLATE AS	
	7	1	**315-5496**	1	HOSE	
	8	1	**5D-1026**	2	CLAMP-BAND	
	9	1	**5P-4116**	2	WASHER-HARD (8.8X20.5X2-MM THK)	
M	10	1	**8C-3798**	2	BOLT-LOCKING (M6X1X30-MM)	
M	11	1	**8T-4138**	2	BOLT (M6X1X20-MM)	
M	12	1	**8T-4189**	2	BOLT (M8X1.25X20-MM)	
	13	1	**8T-4205**	4	WASHER-HARD (7.2X14.5X2-MM THK)	
	14	1	**8T-7529**	2	CLIP	
E	15	1	**136-1955**		HOSE (82-CM)	

E-ORDER BY THE CENTIMETER
M-METRIC PART

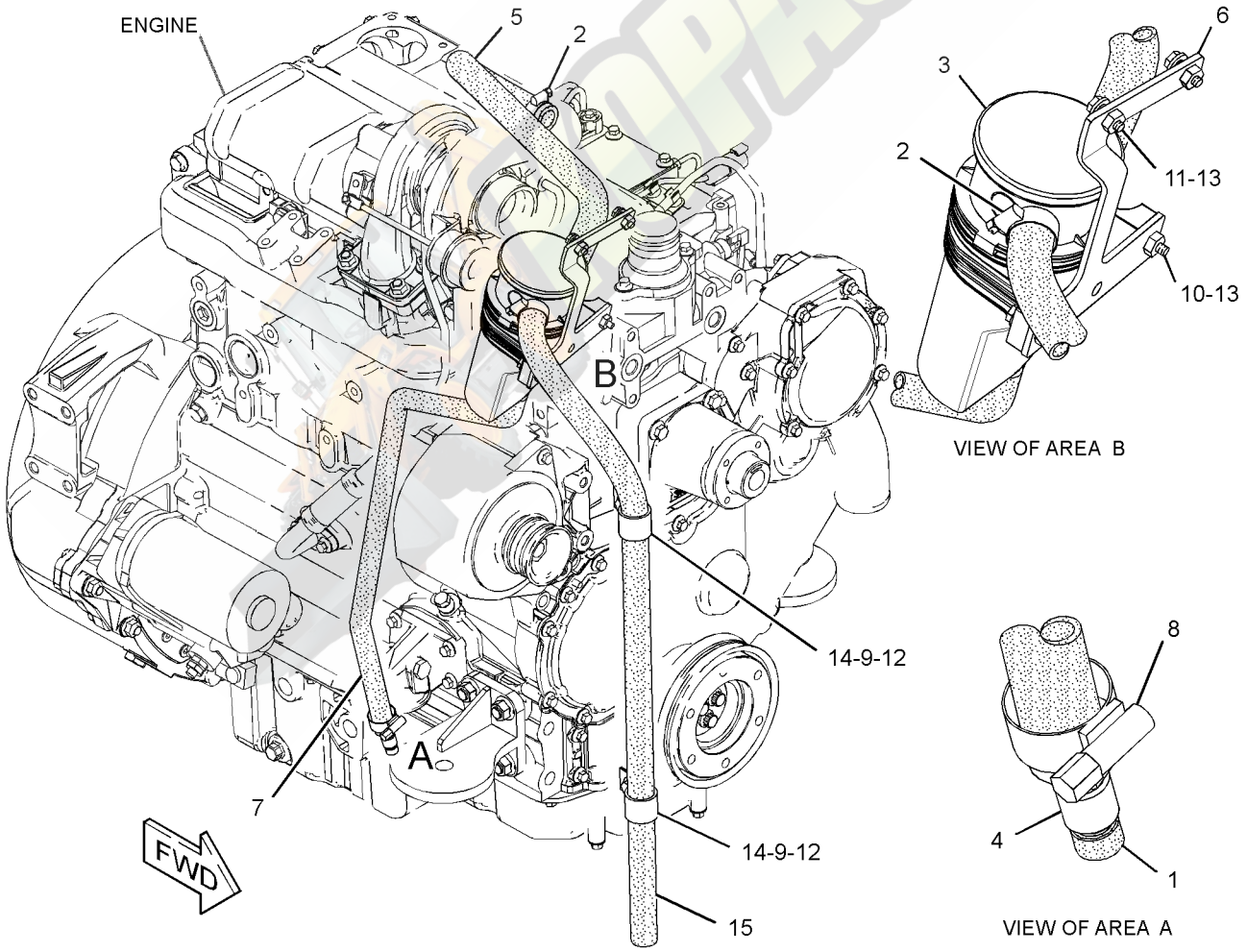

GRAPHIC #1 **<END>** g01890134

309-7555 FILLER GP-ENGINE OIL

S/N: C4Z1-UP
PART OF 321-7704, 321-7705 ENGINE AR-PRIMARY
AN ATTACHMENT

SMCS-1316 **i03128307**

NOTE	REF NO	GRAPHIC REF	PART NUMBER	QTY	PART NAME 1 2 3 4 5 6 (PRODUCT LEVEL)	SEE PAGE
M	1	1	**6I-0260**	2	BOLT (M8X1.25X25-MM)	
	2	1	**225-6522**	1	PLUG-CUP	
	3	1	**317-3769**	1	FILLER GP-ENGINE OIL	
	3A	1	**317-3778**	1	SEAL-O-RING	

M-METRIC PART

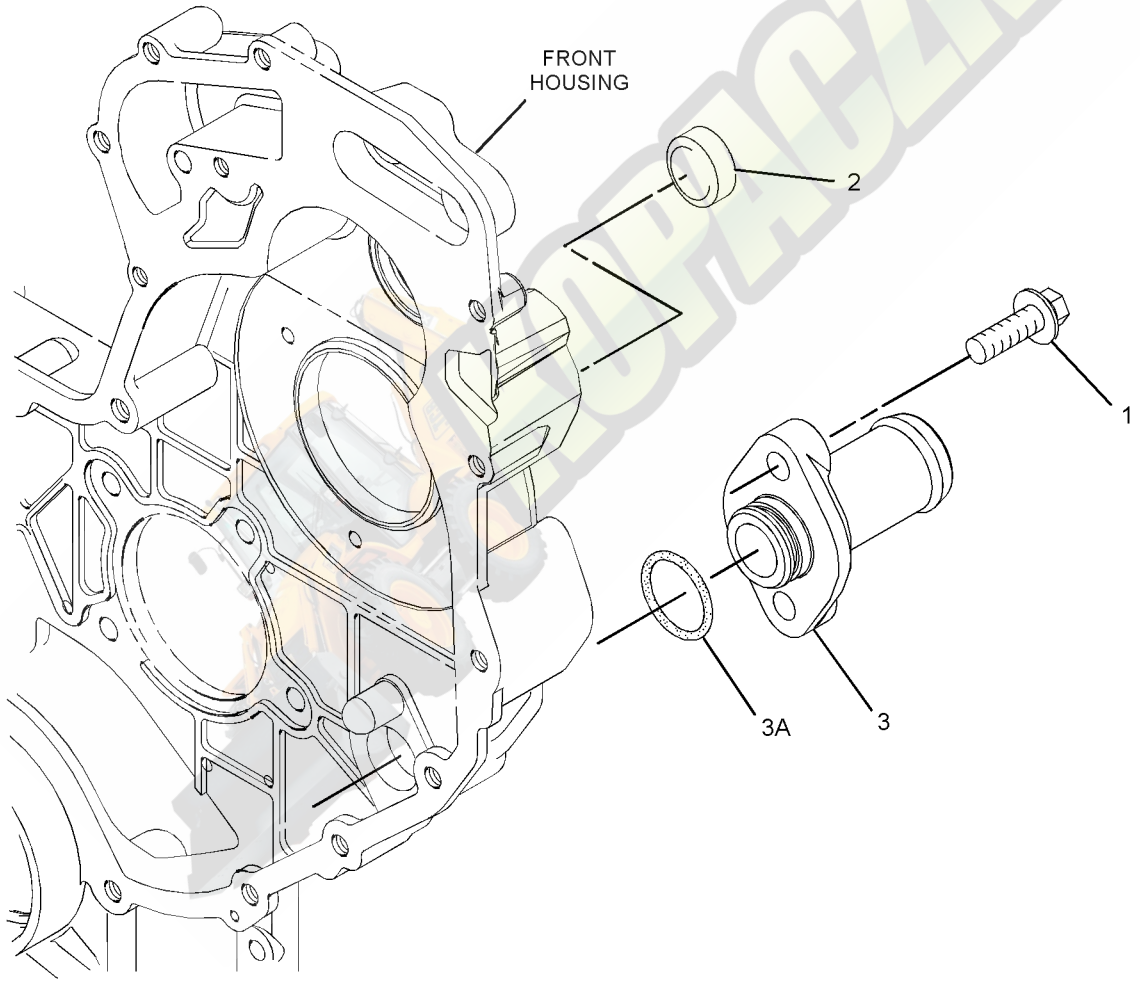

GRAPHIC #1 **<END>** g01378834

LUBRICATION SYSTEM

307-2033 GAUGE GP-OIL LEVEL & FILLER—ENGINE

S/N: JBA1-UP
PART OF 339-4986, 339-4987, 339-4988, 339-4989, 339-4990, 339-4991, 339-4992, 339-4993 ENGINE AR
AN ATTACHMENT

SMCS-1316, 1326 **i03577106**

NOTE	REF NO	GRAPHIC REF	PART NUMBER	QTY	PART NAME 1 2 3 4 5 6 (PRODUCT LEVEL)	SEE PAGE
	1	1	**6I-1497**	1	SEAL	
	2	1	**9M-7958**	1	CLAMP-HOSE	
	3	1	**127-4471**	1	CLAMP-HOSE	
	4	1	**236-6651**	1	CAP AS (ENGINE OIL FILLER)	
	5	1	**293-4671**	1	TUBE AS	
	6	1	**299-4684**	1	TUBE AS	
	7	1	**299-4687**	1	GAUGE-OIL LEVEL (DIPSTICK) (ENGINE)	
	8	1	**304-9457**	1	BRACKET AS	
M		1	**8T-3490**	1	NUT-WELD (M10X1.5-THD)	
	9	1	**321-7031**	1	HOSE (OIL FILLER)	
	10	1	**119-5708**	1	CLIP	
	11	1	**7D-7233**	1	CLIP	
	12	1	**7W-2326**	1	FILTER AS-ENGINE OIL	
	13	1	**8T-4121**	3	WASHER-HARD (11X21X2.5-MM THK)	
M	14	1	**8T-4136**	3	BOLT (M10X1.5X25-MM)	
M	15	1	**8T-4970**	2	BOLT (M6X1X14-MM)	
	16	1	**9X-8256**	2	WASHER (6.6X12X2-MM THK)	

M-METRIC PART

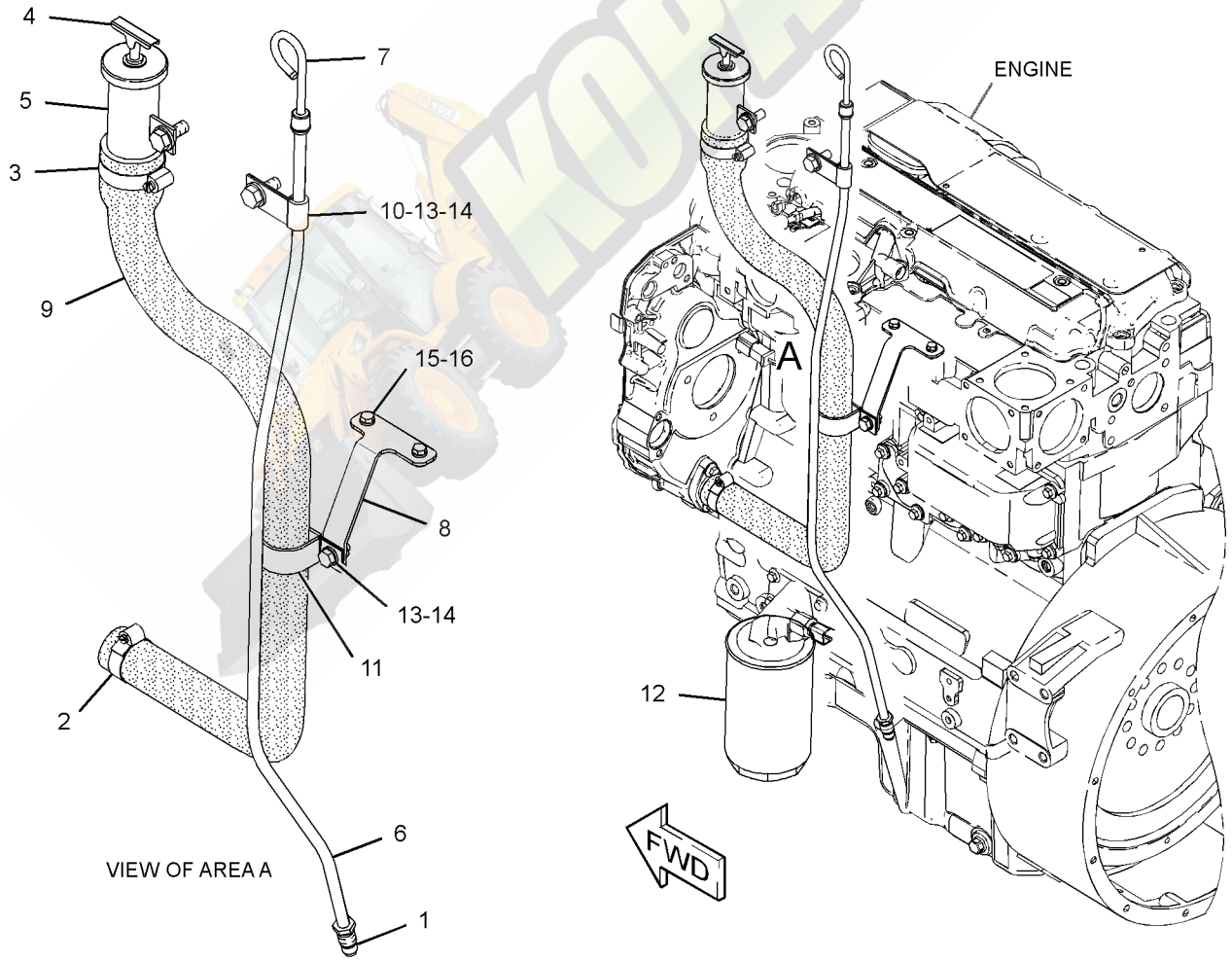

GRAPHIC #1 **<END>** g01607355

230-7578 PUMP GP-ENGINE OIL

S/N: CRS1-UP

PART OF 322-1923, 322-1924 ENGINE AR-PRIMARY

AN ATTACHMENT

SMCS-1304, 1315 **i01896485**

NOTE	REF NO	GRAPHIC REF	PART NUMBER	QTY	PART NAME 1 2 3 4 5 6 (PRODUCT LEVEL)	SEE PAGE
M	1	1	**100-4461**	5	BOLT (M10X1.50X50-MM)	
	2	1	**225-8329**	1	PUMP AS-ENGINE OIL	

M-METRIC PART

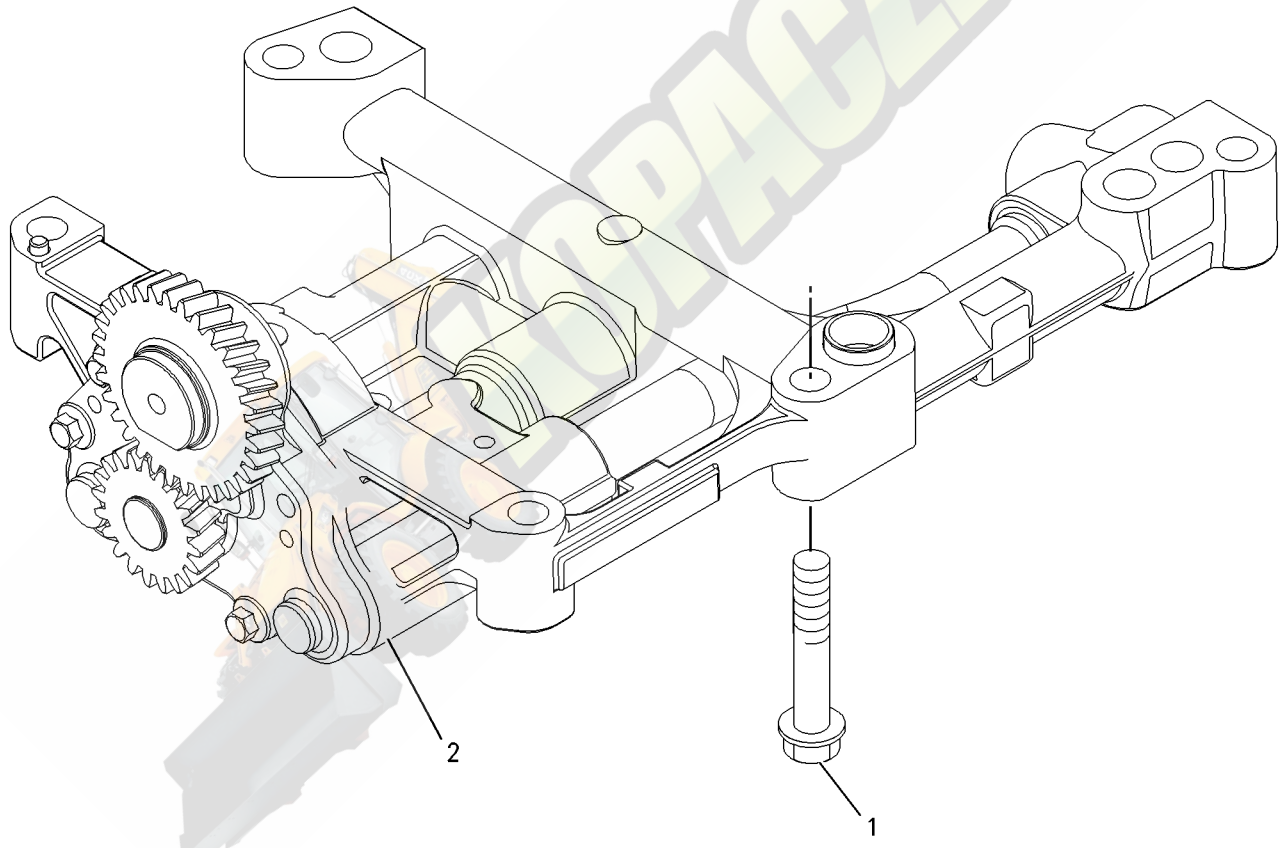

GRAPHIC #1 **<END>** g00911993

LUBRICATION SYSTEM

298-5112 PUMP GP-ENGINE OIL

S/N: C4Z1-UP
PART OF 321-7704, 321-7705 ENGINE AR-PRIMARY
AN ATTACHMENT

SMCS-1304, 1315 **i03128291**

NOTE	REF NO	GRAPHIC REF	PART NUMBER	QTY	PART NAME 1 2 3 4 5 6 (PRODUCT LEVEL)	SEE PAGE
	1	1	**225-8329**	1	PUMP AS-ENGINE OIL	
M	2	1	**100-4461**	5	BOLT (M10X1.50X50-MM)	

M-METRIC PART

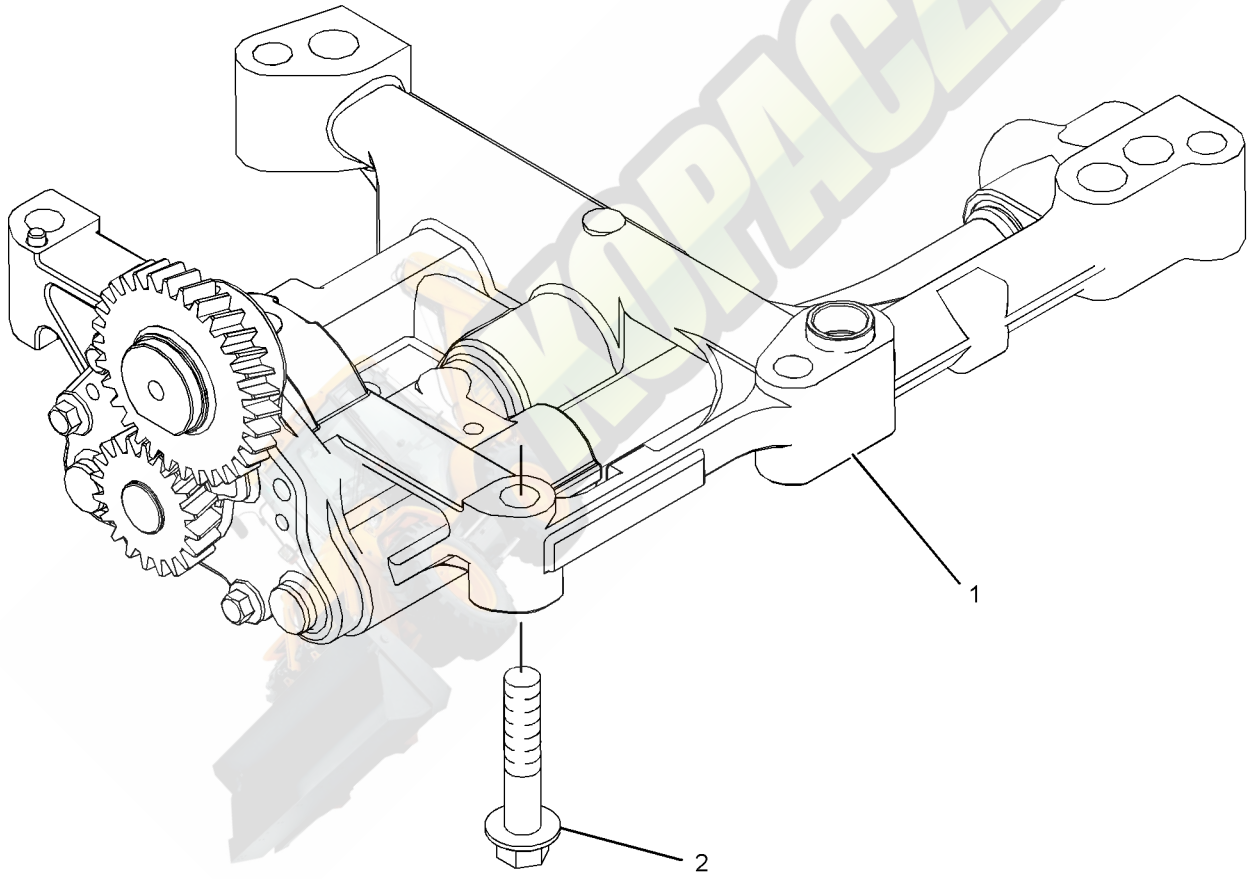

GRAPHIC #1 **<END>** g01304952

231-0033 CONNECTION GP-WATER

S/N: CRS1-UP

PART OF 322-1923, 322-1924 ENGINE AR-PRIMARY

AN ATTACHMENT

SMCS-1380 **i03304223**

NOTE	REF NO	GRAPHIC REF	PART NUMBER	QTY	PART NAME 1 2 3 4 5 6 (PRODUCT LEVEL)	SEE PAGE
M	1	1	**6I-0260**	2	BOLT (M8X1.25X25-MM)	
	2	1	**254-2267**	1	REGULATOR GP-TEMPERATURE (INCLUDES CONNECTOR)	
	2A	1	**254-2270**	1	SEAL-O-RING (WATER TEMPERATURE REGULATOR)	

M-METRIC PART

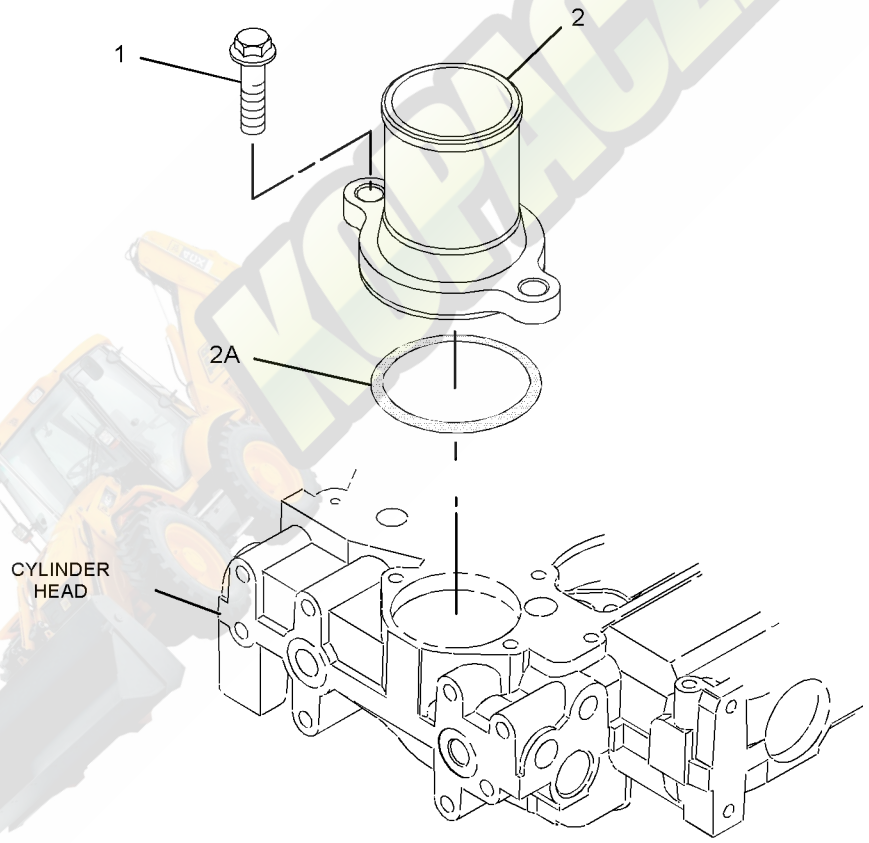

GRAPHIC #1 **<END>** g01081626

316-6941 CONNECTION GP-WATER

S/N: C4Z1-UP

PART OF 321-7704, 321-7705 ENGINE AR-PRIMARY

AN ATTACHMENT

SMCS-1380 **i03128305**

NOTE	REF NO	GRAPHIC REF	PART NUMBER	QTY	PART NAME 1 2 3 4 5 6 (PRODUCT LEVEL)	SEE PAGE
	1	1	**254-2267**	1	REGULATOR GP-TEMPERATURE (INCLUDES CONNECTOR) (WATER)	
	1A	1	**254-2270**	1	SEAL-O-RING	
M	2	1	**6I-0260**	2	BOLT (M8X1.25X25-MM)	

M-METRIC PART

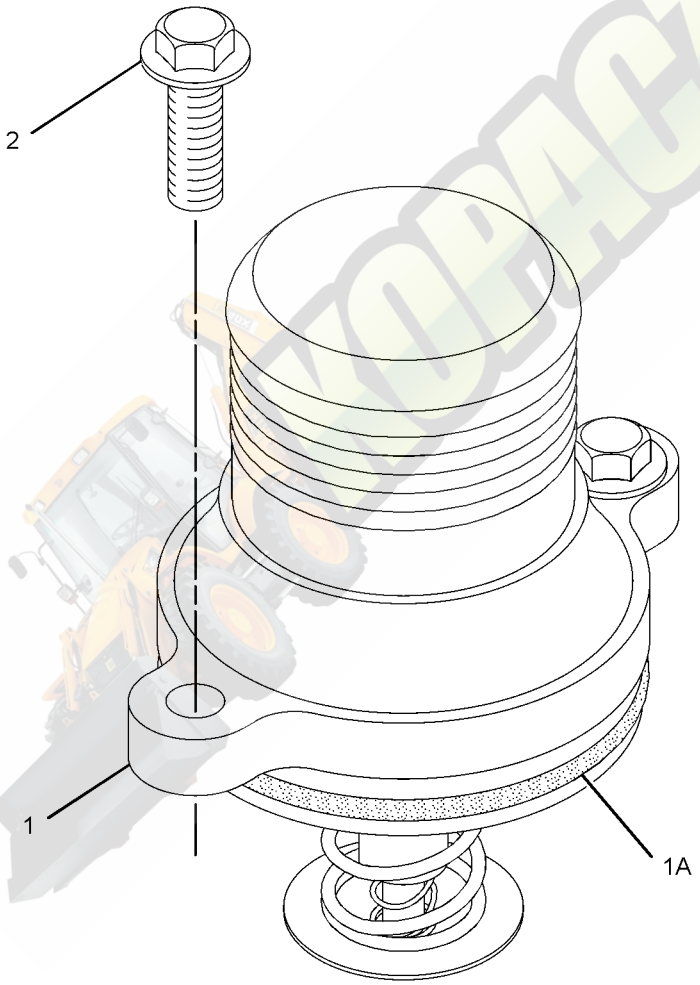

GRAPHIC #1 **<END>** g01319398

296-5616 COOLER GP-ENGINE OIL

S/N: CRS1-UP; C4Z1-UP
PART OF 316-6899 COOLER GP-ENGINE OIL, 238-2799 COOLER GP-FLTR BASE & ENG OIL
AN ATTACHMENT

SMCS-1378 **i02626881**

NOTE	REF NO	GRAPHIC REF	PART NUMBER	QTY	PART NAME 1 2 3 4 5 6 (PRODUCT LEVEL)	SEE PAGE
	1	1	**6I-0218**	2	BOLT (M8X1.25X25-MM)	
M	2	1	**6I-0260**	8	BOLT (M8X1.25X25-MM)	
	3	1	**6I-4374**	3	BOLT (M8X1.25X60-MM)	
M	4	1	**101-3895**	4	BOLT (M8X1.25X35-MM)	
	5	1	**225-6817**	1	COOLER-OIL (ENGINE)	
	6	1	**225-6818**	2	SEAL	
	7	1	**272-2265**	1	SEAL	

M-METRIC PART

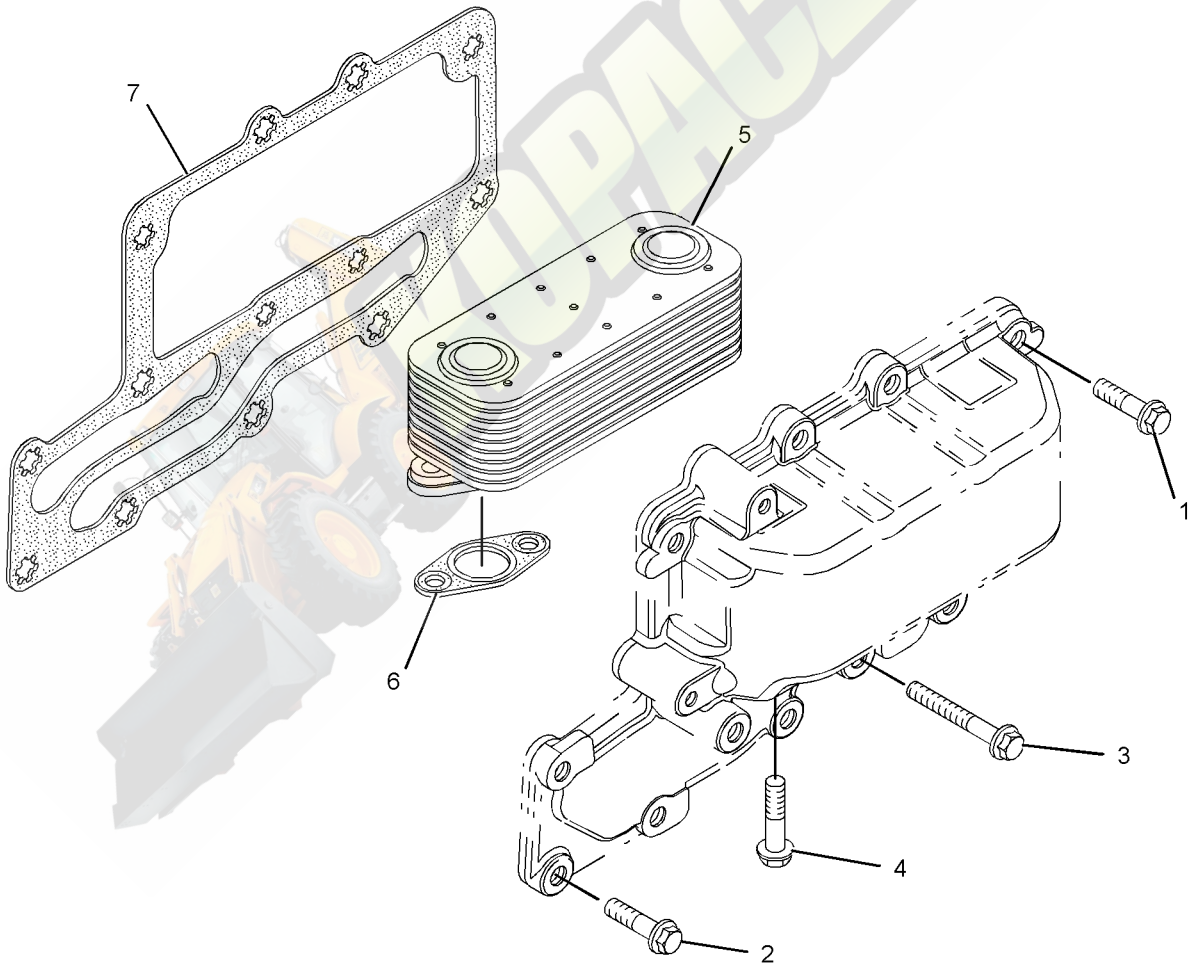

GRAPHIC #1 **<END>** g01204996

316-6899 COOLER GP-ENGINE OIL

S/N: C4Z1-UP
PART OF 321-7704, 321-7705 ENGINE AR-PRIMARY
AN ATTACHMENT

SMCS-1378 **i03332452**

NOTE	REF NO	GRAPHIC REF	PART NUMBER	QTY	PART NAME 1 2 3 4 5 6 (PRODUCT LEVEL)	SEE PAGE
	1	1	**6I-0572**	4	BOLT (M8X1.25X20-MM)	
M	2	1	**6I-0645**	4	BOLT (M8X1.25X25-MM)	
	3	1	**225-7944**	2	GASKET (ENGINE OIL FILTER BASE)	
	4	1	**232-3751**	1	PLATE	
	5	1	**249-0974**	1	HEAD AS-OIL FILTER	
Y	6	1	**296-5616**	1	COOLER GP-ENGINE OIL	81

M-METRIC PART
Y-SEPARATE ILLUSTRATION

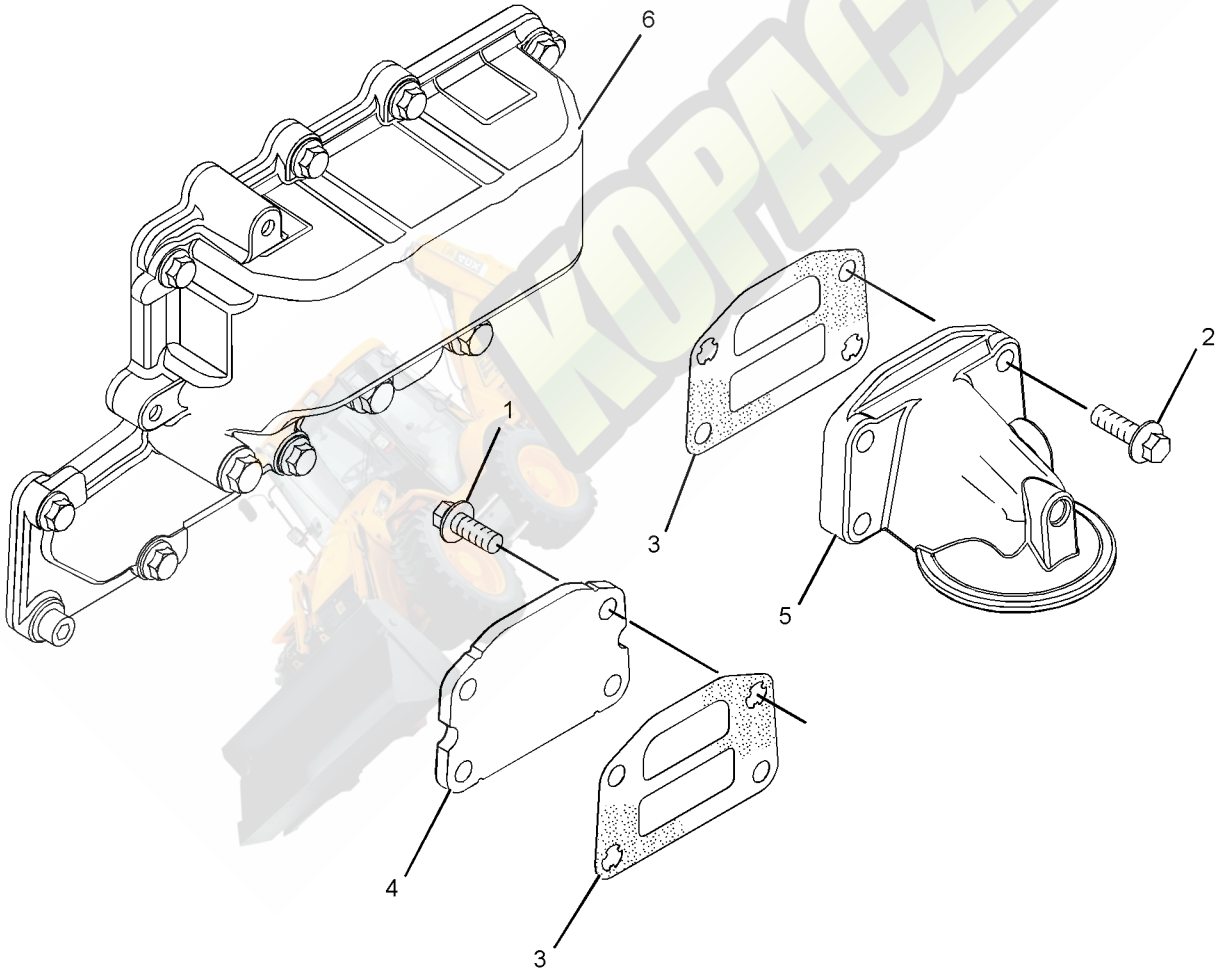

GRAPHIC #1 **<END>** g01400153

238-2799 COOLER GP-FLTR BASE & ENG OIL

S/N: CRS1-UP

PART OF 322-1923, 322-1924 ENGINE AR-PRIMARY

AN ATTACHMENT

SMCS-1306, 1378 **i03145903**

NOTE	REF NO	GRAPHIC REF	PART NUMBER	QTY	PART NAME 1 2 3 4 5 6 (PRODUCT LEVEL)	SEE PAGE
	1	1	**6I-0572**	4	BOLT (M8X1.25X20-MM)	
M	2	1	**6I-0645**	4	BOLT (M8X1.25X25-MM)	
	3	1	**8T-7876**	1	SEAL-O-RING	
	4	1	**225-7941**	1	PLUG	
	5	1	**225-7944**	2	GASKET	
	6	1	**249-0974**	1	HEAD AS-OIL FILTER	
Y	7	1	**296-5616**	1	COOLER GP-ENGINE OIL	81
	8	1	**232-3751**	1	PLATE	

M-METRIC PART
Y-SEPARATE ILLUSTRATION

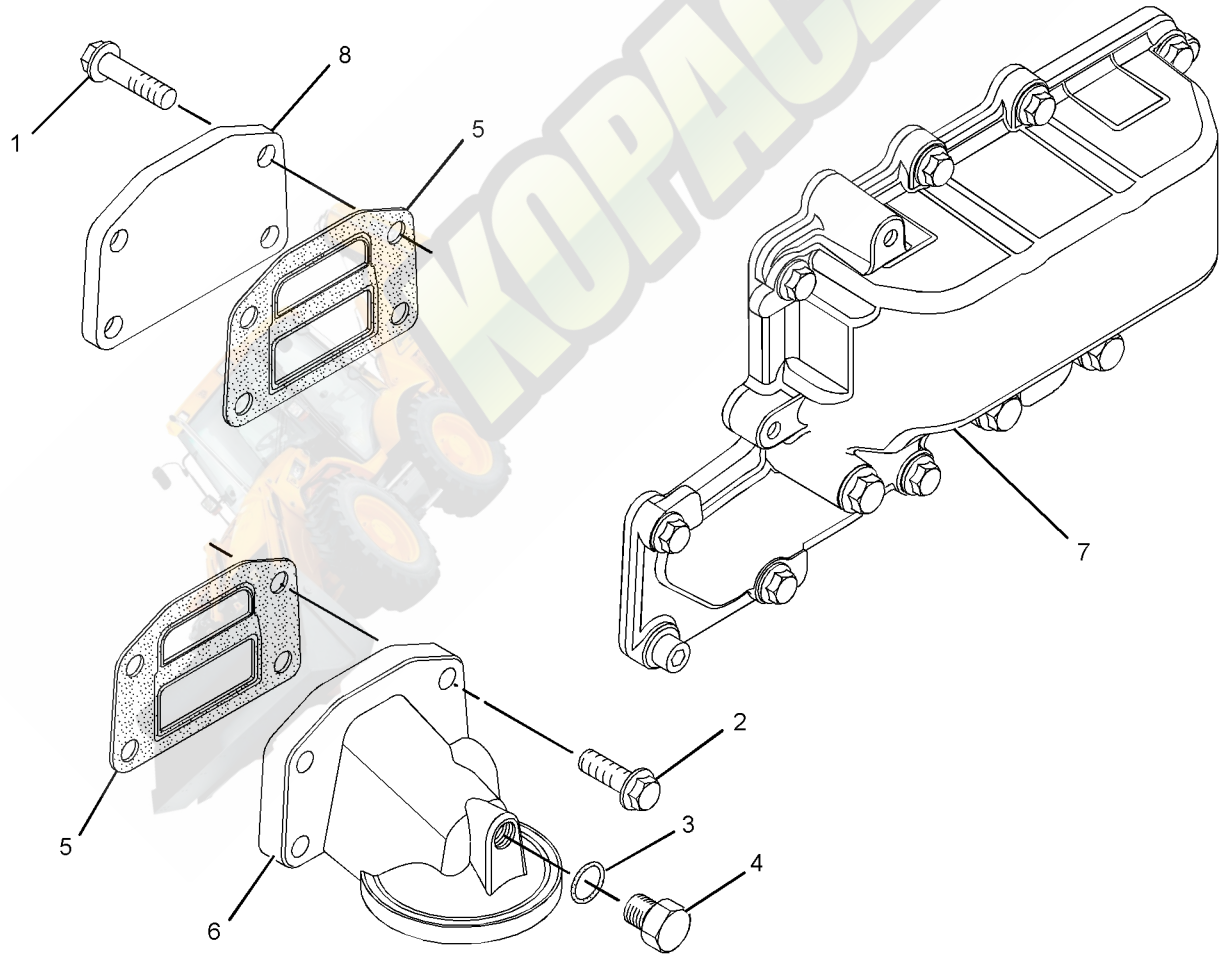

GRAPHIC #1 **<END>** g01621027

299-4716 FAN GP-SUCTION—WITH AIR CONDITIONER

S/N: JBA1-UP

PART OF 339-4990, 339-4991, 339-4992 ENGINE AR

AN ATTACHMENT

SMCS-1356, 1360 **i03035584**

NOTE	REF NO	GRAPHIC REF	PART NUMBER	QTY	PART NAME 1 2 3 4 5 6 (PRODUCT LEVEL)	SEE PAGE
	1	1	**130-7881**	1	SPACER	
	2	1	**142-3391**	1	SPIDER AS (9-BLADE)	
	3	1	**212-9353**	1	BELT-SERPENTINE	
	4	1	**242-9751**	1	GUARD AS (FAN)	
	5	1	**261-0376**	1	BELT TENSIONER	
	6	1	**261-0423**	1	PLATE	
	7	1	**261-0428**	1	PULLEY AS-IDLER	
M		1	**307-2242**	1	BOLT (M10X1.5X45-MM)	
	8	1	**299-4732**	1	PULLEY	
	9	1	**5P-4116**	4	WASHER-HARD (8.8X20.5X2-MM THK)	
M	10	1	**7X-2540**	4	BOLT (M8X1.25X120-MM)	
	11	1	**7X-7729**	1	WASHER (11X25X3-MM THK)	
	12	1	**8T-4121**	3	WASHER-HARD (11X21X2.5-MM THK)	
M	13	1	**8T-4172**	1	BOLT (M10X1.5X80-MM)	
M	14	1	**8T-4196**	3	BOLT (M10X1.5X35-MM)	
	15	1	**8T-4224**	4	WASHER-HARD (8.8X16X2-MM THK)	
M	16	1	**8T-4908**	4	BOLT (M8X1.25X25-MM)	

M-METRIC PART

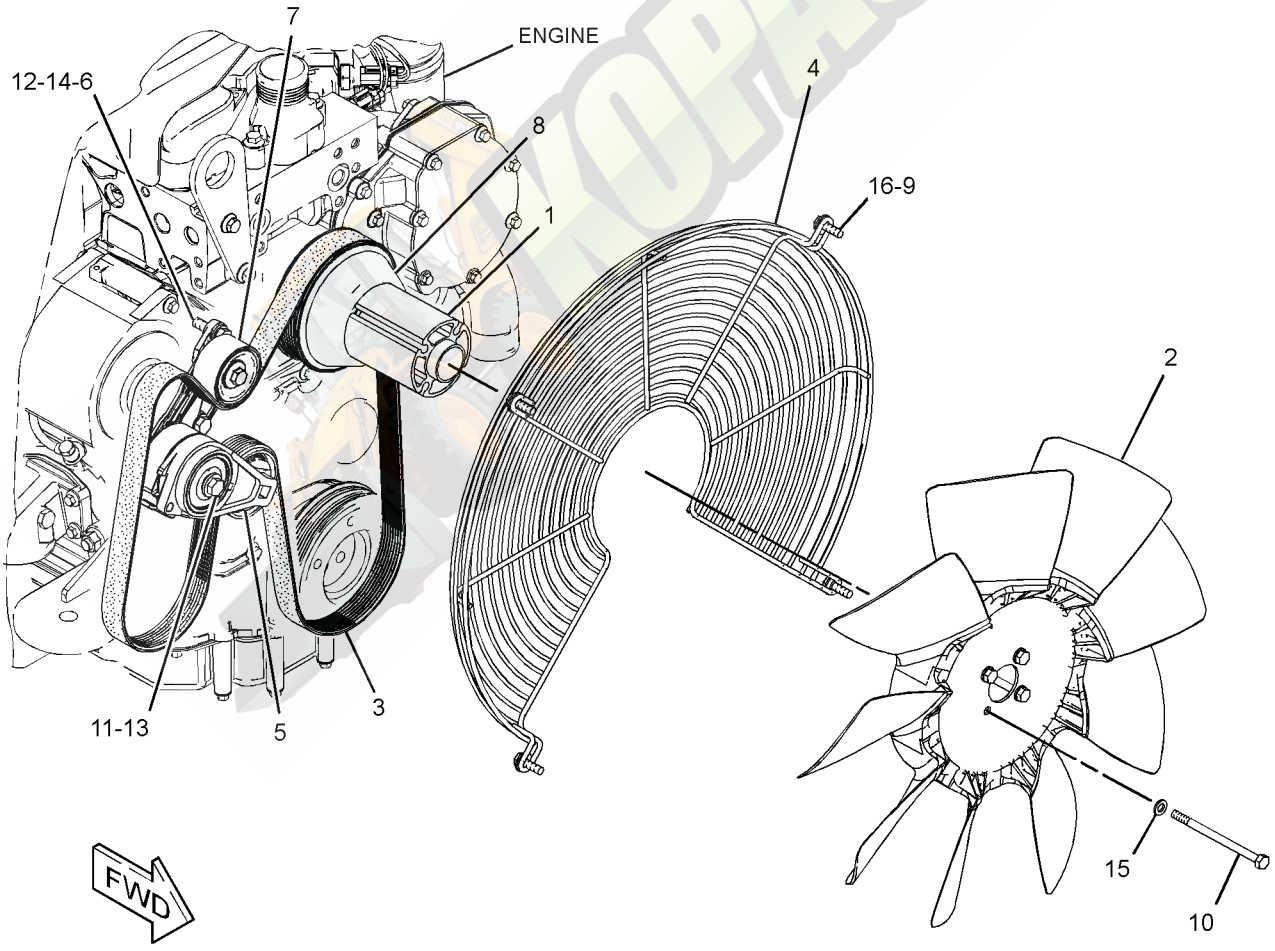

GRAPHIC #1 **<END>** g01520651

299-4729 FAN GP-SUCTION—WITHOUT AIR CONDITIONER

S/N: JBA1-UP

PART OF 339-4986, 339-4987, 339-4988, 339-4989 ENGINE AR

AN ATTACHMENT

SMCS-1356, 1360 **i03527872**

NOTE	REF NO	GRAPHIC REF	PART NUMBER	QTY	PART NAME 1 2 3 4 5 6 (PRODUCT LEVEL)	SEE PAGE
	1	1	**130-7881**	1	SPACER	
	2	1	**142-3391**	1	SPIDER AS (9-BLADE)	
	3	1	**242-9751**	1	GUARD AS (FAN)	
	4	1	**261-0371**	1	PLATE	
	5	1	**261-0406**	1	BELT TENSIONER	
	6	1	**299-4732**	1	PULLEY	
	7	1	**324-3408**	1	BELT-SERPENTINE	
	8	1	**5P-4116**	4	WASHER-HARD (8.8X20.5X2-MM THK)	
M	9	1	**7X-2540**	4	BOLT (M8X1.25X120-MM)	
	10	1	**7X-7729**	1	WASHER (11X25X3-MM THK)	
	11	1	**8T-4121**	3	WASHER-HARD (11X21X2.5-MM THK)	
M	12	1	**8T-4172**	1	BOLT (M10X1.5X80-MM)	
M	13	1	**8T-4196**	3	BOLT (M10X1.5X35-MM)	
	14	1	**8T-4224**	4	WASHER-HARD (8.8X16X2-MM THK)	
M	15	1	**8T-4908**	4	BOLT (M8X1.25X25-MM)	

M-METRIC PART

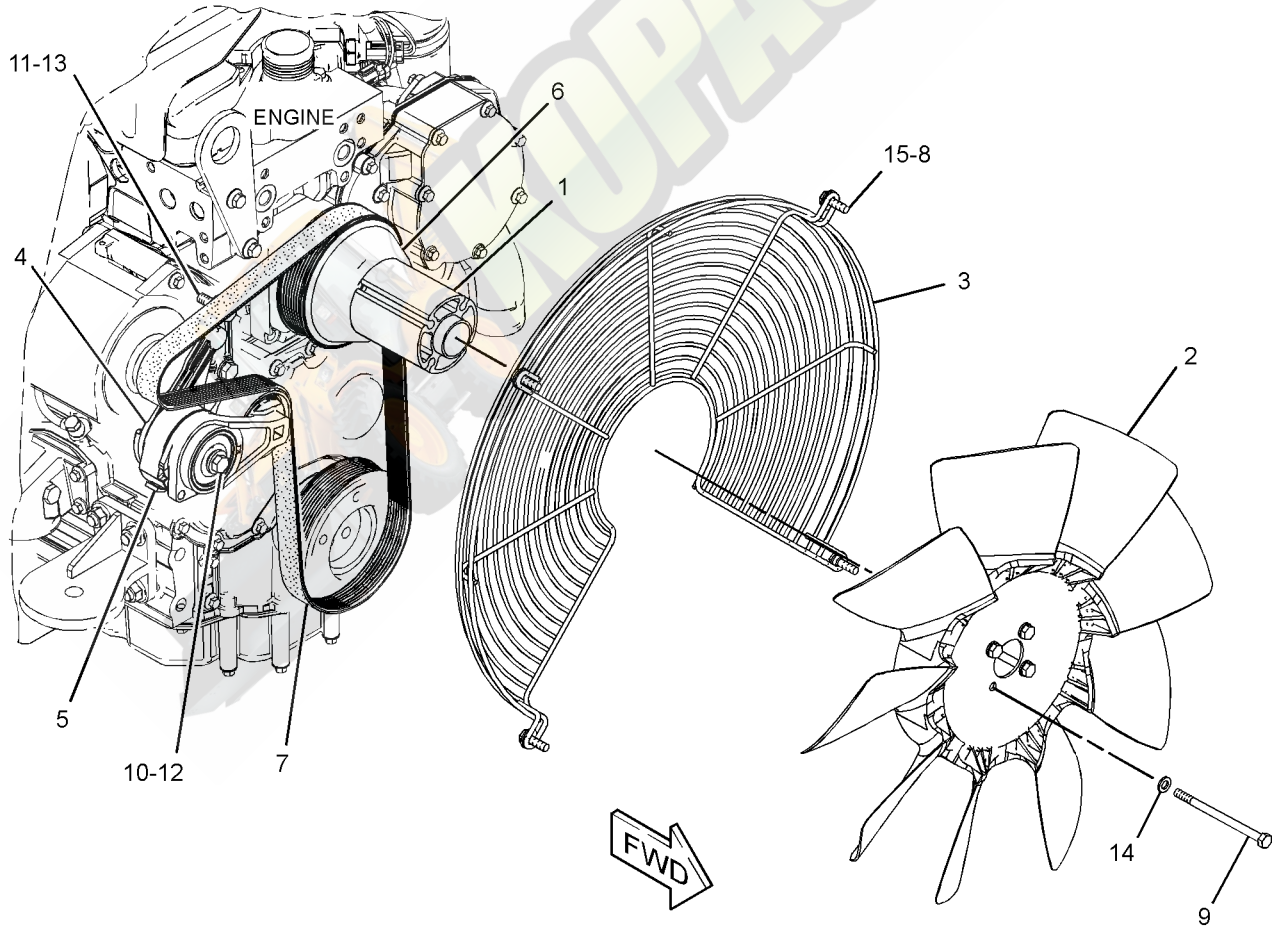

GRAPHIC #1 **<END>** g01520127

COOLING SYSTEM

321-3113 FAN GP-SUCTION—WITH AIR CONDITIONER

S/N: JBA1-UP
PART OF 339-4993 ENGINE AR
AN ATTACHMENT

SMCS-1356, 1360 **i03728745**

NOTE	REF NO	GRAPHIC REF	PART NUMBER	QTY	PART NAME 1 2 3 4 5 6 (PRODUCT LEVEL)	SEE PAGE
	1	1	**130-7881**	1	SPACER	
	2	1	**142-3391**	1	SPIDER AS (9-BLADE)	
	3	1	**212-9353**	1	BELT-SERPENTINE	
	4	1	**242-9751**	1	GUARD AS (FAN)	
	5	1	**261-0376**	1	BELT TENSIONER	
	6	1	**261-0423**	1	PLATE	
	7	1	**261-0428**	1	PULLEY AS-IDLER	
M		1	**307-2242**	1	BOLT (M10X1.5X45-MM)	
	8	1	**304-6673**	1	PULLEY	
	9	1	**5P-4116**	4	WASHER-HARD (8.8X20.5X2-MM THK)	
M	10	1	**7X-2540**	4	BOLT (M8X1.25X120-MM)	
	11	1	**7X-7729**	1	WASHER (11X25X3-MM THK)	
	12	1	**8T-4121**	3	WASHER-HARD (11X21X2.5-MM THK)	
M	13	1	**8T-4172**	1	BOLT (M10X1.5X80-MM)	
M	14	1	**8T-4196**	3	BOLT (M10X1.5X35-MM)	
	15	1	**8T-4224**	4	WASHER-HARD (8.8X16X2-MM THK)	
M	16	1	**8T-4908**	4	BOLT (M8X1.25X25-MM)	

M-METRIC PART

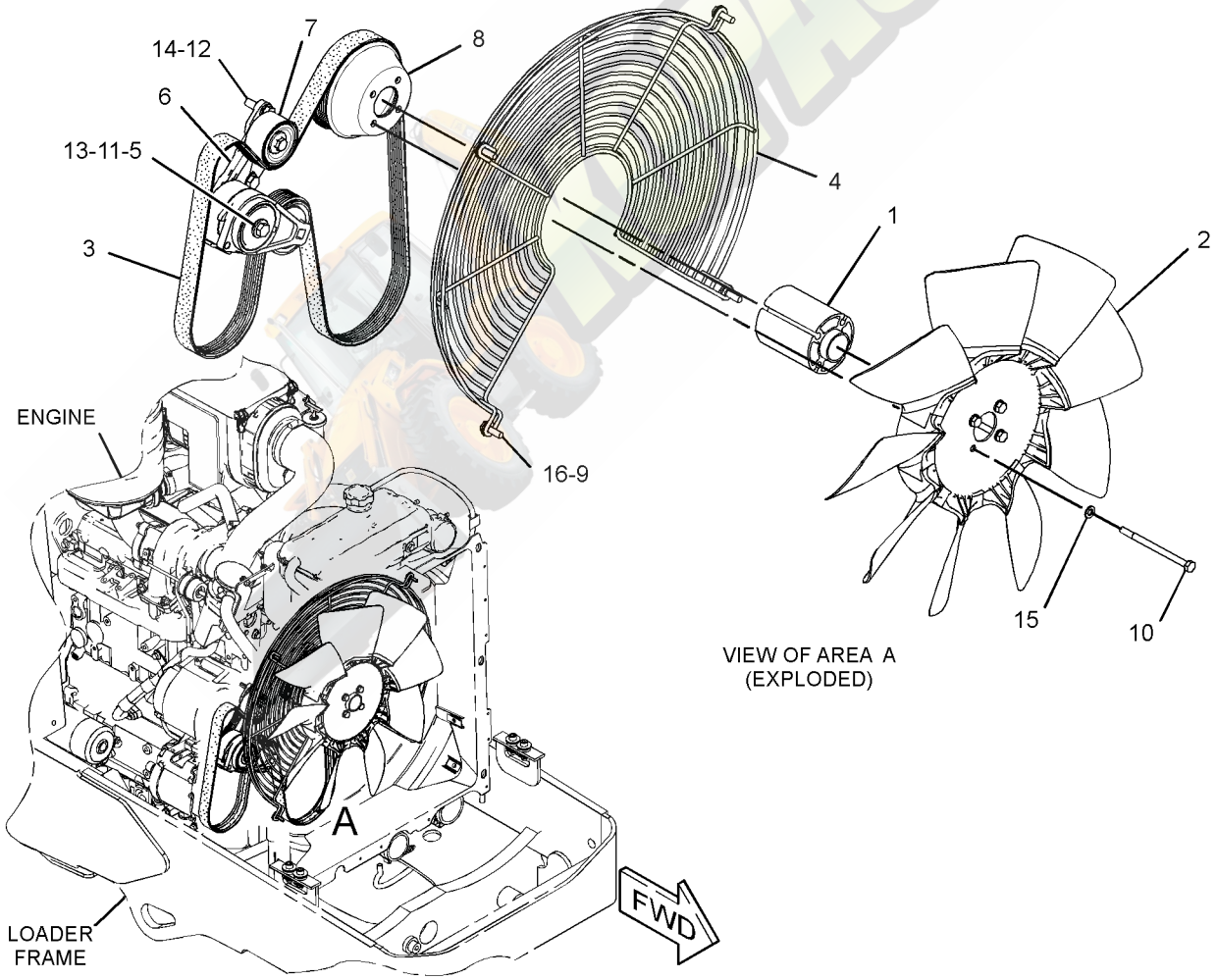

GRAPHIC #1 **<END>** g01592056

315-1369 LINES GP-POWER TRAIN COOLER

S/N: JBA1-UP
PART OF 329-0306, 329-0307 POWER TRAIN AR
AN ATTACHMENT

SMCS-1375, 3016 **i03627134**

NOTE	REF NO	GRAPHIC REF	PART NUMBER	QTY	PART NAME 1 2 3 4 5 6 (PRODUCT LEVEL)	SEE PAGE
	1	1	**118-7286**	1	BRACKET AS	
M		1	**8T-3490**	1	NUT-WELD (M10X1.5-THD)	
	2	1	**130-9984**	1	CLIP	
	3	1	**332-7541**	1	HOSE AS	
	4	1	**332-7542**	1	HOSE AS	
	5	1	**315-5401**	1	TUBE AS	
	6	1	*148-8339*	1	CONNECTOR AS	
		1	**6V-8716**	1	CONNECTOR	
		1	**6V-9746**	1	SEAL-O-RING	
		1	**7M-8485**	1	SEAL-O-RING	
	7	1	*148-8360*	1	ELBOW AS	
		1	**6V-9182**	1	ELBOW	
		1	**6V-9746**	1	SEAL-O-RING	
		1	**7M-8485**	1	SEAL-O-RING	
	8	1	**159-1503**	6	CLAMP-HOSE	
	9	1	**8T-4121**	2	WASHER-HARD (11X21X2.5-MM THK)	
M	10	1	**5C-7261**	2	NUT (M8X1.25-THD)	
M	11	1	**8T-4136**	2	BOLT (M10X1.5X25-MM)	
M	12	1	**8T-4192**	2	BOLT (M12X1.75X25-MM)	
	13	1	**8T-4223**	2	WASHER-HARD (13.5X25.5X3-MM THK)	
	14	1	**8T-7529**	3	CLIP	
E	15	1	**262-8088**		HOSE (80-CM)	
E	15A	1	**262-8088**		HOSE (70-CM)	
	16	1	**5P-4116**	2	WASHER-HARD (8.8X20.5X2-MM THK)	

E-ORDER BY THE CENTIMETER
M-METRIC PART

315-1369 **LINES GP-POWER TRAIN COOLER** *(contd.)* **i03627134**

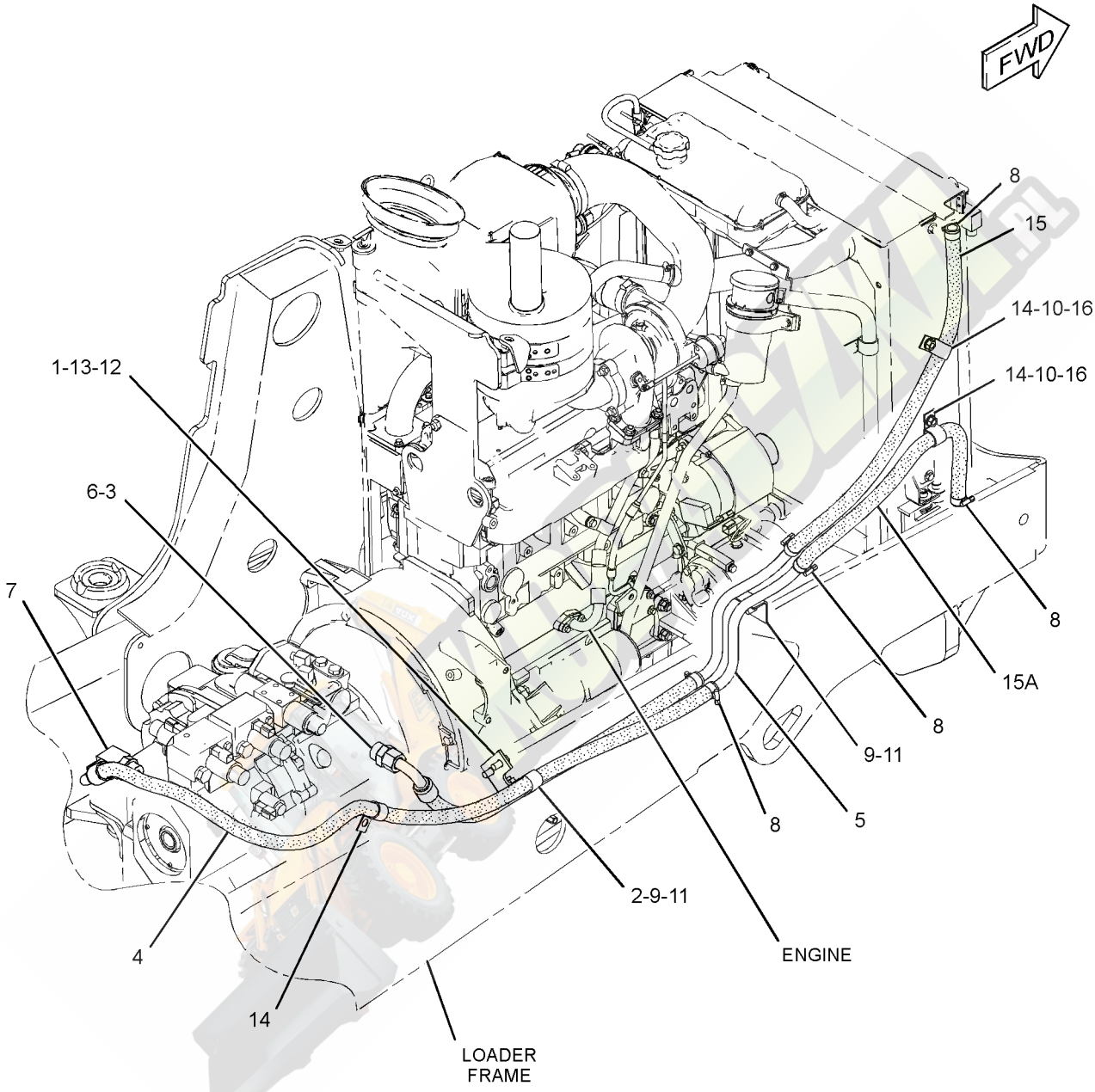

GRAPHIC #1 **<END>** g01636336

304-4022 LINES GP-RADIATOR

S/N: JBA1-UP

PART OF 339-4988, 339-4989, 339-4992, 339-4993 ENGINE AR

AN ATTACHMENT

SMCS-1353, 1380 **i03728762**

NOTE	REF NO	GRAPHIC REF	PART NUMBER	QTY	PART NAME 1 2 3 4 5 6 (PRODUCT LEVEL)	SEE PAGE
	1	1	**2W-9710**	4	MOUNT AS	
	2	1	**5D-1026**	2	CLAMP-BAND	
	3	1	**6N-6984**	2	MOUNT-RUBBER	
	4	1	**9M-7958**	1	CLAMP-HOSE	
	5	1	**031-5644**	2	CLIP	
	6	1	**140-3640**	2	PLATE	
	7	1	**247-1385**	1	TANK GP-EXPANSION (COOLANT)	
		1	**251-3227**	1	CAP AS-COOLANT TANK	
	8	1	**250-2314**	1	BRACKET AS	
M		1	**8T-3612**	2	NUT-WELD (M8X1.25-THD)	
	9	1	**304-7848**	1	HOSE AS	
	10	1	**325-5855**	1	HOSE-RADIATOR (UPPER)	
	11	1	**329-5700**	1	HOSE	
	12	1	**4D-7388**	1	CLIP	
M	13	1	**5C-7261**	2	NUT (M8X1.25-THD)	
	14	1	**7X-0579**	7	WASHER-HARD (8.8X25.5X2-MM THK)	
	15	1	**7X-0603**	4	WASHER-HARD (9.9X35X2.5-MM THK)	
M	16	1	**8T-2223**	4	BOLT-SOCKET HEAD (M10X1.5X45-MM)	
M	17	1	**8T-4133**	4	NUT (M10X1.5-THD)	
M	18	1	**8T-4189**	2	BOLT (M8X1.25X20-MM)	
M	19	1	**8T-4200**	4	BOLT (M8X1.25X16-MM)	
	20	1	**8T-4222**	8	WASHER-PLATED (11X32X2.5-MM THK)	
	21	1	**8T-4984**	3	CLAMP-HOSE	
	22	1	**8T-6703**	1	CLAMP-HOSE	
M	23	1	**8T-7547**	2	BOLT (M8X1.25X30-MM)	
E	24	1	**8C-3681**		HOSE (110.5-CM)	
E	24A	1	**8C-3681**		HOSE (30.2-CM)	
M	25	1	**8T-4908**	1	BOLT (M8X1.25X25-MM)	

E-ORDER BY THE CENTIMETER
M-METRIC PART

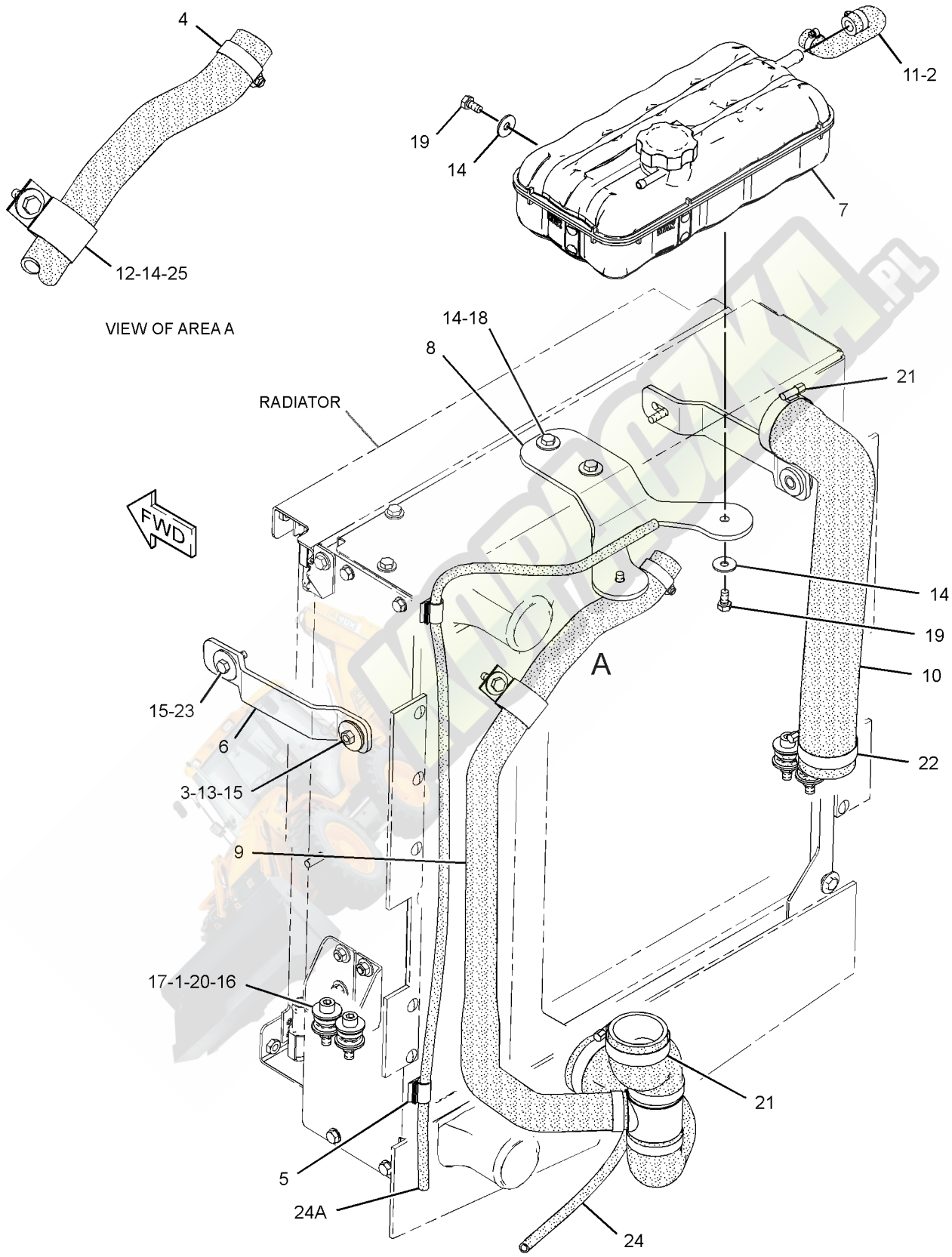

GRAPHIC #1

<END>

g01869628

230-7355 PUMP GP-WATER

S/N: CRS1-UP
PART OF 322-1923, 322-1924 ENGINE AR-PRIMARY
AN ATTACHMENT

SMCS-1361 **i03568520**

NOTE	REF NO	GRAPHIC REF	PART NUMBER	QTY	PART NAME 1 2 3 4 5 6 (PRODUCT LEVEL)	SEE PAGE
M	1	1	**6I-0217**	2	BOLT (M8X1.25X20-MM)	
M	2	1	**6I-0254**	2	BOLT (M8X1.25X30-MM)	
M	3	1	**100-3751**	5	BOLT (M8X1.25X65-MM)	
	4	1	**113-8129**	2	BOLT (M8X1.25X75-MM)	
	5	1	**225-7741**	1	CONNECTION AS	
	6	1	**225-7738**	1	SEAL-O-RING	
	7	1	**225-7739**	1	SEAL-O-RING	
	8	1	**225-8016**	1	PUMP GP-WATER	
	8A	1	**225-8019**	1	GASKET	
	8B	1	**286-3592**	1	GEAR-WATER PUMP	
					AVAILABLE REPAIR KIT(S):	
			247-0144	1	KIT-WATER PUMP	
					(INCLUDES 2 DIFFERENT GASKETS)	

M-METRIC PART

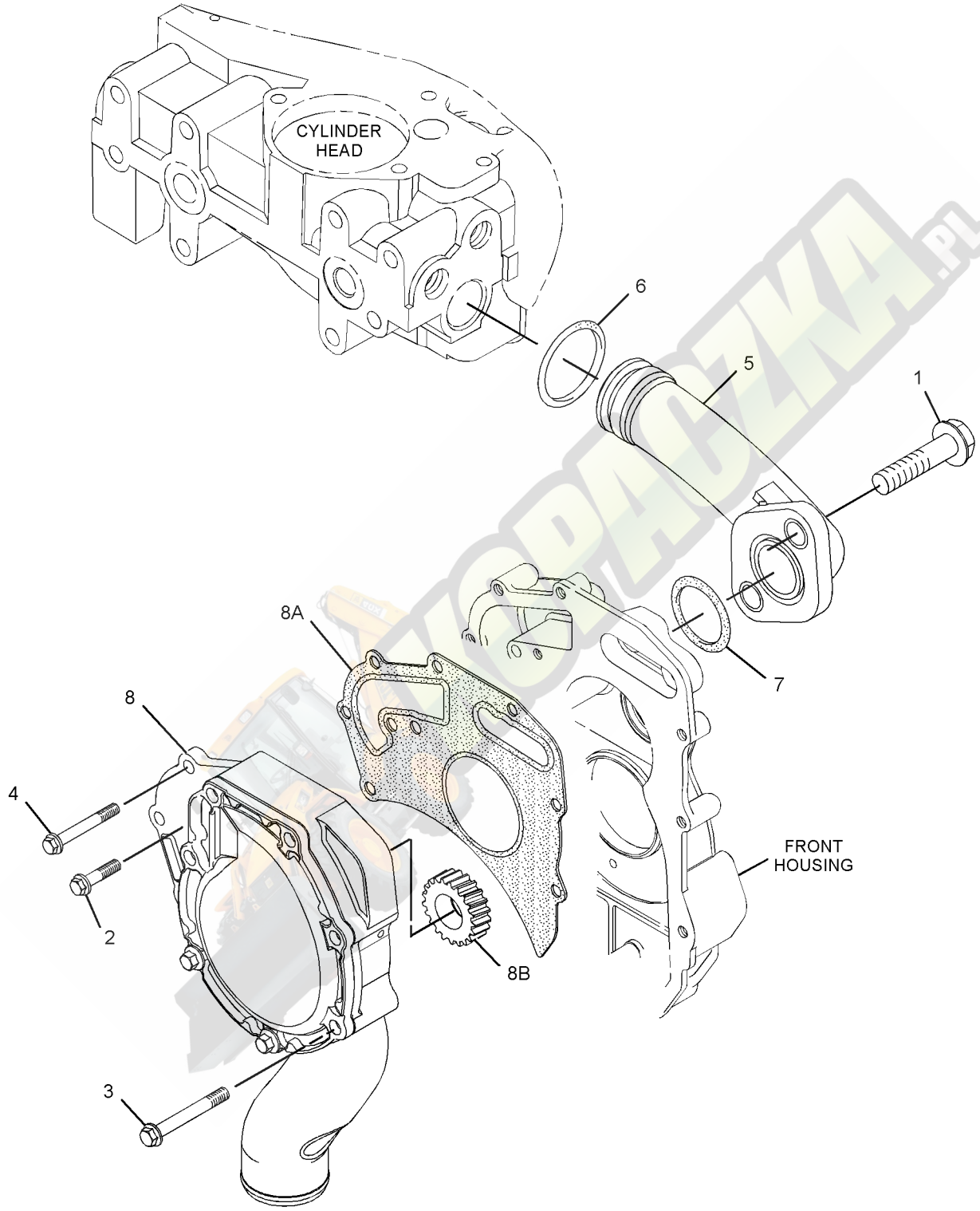

GRAPHIC #1 **<END>** g01897273

315-3411 PUMP GP-WATER

S/N: C4Z1-UP

PART OF 321-7704, 321-7705 ENGINE AR-PRIMARY

AN ATTACHMENT

SMCS-1361 **i03128294**

NOTE	REF NO	GRAPHIC REF	PART NUMBER	QTY	PART NAME 1 2 3 4 5 6 (PRODUCT LEVEL)	SEE PAGE
M	1	1	**6I-0217**	2	BOLT (M8X1.25X20-MM)	
M	2	1	**6I-0254**	2	BOLT (M8X1.25X30-MM)	
M	3	1	**100-3751**	5	BOLT (M8X1.25X65-MM)	
	4	1	**113-8129**	2	BOLT (M8X75-MM)	
	5	1	**225-7741**	1	CONNECTION AS	
	5A	1	**225-7738**	1	SEAL-O-RING	
	5B	1	**225-7739**	1	SEAL-O-RING	
	6	1	**315-3379**	1	PUMP AS-WATER	
	6A	1	**225-8019**	1	GASKET	
	6B	1	**267-8321**	1	GASKET-COVER	

M-METRIC PART

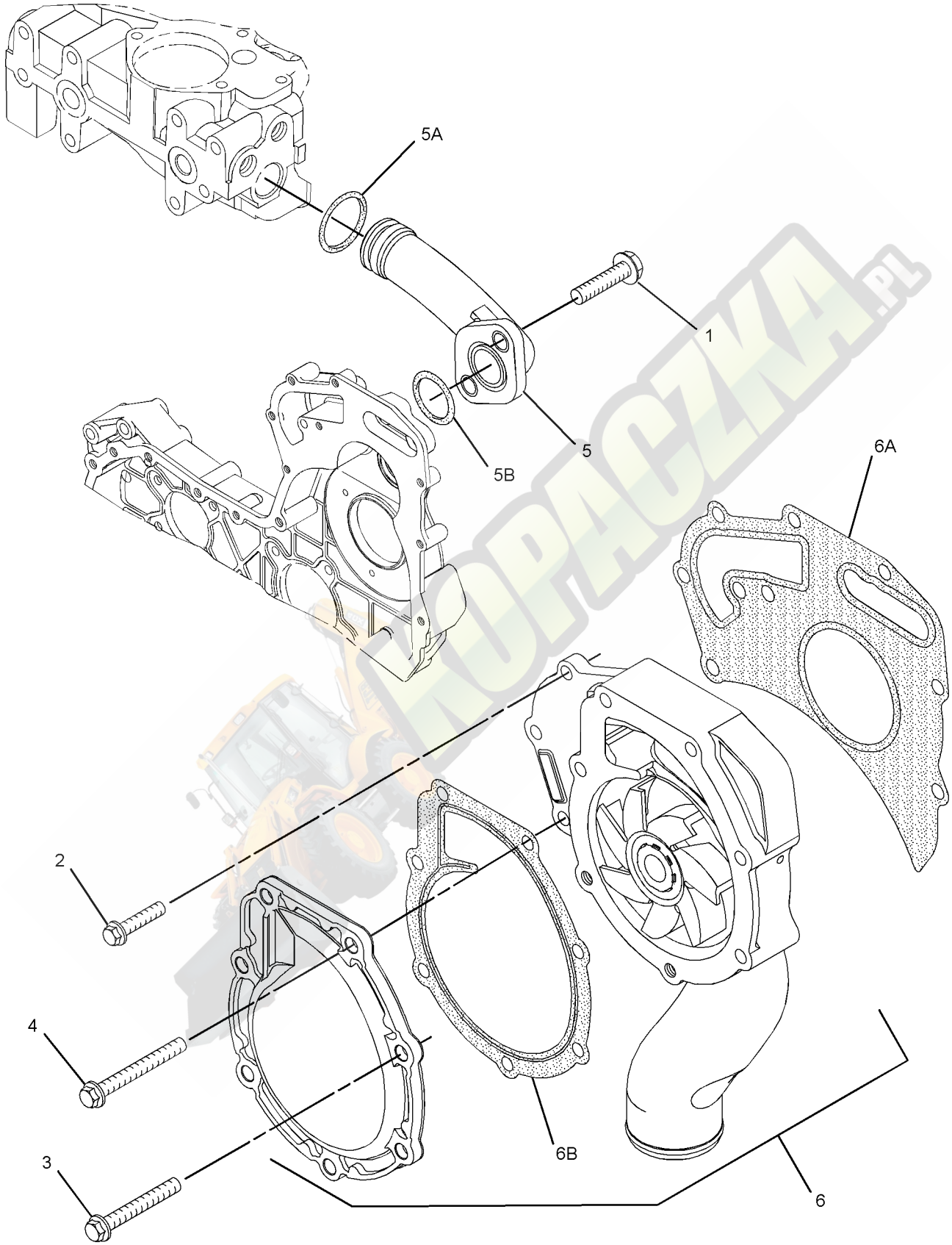

GRAPHIC #1 **<END>** g01399392

297-3233 RADIATOR & HYD OIL COOLER GP

S/N: JBA1-UP
PART OF 309-9105 RADIATOR & HYD OIL COOLER GP
AN ATTACHMENT

SMCS-1353, 1374 **i03330902**

NOTE	REF NO	GRAPHIC REF	PART NUMBER	QTY	PART NAME 1 2 3 4 5 6 (PRODUCT LEVEL)	SEE PAGE
Y	1	1	**299-4246**	1	COOLER GP-HYD & XMSN OIL	370
	2	1	**301-9672**	1	RADIATOR GP	
		1	**315-5667**	2	GASKET	
		1	**225-4287**	1	VALVE GP-RADIATOR DRAIN	
	3	1	**5P-4116**	2	WASHER-HARD (8.8X20.5X2-MM THK)	
M	4	1	**8T-4200**	2	BOLT (M8X1.25X16-MM)	

M-METRIC PART
Y-SEPARATE ILLUSTRATION

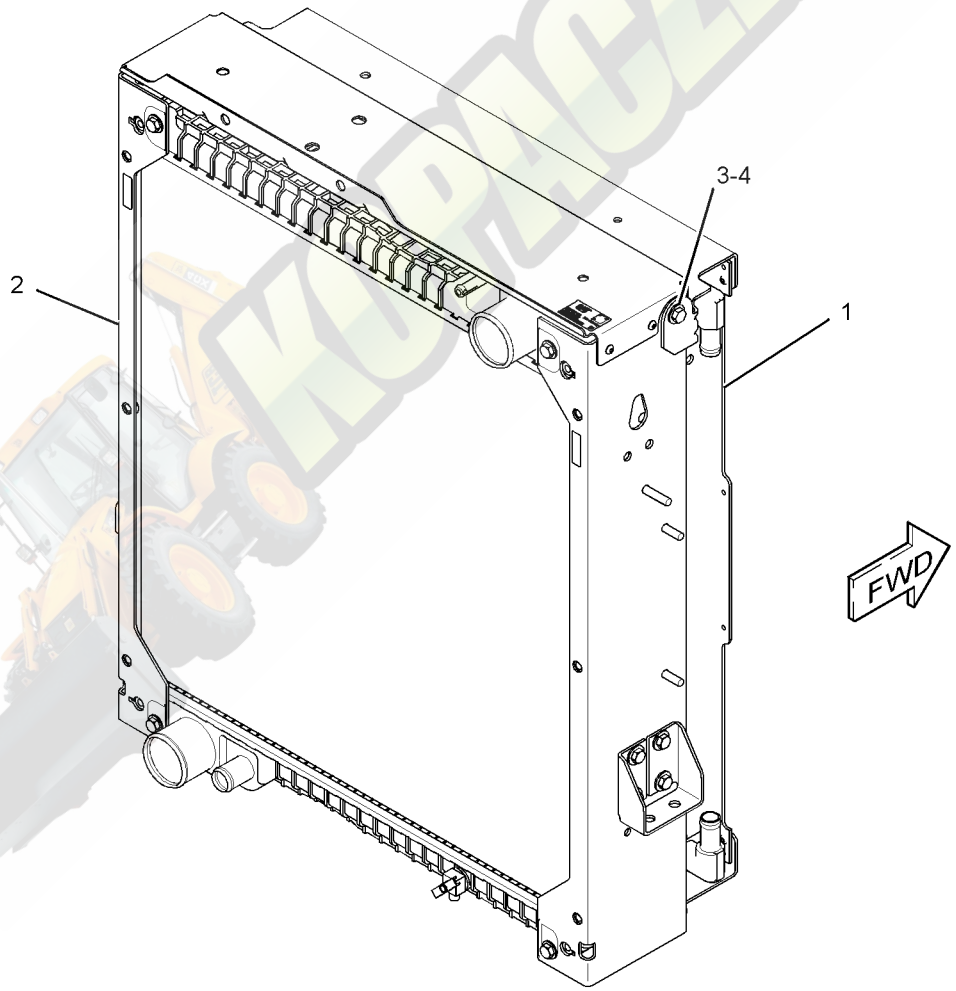

GRAPHIC #1 **<END>** g01514076

304-4023 RADIATOR & HYD OIL COOLER GP–

INCLUDES AFTCLR, XMSN COOLER

S/N: JBA1-UP

PART OF 309-9106 RADIATOR & HYD OIL COOLER GP

AN ATTACHMENT

SMCS-1353, 1374 **i03110260**

NOTE	REF NO	GRAPHIC REF	PART NUMBER	QTY	PART NAME 1 2 3 4 5 6 (PRODUCT LEVEL)	SEE PAGE
Y	1	1	**304-7847**	1	COOLER GP-HYD & XMSN OIL	371
	2	1	**304-7850**	1	AFTERCOOLER GP-AIR	
	3	1	**304-7851**	1	RADIATOR GP	
		1	**225-4287**	1	VALVE GP-RADIATOR DRAIN	
		1	**315-0033**	2	GASKET	
	4	1	**310-7304**	1	PLATE	
M	5	1	**5C-7261**	4	NUT (M8X1.25-THD)	
	6	1	**5P-4116**	6	WASHER-HARD (8.8X20.5X2-MM THK)	
M	7	1	**8T-4189**	2	BOLT (M8X1.25X20-MM)	
M	8	1	**8T-4200**	4	BOLT (M8X1.25X16-MM)	
	9	1	**8T-4224**	4	WASHER-HARD (8.8X16X2-MM THK)	
E	10	1	**145-2350**		SEAL (68-CM)	

E-ORDER BY THE CENTIMETER
M-METRIC PART
Y-SEPARATE ILLUSTRATION

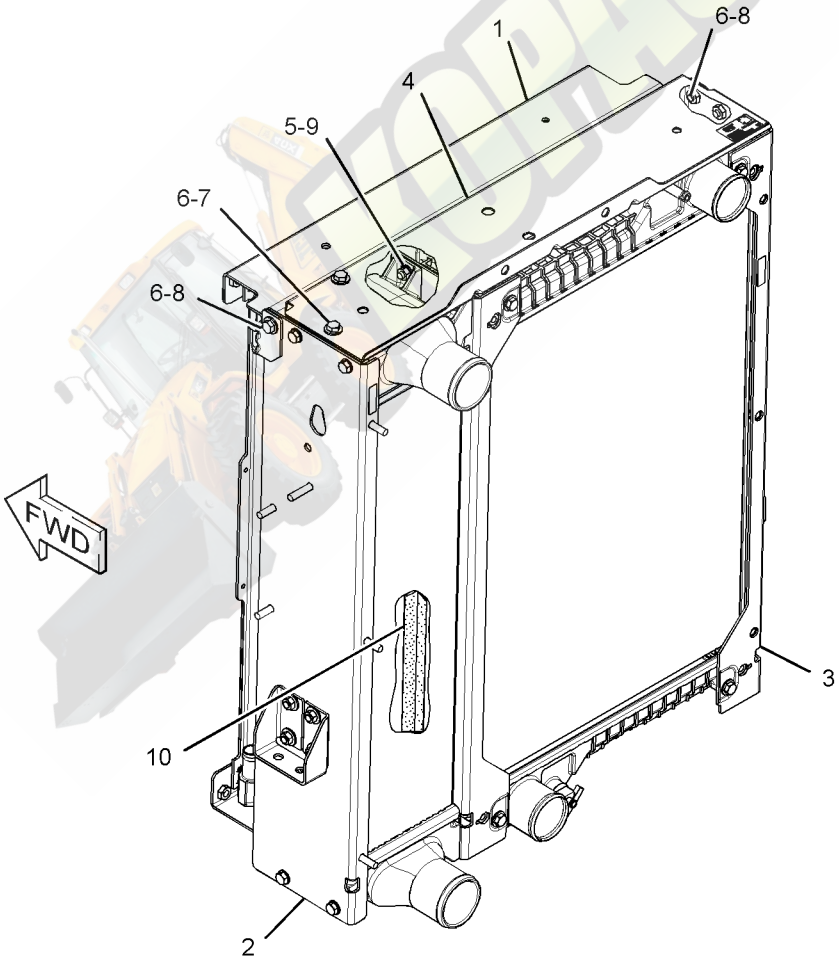

GRAPHIC #1 **<END>** g01618115

309-9105 RADIATOR & HYD OIL COOLER GP

S/N: JBA1-UP

PART OF 339-4986, 339-4987, 339-4990, 339-4991 ENGINE AR

AN ATTACHMENT

SMCS-1353, 1374 **i03627135**

NOTE	REF NO	GRAPHIC REF	PART NUMBER	QTY	PART NAME 1 2 3 4 5 6 (PRODUCT LEVEL)	SEE PAGE
	1	1	**322-9761**	1	SHROUD AS-RADIATOR	
Y	2	1	**297-3233**	1	RADIATOR & HYD OIL COOLER GP	95
	3	1	**324-3851**	2	SKIRT	
	4	1	**214-3647**	1	BAFFLE (LOWER)	
	5	1	**123-4065**	16	RIVET-POP	
	6	1	**7X-0579**	6	WASHER-HARD (8.8X25.5X2-MM THK)	
M	7	1	**8T-4189**	6	BOLT (M8X1.25X20-MM)	

M-METRIC PART
Y-SEPARATE ILLUSTRATION

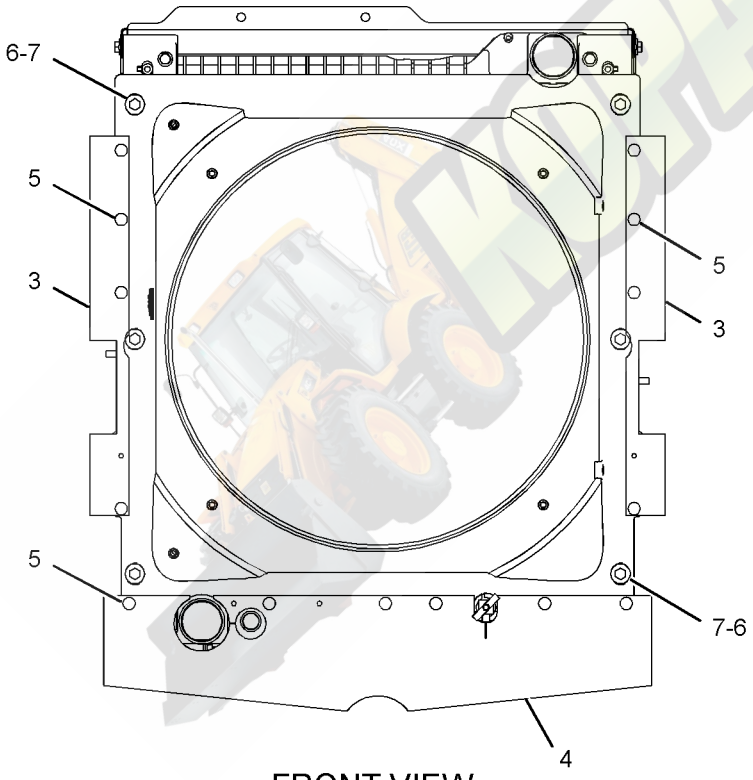

FRONT VIEW

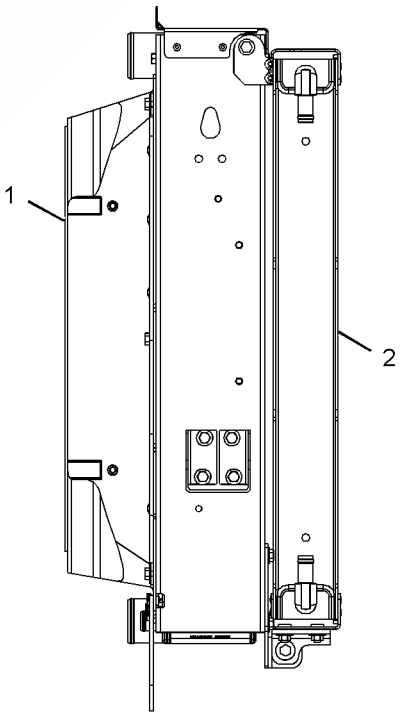

RIGHT SIDE VIEW

GRAPHIC #1 **<END>** g01572923

COOLING SYSTEM

309-9106 RADIATOR & HYD OIL COOLER GP

S/N: JBA1-UP

PART OF 339-4988, 339-4989, 339-4992, 339-4993 ENGINE AR

AN ATTACHMENT

SMCS-1353, 1374 **i03712189**

NOTE	REF NO	GRAPHIC REF	PART NUMBER	QTY	PART NAME 1 2 3 4 5 6 (PRODUCT LEVEL)	SEE PAGE
Y	1	1	**304-4023**	1	RADIATOR & HYD OIL COOLER GP	96
	2	1	**305-6918**	1	BAFFLE (LOWER)	
	3	1	**322-9761**	1	SHROUD AS-RADIATOR	
	4	1	**324-3851**	2	SKIRT	
	5	1	**123-4065**	16	RIVET-POP	
M	6	1	**5C-7261**	3	NUT (M8X1.25-THD)	
	7	1	**7X-0579**	6	WASHER-HARD (8.8X25.5X2-MM THK)	
M	8	1	**8T-4189**	3	BOLT (M8X1.25X20-MM)	

M-METRIC PART
Y-SEPARATE ILLUSTRATION

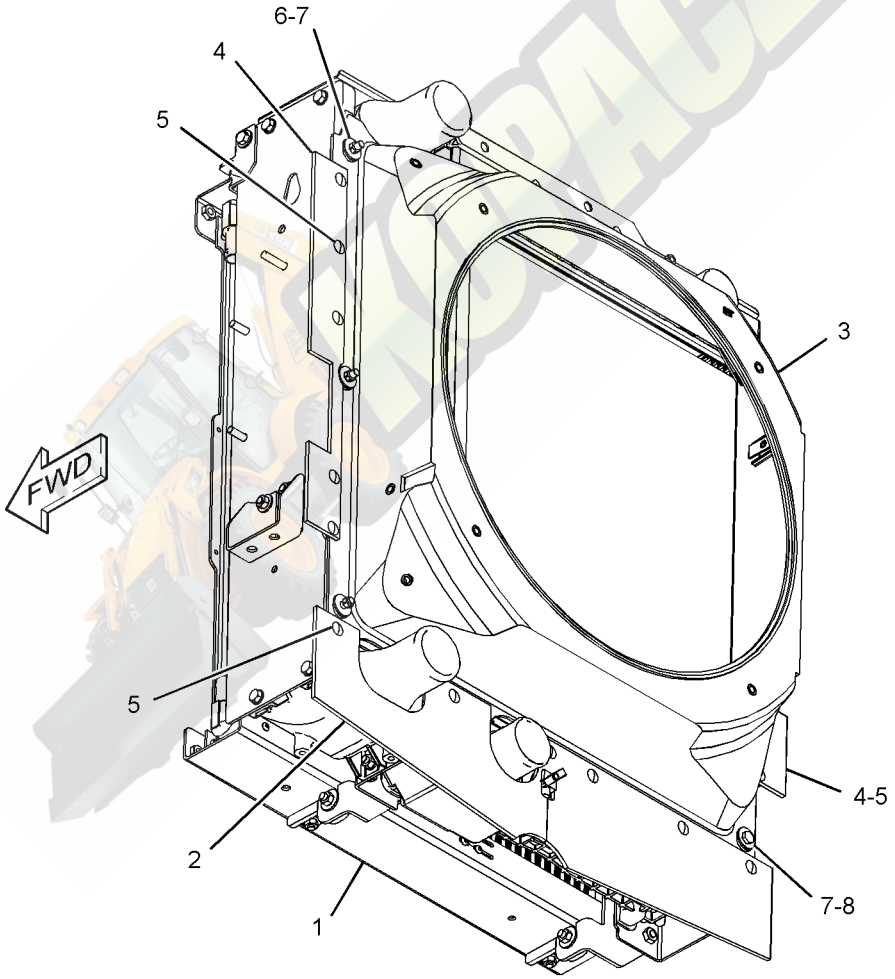

GRAPHIC #1 **<END>** g01599896

324-6213 TANK & LINES GP-COOLANT–EXPANSION, RADIATOR

S/N: JBA1-UP

PART OF 339-4986, 339-4987, 339-4990, 339-4991 ENGINE AR

AN ATTACHMENT

SMCS-1354, 1380 **i03726220**

NOTE	REF NO	GRAPHIC REF	PART NUMBER	QTY	PART NAME 1 2 3 4 5 6 (PRODUCT LEVEL)	SEE PAGE
	1	1	**2W-9710**	4	MOUNT AS	
	2	1	**5D-1026**	2	CLAMP-BAND	
	3	1	**6N-6984**	2	MOUNT-RUBBER	
	4	1	**9M-7958**	2	CLAMP-HOSE	
	5	1	**031-5644**	2	CLIP	
	6	1	**140-3640**	2	PLATE	
	7	1	**210-6139**	1	HOSE-RADIATOR (LOWER)	
	8	1	**247-1385**	1	TANK GP-EXPANSION (COOLANT)	
		1	**251-3227**	1	CAP AS-COOLANT TANK	
	9	1	**250-2314**	1	BRACKET AS	
M		1	**8T-3612**	2	NUT-WELD (M8X1.25-THD)	
	10	1	**259-8417**	1	HOSE	
	11	1	**325-5855**	1	HOSE-RADIATOR (UPPER)	
	12	1	**329-5699**	1	HOSE	
	13	1	**4D-7388**	2	CLIP	
M	14	1	**5C-7261**	2	NUT (M8X1.25-THD)	
	15	1	**7X-0579**	8	WASHER-HARD (8.8X25.5X2-MM THK)	
	16	1	**7X-0603**	4	WASHER-HARD (9.9X35X2.5-MM THK)	
M	17	1	**8T-2223**	4	BOLT-SOCKET HEAD (M10X1.5X45-MM)	
M	18	1	**8T-4133**	4	NUT (M10X1.5-THD)	
M	19	1	**8T-4189**	2	BOLT (M8X1.25X20-MM)	
M	20	1	**8T-4200**	4	BOLT (M8X1.25X16-MM)	
	21	1	**8T-4222**	8	WASHER-PLATED (11X32X2.5-MM THK)	
	22	1	**8T-4984**	3	CLAMP-HOSE	
	23	1	**8T-6703**	1	CLAMP-HOSE	
M	24	1	**8T-7547**	2	BOLT (M8X1.25X30-MM)	
E	25	1	**8C-3681**		HOSE (111-CM)	
E	25A	1	**8C-3681**		HOSE (30-CM)	
M	26	1	**8T-4908**	2	BOLT (M8X1.25X25-MM)	

E-ORDER BY THE CENTIMETER
M-METRIC PART

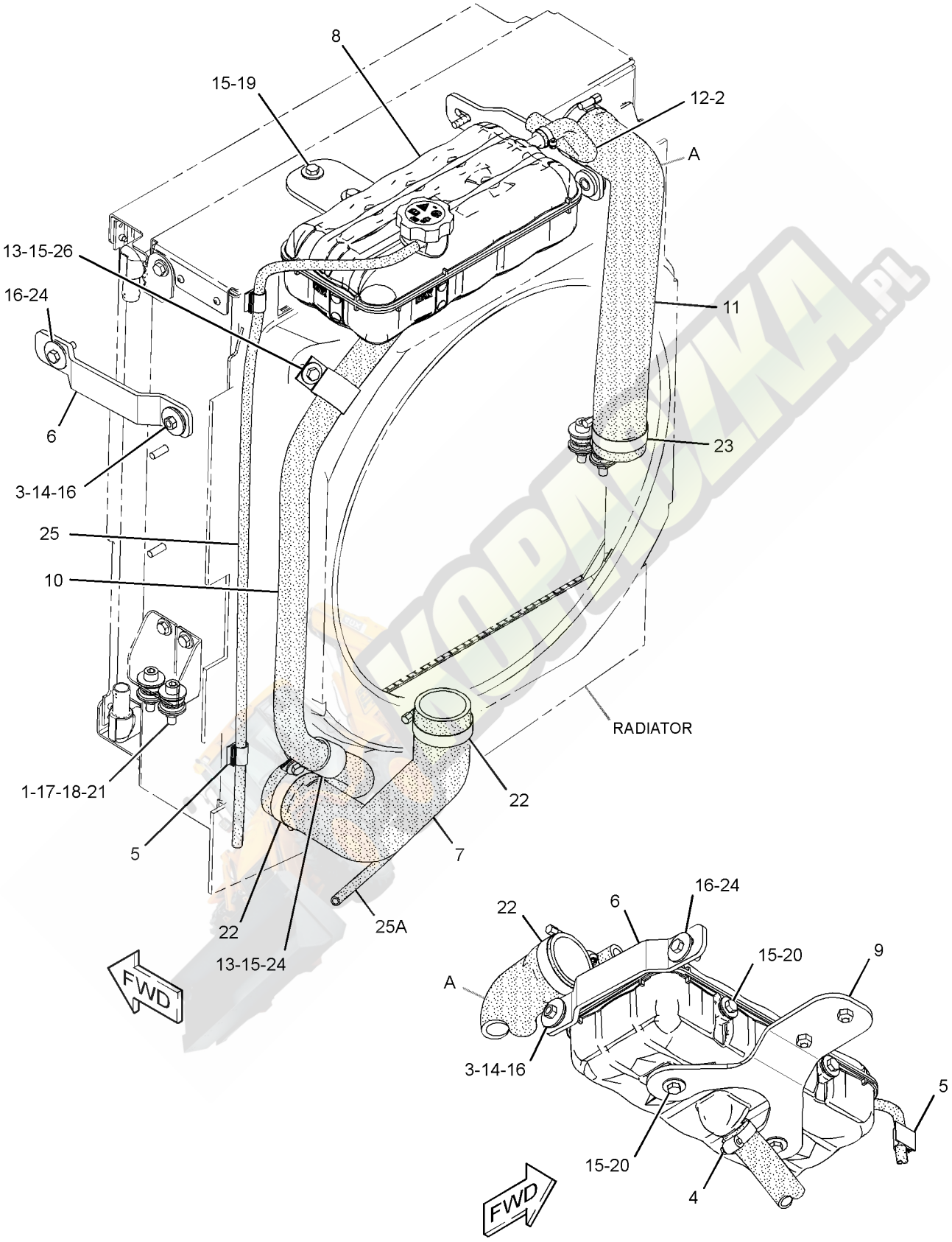

GRAPHIC #1 **<END>** g01872458

234-1981 AIR CLEANER GP–BASIC

S/N: JBA1-UP

PART OF 310-2644, 332-6587 AIR CLEANER GP

AN ATTACHMENT

SMCS-1051, 1054 **i03126100**

NOTE	REF NO	GRAPHIC REF	PART NUMBER	QTY	PART NAME 1 2 3 4 5 6 (PRODUCT LEVEL)	SEE PAGE
	1	1	**227-7449**	1	FILTER ELEMENT-AIR (SECONDARY)	
	2	1	**237-4157**	1	COVER	
	3	1	**262-9786**	1	FRAME (ELEMENT)	
	4	1	**293-4053**	1	FILTER ELEMENT-AIR (PRIMARY)	

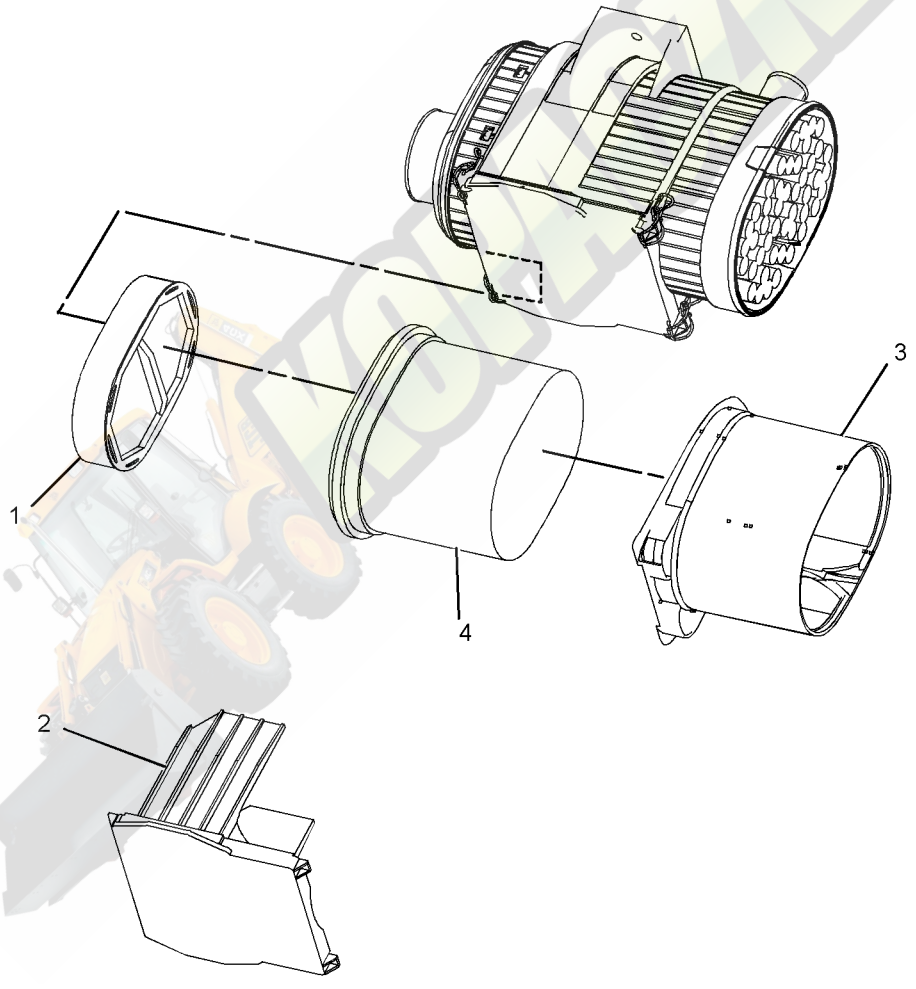

GRAPHIC #1 **<END>** g01601293

AIR INLET AND EXHAUST SYSTEM

310-2644 AIR CLEANER GP–TURBO

S/N: JBA1-UP

PART OF 339-4986, 339-4987, 339-4990, 339-4991 ENGINE AR

AN ATTACHMENT

SMCS-1051, 1054 **i03627136**

NOTE	REF NO	GRAPHIC REF	PART NUMBER	QTY	PART NAME 1 2 3 4 5 6 (PRODUCT LEVEL)	SEE PAGE
	1	1	**8T-6726**	1	CLAMP-HOSE	
	2	1	**8T-9402**	2	CLAMP-HOSE	
	3	1	**110-2445**	1	CLAMP-HOSE	
	4	1	**124-6259**	3	CLAMP-HOSE	
Y	5	1	**234-1981**	1	AIR CLEANER GP (BASIC)	101
	6	1	**247-9730**	1	VALVE AS-CHECK (AIR CLEANER)	
	7	1	**248-3231**	1	DUCT-AIR	
	8	1	**249-5512**	1	SEAL	
E	9	1	**253-4137**	1	SEAL	
	10	1	**253-4138**	1	STUD	
	11	1	**255-4692**	1	CONNECTOR-FILTER	
	12	1	**260-0634**	1	TUBE	
	13	1	**260-1393**	1	HOSE	
	14	1	**284-2917**	1	HOSE AS	
	15	1	**284-5165**	1	HOSE	
	16	1	**293-5352**	1	HOSE-AIR	
	17	1	**298-5901**	1	PLATE AS	
	18	1	**332-7333**	1	INDICATOR GP-AIR FILTER CHANGE	
		1	**205-1627**	1	BRACKET	
M	19	1	**129-3178**	1	LOCKNUT (M6X1-THD)	
	20	1	**226-0449**	1	CLAMP-HOSE	
	21	1	**4B-4863**	4	WASHER (4.7X11X1.2-MM THK)	
M	22	1	**5C-8312**	2	NUT (M4X0.7-THD)	
	23	1	**5P-4116**	6	WASHER-HARD (8.8X20.5X2-MM THK)	
	24	1	**7X-0586**	2	WASHER-HARD (7.2X32X2-MM THK)	
M	25	1	**8T-4189**	2	BOLT (M8X1.25X20-MM)	
M	26	1	**8T-4908**	4	BOLT (M8X1.25X25-MM)	
M	27	1	**8T-9405**	2	BOLT-SOCKET HEAD (M4X0.7X16-MM)	
D	28	1	**6V-1363**		HOSE (0.3-M)	

D-ORDER BY THE METER
E-ORDER BY THE CENTIMETER
M-METRIC PART
Y-SEPARATE ILLUSTRATION

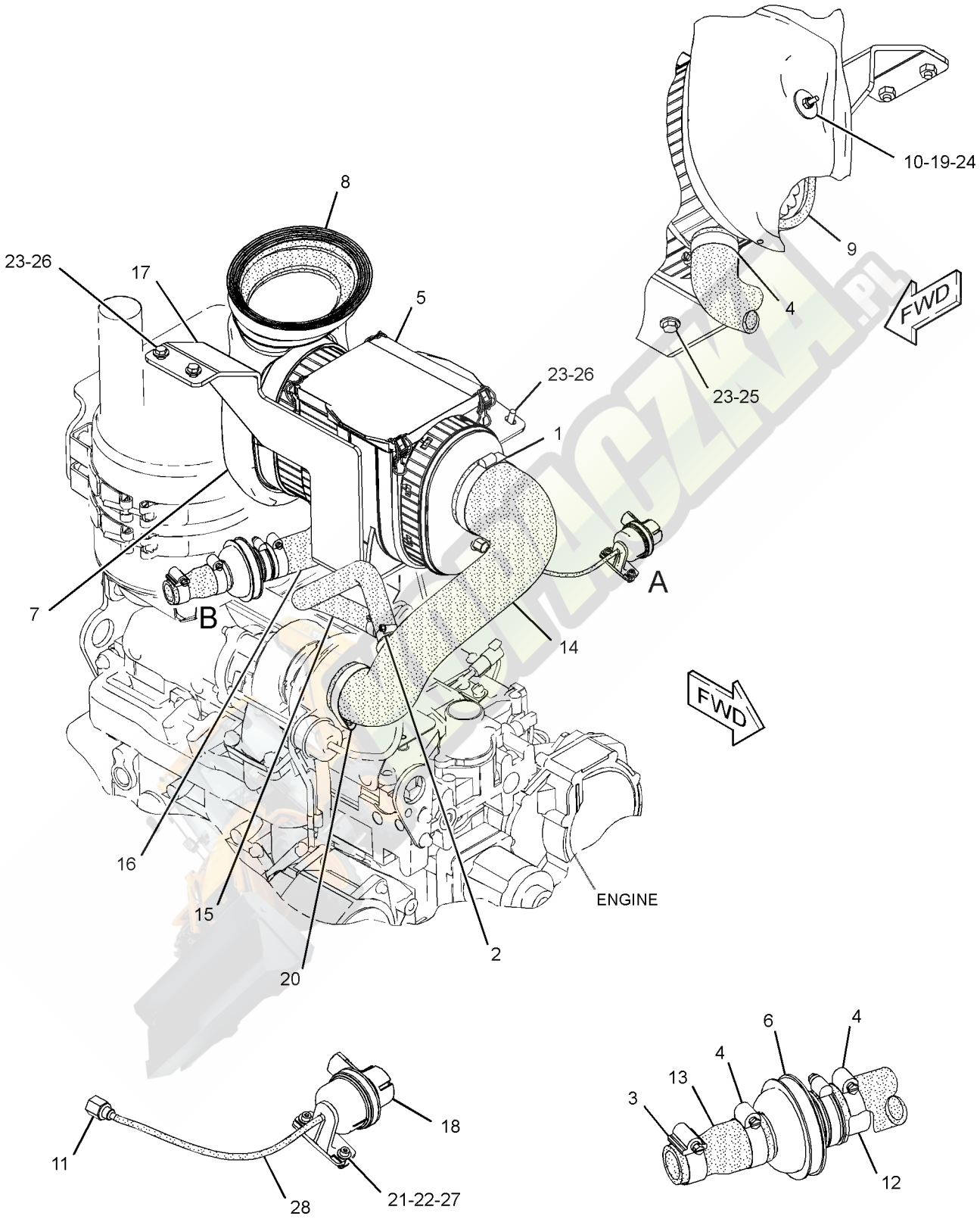

GRAPHIC #1 **<END>** g01625250

AIR INLET AND EXHAUST SYSTEM

332-6587 AIR CLEANER GP–TURBO

S/N: JBA1-UP

PART OF 339-4988, 339-4989, 339-4992, 339-4993 ENGINE AR

AN ATTACHMENT

SMCS-1051, 1054 **i03627137**

NOTE	REF NO	GRAPHIC REF	PART NUMBER	QTY	PART NAME 1 2 3 4 5 6 (PRODUCT LEVEL)	SEE PAGE
	1	1	**8T-6726**	1	CLAMP-HOSE	
	2	1	**110-2445**	1	CLAMP-HOSE	
	3	1	**124-6259**	3	CLAMP-HOSE	
Y	4	1	**234-1981**	1	AIR CLEANER GP (BASIC)	101
	5	1	**247-9730**	1	VALVE AS-CHECK (AIR CLEANER)	
	6	1	**248-3231**	1	DUCT-AIR	
	7	1	**249-5512**	1	SEAL	
	8	1	**253-4137**	1	SEAL	
	9	1	**253-4138**	1	STUD	
	10	1	**255-4692**	1	CONNECTOR-FILTER	
	11	1	**260-0634**	1	TUBE	
	12	1	**260-1393**	1	HOSE	
	13	1	**293-5352**	1	HOSE-AIR	
	14	1	**298-5901**	1	PLATE AS	
	15	1	**330-6734**	1	HOSE	
	16	1	**332-7333**	1	INDICATOR GP-AIR FILTER CHANGE	
		1	**205-1627**	1	BRACKET	
M	17	1	**129-3178**	1	LOCKNUT (M6X1-THD)	
	18	1	**295-5550**	1	CLAMP-BAND (CONSTANT TENSION)	
	19	1	**4B-4863**	4	WASHER (4.7X11X1.2-MM THK)	
M	20	1	**5C-8312**	2	NUT (M4X0.7-THD)	
	21	1	**5P-4116**	6	WASHER-HARD (8.8X20.5X2-MM THK)	
	22	1	**7X-0586**	2	WASHER-HARD (7.2X32X2-MM THK)	
M	23	1	**8T-4189**	2	BOLT (M8X1.25X20-MM)	
M	24	1	**8T-4908**	4	BOLT (M8X1.25X25-MM)	
M	25	1	**8T-9405**	2	BOLT-SOCKET HEAD (M4X0.7X16-MM)	
D	26	1	**6V-1363**		HOSE (0.3-M)	

D-ORDER BY THE METER
M-METRIC PART
Y-SEPARATE ILLUSTRATION

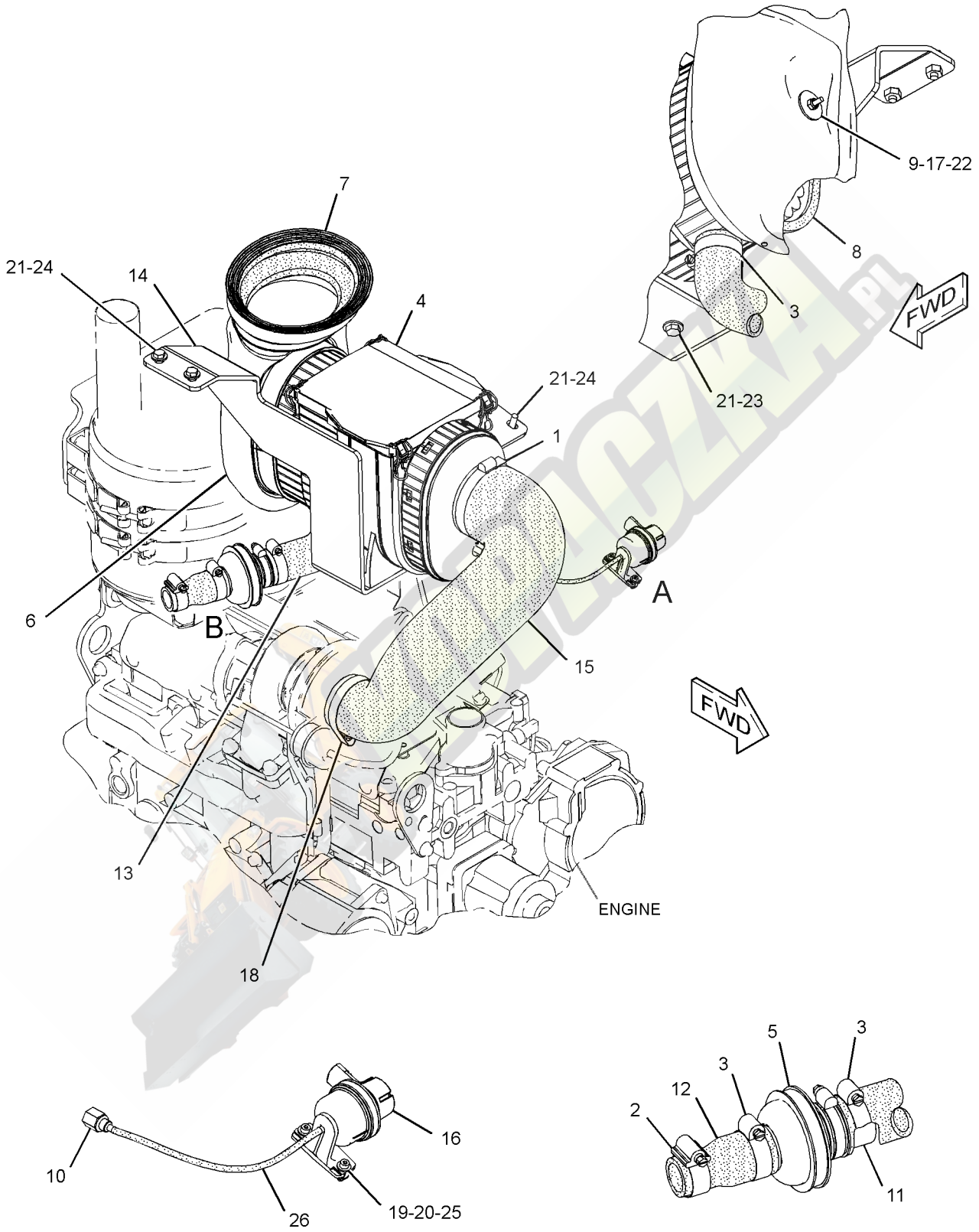

GRAPHIC #1 **<END>** g01625273

AIR INLET AND EXHAUST SYSTEM

231-0149 COVER GP-INLET MANIFOLD

S/N: CRS1-UP
PART OF 322-1923, 322-1924 ENGINE AR-PRIMARY
AN ATTACHMENT

SMCS-1058 **i01892308**

NOTE	REF NO	GRAPHIC REF	PART NUMBER	QTY	PART NAME 1 2 3 4 5 6 (PRODUCT LEVEL)	SEE PAGE
	1	1	**6I-0572**	12	BOLT (M8X1.25X20-MM)	
	2	1	**114-2579**	3	GASKET	
	3	1	**115-1162**	3	PLATE	

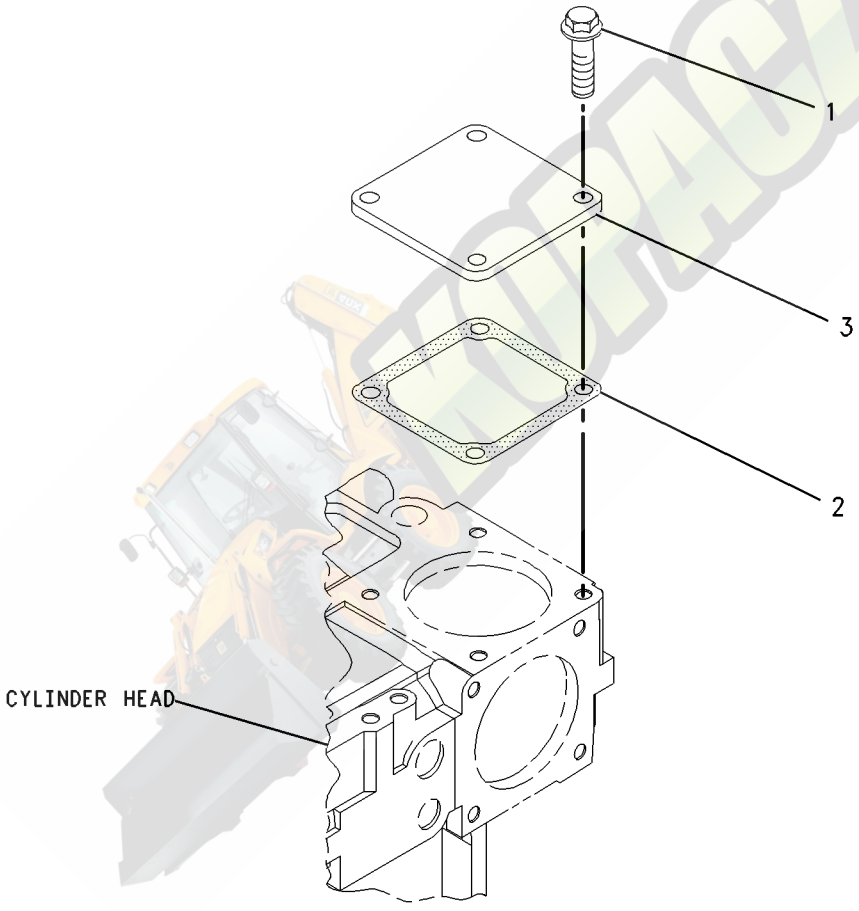

GRAPHIC #1 **<END>** g00986215

329-0129 COVER GP-INLET MANIFOLD

S/N: C4Z1-UP
PART OF 321-7704, 321-7705 ENGINE AR-PRIMARY
AN ATTACHMENT

SMCS-1058 **i03130574**

NOTE	REF NO	GRAPHIC REF	PART NUMBER	QTY	PART NAME 1 2 3 4 5 6 (PRODUCT LEVEL)	SEE PAGE
	1	1	**111-8222**	4	BOLT (M8X16-MM)	
	2	1	**114-2579**	3	GASKET	
M	3	1	**124-3815**	8	BOLT (M8X16X1.25-MM)	
	4	1	**185-6627**	3	PLATE	

M-METRIC PART

KOPACZKA.PL

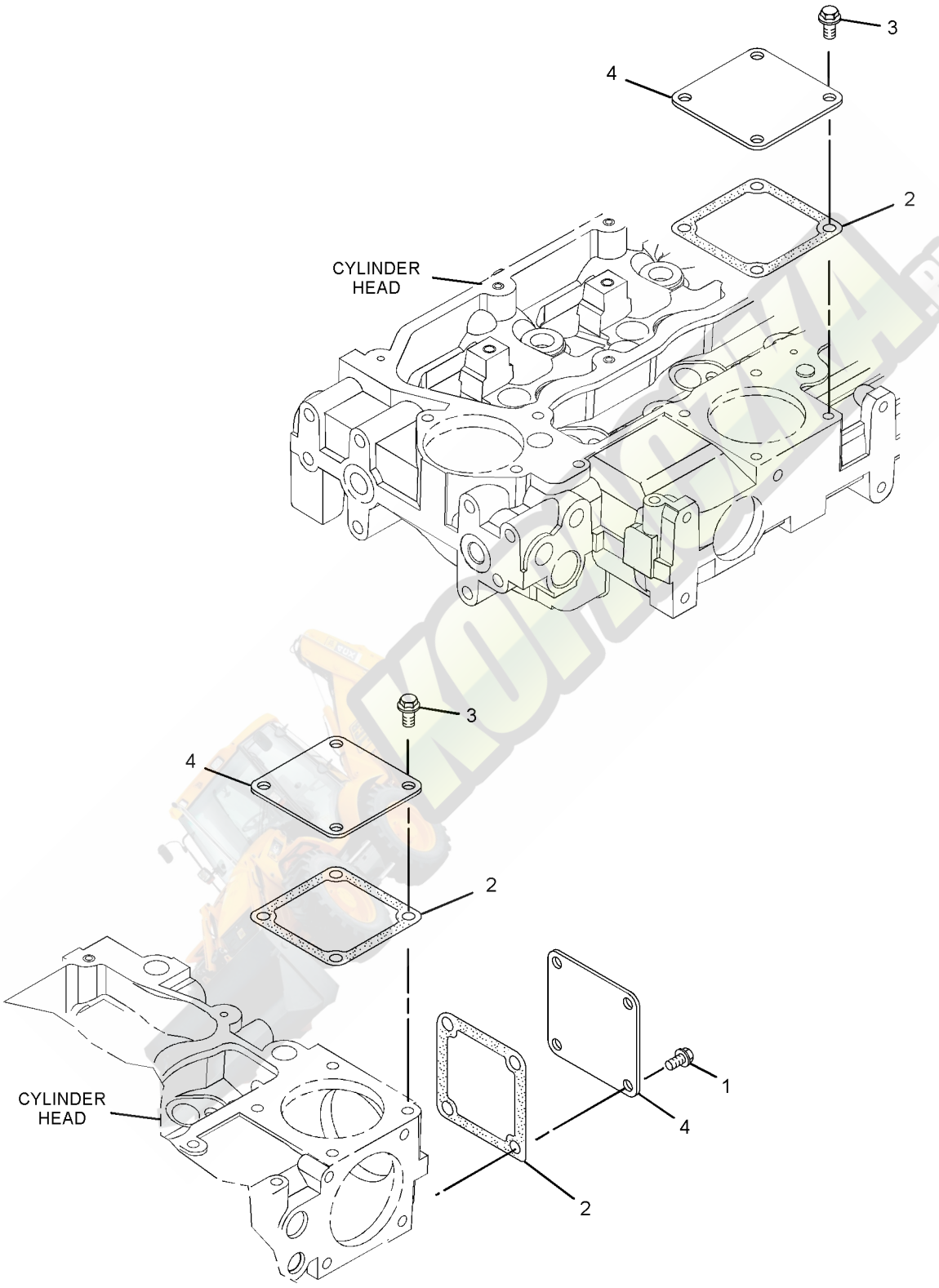

GRAPHIC #1 **<END>** g01619466

AIR INLET AND EXHAUST SYSTEM

210-6807 EXTENSION GP-EXHAUST

S/N: JBA1-UP

PART OF 339-4986, 339-4987, 339-4988, 339-4989, 339-4990, 339-4991, 339-4992, 339-4993 ENGINE AR

AN ATTACHMENT

SMCS-1061 **i02159788**

NOTE	REF NO	GRAPHIC REF	PART NUMBER	QTY	PART NAME 1 2 3 4 5 6 (PRODUCT LEVEL)	SEE PAGE
	1	1	**7E-3870**	1	CLAMP-MUFFLER	
	2	1	**239-2270**	1	PIPE-EXTENSION	

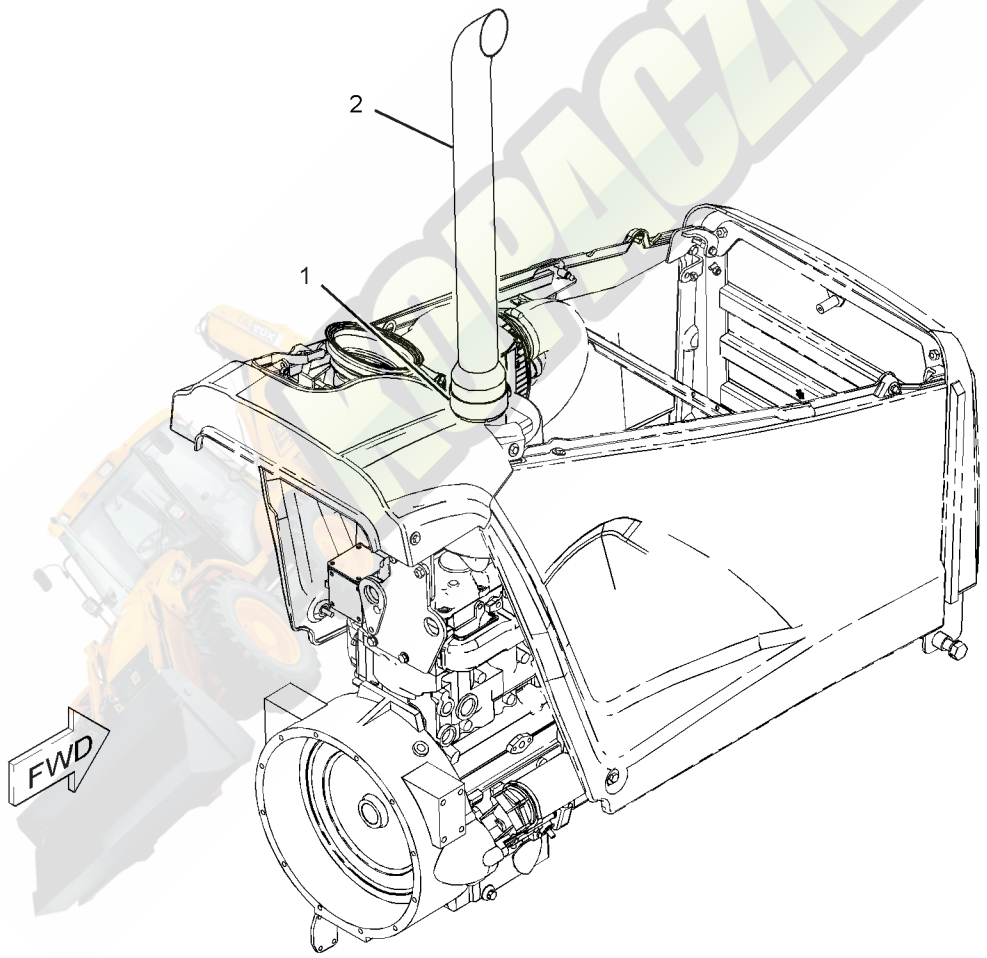

GRAPHIC #1 **<END>** g01098165

AIR INLET AND EXHAUST SYSTEM

304-3920 LINES GP-AIR

S/N: JBA1-UP
PART OF 339-4988, 339-4989, 339-4992, 339-4993 ENGINE AR
AN ATTACHMENT

SMCS-1071 **i03035045**

NOTE	REF NO	GRAPHIC REF	PART NUMBER	QTY	PART NAME 1 2 3 4 5 6 (PRODUCT LEVEL)	SEE PAGE
	1	1	**141-1667**	2	CLAMP-HOSE	
	2	1	**234-3030**	1	GASKET	
	3	1	**263-5376**	1	HOSE	
	4	1	**301-9765**	1	TUBE	
	5	1	**301-9766**	1	HOSE	
	6	1	**304-3922**	1	TUBE	
	7	1	**305-6917**	1	TUBE AS	
	8	1	**311-2768**	1	HOSE	
	9	1	**317-5502**	1	HOSE	
	10	1	**208-9281**	5	BOLT-FLANGE HEAD (M8X1.25X20-MM)	
	11	1	**209-4573**	2	CLAMP-V BAND	
	12	1	**212-6934**	2	CLAMP	
	13	1	**215-4012**	1	CLAMP	
	14	1	**216-4983**	1	CLAMP	

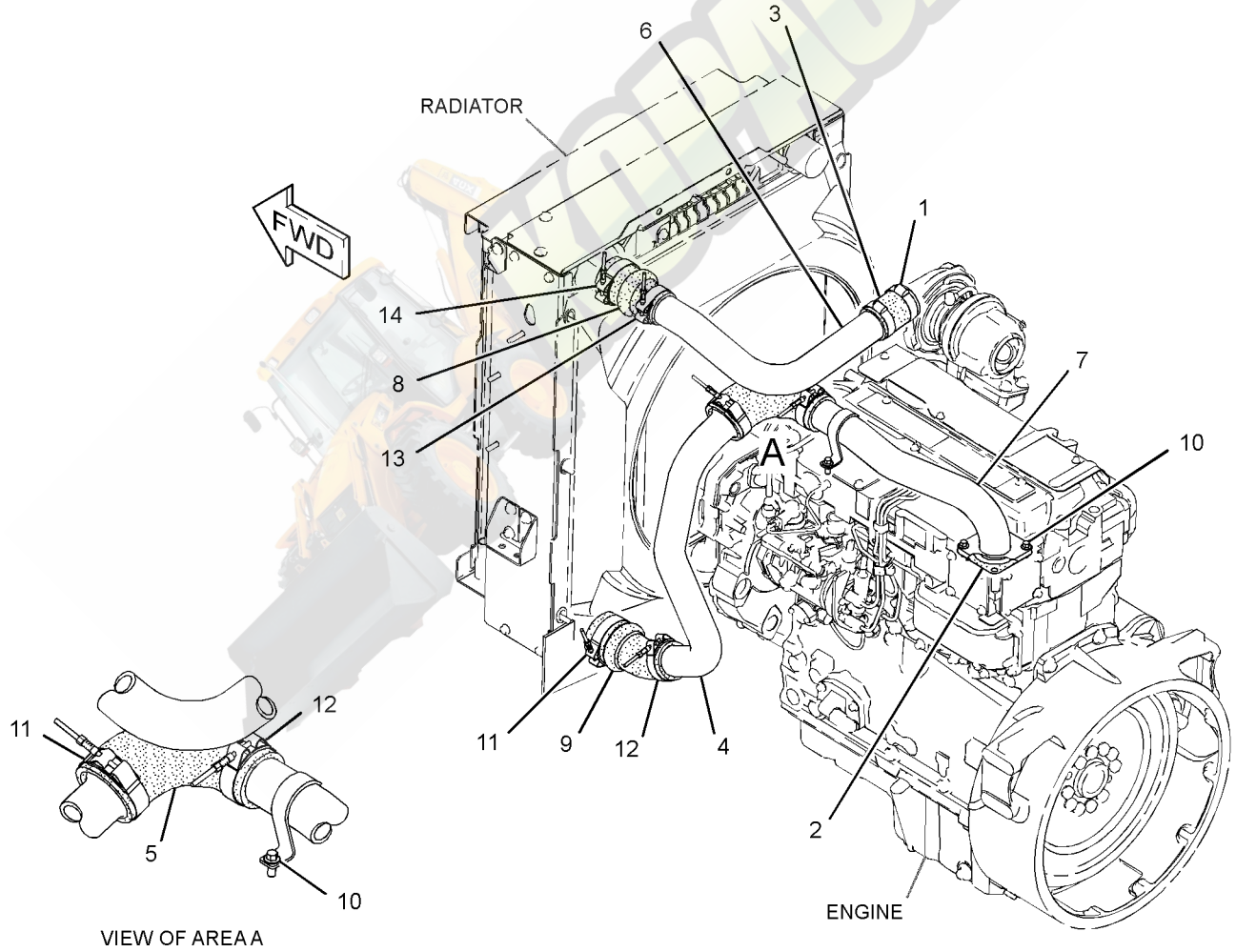

GRAPHIC #1 **<END>** g01574854

AIR INLET AND EXHAUST SYSTEM

325-3036 MUFFLER GP

S/N: JBA1-UP
PART OF 339-4986, 339-4987, 339-4988, 339-4989, 339-4990, 339-4991, 339-4992, 339-4993 ENGINE AR
AN ATTACHMENT

SMCS-1062 **i03105226**

NOTE	REF NO	GRAPHIC REF	PART NUMBER	QTY	PART NAME 1 2 3 4 5 6 (PRODUCT LEVEL)	SEE PAGE
	1	1	**6I-0364**	3	STUD (M10X1.5X30-MM)	
	2	1	**6I-0563**	3	NUT (M10X1.5-THD)	
	3	1	**237-0975**	1	PLATE AS	
M		1	**8T-3490**	4	NUT-WELD (M10X1.5-THD)	
	4	1	**247-4001**	1	PLATE AS	
	5	1	**254-2187**	2	CLAMP AS	
	6	1	**325-3495**	1	MUFFLER AS	
	7	1	**8T-4121**	16	WASHER-HARD (11X21X2.5-MM THK)	
M	8	1	**8T-4133**	4	NUT (M10X1.5-THD)	
M	9	1	**8T-4136**	4	BOLT (M10X1.5X25-MM)	
M	10	1	**8T-4195**	8	BOLT (M10X1.5X30-MM)	

M-METRIC PART

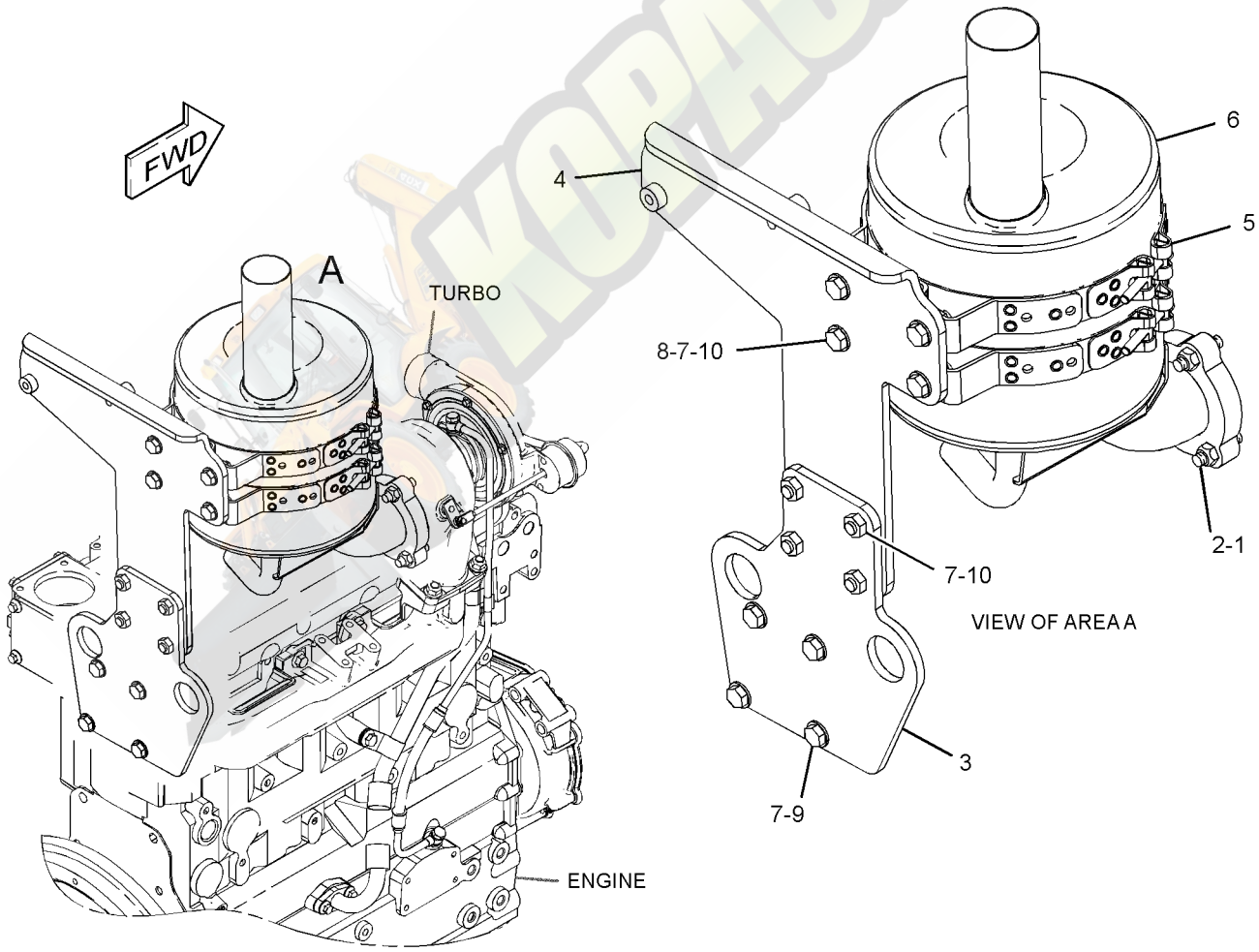

GRAPHIC #1 **<END>** g01592347

AIR INLET AND EXHAUST SYSTEM

237-3924 TURBOCHARGER GP

S/N: CRS1-UP

PART OF 322-1923, 322-1924 ENGINE AR-PRIMARY

AN ATTACHMENT

SMCS-1052, 1053 **i02903001**

NOTE	REF NO	GRAPHIC REF	PART NUMBER	QTY	PART NAME 1 2 3 4 5 6 (PRODUCT LEVEL)	SEE PAGE
M	1	1	**6I-0217**	2	BOLT (M8X1.25X20-MM)	
	2	1	**6I-0563**	4	NUT (M10X1.5-THD)	
	3	1	**6I-0572**	4	BOLT (M8X1.25X20-MM)	
	4	1	**106-8916**	2	BOLT (M6X16-MM)	
	5	1	**141-1667**	2	CLAMP-HOSE	
	6	1	**149-4236**	4	STUD	
	7	1	**174-9638**	8	BOLT	
	8	1	**194-5390**	1	GASKET-MANIFOLD	
	10	1	**225-8533**	1	GASKET (TURBOCHARGER)	
	11	1	**225-8534**	1	GASKET (TURBOCHARGER)	
	12	1	**225-8536**	1	GASKET (MANIFOLD)	
	13	1	**263-5376**	1	HOSE	
	14	1	**234-3030**	1	GASKET	
	15	1	**322-9616**	1	TUBE AS-TURBOCHARGER	
	15A	1	**225-8524**	2	BOLT-SPECIAL (BANJO)	
	15B	1	**225-8526**	4	WASHER (10.4X13.75X1.37-MM THK)	
	16	1	**237-3786**	1	TURBOCHARGER GP	
	17	1	**322-9615**	1	TUBE-TURBOCHARGER	
	18	1	**237-3794**	1	BOLT	
	19	1	**237-3921**	1	CLIP	
	20	1	**237-3922**	1	TUBE	
	21	1	**255-3447**	1	MANIFOLD-EXHAUST	

M-METRIC PART

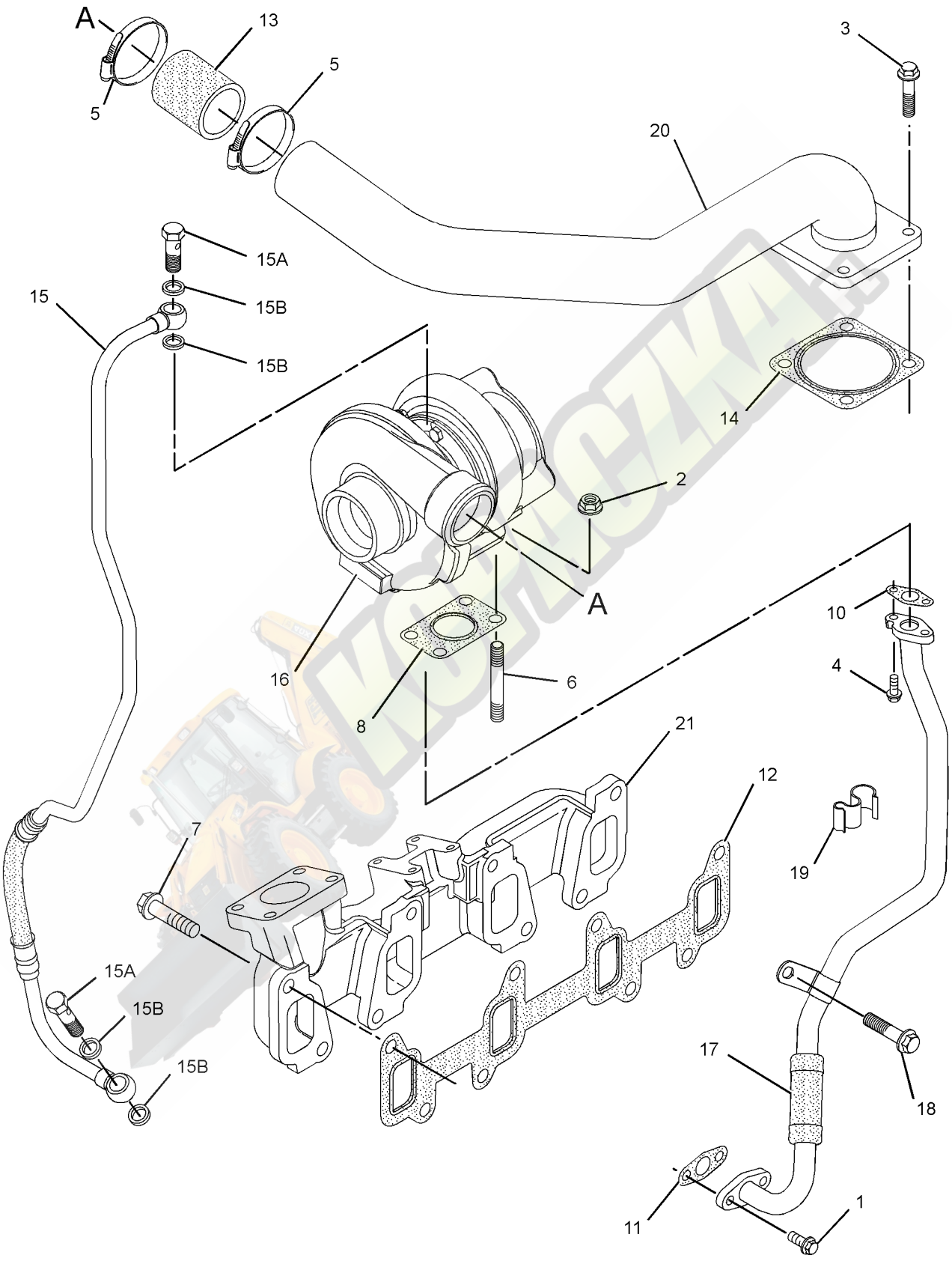

GRAPHIC #1 **<END>** g01450826

AIR INLET AND EXHAUST SYSTEM

326-9010 TURBOCHARGER GP

S/N: C4Z1-UP
PART OF 321-7704 ENGINE AR-PRIMARY
AN ATTACHMENT

SMCS-1052, 1053 **i03127785**

NOTE	REF NO	GRAPHIC REF	PART NUMBER	QTY	PART NAME 1 2 3 4 5 6 (PRODUCT LEVEL)	SEE PAGE
M	1	1	**6I-0217**	2	BOLT (M8X1.25X20-MM)	
	2	1	**6I-0563**	4	NUT (M10X1.5-THD)	
	3	1	**106-8916**	2	BOLT (M6X16-MM)	
	4	1	**147-5553**	4	STUD	
	5	1	**174-9638**	8	BOLT	
	6	1	**194-5390**	1	GASKET-MANIFOLD	
	7	1	**225-8533**	1	GASKET	
	8	1	**225-8534**	1	GASKET	
	9	1	**225-8536**	1	GASKET	
	10	1	**237-3794**	1	BOLT	
	11	1	**237-3921**	1	CLIP	
	12	1	**255-3447**	1	MANIFOLD-EXHAUST	
	13	1	**315-9721**	1	TURBOCHARGER	
	14	1	**322-9615**	1	TUBE-TURBOCHARGER	
	15	1	**322-9616**	1	TUBE AS-TURBOCHARGER	
	15A	1	**225-8524**	2	BOLT-SPECIAL (BANJO)	
	15B	1	**225-8526**	4	WASHER (10.4X13.75X1.37-MM THK)	

M-METRIC PART

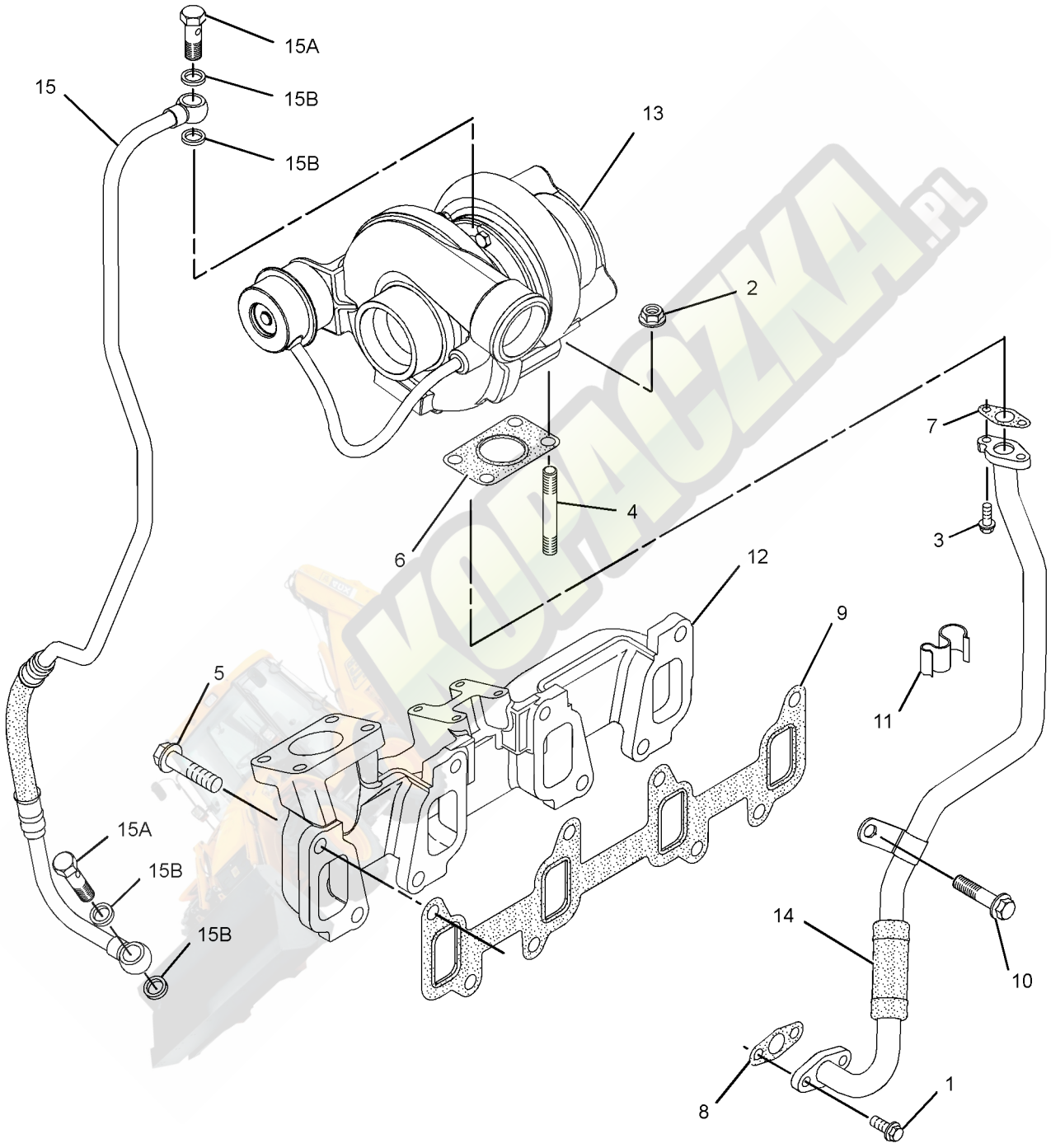

GRAPHIC #1 **<END>** g01615204

AIR INLET AND EXHAUST SYSTEM

326-9156 TURBOCHARGER GP

S/N: C4Z1-UP
PART OF 321-7705 ENGINE AR-PRIMARY
AN ATTACHMENT

SMCS-1052, 1053 **i03128316**

NOTE	REF NO	GRAPHIC REF	PART NUMBER	QTY	PART NAME 1 2 3 4 5 6 (PRODUCT LEVEL)	SEE PAGE
M	1	1	**6I-0217**	2	BOLT (M8X1.25X20-MM)	
	2	1	**6I-0563**	4	NUT (M10X1.5-THD)	
	3	1	**106-8916**	2	BOLT (M6X16-MM)	
	4	1	**147-5553**	4	STUD	
	5	1	**174-9638**	8	BOLT	
	6	1	**194-5390**	1	GASKET-MANIFOLD	
	7	1	**225-8533**	1	GASKET	
	8	1	**225-8534**	1	GASKET	
	9	1	**225-8536**	1	GASKET	
	10	1	**237-3794**	1	BOLT	
	11	1	**237-3921**	1	CLIP	
	12	1	**255-3447**	1	MANIFOLD-EXHAUST	
	13	1	**322-9615**	1	TUBE-TURBOCHARGER	
	14	1	**322-9616**	1	TUBE AS-TURBOCHARGER	
	14A	1	**225-8524**	2	BOLT-SPECIAL (BANJO)	
	14B	1	**225-8526**	4	WASHER (10.4X13.75X1.37-MM THK)	
	15	1	**326-9153**	1	TURBOCHARGER	

M-METRIC PART

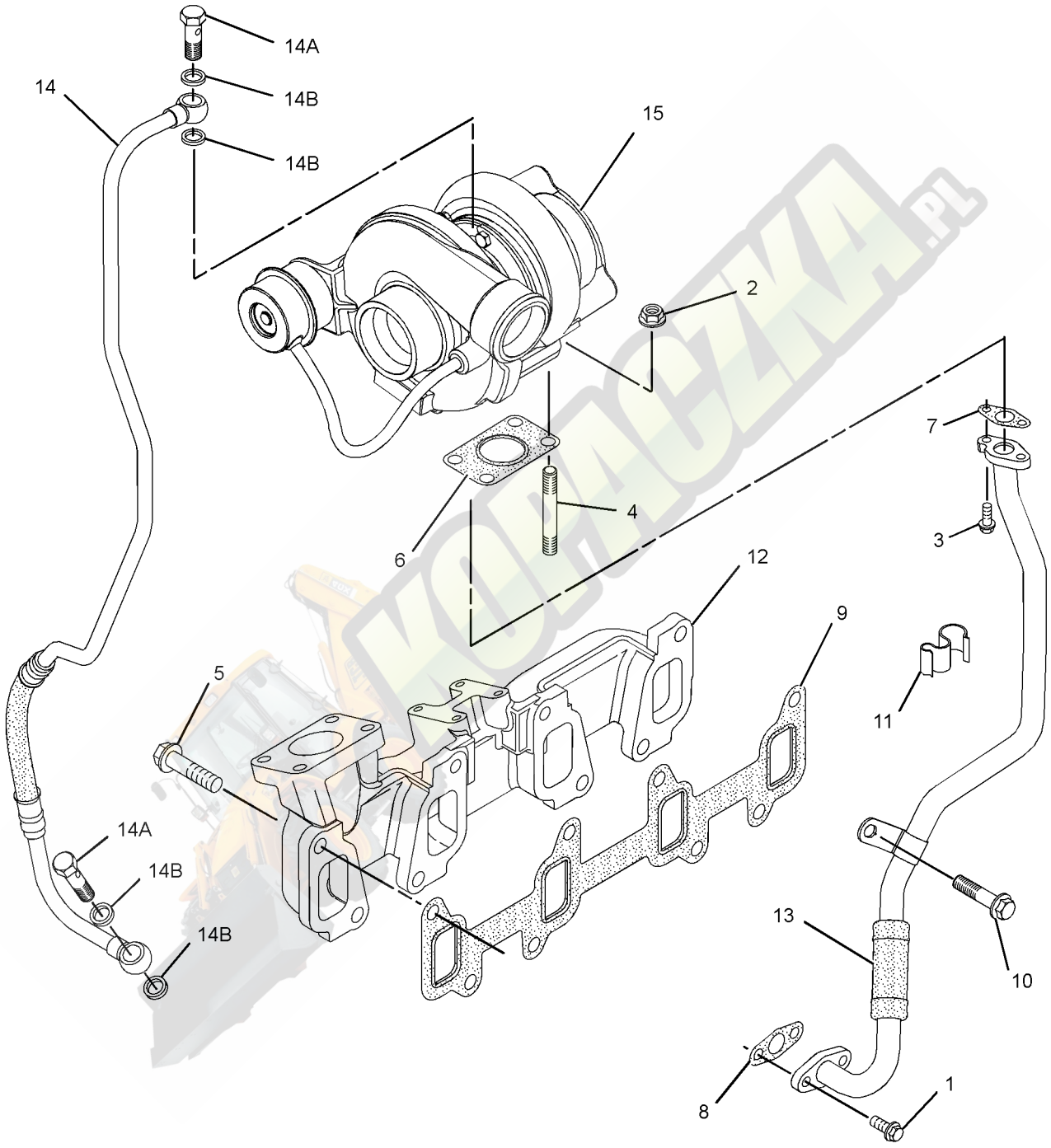

GRAPHIC #1 **<END>** g01615034

206-1640 CONTROL GP-GOVERNOR

S/N: JBA1-UP
PART OF 339-4986, 339-4987, 339-4988, 339-4989, 339-4990, 339-4991, 339-4992, 339-4993 ENGINE AR
AN ATTACHMENT

SMCS-1265 **i03627139**

NOTE	REF NO	GRAPHIC REF	PART NUMBER	QTY	PART NAME 1 2 3 4 5 6 (PRODUCT LEVEL)	SEE PAGE
	1	1	**151-4841**	3	BLOCK	
Y	2	1	**209-3378**	1	PEDAL GP-GOVERNOR (MECHANICAL)	672
	3	1	**235-0128**	1	CABLE AS	
	4	1	**239-1434**	1	PLATE	
C	5	1	**300-1702**	1	BRACKET AS	
		1	**6T-5017**	1	SPACER (2.11X12.7X24-MM THK)	
M		1	**8T-3612**	2	NUT-WELD (M8X1.25-THD)	
	6	1	**248-2707**	1	GROMMET	
M	7	1	**119-5025**	3	SCREW-FLAT HEAD (M6X1X25-MM)	
	8	1	**164-1395**	1	KNOB (GOVERNOR CONTROL)	
Y	9	1	**209-3367**	1	LEVER GP-GOVERNOR (HANDHELD)	658
C	11	1	**7K-1181**	4	STRAP-CABLE	
M	12	1	**8T-4138**	3	BOLT (M6X1X20-MM)	
	13	1	**8T-4205**	3	WASHER-HARD (7.2X14.5X2-MM THK)	
	14	1	**8T-4224**	4	WASHER-HARD (8.8X16X2-MM THK)	
CM	15	1	**8T-4908**	3	BOLT (M8X1.25X25-MM)	
CM	16	1	**7X-0818**	1	BOLT (M8X1.25X45-MM)	

C-CHANGE FROM PREVIOUS TYPE
M-METRIC PART
Y-SEPARATE ILLUSTRATION

206-1640 **CONTROL GP-GOVERNOR** *(contd.)* **i03627139**

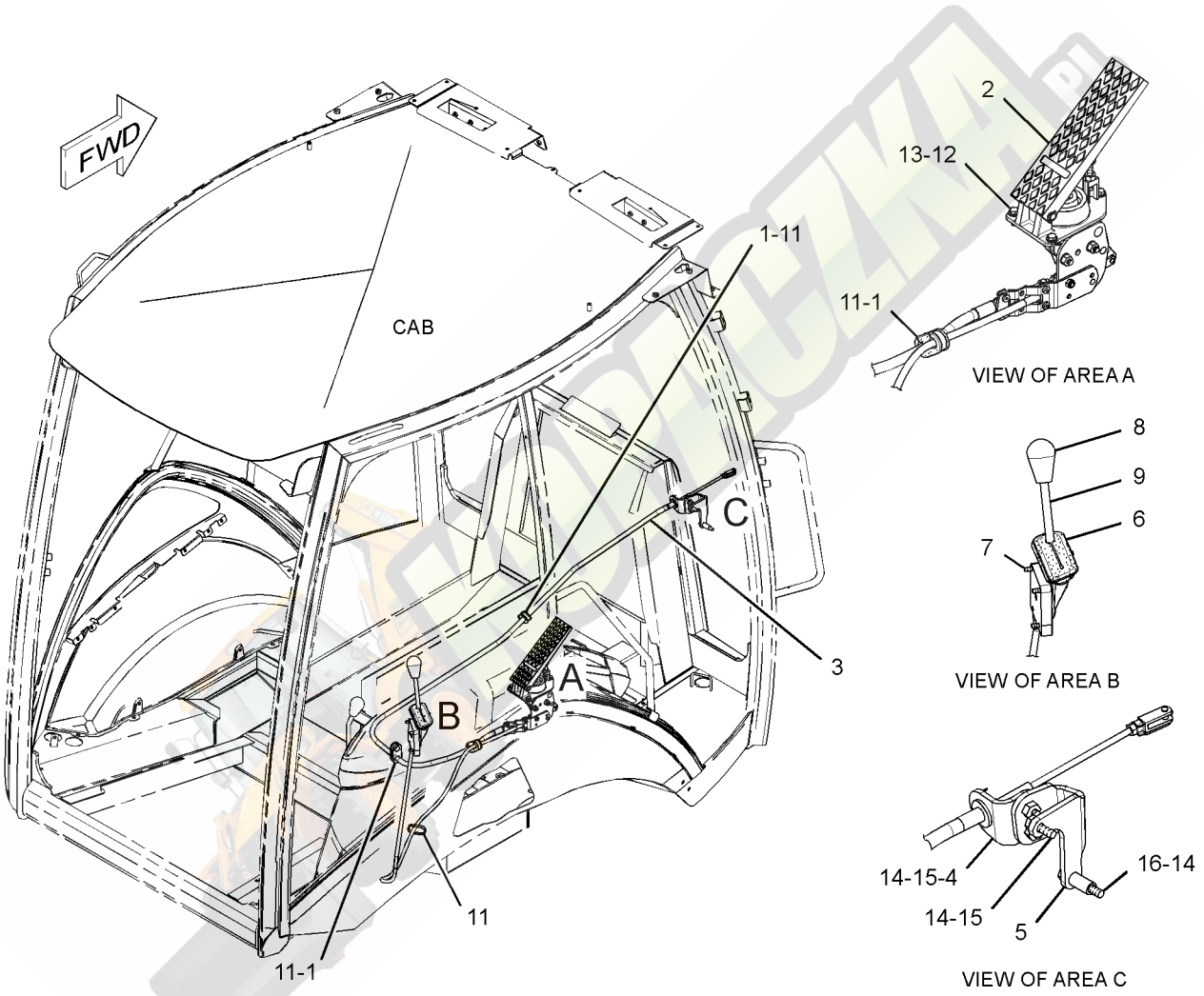

GRAPHIC #1 **<END>** g01347506

130-7092 FILTER GP-WATER SEP & FUEL

S/N: JBA1-UP
PART OF 287-3923 FILTER GP-WATER SEP & FUEL
AN ATTACHMENT

SMCS-1261, 1263 **i03527870**

NOTE	REF NO	GRAPHIC REF	PART NUMBER	QTY	PART NAME 1 2 3 4 5 6 (PRODUCT LEVEL)	SEE PAGE
	1	1	**118-8118**	1	RING-RETAINING	
	2	1	**118-8119**	1	NUT	
	3	1	**131-1812**	1	FILTER ELEMENT-FUEL (WATER SEPARATOR)	
					AVAILABLE REPAIR KIT(S):	
			121-4480	1	KIT-WATER BASE (WATER SEPARATOR)	
					(INCLUDES NUT, CAP, SEALS, PLUGS & RING)	

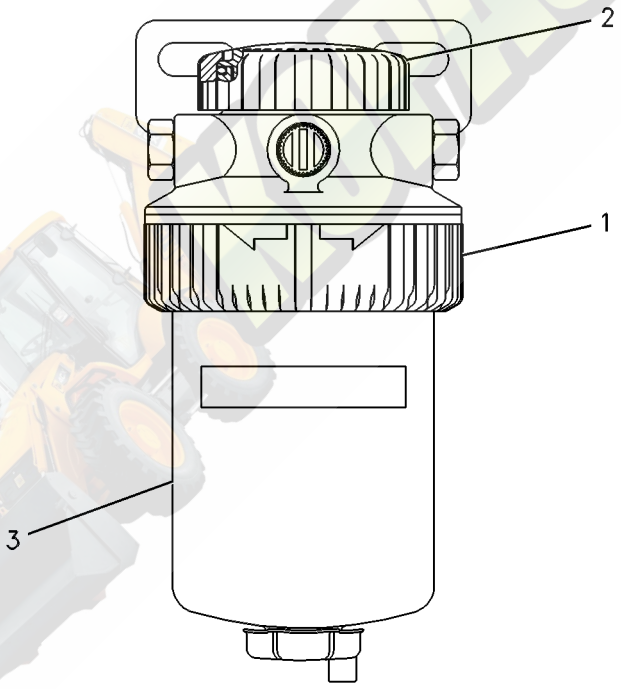

GRAPHIC #1 **<END>** g00259641

287-3923 FILTER GP-WATER SEP & FUEL

S/N: JBA1-UP
AN ATTACHMENT

SMCS-1261, 1263 **i03500480**

NOTE	REF NO	GRAPHIC REF	PART NUMBER	QTY	PART NAME 1 2 3 4 5 6 (PRODUCT LEVEL)	SEE PAGE
	1	1	**1P-4278**	2	CLAMP-HOSE	
	2	1	**6V-3305**	1	ADAPTER-O-RING	
Y	3	1	**130-7092**	1	FILTER GP-WATER SEP & FUEL	120
	4	1	**151-1975**	2	CONNECTOR	
	5	1	**266-2275**	1	BRACKET AS	
M		1	**8T-3490**	4	NUT-WELD (M10X1.5-THD)	
	6	1	*169-5861*	2	PLUG AS	
					(EACH INCLUDES)	
		1	**3K-8460**	1	PLUG	
		1	**5P-7814**	1	SEAL-O-RING	
	7	1	**5P-7814**	3	SEAL-O-RING	
	8	1	**8T-4121**	2	WASHER-HARD (11X21X2.5-MM THK)	
M	9	1	**8T-4195**	2	BOLT (M10X1.5X30-MM)	
E	10	1	**5P-1420**		HOSE (23-CM)	

E-ORDER BY THE CENTIMETER
M-METRIC PART
Y-SEPARATE ILLUSTRATION

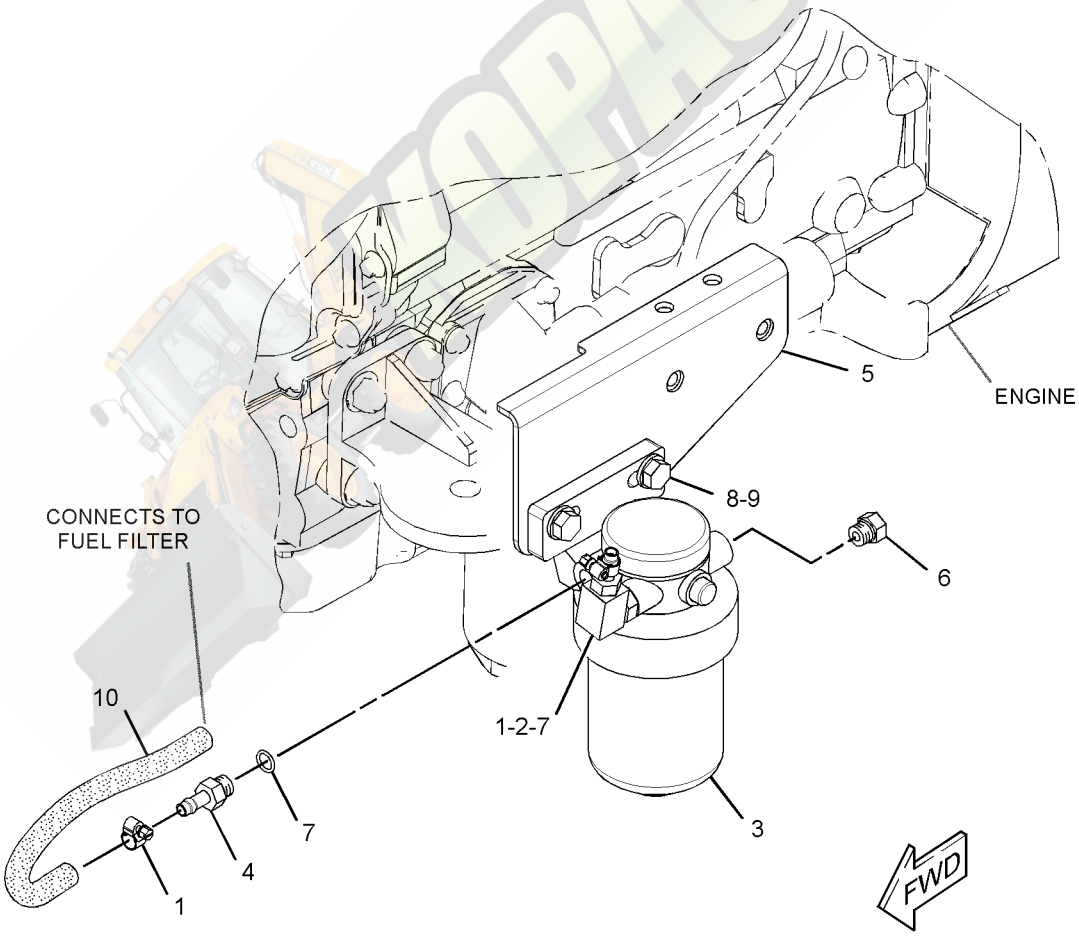

GRAPHIC #1 **<END>** g01817393

326-9012 LINES GP-FUEL

S/N: C4Z1-UP
PART OF 321-7704, 321-7705 ENGINE AR-PRIMARY
AN ATTACHMENT

SMCS-1274 **i03127784**

NOTE	REF NO	GRAPHIC REF	PART NUMBER	QTY	PART NAME 1 2 3 4 5 6 (PRODUCT LEVEL)	SEE PAGE
	1	1	**8T-7876**	1	SEAL-O-RING	
	2	1	**035-8017**	1	UNION	
	3	1	**067-6264**	1	FITTING-FLARED	
	4	1	**067-6265**	1	FITTING-BRASS	
	5	1	**232-3126**	1	CLIP	
	6	1	**236-2144**	1	TUBE AS	
	6A	1	**067-6999**	1	FERRULE	
	7	1	**247-4884**	1	TUBE AS	
	8	1	**320-9213**	1	CONNECTION	

KOPACZKA.pl

326-9012 **LINES GP-FUEL** *(contd.)* **i03127784**

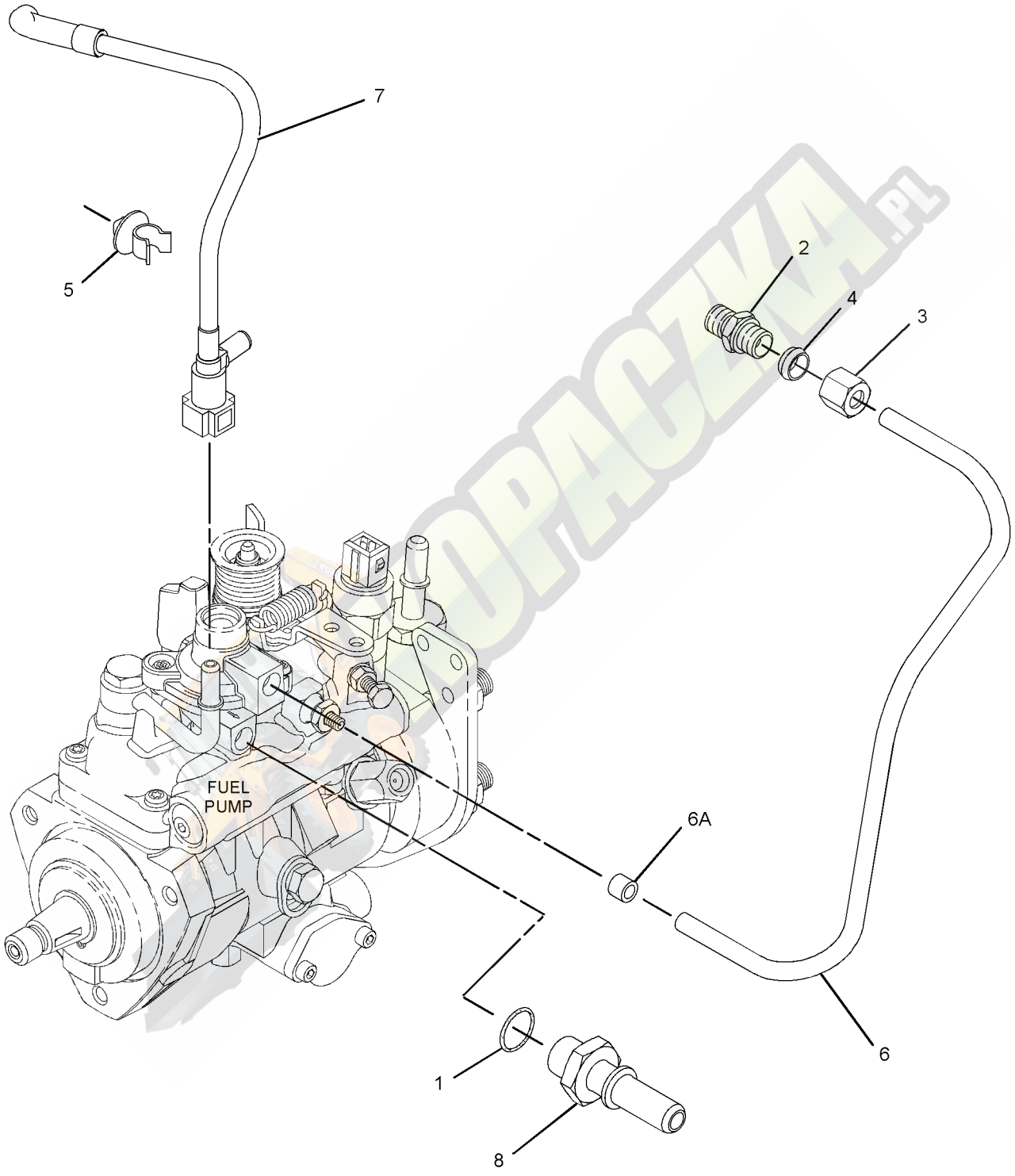

GRAPHIC #1 **<END>** g01613613

FUEL SYSTEM

345-7477 LINES GP-FUEL

S/N: JBA1-UP

PART OF 339-4986, 339-4987, 339-4990, 339-4991 ENGINE AR

AN ATTACHMENT

SMCS-1274 **i03663340**

NOTE	REF NO	GRAPHIC REF	PART NUMBER	QTY	PART NAME 1 2 3 4 5 6 (PRODUCT LEVEL)	SEE PAGE
B	1	1	**1P-4278**	10	CLAMP-HOSE	
	2	1	**7K-1181**	1	STRAP-CABLE	
	3	1	**151-4841**	1	BLOCK	
	4	1	**215-9515**	1	CONNECTOR-HOSE (QUICK DISCONNECT)	
	5	1	**222-3518**	1	TEE	
	6	1	**224-5917**	1	CONNECTOR-SPECIAL	
	7	1	**6K-8178**	1	CLIP	
	8	1	**7C-4354**	1	CLIP	
	9	1	**7S-1912**	1	CLIP	
	10	1	**8M-2773**	3	CLIP	
	11	1	**8T-4121**	2	WASHER-HARD (11X21X2.5-MM THK)	
M	12	1	**8T-4133**	1	NUT (M10X1.5-THD)	
M	13	1	**8T-4136**	1	BOLT (M10X1.5X25-MM)	
M	14	1	**8T-4179**	1	BOLT (M12X1.75X20-MM)	
M	15	1	**8T-4189**	1	BOLT (M8X1.25X20-MM)	
	16	1	**8T-4223**	1	WASHER-HARD (13.5X25.5X3-MM THK)	
	17	1	**8T-4224**	1	WASHER-HARD (8.8X16X2-MM THK)	
	18	1	**9M-8406**	1	CLIP	
E	19	1	**5P-1442**		HOSE (117.5-CM)	
E	20	1	**5P-1420**		HOSE (118-CM)	
E	20A	1	**5P-1420**		HOSE (13.5-CM)	
E	20B	1	**5P-1420**		HOSE (55-CM)	
E	20C	1	**5P-1420**		HOSE (59-CM)	

B-USE AS REQUIRED
E-ORDER BY THE CENTIMETER
M-METRIC PART

345-7477 **LINES GP-FUEL** *(contd.)* **i03663340**

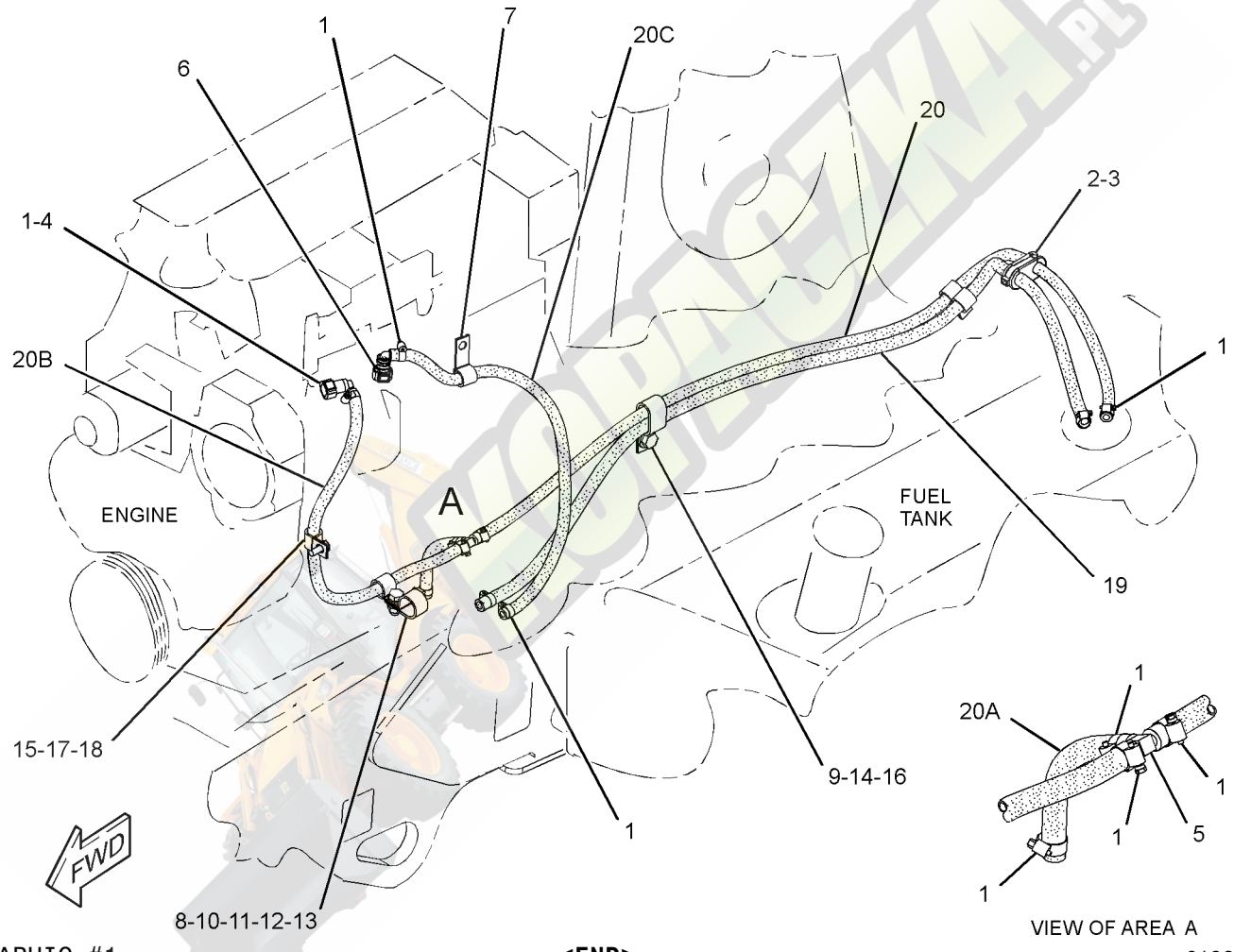

GRAPHIC #1 **<END>** g01967182

FUEL SYSTEM

345-7478 LINES GP-FUEL

S/N: JBA1-UP
PART OF 339-4988, 339-4989, 339-4992, 339-4993 ENGINE AR
AN ATTACHMENT

SMCS-1274 **i03664242**

NOTE	REF NO	GRAPHIC REF	PART NUMBER	QTY	PART NAME 1 2 3 4 5 6 (PRODUCT LEVEL)	SEE PAGE
B	1	1	**1P-4278**	14	CLAMP-HOSE	
	2	1	**7K-1181**	2	STRAP-CABLE	
	3	1	**151-4841**	1	BLOCK	
	4	1	**215-9515**	2	CONNECTOR-HOSE (QUICK DISCONNECT)	
	5	1	**222-3518**	2	TEE	
	6	1	**224-5917**	1	CONNECTOR-SPECIAL	
	7	1	**6K-8178**	1	CLIP	
	8	1	**7C-4354**	1	CLIP	
	9	1	**7S-1912**	1	CLIP	
	10	1	**8M-2773**	2	CLIP	
	11	1	**8T-4121**	2	WASHER-HARD (11X21X2.5-MM THK)	
M	12	1	**8T-4133**	1	NUT (M10X1.5-THD)	
M	13	1	**8T-4136**	1	BOLT (M10X1.5X25-MM)	
M	14	1	**8T-4179**	1	BOLT (M12X1.75X20-MM)	
M	15	1	**8T-4189**	1	BOLT (M8X1.25X20-MM)	
	16	1	**8T-4223**	1	WASHER-HARD (13.5X25.5X3-MM THK)	
	17	1	**8T-4224**	1	WASHER-HARD (8.8X16X2-MM THK)	
	18	1	**9M-8406**	2	CLIP	
E	19	1	**5P-1442**		HOSE (118-CM)	
E	20	1	**5P-1420**		HOSE (118-CM)	
E	20A	1	**5P-1420**		HOSE (59-CM)	
E	20B	1	**5P-1420**		HOSE (32-CM)	
E	20C	1	**5P-1420**		HOSE (8.5-CM)	
E	20D	1	**5P-1420**		HOSE (45-CM)	
E	20E	1	**5P-1420**		HOSE (13.5-CM)	

B-USE AS REQUIRED
E-ORDER BY THE CENTIMETER
M-METRIC PART

345-7478 **LINES GP-FUEL** *(contd.)* **i03664242**

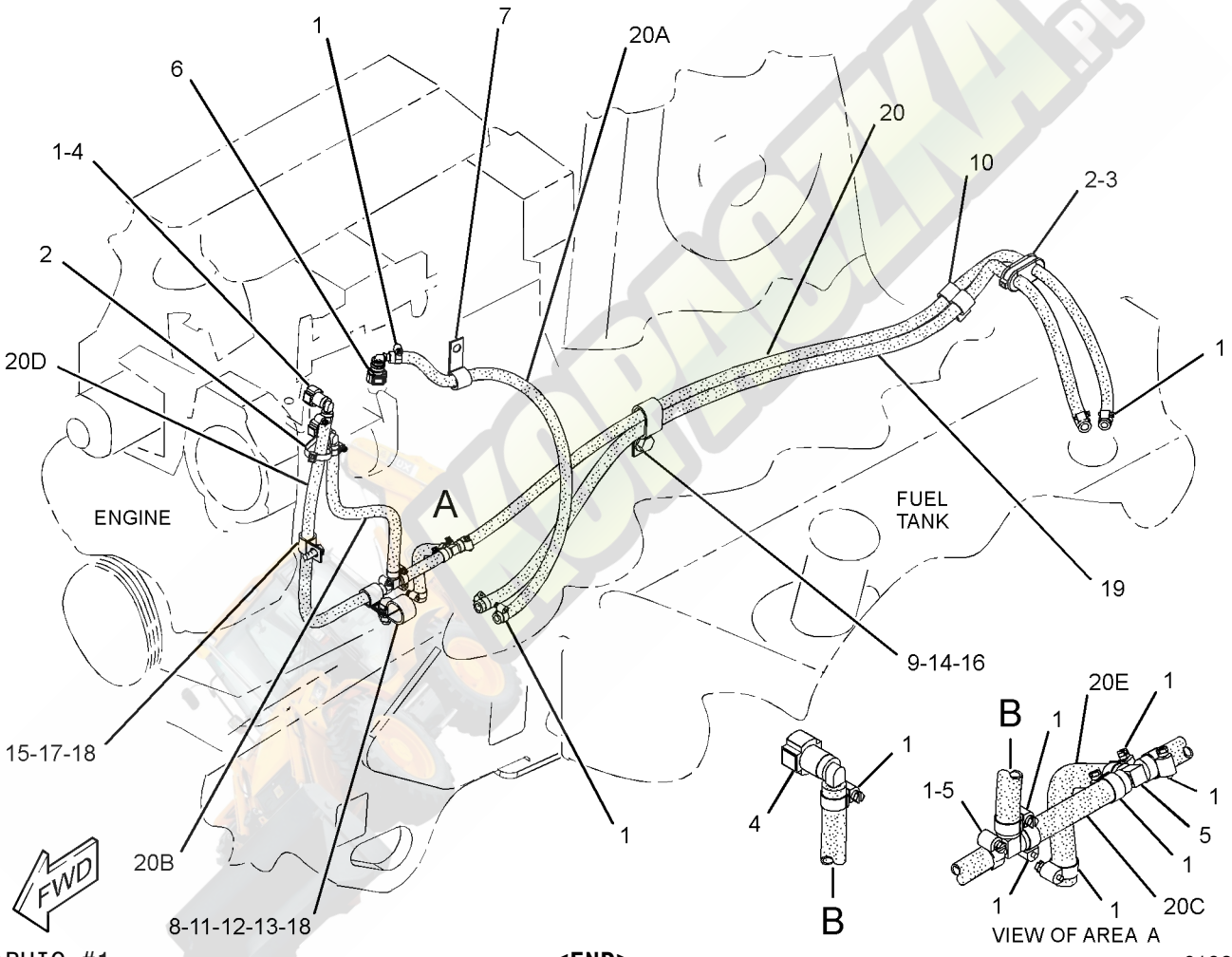

GRAPHIC #1

<END>

g01967298

247-4885 LINES GP-FUEL FILTER

S/N: CRS1-UP
PART OF 322-1923, 322-1924 ENGINE AR-PRIMARY
AN ATTACHMENT

SMCS-1261, 1274 **i02225714**

NOTE	REF NO	GRAPHIC REF	PART NUMBER	QTY	PART NAME 1 2 3 4 5 6 (PRODUCT LEVEL)	SEE PAGE
	1	1	**247-4884**	1	TUBE AS	
	2	1	**232-3126**	1	CLIP	

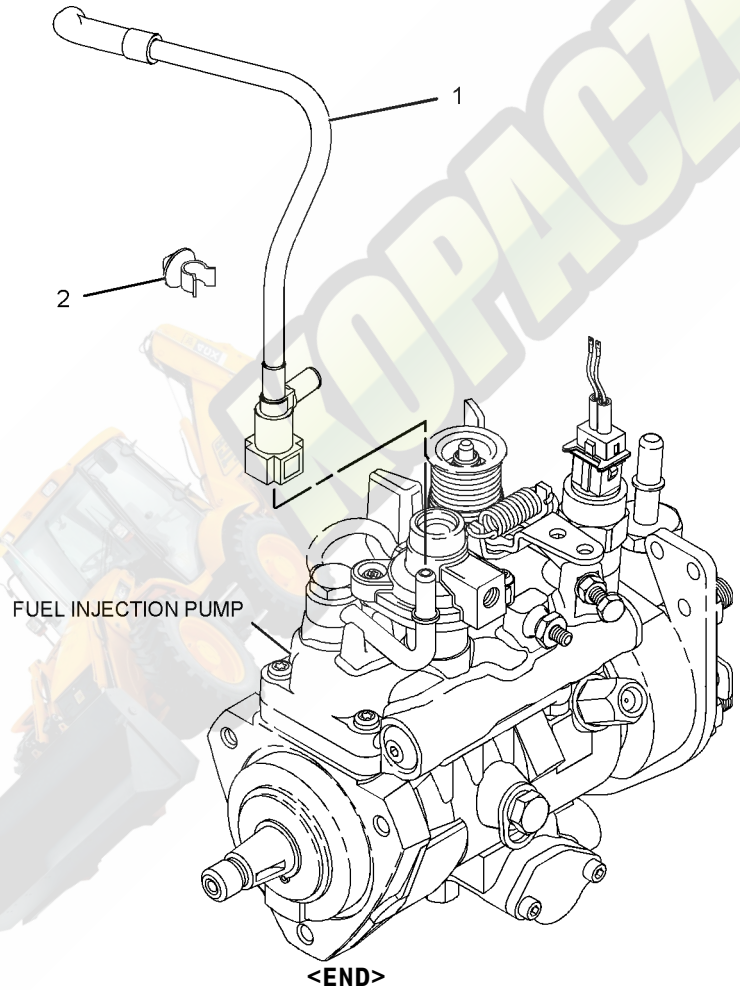

GRAPHIC #1 **<END>** g01123693

236-8228 PUMP GP-FUEL INJECTION

S/N: CRS1-UP
PART OF 236-8229 PUMP GP-FUEL INJECTION
AN ATTACHMENT

SMCS-1251, 1290 **i01999156**

NOTE	REF NO	GRAPHIC REF	PART NUMBER	QTY	PART NAME 1 2 3 4 5 6 (PRODUCT LEVEL)	SEE PAGE
	1	1	**152-3968**	1	SEAL-O-RING	
	2	1	**176-6219**	1	VALVE GP-SOLENOID (12-VOLT) (AIR FUEL RATIO CONTROL)	
	3	1	**193-0161**	1	CABLE AS-ADAPTER	

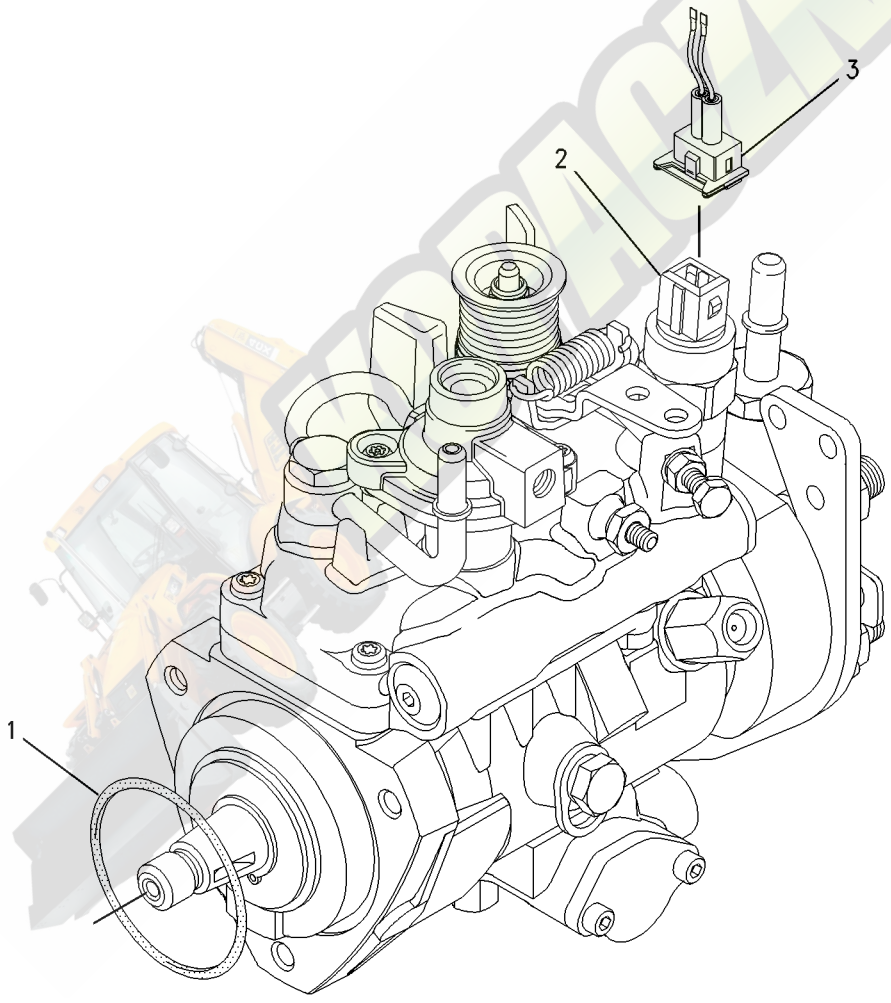

GRAPHIC #1 **<END>** g01006440

FUEL SYSTEM

236-8229 PUMP GP-FUEL INJECTION

S/N: CRS1-UP
PART OF 322-1924 ENGINE AR-PRIMARY
AN ATTACHMENT

SMCS-1251, 1290 **i03601387**

NOTE	REF NO	GRAPHIC REF	PART NUMBER	QTY	PART NAME 1 2 3 4 5 6 (PRODUCT LEVEL)	SEE PAGE
M	1	1	**6I-0217**	1	BOLT (M8X1.25X20-MM)	
M	2	1	**6I-0260**	3	BOLT (M8X1.25X25-MM)	
	3	1	**6I-0291**	1	NUT (M8X1.25-THD)	
	4	1	**035-8017**	1	UNION	
	5	1	**067-6264**	1	FITTING-FLARED	
	6	1	**067-6265**	1	FITTING-BRASS	
M	7	1	**100-4830**	1	BOLT (M10X1.5X20-MM)	
	8	1	**111-3422**	1	NUT	
	9	1	**111-3423**	1	WASHER	
	10	1	**140-8714**	1	CLIP	
	11	1	**230-7886**	1	TUBE AS	
	11A	1	**067-6999**	1	FERRULE	
	11B	1	**106-8835**	1	NUT	
	12	1	**230-8989**	1	GEAR-FUEL PUMP (68-TEETH)	
	13	1	**230-8995**	1	TUBE AS (CYL NO.1)	
	14	1	**230-8996**	1	TUBE AS (CYL NO.2)	
	15	1	**230-8997**	1	TUBE AS (CYL NO.3)	
	16	1	**230-8998**	1	TUBE AS (CYL NO.4)	
	17	2	**232-1323**	1	PLUG-CUP	
	18	1	**232-1328**	1	CAP (FUEL INJECTOR)	
	19	1	**232-1794**	3	HOSE	
	20	1	**232-2725**	2	CLIP	
	21	1	**232-2726**	1	CLIP	
	22	1	**232-3149**	1	WASHER (8.35X16.85X1.55-MM THK) (SEALING)	
	23	1	**232-3157**	1	BRACKET	
	24	1	**238-8671**	4	CLAMP-INJECTOR	
	25	1	**232-3274**	4	BOLT (M8X1.25X48.1-MM)	
	26	2	**235-1790**	1	SWITCH-TEMPERATURE (TIMING ADVANCE)	
	27	1	**236-1674**	4	INJECTOR AS-FUEL	
					(EACH INCLUDES)	
	27A	1	**236-1673**	1	NOZZLE	
	27B	1	**140-8718**	1	WASHER	
	27C	1	**275-1038**	1	SEAL-O-RING	
Y	28	1	**236-8228**	1	PUMP GP-FUEL INJECTION	129
	29	1	**318-2365**	1	CLIP	

M-METRIC PART
Y-SEPARATE ILLUSTRATION

236-8229 **PUMP GP-FUEL INJECTION** *(contd.)* **i03601387**

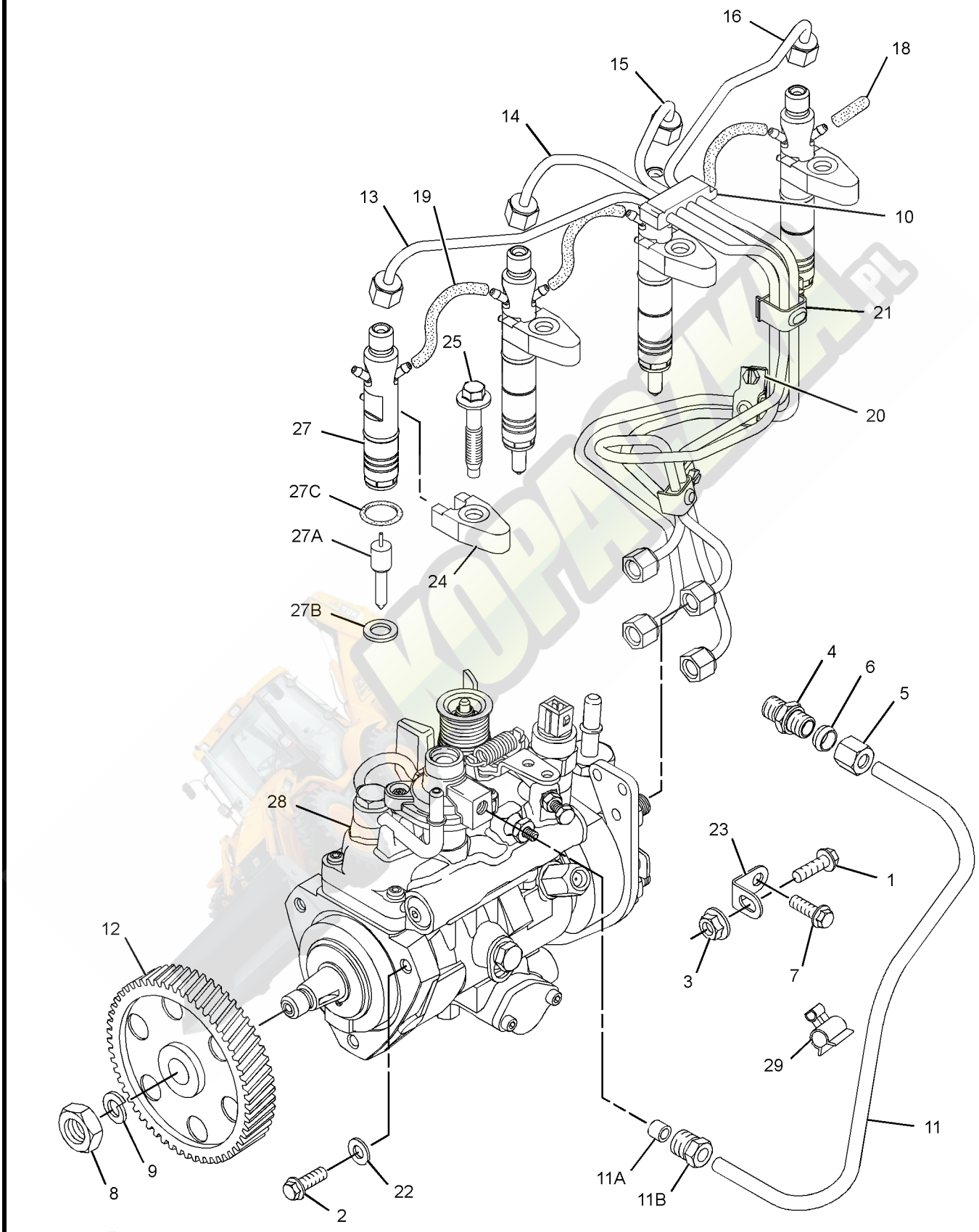

GRAPHIC #1 g01619129

236-8229 **PUMP GP-FUEL INJECTION** *(contd.)* **i03601387**

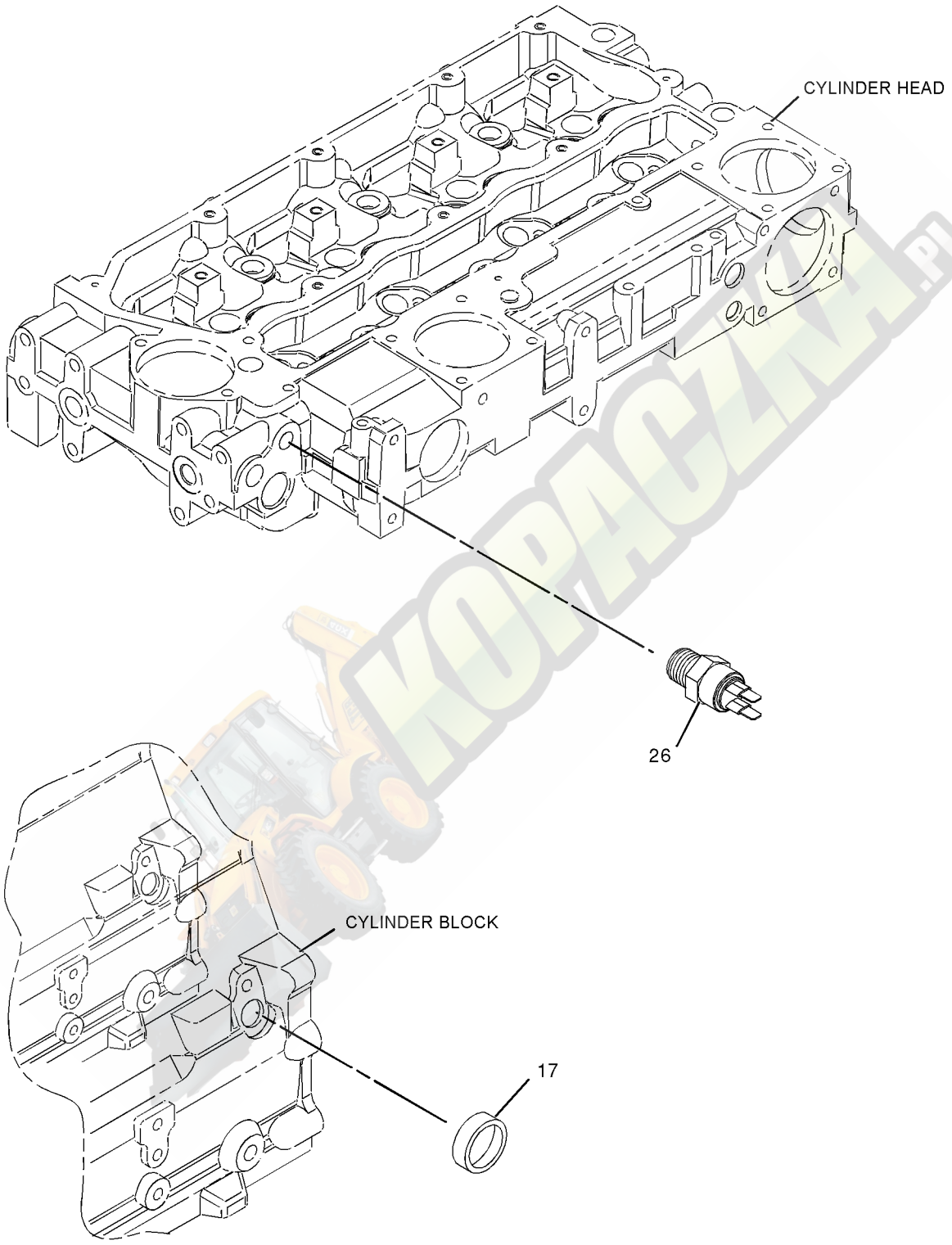

GRAPHIC #2 **<END>** g01022785

237-5214 PUMP GP-FUEL INJECTION

S/N: CRS1-UP
PART OF 322-1923 ENGINE AR-PRIMARY
AN ATTACHMENT

SMCS-1251, 1290 **i03145140**

NOTE	REF NO	GRAPHIC REF	PART NUMBER	QTY	PART NAME 1 2 3 4 5 6 (PRODUCT LEVEL)	SEE PAGE
M	1	1	**6I-0217**	1	BOLT (M8X1.25X20-MM)	
M	2	1	**6I-0260**	3	BOLT (M8X1.25X25-MM)	
	3	1	**6I-0291**	1	NUT (M8X1.25-THD)	
C	4	1	**035-8017**	1	UNION	
C	5	1	**067-6264**	1	FITTING-FLARED	
C	6	1	**067-6265**	1	FITTING-BRASS	
M	7	1	**100-4830**	1	BOLT (M10X1.5X20-MM)	
	8	1	**111-3422**	1	NUT	
	9	1	**111-3423**	1	WASHER	
M	10	1	**124-3815**	1	BOLT (M8X16X1.25-MM)	
	11	1	**140-8714**	1	CLIP	
C	12	1	**318-2365**	1	CLIP	
	13	1	**230-8989**	1	GEAR-FUEL PUMP (68-TEETH)	
	14	1	**230-8995**	1	TUBE AS (CYL NO.1)	
	15	1	**230-8996**	1	TUBE AS (CYL NO.2)	
	16	1	**230-8997**	1	TUBE AS (CYL NO.3)	
	17	1	**230-8998**	1	TUBE AS (CYL NO.4)	
	18	2	**232-1323**	1	PLUG-CUP	
	19	1	**232-1328**	1	CAP	
	20	2	**232-1793**	1	CABLE	
	21	1	**232-1794**	3	HOSE	
	22	1	**232-2725**	1	CLIP	
	23	1	**232-2726**	1	CLIP	
	25	1	**232-3149**	3	WASHER (8.35X16.85X1.55-MM THK)	
	26	1	**232-3157**	1	BRACKET	
	27	1	**232-3274**	4	BOLT (M8X1.25X48.1-MM)	
	28	2	**235-1790**	1	SWITCH-TEMPERATURE (TIMING ADVANCE)	
	29	1	**236-1674**	4	INJECTOR AS-FUEL	
					(EACH INCLUDES)	
		1	**236-1673**	1	NOZZLE	
		1	**275-1038**	1	SEAL-O-RING	
	29A	1	**140-8718**	1	WASHER	
C	30	1	**236-2144**	1	TUBE AS	
	30A	1	**067-6999**	1	FERRULE	
C	31	1	**238-8671**	4	CLAMP-INJECTOR	
	32	1	**240-5571**	1	BRACKET	
C	33	1	**249-9226**	1	PUMP GP-FUEL INJECTION	
	33A	1	**152-3968**	1	SEAL-O-RING	
	33B	1	**176-6219**	1	VALVE GP-SOLENOID (12-VOLT)	

C-CHANGE FROM PREVIOUS TYPE
M-METRIC PART

237-5214 **PUMP GP-FUEL INJECTION** *(contd.)* **i03145140**

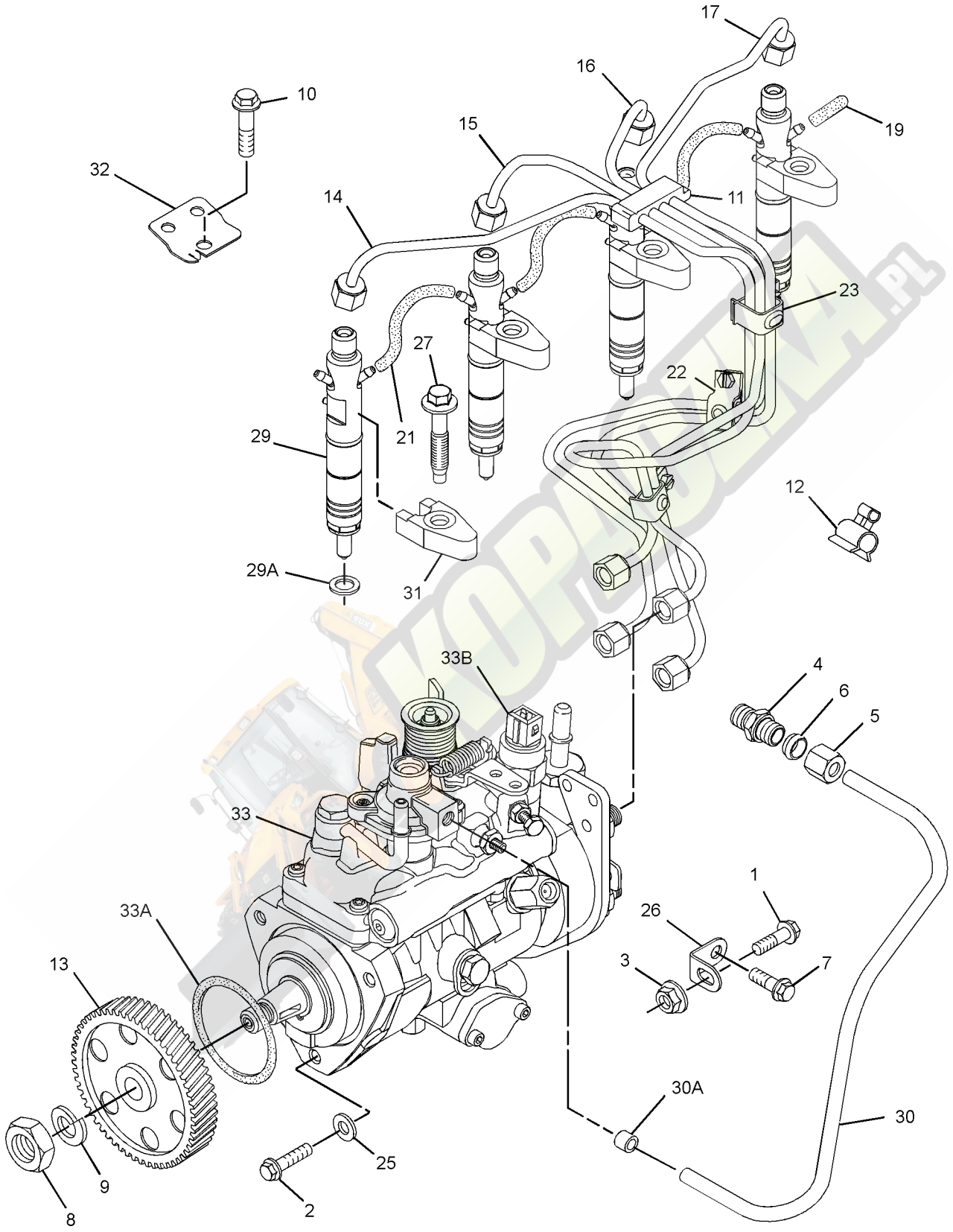

GRAPHIC #1 g01621304

237-5214 **PUMP GP-FUEL INJECTION** *(contd.)* **i03145140**

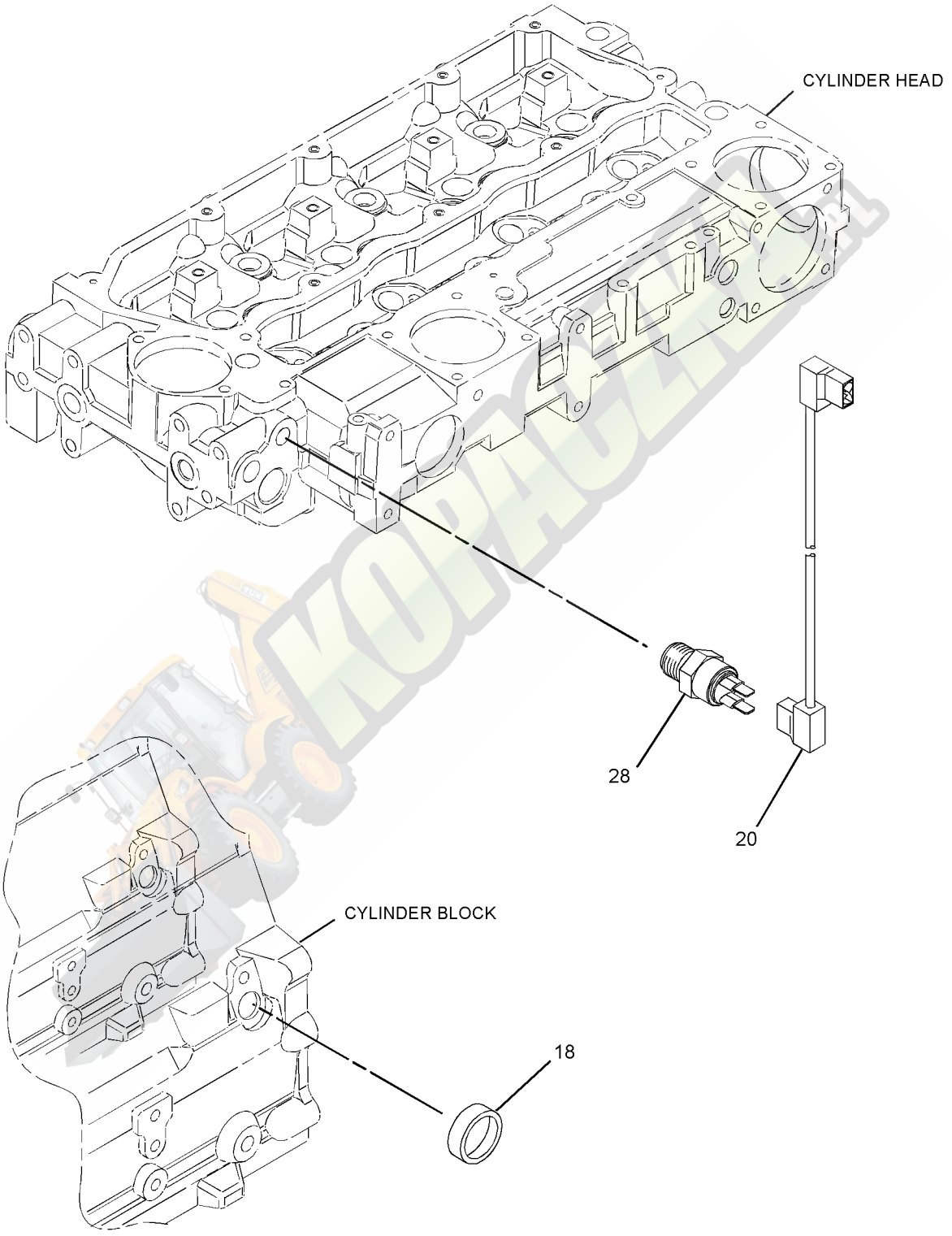

GRAPHIC #2 **<END>** g01347408

326-8993 PUMP GP-FUEL INJECTION

S/N: C4Z1-UP
PART OF 326-9006 PUMP GP-FUEL INJECTION
AN ATTACHMENT

SMCS-1251, 1290 **i03138002**

NOTE	REF NO	GRAPHIC REF	PART NUMBER	QTY	PART NAME 1 2 3 4 5 6 (PRODUCT LEVEL)	SEE PAGE
	1	1	**111-3422**	1	NUT	
	2	1	**111-3423**	1	WASHER	
	3	1	**152-3968**	1	SEAL-O-RING	
	4	1	**176-6219**	1	VALVE GP-SOLENOID (12-VOLT)	

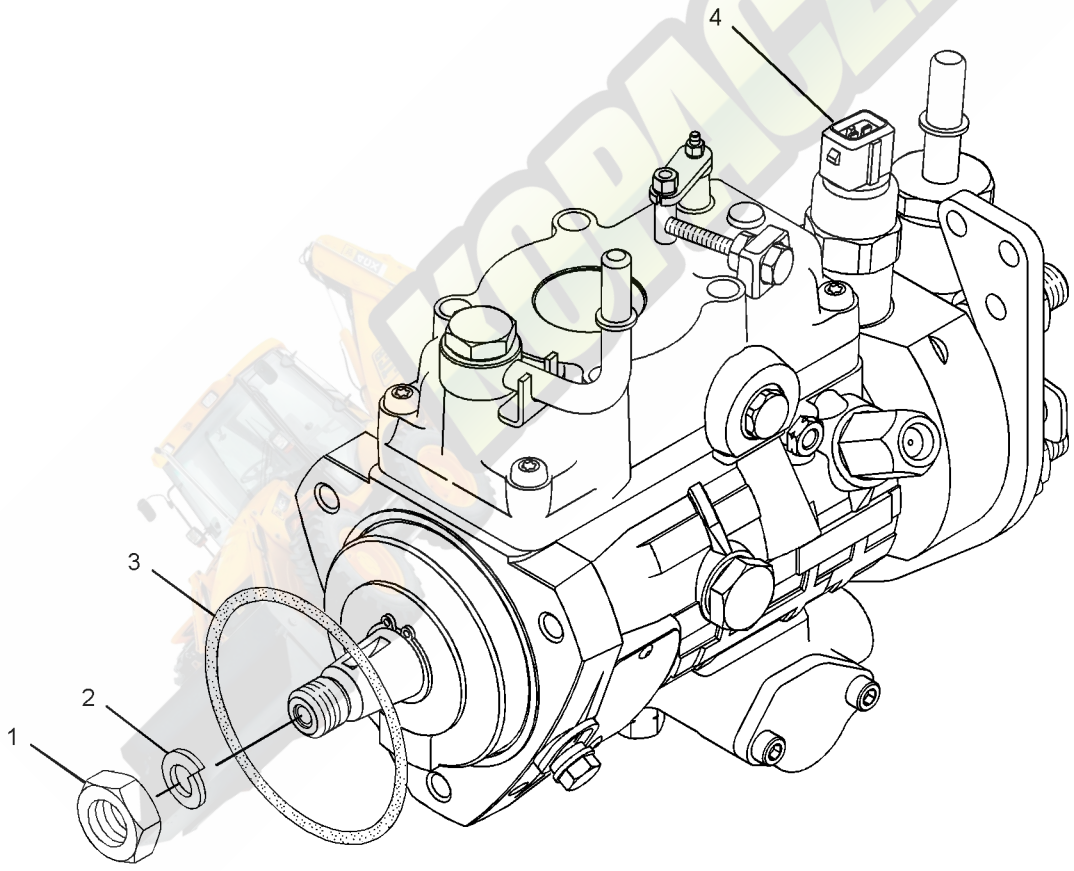

GRAPHIC #1 **<END>** g01615399

326-9006 PUMP GP-FUEL INJECTION

S/N: C4Z1-UP
PART OF 321-7704 ENGINE AR-PRIMARY
AN ATTACHMENT

SMCS-1251, 1290 **i03313780**

NOTE	REF NO	GRAPHIC REF	PART NUMBER	QTY	PART NAME 1 2 3 4 5 6 (PRODUCT LEVEL)	SEE PAGE
M	1	1	**6I-0217**	1	BOLT (M8X1.25X20-MM)	
M	2	1	**6I-0260**	3	BOLT (M8X1.25X25-MM)	
	3	1	**6I-0291**	1	NUT (M8X1.25-THD)	
M	4	1	**100-4830**	1	BOLT (M10X1.5X20-MM)	
M	5	1	**124-3815**	1	BOLT (M8X16X1.25-MM)	
	6	1	**140-8714**	1	CLIP	
	7	2	**169-5326**	1	SWITCH-TEMPERATURE (FUEL)	
	8	1	**230-8989**	1	GEAR-FUEL PUMP (68-TEETH)	
	9	1	**230-8995**	1	TUBE AS (CYL NO.1)	
	10	1	**230-8996**	1	TUBE AS (CYL NO.2)	
	11	1	**230-8997**	1	TUBE AS (CYL NO.3)	
	12	1	**230-8998**	1	TUBE AS (CYL NO.4)	
	13	2	**232-1323**	1	PLUG-CUP	
	14	1	**232-1328**	1	CAP	
	15	2	**232-1793**	1	CABLE	
	16	1	**232-1794**	3	HOSE	
	17	1	**232-2725**	2	CLIP	
	18	1	**232-2726**	1	CLIP	
	19	1	**232-3126**	1	CLIP	
	20	1	**232-3149**	3	WASHER (8.35X16.85X1.55-MM THK)	
	21	1	**232-3157**	1	BRACKET	
	22	1	**232-3274**	4	BOLT (M8X1.25X48.1-MM)	
	23	1	**238-8671**	4	CLAMP-INJECTOR	
	24	1	**240-5571**	1	BRACKET	
	25	1	**315-3381**	4	ATOMIZER AS	
					(EACH INCLUDES)	
	25A	1	**140-8718**	1	WASHER	
	25B	1	**275-1038**	1	SEAL-O-RING	
Y	26	1	**326-8993**	1	PUMP GP-FUEL INJECTION	136

M-METRIC PART
Y-SEPARATE ILLUSTRATION

326-9006 **PUMP GP-FUEL INJECTION** *(contd.)* **i03313780**

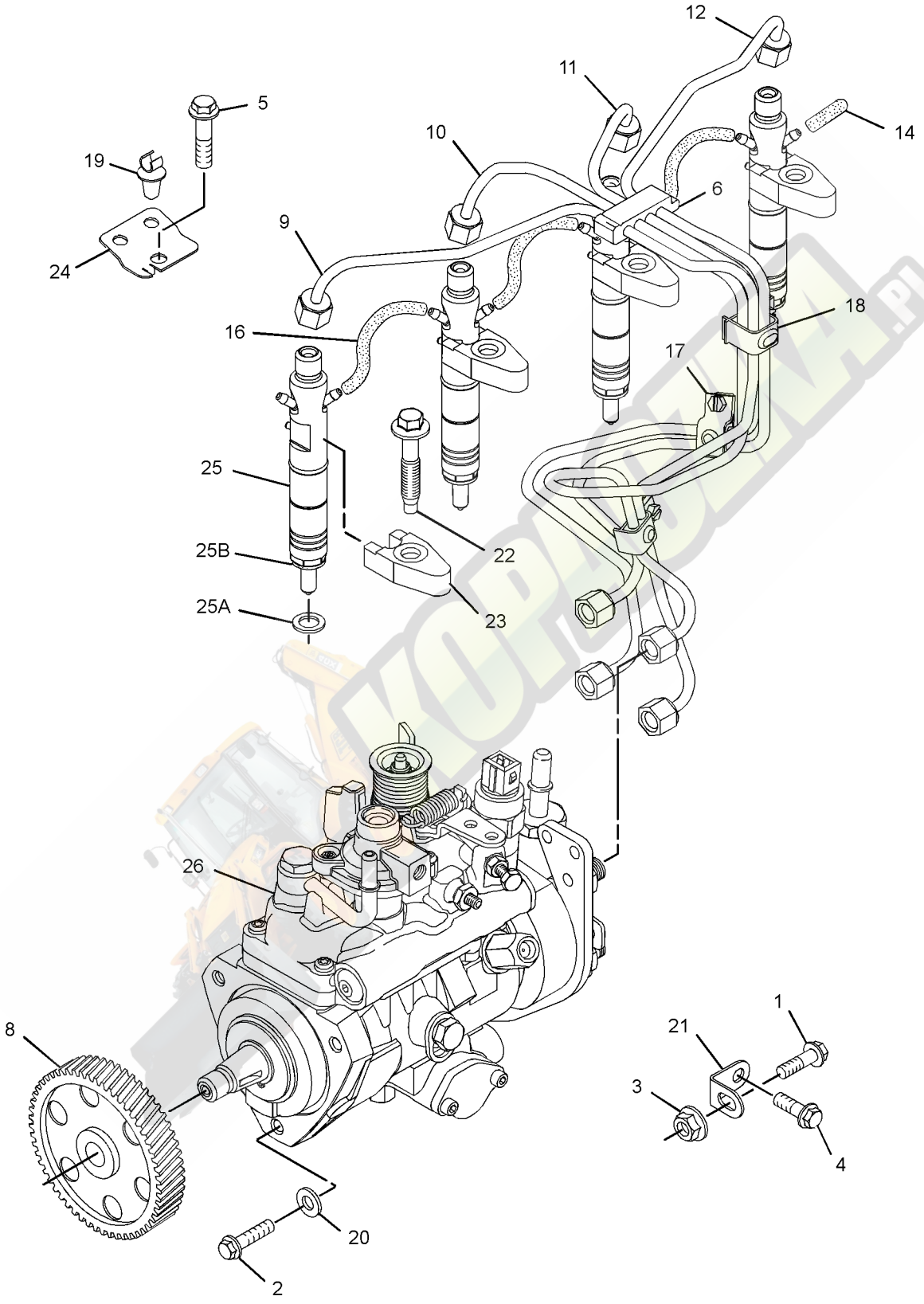

GRAPHIC #1 g01613834

326-9006 **PUMP GP-FUEL INJECTION** *(contd.)* **i03313780**

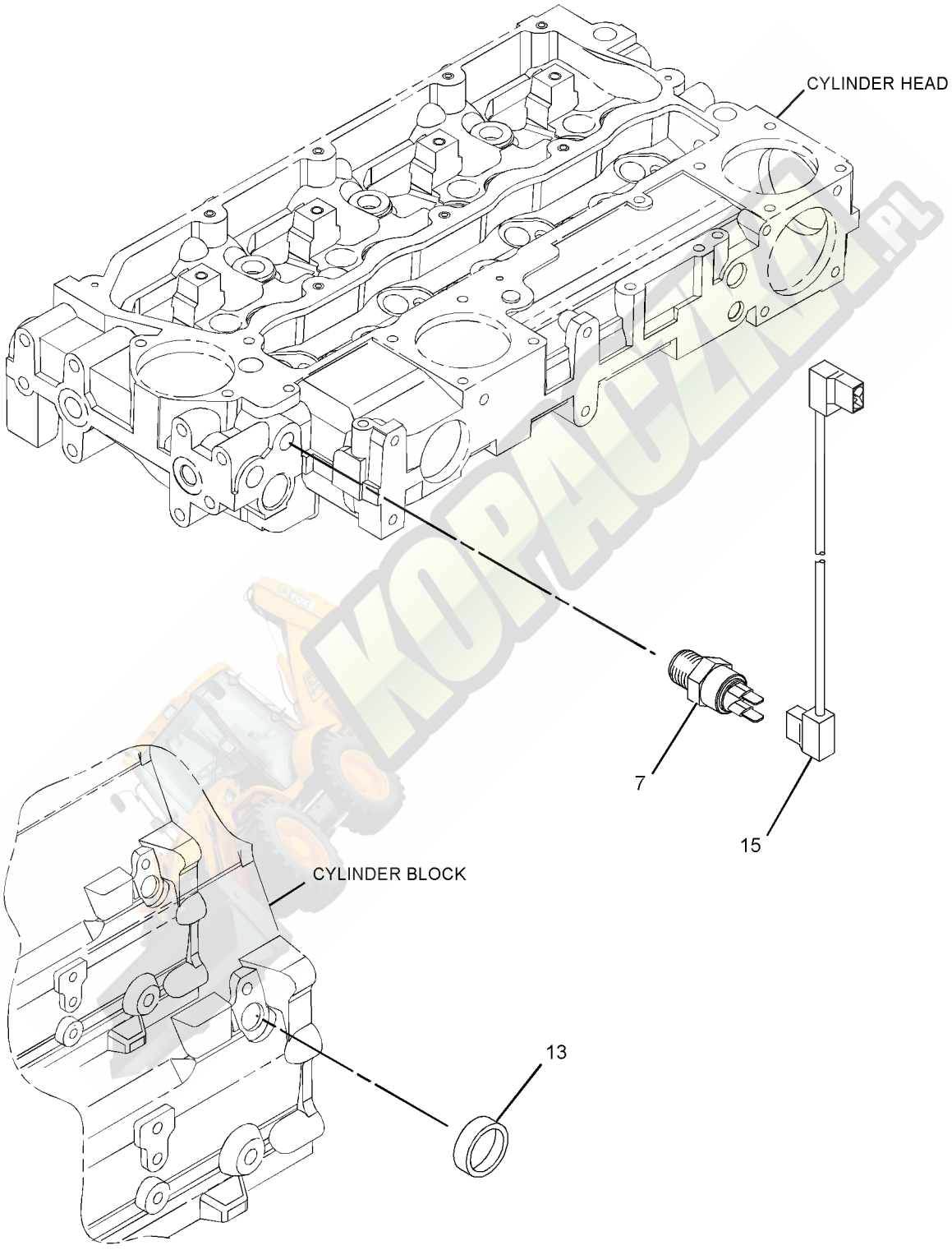

GRAPHIC #2 **<END>** g01611701

FUEL SYSTEM

326-9147 PUMP GP-FUEL INJECTION

S/N: C4Z1-UP

PART OF 326-9149 PUMP GP-FUEL INJECTION

AN ATTACHMENT

SMCS-1251, 1290 **i03718046**

NOTE	REF NO	GRAPHIC REF	PART NUMBER	QTY	PART NAME 1 2 3 4 5 6 (PRODUCT LEVEL)	SEE PAGE
	1	1	**111-3422**	1	NUT	
	2	1	**111-3423**	1	WASHER	
	3	1	**152-3968**	1	SEAL-O-RING	
	4	1	**176-6219**	1	VALVE GP-SOLENOID (12-VOLT) (FUEL SHUTOFF)	

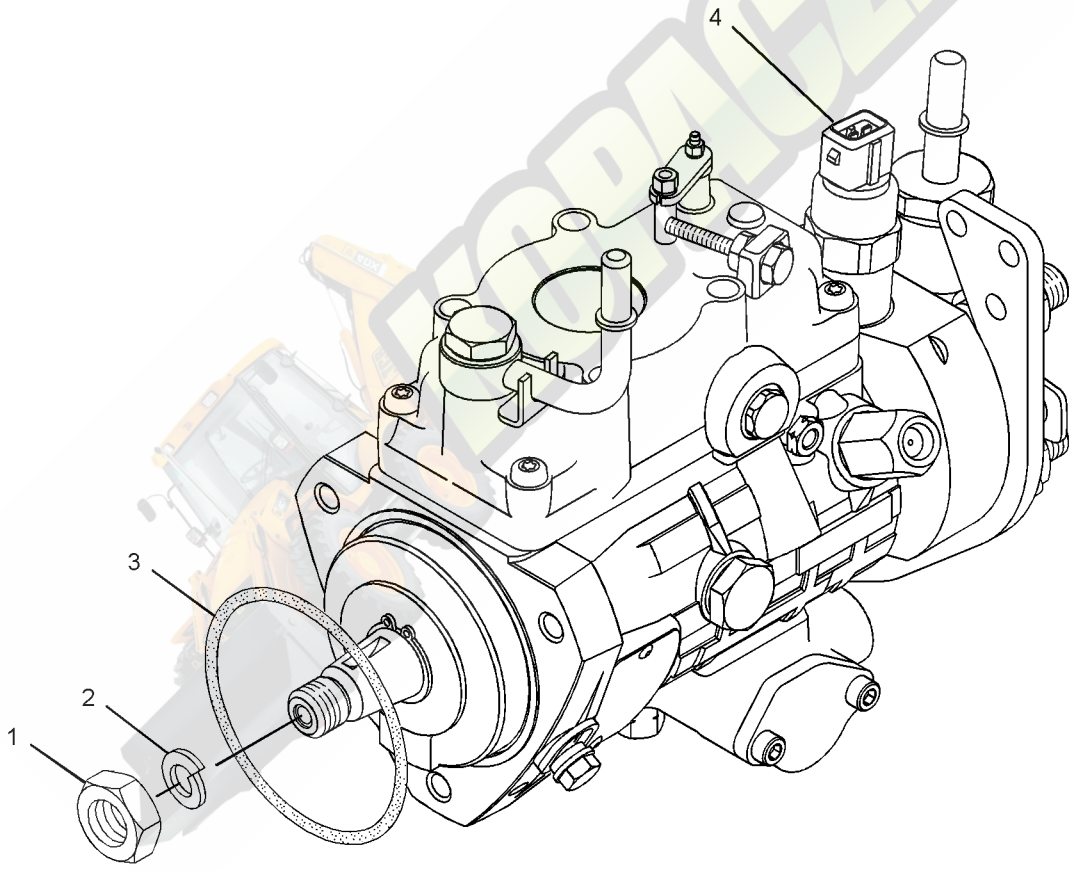

GRAPHIC #1 **<END>** g01615399

326-9149 PUMP GP-FUEL INJECTION

S/N: C4Z1-UP
PART OF 321-7705 ENGINE AR-PRIMARY
AN ATTACHMENT

SMCS-1251, 1290 **i03313740**

NOTE	REF NO	GRAPHIC REF	PART NUMBER	QTY	PART NAME 1 2 3 4 5 6 (PRODUCT LEVEL)	SEE PAGE
M	1	1	**6I-0217**	1	BOLT (M8X1.25X20-MM)	
M	2	1	**6I-0260**	3	BOLT (M8X1.25X25-MM)	
	3	1	**6I-0291**	1	NUT (M8X1.25-THD)	
M	4	1	**100-4830**	1	BOLT (M10X1.5X20-MM)	
M	5	1	**124-3815**	1	BOLT (M8X16X1.25-MM)	
	6	1	**140-8714**	1	CLIP	
	7	2	**169-5326**	1	SWITCH-TEMPERATURE (FUEL)	
	8	1	**230-8989**	1	GEAR-FUEL PUMP (68-TEETH)	
	9	1	**230-8995**	1	TUBE AS (CYL NO.1)	
	10	1	**230-8996**	1	TUBE AS (CYL NO.2)	
	11	1	**230-8997**	1	TUBE AS (CYL NO.3)	
	12	1	**230-8998**	1	TUBE AS (CYL NO.4)	
	13	2	**232-1323**	1	PLUG-CUP	
	14	1	**232-1328**	1	CAP	
	15	2	**232-1793**	1	CABLE	
	16	1	**232-1794**	3	HOSE	
	17	1	**232-2725**	2	CLIP	
	18	1	**232-2726**	1	CLIP	
	19	1	**232-3126**	1	CLIP	
	20	1	**232-3149**	3	WASHER (8.35X16.85X1.55-MM THK)	
	21	1	**232-3157**	1	BRACKET	
	22	1	**232-3274**	4	BOLT (M8X1.25X48.1-MM)	
	23	1	**238-8671**	4	CLAMP-INJECTOR	
	24	1	**240-5571**	1	BRACKET	
	25	1	**315-3381**	4	ATOMIZER AS	
					(EACH INCLUDES)	
	25A	1	**140-8718**	1	WASHER	
	25B	1	**275-1038**	1	SEAL-O-RING	
Y	26	1	**326-9147**	1	PUMP GP-FUEL INJECTION	140

M-METRIC PART
Y-SEPARATE ILLUSTRATION

326-9149 **PUMP GP-FUEL INJECTION** *(contd.)* **i03313740**

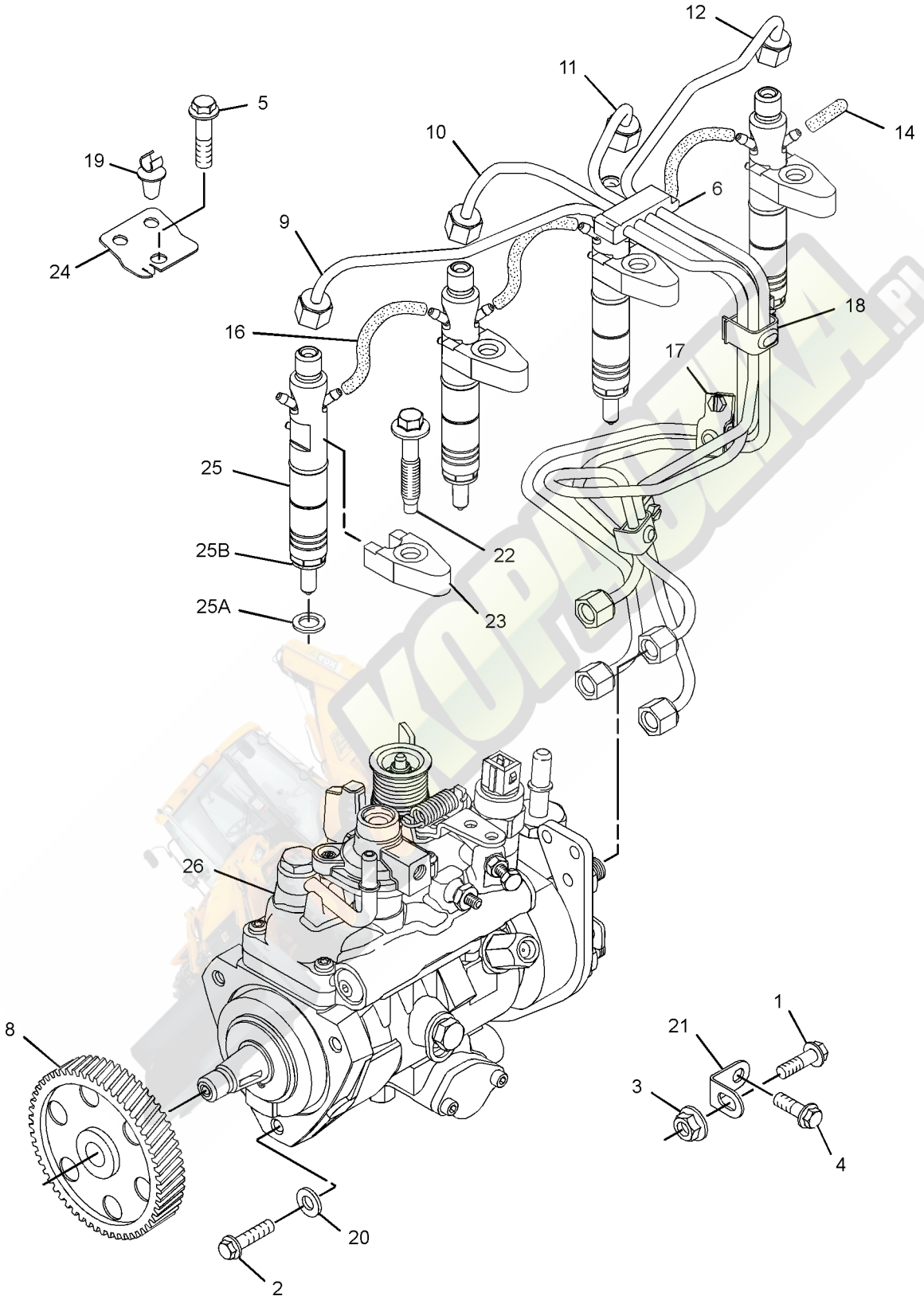

GRAPHIC #1 g01613834

326-9149 **PUMP GP-FUEL INJECTION** *(contd.)* **i03313740**

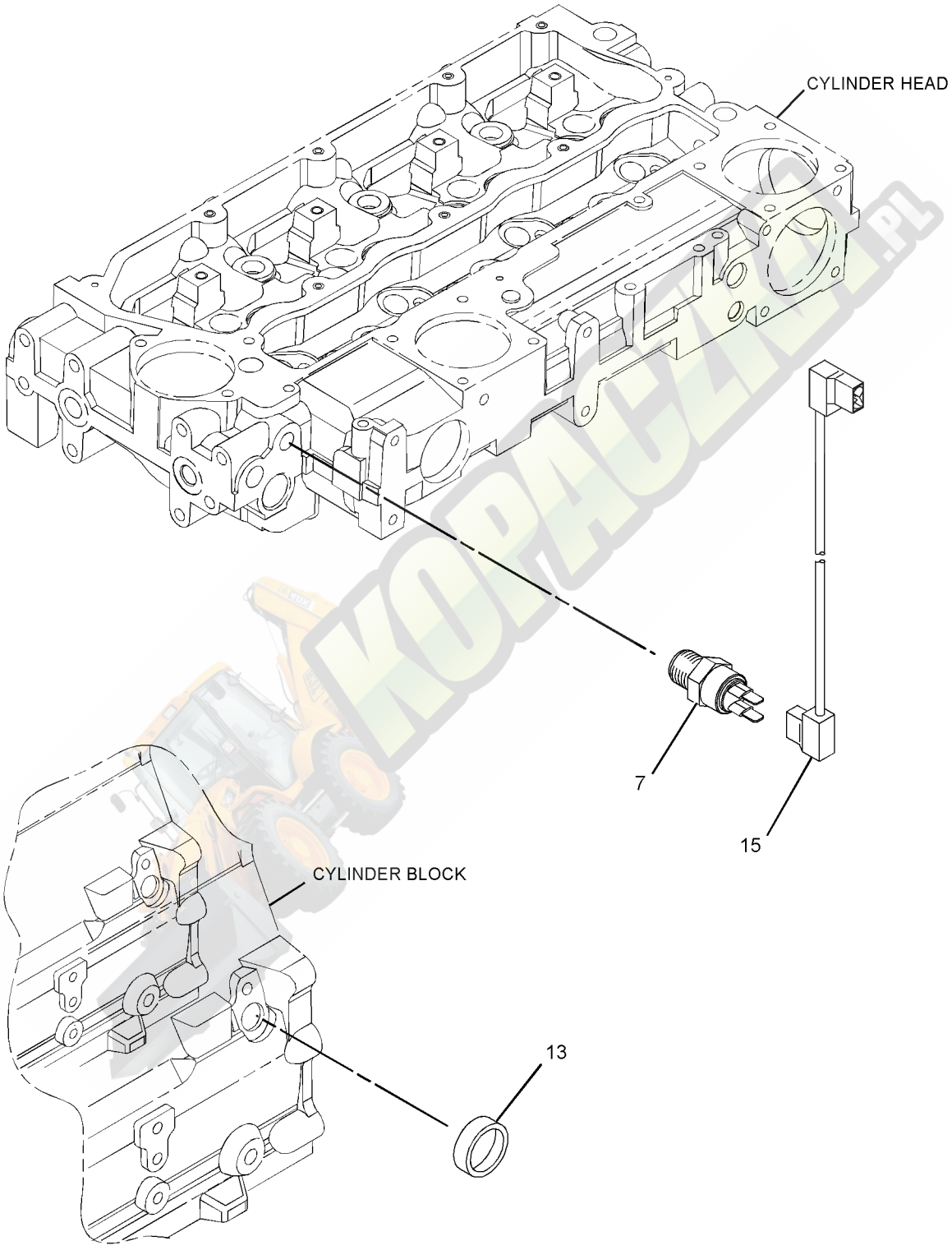

GRAPHIC #2 **<END>** g01611701

249-7669 PUMP GP-FUEL PRM & PRIM FILTER–

WITH WATER SEPARATOR

S/N: JBA1-UP

PART OF 314-6700 PUMP GP-FUEL PRM & PRIM FILTER

AN ATTACHMENT

SMCS-1258, 1260, 1261 **i03728842**

NOTE	REF NO	GRAPHIC REF	PART NUMBER	QTY	PART NAME 1 2 3 4 5 6 (PRODUCT LEVEL)	SEE PAGE
	1	1	**118-8118**	1	RING-RETAINING	
	2	1	**149-9954**	1	DRAIN AS	
	3	1	**193-0618**	1	SENSOR GP-MOISTURE (WATER SEPARATOR)	
		1	**192-7876**	1	SCREW-MOUNTING	
	4	1	**228-9130**	1	FILTER AS-WATER SEP & FUEL	
	5	1	**228-9132**	1	FITTING (FUEL PUMP)	

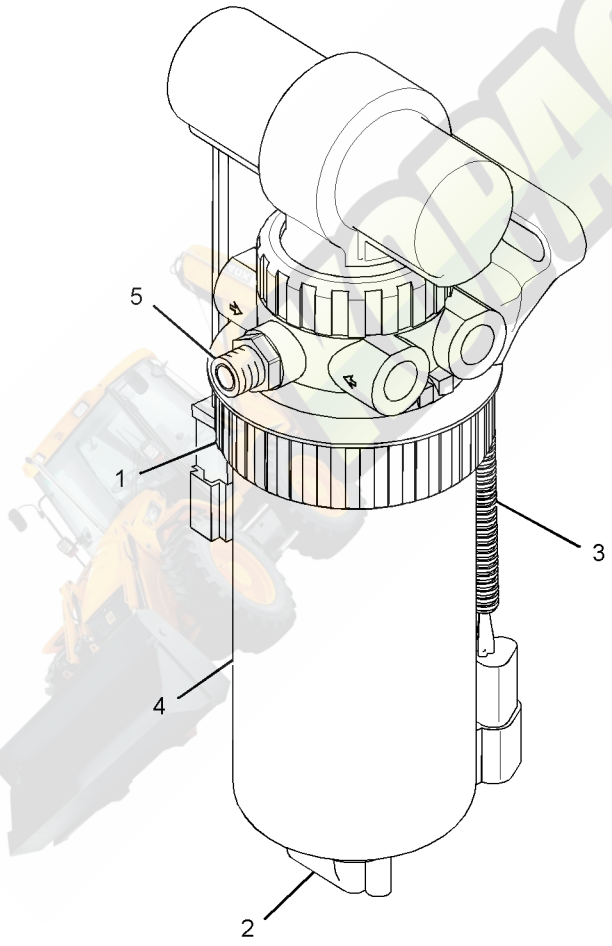

GRAPHIC #1 **<END>** g01825141

314-6700 PUMP GP-FUEL PRM & PRIM FILTER–
WITH MOUNTING
S/N: JBA1-UP
PART OF 339-4986, 339-4987, 339-4988, 339-4989, 339-4990, 339-4991, 339-4992, 339-4993 ENGINE AR
AN ATTACHMENT

SMCS-1258, 1260, 1261 **i03295970**

NOTE	REF NO	GRAPHIC REF	PART NUMBER	QTY	PART NAME 1 2 3 4 5 6 (PRODUCT LEVEL)	SEE PAGE
	1	1	**3S-2093**	1	STRAP-CABLE	
	2	1	**069-4080**	1	FITTING	
	3	1	*165-7951*	1	CONNECTOR AS	
		1	**3J-1907**	1	SEAL-O-RING	
		1	**157-1669**	1	CONNECTOR	
	4	1	*184-6581*	1	CONNECTOR AS	
		1	**3J-1907**	1	SEAL-O-RING	
		1	**195-5830**	1	CONNECTOR	
Y	5	1	**249-7669**	1	PUMP GP-FUEL PRM & PRIM FILTER (WITH WATER SEPARATOR)	144
	6	1	**253-0354**	1	BRACKET AS	
M	7	1	**101-7404**	2	BOLT-SOCKET HEAD (M10X1.5X30-MM)	
	8	1	*148-8407*	2	PLUG AS	
					(EACH INCLUDES)	
		1	**3J-1907**	1	SEAL-O-RING	
		1	**9S-4191**	1	PLUG-O-RING	
	9	1	**8T-4121**	4	WASHER-HARD (11X21X2.5-MM THK)	
M	10	1	**8T-8894**	2	BOLT-SOCKET HEAD (M10X1.5X20-MM)	

M-METRIC PART
Y-SEPARATE ILLUSTRATION

314-6700 **PUMP GP-FUEL PRM & PRIM FILTER** *(contd.)* **i03295970**

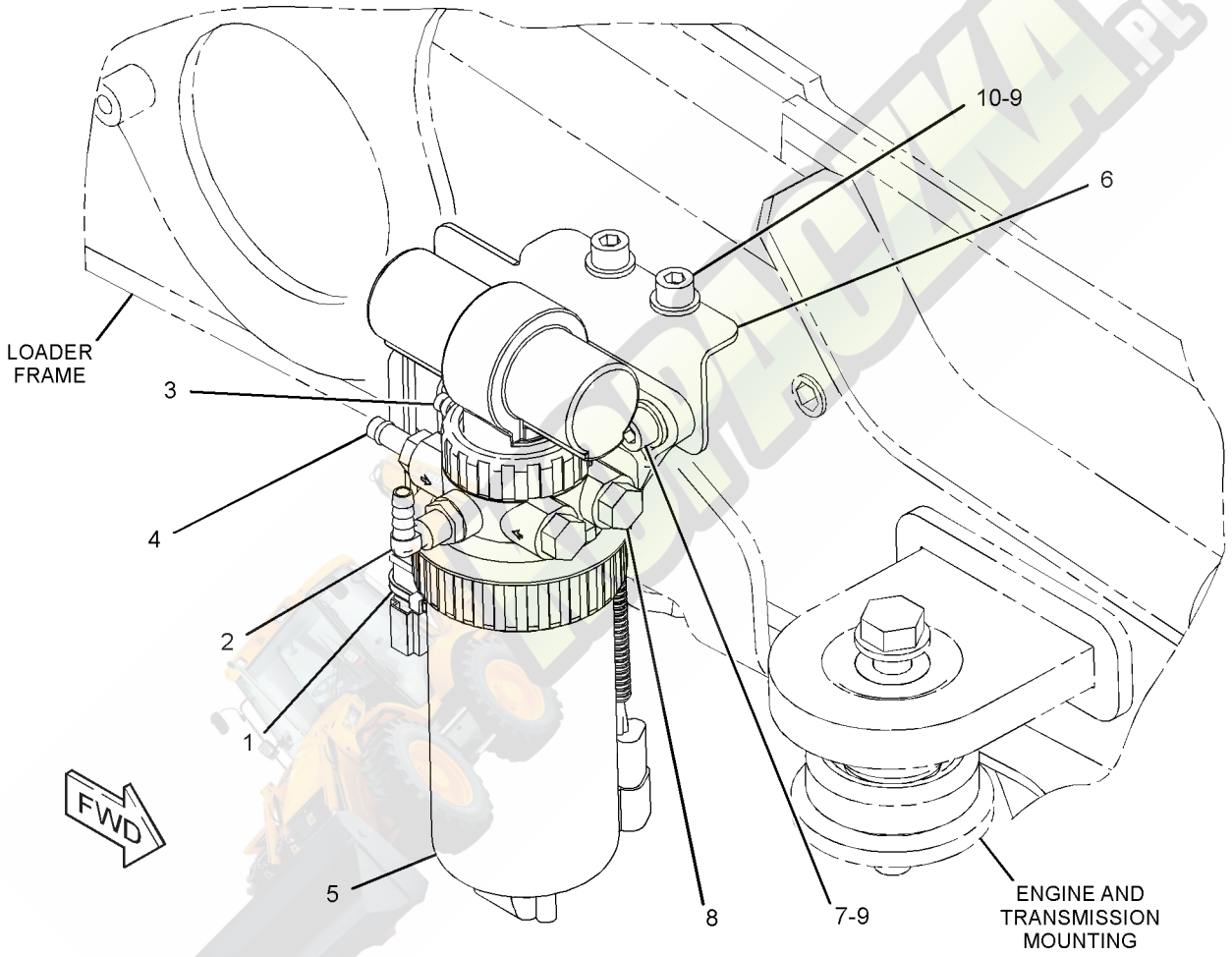

GRAPHIC #1 **<END>** g01679983

FUEL SYSTEM

338-9358 TANK GP-FUEL

S/N: JBA1-UP

PART OF 341-0696 TANK GP-FUEL

SMCS-1273 **i03638355**

NOTE	REF NO	GRAPHIC REF	PART NUMBER	QTY	PART NAME 1 2 3 4 5 6 (PRODUCT LEVEL)	SEE PAGE
	1	1	**272-0537**	1	PLUG AS	
		1	**190-7634**	1	SEAL-O-RING	
	2	1	**284-9039**	1	CAP-FUEL (LOCKABLE, VENTED)	
	3	1	**303-2933**	1	SENDER AS-FUEL LEVEL	
		1	**9R-7240**	1	GASKET	
		1	**102-8802**	1	KIT-RECEPTACLE (2-PIN)	
					(INCLUDES RECEPTACLE AS & WEDGE)	
		1	**186-3735**	1	PIN-CONNECTOR (16-GA TO 18-GA)	
		1	**311-6886**	1	STRAINER (FUEL TANK)	
	4	1	**321-5657**	1	TUBE AS	
	5	1	**338-9357**	1	TANK AS	
	6	1	**106-8020**	1	GASKET	
M	7	1	**184-0982**	13	SCREW-PAN HEAD (M6X1X16-MM)	
F			**180-3730**	1	STRAINER-FUEL (FILLER NECK SCREEN)	

F-NOT SHOWN
M-METRIC PART

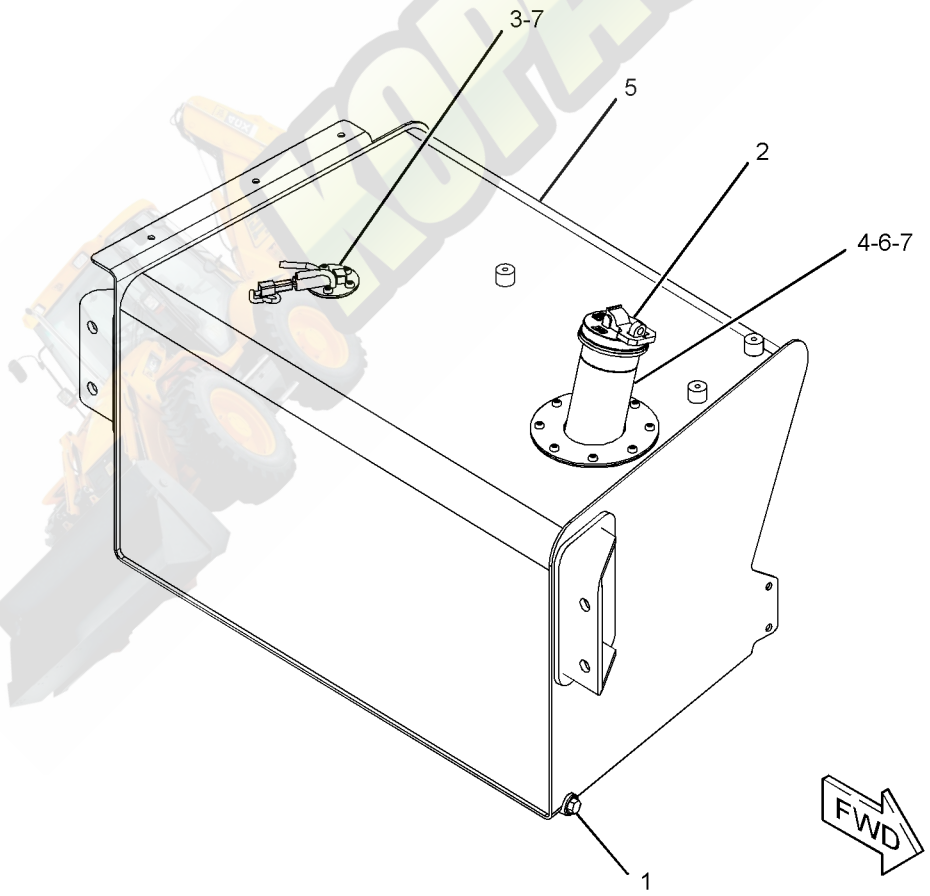

GRAPHIC #1 **<END>** g01999773

FUEL SYSTEM

341-0696 TANK GP-FUEL

S/N: JBA1-UP
160-LITERS (42.5-US GAL)
PART OF 329-0294 CHASSIS AR

SMCS-1273 **i03638346**

NOTE	REF NO	GRAPHIC REF	PART NUMBER	QTY	PART NAME 1 2 3 4 5 6 (PRODUCT LEVEL)	SEE PAGE
	1	1	**245-6103**	1	STEP AS	
	2	1	**317-2017**	1	PLATE AS	
	3	1	**317-3059**	1	TREAD	
Y	4	1	*338-9358*	1	TANK GP-FUEL	147
	5	1	**5P-4116**	10	WASHER-HARD (8.8X20.5X2-MM THK)	
M	6	1	**8T-4189**	10	BOLT (M8X1.25X20-MM)	
M	7	1	**8T-4193**	4	BOLT (M16X2X50-MM)	
	8	1	**9X-8257**	4	WASHER (17.5X30X3.5-MM THK)	

M-METRIC PART
Y-SEPARATE ILLUSTRATION

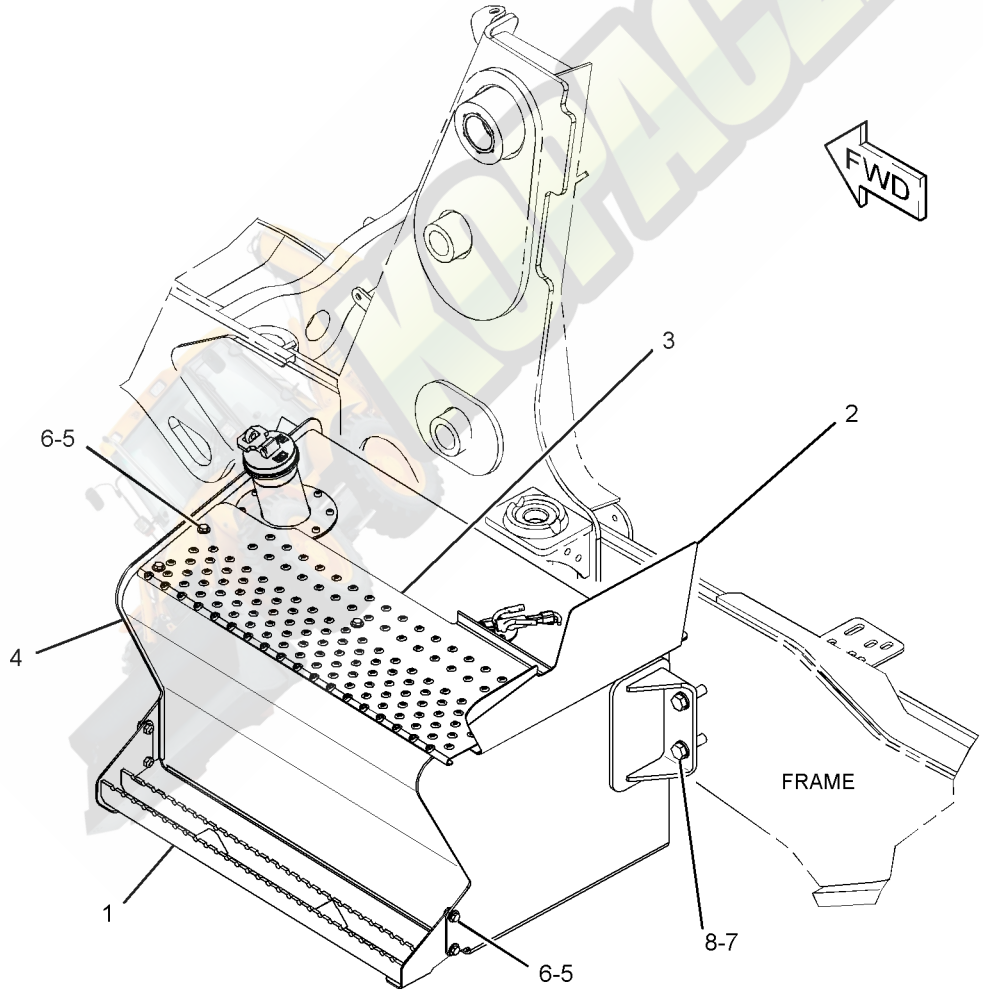

GRAPHIC #1 **<END>** g02000078

317-9776 ALTERNATOR GP-CHARGING

S/N: C4Z1-UP
12 VOLT 120 AMPERE
PART OF 321-7704, 321-7705 ENGINE AR-PRIMARY
AN ATTACHMENT

SMCS-1405, 1425 **i03635370**

NOTE	REF NO	GRAPHIC REF	PART NUMBER	QTY	PART NAME 1 2 3 4 5 6 (PRODUCT LEVEL)	SEE PAGE
M	1	1	**6I-0260**	1	BOLT (M8X1.25X25-MM)	
M	2	1	**6I-0650**	1	BOLT (M10X1.5X65-MM)	
	3	1	**100-8451**	1	BOLT (M8X1.25X130-MM)	
	4	1	**113-6349**	1	NUT (M12X1.75X93-MM)	
M	5	1	**140-8783**	2	BOLT (M10X1.5X45-MM)	
	7	1	**346-9825**	1	ALTERNATOR GP-CHARGING	
	8	1	**284-3425**	1	PULLEY-ALTERNATOR	
	9	1	**305-7881**	1	BRACKET AS-ALTERNATOR	
	9A	1	**161-9820**	1	PIN	

M-METRIC PART

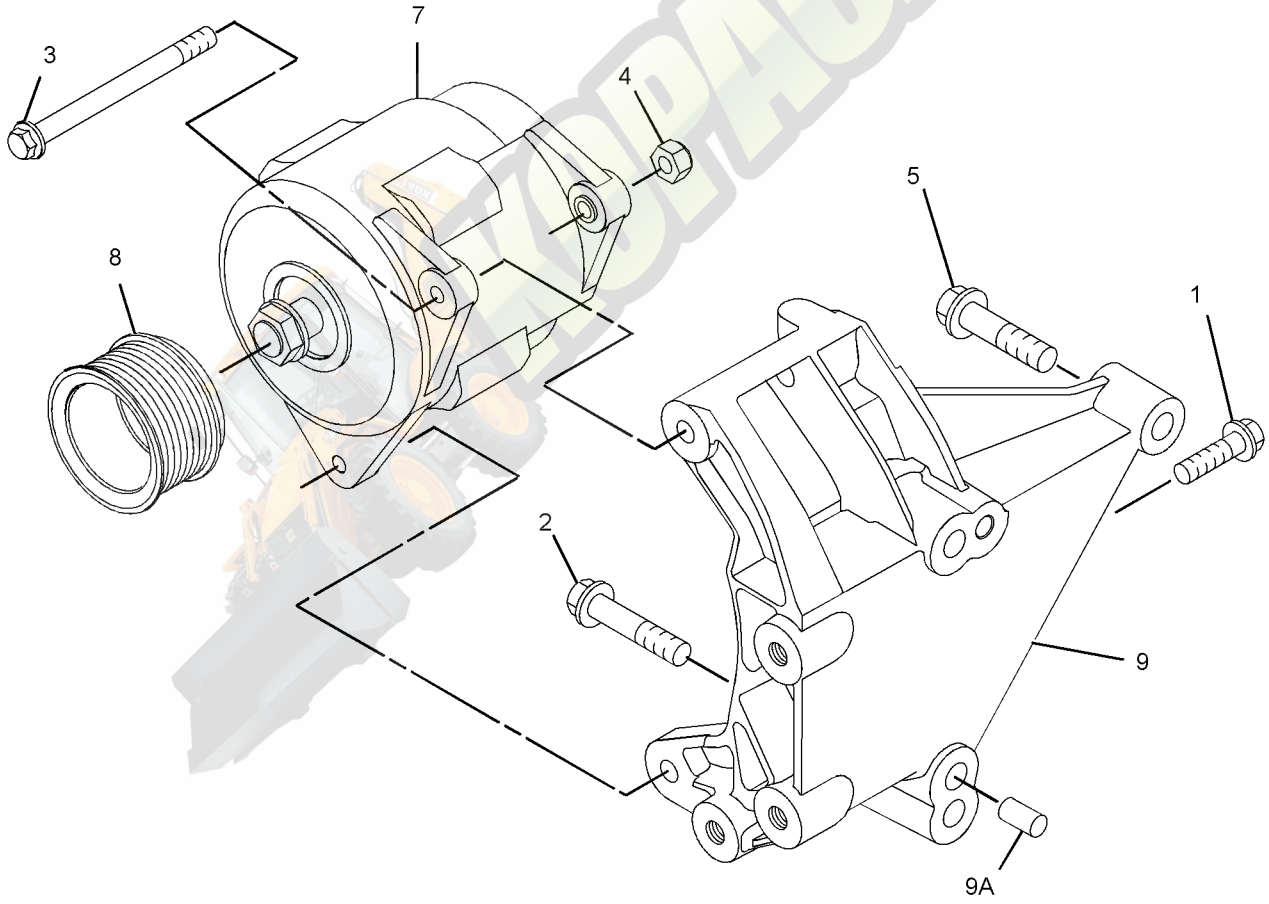

GRAPHIC #1 **<END>** g01953021

334-3756 ALTERNATOR GP-CHARGING

S/N: CRS1-UP
12 VOLT 120 AMPERE
PART OF 322-1923, 322-1924 ENGINE AR-PRIMARY
AN ATTACHMENT

SMCS-1405, 1425 **i03635529**

NOTE	REF NO	GRAPHIC REF	PART NUMBER	QTY	PART NAME 1 2 3 4 5 6 (PRODUCT LEVEL)	SEE PAGE
M	1	1	**6I-0260**	1	BOLT (M8X1.25X25-MM)	
M	2	1	**6I-0650**	1	BOLT (M10X1.5X65-MM)	
	3	1	**100-8451**	1	BOLT (M8X1.25X130-MM)	
	4	1	**113-6349**	1	NUT (M12X1.75X93-MM)	
M	5	1	**140-8783**	2	BOLT (M10X1.5X45-MM)	
	6	1	**346-9825**	1	ALTERNATOR GP-CHARGING	
	7	1	**284-3425**	1	PULLEY-ALTERNATOR	
	8	1	**305-7881**	1	BRACKET AS-ALTERNATOR	
	8A	1	**161-9820**	2	PIN	

M-METRIC PART

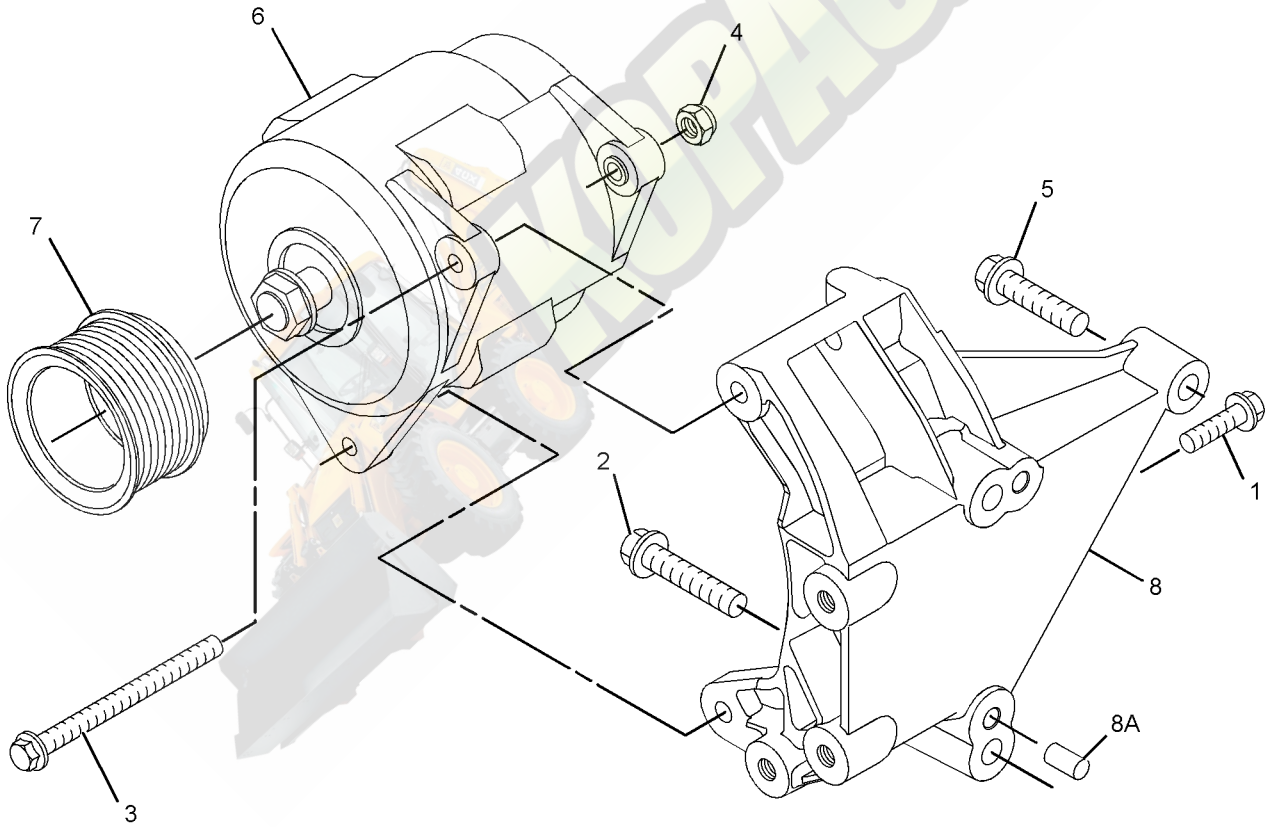

GRAPHIC #1 **<END>** g01953881

242-3197 BATTERY & WIRING GP—HEAVY-DUTY

S/N: JBA1-UP
AN ATTACHMENT

SMCS-1401, 1402, 1408, 1411 **i03579022**

NOTE	REF NO	GRAPHIC REF	PART NUMBER	QTY	PART NAME 1 2 3 4 5 6 (PRODUCT LEVEL)	SEE PAGE
	1	1	**038-9317**	1	TREAD-NONSKID	
	2	1	**178-9242**	1	BRACKET AS	
	3	1	**213-6091**	1	CABLE AS-BATTERY (POSITIVE)	
		1	**3S-2093**	1	STRAP-CABLE	
E		1	**5P-0761**		CABLE (00-GA, RED) (36-CM)	
		1	**7T-9987**	1	COVER-TERMINAL (RED)	
		1	**8S-3020**	1	TERMINAL-CABLE (00-GA, 3/8-IN BOLT)	
E		1	**8Y-8081**		TUBE-CONVOLUTED (36-CM)	
		1	**3S-6049**	1	TERMINAL AS-BATTERY (POSITIVE)	
		1	**1M-6119**	1	BOLT (5/16-18X1.375-IN)	
		1	**1M-6120**	1	NUT (5/16-18-THD)	
	4	1	**213-6092**	1	CABLE AS-BATTERY (NEGATIVE)	
		1	**1S-7252**	1	TERMINAL-CABLE (00-GA, 3/8-IN BOLT)	
E		1	**5P-0747**		CABLE (00-GA, BLACK) (44-CM)	
		1	**7N-5274**	1	COVER-TERMINAL (BLACK)	
		1	**3S-6050**	1	TERMINAL AS-BATTERY (NEGATIVE)	
		1	**1M-6119**	1	BOLT (5/16-18X1.375-IN)	
		1	**1M-6120**	1	NUT (5/16-18-THD)	
	5	1	**3T-5760**	1	BATTERY (12-VOLT, MAINTENANCE FREE, WET)	
	6	1	**7X-7729**	2	WASHER (11X25X3-MM THK)	
M	7	1	**8T-4133**	1	NUT (M10X1.5-THD)	
M	8	1	**8T-4137**	1	BOLT (M10X1.5X20-MM)	
M	9	1	**8T-5005**	1	BOLT (M10X1.5X70-MM)	
	10	1	**8T-4224**	1	WASHER-HARD (8.8X16X2-MM THK)	

E-ORDER BY THE CENTIMETER
M-METRIC PART

242-3197 **BATTERY & WIRING GP** *(contd.)* **i03579022**

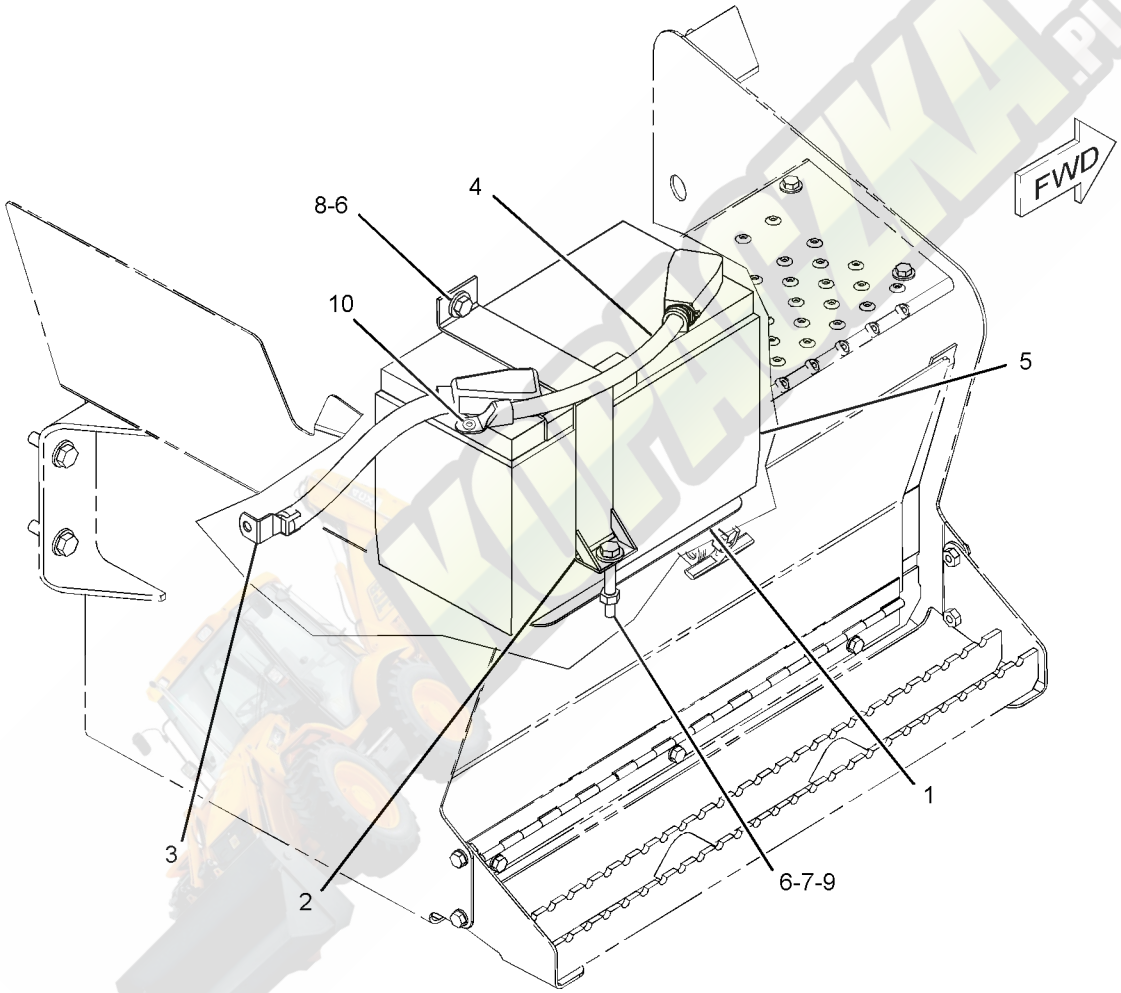

GRAPHIC #1 **<END>** g01337782

ELECTRICAL AND STARTING SYSTEM

313-3380 BATTERY & WIRING GP–STANDARD

S/N: JBA1-UP

PART OF 329-0294 CHASSIS AR

SMCS-1401, 1402, 1408, 1411 **i03648320**

NOTE	REF NO	GRAPHIC REF	PART NUMBER	QTY	PART NAME 1 2 3 4 5 6 (PRODUCT LEVEL)	SEE PAGE
	1	1	**6T-0465**	1	COVER-TERMINAL (BLACK)	
	2	1	**7K-1181**	7	STRAP-CABLE	
	3	1	**038-9317**	1	TREAD-NONSKID	
	4	1	**178-1781**	1	CLIP	
	5	1	**178-9242**	1	BRACKET AS	
	6	1	**213-6089**	1	CABLE AS-POWER	
B		1	**1P-0810**		TAPE-ELECTRICAL	
		1	*278-1439*	1	TERMINAL AS-RING	
		1	**278-1438**	1	TERMINAL-RING	
E		1	**125-7876**		TUBE-HEAT SHRINK (17.78-MM DIA) (4-CM)	
E		1	**319-0755**		TUBE-CONVOLUTED (225-CM)	
E		1	**135-5009**		TUBE-HEAT SHRINK (32-MM DIA) (5-CM)	
		1	**6T-5598**	1	TERMINAL-RING (1-GA TO 2-GA, 5/16-IN SCREW)	
		1	**8T-8799**	1	BOOT	
E		1	**8C-3056**		CABLE (2-GA, RED) (230-CM)	
	7	1	**228-5089**	1	CABLE AS	
		1	**229-9855**	1	TERMINAL AS-BATTERY (NEGATIVE)	
		1	**1S-7251**	1	TERMINAL-CABLE (00-GA, 1/2-IN SCREW)	
E		1	**5P-0747**		CABLE (00-GA, BLACK) (58-CM)	
	8	1	**243-5027**	1	NUT AS (M6X1-THD)	
	9	1	**246-8053**	1	CABLE AS-BATTERY (POSITIVE)	
		1	**1S-7251**	1	TERMINAL-CABLE (00-GA, 1/2-IN SCREW)	
		1	**8N-0869**	1	COVER-TERMINAL (RED)	
		1	**3S-2093**	2	STRAP-CABLE	
E		1	**5P-0761**		CABLE (00-GA, RED) (110-CM)	
E		1	**8Y-8081**		TUBE-CONVOLUTED (105-CM)	
		1	*235-8634*	1	TERMINAL AS-BATTERY (POSITIVE)	
		1	**1M-6119**	1	BOLT (5/16-18X1.375-IN)	
		1	**1M-6120**	1	NUT (5/16-18-THD)	
		1	**6V-8801**	2	NUT (3/8-16-THD)	
	10	1	**246-8058**	1	CABLE AS (ALTERNATOR)	
E		1	**125-7876**		TUBE-HEAT SHRINK (17.78-MM DIA) (7-CM)	
	11	1	**091-9035**	2	SPACER (11X25X20-MM THK)	
	12	1	**132-5789**	1	CLIP	
	13	1	**3T-5760**	1	BATTERY (12-VOLT, MAINTENANCE FREE, WET)	
		1	**123-1373**	6	CAP AS-FILLER (BATTERY)	
	14	1	**4D-6466**	2	CLIP	
	15	1	**7X-7729**	2	WASHER (11X25X3-MM THK)	
	16	1	**8T-4121**	4	WASHER-HARD (11X21X2.5-MM THK)	
M	17	1	**8T-4133**	1	NUT (M10X1.5-THD)	
M	18	1	**8T-4137**	2	BOLT (M10X1.5X20-MM)	
M	19	1	**8T-5005**	1	BOLT (M10X1.5X70-MM)	
M	20	1	**8T-6466**	2	BOLT (M10X1.5X60-MM)	
	21	1	**3S-2093**	2	STRAP-CABLE	
	22	1	**206-2423**	1	SADDLE	

B-USE AS REQUIRED
E-ORDER BY THE CENTIMETER
M-METRIC PART

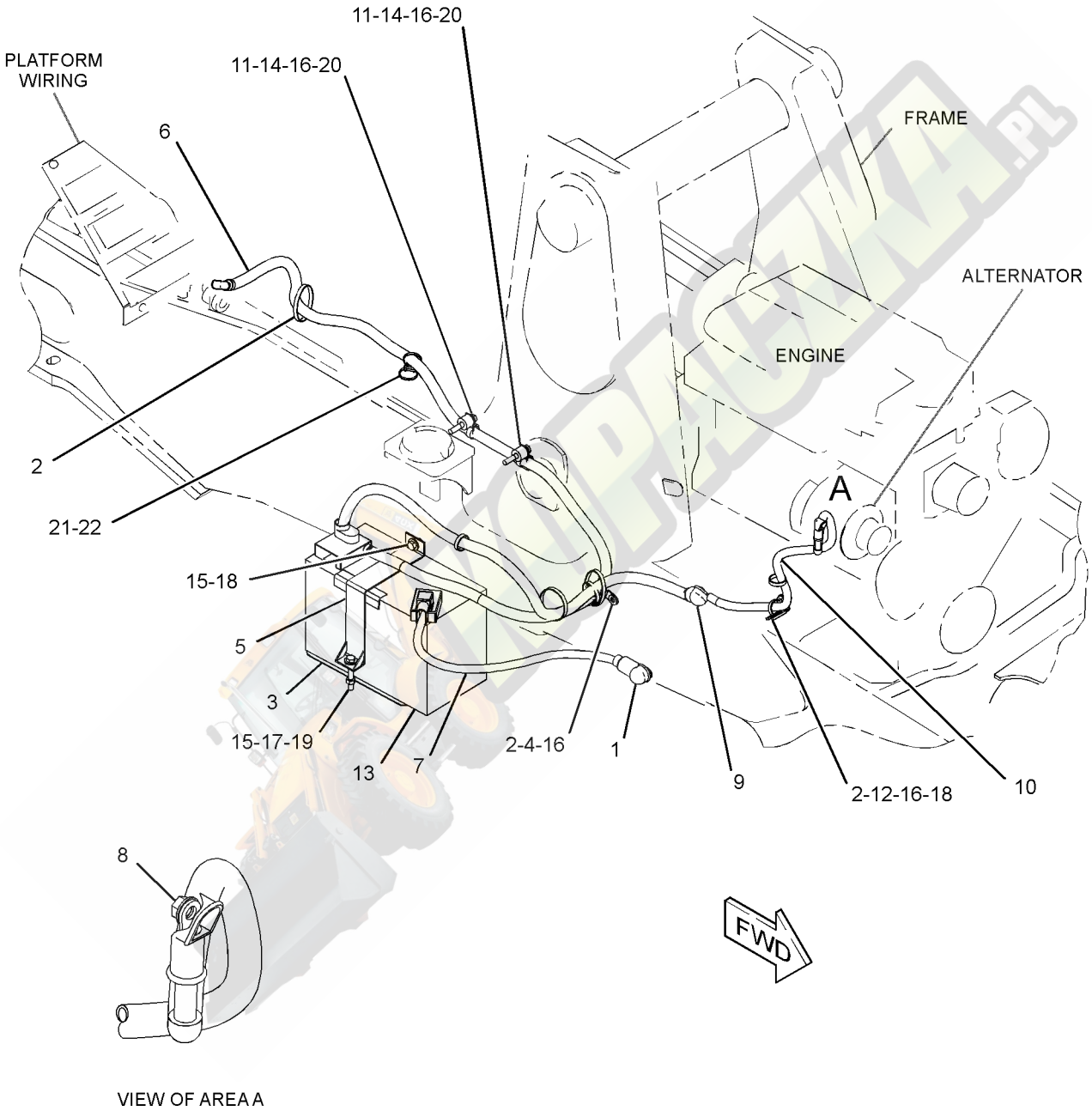

GRAPHIC #1 **<END>** g02000795

325-5950 ELECTRONICS GP-MACHINE

S/N: JBA1-UP

PART OF 338-5738 WIRING GP-PLATFORM

AN ATTACHMENT

SMCS-7610, 7620 **i03542040**

NOTE	PART NUMBER	QTY	PART NAME 1 2 3 4 5 6 (PRODUCT LEVEL)	SEE PAGE
	344-1053	1	SOFTWARE GP-MACHINE	
			-OR-	
R	**304-5691**	1	CONTROL GP-UNPROGRAMMED (MACHINE)	
			-OR-	
	344-1055	1	SERVICE GP-MACHINE	
			(OPTIONAL SERVICE REPLACEMENT) (INCLUDES CONTROL GP & SOFTWARE)	

R-REMFG PART MAY BE AVAILABLE

<END>

KOPACZKA.PL

232-6661 GLOW PLUG GP

S/N: CRS1-UP
PART OF 322-1923, 322-1924 ENGINE AR-PRIMARY
AN ATTACHMENT

SMCS-1412 **i02757127**

NOTE	REF NO	GRAPHIC REF	PART NUMBER	QTY	PART NAME 1 2 3 4 5 6 (PRODUCT LEVEL)	SEE PAGE
	1	1	**286-4880**	1	BUS BAR AS	
	2	1	**232-6662**	4	GLOW PLUG (12-VOLT)	
	3	1	**232-3126**	1	CLIP	

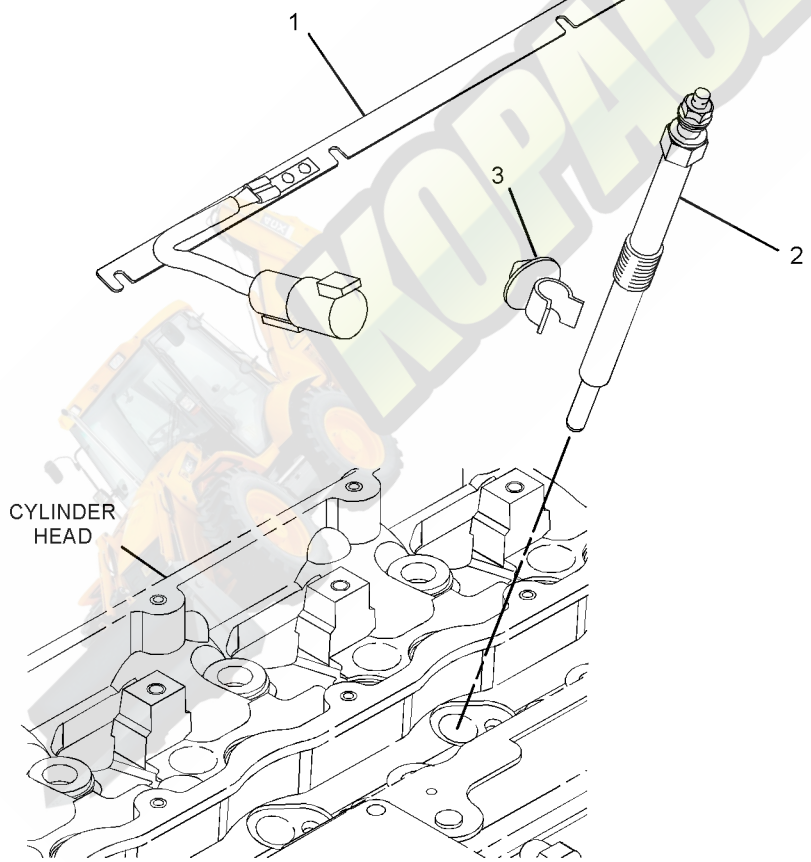

GRAPHIC #1 **<END>** g01392990

315-3418 GLOW PLUG GP

S/N: C4Z1-UP
PART OF 321-7704, 321-7705 ENGINE AR-PRIMARY
AN ATTACHMENT

SMCS-1412 **i03128300**

NOTE	REF NO	GRAPHIC REF	PART NUMBER	QTY	PART NAME 1 2 3 4 5 6 (PRODUCT LEVEL)	SEE PAGE
	1	1	**286-4880**	1	BUS BAR AS	
	2	1	**232-6662**	4	GLOW PLUG (12-VOLT)	

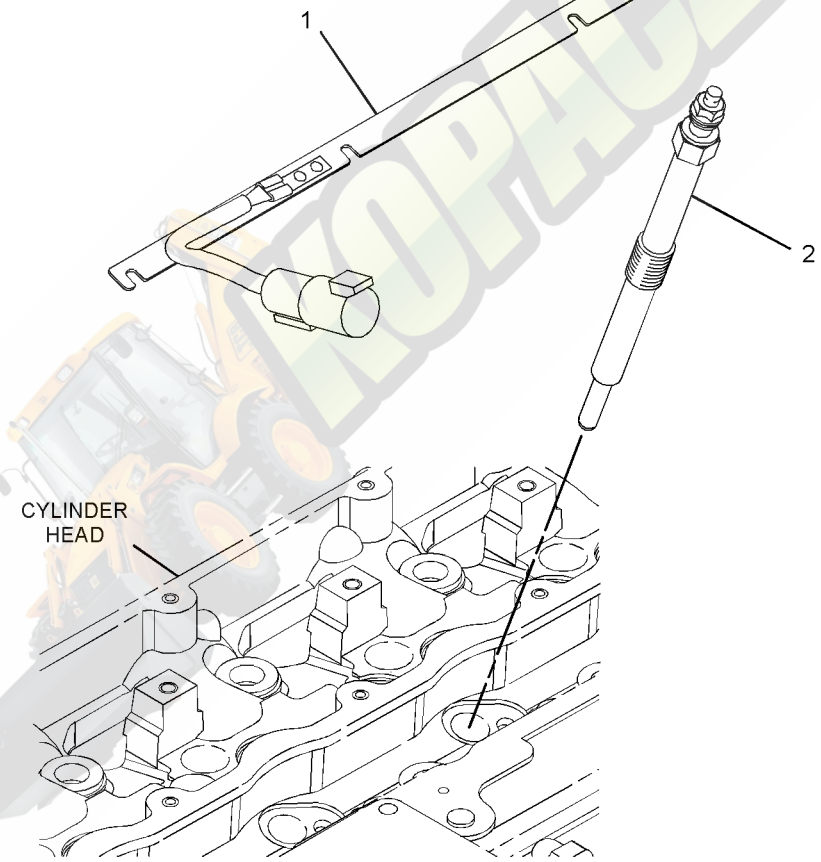

GRAPHIC #1 **<END>** g01398213

231-3058 HEATER GP-JACKET WATER

S/N: JBA1-UP
PART OF 248-2215 HEATER GP-JACKET WATER
AN ATTACHMENT

SMCS-1383 **i03496460**

NOTE	REF NO	GRAPHIC REF	PART NUMBER	QTY	PART NAME 1 2 3 4 5 6 (PRODUCT LEVEL)	SEE PAGE
	1	1	**219-3271**	1	ELEMENT AS-JACKET WATER HEATER (240-VOLT, 1000-WATT)	
		1	**133-3413**	1	KIT-SEAL	
					(INCLUDES SEAL, SPACER & RINGS)	
		1	**133-6517**	1	CAP AS-DUST	
	2	1	**231-3057**	1	CORD AS-HEATER	

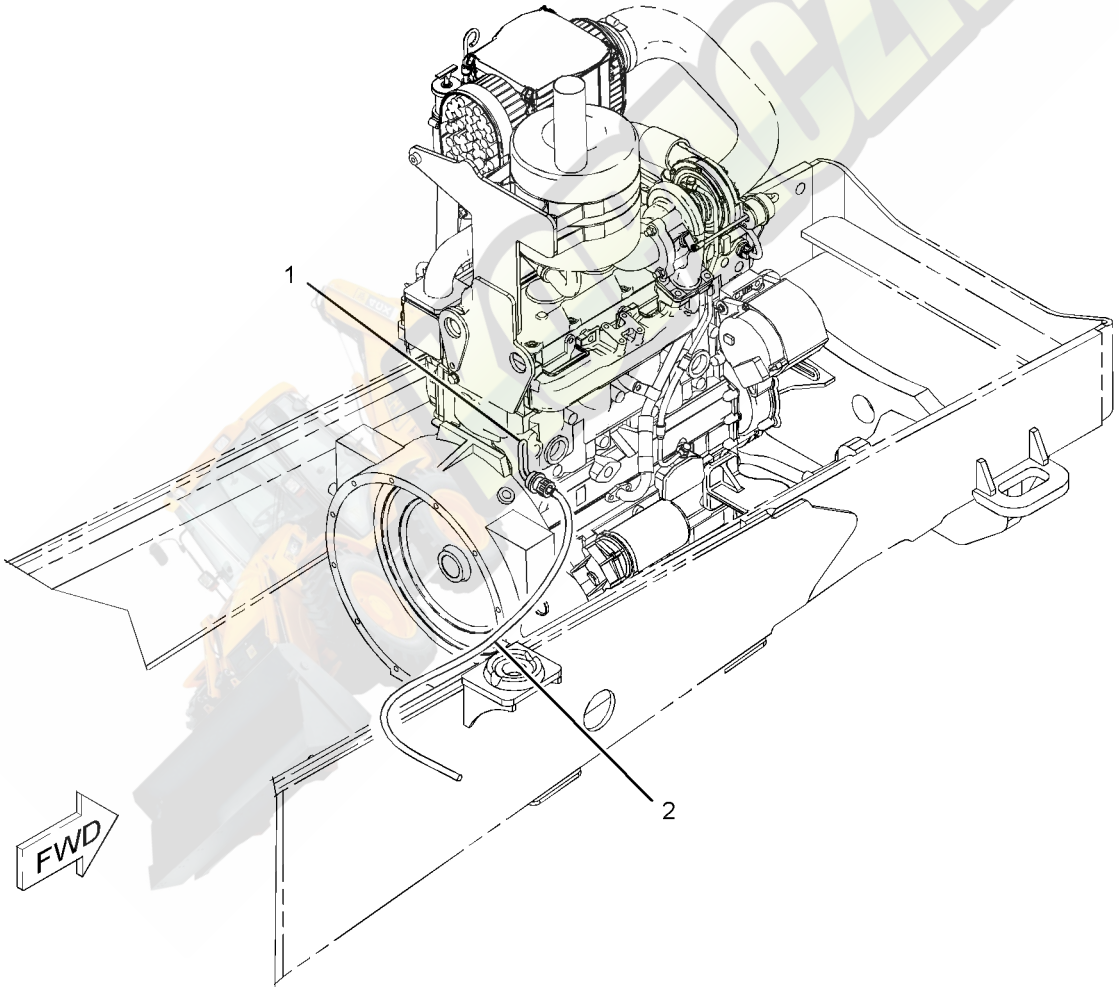

GRAPHIC #1 **<END>** g01105988

248-2215 HEATER GP-JACKET WATER

S/N: JBA1-UP
AN ATTACHMENT

SMCS-1383 **i02174455**

NOTE	REF NO	GRAPHIC REF	PART NUMBER	QTY	PART NAME 1 2 3 4 5 6 (PRODUCT LEVEL)	SEE PAGE
	1	1	**3S-2093**	2	STRAP-CABLE	
Y	2	1	*231-3058*	1	HEATER GP-JACKET WATER	158

Y-SEPARATE ILLUSTRATION

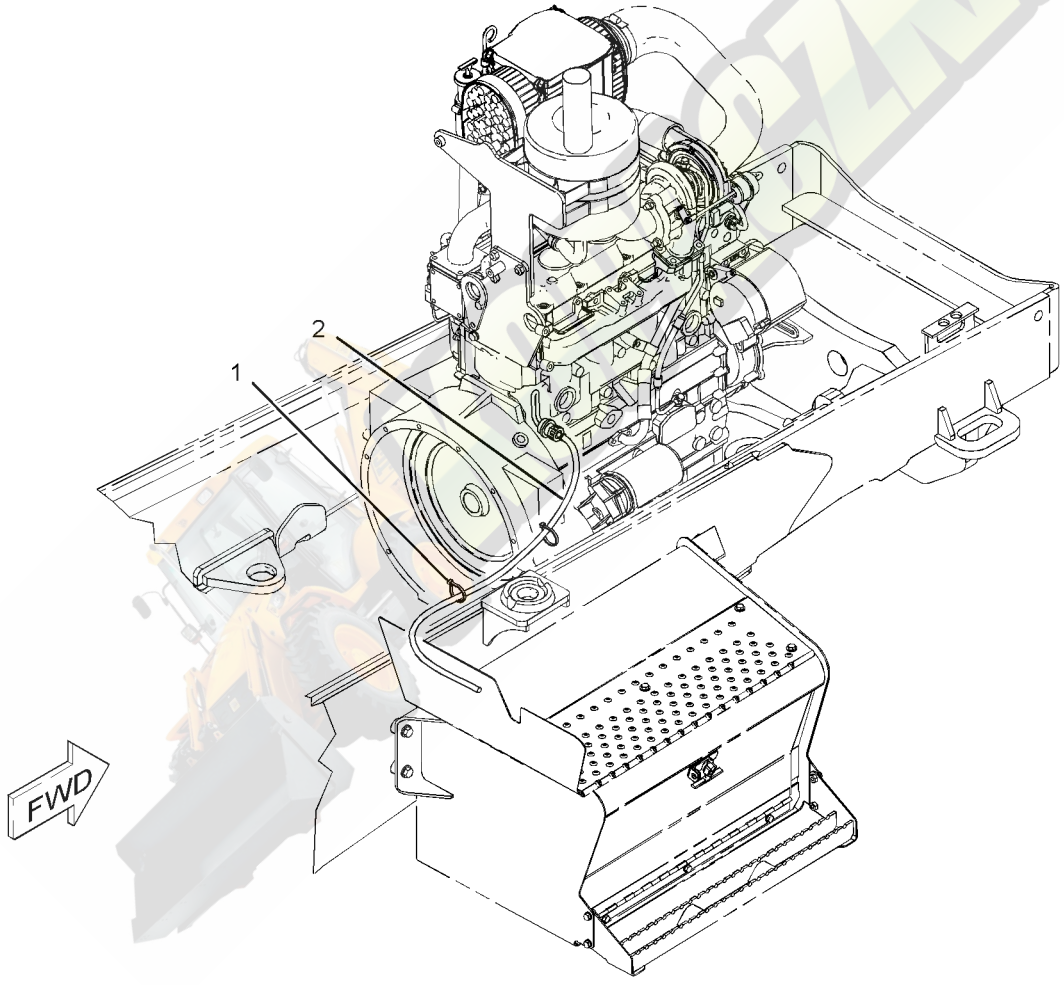

GRAPHIC #1 **<END>** g01104597

322-3037 INSTALLATION GP-SECURITY

S/N: JBA1-UP

AN ATTACHMENT

SMCS-7631 **i03633298**

NOTE	REF NO	GRAPHIC REF	PART NUMBER	QTY	PART NAME 1 2 3 4 5 6 (PRODUCT LEVEL)	SEE PAGE
	1	1	**206-1345**	2	STRAP-CABLE	
	2	1	**225-5927**	2	FILM-INSTRUCTION (MACHINE SECURITY, READ OMM)	
	3	1	**337-5352**	1	FILM-IDENTIFICATION (START SWITCH, READ OMM)	
	4	1	**262-3705**	1	BRACKET AS	
M	5	1	**262-4341**	3	BOLT-SPECIAL	
	6	1	**322-3040**	1	GUARD AS	
Y	7	1	*326-7959*	1	INSTALLATION GP-SECURITY	162
M	8	1	**5C-7261**	1	NUT (M8X1.25-THD)	
M	9	1	**8T-4138**	2	BOLT (M6X1X20-MM)	
M	10	1	**8T-4189**	1	BOLT (M8X1.25X20-MM)	
M	11	1	**8T-4200**	4	BOLT (M8X1.25X16-MM)	
	12	1	**8T-4205**	2	WASHER-HARD (7.2X14.5X2-MM THK)	
	13	1	**8T-4224**	9	WASHER-HARD (8.8X16X2-MM THK)	
	14	1	**9M-8406**	1	CLIP	

M-METRIC PART
Y-SEPARATE ILLUSTRATION

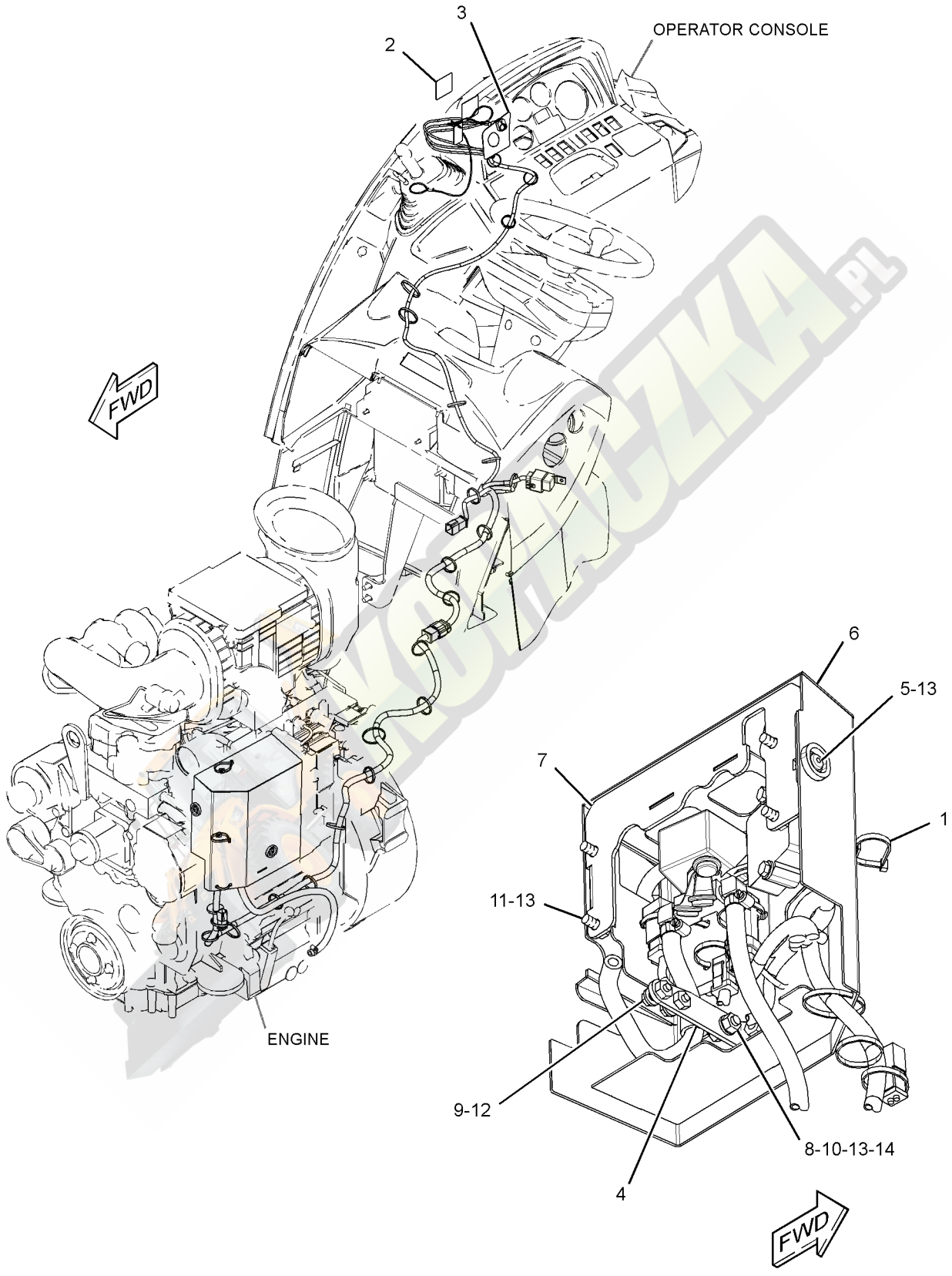

GRAPHIC #1 **<END>** g01626843

326-7959 INSTALLATION GP-SECURITY

S/N: JBA1-UP

PART OF 322-3037 INSTALLATION GP-SECURITY

AN ATTACHMENT

SMCS-7631 **i03628895**

NOTE	REF NO	GRAPHIC REF	PART NUMBER	QTY	PART NAME 1 2 3 4 5 6 (PRODUCT LEVEL)	SEE PAGE
	1	1	**1P-4278**	3	CLAMP-HOSE	
	2	1	**269-0986**	2	FITTING-COUPLING	
Y	3	1	*328-1485*	1	WIRING GP-MACHINE	215
	4	1	**328-1907**	1	BRACKET AS	
M	5	1	**138-8454**	4	SCREW-TRUSS HEAD (M4X0.7X10-MM)	
M	6	1	**7X-2533**	2	BOLT (M6X1X35-MM)	
	7	1	**8T-4205**	2	WASHER-HARD (7.2X14.5X2-MM THK)	
E	8	1	**5P-1420**		HOSE (27.5-CM)	
E	8A	1	**5P-1420**		HOSE (76-CM)	

E-ORDER BY THE CENTIMETER
M-METRIC PART
Y-SEPARATE ILLUSTRATION

326-7959 **INSTALLATION GP-SECURITY** ***(contd.)*** **i03628895**

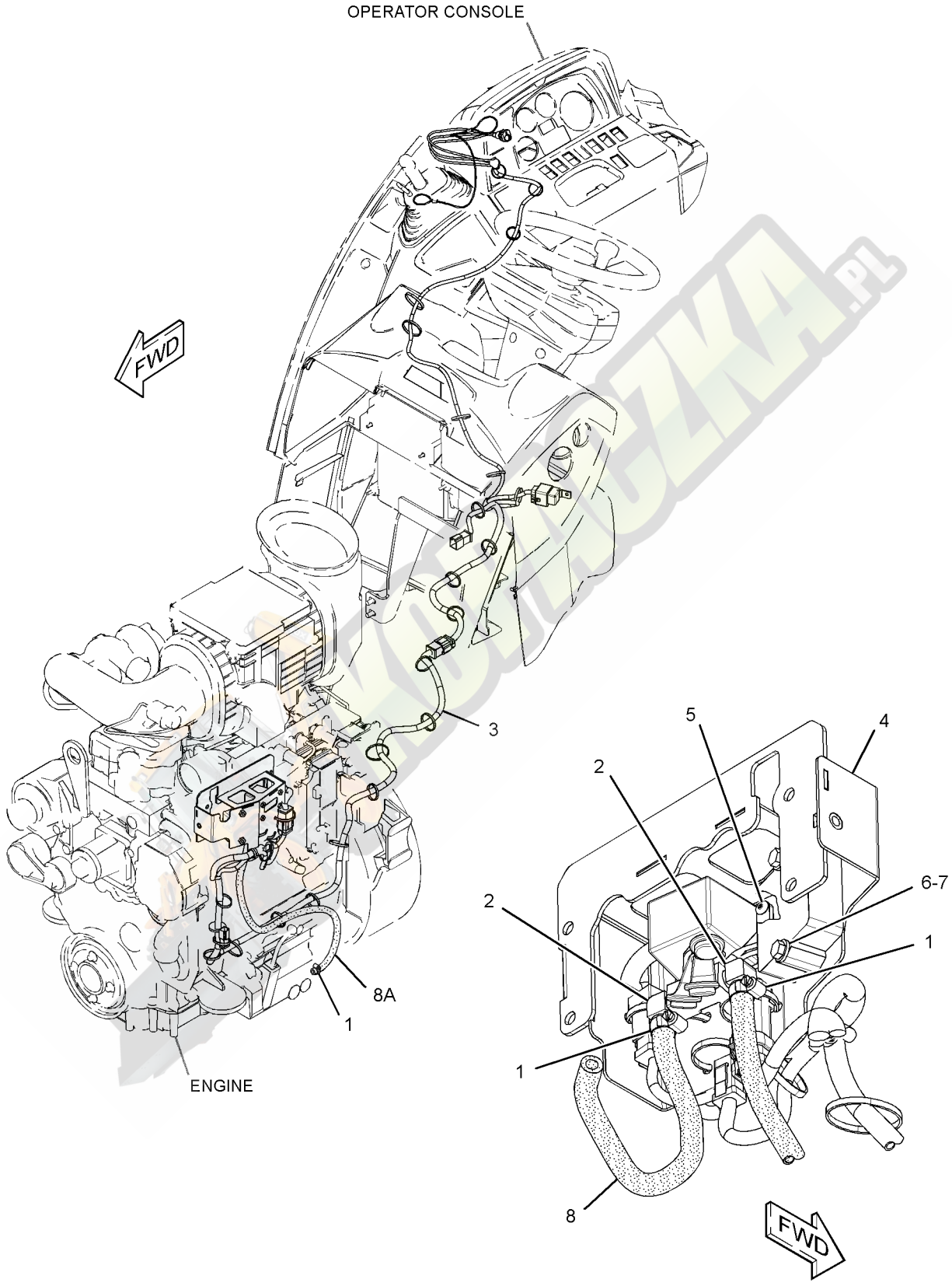

GRAPHIC #1 **<END>** g01626895

ELECTRICAL AND STARTING SYSTEM

328-2481 INSTALLATION GP-SECURITY–TURBO

S/N: JBA1-UP

AN ATTACHMENT

SMCS-7631 **i03579027**

NOTE	REF NO	GRAPHIC REF	PART NUMBER	QTY	PART NAME 1 2 3 4 5 6 (PRODUCT LEVEL)	SEE PAGE
	1	1	**1P-4278**	4	CLAMP-HOSE	
	3	1	**5P-7958**	2	SLEEVE-CABLE SPLICE	
	4	1	**8T-8737**	2	PLUG-SEAL	
	5	1	**123-6758**	1	LANYARD	
	6	1	**200-1898**	1	SUPPRESSOR-ARC	
	7	1	**206-1345**	2	STRAP-CABLE	
	8	1	**219-6314**	1	KEY RING (IDENTIFICATION)	
	9	1	**225-5927**	2	FILM-INSTRUCTION (MACHINE SECURITY, READ OMM)	
	10	1	**257-7211**	1	VALVE AS-SOLENOID (FUEL SHUTOFF)	
		1	**9X-3401**	8	PIN-CONNECTOR (16-GA TO 18-GA)	
		1	**160-3518**	1	KIT-RECEPTACLE (8-PIN)	
					(INCLUDES RECEPTACLE AS & WEDGE)	
		1	**263-8850**	1	KEY AS-ELECTRONIC (BLACK)	
	11	1	**257-7212**	1	SENSOR AS (KEY READER)	
		1	**186-3735**	3	PIN-CONNECTOR (16-GA TO 18-GA)	
		1	**286-1072**	1	SENSOR AS (KEY READER)	
	12	1	**257-7214**	1	HARNESS AS-CONTROL (PLATFORM)	
		1	**102-8806**	1	KIT-RECEPTACLE (8-PIN)	
					(INCLUDES RECEPTACLE AS & WEDGE)	
		1	**8L-8413**	4	STRAP-CABLE	
E		1	**8T-8737**	1	PLUG-SEAL	
		1	**125-7874**		TUBE-HEAT SHRINK (5.72-MM DIA) (15-CM)	
		1	**126-1766**	4	SOCKET-CONNECTOR (14-GA TO 18-GA)	
		1	**155-2270**	1	KIT-CONNECTING PLUG (2-PIN)	
		1	**155-2265**	1	KIT-CONNECTING PLUG (8-PIN)	
					(EACH INCLUDES PLUG AS, WEDGE & INTERFACE SEAL)	
		1	**180-9339**	8	PIN-CONNECTOR (14-GA TO 18-GA)	
		1	**180-9340**	13	SOCKET-CONNECTOR (14-GA TO 18-GA)	
		1	**230-5008**	1	PLUG AS-CONNECTOR (4-PIN)	
		1	**264-7031**	1	SEAL-CONNECTOR	
	13	1	**261-7694**	1	FILM (START SW, READ OMM, SECURITY)	
	14	1	**262-3705**	1	BRACKET AS	
M	15	1	**262-4341**	3	BOLT-SPECIAL	
	16	1	**269-0986**	2	FITTING-COUPLING	
	17	1	**276-5450**	1	RELAY AS (12-VOLT) (FUEL SHUTOFF)	
		1	**186-3735**	4	PIN-CONNECTOR (16-GA TO 18-GA)	
		1	**230-5009**	1	RECEPTACLE AS-CONNECTOR (4-PIN)	
	18	1	**295-5893**	1	HARNESS AS-CONTROL (MACHINE SECURITY SYSTEM)	
		1	**180-9339**	6	PIN-CONNECTOR (14-GA TO 18-GA)	
		1	**180-9340**	11	SOCKET-CONNECTOR (14-GA TO 18-GA)	
		1	**102-8805**	1	KIT-RECEPTACLE (6-PIN)	
					(INCLUDES RECEPTACLE AS & WEDGE)	
E		1	**125-7874**		TUBE-HEAT SHRINK (5.72-MM DIA) (5-CM)	
E		1	**141-8061**		TAPE (2-M)	
		1	**155-2265**	1	KIT-CONNECTING PLUG (8-PIN)	
		1	**155-2260**	1	KIT-CONNECTING PLUG (3-PIN)	
					(EACH INCLUDES PLUG AS, WEDGE & INTERFACE SEAL)	
	19	1	**322-3040**	1	GUARD AS	
	20	1	**328-1907**	1	BRACKET AS	
	21	1	**115-1615**	1	RELAY AS (12-VOLT) (DISABLE START)	
M	22	1	**138-8454**	4	SCREW-TRUSS HEAD (M4X0.7X10-MM)	
	23	1	**102-8802**	1	KIT-RECEPTACLE (2-PIN)	
					(INCLUDES RECEPTACLE AS & WEDGE)	

328-2481 **INSTALLATION GP-SECURITY** *(contd.)* **i03579027**

NOTE	REF NO	GRAPHIC REF	PART NUMBER	QTY	PART NAME 1 2 3 4 5 6 (PRODUCT LEVEL)	SEE PAGE
	24	1	**102-8803**	1	KIT-RECEPTACLE (3-PIN)	
					(INCLUDES RECEPTACLE AS & WEDGE)	
	25	1	**3S-2093**	30	STRAP-CABLE	
M	26	1	**5C-7261**	1	NUT (M8X1.25-THD)	
M	27	1	**7X-2533**	2	BOLT (M6X1X35-MM)	
M	28	1	**8T-4138**	2	BOLT (M6X1X20-MM)	
M	29	1	**8T-4189**	1	BOLT (M8X1.25X20-MM)	
M	30	1	**8T-4200**	4	BOLT (M8X1.25X16-MM)	
	31	1	**8T-4205**	4	WASHER-HARD (7.2X14.5X2-MM THK)	
	32	1	**8T-4224**	9	WASHER-HARD (8.8X16X2-MM THK)	
	33	1	**9M-8406**	1	CLIP	
E	34	1	**5P-1420**		HOSE (76-CM)	
E	34A	1	**5P-1420**		HOSE (27.5-CM)	

E-ORDER BY THE CENTIMETER
M-METRIC PART

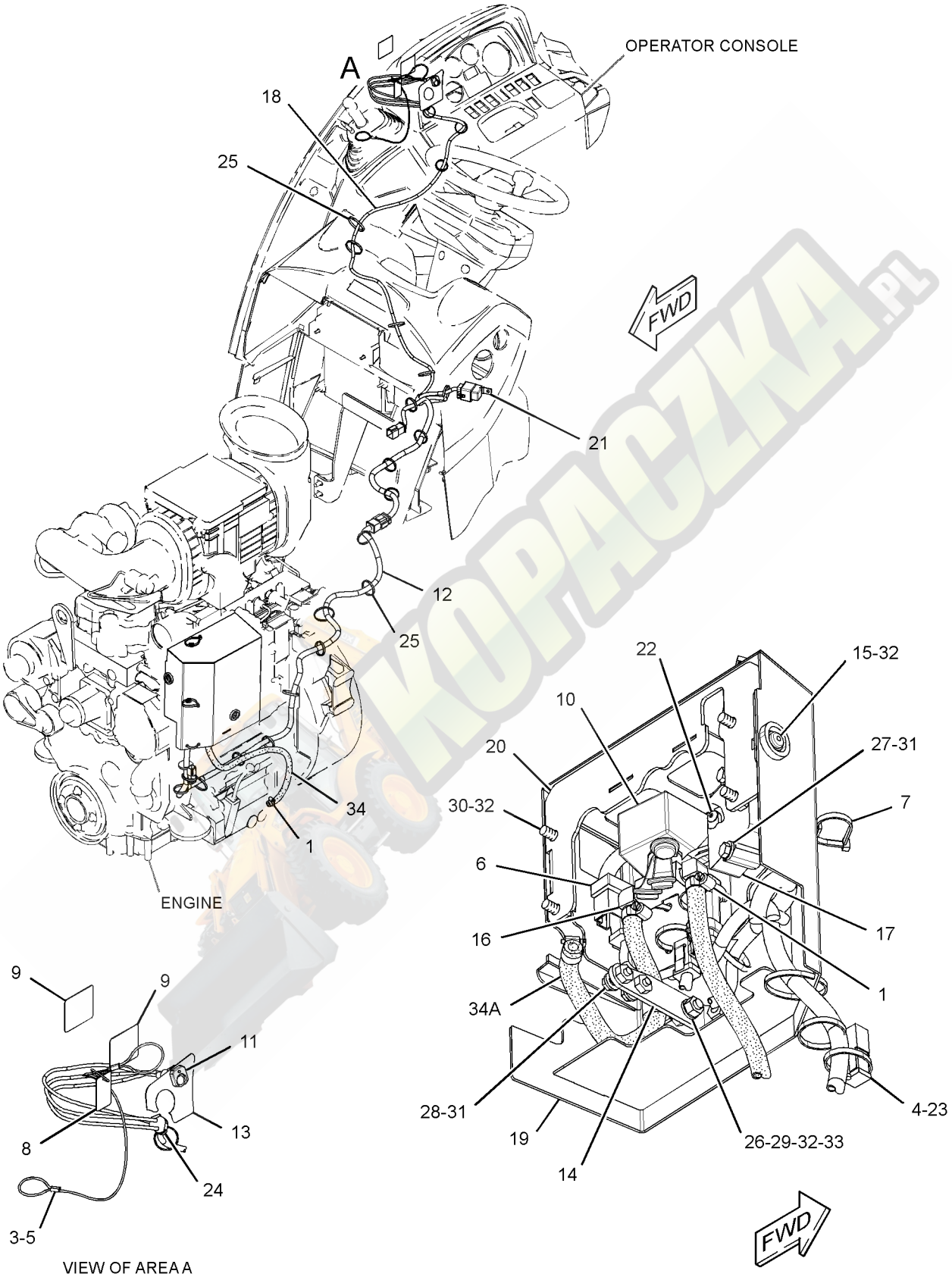

GRAPHIC #1 **<END>** g01636341

214-2968 LAMP GP-FLOOD

S/N: JBA1-UP
12-VOLT
PART OF 340-3552 WIRING GP-CAB
AN ATTACHMENT

SMCS-1429, 1434 **i03712363**

NOTE	REF NO	GRAPHIC REF	PART NUMBER	QTY	PART NAME 1 2 3 4 5 6 (PRODUCT LEVEL)	SEE PAGE
	1	1	**9W-0607**	1	LAMP (12-VOLT, 55-WATT) (FLOODLIGHT)	
M	2	1	**6V-2317**	1	BOLT (M8X1.25X30-MM)	
M	3	1	**5C-7261**	1	NUT (M8X1.25-THD)	
	4	1	**8T-4224**	2	WASHER-HARD (8.8X16X2-MM THK)	
	5	1	**9X-4244**	2	SCREW-SPECIAL (M4X1.79X25-MM)	
	6	1	**202-6614**	1	LENS AS (FLOODLIGHT)	
	7	1	**175-4292**	1	BODY AS	
	8	1	**164-7556**	1	BRACKET (LAMP RETAINING)	
	9	1	**175-4291**	1	BRACKET AS	

M-METRIC PART

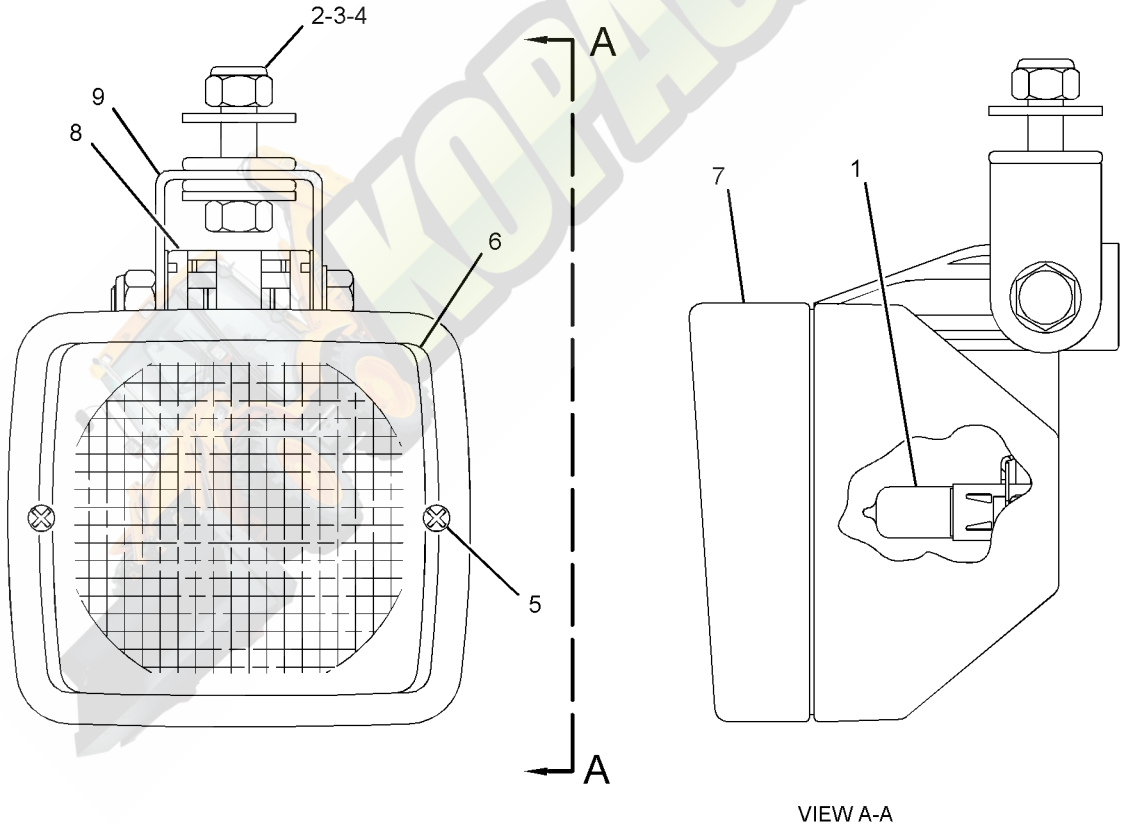

VIEW A-A

GRAPHIC #1 **<END>** g01181714

214-2969 LAMP GP-FLOOD

S/N: JBA1-UP
12-VOLT
PART OF 340-6918 LIGHTING GP-FLOOD
AN ATTACHMENT

SMCS-1429, 1434 **i03712370**

NOTE	REF NO	GRAPHIC REF	PART NUMBER	QTY	PART NAME 1 2 3 4 5 6 (PRODUCT LEVEL)	SEE PAGE
	1	1	**9W-0607**	1	LAMP (12-VOLT, 55-WATT) (FLOODLIGHT)	
M	2	1	**6V-2317**	1	BOLT (M8X1.25X30-MM)	
M	3	1	**5C-7261**	1	NUT (M8X1.25-THD)	
	4	1	**8T-4224**	2	WASHER-HARD (8.8X16X2-MM THK)	
	5	1	**9X-4244**	2	SCREW-SPECIAL (M4X1.79X25-MM)	
	6	1	**202-6611**	1	LENS AS (FLOODLIGHT)	
	7	1	**175-4292**	1	BODY AS	
	8	1	**164-7556**	1	BRACKET (LAMP RETAINING)	
	9	1	**175-4291**	1	BRACKET AS	

M-METRIC PART

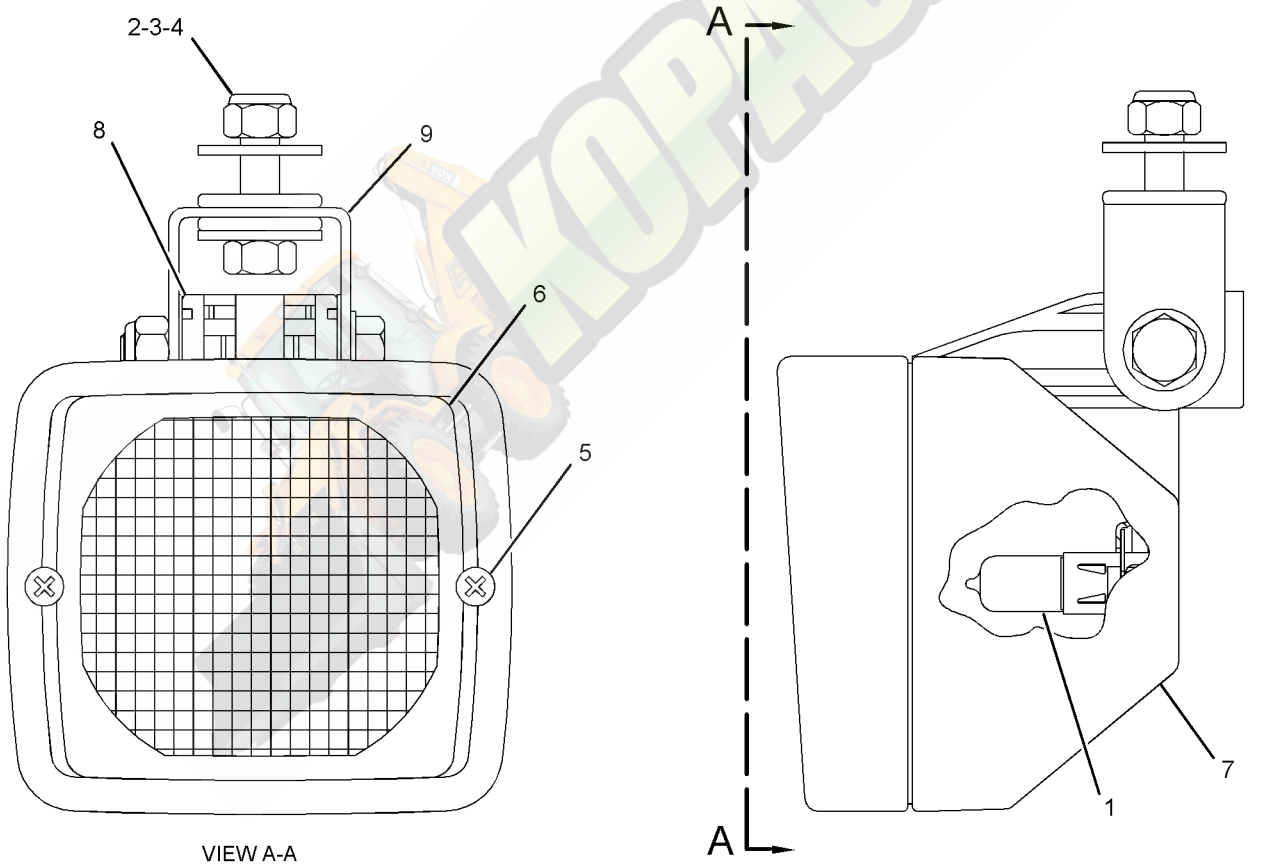

VIEW A-A

GRAPHIC #1 **<END>** g01971255

195-0189 LAMP GP-HEAD & SIGNAL–RH–HIGH, LOW BEAM

S/N: JBA1-UP

PART OF 329-7496 LIGHTING GP-ROADING

AN ATTACHMENT

SMCS-1429 **i03631003**

NOTE	REF NO	GRAPHIC REF	PART NUMBER	QTY	PART NAME 1 2 3 4 5 6 (PRODUCT LEVEL)	SEE PAGE
	1	1	**228-6053**	1	BODY AS	
	2	1	**228-6054**	1	BEZEL	
	3	1	**228-6051**	1	LENS AS (HEADLIGHT)	
	4	1	**228-6052**	1	LENS AS (TURN SIGNAL)	
	5	1	**228-6056**	6	SCREW (4-32X1.26-IN)	
	6	1	**9W-3324**	1	LAMP-HEAD (12-VOLT, 60/55-WATT) (CLEAR)	
	7	1	**226-4560**	1	LAMP (12-VOLT, 21-WATT) (AMBER)	
	8	1	**226-4561**	1	LAMP (12-VOLT, 5-WATT) (CLEAR)	
M	9	1	**8T-0389**	1	LOCKNUT (M10X1.5-THD)	
	10	1	**100-3253**	1	SPACER	
	11	1	**100-3254**	1	SPACER	
	12	1	**100-3255**	1	WASHER (SPHERICAL)	
	13	1	**102-8805**	1	KIT-RECEPTACLE (6-PIN)	
					(INCLUDES RECEPTACLE AS & WEDGE)	
	14	1	**186-3735**	5	PIN-CONNECTOR (16-GA TO 18-GA)	
	15	1	**8T-8737**	1	PLUG-SEAL	

M-METRIC PART

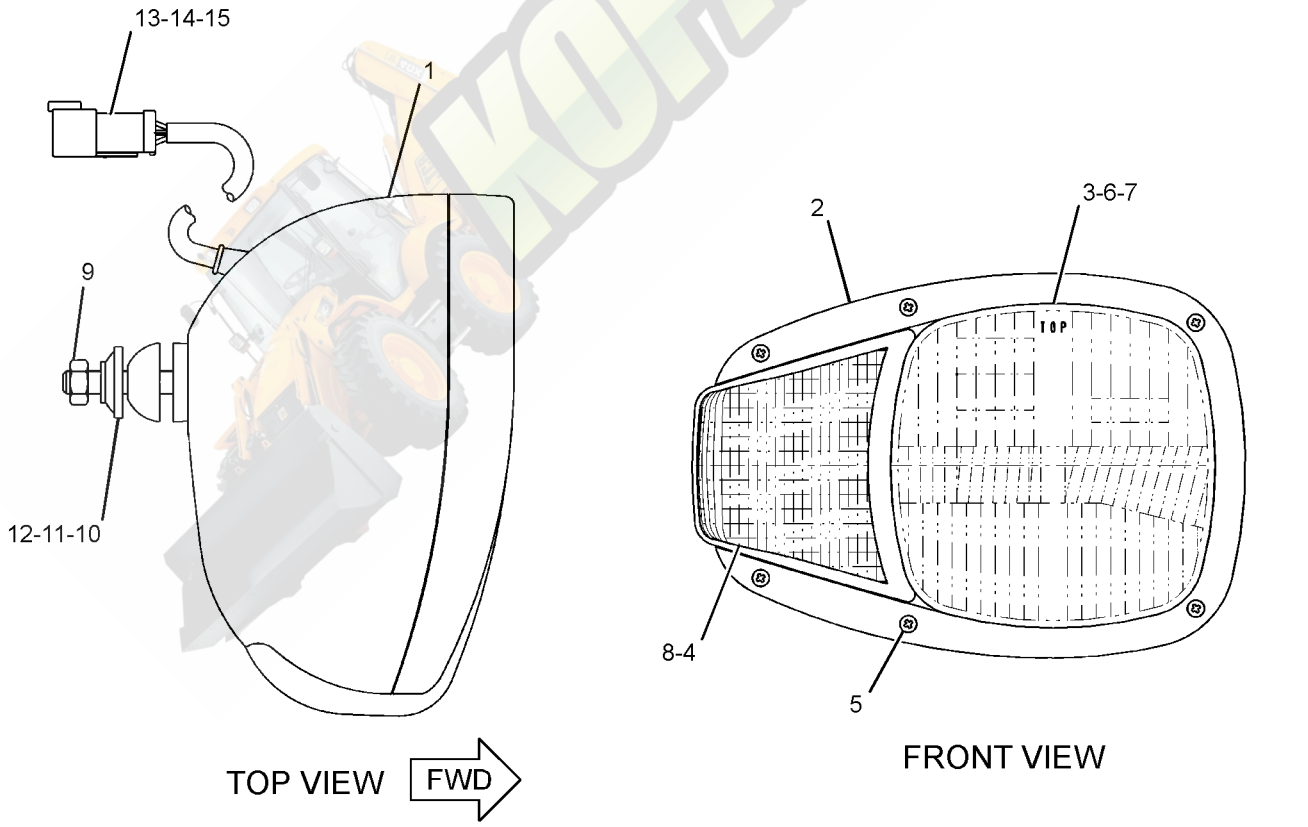

GRAPHIC #1 **<END>** g01313421

195-0190 LAMP GP-HEAD & SIGNAL–LH–HIGH, LOW BEAM

S/N: JBA1-UP
PART OF 329-7496 LIGHTING GP-ROADING
AN ATTACHMENT

SMCS-1429 **i03630995**

NOTE	REF NO	GRAPHIC REF	PART NUMBER	QTY	PART NAME 1 2 3 4 5 6 (PRODUCT LEVEL)	SEE PAGE
	1	1	**228-6053**	1	BODY AS	
	2	1	**228-6054**	1	BEZEL	
	3	1	**228-6051**	1	LENS AS (HEADLIGHT)	
	4	1	**228-6052**	1	LENS AS (TURN SIGNAL)	
	5	1	**228-6056**	6	SCREW (4-32X1.26-IN)	
	6	1	**9W-3324**	1	LAMP-HEAD (12-VOLT, 60/55-WATT) (CLEAR)	
	7	1	**226-4560**	1	LAMP (12-VOLT, 21-WATT) (AMBER)	
	8	1	**226-4561**	1	LAMP (12-VOLT, 5-WATT) (CLEAR)	
M	9	1	**8T-0389**	1	LOCKNUT (M10X1.5-THD)	
	10	1	**100-3253**	1	SPACER	
	11	1	**100-3254**	1	SPACER	
	12	1	**100-3255**	1	WASHER (SPHERICAL)	
	13	1	**102-8805**	1	KIT-RECEPTACLE (6-PIN)	
					(INCLUDES RECEPTACLE AS & WEDGE)	
	14	1	**186-3735**	5	PIN-CONNECTOR (16-GA TO 18-GA)	
	15	1	**8T-8737**	1	PLUG-SEAL	

M-METRIC PART

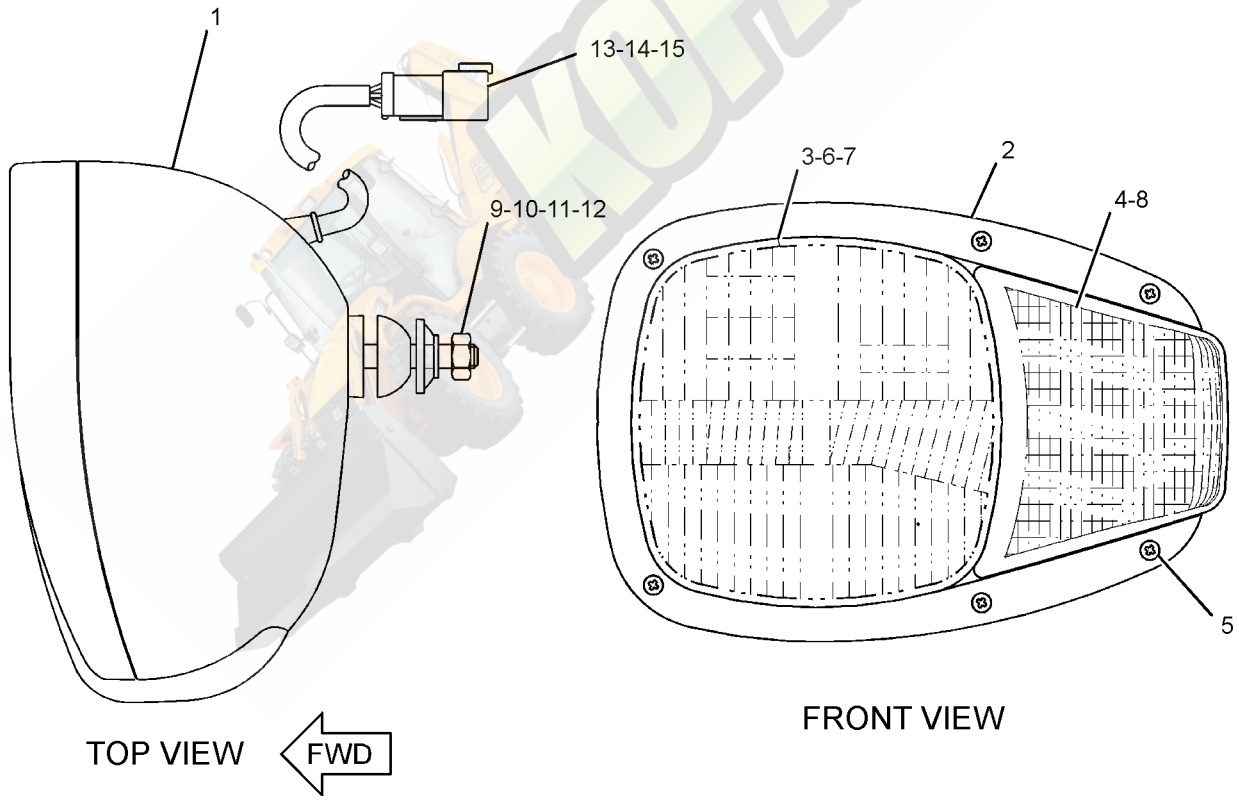

GRAPHIC #1 **<END>** g01313362

195-0191 LAMP GP-HEAD & SIGNAL–RH–HIGH, LOW BEAM

S/N: JBA1-UP
PART OF 329-7497 LIGHTING GP-ROADING
AN ATTACHMENT

SMCS-1429 **i03630988**

NOTE	REF NO	GRAPHIC REF	PART NUMBER	QTY	PART NAME 1 2 3 4 5 6 (PRODUCT LEVEL)	SEE PAGE
	1	1	**228-6053**	1	BODY AS	
	2	1	**228-6054**	1	BEZEL	
	3	1	**228-6050**	1	LENS AS (HEADLIGHT)	
	4	1	**228-6052**	1	LENS AS (TURN SIGNAL)	
	5	1	**228-6056**	6	SCREW (4-32X1.26-IN)	
	6	1	**9W-3324**	1	LAMP-HEAD (12-VOLT, 60/55-WATT) (CLEAR)	
	7	1	**226-4560**	1	LAMP (12-VOLT, 21-WATT) (AMBER)	
	8	1	**226-4561**	1	LAMP (12-VOLT, 5-WATT) (CLEAR)	
M	9	1	**8T-0389**	1	LOCKNUT (M10X1.5-THD)	
	10	1	**100-3253**	1	SPACER	
	11	1	**100-3254**	1	SPACER	
	12	1	**100-3255**	1	WASHER (SPHERICAL)	
	13	1	**102-8805**	1	KIT-RECEPTACLE (6-PIN) (INCLUDES RECEPTACLE AS & WEDGE)	
	14	1	**186-3735**	5	PIN-CONNECTOR (16-GA TO 18-GA)	
	15	1	**8T-8737**	1	PLUG-SEAL	

M-METRIC PART

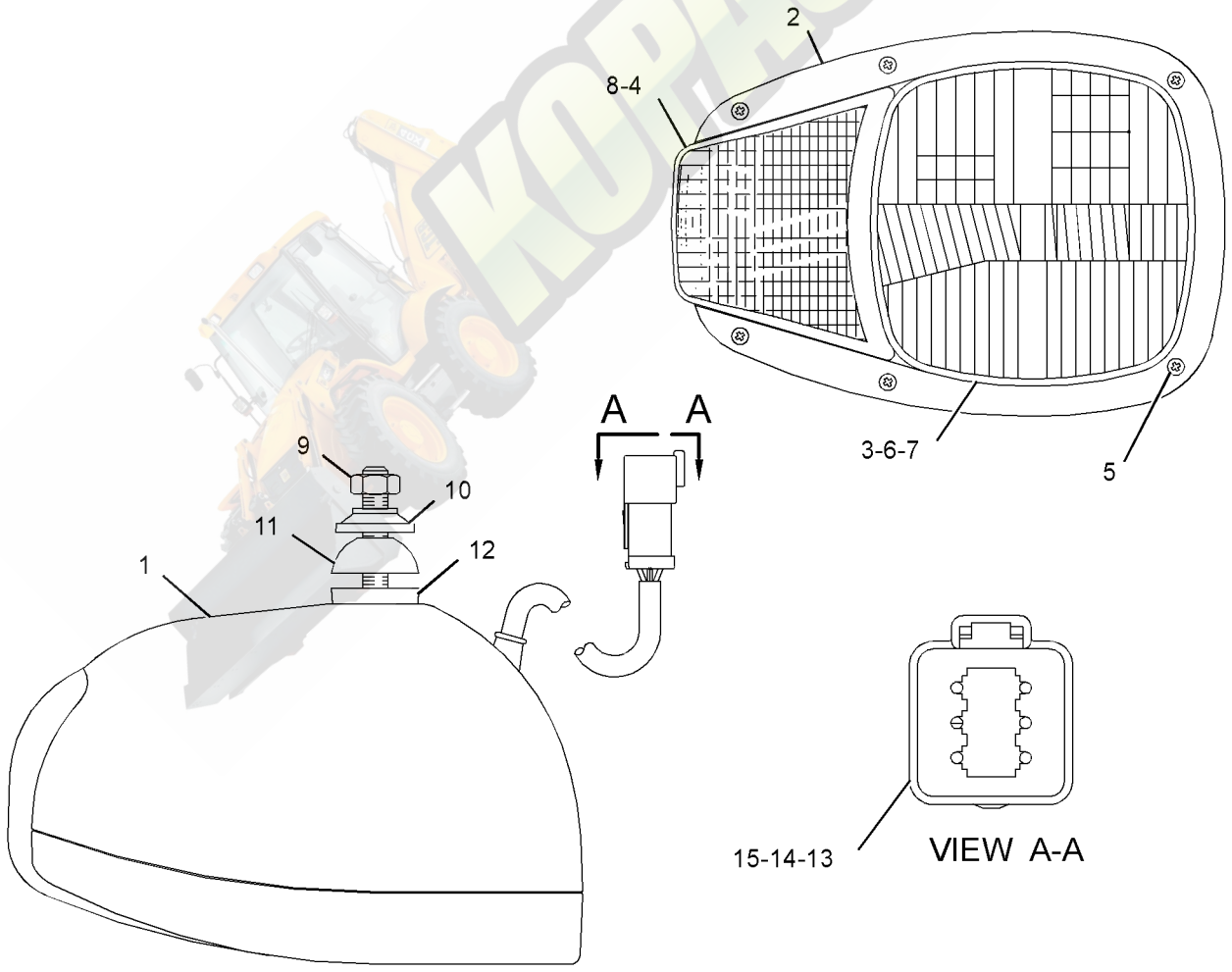

GRAPHIC #1 **<END>** g01948222

195-0192 LAMP GP-HEAD & SIGNAL–LH–HIGH, LOW BEAM

S/N: JBA1-UP
PART OF 329-7497 LIGHTING GP-ROADING
AN ATTACHMENT

SMCS-1429 **i03631761**

NOTE	REF NO	GRAPHIC REF	PART NUMBER	QTY	PART NAME 1 2 3 4 5 6 (PRODUCT LEVEL)	SEE PAGE
	1	1	**228-6053**	1	BODY AS	
	2	1	**228-6054**	1	BEZEL	
	3	1	**228-6050**	1	LENS AS (HEADLIGHT)	
	4	1	**228-6052**	1	LENS AS (TURN SIGNAL)	
	5	1	**228-6056**	6	SCREW (4-32X1.26-IN)	
	6	1	**9W-3324**	1	LAMP-HEAD (12-VOLT, 60/55-WATT) (CLEAR)	
	7	1	**226-4560**	1	LAMP (12-VOLT, 21-WATT) (AMBER)	
	8	1	**226-4561**	1	LAMP (12-VOLT, 5-WATT) (CLEAR)	
M	9	1	**8T-0389**	1	LOCKNUT (M10X1.5-THD)	
	10	1	**100-3253**	1	SPACER	
	11	1	**100-3254**	1	SPACER	
	12	1	**100-3255**	1	WASHER (SPHERICAL)	
	13	1	**102-8805**	1	KIT-RECEPTACLE (6-PIN) (INCLUDES RECEPTACLE AS & WEDGE)	
	14	1	**186-3735**	5	PIN-CONNECTOR (16-GA TO 18-GA)	
	15	1	**8T-8737**	1	PLUG-SEAL	

M-METRIC PART

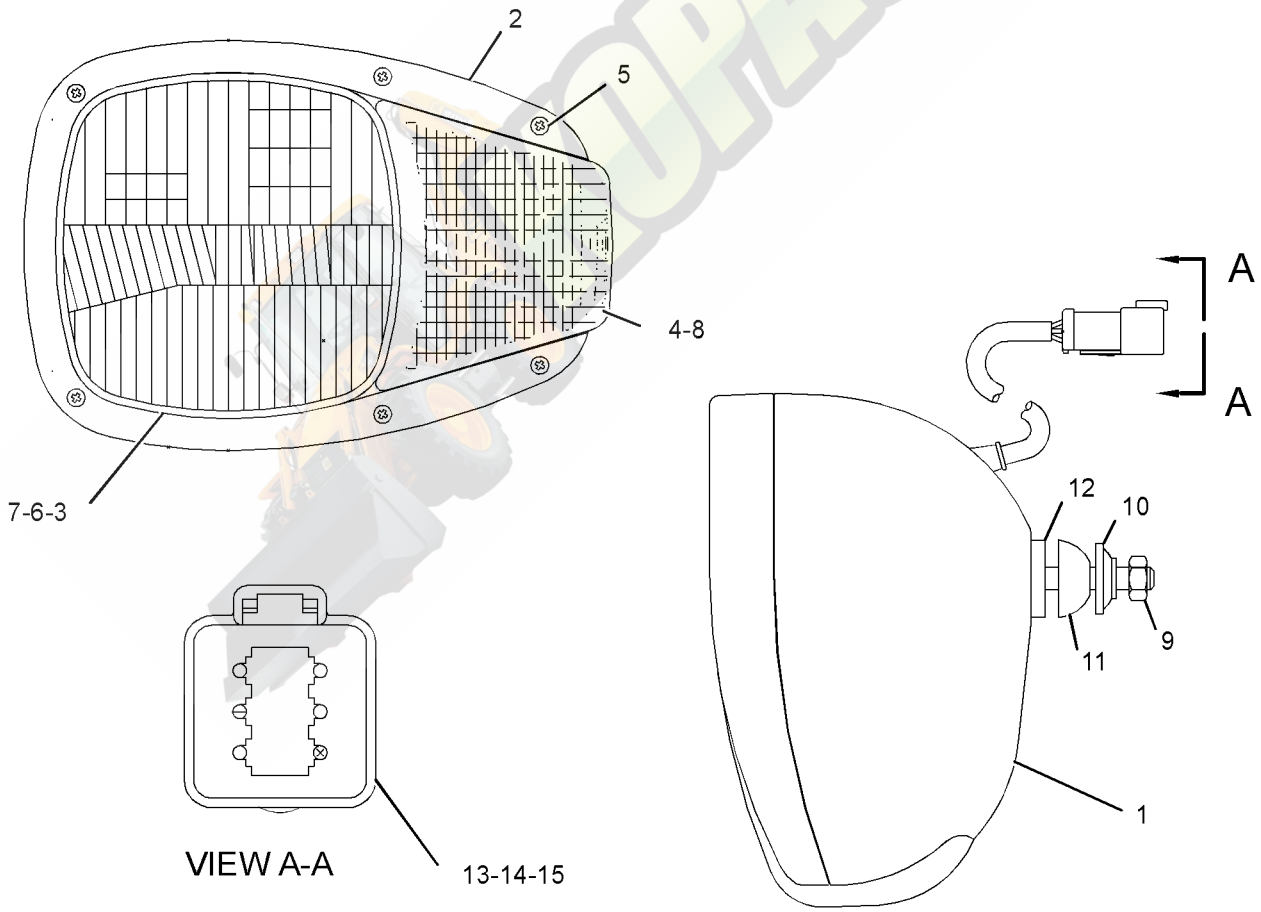

GRAPHIC #1 **<END>** g01948223

196-0030 LAMP GP-REGISTRATION PLATE

S/N: JBA1-UP
12-VOLT
PART OF 328-1953 LAMP GP-REGISTRATION PLATE, 328-1950 LIGHTING GP-ROADING AN ATTACHMENT

SMCS-1429 **i02224900**

NOTE	REF NO	GRAPHIC REF	PART NUMBER	QTY	PART NAME 1 2 3 4 5 6 (PRODUCT LEVEL)	SEE PAGE
	1	1	**195-9712**	1	LAMP (12-VOLT, 10-WATT)	
M	2	1	**5C-2874**	2	NUT (M5X0.8-THD)	
	3	1	**8F-1434**	2	LOCKWASHER	
M	4	1	**8T-4753**	2	SCREW (M5X0.8X20-MM)	
	5	1	**9M-2307**	2	WASHER (5.2X19X2-MM THK)	
	6	1	**102-8802**	1	KIT-RECEPTACLE (2-PIN)	
					(INCLUDES RECEPTACLE AS & WEDGE)	
	7	1	**186-3735**	2	PIN-CONNECTOR (16-GA TO 18-GA)	

M-METRIC PART

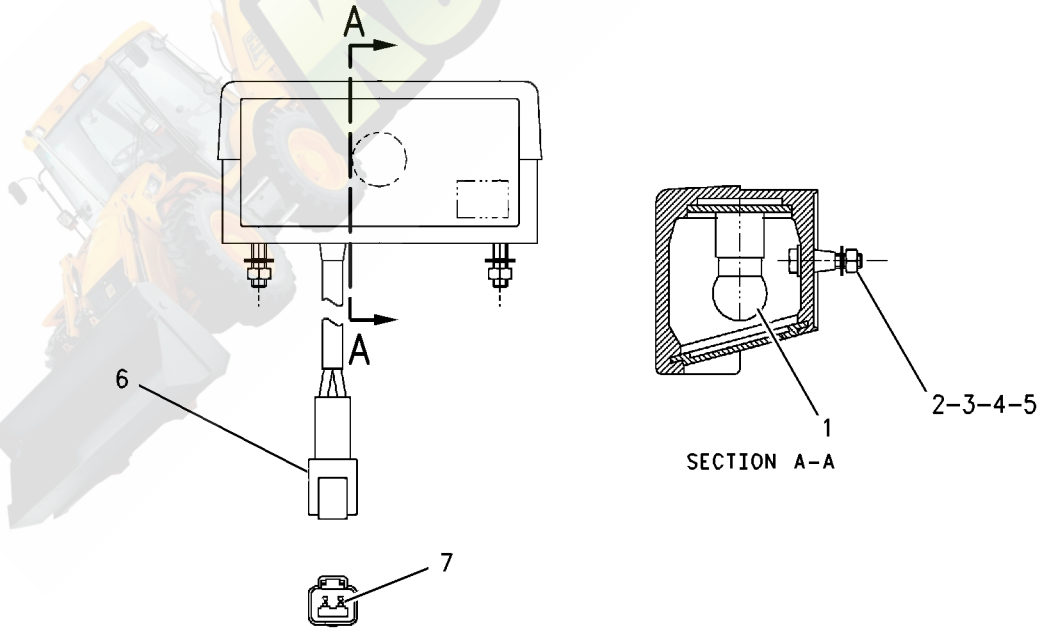

GRAPHIC #1 **<END>** g00890511

ELECTRICAL AND STARTING SYSTEM

328-1953 LAMP GP-REGISTRATION PLATE

S/N: JBA1-UP

AN ATTACHMENT

SMCS-1429 **i03713821**

NOTE	REF NO	GRAPHIC REF	PART NUMBER	QTY	PART NAME 1 2 3 4 5 6 (PRODUCT LEVEL)	SEE PAGE
	1	1	**7K-1181**	3	STRAP-CABLE	
Y	2	1	**196-0030**	1	LAMP GP-REGISTRATION PLATE (12-VOLT)	173
	3	1	**205-9920**	1	STRAP-CABLE	
	4	1	**328-7020**	1	HARNESS AS-LIGHTING (REGISTRATION PLATE)	
		1	**1S-9593**	1	STRAP-CABLE	
		1	**102-8803**	1	KIT-RECEPTACLE (3-PIN)	
					(INCLUDES RECEPTACLE AS & WEDGE)	
		1	**8T-8737**	1	PLUG-SEAL	
		1	**155-2270**	1	KIT-CONNECTING PLUG (2-PIN)	
					(INCLUDES PLUG AS, WEDGE & INTERFACE SEAL)	
		1	**9X-3401**	2	PIN-CONNECTOR (16-GA TO 18-GA)	
		1	**180-9340**	2	SOCKET-CONNECTOR (14-GA TO 18-GA)	
		1	**266-4157**	1	SLEEVE-BRAIDED	
	5	1	**330-7612**	1	PLATE	
	6	1	**3S-2093**	4	STRAP-CABLE	
M	7	1	**5C-7261**	2	NUT (M8X1.25-THD)	
	8	1	**5P-4116**	4	WASHER-HARD (8.8X20.5X2-MM THK)	
M	9	1	**8T-7547**	2	BOLT (M8X1.25X30-MM)	

M-METRIC PART
Y-SEPARATE ILLUSTRATION

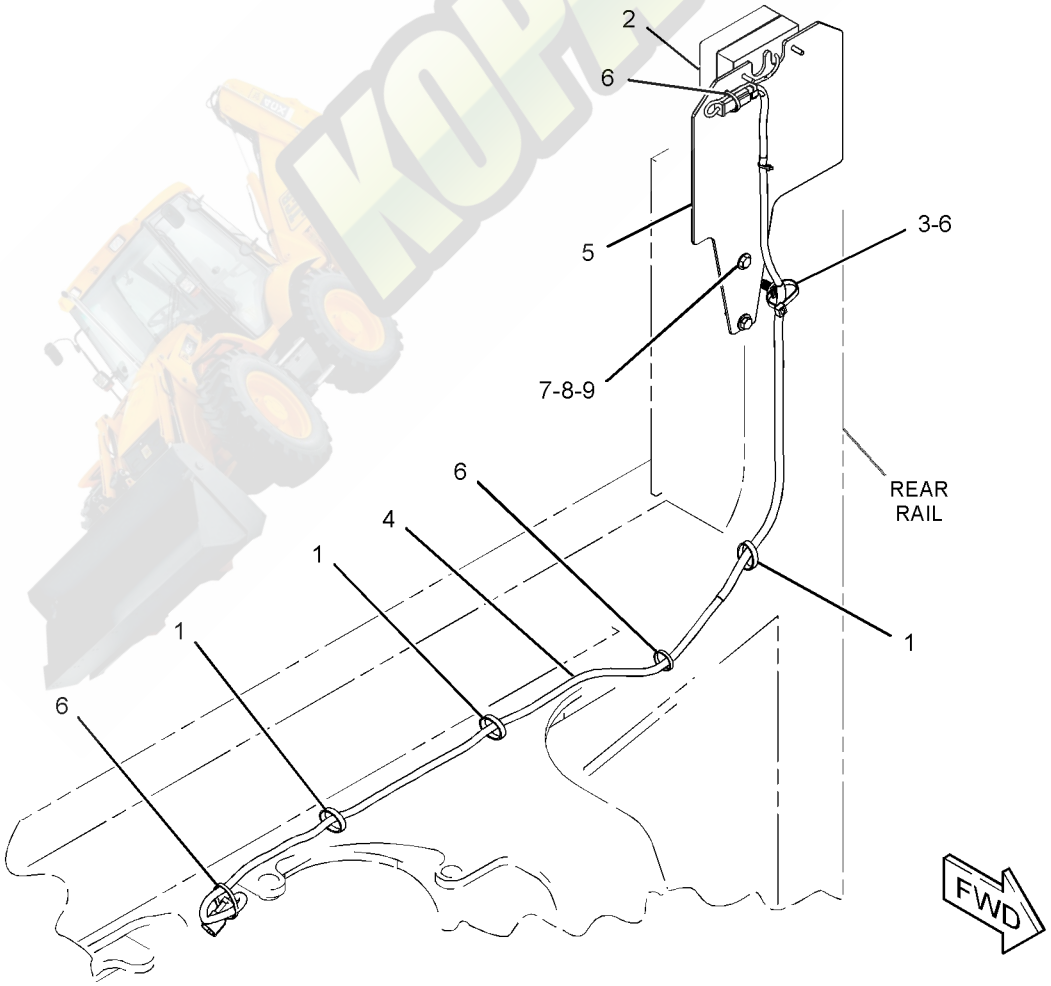

GRAPHIC #1 **<END>** g01963520

309-1325 LAMP GP-WARNING BEACON–12-VOLT, AMBER

S/N: JBA1-UP

PART OF 211-4291 LIGHTING GP-WARNING BEACON

AN ATTACHMENT

SMCS-1431 **i03631017**

NOTE	REF NO	GRAPHIC REF	PART NUMBER	QTY	PART NAME 1 2 3 4 5 6 (PRODUCT LEVEL)	SEE PAGE
	1	1	**272-9800**	1	LENS (AMBER)	
	2	1	**9X-8118**	1	LAMP (12-VOLT, 55-WATT) (WARNING BEACON)	
	3	1	**9X-8139**	1	BELT-DRIVE (WARNING BEACON)	
	4	1	**9R-7958**	1	CORD AS	
	4A	1	**9R-7942**	1	PLUG AS	

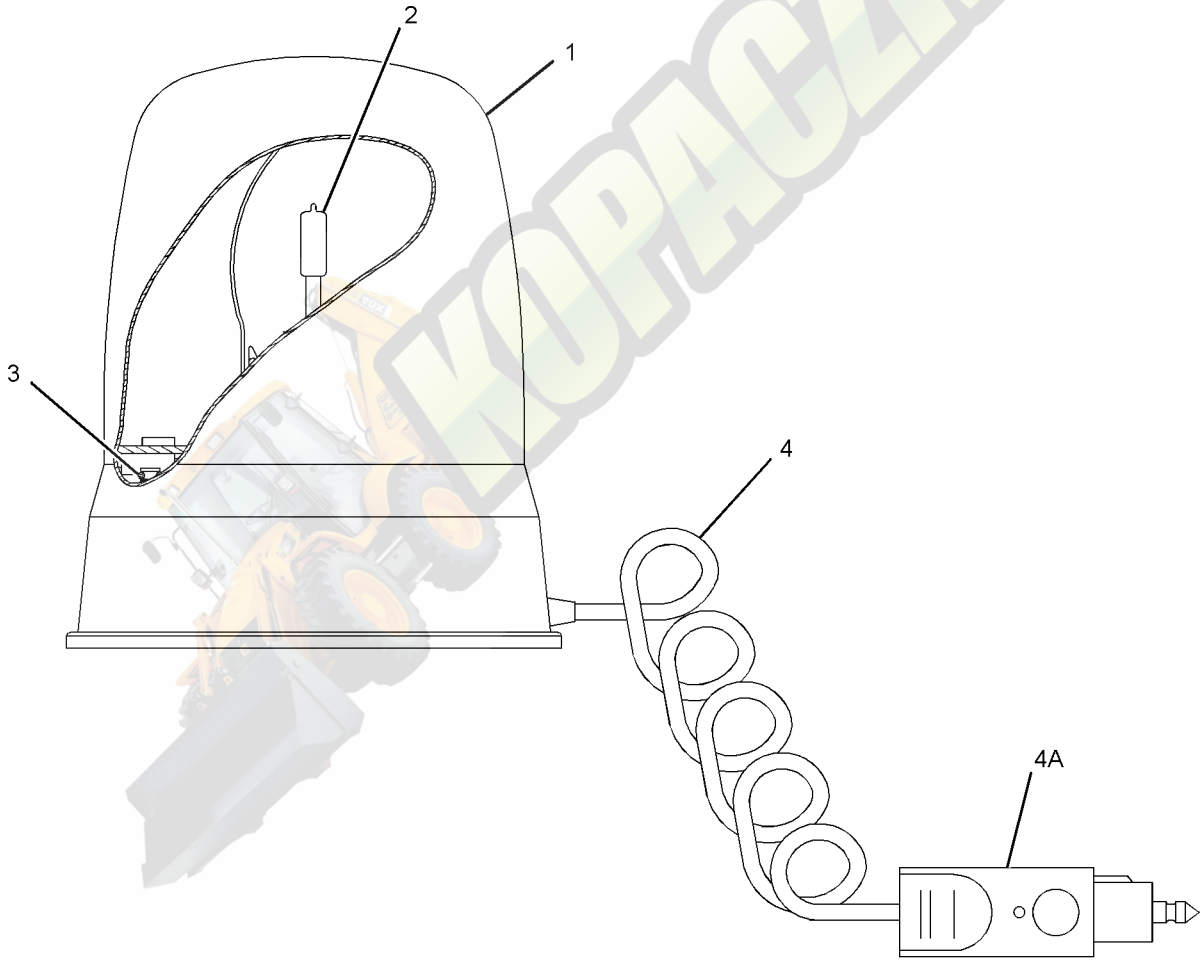

GRAPHIC #1 **<END>** g01382357

340-6918 LIGHTING GP-FLOOD—FRONT, REAR, COSA

S/N: JBA1-UP

PART OF 335-3052, 335-3053, 335-3055 CAB AR, 335-3054 CAB AR-ENCLOSED ROPS AN ATTACHMENT

SMCS-1434 **i03642562**

NOTE	REF NO	GRAPHIC REF	PART NUMBER	QTY	PART NAME 1 2 3 4 5 6 (PRODUCT LEVEL)	SEE PAGE
Y	1	1	*214-2969*	4	LAMP GP-FLOOD	168
	2	1	**214-4698**	1	SWITCH AS-ROCKER (FLOODLIGHTS, FRONT)	
	3	1	**214-4700**	1	SWITCH AS-ROCKER (FLOODLIGHTS, REAR)	
					(EACH SWITCH AS-ROCKER INCLUDES)	
		1	**111-7899**	1	GASKET	
	4	1	**3S-2093**	4	STRAP-CABLE	

Y-SEPARATE ILLUSTRATION

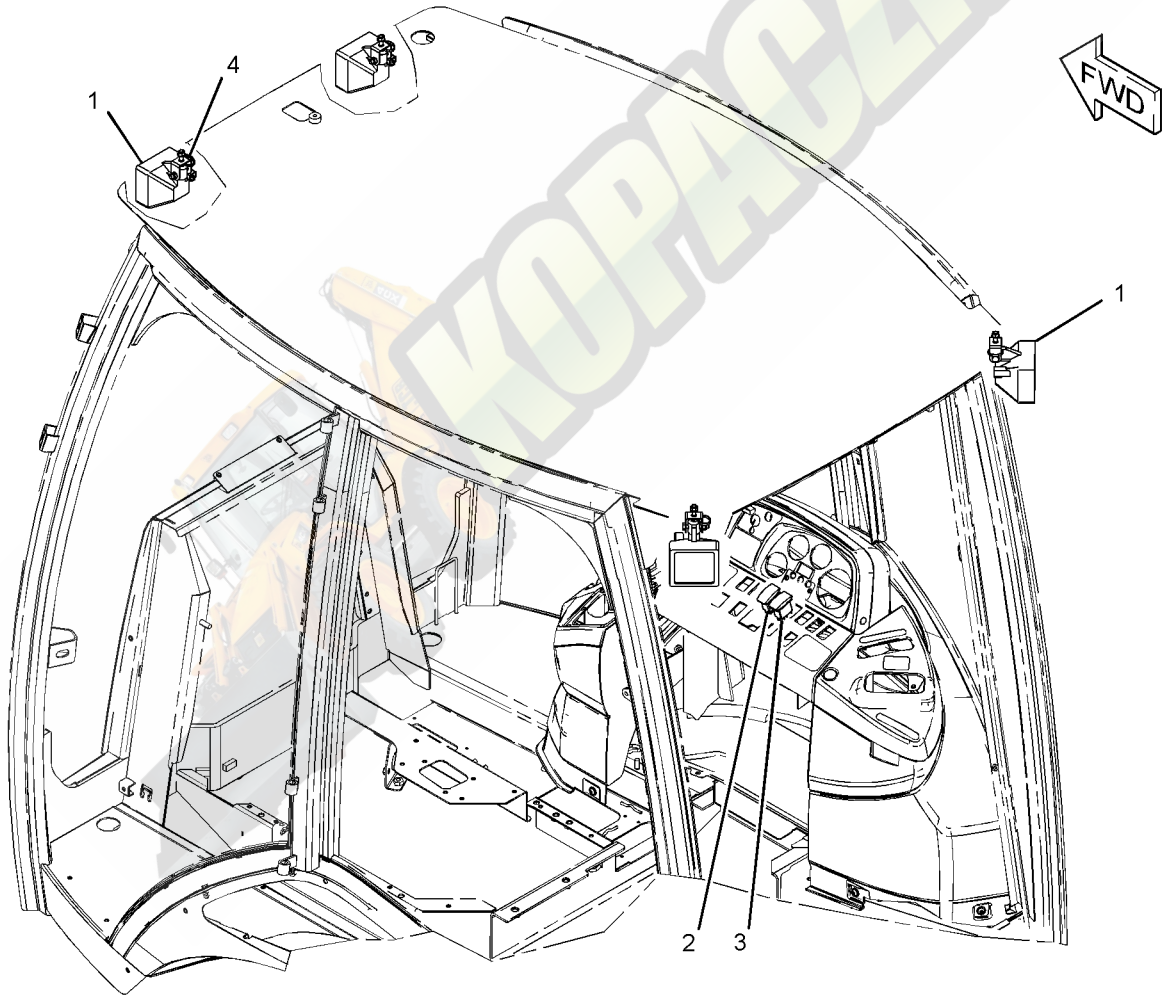

GRAPHIC #1 **<END>** g01970873

328-1950 LIGHTING GP-ROADING—FOG

S/N: JBA1-UP
AN ATTACHMENT

SMCS-1429 **i03652409**

NOTE	REF NO	GRAPHIC REF	PART NUMBER	QTY	PART NAME 1 2 3 4 5 6 (PRODUCT LEVEL)	SEE PAGE
	1	1	**7K-1181**	3	STRAP-CABLE	
Y	2	1	**196-0030**	1	LAMP GP-REGISTRATION PLATE	173
	3	1	**205-9920**	1	STRAP-CABLE	
	4	1	**214-4721**	1	SWITCH AS-ROCKER (FOG LIGHT, REAR)	
		1	**111-7899**	1	GASKET	
	5	1	**262-4727**	1	LAMP GP-ROADING (FOG; RED, REAR)	
		1	**9W-3326**	1	LAMP (12-VOLT, 21-WATT) (ROADING LIGHTS)	
		1	**344-7954**	1	LENS	
	6	1	**327-4172**	1	HARNESS AS-REAR LIGHTING	
		1	**266-4157**	2	SLEEVE-BRAIDED	
		1	**230-4011**	1	PLUG AS-CONNECTOR (2-PIN)	
		1	**264-7029**	1	SEAL-CONNECTOR	
		1	**180-9340**	2	SOCKET-CONNECTOR (14-GA TO 18-GA)	
		1	**1S-9593**	2	STRAP-CABLE	
		1	**102-8803**	1	KIT-RECEPTACLE (3-PIN) (INCLUDES RECEPTACLE AS & WEDGE)	
		1	**155-2270**	1	KIT-CONNECTING PLUG (2-PIN) (INCLUDES PLUG AS, WEDGE & INTERFACE SEAL)	
E		1	**125-7874**		TUBE-HEAT SHRINK (5.72-MM DIA) (5-CM)	
		1	**9X-3402**	2	SOCKET-CONNECTOR (16-GA TO 18-GA)	
		1	**9X-3401**	3	PIN-CONNECTOR (16-GA TO 18-GA)	
	7	1	**330-7612**	1	PLATE	
	8	1	**330-7613**	1	PLATE	
	9	1	**3S-2093**	4	STRAP-CABLE	
M	10	1	**5C-2890**	2	NUT (M6X1-THD)	
M	11	1	**5C-7261**	2	NUT (M8X1.25-THD)	
	12	1	**5P-4116**	4	WASHER-HARD (8.8X20.5X2-MM THK)	
	13	1	**8T-4205**	2	WASHER-HARD (7.2X14.5X2-MM THK)	
M	14	1	**8T-7547**	2	BOLT (M8X1.25X30-MM)	

E-ORDER BY THE CENTIMETER
M-METRIC PART
Y-SEPARATE ILLUSTRATION

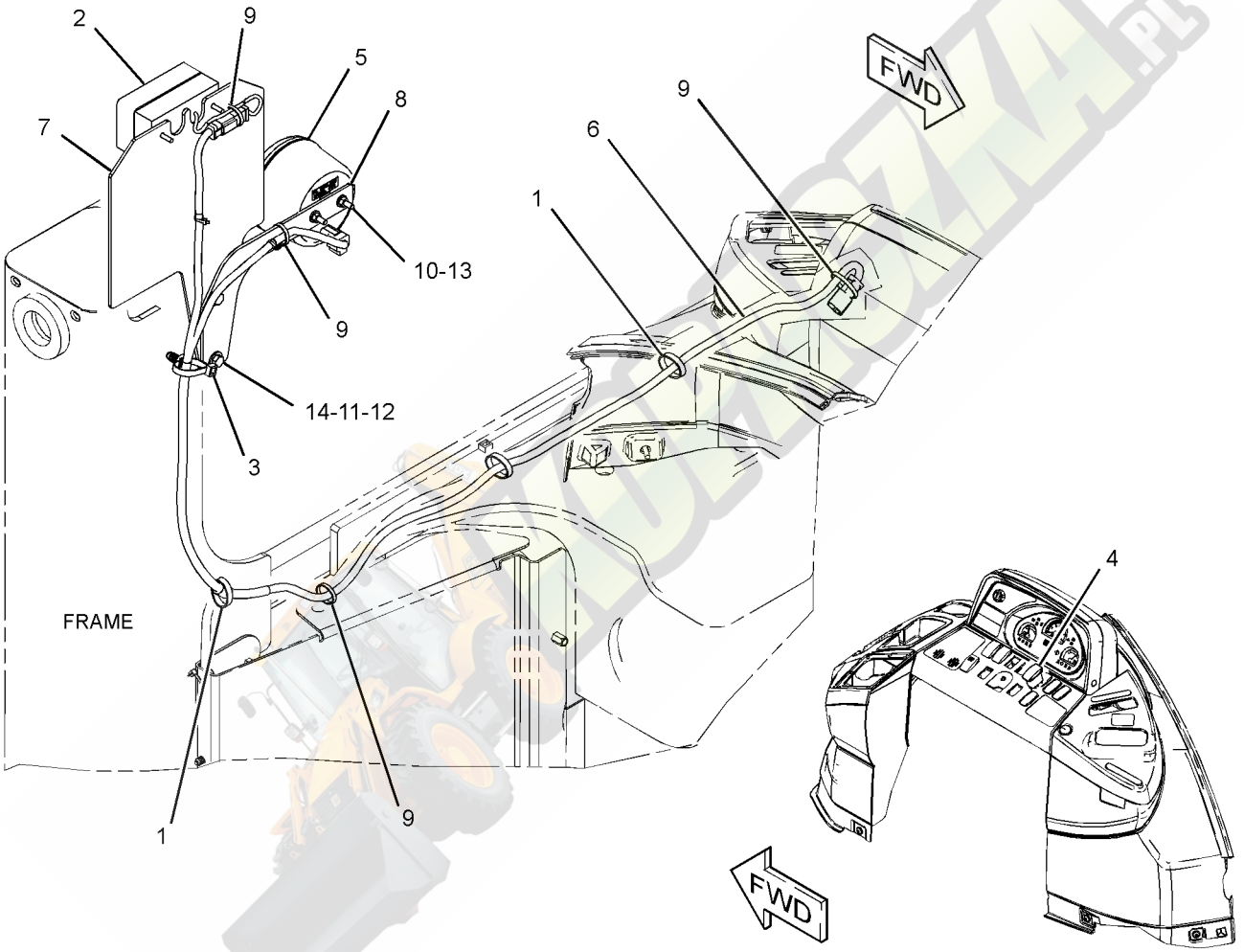

GRAPHIC #1 **<END>** g01963213

329-7496 LIGHTING GP-ROADING—DIPPED, RH

S/N: JBA1-UP

AN ATTACHMENT

SMCS-1429 **i03690297**

NOTE	REF NO	GRAPHIC REF	PART NUMBER	QTY	PART NAME 1 2 3 4 5 6 (PRODUCT LEVEL)	SEE PAGE
	1	1	**9R-1499**	2	REFLECTOR	
Y	2	1	**195-0189**	1	LAMP GP-HEAD & SIGNAL (RH)	169
Y	3	1	**195-0190**	1	LAMP GP-HEAD & SIGNAL (LH)	170
	4	1	**214-4711**	1	SWITCH AS-ROCKER (ROADING LIGHTS)	
		1	**111-7899**	1	GASKET	
	5	1	**336-9096**	2	LAMP GP-SIGNAL (12-VOLT) (STOP, TAIL, TURN)	
	6	1	**337-7029**	2	BRACKET AS	
	7	1	**3S-2093**	2	STRAP-CABLE	
M	8	1	**8T-4189**	2	BOLT (M8X1.25X20-MM)	
	9	1	**8T-4224**	4	WASHER-HARD (8.8X16X2-MM THK)	
M	10	1	**8T-4908**	2	BOLT (M8X1.25X25-MM)	

M-METRIC PART
Y-SEPARATE ILLUSTRATION

KOPACZKA

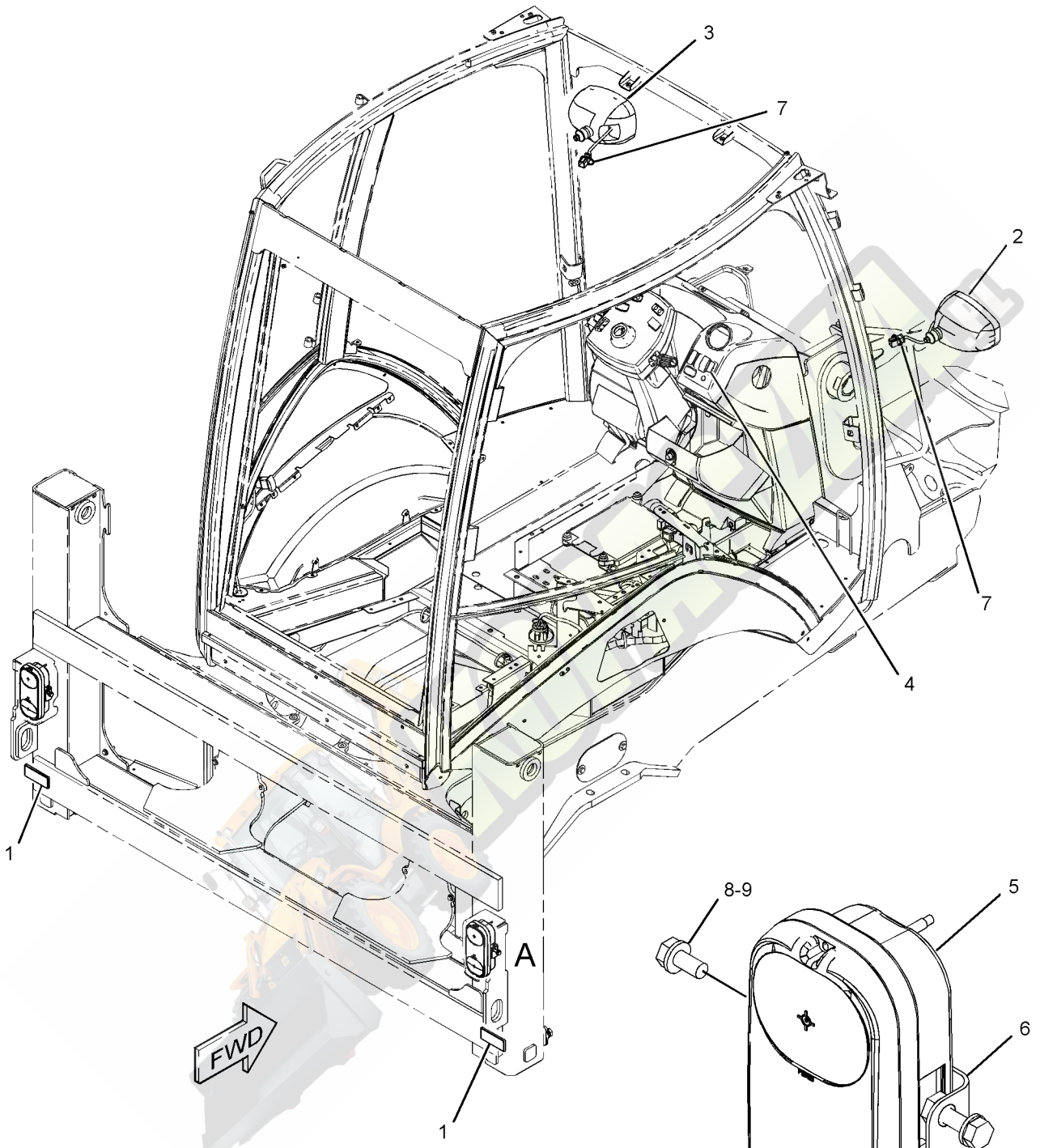

VIEW OF AREA A

GRAPHIC #1 **<END>** g01990054

329-7497 LIGHTING GP-ROADING—DIPPED, LH

S/N: JBA1-UP
AN ATTACHMENT

SMCS-1429 **i03690303**

NOTE	REF NO	GRAPHIC REF	PART NUMBER	QTY	PART NAME 1 2 3 4 5 6 (PRODUCT LEVEL)	SEE PAGE
	1	1	**9R-1499**	2	REFLECTOR	
Y	2	1	**195-0191**	1	LAMP GP-HEAD & SIGNAL (RH)	171
Y	3	1	**195-0192**	1	LAMP GP-HEAD & SIGNAL (LH)	172
	4	1	**214-4711**	1	SWITCH AS-ROCKER (ROADING LIGHTS)	
		1	**111-7899**	1	GASKET	
	5	1	**336-9096**	2	LAMP GP-SIGNAL (12-VOLT) (STOP, TAIL, TURN)	
	6	1	**337-7029**	2	BRACKET AS	
	7	1	**3S-2093**	2	STRAP-CABLE	
M	8	1	**8T-4189**	2	BOLT (M8X1.25X20-MM)	
	9	1	**8T-4224**	4	WASHER-HARD (8.8X16X2-MM THK)	
M	10	1	**8T-4908**	2	BOLT (M8X1.25X25-MM)	

M-METRIC PART
Y-SEPARATE ILLUSTRATION

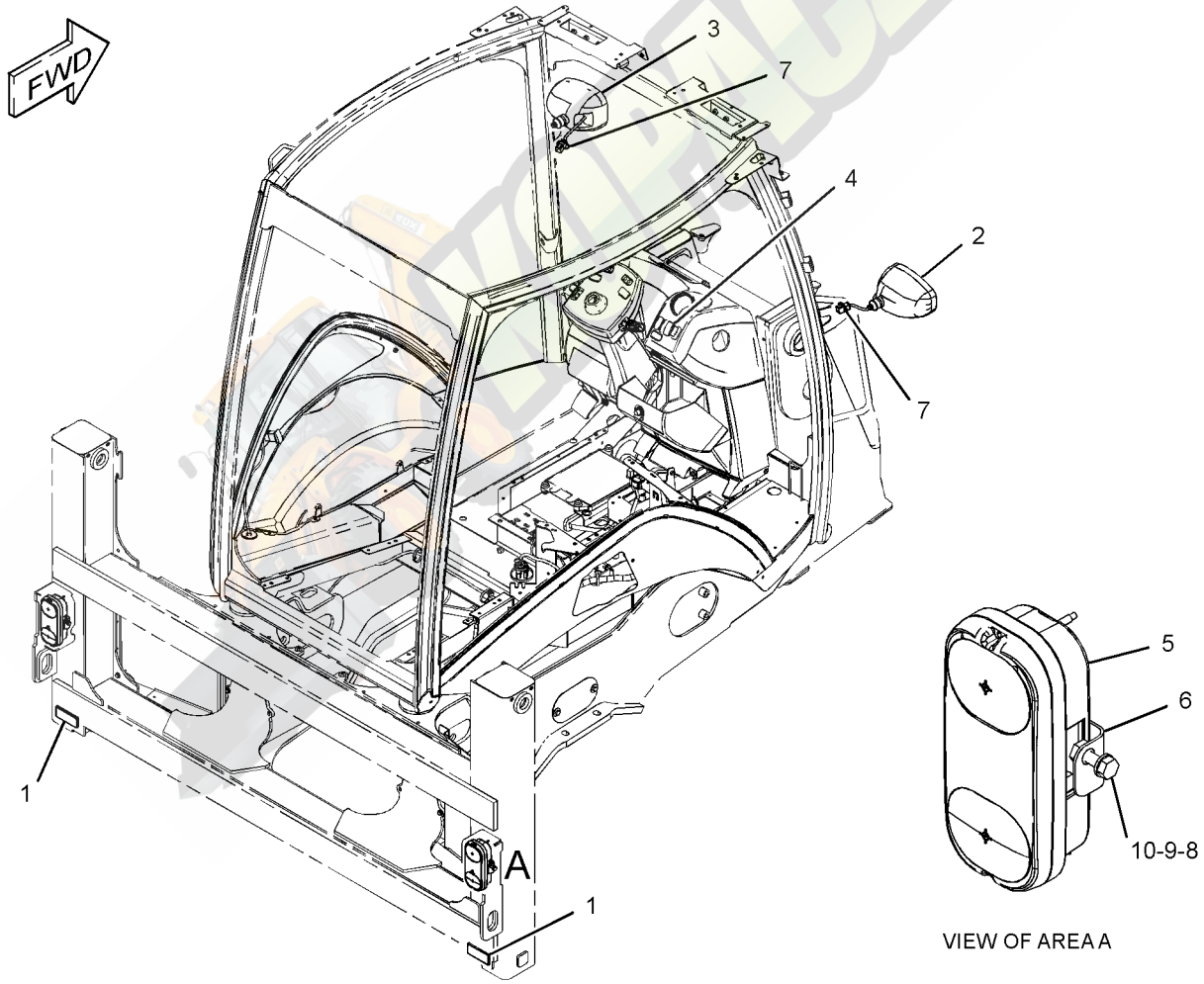

VIEW OF AREA A

GRAPHIC #1 **<END>** g01986742

211-4291 LIGHTING GP-WARNING BEACON–
AMBER, MAGNETIC MOUNT, ROTATING
S/N: JBA1-UP
AN ATTACHMENT

SMCS-1431 **i03628950**

NOTE	REF NO	GRAPHIC REF	PART NUMBER	QTY	PART NAME 1 2 3 4 5 6 (PRODUCT LEVEL)	SEE PAGE
Y	1	1	**309-1325**	1	LAMP GP-WARNING BEACON	175
	2	1	**031-5644**	2	CLIP	

Y-SEPARATE ILLUSTRATION

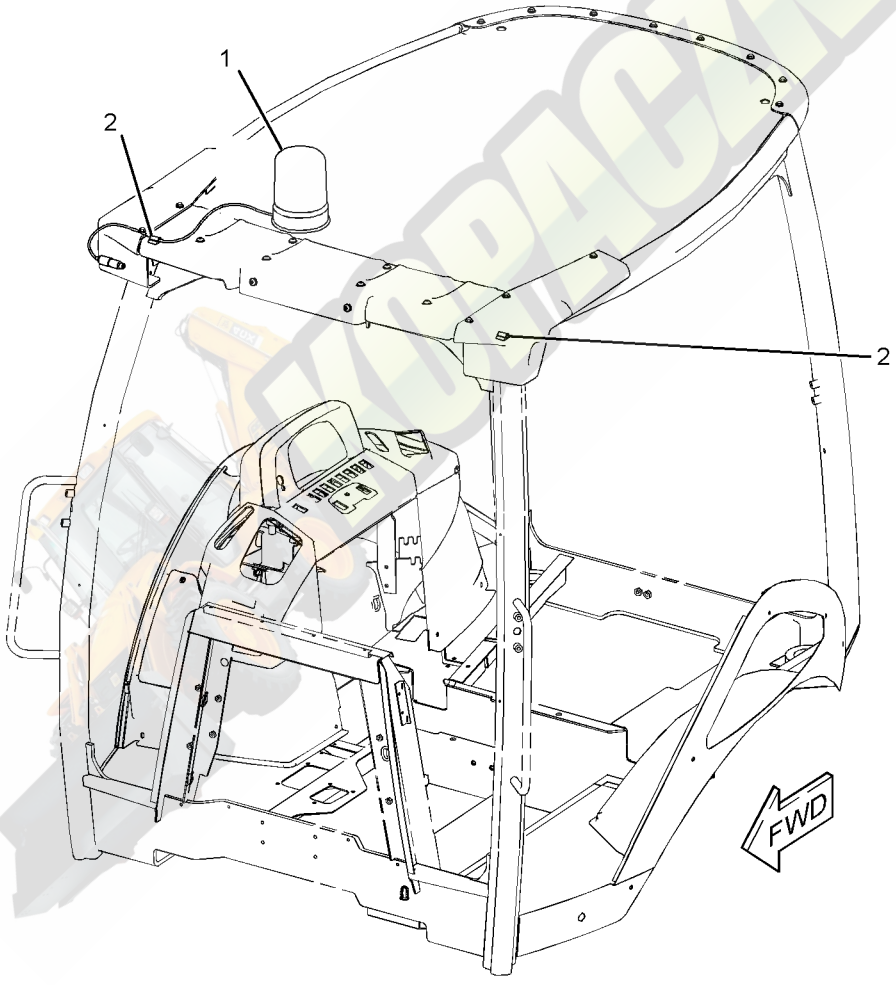

GRAPHIC #1 **<END>** g01228059

276-7287 RELAY GP–POWER DISTRIBUTION

S/N: JBA1-UP
12-VOLT
PART OF 338-5733 WIRING GP-AIR CONDITIONER, 310-5613 WIRING GP-HEATER AN ATTACHMENT

SMCS-1422, 4493 **i03325084**

NOTE	REF NO	GRAPHIC REF	PART NUMBER	QTY	PART NAME 1 2 3 4 5 6 (PRODUCT LEVEL)	SEE PAGE
M	1	1	**5C-2890**	2	NUT (M6X1-THD)	
	2	1	**8T-4205**	2	WASHER-HARD (7.2X14.5X2-MM THK)	
	3	1	**1H-3244**	2	LOCKWASHER	
M	4	1	**5C-7261**	1	NUT (M8X1.25-THD)	
	5	1	**8T-4224**	1	WASHER-HARD (8.8X16X2-MM THK)	
	6	1	**267-5213**	1	COVER	
	7	1	**267-5211**	1	SEAL	
	8	1	**278-6377**	1	FUSE (40-AMPERE)	

M-METRIC PART

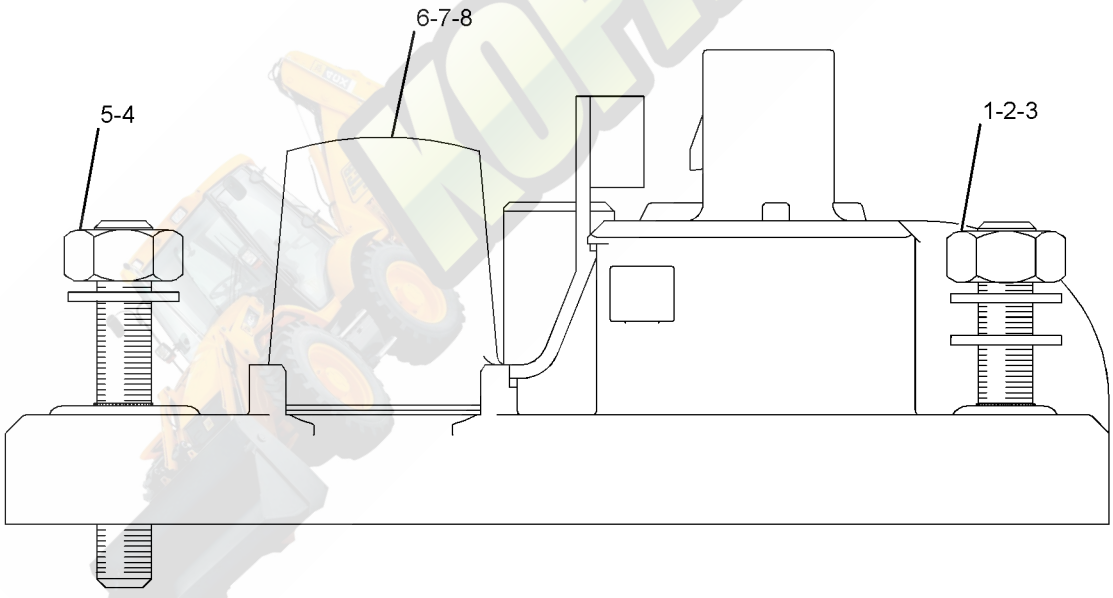

GRAPHIC #1 **<END>** g01290616

276-7290 RELAY GP–POWER, 1

S/N: JBA1-UP
12-VOLT
PART OF 338-5738 WIRING GP-PLATFORM
AN ATTACHMENT

SMCS-1422, 4493 **i03325122**

NOTE	REF NO	GRAPHIC REF	PART NUMBER	QTY	PART NAME 1 2 3 4 5 6 (PRODUCT LEVEL)	SEE PAGE
M	1	1	**5C-2890**	2	NUT (M6X1-THD)	
	2	1	**8T-4205**	2	WASHER-HARD (7.2X14.5X2-MM THK)	
	3	1	**1H-3244**	2	LOCKWASHER	
M	4	1	**5C-7261**	1	NUT (M8X1.25-THD)	
	5	1	**8T-4224**	1	WASHER-HARD (8.8X16X2-MM THK)	
	6	1	**267-5213**	1	COVER	
	7	1	**267-5211**	1	SEAL	
	8	1	**267-2701**	2	FUSE (60-AMPERE)	

M-METRIC PART

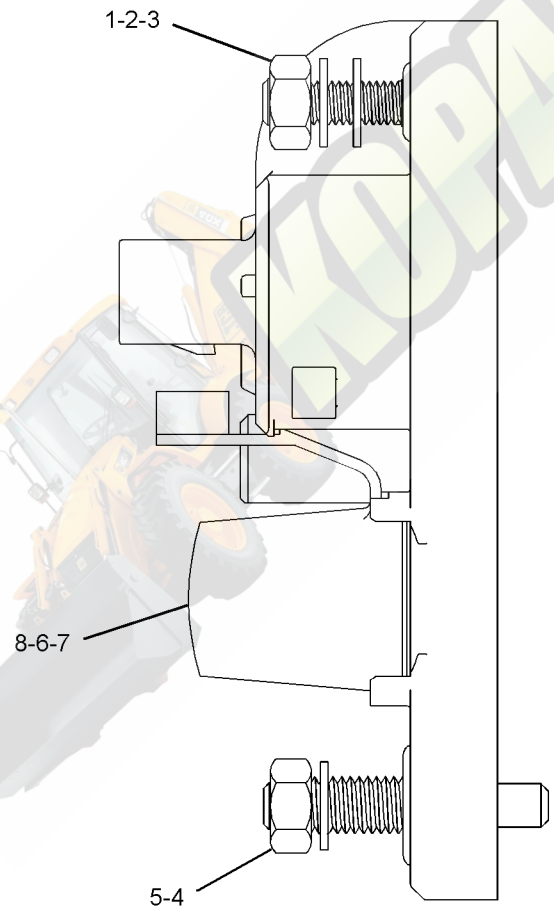

GRAPHIC #1 **<END>** g01278211

276-7291 RELAY GP–POWER, 2

S/N: JBA1-UP
12-VOLT
PART OF 338-5738 WIRING GP-PLATFORM
AN ATTACHMENT

SMCS-1422, 4493 **i03325141**

NOTE	REF NO	GRAPHIC REF	PART NUMBER	QTY	PART NAME 1 2 3 4 5 6 (PRODUCT LEVEL)	SEE PAGE
M	1	1	**5C-2890**	2	NUT (M6X1-THD)	
	2	1	**8T-4205**	2	WASHER-HARD (7.2X14.5X2-MM THK)	
	3	1	**1H-3244**	2	LOCKWASHER	
M	4	1	**5C-7261**	1	NUT (M8X1.25-THD)	
	5	1	**8T-4224**	1	WASHER-HARD (8.8X16X2-MM THK)	
	6	1	**267-5213**	1	COVER	
	7	1	**267-5211**	1	SEAL	
	8	1	**267-2701**	1	FUSE (60-AMPERE)	

M-METRIC PART

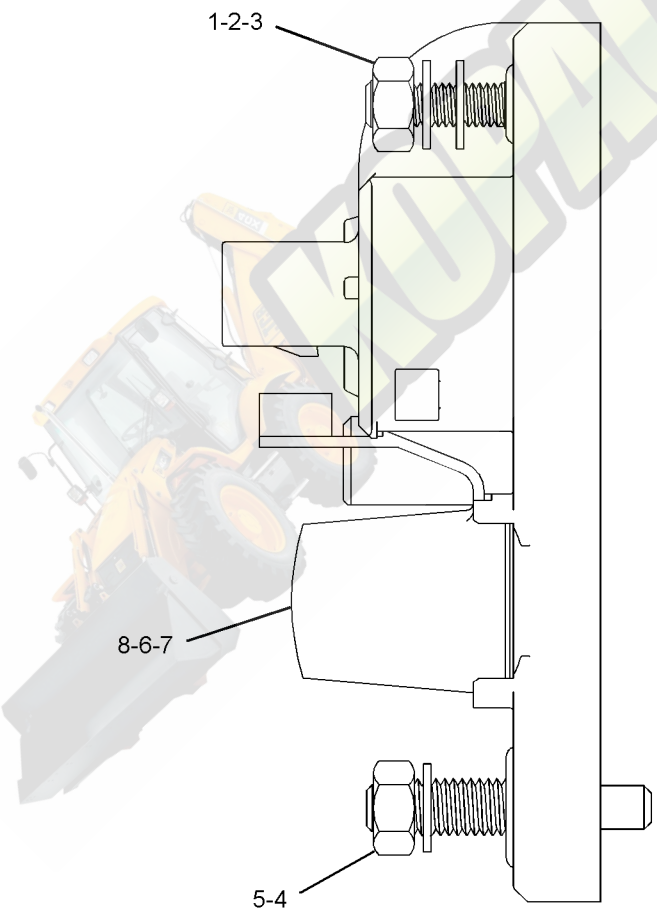

GRAPHIC #1 **<END>** g01278256

295-5903 RELAY GP–STABILIZER, AUTO UP

S/N: JBA1-UP
PART OF 253-1055 VALVE GP-PILOT
AN ATTACHMENT

SMCS-1422, 4493 **i03628916**

NOTE	REF NO	GRAPHIC REF	PART NUMBER	QTY	PART NAME 1 2 3 4 5 6 (PRODUCT LEVEL)	SEE PAGE
	1	1	**173-7003**	1	RELAY AS-TIMER (12-VOLT, PLATFORM)	
	2	1	**3S-2093**	1	STRAP-CABLE	



GRAPHIC #1 **<END>** g01387406

322-6827 RELAY GP–STARTING MOTOR

S/N: JBA1-UP
12-VOLT
PART OF 338-5737 WIRING GP-ENGINE

SMCS-1422, 4493 **i03498280**

NOTE	REF NO	GRAPHIC REF	PART NUMBER	QTY	PART NAME 1 2 3 4 5 6 (PRODUCT LEVEL)	SEE PAGE
	1	1	**274-9872**	1	FUSE (30-AMPERE)	
	2	1	**278-6377**	1	FUSE (40-AMPERE)	
	3	1	**267-5213**	1	COVER (FUSE)	
	4	1	**267-5211**	1	SEAL	
M	5	1	**5C-2890**	2	NUT (M6X1-THD)	
	6	1	**8T-4205**	2	WASHER-HARD (7.2X14.5X2-MM THK)	
	7	1	**1H-3244**	2	LOCKWASHER	
M	8	1	**5C-7261**	1	NUT (M8X1.25-THD)	
	9	1	**8T-4224**	1	WASHER-HARD (8.8X16X2-MM THK)	
	10	1	**9F-5644**	1	LOCKWASHER	

M-METRIC PART

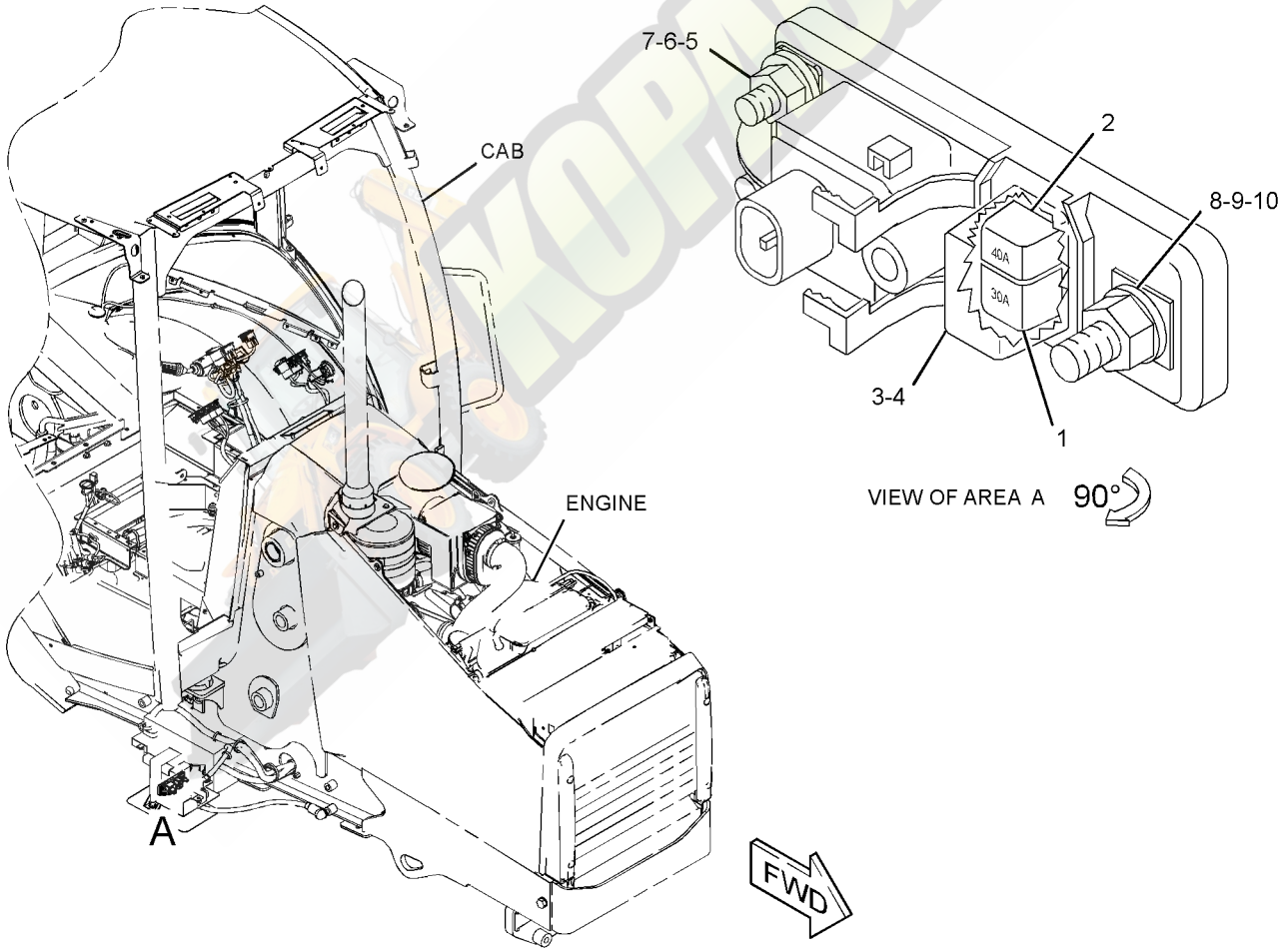

GRAPHIC #1 **<END>** g01571033

189-5746 SENSOR GP-SPEED–OUTPUT

S/N: JBA1-UP
PART OF 294-9816 TRANSMISSION GP-DIRECT DRIVE
AN ATTACHMENT

SMCS-3175 **i03286572**

NOTE	REF NO	GRAPHIC REF	PART NUMBER	QTY	PART NAME 1 2 3 4 5 6 (PRODUCT LEVEL)	SEE PAGE
	1	1	**171-5349**	1	STRAP-MARKER	
	2	1	**102-8802**	1	KIT-RECEPTACLE (2-PIN)	
					(INCLUDES RECEPTACLE AS & WEDGE)	
	3	1	**9X-3401**	2	PIN-CONNECTOR (16-GA TO 18-GA)	
					–OR–	
		1	**126-1767**	2	PIN-CONNECTOR (14-GA)	
E	4	1	**9X-1386**		SLEEVE (14-CM)	

E-ORDER BY THE CENTIMETER

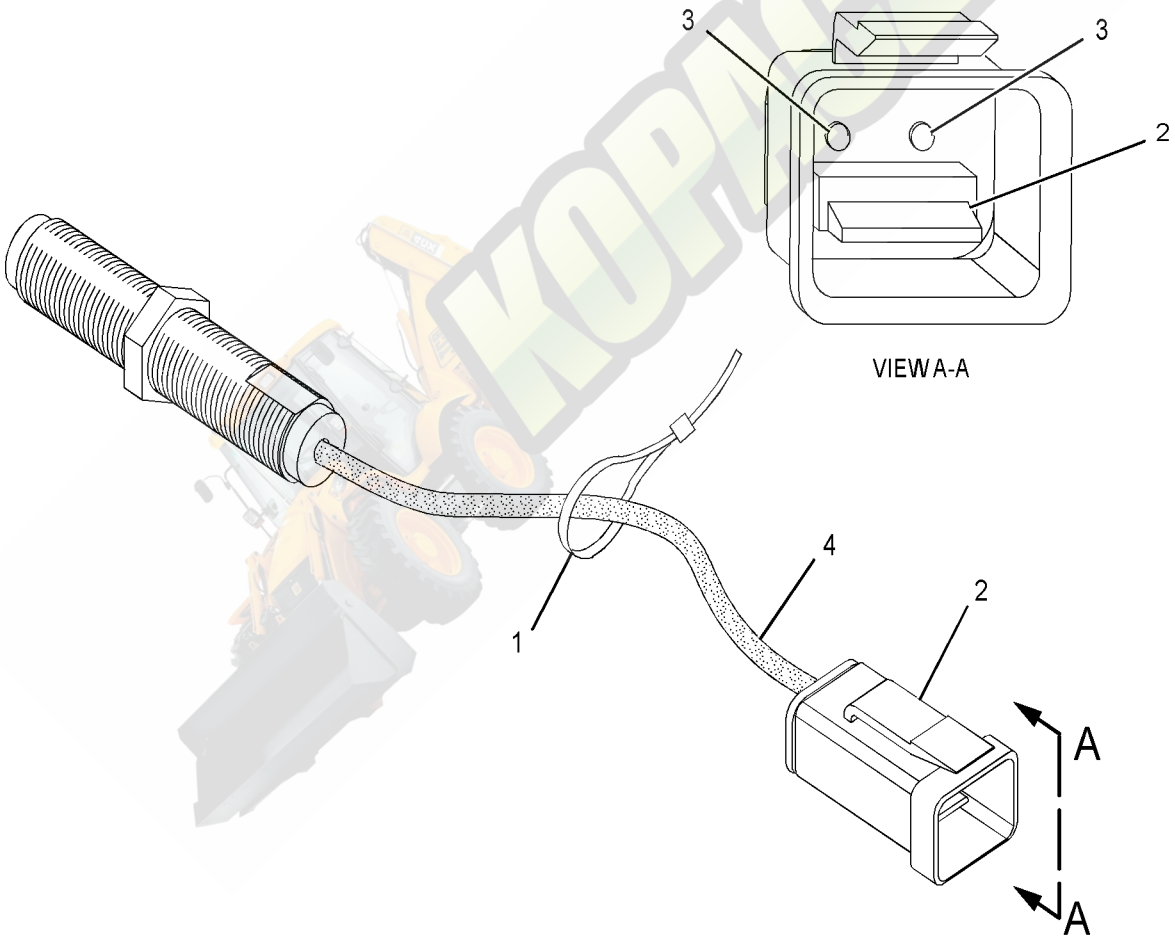

GRAPHIC #1 **<END>** g01353977

143-0539 STARTING MOTOR GP-ELECTRIC–12-VOLT*R

S/N: CRS1-UP

PART OF 237-0024 STARTING MOTOR GP-ELECTRIC

AN ATTACHMENT

SMCS-1453 **i02603749**

NOTE	REF NO	GRAPHIC REF	PART NUMBER	QTY	PART NAME 1 2 3 4 5 6 (PRODUCT LEVEL)	SEE PAGE
	1	1	**8C-9778**	1	PLUNGER AS	
	2	1	**8C-9783**	1	GASKET	
	3	1	**2P-8104**	1	BEARING	
	4	1	**7T-6092**	1	HOLDER AS-BRUSH	
M	5	1	**8T-4133**	2	NUT (M10X1.5-THD)	
	6	1	**7T-6088**	1	BEARING AS	
	7	1	**7T-6087**	1	WASHER (15.2X40X0.5-MM THK)	
	8	1	**7T-6093**	1	CLUTCH AS	
	9	1	**8J-4455**	1	BALL	
	10	1	**7T-6090**	1	SPRING	
	11	1	**8T-4121**	2	WASHER-HARD (11X21X2.5-MM THK)	
	12	1	**3E-5153**	1	COVER-STARTING MOTOR	
M	13	1	**9X-2036**	1	SCREW-PAN HEAD	
	14	1	**8F-1434**	1	LOCKWASHER	
	15	1	**100-4113**	1	SWITCH AS (STARTING MOTOR, 12-VOLT)	
	16	1	**100-4119**	1	ARMATURE AS	
	17	1	**100-4118**	1	CASE AS-STARTING MOTOR	
	18	1	**100-4115**	1	HOUSING-STARTING MOTOR	
	19	1	**143-1344**	1	FRAME-STARTER	
	20	1	**100-3685**	1	CAP	
	21	1	**3E-5154**	1	BUSHING-STARTING MOTOR	
					AVAILABLE REPAIR KIT(S):	
			7T-6099	1	KIT-GEAR (STARTING MOTOR)	
					(INCLUDES RETAINER, PINION & ROLLERS)	
			8C-5457	1	KIT-CONTACT (STARTING MOTOR)	
					(INCLUDES NUT, WASHER, PLATE, BUSHINGS, & BOLT)	
			146-6729	1	KIT-HARDWARE (STARTING MOTOR)	
					(INCLUDES BOLTS, SCREWS, SCREW ASSEMBLIES & PLATE)	
			100-4112	1	KIT-CONTACT (STARTING MOTOR)	
					(INCLUDES NUT, WASHERS, SEAL, BUSHINGS, PLATE & BOLT)	

M-METRIC PART

143-0539 **STARTING MOTOR GP-ELECTRIC** *(contd.)* **i02603749**

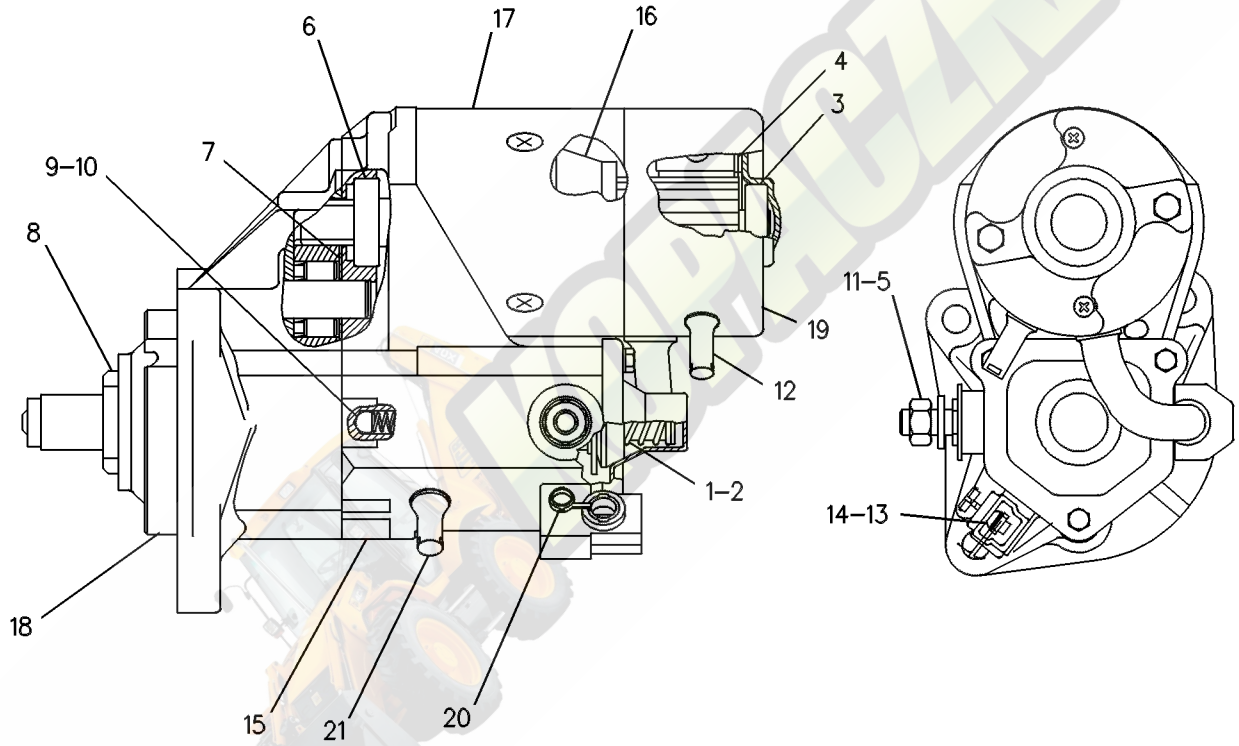

GRAPHIC #1 **<END>** g00131126

237-0024 STARTING MOTOR GP-ELECTRIC–12-VOLT

S/N: CRS1-UP
PART OF 322-1923, 322-1924 ENGINE AR-PRIMARY
AN ATTACHMENT

SMCS-1453 **i03331920**

NOTE	REF NO	GRAPHIC REF	PART NUMBER	QTY	PART NAME 1 2 3 4 5 6 (PRODUCT LEVEL)	SEE PAGE
	1	1	**6I-0364**	3	STUD (M10X1.5X30-MM)	
	2	1	**6I-0594**	3	NUT (M10X1.5-THD)	
YR	3	1	**143-0539**	1	STARTING MOTOR GP-ELECTRIC (12-VOLT)	189

R-REMFG PART MAY BE AVAILABLE
Y-SEPARATE ILLUSTRATION

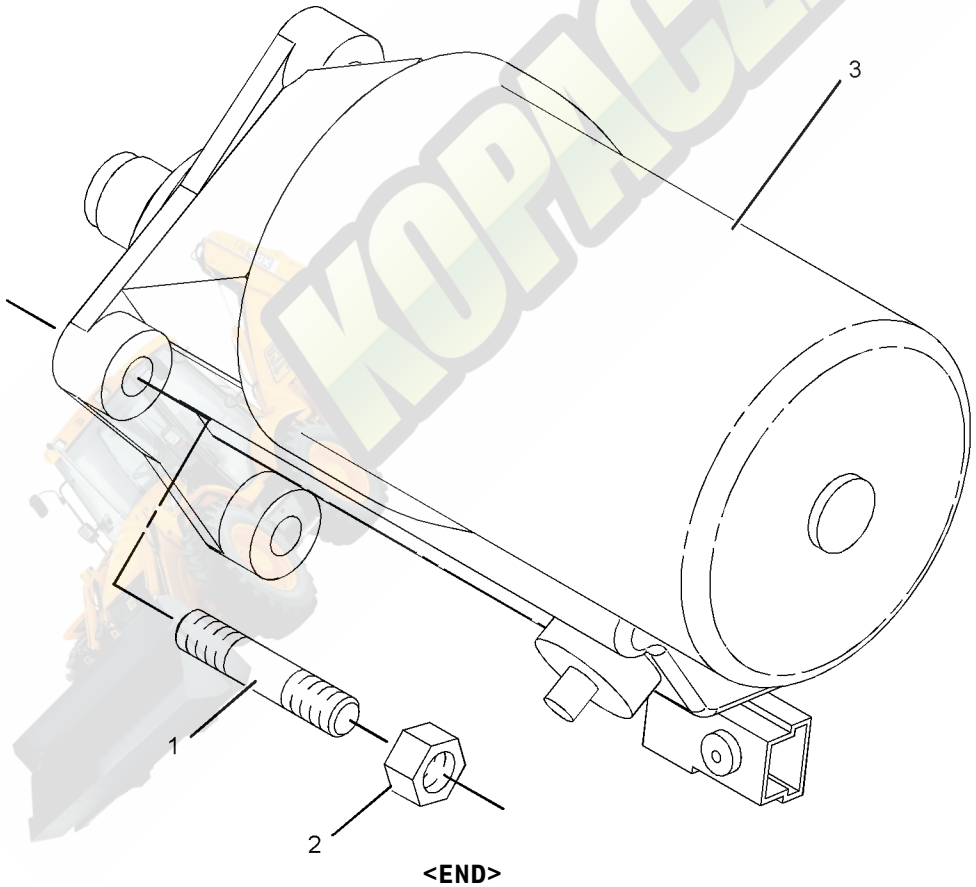

GRAPHIC #1 **<END>** g01039910

303-5769 STARTING MOTOR GP-ELECTRIC–12-VOLT

S/N: C4Z1-UP
PART OF 321-7704, 321-7705 ENGINE AR-PRIMARY
AN ATTACHMENT

SMCS-1453 **i03128303**

NOTE	REF NO	GRAPHIC REF	PART NUMBER	QTY	PART NAME 1 2 3 4 5 6 (PRODUCT LEVEL)	SEE PAGE
	1	1	**6I-0364**	3	STUD (M10X1.5X30-MM)	
	2	1	**6I-0594**	3	NUT (M10X1.5-THD)	
	3	1	**303-5795**	1	STARTING MOTOR-ELECTRIC	

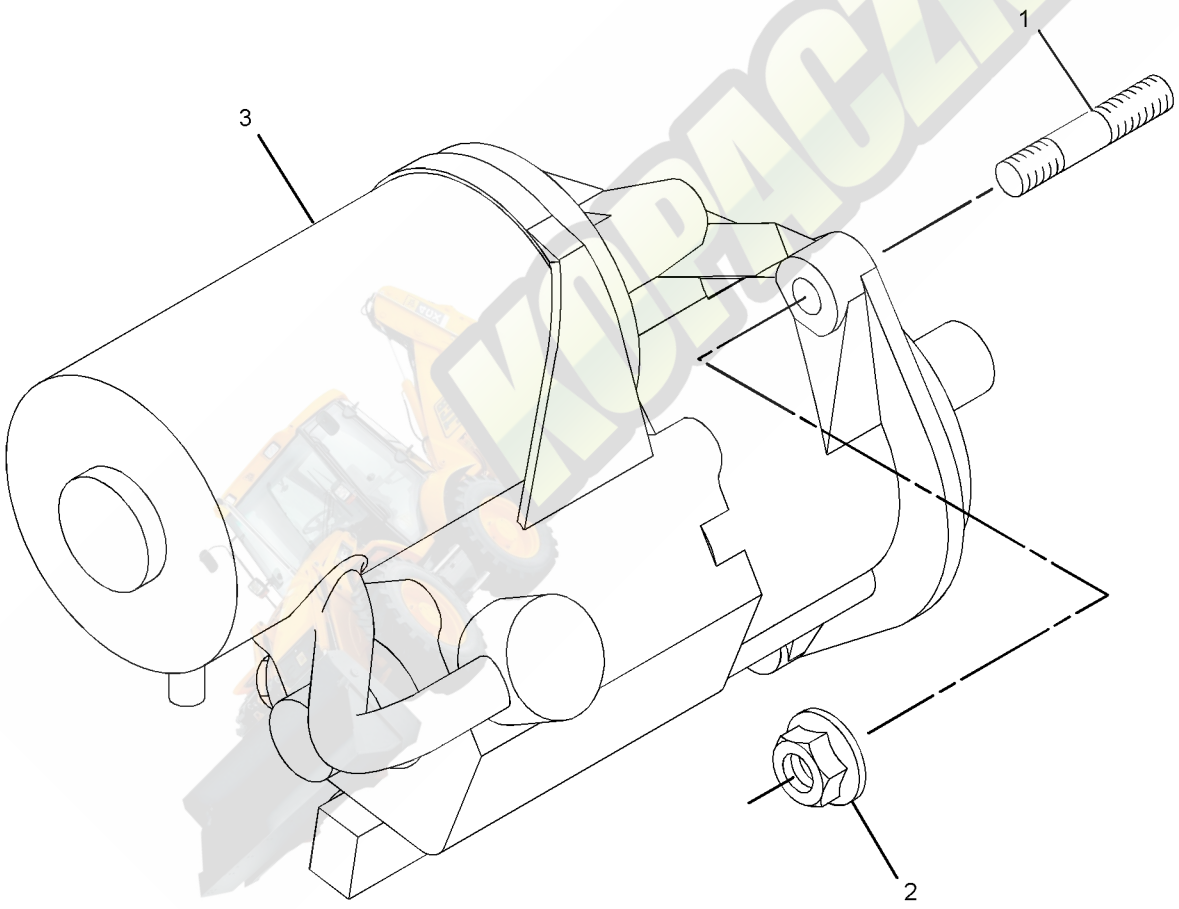

GRAPHIC #1 **<END>** g01376189

305-3295 SWITCH GP-ALL WHEEL DRIVE–INCLUDES RELAY

S/N: JBA1-UP

PART OF 329-0319 DRIVE AR-BACKHOE LOADER

AN ATTACHMENT

SMCS-1435, 4493 **i03726604**

NOTE	REF NO	GRAPHIC REF	PART NUMBER	QTY	PART NAME 1 2 3 4 5 6 (PRODUCT LEVEL)	SEE PAGE
	1	1	**146-9439**	1	RELAY AS (12-VOLT) (ALL WHEEL DRIVE)	
	2	1	**214-4692**	1	SWITCH AS-ROCKER (ALL WHEEL DRIVE)	
		1	**111-7899**	1	GASKET	

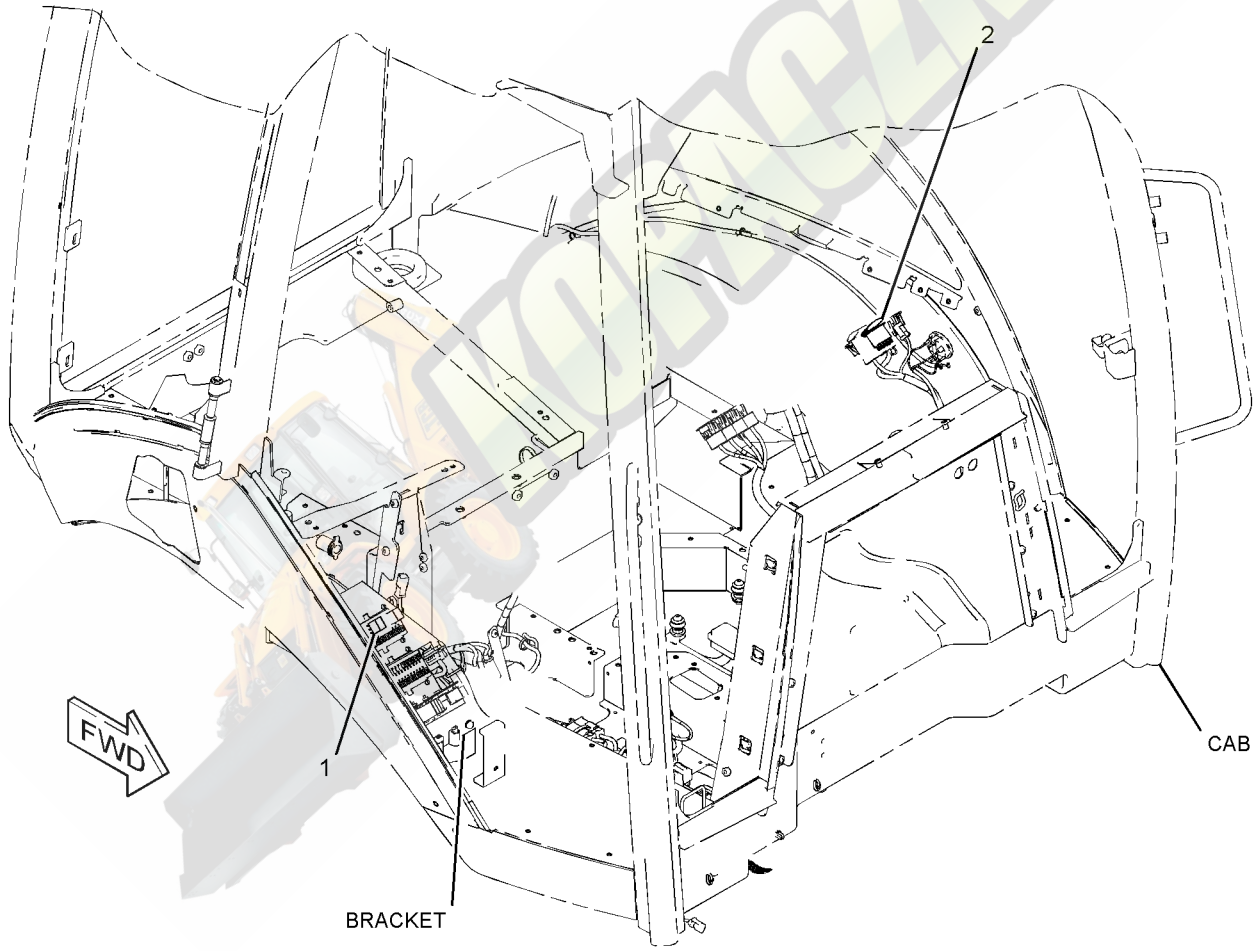

GRAPHIC #1 **<END>** g01391236

308-9973 SWITCH GP-DIFFERENTIAL LOCK

S/N: JBA1-UP
PART OF 329-0306, 329-0307 POWER TRAIN AR
AN ATTACHMENT

SMCS-1435, 3264 **i03726480**

NOTE	REF NO	GRAPHIC REF	PART NUMBER	QTY	PART NAME 1 2 3 4 5 6 (PRODUCT LEVEL)	SEE PAGE
	1	1	**201-9459**	1	BOOT	
	2	1	**202-6017**	1	BRACKET AS	
M		1	**6V-9632**	3	NUT-WELD (M6X1-THD)	
	3	1	**204-0775**	1	SWITCH AS-FOOT (DIFFERENTIAL LOCK ON, OFF)	
	4	1	**205-6298**	1	ACTUATOR (DIFFERENTIAL LOCK CONTROL)	
M	5	1	**9X-2042**	3	SCREW-TRUSS HEAD (M6X1X12-MM)	

M-METRIC PART

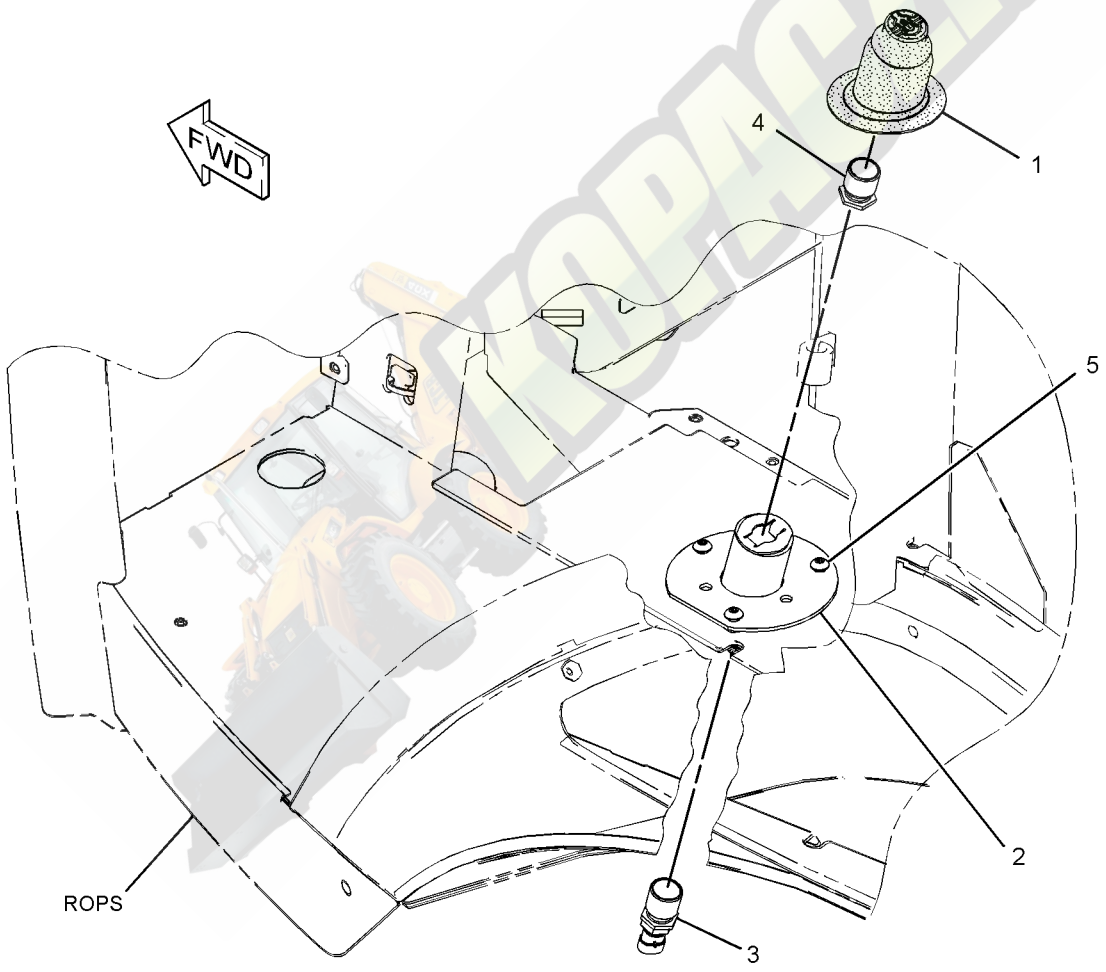

GRAPHIC #1 **<END>** g01390521

237-4896 SWITCH GP-PRESSURE

S/N: CRS1-UP

PART OF 322-1923, 322-1924 ENGINE AR-PRIMARY

AN ATTACHMENT

SMCS-1435 **i02270981**

NOTE	REF NO	GRAPHIC REF	PART NUMBER	QTY	PART NAME 1 2 3 4 5 6 (PRODUCT LEVEL)	SEE PAGE
	1	1	**237-4894**	1	SWITCH AS-PRESSURE (ENGINE OIL)	
	2	1	**199-9267**	1	SEAL-O-RING	

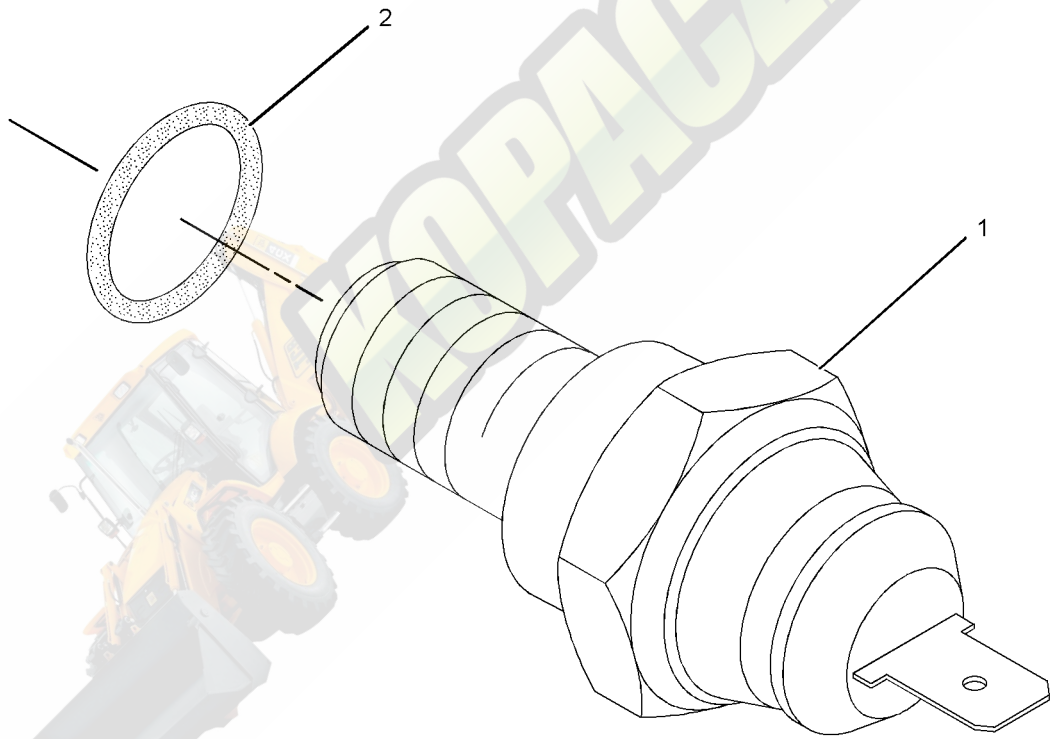

GRAPHIC #1 **<END>** g01138232

316-6925 SWITCH GP-PRESSURE–ENGINE OIL

S/N: C4Z1-UP
PART OF 321-7704, 321-7705 ENGINE AR-PRIMARY
AN ATTACHMENT

SMCS-1435 **i03128304**

NOTE	REF NO	GRAPHIC REF	PART NUMBER	QTY	PART NAME 1 2 3 4 5 6 (PRODUCT LEVEL)	SEE PAGE
	1	1	**035-8063**	1	PLUG	
	2	1	**199-9267**	1	SEAL-O-RING	
	3	1	**225-7941**	1	PLUG	
	4	1	**237-4894**	1	SWITCH AS-PRESSURE (ENGINE OIL)	

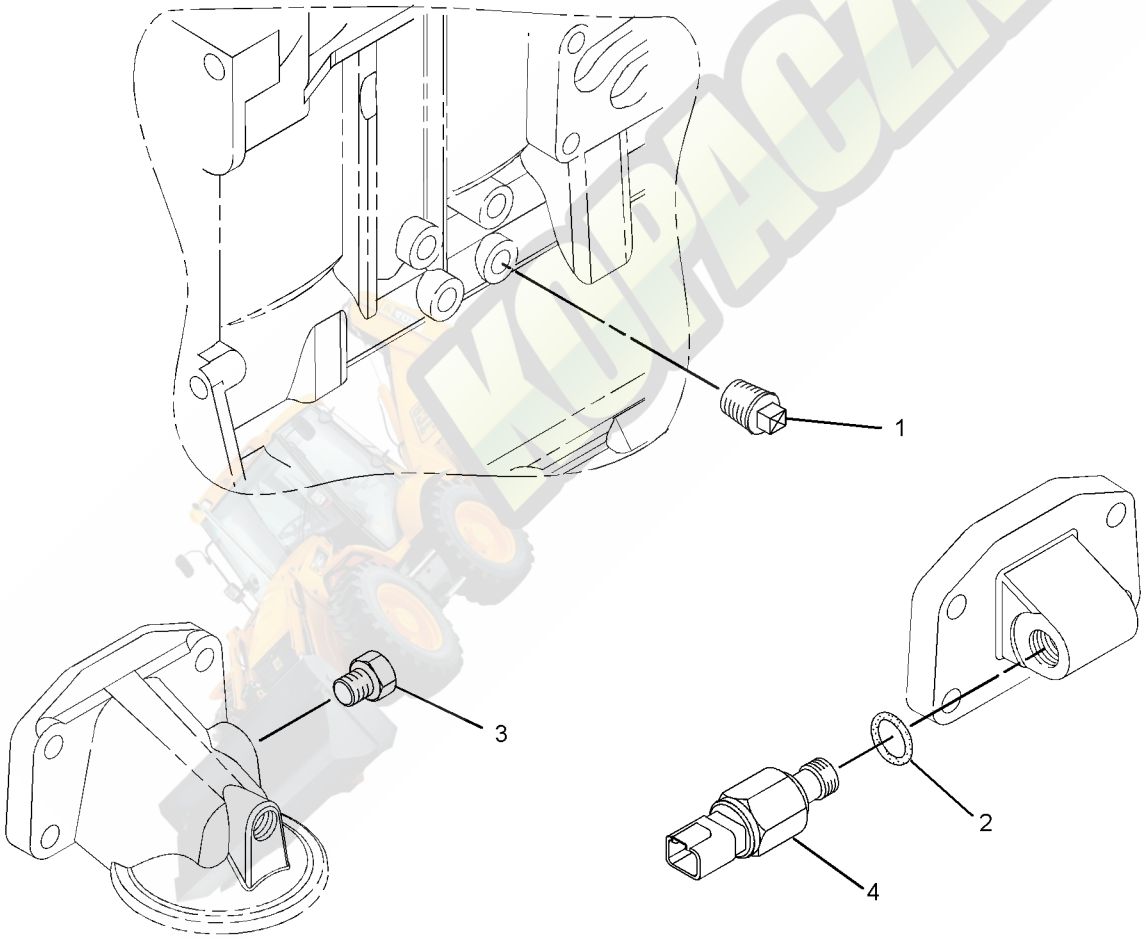

GRAPHIC #1 **<END>** g01400195

328-1954 WARNING GP-BACKUP

S/N: JBA1-UP
EAME MARKET
AN ATTACHMENT

SMCS-7406 **i03713781**

NOTE	REF NO	GRAPHIC REF	PART NUMBER	QTY	PART NAME 1 2 3 4 5 6 (PRODUCT LEVEL)	SEE PAGE
B	1	1	**146-9439**	1	RELAY AS (12-VOLT) (BACKUP ALARM)	
	2	1	**170-0950**	1	ALARM AS (BACKUP)	
		1	**4B-2043**	2	NUT (8-32-THD)	
	3	1	**206-1345**	3	STRAP-CABLE	
	4	1	**332-2577**	1	BRACKET AS	
M	5	1	**5C-2890**	2	NUT (M6X1-THD)	
	6	1	**8T-4121**	2	WASHER-HARD (11X21X2.5-MM THK)	
M	7	1	**8T-4196**	2	BOLT (M10X1.5X35-MM)	
M	8	1	**9X-2045**	2	SCREW-TRUSS HEAD (M6X1X20-MM)	
	9	1	**9X-6165**	4	WASHER (6.5X22X2.5-MM THK)	

B-USE AS REQUIRED
M-METRIC PART

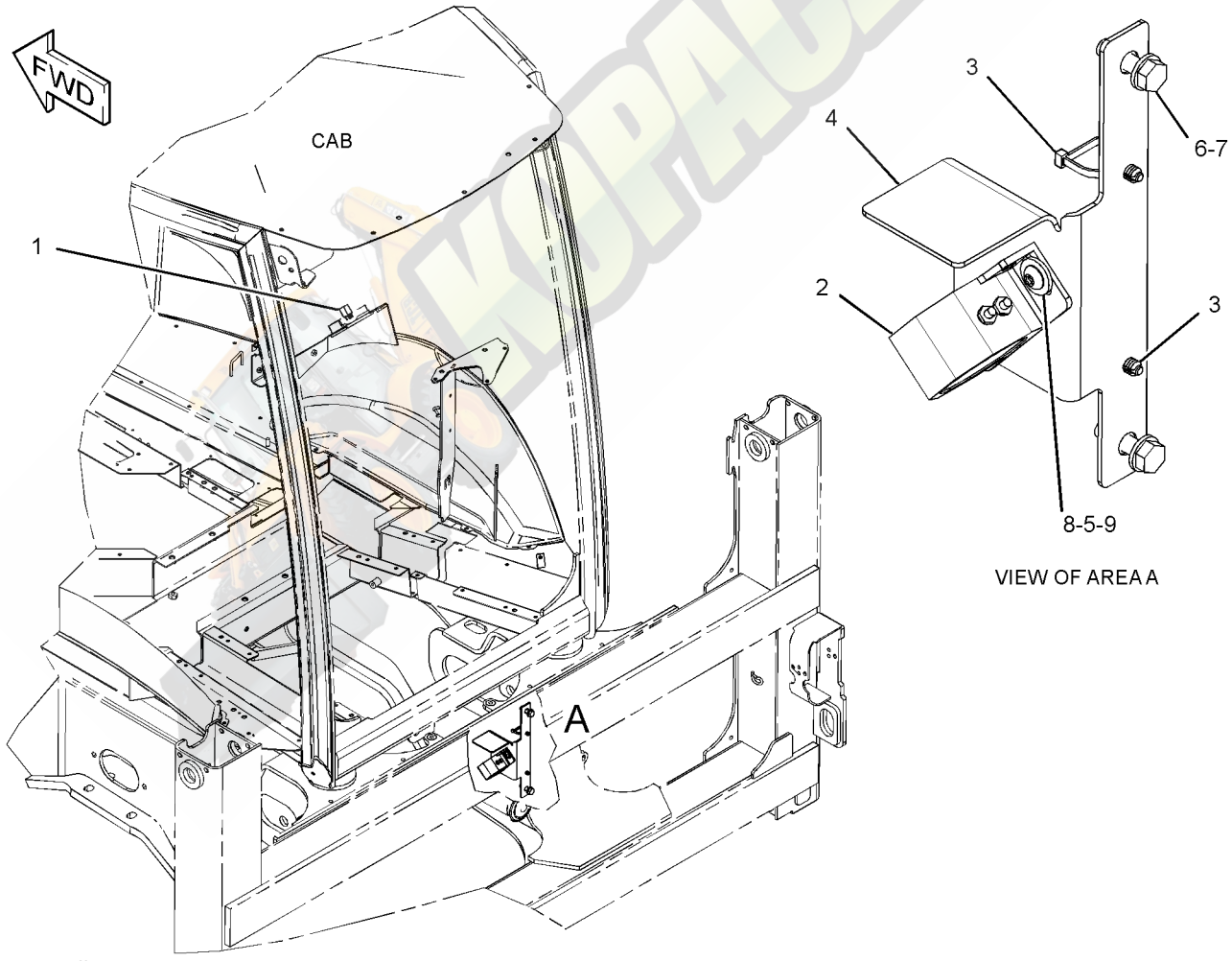

GRAPHIC #1 **<END>** g01986502

ELECTRICAL AND STARTING SYSTEM

338-5733 WIRING GP-AIR CONDITIONER

S/N: JBA1-UP
PART OF 335-3053, 335-3055 CAB AR
AN ATTACHMENT

SMCS-1408, 7320 **i03726340**

NOTE	REF NO	GRAPHIC REF	PART NUMBER	QTY	PART NAME 1 2 3 4 5 6 (PRODUCT LEVEL)	SEE PAGE
	1	1	**3E-9362**	1	RELAY AS (12-VOLT) (SHUTOFF)	
	2	1	**6K-0806**	7	STRAP-CABLE	
	3	1	**8T-8799**	1	BOOT	
	4	1	**189-3158**	1	SUPPRESSOR-ARC	
	5	1	**206-1345**	4	STRAP-CABLE	
	6	1	**213-6055**	1	HARNESS AS-HEATER & AIR COND (VENT)	
		1	**228-5856**	2	CONNECTOR	
		1	**213-0139**	5	PIN	
		1	**9X-3401**	5	PIN-CONNECTOR (16-GA TO 18-GA)	
		1	**155-2270**	1	KIT-CONNECTING PLUG (2-PIN)	
		1	**177-9648**	1	KIT-CONNECTING PLUG (2-PIN)	
		1	**177-9656**	1	KIT-CONNECTING PLUG (4-PIN)	
					(EACH PLUG KIT INCLUDES PLUG AS, WEDGE & INTERFACE SEAL)	
		1	**9X-1054**	1	PLUG AS-CONNECTOR (4-PIN)	
		1	**8T-8737**	1	PLUG-SEAL	
		1	**102-8802**	1	KIT-RECEPTACLE (2-PIN)	
		1	**102-8803**	1	KIT-RECEPTACLE (3-PIN)	
					(EACH RECEPTACLE KIT INCLUDES RECEPTACLE AS & WEDGE)	
		1	**180-9340**	2	SOCKET-CONNECTOR (14-GA TO 18-GA)	
		1	**8L-8413**	29	STRAP-CABLE	
		1	**122-4401**	1	TERMINAL	
		1	**2L-8069**	1	TERMINAL-RING (2-GA TO 10-GA, 3/8-IN SCREW)	
		1	**2L-8067**	1	TERMINAL-RING (10-GA TO 12-GA, 1/4-IN SCREW)	
		1	**091-2436**	7	TERMINAL-BLADE (18-GA TO 22-GA)	
		1	**104-1995**	11	TERMINAL-BLADE (14-GA TO 18-GA)	
		1	**9X-1055**	2	TERMINAL-RECEPTACLE (12-GA)	
		1	**100-5041**	2	TERMINAL-RECEPTACLE (18-GA TO 20-GA)	
E		1	**119-3662**		TUBE-HEAT SHRINK (10.85-MM DIA) (20-CM)	
E		1	**125-7874**		TUBE-HEAT SHRINK (5.72-MM DIA) (10-CM)	
	7	1	**214-4695**	1	SWITCH AS-ROCKER (BLOWER FAN SPEED)	
	8	1	**214-4718**	1	SWITCH AS-ROCKER (AIR CONDITIONER, HEATER SELECT)	
					(EACH SWITCH AS-ROCKER INCLUDES)	
		1	**111-7899**	1	GASKET	
	9	1	**236-6923**	1	SWITCH AS-PRESSURE (REFRIGERANT COMPR, HIGH SIDE)	
	10	1	**238-7492**	1	HARNESS AS-HEATER & AIR COND (COMPRESSOR)	
		1	**9X-3401**	2	PIN-CONNECTOR (16-GA TO 18-GA)	
		1	**155-2270**	2	KIT-CONNECTING PLUG (2-PIN)	
					(EACH INCLUDES PLUG AS, WEDGE & INTERFACE SEAL)	
		1	**102-8802**	1	KIT-RECEPTACLE (2-PIN)	
					(INCLUDES RECEPTACLE AS & WEDGE)	
		1	**100-6674**	2	SEAL-CONNECTOR	
		1	**180-9340**	4	SOCKET-CONNECTOR (14-GA TO 18-GA)	
		1	**124-5640**	2	TERMINAL-SOCKET	
		1	**8L-8413**	1	STRAP-CABLE	
E		1	**125-7874**		TUBE-HEAT SHRINK (5.72-MM DIA) (10-CM)	
	11	1	**275-0570**	1	BAR-BUS	
	12	1	**319-6385**	1	BRACKET	
	13	1	**338-5731**	1	HARNESS AS-HEATER & AIR COND (POWER)	
		1	**111-6795**	1	HOUSING-RELAY (STARTING AID)	
		1	**111-6816**	1	LOCK	

338-5733 WIRING GP-AIR CONDITIONER *(contd.)* i03726340

NOTE	REF NO	GRAPHIC REF	PART NUMBER	QTY	PART NAME 1 2 3 4 5 6 (PRODUCT LEVEL)	SEE PAGE
		1	**186-3735**	4	PIN-CONNECTOR (16-GA TO 18-GA)	
		1	**102-8802**	2	KIT-RECEPTACLE (2-PIN)	
					(EACH INCLUDES RECEPTACLE AS & WEDGE)	
		1	**111-6792**	4	TERMINAL-RECEPTACLE (18-GA TO 20-GA)	
	14	1	**115-1615**	1	RELAY AS (12-VOLT) (HIGH SPEED)	
Y	15	1	**276-7287**	1	RELAY GP (12-VOLT) (POWER DISTRIBUTION)	183
	16	1	**3S-2093**	5	STRAP-CABLE	
M	17	1	**5C-2890**	1	NUT (M6X1-THD)	
M	18	1	**5C-7261**	1	NUT (M8X1.25-THD)	
M	19	1	**7X-2534**	1	BOLT (M6X1X50-MM)	
M	20	1	**8T-4171**	1	BOLT (M6X1X12-MM)	
	21	1	**8T-4205**	2	WASHER-HARD (7.2X14.5X2-MM THK)	
	22	1	**8T-4224**	1	WASHER-HARD (8.8X16X2-MM THK)	
	23	1	**9X-7378**	1	SEAL-O-RING	

E-ORDER BY THE CENTIMETER
M-METRIC PART
Y-SEPARATE ILLUSTRATION

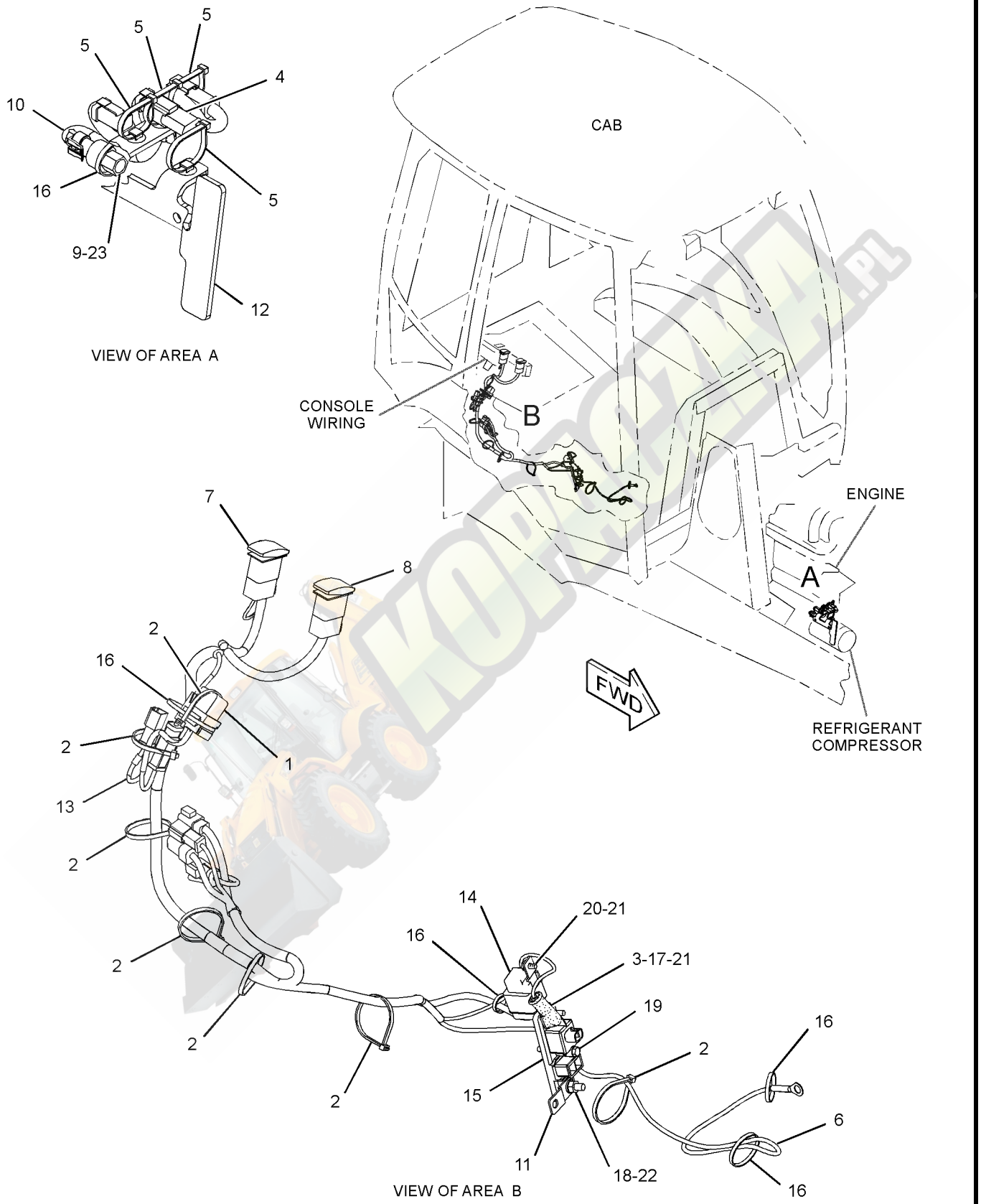

GRAPHIC #1

<END>

g01971656

340-3552 WIRING GP-CAB–ROOF

S/N: JBA1-UP

PART OF 335-3052, 335-3053, 335-3055 CAB AR, 335-3054 CAB AR-ENCLOSED ROPS AN ATTACHMENT

SMCS-1408, 7301 **i03642943**

NOTE	REF NO	GRAPHIC REF	PART NUMBER	QTY	PART NAME 1 2 3 4 5 6 (PRODUCT LEVEL)	SEE PAGE
	1	1	**9R-7941**	2	SOCKET AS	
					(EACH INCLUDES)	
		1	**9R-7980**	1	COVER	
	2	1	**206-1345**	9	STRAP-CABLE	
Y	3	1	**214-2968**	4	LAMP GP-FLOOD (12-VOLT)	167
B	4	1	**214-4697**	1	SWITCH AS-ROCKER (FLOODLIGHTS, FRONT)	
B	5	1	**214-4699**	1	SWITCH AS-ROCKER (FLOODLIGHTS, REAR)	
					(EACH SWITCH AS-ROCKER INCLUDES)	
		1	**111-7899**	1	GASKET	
	6	1	**282-7833**	1	GROMMET	
	7	1	**282-7835**	1	PLATE	
	8	1	**340-3551**	1	HARNESS AS-CHASSIS	
		1	**123-7615**	2	CONNECTOR	
		1	**9W-0852**	2	PIN-CONNECTOR (14-GA)	
		1	**9X-3401**	14	PIN-CONNECTOR (16-GA TO 18-GA)	
		1	**155-2265**	2	KIT-CONNECTING PLUG (8-PIN)	
		1	**155-2270**	8	KIT-CONNECTING PLUG (2-PIN)	
		1	**155-2271**	1	KIT-CONNECTING PLUG (4-PIN)	
					(EACH PLUG KIT INCLUDES PLUG AS, WEDGE & INTERFACE SEAL)	
		1	**8T-8737**	4	PLUG-SEAL	
		1	**102-8805**	1	KIT-RECEPTACLE (6-PIN)	
		1	**102-8801**	1	KIT-RECEPTACLE (12-PIN)	
					(EACH RECEPTACLE KIT INCLUDES RECEPTACLE AS & WEDGE)	
		1	**9W-0844**	4	SOCKET-CONNECTOR (14-GA)	
		1	**180-9340**	30	SOCKET-CONNECTOR (14-GA TO 18-GA)	
		1	**097-7234**	2	TERMINAL (18-GA TO 22-GA)	
		1	*128-4170*	1	TERMINAL AS	
		1	**6H-3587**	1	TERMINAL-RING (6-GA TO 8-GA, 3/8-IN SCREW)	
E		1	**6V-9023**		TUBE-HEAT SHRINK (12.7-MM DIA) (4-CM)	
		1	**5P-4571**	2	TERMINAL-BLADE (14-GA TO 16-GA)	
		1	**091-2436**	4	TERMINAL-BLADE (18-GA TO 22-GA)	
E		1	**119-3662**		TUBE-HEAT SHRINK (10.85-MM DIA) (13-CM)	
E		1	**125-7874**		TUBE-HEAT SHRINK (5.72-MM DIA) (30-CM)	
E		1	**125-7875**		TUBE-HEAT SHRINK (7.44-MM DIA) (5-CM)	
	9	1	**3S-2093**	20	STRAP-CABLE	
M	10	1	**8C-3798**	2	BOLT-LOCKING (M6X1X30-MM)	
	11	1	**8F-3590**	1	LOCKWASHER	
	12	1	**8T-4121**	2	WASHER-HARD (11X21X2.5-MM THK)	
M	13	1	**8T-4133**	1	NUT (M10X1.5-THD)	
	14	1	**9X-8256**	2	WASHER (6.6X12X2-MM THK)	

B-USE AS REQUIRED
E-ORDER BY THE CENTIMETER
M-METRIC PART
Y-SEPARATE ILLUSTRATION

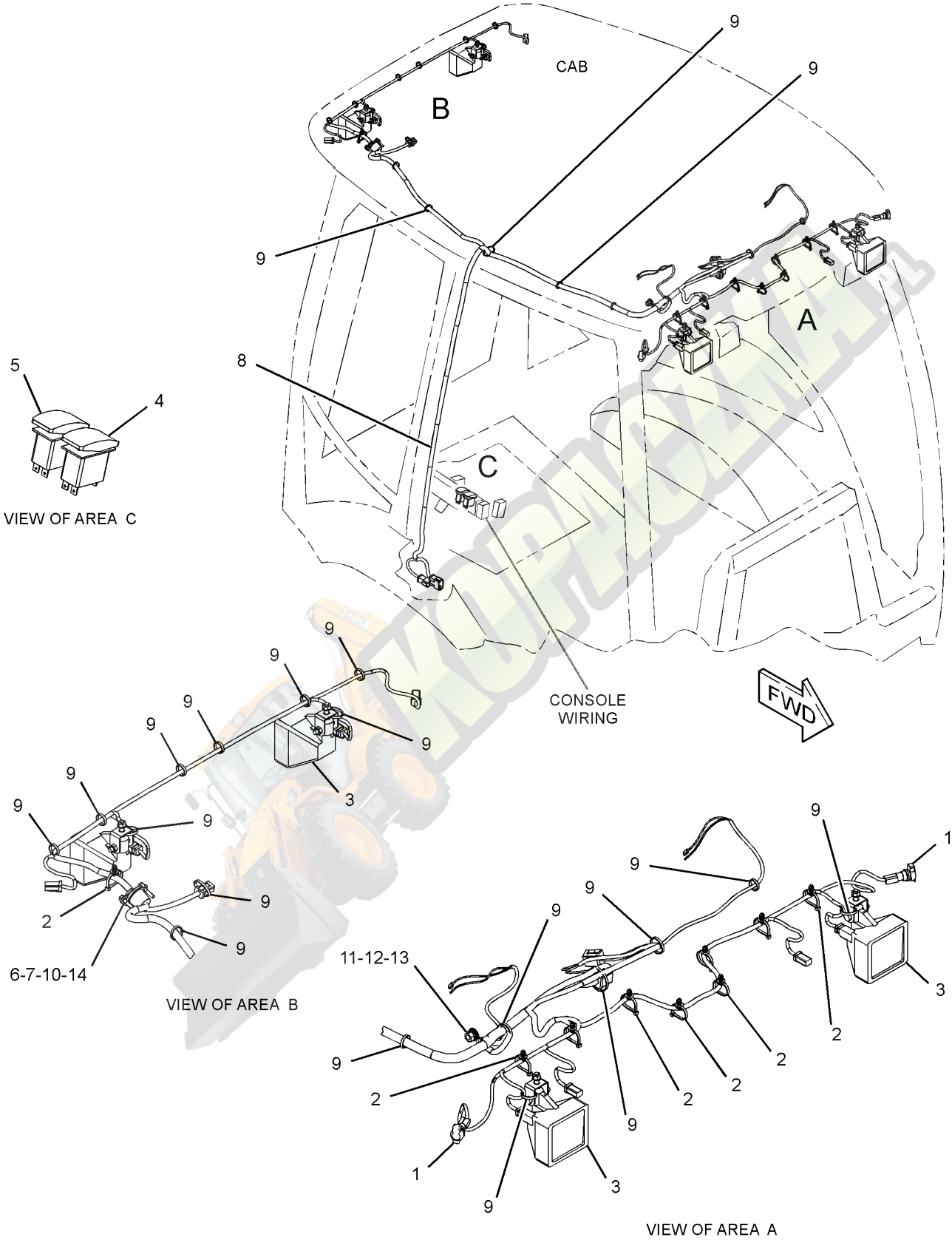

GRAPHIC #1 **<END>** g01971597

338-5740 WIRING GP-CONSOLE–SIDE, PILOT

S/N: JBA1-UP

PART OF 335-3052, 335-3053, 335-3055 CAB AR, 335-3054 CAB AR-ENCLOSED ROPS AN ATTACHMENT

SMCS-1408 **i03664427**

NOTE	REF NO	GRAPHIC REF	PART NUMBER	QTY	PART NAME 1 2 3 4 5 6 (PRODUCT LEVEL)	SEE PAGE
J	1	1	**110-7887**	1	SWITCH AS-START (KEY)	
		1	**7T-6799**	1	NUT-MOUNTING (1-32-THD)	
		1	**102-8804**	1	KIT-RECEPTACLE (4-PIN)	
					(INCLUDES RECEPTACLE AS & WEDGE)	
		1	**186-3735**	4	PIN-CONNECTOR (16-GA TO 18-GA)	
	2	1	**206-1345**	3	STRAP-CABLE	
	3	1	**214-4693**	1	SWITCH AS-ROCKER (WARNING BEACON)	
	4	1	**214-4722**	1	SWITCH AS-ROCKER (STARTING AID)	
					(EACH SWITCH AS-ROCKER INCLUDES)	
		1	**111-7899**	1	GASKET	
B	5	1	**227-1057**	5	PLUG-HOLE	
	6	1	**300-4994**	1	SWITCH AS-ROCKER (HYDRAULIC LOCKOUT)	
		1	**111-7899**	1	GASKET	
	7	1	**338-5723**	1	HARNESS AS-CONSOLE	
		1	**228-5856**	10	CONNECTOR	
		1	**126-1767**	2	PIN-CONNECTOR (14-GA)	
		1	**176-2947**	1	PLUG KIT-CONN	
					(INCLUDES PLUG AS, WEDGE & INTERFACE SEAL)	
		1	**261-0524**	1	PLUG AS-CONNECTOR (4-PIN)	
		1	**264-7031**	1	SEAL-CONNECTOR	
		1	**245-8026**	1	PLUG AS	
		1	**8T-8737**	2	PLUG-SEAL	
		1	**151-9272**	1	KIT-RECEPTACLE (2-PIN)	
					(INCLUDES RECEPTACLE AS & WEDGE)	
		1	**126-1768**	4	SOCKET-CONNECTOR (14-GA)	
		1	**180-9340**	53	SOCKET-CONNECTOR (14-GA TO 18-GA)	
		1	**7N-7221**	2	TERMINAL-BLADE (18-GA TO 22-GA)	
E		1	**119-3662**		TUBE-HEAT SHRINK (10.85-MM DIA) (13-CM)	
E		1	**125-7874**		TUBE-HEAT SHRINK (5.72-MM DIA) (50-CM)	
	8	1	**339-3067**	1	CONTROL GP-ELECTRONIC	
	9	1	**343-4355**	1	HORN	
	10	1	**3S-2093**	5	STRAP-CABLE	

B-USE AS REQUIRED
E-ORDER BY THE CENTIMETER
J-REQUIRES CORPORATE KEY

338-5740 **WIRING GP-CONSOLE** *(contd.)* **i03664427**

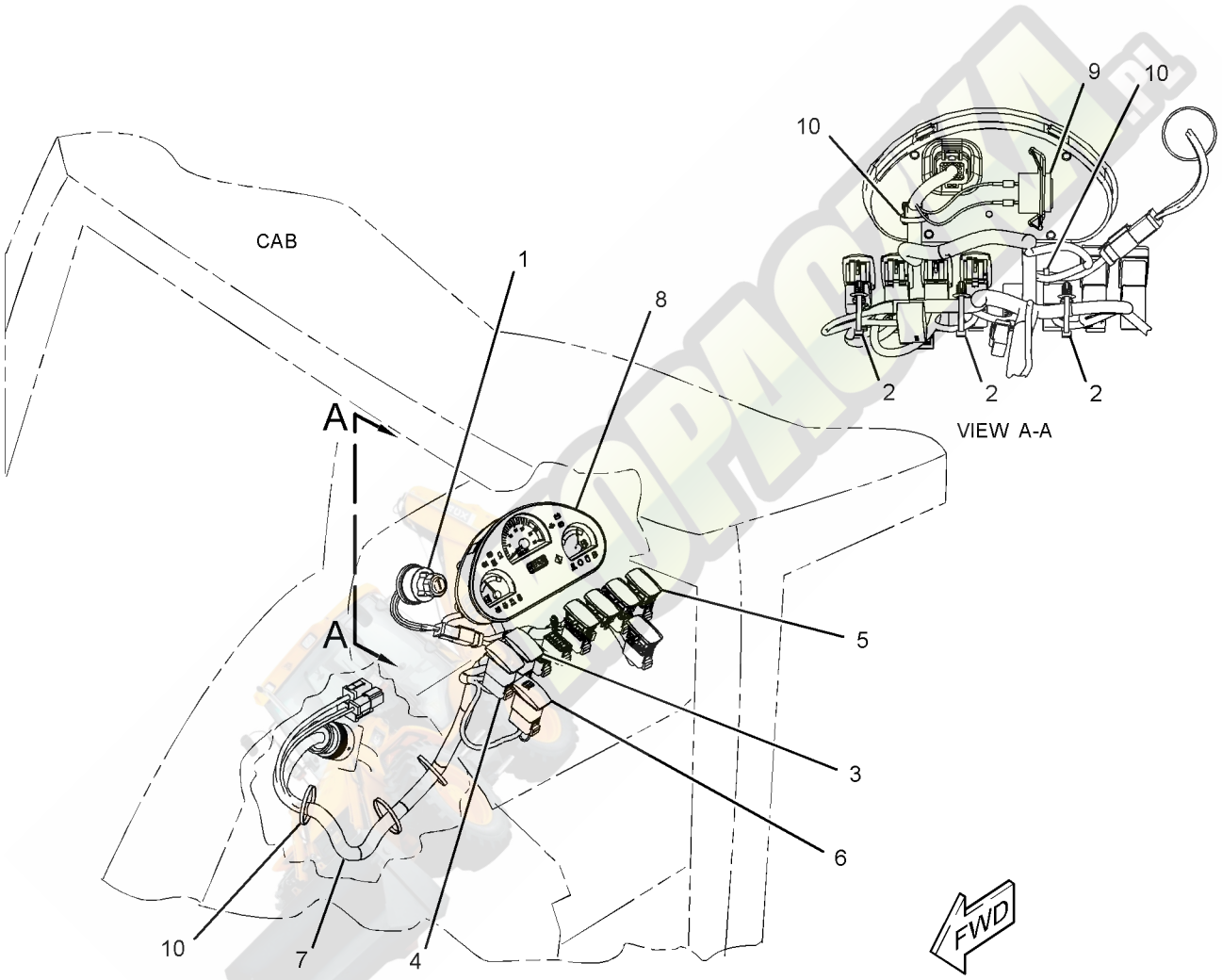

GRAPHIC #1 **<END>** g01971214

267-5635 WIRING GP-CONTROL—JOYSTICK, LH

S/N: JBA1-UP

PART OF 329-0124 HYDRAULIC AR

SMCS-1408 **i03712372**

NOTE	REF NO	GRAPHIC REF	PART NUMBER	QTY	PART NAME 1 2 3 4 5 6 (PRODUCT LEVEL)	SEE PAGE
	1	1	**206-2423**	1	SADDLE	
	2	1	**225-7988**	1	HARNESS AS-AUXILIARY	
		1	**9X-3401**	2	PIN-CONNECTOR (16-GA TO 18-GA)	
		1	**8T-8737**	16	PLUG-SEAL	
		1	**180-9340**	2	SOCKET-CONNECTOR (14-GA TO 18-GA)	
		1	**155-2255**	1	KIT-CONNECTING PLUG (12-PIN)	
					(INCLUDES PLUG AS, WEDGE & INTERFACE SEAL)	
		1	**102-8806**	1	KIT-RECEPTACLE (8-PIN)	
					(INCLUDES RECEPTACLE AS & WEDGE)	
	3	1	**3S-2093**	5	STRAP-CABLE	

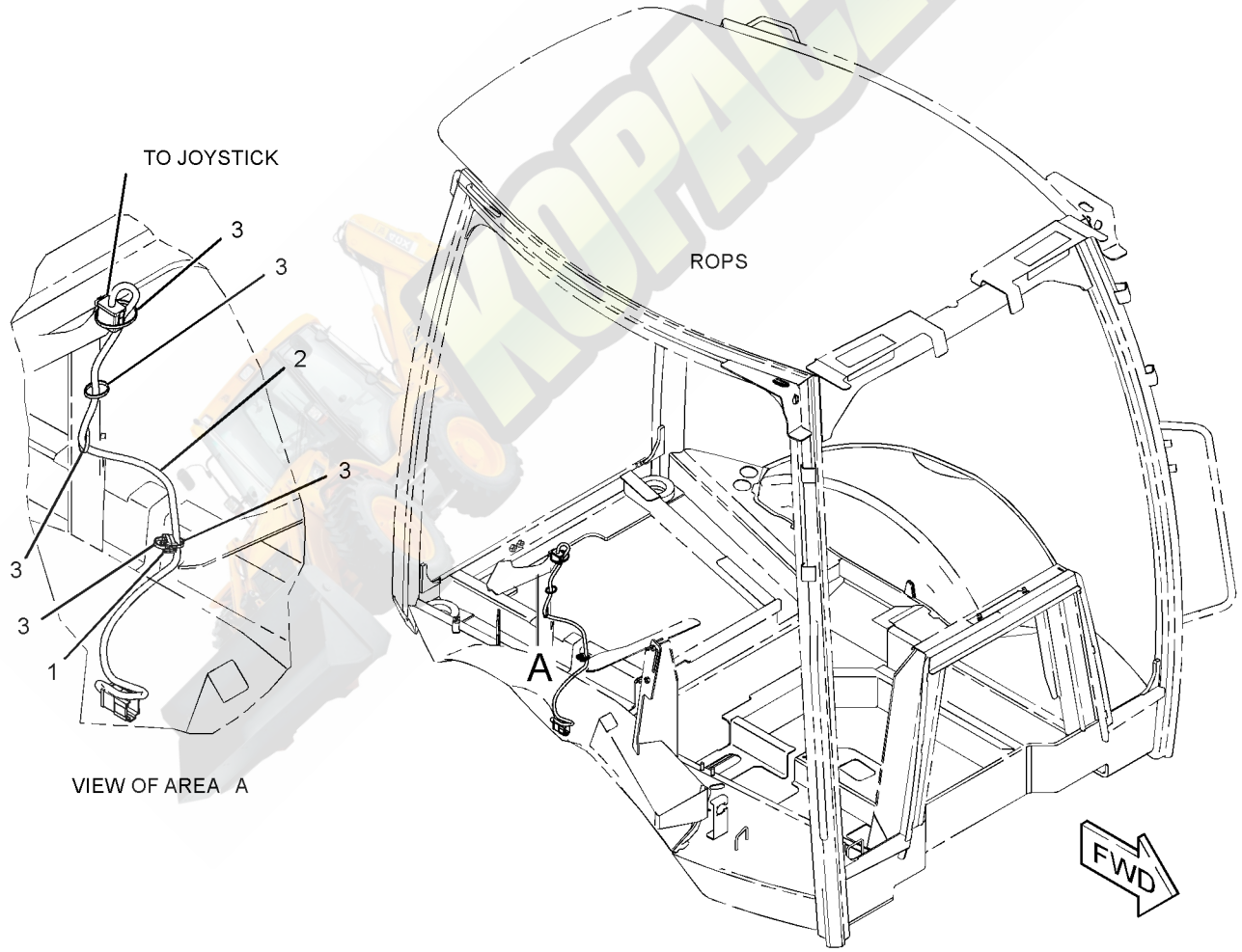

GRAPHIC #1 **<END>** g01367391

338-5737 WIRING GP-ENGINE—PILOT

S/N: JBA1-UP

PART OF 329-0294 CHASSIS AR

SMCS-1408 **i03657456**

NOTE	REF NO	GRAPHIC REF	PART NUMBER	QTY	PART NAME 1 2 3 4 5 6 (PRODUCT LEVEL)	SEE PAGE
	1	1	**7K-1181**	11	STRAP-CABLE	
	2	1	**7Y-3883**	1	CABLE AS	
		1	**1S-7251**	2	TERMINAL-CABLE (00-GA, 1/2-IN SCREW)	
E		1	**5P-0747**		CABLE (00-GA, BLACK) (40-CM)	
	3	1	**8T-8799**	3	BOOT	
	4	1	**189-3158**	1	SUPPRESSOR-ARC	
	5	1	**205-9920**	7	STRAP-CABLE	
	6	1	**206-1345**	7	STRAP-CABLE	
	7	1	**235-8747**	1	SWITCH-TEMPERATURE (ENGINE COOLANT)	
	8	1	**244-3106**	1	SENDER AS-TEMPERATURE (ENGINE COOLANT)	
		1	**102-8802**	1	KIT-RECEPTACLE (2-PIN)	
					(INCLUDES RECEPTACLE AS & WEDGE)	
		1	**186-3735**	2	PIN-CONNECTOR (16-GA TO 18-GA)	
	9	1	**274-3774**	2	CAP-CONNECTOR	
	10	1	**310-2330**	1	HARNESS AS-ENGINE	
		1	**180-9340**	63	SOCKET-CONNECTOR (14-GA TO 18-GA)	
		1	**230-4011**	1	PLUG AS-CONNECTOR (2-PIN)	
		1	**264-7029**	1	SEAL-CONNECTOR	
B		1	**141-8061**		TAPE	
		1	**155-2270**	16	KIT-CONNECTING PLUG (2-PIN)	
		1	**155-2260**	1	KIT-CONNECTING PLUG (3-PIN)	
					(EACH PLUG KIT INCLUDES PLUG AS, WEDGE & INTERFACE SEAL)	
		1	**8L-8413**	12	STRAP-CABLE	
		1	**8T-8737**	3	PLUG-SEAL	
		1	**9X-1054**	1	PLUG AS-CONNECTOR (4-PIN)	
		1	**167-3693**	1	PLUG AS-CONNECTOR (31-PIN)	
		1	**123-7615**	2	CONNECTOR	
		1	**124-5640**	2	TERMINAL-SOCKET	
		1	**9X-3402**	2	SOCKET-CONNECTOR (16-GA TO 18-GA)	
		1	**128-4168**	1	TERMINAL AS	
		1	**128-4172**	1	TERMINAL AS-RING (6-GA TO 8-GA)	
		1	**2L-8067**	2	TERMINAL-RING (10-GA TO 12-GA, 1/4-IN SCREW)	
		1	**2L-8066**	1	TERMINAL-RING (10-GA TO 12-GA, NO. 10 SCREW)	
		1	**2L-8079**	1	TERMINAL-RING (14-GA TO 16-GA, 3/8-IN SCREW)	
		1	**7N-7221**	1	TERMINAL-BLADE (18-GA TO 22-GA)	
		1	**2L-8066**	1	TERMINAL-RING (10-GA TO 12-GA, NO. 10 SCREW)	
		1	**7N-9017**	3	TERMINAL-RING (18-GA TO 22-GA, NO. 10 SCREW)	
		1	**9X-1055**	2	TERMINAL-RECEPTACLE (12-GA)	
		1	**091-2436**	4	TERMINAL-BLADE (18-GA TO 22-GA)	
		1	**100-5041**	2	TERMINAL-RECEPTACLE (18-GA TO 20-GA)	
		1	**100-6674**	2	SEAL-CONNECTOR	
D		1	**5P-6006**		TUBE-HEAT SHRINK (9.52-MM DIA) (0.1-M)	
E		1	**125-7874**		TUBE-HEAT SHRINK (5.72-MM DIA) (18-CM)	
E		1	**125-7875**		TUBE-HEAT SHRINK (7.44-MM DIA) (15-CM)	
E		1	**119-3662**		TUBE-HEAT SHRINK (10.85-MM DIA) (7-CM)	
	11	1	**315-3371**	1	PLATE AS	
Y	12	1	**322-6827**	1	RELAY GP (12-VOLT) (STARTING MOTOR)	187
	13	1	**325-8341**	1	FILM-INSTRUCTION (RELAY CONNECTION)	
	14	1	**115-1615**	1	RELAY AS (12-VOLT) (STARTING AID)	
	15	1	**132-5789**	1	CLIP	
	16	1	**164-9425**	1	HORN AS (24-VOLT, LOW TONE)	

338-5737 **WIRING GP-ENGINE** *(contd.)* **i03657456**

NOTE	REF NO	GRAPHIC REF	PART NUMBER	QTY	PART NAME 1 2 3 4 5 6 (PRODUCT LEVEL)	SEE PAGE
	17	1	**199-9751**	1	SEAL-O-RING	
	18	1	**3F-9556**	1	LOCKWASHER	
	19	1	**3J-4818**	1	LOCKWASHER	
	20	1	**3S-2093**	20	STRAP-CABLE	
	21	1	**4P-7428**	1	CLIP	
	22	1	**4P-7581**	6	CLIP	
	23	1	**4P-8134**	5	CLIP	
M	24	1	**5C-2874**	2	NUT (M5X0.8-THD)	
M	25	1	**5C-2890**	2	NUT (M6X1-THD)	
M	26	1	**5C-7261**	1	NUT (M8X1.25-THD)	
	27	1	**8C-3398**	2	LOCKWASHER	
	28	1	**8F-1434**	2	LOCKWASHER	
	29	1	**8F-3590**	1	LOCKWASHER	
	30	1	**8T-0328**	2	WASHER-HARD (5.5X10X1-MM THK)	
	31	1	**8T-4121**	9	WASHER-HARD (11X21X2.5-MM THK)	
M	32	1	**8T-4133**	2	NUT (M10X1.5-THD)	
M	33	1	**8T-4137**	7	BOLT (M10X1.5X20-MM)	
M	34	1	**8T-4171**	1	BOLT (M6X1X12-MM)	
M	35	1	**8T-4179**	2	BOLT (M12X1.75X20-MM)	
M	36	1	**8T-4189**	3	BOLT (M8X1.25X20-MM)	
	37	1	**8T-4205**	3	WASHER-HARD (7.2X14.5X2-MM THK)	
	38	1	**8T-4223**	2	WASHER-HARD (13.5X25.5X3-MM THK)	
	39	1	**8T-4224**	4	WASHER-HARD (8.8X16X2-MM THK)	
M	40	1	**9X-2480**	1	BOLT (M6X1X45-MM)	

B-USE AS REQUIRED
D-ORDER BY THE METER
E-ORDER BY THE CENTIMETER
M-METRIC PART
Y-SEPARATE ILLUSTRATION

338-5737 **WIRING GP-ENGINE** *(contd.)* **i03657456**

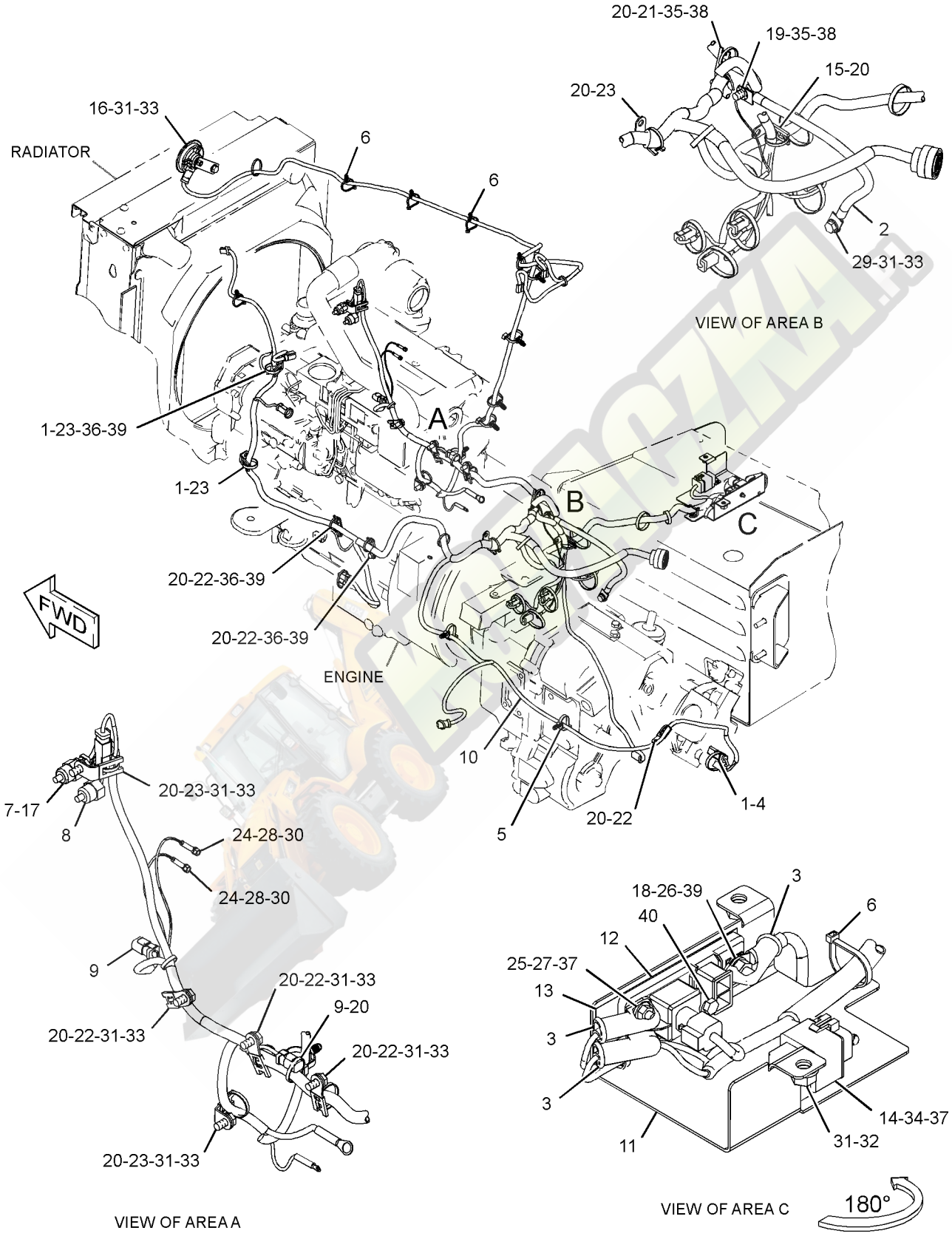

GRAPHIC #1 **<END>** g01990776

310-5613 WIRING GP-HEATER

S/N: JBA1-UP

PART OF 335-3052 CAB AR, 335-3054 CAB AR-ENCLOSED ROPS

AN ATTACHMENT

SMCS-1408, 7304 **i03579082**

NOTE	REF NO	GRAPHIC REF	PART NUMBER	QTY	PART NAME 1 2 3 4 5 6 (PRODUCT LEVEL)	SEE PAGE
M	1	1	**8T-4171**	1	BOLT (M6X1X12-MM)	
	2	1	**8T-8799**	1	BOOT	
	3	1	**213-6055**	1	HARNESS AS-HEATER & AIR COND	
		1	**228-5856**	2	CONNECTOR	
		1	**213-0139**	5	PIN	
		1	**180-9339**	5	PIN-CONNECTOR (14-GA TO 18-GA)	
		1	**9X-1054**	1	PLUG AS-CONNECTOR (4-PIN)	
		1	**155-2270**	1	KIT-CONNECTING PLUG (2-PIN)	
		1	**177-9648**	1	KIT-CONNECTING PLUG (2-PIN)	
		1	**177-9656**	1	KIT-CONNECTING PLUG (4-PIN)	
					(EACH PLUG KIT INCLUDES PLUG AS, WEDGE & INTERFACE SEAL)	
		1	**8T-8737**	1	PLUG-SEAL	
		1	**102-8802**	1	KIT-RECEPTACLE (2-PIN)	
		1	**102-8803**	1	KIT-RECEPTACLE (3-PIN)	
					(EACH RECEPTACLE KIT INCLUDES RECEPTACLE AS & WEDGE)	
		1	**180-9340**	2	SOCKET-CONNECTOR (14-GA TO 18-GA)	
		1	**8L-8413**	29	STRAP-CABLE	
E		1	**125-7874**		TUBE-HEAT SHRINK (5.72-MM DIA) (10-CM)	
E		1	**119-3662**		TUBE-HEAT SHRINK (10.85-MM DIA) (20-CM)	
	4	1	**214-4695**	1	SWITCH AS-ROCKER (BLOWER FAN SPEED)	
	5	1	**214-4703**	1	SWITCH AS-ROCKER (HEATER)	
					(EACH SWITCH AS-ROCKER INCLUDES)	
		1	**111-7899**	1	GASKET	
	6	1	**275-0570**	1	BAR-BUS	
Y	7	1	**276-7287**	1	RELAY GP (12-VOLT) (POWER DISTRIBUTION)	183
	8	1	**115-1615**	1	RELAY AS (12-VOLT) (AIR CONDITIONER)	
	9	1	**3S-2093**	4	STRAP-CABLE	
M	10	1	**5C-2890**	1	NUT (M6X1-THD)	
M	11	1	**5C-7261**	1	NUT (M8X1.25-THD)	
M	12	1	**7X-2534**	1	BOLT (M6X1X50-MM)	
	13	1	**8T-4205**	2	WASHER-HARD (7.2X14.5X2-MM THK)	
	14	1	**8T-4224**	1	WASHER-HARD (8.8X16X2-MM THK)	
	15	1	**6K-0806**	5	STRAP-CABLE	

E-ORDER BY THE CENTIMETER
M-METRIC PART
Y-SEPARATE ILLUSTRATION

310-5613 **WIRING GP-HEATER** *(contd.)* **i03579082**

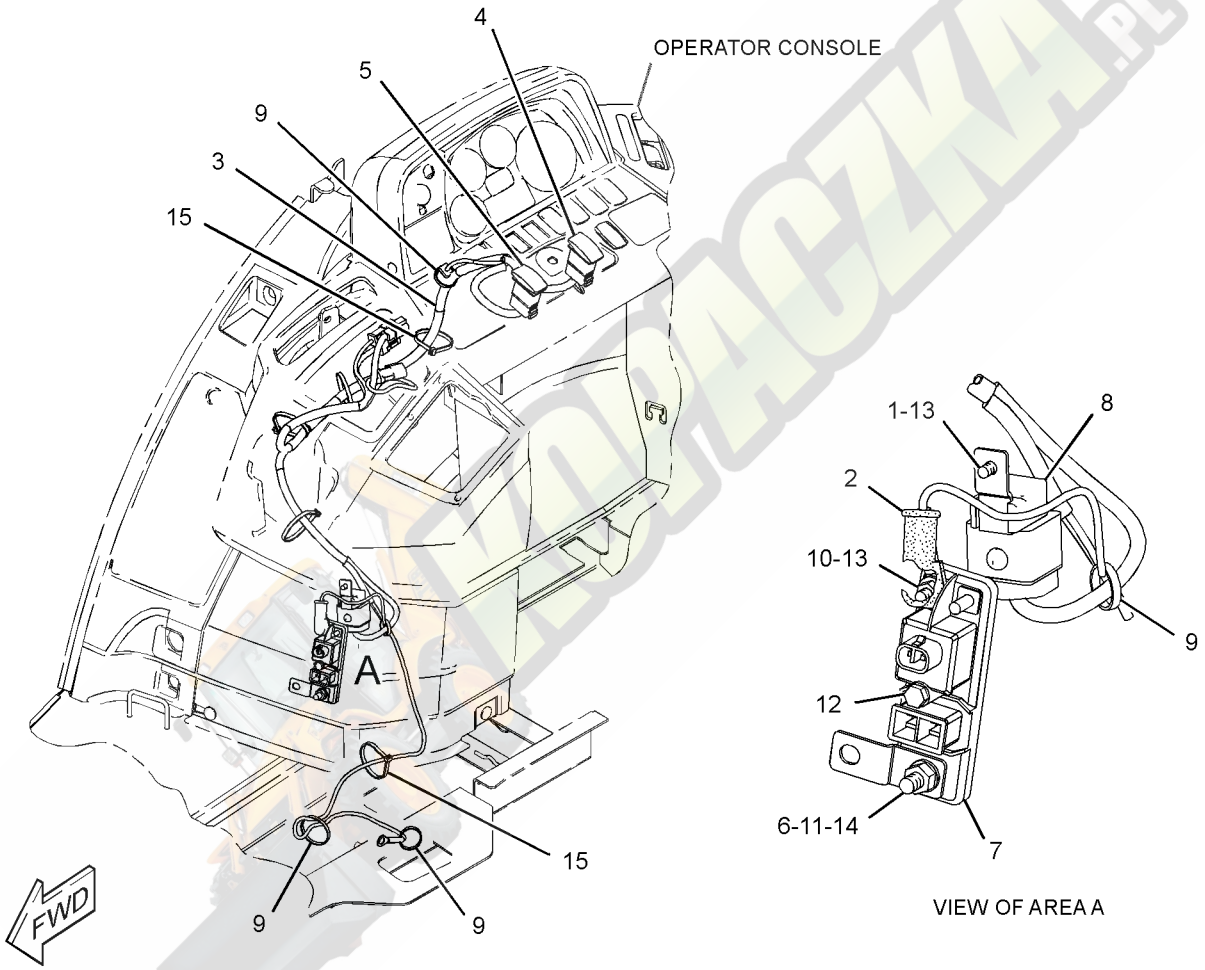

GRAPHIC #1 **<END>** g01869576

329-0058 WIRING GP-KICKOUT & POSITIONER

S/N: JBA1-UP

PART OF 325-1021 LOADER AR

SMCS-5109, 5112, 5734 **i03694780**

NOTE	REF NO	GRAPHIC REF	PART NUMBER	QTY	PART NAME 1 2 3 4 5 6 (PRODUCT LEVEL)	SEE PAGE
	1	1	**9M-6738**	2	CLAMP-HOSE	
	2	1	**9R-2053**	2	BLOCK	
	3	1	**317-4920**	1	SENSOR AS-POSITION (BUCKET)	
		1	**317-4921**	1	TUBE AS	
		1	**317-4922**	1	ROD AS	
		1	**284-0078**	1	SWITCH AS-PUSH BUTTON (BUCKET POSITIONER)	
		1	**295-8141**	1	CLIP	
		1	**295-8142**	2	SEAL-O-RING	
		1	**295-8143**	2	SEAL-O-RING	
	4	1	**328-8594**	1	HARNESS AS-WIRING (KICKOUT, POSITIONER)	
		1	**266-4157**	1	SLEEVE-BRAIDED	
		1	**3S-2093**	1	STRAP-CABLE	
		1	**102-8803**	1	KIT-RECEPTACLE (3-PIN) (INCLUDES RECEPTACLE AS & WEDGE)	
E		1	**6V-8523**		HOSE (206-CM)	
E		1	**8T-6885**		TUBE-HEAT SHRINK (19.05-MM DIA) (10-CM)	
		1	**8T-8737**	1	PLUG-SEAL	
		1	**9X-3401**	2	PIN-CONNECTOR (16-GA TO 18-GA)	
		1	**222-8935**	1	PLUG	
	5	1	**3S-2093**	12	STRAP-CABLE	
G	6	1	**160-2246**		SLEEVE-ABRASION (11.8-IN)	

E-ORDER BY THE CENTIMETER
G-ORDER BY THE INCH

329-0058 **WIRING GP-KICKOUT & POSITIONER** *(contd.)* **i03694780**

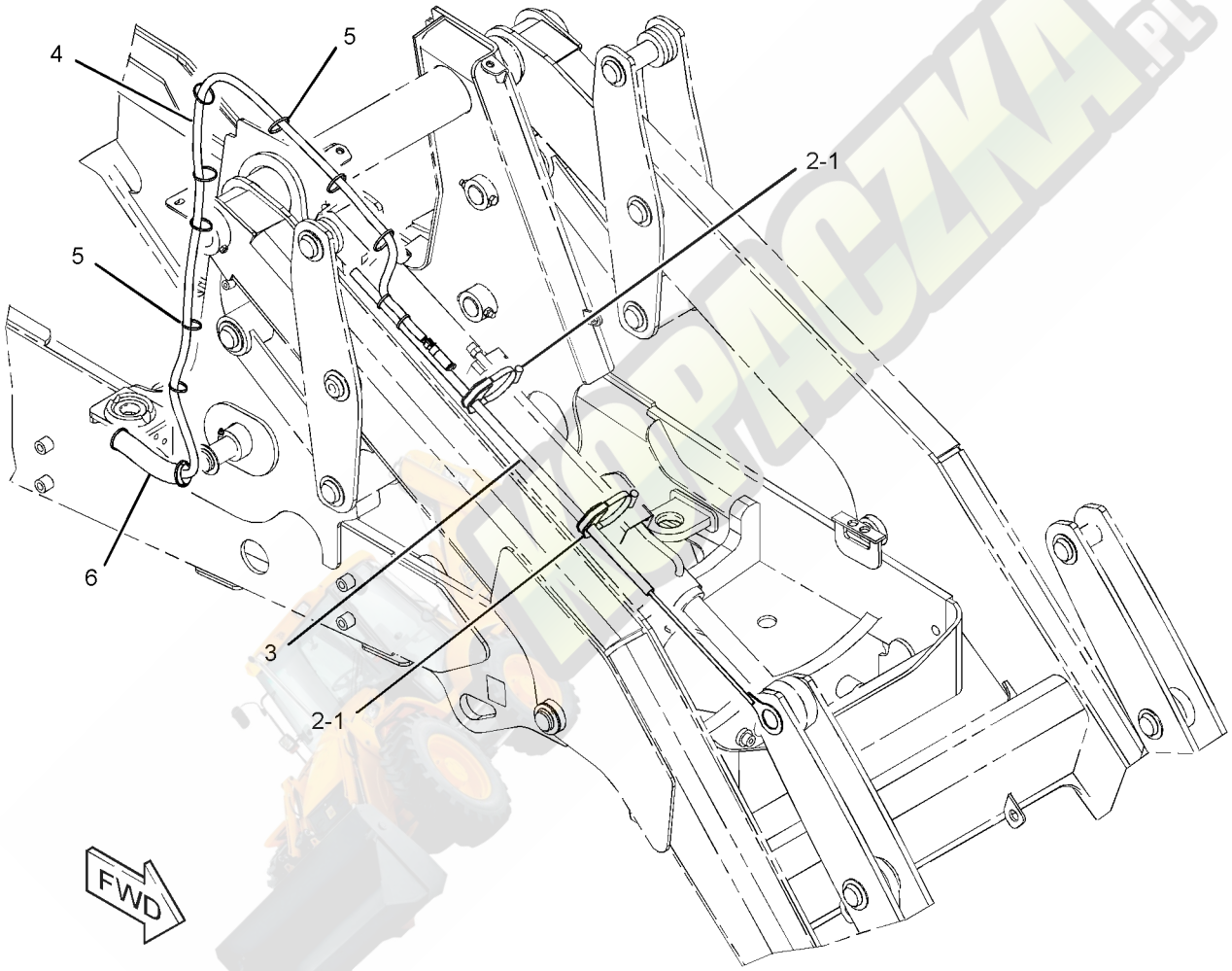

GRAPHIC #1 **<END>** g02002354

323-0992 WIRING GP-LOAD CONTROL

S/N: JBA1-UP

PART OF 332-7959, 332-7961 VALVE AR-BANK 3

AN ATTACHMENT

SMCS-1408 **i03719500**

NOTE	REF NO	GRAPHIC REF	PART NUMBER	QTY	PART NAME 1 2 3 4 5 6 (PRODUCT LEVEL)	SEE PAGE
	1	1	**7K-1181**	2	STRAP-CABLE	
	2	1	**189-3158**	2	SUPPRESSOR-ARC	
	3	1	**213-6064**	1	HARNESS AS-CHASSIS (LOAD CONTROL)	
		1	**180-9339**	4	PIN-CONNECTOR (14-GA TO 18-GA)	
		1	**155-2270**	4	KIT-CONNECTING PLUG (2-PIN)	
		1	**155-2260**	1	KIT-CONNECTING PLUG (3-PIN)	
					(EACH PLUG KIT INCLUDES PLUG AS, WEDGE & INTERFACE SEAL)	
		1	**9X-1054**	2	PLUG AS-CONNECTOR (4-PIN)	
		1	**102-8804**	1	KIT-RECEPTACLE (4-PIN)	
					(INCLUDES RECEPTACLE AS & WEDGE)	
		1	**180-9340**	10	SOCKET-CONNECTOR (14-GA TO 18-GA)	
		1	**9W-0844**	1	SOCKET-CONNECTOR (14-GA)	
		1	**8L-8413**	2	STRAP-CABLE	
E		1	**119-3662**		TUBE-HEAT SHRINK (10.85-MM DIA) (20-CM)	
E		1	**125-7874**		TUBE-HEAT SHRINK (5.72-MM DIA) (15-CM)	
	4	1	**253-9396**	1	SWITCH AS-ROCKER (RIDE CONTROL, LOAD CONTROL)	
		1	**111-7899**	1	GASKET	
	5	1	**115-1615**	2	RELAY AS (12-VOLT) (DEAD ENGINE LOWER)	
	6	1	**3S-2093**	13	STRAP-CABLE (PLASTIC)	

E-ORDER BY THE CENTIMETER

323-0992 **WIRING GP-LOAD CONTROL** ***(contd.)*** **i03719500**

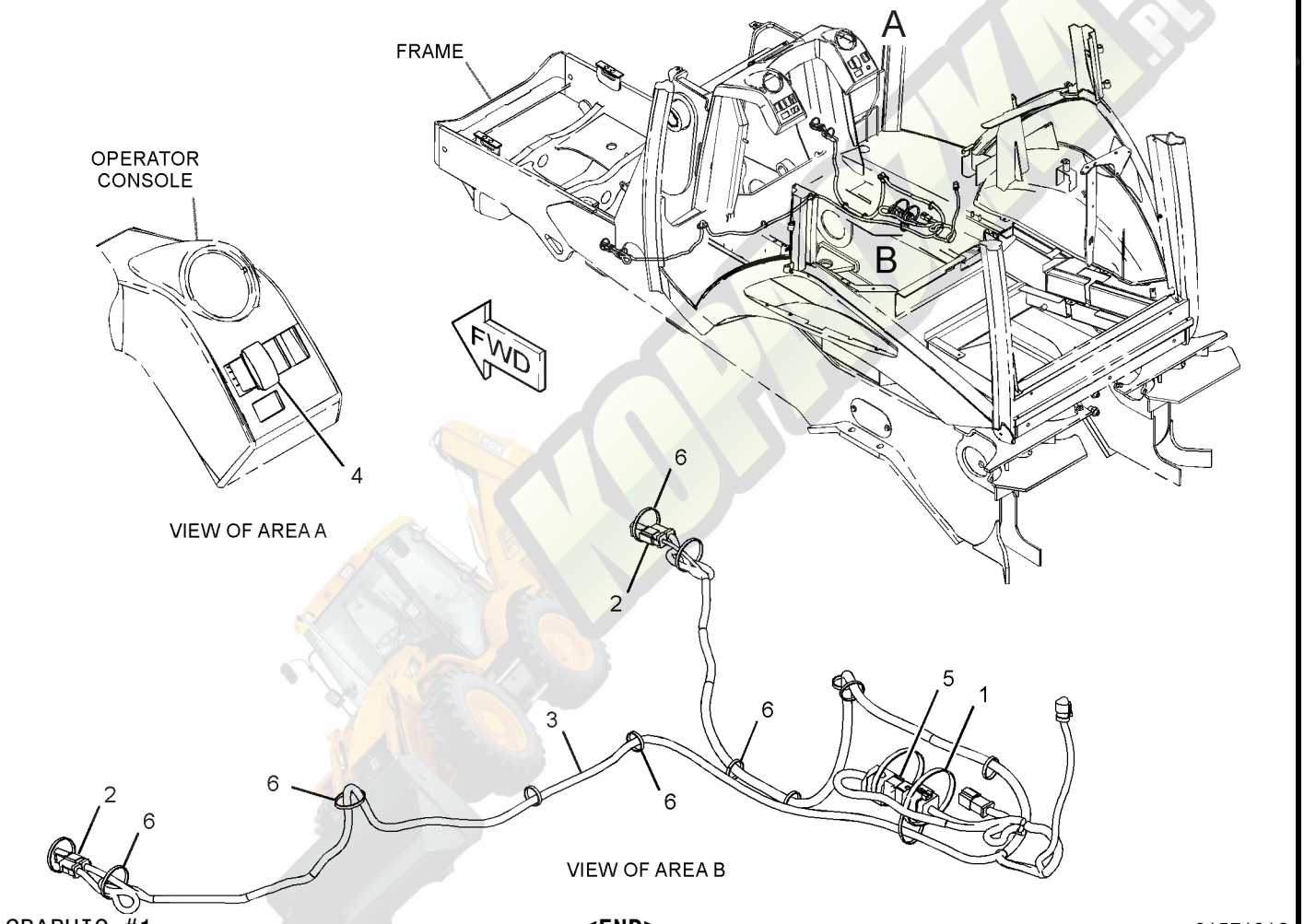

GRAPHIC #1

<END>

g01571916

328-1485 WIRING GP-MACHINE—MACHINE SECURITY SYSTEM

S/N: JBA1-UP

PART OF 326-7959 INSTALLATION GP-SECURITY

AN ATTACHMENT

SMCS-1408 **i03579091**

NOTE	REF NO	GRAPHIC REF	PART NUMBER	QTY	PART NAME 1 2 3 4 5 6 (PRODUCT LEVEL)	SEE PAGE
	1	1	**3E-3371**	1	WEDGE-RECEPTACLE LOCK (3-PIN)	
	2	1	**5P-7958**	2	SLEEVE-CABLE SPLICE (LITERATURE LANYARD)	
	3	1	**8T-8737**	2	PLUG-SEAL	
	4	1	**123-6758**	1	LANYARD	
	5	1	**200-1898**	1	SUPPRESSOR-ARC	
	6	1	**219-6314**	1	KEY RING (IDENTIFICATION)	
	7	1	**257-7211**	1	VALVE AS-SOLENOID (FUEL SHUTOFF)	
		1	**9X-3401**	8	PIN-CONNECTOR (16-GA TO 18-GA)	
		1	**160-3518**	1	KIT-RECEPTACLE (8-PIN)	
					(INCLUDES RECEPTACLE AS & WEDGE)	
		1	**263-8850**	1	KEY AS-ELECTRONIC (BLACK)	
	8	1	**257-7212**	1	SENSOR AS (KEY READER)	
		1	**186-3735**	3	PIN-CONNECTOR (16-GA TO 18-GA)	
		1	**286-1072**	1	SENSOR AS (KEY READER)	
	9	1	**257-7214**	1	HARNESS AS-CONTROL (PLATFORM)	
		1	**102-8806**	1	KIT-RECEPTACLE (8-PIN)	
					(INCLUDES RECEPTACLE AS & WEDGE)	
		1	**8L-8413**	4	STRAP-CABLE	
		1	**8T-8737**	1	PLUG-SEAL	
E		1	**125-7874**		TUBE-HEAT SHRINK (5.72-MM DIA) (15-CM)	
		1	**126-1766**	4	SOCKET-CONNECTOR (14-GA TO 18-GA)	
		1	**155-2270**	1	KIT-CONNECTING PLUG (2-PIN)	
		1	**155-2271**	1	KIT-CONNECTING PLUG (4-PIN)	
					(EACH INCLUDES PLUG AS, WEDGE & INTERFACE SEAL)	
		1	**180-9339**	8	PIN-CONNECTOR (14-GA TO 18-GA)	
		1	**180-9340**	13	SOCKET-CONNECTOR (14-GA TO 18-GA)	
		1	**230-5008**	1	PLUG AS-CONNECTOR (4-PIN)	
		1	**264-7031**	1	SEAL-CONNECTOR	
	10	1	**276-5450**	1	RELAY AS (12-VOLT) (FUEL SHUTOFF)	
		1	**186-3735**	4	PIN-CONNECTOR (16-GA TO 18-GA)	
		1	**230-5009**	1	RECEPTACLE AS-CONNECTOR (4-PIN)	
	11	1	**295-5893**	1	HARNESS AS-CONTROL (MACHINE SECURITY SYSTEM)	
		1	**180-9339**	6	PIN-CONNECTOR (14-GA TO 18-GA)	
		1	**180-9340**	11	SOCKET-CONNECTOR (14-GA TO 18-GA)	
		1	**102-8805**	1	KIT-RECEPTACLE (6-PIN)	
					(INCLUDES RECEPTACLE AS & WEDGE)	
E		1	**125-7874**		TUBE-HEAT SHRINK (5.72-MM DIA) (5-CM)	
D		1	**141-8061**		TAPE (2-M)	
		1	**155-2265**	1	KIT-CONNECTING PLUG (8-PIN)	
		1	**155-2260**	1	KIT-CONNECTING PLUG (3-PIN)	
					(EACH INCLUDES PLUG AS, WEDGE & INTERFACE SEAL)	
	12	1	**115-1615**	1	RELAY AS (12-VOLT) (DISABLE START)	
	13	1	**102-8802**	1	KIT-RECEPTACLE (2-PIN)	
					(INCLUDES RECEPTACLE AS & WEDGE)	
	14	1	**102-8803**	1	KIT-RECEPTACLE (3-PIN)	
					(INCLUDES RECEPTACLE AS & WEDGE)	
	15	1	**3S-2093**	30	STRAP-CABLE	

D-ORDER BY THE METER
E-ORDER BY THE CENTIMETER

328-1485 **WIRING GP-MACHINE** *(contd.)* **i03579091**

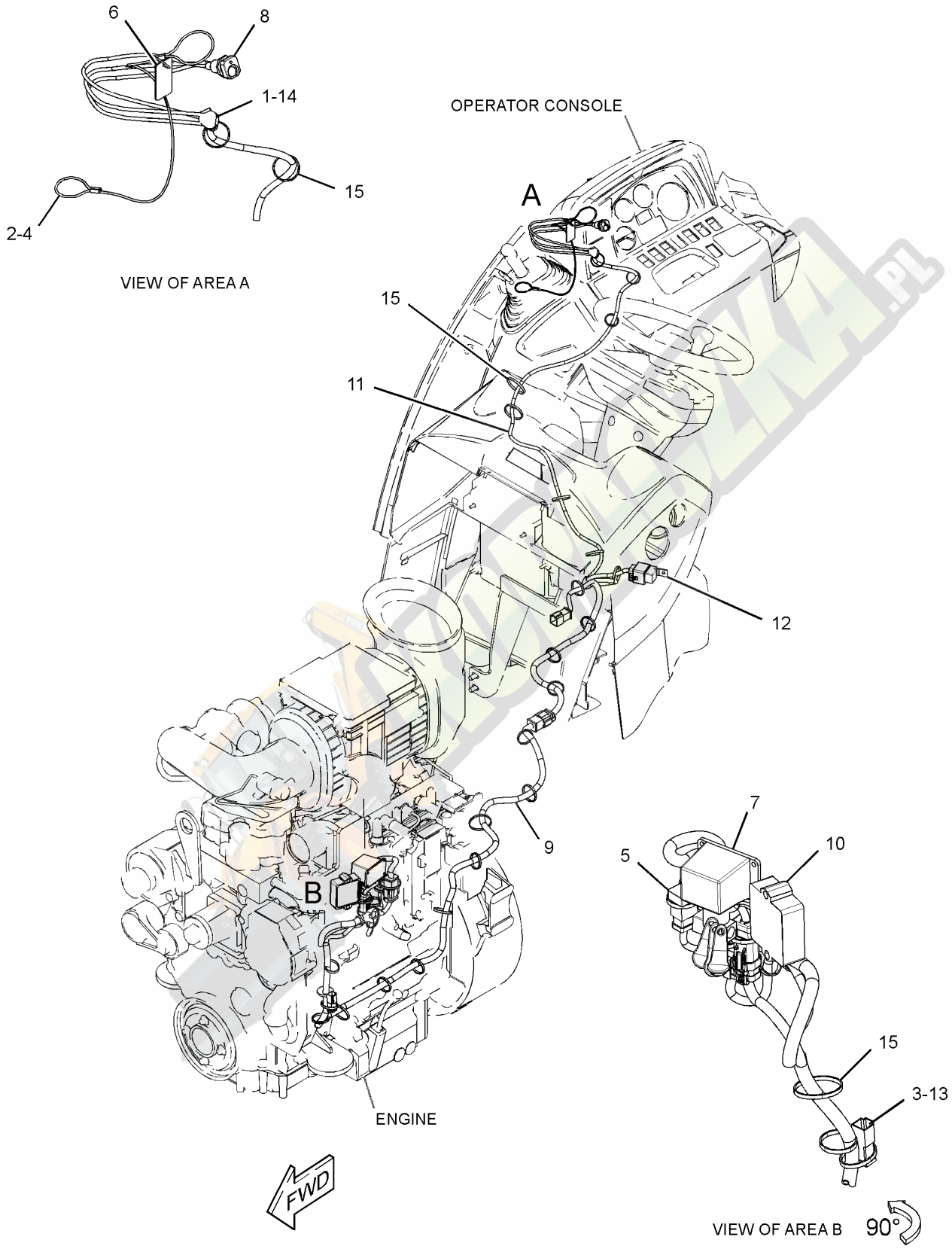

GRAPHIC #1 **<END>** g01626177

338-5738 WIRING GP-PLATFORM–EAME, PILOT

S/N: JBA1-UP

PART OF 335-3052, 335-3053, 335-3055 CAB AR, 335-3054 CAB AR-ENCLOSED ROPS AN ATTACHMENT

SMCS-1408 **i03642941**

NOTE	REF NO	GRAPHIC REF	PART NUMBER	QTY	PART NAME 1 2 3 4 5 6 (PRODUCT LEVEL)	SEE PAGE
	1	1	**1S-9593**	3	STRAP-CABLE	
	2	2	**6I-1418**	4	SPACER (8.2X12.7X28.7-MM THK)	
	3	1	**6K-0806**	3	STRAP-CABLE	
	4	2	**7K-1181**	32	STRAP-CABLE	
	5	2	**7T-4848**	1	FLASHER AS (12-VOLT) (HAZARD)	
	6	2	**8C-6354**	1	CAP-RECEPTACLE	
	7	2	**8T-8799**	3	BOOT	
	8	2	**8T-9655**	8	MOUNT-ISOLATION	
	9	2	**8X-9618**	1	STRAP AS-GROUND	
	10	2	**116-7471**	1	PULLER-MINIFUSE	
	11	2	**140-9378**	1	RELAY AS (12-VOLT) (IMPLEMENT DISABLE)	
	11A	2	**140-9378**	1	RELAY AS (12-VOLT) (DIFFERENTIAL LOCK)	
	11B	2	**140-9378**	1	RELAY AS (12-VOLT) (NEUTRAL START)	
	11C	2	**140-9378**	1	RELAY AS (12-VOLT) (FUEL PUMP)	
	12	2	**146-9439**	1	RELAY AS (12-VOLT) (FRONT HORN)	
	12A	2	**146-9439**	1	RELAY AS (12-VOLT) (REAR HORN)	
	13	1	**178-7539**	1	RECEPTACLE AS (POWER SUPPLY)	
	14	2	**179-6401**	4	SCREW-PAN HEAD (6-32X0.5-IN)	
	15	2	**189-3158**	1	SUPPRESSOR-ARC	
	16	1	**201-1024**	2	BRACKET	
	17	1	**212-0862**	3	CLAMP-CABLE	
	18	1	**214-4694**	1	SWITCH AS-ROCKER (MODE SELECT)	
	19	1	**214-4716**	1	SWITCH AS-ROCKER (TRANSMISSION NEUTRAL LOCK)	
					(EACH SWITCH AS-ROCKER INCLUDES)	
		1	**111-7899**	1	GASKET	
	20	1	**214-4717**	1	INDICATOR AS (TURN SIGNAL LH, PARKING BRAKE)	
	21	1	**214-4723**	1	INDICATOR AS (HIGH BEAM, TURN SIGNAL RH)	
					(EACH INDICATOR AS INCLUDES)	
		1	**111-7899**	1	GASKET	
	22	2	**216-9069**	1	BRACKET AS	
M		2	**6V-9632**	1	NUT-WELD (M6X1-THD)	
B	23	1	**227-1057**	11	PLUG-HOLE	
	24	2	**267-2701**	1	FUSE (60-AMPERE)	
	25	1	**273-9190**	1	SWITCH AS-MULTIFUNCTION (HD LIGHT, TURN SIG, WDO WIPER)	
		1	**8T-8737**	1	PLUG-SEAL	
		1	**151-9275**	1	KIT-RECEPTACLE (6-PIN)	
		1	**160-3518**	1	KIT-RECEPTACLE (8-PIN)	
					(EACH RECEPTACLE KIT INCLUDES RECEPTACLE AS & WEDGE)	
		1	**186-3735**	13	PIN-CONNECTOR (16-GA TO 18-GA)	
	26	2	**274-7409**	4	SCREW-TRUSS HEAD (M8X1.25X45-MM)	
	27	2	**274-9872**	1	FUSE (30-AMPERE)	
	28	2	**275-0553**	1	BAR-BUS	
Y	29	2	**276-7290**	1	RELAY GP (12-VOLT) (POWER, 1)	184
Y	30	2	**276-7291**	1	RELAY GP (12-VOLT) (POWER, 2)	185
	31	2	**278-0461**	1	RELAY AS (12-VOLT) (TORQUE LIMITER)	
	32	2	**278-6377**	1	FUSE (40-AMPERE)	
	33	2	**299-4996**	1	BRACKET AS	
	34	1	**306-7346**	1	SWITCH AS-ROCKER (HAZARD WARNING LIGHTS)	
		1	**111-7899**	1	GASKET	
	35	1	**310-2345**	1	HARNESS AS-PLATFORM	
		1	**7N-7221**	3	TERMINAL-BLADE (18-GA TO 22-GA)	
		1	**134-2540**	2	RESISTOR AS-CONNECTION (3-PIN)	
B		1	**141-8061**		TAPE	

338-5738 **WIRING GP-PLATFORM** *(contd.)* **i03642941**

NOTE	REF NO	GRAPHIC REF	PART NUMBER	QTY	PART NAME 1 2 3 4 5 6 (PRODUCT LEVEL)	SEE PAGE
		1	**147-1445**	1	PLUG AS-CONNECTOR (70-PIN)	
		1	**147-1446**	1	PLUG AS-CONNECTOR (70-PIN)	
					(EACH PLUG AS INCLUDES)	
		1	**159-9322**	1	SEAL-O-RING	
		1	**155-2255**	4	KIT-CONNECTING PLUG (12-PIN)	
		1	**155-2270**	7	KIT-CONNECTING PLUG (2-PIN)	
		1	**155-2271**	5	KIT-CONNECTING PLUG (4-PIN)	
		1	**155-2274**	5	KIT-CONNECTING PLUG (6-PIN)	
		1	**155-2265**	4	KIT-CONNECTING PLUG (8-PIN)	
		1	**174-0503**	2	KIT-CONNECTING PLUG (3-PIN)	
					(EACH PLUG KIT INCLUDES PLUG AS, WEDGE & INTERFACE SEAL)	
		1	**155-2264**	4	PLUG AS-CONNECTOR	
		1	**167-3692**	2	RECEPTACLE AS-CONNECTOR (31-PIN)	
E		1	**119-3662**		TUBE-HEAT SHRINK (10.85-MM DIA) (65-CM)	
		1	**122-4401**	1	TERMINAL	
E		1	**125-7874**		TUBE-HEAT SHRINK (5.72-MM DIA) (240-CM)	
E		1	**125-7875**		TUBE-HEAT SHRINK (7.44-MM DIA) (25-CM)	
		1	**126-1766**	83	SOCKET-CONNECTOR (14-GA TO 18-GA)	
		1	**2L-8069**	2	TERMINAL-RING (2-GA TO 10-GA, 3/8-IN SCREW)	
		1	**2L-8079**	2	TERMINAL-RING (14-GA TO 16-GA, 3/8-IN SCREW)	
		1	**128-4190**	5	TERMINAL AS	
		1	**128-4249**	3	LOCKWASHER	
		1	**5P-4571**	4	TERMINAL-BLADE (14-GA TO 16-GA)	
		1	**100-6674**	2	SEAL-CONNECTOR	
		1	**104-1995**	5	TERMINAL-BLADE (14-GA TO 18-GA)	
		1	**110-0203**	2	CONNECTOR AS	
		1	**111-6792**	6	TERMINAL-RECEPTACLE (18-GA TO 20-GA)	
		1	**111-6795**	2	HOUSING-RELAY	
		1	**111-6816**	2	LOCK	
		1	**113-8490**	9	FUSE (10-AMPERE)	
		1	**113-8491**	10	FUSE (15-AMPERE)	
		1	**113-8492**	7	FUSE (20-AMPERE)	
		1	**9W-0844**	11	SOCKET-CONNECTOR (14-GA)	
		1	**102-8802**	4	KIT-RECEPTACLE (2-PIN)	
		1	**102-8804**	3	KIT-RECEPTACLE (4-PIN)	
		1	**102-8805**	2	KIT-RECEPTACLE (6-PIN)	
		1	**102-8801**	1	KIT-RECEPTACLE (12-PIN)	
					(EACH RECEPTACLE KIT INCLUDES RECEPTACLE AS & WEDGE)	
		1	**7R-2751**	22	PLUG-CONNECTOR	
		1	**8L-8413**	2	STRAP-CABLE	
		1	**8T-8737**	114	PLUG-SEAL	
		1	**8T-8799**	2	BOOT	
		1	**9W-1951**	1	RECEPTACLE-CONNECTOR (9-PIN)	
		1	**091-2436**	47	TERMINAL-BLADE (18-GA TO 22-GA)	
	36	2	**311-8070**	1	BRACKET AS	
	37	2	**312-3083**	1	BRACKET AS	
Y	38	2	*325-5950*	1	ELECTRONICS GP-MACHINE	155
	39	2	**096-6166**	12	WASHER-HARD (4.5X9X1-MM THK)	
	40	1	**156-6175**	2	CLIP	
	41	1	**170-9360**	1	GROMMET	
	42	1	**196-2966**	1	PLUG	
	43	1,2	**3S-2093**	23	STRAP-CABLE	
	44	2	**4P-8134**	2	CLIP	
M	45	1,2	**5C-2890**	4	NUT (M6X1-THD)	
M	46	2	**5C-7261**	6	NUT (M8X1.25-THD)	
	47	2	**6V-5764**	8	SCREW-MACHINE (10-32X0.625-IN)	
	48	2	**7X-0579**	8	WASHER-HARD (8.8X25.5X2-MM THK)	

338-5738 **WIRING GP-PLATFORM** *(contd.)* **i03642941**

NOTE	REF NO	GRAPHIC REF	PART NUMBER	QTY	PART NAME 1 2 3 4 5 6 (PRODUCT LEVEL)	SEE PAGE
M	49	2	**7X-2534**	2	BOLT (M6X1X50-MM)	
	50	2	**7X-7729**	3	WASHER (11X25X3-MM THK)	
	51	1	**8C-3398**	1	LOCKWASHER	
	52	2	**8F-3590**	4	LOCKWASHER	
M	53	2	**8T-0285**	4	SCREW-MACHINE (M4X0.7X12-MM)	
	54	2	**8T-0328**	8	WASHER-HARD (5.5X10X1-MM THK)	
	55	2	**8T-4121**	4	WASHER-HARD (11X21X2.5-MM THK)	
M	56	2	**8T-4133**	2	NUT (M10X1.5-THD)	
M	57	2	**8T-4136**	1	BOLT (M10X1.5X25-MM)	
M	58	2	**8T-4137**	2	BOLT (M10X1.5X20-MM)	
M	59	1,2	**8T-4138**	5	BOLT (M6X1X20-MM)	
M	60	1,2	**8T-4200**	6	BOLT (M8X1.25X16-MM)	
	61	1,2	**8T-4205**	8	WASHER-HARD (7.2X14.5X2-MM THK)	
	62	1,2	**8T-4224**	8	WASHER-HARD (8.8X16X2-MM THK)	
E	63	1	**3E-6600**		SEAL (5-CM EACH)	
E	64	2	**103-2543**		SEAL (3-CM EACH)	
E	65	1	**3E-8299**		SEAL (3-CM EACH)	
E	65A	2	**3E-8299**		SEAL (7-CM)	

B-USE AS REQUIRED
E-ORDER BY THE CENTIMETER
M-METRIC PART
Y-SEPARATE ILLUSTRATION

338-5738 **WIRING GP-PLATFORM** *(contd.)* **i03642941**

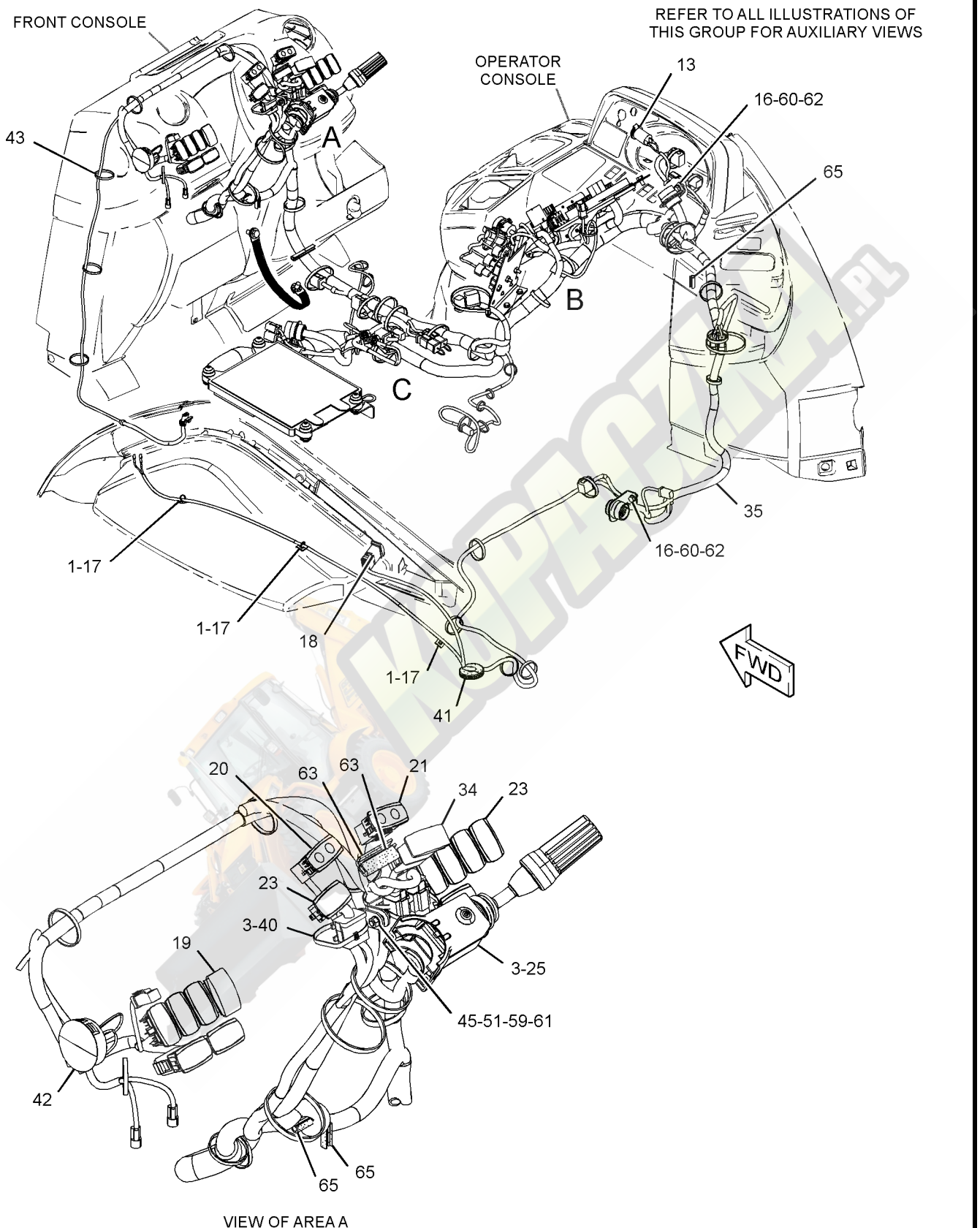

GRAPHIC #1 g01991593

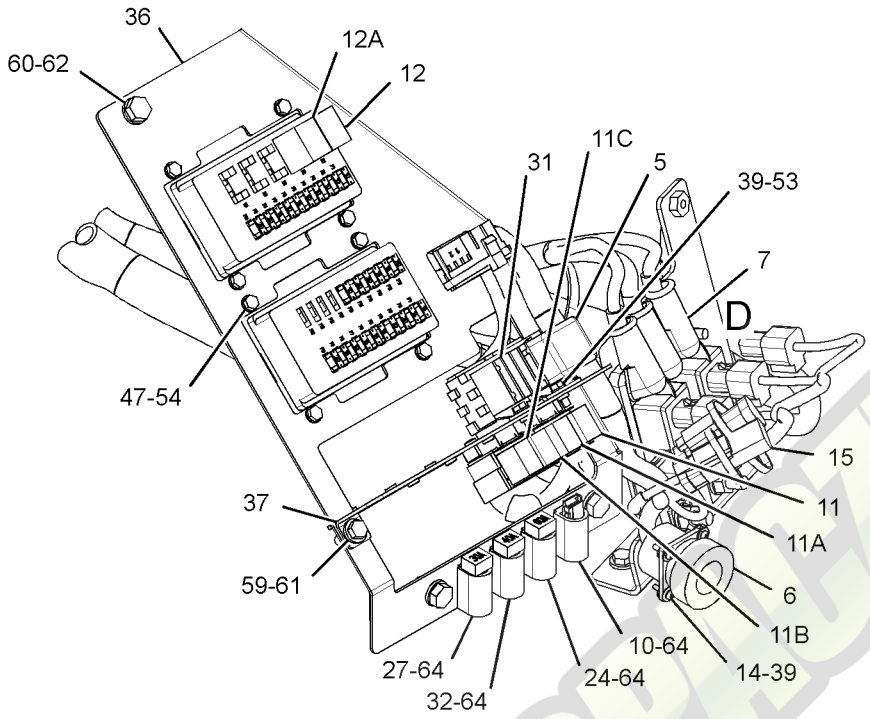

VIEW OF AREA B

180°

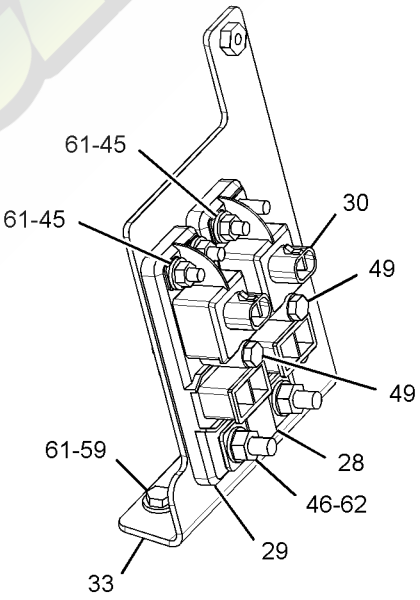

VIEW OF AREA D
(PARTS REMOVED FOR CLARITY)

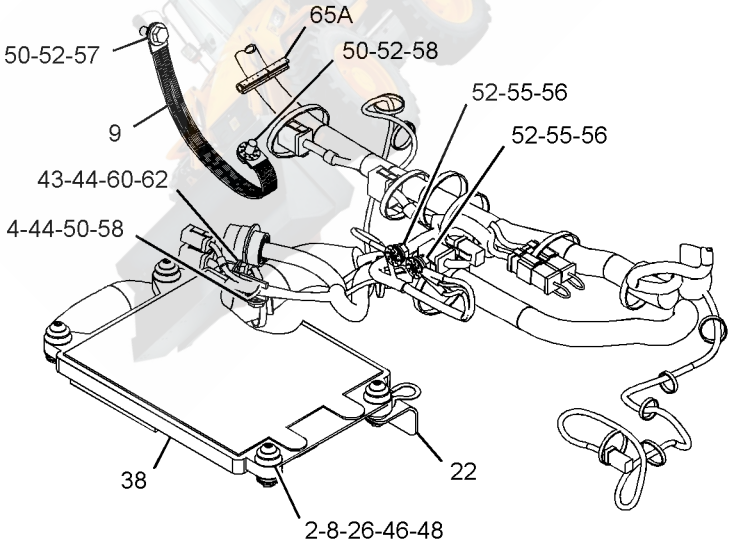

VIEW OF AREA C

GRAPHIC #2 **<END>** g01991594

ELECTRICAL AND STARTING SYSTEM

211-4271 WIRING GP-POWER RECEPTACLE

S/N: JBA1-UP

PART OF 335-3052, 335-3053, 335-3055 CAB AR, 335-3054 CAB AR-ENCLOSED ROPS AN ATTACHMENT

SMCS-1408, 7301 **i03029014**

NOTE	REF NO	GRAPHIC REF	PART NUMBER	QTY	PART NAME 1 2 3 4 5 6 (PRODUCT LEVEL)	SEE PAGE
	1	1	**178-7539**	1	RECEPTACLE AS (POWER SUPPLY)	

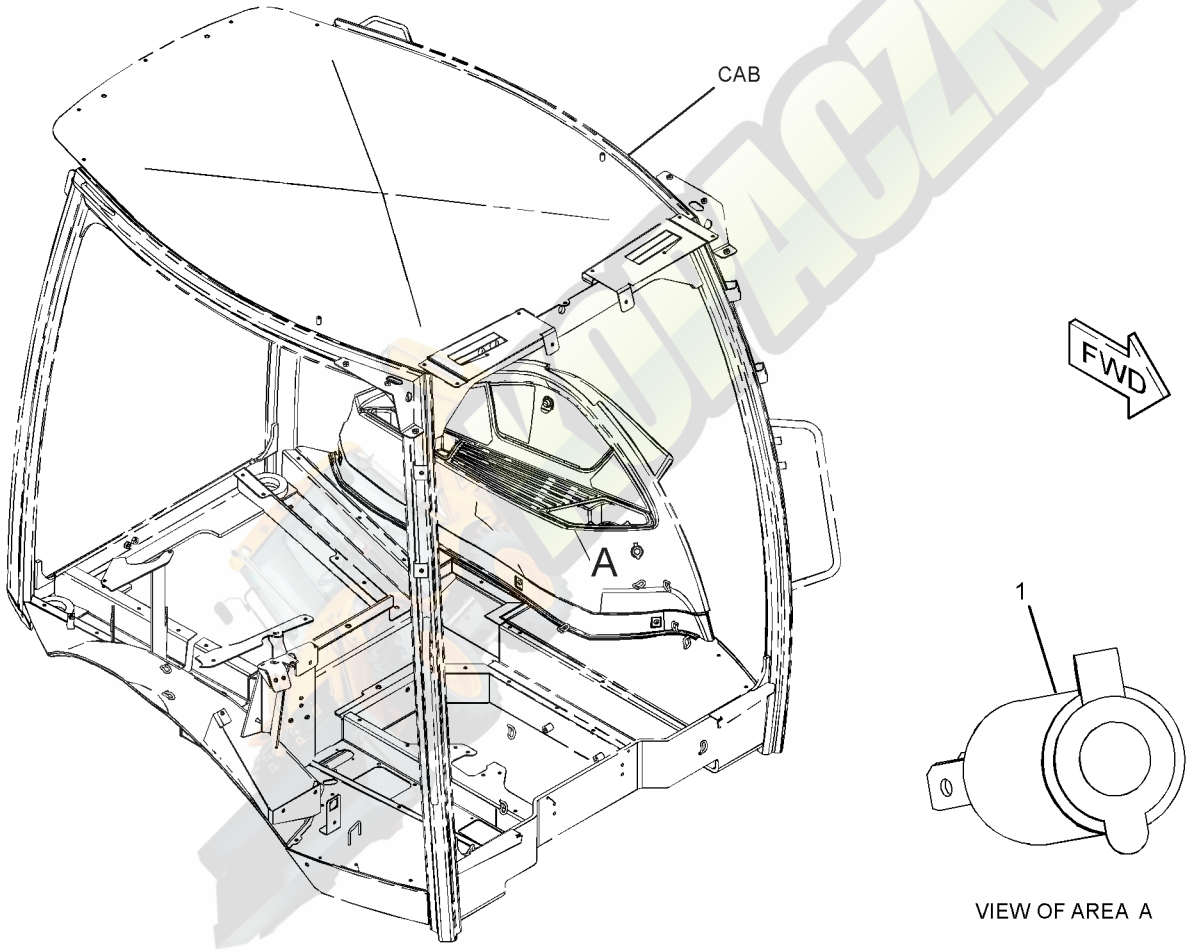

VIEW OF AREA A

GRAPHIC #1 **<END>** g01520595

328-1942 WIRING GP-REAR—PILOT

S/N: JBA1-UP

PART OF 329-0294 CHASSIS AR

SMCS-1408 **i03642976**

NOTE	REF NO	GRAPHIC REF	PART NUMBER	QTY	PART NAME 1 2 3 4 5 6 (PRODUCT LEVEL)	SEE PAGE
	1	1	**3S-2093**	14	STRAP-CABLE	
	2	1	**7K-1181**	1	STRAP-CABLE	
	3	1	**189-3158**	2	SUPPRESSOR-ARC	
	4	1	**205-9920**	11	STRAP-CABLE	
	5	1	**206-1345**	4	STRAP-CABLE	
	6	1	**214-4713**	1	SWITCH AS-ROCKER (SIDESHIFT, LOCK-UNLOCK)	
		1	**111-7899**	1	GASKET	
B	7	1	**274-3774**	1	CAP-CONNECTOR	
	8	1	**327-2269**	1	HARNESS AS-REAR	
		1	**274-3775**	1	CAP-CONNECTOR	
		1	**9W-0852**	1	PIN-CONNECTOR (14-GA)	
		1	**9X-3401**	23	PIN-CONNECTOR (16-GA TO 18-GA)	
		1	**155-2255**	1	KIT-CONNECTING PLUG (12-PIN)	
		1	**155-2260**	2	KIT-CONNECTING PLUG (3-PIN)	
		1	**155-2270**	11	KIT-CONNECTING PLUG (2-PIN)	
		1	**155-2271**	2	KIT-CONNECTING PLUG (4-PIN)	
					(EACH PLUG KIT INCLUDES PLUG AS, WEDGE & INTERFACE SEAL)	
		1	**225-3854**	1	PLUG AS	
		1	**8T-8737**	17	PLUG-SEAL	
		1	**180-9340**	38	SOCKET-CONNECTOR (14-GA TO 18-GA)	
		1	**2L-8075**	2	TERMINAL-RING (14-GA TO 16-GA, NO. 8 SCREW)	
E		1	**119-3662**		TUBE-HEAT SHRINK (10.85-MM DIA) (7-CM)	
E		1	**125-7874**		TUBE-HEAT SHRINK (5.72-MM DIA) (40-CM)	
	9	1	**4P-7428**	2	CLIP	
	10	1	**8T-4121**	4	WASHER-HARD (11X21X2.5-MM THK)	
M	11	1	**8T-4133**	2	NUT (M10X1.5-THD)	
M	12	1	**8T-4195**	2	BOLT (M10X1.5X30-MM)	

B-USE AS REQUIRED
E-ORDER BY THE CENTIMETER
M-METRIC PART

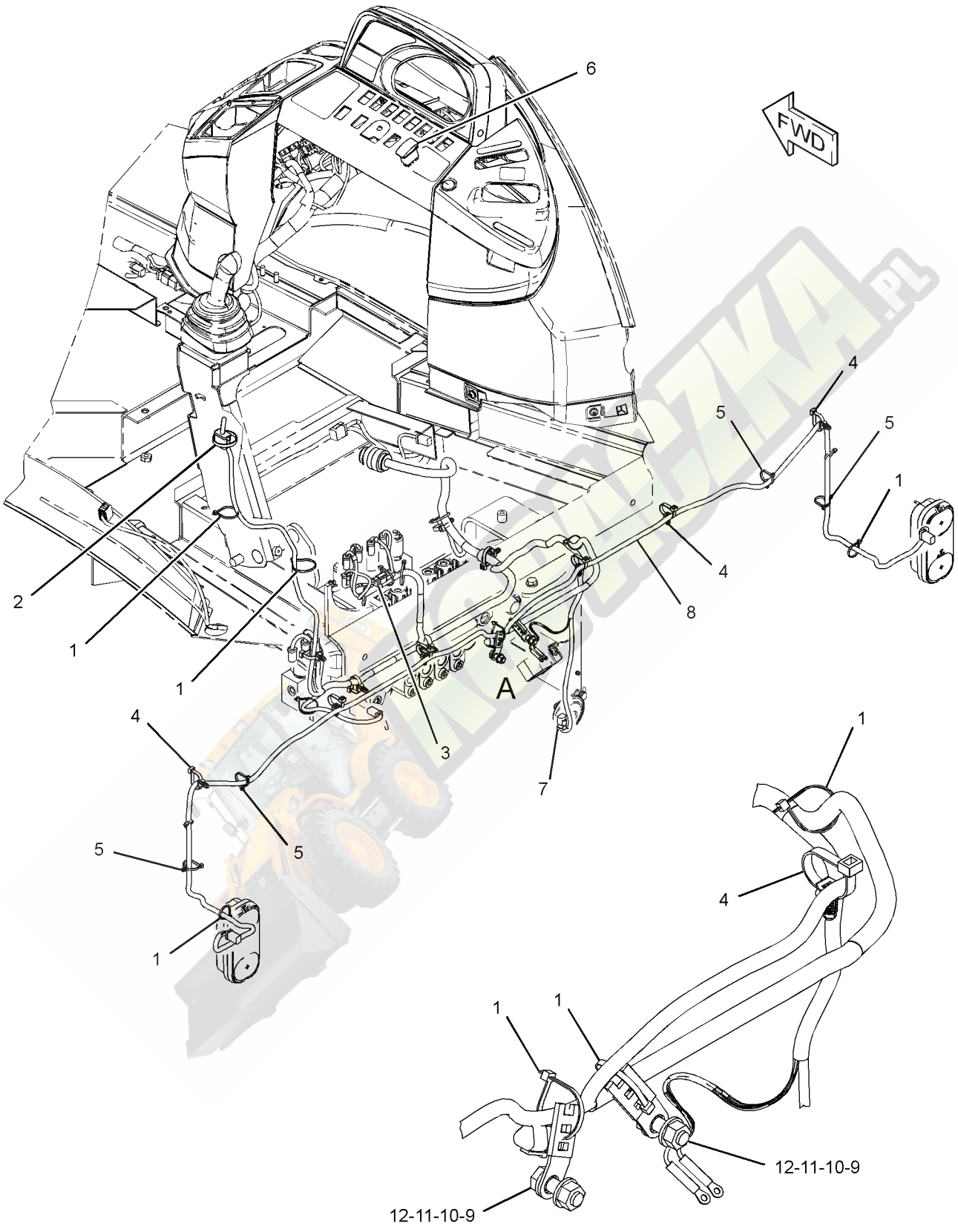

VIEW OF AREA A

GRAPHIC #1 **<END>** g01988114

323-0991 WIRING GP-RIDE CONTROL

S/N: JBA1-UP
PART OF 344-5290 CONTROL AR-RIDE, 344-6354 PREMIER AR, 332-7959, 332-7961 VALVE AR-BANK 3
AN ATTACHMENT

SMCS-1408 **i03713800**

NOTE	REF NO	GRAPHIC REF	PART NUMBER	QTY	PART NAME 1 2 3 4 5 6 (PRODUCT LEVEL)	SEE PAGE
	1	1	**146-9439**	1	RELAY AS (12-VOLT) (RIDE CONTROL)	
	2	1	**189-3158**	1	SUPPRESSOR-ARC	
	3	1	**206-2423**	3	SADDLE	
	4	1	**214-4710**	1	SWITCH AS-ROCKER (RIDE CONTROL)	
		1	**111-7899**	1	GASKET	
	5	1	**246-8038**	1	HARNESS AS-RIDE CONTROL	
		1	**102-8804**	1	KIT-RECEPTACLE (4-PIN)	
					(INCLUDES RECEPTACLE AS & WEDGE)	
		1	**8L-8413**	4	STRAP-CABLE	
		1	**8T-8737**	1	PLUG-SEAL	
		1	**186-3735**	2	PIN-CONNECTOR (16-GA TO 18-GA)	
		1	**186-3736**	8	SOCKET-CONNECTOR (16-GA TO 18-GA)	
E		1	**125-7874**		TUBE-HEAT SHRINK (5.72-MM DIA) (10-CM)	
		1	**155-2270**	3	KIT-CONNECTING PLUG (2-PIN)	
		1	**155-2260**	1	KIT-CONNECTING PLUG (3-PIN)	
					(EACH KIT INCLUDES PLUG AS, WEDGE & INTERFACE SEAL)	
		1	**180-9339**	2	PIN-CONNECTOR (14-GA TO 18-GA)	
	6	1	**304-5696**	1	SWITCH AS-PRESSURE (RIDE CONTROL)	
		1	**186-3735**	3	PIN-CONNECTOR (16-GA TO 18-GA)	
		1	**102-8803**	1	KIT-RECEPTACLE (3-PIN)	
					(KIT INCLUDES RECEPTACLE AS & WEDGE)	
	7	1	**3J-1907**	1	SEAL-O-RING	
	8	1	**3S-2093**	7	STRAP-CABLE	

E-ORDER BY THE CENTIMETER

323-0991 **WIRING GP-RIDE CONTROL** ***(contd.)*** **i03713800**

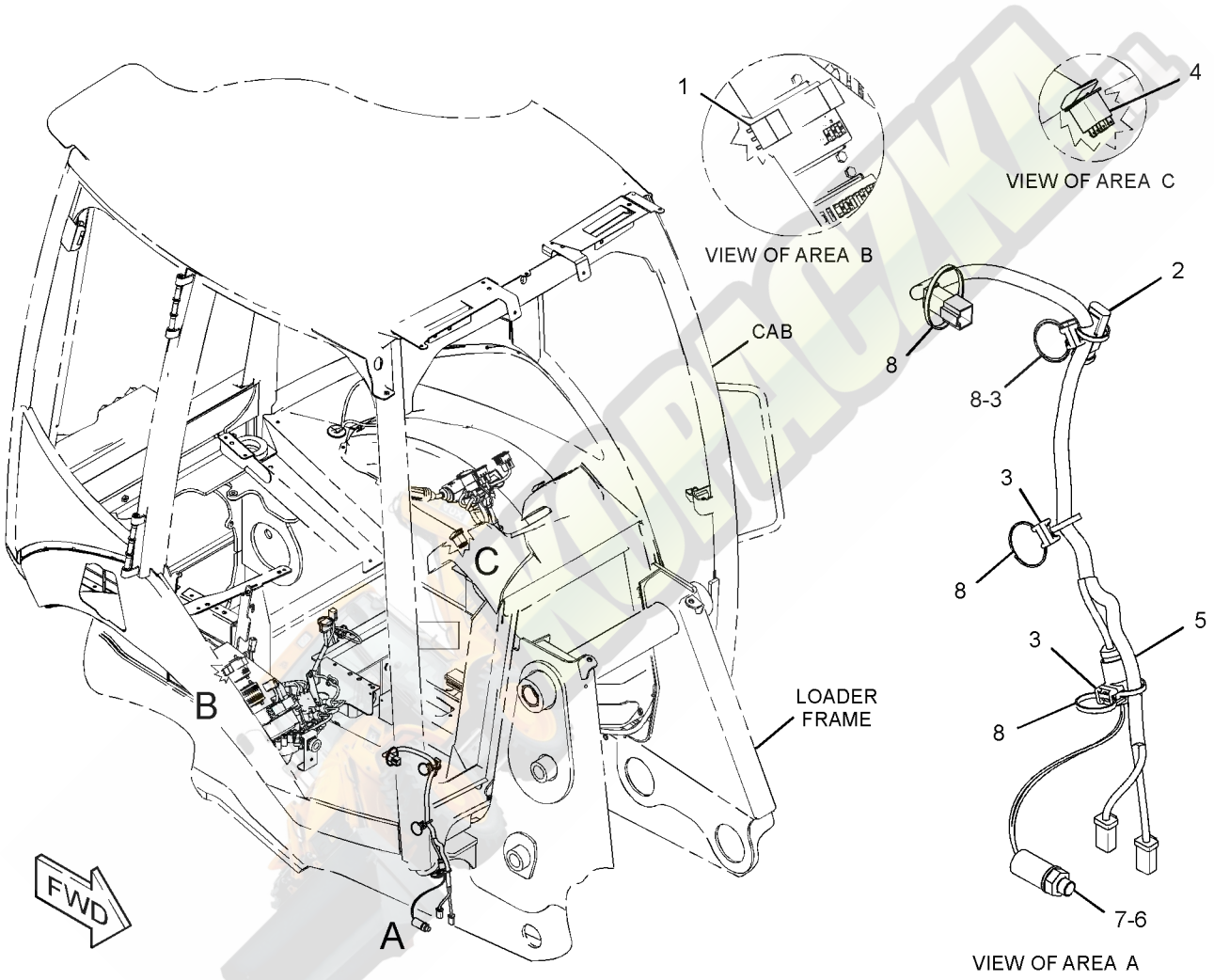

GRAPHIC #1 **<END>** g01575974

338-5732 WIRING GP-SENSOR–DELUXE CAB

S/N: JBA1-UP

PART OF 335-3055 CAB AR, 335-3054 CAB AR-ENCLOSED ROPS AN ATTACHMENT

SMCS-1408 **i03642949**

NOTE	REF NO	GRAPHIC REF	PART NUMBER	QTY	PART NAME 1 2 3 4 5 6 (PRODUCT LEVEL)	SEE PAGE
	1	1	**134-0404**	1	SWITCH AS-PRESSURE (HYDRAULIC OIL FILTER BYPASS)	
	2	1	**250-1448**	1	CONNECTOR	
	3	1	**263-9484**	1	HARNESS AS-SENSOR	
		1	**9X-3401**	3	PIN-CONNECTOR (16-GA TO 18-GA)	
		1	**155-2270**	1	KIT-CONNECTING PLUG (2-PIN)	
					(INCLDUES PLUG AS, WEDGE & INTERFACE SEAL)	
		1	**8T-8737**	1	PLUG-SEAL	
		1	**102-8804**	1	KIT-RECEPTACLE (4-PIN)	
					(INCLDUES RECEPTACLE AS & WEDGE)	
		1	**180-9340**	2	SOCKET-CONNECTOR (14-GA TO 18-GA)	
		1	**2L-8076**	1	TERMINAL-RING (14-GA TO 16-GA, NO. 10 SCREW)	
	4	1	**264-4297**	1	SENSOR GP-TEMPERATURE (HYDRAULIC OIL)	
	5	1	**3J-1907**	1	SEAL-O-RING	
	6	1	**3K-0360**	1	SEAL-O-RING	
	7	1	**3S-2093**	4	STRAP-CABLE	
	8	1	**4P-7581**	1	CLIP	

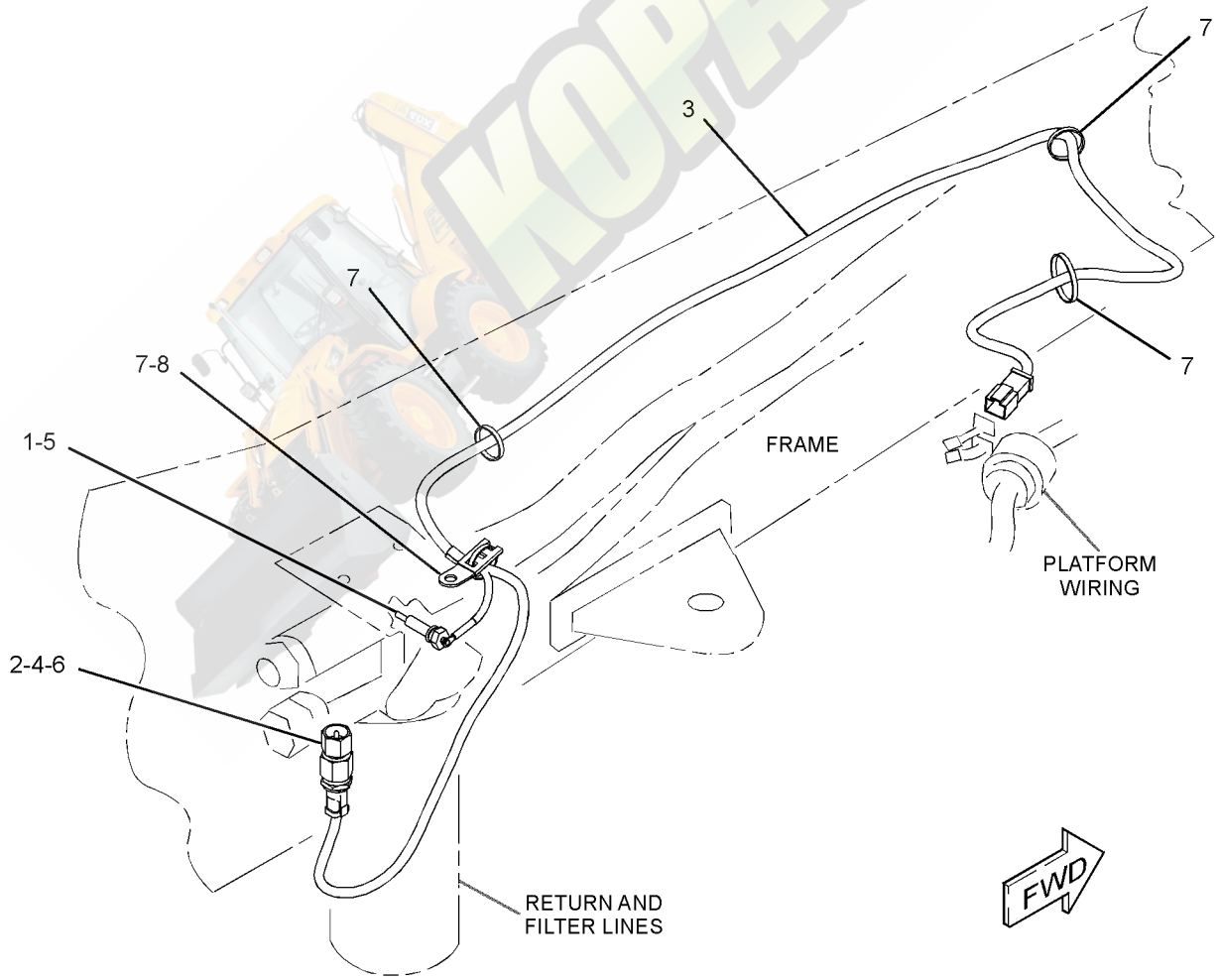

GRAPHIC #1 **<END>** g01971658

349-1101 WIRING GP-SENSOR—OBJECT HANDLING

S/N: JBA1-UP

PART OF 350-6944, 350-6945 BACKHOE AR-EXTENDABLE STICK AN ATTACHMENT

SMCS-1408 **i03694800**

NOTE	REF NO	GRAPHIC REF	PART NUMBER	QTY	PART NAME 1 2 3 4 5 6 (PRODUCT LEVEL)	SEE PAGE
	1	1	**7K-1181**	12	STRAP-CABLE	
	2	1	*148-8447*	1	TEE AS-SWIVEL	
		1	**7J-9108**	1	SEAL-O-RING	
		1	**7X-0872**	1	TEE-SWIVEL	
	3	1	*165-6365*	1	FITTING AS	
		1	**3J-1907**	1	SEAL-O-RING	
		1	**7W-7381**	1	FITTING-OUTLET	
	4	1	**206-2423**	1	SADDLE	
	5	1	*241-6215*	1	ELBOW AS	
		1	**3J-1907**	1	SEAL-O-RING	
		1	**6V-8076**	1	ELBOW	
	6	1	**349-1098**	1	HARNESS AS-SWITCH (CAB)	
		1	**230-4013**	1	PLUG AS-CONNECTOR (3-PIN)	
		1	**264-7030**	1	SEAL-CONNECTOR	
		1	**230-4014**	1	RECEPTACLE AS-CONNECTOR (3-PIN)	
		1	**9X-3401**	3	PIN-CONNECTOR (16-GA TO 18-GA)	
		1	**9X-3402**	3	SOCKET-CONNECTOR (16-GA TO 18-GA)	
	7	1	**349-1099**	1	HARNESS AS-SWITCH (REAR)	
		1	**230-4014**	1	RECEPTACLE AS-CONNECTOR (3-PIN)	
E		1	**188-4651**		HOSE-HYDRAULIC (131-CM)	
		1	**9X-3401**	3	PIN-CONNECTOR (16-GA TO 18-GA)	
		1	**230-4013**	1	PLUG AS-CONNECTOR (3-PIN)	
		1	**264-7030**	1	SEAL-CONNECTOR	
		1	**9X-3402**	3	SOCKET-CONNECTOR (16-GA TO 18-GA)	
D		1	**5P-5995**		TUBE (0.2-M)	
E		1	**125-7876**		TUBE-HEAT SHRINK (17.78-MM DIA) (5-CM)	
	8	1	**349-1100**	1	HARNESS AS-SWITCH (HOE)	
		1	**155-2271**	1	KIT-CONNECTING PLUG (4-PIN) (INCLUDES PLUG AS, WEDGE & INTERFACE SEAL)	
		1	**8T-8737**	1	PLUG-SEAL	
		1	**230-4014**	1	RECEPTACLE AS-CONNECTOR (3-PIN)	
E		1	**188-4651**		HOSE-HYDRAULIC (298-CM)	
		1	**9X-3401**	3	PIN-CONNECTOR (16-GA TO 18-GA)	
		1	**180-9340**	3	SOCKET-CONNECTOR (14-GA TO 18-GA)	
D		1	**5P-5995**		TUBE (0.3-M)	
E		1	**125-7876**		TUBE-HEAT SHRINK (17.78-MM DIA) (5-CM)	
	9	1	**349-2773**	1	FILM-WARNING (TIPPING HAZARD, READ OMM)	
	10	1	**350-1078**	1	SWITCH AS-ROCKER (LOAD STABILITY, BUCKET)	
		1	**111-7899**	1	GASKET	
	11	1	**350-1101**	1	HARNESS AS-CONSOLE	
		1	**228-5856**	1	CONNECTOR	
		1	**9X-3401**	4	PIN-CONNECTOR (16-GA TO 18-GA)	
		1	**230-4013**	1	PLUG AS-CONNECTOR (3-PIN)	
		1	**264-7030**	1	SEAL-CONNECTOR	
		1	**230-5009**	1	RECEPTACLE AS-CONNECTOR (4-PIN)	
		1	**9X-3402**	3	SOCKET-CONNECTOR (16-GA TO 18-GA)	
		1	**091-2436**	4	TERMINAL-BLADE (18-GA TO 22-GA)	
E		1	**125-7874**		TUBE-HEAT SHRINK (5.72-MM DIA) (5-CM)	
	12	1	**350-9471**	1	PLATE AS	
	13	1	**124-0174**	2	CLIP	
	14	1	**3S-2093**	27	STRAP-CABLE	
	15	1	**5P-4115**	1	WASHER-HARD (7.2X19X2-MM THK)	
	16	1	**7X-3165**	1	ADAPTER AS-SWIVEL	
	17	1	**8M-2770**	1	CLIP	

349-1101 **WIRING GP-SENSOR** *(contd.)* **i03694800**

NOTE	REF NO	GRAPHIC REF	PART NUMBER	QTY	PART NAME 1 2 3 4 5 6 (PRODUCT LEVEL)	SEE PAGE
	18	1	**8T-4121**	1	WASHER-HARD (11X21X2.5-MM THK)	
M	19	1	**8T-4137**	1	BOLT (M10X1.5X20-MM)	

D-ORDER BY THE METER
E-ORDER BY THE CENTIMETER
M-METRIC PART

KOPACZKA.PL

349-1101 **WIRING GP-SENSOR** *(contd.)* **i03694800**

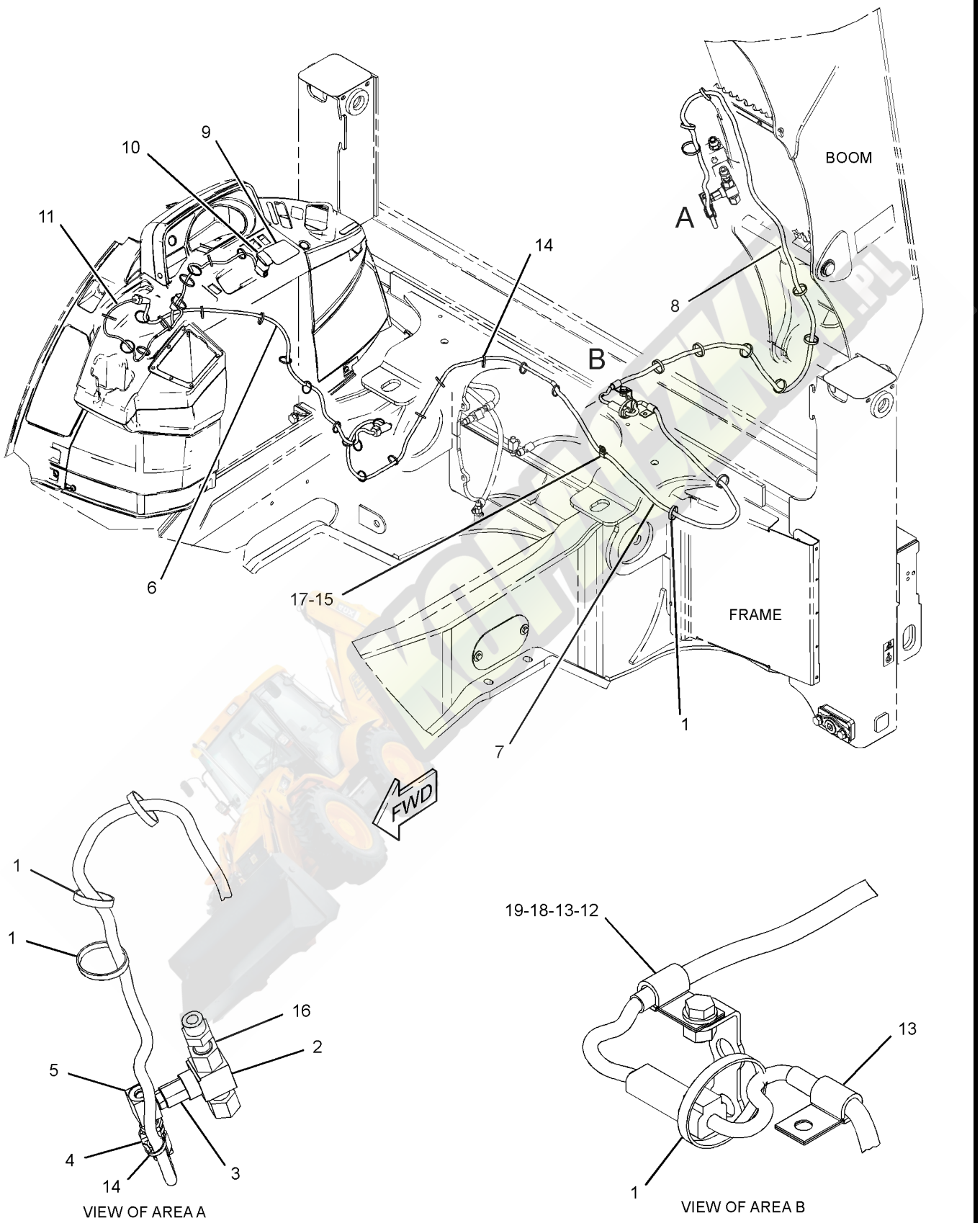

GRAPHIC #1 **<END>** g01990794

310-2352 WIRING GP-TRANSMISSION CONTROL—POWERSHIFT

S/N: JBA1-UP
PART OF 329-0306 POWER TRAIN AR
AN ATTACHMENT

SMCS-1408, 3168 **i03579162**

NOTE	REF NO	GRAPHIC REF	PART NUMBER	QTY	PART NAME 1 2 3 4 5 6 (PRODUCT LEVEL)	SEE PAGE
	1	1	**7K-1181**	7	STRAP-CABLE	
	2	1	**164-1368**	8	FASTENER-PANEL	
	3	1	**206-2423**	1	SADDLE	
	4	1	**214-4691**	1	SWITCH AS-ROCKER (AUTOSHIFT, STANDARD SHIFT)	
		1	**111-7899**	1	GASKET	
	5	1	**232-1545**	1	PLATE AS	
	6	1	**246-8052**	1	HARNESS AS-TRANSMISSION	
		1	**102-8802**	4	KIT-RECEPTACLE (2-PIN)	
		1	**102-8805**	1	KIT-RECEPTACLE (6-PIN)	
					(EACH KIT INCLUDES RECEPTACLE AS & WEDGE)	
		1	**8L-8413**	1	STRAP-CABLE	
		1	**8T-8737**	1	PLUG-SEAL	
E		1	**125-7875**		TUBE-HEAT SHRINK (7.44-MM DIA) (5-CM)	
		1	**155-2270**	8	KIT-CONNECTING PLUG (2-PIN)	
					(EACH KIT INCLUDES PLUG AS, WEDGE & INTERFACE SEAL)	
		1	**180-9339**	13	PIN-CONNECTOR (14-GA TO 18-GA)	
		1	**180-9340**	16	SOCKET-CONNECTOR (14-GA TO 18-GA)	
	7	1	**274-9993**	1	PLATE	
	8	1	**310-9354**	1	CONTROL GP-TRANSMISSION	
		1	**8T-8737**	2	PLUG-SEAL	
		1	**174-3091**	1	KIT-RECEPTACLE (12-PIN)	
					(INCLUDES RECEPTACLE AS & WEDGE)	
M	9	1	**105-3480**	2	BOLT-SOCKET HEAD (M5X0.8X16-MM)	
	10	1	**3S-2093**	3	STRAP-CABLE	
	11	1	**7X-0620**	1	WASHER-HARD (5.5X13X1.6-MM THK)	

E-ORDER BY THE CENTIMETER
M-METRIC PART

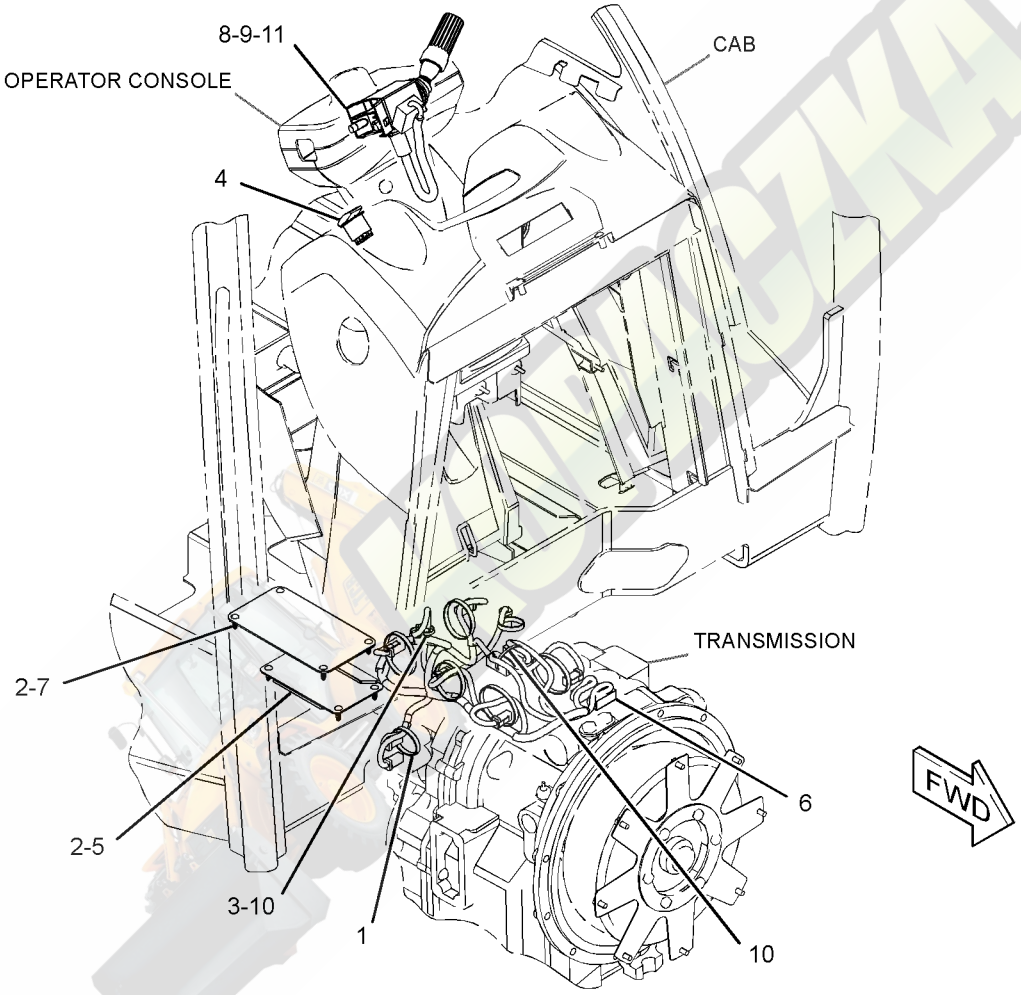

GRAPHIC #1 **<END>** g01764333

311-3639 WIRING GP-WIPER–REAR

S/N: JBA1-UP
PART OF 315-1270 WINDOW GP-CAB
AN ATTACHMENT

SMCS-1408, 7305 **i03579181**

NOTE	REF NO	GRAPHIC REF	PART NUMBER	QTY	PART NAME 1 2 3 4 5 6 (PRODUCT LEVEL)	SEE PAGE
	1	1	**206-1345**	3	STRAP-CABLE	
	2	1	**311-1218**	1	HARNESS AS-WINDOW WIPER	
		1	**266-4157**	7	SLEEVE-BRAIDED	
E		1	**266-2814**		CONDUIT-FLEXIBLE (141-CM)	
		1	**9W-0852**	2	PIN-CONNECTOR (14-GA)	
		1	**180-9339**	2	PIN-CONNECTOR (14-GA TO 18-GA)	
		1	**155-2271**	1	KIT-CONNECTING PLUG (4-PIN)	
					(INCLUDES PLUG AS, WEDGE & INTERFACE SEAL)	
		1	**102-8804**	1	KIT-RECEPTACLE (4-PIN)	
					(INCLUDES RECEPTACLE AS & WEDGE)	
		1	**9W-0844**	2	SOCKET-CONNECTOR (14-GA)	
		1	**180-9340**	2	SOCKET-CONNECTOR (14-GA TO 18-GA)	
D		1	**141-8061**		TAPE (1-M)	
	3	1	**308-3074**	4	CLIP	
	4	1	**3S-2093**	2	STRAP-CABLE	
M	5	1	**8T-4171**	4	BOLT (M6X1X12-MM)	
	6	1	**8T-4205**	5	WASHER-HARD (7.2X14.5X2-MM THK)	

D-ORDER BY THE METER
E-ORDER BY THE CENTIMETER
M-METRIC PART

311-3639 **WIRING GP-WIPER** *(contd.)* **i03579181**

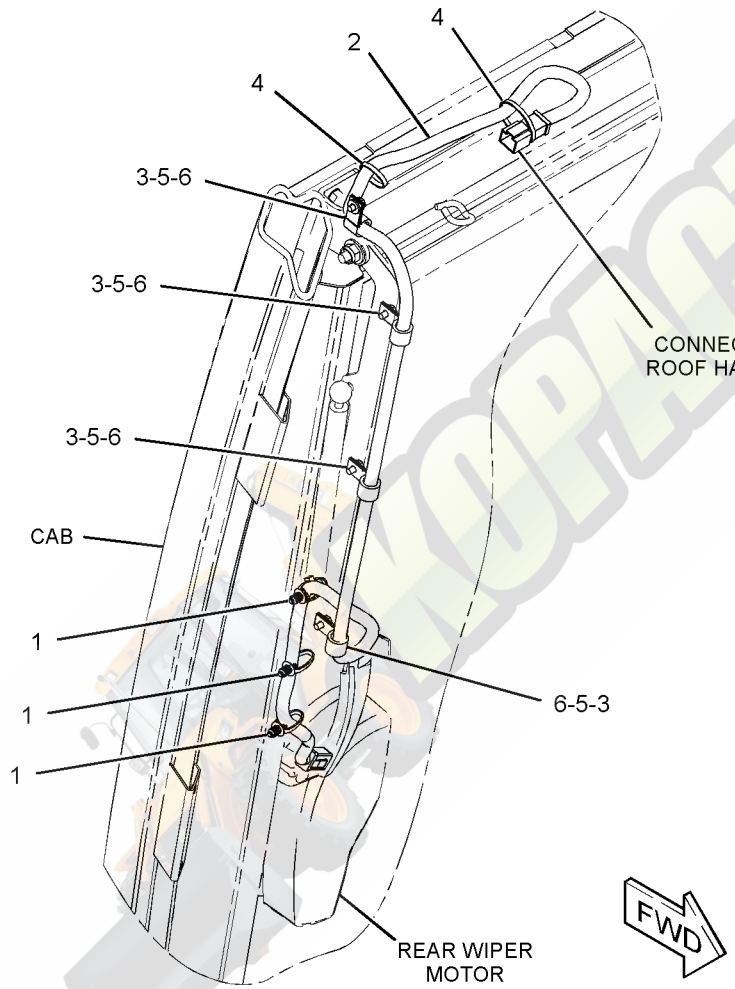

GRAPHIC #1

<END>

g01653654

211-4258 WIRING GP-WORK TOOL–ANGLE BROOM

S/N: JBA1-UP

AN ATTACHMENT

SMCS-1408 **i03579220**

NOTE	REF NO	GRAPHIC REF	PART NUMBER	QTY	PART NAME 1 2 3 4 5 6 (PRODUCT LEVEL)	SEE PAGE
	1	1	**159-9495**	1	NUT (1-1/2-18-THD)	
	2	1	**159-9496**	1	LOCKWASHER	
	3	1	**211-9461**	1	HARNESS AS-WORK TOOL (ANGLE BROOM)	
		1	**7N-7779**	1	SOCKET-CONNECTOR (14-GA TO 18-GA)	
		1	**7N-7780**	2	PIN-CONNECTOR (14-GA TO 18-GA)	
		1	**7N-7781**	1	HOUSING-RECEPTACLE (14-GA TO 18-GA)	
		1	**7N-7782**	1	HOUSING-PLUG (14-GA TO 18-GA)	
		1	**8T-8737**	4	PLUG-SEAL	
		1	**9G-2265**	1	CLIP	
		1	**9G-3695**	3	PLUG-SEAL	
		1	**186-3736**	3	SOCKET-CONNECTOR (16-GA TO 18-GA)	
		1	**9W-0844**	1	SOCKET-CONNECTOR (14-GA)	
E		1	**119-3662**		TUBE-HEAT SHRINK (10.85-MM DIA) (7-CM)	
E		1	**125-7874**		TUBE-HEAT SHRINK (5.72-MM DIA) (10-CM)	
		1	**155-2274**	1	KIT-CONNECTING PLUG (6-PIN) (KIT INCLUDES PLUG AS, WEDGE & INTERFACE SEAL)	
		1	**156-1458**	1	COVER	
		1	**156-1460**	1	RECEPTACLE (8-PIN)	
	4	1	**212-7038**	1	BRACKET	
	5	1	**214-4705**	1	SWITCH AS-ROCKER (ANGLE BROOM)	
		1	**111-7899**	1	GASKET	
	6	1	**3S-2093**	2	STRAP-CABLE	
	7	1	**4P-7581**	1	CLIP	
M	8	1	**8T-0389**	2	LOCKNUT (M10X1.5-THD)	
	9	1	**8T-4121**	2	WASHER-HARD (11X21X2.5-MM THK)	
M	10	1	**8T-4136**	2	BOLT (M10X1.5X25-MM)	

E-ORDER BY THE CENTIMETER
M-METRIC PART

211-4258 **WIRING GP-WORK TOOL** *(contd.)* **i03579220**

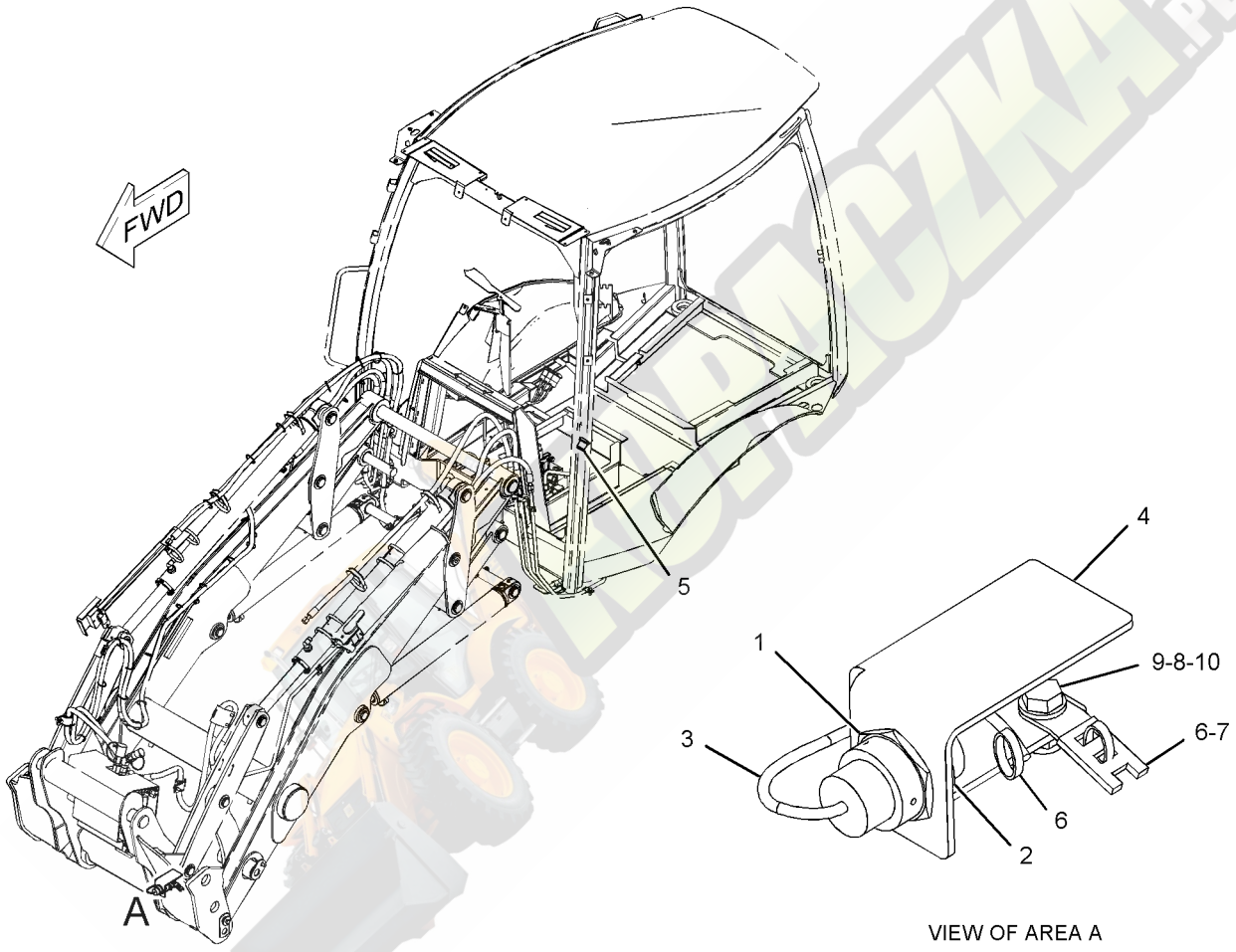

VIEW OF AREA A

GRAPHIC #1 **<END>** g01109313

296-0376 WIRING GP-WORK TOOL

S/N: JBA1-UP

PART OF 332-7949 CONVERSION AR-QUICK COUPLER, 332-7961 VALVE AR-BANK 3 AN ATTACHMENT

SMCS-1408 **i03629786**

NOTE	REF NO	GRAPHIC REF	PART NUMBER	QTY	PART NAME 1 2 3 4 5 6 (PRODUCT LEVEL)	SEE PAGE
	1	1	**189-3158**	5	SUPPRESSOR-ARC	
	2	1	**213-6077**	1	HARNESS AS-FRONT	
E		1	**5P-0767**		HOSE (541-CM)	
		1	**180-9339**	10	PIN-CONNECTOR (14-GA TO 18-GA)	
		1	**155-2270**	1	KIT-CONNECTING PLUG (2-PIN)	
		1	**155-2274**	1	KIT-CONNECTING PLUG (6-PIN)	
					(EACH PLUG KIT INCLUDES PLUG AS, WEDGE & INTERFACE SEAL)	
		1	**8T-8737**	10	PLUG-SEAL	
		1	**102-8805**	1	KIT-RECEPTACLE (6-PIN)	
		1	**102-8806**	1	KIT-RECEPTACLE (8-PIN)	
					(EACH RECEPTACLE KIT INCLUDES RECEPTACLE AS & WEDGE)	
		1	**180-9340**	2	SOCKET-CONNECTOR (14-GA TO 18-GA)	
		1	**8L-8413**	3	STRAP-CABLE	
	3	1	**214-4706**	1	SWITCH AS-ROCKER (AUXILIARY HYDRAULIC FLOW)	
	4	1	**214-4707**	1	SWITCH AS-ROCKER (ELECTRIC POWER)	
	5	1	**214-4708**	1	SWITCH AS-ROCKER (QUICK COUPLER PIN LOCK)	
					(EACH SWITCH AS-ROCKER INCLUDES)	
		1	**111-7899**	1	GASKET	
	6	1	**296-0375**	1	HARNESS AS-CAB	
		1	**228-5856**	4	CONNECTOR	
		1	**180-9339**	10	PIN-CONNECTOR (14-GA TO 18-GA)	
		1	**9X-1054**	1	PLUG AS-CONNECTOR (4-PIN)	
		1	**155-2265**	1	KIT-CONNECTING PLUG (8-PIN)	
		1	**155-2270**	5	KIT-CONNECTING PLUG (2-PIN)	
					(EACH PLUG KIT INCLUDES PLUG AS, WEDGE & INTERFACE SEAL)	
		1	**8T-8737**	4	PLUG-SEAL	
		1	**102-8801**	1	KIT-RECEPTACLE (12-PIN)	
					(INCLUDES RECEPTACLE AS & WEDGE)	
		1	**180-9340**	16	SOCKET-CONNECTOR (14-GA TO 18-GA)	
B		1	**141-8061**		TAPE	
E		1	**125-7874**		TUBE-HEAT SHRINK (5.72-MM DIA) (40-CM)	
E		1	**125-7875**		TUBE-HEAT SHRINK (7.44-MM DIA) (20-CM)	
	7	1	**115-1615**	1	RELAY AS (12-VOLT) (QUICK COUPLER)	
	8	1	**3S-2093**	36	STRAP-CABLE	
	9	1	**3S-8665**	3	CLIP	
E	10	1	**149-7372**		SLEEVE-ABRASION (55-CM)	

B-USE AS REQUIRED
E-ORDER BY THE CENTIMETER

296-0376 **WIRING GP-WORK TOOL** *(contd.)* **i03629786**

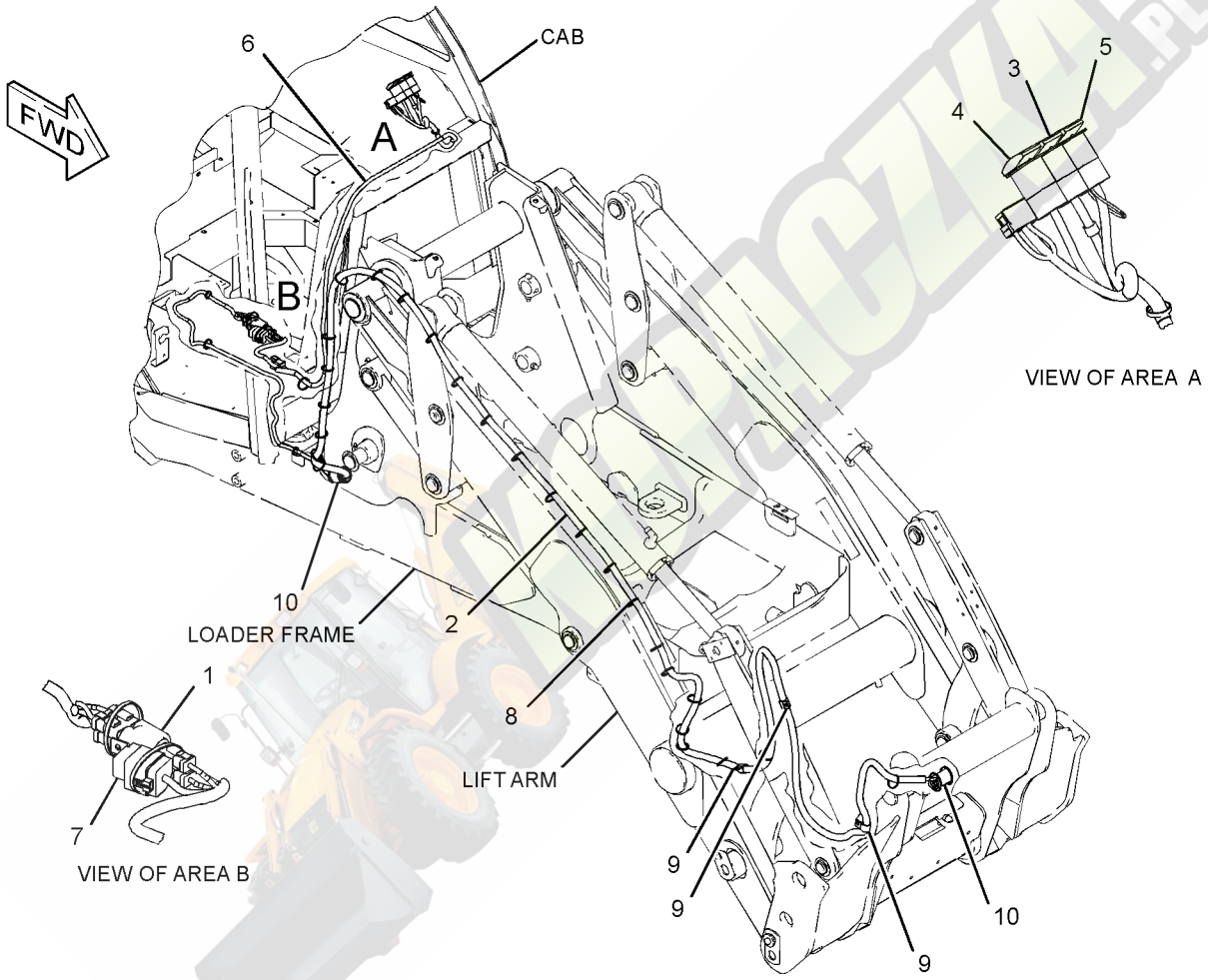

GRAPHIC #1 **<END>** g01394557

230-5743 AXLE GP-DRIVE & STEERING–FRONT

S/N: JBA1-UP
PART OF 329-0319 DRIVE AR-BACKHOE LOADER
AN ATTACHMENT

SMCS-3020, 3250, 3258, 3259, 3260, 3264, 3278, 4050, 4303, 4313

i03627149

NOTE	REF NO	GRAPHIC REF	PART NUMBER	QTY	PART NAME 1 2 3 4 5 6 (PRODUCT LEVEL)	SEE PAGE
	1	1	**199-0639**	4	SCREW-FLAT HEAD (M8X1.25X20-MM)	
	2	1	**207-4254**	6	BOLT (STEERING CYLINDER)	
	3	1	**207-4258**	2	NUT (M20X1.5-THD)	
	4	1	**219-8798**	2	SEAL-LIP TYPE	
	5	1	**219-8795**	1	CAP	
	6	1	**209-9875**	2	DOWEL	
	7	1	**209-7456**	2	BUSHING	
	8	1	**152-6144**	4	PLUG AS-DRAIN (MAGNETIC)	
					(EACH INCLUDES)	
		1	**6V-6228**	1	SEAL-O-RING	
	9	1	**208-0321**	11	BOLT-FLANGE HEAD (M12X1.75X33-MM)	
	10	1	**209-7464**	2	SEAL	
M	11	1	**199-0683**	16	BOLT (M16X2X38-MM)	
	12	1	**210-5937**	2	WASHER (46X66X3-MM THK)	
Y	13	1	**209-9882**	1	DIFFERENTIAL & BEVEL GEAR GP	248
	14	1	**210-5942**	2	RING	
	15	1	**209-9883**	1	HOUSING	
J	16	1	**210-5946**	2	SHAFT GP-AXLE	
					(EACH INCLUDES)	
		1	**174-4671**	1	YOKE	
	17	1	**209-9886**	2	TIE ROD GP	
					(EACH INCLUDES)	
		1	**204-3080**	1	BALL JOINT	
		1	**217-2883**	1	TIE ROD	
		1	**217-2885**	1	NUT	
	18	1	**209-9887**	1	BUSHING	
	19	1	**210-5947**	2	WASHER-THRUST (44.6X58X7-MM THK)	
	20	1	*216-7473*	4	PIN AS (UPPER)	
					(EACH INCLUDES)	
		1	**198-7823**	1	BEARING AS	
		1	**198-7825**	1	SEAL	
		1	**198-7838**	1	PIN	
Y	21	1	**210-5924**	2	PLANETARY GP-FINAL DRIVE	267
Y	22	1	**209-9884**	1	HOUSING & FLANGE GP-AXLE (RH)	259
Y	23	1	**209-9885**	1	HOUSING & FLANGE GP-AXLE (LH)	261
	24	1	**211-6735**	2	SEAL-O-RING	
L	25	1	**214-5097**	1	CYLINDER GP-STEERING	
		1	**238-5254**	1	ROD	
		1	**238-5255**	2	CYLINDER HEAD	
	26	1	**253-5024**	1	BREATHER (FRONT AXLE)	
	27	1	**069-4707**	1	SEALANT (GASKET)	
	28	1	**154-5404**	2	BEARING	
B	29	1	**198-7841**	8	SHIM (0.15-MM THK)	
B	30	1	**198-7842**	4	SHIM (0.2-MM THK)	
B	31	1	**198-7843**	4	SHIM (0.5-MM THK)	
					AVAILABLE REPAIR KIT(S):	
J			**174-4643**	2	KIT-SPIDER	
					(EACH INCLUDES SPIDER & RINGS)	
L			**215-2023**	1	KIT-SEAL	
					(INCLUDES RINGS, SEALS & WASHERS)	

230-5743 AXLE GP-DRIVE & STEERING *(contd.)* i03627149

B-USE AS REQUIRED
J-KIT MARKED J SERVICES PART MARKED J
L-KIT MARKED L SERVICES PART MARKED L
M-METRIC PART
Y-SEPARATE ILLUSTRATION

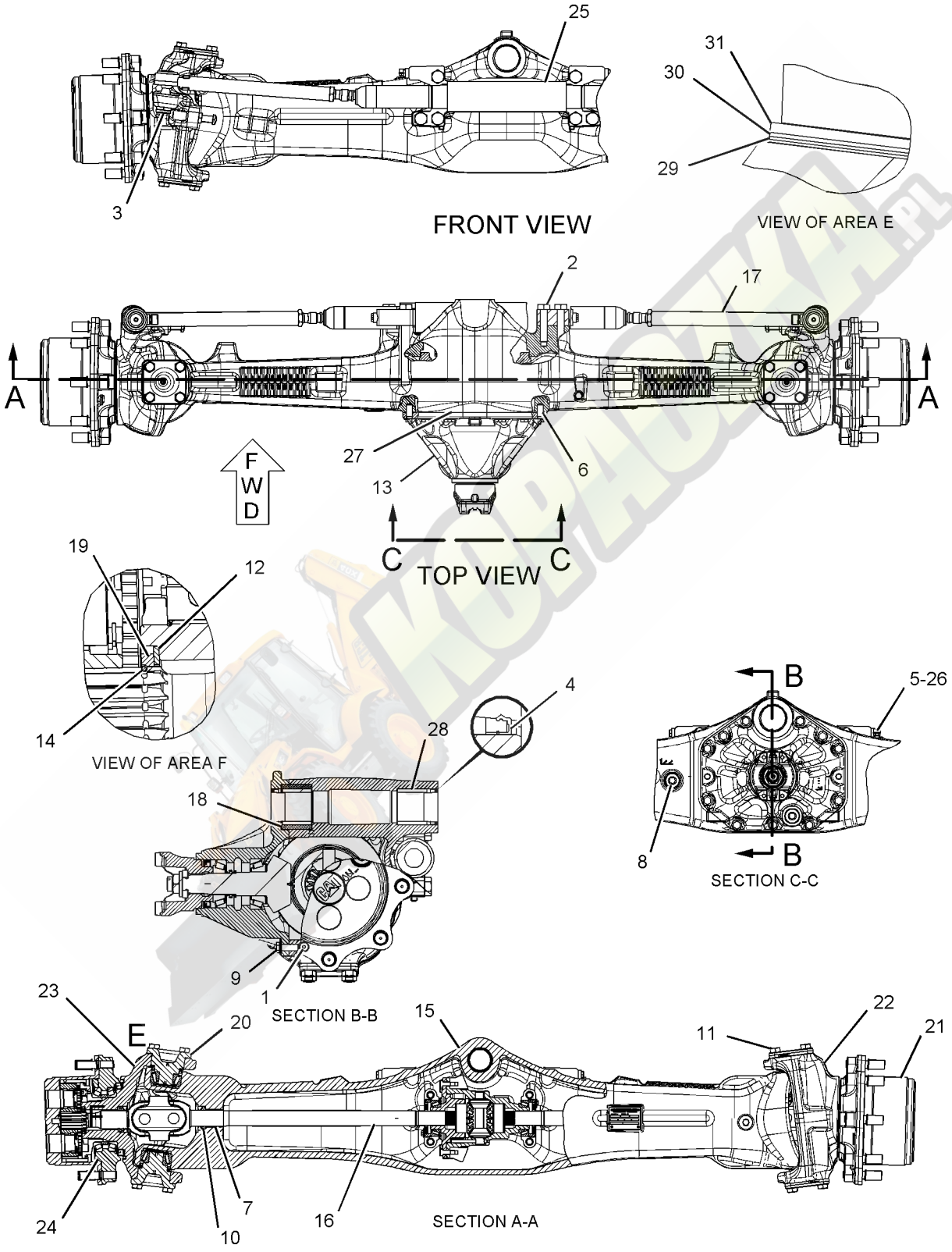

GRAPHIC #1 **<END>** g01094314

POWER TRAIN

230-5738 AXLE GP-REAR

S/N: JBA1-UP
PART OF 329-0319 DRIVE AR-BACKHOE LOADER
AN ATTACHMENT

SMCS-3278, 3282 **i03726660**

NOTE	REF NO	GRAPHIC REF	PART NUMBER	QTY	PART NAME 1 2 3 4 5 6 (PRODUCT LEVEL)	SEE PAGE
	1	1	**199-0639**	4	SCREW-FLAT HEAD (M8X1.25X20-MM)	
	2	1	**199-0641**	2	BOLT (DIFFERENTIAL LOCK)	
M	3	1	**8T-0292**	2	BOLT (M8X1.25X90-MM)	
	4	1	**199-0652**	2	CLIP-PIN	
	5	1	**210-3097**	2	CLIP	
	6	1	**210-3098**	2	SEAL	
	7	1	**199-0688**	2	SHIM (2.9-MM THK)	
	8	1	**197-9155**	1	BREATHER (AXLE)	
	9	1	**199-0670**	2	SCREW-PURGE	
	10	1	**198-7811**	2	DOWEL	
	11	1	**152-6144**	4	PLUG AS-DRAIN (MAGNETIC)	
					(EACH INCLUDES)	
		1	**6V-6228**	1	SEAL-O-RING	
	12	1	**199-0676**	2	SPRING	
M	13	1	**199-0679**	2	BOLT (M16X2X95-MM)	
	14	1	**210-3099**	2	SLEEVE	
	15	1	**210-3100**	2	BUSHING	
	16	1	**199-0706**	1	PISTON	
	17	1	**199-0786**	8	PLATE	
	18	1	**199-0787**	6	PIN	
	19	1	**210-7305**	2	SHAFT	
	20	1	**210-3106**	1	BRACKET	
	21	1	**212-5713**	2	PLUG	
	22	1	*216-1608*	2	GEAR GP-RING	
					(EACH INCLUDES)	
		1	**199-0778**	1	RING-SNAP	
		1	**210-7302**	1	GEAR-RING (81-TEETH)	
		1	**226-4364**	1	HUB	
Y	23	1	*216-1609*	2	FLANGE GP-WHEEL	258
Y	24	1	**216-1610**	2	PLANETARY GP-FINAL DRIVE (AXLE)	268
	25	1	**217-2914**	1	COVER (DIFFERENTIAL LOCK)	
	26	1	**231-0699**	1	COVER (DIFFERENTIAL LOCK)	
	27	1	**219-8839**	1	ROD	
	28	1	**174-4647**	1	BUSHING	
	29	1	**174-4650**	1	SPACER (20X32X8-MM THK)	
	30	1	**231-0698**	2	SHAFT-AXLE	
	31	1	**226-4366**	2	NUT-SPANNER	
	32	1	**226-4365**	2	WASHER-TAB	
	33	1	**226-4367**	2	SPACER (110X123X22.99-MM THK)	
	34	1	**226-4370**	6	BOLT-SELF-LOCKING	
	35	1	**238-5291**	6	DISC-BRAKE	
	36	1	**238-5292**	2	HUB-BRAKE	
	37	1	**238-5293**	1	HOUSING-AXLE (LH)	
	38	1	**238-5294**	1	HOUSING-AXLE (RH)	
Y	39	1	*238-5298*	1	DIFFERENTIAL & BEVEL GEAR GP	250
	40	1	**199-0658**	2	O-RING-CAP	
	41	1	**219-8799**	2	SEAL-O-RING	
	42	1	**199-0662**	2	SEAL-O-RING	
	43	1	**130-7282**	1	BRACKET	
M	44	1	**7X-2559**	26	BOLT (M16X2X160-MM)	
	45	1	**4L-6454**	2	BOLT (3/8-16X1-IN)	
	46	1	**3J-1907**	1	SEAL-O-RING	
	47	1	**9S-8004**	1	PLUG	
	48	1	**219-8795**	1	CAP	
	49	1	**069-4707**	1	SEALANT (GASKET)	

230-5738 AXLE GP-REAR *(contd.)* i03726660

NOTE	REF NO	GRAPHIC REF	PART NUMBER	QTY	PART NAME 1 2 3 4 5 6 (PRODUCT LEVEL)	SEE PAGE
J	50	1	**259-0127**	1	BRAKE GP-HYDRAULIC CALIPER	
					AVAILABLE REPAIR KIT(S):	
J			**166-9413**	1	KIT-CAM (COUNTERCLOCKWISE)	
					(INCLUDES CAMS, BEARINGS & RETAINER)	
J			**230-3810**	1	KIT-BRAKE LINING	
					(INCLUDES LINERS & SPRING)	
J			**230-3811**	1	KIT-BRAKE CALIPER	
					(INCLUDES SLEEVES, WASHERS, NUTS, BOLT, LININGS, BEARING, BOOT, SEAL, SPRING & O-RINGS)	

J-KITS MARKED J AVAILABLE FOR PART(S) MARKED J
M-METRIC PART
Y-SEPARATE ILLUSTRATION

KOPACZKA.PL

230-5738 AXLE GP-REAR *(contd.)* **i03726660**

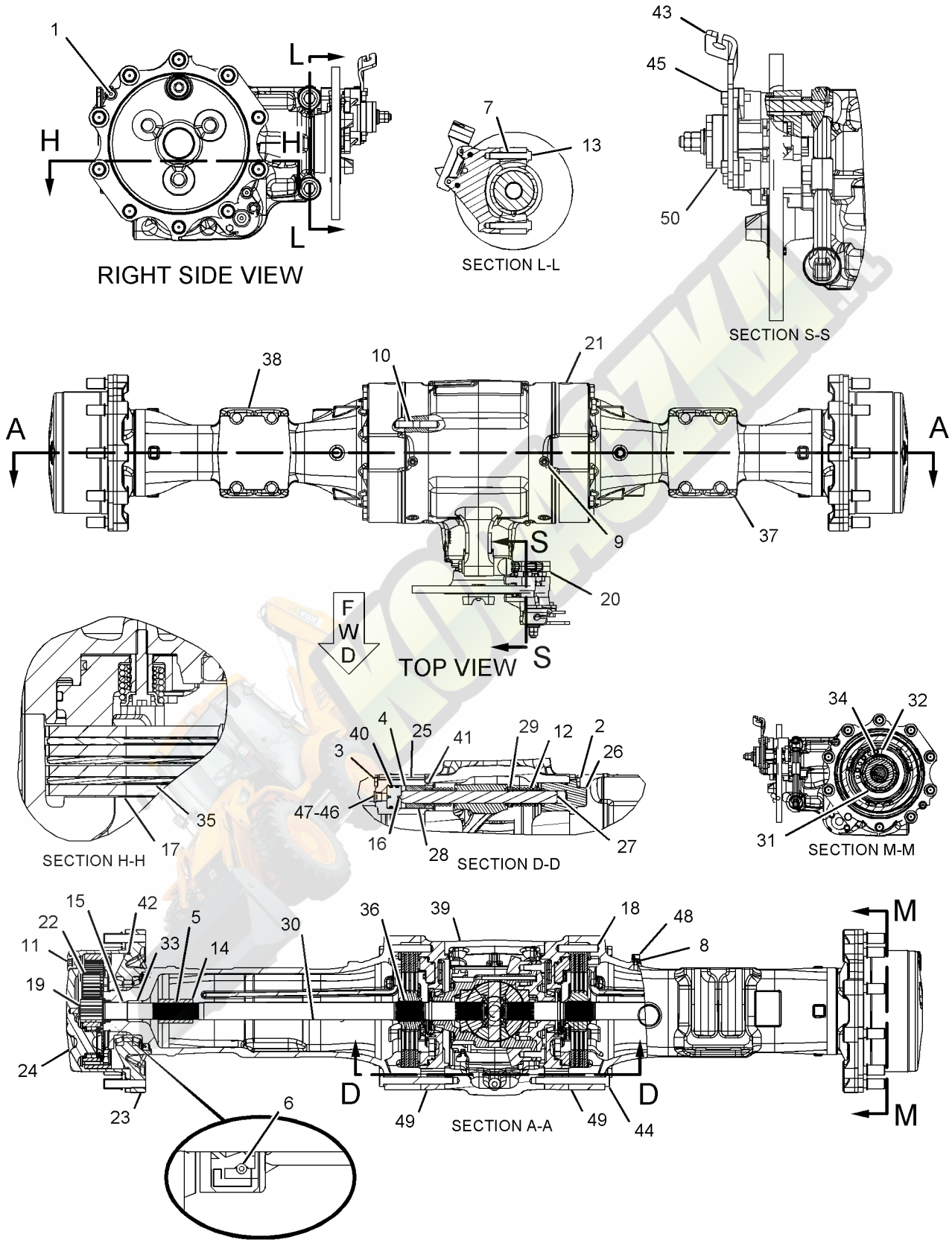

GRAPHIC #1 **<END>** g01093644

275-0468 CASE AS-TRANSMISSION–FRONT

S/N: JBA1-UP
PART OF 294-9816 TRANSMISSION GP-DIRECT DRIVE
AN ATTACHMENT

SMCS-3030, 3064 **i03260645**

NOTE	REF NO	GRAPHIC REF	PART NUMBER	QTY	PART NAME 1 2 3 4 5 6 (PRODUCT LEVEL)	SEE PAGE
	1	1	**120-9762**	4	SEAL-O-RING	
M	2	1	**6V-5215**	2	BOLT (M8X1.25X16-MM)	
	3	1	**7T-2651**	1	STRAINER (SUCTION)	
	4	1	**106-9861**	1	PLATE-COVER	
	5	1	**7T-3051**	1	PLUG	
	6	1	**005-0469**	1	CUP-BEARING	
	7	1	**8T-1580**	1	CUP	
	8	1	**6Y-2737**	1	CUP-BEARING	
	9	1	**123-8906**	2	CUP-TAPERED ROLLER	
	10	1	**9W-5460**	1	RING	
	11	1	**4J-0522**	1	SEAL-O-RING	
	12	1	**275-0469**	1	CASE AS-FRONT	
		1	**122-3652**	2	PLUG	
		1	**123-2920**	3	PLUG	
		1	**237-5188**	1	PLUG-EXPANSION	
	13	1	**7T-3253**	2	DOWEL	

M-METRIC PART

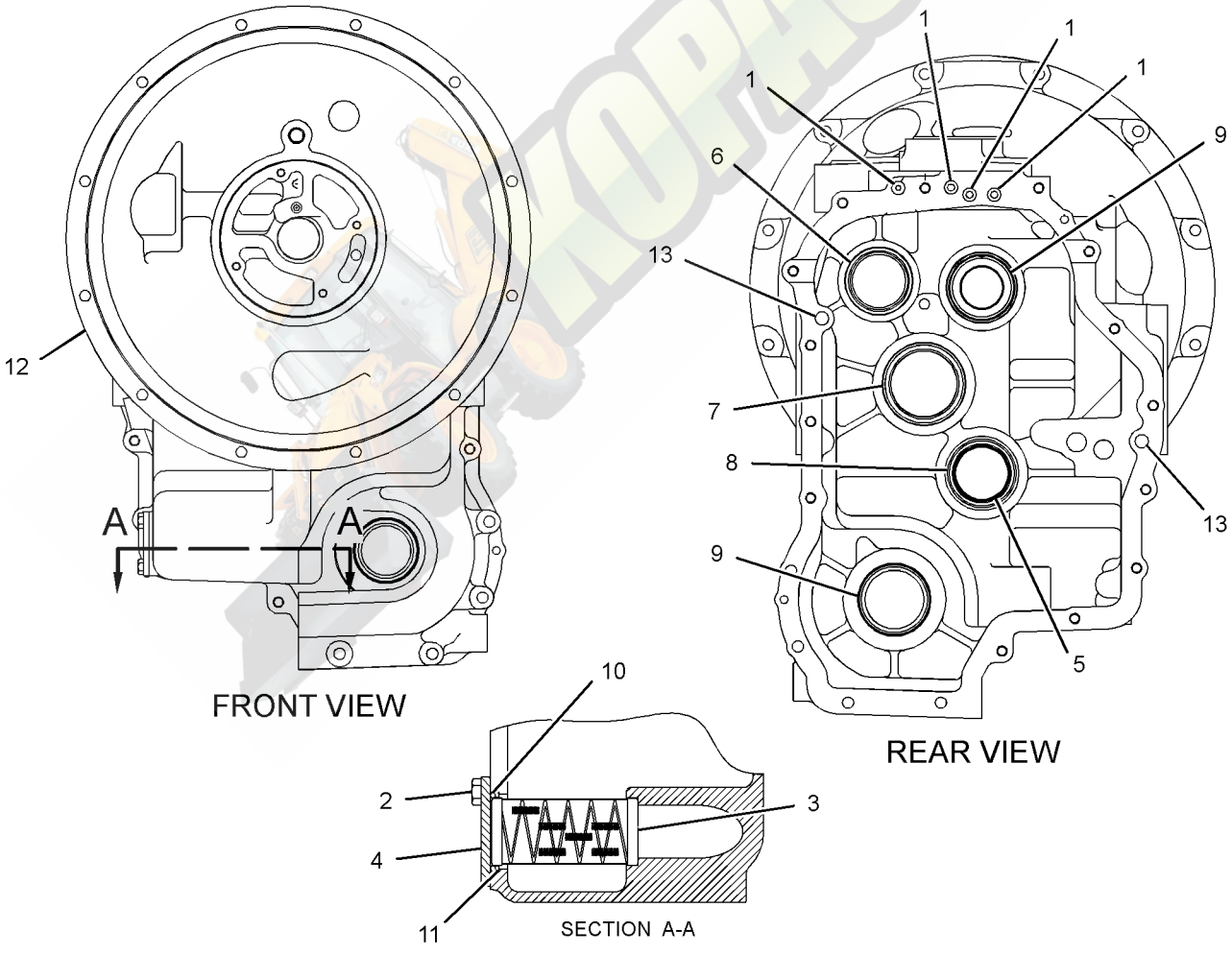

GRAPHIC #1 **<END>** g01220674

275-0470 CASE AS-TRANSMISSION–REAR

S/N: JBA1-UP
PART OF 294-9816 TRANSMISSION GP-DIRECT DRIVE
AN ATTACHMENT

SMCS-3030, 3064 **i02774042**

NOTE	REF NO	GRAPHIC REF	PART NUMBER	QTY	PART NAME 1 2 3 4 5 6 (PRODUCT LEVEL)	SEE PAGE
	1	1	**123-8906**	1	CUP-TAPERED ROLLER	
B	2	1	**6T-9144**	1	SHIM (0.051-MM THK)	
B	3	1	**6T-9147**	1	SHIM (0.076-MM THK)	
B	4	1	**6T-9146**	1	SHIM (0.127-MM THK)	
B	5	1	**6T-9145**	1	SHIM (0.178-MM THK)	
B	6	1	**6T-9143**	1	SHIM (0.381-MM THK)	
B	7	1	**6T-9142**	1	SHIM (0.508-MM THK)	
	8	1	**7T-3034**	1	SPACER (56.9X64.5X1.98-MM)	
	9	1	**7T-2646**	2	SPACER (66X79.5X2.02-MM THK)	
B	10	1	**6T-9166**	2	SHIM (0.051-MM THK)	
B	11	1	**6T-9165**	2	SHIM (0.076-MM THK)	
B	12	1	**6T-9164**	2	SHIM (0.178-MM THK)	
B	13	1	**6T-9163**	2	SHIM (0.599-MM THK)	
B	14	1	**121-7399**	1	SHIM (0.05-MM THK)	
B	15	1	**121-7400**	1	SHIM (0.08-MM THK)	
B	16	1	**121-7401**	1	SHIM (0.18-MM THK)	
B	17	1	**121-7402**	1	SHIM (0.6-MM THK)	
	18	1	**121-7398**	1	SPACER (70X79.5X2-MM THK)	
	19	1	**005-0469**	1	CUP-BEARING	
	20	1	**123-8908**	2	CUP-TAPERED ROLLER	
	21	1	**123-8910**	1	CUP-TAPERED ROLLER	
	22	1	**274-8630**	1	CASE-REAR	
	23	1	**122-1879**	1	SPACER (58X67.5X2-MM THK)	
B	24	1	**104-3288**	1	SHIM (0.05-MM THK)	
B	25	1	**121-2059**	1	SHIM (0.08-MM THK)	
B	26	1	**121-2060**	1	SHIM (0.18-MM THK)	
B	27	1	**121-2061**	1	SHIM (0.6-MM THK)	
	28	1	**216-2267**	1	SEAL-LIP TYPE	

B-USE AS REQUIRED

275-0470 CASE AS-TRANSMISSION *(contd.)* **i02774042**

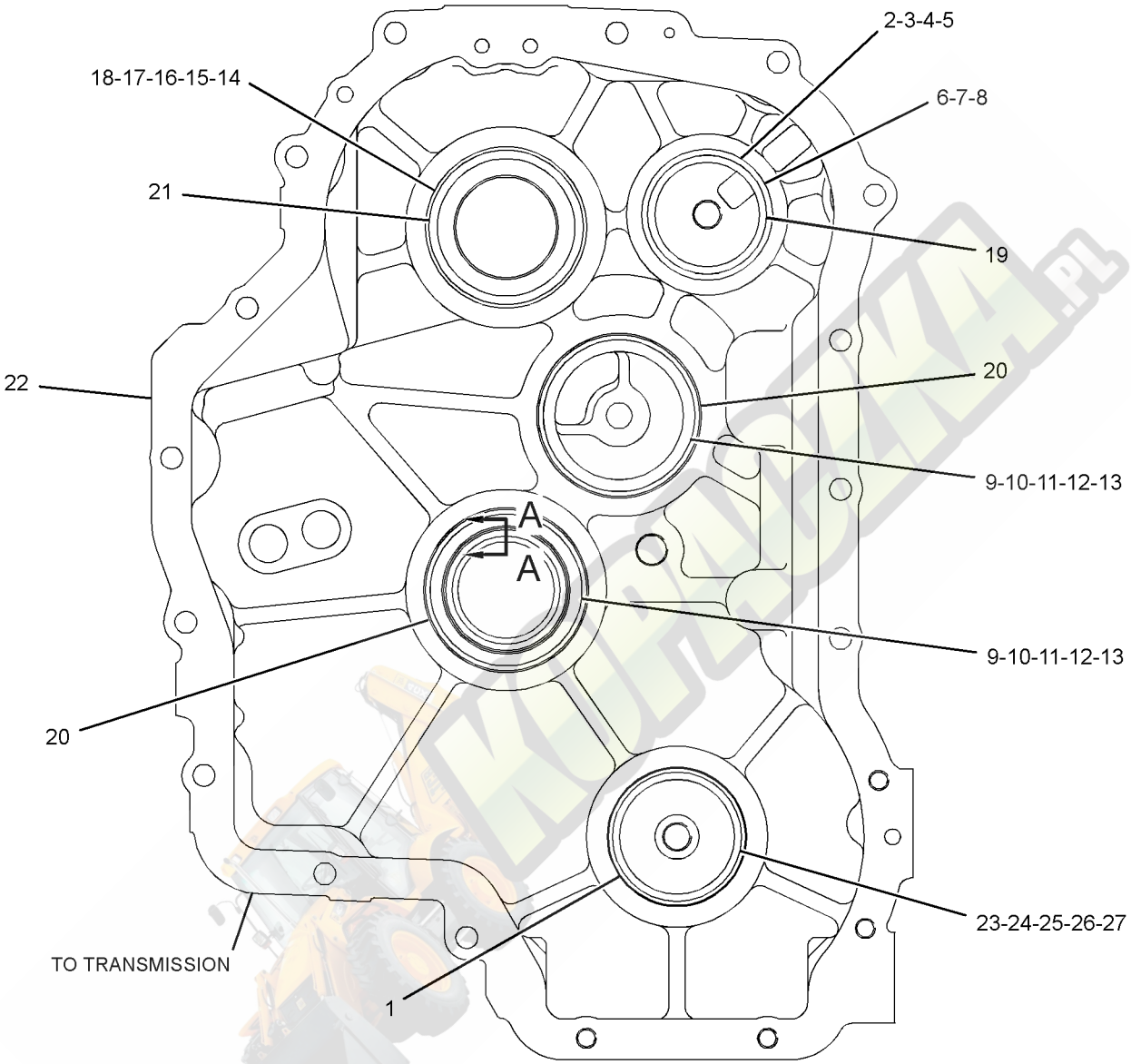

FRONT VIEW

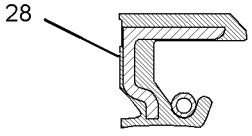

SECTION A-A

GRAPHIC #1 **<END>** g01388010

320-7233 CONTROL GP-DIFFERENTIAL LOCK–

TRANSMISSION AUTOSHIFT

S/N: JBA1-UP

PART OF 329-0306 POWER TRAIN AR

AN ATTACHMENT

SMCS-3264, 3272, 3273 **i03016061**

NOTE	REF NO	GRAPHIC REF	PART NUMBER	QTY	PART NAME 1 2 3 4 5 6 (PRODUCT LEVEL)	SEE PAGE
	1	1	**7K-1181**	2	STRAP-CABLE	
	2	1	**151-4841**	2	BLOCK	
I	3	1	**256-0548**	2	HOSE AS	
I	4	1	**256-0549**	1	HOSE AS	
Y	5	1	**274-8048**	1	VALVE & MTG GP-SOLENOID (DIFFERENTIAL LOCK)	298
	6	1	*148-8325*	1	CONNECTOR AS	
		1	**3J-1907**	1	SEAL-O-RING	
		1	**4J-5477**	1	SEAL-O-RING	
		1	**6V-8641**	1	CONNECTOR	
	7	1	*148-8368*	3	ELBOW AS	
					(EACH INCLUDES)	
		1	**3J-1907**	1	SEAL-O-RING	
		1	**4J-5477**	1	SEAL-O-RING	
		1	**6V-8627**	1	ELBOW	
	8	1	**8T-4121**	2	WASHER-HARD (11X21X2.5-MM THK)	
M	9	1	**8T-4172**	2	BOLT (M10X1.5X80-MM)	

I-REFER TO HYDRAULIC INFORMATION SYSTEM
M-METRIC PART
Y-SEPARATE ILLUSTRATION

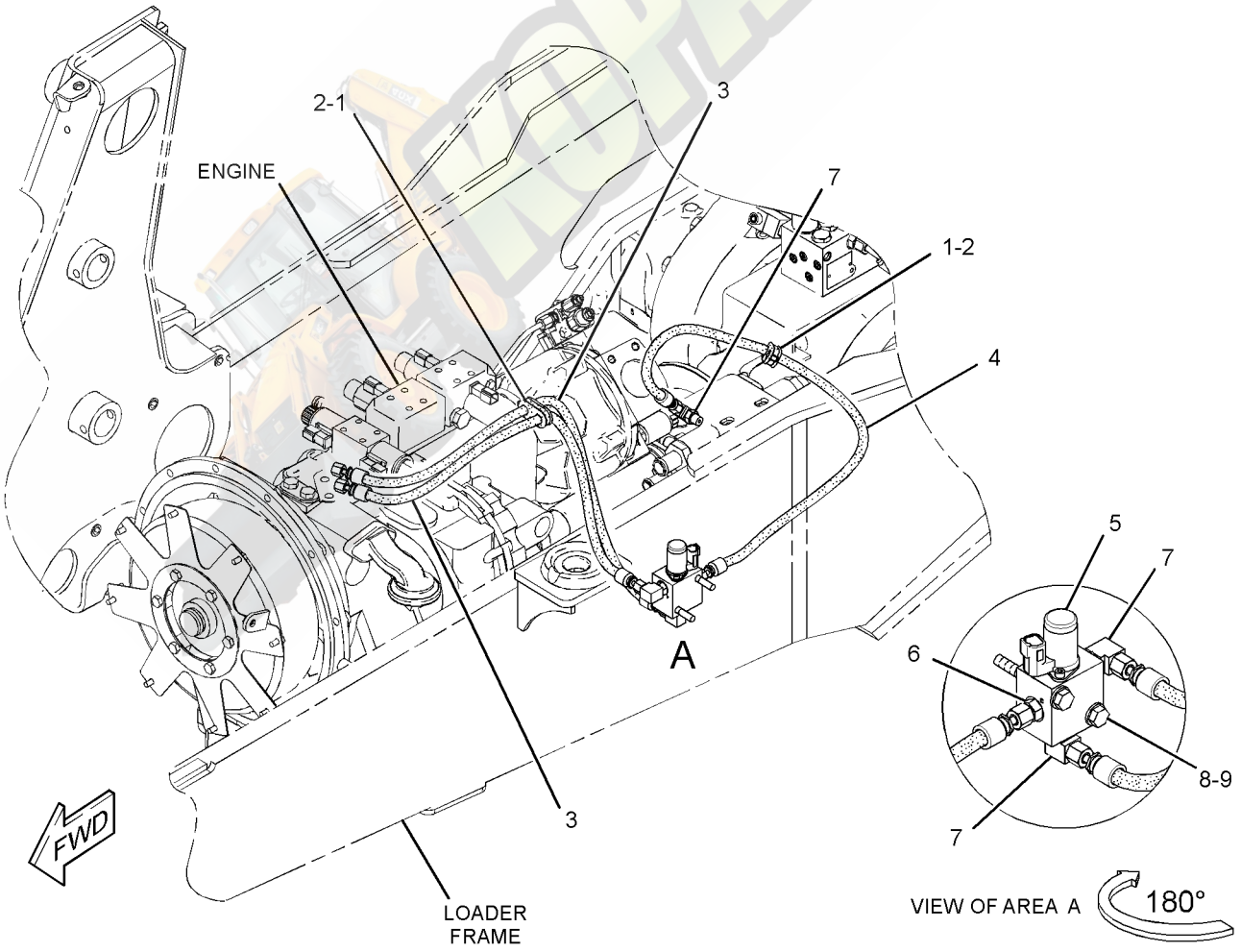

GRAPHIC #1 **<END>** g01574393

209-9882 DIFFERENTIAL & BEVEL GEAR GP–FRONT

S/N: JBA1-UP
PART OF 230-5743 AXLE GP-DRIVE & STEERING
AN ATTACHMENT

SMCS-3256, 3258, 3281, 3283, 3284 **i03727500**

NOTE	REF NO	GRAPHIC REF	PART NUMBER	QTY	PART NAME 1 2 3 4 5 6 (PRODUCT LEVEL)	SEE PAGE
	1	1	**4J-0520**	1	SEAL-O-RING	
	2	1	**216-4457**	1	SEAL	
	3	1	**216-4458**	2	BEARING	
	4	1	**136-7808**	1	BEARING AS-TAPERED ROLLER	
	5	1	**216-4461**	1	BEARING	
	6	1	**209-7454**	2	NUT (M94X2-THD)	
	7	1	**152-6144**	1	PLUG AS-DRAIN (MAGNETIC)	
		1	**6V-6228**	1	SEAL-O-RING	
	8	1	**209-7462**	2	WASHER (40X50X2-MM THK)	
	9	1	**209-7463**	1	SLEEVE	
M	10	1	**199-0695**	2	BOLT (M6X1X14-MM)	
M	11	1	**209-7472**	1	NUT (M24X1.5-THD)	
B	12	1	**209-7473**	1	SHIM (2.5-MM THK)	
B		1	**219-8751**	1	SHIM (2.6-MM THK)	
B		1	**219-8752**	1	SHIM (2.7-MM THK)	
B		1	**219-8753**	1	SHIM (2.8-MM THK)	
B		1	**219-8754**	1	SHIM (2.9-MM THK)	
B		1	**219-8755**	1	SHIM (3-MM THK)	
B		1	**219-8756**	1	SHIM (3.1-MM THK)	
B		1	**219-8757**	1	SHIM (3.2-MM THK)	
B		1	**219-8758**	1	SHIM (3.3-MM THK)	
B		1	**219-8759**	1	SHIM (3.4-MM THK)	
	13	1	**216-4465**	1	WASHER (24.5X52X10-MM THK)	
	14	1	**216-4464**	1	YOKE	
	15	1	**199-0858**	2	RETAINER	
	16	1	**216-4466**	1	KIT-BEVEL GEAR & PINION	
					(INCLUDES SPACER, NUT, WASHERS, SEAL-O-RING & BEVEL GEAR AS)	
Y	17	1	**216-9498**	1	DIFFERENTIAL GP	252
	18	1	**208-0322**	4	BOLT-FLANGE HEAD (M14X2X75-MM)	

B-USE AS REQUIRED
M-METRIC PART
Y-SEPARATE ILLUSTRATION

209-9882 DIFFERENTIAL & BEVEL GEAR GP *(contd.)* i03727500

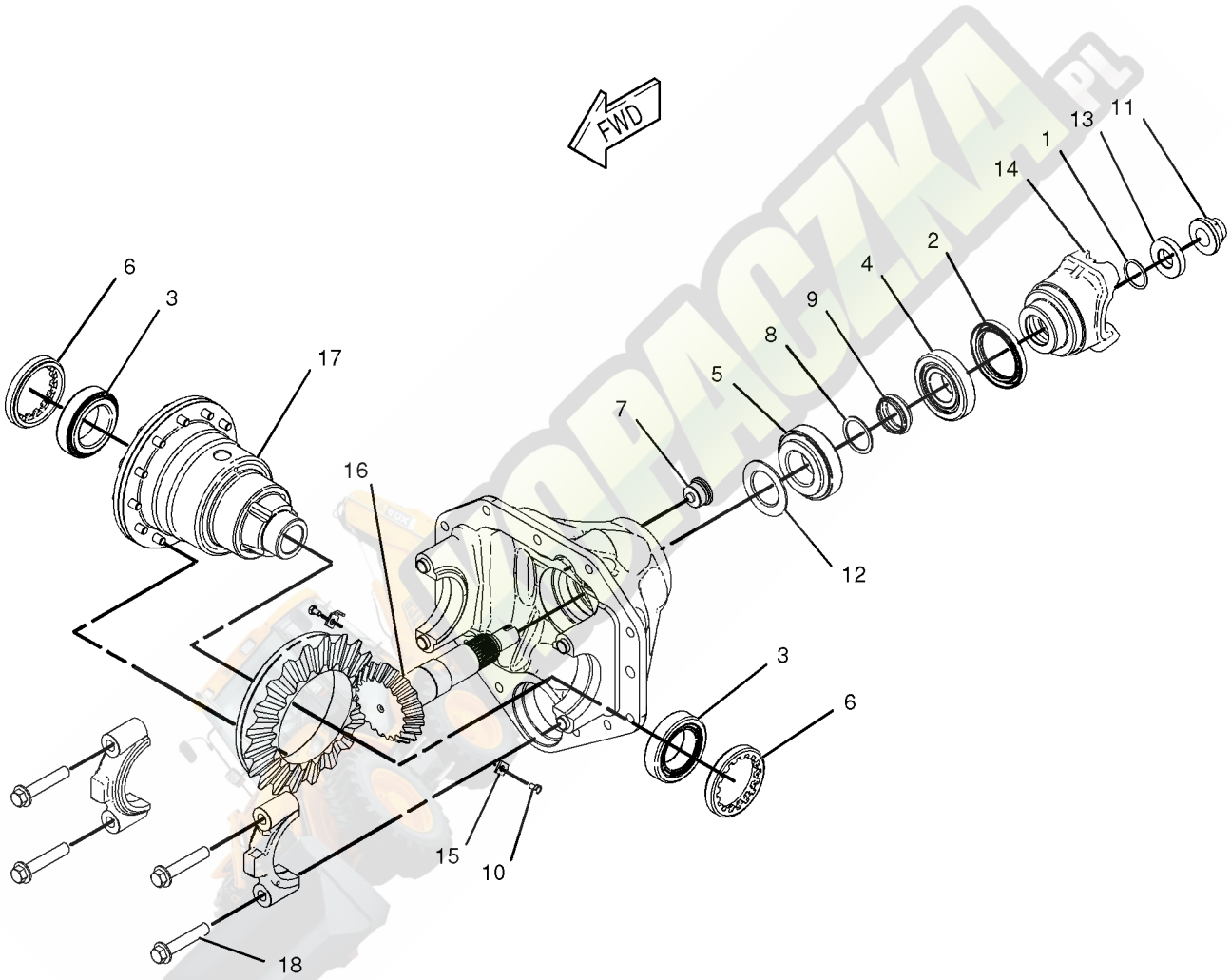

GRAPHIC #1 **<END>** g01028597

238-5298 DIFFERENTIAL & BEVEL GEAR GP

S/N: JBA1-UP
PART OF 230-5738 AXLE GP-REAR
AN ATTACHMENT

SMCS-3256, 3258, 3281, 3283, 3284 **i03627151**

NOTE	REF NO	GRAPHIC REF	PART NUMBER	QTY	PART NAME 1 2 3 4 5 6 (PRODUCT LEVEL)	SEE PAGE
	1	1	**199-0646**	4	BOLT	
	2	1	**199-0656**	2	BEARING	
L	3	1	**199-0663**	1	SEAL-O-RING	
	4	1	**198-7811**	2	DOWEL	
	5	1	**199-0675**	2	NUT (M104X2-THD)	
L	6	1	**199-0678**	2	WASHER (45.5X55X2-MM THK)	
L	7	1	**199-0680**	1	SPACER (47X50X19.2-MM THK)	
M	8	1	**199-0695**	2	BOLT (M6X1X14-MM)	
	9	1	**199-0697**	1	SEAL	
L	10	1	**199-0785**	1	WASHER (30.5X58X10-MM THK)	
L	11	1	**217-2346**	1	KIT-BEVEL GEAR & PINION	
					(INCLUDES BEVEL GEAR, PINION, WASHERS, SEAL, NUT & SPACERS)	
	12	1	**199-0858**	2	RETAINER	
L	13	1	**212-5702**	1	NUT (M30X2-THD)	
	14	1	**216-1600**	1	DISC-BRAKE	
	15	1	**095-1041**	1	BEARING AS	
	16	1	**093-8828**	1	BEARING AS	
Y	17	1	**216-1612**	1	CYLINDER GP-BRAKE (RH)	330
Y	18	1	**216-1613**	1	CYLINDER GP-BRAKE (LH)	331
	19	1	**219-8836**	1	FORK	
Y	20	1	**231-0692**	1	DIFFERENTIAL GP (AXLE)	253
	21	1	**238-5290**	1	HOUSING-CENTER	
	22	1	**069-4707**	1	SEALANT (GASKET)	
B	23	1	**199-0684**	1	SHIM (2.5-MM THK)	
B	24	1	**199-0685**	1	SHIM (2.6-MM THK)	
B	25	1	**199-0686**	1	SHIM (2.7-MM THK)	
B	26	1	**199-0687**	1	SHIM (2.8-MM THK)	
B	27	1	**199-0688**	1	SHIM (2.9-MM THK)	
B	28	1	**199-0689**	1	SHIM (3-MM THK)	
B	29	1	**199-0690**	1	SHIM (3.1-MM THK)	
B	30	1	**199-0691**	1	SHIM (3.2-MM THK)	
B	31	1	**199-0692**	1	SHIM (3.3-MM THK)	
B	32	1	**199-0693**	1	SHIM (3.4-MM THK)	
					AVAILABLE REPAIR KIT(S):	
			217-2345	1	KIT-DIFFERENTIAL	
					(INCLUDES PIN, GEAR & WASHERS)	

B-USE AS REQUIRED
L-KIT MARKED L SERVICES PARTS MARKED L
M-METRIC PART
Y-SEPARATE ILLUSTRATION

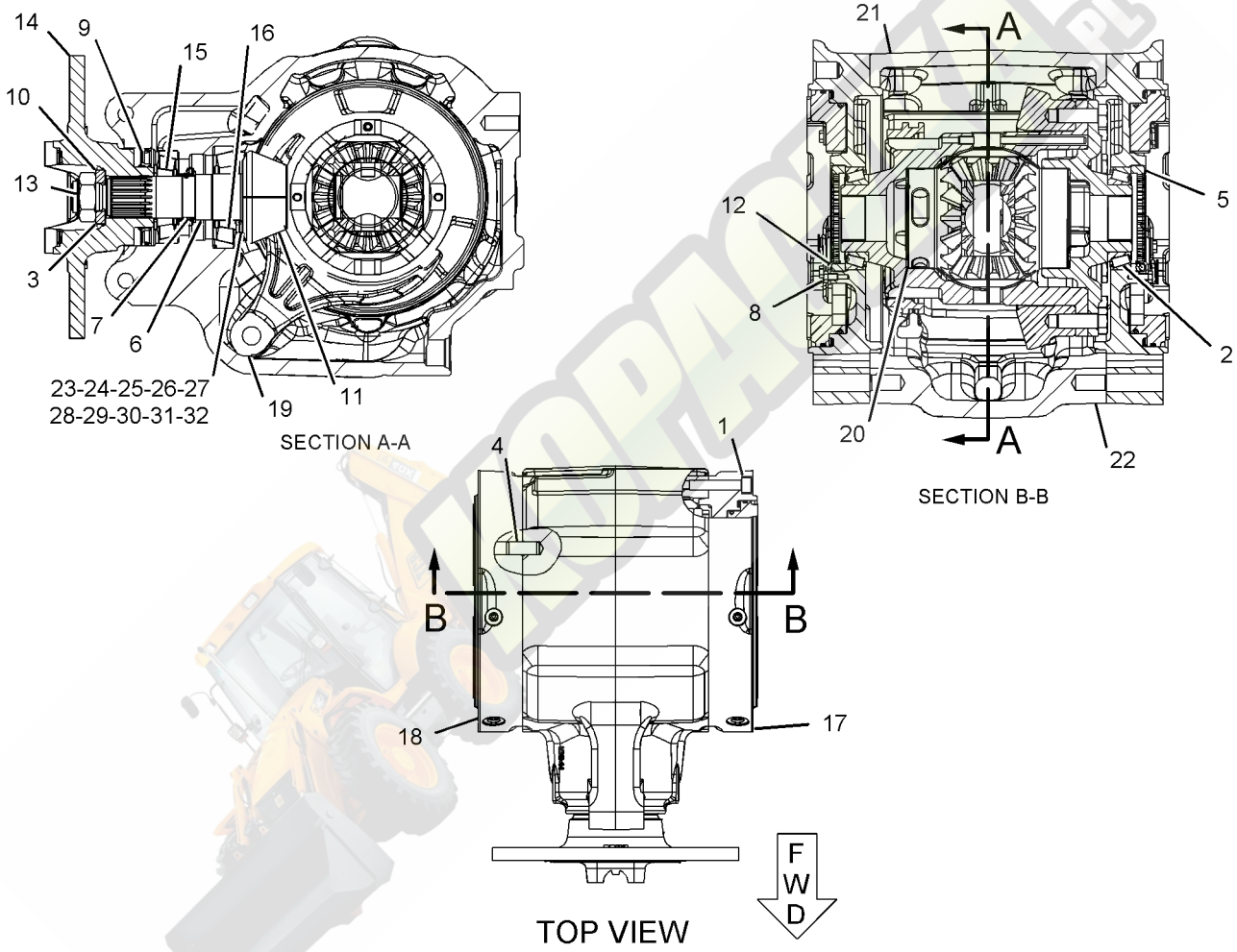

GRAPHIC #1

<END>

g01107896

216-9498 DIFFERENTIAL GP–FRONT

S/N: JBA1-UP
PART OF 209-9882 DIFFERENTIAL & BEVEL GEAR GP
AN ATTACHMENT

SMCS-3258 **i03726325**

NOTE	REF NO	GRAPHIC REF	PART NUMBER	QTY	PART NAME 1 2 3 4 5 6 (PRODUCT LEVEL)	SEE PAGE
	1	1	**216-8687**	1	COVER (DIFFERENTIAL CASE)	
	2	1	**216-8689**	1	HOUSING-DIFFERENTIAL	
	3	1	**229-5093**	2	WASHER-THRUST (49X72X1.5-MM THK)	
M	4	1	**144-6734**	12	BOLT (M10X1.5X30-MM)	
					AVAILABLE REPAIR KIT(S):	
			216-8700		KIT-DIFFERENTIAL (KIT)	
					(INCLUDES PINS,WASHERS,DISC & GEARS)	

M-METRIC PART

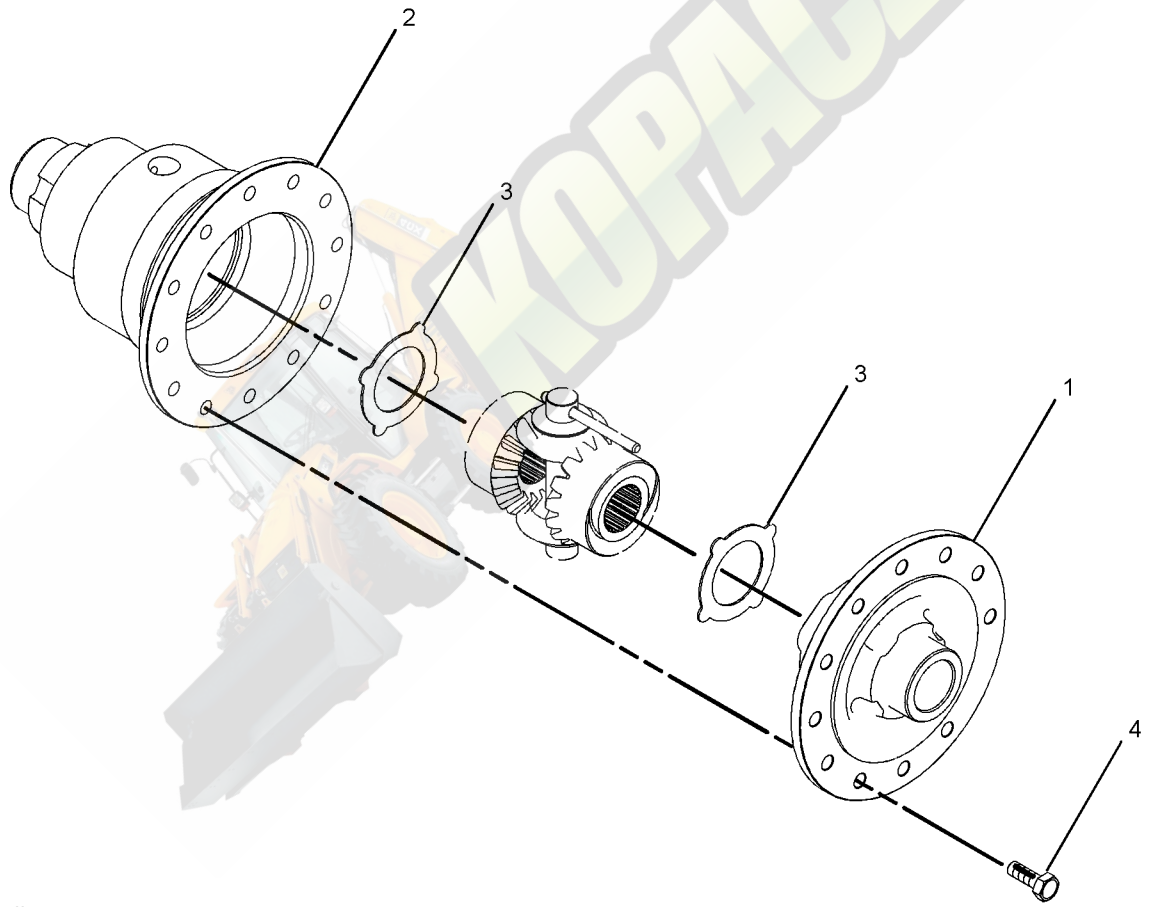

GRAPHIC #1 **<END>** g01008123

231-0692 DIFFERENTIAL GP–AXLE

S/N: JBA1-UP

PART OF 238-5298 DIFFERENTIAL & BEVEL GEAR GP

AN ATTACHMENT

SMCS-3258 **i02188622**

NOTE	REF NO	GRAPHIC REF	PART NUMBER	QTY	PART NAME 1 2 3 4 5 6 (PRODUCT LEVEL)	SEE PAGE
	1	1	**199-0673**	2	BUSHING	
	2	1	**199-0694**	12	BOLT (M14X2X40-MM)	
	3	1	**199-0756**	1	COLLAR	
	4	1	**199-0784**	1	COVER-DIFFERENTIAL	
	5	1	**199-0807**	4	PIN	
	6	1	**199-0808**	3	PIN	
	7	1	**231-0670**	1	SHAFT	
	8	1	**231-0671**	4	WASHER-THRUST	
	9	1	**231-0695**	2	WASHER-THRUST	
	10	1	**231-0693**	1	CASE-DIFFERENTIAL	
	11	1	**231-0696**	2	SHAFT	
	12	1	**231-0697**	1	RETAINER	
	13	1	**231-0694**	1	GEAR AS	
	14	1	**199-0659**	4	SEAL-PIN	

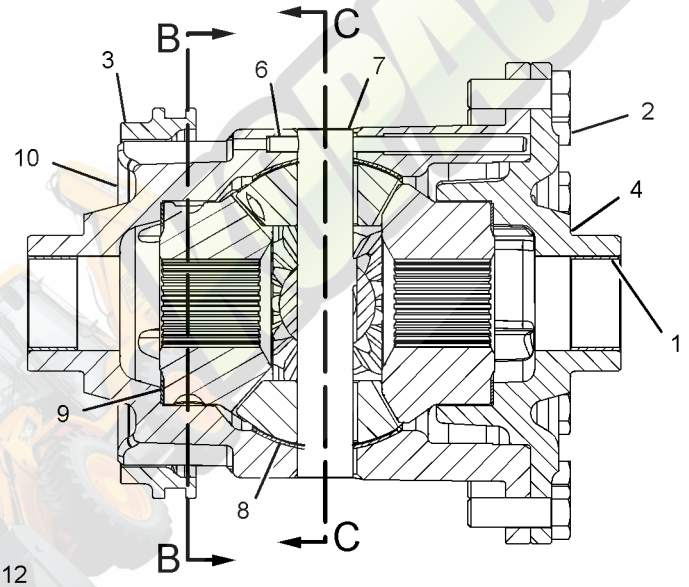

FRONT VIEW
(SECTIONED)

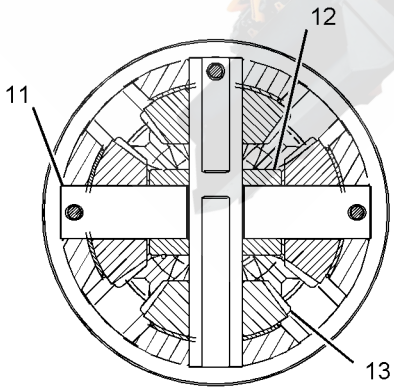

SECTION C-C

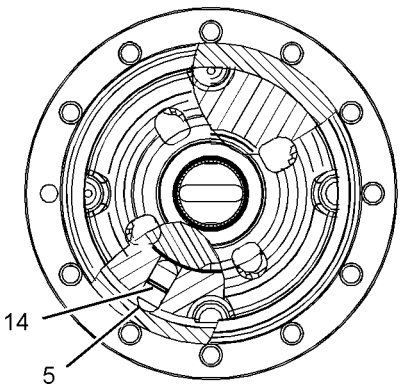

SECTION B-B

GRAPHIC #1 **<END>** g01107764

111-7907 DRIVE GP-FLEXIBLE COUPLING

S/N: JBA1-UP
PART OF 248-0217 TRANSMISSION AR-DIRECT DRIVE, 202-5907 TRANSMISSION AR-POWER SHIFT AN ATTACHMENT

SMCS-3252 **i02594396**

NOTE	REF NO	GRAPHIC REF	PART NUMBER	QTY	PART NAME 1 2 3 4 5 6 (PRODUCT LEVEL)	SEE PAGE
M	1	1	**8T-4200**	8	BOLT (M8X1.25X16-MM)	
M	2	1	**6V-8455**	6	BOLT (M10X1.5X16-MM)	
	3	1	**117-9713**	1	PLATE-CONVERTER REINFORCEMENT	
	4	1	**8T-4224**	8	WASHER-HARD (8.8X16X2-MM THK)	
	5	1	**111-7906**	1	PLATE-CONVERTER DRIVE	

M-METRIC PART

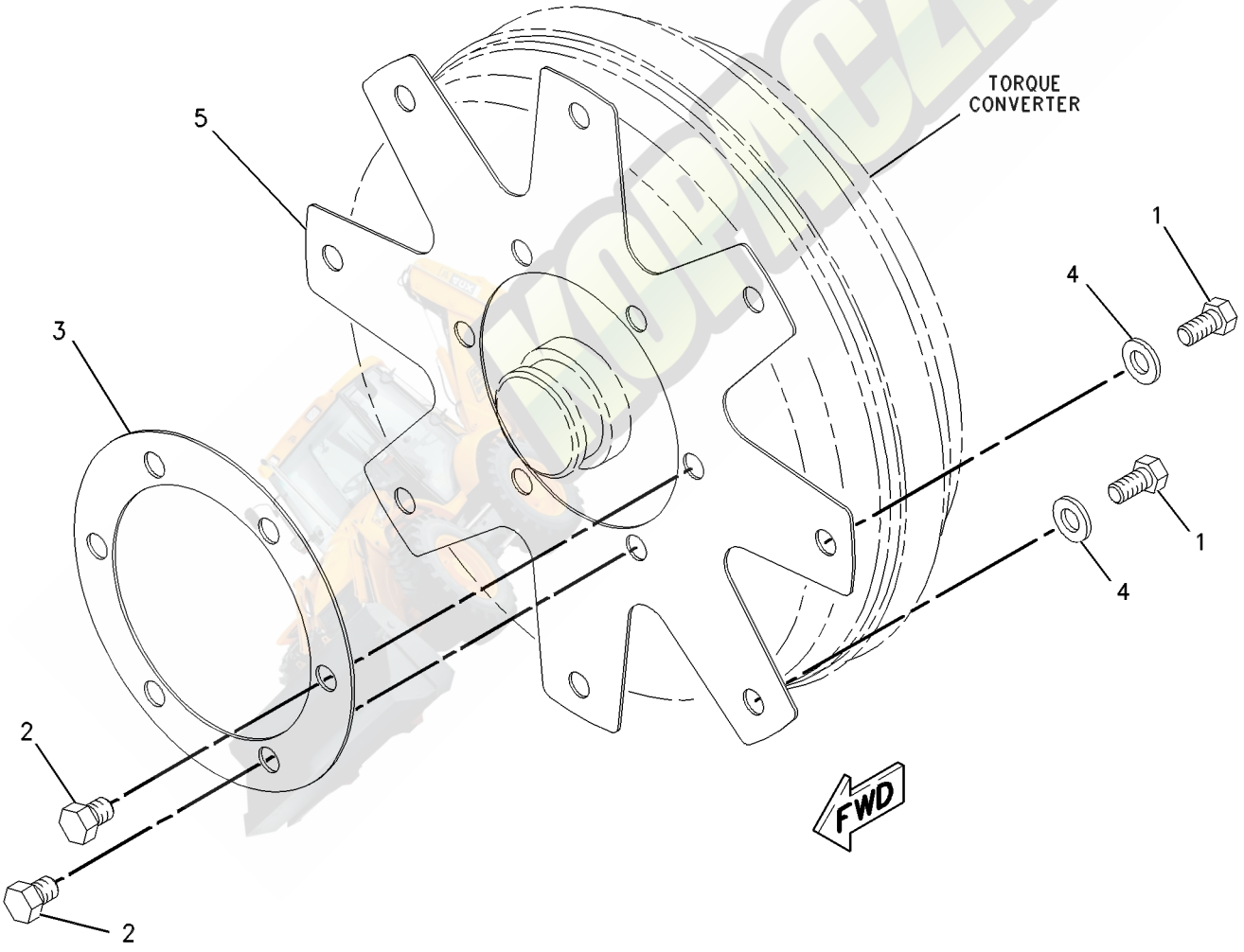

GRAPHIC #1 **<END>** g00547374

211-0073 FILLER GP-POWER TRAIN OIL–AUTOSHIFT

S/N: JBA1-UP
PART OF 329-0306 POWER TRAIN AR
AN ATTACHMENT

SMCS-3005, 3081 **i03538561**

NOTE	REF NO	GRAPHIC REF	PART NUMBER	QTY	PART NAME 1 2 3 4 5 6 (PRODUCT LEVEL)	SEE PAGE
B	1	1	**2B-0941**	1	SPACER (10.5X19X19-MM THK)	
	4	1	**214-3745**	1	TUBE AS	
	5	1	**218-9984**	1	GAUGE AS-OIL LEVEL (DIPSTICK) (POWER TRAIN)	
	6	1	**236-1583**	1	BOSS	
	7	1	*148-8368*	2	ELBOW AS	
					(EACH INCLUDES)	
		1	**3J-1907**	1	SEAL-O-RING	
		1	**4J-5477**	1	SEAL-O-RING	
		1	**6V-8627**	1	ELBOW	
	9	1	**4J-0522**	1	SEAL-O-RING	
	10	1	**5P-4116**	1	WASHER-HARD (8.8X20.5X2-MM THK)	
M	11	1	**7X-0818**	1	BOLT (M8X1.25X45-MM)	
	12	1	**8S-0023**	3	CLIP (SLOT)	
	13	1	**8S-0024**	3	CLIP (TAB)	
	14	1	**8T-4121**	1	WASHER-HARD (11X21X2.5-MM THK)	
M	15	1	**8T-4136**	1	BOLT (M10X1.5X25-MM)	
M	16	1	**8T-4176**	1	BOLT (M12X1.75X90-MM)	
	17	1	**8T-4223**	3	WASHER-HARD (13.5X25.5X3-MM THK)	
M	18	1	**8T-4956**	2	BOLT (M12X1.75X35-MM)	
B	19	1	**164-1404**	1	SPACER (10.67X16.95X23-MM THK)	

B-USE AS REQUIRED
M-METRIC PART

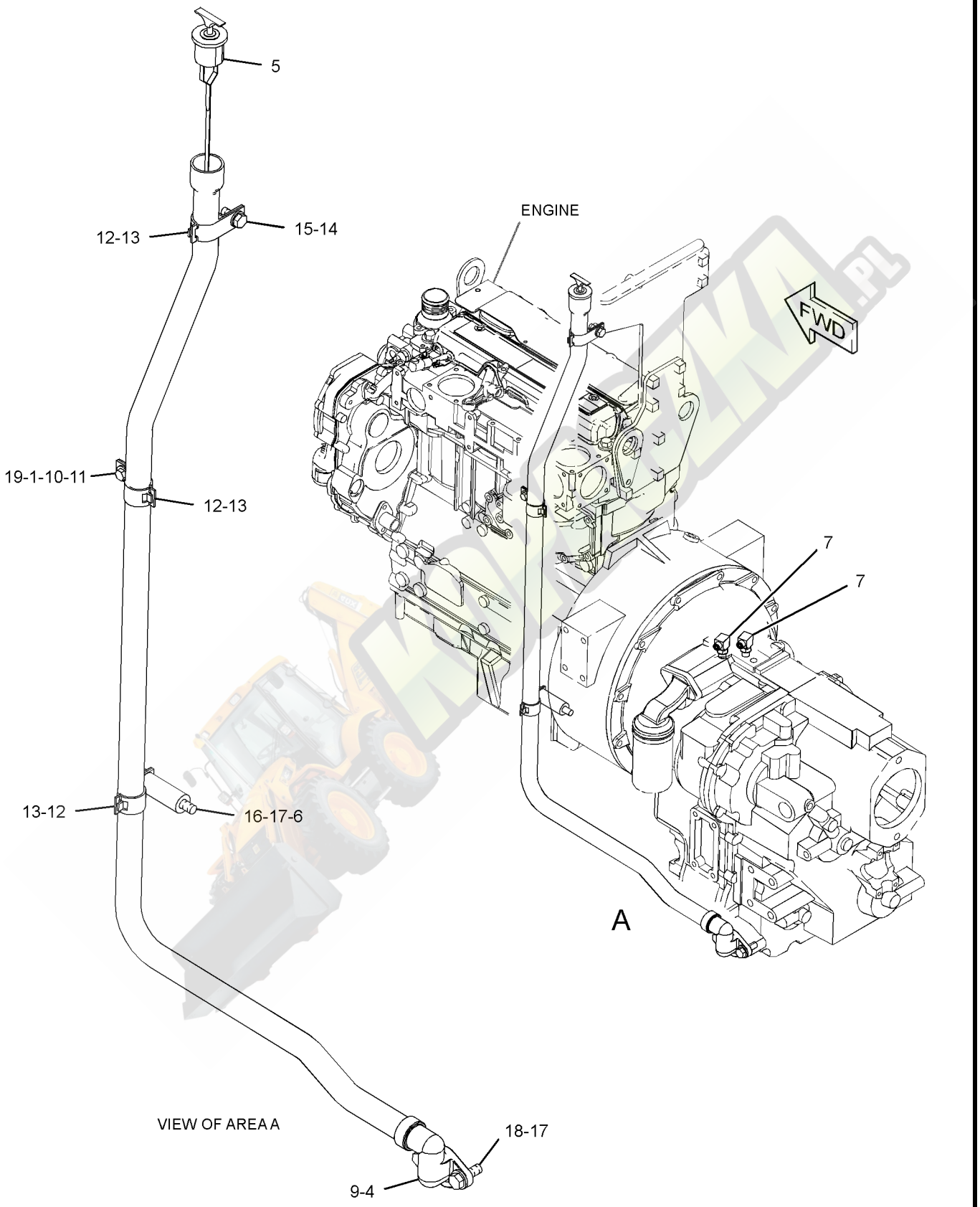

GRAPHIC #1 **<END>** g01869580

214-3740 FILLER GP-POWER TRAIN OIL–

ALL WHEEL DRIVE, STANDARD SHIFT

S/N: JBA1-UP

PART OF 329-0307 POWER TRAIN AR

AN ATTACHMENT

SMCS-3005, 3081 **i03532203**

NOTE	REF NO	GRAPHIC REF	PART NUMBER	QTY	PART NAME 1 2 3 4 5 6 (PRODUCT LEVEL)	SEE PAGE
B	1	1	**2B-0941**	1	SPACER (10.5X19X19-MM THK)	
B	2	1	**164-1404**	1	SPACER (10.67X16.95X23-MM THK)	
	3	1	**230-2610**	1	TUBE AS	
	4	1	**236-1583**	1	BOSS	
	5	1	**271-7167**	1	GAUGE-OIL LEVEL (DIPSTICK) (ENGINE)	
	6	1	**4J-0522**	1	SEAL-O-RING	
	7	1	**5P-4116**	1	WASHER-HARD (8.8X20.5X2-MM THK)	
M	8	1	**7X-0818**	1	BOLT (M8X1.25X45-MM)	
	9	1	**8S-0023**	3	CLIP (SLOT)	
	10	1	**8S-0024**	3	CLIP (TAB)	
	11	1	**8T-4121**	1	WASHER-HARD (11X21X2.5-MM THK)	
M	12	1	**8T-4136**	1	BOLT (M10X1.5X25-MM)	
M	13	1	**8T-4176**	1	BOLT (M12X1.75X90-MM)	
	14	1	**8T-4223**	3	WASHER-HARD (13.5X25.5X3-MM THK)	
M	15	1	**8T-4956**	2	BOLT (M12X1.75X35-MM)	

B-USE AS REQUIRED
M-METRIC PART

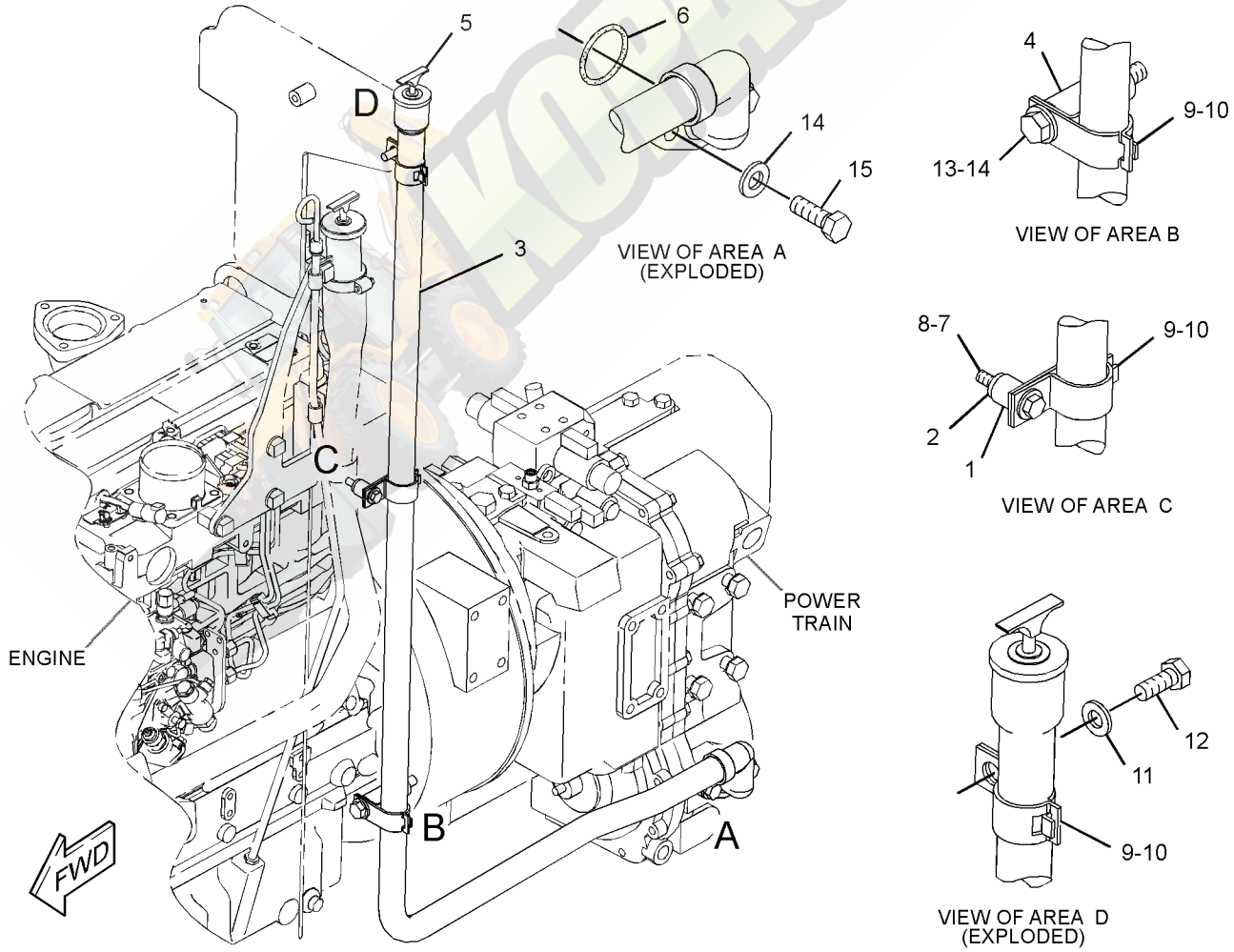

GRAPHIC #1 **<END>** g01870493

216-1609 FLANGE GP-WHEEL

S/N: JBA1-UP
PART OF 230-5738 AXLE GP-REAR
AN ATTACHMENT

SMCS-4057 **i02361154**

NOTE	REF NO	GRAPHIC REF	PART NUMBER	QTY	PART NAME 1 2 3 4 5 6 (PRODUCT LEVEL)	SEE PAGE
	1	1	**210-5932**	2	BEARING-WHEEL	
	2	1	**216-1602**	1	FLANGE	
	3	1	**226-4346**	10	STUD	
	4	1	**229-5092**	1	SEAL	

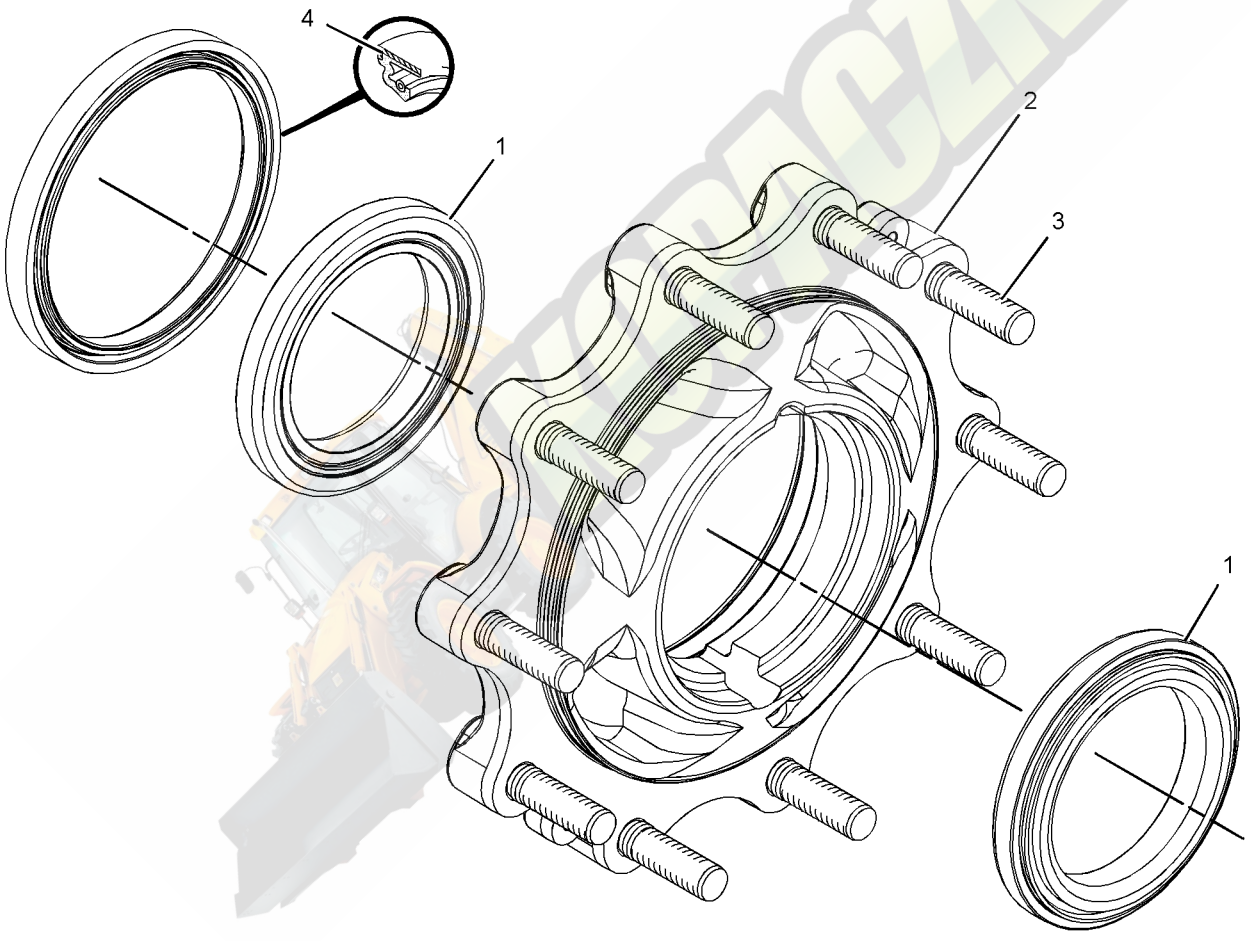

GRAPHIC #1 **<END>** g01180592

209-9884 HOUSING & FLANGE GP-AXLE—RH

S/N: JBA1-UP
PART OF 230-5743 AXLE GP-DRIVE & STEERING
AN ATTACHMENT

SMCS-4057, 4234 **i03656807**

NOTE	REF NO	GRAPHIC REF	PART NUMBER	QTY	PART NAME 1 2 3 4 5 6 (PRODUCT LEVEL)	SEE PAGE
	1	1	**217-2877**	1	HOUSING GP-AXLE (RH)	
M	1A	1	**098-5747**	1	NUT (M16X2-THD)	
	1B	1	**198-7814**	1	BOLT (M16X2X100-MM)	
	1C	1	**209-7460**	1	BUSHING	
	1D	1	**209-7465**	1	SEAL	
	1E	1	**231-0700**	1	HOUSING	
J	2	1	*231-0703*	1	FLANGE AS	
	2A	1	**210-5932**	2	BEARING-WHEEL	
	2B	1	**226-4346**	8	STUD	
	2C	1	**331-8538**	1	SEAL	
C	3	1	**226-4366**	1	NUT-SPANNER	
C	4	1	**226-4370**	1	BOLT-SELF-LOCKING	
	5	1	**229-5085**	1	SPACER (110X123X18.36-MM THK)	
C	6	1	**217-2879**	1	GEAR GP-RING	
C	7	1	**226-4365**	1	WASHER-TAB	
					AVAILABLE REPAIR KIT(S):	
J			**238-5256**	1	KIT-FLANGE (AXLE HOUSING)	
					(INCLUDES STUDS & WHEEL FLANGE)	

C-CHANGE FROM PREVIOUS TYPE
J-KIT MARKED J SERVICES PART MARKED J
M-METRIC PART

209-9884 HOUSING & FLANGE GP-AXLE *(contd.)* i03656807

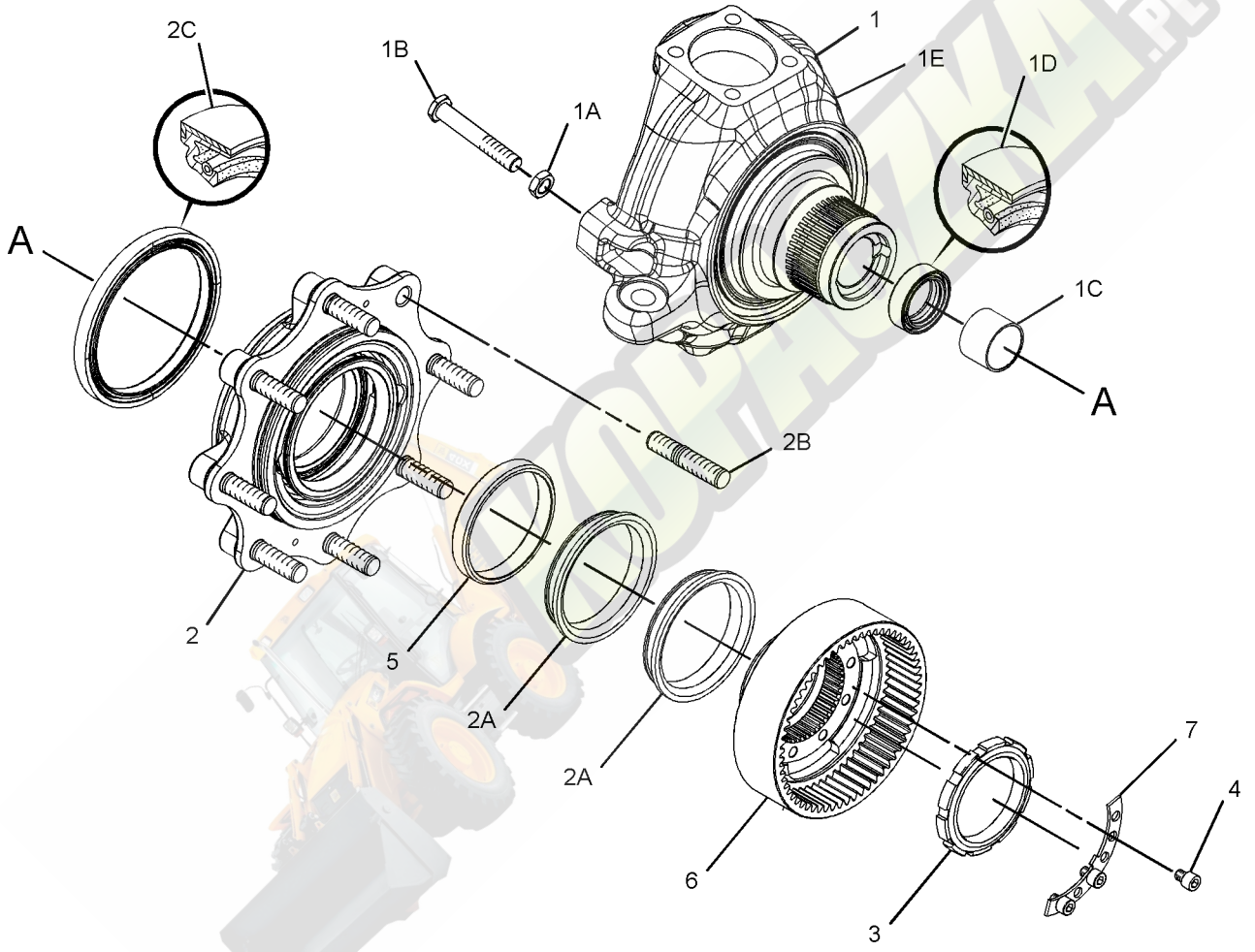

GRAPHIC #1 **<END>** g02003616

209-9885 HOUSING & FLANGE GP-AXLE–LH

S/N: JBA1-UP
PART OF 230-5743 AXLE GP-DRIVE & STEERING
AN ATTACHMENT

SMCS-4057, 4234 **i03656817**

NOTE	REF NO	GRAPHIC REF	PART NUMBER	QTY	PART NAME 1 2 3 4 5 6 (PRODUCT LEVEL)	SEE PAGE
Y	1	1	**217-2878**	1	HOUSING GP-AXLE (LH)	262
J	2	1	**231-0703**	1	FLANGE AS (AXLE)	
	2A	1	**210-5932**	2	BEARING-WHEEL	
	2B	1	**226-4346**	8	STUD	
	2C	1	**331-8538**	1	SEAL	
	3	1	**226-4366**	1	NUT-SPANNER	
	4	1	**226-4370**	1	BOLT-SELF-LOCKING	
	5	1	**229-5085**	1	SPACER (110X123X18.36-MM THK)	
	6	1	**217-2879**	1	GEAR GP-RING	
		1	**209-7459**	1	RETAINER	
		1	**209-7461**	1	GEAR-RING	
		1	**231-0745**	1	HUB-RING GEAR	
	7	1	**226-4365**	1	WASHER-TAB	
					AVAILABLE REPAIR KIT(S):	
J			**238-5256**	1	KIT-FLANGE (AXLE HOUSING)	
					(INCLUDES WHEEL FLANGE & STUDS)	

J-KIT MARKED J SERVICES PART(S) MARKED J
Y-SEPARATE ILLUSTRATION

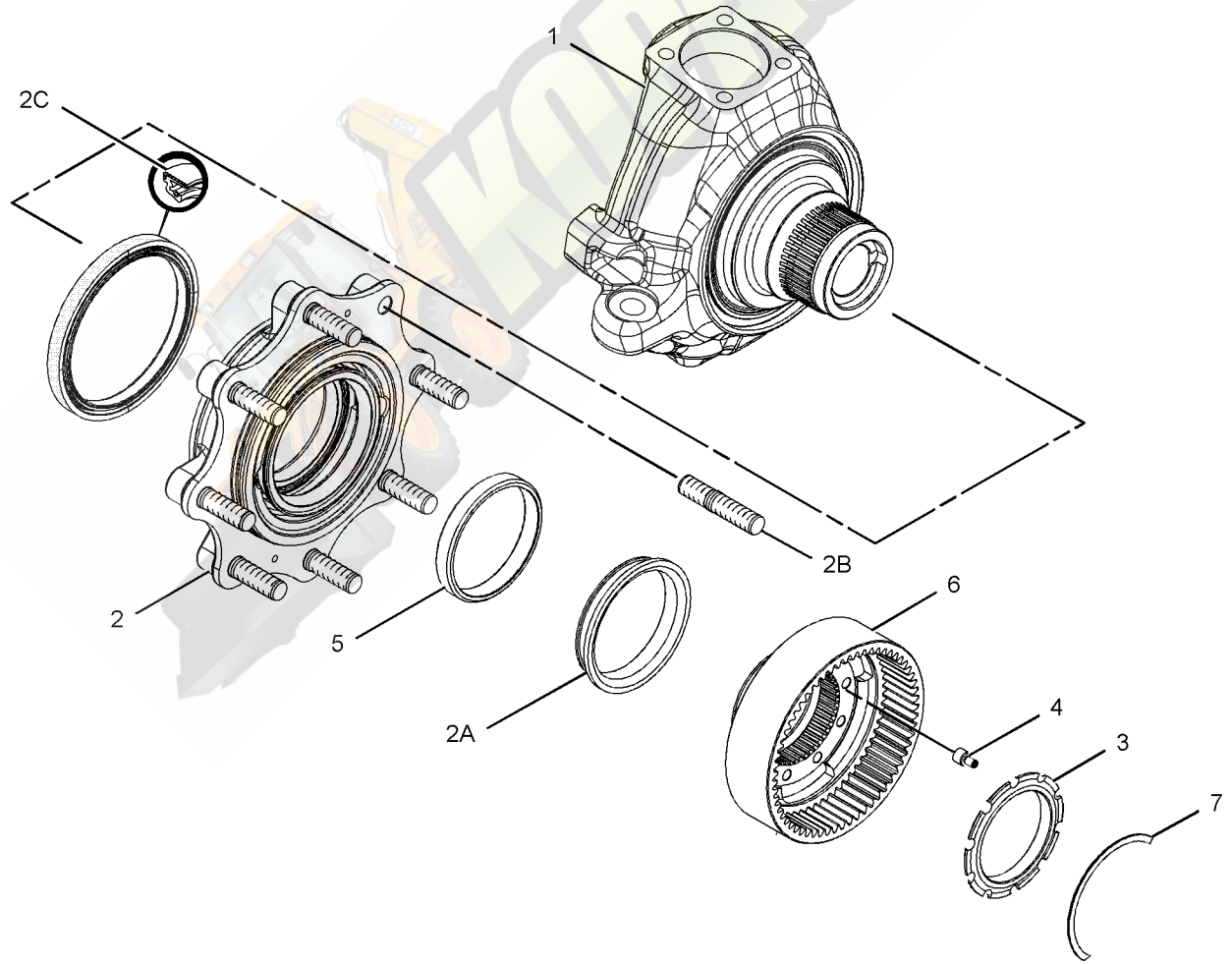

GRAPHIC #1 **<END>** g01180841

217-2878 HOUSING GP-AXLE–LH

S/N: JBA1-UP

PART OF 209-9885 HOUSING & FLANGE GP-AXLE

AN ATTACHMENT

SMCS-3256, 3258, 3260, 4251 **i02364974**

NOTE	REF NO	GRAPHIC REF	PART NUMBER	QTY	PART NAME 1 2 3 4 5 6 (PRODUCT LEVEL)	SEE PAGE
	1	1	**199-0648**	1	NUT-JAM (M16X2-THD)	
	2	1	**198-7814**	1	BOLT (M16X2X100-MM)	
	3	1	**209-7460**	1	BUSHING	
	4	1	**209-7465**	1	SEAL	
	5	1	**231-0701**	1	HOUSING	

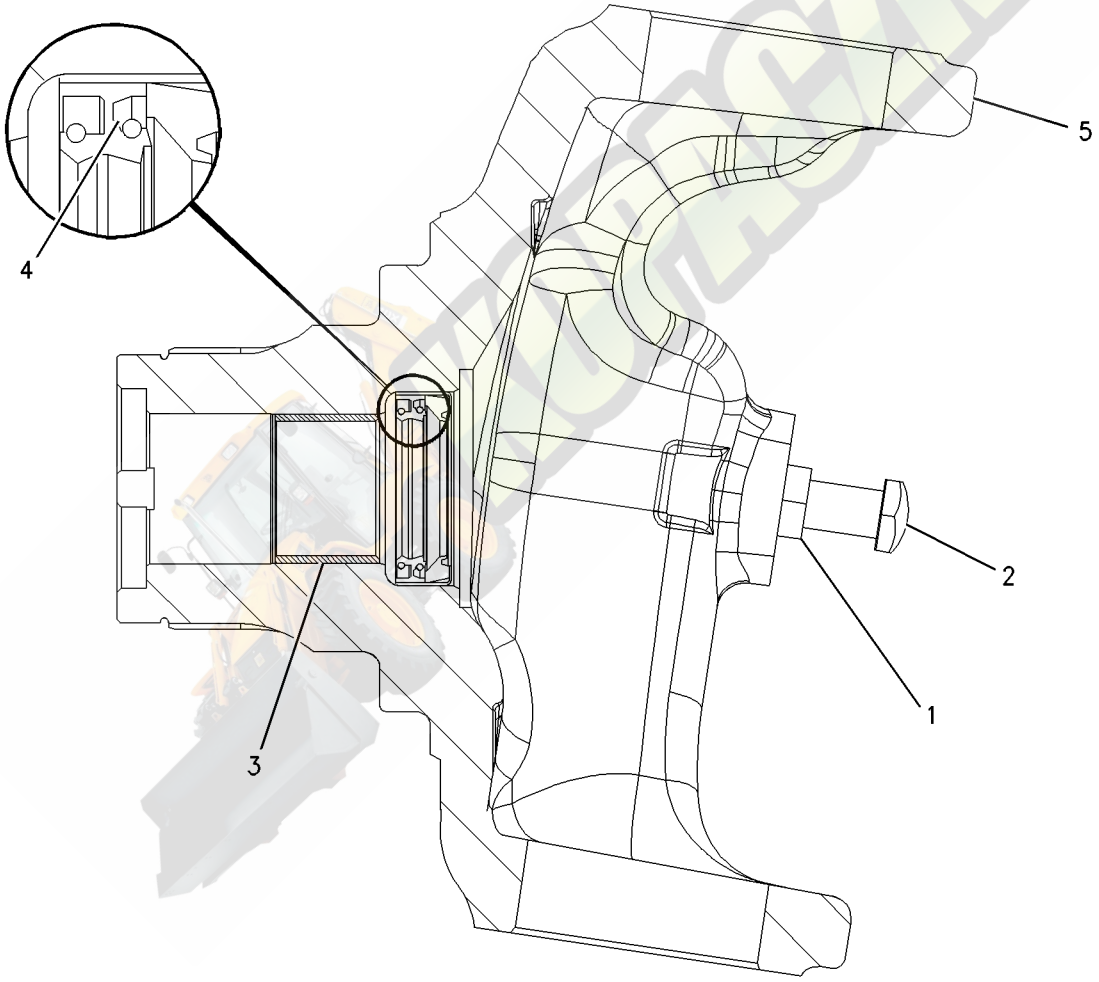

GRAPHIC #1 **<END>** g00926639

256-0546 LINES GP-POWER TRAIN OIL–DIFFERENTIAL LOCK

S/N: JBA1-UP
PART OF 329-0307 POWER TRAIN AR
AN ATTACHMENT

SMCS-3016, 3154 **i02285647**

NOTE	REF NO	GRAPHIC REF	PART NUMBER	QTY	PART NAME 1 2 3 4 5 6 (PRODUCT LEVEL)	SEE PAGE
	1	1	*148-8325*	1	CONNECTOR AS	
		1	**3J-1907**	2	SEAL-O-RING	
		1	**4J-5477**	2	SEAL-O-RING	
		1	**6V-8641**	2	CONNECTOR	
I	2	1	**256-0550**	1	HOSE AS	
	3	1	*148-8368*	1	ELBOW AS	
		1	**3J-1907**	1	SEAL-O-RING	
		1	**4J-5477**	1	SEAL-O-RING	
		1	**6V-8627**	1	ELBOW	
	4	1	**7K-1181**	1	STRAP-CABLE	
	5	1	**151-4841**	1	BLOCK	

I-REFER TO HYDRAULIC INFORMATION SYSTEM

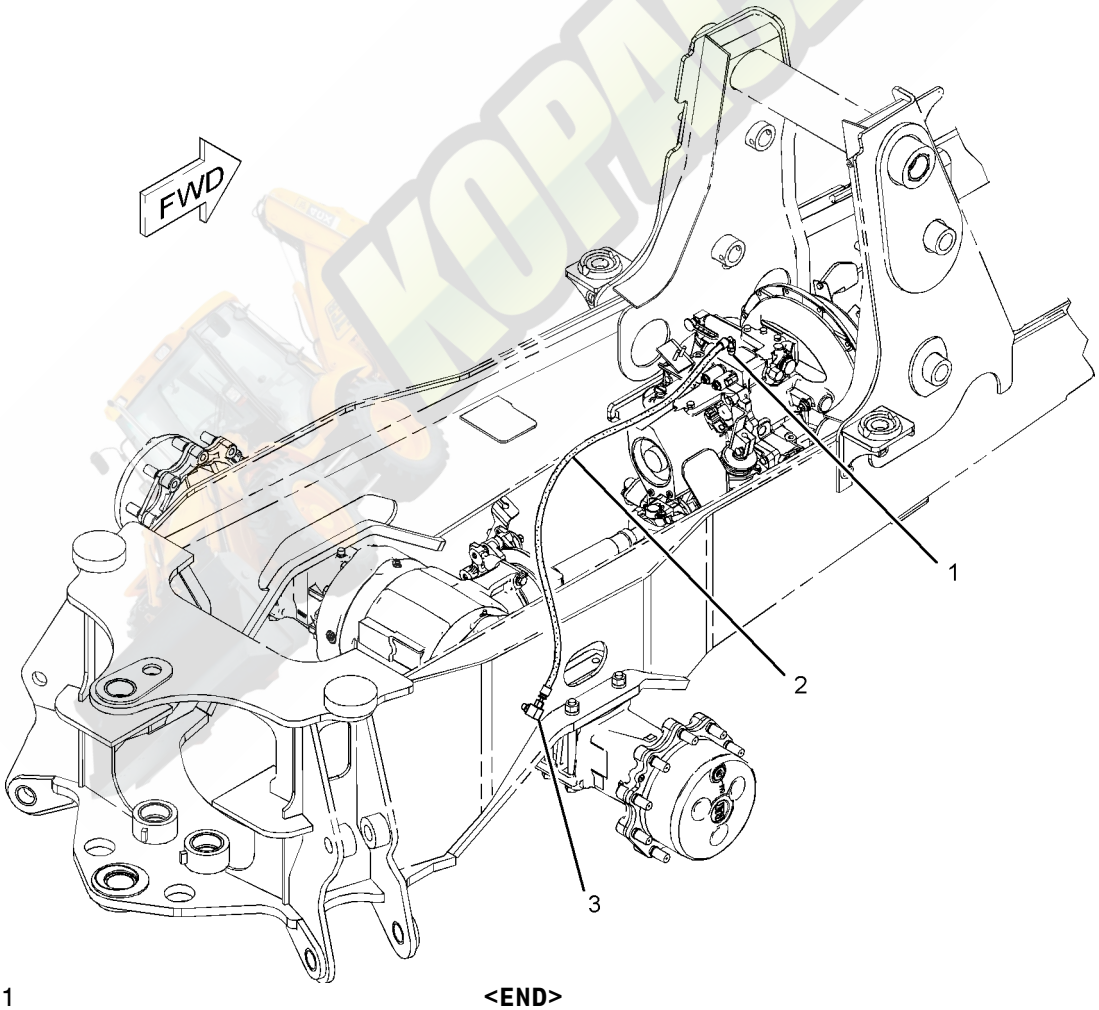

GRAPHIC #1 **<END>** g01083159

221-0811 MOUNTING GP-AXLE

S/N: JBA1-UP
PART OF 329-0319 DRIVE AR-BACKHOE LOADER
AN ATTACHMENT

SMCS-3268 **i02646529**

NOTE	REF NO	GRAPHIC REF	PART NUMBER	QTY	PART NAME 1 2 3 4 5 6 (PRODUCT LEVEL)	SEE PAGE
B	1	1	**1K-7082**	1	WASHER (2.266X4X0.031-IN THK)	
B	2	1	**9R-9702**	2	WASHER (56X100X1.6-MM THK)	
	3	1	**211-9286**	1	PIN AS	
	4	1	**293-9289**	4	BLOCK	
M	5	1	**089-7990**	8	BOLT (M20X2.5X250-MM)	
	6	1	**165-8996**	2	WASHER-THRUST (55.5X100.5X5-MM THK)	
	7	1	**7X-0618**	1	WASHER-HARD (13.5X40X5-MM THK)	
M	8	1	**8T-4192**	1	BOLT (M12X1.75X25-MM)	
	9	1	**8T-5439**	8	WASHER-HARD (21.5X45X6-MM THK)	

B-USE AS REQUIRED
M-METRIC PART

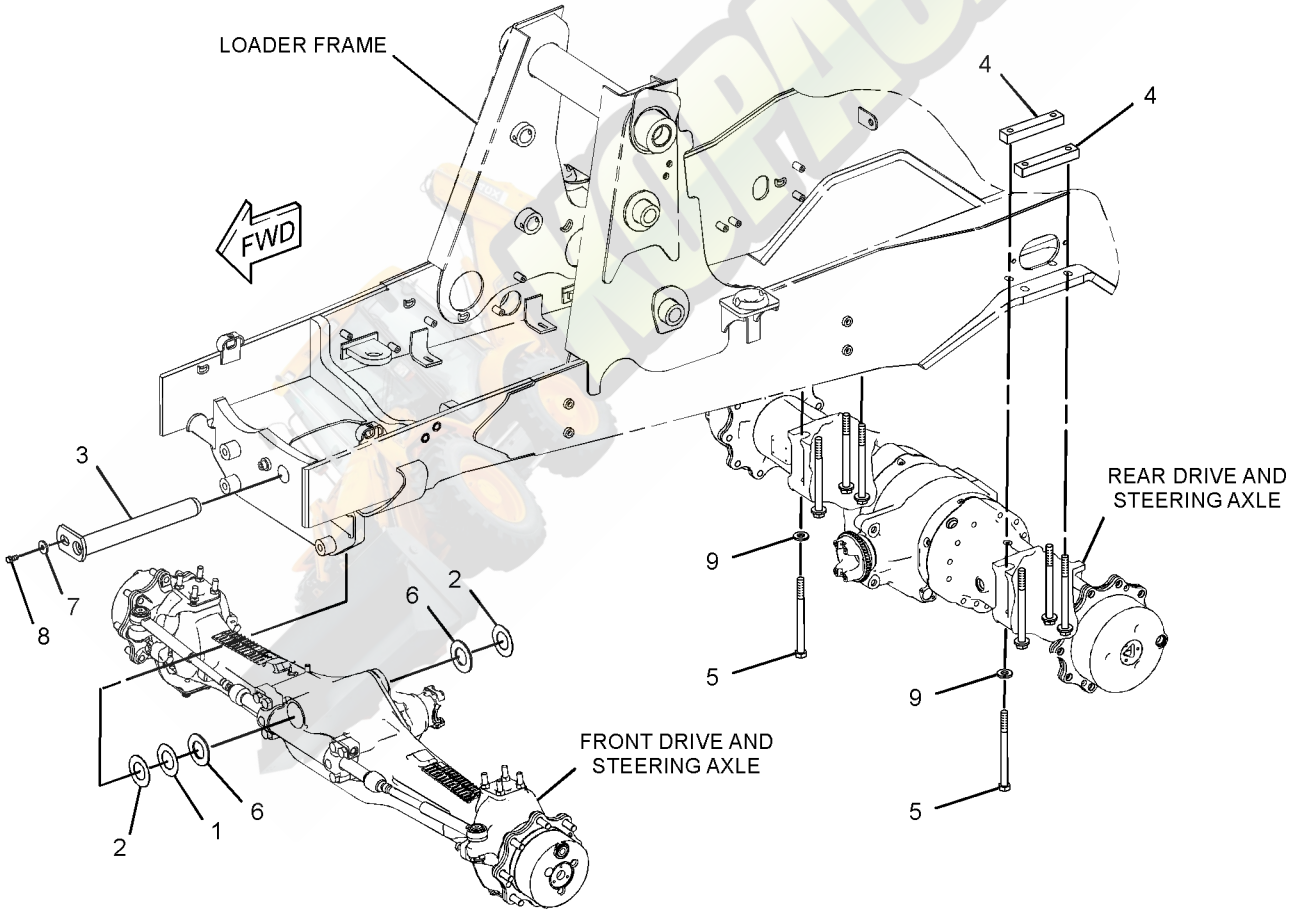

GRAPHIC #1 **<END>** g01343464

254-5703 MOUNTING GP-TRANSMISSION

S/N: JBA1-UP
PART OF 329-0306 POWER TRAIN AR
AN ATTACHMENT

SMCS-3082 **i02433177**

NOTE	REF NO	GRAPHIC REF	PART NUMBER	QTY	PART NAME 1 2 3 4 5 6 (PRODUCT LEVEL)	SEE PAGE
	1	1	**271-7308**	1	SUPPORT AS (LH)	
	2	1	**245-4827**	1	SUPPORT AS (RH)	
M	3	1	**7X-2553**	4	BOLT (M16X2X40-MM)	
	4	1	**8T-4223**	4	WASHER-HARD (13.5X25.5X3-MM THK)	
M	5	1	**8T-4956**	4	BOLT (M12X1.75X35-MM)	
	6	1	**9X-8257**	4	WASHER (17.5X30X3.5-MM THK)	

M-METRIC PART

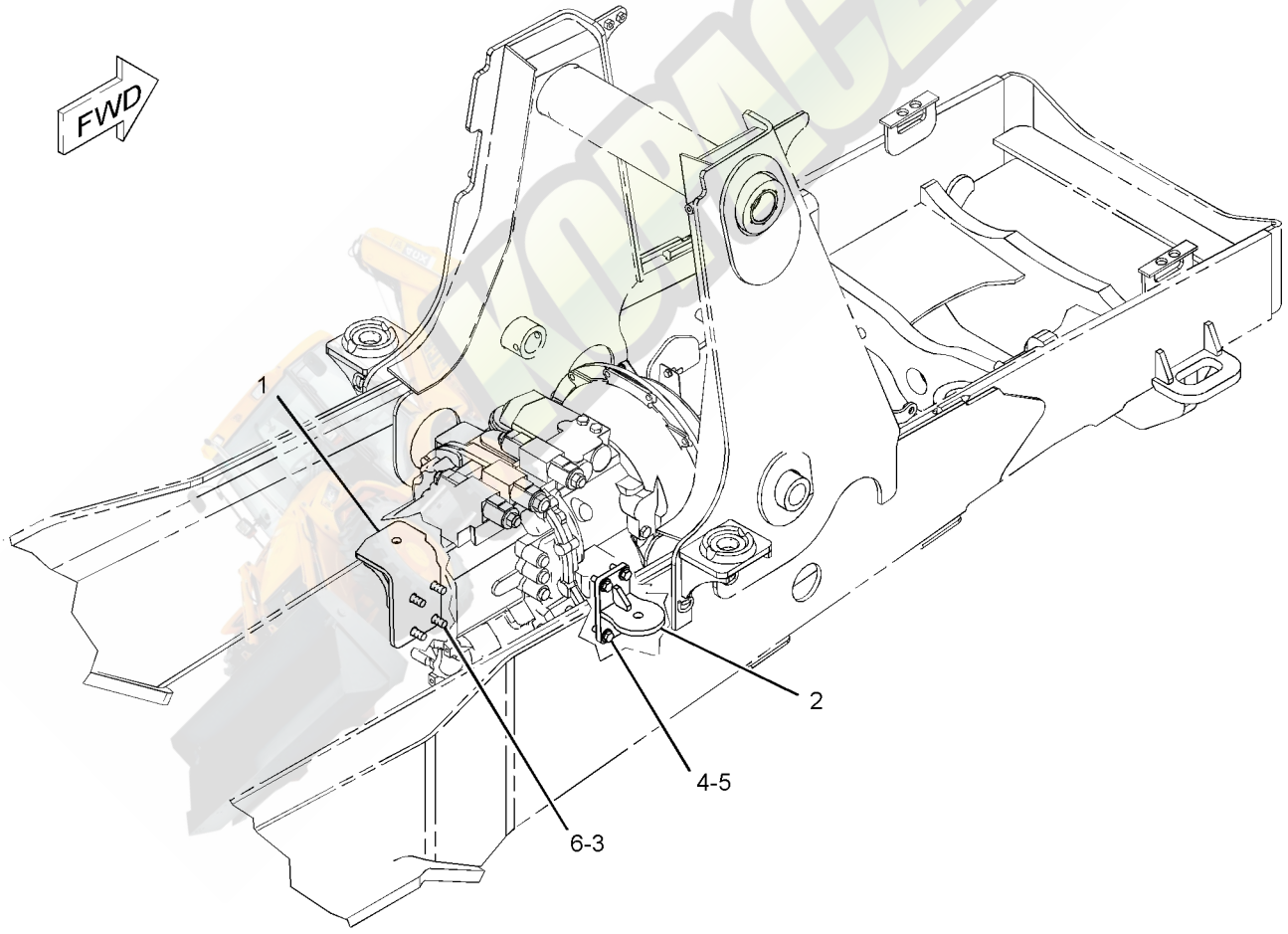

GRAPHIC #1 **<END>** g01216019

271-4487 MOUNTING GP-TRANSMISSION

S/N: JBA1-UP
PART OF 329-0307 POWER TRAIN AR
AN ATTACHMENT

SMCS-3082 **i02354756**

NOTE	REF NO	GRAPHIC REF	PART NUMBER	QTY	PART NAME 1 2 3 4 5 6 (PRODUCT LEVEL)	SEE PAGE
	1	1	**245-4827**	1	SUPPORT AS (RH)	
	2	1	**271-7309**	1	SUPPORT AS (LH)	
M	3	1	**7X-2553**	4	BOLT (M16X2X40-MM)	
	4	1	**8T-4223**	4	WASHER-HARD (13.5X25.5X3-MM THK)	
M	5	1	**8T-4956**	4	BOLT (M12X1.75X35-MM)	
	6	1	**9X-8257**	4	WASHER (17.5X30X3.5-MM THK)	

M-METRIC PART

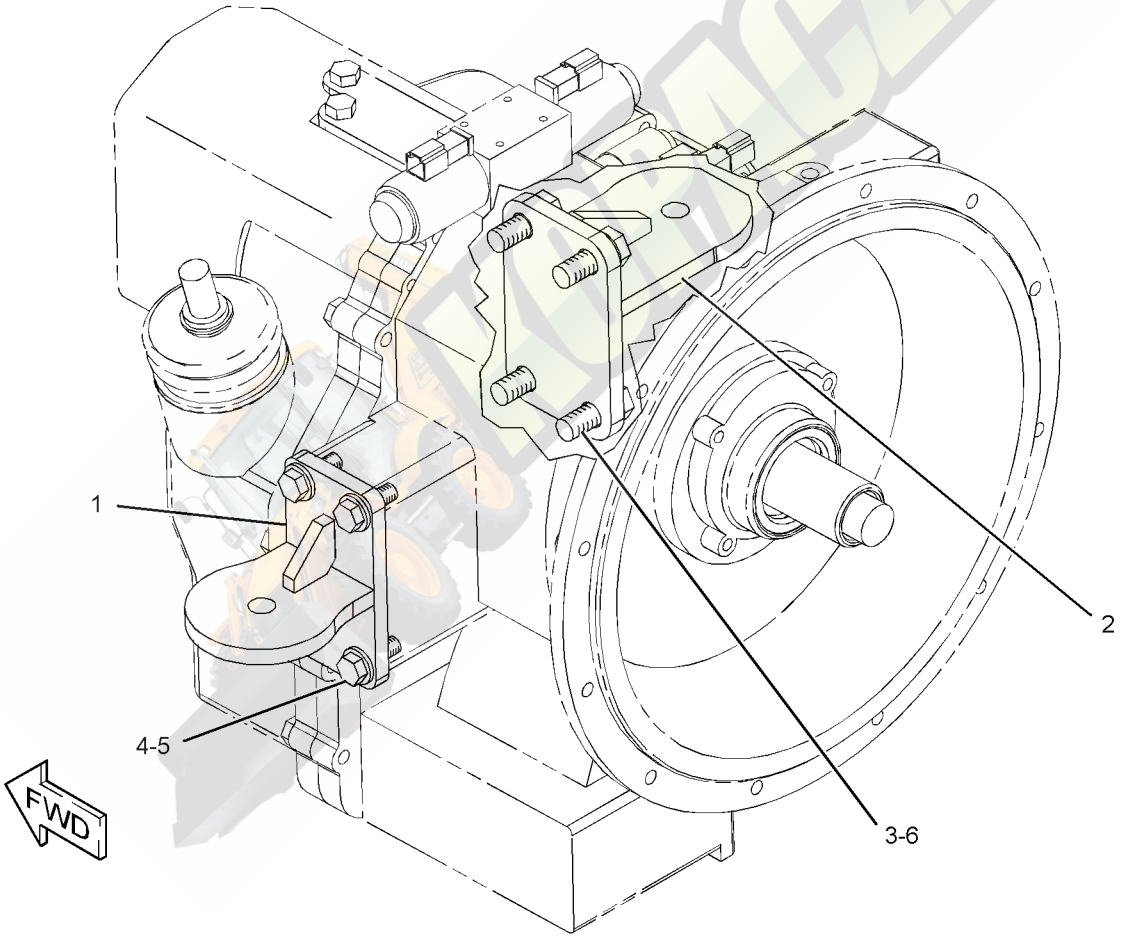

GRAPHIC #1 **<END>** g01202844

210-5924 PLANETARY GP-FINAL DRIVE

S/N: JBA1-UP

PART OF 230-5743 AXLE GP-DRIVE & STEERING

AN ATTACHMENT

SMCS-4050 **i03156043**

NOTE	REF NO	GRAPHIC REF	PART NUMBER	QTY	PART NAME 1 2 3 4 5 6 (PRODUCT LEVEL)	SEE PAGE
	1	1	**210-5931**	4	RETAINER	
	2	1	**209-4157**	4	GEAR (23-TEETH)	
	3	1	**095-0924**	4	RING-RETAINING	
					AVAILABLE REPAIR KIT(S):	
			209-7466	1	KIT-PLANETARY CARRIER	
					(INCLUDES THRUST PLUG, SUN GEAR SHAFT & PLANET CARRIER)	
			219-8783	23	KIT-ROLLER BEARING	
					(EACH INCLUDES 10 NEEDLES)	
					(SERVICED IN QUANITY OF 10, EACH GEAR REQUIRES 56 ROLLERS OR 6 KITS, EACH WHEEL END AS. REQUIRES 224 ROLLERS OR 23 KITS)	

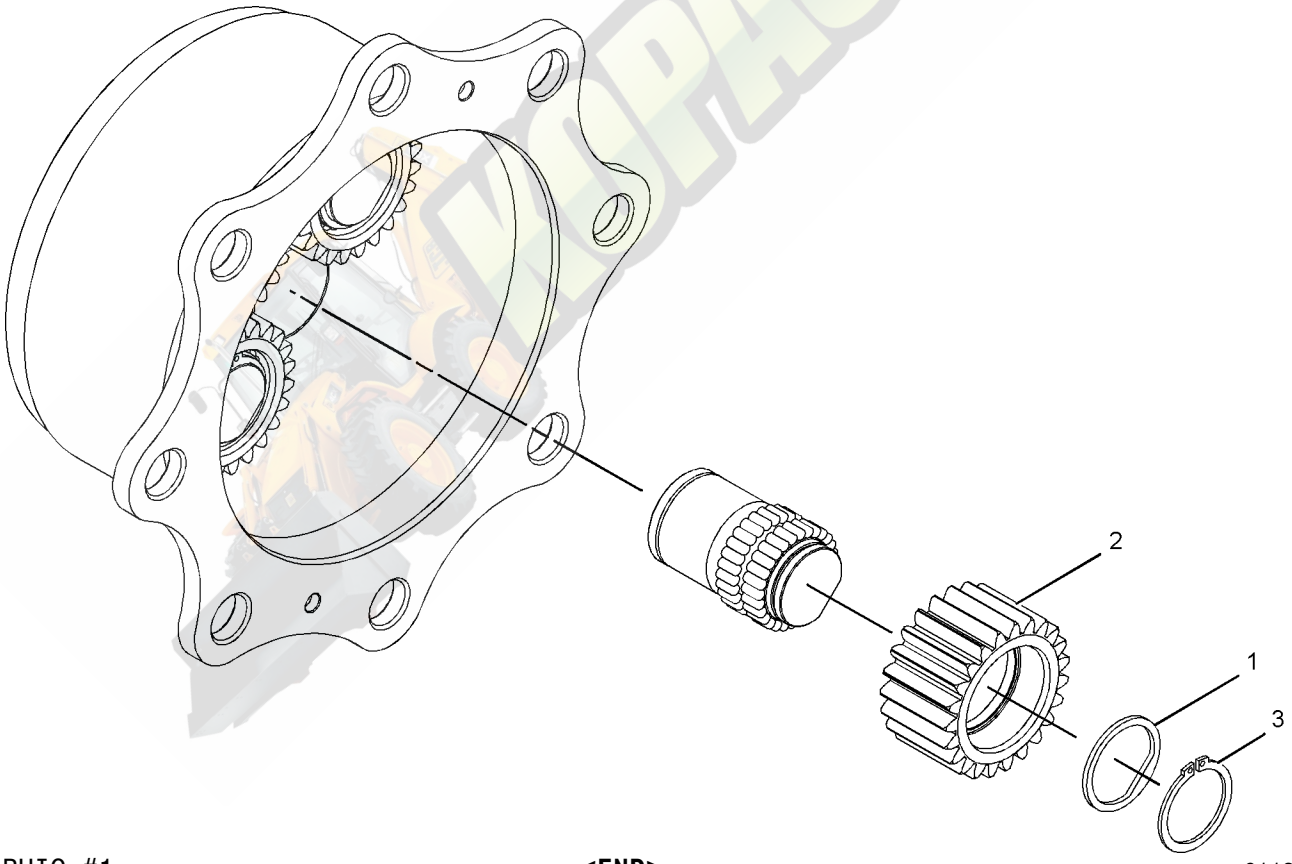

GRAPHIC #1 **<END>** g01132397

216-1610 PLANETARY GP-FINAL DRIVE–AXLE

S/N: JBA1-UP
PART OF 230-5738 AXLE GP-REAR
AN ATTACHMENT

SMCS-4050 **i02196607**

NOTE	REF NO	GRAPHIC REF	PART NUMBER	QTY	PART NAME 1 2 3 4 5 6 (PRODUCT LEVEL)	SEE PAGE
	1	1	**199-0653**	3	RING-RETAINING	
	2	1	**207-4257**	6	RING-RETAINER	
	4	1	**199-0760**	3	BEARING	
	5	1	**213-4222**	3	WASHER (50.1X61X2.5-MM THK)	
	6	1	**207-5962**	6	WASHER (145.1X179.5X8-MM THK)	
	7	1	**216-1606**	3	GEAR-PLANETARY (31-TEETH)	
	8	1	**216-1601**	1	CARRIER	

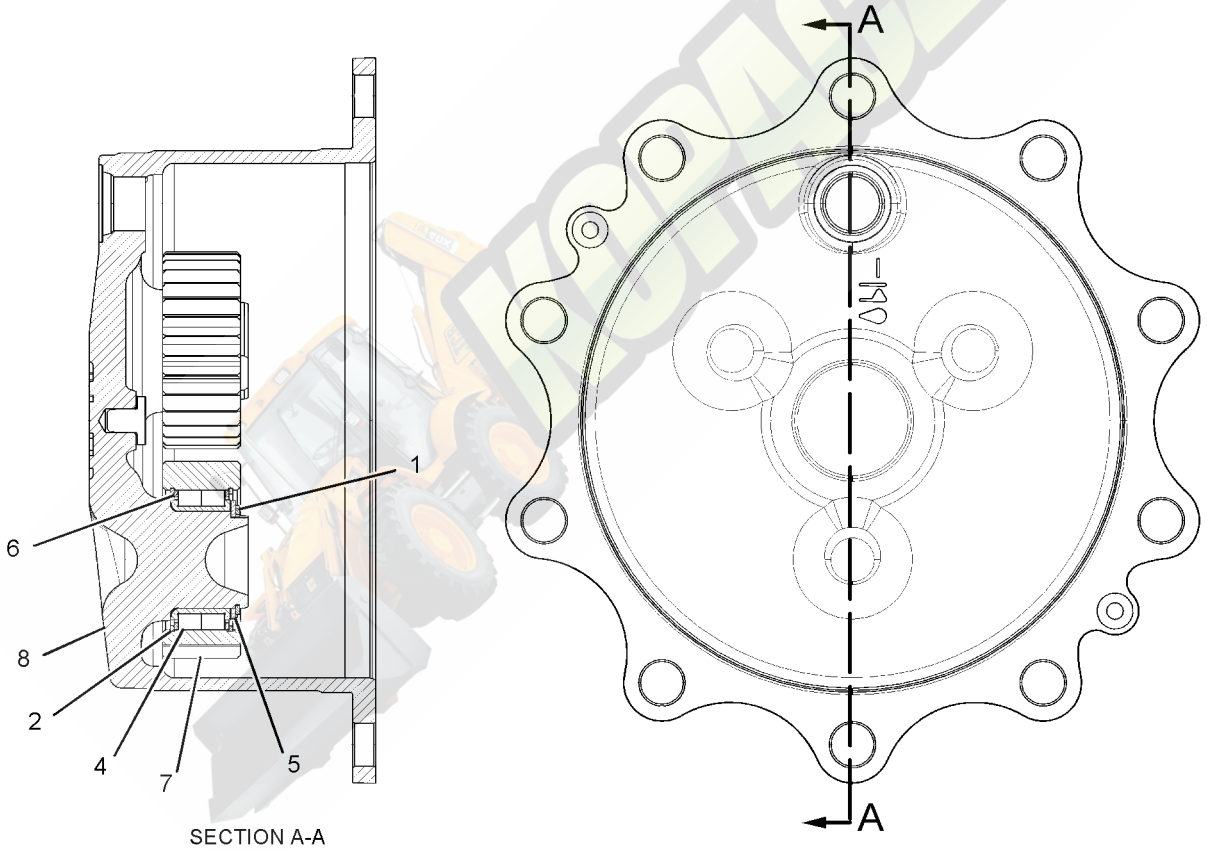

SECTION A-A

GRAPHIC #1 **<END>** g01113985

329-0306 POWER TRAIN AR–
ALL WHEEL DRIVE, 2-WHEEL STEER, AUTOSHIFT
S/N: JBA1-UP
FOR USE WITH 344-6354–PAGE 7
AN ATTACHMENT

SMCS-3000, 4000 **i03726463**

NOTE	PART NUMBER	QTY	PART NAME 1 2 3 4 5 6 (PRODUCT LEVEL)	SEE PAGE
Y	*320-7233*	1	CONTROL GP-DIFFERENTIAL LOCK (TRANSMISSION AUTOSHIFT)	247
Y	*206-1642*	1	CONTROL GP-PARKING BRAKE	325
Y	*206-1639*	1	CONTROL GP-SERVICE BRAKE (STANDARD SHIFT)	327
Y	*112-1826*	1	DRIVE & MTG GP-PUMP	385
Y	*329-0319*	1	DRIVE AR-BACKHOE LOADER (ALL WHEEL DRIVE, 2-WHEEL STEER)	6
Y	*211-0073*	1	FILLER GP-POWER TRAIN OIL (AUTOSHIFT)	255
Y	*315-1369*	1	LINES GP-POWER TRAIN COOLER	87
Y	*254-5703*	1	MOUNTING GP-TRANSMISSION	265
Y	*233-6738*	1	SHAFT GP-DRIVE (FRONT)	272
Y	*308-9973*	1	SWITCH GP-DIFFERENTIAL LOCK	194
Y	*202-5907*	1	TRANSMISSION AR-POWER SHIFT (ALL WHEEL DRIVE, AUTOSHIFT)	286
Y	*310-2352*	1	WIRING GP-TRANSMISSION CONTROL (POWERSHIFT)	231
	119-4740	1	FILTER-OIL (STANDARD EFFICIENCY) (POWER TRAIN)	

Y-SEPARATE ILLUSTRATION

<END>

329-0307 POWER TRAIN AR–
ALL WHEEL DRIVE, 2-WHEEL STEER, STD SHIFT
S/N: JBA1-UP
FOR USE WITH 344-6354–PAGE 7
AN ATTACHMENT

SMCS-3000, 4000 **i03726462**

NOTE	PART NUMBER	QTY	PART NAME 1 2 3 4 5 6 (PRODUCT LEVEL)	SEE PAGE
Y	*206-1642*	1	CONTROL GP-PARKING BRAKE	325
Y	*206-1639*	1	CONTROL GP-SERVICE BRAKE (STANDARD SHIFT)	327
Y	*311-3640*	1	CONTROL GP-TRANSMISSION	632
Y	*112-1826*	1	DRIVE & MTG GP-PUMP	385
Y	*329-0319*	1	DRIVE AR-BACKHOE LOADER (ALL WHEEL DRIVE, 2-WHEEL STEER)	6
Y	*214-3740*	1	FILLER GP-POWER TRAIN OIL (ALL WHEEL DRIVE, STD SHIFT)	257
Y	*315-1369*	1	LINES GP-POWER TRAIN COOLER	87
Y	*256-0546*	1	LINES GP-POWER TRAIN OIL (DIFFERENTIAL LOCK)	263
Y	*271-4487*	1	MOUNTING GP-TRANSMISSION	266
Y	*216-4476*	1	SHAFT GP-DRIVE (FRONT)	272
Y	*308-9973*	1	SWITCH GP-DIFFERENTIAL LOCK	194
Y	*248-0217*	1	TRANSMISSION AR-DIRECT DRIVE (ALL WHEEL DRIVE, STD SHIFT)	286
	119-4740	1	FILTER-OIL (STANDARD EFFICIENCY) (POWER TRAIN)	

Y-SEPARATE ILLUSTRATION

<END>

274-4580 SHAFT GP-COUNTER

S/N: JBA1-UP
PART OF 294-9819 TRANSMISSION GP-POWER SHIFT
AN ATTACHMENT

SMCS-3053, 3063 **i02432350**

NOTE	REF NO	GRAPHIC REF	PART NUMBER	QTY	PART NAME 1 2 3 4 5 6 (PRODUCT LEVEL)	SEE PAGE
	1	1	**6T-9196**	1	SEAL	
	2	1	**6V-5100**	1	SEAL-O-RING	
	3	1	**6V-8757**	1	RING-RETAINING	
	4	1	**6Y-1192**	2	RING-SEAL	
	5	1	**6Y-7929**	8	DISC-FRICTION	
	6	1	**8E-5707**	1	PLATE-END	
	7	1	**122-1877**	1	WASHER-THRUST (40X65X4-MM THK)	
	8	1	**123-8907**	2	CONE-BEARING	
	9	1	**123-8908**	2	CUP-TAPERED ROLLER	
	10	1	**123-8912**	2	BEARING-ROLLER	
	11	1	**147-0203**	1	WASHER-THRUST (45.3X65X5-MM THK)	
	12	1	**147-0215**	1	GEAR (45/19-TEETH)	
	13	1	**147-0216**	1	GEAR (38-TEETH)	
	14	1	**147-0228**	1	PISTON-CLUTCH	
	15	1	**147-0238**	1	SPRING AS	
	16	1	**147-0258**	1	SPACER (46X50X16-MM THK)	
	17	1	**172-6050**	2	BEARING-SPECIAL	
	18	1	**173-0332**	1	SHAFT AS	
		1	**163-9091**	1	PLUG	
	19	1	**211-6752**	1	GEAR (46-TEETH)	
	20	1	**274-4553**	8	DISC-FRICTION	
	21	1	**274-8638**	1	RING-RETAINING	

274-4580 SHAFT GP-COUNTER *(contd.)* **i02432350**

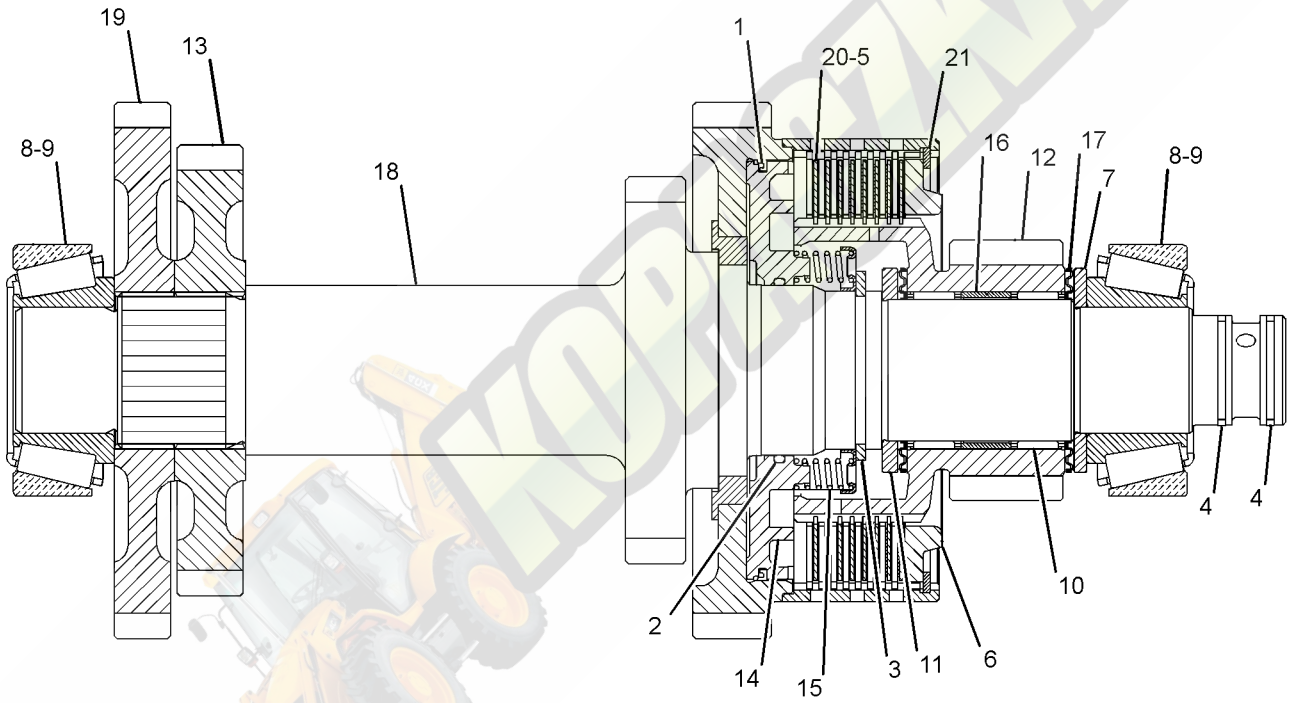

GRAPHIC #1 **<END>** g01216220

216-4475 SHAFT GP-DRIVE–REAR

S/N: JBA1-UP
PART OF 329-0319 DRIVE AR-BACKHOE LOADER
AN ATTACHMENT

SMCS-3253 **i03498387**

NOTE	PART NUMBER	QTY	PART NAME 1 2 3 4 5 6 (PRODUCT LEVEL)	SEE PAGE
J	**304-3269**	1	SHAFT AS (REAR)	
M	**107-6826**	8	BOLT (M24X19.1-MM)	
	5V-2545	4	STRAP	
			AVAILABLE REPAIR KIT(S):	
J	**117-9887**	2	KIT-SPIDER & BEARING (DRIVE SHAFT)	
			(EACH INCLUDES SPIDER & RINGS)	

J-KITS MARKED J SERVICES PART MARKED J
M-METRIC PART

<END>

216-4476 SHAFT GP-DRIVE–FRONT

S/N: JBA1-UP
PART OF 329-0307 POWER TRAIN AR
AN ATTACHMENT

SMCS-3253 **i02858065**

NOTE	PART NUMBER	QTY	PART NAME 1 2 3 4 5 6 (PRODUCT LEVEL)	SEE PAGE
J	**304-3266**	1	SHAFT AS (FRONT)	
M	**107-6826**	8	BOLT (M24X19.1-MM)	
	5V-2545	4	STRAP	
			AVAILABLE REPAIR KIT(S):	
J	**117-9887**	2	KIT-SPIDER & BEARING (DRIVE SHAFT)	
			(EACH INCLUDES SPIDER & RINGS)	

J-KIT MARKED J SERVICES PART MARKED J
M-METRIC PART

<END>

233-6738 SHAFT GP-DRIVE–FRONT

S/N: JBA1-UP
PART OF 329-0306 POWER TRAIN AR
AN ATTACHMENT

SMCS-3253 **i03577163**

NOTE	PART NUMBER	QTY	PART NAME 1 2 3 4 5 6 (PRODUCT LEVEL)	SEE PAGE
J	**304-3262**	1	SHAFT AS (POWER SHIFT)	
M	**107-6826**	8	BOLT (M24X19.1-MM)	
	5V-2545	4	STRAP	
			AVAILABLE REPAIR KIT(S):	
J	**117-9887**	2	KIT-SPIDER & BEARING (DRIVE SHAFT)	
			(EACH INCLUDES SPIDER & RINGS)	

J-KIT MARKED J SERVICES PART(S) MARKED J
M-METRIC PART

<END>

274-4561 SHAFT GP-IDLER

S/N: JBA1-UP
PART OF 294-9819 TRANSMISSION GP-POWER SHIFT
AN ATTACHMENT

SMCS-3063 **i03577165**

NOTE	REF NO	GRAPHIC REF	PART NUMBER	QTY	PART NAME 1 2 3 4 5 6 (PRODUCT LEVEL)	SEE PAGE
	1	1	**147-0256**	1	SHAFT AS-REVERSE	
		1	**163-9091**	1	PLUG	
		1	**147-0270**	1	ORIFICE	
	2	1	**147-0202**	1	GEAR (45/24-TEETH)	
	3	1	**123-8905**	2	CUP-TAPERED ROLLER	
	4	1	**147-0228**	1	PISTON-CLUTCH	
	5	1	**6T-9196**	1	SEAL	
	6	1	**6V-5100**	1	SEAL-O-RING	
	7	1	**147-0238**	1	SPRING AS	
	8	1	**274-4553**	5	DISC-FRICTION	
	9	1	**6Y-7929**	5	DISC-FRICTION	
	10	1	**147-0259**	1	SPACER (51.1X54.9X18.7-MM THK)	
	11	1	**6V-8757**	1	RING-RETAINING	
	12	1	**121-2500**	1	WASHER-THRUST (50X70X4-MM THK)	
	13	1	**172-5317**	2	BEARING-SPECIAL	
	14	1	**121-0694**	1	WASHER-THRUST (40X70X4-MM THK)	
	15	1	**6Y-1192**	2	RING-SEAL	
	16	1	**8E-5707**	1	PLATE-END	
	17	1	**9U-8875**	1	RING-RETAINING	
	18	1	**7T-6655**	2	BEARING	
	19	1	**123-8906**	2	CUP-TAPERED ROLLER	

274-4561 SHAFT GP-IDLER *(contd.)* **i03577165**

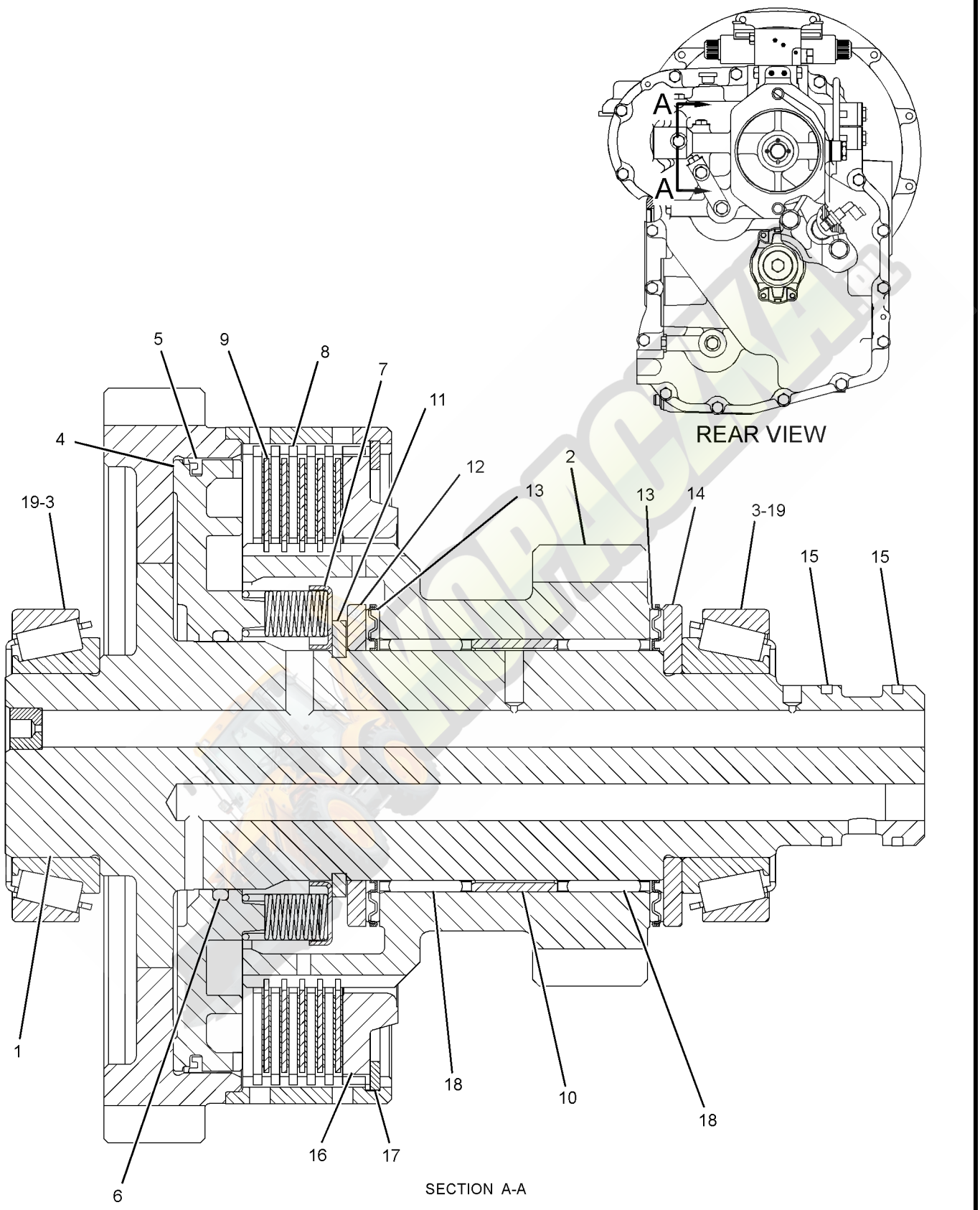

GRAPHIC #1 **<END>** g01216120

274-4578 SHAFT GP-INPUT

S/N: JBA1-UP
PART OF 294-9819 TRANSMISSION GP-POWER SHIFT
AN ATTACHMENT

SMCS-3053, 3063 **i03577181**

NOTE	REF NO	GRAPHIC REF	PART NUMBER	QTY	PART NAME 1 2 3 4 5 6 (PRODUCT LEVEL)	SEE PAGE
	1	1	**6T-9196**	2	SEAL	
	2	1	**6V-5100**	2	SEAL-O-RING	
	3	1	**6V-8757**	3	RING-RETAINING	
	4	1	**6Y-7929**	11	DISC-FRICTION	
	5	1	**7T-6655**	2	BEARING	
	6	1	**8E-5707**	2	PLATE-END	
	7	1	**9U-8886**	4	RING-SEAL	
	8	1	**121-0694**	1	WASHER-THRUST (40X70X4-MM THK)	
	9	1	**121-2500**	3	WASHER-THRUST (50X70X4-MM THK)	
	10	1	**122-1886**	1	RING-SEAL	
	11	1	**123-8905**	1	CUP-TAPERED ROLLER	
	12	1	**123-8906**	1	CUP-TAPERED ROLLER	
	13	1	**123-8909**	1	CONE-BEARING	
	14	1	**123-8910**	1	CUP-TAPERED ROLLER	
	15	1	**123-8913**	2	BEARING-ROLLER	
	16	1	**147-0202**	1	GEAR (45/24-TEETH)	
	17	1	**147-0224**	1	GEAR (45/32-TEETH)	
	18	1	**147-0228**	2	PISTON-CLUTCH	
	19	1	**147-0238**	2	SPRING AS	
	20	1	**147-0257**	1	SHAFT AS-INPUT	
		1	**123-0714**	1	BEARING	
		1	**123-2920**	3	PLUG	
	21	1	**147-0259**	1	SPACER (51.1X54.9X18.7-MM THK)	
	22	1	**172-5317**	4	BEARING-SPECIAL	
	23	1	**274-4553**	11	DISC-FRICTION	
	24	1	**274-8638**	2	RING-RETAINING	

274-4578 SHAFT GP-INPUT *(contd.)* i03577181

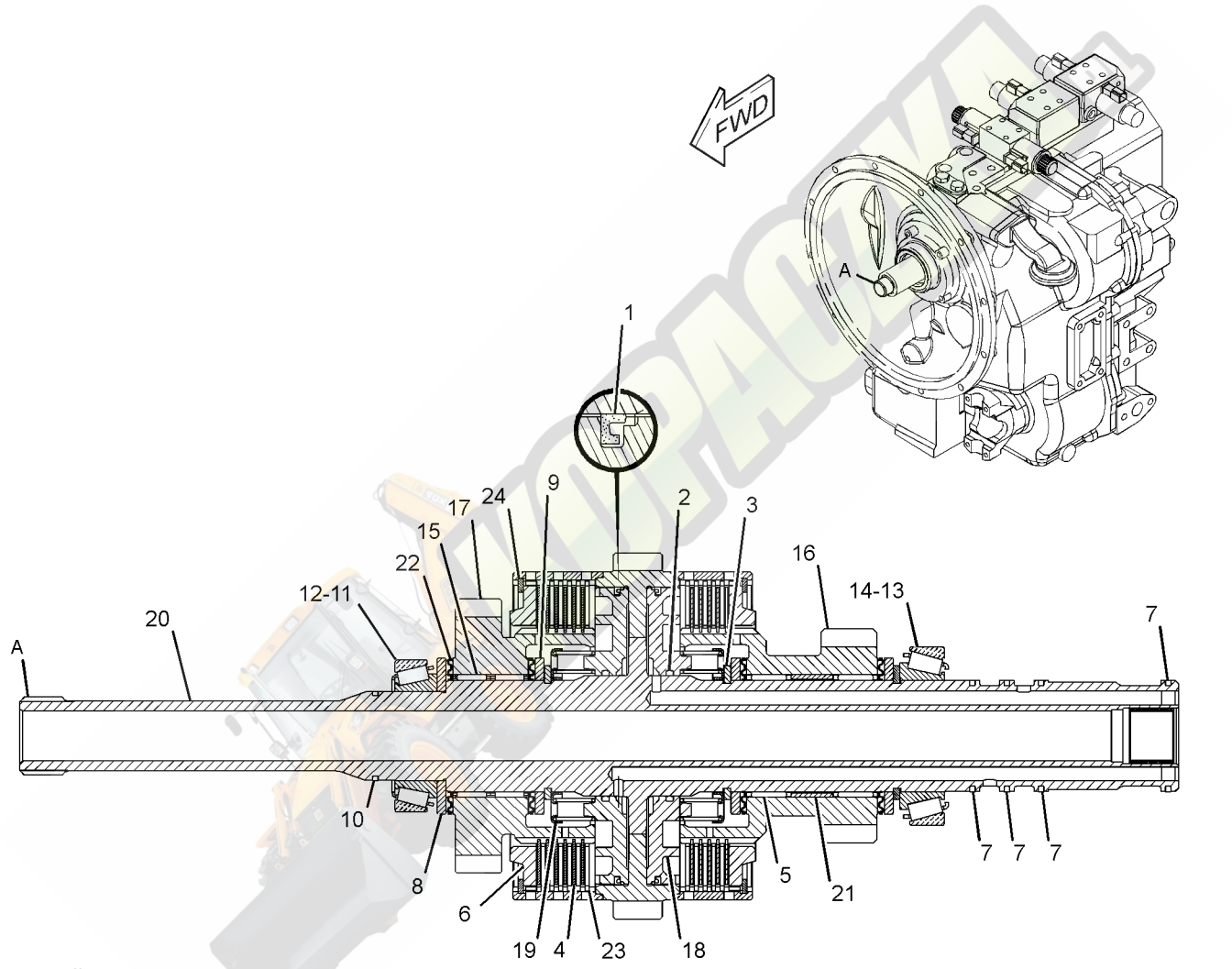

GRAPHIC #1 g01216057

<END>

305-3429 SHAFT GP-INPUT

S/N: JBA1-UP
PART OF 294-9816 TRANSMISSION GP-DIRECT DRIVE
AN ATTACHMENT

SMCS-3053, 3063 **i03043822**

NOTE	REF NO	GRAPHIC REF	PART NUMBER	QTY	PART NAME 1 2 3 4 5 6 (PRODUCT LEVEL)	SEE PAGE
	1	1	**9U-8875**	2	RING-RETAINING	
	2	1	**172-5317**	1	BEARING-SPECIAL	
	3	1	**172-6050**	1	BEARING-SPECIAL	
	4	1	**9U-8886**	4	RING-SEAL	
	5	1	**274-4553**	10	DISC-FRICTION	
	6	1	**122-1886**	1	RING-SEAL	
	7	1	**6V-8757**	3	RING-RETAINING	
	8	1	**121-2500**	2	WASHER-THRUST (50X70X4-MM THK)	
	9	1	**123-8905**	1	CUP-TAPERED ROLLER	
	10	1	**123-8909**	1	CONE-BEARING	
	11	1	**305-3431**	2	PISTON	
	12	1	**147-0238**	2	SPRING AS	
	13	1	**147-0203**	2	WASHER-THRUST (45.3X65X5-MM THK)	
	14	1	**6Y-7929**	10	DISC-FRICTION	
	15	1	**274-8616**	1	GEAR-FORWARD (24-TEETH)	
	16	1	**274-8617**	1	GEAR-REVERSE (27-TEETH)	
	17	1	**274-8628**	1	BEARING-NEEDLE	
	18	1	**274-8629**	1	BEARING-NEEDLE	
	19	1	**294-9821**	1	SPACER	
	20	1	**274-8636**	1	SHAFT AS	
		1	**123-0714**	2	BEARING	
		1	**123-2920**	3	PLUG	
	21	1	**8E-5707**	2	PLATE-END	
	22	1	**294-9812**	2	RETAINER-SPRING	

305-3429 SHAFT GP-INPUT *(contd.)* **i03043822**

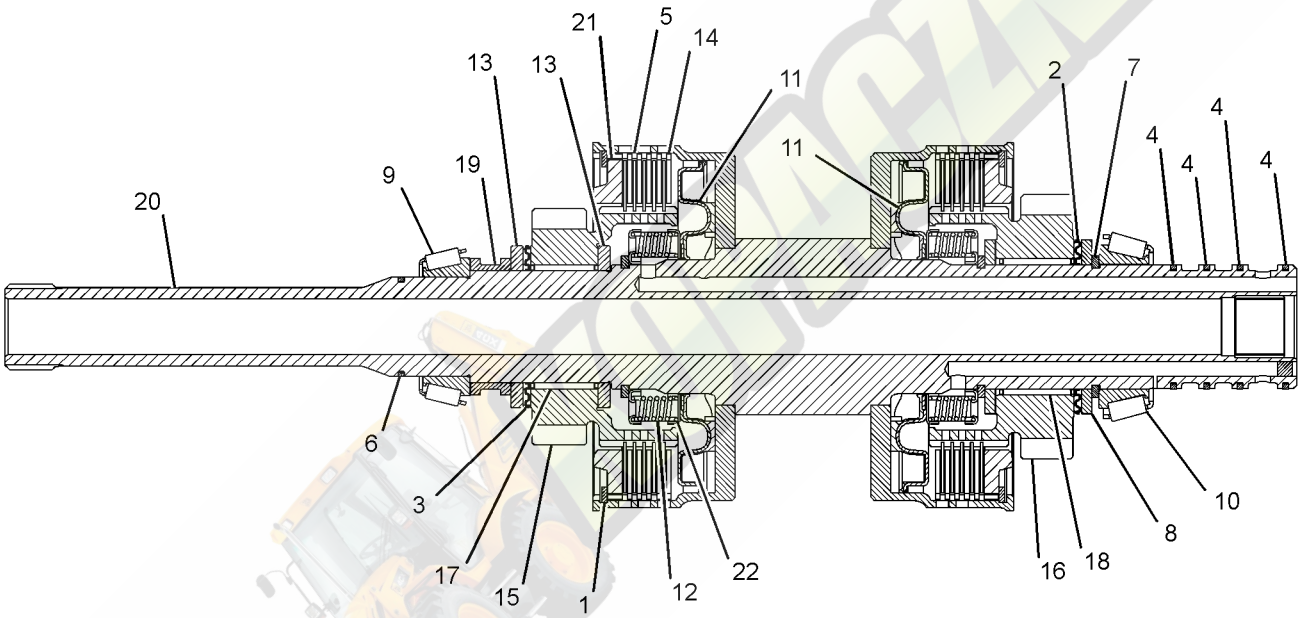

GRAPHIC #1 **<END>** g01383731

274-4582 SHAFT GP-OUTPUT–MAIN

S/N: JBA1-UP
PART OF 294-9819 TRANSMISSION GP-POWER SHIFT
AN ATTACHMENT

SMCS-3053, 3063 **i03577182**

NOTE	REF NO	GRAPHIC REF	PART NUMBER	QTY	PART NAME 1 2 3 4 5 6 (PRODUCT LEVEL)	SEE PAGE
	1	1	**6T-9196**	2	SEAL	
	2	1	**6Y-1192**	3	RING-SEAL	
	3	1	**6Y-7929**	13	DISC-FRICTION	
	4	1	**8E-5707**	2	PLATE-END	
	5	1	**8T-1580**	1	CUP	
	6	1	**8T-1581**	1	CONE	
	7	1	**009-2062**	2	SEAL-O-RING	
	8	1	**095-0927**	1	RING-RETAINING	
	9	1	**095-0928**	1	RING-RETAINING (EXTERNAL)	
	10	1	**121-0885**	1	RETAINER	
	11	1	**122-1877**	1	WASHER-THRUST (40X65X4-MM THK)	
	12	1	**123-8907**	1	CONE-BEARING	
	13	1	**123-8908**	1	CUP-TAPERED ROLLER	
	14	1	**123-8912**	2	BEARING-ROLLER	
	15	1	**147-0203**	1	WASHER-THRUST (45.3X65X5-MM THK)	
	16	1	**147-0205**	2	WASHER (55X78X5-MM THK)	
	17	1	**147-0242**	1	GEAR (48-TEETH)	
	18	1	**147-0248**	1	SPACER (56.2X60X15.8-MM THK)	
	19	1	**147-0260**	1	RETAINER-SPRING	
	20	1	**147-0261**	1	SHAFT AS-OUTPUT (REAR)	
		1	**163-9091**	2	PLUG	
	21	1	**150-3757**	2	BEARING	
	22	1	**157-2088**	2	PISTON AS	
	23	1	**157-2090**	1	GEAR (38-TEETH)	
	24	1	**172-6050**	2	BEARING-SPECIAL	
	25	1	**172-6743**	2	BEARING-SPECIAL	
	26	1	**178-9566**	2	SPRING-PISTON	
	27	1	**211-6753**	1	GEAR (24-TEETH)	
	28	1	**274-4553**	13	DISC-FRICTION	
	29	1	**274-8638**	2	RING-RETAINING	

274-4582 SHAFT GP-OUTPUT *(contd.)* **i03577182**

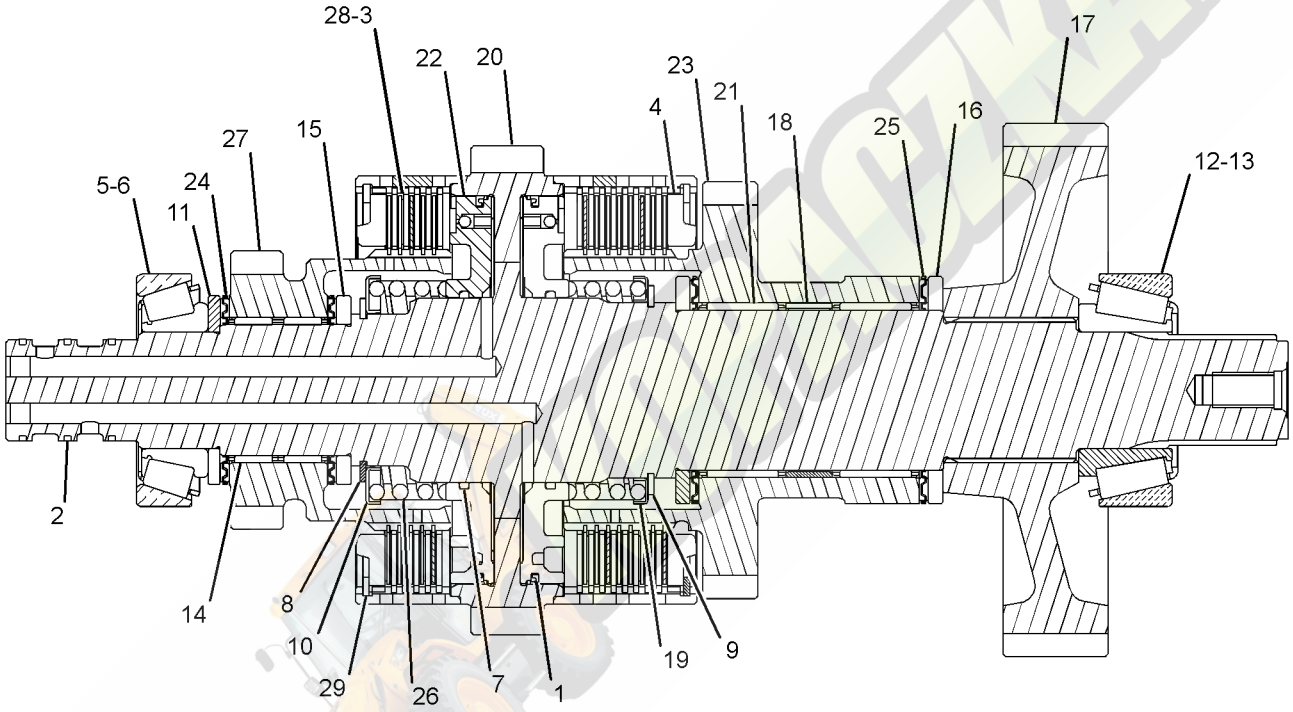

GRAPHIC #1 **<END>** g01216545

275-0478 SHAFT GP-OUTPUT–REAR

S/N: JBA1-UP
PART OF 294-9816 TRANSMISSION GP-DIRECT DRIVE
AN ATTACHMENT

SMCS-3053, 3063 **i02922492**

NOTE	REF NO	GRAPHIC REF	PART NUMBER	QTY	PART NAME 1 2 3 4 5 6 (PRODUCT LEVEL)	SEE PAGE
	1	1	**7T-3022**	2	SLEEVE	
	2	1	**6V-8500**	4	BEARING	
	3	1	**6T-9160**	1	GEAR (43-TEETH)	
	4	1	**7T-3017**	1	SPACER (52.5X59X9.6-MM THK)	
	5	1	**7T-3021**	2	SYNCHRONIZER GP	
	6	1	**096-5516**	1	RING-RETAINING	
	7	1	**259-1831**	1	GEAR (37-TEETH)	
	8	1	**6Y-2736**	1	CONE-BEARING	
	9	1	**123-8907**	1	CONE-BEARING	
	11	1	**274-8620**	1	GEAR-OUTPUT (37-TEETH)	
	12	1	**274-8621**	1	GEAR-OUTPUT (28-TEETH)	
	13	1	**274-8637**	1	SPACER-BEARING	
	14	1	**278-0215**	1	SHAFT-OUTPUT	
	15	1	**278-0216**	1	GEAR-OUTPUT (17-TEETH)	
	16	1	**278-0217**	1	BEARING-NEEDLE	
	17	1	**278-0218**	2	WASHER-THRUST	
	18	1	**178-8214**	1	CLIP	
	19	1	**7T-3018**	1	SLEEVE	
	20	1	**150-3757**	1	BEARING	
	21	1	**293-8761**	1	BEARING-NEEDLE	

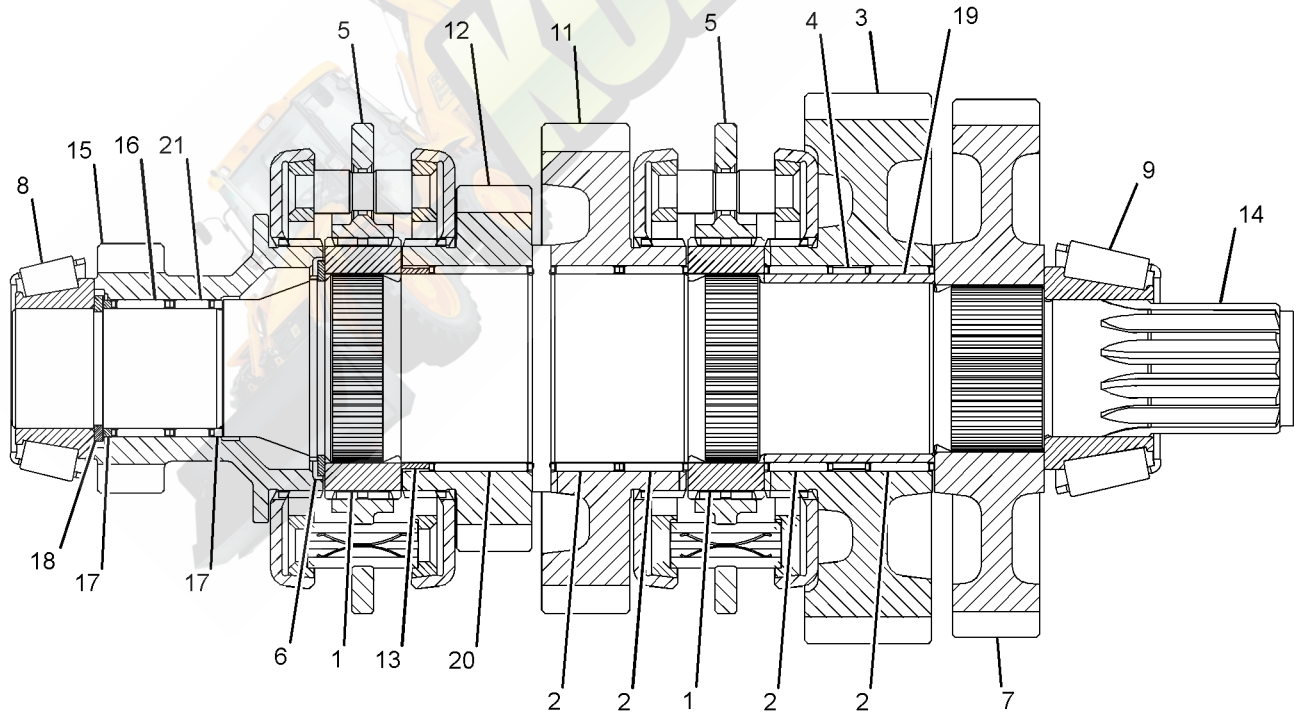

GRAPHIC #1 **<END>** g01508474

280-7007 SHAFT GP-OUTPUT–FRONT

S/N: JBA1-UP

PART OF 294-9819 TRANSMISSION GP-POWER SHIFT

AN ATTACHMENT

SMCS-3053, 3063 **i02432353**

NOTE	REF NO	GRAPHIC REF	PART NUMBER	QTY	PART NAME 1 2 3 4 5 6 (PRODUCT LEVEL)	SEE PAGE
	1	1	**6T-9196**	1	SEAL	
	2	1	**6V-5100**	1	SEAL-O-RING	
	3	1	**6V-8757**	1	RING-RETAINING	
	4	1	**6Y-7957**	8	DISC-FRICTION	
	5	1	**8E-5707**	1	PLATE-END	
	6	1	**122-1877**	1	WASHER-THRUST (40X65X4-MM THK)	
	7	1	**122-1878**	1	RING-SEAL	
	8	1	**122-1884**	1	SPACER (45X49X8-MM THK)	
	9	1	**123-8905**	2	CUP-TAPERED ROLLER	
	10	1	**123-8906**	2	CUP-TAPERED ROLLER	
	11	1	**123-8912**	2	BEARING-ROLLER	
	12	1	**147-0203**	1	WASHER-THRUST (45.3X65X5-MM THK)	
	13	1	**147-0207**	1	SHAFT AS-OUTPUT (FRONT)	
	14	1	**147-0210**	1	GEAR (45/36-TEETH)	
	15	1	**147-0227**	1	PISTON-CLUTCH	
	16	1	**147-0238**	1	SPRING AS	
	17	1	**161-3249**	1	RING-RETAINING	
	18	1	**172-6050**	2	BEARING-SPECIAL	
	19	1	**274-4553**	8	DISC-FRICTION	

280-7007 SHAFT GP-OUTPUT *(contd.)* **i02432353**

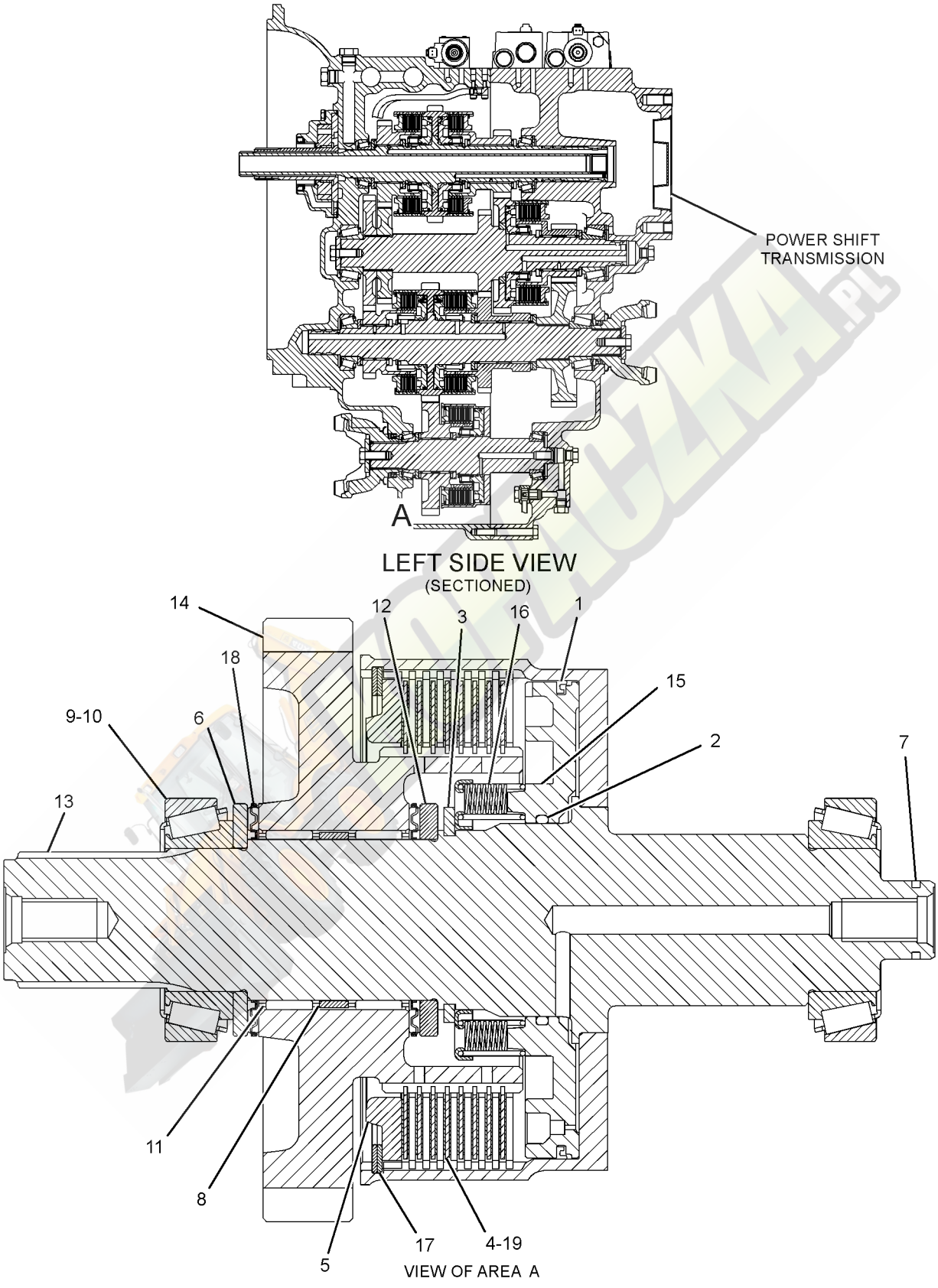

GRAPHIC #1 **<END>** g01216346

POWER TRAIN

305-3427 SHAFT GP-OUTPUT–FRONT

S/N: JBA1-UP
PART OF 294-9816 TRANSMISSION GP-DIRECT DRIVE
AN ATTACHMENT

SMCS-3053, 3063 **i02755327**

NOTE	REF NO	GRAPHIC REF	PART NUMBER	QTY	PART NAME 1 2 3 4 5 6 (PRODUCT LEVEL)	SEE PAGE
	1	1	**6V-8757**	1	RING-RETAINING	
	2	1	**274-4553**	8	DISC-FRICTION	
	3	1	**6Y-7957**	8	DISC-FRICTION	
	4	1	**305-3424**	1	WASHER-THRUST	
	5	1	**172-6050**	2	BEARING-SPECIAL	
	6	1	**122-1878**	1	RING-SEAL	
	7	1	**122-1877**	1	WASHER-THRUST (40X65X4-MM THK)	
	8	1	**122-1884**	1	SPACER (45X49X8-MM THK)	
	9	1	**305-3431**	1	PISTON (CLUTCH)	
	10	1	**123-8905**	2	CUP-TAPERED ROLLER	
	11	1	**178-9566**	1	SPRING-PISTON	
	12	1	**161-3249**	1	RING-RETAINING	
	13	1	**123-8912**	2	BEARING-ROLLER	
	14	1	**305-3425**	1	SHAFT AS-OUTPUT	
	15	1	**121-0904**	1	GEAR AS (36-TEETH)	
	16	1	**8E-5707**	1	PLATE-END	
	17	1	**294-9812**	1	RETAINER-SPRING	

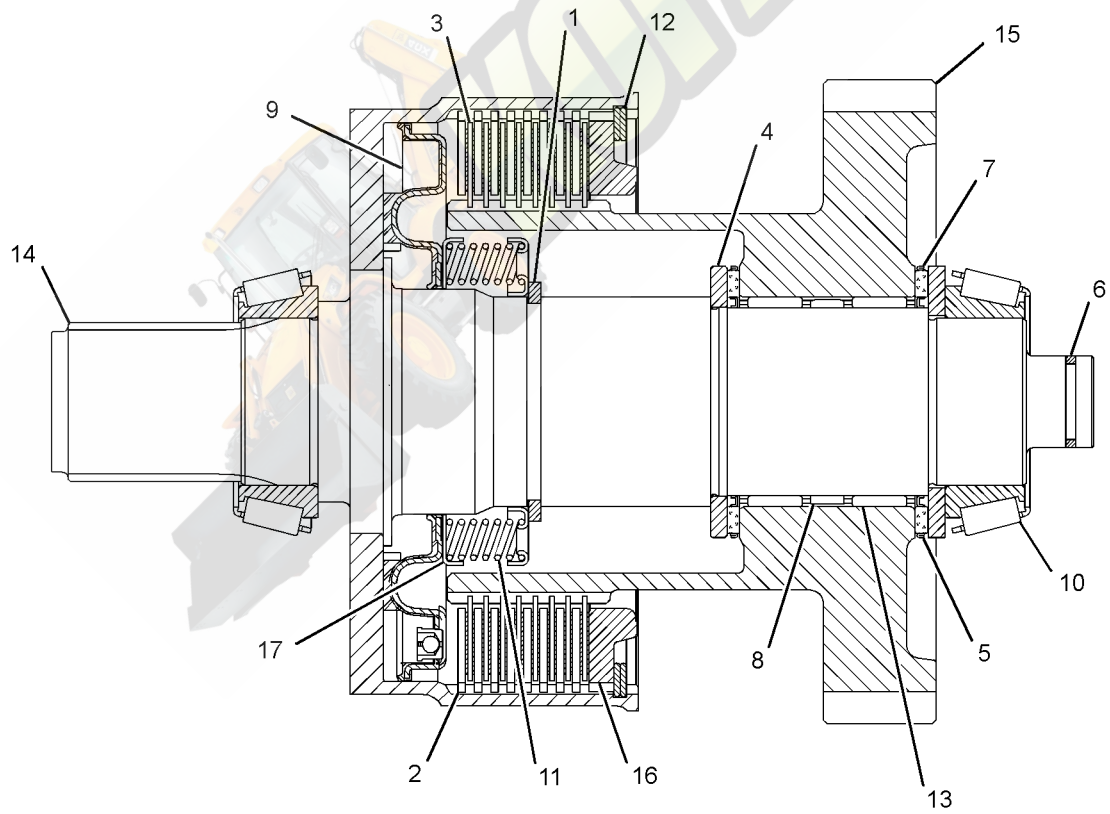

GRAPHIC #1 **<END>** g01382017

311-2230 STOP GP-STEERING

S/N: JBA1-UP

PART OF 303-0415, 319-6834, 341-0596 WHEEL & TIRE AR
FOR USE WITH 20 INCH TIRES LOCATED ON THE FRONT AXLE
AN ATTACHMENT

SMCS-7188 **i02992380**

NOTE	REF NO	GRAPHIC REF	PART NUMBER	QTY	PART NAME 1 2 3 4 5 6 (PRODUCT LEVEL)	SEE PAGE
	1	1	**224-6829**	2	SPACER (17X24.5X17-MM THK)	

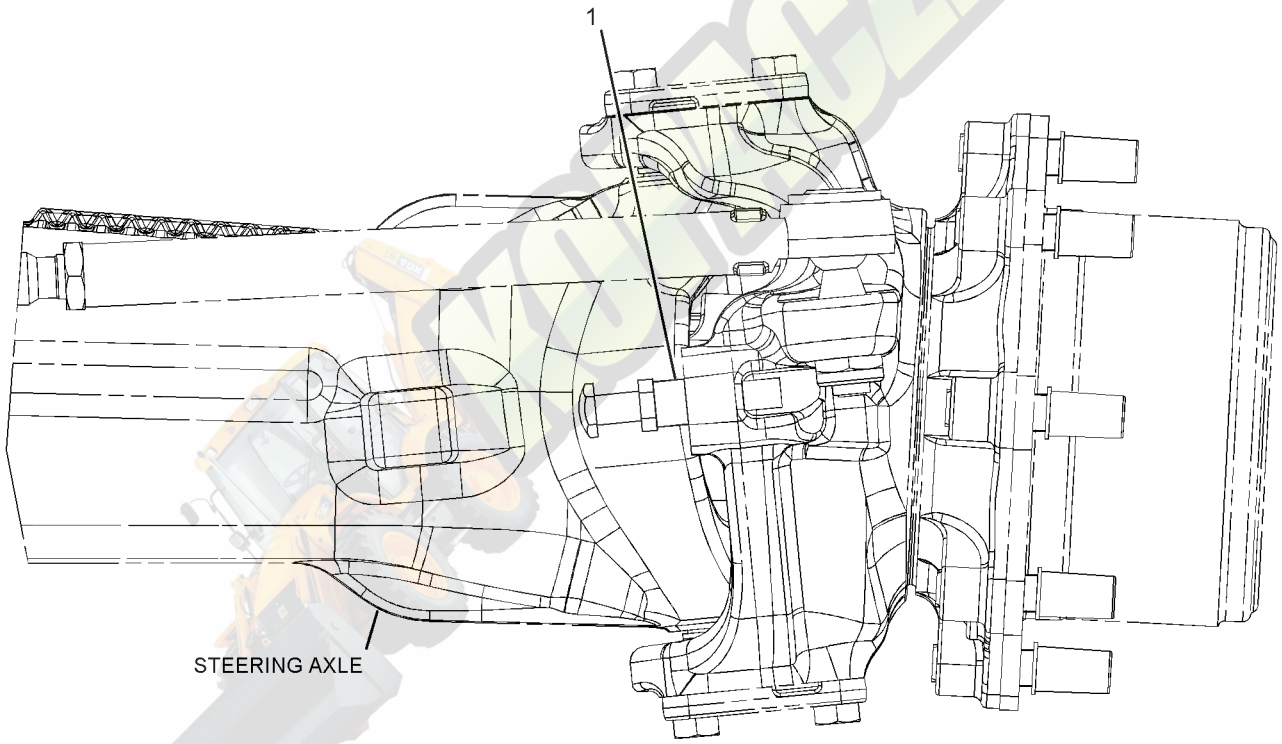

FRONT VIEW

GRAPHIC #1 **<END>** g01618844

248-0217 TRANSMISSION AR-DIRECT DRIVE–
ALL WHEEL DRIVE, STANDARD SHIFT
S/N: JBA1-UP
PART OF 329-0307 POWER TRAIN AR
AN ATTACHMENT

SMCS-3030 **i02755795**

NOTE	PART NUMBER	QTY	PART NAME 1 2 3 4 5 6 (PRODUCT LEVEL)	SEE PAGE
Y	*111-7907*	1	DRIVE GP-FLEXIBLE COUPLING	254
Y	*294-9816*	1	TRANSMISSION GP-DIRECT DRIVE	287
	212-6215	1	TORQUE CONVERTER AS	

Y-SEPARATE ILLUSTRATION

<END>

202-5907 TRANSMISSION AR-POWER SHIFT–
ALL WHEEL DRIVE, AUTOSHIFT
S/N: JBA1-UP
PART OF 329-0306 POWER TRAIN AR
AN ATTACHMENT

SMCS-3030 **i03260052**

NOTE	PART NUMBER	QTY	PART NAME 1 2 3 4 5 6 (PRODUCT LEVEL)	SEE PAGE
Y	*111-7907*	1	DRIVE GP-FLEXIBLE COUPLING	254
Y	**294-9819**	1	TRANSMISSION GP-POWER SHIFT	292
	212-6215	1	TORQUE CONVERTER AS	

Y-SEPARATE ILLUSTRATION

<END>

294-9816 TRANSMISSION GP-DIRECT DRIVE

S/N: JBA1-UP

PART OF 248-0217 TRANSMISSION AR-DIRECT DRIVE

AN ATTACHMENT

SMCS-3030 **i03726281**

NOTE	REF NO	GRAPHIC REF	PART NUMBER	QTY	PART NAME 1 2 3 4 5 6 (PRODUCT LEVEL)	SEE PAGE
Y	1	3	**275-0468**	1	CASE AS-TRANSMISSION (FRONT)	244
Y	2	3	**275-0470**	1	CASE AS-TRANSMISSION (REAR)	245
	3	3	**121-7385**	1	PUMP GP-TRANSMISSION	
		1	**208-8240**	1	SEAL-LIP TYPE	
	4	3	**302-8432**	2	SEAL-LIP TYPE	
M	5	2,3	**8C-5748**	7	BOLT (M8X1.25X55-MM)	
	6	3	**7X-4741**	1	SEAL	
	7	3	**9P-9150**	4	WASHER (8.25X18X0.84-MM THK)	
	8	3	**275-0475**	1	SHAFT GP-IDLER (TRANSMISSION)	
		3	**005-0471**	2	CONE-BEARING	
		3	**274-8623**	1	SHAFT-REVERSE	
	9	3	**275-0477**	1	SHAFT GP-COUNTER (TRANSMISSION)	
		3	**8T-1581**	1	CONE (TAPERED-ROLLER BEARING)	
		3	**123-8907**	1	CONE-BEARING	
		3	**274-8614**	1	GEAR-COUNTERSHAFT (37-TEETH)	
		3	**274-8625**	1	GEAR-COUNTERSHAFT (38-TEETH)	
Y	10	3	**275-0478**	1	SHAFT GP-OUTPUT (REAR)	281
Y	11	3	**305-3427**	1	SHAFT GP-OUTPUT (FRONT)	284
	12	1	**121-7403**	1	FORK-SHIFT	
	13	1	**121-7404**	1	FORK-SHIFT	
	14	1	**121-7389**	1	ROD AS-GEARSHIFT	
	15	1	**121-7390**	1	ROD AS-GEARSHIFT	
	16	1	**6Y-1341**	2	SPRING	
	17	1	**014-5645**	3	BALL	
	18	2	**9M-1974**	3	WASHER-HARD (8.8X16X2-MM THK)	
	19	2	**7T-3109**	1	PIN	
	20	1	**7T-3249**	2	SCREW (3/8-24X0.75-IN)	
	21	1,2	**9S-4191**	12	PLUG-O-RING	
	22	2	**127-3017**	1	SEAT AS	
	23	2	**121-7391**	1	LEVER	
	24	2	**175-0054**	1	SEAL-O-RING	
	25	2	**174-9711**	1	GASKET	
C	27	2	**324-2578**	1	VALVE GP-SOLENOID (FORWARD, REVERSE)	
		2	**8L-2779**	4	SEAL-O-RING	
		2	**280-7009**	2	COIL AS (12-VOLT)	
		2	**280-7012**	2	TUBE AS	
M	28	2	**9X-6615**	4	BOLT (M5X0.8X30-MM)	
	29	2	**305-3423**	2	VALVE GP-SOLENOID (12-VDC) (ALL WHEEL DRIVE, CLUTCH ONE)	
					(EACH INCLUDES)	
		2	**274-8034**	1	COIL AS (12-VOLT)	
	30	2	**121-7396**	1	VALVE GP-RELIEF (TORQUE CONVERTER INLET)	
		2	**6V-4589**	1	SEAL-O-RING	
		2	**8L-2746**	1	SEAL-O-RING	
Y	31	2	**147-0209**	1	VALVE GP-RELIEF (PRESSURE REGULATOR)	299
	32	2	**6K-0806**	1	STRAP-CABLE	
M	34	1	**6V-8335**	14	BOLT-SELF-LOCKING (M10X1.5X40-MM)	
M	35	1	**121-9875**	4	BOLT (M10X1.5X55-MM)	
M	36	2	**6V-7731**	2	BOLT (M10X1.5X70-MM)	
M	37	1	**6V-8097**	2	BOLT (M12X1.75X30-MM)	
	38	1	**293-2147**	1	BREATHER AS (SIDE)	
		1	**3J-1907**	1	SEAL-O-RING	
		1	**122-6785**	1	PLUG AS	
	39	2	**7T-3119**	1	HOUSING	
	41	3	**7T-3195**	2	WASHER (12.3X47X6.35-MM THK)	

294-9816 TRANSMISSION GP-DIRECT DRIVE *(contd.)* i03726281

NOTE	REF NO	GRAPHIC REF	PART NUMBER	QTY	PART NAME 1 2 3 4 5 6 (PRODUCT LEVEL)	SEE PAGE
	42	2	**6Y-2035**	1	GASKET	
	43	3	**5P-8066**	2	SEAL-O-RING	
	44	1	**294-9820**	1	TUBE	
	45	3	**122-1883**	1	SPACER (38X45X5-MM THK)	
	46	3	**122-6787**	2	YOKE AS	
					(EACH INCLUDES)	
		1	**123-1377**	1	GUARD	
	47	1	**6Y-1896**	1	PLUG AS	
		1	**5P-6718**	1	SEAL-O-RING	
	48	2	**4W-9972**	1	SENDER AS-TEMPERATURE (12-VOLT) (TRANSMISSION OIL)	
		2	**6V-8378**	1	NUT (10-32-THD)	
		2	**8F-1434**	1	LOCKWASHER	
		2	**8T-0328**	1	WASHER-HARD (5.5X10X1-MM THK)	
	49	1,2	**3J-1907**	14	SEAL-O-RING	
Y	50	3	**305-3429**	1	SHAFT GP-INPUT	277
	51	2	**7T-3111**	1	COVER	
	52	1,2	**3S-2093**	2	STRAP-CABLE	
	53	3	**208-8240**	1	SEAL-LIP TYPE	
	54	1	**123-2918**	2	SLEEVE	
	55	1	**123-2919**	2	NUT (M11X1-THD)	
	56	2	**7T-3251**	1	BREATHER (TRANSMISSION)	
	57	1	**6V-3965**	1	FITTING (QUICK DISCONNECT)	
	58	1	**6V-0852**	1	CAP-DUST	
Y	59	1	**189-5746**	1	SENSOR GP-SPEED (LOW OUTPUT)	188

C-CHANGE FROM PREVIOUS TYPE
M-METRIC PART
Y-SEPARATE ILLUSTRATION

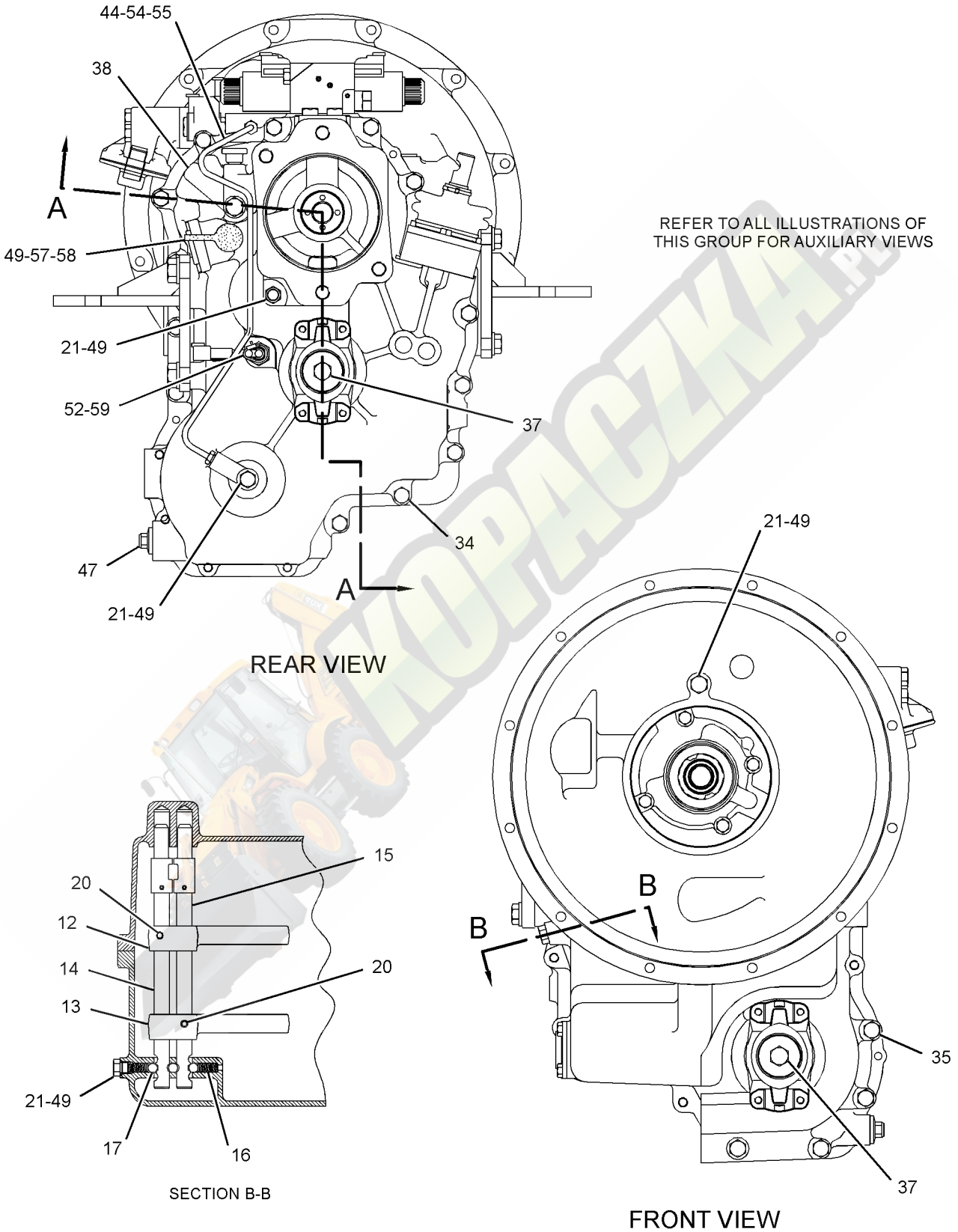

GRAPHIC #1

g01381368

REFER TO ALL ILLUSTRATIONS OF
THIS GROUP FOR AUXILIARY VIEWS

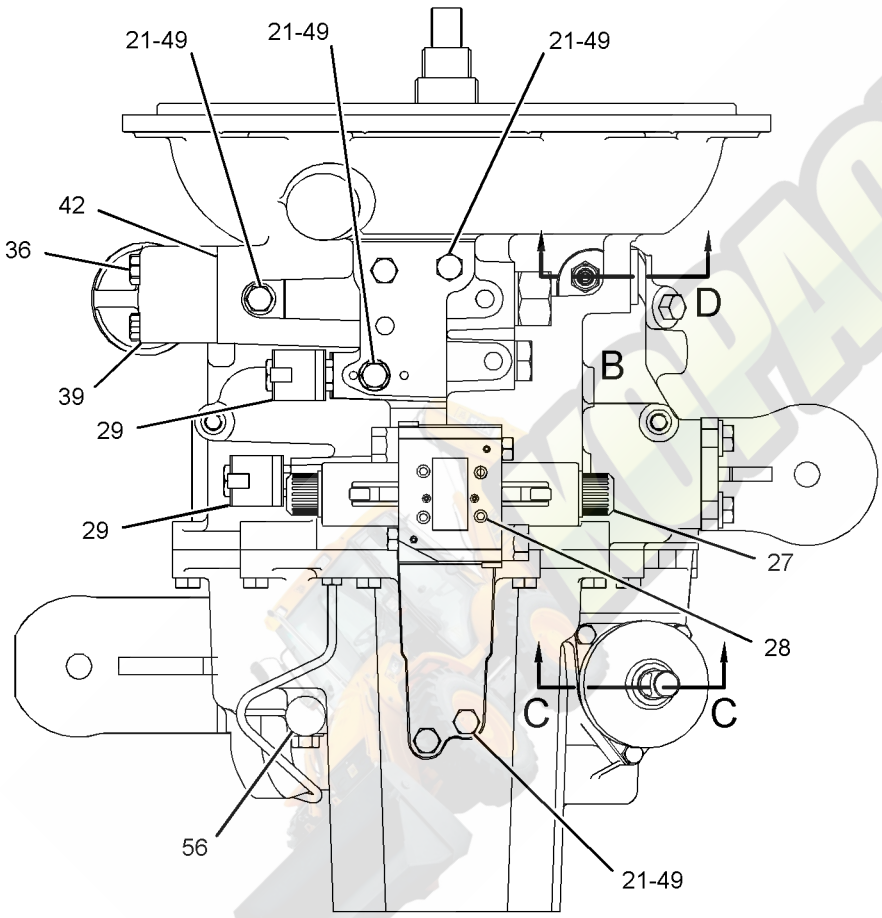

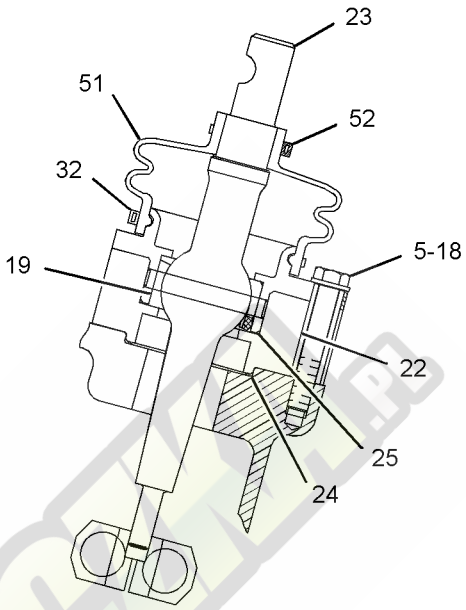

SECTION C-C

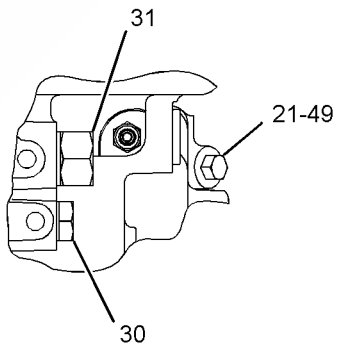

VIEW OF AREA B

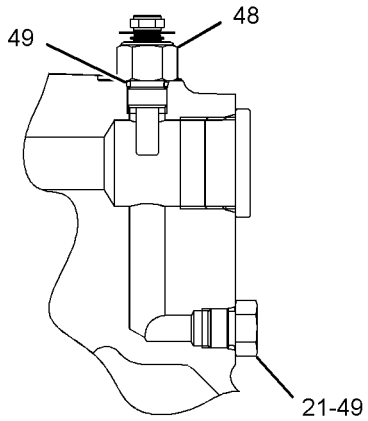

SECTION D

GRAPHIC #2

g01381369

294-9816 TRANSMISSION GP-DIRECT DRIVE *(contd.)* **i03726281**

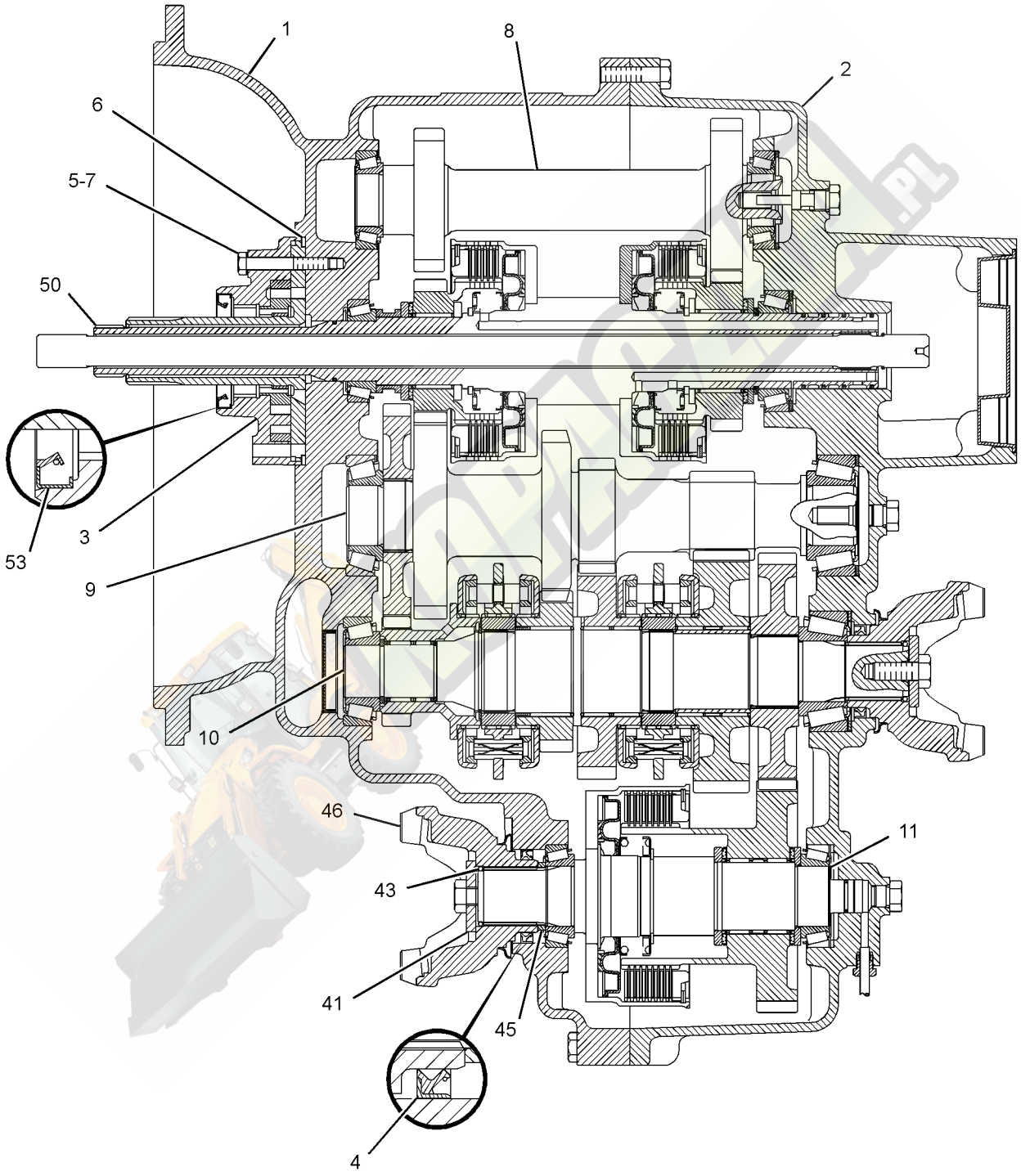

SECTION A-A

GRAPHIC #3 **<END>** g01381370

POWER TRAIN

294-9819 TRANSMISSION GP-POWER SHIFT

S/N: JBA1-UP
PART OF 202-5907 TRANSMISSION AR-POWER SHIFT
AN ATTACHMENT

SMCS-3030 **i03726241**

NOTE	REF NO	GRAPHIC REF	PART NUMBER	QTY	PART NAME 1 2 3 4 5 6 (PRODUCT LEVEL)	SEE PAGE
	1	1	**3J-1907**	2	SEAL-O-RING	
	2	1	**4J-0522**	1	SEAL-O-RING	
	3	1	**4W-9972**	1	SENDER AS-TEMPERATURE (12-VOLT)	
		1	**6V-8378**	1	NUT (10-32-THD)	
		1	**8F-1434**	1	LOCKWASHER	
		1	**8T-0328**	1	WASHER-HARD (5.5X10X1-MM THK)	
	4	1	**5P-8066**	2	SEAL-O-RING	
	5	1	**6T-9163**	2	SHIM (0.599-MM THK)	
	6	1	**6T-9164**	2	SHIM (0.178-MM THK)	
	7	1	**6T-9165**	2	SHIM (0.076-MM THK)	
	8	1	**6T-9166**	2	SHIM (0.051-MM THK)	
	9	1	**6T-9202**	2	PLUG	
M	10	1	**6V-5215**	3	BOLT (M8X1.25X16-MM)	
M	11	1	**6V-5842**	18	BOLT (M10X1.5X40-MM)	
M	12	1	**6V-8097**	2	BOLT (M12X1.75X30-MM)	
	13	1	**6Y-1896**	1	PLUG AS	
		1	**5P-6718**	1	SEAL-O-RING	
	14	1	**7T-2646**	2	SPACER (66X79.5X2.02-MM THK)	
	15	1	**7T-2651**	1	STRAINER (SUCTION)	
	16	1	**7T-3195**	2	WASHER (12.3X47X6.35-MM THK)	
	17	1	**7T-3251**	1	BREATHER (TRANSMISSION)	
	18	1	**7T-3253**	2	DOWEL	
	19	1	**7W-3556**	12	WASHER (14.27X20.57X1.5-MM THK)	
	20	1	**7X-4741**	1	SEAL	
M	21	1	**8C-5748**	4	BOLT (M8X1.25X55-MM)	
M	22	1	**8C-8545**	2	BOLT-SOCKET HEAD (M5X0.8X20-MM)	
M	23	1	**8T-0271**	2	BOLT-SOCKET HEAD (M10X1.5X35-MM)	
M	24	1	**8T-0643**	1	BOLT (M10X1.5X80-MM)	
	25	1	**9P-9150**	4	WASHER (8.25X18X0.84-MM THK)	
	26	1	**9W-5460**	1	RING	
M	27	1	**9X-6615**	12	BOLT (M5X0.8X30-MM)	
	28	1	**104-3288**	2	SHIM (0.05-MM THK)	
	29	1	**106-9861**	1	PLATE-COVER	
	30	1	**117-1385**	1	SEAL-O-RING	
	31	1	**120-9762**	3	SEAL-O-RING	
	32	1	**121-2059**	2	SHIM (0.08-MM THK)	
	33	1	**121-2060**	2	SHIM (0.18-MM THK)	
	34	1	**121-2061**	2	SHIM (0.6-MM THK)	
	35	1	**121-7385**	1	PUMP GP-TRANSMISSION	
	36	1	**121-7396**	1	VALVE GP-RELIEF (TORQUE CONVERTER INLET)	
	37	1	**121-7398**	1	SPACER (70X79.5X2-MM THK)	
	38	1	**121-7399**	1	SHIM (0.05-MM THK)	
	39	1	**121-7400**	1	SHIM (0.08-MM THK)	
	40	1	**121-7401**	1	SHIM (0.18-MM THK)	
	41	1	**121-7402**	1	SHIM (0.6-MM THK)	
	42	1	**122-1879**	2	SPACER (58X67.5X2-MM THK)	
	43	1	**122-1883**	1	SPACER (38X45X5-MM THK)	
	44	1	**122-6787**	2	YOKE AS	
					(EACH INCLUDES)	
		1	**123-1377**	1	GUARD	
	45	1	**147-0201**	1	TUBE AS	
Y	46	1	**147-0209**	1	VALVE GP-RELIEF (PRESSURE REGULATOR)	299
	47	1	**147-0211**	1	ELBOW AS	
		1	**3G-6927**	1	ADAPTER	
	48	1	**147-0218**	1	TUBE AS-TRANSFER	

294-9819 TRANSMISSION GP-POWER SHIFT *(contd.)* i03726241

NOTE	REF NO	GRAPHIC REF	PART NUMBER	QTY	PART NAME 1 2 3 4 5 6 (PRODUCT LEVEL)	SEE PAGE
	49	1	**147-0226**	1	TUBE AS	
	50	1	**147-0234**	6	BOLT (9/16-18X0.83-IN)	
	51	1	**147-0236**	1	TUBE AS-TRANSFER	
	52	1	**147-0262**	4	WASHER (19.1X24.1X1.5-MM THK)	
	53	1	**147-0266**	2	BOLT (3/4-16X1.417-IN)	
	54	1	*148-8407*	15	PLUG AS	
					(EACH INCLUDES)	
		1	**3J-1907**	1	SEAL-O-RING	
		1	**9S-4191**	1	PLUG-O-RING	
	55	1	**150-7732**	2	SEAL-O-RING	
	56	1	**191-8304**	1	SENSOR GP-SPEED (TRANSMISSION OUTPUT, HIGH)	
	57	1	**205-9244**	4	PLUG	
	58	1	**302-8432**	2	SEAL-LIP TYPE	
	59	1	**305-3423**	2	VALVE GP-SOLENOID (12-VDC) (ALL WHEEL DRIVE, CLUTCH ONE)	
					(EACH INCLUDES)	
		1	**274-8034**	1	COIL AS (12-VOLT)	
	60	1	**274-4554**	1	CASE AS-FRONT	
		1	**147-0268**	4	PLUG	
		1	**163-9091**	4	PLUG	
	61	1	**274-4556**	3	PLUG AS	
					(EACH INCLUDES)	
		1	**8L-2786**	1	SEAL-O-RING	
		1	**9S-4185**	1	PLUG-O-RING	
Y	62	1	**274-4561**	1	SHAFT GP-IDLER	273
	63	1	**274-4569**	1	CASE AS-REAR	
		1	**163-9091**	11	PLUG	
Y	64	1	**274-4578**	1	SHAFT GP-INPUT	275
Y	65	1	**274-4580**	1	SHAFT GP-COUNTER	270
Y	66	1	**274-4582**	1	SHAFT GP-OUTPUT (MAIN)	279
	67	1	**280-7010**	1	VALVE GP-SOLENOID (TRANSMISSION)	
		1	**8L-2779**	4	SEAL-O-RING	
		1	**280-7009**	2	COIL AS (12-VOLT)	
		1	**280-7012**	2	TUBE AS	
	68	1	**278-0209**	1	VALVE GP-SOLENOID (REVERSE)	
		1	**8L-2779**	4	SEAL-O-RING	
		1	**280-7009**	1	COIL AS	
		1	**280-7012**	1	TUBE AS	
	69	1	**278-0213**	1	VALVE GP-SOLENOID (CLUTCH)	
		1	**8L-2779**	4	SEAL-O-RING	
		1	**218-3597**	1	PLUG-ORIFICE	
		1	**280-7009**	2	COIL AS	
		1	**286-0867**	2	TUBE AS	
Y	70	1	**280-7007**	1	SHAFT GP-OUTPUT (FRONT)	282
	71	1	**6V-3965**	1	FITTING (QUICK DISCONNECT)	
	72	1	**6V-0852**	1	CAP-DUST	

M-METRIC PART
Y-SEPARATE ILLUSTRATION

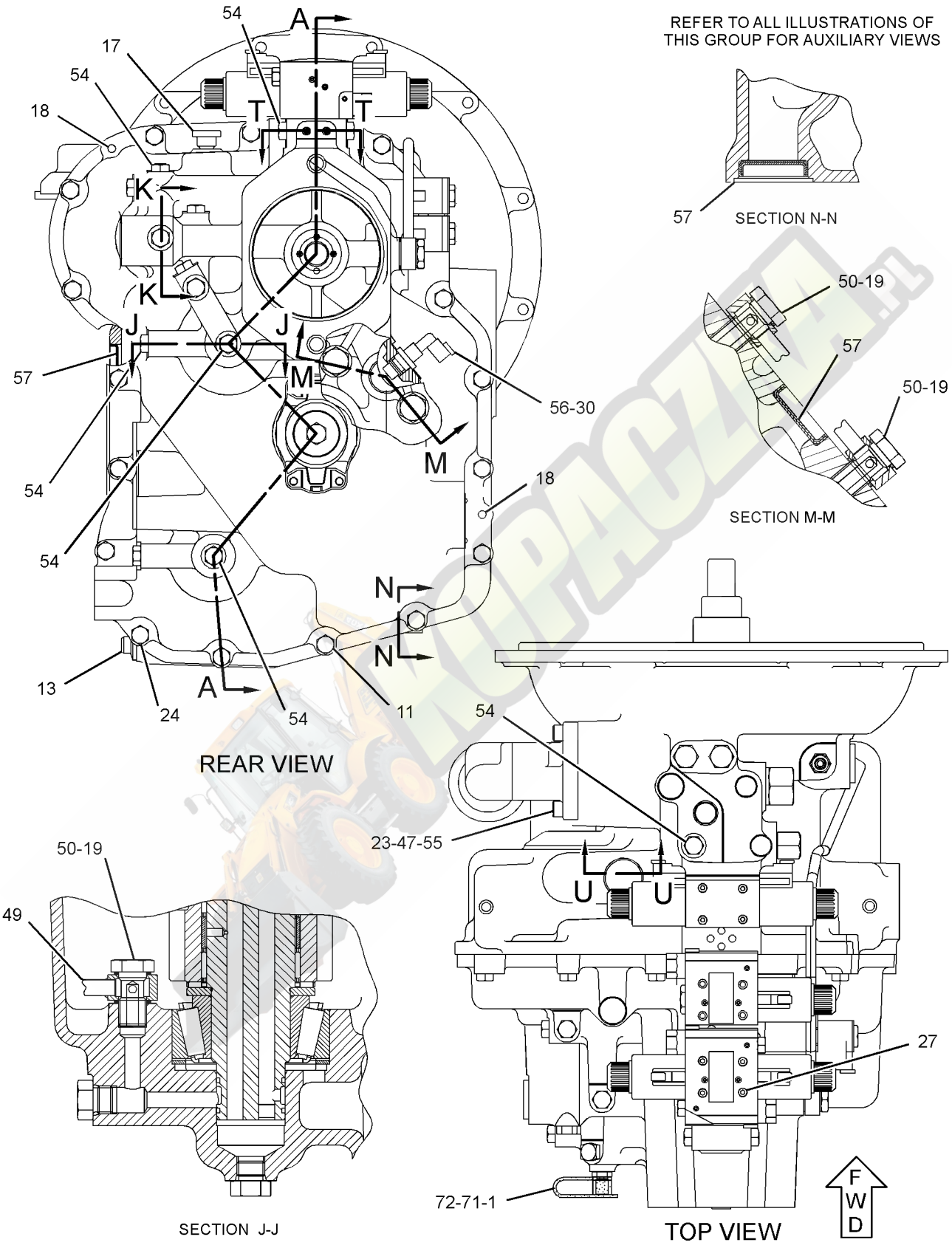

GRAPHIC #1

g01381385

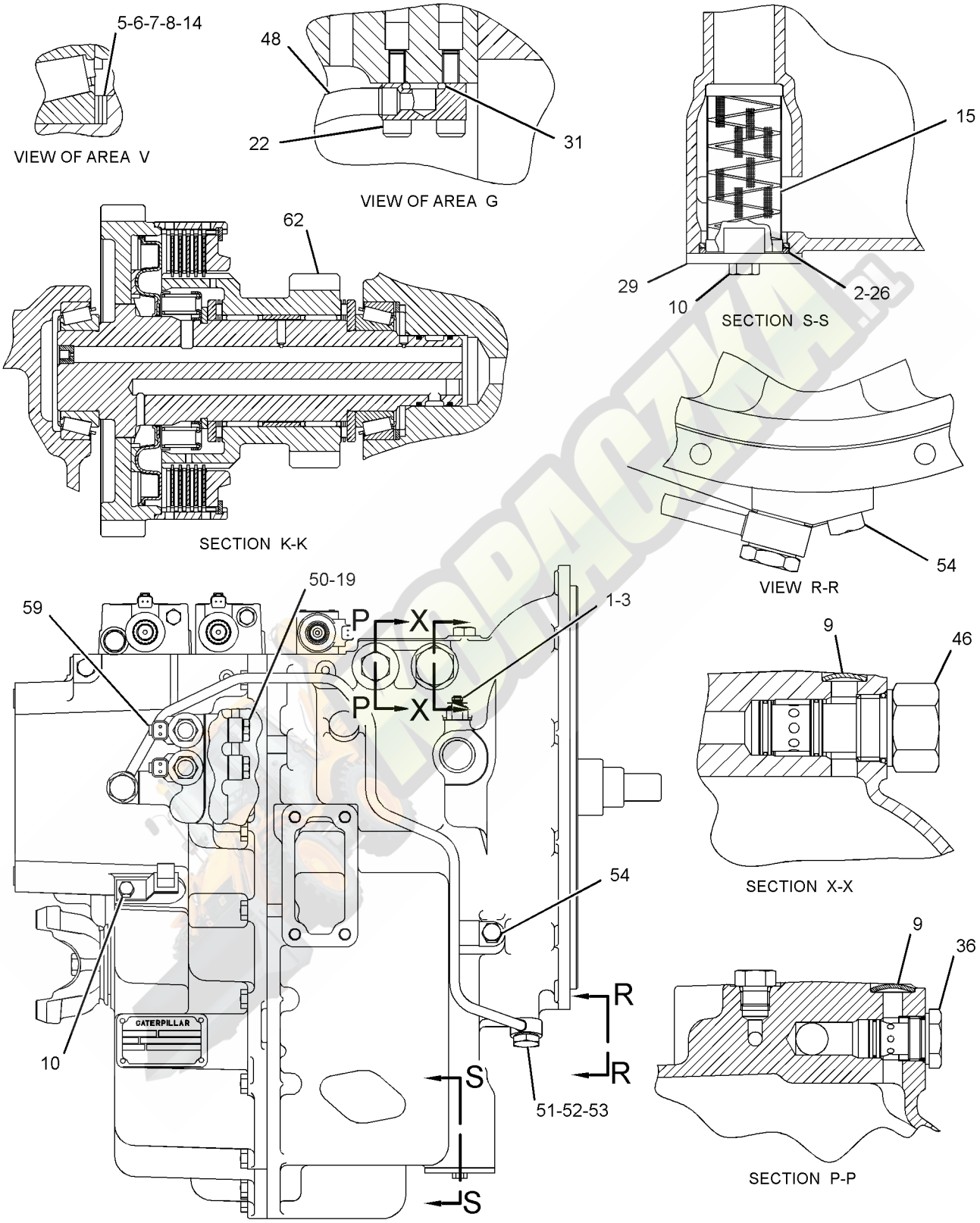

RIGHT SIDE VIEW

REFER TO ALL ILLUSTRATIONS OF THIS GROUP FOR AUXILIARY VIEWS

GRAPHIC #2

g01381386

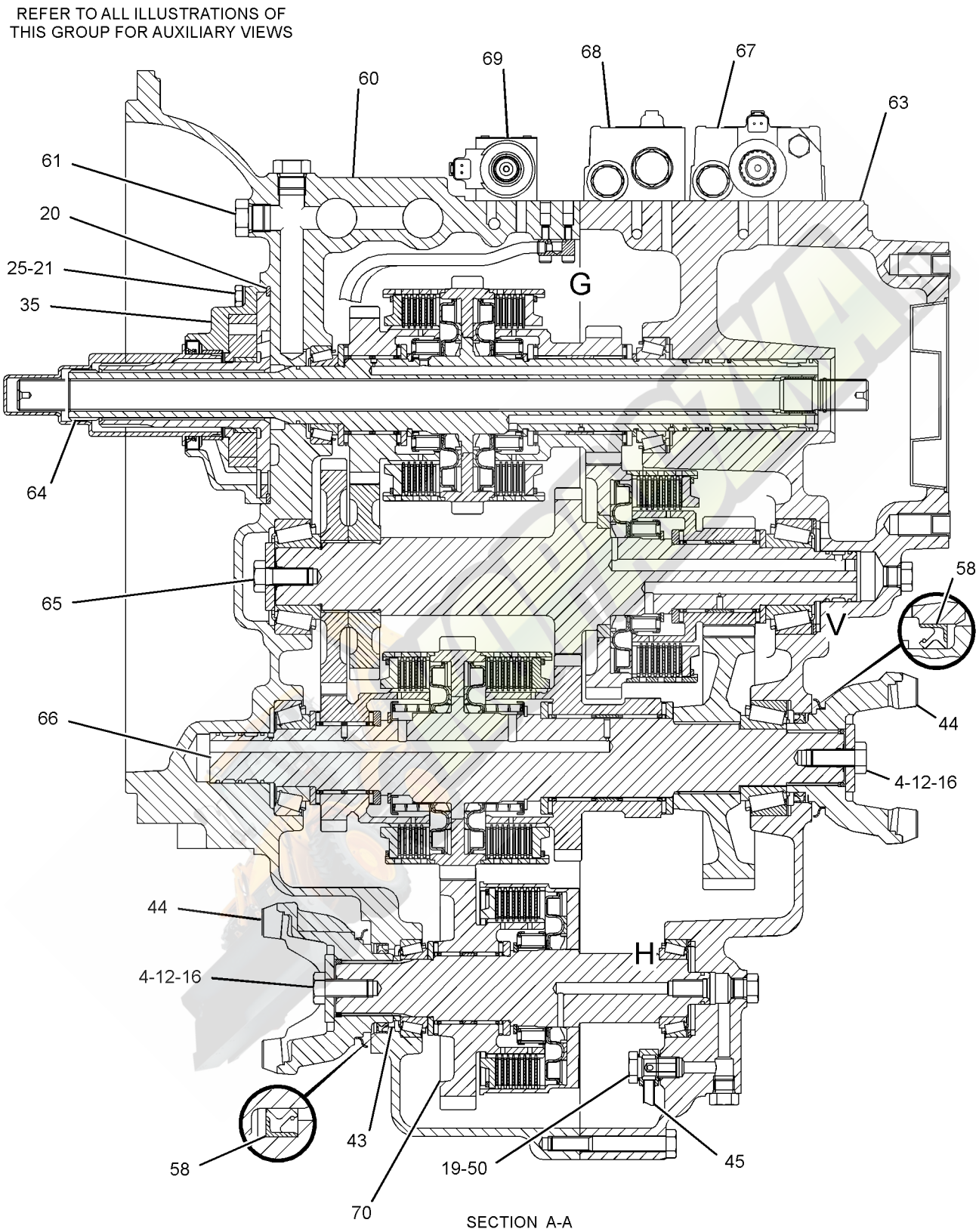

GRAPHIC #3

g01381387

294-9819 TRANSMISSION GP-POWER SHIFT *(contd.)* **i03726241**

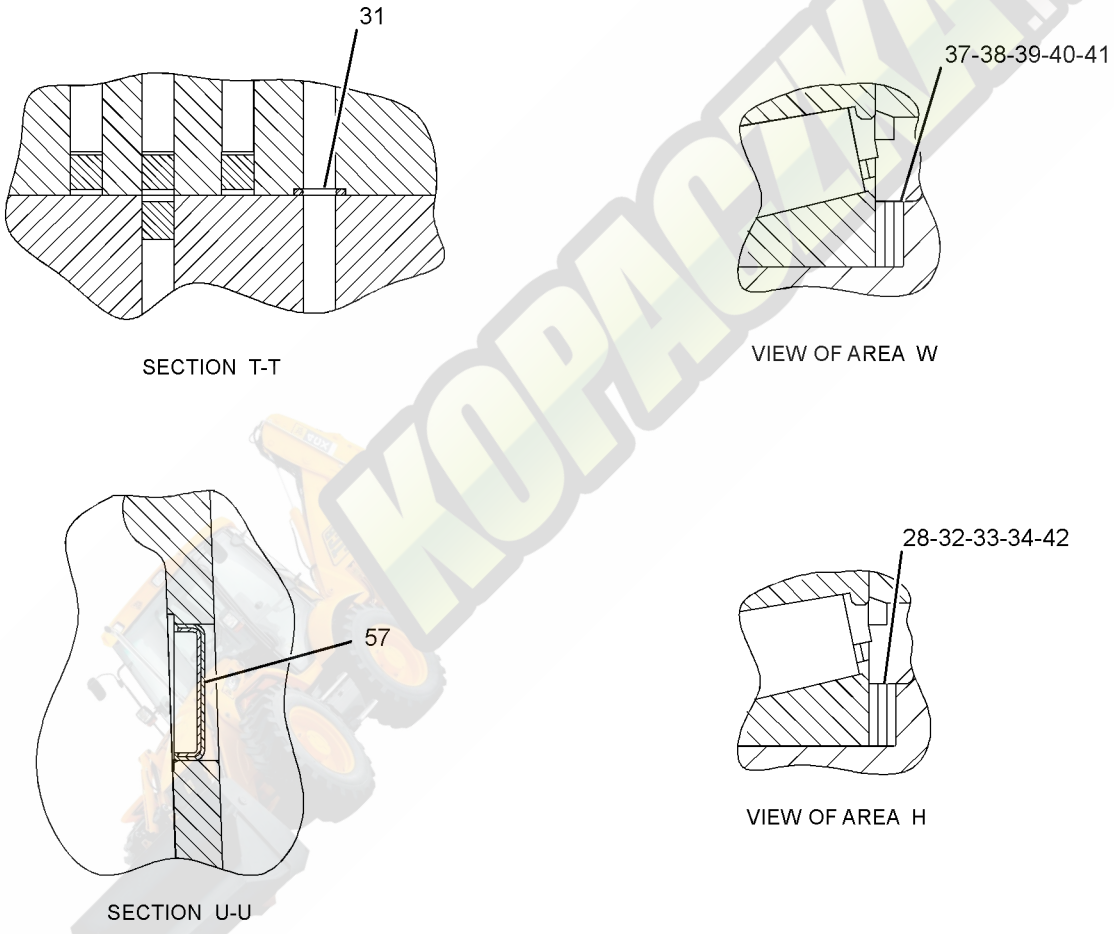

GRAPHIC #4 **<END>** g01381792

274-8048 VALVE & MTG GP-SOLENOID–DIFFERENTIAL LOCK

S/N: JBA1-UP
PART OF 320-7233 CONTROL GP-DIFFERENTIAL LOCK
AN ATTACHMENT

SMCS-5479 **i02450168**

NOTE	REF NO	GRAPHIC REF	PART NUMBER	QTY	PART NAME 1 2 3 4 5 6 (PRODUCT LEVEL)	SEE PAGE
M	1	1	**096-5968**	2	BOLT-SOCKET HEAD (M5X0.8X8-MM)	
J	2	1	*274-8041*	1	VALVE GP-SOLENOID (12-VOLT DC)	
					AVAILABLE REPAIR KIT(S):	
J			**250-8330**	1	KIT-SEAL (VALVE)	
					(INCLUDES O-RINGS)	

J-KIT MARKED J SERVICES PART MARKED J
M-METRIC PART

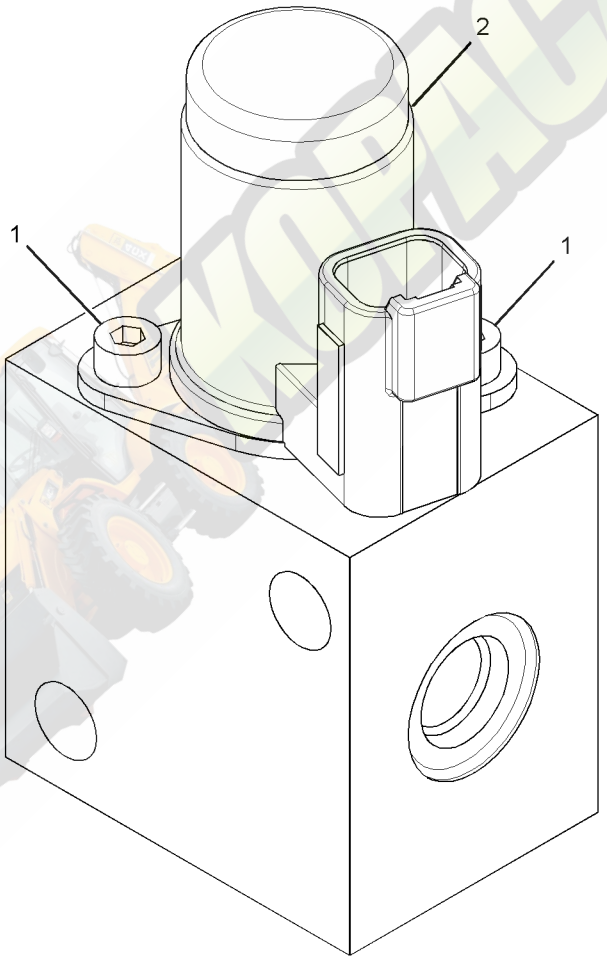

GRAPHIC #1 **<END>** g01346192

147-0209 VALVE GP-RELIEF–PRESSURE REGULATOR

S/N: JBA1-UP

PART OF 294-9816 TRANSMISSION GP-DIRECT DRIVE, 294-9819 TRANSMISSION GP-POWER SHIFT AN ATTACHMENT

SMCS-3133, 3182, 3210, 3213 **i00724885**

NOTE	REF NO	GRAPHIC REF	PART NUMBER	QTY	PART NAME 1 2 3 4 5 6 (PRODUCT LEVEL)	SEE PAGE
	1	1	**7X-4744**	1	SEAL-O-RING	
	2	1	**6V-9178**	1	SEAL-O-RING	
	3	1	**106-9586**	1	SEAL-O-RING	

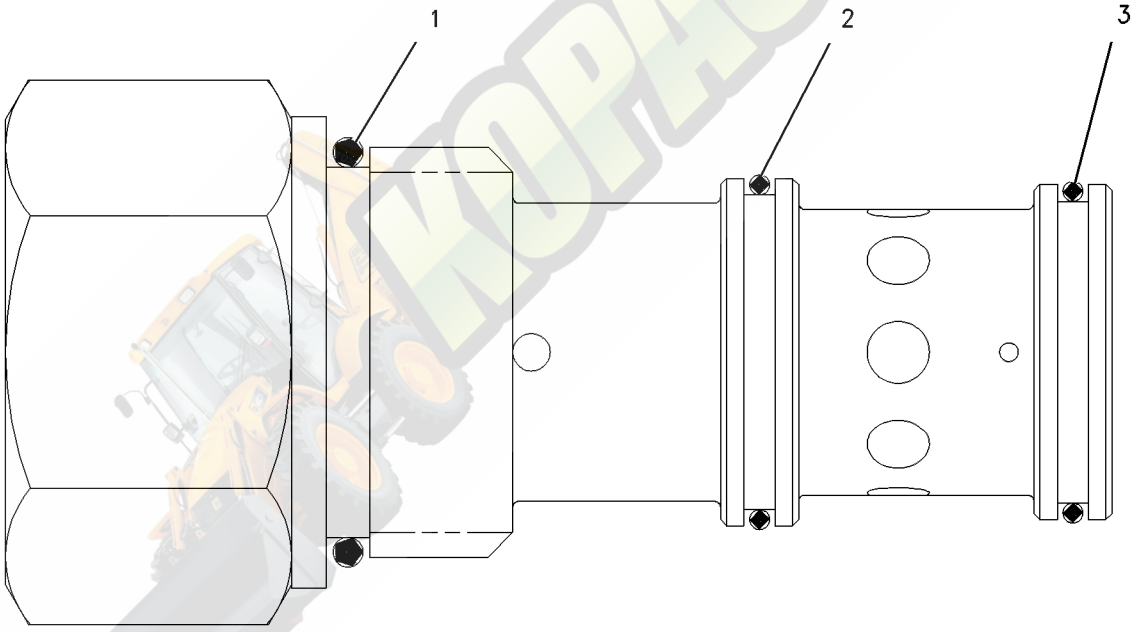

GRAPHIC #1 **<END>** g00304718

6D-0337 VALVE GP-TIRE

S/N: JBA1-UP
PART OF 201-1920 VALVE GP-TIRE
AN ATTACHMENT

SMCS-4203 **i03644348**

NOTE	REF NO	GRAPHIC REF	PART NUMBER	QTY	PART NAME 1 2 3 4 5 6 (PRODUCT LEVEL)	SEE PAGE
	1	1	**6D-0443**	1	HOUSING AS-CORE	
	1A	1	**2D-2628**	1	CORE-VALVE	
	1B	1	**2D-2633**	1	CAP (VALVE STEM)	
	2	1	**8D-2707**	1	SPUD AS	
	2A	1	**2D-2629**	1	GROMMET	
	2B	1	**2D-2630**	1	WASHER	
	2C	1	**2D-2631**	1	NUT (0.482-26-THD)	

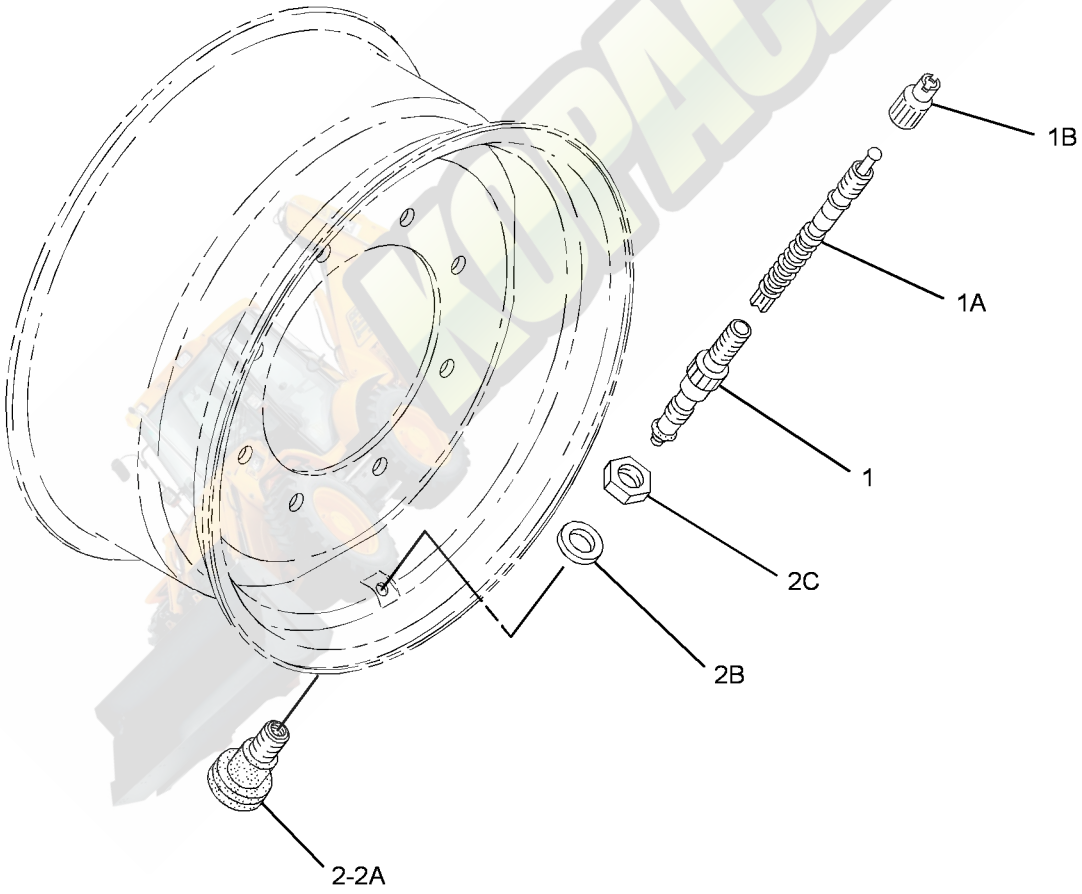

GRAPHIC #1 **<END>** g01955522

201-1920 VALVE GP-TIRE

S/N: JBA1-UP

PART OF 201-1869, 201-1870, 201-1963, 201-1964, 216-9148, 216-9149, 249-7562, 249-7563, 249-7565, 249-7566, 249-7568, 249-7569, 249-7571, 249-7572, 249-9409, 249-9410, 249-9411, 250-0230, 266-1555, 266-1556, 273-5093, 273-5094, 273-5095, 273-5096, 303-0428, 303-0429, 303-0430, 303-0431, 303-0434, 303-0435, 303-0438, 303-0439, 319-7186, 319-7187, 319-7191, 319-7192, 329-1355, 329-1919, 341-9203, 341-9204 WHEEL & TIRE GP

AN ATTACHMENT

SMCS-4203 **i03498408**

NOTE	PART NUMBER	QTY	PART NAME 1 2 3 4 5 6 (PRODUCT LEVEL)	SEE PAGE
Y	**6D-0337**	1	VALVE GP-TIRE	300

Y-SEPARATE ILLUSTRATION

<END>

249-9255 WHEEL & TIRE AR—ALL WHEEL DRIVE

S/N: JBA1-UP

AN ATTACHMENT

SMCS-4201, 4202, 4203, 4208, 4209 **i02213984**

NOTE	PART NUMBER	QTY	PART NAME 1 2 3 4 5 6 (PRODUCT LEVEL)	SEE PAGE
Y	*216-9147*	1	WHEEL & TIRE GP (FRONT)	306
Y	*249-9392*	1	WHEEL & TIRE GP (REAR)	311

Y-SEPARATE ILLUSTRATION

<END>

249-9261 WHEEL & TIRE AR—ALL WHEEL DRIVE

S/N: JBA1-UP

AN ATTACHMENT

SMCS-4201, 4202, 4203, 4208, 4209 **i02177124**

NOTE	PART NUMBER	QTY	PART NAME 1 2 3 4 5 6 (PRODUCT LEVEL)	SEE PAGE
Y	*201-1962*	1	WHEEL & TIRE GP (FRONT)	305
Y	*249-9390*	1	WHEEL & TIRE GP (REAR)	311

Y-SEPARATE ILLUSTRATION

<END>

249-9262 WHEEL & TIRE AR—ALL WHEEL DRIVE

S/N: JBA1-UP

AN ATTACHMENT

SMCS-4201, 4202, 4203, 4208, 4209 **i02171207**

NOTE	PART NUMBER	QTY	PART NAME 1 2 3 4 5 6 (PRODUCT LEVEL)	SEE PAGE
Y	*201-1962*	1	WHEEL & TIRE GP (FRONT)	305
Y	*249-9399*	1	WHEEL & TIRE GP (REAR)	311

Y-SEPARATE ILLUSTRATION

<END>

249-9263 WHEEL & TIRE AR—ALL WHEEL DRIVE

S/N: JBA1-UP
AN ATTACHMENT

SMCS-4201, 4202, 4203, 4208, 4209 **i02214108**

NOTE	PART NUMBER	QTY	PART NAME 1 2 3 4 5 6 (PRODUCT LEVEL)	SEE PAGE
Y	*201-1868*	1	WHEEL & TIRE GP (FRONT)	304
Y	*249-9400*	1	WHEEL & TIRE GP (REAR)	312

Y-SEPARATE ILLUSTRATION

<END>

273-5077 WHEEL & TIRE AR—ALL WHEEL DRIVE

S/N: JBA1-UP
AN ATTACHMENT

SMCS-4201, 4202, 4203, 4208, 4209 **i02403925**

NOTE	PART NUMBER	QTY	PART NAME 1 2 3 4 5 6 (PRODUCT LEVEL)	SEE PAGE
Y	*266-1554*	1	WHEEL & TIRE GP (FRONT)	313
Y	*273-5081*	1	WHEEL & TIRE GP (REAR)	315

Y-SEPARATE ILLUSTRATION

<END>

273-5078 WHEEL & TIRE AR—ALL WHEEL DRIVE

S/N: JBA1-UP
AN ATTACHMENT

SMCS-4201, 4202, 4203, 4208, 4209 **i02404018**

NOTE	PART NUMBER	QTY	PART NAME 1 2 3 4 5 6 (PRODUCT LEVEL)	SEE PAGE
Y	*266-1554*	1	WHEEL & TIRE GP (FRONT)	313
Y	*273-5080*	1	WHEEL & TIRE GP (REAR)	314

Y-SEPARATE ILLUSTRATION

<END>

303-0413 WHEEL & TIRE AR—ALL WHEEL DRIVE

S/N: JBA1-UP
AN ATTACHMENT

SMCS-4201, 4202, 4203, 4208, 4209 **i02675636**

NOTE	PART NUMBER	QTY	PART NAME 1 2 3 4 5 6 (PRODUCT LEVEL)	SEE PAGE
Y	*303-0418*	1	WHEEL & TIRE GP (FRONT)	316
Y	*303-0419*	1	WHEEL & TIRE GP (REAR)	317

Y-SEPARATE ILLUSTRATION

<END>

303-0414 WHEEL & TIRE AR—ALL WHEEL DRIVE

S/N: JBA1-UP
AN ATTACHMENT

SMCS-4201, 4202, 4203, 4208, 4209 **i02675689**

NOTE	PART NUMBER	QTY	PART NAME 1 2 3 4 5 6 (PRODUCT LEVEL)	SEE PAGE
Y	*303-0418*	1	WHEEL & TIRE GP (FRONT)	316
Y	*303-0421*	1	WHEEL & TIRE GP (REAR)	317

Y-SEPARATE ILLUSTRATION

<END>

303-0415 WHEEL & TIRE AR—ALL WHEEL DRIVE

S/N: JBA1-UP
AN ATTACHMENT

SMCS-4201, 4202, 4203, 4208, 4209 **i03325570**

NOTE	PART NUMBER	QTY	PART NAME 1 2 3 4 5 6 (PRODUCT LEVEL)	SEE PAGE
Y	*311-2230*	1	STOP GP-STEERING	285
Y	*303-0421*	1	WHEEL & TIRE GP (REAR)	317
Y	*303-0423*	1	WHEEL & TIRE GP (FRONT)	317

Y-SEPARATE ILLUSTRATION

<END>

319-6834 WHEEL & TIRE AR—ALL WHEEL DRIVE

S/N: JBA1-UP
AN ATTACHMENT

SMCS-4201, 4202, 4203, 4208, 4209 **i03325572**

NOTE	PART NUMBER	QTY	PART NAME 1 2 3 4 5 6 (PRODUCT LEVEL)	SEE PAGE
Y	*311-2230*	1	STOP GP-STEERING	285
Y	*319-6835*	1	WHEEL & TIRE GP (FRONT)	320
Y	*319-6836*	1	WHEEL & TIRE GP (REAR)	321

Y-SEPARATE ILLUSTRATION

<END>

329-1350 WHEEL & TIRE AR—ALL WHEEL DRIVE, BIAS

S/N: JBA1-UP
AN ATTACHMENT

SMCS-4201, 4202, 4203, 4208, 4209 **i03097507**

NOTE	PART NUMBER	QTY	PART NAME 1 2 3 4 5 6 (PRODUCT LEVEL)	SEE PAGE
Y	*249-9388*	1	WHEEL & TIRE GP (REAR)	310
Y	*329-1354*	1	WHEEL & TIRE GP (FRONT)	322

Y-SEPARATE ILLUSTRATION

<END>

329-1351 WHEEL & TIRE AR—ALL WHEEL DRIVE, BIAS

S/N: JBA1-UP
AN ATTACHMENT

SMCS-4201, 4202, 4203, 4208, 4209 **i03099680**

NOTE	PART NUMBER	QTY	PART NAME 1 2 3 4 5 6 (PRODUCT LEVEL)	SEE PAGE
Y	*249-9271*	1	WHEEL & TIRE GP (REAR)	310
Y	*329-1354*	1	WHEEL & TIRE GP (FRONT)	322

Y-SEPARATE ILLUSTRATION

<END>

329-1352 WHEEL & TIRE AR—ALL WHEEL DRIVE, BIAS

S/N: JBA1-UP
AN ATTACHMENT

SMCS-4201, 4202, 4203, 4208, 4209 **i03091582**

NOTE	PART NUMBER	QTY	PART NAME 1 2 3 4 5 6 (PRODUCT LEVEL)	SEE PAGE
Y	*249-9390*	1	WHEEL & TIRE GP (REAR)	311
Y	*329-1354*	1	WHEEL & TIRE GP (FRONT)	322

Y-SEPARATE ILLUSTRATION

<END>

341-0596 WHEEL & TIRE AR—ALL WHEEL DRIVE

S/N: JBA1-UP
AN ATTACHMENT

SMCS-4201, 4202, 4203, 4208, 4209 **i03537760**

NOTE	PART NUMBER	QTY	PART NAME 1 2 3 4 5 6 (PRODUCT LEVEL)	SEE PAGE
Y	*311-2230*	1	STOP GP-STEERING	285
Y	*273-5080*	1	WHEEL & TIRE GP (REAR)	314
Y	*341-9202*	1	WHEEL & TIRE GP (FRONT)	323

Y-SEPARATE ILLUSTRATION

<END>

201-1868 WHEEL & TIRE GP—FRONT

S/N: JBA1-UP
PART OF 249-9263 WHEEL & TIRE AR
AN ATTACHMENT

SMCS-4201, 4202, 4203, 4208, 4209 **i02469798**

NOTE	PART NUMBER	QTY	PART NAME 1 2 3 4 5 6 (PRODUCT LEVEL)	SEE PAGE
Y	*201-1869*	1	WHEEL & TIRE GP (LH)	305
Y	*201-1870*	1	WHEEL & TIRE GP (RH)	305
	201-1915	1	MOUNTING GP-WHEEL (FRONT)	
M	**178-1304**	8	NUT-HEX FLANGE (M20X1.5-THD)	
	8T-5439	8	WASHER-HARD (21.5X45X6-MM THK)	

M-METRIC PART
Y-SEPARATE ILLUSTRATION

<END>

201-1869 WHEEL & TIRE GP—FRONT, LH

S/N: JBA1-UP
PART OF 201-1868 WHEEL & TIRE GP
AN ATTACHMENT

SMCS-4201, 4202, 4203, 4208, 4209 **i03498413**

NOTE	PART NUMBER	QTY	PART NAME 1 2 3 4 5 6 (PRODUCT LEVEL)	SEE PAGE
Y	*201-1920*	1	VALVE GP-TIRE	301
	202-6186	1	WHEEL AS (FRONT)	
	194-0832	1	TIRE (340/80-R18)	

Y-SEPARATE ILLUSTRATION

<END>

201-1870 WHEEL & TIRE GP—FRONT, RH

S/N: JBA1-UP
PART OF 201-1868 WHEEL & TIRE GP
AN ATTACHMENT

SMCS-4201, 4202, 4203, 4208, 4209 **i03498414**

NOTE	PART NUMBER	QTY	PART NAME 1 2 3 4 5 6 (PRODUCT LEVEL)	SEE PAGE
Y	*201-1920*	1	VALVE GP-TIRE	301
	202-6186	1	WHEEL AS (FRONT)	
	194-0832	1	TIRE (340/80-R18)	

Y-SEPARATE ILLUSTRATION

<END>

201-1962 WHEEL & TIRE GP—FRONT

S/N: JBA1-UP
PART OF 249-9261, 249-9262 WHEEL & TIRE AR
AN ATTACHMENT

SMCS-4201, 4202, 4203, 4208, 4209 **i02469802**

NOTE	PART NUMBER	QTY	PART NAME 1 2 3 4 5 6 (PRODUCT LEVEL)	SEE PAGE
Y	*201-1963*	1	WHEEL & TIRE GP (LH)	306
Y	*201-1964*	1	WHEEL & TIRE GP (RH)	306
	201-1915	1	MOUNTING GP-WHEEL (FRONT)	
	8T-5439	16	WASHER-HARD (21.5X45X6-MM THK)	
M	**201-1919**	16	NUT (M20X1.5-THD)	

M-METRIC PART
Y-SEPARATE ILLUSTRATION

<END>

201-1963 WHEEL & TIRE GP—FRONT, LH

S/N: JBA1-UP
(10X18)
PART OF 201-1962 WHEEL & TIRE GP
AN ATTACHMENT

SMCS-4201, 4202, 4203, 4208, 4209 **i03498416**

NOTE	PART NUMBER	QTY	PART NAME 1 2 3 4 5 6 (PRODUCT LEVEL)	SEE PAGE
Y	*201-1920*	1	VALVE GP-TIRE	301
	202-6186	1	WHEEL AS (FRONT)	
	201-1929	1	TIRE (340/80-R18)	

Y-SEPARATE ILLUSTRATION

<END>

201-1964 WHEEL & TIRE GP—FRONT, RH

S/N: JBA1-UP
(10X18)
PART OF 201-1962 WHEEL & TIRE GP
AN ATTACHMENT

SMCS-4201, 4202, 4203, 4208, 4209 **i03592770**

NOTE	PART NUMBER	QTY	PART NAME 1 2 3 4 5 6 (PRODUCT LEVEL)	SEE PAGE
Y	*201-1920*	1	VALVE GP-TIRE	301
	202-6186	1	WHEEL AS (FRONT)	
	201-1929	1	TIRE (340/80-R18)	

Y-SEPARATE ILLUSTRATION

<END>

216-9147 WHEEL & TIRE GP—FRONT

S/N: JBA1-UP
PART OF 249-9255 WHEEL & TIRE AR
AN ATTACHMENT

SMCS-4201, 4202, 4203, 4208, 4209 **i03726385**

NOTE	PART NUMBER	QTY	PART NAME 1 2 3 4 5 6 (PRODUCT LEVEL)	SEE PAGE
Y	*216-9148*	1	WHEEL & TIRE GP (LH)	307
Y	*216-9149*	1	WHEEL & TIRE GP (RH)	307
	201-1915	1	MOUNTING GP-WHEEL (FRONT)	
	8T-5439	16	WASHER-HARD (21.5X45X6-MM THK)	
M	**201-1919**	16	NUT (M20X1.5-THD)	

M-METRIC PART
Y-SEPARATE ILLUSTRATION

<END>

216-9148 WHEEL & TIRE GP—FRONT, LH

S/N: JBA1-UP
(10X18)
PART OF 216-9147 WHEEL & TIRE GP
AN ATTACHMENT

SMCS-4201, 4202, 4203, 4208, 4209 **i03592782**

NOTE	PART NUMBER	QTY	PART NAME 1 2 3 4 5 6 (PRODUCT LEVEL)	SEE PAGE
Y	*201-1920*	1	VALVE GP-TIRE	301
	202-6186	1	WHEEL AS (FRONT)	
	216-9111	1	TIRE (12.5/80-18)	

Y-SEPARATE ILLUSTRATION

<END>

216-9149 WHEEL & TIRE GP—FRONT, RH

S/N: JBA1-UP
(10X18)
PART OF 216-9147 WHEEL & TIRE GP
AN ATTACHMENT

SMCS-4201, 4202, 4203, 4208, 4209 **i03577261**

NOTE	PART NUMBER	QTY	PART NAME 1 2 3 4 5 6 (PRODUCT LEVEL)	SEE PAGE
Y	*201-1920*	1	VALVE GP-TIRE	301
	202-6186	1	WHEEL AS (FRONT)	
	216-9111	1	TIRE (12.5/80-18)	

Y-SEPARATE ILLUSTRATION

<END>

249-7562 WHEEL & TIRE GP—REAR, LH

S/N: JBA1-UP
(15X28)
PART OF 249-9271 WHEEL & TIRE GP
AN ATTACHMENT

SMCS-4201, 4202, 4203, 4208, 4209 **i03592783**

NOTE	PART NUMBER	QTY	PART NAME 1 2 3 4 5 6 (PRODUCT LEVEL)	SEE PAGE
Y	*201-1920*	1	VALVE GP-TIRE	301
	195-6348	1	WHEEL AS (REAR, LH)	
	146-8319	1	TIRE (16.9-28)	

Y-SEPARATE ILLUSTRATION

<END>

249-7563 WHEEL & TIRE GP–REAR, RH

S/N: JBA1-UP
(15X28)
PART OF 249-9271 WHEEL & TIRE GP
AN ATTACHMENT

SMCS-4201, 4202, 4203, 4208, 4209 **i03592784**

NOTE	PART NUMBER	QTY	PART NAME 1 2 3 4 5 6 (PRODUCT LEVEL)	SEE PAGE
Y	*201-1920*	1	VALVE GP-TIRE	301
	195-6348	1	WHEEL AS (RH,REAR)	
	146-8319	1	TIRE (16.9-28)	

Y-SEPARATE ILLUSTRATION

<END>

249-7565 WHEEL & TIRE GP–REAR, LH

S/N: JBA1-UP
(15X28)
PART OF 249-9388 WHEEL & TIRE GP
AN ATTACHMENT

SMCS-4201, 4202, 4203, 4208, 4209 **i03592785**

NOTE	PART NUMBER	QTY	PART NAME 1 2 3 4 5 6 (PRODUCT LEVEL)	SEE PAGE
Y	*201-1920*	1	VALVE GP-TIRE	301
	195-6348	1	WHEEL AS (LH,REAR)	
	178-7230	1	TIRE (16.9-28)	

Y-SEPARATE ILLUSTRATION

<END>

249-7566 WHEEL & TIRE GP–REAR, RH

S/N: JBA1-UP
(15X28)
PART OF 249-9388 WHEEL & TIRE GP
AN ATTACHMENT

SMCS-4201, 4202, 4203, 4208, 4209 **i03592786**

NOTE	PART NUMBER	QTY	PART NAME 1 2 3 4 5 6 (PRODUCT LEVEL)	SEE PAGE
Y	*201-1920*	1	VALVE GP-TIRE	301
	195-6348	1	WHEEL AS (RH,REAR)	
	178-7230	1	TIRE (16.9-28)	

Y-SEPARATE ILLUSTRATION

<END>

249-7568 WHEEL & TIRE GP—REAR, LH

S/N: JBA1-UP
(15X28)
PART OF 249-9399 WHEEL & TIRE GP
AN ATTACHMENT

SMCS-4201, 4202, 4203, 4208, 4209 **i03592788**

NOTE	PART NUMBER	QTY	PART NAME 1 2 3 4 5 6 (PRODUCT LEVEL)	SEE PAGE
Y	*201-1920*	1	VALVE GP-TIRE	301
	195-6348	1	WHEEL AS (LH,REAR)	
	201-1975	1	TIRE (440/80-R28)	

Y-SEPARATE ILLUSTRATION

<END>

249-7569 WHEEL & TIRE GP—REAR, RH

S/N: JBA1-UP
(15X28)
PART OF 249-9399 WHEEL & TIRE GP
AN ATTACHMENT

SMCS-4201, 4202, 4203, 4208, 4209 **i03592789**

NOTE	PART NUMBER	QTY	PART NAME 1 2 3 4 5 6 (PRODUCT LEVEL)	SEE PAGE
Y	*201-1920*	1	VALVE GP-TIRE	301
	195-6348	1	WHEEL AS (RH,REAR)	
	201-1975	1	TIRE (440/80-R28)	

Y-SEPARATE ILLUSTRATION

<END>

249-7571 WHEEL & TIRE GP—REAR, LH

S/N: JBA1-UP
(15X28)
PART OF 249-9400 WHEEL & TIRE GP
AN ATTACHMENT

SMCS-4201, 4202, 4203, 4208, 4209 **i03592790**

NOTE	PART NUMBER	QTY	PART NAME 1 2 3 4 5 6 (PRODUCT LEVEL)	SEE PAGE
Y	*201-1920*	1	VALVE GP-TIRE	301
	195-6348	1	WHEEL AS (LH,REAR)	
	195-6329	1	TIRE (440/80-R28)	

Y-SEPARATE ILLUSTRATION

<END>

249-7572 WHEEL & TIRE GP–REAR, RH

S/N: JBA1-UP
(15X28)
PART OF 249-9400 WHEEL & TIRE GP
AN ATTACHMENT

SMCS-4201, 4202, 4203, 4208, 4209 **i03592801**

NOTE	PART NUMBER	QTY	PART NAME 1 2 3 4 5 6 (PRODUCT LEVEL)	SEE PAGE
Y	*201-1920*	1	VALVE GP-TIRE	301
	195-6348	1	WHEEL AS (RH,REAR)	
	195-6329	1	TIRE (440/80-R28)	

Y-SEPARATE ILLUSTRATION

<END>

249-9271 WHEEL & TIRE GP–REAR

S/N: JBA1-UP
PART OF 329-1351 WHEEL & TIRE AR
AN ATTACHMENT

SMCS-4201, 4202, 4203, 4208, 4209 **i02469807**

NOTE	PART NUMBER	QTY	PART NAME 1 2 3 4 5 6 (PRODUCT LEVEL)	SEE PAGE
Y	*249-7562*	1	WHEEL & TIRE GP (LH)	307
Y	*249-7563*	1	WHEEL & TIRE GP (RH)	308
	201-1916	1	MOUNTING GP-WHEEL (REAR)	
	8T-5439	20	WASHER-HARD (21.5X45X6-MM THK)	
M	**201-1919**	20	NUT (M20X1.5-THD)	

M-METRIC PART
Y-SEPARATE ILLUSTRATION

<END>

249-9388 WHEEL & TIRE GP–REAR

S/N: JBA1-UP
PART OF 329-1350 WHEEL & TIRE AR
AN ATTACHMENT

SMCS-4201, 4202, 4203, 4208, 4209 **i02469809**

NOTE	PART NUMBER	QTY	PART NAME 1 2 3 4 5 6 (PRODUCT LEVEL)	SEE PAGE
Y	*249-7565*	1	WHEEL & TIRE GP (LH)	308
Y	*249-7566*	1	WHEEL & TIRE GP (RH)	308
	201-1916	1	MOUNTING GP-WHEEL (REAR)	
	8T-5439	20	WASHER-HARD (21.5X45X6-MM THK)	
M	**201-1919**	20	NUT (M20X1.5-THD)	

M-METRIC PART
Y-SEPARATE ILLUSTRATION

<END>

249-9390 WHEEL & TIRE GP–REAR

S/N: JBA1-UP
PART OF 249-9261, 329-1352 WHEEL & TIRE AR
AN ATTACHMENT

SMCS-4201, 4202, 4203, 4208, 4209 **i02469810**

NOTE	PART NUMBER	QTY	PART NAME 1 2 3 4 5 6 (PRODUCT LEVEL)	SEE PAGE
Y	*249-9409*	1	WHEEL & TIRE GP (LH)	312
Y	*249-9410*	1	WHEEL & TIRE GP (RH)	312
	201-1916	1	MOUNTING GP-WHEEL (REAR)	
	8T-5439	20	WASHER-HARD (21.5X45X6-MM THK)	
M	**201-1919**	20	NUT (M20X1.5-THD)	

M-METRIC PART
Y-SEPARATE ILLUSTRATION

<END>

249-9392 WHEEL & TIRE GP–REAR

S/N: JBA1-UP
PART OF 249-9255 WHEEL & TIRE AR
AN ATTACHMENT

SMCS-4201, 4202, 4203, 4208, 4209 **i02469811**

NOTE	PART NUMBER	QTY	PART NAME 1 2 3 4 5 6 (PRODUCT LEVEL)	SEE PAGE
Y	*249-9411*	1	WHEEL & TIRE GP (LH)	313
Y	*250-0230*	1	WHEEL & TIRE GP (RH)	313
	201-1916	1	MOUNTING GP-WHEEL (REAR)	
	8T-5439	20	WASHER-HARD (21.5X45X6-MM THK)	
M	**201-1919**	20	NUT (M20X1.5-THD)	

M-METRIC PART
Y-SEPARATE ILLUSTRATION

<END>

249-9399 WHEEL & TIRE GP–REAR

S/N: JBA1-UP
PART OF 249-9262 WHEEL & TIRE AR
AN ATTACHMENT

SMCS-4201, 4202, 4203, 4208, 4209 **i02233228**

NOTE	PART NUMBER	QTY	PART NAME 1 2 3 4 5 6 (PRODUCT LEVEL)	SEE PAGE
Y	*249-7568*	1	WHEEL & TIRE GP (LH)	309
Y	*249-7569*	1	WHEEL & TIRE GP (RH)	309
	201-1916	1	MOUNTING GP-WHEEL (REAR)	
	8T-5439	20	WASHER-HARD (21.5X45X6-MM THK)	
M	**201-1919**	20	NUT (M20X1.5-THD)	

M-METRIC PART
Y-SEPARATE ILLUSTRATION

<END>

249-9400 WHEEL & TIRE GP–REAR

S/N: JBA1-UP
PART OF 249-9263 WHEEL & TIRE AR
AN ATTACHMENT

SMCS-4201, 4202, 4203, 4208, 4209 **i02469925**

NOTE	PART NUMBER	QTY	PART NAME 1 2 3 4 5 6 (PRODUCT LEVEL)	SEE PAGE
Y	*249-7571*	1	WHEEL & TIRE GP (LH)	309
Y	*249-7572*	1	WHEEL & TIRE GP (RH)	310
	201-1916	1	MOUNTING GP-WHEEL (REAR)	
	8T-5439	20	WASHER-HARD (21.5X45X6-MM THK)	
M	**201-1919**	20	NUT (M20X1.5-THD)	

M-METRIC PART
Y-SEPARATE ILLUSTRATION

<END>

249-9409 WHEEL & TIRE GP–REAR, LH

S/N: JBA1-UP
(16X26)
PART OF 249-9390 WHEEL & TIRE GP
AN ATTACHMENT

SMCS-4201, 4202, 4203, 4208, 4209 **i03592805**

NOTE	PART NUMBER	QTY	PART NAME 1 2 3 4 5 6 (PRODUCT LEVEL)	SEE PAGE
Y	*201-1920*	1	VALVE GP-TIRE	301
	195-6345	1	WHEEL AS (REAR)	
	135-5893	1	TIRE (18.4/15-26)	

Y-SEPARATE ILLUSTRATION

<END>

249-9410 WHEEL & TIRE GP–REAR, RH

S/N: JBA1-UP
(16X26)
PART OF 249-9390 WHEEL & TIRE GP
AN ATTACHMENT

SMCS-4201, 4202, 4203, 4208, 4209 **i03592806**

NOTE	PART NUMBER	QTY	PART NAME 1 2 3 4 5 6 (PRODUCT LEVEL)	SEE PAGE
Y	*201-1920*	1	VALVE GP-TIRE	301
	195-6345	1	WHEEL AS (REAR)	
	135-5893	1	TIRE (18.4/15-26)	

Y-SEPARATE ILLUSTRATION

<END>

249-9411 WHEEL & TIRE GP—REAR, LH

S/N: JBA1-UP
(16X26)
PART OF 249-9392 WHEEL & TIRE GP
AN ATTACHMENT

SMCS-4201, 4202, 4203, 4208, 4209 **i03592808**

NOTE	PART NUMBER	QTY	PART NAME 1 2 3 4 5 6 (PRODUCT LEVEL)	SEE PAGE
Y	*201-1920*	1	VALVE GP-TIRE	301
	195-6345	1	WHEEL AS (REAR)	
	216-9112	1	TIRE (18.4-26)	

Y-SEPARATE ILLUSTRATION

<END>

250-0230 WHEEL & TIRE GP—REAR, RH

S/N: JBA1-UP
(16X26)
PART OF 249-9392 WHEEL & TIRE GP
AN ATTACHMENT

SMCS-4201, 4202, 4203, 4208, 4209 **i03592809**

NOTE	PART NUMBER	QTY	PART NAME 1 2 3 4 5 6 (PRODUCT LEVEL)	SEE PAGE
Y	*201-1920*	1	VALVE GP-TIRE	301
	195-6345	1	WHEEL AS (REAR)	
	216-9112	1	TIRE (18.4-26)	

Y-SEPARATE ILLUSTRATION

<END>

266-1554 WHEEL & TIRE GP—FRONT

S/N: JBA1-UP
PART OF 273-5077, 273-5078 WHEEL & TIRE AR
AN ATTACHMENT

SMCS-4201, 4202, 4203, 4208, 4209 **i02469929**

NOTE	PART NUMBER	QTY	PART NAME 1 2 3 4 5 6 (PRODUCT LEVEL)	SEE PAGE
Y	*266-1555*	1	WHEEL & TIRE GP (FRONT, LH)	314
Y	*266-1556*	1	WHEEL & TIRE GP (FRONT, RH)	314
	201-1915	1	MOUNTING GP-WHEEL (FRONT)	
	8T-5439	16	WASHER-HARD (21.5X45X6-MM THK)	
M	**201-1919**	16	NUT (M20X1.5-THD)	

M-METRIC PART
Y-SEPARATE ILLUSTRATION

<END>

266-1555 WHEEL & TIRE GP—FRONT, LH

S/N: JBA1-UP
(10X18)
PART OF 266-1554 WHEEL & TIRE GP
AN ATTACHMENT

SMCS-4201, 4202, 4203, 4208, 4209 **i03592812**

NOTE	PART NUMBER	QTY	PART NAME 1 2 3 4 5 6 (PRODUCT LEVEL)	SEE PAGE
Y	*201-1920*	1	VALVE GP-TIRE	301
	202-6186	1	WHEEL AS (FRONT)	
	266-1560	1	TIRE (12.5/80-18)	

Y-SEPARATE ILLUSTRATION

<END>

266-1556 WHEEL & TIRE GP—FRONT, RH

S/N: JBA1-UP
(10X18)
PART OF 266-1554 WHEEL & TIRE GP
AN ATTACHMENT

SMCS-4201, 4202, 4203, 4208, 4209 **i03592813**

NOTE	PART NUMBER	QTY	PART NAME 1 2 3 4 5 6 (PRODUCT LEVEL)	SEE PAGE
Y	*201-1920*	1	VALVE GP-TIRE	301
	202-6186	1	WHEEL AS (FRONT)	
	266-1560	1	TIRE (12.5/80-18)	

Y-SEPARATE ILLUSTRATION

<END>

273-5080 WHEEL & TIRE GP—REAR

S/N: JBA1-UP
PART OF 273-5078, 341-0596 WHEEL & TIRE AR
AN ATTACHMENT

SMCS-4201, 4202, 4203, 4208, 4209 **i02469931**

NOTE	PART NUMBER	QTY	PART NAME 1 2 3 4 5 6 (PRODUCT LEVEL)	SEE PAGE
Y	*273-5093*	1	WHEEL & TIRE GP (REAR, LH)	315
Y	*273-5094*	1	WHEEL & TIRE GP (REAR, RH)	315
	201-1916	1	MOUNTING GP-WHEEL (REAR)	
	8T-5439	20	WASHER-HARD (21.5X45X6-MM THK)	
M	**201-1919**	20	NUT (M20X1.5-THD)	

M-METRIC PART
Y-SEPARATE ILLUSTRATION

<END>

273-5081 WHEEL & TIRE GP—REAR

S/N: JBA1-UP
PART OF 273-5077 WHEEL & TIRE AR
AN ATTACHMENT

SMCS-4201, 4202, 4203, 4208, 4209 **i02469932**

NOTE	PART NUMBER	QTY	PART NAME 1 2 3 4 5 6 (PRODUCT LEVEL)	SEE PAGE
Y	*273-5095*	1	WHEEL & TIRE GP (REAR, LH)	316
Y	*273-5096*	1	WHEEL & TIRE GP (REAR, RH)	316
	201-1916	1	MOUNTING GP-WHEEL (REAR)	
	8T-5439	20	WASHER-HARD (21.5X45X6-MM THK)	
M	**201-1919**	20	NUT (M20X1.5-THD)	

M-METRIC PART
Y-SEPARATE ILLUSTRATION

<END>

273-5093 WHEEL & TIRE GP—REAR, LH

S/N: JBA1-UP
(16X26)
PART OF 273-5080 WHEEL & TIRE GP
AN ATTACHMENT

SMCS-4201, 4202, 4203, 4208, 4209 **i03592814**

NOTE	PART NUMBER	QTY	PART NAME 1 2 3 4 5 6 (PRODUCT LEVEL)	SEE PAGE
Y	*201-1920*	1	VALVE GP-TIRE	301
	195-6345	1	WHEEL AS (REAR)	
	267-8364	1	TIRE (480/80-R26)	

Y-SEPARATE ILLUSTRATION

<END>

273-5094 WHEEL & TIRE GP—REAR, RH

S/N: JBA1-UP
(16X26)
PART OF 273-5080 WHEEL & TIRE GP
AN ATTACHMENT

SMCS-4201, 4202, 4203, 4208, 4209 **i03592815**

NOTE	PART NUMBER	QTY	PART NAME 1 2 3 4 5 6 (PRODUCT LEVEL)	SEE PAGE
Y	*201-1920*	1	VALVE GP-TIRE	301
	195-6345	1	WHEEL AS (REAR)	
	267-8364	1	TIRE (480/80-R26)	

Y-SEPARATE ILLUSTRATION

<END>

273-5095 WHEEL & TIRE GP—REAR, LH

S/N: JBA1-UP
(15X28)
PART OF 273-5081 WHEEL & TIRE GP
AN ATTACHMENT

SMCS-4201, 4202, 4203, 4208, 4209 **i03592817**

NOTE	PART NUMBER	QTY	PART NAME 1 2 3 4 5 6 (PRODUCT LEVEL)	SEE PAGE
Y	*201-1920*	1	VALVE GP-TIRE	301
	195-6348	1	WHEEL AS (REAR)	
	267-8363	1	TIRE (440/80-R28)	

Y-SEPARATE ILLUSTRATION

<END>

273-5096 WHEEL & TIRE GP—REAR, RH

S/N: JBA1-UP
(15X28)
PART OF 273-5081 WHEEL & TIRE GP
AN ATTACHMENT

SMCS-4201, 4202, 4203, 4208, 4209 **i03592818**

NOTE	PART NUMBER	QTY	PART NAME 1 2 3 4 5 6 (PRODUCT LEVEL)	SEE PAGE
Y	*201-1920*	1	VALVE GP-TIRE	301
	195-6348	1	WHEEL AS (REAR)	
	267-8363	1	TIRE (440/80-R28)	

Y-SEPARATE ILLUSTRATION

<END>

303-0418 WHEEL & TIRE GP—FRONT

S/N: JBA1-UP
PART OF 303-0413, 303-0414 WHEEL & TIRE AR
AN ATTACHMENT

SMCS-4201, 4202, 4203, 4208, 4209 **i02675650**

NOTE	PART NUMBER	QTY	PART NAME 1 2 3 4 5 6 (PRODUCT LEVEL)	SEE PAGE
Y	*303-0428*	1	WHEEL & TIRE GP (FRONT, LH)	318
Y	*303-0429*	1	WHEEL & TIRE GP (FRONT, RH)	318
	201-1915	1	MOUNTING GP-WHEEL (FRONT)	
	5T-5439	16	PLATE	
M	**201-1919**	16	NUT (M20X1.5-THD)	

M-METRIC PART
Y-SEPARATE ILLUSTRATION

<END>

303-0419 WHEEL & TIRE GP–REAR

S/N: JBA1-UP
PART OF 303-0413 WHEEL & TIRE AR
AN ATTACHMENT

SMCS-4201, 4202, 4203, 4208, 4209 **i02675652**

NOTE	PART NUMBER	QTY	PART NAME 1 2 3 4 5 6 (PRODUCT LEVEL)	SEE PAGE
Y	*303-0430*	1	WHEEL & TIRE GP (REAR, LH)	318
Y	*303-0431*	1	WHEEL & TIRE GP (REAR, RH)	319
	201-1916	1	MOUNTING GP-WHEEL (REAR)	
	8T-5439	20	WASHER-HARD (21.5X45X6-MM THK)	
M	**201-1919**	20	NUT (M20X1.5-THD)	

M-METRIC PART
Y-SEPARATE ILLUSTRATION

<END>

303-0421 WHEEL & TIRE GP–REAR

S/N: JBA1-UP
PART OF 303-0414, 303-0415 WHEEL & TIRE AR
AN ATTACHMENT

SMCS-4201, 4202, 4203, 4208, 4209 **i02675691**

NOTE	PART NUMBER	QTY	PART NAME 1 2 3 4 5 6 (PRODUCT LEVEL)	SEE PAGE
Y	*303-0434*	1	WHEEL & TIRE GP (REAR, LH)	319
Y	*303-0435*	1	WHEEL & TIRE GP (REAR, RH)	319
	201-1916	1	MOUNTING GP-WHEEL (REAR)	
	8T-5439	20	WASHER-HARD (21.5X45X6-MM THK)	
M	**201-1919**	20	NUT (M20X1.5-THD)	

M-METRIC PART
Y-SEPARATE ILLUSTRATION

<END>

303-0423 WHEEL & TIRE GP–FRONT

S/N: JBA1-UP
PART OF 303-0415 WHEEL & TIRE AR
AN ATTACHMENT

SMCS-4201, 4202, 4203, 4208, 4209 **i02675702**

NOTE	PART NUMBER	QTY	PART NAME 1 2 3 4 5 6 (PRODUCT LEVEL)	SEE PAGE
Y	*303-0438*	1	WHEEL & TIRE GP (FRONT, LH)	320
Y	*303-0439*	1	WHEEL & TIRE GP (FRONT, RH)	320
	201-1915	1	MOUNTING GP-WHEEL (FRONT)	
	5T-5439	16	PLATE	
M	**201-1919**	16	NUT (M20X1.5-THD)	

M-METRIC PART
Y-SEPARATE ILLUSTRATION

<END>

303-0428 WHEEL & TIRE GP—FRONT, LH

S/N: JBA1-UP
(10X18)
PART OF 303-0418 WHEEL & TIRE GP
AN ATTACHMENT

SMCS-4201, 4202, 4203, 4208, 4209 **i03592819**

NOTE	PART NUMBER	QTY	PART NAME 1 2 3 4 5 6 (PRODUCT LEVEL)	SEE PAGE
Y	*201-1920*	1	VALVE GP-TIRE	301
	202-6186	1	WHEEL AS (FRONT)	
	259-2940	1	TIRE (340/80-R18)	

Y-SEPARATE ILLUSTRATION

<END>

303-0429 WHEEL & TIRE GP—FRONT, RH

S/N: JBA1-UP
(10X18)
PART OF 303-0418 WHEEL & TIRE GP
AN ATTACHMENT

SMCS-4201, 4202, 4203, 4208, 4209 **i03592820**

NOTE	PART NUMBER	QTY	PART NAME 1 2 3 4 5 6 (PRODUCT LEVEL)	SEE PAGE
Y	*201-1920*	1	VALVE GP-TIRE	301
	202-6186	1	WHEEL AS (FRONT)	
	259-2940	1	TIRE (340/80-R18)	

Y-SEPARATE ILLUSTRATION

<END>

303-0430 WHEEL & TIRE GP—REAR, LH

S/N: JBA1-UP
(15X28)
PART OF 303-0419 WHEEL & TIRE GP
AN ATTACHMENT

SMCS-4201, 4202, 4203, 4208, 4209 **i03592821**

NOTE	PART NUMBER	QTY	PART NAME 1 2 3 4 5 6 (PRODUCT LEVEL)	SEE PAGE
Y	*201-1920*	1	VALVE GP-TIRE	301
	195-6348	1	WHEEL AS (REAR)	
	303-0441	1	TIRE (16.9-R28)	

Y-SEPARATE ILLUSTRATION

<END>

303-0431 WHEEL & TIRE GP—REAR, RH

S/N: JBA1-UP
(15X28)
PART OF 303-0419 WHEEL & TIRE GP
AN ATTACHMENT

SMCS-4201, 4202, 4203, 4208, 4209 **i03592825**

NOTE	PART NUMBER	QTY	PART NAME 1 2 3 4 5 6 (PRODUCT LEVEL)	SEE PAGE
Y	*201-1920*	1	VALVE GP-TIRE	301
	195-6348	1	WHEEL AS (REAR)	
	303-0441	1	TIRE (16.9-R28)	

Y-SEPARATE ILLUSTRATION

<END>

303-0434 WHEEL & TIRE GP—REAR, LH

S/N: JBA1-UP
(16X26)
PART OF 303-0421 WHEEL & TIRE GP
AN ATTACHMENT

SMCS-4201, 4202, 4203, 4208, 4209 **i03592826**

NOTE	PART NUMBER	QTY	PART NAME 1 2 3 4 5 6 (PRODUCT LEVEL)	SEE PAGE
Y	*201-1920*	1	VALVE GP-TIRE	301
	195-6345	1	WHEEL AS (REAR)	
	303-0442	1	TIRE (480/80-R26)	

Y-SEPARATE ILLUSTRATION

<END>

303-0435 WHEEL & TIRE GP—REAR, RH

S/N: JBA1-UP
(16X26)
PART OF 303-0421 WHEEL & TIRE GP
AN ATTACHMENT

SMCS-4201, 4202, 4203, 4208, 4209 **i03592827**

NOTE	PART NUMBER	QTY	PART NAME 1 2 3 4 5 6 (PRODUCT LEVEL)	SEE PAGE
Y	*201-1920*	1	VALVE GP-TIRE	301
	195-6345	1	WHEEL AS (REAR)	
	303-0442	1	TIRE (480/80-R26)	

Y-SEPARATE ILLUSTRATION

<END>

303-0438 WHEEL & TIRE GP—FRONT, LH

S/N: JBA1-UP
(11X20)
PART OF 303-0423 WHEEL & TIRE GP
AN ATTACHMENT

SMCS-4201, 4202, 4203, 4208, 4209 **i03592828**

NOTE	PART NUMBER	QTY	PART NAME 1 2 3 4 5 6 (PRODUCT LEVEL)	SEE PAGE
Y	*201-1920*	1	VALVE GP-TIRE	301
	9R-3545	1	WHEEL AS (FRONT)	
	303-0443	1	TIRE (335/80-R20)	

Y-SEPARATE ILLUSTRATION

<END>

303-0439 WHEEL & TIRE GP—FRONT, RH

S/N: JBA1-UP
(11X20)
PART OF 303-0423 WHEEL & TIRE GP
AN ATTACHMENT

SMCS-4201, 4202, 4203, 4208, 4209 **i03592829**

NOTE	PART NUMBER	QTY	PART NAME 1 2 3 4 5 6 (PRODUCT LEVEL)	SEE PAGE
Y	*201-1920*	1	VALVE GP-TIRE	301
	9R-3545	1	WHEEL AS (FRONT)	
	303-0443	1	TIRE (335/80-R20)	

Y-SEPARATE ILLUSTRATION

<END>

319-6835 WHEEL & TIRE GP—FRONT

S/N: JBA1-UP
PART OF 319-6834 WHEEL & TIRE AR
AN ATTACHMENT

SMCS-4201, 4202, 4203, 4208, 4209 **i02884193**

NOTE	PART NUMBER	QTY	PART NAME 1 2 3 4 5 6 (PRODUCT LEVEL)	SEE PAGE
Y	*319-7186*	1	WHEEL & TIRE GP (FRONT, RH)	321
Y	*319-7187*	1	WHEEL & TIRE GP (FRONT, LH)	321
	201-1915	1	MOUNTING GP-WHEEL (FRONT)	
	8T-5439	16	WASHER-HARD (21.5X45X6-MM THK)	
M	**201-1919**	16	NUT (M20X1.5-THD)	

M-METRIC PART
Y-SEPARATE ILLUSTRATION

<END>

319-6836 WHEEL & TIRE GP—REAR

S/N: JBA1-UP
PART OF 319-6834 WHEEL & TIRE AR
AN ATTACHMENT

SMCS-4201, 4202, 4203, 4208, 4209 **i03308880**

NOTE	PART NUMBER	QTY	PART NAME 1 2 3 4 5 6 (PRODUCT LEVEL)	SEE PAGE
Y	*319-7191*	1	WHEEL & TIRE GP (REAR, LH)	322
Y	*319-7192*	1	WHEEL & TIRE GP (REAR, RH)	322
	201-1916	1	MOUNTING GP-WHEEL (REAR)	
	8T-5439	20	WASHER-HARD (21.5X45X6-MM THK)	
M	**201-1919**	20	NUT (M20X1.5-THD)	

M-METRIC PART
Y-SEPARATE ILLUSTRATION

<END>

319-7186 WHEEL & TIRE GP—FRONT, RH

S/N: JBA1-UP
(11X20)
PART OF 319-6835 WHEEL & TIRE GP
AN ATTACHMENT

SMCS-4201, 4202, 4203, 4208, 4209 **i03592830**

NOTE	PART NUMBER	QTY	PART NAME 1 2 3 4 5 6 (PRODUCT LEVEL)	SEE PAGE
Y	*201-1920*	1	VALVE GP-TIRE	301
	9R-3545	1	WHEEL AS (FRONT)	
	319-6837	1	TIRE (340/80-R20)	

Y-SEPARATE ILLUSTRATION

<END>

319-7187 WHEEL & TIRE GP—FRONT, LH

S/N: JBA1-UP
(11X20)
PART OF 319-6835 WHEEL & TIRE GP
AN ATTACHMENT

SMCS-4201, 4202, 4203, 4208, 4209 **i03592831**

NOTE	PART NUMBER	QTY	PART NAME 1 2 3 4 5 6 (PRODUCT LEVEL)	SEE PAGE
Y	*201-1920*	1	VALVE GP-TIRE	301
	9R-3545	1	WHEEL AS (FRONT)	
	319-6837	1	TIRE (340/80-R20)	

Y-SEPARATE ILLUSTRATION

<END>

319-7191 WHEEL & TIRE GP—REAR, LH

S/N: JBA1-UP
(16X26)
PART OF 319-6836 WHEEL & TIRE GP
AN ATTACHMENT

SMCS-4201, 4202, 4203, 4208, 4209 **i03592832**

NOTE	PART NUMBER	QTY	PART NAME 1 2 3 4 5 6 (PRODUCT LEVEL)	SEE PAGE
Y	*201-1920*	1	VALVE GP-TIRE	301
	195-6345	1	WHEEL AS (REAR)	
	319-6838	1	TIRE (480/80-R26)	

Y-SEPARATE ILLUSTRATION

<END>

319-7192 WHEEL & TIRE GP—REAR, RH

S/N: JBA1-UP
(16X26)
PART OF 319-6836 WHEEL & TIRE GP
AN ATTACHMENT

SMCS-4201, 4202, 4203, 4208, 4209 **i03592833**

NOTE	PART NUMBER	QTY	PART NAME 1 2 3 4 5 6 (PRODUCT LEVEL)	SEE PAGE
Y	*201-1920*	1	VALVE GP-TIRE	301
	195-6345	1	WHEEL AS (REAR)	
	319-6838	1	TIRE (480/80-R26)	

Y-SEPARATE ILLUSTRATION

<END>

329-1354 WHEEL & TIRE GP—FRONT

S/N: JBA1-UP
PART OF 329-1350, 329-1351, 329-1352 WHEEL & TIRE AR
AN ATTACHMENT

SMCS-4201, 4202, 4203, 4208, 4209 **i03091583**

NOTE	PART NUMBER	QTY	PART NAME 1 2 3 4 5 6 (PRODUCT LEVEL)	SEE PAGE
Y	*329-1355*	1	WHEEL & TIRE GP (FRONT, LH)	323
Y	*329-1919*	1	WHEEL & TIRE GP (FRONT, RH)	323
	201-1915	1	MOUNTING GP-WHEEL (FRONT)	
	8T-5439	16	WASHER-HARD (21.5X45X6-MM THK)	
M	**201-1919**	16	NUT (M20X1.5-THD)	

M-METRIC PART
Y-SEPARATE ILLUSTRATION

<END>

329-1355 WHEEL & TIRE GP—FRONT, LH

S/N: JBA1-UP
(10X18)
PART OF 329-1354 WHEEL & TIRE GP
AN ATTACHMENT

SMCS-4201, 4202, 4203, 4208, 4209 **i03592834**

NOTE	PART NUMBER	QTY	PART NAME 1 2 3 4 5 6 (PRODUCT LEVEL)	SEE PAGE
Y	*201-1920*	1	VALVE GP-TIRE	301
	202-6186	1	WHEEL AS (FRONT)	
	329-1348	1	TIRE (12.5/80-18)	

Y-SEPARATE ILLUSTRATION

<END>

329-1919 WHEEL & TIRE GP—FRONT, RH

S/N: JBA1-UP
(10X18)
PART OF 329-1354 WHEEL & TIRE GP
AN ATTACHMENT

SMCS-4201, 4202, 4203, 4208, 4209 **i03592835**

NOTE	PART NUMBER	QTY	PART NAME 1 2 3 4 5 6 (PRODUCT LEVEL)	SEE PAGE
Y	*201-1920*	1	VALVE GP-TIRE	301
	202-6186	1	WHEEL AS (FRONT)	
	329-1348	1	TIRE (12.5/80-18)	

Y-SEPARATE ILLUSTRATION

<END>

341-9202 WHEEL & TIRE GP—FRONT

S/N: JBA1-UP
PART OF 341-0596 WHEEL & TIRE AR
AN ATTACHMENT

SMCS-4201, 4202, 4203, 4208, 4209 **i03640953**

NOTE	PART NUMBER	QTY	PART NAME 1 2 3 4 5 6 (PRODUCT LEVEL)	SEE PAGE
Y	*341-9203*	1	WHEEL & TIRE GP (FRONT, LH)	324
Y	*341-9204*	1	WHEEL & TIRE GP (FRONT, RH)	324
	201-1915	1	MOUNTING GP-WHEEL (FRONT)	
	8T-5439	16	WASHER-HARD (21.5X45X6-MM THK)	
M	**201-1919**	16	NUT (M20X1.5-THD)	

M-METRIC PART
Y-SEPARATE ILLUSTRATION

<END>

341-9203 WHEEL & TIRE GP—FRONT, LH

S/N: JBA1-UP
(11X20)
PART OF 341-9202 WHEEL & TIRE GP
AN ATTACHMENT

SMCS-4201, 4202, 4203, 4208, 4209 **i03538521**

NOTE	PART NUMBER	QTY	PART NAME 1 2 3 4 5 6 (PRODUCT LEVEL)	SEE PAGE
Y	*201-1920*	1	VALVE GP-TIRE	301
	9R-3545	1	WHEEL AS (FRONT)	
	341-9201	1	TIRE (340/80-R20)	
Y-SEPARATE ILLUSTRATION				

<END>

341-9204 WHEEL & TIRE GP—FRONT, RH

S/N: JBA1-UP
(11X20)
PART OF 341-9202 WHEEL & TIRE GP
AN ATTACHMENT

SMCS-4201, 4202, 4203, 4208, 4209 **i03538524**

NOTE	PART NUMBER	QTY	PART NAME 1 2 3 4 5 6 (PRODUCT LEVEL)	SEE PAGE
Y	*201-1920*	1	VALVE GP-TIRE	301
	9R-3545	1	WHEEL AS (FRONT)	
	341-9201	1	TIRE (340/80-R20)	
Y-SEPARATE ILLUSTRATION				

<END>

206-1642 CONTROL GP-PARKING BRAKE

S/N: JBA1-UP
PART OF 329-0306, 329-0307 POWER TRAIN AR
AN ATTACHMENT

SMCS-4282, 4284 **i03577384**

NOTE	REF NO	GRAPHIC REF	PART NUMBER	QTY	PART NAME 1 2 3 4 5 6 (PRODUCT LEVEL)	SEE PAGE
	1	1	**7K-1181**	1	STRAP-CABLE	
	2	1	**9R-2806**	1	PIN	
	3	1	**9R-2807**	1	CLIP	
J	4	1	**154-5416**	1	SWITCH AS (PARKING BRAKE)	
Y	5	1	**261-5517**	1	CONTROL GP-PARKING BRAKE	326
	6	1	**261-9635**	1	BOOT (PARKING BRAKE)	
	7	1	**8T-4224**	2	WASHER-HARD (8.8X16X2-MM THK)	
M	8	1	**8T-6912**	2	BOLT (M8X1.25X50-MM)	
	9	1	**164-1368**	2	FASTENER-PANEL	
					AVAILABLE REPAIR KIT(S):	
J			**155-2270**	1	KIT-CONNECTING PLUG (2-PIN)	
					(INCLUDES PLUG AS, WEDGE & INTERFACE SEAL)	

J-KIT MARKED J SERVICES PARTS MARKED J
M-METRIC PART
Y-SEPARATE ILLUSTRATION

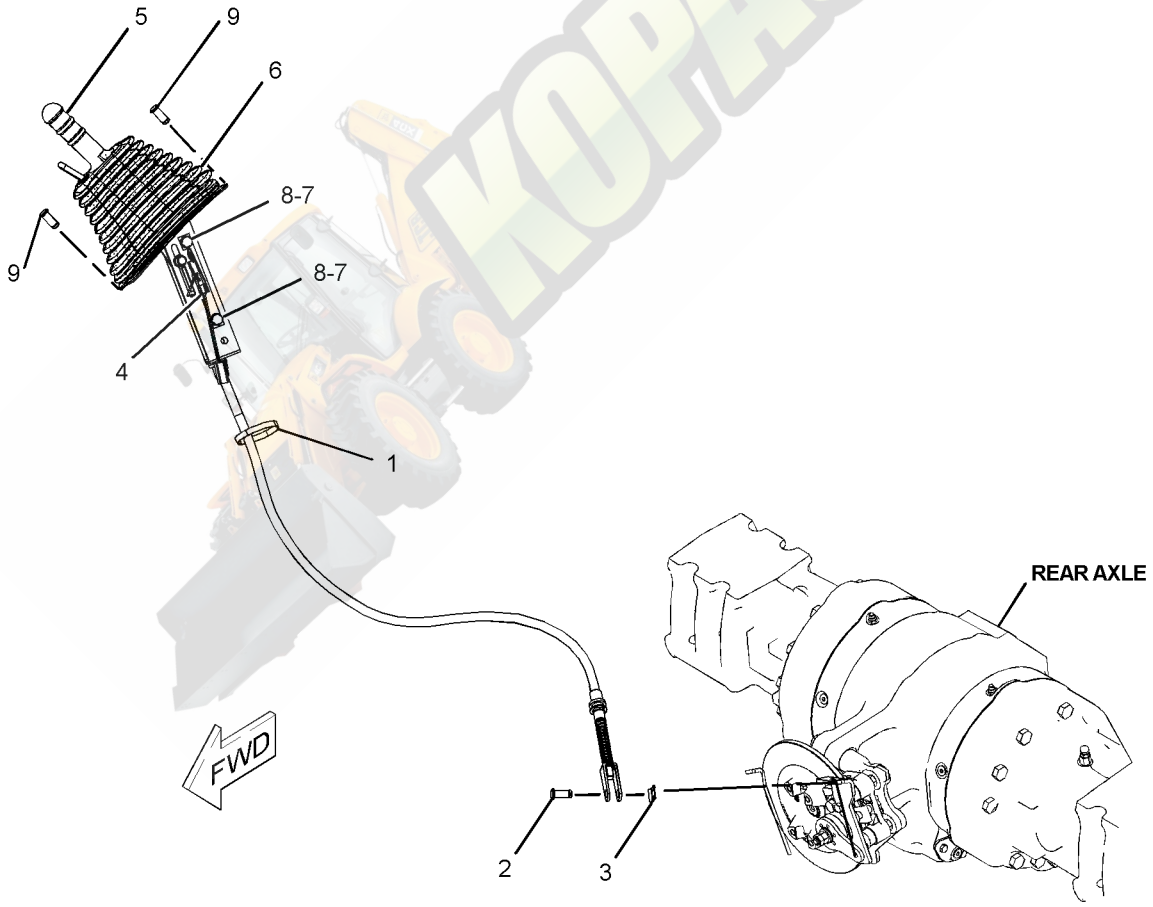

GRAPHIC #1 **<END>** g01228986

BRAKING SYSTEM

261-5517 CONTROL GP-PARKING BRAKE

S/N: JBA1-UP

PART OF 206-1642 CONTROL GP-PARKING BRAKE

AN ATTACHMENT

SMCS-4282, 4284 **i03712421**

NOTE	REF NO	GRAPHIC REF	PART NUMBER	QTY	PART NAME 1 2 3 4 5 6 (PRODUCT LEVEL)	SEE PAGE
Y	1	1	**163-0753**	1	LEVER GP-HAND CONTROL (PARKING BRAKE)	332
	2	1	**261-5519**	1	CABLE AS	
		1	**6V-8759**	1	RING-RETAINING	

Y-SEPARATE ILLUSTRATION

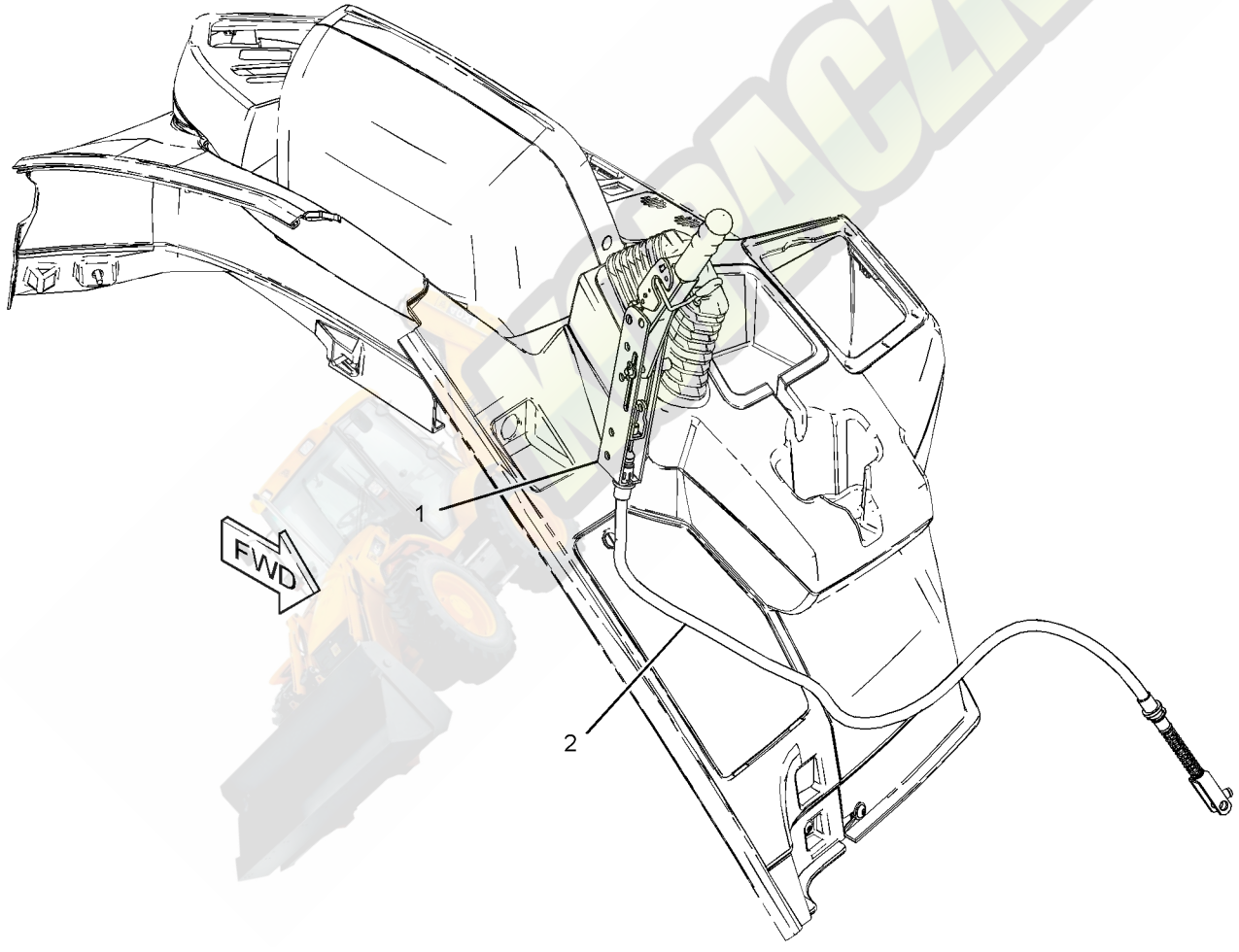

GRAPHIC #1 **<END>** g01210353

206-1639 CONTROL GP-SERVICE BRAKE–STANDARD SHIFT

S/N: JBA1-UP

PART OF 329-0306, 329-0307 POWER TRAIN AR

AN ATTACHMENT

SMCS-4269 **i03712420**

NOTE	REF NO	GRAPHIC REF	PART NUMBER	QTY	PART NAME 1 2 3 4 5 6 (PRODUCT LEVEL)	SEE PAGE
	1	1	**1H-1200**	1	PIN-SPRING	
	2	1	**3E-7675**	1	SWITCH GP-PRESSURE (BRAKE)	
		1	**102-8803**	1	KIT-RECEPTACLE (3-PIN)	
					(INCLUDES RECEPTACLE AS & WEDGE)	
		1	**8T-8729**	3	PIN-CONNECTOR (16-GA TO 18-GA)	
	3	1	**7K-1181**	1	STRAP-CABLE	
	4	1	**8T-0131**	1	ELBOW	
	5	1	**8T-1889**	2	CLIP (SLOT)	
	6	1	**8T-1890**	2	CLIP (TAB)	
	7	1	**105-8034**	2	SWITCH AS-LIMIT (BRAKE PEDAL)	
	8	1	**151-4841**	1	BLOCK	
	9	1	**156-3600**	1	FITTING	
	10	1	**156-3631**	1	FITTING	
	11	1	**165-6595**	1	PIN AS	
	12	1	*194-2903*	1	ELBOW AS	
		1	**3K-0360**	1	SEAL-O-RING	
		1	**8T-0119**	1	ELBOW	
	13	1	**201-3652**	1	PLATE AS	
	14	1	**202-5993**	1	PLATE	
	15	1	**206-1634**	1	PLATE AS	
	16	1	**206-1650**	1	GROMMET	
	17	1	**291-8379**	1	COVER-BRAKE	
	18	1	**206-1752**	1	PLATE AS	
	19	1	**206-1758**	1	PEDAL AS (LH)	
		1	**202-6029**	2	BEARING-SLEEVE	
	20	1	**206-1759**	1	PEDAL AS (RH)	
		1	**202-6029**	2	BEARING-SLEEVE	
	21	1	**206-1766**	2	PIN	
	22	1	**206-1767**	1	SPRING (LH)	
	23	1	**206-1768**	1	SPRING (RH)	
	24	1	**220-8226**	1	VALVE AS-BRAKE	
		1	**262-4084**	1	BOOT	
	25	1	**251-5579**	1	PLATE AS	
	26	1	**253-1549**	2	HOSE AS	
I	27	1	**255-5461**	1	HOSE AS	
I	28	1	**255-8280**	1	HOSE AS	
	29	1	**262-4081**	2	END-YOKE ROD	
M	30	1	**142-0485**	2	NUT (M10X1.5-THD)	
	31	1	*148-8318*	1	CONNECTOR AS	
		1	**3K-0360**	1	SEAL-O-RING	
		1	**6V-8397**	1	SEAL-O-RING	
		1	**6V-8634**	1	CONNECTOR	
	32	1	*148-8325*	4	CONNECTOR AS	
					(EACH INCLUDES)	
		1	**3J-1907**	1	SEAL-O-RING	
		1	**4J-5477**	1	SEAL-O-RING	
		1	**6V-8641**	1	CONNECTOR	
	33	1	*148-8364*	1	ELBOW AS	
		1	**3K-0360**	1	SEAL-O-RING	
		1	**6V-8398**	1	SEAL-O-RING	
		1	**6V-8625**	1	ELBOW	
	34	1	*148-8378*	1	ELBOW AS	
		1	**3J-1907**	1	SEAL-O-RING	
		1	**6V-8397**	1	SEAL-O-RING	
		1	**6V-8724**	1	ELBOW	

206-1639 **CONTROL GP-SERVICE BRAKE** *(contd.)* **i03712420**

NOTE	REF NO	GRAPHIC REF	PART NUMBER	QTY	PART NAME 1 2 3 4 5 6 (PRODUCT LEVEL)	SEE PAGE
M	35	1	**9X-2045**	4	SCREW-TRUSS HEAD (M6X1X20-MM)	
	36	1	**3J-1907**	1	SEAL-O-RING	
	37	1	**3K-0360**	2	SEAL-O-RING	
M	38	1	**5C-7261**	6	NUT (M8X1.25-THD)	
	39	1	**5P-4116**	4	WASHER-HARD (8.8X20.5X2-MM THK)	
	40	1	**6V-0826**	2	GROMMET	
	41	1	**7J-9108**	1	SEAL-O-RING	
	42	1	**7X-7729**	6	WASHER (11X25X3-MM THK)	
	43	1	**8T-4121**	2	WASHER-HARD (11X21X2.5-MM THK)	
M	44	1	**8T-4133**	2	NUT (M10X1.5-THD)	
M	45	1	**8T-4136**	6	BOLT (M10X1.5X25-MM)	
M	46	1	**8T-4138**	1	BOLT (M6X1X20-MM)	
	47	1	**8T-4205**	1	WASHER-HARD (7.2X14.5X2-MM THK)	
	48	1	**8T-4224**	4	WASHER-HARD (8.8X16X2-MM THK)	
M	49	1	**8T-4908**	2	BOLT (M8X1.25X25-MM)	
	50	1	**9D-3767**	2	PLUG-BUTTON	
	51	1	**9R-2807**	2	CLIP	
M	52	1	**9X-2044**	2	SCREW-TRUSS HEAD (M6X1X16-MM)	
	53	1	**286-1930**	2	RING-RETAINING	

I-REFER TO HYDRAULIC INFORMATION SYSTEM
M-METRIC PART

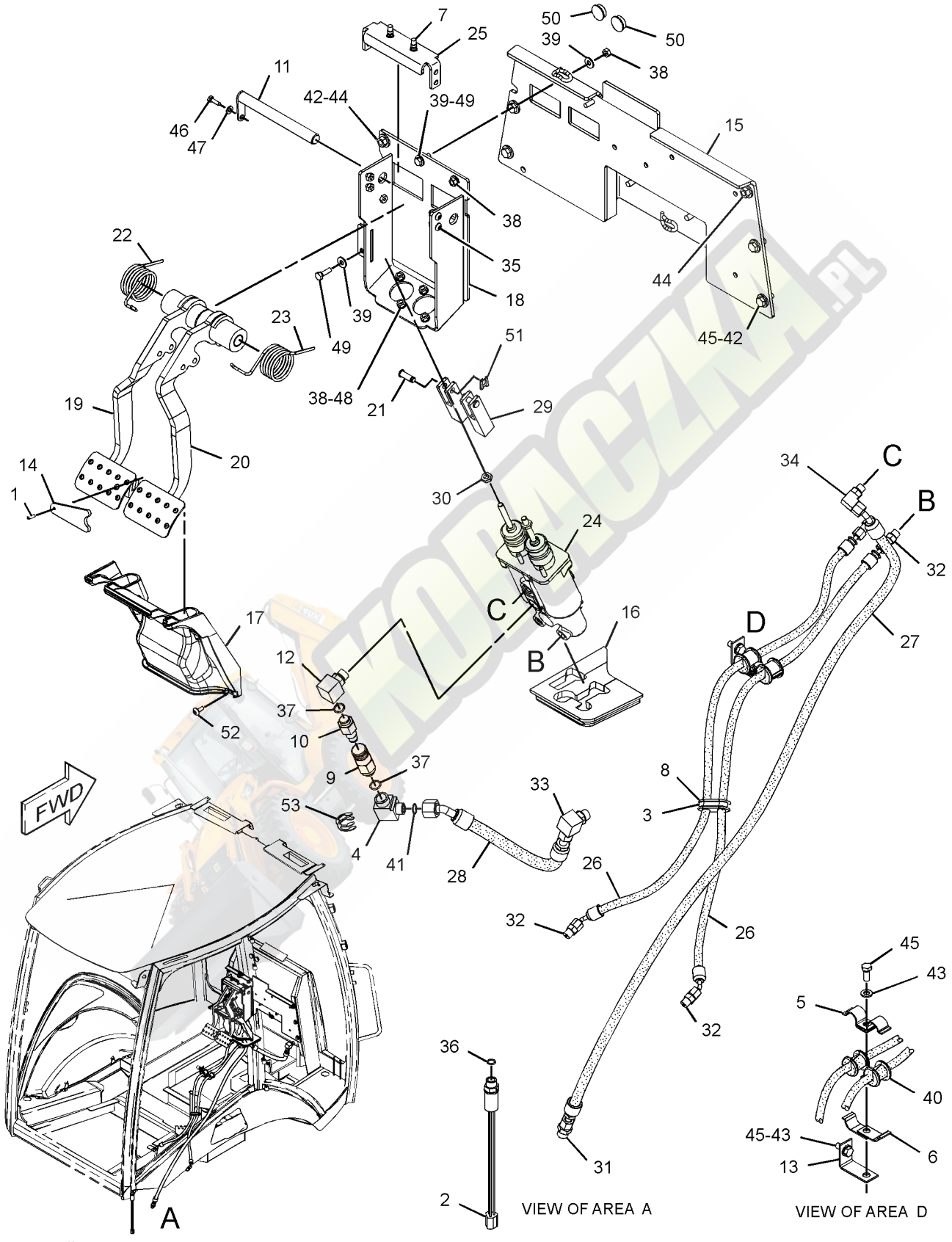

GRAPHIC #1

<END>

g01233551

216-1612 CYLINDER GP-BRAKE–RH

S/N: JBA1-UP
PART OF 238-5298 DIFFERENTIAL & BEVEL GEAR GP
AN ATTACHMENT

SMCS-4262 **i03563407**

NOTE	REF NO	GRAPHIC REF	PART NUMBER	QTY	PART NAME 1 2 3 4 5 6 (PRODUCT LEVEL)	SEE PAGE
M	1	1	**6V-2315**	3	BOLT (M6X1X35-MM)	
JLM	2	1	**1R-5396**	3	BOLT (M6X1X35-MM)	
J	3	1	**199-0672**	3	SPACER-SPECIAL	
J	4	1	**199-0681**	3	WASHER (6.2X16.5X2-MM THK)	
L	5	1	**199-0701**	3	BRAKE-COVER	
L	6	1	**199-0702**	3	SPRING (INNER)	
L	7	1	**199-0703**	3	SPRING (OUTER)	
	8	1	**199-0752**	1	PISTON-BRAKE	
	9	1	**199-0759**	1	O-RING-INNER	
JL	10	1	**212-5712**	6	BUSHING	
	11	1	**219-8834**	1	CYLINDER-BRAKE	
	12	1	**199-0700**	1	O-RING-OUTER	
					AVAILABLE REPAIR KIT(S):	
J			**217-2347**	3	KIT-BRAKE CYLINDER (ADJUSTER)	
L			**217-2349**	3	KIT-BRAKE CYLINDER (SPRING RETENTION)	

J-KIT MARKED J SERVICES PARTS MARKED J
L-KIT MARKED L SERVICES PARTS MARKED L
M-METRIC PART

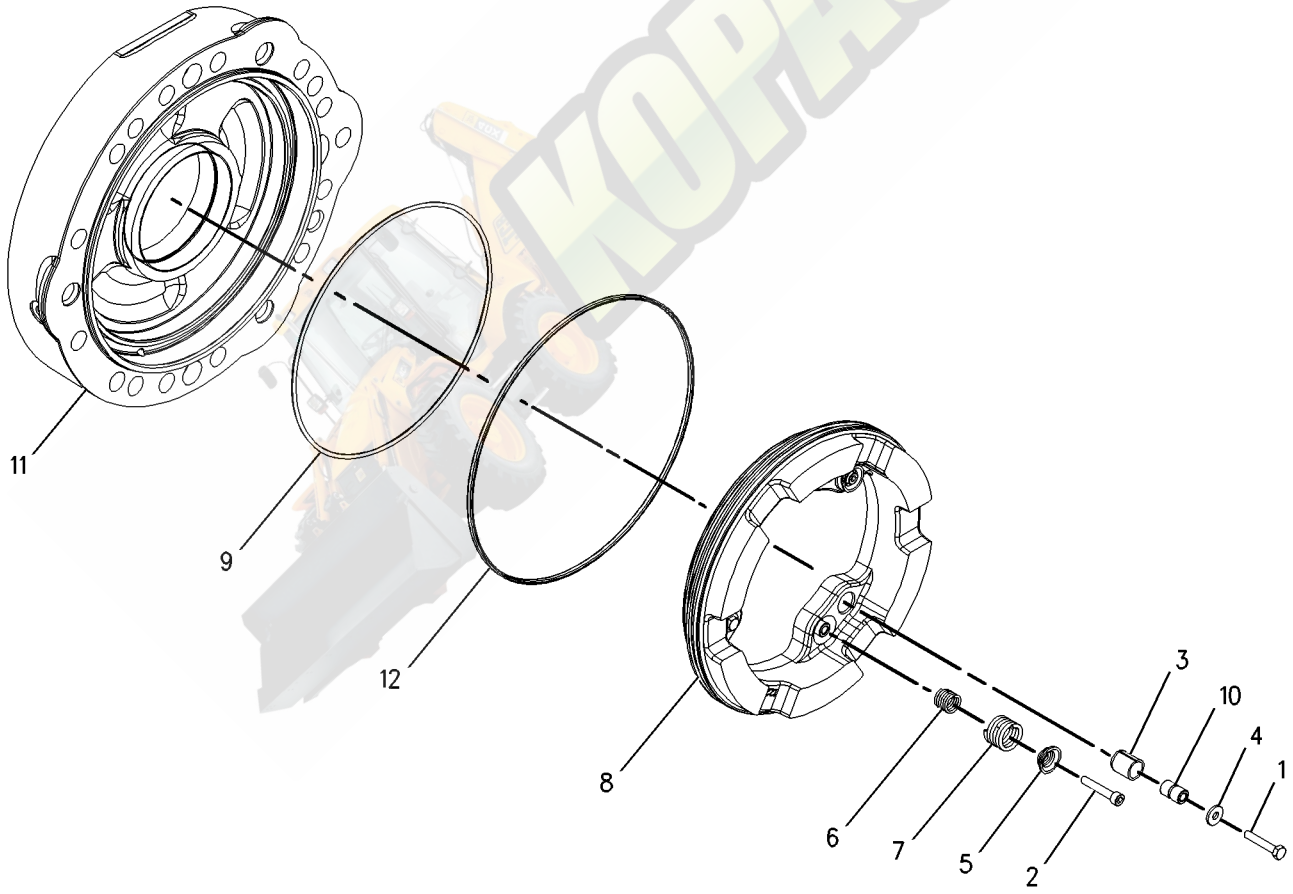

GRAPHIC #1 **<END>** g00953880

216-1613 CYLINDER GP-BRAKE–LH

S/N: JBA1-UP

PART OF 238-5298 DIFFERENTIAL & BEVEL GEAR GP

AN ATTACHMENT

SMCS-4262 **i03627160**

NOTE	REF NO	GRAPHIC REF	PART NUMBER	QTY	PART NAME 1 2 3 4 5 6 (PRODUCT LEVEL)	SEE PAGE
M	1	1	**6V-2315**	3	BOLT (M6X1X35-MM)	
JLM	2	1	**1R-5396**	3	BOLT (M6X1X35-MM)	
J	3	1	**199-0672**	3	SPACER-SPECIAL	
J	4	1	**199-0681**	3	WASHER (6.2X16.5X2-MM THK)	
L	5	1	**199-0701**	3	BRAKE-COVER	
L	6	1	**199-0702**	3	SPRING (INNER)	
L	7	1	**199-0703**	3	SPRING (OUTER)	
	8	1	**199-0752**	1	PISTON-BRAKE	
	9	1	**199-0759**	1	O-RING-INNER	
JL	10	1	**212-5712**	6	BUSHING	
	11	1	**219-8835**	1	CYLINDER-BRAKE	
	12	1	**199-0700**	1	O-RING-OUTER	
					AVAILABLE REPAIR KIT(S):	
J			**217-2347**	3	KIT-BRAKE CYLINDER (ADJUSTER)	
L			**217-2349**	3	KIT-BRAKE CYLINDER (SPRING RETENTION)	

J-KIT MARKED J SERVICES PARTS MARKED J
L-KIT MARKED L SERVICES PARTS MARKED L
M-METRIC PART

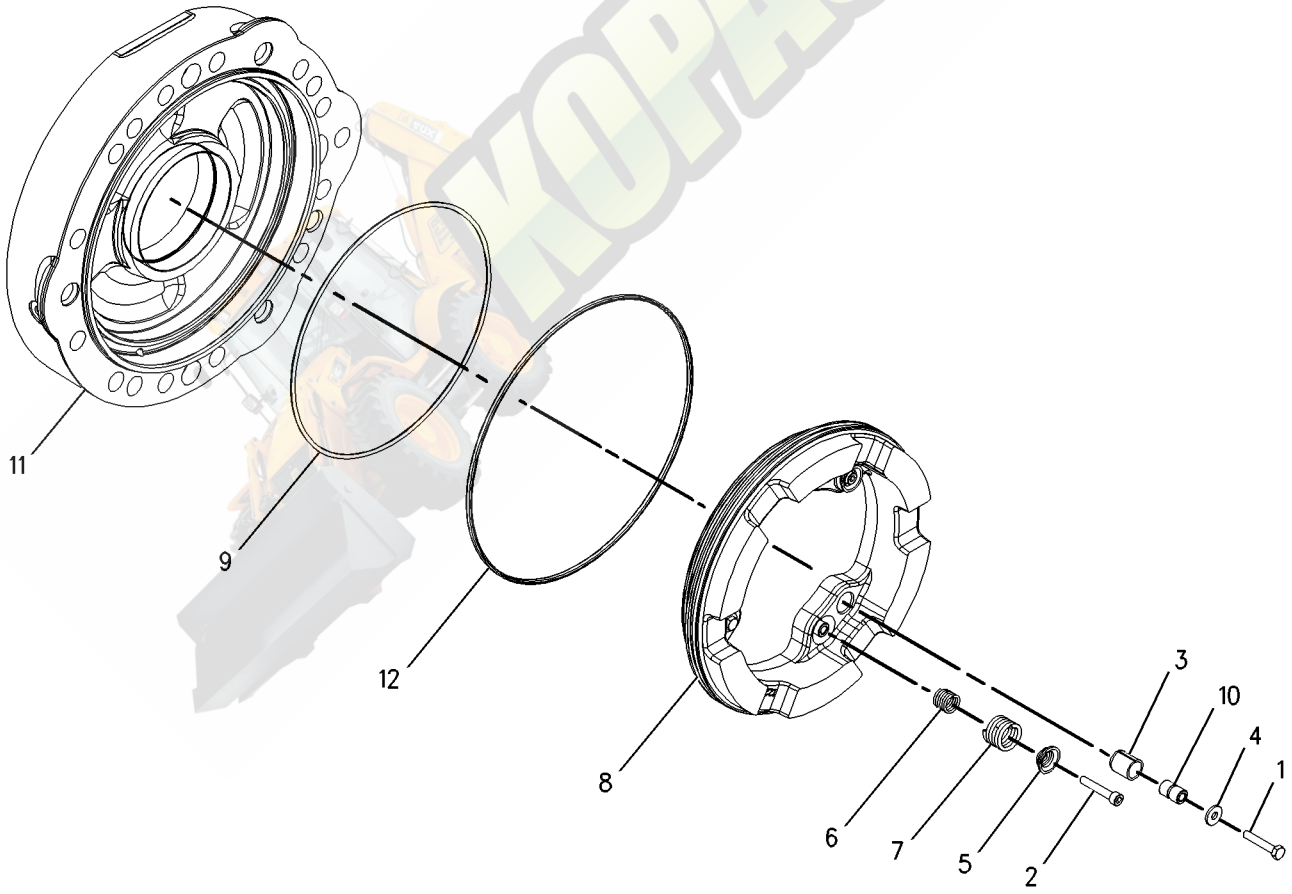

GRAPHIC #1 **<END>** g00995396

163-0753 LEVER GP-HAND CONTROL–PARKING BRAKE

S/N: JBA1-UP

PART OF 261-5517 CONTROL GP-PARKING BRAKE

AN ATTACHMENT

SMCS-4284 **i02156244**

NOTE	REF NO	GRAPHIC REF	PART NUMBER	QTY	PART NAME 1 2 3 4 5 6 (PRODUCT LEVEL)	SEE PAGE
	1	1	**7R-8239**	2	SPACER	
	2	1	**039-9133**	1	PIN	
	3	1	**164-9598**	1	GRIP	
	4	1	**164-9599**	1	COVER	
	5	1	**3B-4610**	1	PIN-COTTER	
	6	1	**8T-4224**	2	WASHER-HARD (8.8X16X2-MM THK)	

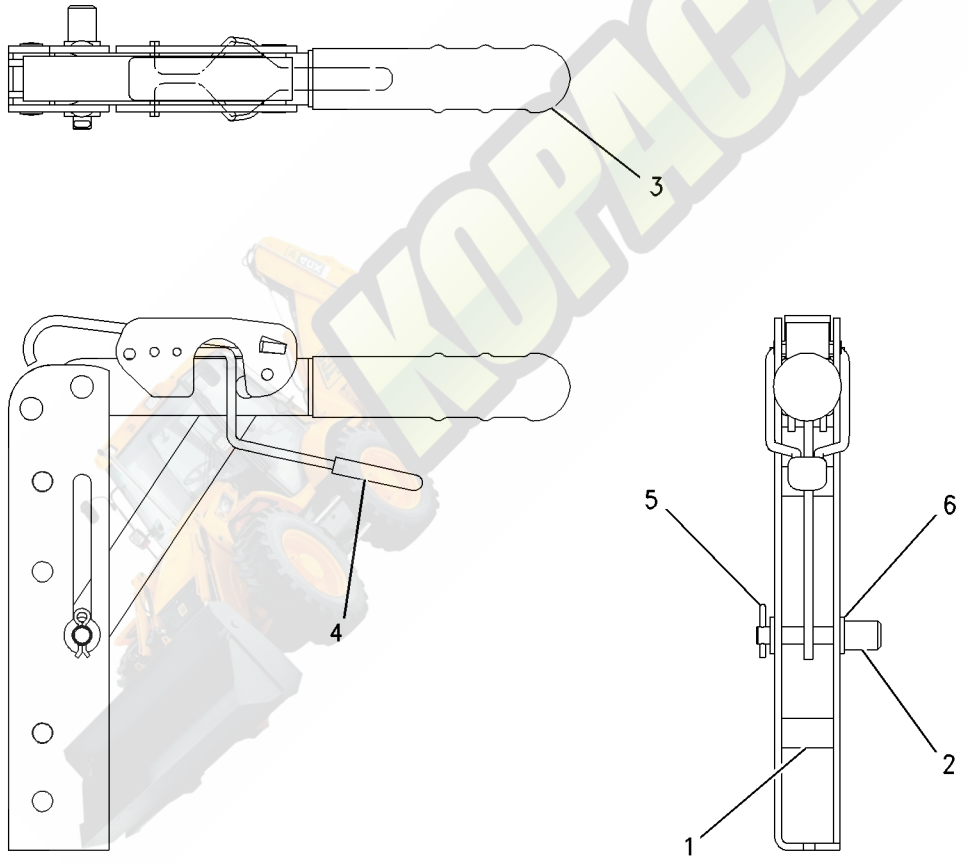

GRAPHIC #1 **<END>** g00729504

STEERING SYSTEM

340-7030 LINES GP-STEERING–
ALL WHEEL DRIVE, 2-WHEEL STEER
S/N: JBA1-UP
PART OF 329-0319 DRIVE AR-BACKHOE LOADER
AN ATTACHMENT

SMCS-4304 **i03648223**

NOTE	REF NO	GRAPHIC REF	PART NUMBER	QTY	PART NAME 1 2 3 4 5 6 (PRODUCT LEVEL)	SEE PAGE
	1	1	**5D-1026**	2	CLAMP-BAND	
I	2	1	**340-7025**	1	HOSE AS	
I	3	1	**340-7026**	1	HOSE AS	
I	4	1	**340-7125**	1	HOSE AS	
I	5	1	**342-0409**	1	HOSE AS	
	6	1	**091-9035**	2	SPACER (11X25X20-MM THK)	
	7	1	**100-4336**	3	CLIP	
	8	1	*148-8318*	2	CONNECTOR AS	
					(EACH INCLUDES)	
		1	**3K-0360**	1	SEAL-O-RING	
		1	**6V-8397**	1	SEAL-O-RING	
		1	**6V-8634**	1	CONNECTOR	
	9	1	*148-8325*	1	CONNECTOR AS	
		1	**3J-1907**	1	SEAL-O-RING	
		1	**4J-5477**	1	SEAL-O-RING	
		1	**6V-8641**	1	CONNECTOR	
	10	1	*148-8367*	3	ELBOW AS	
					(EACH INCLUDES)	
		1	**6V-8397**	1	SEAL-O-RING	
		1	**6V-9850**	1	ELBOW	
	11	1	*148-8369*	1	ELBOW AS	
		1	**3J-7354**	1	SEAL-O-RING	
		1	**4J-5477**	1	SEAL-O-RING	
		1	**6V-8628**	1	ELBOW	
	12	1	*148-8383*	2	ELBOW AS	
					(EACH INCLUDES)	
		1	**3K-0360**	1	SEAL-O-RING	
		1	**6V-8397**	1	SEAL-O-RING	
		1	**8T-1683**	1	ELBOW	
	13	1	*150-3026*	1	ELBOW AS	
		1	**3K-0360**	1	SEAL-O-RING	
		1	**6V-4292**	1	ELBOW	
	14	1	*164-5605*	1	CONNECTOR AS	
		1	**3K-0360**	1	SEAL-O-RING	
		1	**6V-8397**	1	SEAL-O-RING	
		1	**8T-0076**	1	CONNECTOR	
	15	1	*204-0317*	1	CONNECTOR AS	
		1	**3K-0360**	1	SEAL-O-RING	
		1	**6V-8397**	1	SEAL-O-RING	
		1	**092-3635**	1	CONNECTOR	
	16	1	**206-1652**	1	SEAL	
	17	1	**325-2011**	1	PUMP GP-METERING (STEERING LINES)	
	18	1	**7K-1181**	2	STRAP-CABLE	
	19	1	**8S-0948**	1	CLIP	
	20	1	**8T-4121**	4	WASHER-HARD (11X21X2.5-MM THK)	
M	21	1	**8T-4137**	1	BOLT (M10X1.5X20-MM)	
M	22	1	**8T-4172**	1	BOLT (M10X1.5X80-MM)	
M	23	1	**8T-5005**	2	BOLT (M10X1.5X70-MM)	
	24	1	**9R-3884**	1	SPACER (13X20X45-MM THK)	
E	25	1	**5P-1505**		HOSE (72-CM)	

E-ORDER BY THE CENTIMETER
I-REFER TO HYDRAULIC INFORMATION SYSTEM
M-METRIC PART

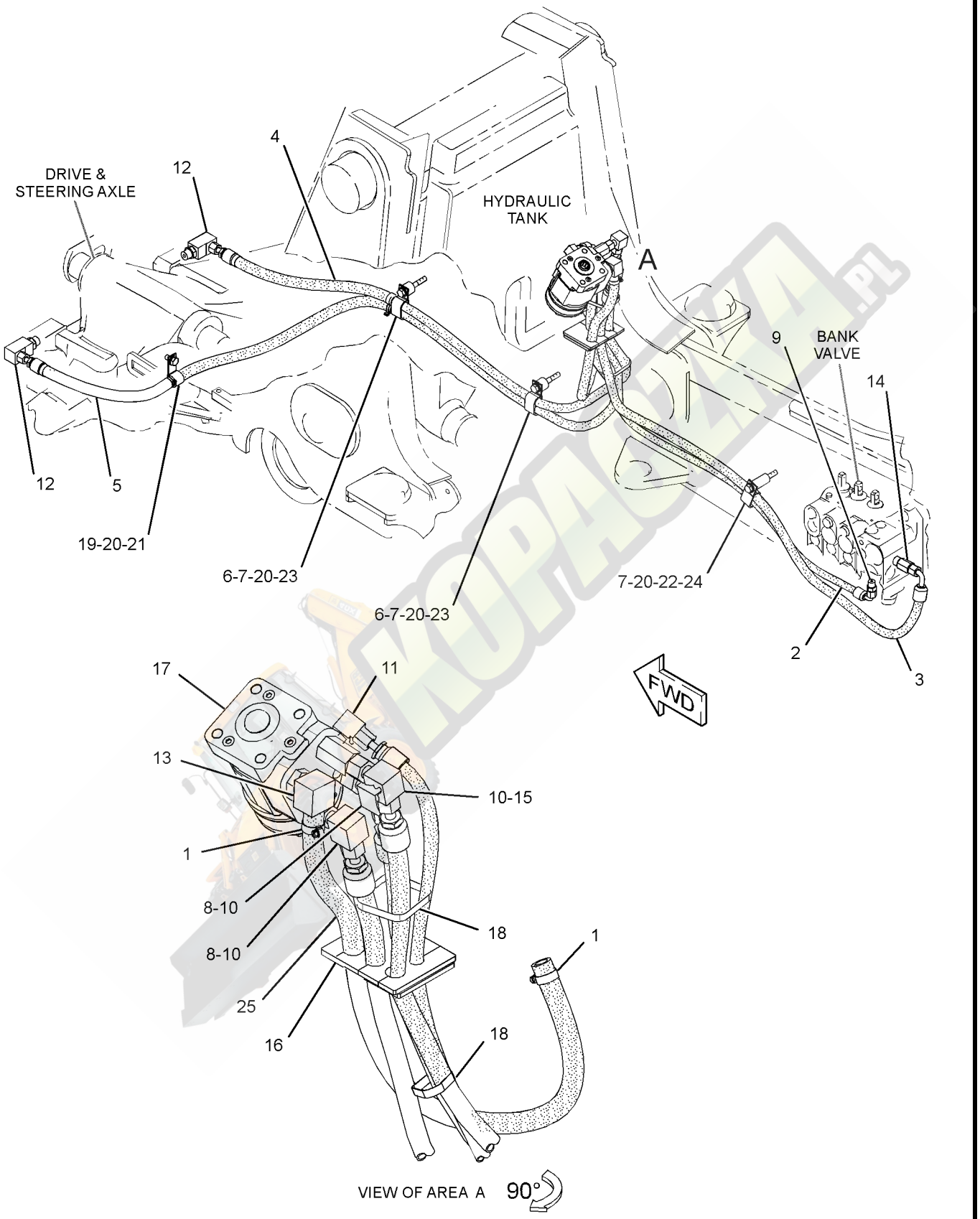

GRAPHIC #1

<END>

g01963496

310-6216 STEERING COLUMN GP–TILT

S/N: JBA1-UP
PART OF 317-5538 CONTROL GP-STEERING
AN ATTACHMENT

SMCS-4310, 4338 **i03642520**

NOTE	REF NO	GRAPHIC REF	PART NUMBER	QTY	PART NAME 1 2 3 4 5 6 (PRODUCT LEVEL)	SEE PAGE
M	1	1	**169-3261**	1	NUT (M18X1.5-THD)	
	2	1	**338-1508**	1	SPRING GP-GAS (STEERING COLUMN)	
		1	**146-6347**	2	RING-RETAINING	
	3	1	**254-9926**	1	KIT-TILT PEDAL	
					(INCLUDES BOLT, RING, NUT, SPRING & TILT LEVER)	
M	4	1	**5C-8312**	1	NUT (M4X0.7-THD)	
	5	1	**317-5544**	1	CAM	
M	6	1	**123-0708**	1	SCREW-HEX SOCKET (M4X0.7X30-MM)	

M-METRIC PART

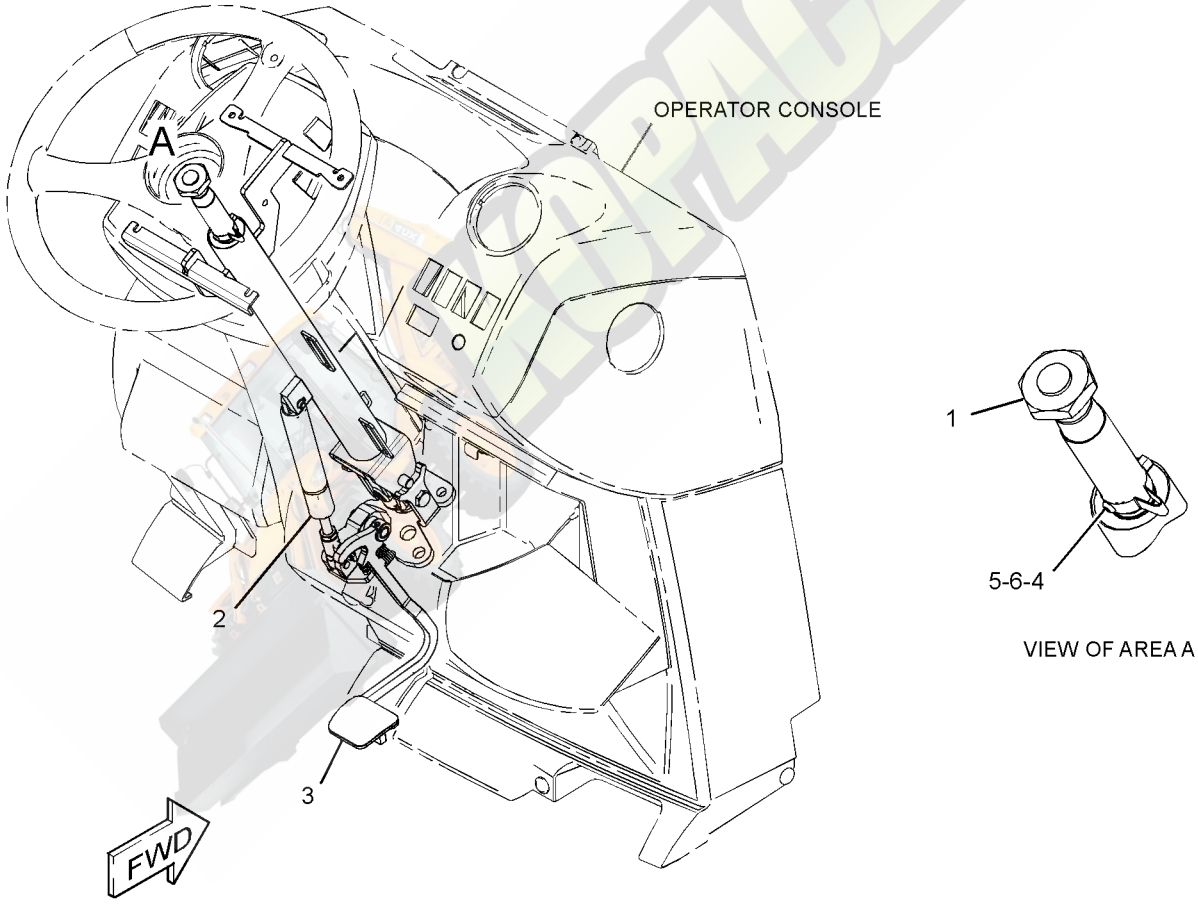

GRAPHIC #1 **<END>** g01960591

341-0695 BOX GP-BATTERY

S/N: JBA1-UP

PART OF 329-0294 CHASSIS AR

SMCS-7257 **i03642579**

NOTE	REF NO	GRAPHIC REF	PART NUMBER	QTY	PART NAME 1 2 3 4 5 6 (PRODUCT LEVEL)	SEE PAGE
	1	1	**8C-8522**	1	PAWL-LATCH	
	2	1	**118-6854**	1	TREAD	
	3	1	**124-2456**	1	FILM-INSTRUCTION (NO STEP)	
J	4	1	**129-4741**	1	LATCH AS-T-BAR	
	5	1	**159-8033**	1	FILM-IDENTIFICATION (12-VOLT)	
	6	1	**164-3876**	1	STEP AS	
M		1	**8T-3612**	4	NUT-WELD (M8X1.25-THD)	
	7	1	**225-0312**	1	FILM-WARNING (JUMP START, READ OMM)	
	8	1	**245-6109**	1	PLATE AS	
M		1	**8T-3612**	3	NUT-WELD (M8X1.25-THD)	
	9	1	**289-3412**	1	FILM-COVER (PROTECT)	
	10	1	**321-2559**	1	COVER AS-ACCESS	
	11	1	**336-7612**	1	FILM-NOTICE (BATTERY CABLES DISCONNECT)	
	12	1	**338-9362**	1	BOX AS-BATTERY	
M	13	1	**5C-7261**	3	NUT (M8X1.25-THD)	
	14	1	**5P-4116**	13	WASHER-HARD (8.8X20.5X2-MM THK)	
M	15	1	**6V-7743**	2	LOCKNUT (M6X1-THD)	
M	16	1	**8T-4133**	2	NUT (M10X1.5-THD)	
M	17	1	**8T-4183**	4	BOLT (M12X1.75X40-MM)	
M	18	1	**8T-4189**	10	BOLT (M8X1.25X20-MM)	
	19	1	**8T-4205**	2	WASHER-HARD (7.2X14.5X2-MM THK)	
	20	1	**8T-4223**	5	WASHER-HARD (13.5X25.5X3-MM THK)	

J-REQUIRES CORPORATE KEY
M-METRIC PART

341-0695 **BOX GP-BATTERY** *(contd.)* **i03642579**

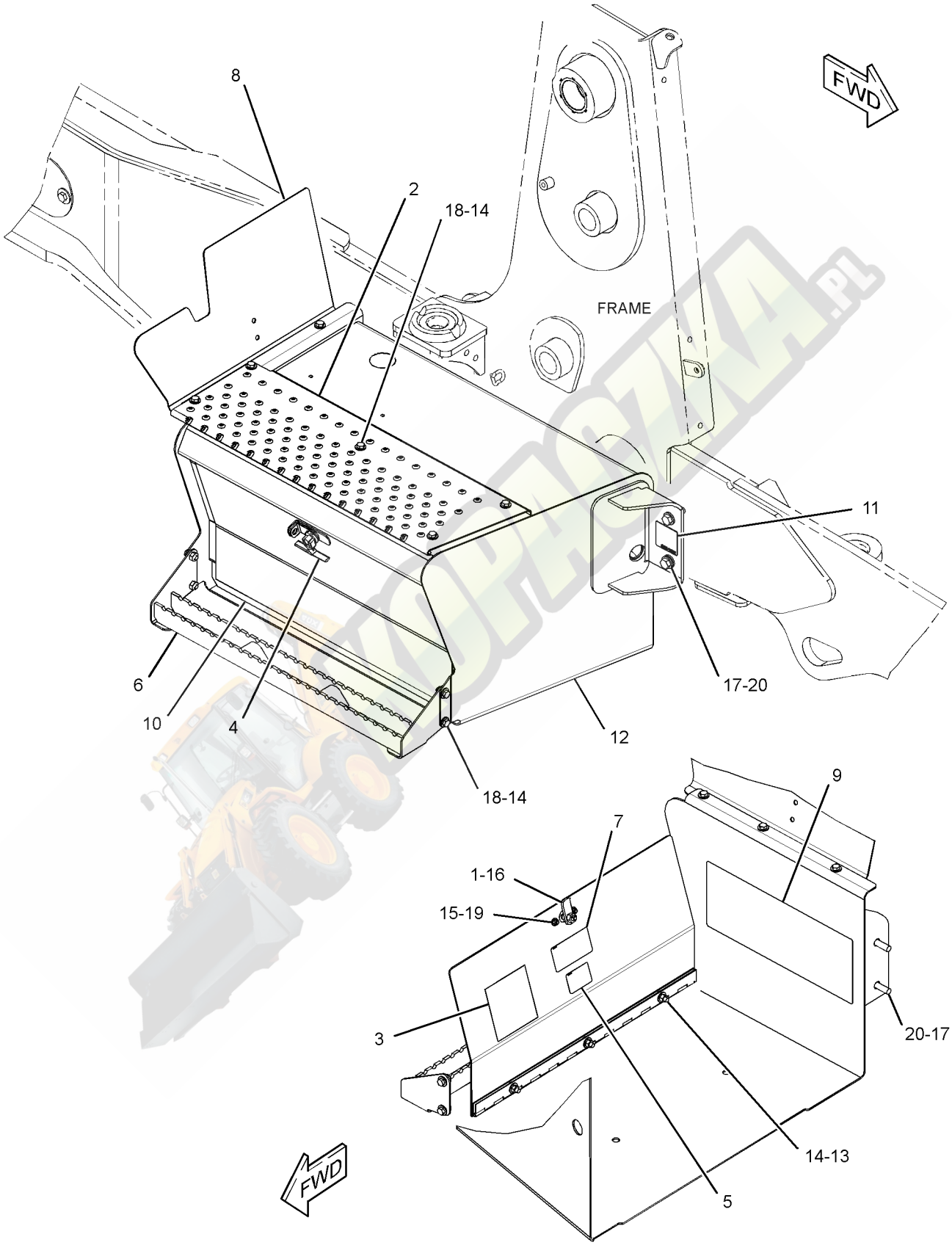

GRAPHIC #1

<END>

g01999937

FRAME AND BODY

211-3649 COUNTERWEIGHT GP

S/N: JBA1-UP
115-KG (250-LB)
AN ATTACHMENT

SMCS-7056 **i03709642**

NOTE	REF NO	GRAPHIC REF	PART NUMBER	QTY	PART NAME 1 2 3 4 5 6 (PRODUCT LEVEL)	SEE PAGE
	1	1	**214-3254**	1	COUNTERWEIGHT (115-KG (250-LB))	
M	2	1	**8C-3290**	2	BOLT (M24X3X150-MM)	
	3	1	**8T-4167**	2	WASHER-HARD (26X44X4-MM THK)	

M-METRIC PART

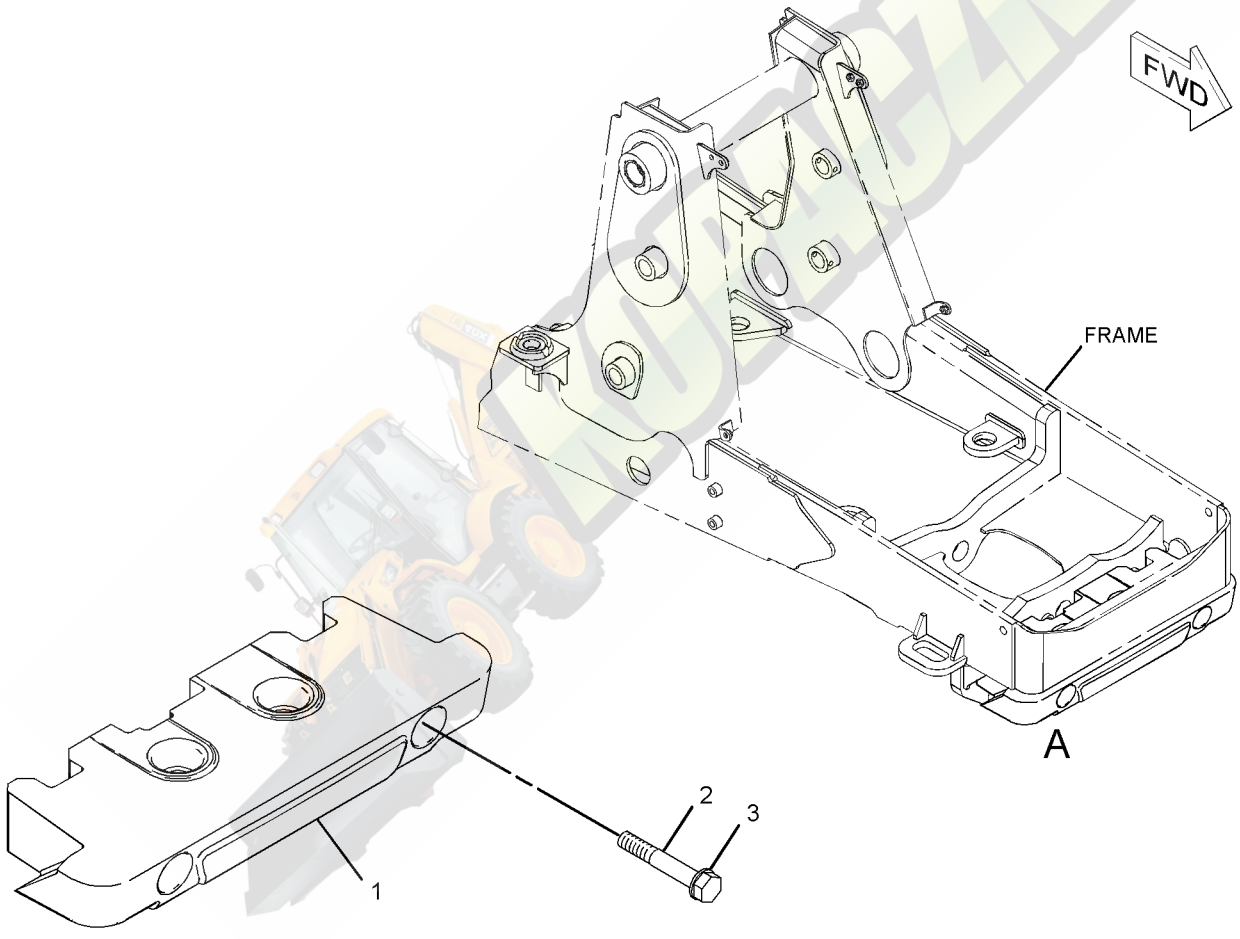

VIEW OF AREA A

GRAPHIC #1 **<END>** g01996882

FRAME AND BODY

211-3652 COUNTERWEIGHT GP

S/N: JBA1-UP
234-KG (515-LB)
AN ATTACHMENT

SMCS-7056 **i03470845**

NOTE	REF NO	GRAPHIC REF	PART NUMBER	QTY	PART NAME 1 2 3 4 5 6 (PRODUCT LEVEL)	SEE PAGE
	1	1	*252-9985*	1	COUNTERWEIGHT GP	
M		1	**7X-2476**	2	BOLT (M24X3X220-MM)	
M		1	**8T-4001**	2	NUT (M24X3-THD)	
		1	**8T-4167**	2	WASHER-HARD (26X44X4-MM THK)	
		1	**214-3254**	2	COUNTERWEIGHT (115-KG (250-LB))	
M	2	1	**8C-3290**	4	BOLT (M24X3X150-MM)	
	3	1	**8T-4167**	4	WASHER-HARD (26X44X4-MM THK)	

M-METRIC PART

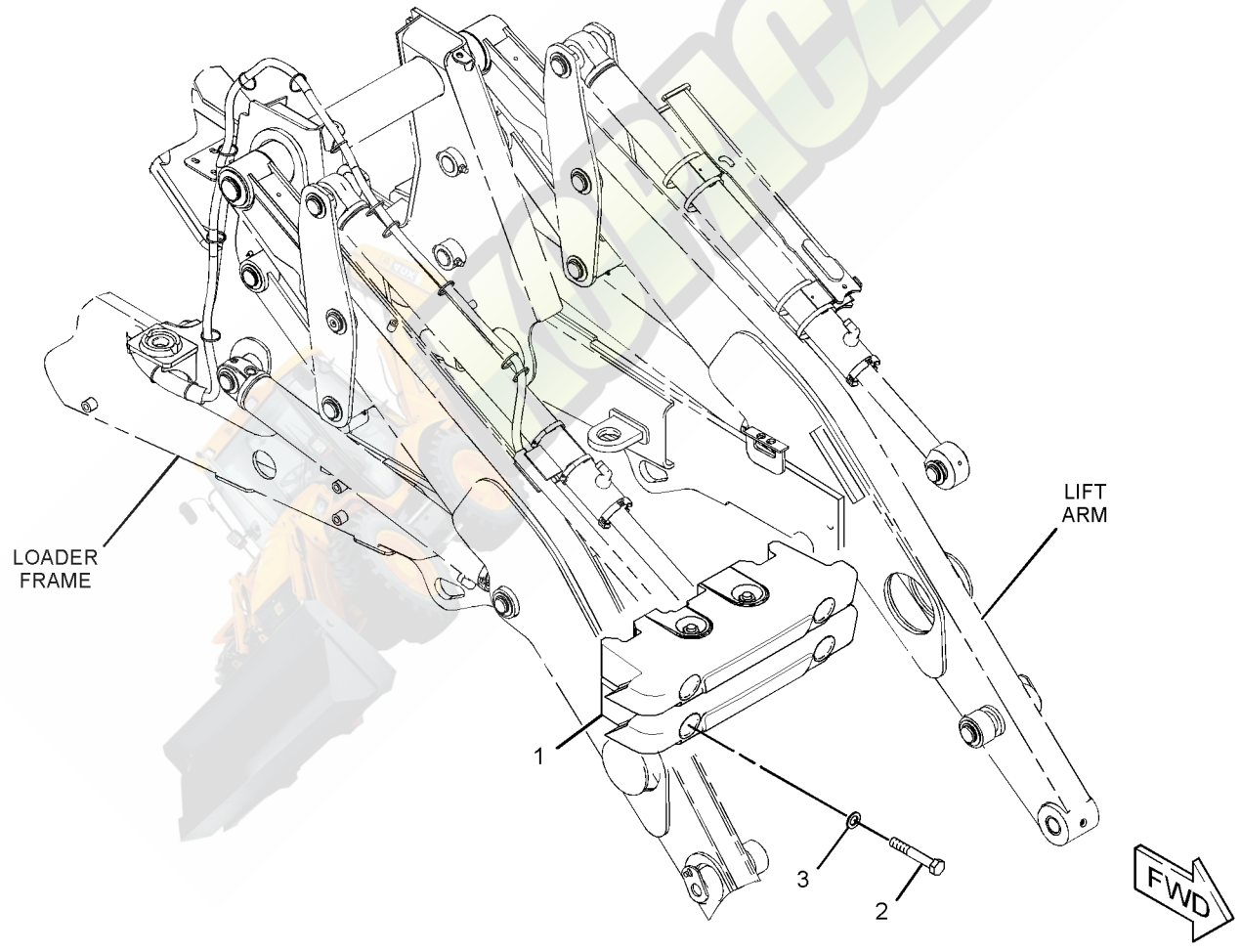

GRAPHIC #1 **<END>** g01825014

FRAME AND BODY

211-3653 COUNTERWEIGHT GP

S/N: JBA1-UP
485-KG (1070-LB)
AN ATTACHMENT

SMCS-7056 **i03470862**

NOTE	REF NO	GRAPHIC REF	PART NUMBER	QTY	PART NAME 1 2 3 4 5 6 (PRODUCT LEVEL)	SEE PAGE
	1	1	*252-9983*	1	COUNTERWEIGHT GP	
M		1	**127-4834**	2	BOLT (M24X3X340-MM)	
		1	**247-8222**	1	COUNTERWEIGHT (170-KG (375-LB))	
M		1	**8T-4001**	2	NUT (M24X3-THD)	
		1	**8T-4167**	2	WASHER-HARD (26X44X4-MM THK)	
		1	**214-3255**	2	COUNTERWEIGHT (320-KG (700-LB))	
M	2	1	**8C-3290**	4	BOLT (M24X3X150-MM)	
	3	1	**8T-4167**	4	WASHER-HARD (26X44X4-MM THK)	

M-METRIC PART

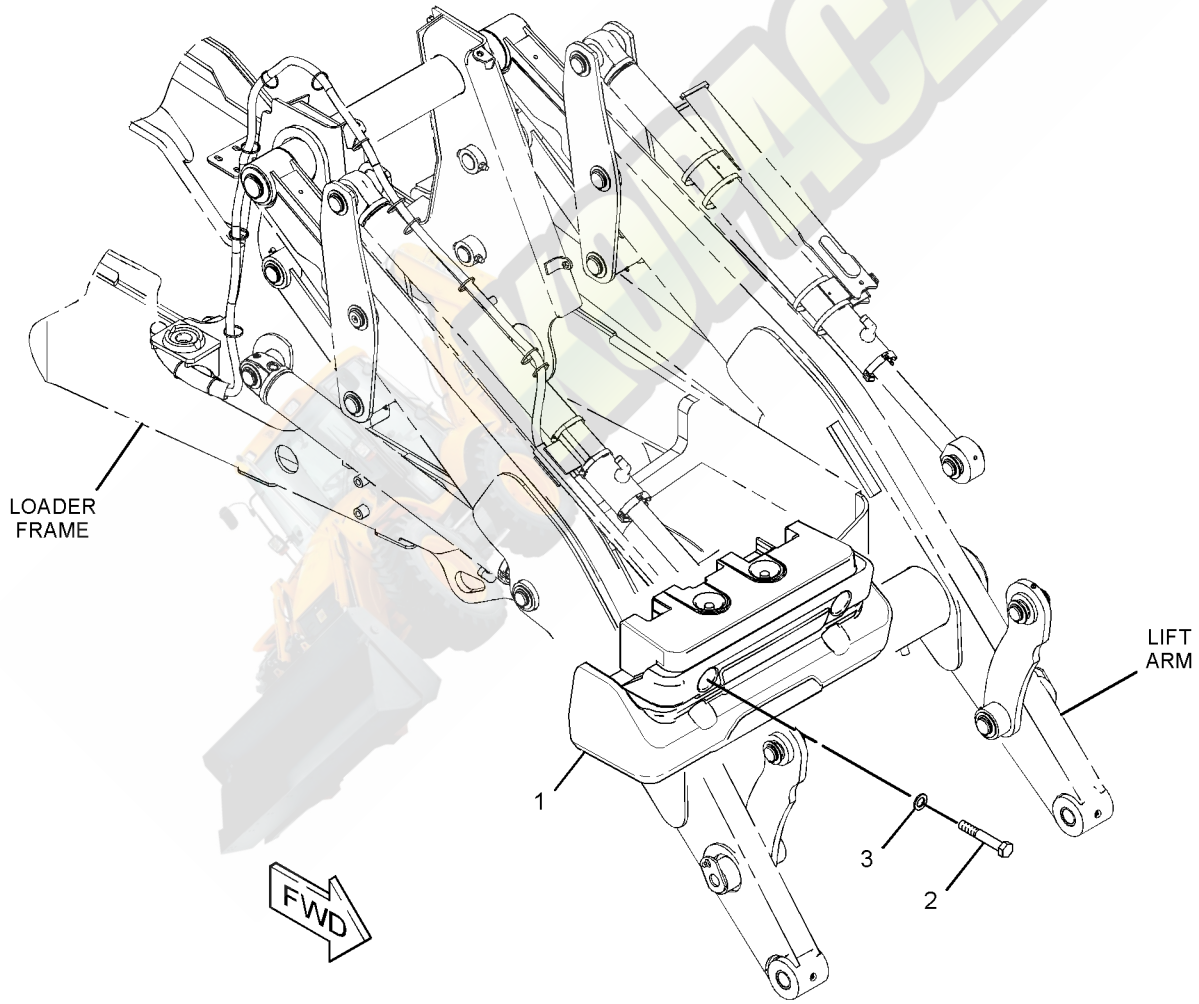

GRAPHIC #1 **<END>** g01824940

249-9325 EXTENSION GP-FENDER

S/N: JBA1-UP

AN ATTACHMENT

SMCS-7252 **i02523405**

NOTE	REF NO	GRAPHIC REF	PART NUMBER	QTY	PART NAME 1 2 3 4 5 6 (PRODUCT LEVEL)	SEE PAGE
	1	1	**249-9326**	1	EXTENSION-FENDER (LH)	
	2	1	**249-9327**	1	EXTENSION-FENDER (RH)	
	3	1	**251-4889**	20	WASHER-HARD (7.2X14.5X2-MM THK)	
	4	1	**251-4890**	10	SCREW-MACHINE (M6X1X25-MM)	
	5	1	**251-4891**	10	LOCKNUT (M6X1-THD)	
	6	1	**261-9639**	2	SCREW-PAN HEAD (NO 12X0.5-IN)	
	7	1	**8T-4205**	2	WASHER-HARD (7.2X14.5X2-MM THK)	

KOPACZKA.PL

249-9325 **EXTENSION GP-FENDER** *(contd.)* **i02523405**

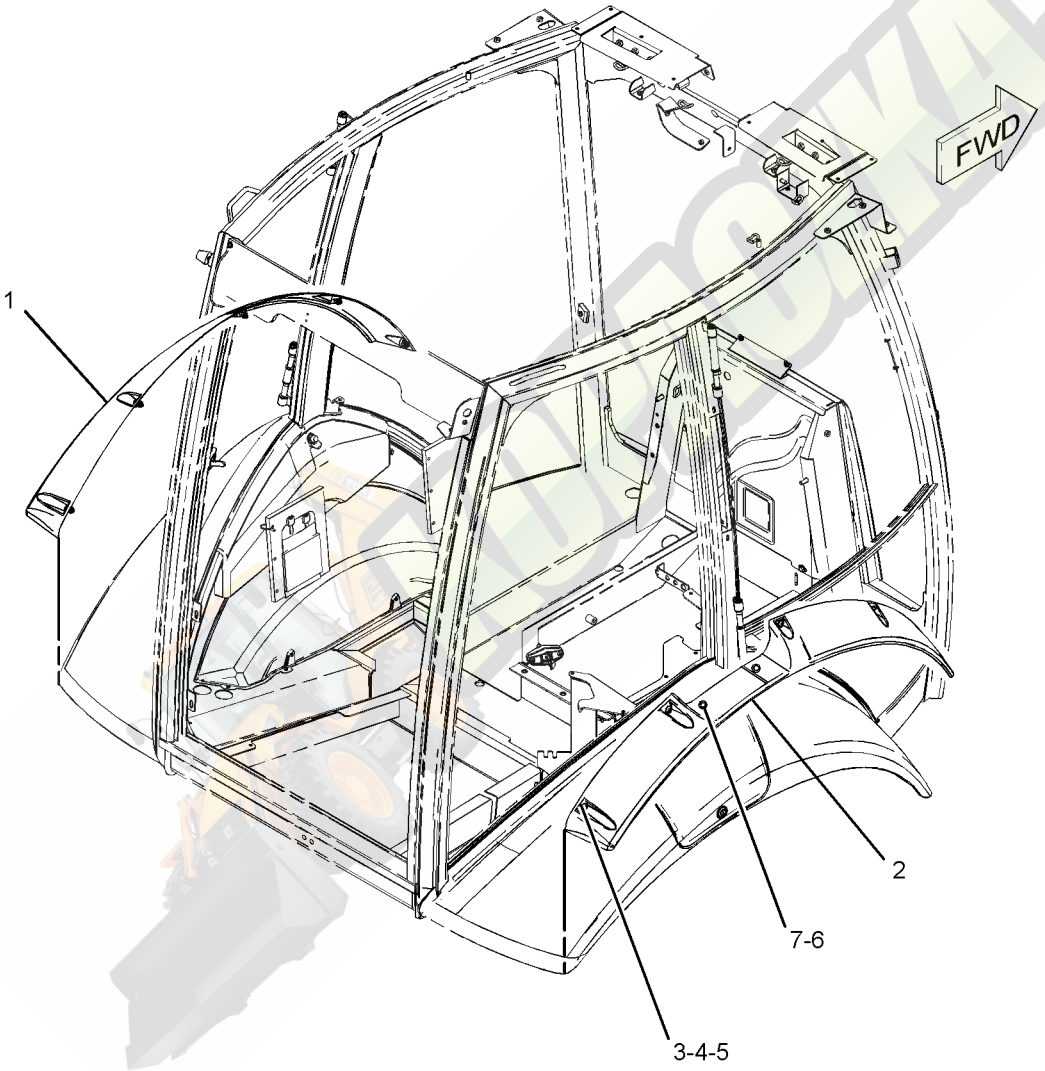

GRAPHIC #1 **<END>** g01283960

201-3954 FENDER GP-FRONT

S/N: JBA1-UP
AN ATTACHMENT

SMCS-7252 **i03498522**

NOTE	REF NO	GRAPHIC REF	PART NUMBER	QTY	PART NAME 1 2 3 4 5 6 (PRODUCT LEVEL)	SEE PAGE
	1	1	**162-4004**	2	FENDER	
M	2	1	**199-0783**	4	BOLT (M16X2X38-MM)	
	3	1	**222-1801**	1	BRACKET AS (LH)	
	4	1	**222-1802**	1	BRACKET AS (RH)	
M	5	1	**6V-7744**	4	LOCKNUT (M10X1.5-THD)	
	6	1	**8T-4121**	4	WASHER-HARD (11X21X2.5-MM THK)	
	7	1	**8T-4122**	12	WASHER-HARD (17X32X3.5-MM THK)	
M	8	1	**8T-4195**	4	BOLT (M10X1.5X30-MM)	
	9	1	**8T-4222**	4	WASHER-PLATED (11X32X2.5-MM THK)	
M	10	1	**8T-4778**	4	LOCKNUT (M16X2-THD)	

M-METRIC PART

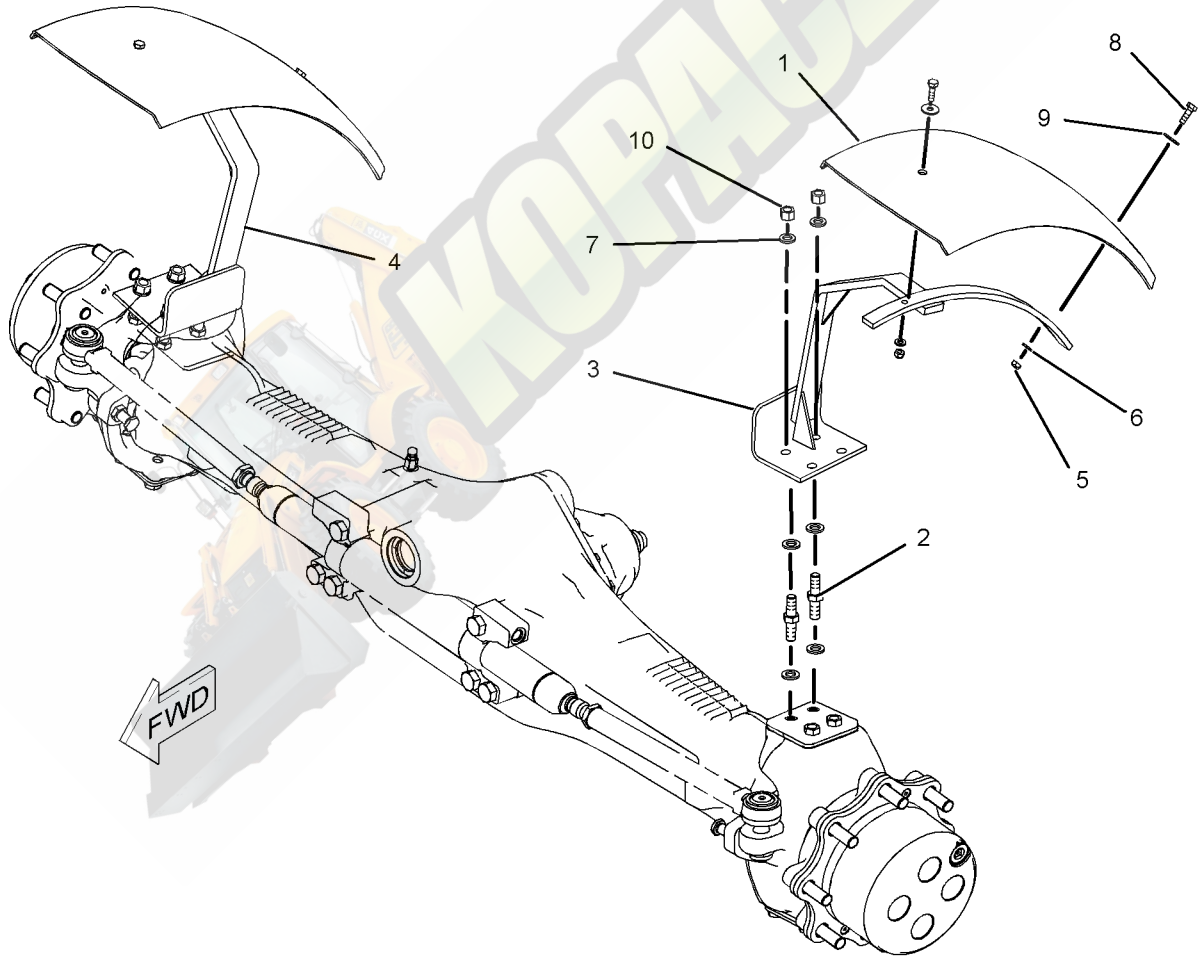

GRAPHIC #1 **<END>** g01027709

301-0988 FENDER GP-FRONT

S/N: JBA1-UP

AN ATTACHMENT

SMCS-7252 **i03458001**

NOTE	REF NO	GRAPHIC REF	PART NUMBER	QTY	PART NAME 1 2 3 4 5 6 (PRODUCT LEVEL)	SEE PAGE
	1	1	**162-4004**	2	FENDER	
M	2	1	**199-0783**	4	BOLT (M16X2X38-MM)	
	3	1	**222-1801**	1	BRACKET AS (LH)	
	4	1	**222-1802**	1	BRACKET AS (RH)	
M	5	1	**6V-7744**	4	LOCKNUT (M10X1.5-THD)	
	6	1	**8T-4121**	4	WASHER-HARD (11X21X2.5-MM THK)	
	7	1	**8T-4122**	12	WASHER-HARD (17X32X3.5-MM THK)	
M	8	1	**8T-4195**	4	BOLT (M10X1.5X30-MM)	
	9	1	**8T-4222**	4	WASHER-PLATED (11X32X2.5-MM THK)	
M	10	1	**8T-4778**	4	LOCKNUT (M16X2-THD)	

M-METRIC PART

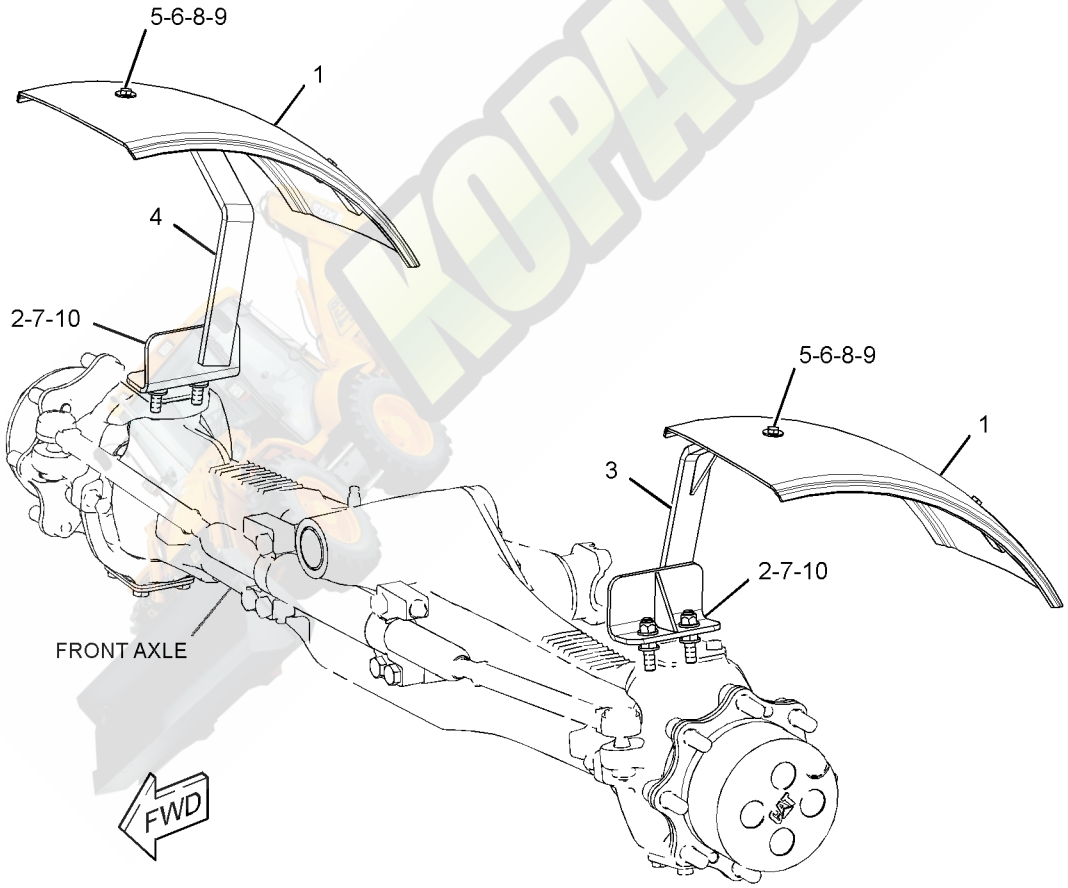

GRAPHIC #1 **<END>** g01805777

211-3782 FENDER GP-REAR

S/N: JBA1-UP

PART OF 335-3052, 335-3053, 335-3055 CAB AR, 335-3054 CAB AR-ENCLOSED ROPS AN ATTACHMENT

SMCS-7252 **i03530382**

NOTE	REF NO	GRAPHIC REF	PART NUMBER	QTY	PART NAME 1 2 3 4 5 6 (PRODUCT LEVEL)	SEE PAGE
M	1	1	**8T-4908**	4	BOLT (M8X1.25X25-MM)	
E	2	1	**244-3113**		SEAL (211-CM EACH)	
	3	1	**116-5763**	1	CLIP-SPRING	
M	4	1	**193-9055**	2	SCREW-HEX FLANGE (M4X1.79X17-MM)	
	6	1	**213-1889**	1	PLATE	
J	7	1	**226-0291**	1	LOCK AS	
	8	1	**227-5556**	1	PLATE	
	9	1	**244-3111**	1	FENDER-REAR (LH)	
	11	1	**247-5557**	1	GUARD	
M	12	1	**127-2170**	1	SCREW-TRUSS HEAD (M8X1.25X20-MM)	
	13	1	**156-0283**	22	WASHER-HARD (8.4X35X2.5-MM THK)	
M	14	1	**6V-9189**	4	LOCKNUT (M8X1.25-THD)	
M	15	1	**8T-5093**	14	BOLT-LOCKING (M8X1.25X25-MM)	
E	16	1	**220-0738**		SEAL (118-CM)	
	18	1	*289-6410*	1	FENDER GP (RH)	
		1	**213-1887**	1	COVER-FENDER	
		1	**244-3112**	1	FENDER-REAR (RH)	
D	19	1	**5P-5927**		SEAL (0.8-M)	

D-ORDER BY THE METER
E-ORDER BY THE CENTIMETER
J-REQUIRES CORPORATE KEY
M-METRIC PART

211-3782 **FENDER GP-REAR** *(contd.)* **i03530382**

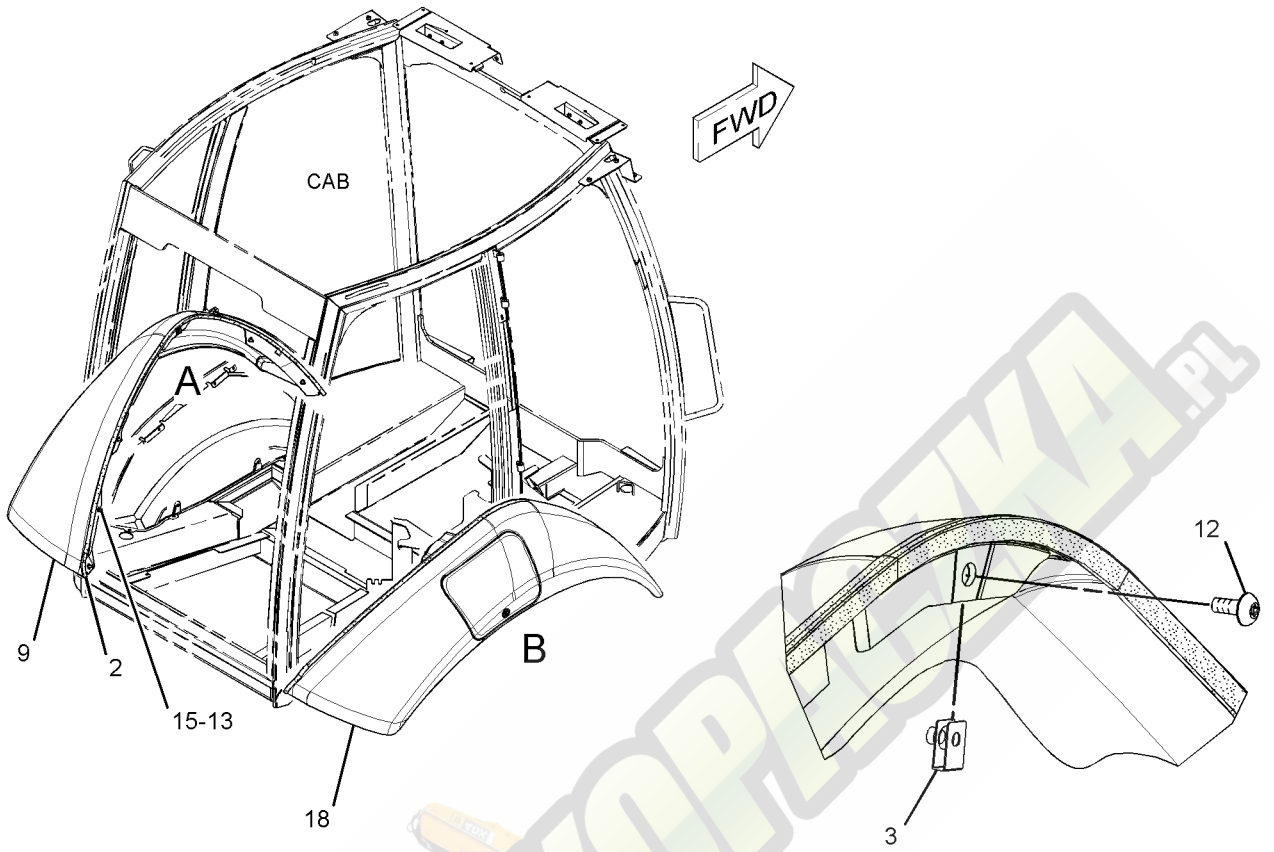

VIEW OF AREA A
(EXPLODED)

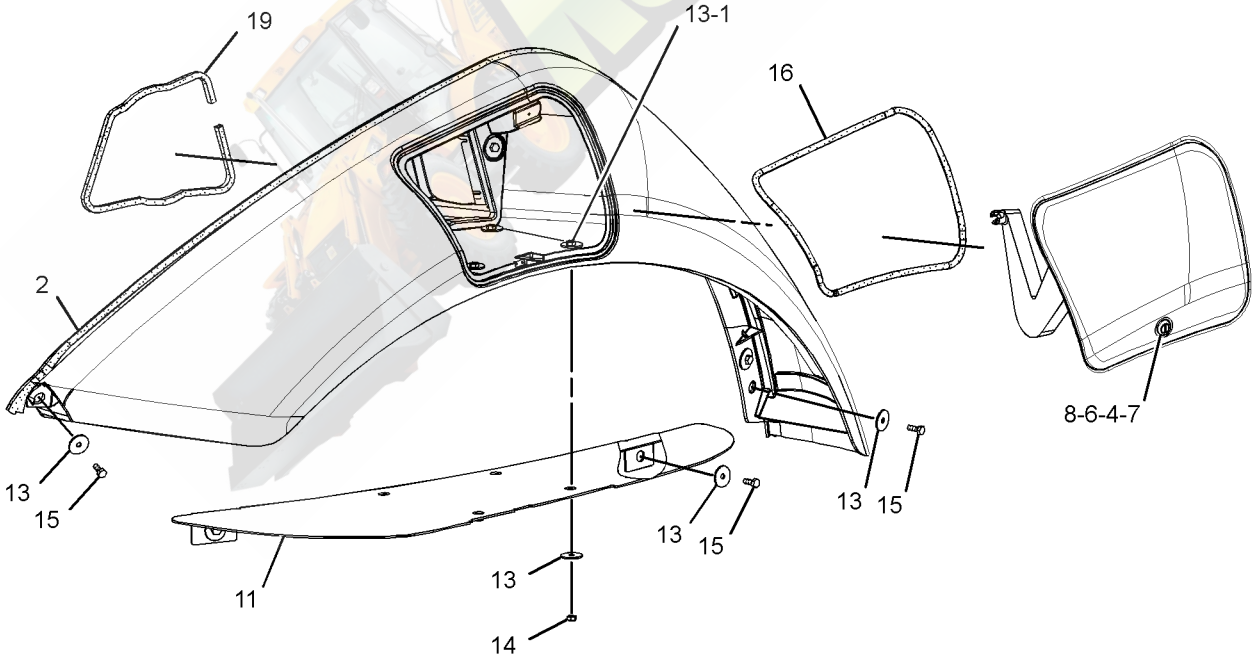

VIEW OF AREA B
(EXPLODED)

GRAPHIC #1 **<END>** g01367108

206-1831 FLOORPLATE GP

S/N: JBA1-UP

PART OF 335-3052, 335-3053, 335-3055 CAB AR, 335-3054 CAB AR-ENCLOSED ROPS AN ATTACHMENT

SMCS-7265 **i02752079**

NOTE	REF NO	GRAPHIC REF	PART NUMBER	QTY	PART NAME 1 2 3 4 5 6 (PRODUCT LEVEL)	SEE PAGE
	1	1	**289-9871**	1	PLATE AS	
	2	1	**269-3269**	1	PLATE AS	
M	3	1	**9X-2043**	42	SCREW-TRUSS HEAD (M6X1X14-MM)	
	4	1	**289-9874**	1	PLATE AS	
	5	1	**206-1850**	1	PLATE AS	
	6	1	**232-2865**	1	PLATE AS	
	7	1	**289-9873**	1	PLATE AS	
	8	1	**232-2869**	1	PLATE AS	
	9	1	**283-8563**	1	PLATE AS	
	10	1	**9X-2038**	38	WASHER (7X19X2-MM THK)	
	11	1	**232-2870**	1	PLATE AS	
	12	1	**206-1838**	1	PLATE	

M-METRIC PART

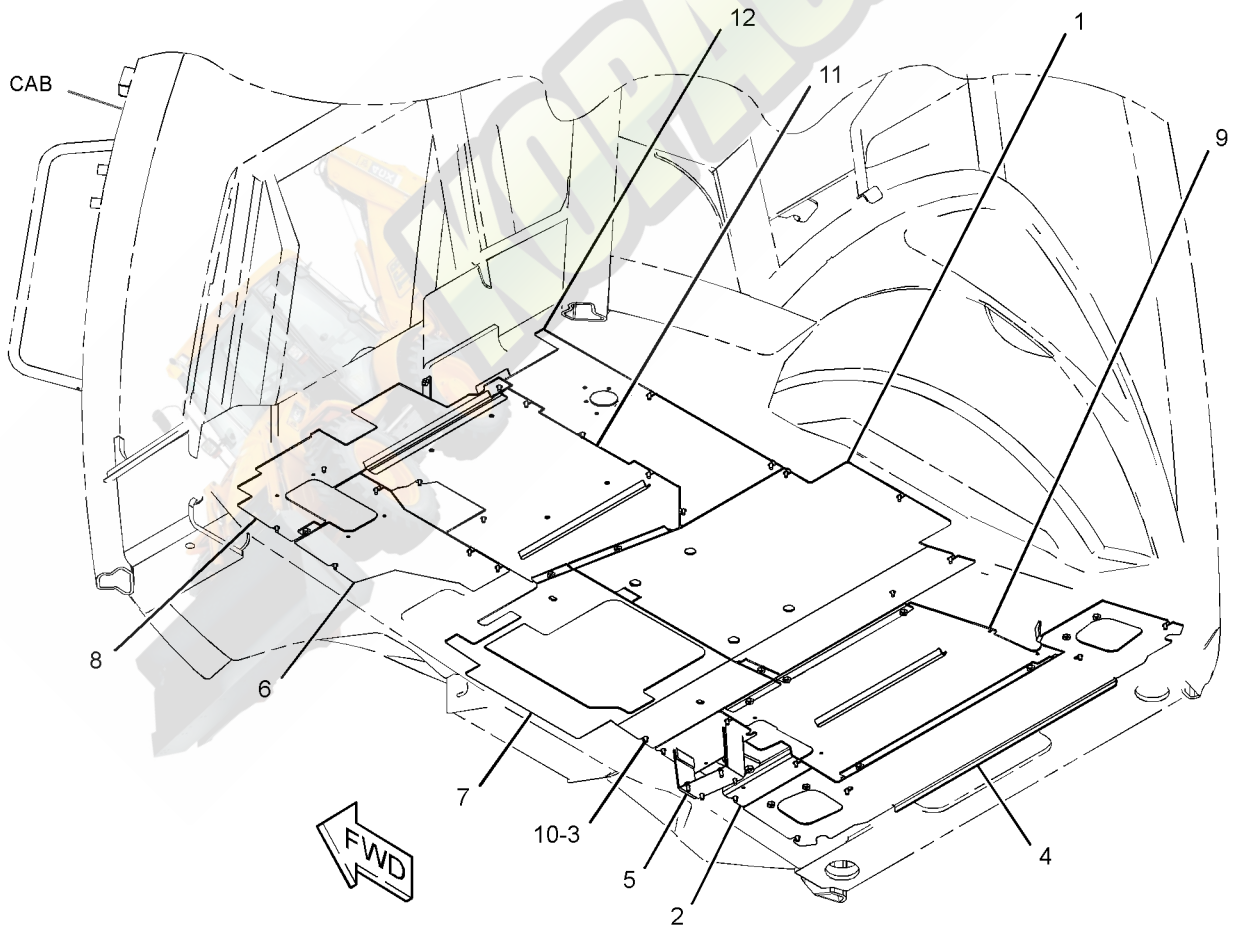

GRAPHIC #1 **<END>** g01380541

327-0112 FRAME AR-LOADER—NARROW

S/N: JBA1-UP
AN ATTACHMENT

SMCS-7054 **i03694623**

NOTE	PART NUMBER	QTY	PART NAME 1 2 3 4 5 6 (PRODUCT LEVEL)	SEE PAGE
Y	**320-5938**	2	CYLINDER GP-STABILIZER	380
Y	*327-0109*	1	FRAME GP-LOADER (NARROW)	351
Y	*326-1801*	1	LINES GP-STABILIZER	445
Y	*328-5964*	1	STABILIZER GP-BACKHOE	507

Y-SEPARATE ILLUSTRATION

<END>

327-0113 FRAME AR-LOADER—STANDARD, SIDESHIFT

S/N: JBA1-UP
AN ATTACHMENT

SMCS-7054 **i03694707**

NOTE	PART NUMBER	QTY	PART NAME 1 2 3 4 5 6 (PRODUCT LEVEL)	SEE PAGE
Y	**320-5938**	2	CYLINDER GP-STABILIZER	380
Y	*325-7603*	1	FRAME GP-LOADER (STANDARD)	349
Y	*326-1801*	1	LINES GP-STABILIZER	445
Y	*328-5964*	1	STABILIZER GP-BACKHOE	507

Y-SEPARATE ILLUSTRATION

<END>

325-7603 FRAME GP-LOADER–STANDARD

S/N: JBA1-UP
PART OF 327-0113 FRAME AR-LOADER
AN ATTACHMENT

SMCS-7054 **i03694721**

NOTE	REF NO	GRAPHIC REF	PART NUMBER	QTY	PART NAME 1 2 3 4 5 6 (PRODUCT LEVEL)	SEE PAGE
	1	1	**159-3590**	1	FILM-IDENTIFICATION (WATER SEPARATOR)	
B	2	1	**193-1681**	8	PAD	
B	3	1	**193-1683**	2	PAD	
B	4	1	**193-1684**	2	PAD	
M	5	1	**246-7854**	20	NUT-SPECIAL (M10X1.5-THD)	
	6	1	**248-5245**	2	FILM-INFORMATION (LIFT EYE, TIE-DOWN LOCATION)	
	7	1	**252-2157**	2	FILM-INFORMATION (TIE-DOWN)	
	8	1	**317-7120**	2	COVER	
	9	1	**324-0298**	1	FRAME AS	
	10	1	**330-0798**	2	TUBE AS	
	11	1	**331-2489**	4	WEAR PAD	
	12	1	**331-4365**	2	COVER	
	13	1	**333-7265**	2	GUARD AS	
	14	1	**340-9290**	4	PLATE GP-COVER	
	15	1	**3B-8488**	1	FITTING-GREASE	
	16	1	**5P-4116**	6	WASHER-HARD (8.8X20.5X2-MM THK)	
M	17	1	**8T-4196**	4	BOLT (M10X1.5X35-MM)	
M	18	1	**8T-4197**	2	BOLT (M8X1.25X40-MM)	
	19	1	**8T-4222**	4	WASHER-PLATED (11X32X2.5-MM THK)	
M	20	1	**8T-7338**	8	BOLT (M16X2X45-MM)	
M	21	1	**8T-7547**	4	BOLT (M8X1.25X30-MM)	
	22	1	**9X-8257**	8	WASHER (17.5X30X3.5-MM THK)	

B-USE AS REQUIRED
M-METRIC PART

325-7603 **FRAME GP-LOADER** *(contd.)* **i03694721**

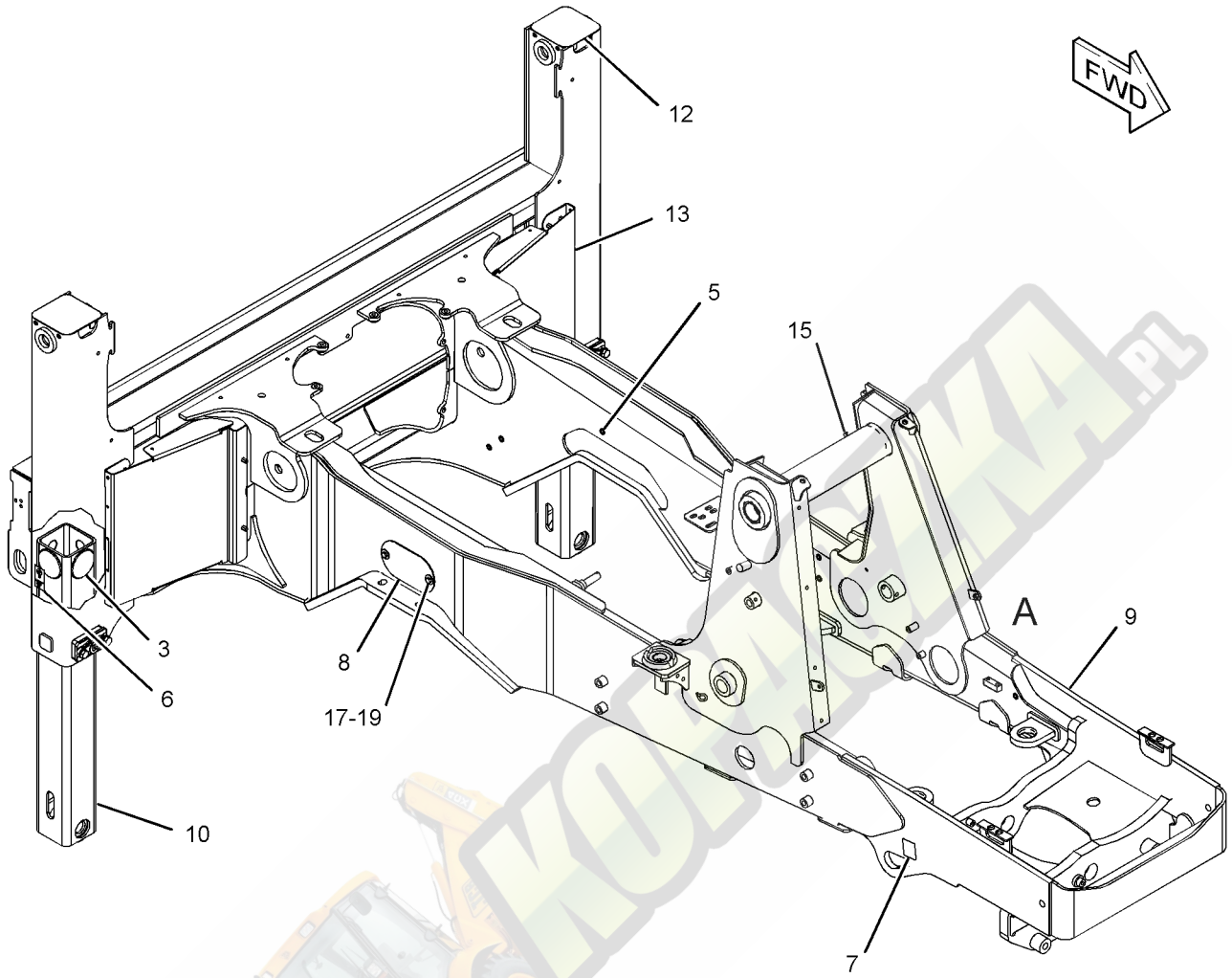

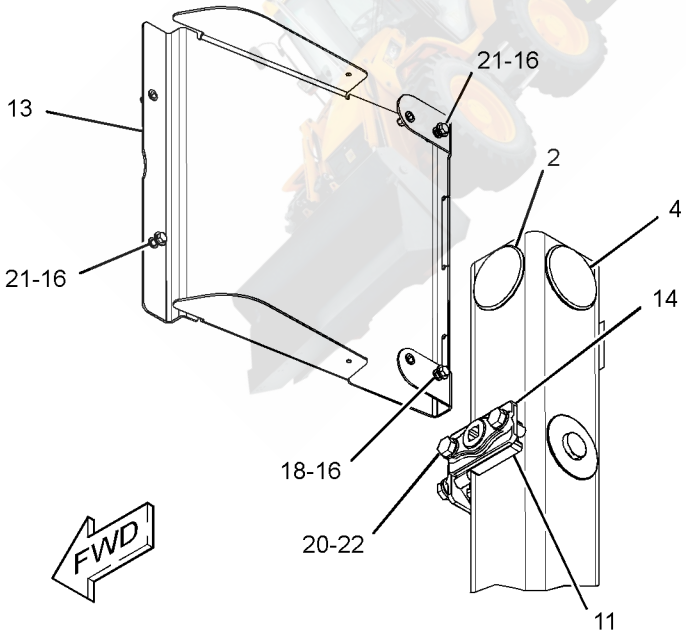

(FRAME REMOVED FOR CLARITY)

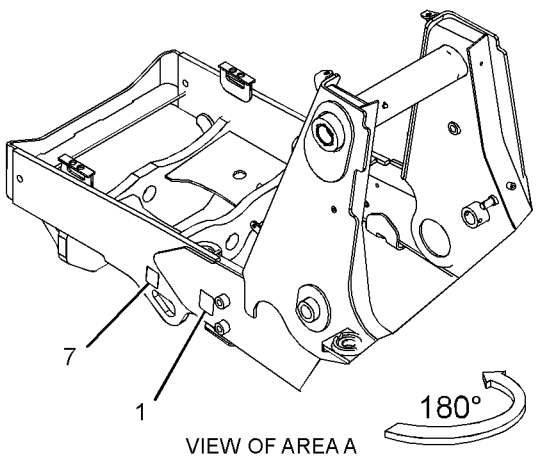

VIEW OF AREA A

GRAPHIC #1 **<END>** g01991640

327-0109 FRAME GP-LOADER–NARROW

S/N: JBA1-UP
PART OF 327-0112 FRAME AR-LOADER
AN ATTACHMENT

SMCS-7054 **i03694642**

NOTE	REF NO	GRAPHIC REF	PART NUMBER	QTY	PART NAME 1 2 3 4 5 6 (PRODUCT LEVEL)	SEE PAGE
	1	1	**159-3590**	1	FILM-IDENTIFICATION (WATER SEPARATOR)	
B	2	1	**193-1681**	8	PAD	
B	3	1	**193-1683**	2	PAD	
B	4	1	**193-1684**	2	PAD	
M	5	1	**246-7854**	20	NUT-SPECIAL (M10X1.5-THD)	
	6	1	**248-5245**	2	FILM-INFORMATION (LIFT EYE, TIE-DOWN LOCATION)	
	7	1	**252-2157**	2	FILM-INFORMATION (TIE-DOWN)	
	8	1	**317-7120**	2	COVER	
	9	1	**327-0105**	1	FRAME AS	
	10	1	**330-0798**	2	TUBE AS	
	11	1	**331-2489**	4	WEAR PAD	
	12	1	**331-4365**	2	COVER	
	13	1	**333-7265**	2	GUARD AS	
	14	1	**340-9290**	4	PLATE GP-COVER	
	15	1	**3B-8488**	1	FITTING-GREASE	
	16	1	**5P-4116**	6	WASHER-HARD (8.8X20.5X2-MM THK)	
M	17	1	**8T-4196**	4	BOLT (M10X1.5X35-MM)	
M	18	1	**8T-4197**	2	BOLT (M8X1.25X40-MM)	
	19	1	**8T-4222**	4	WASHER-PLATED (11X32X2.5-MM THK)	
M	20	1	**8T-7338**	8	BOLT (M16X2X45-MM)	
M	21	1	**8T-7547**	4	BOLT (M8X1.25X30-MM)	
	22	1	**9X-8257**	8	WASHER (17.5X30X3.5-MM THK)	

B-USE AS REQUIRED
M-METRIC PART

327-0109 **FRAME GP-LOADER** *(contd.)* **i03694642**

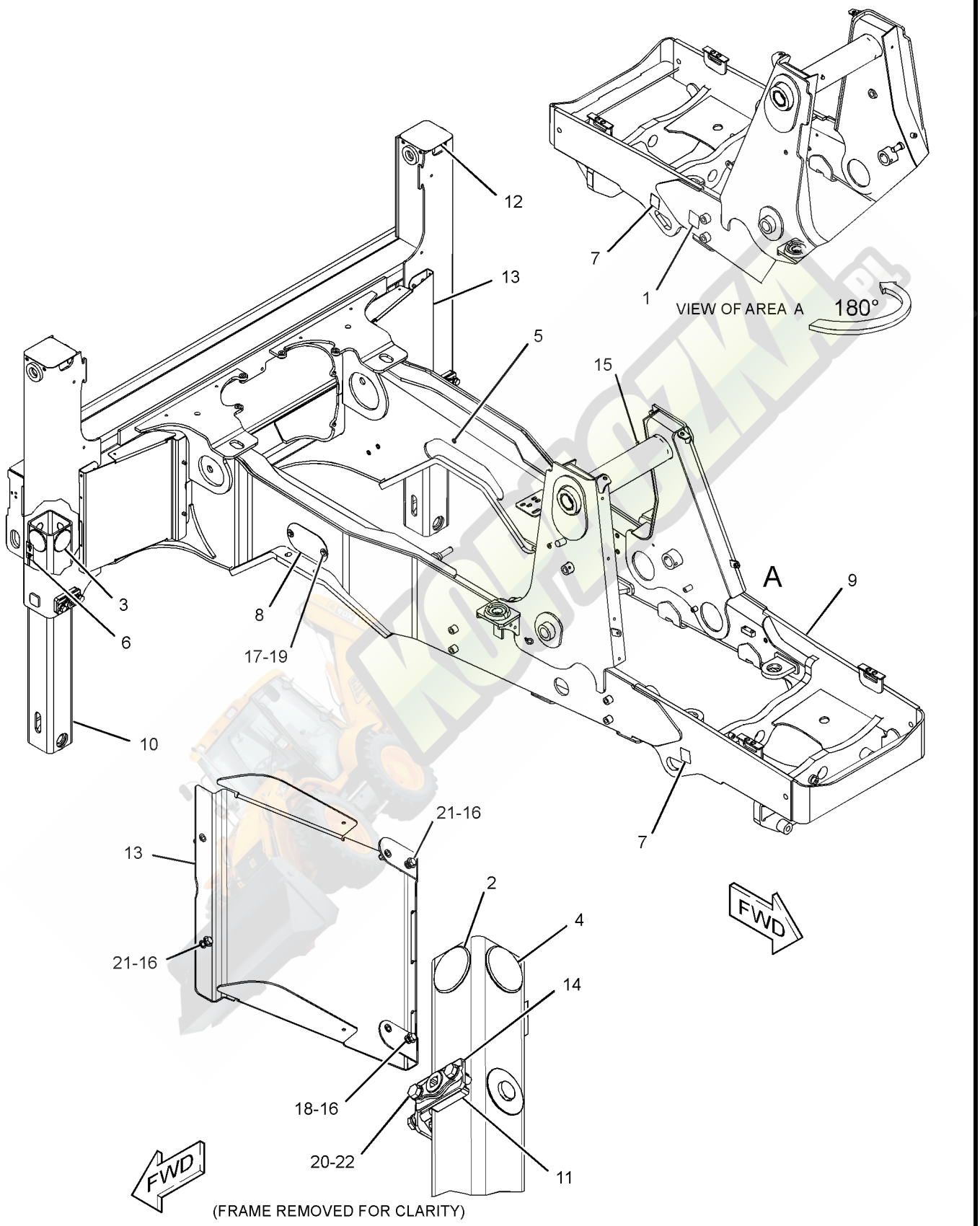

GRAPHIC #1 **<END>** g01991653

320-5933 FRAME GP-SLIDING

S/N: JBA1-UP

PART OF 329-0294 CHASSIS AR

SMCS-5804, 6508 **i03656613**

NOTE	REF NO	GRAPHIC REF	PART NUMBER	QTY	PART NAME 1 2 3 4 5 6 (PRODUCT LEVEL)	SEE PAGE
	1	1	**9R-0481**	2	WASHER (71X110X4-MM THK)	
	2	1	**161-7145**	4	SEAL-PISTON	
Y	3	1	**269-0381**	1	CYLINDER GP-HYDRAULIC (RH)	375
Y	4	1	**279-5556**	1	CYLINDER GP-HYDRAULIC (LH)	376
	5	1	**316-4811**	1	WASHER (66.5X120X8-MM THK)	
	6	1	**320-2948**	4	CAP-CYLINDER END	
	7	1	**320-2949**	2	BAR	
	8	1	**320-3619**	4	PISTON	
	9	1	**320-3620**	2	PAD	
	10	1	**322-3768**	1	CAP & BEARING AS	
	10A	1	**9R-4110**	2	BEARING-SLEEVE	
	11	1	**322-3770**	1	FRAME AS-SLIDING	
	11A	1	**331-1521**	1	BEARING	
	11B	1	**331-1522**	1	BEARING	
	11C	1	**9R-4110**	2	BEARING-SLEEVE	
	12	1	**340-6272**	8	RING-WEAR	
	13	1	**341-4712**	2	BAR	
M	14	1	**112-1533**	12	BOLT (M24X3X160-MM)	
	15	1	**3B-8488**	2	FITTING-GREASE	
	16	1	**3B-8489**	2	FITTING-GREASE	
	17	1	**3P-0439**	4	SEAL-O-RING	
	18	1	**7K-9208**	4	SEAL-LIP TYPE	
	19	1	**8C-3347**	2	PIN-ROLL	
	20	1	**8T-1482**	6	WASHER-HARD (26X50X8-MM THK)	
	21	1	**8T-4121**	4	WASHER-HARD (11X21X2.5-MM THK)	
	22	1	**8T-4167**	6	WASHER-HARD (26X44X4-MM THK)	
M	23	1	**8T-4187**	4	BOLT (M20X2.5X80-MM)	
M	24	1	**8T-4648**	16	BOLT (M12X1.75X70-MM)	
M	25	1	**8T-5035**	4	BOLT (M10X1.5X65-MM)	
	26	1	**8T-5439**	4	WASHER-HARD (21.5X45X6-MM THK)	
	27	1	**8T-7971**	16	WASHER-HARD (13.5X25.5X5-MM THK)	
	28	1	**9M-4335**	2	DOWEL-REACTION	

M-METRIC PART
Y-SEPARATE ILLUSTRATION

320-5933 **FRAME GP-SLIDING** *(contd.)* **i03656613**

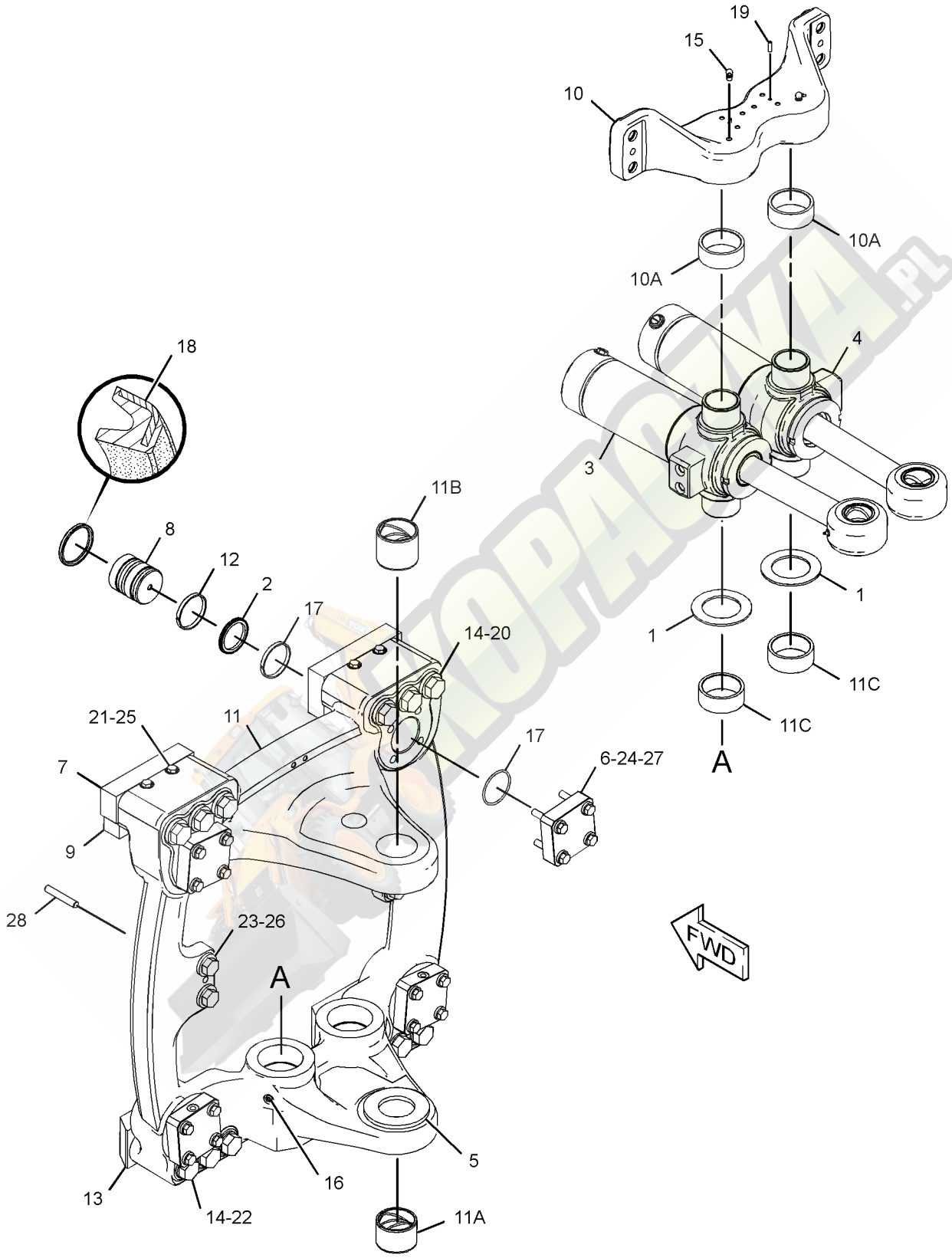

GRAPHIC #1 **<END>** g01988755

322-3764 FRAME GP-SWING

S/N: JBA1-UP

PART OF 329-0294 CHASSIS AR

SMCS-6506 **i03642530**

NOTE	REF NO	GRAPHIC REF	PART NUMBER	QTY	PART NAME 1 2 3 4 5 6 (PRODUCT LEVEL)	SEE PAGE
	1	1	**2U-9234**	1	BUSHING	
	2	1	**176-0626**	2	WASHER (67.5X120X3-MM THK)	
	3	1	**9R-8291**	2	SPACER (66X125X1-MM THK)	
	4	1	**310-0851**	2	PIN	
	5	1	**315-5384**	1	FRAME AS-SWING	
	5A	1	**213-6702**	4	BEARING-SLEEVE	
	5B	1	**331-1521**	2	BEARING	
	6	1	**316-6951**	1	PIN AS	
	7	1	**316-6952**	1	PIN AS	
	8	1	**326-0089**	1	PIN AS	
	9	1	**095-0929**	1	RING-RETAINING	
	10	1	**270-5290**	1	BOLT-SOCKET HEAD (M12X1.75X300-MM)	
	11	1	**3B-8489**	2	FITTING-GREASE	
	12	1	**5P-1076**	2	WASHER-HARD (13.5X30X4-MM THK)	
M	13	1	**6V-7687**	1	LOCKNUT (M12X1.75-THD)	
	14	1	**7X-0632**	2	WASHER-HARD (11X36X6-MM THK)	
M	15	1	**8T-4136**	1	BOLT (M10X1.5X25-MM)	
M	16	1	**8T-4196**	1	BOLT (M10X1.5X35-MM)	

M-METRIC PART

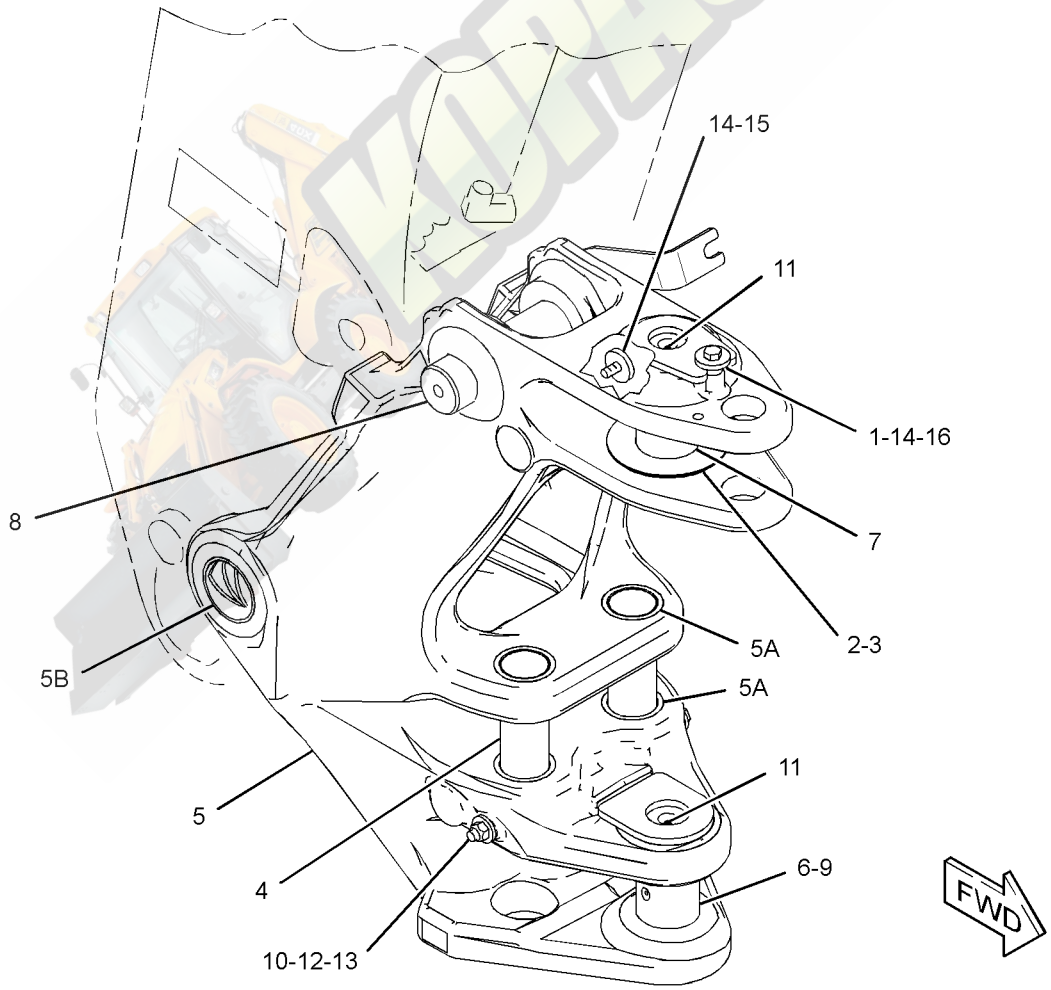

GRAPHIC #1 **<END>** g01996130

FRAME AND BODY

217-9672 GUARD GP-DRIVE SHAFT

S/N: JBA1-UP
AN ATTACHMENT

SMCS-7153 **i02531164**

NOTE	REF NO	GRAPHIC REF	PART NUMBER	QTY	PART NAME 1 2 3 4 5 6 (PRODUCT LEVEL)	SEE PAGE
	1	1	**216-5981**	1	GUARD AS	
M	2	1	**290-3347**	4	BOLT-CARRIAGE (M16X2X40-MM)	
	3	1	**8T-4122**	4	WASHER-HARD (17X32X3.5-MM THK)	
M	4	1	**8T-4132**	4	NUT (M16X2-THD)	

M-METRIC PART

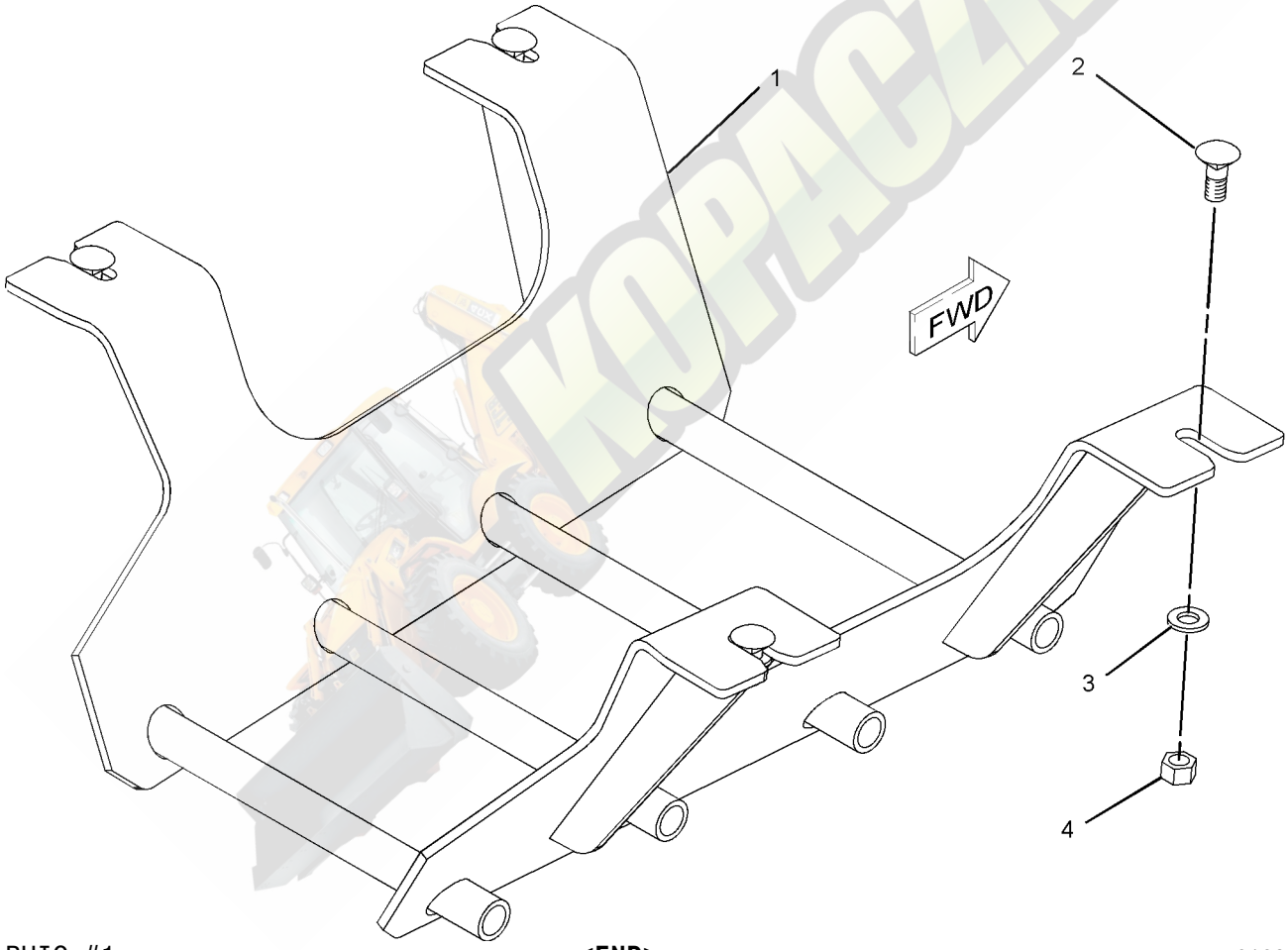

GRAPHIC #1 **<END>** g01083443

338-1421 GUARD GP-LIGHTING

S/N: JBA1-UP
AN ATTACHMENT

SMCS-715L **i03620562**

NOTE	REF NO	GRAPHIC REF	PART NUMBER	QTY	PART NAME 1 2 3 4 5 6 (PRODUCT LEVEL)	SEE PAGE
	1	1	**337-8655**	2	GUARD	
M	2	1	**8T-4200**	2	BOLT (M8X1.25X16-MM)	
	3	1	**8T-4224**	4	WASHER-HARD (8.8X16X2-MM THK)	
M	4	1	**8T-4908**	2	BOLT (M8X1.25X25-MM)	

M-METRIC PART

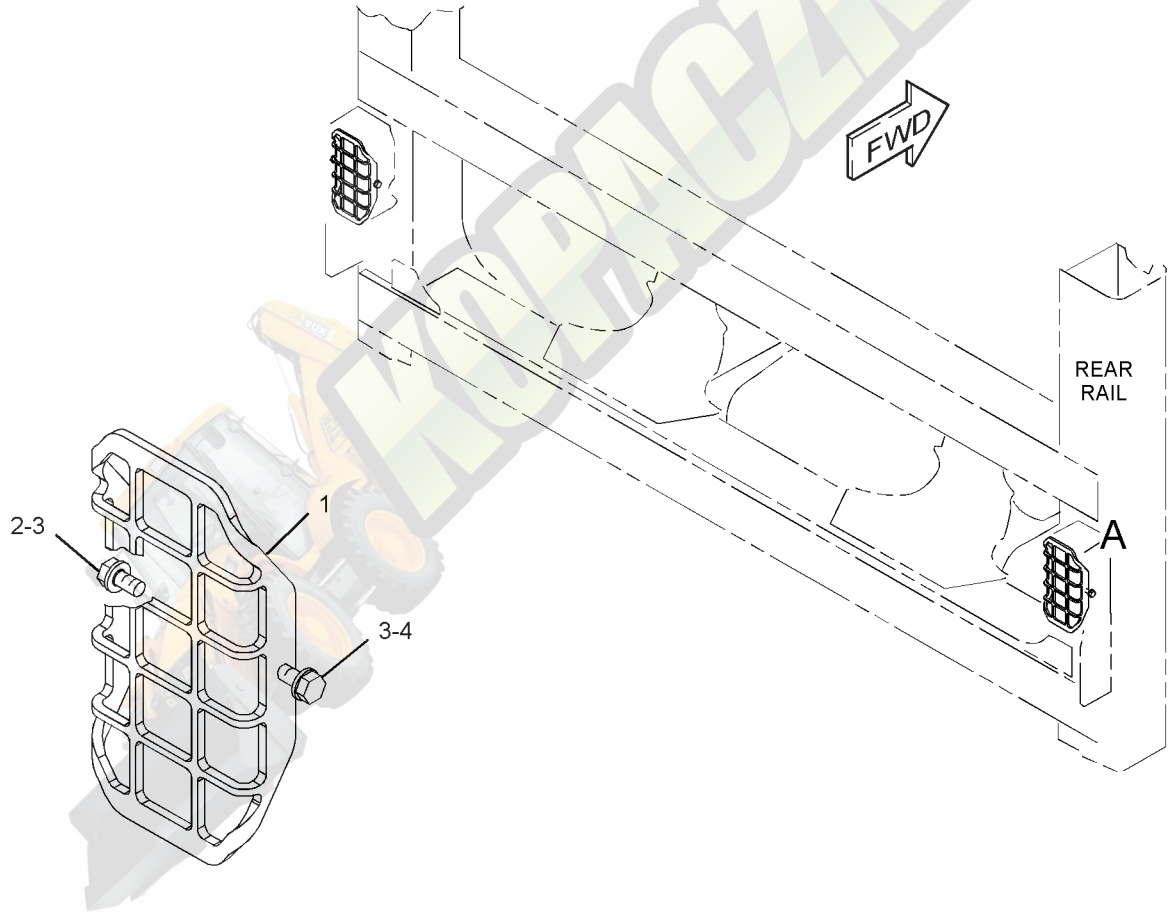

VIEW OF AREA A

GRAPHIC #1 **<END>** g01994458

FRAME AND BODY

256-0324 GUARD GP-RADIATOR

S/N: JBA1-UP

AN ATTACHMENT

SMCS-7155 **i02162026**

NOTE	REF NO	GRAPHIC REF	PART NUMBER	QTY	PART NAME 1 2 3 4 5 6 (PRODUCT LEVEL)	SEE PAGE
	1	1	**256-0323**	1	COVER	
M	2	1	**7X-2572**	2	BOLT (M24X3X35-MM)	
	3	1	**8T-4167**	2	WASHER-HARD (26X44X4-MM THK)	

M-METRIC PART

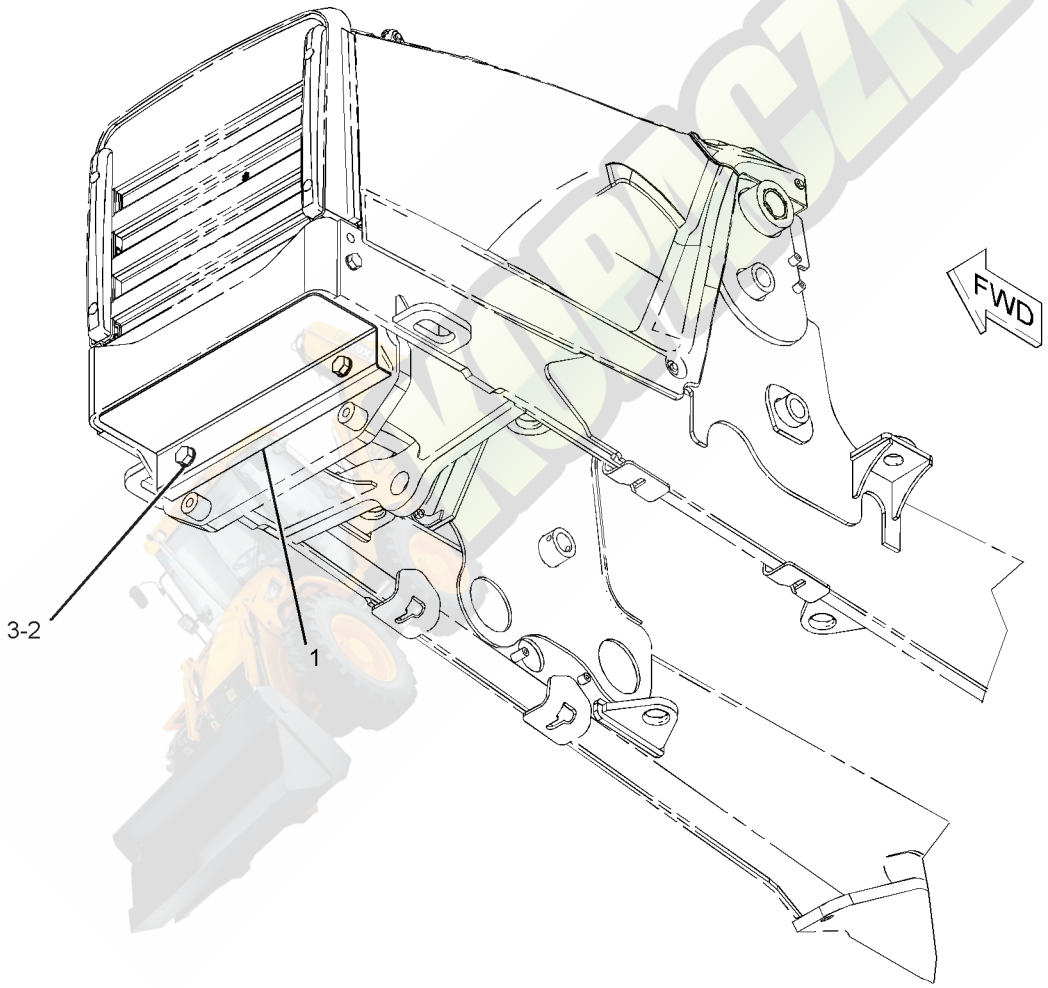

GRAPHIC #1 **<END>** g01096781

311-8062 HOOD & GUARD GP

S/N: JBA1-UP

PART OF 329-0294 CHASSIS AR

SMCS-7150, 7170, 7251, 7263 **i03318700**

NOTE	REF NO	GRAPHIC REF	PART NUMBER	QTY	PART NAME 1 2 3 4 5 6 (PRODUCT LEVEL)	SEE PAGE
	1	1	**9X-7114**	4	SPACER (8.5X10.15X5.6-MM THK)	
	2	1	**123-0428**	2	BAR	
	3	1	**247-1080**	2	BUMPER AS	
	4	1	*250-3344*	1	COWLING AS	
		1	**244-2041**	1	COWLING	
		1	**250-3331**	1	FILM-STRIPE (YELLOW)	
Y	5	1	*311-8055*	1	HOOD GP-ENGINE	363
	6	1	**317-7180**	1	ENCLOSURE (LH)	
	7	1	**317-7313**	1	ENCLOSURE AS (RH)	
		1	**329-2959**	1	INSULATION	
		1	**317-7181**	1	ENCLOSURE (RH)	
	8	1	**325-1969**	1	BRACE	
	9	1	**325-3639**	1	GUARD AS	
	10	1	**325-5483**	1	GRILL	
	11	1	**7X-0579**	10	WASHER-HARD (8.8X25.5X2-MM THK)	
	12	1	**8T-4121**	8	WASHER-HARD (11X21X2.5-MM THK)	
	13	1	**8T-4123**	2	WASHER (22X35X3.5-MM THK)	
M	14	1	**8T-4136**	2	BOLT (M10X1.5X25-MM)	
M	15	1	**8T-4137**	6	BOLT (M10X1.5X20-MM)	
M	16	1	**8T-4139**	2	BOLT (M12X1.75X30-MM)	
M	17	1	**8T-4141**	2	BOLT (M20X2.5X70-MM)	
M	18	1	**8T-4189**	12	BOLT (M8X1.25X20-MM)	
	19	1	**8T-4223**	2	WASHER-HARD (13.5X25.5X3-MM THK)	
	20	1	**8T-4224**	6	WASHER-HARD (8.8X16X2-MM THK)	
M	21	1	**8T-7547**	4	BOLT (M8X1.25X30-MM)	

M-METRIC PART
Y-SEPARATE ILLUSTRATION

311-8062 **HOOD & GUARD GP** *(contd.)* **i03318700**

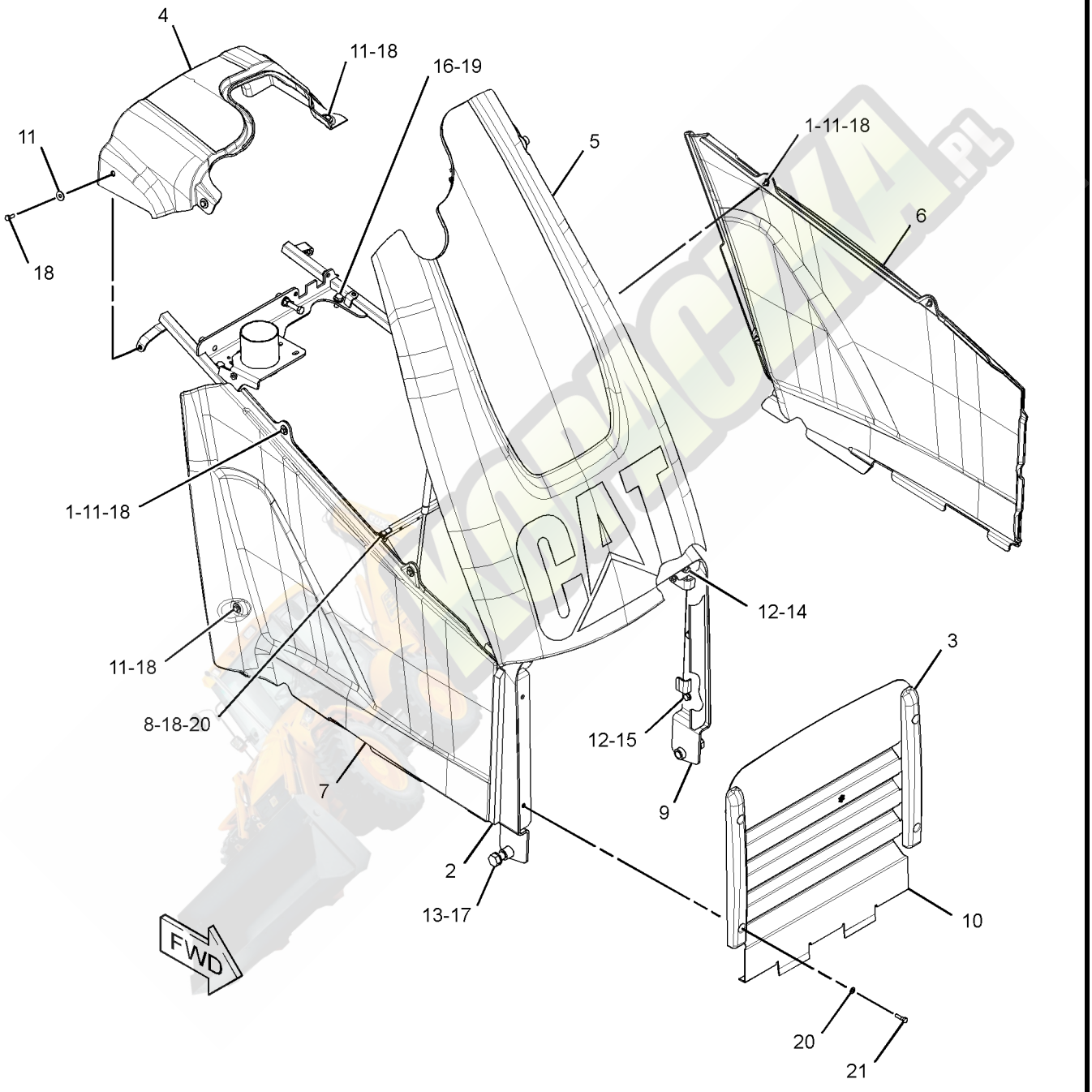

GRAPHIC #1 **<END>** g01620417

299-3141 HOOD GP-ENGINE

S/N: JBA1-UP

PART OF 311-8055 HOOD GP-ENGINE

SMCS-7251 **i03532120**

NOTE	REF NO	GRAPHIC REF	PART NUMBER	QTY	PART NAME 1 2 3 4 5 6 (PRODUCT LEVEL)	SEE PAGE
	1	1	**5E-8557**	1	CLIP	
E	2	1	**9X-8699**		SEAL (70-CM)	
	3	1	**316-1194**	1	HOOD AS	
	4	1	**341-9304**	1	BRACKET AS	
	5	1	**250-1878**	1	FILM-IDENTIFICATION (CAT)	
	6	1	**250-3330**	1	FILM-STRIPE (YELLOW)	
	7	1	**250-6850**	2	BRACKET AS	
	8	1	**250-6858**	1	LATCH AS (HOOD)	
	9	1	**313-7109**	1	LOCK AS	
	10	1	**251-4375**	1	ROD	
	11	1	**292-3995**	1	HINGE AS	
	12	1	**292-3996**	1	HINGE AS	
M	13	1	**7X-2537**	2	BOLT (M8X1.25X35-MM)	
M	14	1	**8T-4189**	10	BOLT (M8X1.25X20-MM)	
	15	1	**8T-4224**	12	WASHER-HARD (8.8X16X2-MM THK)	

E-ORDER BY THE CENTIMETER
M-METRIC PART

299-3141 **HOOD GP-ENGINE** *(contd.)* **i03532120**

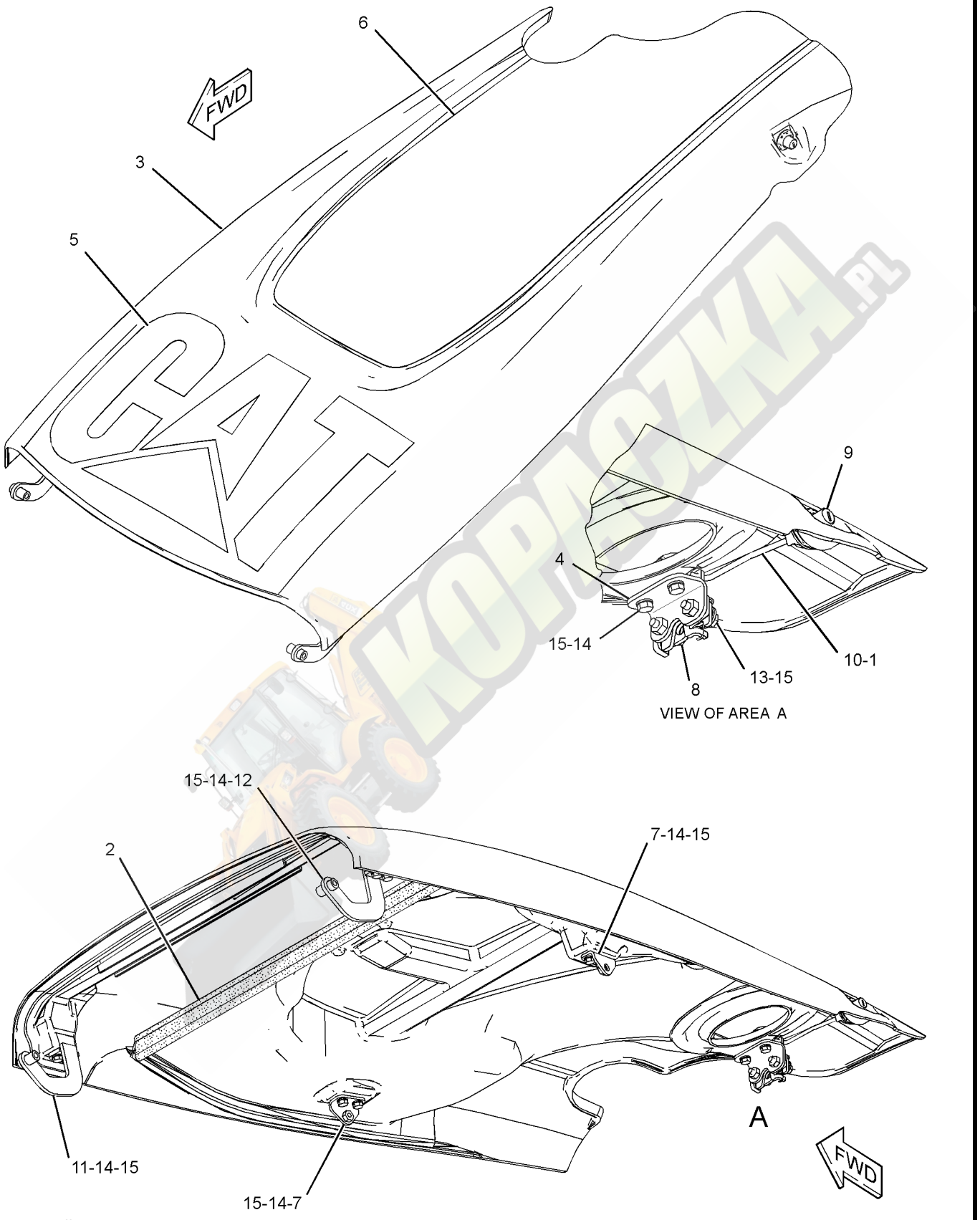

GRAPHIC #1 **<END>** g01355907

311-8055 HOOD GP-ENGINE

S/N: JBA1-UP

PART OF 311-8062 HOOD & GUARD GP

SMCS-7251 **i03018394**

NOTE	REF NO	GRAPHIC REF	PART NUMBER	QTY	PART NAME 1 2 3 4 5 6 (PRODUCT LEVEL)	SEE PAGE
J	1	1	**250-5881**	1	SPRING AS-GAS	
J	2	1	**254-9301**	1	SPRING AS-GAS (LOCKABLE)	
	3	1	**288-1157**	1	FILM-INSTRUCTION (UNLOCK)	
Y	4	1	*299-3141*	1	HOOD GP-ENGINE	361
	5	1	**311-8060**	1	FRAME AS-HOOD	
M		1	**8T-3490**	2	NUT-WELD (M10X1.5-THD)	
M		1	**8T-3612**	6	NUT-WELD (M8X1.25-THD)	
	6	1	**3B-4506**	2	LOCKWASHER	
	7	1	**8T-4223**	2	WASHER-HARD (13.5X25.5X3-MM THK)	
	8	1	**8T-4224**	4	WASHER-HARD (8.8X16X2-MM THK)	
M	9	1	**8T-4244**	2	NUT (M12X1.75-THD)	
M	10	1	**8T-4648**	1	BOLT (M12X1.75X70-MM)	
M	11	1	**8T-6869**	2	BOLT (M8X1.25X60-MM)	
					AVAILABLE REPAIR KIT(S):	
J			**275-0001**	1	KIT-GAS SPRING	
					(INCLUDES BALL STUDS AND CLIPS)	

J-KIT MARKED J SERVICES PART(S) MARKED J
M-METRIC PART
Y-SEPARATE ILLUSTRATION

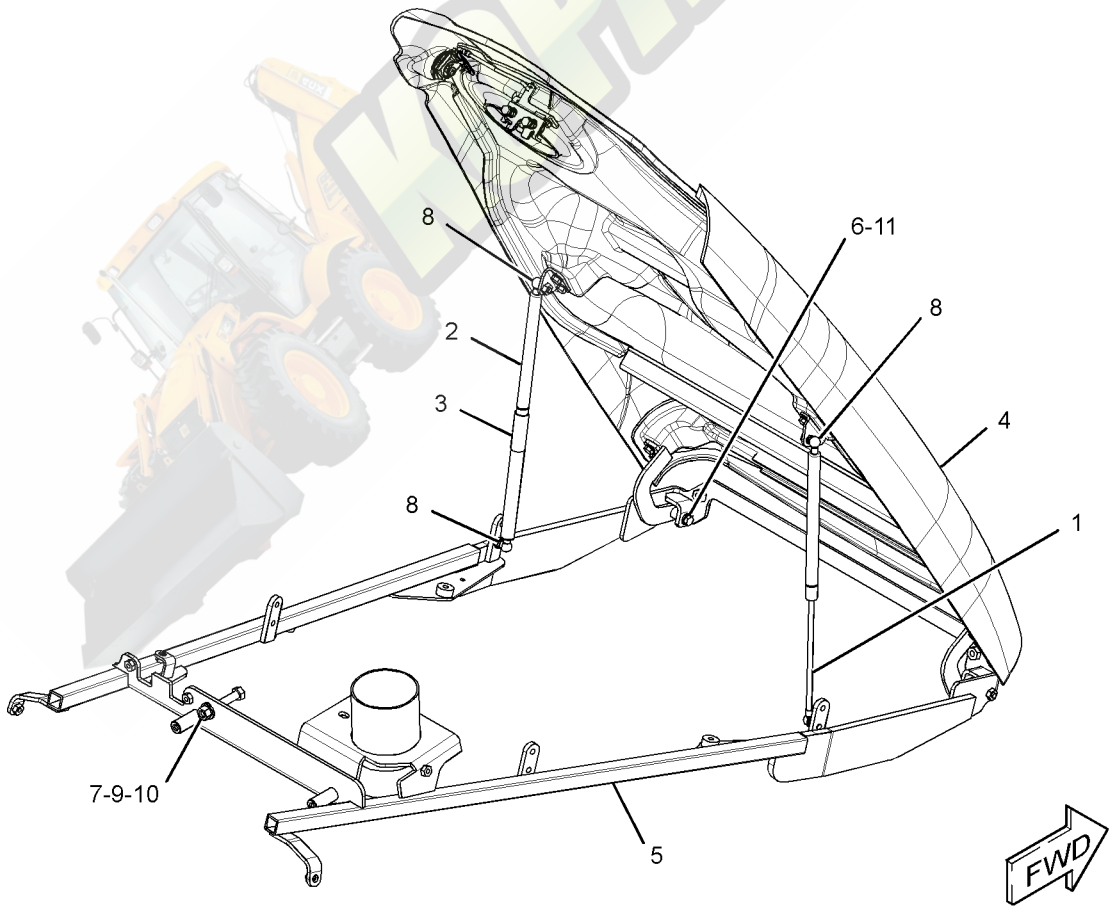

GRAPHIC #1 **<END>** g01601035

320-8639 LINER GP-SOUND SUPPRESSION

S/N: JBA1-UP
PART OF 323-0974, 323-0975 SUPPRESSION AR-SOUND
AN ATTACHMENT

SMCS-1801 **i03090582**

NOTE	REF NO	GRAPHIC REF	PART NUMBER	QTY	PART NAME 1 2 3 4 5 6 (PRODUCT LEVEL)	SEE PAGE
	1	1	**320-8641**	1	INSULATION (RH)	
	2	1	**320-8642**	1	INSULATION (LH)	

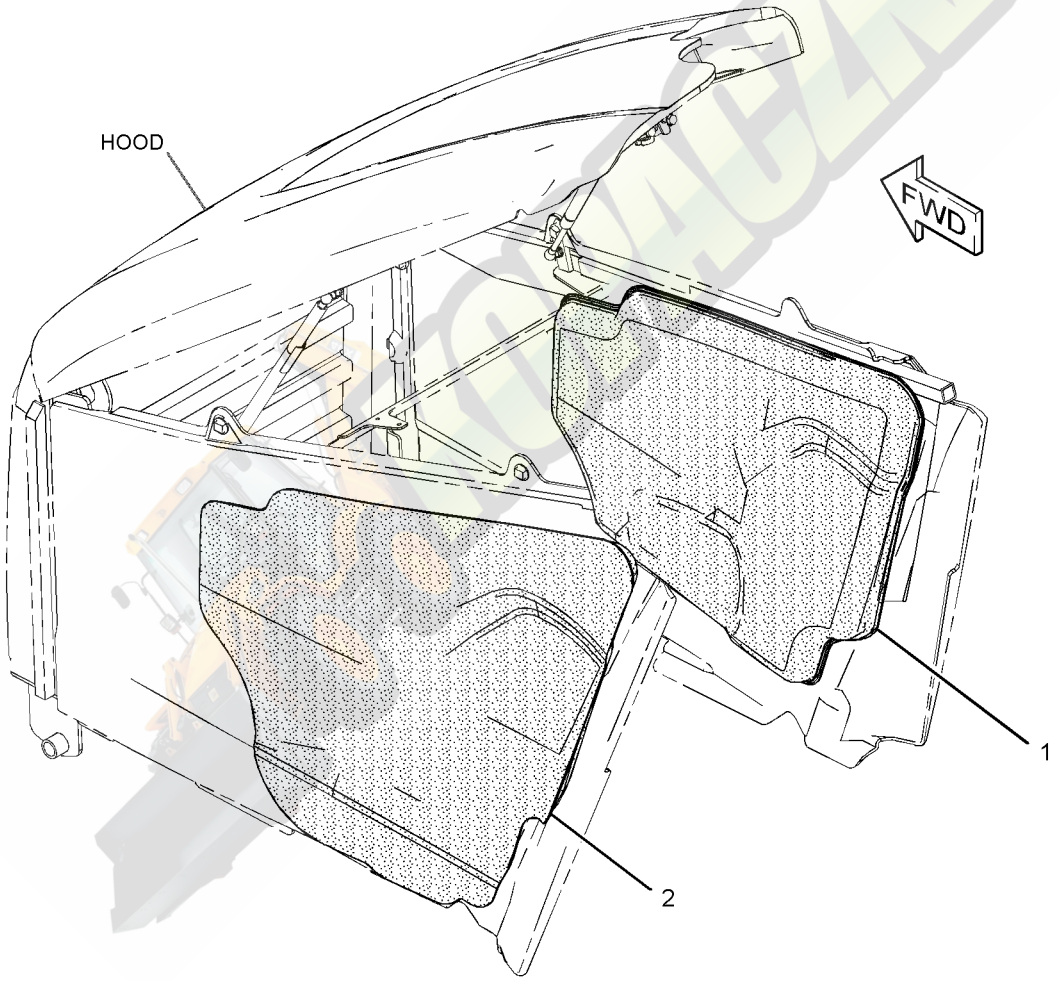

GRAPHIC #1 **<END>** g01592064

323-0974 SUPPRESSION AR-SOUND

S/N: JBA1-UP
AN ATTACHMENT

SMCS-7076, 7261 **i03090560**

NOTE	PART NUMBER	QTY	PART NAME 1 2 3 4 5 6 (PRODUCT LEVEL)	SEE PAGE
Y	*320-8639*	1	LINER GP-SOUND SUPPRESSION	364
Y-SEPARATE ILLUSTRATION				

<END>

323-0975 SUPPRESSION AR-SOUND

S/N: JBA1-UP
AN ATTACHMENT

SMCS-7076, 7261 **i03091705**

NOTE	PART NUMBER	QTY	PART NAME 1 2 3 4 5 6 (PRODUCT LEVEL)	SEE PAGE
Y	*320-8639*	1	LINER GP-SOUND SUPPRESSION	364
Y-SEPARATE ILLUSTRATION				

<END>

HYDRAULIC SYSTEM

149-0686 ACCUMULATOR GP-HYDRAULIC—CHARGED

S/N: JBA1-UP
PART OF 338-0433 LINES GP-PILOT
FIELD REPLACEMENT ORDER 227-8807—PAGE 366

SMCS-5077 **i02858450**

NOTE	PART NUMBER	QTY	PART NAME 1 2 3 4 5 6 (PRODUCT LEVEL)	SEE PAGE
Y	**227-8807**	1	ACCUMULATOR GP-HYDRAULIC (UNCHARGED) (PILOT)	366

Y-SEPARATE ILLUSTRATION

<END>

227-8807 ACCUMULATOR GP-HYDRAULIC—UNCHARGED

S/N: JBA1-UP
PART OF 149-0686 ACCUMULATOR GP-HYDRAULIC
FIELD REPLACEMENT FOR 149-0686—PAGE 366

SMCS-5077 **i02858449**

NOTE	PART NUMBER	QTY	PART NAME 1 2 3 4 5 6 (PRODUCT LEVEL)	SEE PAGE
			(NO SERVICED PARTS)	

<END>

345-3672 ACCUMULATOR GP-RIDE CONTROL–CHARGED

S/N: JBA1-UP
PART OF 331-8676 LINES GP-RIDE CONTROL
FIELD REPLACEMENT ORDER 345-3674–PAGE 368
AN ATTACHMENT

SMCS-5077 **i03662271**

NOTE	REF NO	GRAPHIC REF	PART NUMBER	QTY	PART NAME 1 2 3 4 5 6 (PRODUCT LEVEL)	SEE PAGE
	1	1	**224-5132**	1	CAP (GAS VALVE)	
	2	1	**224-5152**	1	VALVE-GAS	
	3	1	**3J-7354**	1	SEAL-O-RING	
	4	1	**1J-9671**	1	SEAL-O-RING	
	5	1	**241-0037**	1	FILM-WARNING (HIGH PRESSURE, READ OMM)	

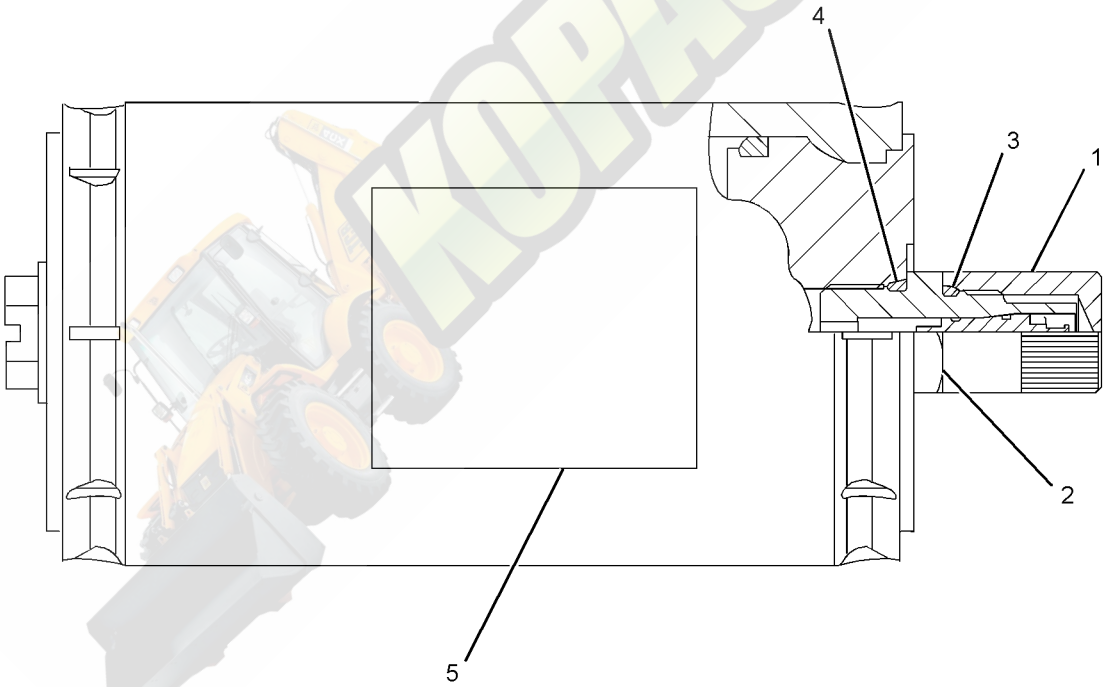

GRAPHIC #1 **<END>** g01965975

345-3674 ACCUMULATOR GP-RIDE CONTROL—UNCHARGED

S/N: JBA1-UP

FIELD REPLACEMENT FOR 345-3672—PAGE 367

SMCS-5077 **i03662277**

NOTE	REF NO	GRAPHIC REF	PART NUMBER	QTY	PART NAME 1 2 3 4 5 6 (PRODUCT LEVEL)	SEE PAGE
	1	1	**224-5132**	1	CAP (GAS VALVE)	
	2	1	**224-5152**	1	VALVE-GAS	
	3	1	**3J-7354**	1	SEAL-O-RING	
	4	1	**1J-9671**	1	SEAL-O-RING	
	5	1	**241-0037**	1	FILM-WARNING (HIGH PRESSURE, READ OMM)	

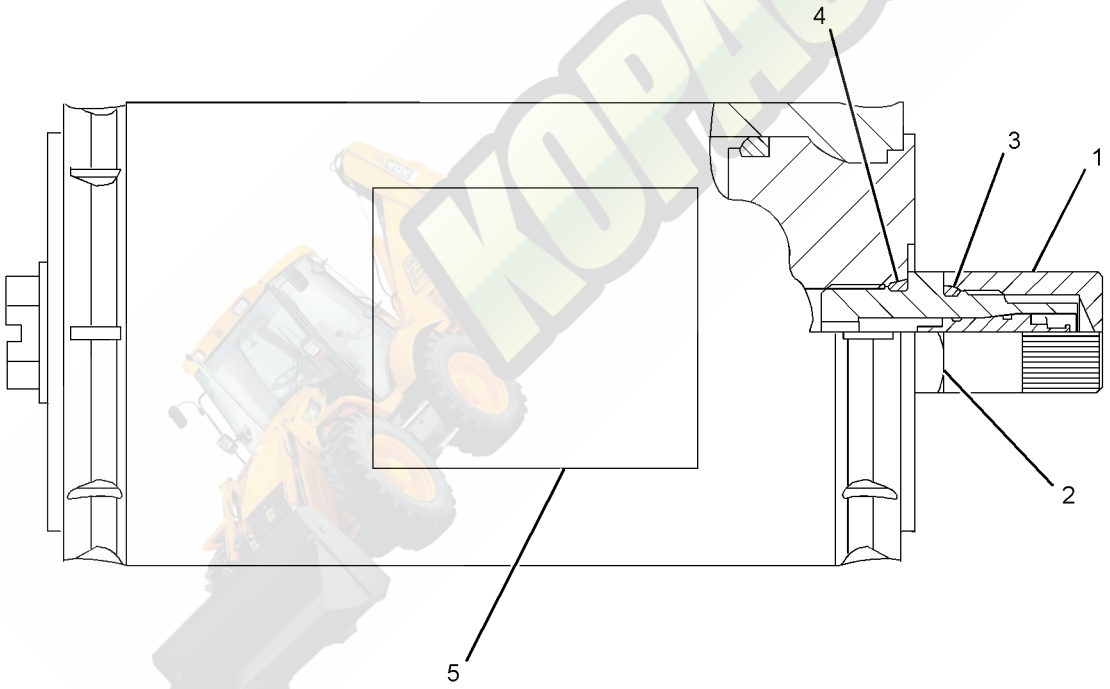

GRAPHIC #1 **<END>** g01966053

344-5290 CONTROL AR-RIDE–PILOT

S/N: JBA1-UP

CANNOT BE USED WITH 344-6354–PAGE 7

AN ATTACHMENT

SMCS-5004 **i03662248**

NOTE	PART NUMBER	QTY	PART NAME 1 2 3 4 5 6 (PRODUCT LEVEL)	SEE PAGE
Y	*331-8676*	1	LINES GP-RIDE CONTROL	441
Y	*323-0991*	1	WIRING GP-RIDE CONTROL	225

Y-SEPARATE ILLUSTRATION

<END>

KOPACZKA.PL

HYDRAULIC SYSTEM

299-4246 COOLER GP-HYD & XMSN OIL

S/N: JBA1-UP
PART OF 297-3233 RADIATOR & HYD OIL COOLER GP
AN ATTACHMENT

SMCS-1374, 1375 **i03035121**

NOTE	REF NO	GRAPHIC REF	PART NUMBER	QTY	PART NAME 1 2 3 4 5 6 (PRODUCT LEVEL)	SEE PAGE
	1	1	**9M-5733**	24	RIVET-POP	
	2	1	**299-4247**	1	CORE AS-OIL COOLER (19 PLATE)	
	3	1	**299-4248**	1	CORE AS-OIL COOLER (12 PLATE)	
M	4	1	**5C-7261**	2	NUT (M8X1.25-THD)	
M	5	1	**8T-7547**	2	BOLT (M8X1.25X30-MM)	
	6	1	**9N-0869**	6	WASHER-HARD (8.8X25.5X2-MM THK)	
	7	1	**9W-4216**	2	SPACER (9X18X7-MM THK)	

M-METRIC PART

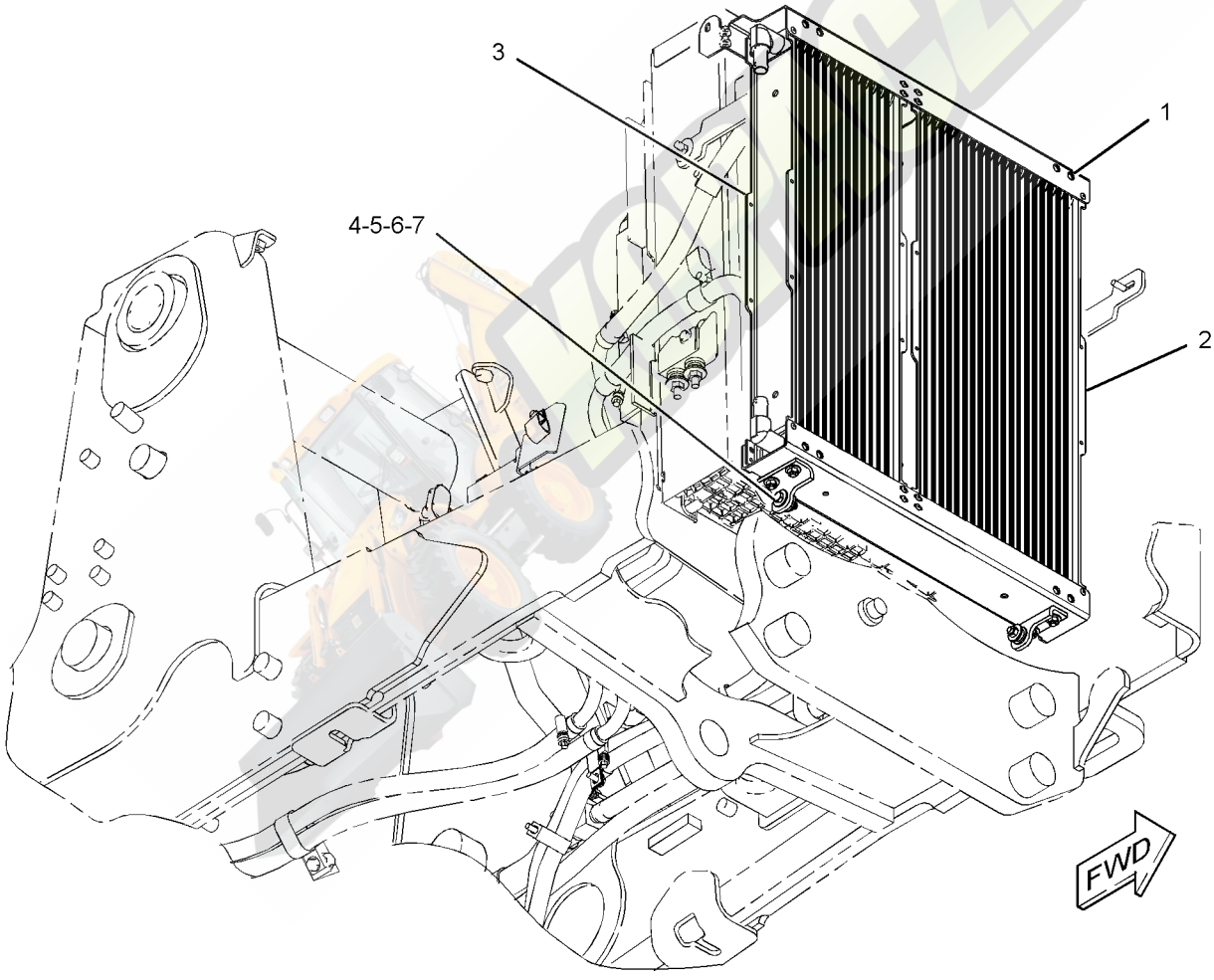

GRAPHIC #1 **<END>** g01522307

304-7847 COOLER GP-HYD & XMSN OIL

S/N: JBA1-UP

PART OF 304-4023 RADIATOR & HYD OIL COOLER GP

AN ATTACHMENT

SMCS-1374, 1375 **i03325889**

NOTE	REF NO	GRAPHIC REF	PART NUMBER	QTY	PART NAME 1 2 3 4 5 6 (PRODUCT LEVEL)	SEE PAGE
M	1	1	**8T-7547**	2	BOLT (M8X1.25X30-MM)	
	2	1	**9M-5733**	32	RIVET-POP	
	3	1	**214-4746**	1	CORE AS-OIL COOLER (HYDRAULIC) (18 PLATE)	
	4	1	**304-7849**	1	CORE AS-OIL COOLER (11 PLATE)	
M	5	1	**5C-7261**	2	NUT (M8X1.25-THD)	
	6	1	**9N-0869**	6	WASHER-HARD (8.8X25.5X2-MM THK)	
	7	1	**9W-4216**	2	SPACER (9X18X7-MM THK)	

M-METRIC PART

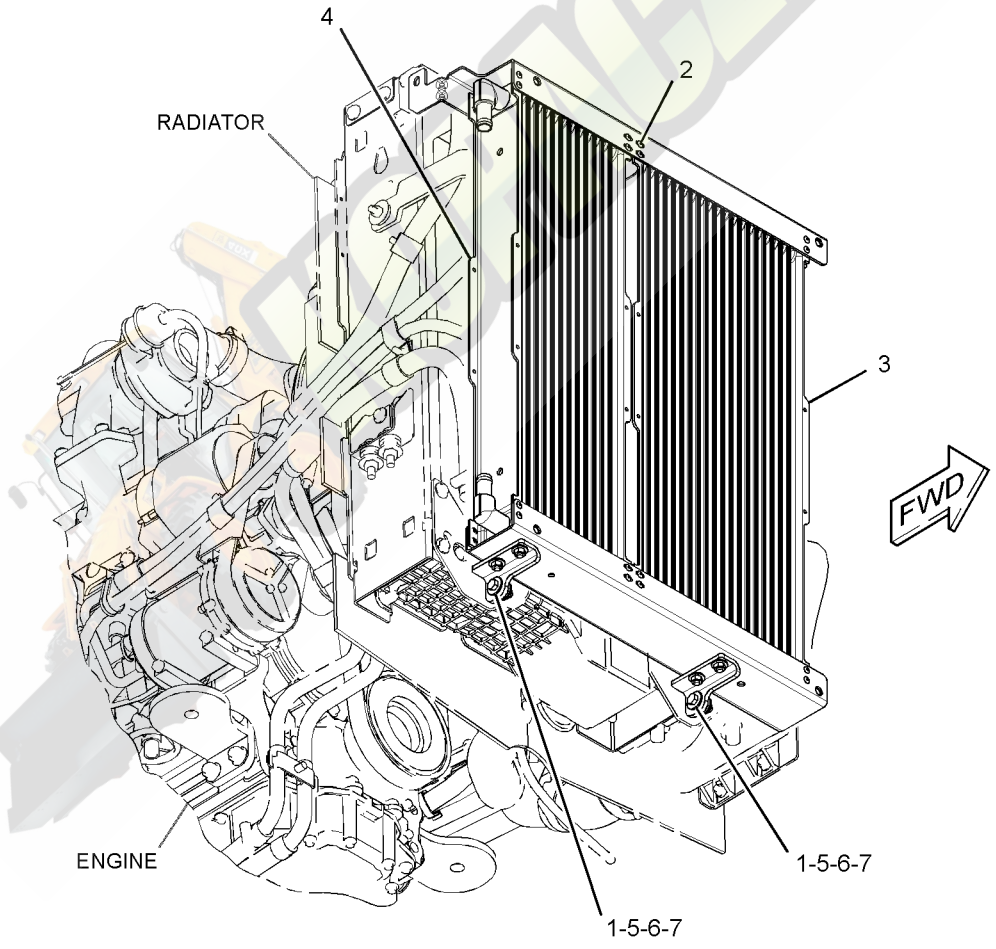

GRAPHIC #1 **<END>** g01597733

HYDRAULIC SYSTEM

320-5937 CYLINDER GP-BACKHOE BUCKET

S/N: JBA1-UP
90-MM (3.54-IN) BORE X 852-MM (33.54-IN) STROKE
PART OF 334-0686, 334-0691, 350-6934, 350-6935, 350-6944, 350-6945 BACKHOE AR-EXTENDABLE STICK, 334-0694, 350-6933 BACKHOE AR-STANDARD STICK AN ATTACHMENT

SMCS-5457 **i03693864**

NOTE	REF NO	GRAPHIC REF	PART NUMBER	QTY	PART NAME 1 2 3 4 5 6 (PRODUCT LEVEL)	SEE PAGE
	1	1	**323-2424**	1	ROD AS	
	1A	1	**9R-3092**	2	BEARING-SLEEVE	
	2	1	**323-2431**	1	CYLINDER HEAD AS	
	2A	1	**323-2470**	1	BEARING	
		1	**338-2415**	1	SEAL-WIPER	
		1	**338-2445**	1	SEAL-U-CUP	
		1	**340-9325**	1	SEAL-O-RING	
	3	1	**323-2433**	1	PISTON AS	
		1	**144-5287**	1	SEAL-PISTON	
		1	**340-9308**	1	SEAL-O-RING	
		1	**343-8051**	2	RING-WEAR	
	4	1	**323-2435**	1	CYLINDER AS-HYDRAULIC	
	4A	1	**9R-3092**	2	BEARING-SLEEVE	
	5	1	**350-3842**	2	SET SCREW (M8X1.25X10-MM)	
	6	1	**7J-9108**	2	SEAL-O-RING	
					AVAILABLE REPAIR KIT(S):	
			324-0386	1	KIT-SEAL (BUCKET CYLINDER)	

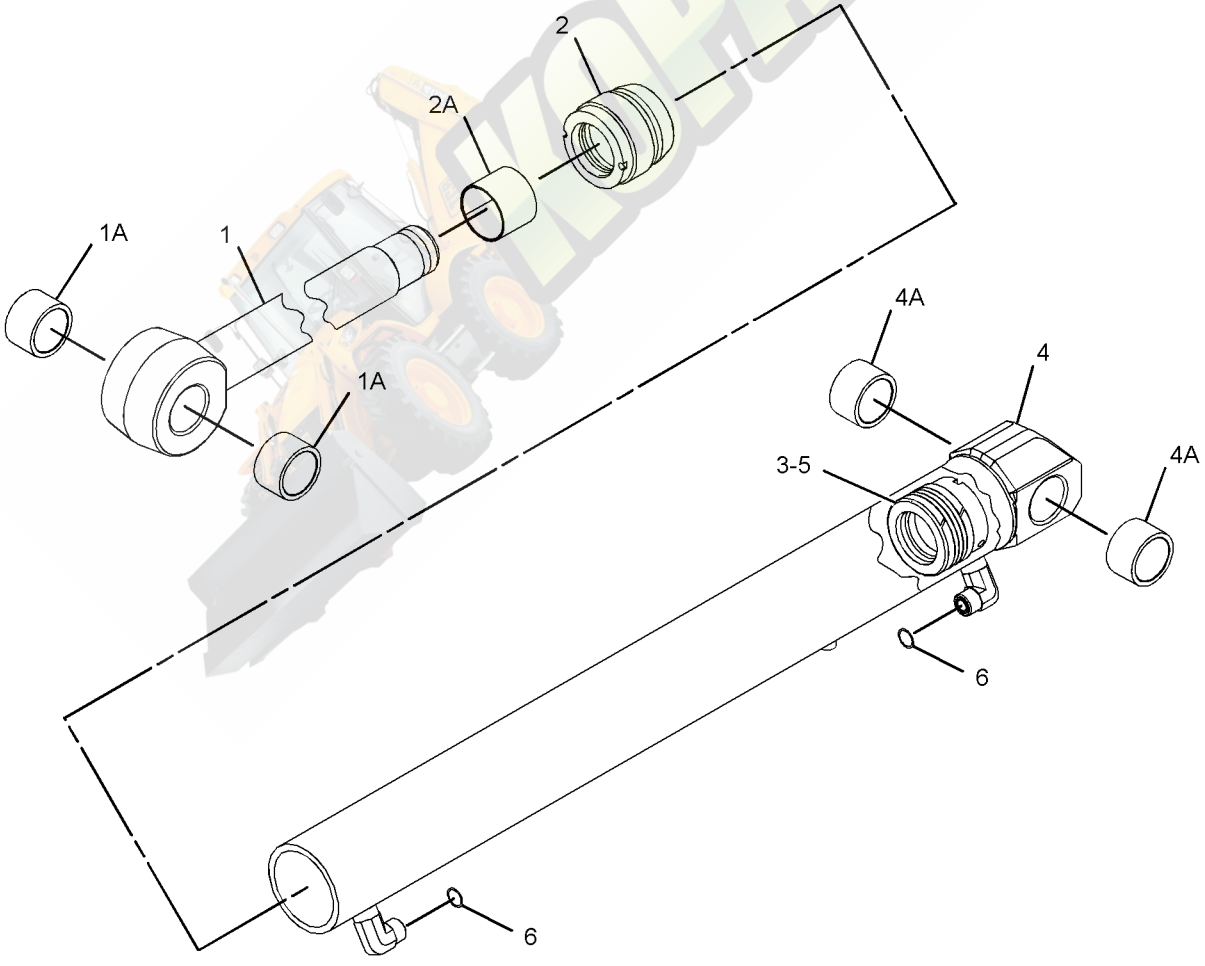

GRAPHIC #1 **<END>** g01993461

320-6520 CYLINDER GP-BOOM

S/N: JBA1-UP
120-MM (4.7-IN) BORE X 942-MM (37.1-IN) STROKE
PART OF 334-0686, 334-0691, 350-6934, 350-6935, 350-6944, 350-6945 BACKHOE AR-EXTENDABLE STICK, 334-0694, 350-6933 BACKHOE AR-STANDARD STICK AN ATTACHMENT

SMCS-5456 **i03695644**

NOTE	REF NO	GRAPHIC REF	PART NUMBER	QTY	PART NAME 1 2 3 4 5 6 (PRODUCT LEVEL)	SEE PAGE
	1	1	**324-0361**	1	ROD AS-HYDRAULIC CYLINDER	
	1A	1	**331-1520**	1	BEARING	
	2	1	**324-0367**	1	CYLINDER HEAD AS	
	2A	1	**323-2474**	1	BEARING-SLEEVE	
		1	**338-2416**	1	SEAL-WIPER	
		1	**338-2446**	1	SEAL-U-CUP	
		1	**340-9322**	1	SEAL-O-RING	
	3	1	**324-0369**	1	PISTON AS	
		1	**340-6339**	1	SEAL-PISTON	
		1	**340-9314**	1	SEAL-O-RING	
		1	**343-8053**	2	RING-WEAR	
	4	1	**324-0372**	1	CYLINDER AS	
	4A	1	**212-8960**	2	BEARING	
	5	1	**350-3842**	2	SET SCREW (M8X1.25X10-MM)	
	6	1	**7J-9108**	1	SEAL-O-RING	
					AVAILABLE REPAIR KIT(S):	
			324-0398	1	KIT-SEAL (BOOM CYLINDER)	

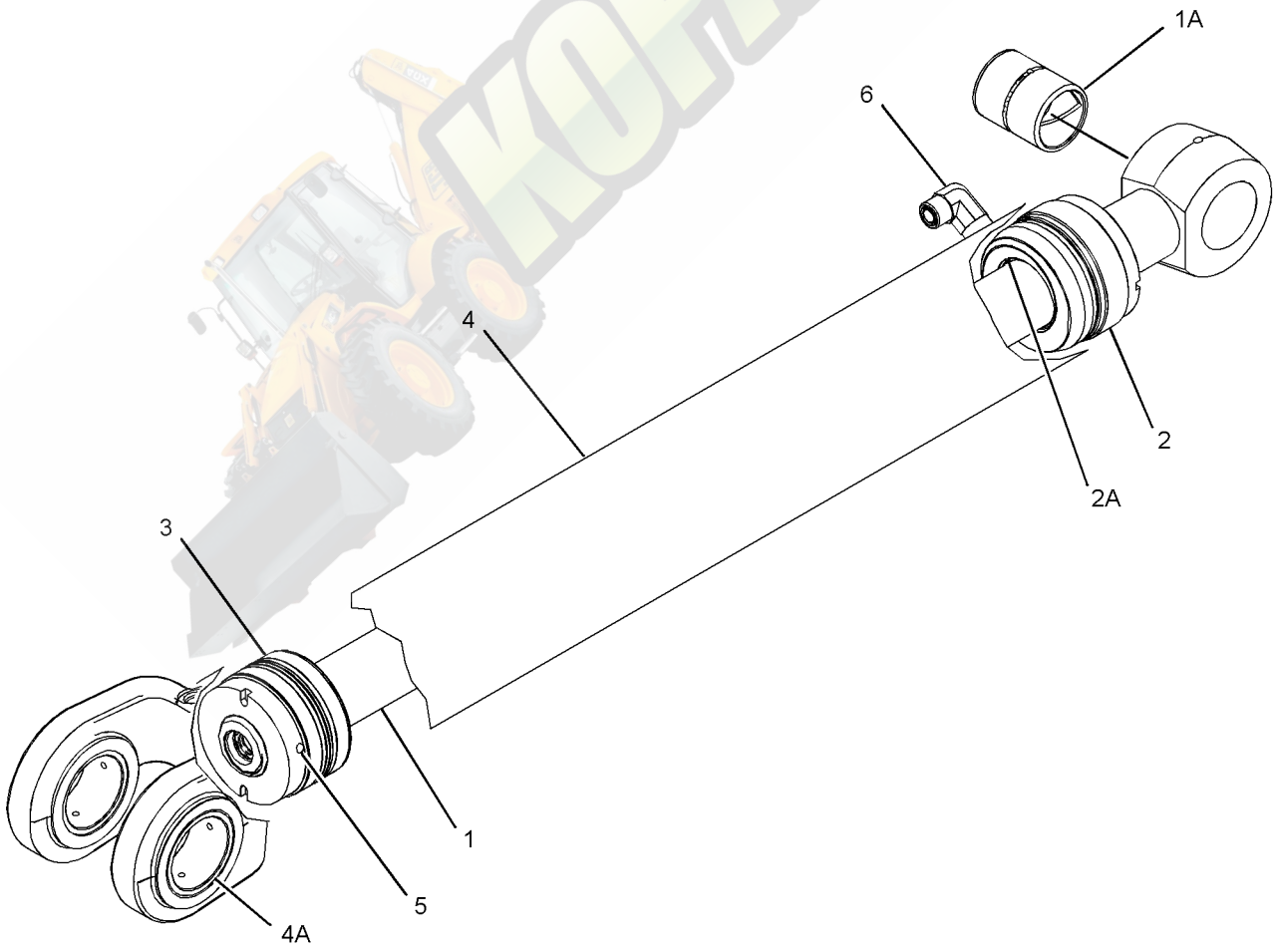

GRAPHIC #1 **<END>** g01991413

HYDRAULIC SYSTEM

190-3085 CYLINDER GP-COUPLER

S/N: JBA1-UP
PART OF 331-7412 LINES GP-HYDRAULIC
AN ATTACHMENT

SMCS-5133 **i03726473**

NOTE	REF NO	GRAPHIC REF	PART NUMBER	QTY	PART NAME 1 2 3 4 5 6 (PRODUCT LEVEL)	SEE PAGE
	1	1	**178-3893**	2	ROD	
	2	1	**190-3611**	1	VALVE GP-CHECK (COUPLER CYLINDER)	
					AVAILABLE REPAIR KIT(S):	
			180-9872	1	KIT-SEAL (COUPLER CYLINDER)	
					(INCLUDES LOCKNUT, SEALS, RINGS & RETAINER)	

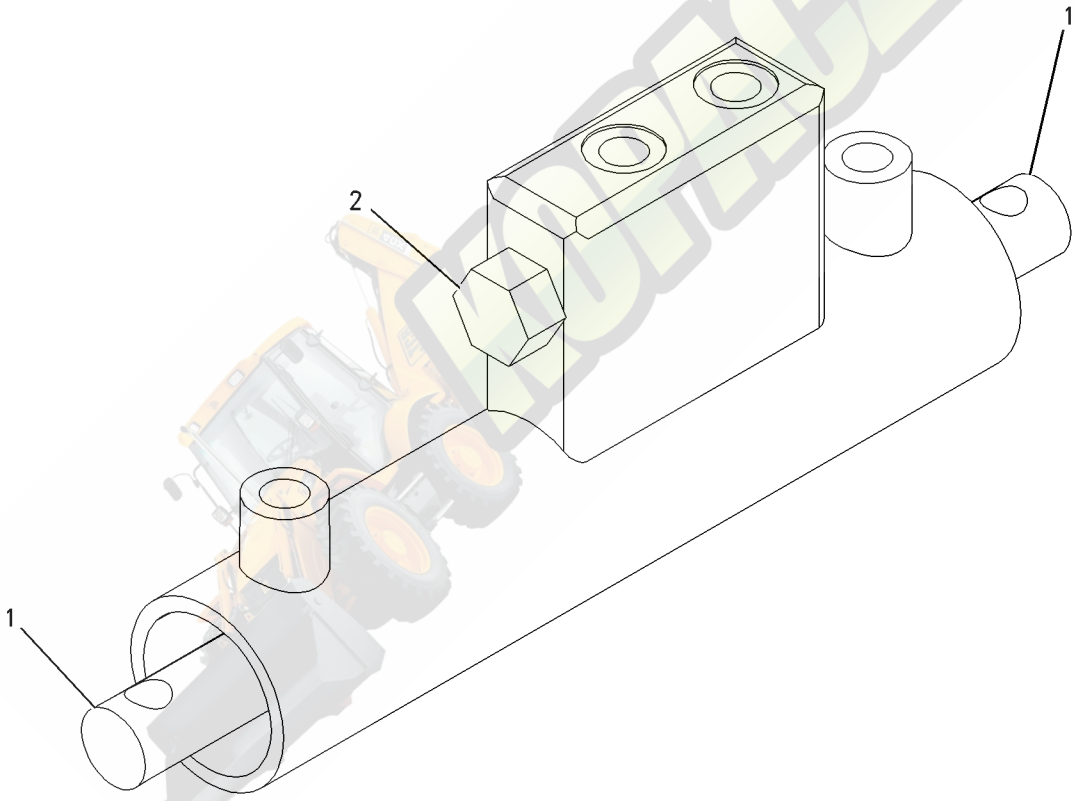

GRAPHIC #1 **<END>** g00944484

269-0381 CYLINDER GP-HYDRAULIC

S/N: JBA1-UP
100-MM (3.9-IN) BORE X 254-MM (10-IN) STROKE
PART OF 320-5933 FRAME GP-SLIDING

SMCS-7562 **i03656615**

NOTE	REF NO	GRAPHIC REF	PART NUMBER	QTY	PART NAME 1 2 3 4 5 6 (PRODUCT LEVEL)	SEE PAGE
	1	1	**3B-8489**	1	FITTING-GREASE	
	2	1	**3N-5739**	1	SPRING	
	3	1	**6E-1478**	1	PLUNGER	
	4	1	**102-3582**	1	WASHER (11X19.5X2.5-MM THK)	
	5	1	**233-0619**	1	SEAL-WIPER	
	6	1	**233-2589**	1	RING-WEAR	
	7	1	**233-2613**	1	BEARING	
	8	1	*269-0382*	1	CYLINDER AS-HYDRAULIC	
	8A	1	**9T-2883**	2	BEARING	
	9	1	*269-0386*	1	ROD AS	
	9A	1	**274-4274**	1	BEARING-SLEEVE	
	10	1	**9X-4611**	1	SEAL-O-RING	
M	11	1	**9X-6611**	1	SETSCREW-SOCKET (M10X1.5X16-MM)	
	12	1	**140-7649**	1	SEAL-PISTON	
	13	1	**167-2183**	1	SEAL AS-BUFFER	
	14	1	**167-2303**	1	SEAL-U-CUP	
	15	1	**2K-6830**	1	RING-BACKUP	
	16	1	**2Y-5821**	1	RING	
	17	1	**3E-6735**	1	SEAL-O-RING	

M-METRIC PART

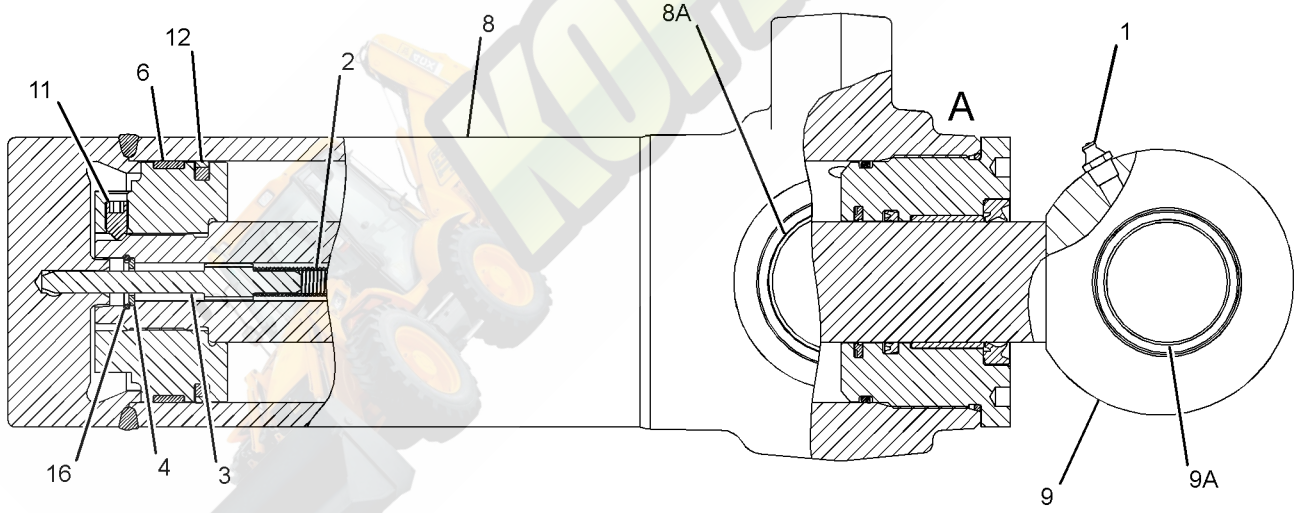

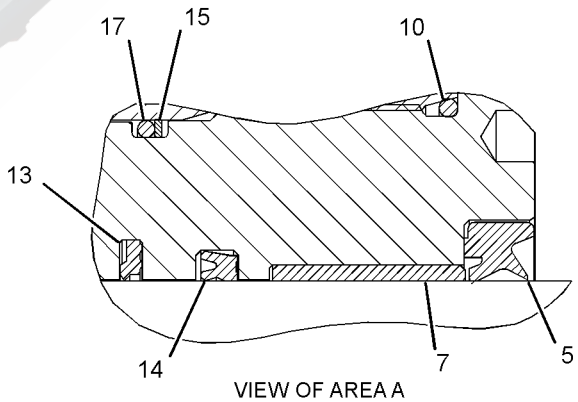

VIEW OF AREA A

GRAPHIC #1 **<END>** g01987994

HYDRAULIC SYSTEM

279-5556 CYLINDER GP-HYDRAULIC

S/N: JBA1-UP
100-MM (3.9-IN) BORE X 254-MM (10-IN) STROKE
PART OF 320-5933 FRAME GP-SLIDING

SMCS-7562 **i03656618**

NOTE	REF NO	GRAPHIC REF	PART NUMBER	QTY	PART NAME 1 2 3 4 5 6 (PRODUCT LEVEL)	SEE PAGE
	1	1	**3B-8489**	1	FITTING-GREASE	
	2	1	**3N-5739**	1	SPRING	
	3	1	**6E-1478**	1	PLUNGER	
	4	1	**102-3582**	1	WASHER (11X19.5X2.5-MM THK)	
	5	1	**233-0619**	1	SEAL-WIPER	
	6	1	**233-2589**	1	RING-WEAR	
	7	1	**233-2613**	1	BEARING	
	8	1	*269-0386*	1	ROD AS	
	8A	1	**274-4274**	1	BEARING-SLEEVE	
	9	1	**9X-4611**	1	SEAL-O-RING	
M	10	1	**9X-6611**	1	SETSCREW-SOCKET (M10X1.5X16-MM)	
	11	1	*279-5557*	1	CYLINDER AS-HYDRAULIC	
	11A	1	**9T-2883**	2	BEARING	
	12	1	**140-7649**	1	SEAL-PISTON	
	13	1	**167-2183**	1	SEAL AS-BUFFER	
	14	1	**167-2303**	1	SEAL-U-CUP	
	15	1	**2K-6830**	1	RING-BACKUP	
	16	1	**2Y-5821**	1	RING	
	17	1	**3E-6735**	1	SEAL-O-RING	

M-METRIC PART

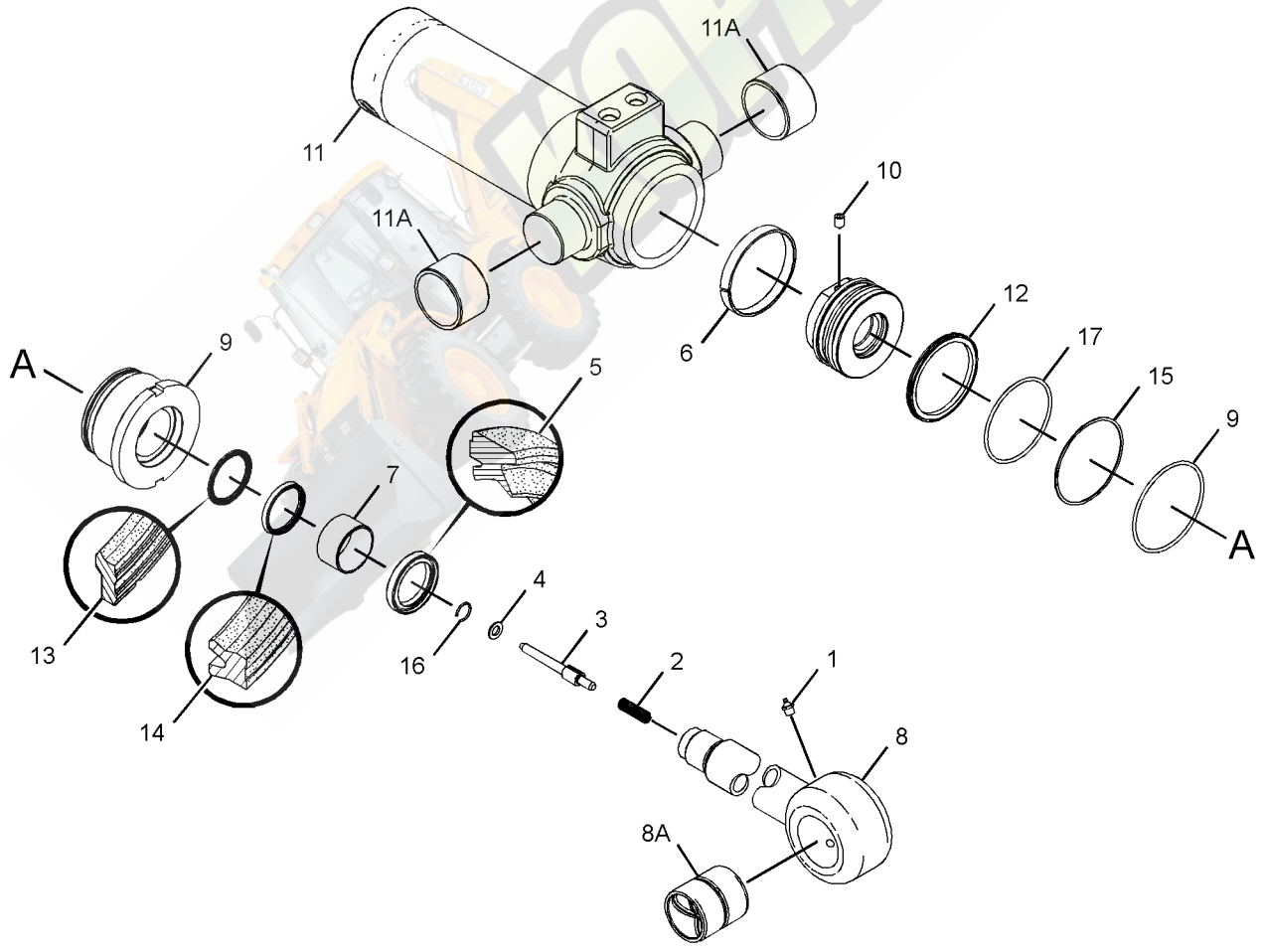

GRAPHIC #1 **<END>** g01987955

320-5934 CYLINDER GP-LIFT–RH

S/N: JBA1-UP
80-MM (3.15-IN) BORE X 704-MM (27.7-IN) STROKE
PART OF 325-1021 LOADER AR

SMCS-5102 **i03694774**

NOTE	REF NO	GRAPHIC REF	PART NUMBER	QTY	PART NAME 1 2 3 4 5 6 (PRODUCT LEVEL)	SEE PAGE
	1	1	**6V-8398**	2	SEAL-O-RING	
	2	1	**323-4212**	1	ROD AS	
	2A	1	**9R-0153**	2	BEARING-SLEEVE	
	3	1	**323-4219**	1	HEAD AS	
		1	**340-9315**	1	SEAL-O-RING	
	4	1	**323-4221**	1	PISTON AS	
		1	**161-7147**	1	SEAL-PISTON	
		1	**343-8050**	2	RING-WEAR	
	5	1	**323-4224**	1	CYLINDER AS-HYDRAULIC	
	5A	1	**9R-0153**	2	BEARING-SLEEVE	
	6	1	**350-3842**	2	SET SCREW (M8X1.25X10-MM)	
					AVAILABLE REPAIR KIT(S):	
			324-0356	1	KIT-SEAL (LIFT CYLINDER)	

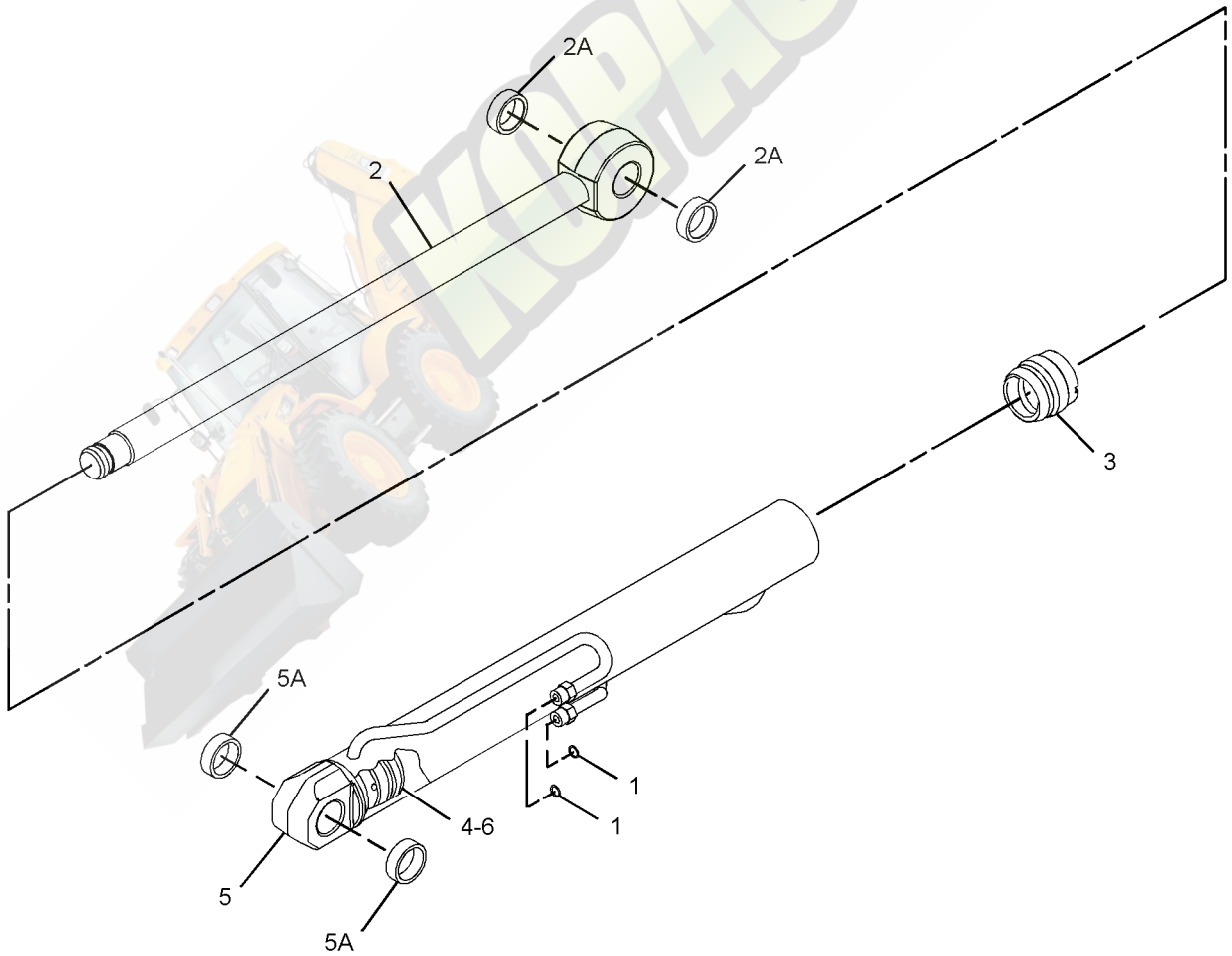

GRAPHIC #1 **<END>** g01995199

HYDRAULIC SYSTEM

351-9352 CYLINDER GP-LIFT–LH

S/N: JBA1-UP
80-MM (3.15-IN) BORE X 704-MM (27.7-IN) STROKE
PART OF 325-1021 LOADER AR

SMCS-5102 **i03695665**

NOTE	REF NO	GRAPHIC REF	PART NUMBER	QTY	PART NAME 1 2 3 4 5 6 (PRODUCT LEVEL)	SEE PAGE
	1	1	**6V-8398**	2	SEAL-O-RING	
	2	1	**323-4212**	1	ROD AS	
	2A	1	**9R-0153**	2	BEARING-SLEEVE	
	3	1	**323-4219**	1	HEAD AS	
		1	**340-9315**	1	SEAL-O-RING	
	4	1	**323-4221**	1	PISTON AS	
		1	**161-7147**	1	SEAL-PISTON	
		1	**343-8050**	2	RING-WEAR	
	5	1	**350-3842**	2	SET SCREW (M8X1.25X10-MM)	
	6	1	**351-9353**	1	CYLINDER AS-HYDRAULIC	
	6A	1	**9R-0153**	2	BEARING-SLEEVE	
					AVAILABLE REPAIR KIT(S):	
			324-0356	1	KIT-SEAL (LIFT CYLINDER)	

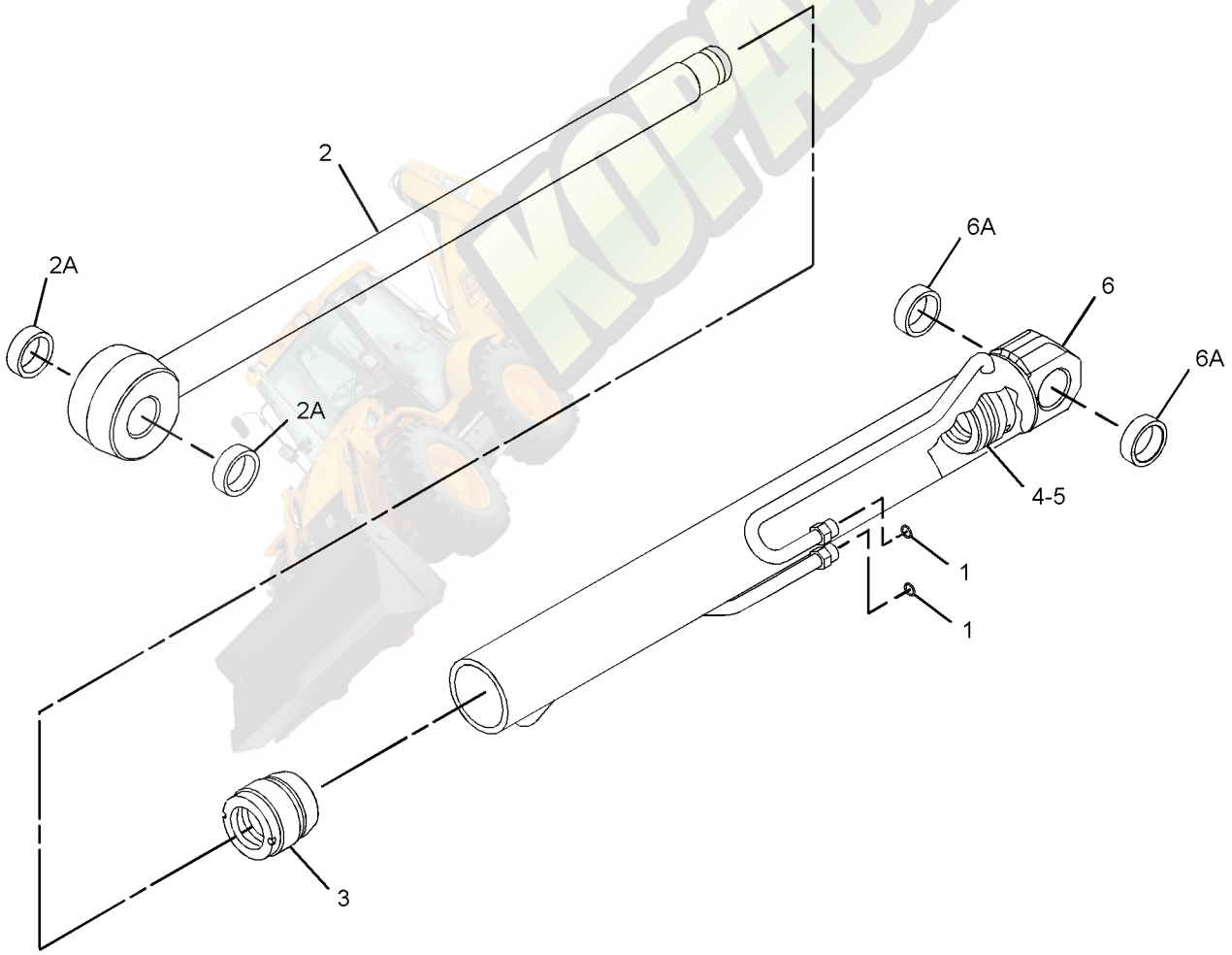

GRAPHIC #1 **<END>** g01995814

226-5540 CYLINDER GP-MULTIPURPOSE BUKT

S/N: JBA1-UP
76-MM (2.99-IN) BORE X 262-MM (10.31-IN) STROKE
PART OF 318-7246, 318-7247, 318-7248, 318-7251, 320-9948 BUCKET
AR-MULTIPURPOSE
AN ATTACHMENT

SMCS-5457 **i02983289**

NOTE	REF NO	GRAPHIC REF	PART NUMBER	QTY	PART NAME 1 2 3 4 5 6 (PRODUCT LEVEL)	SEE PAGE
	1	1	**3B-8489**	2	FITTING-GREASE	
	2	1	**9S-8004**	2	PLUG	
	3	1	**3J-1907**	2	SEAL-O-RING	
	4	1	**9T-4007**	2	BEARING	
					AVAILABLE REPAIR KIT(S):	
			230-9357	1	KIT-SEAL (BUCKET CYLINDER)	
					(INCLUDES WIPER SEAL, O-RINGS, MOISTURE EXCLUDER & POLYPAK)	

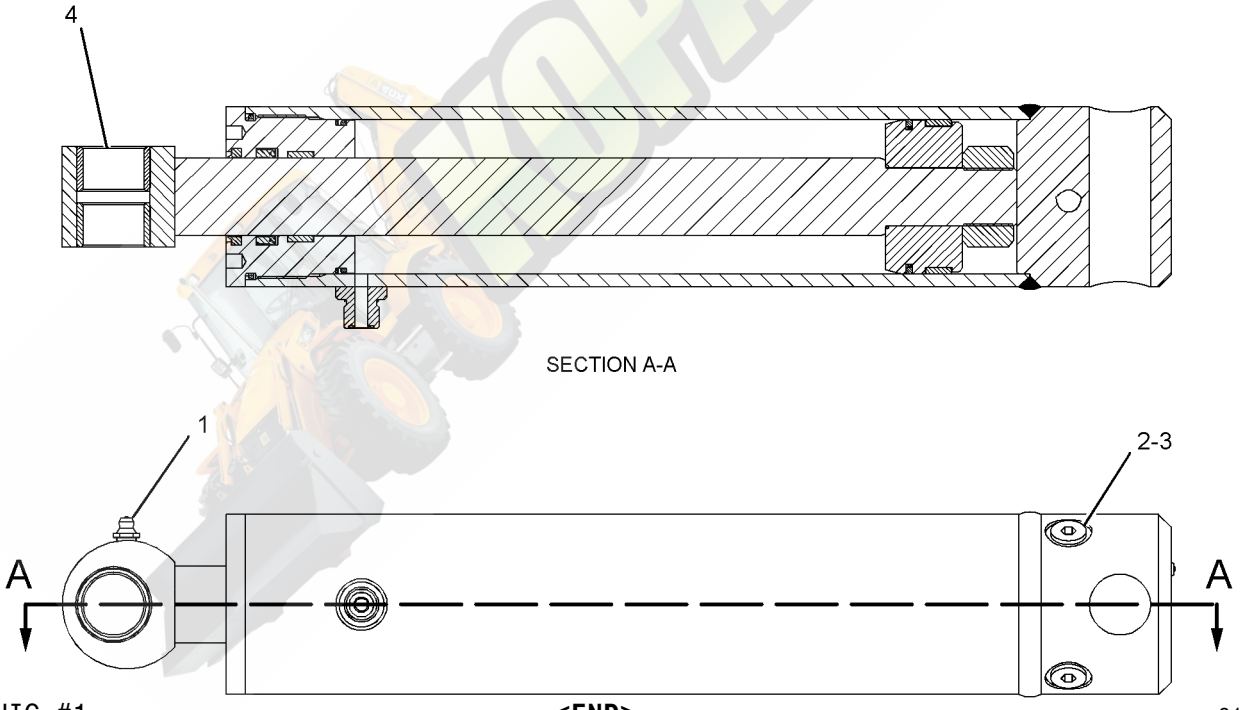

GRAPHIC #1 **<END>** g01086486

HYDRAULIC SYSTEM

320-5938 CYLINDER GP-STABILIZER

S/N: JBA1-UP
70-MM (2.75-IN) BORE X 700-MM (27.55-IN) STROKE
PART OF 327-0112, 327-0113 FRAME AR-LOADER
AN ATTACHMENT

SMCS-5468 **i03693801**

NOTE	REF NO	GRAPHIC REF	PART NUMBER	QTY	PART NAME 1 2 3 4 5 6 (PRODUCT LEVEL)	SEE PAGE
	1	1	**324-0496**	1	CYLINDER HEAD AS	
	1A	1	**323-2465**	1	BEARING-SLEEVE	
		1	**338-2412**	1	SEAL-WIPER	
		1	**338-2442**	1	SEAL-U-CUP	
		1	**340-9308**	1	SEAL-O-RING	
	2	1	**324-0498**	1	PISTON AS	
		1	**161-7145**	1	SEAL-PISTON	
		1	**340-6272**	2	RING-WEAR	
		1	**340-9311**	1	SEAL-O-RING	
	3	1	**324-0505**	1	ROD AS-HYDRAULIC CYLINDER	
	4	1	**324-0516**	1	CYLINDER AS-HYDRAULIC	
	5	1	**350-3842**	2	SET SCREW (M8X1.25X10-MM)	
	6	1	**6V-8397**	2	SEAL-O-RING	
					AVAILABLE REPAIR KIT(S):	
			324-0355	1	KIT-SEAL (STABILIZER CYLINDER)	

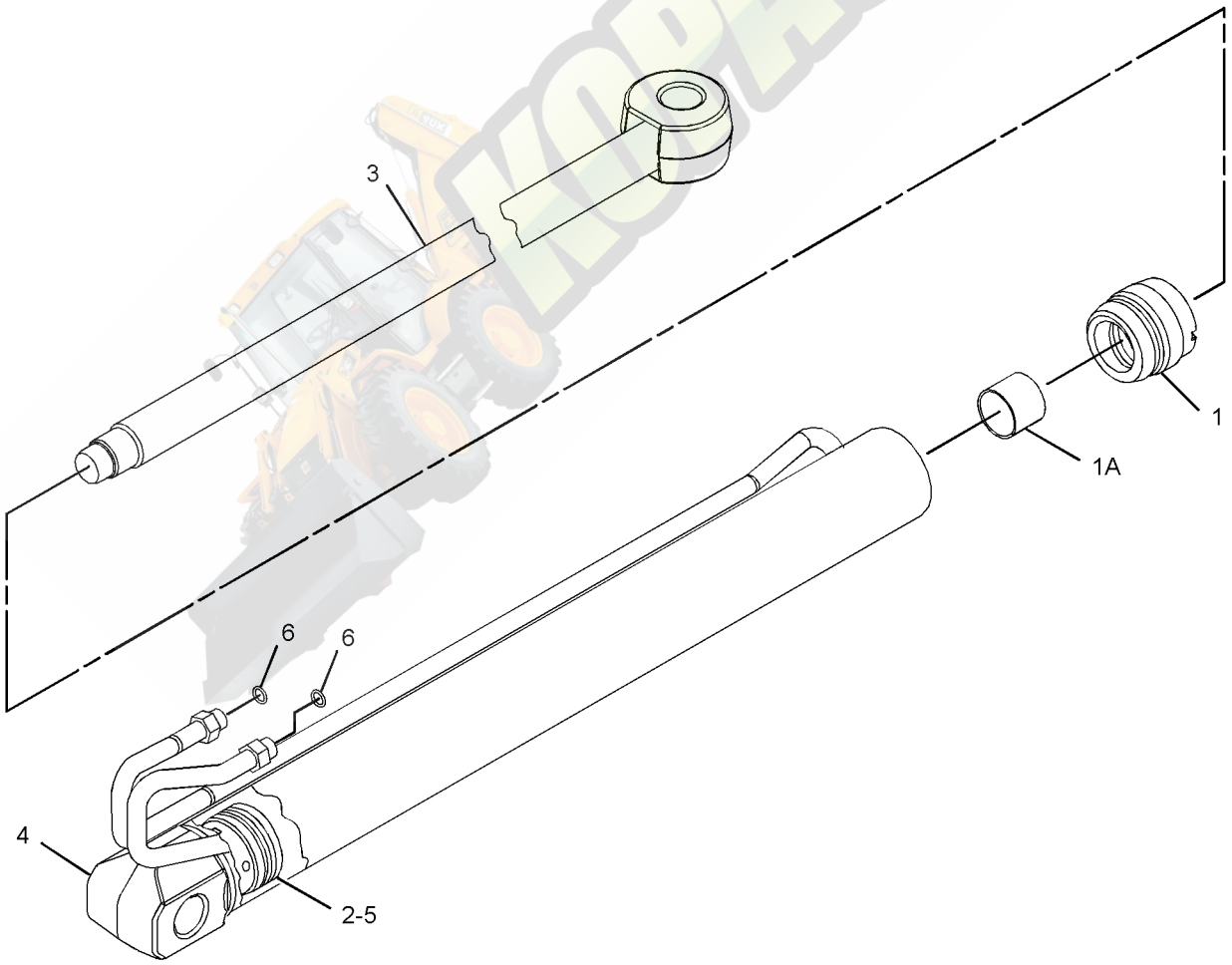

GRAPHIC #1 **<END>** g01993459

320-5935 CYLINDER GP-STICK

S/N: JBA1-UP
70-MM (2.75-IN) BORE X 1050-MM (41.35-IN) STROKE
PART OF 324-0550, 329-9749 STICK GP-EXTENDABLE
AN ATTACHMENT

SMCS-5458 **i03693945**

NOTE	REF NO	GRAPHIC REF	PART NUMBER	QTY	PART NAME 1 2 3 4 5 6 (PRODUCT LEVEL)	SEE PAGE
	1	1	**6V-8398**	1	SEAL-O-RING	
	2	1	**324-0436**	1	ROD AS	
	3	1	**324-0496**	1	CYLINDER HEAD AS	
	3A	1	**323-2465**	1	BEARING-SLEEVE	
		1	**338-2412**	1	SEAL-WIPER	
		1	**338-2442**	1	SEAL-U-CUP	
		1	**340-9308**	1	SEAL-O-RING	
	4	1	**324-0498**	1	PISTON AS	
		1	**161-7145**	1	SEAL-PISTON	
		1	**340-6272**	2	RING-WEAR	
		1	**340-9311**	1	SEAL-O-RING	
	5	1	**324-0501**	1	CYLINDER AS	
	6	1	**350-3842**	2	SET SCREW (M8X1.25X10-MM)	
					AVAILABLE REPAIR KIT(S):	
			324-0355	1	KIT-SEAL (EXTENDABLE STICK)	

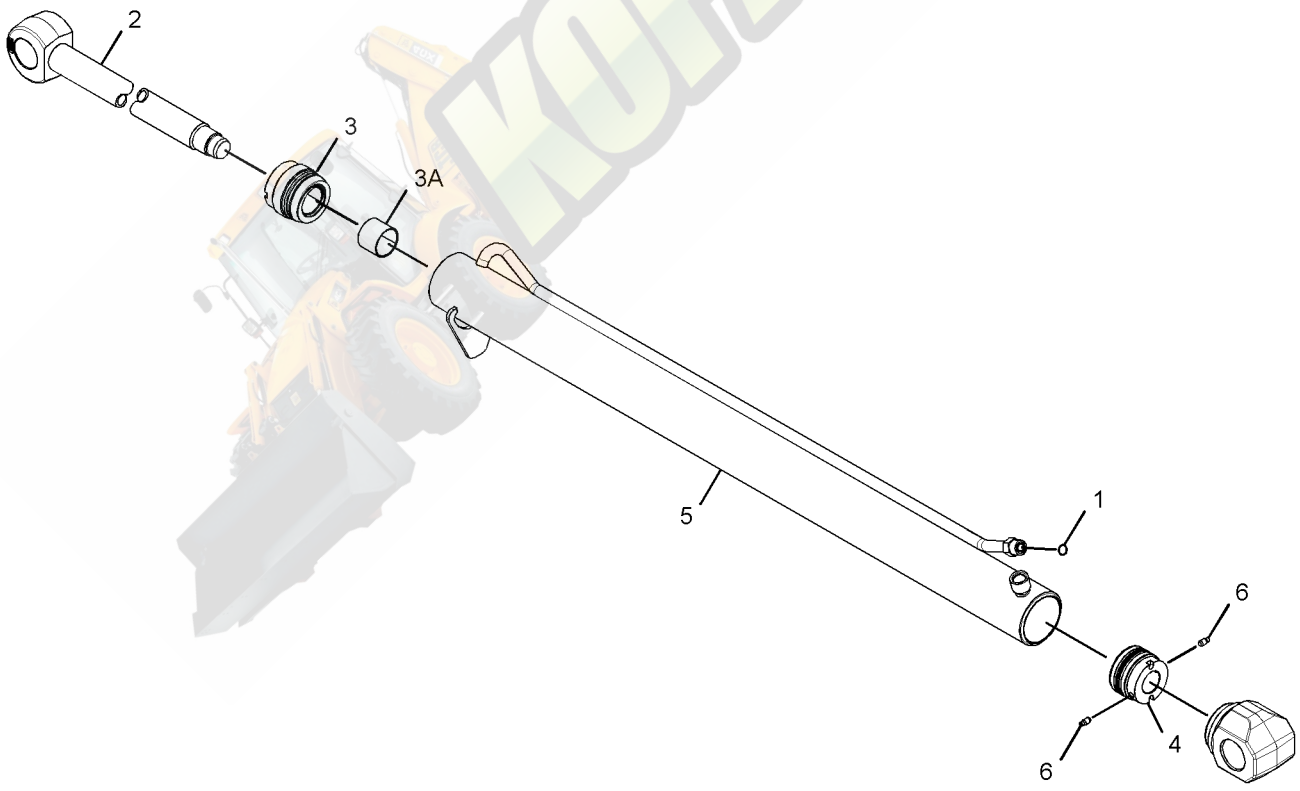

GRAPHIC #1 **<END>** g01991690

HYDRAULIC SYSTEM

320-6521 CYLINDER GP-STICK

S/N: JBA1-UP
120-MM (4.7-IN) BORE X 677-MM (26.7-IN) STROKE
PART OF 334-0686, 334-0691, 350-6934, 350-6935, 350-6944, 350-6945 BACKHOE AR-EXTENDABLE STICK, 334-0694, 350-6933 BACKHOE AR-STANDARD STICK AN ATTACHMENT

SMCS-5458 **i03695660**

NOTE	REF NO	GRAPHIC REF	PART NUMBER	QTY	PART NAME 1 2 3 4 5 6 (PRODUCT LEVEL)	SEE PAGE
	1	1	**6V-8398**	1	SEAL-O-RING	
	2	1	**324-0367**	1	CYLINDER HEAD AS	
	2A	1	**323-2474**	1	BEARING-SLEEVE	
		1	**338-2416**	1	SEAL-WIPER	
		1	**338-2446**	1	SEAL-U-CUP	
		1	**340-9322**	1	SEAL-O-RING	
	3	1	**324-0369**	1	PISTON AS	
		1	**340-6339**	1	SEAL-PISTON	
		1	**340-9314**	1	SEAL-O-RING	
		1	**343-8053**	2	RING-WEAR	
	4	1	**324-0406**	1	ROD AS	
	4A	1	**331-1520**	1	BEARING	
	5	1	**324-0417**	1	CYLINDER AS	
	5A	1	**215-1906**	2	BEARING-SLEEVE	
	6	1	**350-3842**	2	SET SCREW (M8X1.25X10-MM)	
	7	1	**7J-9108**	1	SEAL-O-RING	
					AVAILABLE REPAIR KIT(S):	
			324-0398	1	KIT-SEAL (STICK CYLINDER)	

320-6521 **CYLINDER GP-STICK** *(contd.)* **i03695660**

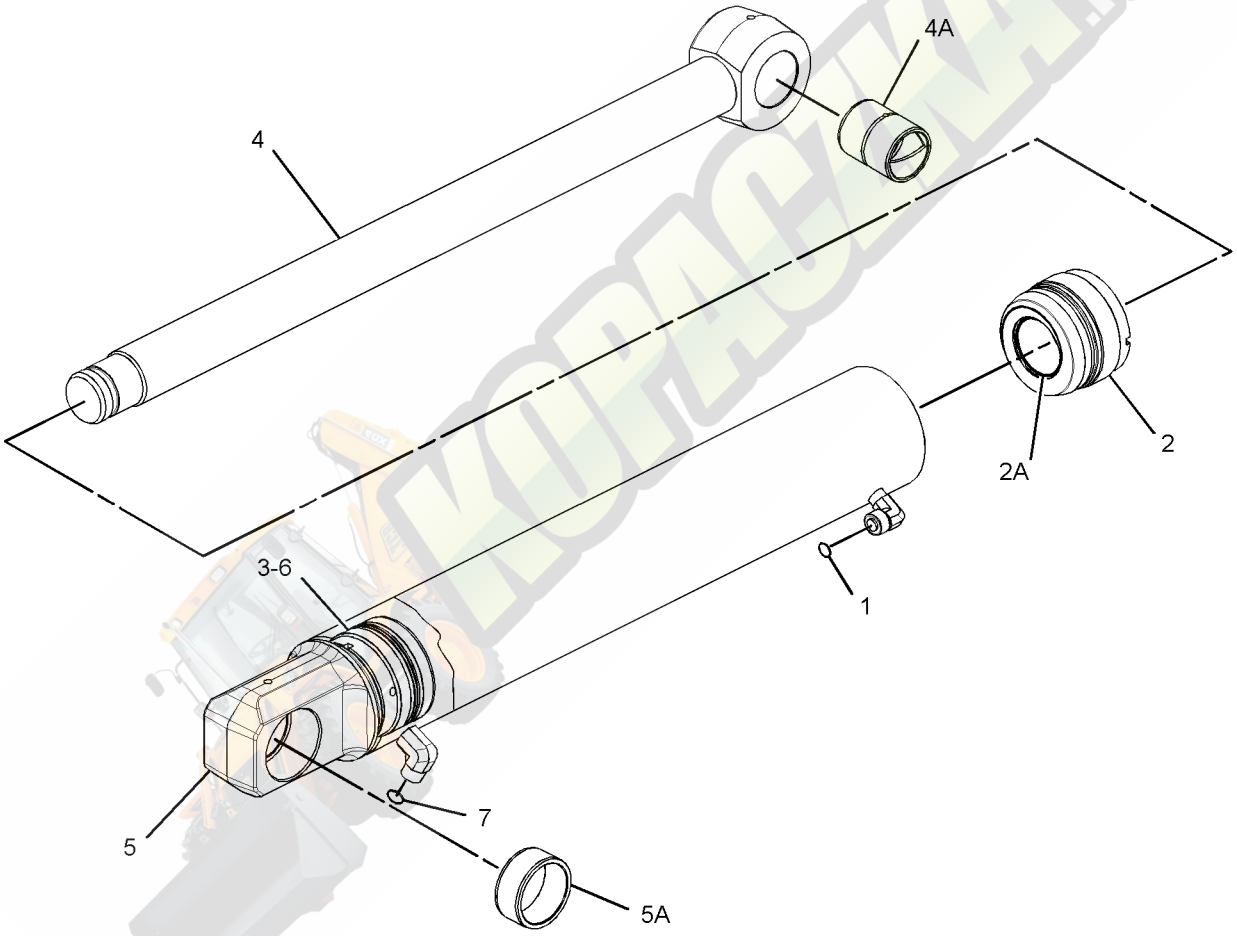

GRAPHIC #1 **<END>** g01993595

HYDRAULIC SYSTEM

333-5427 CYLINDER GP-TILT

S/N: JBA1-UP
70-MM (2.75-IN) BORE X 885-MM (34.84-IN) STROKE
PART OF 325-1021 LOADER AR

SMCS-5104 **i03694762**

NOTE	REF NO	GRAPHIC REF	PART NUMBER	QTY	PART NAME 1 2 3 4 5 6 (PRODUCT LEVEL)	SEE PAGE
	1	1	**6V-8398**	1	SEAL-O-RING	
	2	1	**324-0512**	1	HEAD AS	
	2A	1	**323-2466**	1	BEARING	
		1	**338-2413**	1	SEAL-WIPER	
		1	**338-2443**	1	SEAL-U-CUP	
		1	**340-9308**	1	SEAL-O-RING	
	3	1	**324-0519**	1	ROD AS	
	3A	1	**9R-0153**	2	BEARING-SLEEVE	
	4	1	**324-0525**	1	PISTON AS	
		1	**161-7145**	1	SEAL-PISTON	
		1	**340-6272**	2	RING-WEAR	
	5	1	**324-0530**	1	CYLINDER AS-HYDRAULIC	
	5A	1	**9R-0153**	2	BEARING-SLEEVE	
	6	1	**350-3842**	2	SET SCREW (M8X1.25X10-MM)	
					AVAILABLE REPAIR KIT(S):	
			324-0411	1	KIT-SEAL (TILT CYLINDER)	

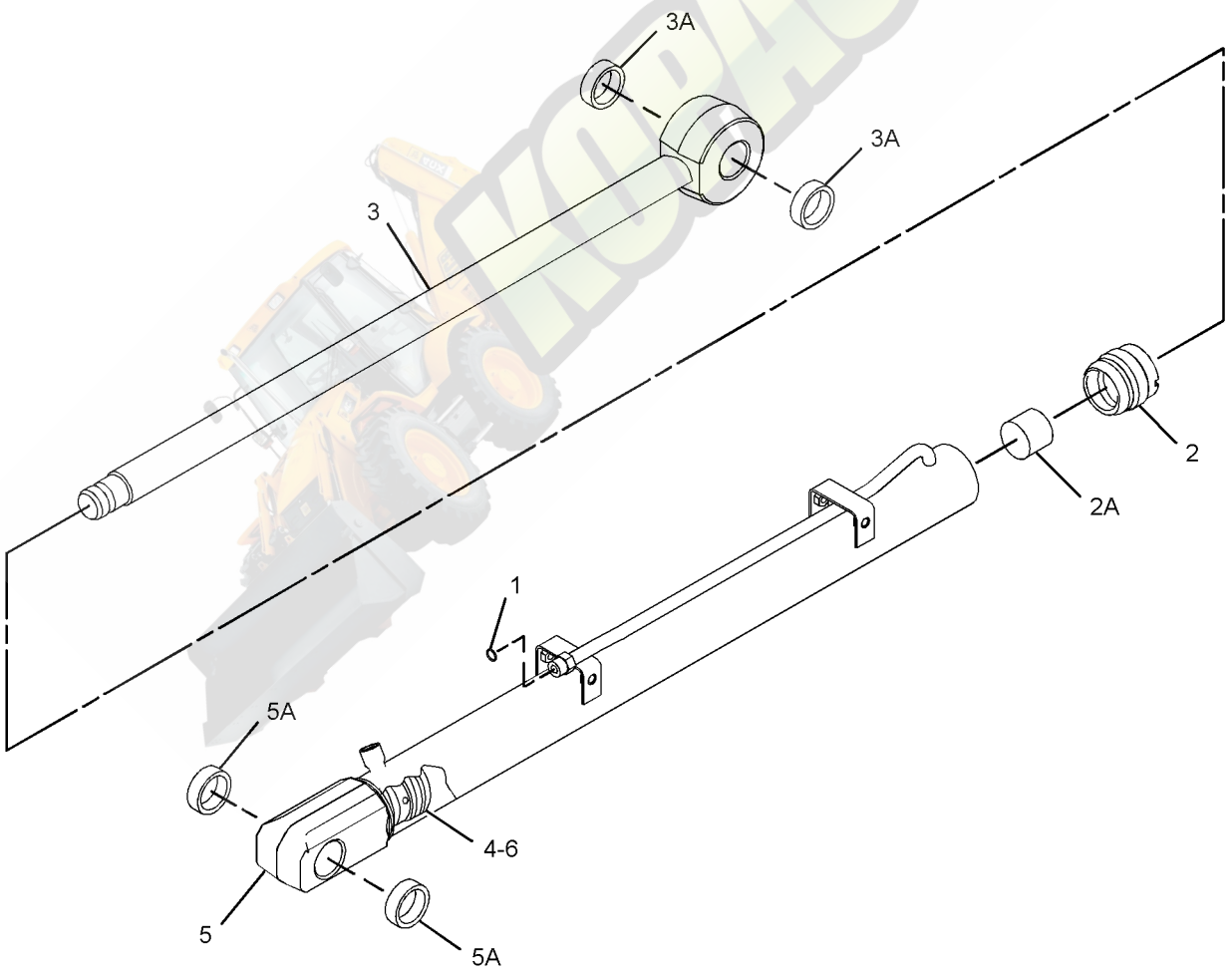

GRAPHIC #1 **<END>** g01994376

112-1826 DRIVE & MTG GP-PUMP

S/N: JBA1-UP
PART OF 329-0306, 329-0307 POWER TRAIN AR
AN ATTACHMENT

SMCS-3108, 5070 **i03458260**

NOTE	REF NO	GRAPHIC REF	PART NUMBER	QTY	PART NAME 1 2 3 4 5 6 (PRODUCT LEVEL)	SEE PAGE
M	1	1	**8T-9405**	4	BOLT-SOCKET HEAD (M4X0.7X16-MM)	
	2	1	**9U-8886**	1	RING-SEAL	
	3	1	**115-1918**	1	PLATE	
	4	1	**117-3534**	1	ADAPTER	
	5	1	**274-4555**	1	HUB	
Y	6	1	**128-5596**	1	SHAFT GP-PUMP DRIVE	461
	7	1	**175-7904**	1	SEAL-O-RING	
	8	1	**8T-4122**	2	WASHER-HARD (17X32X3.5-MM THK)	
M	9	1	**8T-7338**	2	BOLT (M16X2X45-MM)	

M-METRIC PART
Y-SEPARATE ILLUSTRATION

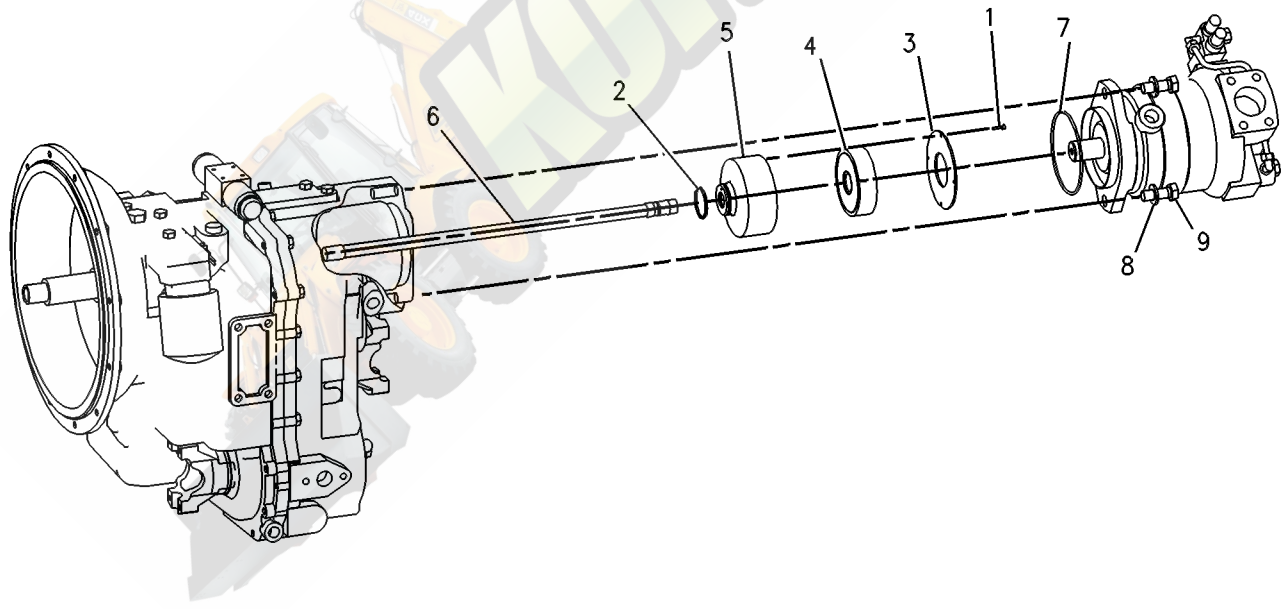

GRAPHIC #1 **<END>** g00131524

HYDRAULIC SYSTEM

325-6257 FILTER GP-OIL

S/N: JBA1-UP

PART OF 334-8021 LINES GP-RETURN

SMCS-5068 **i03038500**

NOTE	REF NO	GRAPHIC REF	PART NUMBER	QTY	PART NAME 1 2 3 4 5 6 (PRODUCT LEVEL)	SEE PAGE
	1	1	**308-3025**	1	BASE AS-FILTER	
	2	1	*148-8335*	1	CONNECTOR AS	
		1	**5K-9090**	1	SEAL-O-RING	
		1	**6V-8635**	1	CONNECTOR (SEAL)	
		1	**7M-8485**	1	SEAL-O-RING	
	3	1	*148-8407*	1	PLUG AS (STORAGE)	
		1	**3J-1907**	1	SEAL-O-RING	
		1	**9S-4191**	1	PLUG-O-RING	
	4	1	**6V-9830**	2	CAP AS	
	5	1	**6V-9833**	1	CAP AS (HYDRAULIC RETURN)	
	6	1	**8C-3451**	1	CAP-DUST	
	7	1	**126-1817**	1	FILTER-OIL (ULTRA HIGH EFFICIENCY)	
	8	1	**8C-3446**	1	VALVE-FLUID SAMPLING	

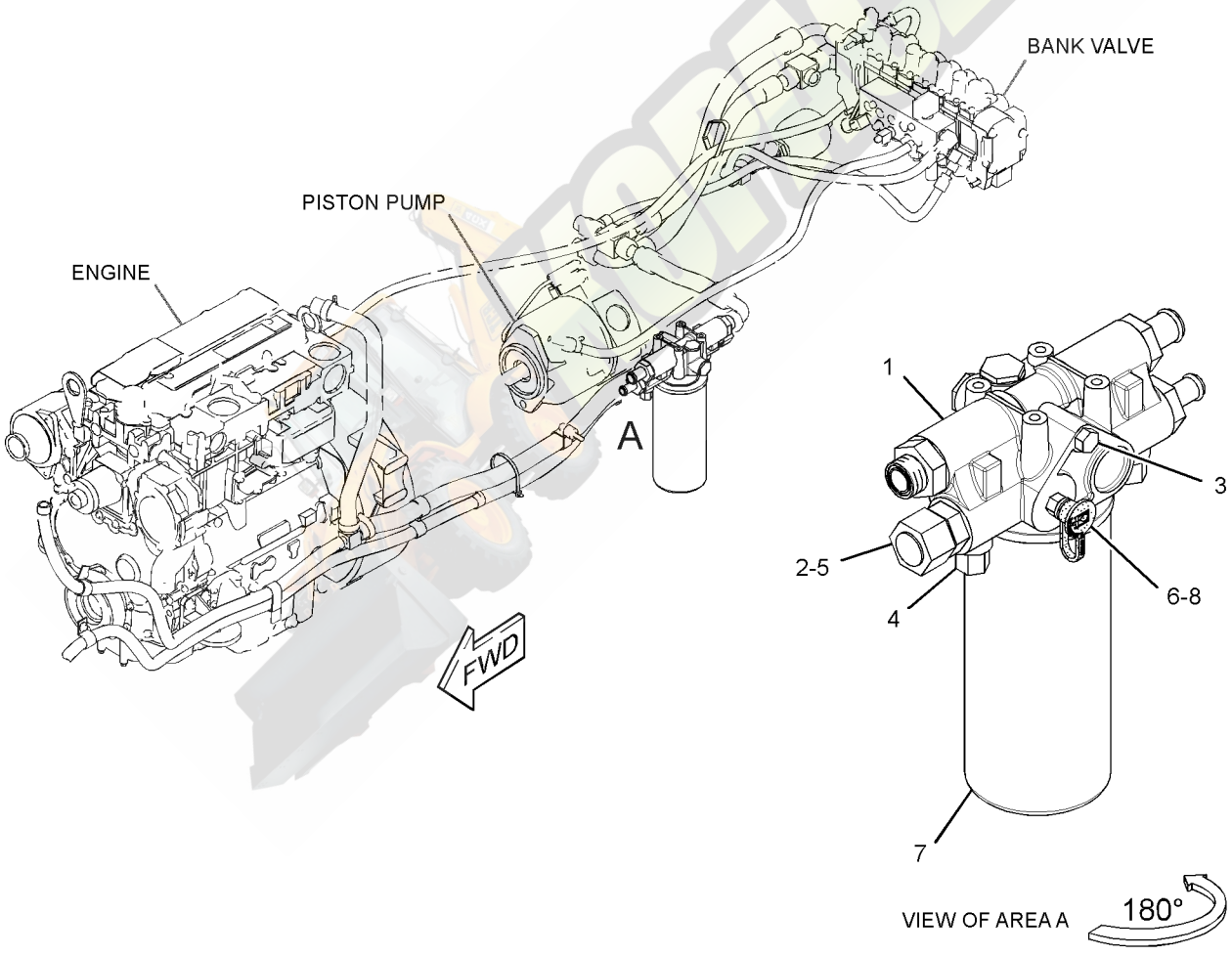

GRAPHIC #1 **<END>** g01573096

132-8769 FITTING GP-HYDRAULIC–QUICK DISCONNECT

S/N: JBA1-UP
AN ATTACHMENT

SMCS-5057 **i01499420**

NOTE	REF NO	GRAPHIC REF	PART NUMBER	QTY	PART NAME 1 2 3 4 5 6 (PRODUCT LEVEL)	SEE PAGE
	1	1	**106-0406**	1	FITTING (QUICK DISCONNECT, MALE)	
	2	1	**106-0401**	1	FITTING (QUICK DISCONNECT, FEMALE)	

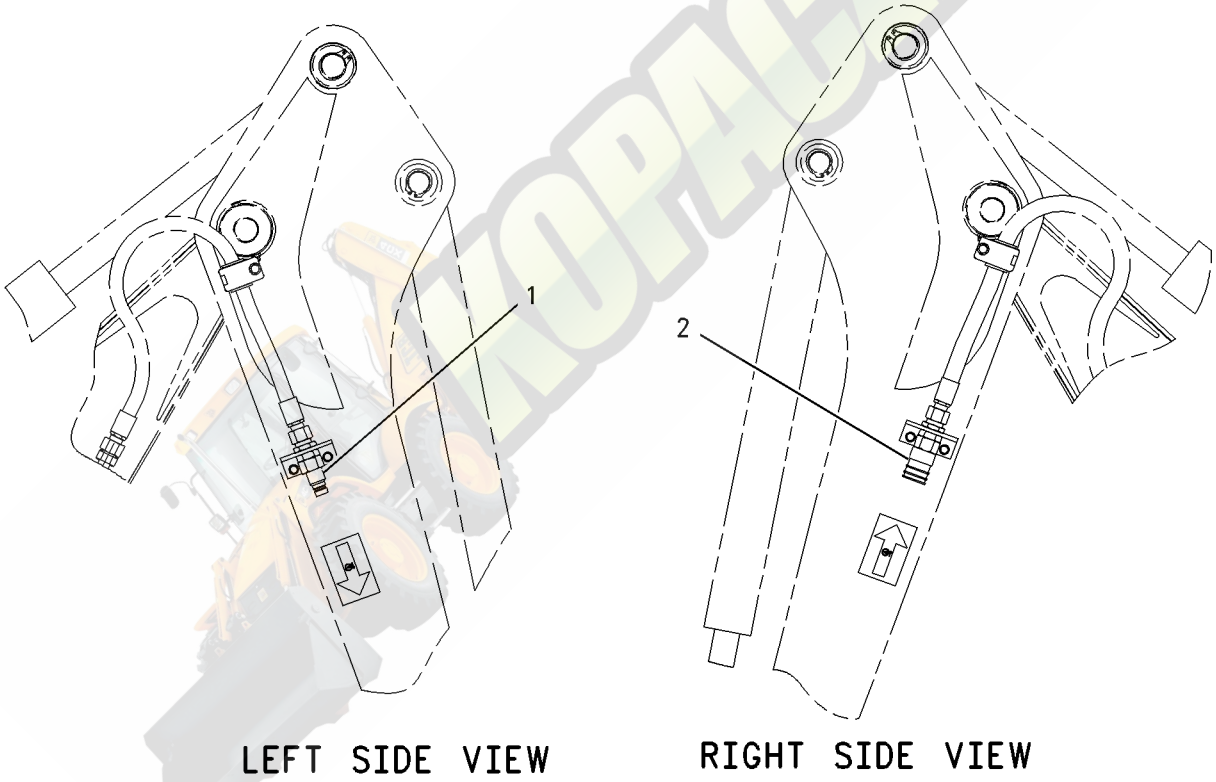

GRAPHIC #1 **<END>** g00778121

263-7645 FITTING GP-HYDRAULIC–QUICK DISCONNECT

S/N: JBA1-UP
PART OF 234-9402 OPTION AR
AN ATTACHMENT

SMCS-5057 **i03259222**

NOTE	REF NO	GRAPHIC REF	PART NUMBER	QTY	PART NAME 1 2 3 4 5 6 (PRODUCT LEVEL)	SEE PAGE
	1	1	**106-0401**	1	FITTING (QUICK DISCONNECT, FEMALE)	
	2	1	**263-7646**	1	COUPLER-QUICK DISCONNECT (FEMALE)	

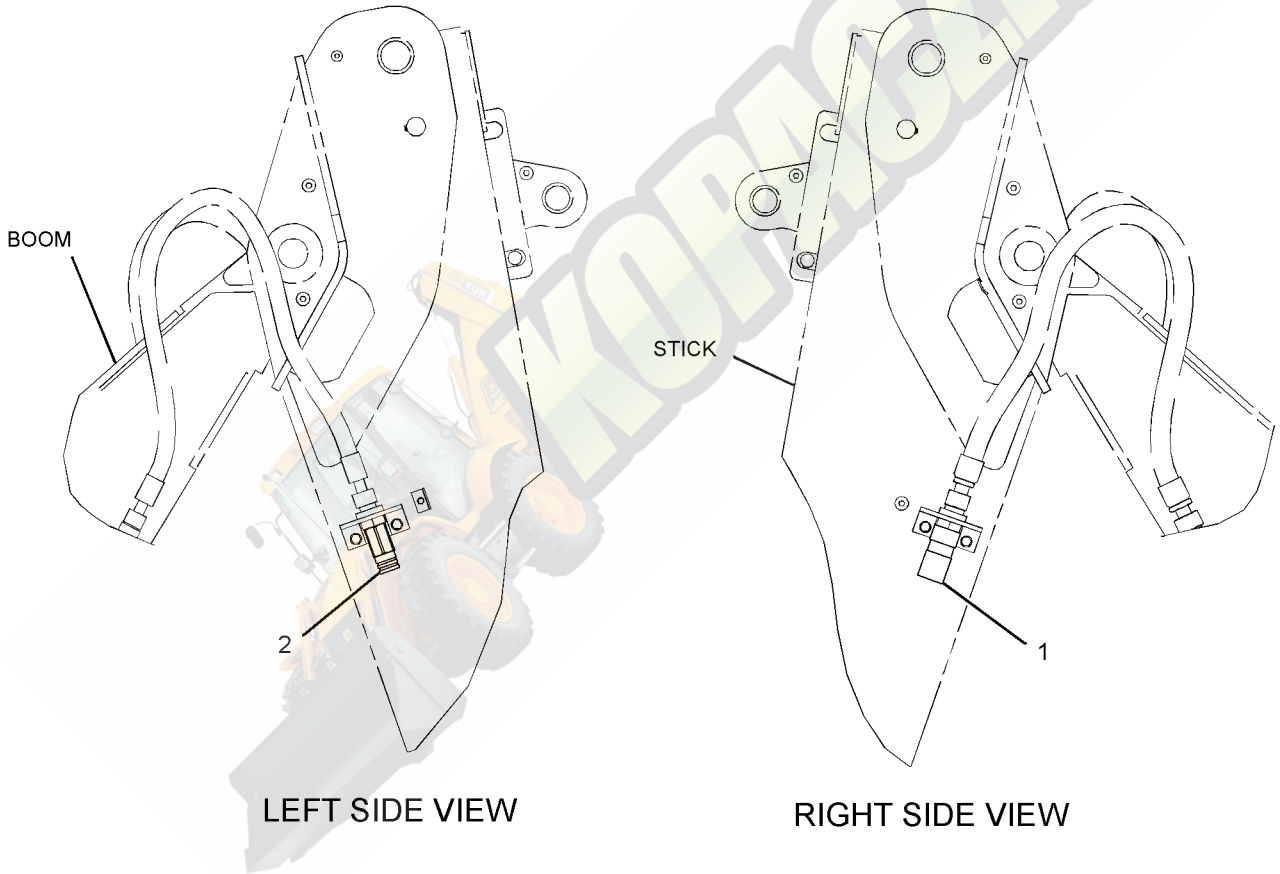

GRAPHIC #1 **<END>** g01664793

329-0124 HYDRAULIC AR

S/N: JBA1-UP

PART OF 329-0079 COMMON AR

SMCS-5050 **i03665582**

NOTE	PART NUMBER	QTY	PART NAME 1 2 3 4 5 6 (PRODUCT LEVEL)	SEE PAGE
Y	**272-9700**	1	CONTROL GP-HANDLE (RH, JOYSTICK)	627
Y	*321-7231*	1	LINES GP-BACKHOE	397
Y	*299-6859*	1	LINES GP-PILOT (AUXILIARY)	427
Y	*333-0699*	1	LINES GP-PILOT (LOADER)	428
Y	*338-0432*	1	LINES GP-PILOT (BACKHOE)	430
Y	*338-0433*	1	LINES GP-PILOT (SUPPLY)	432
Y	*339-4981*	1	LINES GP-PILOT (SIGNAL)	435
Y	*335-1692*	1	LINES GP-PUMP	437
Y	*334-8021*	1	LINES GP-RETURN	439
Y	*321-7205*	1	LINES GP-SIDESHIFT LOCK	443
Y	*299-6857*	1	LINES GP-STABILIZER	444
Y	*326-1803*	1	LINES GP-SWING	448
Y	**289-6370**	1	PUMP GP-PISTON	458
Y	*324-5929*	1	TANK & MTG GP-HYDRAULIC	462
Y	*332-9781*	1	VALVE & MTG GP-BANK	466
Y	*267-5635*	1	WIRING GP-CONTROL (JOYSTICK, LH)	205
	272-5420	1	FILM-CONTROL (LOADER, JOYSTICK)	
			(ON THE SIDE CONSOLE NEXT TO THE SWITCHES & NEXT TO THE LOADER CONTROL JOYSTICK)	

Y-SEPARATE ILLUSTRATION

<END>

HYDRAULIC SYSTEM

321-7246 LINES GP-AUXILIARY HYDRAULIC–SIDESHIFT

S/N: JBA1-UP

PART OF 344-1302, 344-1303 LINES GP-BACKHOE AUXILIARY AN ATTACHMENT

SMCS-5057 **i03664543**

NOTE	REF NO	GRAPHIC REF	PART NUMBER	QTY	PART NAME 1 2 3 4 5 6 (PRODUCT LEVEL)	SEE PAGE
	1	1	*313-3477*	2	TEE AS	
					(EACH INCLUDES)	
		1	**5K-9090**	1	SEAL-O-RING	
		1	**7J-9108**	2	SEAL-O-RING	
		1	**313-3476**	1	TEE	
	2	1	**321-3096**	1	TUBE AS	
M	3	1	**8T-4908**	2	BOLT (M8X1.25X25-MM)	
I	4	1	**321-7303**	2	HOSE AS	
I	5	1	**334-4943**	1	HOSE AS	
	6	1	**2P-1293**	1	LOCKNUT (1-3/16-12-THD)	
	7	1	**6V-1249**	2	GROMMET	
	8	1	**8T-4224**	2	WASHER-HARD (8.8X16X2-MM THK)	

I-REFER TO HYDRAULIC INFORMATION SYSTEM
M-METRIC PART

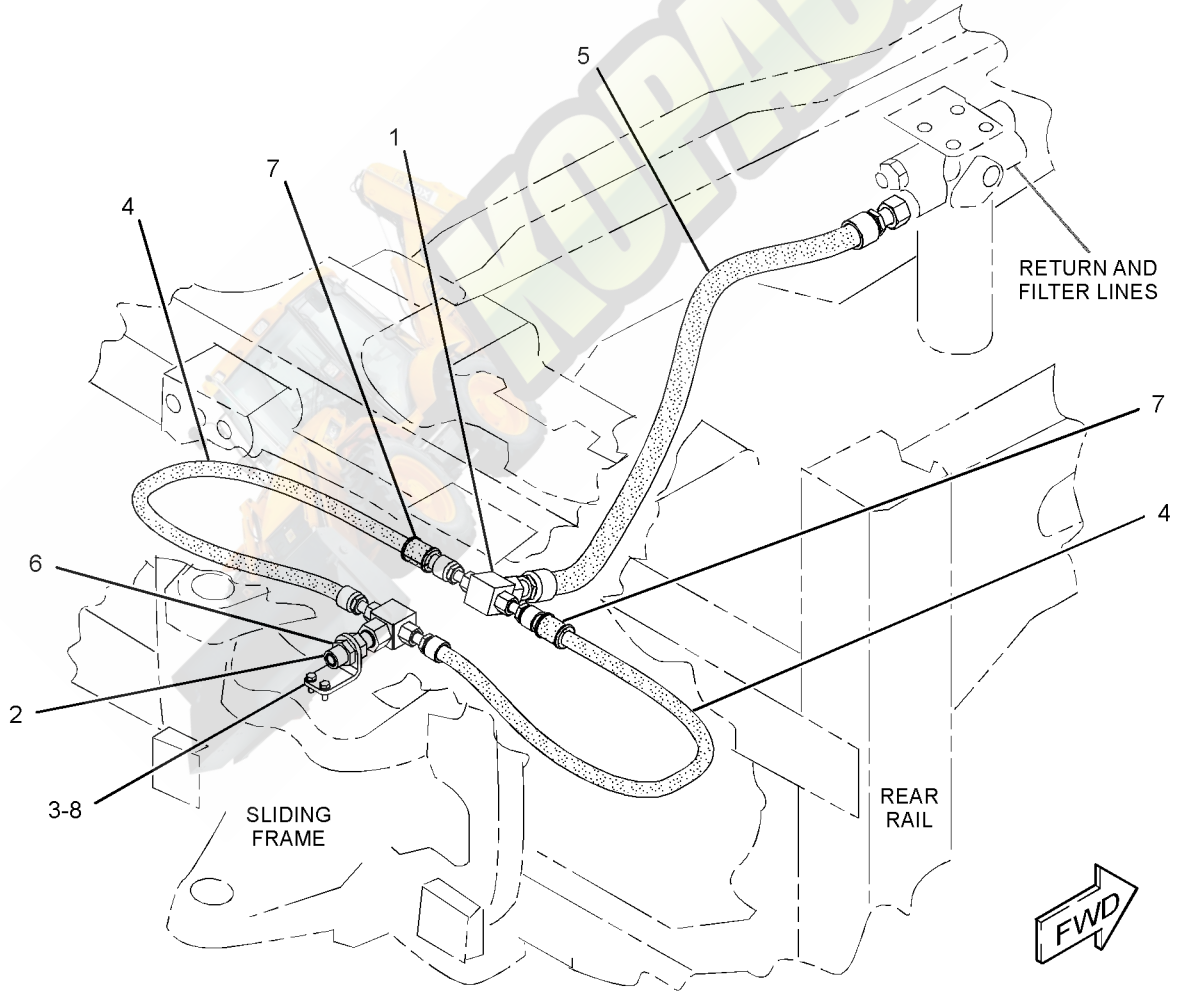

GRAPHIC #1 **<END>** g01970434

327-6983 LINES GP-AUXILIARY HYDRAULIC–EXTENDABLE STICK

S/N: JBA1-UP

PART OF 344-1303 LINES GP-BACKHOE AUXILIARY AN ATTACHMENT

SMCS-5057 **i03664550**

NOTE	REF NO	GRAPHIC REF	PART NUMBER	QTY	PART NAME 1 2 3 4 5 6 (PRODUCT LEVEL)	SEE PAGE
	1	1	**123-7637**	2	CAP	
	2	1	**225-7733**	2	PLATE	
	3	1	*241-6226*	1	TEE AS	
		1	**6V-8398**	1	SEAL-O-RING	
		1	**6V-9746**	1	SEAL-O-RING	
		1	**7J-9108**	1	SEAL-O-RING	
		1	**241-6225**	1	TEE	
	4	1	**241-8450**	2	FILM-WARNING (HYD PRESS, READ OMM, INTL)	
	5	1	**281-4726**	2	FILM-INSTRUCTION (OIL FLOW DIRECTION)	
	6	1	**321-6387**	1	TUBE AS	
I	7	1	**324-7611**	1	HOSE AS	
	8	1	**327-8298**	1	TUBE AS	
	9	1	**329-0143**	1	TUBE AS	
	10	1	**331-3779**	1	PLATE	
I	11	1	**331-6299**	1	HOSE AS	
I	12	1	**331-7306**	1	HOSE AS	
	13	1	**332-1829**	1	PLATE	
	14	1	*150-3052*	1	CONNECTOR AS	
		1	**5K-9090**	1	SEAL-O-RING	
		1	**7M-8485**	1	SEAL-O-RING	
		1	**107-6709**	1	CONNECTOR	
	15	1	*150-3053*	1	CONNECTOR AS	
		1	**6V-9746**	1	SEAL-O-RING	
		1	**7M-8485**	1	SEAL-O-RING	
		1	**108-3872**	1	CONNECTOR	
	16	1	**2P-1293**	1	LOCKNUT (1-3/16-12-THD)	
	17	1	**6V-8398**	2	SEAL-O-RING	
	18	1	**6V-9170**	1	NUT-BULKHEAD (1-14-THD)	
	19	1	**6V-9172**	1	NUT (1-7/16-12-THD)	
	20	1	**6V-9746**	3	SEAL-O-RING	
	21	1	**8K-1117**	1	CLAMP	
	22	1	**8T-4121**	8	WASHER-HARD (11X21X2.5-MM THK)	
M	23	1	**8T-4133**	4	NUT (M10X1.5-THD)	
M	24	1	**8T-4136**	2	BOLT (M10X1.5X25-MM)	
M	25	1	**8T-4195**	2	BOLT (M10X1.5X30-MM)	

I-REFER TO HYDRAULIC INFORMATION SYSTEM
M-METRIC PART

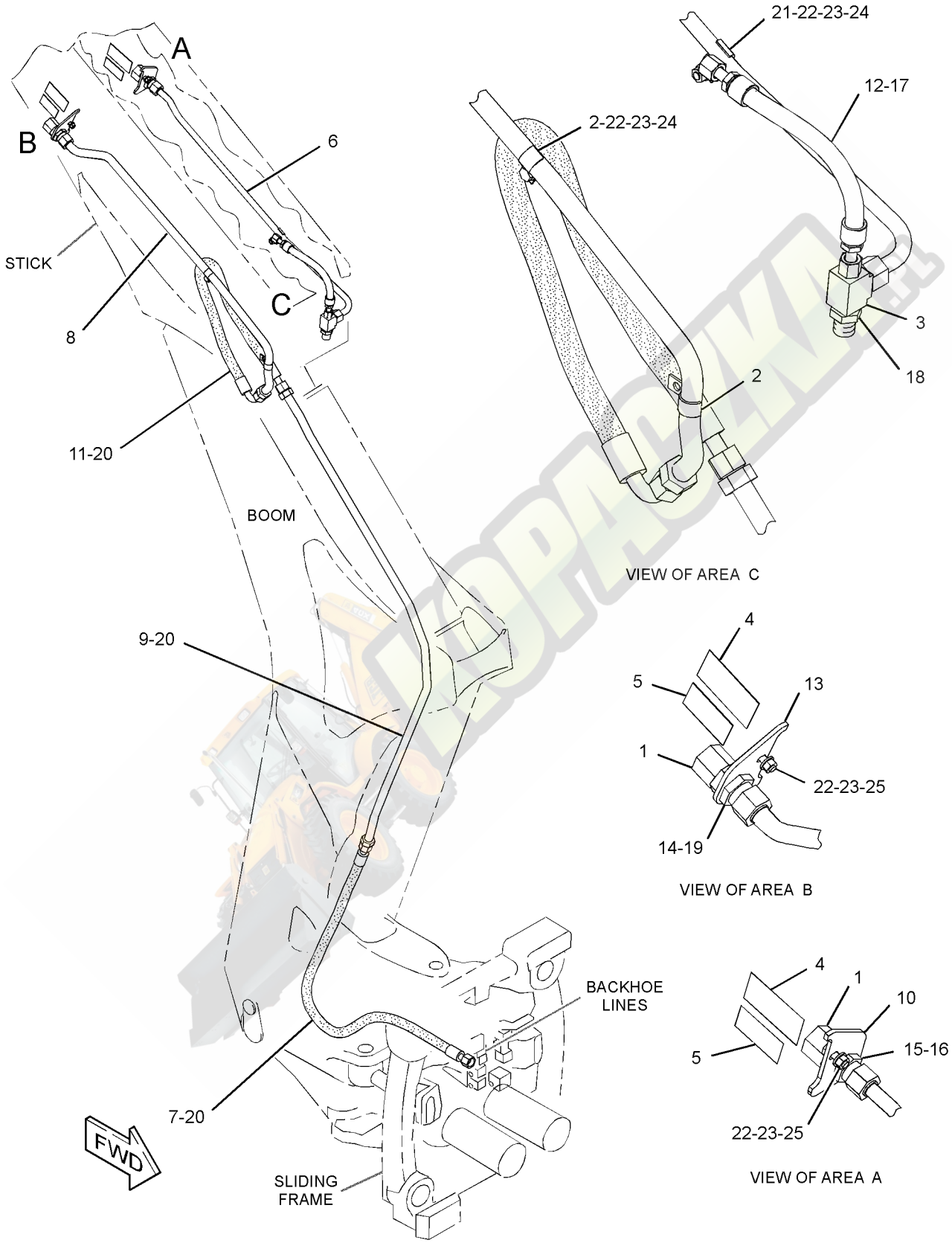

GRAPHIC #1 **<END>** g01972359

HYDRAULIC SYSTEM

329-3503 LINES GP-AUXILIARY HYDRAULIC

S/N: JBA1-UP
PART OF 332-7949 CONVERSION AR-QUICK COUPLER, 332-7947, 332-7959, 332-7961
VALVE AR-BANK 3
AN ATTACHMENT

SMCS-5057 **i03643009**

NOTE	REF NO	GRAPHIC REF	PART NUMBER	QTY	PART NAME 1 2 3 4 5 6 (PRODUCT LEVEL)	SEE PAGE
	1	1	*281-5969*	2	ELBOW AS	
					(EACH INCLUDES)	
		1	**6V-8398**	1	SEAL-O-RING	
		1	**6V-9796**	1	ELBOW	
		1	**7J-9108**	1	SEAL-O-RING	
	2	1	**329-3491**	1	TUBE AS	
	3	1	**329-3492**	1	TUBE AS	
I	4	1	**329-3494**	2	HOSE AS	
	5	1	**329-3597**	1	TUBE AS	
	6	1	**329-3598**	1	TUBE AS	
	7	1	*148-8341*	1	CONNECTOR AS	
		1	**3D-2824**	1	SEAL-O-RING	
		1	**6V-8713**	1	CONNECTOR	
		1	**7J-9108**	1	SEAL-O-RING	
	8	1	*148-8382*	1	ELBOW AS	
		1	**3D-2824**	1	SEAL-O-RING	
		1	**7J-9108**	1	SEAL-O-RING	
		1	**8T-0404**	1	ELBOW	
	9	1	**6V-8398**	4	SEAL-O-RING	
	10	1	**6V-9170**	2	NUT-BULKHEAD (1-14-THD)	
	11	1	**6V-9830**	2	CAP AS	
	12	1	**8T-4121**	12	WASHER-HARD (11X21X2.5-MM THK)	
M	13	1	**8T-4196**	6	BOLT (M10X1.5X35-MM)	
	14	1	**9R-1004**	6	CLIP (TAB)	
	15	1	**9R-1005**	6	CLIP (SLOT)	

I-REFER TO HYDRAULIC INFORMATION SYSTEM
M-METRIC PART

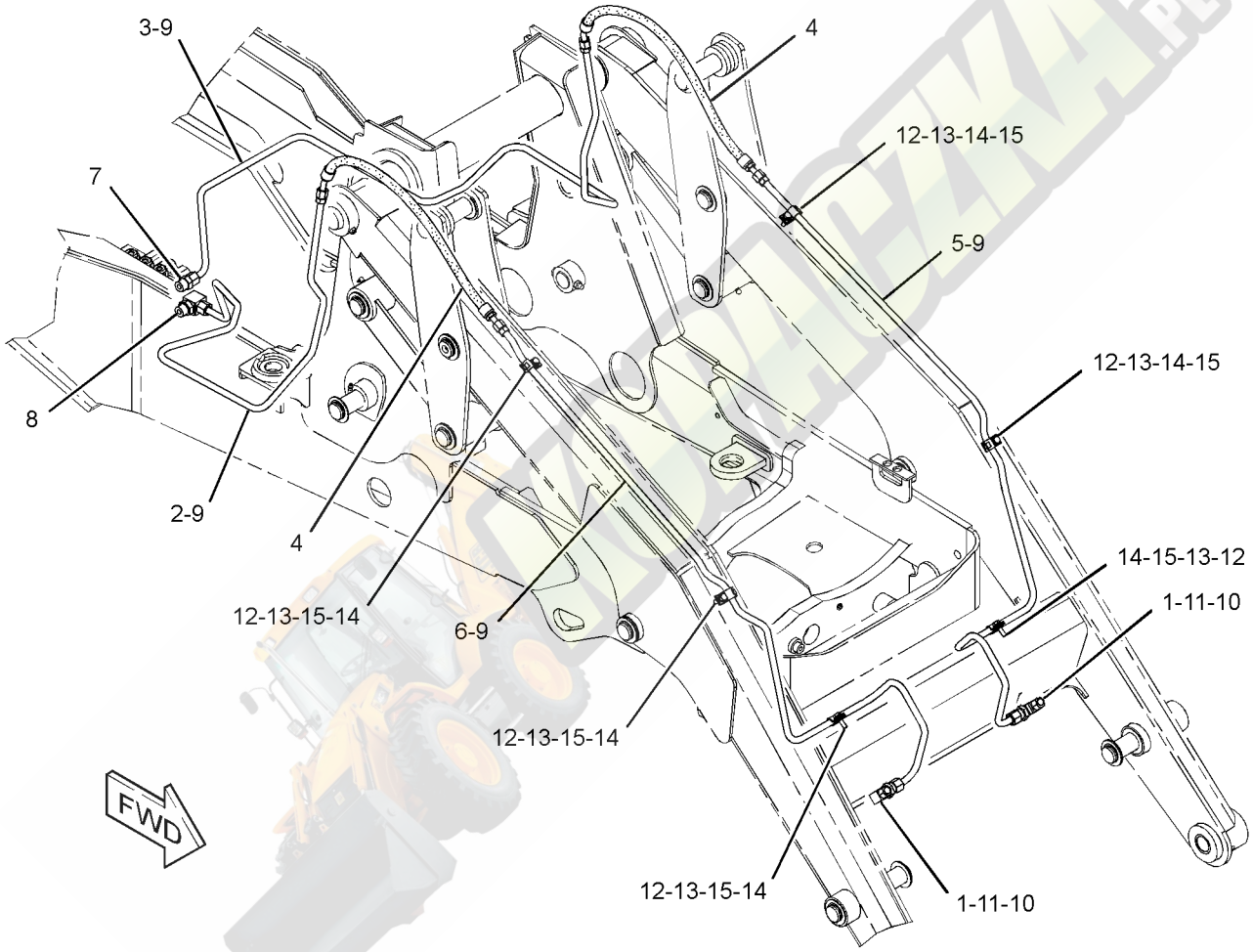

GRAPHIC #1 **<END>** g01963380

332-2691 LINES GP-AUXILIARY HYDRAULIC–
STANDARD STICK, 1-WAY
S/N: JBA1-UP
PART OF 344-1302 LINES GP-BACKHOE AUXILIARY
AN ATTACHMENT

SMCS-5057 **i03705788**

NOTE	REF NO	GRAPHIC REF	PART NUMBER	QTY	PART NAME 1 2 3 4 5 6 (PRODUCT LEVEL)	SEE PAGE
	1	1	**123-7637**	2	CAP	
	2	1	**225-7733**	2	PLATE	
	3	1	*241-6226*	1	TEE AS	
		1	**6V-8398**	1	SEAL-O-RING	
		1	**6V-9746**	1	SEAL-O-RING	
		1	**7J-9108**	1	SEAL-O-RING	
		1	**241-6225**	1	TEE	
	4	1	**241-8450**	2	FILM-WARNING (HYD PRESS, READ OMM, INTL)	
	5	1	**281-4726**	2	FILM-INSTRUCTION (OIL FLOW DIRECTION)	
	6	1	**321-6387**	1	TUBE AS	
I	7	1	**324-7599**	1	HOSE AS	
I	8	1	**324-7611**	1	HOSE AS	
	9	1	**327-8298**	1	TUBE AS	
	10	1	**329-0143**	1	TUBE AS	
I	11	1	**331-6299**	1	HOSE AS	
	12	1	**336-8184**	1	PLATE	
	13	1	**336-8185**	1	PLATE	
	14	1	*150-3052*	1	CONNECTOR AS	
		1	**5K-9090**	1	SEAL-O-RING	
		1	**7M-8485**	1	SEAL-O-RING	
		1	**107-6709**	1	CONNECTOR	
	15	1	*150-3053*	1	CONNECTOR AS	
		1	**6V-9746**	1	SEAL-O-RING	
		1	**7M-8485**	1	SEAL-O-RING	
		1	**108-3872**	1	CONNECTOR	
	16	1	**2P-1293**	1	LOCKNUT (1-3/16-12-THD)	
	17	1	**6V-8398**	1	SEAL-O-RING	
	18	1	**6V-9170**	1	NUT-BULKHEAD (1-14-THD)	
	19	1	**6V-9172**	1	NUT (1-7/16-12-THD)	
	20	1	**6V-9746**	3	SEAL-O-RING	
	21	1	**6V-9830**	1	CAP AS	
	22	1	**8K-1117**	1	CLAMP	
	23	1	**8T-4121**	8	WASHER-HARD (11X21X2.5-MM THK)	
M	24	1	**8T-4133**	4	NUT (M10X1.5-THD)	
M	25	1	**8T-4136**	2	BOLT (M10X1.5X25-MM)	
M	26	1	**8T-4195**	2	BOLT (M10X1.5X30-MM)	

I-REFER TO HYDRAULIC INFORMATION SYSTEM
M-METRIC PART

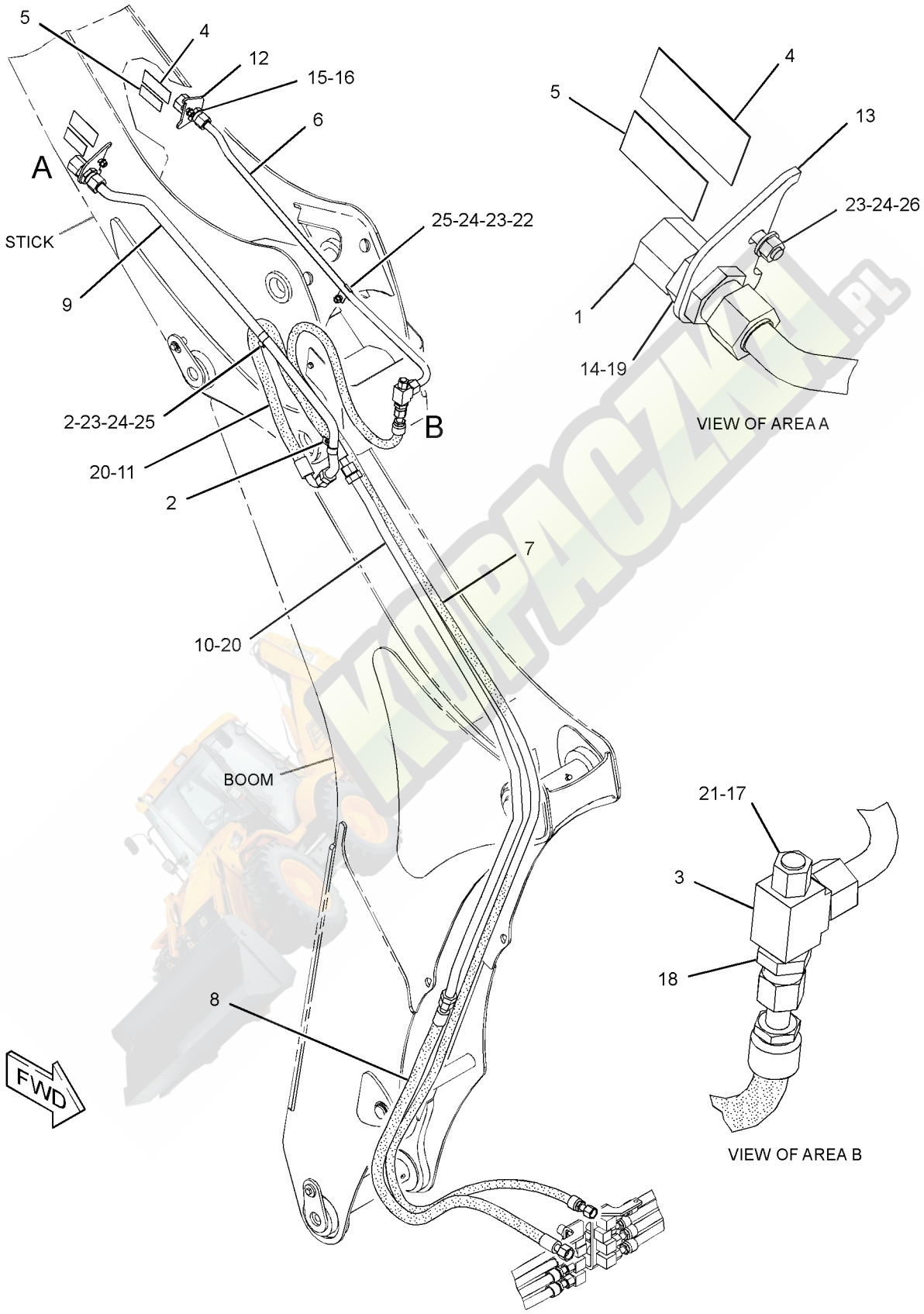

GRAPHIC #1 **<END>** g01969935

HYDRAULIC SYSTEM

321-7231 LINES GP-BACKHOE

S/N: JBA1-UP

PART OF 329-0124 HYDRAULIC AR

SMCS-5057 **i03658106**

NOTE	REF NO	GRAPHIC REF	PART NUMBER	QTY	PART NAME 1 2 3 4 5 6 (PRODUCT LEVEL)	SEE PAGE
	1	1	**5P-5148**	12	STRAP-TIE	
	2	1	*260-9214*	5	CONNECTOR AS	
					(EACH INCLUDES)	
		1	**3D-2824**	1	SEAL-O-RING	
		1	**7J-9108**	1	SEAL-O-RING	
		1	**260-9213**	1	CONNECTOR	
	3	1	**319-6906**	4	HOSE AS	
I	4	1	**319-6907**	2	HOSE AS	
	5	1	**319-6908**	2	HOSE AS	
	6	1	**320-8438**	4	CLAMP	
	7	1	**323-9083**	1	TUBE AS	
	8	1	**323-9084**	1	TUBE AS	
	9	1	**323-9085**	1	TUBE AS	
	10	1	**323-9086**	1	TUBE AS	
	11	1	**333-0739**	4	PLATE	
	12	1	*344-2170*	1	FITTING & MTG GP-HYDRAULIC	
		1	**6V-8398**	2	SEAL-O-RING	
		1	**7J-9108**	6	SEAL-O-RING	
		1	**327-0223**	1	FITTING & MTG GP-HYDRAULIC	
	13	1	*344-2171*	1	FITTING & MTG GP-HYDRAULIC	
		1	**6V-8398**	2	SEAL-O-RING	
		1	**7J-9108**	6	SEAL-O-RING	
		1	**327-0222**	1	FITTING & MTG GP-HYDRAULIC	
	14	1	*148-8328*	2	CONNECTOR AS	
					(EACH INCLUDES)	
		1	**3D-2824**	1	SEAL-O-RING	
		1	**6V-8398**	1	SEAL-O-RING	
		1	**6V-8633**	1	CONNECTOR	
	15	1	*148-8341*	1	CONNECTOR AS	
		1	**3D-2824**	1	SEAL-O-RING	
		1	**6V-8713**	1	CONNECTOR	
		1	**7J-9108**	1	SEAL-O-RING	
M	16	1	**5C-2890**	5	NUT (M6X1-THD)	
	17	1	**6V-8398**	2	SEAL-O-RING	
B	18	1	**6V-9831**	2	CAP AS	
	19	1	**7J-9108**	2	SEAL-O-RING	
M	20	1	**8T-3844**	6	BOLT (M6X1X70-MM)	
	21	1	**8T-4205**	12	WASHER-HARD (7.2X14.5X2-MM THK)	
	22	1	**8T-4224**	4	WASHER-HARD (8.8X16X2-MM THK)	
M	23	1	**8T-4908**	4	BOLT (M8X1.25X25-MM)	

B-USE AS REQUIRED
I-REFER TO HYDRAULIC INFORMATION SYSTEM
M-METRIC PART

321-7231 **LINES GP-BACKHOE** *(contd.)* **i03658106**

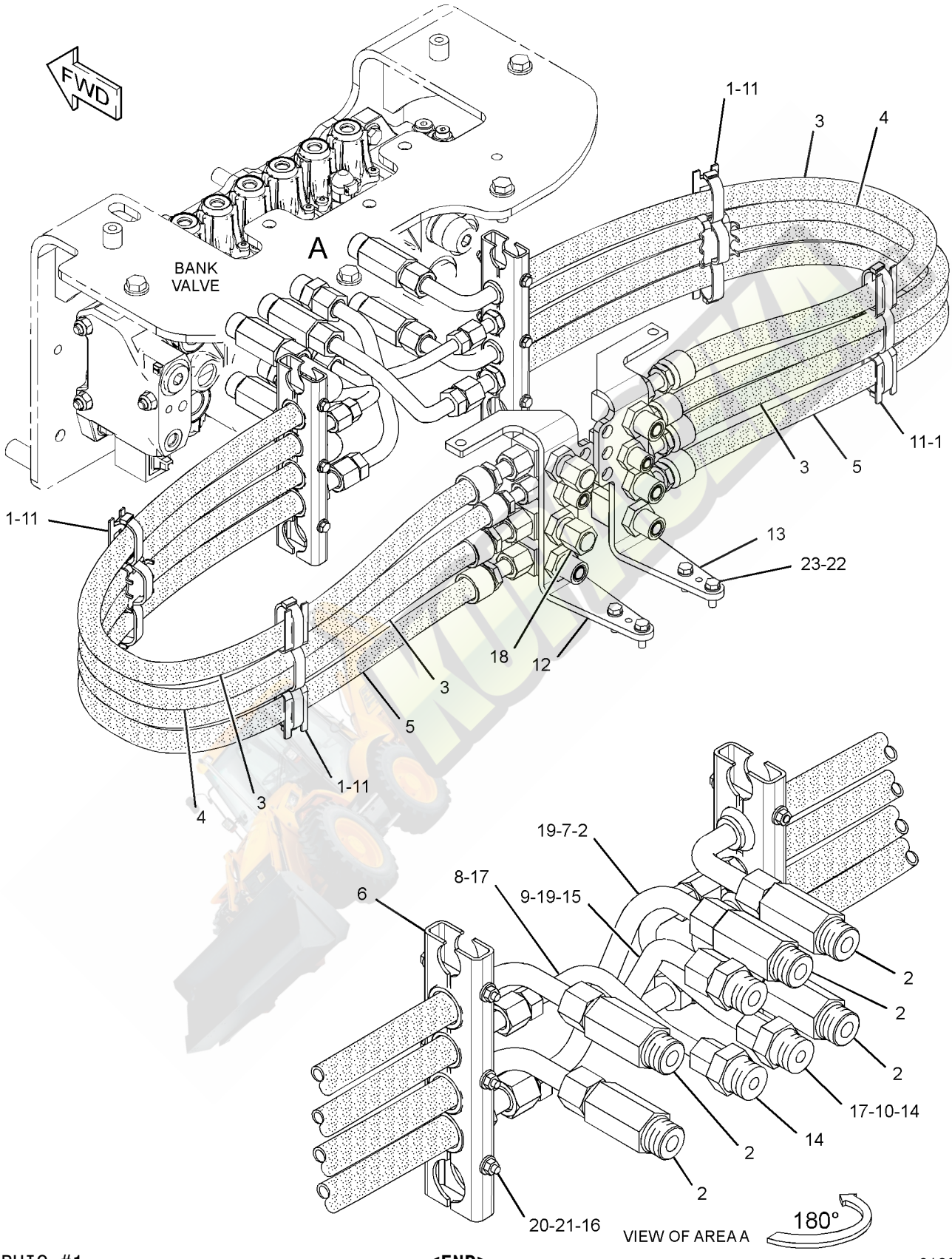

GRAPHIC #1 **<END>** g01989253

321-7183 LINES GP-BACKHOE AUXILIARY–EXTENDABLE STICK, 2-WAY

S/N: JBA1-UP

FOR USE WITH 327-6983–PAGE 391. CANNOT BE USED WITH 332-2691–PAGE 395, 132-8769–PAGE 387 AN ATTACHMENT

SMCS-5057 **i03648251**

NOTE	REF NO	GRAPHIC REF	PART NUMBER	QTY	PART NAME 1 2 3 4 5 6 (PRODUCT LEVEL)	SEE PAGE
	1	1	**123-7637**	1	CAP	
	2	1	**171-1357**	1	CONNECTOR AS	
		1	**3K-0360**	1	SEAL-O-RING	
		1	**7J-9108**	1	SEAL-O-RING	
		1	**160-5083**	1	CONNECTOR	
M	3	1	**8T-4195**	2	BOLT (M10X1.5X30-MM)	
	4	1	**321-6383**	1	TUBE AS	
I	5	1	**324-7612**	1	HOSE AS	
	6	1	**331-3770**	1	PLATE	
	7	1	**333-1320**	1	VALVE-MANUAL	
	8	1	*148-8311*	1	ADAPTER AS	
		1	**3K-0360**	1	SEAL-O-RING	
		1	**8T-1715**	1	ADAPTER	
	9	1	*148-8340*	1	CONNECTOR AS	
		1	**3K-0360**	1	SEAL-O-RING	
		1	**6V-8398**	1	SEAL-O-RING	
		1	**6V-8639**	1	CONNECTOR	
	10	1	*148-8359*	1	ELBOW AS	
		1	**3K-0360**	1	SEAL-O-RING	
		1	**6V-9746**	1	SEAL-O-RING	
		1	**6V-9877**	1	ELBOW	
	11	1	*150-3053*	1	CONNECTOR AS	
		1	**6V-9746**	1	SEAL-O-RING	
		1	**7M-8485**	1	SEAL-O-RING	
		1	**108-3872**	1	CONNECTOR	
	12	1	**2P-1293**	1	LOCKNUT (1-3/16-12-THD)	
	13	1	**6V-9170**	1	NUT-BULKHEAD (1-14-THD)	
	14	1	**8K-1117**	1	CLAMP	
	15	1	**8T-4121**	4	WASHER-HARD (11X21X2.5-MM THK)	
M	16	1	**8T-4133**	2	NUT (M10X1.5-THD)	

I-REFER TO HYDRAULIC INFORMATION SYSTEM
M-METRIC PART

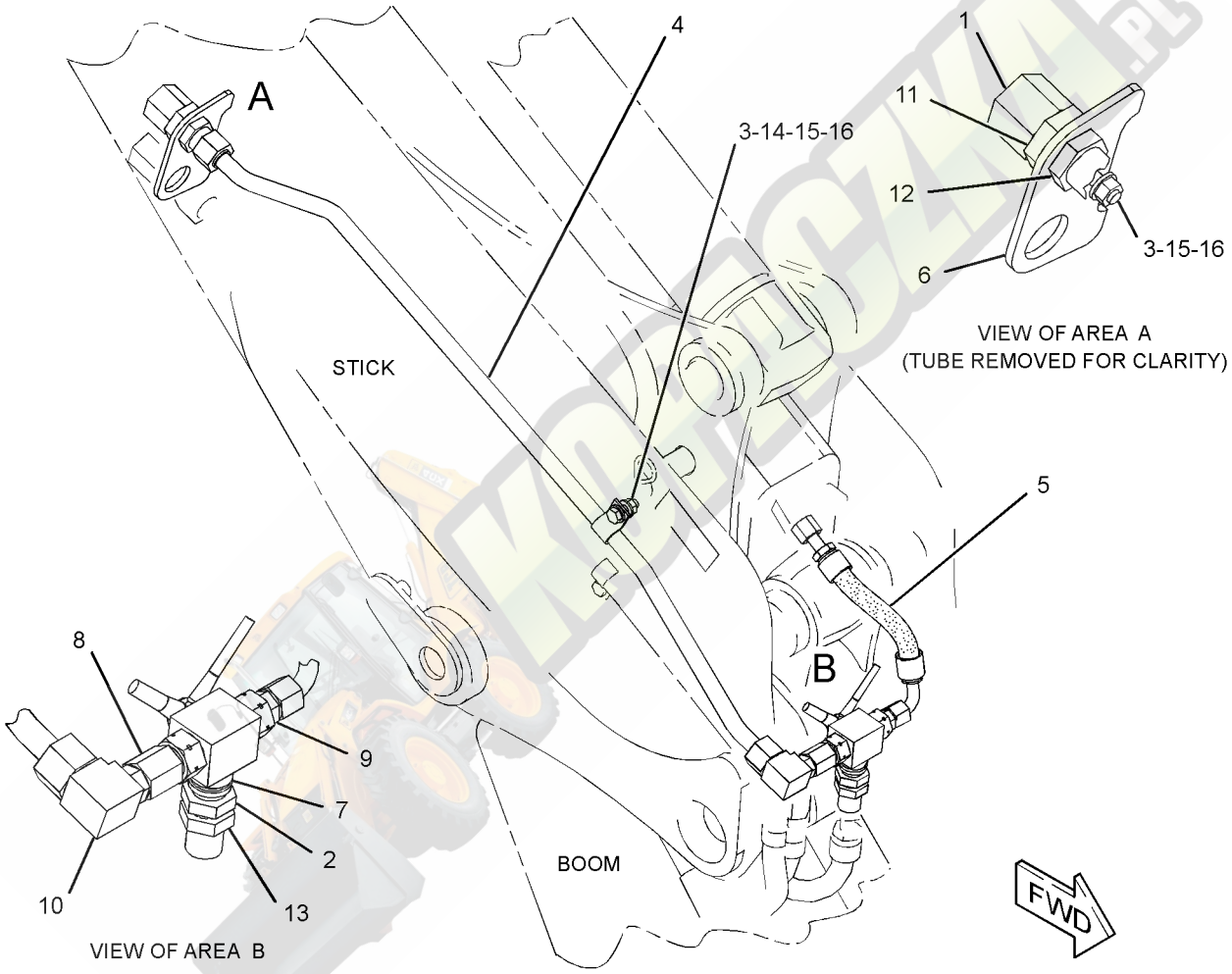

GRAPHIC #1

<END>

g01968173

344-1302 LINES GP-BACKHOE AUXILIARY–
STANDARD STICK, 1-WAY
S/N: JBA1-UP

FOR USE WITH 334-0694–PAGE 4. CANNOT BE USED WITH 334-0686–PAGE 1, 334-0691–PAGE 1, 321-7183–PAGE 399, 132-8769–PAGE 387 AN ATTACHMENT

SMCS-5057 **i03664560**

NOTE	PART NUMBER	QTY	PART NAME 1 2 3 4 5 6 (PRODUCT LEVEL)	SEE PAGE
Y	*321-7246*	1	LINES GP-AUXILIARY HYDRAULIC (SIDESHIFT)	390
Y	*332-2691*	1	LINES GP-AUXILIARY HYDRAULIC (STANDARD STICK, 1-WAY)	395

Y-SEPARATE ILLUSTRATION

<END>

344-1303 LINES GP-BACKHOE AUXILIARY–
EXTENDABLE STICK, 1-WAY
S/N: JBA1-UP

FOR USE WITH 334-0686–PAGE 1, 334-0691–PAGE 1. CANNOT BE USED WITH 334-0694–PAGE 4, 132-8769–PAGE 387 AN ATTACHMENT

SMCS-5057 **i03664542**

NOTE	PART NUMBER	QTY	PART NAME 1 2 3 4 5 6 (PRODUCT LEVEL)	SEE PAGE
Y	*321-7246*	1	LINES GP-AUXILIARY HYDRAULIC (SIDESHIFT)	390
Y	*327-6983*	1	LINES GP-AUXILIARY HYDRAULIC (EXTENDABLE STICK)	391

Y-SEPARATE ILLUSTRATION

<END>

321-7178 LINES GP-BOOM

S/N: JBA1-UP

PART OF 334-0686, 334-0691, 350-6934, 350-6935, 350-6944, 350-6945 BACKHOE AR-EXTENDABLE STICK, 334-0694, 350-6933 BACKHOE AR-STANDARD STICK AN ATTACHMENT

SMCS-5057, 5456 **i03642521**

NOTE	REF NO	GRAPHIC REF	PART NUMBER	QTY	PART NAME 1 2 3 4 5 6 (PRODUCT LEVEL)	SEE PAGE
I	1	1	**324-7594**	1	HOSE AS	
I	2	1	**324-7597**	1	HOSE AS	
	3	1	*148-8390*	1	ELBOW AS	
		1	**2M-9780**	1	SEAL-O-RING	
		1	**6V-8626**	1	ELBOW	
		1	**7J-9108**	1	SEAL-O-RING	

I-REFER TO HYDRAULIC INFORMATION SYSTEM

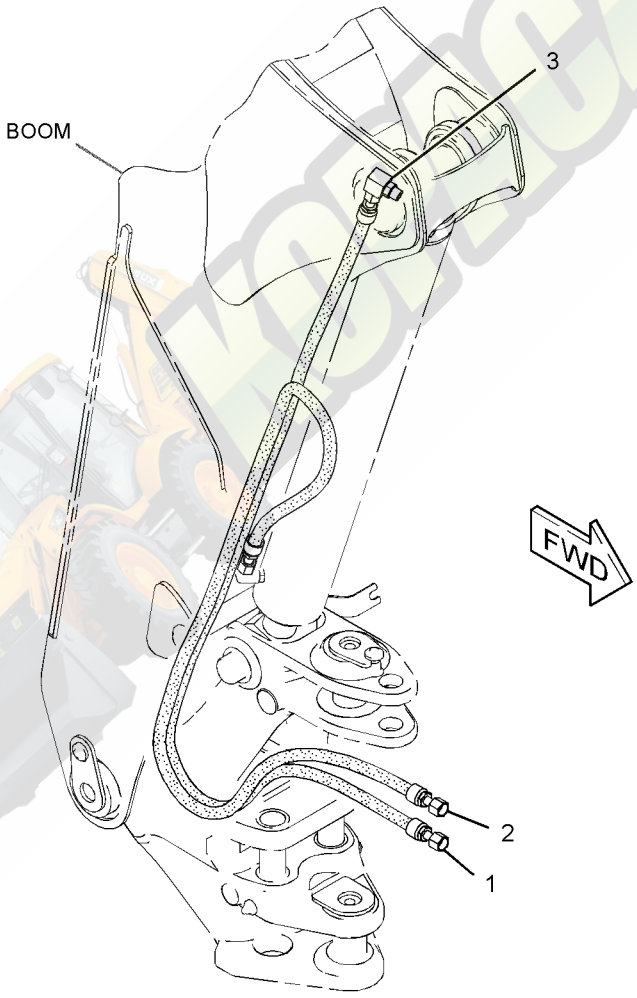

GRAPHIC #1 **<END>** g01990053

320-9949 LINES GP-BUCKET

S/N: JBA1-UP
PART OF 320-9948 BUCKET AR-MULTIPURPOSE
AN ATTACHMENT

SMCS-5057, 5457 **i03486573**

NOTE	REF NO	GRAPHIC REF	PART NUMBER	QTY	PART NAME 1 2 3 4 5 6 (PRODUCT LEVEL)	SEE PAGE
	1	1	**8T-6726**	2	CLAMP-HOSE	
	2	1	**9R-8870**	2	BLOCK	
I	3	1	**9W-4363**	1	HOSE AS	
I	4	1	**120-4553**	1	HOSE AS	
I	5	1	**320-9943**	1	HOSE AS	
I	6	1	**320-9944**	1	HOSE AS	
I	7	1	**320-9945**	1	HOSE AS	
I	8	1	**320-9946**	1	HOSE AS	
	9	1	*148-8378*	2	ELBOW AS	
					(EACH INCLUDES)	
		1	**3J-1907**	1	SEAL-O-RING	
		1	**6V-8397**	1	SEAL-O-RING	
		1	**6V-8724**	1	ELBOW	
	10	1	*150-3060*	2	TEE AS	
					(EACH INCLUDES)	
		1	**6V-8397**	2	SEAL-O-RING	
		1	**6V-8398**	1	SEAL-O-RING	
		1	**8T-3444**	1	TEE-UNION	
	11	1	**5P-7464**	2	CLIP (SLOT)	
	12	1	**5P-7465**	2	CLIP (TAB)	
	13	1	**6V-1249**	2	GROMMET	
	14	1	**6V-8397**	2	SEAL-O-RING	
	15	1	**8T-1893**	4	CLIP (SLOT)	
	16	1	**8T-1894**	4	CLIP (TAB)	
	17	1	**8T-4121**	2	WASHER-HARD (11X21X2.5-MM THK)	
M	18	1	**8T-4136**	2	BOLT (M10X1.5X25-MM)	
M	19	1	**8T-4192**	2	BOLT (M12X1.75X25-MM)	
	20	1	**8T-4223**	2	WASHER-HARD (13.5X25.5X3-MM THK)	

I-REFER TO HYDRAULIC INFORMATION SYSTEM
M-METRIC PART

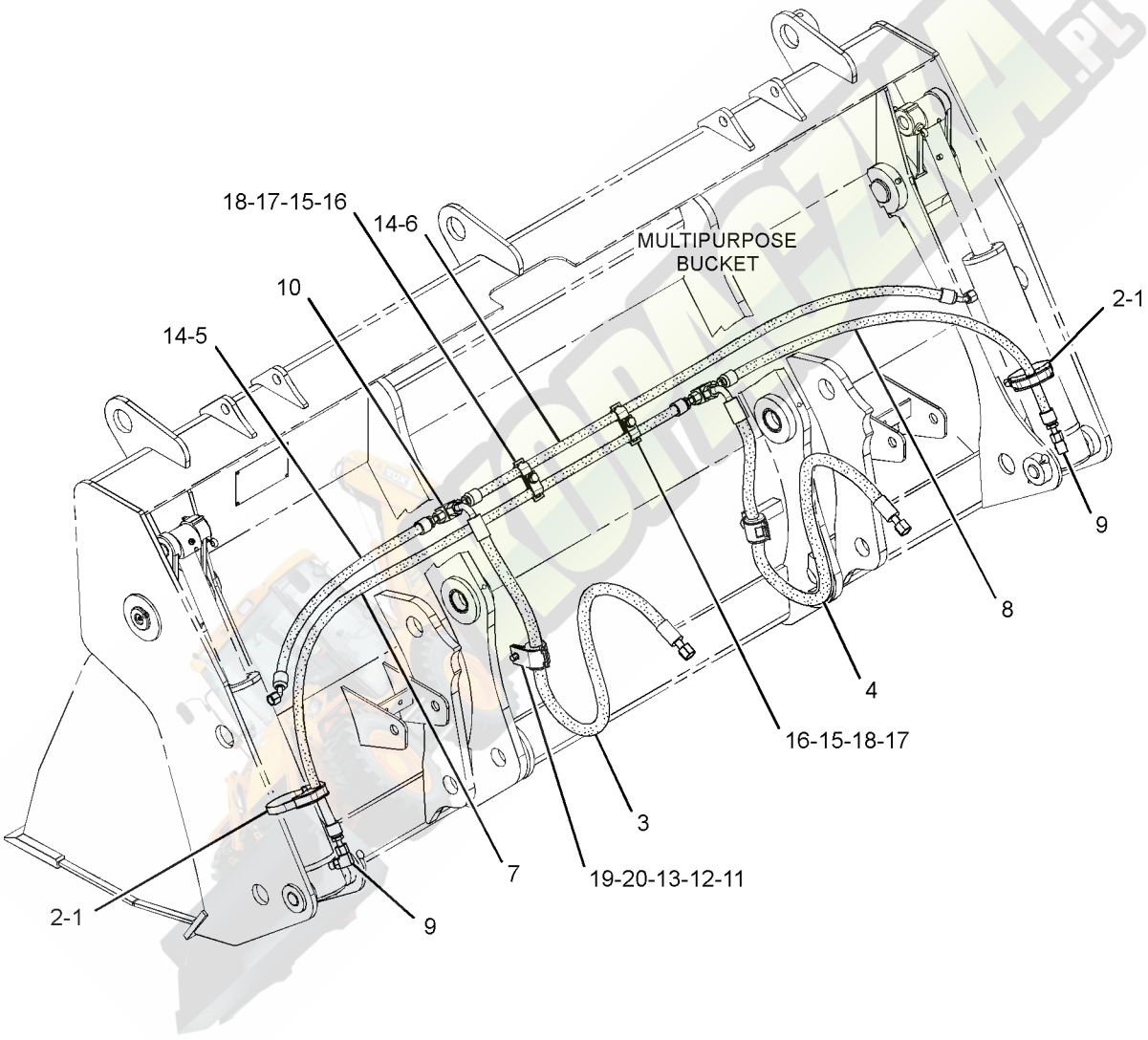

GRAPHIC #1 **<END>** g01515829

321-7179 LINES GP-BUCKET–EXTENDABLE STICK

S/N: JBA1-UP

PART OF 334-0686, 334-0691, 350-6934, 350-6935, 350-6944, 350-6945 BACKHOE

AR-EXTENDABLE STICK

AN ATTACHMENT

SMCS-5057, 5457 **i03693921**

NOTE	REF NO	GRAPHIC REF	PART NUMBER	QTY	PART NAME 1 2 3 4 5 6 (PRODUCT LEVEL)	SEE PAGE
	1	1	**091-0081**	1	SPACER (10.5X20X10-MM THK)	
	2	1	*268-1548*	2	CONNECTOR AS	
					(EACH INCLUDES)	
		1	**6V-8398**	1	SEAL-O-RING	
		1	**7J-9108**	1	SEAL-O-RING	
		1	**268-1547**	1	CONNECTOR	
	3	1	**321-6111**	1	TUBE AS	
	4	1	**321-6341**	1	TUBE AS	
I	6	1	**324-7598**	1	HOSE AS	
I	7	1	**324-7599**	3	HOSE AS	
I	8	1	**324-7602**	1	HOSE AS	
I	9	1	**324-7603**	1	HOSE AS	
I	10	1	**324-7604**	1	HOSE AS	
I	11	1	**334-7931**	1	HOSE AS	
	12	1	**341-5752**	1	TUBE AS	
	13	1	*148-8364*	1	ELBOW AS	
		1	**3K-0360**	1	SEAL-O-RING	
		1	**6V-8398**	1	SEAL-O-RING	
		1	**6V-8625**	1	ELBOW	
M	14	1	**5C-7261**	2	NUT (M8X1.25-THD)	
	15	1	**5P-7464**	1	CLIP (SLOT)	
	16	1	**5P-7465**	1	CLIP (TAB)	
	17	1	**6V-7359**	1	GROMMET	
	18	1	**6V-8398**	1	SEAL-O-RING	
	19	1	**6V-9170**	4	NUT-BULKHEAD (1-14-THD)	
	20	1	**7J-9108**	7	SEAL-O-RING	
	21	1	**8K-1117**	2	CLAMP	
	22	1	**8T-4121**	6	WASHER-HARD (11X21X2.5-MM THK)	
M	23	1	**8T-4133**	3	NUT (M10X1.5-THD)	
M	24	1	**8T-4136**	2	BOLT (M10X1.5X25-MM)	
M	25	1	**8T-4191**	1	BOLT (M10X1.5X16-MM)	
	26	1	**8T-4224**	4	WASHER-HARD (8.8X16X2-MM THK)	
M	27	1	**8T-4908**	2	BOLT (M8X1.25X25-MM)	
	28	1	**9M-8406**	1	CLIP	
M	29	1	**9X-6418**	1	BOLT (M10X1.5X45-MM)	

I-REFER TO HYDRAULIC INFORMATION SYSTEM
M-METRIC PART

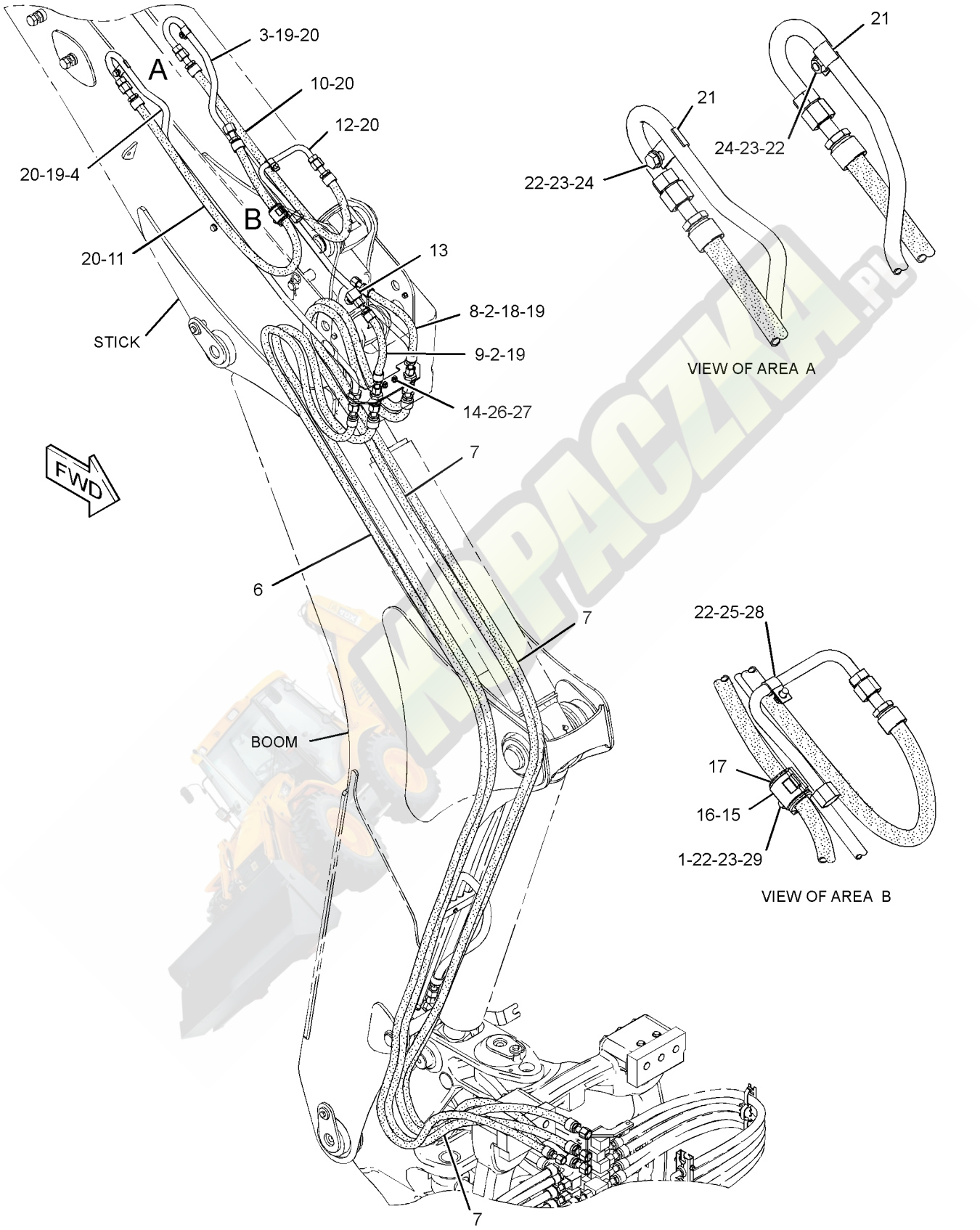

GRAPHIC #1 **<END>** g01989636

323-2023 LINES GP-BUCKET CYLINDER–STANDARD STICK

S/N: JBA1-UP

PART OF 334-0694, 350-6933 BACKHOE AR-STANDARD STICK

AN ATTACHMENT

SMCS-5057, 5457 **i03690285**

NOTE	REF NO	GRAPHIC REF	PART NUMBER	QTY	PART NAME 1 2 3 4 5 6 (PRODUCT LEVEL)	SEE PAGE
	1	1	*281-5983*	1	ELBOW AS	
		1	**6V-8989**	1	ELBOW	
		1	**228-7091**	2	SEAL-O-RING	
	2	1	**323-2045**	1	PLATE	
I	3	1	**324-7598**	1	HOSE AS	
I	4	1	**324-7599**	1	HOSE AS	
I	5	1	**332-1025**	1	HOSE AS	
I	6	1	**334-7947**	1	HOSE AS	
	7	1	*148-8393*	1	ELBOW AS	
		1	**6V-9852**	1	ELBOW	
		1	**7J-9108**	1	SEAL-O-RING	
	8	1	*169-7409*	1	UNION AS	
		1	**6V-8996**	1	UNION	
		1	**7J-9108**	2	SEAL-O-RING	
M	9	1	**5C-7261**	2	NUT (M8X1.25-THD)	
	10	1	**6V-9170**	2	NUT-BULKHEAD (1-14-THD)	
	11	1	**7J-9108**	2	SEAL-O-RING	
	12	1	**8T-4224**	4	WASHER-HARD (8.8X16X2-MM THK)	
M	13	1	**8T-4908**	2	BOLT (M8X1.25X25-MM)	

I-REFER TO HYDRAULIC INFORMATION SYSTEM
M-METRIC PART

323-2023 **LINES GP-BUCKET CYLINDER** *(contd.)* **i03690285**

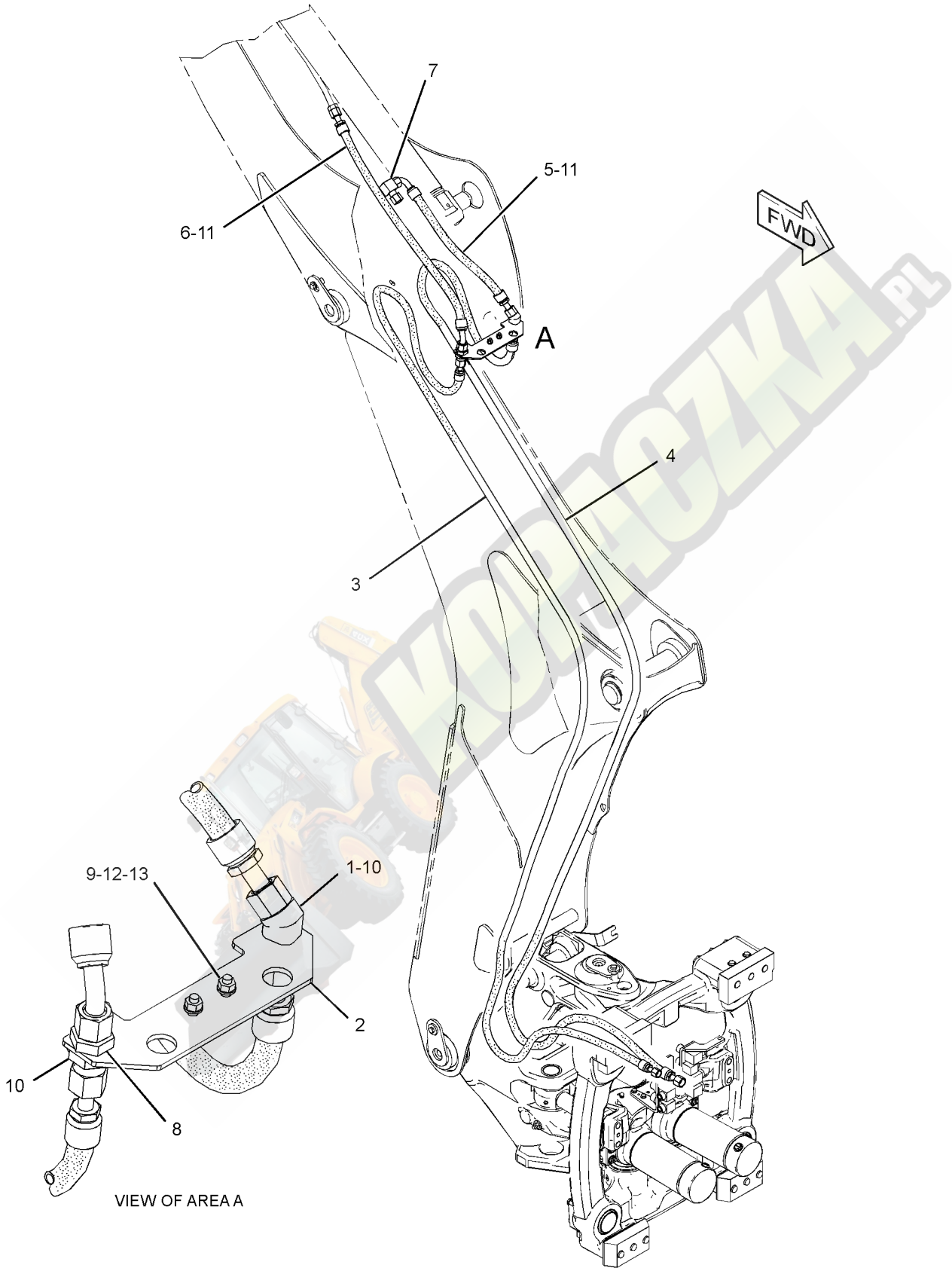

GRAPHIC #1 **<END>** g01989194

196-1136 LINES GP-CONNECTING

S/N: JBA1-UP
PART OF 318-7267 BUCKET AR-MULTIPURPOSE
AN ATTACHMENT

SMCS-5057 **i01449103**

NOTE	REF NO	GRAPHIC REF	PART NUMBER	QTY	PART NAME 1 2 3 4 5 6 (PRODUCT LEVEL)	SEE PAGE
	1	1	**195-6525**	1	FITTING AS (QUICK DISCONNECT, FEMALE)	
	2	1	**195-6527**	1	FITTING AS (QUICK DISCONNECT, MALE)	
	3	1	**195-9877**	1	CAP-DUST	
	4	1	**195-9878**	1	CAP-DUST	
I	5	1	**196-0039**	1	HOSE AS	
I	6	1	**196-0040**	1	HOSE AS	
	7	1	**3D-2824**	2	SEAL-O-RING	
	8	1	**6V-8398**	2	SEAL-O-RING	

I-REFER TO HYDRAULIC INFORMATION SYSTEM

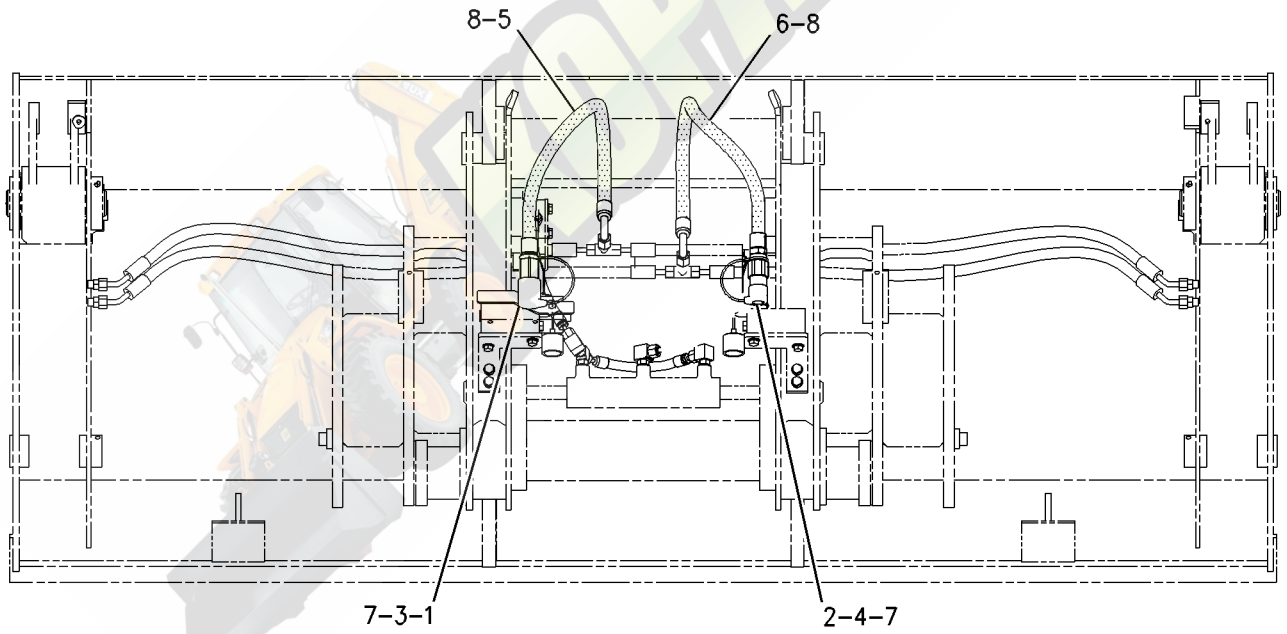

GRAPHIC #1 **<END>** g00758420

HYDRAULIC SYSTEM

216-5332 LINES GP-DRAIN

S/N: JBA1-UP
AN ATTACHMENT

SMCS-5057 **i03724300**

NOTE	REF NO	GRAPHIC REF	PART NUMBER	QTY	PART NAME 1 2 3 4 5 6 (PRODUCT LEVEL)	SEE PAGE
	1	1	**8T-0154**	1	CLAMP-HOSE	
	2	1	*165-2273*	1	VALVE GP-SHUTOFF (HYDRAULIC TANK DRAIN)	
		1	**3K-0360**	1	SEAL-O-RING	
		1	**6V-7238**	1	VALVE-SHUTOFF	
E	3	1	**5P-0743**		HOSE (35-CM)	

E-ORDER BY THE CENTIMETER

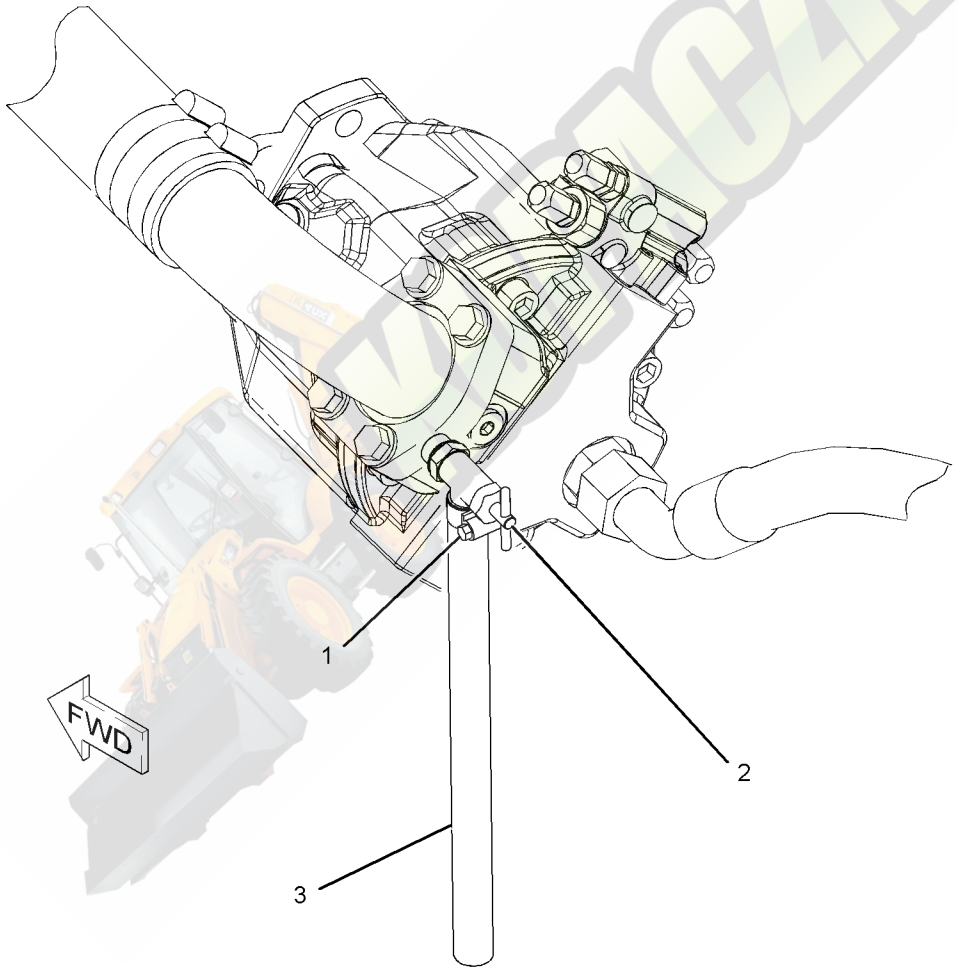

GRAPHIC #1 **<END>** g01087946

HYDRAULIC SYSTEM

331-7412 LINES GP-HYDRAULIC—PARALLEL LIFT

S/N: JBA1-UP

PART OF 332-7949 CONVERSION AR-QUICK COUPLER, 332-7961 VALVE AR-BANK 3 AN ATTACHMENT

SMCS-5057 **i03726474**

NOTE	REF NO	GRAPHIC REF	PART NUMBER	QTY	PART NAME 1 2 3 4 5 6 (PRODUCT LEVEL)	SEE PAGE
	1	1	**6W-5760**	2	DOWEL	
	2	1	**6W-5761**	2	PIN	
	3	1	**148-5367**	2	PLATE AS	
					(EACH INCLUDES)	
M		1	**111-0483**	1	BOSS (M10X1.5-THD)	
	4	1	**152-5717**	1	CAP-DUST	
I	5	1	**188-9838**	1	HOSE AS	
Y	6	1	**190-3085**	1	CYLINDER GP-COUPLER	374
	7	1	**195-6525**	1	FITTING AS (QUICK DISCONNECT, FEMALE)	
	8	1	**195-6526**	1	FITTING AS (QUICK DISCONNECT, MALE)	
	9	1	*208-5149*	2	ELBOW AS	
					(EACH INCLUDES)	
		1	**3D-2824**	1	SEAL-O-RING	
		1	**208-5148**	1	ELBOW	
	10	1	**211-6796**	1	COVER AS	
I	11	1	**211-6799**	1	HOSE AS	
I	12	1	**211-6800**	1	HOSE AS	
I	13	1	**211-6801**	1	HOSE AS	
	14	1	**211-8319**	1	COVER	
	15	1	**211-9032**	2	WASHER-HARD (8.8X13X2-MM THK)	
Y	16	1	**231-2615**	1	VALVE GP-SOLENOID (REMOTE CONTROL)	487
I	17	1	**244-6864**	1	HOSE AS	
	18	1	**285-3048**	1	VALVE GP-CHECK (PILOT OPERATED HYDRAULIC)	
I	19	1	**285-3243**	1	HOSE AS	
I	20	1	**331-7413**	1	HOSE AS	
I	21	1	**331-8677**	1	HOSE AS	
	22	1	*148-8315*	2	CONNECTOR AS	
					(EACH INCLUDES)	
		1	**2M-9780**	1	SEAL-O-RING	
		1	**6V-8642**	1	CONNECTOR	
		1	**7J-9108**	1	SEAL-O-RING	
	23	1	*148-8319*	2	CONNECTOR AS	
					(EACH INCLUDES)	
		1	**2M-9780**	1	SEAL-O-RING	
		1	**6V-8397**	1	SEAL-O-RING	
		1	**6V-8715**	1	CONNECTOR	
	24	1	*148-8336*	2	CONNECTOR AS	
					(EACH INCLUDES)	
		1	**3J-1907**	1	SEAL-O-RING	
		1	**6V-8397**	1	SEAL-O-RING	
		1	**6V-8636**	1	CONNECTOR	
	25	1	*148-8345*	2	CONNECTOR AS	
					(EACH INCLUDES)	
		1	**2M-9780**	1	SEAL-O-RING	
		1	**6V-8398**	1	SEAL-O-RING	
		1	**6V-8638**	1	CONNECTOR	
	26	1	*148-8361*	1	ELBOW AS	
		1	**3J-7354**	1	SEAL-O-RING	
		1	**6V-8397**	1	SEAL-O-RING	
		1	**6V-9200**	1	ELBOW	
	27	1	*148-8367*	3	ELBOW AS	
					(EACH INCLUDES)	
		1	**6V-8397**	1	SEAL-O-RING	
		1	**6V-9850**	1	ELBOW	

331-7412 **LINES GP-HYDRAULIC** *(contd.)* **i03726474**

NOTE	REF NO	GRAPHIC REF	PART NUMBER	QTY	PART NAME 1 2 3 4 5 6 (PRODUCT LEVEL)	SEE PAGE
	28	1	*148-8370*	2	ELBOW AS	
					(EACH INCLUDES)	
		1	**6V-8398**	1	SEAL-O-RING	
		1	**6V-9851**	1	ELBOW	
	29	1	*148-8378*	3	ELBOW AS	
					(EACH INCLUDES)	
		1	**3J-1907**	1	SEAL-O-RING	
		1	**6V-8397**	1	SEAL-O-RING	
		1	**6V-8724**	1	ELBOW	
	30	1	*148-8433*	2	TEE AS	
					(EACH INCLUDES)	
		1	**6V-8397**	2	SEAL-O-RING	
		1	**6V-9836**	1	TEE-SWIVEL	
	31	1	*148-8435*	1	TEE AS	
		1	**3J-1907**	1	SEAL-O-RING	
		1	**6V-8397**	2	SEAL-O-RING	
		1	**6V-8781**	1	TEE-FACE SEAL	
	32	1	**152-5718**	1	CAP-DUST	
M	33	1	**5C-7261**	2	NUT (M8X1.25-THD)	
	34	1	**5P-7465**	4	CLIP (TAB)	
	35	1	**6V-1249**	4	GROMMET	
M	36	1	**6V-8213**	2	BOLT-SOCKET HEAD (M8X1.25X70-MM)	
	37	1	**8T-4121**	10	WASHER-HARD (11X21X2.5-MM THK)	
M	38	1	**8T-4133**	4	NUT (M10X1.5-THD)	
M	39	1	**8T-4136**	2	BOLT (M10X1.5X25-MM)	
M	40	1	**8T-4189**	4	BOLT (M8X1.25X20-MM)	
M	41	1	**8T-4195**	2	BOLT (M10X1.5X30-MM)	
M	42	1	**8T-4196**	4	BOLT (M10X1.5X35-MM)	
	43	1	**8T-4224**	8	WASHER-HARD (8.8X16X2-MM THK)	
	44	1	**8T-4646**	4	CLIP (SLOT)	
M	45	1	**8T-6912**	2	BOLT (M8X1.25X50-MM)	

I-REFER TO HYDRAULIC INFORMATION SYSTEM
M-METRIC PART
Y-SEPARATE ILLUSTRATION

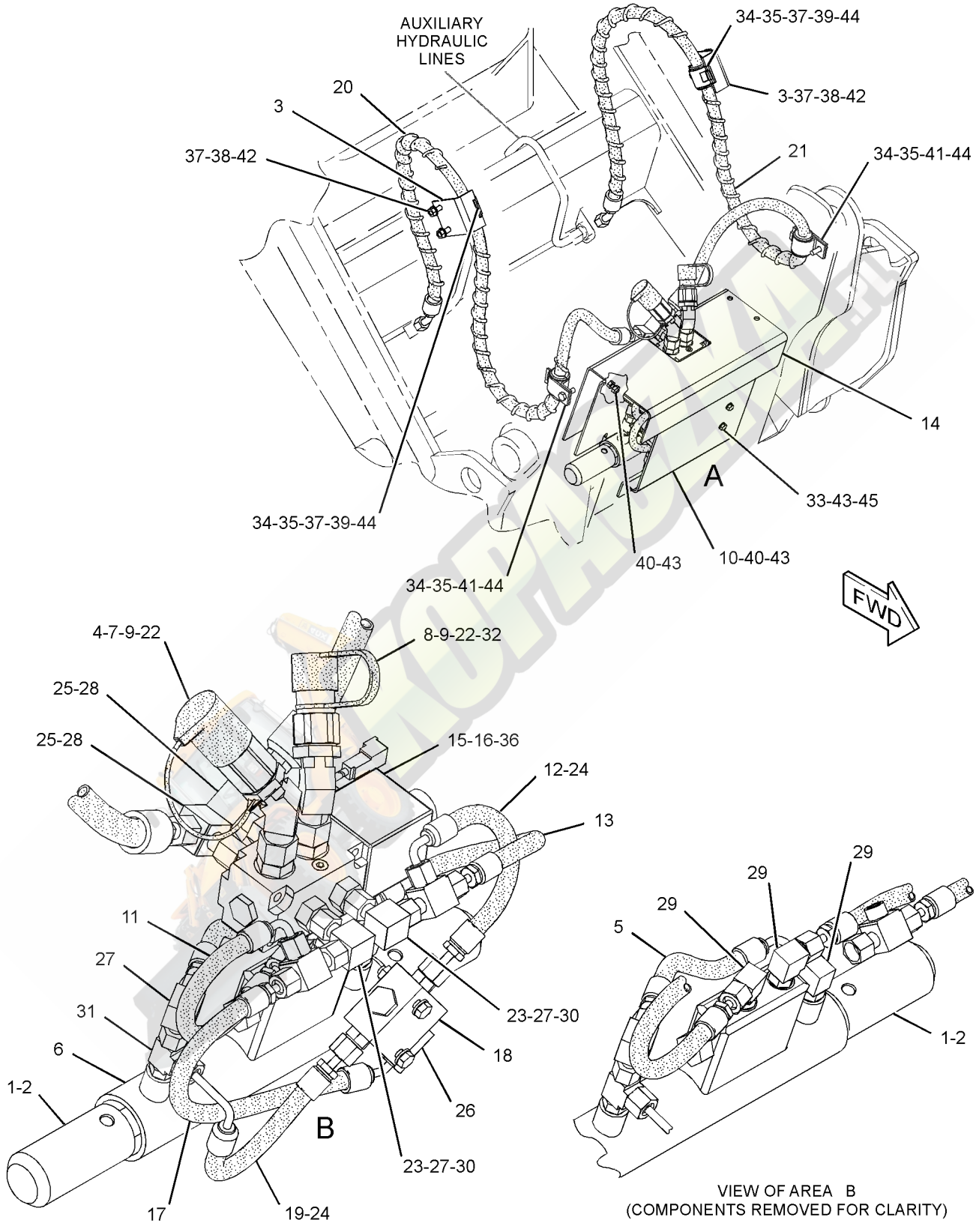

GRAPHIC #1 **<END>** g01963753

HYDRAULIC SYSTEM

329-3600 LINES GP-LIFT & TILT

S/N: JBA1-UP

PART OF 332-7949 CONVERSION AR-QUICK COUPLER, 332-7946 VALVE AR-BANK 2, 332-7947, 332-7959, 332-7961 VALVE AR-BANK 3 AN ATTACHMENT

SMCS-5057 **i03651182**

NOTE	REF NO	GRAPHIC REF	PART NUMBER	QTY	PART NAME 1 2 3 4 5 6 (PRODUCT LEVEL)	SEE PAGE
	1	1	*260-9137*	2	UNION AS-CROSS	
					(EACH INCLUDES)	
		1	**7J-9108**	4	SEAL-O-RING	
		1	**260-9136**	1	CROSS-UNION	
	2	1	*287-7269*	1	CONNECTOR AS	
		1	**3D-2824**	1	SEAL-O-RING	
		1	**7J-9108**	1	SEAL-O-RING	
		1	**287-7268**	1	CONNECTOR	
	3	1	**329-3483**	1	TUBE AS	
	4	1	**329-3484**	1	TUBE AS	
	5	1	**329-3485**	1	TUBE AS	
	6	1	**329-3486**	1	TUBE AS	
	7	1	**329-3487**	1	TUBE AS	
	8	1	**329-3488**	1	TUBE AS	
	9	1	**329-3489**	1	TUBE AS	
	10	1	**329-3490**	1	TUBE AS	
	11	1	**329-3548**	1	PLATE AS	
	12	1	**329-3819**	2	PLATE	
	13	1	**329-3820**	4	CLAMP	
	14	1	**329-3821**	4	CLAMP	
	15	1	**329-5390**	4	CLAMP	
	16	1	*330-9752*	2	ELBOW AS	
					(EACH INCLUDES)	
		1	**3D-2824**	1	SEAL-O-RING	
		1	**330-9591**	1	ELBOW	
	17	1	**334-9386**	1	PLATE AS	
	18	1	*148-8341*	1	CONNECTOR AS	
		1	**3D-2824**	1	SEAL-O-RING	
		1	**6V-8713**	1	CONNECTOR	
		1	**7J-9108**	1	SEAL-O-RING	
	19	1	*148-8446*	1	TEE AS-SWIVEL	
		1	**6V-9838**	1	TEE-SWIVEL	
		1	**7J-9108**	2	SEAL-O-RING	
	20	1	*150-4031*	1	TEE AS	
		1	**6V-9845**	1	TEE-SWIVEL	
		1	**7J-9108**	2	SEAL-O-RING	
	21	1	**6V-8398**	8	SEAL-O-RING	
	22	1	**6V-9831**	2	CAP AS	
M	23	1	**7X-2543**	2	BOLT (M10X1.5X120-MM)	
	24	1	**8T-4121**	14	WASHER-HARD (11X21X2.5-MM THK)	
M	25	1	**8T-4133**	6	NUT (M10X1.5-THD)	
M	26	1	**8T-4137**	2	BOLT (M10X1.5X20-MM)	
M	27	1	**8T-4185**	4	BOLT (M10X1.5X50-MM)	
M	28	1	**8T-4195**	4	BOLT (M10X1.5X30-MM)	

M-METRIC PART

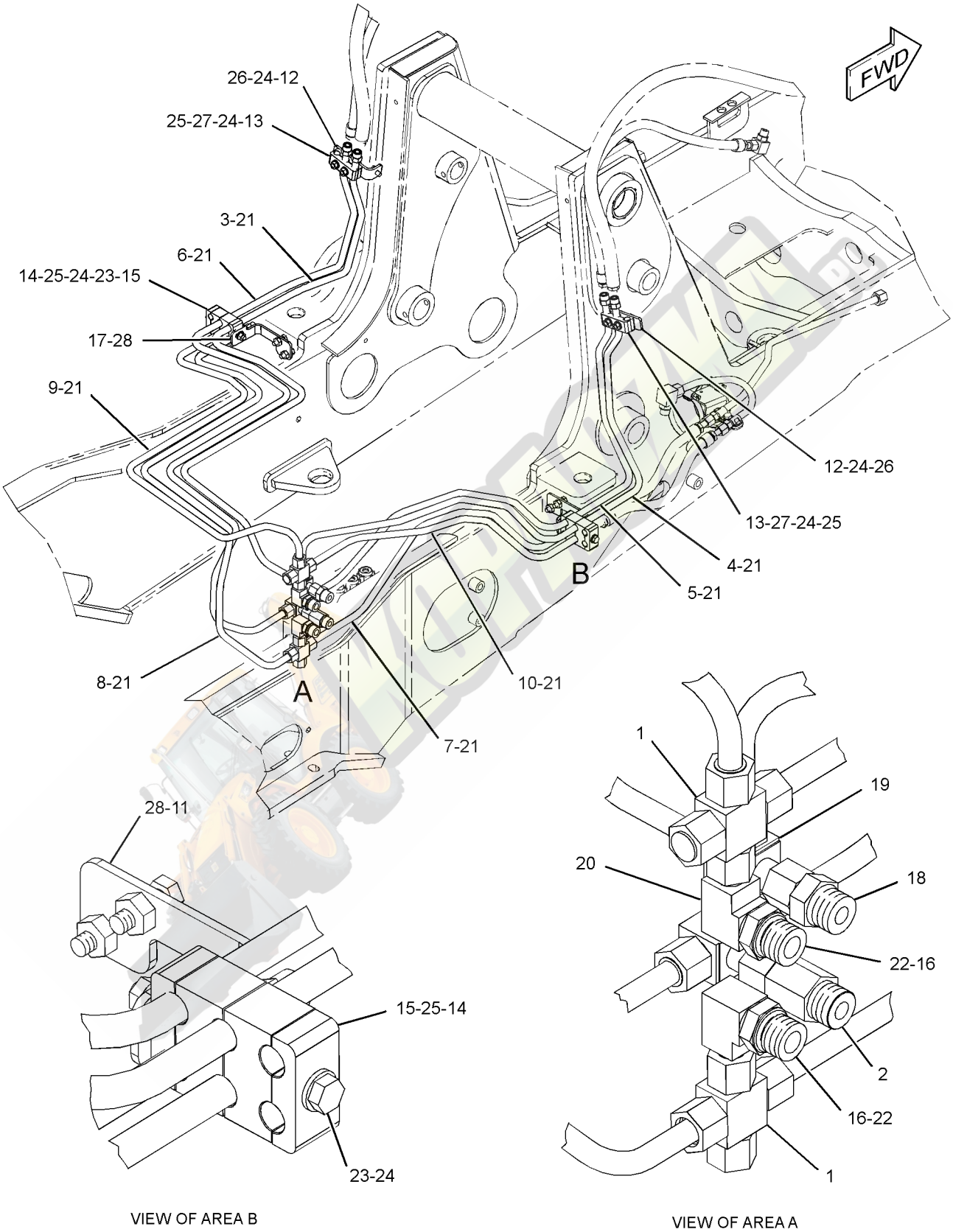

GRAPHIC #1 **<END>** g01963119

329-3504 LINES GP-LIFT CYLINDER–PARALLEL LIFT

S/N: JBA1-UP
PART OF 332-7949 CONVERSION AR-QUICK COUPLER, 332-7946 VALVE AR-BANK 2, 332-7947 VALVE AR-BANK 3
AN ATTACHMENT

SMCS-5057, 5102 **i03643014**

NOTE	REF NO	GRAPHIC REF	PART NUMBER	QTY	PART NAME 1 2 3 4 5 6 (PRODUCT LEVEL)	SEE PAGE
	1	1	**7K-1181**	4	STRAP-CABLE	
I	2	1	**329-3493**	1	HOSE AS	
I	3	1	**329-3497**	3	HOSE AS	
I	4	1	**329-3546**	2	HOSE AS	
I	5	1	**331-8678**	2	HOSE AS	
	6	1	*148-8364*	2	ELBOW AS	
					(EACH INCLUDES)	
		1	**3K-0360**	1	SEAL-O-RING	
		1	**6V-8398**	1	SEAL-O-RING	
		1	**6V-8625**	1	ELBOW	

I-REFER TO HYDRAULIC INFORMATION SYSTEM

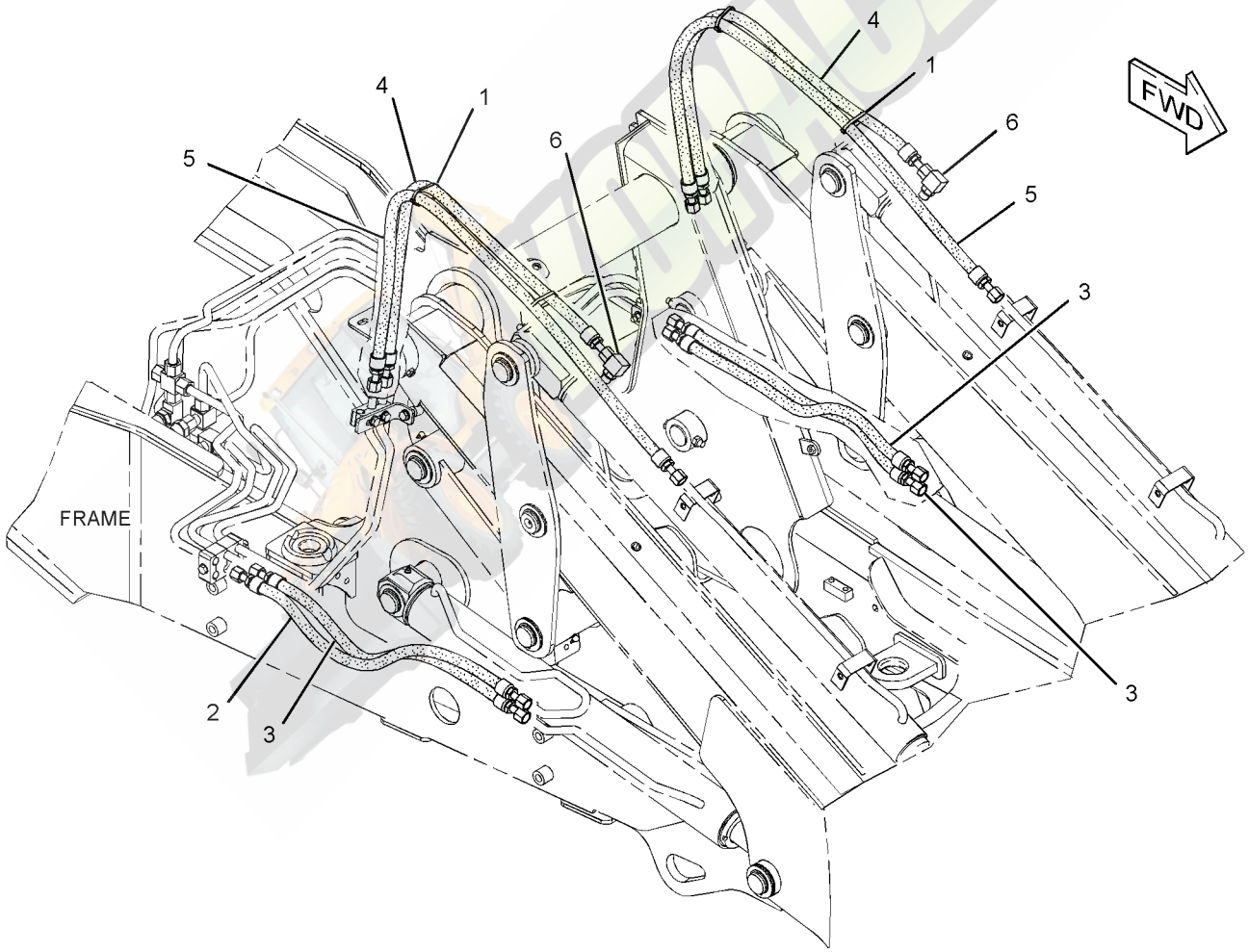

GRAPHIC #1 **<END>** g01963412

HYDRAULIC SYSTEM

329-3506 LINES GP-LIFT CYLINDER—PARALLEL LIFT

S/N: JBA1-UP

PART OF 332-7959, 332-7961 VALVE AR-BANK 3

AN ATTACHMENT

SMCS-5057, 5102 **i03724322**

NOTE	REF NO	GRAPHIC REF	PART NUMBER	QTY	PART NAME 1 2 3 4 5 6 (PRODUCT LEVEL)	SEE PAGE
	1	1	**7K-1181**	4	STRAP-CABLE	
	2	1	**8T-6726**	4	CLAMP-HOSE	
	3	1	**9M-6738**	4	CLAMP-HOSE	
	4	1	*161-9916*	2	ADAPTER AS	
					(EACH INCLUDES)	
		1	**2M-9780**	1	SEAL-O-RING	
		1	**6V-7420**	1	ADAPTER	
	5	1	*250-1440*	2	ADAPTER AS	
					(EACH INCLUDES)	
		1	**3K-0360**	1	SEAL-O-RING	
		1	**7X-3164**	1	ADAPTER-SWIVEL	
	6	1	*250-1471*	2	TEE AS	
					(EACH INCLUDES)	
		1	**3J-1907**	1	SEAL-O-RING	
		1	**6V-8398**	1	SEAL-O-RING	
		1	**7J-9108**	1	SEAL-O-RING	
		1	**250-1470**	1	TEE	
	7	1	*260-9219*	2	CONNECTOR AS	
					(EACH INCLUDES)	
		1	**6V-8638**	1	CONNECTOR	
		1	**228-7090**	1	SEAL-O-RING	
		1	**238-5081**	1	SEAL-O-RING	
	8	1	**262-7079**	2	VALVE GP-CHECK (PILOT CONTROL)	
	9	1	**262-7081**	2	VALVE GP-LOAD CONTROL (LIFT & TILT)	
	10	1	**279-4969**	2	BRACKET	
I	11	1	**329-3501**	2	HOSE AS	
I	12	1	**329-3502**	2	HOSE AS	
I	13	1	**329-3545**	2	HOSE AS	
I	14	1	**329-3546**	2	HOSE AS	
	15	1	**329-3547**	2	TUBE AS	
	16	1	**329-3596**	2	TUBE AS	
	17	1	**331-8679**	2	TUBE AS	
	18	1	**346-5517**	2	BRACKET	
	19	1	*148-8345*	2	CONNECTOR AS	
					(EACH INCLUDES)	
		1	**2M-9780**	1	SEAL-O-RING	
		1	**6V-8398**	1	SEAL-O-RING	
		1	**6V-8638**	1	CONNECTOR	
	20	1	*148-8372*	2	ELBOW AS	
					(EACH INCLUDES)	
		1	**2M-9780**	1	SEAL-O-RING	
		1	**6V-8398**	1	SEAL-O-RING	
		1	**6V-8721**	1	ELBOW	
	21	1	*148-8378*	2	ELBOW AS	
					(EACH INCLUDES)	
		1	**3J-1907**	1	SEAL-O-RING	
		1	**6V-8397**	1	SEAL-O-RING	
		1	**6V-8724**	1	ELBOW	
	22	1	*148-8426*	2	TEE AS	
					(EACH INCLUDES)	
		1	**3K-0360**	1	SEAL-O-RING	
		1	**6V-8397**	1	SEAL-O-RING	
		1	**6V-8398**	1	SEAL-O-RING	
		1	**8T-6696**	1	TEE-O-RING	
	23	1	**8T-4224**	16	WASHER-HARD (8.8X16X2-MM THK)	

329-3506 **LINES GP-LIFT CYLINDER** *(contd.)* **i03724322**

NOTE	REF NO	GRAPHIC REF	PART NUMBER	QTY	PART NAME 1 2 3 4 5 6 (PRODUCT LEVEL)	SEE PAGE
M	24	1	**8T-6912**	8	BOLT (M8X1.25X50-MM)	
M	25	1	**8T-7963**	8	LOCKNUT (M8X1.25-THD)	

I-REFER TO HYDRAULIC INFORMATION SYSTEM
M-METRIC PART

KOPACZKA.PL

329-3506 **LINES GP-LIFT CYLINDER** *(contd.)* **i03724322**

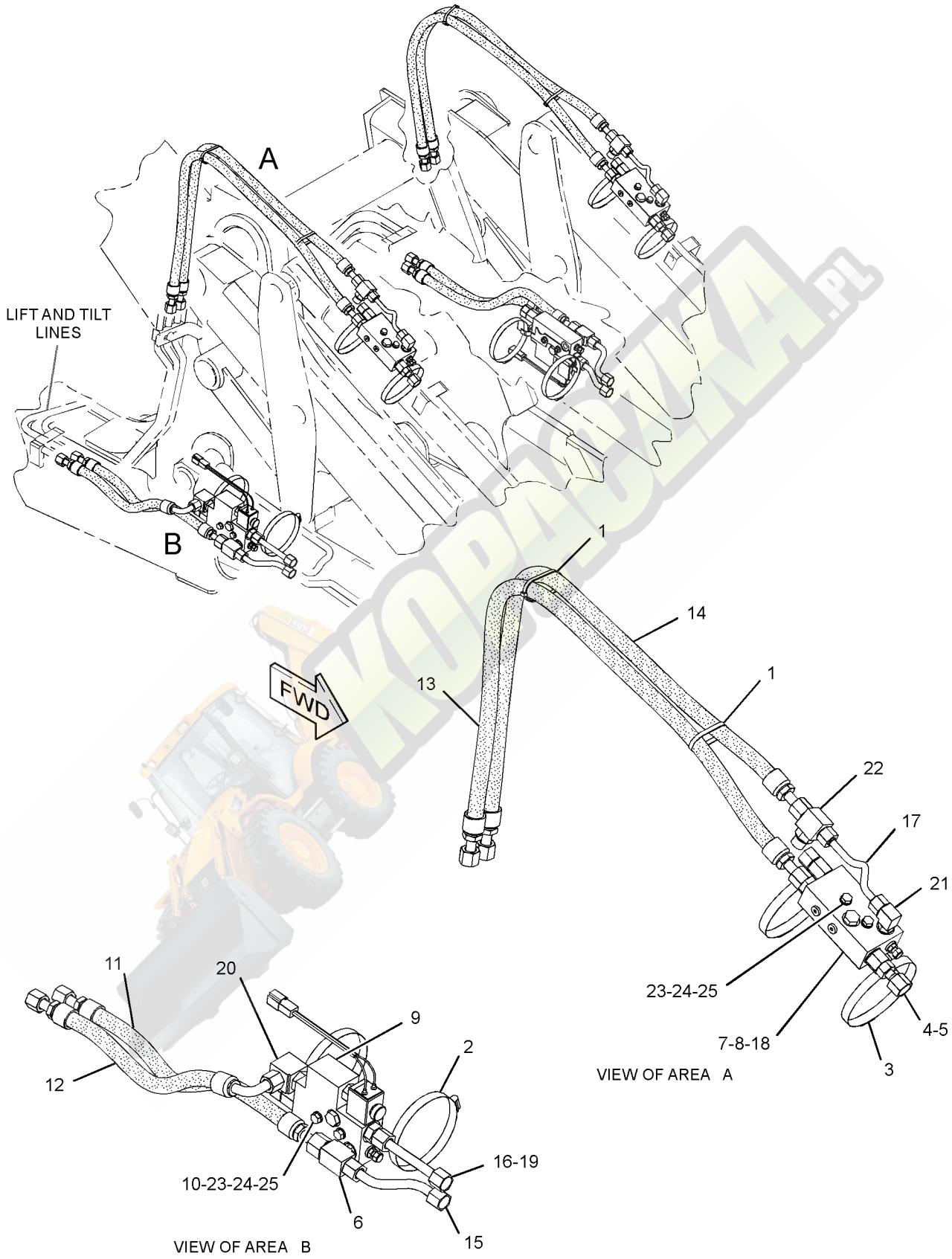

GRAPHIC #1

<END>

g01963794

HYDRAULIC SYSTEM

338-0837 LINES GP-LOAD CONTROL VALVE—PILOT

S/N: JBA1-UP

PART OF 350-6944, 350-6945 BACKHOE AR-EXTENDABLE STICK AN ATTACHMENT

SMCS-5057, 5811 **i03712425**

NOTE	REF NO	GRAPHIC REF	PART NUMBER	QTY	PART NAME 1 2 3 4 5 6 (PRODUCT LEVEL)	SEE PAGE
	1	1	*161-9916*	1	ADAPTER AS	
		1	**2M-9780**	1	SEAL-O-RING	
		1	**6V-7420**	1	ADAPTER	
	2	1	*166-2033*	1	TEE AS	
		1	**4J-5477**	1	SEAL-O-RING	
		1	**7X-2444**	1	TEE-SWIVEL	
	3	1	*205-7198*	2	TEE AS	
					(EACH INCLUDES)	
		1	**3J-1907**	1	SEAL-O-RING	
		1	**4J-5477**	2	SEAL-O-RING	
	4	1	*250-1440*	1	ADAPTER AS	
		1	**3K-0360**	1	SEAL-O-RING	
		1	**7X-3164**	1	ADAPTER-SWIVEL	
	5	1	**347-1128**	1	VALVE GP-LOAD CONTROL (BOOM)	
	6	1	**328-2477**	1	PLATE	
I	7	1	**329-4508**	1	HOSE AS	
I	8	1	**330-6124**	1	HOSE AS	
I	9	1	**330-6125**	1	HOSE AS	
I	10	1	**330-6126**	1	HOSE AS	
I	11	1	**339-0007**	1	HOSE AS	
I	12	1	**339-0010**	1	HOSE AS	
I	13	1	**339-2886**	1	HOSE AS	
I	14	1	**339-2935**	1	HOSE AS	
	15	1	**339-4287**	2	BRACKET	
	16	1	**347-1129**	1	VALVE GP-LOAD CONTROL (STICK)	
	17	1	*148-8315*	1	CONNECTOR AS	
		1	**2M-9780**	1	SEAL-O-RING	
		1	**6V-8642**	1	CONNECTOR	
		1	**7J-9108**	1	SEAL-O-RING	
	18	1	*148-8325*	3	CONNECTOR AS	
					(EACH INCLUDES)	
		1	**3J-1907**	1	SEAL-O-RING	
		1	**4J-5477**	1	SEAL-O-RING	
		1	**6V-8641**	1	CONNECTOR	
	19	1	*148-8345*	1	CONNECTOR AS	
		1	**2M-9780**	1	SEAL-O-RING	
		1	**6V-8398**	1	SEAL-O-RING	
		1	**6V-8638**	1	CONNECTOR	
	20	1	*148-8368*	2	ELBOW AS	
					(EACH INCLUDES)	
		1	**3J-1907**	1	SEAL-O-RING	
		1	**4J-5477**	1	SEAL-O-RING	
		1	**6V-8627**	1	ELBOW	
	21	1	*150-4052*	3	UNION AS	
					(EACH INCLUDES)	
		1	**4J-5477**	2	SEAL-O-RING	
		1	**6V-8993**	1	UNION	
	22	1	*150-5968*	1	TEE AS	
		1	**4J-5477**	2	SEAL-O-RING	
		1	**6V-9835**	1	TEE-SWIVEL	
	23	1	**2M-9780**	1	SEAL-O-RING	
	24	1	**2P-1279**	3	LOCKNUT (9/16-18-THD)	
	25	1	**3S-2093**	1	STRAP-CABLE	
	26	1	**5P-0599**	4	CLAMP-BAND	
M	27	1	**6V-7744**	4	LOCKNUT (M10X1.5-THD)	

338-0837 LINES GP-LOAD CONTROL VALVE *(contd.)* i03712425

NOTE	REF NO	GRAPHIC REF	PART NUMBER	QTY	PART NAME 1 2 3 4 5 6 (PRODUCT LEVEL)	SEE PAGE
	28	1	**6V-9169**	1	NUT-BULKHEAD (13/16-16-THD)	
	29	1	**6V-9170**	1	NUT-BULKHEAD (1-14-THD)	
	30	1	**7X-3165**	1	ADAPTER AS-SWIVEL	
	31	1	**8T-4121**	4	WASHER-HARD (11X21X2.5-MM THK)	
M	32	1	**8T-6466**	4	BOLT (M10X1.5X60-MM)	

I-REFER TO HYDRAULIC INFORMATION SYSTEM
M-METRIC PART

KOPACZKA.PL

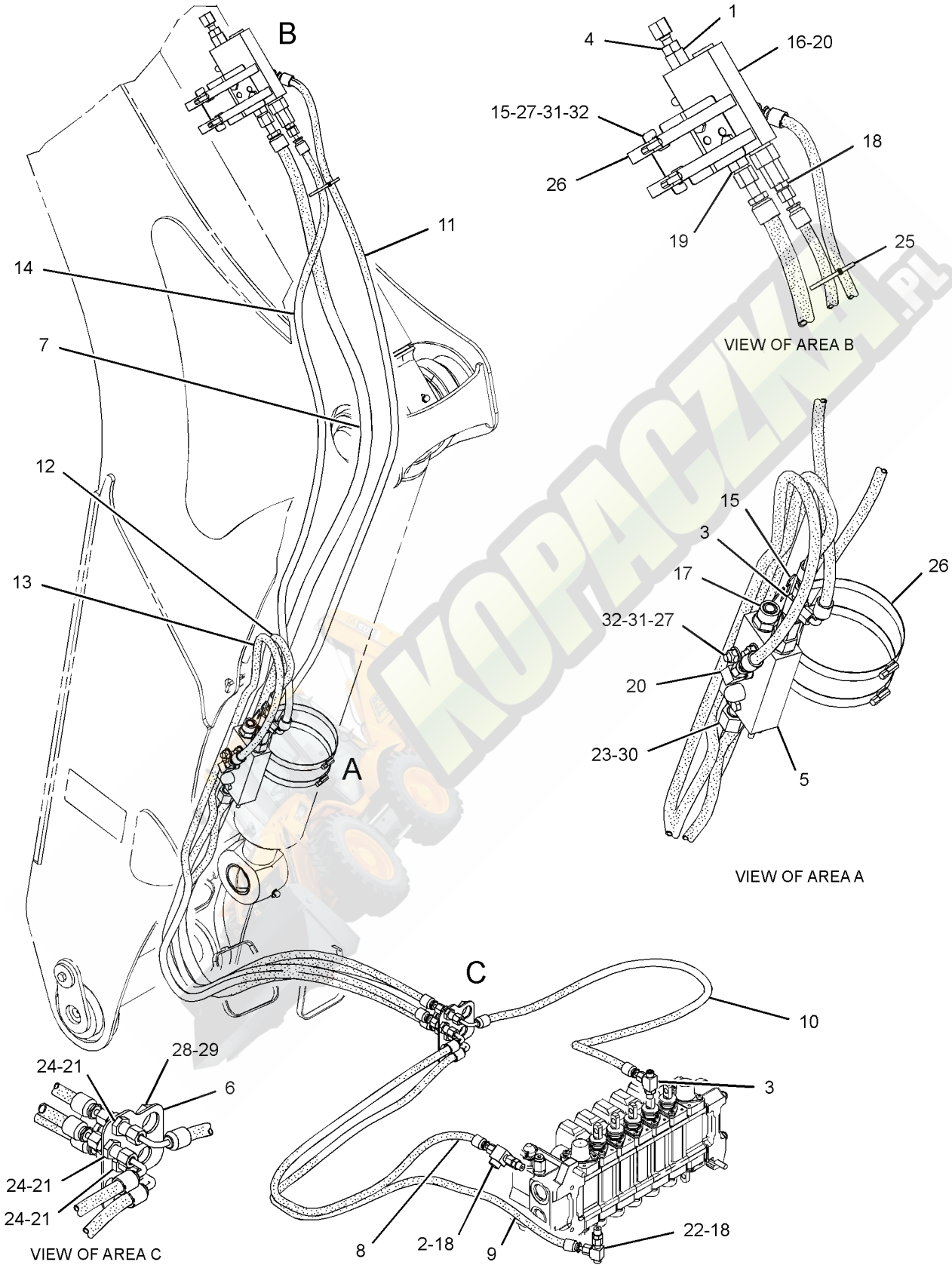

GRAPHIC #1

<END>

g01991430

HYDRAULIC SYSTEM

317-4362 LINES GP-MULTIPURPOSE BUCKET

S/N: JBA1-UP

PART OF 318-7251 BUCKET AR-MULTIPURPOSE

AN ATTACHMENT

SMCS-5057 **i03479101**

NOTE	REF NO	GRAPHIC REF	PART NUMBER	QTY	PART NAME 1 2 3 4 5 6 (PRODUCT LEVEL)	SEE PAGE
	1	1	**8T-6726**	2	CLAMP-HOSE	
	2	1	**9R-8870**	2	BLOCK	
I	3	1	**292-8339**	1	HOSE AS	
I	4	1	**317-4359**	1	HOSE AS	
I	5	1	**317-4360**	1	HOSE AS	
I	6	1	**317-4361**	1	HOSE AS	
	7	1	*148-8378*	2	ELBOW AS	
					(EACH INCLUDES)	
		1	**3J-1907**	1	SEAL-O-RING	
		1	**6V-8397**	1	SEAL-O-RING	
		1	**6V-8724**	1	ELBOW	
	8	1	*150-3060*	2	TEE AS	
					(EACH INCLUDES)	
		1	**6V-8397**	2	SEAL-O-RING	
		1	**6V-8398**	1	SEAL-O-RING	
		1	**8T-3444**	1	TEE-UNION	
	9	1	**6V-8397**	2	SEAL-O-RING	
	10	1	**6V-9830**	2	CAP AS	
	11	1	**8T-1893**	4	CLIP (SLOT)	
	12	1	**8T-1894**	4	CLIP (TAB)	
	13	1	**8T-4121**	2	WASHER-HARD (11X21X2.5-MM THK)	
M	14	1	**8T-4136**	2	BOLT (M10X1.5X25-MM)	

I-REFER TO HYDRAULIC INFORMATION SYSTEM
M-METRIC PART

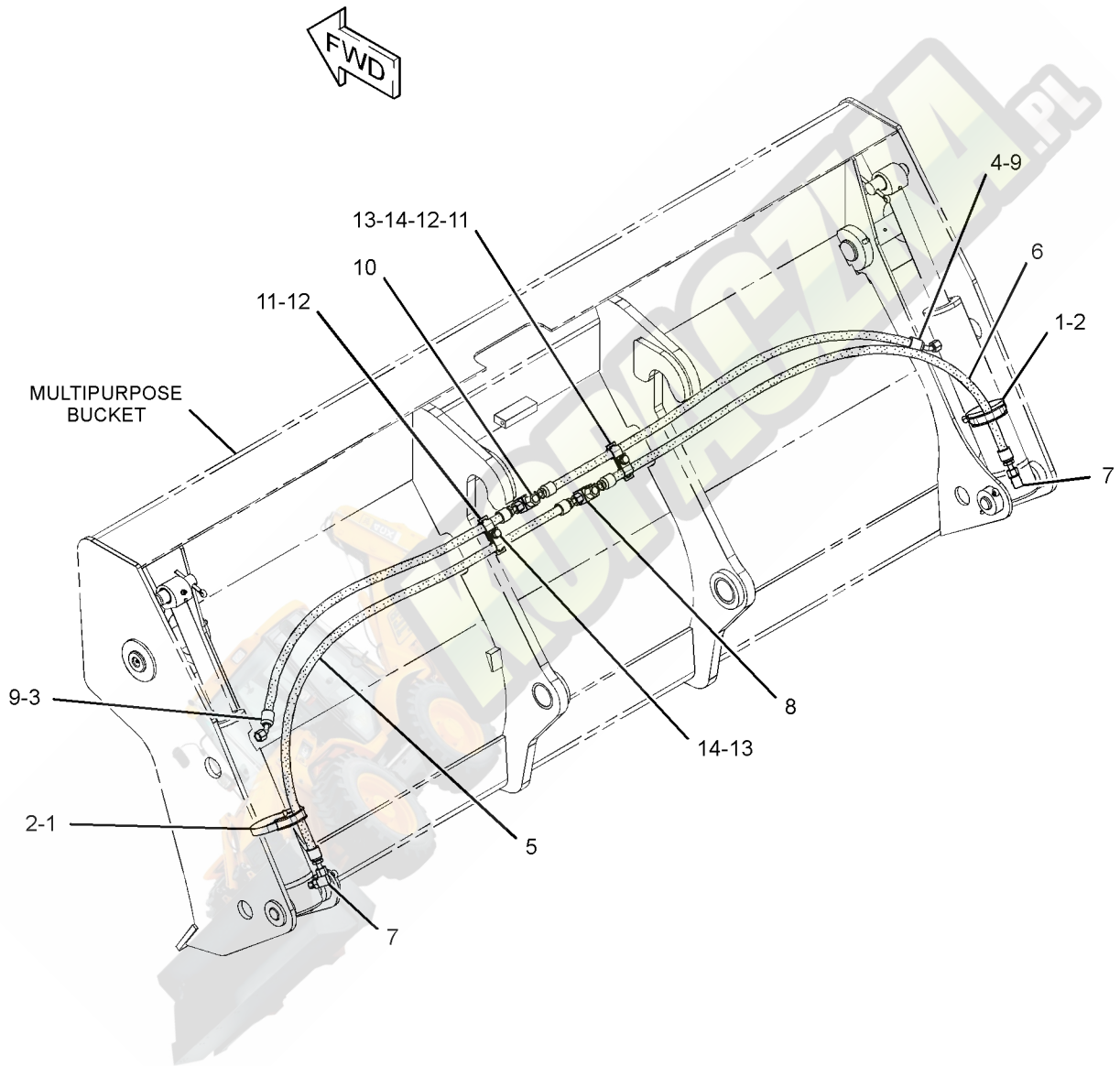

GRAPHIC #1 **<END>** g01858933

317-6270 LINES GP-MULTIPURPOSE BUCKET

S/N: JBA1-UP

PART OF 318-7246, 318-7247, 318-7248 BUCKET AR-MULTIPURPOSE AN ATTACHMENT

SMCS-5057 **i03481060**

NOTE	REF NO	GRAPHIC REF	PART NUMBER	QTY	PART NAME 1 2 3 4 5 6 (PRODUCT LEVEL)	SEE PAGE
	1	1	**8T-6726**	2	CLAMP-HOSE	
	2	1	**9R-8870**	2	BLOCK	
I	3	1	**317-2250**	1	HOSE AS	
I	4	1	**317-4367**	1	HOSE AS	
I	5	1	**317-6266**	1	HOSE AS	
I	6	1	**317-6267**	1	HOSE AS	
I	7	1	**317-6268**	1	HOSE AS	
I	8	1	**317-6269**	1	HOSE AS	
	9	1	*148-8378*	2	ELBOW AS	
					(EACH INCLUDES)	
		1	**3J-1907**	1	SEAL-O-RING	
		1	**6V-8397**	1	SEAL-O-RING	
		1	**6V-8724**	1	ELBOW	
	10	1	*150-3060*	2	TEE AS	
					(EACH INCLUDES)	
		1	**6V-8397**	2	SEAL-O-RING	
		1	**6V-8398**	1	SEAL-O-RING	
		1	**8T-3444**	1	TEE-UNION	
	11	1	**6V-8397**	2	SEAL-O-RING	
	12	1	**8T-1893**	4	CLIP (SLOT)	
	13	1	**8T-1894**	4	CLIP (TAB)	
	14	1	**5P-7464**	2	CLIP (SLOT)	
	15	1	**5P-7465**	2	CLIP (TAB)	
	16	1	**8T-4121**	2	WASHER-HARD (11X21X2.5-MM THK)	
M	17	1	**8T-4136**	2	BOLT (M10X1.5X25-MM)	
M	18	1	**8T-4192**	2	BOLT (M12X1.75X25-MM)	
	19	1	**8T-4223**	2	WASHER-HARD (13.5X25.5X3-MM THK)	
	20	1	**6V-1249**	2	GROMMET	

I-REFER TO HYDRAULIC INFORMATION SYSTEM
M-METRIC PART

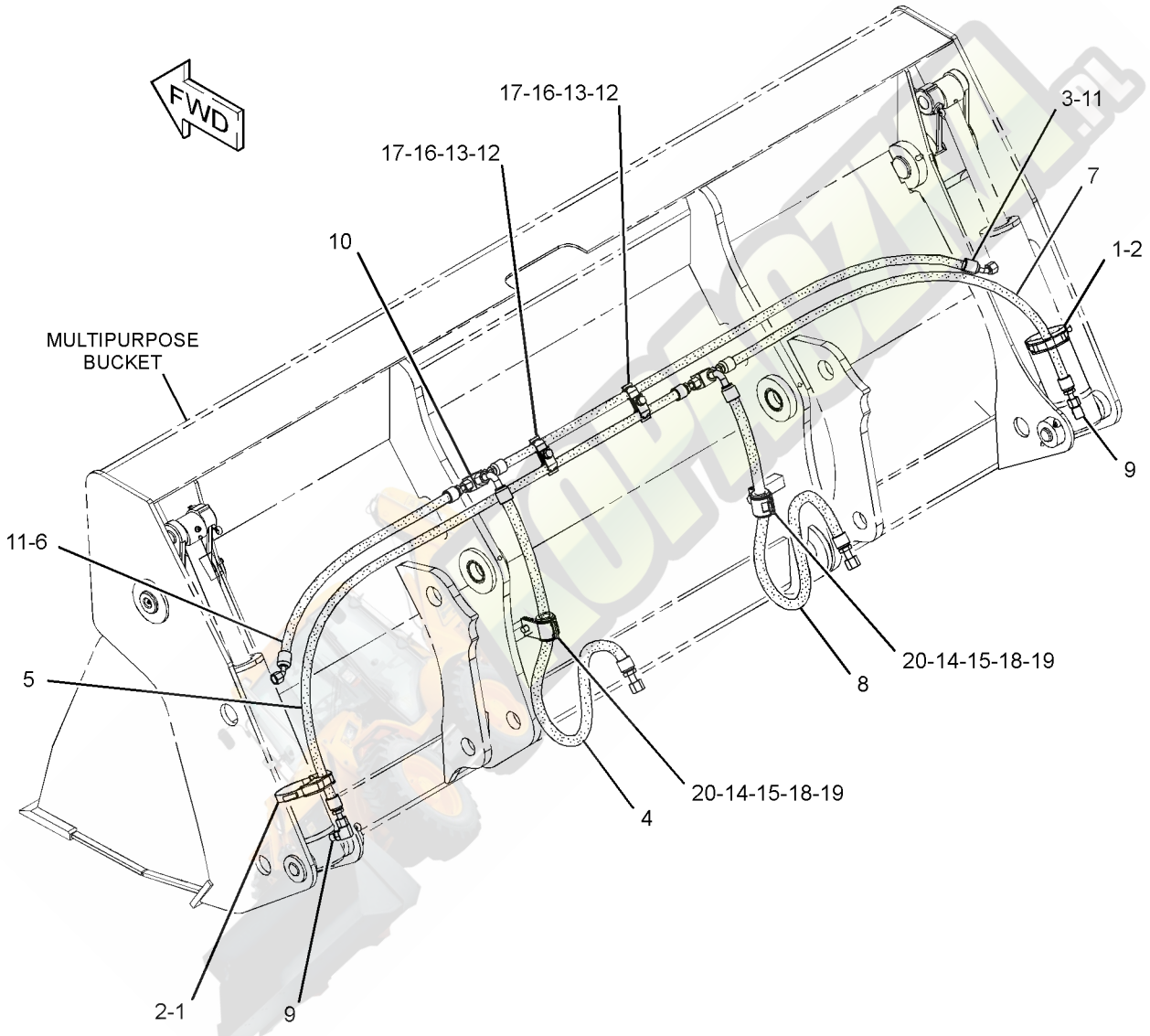

GRAPHIC #1 **<END>** g01858936

299-6859 LINES GP-PILOT–AUXILIARY

S/N: JBA1-UP

PART OF 329-0124 HYDRAULIC AR

SMCS-5057, 5059 **i03653635**

NOTE	REF NO	GRAPHIC REF	PART NUMBER	QTY	PART NAME 1 2 3 4 5 6 (PRODUCT LEVEL)	SEE PAGE
	1	1	**299-6940**	1	HOSE AS	
	2	1	**299-5159**	1	HOSE AS	
	3	1	**307-5354**	1	HOSE AS	
	4	1	*148-8325*	6	CONNECTOR AS	
					(EACH INCLUDES)	
		1	**3J-1907**	1	SEAL-O-RING	
		1	**4J-5477**	1	SEAL-O-RING	
		1	**6V-8641**	1	CONNECTOR	
	5	1	*148-8368*	1	ELBOW AS	
		1	**3J-1907**	1	SEAL-O-RING	
		1	**4J-5477**	1	SEAL-O-RING	
		1	**6V-8627**	1	ELBOW	
	6	1	*150-3033*	1	ELBOW AS	
		1	**3J-1907**	1	SEAL-O-RING	
		1	**4J-5477**	1	SEAL-O-RING	
		1	**8T-0164**	1	ELBOW	
	7	1	**299-7887**	1	HOSE AS	

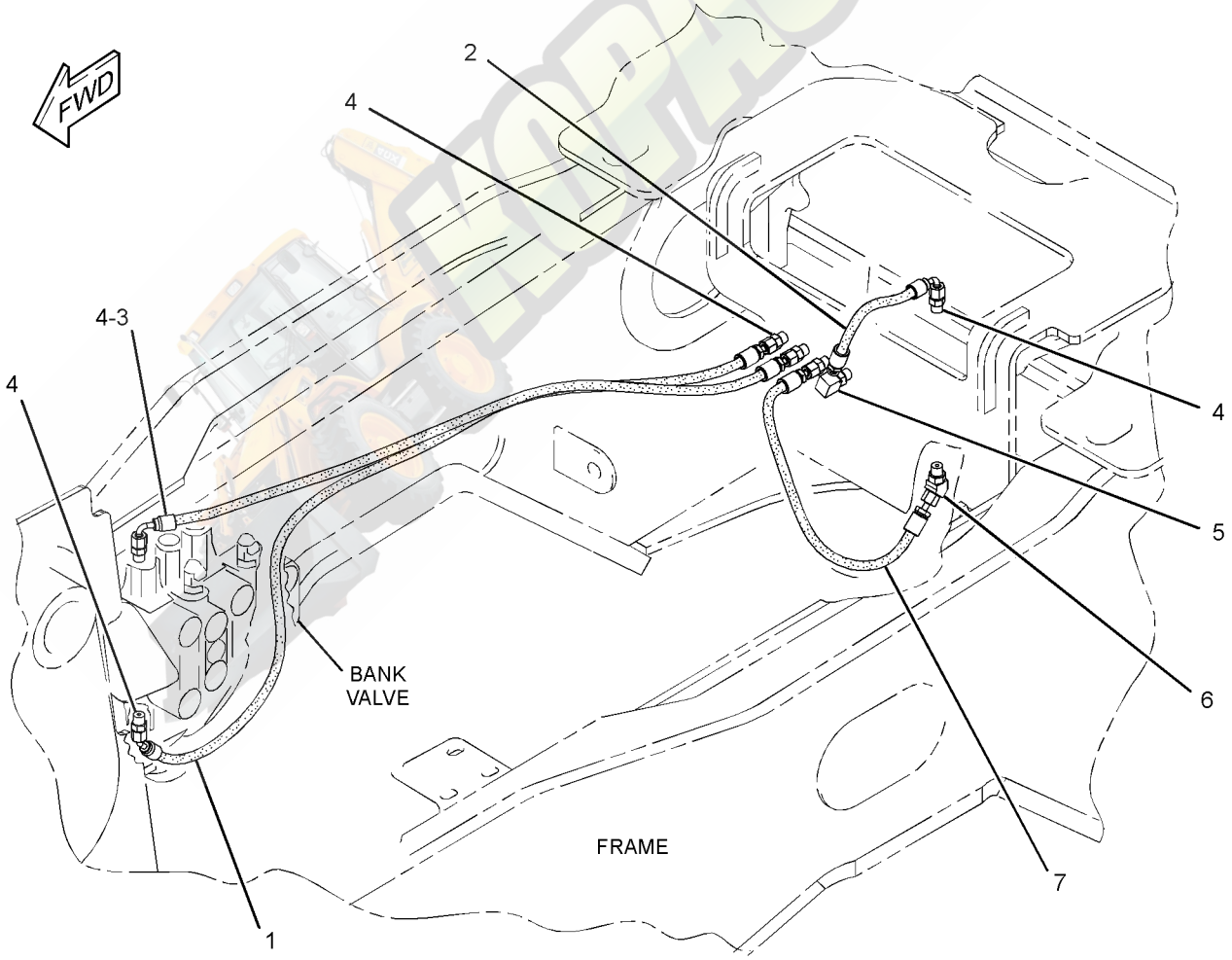

GRAPHIC #1 **<END>** g01963594

HYDRAULIC SYSTEM

333-0699 LINES GP-PILOT—LOADER

S/N: JBA1-UP

PART OF 329-0124 HYDRAULIC AR

SMCS-5057, 5059 **i03642931**

NOTE	REF NO	GRAPHIC REF	PART NUMBER	QTY	PART NAME 1 2 3 4 5 6 (PRODUCT LEVEL)	SEE PAGE
	1	1	**7K-1181**	4	STRAP-CABLE	
	2	1	**133-5813**	2	BAND-MARKER (GRAY, P)	
	3	1	*164-9639*	4	CONNECTOR AS	
					(EACH INCLUDES)	
		1	**3J-1907**	1	SEAL-O-RING	
		1	**4J-5477**	1	SEAL-O-RING	
		1	**148-7925**	1	CONNECTOR	
	4	1	**195-0256**	2	BAND-MARKER (PINK)	
	5	1	**195-0257**	2	BAND-MARKER (BLUE)	
	6	1	**195-0258**	2	BAND-MARKER (MARINE BLUE)	
	7	1	**195-0259**	2	BAND-MARKER (GREEN)	
	8	1	**267-2760**	1	VALVE GP-PILOT (LOADER)	
		1	**260-3020**	1	KIT-SEAL	
					(INCLUDES SEAL-O-RINGS & RETAINING RINGS)	
		1	**260-3021**	2	KIT-DETENT	
					(EACH INCLUDES RETAINING RING, PLUNGER & COIL AS)	
		1	**102-8805**	1	KIT-RECEPTACLE (6-PIN)	
					(INCLUDES RECPETACLE AS & WEDGE)	
		1	**316-7091**	1	KIT-JOINT	
	9	1	**299-3270**	1	HOSE AS	
	10	1	**299-6936**	2	HOSE AS	
	11	1	**299-6938**	2	HOSE AS	
	12	1	**299-6940**	1	HOSE AS	
	13	1	*148-8325*	6	CONNECTOR AS	
					(EACH INCLUDES)	
		1	**3J-1907**	1	SEAL-O-RING	
		1	**4J-5477**	1	SEAL-O-RING	
		1	**6V-8641**	1	CONNECTOR	
G	14	1	**160-2248**		SLEEVE-ABRASION (7.9-IN)	

G-ORDER BY THE INCH

333-0699 **LINES GP-PILOT** *(contd.)* **i03642931**

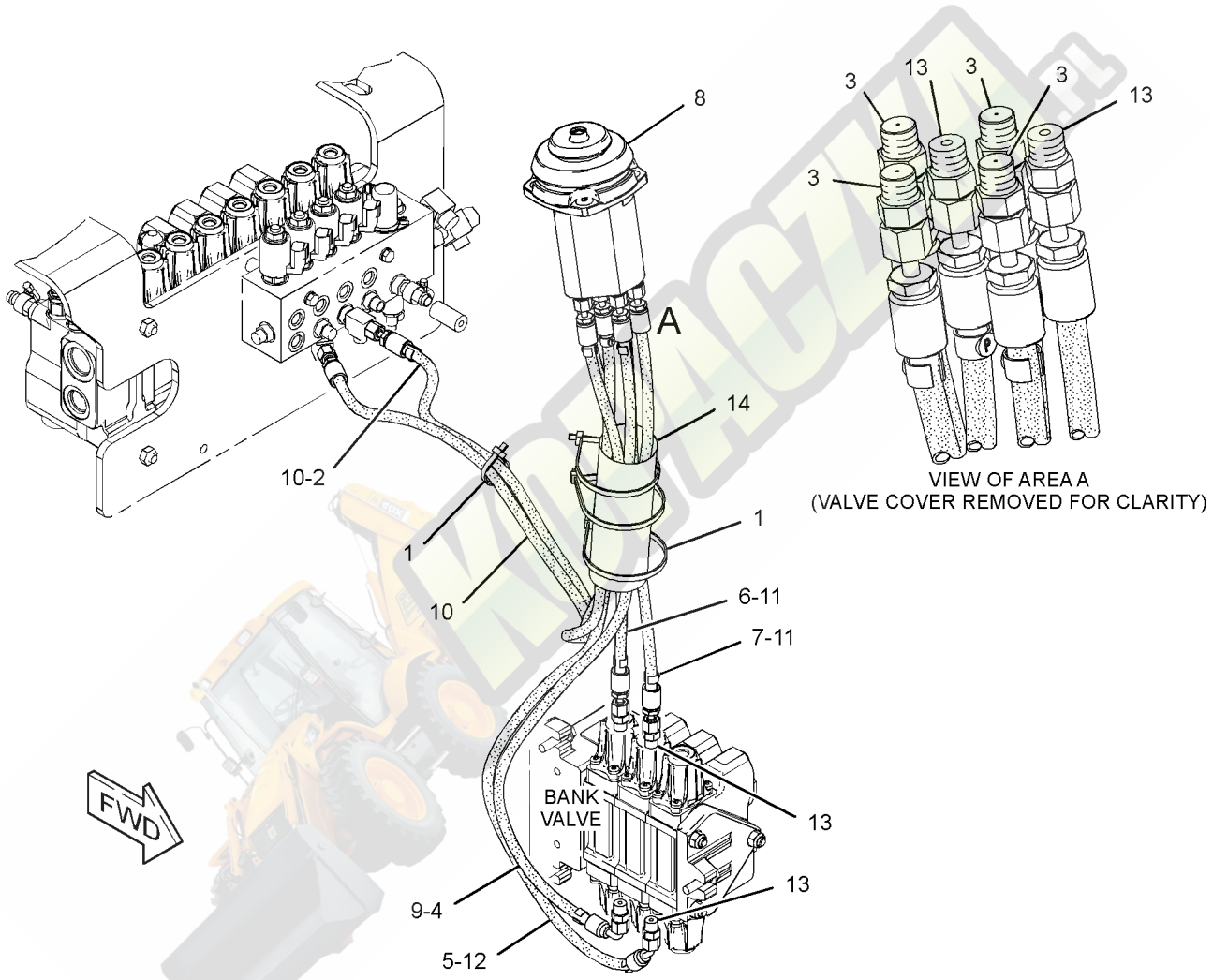

GRAPHIC #1 **<END>** g01988974

HYDRAULIC SYSTEM

338-0432 LINES GP-PILOT–BACKHOE

S/N: JBA1-UP

PART OF 329-0124 HYDRAULIC AR

SMCS-5057, 5059 **i03665640**

NOTE	REF NO	GRAPHIC REF	PART NUMBER	QTY	PART NAME 1 2 3 4 5 6 (PRODUCT LEVEL)	SEE PAGE
	1	1	**4I-9521**	2	BAND-MARKER (RED, L1)	
	2	1	**4I-9522**	2	BAND-MARKER (YELLOW, L2)	
	3	1	**4I-9523**	2	BAND-MARKER (BLUE, L3)	
	4	1	**4I-9524**	2	BAND-MARKER (BROWN, L4)	
	5	1	**4I-9525**	2	BAND-MARKER (ORANGE, R1)	
	6	1	**4I-9526**	2	BAND-MARKER (WHITE, R2)	
	7	1	**4I-9527**	2	BAND-MARKER (GREEN, R3)	
	8	1	**4I-9528**	2	BAND-MARKER (PURPLE, R4)	
	9	1	**7K-1181**	6	STRAP-CABLE	
Y	10	1	**271-3096**	1	CONTROL GP-JOYSTICK (RH)	628
Y	11	1	**271-3097**	1	CONTROL GP-JOYSTICK (LH)	629
	12	1	**299-5152**	2	HOSE AS	
	13	1	**299-5155**	1	HOSE AS	
	14	1	**299-5156**	1	HOSE AS	
	15	1	**299-5157**	1	HOSE AS	
	16	1	**299-5158**	1	HOSE AS	
	17	1	**299-5159**	1	HOSE AS	
Y	18	1	**300-4491**	1	MANIFOLD GP-CONTROL	451
	19	1	**307-6461**	2	HOSE AS	
	20	1	**307-6462**	2	HOSE AS	
	21	1	**309-5684**	1	HOSE AS	
	22	1	**347-2208**	2	VALVE GP-PILOT (BACKHOE)	
	23	1	*148-8325*	19	CONNECTOR AS	
					(EACH INCLUDES)	
		1	**3J-1907**	1	SEAL-O-RING	
		1	**4J-5477**	1	SEAL-O-RING	
		1	**6V-8641**	1	CONNECTOR	
	24	1	*148-8368*	2	ELBOW AS	
					(EACH INCLUDES)	
		1	**3J-1907**	1	SEAL-O-RING	
		1	**4J-5477**	1	SEAL-O-RING	
		1	**6V-8627**	1	ELBOW	
	25	1	*150-3033*	1	ELBOW AS	
		1	**3J-1907**	1	SEAL-O-RING	
		1	**4J-5477**	1	SEAL-O-RING	
		1	**8T-0164**	1	ELBOW	
	26	1	**156-6175**	1	CLIP	
	27	1	**342-7196**	1	VALVE GP-CHECK (300-BAR)	
	28	1	**8T-4224**	2	WASHER-HARD (8.8X16X2-MM THK)	
M	29	1	**8T-6869**	2	BOLT (M8X1.25X60-MM)	
	30	1	**9X-2038**	1	WASHER (7X19X2-MM THK)	
M	31	1	**9X-2043**	1	SCREW-TRUSS HEAD (M6X1X14-MM)	
G	32	1	**160-2248**		SLEEVE-ABRASION (17.7-IN EACH)	

G-ORDER BY THE INCH
M-METRIC PART
Y-SEPARATE ILLUSTRATION

338-0432 **LINES GP-PILOT** *(contd.)* **i03665640**

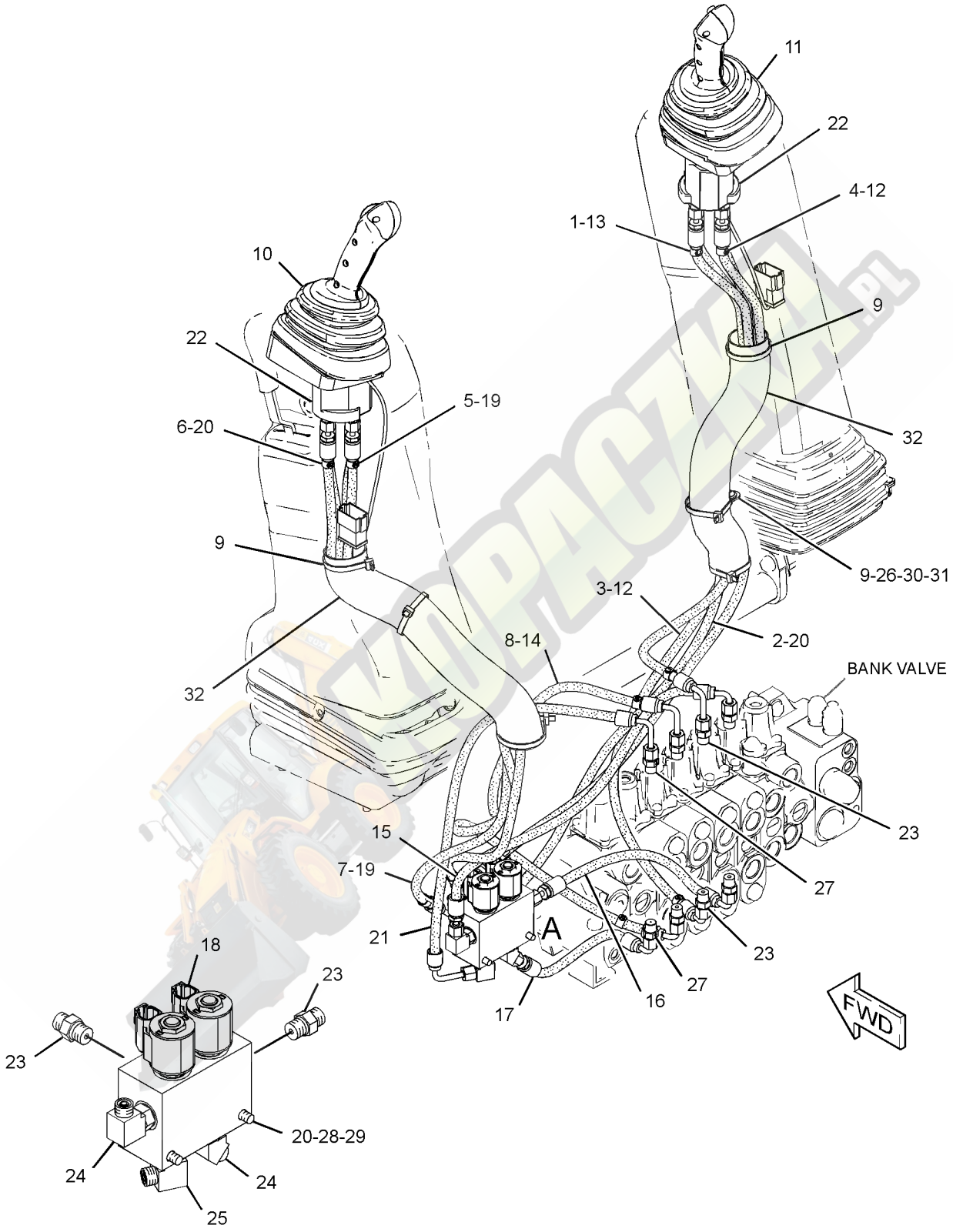

VIEW OF AREA A
(PARTS REMOVED FOR CLARITY AND EXPLODED)

GRAPHIC #1 **<END>** g01989495

HYDRAULIC SYSTEM

338-0433 LINES GP-PILOT—SUPPLY

S/N: JBA1-UP

PART OF 329-0124 HYDRAULIC AR

SMCS-5057, 5059 **i03642559**

NOTE	REF NO	GRAPHIC REF	PART NUMBER	QTY	PART NAME 1 2 3 4 5 6 (PRODUCT LEVEL)	SEE PAGE
	1	1	**133-5813**	6	BAND-MARKER (GRAY, P)	
Y	2	1	*149-0686*	1	ACCUMULATOR GP-HYDRAULIC (CHARGED)	366
	3	1	*164-5586*	1	TEE AS	
		1	**6V-8398**	1	SEAL-O-RING	
		1	**7X-0871**	1	TEE	
	4	1	*174-6740*	1	TEE AS	
		1	**2M-9780**	1	SEAL-O-RING	
		1	**122-1113**	1	TEE-O-RING	
	5	1	*205-7198*	2	TEE AS	
					(EACH INCLUDES)	
		1	**3J-1907**	1	SEAL-O-RING	
		1	**4J-5477**	2	SEAL-O-RING	
	6	1	*229-5336*	1	TEE AS	
		1	**3J-1907**	1	SEAL-O-RING	
		1	**4J-5477**	1	SEAL-O-RING	
		1	**081-5648**	1	TEE	
	7	1	*273-4211*	1	TEE AS	
		1	**6V-8398**	1	SEAL-O-RING	
		1	**273-4210**	1	TEE	
	8	1	**276-2334**	1	FILM-WARNING (HIGH PRESS CYLINDER, READ OMM)	
	9	1	**297-7964**	2	CONNECTOR	
	10	1	**299-3270**	1	HOSE AS	
	11	1	**299-5155**	1	HOSE AS	
Y	12	1	**300-4493**	1	MANIFOLD & SOLENOID GP-CONTROL	450
I	13	1	**307-1432**	1	HOSE AS	
	14	1	**307-6461**	3	HOSE AS	
I	15	1	**344-7777**	1	HOSE AS	
	16	1	**6V-0852**	1	CAP-DUST	
	17	1	*148-8318*	1	CONNECTOR AS	
		1	**3K-0360**	1	SEAL-O-RING	
		1	**6V-8397**	1	SEAL-O-RING	
		1	**6V-8634**	1	CONNECTOR	
	18	1	*148-8325*	9	CONNECTOR AS	
					(EACH INCLUDES)	
		1	**3J-1907**	1	SEAL-O-RING	
		1	**4J-5477**	1	SEAL-O-RING	
		1	**6V-8641**	1	CONNECTOR	
	19	1	*148-8336*	1	CONNECTOR AS	
		1	**3J-1907**	1	SEAL-O-RING	
		1	**6V-8397**	1	SEAL-O-RING	
		1	**6V-8636**	1	CONNECTOR	
	20	1	*148-8365*	1	ELBOW AS	
		1	**3J-1907**	1	SEAL-O-RING	
		1	**6V-8398**	1	SEAL-O-RING	
		1	**8T-6876**	1	ELBOW	
	21	1	*148-8433*	1	TEE AS	
		1	**6V-8397**	2	SEAL-O-RING	
		1	**6V-9836**	1	TEE-SWIVEL	
	22	1	*150-3027*	1	ELBOW AS	
		1	**2M-9780**	1	SEAL-O-RING	
		1	**6V-5653**	1	ELBOW	
	23	1	*164-5567*	1	COUPLER AS-QUICK DISCONNECT	
		1	**6V-3965**	1	FITTING (QUICK DISCONNECT)	
		1	**214-7568**	1	SEAL-O-RING	
	24	1	**178-3620**	1	STRAP-DUAL CLAMP	
I	25	1	**214-9468**	1	HOSE AS	

338-0433 **LINES GP-PILOT** *(contd.)* **i03642559**

NOTE	REF NO	GRAPHIC REF	PART NUMBER	QTY	PART NAME 1 2 3 4 5 6 (PRODUCT LEVEL)	SEE PAGE
	26	1	**3J-1907**	2	SEAL-O-RING	
	27	1	**3K-0360**	1	SEAL-O-RING	
	28	1	**5D-1026**	4	CLAMP-BAND	
	29	1	**6V-9169**	1	NUT-BULKHEAD (13/16-16-THD)	
	30	1	**6V-9829**	1	CAP AS	
M	31	1	**8T-3647**	2	BOLT (M8X1.25X80-MM)	
	32	1	**8T-4224**	2	WASHER-HARD (8.8X16X2-MM THK)	
E	33	1	**5P-1505**		HOSE (111-CM)	
E	33A	1	**5P-1505**		HOSE (226-CM)	

E-ORDER BY THE CENTIMETER
I-REFER TO HYDRAULIC INFORMATION SYSTEM
M-METRIC PART
Y-SEPARATE ILLUSTRATION

KOPACZKA.PL

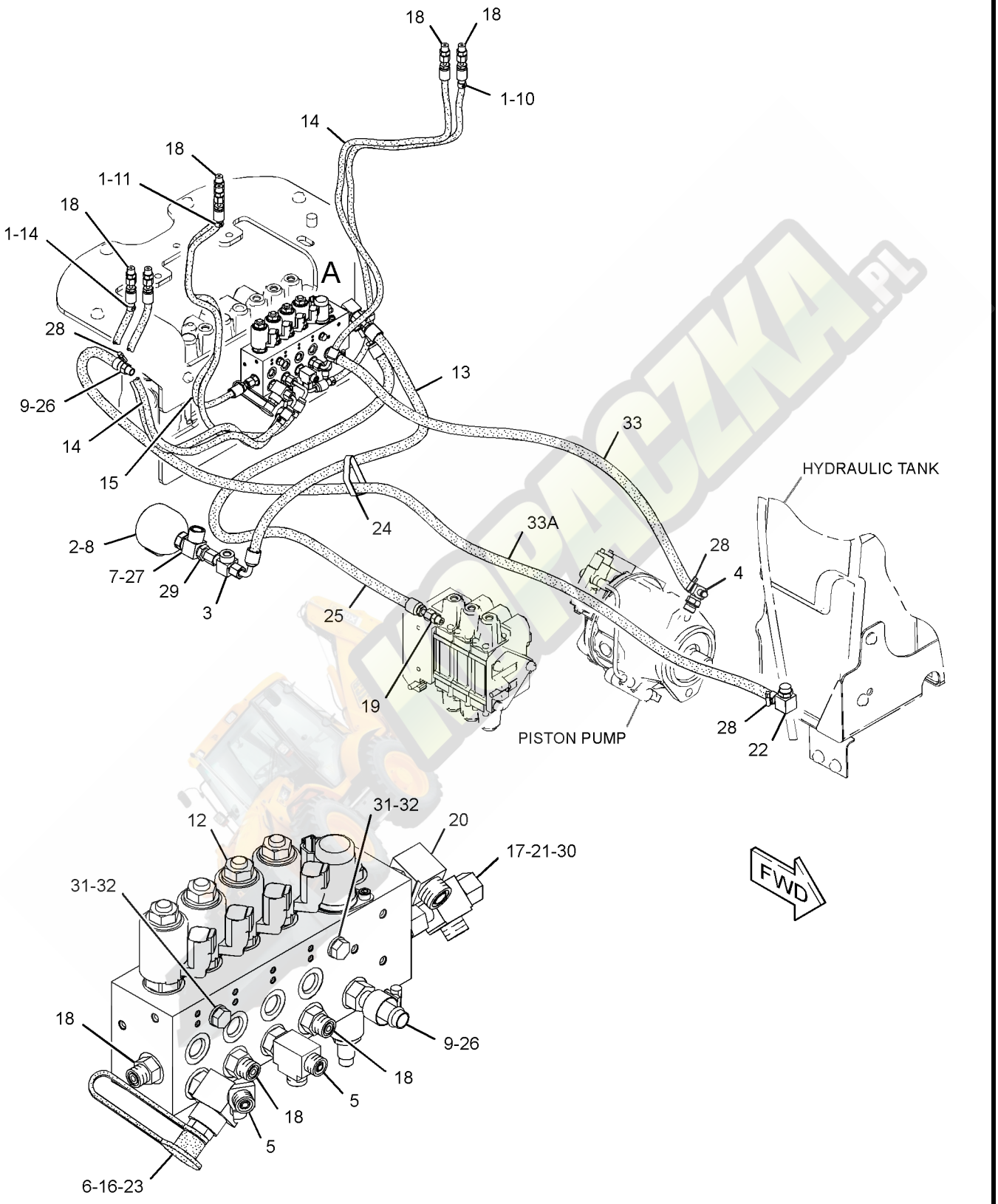

VIEW OF AREA A
(PARTS REMOVED FOR CLARITY)

GRAPHIC #1 **<END>** g01989255

339-4981 LINES GP-PILOT–SIGNAL

S/N: JBA1-UP

PART OF 329-0124 HYDRAULIC AR

SMCS-5057, 5059 **i03665702**

NOTE	REF NO	GRAPHIC REF	PART NUMBER	QTY	PART NAME 1 2 3 4 5 6 (PRODUCT LEVEL)	SEE PAGE
	1	1	**5D-1026**	2	CLAMP-BAND	
	2	1	**7K-1181**	1	STRAP-CABLE	
	3	1	*174-6740*	1	TEE AS	
		1	**2M-9780**	1	SEAL-O-RING	
		1	**122-1113**	1	TEE-O-RING	
I	4	1	**208-3600**	1	HOSE AS	
I	5	1	**308-5496**	1	HOSE AS	
	6	1	**6V-0852**	2	CAP-DUST	
	7	1	*148-8325*	2	CONNECTOR AS	
					(EACH INCLUDES)	
		1	**3J-1907**	1	SEAL-O-RING	
		1	**4J-5477**	1	SEAL-O-RING	
		1	**6V-8641**	1	CONNECTOR	
	8	1	*150-3062*	1	TEE AS	
		1	**3J-7354**	1	SEAL-O-RING	
		1	**4J-5477**	1	SEAL-O-RING	
		1	**101-1787**	1	TEE AS	
	9	1	*150-5968*	2	TEE AS	
					(EACH INCLUDES)	
		1	**4J-5477**	2	SEAL-O-RING	
		1	**6V-9835**	1	TEE-SWIVEL	
	10	1	*164-5567*	2	COUPLER AS-QUICK DISCONNECT	
					(EACH INCLUDES)	
		1	**6V-3965**	1	FITTING (QUICK DISCONNECT)	
		1	**214-7568**	1	SEAL-O-RING	
	11	1	*165-4931*	1	ELBOW AS	
		1	**3J-1907**	1	SEAL-O-RING	
		1	**6V-8077**	1	ELBOW	
	12	1	**6V-9828**	1	CAP AS	
E	13	1	**5P-1505**		HOSE (91-CM)	

E-ORDER BY THE CENTIMETER
I-REFER TO HYDRAULIC INFORMATION SYSTEM

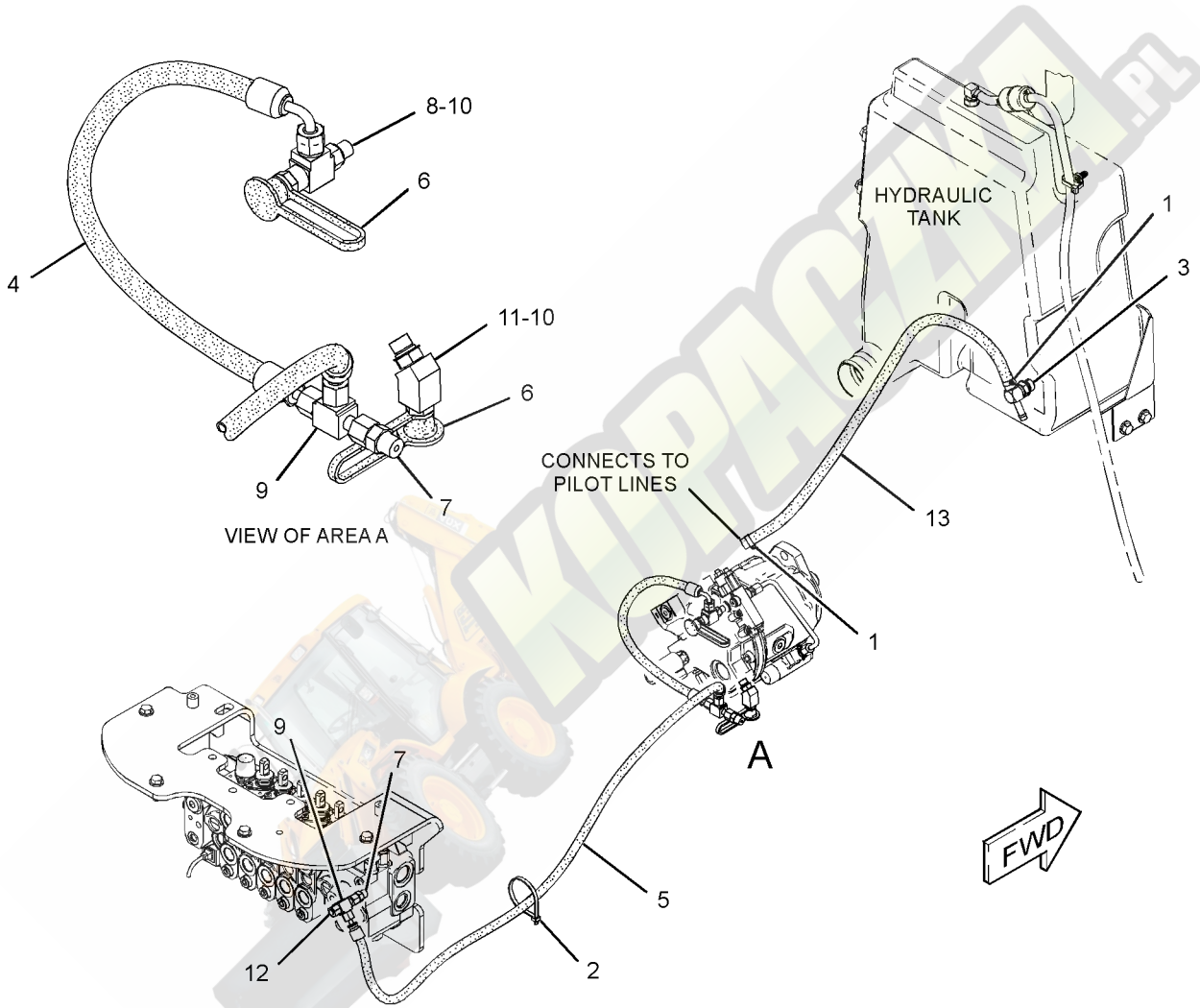

GRAPHIC #1 **<END>** g01986813

HYDRAULIC SYSTEM

335-1692 LINES GP-PUMP

S/N: JBA1-UP

PART OF 329-0124 HYDRAULIC AR

SMCS-5057 **i03663042**

NOTE	REF NO	GRAPHIC REF	PART NUMBER	QTY	PART NAME 1 2 3 4 5 6 (PRODUCT LEVEL)	SEE PAGE
	1	1	**144-0367**	1	CLAMP-HOSE	
	2	1	**211-4348**	1	ELBOW AS	
	3	1	**235-8528**	1	HOSE	
I	4	1	**298-5398**	1	HOSE AS	
I	5	1	**307-3488**	1	HOSE AS	
I	6	1	**338-0426**	1	HOSE AS	
I	7	1	**338-0427**	1	HOSE AS	
	8	1	*148-8317*	1	CONNECTOR AS	
		1	**3D-2824**	1	SEAL-O-RING	
		1	**5K-9090**	1	SEAL-O-RING	
		1	**6V-8714**	1	CONNECTOR	
	9	1	*148-8335*	2	CONNECTOR AS	
					(EACH INCLUDES)	
		1	**5K-9090**	1	SEAL-O-RING	
		1	**6V-8635**	1	CONNECTOR	
		1	**7M-8485**	1	SEAL-O-RING	
	10	1	*148-8352*	1	ELBOW AS	
		1	**5K-9090**	1	SEAL-O-RING	
		1	**6V-9854**	1	ELBOW	
	11	1	*148-8362*	1	ELBOW AS	
		1	**3D-2824**	1	SEAL-O-RING	
		1	**5K-9090**	1	SEAL-O-RING	
		1	**8T-6684**	1	ELBOW	
	12	1	*148-8429*	2	TEE AS	
					(EACH INCLUDES)	
		1	**5K-9090**	2	SEAL-O-RING	
		1	**6V-9840**	1	TEE-SWIVEL	
	13	1	**1P-4584**	2	FLANGE-HALF	
	14	1	*313-3490*	1	CONNECTOR AS	
		1	**5K-9090**	1	SEAL-O-RING	
		1	**7M-8485**	1	SEAL-O-RING	
		1	**313-3486**	1	CONNECTOR	
	15	1	**5P-4868**	2	CLAMP-HOSE	
	16	1	**6J-2680**	1	SEAL-O-RING	
M	17	1	**8T-4183**	4	BOLT (M12X1.75X40-MM)	
	18	1	**8T-4223**	4	WASHER-HARD (13.5X25.5X3-MM THK)	

I-REFER TO HYDRAULIC INFORMATION SYSTEM
M-METRIC PART

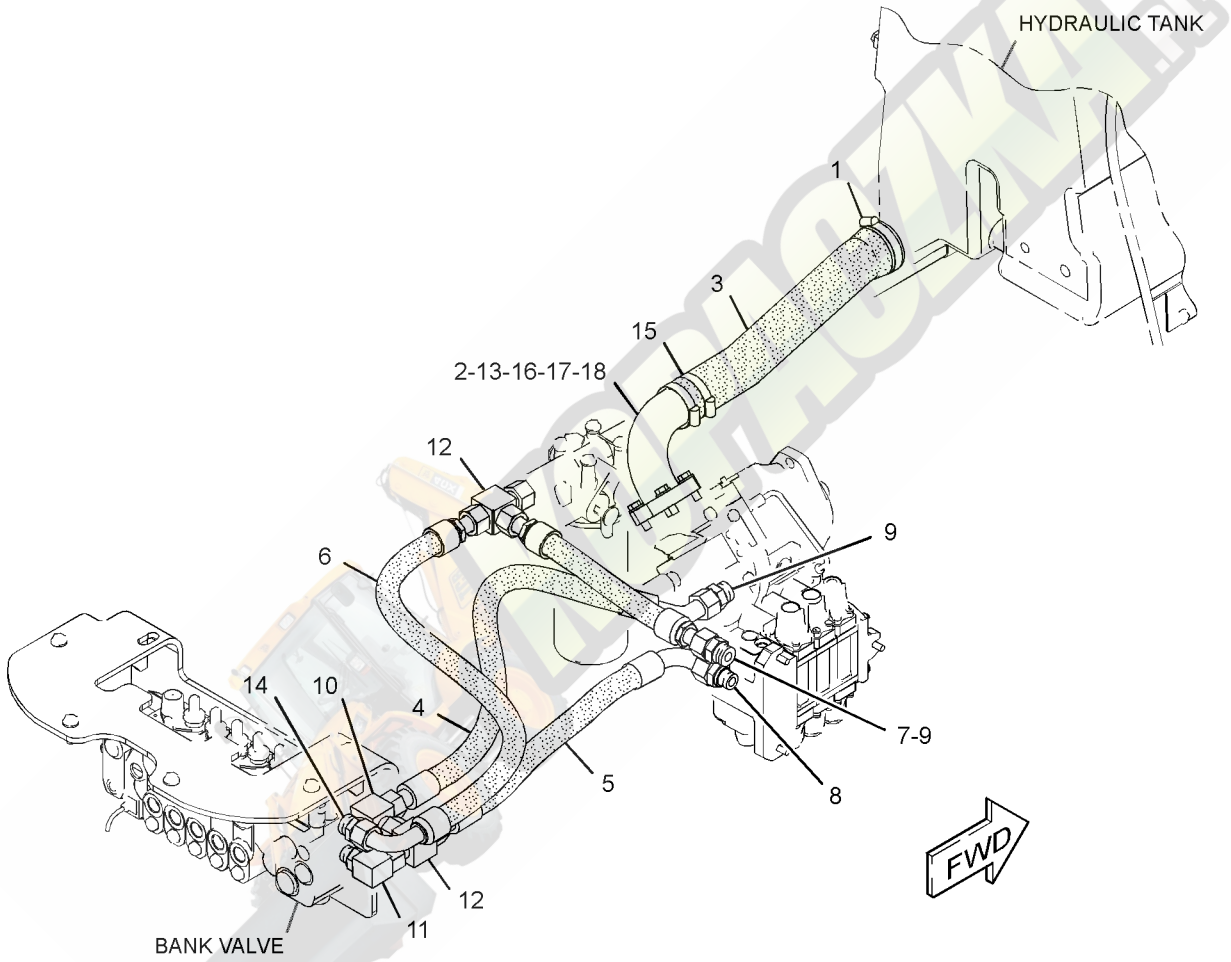

GRAPHIC #1 **<END>** g01988937

334-8021 LINES GP-RETURN

S/N: JBA1-UP

PART OF 329-0124 HYDRAULIC AR

SMCS-5057 **i03642932**

NOTE	REF NO	GRAPHIC REF	PART NUMBER	QTY	PART NAME 1 2 3 4 5 6 (PRODUCT LEVEL)	SEE PAGE
	1	1	**7K-1181**	3	STRAP-CABLE	
	2	1	**130-9984**	1	CLIP	
	3	1	**159-1503**	4	CLAMP-HOSE	
	4	1	**232-0252**	1	TEE	
	5	1	**235-7091**	1	HOSE	
Y	6	1	*325-6257*	1	FILTER GP-OIL (HYDRAULIC)	386
	7	1	**091-9035**	2	SPACER (11X25X20-MM THK)	
M	8	1	**5C-7261**	2	NUT (M8X1.25-THD)	
	9	1	**5P-4116**	2	WASHER-HARD (8.8X20.5X2-MM THK)	
	10	1	**7D-7233**	2	CLIP	
	11	1	**7X-7729**	4	WASHER (11X25X3-MM THK)	
	12	1	**7X-7958**	4	CLAMP-HOSE	
	13	1	**8T-4121**	3	WASHER-HARD (11X21X2.5-MM THK)	
M	14	1	**8T-4136**	5	BOLT (M10X1.5X25-MM)	
M	15	1	**8T-5005**	2	BOLT (M10X1.5X70-MM)	
	16	1	**8T-7529**	3	CLIP	
E	17	1	**5P-1506**		HOSE (90-CM)	
E	18	1	**262-8088**		HOSE (130-CM)	
E	18A	1	**262-8088**		HOSE (222-CM)	
G	19	1	**160-2246**		SLEEVE-ABRASION (21-IN)	

E-ORDER BY THE CENTIMETER
G-ORDER BY THE INCH
M-METRIC PART
Y-SEPARATE ILLUSTRATION

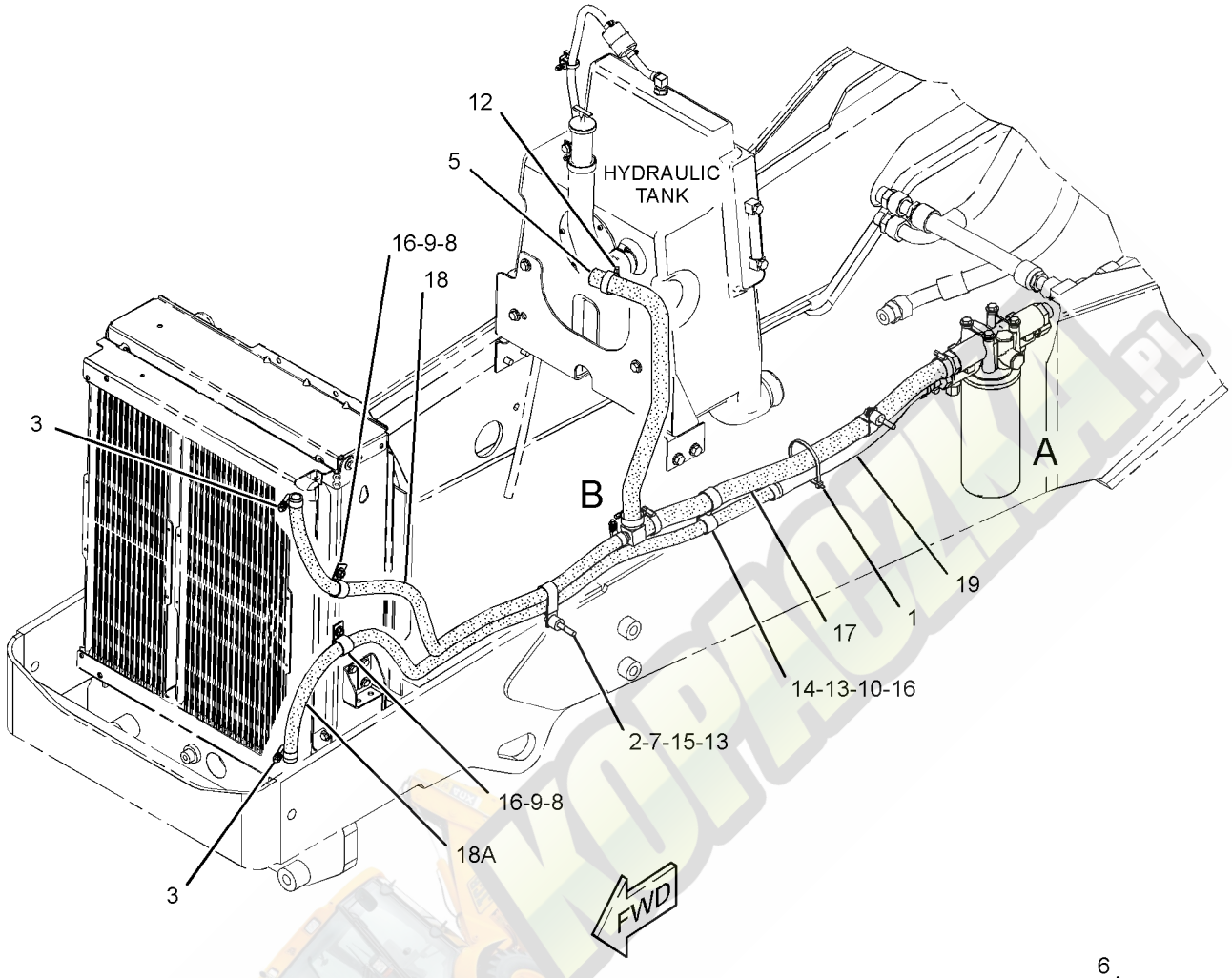

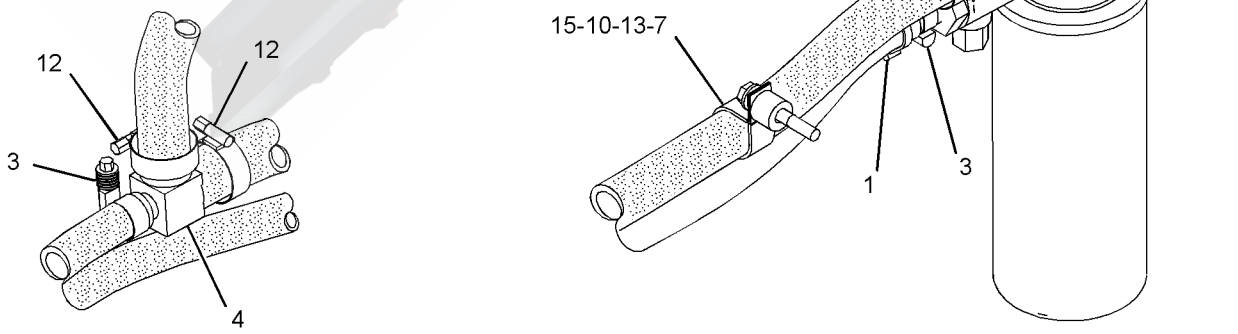

VIEW OF AREA A

VIEW OF AREA B

GRAPHIC #1 **<END>** g01988835

HYDRAULIC SYSTEM

331-8676 LINES GP-RIDE CONTROL

S/N: JBA1-UP

PART OF 344-5290 CONTROL AR-RIDE, 344-6354 PREMIER AR AN ATTACHMENT

SMCS-5057, 5077, 5264 **i03726365**

NOTE	REF NO	GRAPHIC REF	PART NUMBER	QTY	PART NAME 1 2 3 4 5 6 (PRODUCT LEVEL)	SEE PAGE
	1	1	**7K-1181**	1	STRAP-CABLE	
Y	2	1	**245-8780**	1	MANIFOLD GP-RIDE CONTROL	455
	3	1	**276-2334**	1	FILM-WARNING (HIGH PRESS CYLINDER, READ OMM)	
I	4	1	**307-3529**	1	HOSE AS	
I	5	1	**329-7293**	1	HOSE AS	
	6	1	**331-8675**	1	BRACKET AS	
I	7	1	**337-8684**	1	HOSE AS	
Y	8	1	*345-3672*	1	ACCUMULATOR GP-RIDE CONTROL (CHARGED)	367
	9	1	*148-8318*	1	CONNECTOR AS	
		1	**3K-0360**	1	SEAL-O-RING	
		1	**6V-8397**	1	SEAL-O-RING	
		1	**6V-8634**	1	CONNECTOR	
	10	1	*148-8340*	1	CONNECTOR AS	
		1	**3K-0360**	1	SEAL-O-RING	
		1	**6V-8398**	1	SEAL-O-RING	
		1	**6V-8639**	1	CONNECTOR	
	11	1	*148-8345*	1	CONNECTOR AS	
		1	**2M-9780**	1	SEAL-O-RING	
		1	**6V-8398**	1	SEAL-O-RING	
		1	**6V-8638**	1	CONNECTOR	
	12	1	*148-8370*	1	ELBOW AS	
		1	**6V-8398**	1	SEAL-O-RING	
		1	**6V-9851**	1	ELBOW	
	13	1	*148-8372*	1	ELBOW AS	
		1	**2M-9780**	1	SEAL-O-RING	
		1	**6V-8398**	1	SEAL-O-RING	
		1	**6V-8721**	1	ELBOW	
	14	1	*153-6241*	1	ELBOW AS	
		1	**6V-8398**	1	SEAL-O-RING	
		1	**8C-8989**	1	ELBOW	
	15	1	*164-5549*	1	COUPLING AS	
		1	**3J-1907**	1	SEAL-O-RING	
		1	**4I-6287**	1	COUPLING	
	16	1	**286-3018**	2	CLIP (SLOT)	
	17	1	**286-3019**	2	CLIP (TAB)	
	18	1	**7X-0605**	2	WASHER-HARD (13X28X1.6-MM THK)	
	19	1	**8A-8563**	2	SPACER (8.6X20X10-MM THK)	
	20	1	**8T-4121**	3	WASHER-HARD (11X21X2.5-MM THK)	
M	21	1	**8T-4137**	3	BOLT (M10X1.5X20-MM)	
M	22	1	**8T-4177**	2	BOLT (M8X1.25X90-MM)	
	23	1	**8T-4223**	2	WASHER-HARD (13.5X25.5X3-MM THK)	
	24	1	**8T-4224**	2	WASHER-HARD (8.8X16X2-MM THK)	
M	25	1	**8T-4956**	2	BOLT (M12X1.75X35-MM)	

I-REFER TO HYDRAULIC INFORMATION SYSTEM
M-METRIC PART
Y-SEPARATE ILLUSTRATION

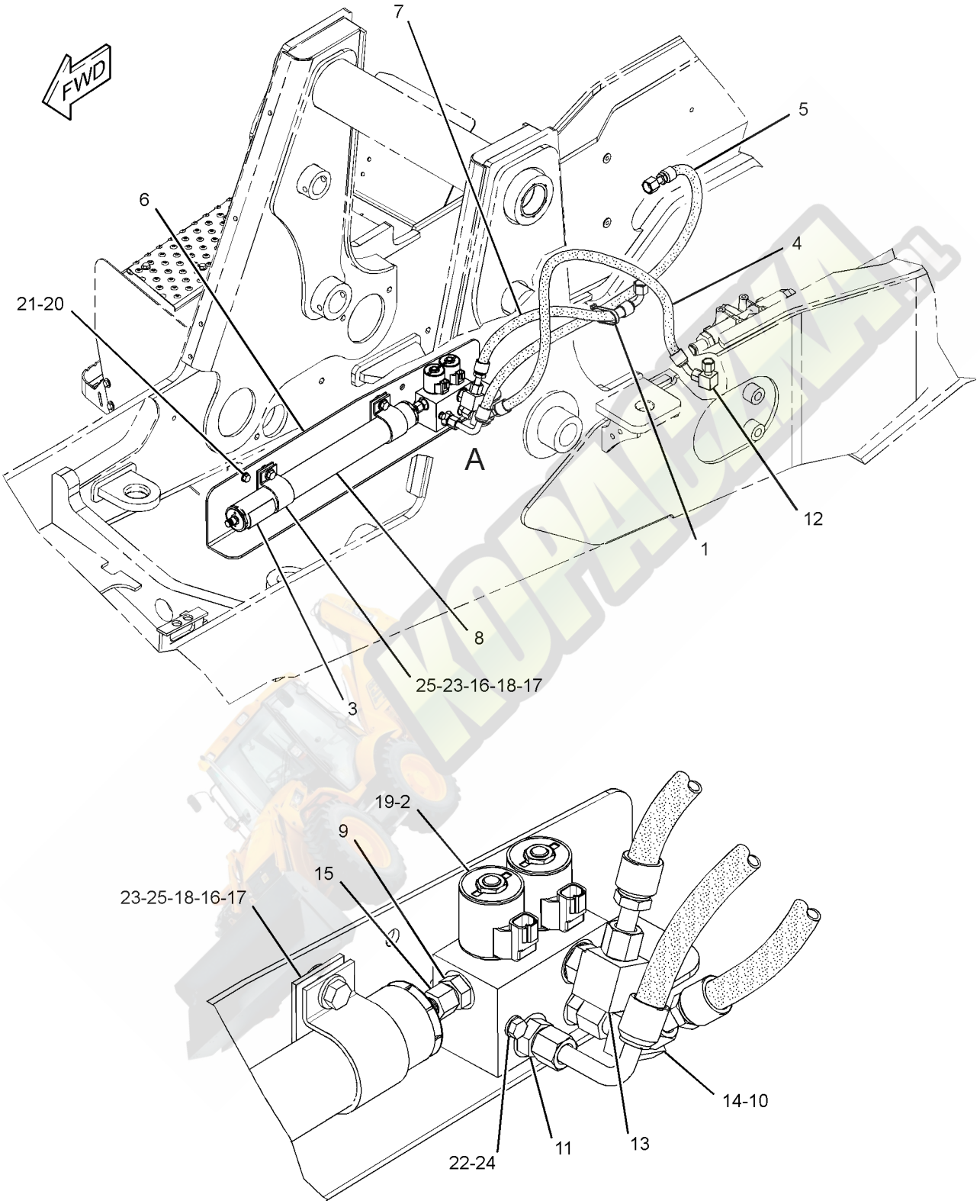

VIEW OF AREA A

GRAPHIC #1 **<END>** g01970213

HYDRAULIC SYSTEM

321-7205 LINES GP-SIDESHIFT LOCK

S/N: JBA1-UP

PART OF 329-0124 HYDRAULIC AR

SMCS-5057, 5484 **i03642525**

NOTE	REF NO	GRAPHIC REF	PART NUMBER	QTY	PART NAME 1 2 3 4 5 6 (PRODUCT LEVEL)	SEE PAGE
I	1	1	**324-7815**	1	HOSE AS	
I	2	1	**324-7816**	2	HOSE AS	
I	3	1	**324-7817**	1	HOSE AS	
	4	1	*148-8316*	2	CONNECTOR AS	
					(EACH INCLUDES)	
		1	**3J-7354**	1	SEAL-O-RING	
		1	**4J-5477**	1	SEAL-O-RING	
		1	**6V-8647**	1	CONNECTOR	
	5	1	*148-8325*	1	CONNECTOR AS	
		1	**3J-1907**	1	SEAL-O-RING	
		1	**4J-5477**	1	SEAL-O-RING	
		1	**6V-8641**	1	CONNECTOR	
	6	1	*150-4029*	2	TEE AS	
					(EACH INCLUDES)	
		1	**3J-7354**	1	SEAL-O-RING	
		1	**4J-5477**	2	SEAL-O-RING	
		1	**6V-8780**	1	TEE-FACE SEAL	
	7	1	*150-5968*	1	TEE AS	
		1	**4J-5477**	2	SEAL-O-RING	
		1	**6V-9835**	1	TEE-SWIVEL	

I-REFER TO HYDRAULIC INFORMATION SYSTEM

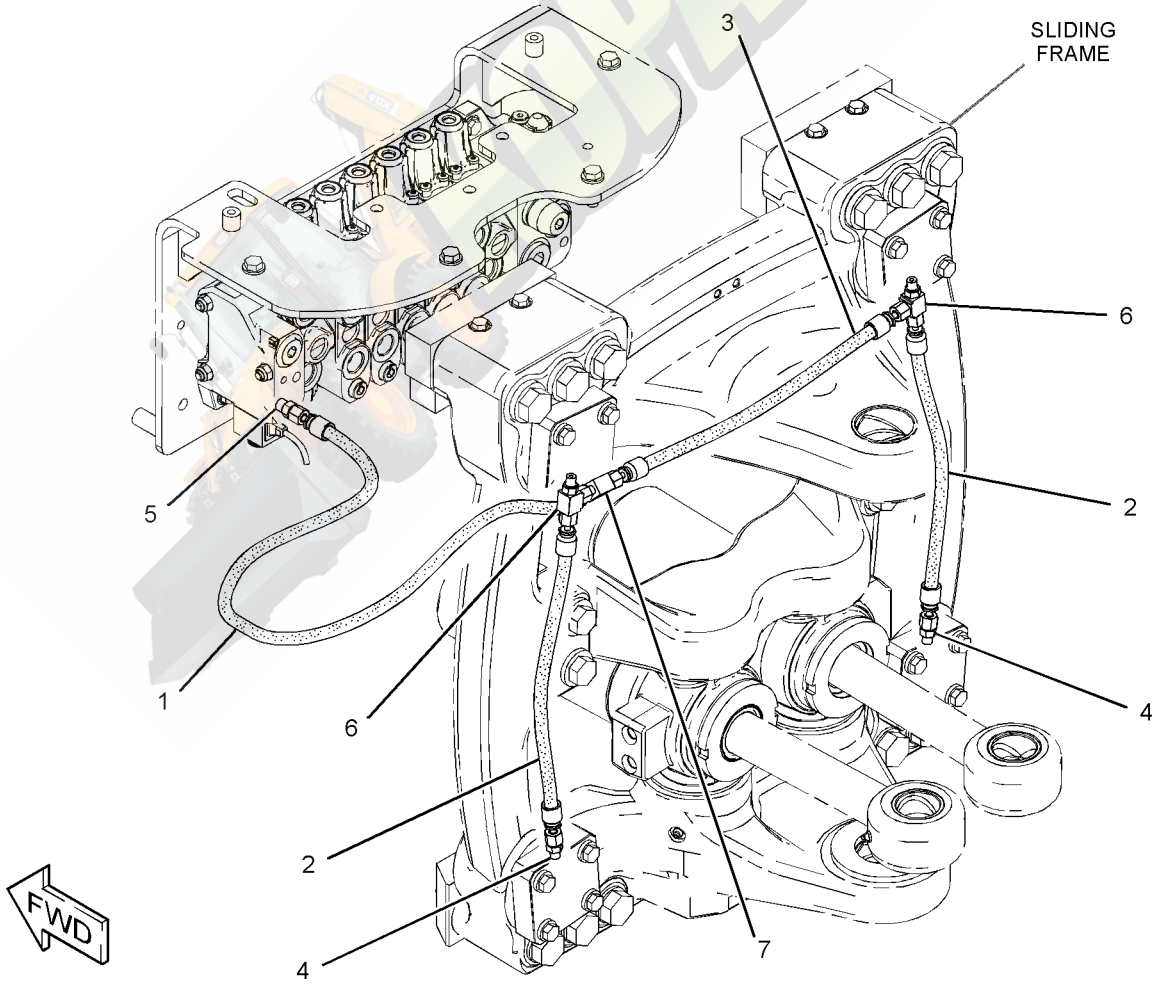

GRAPHIC #1 **<END>** g01985493

HYDRAULIC SYSTEM

299-6857 LINES GP-STABILIZER

S/N: JBA1-UP

PART OF 329-0124 HYDRAULIC AR

SMCS-5057, 5468 **i02774661**

NOTE	REF NO	GRAPHIC REF	PART NUMBER	QTY	PART NAME 1 2 3 4 5 6 (PRODUCT LEVEL)	SEE PAGE
	1	1	**7K-1181**	2	STRAP-CABLE	
	2	1	**195-0260**	2	MARKER (BEIGE, L1)	
	3	1	**195-0261**	2	BAND-MARKER (BLACK, L2)	
	4	1	**195-0262**	2	BAND-MARKER (GREEN, R1)	
	5	1	**195-0263**	2	BAND-MARKER (PINK, R2)	
	6	1	**206-1851**	1	SEAL	
	7	1	**299-3270**	1	HOSE AS	
	8	1	**299-5152**	1	HOSE AS	
	9	1	**299-6934**	1	HOSE AS	
	10	1	**302-7768**	1	HOSE AS	
	11	1	*148-8325*	8	CONNECTOR AS	
					(EACH INCLUDES)	
		1	**3J-1907**	1	SEAL-O-RING	
		1	**4J-5477**	1	SEAL-O-RING	
		1	**6V-8641**	1	CONNECTOR	
G	12	1	**160-2248**		SLEEVE-ABRASION (21.7-IN)	

G-ORDER BY THE INCH

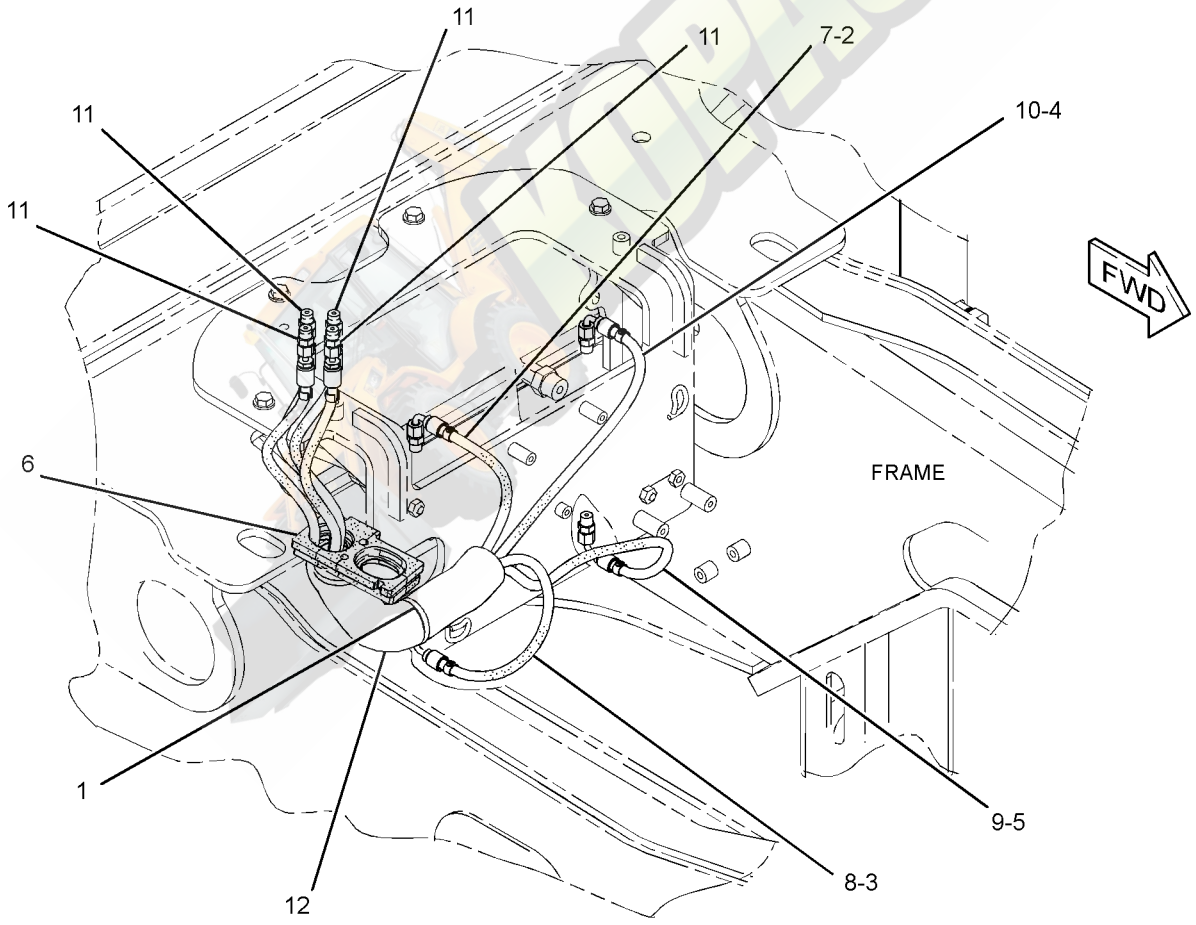

GRAPHIC #1 **<END>** g01391165

HYDRAULIC SYSTEM

326-1801 LINES GP-STABILIZER

S/N: JBA1-UP

PART OF 327-0112, 327-0113 FRAME AR-LOADER

AN ATTACHMENT

SMCS-5057, 5468 **i03642967**

NOTE	REF NO	GRAPHIC REF	PART NUMBER	QTY	PART NAME 1 2 3 4 5 6 (PRODUCT LEVEL)	SEE PAGE
	1	1	**3S-2093**	4	STRAP-CABLE	
	2	1	**154-2302**	2	SPACER (11X20X15-MM THK)	
	3	1	*205-2357*	4	CONNECTOR AS	
					(EACH INCLUDES)	
		1	**3D-2824**	1	SEAL-O-RING	
		1	**6V-8398**	1	SEAL-O-RING	
		1	**8T-7968**	1	CONNECTOR	
Y	4	1	**308-3437**	2	VALVE GP-LOAD CONTROL (STABILIZER)	480
I	5	1	**331-0797**	1	HOSE AS	
I	6	1	**331-0798**	3	HOSE AS	
	7	1	*148-8336*	4	CONNECTOR AS	
					(EACH INCLUDES)	
		1	**3J-1907**	1	SEAL-O-RING	
		1	**6V-8397**	1	SEAL-O-RING	
		1	**6V-8636**	1	CONNECTOR	
	8	1	*164-5549*	2	COUPLING AS	
					(EACH INCLUDES)	
		1	**3J-1907**	1	SEAL-O-RING	
		1	**4I-6287**	1	COUPLING	
	9	1	*340-1650*	2	ADAPTER AS	
					(EACH INCLUDES)	
		1	**3J-1907**	1	SEAL-O-RING	
		1	**341-0076**	1	ADAPTER	
	10	1	**5I-3978**	2	CLIP	
	11	1	**8T-4224**	2	WASHER-HARD (8.8X16X2-MM THK)	
M	12	1	**8T-6912**	2	BOLT (M8X1.25X50-MM)	

I-REFER TO HYDRAULIC INFORMATION SYSTEM
M-METRIC PART
Y-SEPARATE ILLUSTRATION

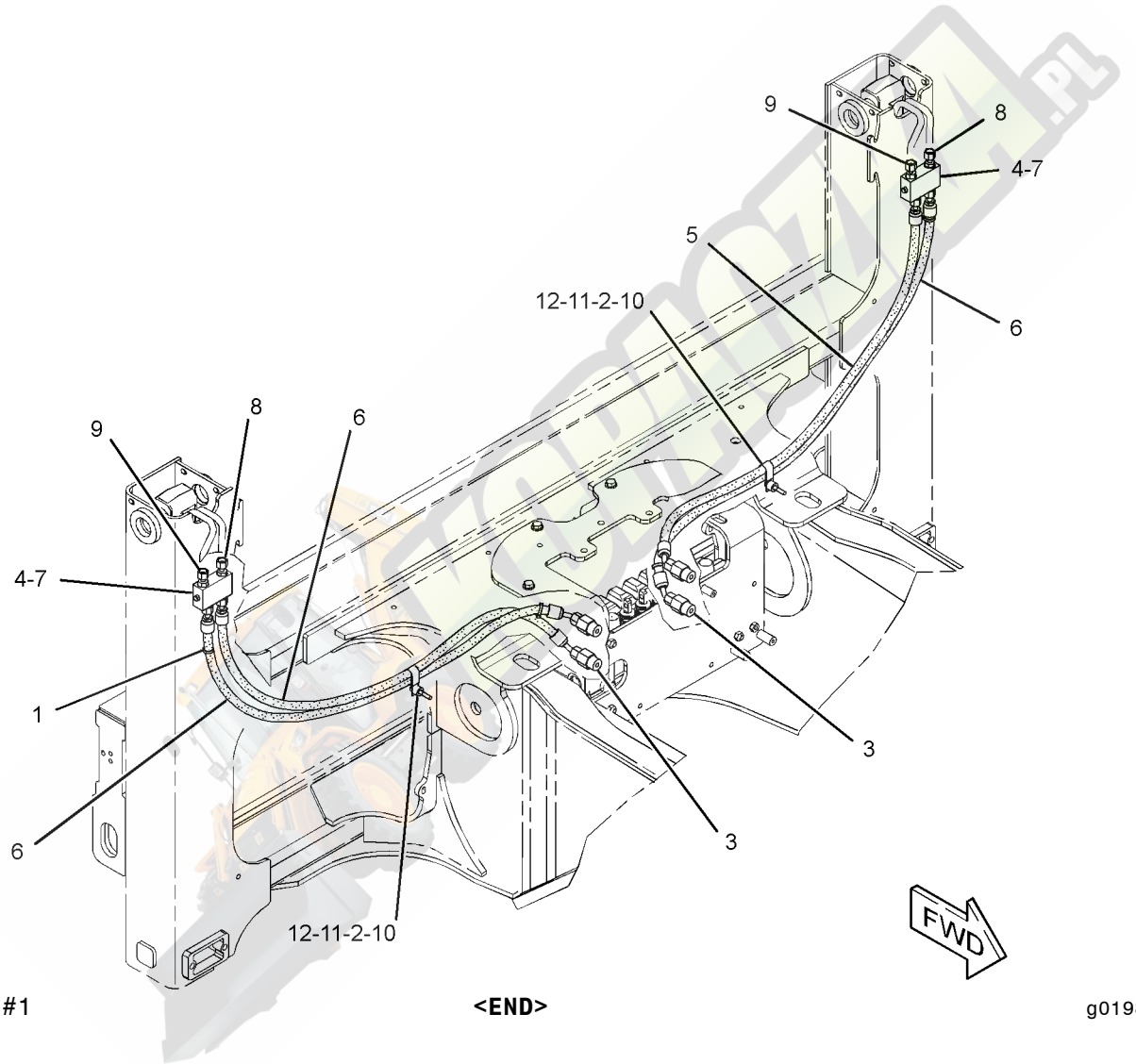

GRAPHIC #1 **<END>** g01986358

321-7192 LINES GP-STICK

S/N: JBA1-UP

PART OF 334-0686, 334-0691, 350-6934, 350-6935, 350-6944, 350-6945 BACKHOE AR-EXTENDABLE STICK, 334-0694, 350-6933 BACKHOE AR-STANDARD STICK AN ATTACHMENT

SMCS-5057 **i03690282**

NOTE	REF NO	GRAPHIC REF	PART NUMBER	QTY	PART NAME 1 2 3 4 5 6 (PRODUCT LEVEL)	SEE PAGE
I	1	1	**324-7596**	1	HOSE AS	
	2	1	**343-4301**	1	HOSE AS	

I-REFER TO HYDRAULIC INFORMATION SYSTEM

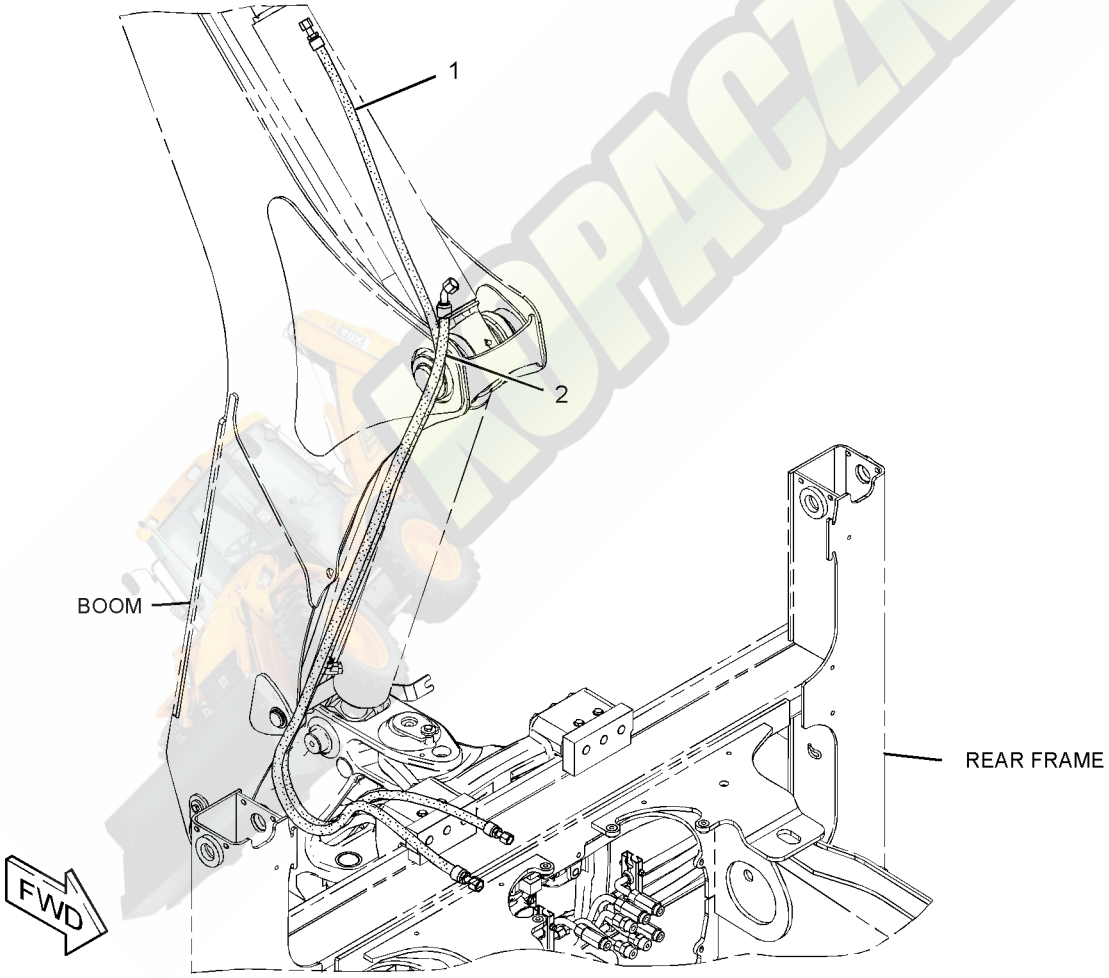

GRAPHIC #1 **<END>** g01989920

HYDRAULIC SYSTEM

326-1803 LINES GP-SWING

S/N: JBA1-UP

PART OF 329-0124 HYDRAULIC AR

SMCS-5057, 5105 **i03642535**

NOTE	REF NO	GRAPHIC REF	PART NUMBER	QTY	PART NAME 1 2 3 4 5 6 (PRODUCT LEVEL)	SEE PAGE
	1	1	**204-2281**	2	STRAP-TIE	
	2	1	*287-7252*	1	TEE AS	
		1	**3J-1907**	1	SEAL-O-RING	
		1	**6V-8398**	2	SEAL-O-RING	
		1	**287-7251**	1	TEE	
	3	1	**320-7812**	1	VALVE GP-PRESSURE CONTROL (290-BAR)	
I	4	1	**328-5333**	2	HOSE AS	
I	5	1	**328-5358**	2	HOSE AS	
	6	1	*341-0121*	1	TEE AS	
		1	**3D-2824**	1	SEAL-O-RING	
		1	**4J-5477**	1	SEAL-O-RING	
		1	**6V-8398**	1	SEAL-O-RING	
		1	**119-6346**	1	TEE-FACE SEAL	
	7	1	**344-8098**	1	TUBE AS	
I	8	1	**344-8154**	1	HOSE AS	
	9	1	**344-8163**	1	TUBE AS	
	10	1	*148-8325*	1	CONNECTOR AS	
		1	**3J-1907**	1	SEAL-O-RING	
		1	**4J-5477**	1	SEAL-O-RING	
		1	**6V-8641**	1	CONNECTOR	
	11	1	*148-8328*	1	CONNECTOR AS	
		1	**3D-2824**	1	SEAL-O-RING	
		1	**6V-8398**	1	SEAL-O-RING	
		1	**6V-8633**	1	CONNECTOR	
	12	1	*148-8340*	4	CONNECTOR AS	
					(EACH INCLUDES)	
		1	**3K-0360**	1	SEAL-O-RING	
		1	**6V-8398**	1	SEAL-O-RING	
		1	**6V-8639**	1	CONNECTOR	
	13	1	*148-8364*	2	ELBOW AS	
					(EACH INCLUDES)	
		1	**3K-0360**	1	SEAL-O-RING	
		1	**6V-8398**	1	SEAL-O-RING	
		1	**6V-8625**	1	ELBOW	
	14	1	**6V-1249**	2	GROMMET	
	15	1	**6V-8398**	1	SEAL-O-RING	
	16	1	**8T-1899**	2	CLIP (SLOT)	
	17	1	**8T-1900**	2	CLIP (TAB)	
	18	1	**8T-4121**	4	WASHER-HARD (11X21X2.5-MM THK)	
M	19	1	**8T-4133**	2	NUT (M10X1.5-THD)	
M	20	1	**8T-4195**	2	BOLT (M10X1.5X30-MM)	

I-REFER TO HYDRAULIC INFORMATION SYSTEM
M-METRIC PART

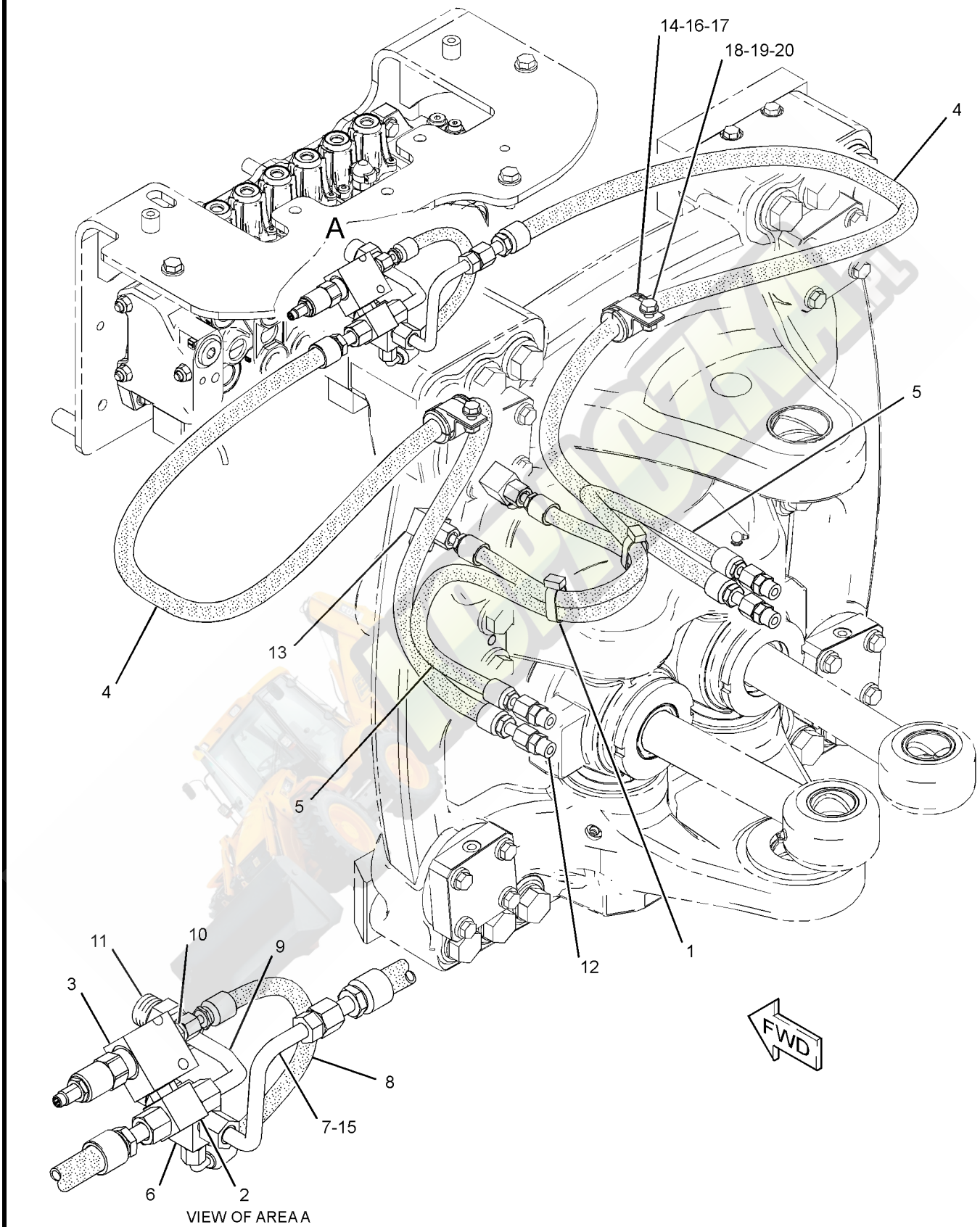

VIEW OF AREA A

GRAPHIC #1 **<END>** g01986077

HYDRAULIC SYSTEM

300-4493 MANIFOLD & SOLENOID GP-CONTROL

S/N: JBA1-UP

PART OF 338-0433 LINES GP-PILOT

SMCS-5264, 5479 **i03724325**

NOTE	REF NO	GRAPHIC REF	PART NUMBER	QTY	PART NAME 1 2 3 4 5 6 (PRODUCT LEVEL)	SEE PAGE
J	1	1	**177-3868**	1	VALVE GP-CHECK (REVERSING FAN)	
Y	2	1	**185-4254**	4	VALVE GP-SOLENOID (12-VOLT) (AUXILIARY)	486
H	3	1	**220-3398**	1	VALVE GP-SOLENOID (DIFFERENTIAL LOCK)	
	4	1	**307-0768**	1	VALVE GP-PRESSURE REDUCING (BRAKE)	
					AVAILABLE REPAIR KIT(S):	
J			**120-9051**	1	KIT-SEAL (FAN MOTOR)	
					(INCLUDES SEALS & RINGS)	
H			**250-8330**	1	KIT-SEAL	
					(INCLUDES RINGS)	

H-KIT MARKED H SERVICES PARTS MARKED H
J-KIT MARKED J SERVICES PARTS MARKED J
Y-SEPARATE ILLUSTRATION

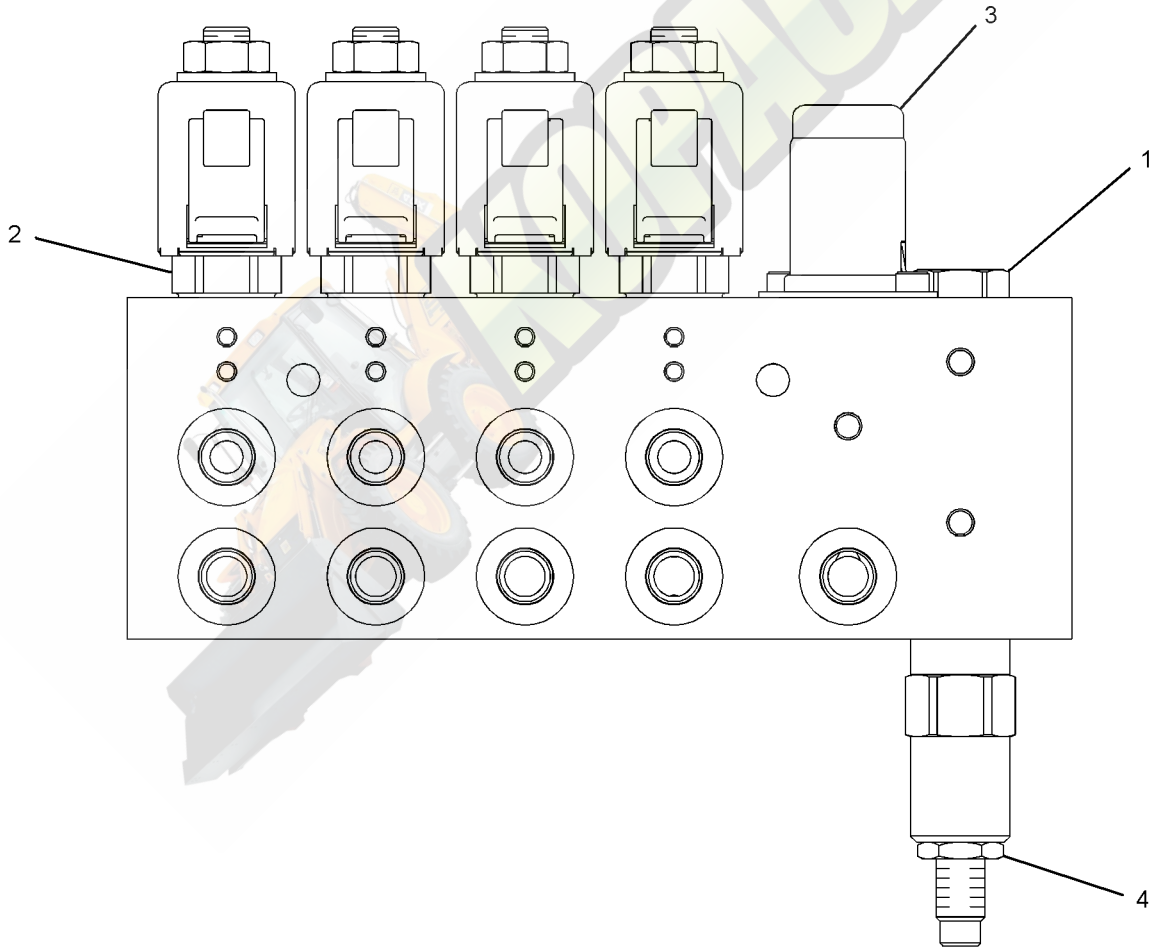

GRAPHIC #1 **<END>** g01388550

300-4491 MANIFOLD GP-CONTROL

S/N: JBA1-UP

PART OF 338-0432 LINES GP-PILOT

SMCS-5264 **i03712428**

NOTE	REF NO	GRAPHIC REF	PART NUMBER	QTY	PART NAME 1 2 3 4 5 6 (PRODUCT LEVEL)	SEE PAGE
J	1	1	**240-6866**	2	VALVE GP-SOLENOID (FLOW CONTROL)	
					(EACH INCLUDES)	
		1	**250-6148**	1	COIL AS (24-VOLT)	
					AVAILABLE REPAIR KIT(S):	
J			**106-3108**	1	KIT-SEAL	
J-KIT MARKED J SERVICES PART MARKED J						

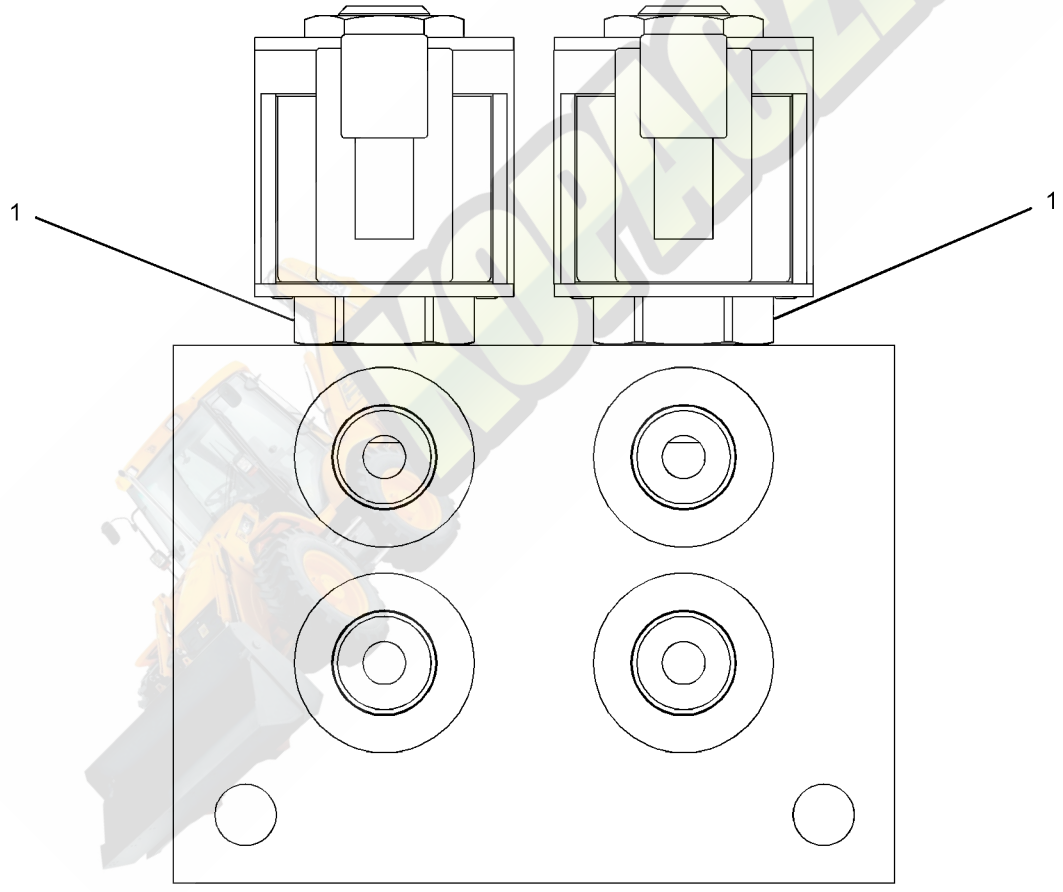

GRAPHIC #1 **<END>** g01388429

HYDRAULIC SYSTEM

308-2154 MANIFOLD GP-CONTROL–OUTLET

S/N: JBA1-UP

PART OF 321-9975 VALVE GP-BANK 7

SMCS-5264 **i02766813**

NOTE	REF NO	GRAPHIC REF	PART NUMBER	QTY	PART NAME 1 2 3 4 5 6 (PRODUCT LEVEL)	SEE PAGE
	1	1	**9S-8004**	2	PLUG	
	2	1	**3J-1907**	2	SEAL-O-RING	
	3	1	**257-0477**	1	KIT-CARTRIDGE	
	4	1	**257-0478**	1	COIL AS	
	5	1	**9S-8008**	1	PLUG-O-RING	
	6	1	**308-2886**	1	KIT-VALVE (SHUTTLE)	
	7	1	**3D-2824**	1	SEAL-O-RING	

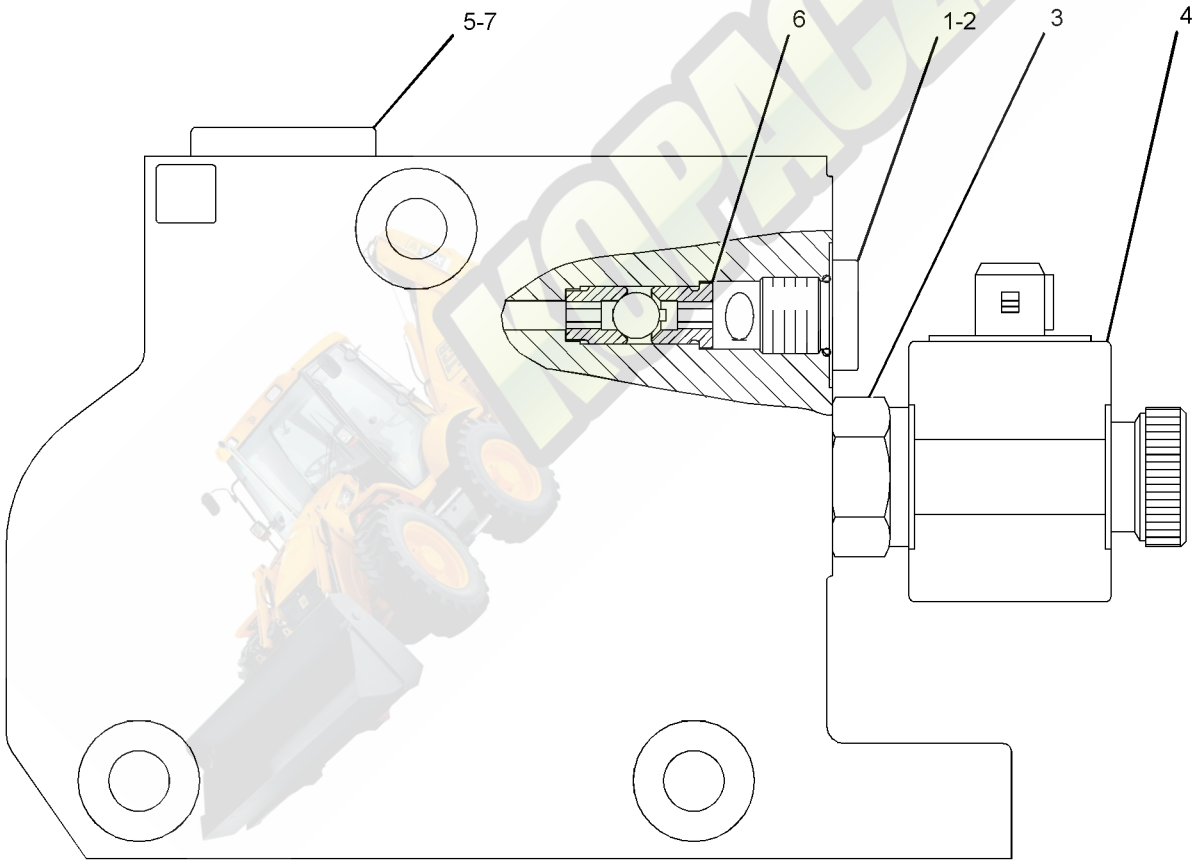

GRAPHIC #1 **<END>** g01388401

308-2156 MANIFOLD GP-CONTROL

S/N: JBA1-UP
PART OF 321-9976 VALVE GP-BANK 3
AN ATTACHMENT

SMCS-5264 **i03724324**

NOTE	REF NO	GRAPHIC REF	PART NUMBER	QTY	PART NAME 1 2 3 4 5 6 (PRODUCT LEVEL)	SEE PAGE
	1	1	**308-2890**	1	KIT-VALVE (REGULATOR)	
					(INCLUDES SEAL-O-RING,CAP,SPACER & SPRINGS)	
	2	1	**308-2889**	1	KIT-VALVE (PRIORITY)	
					(INCLUDES RETAINERS,BALL,SPRING,SPOOL & FILTER)	
	3	1	**308-2888**	1	KIT-VALVE (SHUTTLE)	
	4	1	**308-2878**	1	PLUG GP-CONTROL MANIFOLD	
		1	**3K-0360**	1	SEAL-O-RING	
		1	**161-6149**	1	SEAL-O-RING	
	5	1	**308-2877**	1	PLUG GP-CONTROL MANIFOLD	
		1	**114-1042**	1	SEAL-O-RING	
		1	**122-9250**	1	SEAL-O-RING	
	6	1	**227-1199**	1	KIT-SEAL (CONTROL VALVE)	
					(INCLUDES SEAL-O-RINGS & RING-BACKUP)	
	7	1	**227-1198**	1	KIT-SEAL (FLOW CONTROL VALVE)	
					(INCLUDES SEAL-O-RINGS & RING-BACKUP)	

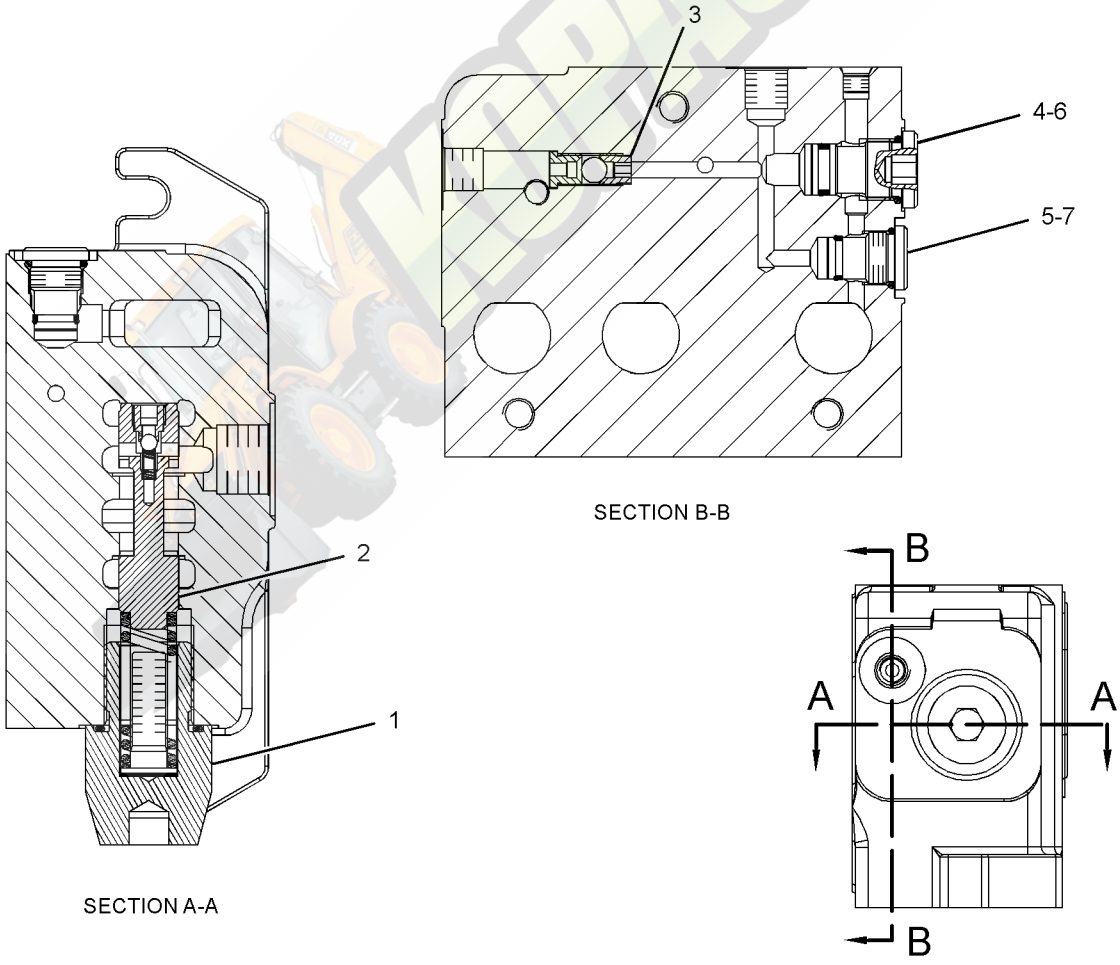

GRAPHIC #1 **<END>** g01391896

344-6126 MANIFOLD GP-CONTROL–INLET

S/N: JBA1-UP

PART OF 321-9975 VALVE GP-BANK 7

SMCS-5264 **i03665624**

NOTE	REF NO	GRAPHIC REF	PART NUMBER	QTY	PART NAME 1 2 3 4 5 6 (PRODUCT LEVEL)	SEE PAGE
	1	1	**227-1184**	1	VALVE GP-RELIEF (LOAD SENSING SIGNAL)	
	2	1	**227-1185**	1	VALVE GP-FLOW CONTROL (AUXILIARY, INLET)	
		1	**227-1198**	1	KIT-SEAL (FLOW CONTROL VALVE)	
					(INCLUDES SEAL-O-RINGS & BACKUP RINGS)	
	3	1	**3J-1907**	1	SEAL-O-RING	
	4	1	**9S-8004**	1	PLUG	
	5	1	**9S-9334**	1	PLUG-O-RING	
	6	1	**9S-8008**	1	PLUG-O-RING	
	7	1	**3D-2824**	1	SEAL-O-RING	
	8	1	**316-0675**	1	KIT-REGULATOR (CONTROL MANIFOLD)	
					(INCLUDES SEAL-O-RING, CAP, SPRING, SHIMS & SPOOL)	
	9	1	**227-1199**	1	KIT-SEAL (CONTROL MANIFOLD)	
					(INCLUDES SEAL-O-RINGS & BACKUP RINGS)	
	10	1	**227-1197**	1	FILTER-OIL (FLOW REGULATOR)	
	11	1	**7M-8485**	1	SEAL-O-RING	
	12	1	**257-0468**	1	CAP-PROTECTION	

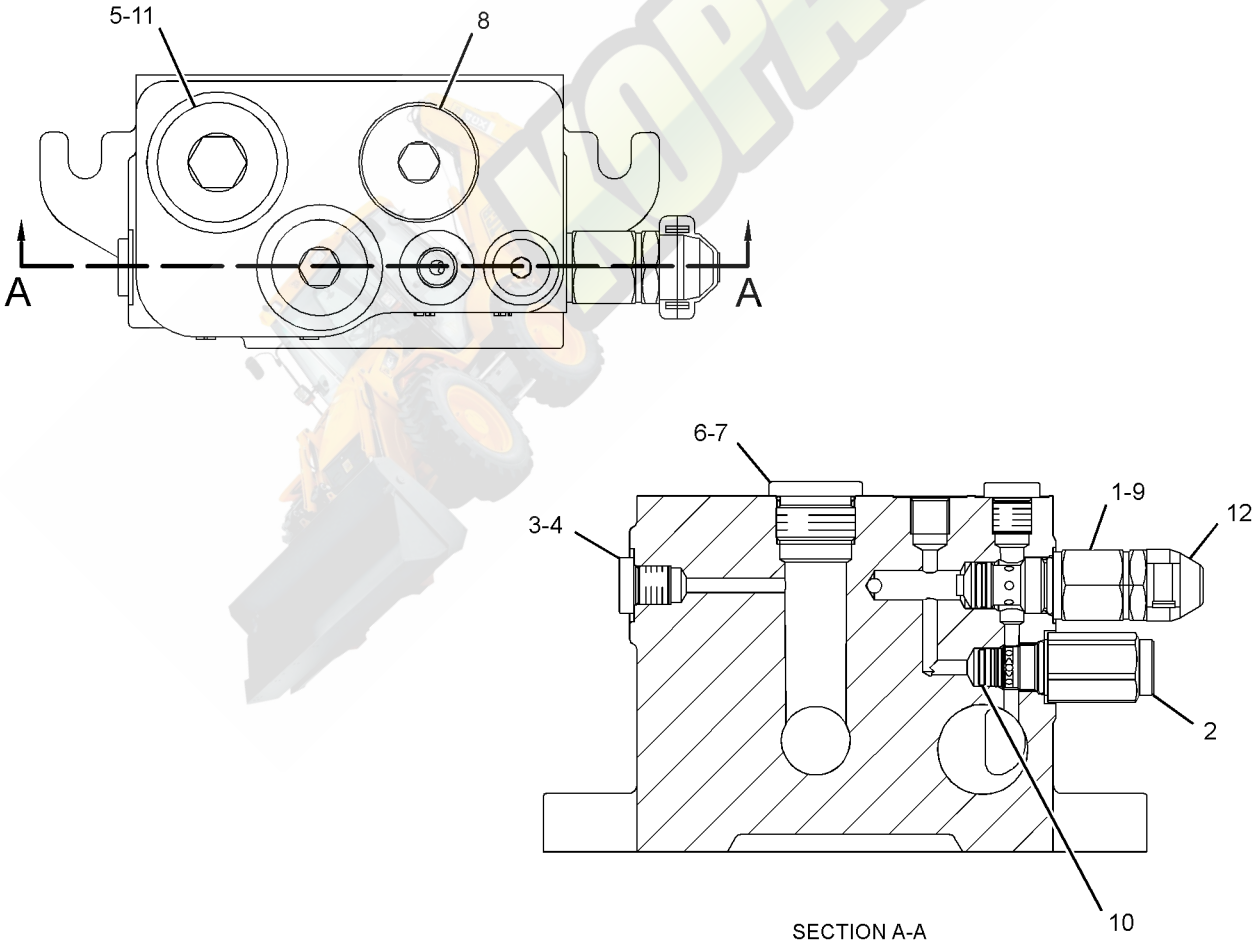

GRAPHIC #1 **<END>** g01988433

245-8780 MANIFOLD GP-RIDE CONTROL

S/N: JBA1-UP
PART OF 331-8676 LINES GP-RIDE CONTROL
AN ATTACHMENT

SMCS-5264 **i03628662**

NOTE	REF NO	GRAPHIC REF	PART NUMBER	QTY	PART NAME 1 2 3 4 5 6 (PRODUCT LEVEL)	SEE PAGE
J	1	1	**249-3124**	1	VALVE GP-SOLENOID (RIDE CONTROL, SWITCH)	
L	2	1	**249-3125**	1	VALVE GP-SOLENOID (ACCUMULATOR)	
	3	1	**238-4628**	1	COIL AS	
					AVAILABLE REPAIR KIT(S):	
J			**141-0888**	1	KIT-SEAL (RIDE CONTROL, SWITCH)	
L			**227-5509**	1	KIT-SEAL (ACCUMULATOR)	
					(EACH KIT-SEAL INCLUDES RING & SEALS)	

J-KIT MARKED J SERVICES PART MARKED J
L-KIT MARKED L SERVICES PART MARKED L

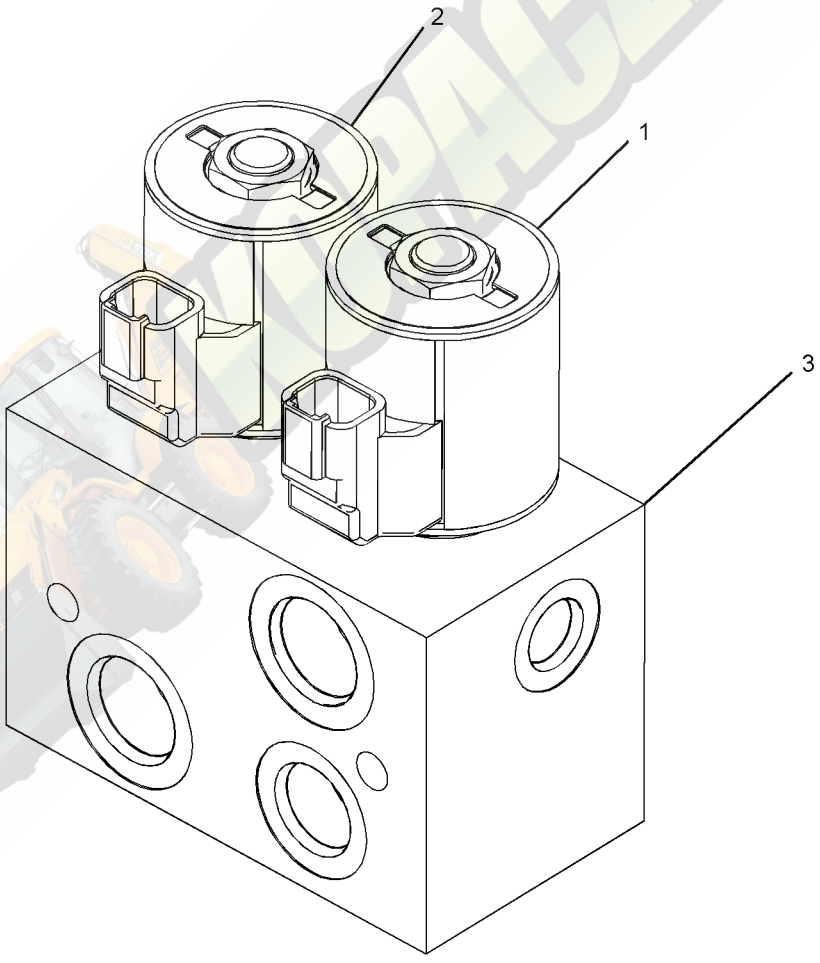

GRAPHIC #1 **<END>** g01646794

HYDRAULIC SYSTEM

9R-4668 MOUNTING GP-CYLINDER—MULTIPURPOSE BUCKET

S/N: JBA1-UP

PART OF 318-7246, 318-7247, 318-7248, 318-7251, 320-9948 BUCKET

AR-MULTIPURPOSE

AN ATTACHMENT

SMCS-5102, 6068, 7562 **i00528574**

NOTE	REF NO	GRAPHIC REF	PART NUMBER	QTY	PART NAME 1 2 3 4 5 6 (PRODUCT LEVEL)	SEE PAGE
	1	1	**9R-4677**	2	PIN	
	2	1	**3B-5317**	4	PIN-COTTER	
	3	1	**9R-4678**	2	PIN	
	4	1	**3B-8489**	4	FITTING-GREASE	

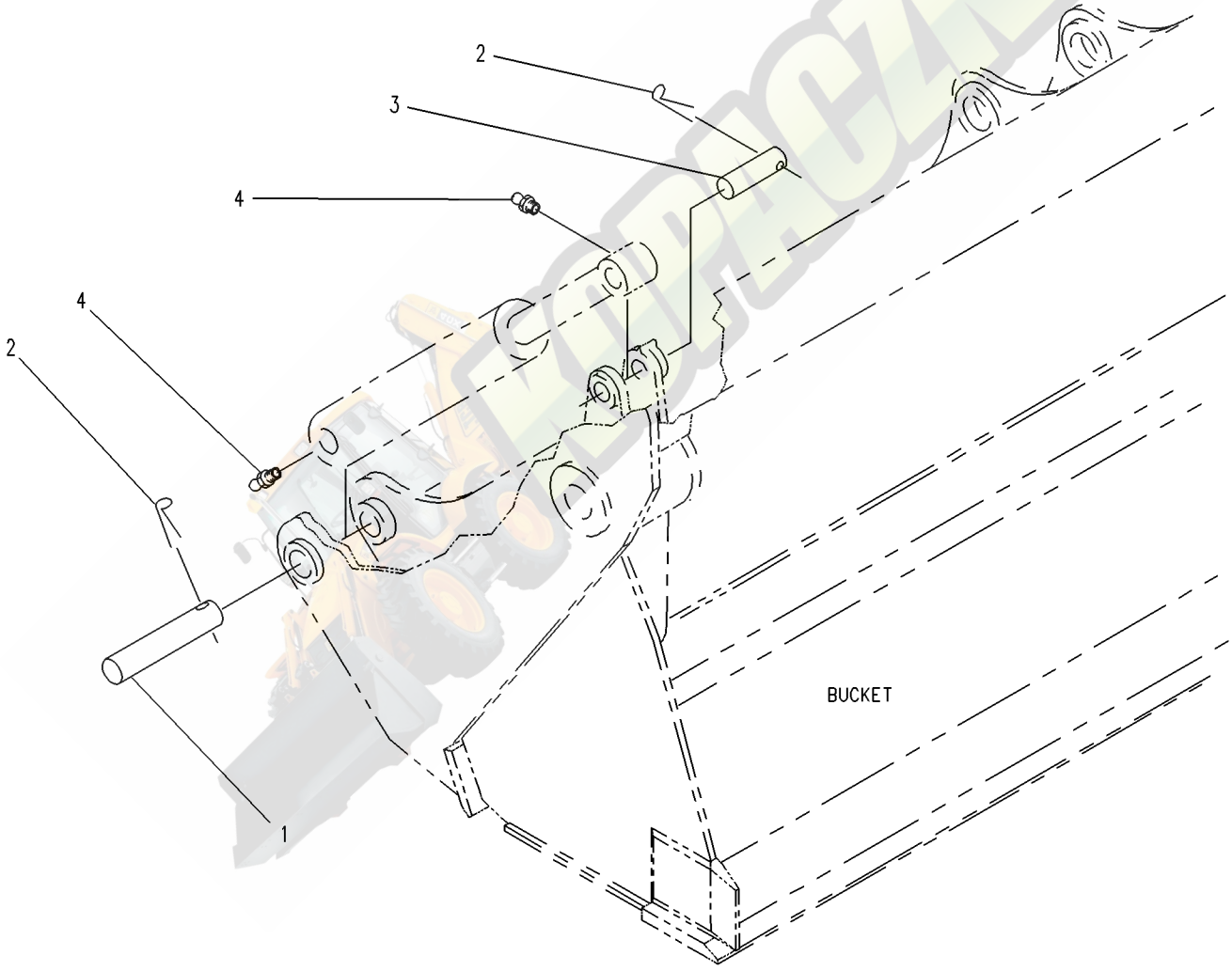

GRAPHIC #1 **<END>** g00219196

323-2096 MOUNTING GP-LINES

S/N: JBA1-UP

PART OF 334-0686, 334-0691, 350-6934, 350-6935, 350-6944, 350-6945 BACKHOE AR-EXTENDABLE STICK, 334-0694, 350-6933 BACKHOE AR-STANDARD STICK AN ATTACHMENT

SMCS-5057 **i03690287**

NOTE	REF NO	GRAPHIC REF	PART NUMBER	QTY	PART NAME 1 2 3 4 5 6 (PRODUCT LEVEL)	SEE PAGE
	1	1	**5P-5148**	3	STRAP-TIE	
	2	1	**315-7645**	1	CLAMP	
	3	1	**315-7646**	1	CLAMP	
	4	1	**315-7647**	1	CLAMP	
	5	1	**327-3753**	1	PLATE	
	6	1	**332-0092**	2	BLOCK	
	7	1	**343-7400**	1	CLAMP	
M	8	1	**5C-9553**	2	BOLT (M6X1X16-MM)	
	9	1	**8T-4205**	2	WASHER-HARD (7.2X14.5X2-MM THK)	
	10	1	**8T-4224**	4	WASHER-HARD (8.8X16X2-MM THK)	
M	11	1	**8T-6869**	2	BOLT (M8X1.25X60-MM)	
M	12	1	**8T-6912**	2	BOLT (M8X1.25X50-MM)	

M-METRIC PART

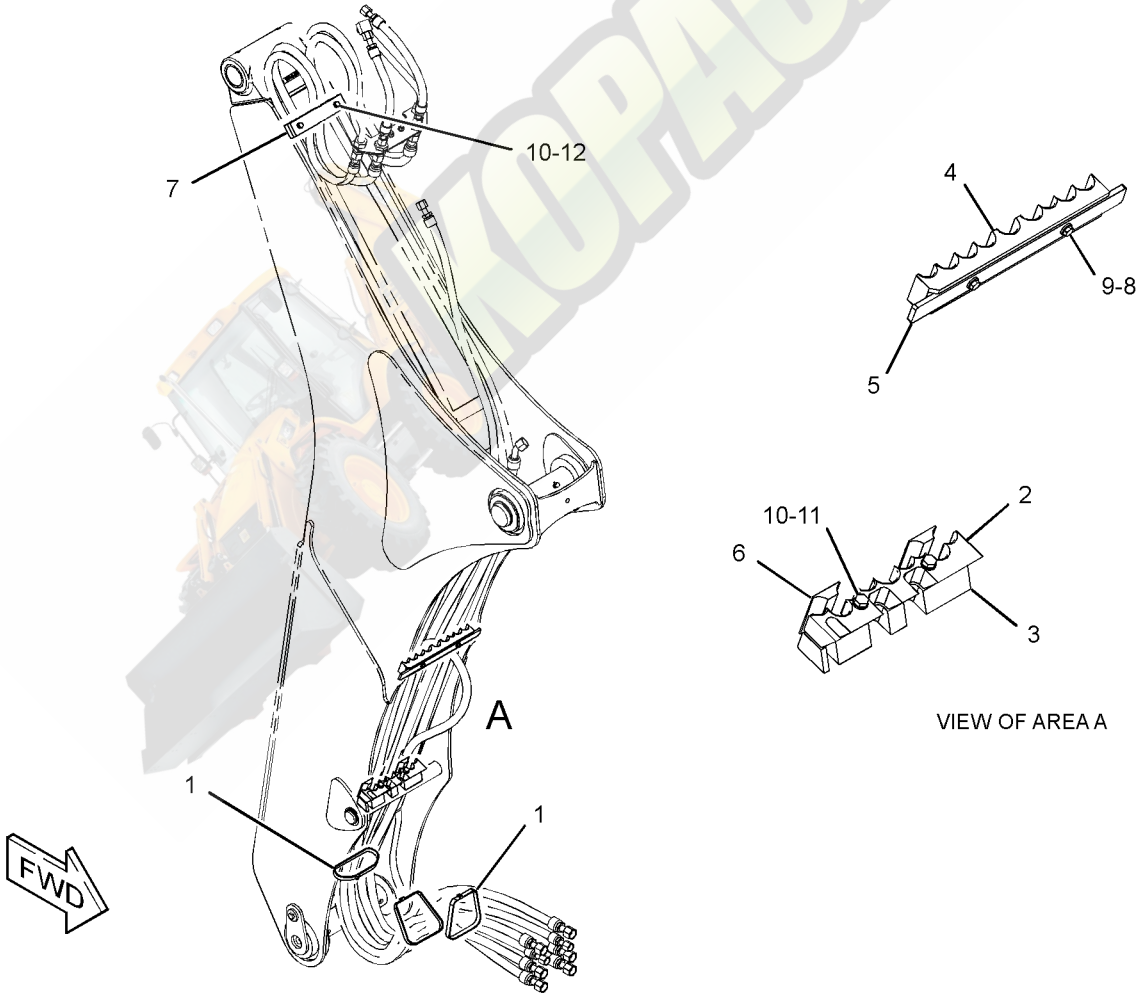

GRAPHIC #1 **<END>** g01989478

HYDRAULIC SYSTEM

289-6370 PUMP GP-PISTON

S/N: JBA1-UP

PART OF 329-0124 HYDRAULIC AR

SMCS-5070 **i03726475**

NOTE	REF NO	GRAPHIC REF	PART NUMBER	QTY	PART NAME 1 2 3 4 5 6 (PRODUCT LEVEL)	SEE PAGE
	1	1	**280-7869**	1	VALVE GP-PUMP CONTROL (PRESSURE, FLOW COMPENSATOR)	
		1	**6E-6528**	2	SEAL	
M		1	**8T-8442**	4	BOLT-SOCKET HEAD (M6X1X30-MM)	
		1	**033-6043**	2	SEAL-O-RING	
		1	**280-7870**	1	GASKET	
Y	2	1	**6E-4006**	1	ROTATING GP-PUMP	460
	3	1	**6E-4004**	2	SEAL-SHAFT	
	4	1	**180-6213**	1	RING-RETAINING	
	5	1	**162-1604**	1	SHAFT-DRIVE	
	6	1	**3B-5790**	1	CUP-BEARING	
	7	1	**6V-2323**	1	CONE-BEARING	
	8	1	**1P-6872**	1	CUP-BEARING	
	9	1	**8C-7110**	1	CONE-BEARING	
	10	1	**6E-4003**	2	BEARING	
	12	1	**173-0639**	1	SWASHPLATE AS	
	13	1	**033-6028**	1	SEAL-O-RING	
	14	1	**153-4906**	1	SEAL-O-RING	
	15	1	**9S-8004**	1	PLUG	
	16	1	**2M-9780**	1	SEAL-O-RING	
	17	1	**3E-6770**	1	SEAL-O-RING	
	18	1	**3E-6769**	4	SEAL-O-RING	
	19	1	**263-5516**	1	VALVE GP-SOLENOID (LOAD SENSING PRESSURE)	
		1	**217-3875**	1	SEAL-O-RING	
		1	**247-7054**	1	COLLAR-LOCKING	
		1	**251-2429**	1	KIT-SEAL (SOLENOID VALVE) (INCLUDES SEAL-O-RINGS)	
		1	**282-6944**	1	COIL AS	
Y	20	1	**280-7871**	1	VALVE GP-PUMP CONTROL (POWER COMPENSATOR)	485
	21	1	**280-7868**	1	TUBE AS	
	22	1	**280-7872**	1	TUBE AS	
	23	1	**173-0641**	1	PLUG-FILTER	

M-METRIC PART
Y-SEPARATE ILLUSTRATION

289-6370 PUMP GP-PISTON *(contd.)* **i03726475**

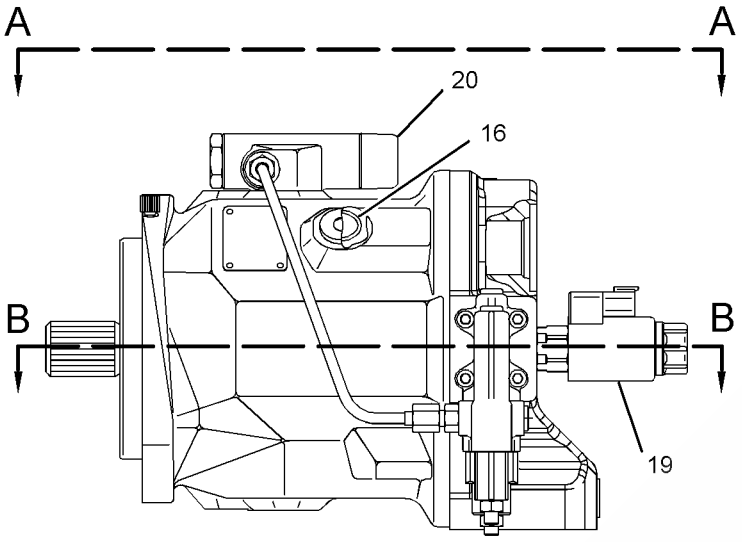

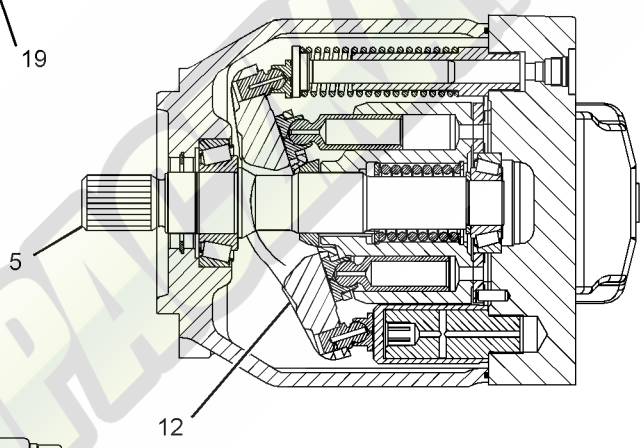

SECTION B-B

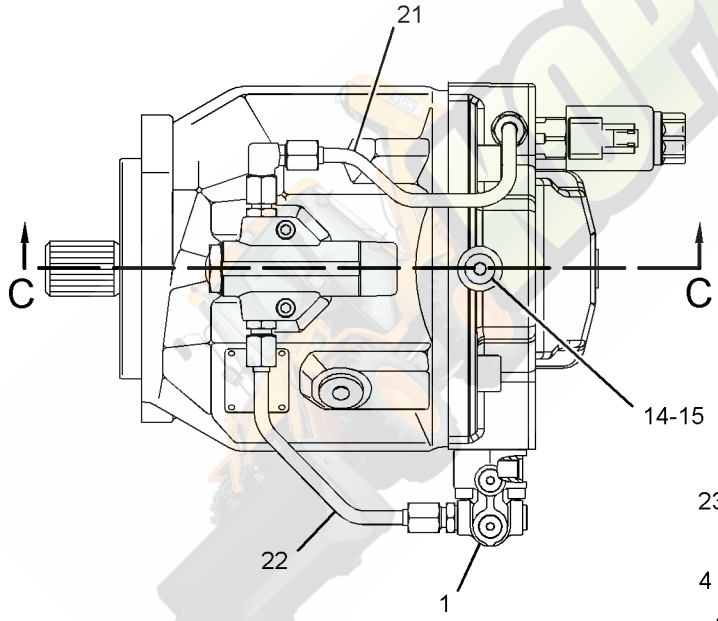

VIEW A-A

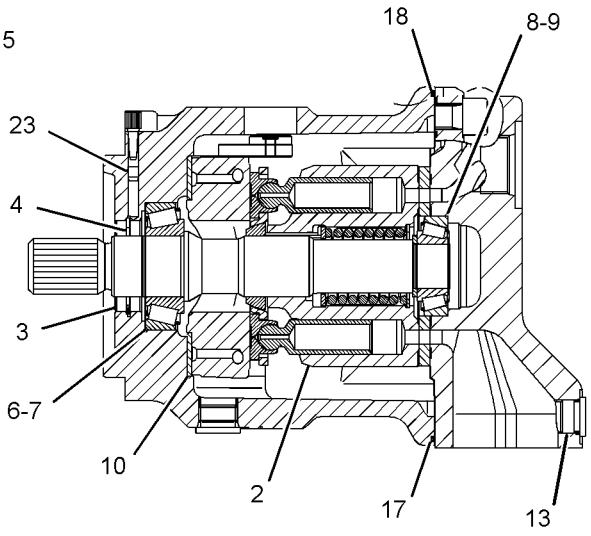

SECTION C-C

GRAPHIC #1 **<END>** g01389931

HYDRAULIC SYSTEM

6E-4006 ROTATING GP-PUMP

S/N: JBA1-UP

PART OF 289-6370 PUMP GP-PISTON

SMCS-5070 **i02780608**

NOTE	REF NO	GRAPHIC REF	PART NUMBER	QTY	PART NAME 1 2 3 4 5 6 (PRODUCT LEVEL)	SEE PAGE
	1	1	**6E-6154**	1	PLATE-RETRACTION	
	2	1	**6E-6155**	1	BEARING	
	3	1	**6E-6157**	3	PIN	
	4	1	**6E-6151**	9	PISTON AS	
	5	1	**196-0226**	1	BARREL	
	6	1	**120-5724**	1	PLATE-VALVE	
	7	1	**7X-2908**	1	RING-RETAINING	
	8	1	**6E-4009**	1	SPRING	
	9	1	**6E-3341**	2	SEAT-SPRING	

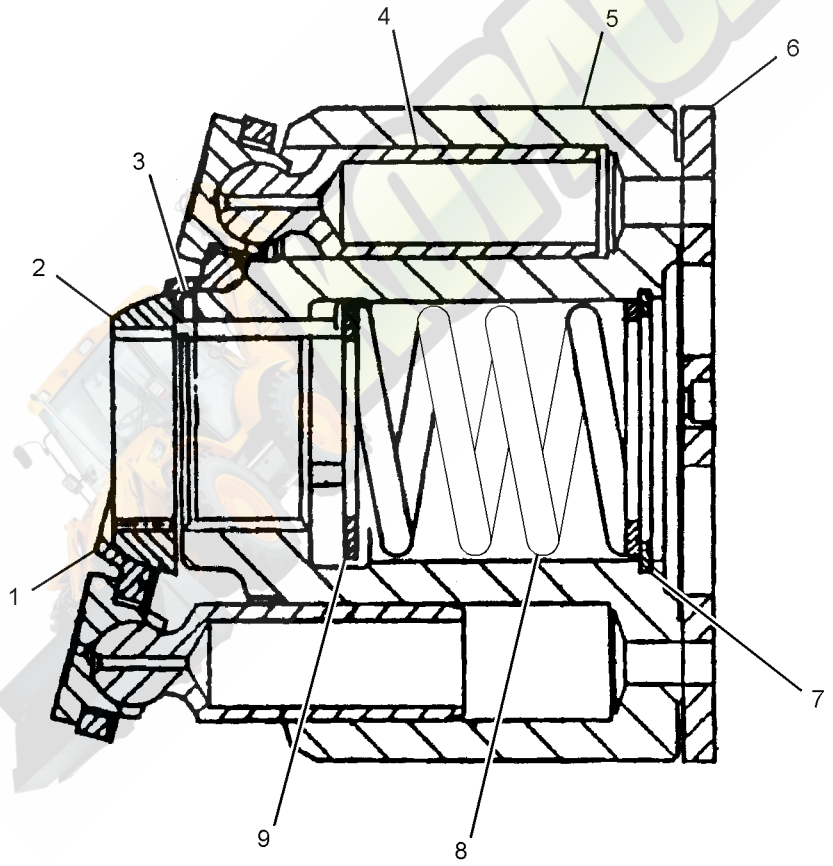

GRAPHIC #1 **<END>** g01389663

128-5596 SHAFT GP-PUMP DRIVE

S/N: JBA1-UP
PART OF 112-1826 DRIVE & MTG GP-PUMP
AN ATTACHMENT

SMCS-3108 **i00535584**

NOTE	REF NO	GRAPHIC REF	PART NUMBER	QTY	PART NAME 1 2 3 4 5 6 (PRODUCT LEVEL)	SEE PAGE
	1	1	**130-8150**	1	RING-RETAINING	

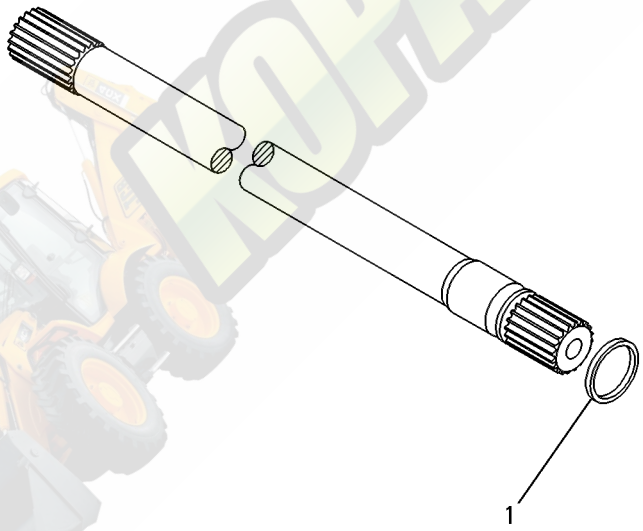

GRAPHIC #1 **<END>** g00131851

HYDRAULIC SYSTEM

324-5929 TANK & MTG GP-HYDRAULIC

S/N: JBA1-UP

PART OF 329-0124 HYDRAULIC AR

SMCS-5056 **i03628706**

NOTE	REF NO	GRAPHIC REF	PART NUMBER	QTY	PART NAME 1 2 3 4 5 6 (PRODUCT LEVEL)	SEE PAGE
	1	1	**1P-4278**	3	CLAMP-HOSE	
	2	1	**9M-0164**	1	CLAMP-HOSE	
	3	1	**9R-9925**	1	FILTER ELEMENT-BREATHER (HYDRAULIC TANK)	
	4	1	**127-4471**	1	CLAMP-HOSE	
	5	1	**132-3056**	1	SEAL-O-RING	
	6	1	**205-9920**	1	STRAP-CABLE	
	7	1	**210-7773**	1	BRACKET AS	
	8	1	*217-8185*	1	ELBOW AS	
		1	**3K-0360**	1	SEAL-O-RING	
		1	**9X-3982**	1	ELBOW	
	9	1	**222-4067**	6	BOLT-SOCKET HEAD (M5X0.8X14-MM)	
	10	1	**234-6927**	1	HOSE	
	11	1	**235-5843**	1	DIFFUSER AS	
	12	1	**237-3797**	1	CAP-FILL (HYDRAULIC OIL)	
Y	13	1	*245-8778*	1	TANK GP-HYDRAULIC	464
	14	1	**293-4671**	1	TUBE AS	
	15	1	**7X-7729**	4	WASHER (11X25X3-MM THK)	
	16	1	**8T-4121**	1	WASHER-HARD (11X21X2.5-MM THK)	
M	17	1	**8T-4137**	1	BOLT (M10X1.5X20-MM)	
M	19	1	**8T-4179**	4	BOLT (M12X1.75X20-MM)	
M	20	1	**8T-4191**	4	BOLT (M10X1.5X16-MM)	
	21	1	**8T-4223**	4	WASHER-HARD (13.5X25.5X3-MM THK)	
E	22	1	**5P-1442**		HOSE (124-CM)	
E	22A	1	**5P-1442**		HOSE (8-CM)	
	23	1	**334-4603**	1	FILM-INFORMATION (HYDO ADVANCED 10)	

E-ORDER BY THE CENTIMETER
M-METRIC PART
Y-SEPARATE ILLUSTRATION

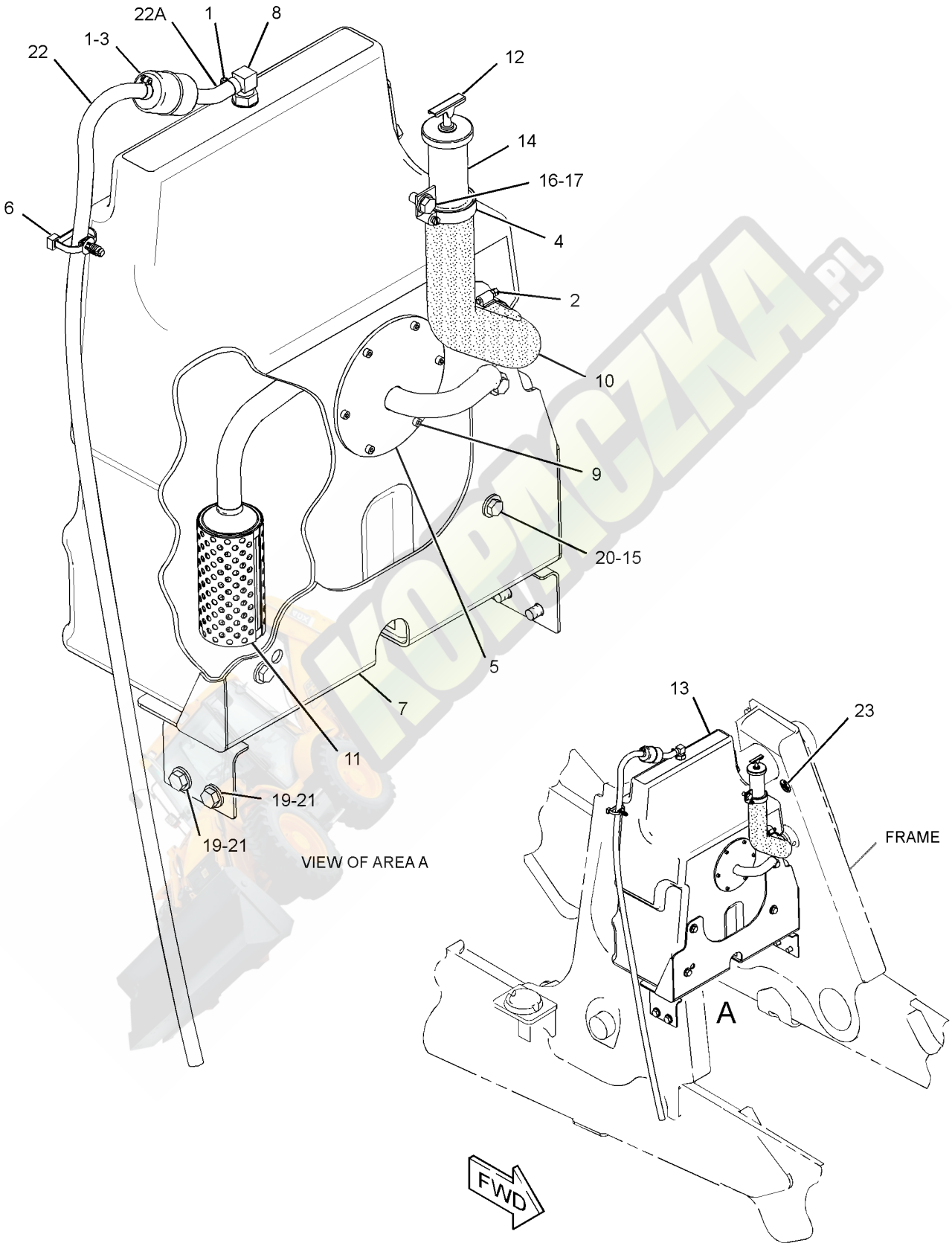

GRAPHIC #1 **<END>** g01818493

HYDRAULIC SYSTEM

245-8778 TANK GP-HYDRAULIC

S/N: JBA1-UP

PART OF 324-5929 TANK & MTG GP-HYDRAULIC

SMCS-5056 **i03712442**

NOTE	REF NO	GRAPHIC REF	PART NUMBER	QTY	PART NAME 1 2 3 4 5 6 (PRODUCT LEVEL)	SEE PAGE
	1	1	**253-8295**	1	GAUGE-SIGHT (HYDRAULIC OIL LEVEL)	

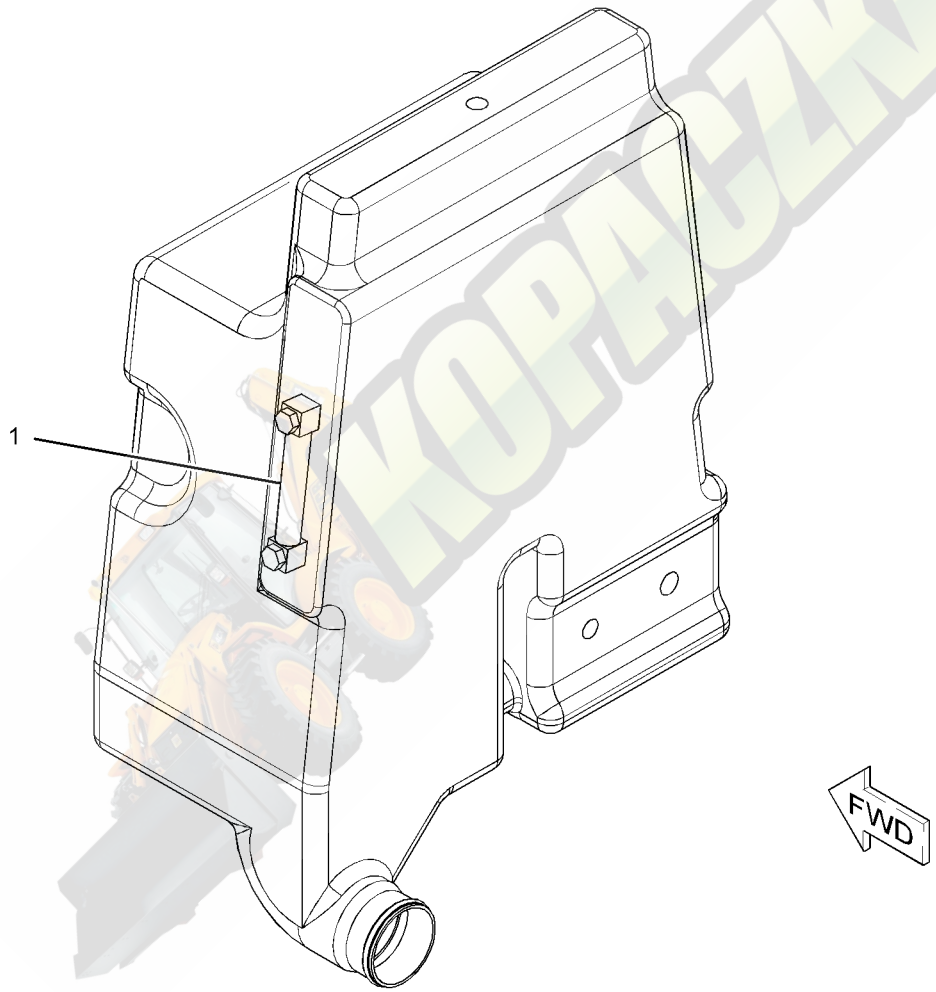

GRAPHIC #1 **<END>** g01087032

332-9195 VALVE & MTG GP-BANK–PILOT CONTROL

S/N: JBA1-UP

PART OF 332-7949 CONVERSION AR-QUICK COUPLER, 332-7946 VALVE AR-BANK 2, 332-7947, 332-7959, 332-7961 VALVE AR-BANK 3 AN ATTACHMENT

SMCS-5051, 5057, 7265 **i03642527**

NOTE	REF NO	GRAPHIC REF	PART NUMBER	QTY	PART NAME 1 2 3 4 5 6 (PRODUCT LEVEL)	SEE PAGE
Y	1	1	*321-9976*	1	VALVE GP-BANK 3 (PILOT CONTROL)	469
B	2	1	*148-8408*	2	PLUG AS	
					(EACH INCLUDES)	
		1	**3D-2824**	1	SEAL-O-RING	
		1	**9S-4183**	1	PLUG-O-RING	
	3	1	**8T-4121**	3	WASHER-HARD (11X21X2.5-MM THK)	
M	4	1	**8T-4186**	3	BOLT (M10X1.5X40-MM)	

B-USE AS REQUIRED
M-METRIC PART
Y-SEPARATE ILLUSTRATION

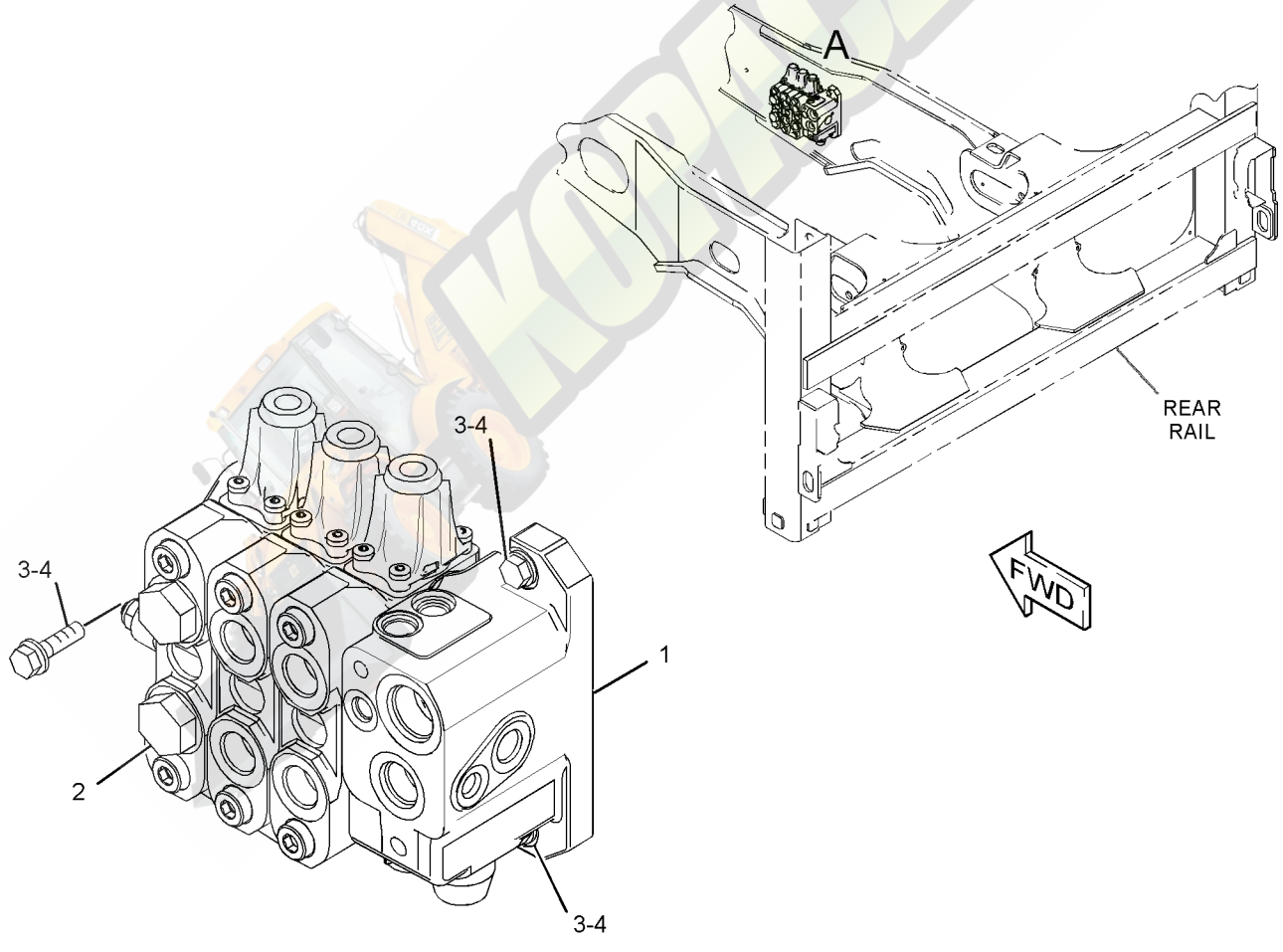

VIEW OF AREA A

GRAPHIC #1 **<END>** g01962630

HYDRAULIC SYSTEM

332-9781 VALVE & MTG GP-BANK–PILOT

S/N: JBA1-UP

PART OF 329-0124 HYDRAULIC AR

SMCS-5051, 5057, 7265 **i03665601**

NOTE	REF NO	GRAPHIC REF	PART NUMBER	QTY	PART NAME 1 2 3 4 5 6 (PRODUCT LEVEL)	SEE PAGE
Y	1	1	*321-9975*	1	VALVE GP-BANK 7	470
	2	1	**331-4340**	1	BRACKET AS	
	3	1	**8T-4121**	3	WASHER-HARD (11X21X2.5-MM THK)	
M	4	1	**8T-4182**	3	BOLT (M10X1.5X45-MM)	
M	5	1	**8T-4183**	4	BOLT (M12X1.75X40-MM)	
	6	1	**8T-4223**	4	WASHER-HARD (13.5X25.5X3-MM THK)	

M-METRIC PART
Y-SEPARATE ILLUSTRATION

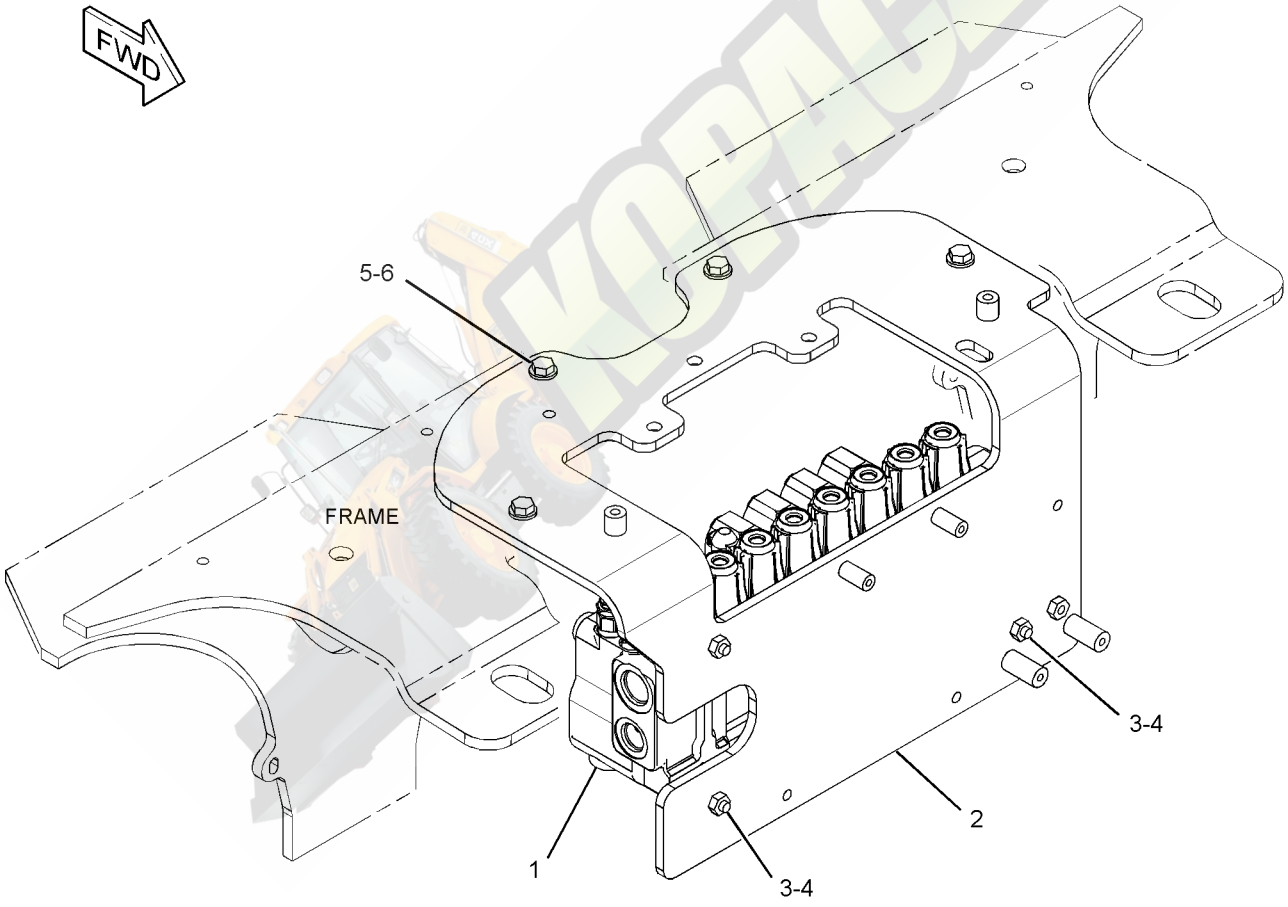

GRAPHIC #1 **<END>** g01987840

332-7946 VALVE AR-BANK 2

S/N: JBA1-UP
AN ATTACHMENT

SMCS-5051 **i03726602**

NOTE	PART NUMBER	QTY	PART NAME 1 2 3 4 5 6 (PRODUCT LEVEL)	SEE PAGE
Y	*329-3600*	1	LINES GP-LIFT & TILT	414
Y	*329-3504*	1	LINES GP-LIFT CYLINDER (PARALLEL LIFT)	416
Y	*320-4769*	1	MOUNTING GP-BUCKET (PARALLEL LIFT)	605
Y	*332-9195*	1	VALVE & MTG GP-BANK (PILOT CONTROL)	465

Y-SEPARATE ILLUSTRATION

<END>

332-7947 VALVE AR-BANK 3

S/N: JBA1-UP
AN ATTACHMENT

SMCS-5051 **i03726603**

NOTE	PART NUMBER	QTY	PART NAME 1 2 3 4 5 6 (PRODUCT LEVEL)	SEE PAGE
Y	*329-3503*	1	LINES GP-AUXILIARY HYDRAULIC	393
Y	*329-3600*	1	LINES GP-LIFT & TILT	414
Y	*329-3504*	1	LINES GP-LIFT CYLINDER (PARALLEL LIFT)	416
Y	*320-4769*	1	MOUNTING GP-BUCKET (PARALLEL LIFT)	605
Y	*332-9195*	1	VALVE & MTG GP-BANK (PILOT CONTROL)	465

Y-SEPARATE ILLUSTRATION

<END>

332-7959 VALVE AR-BANK 3

S/N: JBA1-UP
AN ATTACHMENT

SMCS-5051 **i03654262**

NOTE	PART NUMBER	QTY	PART NAME 1 2 3 4 5 6 (PRODUCT LEVEL)	SEE PAGE
Y	*329-3503*	1	LINES GP-AUXILIARY HYDRAULIC	393
Y	*329-3600*	1	LINES GP-LIFT & TILT	414
Y	*329-3506*	1	LINES GP-LIFT CYLINDER (PARALLEL LIFT)	417
Y	*320-4769*	1	MOUNTING GP-BUCKET (PARALLEL LIFT)	605
Y	*332-9195*	1	VALVE & MTG GP-BANK (PILOT CONTROL)	465
Y	*323-0992*	1	WIRING GP-LOAD CONTROL	213
Y	*323-0991*	1	WIRING GP-RIDE CONTROL	225

Y-SEPARATE ILLUSTRATION

<END>

HYDRAULIC SYSTEM

332-7961 VALVE AR-BANK 3

S/N: JBA1-UP
AN ATTACHMENT

SMCS-5051 **i03654965**

NOTE	PART NUMBER	QTY	PART NAME 1 2 3 4 5 6 (PRODUCT LEVEL)	SEE PAGE
Y	*344-6067*	1	COUPLER GP-QUICK	593
Y	*329-3503*	1	LINES GP-AUXILIARY HYDRAULIC	393
Y	*331-7412*	1	LINES GP-HYDRAULIC (PARALLEL LIFT)	411
Y	*329-3600*	1	LINES GP-LIFT & TILT	414
Y	*329-3506*	1	LINES GP-LIFT CYLINDER	417
Y	*332-9195*	1	VALVE & MTG GP-BANK	465
Y	*323-0992*	1	WIRING GP-LOAD CONTROL	213
Y	*323-0991*	1	WIRING GP-RIDE CONTROL	225
Y	*296-0376*	1	WIRING GP-WORK TOOL	237
	282-9043	1	FILM-WARNING (QUICK COUPLER)	
			(ON RIGHT HAND SIDE OF A POST, CENTERED HORIZONTALLY & VERTICALLY BELOW THE DOOR LATCH)	

Y-SEPARATE ILLUSTRATION

<END>

321-9976 VALVE GP-BANK 3—PILOT CONTROL

S/N: JBA1-UP
PART OF 332-9195 VALVE & MTG GP-BANK
AN ATTACHMENT

SMCS-5051 **i03654255**

NOTE	REF NO	GRAPHIC REF	PART NUMBER	QTY	PART NAME 1 2 3 4 5 6 (PRODUCT LEVEL)	SEE PAGE
Y	1	1	**308-2156**	1	MANIFOLD GP-CONTROL (INLET)	453
Y	2	1	**344-6133**	1	VALVE GP-CONTROL (LIFT)	477
Y	3	1	**344-6134**	1	VALVE GP-CONTROL (TILT)	478
Y	4	1	**344-6135**	1	VALVE GP-CONTROL (AUXILIARY)	479
	5	1	**308-2160**	1	COVER GP	
	6	1	**308-2161**	1	KIT-FASTENER (BANK VALVE)	
					(INCLUDES LOCKNUTS & TIE RODS)	
	7	1	**4J-9535**	4	SEAL-O-RING	
	8	1	**6V-8978**	12	SEAL-O-RING	

Y-SEPARATE ILLUSTRATION

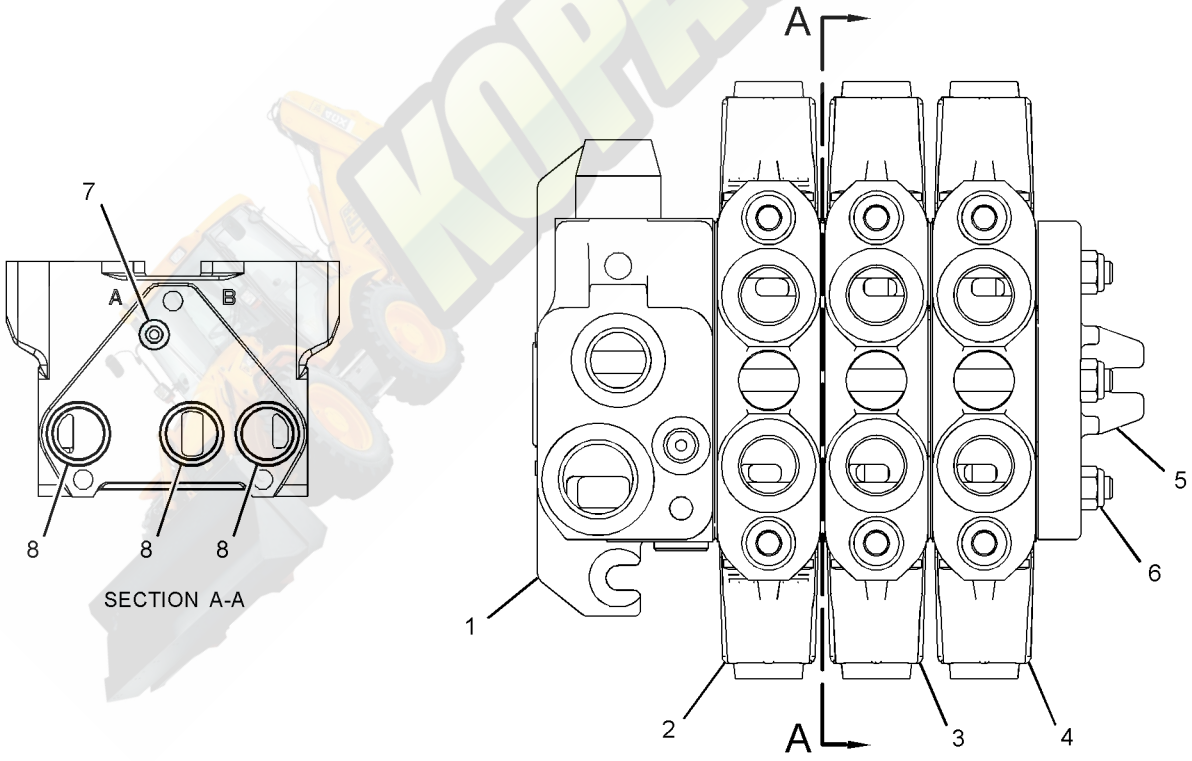

GRAPHIC #1 **<END>** g01964974

321-9975 VALVE GP-BANK 7–PILOT CONTROL

S/N: JBA1-UP

PART OF 332-9781 VALVE & MTG GP-BANK

SMCS-5051 **i03665620**

NOTE	REF NO	GRAPHIC REF	PART NUMBER	QTY	PART NAME 1 2 3 4 5 6 (PRODUCT LEVEL)	SEE PAGE
Y	1	1	**344-6126**	1	MANIFOLD GP-CONTROL (INLET)	454
Y	2	1	**344-6127**	2	VALVE GP-CONTROL (STABILIZER)	471
Y	3	1	**344-6128**	1	VALVE GP-CONTROL (BOOM)	472
Y	4	1	**344-6129**	1	VALVE GP-CONTROL (SWING)	473
Y	5	1	**344-6130**	1	VALVE GP-CONTROL (BUCKET)	474
Y	6	1	**344-6131**	1	VALVE GP-CONTROL (STICK)	475
Y	7	1	**344-6132**	1	VALVE GP-CONTROL (EXTENDABLE STICK)	476
Y	8	1	**308-2154**	1	MANIFOLD GP-CONTROL (OUTLET)	452
	9	1	**308-2155**	1	KIT-FASTENER	
					(INCLUDES LOCKNUTS & TIE RODS)	
	10	1	**4J-9535**	8	SEAL-O-RING	
	11	1	**6V-8978**	24	SEAL-O-RING	

Y-SEPARATE ILLUSTRATION

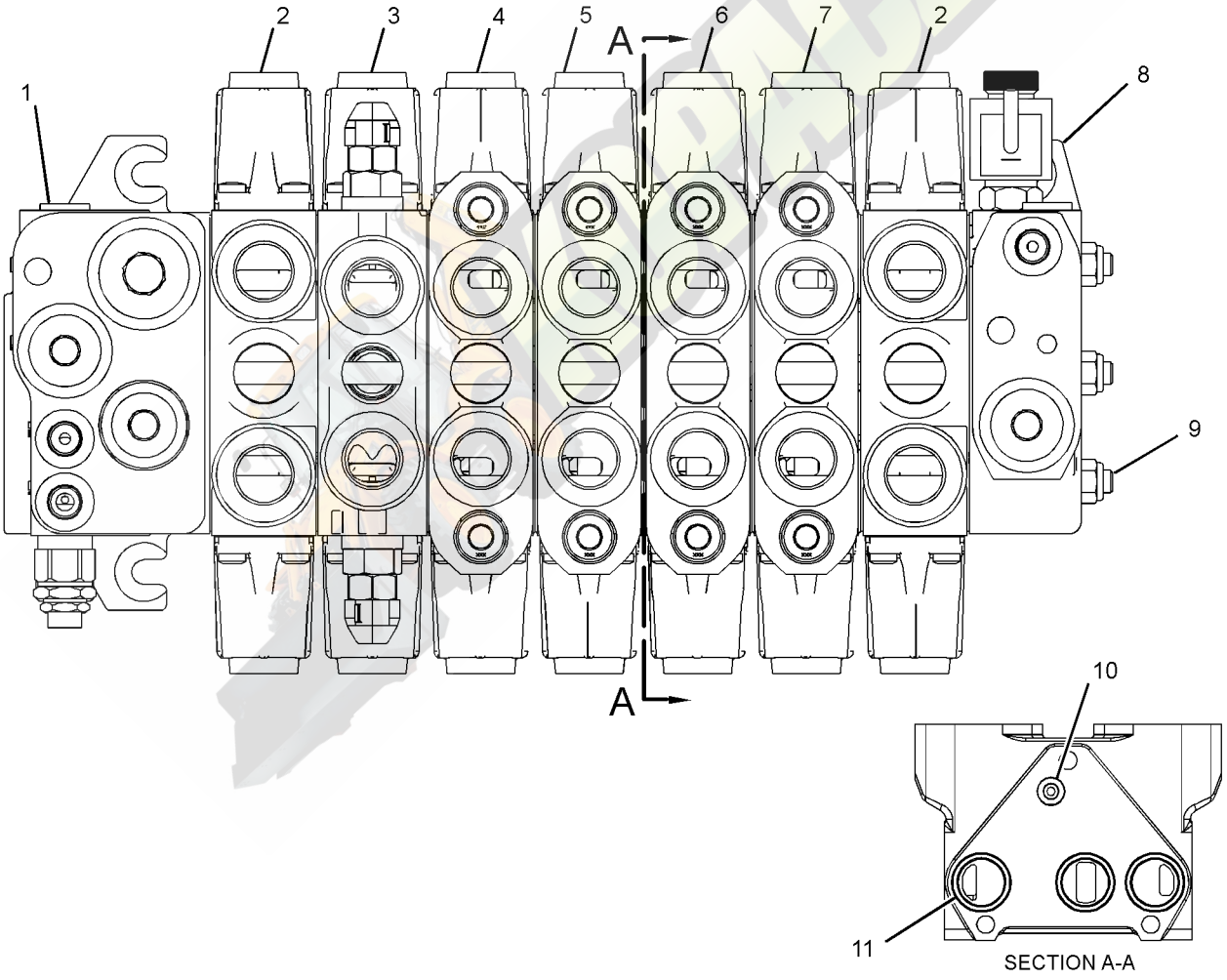

GRAPHIC #1 **<END>** g01987873

344-6127 VALVE GP-CONTROL–STABILIZER

S/N: JBA1-UP

PART OF 321-9975 VALVE GP-BANK 7

SMCS-5051 **i03724321**

NOTE	REF NO	GRAPHIC REF	PART NUMBER	QTY	PART NAME 1 2 3 4 5 6 (PRODUCT LEVEL)	SEE PAGE
	1	1	**308-2872**	1	VALVE GP-CHECK (STABILIZER CONTROL)	
		1	**6V-7970**	1	SEAL-O-RING	
		1	**095-1751**	1	SEAL-O-RING	
	2	1	**308-2873**	1	KIT-COVER (CONTROL VALVE)	
					(INCLUDES SEAL-O-RINGS, BOLTS, SPRINGS, RETAINERS & COVERS)	

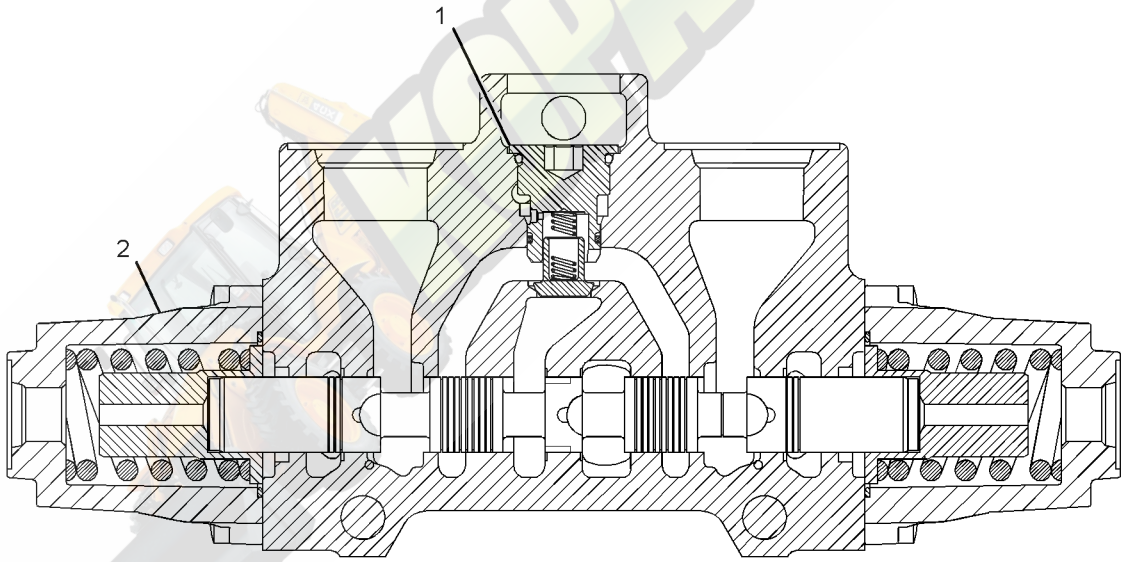

GRAPHIC #1 **<END>** g01987513

HYDRAULIC SYSTEM

344-6128 VALVE GP-CONTROL–BOOM

S/N: JBA1-UP

PART OF 321-9975 VALVE GP-BANK 7

SMCS-5051 **i03688421**

NOTE	REF NO	GRAPHIC REF	PART NUMBER	QTY	PART NAME 1 2 3 4 5 6 (PRODUCT LEVEL)	SEE PAGE
	1	1	**257-7733**	2	VALVE GP-CHECK (BOOM CONTROL VALVE)	
					(EACH INCLUDES)	
		1	**122-9250**	1	SEAL-O-RING	
	2	1	**308-2873**	1	KIT-COVER (CONTROL VALVE)	
					(INCLUDES SEAL-O-RINGS, BOLTS, SPRINGS, REAINERS & COVERS)	
	3	1	**266-2585**	1	VALVE GP-RELIEF (165-BAR)	
		1	**8J-2413**	1	SEAL-O-RING	
		1	**095-1751**	1	SEAL-O-RING	
		1	**169-1616**	1	RING-BACKUP	
	4	1	**308-2879**	1	VALVE GP-RELIEF (300-BAR)	
		1	**8J-2413**	1	SEAL-O-RING	
		1	**095-1751**	1	SEAL-O-RING	
		1	**169-1616**	1	RING-BACKUP	
	5	1	**6V-7970**	1	SEAL-O-RING	
	6	1	**257-0468**	2	CAP-PROTECTION	

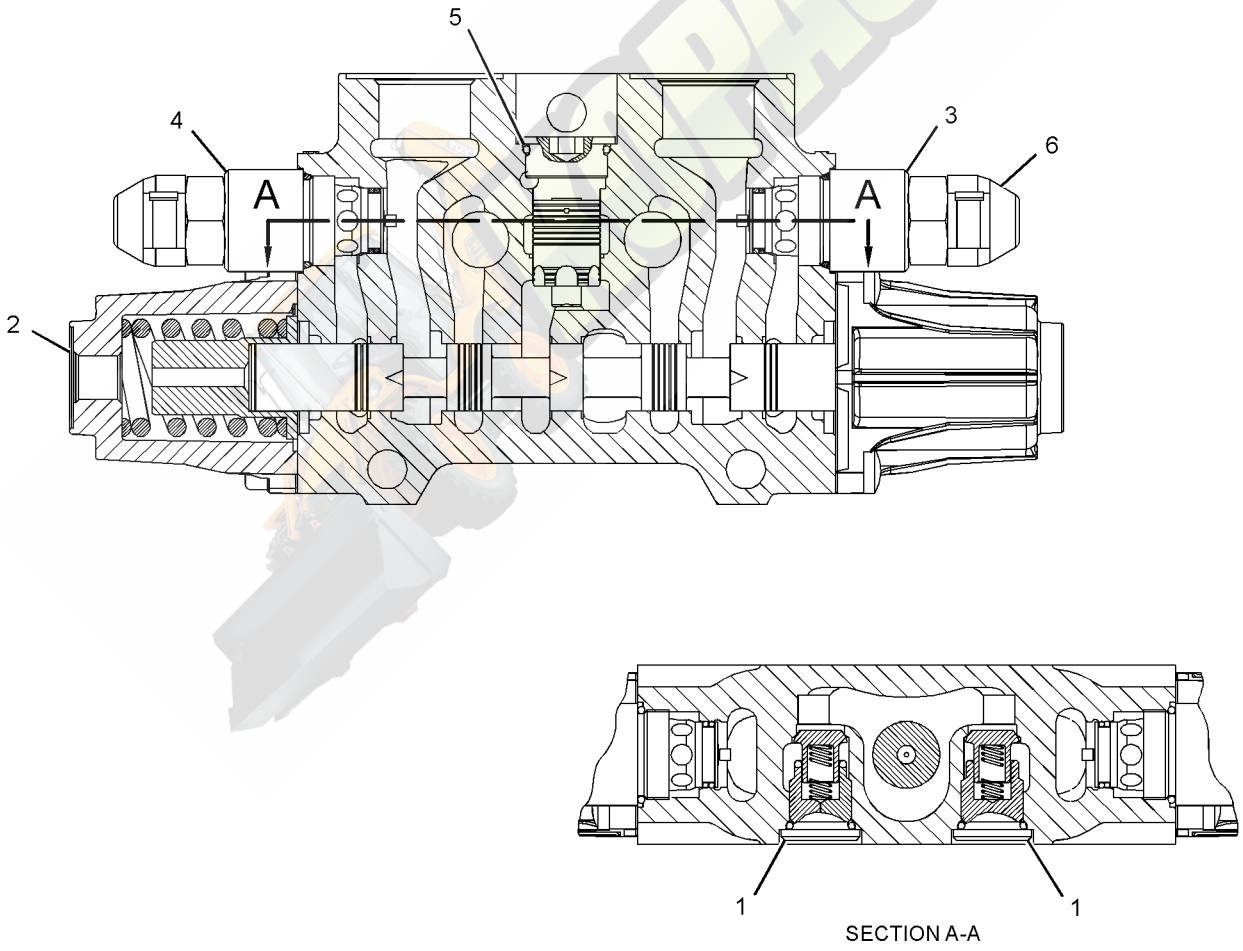

GRAPHIC #1 **<END>** g01987836

344-6129 VALVE GP-CONTROL–SWING

S/N: JBA1-UP

PART OF 321-9975 VALVE GP-BANK 7

SMCS-5051 **i03688422**

NOTE	REF NO	GRAPHIC REF	PART NUMBER	QTY	PART NAME 1 2 3 4 5 6 (PRODUCT LEVEL)	SEE PAGE
	1	1	**350-8841**	1	KIT-COMPENSATOR (CONTROL VALVE)	
					(INCLUDES SEAL-O-RINGS)	
	2	1	**308-2873**	1	KIT-COVER (CONTROL VALVE)	
					(INCLUDES SEAL-O-RINGS, BOLTS, SPRINGS, RETAINERS & COVERS)	
	3	1	**308-2882**	2	VALVE GP-RELIEF (270-BAR)	
					(EACH INCLUDES)	
		1	**4D-2297**	1	SEAL-O-RING	

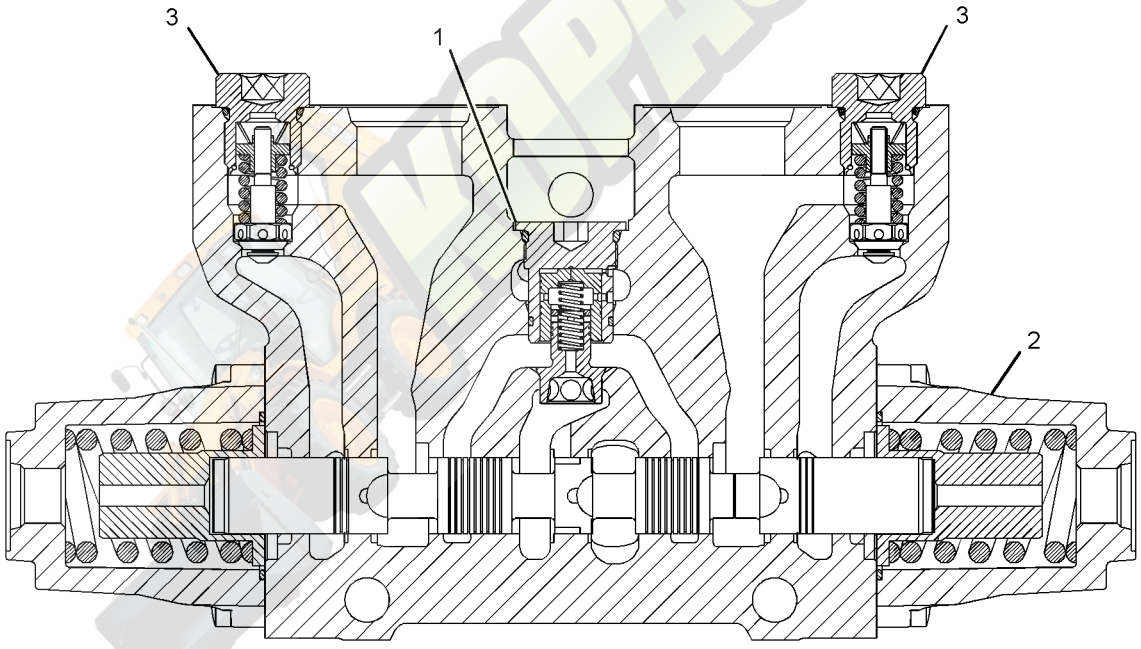

GRAPHIC #1 **<END>** g01987620

HYDRAULIC SYSTEM

344-6130 VALVE GP-CONTROL–BUCKET

S/N: JBA1-UP

PART OF 321-9975 VALVE GP-BANK 7

SMCS-5051 **i03724320**

NOTE	REF NO	GRAPHIC REF	PART NUMBER	QTY	PART NAME 1 2 3 4 5 6 (PRODUCT LEVEL)	SEE PAGE
	1	1	**350-8841**	1	KIT-COMPENSATOR (CONTROL VALVE)	
					(INCLUDES SEAL-O-RINGS)	
	2	1	**308-2873**	1	KIT-COVER (CONTROL VALVE)	
					(INCLUDES SEAL-O-RINGS, BOLTS, SPRINGS, RETAINERS & COVERS)	
	3	1	**308-2884**	2	VALVE GP-RELIEF (300-BAR)	
					(EACH INCLUDES)	
		1	**4D-2297**	1	SEAL-O-RING	

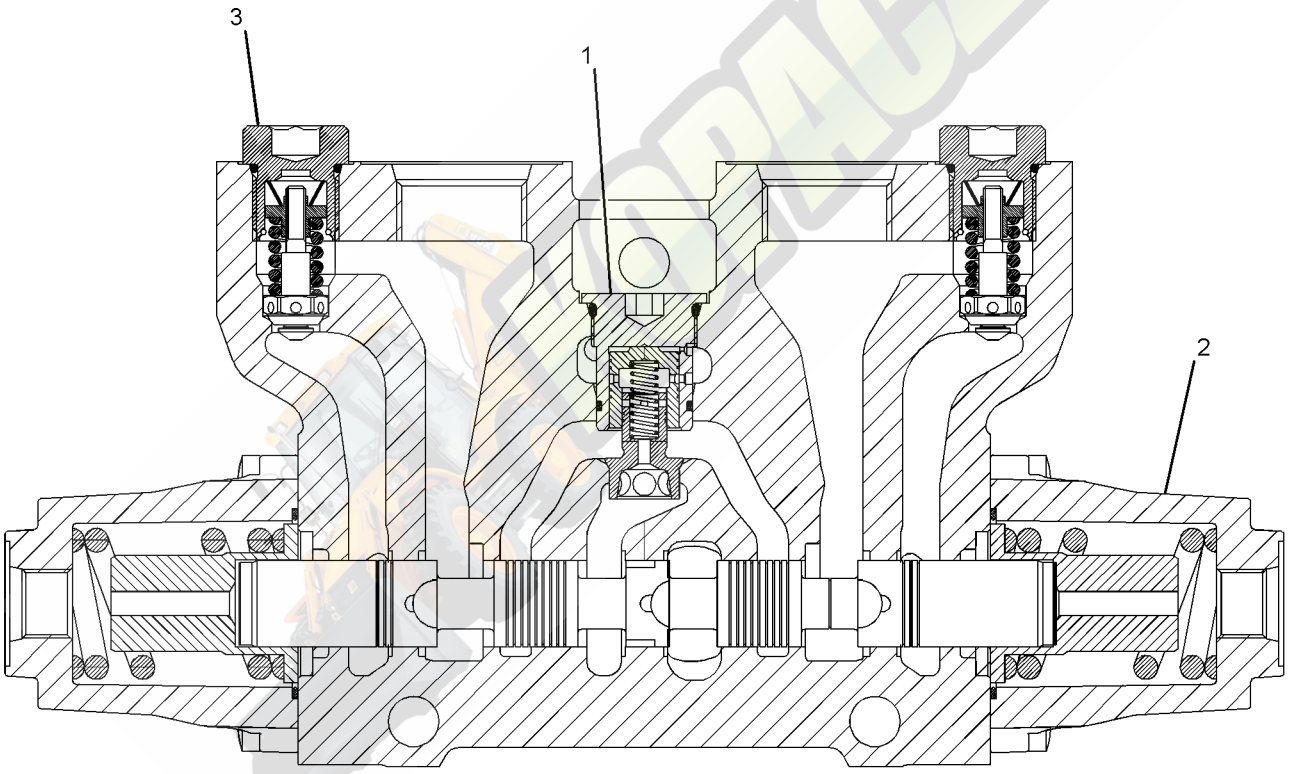

GRAPHIC #1 **<END>** g01987634

344-6131 VALVE GP-CONTROL–STICK

S/N: JBA1-UP

PART OF 321-9975 VALVE GP-BANK 7

SMCS-5051 **i03688441**

NOTE	REF NO	GRAPHIC REF	PART NUMBER	QTY	PART NAME 1 2 3 4 5 6 (PRODUCT LEVEL)	SEE PAGE
	1	1	**350-8841**	1	KIT-COMPENSATOR (CONTROL VALVE)	
					(INCLUDES SEAL-O-RINGS)	
	2	1	**308-2873**	1	KIT-COVER (CONTROL VALVE)	
					(INCLUDES SEAL-O-RINGS, BOLTS, SPRINGS, RETAINERS & COVERS)	
	3	1	**308-2882**	1	VALVE GP-RELIEF (270-BAR)	
	4	1	**308-2883**	1	VALVE GP-RELIEF (290-BAR)	
					(EACH VALVE GP-RELIEF INCLUDES)	
		1	**4D-2297**	1	SEAL-O-RING	

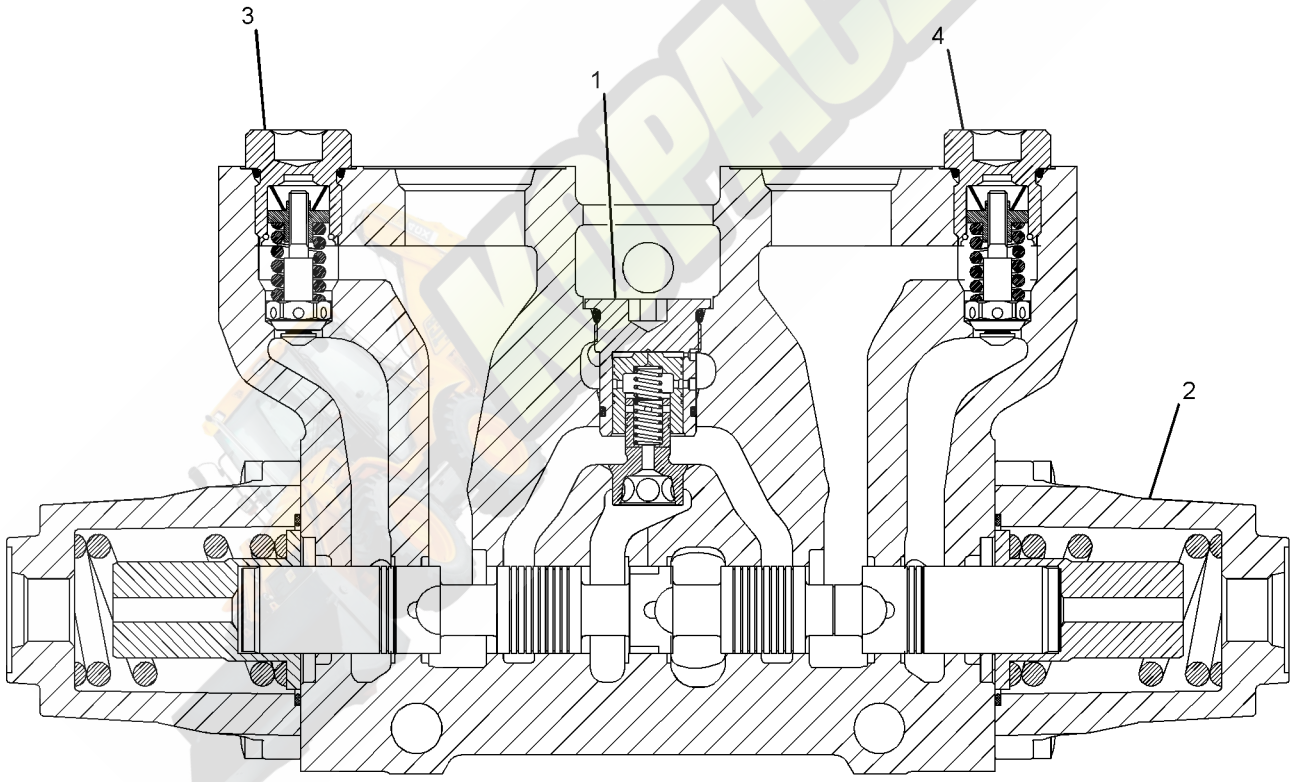

GRAPHIC #1 **<END>** g01987676

HYDRAULIC SYSTEM

344-6132 VALVE GP-CONTROL–EXTENDABLE STICK

S/N: JBA1-UP

PART OF 321-9975 VALVE GP-BANK 7

SMCS-5051 **i03688442**

NOTE	REF NO	GRAPHIC REF	PART NUMBER	QTY	PART NAME 1 2 3 4 5 6 (PRODUCT LEVEL)	SEE PAGE
	1	1	**350-8841**	1	KIT-COMPENSATOR (CONTROL VALVE)	
					(INCLUDES SEAL-O-RINGS)	
	2	1	**308-2873**	1	KIT-COVER (CONTROL VALVE)	
					(INCLUDES SEAL-O-RINGS, BOLTS, SPRINGS, RETAINERS & COVERS)	
	3	1	**308-2882**	2	VALVE GP-RELIEF (270-BAR)	
					(EACH INCLUDES)	
		1	**4D-2297**	1	SEAL-O-RING	

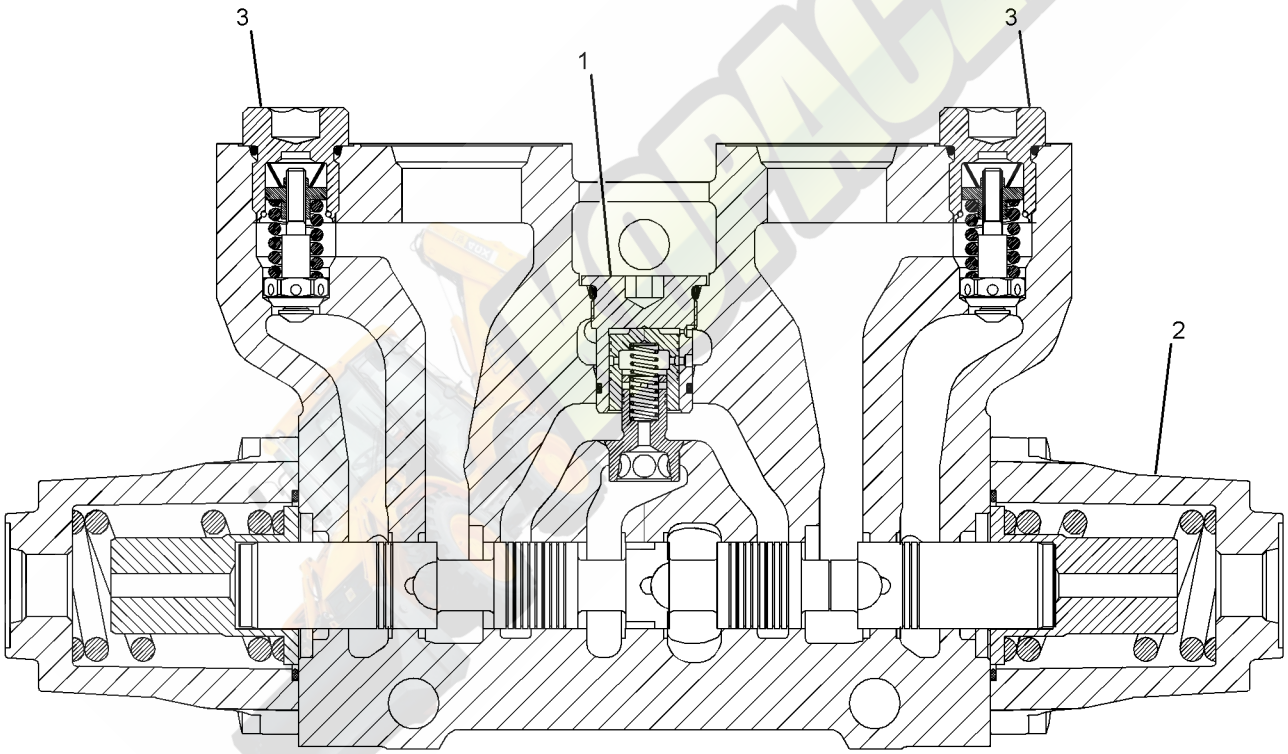

GRAPHIC #1 **<END>** g01987814

344-6133 VALVE GP-CONTROL–LIFT

S/N: JBA1-UP
PART OF 321-9976 VALVE GP-BANK 3
AN ATTACHMENT

SMCS-5051 **i03664300**

NOTE	REF NO	GRAPHIC REF	PART NUMBER	QTY	PART NAME 1 2 3 4 5 6 (PRODUCT LEVEL)	SEE PAGE
	1	1	**350-8841**	1	KIT-COMPENSATOR (CONTROL VALVE)	
					(INCLUDES SEAL-O-RINGS)	
	2	1	**308-2874**	1	KIT-COVER (CONTROL VALVE)	
					(INCLUDES SEAL-O-RINGS, BOLTS, SPRINGS, SPRING RETAINERS, SCREW & COVERS)	
	3	1	**308-2885**	2	PLUG GP-CONTROL VALVE	
					(EACH INCLUDES)	
		1	**4D-2297**	1	SEAL-O-RING	

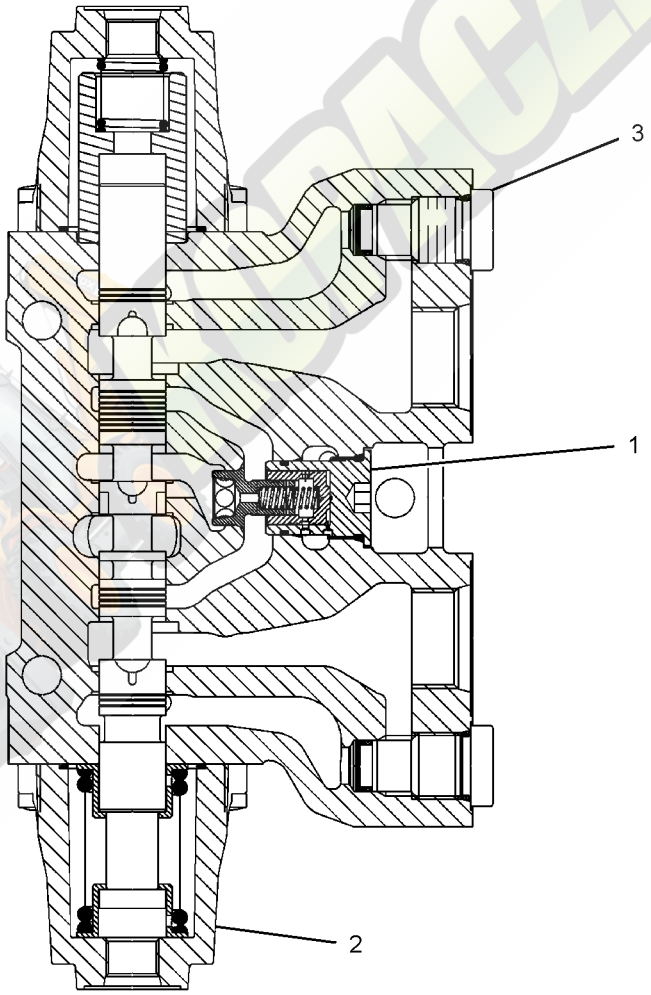

GRAPHIC #1 **<END>** g01967584

HYDRAULIC SYSTEM

344-6134 VALVE GP-CONTROL–TILT

S/N: JBA1-UP
PART OF 321-9976 VALVE GP-BANK 3
AN ATTACHMENT

SMCS-5051 **i03664301**

NOTE	REF NO	GRAPHIC REF	PART NUMBER	QTY	PART NAME 1 2 3 4 5 6 (PRODUCT LEVEL)	SEE PAGE
	1	1	**350-8841**	1	KIT-COMPENSATOR (CONTROL VALVE)	
					(INCLUDES SEAL-O-RINGS)	
	2	1	**308-2873**	1	KIT-COVER (CONTROL VALVE)	
					(INCLUDES SEAL-O-RINGS, BOLTS, SPRINGS, SPRING RETAINERS & COVERS)	
	3	1	**308-2884**	1	VALVE GP-RELIEF (300-BAR)	
	4	1	**350-8888**	1	VALVE GP-RELIEF (160-BAR)	
					(EACH VALVE GP-RELIEF INCLUDES)	
		1	**4D-2297**	1	SEAL-O-RING	

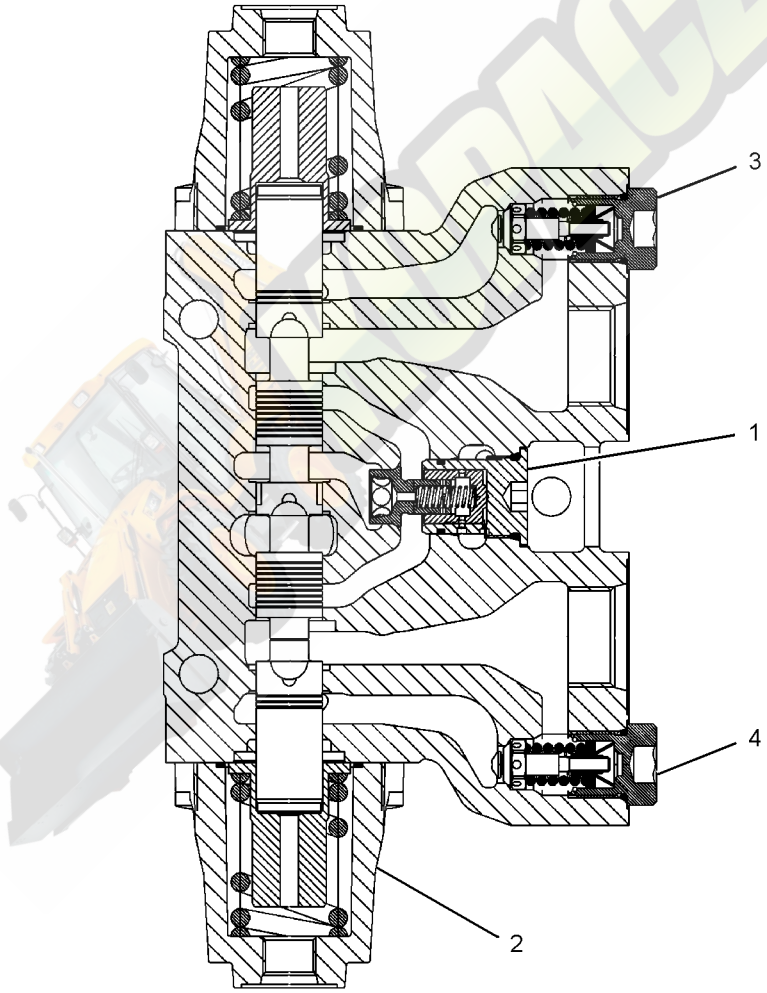

GRAPHIC #1 **<END>** g01967793

344-6135 VALVE GP-CONTROL–AUXILIARY

S/N: JBA1-UP
PART OF 321-9976 VALVE GP-BANK 3
AN ATTACHMENT

SMCS-5051 **i03664302**

NOTE	REF NO	GRAPHIC REF	PART NUMBER	QTY	PART NAME 1 2 3 4 5 6 (PRODUCT LEVEL)	SEE PAGE
	1	1	**350-8841**	1	KIT-COMPENSATOR (CONTROL VALVE)	
					(INCLUDES SEAL-O-RINGS)	
	2	1	**308-2873**	1	KIT-COVER (CONTROL VALVE)	
					(INCLUDES SEAL-O-RINGS, BOLTS, SPRINGS, SPRING RETAINERS & COVERS)	
	3	1	**350-8898**	1	VALVE GP-RELIEF (240-BAR)	
		1	**4D-2297**	1	SEAL-O-RING	
	4	1	**308-2885**	1	PLUG GP-CONTROL VALVE	
		1	**4D-2297**	1	SEAL-O-RING	

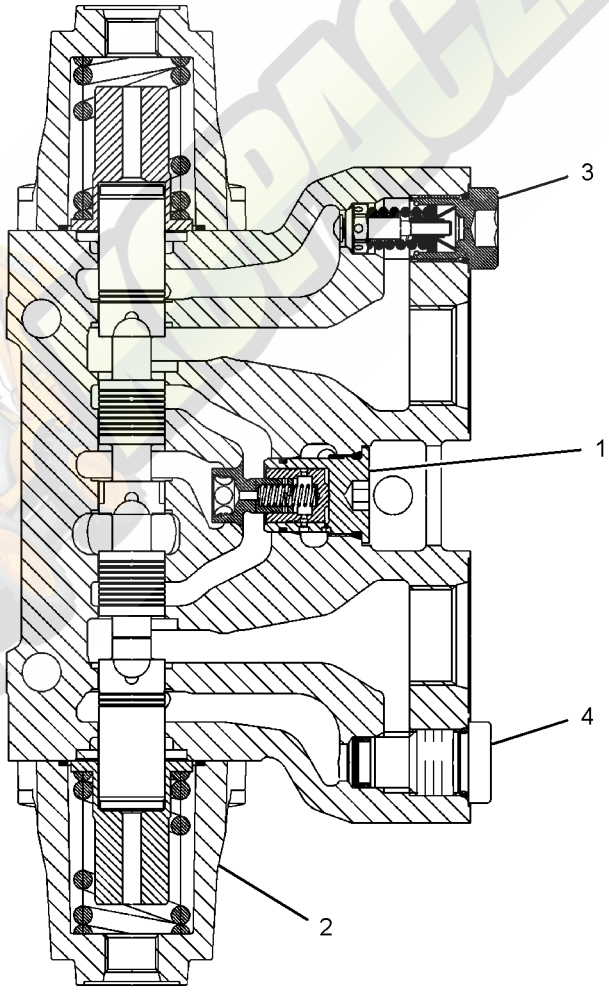

GRAPHIC #1 **<END>** g01967834

HYDRAULIC SYSTEM

308-3437 VALVE GP-LOAD CONTROL–STABILIZER

S/N: JBA1-UP
PART OF 326-1801 LINES GP-STABILIZER
AN ATTACHMENT

SMCS-5811 **i02843462**

NOTE	REF NO	GRAPHIC REF	PART NUMBER	QTY	PART NAME 1 2 3 4 5 6 (PRODUCT LEVEL)	SEE PAGE
					(NO SERVICED PARTS)	

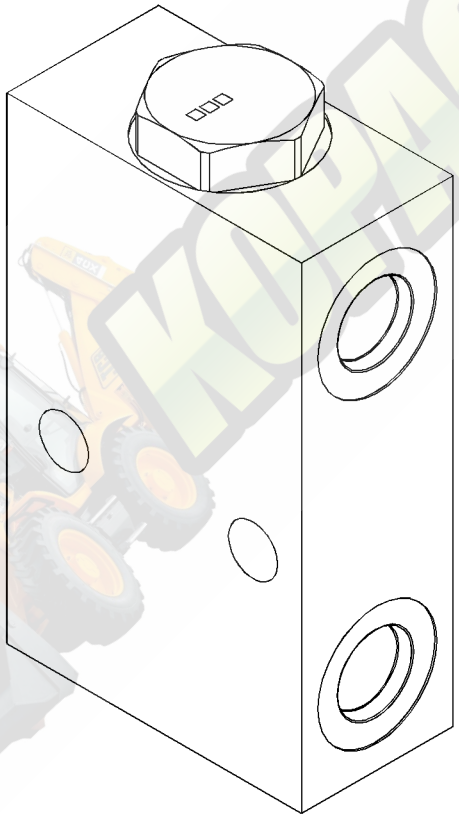

GRAPHIC #1 **<END>** g01444975

253-1054 VALVE GP-PILOT–STABILIZER

S/N: JBA1-UP
AN ATTACHMENT

SMCS-5059 **i02767788**

NOTE	PART NUMBER	QTY	PART NAME 1 2 3 4 5 6 (PRODUCT LEVEL)	SEE PAGE
Y	**297-4394**	1	VALVE GP-PILOT (STABILIZER)	482
	251-5627	1	FILM-INSTRUCTION (STABILIZER, SIDESHIFT)	

Y-SEPARATE ILLUSTRATION

<END>

253-1055 VALVE GP-PILOT–STABILIZER, SIDESHIFT, AUTO UP

S/N: JBA1-UP
AN ATTACHMENT

SMCS-5059 **i02767803**

NOTE	PART NUMBER	QTY	PART NAME 1 2 3 4 5 6 (PRODUCT LEVEL)	SEE PAGE
Y	**297-4395**	1	VALVE GP-PILOT (STABILIZER)	483
Y	*295-5903*	1	RELAY GP	186
	251-5629	1	FILM-IDENTIFICATION (STABILIZER, AUTO UP)	
			(ON RH CONSOLE NEXT TO STABILIZER CONTROLS)	

Y-SEPARATE ILLUSTRATION

<END>

HYDRAULIC SYSTEM

297-4394 VALVE GP-PILOT–STABILIZER

S/N: JBA1-UP
PART OF 253-1054 VALVE GP-PILOT
AN ATTACHMENT

SMCS-5059 **i03713900**

NOTE	REF NO	GRAPHIC REF	PART NUMBER	QTY	PART NAME 1 2 3 4 5 6 (PRODUCT LEVEL)	SEE PAGE
	1	1	**198-6498**	2	BOOT	
	2	1	**305-2139**	1	KIT-LEVER	
					(INCLUDES LEVER, CAM, COVER FOR MICROSWITCH, PIN & SCREWS)	
	3	1	**305-2140**	1	KIT-LEVER	
					(INCLUDES LEVER, CAM, COVER FOR MICROSWITCH, PIN & SCREWS)	
	4	1	**198-6516**	2	KIT-SWITCH (PILOT VALVE)	
					(INCLUDES SWITCH PLATES, SCREWS, WASHERS, MICROSWITCH, CONNECTOR & SOCKETS)	
	5	1	**305-2136**	1	KIT-SPRING	
					(INCLUDES SPRINGS)	
	6	1	**305-2137**	1	PLATE	
	7	1	**305-2141**	2	KIT-PLUNGER	
					(INCLUDES PLUNGER GUIDE, PLUNGER & SNAP RING)	
	8	1	**305-2142**	2	KIT-PLUNGER	
					(INCLUDES PLUNGER GUIDE, PLUNGER, SNAP RING & RELEASE SWITCH)	

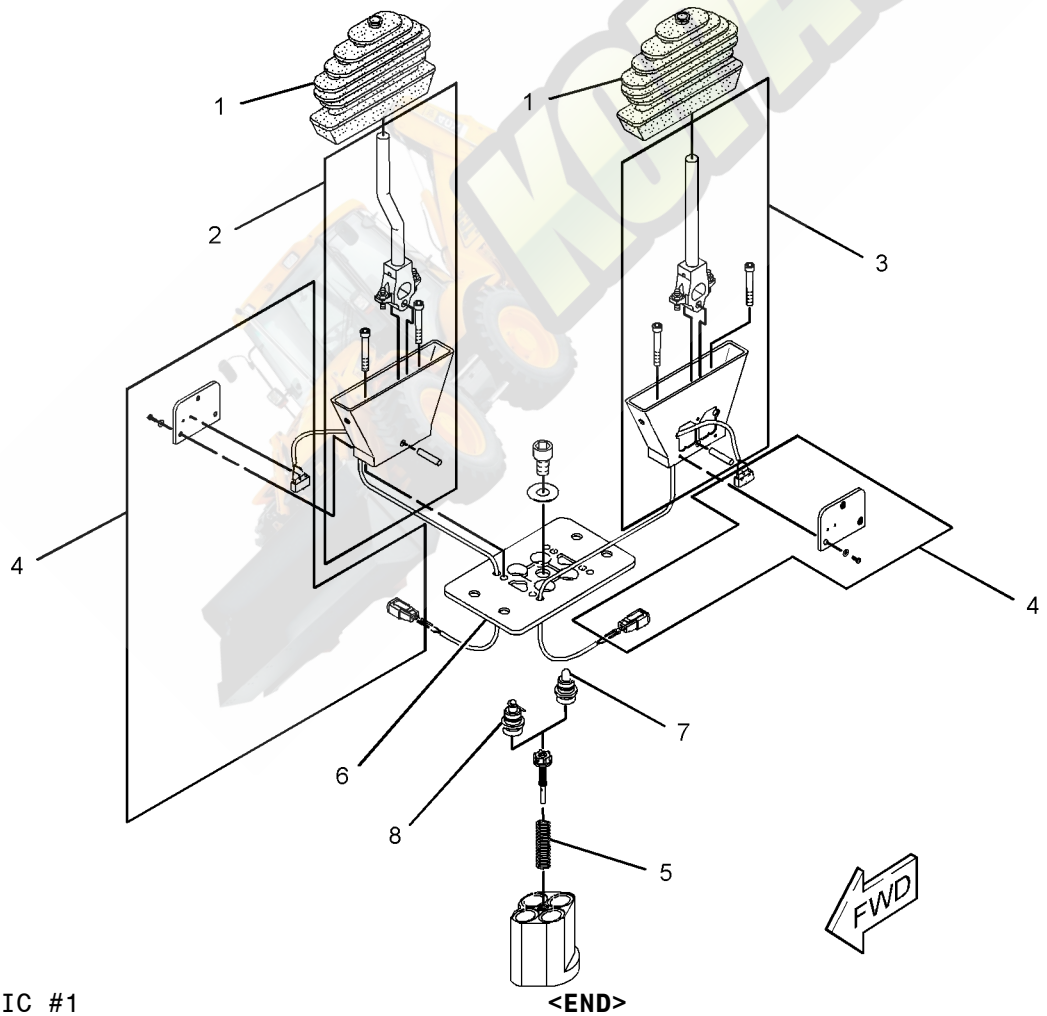

GRAPHIC #1 **<END>** g01394985

297-4395 VALVE GP-PILOT–STABILIZER

S/N: JBA1-UP
PART OF 253-1055 VALVE GP-PILOT
AN ATTACHMENT

SMCS-5059 **i03724326**

NOTE	REF NO	GRAPHIC REF	PART NUMBER	QTY	PART NAME 1 2 3 4 5 6 (PRODUCT LEVEL)	SEE PAGE
	1	1	**198-6498**	2	BOOT	
	2	1	**305-2143**	1	KIT-LEVER	
	3	1	**305-2144**	1	KIT-LEVER	
					(EACH KIT LEVER INCLUDES LEVER, CAM, COVER, PIN, SCREWS, ARMATURE & SNAP RING)	
	4	1	**198-6516**	2	KIT-SWITCH (PILOT VALVE)	
					(EACH KIT SWITCH INCLUDES MICROSWITCH, PLATE, SCREWS, WASHERS, CONNECTOR & SOCKET)	
	5	1	**198-6505**	2	KIT-COIL (PILOT VALVE)	
					(EACH KIT COIL INCLUDES SOLENOID, BOLT & CONNECTOR KIT)	
	6	1	**305-2137**	1	PLATE	
	7	1	**305-2141**	2	KIT-PLUNGER	
					(EACH KIT PLUNGER INCLUDES PLUNGER GUIDE, PLUNGER & SNAP RING)	
	8	1	**305-2142**	2	KIT-PLUNGER	
					(EACH KIT PLUNGER INCLUDES PLUNGER GUIDE, PLUNGER, RELEASE SWITCH & SNAP RING)	
	9	1	**305-2136**	1	KIT-SPRING	
					(INCLUDES SPRING)	
	10	1	**305-2145**	1	KIT-SENSOR	
					(INCLUDES SOCKET & SPRING)	

297-4395 VALVE GP-PILOT *(contd.)* **i03724326**

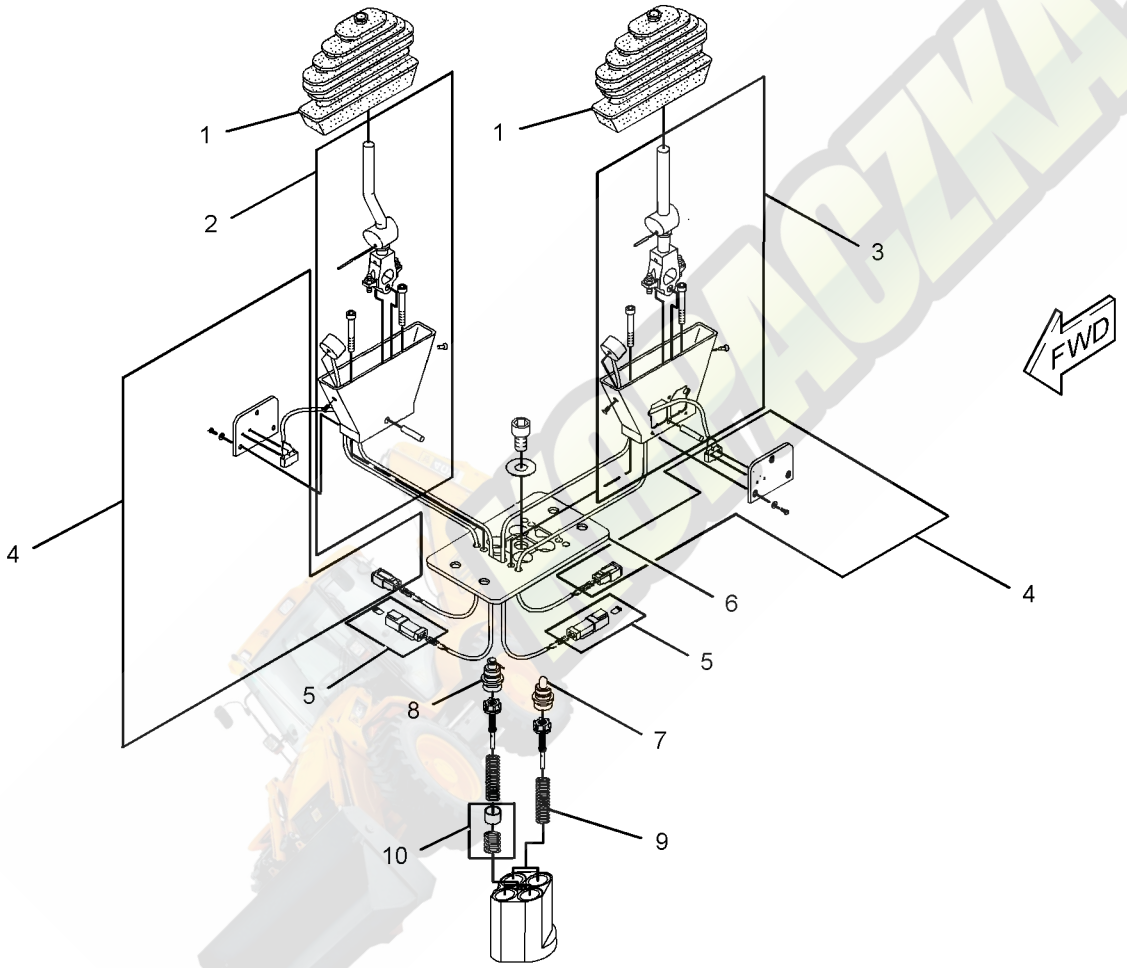

GRAPHIC #1 **<END>** g01397048

280-7871 VALVE GP-PUMP CONTROL–POWER COMPENSATOR

S/N: JBA1-UP

PART OF 289-6370 PUMP GP-PISTON

SMCS-5086, 5455 **i02760902**

NOTE	REF NO	GRAPHIC REF	PART NUMBER	QTY	PART NAME 1 2 3 4 5 6 (PRODUCT LEVEL)	SEE PAGE
	1	1	**103-5520**	1	CARRIER-PIN	
	2	1	**214-0592**	1	GASKET	
M	3	1	**6V-5683**	1	BOLT (M6X1X16-MM)	
M	4	1	**3T-0849**	2	BOLT-SOCKET HEAD (M6X1X25-MM)	
	5	1	**3C-8388**	1	PIN-ROLL	
	6	1	**6V-8236**	1	PIN-SPRING	
	7	1	**105-1440**	1	CAP	
	8	1	**6V-4589**	1	SEAL-O-RING	
	9	1	**033-6044**	1	SEAL-O-RING	

M-METRIC PART

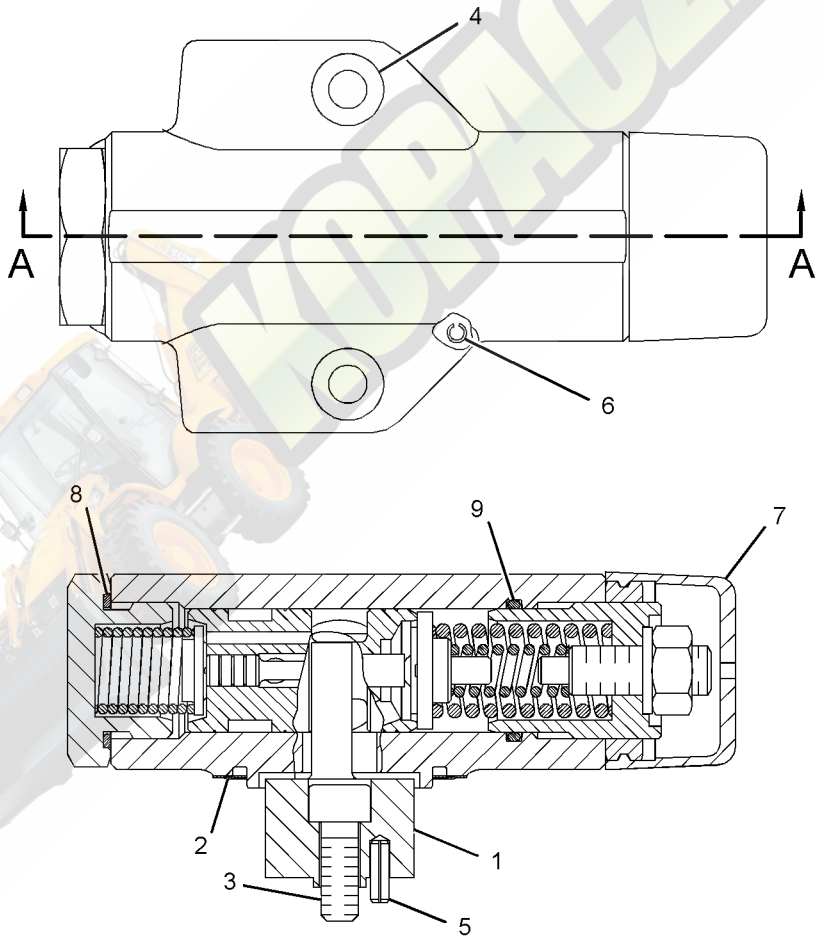

SECTION A-A

GRAPHIC #1 **<END>** g01386050

185-4254 VALVE GP-SOLENOID–AUXILIARY

S/N: JBA1-UP
12-VOLT
PART OF 300-4493 MANIFOLD & SOLENOID GP-CONTROL

SMCS-5132, 5479 **i03370641**

NOTE	REF NO	GRAPHIC REF	PART NUMBER	QTY	PART NAME 1 2 3 4 5 6 (PRODUCT LEVEL)	SEE PAGE
	1	1	**226-9629**	1	COIL AS-SOLENOID (12-VOLT)	
	2	1	**164-2108**	1	WASHER (13.03X25.4X2.38-MM THK)	
	3	1	**218-2373**	1	NUT (1/2-28-THD)	

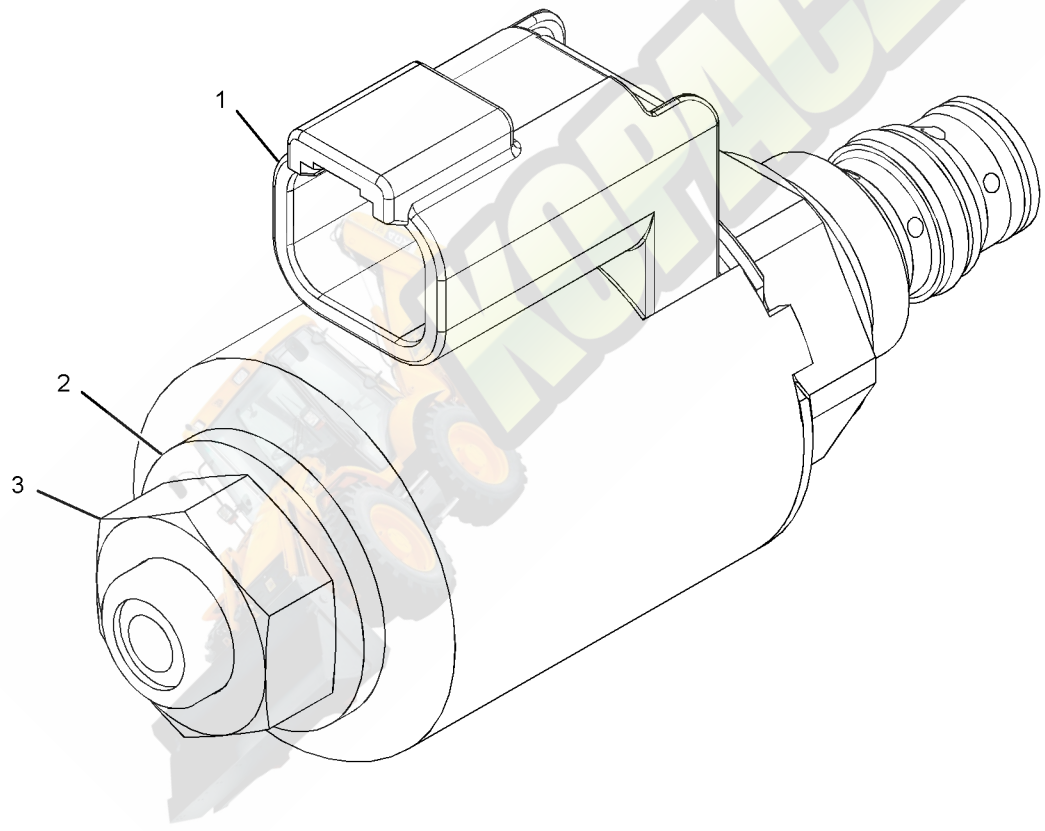

GRAPHIC #1 **<END>** g01716997

231-2615 VALVE GP-SOLENOID–REMOTE CONTROL

S/N: JBA1-UP
PART OF 331-7412 LINES GP-HYDRAULIC
AN ATTACHMENT

SMCS-5132, 5479 **i03712464**

NOTE	REF NO	GRAPHIC REF	PART NUMBER	QTY	PART NAME 1 2 3 4 5 6 (PRODUCT LEVEL)	SEE PAGE
	1	1	**212-3350**	1	SOLENOID AS (REMOTE CONTROL)	
		1	**102-8802**	1	KIT-RECEPTACLE (2-PIN)	
					(INCLUDES RECEPTACLE AS & WEDGE)	
		1	**186-3735**	2	PIN-CONNECTOR (16-GA TO 18-GA)	
	2	1	**224-6562**	1	CARTRIDGE AS	
		1	**6V-8399**	1	SEAL-O-RING	
	3	1	**224-6563**	1	FASTENER GP-VALVE	
		1	**3D-4245**	1	SEAL-O-RING	
		1	**4J-5267**	1	SEAL-O-RING	

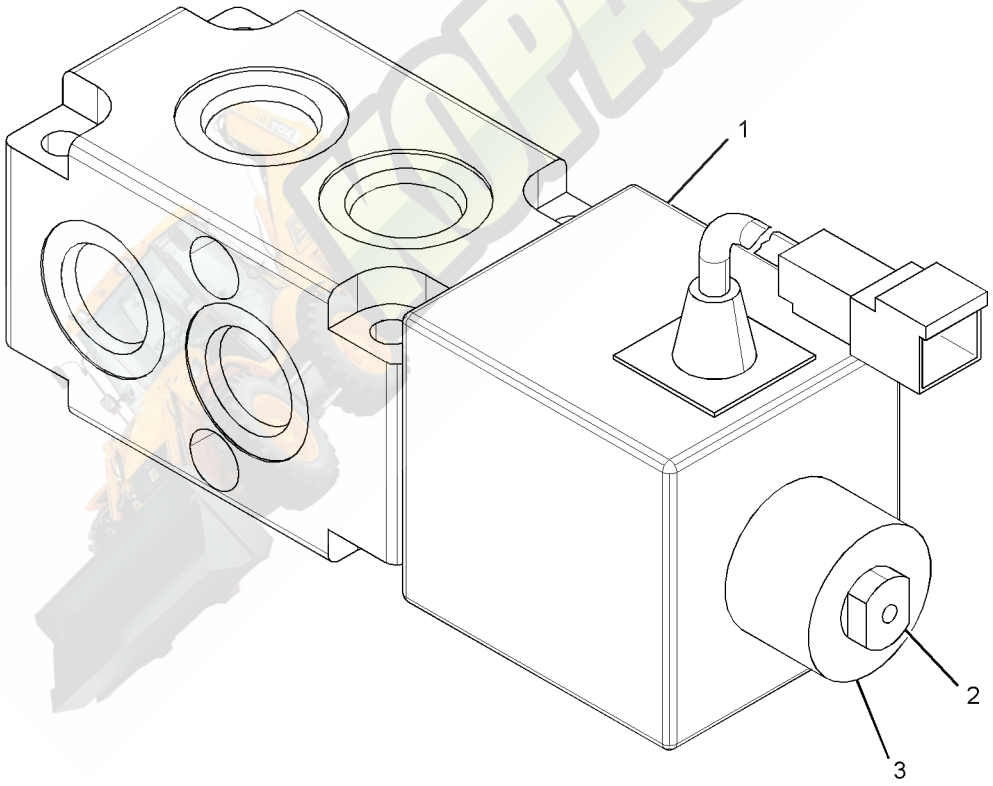

GRAPHIC #1 **<END>** g01335212

321-4060 ARM GP-LIFT

S/N: JBA1-UP

PART OF 325-1021 LOADER AR

SMCS-6118, 6119 **i03638344**

NOTE	REF NO	GRAPHIC REF	PART NUMBER	QTY	PART NAME 1 2 3 4 5 6 (PRODUCT LEVEL)	SEE PAGE
	1	1	**111-4332**	4	PLATE	
B	2	1,2	**111-4337**	18	WASHER (46X70X1-MM THK)	
B	3	1	**119-4594**	2	WASHER (41X64X1-MM THK)	
B	4	1	**128-7903**	2	SPACER (61X114.3X3-MM THK)	
B	5	1	**128-7905**	2	SPACER (61X114.3X1-MM THK)	
M	6	1,2	**246-7854**	6	NUT-SPECIAL (M10X1.5-THD)	
	7	1,2	**320-3614**	2	LINK AS	
					(EACH INCLUDES)	
	7A	2	**116-4825**	4	BEARING-SLEEVE	
	8	1	**320-4771**	4	LINK	
	9	1	**321-4059**	1	ARM & BEARING AS (PARALLEL LIFT)	
	9A	2	**9R-0111**	4	BEARING-SLEEVE	
	9B	2	**9R-0411**	4	BEARING-SLEEVE	
	10	1	**322-4583**	2	PIN	
	11	1	**322-4584**	2	PIN	
	12	1	**322-4585**	2	PIN	
	13	1	**322-4586**	2	PIN	
	14	1	**322-4587**	4	PIN	
	15	1	**322-4589**	2	PIN	
	16	1	**325-2009**	1	PIN	
	17	1,2	**326-0088**	4	PIN	
	18	1	**326-0093**	2	PIN	
	19	1	**342-2161**	1	LINK AS (RH)	
	19A	2	**116-4825**	4	BEARING-SLEEVE (RH)	
	20	1	**342-2162**	1	LINK AS (LH)	
	20A	2	**116-4825**	4	BEARING-SLEEVE (LH)	
	21	1	**342-2622**	8	SPACER (45.5X80X13-MM THK)	
	22	1	**3B-8488**	8	FITTING-GREASE	
	23	1,2	**3B-8489**	12	FITTING-GREASE	
	24	1	**6V-5201**	4	RING-RETAINING	
	25	1,2	**6V-5204**	32	RING-RETAINING	
M	26	2	**6V-7687**	4	LOCKNUT (M12X1.75-THD)	
M	27	1	**6V-7744**	2	LOCKNUT (M10X1.5-THD)	
M	28	2	**8T-4176**	4	BOLT (M12X1.75X90-MM)	
M	29	1	**8T-6685**	2	BOLT (M10X1.5X110-MM)	
B	30	1	**9R-0109**	6	WASHER (41X64X3-MM THK)	
B	31	1,2	**9R-0158**	43	WASHER (46X69X3-MM THK)	

B-USE AS REQUIRED
M-METRIC PART

321-4060 **ARM GP-LIFT** *(contd.)* **i03638344**

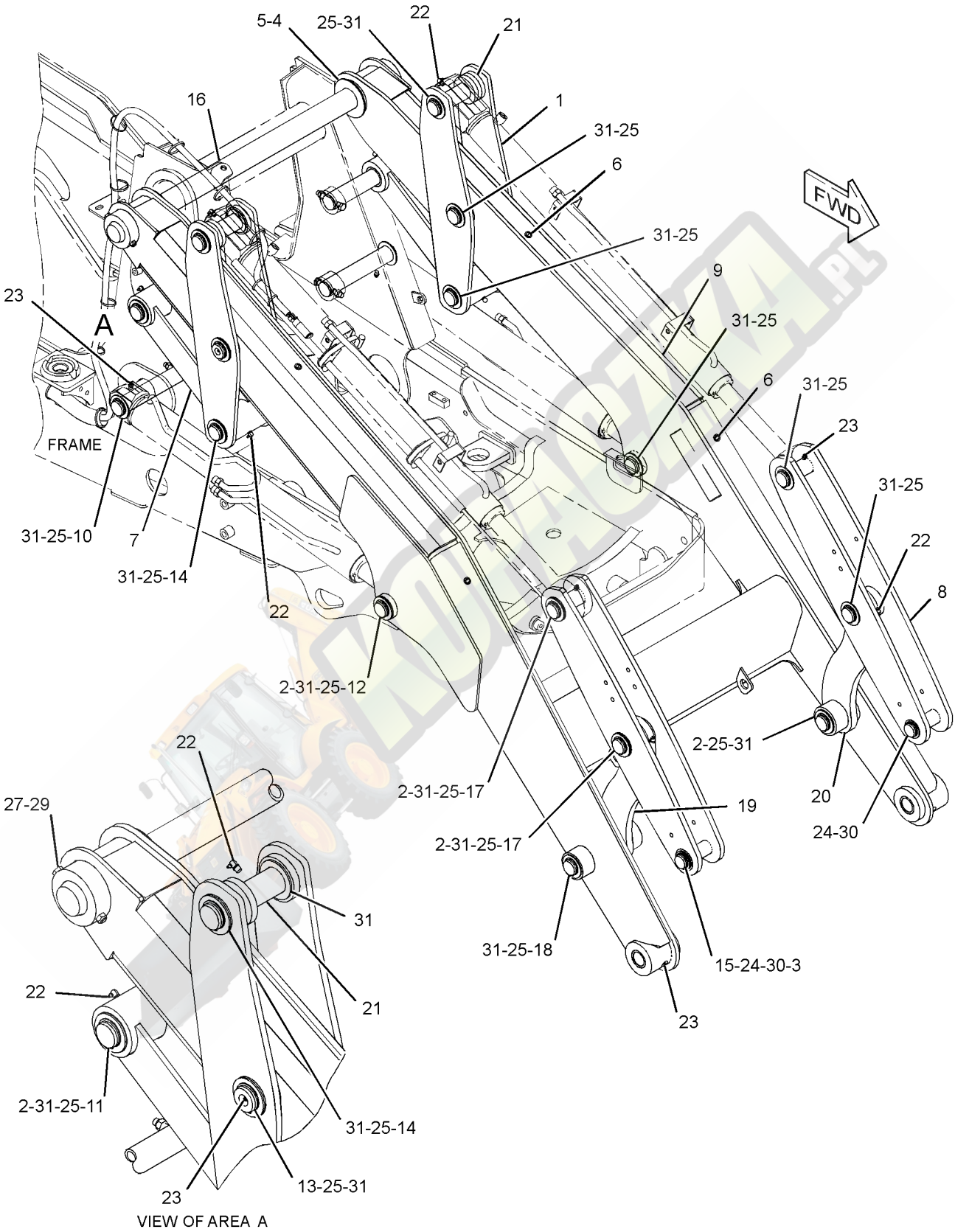

GRAPHIC #1 g01990696

321-4060 **ARM GP-LIFT** *(contd.)* **i03638344**

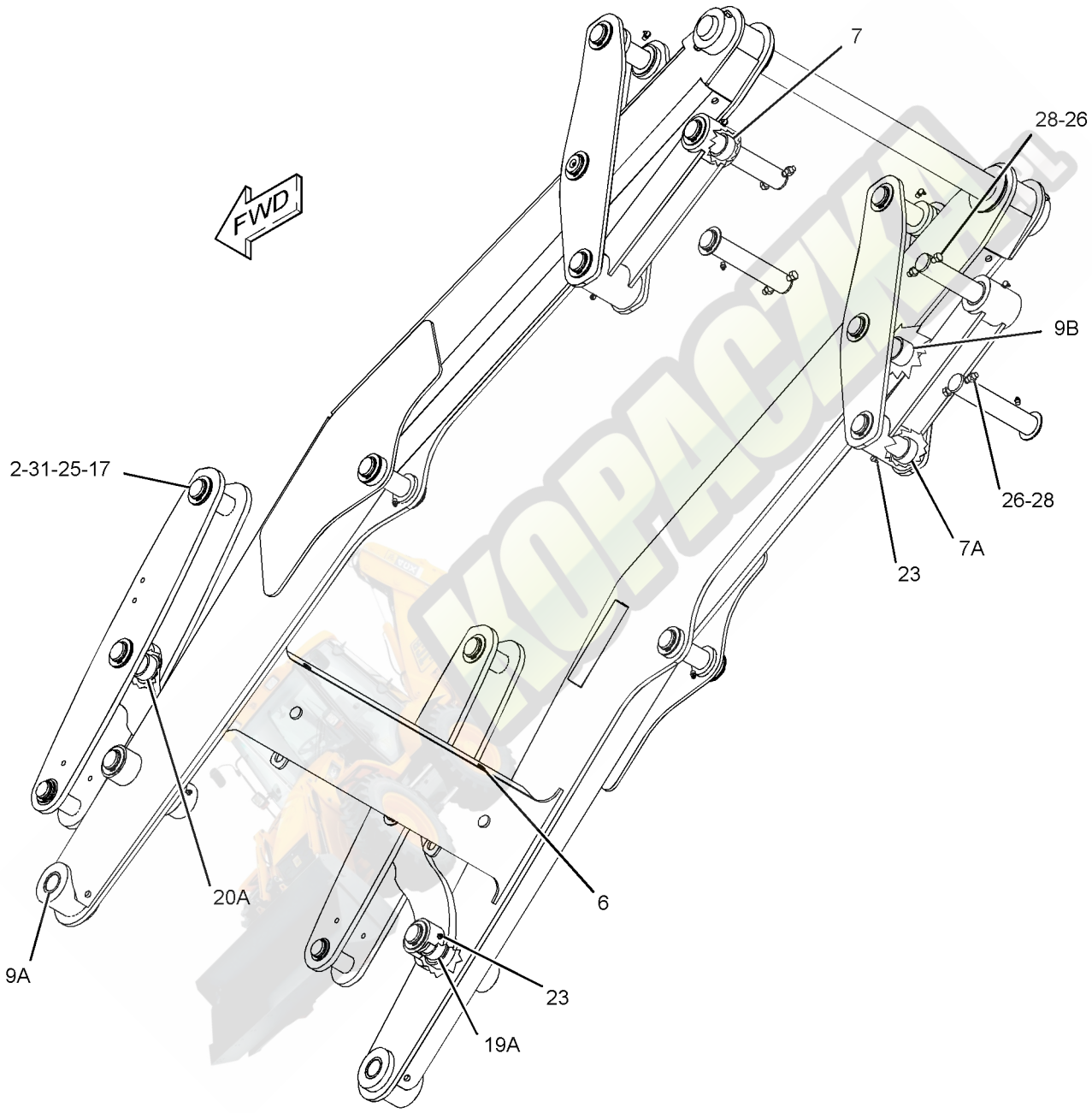

GRAPHIC #2 **<END>** g01990774

324-0548 BOOM GP

S/N: JBA1-UP

PART OF 334-0686, 334-0691, 350-6934, 350-6935, 350-6944, 350-6945 BACKHOE AR-EXTENDABLE STICK, 334-0694, 350-6933 BACKHOE AR-STANDARD STICK AN ATTACHMENT

SMCS-6501 **i03690289**

NOTE	REF NO	GRAPHIC REF	PART NUMBER	QTY	PART NAME 1 2 3 4 5 6 (PRODUCT LEVEL)	SEE PAGE
B	1	1	**9R-0481**	2	WASHER (71X110X4-MM THK)	
B	2	1	**9R-8291**	2	SPACER (66X125X1-MM THK)	
	3	1	**226-1240**	2	FILM-WARNING (CRUSH HAZARD, STAY BACK, INTL)	
M	4	1	**246-7853**	4	NUT-SPECIAL (M8X1.25-THD)	
	5	1	**316-4741**	1	BOOM AS	
	5A	1	**213-6683**	2	BEARING-SLEEVE	
	6	1	**316-6945**	1	PIN	
	7	1	**320-4725**	1	PIN AS	
	8	1	**322-3736**	1	PIN-BOOM LOCK	
	9	1	**095-7950**	2	RING-RETAINING	
	10	1	**115-6433**	1	WASHER (11X50X6-MM THK)	
	11	1	**3B-8488**	4	FITTING-GREASE	
	12	1	**3B-8489**	2	FITTING-GREASE	
	13	1	**6V-5201**	2	RING-RETAINING	
M	14	1	**8T-4136**	1	BOLT (M10X1.5X25-MM)	
	15	1	**9R-0109**	2	WASHER (41X64X3-MM THK)	

B-USE AS REQUIRED
M-METRIC PART

324-0548 **BOOM GP** ***(contd.)*** **i03690289**

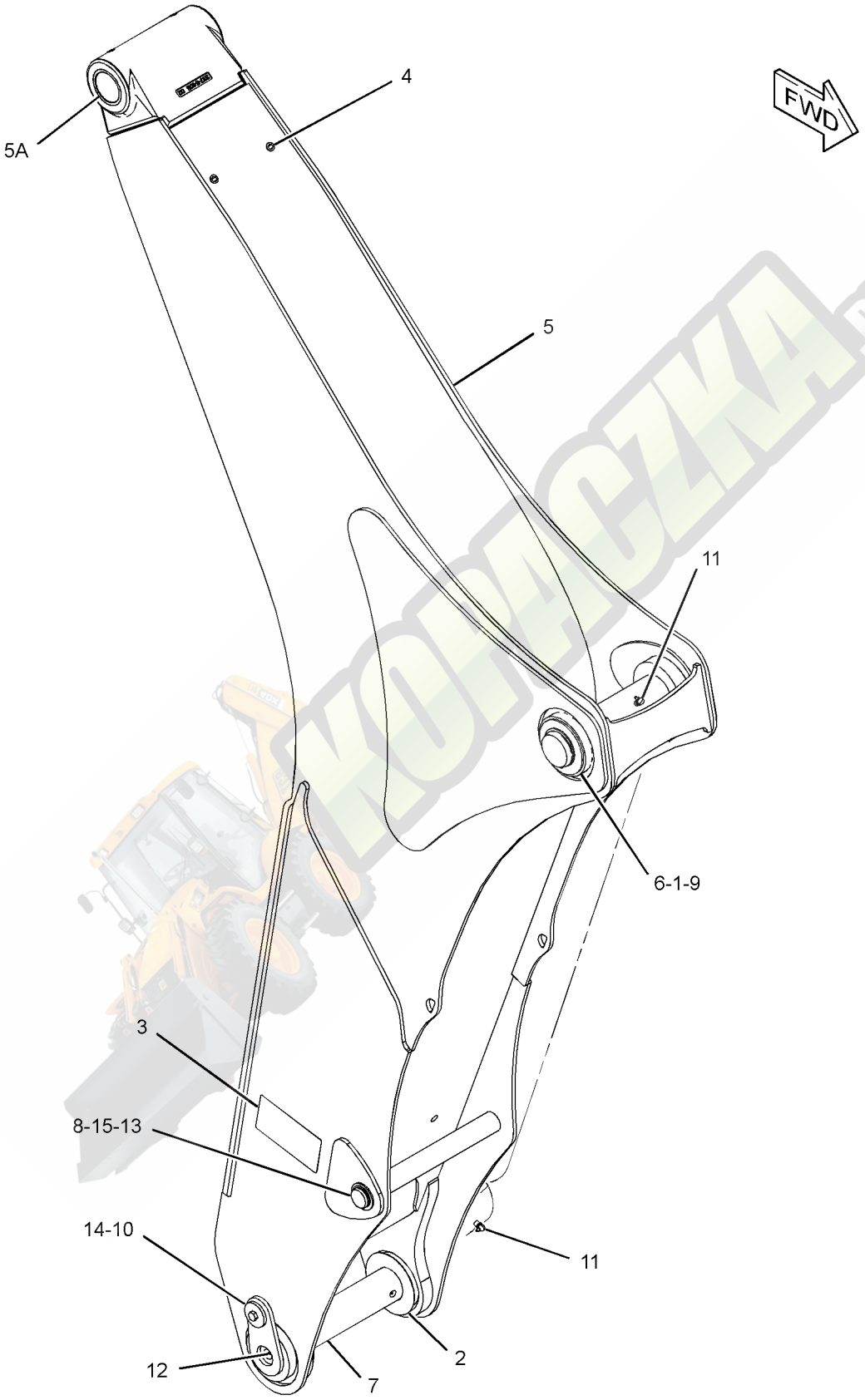

GRAPHIC #1 **<END>** g01990094

325-1034 BRACE GP-LIFT CYLINDER

S/N: JBA1-UP

PART OF 325-1021 LOADER AR

SMCS-7507 **i03642533**

NOTE	REF NO	GRAPHIC REF	PART NUMBER	QTY	PART NAME 1 2 3 4 5 6 (PRODUCT LEVEL)	SEE PAGE
	1	1	**118-1348**	2	PIN	
	2	1	**239-9430**	1	FILM-WARNING (ARM BRACE, READ OMM)	
	3	1	**320-3568**	1	BRACE	
	4	1	**343-2876**	2	PLATE	
	5	1	**8T-4121**	2	WASHER-HARD (11X21X2.5-MM THK)	
M	6	1	**8T-4137**	2	BOLT (M10X1.5X20-MM)	
	7	1	**9R-5301**	2	PIN-COTTER	

M-METRIC PART

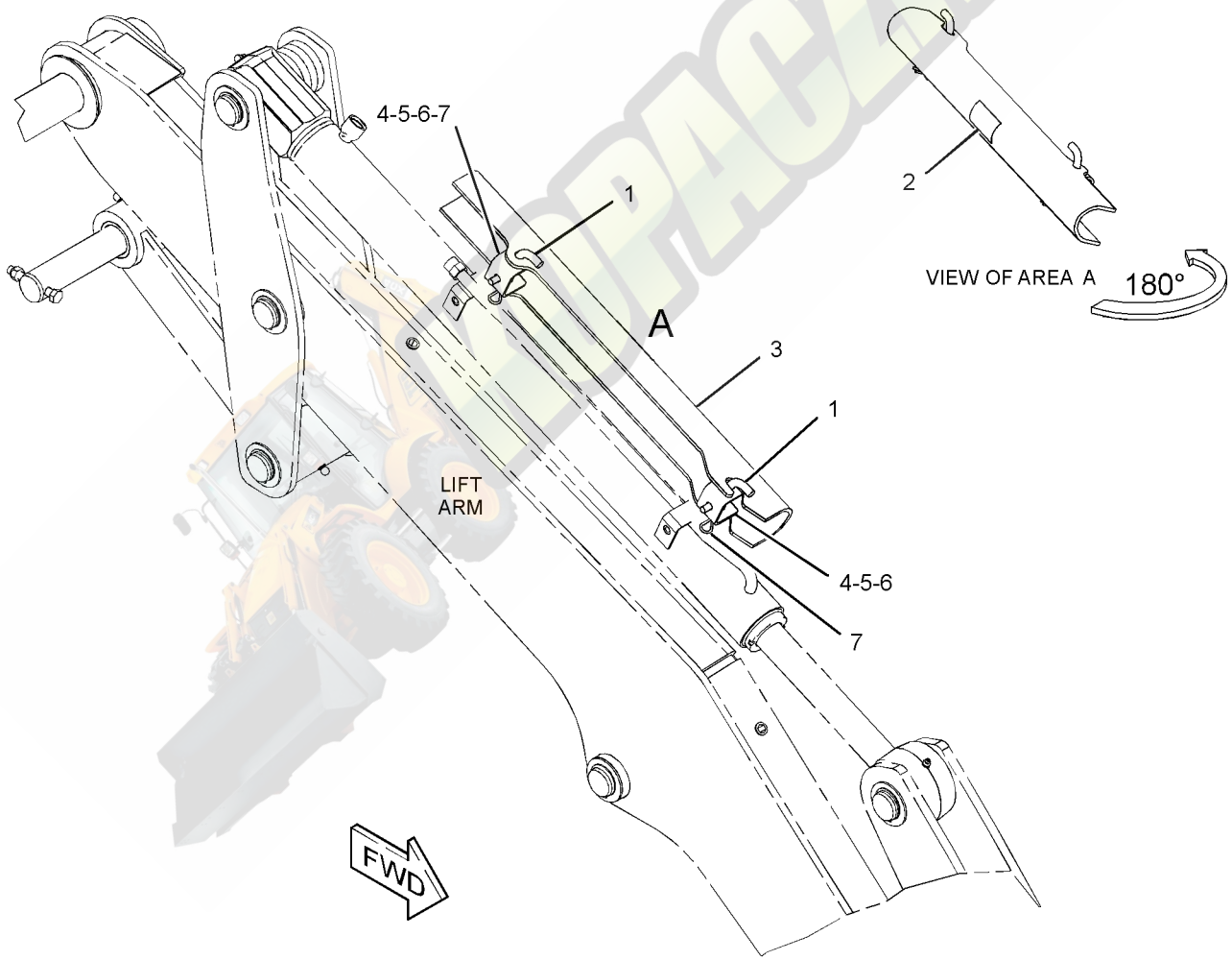

GRAPHIC #1 **<END>** g01990713

334-0751 LINKAGE GP-BACKHOE BUCKET—LIFTING

S/N: JBA1-UP

PART OF 334-0686, 350-6944 BACKHOE AR-EXTENDABLE STICK, 334-0694 BACKHOE AR-STANDARD STICK

AN ATTACHMENT

SMCS-6513 **i03694722**

NOTE	REF NO	GRAPHIC REF	PART NUMBER	QTY	PART NAME 1 2 3 4 5 6 (PRODUCT LEVEL)	SEE PAGE
	1	1	**9R-0158**	2	WASHER (46X69X3-MM THK)	
	2	1	**9R-1510**	2	WASHER (51X82X4-MM THK)	
B	3	1	**111-4337**	2	WASHER (46X70X1-MM THK)	
	4	1	**154-5280**	1	PIN	
B	5	1	**210-1707**	2	SHIM (1-MM THK)	
B	6	1	**220-7108**	6	WASHER (51X85X1-MM THK)	
	7	1	**320-9164**	1	PIN	
	8	1	**320-9241**	1	PIN	
	9	1	**328-5234**	1	PIN	
	10	1	**330-4926**	1	LINK AS	
	10A	1	**9R-0139**	2	BEARING-SLEEVE	
	10B	1	**213-6703**	2	BEARING	
	11	1	**330-5738**	1	LINK	
	12	1	**330-5739**	1	LINK	
	13	1	**096-5516**	2	RING-RETAINING	
	14	1	**154-5279**	1	PIN	
	15	1	**3B-5319**	4	PIN-COTTER	
	16	1	**3B-8489**	4	FITTING-GREASE	
	17	1	**8T-4241**	4	RING-RETAINING	

B-USE AS REQUIRED

334-0751 **LINKAGE GP-BACKHOE BUCKET** *(contd.)* **i03694722**

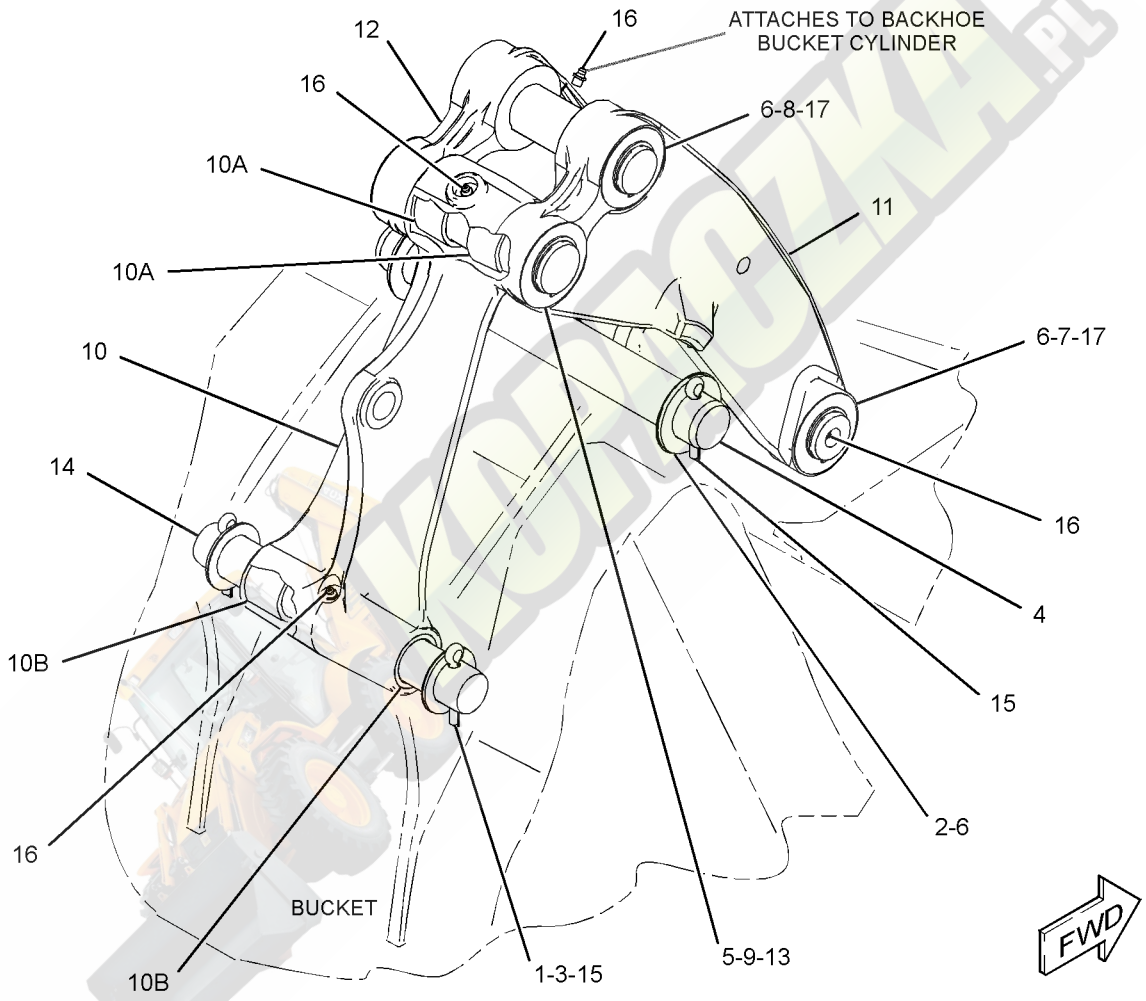

GRAPHIC #1 **<END>** g01994426

334-0752 LINKAGE GP-BACKHOE BUCKET—WITH LIFTING EYE

S/N: JBA1-UP

PART OF 334-0691, 350-6945 BACKHOE AR-EXTENDABLE STICK

AN ATTACHMENT

SMCS-6513 **i03695663**

NOTE	REF NO	GRAPHIC REF	PART NUMBER	QTY	PART NAME 1 2 3 4 5 6 (PRODUCT LEVEL)	SEE PAGE
	1	1	**9R-0158**	2	WASHER (46X69X3-MM THK)	
	2	1	**9R-9105**	2	PIN AS	
B	3	1	**111-4337**	4	WASHER (46X70X1-MM THK)	
B	4	1	**210-1707**	2	SHIM (1-MM THK)	
B	5	1	**220-7108**	4	WASHER (51X85X1-MM THK)	
	6	1	**308-4315**	2	SPACER (51X115X51-MM THK)	
	7	1	**331-8037**	1	LINKAGE GP-BUCKET	
	7A	1	**9R-0147**	2	BEARING-SLEEVE	
	7B	1	**9R-0170**	2	BEARING-SLEEVE	
	8	1	**332-2578**	1	PLATE AS (LH)	
	9	1	**332-2579**	1	PLATE AS (RH)	
	10	1	**333-0790**	1	PIN	
	11	1	**333-0791**	1	PIN	
	12	1	**333-0792**	1	PIN	
	13	1	**096-5516**	2	RING-RETAINING	
	14	1	**3B-5319**	2	PIN-COTTER	
	15	1	**3B-8489**	4	FITTING-GREASE	
	16	1	**8T-4241**	4	RING-RETAINING	

B-USE AS REQUIRED

334-0752 **LINKAGE GP-BACKHOE BUCKET** *(contd.)* **i03695663**

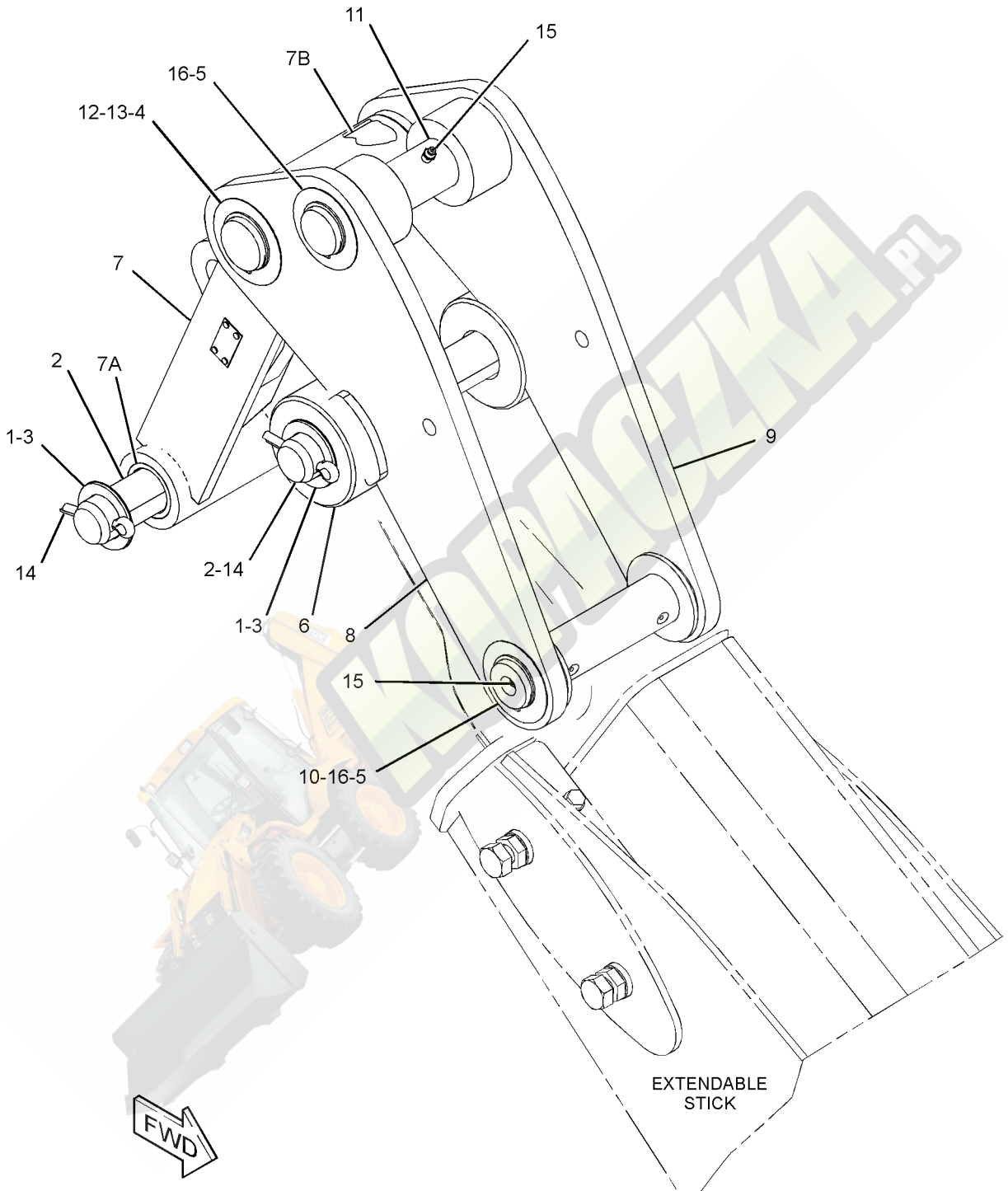

GRAPHIC #1 **<END>** g01993633

348-5464 LINKAGE GP-BACKHOE BUCKET–

WITHOUT LIFTING EYE

S/N: JBA1-UP

PART OF 350-6935 BACKHOE AR-EXTENDABLE STICK

AN ATTACHMENT

SMCS-6513 **i03693943**

NOTE	REF NO	GRAPHIC REF	PART NUMBER	QTY	PART NAME 1 2 3 4 5 6 (PRODUCT LEVEL)	SEE PAGE
	1	1	**9R-0158**	2	WASHER (46X69X3-MM THK)	
	2	1	**9R-9105**	2	PIN AS	
B	3	1	**111-4337**	4	WASHER (46X70X1-MM THK)	
B	4	1	**210-1707**	2	SHIM (1-MM THK)	
B	5	1	**220-7108**	4	WASHER (51X85X1-MM THK)	
	6	1	**308-4315**	2	SPACER (51X115X51-MM THK)	
	7	1	**332-2578**	1	PLATE AS (LH)	
	8	1	**332-2579**	1	PLATE AS (RH)	
	9	1	**333-0790**	1	PIN	
	10	1	**333-0791**	1	PIN	
	11	1	**333-0792**	1	PIN	
	12	1	**348-5460**	1	LINKAGE GP-BUCKET	
	12A	1	**9R-0147**	2	BEARING-SLEEVE	
	12B	1	**9R-0170**	2	BEARING-SLEEVE	
	13	1	**096-5516**	2	RING-RETAINING	
	14	1	**3B-5319**	2	PIN-COTTER	
	15	1	**3B-8489**	4	FITTING-GREASE	
	16	1	**8T-4241**	4	RING-RETAINING	

B-USE AS REQUIRED

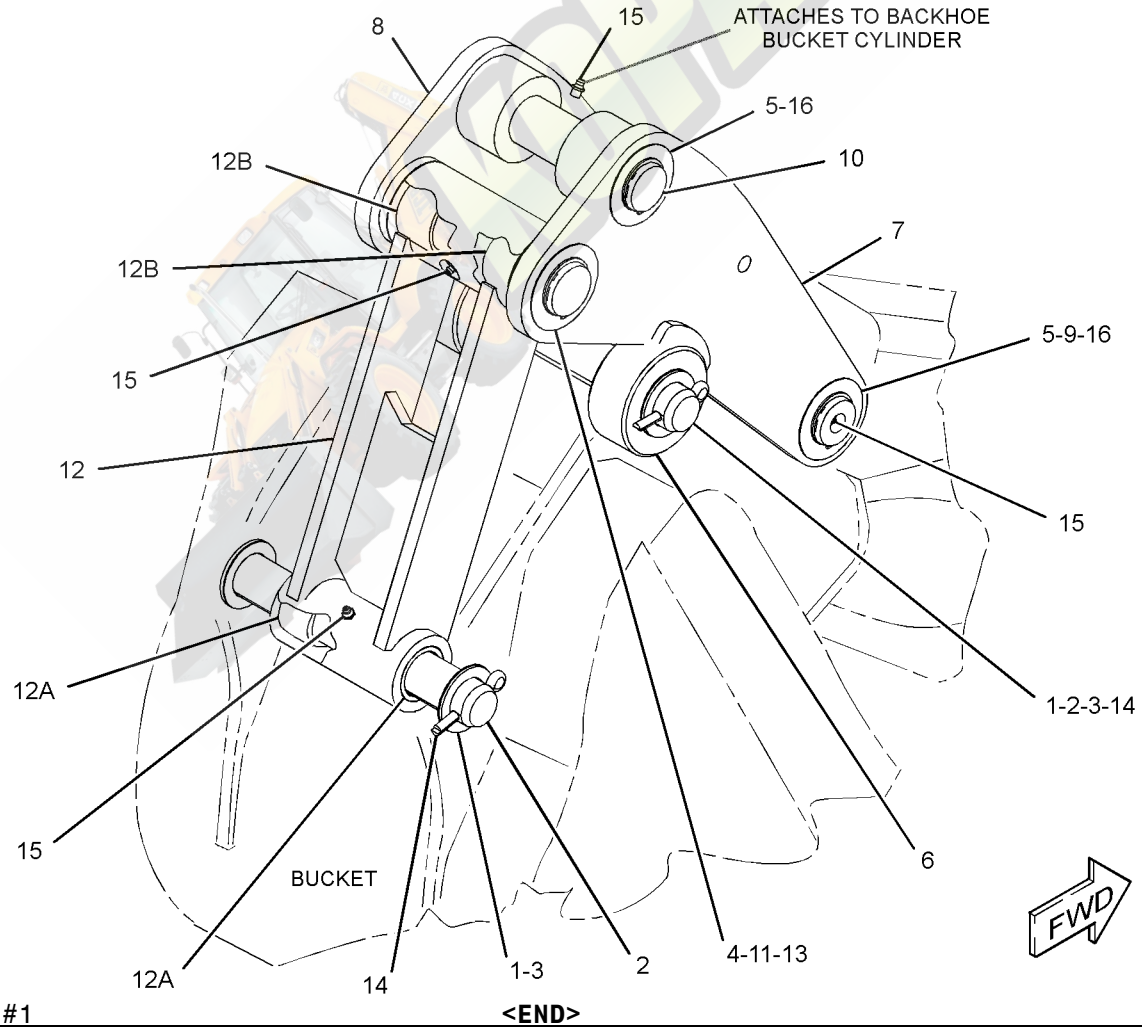

GRAPHIC #1 **<END>** g01994435

348-5465 LINKAGE GP-BACKHOE BUCKET

S/N: JBA1-UP

PART OF 350-6934 BACKHOE AR-EXTENDABLE STICK, 350-6933 BACKHOE AR-STANDARD STICK

AN ATTACHMENT

SMCS-6513 **i03690291**

NOTE	REF NO	GRAPHIC REF	PART NUMBER	QTY	PART NAME 1 2 3 4 5 6 (PRODUCT LEVEL)	SEE PAGE
	1	1	**9R-0158**	2	WASHER (46X69X3-MM THK)	
	2	1	**9R-1510**	2	WASHER (51X82X4-MM THK)	
B	3	1	**111-4337**	2	WASHER (46X70X1-MM THK)	
	4	1	**154-5280**	1	PIN	
B	5	1	**210-1707**	2	SHIM (1-MM THK)	
B	6	1	**220-7108**	6	WASHER (51X85X1-MM THK)	
	7	1	**320-9164**	1	PIN	
	8	1	**320-9241**	1	PIN	
	9	1	**328-5234**	1	PIN	
	10	1	**330-5738**	1	LINK	
	11	1	**330-5739**	1	LINK	
	12	1	**348-5463**	1	LINKAGE GP-BUCKET	
	12A	1	**9R-0139**	2	BEARING-SLEEVE	
	12B	1	**213-6703**	2	BEARING	
	13	1	**096-5516**	2	RING-RETAINING	
	14	1	**154-5279**	1	PIN	
	15	1	**3B-5319**	4	PIN-COTTER	
	16	1	**3B-8489**	4	FITTING-GREASE	
	17	1	**8T-4241**	4	RING-RETAINING	

B-USE AS REQUIRED

348-5465 **LINKAGE GP-BACKHOE BUCKET** *(contd.)* **i03690291**

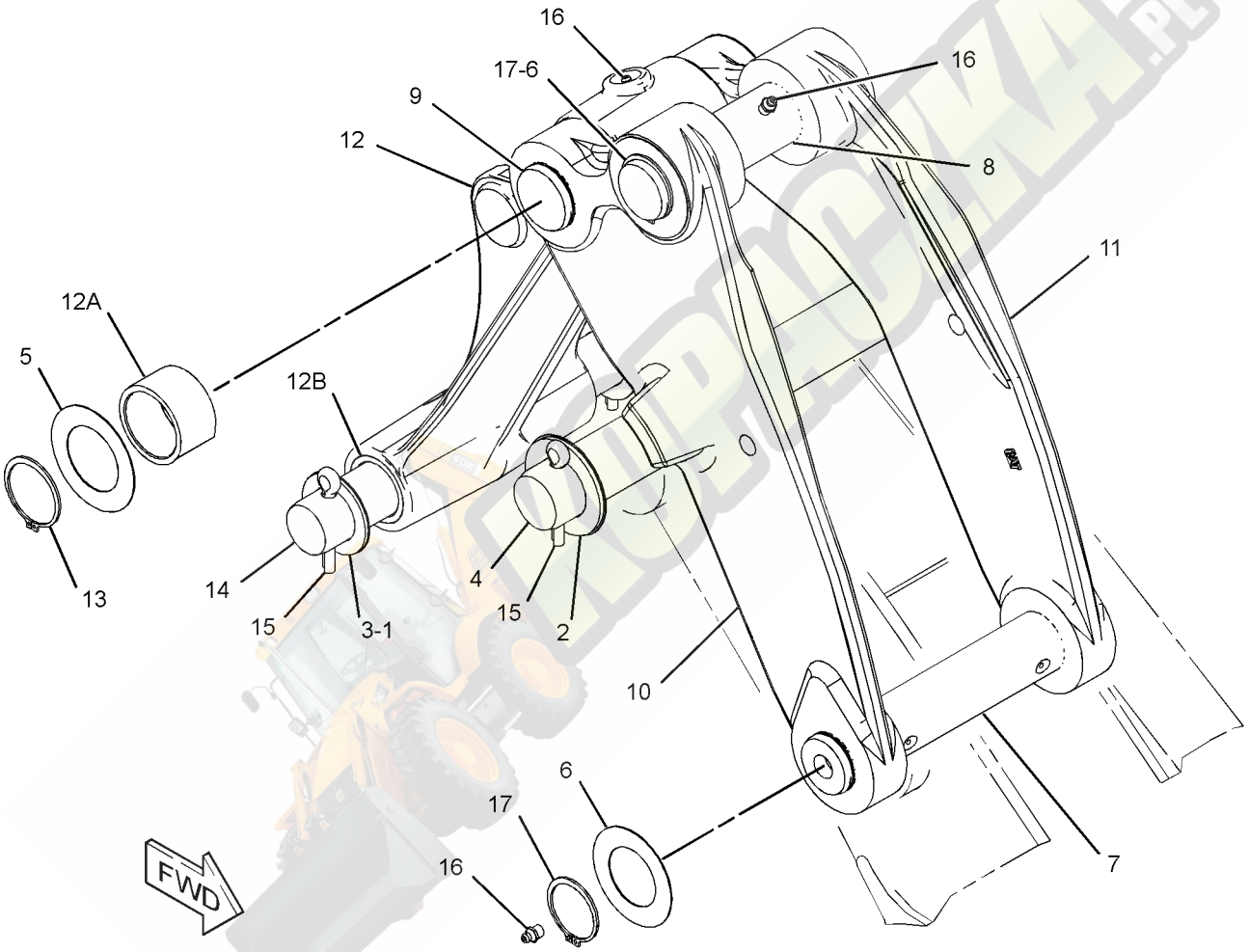

GRAPHIC #1 **<END>** g01986853

121-9797 LOCK GP-TRANSPORT—LOADER

S/N: JBA1-UP

AN ATTACHMENT

SMCS-7505 **i00534753**

NOTE	REF NO	GRAPHIC REF	PART NUMBER	QTY	PART NAME 1 2 3 4 5 6 (PRODUCT LEVEL)	SEE PAGE
	1	1	**5P-0370**	1	LOCKPIN	
	2	1	**113-8087**	1	BRACE AS	
	3	1	**118-1348**	1	PIN	
	4	1	**126-4974**	1	PLATE AS	
	5	1	**134-4807**	1	PIN	
	6	1	**9R-5301**	1	PIN-COTTER	

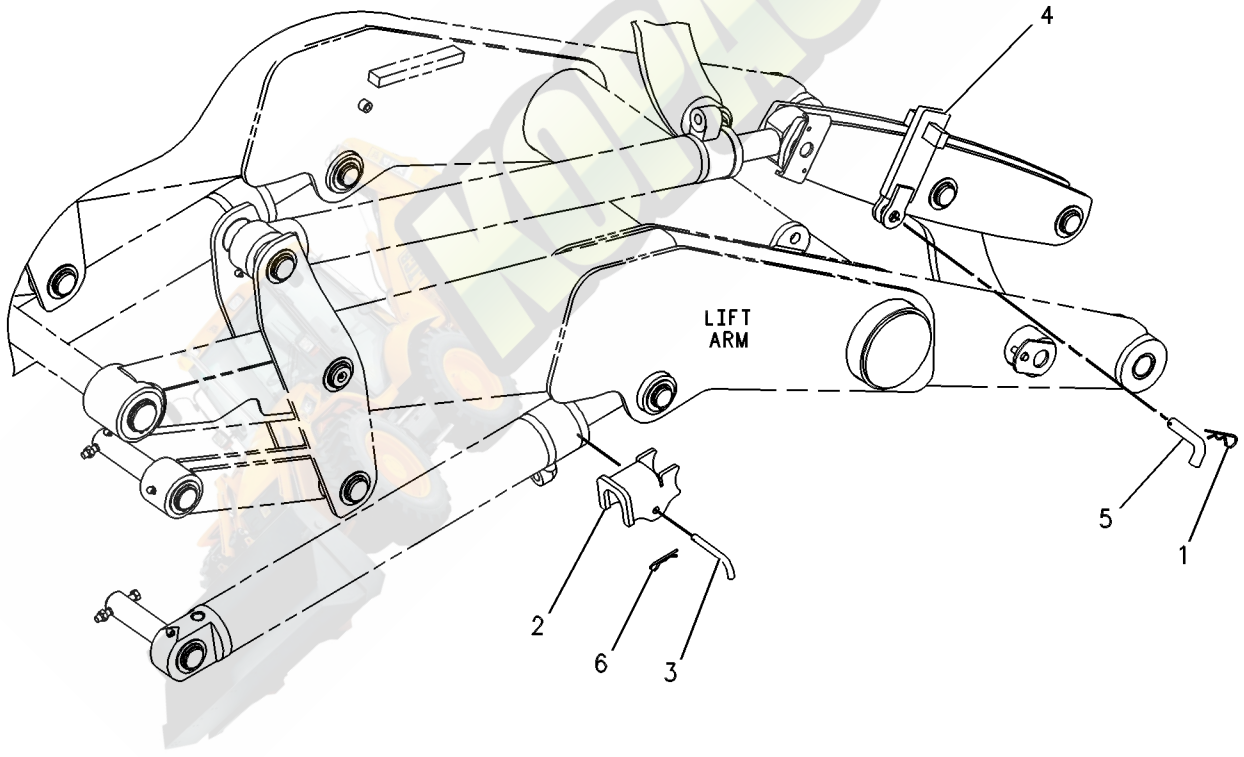

GRAPHIC #1 **<END>** g00258876

IMPLEMENTS

206-1641 LOCK GP-TRANSPORT—STABILIZER

S/N: JBA1-UP

PART OF 329-0294 CHASSIS AR

SMCS-7505 **i03577612**

NOTE	REF NO	GRAPHIC REF	PART NUMBER	QTY	PART NAME 1 2 3 4 5 6 (PRODUCT LEVEL)	SEE PAGE
	1	1	**9R-8165**	1	BEARING	
	2	1	**164-1398**	2	KNOB	
	3	1	**183-6084**	1	BEARING	
	4	1	**206-1871**	1	BRACKET AS	
M		1	**6V-9632**	3	NUT-WELD (M6X1-THD)	
M		1	**8T-3612**	9	NUT-WELD (M8X1.25-THD)	
	5	1	**206-1874**	1	LEVER AS	
	6	1	**229-5745**	1	SPACER (8X15.875X11.6-MM THK)	
	7	1	**248-2710**	1	GROMMET	
	8	1	**164-1395**	1	KNOB	
	9	1	**5P-4116**	6	WASHER-HARD (8.8X20.5X2-MM THK)	
B	10	1	**6E-5431**	1	SHIM (0.5-MM THK)	
M	11	1	**8T-4138**	1	BOLT (M6X1X20-MM)	
M	12	1	**8T-4189**	8	BOLT (M8X1.25X20-MM)	
	13	1	**8T-4224**	4	WASHER-HARD (8.8X16X2-MM THK)	
	14	1	**8T-6902**	1	CLIP	
M	15	1	**8T-7547**	1	BOLT (M8X1.25X30-MM)	
	16	1	**9X-8256**	1	WASHER (6.6X12X2-MM THK)	

B-USE AS REQUIRED
M-METRIC PART

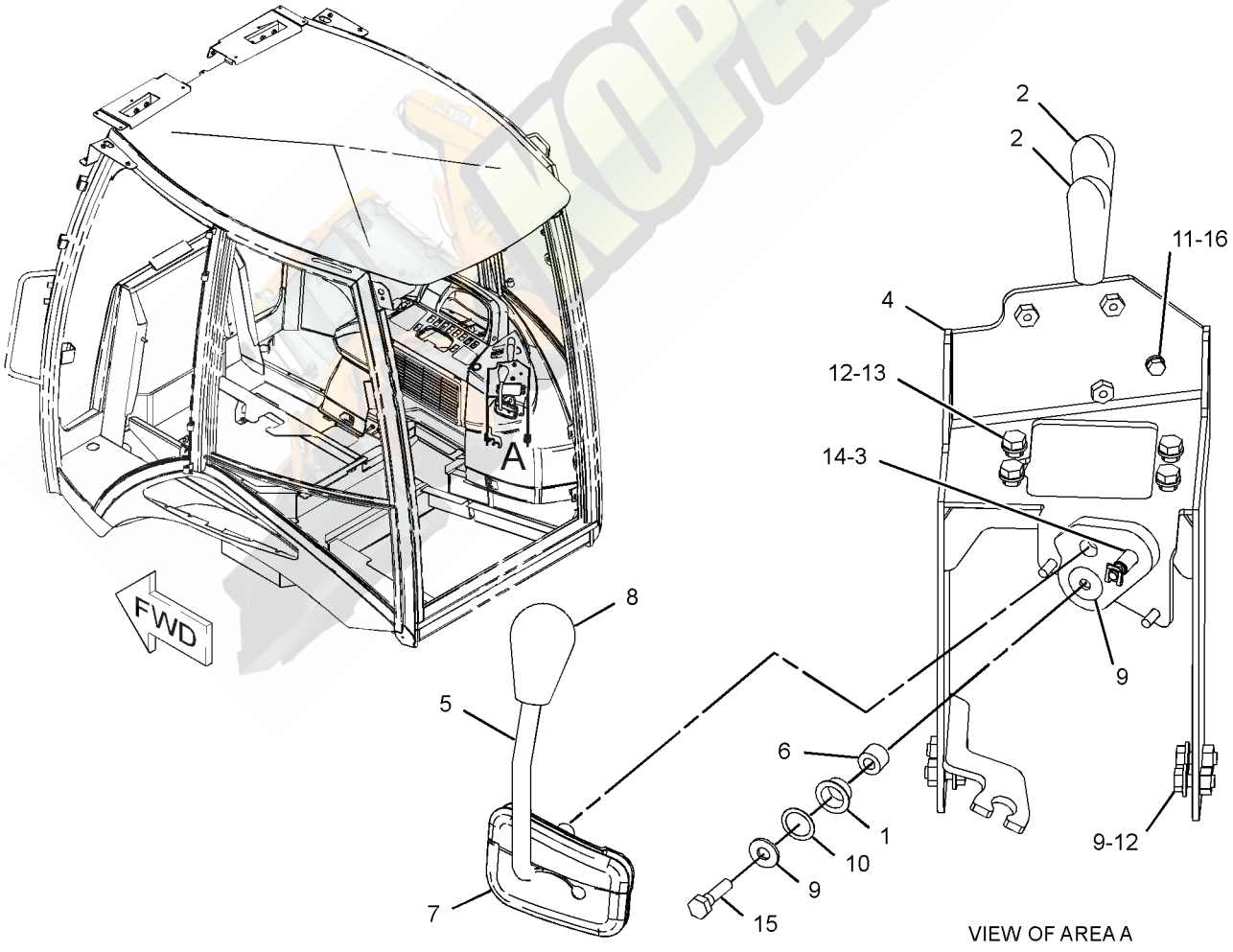

GRAPHIC #1 **<END>** g01207186

252-4660 LOCK GP-TRANSPORT—BACKHOE BUCKET

S/N: JBA1-UP
AN ATTACHMENT

SMCS-7505 **i02210128**

NOTE	REF NO	GRAPHIC REF	PART NUMBER	QTY	PART NAME 1 2 3 4 5 6 (PRODUCT LEVEL)	SEE PAGE
	1	1	**9R-9028**	1	PIN	
	2	1	**252-4659**	1	CABLE AS	
	3	1	**9R-5301**	2	PIN-COTTER	

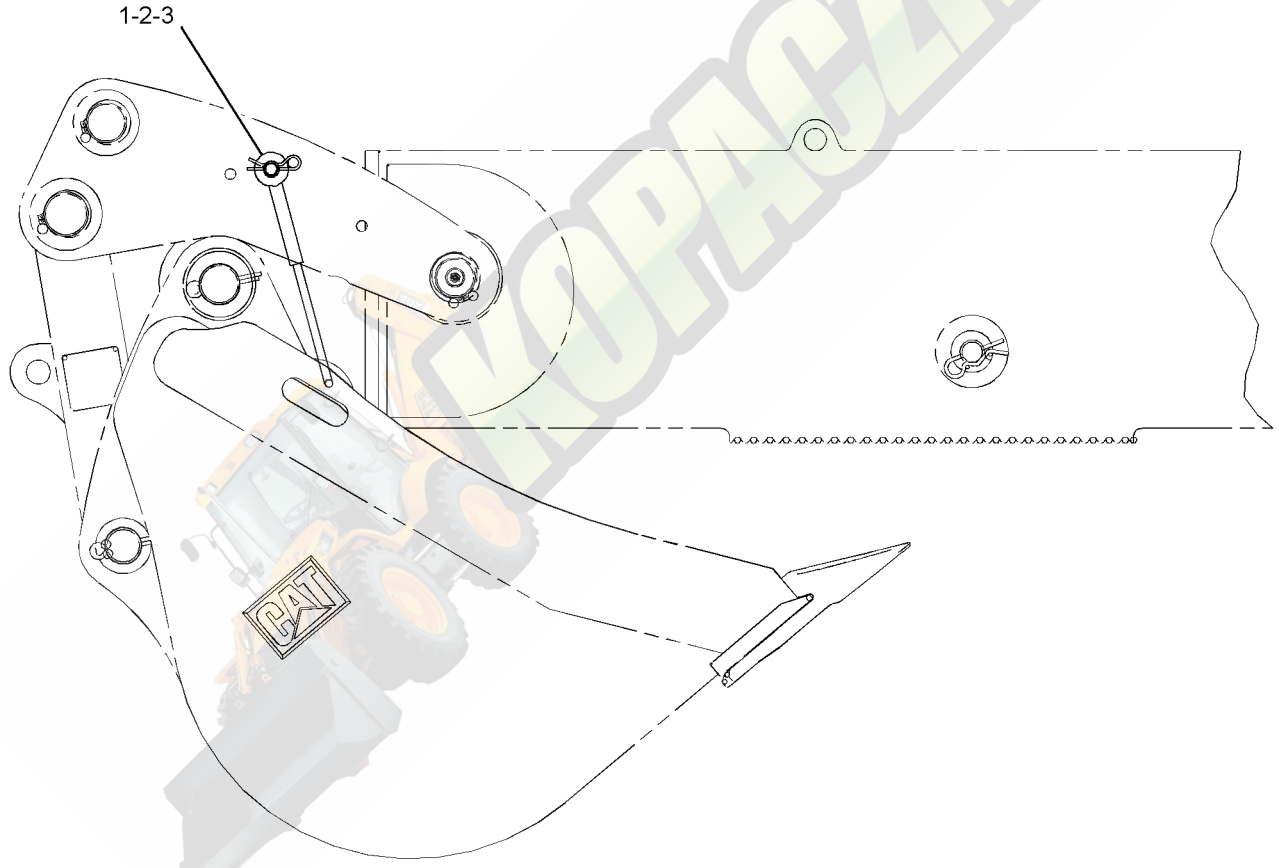

RIGHT SIDE VIEW

GRAPHIC #1 **<END>** g01116719

329-1322 LOCK GP-TRANSPORT–BOOM

S/N: JBA1-UP

PART OF 329-0294 CHASSIS AR

SMCS-7505 **i03642929**

NOTE	REF NO	GRAPHIC REF	PART NUMBER	QTY	PART NAME 1 2 3 4 5 6 (PRODUCT LEVEL)	SEE PAGE
	1	1	**5P-7958**	1	SLEEVE-CABLE SPLICE	
	2	1	**134-0143**	1	CABLE	
	3	1	**214-4285**	2	PAD AS	
	4	1	**214-7043**	1	SPACER (6.15X7.94X10-MM THK)	
	5	1	**310-3933**	1	CABLE AS	
		1	**2R-0364**	1	RING-RETAINING	
		1	**4D-9517**	1	CLIP	
		1	**5D-6523**	2	CLIP	
	6	1	**313-6572**	1	PLATE	
	7	1	**315-4533**	1	BRACKET AS	
	8	1	**317-4928**	1	PIN AS	
	9	1	**329-1329**	1	HOOK	
	10	1	**329-1330**	1	HOOK	
	11	1	**329-1331**	1	PIN	
M	12	1	**238-0251**	3	SCREW-BUTTON HEAD (M10X1.5X25-MM)	
	13	1	**3B-8489**	2	FITTING-GREASE	
M	14	1	**5A-3604**	2	BOLT-SOCKET HEAD (M8X1.25X25-MM)	
M	15	1	**5C-9553**	1	BOLT (M6X1X16-MM)	
	16	1	**6E-1135**	2	PIN	
	17	1	**7X-3383**	2	WASHER (22X50X3-MM THK)	
	18	1	**8T-4121**	7	WASHER-HARD (11X21X2.5-MM THK)	
M	19	1	**8T-4133**	1	NUT (M10X1.5-THD)	
M	20	1	**8T-4137**	1	BOLT (M10X1.5X20-MM)	
M	21	1	**8T-4195**	2	BOLT (M10X1.5X30-MM)	
	22	1	**8T-4224**	1	WASHER-HARD (8.8X16X2-MM THK)	
M	23	1	**8T-4908**	1	BOLT (M8X1.25X25-MM)	

M-METRIC PART

329 - 1322 **LOCK GP - TRANSPORT** *(contd.)* **i03642929**

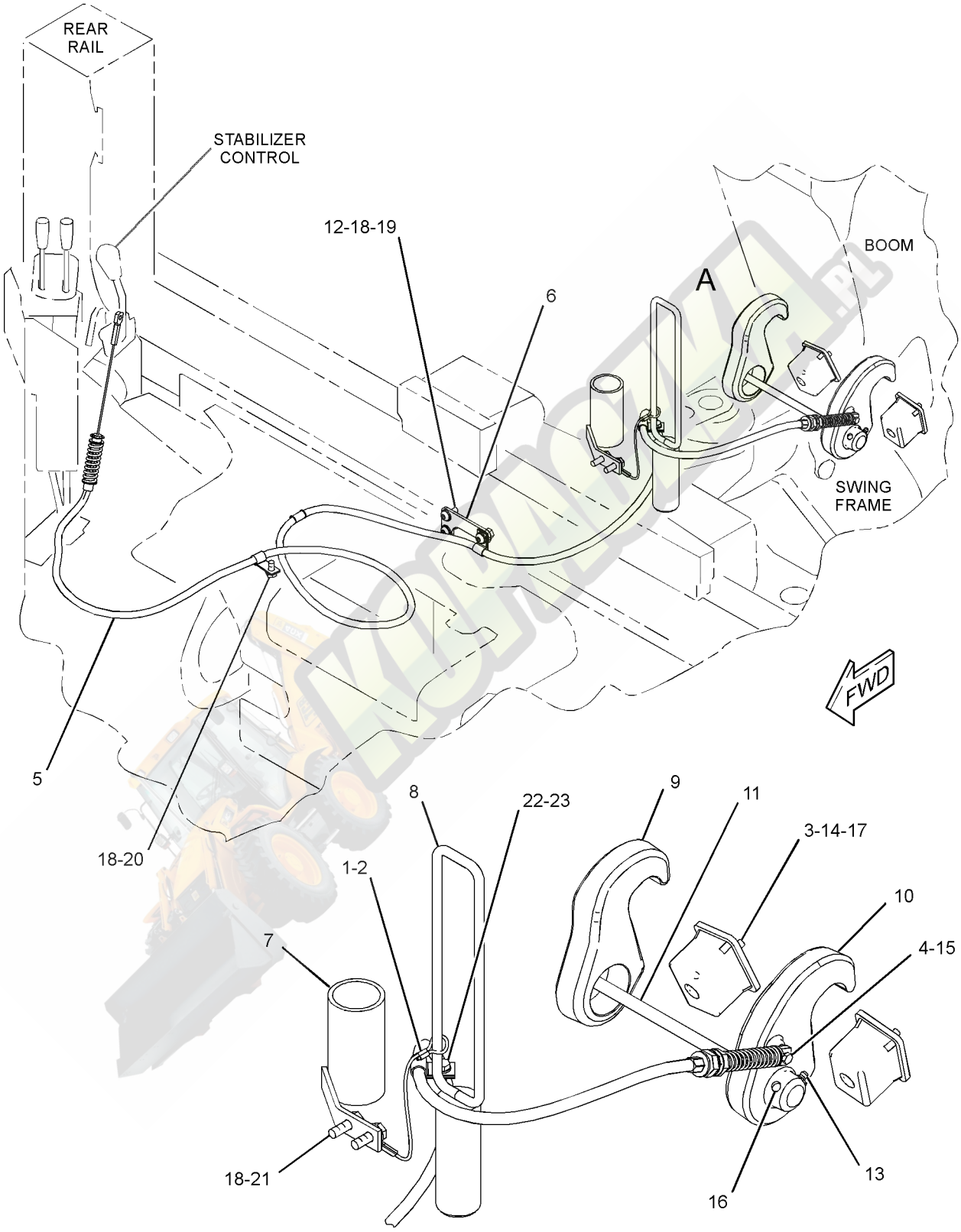

VIEW OF AREA A

GRAPHIC #1 **<END>** g01995013

9R-0868 PAD GP-STABILIZER—STREET

S/N: JBA1-UP
FOR USE WITH 9R-1259 STABILIZER GP-SIDESHIFT
AN ATTACHMENT

SMCS-7222 **i01238045**

NOTE	REF NO	GRAPHIC REF	PART NUMBER	QTY	PART NAME 1 2 3 4 5 6 (PRODUCT LEVEL)	SEE PAGE
	1	1	**166-7870**	4	PAD AS-STABILIZER (STREET)	
M	2	1	**8T-4193**	12	BOLT (M16X2X50-MM)	
	3	1	**9X-8257**	12	WASHER (17.5X30X3.5-MM THK)	

M-METRIC PART

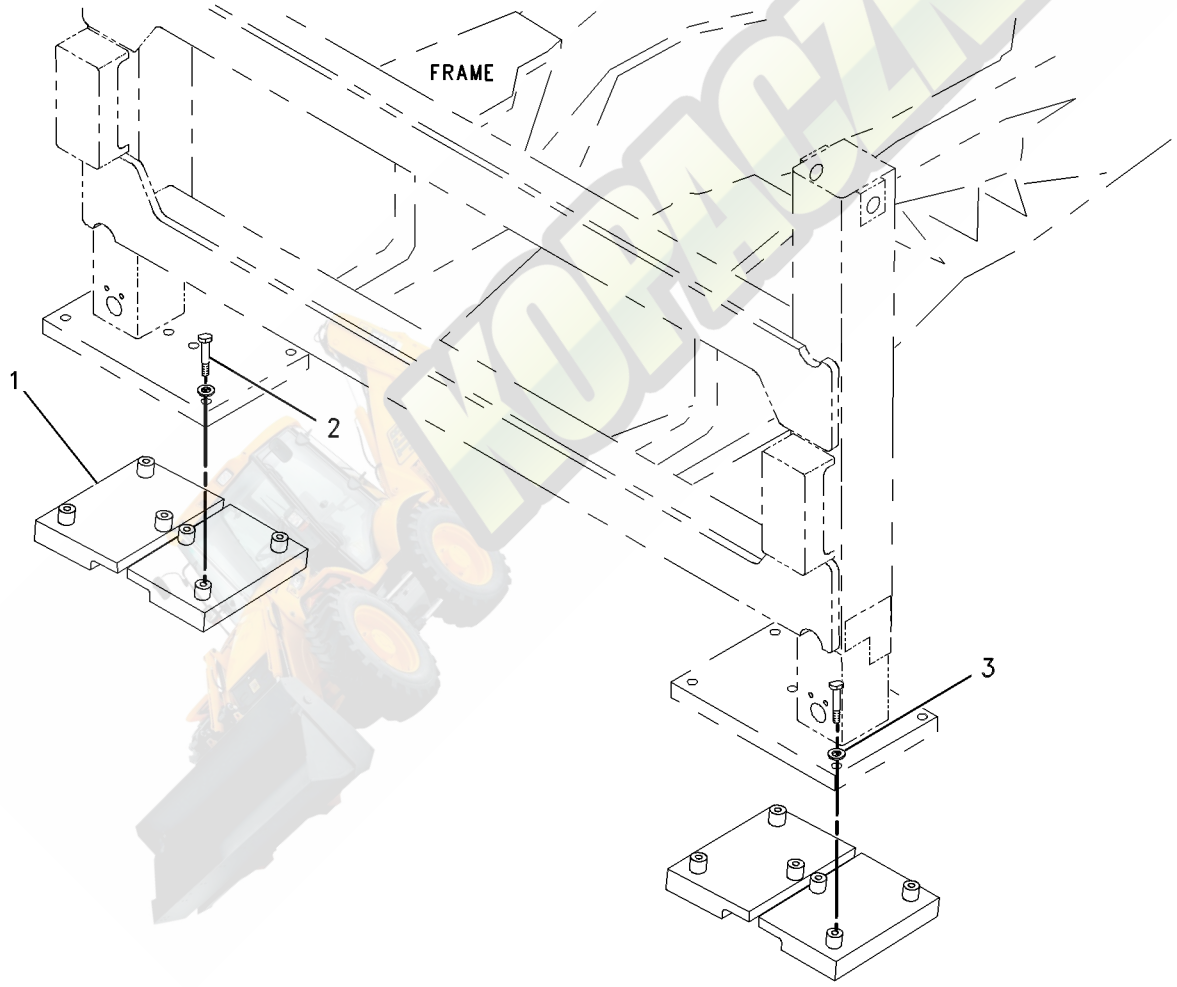

GRAPHIC #1 **<END>** g00661392

328-5964 STABILIZER GP-BACKHOE

S/N: JBA1-UP

PART OF 327-0112, 327-0113 FRAME AR-LOADER

AN ATTACHMENT

SMCS-7222 **i03642982**

NOTE	REF NO	GRAPHIC REF	PART NUMBER	QTY	PART NAME 1 2 3 4 5 6 (PRODUCT LEVEL)	SEE PAGE
	1	1	**325-7563**	4	SPACER (45.5X75X35-MM THK)	
	2	1	**328-5196**	2	PAD-STABILIZER	
	3	1	**330-9669**	2	PIN	
	4	1	**330-9670**	2	PIN AS	
	5	1	**6V-5204**	6	RING-RETAINING	

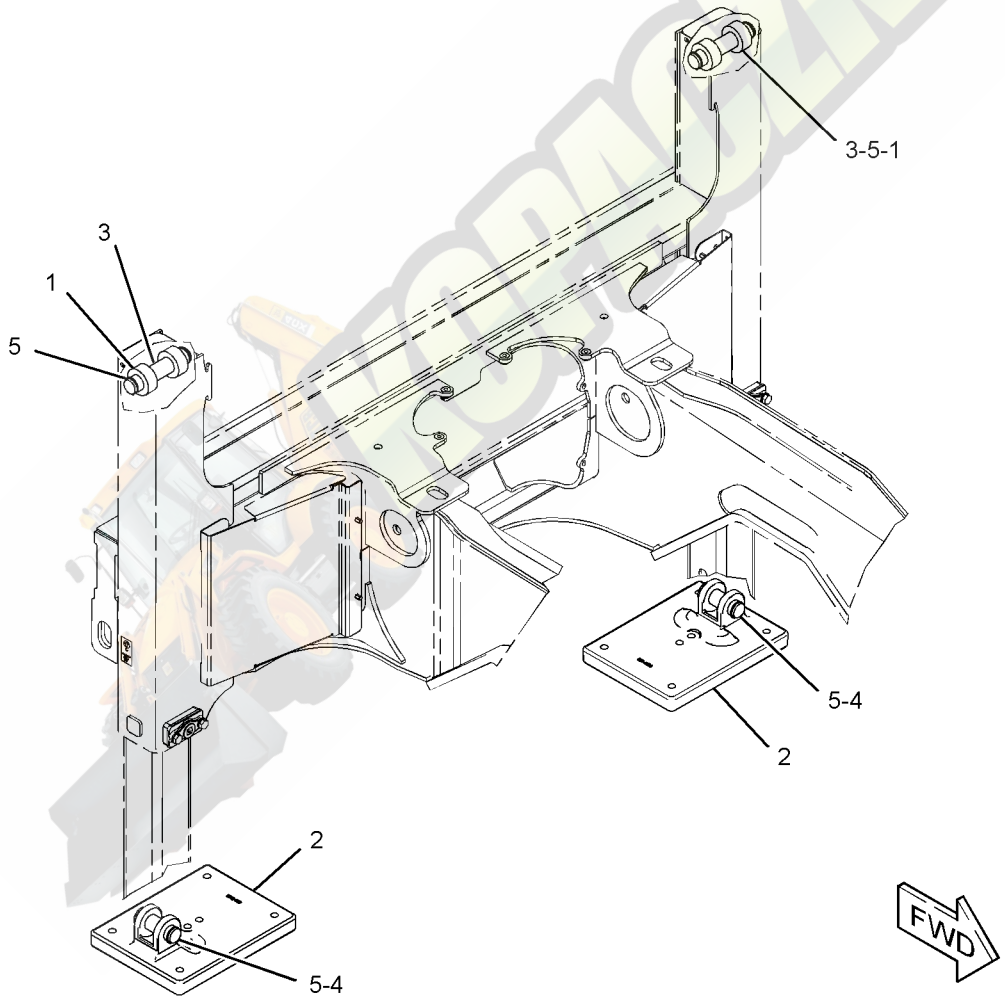

GRAPHIC #1 **<END>** g01986675

IMPLEMENTS

324-0552 STICK GP

S/N: JBA1-UP

PART OF 334-0694, 350-6933 BACKHOE AR-STANDARD STICK

AN ATTACHMENT

SMCS-6502 **i03642965**

NOTE	REF NO	GRAPHIC REF	PART NUMBER	QTY	PART NAME 1 2 3 4 5 6 (PRODUCT LEVEL)	SEE PAGE
B	1	1	**9R-8292**	2	SPACER (61X135X1-MM THK)	
	2	1	**316-6946**	1	PIN AS	
	3	1	**316-6947**	1	PIN	
	4	1	**319-4504**	1	STICK AS	
	4A	1	**9R-0162**	2	BEARING-SLEEVE	
	4B	1	**9R-3092**	2	BEARING-SLEEVE	
	5	1	**328-9650**	1	PIN	
	6	1	**344-2543**	1	PLATE	
	7	1	**3B-8488**	1	FITTING-GREASE	
	8	1	**3B-8489**	2	FITTING-GREASE	
	9	1	**7X-0632**	1	WASHER-HARD (11X36X6-MM THK)	
M	10	1	**7X-2543**	1	BOLT (M10X1.5X120-MM)	
	11	1	**7X-7729**	4	WASHER (11X25X3-MM THK)	
M	12	1	**8T-0389**	2	LOCKNUT (M10X1.5-THD)	
	13	1	**8T-4121**	3	WASHER-HARD (11X21X2.5-MM THK)	
M	14	1	**8T-4133**	4	NUT (M10X1.5-THD)	
M	15	1	**8T-4195**	1	BOLT (M10X1.5X30-MM)	
M	16	1	**8T-6685**	1	BOLT (M10X1.5X110-MM)	
M	17	1	**9X-2060**	4	BOLT (M10X1.5X30-MM)	

B-USE AS REQUIRED
M-METRIC PART

324-0552 **STICK GP** ***(contd.)*** **i03642965**

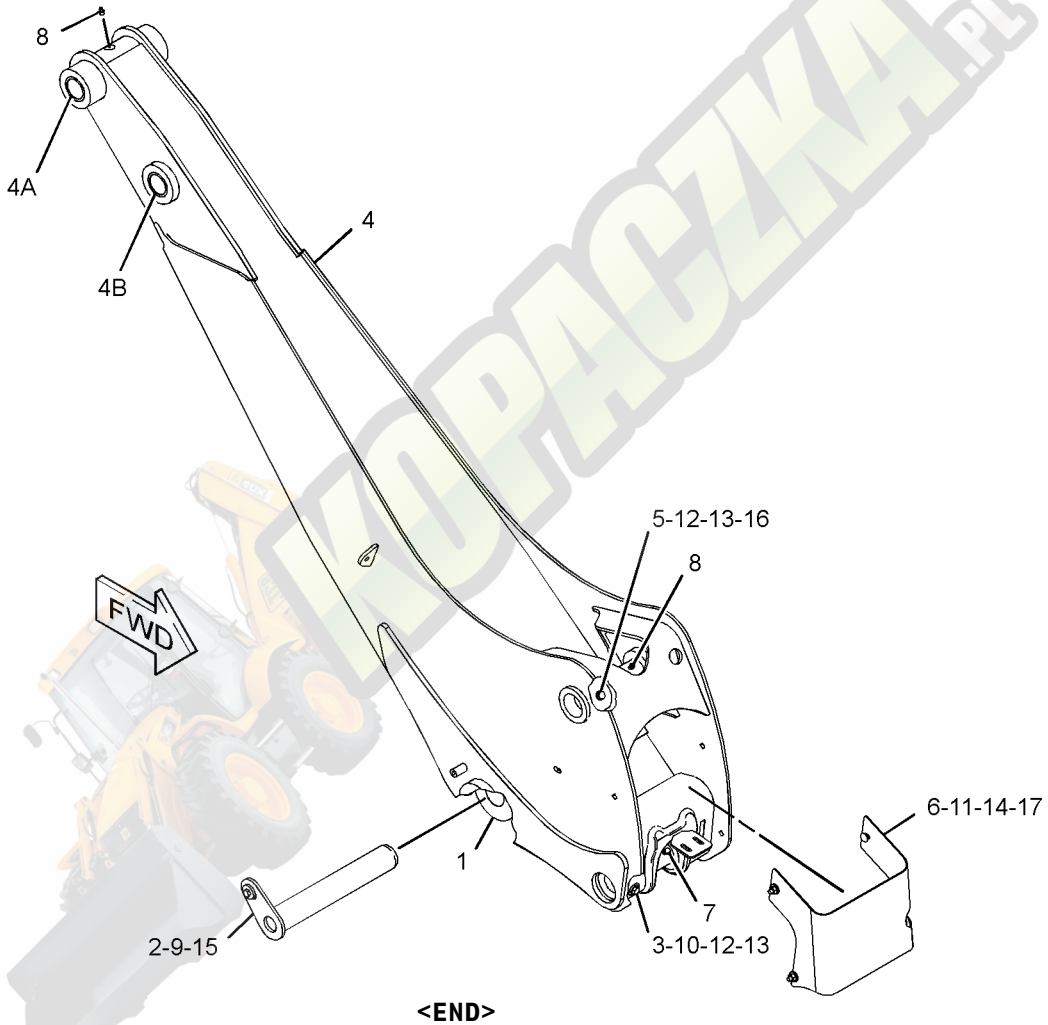

GRAPHIC #1 **<END>** g01992913

324-0550 STICK GP-EXTENDABLE

S/N: JBA1-UP

PART OF 334-0686, 350-6934, 350-6944 BACKHOE AR-EXTENDABLE STICK AN ATTACHMENT

SMCS-6533 **i03693940**

NOTE	REF NO	GRAPHIC REF	PART NUMBER	QTY	PART NAME 1 2 3 4 5 6 (PRODUCT LEVEL)	SEE PAGE
	1	1	**9R-0158**	2	WASHER (46X69X3-MM THK)	
	2	1	**9R-2959**	2	CLIP	
B	3	1	**9R-8292**	2	SPACER (61X135X1-MM THK)	
	4	1	**316-4742**	1	STICK AS	
	4A	1	**9R-0162**	2	BEARING-SLEEVE	
	4B	1	**9R-3092**	2	BEARING-SLEEVE	
	5	1	**316-4743**	1	STICK AS	
	6	1	**316-6946**	1	PIN AS	
	7	1	**316-6947**	1	PIN	
	8	1	**316-6948**	1	PIN	
	9	1	**316-6949**	2	PIN	
	10	1	**319-9667**	4	PAD AS	
	11	1	**319-9668**	4	PAD AS	
Y	12	1	**320-5935**	1	CYLINDER GP-STICK	381
	13	1	**334-4169**	1	LOCKPIN	
	14	1	**336-6396**	1	PLATE	
	15	1	**346-5631**	2	SPACER	
	16	1	**346-6559**	4	ADJUSTER	
	17	1	**346-6560**	4	ADJUSTER	
	18	1	**350-3733**	1	FILM-INSTRUCTION (EXTENDABLE STICK PIN, READ OMM)	
M	19	1	**098-6004**	8	LOCKNUT (M20X2.5-THD)	
	20	1	**3B-8488**	1	FITTING-GREASE	
	21	1	**3B-8489**	2	FITTING-GREASE	
	22	1	**6V-5204**	4	RING-RETAINING	
	23	1	**7X-0632**	1	WASHER-HARD (11X36X6-MM THK)	
M	24	1	**7X-2543**	1	BOLT (M10X1.5X120-MM)	
	25	1	**7X-7729**	5	WASHER (11X25X3-MM THK)	
M	26	1	**8T-0271**	2	BOLT-SOCKET HEAD (M10X1.5X35-MM)	
M	27	1	**8T-0389**	1	LOCKNUT (M10X1.5-THD)	
	28	1	**8T-4121**	10	WASHER-HARD (11X21X2.5-MM THK)	
M	29	1	**8T-4133**	6	NUT (M10X1.5-THD)	
M	30	1	**8T-4195**	1	BOLT (M10X1.5X30-MM)	
M	31	1	**8T-4196**	8	BOLT (M10X1.5X35-MM)	
	32	1	**8T-4241**	2	RING-RETAINING	
M	33	1	**9X-2060**	4	BOLT (M10X1.5X30-MM)	

B-USE AS REQUIRED
M-METRIC PART
Y-SEPARATE ILLUSTRATION

324-0550 **STICK GP-EXTENDABLE** *(contd.)* **i03693940**

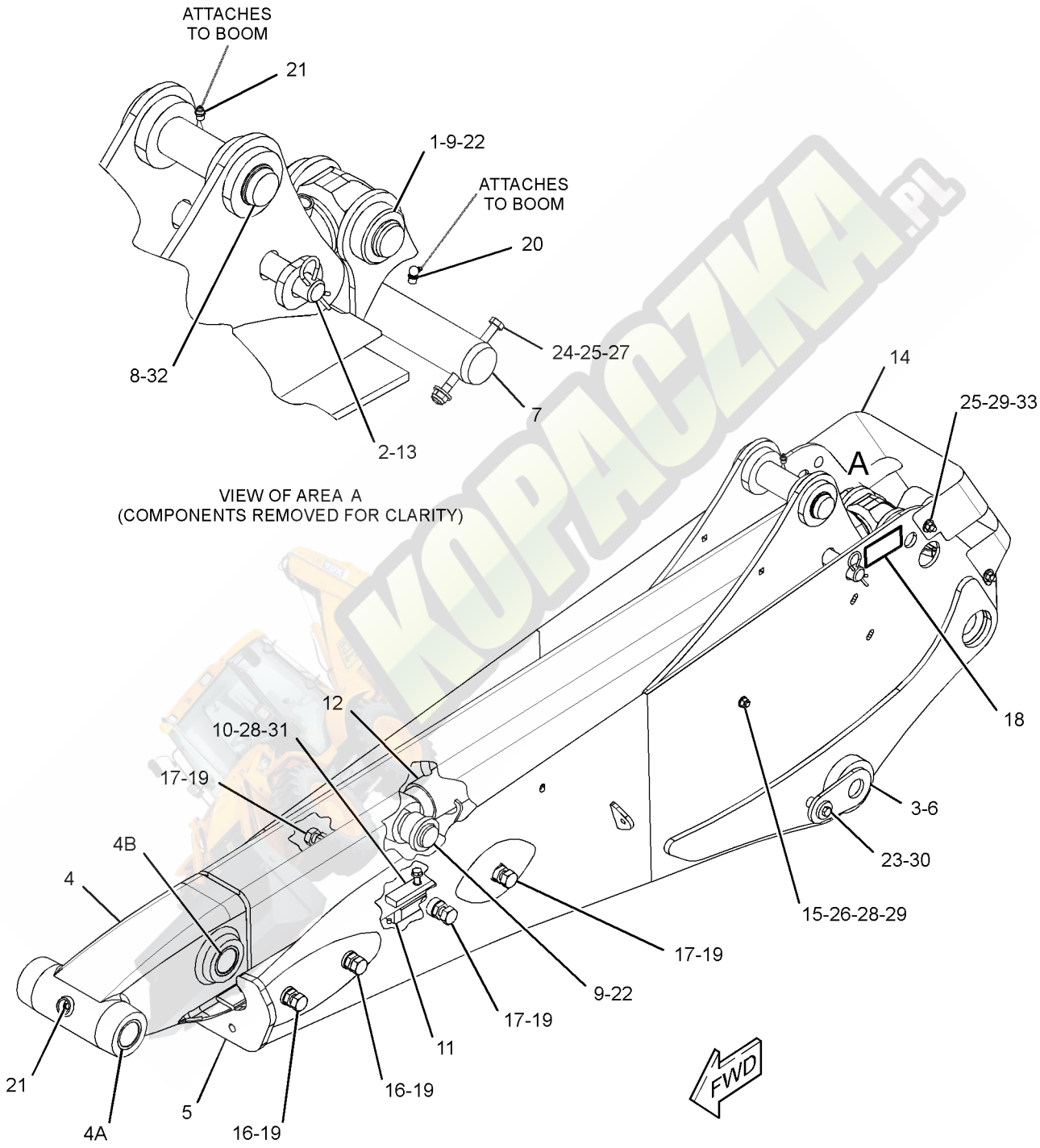

GRAPHIC #1 **<END>** g01994514

329-9749 STICK GP-EXTENDABLE

S/N: JBA1-UP

PART OF 334-0691, 350-6935, 350-6945 BACKHOE AR-EXTENDABLE STICK AN ATTACHMENT

SMCS-6533 **i03693944**

NOTE	REF NO	GRAPHIC REF	PART NUMBER	QTY	PART NAME 1 2 3 4 5 6 (PRODUCT LEVEL)	SEE PAGE
	1	1	**9R-0158**	2	WASHER (46X69X3-MM THK)	
	2	1	**9R-2959**	2	CLIP	
B	3	1	**9R-8292**	2	SPACER (61X135X1-MM THK)	
	4	1	**316-4743**	1	STICK AS	
	5	1	**316-6946**	1	PIN AS	
	6	1	**316-6947**	1	PIN	
	7	1	**316-6948**	1	PIN	
	8	1	**316-6949**	2	PIN	
	9	1	**319-9667**	4	PAD AS	
	10	1	**319-9668**	4	PAD AS	
Y	11	1	**320-5935**	1	CYLINDER GP-STICK	381
	12	1	**329-9748**	1	STICK AS	
	12A	1	**9R-3092**	2	BEARING-SLEEVE	
	12B	1	**9R-7891**	2	BEARING-SLEEVE	
	13	1	**334-4169**	1	LOCKPIN	
	14	1	**336-6396**	1	PLATE	
	15	1	**346-5631**	2	SPACER	
	16	1	**346-6559**	4	ADJUSTER	
	17	1	**346-6560**	4	ADJUSTER	
	18	1	**350-3733**	1	FILM-INSTRUCTION (EXTENDABLE STICK PIN, READ OMM)	
M	19	1	**098-6004**	8	LOCKNUT (M20X2.5-THD)	
	20	1	**3B-8488**	1	FITTING-GREASE	
	21	1	**3B-8489**	2	FITTING-GREASE	
	22	1	**6V-5204**	4	RING-RETAINING	
	23	1	**7X-0632**	1	WASHER-HARD (11X36X6-MM THK)	
M	24	1	**7X-2543**	1	BOLT (M10X1.5X120-MM)	
	25	1	**7X-7729**	5	WASHER (11X25X3-MM THK)	
M	26	1	**8T-0271**	2	BOLT-SOCKET HEAD (M10X1.5X35-MM)	
M	27	1	**8T-0389**	1	LOCKNUT (M10X1.5-THD)	
	28	1	**8T-4121**	10	WASHER-HARD (11X21X2.5-MM THK)	
M	29	1	**8T-4133**	6	NUT (M10X1.5-THD)	
M	30	1	**8T-4195**	1	BOLT (M10X1.5X30-MM)	
M	31	1	**8T-4196**	8	BOLT (M10X1.5X35-MM)	
	32	1	**8T-4241**	2	RING-RETAINING	
M	33	1	**9X-2060**	4	BOLT (M10X1.5X30-MM)	

B-USE AS REQUIRED
M-METRIC PART
Y-SEPARATE ILLUSTRATION

329-9749 **STICK GP-EXTENDABLE** *(contd.)* **i03693944**

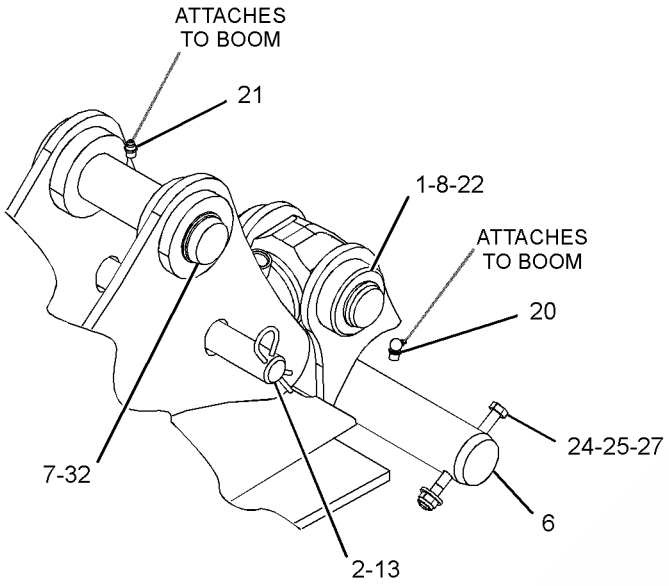

VIEW OF AREA A
(COMPONENTS REMOVED FOR CLARITY)

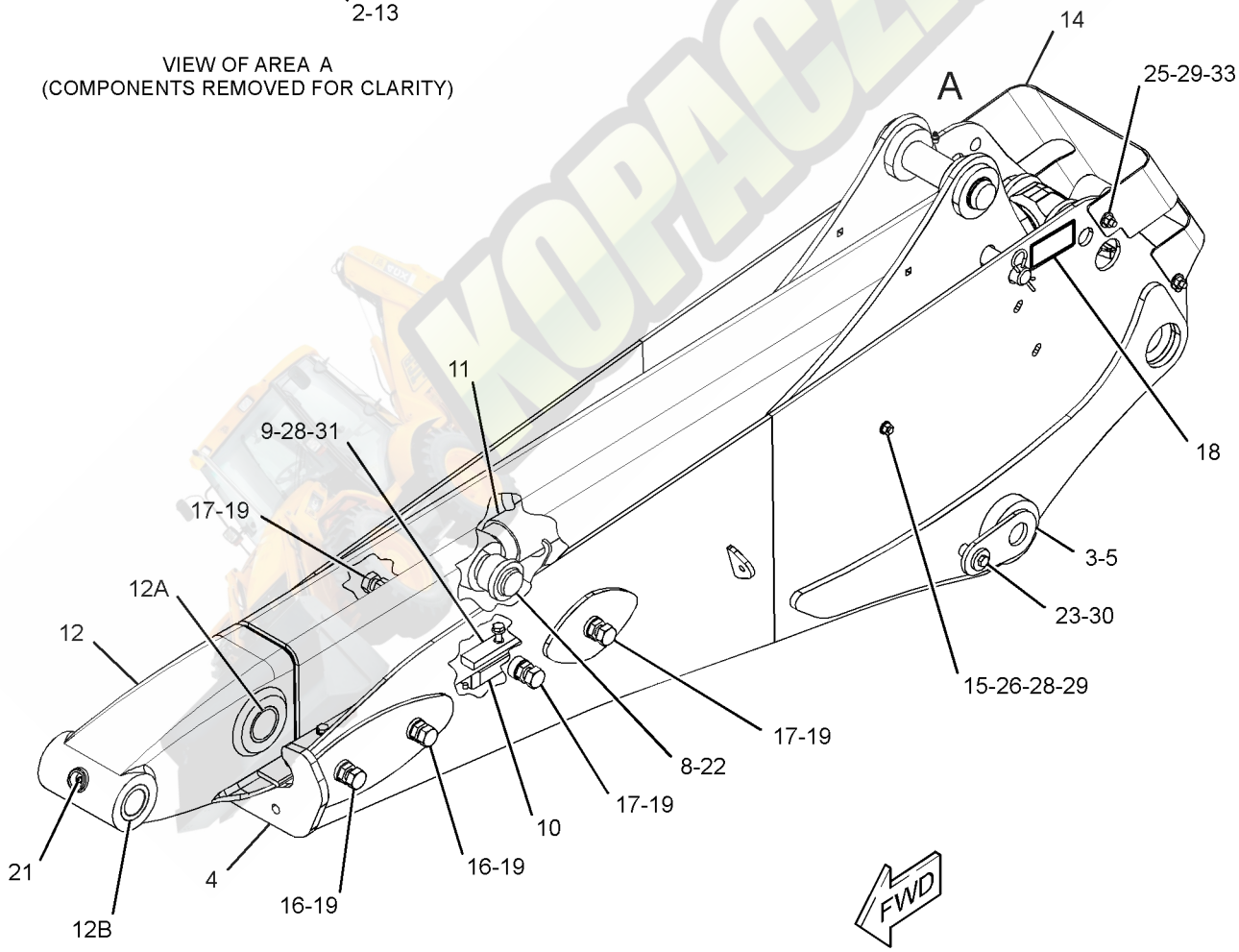

GRAPHIC #1 **<END>** g01993494

318-7246 BUCKET AR-MULTIPURPOSE

S/N: JBA1-UP
PART OF 318-7263 BUCKET AR-MULTIPURPOSE
AN ATTACHMENT

SMCS-6104 **i02988820**

NOTE	REF NO	GRAPHIC REF	PART NUMBER	QTY	PART NAME 1 2 3 4 5 6 (PRODUCT LEVEL)	SEE PAGE
Y	1	1	*9R-4668*	1	MOUNTING GP-CYLINDER (MULTIPURPOSE BUCKET)	456
Y	2	1	**226-5540**	2	CYLINDER GP-MULTIPURPOSE BUKT	379
Y	3	1	*252-9059*	1	BUCKET GP-MULTIPURPOSE	575
Y	4	1	*317-6270*	1	LINES GP-MULTIPURPOSE BUCKET	425

Y-SEPARATE ILLUSTRATION

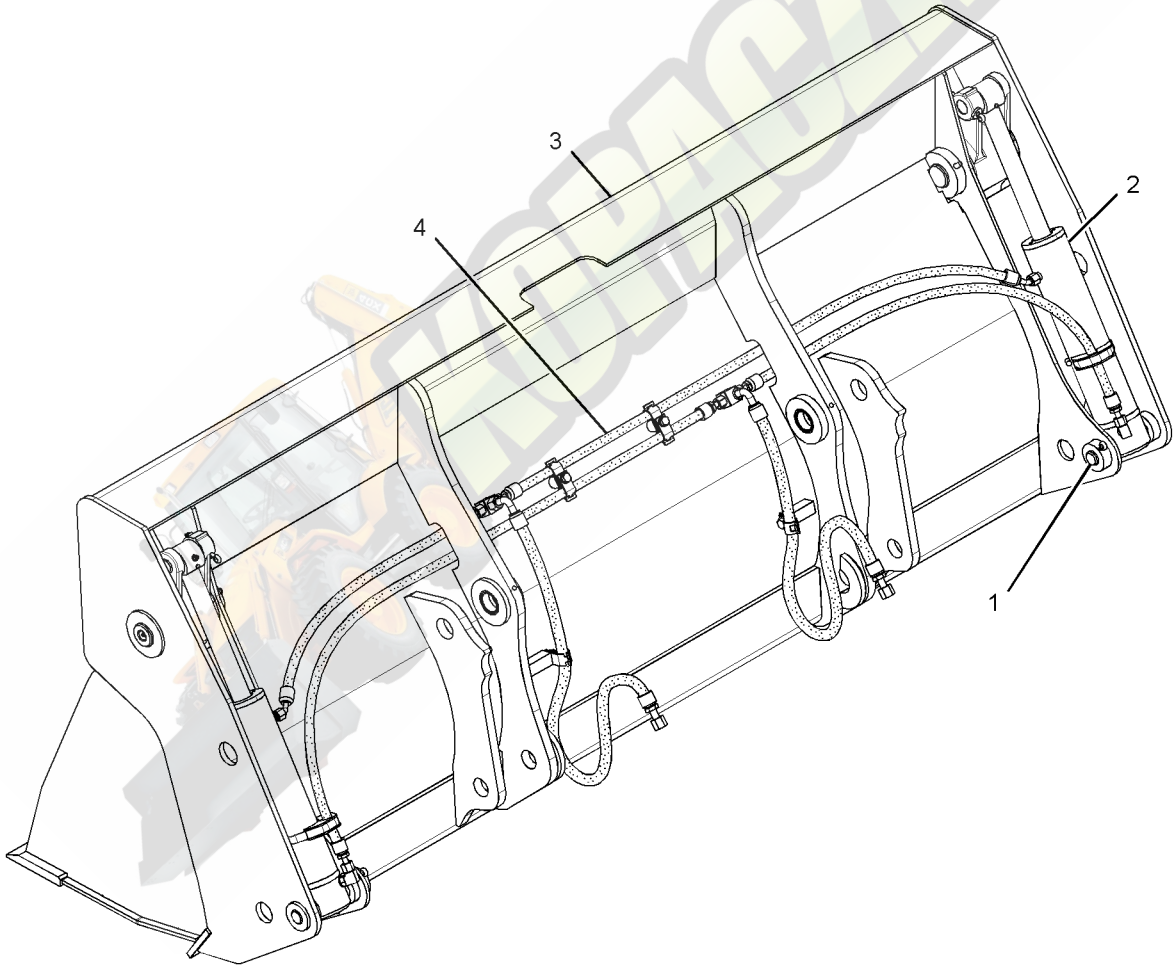

GRAPHIC #1 **<END>** g01516479

318-7247 BUCKET AR-MULTIPURPOSE

S/N: JBA1-UP
AN ATTACHMENT

SMCS-6104 **i02988830**

NOTE	REF NO	GRAPHIC REF	PART NUMBER	QTY	PART NAME 1 2 3 4 5 6 (PRODUCT LEVEL)	SEE PAGE
Y	1	1	*9R-4668*	1	MOUNTING GP-CYLINDER (MULTIPURPOSE BUCKET)	456
	2	1	**137-4234**	1	PLATE-IDENTIFICATION (WORK TOOL)	
	3	1	**168-8389**	4	TACK-FASTENER	
Y	4	1	**226-5540**	2	CYLINDER GP-MULTIPURPOSE BUKT	379
Y	5	1	*252-9063*	1	BUCKET GP-MULTIPURPOSE	576
Y	6	1	*317-6270*	1	LINES GP-MULTIPURPOSE BUCKET	425

Y-SEPARATE ILLUSTRATION

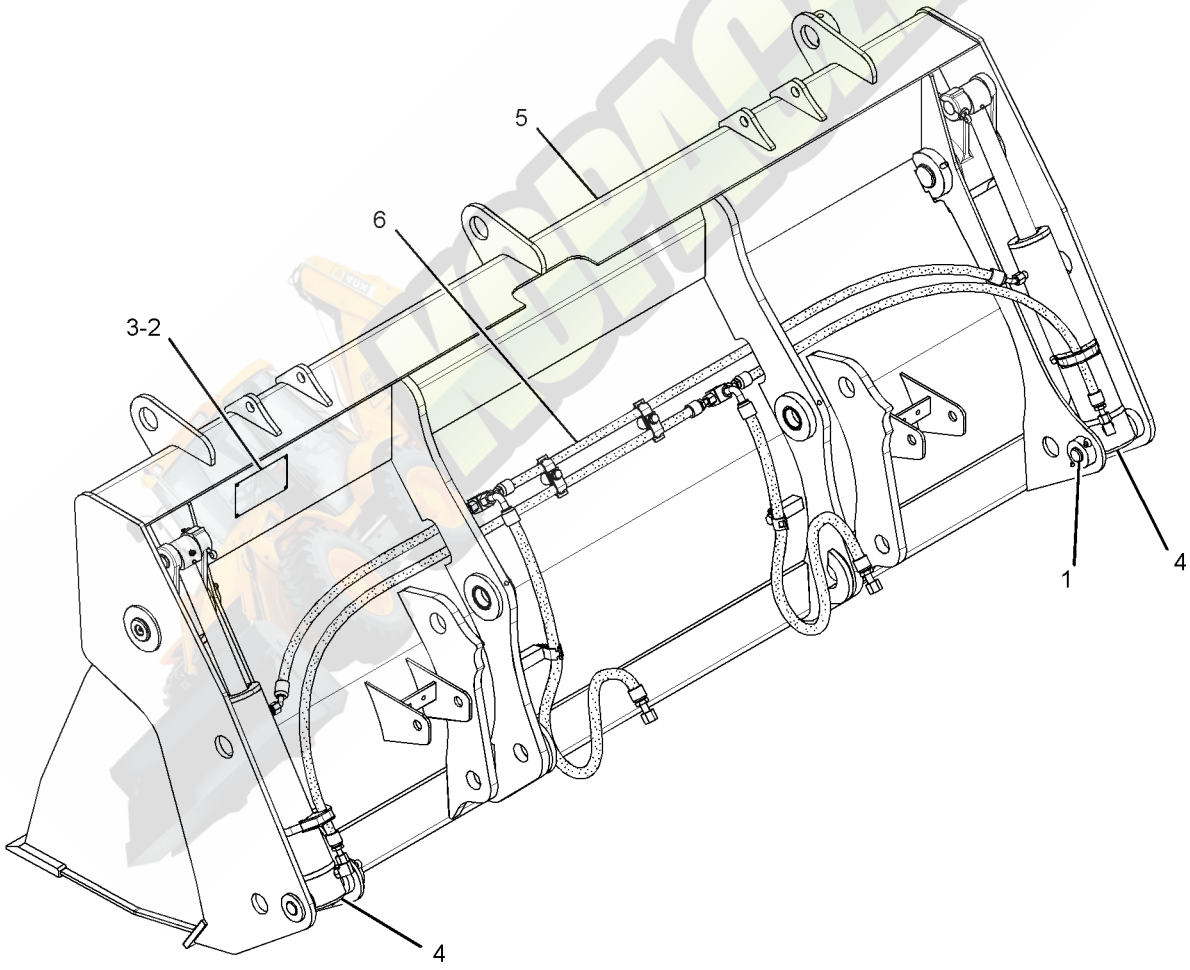

GRAPHIC #1 **<END>** g01566520

318-7248 BUCKET AR-MULTIPURPOSE

S/N: JBA1-UP
PART OF 318-7264 BUCKET AR-MULTIPURPOSE
AN ATTACHMENT

SMCS-6104 **i03592844**

NOTE	REF NO	GRAPHIC REF	PART NUMBER	QTY	PART NAME 1 2 3 4 5 6 (PRODUCT LEVEL)	SEE PAGE
	1	1	**5D-8159**	2	PIN AS	
Y	2	1	*9R-4668*	1	MOUNTING GP-CYLINDER (MULTIPURPOSE BUCKET)	456
	3	1	**178-2593**	4	BUMPER	
Y	4	1	**226-5540**	2	CYLINDER GP-MULTIPURPOSE BUKT	379
	5	1	**250-1057**	2	PIN	
Y	6	1	*252-6005*	1	MOUNTING GP-FORK (MULTIPURPOSE BUCKET)	606
Y	7	1	*252-9063*	1	BUCKET GP-MULTIPURPOSE	576
Y	8	1	*317-6270*	1	LINES GP-MULTIPURPOSE BUCKET	425
M	9	1	**5C-7261**	4	NUT (M8X1.25-THD)	
	10	1	**8T-4224**	4	WASHER-HARD (8.8X16X2-MM THK)	

M-METRIC PART
Y-SEPARATE ILLUSTRATION

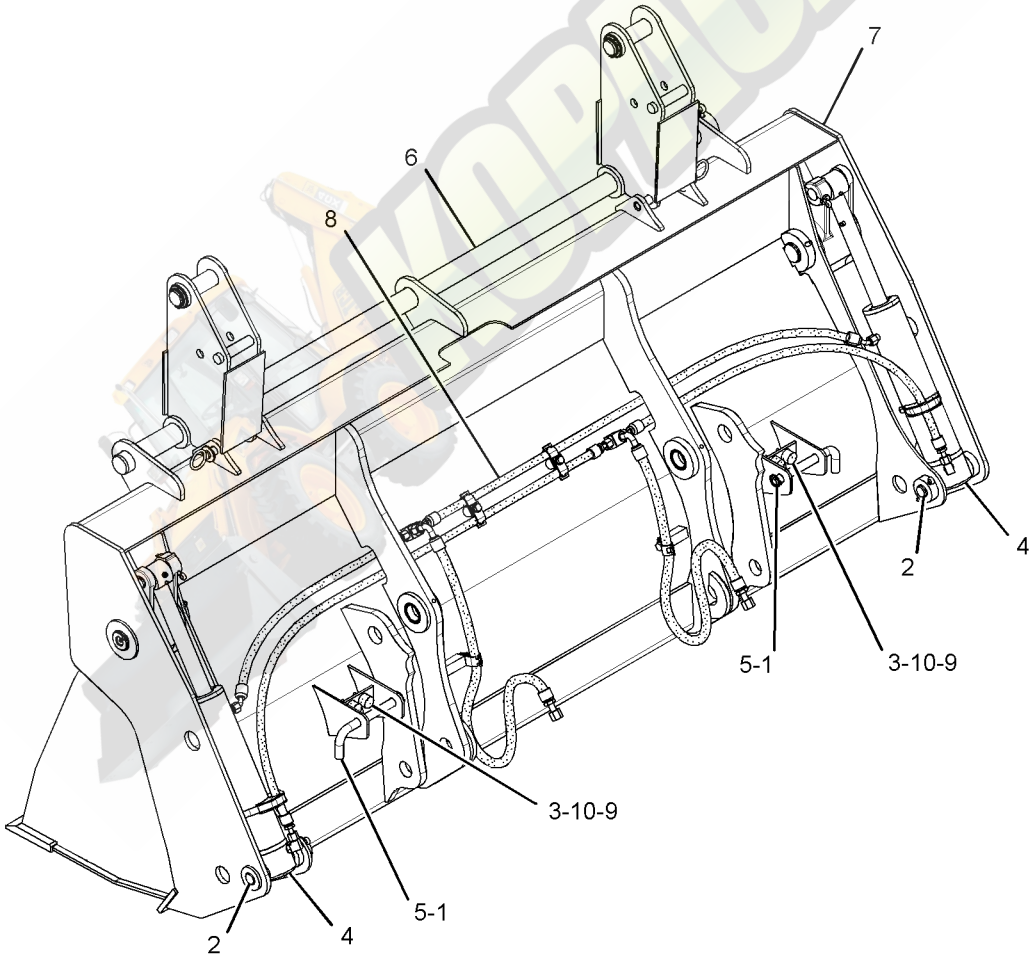

GRAPHIC #1 **<END>** g01563633

WORK TOOLS

318-7251 BUCKET AR-MULTIPURPOSE

S/N: JBA1-UP

PART OF 318-7267 BUCKET AR-MULTIPURPOSE

AN ATTACHMENT

SMCS-6104 **i02988949**

NOTE	REF NO	GRAPHIC REF	PART NUMBER	QTY	PART NAME 1 2 3 4 5 6 (PRODUCT LEVEL)	SEE PAGE
Y	1	1	*9R-4668*	1	MOUNTING GP-CYLINDER (MULTIPURPOSE BUCKET)	456
Y	2	1	**226-5540**	2	CYLINDER GP-MULTIPURPOSE BUKT	379
Y	3	1	*252-9068*	1	BUCKET GP-MULTIPURPOSE	577
Y	4	1	*317-4362*	1	LINES GP-MULTIPURPOSE BUCKET	423
Y-SEPARATE ILLUSTRATION						

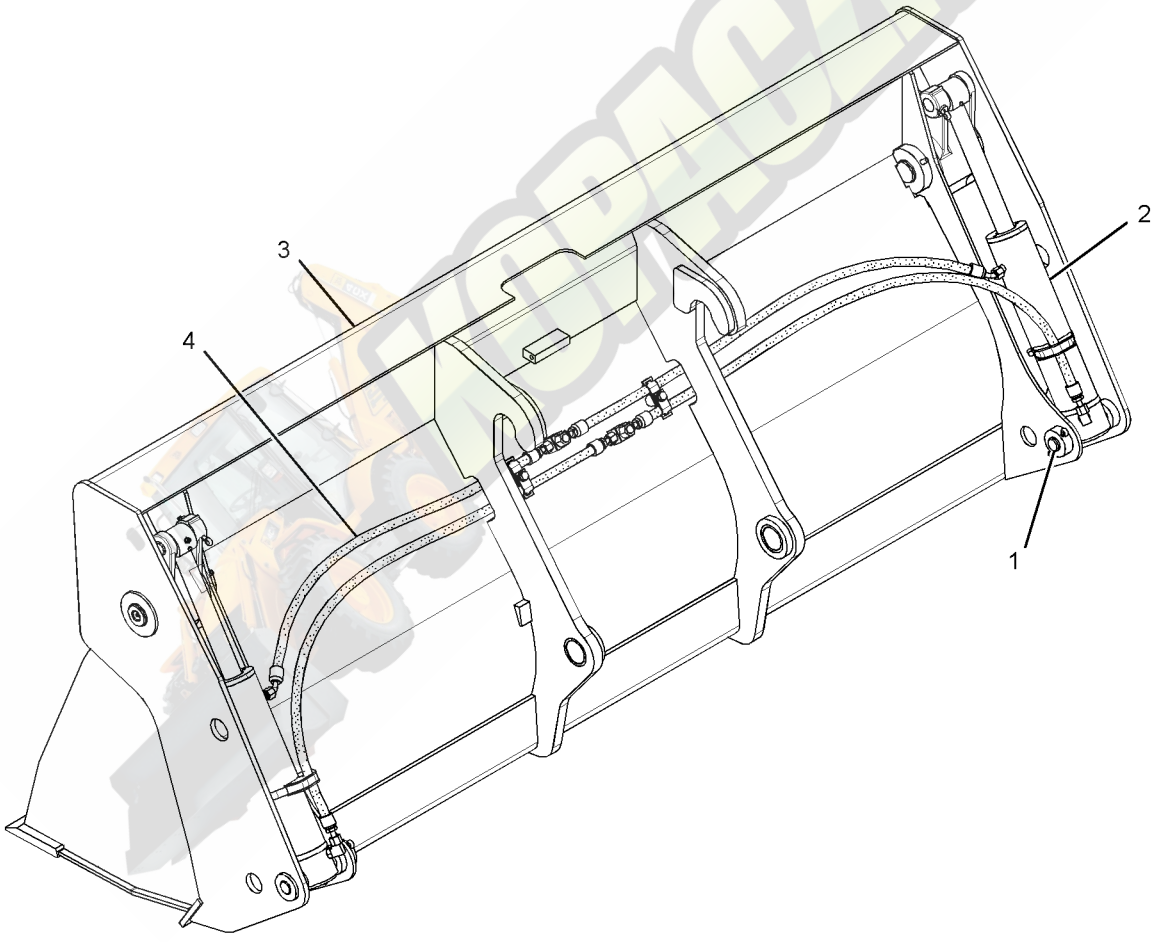

GRAPHIC #1 **<END>** g01517273

WORK TOOLS

318-7263 BUCKET AR-MULTIPURPOSE

S/N: JBA1-UP

AN ATTACHMENT

SMCS-6104 **i02988768**

NOTE	REF NO	GRAPHIC REF	PART NUMBER	QTY	PART NAME 1 2 3 4 5 6 (PRODUCT LEVEL)	SEE PAGE
	1	1	**137-4234**	1	PLATE-IDENTIFICATION (WORK TOOL)	
	2	1	**168-8389**	4	TACK-FASTENER	
Y	3	1	*318-7246*	1	BUCKET AR-MULTIPURPOSE	514

Y-SEPARATE ILLUSTRATION

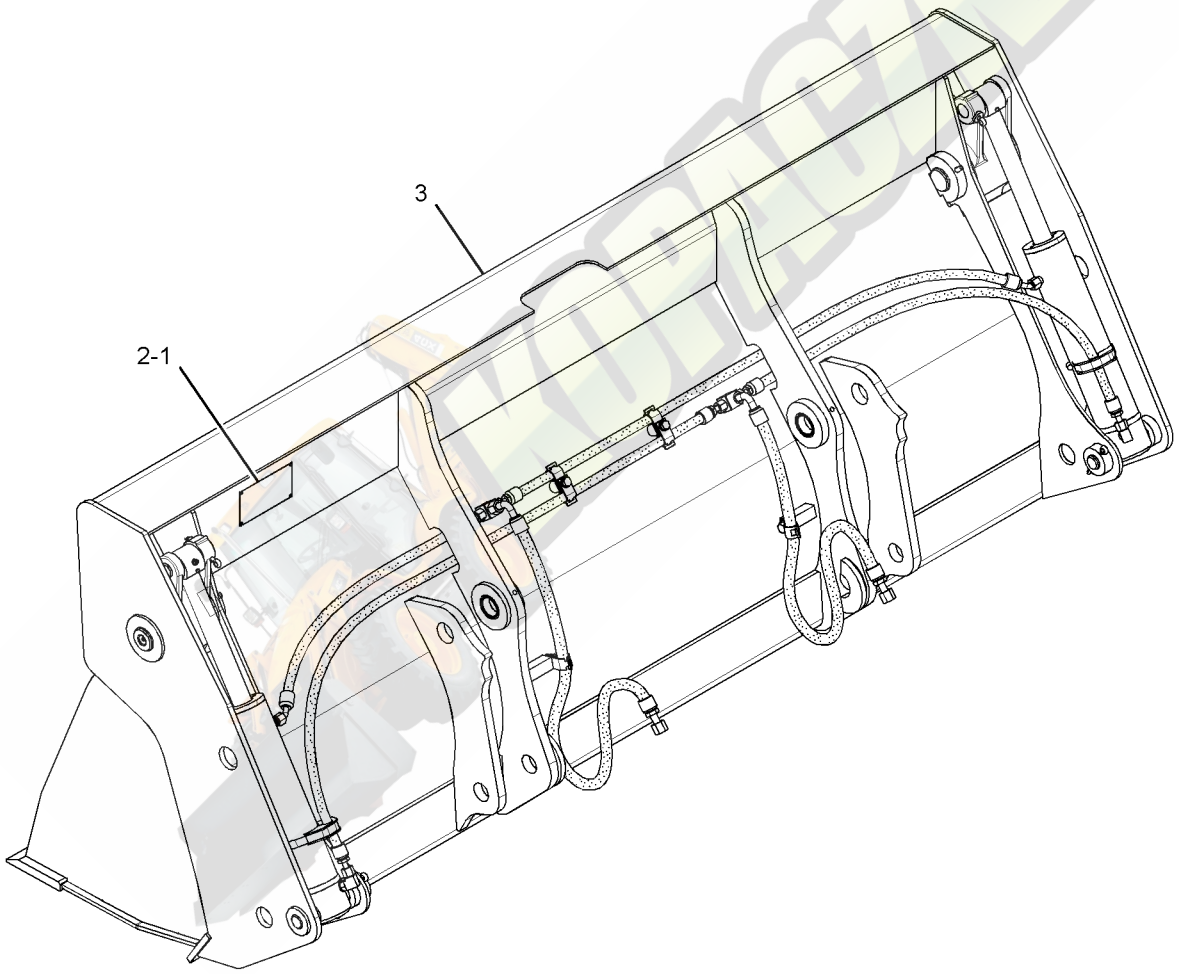

GRAPHIC #1 **<END>** g01517237

WORK TOOLS

318-7264 BUCKET AR-MULTIPURPOSE

S/N: JBA1-UP
AN ATTACHMENT

SMCS-6104 **i02988844**

NOTE	REF NO	GRAPHIC REF	PART NUMBER	QTY	PART NAME 1 2 3 4 5 6 (PRODUCT LEVEL)	SEE PAGE
	1	1	**104-6312**	2	FORK AS	
	2	1	**137-4234**	1	PLATE-IDENTIFICATION (WORK TOOL)	
	3	1	**168-8389**	4	TACK-FASTENER	
Y	4	1	*318-7248*	1	BUCKET AR-MULTIPURPOSE	516

Y-SEPARATE ILLUSTRATION

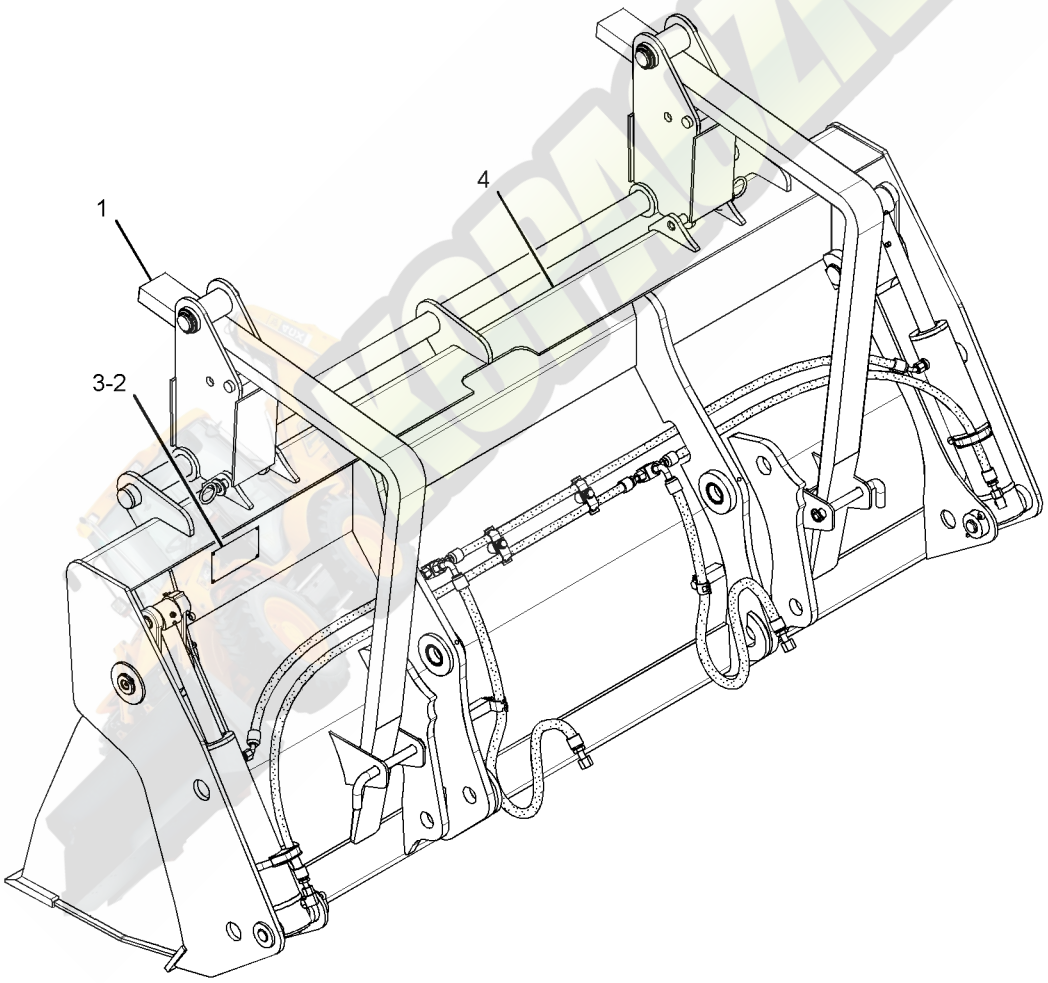

GRAPHIC #1 **<END>** g01569516

WORK TOOLS

318-7267 BUCKET AR-MULTIPURPOSE

S/N: JBA1-UP

AN ATTACHMENT

SMCS-6104 **i02988923**

NOTE	REF NO	GRAPHIC REF	PART NUMBER	QTY	PART NAME 1 2 3 4 5 6 (PRODUCT LEVEL)	SEE PAGE
	1	1	**137-4234**	1	PLATE-IDENTIFICATION (WORK TOOL)	
	2	1	**168-8389**	4	TACK-FASTENER	
Y	3	1	*196-1136*	1	LINES GP-CONNECTING	409
Y	4	1	*318-7251*	1	BUCKET AR-MULTIPURPOSE	517

Y-SEPARATE ILLUSTRATION

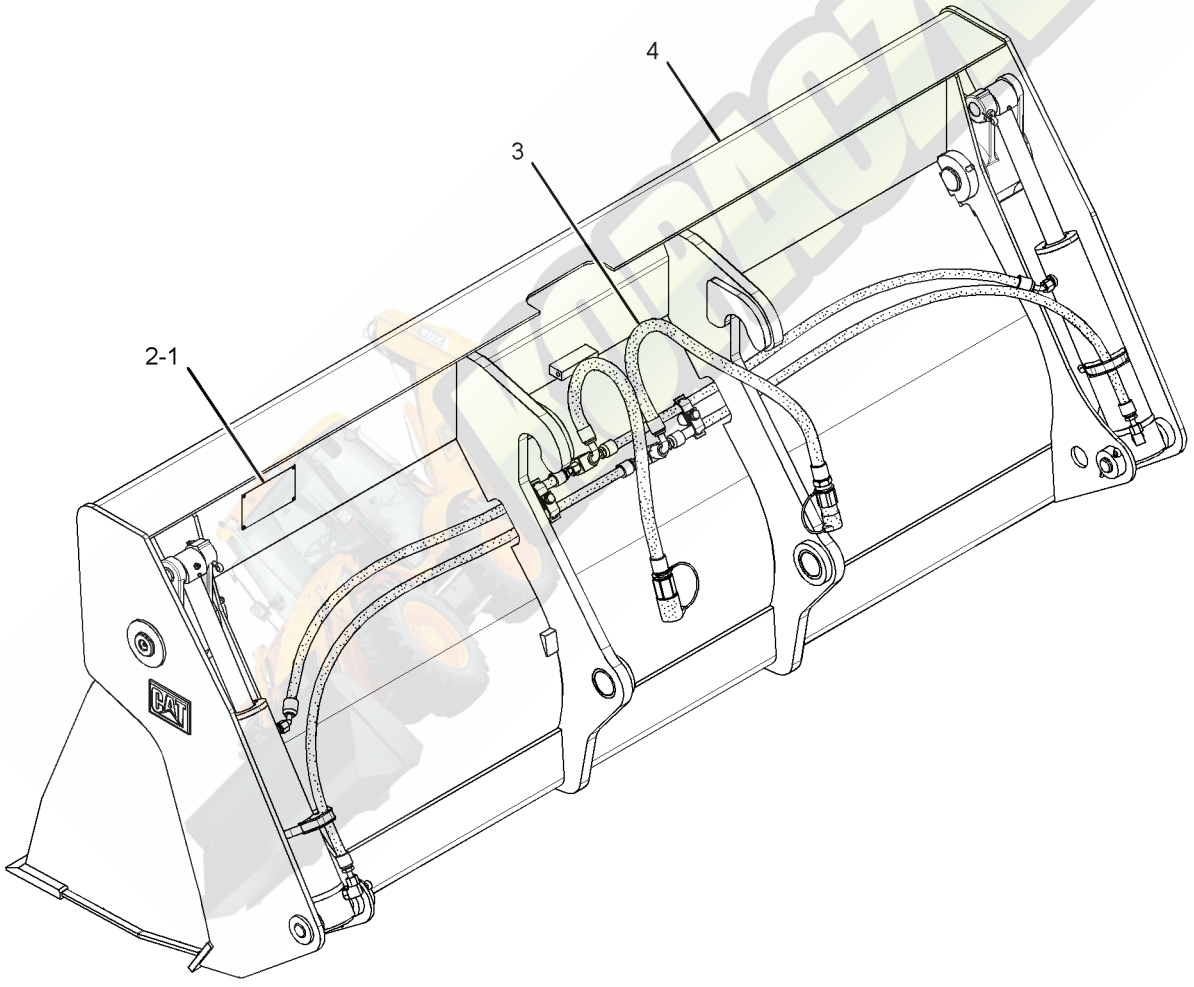

GRAPHIC #1 **<END>** g01515830

WORK TOOLS

320-9947 BUCKET AR-MULTIPURPOSE

S/N: JBA1-UP
AN ATTACHMENT

SMCS-6104 **i02989134**

NOTE	REF NO	GRAPHIC REF	PART NUMBER	QTY	PART NAME 1 2 3 4 5 6 (PRODUCT LEVEL)	SEE PAGE
	1	1	**104-6312**	2	FORK AS	
	2	1	**137-4234**	1	PLATE-IDENTIFICATION (WORK TOOL)	
	3	1	**168-8389**	4	TACK-FASTENER	
Y	4	1	*320-9948*	1	BUCKET AR-MULTIPURPOSE	522

Y-SEPARATE ILLUSTRATION

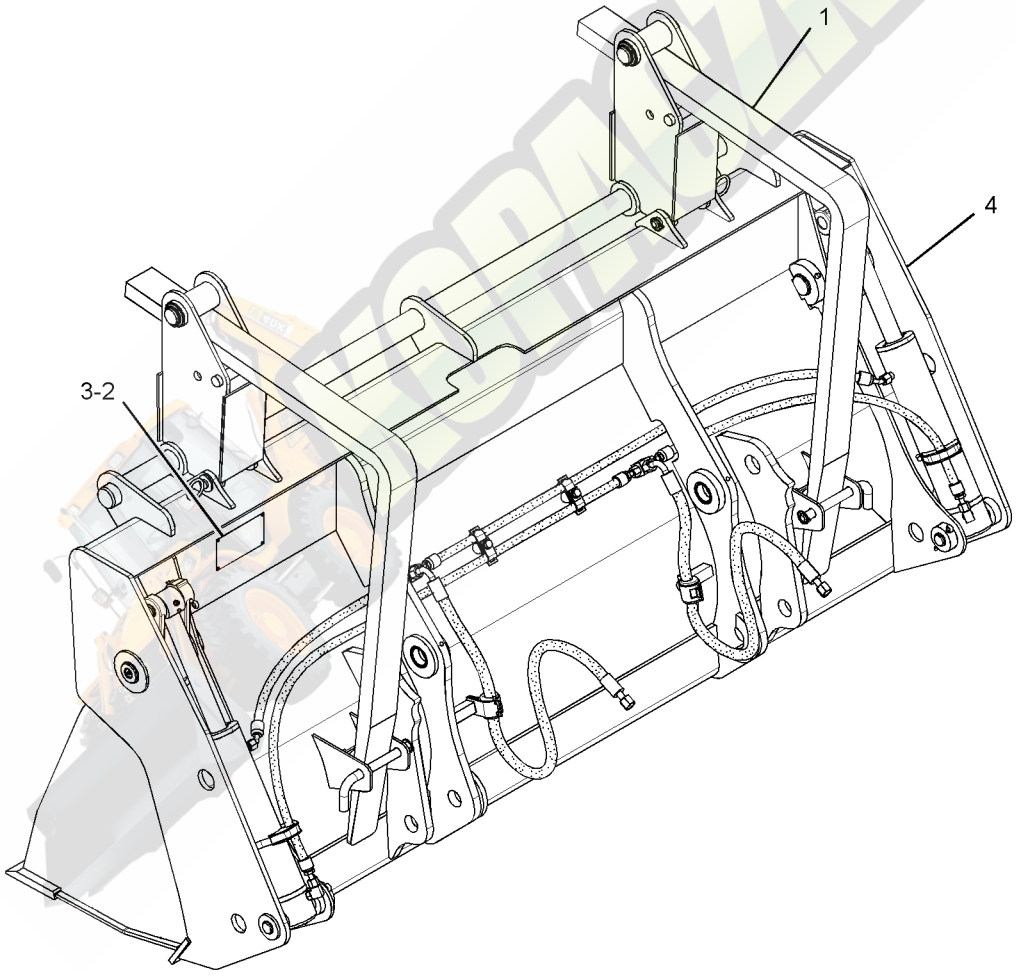

GRAPHIC #1 **<END>** g01515826

WORK TOOLS

320-9948 BUCKET AR-MULTIPURPOSE

S/N: JBA1-UP
PART OF 320-9947 BUCKET AR-MULTIPURPOSE
AN ATTACHMENT

SMCS-6104 **i03592848**

NOTE	REF NO	GRAPHIC REF	PART NUMBER	QTY	PART NAME 1 2 3 4 5 6 (PRODUCT LEVEL)	SEE PAGE
	1	1	**5D-8159**	2	PIN AS	
Y	2	1	*9R-4668*	1	MOUNTING GP-CYLINDER (MULTIPURPOSE BUCKET)	456
	3	1	**178-2593**	4	BUMPER	
Y	4	1	**226-5540**	2	CYLINDER GP-MULTIPURPOSE BUKT	379
	5	1	**250-1057**	2	PIN	
Y	6	1	*252-6005*	1	MOUNTING GP-FORK (MULTIPURPOSE BUCKET)	606
Y	7	1	*252-9043*	1	BUCKET GP-MULTIPURPOSE	574
Y	8	1	*320-9949*	1	LINES GP-BUCKET	403
M	9	1	**5C-7261**	4	NUT (M8X1.25-THD)	
	10	1	**8T-4224**	4	WASHER-HARD (8.8X16X2-MM THK)	

M-METRIC PART
Y-SEPARATE ILLUSTRATION

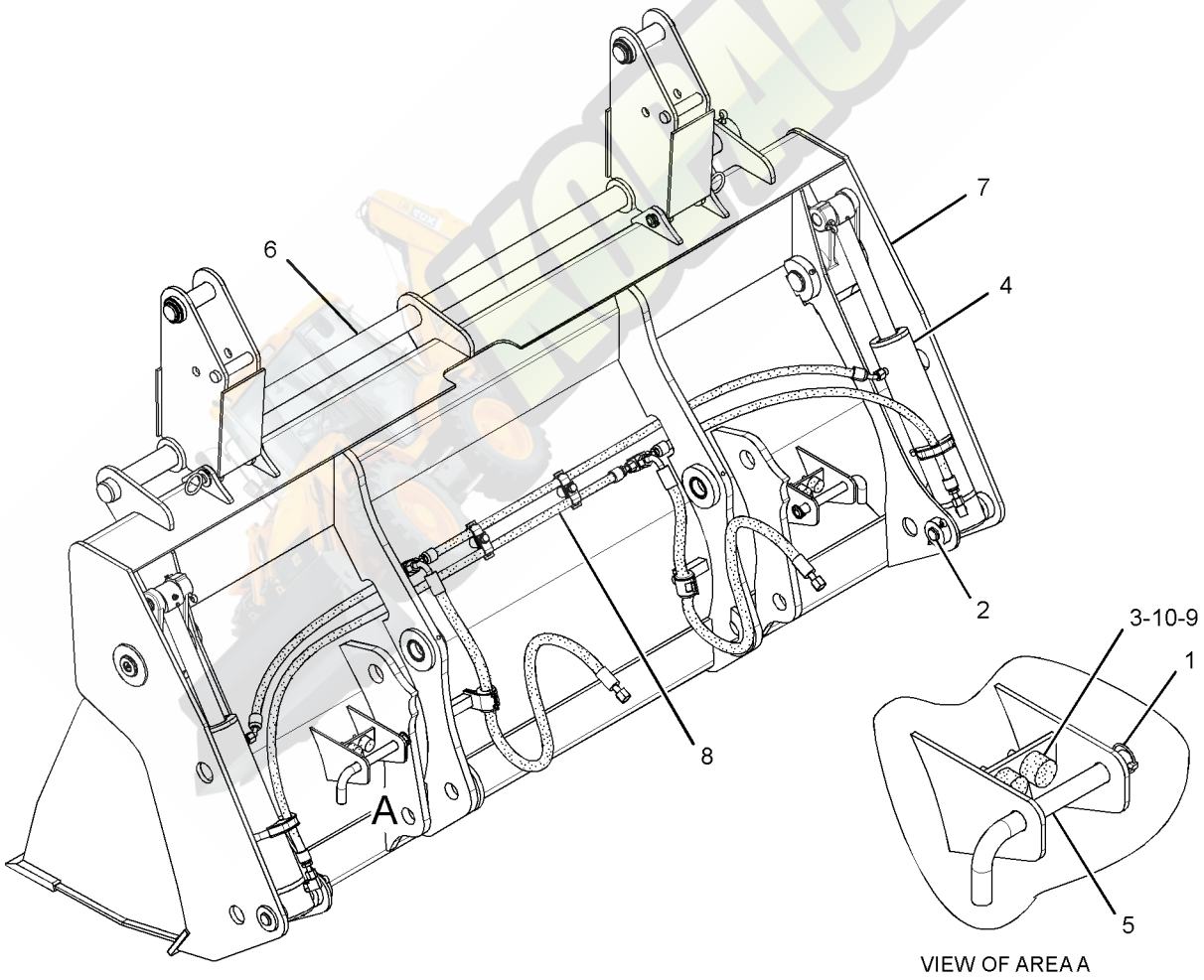

VIEW OF AREA A

GRAPHIC #1 **<END>** g01515828

112-1931 BUCKET AS-GENERAL PURPOSE

S/N: JBA1-UP
1.0-CU M (1.31-CU YD)
AN ATTACHMENT

SMCS-6101 **i02469946**

NOTE	REF NO	GRAPHIC REF	PART NUMBER	QTY	PART NAME 1 2 3 4 5 6 (PRODUCT LEVEL)	SEE PAGE
	1	1	**9R-5205**	1	EDGE (LH)	
	2	1	**9R-5206**	1	EDGE (RH)	
	3	1	**9R-5832**	2	EDGE	
	4	1	**9R-5313**	1	EDGE	
	5	1	*113-9083*	1	BRACKET AS (RH)	
	5A	1	**9R-1496**	2	BEARING-SLEEVE	
	6	1	*113-9084*	1	BRACKET AS (LH)	
	6A	1	**9R-1496**	2	BEARING-SLEEVE	

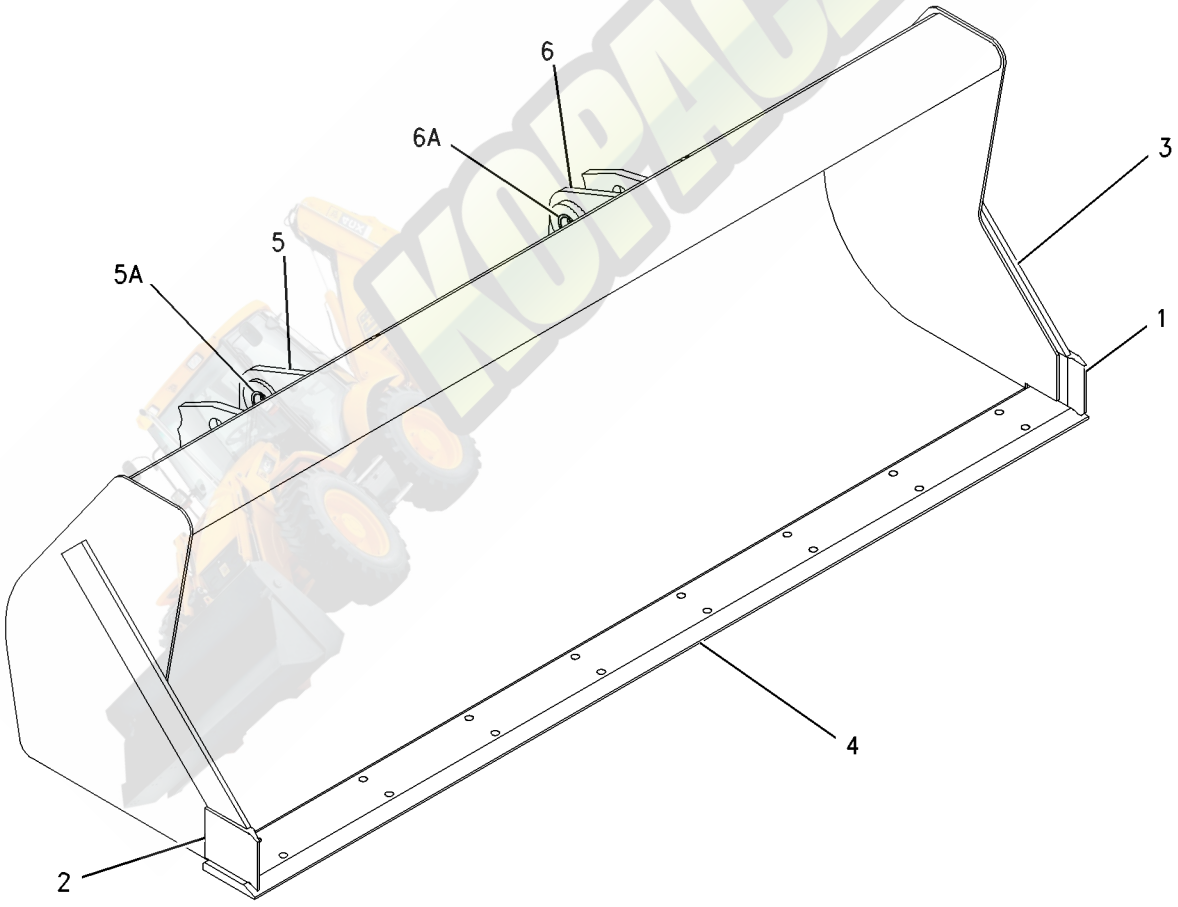

GRAPHIC #1 **<END>** g01006349

WORK TOOLS

118-1984 BUCKET AS-GENERAL PURPOSE

S/N: JBA1-UP
1.0-CU M (1.31-CU YD)
AN ATTACHMENT

SMCS-6101 **i01953264**

NOTE	REF NO	GRAPHIC REF	PART NUMBER	QTY	PART NAME 1 2 3 4 5 6 (PRODUCT LEVEL)	SEE PAGE
	1	1	**9R-5205**	1	EDGE-LH	
	2	1	**9R-5206**	1	EDGE-RH	
	3	1	**9R-5313**	1	EDGE	
	4	1	**9R-5832**	2	EDGE	
	5	1	*118-1977*	1	PLATE AS-RH	
	5A	1	**6K-4076**	1	BEARING-SLEEVE	
	6	1	*118-1978*	1	PLATE AS-LH	
	6A	1	**6K-4076**	1	BEARING-SLEEVE	

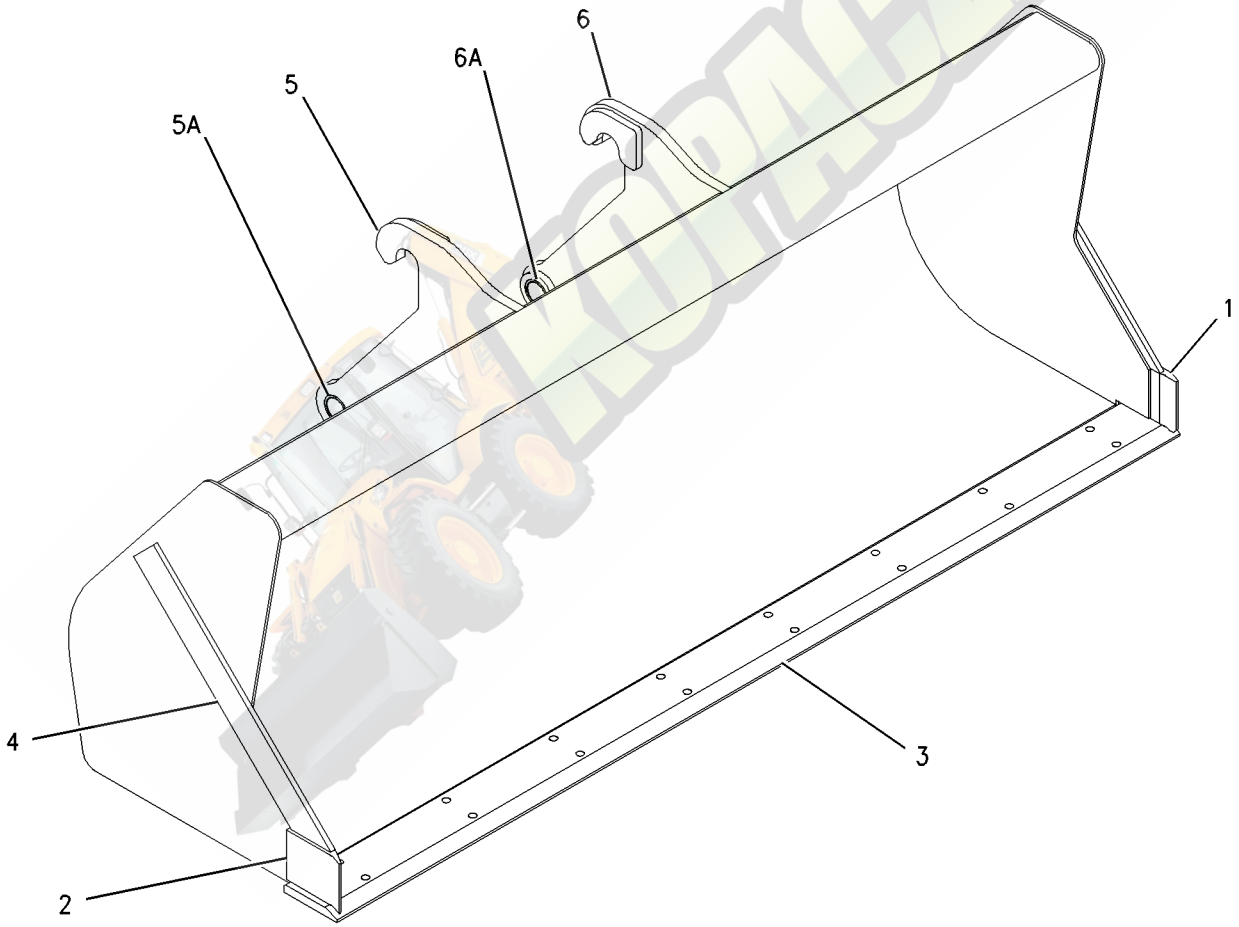

GRAPHIC #1 **<END>** g01006423

151-7829 BUCKET AS-HOE—HIGH CAPACITY

S/N: JBA1-UP
458-MM (18-IN)
PART OF 151-7887 BUCKET GP-HOE
AN ATTACHMENT

SMCS-6503 **i02686003**

NOTE	REF NO	GRAPHIC REF	PART NUMBER	QTY	PART NAME 1 2 3 4 5 6 (PRODUCT LEVEL)	SEE PAGE
	1	1	**128-3778**	1	EDGE	
	2	1	*151-7902*	1	BRACKET AS (LH)	
	2A	1	**9R-0162**	1	BEARING-SLEEVE	
	2B	1	**168-0480**	1	BEARING-SLEEVE	
	3	1	**9R-8987**	1	EDGE (LH)	
	4	1	**9R-8988**	1	EDGE (RH)	
	5	1	*151-7903*	1	BRACKET AS (RH)	
	5A	1	**9R-0162**	1	BEARING-SLEEVE	
	5B	1	**168-0480**	1	BEARING-SLEEVE	

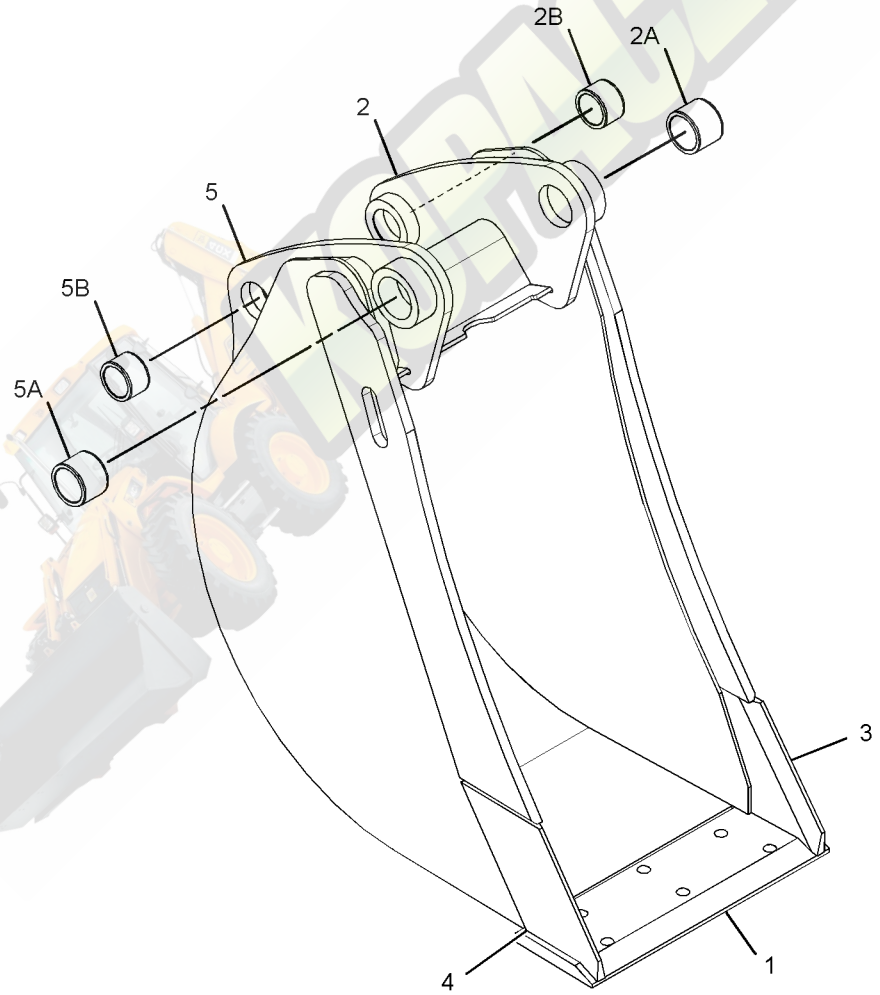

GRAPHIC #1 **<END>** g01424314

151-7830 BUCKET AS-HOE—HIGH CAPACITY

S/N: JBA1-UP
610-MM (24-IN)
PART OF 151-7888 BUCKET GP-HOE
AN ATTACHMENT

SMCS-6503 **i02685979**

NOTE	REF NO	GRAPHIC REF	PART NUMBER	QTY	PART NAME 1 2 3 4 5 6 (PRODUCT LEVEL)	SEE PAGE
	1	1	**9R-8987**	1	EDGE (LH)	
	2	1	**9R-8988**	1	EDGE (RH)	
	3	1	**128-3094**	1	EDGE	
	4	1	*151-7902*	1	BRACKET AS (LH)	
	4A	1	**168-0480**	1	BEARING-SLEEVE	
	4B	1	**9R-0162**	1	BEARING-SLEEVE	
	5	1	*151-7903*	1	BRACKET AS (RH)	
	5A	1	**168-0480**	1	BEARING-SLEEVE	
	5B	1	**9R-0162**	1	BEARING-SLEEVE	

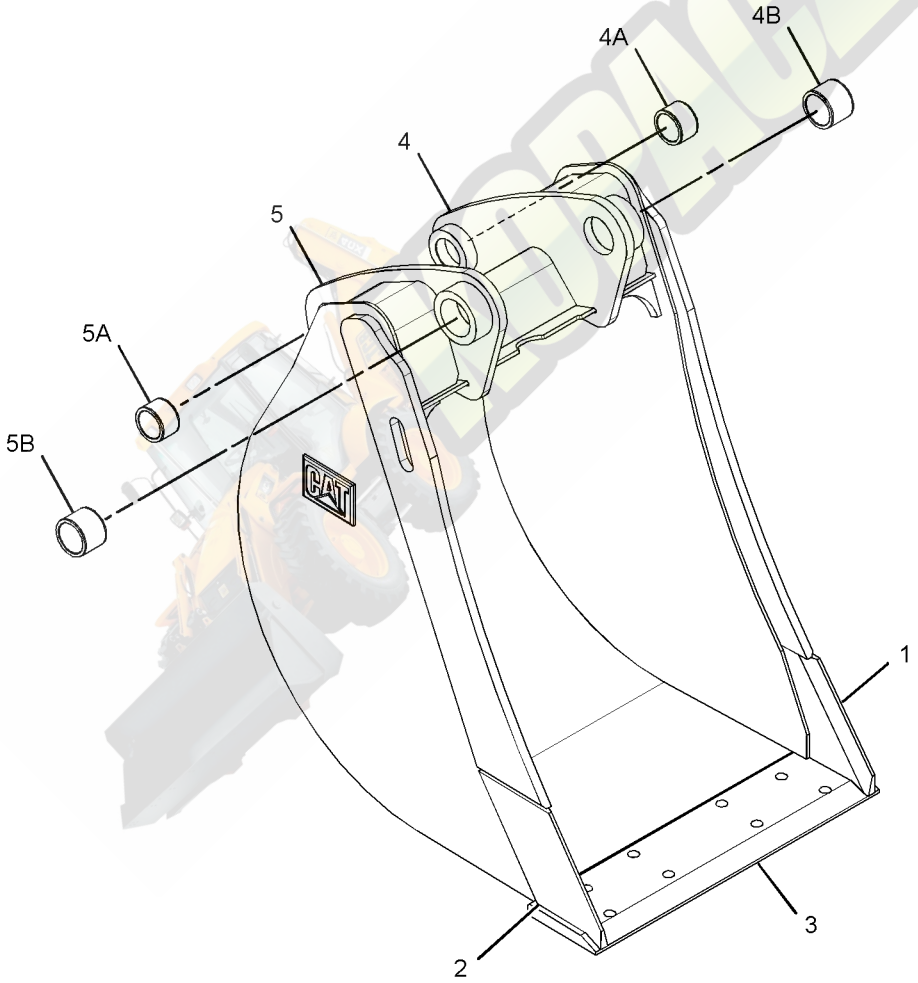

GRAPHIC #1 **<END>** g01398979

151-7831 BUCKET AS-HOE—HIGH CAPACITY

S/N: JBA1-UP
762-MM (30-IN)
PART OF 151-7889 BUCKET GP-HOE
AN ATTACHMENT

SMCS-6503 **i02686105**

NOTE	REF NO	GRAPHIC REF	PART NUMBER	QTY	PART NAME 1 2 3 4 5 6 (PRODUCT LEVEL)	SEE PAGE
	1	1	*151-7902*	1	BRACKET AS (LH)	
	1A	1	**9R-0162**	1	BEARING-SLEEVE	
	1B	1	**168-0480**	1	BEARING-SLEEVE	
	2	1	**9R-8987**	1	EDGE (LH)	
	3	1	**9R-8988**	1	EDGE (RH)	
	4	1	**131-2117**	1	EDGE	
	5	1	*151-7903*	1	BRACKET AS (RH)	
	5A	1	**9R-0162**	1	BEARING-SLEEVE	
	5B	1	**168-0480**	1	BEARING-SLEEVE	

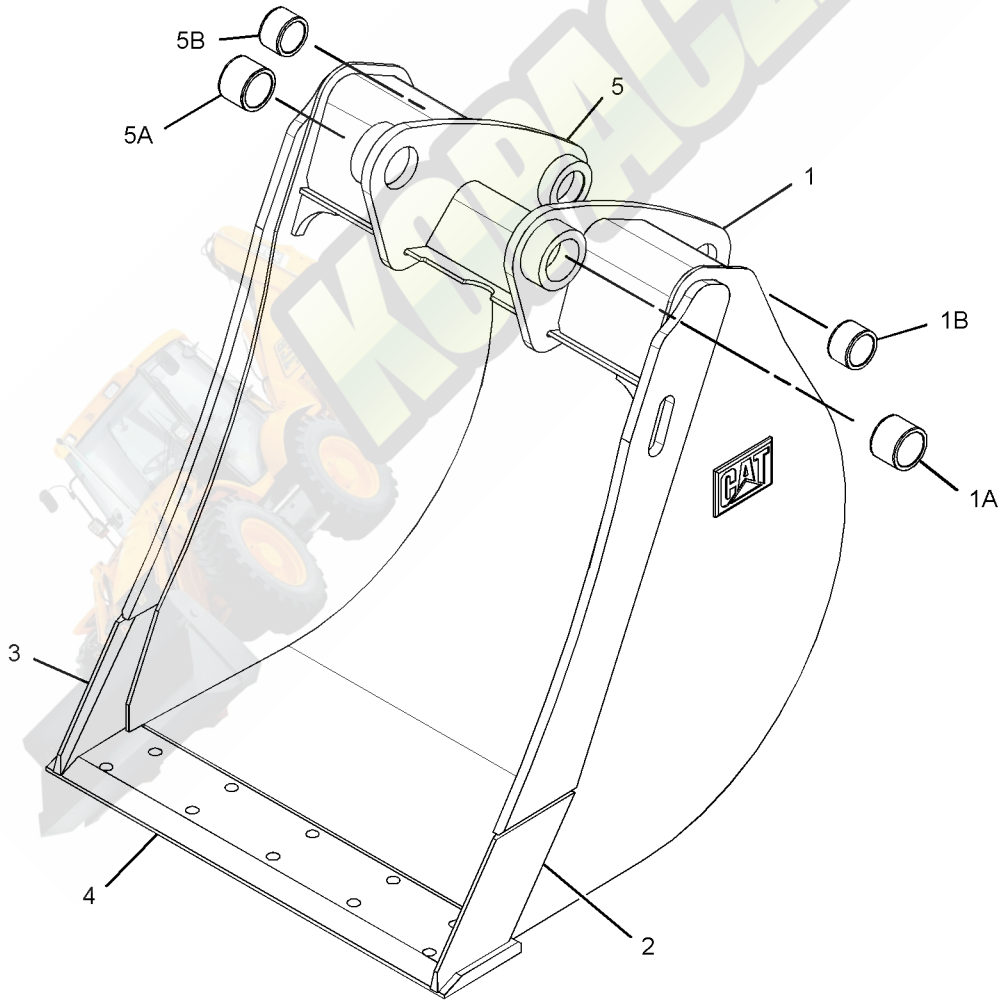

GRAPHIC #1 **<END>** g01359127

151-7832 BUCKET AS-HOE—HIGH CAPACITY

S/N: JBA1-UP
914-MM (36-IN)
PART OF 151-7890 BUCKET GP-HOE
AN ATTACHMENT

SMCS-6503 **i02686157**

NOTE	REF NO	GRAPHIC REF	PART NUMBER	QTY	PART NAME 1 2 3 4 5 6 (PRODUCT LEVEL)	SEE PAGE
	1	1	**9R-8987**	1	EDGE (LH)	
	2	1	**9R-8988**	1	EDGE (RH)	
	3	1	**130-2057**	1	EDGE	
	4	1	*151-7902*	1	BRACKET AS (LH)	
	4A	1	**9R-0162**	1	BEARING-SLEEVE	
	4B	1	**168-0480**	1	BEARING-SLEEVE	
	5	1	*151-7903*	1	BRACKET AS (RH)	
	5A	1	**9R-0162**	1	BEARING-SLEEVE	
	5B	1	**168-0480**	1	BEARING-SLEEVE	

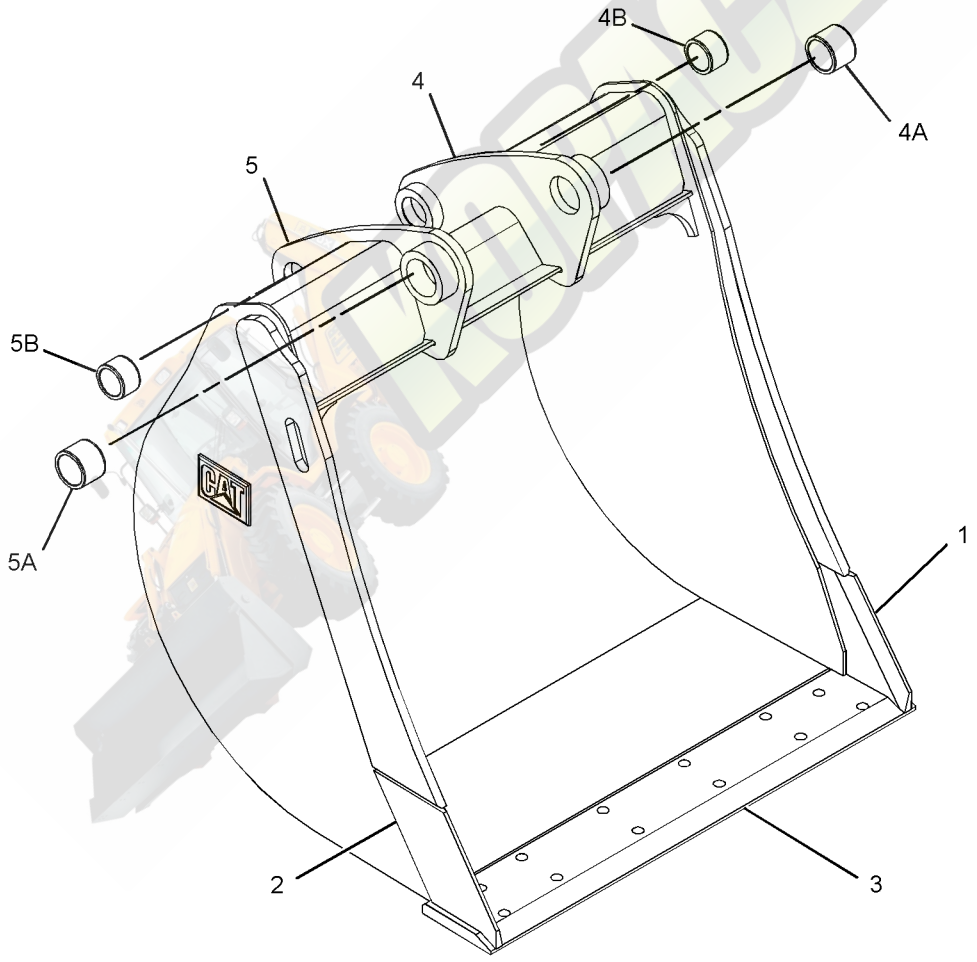

GRAPHIC #1 **<END>** g01356395

191-6262 BUCKET AS-HOE—DITCH CLEANING

S/N: JBA1-UP
1500-MM (59-IN)
AN ATTACHMENT

SMCS-6503 **i02304055**

NOTE	REF NO	GRAPHIC REF	PART NUMBER	QTY	PART NAME 1 2 3 4 5 6 (PRODUCT LEVEL)	SEE PAGE
	1	1	**121-7238**	1	EDGE-CUTTING	
	2	1	**191-6254**	1	PLATE (TORQUE)	
	3	1	**191-6259**	2	BRACKET AS	

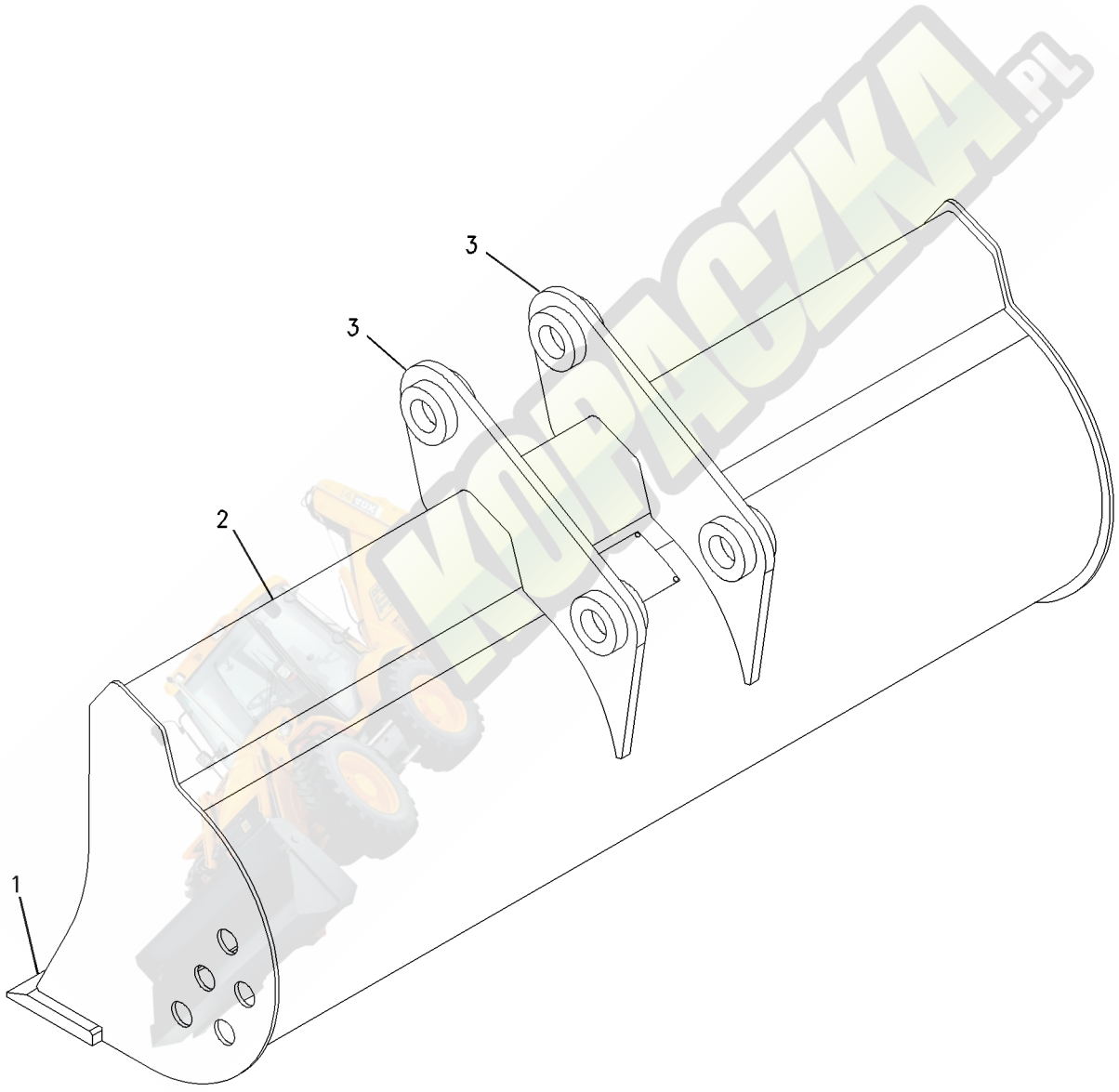

GRAPHIC #1 **<END>** g00757684

WORK TOOLS

219-3366 BUCKET AS-HOE—HIGH CAPACITY

S/N: JBA1-UP
458-MM (18-IN)
PART OF 219-3390 BUCKET GP-HOE
AN ATTACHMENT

SMCS-6503 **i02651484**

NOTE	REF NO	GRAPHIC REF	PART NUMBER	QTY	PART NAME 1 2 3 4 5 6 (PRODUCT LEVEL)	SEE PAGE
	1	1	**134-5884**	1	EDGE (LH)	
	2	1	**134-5885**	1	EDGE (RH)	
	3	1	*151-7902*	1	BRACKET AS (LH)	
	3A	1	**9R-0162**	1	BEARING-SLEEVE	
	3B	1	**168-0480**	1	BEARING-SLEEVE	
	4	1	*151-7903*	1	BRACKET AS (RH)	
	4A	1	**9R-0162**	1	BEARING-SLEEVE	
	4B	1	**168-0480**	1	BEARING-SLEEVE	
	5	1	**161-4130**	2	PLATE-IDENTIFICATION (CAT)	
	6	1	**201-1234**	4	ADAPTER (2-STRAP)	
	7	1	**219-9483**	1	EDGE	

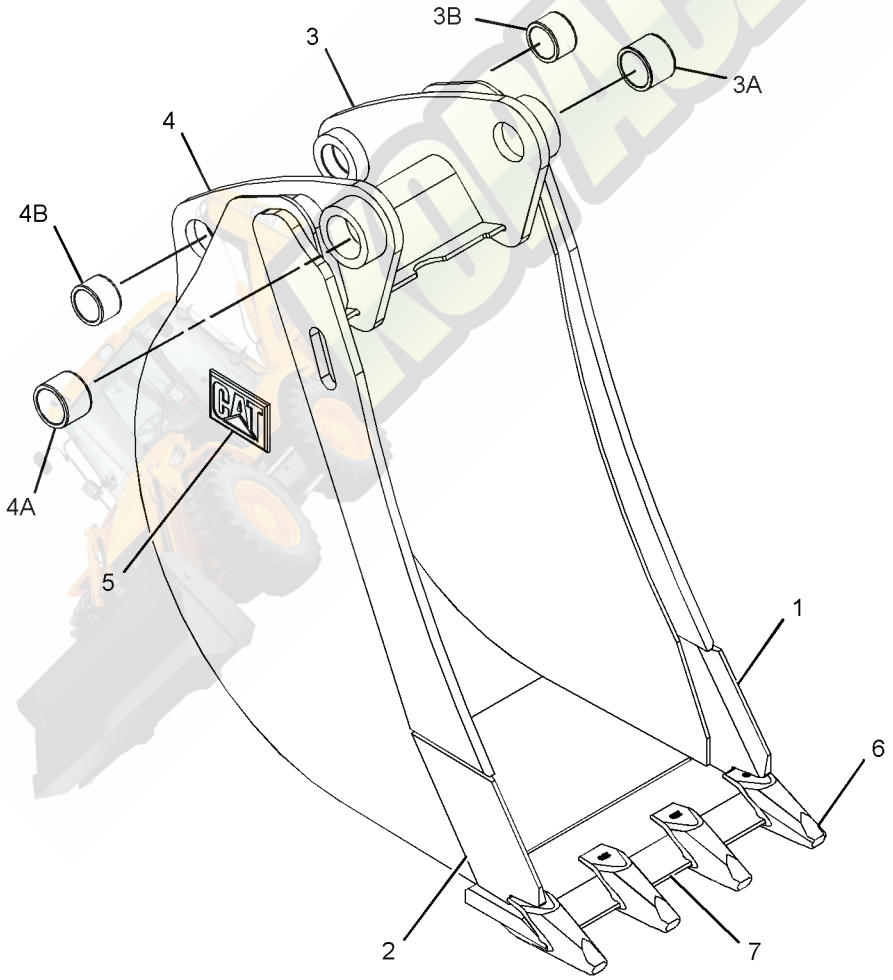

GRAPHIC #1 **<END>** g01334080

219-3367 BUCKET AS-HOE—HIGH CAPACITY

S/N: JBA1-UP
610-MM (24-IN)
PART OF 219-3391 BUCKET GP-HOE
AN ATTACHMENT

SMCS-6503 **i02651946**

NOTE	REF NO	GRAPHIC REF	PART NUMBER	QTY	PART NAME 1 2 3 4 5 6 (PRODUCT LEVEL)	SEE PAGE
	1	1	**134-5884**	1	EDGE (LH)	
	2	1	**134-5885**	1	EDGE (RH)	
	3	1	*151-7902*	1	BRACKET AS (LH)	
	3A	1	**9R-0162**	1	BEARING-SLEEVE	
	3B	1	**168-0480**	1	BEARING-SLEEVE	
	4	1	*151-7903*	1	BRACKET AS (RH)	
	4A	1	**9R-0162**	1	BEARING-SLEEVE	
	4B	1	**168-0480**	1	BEARING-SLEEVE	
	5	1	**151-7926**	2	PLATE	
	6	1	**161-4130**	2	PLATE-IDENTIFICATION (CAT)	
	7	1	**201-1234**	5	ADAPTER (2-STRAP)	
	8	1	**219-9486**	1	EDGE	

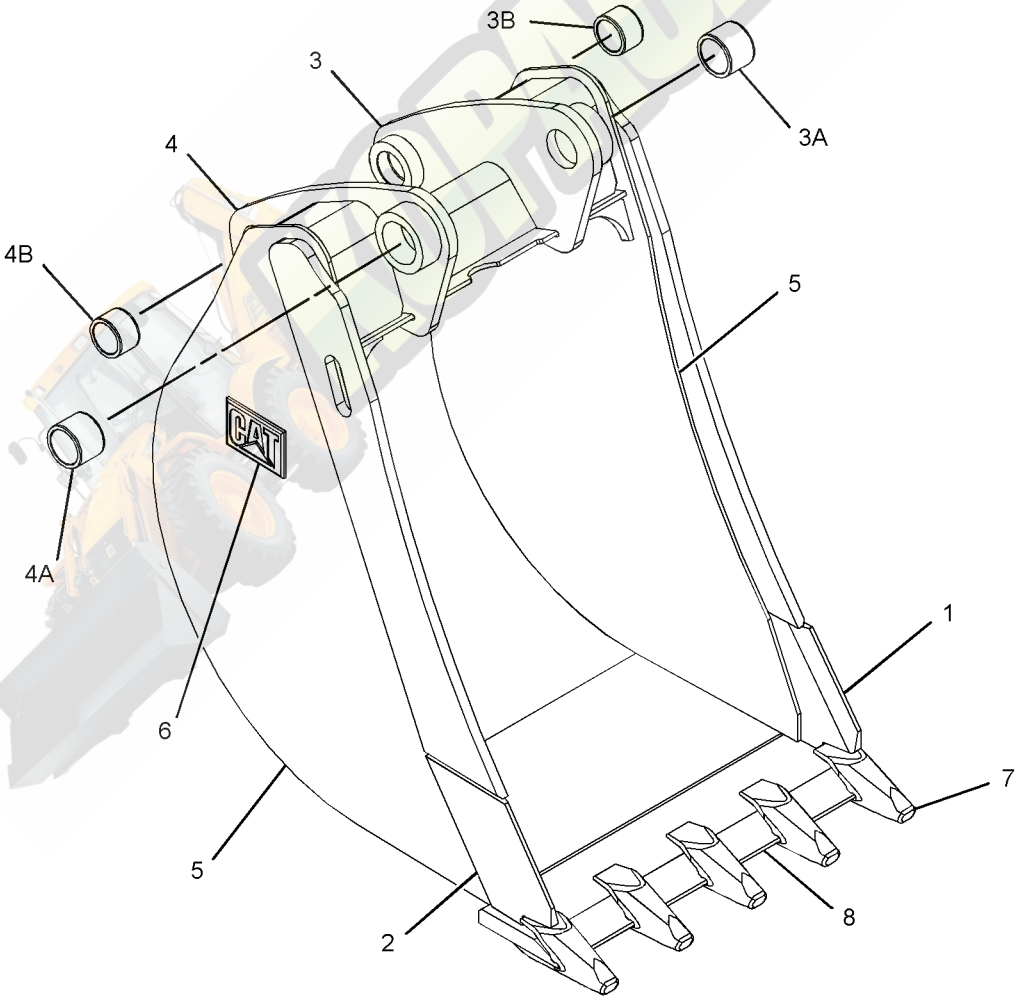

GRAPHIC #1 **<END>** g01342073

WORK TOOLS

219-3368 BUCKET AS-HOE—HIGH CAPACITY

S/N: JBA1-UP
762-MM (30-IN)
PART OF 219-3392 BUCKET GP-HOE
AN ATTACHMENT

SMCS-6503 **i02651971**

NOTE	REF NO	GRAPHIC REF	PART NUMBER	QTY	PART NAME 1 2 3 4 5 6 (PRODUCT LEVEL)	SEE PAGE
	1	1	**134-5884**	1	EDGE (LH)	
	2	1	**134-5885**	1	EDGE (RH)	
	3	1	*151-7902*	1	BRACKET AS (LH)	
	3A	1	**9R-0162**	1	BEARING-SLEEVE	
	3B	1	**168-0480**	1	BEARING-SLEEVE	
	4	1	*151-7903*	1	BRACKET AS (RH)	
	4A	1	**9R-0162**	1	BEARING-SLEEVE	
	4B	1	**168-0480**	1	BEARING-SLEEVE	
	5	1	**161-4130**	2	PLATE-IDENTIFICATION (CAT)	
	6	1	**201-1234**	5	ADAPTER (2-STRAP)	
	7	1	**219-9485**	1	EDGE	

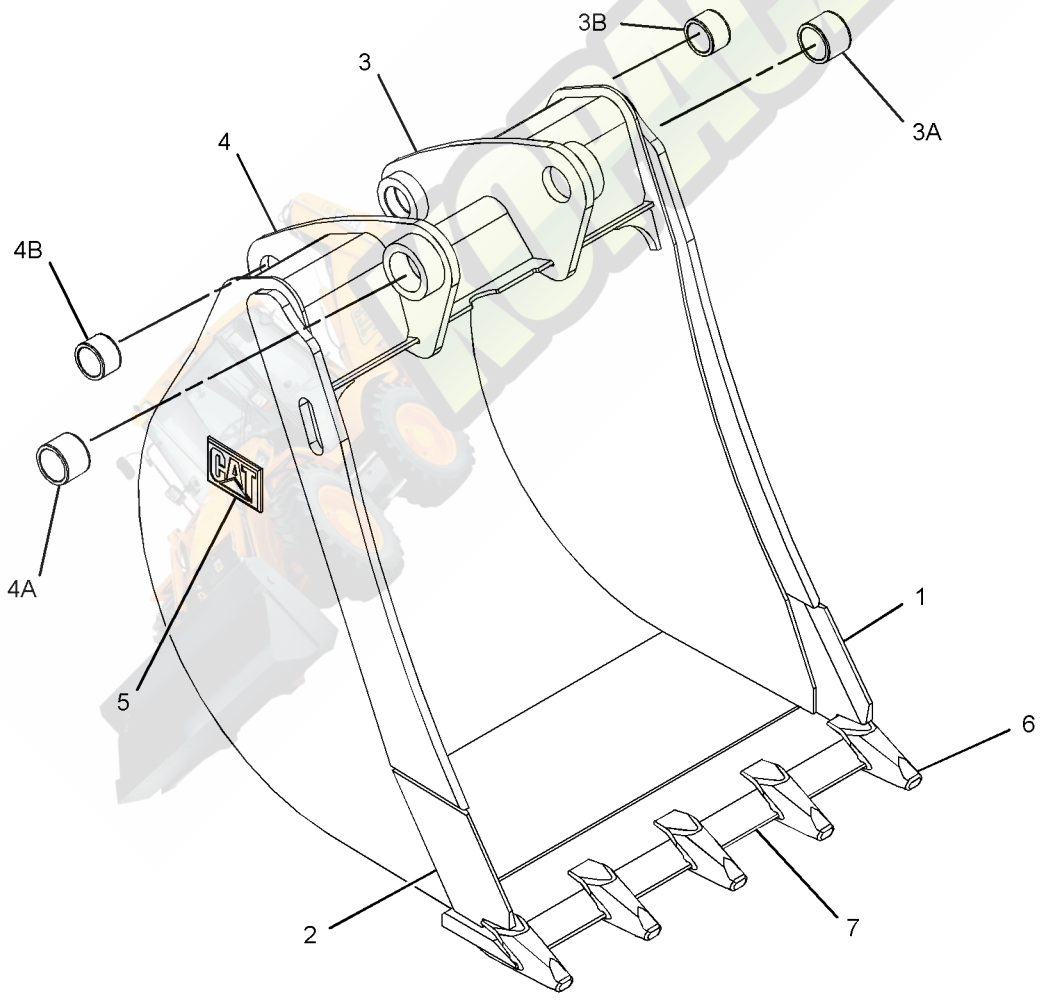

GRAPHIC #1 **<END>** g01341935

219-3369 BUCKET AS-HOE—HIGH CAPACITY

S/N: JBA1-UP
914-MM (36-IN)
PART OF 219-3393 BUCKET GP-HOE
AN ATTACHMENT

SMCS-6503 **i02651981**

NOTE	REF NO	GRAPHIC REF	PART NUMBER	QTY	PART NAME 1 2 3 4 5 6 (PRODUCT LEVEL)	SEE PAGE
	1	1	**134-5884**	1	EDGE (LH)	
	2	1	**134-5885**	1	EDGE (RH)	
	3	1	*151-7902*	1	BRACKET AS (LH)	
	3A	1	**9R-0162**	1	BEARING-SLEEVE	
	3B	1	**168-0480**	1	BEARING-SLEEVE	
	4	1	*151-7903*	1	BRACKET AS (RH)	
	4A	1	**9R-0162**	1	BEARING-SLEEVE	
	4B	1	**168-0480**	1	BEARING-SLEEVE	
	5	1	**161-4130**	2	PLATE-IDENTIFICATION (CAT)	
	6	1	**201-1234**	6	ADAPTER (2-STRAP)	
	7	1	**219-9486**	1	EDGE	

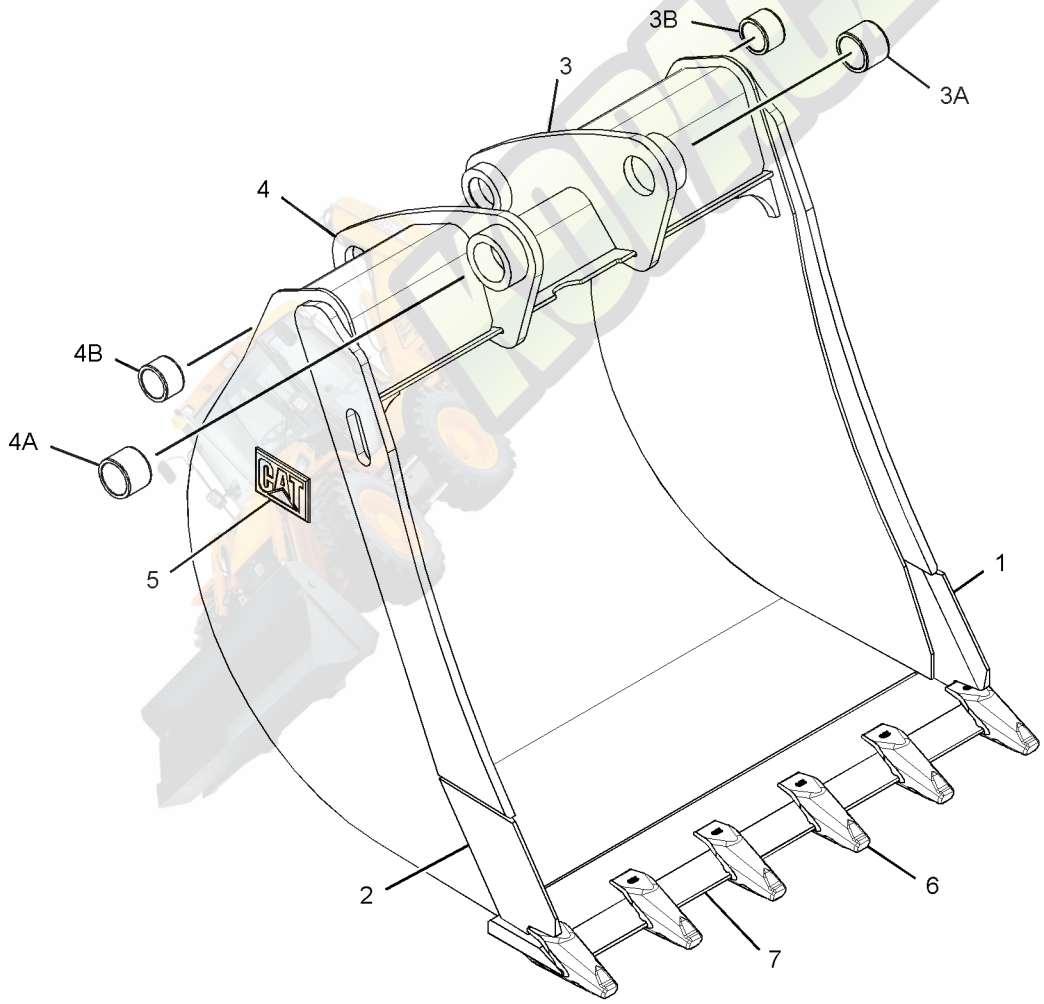

GRAPHIC #1 **<END>** g01335133

249-4220 BUCKET AS-HOE—HEAVY-DUTY

S/N: JBA1-UP
610-MM (24-IN)
PART OF 249-4221 BUCKET GP-HOE
AN ATTACHMENT

SMCS-6503 **i03726361**

NOTE	REF NO	GRAPHIC REF	PART NUMBER	QTY	PART NAME 1 2 3 4 5 6 (PRODUCT LEVEL)	SEE PAGE
	1	1	**201-1235**	5	ADAPTER (2-STRAP)	
	2	1	**219-9488**	1	EDGE	
	3	1	*249-4209*	1	PLATE AS (RH)	
		1	**249-4207**	1	EDGE (RH)	
	4	1	*249-4210*	1	PLATE AS (LH)	
		1	**273-3622**	1	EDGE (LH)	

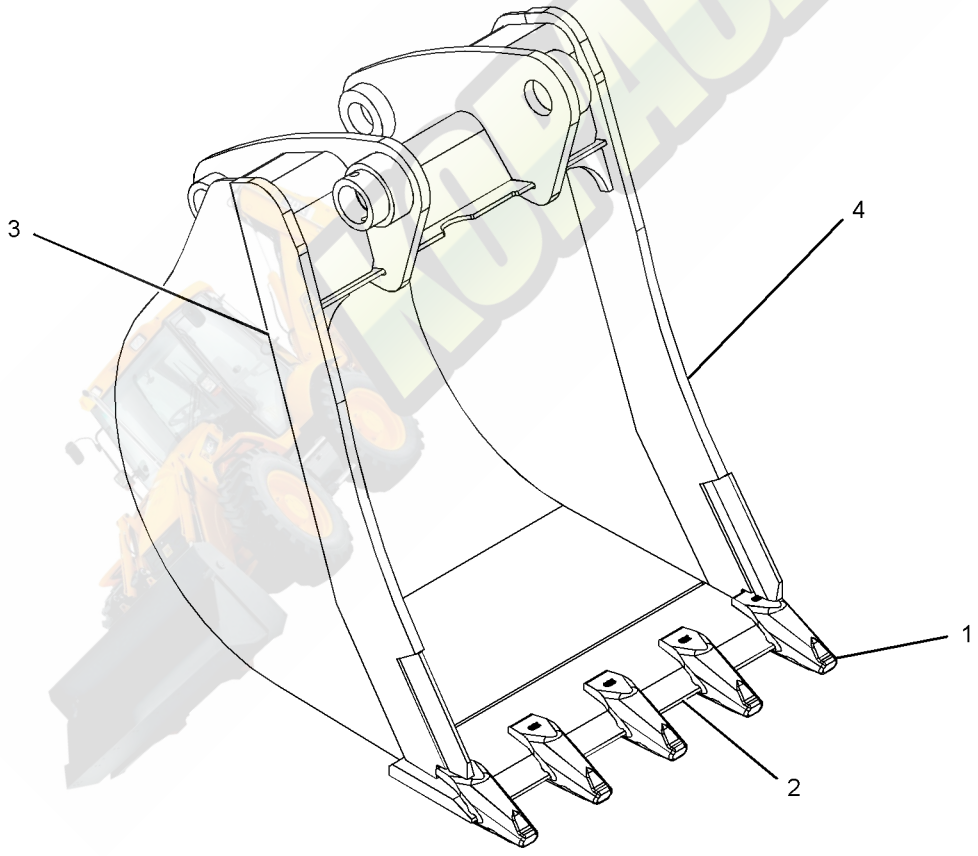

GRAPHIC #1 **<END>** g01226709

WORK TOOLS

272-6411 BUCKET AS-HOE—HEAVY-DUTY

S/N: JBA1-UP
458-MM (18-IN)
PART OF 272-6410 BUCKET GP-HOE
AN ATTACHMENT

SMCS-6503 **i03726342**

NOTE	REF NO	GRAPHIC REF	PART NUMBER	QTY	PART NAME 1 2 3 4 5 6 (PRODUCT LEVEL)	SEE PAGE
	1	1	**136-6887**	1	EDGE	
	2	1	**201-1235**	4	ADAPTER (2-STRAP)	
	3	1	*249-4209*	1	PLATE AS (RH)	
		1	**249-4207**	1	EDGE (RH)	
	4	1	*249-4210*	1	PLATE AS (LH)	
		1	**273-3622**	1	EDGE (LH)	
	5	1	**272-6369**	4	PLATE	

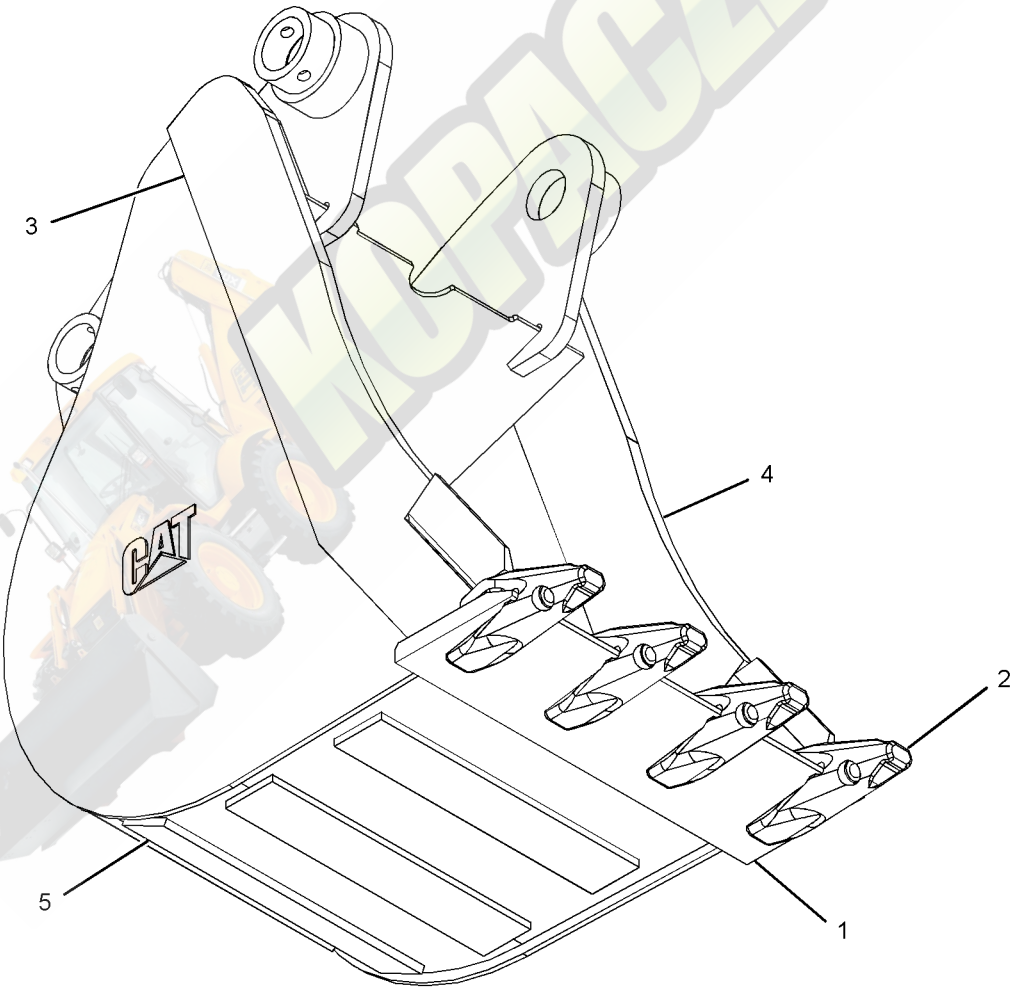

GRAPHIC #1 **<END>** g01214815

272-7873 BUCKET AS-HOE—HEAVY-DUTY

S/N: JBA1-UP
762-MM (30-IN)
PART OF 272-7872 BUCKET GP-HOE
AN ATTACHMENT

SMCS-6503 **i03726600**

NOTE	REF NO	GRAPHIC REF	PART NUMBER	QTY	PART NAME 1 2 3 4 5 6 (PRODUCT LEVEL)	SEE PAGE
	1	1	**136-6889**	1	EDGE	
	2	1	**201-1235**	5	ADAPTER (2-STRAP)	
	3	1	*249-4209*	1	PLATE AS (RH)	
		1	**249-4207**	1	EDGE (RH)	
	4	1	*249-4210*	1	PLATE AS (LH)	
		1	**273-3622**	1	EDGE (LH)	
	5	1	**272-7914**	4	PLATE	

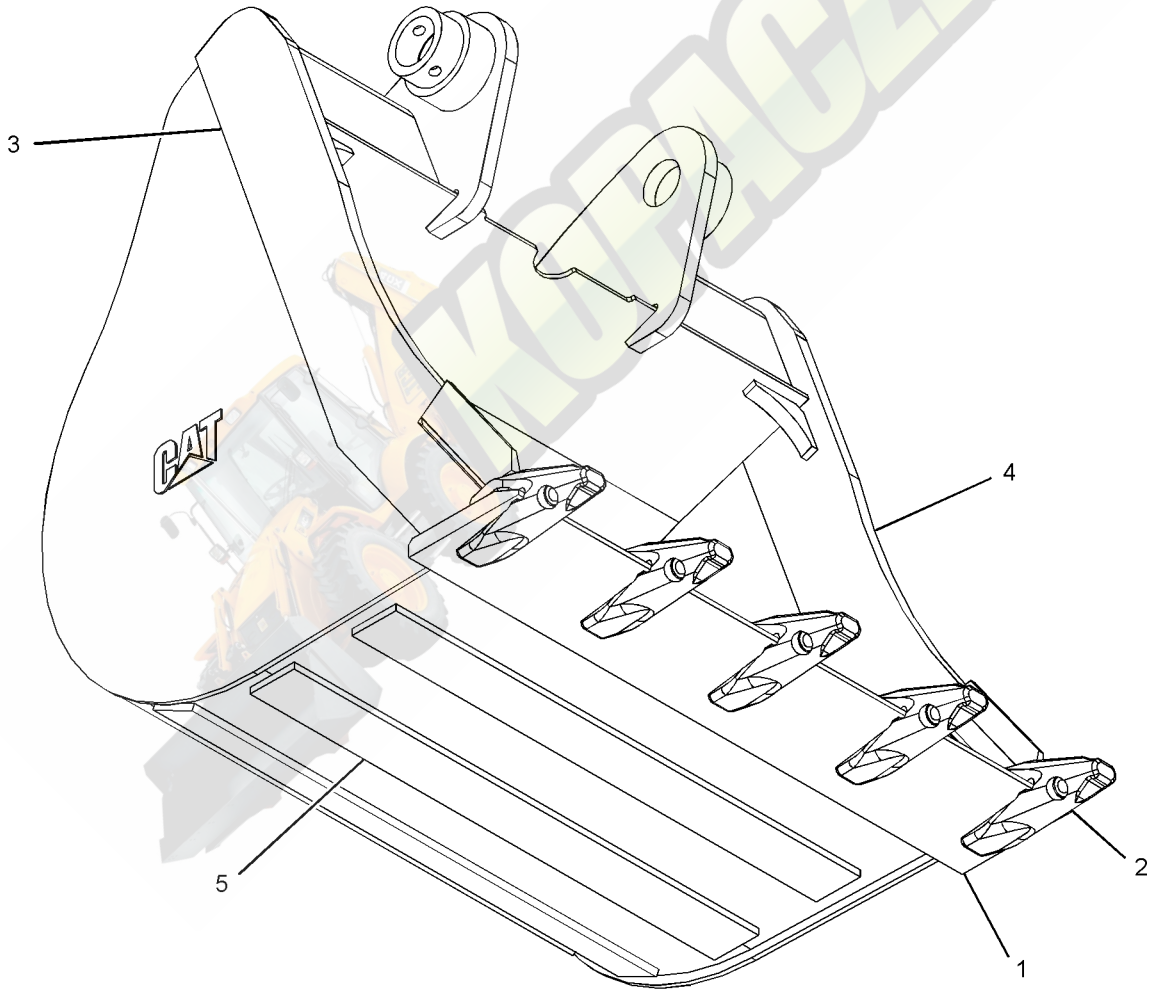

GRAPHIC #1 **<END>** g01215272

WORK TOOLS

272-9235 BUCKET AS-HOE—HEAVY-DUTY

S/N: JBA1-UP
914-MM (36-IN)
PART OF 272-9234 BUCKET GP-HOE
AN ATTACHMENT

SMCS-6503 **i03726364**

NOTE	REF NO	GRAPHIC REF	PART NUMBER	QTY	PART NAME 1 2 3 4 5 6 (PRODUCT LEVEL)	SEE PAGE
	1	1	**201-1235**	6	ADAPTER (2-STRAP)	
	2	1	*249-4209*	1	PLATE AS (RH)	
		1	**249-4207**	1	EDGE (RH)	
	3	1	*249-4210*	1	PLATE AS (LH)	
		1	**273-3622**	1	EDGE (LH)	
	4	1	**272-7916**	4	PLATE	
	5	1	**136-6890**	1	EDGE	

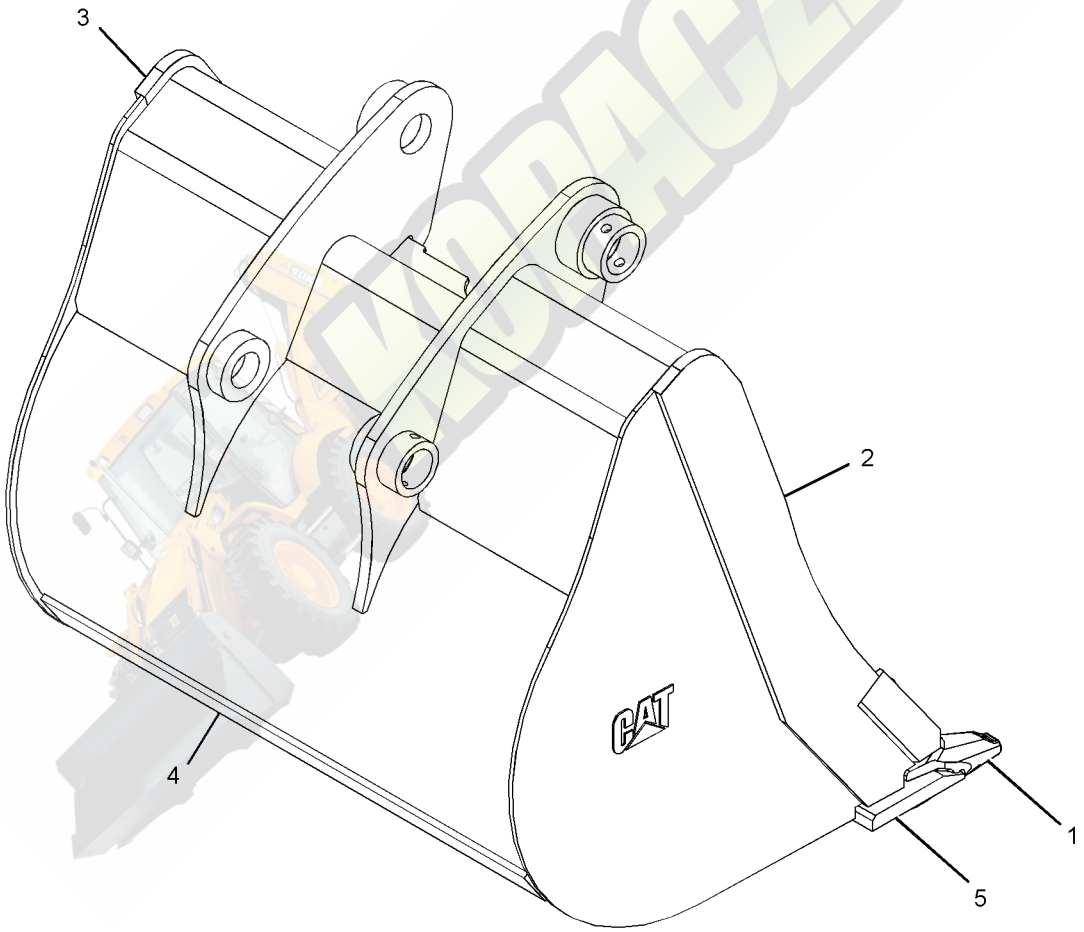

GRAPHIC #1 **<END>** g02009296

272-9609 BUCKET AS-HOE—HEAVY-DUTY

S/N: JBA1-UP
914-MM (36-IN)
PART OF 272-9608 BUCKET GP-HOE
AN ATTACHMENT

SMCS-6503 **i02425901**

NOTE	REF NO	GRAPHIC REF	PART NUMBER	QTY	PART NAME 1 2 3 4 5 6 (PRODUCT LEVEL)	SEE PAGE
	1	1	**272-7916**	4	PLATE	
	2	1	*272-7920*	1	PLATE AS (RH)	
		1	**272-7918**	1	EDGE (RH)	
	3	1	*272-7921*	1	PLATE AS (LH)	
		1	**272-7919**	1	EDGE (LH)	
	4	1	**273-1466**	1	EDGE	

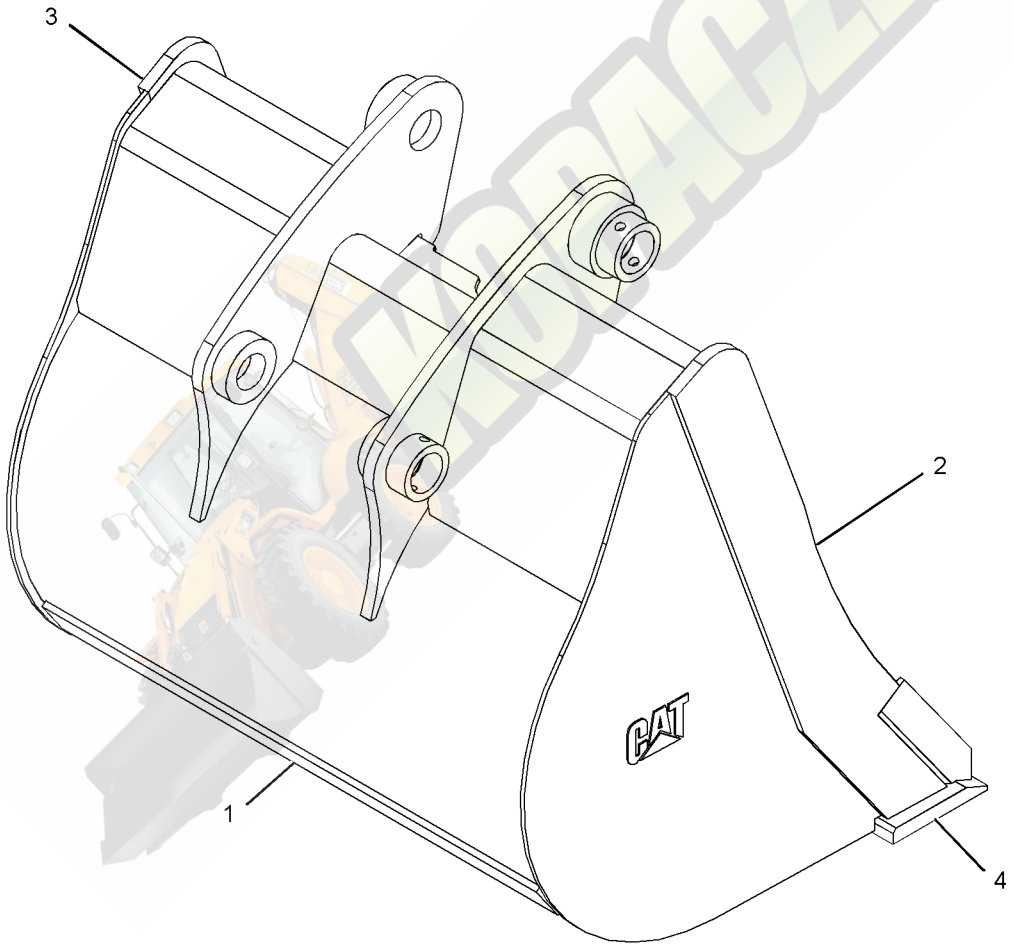

GRAPHIC #1 **<END>** g01226278

273-0043 BUCKET AS-HOE—HEAVY-DUTY

S/N: JBA1-UP
762-MM (30-IN)
PART OF 273-0042 BUCKET GP-HOE
AN ATTACHMENT

SMCS-6503 **i02427539**

NOTE	REF NO	GRAPHIC REF	PART NUMBER	QTY	PART NAME 1 2 3 4 5 6 (PRODUCT LEVEL)	SEE PAGE
	1	1	**272-7914**	4	PLATE	
	2	1	*272-7920*	1	PLATE AS (RH)	
		1	**272-7918**	1	EDGE (RH)	
	3	1	*272-7921*	1	PLATE AS (LH)	
		1	**272-7919**	1	EDGE (LH)	
	4	1	**273-1465**	1	EDGE	

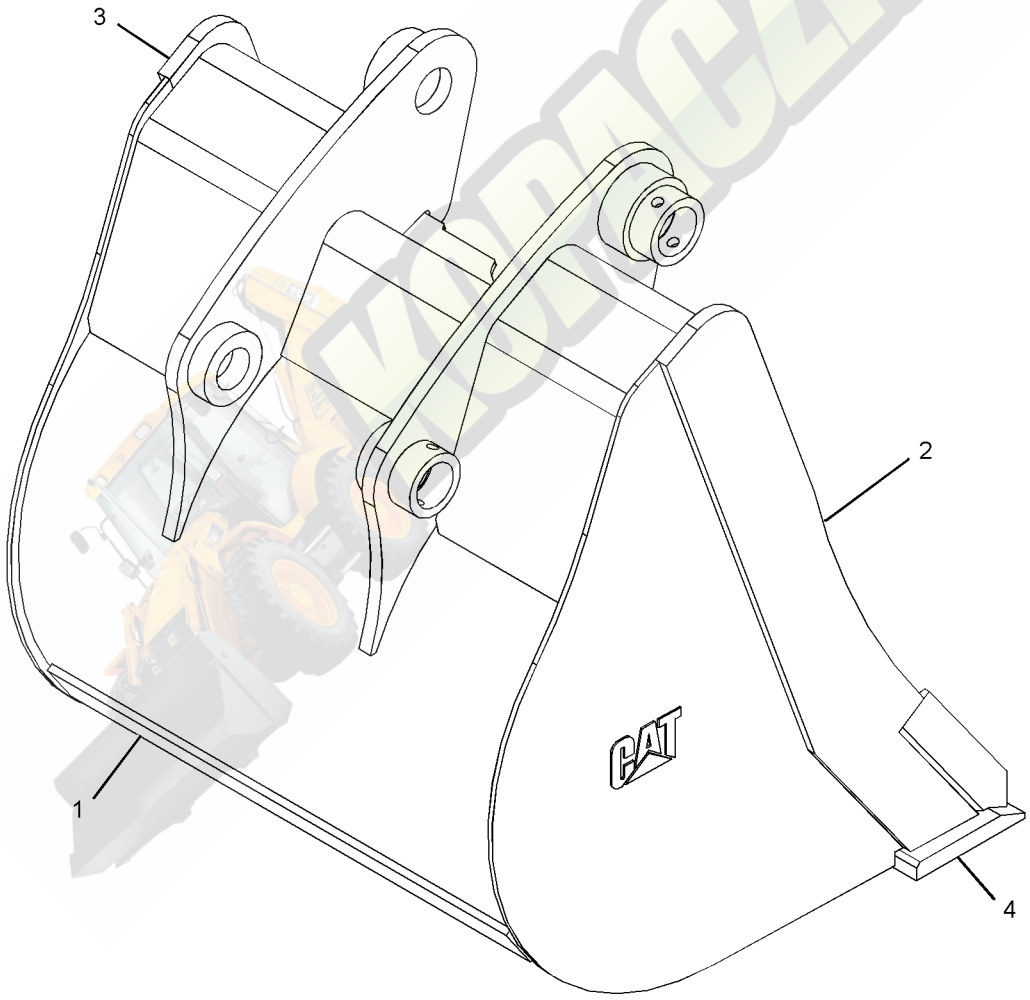

GRAPHIC #1 **<END>** g01214211

WORK TOOLS

273-0094 BUCKET AS-HOE—HEAVY-DUTY

S/N: JBA1-UP
408-MM (16-IN)
PART OF 273-0093 BUCKET GP-HOE
AN ATTACHMENT

SMCS-6503 **i03726561**

NOTE	REF NO	GRAPHIC REF	PART NUMBER	QTY	PART NAME 1 2 3 4 5 6 (PRODUCT LEVEL)	SEE PAGE
	1	1	**201-1235**	3	ADAPTER (2-STRAP)	
	2	1	*249-4209*	1	PLATE AS (RH)	
		1	**249-4207**	1	EDGE (RH)	
	3	1	*249-4210*	1	PLATE AS (LH)	
		1	**273-3622**	1	EDGE (LH)	
	4	1	**272-7922**	1	EDGE	
	5	1	**273-5532**	4	PLATE	

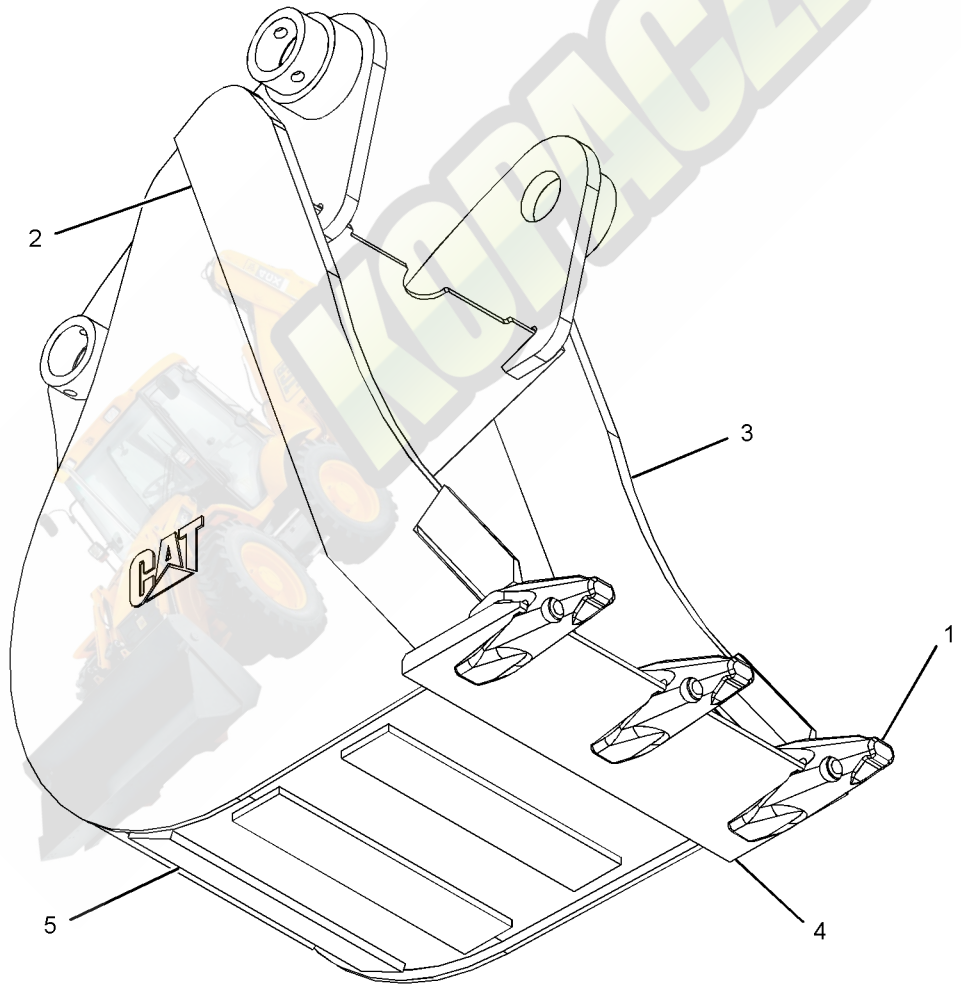

GRAPHIC #1 **<END>** g01214848

273-0800 BUCKET AS-HOE—HEAVY-DUTY

S/N: JBA1-UP
610-MM (24-IN)
PART OF 273-0799 BUCKET GP-HOE
AN ATTACHMENT

SMCS-6503 **i02427585**

NOTE	REF NO	GRAPHIC REF	PART NUMBER	QTY	PART NAME 1 2 3 4 5 6 (PRODUCT LEVEL)	SEE PAGE
	1	1	**249-4211**	4	PLATE	
	2	1	*272-7920*	1	PLATE AS (RH)	
		1	**272-7918**	1	EDGE (RH)	
	3	1	*272-7921*	1	PLATE AS (LH)	
		1	**272-7919**	1	EDGE (LH)	
	4	1	**273-1463**	1	EDGE	

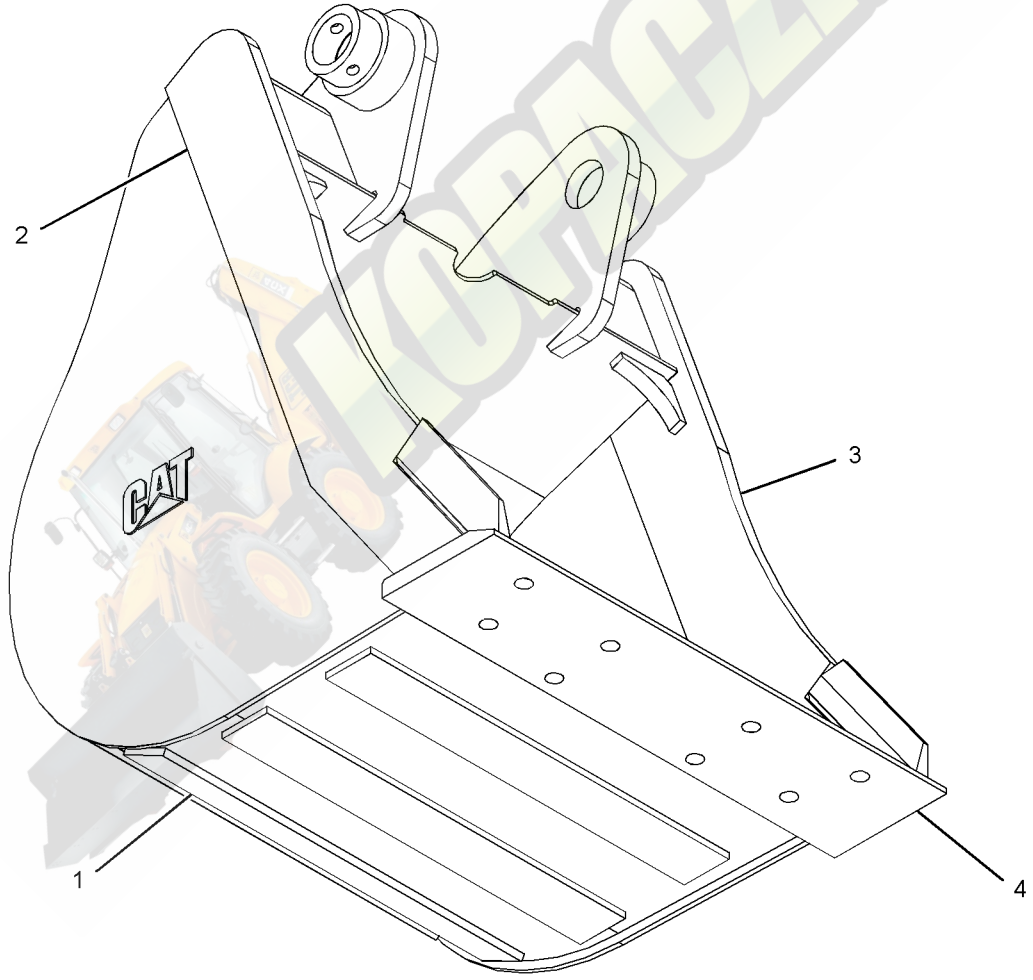

GRAPHIC #1 **<END>** g01214857

273-0863 BUCKET AS-HOE—HEAVY-DUTY

S/N: JBA1-UP
458-MM (18-IN)
PART OF 273-0862 BUCKET GP-HOE
AN ATTACHMENT

SMCS-6503 **i02427594**

NOTE	REF NO	GRAPHIC REF	PART NUMBER	QTY	PART NAME 1 2 3 4 5 6 (PRODUCT LEVEL)	SEE PAGE
	1	1	**272-6369**	4	PLATE	
	2	1	*272-7920*	1	PLATE AS (RH)	
		1	**272-7918**	1	EDGE (RH)	
	3	1	*272-7921*	1	PLATE AS (LH)	
		1	**272-7919**	1	EDGE (LH)	
	4	1	**273-1462**	1	EDGE	

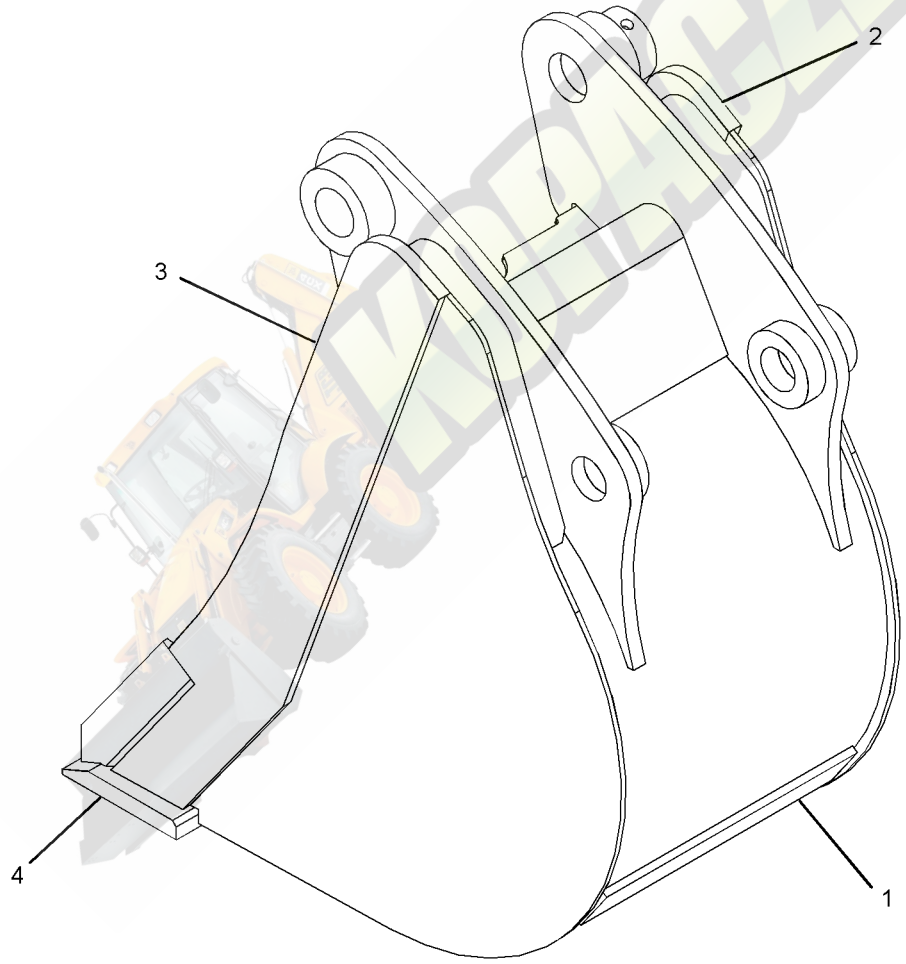

GRAPHIC #1 **<END>** g01215030

WORK TOOLS

273-1375 BUCKET AS-HOE

S/N: JBA1-UP
458-MM (18-IN)
PART OF 273-1374 BUCKET GP-HOE
AN ATTACHMENT

SMCS-6503 **i02427596**

NOTE	REF NO	GRAPHIC REF	PART NUMBER	QTY	PART NAME 1 2 3 4 5 6 (PRODUCT LEVEL)	SEE PAGE
	1	1	**273-1462**	1	EDGE	

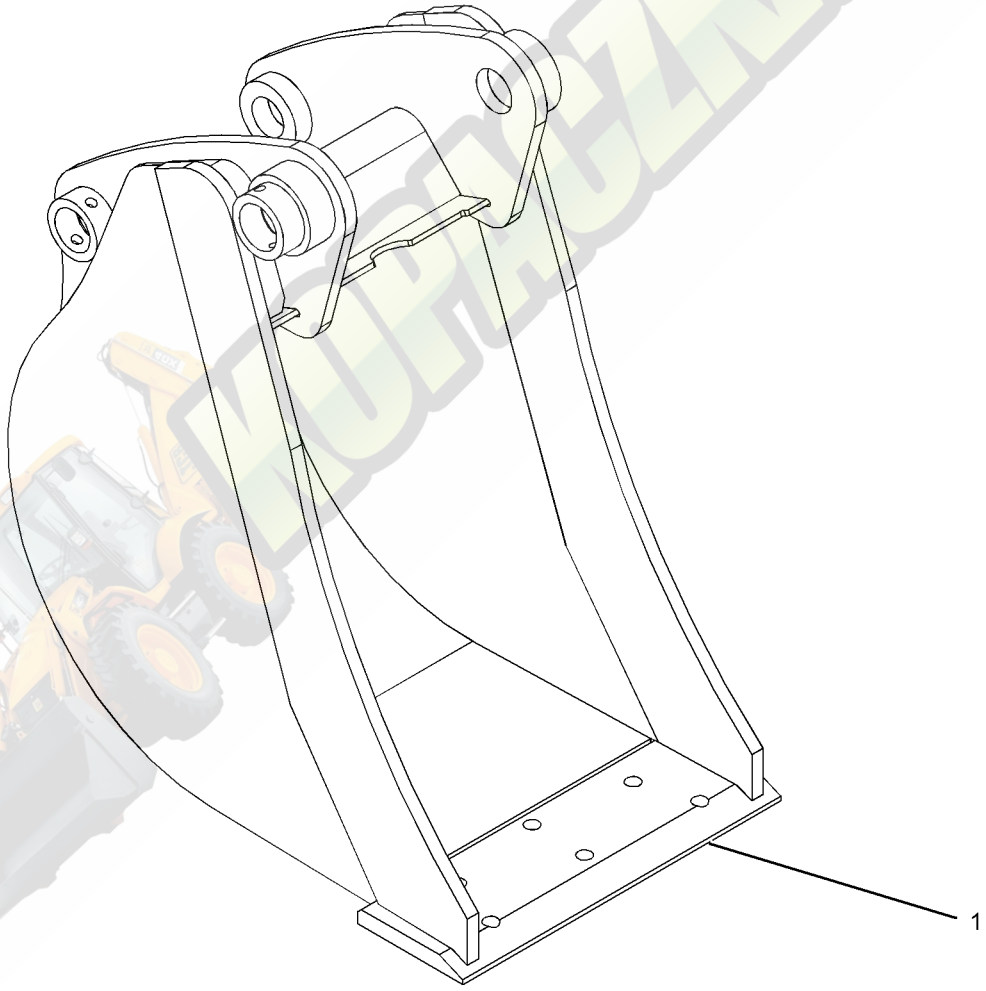

GRAPHIC #1 **<END>** g01215118

WORK TOOLS

273-1949 BUCKET AS-HOE

S/N: JBA1-UP
610-MM (24-IN)
PART OF 273-1948 BUCKET GP-HOE
AN ATTACHMENT

SMCS-6503 **i02427601**

NOTE	REF NO	GRAPHIC REF	PART NUMBER	QTY	PART NAME 1 2 3 4 5 6 (PRODUCT LEVEL)	SEE PAGE
	1	1	**273-1463**	1	EDGE	

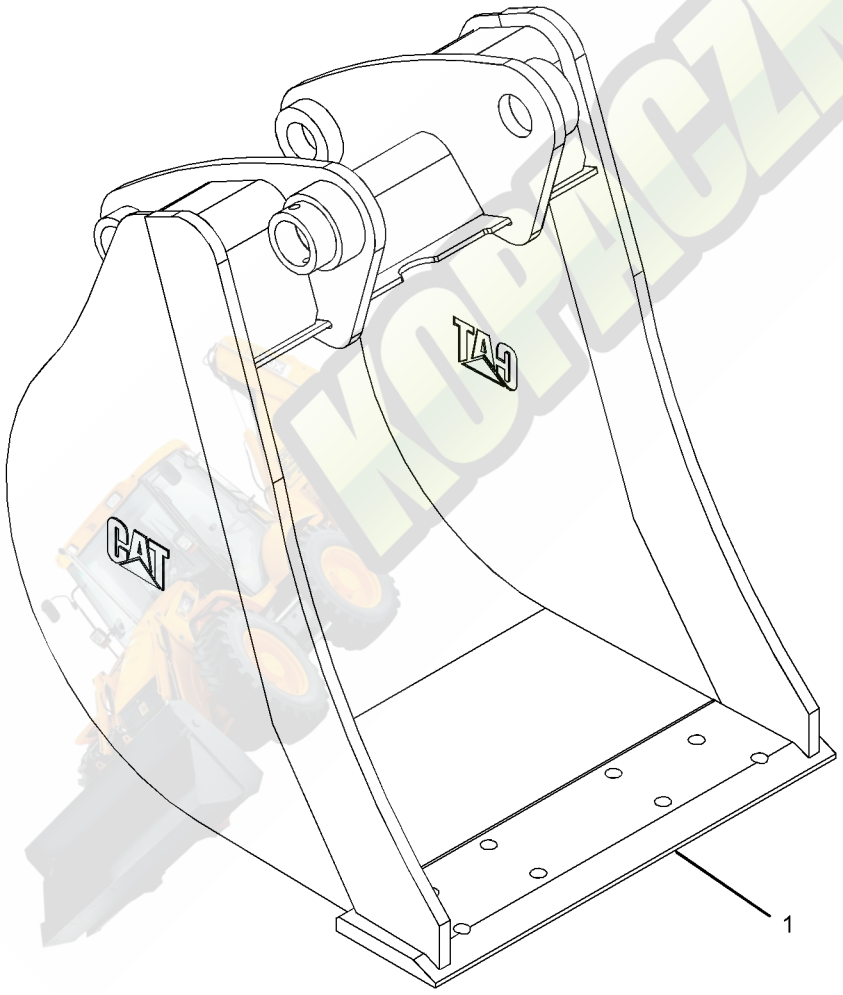

GRAPHIC #1 **<END>** g01215716

WORK TOOLS

273-1951 BUCKET AS-HOE

S/N: JBA1-UP
762-MM (30-IN)
PART OF 273-1950 BUCKET GP-HOE
AN ATTACHMENT

SMCS-6503 **i02427603**

NOTE	REF NO	GRAPHIC REF	PART NUMBER	QTY	PART NAME 1 2 3 4 5 6 (PRODUCT LEVEL)	SEE PAGE
	1	1	**273-1465**	1	EDGE	

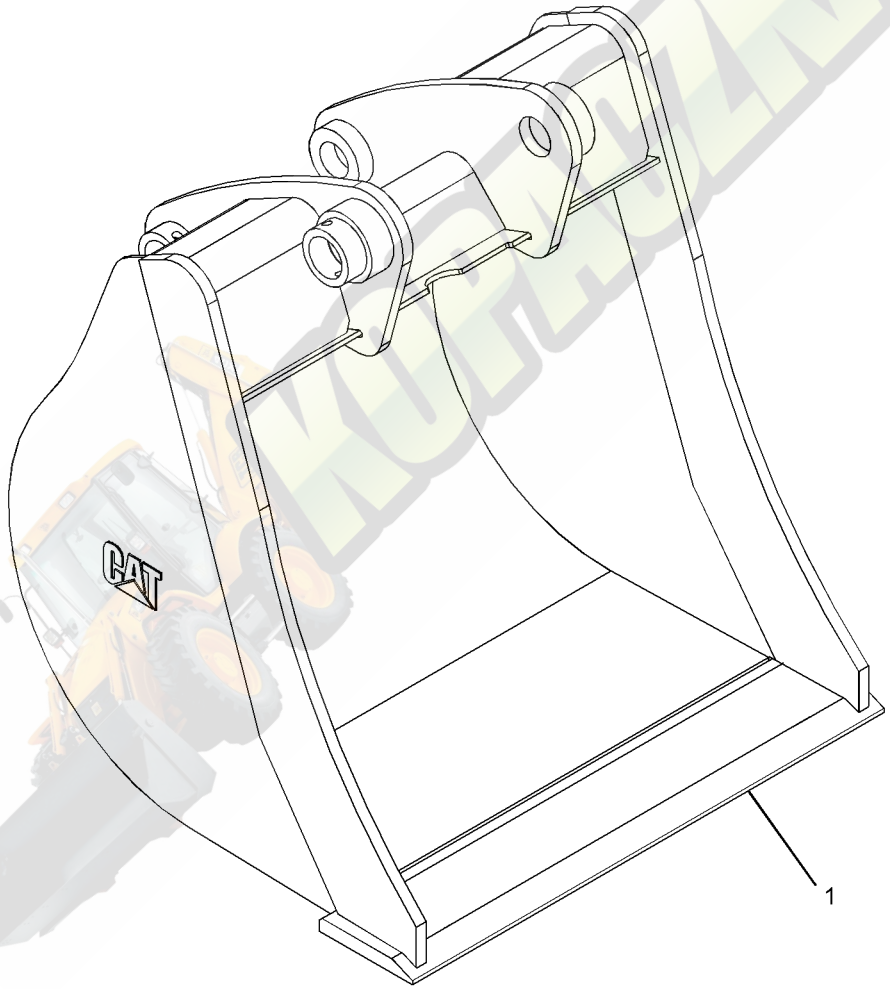

GRAPHIC #1 **<END>** g01215693

273-1958 BUCKET AS-HOE

S/N: JBA1-UP
914-MM (36-IN)
PART OF 273-1957 BUCKET GP-HOE
AN ATTACHMENT

SMCS-6503 **i02427609**

NOTE	REF NO	GRAPHIC REF	PART NUMBER	QTY	PART NAME 1 2 3 4 5 6 (PRODUCT LEVEL)	SEE PAGE
	1	1	**273-1466**	1	EDGE	

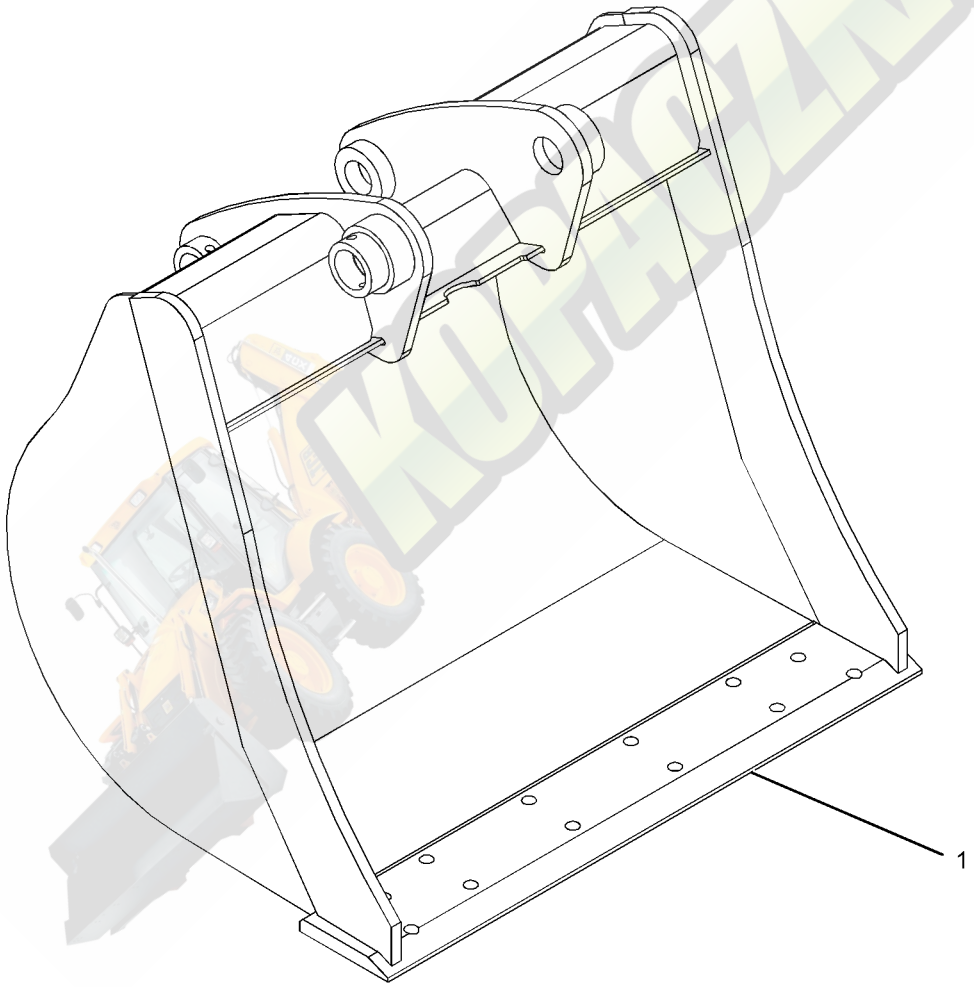

GRAPHIC #1 **<END>** g01215767

WORK TOOLS

273-3733 BUCKET AS-HOE—HEAVY-DUTY

S/N: JBA1-UP
305-MM (12-IN)
PART OF 273-3732 BUCKET GP-HOE
AN ATTACHMENT

SMCS-6503 **i02560416**

NOTE	REF NO	GRAPHIC REF	PART NUMBER	QTY	PART NAME 1 2 3 4 5 6 (PRODUCT LEVEL)	SEE PAGE
	1	1	*286-9340*	1	BRACKET AS (LH)	
		1	**9R-0320**	1	BEARING-SLEEVE	
		1	**154-5257**	1	BEARING-SLEEVE	
	2	1	*286-9338*	1	BRACKET AS (RH)	
		1	**9R-0320**	1	BEARING-SLEEVE	
		1	**154-5257**	1	BEARING-SLEEVE	
	3	1	**273-3599**	4	PLATE	
	4	1	**273-3730**	1	EDGE	
	5	1	*273-3755*	1	PLATE AS (RH)	
		1	**272-7918**	1	EDGE (RH)	
	6	1	*273-3756*	1	PLATE AS (LH)	
		1	**272-7919**	1	EDGE (LH)	

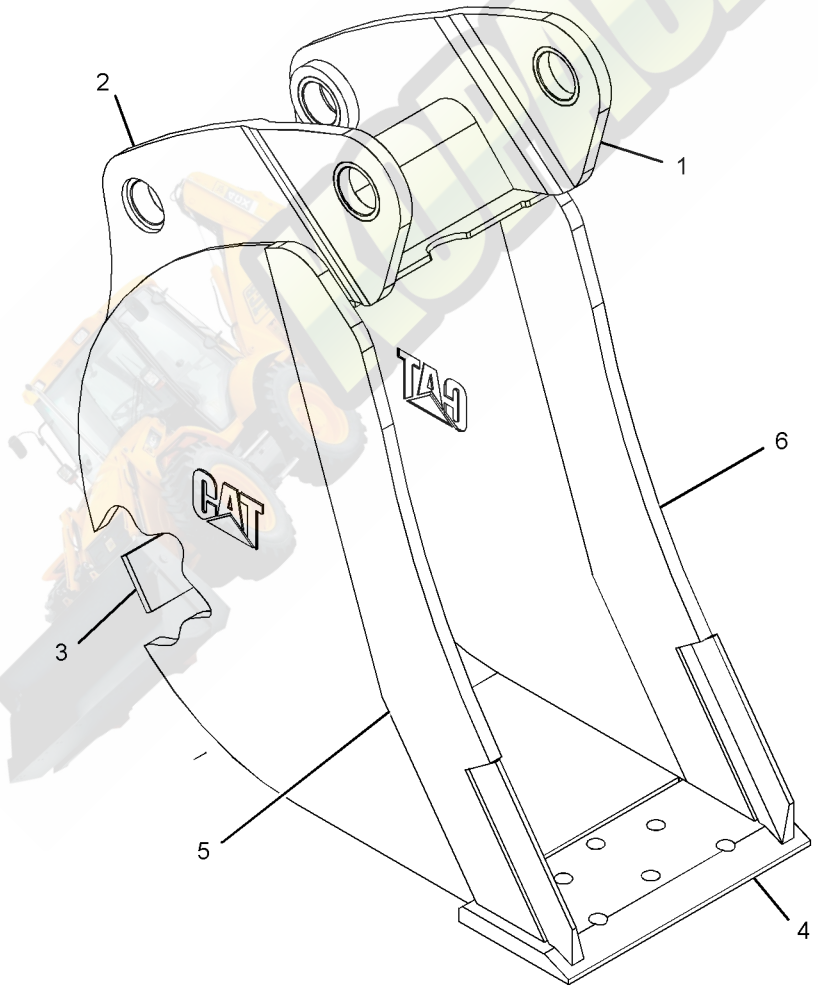

GRAPHIC #1 **<END>** g01215630

WORK TOOLS

273-3793 BUCKET AS-HOE

S/N: JBA1-UP
305-MM (12-IN)
PART OF 273-3792 BUCKET GP-HOE
AN ATTACHMENT

SMCS-6503 **i02523409**

NOTE	REF NO	GRAPHIC REF	PART NUMBER	QTY	PART NAME 1 2 3 4 5 6 (PRODUCT LEVEL)	SEE PAGE
	1	1	*286-9340*	1	BRACKET AS (LH)	
		1	**9R-0320**	1	BEARING-SLEEVE	
		1	**154-5257**	1	BEARING-SLEEVE	
	2	1	*286-9338*	1	BRACKET AS (RH)	
		1	**9R-0320**	1	BEARING-SLEEVE	
		1	**154-5257**	1	BEARING-SLEEVE	
	3	1	**273-3730**	1	EDGE	

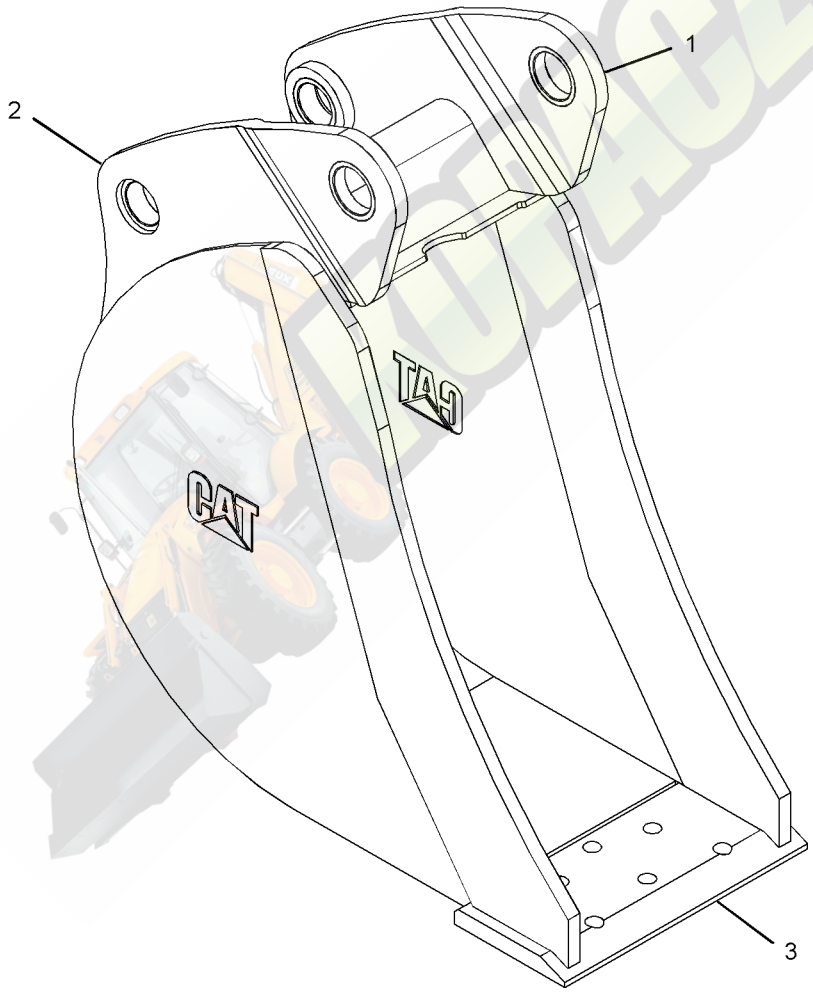

GRAPHIC #1 **<END>** g01215699

151-7887 BUCKET GP-HOE—HIGH CAPACITY

S/N: JBA1-UP
AN ATTACHMENT

SMCS-6503 **i03595462**

NOTE	REF NO	GRAPHIC REF	PART NUMBER	QTY	PART NAME 1 2 3 4 5 6 (PRODUCT LEVEL)	SEE PAGE
C	1	1	*135-8206*	3	TOOTH GP-UNI	
					(EACH INCLUDES)	
		1	**4F-3657**	2	BOLT-PLOW (5/8-11X2.75-IN)	
		1	**4K-0367**	2	NUT-FULL (5/8-11-THD)	
		1	**135-8203**	1	TOOTH-UNI	
	2	1	**137-4234**	1	PLATE-IDENTIFICATION (WORK TOOL)	
Y	3	1	*151-7829*	1	BUCKET AS-HOE	525
C	4	1	**168-8389**	4	TACK-FASTENER	

C-CHANGE FROM PREVIOUS TYPE
Y-SEPARATE ILLUSTRATION

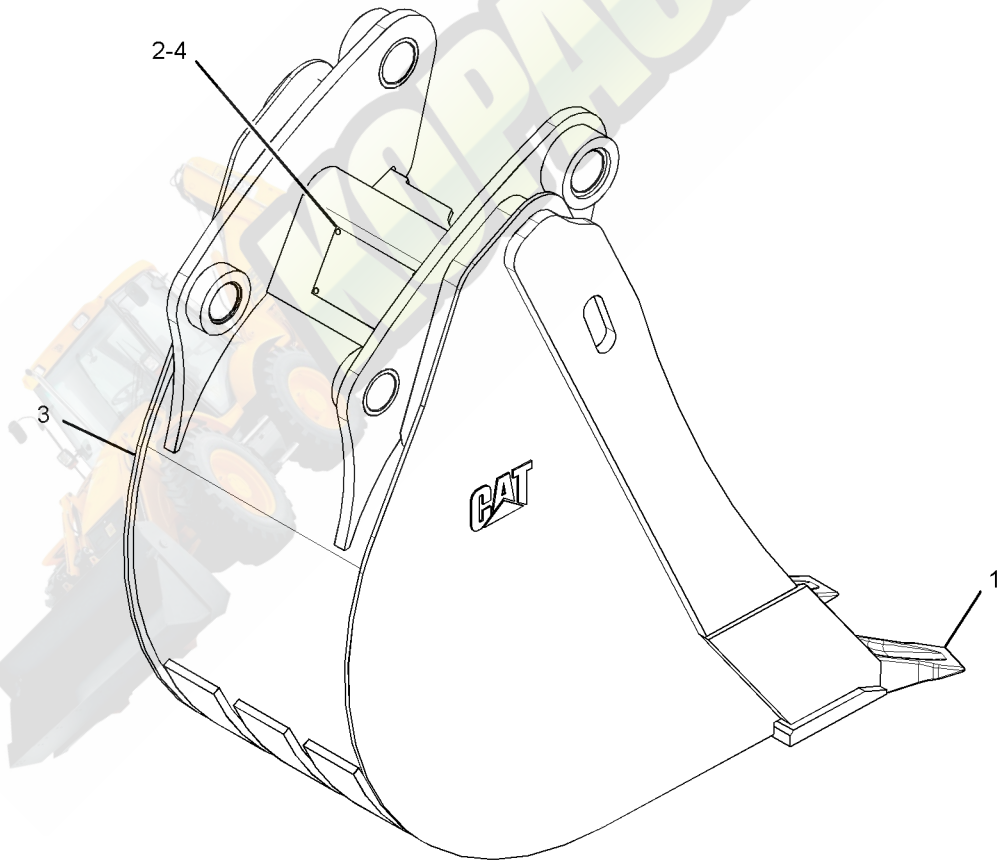

GRAPHIC #1 **<END>** g01398326

151-7888 BUCKET GP-HOE—HIGH CAPACITY

S/N: JBA1-UP
AN ATTACHMENT

SMCS-6503 **i03595481**

NOTE	REF NO	GRAPHIC REF	PART NUMBER	QTY	PART NAME 1 2 3 4 5 6 (PRODUCT LEVEL)	SEE PAGE
C	1	1	*135-8206*	4	TOOTH GP-UNI	
					(EACH INCLUDES)	
		1	**4F-3657**	2	BOLT-PLOW (5/8-11X2.75-IN)	
		1	**4K-0367**	2	NUT-FULL (5/8-11-THD)	
		1	**135-8203**	1	TOOTH-UNI	
	2	1	**137-4234**	1	PLATE-IDENTIFICATION (WORK TOOL)	
Y	3	1	*151-7830*	1	BUCKET AS-HOE	526
C	4	1	**168-8389**	4	TACK-FASTENER	

C-CHANGE FROM PREVIOUS TYPE
Y-SEPARATE ILLUSTRATION

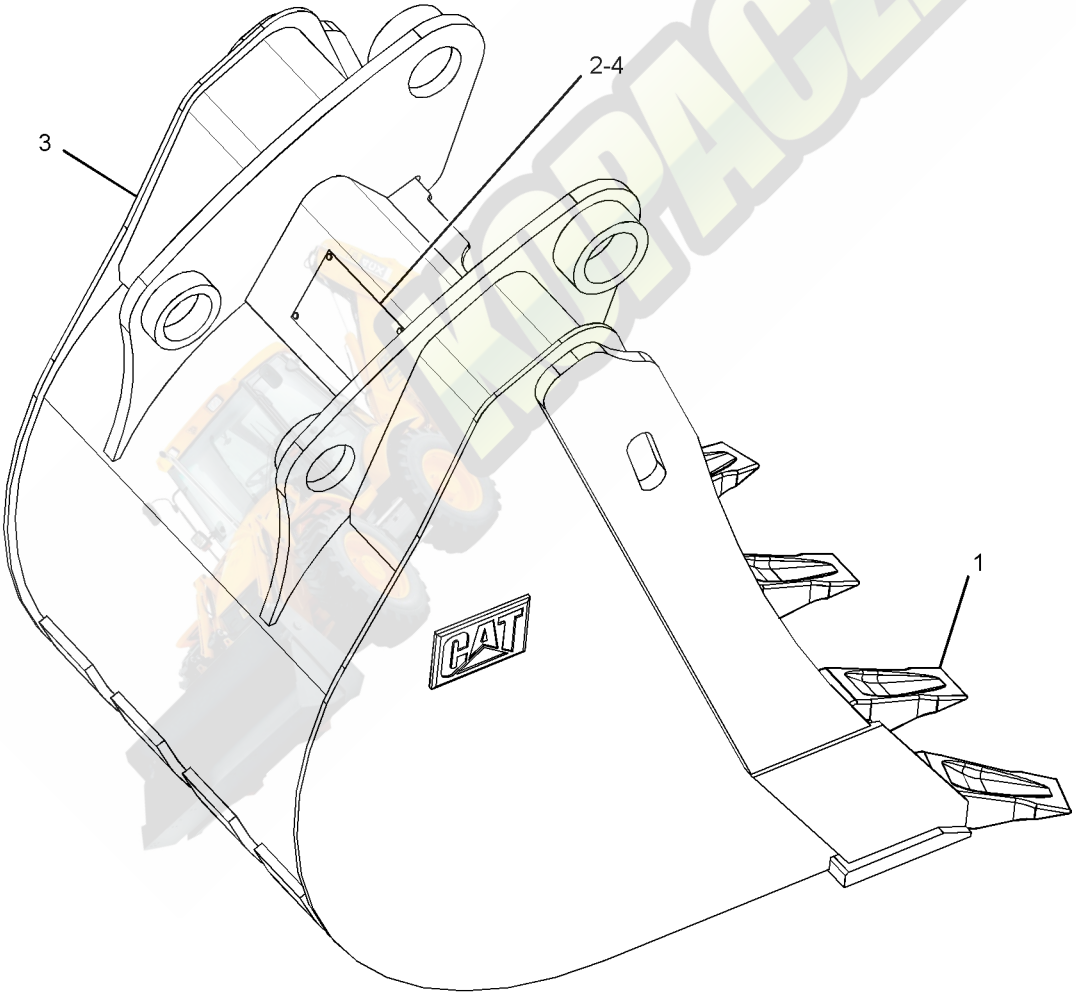

GRAPHIC #1 **<END>** g01398597

151-7889 BUCKET GP-HOE—HIGH CAPACITY

S/N: JBA1-UP
AN ATTACHMENT

SMCS-6503 **i03595500**

NOTE	REF NO	GRAPHIC REF	PART NUMBER	QTY	PART NAME 1 2 3 4 5 6 (PRODUCT LEVEL)	SEE PAGE
C	1	1	*135-8206*	5	TOOTH GP-UNI	
					(EACH INCLUDES)	
		1	**4F-3657**	2	BOLT-PLOW (5/8-11X2.75-IN)	
		1	**4K-0367**	2	NUT-FULL (5/8-11-THD)	
		1	**135-8203**	1	TOOTH-UNI	
	2	1	**137-4234**	1	PLATE-IDENTIFICATION (WORK TOOL)	
Y	3	1	*151-7831*	1	BUCKET AS-HOE	527
C	4	1	**168-8389**	4	TACK-FASTENER	

C-CHANGE FROM PREVIOUS TYPE
Y-SEPARATE ILLUSTRATION

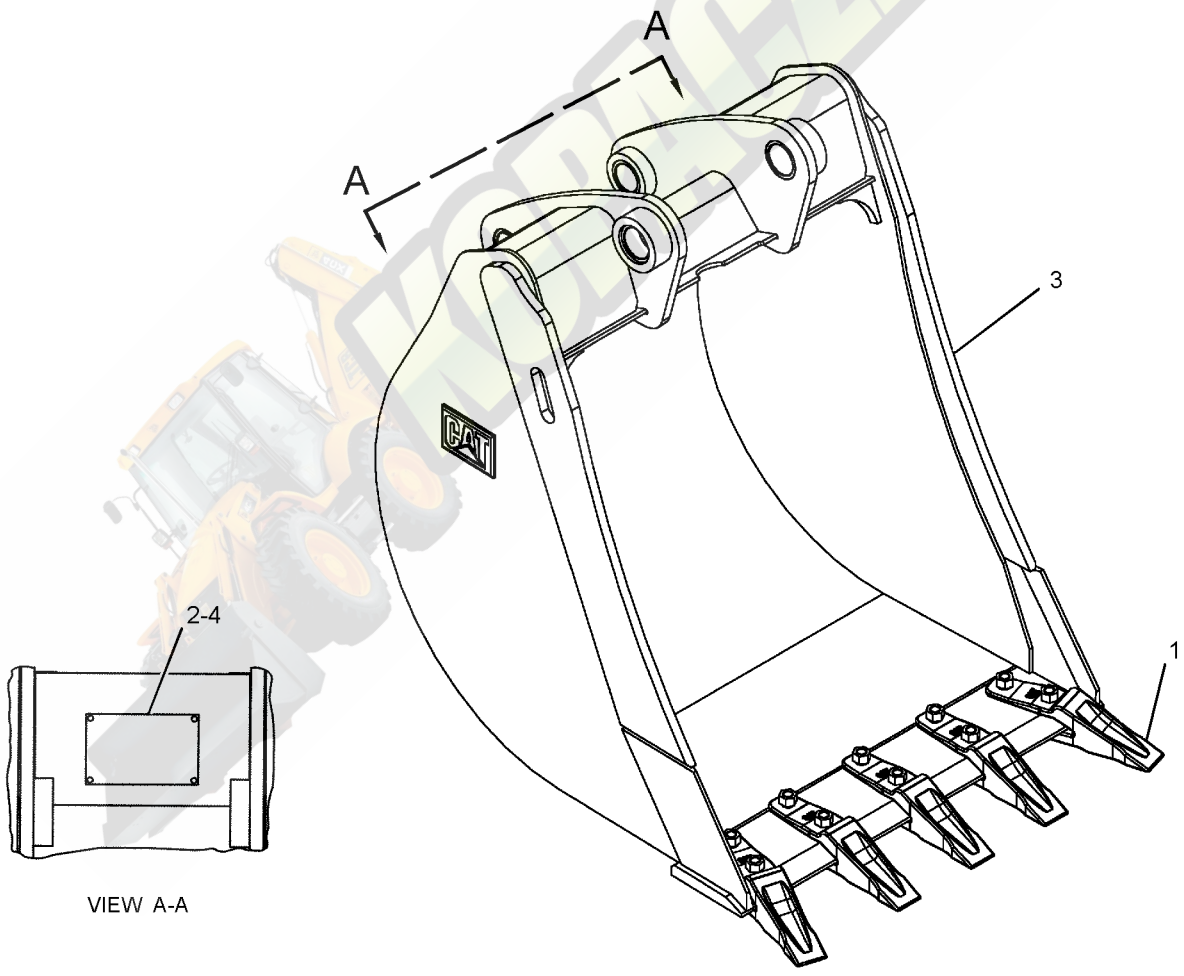

GRAPHIC #1 **<END>** g01356630

WORK TOOLS

151-7890 BUCKET GP-HOE—HIGH CAPACITY

S/N: JBA1-UP

AN ATTACHMENT

SMCS-6503 **i03595501**

NOTE	REF NO	GRAPHIC REF	PART NUMBER	QTY	PART NAME 1 2 3 4 5 6 (PRODUCT LEVEL)	SEE PAGE
C	1	1	*135-8206*	6	TOOTH GP-UNI	
					(EACH INCLUDES)	
		1	**4F-3657**	2	BOLT-PLOW (5/8-11X2.75-IN)	
		1	**4K-0367**	2	NUT-FULL (5/8-11-THD)	
		1	**135-8203**	1	TOOTH-UNI	
Y	2	1	*151-7832*	1	BUCKET AS-HOE	528
	3	1	**137-4234**	1	PLATE-IDENTIFICATION (WORK TOOL)	
	4	1	**168-8389**	4	TACK-FASTENER	

C-CHANGE FROM PREVIOUS TYPE
Y-SEPARATE ILLUSTRATION

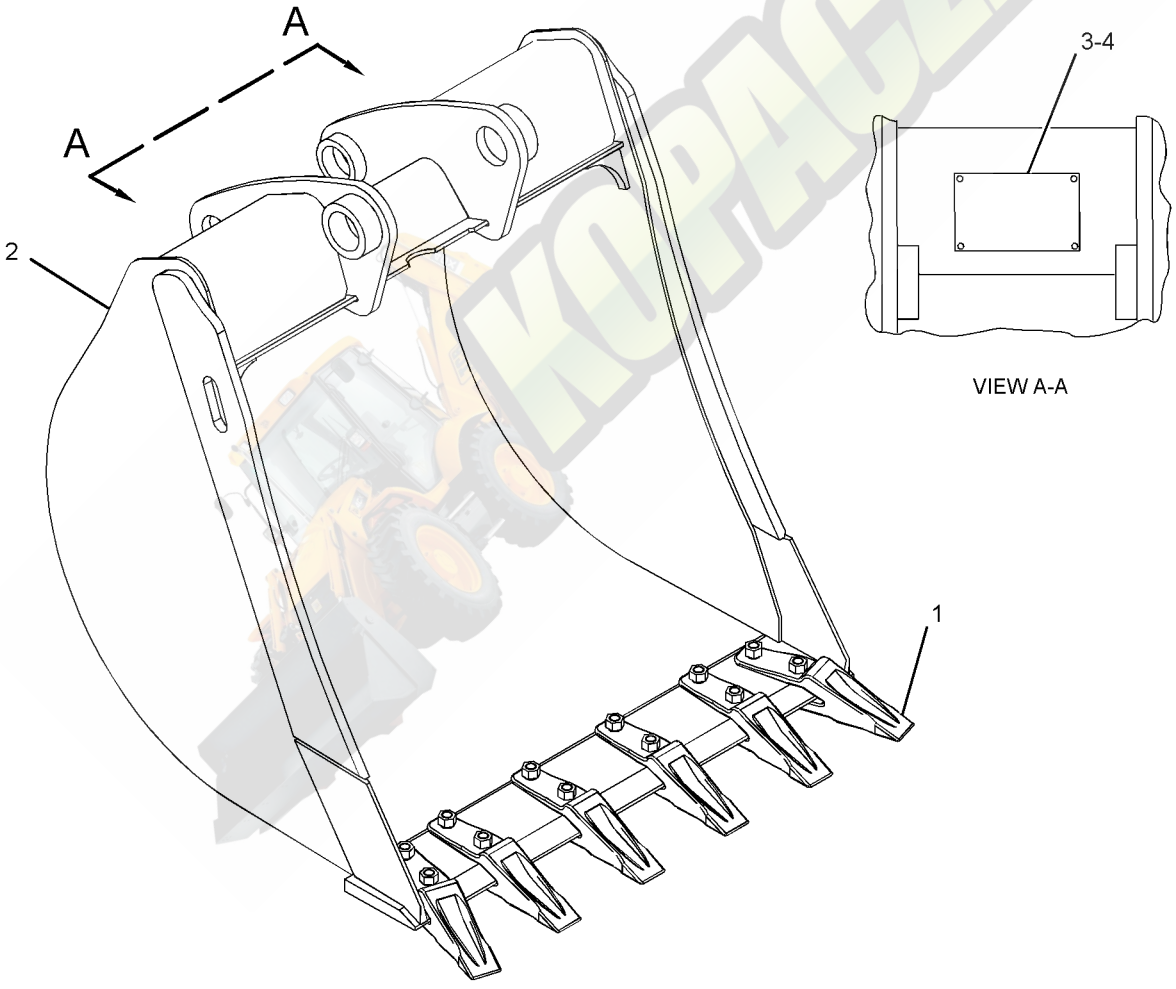

GRAPHIC #1 **<END>** g01925157

219-3390 BUCKET GP-HOE—HIGH CAPACITY

S/N: JBA1-UP

AN ATTACHMENT

SMCS-6503 **i02651418**

NOTE	REF NO	GRAPHIC REF	PART NUMBER	QTY	PART NAME 1 2 3 4 5 6 (PRODUCT LEVEL)	SEE PAGE
	1	1	**137-4234**	1	PLATE-IDENTIFICATION (WORK TOOL)	
	2	1	**168-8389**	4	TACK-FASTENER	
	3		*208-5245*	4	TIP GP-PENETRATION	
					(EACH INCLUDES)	
		1	**201-1238**	1	PIN	
		1	**201-1239**	1	RETAINER AS	
		1	**208-5235**	1	TIP-PENETRATION	
Y	4	1	*219-3366*	1	BUCKET AS-HOE	530

Y-SEPARATE ILLUSTRATION

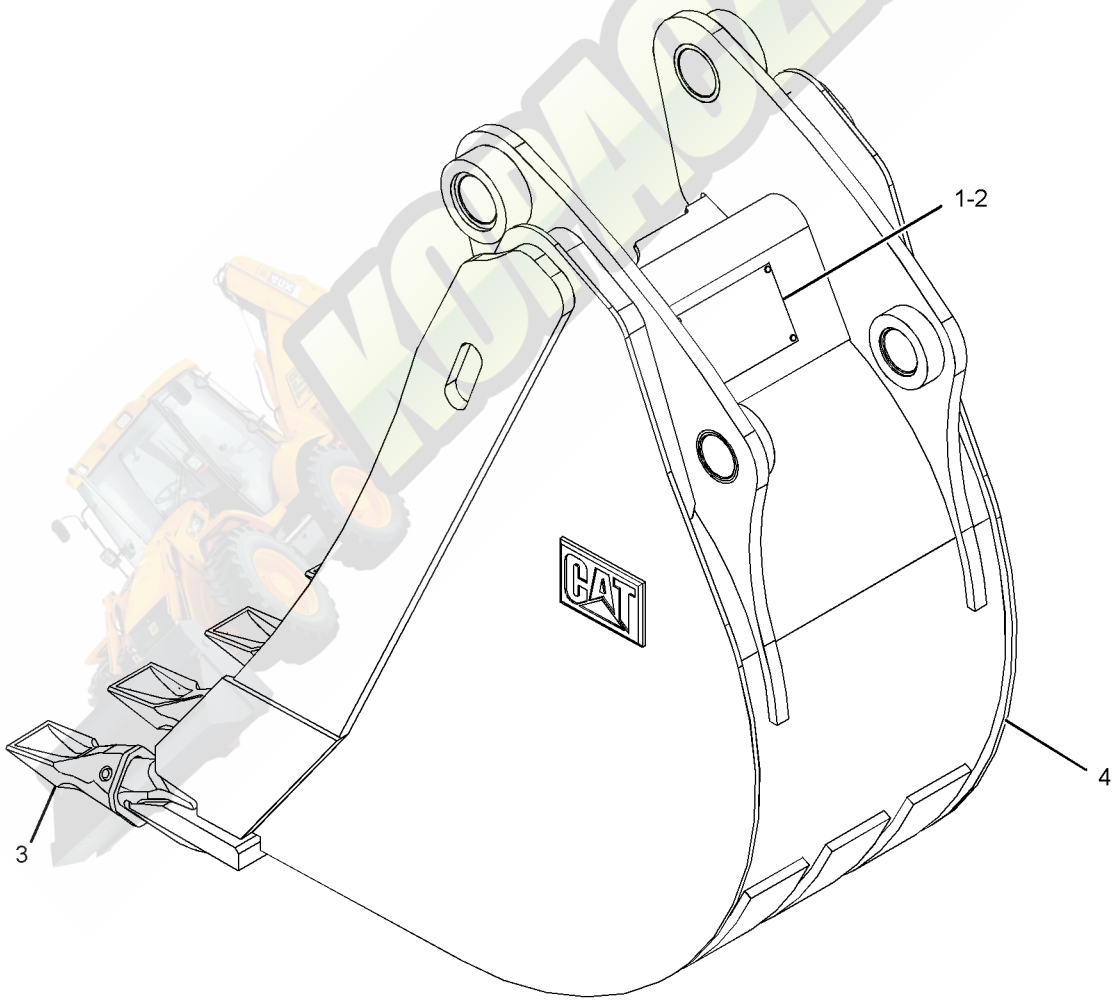

GRAPHIC #1 **<END>** g01337541

WORK TOOLS

219-3391 BUCKET GP-HOE—HIGH CAPACITY

S/N: JBA1-UP
AN ATTACHMENT

SMCS-6503 **i02651581**

NOTE	REF NO	GRAPHIC REF	PART NUMBER	QTY	PART NAME 1 2 3 4 5 6 (PRODUCT LEVEL)	SEE PAGE
	1	1	**137-4234**	1	PLATE-IDENTIFICATION (WORK TOOL)	
	2	1	**168-8389**	4	TACK-FASTENER	
	3	1	*208-5245*	5	TIP GP-PENETRATION	
					(EACH INCLUDES)	
		1	**201-1238**	1	PIN	
		1	**201-1239**	1	RETAINER AS	
		1	**208-5235**	1	TIP-PENETRATION	
Y	4	1	*219-3367*	1	BUCKET AS-HOE	531

Y-SEPARATE ILLUSTRATION

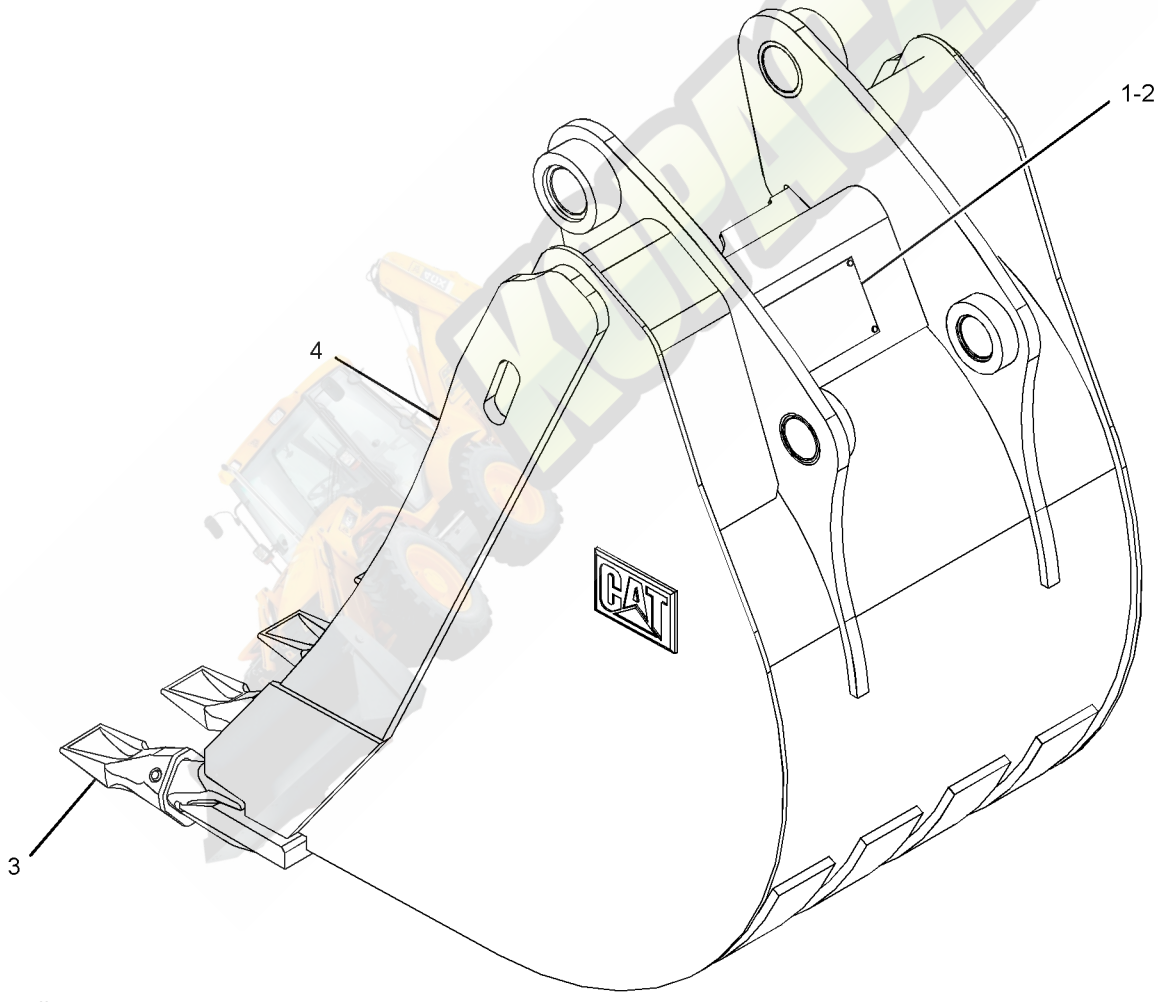

GRAPHIC #1 **<END>** g01341952

219-3392 BUCKET GP-HOE—HIGH CAPACITY

S/N: JBA1-UP

AN ATTACHMENT

SMCS-6503 **i02651585**

NOTE	REF NO	GRAPHIC REF	PART NUMBER	QTY	PART NAME 1 2 3 4 5 6 (PRODUCT LEVEL)	SEE PAGE
	1	1	**137-4234**	1	PLATE-IDENTIFICATION (WORK TOOL)	
	2	1	**168-8389**	4	TACK-FASTENER	
	3	1	*208-5245*	5	TIP GP-PENETRATION	
					(EACH INCLUDES)	
		1	**201-1238**	1	PIN	
		1	**201-1239**	1	RETAINER AS	
		1	**208-5235**	1	TIP-PENETRATION	
Y	4	1	*219-3368*	1	BUCKET AS-HOE	532

Y-SEPARATE ILLUSTRATION

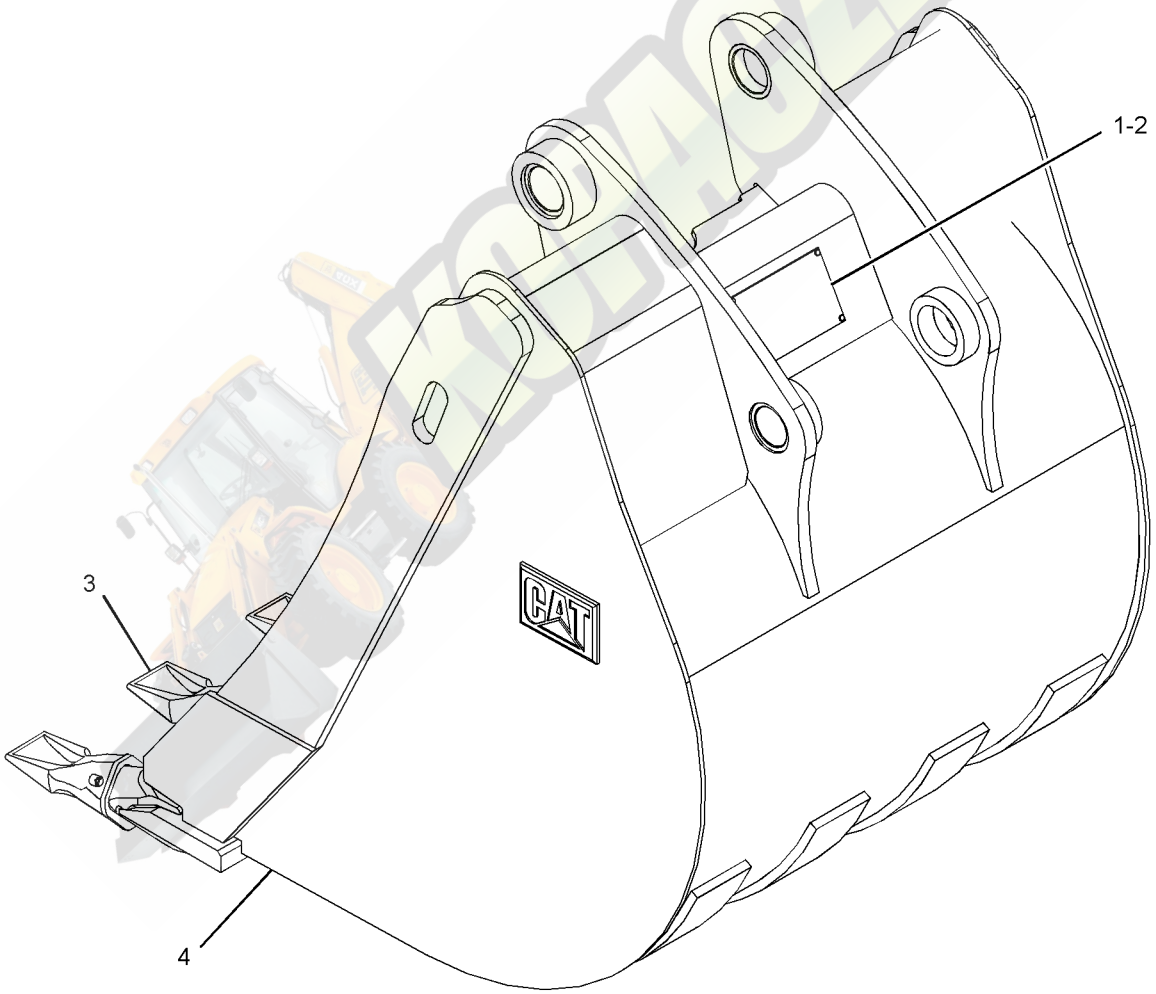

GRAPHIC #1 **<END>** g01341920

WORK TOOLS

219-3393 BUCKET GP-HOE—HIGH CAPACITY

S/N: JBA1-UP

AN ATTACHMENT

SMCS-6503 **i02651587**

NOTE	REF NO	GRAPHIC REF	PART NUMBER	QTY	PART NAME 1 2 3 4 5 6 (PRODUCT LEVEL)	SEE PAGE
	1	1	**137-4234**	1	PLATE-IDENTIFICATION (WORK TOOL)	
	2	1	**168-8389**	4	TACK-FASTENER	
	3		*208-5245*	6	TIP GP-PENETRATION	
					(EACH INCLUDES)	
		1	**201-1238**	1	PIN	
		1	**201-1239**	1	RETAINER AS	
		1	**208-5235**	1	TIP-PENETRATION	
Y	4	1	*219-3369*	1	BUCKET AS-HOE	533

Y-SEPARATE ILLUSTRATION

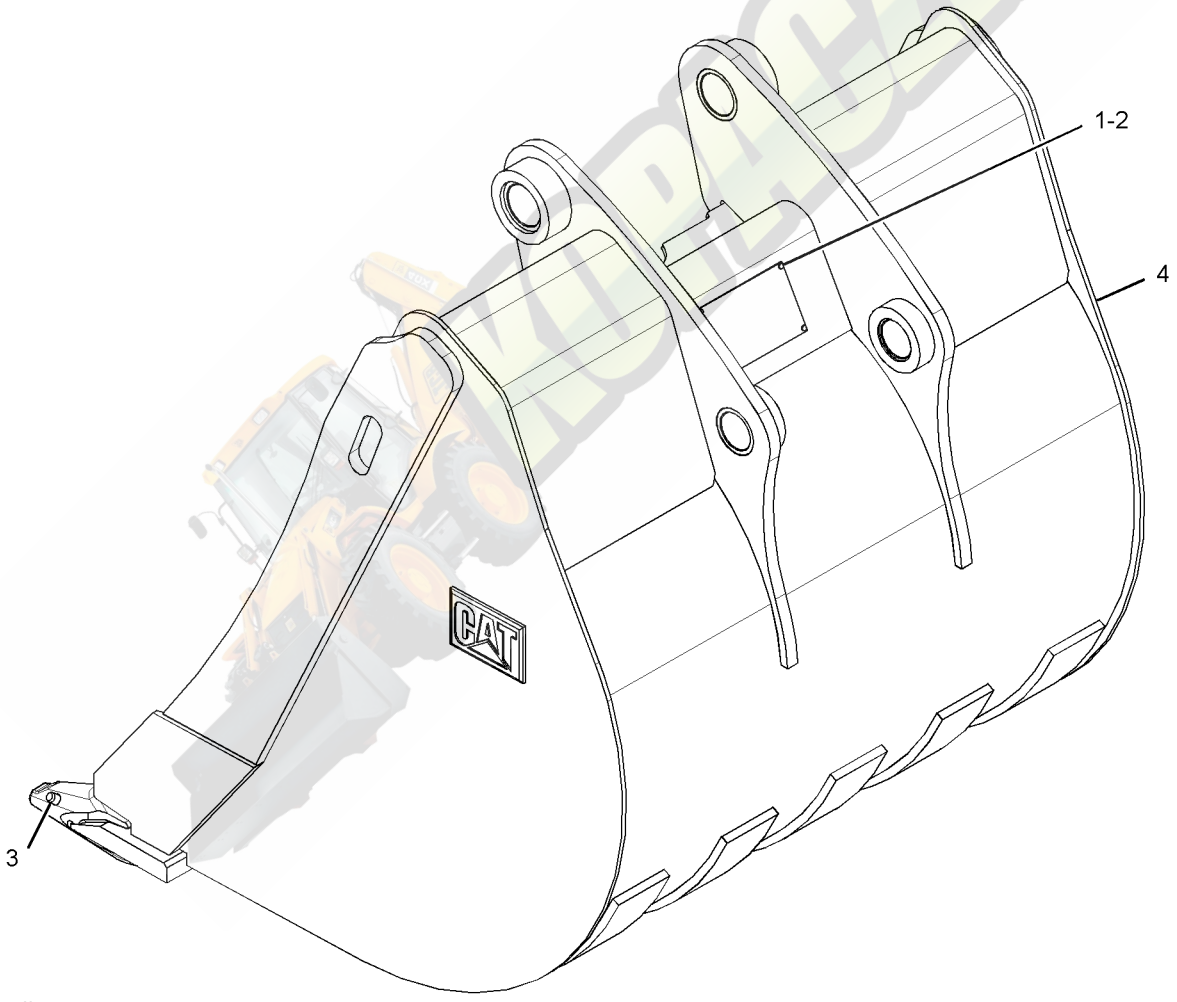

GRAPHIC #1 **<END>** g01336804

249-4221 BUCKET GP-HOE—HEAVY-DUTY

S/N: JBA1-UP
AN ATTACHMENT

SMCS-6503 **i02399270**

NOTE	REF NO	GRAPHIC REF	PART NUMBER	QTY	PART NAME 1 2 3 4 5 6 (PRODUCT LEVEL)	SEE PAGE
	1	1	**137-4234**	1	PLATE-IDENTIFICATION (WORK TOOL)	
	2	1	**168-8389**	4	TACK-FASTENER	
	3	1	*208-5245*	5	TIP GP-PENETRATION	
					(EACH INCLUDES)	
		1	**201-1238**	1	PIN	
		1	**201-1239**	1	RETAINER AS	
		1	**208-5235**	1	TIP-PENETRATION	
Y	4	1	*249-4220*	1	BUCKET AS-HOE	534
M	5	1	**8T-4133**	4	NUT (M10X1.5-THD)	
M	6	1	**8T-4178**	2	BOLT (M10X1.5X90-MM)	

M-METRIC PART
Y-SEPARATE ILLUSTRATION

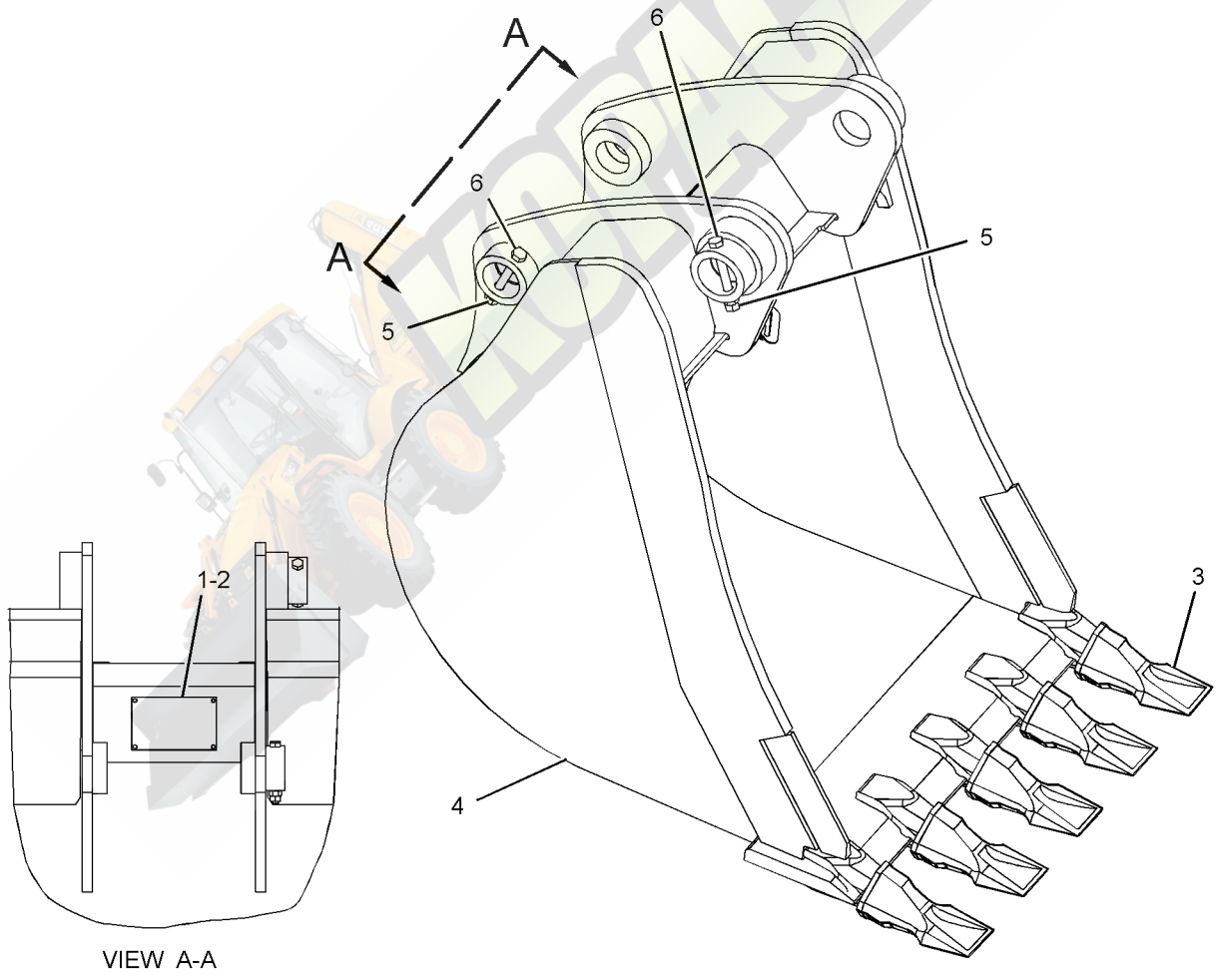

VIEW A-A

GRAPHIC #1 **<END>** g01200276

WORK TOOLS

272-6410 BUCKET GP-HOE—HEAVY-DUTY

S/N: JBA1-UP
AN ATTACHMENT

SMCS-6503 **i02425851**

NOTE	REF NO	GRAPHIC REF	PART NUMBER	QTY	PART NAME 1 2 3 4 5 6 (PRODUCT LEVEL)	SEE PAGE
	1	1	**137-4234**	1	PLATE-IDENTIFICATION (WORK TOOL)	
	2	1	**168-8389**	4	TACK-FASTENER	
	3	1	*208-5245*	4	TIP GP-PENETRATION	
					(EACH INCLUDES)	
		1	**201-1238**	1	PIN	
		1	**201-1239**	1	RETAINER AS	
		1	**208-5235**	1	TIP-PENETRATION	
Y	4	1	*272-6411*	1	BUCKET AS-HOE	535
M	5	1	**8T-4133**	4	NUT (M10X1.5-THD)	
M	6	1	**8T-4178**	2	BOLT (M10X1.5X90-MM)	

M-METRIC PART
Y-SEPARATE ILLUSTRATION

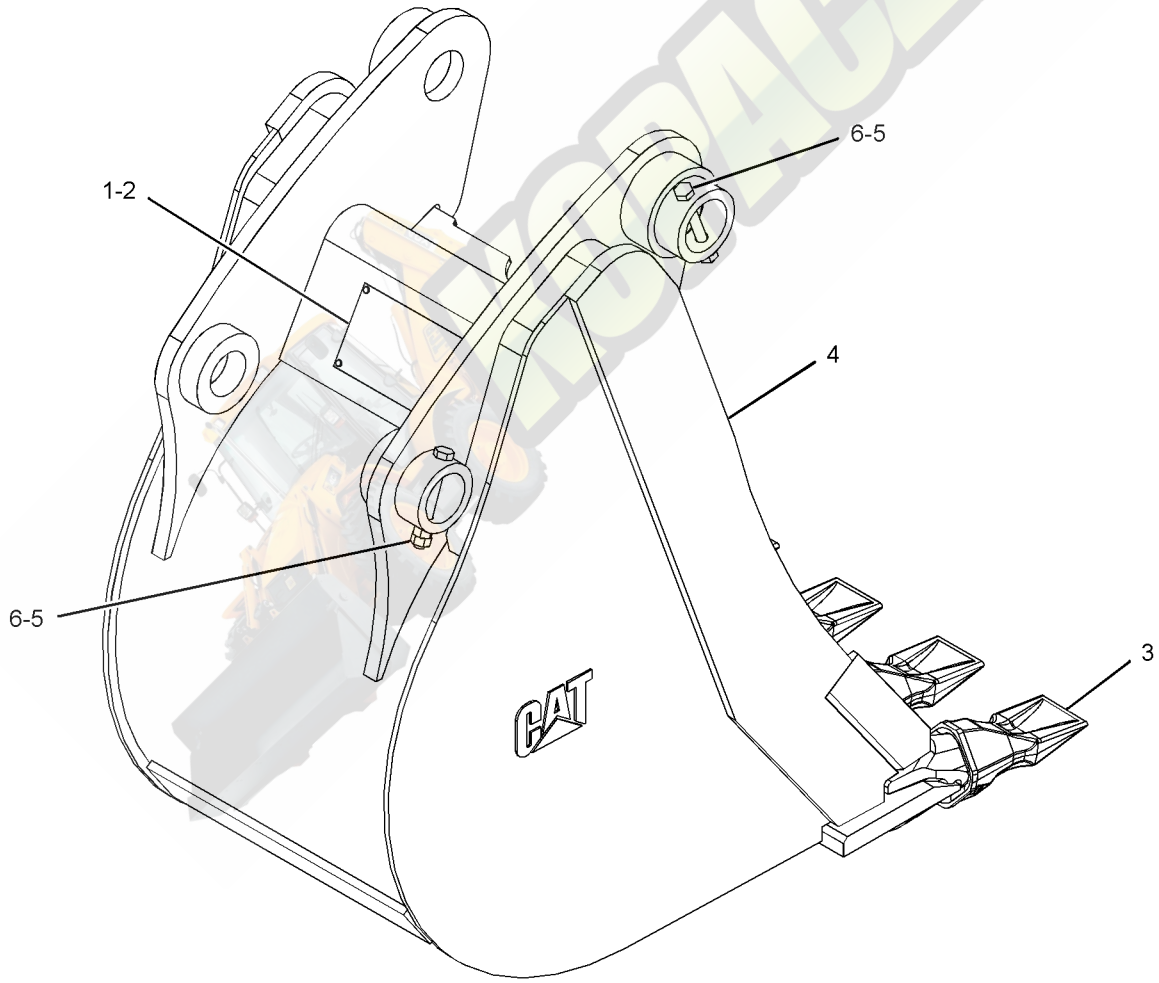

GRAPHIC #1 **<END>** g01214807

272-7872 BUCKET GP-HOE—HEAVY-DUTY

S/N: JBA1-UP
AN ATTACHMENT

SMCS-6503 **i02425880**

NOTE	REF NO	GRAPHIC REF	PART NUMBER	QTY	PART NAME 1 2 3 4 5 6 (PRODUCT LEVEL)	SEE PAGE
	1	1	**137-4234**	1	PLATE-IDENTIFICATION (WORK TOOL)	
	2	1	**168-8389**	4	TACK-FASTENER	
	3	1	*208-5245*	5	TIP GP-PENETRATION	
					(EACH INCLUDES)	
		1	**201-1238**	1	PIN	
		1	**201-1239**	1	RETAINER AS	
		1	**208-5235**	1	TIP-PENETRATION	
Y	4	1	*272-7873*	1	BUCKET AS-HOE	536
M	5	1	**8T-4133**	4	NUT (M10X1.5-THD)	
M	6	1	**8T-4178**	2	BOLT (M10X1.5X90-MM)	

M-METRIC PART
Y-SEPARATE ILLUSTRATION

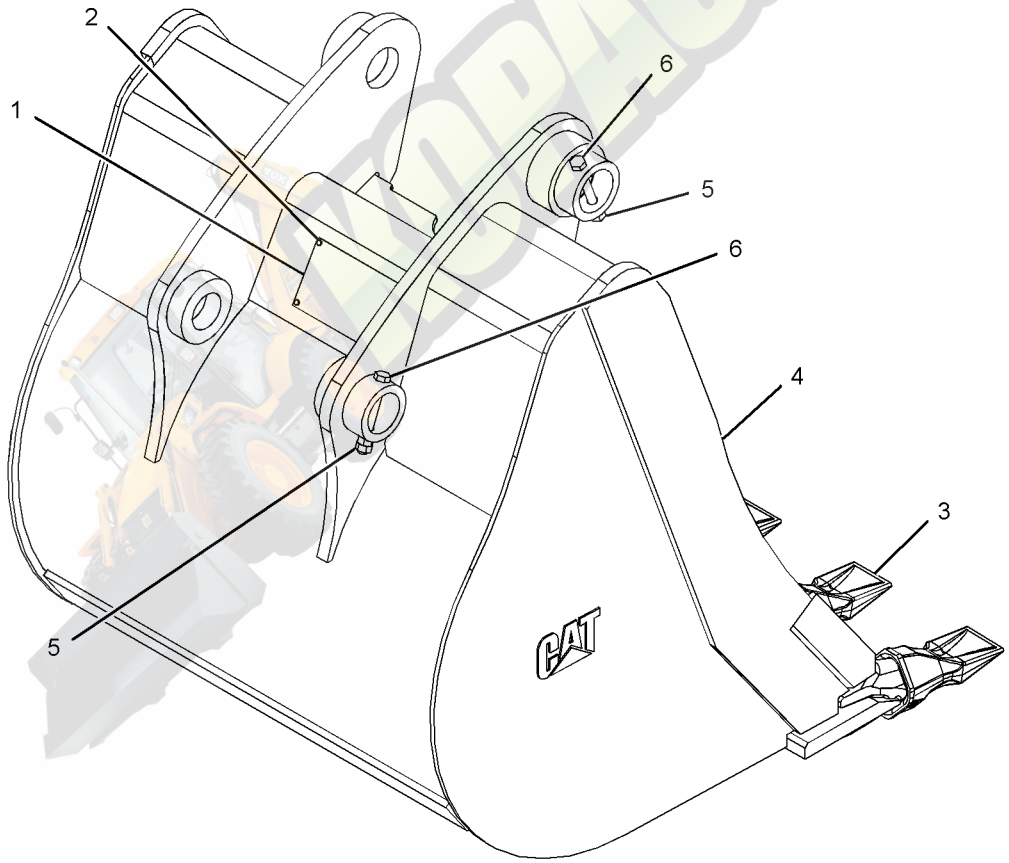

GRAPHIC #1 **<END>** g01215020

WORK TOOLS

272-9234 BUCKET GP-HOE—HEAVY-DUTY

S/N: JBA1-UP
AN ATTACHMENT

SMCS-6503 **i02427535**

NOTE	REF NO	GRAPHIC REF	PART NUMBER	QTY	PART NAME 1 2 3 4 5 6 (PRODUCT LEVEL)	SEE PAGE
	1	1	**137-4234**	1	PLATE-IDENTIFICATION (WORK TOOL)	
	2	1	**168-8389**	4	TACK-FASTENER	
	3	1	*208-5245*	6	TIP GP-PENETRATION	
					(EACH INCLUDES)	
		1	**201-1238**	1	PIN	
		1	**201-1239**	1	RETAINER AS	
		1	**208-5235**	1	TIP-PENETRATION	
Y	4	1	*272-9235*	1	BUCKET AS-HOE	537
M	5	1	**8T-4133**	4	NUT (M10X1.5-THD)	
M	6	1	**8T-4178**	2	BOLT (M10X1.5X90-MM)	

M-METRIC PART
Y-SEPARATE ILLUSTRATION

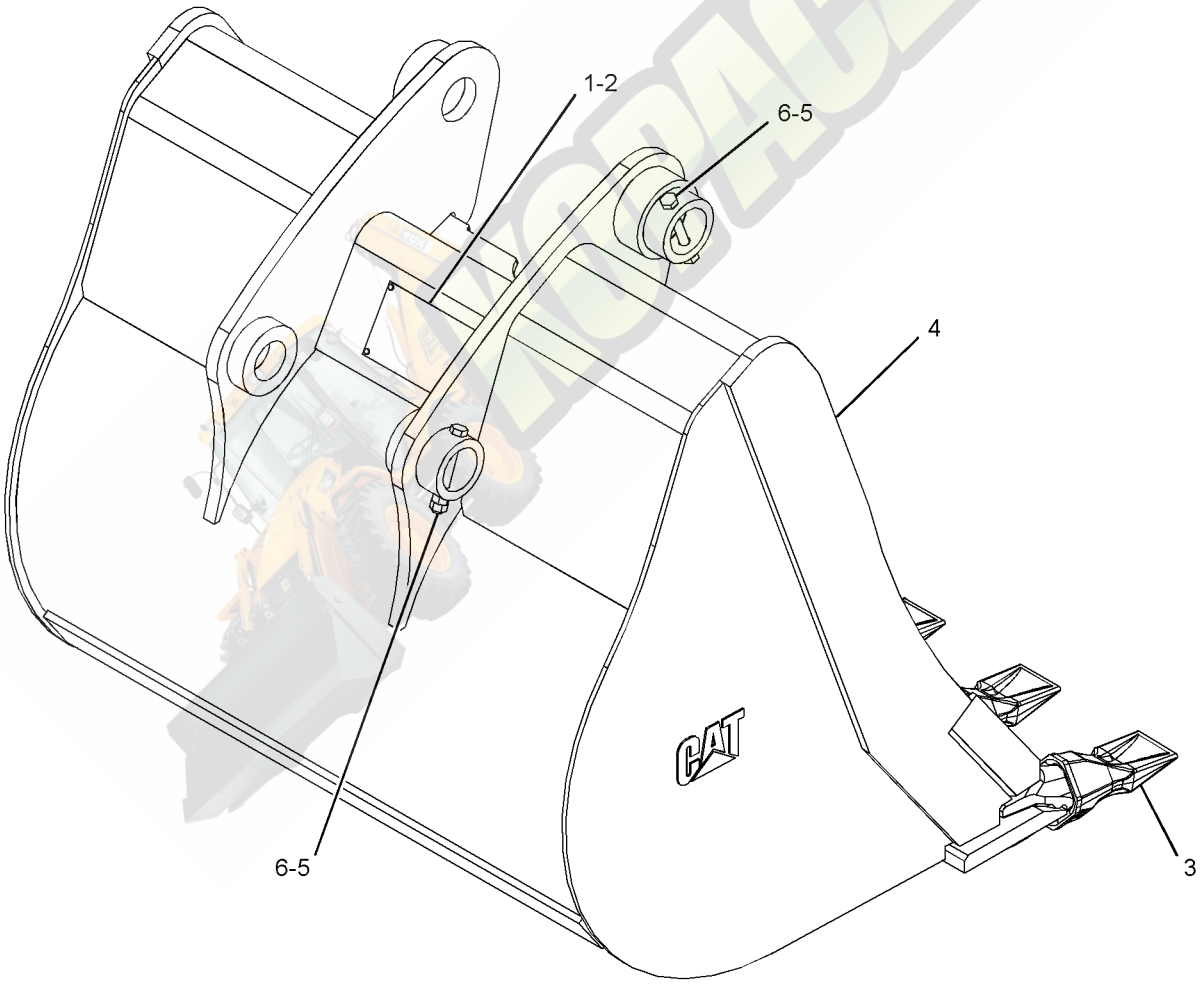

GRAPHIC #1 **<END>** g01214243

WORK TOOLS

272-9608 BUCKET GP-HOE—HEAVY-DUTY

S/N: JBA1-UP

AN ATTACHMENT

SMCS-6503 **i03599041**

NOTE	REF NO	GRAPHIC REF	PART NUMBER	QTY	PART NAME 1 2 3 4 5 6 (PRODUCT LEVEL)	SEE PAGE
	1	1	*135-8206*	6	TOOTH GP-UNI	
					(EACH INCLUDES)	
		1	**4F-3657**	2	BOLT-PLOW (5/8-11X2.75-IN)	
		1	**4K-0367**	2	NUT-FULL (5/8-11-THD)	
		1	**135-8203**	1	TOOTH-UNI	
	2	1	**137-4234**	1	PLATE-IDENTIFICATION (WORK TOOL)	
	3	1	**168-8389**	4	TACK-FASTENER	
Y	4	1	*272-9609*	1	BUCKET AS-HOE	538
M	5	1	**8T-4133**	4	NUT (M10X1.5-THD)	
M	6	1	**8T-4178**	2	BOLT (M10X1.5X90-MM)	

M-METRIC PART
Y-SEPARATE ILLUSTRATION

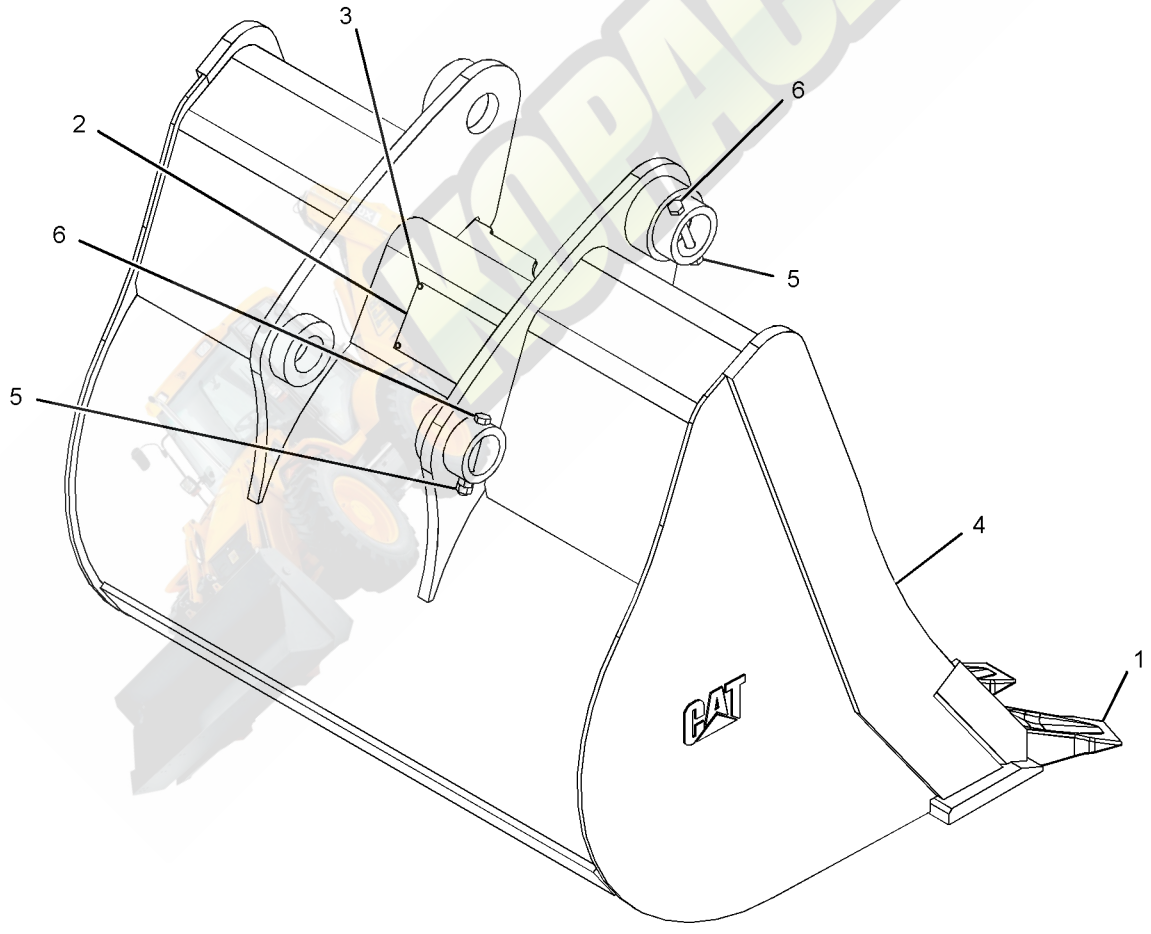

GRAPHIC #1 **<END>** g01215725

WORK TOOLS

273-0042 BUCKET GP-HOE—HEAVY-DUTY

S/N: JBA1-UP

AN ATTACHMENT

SMCS-6503 **i03599042**

NOTE	REF NO	GRAPHIC REF	PART NUMBER	QTY	PART NAME 1 2 3 4 5 6 (PRODUCT LEVEL)	SEE PAGE
	1	1	*135-8206*	5	TOOTH GP-UNI	
					(EACH INCLUDES)	
		1	**4F-3657**	2	BOLT-PLOW (5/8-11X2.75-IN)	
		1	**4K-0367**	2	NUT-FULL (5/8-11-THD)	
		1	**135-8203**	1	TOOTH-UNI	
	2	1	**137-4234**	1	PLATE-IDENTIFICATION (WORK TOOL)	
	3	1	**168-8389**	4	TACK-FASTENER	
Y	4	1	*273-0043*	1	BUCKET AS-HOE	539
M	5	1	**8T-4133**	4	NUT (M10X1.5-THD)	
M	6	1	**8T-4178**	2	BOLT (M10X1.5X90-MM)	

M-METRIC PART
Y-SEPARATE ILLUSTRATION

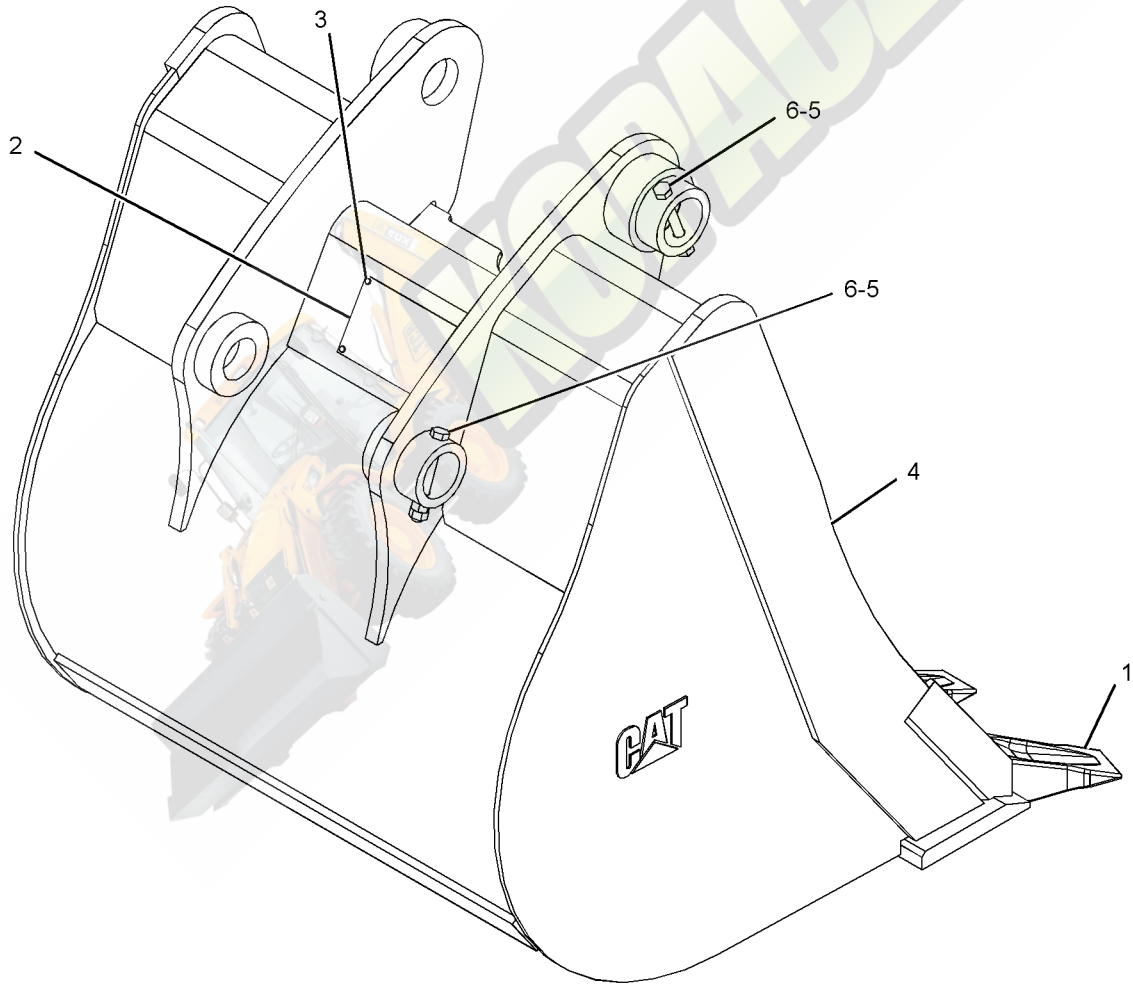

GRAPHIC #1 **<END>** g01214208

WORK TOOLS

273-0093 BUCKET GP-HOE—HEAVY-DUTY

S/N: JBA1-UP
AN ATTACHMENT

SMCS-6503 **i02427582**

NOTE	REF NO	GRAPHIC REF	PART NUMBER	QTY	PART NAME 1 2 3 4 5 6 (PRODUCT LEVEL)	SEE PAGE
	1	1	**137-4234**	1	PLATE-IDENTIFICATION (WORK TOOL)	
	2	1	**168-8389**	4	TACK-FASTENER	
	3	1	*208-5245*	3	TIP GP-PENETRATION	
					(EACH INCLUDES)	
		1	**201-1238**	1	PIN	
		1	**201-1239**	1	RETAINER AS	
		1	**208-5235**	1	TIP-PENETRATION	
Y	4	1	*273-0094*	1	BUCKET AS-HOE	540
M	5	1	**8T-4133**	4	NUT (M10X1.5-THD)	
M	6	1	**8T-4178**	2	BOLT (M10X1.5X90-MM)	

M-METRIC PART
Y-SEPARATE ILLUSTRATION

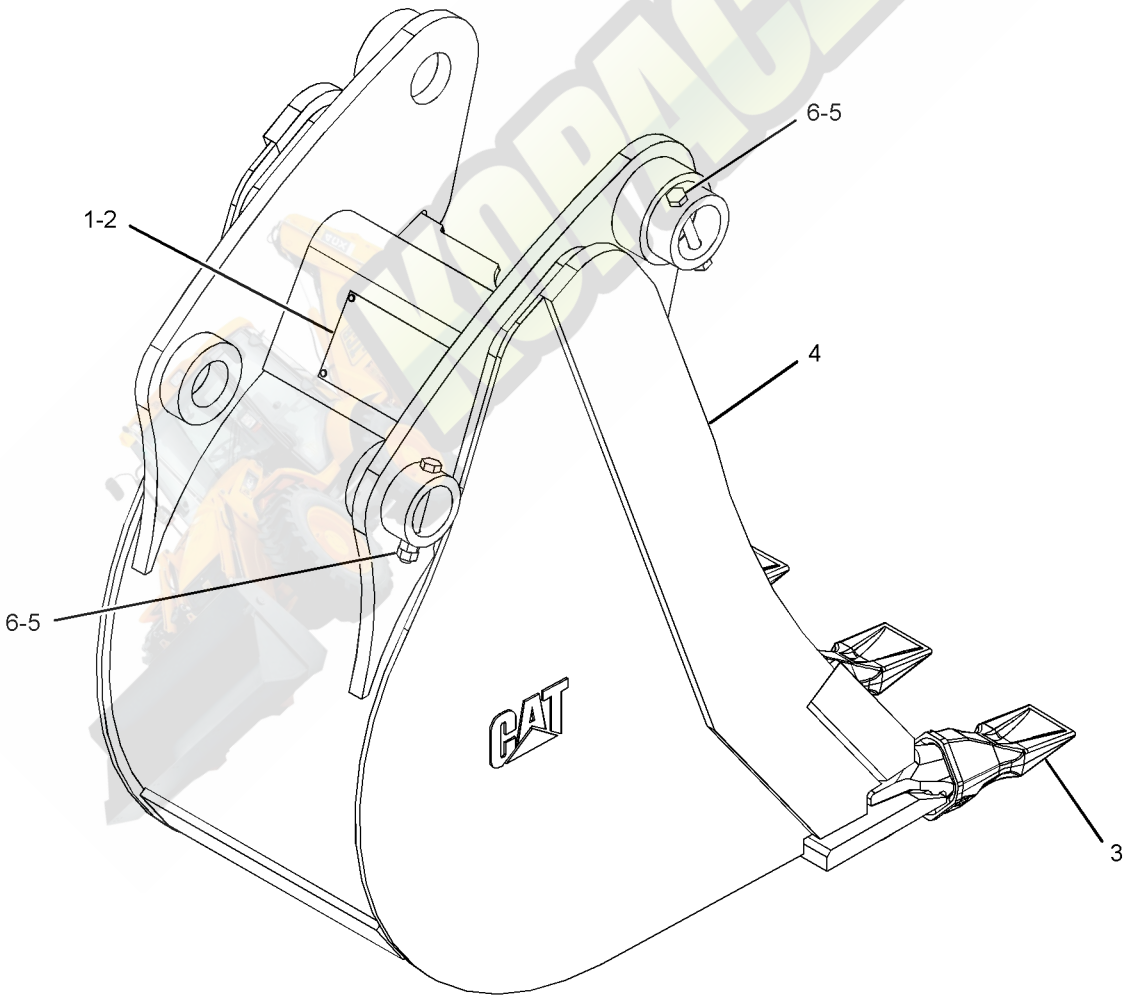

GRAPHIC #1 **<END>** g01214837

WORK TOOLS

273-0799 BUCKET GP-HOE—HEAVY-DUTY

S/N: JBA1-UP

AN ATTACHMENT

SMCS-6503 **i03599045**

NOTE	REF NO	GRAPHIC REF	PART NUMBER	QTY	PART NAME 1 2 3 4 5 6 (PRODUCT LEVEL)	SEE PAGE
	1	1	*135-8206*	4	TOOTH GP-UNI	
					(EACH INCLUDES)	
		1	**4F-3657**	2	BOLT-PLOW (5/8-11X2.75-IN)	
		1	**4K-0367**	2	NUT-FULL (5/8-11-THD)	
		1	**135-8203**	1	TOOTH-UNI	
	2	1	**137-4234**	1	PLATE-IDENTIFICATION (WORK TOOL)	
	3	1	**168-8389**	4	TACK-FASTENER	
Y	4	1	*273-0800*	1	BUCKET AS-HOE	541
M	5	1	**8T-4133**	4	NUT (M10X1.5-THD)	
M	6	1	**8T-4178**	2	BOLT (M10X1.5X90-MM)	

M-METRIC PART
Y-SEPARATE ILLUSTRATION

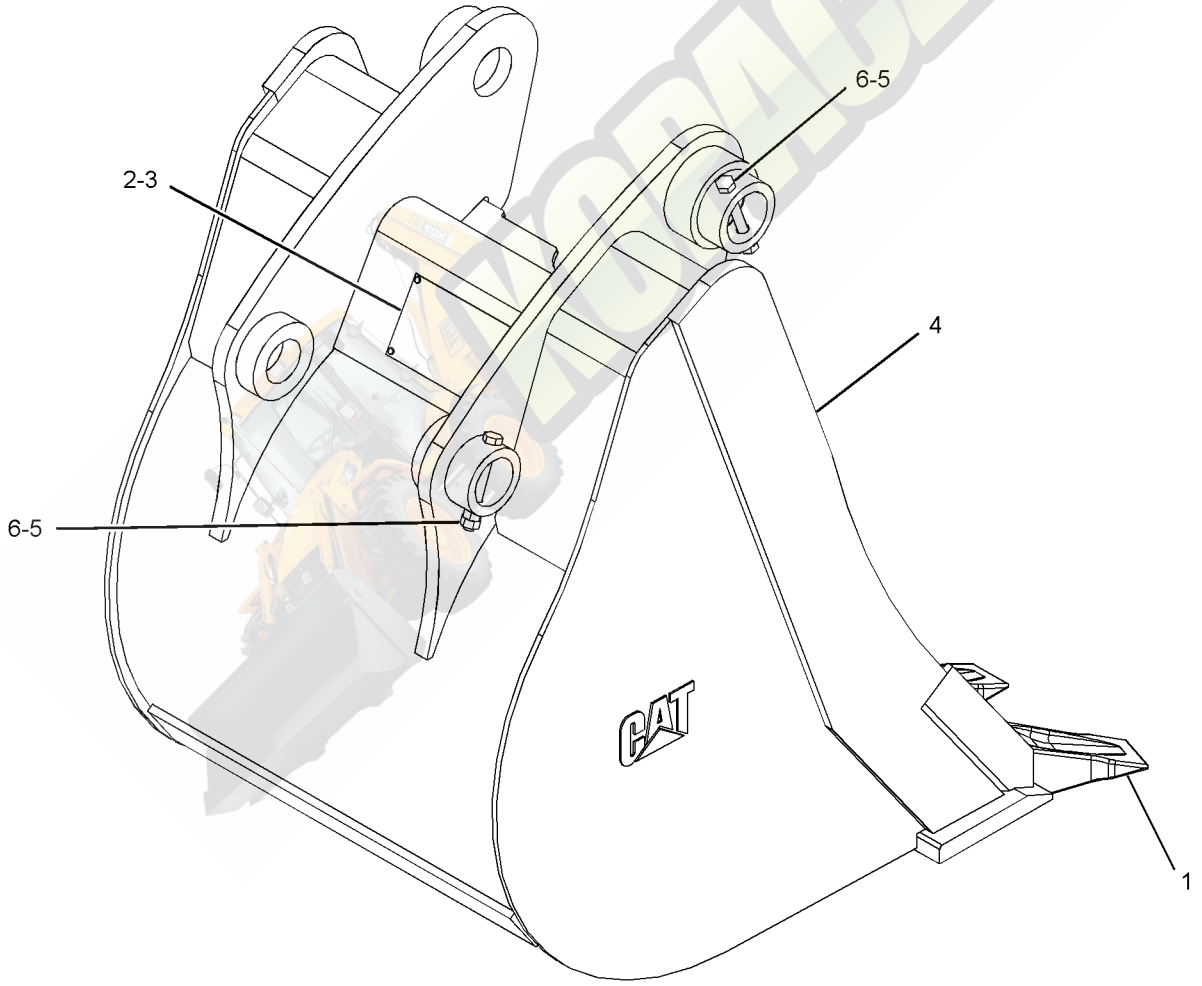

GRAPHIC #1 **<END>** g01214824

273-0862 BUCKET GP-HOE—HEAVY-DUTY

S/N: JBA1-UP
AN ATTACHMENT

SMCS-6503 **i03599047**

NOTE	REF NO	GRAPHIC REF	PART NUMBER	QTY	PART NAME 1 2 3 4 5 6 (PRODUCT LEVEL)	SEE PAGE
	1	1	*135-8206*	3	TOOTH GP-UNI	
					(EACH INCLUDES)	
		1	**4F-3657**	2	BOLT-PLOW (5/8-11X2.75-IN)	
		1	**4K-0367**	2	NUT-FULL (5/8-11-THD)	
		1	**135-8203**	1	TOOTH-UNI	
	2	1	**137-4234**	1	PLATE-IDENTIFICATION (WORK TOOL)	
	3	1	**168-8389**	4	TACK-FASTENER	
Y	4	1	*273-0863*	1	BUCKET AS-HOE	542
M	5	1	**8T-4133**	4	NUT (M10X1.5-THD)	
M	6	1	**8T-4178**	2	BOLT (M10X1.5X90-MM)	

M-METRIC PART
Y-SEPARATE ILLUSTRATION

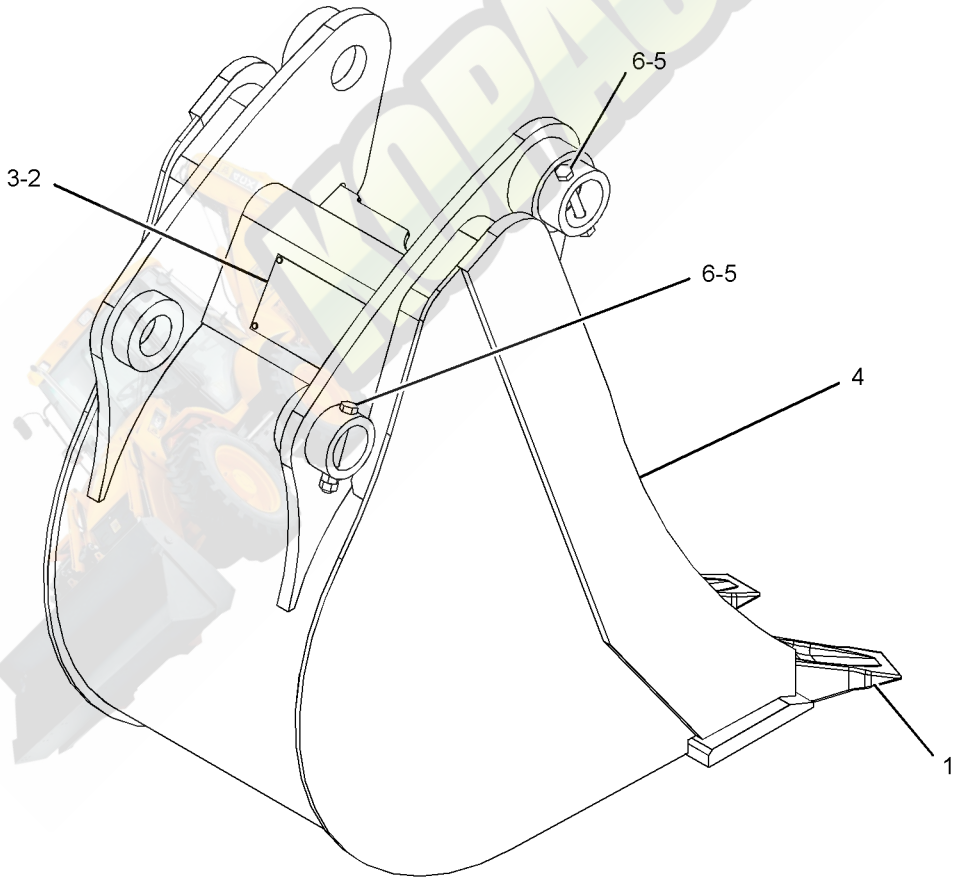

GRAPHIC #1 **<END>** g01220738

WORK TOOLS

273-1374 BUCKET GP-HOE

S/N: JBA1-UP
AN ATTACHMENT

SMCS-6503 **i03599056**

NOTE	REF NO	GRAPHIC REF	PART NUMBER	QTY	PART NAME 1 2 3 4 5 6 (PRODUCT LEVEL)	SEE PAGE
	1	1	*135-8206*	3	TOOTH GP-UNI	
					(EACH INCLUDES)	
		1	**4F-3657**	2	BOLT-PLOW (5/8-11X2.75-IN)	
		1	**4K-0367**	2	NUT-FULL (5/8-11-THD)	
		1	**135-8203**	1	TOOTH-UNI	
	2	1	**137-4234**	1	PLATE-IDENTIFICATION (WORK TOOL)	
	3	1	**168-8389**	4	TACK-FASTENER	
Y	4	1	*273-1375*	1	BUCKET AS-HOE	543
M	5	1	**8T-4133**	4	NUT (M10X1.5-THD)	
M	6	1	**8T-4178**	2	BOLT (M10X1.5X90-MM)	

M-METRIC PART
Y-SEPARATE ILLUSTRATION

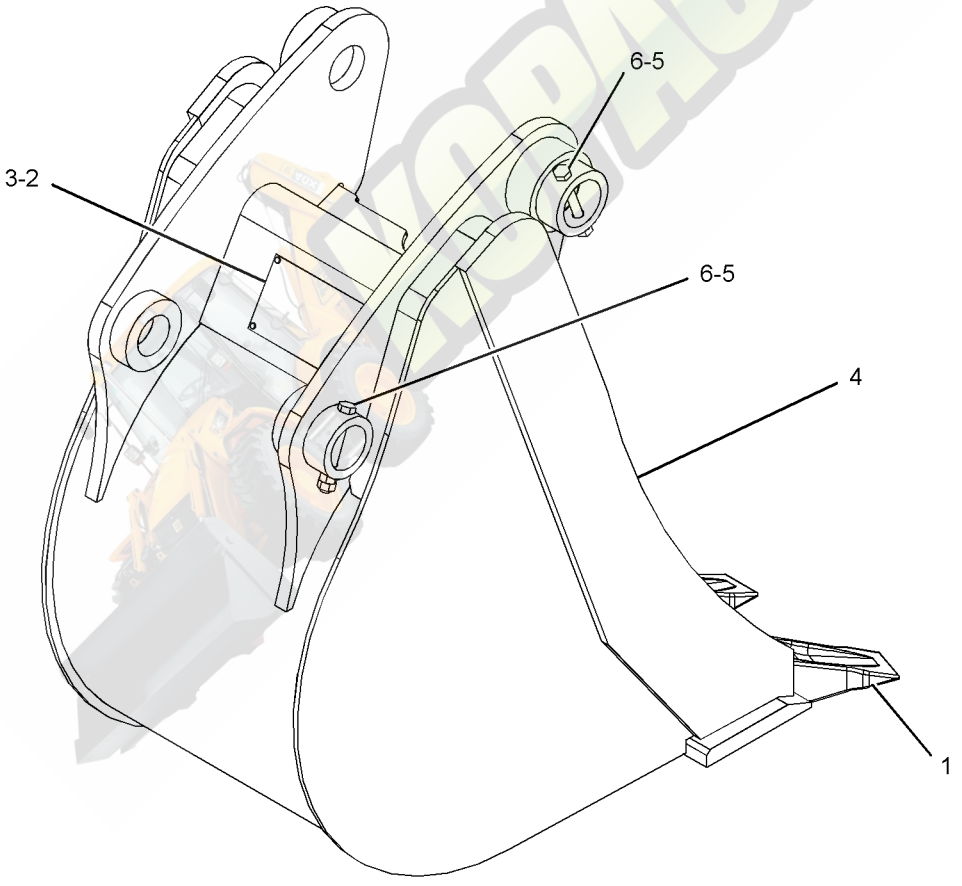

GRAPHIC #1 **<END>** g01220738

WORK TOOLS

273-1948 BUCKET GP-HOE

S/N: JBA1-UP
610-MM(24-IN)
AN ATTACHMENT

SMCS-6503 **i03599057**

NOTE	REF NO	GRAPHIC REF	PART NUMBER	QTY	PART NAME 1 2 3 4 5 6 (PRODUCT LEVEL)	SEE PAGE
	1	1	*135-8206*	4	TOOTH GP-UNI	
					(EACH INCLUDES)	
		1	**4F-3657**	2	BOLT-PLOW (5/8-11X2.75-IN)	
		1	**4K-0367**	2	NUT-FULL (5/8-11-THD)	
		1	**135-8203**	1	TOOTH-UNI	
	2	1	**137-4234**	1	PLATE-IDENTIFICATION (WORK TOOL)	
	3	1	**168-8389**	4	TACK-FASTENER	
Y	4	1	*273-1949*	1	BUCKET AS-HOE	544
M	5	1	**8T-4133**	4	NUT (M10X1.5-THD)	
M	6	1	**8T-4178**	2	BOLT (M10X1.5X90-MM)	

M-METRIC PART
Y-SEPARATE ILLUSTRATION

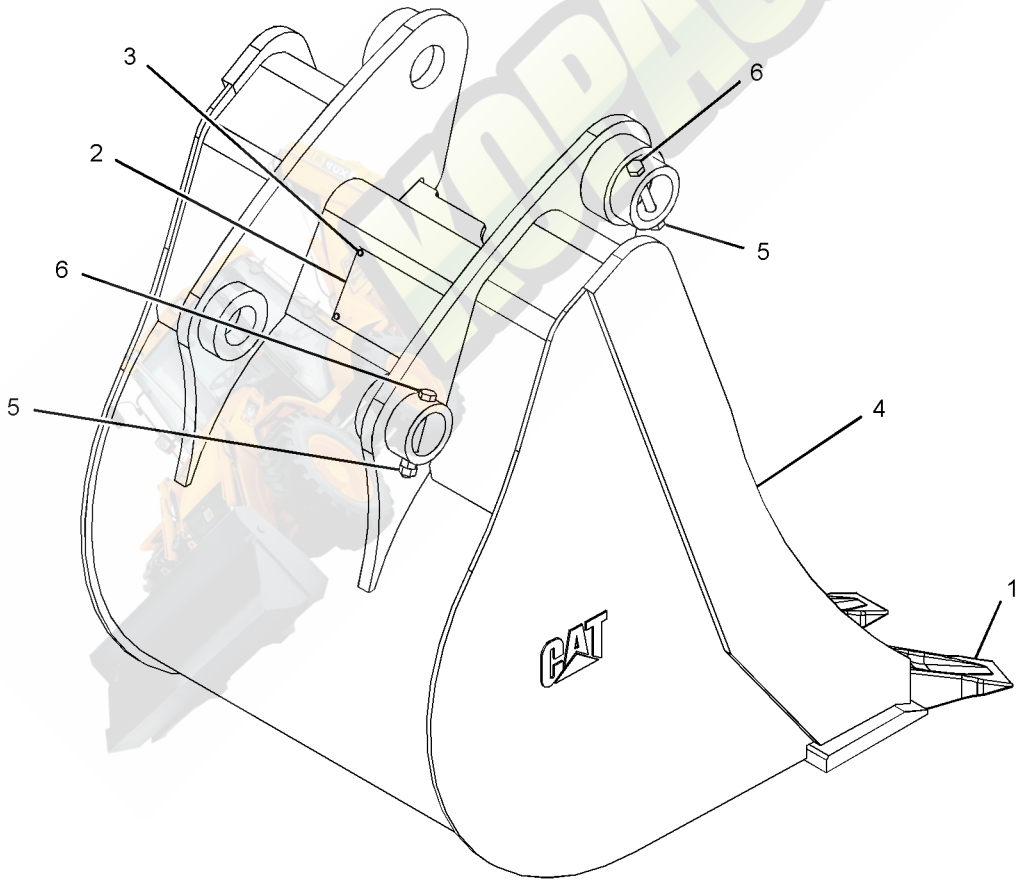

GRAPHIC #1 **<END>** g01215663

WORK TOOLS

273-1950 BUCKET GP-HOE

S/N: JBA1-UP
AN ATTACHMENT

SMCS-6503 **i03599058**

NOTE	REF NO	GRAPHIC REF	PART NUMBER	QTY	PART NAME 1 2 3 4 5 6 (PRODUCT LEVEL)	SEE PAGE
	1	1	*135-8206*	5	TOOTH GP-UNI	
					(EACH INCLUDES)	
		1	**4F-3657**	2	BOLT-PLOW (5/8-11X2.75-IN)	
		1	**4K-0367**	2	NUT-FULL (5/8-11-THD)	
		1	**135-8203**	1	TOOTH-UNI	
	2	1	**137-4234**	1	PLATE-IDENTIFICATION (WORK TOOL)	
	3	1	**168-8389**	4	TACK-FASTENER	
Y	4	1	*273-1951*	1	BUCKET AS-HOE	545
M	5	1	**8T-4133**	4	NUT (M10X1.5-THD)	
M	6	1	**8T-4178**	2	BOLT (M10X1.5X90-MM)	

M-METRIC PART
Y-SEPARATE ILLUSTRATION

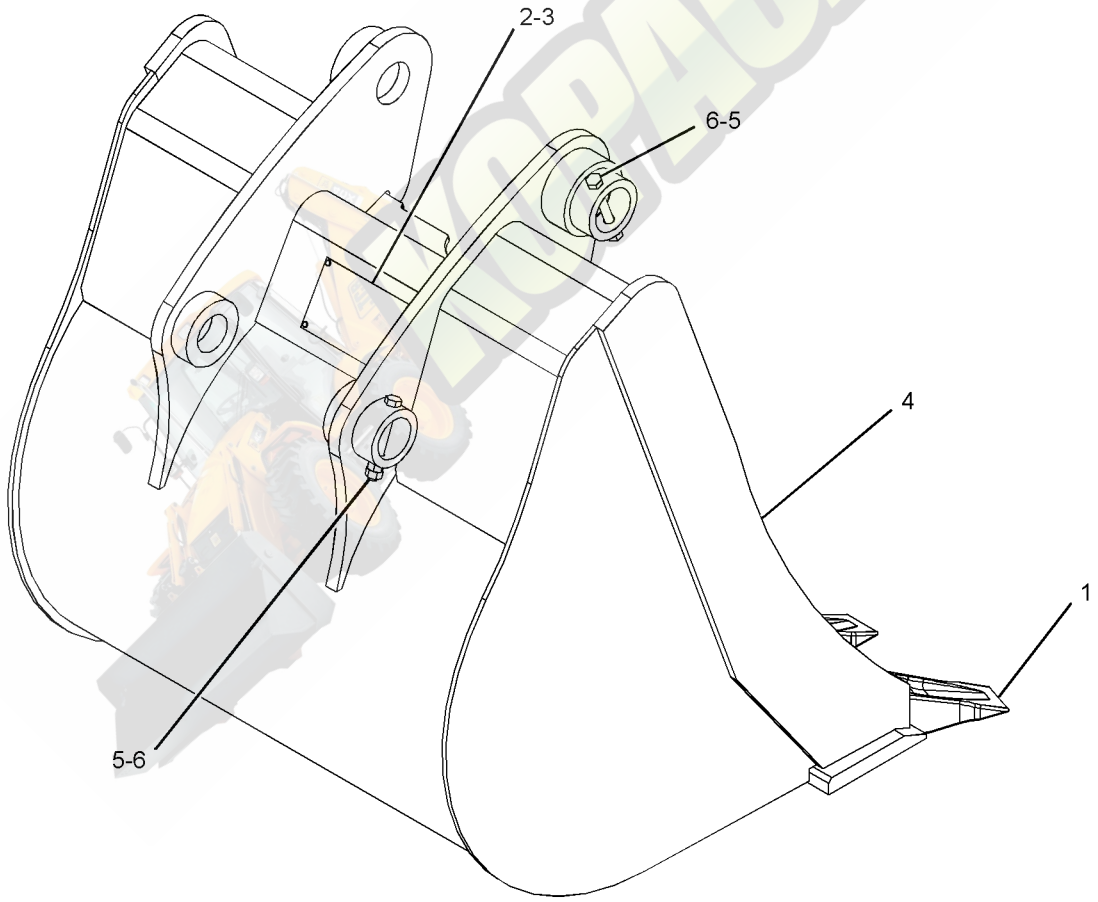

GRAPHIC #1 **<END>** g01215674

WORK TOOLS

273-1957 BUCKET GP-HOE

S/N: JBA1-UP
AN ATTACHMENT

SMCS-6503 **i03599053**

NOTE	REF NO	GRAPHIC REF	PART NUMBER	QTY	PART NAME 1 2 3 4 5 6 (PRODUCT LEVEL)	SEE PAGE
	1	1	*135-8206*	6	TOOTH GP-UNI	
					(EACH INCLUDES)	
		1	**4F-3657**	2	BOLT-PLOW (5/8-11X2.75-IN)	
		1	**4K-0367**	2	NUT-FULL (5/8-11-THD)	
		1	**135-8203**	1	TOOTH-UNI	
	2	1	**137-4234**	1	PLATE-IDENTIFICATION (WORK TOOL)	
	3	1	**168-8389**	4	TACK-FASTENER	
Y	4	1	*273-1958*	1	BUCKET AS-HOE	546
M	5	1	**8T-4133**	4	NUT (M10X1.5-THD)	
M	6	1	**8T-4178**	2	BOLT (M10X1.5X90-MM)	

M-METRIC PART
Y-SEPARATE ILLUSTRATION

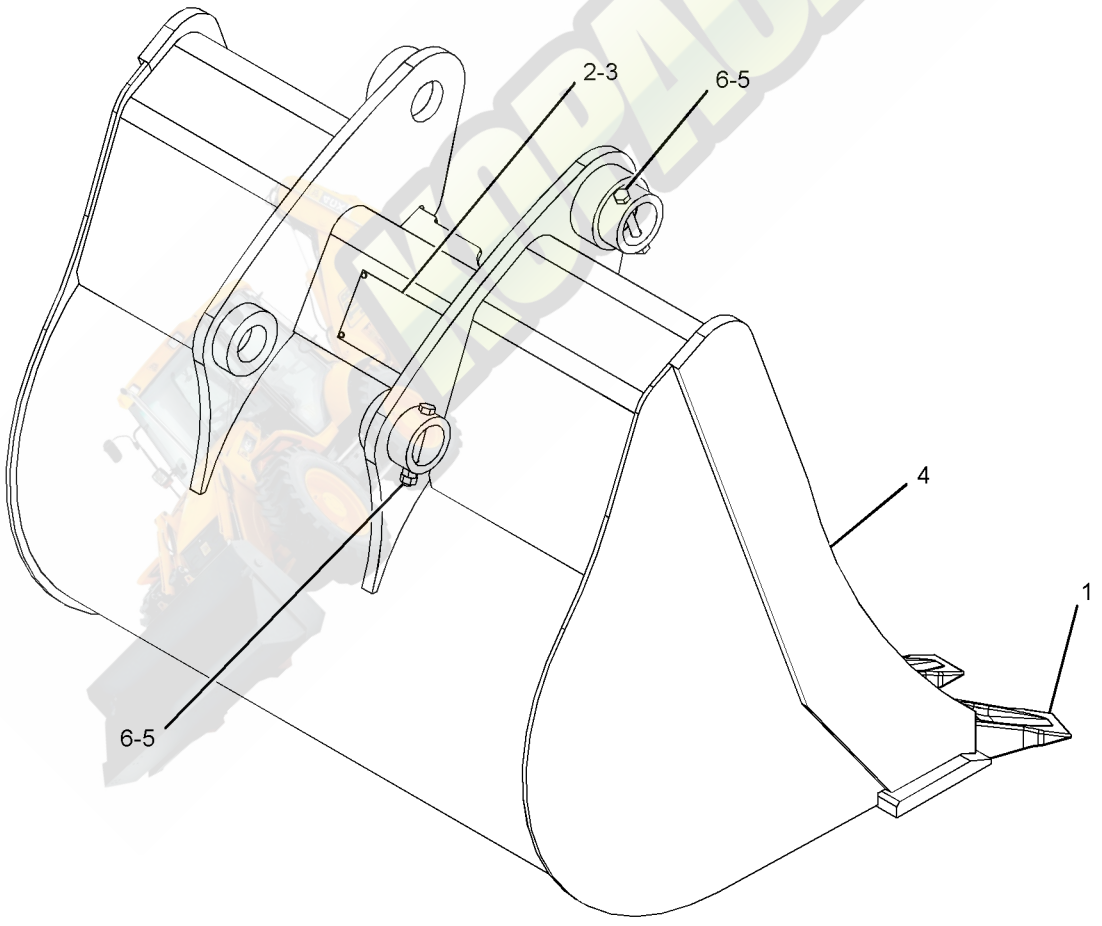

GRAPHIC #1 **<END>** g01215755

273-3731 BUCKET GP-HOE—HEAVY-DUTY

S/N: JBA1-UP

AN ATTACHMENT

SMCS-6503 **i02427621**

NOTE	REF NO	GRAPHIC REF	PART NUMBER	QTY	PART NAME 1 2 3 4 5 6 (PRODUCT LEVEL)	SEE PAGE
	1	1	**9R-0158**	5	WASHER (46X69X3-MM THK)	
	2	1	**9R-1510**	3	WASHER (51X82X4-MM THK)	
	3	1	**168-0443**	1	PIN	
	4	1	**168-0444**	1	PIN	
Y	5	1	**273-3732**	1	BUCKET GP-HOE (HEAVY-DUTY)	571
	6	1	**6V-3213**	2	RING-RETAINING	
	7	1	**6V-4364**	2	RING-RETAINING	

Y-SEPARATE ILLUSTRATION

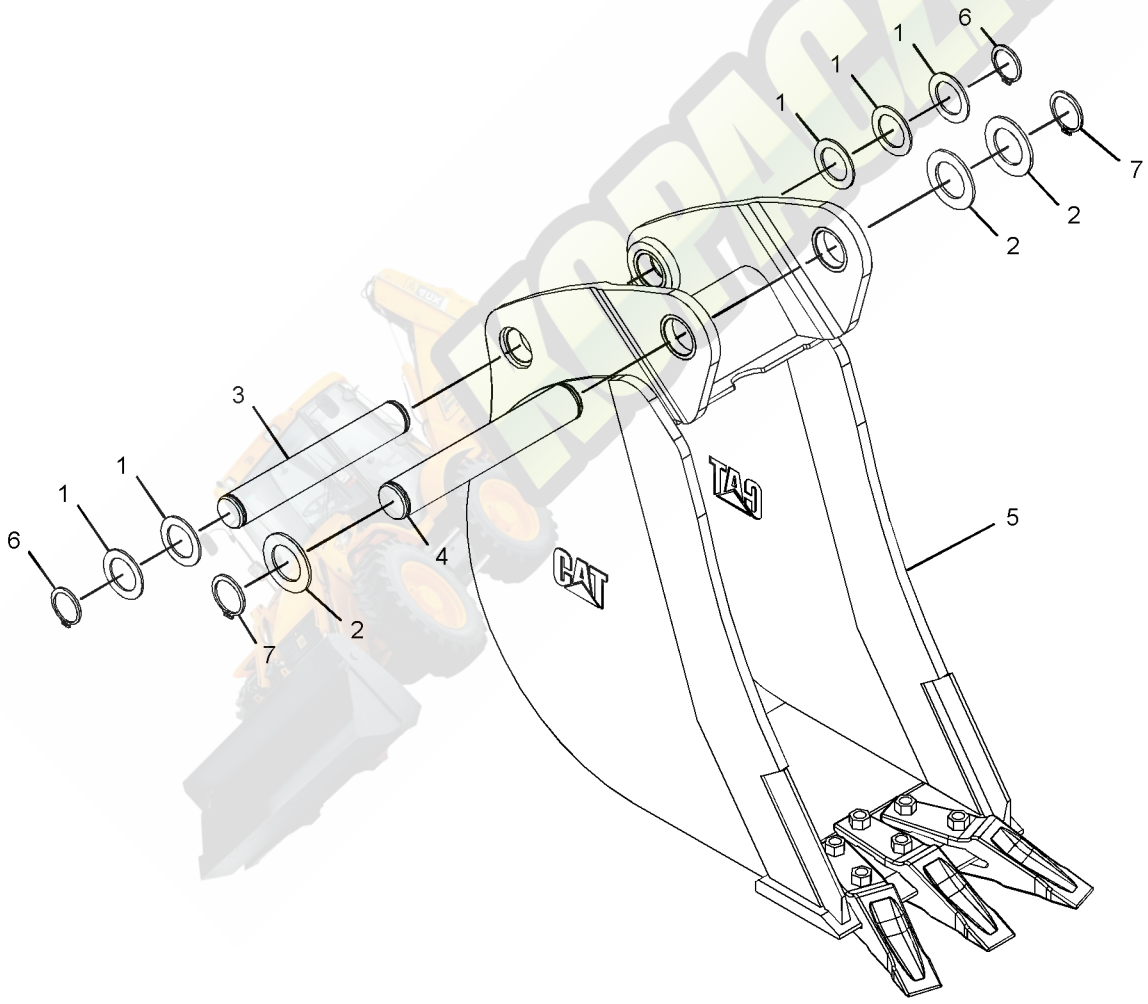

GRAPHIC #1 **<END>** g01215645

WORK TOOLS

273-3732 BUCKET GP-HOE—HEAVY-DUTY

S/N: JBA1-UP
PART OF 273-3731 BUCKET GP-HOE
AN ATTACHMENT

SMCS-6503 **i03599052**

NOTE	REF NO	GRAPHIC REF	PART NUMBER	QTY	PART NAME 1 2 3 4 5 6 (PRODUCT LEVEL)	SEE PAGE
	1	1	*135-8206*	3	TOOTH GP-UNI	
					(EACH INCLUDES)	
		1	**4F-3657**	2	BOLT-PLOW (5/8-11X2.75-IN)	
		1	**4K-0367**	2	NUT-FULL (5/8-11-THD)	
		1	**135-8203**	1	TOOTH-UNI	
	2	1	**137-4234**	1	PLATE-IDENTIFICATION (WORK TOOL)	
	3	1	**168-8389**	4	TACK-FASTENER	
Y	4	1	*273-3733*	1	BUCKET AS-HOE	547

Y-SEPARATE ILLUSTRATION

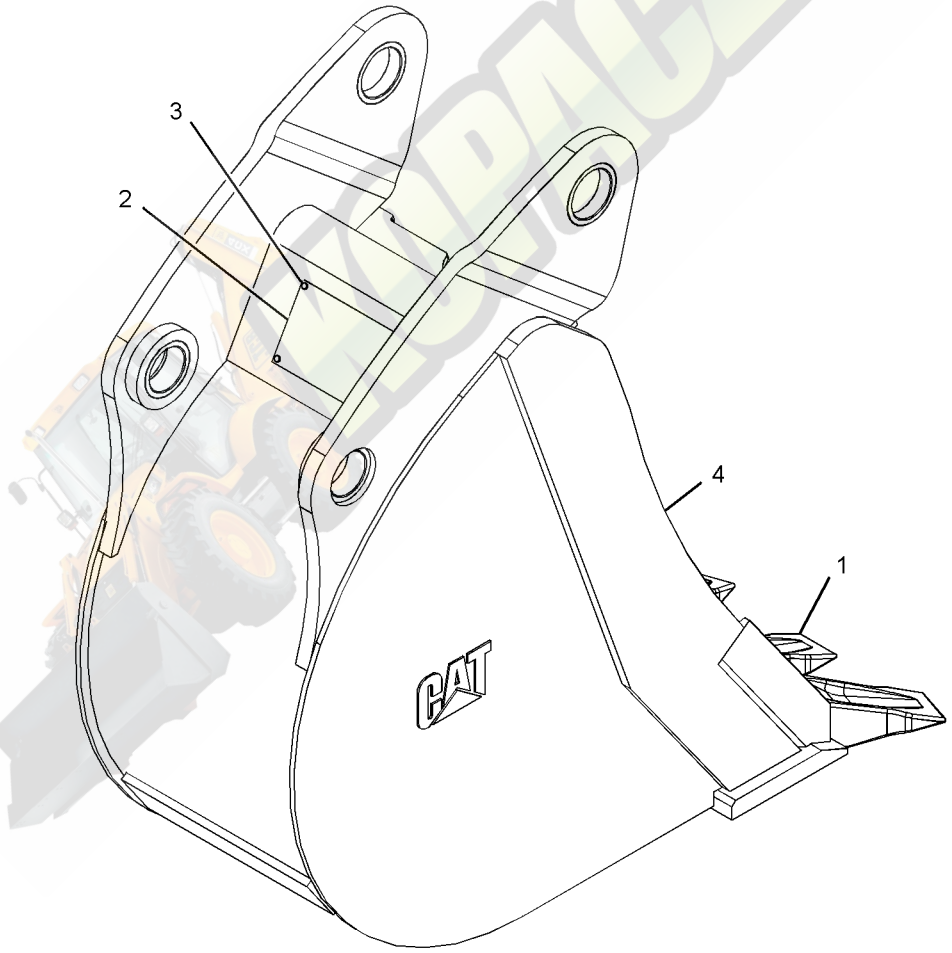

GRAPHIC #1 **<END>** g01228335

WORK TOOLS

273-3791 BUCKET GP-HOE

S/N: JBA1-UP
AN ATTACHMENT

SMCS-6503 **i02428435**

NOTE	REF NO	GRAPHIC REF	PART NUMBER	QTY	PART NAME 1 2 3 4 5 6 (PRODUCT LEVEL)	SEE PAGE
	1	1	**9R-0158**	5	WASHER (46X69X3-MM THK)	
	2	1	**9R-1510**	3	WASHER (51X82X4-MM THK)	
	3	1	**168-0443**	1	PIN	
	4	1	**168-0444**	1	PIN	
Y	5	1	**273-3792**	1	BUCKET GP-HOE	573
	6	1	**6V-3213**	2	RING-RETAINING	
	7	1	**6V-4364**	2	RING-RETAINING	

Y-SEPARATE ILLUSTRATION

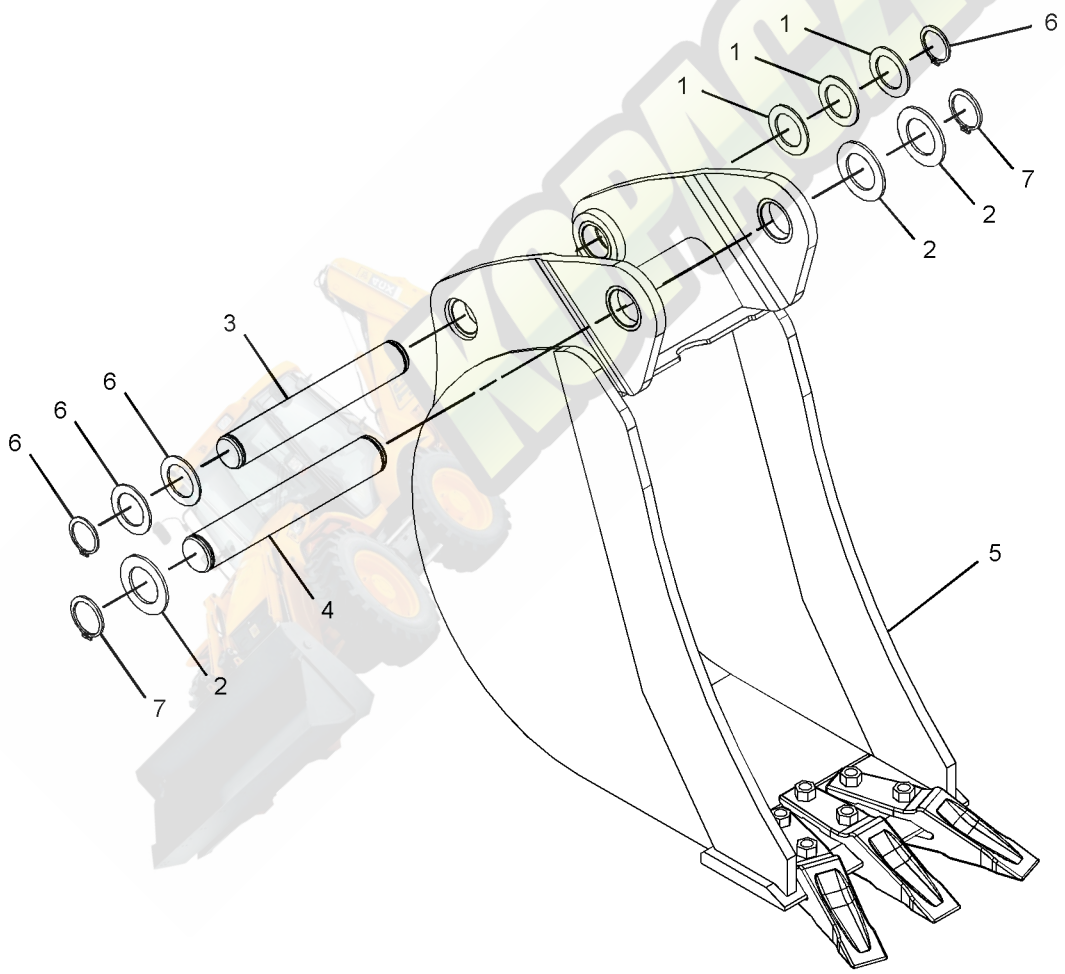

GRAPHIC #1 **<END>** g01215655

WORK TOOLS

273-3792 BUCKET GP-HOE

S/N: JBA1-UP
PART OF 273-3791 BUCKET GP-HOE
AN ATTACHMENT

SMCS-6503 **i03599051**

NOTE	REF NO	GRAPHIC REF	PART NUMBER	QTY	PART NAME 1 2 3 4 5 6 (PRODUCT LEVEL)	SEE PAGE
	1	1	*135-8206*	3	TOOTH GP-UNI	
					(EACH INCLUDES)	
		1	**4F-3657**	2	BOLT-PLOW (5/8-11X2.75-IN)	
		1	**4K-0367**	2	NUT-FULL (5/8-11-THD)	
		1	**135-8203**	1	TOOTH-UNI	
	2	1	**137-4234**	1	PLATE-IDENTIFICATION (WORK TOOL)	
	3	1	**168-8389**	4	TACK-FASTENER	
Y	4	1	*273-3793*	1	BUCKET AS-HOE	548

Y-SEPARATE ILLUSTRATION

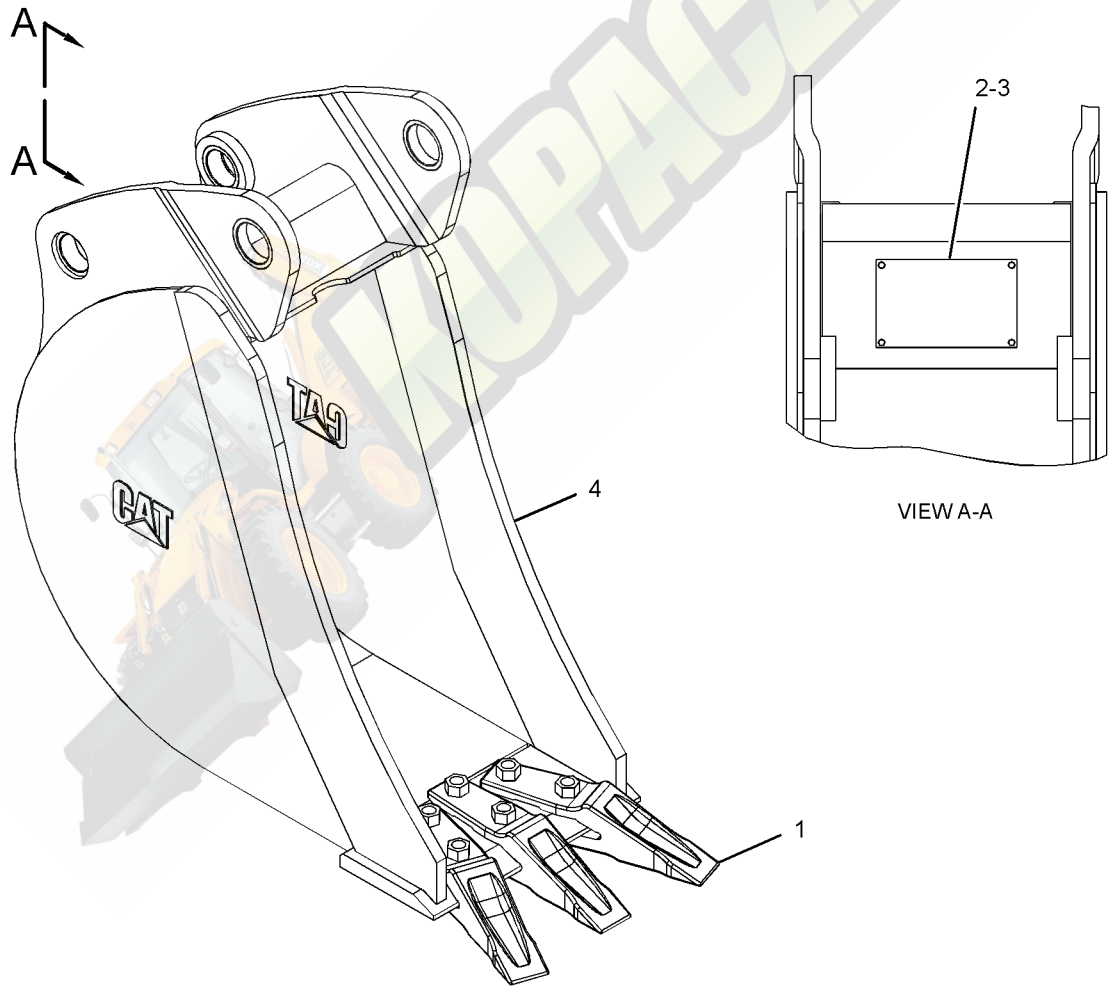

GRAPHIC #1 **<END>** g01226143

252-9043 BUCKET GP-MULTIPURPOSE

S/N: JBA1-UP
0.96-CU M(1.25-CU YD)
PART OF 320-9948 BUCKET AR-MULTIPURPOSE
AN ATTACHMENT

SMCS-6104 **i02215995**

NOTE	REF NO	GRAPHIC REF	PART NUMBER	QTY	PART NAME 1 2 3 4 5 6 (PRODUCT LEVEL)	SEE PAGE
	1	1	**9R-4676**	2	PIN	
Y	2	1	**252-9044**	1	BULLDOZER AS (MULTIPURPOSE BUCKET)	578
Y	3	1	**252-9046**	1	CLAM AS-MULTIPURPOSE BUCKET	585
	4	1	**3B-8489**	2	FITTING-GREASE	
	5	1	**4J-1888**	2	PIN-COTTER	

Y-SEPARATE ILLUSTRATION

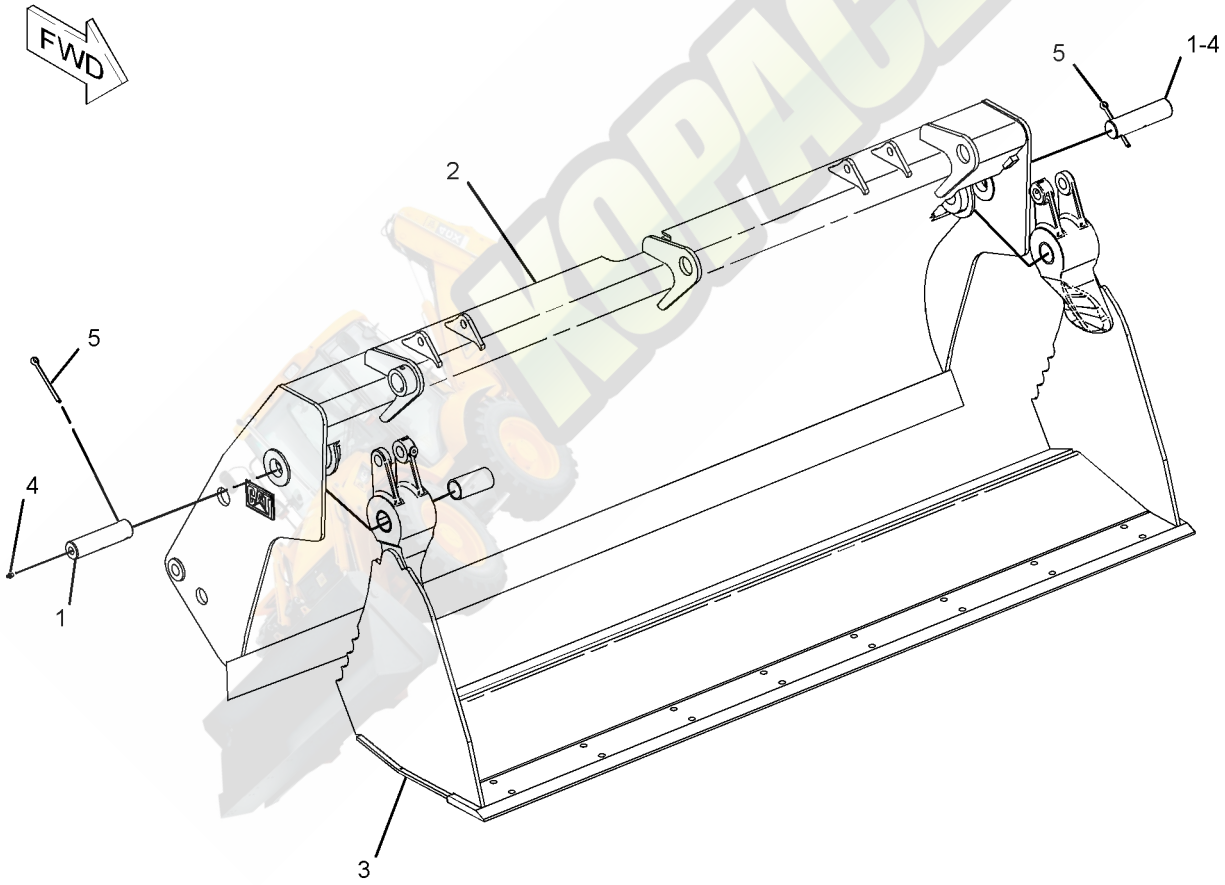

GRAPHIC #1 **<END>** g01121333

252-9059 BUCKET GP-MULTIPURPOSE

S/N: JBA1-UP
1.03-CU M(1.35-CU YD)
PART OF 318-7246 BUCKET AR-MULTIPURPOSE
AN ATTACHMENT

SMCS-6104 **i02216970**

NOTE	REF NO	GRAPHIC REF	PART NUMBER	QTY	PART NAME 1 2 3 4 5 6 (PRODUCT LEVEL)	SEE PAGE
	1	1	**9R-4676**	2	PIN	
Y	2	1	**252-9051**	1	CLAM AS-MULTIPURPOSE BUCKET	586
Y	3	1	**252-9060**	1	BULLDOZER AS (MULTIPURPOSE BUCKET)	580
	4	1	**3B-8489**	2	FITTING-GREASE	
	5	1	**4J-1888**	2	PIN-COTTER	

Y-SEPARATE ILLUSTRATION

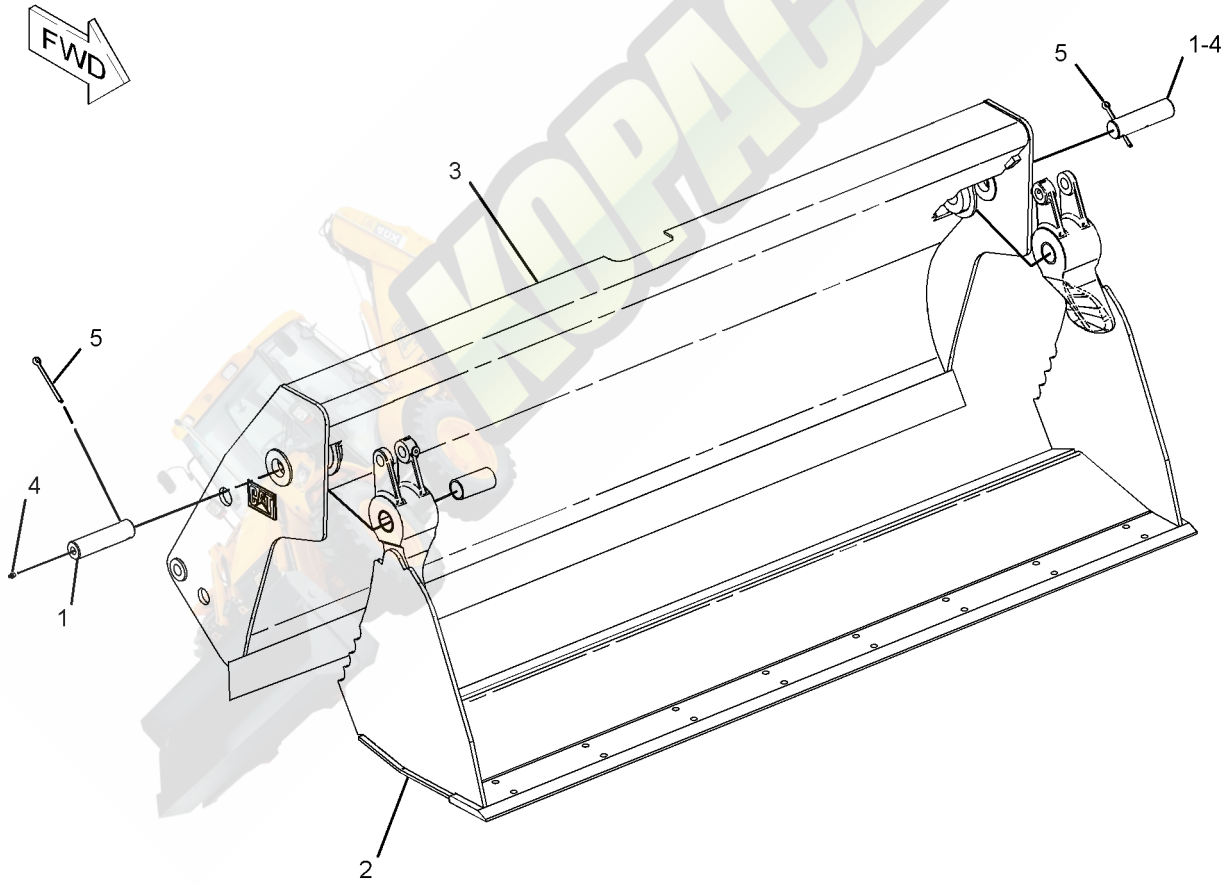

GRAPHIC #1 **<END>** g01121337

252-9063 BUCKET GP-MULTIPURPOSE

S/N: JBA1-UP
1.03-CU M (1.35-CU YD)
PART OF 318-7247, 318-7248 BUCKET AR-MULTIPURPOSE
AN ATTACHMENT

SMCS-6104 **i02223579**

NOTE	REF NO	GRAPHIC REF	PART NUMBER	QTY	PART NAME 1 2 3 4 5 6 (PRODUCT LEVEL)	SEE PAGE
	1	1	**9R-4676**	2	PIN	
Y	2	1	**252-9051**	1	CLAM AS-MULTIPURPOSE BUCKET	586
Y	3	1	**252-9064**	1	BULLDOZER AS (MULTIPURPOSE BUCKET)	581
	4	1	**3B-8489**	2	FITTING-GREASE	
	5	1	**4J-1888**	2	PIN-COTTER	

Y-SEPARATE ILLUSTRATION

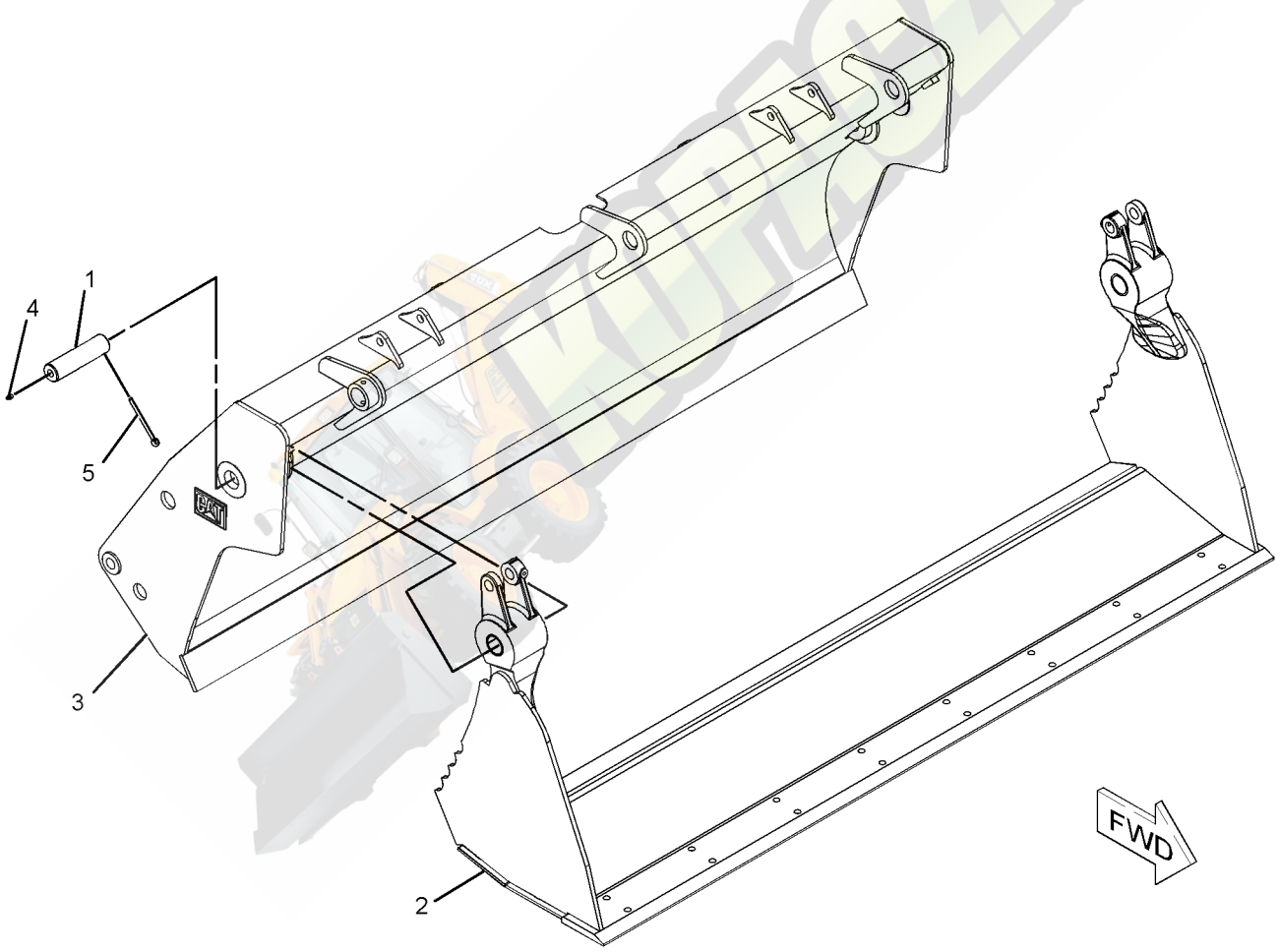

GRAPHIC #1 **<END>** g01114145

252-9068 BUCKET GP-MULTIPURPOSE

S/N: JBA1-UP
1.03-CU M (1.35-CU YD)
PART OF 318-7251 BUCKET AR-MULTIPURPOSE
AN ATTACHMENT

SMCS-6104 **i02223594**

NOTE	REF NO	GRAPHIC REF	PART NUMBER	QTY	PART NAME 1 2 3 4 5 6 (PRODUCT LEVEL)	SEE PAGE
	1	1	**9R-4676**	2	PIN	
Y	2	1	**252-9051**	1	CLAM AS-MULTIPURPOSE BUCKET	586
Y	3	1	**252-9069**	1	BULLDOZER AS (MULTIPURPOSE BUCKET)	582
	4	1	**3B-8489**	2	FITTING-GREASE	
	5	1	**4J-1888**	2	PIN-COTTER	

Y-SEPARATE ILLUSTRATION

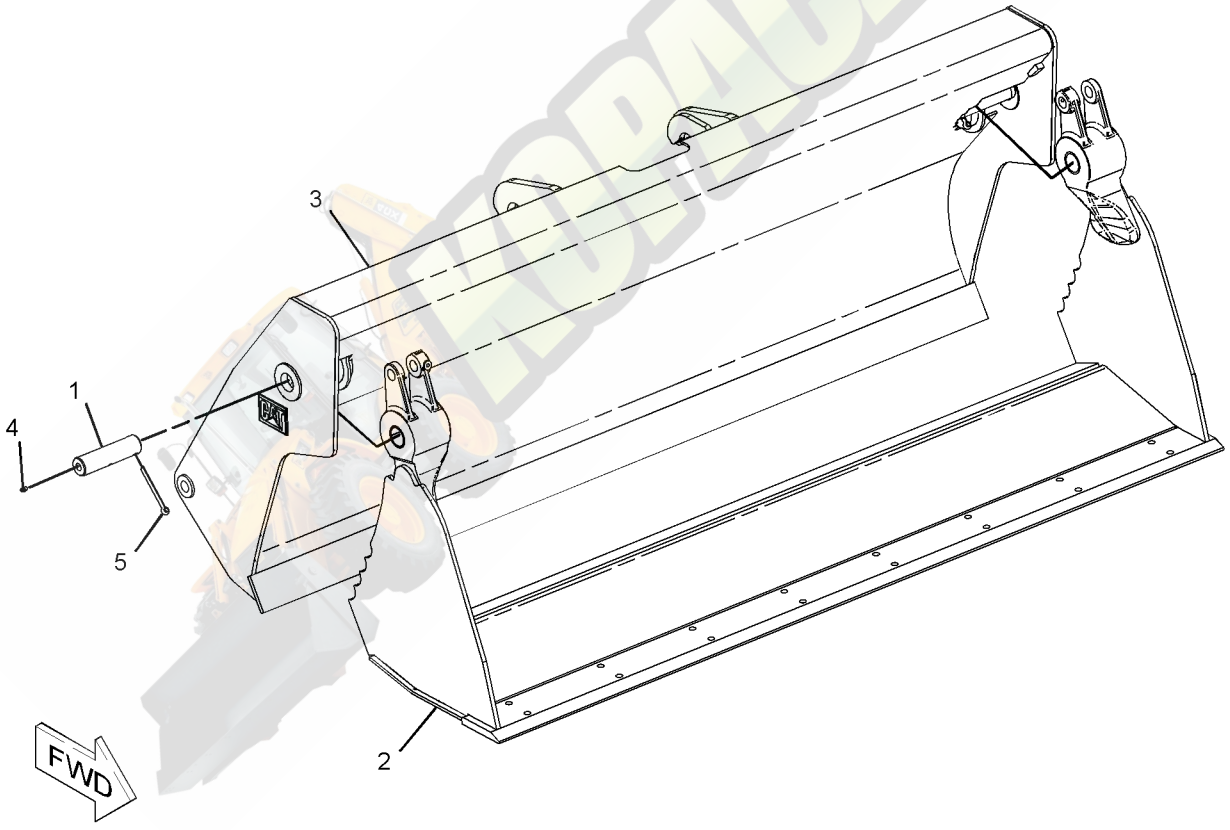

GRAPHIC #1 **<END>** g01101021

252-9044 BULLDOZER AS

S/N: JBA1-UP
0.96-CU M(1.26-CU YD)
PART OF 252-9043 BUCKET GP-MULTIPURPOSE
AN ATTACHMENT

SMCS-6050 **i02418023**

NOTE	REF NO	GRAPHIC REF	PART NUMBER	QTY	PART NAME 1 2 3 4 5 6 (PRODUCT LEVEL)	SEE PAGE
	1	1	**104-6313**	1	BRACKET AS	
		1	**106-9388**	1	BRACKET	
	2	1	**106-9388**	2	BRACKET	
	3	1	**110-2861**	4	BRACKET	
	4	1	**250-6587**	2	PLATE	
Y	5	1	*252-9045*	1	BULLDOZER AS	579
	6	1	**252-9095**	4	PLATE	

Y-SEPARATE ILLUSTRATION

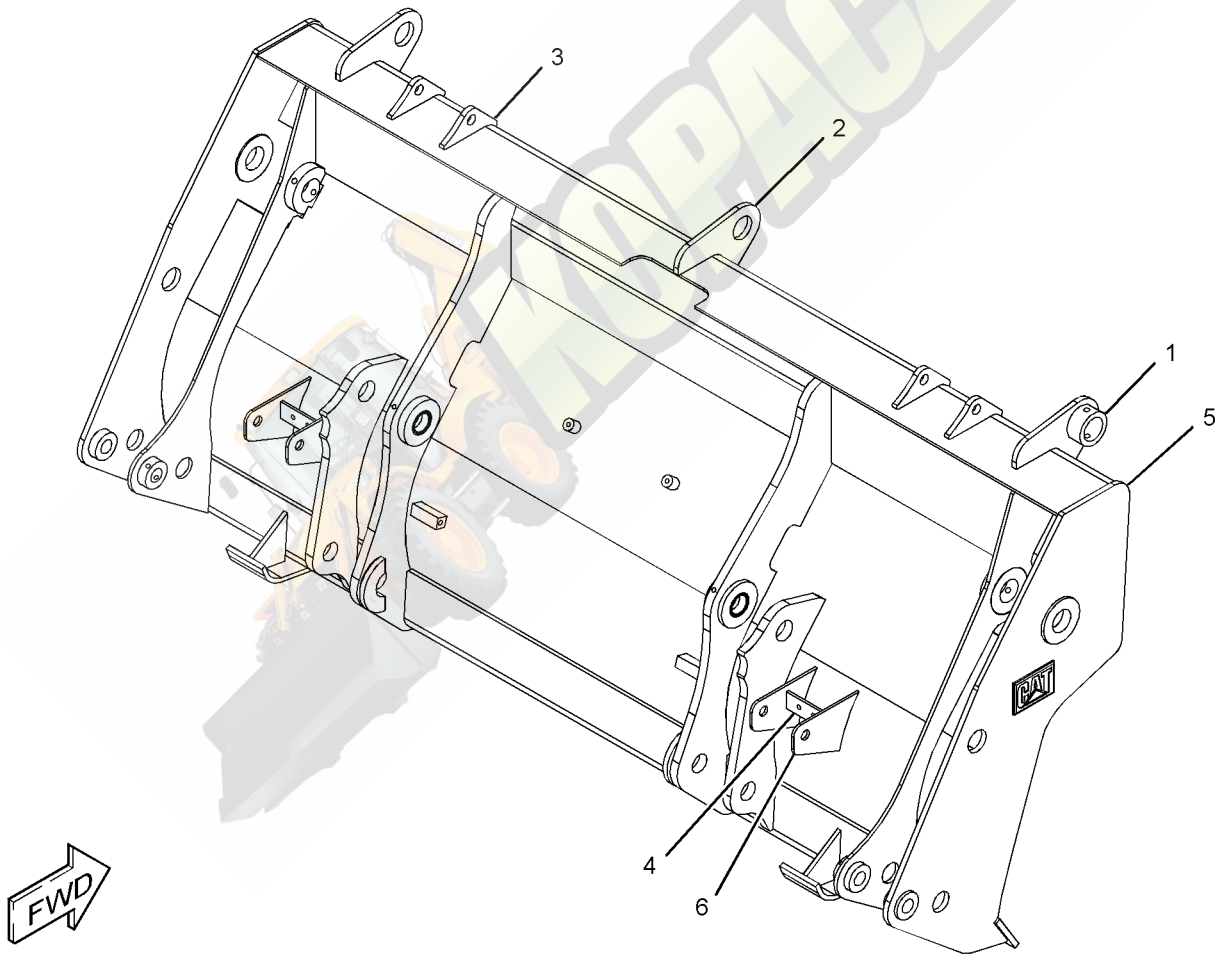

GRAPHIC #1 **<END>** g01211708

252-9045 BULLDOZER AS

S/N: JBA1-UP
0.96-CU M (1.26-CU YD) CAPACITY
PART OF 252-9044 BULLDOZER AS
AN ATTACHMENT

SMCS-6050 **i03028380**

NOTE	REF NO	GRAPHIC REF	PART NUMBER	QTY	PART NAME 1 2 3 4 5 6 (PRODUCT LEVEL)	SEE PAGE
	1	1	*114-3832*	1	BRACKET AS	
		1	**9R-1496**	2	BEARING-SLEEVE	
	2	1	*114-3833*	1	BRACKET AS	
		1	**9R-1496**	2	BEARING-SLEEVE	
	3	1	*252-9072*	1	BRACKET AS (LH)	
		1	**9R-5264**	1	BOSS	
	4	1	*252-9073*	1	BRACKET AS (RH)	
		1	**9R-5264**	1	BOSS	
	5	1	**252-9100**	1	EDGE	
M	6	1	**9R-5271**	2	BOSS (M10X1.5X25-MM)	

M-METRIC PART

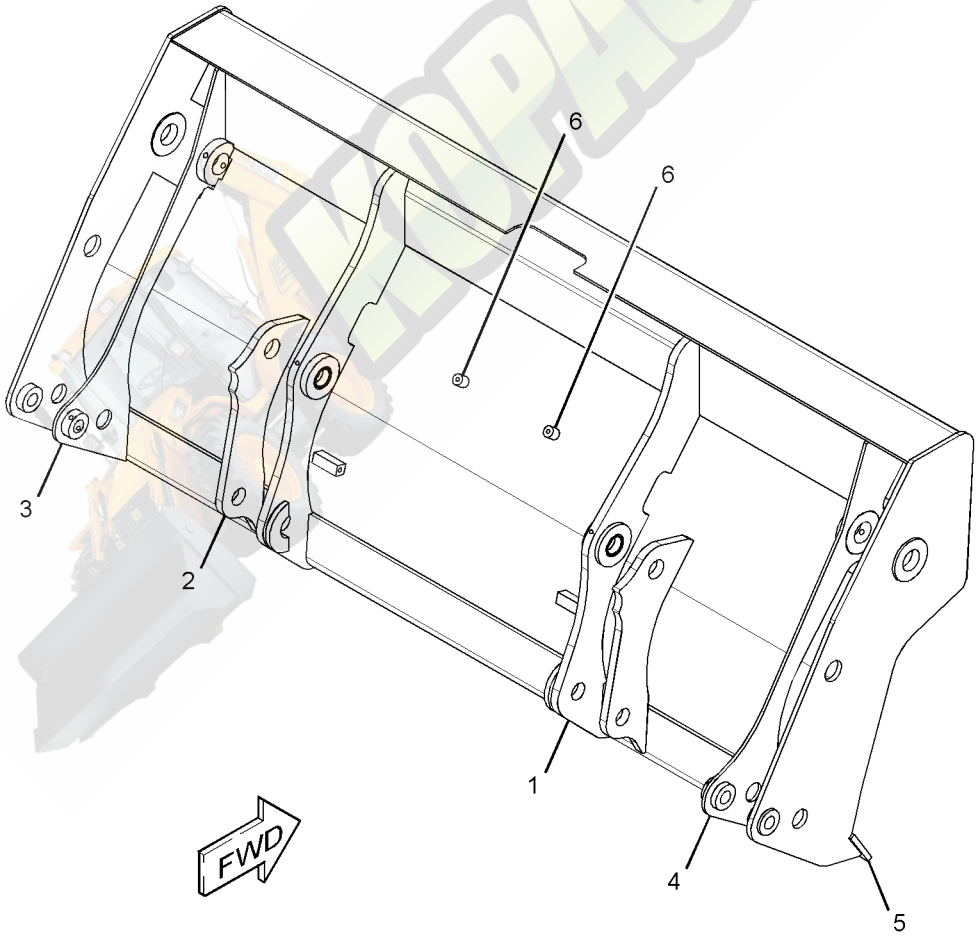

GRAPHIC #1 **<END>** g01613235

252-9060 BULLDOZER AS—MULTIPURPOSE BUCKET

S/N: JBA1-UP
1.03-CU M (1.35-CU YD)
PART OF 252-9059 BUCKET GP-MULTIPURPOSE, 252-9064 BULLDOZER AS
AN ATTACHMENT

SMCS-6050 **i02909230**

NOTE	REF NO	GRAPHIC REF	PART NUMBER	QTY	PART NAME 1 2 3 4 5 6 (PRODUCT LEVEL)	SEE PAGE
M	1	1	**9R-5271**	2	BOSS (M10X1.5X25-MM)	
	2	1	*114-3832*	1	BRACKET AS	
		1	**9R-1496**	2	BEARING-SLEEVE	
	3	1	*114-3833*	1	BRACKET AS	
		1	**9R-1496**	2	BEARING-SLEEVE	
	4	1	**256-9600**	1	EDGE	

M-METRIC PART

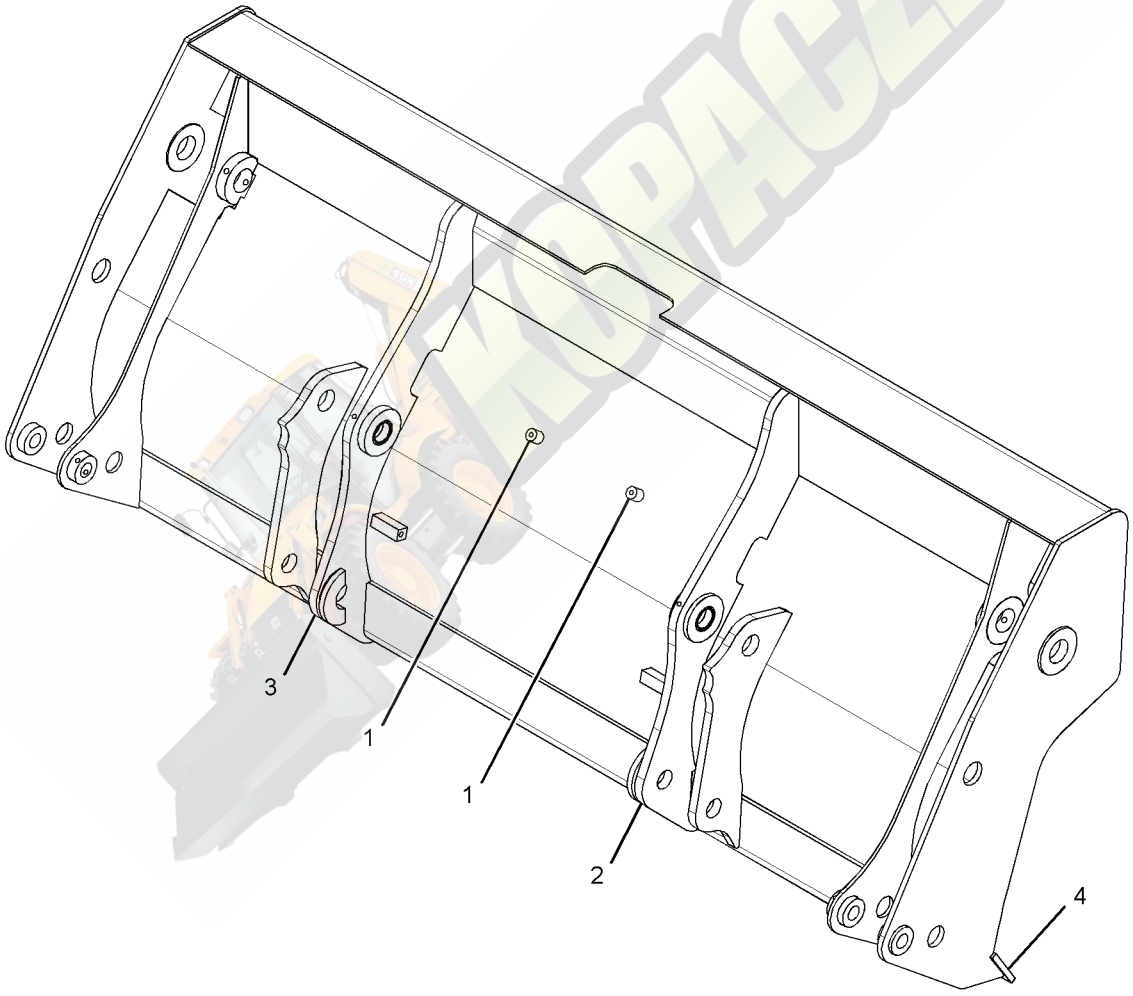

GRAPHIC #1 **<END>** g01456889

252-9064 BULLDOZER AS—MULTIPURPOSE BUCKET

S/N: JBA1-UP

PART OF 252-9063 BUCKET GP-MULTIPURPOSE

AN ATTACHMENT

SMCS-6050 **i02474508**

NOTE	REF NO	GRAPHIC REF	PART NUMBER	QTY	PART NAME 1 2 3 4 5 6 (PRODUCT LEVEL)	SEE PAGE
	1	1	**104-6313**	1	BRACKET AS	
		1	**106-9388**	1	BRACKET	
	2	1	**106-9388**	2	BRACKET	
	3	1	**110-2861**	4	BRACKET	
	4	1	**250-6587**	2	PLATE	
Y	5	1	**252-9060**	1	BULLDOZER AS (MULTIPURPOSE BUCKET)	580
	6	1	**252-9095**	4	PLATE	

Y-SEPARATE ILLUSTRATION

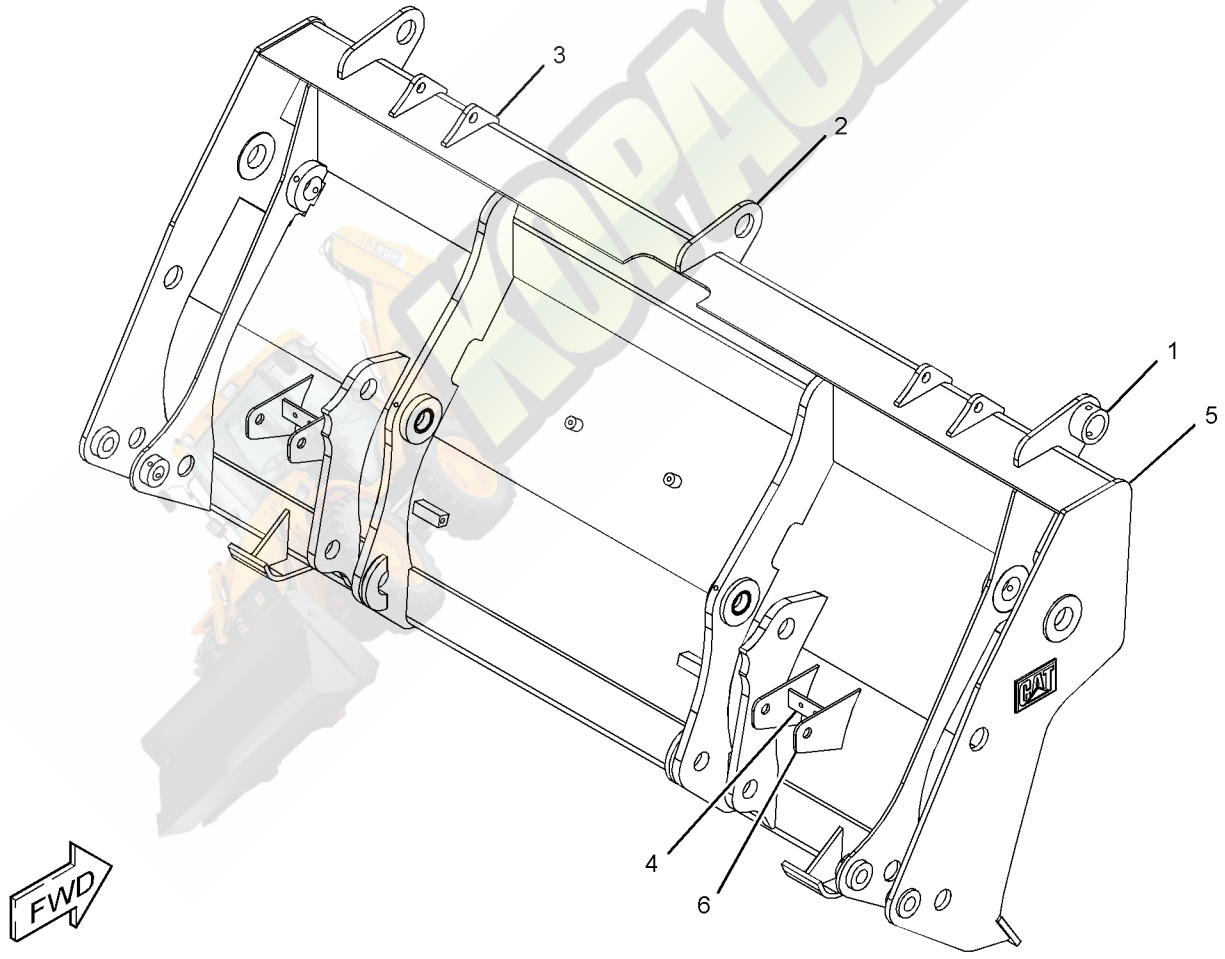

GRAPHIC #1 **<END>** g01211708

252-9069 BULLDOZER AS—MULTIPURPOSE BUCKET

S/N: JBA1-UP
1.03-CU M (1.35-CU YD)
PART OF 252-9068 BUCKET GP-MULTIPURPOSE
AN ATTACHMENT

SMCS-6050 **i03202141**

NOTE	REF NO	GRAPHIC REF	PART NUMBER	QTY	PART NAME 1 2 3 4 5 6 (PRODUCT LEVEL)	SEE PAGE
M	1	1	**9R-5271**	2	BOSS (M10X1.5X25-MM)	
	2	1	*118-1979*	1	PLATE AS (RH)	
	2A	1	**6K-4076**	1	BEARING-SLEEVE	
	2B	1	**9R-4649**	1	BOSS	
	3	1	*118-1980*	1	PLATE AS (LH)	
	3A	1	**6K-4076**	1	BEARING-SLEEVE	
	3B	1	**9R-4649**	1	BOSS	
	4	1	**256-9600**	1	EDGE	

M-METRIC PART

KOPACZKA

252-9069 **BULLDOZER AS** *(contd.)* **i03202141**

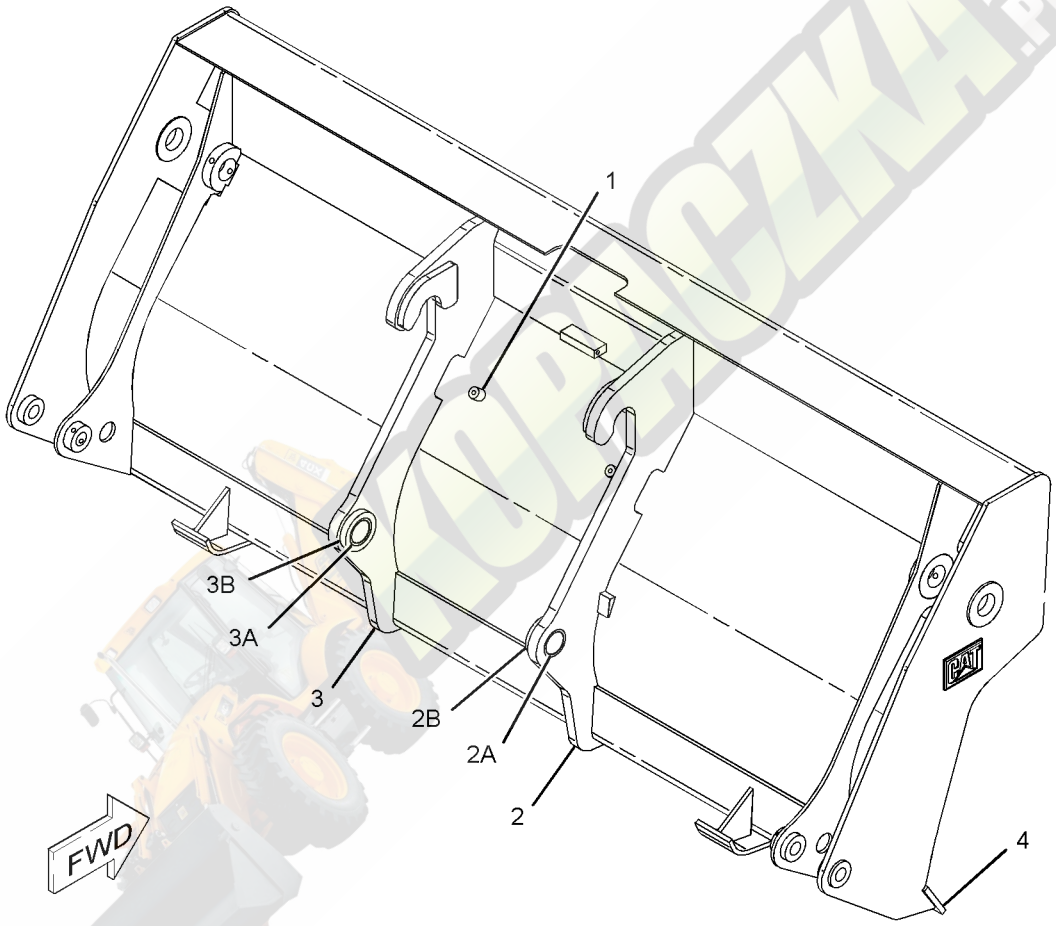

GRAPHIC #1 **<END>** g01634414

6W-8832 CARRIAGE AS-FORK—QUICK COUPLER

S/N: JBA1-UP

AN ATTACHMENT

SMCS-6402 **i03516388**

NOTE	REF NO	GRAPHIC REF	PART NUMBER	QTY	PART NAME 1 2 3 4 5 6 (PRODUCT LEVEL)	SEE PAGE
	1	1	**9V-9077**	1	PLATE	
	2	1	**251-4309**	1	PLATE-INSTRUCTION	
	3	1	**168-8389**	4	TACK-FASTENER	

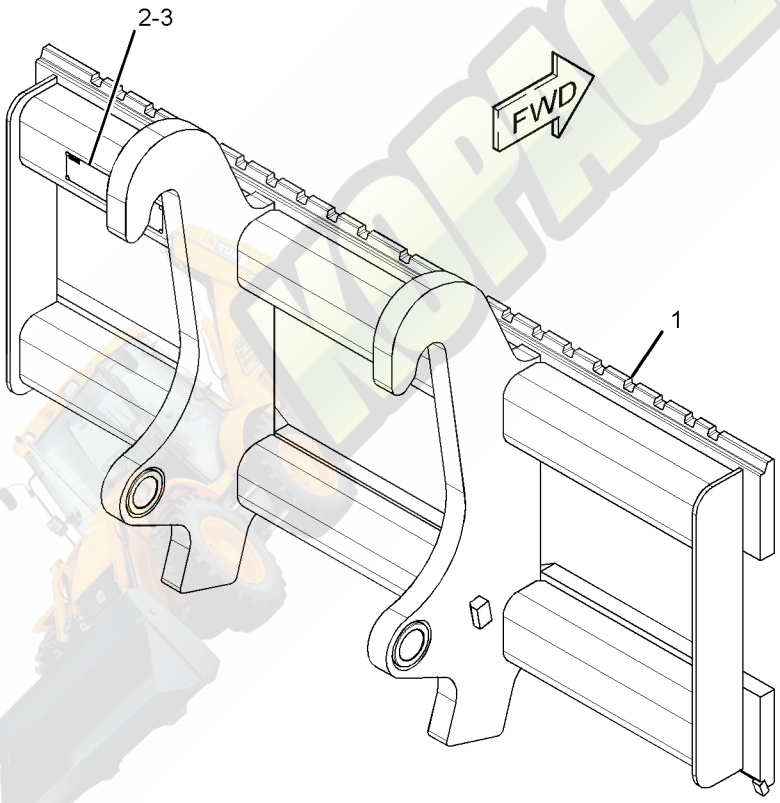

GRAPHIC #1 **<END>** g01861836

252-9046 CLAM AS-MULTIPURPOSE BUCKET

S/N: JBA1-UP
PART OF 252-9043 BUCKET GP-MULTIPURPOSE
AN ATTACHMENT

SMCS-6104 **i02223551**

NOTE	REF NO	GRAPHIC REF	PART NUMBER	QTY	PART NAME 1 2 3 4 5 6 (PRODUCT LEVEL)	SEE PAGE
	1	1	*252-9078*	1	PLATE AS (LH)	
	1A	1	**9R-4675**	1	BUSHING-TERMINAL	
	1B	1	**9R-5294**	1	HINGE	
	2	1	*252-9080*	1	PLATE AS (RH)	
	2A	1	**9R-4675**	1	BUSHING-TERMINAL	
	2B	1	**9R-5294**	1	HINGE	
	3	1	*252-9081*	1	PLATE AS	
	3A	1	**9R-4672**	1	EDGE	
	3B	1	**252-9087**	1	EDGE	

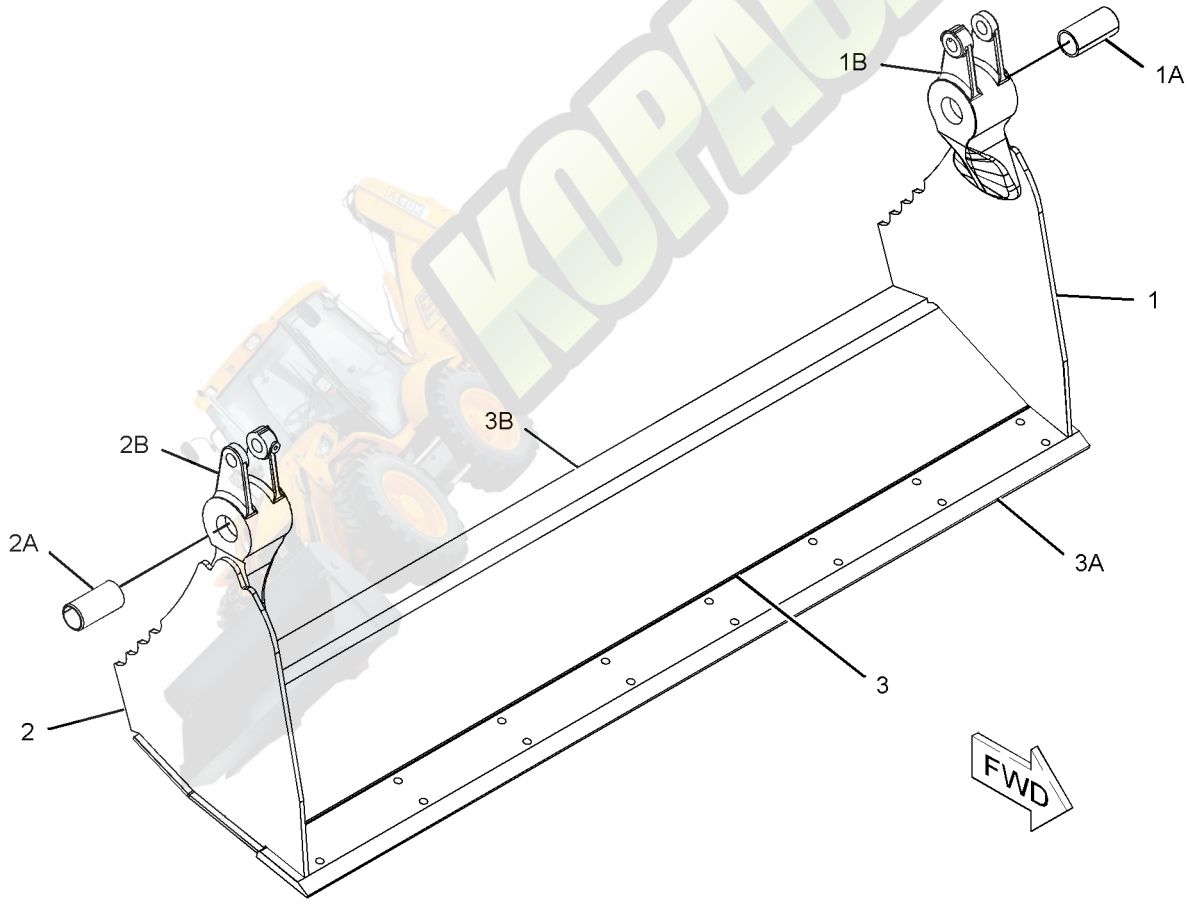

GRAPHIC #1 **<END>** g01121639

252-9051 CLAM AS-MULTIPURPOSE BUCKET

S/N: JBA1-UP

PART OF 252-9059, 252-9063, 252-9068 BUCKET GP-MULTIPURPOSE

AN ATTACHMENT

SMCS-6104 **i02223563**

NOTE	REF NO	GRAPHIC REF	PART NUMBER	QTY	PART NAME 1 2 3 4 5 6 (PRODUCT LEVEL)	SEE PAGE
	1	1	*252-9078*	1	PLATE AS (LH)	
	1A	1	**9R-4675**	1	BUSHING-TERMINAL	
	1B	1	**9R-5294**	1	HINGE	
	2	1	*252-9080*	1	PLATE AS (RH)	
	2A	1	**9R-4675**	1	BUSHING-TERMINAL	
	2B	1	**9R-5294**	1	HINGE	
	3	1	*252-9084*	1	PLATE AS	
	3A	1	**9R-5313**	1	EDGE	
	3B	1	**252-9088**	1	EDGE	

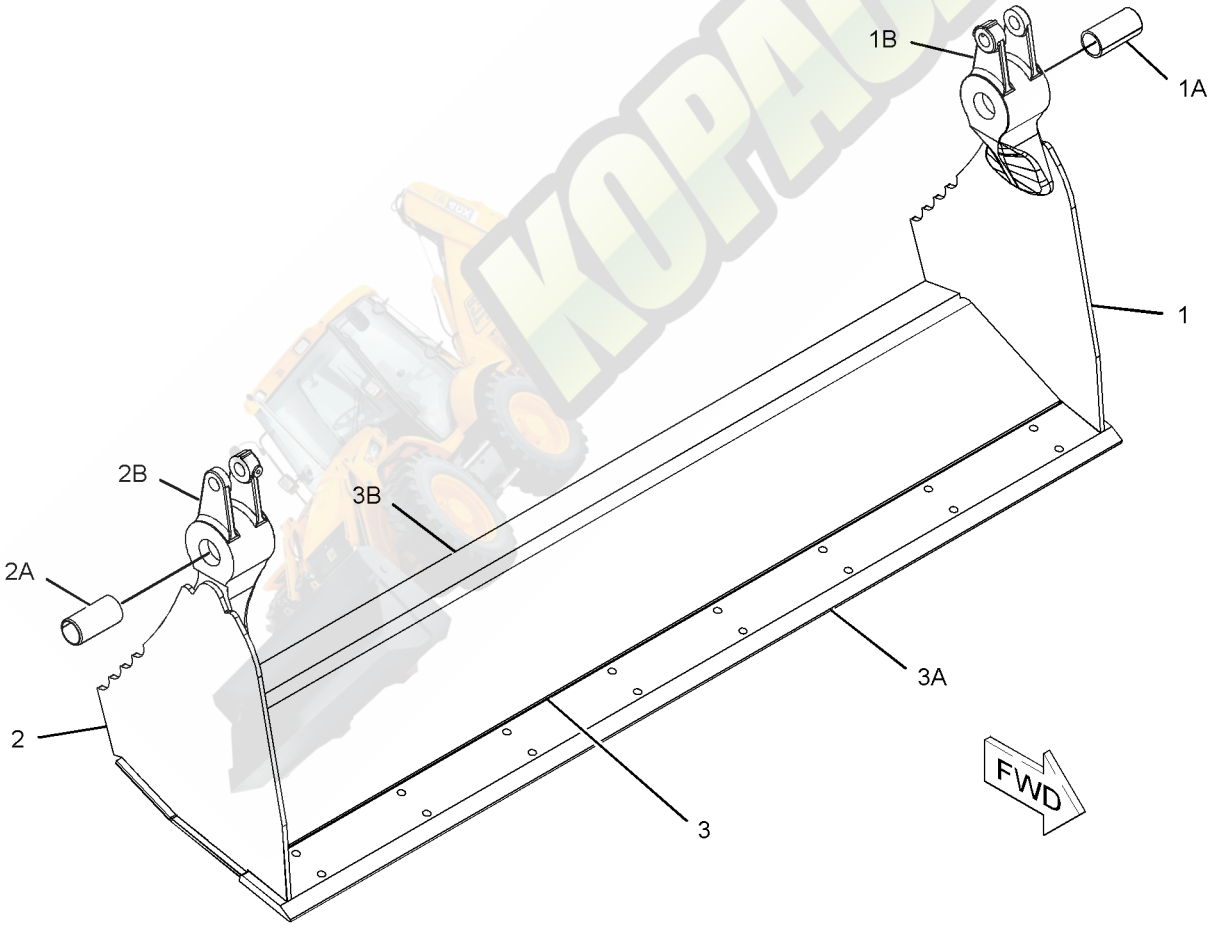

GRAPHIC #1 **<END>** g01121768

WORK TOOLS

332-7949 CONVERSION AR-QUICK COUPLER

S/N: JBA1-UP

AN ATTACHMENT

SMCS-6129 **i03654224**

NOTE	PART NUMBER	QTY	PART NAME 1 2 3 4 5 6 (PRODUCT LEVEL)	SEE PAGE
Y	*344-6067*	1	COUPLER GP-QUICK	593
Y	*329-3503*	1	LINES GP-AUXILIARY HYDRAULIC	393
Y	*331-7412*	1	LINES GP-HYDRAULIC (PARALLEL LIFT)	411
Y	*329-3600*	1	LINES GP-LIFT & TILT	414
Y	*329-3504*	1	LINES GP-LIFT CYLINDER	416
Y	*332-9195*	1	VALVE & MTG GP-BANK	465
Y	*296-0376*	1	WIRING GP-WORK TOOL	237
	282-9043	1	FILM-WARNING (QUICK COUPLER)	
			(ON RIGHT HAND SIDE OF A POST, CENTERED HORIZONTALLY & VERTICALLY BELOW THE DOOR LATCH)	

Y-SEPARATE ILLUSTRATION

<END>

WORK TOOLS

176-6251 COUPLER GP-QUICK–BACKHOE

S/N: JBA1-UP
PART OF 178-8850, 318-9901 COUPLER GP-QUICK
AN ATTACHMENT

SMCS-6129 **i03505443**

NOTE	REF NO	GRAPHIC REF	PART NUMBER	QTY	PART NAME 1 2 3 4 5 6 (PRODUCT LEVEL)	SEE PAGE
	1	1	**176-6252**	1	COUPLER	
	2	1	**200-5921**	1	HOOK	
	3	1	**216-7377**	1	SPRING	
	4	1	**132-3721**	1	PIN AS (HOOK)	
	5	1	**132-3723**	1	LOCK PIN	
C	6	1	**091-5928**	1	FITTING-GREASE	
	7	1	**8T-0144**	1	PIN-SPRING	
F			**132-3821**	1	LEVER-ACTUATING	

C-CHANGE FROM PREVIOUS TYPE
F-NOT SHOWN

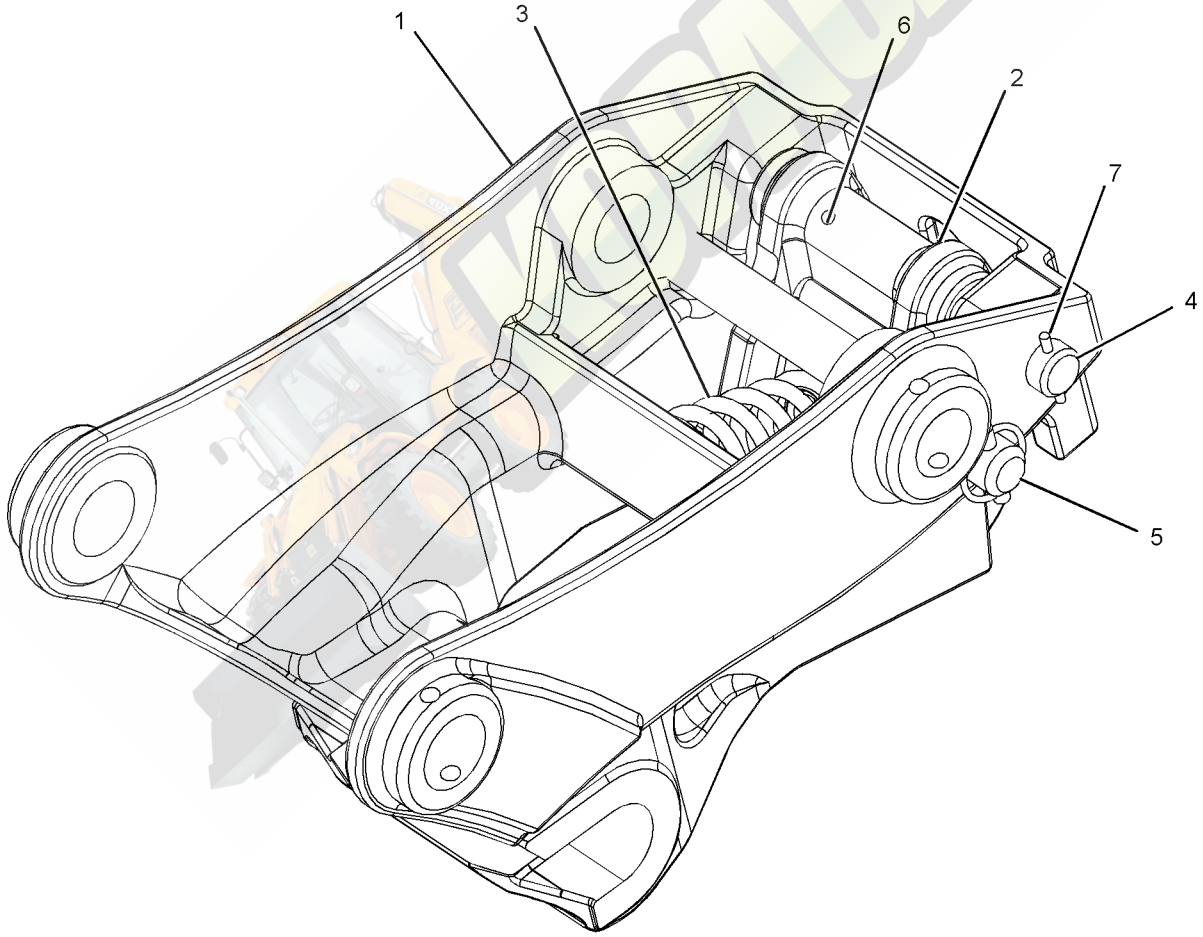

GRAPHIC #1 **<END>** g01017414

178-8850 COUPLER GP-QUICK–BACKHOE

S/N: JBA1-UP

FOR USE WITH 178-3593–PAGE 602

AN ATTACHMENT

SMCS-6129 **i03332282**

NOTE	REF NO	GRAPHIC REF	PART NUMBER	QTY	PART NAME 1 2 3 4 5 6 (PRODUCT LEVEL)	SEE PAGE
	1	1	**4J-1888**	2	PIN-COTTER	
	2	1	**132-3777**	1	PIN	
	3	1	**132-3778**	1	PIN	
Y	4	1	**176-6251**	1	COUPLER GP-QUICK (BACKHOE)	588

Y-SEPARATE ILLUSTRATION

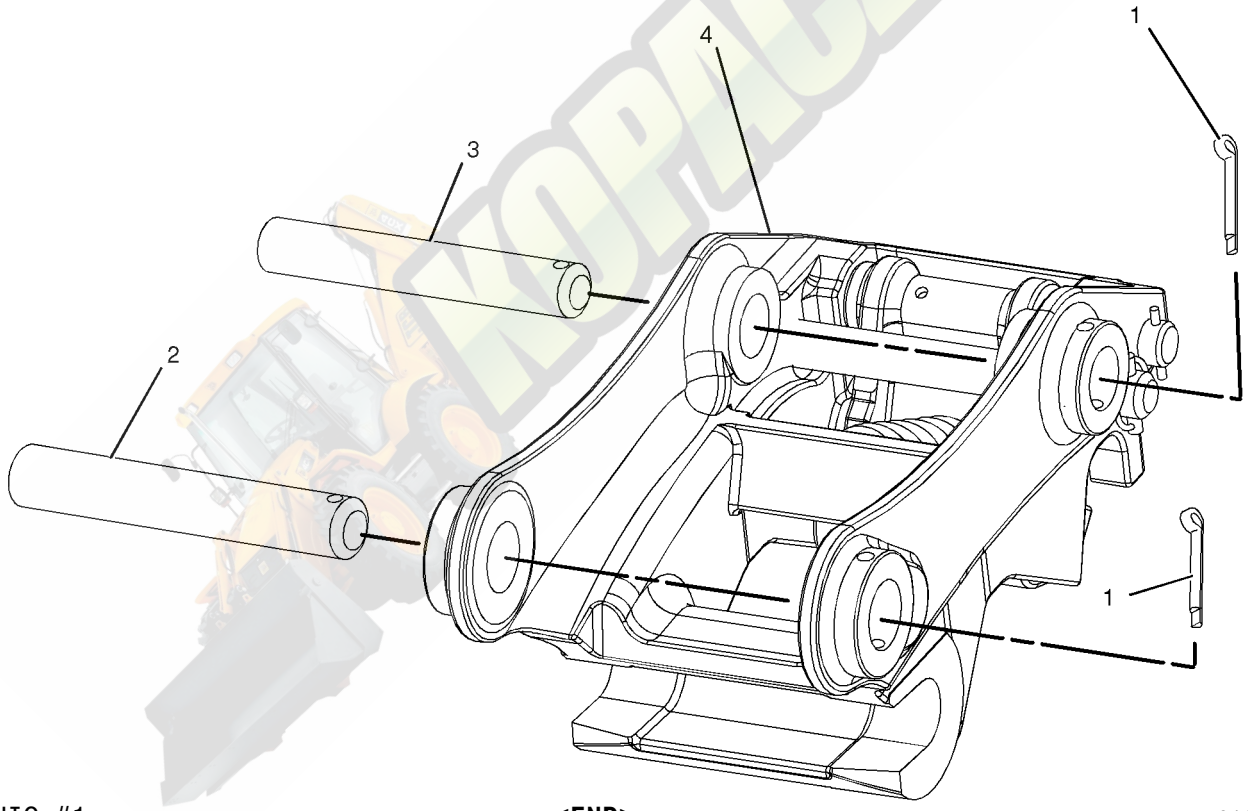

GRAPHIC #1 **<END>** g01036330

WORK TOOLS

213-8000 COUPLER GP-QUICK–JCB

S/N: JBA1-UP
FOR USE WITH 223-1882–PAGE 603, JCB STYLE BUCKETS
AN ATTACHMENT

SMCS-6129 **i01670207**

NOTE	REF NO	GRAPHIC REF	PART NUMBER	QTY	PART NAME 1 2 3 4 5 6 (PRODUCT LEVEL)	SEE PAGE
Y	1	1	**213-8008**	1	COUPLER GP-QUICK	591
	2	1	**216-7374**	2	PIN	
	3	1	**4J-1888**	2	PIN-COTTER	

Y-SEPARATE ILLUSTRATION

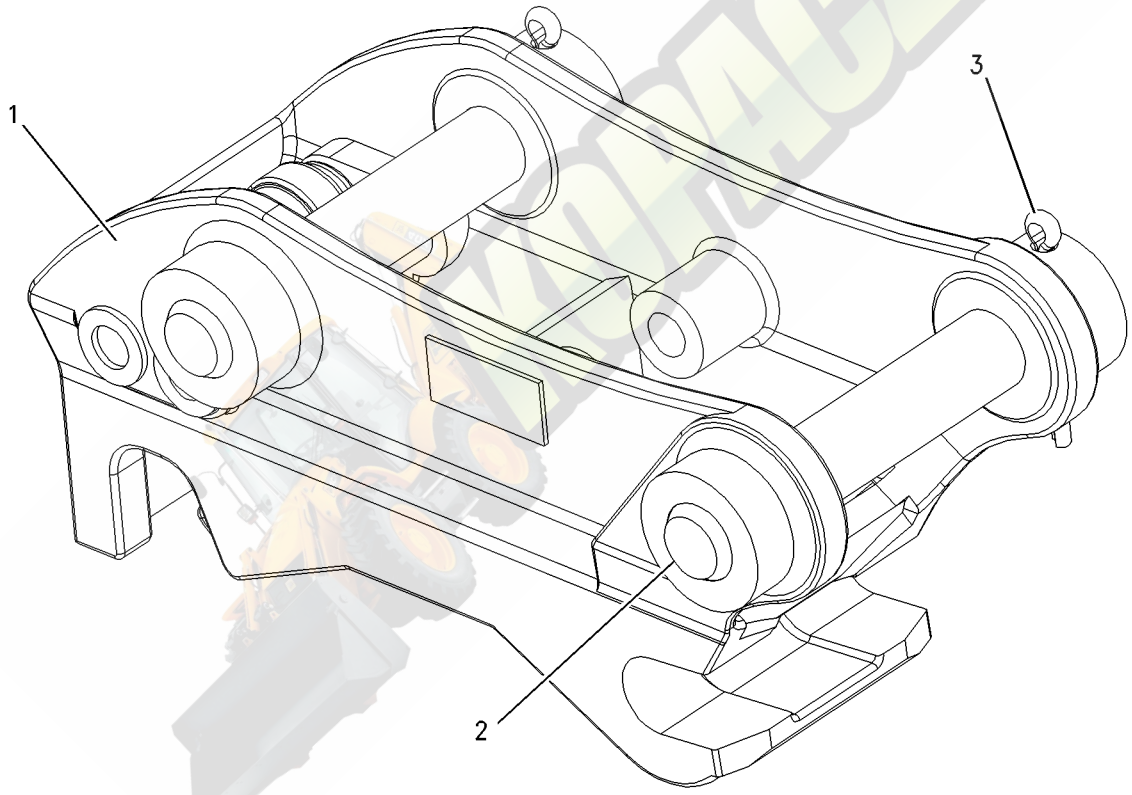

GRAPHIC #1 **<END>** g00863381

WORK TOOLS

213-8008 COUPLER GP-QUICK

S/N: JBA1-UP

PART OF 213-8000, 318-9903 COUPLER GP-QUICK

AN ATTACHMENT

SMCS-6129 **i01739273**

NOTE	REF NO	GRAPHIC REF	PART NUMBER	QTY	PART NAME 1 2 3 4 5 6 (PRODUCT LEVEL)	SEE PAGE
	1	1	**091-5928**	1	FITTING-GREASE	
	2	1	**216-7377**	1	SPRING	
	3	1	**215-1216**	1	COUPLER	
	4	1	**215-1217**	1	HOOK	
	5	1	**216-7375**	1	PIN AS	
	6	1	**216-7376**	1	PIN AS	
F		1	**132-3821**	1	LEVER-ACTUATING	

F-NOT SHOWN

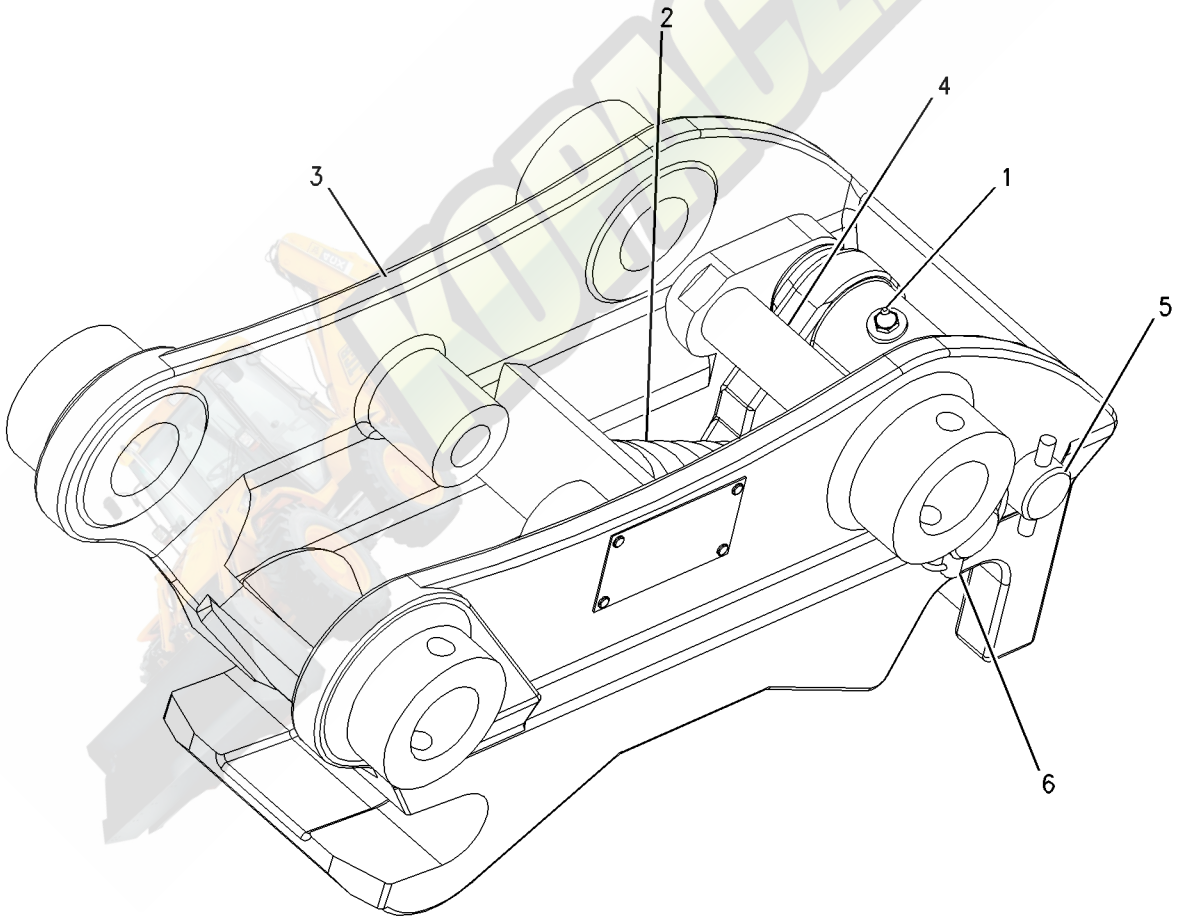

GRAPHIC #1 **<END>** g00890825

WORK TOOLS

318-9901 COUPLER GP-QUICK—BACKHOE

S/N: JBA1-UP
FOR USE WITH 318-9902—PAGE 604
AN ATTACHMENT

SMCS-6129 **i02990480**

NOTE	PART NUMBER	QTY	PART NAME 1 2 3 4 5 6 (PRODUCT LEVEL)	SEE PAGE
Y	**176-6251**	1	COUPLER GP-QUICK (BACKHOE)	588
	132-3777	1	PIN	
	132-3778	1	PIN	
	4J-1888	2	PIN-COTTER	

Y-SEPARATE ILLUSTRATION

<END>

318-9903 COUPLER GP-QUICK

S/N: JBA1-UP
FOR USE WITH 318-9904—PAGE 604
AN ATTACHMENT

SMCS-6129 **i02977716**

NOTE	PART NUMBER	QTY	PART NAME 1 2 3 4 5 6 (PRODUCT LEVEL)	SEE PAGE
Y	**213-8008**	1	COUPLER GP-QUICK (JCB)	591
	216-7374	2	PIN	
	4J-1888	2	PIN-COTTER	

Y-SEPARATE ILLUSTRATION

<END>

344-6067 COUPLER GP-QUICK–PARALLEL LIFT

S/N: JBA1-UP

PART OF 332-7949 CONVERSION AR-QUICK COUPLER, 332-7961 VALVE AR-BANK 3 AN ATTACHMENT

SMCS-6129 **i03638347**

NOTE	REF NO	GRAPHIC REF	PART NUMBER	QTY	PART NAME 1 2 3 4 5 6 (PRODUCT LEVEL)	SEE PAGE
B	1	1	**119-4594**	4	WASHER (41X64X1-MM THK)	
	2	1	**178-0469**	1	COVER	
	3	1	**344-6066**	2	PIN AS	
	4	1	**348-4900**	1	COUPLER AS	
	5	1	**3B-8489**	2	FITTING-GREASE	
	6	1	**7X-0590**	2	WASHER-HARD (13.5X44.5X6-MM THK)	
M	7	1	**8T-4179**	2	BOLT (M12X1.75X20-MM)	
M	8	1	**8T-4189**	2	BOLT (M8X1.25X20-MM)	
	9	1	**8T-4224**	4	WASHER-HARD (8.8X16X2-MM THK)	
M	10	1	**8T-4908**	2	BOLT (M8X1.25X25-MM)	
B	11	1	**9R-0109**	16	WASHER (41X64X3-MM THK)	

B-USE AS REQUIRED
M-METRIC PART

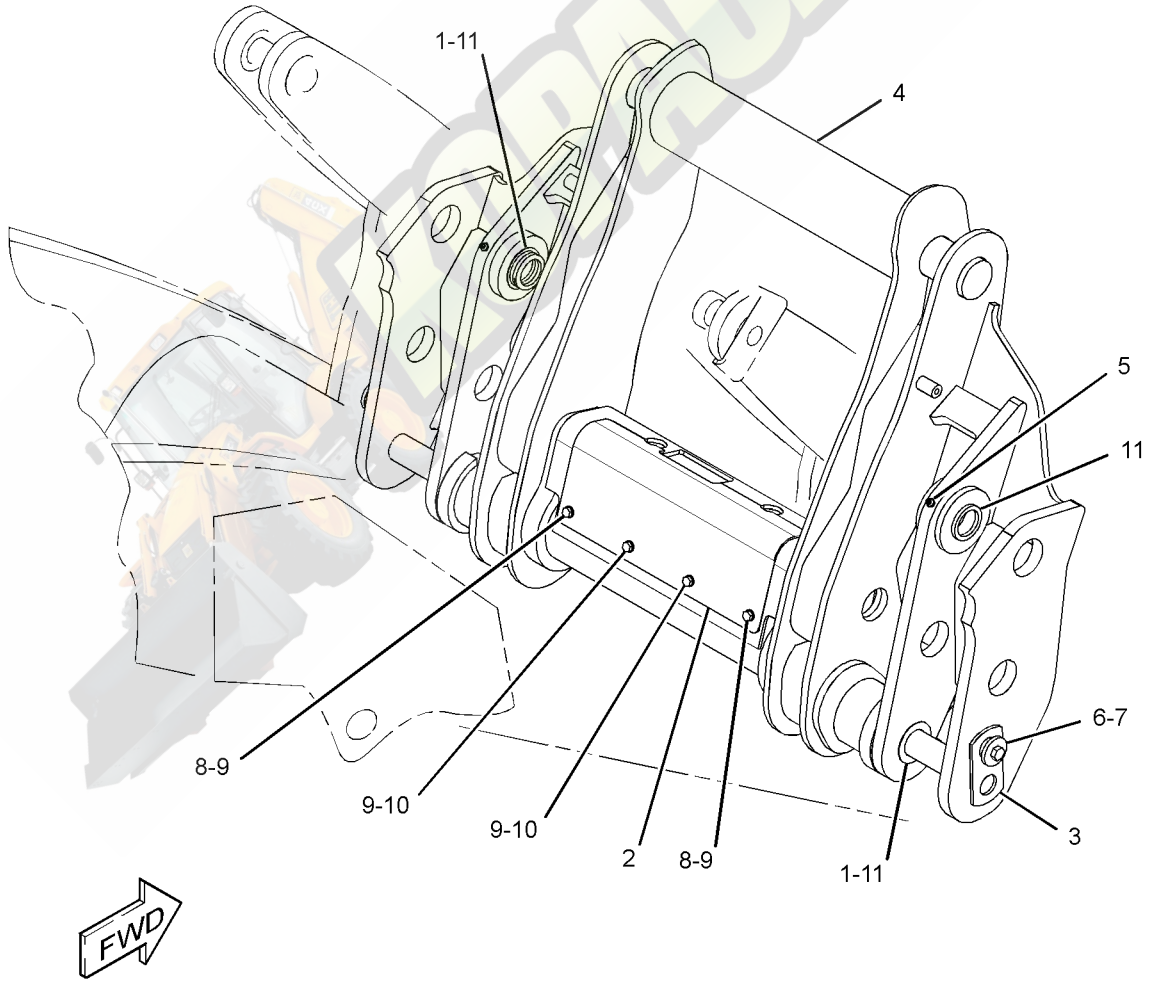

GRAPHIC #1 **<END>** g01963694

WORK TOOLS

9R-5320 EDGE GP-CUTTING

S/N: JBA1-UP
AN ATTACHMENT

SMCS-6801 **i00530080**

NOTE	REF NO	GRAPHIC REF	PART NUMBER	QTY	PART NAME 1 2 3 4 5 6 (PRODUCT LEVEL)	SEE PAGE
	1	1	**118-7110**	2	EDGE-CUTTING	
	2	1	**4F-3657**	8	BOLT-PLOW (5/8-11X2.75-IN)	
	3	1	**4K-0367**	8	NUT-FULL (5/8-11-THD)	
	4	1	**8T-4122**	8	WASHER-HARD (17X32X3.5-MM THK)	

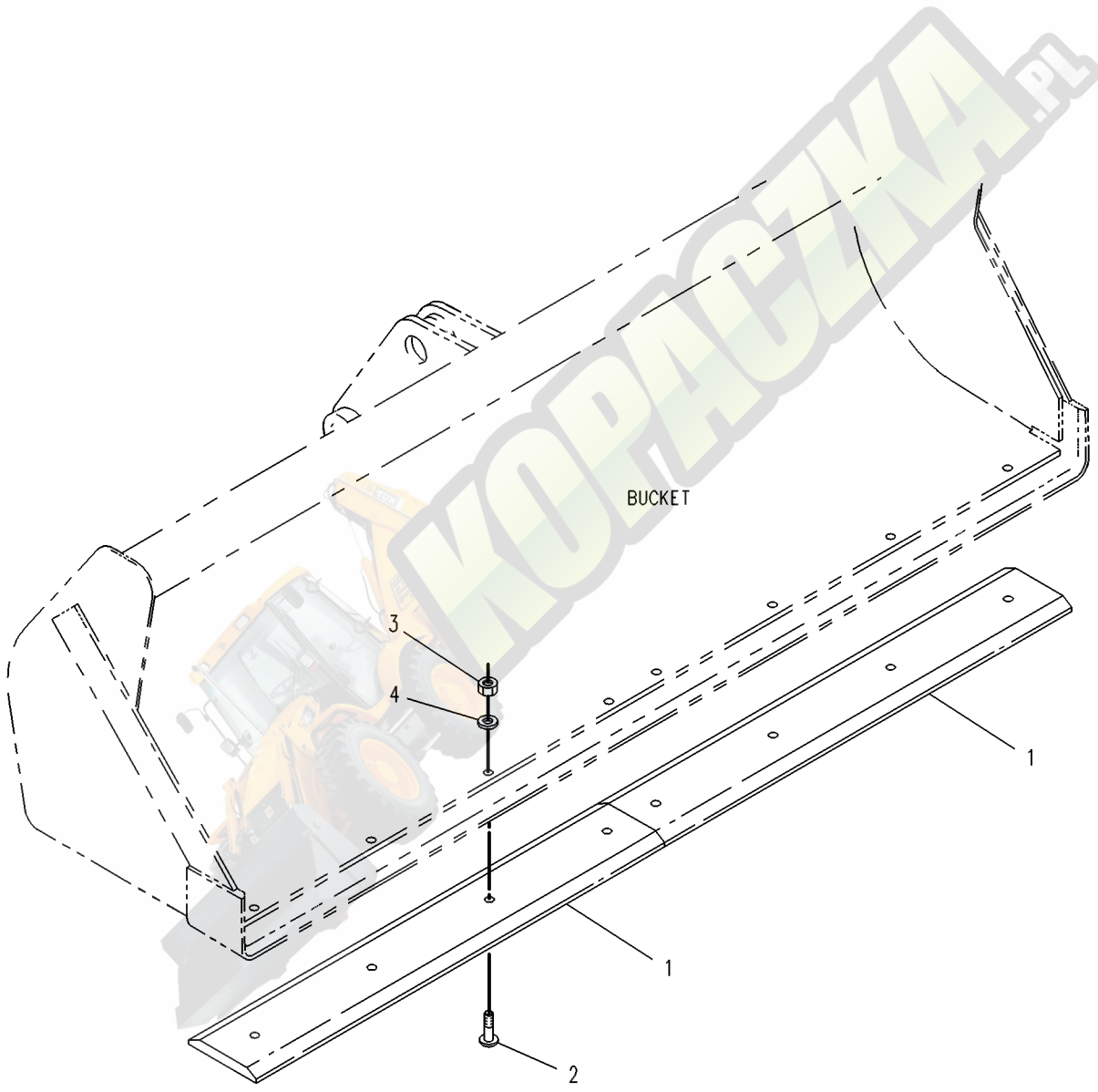

GRAPHIC #1 **<END>** g00131376

WORK TOOLS

9R-5321 EDGE GP-CUTTING

S/N: JBA1-UP

AN ATTACHMENT

SMCS-6801 **i00530701**

NOTE	REF NO	GRAPHIC REF	PART NUMBER	QTY	PART NAME 1 2 3 4 5 6 (PRODUCT LEVEL)	SEE PAGE
	1	1	**9W-8215**	2	EDGE-CUTTING	
	2	1	**3F-5108**	8	BOLT-PLOW (5/8-11X2.25-IN)	
	3	1	**4K-0367**	8	NUT-FULL (5/8-11-THD)	
	4	1	**8T-4122**	8	WASHER-HARD (17X32X3.5-MM THK)	

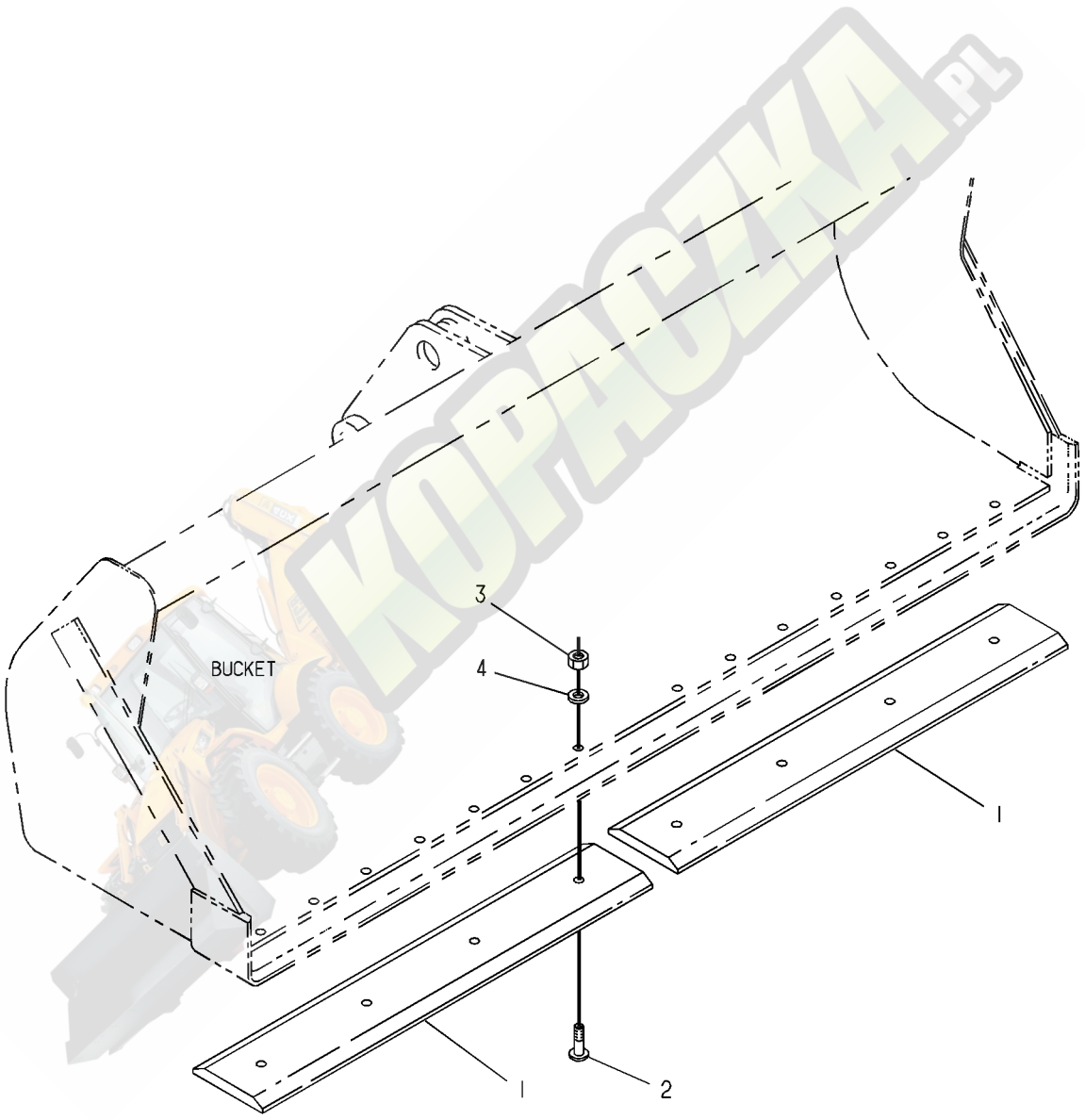

GRAPHIC #1 **<END>** g00130834

WORK TOOLS

104-6310 FORK GP

S/N: JBA1-UP
PART OF 255-9086 FORK GP
AN ATTACHMENT

SMCS-6405 **i01114480**

NOTE	REF NO	GRAPHIC REF	PART NUMBER	QTY	PART NAME 1 2 3 4 5 6 (PRODUCT LEVEL)	SEE PAGE
	1	1	**104-6311**	2	BRACKET AS	
	2	1	**104-6312**	2	FORK AS	
	3	1	**104-6316**	1	PIN	
	4	1	**104-6317**	2	PIN	
	5	1	**4J-1888**	1	PIN-COTTER	
	6	1	**9R-0109**	4	WASHER (41X64X3-MM THK)	
	7	1	**112-1776**	2	PIN AS	
	8	1	**6V-8144**	4	RING-RETAINING	
	9	1	**5D-8159**	2	PIN AS	

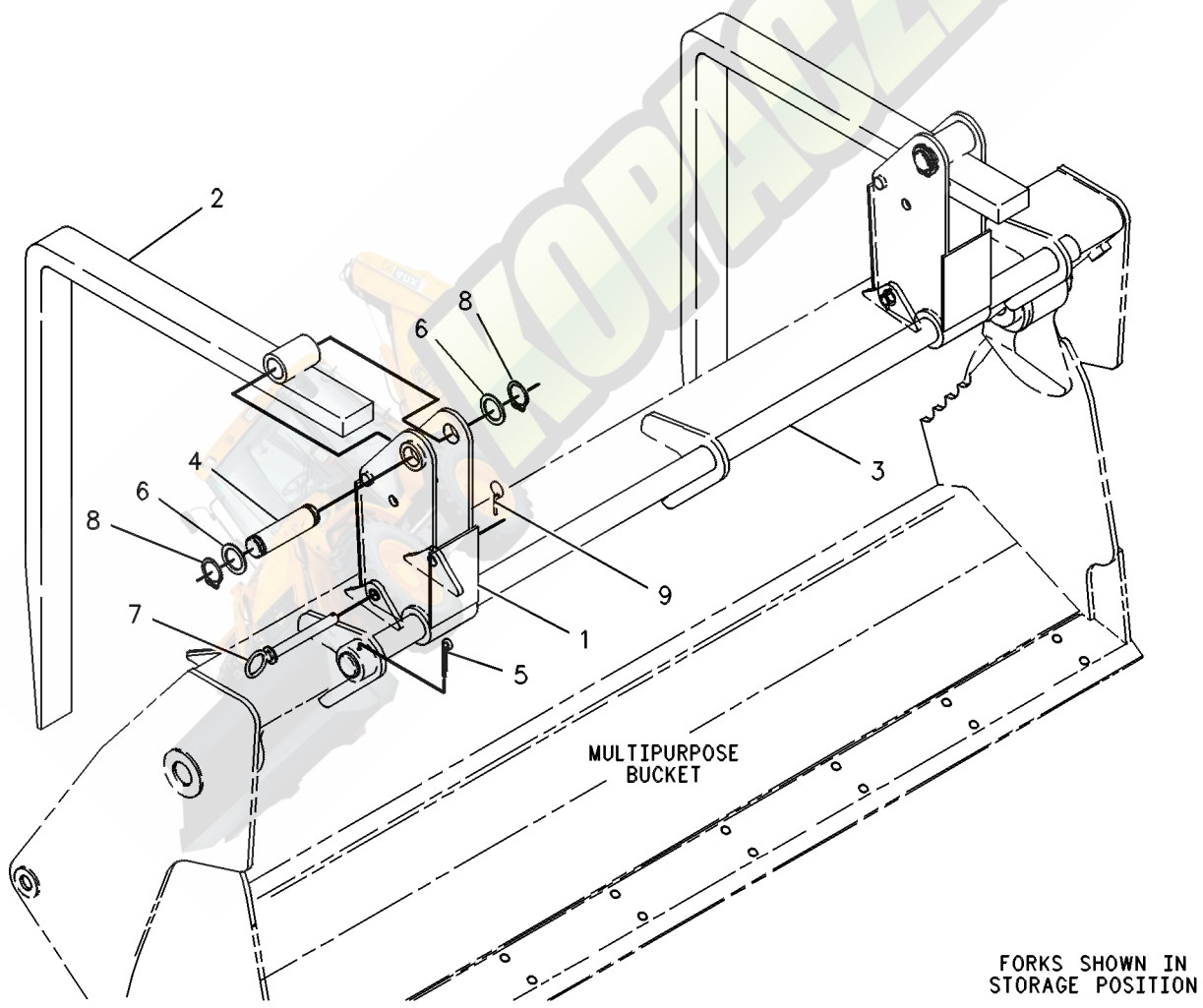

GRAPHIC #1 **<END>** g00131084

WORK TOOLS

255-9086 FORK GP

S/N: JBA1-UP

AN ATTACHMENT

SMCS-6405 **i02402999**

NOTE	REF NO	GRAPHIC REF	PART NUMBER	QTY	PART NAME 1 2 3 4 5 6 (PRODUCT LEVEL)	SEE PAGE
	1	1	**5D-8159**	2	PIN AS	
Y	2	1	**104-6310**	1	FORK GP	596
	3	1	**178-2593**	4	BUMPER	
	4	1	**250-1057**	2	PIN	
Y	5	1	*255-9087*	1	MOUNTING GP-FORK	607
M	6	1	**5C-7261**	4	NUT (M8X1.25-THD)	
	7	1	**8T-4224**	4	WASHER-HARD (8.8X16X2-MM THK)	

M-METRIC PART
Y-SEPARATE ILLUSTRATION

KOPACZKA.PL

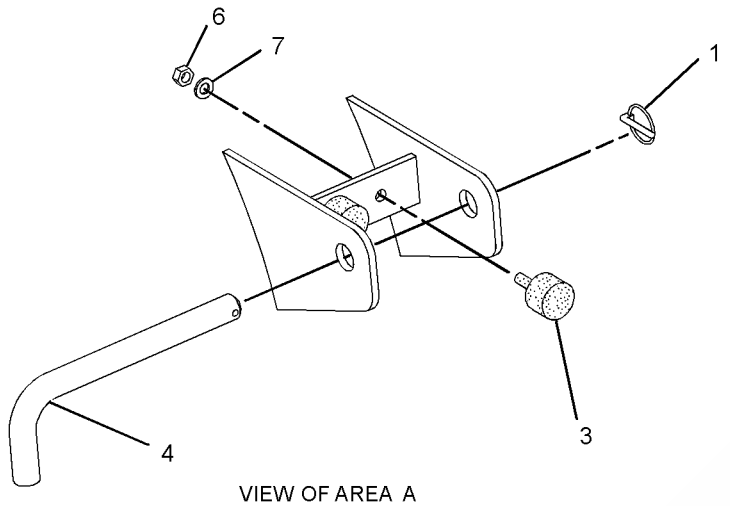

VIEW OF AREA A
(EXPLODED)

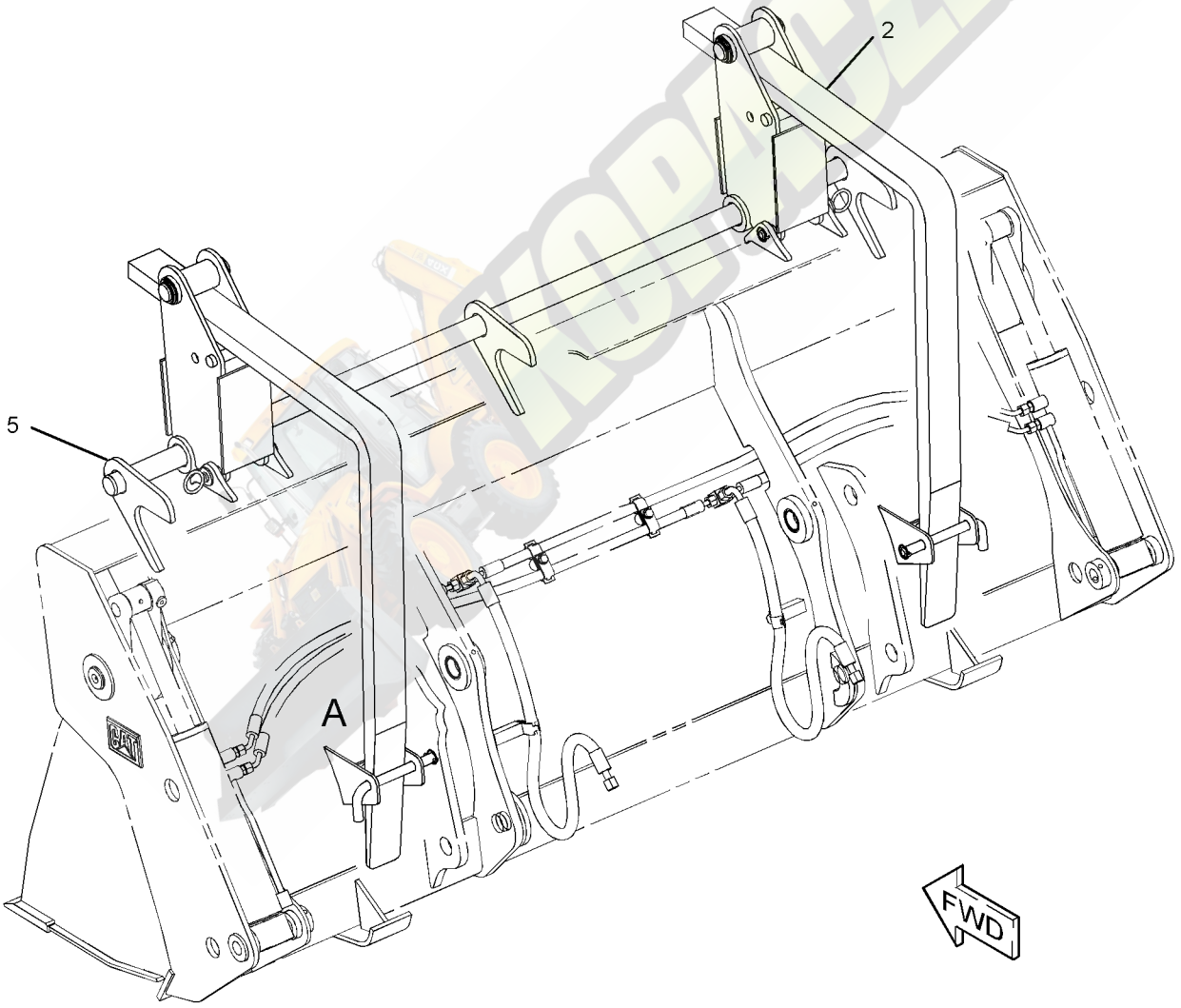

GRAPHIC #1 **<END>** g01202316

WORK TOOLS

6W-8900 FORK GP-PALLET

S/N: JBA1-UP
1200-MM (47-IN)
AN ATTACHMENT

SMCS-6136 **i02595638**

NOTE	PART NUMBER	QTY	PART NAME 1 2 3 4 5 6 (PRODUCT LEVEL)	SEE PAGE
	091-1637	1	SERVICE GP-FORK POSITIONER	
	091-1665	1	LEVER	
	091-1664	1	PIN	
	8T-0255	1	PIN-SPRING	
	091-1667	1	SPRING	
	091-1745	1	WASHER (16.6X24X1.2-MM THK)	

<END>

6W-8933 FORK GP-PALLET

S/N: JBA1-UP
1050-MM (41-IN)
AN ATTACHMENT

SMCS-6136 **i02595640**

NOTE	PART NUMBER	QTY	PART NAME 1 2 3 4 5 6 (PRODUCT LEVEL)	SEE PAGE
	091-1637	1	SERVICE GP-FORK POSITIONER	
	091-1665	1	LEVER	
	091-1664	1	PIN	
	8T-0255	1	PIN-SPRING	
	091-1667	1	SPRING	
	091-1745	1	WASHER (16.6X24X1.2-MM THK)	

<END>

6W-9739 FORK GP-PALLET

S/N: JBA1-UP
1350-MM (53-IN)
AN ATTACHMENT

SMCS-6136 **i03500263**

NOTE	PART NUMBER	QTY	PART NAME 1 2 3 4 5 6 (PRODUCT LEVEL)	SEE PAGE
	091-1637	1	SERVICE GP-FORK POSITIONER	
	091-1665	1	LEVER	
	091-1664	1	PIN	
	8T-0255	1	PIN-SPRING	
	091-1667	1	SPRING	
	091-1745	1	WASHER (16.6X24X1.2-MM THK)	

<END>

WORK TOOLS

214-7024 GUARD GP-BUCKET

S/N: JBA1-UP

AN ATTACHMENT

SMCS-6001, 6800, 6805 **i03310000**

NOTE	REF NO	GRAPHIC REF	PART NUMBER	QTY	PART NAME 1 2 3 4 5 6 (PRODUCT LEVEL)	SEE PAGE
	1	1	**101-4415**	1	FILM (REFLECTOR)	
Y	2	1	*214-7025*	1	GUARD GP-BUCKET	601

Y-SEPARATE ILLUSTRATION

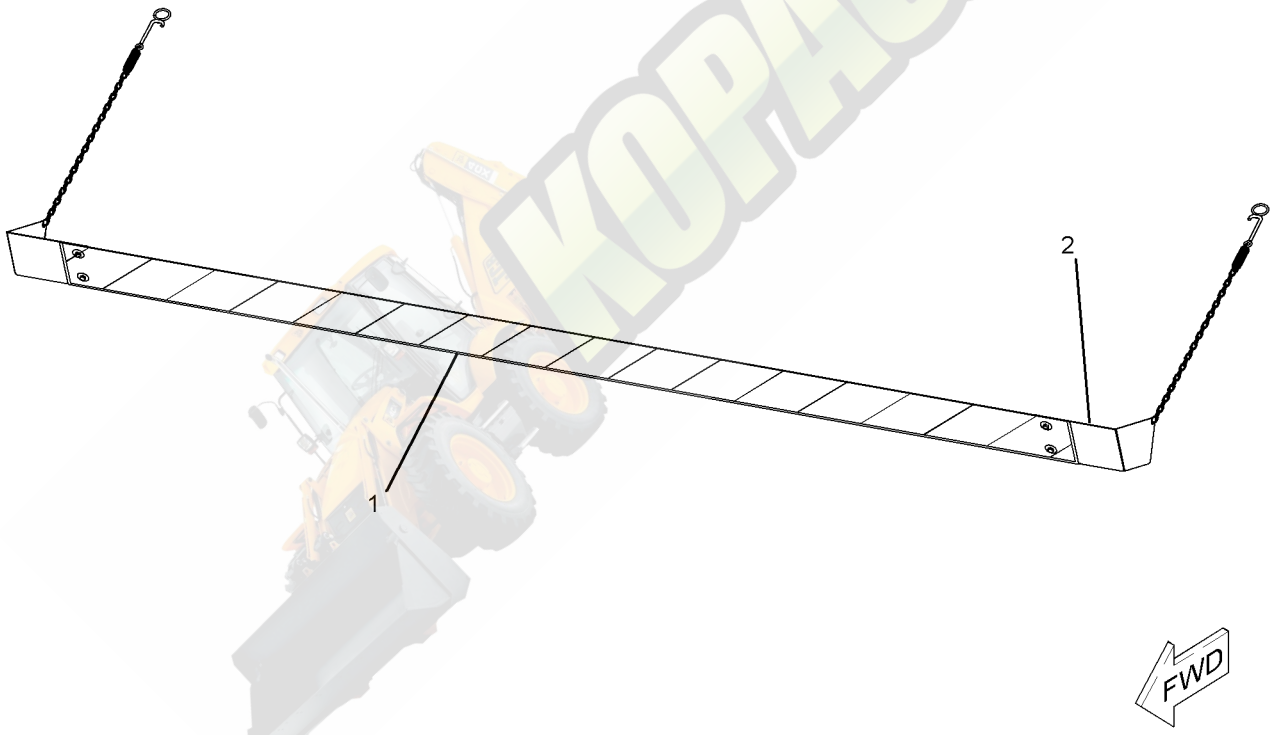

GRAPHIC #1 **<END>** g01120346

KOPACZKA.PL

214-7025 GUARD GP-BUCKET

S/N: JBA1-UP
PART OF 214-7024 GUARD GP-BUCKET
AN ATTACHMENT

SMCS-6001, 6800, 6805 **i02224089**

NOTE	REF NO	GRAPHIC REF	PART NUMBER	QTY	PART NAME 1 2 3 4 5 6 (PRODUCT LEVEL)	SEE PAGE
	1	1	**214-7026**	1	PLATE	
	2	1	**101-4411**	2	RETAINER AS	
					(EACH INCLUDES)	
	2A	1	**101-4412**	1	CHAIN	
	2B	1	**101-4413**	1	SPRING	
	2C	1	**101-4414**	1	HOOK AS	
	3	1	**204-5258**	1	PLATE AS	
M		1	**6V-9632**	2	NUT-WELD (M6X1-THD)	
	4	1	**204-5259**	1	PLATE AS	
M		1	**6V-9632**	2	NUT-WELD (M6X1-THD)	
	5	1	**6V-7646**	4	WASHER-HARD (7.2X25X2-MM THK)	
M	6	1	**8T-4171**	4	BOLT (M6X1X12-MM)	
	7	1	**034-1432**	9	STRAP-CABLE	

M-METRIC PART

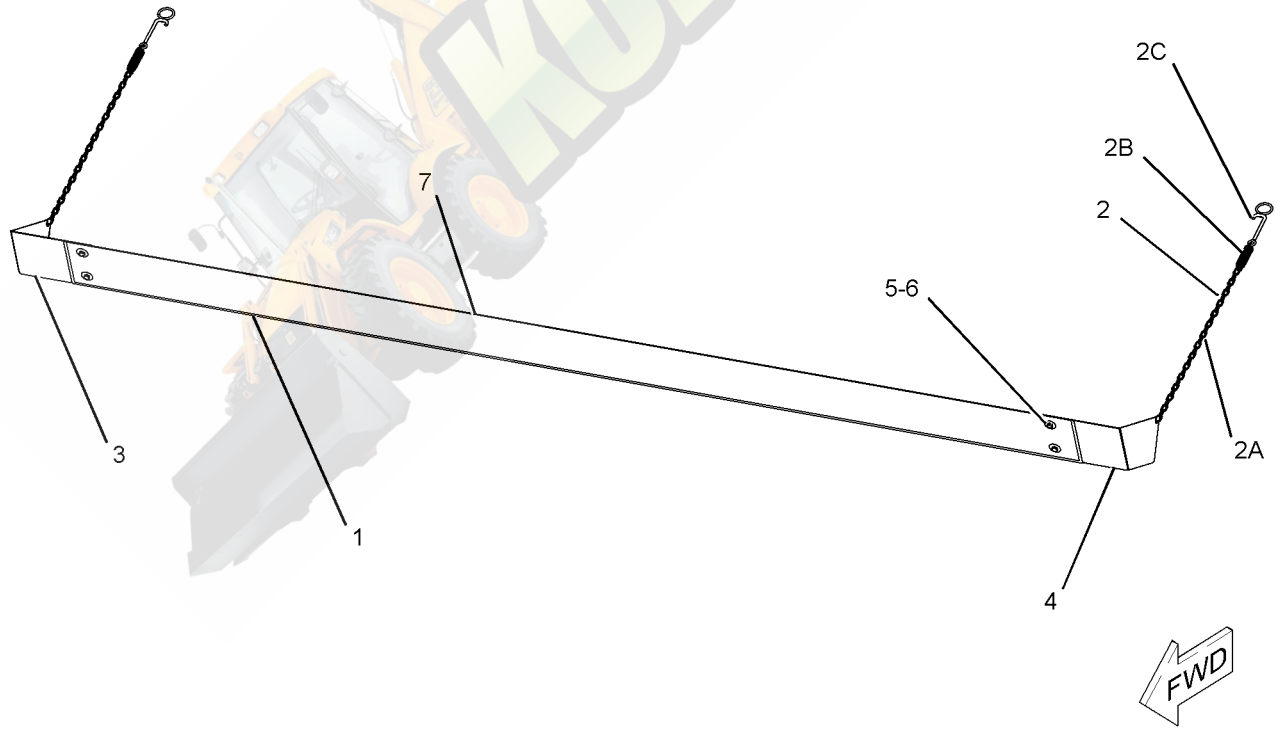

GRAPHIC #1 **<END>** g01121793

178-3593 MOUNTING GP-BUCKET—BACKHOE, QUICK COUPLER

S/N: JBA1-UP

FOR USE WITH 178-8850—PAGE 589

AN ATTACHMENT

SMCS-6101 **i01179790**

NOTE	PART NUMBER	QTY	PART NAME 1 2 3 4 5 6 (PRODUCT LEVEL)	SEE PAGE
	3B-5319	4	PIN-COTTER	
	154-5279	1	PIN	
	154-5280	1	PIN	
	9R-0158	5	WASHER (46X69X3-MM THK)	
	9R-1510	5	WASHER (51X82X4-MM THK)	

<END>

KOPACZKA.pl

223-1882 MOUNTING GP-BUCKET—BACKHOE

S/N: JBA1-UP
FOR USE WITH 213-8000—PAGE 590
AN ATTACHMENT

SMCS-6101 **i01801870**

NOTE	REF NO	GRAPHIC REF	PART NUMBER	QTY	PART NAME 1 2 3 4 5 6 (PRODUCT LEVEL)	SEE PAGE
	1	1	**9R-0158**	2	WASHER (46X69X3MM THK)	
	2	1	**9R-9105**	2	PIN AS	
	3	1	**3B-5319**	2	PIN-COTTER	

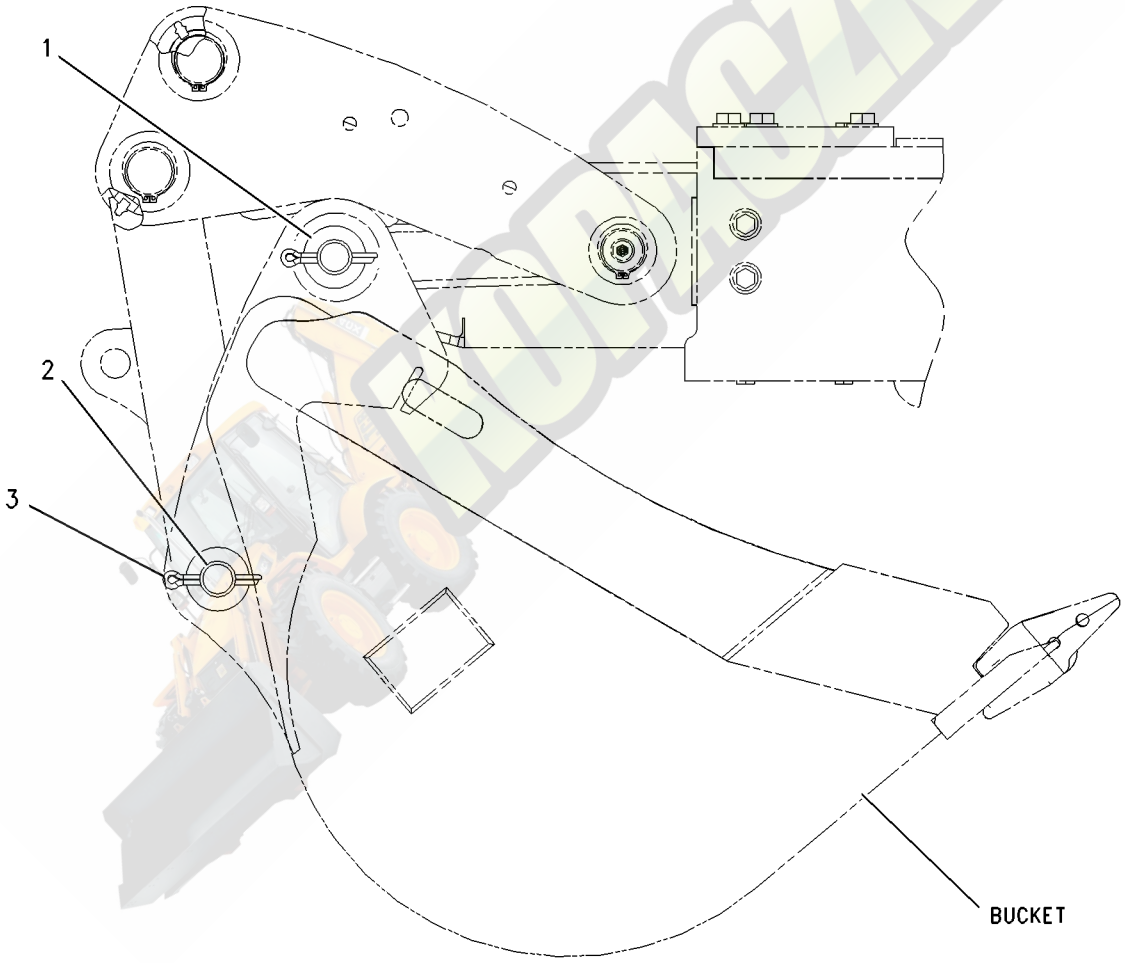

GRAPHIC #1 **<END>** g00925340

318-9902 MOUNTING GP-BUCKET—BACKHOE, QUICK COUPLER

S/N: JBA1-UP
FOR USE WITH 318-9901—PAGE 592
AN ATTACHMENT

SMCS-6101 **i02990524**

NOTE	PART NUMBER	QTY	PART NAME 1 2 3 4 5 6 (PRODUCT LEVEL)	SEE PAGE
	154-5279	1	PIN	
	154-5280	1	PIN	
	3B-5319	4	PIN-COTTER	
B	**9R-0158**	5	WASHER (46X69X3-MM THK)	
B	**9R-1510**	5	WASHER (51X82X4-MM THK)	

B-USE AS REQUIRED

<END>

318-9904 MOUNTING GP-BUCKET—BACKHOE, QUICK COUPLER

S/N: JBA1-UP
FOR USE WITH 318-9903—PAGE 592
AN ATTACHMENT

SMCS-6101 **i02977715**

NOTE	PART NUMBER	QTY	PART NAME 1 2 3 4 5 6 (PRODUCT LEVEL)	SEE PAGE
	9R-9105	2	PIN AS	
	3B-5319	2	PIN-COTTER	
	9R-0158	2	WASHER (46X69X3-MM THK)	

<END>

320-4769 MOUNTING GP-BUCKET—PARALLEL LIFT

S/N: JBA1-UP

PART OF 332-7946 VALVE AR-BANK 2, 332-7947, 332-7959 VALVE AR-BANK 3

AN ATTACHMENT

SMCS-6101 **i03638343**

NOTE	REF NO	GRAPHIC REF	PART NUMBER	QTY	PART NAME 1 2 3 4 5 6 (PRODUCT LEVEL)	SEE PAGE
B	1	1	**119-4594**	4	WASHER (41X64X1-MM THK)	
	2	1	**310-0843**	2	PIN AS	
	3	1	**3B-8489**	2	FITTING-GREASE	
	4	1	**6V-8144**	2	RING-RETAINING	
B	5	1	**9R-0109**	20	WASHER (41X64X3-MM THK)	

B-USE AS REQUIRED

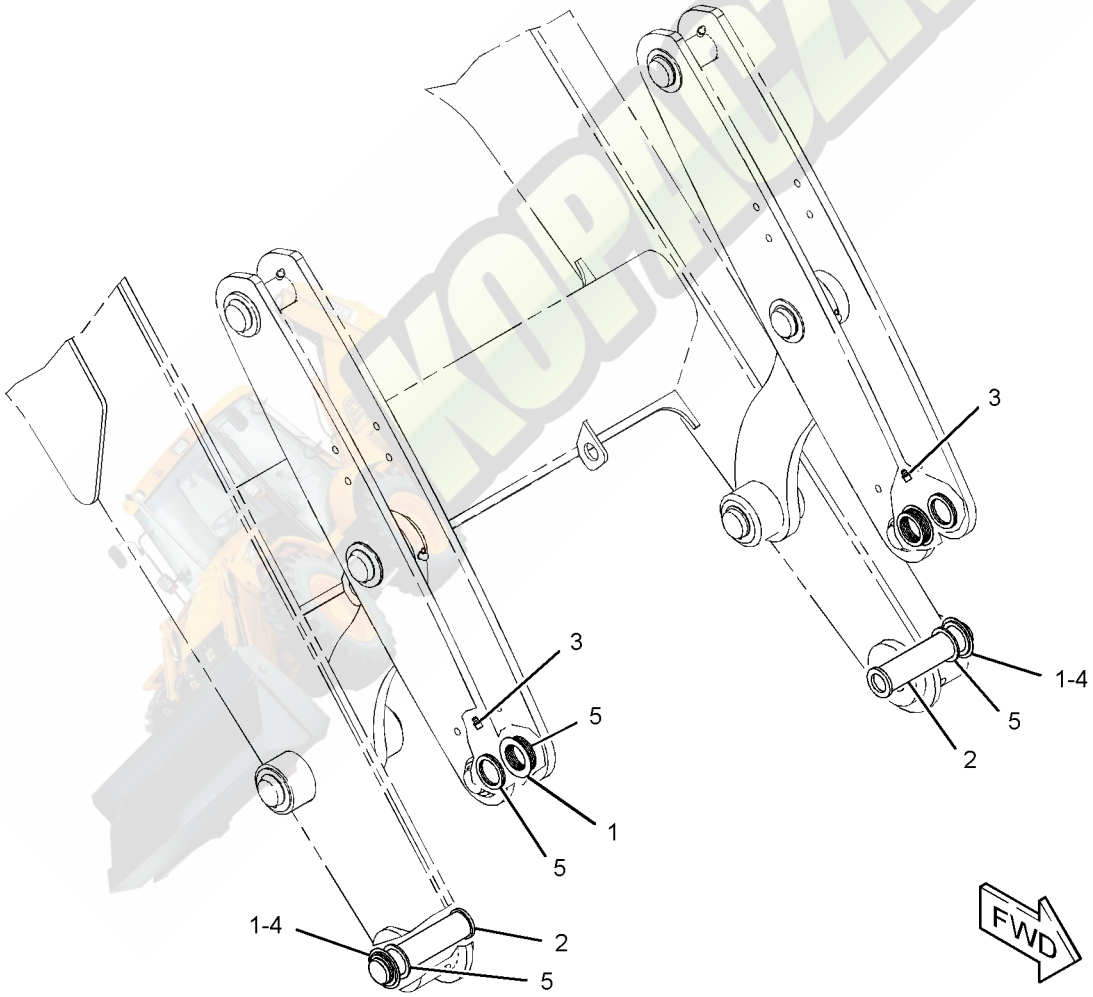

GRAPHIC #1 **<END>** g01963180

WORK TOOLS

252-6005 MOUNTING GP-FORK—MULTIPURPOSE BUCKET

S/N: JBA1-UP
PART OF 318-7248, 320-9948 BUCKET AR-MULTIPURPOSE
AN ATTACHMENT

SMCS-6405 **i02164351**

NOTE	REF NO	GRAPHIC REF	PART NUMBER	QTY	PART NAME 1 2 3 4 5 6 (PRODUCT LEVEL)	SEE PAGE
	1	1	**5D-8159**	2	PIN AS	
	2	1	**104-6311**	2	BRACKET AS	
	3	1	**104-6316**	1	PIN	
	4	1	**104-6317**	2	PIN	
	5	1	**112-1776**	2	PIN AS	
	6	1	**4J-1888**	1	PIN-COTTER	
	7	1	**6V-8144**	4	RING-RETAINING	
	8	1	**9R-0109**	4	WASHER (41X64X3-MM THK)	

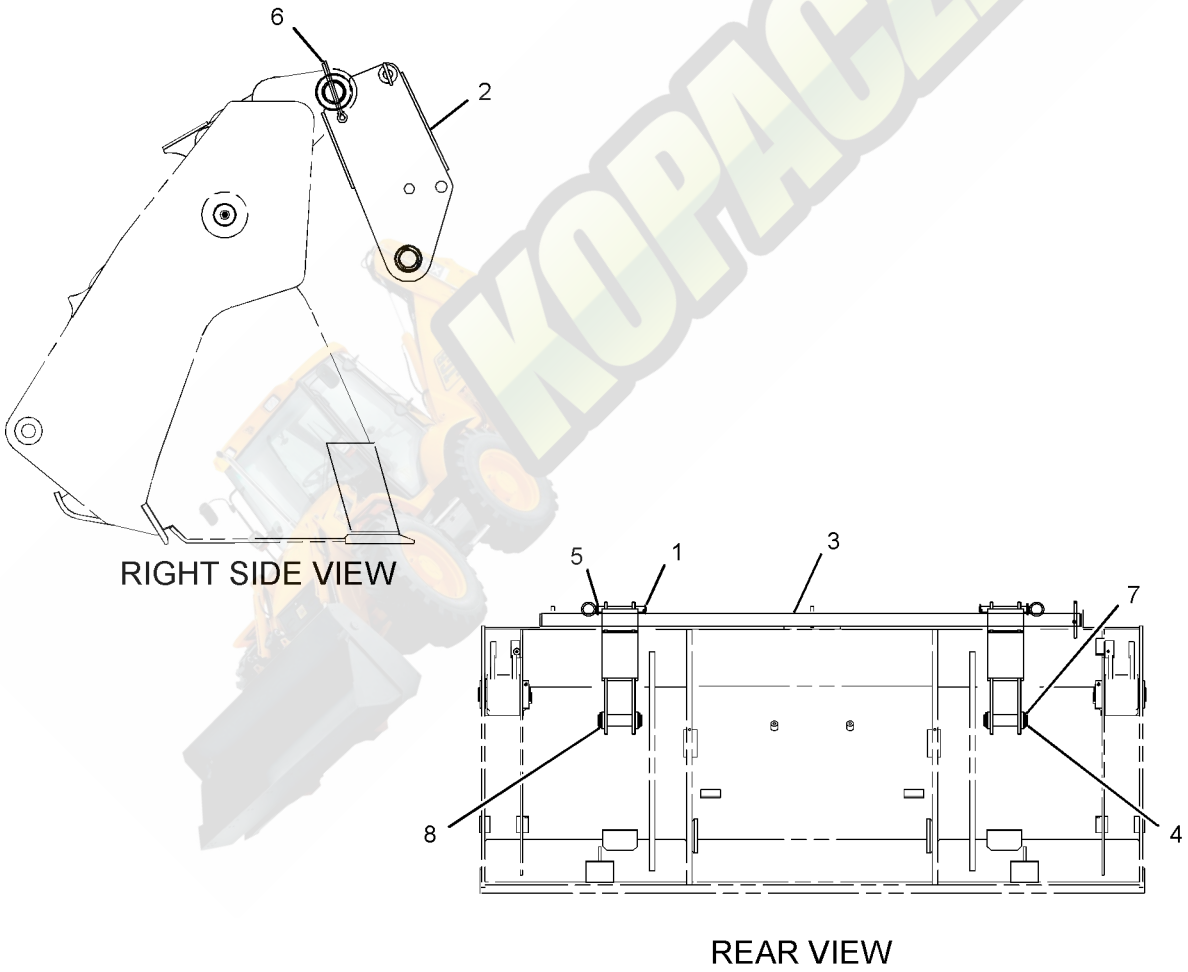

GRAPHIC #1 **<END>** g01097992

WORK TOOLS

255-9087 MOUNTING GP-FORK

S/N: JBA1-UP
PART OF 255-9086 FORK GP
AN ATTACHMENT

SMCS-6405 **i02403011**

NOTE	REF NO	GRAPHIC REF	PART NUMBER	QTY	PART NAME 1 2 3 4 5 6 (PRODUCT LEVEL)	SEE PAGE
	1	1	**104-6313**	1	BRACKET AS	
		1	**106-9388**	1	BRACKET	
	2	1	**106-9388**	2	BRACKET	
	3	1	**110-2861**	4	BRACKET	
	4	1	**250-6587**	2	PLATE	
	5	1	**252-9095**	4	PLATE	

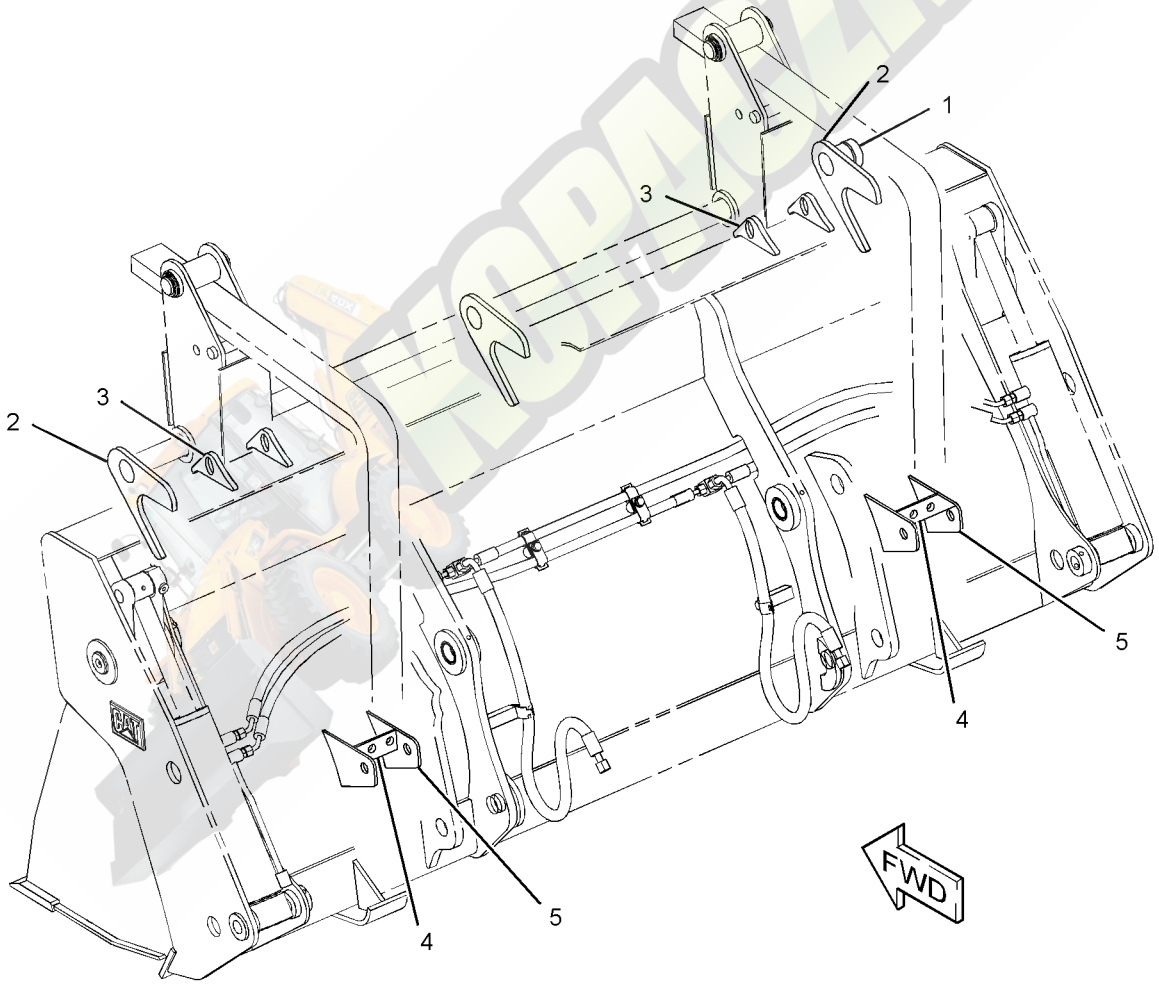

GRAPHIC #1 **<END>** g01202383

WORK TOOLS

9R-5866 TOOTH GP-UNI

S/N: JBA1-UP
FOR USE WITH LOADER BUCKETS
AN ATTACHMENT

SMCS-6822 **i01789850**

NOTE	REF NO	GRAPHIC REF	PART NUMBER	QTY	PART NAME 1 2 3 4 5 6 (PRODUCT LEVEL)	SEE PAGE
	1	1	**135-8203**	8	TOOTH-UNI	
	2	1	**4F-3657**	16	BOLT-PLOW (5/8-11X2.75 IN)	
	3	1	**4K-0367**	16	NUT-FULL (5/8-11 THD)	

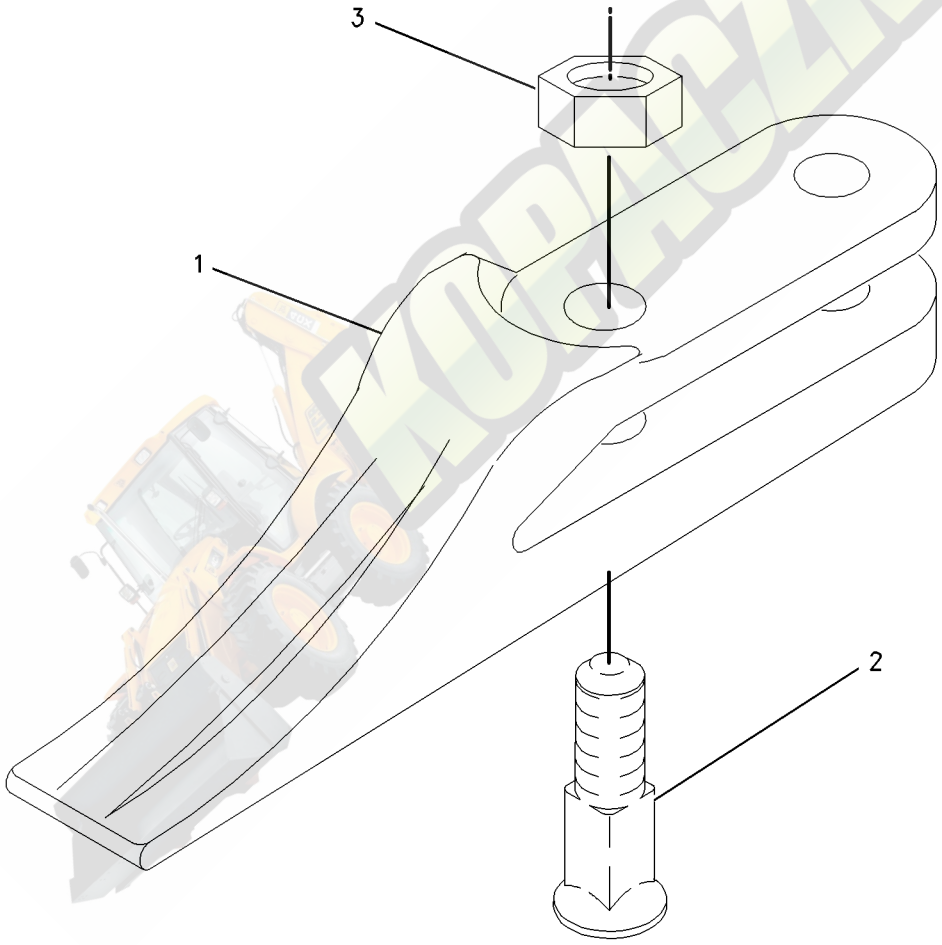

GRAPHIC #1 **<END>** g00915931

OPERATOR STATION

335-3052 CAB AR—PILOT, NON-A/C

S/N: JBA1-UP

CANNOT BE USED WITH 339-4990—PAGE 12, 339-4992—PAGE 14, 339-4991—PAGE 13, 339-4993—PAGE 15

AN ATTACHMENT

SMCS-7301, 7325 **i03726583**

NOTE	PART NUMBER	QTY	PART NAME 1 2 3 4 5 6 (PRODUCT LEVEL)	SEE PAGE
Y	**342-7147**	1	CAB GP	613
Y	*206-1702*	1	CONSOLE GP-OPERATOR (LH)	620
Y	*317-5539*	1	CONSOLE GP-OPERATOR (FRONT)	622
Y	*336-7545*	1	CONSOLE GP-OPERATOR (RH)	624
Y	*269-3201*	1	CONTROL & MTG GP-JOYSTICK	626
Y	*317-5538*	1	CONTROL GP-STEERING (TILT)	630
Y	*211-3782*	1	FENDER GP-REAR	345
Y	*206-1618*	1	FLOOR MAT GP	638
Y	*206-1831*	1	FLOORPLATE GP	347
Y	*316-7290*	1	HEATER & MTG GP-CAB	639
Y	*340-6918*	1	LIGHTING GP-FLOOD (FRONT, REAR, COSA)	176
Y	*317-5543*	1	LINER GP-CAB	659
Y	*315-2940*	1	LINES GP-HEATER	661
Y	*259-6276*	1	MIRROR GP-REAR VIEW (INTERIOR)	664
Y	*336-9168*	1	MIRROR GP-REAR VIEW (EXTERIOR)	665
Y	*269-3247*	1	MOUNTING GP-BACKHOE CONTROL (PILOT)	668
Y	*206-1701*	1	PROTECTION GP-VANDALISM (ROTATING GUARD)	705
Y	*334-7225*	1	ROOF GP-CAB	673
Y	*315-9890*	1	SEAT GP-SUSPENSION (CLOTH)	682
Y	*206-1857*	1	VISOR GP-CAB	687
Y	*340-8276*	1	WASHER GP-WINDOW	688
Y	*340-3552*	1	WIRING GP-CAB	201
Y	*338-5740*	1	WIRING GP-CONSOLE (SIDE, PILOT)	203
Y	*310-5613*	1	WIRING GP-HEATER	209
Y	*338-5738*	1	WIRING GP-PLATFORM	217
Y	*211-4271*	1	WIRING GP-POWER RECEPTACLE	222
	272-5421	1	FILM-CONTROL (BACKHOE, JOYSTICK)	
			(ON THE MACHINE LH REAR SIDE CONSOLE)	
	256-5299	1	FILM-IDENTIFICATION (CATERPILLAR)	
			(ON THE FRONT OF THE ROOF CAP CENTERED HORIZONTALLY & VERTICALLY)	
	285-1207	1	MAT-PROTECTIVE	

Y-SEPARATE ILLUSTRATION

<END>

OPERATOR STATION

335-3053 CAB AR—PILOT, AIR CONDITIONER

S/N: JBA1-UP

CANNOT BE USED WITH 339-4986—PAGE 8, 339-4987—PAGE 9, 339-4988—PAGE 10, 339-4989—PAGE 11

AN ATTACHMENT

SMCS-7301, 7325 **i03726585**

NOTE	PART NUMBER	QTY	PART NAME 1 2 3 4 5 6 (PRODUCT LEVEL)	SEE PAGE
Y	**342-7147**	1	CAB GP	613
Y	*321-7038*	1	COMPRESSOR GP-REFRIGERANT	618
Y	*301-9725*	1	CONDENSER & MTG GP-REFRIGERANT	619
Y	*336-7545*	1	CONSOLE GP-OPERATOR (RH)	624
Y	*206-1702*	1	CONSOLE GP-OPERATOR (LH)	620
Y	*317-5539*	1	CONSOLE GP-OPERATOR (FRONT)	622
Y	*269-3201*	1	CONTROL & MTG GP-JOYSTICK	626
Y	*317-5538*	1	CONTROL GP-STEERING (TILT)	630
Y	*211-3782*	1	FENDER GP-REAR	345
Y	*206-1618*	1	FLOOR MAT GP	638
Y	*206-1831*	1	FLOORPLATE GP	347
Y	*316-7291*	1	HEATER & MTG GP-CAB	641
Y	*340-6918*	1	LIGHTING GP-FLOOD (FRONT, REAR, COSA)	176
Y	*317-5543*	1	LINER GP-CAB	659
Y	*315-2939*	1	LINES GP-HEATER & AIR COND	662
Y	*259-6276*	1	MIRROR GP-REAR VIEW (INTERIOR)	664
Y	*336-9168*	1	MIRROR GP-REAR VIEW (EXTERIOR)	665
Y	*269-3247*	1	MOUNTING GP-BACKHOE CONTROL (PILOT)	668
Y	*206-1701*	1	PROTECTION GP-VANDALISM (ROTATING GUARD)	705
Y	*334-7225*	1	ROOF GP-CAB	673
Y	*315-9890*	1	SEAT GP-SUSPENSION (CLOTH)	682
Y	*206-1857*	1	VISOR GP-CAB	687
Y	*340-8276*	1	WASHER GP-WINDOW	688
Y	*338-5733*	1	WIRING GP-AIR CONDITIONER	198
Y	*340-3552*	1	WIRING GP-CAB	201
Y	*338-5740*	1	WIRING GP-CONSOLE (SIDE, PILOT)	203
Y	*338-5738*	1	WIRING GP-PLATFORM	217
Y	*211-4271*	1	WIRING GP-POWER RECEPTACLE	222
	272-5421	1	FILM-CONTROL (BACKHOE, JOYSTICK)	
			(ON THE MACHINE LH REAR SIDE CONSOLE)	
	256-5299	1	FILM-IDENTIFICATION (CATERPILLAR)	
			(ON THE FRONT OF THE ROOF CAP CENTERED HORIZONTALLY & VERTICALLY)	
	285-1207	1	MAT-PROTECTIVE	

Y-SEPARATE ILLUSTRATION

<END>

OPERATOR STATION

335-3055 CAB AR—DELUXE, WITH A/C

S/N: JBA1-UP

CANNOT BE USED WITH 339-4986—PAGE 8, 339-4987—PAGE 9, 339-4988—PAGE 10, 339-4989—PAGE 11

AN ATTACHMENT

SMCS-7301, 7325 **i03726586**

NOTE	PART NUMBER	QTY	PART NAME 1 2 3 4 5 6 (PRODUCT LEVEL)	SEE PAGE
Y	**342-7149**	1	CAB GP (DELUXE)	615
Y	*321-7038*	1	COMPRESSOR GP-REFRIGERANT	618
Y	*301-9725*	1	CONDENSER & MTG GP-REFRIGERANT	619
Y	*206-1702*	1	CONSOLE GP-OPERATOR (LH)	620
Y	*317-5539*	1	CONSOLE GP-OPERATOR (FRONT)	622
Y	*336-7545*	1	CONSOLE GP-OPERATOR (RH)	624
Y	*269-3201*	1	CONTROL & MTG GP-JOYSTICK	626
Y	*317-5538*	1	CONTROL GP-STEERING (TILT)	630
Y	*211-3782*	1	FENDER GP-REAR	345
Y	*206-1618*	1	FLOOR MAT GP	638
Y	*206-1831*	1	FLOORPLATE GP	347
Y	*316-7291*	1	HEATER & MTG GP-CAB	641
Y	*340-6918*	1	LIGHTING GP-FLOOD (FRONT, REAR, COSA)	176
Y	*317-5543*	1	LINER GP-CAB	659
Y	*315-2939*	1	LINES GP-HEATER & AIR COND	662
Y	*259-6276*	1	MIRROR GP-REAR VIEW (INTERIOR)	664
Y	*336-9168*	1	MIRROR GP-REAR VIEW (EXTERIOR)	665
Y	*269-3247*	1	MOUNTING GP-BACKHOE CONTROL (PILOT)	668
Y	*206-1701*	1	PROTECTION GP-VANDALISM (ROTATING GUARD)	705
Y	*334-7225*	1	ROOF GP-CAB	673
Y	*315-9891*	1	SEAT GP-SUSPENSION (DELUXE, CLOTH)	682
Y	*206-1857*	1	VISOR GP-CAB	687
Y	*340-8276*	1	WASHER GP-WINDOW	688
Y	*338-5733*	1	WIRING GP-AIR CONDITIONER	198
Y	*340-3552*	1	WIRING GP-CAB	201
Y	*338-5740*	1	WIRING GP-CONSOLE (SIDE, PILOT)	203
Y	*338-5738*	1	WIRING GP-PLATFORM	217
Y	*211-4271*	1	WIRING GP-POWER RECEPTACLE	222
Y	*338-5732*	1	WIRING GP-SENSOR (DELUXE CAB)	227
	272-5421	1	FILM-CONTROL (BACKHOE, JOYSTICK)	
			(ON THE MACHINE LH REAR SIDE CONSOLE)	
	250-7912	1	FILM-IDENTIFICATION (CATERPILLAR, FRONT)	
			(ON THE FRONT WINDOW AT THE TOP ON THE DELUXE CABS)	
	285-1207	1	MAT-PROTECTIVE	

Y-SEPARATE ILLUSTRATION

<END>

OPERATOR STATION

335-3054 CAB AR-ENCLOSED ROPS—PILOT, NON-A/C

S/N: JBA1-UP

CANNOT BE USED WITH 339-4990—PAGE 12, 339-4991—PAGE 13, 339-4992—PAGE 14, 339-4993—PAGE 15

AN ATTACHMENT

SMCS-7301, 7325 **i03726390**

NOTE	PART NUMBER	QTY	PART NAME 1 2 3 4 5 6 (PRODUCT LEVEL)	SEE PAGE
Y	**342-7149**	1	CAB GP (DELUXE)	615
Y	*206-1702*	1	CONSOLE GP-OPERATOR (LH)	620
Y	*317-5539*	1	CONSOLE GP-OPERATOR (FRONT)	622
Y	*336-7545*	1	CONSOLE GP-OPERATOR (RH)	624
Y	*269-3201*	1	CONTROL & MTG GP-JOYSTICK	626
Y	*317-5538*	1	CONTROL GP-STEERING (TILT)	630
Y	*211-3782*	1	FENDER GP-REAR	345
Y	*206-1618*	1	FLOOR MAT GP	638
Y	*206-1831*	1	FLOORPLATE GP	347
Y	*316-7290*	1	HEATER & MTG GP-CAB	639
Y	*340-6918*	1	LIGHTING GP-FLOOD (FRONT, REAR, COSA)	176
Y	*317-5543*	1	LINER GP-CAB	659
Y	*315-2940*	1	LINES GP-HEATER	661
Y	*259-6276*	1	MIRROR GP-REAR VIEW (INTERIOR)	664
Y	*336-9168*	1	MIRROR GP-REAR VIEW (EXTERIOR)	665
Y	*269-3247*	1	MOUNTING GP-BACKHOE CONTROL (PILOT)	668
Y	*206-1701*	1	PROTECTION GP-VANDALISM (ROTATING GUARD)	705
Y	*334-7225*	1	ROOF GP-CAB	673
Y	*315-9891*	1	SEAT GP-SUSPENSION (DELUXE, CLOTH)	682
Y	*206-1857*	1	VISOR GP-CAB	687
Y	*340-8276*	1	WASHER GP-WINDOW	688
Y	*340-3552*	1	WIRING GP-CAB	201
Y	*338-5740*	1	WIRING GP-CONSOLE (SIDE, PILOT)	203
Y	*310-5613*	1	WIRING GP-HEATER	209
Y	*338-5738*	1	WIRING GP-PLATFORM	217
Y	*211-4271*	1	WIRING GP-POWER RECEPTACLE	222
Y	*338-5732*	1	WIRING GP-SENSOR (DELUXE CAB)	227
	272-5421	1	FILM-CONTROL (BACKHOE, JOYSTICK)	
			(ON THE MACHINE LH REAR SIDE CONSOLE)	
	250-7912	1	FILM-IDENTIFICATION (CATERPILLAR, FRONT)	
			(ON THE FRONT WINDOW AT THE TOP ON THE DELUXE CABS)	
	285-1207	1	MAT-PROTECTIVE	

Y-SEPARATE ILLUSTRATION

<END>

OPERATOR STATION

342-7147 CAB GP–STANDARD

S/N: JBA1-UP
EAME MARKET
PART OF 335-3052, 335-3053 CAB AR
AN ATTACHMENT

SMCS-7301 **i03713880**

NOTE	REF NO	GRAPHIC REF	PART NUMBER	QTY	PART NAME 1 2 3 4 5 6 (PRODUCT LEVEL)	SEE PAGE
	1	1	**3S-2093**	6	STRAP-CABLE	
	2	1	**8Y-7309**	2	RETAINER	
	3	1	**129-3738**	2	GUARD-STRIKER	
	4	1	**129-5256**	12	BUSHING	
	5	1	**129-5257**	8	BUSHING	
	6	1	**205-9605**	1	GLASS (FRONT, LH)	
	7	1	**205-9606**	1	GLASS (FRONT, RH)	
	8	1	**205-9607**	1	GLASS (WINDSHIELD) (FRONT WINDOW)	
	9	1	**205-9608**	1	GLASS (REAR, RH)	
	10	1	**205-9609**	1	GLASS (REAR, LH)	
	11	1	**205-9629**	4	SPACER (15.9X21.4X50-MM THK)	
	12	1	**206-1590**	4	PIN	
	13	1	**206-1647**	1	PLATE	
	14	1	**210-6475**	2	PLATE	
	15	1	**213-6057**	1	HARNESS AS-LIGHTING (ROADING)	
		1	**115-1052**	2	PIN-CONNECTOR	
		1	**9X-3401**	1	PIN-CONNECTOR (16-GA TO 18-GA)	
		1	**155-2274**	2	KIT-CONNECTING PLUG (6-PIN)	
					(EACH PLUG KIT INCLUDES PLUG AS, WEDGE & INTERFACE SEAL)	
		1	**8T-8737**	3	PLUG-SEAL	
		1	**102-8806**	1	KIT-RECEPTACLE (8-PIN)	
					(INLUDES RECEPTACLE AS & WEDGE)	
		1	**9W-0844**	4	SOCKET-CONNECTOR (14-GA)	
		1	**180-9340**	6	SOCKET-CONNECTOR (14-GA TO 18-GA)	
E		1	**119-3662**		TUBE-HEAT SHRINK (10.85-MM DIA) (13-CM)	
E		1	**125-7875**		TUBE-HEAT SHRINK (7.44-MM DIA) (5-CM)	
	16	1	**215-2913**	1	GROMMET	
	17	1	**219-0302**	1	FILM-WARNING (NO WELD, NO DRILL, READ OMM)	
	18	1	**223-2030**	2	LATCH AS (HOLD OPEN)	
					(EACH INCLUDES)	
M		1	**6V-7743**	2	LOCKNUT (M6X1-THD)	
M		1	**9X-2045**	2	SCREW-TRUSS HEAD (M6X1X20-MM)	
		1	**143-2827**	2	SPRING	
Y	19	1	*315-1270*	1	WINDOW GP-CAB (REAR)	690
	20	1	**325-9310**	1	FILM-CERTIFICATION (OPS, READ OMM)	
Y	21	1	**329-1167**	1	DOOR GP-CAB (RH)	634
Y	22	1	**329-1168**	1	DOOR GP-CAB (LH) (LH)	636
	23	1	**338-3328**	2	BOLT-STRIKER	
	24	1	**342-7146**	1	CAB AS	
M	25	1	**5C-7261**	2	NUT (M8X1.25-THD)	
	26	1	**5P-4116**	11	WASHER-HARD (8.8X20.5X2-MM THK)	
	27	1	**5P-7648**	2	GROMMET	
	28	1	**7X-0618**	2	WASHER-HARD (13.5X40X5-MM THK)	
	29	1	**7X-2393**	2	BUMPER-CONICAL	
	30	1	**8S-7803**	8	RING-RETAINING	
M	31	1	**8T-4200**	11	BOLT (M8X1.25X16-MM)	
E	32	1	**322-8414**		SEAL-CAB (339-CM EACH)	

E-ORDER BY THE CENTIMETER
M-METRIC PART
Y-SEPARATE ILLUSTRATION

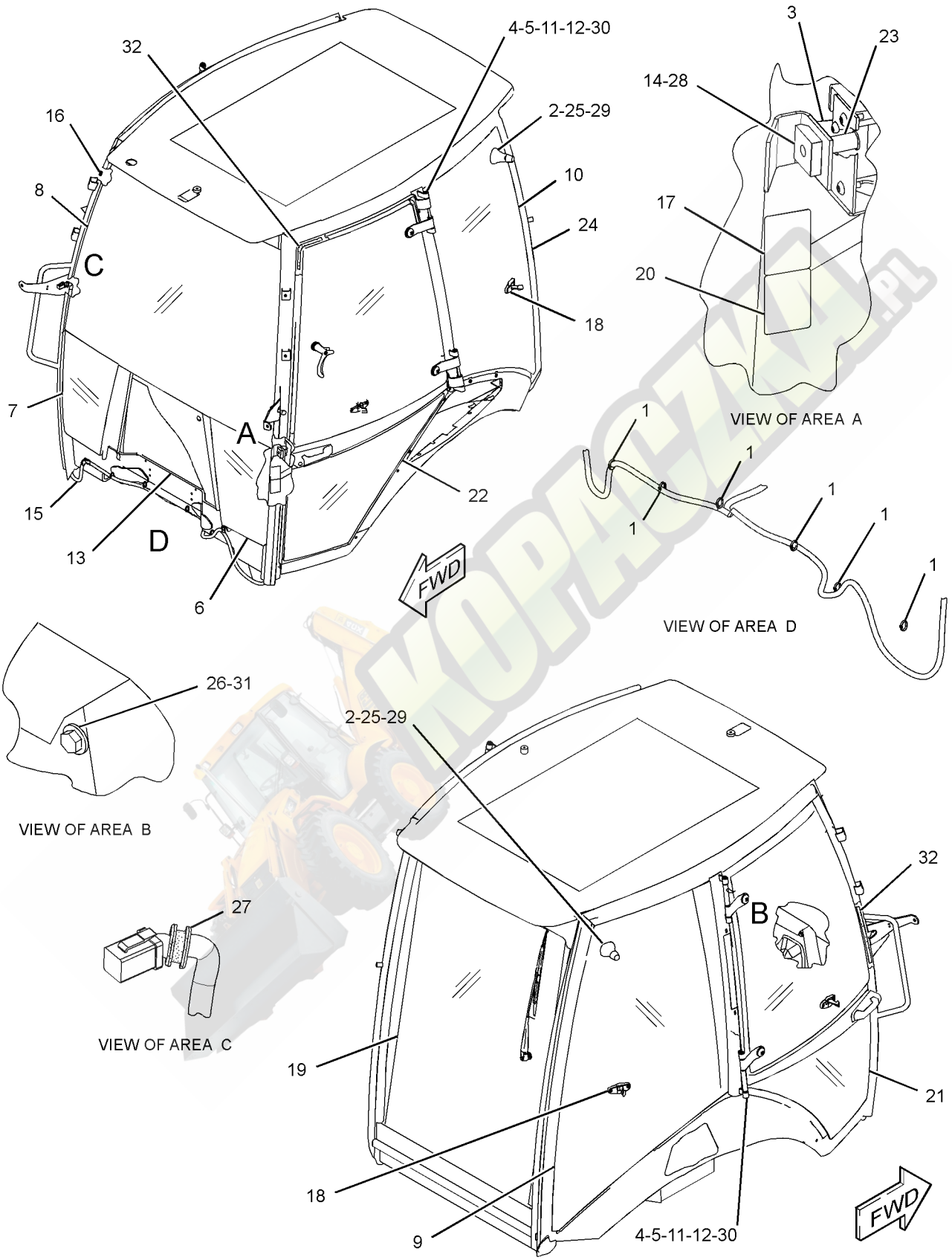

GRAPHIC #1

<END>

g01970834

OPERATOR STATION

342-7149 CAB GP–DELUXE

S/N: JBA1-UP
EUROPEAN MARKET
PART OF 335-3055 CAB AR, 335-3054 CAB AR-ENCLOSED ROPS
AN ATTACHMENT

SMCS-7301 **i03712377**

NOTE	REF NO	GRAPHIC REF	PART NUMBER	QTY	PART NAME 1 2 3 4 5 6 (PRODUCT LEVEL)	SEE PAGE
	1	1	**3S-2093**	6	STRAP-CABLE	
	2	1	**129-3738**	2	GUARD-STRIKER	
	3	1	**129-5256**	12	BUSHING	
	4	1	**129-5257**	8	BUSHING	
	5	1	**159-4945**	2	KEEPER	
B	6	1	**177-4877**	4	SHIM (1-MM THK)	
	7	1	**205-9605**	1	GLASS (FRONT, LH)	
	8	1	**205-9606**	1	GLASS (FRONT, RH)	
	9	1	**205-9607**	1	GLASS (WINDSHIELD) (FRONT WINDOW)	
	10	1	**205-9622**	1	GLASS (LOWER, LH)	
	11	1	**205-9631**	1	GLASS (LOWER, RH)	
	12	1	**206-1590**	4	PIN	
	13	1	**206-1647**	1	PLATE	
	14	1	**210-6475**	2	PLATE	
	15	1	**213-6057**	1	HARNESS AS-LIGHTING (ROADING)	
		1	**9W-0852**	2	PIN-CONNECTOR (14-GA)	
		1	**9X-3401**	5	PIN-CONNECTOR (16-GA TO 18-GA)	
		1	**155-2274**	2	KIT-CONNECTING PLUG (6-PIN) (INCLUDES PLUG AS, WEDGE & INTERFACE SEAL)	
		1	**8T-8737**	3	PLUG-SEAL	
		1	**102-8806**	1	KIT-RECEPTACLE (8-PIN) (INCLUDES RECEPTACLE AS & WEDGE)	
		1	**9W-0844**	4	SOCKET-CONNECTOR (14-GA)	
		1	**180-9340**	6	SOCKET-CONNECTOR (14-GA TO 18-GA)	
E		1	**119-3662**		TUBE-HEAT SHRINK (10.85-MM DIA) (13-CM)	
E		1	**125-7875**		TUBE-HEAT SHRINK (7.44-MM DIA) (5-CM)	
	16	1	**215-2913**	1	GROMMET	
	17	1	**219-0302**	1	FILM-WARNING (NO WELD, NO DRILL, READ OMM)	
Y	18	1	*315-1270*	1	WINDOW GP-CAB (REAR)	690
	19	1	**325-9310**	1	FILM-CERTIFICATION (OPS, READ OMM)	
Y	20	1	**327-7601**	1	WINDOW GP-CAB (LH)	692
Y	21	1	**327-7637**	1	WINDOW GP-CAB (RH)	694
Y	22	1	**329-1167**	1	DOOR GP-CAB (RH)	634
Y	23	1	**329-1168**	1	DOOR GP-CAB (LH) (LH)	636
	24	1	**338-3328**	2	BOLT-STRIKER	
	25	1	**342-7148**	1	CAB AS (DELUXE)	
M	26	1	**131-3987**	8	SCREW (M4X0.7X12-MM)	
	27	1	**159-4946**	2	KEEPER	
	28	1	**5P-4116**	11	WASHER-HARD (8.8X20.5X2-MM THK)	
	29	1	**5P-7648**	2	GROMMET	
	30	1	**7X-0618**	2	WASHER-HARD (13.5X40X5-MM THK)	
	31	1	**8S-7803**	8	RING-RETAINING	
M	32	1	**8T-4200**	11	BOLT (M8X1.25X16-MM)	
E	33	1	**322-8414**		SEAL-CAB (258-CM EACH)	
E	33A	1	**322-8414**		SEAL-CAB (339-CM EACH)	

B-USE AS REQUIRED
E-ORDER BY THE CENTIMETER
M-METRIC PART
Y-SEPARATE ILLUSTRATION

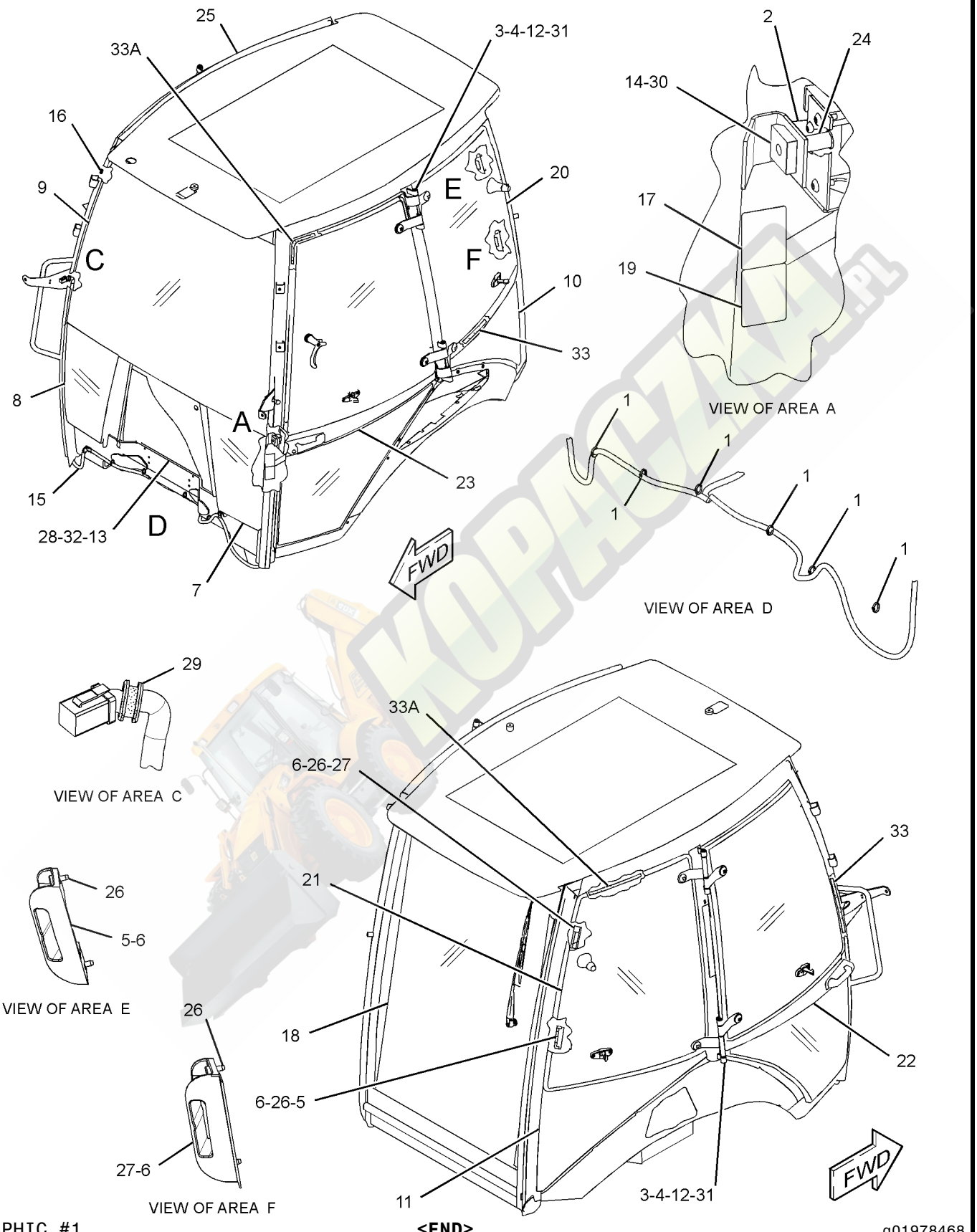

GRAPHIC #1

<END>

g01978468

OPERATOR STATION

299-2212 COMPRESSOR GP-REFRIGERANT

S/N: JBA1-UP

PART OF 321-7038 COMPRESSOR GP-REFRIGERANT

AN ATTACHMENT

SMCS-1802 **i03729560**

NOTE	REF NO	GRAPHIC REF	PART NUMBER	QTY	PART NAME 1 2 3 4 5 6 (PRODUCT LEVEL)	SEE PAGE
	1	1	**126-1767**	2	PIN-CONNECTOR (14-GA)	
	2	1	**102-8802**	1	KIT-RECEPTACLE (2-PIN)	
					(INCLUDES RECEPTACLE AS & WEDGE)	
	3	1	**314-4018**	1	VALVE AS-PRESSURE RELIEF (REFRIGERANT COMPRESSOR)	
	4	1	**7T-4532**	1	PLUG AS	
	5	1	**9X-7385**	2	SEAL-O-RING	

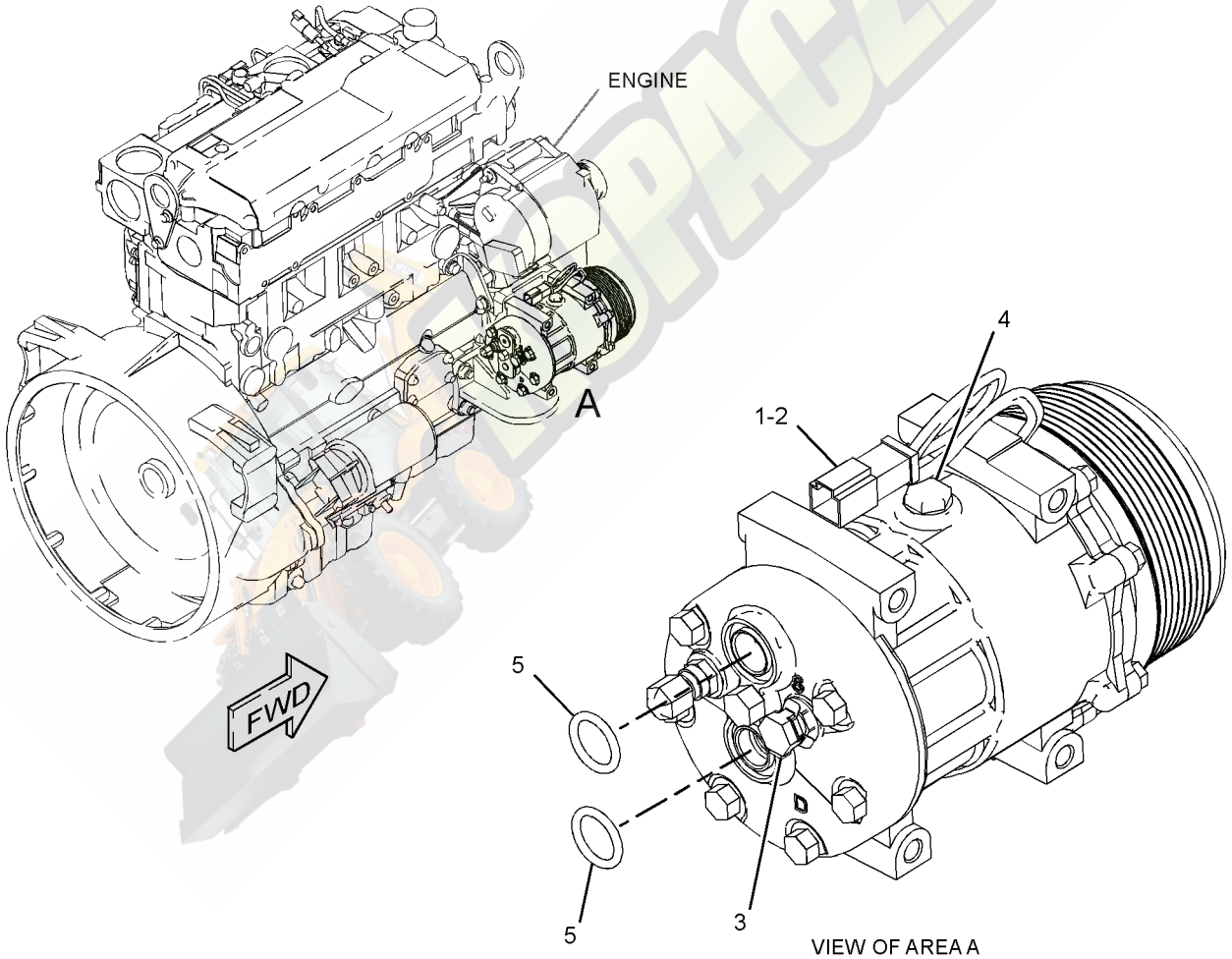

GRAPHIC #1

<END>

g01513535

OPERATOR STATION

321-7038 COMPRESSOR GP-REFRIGERANT

S/N: JBA1-UP
PART OF 335-3053, 335-3055 CAB AR
AN ATTACHMENT

SMCS-1802 **i03035509**

NOTE	REF NO	GRAPHIC REF	PART NUMBER	QTY	PART NAME 1 2 3 4 5 6 (PRODUCT LEVEL)	SEE PAGE
	1	1	**288-9734**	1	BRACKET	
	2	1	**290-7831**	1	BRACKET	
Y	3	1	**299-2212**	1	COMPRESSOR GP-REFRIGERANT	617
M	4	1	**7X-2538**	4	BOLT (M8X1.25X100-MM)	
M	5	1	**7X-2553**	2	BOLT (M16X2X40-MM)	
	6	1	**8T-4121**	2	WASHER-HARD (11X21X2.5-MM THK)	
M	7	1	**8T-4136**	2	BOLT (M10X1.5X25-MM)	
	8	1	**8T-4224**	4	WASHER-HARD (8.8X16X2-MM THK)	
	9	1	**9X-8257**	2	WASHER (17.5X30X3.5-MM THK)	

M-METRIC PART
Y-SEPARATE ILLUSTRATION

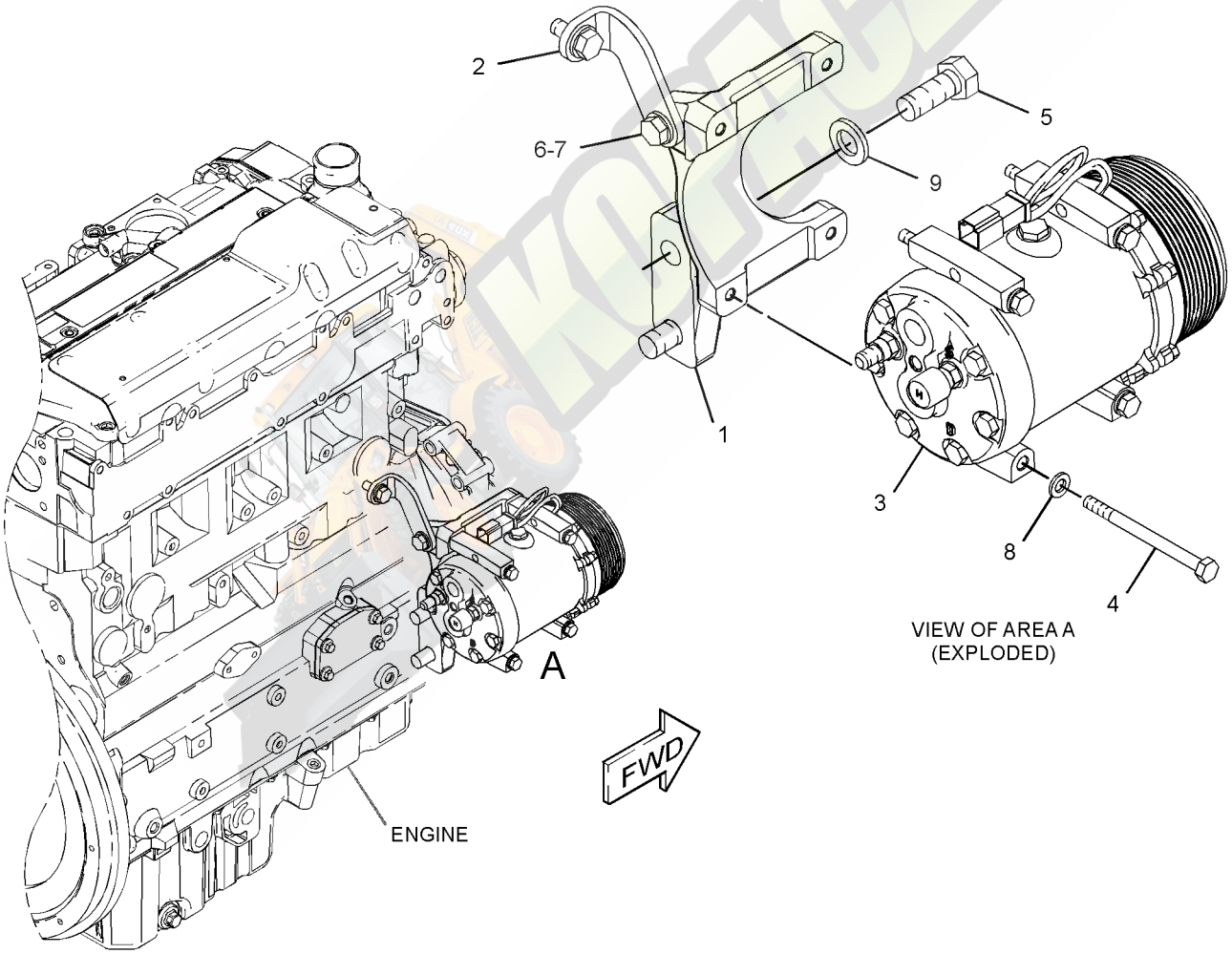

GRAPHIC #1 **<END>** g01570153

OPERATOR STATION

301-9725 CONDENSER & MTG GP-REFRIGERANT

S/N: JBA1-UP
PART OF 335-3053, 335-3055 CAB AR
AN ATTACHMENT

SMCS-1805 **i03028622**

NOTE	REF NO	GRAPHIC REF	PART NUMBER	QTY	PART NAME 1 2 3 4 5 6 (PRODUCT LEVEL)	SEE PAGE
	1	1	**8C-9987**	4	WASHER (8.3X28X2.5-MM THK)	
	2	1	**300-6792**	1	CORE AS-CONDENSER	
		1	**317-8141**	4	MOUNT	
M	3	1	**8T-4908**	4	BOLT (M8X1.25X25-MM)	

M-METRIC PART

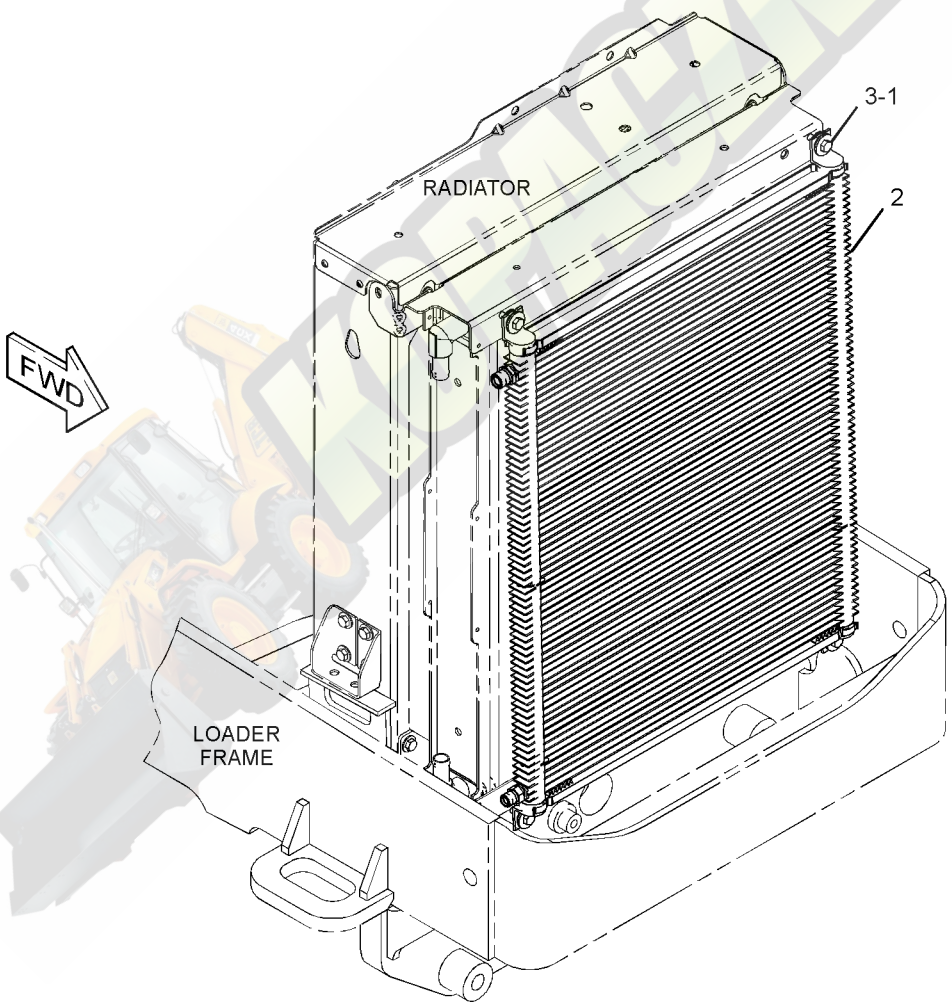

GRAPHIC #1 **<END>** g01410038

OPERATOR STATION

206-1702 CONSOLE GP-OPERATOR—LH

S/N: JBA1-UP

PART OF 335-3052, 335-3053, 335-3055 CAB AR, 335-3054 CAB AR-ENCLOSED ROPS

AN ATTACHMENT

SMCS-5258, 7451 **i03126124**

NOTE	REF NO	GRAPHIC REF	PART NUMBER	QTY	PART NAME 1 2 3 4 5 6 (PRODUCT LEVEL)	SEE PAGE
E	1	1	**3E-6600**		SEAL (34-CM)	
D	2	1	**5P-5927**		SEAL (1.7-M)	
	3	1	**206-1696**	1	CONSOLE AS (LH)	
	4	1	**206-1698**	1	DOOR-STORAGE	
	5	1	**206-1699**	1	CUP HOLDER (FRONT)	
	6	1	**206-1706**	1	BOX AS-STORAGE	
J	7	1	**206-1708**	1	LOCK AS	
	8	1	**206-1712**	1	HINGE-DOOR	
	9	1	**210-6491**	1	CUP HOLDER (REAR)	
	10	1	**249-2482**	1	PLATE	
	11	1	**261-9636**	1	BRACKET-SUPPORT	
	12	1	**261-9637**	2	BRACKET AS	
	13	1	**261-9639**	3	SCREW-PAN HEAD (12X0.5-IN)	
E	14	1	**293-1980**		SEAL (71-CM)	
E	14A	1	**293-1980**		SEAL (77-CM)	
M	15	1	**5C-2890**	3	NUT (M6X1-THD)	
	16	1	**8T-4205**	3	WASHER-HARD (7.2X14.5X2-MM THK)	
	17	1	**9X-2038**	6	WASHER (7X19X2-MM THK)	
M	18	1	**9X-2044**	19	SCREW-TRUSS HEAD (M6X1X16-MM)	

D-ORDER BY THE METER
E-ORDER BY THE CENTIMETER
J-REQUIRES CORPORATE KEY
M-METRIC PART

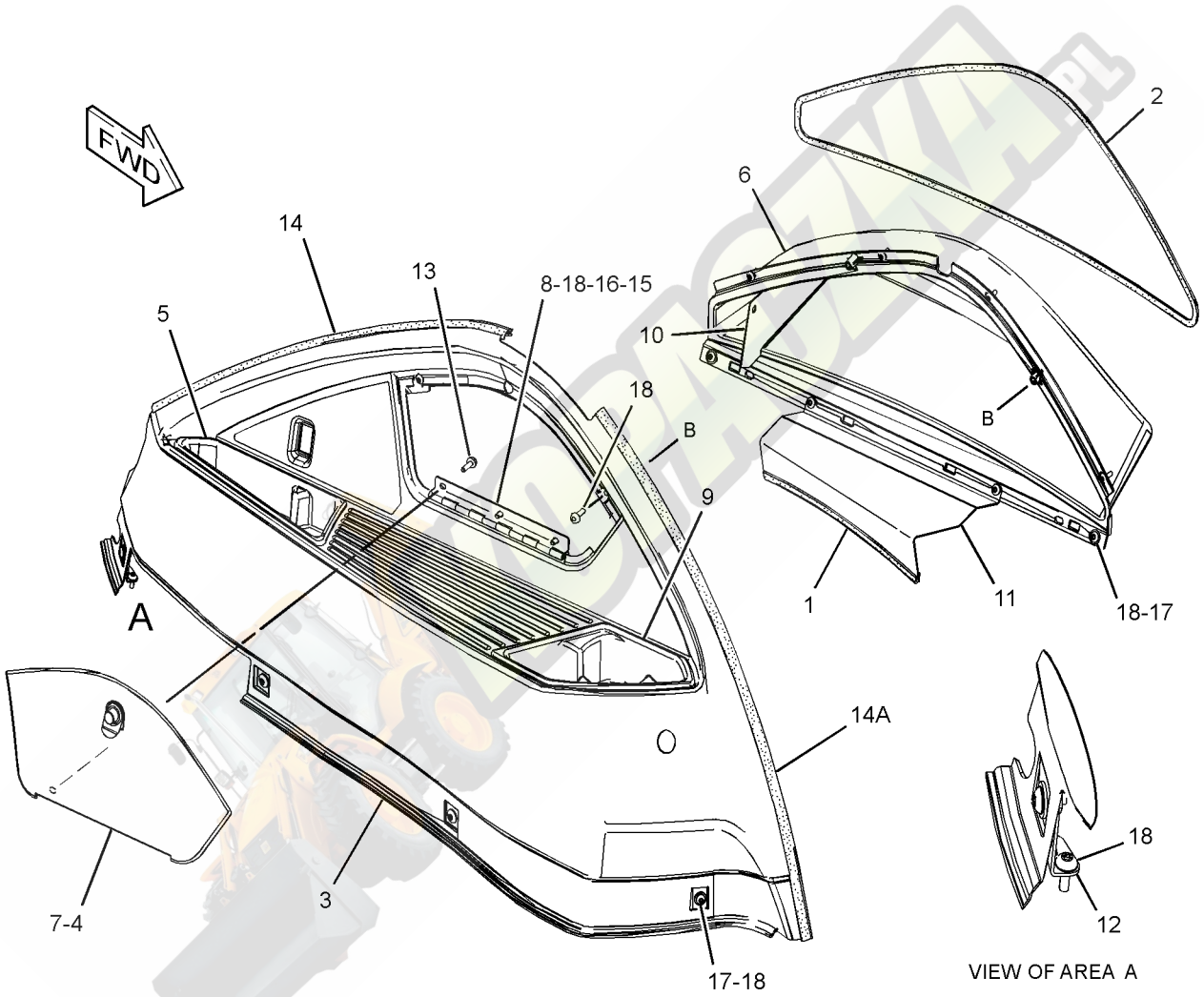

GRAPHIC #1 **<END>** g01520782

OPERATOR STATION

317-5539 CONSOLE GP-OPERATOR—FRONT

S/N: JBA1-UP

PART OF 335-3052, 335-3053, 335-3055 CAB AR, 335-3054 CAB AR-ENCLOSED ROPS

AN ATTACHMENT

SMCS-5258, 7451 **i03504003**

NOTE	REF NO	GRAPHIC REF	PART NUMBER	QTY	PART NAME 1 2 3 4 5 6 (PRODUCT LEVEL)	SEE PAGE
	1	1	**4I-3038**	2	WASHER (3.3X8X0.5-MM THK)	
B	2	1	**184-5293**	1	PLUG	
	3	1	**206-1659**	1	DOOR-STORAGE	
	4	1	**206-1662**	1	CONSOLE AS-FRONT (UPPER)	
		1	**206-1667**	8	CLIP	
	5	1	**206-1663**	1	CONSOLE-FRONT (MIDDLE)	
J	6	1	**206-1708**	1	LOCK AS	
	7	1	**224-2147**	1	CONSOLE AS-FRONT (LOWER, LH)	
	8	1	**224-2149**	1	CONSOLE AS-FRONT (LOWER, RH)	
	9	1	**233-5260**	2	LANYARD	
	10	1	**258-2354**	1	BRACKET-LATCH	
	11	1	**261-9639**	10	SCREW-PAN HEAD (NO 12X0.5-IN)	
	12	1	**313-6711**	1	COVER AS-STEERING COLUMN (UPPER)	
		1	**206-1667**	2	CLIP	
	13	1	**313-6712**	1	COVER AS-STEERING COLUMN (FRONT)	
	14	1	**313-6713**	1	COVER AS-STEERING COLUMN (REAR)	
					(EACH COVER AS-STEERING COLUMN INCLUDES)	
		1	**206-1667**	4	CLIP	
	15	1	**320-9835**	1	FILM-INSTRUCTION (FORWARD, NEUTRAL, REVERSE)	
M	16	1	**120-9027**	2	SCREW-PAN HEAD (M3X0.5X16-MM)	
	17	1	**206-1854**	1	HINGE	
M	18	1	**8T-2658**	2	LOCKNUT (M3X0.5-THD)	
	19	1	**9X-2038**	3	WASHER (7X19X2-MM THK)	
M	20	1	**9X-2044**	2	SCREW-TRUSS HEAD (M6X1X16-MM)	
M	21	1	**9X-2045**	16	SCREW-TRUSS HEAD (M6X1X20-MM)	
E	22	1	**220-0738**		SEAL (22-CM)	
D	23	1	**5P-7070**		INSULATION-STRIP (0.03-M EACH)	

B-USE AS REQUIRED
D-ORDER BY THE METER
E-ORDER BY THE CENTIMETER
J-REQUIRES CORPORATE KEY
M-METRIC PART

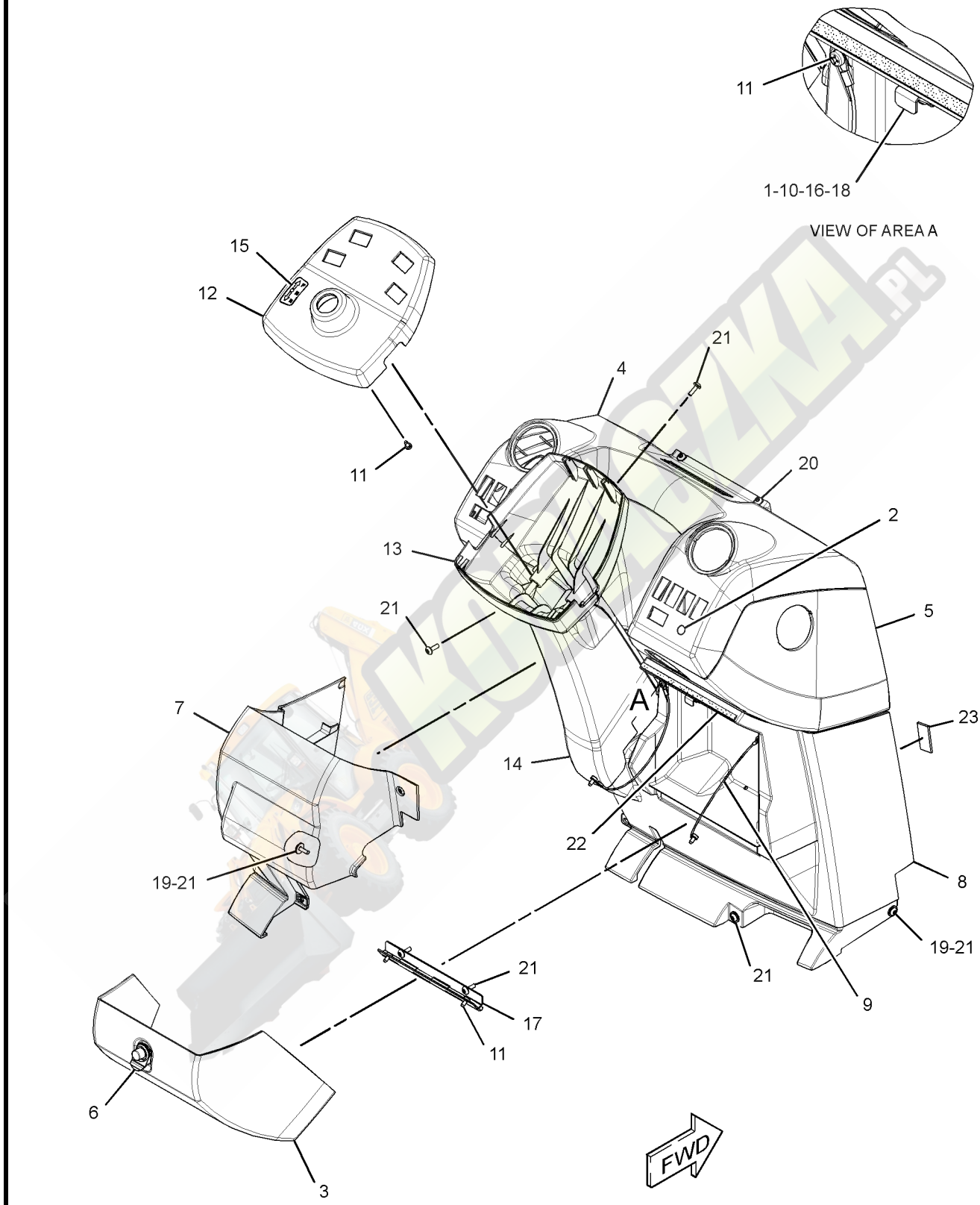

GRAPHIC #1 **<END>** g01841134

OPERATOR STATION

336-7545 CONSOLE GP-OPERATOR—RH

S/N: JBA1-UP

PART OF 335-3052, 335-3053, 335-3055 CAB AR, 335-3054 CAB AR-ENCLOSED ROPS AN ATTACHMENT

SMCS-5258, 7451 **i03663181**

NOTE	REF NO	GRAPHIC REF	PART NUMBER	QTY	PART NAME 1 2 3 4 5 6 (PRODUCT LEVEL)	SEE PAGE
B	1	1	**2S-3163**	1	PLUG	
	2	1	**164-1178**	1	CLIP	
	3	1	**167-8251**	1	FASTENER	
	4	1	**206-1678**	1	HOUSING AS (UPPER)	
	5	1	**206-1681**	1	PANEL AS (LOWER)	
		1	**172-8591**	5	NUT-SPRING	
	6	1	**206-1687**	1	COVER-FUSE	
	7	1	**206-1690**	1	COVER (FENDER, REAR)	
	8	1	**206-1692**	1	COVER AS (CONTROLS, REAR)	
		1	**206-1667**	3	CLIP	
	9	1	**231-9361**	1	FILM-IDENTIFICATION (FUSE, RELAY)	
B	10	1	**248-2709**	2	PLUG	
	11	1	**250-7910**	1	FILM-INSTRUCTION (BOOM LOCK)	
	12	1	**250-7911**	1	FILM-INSTRUCTION (VARIABLE SPEED)	
	13	1	**255-0793**	1	FILM-WARNING (READ OMM)	
	14	1	**255-0794**	1	FILM-WARNING (SEAT BELT)	
	15	1	**261-9644**	1	COVER AS (CONTROLS, FRONT, LOWER)	
		1	**206-1667**	1	CLIP	
	16	1	**261-9645**	1	COVER AS (CONTROLS, FRONT, UPPER)	
		1	**206-1667**	4	CLIP	
	17	1	**269-9115**	1	COVER AS (FENDER, FRONT)	
		1	**172-8591**	1	NUT-SPRING	
E	18	1	**293-1980**		SEAL (73-CM)	
E	18A	1	**293-1980**		SEAL (77.5-CM)	
	19	1	**323-3324**	1	FILM-IDENTIFICATION (FUSE PANEL)	
	20	1	**336-7533**	1	PANEL AS-GAUGE	
		1	**206-1667**	2	CLIP	
	21	1	**337-5351**	1	FILM-INSTRUCTION (START SWITCH)	
	22	1	**9X-2038**	5	WASHER (7X19X2-MM THK)	
M	23	1	**9X-2045**	16	SCREW-TRUSS HEAD (M6X1X20-MM)	

B-USE AS REQUIRED
E-ORDER BY THE CENTIMETER
M-METRIC PART

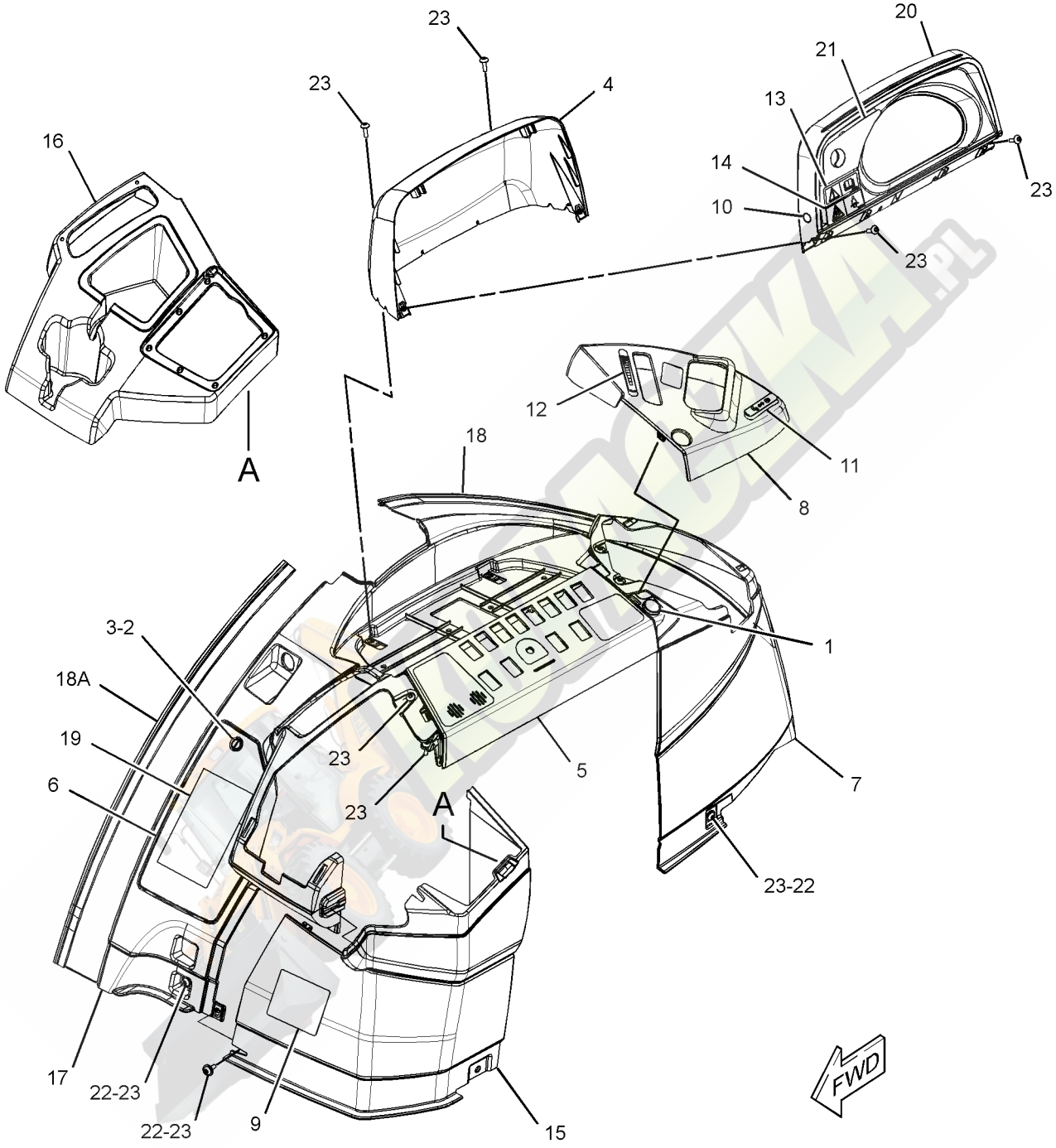

GRAPHIC #1 **<END>** g01983418

OPERATOR STATION

269-3201 CONTROL & MTG GP-JOYSTICK

S/N: JBA1-UP

PART OF 335-3052, 335-3053, 335-3055 CAB AR, 335-3054 CAB AR-ENCLOSED ROPS AN ATTACHMENT

SMCS-5059, 5705 **i03126127**

NOTE	REF NO	GRAPHIC REF	PART NUMBER	QTY	PART NAME 1 2 3 4 5 6 (PRODUCT LEVEL)	SEE PAGE
	1	1	**164-1368**	12	FASTENER-PANEL	
	2	1	**269-4159**	1	BRACKET AS	
	3	1	**269-4161**	1	BRACKET AS	
	4	1	**270-0149**	1	BOOT	
	5	1	**270-2795**	1	PLATE	
	6	1	**275-8869**	1	BRACKET AS	
	7	1	**291-5108**	1	GASKET	
M	8	1	**3T-0849**	4	BOLT-SOCKET HEAD (M6X1X25-MM)	
M	9	1	**6V-7744**	2	LOCKNUT (M10X1.5-THD)	
	10	1	**7X-7729**	4	WASHER (11X25X3-MM THK)	
M	11	1	**8T-4189**	8	BOLT (M8X1.25X20-MM)	
	12	1	**8T-4224**	4	WASHER-HARD (8.8X16X2-MM THK)	
M	13	1	**9X-2040**	2	SCREW-TRUSS HEAD (M10X1.5X25-MM)	
	14	1	**9X-8256**	4	WASHER (6.6X12X2-MM THK)	
	15	1	**5P-4116**	4	WASHER-HARD (8.8X20.5X2-MM THK)	
E	16	1	**3E-6600**		SEAL (7-CM)	
M	17	1	**8T-4244**	1	NUT (M12X1.75-THD)	

E-ORDER BY THE CENTIMETER
M-METRIC PART

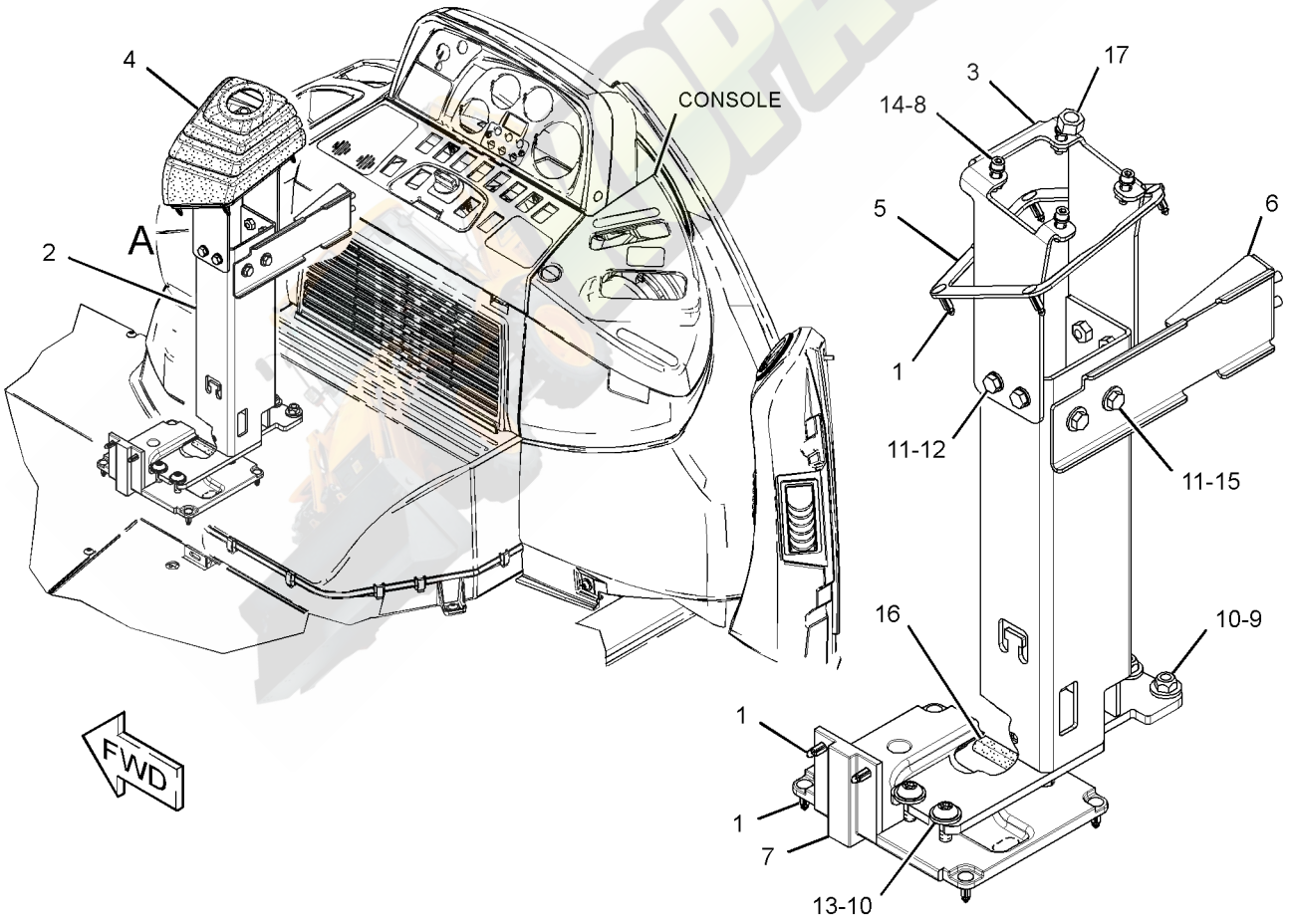

VIEW OF AREA A
(BOOT REMOVED FOR CLARITY)

GRAPHIC #1 **<END>** g01385649

OPERATOR STATION

272-9700 CONTROL GP-HANDLE–RH, JOYSTICK

S/N: JBA1-UP

PART OF 329-0124 HYDRAULIC AR

SMCS-5063, 5705 **i03712373**

NOTE	REF NO	GRAPHIC REF	PART NUMBER	QTY	PART NAME 1 2 3 4 5 6 (PRODUCT LEVEL)	SEE PAGE
	1	1	**263-2901**	1	HANDLE GP-MODULAR (RH)	
		1	**8T-8737**	5	PLUG-SEAL	
		1	**174-3091**	1	KIT-RECEPTACLE (12-PIN)	
					(INCLUDES RECEPTACLE AS & WEDGE)	
		1	**186-3735**	7	PIN-CONNECTOR (16-GA TO 18-GA)	
	2	1	**272-9701**	1	ADAPTER (RH)	

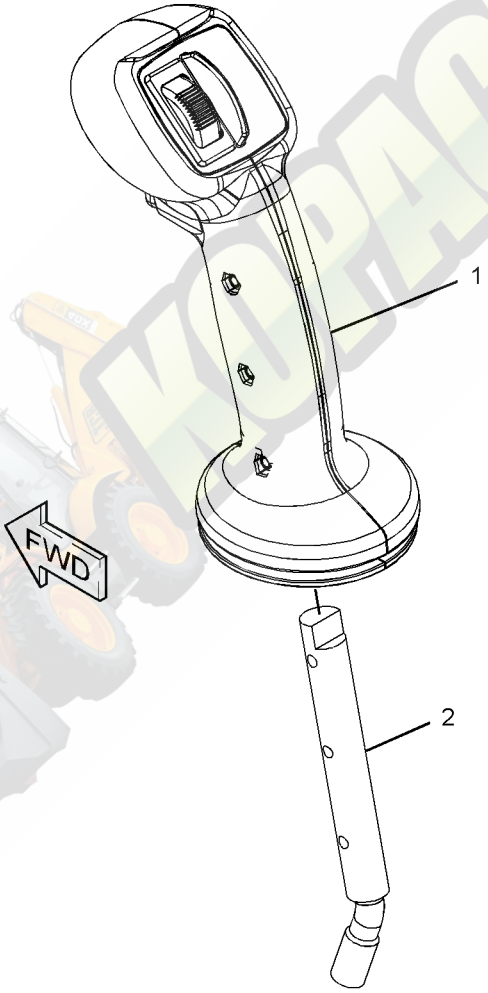

GRAPHIC #1 **<END>** g01214739

OPERATOR STATION

271-3096 CONTROL GP-JOYSTICK–RH

S/N: JBA1-UP

PART OF 338-0432 LINES GP-PILOT

SMCS-5705 **i03321223**

NOTE	REF NO	GRAPHIC REF	PART NUMBER	QTY	PART NAME 1 2 3 4 5 6 (PRODUCT LEVEL)	SEE PAGE
	1	1	**271-3101**	1	HANDLE GP-MODULAR (RH)	
		1	**8T-8737**	8	PLUG-SEAL	
		1	**174-3091**	1	KIT-RECEPTACLE (12-PIN)	
					(INCLUDES RECEPTACLE AS & WEDGE)	
		1	**186-3735**	4	PIN-CONNECTOR (16-GA TO 18-GA)	
	2	1	**272-9701**	1	ADAPTER (RH)	
	3	1	**254-3437**	1	BOOT	

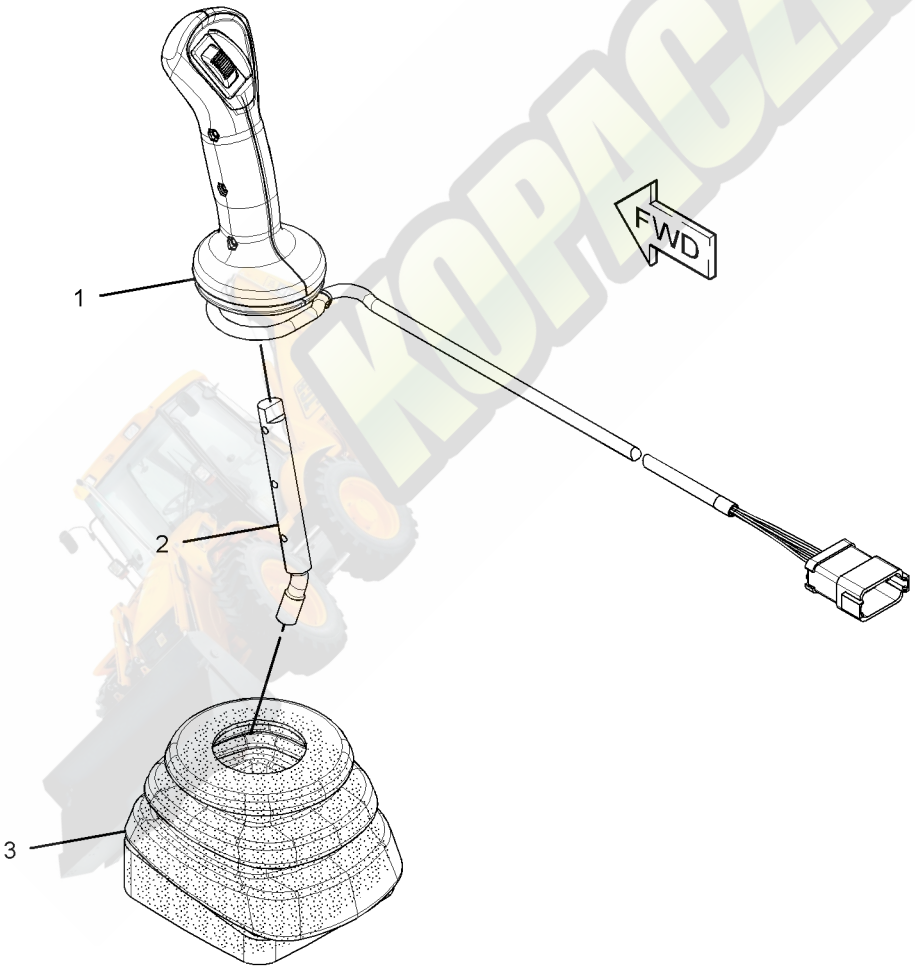

GRAPHIC #1 **<END>** g01478115

OPERATOR STATION

271-3097 CONTROL GP-JOYSTICK–LH

S/N: JBA1-UP

PART OF 338-0432 LINES GP-PILOT

SMCS-5705 **i03321224**

NOTE	REF NO	GRAPHIC REF	PART NUMBER	QTY	PART NAME 1 2 3 4 5 6 (PRODUCT LEVEL)	SEE PAGE
	1	1	**271-3103**	1	HANDLE GP-MODULAR (LH)	
		1	**8T-8737**	10	PLUG-SEAL	
		1	**174-3091**	1	KIT-RECEPTACLE (12-PIN)	
					(INCLUDES RECEPTACLE AS & WEDGE)	
		1	**186-3735**	2	PIN-CONNECTOR (16-GA TO 18-GA)	
	2	1	**278-7469**	1	ADAPTER (LH)	
	3	1	**254-3437**	1	BOOT	

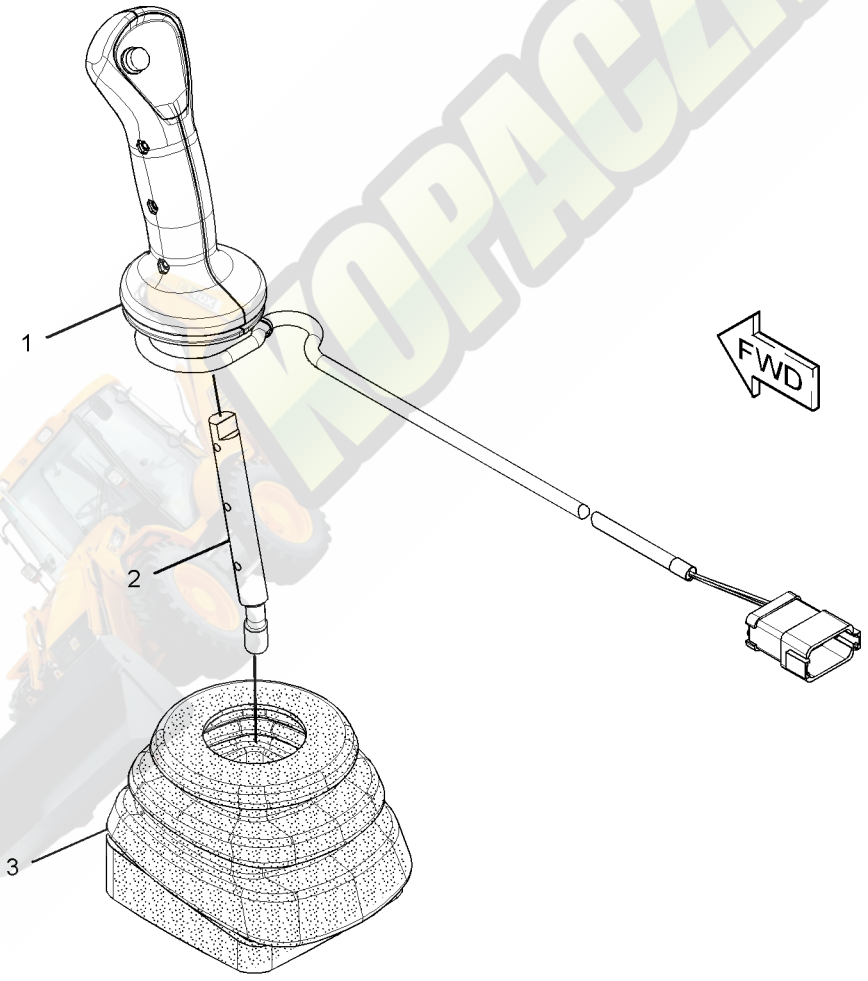

GRAPHIC #1 **<END>** g01473695

OPERATOR STATION

317-5538 CONTROL GP-STEERING–TILT

S/N: JBA1-UP

PART OF 335-3052, 335-3053, 335-3055 CAB AR, 335-3054 CAB AR-ENCLOSED ROPS

AN ATTACHMENT

SMCS-4309, 4310, 4338 **i03332302**

NOTE	REF NO	GRAPHIC REF	PART NUMBER	QTY	PART NAME 1 2 3 4 5 6 (PRODUCT LEVEL)	SEE PAGE
	1	1	**206-1632**	1	PLATE AS	
	2	1	**255-2749**	1	PLUG	
Y	3	1	**310-6216**	1	STEERING COLUMN GP (TILT)	335
	4	1	**317-5541**	1	STEERING WHEEL	
	5	1	**325-9308**	1	KNOB AS	
	6	1	**7X-7729**	6	WASHER (11X25X3-MM THK)	
	7	1	**8R-2916**	1	COVER AS (CAT STEERING WHEEL)	
	8	1	**8T-4121**	4	WASHER-HARD (11X21X2.5-MM THK)	
M	9	1	**8T-4133**	2	NUT (M10X1.5-THD)	
M	10	1	**8T-4136**	4	BOLT (M10X1.5X25-MM)	
M	11	1	**8T-4195**	4	BOLT (M10X1.5X30-MM)	
M	12	1	**8T-8894**	1	BOLT-SOCKET HEAD (M10X1.5X20-MM)	

M-METRIC PART
Y-SEPARATE ILLUSTRATION

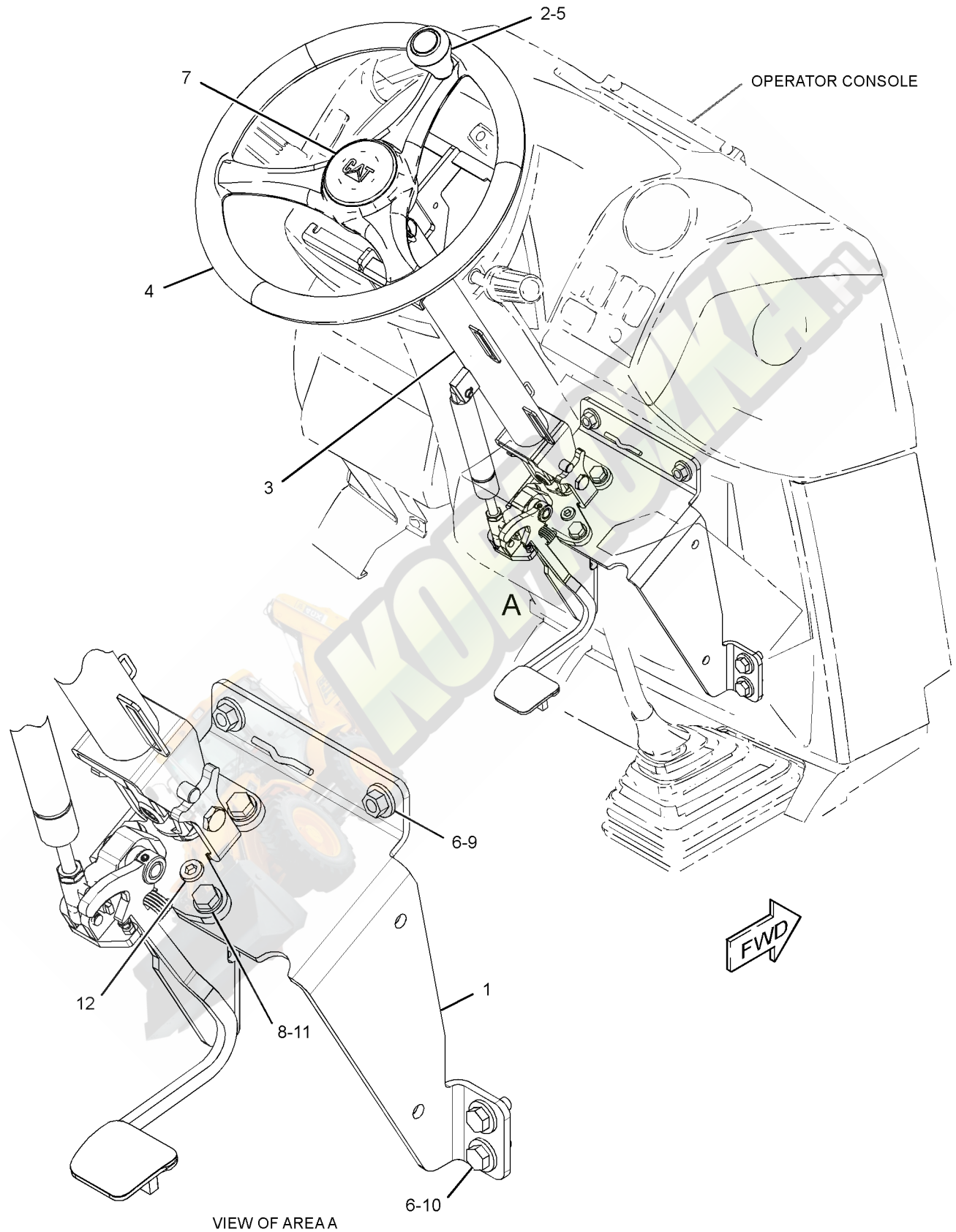

VIEW OF AREA A

GRAPHIC #1 **<END>** g01576454

OPERATOR STATION

311-3640 CONTROL GP-TRANSMISSION

S/N: JBA1-UP
PART OF 329-0307 POWER TRAIN AR
AN ATTACHMENT

SMCS-3065, 3168 **i03464601**

NOTE	REF NO	GRAPHIC REF	PART NUMBER	QTY	PART NAME 1 2 3 4 5 6 (PRODUCT LEVEL)	SEE PAGE
	1	1	**164-1153**	1	KNOB (UPPER)	
	2	1	**9R-1766**	1	COVER-BOTTOM	
	3	1	**9R-1767**	1	BOOT	
	4	1	**107-5591**	1	NUT-JAM (3/4-16-THD)	
	6	1	**164-1368**	8	FASTENER-PANEL	
	7	1	**206-1669**	1	BOOT	
	8	1	**328-3211**	1	ROD AS	
	9	1	**220-3470**	1	BOOT-SEAL	
	10	1	**230-2389**	1	PLATE	
	11	1	**230-2390**	1	PLATE	
	12	1	**263-7261**	1	SWITCH GP-PUSH BUTTON (NEUTRALIZER, DOWNSHIFT)	
	13	1	**310-9355**	1	CONTROL GP-TRANSMISSION (FORWARD, NEUTRAL, REVERSE)	
		1	**8T-8737**	6	PLUG-SEAL	
		1	**174-3091**	1	KIT-RECEPTACLE (12-PIN)	
					(INCLUDES RECEPTACLE AS & WEDGE)	
M	14	1	**105-3480**	2	BOLT-SOCKET HEAD (M5X0.8X16-MM)	
	15	1	**102-8802**	1	KIT-RECEPTACLE (2-PIN)	
					(INCLUDES RECEPTACLE AS & WEDGE)	
	16	1	**8T-4223**	1	WASHER-HARD (13.5X25.5X3-MM THK)	
M	17	1	**8T-4956**	1	BOLT (M12X1.75X35-MM)	
	18	1	**8T-9501**	2	SCREW (10-16X0.75-IN)	
	19	1	**7X-0620**	1	WASHER-HARD (5.5X13X1.6-MM THK)	

M-METRIC PART

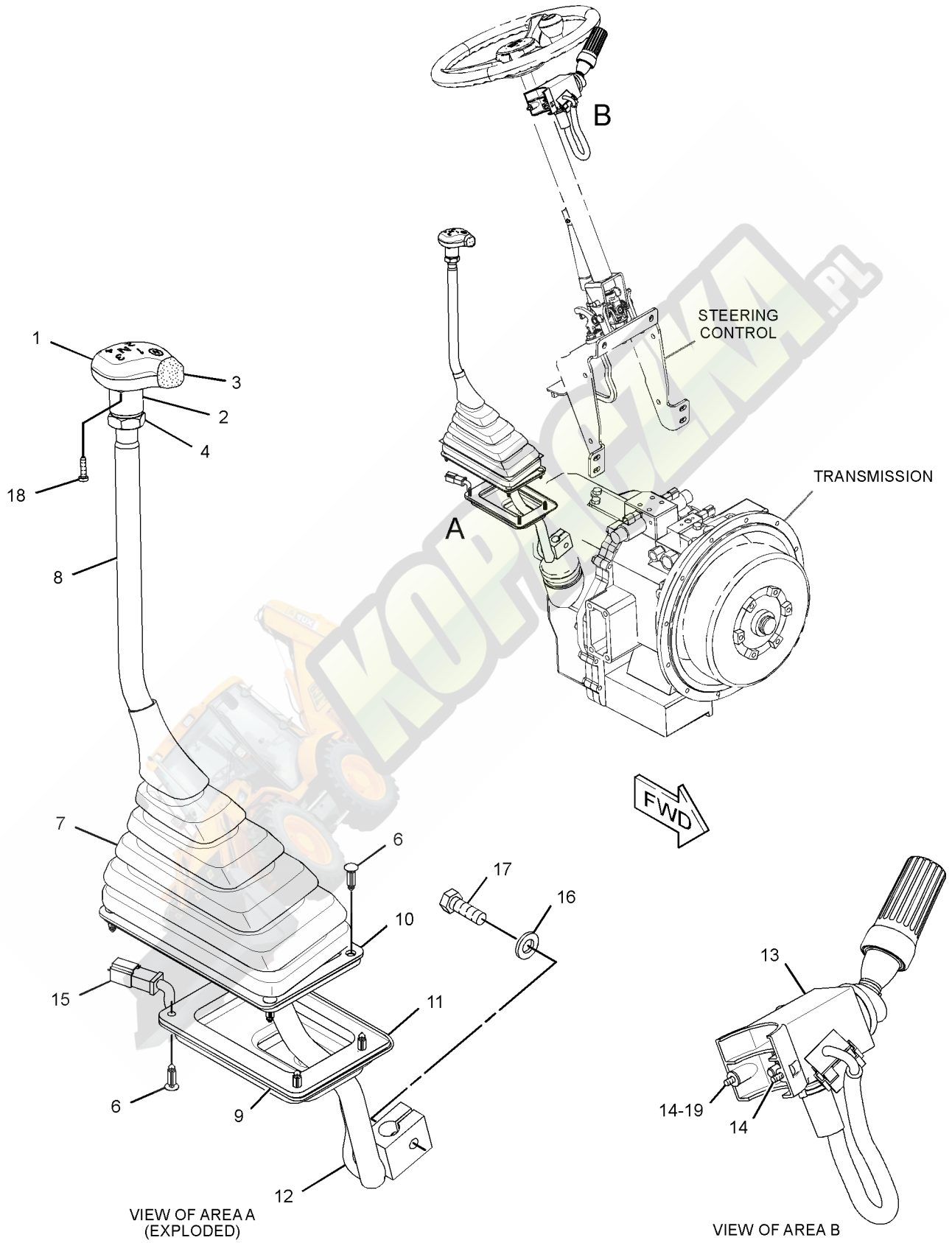

GRAPHIC #1 **<END>** g01866638

OPERATOR STATION

329-1167 DOOR GP-CAB—RH

S/N: JBA1-UP
PART OF 342-7147, 342-7149 CAB GP
AN ATTACHMENT

SMCS-7308 **i03628846**

NOTE	REF NO	GRAPHIC REF	PART NUMBER	QTY	PART NAME 1 2 3 4 5 6 (PRODUCT LEVEL)	SEE PAGE
	1	1	**132-2249**	2	SPACER (7.4X12.7X24-MM THK)	
J	2	1	**159-4269**	1	SPRING GP-GAS (CAB DOOR)	
	3	1	**159-4945**	1	KEEPER	
B	4	1	**177-4877**	1	SHIM (1-MM THK)	
	5	1	**205-9598**	1	GLASS (RH)	
	6	1	**248-2714**	2	NUT-ACORN	
N	7	1	**252-1862**	1	HANDLE AS (PULL)	
	8	1	**252-1863**	1	GASKET	
	9	1	**252-1865**	1	LATCH AS (RH)	
	10	1	**253-1817**	1	SPACER (6.5X14.5X12-MM THK)	
	11	1	**253-1857**	1	PLATE	
	12	1	**253-1858**	1	COVER (LATCH)	
	13	1	**254-1126**	1	PLATE	
	14	1	**254-1127**	1	PLATE	
	15	1	**258-3697**	2	WASHER-NYLON (7X20X2-MM THK)	
	16	1	**329-1169**	1	DOOR AS (RH)	
Y	17	1	*333-9902*	1	WINDOW GP-DOOR (RH)	697
	18	1	**223-2029**	1	SEAL AS (RH)	
M	19	1	**131-3987**	2	SCREW (M4X0.7X12-MM)	
	20	1	**197-5107**	2	SCREW-TRUSS HEAD (M6X1X60-MM)	
	21	1	**205-7048**	2	INSERT-THREADED (M6X1-THD)	
M	22	1	**5C-9553**	3	BOLT (M6X1X16-MM)	
M	23	1	**8T-6974**	1	BOLT (M6X1X80-MM)	
	24	1	**9X-2038**	4	WASHER (7X19X2-MM THK)	
M	25	1	**9X-2045**	4	SCREW-TRUSS HEAD (M6X1X20-MM)	
E	26	1	**322-8414**		SEAL-CAB (347-CM)	
					PARTS SHOWN IN GRAPHIC(S) WITHOUT A REFERENCE NUMBER ARE NOT SERVICED SEPARATELY	
					AVAILABLE REPAIR KIT(S):	
J			**161-9044**	1	KIT-FITTING	
					(INCLUDES FITTING AS & NUT)	

B-USE AS REQUIRED
E-ORDER BY THE CENTIMETER
J-KIT MARKED J SERVICES PART MARKED J
M-METRIC PART
N-REQUIRES CORPORATE KEY
Y-SEPARATE ILLUSTRATION

329-1167 DOOR GP-CAB *(contd.)* **i03628846**

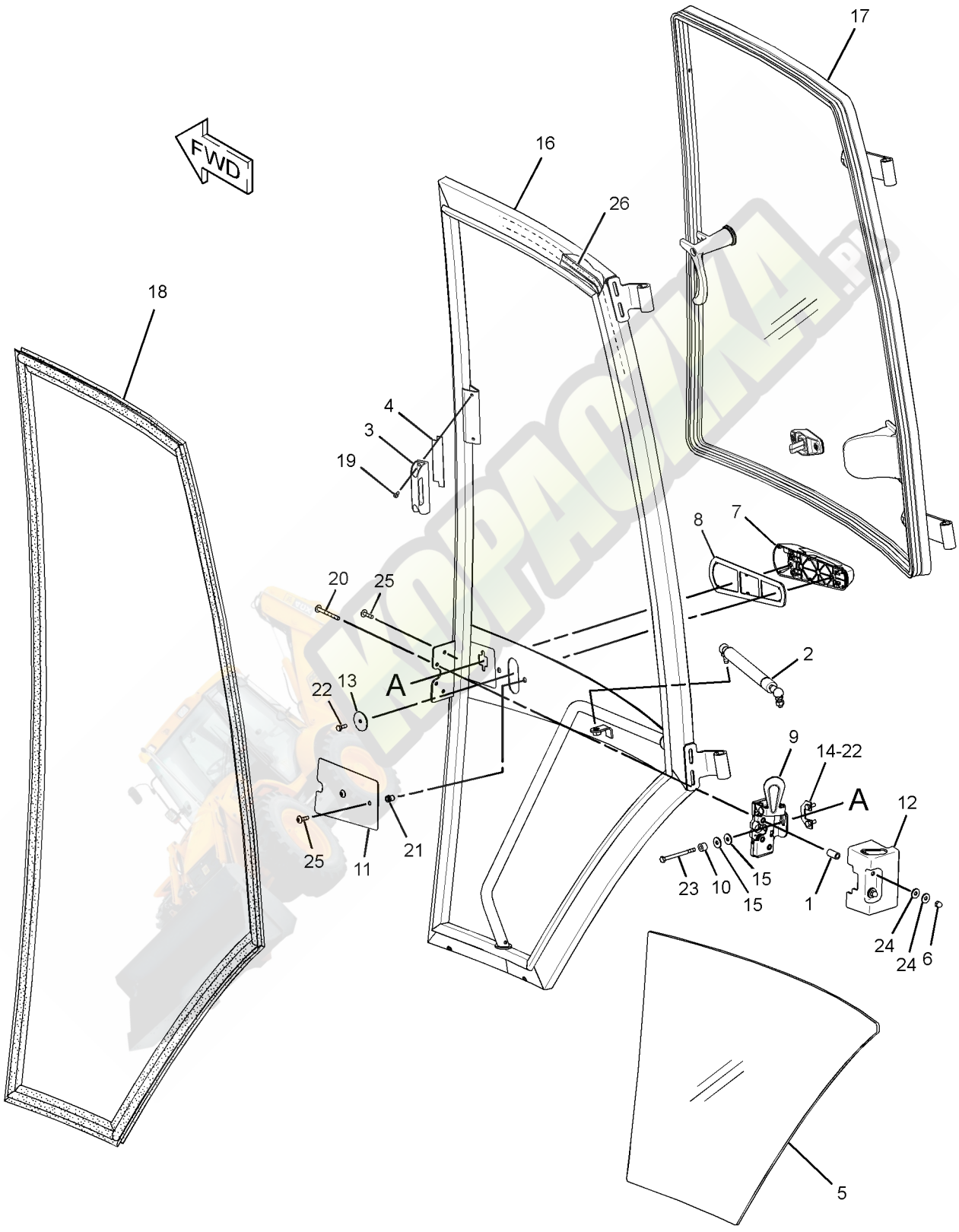

GRAPHIC #1 **<END>** g01819794

OPERATOR STATION

329-1168 DOOR GP-CAB—LH

S/N: JBA1-UP
PART OF 342-7147, 342-7149 CAB GP
AN ATTACHMENT

SMCS-7308 **i03628663**

NOTE	REF NO	GRAPHIC REF	PART NUMBER	QTY	PART NAME 1 2 3 4 5 6 (PRODUCT LEVEL)	SEE PAGE
	1	1	**132-2249**	2	SPACER (7.4X12.7X24-MM THK)	
J	2	1	**159-4269**	1	SPRING GP-GAS (CAB DOOR)	
B	3	1	**177-4877**	1	SHIM (1-MM THK)	
	4	1	**205-9588**	1	GLASS (LH)	
	5	1	**248-2714**	2	NUT-ACORN	
N	6	1	**252-1862**	1	HANDLE AS (PULL)	
	7	1	**252-1863**	1	GASKET	
	8	1	**252-1864**	1	LATCH AS (LH)	
	9	1	**253-1817**	1	SPACER (6.5X14.5X12-MM THK)	
	10	1	**253-1857**	1	PLATE	
	11	1	**253-1858**	1	COVER (LATCH)	
	12	1	**254-1126**	1	PLATE	
	13	1	**254-1127**	1	PLATE	
	14	1	**258-3697**	2	WASHER-NYLON (7X20X2-MM THK)	
	15	1	**329-1170**	1	DOOR AS (LH)	
Y	16	1	*333-9901*	1	WINDOW GP-DOOR (LH)	696
	17	1	**223-2028**	1	SEAL AS (LH)	
M	18	1	**131-3987**	2	SCREW (M4X0.7X12-MM)	
	19	1	**159-4946**	1	KEEPER	
	20	1	**197-5107**	2	SCREW-TRUSS HEAD (M6X1X60-MM)	
	21	1	**205-7048**	2	INSERT-THREADED (M6X1-THD)	
M	22	1	**5C-9553**	3	BOLT (M6X1X16-MM)	
M	23	1	**8T-6974**	1	BOLT (M6X1X80-MM)	
	24	1	**9X-2038**	4	WASHER (7X19X2-MM THK)	
M	25	1	**9X-2045**	4	SCREW-TRUSS HEAD (M6X1X20-MM)	
E	26	1	**322-8414**		SEAL-CAB (347-CM)	
					PARTS SHOWN IN GRAPHIC(S) WITHOUT A REFERENCE NUMBER ARE NOT SERVICED SEPARATELY	
					AVAILABLE REPAIR KIT(S):	
J			**161-9044**	1	KIT-FITTING	
					(INCLUDES NUT & FITTING AS)	

B-USE AS REQUIRED
E-ORDER BY THE CENTIMETER
J-KIT MARKED J SERVICES PART MARKED J
M-METRIC PART
N-REQUIRES CORPORATE KEY
Y-SEPARATE ILLUSTRATION

329-1168 DOOR GP-CAB *(contd.)* **i03628663**

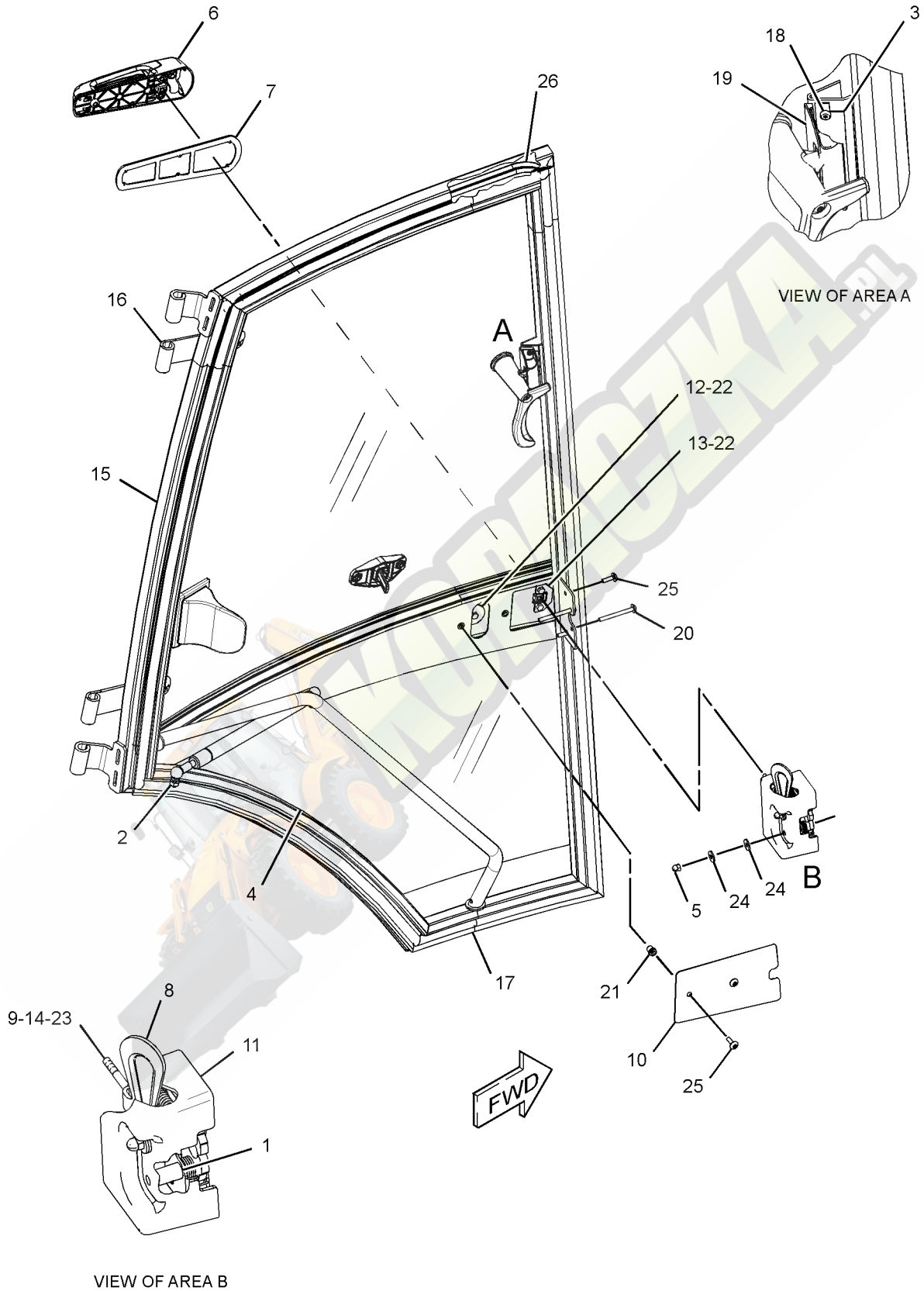

GRAPHIC #1 **<END>** g01811576

OPERATOR STATION

206-1618 FLOOR MAT GP

S/N: JBA1-UP

PART OF 335-3052, 335-3053, 335-3055 CAB AR, 335-3054 CAB AR-ENCLOSED ROPS AN ATTACHMENT

SMCS-7265 **i02454744**

NOTE	REF NO	GRAPHIC REF	PART NUMBER	QTY	PART NAME 1 2 3 4 5 6 (PRODUCT LEVEL)	SEE PAGE
	1	1	**247-8179**	2	PLATE	
	2	1	**284-1602**	1	FLOOR MAT	
	3	1	**1H-3244**	4	LOCKWASHER	
M	4	1	**9X-2045**	4	SCREW-TRUSS HEAD (M6X1X20-MM)	

M-METRIC PART

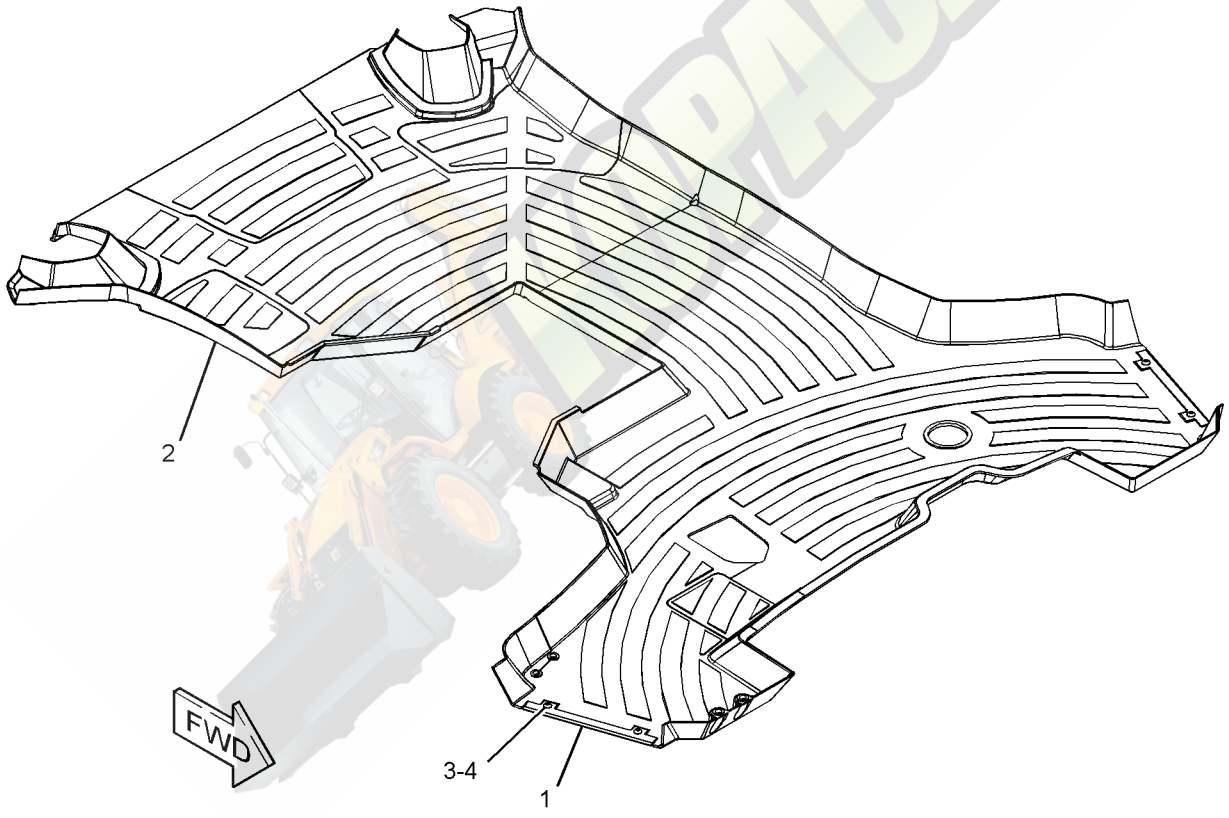

GRAPHIC #1 **<END>** g01228081

OPERATOR STATION

316-7290 HEATER & MTG GP-CAB

S/N: JBA1-UP

PART OF 335-3052 CAB AR, 335-3054 CAB AR-ENCLOSED ROPS

AN ATTACHMENT

SMCS-7304 **i03713801**

NOTE	REF NO	GRAPHIC REF	PART NUMBER	QTY	PART NAME 1 2 3 4 5 6 (PRODUCT LEVEL)	SEE PAGE
	1	1	**319-8524**	1	HOSE-AIR	
	2	1	**6L-4725**	2	CLAMP-HOSE	
	3	1	**8Y-5737**	1	CLAMP (COMPRESSION)	
	4	1	**8Y-6352**	1	LOUVER AS	
	5	1	**8Y-6967**	6	LOUVER AS-VENT	
	6	1	**9M-7959**	4	CLAMP-HOSE	
	7	1	**9N-2231**	1	GROMMET AS	
	8	1	**110-6109**	1	KNOB-CONTROL (HEATER)	
	9	1	**130-4832**	2	SCREW (8-18X10-MM)	
	10	1	**164-1368**	4	FASTENER-PANEL	
	11	1	**164-8474**	2	LOUVER AS-VENT	
	12	1	**189-0881**	1	CONTROL AS (PANEL)	
	13	1	**193-3356**	1	CABLE AS	
	14	1	**194-5622**	1	VALVE AS-WATER (AIR CONDITIONER)	
		1	**6V-6717**	1	SCREW-WASHER HEAD (8-32X9.52-MM)	
		1	**124-0312**	2	SCREW-PAN HEAD (8-16X0.32-IN)	
	15	1	**206-1648**	1	LOUVER	
	16	1	**206-1653**	4	GASKET	
	17	1	**206-1682**	1	PANEL-CONTROL	
	18	1	**206-1684**	1	COVER (CAB FILTER)	
	19	1	**206-1803**	2	GASKET	
	20	1	**206-1804**	1	GASKET	
	21	1	**206-1805**	1	GASKET	
	22	1	**206-1807**	1	GASKET	
	23	1	**206-1808**	1	PLATE	
	24	1	**206-1809**	1	ROD AS	
	25	1	**206-1810**	1	DUCT-AIR	
	26	1	**206-1815**	1	DUCT-AIR	
	27	1	**206-1816**	1	DUCT-AIR	
	28	1	**206-1817**	2	DUCT-AIR	
	29	1	**206-1818**	1	DUCT AS-AIR	
		1	**172-8591**	2	NUT-SPRING	
E		1	**144-0195**		HOSE (1110-CM)	
Y	30	1	**210-8364**	1	HEATER GP-CAB	646
	31	1	**211-2661**	1	FILTER ELEMENT AS-AIR (CAB HEATER)	
	32	1	**218-0666**	6	LOUVER AS	
	33	1	**221-2420**	2	HOSE-AIR	
	34	1	**255-0795**	1	FILM (TEMPERATURE CONTROL)	
	35	1	**313-6709**	1	DUCT-AIR	
	36	1	**313-6710**	1	DUCT-AIR	
M	37	1	**111-4627**	3	SCREW-MACHINE (M6X1X30-MM)	
	38	1	**5P-4116**	1	WASHER-HARD (8.8X20.5X2-MM THK)	
	39	1	**7X-0579**	1	WASHER-HARD (8.8X25.5X2-MM THK)	
M	40	1	**8T-4200**	1	BOLT (M8X1.25X16-MM)	
	41	1	**8T-4205**	4	WASHER-HARD (7.2X14.5X2-MM THK)	
	42	1	**9X-2038**	4	WASHER (7X19X2-MM THK)	
M	43	1	**9X-2045**	8	SCREW-TRUSS HEAD (M6X1X20-MM)	
E	44	1	**220-0738**		SEAL (87-CM)	

E-ORDER BY THE CENTIMETER
M-METRIC PART
Y-SEPARATE ILLUSTRATION

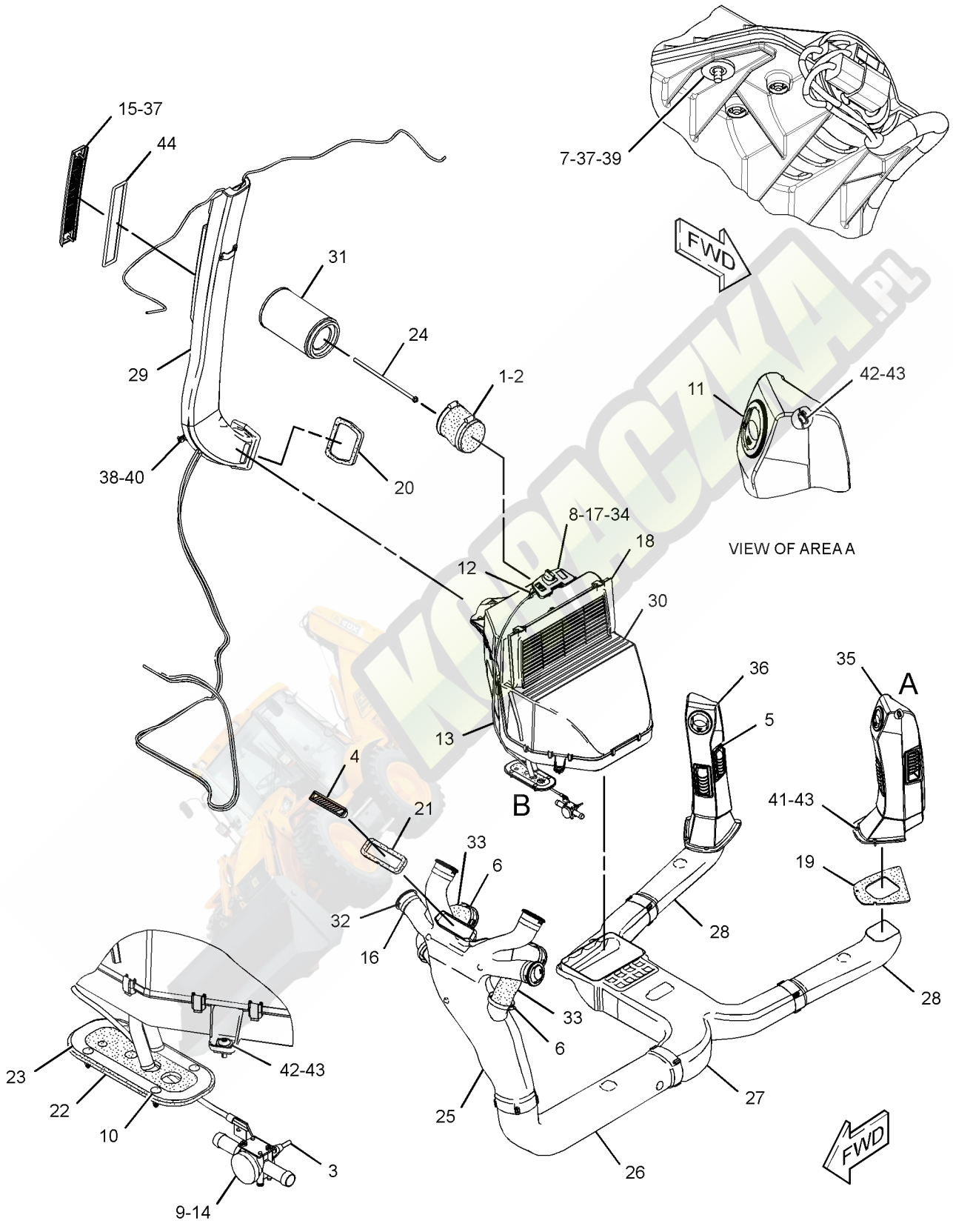

GRAPHIC #1 **<END>** g01578345

OPERATOR STATION

316-7291 HEATER & MTG GP-CAB

S/N: JBA1-UP
PART OF 335-3053, 335-3055 CAB AR
AN ATTACHMENT

SMCS-7304 **i03712361**

NOTE	REF NO	GRAPHIC REF	PART NUMBER	QTY	PART NAME 1 2 3 4 5 6 (PRODUCT LEVEL)	SEE PAGE
	1	1	**6L-4725**	2	CLAMP-HOSE	
	2	1	**8Y-5737**	1	CLAMP (COMPRESSION)	
	3	1	**8Y-6352**	1	LOUVER AS	
	4	1	**8Y-6967**	6	LOUVER AS-VENT	
	5	1	**9N-2231**	1	GROMMET AS	
	6	1	**110-6109**	1	KNOB-CONTROL (HEATER)	
	7	1	**130-4832**	2	SCREW (8-18X10-MM)	
	8	1	**164-1368**	4	FASTENER-PANEL	
	9	1	**164-8474**	2	LOUVER AS-VENT	
	10	1	**189-0881**	1	CONTROL AS (PANEL)	
	11	1	**193-3356**	1	CABLE AS	
	12	1	**194-5622**	1	VALVE AS-WATER (AIR CONDITIONER)	
		1	**6V-6717**	1	SCREW-WASHER HEAD (8-32X9.52-MM)	
		1	**124-0312**	2	SCREW-PAN HEAD (8-16X0.32-IN)	
	13	1	**206-1648**	1	LOUVER	
	14	1	**206-1653**	4	GASKET	
	15	1	**206-1682**	1	PANEL-CONTROL	
	16	1	**206-1684**	1	COVER (CAB FILTER)	
	17	1	**206-1803**	2	GASKET	
	18	1	**206-1804**	1	GASKET	
	19	1	**206-1805**	1	GASKET	
	20	1	**206-1807**	1	GASKET	
	21	1	**206-1808**	1	PLATE	
	22	1	**206-1809**	1	ROD AS	
	23	1	**206-1810**	1	DUCT-AIR	
	24	1	**206-1815**	1	DUCT-AIR	
	25	1	**206-1816**	1	DUCT-AIR	
	26	1	**206-1817**	2	DUCT-AIR	
	27	1	**206-1818**	1	DUCT AS-AIR	
		1	**172-8591**	2	NUT-SPRING	
E		1	**144-0195**		HOSE (1110-CM)	
	28	1	**206-1846**	1	INSULATION	
	29	1	**206-1847**	1	INSULATION	
Y	30	1	*210-8363*	1	HEATER GP-CAB	644
	31	1	**211-2661**	1	FILTER ELEMENT AS-AIR (CAB HEATER)	
	32	1	**218-0666**	6	LOUVER AS	
	33	1	**221-2420**	2	HOSE-AIR	
	34	1	**255-0795**	1	FILM (TEMPERATURE CONTROL)	
	35	1	**313-6709**	1	DUCT-AIR	
	36	1	**313-6710**	1	DUCT-AIR	
	37	1	**319-8524**	1	HOSE-AIR	
M	38	1	**111-4627**	3	SCREW-MACHINE (M6X1X30-MM)	
	39	1	**4H-2558**	2	GROMMET	
	40	1	**5P-4116**	1	WASHER-HARD (8.8X20.5X2-MM THK)	
	41	1	**7X-0579**	1	WASHER-HARD (8.8X25.5X2-MM THK)	
M	42	1	**8T-4200**	1	BOLT (M8X1.25X16-MM)	
	43	1	**8T-4205**	4	WASHER-HARD (7.2X14.5X2-MM THK)	
	44	1	**9M-7959**	4	CLAMP-HOSE	
	45	1	**9X-2038**	4	WASHER (7X19X2-MM THK)	
M	46	1	**9X-2045**	8	SCREW-TRUSS HEAD (M6X1X20-MM)	
E	47	1	**220-0738**		SEAL (87-CM)	
D	48	1	**5P-6129**		TUBE (0.4-M)	
D	48A	1	**5P-6129**		TUBE (0.4-M)	

D-ORDER BY THE METER
E-ORDER BY THE CENTIMETER
M-METRIC PART
Y-SEPARATE ILLUSTRATION

KOPACZKA.PL

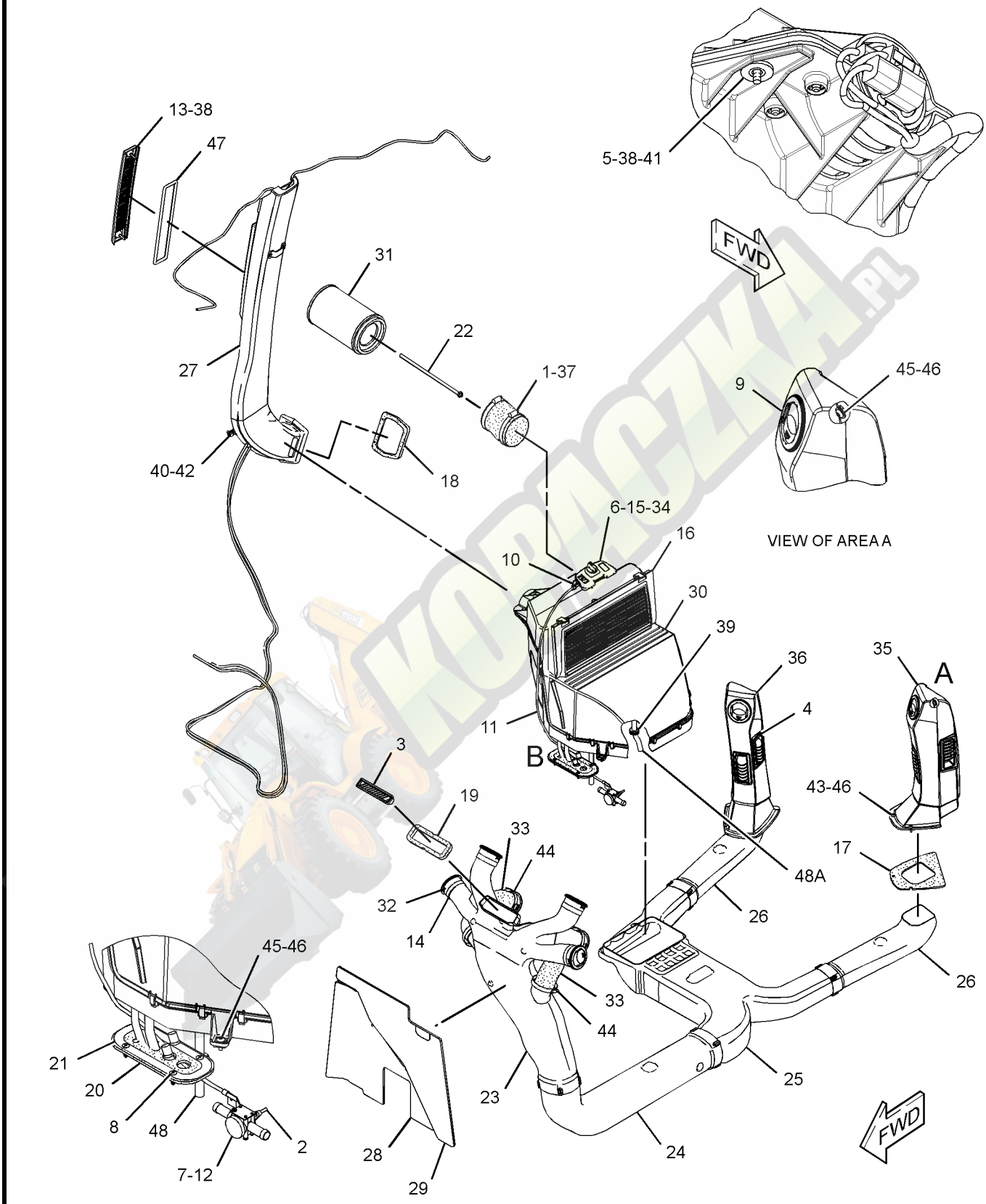

GRAPHIC #1 **<END>** g01578133

OPERATOR STATION

210-8363 HEATER GP-CAB

S/N: JBA1-UP
PART OF 316-7291 HEATER & MTG GP-CAB
AN ATTACHMENT

SMCS-7304 **i03726382**

NOTE	REF NO	GRAPHIC REF	PART NUMBER	QTY	PART NAME 1 2 3 4 5 6 (PRODUCT LEVEL)	SEE PAGE
	1	1	**8C-3756**	1	FILM-IDENTIFICATION (GROUP NO., SEQUENCE NO.)	
	2	1	**119-9631**	1	SWITCH-TEMPERATURE (AIR CONDITIONER)	
	3	1	**304-8965**	1	BLOWER GP-CAB (HEATER)	
		1	**177-9645**	1	KIT-RECEPTACLE (2-PIN)	
					(INCLUDES RECEPTACLE AS & WEDGE)	
		1	**7T-0093**	2	PIN-CONNECTOR (12-GA TO 14-GA)	
	4	1	**185-4015**	11	CLIP	
	5	1	**204-9921**	1	RESISTOR AS (HEATER)	
	6	1	**210-7665**	1	HOUSING-TOP	
	7	1	**210-7666**	1	BAFFLE	
	8	1	**210-8401**	1	COIL AS-EVAPORATOR	
J		1	**219-6288**	1	GASKET	
DJ		1	**5P-5688**		SEAL (1-M)	
	9	1	**211-2660**	1	FILTER ELEMENT-AIR (RECIRCULATION)	
	10	1	**212-3416**	3	SCREW-PAN HEAD (8-16X0.5-IN)	
	11	1	**219-6281**	1	COVER AS	
		1	**219-6283**	1	LATCH	
		1	**6C-3680**	1	RIVET-POP	
J	12	1	**219-6284**	2	GASKET	
J	13	1	**219-6285**	1	GASKET	
J	14	1	**219-6286**	1	GASKET	
J	15	1	**219-6287**	2	GASKET	
	16	1	**219-6292**	1	HOUSING AS	
		1	**7H-3937**	4	LOCKWASHER	
M		1	**129-3178**	4	LOCKNUT (M6X1-THD)	
	18	1	**220-3762**	1	HARNESS AS-HEATER & AIR COND	
		1	**192-2112**	5	SOCKET-TERMINAL	
		1	**128-7716**	1	CONNECTOR	
		1	**7T-6739**	1	HOUSING-PLUG	
		1	**7T-0093**	3	PIN-CONNECTOR (12-GA TO 14-GA)	
		1	**155-2270**	1	KIT-CONNECTING PLUG (2-PIN)	
					(INCLUDES PLUG AS, WEDGE & INTERFACE SEAL)	
		1	**8T-8737**	1	PLUG-SEAL	
		1	**177-9653**	1	KIT-RECEPTACLE (4-PIN)	
					(INCLUDES RECEPTACLE AS & WEDGE)	
		1	**186-3736**	2	SOCKET-CONNECTOR (16-GA TO 18-GA)	
	19	1	**253-9510**	1	GUARD	
	20	1	**2S-3745**	4	SCREW-TAPPING (10-16X0.5-IN)	
M	21	1	**6V-7357**	4	BOLT (M6X1X25-MM)	
	22	1	**8T-4205**	5	WASHER-HARD (7.2X14.5X2-MM THK)	
D	23	1	**5P-5655**		SEAL (0.5-M)	
DJ	24	1	**5P-5637**		SEAL (0.8-M)	
EJ	25	1	**8C-7524**		SEAL (35-CM)	
					AVAILABLE REPAIR KIT(S):	
J			**285-9109**	1	KIT-SEAL (HVAC)	

D-ORDER BY THE METER
E-ORDER BY THE CENTIMETER
J-KIT MARKED J SERVICES PARTS MARKED J
M-METRIC PART

210-8363 **HEATER GP-CAB** *(contd.)* **i03726382**

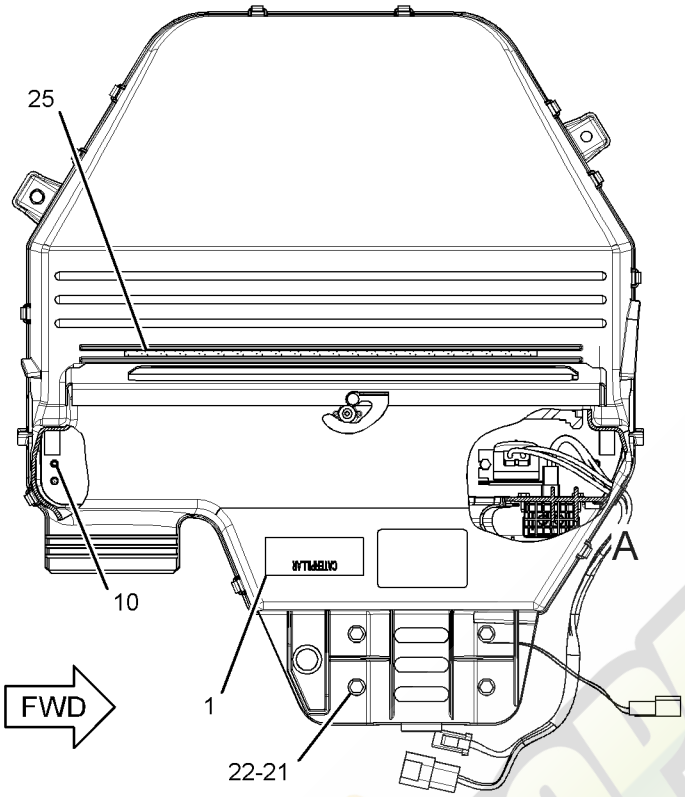

TOP VIEW

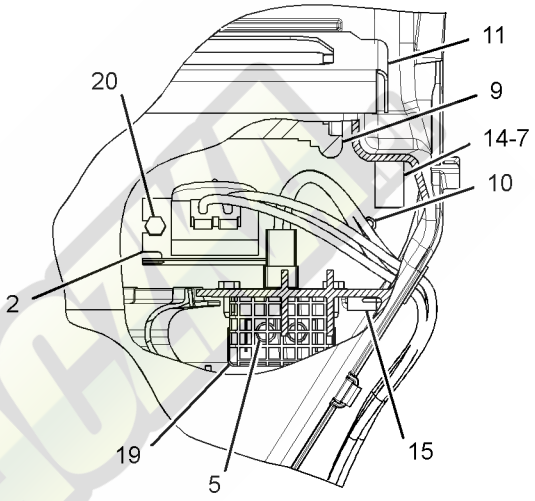

VIEW OF AREA A

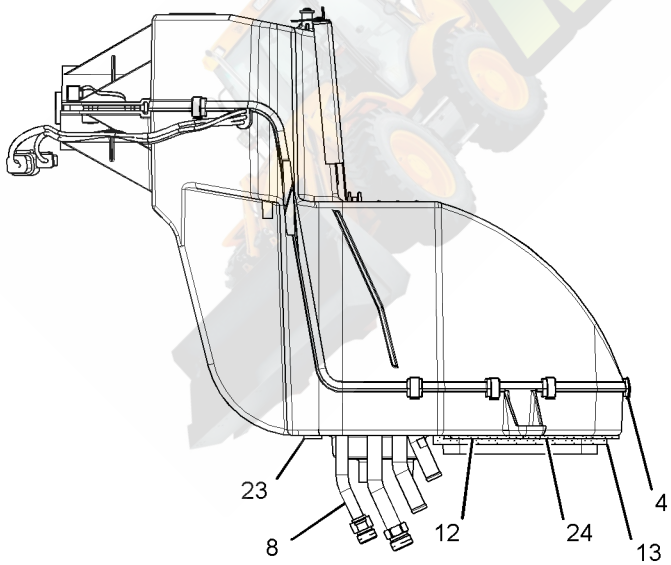

FRONT VIEW

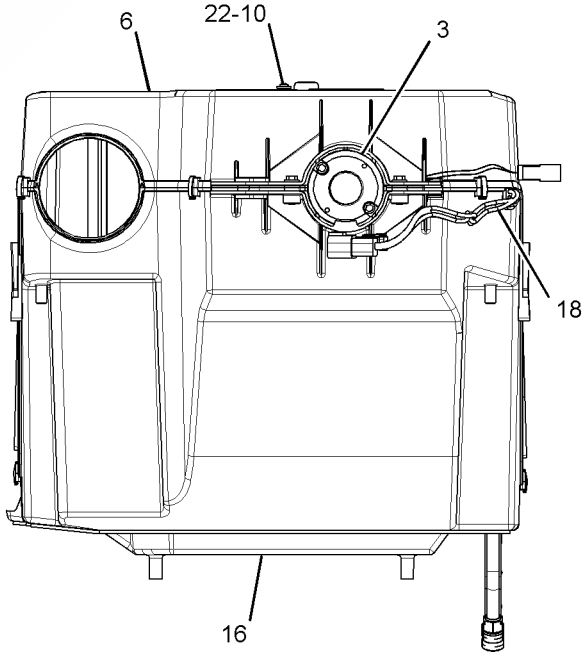

RIGHT SIDE VIEW

GRAPHIC #1 **<END>** g01460871

OPERATOR STATION

210-8364 HEATER GP-CAB

S/N: JBA1-UP
PART OF 316-7290 HEATER & MTG GP-CAB
AN ATTACHMENT

SMCS-7304 **i03726581**

NOTE	REF NO	GRAPHIC REF	PART NUMBER	QTY	PART NAME 1 2 3 4 5 6 (PRODUCT LEVEL)	SEE PAGE
	1	1	**8C-3756**	1	FILM-IDENTIFICATION (GROUP NO., SEQUENCE NO.)	
	2	1	**304-8965**	1	BLOWER GP-CAB (HEATER)	
		1	**177-9645**	1	KIT-RECEPTACLE (2-PIN)	
					(INCLUDES RECEPTACLE AS & WEDGE)	
		1	**7T-0093**	2	PIN-CONNECTOR (12-GA TO 14-GA)	
	3	1	**185-4015**	11	CLIP	
	4	1	**204-9921**	1	RESISTOR AS (HEATER)	
	5	1	**210-7665**	1	HOUSING-TOP	
	6	1	**210-7666**	1	BAFFLE	
	7	1	**210-8402**	1	COIL AS-HEATER	
DJ		1	**5P-5688**		SEAL (1-M)	
J		1	**219-6288**	1	GASKET	
	8	1	**211-2660**	1	FILTER ELEMENT-AIR (CAB HEATER, AIR CONDITIONER)	
	9	1	**212-3416**	3	SCREW-PAN HEAD (8-16X0.5-IN)	
	10	1	**219-6281**	1	COVER AS	
		1	**219-6283**	1	LATCH	
		1	**6C-3680**	1	RIVET-POP	
J	11	1	**219-6284**	2	GASKET	
J	12	1	**219-6285**	1	GASKET	
J	13	1	**219-6286**	1	GASKET	
J	14	1	**219-6287**	2	GASKET	
	15	1	**219-6292**	1	HOUSING AS	
		1	**7H-3937**	4	LOCKWASHER	
M		1	**129-3178**	4	LOCKNUT (M6X1-THD)	
	17	1	**253-2470**	1	HARNESS AS-HEATER	
		1	**192-2112**	3	SOCKET-TERMINAL	
		1	**128-7716**	1	CONNECTOR	
		1	**220-5725**	1	GROMMET	
		1	**7T-0093**	3	PIN-CONNECTOR (12-GA TO 14-GA)	
		1	**8T-8737**	1	PLUG-SEAL	
		1	**177-9653**	1	KIT-RECEPTACLE (4-PIN)	
					(INCLUDES RECEPTACLE AS & WEDGE)	
	18	1	**253-9510**	1	GUARD	
	19	1	**2S-3745**	2	SCREW-TAPPING (10-16X0.5-IN)	
M	20	1	**6V-7357**	4	BOLT (M6X1X25-MM)	
	21	1	**8T-4205**	5	WASHER-HARD (7.2X14.5X2-MM THK)	
D	22	1	**5P-5655**		SEAL (0.5-M)	
DJ	23	1	**5P-5637**		SEAL (0.8-M)	
EJ	24	1	**8C-7524**		SEAL (35-CM)	
					AVAILABLE REPAIR KIT(S):	
J			**285-9109**	1	KIT-SEAL (HVAC)	

D-ORDER BY THE METER
E-ORDER BY THE CENTIMETER
J-KIT MARKED J SERVICES PARTS MARKED J
M-METRIC PART

210-8364 HEATER GP-CAB *(contd.)* **i03726581**

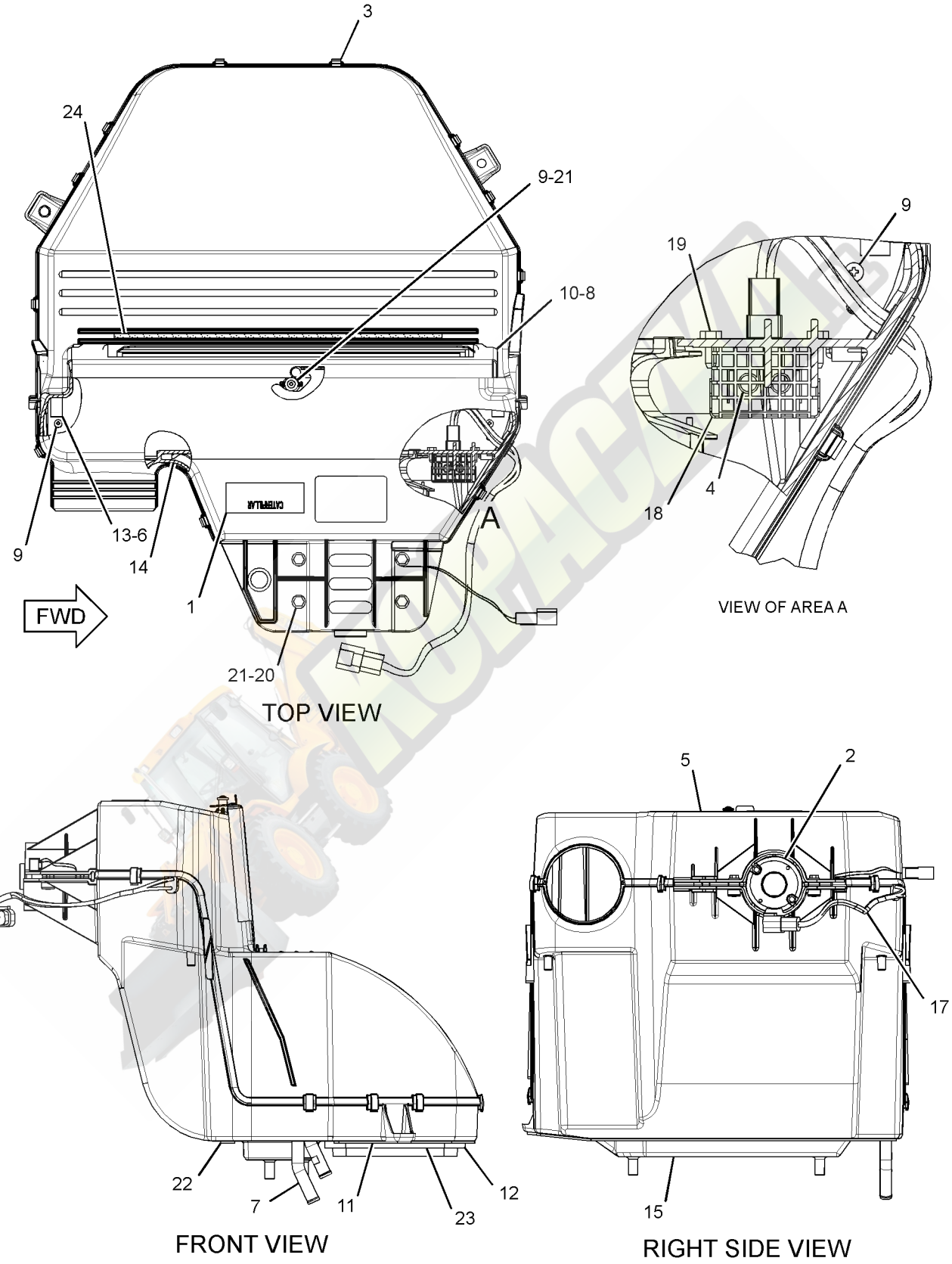

GRAPHIC #1 **<END>** g01460989

OPERATOR STATION

328-1956 HORN GP-ELECTRIC—REAR

S/N: JBA1-UP

AN ATTACHMENT

SMCS-7402 **i03620563**

NOTE	REF NO	GRAPHIC REF	PART NUMBER	QTY	PART NAME 1 2 3 4 5 6 (PRODUCT LEVEL)	SEE PAGE
	1	1	**3S-2093**	1	STRAP-CABLE	
	2	1	**164-9425**	1	HORN AS (24-VOLT, LOW TONE)	
B	3	1	**8T-4121**	2	WASHER-HARD (11X21X2.5-MM THK)	
BM	4	1	**8T-4133**	1	NUT (M10X1.5-THD)	
BM	5	1	**8T-4196**	1	BOLT (M10X1.5X35-MM)	

B-USE AS REQUIRED
M-METRIC PART

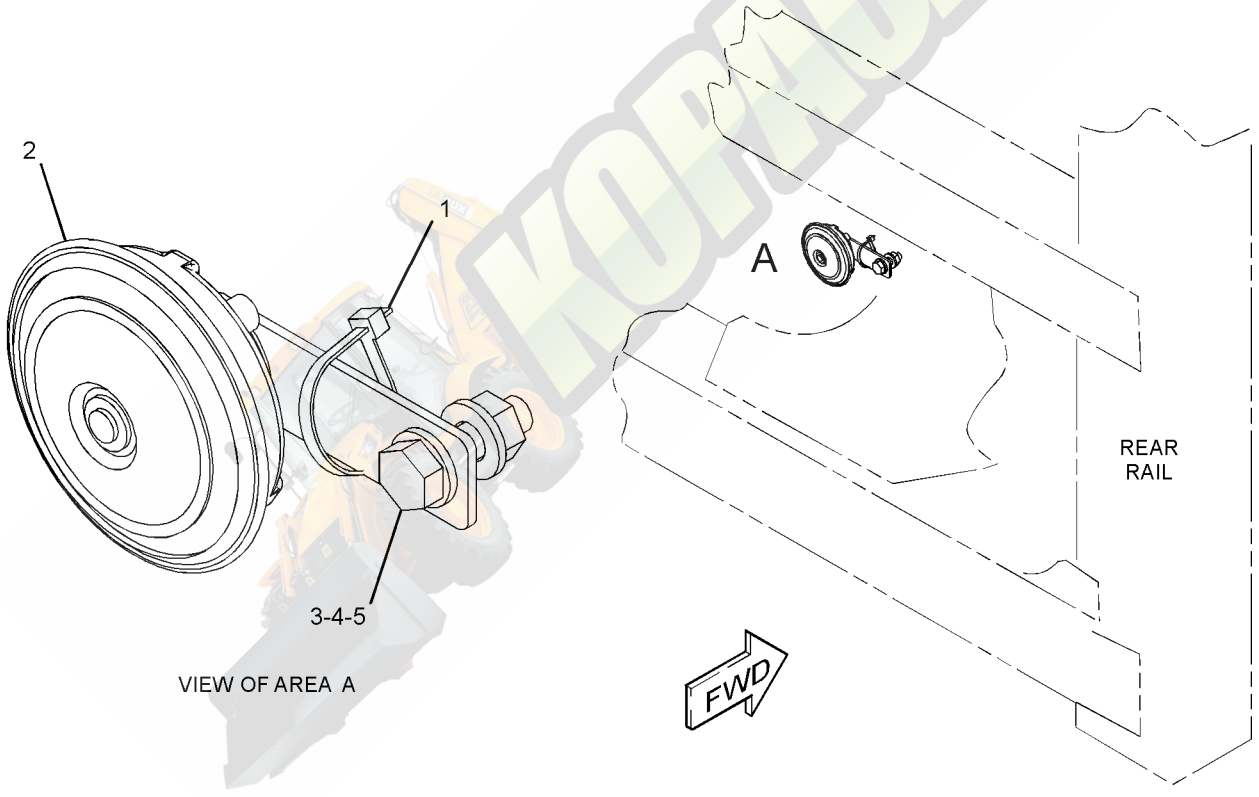

GRAPHIC #1 **<END>** g01994394

OPERATOR STATION

270-3217 INSTALLATION GP-RADIO

S/N: JBA1-UP
AN ATTACHMENT

SMCS-1408, 7338 **i03592841**

NOTE	PART NUMBER	QTY	PART NAME 1 2 3 4 5 6 (PRODUCT LEVEL)	SEE PAGE
	200-5728	1	HARNESS AS-RADIO	
	172-8039	11	TERMINAL (RADIO)	
	8T-8737	1	PLUG-SEAL	
	160-3518	1	KIT-RECEPTACLE (8-PIN)	
			(INCLUDES RECEPTACLE AS & WEDGE)	
	172-8037	1	CONNECTOR (RADIO)	
	186-3735	7	PIN-CONNECTOR (16-GA TO 18-GA)	
	262-2781	1	RADIO	
	6K-0806	1	STRAP-CABLE	

<END>

KOPACZKA.pl

OPERATOR STATION

324-2897 KIT-SEAT FRAME

S/N: JBA1-UP
PART OF 324-2896 SEAT GP
AN ATTACHMENT

SMCS-7321 **i03121860**

NOTE	REF NO	GRAPHIC REF	PART NUMBER	QTY	PART NAME 1 2 3 4 5 6 (PRODUCT LEVEL)	SEE PAGE
	1	1	**164-1255**	1	SECTOR	
	2	1	**164-1256**	2	SPACER (19X25.4X12.5-MM THK)	
	3	1	**161-9283**	1	WASHER (19.8X31.8X1.6-MM THK)	
	4	1	**164-1249**	1	LEVER AS (RECLINER CONTROL)	
	5	1	**164-1251**	1	SPRING (RECLINER)	
	6	1	**164-1252**	1	SPRING (SEAT RECLINER)	
	7	1	**164-1253**	1	PLATE	
	8	1	**164-1254**	1	SECTOR	
					PARTS SHOWN IN GRAPHIC(S) WITHOUT A REFERENCE NUMBER ARE NOT SERVICED SEPARATELY	

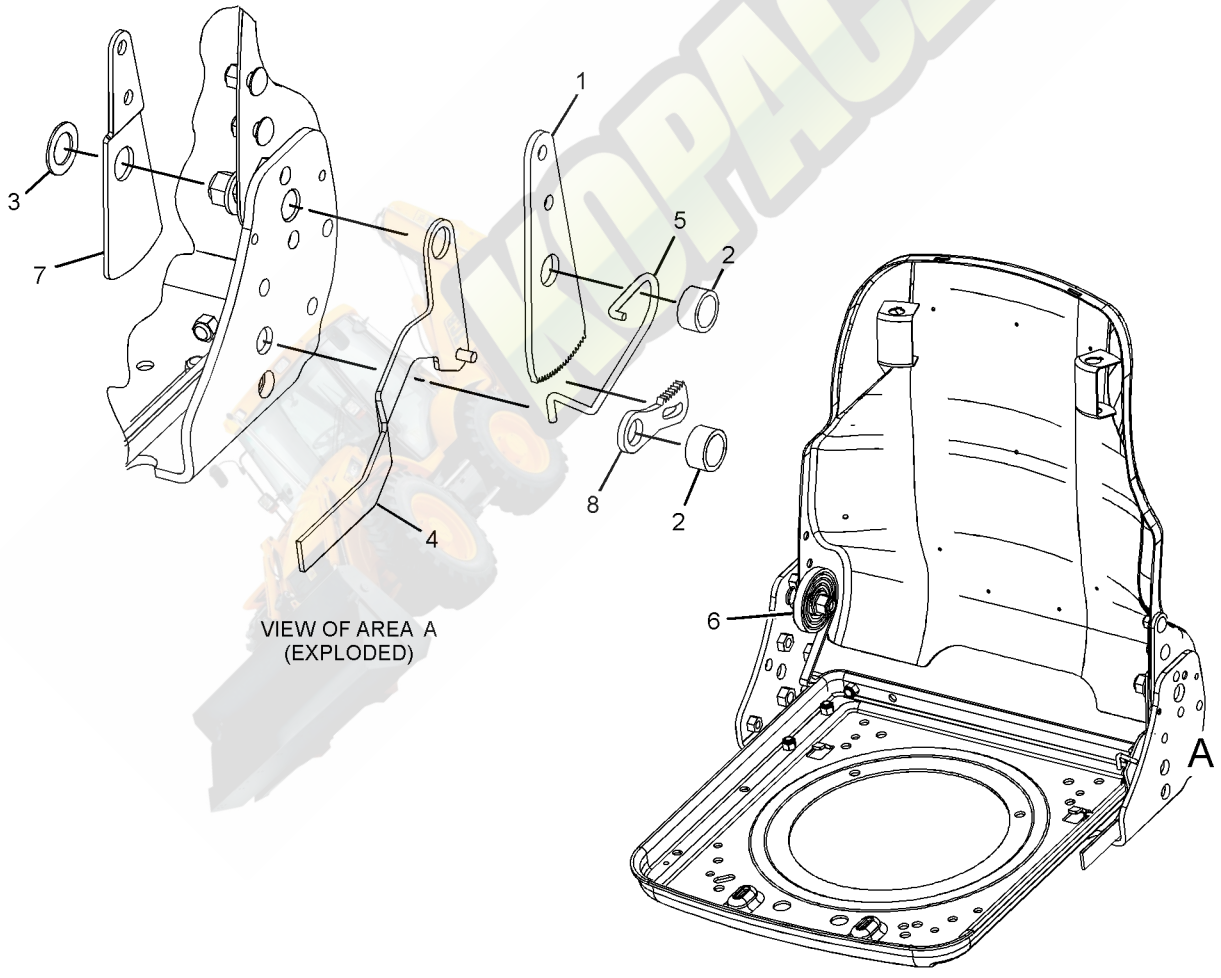

GRAPHIC #1 **<END>** g01626962

OPERATOR STATION

324-2906 KIT-SEAT PAN

S/N: JBA1-UP
PART OF 324-2903 SEAT GP
AN ATTACHMENT

SMCS-7321 **i03121864**

NOTE	REF NO	GRAPHIC REF	PART NUMBER	QTY	PART NAME 1 2 3 4 5 6 (PRODUCT LEVEL)	SEE PAGE
	1	1	**5P-1076**	2	WASHER-HARD (13.5X30X4-MM THK)	
M	2	1	**6V-5217**	2	BOLT (M8X1.25X20-MM)	
M	3	1	**105-3481**	2	BOLT-SOCKET HEAD (M8X1.25X20-MM)	
	4	1	**161-9283**	1	WASHER (19.8X31.8X1.6-MM THK)	
	5	1	**164-1249**	1	LEVER AS (RECLINER CONTROL)	
	6	1	**164-1251**	1	SPRING (RECLINER)	
	7	1	**164-1252**	1	SPRING (SEAT RECLINER)	
	8	1	**164-1253**	1	PLATE	
	9	1	**164-1254**	1	SECTOR	
	10	1	**164-1255**	1	SECTOR	
	11	1	**164-1256**	2	SPACER (19X25.4X12.5-MM THK)	
	12	1	**164-1274**	1	BLOCK	
	13	1	**180-5785**	1	SPRING	
	14	1	**180-5786**	4	PUCK	
	15	1	**180-5789**	1	NUT	
	16	1	**324-9976**	1	LATCH (SLIDE)	
	17	1	**324-9977**	1	LINK	
	18	1	**2P-7864**	1	SCREW-TAPPING	
M	19	1	**3T-0852**	12	LOCKNUT (M8X1.25-THD)	
	20	1	**4H-1641**	1	PIN-SPRING	
	21	1	**4K-9890**	4	WASHER (8.6X17.3X1.6-MM THK)	

M-METRIC PART

324-2906 KIT-SEAT PAN *(contd.)* i03121864

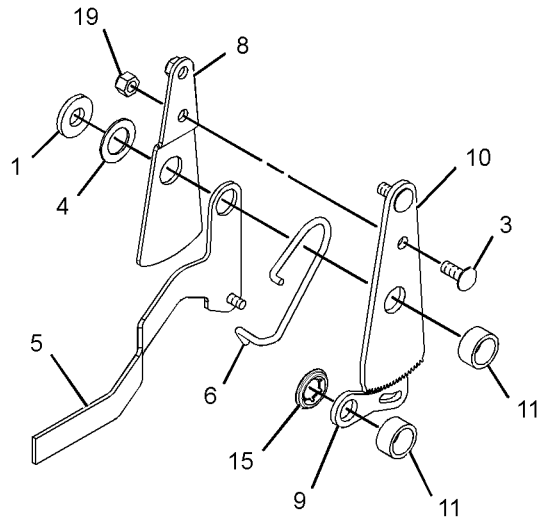

VIEW OF AREA A
(EXPLODED)

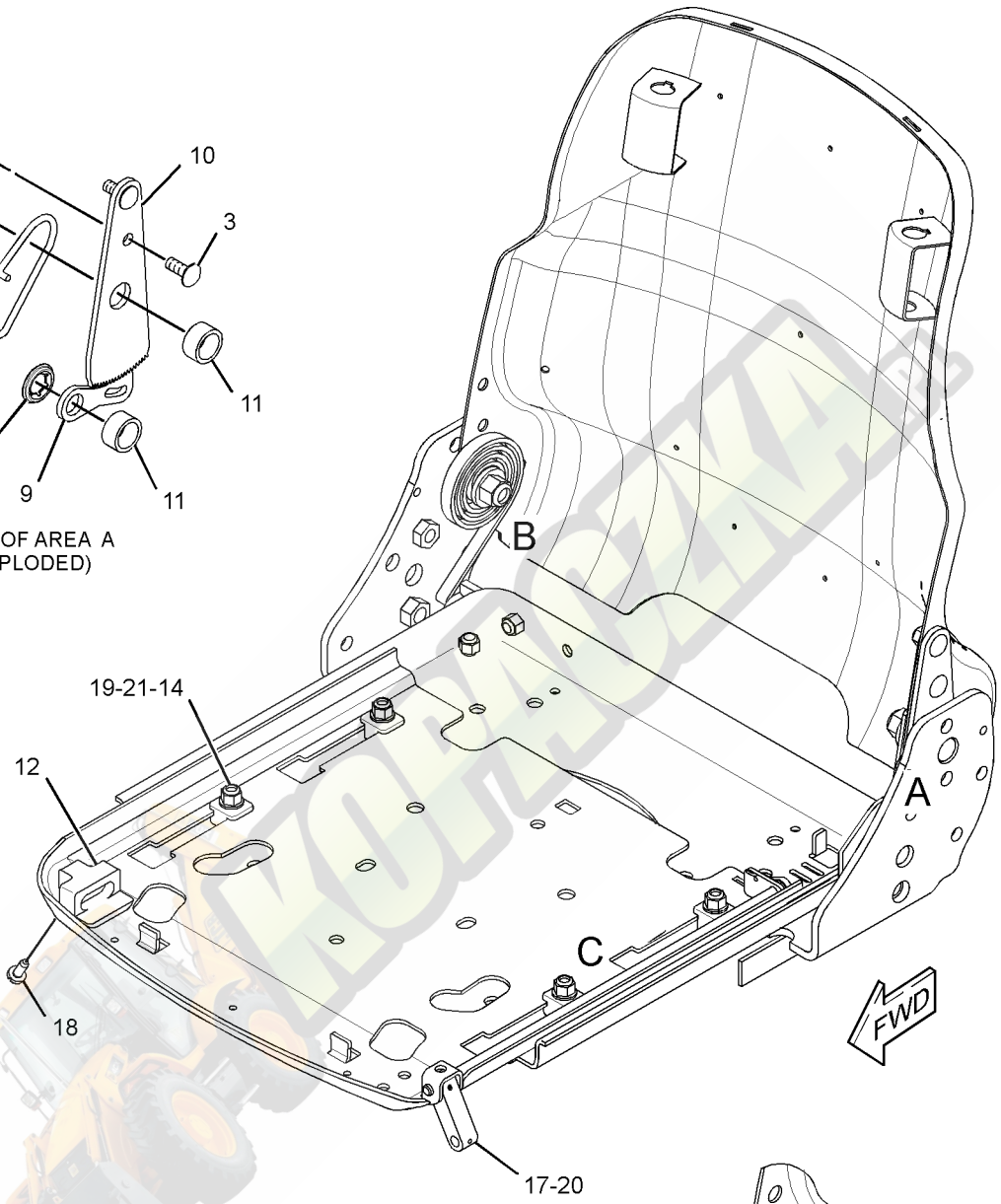

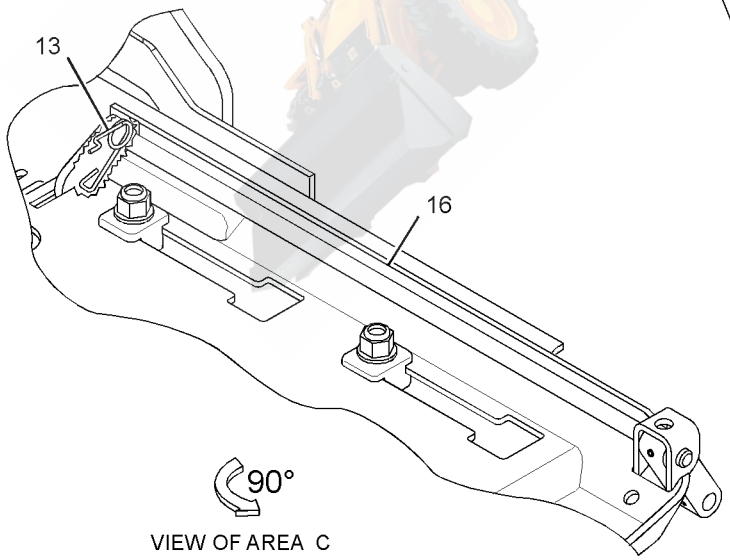

VIEW OF AREA C

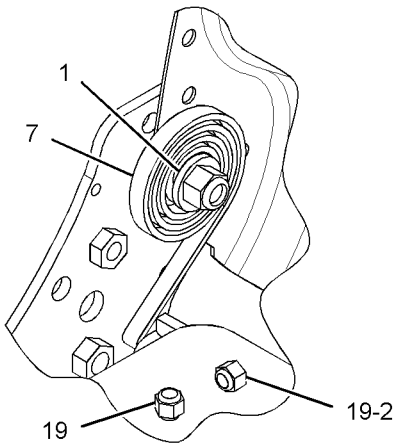

VIEW OF AREA B

GRAPHIC #1 **<END>** g01624350

OPERATOR STATION

324-2894 KIT-SEAT SUSPENSION—AIR

S/N: JBA1-UP
PART OF 324-2890 SUSPENSION GP-SEAT
AN ATTACHMENT

SMCS-7312, 7324 **i03724323**

NOTE	REF NO	GRAPHIC REF	PART NUMBER	QTY	PART NAME 1 2 3 4 5 6 (PRODUCT LEVEL)	SEE PAGE
	1	1	**163-1135**	1	SPRING	
	2	1	**186-5110**	2	BOLT-SHOULDER	
	3	1	**192-7805**	1	HARNESS AS-VALVE (SEAT AIR COMPRESSOR)	
		1	**5P-4571**	2	TERMINAL-BLADE (14-GA TO 16-GA)	
		1	**102-8802**	1	KIT-RECEPTACLE (2-PIN)	
					(INCLUDES RECEPTACLE AS & WEDGE)	
		1	**186-3735**	2	PIN-CONNECTOR (16-GA TO 18-GA)	
E		1	**211-5358**		CONDUIT-FLEXIBLE (64-CM)	
	4	1	**237-3943**	1	BRACKET	
	5	1	**4F-4879**	1	BOLT (3/8-16X0.5-IN)	
	6	1	**328-7749**	1	HARNESS AS-WIRING (SEAT AIR COMPRESSOR)	
	7	1	**328-7750**	1	TEE	
	8	1	**328-7751**	1	ELBOW	
	9	1	**328-7752**	1	ELBOW	
	10	1	**330-9687**	1	TUBE	
	11	1	**331-7798**	1	TUBE	
	12	1	**331-7799**	1	TUBE	
	13	1	**108-4311**	1	SCREW-MACHINE (3/8-16X0.75-IN)	
	14	1	**3E-4337**	1	RIVET-POP	
	15	1	**4V-2264**	1	NUT-PUSH	
	16	1	**216-4554**	2	SHIM (1.4-MM THK)	
	17	1	**338-9831**	1	CLIP	

E-ORDER BY THE CENTIMETER

324-2894 KIT-SEAT SUSPENSION *(contd.)* i03724323

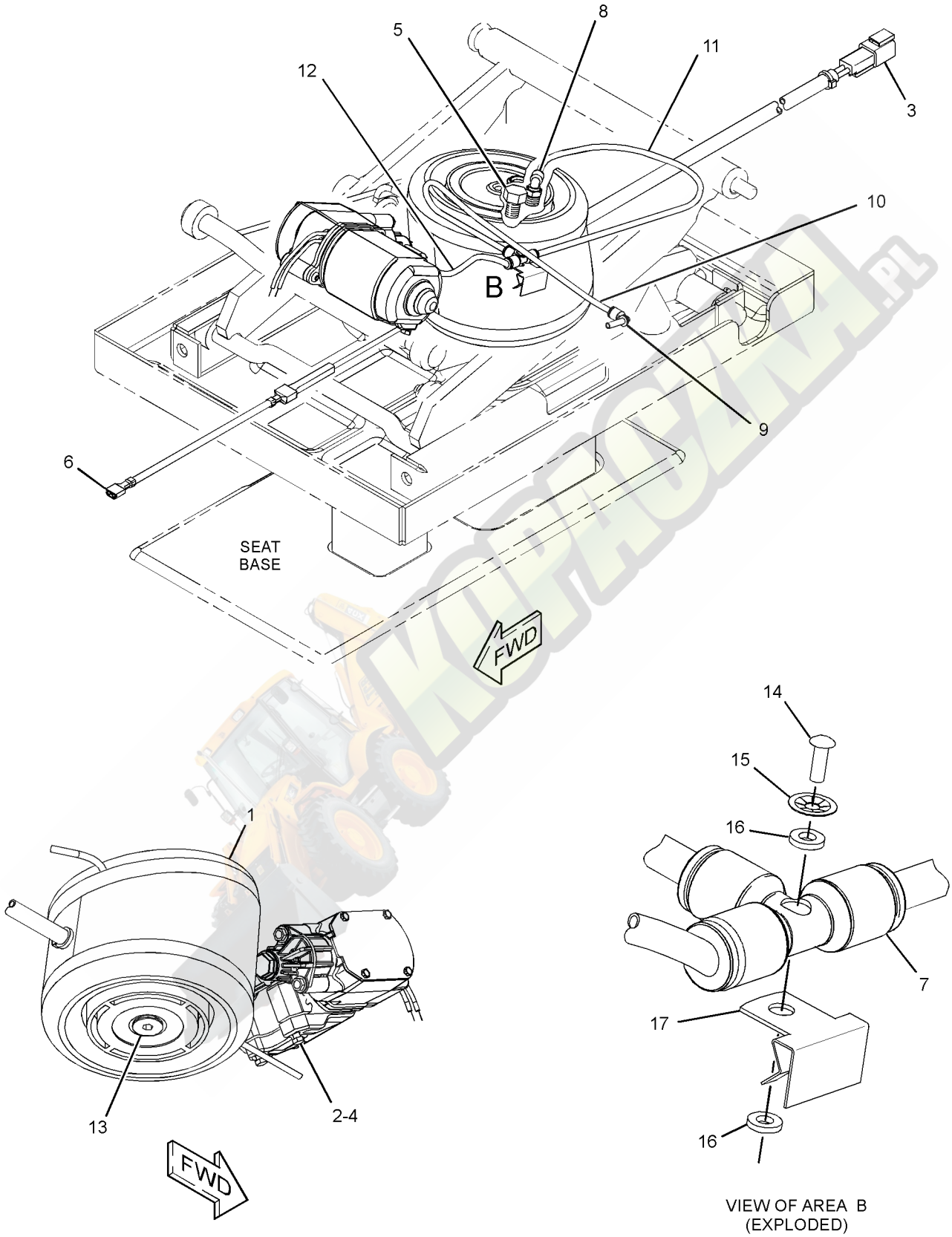

GRAPHIC #1 **<END>** g01783376

OPERATOR STATION

299-6985 LATCH GP-CAB DOOR & WINDOW

S/N: JBA1-UP

PART OF 327-7601, 327-7637 WINDOW GP-CAB, 333-9902 WINDOW GP-DOOR

AN ATTACHMENT

SMCS-7308, 7310 **i02693060**

NOTE	REF NO	GRAPHIC REF	PART NUMBER	QTY	PART NAME 1 2 3 4 5 6 (PRODUCT LEVEL)	SEE PAGE
M	1	1	**161-6984**	1	SCREW-TRUSS HEAD (M5X0.8X20-MM)	
	2	1	**161-6987**	1	WASHER-HARD (5.2X16X1.5-MM THK)	
	3	1	**161-9294**	1	SPRING-FLAT WIRE	
M	4	1	**162-6556**	1	LOCKNUT (M6X1-THD)	
M	5	1	**5C-2874**	1	NUT (M5X0.8-THD)	

M-METRIC PART

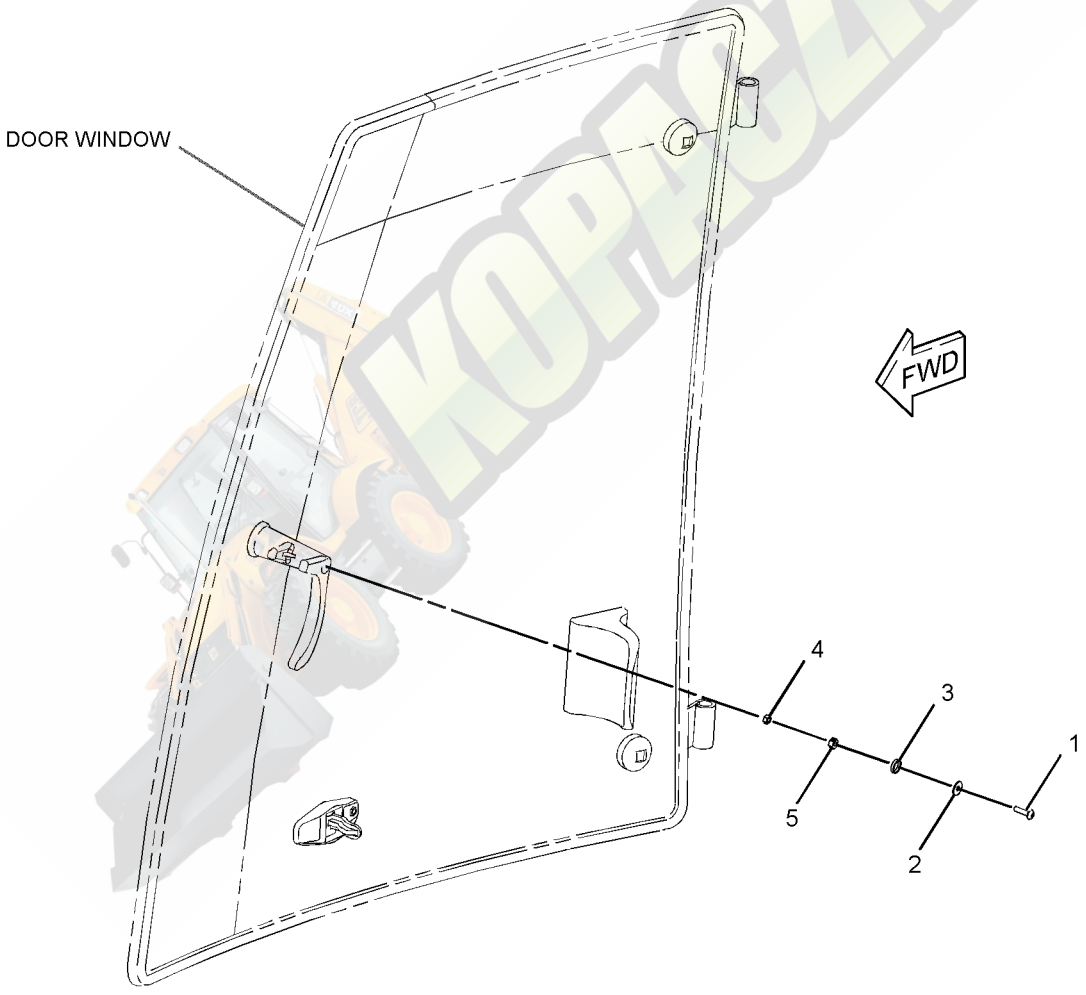

GRAPHIC #1 **<END>** g01353996

OPERATOR STATION

299-6986 LATCH GP-CAB DOOR & WINDOW

S/N: JBA1-UP

PART OF 327-7601, 327-7637 WINDOW GP-CAB, 333-9901 WINDOW GP-DOOR AN ATTACHMENT

SMCS-7308, 7310 **i02693061**

NOTE	REF NO	GRAPHIC REF	PART NUMBER	QTY	PART NAME 1 2 3 4 5 6 (PRODUCT LEVEL)	SEE PAGE
M	1	1	**161-6984**	1	SCREW-TRUSS HEAD (M5X0.8X20-MM)	
	2	1	**161-6987**	1	WASHER-HARD (5.2X16X1.5-MM THK)	
	3	1	**161-9294**	1	SPRING-FLAT WIRE	
M	4	1	**162-6556**	1	LOCKNUT (M6X1-THD)	
M	5	1	**5C-2874**	1	NUT (M5X0.8-THD)	

M-METRIC PART

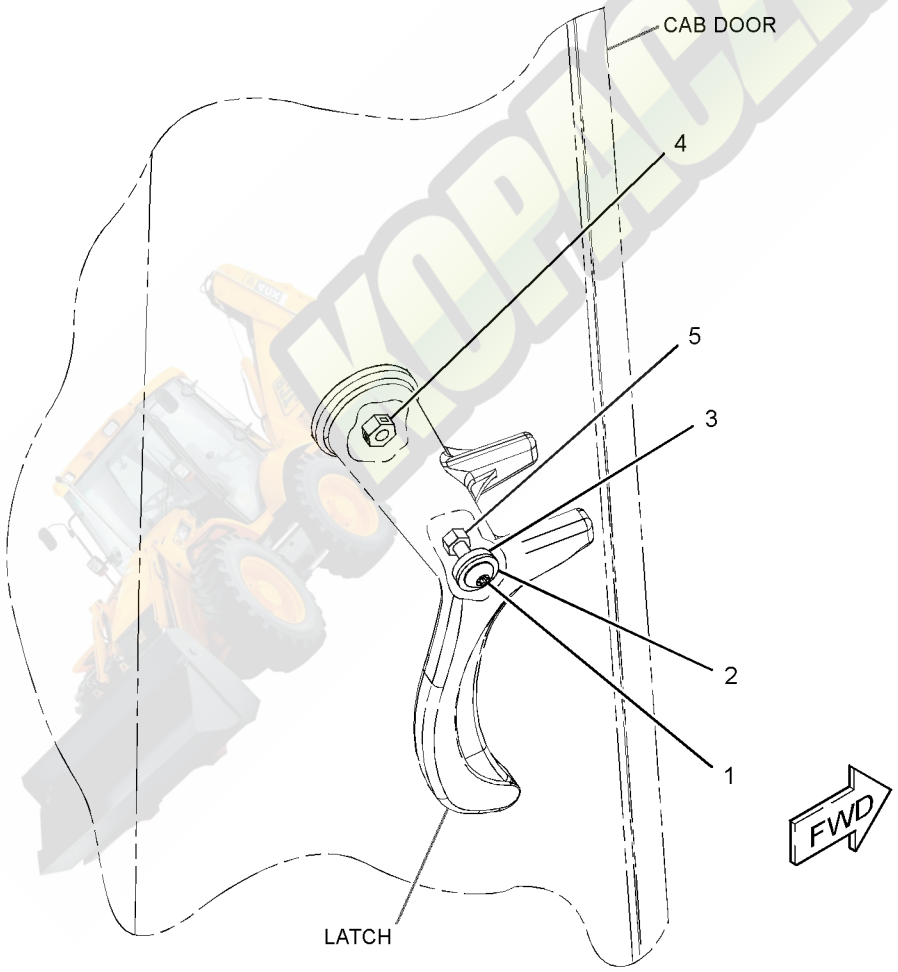

GRAPHIC #1 **<END>** g01354326

OPERATOR STATION

269-3248 LATCH GP-CONSOLE

S/N: JBA1-UP

PART OF 269-3247 MOUNTING GP-BACKHOE CONTROL

AN ATTACHMENT

SMCS-5258 **i03721020**

NOTE	REF NO	GRAPHIC REF	PART NUMBER	QTY	PART NAME 1 2 3 4 5 6 (PRODUCT LEVEL)	SEE PAGE
	1	1	**8T-4742**	2	END-YOKE ROD	
	2	1	**8T-4744**	2	PIN AS-SPRING	
	3	1	**110-5602**	1	KNOB	
	4	1	**183-5443**	1	LATCH AS	
	5	1	**183-4911**	2	PLATE	
	6	1	**180-9160**	1	LATCH AS	
	7	1	**183-6085**	2	BEARING	
	8	1	**268-5902**	1	LEVER AS	
	9	1	**268-5903**	2	ROD	
M	10	1	**099-3649**	1	BOLT (M8X1.25X40-MM)	
	11	1	**156-0283**	3	WASHER-HARD (8.4X35X2.5-MM THK)	
	12	1	**183-4912**	1	SLEEVE	
M	13	1	**5C-2890**	2	NUT (M6X1-THD)	

M-METRIC PART

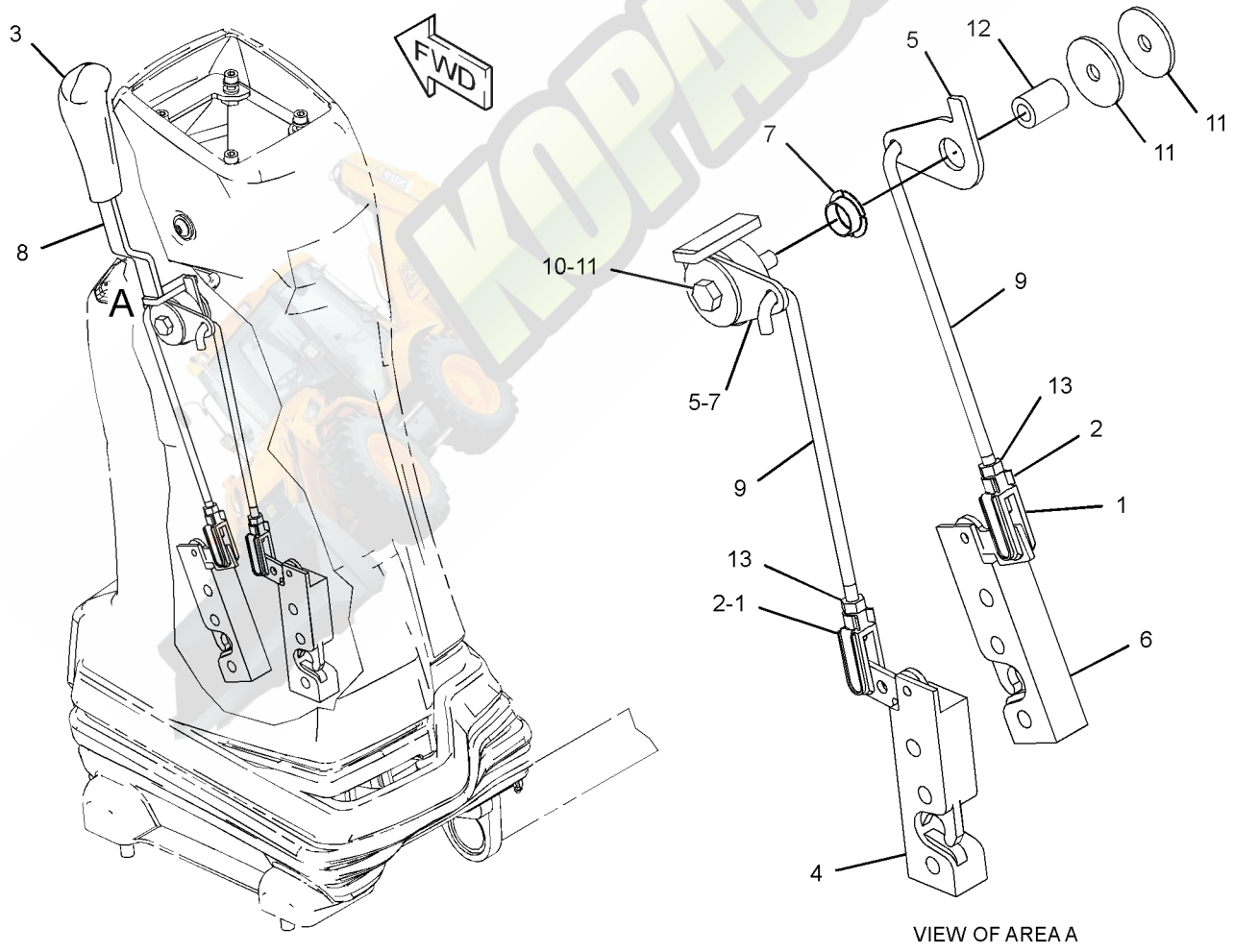

VIEW OF AREA A

GRAPHIC #1 **<END>** g01211340

OPERATOR STATION

209-3367 LEVER GP-GOVERNOR—HANDHELD

S/N: JBA1-UP
PART OF 206-1640 CONTROL GP-GOVERNOR
AN ATTACHMENT

SMCS-1265 **i02159826**

NOTE	REF NO	GRAPHIC REF	PART NUMBER	QTY	PART NAME 1 2 3 4 5 6 (PRODUCT LEVEL)	SEE PAGE
	1	1	**209-3366**	1	CABLE AS	
	2	1	**219-0343**	1	LEVER AS	
	3	1	**8T-4742**	1	END-YOKE ROD	
	4	1	**8T-4744**	1	PIN AS-SPRING	
M	5	1	**8T-4971**	1	BOLT (M6X1X30-MM)	
M	6	1	**129-3178**	1	LOCKNUT (M6X1-THD)	

M-METRIC PART

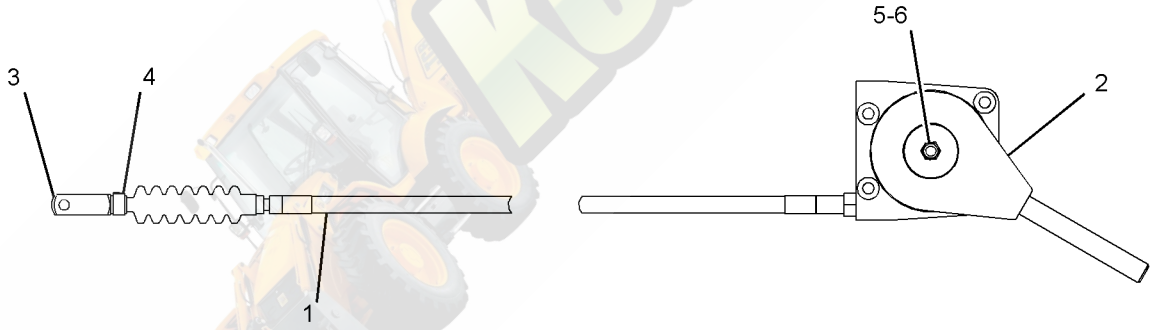

GRAPHIC #1 **<END>** g01096744

OPERATOR STATION

317-5543 LINER GP-CAB

S/N: JBA1-UP

PART OF 335-3052, 335-3053, 335-3055 CAB AR, 335-3054 CAB AR-ENCLOSED ROPS AN ATTACHMENT

SMCS-7329 **i03417781**

NOTE	REF NO	GRAPHIC REF	PART NUMBER	QTY	PART NAME 1 2 3 4 5 6 (PRODUCT LEVEL)	SEE PAGE
	1	1	**325-9311**	3	FASTENER	
	2	1	**5G-2003**	2	SPACER (6.8X13X10-MM THK)	
	3	1	**8E-1118**	1	ANTENNA AS	
	4	1	**8R-6111**	1	CABLE AS-COAXIAL	
	5	1	**9U-8263**	1	COVER	
	6	1	**084-4277**	1	LAMP GP-DOME (12-VOLT)	
		1	**210-8754**	1	LAMP (12-VOLT)	
	7	1	**132-2249**	1	SPACER (7.4X12.7X24-MM THK)	
	8	1	**145-0981**	2	SPACER (8.5X12.7X18-MM)	
	9	1	**169-7291**	2	COVER-SPEAKER	
	10	1	**209-4716**	2	PLATE	
	11	1	**262-9567**	2	SPEAKER	
	12	1	**282-7832**	1	GROMMET	
	13	1	**282-7835**	1	PLATE	
	14	1	**292-5773**	1	COVER	
	15	1	**317-5542**	1	LINER AS-CAB	
		1	**263-5781**	2	PLATE AS	
					(EACH INCLUDES)	
		1	**205-7047**	8	INSERT-THREADED (M4X0.7-THD)	
M	16	1	**113-0920**	8	BOLT-SOCKET HEAD (M4X0.7X35-MM)	
M	17	1	**121-9870**	5	SCREW-MACHINE (M6X1X40-MM)	
M	18	1	**8C-4982**	8	BOLT-SOCKET HEAD (M4X0.7X20-MM)	
M	19	1	**8C-3798**	2	BOLT-LOCKING (M6X1X30-MM)	
	20	1	**9X-2038**	3	WASHER (7X19X2-MM THK)	
	21	1	**9X-8256**	2	WASHER (6.6X12X2-MM THK)	

M-METRIC PART

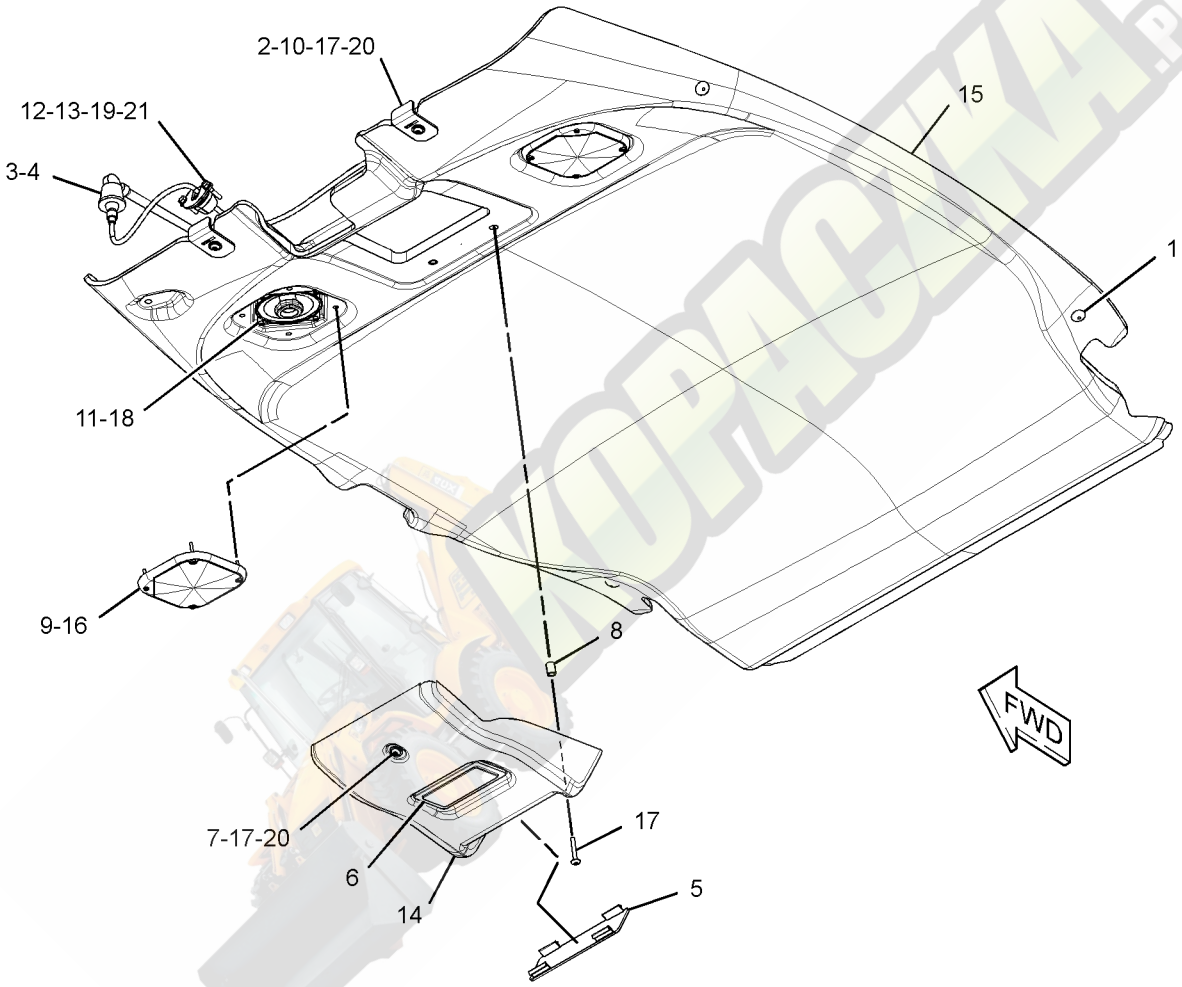

GRAPHIC #1 **<END>** g01625714

OPERATOR STATION

315-2940 LINES GP-HEATER

S/N: JBA1-UP
PART OF 335-3052 CAB AR, 335-3054 CAB AR-ENCLOSED ROPS
AN ATTACHMENT

SMCS-1812 **i03462303**

NOTE	REF NO	GRAPHIC REF	PART NUMBER	QTY	PART NAME 1 2 3 4 5 6 (PRODUCT LEVEL)	SEE PAGE
	1	1	**6P-8855**	1	TUBE	
	2	1	**7K-1181**	3	STRAP-CABLE	
	3	1	**9M-4814**	1	CONNECTOR-HOSE	
	4	1	**6V-0675**	1	ELBOW	
E	5	1	**5P-0767**		HOSE (260-CM)	
E	5A	1	**5P-0767**		HOSE (205-CM)	
E	5B	1	**5P-0767**		HOSE (22-CM)	
E	5C	1	**5P-0767**		HOSE (65-CM)	
	6	1	**3E-4321**	4	CLIP	
	7	1	**5D-1026**	8	CLAMP-BAND	
	8	1	**8T-4121**	2	WASHER-HARD (11X21X2.5-MM THK)	
M	9	1	**8T-4137**	2	BOLT (M10X1.5X20-MM)	

E-ORDER BY THE CENTIMETER
M-METRIC PART

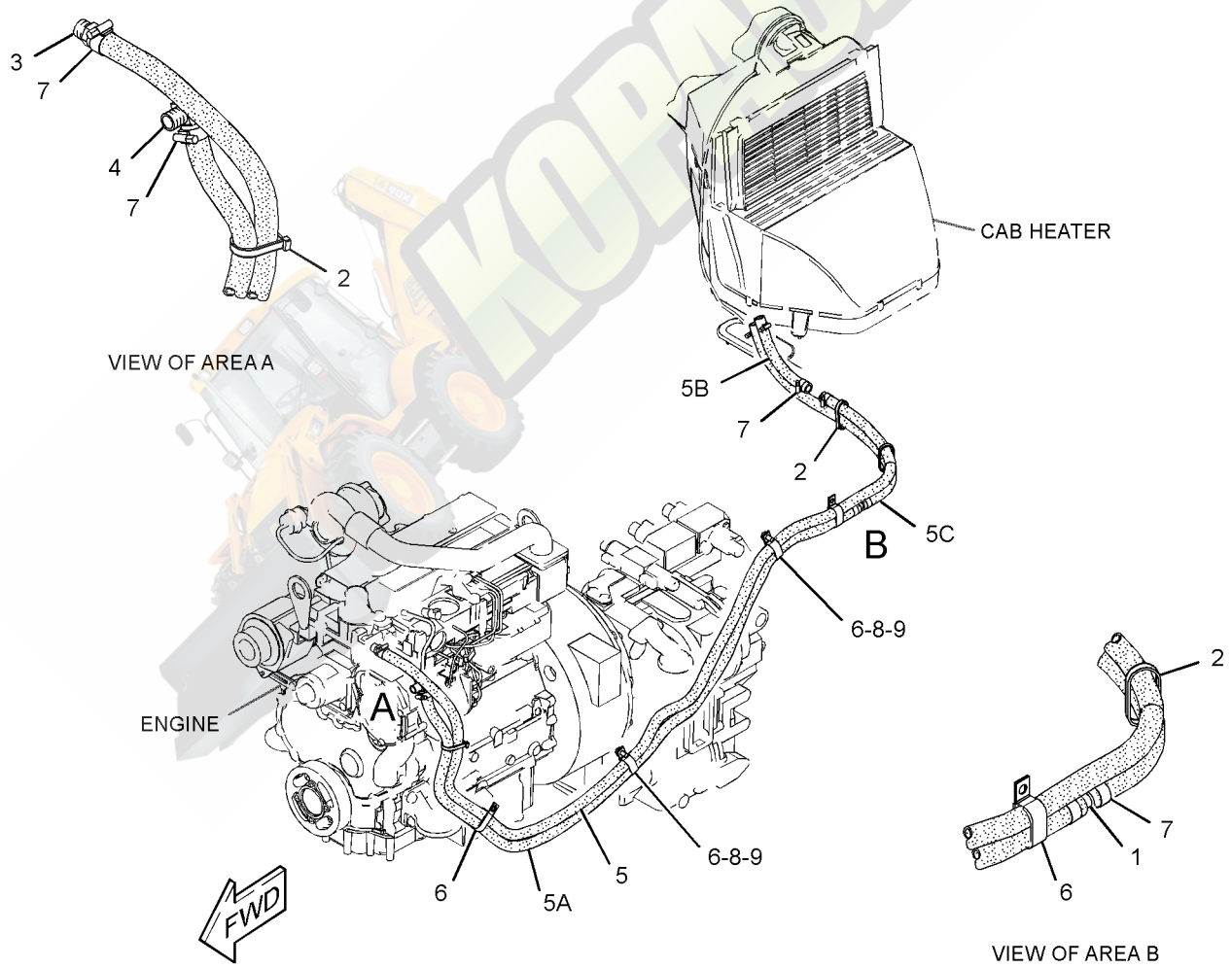

GRAPHIC #1 **<END>** g01808733

OPERATOR STATION

315-2939 LINES GP-HEATER & AIR COND

S/N: JBA1-UP
PART OF 335-3053, 335-3055 CAB AR
AN ATTACHMENT

SMCS-1380, 1808, 1812 **i03500281**

NOTE	REF NO	GRAPHIC REF	PART NUMBER	QTY	PART NAME 1 2 3 4 5 6 (PRODUCT LEVEL)	SEE PAGE
	1	1	**3S-2093**	2	STRAP-CABLE	
	2	1	**6P-8855**	1	TUBE	
	3	1	**7K-1181**	4	STRAP-CABLE	
	4	1	**9M-4814**	1	CONNECTOR-HOSE	
	5	1	**105-9411**	1	SUPPORT	
	6	1	**114-0063**	1	PLATE-INSTRUCTION	
	7	1	**130-9984**	3	CLIP	
	8	1	**6V-0675**	1	ELBOW	
	9	1	**170-0235**	1	ACCUMULATOR-REFRIGERANT (AIR CONDITIONER)	
I	10	1	**214-3736**	1	HOSE AS	
	11	1	**283-4237**	1	RECEIVER-REFRIGERANT DRYER (AIR CONDITIONER)	
		1	**3E-0068**	1	TUBE AS-REFRIGERANT ORIFICE	
	12	1	**289-6018**	2	U-BOLT	
	13	1	**289-6021**	1	PLATE	
	14	1	**297-5252**	1	HOSE AS	
I	15	1	**166-7208**	1	HOSE AS	
	16	1	**297-5254**	1	HOSE AS	
I	17	1	**319-5639**	1	HOSE AS	
	19	1	**109-1633**	1	CLIP (SLOT)	
	20	1	**109-1634**	1	CLIP (TAB)	
M	21	1	**208-9293**	2	BOLT-FLANGE HEAD (M10X1.5X30-MM)	
	22	1	**2K-4973**	4	LOCKNUT (3/8-16-THD)	
	23	1	**3E-4321**	4	CLIP	
	24	1	**5D-1026**	8	CLAMP-BAND	
	25	1	**5K-5338**	1	CLIP	
	26	1	**8T-4121**	10	WASHER-HARD (11X21X2.5-MM THK)	
M	27	1	**8T-4136**	1	BOLT (M10X1.5X25-MM)	
M	28	1	**8T-4137**	2	BOLT (M10X1.5X20-MM)	
M	29	1	**8T-4139**	1	BOLT (M12X1.75X30-MM)	
M	30	1	**8T-4196**	1	BOLT (M10X1.5X35-MM)	
	31	1	**8T-4223**	1	WASHER-HARD (13.5X25.5X3-MM THK)	
	33	1	**9X-7380**	2	SEAL-O-RING	
	34	1	**9X-7381**	3	SEAL-O-RING	
	35	1	**9X-7382**	1	SEAL-O-RING	
	36	1	**9X-7383**	2	SEAL-O-RING	
E	37	1	**5P-0767**		HOSE (260-CM)	
E	37A	1	**5P-0767**		HOSE (65-CM)	
E	37B	1	**5P-0767**		HOSE (22-CM)	
E	37C	1	**5P-0767**		HOSE (205-CM)	
M	38	1	**8T-4185**	2	BOLT (M10X1.5X50-MM)	
	39	1	**194-8648**	2	BOSS	

E-ORDER BY THE CENTIMETER
I-REFER TO HYDRAULIC INFORMATION SYSTEM
M-METRIC PART

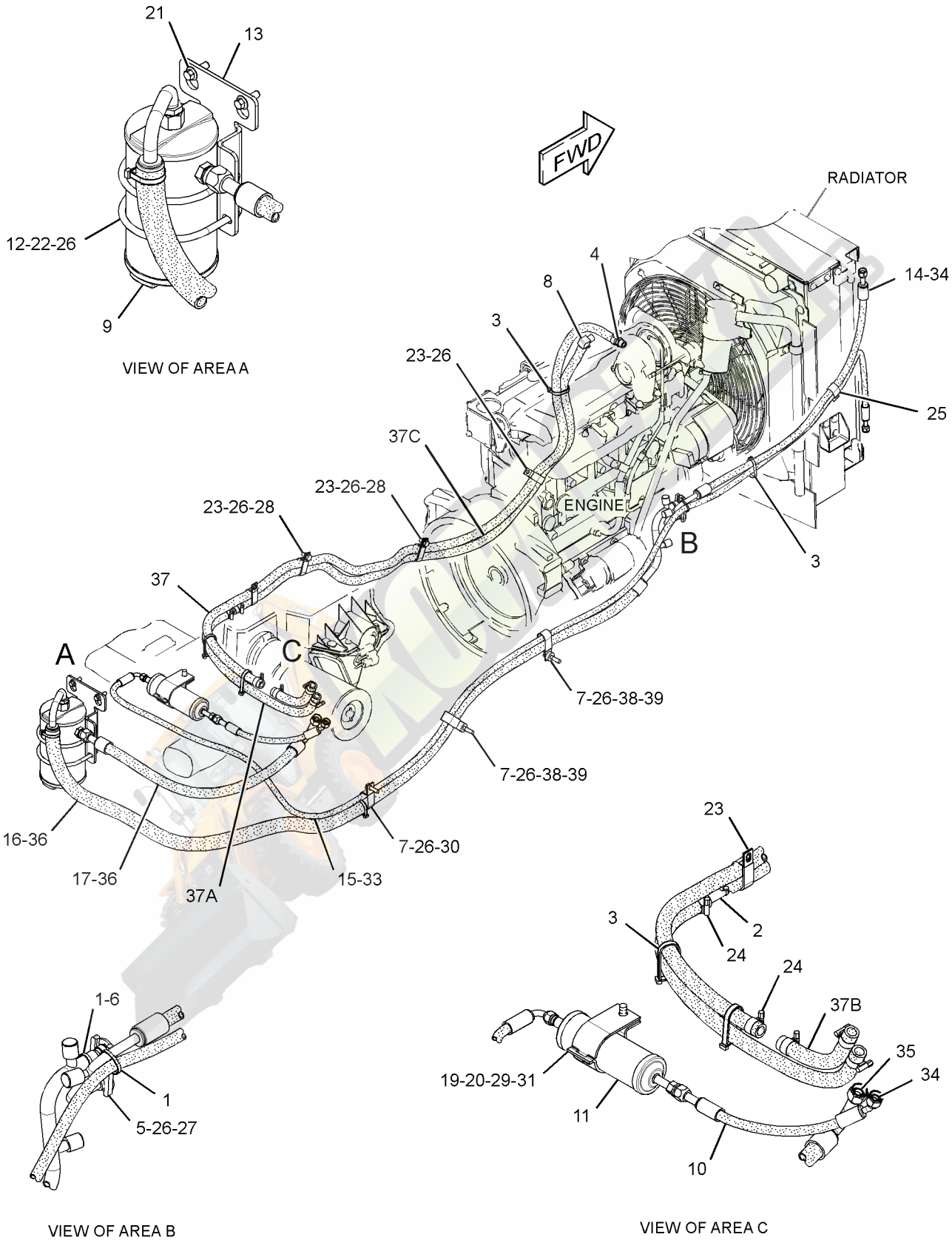

GRAPHIC #1 **<END>** g01805933

OPERATOR STATION

259-6276 MIRROR GP-REAR VIEW—INTERIOR

S/N: JBA1-UP
PART OF 335-3052, 335-3053, 335-3055 CAB AR, 335-3054 CAB AR-ENCLOSED ROPS, 234-9402 OPTION AR
AN ATTACHMENT

SMCS-7319 **i02403099**

NOTE	REF NO	GRAPHIC REF	PART NUMBER	QTY	PART NAME 1 2 3 4 5 6 (PRODUCT LEVEL)	SEE PAGE
M	1	1	**8C-4982**	2	BOLT-SOCKET HEAD (M4X0.7X20-MM)	
	2	1	**199-0929**	1	MIRROR AS	
	3	1	**096-6166**	2	WASHER-HARD (4.5X9X1-MM THK)	

M-METRIC PART

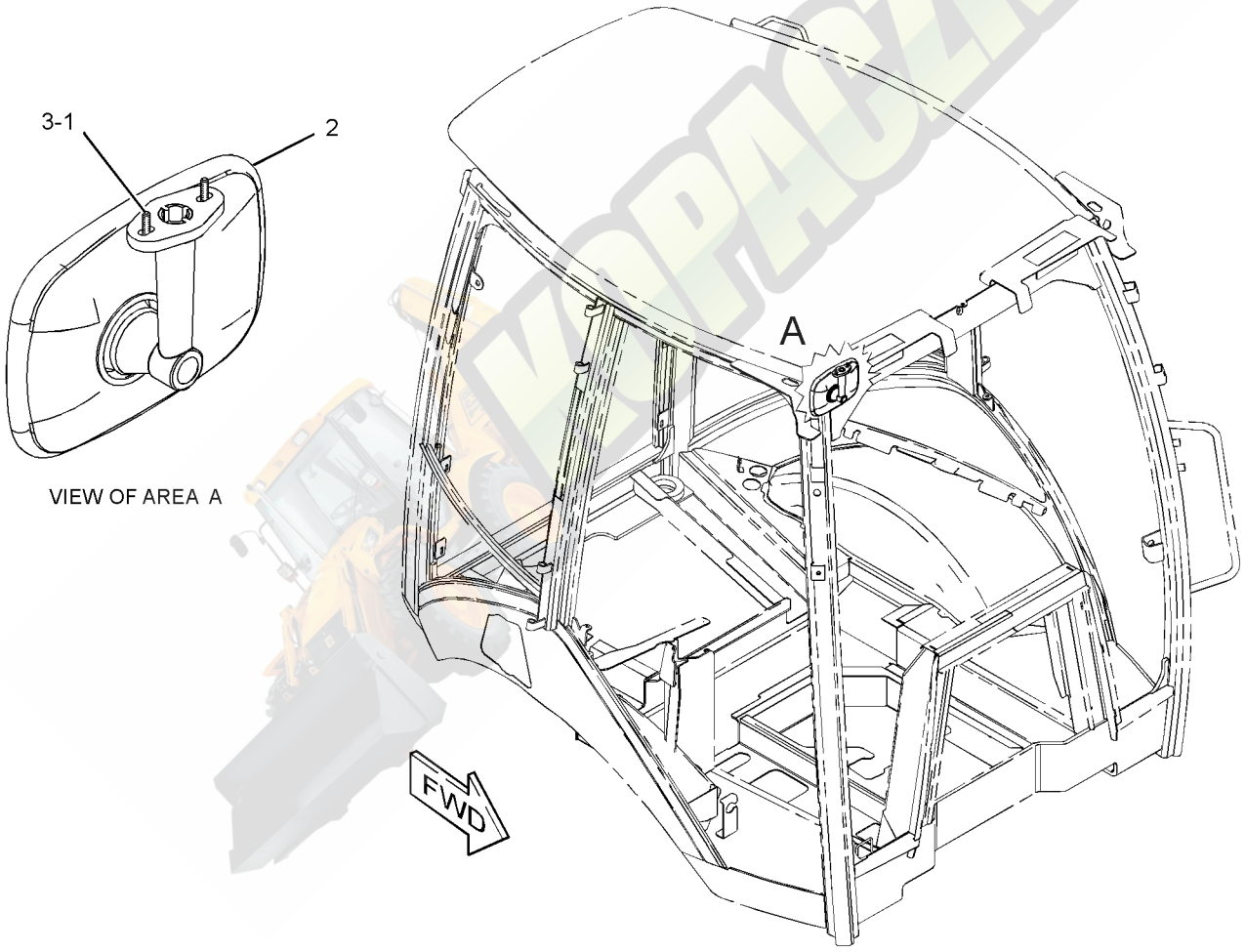

VIEW OF AREA A

GRAPHIC #1 **<END>** g01214241

OPERATOR STATION

336-9168 MIRROR GP-REAR VIEW—EXTERIOR

S/N: JBA1-UP

PART OF 335-3052, 335-3053, 335-3055 CAB AR, 335-3054 CAB AR-ENCLOSED ROPS AN ATTACHMENT

SMCS-7319 **i03338640**

NOTE	REF NO	GRAPHIC REF	PART NUMBER	QTY	PART NAME 1 2 3 4 5 6 (PRODUCT LEVEL)	SEE PAGE
	1	1	**180-0448**	2	MIRROR AS	
	2	1	**159-7105**	1	BRACKET & MOUNTING AS (LH)	
	3	1	**159-7106**	1	BRACKET & MOUNTING AS (RH)	
	4	1	**8T-4224**	4	WASHER-HARD (8.8X16X2-MM THK)	
M	5	1	**8T-4908**	4	BOLT (M8X1.25X25-MM)	

M-METRIC PART

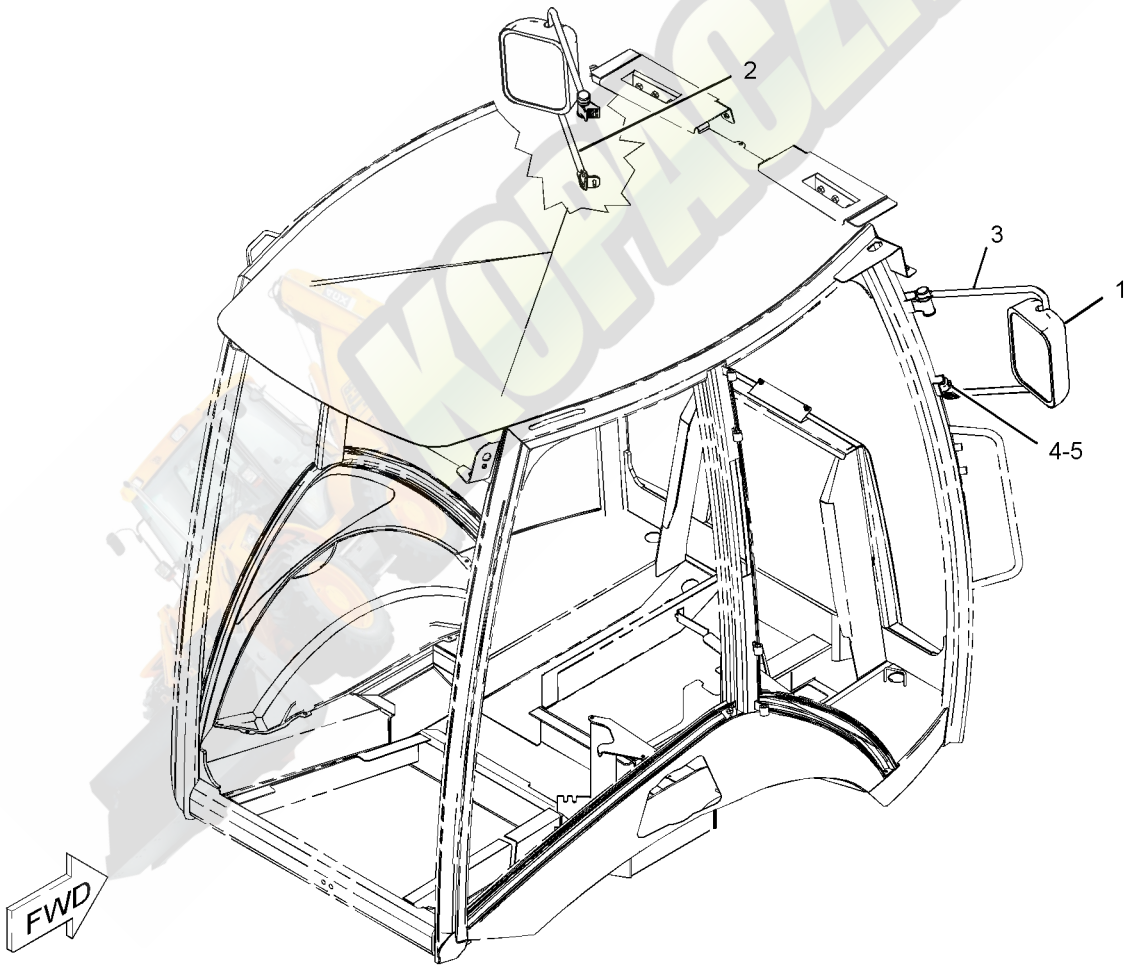

GRAPHIC #1 **<END>** g01090966

OPERATOR STATION

313-3752 MOTOR GP-WINDOW WIPER–12-VOLT

S/N: JBA1-UP
PART OF 340-8276 WASHER GP-WINDOW
AN ATTACHMENT

SMCS-7305 **i03500282**

NOTE	REF NO	GRAPHIC REF	PART NUMBER	QTY	PART NAME 1 2 3 4 5 6 (PRODUCT LEVEL)	SEE PAGE
	1	1	**102-8806**	1	KIT-RECEPTACLE (8-PIN)	
					(INCLUDES RECEPTACLE AS & WEDGE)	
	2	1	**8T-8737**	1	PLUG-SEAL	
	3	1	**186-3735**	7	PIN-CONNECTOR (16-GA TO 18-GA)	
	4	1	**206-5823**	1	CAP (MOTOR)	
	5	1	**3F-9556**	1	LOCKWASHER	
M	6	1	**5C-7261**	1	NUT (M8X1.25-THD)	

M-METRIC PART

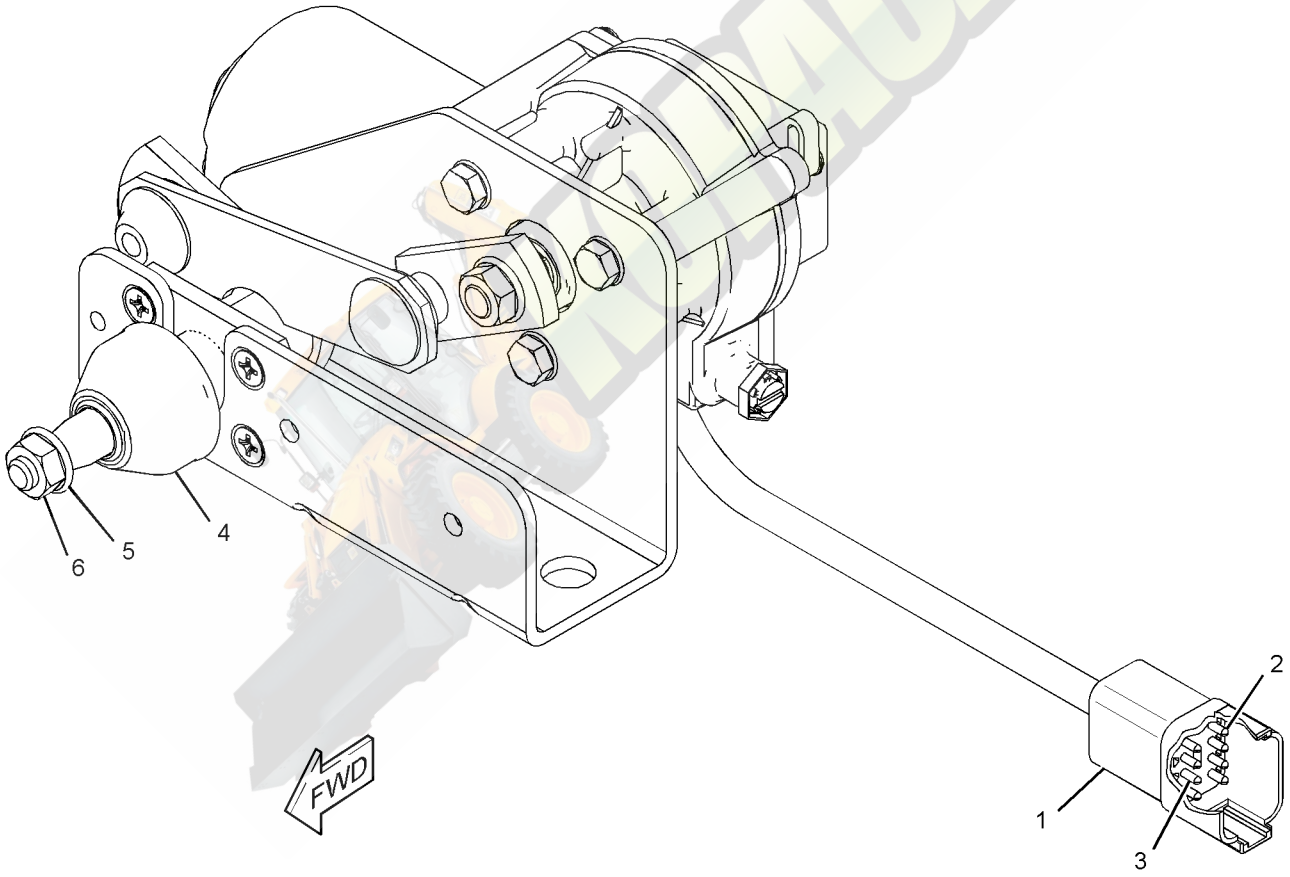

GRAPHIC #1 **<END>** g01570360

315-1318 MOTOR GP-WINDOW WIPER–REAR

S/N: JBA1-UP
PART OF 315-1272 WIPER GP-WINDOW
AN ATTACHMENT

SMCS-7305 **i03214029**

NOTE	REF NO	GRAPHIC REF	PART NUMBER	QTY	PART NAME 1 2 3 4 5 6 (PRODUCT LEVEL)	SEE PAGE
	1	1	**102-8804**	1	KIT-RECEPTACLE (4-PIN)	
					(INCLUDES RECEPTACLE AS & WEDGE)	
	2	1	**186-3735**	4	PIN-CONNECTOR (16-GA TO 18-GA)	
M	3	1	**5C-7261**	1	NUT (M8X1.25-THD)	
M	4	1	**8C-6437**	1	NUT (M16X1-THD)	
	5	1	**263-3823**	1	CAP-WIPER	

M-METRIC PART

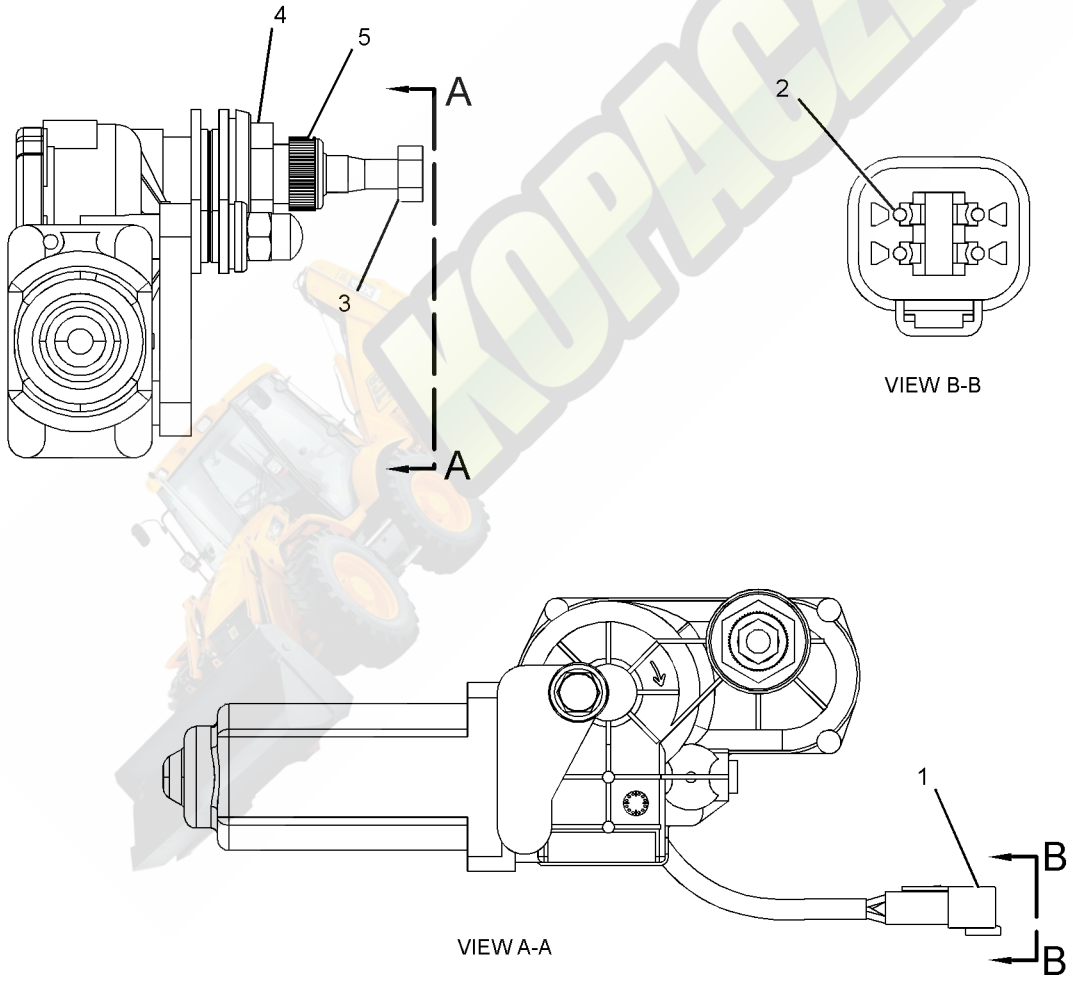

GRAPHIC #1 **<END>** g01654033

OPERATOR STATION

269-3247 MOUNTING GP-BACKHOE CONTROL—PILOT

S/N: JBA1-UP

PART OF 335-3052, 335-3053, 335-3055 CAB AR, 335-3054 CAB AR-ENCLOSED ROPS AN ATTACHMENT

SMCS-5063, 5258, 5705 **i02502859**

NOTE	REF NO	GRAPHIC REF	PART NUMBER	QTY	PART NAME 1 2 3 4 5 6 (PRODUCT LEVEL)	SEE PAGE
	1	1,2	**7K-1181**	2	STRAP-CABLE	
	2	1,2	**164-1368**	15	FASTENER-PANEL	
	3	1,2	**183-4934**	2	BEARING-SELF-ALIGNING	
B	4	1,2	**195-7602**	3	SHIM (1.6-MM THK)	
E	5	1	**261-9634**		SEAL-BULK (8.5-CM EACH)	
	6	2	**261-9642**	1	COVER-CONSOLE (LH)	
	7	2	**267-5225**	1	BOOT	
Y	8	1	*269-3248*	1	LATCH GP-CONSOLE	657
	9	2	**269-3254**	1	SUPPORT AS (LH)	
B	10	2	**269-3262**	4	SHIM (1-MM THK)	
	11	1,2	**270-2794**	2	INSULATION	
	12	2	**270-5161**	1	GASKET	
	13	2	**272-7079**	1	PLATE	
	14	1	**273-1473**	1	GROMMET	
	15	1	**273-1475**	1	COVER-CONSOLE (RH)	
	16	1	**273-1476**	1	BOOT	
	17	1	**273-1477**	1	PLATE	
	18	1	**273-1478**	1	BUMPER AS	
	19	1	**283-3467**	1	PLATE AS	
M		1	**6V-9632**	7	NUT-WELD (M6X1-THD)	
M		1	**8T-3490**	3	NUT-WELD (M10X1.5-THD)	
M		1	**8T-3612**	1	NUT-WELD (M8X1.25-THD)	
	20	2	**283-3477**	1	TUBE AS	
	21	1	**283-7981**	1	PLATE AS	
	22	1	**283-8053**	2	STRIKER	
	23	1	**039-8557**	2	WASHER (13X26X6-MM THK)	
M	24	1,2	**3T-0849**	8	BOLT-SOCKET HEAD (M6X1X25-MM)	
M	25	1	**7X-2533**	6	BOLT (M6X1X35-MM)	
	26	1,2	**8T-4121**	9	WASHER-HARD (11X21X2.5-MM THK)	
M	27	1	**8T-4134**	6	NUT (M6X1-THD)	
M	28	1,2	**8T-4138**	2	BOLT (M6X1X20-MM)	
M	29	2	**8T-4186**	5	BOLT (M10X1.5X40-MM)	
M	30	1	**8T-4189**	2	BOLT (M8X1.25X20-MM)	
M	31	1	**8T-4195**	4	BOLT (M10X1.5X30-MM)	
	32	1,2	**8T-4224**	4	WASHER-HARD (8.8X16X2-MM THK)	
M	33	1,2	**8T-4244**	2	NUT (M12X1.75-THD)	
M	34	1	**8T-4956**	2	BOLT (M12X1.75X35-MM)	
M	35	1	**8T-4971**	2	BOLT (M6X1X30-MM)	
M	36	2	**8T-7547**	2	BOLT (M8X1.25X30-MM)	
	37	1,2	**9X-2038**	14	WASHER (7X19X2-MM THK)	
M	38	1,2	**9X-2045**	8	SCREW-TRUSS HEAD (M6X1X20-MM)	
	39	1,2	**9X-8256**	26	WASHER (6.6X12X2-MM THK)	

B-USE AS REQUIRED
E-ORDER BY THE CENTIMETER
M-METRIC PART
Y-SEPARATE ILLUSTRATION

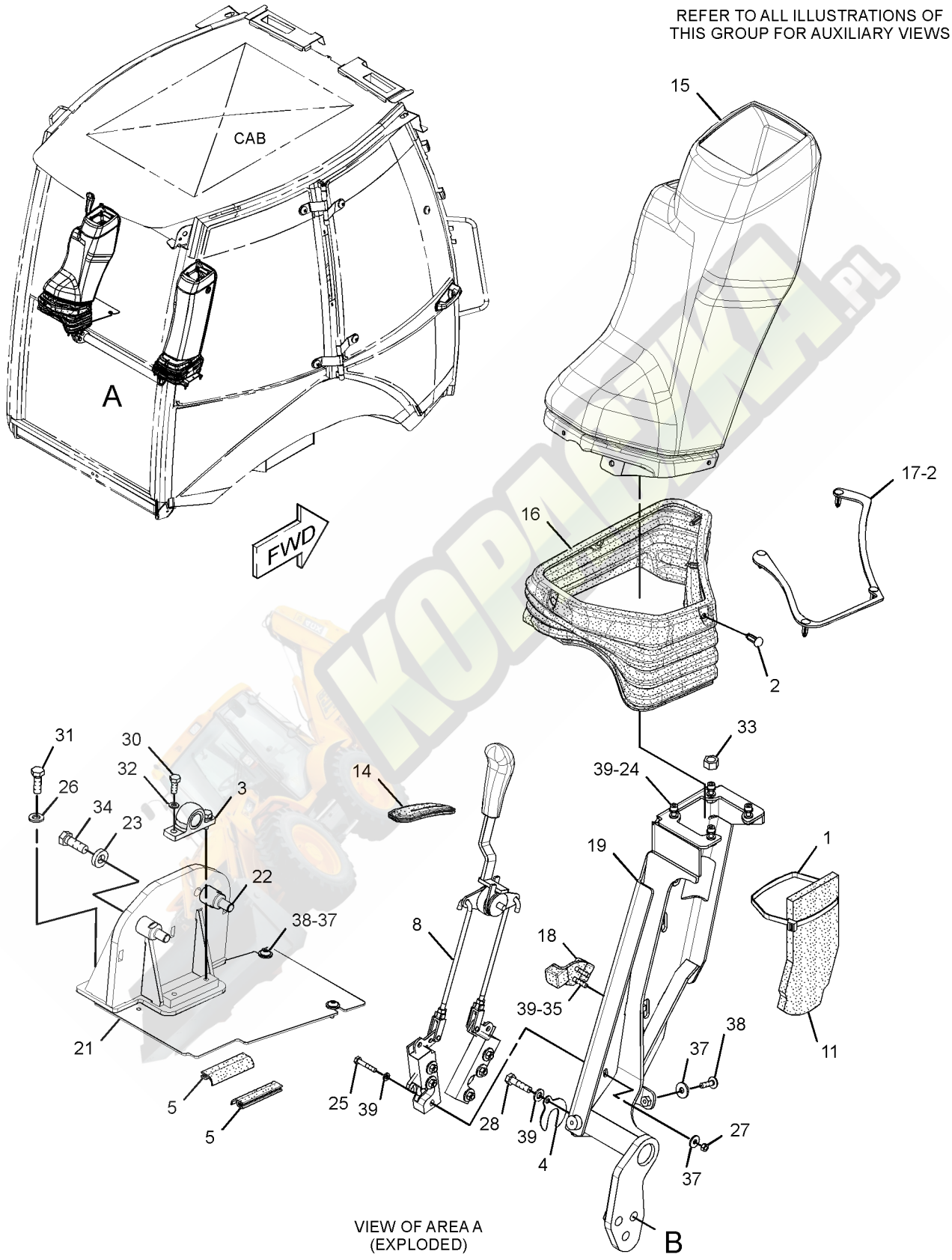

GRAPHIC #1

g01316012

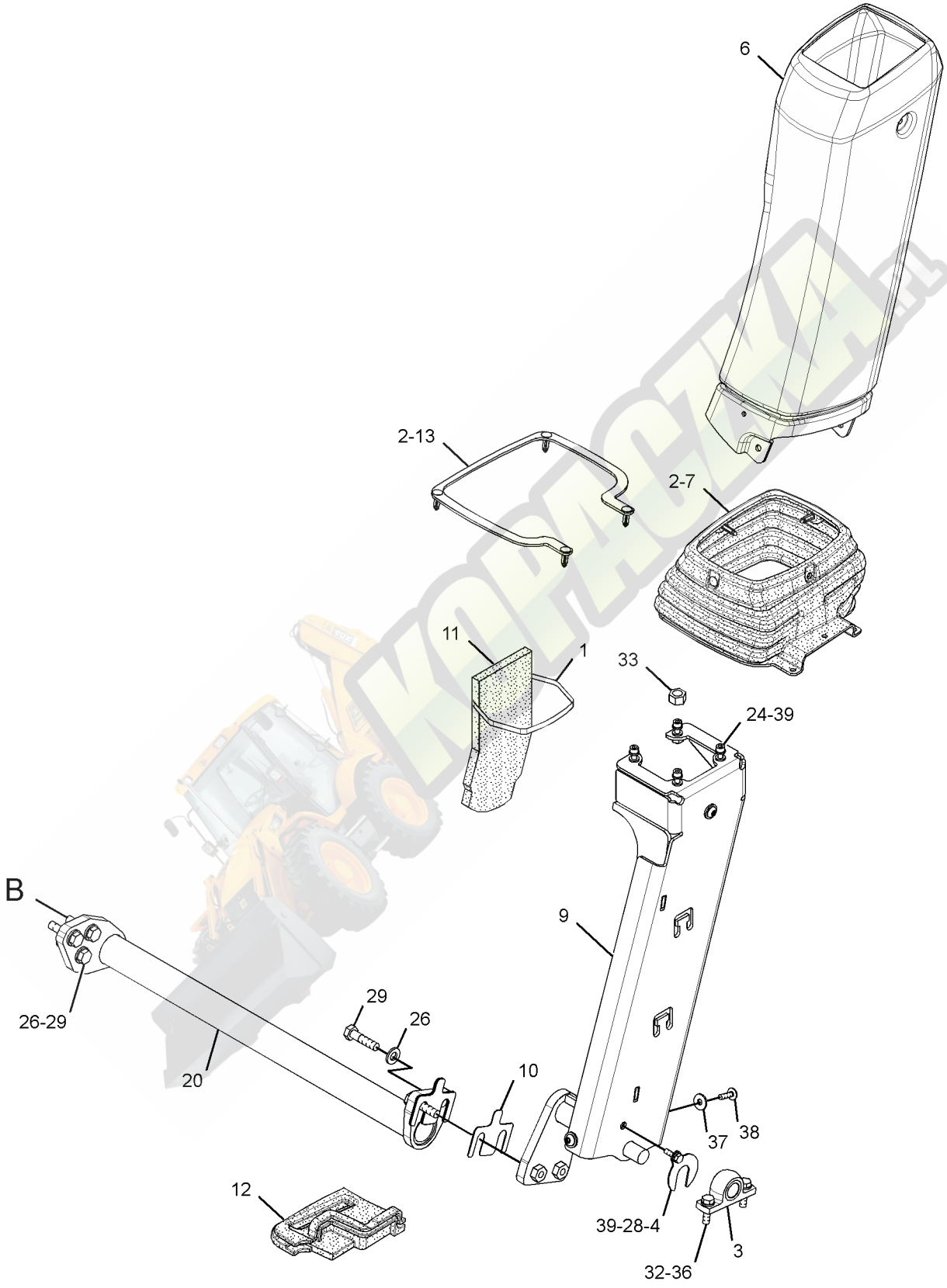

GRAPHIC #2 **<END>** g01316018

OPERATOR STATION

204-4248 MOUNTING GP-CAB

S/N: JBA1-UP

PART OF 329-0294 CHASSIS AR

SMCS-7301 **i02509401**

NOTE	REF NO	GRAPHIC REF	PART NUMBER	QTY	PART NAME 1 2 3 4 5 6 (PRODUCT LEVEL)	SEE PAGE
	1	1	**6Y-9930**	2	MOUNT AS	
	2	1	**118-2990**	2	MOUNT AS	
	3	1	**9W-6582**	2	SLEEVE	
M	4	1	**7X-2532**	2	BOLT (M20X2.5X130-MM)	
	5	1	**8C-3291**	2	WASHER (17X90X10-MM THK)	
	6	1	**8T-4123**	4	WASHER (22X35X3.5-MM THK)	
M	7	1	**8T-4131**	2	NUT (M20X2.5-THD)	
M	8	1	**8T-4132**	2	NUT (M16X2-THD)	
M	9	1	**8T-4173**	2	BOLT (M16X2X110-MM)	
	10	1	**9W-6584**	2	WASHER (20.5X114X10-MM THK)	
	11	1	**9X-8257**	4	WASHER (17.5X30X3.5-MM THK)	
	12	1	**1L-6377**	2	BUTTON-PLUG	

M-METRIC PART

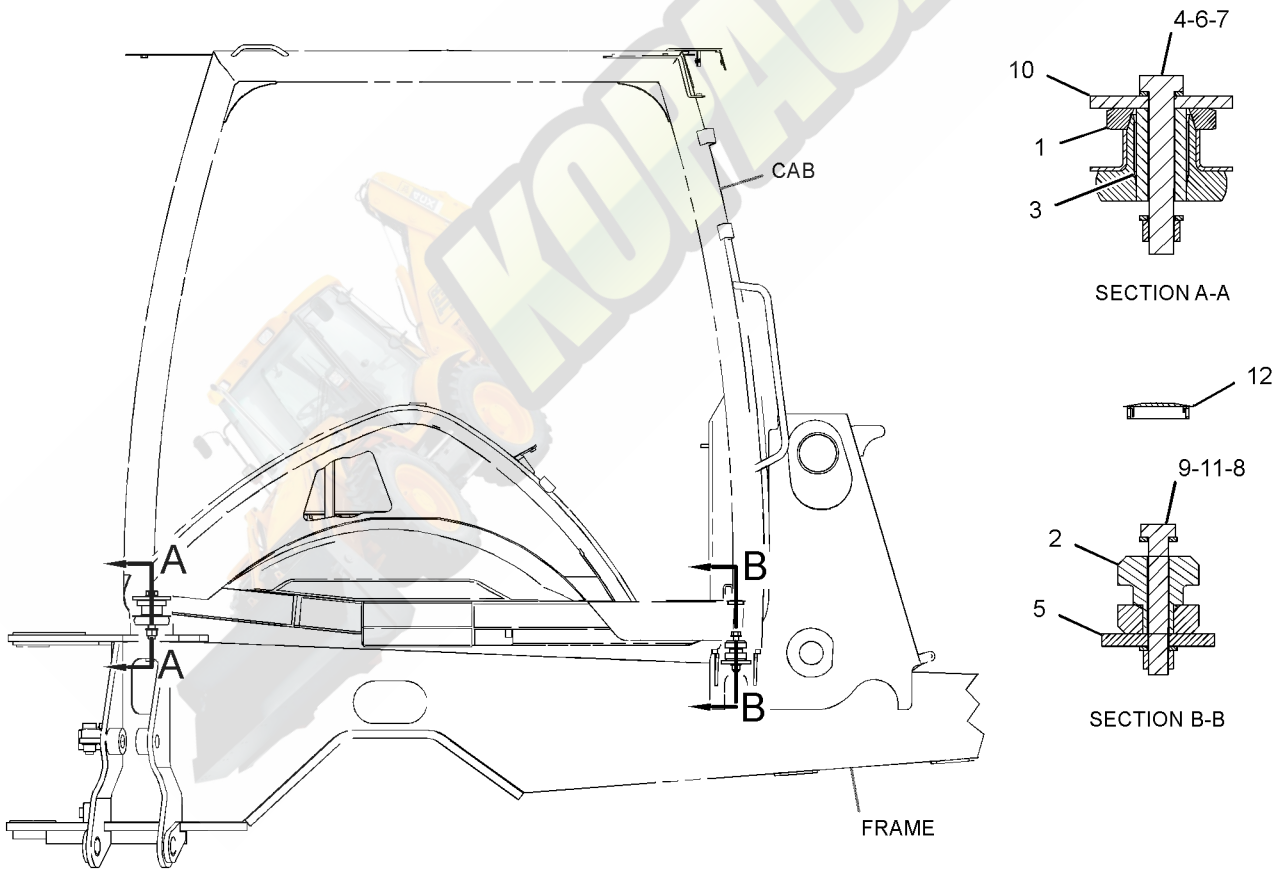

RIGHT SIDE VIEW

GRAPHIC #1 **<END>** g01271349

OPERATOR STATION

209-3378 PEDAL GP-GOVERNOR

S/N: JBA1-UP
PART OF 206-1640 CONTROL GP-GOVERNOR
AN ATTACHMENT

SMCS-1265 **i03592816**

NOTE	REF NO	GRAPHIC REF	PART NUMBER	QTY	PART NAME 1 2 3 4 5 6 (PRODUCT LEVEL)	SEE PAGE
M	1	1	**129-3178**	1	LOCKNUT (M6X1-THD)	
M	2	1	**5C-7261**	1	NUT (M8X1.25-THD)	
M	3	1	**5C-9553**	1	BOLT (M6X1X16-MM)	
	4	1	**8T-4205**	1	WASHER-HARD (7.2X14.5X2-MM THK)	
M	5	1	**095-0641**	4	BOLT-SOCKET HEAD (M4X0.7X10-MM)	
	6	1	**243-0063**	1	BOOT	
	7	1	**3F-9556**	2	LOCKWASHER	
	8	1	**6V-8186**	2	NUT-FULL (5/16-24-THD)	
	9	1	**8T-6902**	3	CLIP	
M	10	1	**9X-2842**	1	BOLT (M8X1.25X45-MM)	
					AVAILABLE REPAIR KIT(S):	
			164-1154	1	KIT-SERVICE	
					(INCLUDES CLAMP & SCREWS)	
			243-0062	1	KIT-REPAIR (GOVERNOR PEDAL)	
					(INCLUDES SHAFT, CLIPS & BEARINGS)	

M-METRIC PART

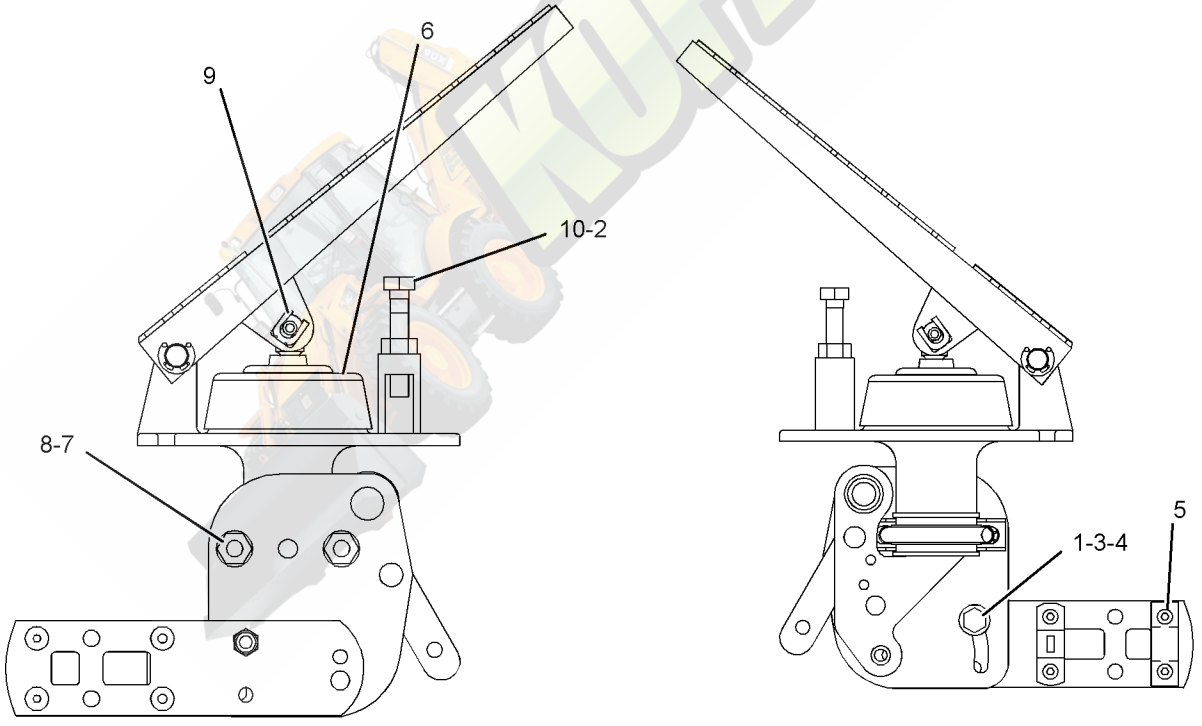

RIGHT SIDE VIEW **LEFT SIDE VIEW**

GRAPHIC #1 **<END>** g01081364

OPERATOR STATION

334-7225 ROOF GP-CAB

S/N: JBA1-UP

PART OF 335-3052, 335-3053, 335-3055 CAB AR, 335-3054 CAB AR-ENCLOSED ROPS AN ATTACHMENT

SMCS-7301 **i03686780**

NOTE	REF NO	GRAPHIC REF	PART NUMBER	QTY	PART NAME 1 2 3 4 5 6 (PRODUCT LEVEL)	SEE PAGE
	1	1	**193-5915**	2	PLUG	
	2	1	**334-7227**	1	CAP AS	
	3	1	**341-5749**	5	SPACER (8.5X12.7X4.3-MM THK)	
	4	1	**341-5750**	5	PLATE	
	5	1	**8C-9987**	3	WASHER (8.3X28X2.5-MM THK)	
M	6	1	**8T-4189**	8	BOLT (M8X1.25X20-MM)	
B	7	1	**193-5914**	2	PLUG	
	8	1	**8T-4224**	5	WASHER-HARD (8.8X16X2-MM THK)	

B-USE AS REQUIRED
M-METRIC PART

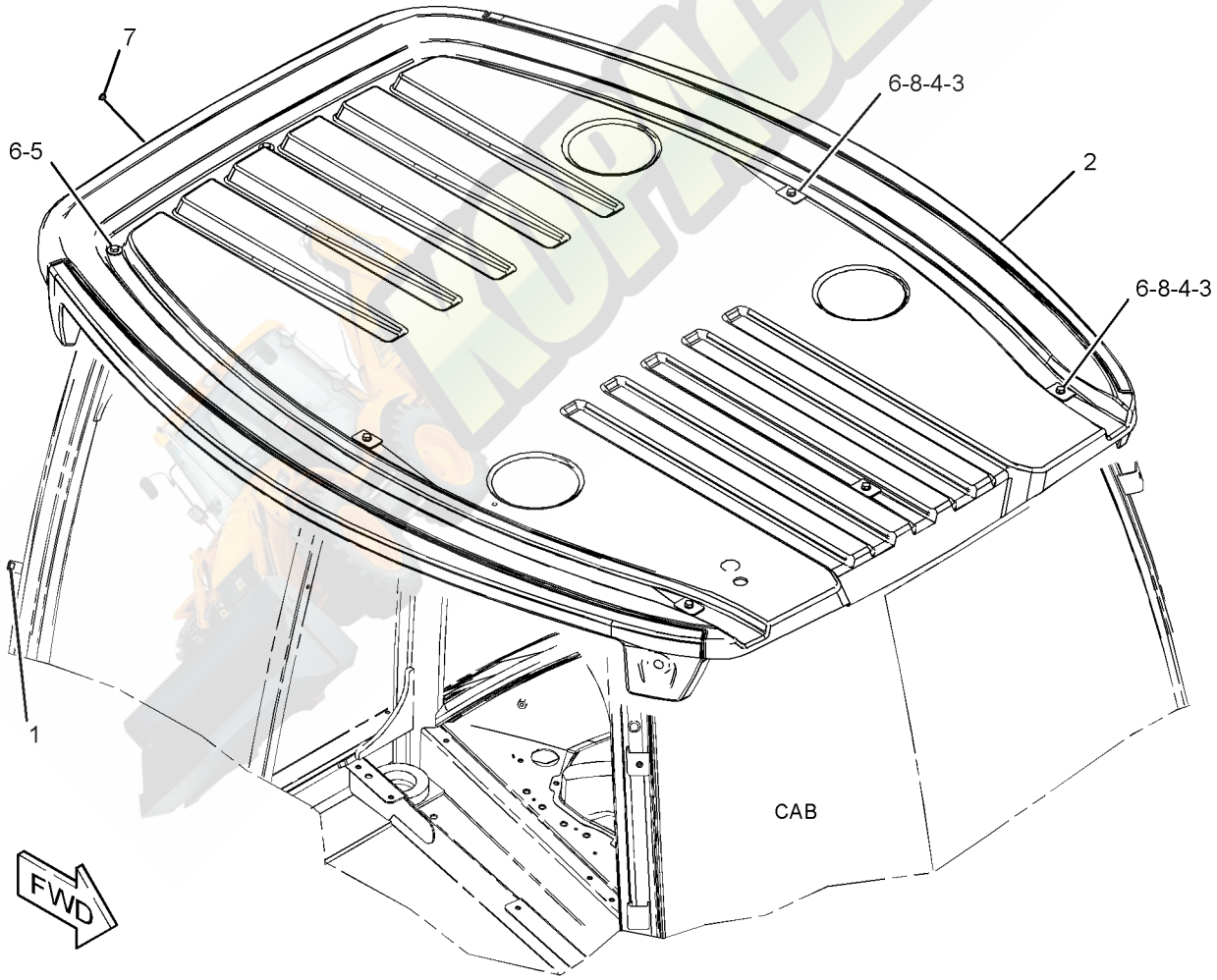

GRAPHIC #1 **<END>** g01983395

OPERATOR STATION

324-2896 SEAT GP

S/N: JBA1-UP
PART OF 314-4290 SEAT GP-SUSPENSION
AN ATTACHMENT

SMCS-7312, 7321, 7324, 7336 **i03502361**

NOTE	REF NO	GRAPHIC REF	PART NUMBER	QTY	PART NAME 1 2 3 4 5 6 (PRODUCT LEVEL)	SEE PAGE
	1	1	**1V-0358**	4	WASHER (8.6X33.3X1.2-MM THK)	
	2	1	**164-1244**	1	CUSHION AS-BACK	
	3	1	**180-5796**	1	CUSHION AS-SEAT	
	4	1	**197-4521**	1	KIT-KNOB	
	5	1	**203-9858**	1	SPACER (8.5X20X12-MM THK)	
	6	1	**220-3790**	1	ARMREST AS (RH)	
M		1	**6A-9083**	1	SCREW-MACHINE (M6X1X15-MM)	
	7	1	**220-3791**	1	ARMREST AS (LH)	
M		1	**6A-9083**	1	SCREW-MACHINE (M6X1X15-MM)	
	8	1	**119-3859**	2	SCREW-PAN HEAD (10-16X0.75-IN)	
Y	9	1	**324-2897**	1	KIT-SEAT FRAME	650
	10	1	**324-2900**	1	BRACKET	
	11	1	**324-2901**	1	BRACKET	
	12	1	**0S-1595**	2	BOLT (1/2-13X1.25-IN)	
	13	1	**1K-6872**	2	LOCKNUT (1/2-13-THD)	
	14	1	**5P-8245**	2	WASHER-HARD (13.5X25.5X3-MM THK)	
M	15	1	**6V-9189**	1	LOCKNUT (M8X1.25-THD)	
M	16	1	**8C-6431**	1	SCREW-FLAT HEAD	
M	17	1	**8T-4908**	4	BOLT (M8X1.25X25-MM)	
	18	1	**8T-9501**	2	SCREW (10-16X0.75-IN)	

M-METRIC PART
Y-SEPARATE ILLUSTRATION

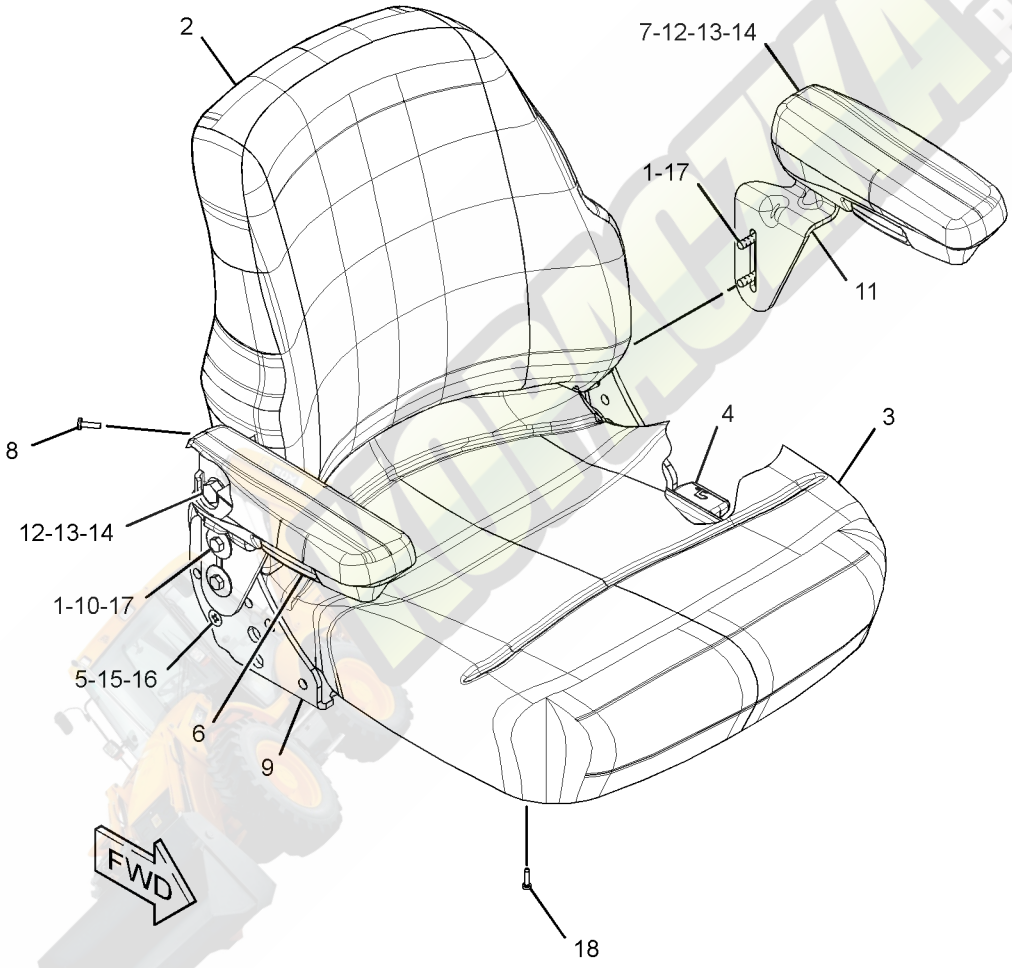

GRAPHIC #1 **<END>** g01625312

OPERATOR STATION

324-2903 SEAT GP–DELUXE

S/N: JBA1-UP
PART OF 314-4291 SEAT GP-SUSPENSION
AN ATTACHMENT

SMCS-7312, 7321, 7324, 7336 **i03164620**

NOTE	REF NO	GRAPHIC REF	PART NUMBER	QTY	PART NAME 1 2 3 4 5 6 (PRODUCT LEVEL)	SEE PAGE
	1	1	**1V-0358**	4	WASHER (8.6X33.3X1.2-MM THK)	
	2	1	**121-3040**	6	FASTENER-PANEL	
	3	1	**164-1246**	1	CUSHION AS (BACK)	
	4	1	**164-1269**	1	BOOT	
	5	1	**164-1271**	2	SPRING	
	6	1	**164-1272**	1	ROD AS	
	7	1	**164-1273**	2	SPRING-EXTENSION (TILT)	
	8	1	**164-1274**	1	BLOCK	
	9	1	**164-1276**	2	TUBE	
	10	1	**164-1277**	2	CLIP-SPRING	
	11	1	**180-5787**	1	KNOB	
	12	1	**180-5788**	1	BLOCK	
	13	1	**180-5791**	1	SUPPORT AS-SEAT (LUMBAR)	
	14	1	**186-5113**	2	SCREW	
	15	1	**197-4521**	1	KIT-KNOB	
	16	1	**203-9858**	1	SPACER (8.5X20X12-MM THK)	
	17	1	**220-3790**	1	ARMREST AS (RH)	
M		1	**6A-9083**	1	SCREW-MACHINE (M6X1X15-MM)	
	18	1	**220-3791**	1	ARMREST AS (LH)	
M		1	**6A-9083**	1	SCREW-MACHINE (M6X1X15-MM)	
	19	1	**119-3859**	2	SCREW-PAN HEAD (10-16X0.75-IN)	
	20	1	**324-2900**	1	BRACKET	
	21	1	**324-2901**	1	BRACKET	
	22	1	**324-2905**	1	KNOB	
Y	23	1	**324-2906**	1	KIT-SEAT FRAME	651
	24	1	**324-2907**	1	CUSHION AS-SEAT	
	25	1	**324-2909**	1	HEADREST	
	26	1	**324-2910**	1	HANDLE	
	27	1	**324-9978**	1	PIN	
	28	1	**0S-1595**	2	BOLT (1/2-13X1.25-IN)	
	29	1	**1K-6872**	2	LOCKNUT (1/2-13-THD)	
	30	1	**2P-7864**	1	SCREW-TAPPING	
	31	1	**4H-1641**	3	PIN-SPRING	
	32	1	**5P-8245**	2	WASHER-HARD (13.5X25.5X3-MM THK)	
M	33	1	**6V-9189**	1	LOCKNUT (M8X1.25-THD)	
M	34	1	**8C-6431**	1	SCREW-FLAT HEAD	
M	35	1	**8T-4908**	4	BOLT (M8X1.25X25-MM)	

M-METRIC PART
Y-SEPARATE ILLUSTRATION

324-2903 SEAT GP *(contd.)* **i03164620**

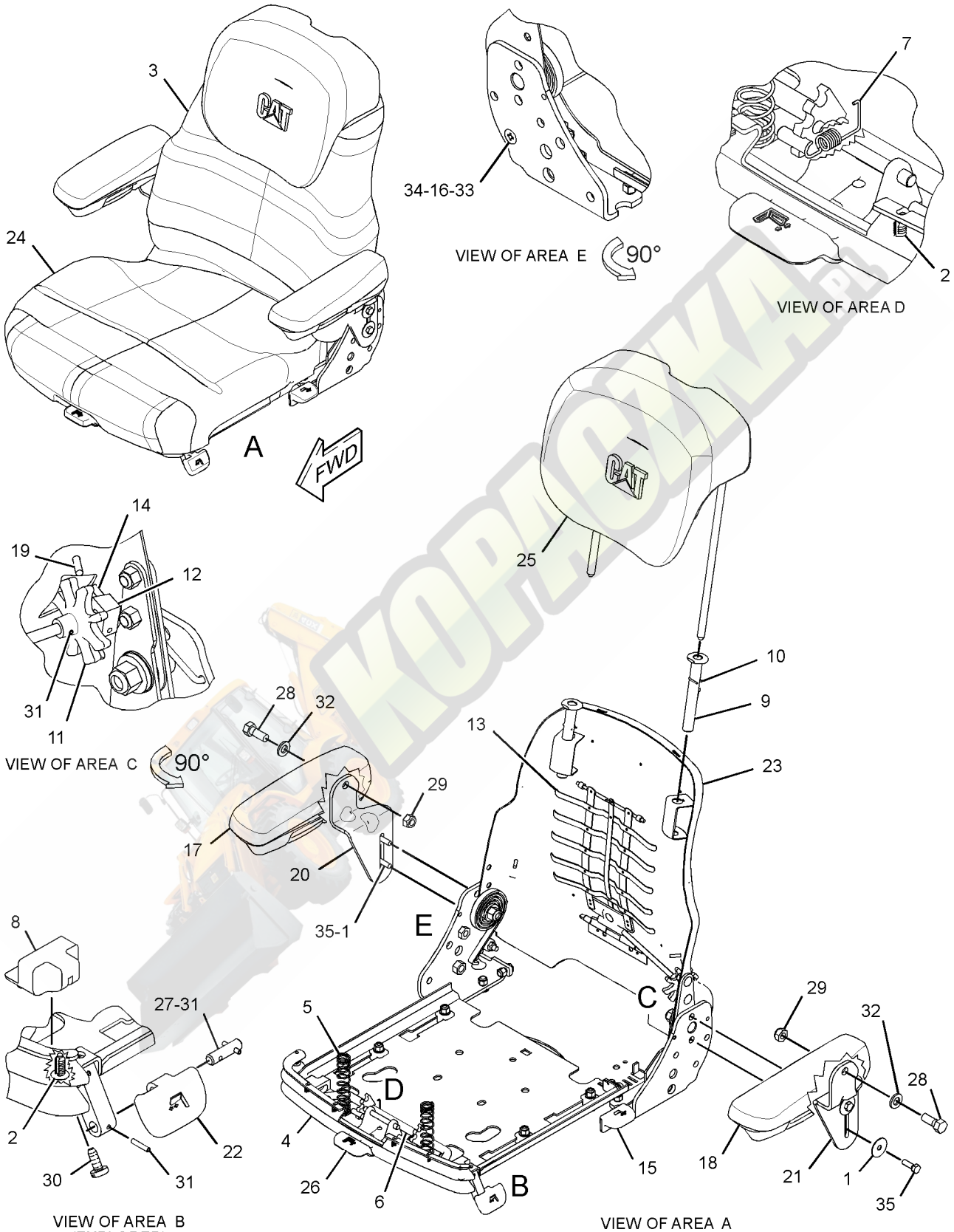

GRAPHIC #1

<END>

g01624167

OPERATOR STATION

314-4290 SEAT GP-SUSPENSION—CLOTH

S/N: JBA1-UP
PART OF 315-9890 SEAT GP-SUSPENSION
AN ATTACHMENT

SMCS-7324, 7336 **i03164080**

NOTE	REF NO	GRAPHIC REF	PART NUMBER	QTY	PART NAME 1 2 3 4 5 6 (PRODUCT LEVEL)	SEE PAGE
	1	1	**0S-1594**	4	BOLT (3/8-16X1-IN)	
	2	1	**2K-4973**	4	LOCKNUT (3/8-16-THD)	
	3	1	**308-3554**	8	SPACER (9.9X28.4X3.2-MM THK)	
	4	1	**322-9480**	1	KIT-SEAT BELT	
					(INCLUDES SPACER, WASHERS & BOLTS)	
	5	1	**322-9481**	1	BASE-SEAT	
Y	6	1	**322-9486**	1	SWIVEL GP-SEAT	685
Y	7	1	**324-2890**	1	SUSPENSION GP-SEAT	683
Y	8	1	**324-2896**	1	SEAT GP	674

Y-SEPARATE ILLUSTRATION

KOPACZKA

314-4290 SEAT GP-SUSPENSION *(contd.)* **i03164080**

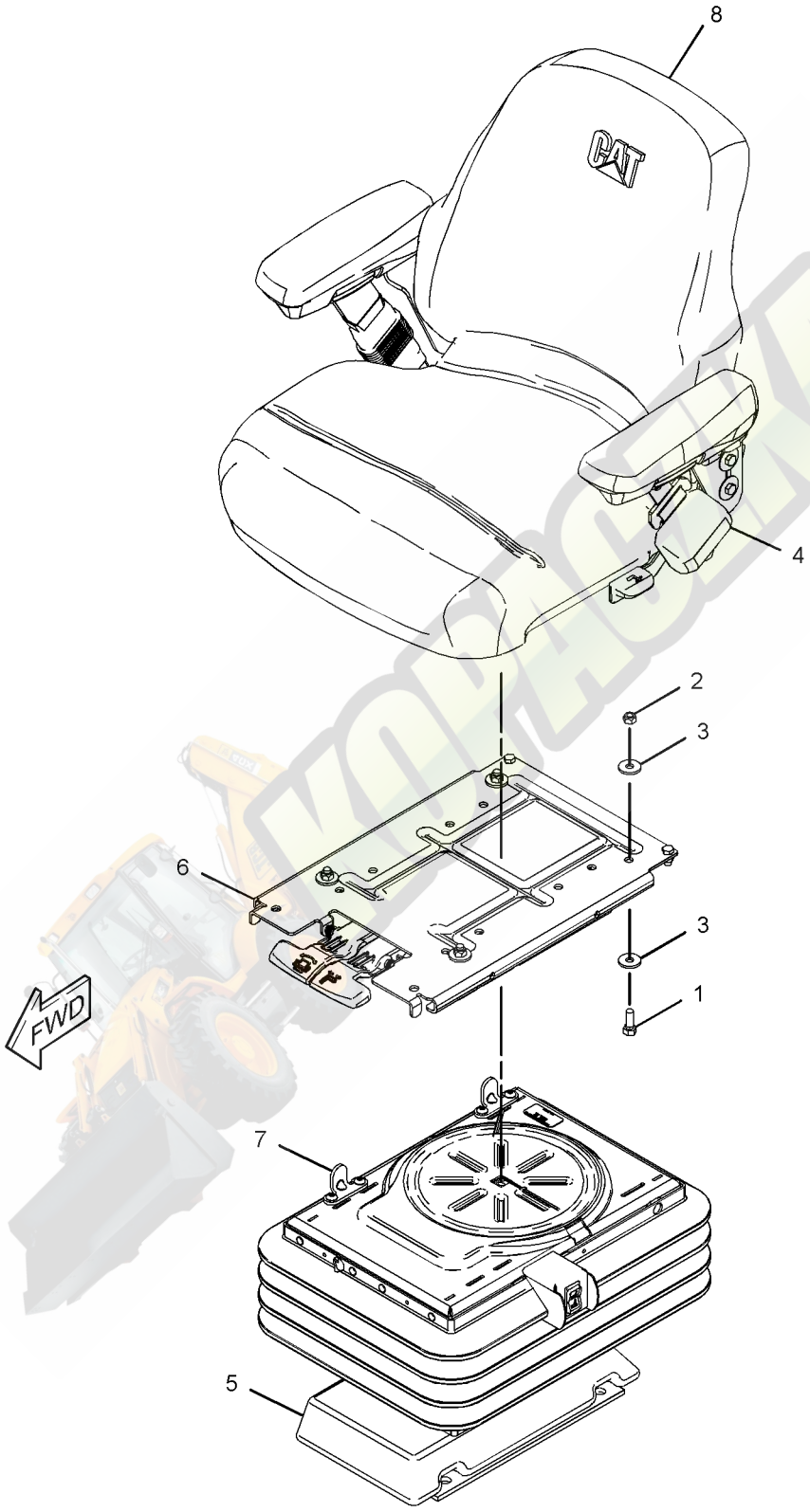

GRAPHIC #1 **<END>** g01625141

OPERATOR STATION

314-4291 SEAT GP-SUSPENSION—DELUXE, CLOTH

S/N: JBA1-UP

PART OF 315-9891 SEAT GP-SUSPENSION

AN ATTACHMENT

SMCS-7324, 7336 **i03332381**

NOTE	REF NO	GRAPHIC REF	PART NUMBER	QTY	PART NAME 1 2 3 4 5 6 (PRODUCT LEVEL)	SEE PAGE
	1	1	**0S-1594**	2	BOLT (3/8-16X1-IN)	
	2	1	**2K-4973**	4	LOCKNUT (3/8-16-THD)	
	3	1	**234-3017**	2	BOLT (3/8-16X0.875-IN)	
	4	1	**7X-7729**	8	WASHER (11X25X3-MM THK)	
	5	1	**308-3554**	8	SPACER (9.9X28.4X3.2-MM THK)	
	6	1	**322-9480**	1	KIT-SEAT BELT	
					(INCLUDES SPACER, WASHERS & BOLTS)	
	7	1	**322-9481**	1	BASE-SEAT	
Y	8	1	**322-9486**	1	SWIVEL GP-SEAT	685
Y	9	1	**324-2890**	1	SUSPENSION GP-SEAT	683
Y	10	1	**324-2903**	1	SEAT GP (DELUXE)	676

Y-SEPARATE ILLUSTRATION

314-4291 SEAT GP-SUSPENSION *(contd.)* **i03332381**

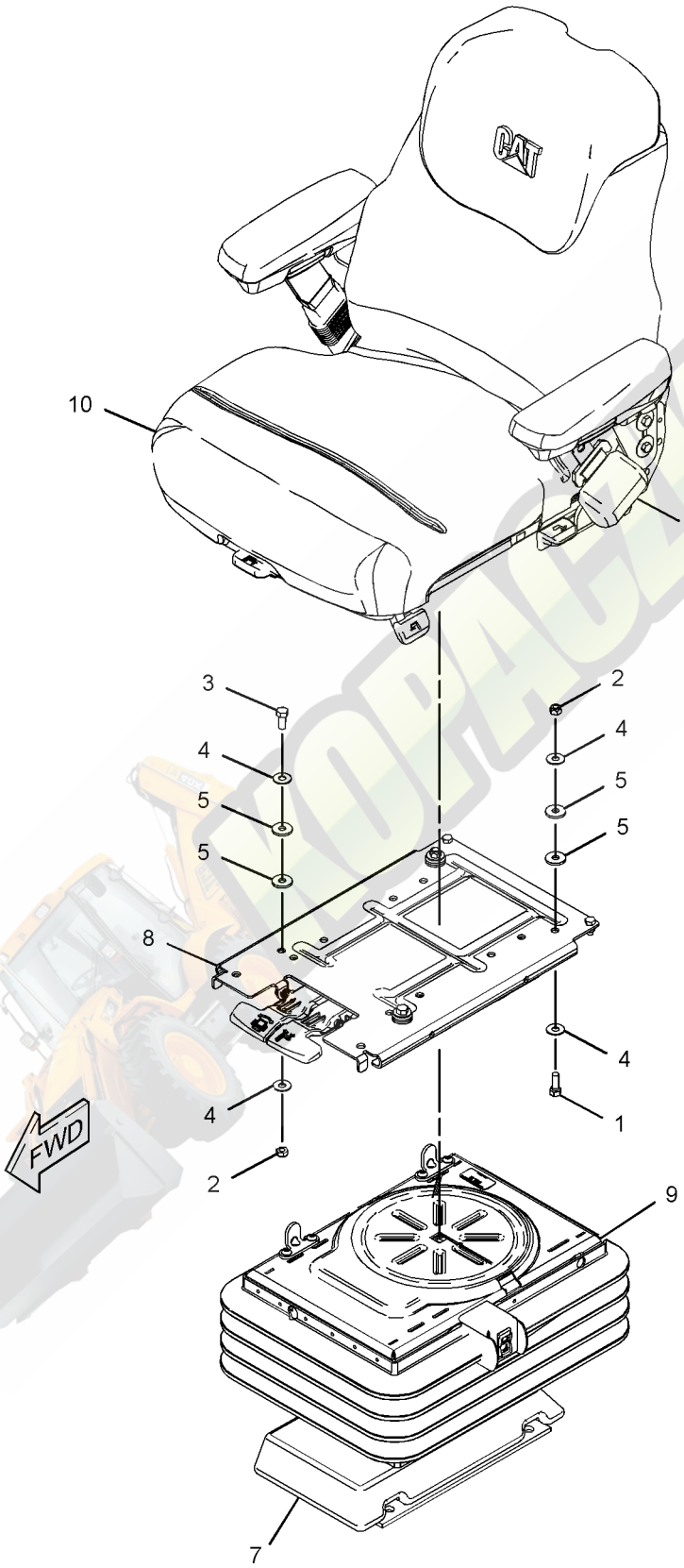

GRAPHIC #1 **<END>** g01625673

OPERATOR STATION

315-9890 SEAT GP-SUSPENSION—CLOTH

S/N: JBA1-UP
PART OF 335-3052, 335-3053 CAB AR
AN ATTACHMENT

SMCS-7324, 7336 **i03164824**

NOTE	PART NUMBER	QTY	PART NAME 1 2 3 4 5 6 (PRODUCT LEVEL)	SEE PAGE
Y	**314-4290**	1	SEAT GP-SUSPENSION (CLOTH)	678
M	**8T-4139**	4	BOLT (M12X1.75X30-MM)	
	3S-2093	1	STRAP-CABLE	
	8T-4223	4	WASHER-HARD (13.5X25.5X3-MM THK)	

M-METRIC PART
Y-SEPARATE ILLUSTRATION

<END>

315-9891 SEAT GP-SUSPENSION—DELUXE, CLOTH

S/N: JBA1-UP
PART OF 335-3055 CAB AR, 335-3054 CAB AR-ENCLOSED ROPS
AN ATTACHMENT

SMCS-7324, 7336 **i03164361**

NOTE	PART NUMBER	QTY	PART NAME 1 2 3 4 5 6 (PRODUCT LEVEL)	SEE PAGE
Y	**314-4291**	1	SEAT GP-SUSPENSION (DELUXE, CLOTH)	680
M	**8T-4139**	4	BOLT (M12X1.75X30-MM)	
	3S-2093	1	STRAP-CABLE	
	8T-4223	4	WASHER-HARD (13.5X25.5X3-MM THK)	

M-METRIC PART
Y-SEPARATE ILLUSTRATION

<END>

OPERATOR STATION

324-2890 SUSPENSION GP-SEAT

S/N: JBA1-UP
PART OF 314-4290, 314-4291 SEAT GP-SUSPENSION
AN ATTACHMENT

SMCS-7312, 7324 **i03500320**

NOTE	REF NO	GRAPHIC REF	PART NUMBER	QTY	PART NAME 1 2 3 4 5 6 (PRODUCT LEVEL)	SEE PAGE
	1	1	**164-1230**	4	BEARING	
	2	1	**204-1682**	4	STRAP-CABLE	
	3	1	**304-1021**	4	ROLLER	
	4	1	**304-1023**	2	BUMPER	
	7	1	**305-4353**	2	SPACER (6.4X24X6-MM THK)	
	8	1	**313-3280**	2	NUT	
	9	1	**321-5776**	1	RING-RETAINING	
	10	1	**322-9507**	2	SHAFT	
	11	1	**322-9509**	2	BRACKET-STOP	
	12	1	**322-9520**	1	BASE-SEAT	
	13	1	**324-2889**	1	HOUSING-UPPER	
	14	1	**324-2891**	1	ARM AS-SCISSORS	
	15	1	**324-2892**	2	PLATE	
	16	1	**324-2893**	2	STOP	
Y	17	1	**324-2894**	1	KIT-SEAT SUSPENSION (AIR)	653
	18	1	**324-2895**	1	SWITCH-TOGGLE (SUSPENSION SEAT)	
	19	1	**328-7742**	1	SHOCK ABSORBER	
	20	1	**031-4155**	2	LOCKNUT (5/16-18-THD)	
M	21	1	**129-3178**	1	LOCKNUT (M6X1-THD)	
	22	1	**1B-2705**	2	BOLT-CARRIAGE (5/16-18X0.75-IN)	
	23	1	**2K-4973**	2	LOCKNUT (3/8-16-THD)	
	24	1	**4K-9890**	2	WASHER (8.6X17.3X1.6-MM THK)	
M	25	1	**6V-7743**	4	LOCKNUT (M6X1-THD)	
M	26	1	**9X-2044**	4	SCREW-TRUSS HEAD (M6X1X16-MM)	
					PARTS SHOWN IN GRAPHIC(S) WITHOUT A REFERENCE NUMBER ARE NOT SERVICED SEPARATELY	

M-METRIC PART
Y-SEPARATE ILLUSTRATION

324-2890 SUSPENSION GP-SEAT *(contd.)* i03500320

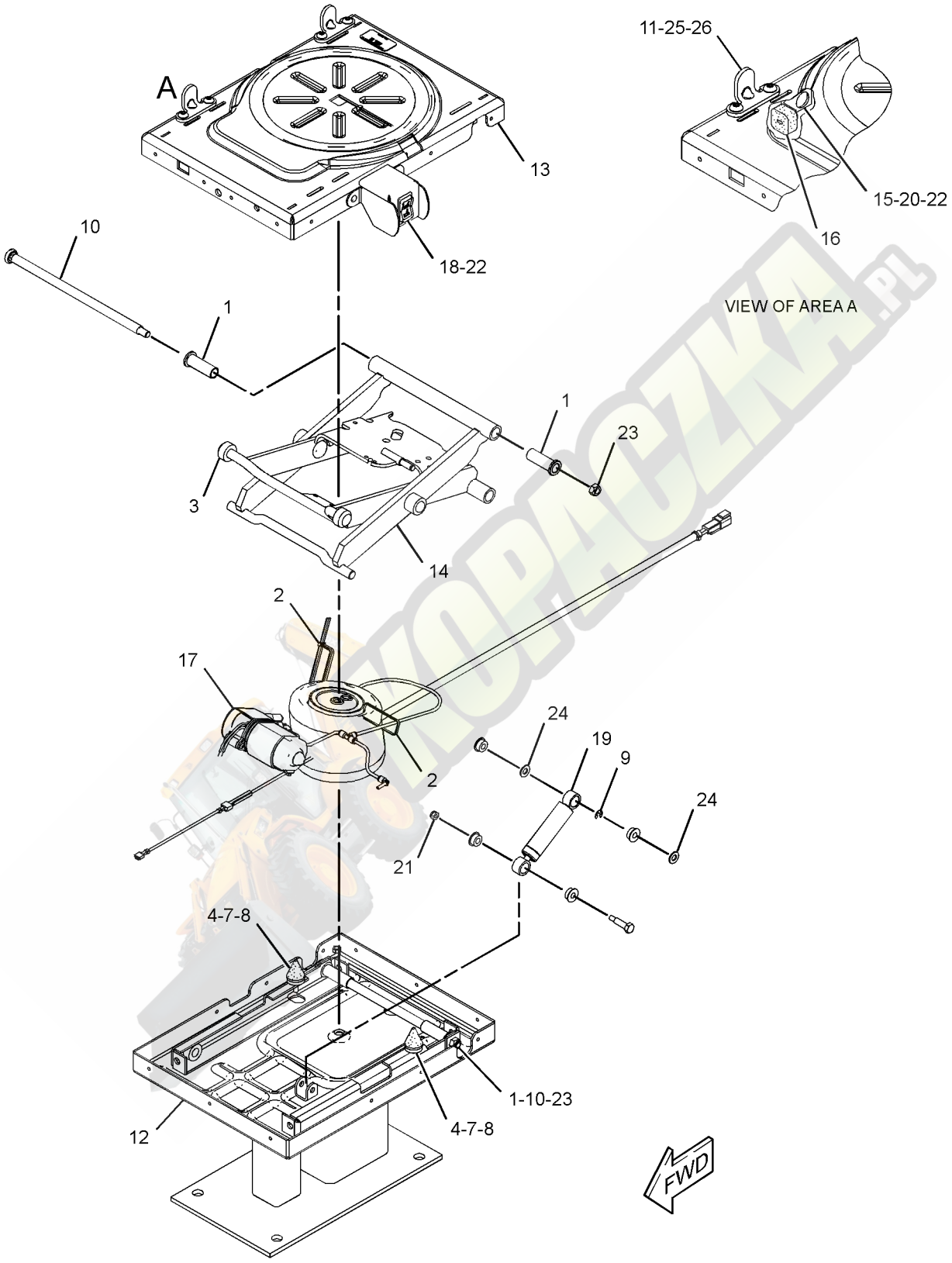

GRAPHIC #1 **<END>** g01623750

OPERATOR STATION

322-9486 SWIVEL GP-SEAT

S/N: JBA1-UP
PART OF 314-4290, 314-4291 SEAT GP-SUSPENSION
AN ATTACHMENT

SMCS-7312, 7321 **i03579014**

NOTE	REF NO	GRAPHIC REF	PART NUMBER	QTY	PART NAME 1 2 3 4 5 6 (PRODUCT LEVEL)	SEE PAGE
	1	1	**161-9283**	1	WASHER (19.8X31.8X1.6-MM THK)	
	2	1	**161-9285**	1	NUT (3/4-10-THD)	
	3	1	**161-9288**	1	SHAFT-PIVOT	
	5	1	**215-1242**	1	RING	
	6	1	**260-0030**	1	SHAFT-PIVOT	
	7	1	**260-0033**	1	SPRING-TORSION	
	8	1	**260-0034**	1	SPRING-RETURN	
	9	1	**260-0035**	1	SPRING-RETURN	
	10	1	**260-0041**	1	BOLT (3/4-1-X1.42-IN)	
	11	1	**260-0057**	1	LATCH AS-SLIDE	
	12	1	**313-5637**	2	BOLT	
	13	1	**322-9490**	1	HANDLE (SWIVEL)	
	14	1	**322-9491**	1	HANDLE (SLIDE)	
	15	1	**322-9492**	1	SPRING	
	16	1	**322-9493**	1	PLATE AS-SLIDE	
	17	1	**322-9494**	1	KIT-BLOCK	
					(INCLUDES BLOCK-SLIDERS & SETSCREWS)	
	18	1	**322-9495**	1	PLATE AS-UPPER	
	19	1	**322-9496**	1	LATCH (SWIVEL)	
	20	1	**031-4155**	2	LOCKNUT (5/16-18-THD)	
	21	1	**2L-5893**	1	PIN-SPRING	
	22	1	**3B-4631**	1	PIN-COTTER	
	23	1	**4B-9784**	8	BALL	
	24	1	**4B-4283**	1	WASHER (20.6X37.5X3.5-MM THK)	
	25	1	**8S-7803**	3	RING-RETAINING	
	26	1	**9R-5708**	2	LOCKWASHER	

322-9486 SWIVEL GP-SEAT *(contd.)* **i03579014**

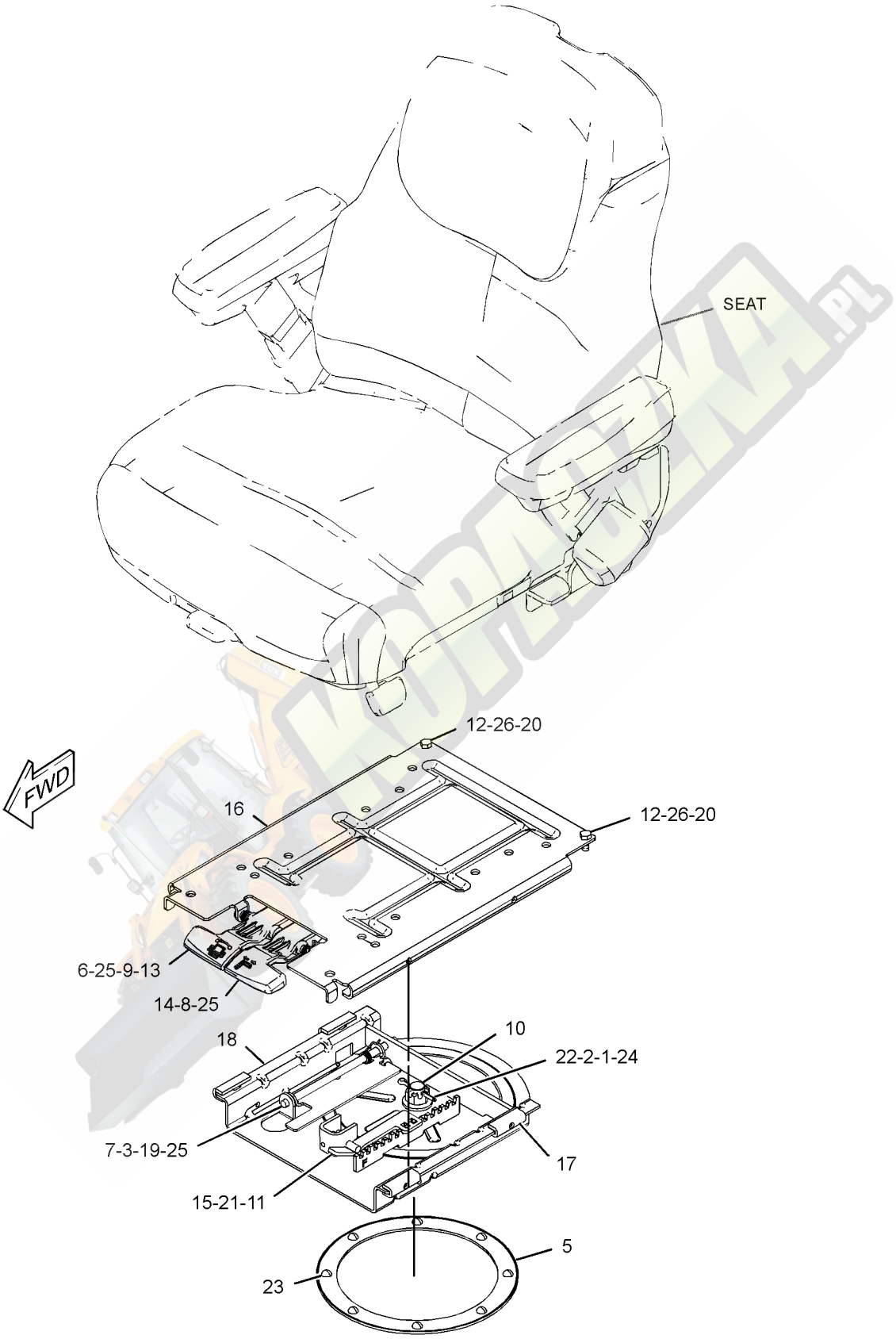

GRAPHIC #1

<END>

g01623695

OPERATOR STATION

206-1857 VISOR GP-CAB

S/N: JBA1-UP

PART OF 335-3052, 335-3053, 335-3055 CAB AR, 335-3054 CAB AR-ENCLOSED ROPS AN ATTACHMENT

SMCS-7301 **i02704721**

NOTE	REF NO	GRAPHIC REF	PART NUMBER	QTY	PART NAME 1 2 3 4 5 6 (PRODUCT LEVEL)	SEE PAGE
CE	1	1	**8C-3681**		HOSE (2.5-CM EACH)	
	2	1	**9R-3205**	1	VISOR AS	
C	3	1	**5P-9297**	2	CLIP	

C-CHANGE FROM PREVIOUS TYPE
E-ORDER BY THE CENTIMETER

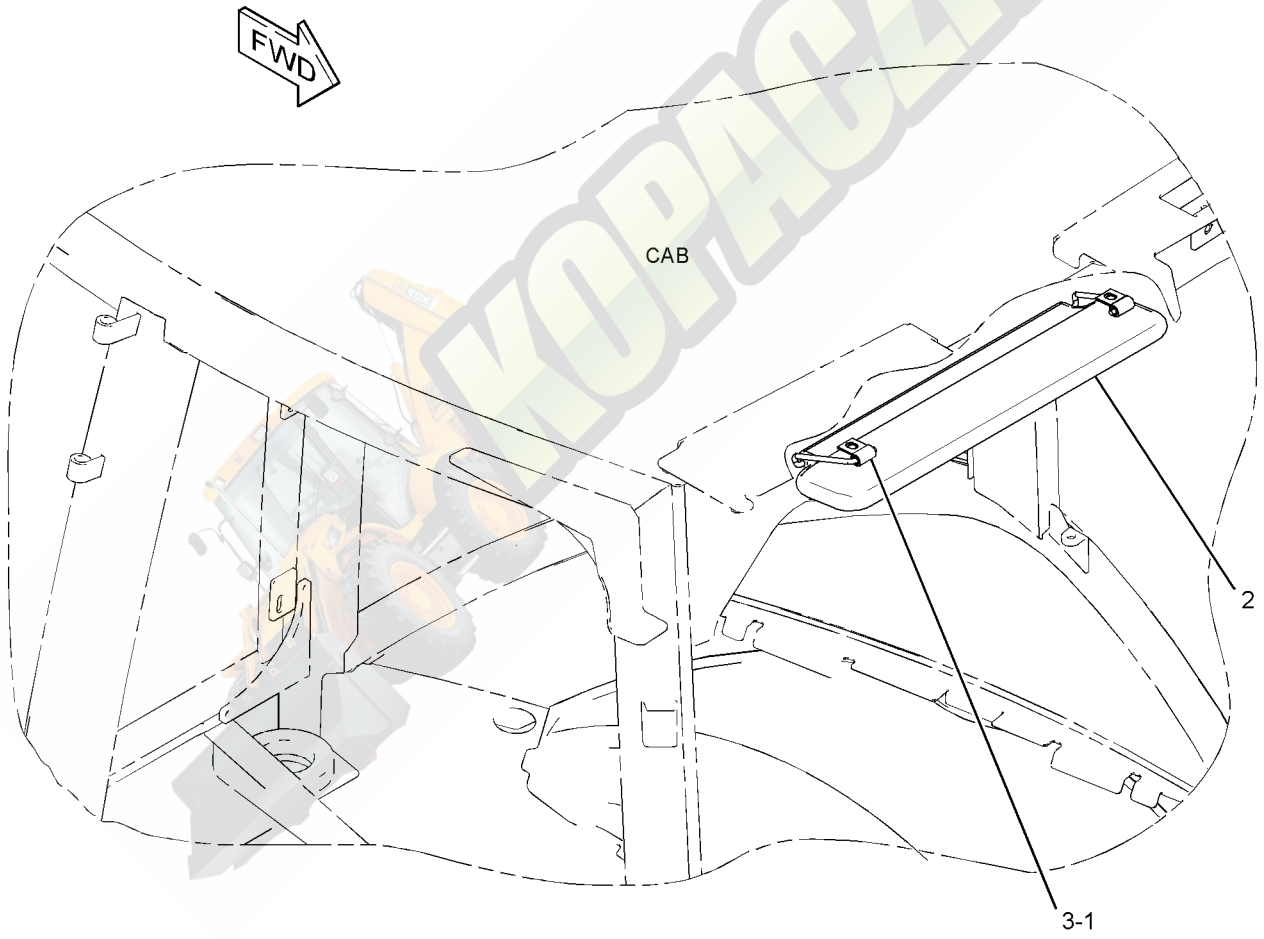

GRAPHIC #1 **<END>** g01384970

OPERATOR STATION

340-8276 WASHER GP-WINDOW

S/N: JBA1-UP

PART OF 335-3052, 335-3053, 335-3055 CAB AR, 335-3054 CAB AR-ENCLOSED ROPS AN ATTACHMENT

SMCS-7306 **i03712386**

NOTE	REF NO	GRAPHIC REF	PART NUMBER	QTY	PART NAME 1 2 3 4 5 6 (PRODUCT LEVEL)	SEE PAGE
	1	1	**3S-2093**	12	STRAP-CABLE	
	2	1	**8T-1118**	1	NOZZLE AS-WASHER	
	3	1	**9R-3469**	2	DIAPHRAGM	
	4	1	**9X-8372**	1	FILM-INSTRUCTION (WASHER FILL)	
	5	1	**101-0745**	1	BLADE AS-WIPER (600-MM) (FRONT)	
	6	1	**121-6936**	1	CONNECTOR	
	7	1	**154-5410**	1	ARM-WINDOW WIPER (FRONT)	
	8	1	**214-3763**	1	TANK GP-WINDOW WASHER	
		1	**6T-1375**	2	PUMP AS-WASHER	
		1	**8E-8293**	2	GROMMET	
		1	**214-3742**	1	TANK-WASHER	
		1	**254-5683**	1	CAP	
	9	1	**214-4709**	1	SWITCH AS-ROCKER (WIPER, WASHER, REAR)	
		1	**111-7899**	1	GASKET	
	10	1	**276-8791**	1	CLIP	
	11	1	**283-3451**	2	CONNECTOR AS	
Y	12	1	**313-3752**	1	MOTOR GP-WINDOW WIPER (12-VOLT)	666
	13	1	**315-1284**	1	NOZZLE	
	14	1	**156-0283**	2	WASHER-HARD (8.4X35X2.5-MM THK)	
M	15	1	**6V-7357**	1	BOLT (M6X1X25-MM)	
	16	1	**8T-4205**	1	WASHER-HARD (7.2X14.5X2-MM THK)	
M	17	1	**8T-5093**	2	BOLT-LOCKING (M8X1.25X25-MM)	
E	18	1	**144-0195**		HOSE (52-CM)	
E	18A	1	**144-0195**		HOSE (72-CM)	
E	18B	1	**144-0195**		HOSE (21-CM EACH)	

E-ORDER BY THE CENTIMETER
M-METRIC PART
Y-SEPARATE ILLUSTRATION

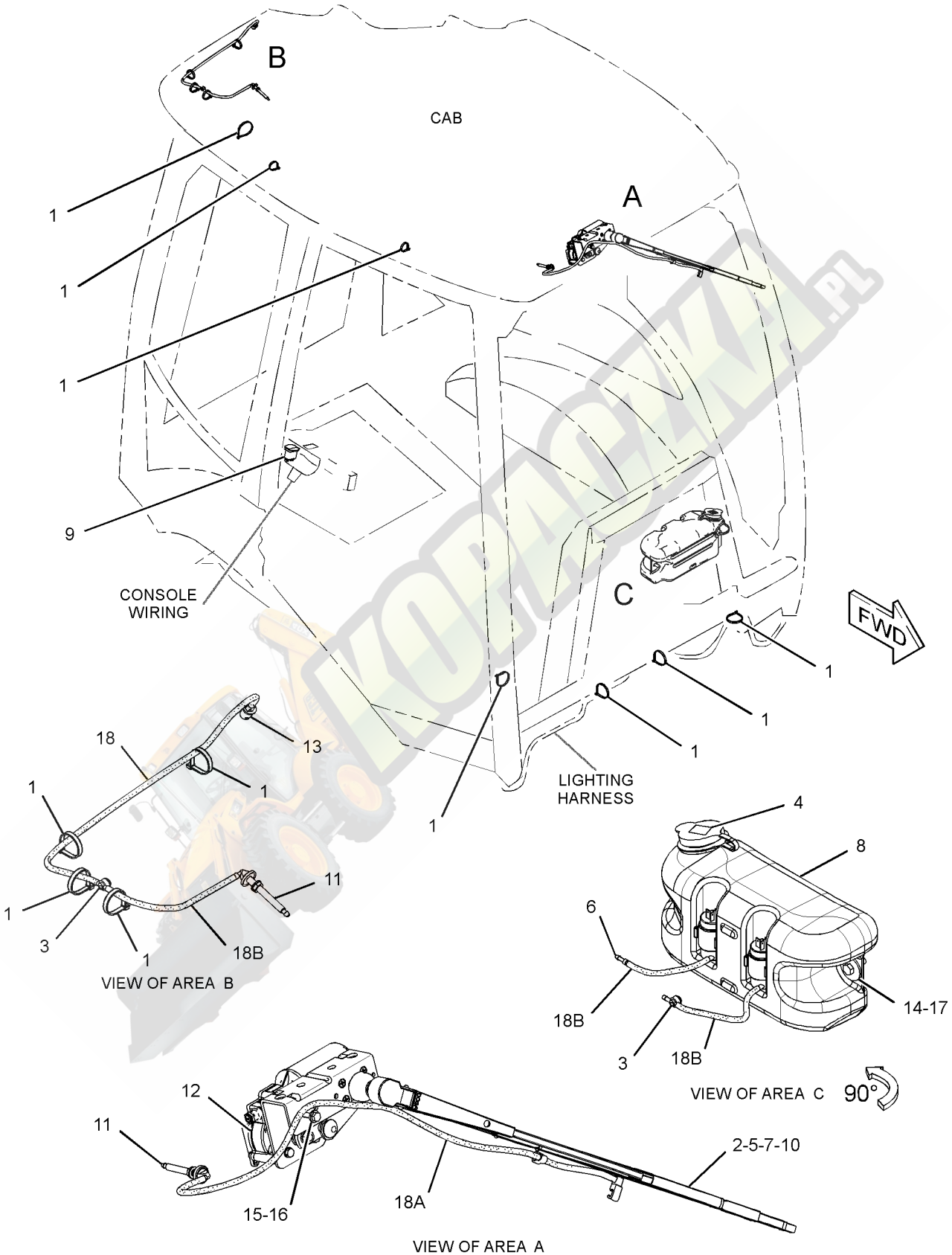

GRAPHIC #1

<END>

g01972114

OPERATOR STATION

315-1270 WINDOW GP-CAB—REAR

S/N: JBA1-UP
PART OF 342-7147, 342-7149 CAB GP
AN ATTACHMENT

SMCS-7310 **i03651202**

NOTE	REF NO	GRAPHIC REF	PART NUMBER	QTY	PART NAME 1 2 3 4 5 6 (PRODUCT LEVEL)	SEE PAGE
	1	1	**5C-6588**	2	WASHER (13X22X2-MM THK)	
	2	1	**7H-3937**	4	LOCKWASHER	
	3	1	**146-4023**	2	PLUG	
	4	1	**167-8182**	2	BUMPER	
	5	1	**180-3748**	8	INSERT-THREADED (M8X1.25-THD)	
Y	6	1	*311-3639*	1	WIRING GP-WIPER (REAR)	233
Y	7	1	*315-1272*	1	WIPER GP-WINDOW (REAR)	698
	8	1	**315-1277**	1	FRAME AS	
	9	1	**315-1282**	1	PLATE AS	
	10	1	**315-1299**	1	GLASS (REAR)	
	11	1	**315-1300**	2	ROLLER	
	12	1	**315-1301**	2	ROLLER	
	13	1	**315-1302**	1	HANDLE GP-DOOR (LH)	
	14	1	**315-1303**	1	HANDLE GP-DOOR (RH)	
					(EACH HANDLE GP INCLUDES)	
		1	**317-4261**	1	AXLE	
		1	**317-4262**	1	SPRING	
		1	**317-4263**	1	PIN	
	15	1	**315-1304**	2	PIVOT	
	16	1	**315-1306**	1	BRACKET	
	17	1	**315-1311**	2	SPRING-GAS	
	18	1	**315-1312**	2	CAP	
	19	1	**315-1313**	1	SEAL	
	20	1	**315-1314**	1	SEAL	
	21	1	**344-1004**	1	SEAL	
	22	1	**316-8228**	2	SCREW-BUTTON HEAD (M8X1.25X45-MM)	
	23	1	**323-6066**	1	SEAL	
	24	1	**325-1968**	2	PLATE	
	25	1	**325-9315**	2	CORNER	
	26	1	**326-6389**	1	BRACKET AS	
	27	1	**335-2224**	2	FOAM	
M	28	1	**131-3540**	2	LOCKNUT (M8X1.25-THD)	
M	29	1	**172-4018**	8	BOLT-SOCKET HEAD (M8X1.25X35-MM)	
	30	1	**3F-9556**	4	LOCKWASHER	
	31	1	**4D-6433**	2	WASHER-HARD (12X25.5X2-MM THK)	
M	32	1	**5C-7261**	8	NUT (M8X1.25-THD)	
	33	1	**5P-4116**	2	WASHER-HARD (8.8X20.5X2-MM THK)	
M	34	1	**8T-0389**	2	LOCKNUT (M10X1.5-THD)	
M	35	1	**8T-4133**	2	NUT (M10X1.5-THD)	
	36	1	**9P-2553**	2	SPACER (6.83X10.28X11-MM THK)	
M	37	1	**9X-2045**	2	SCREW-TRUSS HEAD (M6X1X20-MM)	
E	38	1	**9X-2092**		TRIM-EDGE (88-CM)	
	39	1	**6C-9089**	2	NUT-CAP	

E-ORDER BY THE CENTIMETER
M-METRIC PART
Y-SEPARATE ILLUSTRATION

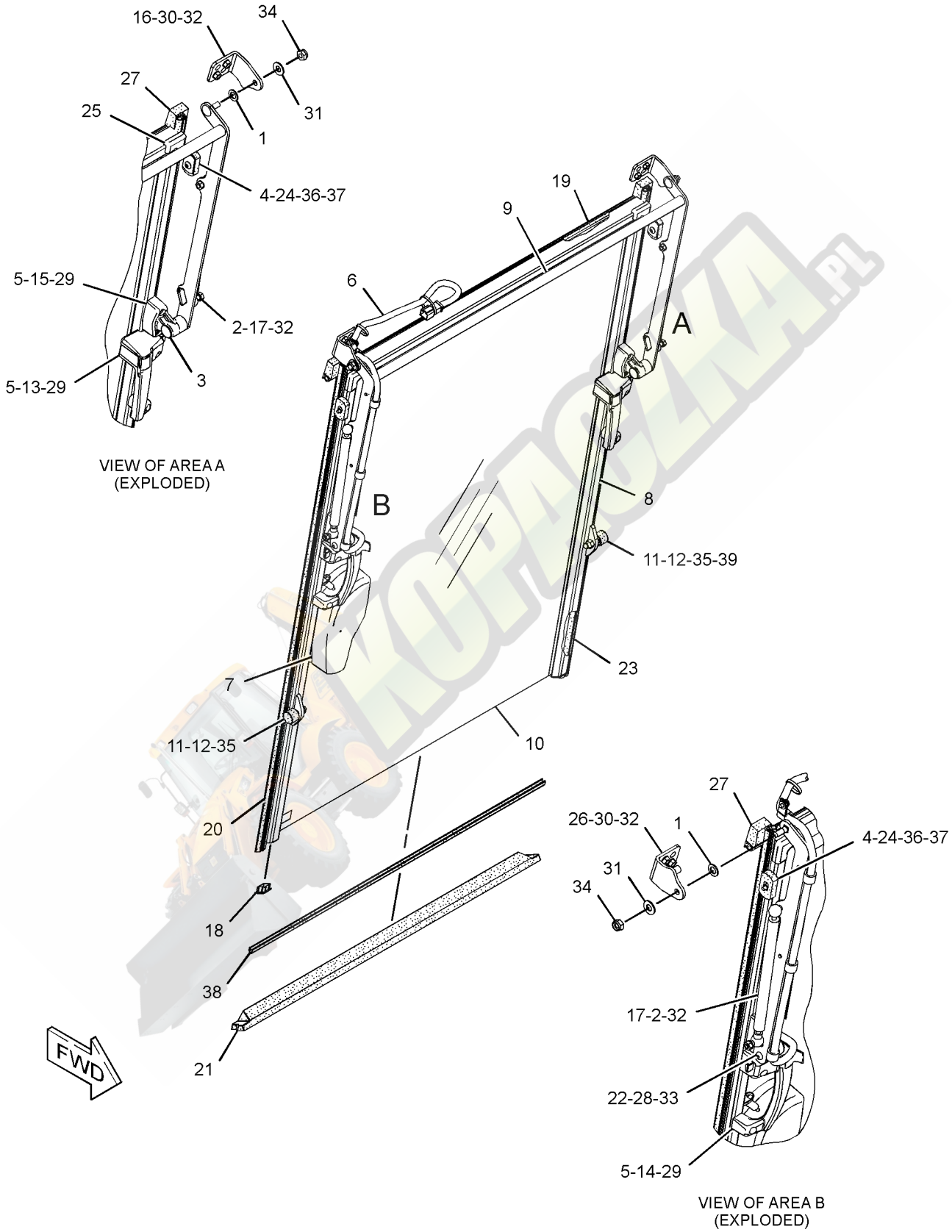

GRAPHIC #1 **<END>** g01960733

OPERATOR STATION

327-7601 WINDOW GP-CAB—LH

S/N: JBA1-UP
PART OF 342-7149 CAB GP
AN ATTACHMENT

SMCS-7310 **i03712338**

NOTE	REF NO	GRAPHIC REF	PART NUMBER	QTY	PART NAME 1 2 3 4 5 6 (PRODUCT LEVEL)	SEE PAGE
	1	1	**8Y-7309**	1	RETAINER	
	2	1	**100-7608**	1	HANDLE (LH)	
	3	1	**129-8542**	6	RETAINER	
	4	1	**129-8545**	8	WASHER (13X40X3-MM THK)	
M	5	1	**136-4192**	4	BOLT (M6X1X35-MM)	
	6	1	**154-5423**	2	SPACER (6.6X12.7X17-MM THK)	
	7	1	**205-9623**	1	HINGE (LOWER, LH)	
	8	1	**205-9624**	1	HINGE (UPPER, LH)	
Y	9	1	**299-6985**	1	LATCH GP-CAB DOOR & WINDOW (LOWER)	655
Y	10	1	**299-6986**	1	LATCH GP-CAB DOOR & WINDOW (UPPER)	656
	11	1	**325-9300**	1	GLASS (REAR, LH)	
	12	1	**223-2030**	1	LATCH AS (HOLD OPEN)	
M		1	**6V-7743**	2	LOCKNUT (M6X1-THD)	
M		1	**9X-2045**	2	SCREW-TRUSS HEAD (M6X1X20-MM)	
		1	**143-2827**	1	SPRING	
M	13	1	**5C-7261**	1	NUT (M8X1.25-THD)	
M	14	1	**6V-7743**	2	LOCKNUT (M6X1-THD)	
	15	1	**7X-2393**	1	BUMPER-CONICAL	
E	16	1	**148-5353**		SEAL (342-CM)	

E-ORDER BY THE CENTIMETER
M-METRIC PART
Y-SEPARATE ILLUSTRATION

327-7601 WINDOW GP-CAB *(contd.)* **i03712338**

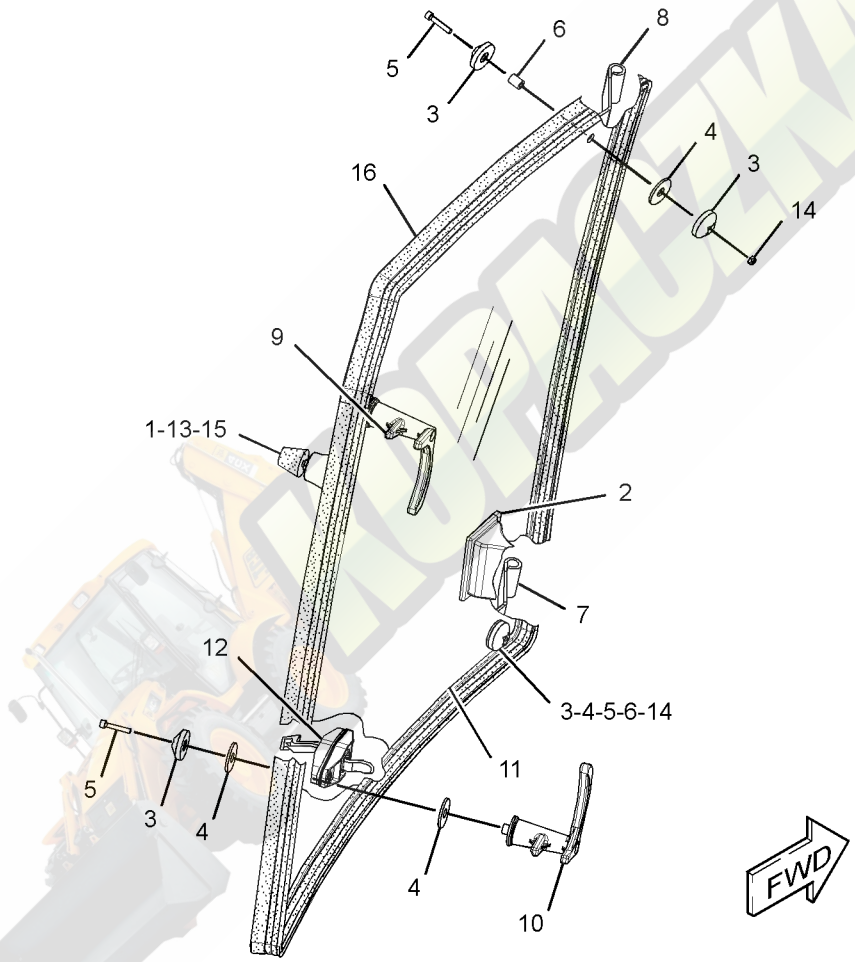

GRAPHIC #1 **<END>** g01971456

OPERATOR STATION

327-7637 WINDOW GP-CAB—RH

S/N: JBA1-UP
PART OF 342-7149 CAB GP
AN ATTACHMENT

SMCS-7310 **i03712339**

NOTE	REF NO	GRAPHIC REF	PART NUMBER	QTY	PART NAME 1 2 3 4 5 6 (PRODUCT LEVEL)	SEE PAGE
	1	1	**8Y-7309**	1	RETAINER	
	2	1	**100-7608**	1	HANDLE (RH)	
	3	1	**129-8542**	6	RETAINER	
	4	1	**129-8545**	8	WASHER (13X40X3-MM THK)	
M	5	1	**136-4192**	4	BOLT (M6X1X35-MM)	
	6	1	**154-5423**	2	SPACER (6.6X12.7X17-MM THK)	
	7	1	**205-9633**	1	HINGE (LOWER, RH)	
	8	1	**205-9634**	1	HINGE (UPPER, RH)	
Y	9	1	**299-6985**	1	LATCH GP-CAB DOOR & WINDOW (LOWER)	655
Y	10	1	**299-6986**	1	LATCH GP-CAB DOOR & WINDOW (UPPER)	656
	11	1	**325-9301**	1	GLASS (REAR, RH)	
	12	1	**223-2030**	1	LATCH AS (HOLD OPEN)	
M		1	**6V-7743**	2	LOCKNUT (M6X1-THD)	
M		1	**9X-2045**	2	SCREW-TRUSS HEAD (M6X1X20-MM)	
		1	**143-2827**	1	SPRING	
M	13	1	**5C-7261**	1	NUT (M8X1.25-THD)	
M	14	1	**6V-7743**	2	LOCKNUT (M6X1-THD)	
	15	1	**7X-2393**	1	BUMPER-CONICAL	
E	16	1	**148-5353**		SEAL (342-CM)	

E-ORDER BY THE CENTIMETER
M-METRIC PART
Y-SEPARATE ILLUSTRATION

327-7637 WINDOW GP-CAB *(contd.)* **i03712339**

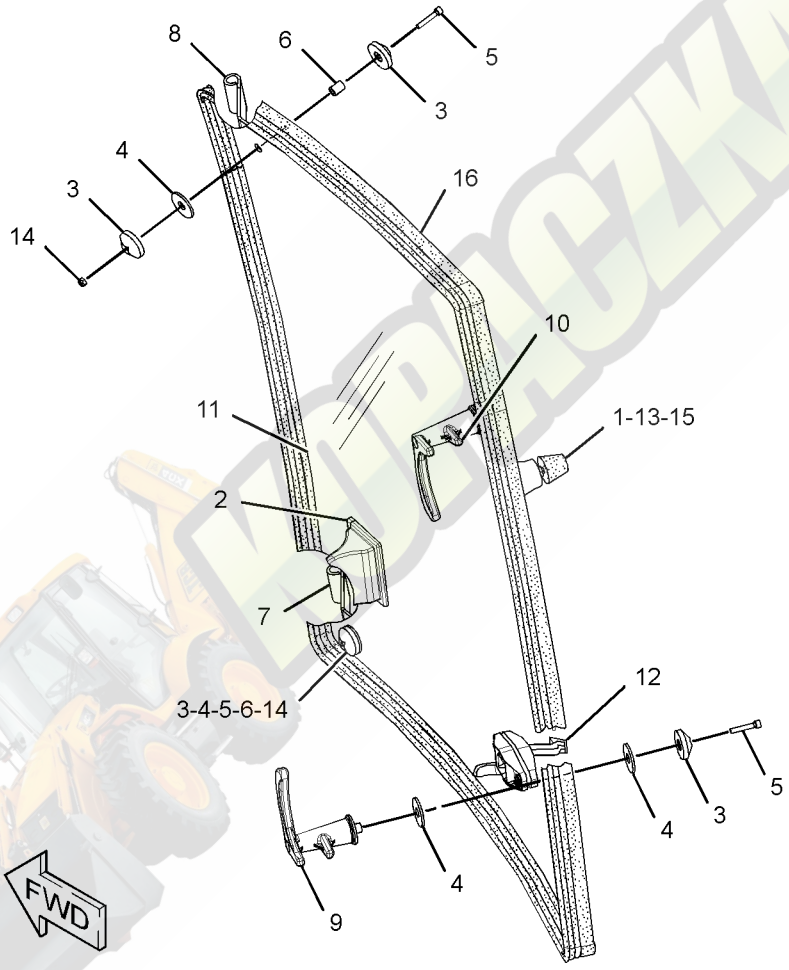

GRAPHIC #1 **<END>** g01971659

OPERATOR STATION

333-9901 WINDOW GP-DOOR–LH

S/N: JBA1-UP
PART OF 329-1168 DOOR GP-CAB
AN ATTACHMENT

SMCS-7308, 7310 **i03564760**

NOTE	REF NO	GRAPHIC REF	PART NUMBER	QTY	PART NAME 1 2 3 4 5 6 (PRODUCT LEVEL)	SEE PAGE
E	1	1	**148-5353**		SEAL (354-CM)	
	2	1	**100-7608**	1	HANDLE (LH)	
	3	1	**129-8542**	5	RETAINER	
	4	1	**129-8545**	6	WASHER (13X40X3-MM THK)	
M	5	1	**136-4192**	3	BOLT (M6X1X35-MM)	
	6	1	**154-5423**	2	SPACER (6.6X12.7X17-MM THK)	
	7	1	**205-9587**	1	GLASS (LH)	
	8	1	**205-9590**	1	HINGE (UPPER)	
	9	1	**205-9591**	1	HINGE (LOWER)	
Y	10	1	**299-6986**	1	LATCH GP-CAB DOOR & WINDOW (LH)	656
	11	1	**223-2030**	1	LATCH AS (HOLD OPEN) (LH)	
M		1	**6V-7743**	2	LOCKNUT (M6X1-THD)	
M		1	**9X-2045**	2	SCREW-TRUSS HEAD (M6X1X20-MM)	
		1	**143-2827**	1	SPRING	
M	12	1	**6V-7743**	2	LOCKNUT (M6X1-THD)	

E-ORDER BY THE CENTIMETER
M-METRIC PART
Y-SEPARATE ILLUSTRATION

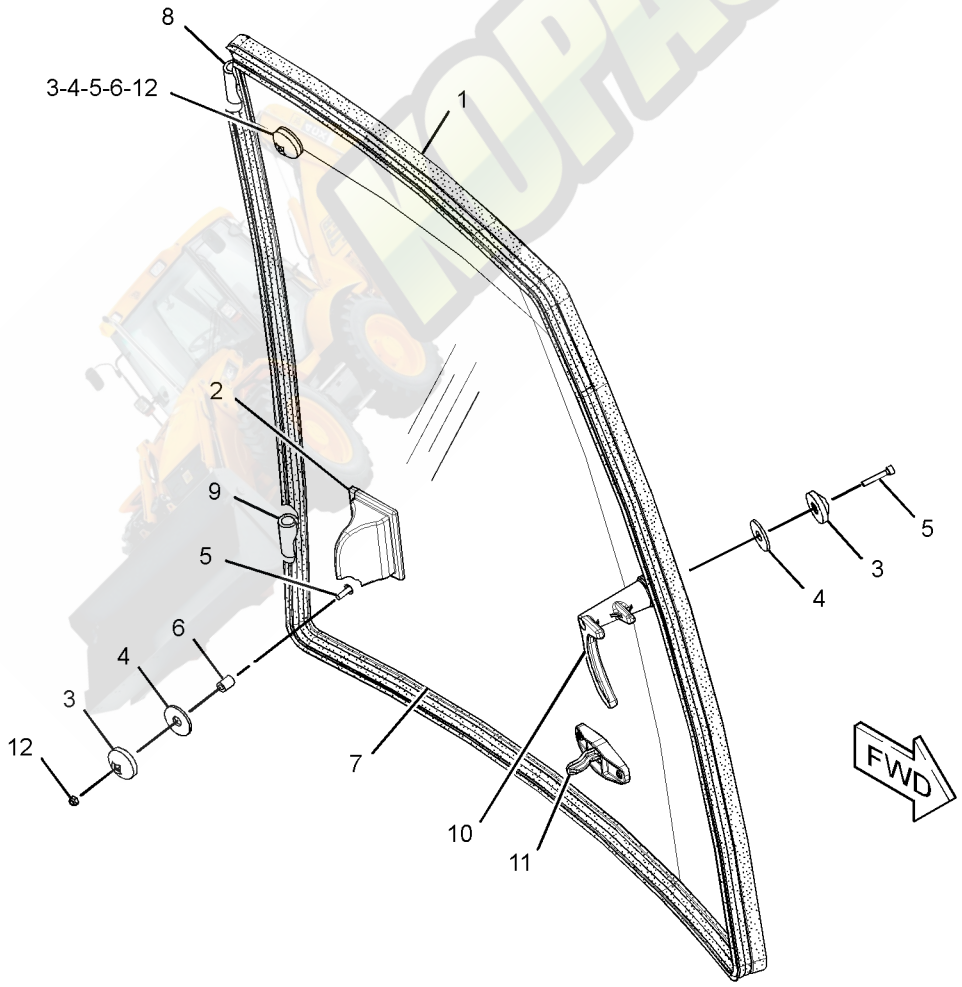

GRAPHIC #1 **<END>** g01890354

OPERATOR STATION

333-9902 WINDOW GP-DOOR—RH

S/N: JBA1-UP
PART OF 329-1167 DOOR GP-CAB
AN ATTACHMENT

SMCS-7308, 7310 **i03564761**

NOTE	REF NO	GRAPHIC REF	PART NUMBER	QTY	PART NAME 1 2 3 4 5 6 (PRODUCT LEVEL)	SEE PAGE
E	1	1	**148-5353**		SEAL (354-CM)	
	2	1	**100-7608**	1	HANDLE (RH)	
	3	1	**129-8542**	5	RETAINER	
	4	1	**129-8545**	6	WASHER (13X40X3-MM THK)	
M	5	1	**136-4192**	3	BOLT (M6X1X35-MM)	
	6	1	**154-5423**	2	SPACER (6.6X12.7X17-MM THK)	
	7	1	**205-9597**	1	GLASS (RH)	
	8	1	**205-9614**	1	HINGE (LOWER)	
	9	1	**205-9615**	1	HINGE (UPPER)	
Y	10	1	**299-6985**	1	LATCH GP-CAB DOOR & WINDOW (RH)	655
	11	1	**223-2030**	1	LATCH AS (HOLD OPEN) (RH)	
M		1	**6V-7743**	2	LOCKNUT (M6X1-THD)	
M		1	**9X-2045**	2	SCREW-TRUSS HEAD (M6X1X20-MM)	
		1	**143-2827**	1	SPRING	
M	12	1	**6V-7743**	2	LOCKNUT (M6X1-THD)	

E-ORDER BY THE CENTIMETER
M-METRIC PART
Y-SEPARATE ILLUSTRATION

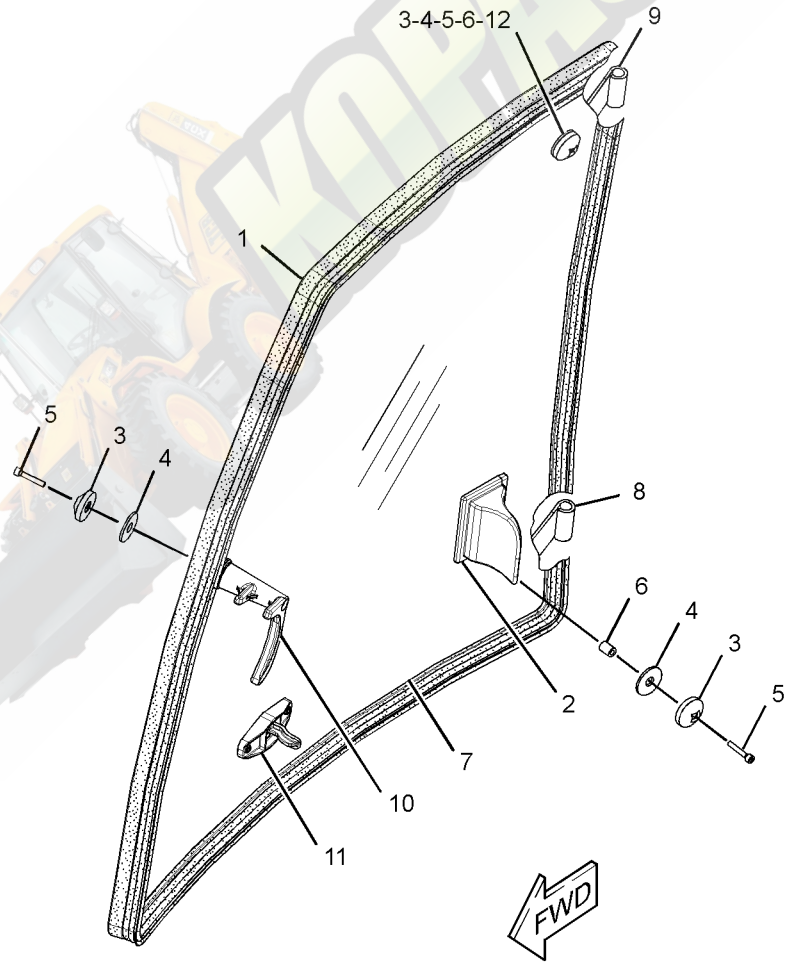

GRAPHIC #1 **<END>** g01890418

OPERATOR STATION

315-1272 WIPER GP-WINDOW—REAR

S/N: JBA1-UP
PART OF 315-1270 WINDOW GP-CAB
AN ATTACHMENT

SMCS-7305 **i03332455**

NOTE	REF NO	GRAPHIC REF	PART NUMBER	QTY	PART NAME 1 2 3 4 5 6 (PRODUCT LEVEL)	SEE PAGE
	1	1	**315-1316**	1	BLADE AS (WIPER, REAR)	
	2	1	**315-1317**	1	ARM GP-WINDOW WIPER (REAR)	
Y	3	1	**315-1318**	1	MOTOR GP-WINDOW WIPER (REAR)	667
	4	1	**315-1319**	1	COVER	

Y-SEPARATE ILLUSTRATION

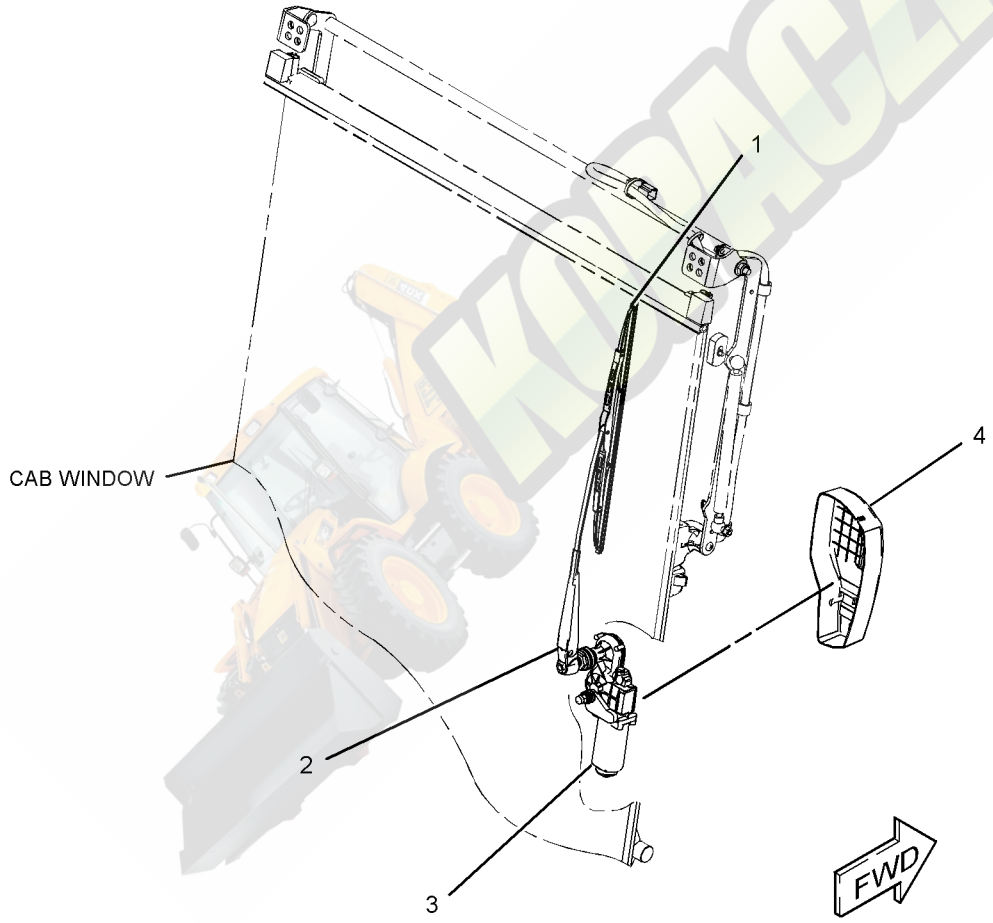

GRAPHIC #1 **<END>** g01653534

SERVICE EQUIPMENT AND SUPPLIES

252-8915 FILM GP–HEWDEN

S/N: JBA1-UP
PART OF 234-9402 OPTION AR
AN ATTACHMENT

SMCS-7405, 7557 **i02417640**

NOTE	REF NO	GRAPHIC REF	PART NUMBER	QTY	PART NAME 1 2 3 4 5 6 (PRODUCT LEVEL)	SEE PAGE
B	1	1	**237-3664**	3	FILM-IDENTIFICATION (ONE)	
B	2	1	**237-3665**	3	FILM-IDENTIFICATION (TWO)	
B	3	1	**237-3666**	3	FILM-IDENTIFICATION (THREE)	
B	4	1	**237-3667**	3	FILM-IDENTIFICATION (FOUR)	
B	5	1	**237-3668**	3	FILM-IDENTIFICATION (FIVE)	
B	6	1	**237-3669**	3	FILM-IDENTIFICATION (SIX)	
B	7	1	**237-3670**	3	FILM-IDENTIFICATION (SEVEN)	
B	8	1	**237-3671**	3	FILM-IDENTIFICATION (EIGHT)	
B	9	1	**237-3672**	3	FILM-IDENTIFICATION (NINE)	
B	10	1	**237-3673**	3	FILM-IDENTIFICATION (ZERO)	
	11	1	**252-8916**	3	FILM-INSTRUCTION (STICK)	
	12	1	**252-8917**	2	FILM-IDENTIFICATION (HEWDEN, BOOM)	
	13	1	**252-8918**	1	FILM-IDENTIFICATION (HEWDEN, CAB)	
	14	1	**252-8919**	2	FILM-IDENTIFICATION (HEWDEN, LOADER ARM)	

B-USE AS REQUIRED

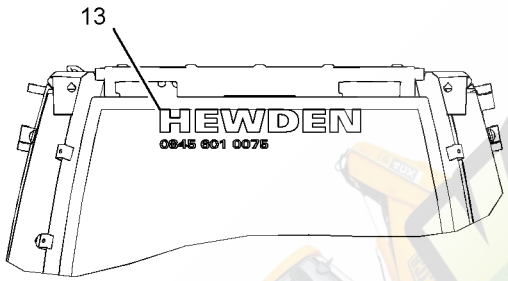

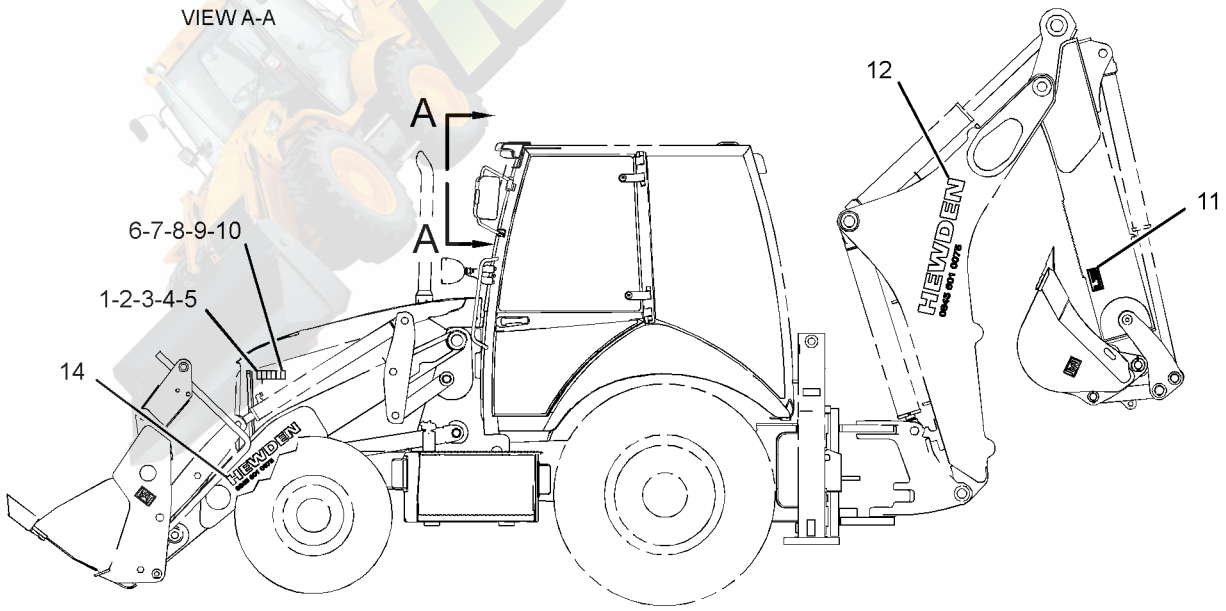

LEFT SIDE VIEW

GRAPHIC #1 **<END>** g01210406

SERVICE EQUIPMENT AND SUPPLIES

343-7809 FILM GP

S/N: JBA1-UP

PART OF 329-0294 CHASSIS AR

SMCS-7405, 7557 **i03642946**

NOTE	REF NO	GRAPHIC REF	PART NUMBER	QTY	PART NAME 1 2 3 4 5 6 (PRODUCT LEVEL)	SEE PAGE
	1	1	**292-2833**	1	FILM-IDENTIFICATION (BOOM, RH)	
	2	1	**292-2834**	1	FILM-IDENTIFICATION (BOOM, LH)	
	3	1	**295-5554**	1	FILM-IDENTIFICATION (432E, LIFT ARM, RH)	
	4	1	**295-5555**	1	FILM-IDENTIFICATION (432E, LIFT ARM, LH)	

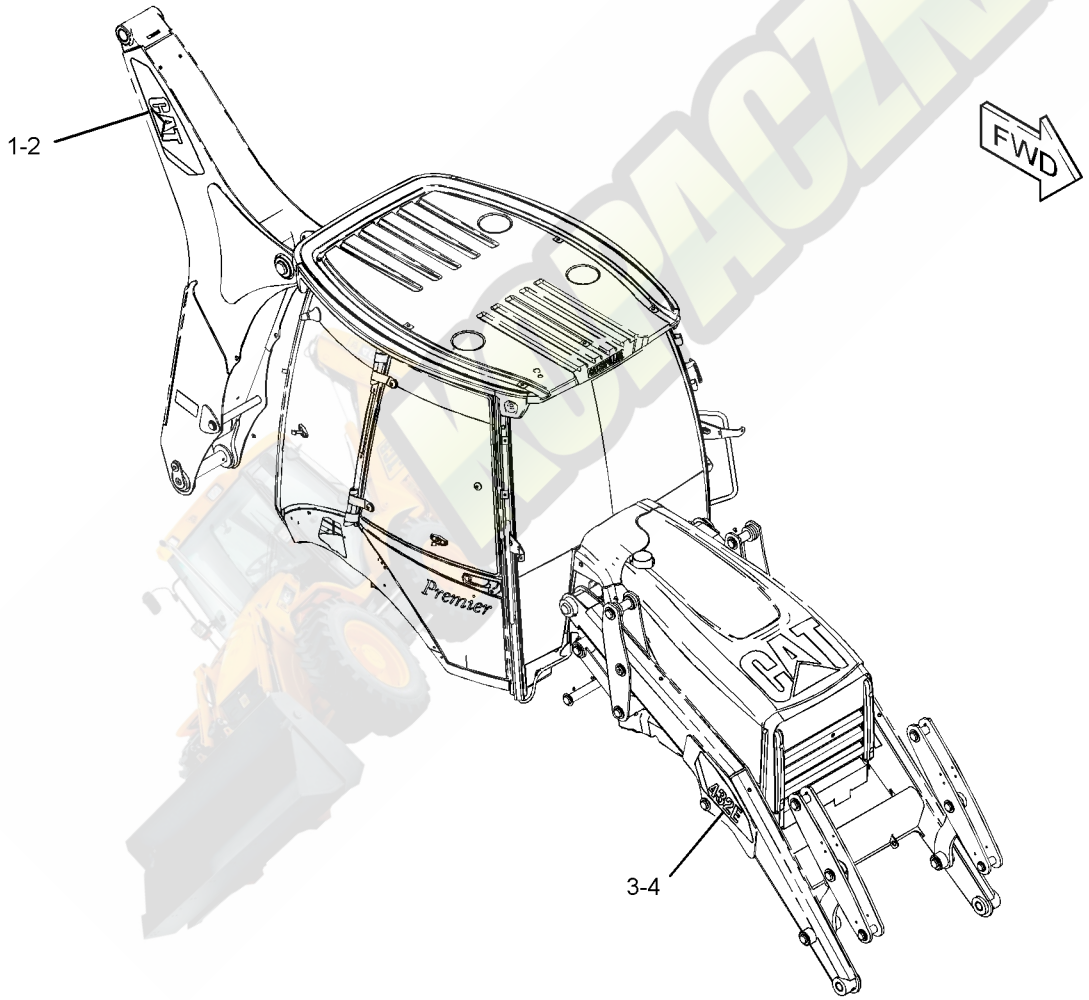

GRAPHIC #1 **<END>** g01991660

8F-9866 GREASE GUN GP

S/N: JBA1-UP
PART OF 234-9402 OPTION AR
AN ATTACHMENT

SMCS-0646 **i02377690**

NOTE	REF NO	GRAPHIC REF	PART NUMBER	QTY	PART NAME 1 2 3 4 5 6 (PRODUCT LEVEL)	SEE PAGE
C	1	1	**190-1669**	1	HOSE AS	
	2	1	**9F-2637**	1	FITTING (GREASE GUN)	
C	3	1	**190-1668**	1	COUPLER-GREASE	

C-CHANGE FROM PREVIOUS TYPE

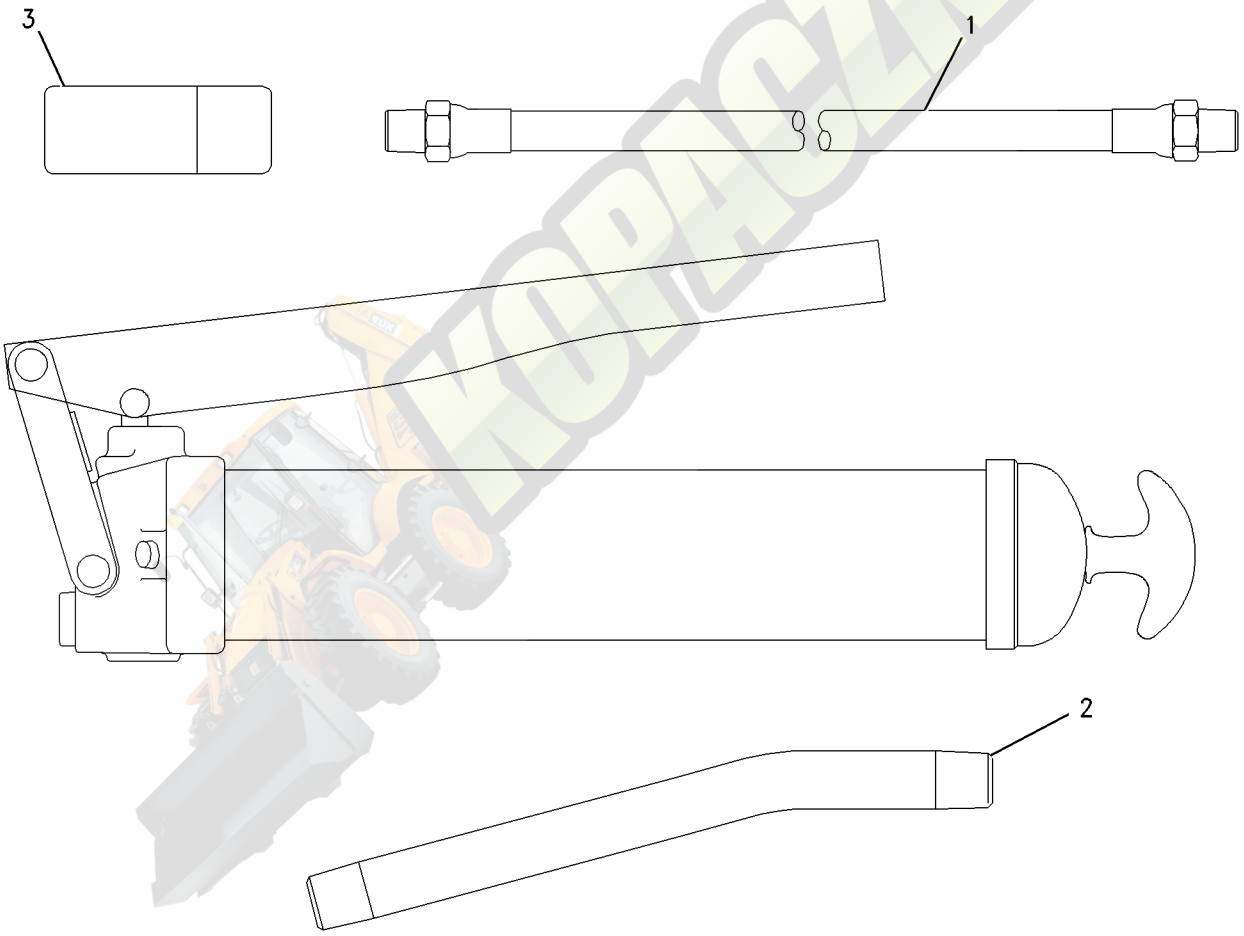

GRAPHIC #1 **<END>** g00752624

SERVICE EQUIPMENT AND SUPPLIES

175-7877 LINK GP-SHIPPING

S/N: JBA1-UP

PART OF 329-0294 CHASSIS AR

SMCS-6513 **i01190768**

NOTE	PART NUMBER	QTY	PART NAME 1 2 3 4 5 6 (PRODUCT LEVEL)	SEE PAGE
	120-9286	1	PLATE	

<END>

KOPACZKA.PL

216-0910 LOCK GP-VANDALISM

S/N: JBA1-UP

AN ATTACHMENT

SMCS-7315 **i03326060**

NOTE	REF NO	GRAPHIC REF	PART NUMBER	QTY	PART NAME 1 2 3 4 5 6 (PRODUCT LEVEL)	SEE PAGE
	1	1	**246-2641**	3	PADLOCK GP	
					(EACH INCLUDES)	
		1	**5P-8500**	1	KEY	

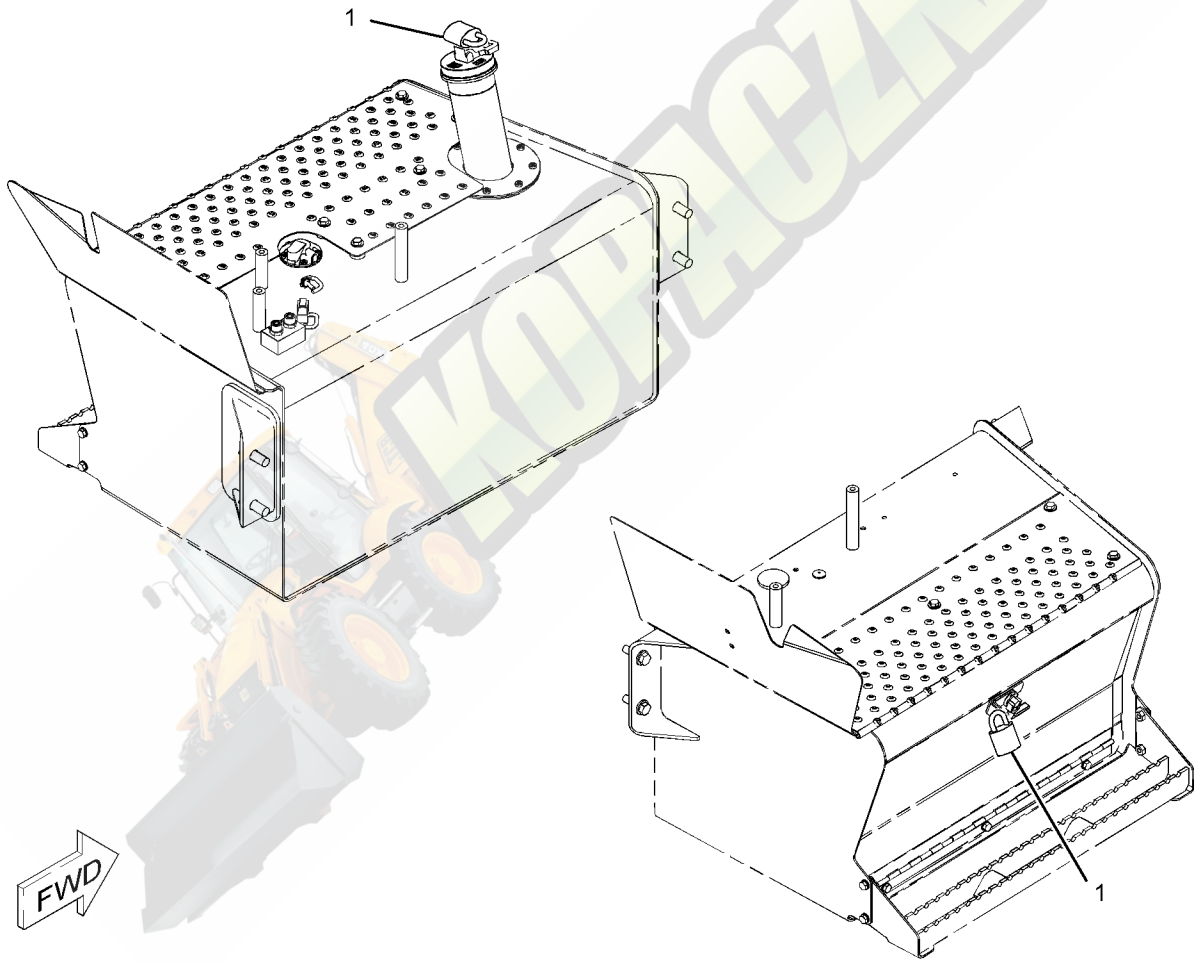

GRAPHIC #1 **<END>** g01096994

SERVICE EQUIPMENT AND SUPPLIES

342-8061 PLATE & FILM GP

S/N: JBA1-UP

PART OF 329-0294 CHASSIS AR

SMCS-7405 **i03657452**

NOTE	PART NUMBER	QTY	PART NAME 1 2 3 4 5 6 (PRODUCT LEVEL)	SEE PAGE
	239-6989	1	PLATE-SERIAL NUMBER (MACHINE)	
	225-4150	1	PLATE-SERVICE INFORMATION (MACHINE)	
	323-3308	30	CAP	
	323-3309	15	CAP	
	323-6645	10	CAP	
B	**193-5913**	2	PLUG	
B	**193-5914**	16	PLUG	
B	**193-5915**	6	PLUG	
B	**193-5916**	4	PLUG	
	258-9999	2	FILM (LIFT EYE LOCATION)	
			(ON FRONT SIDE OF THE FRONT AXLE BETWEEN THE CHASSIS & WHEEL ASSEMBLY ON THE LH & RH SIDE OF THE MACHINE)	
	255-0796	1	FILM-IDENTIFICATION (LUBRICATION POINTS)	
			(UNDER THE HOOD ON PRE-CLEANER)	
	134-7258	1	FILM-INFORMATION (EXTENDED LIFE COOLANT,READ OMM)	
			(ON SHUNT TANK NEXT TO RADIATOR CAP)	
	224-8946	1	FILM-WARNING (NO ETHER SPRAY/AIR INTK, INTL)	
			(UNDER HOOD ON PRE-CLEANER UNDER THE SERVICE FILM)	
	259-4402	1	FILM-WARNING (HOT FLUID UNDER PRESSURE)	
			(ON TOP OF THE RADIATOR SHUNT TANK CAP)	

B-USE AS REQUIRED

<END>

SERVICE EQUIPMENT AND SUPPLIES

206-1701 PROTECTION GP-VANDALISM—ROTATING GUARD

S/N: JBA1-UP

PART OF 335-3052, 335-3053, 335-3055 CAB AR, 335-3054 CAB AR-ENCLOSED ROPS AN ATTACHMENT

SMCS-7315 **i03500322**

NOTE	REF NO	GRAPHIC REF	PART NUMBER	QTY	PART NAME 1 2 3 4 5 6 (PRODUCT LEVEL)	SEE PAGE
	1	1	**206-1852**	1	COVER-VANDALISM	
	2	1	**206-1853**	2	BUSHING	
	3	1	**206-1855**	1	PLATE	
	4	1	**206-1856**	1	BRACKET	
J	5	1	**226-0291**	1	LOCK AS	
M	6	1	**129-3178**	2	LOCKNUT (M6X1-THD)	
M	7	1	**174-8131**	1	SCREW-TRUSS HEAD (M4X0.7X12-MM)	
	8	1	**232-4636**	2	BOLT-CARRIAGE (M6X1-THD)	
	9	1	**8C-9660**	1	WASHER (4.6X7.9X0.8-MM THK)	
M	10	1	**8T-2659**	1	LOCKNUT (M4X0.7-THD)	
	11	1	**9X-2038**	2	WASHER (7X19X2-MM THK)	

J-REQUIRES 5P-8500 KEY
M-METRIC PART

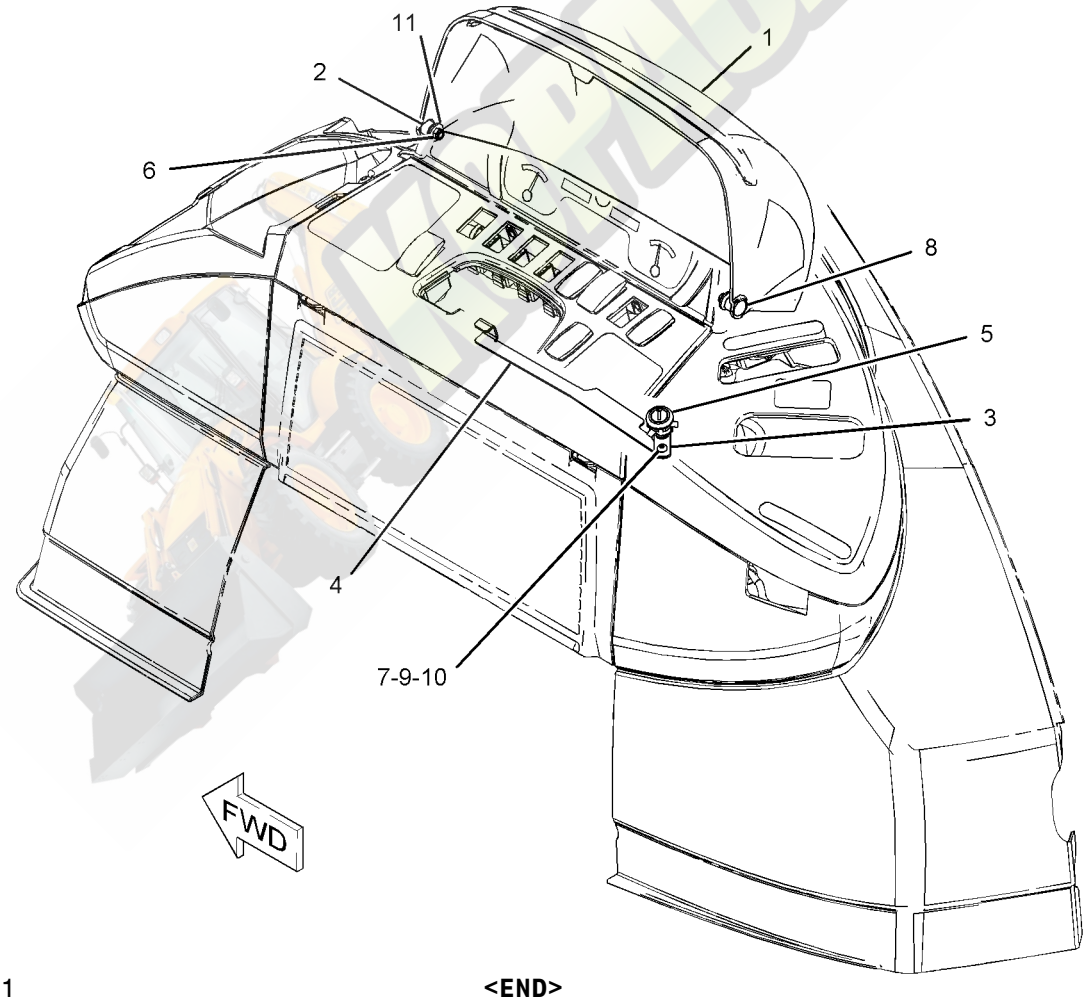

GRAPHIC #1 **<END>** g01083362

SERVICE EQUIPMENT AND SUPPLIES

243-1022 SERVICE GP-FILTER–KIT

S/N: JBA1-UP

AN ATTACHMENT

SMCS-1260, 1261, 1263, 1308, 3067, 5068 **i02474610**

NOTE	PART NUMBER	QTY	PART NAME 1 2 3 4 5 6 (PRODUCT LEVEL)	SEE PAGE
	7W-2326	1	FILTER AS-ENGINE OIL	
	119-4740	1	FILTER-OIL (STANDARD EFFICIENCY) (HYDRAULIC)	
	126-1817	1	FILTER-OIL (ULTRA HIGH EFFICIENCY)	
	228-9130	1	FILTER AS-WATER SEP & FUEL	

<END>

KOPACZKA.PL

PART NUMBER INDEX

Part	Page
0	
0S-1594	678
	680
0S-1595	674
	676
0S-1603	44
	45
1	
1B-2705	683
1B-8736	20
	21
	26
	50
1H-1200	327
1H-3244	183
	184
	185
	187
	638
1J-9671	367
	368
1K-6872	674
	676
1K-7082	264
1L-6377	671
1M-6119	151
	153
1M-6120	151
	153
1P-0545	6
1P-0810	153
1P-4278	121
	124
	126
	162
	164
	462
1P-4584	437
1P-6872	458
1R-5396	330
	331
1S-7251	153
	206
1S-7252	151
1S-9593	174
	177
	217
1V-0358	674
	676
2	
2B-0858	36
	37
	65
	68
2B-0941	255
	257
2D-2628	300
2D-2629	300
2D-2630	300
2D-2631	300
2D-2633	300
2K-4973	662
	678
	680
	683
2K-6830	375
	376
2L-5893	685
2L-8066	206
2L-8067	198
	206
2L-8069	198
	218
2L-8075	223
2L-8076	227
2L-8079	206
	218
2M-9780	402
	411
	417
	420
	432
	435
	441
	458
2P-1279	420
2P-1293	390
	391
	395
	399
2P-7864	651
	676
2P-8104	189
2R-0364	504
2S-3163	624
2S-3745	644
	646
2U-9234	355
2W-9710	89
	99
2Y-5821	375
	376
3	
3B-4506	363
3B-4610	332
3B-4631	685
3B-5317	456
3B-5319	494
	496
	498
	499
	602
	603
	604
3B-5790	458
3B-8488	349
	351
	353
	488
	491
	508
	510
	512
3B-8489	353
	355
	375
	376
	379
	456
	488
	491
	494
	496
	498
	499
	504
	508
	510
	512
	574
	575
	576
	577
	593
	605
3C-8388	485
3D-2824	393
	397
	409
	411
	414
	437
	445
	448
	452
	454
	465
3D-4245	487
3E-0068	662
3E-3371	215
3E-4321	661
	662
3E-4337	653
3E-5153	189
3E-5154	189
3E-6600	219
	620
	626
3E-6735	375
	376
3E-6769	458
3E-6770	458
3E-7675	327
3E-8299	219
3E-9362	198
3F-5108	595
3F-9556	207
	666
	672
	690
3G-6927	292
3J-1907	145
	225
	227
	228
	241
	247
	255
	263
	287
	288
	292
	293
	327
	328
	333
	379
	386
	403
	411
	412
	417
	420
	423
	425
	427
	428
	430
	432
	433
	435
	441
	443
	444
	445
	448
	452
	454
3J-4818	207
3J-7354	333
	367
	368
	411
	435
	443
3K-0360	227
	327
	328
	333
	399
	405
	410
	416
	417
	420
	432
	433
	441
	448
	453
	462
3K-8460	121
3N-5739	375
	376
3P-0439	353
3S-2093	145
	151
	153
	159
	165
	174

► **PRIMARY REFERENCE**

PART NUMBER INDEX

Part	Page
	176
	177
	179
	181
	186
	199
	201
	203
	205
	207
	209
	211
	213
	215
	218
	223
	225
	227
	228
	231
	233
	235
	237
	288
	420
	445
	613
	615
	648
	662
	682
	688
3S-6049	151
3S-6050	151
3S-8665	237
3T-0849	485
	626
	668
3T-0852	651
3T-5760	151
	153
4	
4B-2043	197
4B-4283	685
4B-4863	102
	104
4B-9784	685
4D-2297	473
	474
	475
	476
	477
	478
	479
4D-6433	690
4D-6466	153
4D-7388	89
	99
4D-9517	504
4F-3657	549
	550
	551
	552
	561
	562
	564
	565
	566
	567
	568
	569
	571
	573
	594
	608
4F-4879	653
4H-0408	47
4H-1641	651
	676
4H-2558	641
4I-3038	622
4I-6287	441
	445
4I-9521	430
4I-9522	430
4I-9523	430
4I-9524	430
4I-9525	430
4I-9526	430
4I-9527	430
4I-9528	430
4J-0520	248
4J-0522	244
	255
	257
	292
4J-1888	574
	575
	576
	577
	589
	590
	592
	596
	606
4J-5267	487
4J-5477	247
	255
	263
	327
	333
	420
	427
	428
	430
	432
	435
	443
	444
	448
4J-9535	469
	470
4K-0367	549
	550
	551
	552
	561
	562
	564
	565
	566
	567
	568
	569
	571
	573
	594
	595
	608
4K-9890	651
	683
4L-6454	241
4P-7428	207
	223
4P-7581	207
	227
	235
4P-8134	207
	218
4V-2264	653
4W-9972	288
	292
5	
5A-3604	504
5B-9079	70
5C-2874	173
	207
	655
	656
5C-2890	177
	183
	184
	185
	187
	197
	199
	207
	209
	218
	397
	620
	657
5C-6588	690
5C-7261	87
	89
	96
	98
	99
	160
	165
	167
	168
	174
	177
	183
	184
	185
	187
	199
	207
	209
	218
	328
	336
	370
	371
	405
	407
	412
	439
	516
	522
	597
	613
	666
	667
	672
	690
	692
	694
5C-8312	102
	104
	335
5C-9553	457
	504
	634
	636
	672
5D-1026	74
	89
	99
	333
	433
	435
	661
	662
5D-6523	504
5D-8159	516
	522
	596
	597
	606
5E-8557	361
5G-2003	659
5I-3978	445
5K-5338	662
5K-9090	386
	390
	391
	395
	437
5P-0370	501
5P-0599	420
5P-0743	410
5P-0747	151
	153
	206
5P-0761	151
	153
5P-0767	237
	661
	662
5P-1076	355
	651

PART NUMBER INDEX

Part	Page
5P-1420	121
	124
	126
	162
	165
5P-1442	124
	126
	462
5P-1505	333
	433
	435
5P-1506	439
5P-4115	228
5P-4116	74
	84
	85
	86
	87
	95
	96
	102
	104
	148
	174
	177
	255
	257
	328
	336
	349
	351
	439
	502
	613
	615
	626
	639
	641
	690
5P-4571	201
	218
	653
5P-4868	437
5P-5148	397
	457
5P-5637	644
	646
5P-5655	644
	646
5P-5688	644
	646
5P-5927	345
	620
5P-5995	228
5P-6006	206
5P-6129	641
5P-6718	288
	292
5P-7070	622
5P-7464	403
	405
	425
5P-7465	403
	405
	412
	425
5P-7648	613
	615
5P-7814	121
5P-7958	164
	215
	504
5P-8066	288
	292
5P-8245	44
	45
	674
	676
5P-8500	703
5P-9297	687
5T-5439	316
	317
5V-2545	272
6	
6A-9083	674
	676
6C-3680	644
	646
6C-9089	690
6D-0337	▶300
	301
6D-0443	300
6E-1135	504
6E-1478	375
	376
6E-3341	460
6E-4003	458
6E-4004	458
6E-4006	458
	▶460
6E-4009	460
6E-5431	502
6E-6151	460
6E-6154	460
6E-6155	460
6E-6157	460
6E-6528	458
6H-3587	201
6H-3616	54
	55
6I-0217	48
	50
	57
	59
	91
	93
	112
	114
	116
	130
	133
	137
	141
	149
	150
6I-0218	81
6I-0254	91
	93
6I-0260	24
	57
	59
	75
	79
	80
	81
	130
	133
	137
	141
	149
	150
6I-0289	57
	59
6I-0291	130
	133
	137
	141
6I-0363	57
	59
6I-0364	111
	191
	192
6I-0423	46
	47
6I-0501	40
	41
6I-0563	111
	112
	114
	116
6I-0572	30
	34
	57
	59
	82
	83
	106
	112
6I-0594	191
	192
6I-0645	48
	50
	82
	83
6I-0646	34
	69
6I-0650	48
	50
	149
	150
6I-0846	22
	24
6I-0847	46
	47
6I-0917	22
	24
6I-1418	217
6I-1497	74
	76
6I-4374	81
6J-2680	437
6K-0806	198
	209
	217
	287
	649
6K-4076	524
	582
6K-8178	124
	126
6L-4725	639
	641
6N-6984	89
	99
6P-8855	661
	662
6T-0465	153
6T-1375	688
6T-5017	118
6T-5598	153
6T-9142	245
6T-9143	245
6T-9144	245
6T-9145	245
6T-9146	245
6T-9147	245
6T-9160	281
6T-9163	245
	292
6T-9164	245
	292
6T-9165	245
	292
6T-9166	245
	292
6T-9196	270
	273
	275
	279
	282
6T-9202	292
6V-0675	661
	662
6V-0826	328
6V-0852	288
	293
	432
	435
6V-1249	390
	403
	412
	425
	448
6V-1363	102
	104
6V-2315	330
	331
6V-2317	167
	168
6V-2323	458
6V-3213	570
	572
6V-3305	121
6V-3965	288
	293
	432
	435
6V-4292	333
6V-4364	570

▶ **PRIMARY REFERENCE**

PART NUMBER INDEX

Part	Page
	572
6V-4589	287
	485
6V-5100	270
	273
	275
	282
6V-5201	488
	491
6V-5204	488
	507
	510
	512
6V-5215	244
	292
6V-5217	651
6V-5653	432
6V-5683	485
6V-5764	218
6V-5842	292
6V-6228	239
	241
	248
6V-6717	639
	641
6V-7238	410
6V-7357	644
	646
	688
6V-7359	405
6V-7420	417
	420
6V-7646	601
6V-7687	355
	488
6V-7731	287
6V-7743	336
	613
	683
	692
	694
	696
	697
6V-7744	343
	344
	420
	488
	626
6V-7970	471
	472
6V-8076	228
6V-8077	435
6V-8097	287
	292
6V-8144	596
	605
	606
6V-8186	672
6V-8213	412
6V-8236	485
6V-8335	287
6V-8378	288
	292
6V-8397	327
	333
	380
	403
	411
	412
	417
	423
	425
	432
	441
	445
6V-8398	327
	377
	378
	381
	382
	384
	391
	393
	395
	397
	399
	403
	405
	409
	411
	412
	414
	416
	417
	420
	423
	425
	432
	441
	445
	448
6V-8399	487
6V-8455	254
6V-8500	281
6V-8523	211
6V-8625	327
	405
	416
	448
6V-8626	402
6V-8627	247
	255
	263
	420
	427
	430
6V-8628	333
6V-8633	397
	448
6V-8634	327
	333
	432
	441
6V-8635	386
	437
6V-8636	411
	432
	445
6V-8638	411
	417
	420
	441
6V-8639	399
	441
	448
6V-8641	247
	263
	327
	333
	420
	427
	428
	430
	432
	435
	443
	444
	448
6V-8642	411
	420
6V-8647	443
6V-8713	393
	397
	414
6V-8714	437
6V-8715	411
6V-8716	87
6V-8721	417
	441
6V-8724	327
	403
	412
	417
	423
	425
6V-8757	270
	273
	275
	277
	282
	284
6V-8759	326
6V-8780	443
6V-8781	412
6V-8801	153
6V-8978	469
	470
6V-8989	407
6V-8993	420
6V-8996	407
6V-9023	201
6V-9169	421
	433
6V-9170	391
	393
	395
	399
	405
	407
	421
6V-9172	391
	395
6V-9178	299
6V-9182	87
6V-9189	345
	674
	676
6V-9200	411
6V-9632	194
	217
	502
	601
	668
6V-9746	87
	391
	395
	399
6V-9796	393
6V-9828	435
6V-9829	433
6V-9830	386
	393
	395
	423
6V-9831	397
	414
6V-9833	386
6V-9835	420
	435
	443
6V-9836	412
	432
6V-9838	414
6V-9840	437
6V-9845	414
6V-9850	333
	411
6V-9851	412
	441
6V-9852	407
6V-9854	437
6V-9877	399
6W-5760	411
6W-5761	411
6W-8832	▶584
6W-8900	▶599
6W-8933	▶599
6W-9739	▶599
6Y-1192	270
	273
	279
6Y-1341	287
6Y-1896	288
	292
6Y-2035	288
6Y-2736	281
6Y-2737	244
6Y-7929	270
	273
	275
	277
	279
6Y-7957	282
	284
6Y-9930	671
7C-0351	57

7

▶ PRIMARY REFERENCE

PART NUMBER INDEX

Part	Page	Part	Page	Part	Page	Part	Page
	59		437		359		439
7C-1224	57		454		639		462
	59	7N-5274	151		641		508
7C-4354	124	7N-7221	203	7X-0586	102		510
	126		206		104		512
7C-4616	48		217	7X-0590	593		626
	50	7N-7779	235	7X-0603	89		630
7D-7233	76	7N-7780	235		99		680
	439	7N-7781	235	7X-0605	441	7X-7958	439
7E-3870	109	7N-7782	235	7X-0618	264	7Y-3883	206
7H-3937	644	7N-9017	206		613		
	646	7R-2751	218		615		
	690	7R-8239	332	7X-0620	231		
7J-9108	228	7S-1912	124		632		
	328		126	7X-0632	355	8A-8563	441
	372	7T-0093	644		508	8C-3056	153
	373		646		510	8C-3290	338
	382	7T-2646	245		512		339
	390		292	7X-0818	118		340
	391	7T-2651	244		255	8C-3291	671
	393		292		257	8C-3347	353
	395	7T-3017	281	7X-0871	432	8C-3398	207
	397	7T-3018	281	7X-0872	228		219
	399	7T-3021	281	7X-2393	613	8C-3446	386
	402	7T-3022	281		692	8C-3451	386
	405	7T-3034	245		694	8C-3681	89
	407	7T-3051	244	7X-2444	420		99
	411	7T-3109	287	7X-2476	339		687
	414	7T-3111	288	7X-2532	671	8C-3756	644
	417	7T-3119	287	7X-2533	162		646
	420	7T-3195	287		165	8C-3798	74
7K-1181	118		292		668		201
	124	7T-3249	287	7X-2534	199		659
	126	7T-3251	288		209	8C-4982	659
	153		292		219		664
	174	7T-3253	244	7X-2537	361	8C-5457	189
	177		292	7X-2538	618	8C-5748	287
	206	7T-4532	617	7X-2540	84		292
	213	7T-4848	217		85	8C-6354	217
	217	7T-6087	189		86	8C-6431	674
	223	7T-6088	189	7X-2543	414		676
	228	7T-6090	189		508	8C-6437	667
	231	7T-6092	189		510	8C-7110	458
	247	7T-6093	189		512	8C-7524	644
	263	7T-6099	189	7X-2553	265		646
	325	7T-6655	273		266	8C-8522	336
	327		275		618	8C-8545	292
	333	7T-6739	644	7X-2559	241	8C-8989	441
	416	7T-6799	203	7X-2572	358	8C-9660	705
	417	7T-9987	151	7X-2908	460	8C-9778	189
	428	7W-1176	46	7X-3164	417	8C-9783	189
	430		47		420	8C-9987	619
	435	7W-2326	76	7X-3165	228		673
	439		706		421	8D-2707	300
	441	7W-3556	292	7X-3383	504	8E-1118	659
	444	7W-4634	40	7X-4741	287	8E-5707	270
	661		41		292		273
	662	7W-4642	46	7X-4744	299		275
	668		47	7X-7729	84		277
7K-9208	353	7W-7381	228		85		279
7M-8485	87	7X-0579	89		86		282
	386		97		151		284
	391		98		153	8E-8293	688
	395		99		219	8F-1434	173
	399		218		328		189

► **PRIMARY REFERENCE**

PART NUMBER INDEX

Part	Page	Part	Page	Part	Page	Part	Page
	207		219		126		126
	288		288		145		151
	292		292		153		153
8F-3590	201	8T-0389	169		189		189
	207		170		197		201
	219		171		201		207
8F-9866	6		172		207		219
	►701		235		219		223
8J-2413	472		508		223		328
8J-4455	189		510		229		336
8K-1117	391		512		235		391
	395		690		247		395
	399	8T-0404	393		255		399
	405	8T-0643	292		257		405
8L-2746	287	8T-1118	688		328		412
8L-2779	287	8T-1482	353		333		414
	293	8T-1580	244		343		448
8L-2786	293		279		344		504
8L-8413	8	8T-1581	279		353		508
	9		287		359		510
	10	8T-1683	333		391		512
	11	8T-1715	399		393		557
	12	8T-1889	327		395		558
	13	8T-1890	327		399		559
	14	8T-1893	403		403		560
	15		423		405		561
	164		425		412		562
	198	8T-1894	403		414		563
	206		423		421		564
	209		425		423		565
	213	8T-1899	448		425		566
	215	8T-1900	448		439		567
	218	8T-2223	89		441		568
	225		99		448		569
	231	8T-2658	622		462		630
	237	8T-2659	705		465		648
8M-2770	228	8T-3444	403		466		690
8M-2773	124		423		493	8T-4134	668
	126		425		504	8T-4136	76
8N-0869	153	8T-3490	76		508		87
8R-2916	630		87		510		111
8R-6111	659		111		512		124
8S-0023	255		121		618		126
	257		363		630		219
8S-0024	255		668		648		235
	257	8T-3612	89		661		255
8S-0948	333		99		662		257
8S-3020	151		118		668		328
8S-7803	613		336	8T-4122	56		355
	615		363		343		359
	685		502		344		391
8T-0076	333		668		356		395
8T-0119	327	8T-3647	433		385		403
8T-0131	327	8T-3844	397		594		405
8T-0144	588	8T-4001	339		595		412
8T-0154	410		340	8T-4123	359		423
8T-0164	427	8T-4121	56		671		425
	430		76	8T-4131	671		439
8T-0255	599		84	8T-4132	56		491
8T-0271	292		85		356		618
	510		86		671		630
	512		87	8T-4133	89		662
8T-0285	219		111		99	8T-4137	151
8T-0292	241		121		111		153
8T-0328	207		124		124		207

► PRIMARY REFERENCE

PART NUMBER INDEX

Part	Page	Part	Page	Part	Page	Part	Page
	219	8T-4185	414		510		437
	229		662		512		441
	333	8T-4186	465		648		462
	359		668		662		466
	414	8T-4187	353	8T-4197	349		632
	441	8T-4189	74		351		662
	462		89	8T-4200	89		682
	493		96		95	8T-4224	84
	504		97		96		85
	661		98		99		86
	662		99		160		96
8T-4138	74		102		165		118
	118		104		219		124
	160		124		254		126
	165		126		357		151
	219		148		613		160
	328		160		615		165
	502		165		639		167
	668		179		641		168
8T-4139	359		181	8T-4205	74		179
	662		207		118		181
	682		336		160		183
8T-4141	359		359		162		184
8T-4167	338		361		165		185
	339		412		177		187
	340		502		183		199
	353		593		184		207
	358		626		185		209
8T-4171	199		668		187		219
	207		673		199		254
	209	8T-4191	405		207		325
	233		462		209		328
	601	8T-4192	87		219		332
8T-4172	84		264		233		357
	85		403		328		359
	86		425		336		361
	247	8T-4193	148		341		363
	333		506		397		390
8T-4173	671	8T-4195	111		457		397
8T-4176	255		121		620		405
	257		223		639		407
	488		343		641		412
8T-4177	441		344		644		417
8T-4178	557		391		646		430
	558		395		672		433
	559		399		688		441
	560		412	8T-4222	89		445
	561		414		99		457
	562		448		343		502
	563		504		344		504
	564		508		349		516
	565		510		351		522
	566		512	8T-4223	87		593
	567		630		124		597
	568		668		126		618
	569	8T-4196	56		207		626
8T-4179	124		84		255		665
	126		85		257		668
	207		86		265		673
	462		197		266	8T-4241	494
	593		349		336		496
8T-4182	466		351		359		498
8T-4183	336		355		363		499
	437		393		403		510
	466		412		425		512

► **PRIMARY REFERENCE**

PART NUMBER INDEX

Part	Page
8T-4244	363
	626
	668
8T-4646	412
8T-4648	353
	363
8T-4742	657
	658
8T-4744	657
	658
8T-4753	173
8T-4778	343
	344
8T-4908	84
	85
	86
	89
	99
	102
	104
	118
	179
	181
	328
	345
	357
	390
	397
	405
	407
	504
	593
	619
	665
	674
	676
8T-4956	255
	257
	265
	266
	441
	632
	668
8T-4970	76
8T-4971	658
	668
8T-4984	89
	99
8T-5005	151
	153
	333
	439
8T-5035	353
8T-5093	345
	688
8T-5439	264
	304
	305
	306
	310
	311
	312
	313
	314
	315
	317
	320
	321
	322
	323
	353
8T-6466	153
	421
8T-6684	437
8T-6685	488
	508
8T-6696	417
8T-6703	89
	99
8T-6726	102
	104
	403
	417
	423
	425
8T-6869	363
	430
	457
8T-6876	432
8T-6885	211
8T-6902	502
	672
8T-6912	325
	412
	418
	445
	457
8T-6974	634
	636
8T-7338	349
	351
	385
8T-7529	74
	87
	439
8T-7547	89
	99
	174
	177
	349
	351
	359
	370
	371
	502
	668
8T-7876	83
	122
8T-7963	418
8T-7968	445
8T-7971	353
8T-8442	458
8T-8729	327
8T-8737	164
	169
	170
	171
	172
	174
	198
	201
	203
	205
	206
	209
	211
	215
	217
	218
	223
	225
	227
	228
	231
	235
	237
	613
	615
	627
	628
	629
	632
	644
	646
	649
	666
8T-8799	153
	198
	206
	209
	217
	218
8T-8894	145
	630
8T-9402	74
	102
8T-9405	102
	104
	385
8T-9501	632
	674
8T-9655	217
8X-9618	217
8Y-5737	639
	641
8Y-6352	639
	641
8Y-6967	639
	641
8Y-7309	613
	692
	694
8Y-8081	151
	153

9

Part	Page
9D-3767	328
9F-2637	701
9F-5644	187
9G-2265	235
9G-3695	235
9M-0164	462
9M-1974	287
9M-2307	173
9M-4335	353
9M-4814	661
	662
9M-5733	370
	371
9M-6738	211
	417
9M-7958	76
	89
	99
9M-7959	639
	641
9M-8406	124
	126
	160
	165
	405
9N-0869	370
	371
9N-2231	639
	641
9P-2553	690
9P-9150	287
	292
9R-0109	488
	491
	593
	596
	605
	606
9R-0111	488
9R-0139	494
	499
9R-0147	496
	498
9R-0153	377
	378
	384
9R-0158	488
	494
	496
	498
	499
	510
	512
	570
	572
	602
	603
	604
9R-0162	508
	510
	525
	526
	527
	528
	530
	531
	532
	533
9R-0170	496
	498
9R-0320	547
	548

PART NUMBER INDEX

Part	Page	Part	Page	Part	Page	Part	Page
9R-0411	488	9R-5313	523	9W-0844	201		638
9R-0481	353		524		213		639
	491		586		218		641
9R-0868	▶506	9R-5320	▶594		233		668
9R-1004	393	9R-5321	▶595		235		690
9R-1005	393	9R-5708	685		613		692
9R-1496	523	9R-5832	523		615		694
	579		524	9W-0852	201		696
	580	9R-5866	▶608		223		697
9R-1499	179	9R-7240	147		233	9X-2060	508
	181	9R-7891	512		615		510
9R-1510	494	9R-7941	201	9W-1951	218		512
	499	9R-7942	175	9W-3324	169	9X-2092	690
	570	9R-7958	175		170	9X-2480	207
	572	9R-7980	201		171	9X-2842	672
	602	9R-8165	502		172	9X-3401	8
	604	9R-8291	355	9W-3326	177		9
9R-1766	632		491	9W-4216	370		10
9R-1767	632	9R-8292	508		371		11
9R-2053	211		510	9W-4363	403		12
9R-2806	325		512	9W-5460	244		13
9R-2807	325	9R-8870	403		292		14
	328		423	9W-6582	671		15
9R-2959	510		425	9W-6584	671		164
	512	9R-8987	525	9W-8215	595		174
9R-3092	372		526	9W-9910	56		177
	508		527	9W-9915	56		188
	510		528	9W-9952	56		198
	512	9R-8988	525	9W-9953	56		201
9R-3205	687		526	9X-1054	198		205
9R-3469	688		527		206		211
9R-3545	320		528		209		215
	321	9R-9028	503		213		223
	324	9R-9105	496		237		227
9R-3884	333		498	9X-1055	198		228
9R-4110	353		603		206		613
9R-4649	582		604	9X-1386	188		615
9R-4668	▶456	9R-9702	264	9X-2036	189	9X-3402	177
	514	9R-9925	462	9X-2038	347		206
	515	9S-4183	465		430		228
	516	9S-4185	293		620	9X-3982	462
	517	9S-4191	145		622	9X-4244	167
	522		287		624		168
9R-4672	585		293		634	9X-4611	375
9R-4675	585		386		636		376
	586	9S-8004	241		639	9X-6165	197
9R-4676	574		379		641	9X-6418	405
	575		452		659	9X-6611	375
	576		454		668		376
	577		458		705	9X-6615	287
9R-4677	456	9S-8008	452	9X-2040	626		292
9R-4678	456		454	9X-2042	194	9X-7114	359
9R-5205	523	9S-9334	454	9X-2043	347	9X-7378	199
	524	9T-2883	375		430	9X-7380	662
9R-5206	523		376	9X-2044	328	9X-7381	662
	524	9T-4007	379		620	9X-7382	662
9R-5264	579	9U-8263	659		622	9X-7383	662
9R-5271	579	9U-8875	273		683	9X-7385	617
	580		277	9X-2045	197	9X-8118	175
	582	9U-8886	275		328	9X-8139	175
9R-5294	585		277		613	9X-8256	76
	586		385		622		201
9R-5301	493	9V-9077	584		624		502
	501	9W-0607	167		634		626
	503		168		636		659

▶ **PRIMARY REFERENCE**

PART NUMBER INDEX

Part	Page
	668
9X-8257	148
	265
	266
	349
	351
	506
	618
	671
9X-8372	688
9X-8699	361
9Y-5015	36
	37
0	
005-0469	244
	245
005-0471	287
009-2062	279
014-5645	287
031-4155	683
	685
031-5644	89
	99
	182
032-9090	26
032-9091	26
033-6028	458
033-6043	458
033-6044	485
033-7687	44
	45
034-1432	601
035-8017	122
	130
	133
035-8063	34
	196
035-8068	30
	34
038-9317	151
	153
039-8557	668
039-9133	332
067-6002	30
	34
067-6006	30
	34
	36
	37
067-6043	30
	34
067-6095	21
067-6179	48
	50
067-6213	57
	59
067-6264	122
	130
	133
067-6265	122
	130
	133
067-6873	26
067-6874	26
067-6999	122
	130
	133
069-4080	145
069-4707	239
	241
	250
081-5648	432
084-4277	659
089-7990	264
091-0081	405
091-1637	599
091-1664	599
091-1665	599
091-1667	599
091-1745	599
091-2436	198
	201
	206
	218
	228
091-5928	588
	591
091-9035	153
	333
	439
092-3635	333
093-8828	250
095-0641	672
095-0924	267
095-0927	279
095-0928	279
095-0929	355
095-1041	250
095-1751	471
	472
095-7950	491
096-5516	281
	494
	496
	498
	499
096-5968	298
096-6166	218
	664
097-7234	201
098-5747	259
098-6004	510
	512
099-3649	657
1	
100-3253	169
	170
	171
	172
100-3254	169
	170
	171
	172
100-3255	169
	170
	171
	172
100-3685	189
100-3751	48
	50
	91
	93
100-4112	189
100-4113	189
100-4115	189
100-4118	189
100-4119	189
100-4336	333
100-4461	77
	78
100-4830	52
	53
	130
	133
	137
	141
100-4838	22
	24
100-4841	22
	24
	30
	34
100-5041	198
	206
100-6674	198
	206
	218
100-7608	692
	694
	696
	697
100-8451	149
	150
101-0745	688
101-1787	435
101-2987	54
	55
101-3617	46
101-3771	57
	59
101-3895	48
	50
	81
101-4411	601
101-4412	601
101-4413	601
101-4414	601
101-4415	600
101-7404	145
102-3582	375
	376
102-8801	201
	218
	237
102-8802	8
	9
	10
	11
	12
	13
	14
	15
	147
	164
	173
	188
	198
	199
	206
	209
	215
	218
	231
	487
	617
	632
	653
102-8803	165
	174
	177
	198
	209
	211
	215
	225
	327
102-8804	203
	213
	218
	225
	227
	233
	667
102-8805	164
	169
	170
	171
	172
	201
	215
	218
	231
	237
	428
102-8806	164
	205
	215
	237
	613
	615
	666
102-9941	40
	41
103-2543	219
103-5520	485
104-1995	198
	218
104-3288	245
	292
104-6310	▶596
	597
104-6311	596
	606
104-6312	519

▶ **PRIMARY REFERENCE**

PART NUMBER INDEX

Part	Page	Part	Page	Part	Page	Part	Page
	521		498		213	121-2061	245
	596		499		215		292
104-6313	578	111-4627	639		237	121-2500	273
	581		641	115-1918	385		275
	607	111-6792	199	115-6433	491		277
104-6316	596		218	116-4825	488	121-3040	676
	606	111-6795	198	116-5763	345	121-4480	120
104-6317	596		218	116-7471	217	121-6936	688
	606	111-6816	198	117-1385	292	121-7238	529
105-1440	485		218	117-3534	385	121-7385	287
105-3480	231	111-7899	176	117-9713	254		292
	632		177	117-9887	272	121-7389	287
105-3481	651		179	118-1348	493	121-7390	287
105-8034	327		181		501	121-7391	287
105-9411	662		193	118-1977	524	121-7396	287
106-0401	387		198	118-1978	524		292
	388		201	118-1979	582	121-7398	245
106-0406	387		203	118-1980	582		292
106-3108	451		209	118-1984	▶524	121-7399	245
106-8020	147		213	118-2990	671		292
106-8835	130		217	118-6854	336	121-7400	245
106-8916	112		223	118-7110	594		292
	114		225	118-7286	87	121-7401	245
	116		228	118-8118	120		292
106-9388	578		231		144	121-7402	245
	581		235	118-8119	120		292
	607		237	119-3662	198	121-7403	287
106-9586	299		688		201	121-7404	287
106-9861	244	111-7906	254		203	121-9797	▶501
	292	111-7907	▶254		206	121-9870	659
107-5591	632		286		209	121-9875	287
107-6709	391	111-8222	107		213	122-1113	432
	395	112-1533	353		218		435
107-6826	272	112-1776	596		223	122-1877	270
108-3872	391		606		235		279
	395	112-1826	269		613		282
	399		▶385		615		284
108-4311	653	112-1931	▶523	119-3859	674	122-1878	282
109-1633	662	113-0920	659		676		284
109-1634	662	113-6349	149	119-4594	488	122-1879	245
110-0203	218		150		593		292
110-2445	102	113-8087	501		605	122-1883	288
	104	113-8129	91	119-4740	269		292
110-2861	578		93		706	122-1884	282
	581	113-8490	218	119-5025	118		284
	607	113-8491	218	119-5708	76	122-1886	275
110-5602	657	113-8492	218	119-6346	448		277
110-6109	639	113-9083	523	119-9631	644	122-3652	244
	641	113-9084	523	120-4553	403	122-4401	198
110-7887	203	114-0063	662	120-5724	460		218
111-0483	411	114-1042	453	120-9027	622	122-6785	287
111-0859	42	114-2579	106	120-9051	450	122-6787	288
	43		107	120-9286	702		292
111-3422	130	114-3832	579	120-9762	244	122-9250	453
	133		580		292		472
	136	114-3833	579	121-0694	273	123-0428	359
	140		580		275	123-0708	335
111-3423	130	114-4363	46	121-0883	46	123-0714	275
	133		47		47		277
	136	115-1052	613	121-0885	279	123-1373	153
	140	115-1162	106	121-0904	284	123-1377	288
111-4332	488	115-1615	164	121-2059	245		292
111-4337	488		199		292	123-2918	288
	494		206	121-2060	245	123-2919	288
	496		209		292	123-2920	244

▶ **PRIMARY REFERENCE**

PART NUMBER INDEX

Part	Page
	275
	277
123-4065	97
	98
123-6758	164
	215
123-7615	201
	206
123-7637	391
	395
	399
123-8905	273
	275
	277
	282
	284
123-8906	244
	245
	273
	275
	282
123-8907	270
	279
	281
	287
123-8908	245
	270
	279
123-8909	275
	277
123-8910	245
	275
123-8912	270
	279
	282
	284
123-8913	275
124-0174	228
124-0312	639
	641
124-2456	336
124-3536	61
	62
124-3815	48
	50
	107
	133
	137
	141
124-5640	198
	206
124-6259	102
	104
125-7874	164
	177
	198
	201
	203
	206
	209
	213
	215
	218
	223
	225
	228
	235
	237
125-7875	201
	206
	218
	231
	237
	613
	615
125-7876	153
	228
126-1766	164
	215
	218
126-1767	188
	203
	617
126-1768	203
126-1817	386
	706
126-4974	501
127-2170	345
127-3017	287
127-4471	76
	462
127-4834	340
128-3094	526
128-3778	525
128-4168	206
128-4170	201
128-4172	206
128-4190	218
128-4249	218
128-5596	385
	▶461
128-7716	644
	646
128-7903	488
128-7905	488
129-3178	102
	104
	644
	646
	658
	672
	683
	705
129-3738	613
	615
129-4741	336
129-5256	613
	615
129-5257	613
	615
129-8542	692
	694
	696
	697
129-8545	692
	694
	696
	697
130-2057	528
130-4832	639
	641
130-7092	▶120
	121
130-7282	241
130-7881	84
	85
	86
130-8150	461
130-9984	87
	439
	662
131-1812	120
131-2117	527
131-3540	690
131-3987	615
	634
	636
132-2249	634
	636
	659
132-3056	462
132-3721	588
132-3723	588
132-3777	589
	592
132-3778	589
	592
132-3821	588
	591
132-5789	153
	206
132-8769	▶387
133-1011	48
	50
133-3413	158
133-5813	428
	432
133-6517	158
134-0143	504
134-0404	227
134-2540	217
134-4807	501
134-5884	530
	531
	532
	533
134-5885	530
	531
	532
	533
134-7258	704
135-5009	153
135-5893	312
135-8203	549
	550
	551
	552
	561
	562
	564
	565
	566
	567
	568
	569
	571
	573
	608
135-8206	549
	550
	551
	552
	561
	562
	564
	565
	566
	567
	568
	569
	571
	573
136-1955	74
136-4192	692
	694
	696
	697
136-6887	535
136-6889	536
136-6890	537
136-7808	248
137-4234	515
	518
	519
	520
	521
	549
	550
	551
	552
	553
	554
	555
	556
	557
	558
	559
	560
	561
	562
	563
	564
	565
	566
	567
	568
	569
	571
	573
138-2053	21
138-8454	162
	164
140-3640	89
	99
140-7649	375
	376
140-8714	130
	133
	137
	141

▶ PRIMARY REFERENCE

PART NUMBER INDEX

Part	Page
140-8718	130
	133
	137
	141
140-8783	149
	150
140-9378	217
141-0888	455
141-1667	110
	112
141-8061	164
	206
	215
	217
	233
	237
142-0485	327
142-3391	84
	85
	86
143-0539	▶189
	191
143-1344	189
143-2827	613
	692
	694
	696
	697
144-0195	639
	641
	688
144-0367	437
144-5287	372
144-6734	252
145-0981	659
145-2350	96
146-4023	690
146-6347	335
146-6729	189
146-8319	307
	308
146-9439	193
	197
	217
	225
147-0201	292
147-0202	273
	275
147-0203	270
	277
	279
	282
147-0205	279
147-0207	282
147-0209	287
	292
	▶299
147-0210	282
147-0211	292
147-0215	270
147-0216	270
147-0218	292
147-0224	275
147-0226	293
147-0227	282
147-0228	270
	273
	275
147-0234	293
147-0236	293
147-0238	270
	273
	275
	277
	282
147-0242	279
147-0248	279
147-0256	273
147-0257	275
147-0258	270
147-0259	273
	275
147-0260	279
147-0261	279
147-0262	293
147-0266	293
147-0268	293
147-0270	273
147-1445	218
147-1446	218
147-1979	36
147-5553	114
	116
148-5353	692
	694
	696
	697
148-5367	411
148-7925	428
148-8311	399
148-8315	411
	420
148-8316	443
148-8317	437
148-8318	327
	333
	432
	441
148-8319	411
148-8325	247
	263
	327
	333
	420
	427
	428
	430
	432
	435
	443
	445
148-8328	397
	448
148-8335	386
	437
148-8336	411
	432
	445
148-8339	87
148-8340	399
	441
	448
148-8341	393
	397
	414
148-8345	411
	417
	420
	441
148-8352	437
148-8359	399
148-8360	87
148-8361	411
148-8362	437
148-8364	327
	405
	416
	448
148-8365	432
148-8367	333
	411
148-8368	247
	255
	263
	420
	427
	430
148-8369	333
148-8370	412
	441
148-8372	417
	441
148-8378	327
	403
	412
	417
	423
	425
148-8382	393
148-8383	333
148-8390	402
148-8393	407
148-8407	145
	293
	386
148-8408	465
148-8426	417
148-8429	437
148-8433	412
	432
148-8435	412
148-8446	414
148-8447	228
149-0686	▶366
	432
149-4236	112
149-7372	237
149-9954	144
150-3026	333
150-3027	432
150-3033	427
	430
150-3052	391
	395
150-3053	391
	395
	399
150-3060	403
	423
	425
150-3062	435
150-3757	279
	281
150-4029	443
150-4031	414
150-4052	420
150-5968	420
	435
	443
150-7732	293
151-1975	121
151-4841	118
	124
	126
	247
	263
	327
151-7829	▶525
	549
151-7830	▶526
	550
151-7831	▶527
	551
151-7832	▶528
	552
151-7887	▶549
151-7888	▶550
151-7889	▶551
151-7890	▶552
151-7902	525
	526
	527
	528
	530
	531
	532
	533
151-7903	525
	526
	527
	528
	530
	531
	532
	533
151-7926	531
151-9272	203
151-9275	217
152-3968	129
	133
	136
	140
152-5717	411
152-5718	412
152-6144	239
	241
	248
153-4906	458
153-6241	441

▶ **PRIMARY REFERENCE**

PART NUMBER INDEX

Part	Page
154-2302	445
154-5257	547
	548
154-5279	494
	499
	602
	604
154-5280	494
	499
	602
	604
154-5404	239
154-5410	688
154-5416	325
154-5423	692
	694
	696
	697
155-2255	205
	218
	223
155-2260	164
	206
	213
	215
	223
	225
155-2264	218
155-2265	164
	201
	215
	218
	237
155-2270	164
	174
	177
	198
	201
	206
	209
	213
	215
	218
	223
	225
	227
	231
	237
	325
	644
155-2271	201
	215
	218
	223
	228
	233
155-2274	218
	235
	237
	613
	615
156-0283	345
	657
	688
156-1458	235
156-1460	235
156-3600	327
156-3631	327
156-6175	218
	430
157-1669	145
157-2088	279
157-2090	279
159-1503	87
	439
159-3590	349
	351
159-4269	634
	636
159-4945	615
	634
159-4946	615
	636
159-7105	665
159-7106	665
159-8033	336
159-9322	218
159-9495	235
159-9496	235
160-2246	211
	439
160-2248	428
	430
	444
160-3518	164
	215
	217
	649
160-5083	399
160-7599	5
161-3249	282
	284
161-4130	530
	531
	532
	533
161-6149	453
161-6984	655
	656
161-6987	655
	656
161-7145	353
	380
	381
	384
161-7147	377
	378
161-9044	634
	636
161-9283	650
	651
	685
161-9285	685
161-9288	685
161-9294	655
	656
161-9820	149
	150
161-9916	417
	420
162-1604	458
162-4004	343
	344
162-6556	655
	656
163-0753	326
	▶332
163-1135	653
163-9091	270
	273
	279
	293
164-1153	632
164-1154	672
164-1178	624
164-1230	683
164-1244	674
164-1246	676
164-1249	650
	651
164-1251	650
	651
164-1252	650
	651
164-1253	650
	651
164-1254	650
	651
164-1255	650
	651
164-1256	650
	651
164-1269	676
164-1271	676
164-1272	676
164-1273	676
164-1274	651
	676
164-1276	676
164-1277	676
164-1368	231
	325
	626
	632
	639
	641
	668
164-1395	118
	502
164-1398	502
164-1404	255
	257
164-2108	486
164-3876	336
164-5549	441
	445
164-5567	432
	435
164-5586	432
164-5605	333
164-7556	167
	168
164-8474	639
	641
164-9425	206
	648
164-9598	332
164-9599	332
164-9639	428
165-2273	410
165-4021	74
165-4931	435
165-6365	228
165-6595	327
165-7951	145
165-8996	264
166-2033	420
166-7208	662
166-7870	506
166-9413	242
167-2183	375
	376
167-2303	375
	376
167-3692	218
167-3693	206
167-8182	690
167-8251	624
168-0443	570
	572
168-0444	570
	572
168-0480	525
	526
	527
	528
	530
	531
	532
	533
168-8389	515
	518
	519
	520
	521
	549
	550
	551
	552
	553
	554
	555
	556
	557
	558
	559
	560
	561
	562
	563
	564
	565
	566
	567
	568
	569
	571
	573
	584
169-1616	472

▶ **PRIMARY REFERENCE**

PART NUMBER INDEX

Part	Page
169-3261	335
169-5326	137
	141
169-5861	121
169-7291	659
169-7409	407
170-0235	662
170-0950	197
170-9360	218
171-1357	399
171-5349	188
172-4018	690
172-5317	273
	275
	277
172-6050	270
	277
	279
	282
	284
172-6743	279
172-8037	649
172-8039	649
172-8591	624
	639
	641
173-0332	270
173-0639	458
173-0641	458
173-7003	186
174-0503	218
174-3091	231
	627
	628
	629
	632
174-4643	239
174-4647	241
174-4650	241
174-4671	239
174-6740	432
	435
174-8131	705
174-9638	112
	114
	116
174-9711	287
175-0054	287
175-4291	167
	168
175-4292	167
	168
175-7877	5
	▶702
175-7904	385
176-0626	355
176-1477	8
	9
	10
	11
	12
	13
	14
	15
176-1521	8
	9
	10
	11
	12
	13
	14
	15
176-2947	203
176-6219	129
	133
	136
	140
176-6251	▶588
	589
	592
176-6252	588
177-3868	450
177-4877	615
	634
	636
177-9600	7
177-9645	644
	646
177-9648	198
	209
177-9653	644
	646
177-9656	198
	209
178-0469	593
178-1304	304
178-1781	153
178-2593	516
	522
	597
178-3593	▶602
178-3620	432
178-3893	374
178-7230	308
178-7539	217
	222
178-8214	281
178-8465	8
	9
	10
	11
	12
	13
	14
	15
178-8850	▶589
178-9242	151
	153
178-9566	279
	284
179-6401	217
180-0448	665
180-3730	147
180-3748	690
180-5785	651
180-5786	651
180-5787	676
180-5788	676
180-5789	651
180-5791	676
180-5796	674
180-6213	458
180-9160	657
180-9339	164
	209
	213
	215
	225
	231
	233
	237
180-9340	164
	174
	177
	198
	201
	203
	205
	206
	209
	213
	215
	223
	227
	228
	231
	233
	237
	613
	615
180-9872	374
183-4911	657
183-4912	657
183-4934	668
183-5443	657
183-6084	502
183-6085	657
184-0982	147
184-5293	622
184-6581	145
185-0882	36
	37
185-0884	30
	34
185-1546	70
185-1861	8
	9
	10
	11
	12
	13
	14
	15
185-4015	644
	646
185-4254	450
	▶486
185-6627	107
185-6643	74
186-3735	147
	164
	169
	170
	171
	172
	173
	199
	203
	206
	215
	217
	225
	487
	627
	628
	629
	649
	653
	666
	667
186-3736	225
	235
	644
186-5110	653
186-5113	676
188-4651	228
188-9838	411
189-0881	639
	641
189-3158	198
	206
	213
	217
	223
	225
	237
189-5746	▶188
	288
190-1668	701
190-1669	701
190-3085	▶374
	411
190-3611	374
190-7634	147
191-6254	529
191-6259	529
191-6262	▶529
191-8304	293
192-2112	644
	646
192-7805	653
192-7876	144
193-0161	129
193-0618	144
193-1681	349
	351
193-1683	349
	351
193-1684	349
	351
193-3356	639
	641
193-5913	704
193-5914	673
	704
193-5915	673
	704
193-5916	704
193-9055	345
194-0832	305

▶ **PRIMARY REFERENCE**

PART NUMBER INDEX

Part	Page
194-2903	327
194-5390	112
	114
	116
194-5622	639
	641
194-8648	662
195-0189	▶169
	179
195-0190	▶170
	179
195-0191	▶171
	181
195-0192	▶172
	181
195-0256	428
195-0257	428
195-0258	428
195-0259	428
195-0260	444
195-0261	444
195-0262	444
195-0263	444
195-2132	54
	55
195-2134	54
	55
195-2136	54
	55
195-2221	54
	55
195-5830	145
195-6329	309
	310
195-6345	312
	313
	315
	319
	322
195-6348	307
	308
	309
	310
	316
	318
	319
195-6525	409
	411
195-6526	411
195-6527	409
195-7602	668
195-9712	173
195-9877	409
195-9878	409
196-0030	▶173
	174
	177
196-0039	409
196-0040	409
196-0226	460
196-1136	▶409
	520
196-2966	218
197-4521	674
	676
197-5107	634
	636
197-9155	241
198-6498	482
	483
198-6505	483
198-6516	482
	483
198-7811	241
	250
198-7814	259
	262
198-7823	239
198-7825	239
198-7838	239
198-7841	239
198-7842	239
198-7843	239
199-0639	239
	241
199-0641	241
199-0646	250
199-0648	262
199-0652	241
199-0653	268
199-0656	250
199-0658	241
199-0659	253
199-0662	241
199-0663	250
199-0670	241
199-0672	330
	331
199-0673	253
199-0675	250
199-0676	241
199-0678	250
199-0679	241
199-0680	250
199-0681	330
	331
199-0683	239
199-0684	250
199-0685	250
199-0686	250
199-0687	250
199-0688	241
	250
199-0689	250
199-0690	250
199-0691	250
199-0692	250
199-0693	250
199-0694	253
199-0695	248
	250
199-0697	250
199-0700	330
	331
199-0701	330
	331
199-0702	330
	331
199-0703	330
	331
199-0706	241
199-0752	330
	331
199-0756	253
199-0759	330
	331
199-0760	268
199-0778	241
199-0783	343
	344
199-0784	253
199-0785	250
199-0786	241
199-0787	241
199-0807	253
199-0808	253
199-0858	248
	250
199-0929	664
199-9267	195
	196
199-9751	36
	37
	64
	67
	207
200-1898	164
	215
200-5728	649
200-5921	588
201-1024	217
201-1234	530
	531
	532
	533
201-1235	534
	535
	536
	537
	540
201-1238	553
	554
	555
	556
	557
	558
	559
	560
	563
201-1239	553
	554
	555
	556
	557
	558
	559
	560
	563
201-1868	302
	▶304
201-1869	304
	▶305
201-1870	304
	▶305
201-1915	304
	305
	306
	313
	316
	317
	320
	322
	323
201-1916	310
	311
	312
	314
	315
	317
201-1919	305
	306
	310
	311
	312
	313
	314
	315
	316
	317
	320
	321
	322
	323
201-1920	▶301
	305
	306
	307
	308
	309
	310
	312
	313
	314
	315
	316
	318
	319
	320
	321
	322
	323
	324
201-1929	306
201-1962	301
	▶305
201-1963	305
	▶306
201-1964	305
	▶306
201-1975	309
201-3652	327
201-3954	▶343
201-9459	194
202-5907	269
	▶286

2

▶ PRIMARY REFERENCE

PART NUMBER INDEX

Part	Page
202-5909	74
202-5993	327
202-6017	194
202-6029	327
202-6186	305
	306
	307
	314
	318
	323
202-6611	168
202-6614	167
203-9858	674
	676
204-0317	333
204-0775	194
204-1682	683
204-2281	448
204-3080	239
204-4248	5
	▶671
204-5258	601
204-5259	601
204-9921	644
	646
205-1627	102
	104
205-2357	445
205-6298	194
205-7047	659
205-7048	634
	636
205-7198	420
	432
205-9244	293
205-9587	696
205-9588	636
205-9590	696
205-9591	696
205-9597	697
205-9598	634
205-9605	613
	615
205-9606	613
	615
205-9607	613
	615
205-9608	613
205-9609	613
205-9614	697
205-9615	697
205-9622	615
205-9623	692
205-9624	692
205-9629	613
205-9631	615
205-9633	694
205-9634	694
205-9920	174
	177
	206
	223
	462
206-1345	160
	164
	197
	198
	201
	203
	206
	223
	233
206-1590	613
	615
206-1618	609
	610
	611
	612
	▶638
206-1632	630
206-1634	327
206-1639	269
	▶327
206-1640	8
	9
	10
	11
	12
	13
	14
	15
	▶118
206-1641	5
	▶502
206-1642	269
	▶325
206-1647	613
	615
206-1648	639
	641
206-1650	327
206-1652	333
206-1653	639
	641
206-1659	622
206-1662	622
206-1663	622
206-1667	622
	624
206-1669	632
206-1678	624
206-1681	624
206-1682	639
	641
206-1684	639
	641
206-1687	624
206-1690	624
206-1692	624
206-1696	620
206-1698	620
206-1699	620
206-1701	609
	610
	611
	612
	▶705
206-1702	609
	610
	611
	612
	▶620
206-1706	620
206-1708	620
	622
206-1712	620
206-1752	327
206-1758	327
206-1759	327
206-1766	327
206-1767	327
206-1768	327
206-1803	639
	641
206-1804	639
	641
206-1805	639
	641
206-1807	639
	641
206-1808	639
	641
206-1809	639
	641
206-1810	639
	641
206-1815	639
	641
206-1816	639
	641
206-1817	639
	641
206-1818	639
	641
206-1831	▶347
	609
	610
	611
	612
206-1838	347
206-1846	641
206-1847	641
206-1850	347
206-1851	444
206-1852	705
206-1853	705
206-1854	622
206-1855	705
206-1856	705
206-1857	609
	610
	611
	612
	▶687
206-1871	502
206-1874	502
206-2423	153
	205
	225
	228
	231
206-5823	666
207-4254	239
207-4257	268
207-4258	239
207-5962	268
208-0321	239
208-0322	248
208-3600	435
208-5148	411
208-5149	411
208-5235	553
	554
	555
	556
	557
	558
	559
	560
	563
208-5245	553
	554
	555
	556
	557
	558
	559
	560
	563
208-8240	287
	288
208-9281	110
208-9293	662
209-3366	658
209-3367	118
	▶658
209-3378	118
	▶672
209-4157	267
209-4573	110
209-4716	659
209-7454	248
209-7456	239
209-7459	261
209-7460	259
	262
209-7461	261
209-7462	248
209-7463	248
209-7464	239
209-7465	259
	262
209-7466	267
209-7472	248
209-7473	248
209-9219	32
	33
209-9875	239
209-9882	239
	▶248
209-9883	239
209-9884	239
	▶259
209-9885	239
	▶261
209-9886	239
209-9887	239
210-1707	494
	496
	498

▶ **PRIMARY REFERENCE**

PART NUMBER INDEX

Part	Page	Part	Page	Part	Page	Part	Page
	499	211-5358	653	214-4285	504	216-4464	248
210-3097	241	211-6735	239	214-4691	231	216-4465	248
210-3098	241	211-6752	270	214-4692	193	216-4466	248
210-3099	241	211-6753	279	214-4693	203	216-4475	6
210-3100	241	211-6796	411	214-4694	217		▶272
210-3106	241	211-6799	411	214-4695	198	216-4476	269
210-5924	239	211-6800	411		209		▶272
	▶267	211-6801	411	214-4697	201	216-4554	653
210-5931	267	211-8319	411	214-4698	176	216-4983	110
210-5932	258	211-9032	411	214-4699	201	216-5332	▶410
	259	211-9286	264	214-4700	176	216-5981	356
	261	211-9461	235	214-4703	209	216-7374	590
210-5937	239	212-0862	217	214-4705	235		592
210-5942	239	212-3350	487	214-4706	237	216-7375	591
210-5946	239	212-3416	644	214-4707	237	216-7376	591
210-5947	239		646	214-4708	237	216-7377	588
210-6139	99	212-5702	250	214-4709	688		591
210-6475	613	212-5712	330	214-4710	225	216-7473	239
	615		331	214-4711	179	216-8314	28
210-6491	620	212-5713	241		181		29
210-6807	8	212-6215	286	214-4713	223	216-8634	48
	9	212-6934	110	214-4716	217		50
	10	212-7038	235	214-4717	217	216-8687	252
	11	212-8960	373	214-4718	198	216-8689	252
	12	212-9353	84	214-4721	177	216-8700	252
	13		86	214-4722	203	216-9069	217
	14	213-0139	198	214-4723	217	216-9111	307
	15		209	214-4746	371	216-9112	313
	▶109	213-1887	345	214-5097	239	216-9147	301
210-7302	241	213-1889	345	214-7024	▶600		▶306
210-7305	241	213-4222	268	214-7025	600	216-9148	306
210-7665	644	213-6055	198		▶601		▶307
	646		209	214-7026	601	216-9149	306
210-7666	644	213-6057	613	214-7043	504		▶307
	646		615	214-7568	432	216-9498	248
210-7773	462	213-6064	213		435		▶252
210-8363	641	213-6077	237	214-9468	432	217-2345	250
	▶644	213-6089	153	215-1216	591	217-2346	250
210-8364	639	213-6091	151	215-1217	591	217-2347	330
	▶646	213-6092	151	215-1242	685		331
210-8401	644	213-6683	491	215-1906	382	217-2349	330
210-8402	646	213-6702	355	215-2023	239		331
210-8754	659	213-6703	494	215-2913	613	217-2877	259
211-0073	▶255		499		615	217-2878	261
	269	213-8000	▶590	215-4012	110		▶262
211-2660	644	213-8008	590	215-9515	124	217-2879	259
	646		▶591		126		261
211-2661	639		592	216-0910	▶703	217-2883	239
	641	214-0592	485	216-1600	250	217-2885	239
211-3649	▶338	214-2968	▶167	216-1601	268	217-2914	241
211-3652	▶339		201	216-1602	258	217-3875	458
211-3653	▶340	214-2969	▶168	216-1606	268	217-8185	462
211-3782	▶345		176	216-1608	241	217-9672	▶356
	609	214-3203	34	216-1609	241	218-0666	639
	610		69		▶258		641
	611	214-3254	338	216-1610	241	218-2373	486
	612		339		▶268	218-3597	293
211-4258	▶235	214-3255	340	216-1612	250	218-9984	255
211-4271	▶222	214-3647	97		▶330	219-0302	613
	609	214-3736	662	216-1613	250		615
	610	214-3740	▶257		▶331	219-0343	658
	611		269	216-2267	245	219-3271	158
	612	214-3742	688	216-4457	248	219-3366	▶530
211-4291	▶182	214-3745	255	216-4458	248		553
211-4348	437	214-3763	688	216-4461	248	219-3367	▶531

▶ **PRIMARY REFERENCE**

PART NUMBER INDEX

Part	Page
	554
219-3368	▶532
	555
219-3369	▶533
	556
219-3390	▶553
219-3391	▶554
219-3392	▶555
219-3393	▶556
219-6281	644
	646
219-6283	644
	646
219-6284	644
	646
219-6285	644
	646
219-6286	644
	646
219-6287	644
	646
219-6288	644
	646
219-6292	644
	646
219-6314	164
	215
219-8751	248
219-8752	248
219-8753	248
219-8754	248
219-8755	248
219-8756	248
219-8757	248
219-8758	248
219-8759	248
219-8783	267
219-8795	239
	241
219-8798	239
219-8799	241
219-8834	330
219-8835	331
219-8836	250
219-8839	241
219-9483	530
219-9485	532
219-9486	531
	533
219-9488	534
220-0738	345
	622
	639
	641
220-3398	450
220-3470	632
220-3762	644
220-3790	674
	676
220-3791	674
	676
220-5725	646
220-7108	494
	496
	498
	499
220-8226	327
220-8631	46
	47
221-0811	6
	▶264
221-2420	639
	641
222-1801	343
	344
222-1802	343
	344
222-3518	124
	126
222-4067	462
222-8935	211
223-1882	▶603
223-2028	636
223-2029	634
223-2030	613
	692
	694
	696
	697
224-2147	622
224-2149	622
224-5132	367
	368
224-5152	367
	368
224-5917	124
	126
224-6562	487
224-6563	487
224-6829	285
224-8946	704
225-0312	336
225-3854	223
225-4150	704
225-4287	95
	96
225-4317	18
	19
	▶65
225-5436	62
225-5437	62
225-5438	61
	62
225-5439	61
	62
225-5441	61
	62
225-5451	61
	62
225-5453	61
	62
225-5454	61
	62
225-5458	61
	62
225-5459	61
	62
225-5495	36
225-5496	36
225-5498	36
225-5499	36
225-5501	38
	39
225-5502	38
	39
225-5625	70
225-5629	70
	71
225-5634	70
	71
225-5638	70
	71
225-5640	70
225-5927	160
	164
225-5959	70
	71
225-5960	70
	71
225-5961	70
	71
225-5962	70
	71
225-5963	▶70
	73
225-6005	57
	59
225-6041	57
	59
225-6451	22
	24
225-6456	22
	24
225-6461	22
	24
225-6464	22
	24
225-6477	22
	24
225-6478	22
	24
225-6479	22
	24
225-6522	24
	75
225-6817	81
225-6818	81
225-7733	391
	395
225-7738	91
	93
225-7739	91
	93
225-7741	91
	93
225-7772	26
225-7941	83
	196
225-7944	30
	34
	82
	83
225-7988	205
225-8016	91
225-8019	91
	93
225-8287	48
	50
225-8329	77
	78
225-8524	112
	114
225-8526	112
	114
	116
225-8533	112
	114
	116
225-8534	112
	114
	116
225-8536	112
	114
	116
225-8848	52
	53
225-8858	30
	34
226-0291	345
	705
226-0449	102
226-1240	491
226-4346	258
	259
	261
226-4364	241
226-4365	241
	259
	261
226-4366	241
	259
	261
226-4367	241
226-4370	241
	259
	261
226-4560	169
	170
	171
	172
226-4561	169
	170
	171
	172
226-5540	▶379
	514
	515
	516
	517
	522
226-9629	486
227-1057	203
	217
227-1184	454
227-1185	454
227-1197	454
227-1198	453
	454
227-1199	453

▶ **PRIMARY REFERENCE**

PART NUMBER INDEX

Part	Page
	454
227-5509	455
227-5556	345
227-7449	101
227-8807	▶366
228-5089	153
228-5856	198
	203
	209
	228
	237
228-6050	171
	172
228-6051	169
	170
228-6052	169
	170
	171
	172
228-6053	169
	170
	171
	172
228-6054	169
	170
	171
	172
228-6056	169
	170
	171
	172
228-7090	417
228-7091	407
228-9130	144
	706
228-9132	144
229-4896	24
229-5085	259
	261
229-5092	258
229-5093	252
229-5336	432
229-5745	502
229-9855	153
230-2389	632
230-2390	632
230-2610	257
230-3810	242
230-3811	242
230-4011	177
	206
230-4013	228
230-4014	228
230-5008	164
	215
230-5009	164
	215
	228
230-5738	6
	▶241
230-5743	6
	▶239
230-7300	18
	19
	▶44
230-7355	18
	19
	▶91
230-7569	18
	19
	▶66
230-7578	18
	19
	▶77
230-7886	130
230-8094	57
	59
230-8989	130
	133
	137
	141
230-8995	130
	133
	137
	141
230-8996	130
	133
	137
	141
230-8997	130
	133
	137
	141
230-8998	130
	133
	137
	141
230-9127	22
	24
230-9357	379
231-0033	18
	19
	▶79
231-0046	66
231-0149	18
	19
	▶106
231-0670	253
231-0671	253
231-0692	250
	▶253
231-0693	253
231-0694	253
231-0695	253
231-0696	253
231-0697	253
231-0698	241
231-0699	241
231-0700	259
231-0701	262
231-0703	259
	261
231-0745	261
231-2615	411
	▶487
231-3057	158
231-3058	▶158
	159
231-9361	624
232-0252	439
232-1322	36
	37
	64
	67
232-1323	130
	133
	137
	141
232-1328	130
	133
	137
	141
232-1545	231
232-1793	133
	137
	141
232-1794	130
	133
	137
	141
232-2725	130
	133
	137
	141
232-2726	130
	133
	137
	141
232-2865	347
232-2869	347
232-2870	347
232-3126	122
	128
	137
	141
232-3149	130
	133
	137
	141
232-3157	130
	133
	137
	141
232-3274	130
	133
	137
	141
232-3657	48
	50
232-3666	48
	50
232-3751	30
	34
	82
	83
232-4636	705
232-6204	18
	19
	▶67
232-6661	18
	19
	▶156
232-6662	156
	157
232-7400	▶26
	28
	29
232-7440	30
	34
232-7449	32
	33
232-7596	30
	34
232-7597	30
	34
232-7599	30
	34
232-7600	30
232-7603	30
232-7604	▶30
	33
233-0619	375
	376
233-2589	375
	376
233-2613	375
	376
233-3784	26
233-3785	26
233-3786	26
233-5260	622
233-6738	269
	▶272
233-7432	18
	19
	▶52
234-1981	▶101
	102
	104
234-3017	680
234-3030	110
	112
234-6927	462
234-9402	▶6
235-0128	118
235-1790	130
	133
235-5843	462
235-7091	439
235-8528	437
235-8634	153
235-8747	206
236-1583	255
	257
236-1673	130
	133
236-1674	130
	133
236-2144	122
	133
236-6651	76
236-6923	198
236-8228	▶129
	130
236-8229	19
	▶130
236-8238	18
	19
	▶46

▶ **PRIMARY REFERENCE**

PART NUMBER INDEX

Part	Page
237-0024	18
	19
	▶191
237-0769	22
	24
237-0975	111
237-3658	18
	19
	▶54
237-3664	699
237-3665	699
237-3666	699
237-3667	699
237-3668	699
237-3669	699
237-3670	699
237-3671	699
237-3672	699
237-3673	699
237-3786	112
237-3794	112
	114
	116
237-3797	462
237-3921	112
	114
	116
237-3922	112
237-3924	18
	19
	▶112
237-3943	653
237-4157	101
237-4894	195
	196
237-4896	18
	19
	▶195
237-5188	244
237-5214	18
	▶133
238-0251	504
238-2799	18
	19
	▶83
238-4628	455
238-5081	417
238-5254	239
238-5255	239
238-5256	259
	261
238-5290	250
238-5291	241
238-5292	241
238-5293	241
238-5294	241
238-5298	241
	▶250
238-7492	198
238-8671	130
	133
	137
	141
239-1434	118
239-2270	109
239-6989	704
239-9430	493
240-5571	133
	137
	141
240-6866	451
241-0037	367
	368
241-6215	228
241-6225	391
	395
241-6226	391
	395
241-6602	6
241-6603	6
241-8450	391
	395
242-3197	▶151
242-9751	84
	85
	86
243-0062	672
243-0063	672
243-1022	▶706
243-5027	153
244-2041	359
244-3106	206
244-3111	345
244-3112	345
244-3113	345
244-6864	411
245-4827	265
	266
245-6103	148
245-6109	336
245-8026	203
245-8778	462
	▶464
245-8780	441
	▶455
245-9828	44
	45
246-1163	24
246-2641	703
246-7853	491
246-7854	349
	351
	488
246-8038	225
246-8052	231
246-8053	153
246-8058	153
247-0144	91
247-1080	359
247-1385	89
	99
247-4001	111
247-4868	▶36
	39
247-4884	122
	128
247-4885	18
	19
	▶128
247-5557	345
247-7054	458
247-8179	638
247-8222	340
247-9730	102
	104
248-0217	269
	▶286
248-2215	▶159
248-2707	118
248-2709	624
248-2710	502
248-2714	634
	636
248-3231	102
	104
248-5245	349
	351
249-0974	82
	83
249-2482	620
249-3124	455
249-3125	455
249-4207	534
	535
	536
	537
	540
249-4209	534
	535
	536
	537
	540
249-4210	534
	535
	536
	537
	540
249-4211	541
249-4220	▶534
	557
249-4221	▶557
249-5512	102
	104
249-7562	▶307
	310
249-7563	▶308
	310
249-7565	▶308
	310
249-7566	▶308
	310
249-7568	▶309
	311
249-7569	▶309
	311
249-7571	▶309
	312
249-7572	▶310
	312
249-7669	▶144
	145
249-9226	133
249-9255	▶301
249-9261	▶301
249-9262	▶301
249-9263	▶302
249-9271	304
	▶310
249-9325	▶341
249-9326	341
249-9327	341
249-9388	303
	▶310
249-9390	301
	304
	▶311
249-9392	301
	▶311
249-9399	301
	▶311
249-9400	302
	▶312
249-9409	311
	▶312
249-9410	311
	▶312
249-9411	311
	▶313
250-0230	311
	▶313
250-1057	516
	522
	597
250-1440	417
	420
250-1448	227
250-1470	417
250-1471	417
250-1878	361
250-2314	89
	99
250-3330	361
250-3331	359
250-3344	359
250-5881	363
250-6148	451
250-6587	578
	581
	607
250-6850	361
250-6858	361
250-7910	624
250-7911	624
250-7912	611
	612
250-8330	298
	450
251-2429	458
251-2437	42
	43
251-3227	89
	99
251-4309	584
251-4375	361
251-4889	341
251-4890	341
251-4891	341
251-5579	327
251-5627	481
251-5629	481

▶ **PRIMARY REFERENCE**

PART NUMBER INDEX

Part	Page
252-1862	634
	636
252-1863	634
	636
252-1864	636
252-1865	634
252-2157	349
	351
252-4659	503
252-4660	▶503
252-6005	516
	522
	▶606
252-6438	36
	37
252-8915	6
	▶699
252-8916	699
252-8917	699
252-8918	699
252-8919	699
252-9043	522
	▶574
252-9044	574
	▶578
252-9045	578
	▶579
252-9046	574
	▶585
252-9051	575
	576
	577
	▶586
252-9059	514
	▶575
252-9060	575
	▶580
	581
252-9063	515
	516
	▶576
252-9064	576
	▶581
252-9068	517
	▶577
252-9069	577
	▶582
252-9072	579
252-9073	579
252-9078	585
	586
252-9080	585
	586
252-9081	585
252-9084	586
252-9087	585
252-9088	586
252-9095	578
	581
	607
252-9100	579
252-9983	340
252-9985	339
253-0354	145
253-1054	▶481
253-1055	▶481
253-1549	327
253-1817	634
	636
253-1857	634
	636
253-1858	634
	636
253-2470	646
253-4137	102
	104
253-4138	102
	104
253-5024	239
253-8295	464
253-9396	213
253-9510	644
	646
254-1126	634
	636
254-1127	634
	636
254-2187	111
254-2267	79
	80
254-2270	79
	80
254-3437	628
	629
254-3954	36
	37
254-4418	74
254-5683	688
254-5703	▶265
	269
254-9301	363
254-9926	335
255-0793	624
255-0794	624
255-0795	639
	641
255-0796	704
255-2749	630
255-3447	112
	114
	116
255-4692	102
	104
255-5461	327
255-8280	327
255-9086	▶597
255-9087	597
	▶607
256-0323	358
256-0324	▶358
256-0546	▶263
	269
256-0548	247
256-0549	247
256-0550	263
256-5299	609
	610
256-9600	580
	582
257-0468	454
	472
257-0477	452
257-0478	452
257-7211	164
	215
257-7212	164
	215
257-7214	164
	215
257-7733	472
258-2354	622
258-3697	634
	636
258-4946	38
	39
258-9999	704
259-0127	242
259-1831	281
259-2940	318
259-4402	704
259-6276	6
	609
	610
	611
	612
	▶664
259-8417	99
260-0030	685
260-0033	685
260-0034	685
260-0035	685
260-0041	685
260-0057	685
260-0634	102
	104
260-1393	102
	104
260-3020	428
260-3021	428
260-9136	414
260-9137	414
260-9213	397
260-9214	397
260-9219	417
261-0371	85
261-0376	84
	86
261-0406	85
261-0423	84
	86
261-0428	84
	86
261-0524	203
261-5517	325
	▶326
261-5519	326
261-7694	164
261-9634	668
261-9635	325
261-9636	620
261-9637	620
261-9639	341
	620
	622
261-9642	668
261-9644	624
261-9645	624
262-2781	649
262-3705	160
	164
262-4081	327
262-4084	327
262-4341	160
	164
262-4727	177
262-7079	417
262-7081	417
262-8088	87
	439
262-9567	659
262-9786	101
263-2901	627
263-3823	667
263-5376	110
	112
263-5516	458
263-5781	659
263-7261	632
263-7645	6
	▶388
263-7646	388
263-8850	164
	215
263-9484	227
264-4297	227
264-7029	177
	206
264-7030	228
264-7031	164
	203
	215
266-1554	302
	▶313
266-1555	313
	▶314
266-1556	313
	▶314
266-1560	314
266-2275	121
266-2585	472
266-2814	233
266-4157	174
	177
	211
	233
267-2701	184
	185
	217
267-2760	428
267-5211	183
	184
	185
	187
267-5213	183
	184
	185
	187
267-5225	668
267-5635	▶205
	389

▶ **PRIMARY REFERENCE**

PART NUMBER INDEX

Part	Page
267-8321	93
267-8363	316
267-8364	315
268-0867	18
	19
268-1547	405
268-1548	405
268-5902	657
268-5903	657
269-0381	353
	▶375
269-0382	375
269-0386	375
	376
269-0986	162
	164
269-3201	609
	610
	611
	612
	▶626
269-3247	609
	610
	611
	612
	▶668
269-3248	▶657
	668
269-3254	668
269-3262	668
269-3269	347
269-4159	626
269-4161	626
269-9115	624
270-0149	626
270-2794	668
270-2795	626
270-3217	▶649
270-5161	668
270-5290	355
271-3096	430
	▶628
271-3097	430
	▶629
271-3101	628
271-3103	629
271-4487	▶266
	269
271-7167	257
271-7308	265
271-7309	266
272-0537	147
272-2232	18
	19
272-2265	81
272-5420	389
272-5421	609
	610
	611
	612
272-6369	535
	542
272-6410	▶558
272-6411	▶535
	558
272-7079	668
272-7872	▶559
272-7873	▶536
	559
272-7914	536
	539
272-7916	537
	538
272-7918	538
	539
	541
	542
	547
272-7919	538
	539
	541
	542
	547
272-7920	538
	539
	541
	542
272-7921	538
	539
	541
	542
272-7922	540
272-9234	▶560
272-9235	▶537
	560
272-9608	▶561
272-9609	▶538
	561
272-9700	389
	▶627
272-9701	627
	628
272-9800	175
273-0042	▶562
273-0043	▶539
	562
273-0093	▶563
273-0094	▶540
	563
273-0799	▶564
273-0800	▶541
	564
273-0862	▶565
273-0863	▶542
	565
273-1374	▶566
273-1375	▶543
	566
273-1462	542
	543
273-1463	541
	544
273-1465	539
	545
273-1466	538
	546
273-1473	668
273-1475	668
273-1476	668
273-1477	668
273-1478	668
273-1948	▶567
273-1949	▶544
	567
273-1950	▶568
273-1951	▶545
	568
273-1957	▶569
273-1958	▶546
	569
273-3599	547
273-3622	534
	535
	536
	537
	540
273-3730	547
	548
273-3731	▶570
273-3732	570
	▶571
273-3733	▶547
	571
273-3755	547
273-3756	547
273-3791	▶572
273-3792	572
	▶573
273-3793	▶548
	573
273-4210	432
273-4211	432
273-5077	▶302
273-5078	▶302
273-5080	302
	304
	▶314
273-5081	302
	▶315
273-5093	314
	▶315
273-5094	314
	▶315
273-5095	315
	▶316
273-5096	315
	▶316
273-5532	540
273-9190	217
274-3774	206
	223
274-3775	223
274-4274	375
	376
274-4553	270
	273
	275
	277
	279
	282
	284
274-4554	293
274-4555	385
274-4556	293
274-4561	▶273
	293
274-4569	293
274-4578	▶275
	293
274-4580	▶270
	293
274-4582	▶279
	293
274-4716	28
274-7409	217
274-8034	287
	293
274-8041	298
274-8048	247
	▶298
274-8614	287
274-8616	277
274-8617	277
274-8620	281
274-8621	281
274-8623	287
274-8625	287
274-8628	277
274-8629	277
274-8630	245
274-8636	277
274-8637	281
274-8638	270
	275
	279
274-9872	187
	217
274-9993	231
275-0001	363
275-0468	▶244
	287
275-0469	244
275-0470	▶245
	287
275-0475	287
275-0477	287
275-0478	▶281
	287
275-0553	217
275-0570	198
	209
275-1038	130
	133
	137
	141
275-8869	626
275-9883	57
	59
276-2334	432
	441
276-5450	164
	215
276-5605	30
	34
276-7287	▶183
	199
	209
276-7290	▶184
	217
276-7291	▶185

▶ **PRIMARY REFERENCE**

PART NUMBER INDEX

Part	Page
	217
276-7476	61
276-8791	688
277-3012	48
	50
277-5156	18
	19
278-0209	293
278-0213	293
278-0215	281
278-0216	281
278-0217	281
278-0218	281
278-0461	217
278-1438	153
278-1439	153
278-5113	71
278-5126	20
278-6377	183
	187
	217
278-7469	629
279-4969	417
279-5556	353
	▶376
279-5557	376
280-7007	▶282
	293
280-7009	287
	293
280-7010	293
280-7012	287
	293
280-7868	458
280-7869	458
280-7870	458
280-7871	458
	▶485
280-7872	458
281-4726	391
	395
281-5969	393
281-5983	407
282-6944	458
282-7832	659
282-7833	201
282-7835	201
	659
282-9043	468
	587
283-3451	688
283-3467	668
283-3477	668
283-4237	662
283-7981	668
283-8053	668
283-8563	347
284-0078	211
284-1602	638
284-2917	102
284-3425	149
	150
284-5165	102
284-9039	147
285-1207	609
	610
	611
	612
285-3048	411
285-3243	411
285-9109	644
	646
286-0867	293
286-1072	164
	215
286-1930	328
286-3018	441
286-3019	441
286-3592	91
286-4880	156
	157
286-7848	40
	41
286-9338	547
	548
286-9340	547
	548
287-3923	▶121
287-7251	448
287-7252	448
287-7268	414
287-7269	414
287-8573	22
	24
287-8597	46
	47
288-0422	48
	50
288-1157	363
288-1394	62
288-1395	62
288-9734	618
289-3412	336
289-6018	662
289-6021	662
289-6370	389
	▶458
289-6410	345
289-9871	347
289-9873	347
289-9874	347
290-3347	356
290-7831	618
291-5108	626
291-8379	327
292-2833	700
292-2834	700
292-3995	361
292-3996	361
292-5773	659
292-8339	423
293-1980	620
	624
293-2147	287
293-4053	101
293-4671	76
	462
293-5352	102
	104
293-8761	281
293-9289	264
294-0288	48
	50
294-9812	277
	284
294-9816	286
	▶287
294-9819	286
	▶292
294-9820	288
294-9821	277
295-5550	104
295-5554	700
295-5555	700
295-5893	164
	215
295-5903	▶186
	481
295-8141	211
295-8142	211
295-8143	211
296-0375	237
296-0376	▶237
	468
	587
296-5616	▶81
	82
	83
297-3233	▶95
	97
297-4394	481
	▶482
297-4395	481
	▶483
297-5252	662
297-5254	662
297-7964	432
298-4524	26
298-5112	16
	17
	▶78
298-5129	16
	17
	▶64
298-5131	16
	17
	▶68
298-5398	437
298-5901	102
	104
299-2212	▶617
	618
299-3141	▶361
	363
299-3270	428
	432
	444
299-4246	95
	▶370
299-4247	370
299-4248	370
299-4684	76
299-4687	76
299-4716	12
	13
	14
	▶84
299-4729	8
	9
	10
	11
	▶85
299-4732	84
	85
299-4996	217
299-5152	430
	444
299-5155	430
	432
299-5156	430
299-5157	430
299-5158	430
299-5159	427
	430
299-6857	389
	▶444
299-6859	389
	▶427
299-6934	444
299-6936	428
299-6938	428
299-6940	427
	428
299-6985	▶655
	692
	694
	697
299-6986	▶656
	692
	694
	696
299-7887	427
	3
300-1702	118
300-4491	430
	▶451
300-4493	432
	▶450
300-4994	203
300-6792	619
301-0988	▶344
301-9672	95
301-9725	610
	611
	▶619
301-9765	110
301-9766	110
302-7768	444
302-8432	287
	293
303-0413	▶302
303-0414	▶303
303-0415	▶303
303-0418	302
	303
	▶316
303-0419	302

▶ PRIMARY REFERENCE

PART NUMBER INDEX

Part	Page
	▶317
303-0421	303
	▶317
303-0423	303
	▶317
303-0428	316
	▶318
303-0429	316
	▶318
303-0430	317
	▶318
303-0431	317
	▶319
303-0434	317
	▶319
303-0435	317
	▶319
303-0438	317
	▶320
303-0439	317
	▶320
303-0441	318
	319
303-0442	319
303-0443	320
303-2933	147
303-5767	16
	17
	▶47
303-5768	16
	17
	▶45
303-5769	16
	17
	▶192
303-5770	16
	17
	▶42
303-5778	16
	17
	▶55
303-5795	192
304-1021	683
304-1023	683
304-3262	272
304-3266	272
304-3269	272
304-3920	10
	11
	14
	15
	▶110
304-3922	110
304-4022	10
	11
	14
	15
	▶89
304-4023	▶96
	98
304-5691	155
304-5696	225
304-6673	86
304-7847	96
	▶371
304-7848	89
304-7849	371
304-7850	96
304-7851	96
304-8760	16
	17
	▶48
304-8761	16
	17
	▶69
304-8764	57
	59
304-8965	644
	646
304-9457	76
305-2136	482
	483
305-2137	482
	483
305-2139	482
305-2140	482
305-2141	482
	483
305-2142	482
	483
305-2143	483
305-2144	483
305-2145	483
305-3295	6
	▶193
305-3423	287
	293
305-3424	284
305-3425	284
305-3427	▶284
	287
305-3429	▶277
	288
305-3431	277
	284
305-4353	683
305-6917	110
305-6918	98
305-7881	149
	150
306-7346	217
306-8857	40
	41
307-0768	450
307-1432	432
307-2033	8
	9
	10
	11
	12
	13
	14
	15
	▶76
307-2242	84
	86
307-3488	437
307-3529	441
307-5354	427
307-6461	430
	432
307-6462	430
308-1792	22
	24
308-2154	▶452
	470
308-2155	470
308-2156	▶453
	469
308-2160	469
308-2161	469
308-2872	471
308-2873	471
	472
	473
	474
	475
	476
	478
	479
308-2874	477
308-2877	453
308-2878	453
308-2879	472
308-2882	473
	475
	476
308-2883	475
308-2884	474
	478
308-2885	477
	479
308-2886	452
308-2888	453
308-2889	453
308-2890	453
308-3025	386
308-3074	233
308-3437	445
	▶480
308-3554	678
	680
308-4315	496
	498
308-5496	435
308-9973	▶194
	269
309-1325	▶175
	182
309-5684	430
309-7555	16
	17
	▶75
309-9105	8
	9
	12
	13
	▶97
309-9106	10
	11
	14
	15
	▶98
310-0843	605
310-0851	355
310-2330	206
310-2345	217
310-2352	▶231
	269
310-2644	8
	9
	12
	13
	▶102
310-3933	504
310-5613	▶209
	609
	612
310-6216	▶335
	630
310-7304	96
310-9354	231
310-9355	632
311-1218	233
311-2230	▶285
	303
	304
311-2768	110
311-3639	▶233
	690
311-3640	269
	▶632
311-6094	74
311-6886	147
311-8055	359
	▶363
311-8060	363
311-8062	5
	▶359
311-8070	218
312-3083	218
313-3280	683
313-3380	5
	▶153
313-3476	390
313-3477	390
313-3486	437
313-3490	437
313-3752	▶666
	688
313-5637	685
313-6572	504
313-6709	639
	641
313-6710	639
	641
313-6711	622
313-6712	622
313-6713	622
313-7109	361
314-4018	617
314-4290	▶678
	682
314-4291	▶680
	682
314-6700	8
	9
	10
	11
	12

▶ **PRIMARY REFERENCE**

PART NUMBER INDEX

Part	Page	Part	Page	Part	Page	Part	Page
	13	315-5496	74	317-4920	211	319-6837	321
	14	315-5667	95	317-4921	211	319-6838	322
	15	315-7645	457	317-4922	211	319-6906	397
	▶145	315-7646	457	317-4928	504	319-6907	397
315-0033	96	315-7647	457	317-5502	110	319-6908	397
315-1270	613	315-9721	114	317-5538	609	319-7186	320
	615	315-9890	609		610		▶321
	▶690		610		611	319-7187	320
315-1272	690		▶682		612		▶321
	▶698	315-9891	611		▶630	319-7191	321
315-1277	690		612	317-5539	609		▶322
315-1282	690		▶682		610	319-7192	321
315-1284	688	316-0675	454		611		▶322
315-1299	690	316-1194	361		612	319-8524	639
315-1300	690	316-4741	491		▶622		641
315-1301	690	316-4742	510	317-5541	630	319-9667	510
315-1302	690	316-4743	510	317-5542	659		512
315-1303	690		512	317-5543	609	319-9668	510
315-1304	690	316-4811	353		610		512
315-1306	690	316-6899	16		611	320-2948	353
315-1311	690		17		612	320-2949	353
315-1312	690		▶82		▶659	320-3568	493
315-1313	690	316-6925	16	317-5544	335	320-3614	488
315-1314	690		17	317-6266	425	320-3619	353
315-1316	698		▶196	317-6267	425	320-3620	353
315-1317	698	316-6941	16	317-6268	425	320-4725	491
315-1318	▶667		17	317-6269	425	320-4769	467
	698		▶80	317-6270	▶425		▶605
315-1319	698	316-6945	491		514	320-4771	488
315-1369	▶87	316-6946	508		515	320-5933	5
	269		510		516		▶353
315-2939	610		512	317-7120	349	320-5934	6
	611	316-6947	508		351		▶377
	▶662		510	317-7180	359	320-5935	▶381
315-2940	609		512	317-7181	359		510
	612	316-6948	510	317-7313	359		512
	▶661		512	317-8141	619	320-5937	1
315-3371	206	316-6949	510	317-9776	16		2
315-3379	93		512		17		3
315-3381	137	316-6951	355		▶149		4
	141	316-6952	355	318-2365	130		▶372
315-3384	20	316-7091	428		133	320-5938	348
315-3385	▶71	316-7290	609	318-7246	▶514		▶380
	72		612		518	320-6520	1
315-3386	71		▶639	318-7247	▶515		2
315-3387	71	316-7291	610	318-7248	▶516		3
315-3388	71		611		519		4
315-3390	37		▶641	318-7251	▶517		▶373
315-3391	37	316-7896	▶37		520	320-6521	1
315-3392	37		38	318-7263	▶518		2
315-3393	37	316-8228	690	318-7264	▶519		3
315-3394	37	317-2017	148	318-7267	▶520		4
315-3395	61	317-2250	425	318-9901	▶592		▶382
315-3396	26	317-3059	148	318-9902	▶604	320-7233	▶247
315-3397	26	317-3769	75	318-9903	▶592		269
315-3398	26	317-3778	75	318-9904	▶604	320-7812	448
315-3411	16	317-4261	690	319-0755	153	320-8438	397
	17	317-4262	690	319-4504	508	320-8639	▶364
	▶93	317-4263	690	319-5639	662		365
315-3418	16	317-4359	423	319-6385	198	320-8641	364
	17	317-4360	423	319-6834	▶303	320-8642	364
	▶157	317-4361	423	319-6835	303	320-9164	494
315-4533	504	317-4362	▶423		▶320		499
315-5384	355		517	319-6836	303	320-9213	122
315-5401	87	317-4367	425		▶321	320-9241	494

▶ PRIMARY REFERENCE

PART NUMBER INDEX

Part	Page	Part	Page	Part	Page	Part	Page
	499		▶18	323-2023	4	324-0512	384
320-9835	622	322-1924	9		▶407	324-0516	380
320-9943	403		13	323-2045	407	324-0519	384
320-9944	403		▶19	323-2096	1	324-0525	384
320-9945	403	322-3037	▶160		2	324-0530	384
320-9946	403	322-3040	160		3	324-0548	1
320-9947	▶521		164		4		2
320-9948	521	322-3736	491		▶457		3
	▶522	322-3764	5	323-2424	372		4
320-9949	▶403		▶355	323-2431	372		▶491
	522	322-3768	353	323-2433	372	324-0550	1
321-2559	336	322-3770	353	323-2435	372		2
321-3096	390	322-4583	488	323-2465	380		3
321-3113	15	322-4584	488		381		▶510
	▶86	322-4585	488	323-2466	384	324-0552	4
321-4059	488	322-4586	488	323-2470	372		▶508
321-4060	6	322-4587	488	323-2474	373	324-2578	287
	▶488	322-4589	488		382	324-2889	683
321-5657	147	322-6827	▶187	323-3308	704	324-2890	678
321-5776	683		206	323-3309	704		680
321-6111	405	322-8414	613	323-3324	624		▶683
321-6341	405		615	323-4212	377	324-2891	683
321-6383	399		634		378	324-2892	683
321-6387	391		636	323-4219	377	324-2893	683
	395	322-9476	16		378	324-2894	▶653
321-7031	76		17	323-4221	377		683
321-7038	610		▶57		378	324-2895	683
	611	322-9480	678	323-4224	377	324-2896	▶674
	▶618		680	323-6066	690		678
321-7178	1	322-9481	678	323-6645	704	324-2897	▶650
	2		680	323-9083	397		674
	3	322-9486	678	323-9084	397	324-2900	674
	4		680	323-9085	397		676
	▶402		▶685	323-9086	397	324-2901	674
321-7179	1	322-9490	685	323-9307	10		676
	2	322-9491	685		11	324-2903	▶676
	3	322-9492	685		14		680
	▶405	322-9493	685		15	324-2905	676
321-7183	▶399	322-9494	685		▶74	324-2906	▶651
321-7192	1	322-9495	685	324-0298	349		676
	2	322-9496	685	324-0355	380	324-2907	676
	3	322-9507	683		381	324-2909	676
	4	322-9509	683	324-0356	377	324-2910	676
	▶447	322-9520	683		378	324-3408	85
321-7205	389	322-9615	112	324-0361	373	324-3851	97
	▶443		114	324-0367	373		98
321-7231	389		116		382	324-5929	389
	▶397	322-9616	112	324-0369	373		▶462
321-7246	▶390		114		382	324-6213	8
	401		116	324-0372	373		9
321-7303	390	322-9663	36	324-0386	372		12
321-7704	10		37	324-0398	373		13
	14	322-9664	37		382		▶99
	▶16	322-9761	97	324-0406	382	324-7594	402
321-7705	11		98	324-0411	384	324-7596	447
	15	323-0974	▶365	324-0417	382	324-7597	402
	▶17	323-0975	▶365	324-0436	381	324-7598	405
321-7782	16	323-0991	7	324-0444	48		407
	17		▶225		50	324-7599	395
321-9975	466		369	324-0496	380		405
	▶470		467		381		407
321-9976	465		468	324-0498	380	324-7602	405
	▶469	323-0992	▶213		381	324-7603	405
322-1923	8		467	324-0501	381	324-7604	405
	12		468	324-0505	380	324-7611	391

▶ **PRIMARY REFERENCE**

PART NUMBER INDEX

Part	Page
	395
324-7612	399
324-7815	443
324-7816	443
324-7817	443
324-9976	651
324-9977	651
324-9978	676
325-1021	5
	▶6
325-1034	6
	▶493
325-1968	690
325-1969	359
325-2009	488
325-2011	333
325-3036	8
	9
	10
	11
	12
	13
	14
	15
	▶111
325-3495	111
325-3639	359
325-5483	359
325-5855	89
	99
325-5950	▶155
	218
325-6257	▶386
	439
325-7563	507
325-7603	348
	▶349
325-8341	206
325-9300	692
325-9301	694
325-9308	630
325-9310	613
	615
325-9311	659
325-9315	690
326-0088	488
326-0089	355
326-0093	488
326-1801	348
	▶445
326-1803	389
	▶448
326-1880	42
	43
326-6389	690
326-7959	160
	▶162
326-8992	20
326-8993	▶136
	137
326-8999	16
	17
	▶32
326-9000	16
	17
	▶28
326-9002	16
	17
	▶61
326-9003	16
	17
	▶38
326-9004	16
	17
	▶72
326-9005	16
	17
	▶20
326-9006	16
	▶137
326-9008	16
	17
	▶22
326-9009	16
	17
	▶40
326-9010	16
	▶114
326-9012	16
	17
	▶122
326-9013	16
	17
	▶53
326-9147	▶140
	141
326-9149	17
	▶141
326-9153	116
326-9156	17
	▶116
327-0105	351
327-0109	348
	▶351
327-0112	▶348
327-0113	▶348
327-0222	397
327-0223	397
327-2269	223
327-3753	457
327-4172	177
327-6983	▶391
	401
327-7601	615
	▶692
327-7637	615
	▶694
327-8298	391
	395
328-1485	162
	▶215
328-1907	162
	164
328-1942	5
	▶223
328-1950	▶177
328-1953	▶174
328-1954	▶197
328-1956	▶648
328-2477	420
328-2481	▶164
328-3211	632
328-5196	507
328-5234	494
	499
328-5333	448
328-5358	448
328-5964	348
	▶507
328-7020	174
328-7742	683
328-7749	653
328-7750	653
328-7751	653
328-7752	653
328-8594	211
328-9650	508
329-0058	6
	▶211
329-0079	▶5
329-0124	5
	▶389
329-0129	16
	17
	▶107
329-0143	391
	395
329-0294	5
329-0306	▶269
329-0307	▶269
329-0319	▶6
	269
329-1167	613
	615
	▶634
329-1168	613
	615
	▶636
329-1169	634
329-1170	636
329-1322	5
	▶504
329-1329	504
329-1330	504
329-1331	504
329-1348	323
329-1350	▶303
329-1351	▶304
329-1352	▶304
329-1354	303
	304
	▶322
329-1355	322
	▶323
329-1919	322
	▶323
329-2959	359
329-3483	414
329-3484	414
329-3485	414
329-3486	414
329-3487	414
329-3488	414
329-3489	414
329-3490	414
329-3491	393
329-3492	393
329-3493	416
329-3494	393
329-3497	416
329-3501	417
329-3502	417
329-3503	▶393
	467
	468
	587
329-3504	▶416
	467
	587
329-3506	▶417
	467
	468
329-3545	417
329-3546	416
	417
329-3547	417
329-3548	414
329-3596	417
329-3597	393
329-3598	393
329-3600	▶414
	467
	468
	587
329-3819	414
329-3820	414
329-3821	414
329-4508	420
329-5390	414
329-5699	99
329-5700	89
329-6655	36
329-7293	441
329-7496	▶179
329-7497	▶181
329-9748	512
329-9749	1
	2
	3
	▶512
330-0798	349
	351
330-4926	494
330-5738	494
	499
330-5739	494
	499
330-6124	420
330-6125	420
330-6126	420
330-6734	104
330-7612	174
	177
330-7613	177
330-9591	414
330-9669	507
330-9670	507
330-9687	653
330-9752	414
331-0797	445

▶ **PRIMARY REFERENCE**

PART NUMBER INDEX

Part	Page
331-0798	445
331-1520	373
	382
331-1521	353
	355
331-1522	353
331-2489	349
	351
331-3770	399
331-3779	391
331-4340	466
331-4365	349
	351
331-6299	391
	395
331-7306	391
331-7412	▶411
	468
	587
331-7413	411
331-7798	653
331-7799	653
331-8037	496
331-8538	259
	261
331-8675	441
331-8676	7
	369
	▶441
331-8677	411
331-8678	416
331-8679	417
332-0092	457
332-1025	407
332-1829	391
332-2577	197
332-2578	496
	498
332-2579	496
	498
332-2691	▶395
	401
332-6587	10
	11
	14
	15
	▶104
332-7333	102
	104
332-7541	87
332-7542	87
332-7946	▶467
332-7947	▶467
332-7949	▶587
332-7959	▶467
332-7961	▶468
332-9195	▶465
	467
	468
	587
332-9781	389
	▶466
333-0699	389
	▶428
333-0739	397
333-0790	496
	498
333-0791	496
	498
333-0792	496
	498
333-1320	399
333-5427	6
	▶384
333-7265	349
	351
333-9901	636
	▶696
333-9902	634
	▶697
334-0686	▶1
334-0691	▶1
334-0694	▶4
334-0751	1
	3
	4
	▶494
334-0752	1
	3
	▶496
334-2318	62
334-2319	62
334-3754	18
	19
	▶43
334-3755	18
	19
	▶41
334-3756	18
	19
	▶150
334-3757	18
	19
	▶50
334-4169	510
	512
334-4202	18
	19
	▶33
334-4203	18
	19
	▶29
334-4204	18
	19
	▶62
334-4205	18
	19
	▶39
334-4207	18
	19
	▶73
334-4208	18
	19
	▶21
334-4603	462
334-4943	390
334-7152	8
	9
	10
	11
	12
	13
	14
	15
	▶56
334-7225	609
	610
	611
	612
	▶673
334-7227	673
334-7931	405
334-7947	407
334-8021	389
	▶439
334-9386	414
335-1584	32
	▶34
335-1692	389
	▶437
335-1836	56
335-2224	690
335-3052	▶609
335-3053	▶610
335-3054	▶612
335-3055	▶611
335-9798	18
	19
	▶24
335-9799	18
	19
	▶59
336-6396	510
	512
336-7533	624
336-7545	609
	610
	611
	612
	▶624
336-7612	336
336-8184	395
336-8185	395
336-9096	179
	181
336-9168	609
	610
	611
	612
	▶665
337-5351	624
337-5352	160
337-7029	179
	181
337-8655	357
337-8684	441
338-0426	437
338-0427	437
338-0432	389
	▶430
338-0433	389
	▶432
338-0837	3
	▶420
338-1421	▶357
338-1508	335
338-2412	380
	381
338-2413	384
338-2415	372
338-2416	373
	382
338-2442	380
	381
338-2443	384
338-2445	372
338-2446	373
	382
338-3328	613
	615
338-5723	203
338-5731	198
338-5732	▶227
	611
	612
338-5733	▶198
	610
	611
338-5737	5
	▶206
338-5738	▶217
	609
	610
	611
	612
338-5740	▶203
	609
	610
	611
	612
338-9357	147
338-9358	▶147
	148
338-9362	336
338-9831	653
339-0007	420
339-0010	420
339-2886	420
339-2935	420
339-3067	203
339-4287	420
339-4981	389
	▶435
339-4986	▶8
339-4987	▶9
339-4988	▶10
339-4989	▶11
339-4990	▶12
339-4991	▶13
339-4992	▶14
339-4993	▶15
340-1650	445
340-3551	201
340-3552	▶201
	609
	610
	611
	612
340-6272	353
	380

▶ **PRIMARY REFERENCE**

PART NUMBER INDEX

Part	Page
	381
	384
340-6339	373
	382
340-6918	▶176
	609
	610
	611
	612
340-7025	333
340-7026	333
340-7030	6
	▶333
340-7125	333
340-8276	609
	610
	611
	612
	▶688
340-9290	349
	351
340-9308	372
	380
	381
	384
340-9311	380
	381
340-9314	373
	382
340-9315	377
	378
340-9322	373
	382
340-9325	372
341-0076	445
341-0121	448
341-0596	▶304
341-0695	5
	▶336
341-0696	5
	▶148
341-4712	353
341-5749	673
341-5750	673
341-5752	405
341-9201	324
341-9202	304
	▶323
341-9203	323
	▶324
341-9204	323
	▶324
341-9304	361
342-0409	333
342-2161	488
342-2162	488
342-2622	488
342-7146	613
342-7147	609
	610
	▶613
342-7148	615
342-7149	611
	612
	▶615
342-7196	430
342-8061	5
	▶704
343-0656	▶5
343-2876	493
343-4301	447
343-4355	203
343-7400	457
343-7809	5
	▶700
343-8050	377
	378
343-8051	372
343-8053	373
	382
344-1004	690
344-1053	155
344-1055	155
344-1302	▶401
344-1303	▶401
344-2170	397
344-2171	397
344-2543	508
344-5290	▶369
344-6066	593
344-6067	468
	587
	▶593
344-6126	▶454
	470
344-6127	470
	▶471
344-6128	470
	▶472
344-6129	470
	▶473
344-6130	470
	▶474
344-6131	470
	▶475
344-6132	470
	▶476
344-6133	469
	▶477
344-6134	469
	▶478
344-6135	469
	▶479
344-6354	▶7
344-7777	432
344-7954	177
344-8098	448
344-8154	448
344-8163	448
345-3672	▶367
	441
345-3674	▶368
345-7477	8
	9
	12
	13
	▶124
345-7478	10
	11
	14
	15
	▶126
346-0407	48
	50
346-0408	48
	50
346-5517	417
346-5631	510
	512
346-6559	510
	512
346-6560	510
	512
346-9825	149
	150
347-1128	420
347-1129	420
347-2208	430
348-4900	593
348-5460	498
348-5463	499
348-5464	2
	▶498
348-5465	2
	4
	▶499
349-1098	228
349-1099	228
349-1100	228
349-1101	3
	▶228
349-2773	228
349-3644	5
350-1078	228
350-1101	228
350-2374	21
350-3733	510
	512
350-3842	372
	373
	377
	378
	380
	381
	382
	384
350-6933	▶4
350-6934	▶2
350-6935	▶2
350-6944	▶3
350-6945	▶3
350-8841	473
	474
	475
	476
	477
	478
	479
350-8888	478
350-8898	479
350-9471	228
351-9352	6
	▶378
351-9353	378

▶ PRIMARY REFERENCE

KOPACZKA.PL

CATERPILLAR®

© 2009 CATERPILLAR
ALL RIGHTS
RESERVED

CAT, CATERPILLAR, THEIR RESPECTIVE LOGOS, “CATERPILLAR YELLOW” AND THE POWER EDGE TRADE DRESS, AS WELL AS CORPORATE AND PRODUCT IDENTITY USED HEREIN, ARE TRADEMARKS OF CATERPILLAR AND MAY NOT BE USED WITHOUT PERMISSION.

PRINTED IN
U.S.A.

SEBP5080 432E Backhoe Loader JBA1-Up