CATERPILLAR®

SEBP5949
January 2012

RUTHZIL TRATOR COMERCIAL DE PEÇAS LTDA 11 97083-6812 ROLANDO

Parts Manual

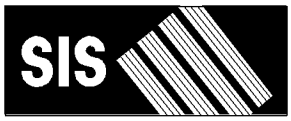

See "General Information" for New Parts Manual Features.

432F Backhoe Loader

SEJ1-Up (Machine)
C4Z1-Up (Engine)

Powered By C4.4 Engine

Product and Dealer Information

Note: For product identification plate locations, see the section “Product Identification Information” in the Operation and Maintenance Manual.

Delivery Date: _____

Product Information

Model: _____

Product Identification Number: _____

Engine Serial Number: _____

Transmission Serial Number: _____

Generator Serial Number: _____

Attachment Serial Numbers: _____

Attachment Information: _____

Customer Equipment Number: _____

Dealer Equipment Number: _____

Dealer Information

Name: _____ Branch: _____

Address: _____

_____

_____

	Dealer Contact	Phone Number	Hours
Sales:	_____	_____	_____
Parts:	_____	_____	_____
Service:	_____	_____	_____

MEMORANDA

TABLE OF CONTENTS

Name	Page
GENERAL INFORMATION	A5
REPAIR ALTERNATIVES	A8
SUPPLEMENTAL COOLANT ADDITIVES	A9
MAINTENANCE PARTS	A10
INDEX	A13
MACHINE ARRANGEMENT	1
BACKHOE AR-EXTENDABLE STICK	1
BACKHOE AR-STANDARD STICK	2
CHASSIS AR	3
COMMON AR	3
CONVERSION AR-CERTIFICATION	3
CONVERSION AR-ROADING	4
DRIVE AR-BACKHOE LOADER	5
LOADER AR	5
OPTION AR-BACKHOE	5
OPTION AR-REGIONAL	6
PREMIER AR	6
ENGINE ARRANGEMENT	7
ENGINE AR-COMPLETE	7
ENGINE AR-PRIMARY	8
BASIC ENGINE	9
CAMSHAFT GP	9
COVER GP-VALVE MECHANISM	10
CRANKSHAFT GP	12
CYLINDER BLOCK GP	14
CYLINDER HEAD GP	16
DRIVE GP-FAN	18
FLYWHEEL GP	19
HOUSING GP-FLYWHEEL	20
HOUSING GP-FRONT	21
LIFTING GP-ENGINE	23
MOUNTING GP-ENGINE	24
MOUNTING GP-ENGINE & XMSN	26
PAN GP-OIL	28
PISTON & ROD GP	30
PLUG GP-CYLINDER HEAD	32
PLUG GP-ENGINE	33
PULLEY GP-CRANKSHAFT	35
ROCKER ARM GP	36
VALVE MECHANISM GP	37
LUBRICATION SYSTEM	38
BREATHER GP	38
FILLER GP-ENGINE OIL	40
GAUGE GP-OIL LEVEL & FILLER	41
GAUGE GP-OIL LEVEL (DIPSTICK)	42
PUMP GP-ENGINE OIL	43
COOLING SYSTEM	44
CONNECTION GP-WATER	44
COOLER GP-ENGINE OIL	45
FAN GP-SUCTION	47
LINES GP-POWER TRAIN COOLER	51
PUMP GP-WATER	55
RADIATOR & HYD OIL COOLER GP	57
TANK & LINES GP-COOLANT	58
AIR INLET AND EXHAUST SYSTEM	61
AIR CLEANER GP	61
COVER GP-INLET MANIFOLD	64
EXTENSION GP-EXHAUST	66
LINES GP-AIR	67
MUFFLER GP	68
TURBOCHARGER GP	69
FUEL SYSTEM	71
CONTROL GP-GOVERNOR	71
FILTER GP-WATER SEP & FUEL	73
LINES GP-FUEL	74
MOUNTING GP-GOVERNOR CONTROL	78
PUMP GP-FUEL INJECTION	79
PUMP GP-FUEL PRM & PRIM FILTER	83
TANK GP-FUEL	84
ELECTRICAL AND STARTING SYSTEM	87
ALTERNATOR GP-CHARGING	87
BATTERY & WIRING GP	88
BATTERY GP	92
CONTROL GP-MACHINE	94
ELECTRONICS AR-MACHINE	94
ELECTRONICS GP-COMMUNICATION	94
GLOW PLUG GP	95
HEATER GP-JACKET WATER	96
LAMP GP-FLOOD	98
LAMP GP-HEAD & SIGNAL	100
LAMP GP-REGISTRATION PLATE	104
LAMP GP-WARNING BEACON	105
LIGHTING GP-FLOOD	106
LIGHTING GP-ROADING	107
LIGHTING GP-WARNING BEACON	114
RELAY GP	116
SENSOR GP-SPEED	121
STARTING MOTOR GP-ELECTRIC	122
SWITCH GP-ALL WHEEL DRIVE	123
SWITCH GP-DIFFERENTIAL LOCK	124
SWITCH GP-DISCONNECT	125
SWITCH GP-PRESSURE	126
WIRING GP-AIR CONDITIONER	128
WIRING GP-CAB	131
WIRING GP-COMMUNICATION	133
WIRING GP-CONSOLE	135

TABLE OF CONTENTS

Name	Page
WIRING GP-CONTROL	137
WIRING GP-ENGINE	138
WIRING GP-HEATER	141
WIRING GP-KICKOUT & POSITIONER	143
WIRING GP-LOAD CONTROL	147
WIRING GP-PLATFORM	149
WIRING GP-REAR	156
WIRING GP-RIDE CONTROL	158
WIRING GP-SENSOR	160
WIRING GP-TRANSMISSION CONTROL	163
WIRING GP-WIPER	167
WIRING GP-WORK TOOL	169
POWER TRAIN	173
AXLE GP-DRIVE & STEERING	173
AXLE GP-REAR	175
CASE AS-TRANSMISSION	178
DIFFERENTIAL & BEVEL GEAR GP	181
DIFFERENTIAL GP	185
DRIVE GP-FLEXIBLE COUPLING	187
FILLER GP-POWER TRAIN OIL	189
FLANGE GP-WHEEL	193
HOUSING & FLANGE GP-AXLE	194
HOUSING GP-AXLE	196
LINES GP-POWER TRAIN OIL	198
LOCK GP-DIFFERENTIAL	199
LOCKOUT GP-FOURTH GEAR	201
MOUNTING GP-AXLE	202
MOUNTING GP-TRANSMISSION	203
PLANETARY GP-FINAL DRIVE	205
POWER TRAIN AR	207
SHAFT GP-COUNTER	208
SHAFT GP-DRIVE	212
SHAFT GP-IDLER	215
SHAFT GP-INPUT	217
SHAFT GP-OUTPUT	223
SHAFT GP-MAIN	228
STOP GP-STEERING	230
TORQUE CONVERTER AR	231
TRANSMISSION AR-DIRECT DRIVE	233
TRANSMISSION AR-POWER SHIFT	234
TRANSMISSION GP-DIRECT DRIVE	238
TRANSMISSION GP-POWER SHIFT	249
VALVE & MTG GP-SOLENOID	256
VALVE GP-RELIEF	257
VALVE GP-SOLENOID	258
VALVE GP-TIRE	263
WHEEL & TIRE AR	264
WHEEL & TIRE GP	267
BRAKING SYSTEM	288
CONTROL GP-PARKING BRAKE	288
CONTROL GP-SERVICE BRAKE	290
CYLINDER GP-BRAKE	293
LEVER GP-HAND CONTROL	297
STEERING SYSTEM	298
LINES GP-STEERING	298
PUMP GP-METERING	300
STEERING COLUMN GP	301
FRAME AND BODY	302
BOX GP-STORAGE	302
COUNTERWEIGHT GP	304
COVER GP-PROTECTION	308
FENDER GP-FRONT	309
FENDER GP-REAR	310
FLOORPLATE GP	312
FRAME AR-LOADER	313
FRAME GP-LOADER	314
FRAME GP-SLIDING	318
FRAME GP-SWING	320
GRILL GP-RADIATOR	323
GUARD GP-DEBRIS	325
GUARD GP-DRIVE SHAFT	326
GUARD GP-FUEL TANK	327
GUARD GP-LIGHTING	328
HOOD & GUARD GP	329
HOOD GP-ENGINE	331
KIT-GUARD	332
KIT-ROADING CONVERSION	332
LINER GP-SOUND SUPPRESSION	333
REFLECTOR GP	334
HYDRAULIC SYSTEM	335
ACCUMULATOR GP-PILOT OIL	335
ACCUMULATOR GP-HYDRAULIC	336
ACCUMULATOR GP-PILOT OIL	337
ACCUMULATOR GP-RIDE CONTROL	338
CONTROL AR-RIDE	340
CYLINDER GP-BACKHOE BUCKET	341
CYLINDER GP-BOOM	343
CYLINDER GP-COUPLER	345
CYLINDER GP-HYDRAULIC	346
CYLINDER GP-LIFT	350
CYLINDER GP-MULTIPURPOSE BUKT	352
CYLINDER GP-STABILIZER	353
CYLINDER GP-STICK	354
CYLINDER GP-TILT	359
DRIVE & MTG GP-PUMP	360
FILTER & MTG GP-OIL	362
FILTER GP-OIL	363
FITTING GP-HYDRAULIC	364
HYDRAULIC AR	365
LINES GP-AUXILIARY HYDRAULIC	366
LINES GP-BACKHOE	377
LINES GP-BACKHOE AUXILIARY	379
LINES GP-BOOM	389

TABLE OF CONTENTS

Name	Page
LINES GP-BUCKET	391
LINES GP-BUCKET CYLINDER	393
LINES GP-CONNECTING	397
LINES GP-COUPLER	398
LINES GP-LIFT & TILT	400
LINES GP-LIFT CYLINDER	402
LINES GP-LOAD CONTROL VALVE	406
LINES GP-MULTIPURPOSE BUCKET	412
LINES GP-PILOT	418
LINES GP-PUMP	431
LINES GP-RETURN	433
LINES GP-RIDE CONTROL	435
LINES GP-SIDESHIFT	437
LINES GP-STABILIZER	439
LINES GP-STICK	441
LINES GP-SWING	443
MANIFOLD GP-CONTROL	445
MANIFOLD GP-RIDE CONTROL	446
MOUNTING GP-CYLINDER	447
MOUNTING GP-LINES	449
PUMP & MTG GP-HYDRAULIC	450
SHAFT GP-PUMP DRIVE	451
TANK & MTG GP-HYDRAULIC	452
VALVE & MTG GP-AUXILIARY	453
VALVE & MTG GP-BANK	454
VALVE AR-BANK 3	456
VALVE GP-BANK 3	459
VALVE GP-BANK 7	460
VALVE GP-PILOT	461
VALVE GP-SOLENOID & PRESS REDC	462
IMPLEMENTS	463
ARM GP-LIFT	463
BOOM GP	466
BRACE GP-LIFT CYLINDER	469
LINKAGE AR	470
LINKAGE AR-BUCKET	471
LINKAGE GP-BACKHOE BUCKET	472
LINKAGE GP-BUCKET	479
LOCK GP-STABILIZER LEG	480
LOCK GP-TRANSPORT	481
PAD GP-STABILIZER	490
STABILIZER GP-BACKHOE	491
STICK GP	492
STICK GP-EXTENDABLE	494
WORK TOOLS	500
BUCKET AR-MULTIPURPOSE	500
BUCKET AS-GENERAL PURPOSE	510
BUCKET AS-HOE	513
BUCKET GP-GENERAL PURPOSE	526
BUCKET GP-HOE	527
BUCKET GP-MULTIPURPOSE	542
BULLDOZER AS	546
CARRIAGE AS-FORK	552
CLAM AS-MULTIPURPOSE BUCKET	553
CONVERSION AR-QUICK COUPLER	555
COUPLER GP-QUICK	556
EDGE GP-CUTTING	557
FORK GP-PALLET	559
GUARD GP-BUCKET	560
MOUNTING GP-BUCKET	562
MOUNTING GP-FORK	564
TOOTH GP-UNI	565
OPERATOR STATION	566
AIR CONDITIONER & MOUNTING GP	566
CAB AR	569
CAB AR-TRIM	570
CAB AR	570
CAB AR-ENCLOSED ROPS	571
CAB GP	572
COMPRESSOR GP-REFRIGERANT	579
CONDENSER & MTG GP-REFRIGERANT	581
CONSOLE GP-OPERATOR	582
CONTROL & MTG GP-JOYSTICK	588
CONTROL AR-STABILIZER	589
CONTROL GP-HANDLE	590
CONTROL GP-HYDRAULIC LOCKOUT	592
CONTROL GP-JOYSTICK	594
CONTROL GP-STEERING	595
CONTROL GP-TRANSMISSION	596
DOOR GP-CAB	598
DUCT GP-CAB AIR	602
FLOOR MAT GP	603
HEATER & AIR CONDITIONER AR	604
HEATER & AIR CONDITIONER GP	605
HEATER GP-CAB	607
INSTALLATION GP-RADIO	611
KIT-RADIO	612
KIT-SEAT FRAME	613
KIT-SEAT PAN	614
KIT-SEAT SUSPENSION	616
LATCH GP-CAB DOOR & WINDOW	618
LATCH GP-CONSOLE	620
LEVER GP-GOVERNOR	621
LINER GP-CAB	622
LINES GP-HEATER	624
LINES GP-HEATER & AIR COND	626
MIRROR GP-REAR VIEW	629
MOTOR GP-WINDOW WIPER	632
MOUNTING GP-BACKHOE CONTROL	634
MOUNTING GP-CAB	637
MOUNTING GP-HYDRAULIC LOCKOUT	638
PEDAL GP-GOVERNOR	639
ROOF GP-CAB	640

TABLE OF CONTENTS

Name	Page	Name	Page
SEAT GP	641		
SEAT GP-SUSPENSION	645		
SUSPENSION GP-SEAT	650		
SWIVEL GP-SEAT	652		
VISOR GP-CAB	654		
WINDOW GP-CAB	655		
WINDOW GP-DOOR	661		
WIPER & WASHER GP-WINDOW	663		
WIPER GP-WINDOW	665		
SERVICE EQUIPMENT AND SUPPLIES	666		
FILM GP	666		
FILM GP-INTERNATIONAL	667		
INSTALLATION AR-WHEEL CHOCK	668		
KIT-TOOL	669		
LINK GP-SHIPPING	670		
LOCK GP-VANDALISM	671		
PLATE & FILM GP	672		
PLATE AS-SIDE REFLECTIVE	675		
PLATE GP-IDENTIFICATION	676		
PROTECTION GP-VANDALISM	677		
PART NUMBER INDEX	B1		

GENERAL INFORMATION

1. MACHINE IDENTIFICATION

Caterpillar machines are identified by Product Identification Numbers (PIN). Some components included in a machine may be identified by Serial Numbers (S/N). Typical components that will be serialized include engines, transmissions, bulldozers, and rippers. The machine and engine are further identified by arrangement numbers and in some cases modification numbers. These numbers are shown on the product identification plate(s) and on the master plate in the operator's compartment.

Caterpillar dealers need all of these numbers to determine accurate parts identification.

SIS *New Feature*

Effective First Quarter 2001 the Caterpillar Product Identification Number (PIN) changed from 8 to 17 characters. In an effort to provide uniform equipment identification, Caterpillar and other construction equipment manufacturers are moving to comply with the latest version of the product identification numbering standard. Non-road machine PINs are defined by ISO 10261. The new PIN format will apply to all Caterpillar machines and generator sets. The PIN plates and frame marking will display the 17 character PIN. The new format will look like the following:

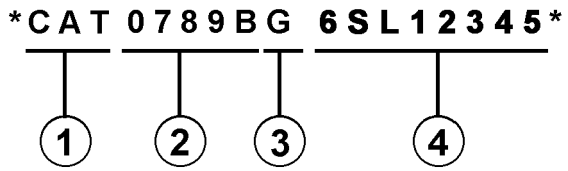

Where:

1. Caterpillar's World Manufacturing Code (characters 1-3)

2. Machine Descriptor (characters 4-8)

3. Check Character (character 9)

4. Machine Indicator Section (MIS) or Product Sequence Number (characters 10-17). These were previously referred to as the Serial Number.

Machines and generator sets produced before First Quarter 2001 will maintain their 8 character PIN format.

Components such as engines, transmissions, axles, etc. and work tools will continue to use an 8 character Serial Number (S/N).

2. ORDERING PARTS

WARNING

When replacement parts are required for this product Caterpillar recommends using Caterpillar replacement parts or parts with equivalent specifications including, but not limited to, physical dimensions, type, strength and material.

Failure to heed this warning can lead to premature failures, product damage, personal injury or death.

Quality Caterpillar replacement parts are available from Caterpillar dealers throughout the world. Their parts inventories are up to date and include all parts normally required to protect your investment in Caterpillar machines. Dealers may offer repair kits or remanufactured parts to allow selection of the most effective repair alternative for a particular situation. When ordering parts, your order should specify the quantity, part number, part name, and the serial number/product identification number of the machine for which the parts are needed.

3. PARTS MANUAL ORGANIZATION

Product information in this manual is presented as "information elements" that represent all of the components for the specific model. Engine Arrangement and Seat Group are examples of information elements. The information elements are organized alphabetically by part name and secondarily by part number within each major section of the manual.

4. TABLE OF CONTENTS

A table of contents (TOC) is found at the beginning of the manual. The TOC lists each section of the manual with a complete list of all information elements organized as they appear in the manual. Page numbers are provided for quick reference to detailed parts identification illustrations and serviceable consist lists.

5. MAINTENANCE PARTS INDEX

The Maintenance Parts Index, located near the beginning of the manual, references most frequently used maintenance part numbers, providing description, quantity, usage and page number. This information is organized alphabetically by part description.

GENERAL INFORMATION

6. INDEX

The index located near the front of the manual is an alphabetical listing of all information elements included in the manual. Page numbers are provided for quick reference to detailed parts identification illustrations and serviceable consist lists.

7. PART NUMBER INDEX

A numerical index listing all part numbers and the corresponding page number(s) appears at the back of the manual.

8. CAPTIONS

Captions located at the beginning of each information element identify the part number and part name along with additional descriptive information. PIN and S/N information found in each caption should be used to select correct information for a specific machine. Field replacement options, identification of optional attachment components, and where used ("part of") information is also provided.

The first line of a caption is shown in larger type font to indicate the beginning of an information element. Captions for additional pages that may be required to illustrate an information element will be shown in standard type font and will include the term *(contd.)* .

9. NON-SERVICED PARTS

In some instances it is necessary to display non-serviced parts that are a link to a lower level serviceable consist lists. These non-serviced part numbers are shown in *italic* type indicating that they are not available.

10. PARTS LIST REFERENCE NUMBERS

Numbers shown in the Ref No column correspond to numbers used in the associated graphic(s). An alphabetic suffix may be added to a reference number to identify lower level consist items. Numbers shown in the Graphic Ref column refer to the graphic number identifier displayed in the lower left corner of each illustration. The Graphic Ref number may be used in combination with the item Ref No to determine the correct part number. There may be intentional omission of a Ref No in a consist list as information is updated to reflect the latest serviceable part numbers.

11. INDENTED PART NAMES

When a part name is indented in a parts list, it is part of (included in) the group or assembly under which it is indented.

12. ILLUSTRATION REFERENCE LETTERS

When necessary, illustrations contain reference letters (A, B, C etc.) that are intended to track lines and harnesses from one point to another. They are also used to show where to reconnect illustrations that have been separated.

13. ABBREVIATIONS AND SYMBOLS

O.D. – Outside Diameter
I.D. – Inside Diameter
A – Not Part Of This Group
B – Use As Required
C – Change From Previous Type
D – Order By The Meter
E – Order By The Centimeter
F – Not Shown
G – Order By The Inch
I – Refer To Hydraulic Information System
M – Metric Part
R – Remfg Part May Be Available
Y – Separate Illustration
Z – Not Serviced Separately

SIS *New Feature*

14. DESCRIPTION OF TYPE CHANGES

Type - A type is defined as any configuration change that requires an additional Information Element for an Arrangement, Group, or Assembly. If serial number breaks for types are not available, a type # (Type 1, Type 2, etc.) will be displayed in the caption. These "type" changes are identified with a "C" note (change from previous type) in the Parts List. Only the "types" that apply to this Parts Manual will be included. Additional types may exist causing "C" notes to appear on an Information Element when no other types are shown.

15.<END>

This symbol indicates the end of an information element.

NOTE:

Continuing improvement and advancement of product design may cause changes to your machine which may not be included in this publication. Whenever a question arises regarding your Caterpillar product or this publication, please consult your Caterpillar dealer for the latest available information.

GENERAL INFORMATION

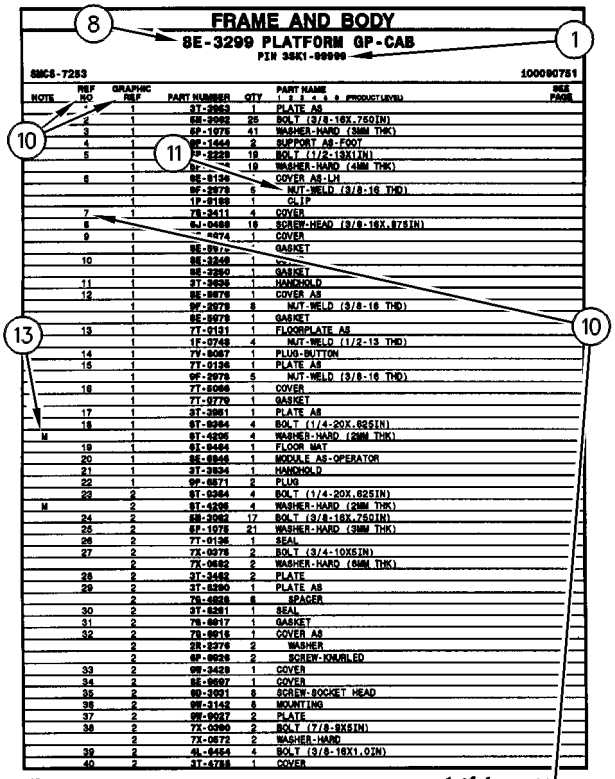

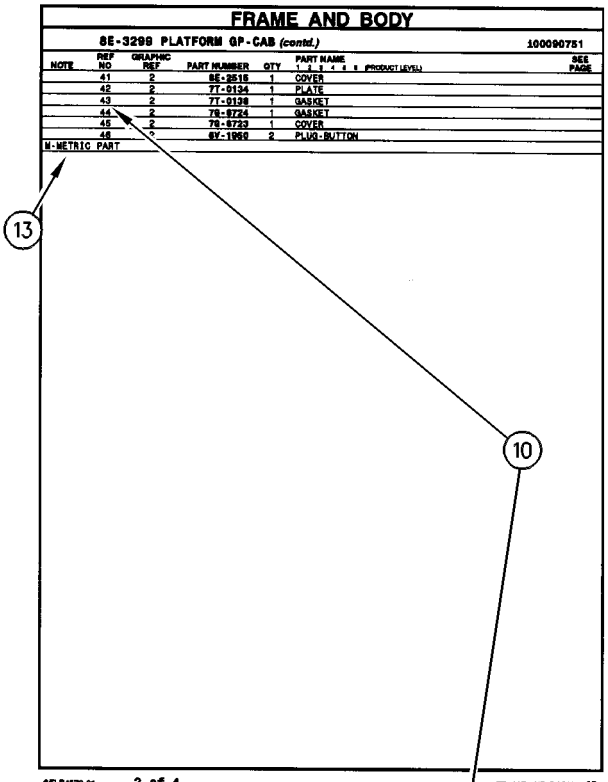

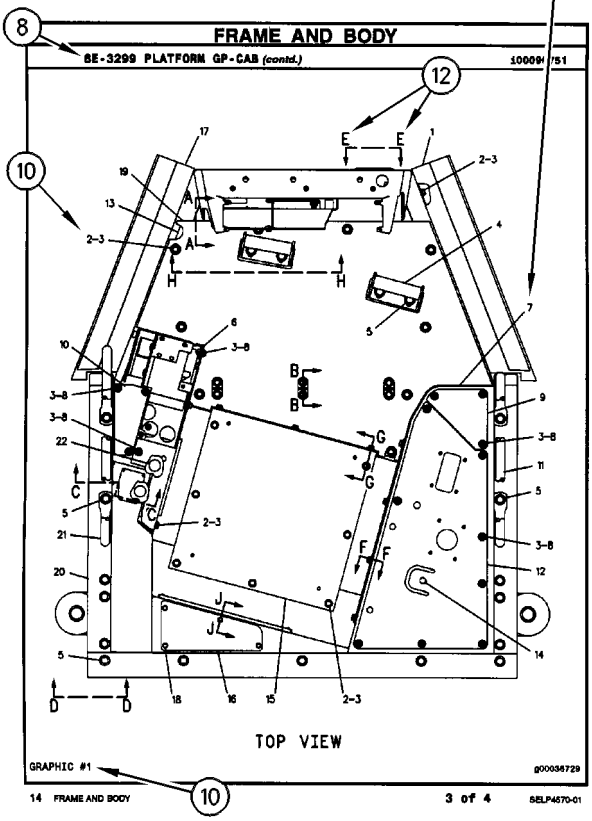

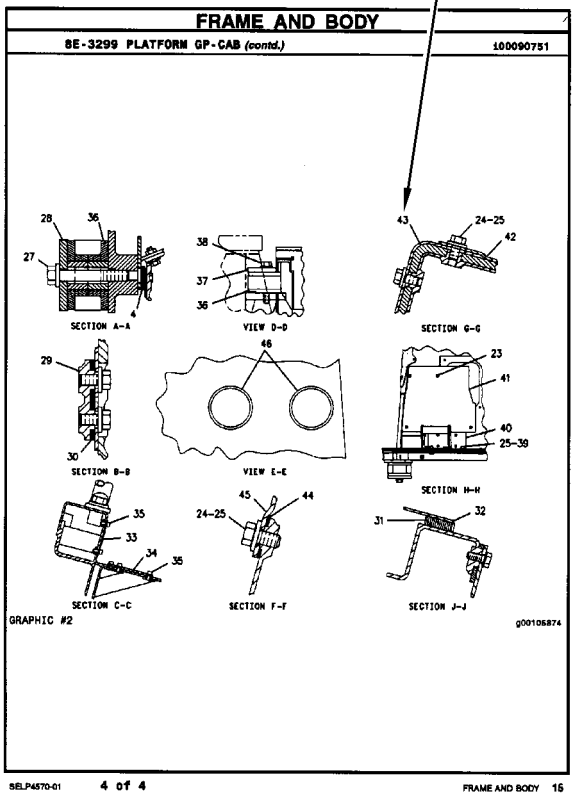

REPAIR ALTERNATIVES

REMANUFACTURED COMPONENTS

As an option when making repairs consider Caterpillar Remanufactured Components. Components that are available through the Caterpillar Remanufactured Program are identified three ways in the parts book:

- with the letter R in the note field of the parts list
- with an R* at the beginning of the first line of the caption
- with an *R at the end of the first line of the caption

Typical components included in the Remanufacturing Program include:

ALTERNATORS
CONNECTING RODS
CRANKSHAFTS - UNDERSIZE
CRANKSHAFTS - UPGRADE TO NEW
CYLINDER HEADS
ELECTRONIC CONTROL MODULES (ECM)
ELECTRONIC SENSORS
FUEL INJECTORS
FUEL NOZZLES
FUEL PUMPS
GOVERNORS
OIL PUMPS
PISTONS
SHORT BLOCKS
STARTERS
TURBOCHARGERS - COMPLETE
TURBOCHARGER CARTRIDGES
WATER PUMPS

Caterpillar Remanufactured engines for many engine arrangements are also available.

SUPPLEMENTAL COOLANT ADDITIVES

CUSTOMER BENEFITS:

Protects against cavitation, foam, erosion, corrosion, and scale buildup in cooling systems.

- Provides measured coolant conditioner.

DESCRIPTION:

Additives deplete from the coolant with normal operation. For this reason, Supplemental Coolant Additives (SCA) must be added to all heavy duty coolants at regular intervals. In addition, when not using a fully formulated, pre-charged antifreeze, like Caterpillar's DEAC, an initial charge of SCA must be added to the cooling system. The amount of SCA added to the system is dependent on the capacity of the system.

The SCA for initial fill is provided as a liquid. SCA's for maintenance intervals are available in liquid form and as a spin-on element. (No Spin-on available for 3600 Family of Engines)

NOTE:

The amount of SCA added at initial fill is not the same as the amount added at maintenance intervals.

The coolant additive elements can be used with any ethylene or propylene glycol type antifreeze which meets ASTM D4985 or ASTM D5345 Specifications.

NOTE:

For use with standard heavy duty coolant only, not for use with Extended Life Coolant.

PARTS NEEDED:

Cooling System Capacity		Liquid SCA at Initial Fill	Liquid SCA at Maintenance*	Spin-on SCA Maintenance Element*
Liters	Gallons			
22-30	(6-8)	3P-2044 (1)	6V-3542 (1)	111-2370 (1)
30-38	(8-10)	3P-2044 (1) 6V-3542 (1)	111-2372 (1)	111-2369 (1)
38-49	(10-13)	3P-2044 (1) 8T-1589 (1)	111-2372 (1)	111-2369 (1)
49-64	(13-17)	3P-2044 (2)	8T-1589 (1)	9N-3368 (1)
64-83	(17-22)	3P-2044 (2) 8T-1589 (1)	111-2372 (1) 6V-3542 (1)	111-2371 (1)
83-114	(22-30)	3P-2044 (3) 8T-1589 (1)	3P-2044 (1)	9N-3718 (1)
114-163	(30-43)	3P-2044 (5)	3P-2044 (1) 6V-3542 (1)	111-2371 (2)
163-242	(43-64)	3P-2044 (8)	3P-2044 (2)	9N-3718 (2)

** Normal maintenance period is 250 hrs. See your Operation and Maintenance Manual for complete coolant maintenance instructions.*

( ) Indicates quantity required.

MAINTENANCE PARTS

DESCRIPTION	PART NUMBER	QTY	WHERE USED	PAGE
AIR INLET AND EXHAUST SYSTEM				
FILTER ELEMENT-AIR (PRIMARY)	346-6687	1	AIR CLEANER GP	61
FILTER ELEMENT-AIR (SECONDARY)	346-6688	1	AIR CLEANER GP	61
BASIC ENGINE				
GASKET (VALVE COVER)	225-6451	1	COVER GP-VALVE MECHANISM	10
PLUG-DRAIN (ENGINE OIL)	7C-0351	2	PAN GP-OIL	28
COOLING SYSTEM				
BELT-SERPENTINE (FAN PULLEY)	298-5872	1	FAN GP-SUCTION	49
BELT-SERPENTINE (FAN)	309-6655	1	FAN GP-SUCTION	47
CAP AS-COOLANT TANK	251-3227	1	TANK & LINES GP-COOLANT	58
HOSE-RADIATOR (LOWER)	373-9373	1	TANK & LINES GP-COOLANT	58
HOSE-RADIATOR (UPPER)	354-8258	1	TANK & LINES GP-COOLANT	58
REGULATOR GP-TEMPERATURE (INCLUDES CONNECTOR) (WATER)	254-2267	1	CONNECTION GP-WATER	44

MAINTENANCE PARTS

DESCRIPTION	PART NUMBER	QTY	WHERE USED	PAGE
ELECTRICAL AND STARTING SYSTEM				
BATTERY (12-VOLT, MAINTENANCE FREE)	230-6368	1	BATTERY & WIRING GP	88
		1	BATTERY GP	92
BELT-DRIVE (WARNING BEACON)	9X-8139	1	LAMP GP-WARNING BEACON	105
FLASHER AS (12-VOLT) (HAZARD)	7T-4848	1	WIRING GP-PLATFORM	149
FUSE (10-AMPERE)	113-8490	9	WIRING GP-PLATFORM	150
FUSE (15-AMPERE)	113-8491	12	WIRING GP-PLATFORM	150
FUSE (30-AMPERE)	274-9872	1	RELAY GP	119
FUSE (30-AMPERE) (MAIN)	274-9872	1	WIRING GP-PLATFORM	149
FUSE (40-AMPERE)	278-6377	1	RELAY GP	116
		1	RELAY GP	119
FUSE (40-AMPERE) (POWER, 2)	278-6377	1	WIRING GP-PLATFORM	149
FUSE (60-AMPERE)	267-2701	2	RELAY GP	117
		1	RELAY GP	118
FUSE (60-AMPERE) (POWER, 1)	267-2701	1	WIRING GP-PLATFORM	149
GLOW PLUG (12-VOLT)	232-6662	4	GLOW PLUG GP	95
KEY (BATTERY DISCONNECT)	8H-5306	1	SWITCH GP-DISCONNECT	125
LAMP (12-VOLT)	7S-1800	1	WIRING GP-REAR	156
LAMP (12-VOLT, 10-WATT)	195-9712	1	LAMP GP-REGISTRATION PLATE	104
LAMP (12-VOLT, 21-WATT)	9W-3326	1	WIRING GP-REAR	156
LAMP (12-VOLT, 21-WATT) (AMBER)	226-4560	1	LAMP GP-HEAD & SIGNAL	100
		1	LAMP GP-HEAD & SIGNAL	101
		1	LAMP GP-HEAD & SIGNAL	102
		1	LAMP GP-HEAD & SIGNAL	103
LAMP (12-VOLT, 21-WATT) (ROADING LIGHTS)	9W-3326	1	LIGHTING GP-ROADING	107
		1	LIGHTING GP-ROADING	112
LAMP (12-VOLT, 5-WATT) (CLEAR)	226-4561	1	LAMP GP-HEAD & SIGNAL	100
		1	LAMP GP-HEAD & SIGNAL	101
		1	LAMP GP-HEAD & SIGNAL	102
		1	LAMP GP-HEAD & SIGNAL	103
LAMP (12-VOLT, 55-WATT) (FLOODLIGHT)	9W-0607	1	LAMP GP-FLOOD	98
		1	LAMP GP-FLOOD	99
LAMP (12-VOLT, 55-WATT) (WARNING BEACON)	9X-8118	1	LAMP GP-WARNING BEACON	105
LAMP-HEAD (12-VOLT, 60/55-WATT) (CLEAR)	9W-3324	1	LAMP GP-HEAD & SIGNAL	100
		1	LAMP GP-HEAD & SIGNAL	101
		1	LAMP GP-HEAD & SIGNAL	102
		1	LAMP GP-HEAD & SIGNAL	103
FUEL SYSTEM				
CAP-FUEL (LOCKABLE, VENTED)	284-9039	1	TANK GP-FUEL	84
ELEMENT-WATER SEPARATOR (FUEL FILTER)	361-9554	1	PUMP GP-FUEL PRM & PRIM FILTER	83
FILTER ELEMENT-FUEL (WATER SEPARATOR)	156-1200	1	FILTER GP-WATER SEP & FUEL	73
STRAINER (FUEL TANK)	340-4152	1	TANK GP-FUEL	84

MAINTENANCE PARTS

DESCRIPTION	PART NUMBER	QTY	WHERE USED	PAGE
HYDRAULIC SYSTEM				
BREATHER (HYDRAULIC TANK)	361-9918	1	TANK & MTG GP-HYDRAULIC	452
CAP AS	6V-9830	2	LINES GP-AUXILIARY HYDRAULIC	366
		1	LINES GP-AUXILIARY HYDRAULIC	371
		2	LINES GP-MULTIPURPOSE BUCKET	412
STRAINER (HYDRAULIC TANK)	254-1098	1	TANK & MTG GP-HYDRAULIC	452
LUBRICATION SYSTEM				
CAP AS-FILLER (ENGINE OIL)	236-6651	1	GAUGE GP-OIL LEVEL & FILLER	41
FILTER AS-ENGINE OIL	7W-2326	1	GAUGE GP-OIL LEVEL & FILLER	41
OPERATOR STATION				
BLADE AS-WIPER (450-MM) (REAR)	315-1316	1	WIPER GP-WINDOW	665
BLADE AS-WIPER (600-MM) (FRONT)	101-0745	1	WIPER & WASHER GP-WINDOW	663
DRYER AS-AIR	283-4236	1	LINES GP-HEATER & AIR COND	626
FILTER ELEMENT AS-AIR (CAB HEATER)	211-2661	1	AIR CONDITIONER & MOUNTING GP	566
		1	HEATER GP-CAB	607
FILTER ELEMENT-AIR (CAB HEATER)	211-2660	1	HEATER & AIR CONDITIONER GP	605
		1	HEATER GP-CAB	609
LAMP (12-VOLT)	210-8754	1	LINER GP-CAB	622
POWER TRAIN				
BREATHER (AXLE, FRONT)	253-5024	1	AXLE GP-DRIVE & STEERING	173
BREATHER (AXLE, REAR)	197-9155	1	AXLE GP-REAR	175
BREATHER (TRANSMISSION)	7T-3251	1	TRANSMISSION GP-DIRECT DRIVE	239
		1	TRANSMISSION GP-DIRECT DRIVE	243
		1	TRANSMISSION GP-POWER SHIFT	249
BREATHER AS (TRANSMISSION)	293-2147	1	TRANSMISSION GP-DIRECT DRIVE	239
CAP-DUST	6V-0852	1	TRANSMISSION GP-DIRECT DRIVE	238
		1	TRANSMISSION GP-POWER SHIFT	249
FILTER-OIL (STANDARD EFFICIENCY) (TRANSMISSION)	119-4740	1	TRANSMISSION AR-DIRECT DRIVE	233
		1	TRANSMISSION AR-POWER SHIFT	234
		1	TRANSMISSION AR-POWER SHIFT	237
PLUG AS-DRAIN (MAGNETIC) (AXLE, FRONT)	152-6144	4	AXLE GP-DRIVE & STEERING	173
		1	DIFFERENTIAL & BEVEL GEAR GP	181
PLUG AS-DRAIN (MAGNETIC) (AXLE, REAR)	152-6144	4	AXLE GP-REAR	175
PLUG AS-DRAIN (TRANSMISSION)	6Y-1896	1	TRANSMISSION GP-DIRECT DRIVE	238
		1	TRANSMISSION GP-DIRECT DRIVE	243
		1	TRANSMISSION GP-POWER SHIFT	249
STRAINER-SUCTION (TRANSMISSION)	7T-2651	1	CASE AS-TRANSMISSION	178
		1	TRANSMISSION GP-DIRECT DRIVE	243
		1	TRANSMISSION GP-POWER SHIFT	249

INDEX

Name	Page
A	
ACCUMULATOR GP-HYDRAULIC	336
ACCUMULATOR GP-PILOT OIL–CHARGED	335
ACCUMULATOR GP-PILOT OIL–UNCHARGED	337
ACCUMULATOR GP-RIDE CONTROL–CHARGED	339
ACCUMULATOR GP-RIDE CONTROL–UNCHARGED	338
ACCUMULATOR-REFRIGERANT	626
AFTERCOOLER GP-AIR	57
AIR CLEANER GP	61
	62
AIR CONDITIONER & MOUNTING GP	566
ALTERNATOR GP-CHARGING	87
ARM GP-LIFT	463
ARM GP-WINDOW WIPER (REAR)	665
AXLE GP-DRIVE & STEERING–FRONT	173
AXLE GP-REAR	175
B	
BACKHOE AR-EXTENDABLE STICK–SIDESHIFT	1
	2
BACKHOE AR-STANDARD STICK–SIDESHIFT	2
BATTERY & WIRING GP	88
BATTERY (12-VOLT, MAINTENANCE FREE)	88
	92
BATTERY GP	92
BELT-DRIVE (WARNING BEACON)	105
BELT-SERPENTINE (FAN PULLEY)	49
BELT-SERPENTINE (FAN)	47
BLADE AS-WIPER (450-MM) (REAR)	665
BLADE AS-WIPER (600-MM) (FRONT)	663
BLOWER GP-CAB (HEATER)	605
	609
BOOM GP	466
	468
BOX GP-STORAGE	302
	303
BRACE GP-LIFT CYLINDER	469
BRAKE GP-MECH CALIPER PARKING	176
BREATHER (AXLE, FRONT)	173
BREATHER (AXLE, REAR)	175
BREATHER (HYDRAULIC TANK)	452
BREATHER (TRANSMISSION)	239
	243
	249
BREATHER AS (TRANSMISSION)	239
BREATHER GP–CRANKCASE	38
BUCKET AR-MULTIPURPOSE	500
	501
	502
	503
	504
	505
	506
	507
	508
	509
BUCKET AS-GENERAL PURPOSE	510
	511
	512
BUCKET AS-HOE–HEAVY-DUTY	516
	517
	518
	519
	520
	521
	522
	523
	524
	525
BUCKET AS-HOE–HIGH CAPACITY	513
	514
	515
BUCKET GP-GENERAL PURPOSE	526
BUCKET GP-HOE–HEAVY-DUTY	530
	531
	532
	533
	534
	535
	536
	537
	538
	539
	540
	541
BUCKET GP-HOE–HIGH CAPACITY	527
	528
	529
BUCKET GP-MULTIPURPOSE	542
	543
	544
	545
BULLDOZER AS–MULTIPURPOSE BUCKET	546
	548
	549
	550
	551
C	
CAB AR	569
CAB AR–DELUXE	570
CAB AR–PILOT, AIR CONDITIONER	571

INDEX

Name	Page
CAB AR–SIDESHIFT	571
CAB AR-ENCLOSED ROPS–DELUXE, WITH A/C	571
CAB AR-TRIM–DELUXE	570
CAB GP–DELUXE	575
CAB GP–STANDARD	572
CAMSHAFT GP	9
CAP AS	366 371 412
CAP AS-COOLANT TANK	58
CAP AS-FILLER (ENGINE OIL)	41
CAP-DUST	238 249
CAP-FUEL (LOCKABLE, VENTED)	84
CARRIAGE AS-FORK–QUICK COUPLER	552
CASE AS-TRANSMISSION–ALL WHEEL DRIVE	179
CASE AS-TRANSMISSION–FRONT	178
CHASSIS AR	3
CHOCK GP-WHEEL	668
CLAM AS-MULTIPURPOSE BUCKET	553 554
COMMON AR	3
COMPRESSOR GP-REFRIGERANT	579 580
CONDENSER & MTG GP-REFRIGERANT	581
CONNECTION GP-WATER	44
CONSOLE GP-OPERATOR–FRONT	584
CONSOLE GP-OPERATOR–LH	582
CONSOLE GP-OPERATOR–RH	586
CONTROL & MTG GP-JOYSTICK	588
CONTROL AR-RIDE	340
CONTROL AR-STABILIZER–AUTO UP	589
CONTROL AR-STABILIZER–SIDESHIFT	589
CONTROL GP-GOVERNOR	71
CONTROL GP-HANDLE–LH	590
CONTROL GP-HANDLE–RH, JOYSTICK	591
CONTROL GP-HYDRAULIC LOCKOUT–HAND THROTTLE	593
CONTROL GP-HYDRAULIC LOCKOUT–PEDAL, BACKHOE	592
CONTROL GP-JOYSTICK–RH	594
CONTROL GP-MACHINE	94
CONTROL GP-PARKING BRAKE	288 289
CONTROL GP-SERVICE BRAKE–STANDARD SHIFT	290
CONTROL GP-STEERING–TILT	595
CONTROL GP-TRANSMISSION	165 596
CONTROL GP-TRANSMISSION (FORWARD, NEUTRAL, REVERSE)	596
CONTROL GP-UNPROGRAMMED (MACHINE ECM)	94
CONVERSION AR-CERTIFICATION–OUTSIDE NACD	3
CONVERSION AR-QUICK COUPLER	555
CONVERSION AR-ROADING–ITALY	4
CONVERSION AR-ROADING–UNITED KINGDOM	4
COOLER GP-ENGINE OIL	45 46
COOLER GP-OIL	57
COUNTERWEIGHT GP	304 305 306 307
COUPLER GP-QUICK–PARALLEL LIFT	556
COVER GP (OUTLET)	459
COVER GP-INLET MANIFOLD	64
COVER GP-PROTECTION	308
COVER GP-VALVE MECHANISM	10
CRANKSHAFT GP	12 13
CYLINDER BLOCK GP	14 15
CYLINDER GP-BACKHOE BUCKET	341
CYLINDER GP-BOOM	343 344
CYLINDER GP-BRAKE	293 295
CYLINDER GP-COUPLER	345
CYLINDER GP-HYDRAULIC–LH	348
CYLINDER GP-HYDRAULIC–RH	346
CYLINDER GP-LIFT	350 351
CYLINDER GP-MULTIPURPOSE BUKT	352
CYLINDER GP-STABILIZER	353
CYLINDER GP-STEERING (FRONT AXLE)	173
CYLINDER GP-STICK	354 355 357
CYLINDER GP-TILT	359
CYLINDER HEAD GP	16 17

D

DIFFERENTIAL & BEVEL GEAR GP	185
DIFFERENTIAL & BEVEL GEAR GP–FRONT	181
DIFFERENTIAL & BEVEL GEAR GP–REAR	183
DIFFERENTIAL GP–AXLE, FRONT	185
DIFFERENTIAL GP–AXLE, REAR	186
DOOR GP-CAB–LH	600
DOOR GP-CAB–RH	598
DRIVE & MTG GP-PUMP	360 361
DRIVE AR-BACKHOE LOADER–4-WHEEL DRIVE, 2-WHEEL STEER	5

INDEX

Name	Page
DRIVE GP-FAN	18
DRIVE GP-FLEXIBLE COUPLING	187, 188
DRYER AS-AIR	626
DUCT GP-CAB AIR	602
E	
EDGE GP-CUTTING	557, 558
ELECTRONICS AR-MACHINE	94
ELECTRONICS GP-COMMUNICATION–PRODUCT LINK 121SR	94
ELEMENT-WATER SEPARATOR (FUEL FILTER)	83
ENGINE AR-COMPLETE	7
ENGINE AR-PRIMARY	8
EXTENSION GP-EXHAUST	66
F	
FAN GP-SUCTION–WITH AIR CONDITIONER	49
FAN GP-SUCTION–WITHOUT AIR CONDITIONER	47
FENDER GP (RH)	310
FENDER GP-FRONT	309
FENDER GP-REAR	310
FILLER GP-ENGINE OIL	40
FILLER GP-POWER TRAIN OIL–AUTOSHIFT	189
FILLER GP-POWER TRAIN OIL–STANDARD SHIFT	191
FILM (REFLECTOR)	560
FILM GP	666
FILM GP-INTERNATIONAL	667
FILM-CERTIFICATION (ROPS, FOPS, READ OMM)	572, 575
FILM-CONTROL (LOADER, JOYSTICK)	427
FILM-IDENTIFICATION (CAT)	329
FILM-IDENTIFICATION (FUSE, RELAY PANEL)	151
FILM-IDENTIFICATION (GROUP NO., SEQUENCE NO.)	605, 609
FILM-IDENTIFICATION (HYDRAULIC OIL FILTER)	362
FILM-IDENTIFICATION (LIFT EYE LOCATION)	202
FILM-IDENTIFICATION (PREMIER)	6
FILM-IDENTIFICATION (STABILIZER, AUTO UP)	589
FILM-IDENTIFICATION (TEMPERATURE CONTROL)	566, 607
FILM-INFORMATION (BELT ROUTING)	47, 49
FILM-INFORMATION (HYDO ADVANCED 10)	452
FILM-INFORMATION (LIFT EYE, TIE-DOWN LOCATION)	314, 316
FILM-INFORMATION (TIE-DOWN)	314, 316
FILM-INSTRUCTION (AUXILIARY CONTROL VALVE)	383, 386
FILM-INSTRUCTION (BEACON)	115
FILM-INSTRUCTION (BOOM LOCK)	71
FILM-INSTRUCTION (EXTENDABLE STICK PIN, READ OMM)	494, 496, 498
FILM-INSTRUCTION (FORWARD, NEUTRAL, REVERSE)	584
FILM-INSTRUCTION (OIL FLOW DIRECTION)	371, 375, 381, 383, 386
FILM-INSTRUCTION (OPERATOR CONTROLS, READ OMM)	422
FILM-INSTRUCTION (STABILIZER, SIDESHIFT)	589
FILM-INSTRUCTION (START SWITCH)	586
FILM-INSTRUCTION (VARIABLE SPEED)	71
FILM-NOTICE (ROADING HEIGHT)	4
FILM-WARNING (HIGH PRESS CYLINDER, READ OMM)	435, 667
FILM-WARNING (HIGH PRESSURE, READ OMM)	338, 339
FILM-WARNING (HYD PRESS, READ OMM, INTL)	371, 375, 381, 383, 386, 667
FILM-WARNING (NO ENTRANCE, EXIT, READ OMM)	318, 667
FILM-WARNING (NO WELD, NO DRILL, READ OMM)	575
FILM-WARNING (PRODUCT LINK 300, INTL)	133, 667
FILM-WARNING (TIPPING HAZARD, READ OMM)	160
FILTER & MTG GP-OIL–HYDRAULIC	362
FILTER AS-ENGINE OIL	41
FILTER ELEMENT AS-AIR (CAB HEATER)	566

INDEX

Name	Page
	607
FILTER ELEMENT-AIR (CAB HEATER)	605
	609
FILTER ELEMENT-AIR (PRIMARY)	61
FILTER ELEMENT-AIR (SECONDARY)	61
FILTER ELEMENT-FUEL (WATER SEPARATOR)	73
FILTER GP-FUEL (WATER SEPARATOR)	73
FILTER GP-OIL	363
FILTER GP-WATER SEP & FUEL	73
FILTER-OIL (STANDARD EFFICIENCY) (TRANSMISSION)	233
	234
	237
FINAL DRIVE GP	206
FITTING & MTG GP-HYDRAULIC	377
FITTING GP-HYDRAULIC–QUICK DISCONNECT	364
FLANGE GP-WHEEL	193
FLASHER AS (12-VOLT) (HAZARD)	149
FLOOR MAT	603
FLOOR MAT GP	603
FLOORPLATE GP	312
FLYWHEEL GP	19
FORK GP-PALLET	559
FRAME AR-LOADER	313
FRAME AR-LOADER–NARROW	313
FRAME GP-LOADER	316
FRAME GP-LOADER–NARROW	314
FRAME GP-SLIDING	318
FRAME GP-SWING	320
	321
FUSE (10-AMPERE)	150
FUSE (15-AMPERE)	150
FUSE (30-AMPERE)	119
FUSE (30-AMPERE) (MAIN)	149
FUSE (40-AMPERE)	116
	119
FUSE (40-AMPERE) (POWER, 2)	149
FUSE (60-AMPERE)	117
	118
FUSE (60-AMPERE) (POWER, 1)	149

G

Name	Page
GASKET (VALVE COVER)	10
GAUGE (HYDRAULIC TANK)	452
GAUGE AS-OIL LEVEL (DIPSTICK) (ENGINE)	42
GAUGE GP-OIL LEVEL & FILLER	41
GAUGE GP-OIL LEVEL (DIPSTICK)	42
GAUGE-OIL LEVEL (DIPSTICK) (POWER TRAIN)	189
	191
GEAR GP-RING	175
	194
	195
GLOW PLUG (12-VOLT)	95
GLOW PLUG GP	95
GRILL GP-RADIATOR	323
GUARD GP-BUCKET	560
	561
GUARD GP-DEBRIS–CANOPY	325
GUARD GP-DRIVE SHAFT	326
GUARD GP-FUEL TANK	327
GUARD GP-LIGHTING	328

H

Name	Page
HANDLE GP-DOOR (LH)	655
HANDLE GP-DOOR (RH)	655
HANDLE GP-MODULAR (LH)	590
HANDLE GP-MODULAR (RH)	591
	594
HARNESS AS-ALARM	138
HARNESS AS-AUXILIARY	137
HARNESS AS-CAB (OBJECT HANDLING)	160
HARNESS AS-CAB (ROOF)	131
HARNESS AS-CHASSIS (LOAD CONTROL)	147
HARNESS AS-CONSOLE	135
HARNESS AS-ENGINE	138
HARNESS AS-FUEL TANK (FUEL SHUTOFF)	7
HARNESS AS-HEATER & AIR COND	141
HARNESS AS-HEATER & AIR COND (CAB)	605
HARNESS AS-HEATER & AIR COND (COMPRESSOR)	128
HARNESS AS-HEATER & AIR COND (VENT)	128
HARNESS AS-HEATER (CAB)	609
HARNESS AS-LIGHTING	572
	575
HARNESS AS-PLATFORM	150
HARNESS AS-QUICK COUPLER (LOADER)	171
HARNESS AS-QUICK COUPLER (PLATFORM)	171
HARNESS AS-RADIO (FLANGE)	611
HARNESS AS-RADIO (PRODUCT LINK)	133
HARNESS AS-REAR	160
HARNESS AS-REAR (PILOT)	156
HARNESS AS-REAR LIGHTING	107
	112
HARNESS AS-RIDE CONTROL	158
HARNESS AS-SWITCH (HOE)	160
HARNESS AS-SWITCH (OBJECT HANDLING)	160
HARNESS AS-TRANSMISSION (AUTOSHIFT)	165
HARNESS AS-TRANSMISSION (STANDARD SHIFT)	163
HARNESS AS-VALVE (SEAT AIR COMPRESSOR)	616
HARNESS AS-WINDOW WIPER	167

INDEX

Name	Page
HARNESS AS-WIRING (KICKOUT, POSITIONER)	143, 145
HARNESS AS-WIRING (PRODUCT LINK)	133
HARNESS AS-WIRING (SEAT AIR COMPRESSOR)	616
HARNESS AS-WORK TOOL (ANGLE BROOM)	169
HEATER & AIR CONDITIONER AR	604
HEATER & AIR CONDITIONER GP	605
HEATER GP-CAB	607, 609
HEATER GP-JACKET WATER	96, 97
HOOD & GUARD GP	329
HOOD GP-ENGINE	331
HOSE-RADIATOR (LOWER)	58
HOSE-RADIATOR (UPPER)	58
HOUSING & FLANGE GP-AXLE–LH	195
HOUSING & FLANGE GP-AXLE–RH	194
HOUSING GP-AXLE–LH	197
HOUSING GP-AXLE–RH	196
HOUSING GP-FLYWHEEL	20
HOUSING GP-FRONT	21
HYDRAULIC AR	365

I

Name	Page
INDICATOR AS (LH TURN SIGNAL, PARKING BRAKE)	149
INDICATOR AS (RH TURN SIGNAL, HIGH BEAM)	149
INSTALLATION AR-WHEEL CHOCK	668
INSTALLATION GP-RADIO	611

K

Name	Page
KEY (BATTERY DISCONNECT)	125
KIT-GUARD	332
KIT-RADIO	612
KIT-ROADING CONVERSION–FOG	332
KIT-SEAT FRAME	613
KIT-SEAT PAN	614
KIT-SEAT SUSPENSION–AIR	616
KIT-TOOL–HAND	669

L

Name	Page
LAMP (12-VOLT)	156, 622
LAMP (12-VOLT, 10-WATT)	104
LAMP (12-VOLT, 21-WATT)	156
LAMP (12-VOLT, 21-WATT) (AMBER)	100, 101, 102, 103
LAMP (12-VOLT, 21-WATT) (ROADING LIGHTS)	107, 112
LAMP (12-VOLT, 5-WATT) (CLEAR)	100, 101, 102, 103
LAMP (12-VOLT, 55-WATT) (FLOODLIGHT)	98, 99
LAMP (12-VOLT, 55-WATT) (WARNING BEACON)	105
LAMP GP-DOME (12-VOLT) (CAB)	622
LAMP GP-FLOOD	98, 99
LAMP GP-HEAD & SIGNAL–LH	101, 103
LAMP GP-HEAD & SIGNAL–RH	100, 102
LAMP GP-REGISTRATION PLATE	104
LAMP GP-ROADING (FOG LIGHT, RED, REAR)	107, 112
LAMP GP-SIGNAL (12-VOLT) (STOP, TAIL, TURN, LH)	156
LAMP GP-SIGNAL (12-VOLT) (STOP, TAIL, TURN, RH)	156
LAMP GP-WARNING BEACON–AMBER	105
LAMP-HEAD (12-VOLT, 60/55-WATT) (CLEAR)	100, 101, 102, 103
LATCH GP-CAB DOOR & WINDOW	618, 619
LATCH GP-CONSOLE	620
LEVER GP-GOVERNOR–HANDHELD	621
LEVER GP-HAND CONTROL	297
LIFTING GP-ENGINE	23
LIGHTING GP-FLOOD	106
LIGHTING GP-ROADING–DIPPED, LH	111
LIGHTING GP-ROADING–DIPPED, RH	109
LIGHTING GP-ROADING–FOG	107
LIGHTING GP-ROADING–FOG LIGHT	112
LIGHTING GP-WARNING BEACON	115
LIGHTING GP-WARNING BEACON–AMBER, MAGNETIC MOUNT, ROTATING	114
LINER GP-CAB	622
LINER GP-SOUND SUPPRESSION	333
LINES GP-AIR	67
LINES GP-AUXILIARY HYDRAULIC	369, 370
LINES GP-AUXILIARY HYDRAULIC–EXTENDABLE STICK	368

INDEX

Name	Page
LINES GP-AUXILIARY HYDRAULIC–EXTENDABLE STICK, 1-WAY	375
LINES GP-AUXILIARY HYDRAULIC–PARALLEL LIFT	366
LINES GP-AUXILIARY HYDRAULIC–SIDESHIFT	373
LINES GP-AUXILIARY HYDRAULIC–STANDARD STICK, 1-WAY	371
LINES GP-BACKHOE	377
LINES GP-BACKHOE AUXILIARY–1-WAY	381
LINES GP-BACKHOE AUXILIARY–EXTENDABLE STICK, 1-WAY	379
LINES GP-BACKHOE AUXILIARY–EXTENDABLE STICK, 2-WAY	379 383 386
LINES GP-BACKHOE AUXILIARY–STANDARD STICK, 1-WAY	380
LINES GP-BOOM	389 390
LINES GP-BUCKET CYLINDER–EXTENDABLE STICK	395
LINES GP-BUCKET CYLINDER–STANDARD STICK	393
LINES GP-BUCKET–EXTENDABLE STICK	391
LINES GP-CONNECTING	397
LINES GP-COUPLER–PARALLEL LIFT	398
LINES GP-FUEL	74 76
LINES GP-HEATER	624
LINES GP-HEATER & AIR COND	626
LINES GP-LIFT & TILT	400
LINES GP-LIFT CYLINDER	403
LINES GP-LIFT CYLINDER–PARALLEL LIFT	402
LINES GP-LOAD CONTROL VALVE	409
LINES GP-LOAD CONTROL VALVE–PILOT	406
LINES GP-MULTIPURPOSE BUCKET	412 414 416
LINES GP-PILOT	418
LINES GP-PILOT–AUXILIARY	429 430
LINES GP-PILOT–BACKHOE	422
LINES GP-PILOT–LOADER	427
LINES GP-PILOT–STABILIZER	425
LINES GP-PILOT–SUPPLY	420
LINES GP-POWER TRAIN COOLER	51 53
LINES GP-POWER TRAIN OIL	198
LINES GP-PUMP	431
LINES GP-RETURN	433
LINES GP-RIDE CONTROL	435
LINES GP-SIDESHIFT	437
LINES GP-STABILIZER	439
LINES GP-STEERING	298
LINES GP-STICK	441 442
LINES GP-SWING	443
LINK GP-SHIPPING	670
LINKAGE AR	470 471
LINKAGE AR–WITH LIFTING EYE	470
LINKAGE AR-BUCKET–WITH LIFTING EYE	471
LINKAGE AR-BUCKET–WITHOUT LIFTING EYE	471
LINKAGE GP-BACKHOE BUCKET–LIFTING	472
LINKAGE GP-BACKHOE BUCKET–WITH LIFTING EYE	474
LINKAGE GP-BACKHOE BUCKET–WITHOUT LIFTING EYE	476 477
LINKAGE GP-BUCKET (LIFTING)	479
LINKAGE GP-BUCKET (WITHOUT LIFTING EYE)	476
LINKAGE GP-BUCKET–LIFTING	479
LOADER AR–PARALLEL LIFT	5
LOCK GP-DIFFERENTIAL–AUTOSHIFT	199
LOCK GP-STABILIZER LEG	480
LOCK GP-TRANSPORT	483 488 489
LOCK GP-TRANSPORT–BACKHOE BUCKET	482
LOCK GP-TRANSPORT–BOOM	486
LOCK GP-TRANSPORT–SIDESHIFT	484
LOCK GP-TRANSPORT–STABILIZER	481
LOCK GP-VANDALISM	671
LOCKOUT GP-FOURTH GEAR	201

M

MANIFOLD GP-CONTROL (INLET)	459
MANIFOLD GP-CONTROL–PATTERN CHANGE	445
MANIFOLD GP-RIDE CONTROL	446
MIRROR GP-REAR VIEW–EXTERIOR	630 631
MIRROR GP-REAR VIEW–INTERIOR	629
MOTOR GP-WINDOW WIPER	632
MOTOR GP-WINDOW WIPER–REAR	633
MOUNTING GP-AXLE	202
MOUNTING GP-BACKHOE CONTROL–PILOT	634
MOUNTING GP-BUCKET–BACKHOE, QUICK COUPLER	562
MOUNTING GP-BUCKET–PARALLEL LIFT	563
MOUNTING GP-CAB	637
MOUNTING GP-CYLINDER–MULTIPURPOSE BUCKET	447 448
MOUNTING GP-ENGINE	24

INDEX

Name	Page
MOUNTING GP-ENGINE & XMSN	26
	27
MOUNTING GP-FORK–MULTIPURPOSE BUCKET	564
MOUNTING GP-GOVERNOR CONTROL–ENGINE	78
MOUNTING GP-HYDRAULIC LOCKOUT	638
MOUNTING GP-LINES	449
MOUNTING GP-TRANSMISSION	203
	204
MOUNTING GP-WHEEL (FRONT)	267
	268
	269
	276
	279
	280
	283
	285
	286
MOUNTING GP-WHEEL (REAR)	273
	274
	275
	277
	278
	280
	284
MUFFLER GP–TURBOCHARGER	68

O

OPTION AR-BACKHOE	5
OPTION AR-REGIONAL–GERMANY	6

P

PAD GP-STABILIZER–STREET	490
PADLOCK GP	671
PAN GP-OIL	28
PANEL GP-INSTRUMENT	94
PEDAL GP-GOVERNOR	639
PISTON & ROD GP	30
PLANETARY GP-FINAL DRIVE–AXLE	205
	206
PLATE & FILM GP	672
	673
	674
PLATE AS-SIDE REFLECTIVE	675
PLATE GP-COVER (LOADER FRAME)	314
	316
PLATE GP-IDENTIFICATION	676
PLATE-IDENTIFICATION (WORK TOOL)	501
	530
	531
	532
	533
	535
PLUG AS-DRAIN (MAGNETIC) (AXLE, FRONT)	173
	181
PLUG AS-DRAIN (MAGNETIC) (AXLE, REAR)	175
PLUG AS-DRAIN (TRANSMISSION)	238
	243
	249
PLUG GP-CYLINDER HEAD	32
PLUG GP-ENGINE	33
	34
PLUG-DRAIN (ENGINE OIL)	28
POWER TRAIN AR	207
POWER TRAIN AR–4-WHEEL DRIVE, 2-WHEEL STEER	207
PREMIER AR	6
PROTECTION GP-VANDALISM–ROTATING GUARD	677
PULLEY GP-CRANKSHAFT	35
PUMP & MTG GP-HYDRAULIC	450
PUMP GP-ENGINE OIL	43
PUMP GP-FUEL INJECTION	79
	80
PUMP GP-FUEL PRM & PRIM FILTER–WITH WATER SEPARATOR	83
PUMP GP-METERING	300
PUMP GP-PISTON (HYDRAULIC)	450
PUMP GP-TRANSMISSION	249
PUMP GP-TRANSMISSION (POWER TRAIN)	238
	243
PUMP GP-WATER	55

R

RADIATOR & HYD OIL COOLER GP	57
RADIATOR GP	57
REFLECTOR GP–SIDE SHIFT	334
REGULATOR GP-TEMPERATURE (INCLUDES CONNECTOR) (WATER)	44
RELAY AS (12-VOLT) (AIR CONDITIONER, HEATER)	128
RELAY AS (12-VOLT) (DEAD ENGINE LOWER)	147
RELAY AS (12-VOLT) (FUEL PUMP)	149
RELAY AS (12-VOLT) (FUSE BLOCK)	149
RELAY AS (12-VOLT) (HIGH SPEED)	128
	141
RELAY AS (12-VOLT) (LOAD CONTROL)	147
RELAY AS (12-VOLT) (NEUTRAL START)	149
RELAY AS (12-VOLT) (RIDE CONTROL)	158
RELAY AS (12-VOLT) (STABILIZER, AUTO UP)	120
RELAY AS (12-VOLT) (START)	149
RELAY GP–POWER DISTRIBUTION	116
RELAY GP–POWER, 1	117

INDEX

Name	Page
RELAY GP–POWER, 2	118
RELAY GP–STABILIZER, AUTO UP	120
RELAY GP–STARTING MOTOR	119
ROCKER ARM GP	36
ROOF GP-CAB	640

S

SEAT GP–CLOTH	641
SEAT GP–DELUXE, CLOTH	643
SEAT GP-SUSPENSION (DELUXE, CLOTH)	649
SEAT GP-SUSPENSION–CLOTH	645 649
SEAT GP-SUSPENSION–DELUXE, CLOTH	647 649
SENDER AS-FUEL LEVEL	84
SENDER AS-TEMPERATURE (12-VOLT) (TRANSMISSION OIL)	238 243 249
SENDER AS-TEMPERATURE (ENGINE COOLANT)	138
SENSOR AS-POSITION (BUCKET)	143 145
SENSOR AS-TEMPERATURE (HYDRAULIC OIL)	362
SENSOR GP-MOISTURE (WATER SEPARATOR)	83
SENSOR GP-PRESSURE (HYDRAULIC OIL)	450
SENSOR GP-PRESSURE (RIDE CONTROL)	158
SENSOR GP-SPEED (TACHOMETER)	239
SENSOR GP-SPEED (TRANSMISSION OUTPUT 1)	249
SENSOR GP-SPEED (TRANSMISSION)	244
SENSOR GP-SPEED–TRANSMISSION	121
SERVICE GP-FORK POSITIONER	559
SERVICE GP-MACHINE	94
SHAFT GP-AXLE	173
SHAFT GP-COUNTER	208 210
SHAFT GP-COUNTER (TRANSMISSION)	239
SHAFT GP-DRIVE	212 213 214
SHAFT GP-IDLER (TRANSMISSION)	238
SHAFT GP-IDLER–POWERSHIFT	215
SHAFT GP-INPUT	217 221
SHAFT GP-INPUT–ALL WHEEL DRIVE	219
SHAFT GP-MAIN	228
SHAFT GP-OUTPUT–FRONT	226 227
SHAFT GP-OUTPUT–MAIN	223
SHAFT GP-OUTPUT–REAR	225
SHAFT GP-POWER TAKE-OFF (TRANSMISSION)	361
SHAFT GP-PUMP DRIVE	451
SOFTWARE GP-COMMUNICATION (PRODUCT LINK 121SR)	94
SOFTWARE GP-MACHINE	94
SPRING AS-GAS (GRILL, RH)	329
SPRING AS-GAS (HOOD, RH)	329
SPRING AS-GAS (LOCKABLE) (GRILL, LH)	329
SPRING AS-GAS (LOCKABLE) (HOOD, LH)	329
SPRING GP-GAS (CAB DOOR)	598 600
SPRING GP-GAS (STEERING COLUMN)	301
STABILIZER GP-BACKHOE	491
STARTING MOTOR GP-ELECTRIC–12-VOLT	122
STEERING COLUMN GP–TILT	301
STICK GP	492
STICK GP-EXTENDABLE	494 496 498
STOP GP-STEERING	230 266
STRAINER (FUEL TANK)	84
STRAINER (HYDRAULIC TANK)	452
STRAINER-SUCTION (TRANSMISSION)	178 243 249
SUN VISOR	654
SUSPENSION GP-SEAT–DELUXE, CLOTH	650
SWITCH AS (PARKING BRAKE)	288
SWITCH AS-FOOT (DIFFERENTIAL LOCK ON, OFF)	124
SWITCH AS-LIMIT (SERVICE BRAKE)	290
SWITCH AS-MULTIFUNCTION (HD LIGHT, TURN SIG, WDO WIPER)	149
SWITCH AS-PRESSURE (ENGINE OIL)	126
SWITCH AS-PRESSURE (HYDRAULIC OIL)	363
SWITCH AS-PRESSURE (LOAD CONTROL)	127
SWITCH AS-PRESSURE (REFRIGERANT)	128
SWITCH AS-PUSH BUTTON (BUCKET POSITIONER)	143 145
SWITCH AS-ROCKER (AIR CONDITIONER, HEATER SELECT)	128
SWITCH AS-ROCKER (ALL WHEEL DRIVE)	123
SWITCH AS-ROCKER (ALL WHEEL DRIVE, BRAKE)	4
SWITCH AS-ROCKER (ANGLE BROOM)	169
SWITCH AS-ROCKER (AUTOSHIFT, STANDARD SHIFT)	165
SWITCH AS-ROCKER (AUXILIARY HYDRAULIC FLOW)	171
SWITCH AS-ROCKER (BLOWER FAN SPEED)	128 141

INDEX

Name	Page
SWITCH AS-ROCKER (FLOODLIGHTS, FRONT)	106, 131
SWITCH AS-ROCKER (FLOODLIGHTS, REAR)	106, 131
SWITCH AS-ROCKER (FOG LIGHT, REAR)	107, 112
SWITCH AS-ROCKER (HAZARD WARNING LIGHTS)	149
SWITCH AS-ROCKER (HEATER)	141
SWITCH AS-ROCKER (HYDRAULIC LOCKOUT)	135
SWITCH AS-ROCKER (LOAD CONTROL)	147
SWITCH AS-ROCKER (LOAD STABILITY, BUCKET)	160
SWITCH AS-ROCKER (MODE SELECT)	149
SWITCH AS-ROCKER (QUICK COUPLER PIN LOCK)	171
SWITCH AS-ROCKER (QUICK COUPLER SWITCH)	171
SWITCH AS-ROCKER (RIDE CONTROL)	158
SWITCH AS-ROCKER (RIDE CONTROL, LOAD CONTROL)	147
SWITCH AS-ROCKER (ROADING LIGHTS)	156
SWITCH AS-ROCKER (SIDESHIFT, LOCK-UNLOCK)	156
SWITCH AS-ROCKER (STARTING AID)	135
SWITCH AS-ROCKER (TRANSMISSION NEUTRAL LOCK)	149
SWITCH AS-ROCKER (WIPER, WASHER, REAR)	663
SWITCH AS-START (KEY)	135
SWITCH GP-ALL WHEEL DRIVE	123
SWITCH GP-DIFFERENTIAL LOCK	124
SWITCH GP-DISCONNECT–BATTERY	125
SWITCH GP-PRESSURE–ENGINE OIL	126
SWITCH GP-PRESSURE–HYDRAULIC LOCKOUT	127
SWITCH GP-PUSH BUTTON (NEUTRALIZER)	596
SWITCH-PRESSURE (AIR CLEANER)	62
SWITCH-TEMPERATURE (FUEL)	80
SWITCH-TEMPERATURE (HVAC) (AIR CONDITIONER)	605
SWITCH-TOGGLE (SUSPENSION SEAT)	650
SWIVEL GP-SEAT	652
SYNCHRONIZER GP	225

T

Name	Page
TANK & LINES GP-COOLANT–EXPANSION, RADIATOR	58
TANK & MTG GP-HYDRAULIC	452
TANK GP-EXPANSION (COOLANT)	58
TANK GP-FUEL	84
TIE ROD GP	85, 173
TIP GP-PENETRATION	530, 531, 532, 533, 535, 541
TOOTH GP-UNI	527, 528, 529, 534, 536, 537, 539, 565
TORQUE CONVERTER AR	231, 232
TRANSMISSION AR-DIRECT DRIVE	233
TRANSMISSION AR-POWER SHIFT	234, 235, 237
TRANSMISSION AR-POWER SHIFT–4-WHEEL DRIVE, AUTO SHIFT	235
TRANSMISSION AR-POWER SHIFT–ALL WHEEL DRIVE	236
TRANSMISSION GP-DIRECT DRIVE–ALL WHEEL DRIVE	238, 243
TRANSMISSION GP-POWER SHIFT	249
TURBOCHARGER GP	69

V

Name	Page
VALVE & MTG GP-AUXILIARY	453
VALVE & MTG GP-BANK–3-BANK	454
VALVE & MTG GP-BANK–7-BANK	455
VALVE & MTG GP-SOLENOID	256
VALVE AR-BANK 3	457
VALVE AR-BANK 3–MULTIPURPOSE	456
VALVE AR-BANK 3–QUICK COUPLER LOCK	458
VALVE AS-PRESSURE RELIEF (REFRIGERANT COMPRESSOR)	579
VALVE GP-BANK 3–PILOT CONTROL	459
VALVE GP-BANK 7 (PILOT CONTROL)	455
VALVE GP-BANK 7–PILOT CONTROL	460
VALVE GP-CHECK (PILOT CONTROL)	403
VALVE GP-CONTROL (AUX)	459
VALVE GP-CONTROL (LIFT)	459
VALVE GP-CONTROL (REMOTE CONTROL)	398
VALVE GP-CONTROL (TILT)	459
VALVE GP-LOAD CONTROL (BOOM)	406, 409
VALVE GP-LOAD CONTROL (LIFT & TILT)	403
VALVE GP-LOAD CONTROL (STABILIZER)	439

INDEX

Name	Page
VALVE GP-LOAD CONTROL (STICK)	406, 409
VALVE GP-PILOT	422, 589
VALVE GP-PILOT (LOADER)	427
VALVE GP-PILOT–STABILIZER CONTROL	461
VALVE GP-PRESSURE CONTROL (290-BAR)	443
VALVE GP-PRESSURE REDUCING (BRAKE)	462
VALVE GP-RADIATOR DRAIN	57
VALVE GP-RELIEF	250, 257
VALVE GP-RELIEF (TORQUE CONVERTER INLET)	238, 243, 249
VALVE GP-SHUTOFF (HYDRAULIC OIL)	450
VALVE GP-SOLENOID	258
VALVE GP-SOLENOID & PRESS REDC	462
VALVE GP-SOLENOID (12 VDC) (AUXILIARY)	462
VALVE GP-SOLENOID (12-VOLT)	250
VALVE GP-SOLENOID (12-VOLT) (ACCUMULATOR)	446
VALVE GP-SOLENOID (12-VOLT) (ALL WHEEL DRIVE)	239
VALVE GP-SOLENOID (12-VOLT) (CLUTCH)	244, 250
VALVE GP-SOLENOID (12-VOLT) (DIFFERENTIAL LOCK)	244, 250, 256
VALVE GP-SOLENOID (12-VOLT) (FLOW CONTROL)	445
VALVE GP-SOLENOID (12-VOLT) (FORWARD, REVERSE)	239
VALVE GP-SOLENOID (12-VOLT) (PILOT SHUTOFF)	462
VALVE GP-SOLENOID (12-VOLT) (REVERSE)	244, 250
VALVE GP-SOLENOID (12-VOLT) (RIDE CONTROL, SWITCH)	446
VALVE GP-SOLENOID (12-VOLT) (TRANSMISSION)	244, 250
VALVE GP-SOLENOID–CLUTCH	260
VALVE GP-SOLENOID–TRANSMISSION	261
VALVE GP-TIRE	263, 264
VALVE MECHANISM GP	37
VISOR GP-CAB	654

W

Name	Page
WHEEL & TIRE AR–ALL WHEEL DRIVE	264, 265, 266, 267
WHEEL & TIRE AR–ALL WHEEL DRIVE, BIAS	266, 267
WHEEL & TIRE GP–FRONT	267, 268, 269, 276, 279, 280, 283, 285, 286
WHEEL & TIRE GP–FRONT, LH	268, 269, 270, 277, 281, 283, 284, 286, 287
WHEEL & TIRE GP–FRONT, RH	268, 269, 270, 277, 281, 283, 284, 286, 287
WHEEL & TIRE GP–REAR	273, 274, 275, 277, 278, 280, 284
WHEEL & TIRE GP–REAR, LH	270, 271, 272, 275, 276, 278, 279, 281, 282, 285
WHEEL & TIRE GP–REAR, RH	271, 272, 273, 275, 276, 278, 279, 282

INDEX

Name	Page	Name	Page
	285		
WINDOW GP-CAB–LH	657		
WINDOW GP-CAB–REAR	655		
WINDOW GP-CAB–RH	659		
WINDOW GP-DOOR–LH	661		
WINDOW GP-DOOR–RH	662		
WIPER & WASHER GP-WINDOW	663		
WIPER GP-WINDOW–REAR	665		
WIRING GP-AIR CONDITIONER	128		
WIRING GP-CAB–ROOF	131		
WIRING GP-COMMUNICATION	133		
WIRING GP-CONSOLE	4		
WIRING GP-CONSOLE–SIDE, PILOT	135		
WIRING GP-CONTROL–JOYSTICK, LH	137		
WIRING GP-ENGINE–PILOT & MECHANICAL	138		
WIRING GP-HEATER	141		
WIRING GP-KICKOUT & POSITIONER	145		
WIRING GP-KICKOUT & POSITIONER–PARALLEL LIFT	143		
WIRING GP-LOAD CONTROL–PILOT	147		
WIRING GP-PLATFORM–EAME, PILOT	149		
WIRING GP-REAR–PILOT	156		
WIRING GP-RIDE CONTROL	158		
WIRING GP-SENSOR–OBJECT HANDLING	160		
WIRING GP-TRANSMISSION CONTROL–AUTOSHIFT	165		
WIRING GP-TRANSMISSION CONTROL–STANDARD SHIFT	163		
WIRING GP-WIPER–REAR	167		
WIRING GP-WORK TOOL–ANGLE BROOM	169		
WIRING GP-WORK TOOL–QUICK COUPLER	171		

MEMORANDA

MACHINE ARRANGEMENT

340-1736 BACKHOE AR-EXTENDABLE STICK—SIDESHIFT

S/N: SEJ1-UP
14-FT
FOR USE WITH 340-1749—PAGE 470, 340-1744—PAGE 470
AN ATTACHMENT

SMCS-6504, 6533 **i04580409**

NOTE	PART NUMBER	QTY	PART NAME 1 2 3 4 5 6 (PRODUCT LEVEL)	SEE PAGE
Y	*324-0548*	1	BOOM GP	466
Y	**320-5937**	1	CYLINDER GP-BACKHOE BUCKET	341
Y	**320-6520**	1	CYLINDER GP-BOOM	343
Y	**320-6521**	1	CYLINDER GP-STICK	355
Y	*378-9623*	1	FRAME GP-SWING	321
Y	*321-7231*	1	LINES GP-BACKHOE	377
Y	*365-3333*	1	LINES GP-BUCKET (EXTENDABLE STICK)	391
Y	*368-5465*	1	LINES GP-SIDESHIFT	437
Y	*353-1418*	1	LOCK GP-TRANSPORT	484
Y	*323-2096*	1	MOUNTING GP-LINES	449
Y	*324-0550*	1	STICK GP-EXTENDABLE	494

Y-SEPARATE ILLUSTRATION

<END>

340-1737 BACKHOE AR-EXTENDABLE STICK—SIDESHIFT

S/N: SEJ1-UP
14-FT. JCB
FOR USE WITH 340-1743—PAGE 470, 340-1744—PAGE 470
AN ATTACHMENT

SMCS-6504, 6533 **i04550446**

NOTE	PART NUMBER	QTY	PART NAME 1 2 3 4 5 6 (PRODUCT LEVEL)	SEE PAGE
Y	*324-0548*	1	BOOM GP	466
Y	**320-5937**	1	CYLINDER GP-BACKHOE BUCKET	341
Y	**320-6520**	1	CYLINDER GP-BOOM	343
Y	**320-6521**	1	CYLINDER GP-STICK	355
Y	*378-9623*	1	FRAME GP-SWING	321
Y	*321-7231*	1	LINES GP-BACKHOE	377
Y	*365-3333*	1	LINES GP-BUCKET (EXTENDABLE STICK)	391
Y	*368-5465*	1	LINES GP-SIDESHIFT	437
Y	*353-1418*	1	LOCK GP-TRANSPORT	484
Y	*323-2096*	1	MOUNTING GP-LINES	449
Y	*329-9749*	1	STICK GP-EXTENDABLE	498

Y-SEPARATE ILLUSTRATION

<END>

MACHINE ARRANGEMENT

340-1738 BACKHOE AR-EXTENDABLE STICK—SIDESHIFT

S/N: SEJ1-UP
16-FT
FOR USE WITH 374-6882—PAGE 471, 340-1745—PAGE 471. CANNOT BE USED WITH 373-4295—PAGE 313
AN ATTACHMENT

SMCS-6504, 6533 **i04599797**

NOTE	PART NUMBER	QTY	PART NAME 1 2 3 4 5 6 (PRODUCT LEVEL)	SEE PAGE
Y	*324-0549*	1	BOOM GP	468
Y	**320-5937**	1	CYLINDER GP-BACKHOE BUCKET	341
Y	**320-6522**	1	CYLINDER GP-BOOM	344
Y	**320-6523**	1	CYLINDER GP-STICK	357
Y	*322-3766*	1	FRAME GP-SWING	320
Y	*321-7231*	1	LINES GP-BACKHOE	377
Y	*365-3334*	1	LINES GP-BUCKET CYLINDER (EXTENDABLE STICK)	395
Y	*368-5465*	1	LINES GP-SIDESHIFT	437
Y	*353-1419*	1	LOCK GP-TRANSPORT	486
Y	*323-2096*	1	MOUNTING GP-LINES	449
Y	*324-0551*	1	STICK GP-EXTENDABLE	496
Y-SEPARATE ILLUSTRATION				

<END>

340-1735 BACKHOE AR-STANDARD STICK—SIDESHIFT

S/N: SEJ1-UP
BUCKET LINKAGE IS NOT INCLUDED
FOR USE WITH 340-1749—PAGE 470, 340-1744—PAGE 470
AN ATTACHMENT

SMCS-6502, 6504 **i04556065**

NOTE	PART NUMBER	QTY	PART NAME 1 2 3 4 5 6 (PRODUCT LEVEL)	SEE PAGE
Y	**320-5937**	1	CYLINDER GP-BACKHOE BUCKET	341
Y	**320-6520**	1	CYLINDER GP-BOOM	343
Y	**320-6521**	1	CYLINDER GP-STICK	355
Y	*321-7231*	1	LINES GP-BACKHOE	377
Y	*323-2023*	1	LINES GP-BUCKET CYLINDER (STANDARD STICK)	393
Y	*323-2096*	1	MOUNTING GP-LINES	449
Y	*324-0548*	1	BOOM GP	466
Y	*324-0552*	1	STICK GP	492
Y	*353-1418*	1	LOCK GP-TRANSPORT (SIDESHIFT)	484
Y	*368-5465*	1	LINES GP-SIDESHIFT	437
Y	*378-9623*	1	FRAME GP-SWING	321
Y-SEPARATE ILLUSTRATION				

<END>

MACHINE ARRANGEMENT

340-1693 CHASSIS AR

S/N: SEJ1-UP

PART OF 367-5958 COMMON AR

SMCS-7000 **i04549427**

NOTE	PART NUMBER	QTY	PART NAME 1 2 3 4 5 6 (PRODUCT LEVEL)	SEE PAGE
Y	**320-5938**	2	CYLINDER GP-STABILIZER	353
Y	*320-5933*	1	FRAME GP-SLIDING	318
Y	*337-9821*	1	LINES GP-STABILIZER	439
Y	*216-0910*	1	LOCK GP-VANDALISM	671
Y	*328-5964*	1	STABILIZER GP-BACKHOE	491
Y	*362-4625*	1	TANK GP-FUEL	85
B	**193-5914**	10	PLUG	
B	**193-5915**	12	PLUG	

B-USE AS REQUIRED
Y-SEPARATE ILLUSTRATION

<END>

367-5958 COMMON AR

S/N: SEJ1-UP

SMCS-7000 **i04549335**

NOTE	PART NUMBER	QTY	PART NAME 1 2 3 4 5 6 (PRODUCT LEVEL)	SEE PAGE
Y	*340-1693*	1	CHASSIS AR	3
Y	*367-5835*	1	FILM GP	666
Y	*353-1392*	1	FILM GP-INTERNATIONAL	667
Y	*340-1719*	1	HYDRAULIC AR	365
Y	*340-1701*	1	LOADER AR	5
Y	*374-7438*	1	PLATE GP-IDENTIFICATION	676

Y-SEPARATE ILLUSTRATION

<END>

341-3105 CONVERSION AR-CERTIFICATION—OUTSIDE NACD

S/N: SEJ1-UP

AN ATTACHMENT

SMCS-7000 **i04560201**

NOTE	PART NUMBER	QTY	PART NAME 1 2 3 4 5 6 (PRODUCT LEVEL)	SEE PAGE
Y	*216-1238*	1	LOCK GP-STABILIZER LEG	480
Y	*347-4525*	1	MIRROR GP-REAR VIEW	631
Y	*152-0184*	1	REFLECTOR GP (SIDESHIFT)	334

Y-SEPARATE ILLUSTRATION

<END>

MACHINE ARRANGEMENT

341-3107 CONVERSION AR-ROADING—ITALY

S/N: SEJ1-UP

FOR USE WITH 341-3105—PAGE 3. CANNOT BE USED WITH 372-8661—PAGE 112, 329-7496—PAGE 109, 252-4660—PAGE 482, 337-6851—PAGE 309

AN ATTACHMENT

SMCS-7000 **i04609235**

NOTE	PART NUMBER	QTY	PART NAME 1 2 3 4 5 6 (PRODUCT LEVEL)	SEE PAGE
Y	*231-2879*	1	CONTROL GP-HYDRAULIC LOCKOUT (PEDAL, BACKHOE)	592
Y	*332-4254*	1	CONTROL GP-HYDRAULIC LOCKOUT (HAND THROTTLE)	593
Y	*337-6851*	1	FENDER GP-FRONT	309
Y	*214-7024*	1	GUARD GP-BUCKET	560
Y	*329-7496*	1	LIGHTING GP-ROADING (DIPPED, RH)	109
Y	*372-8661*	1	LIGHTING GP-ROADING (FOG LIGHT)	112
Y	*343-3433*	1	LIGHTING GP-WARNING BEACON (AMBER, MAGNETIC MOUNT, ROTATIN)	115
Y	*252-4660*	1	LOCK GP-TRANSPORT (BACKHOE BUCKET)	482
Y	*374-6872*	1	LOCK GP-TRANSPORT (LOADER)	489
Y	*278-8223*	1	MOUNTING GP-HYDRAULIC LOCKOUT	638
Y	*374-7439*	1	PLATE & FILM GP (ENGINE)	673
Y	*374-7440*	1	PLATE & FILM GP (MACHINE)	674
Y	*101-4419*	3	PLATE AS-SIDE REFLECTIVE	675
	246-3229	1	WIRING GP-CONSOLE	
	8Y-7833	1	WIRE AS	
	283-7616	1	SWITCH AS-ROCKER (ALL WHEEL DRIVE, BRAKE)	
	111-7899	1	GASKET	
B	**101-4416**	8	COVER-WORK LIGHT	

B-USE AS REQUIRED
Y-SEPARATE ILLUSTRATION

<END>

341-3111 CONVERSION AR-ROADING—UNITED KINGDOM

S/N: SEJ1-UP

FOR USE WITH 341-3105—PAGE 3. CANNOT BE USED WITH 372-8661—PAGE 112, 211-4291—PAGE 114

AN ATTACHMENT

SMCS-7000 **i04552037**

NOTE	PART NUMBER	QTY	PART NAME 1 2 3 4 5 6 (PRODUCT LEVEL)	SEE PAGE
Y	*372-8661*	1	LIGHTING GP-ROADING (FOG LIGHT)	112
Y	*211-4291*	1	LIGHTING GP-WARNING BEACON (AMBER, MAGNETIC MOUNT, ROTATIN)	114
	349-3644	1	FILM-NOTICE (ROADING HEIGHT)	
			(INSIDE OF THE FRONT WINDSCREEN IN THE TOP LH CORNER, BELOW THE SUN VISOR)	
	160-7599	2	RESTRAINER-BUCKET	

Y-SEPARATE ILLUSTRATION

<END>

MACHINE ARRANGEMENT

353-1501 DRIVE AR-BACKHOE LOADER–
4-WHEEL DRIVE, 2-WHEEL STEER
S/N: SEJ1-UP
PART OF 374-6828, 374-6836, 374-6844 POWER TRAIN AR
AN ATTACHMENT

SMCS-3268, 3278, 3282, 4304, 4313, 4334 **i04611576**

NOTE	PART NUMBER	QTY	PART NAME 1 2 3 4 5 6 (PRODUCT LEVEL)	SEE PAGE
Y	**230-5743**	1	AXLE GP-DRIVE & STEERING (FRONT)	173
Y	**230-5738**	1	AXLE GP-REAR	175
Y	*206-1642*	1	CONTROL GP-PARKING BRAKE	288
Y	*337-9825*	1	LINES GP-STEERING	298
Y	*337-9837*	1	MOUNTING GP-AXLE	202
Y	*308-9973*	1	SWITCH GP-DIFFERENTIAL LOCK (SIDESHIFT)	124
Y-SEPARATE ILLUSTRATION				

<END>

340-1701 LOADER AR–PARALLEL LIFT
S/N: SEJ1-UP
PART OF 367-5958 COMMON AR

SMCS-6100 **i04640932**

NOTE	PART NUMBER	QTY	PART NAME 1 2 3 4 5 6 (PRODUCT LEVEL)	SEE PAGE
Y	*337-9846*	1	ARM GP-LIFT	463
Y	*337-9841*	1	BRACE GP-LIFT CYLINDER	469
Y	**358-5034**	1	CYLINDER GP-LIFT (LH)	350
Y	**358-5035**	1	CYLINDER GP-LIFT (RH)	351
Y	**358-5045**	2	CYLINDER GP-TILT	359
Y-SEPARATE ILLUSTRATION				

<END>

377-0023 OPTION AR-BACKHOE
S/N: SEJ1-UP
240-VOLT
CANNOT BE USED WITH 331-5461–PAGE 92
AN ATTACHMENT

SMCS-7000 **i04603830**

NOTE	PART NUMBER	QTY	PART NAME 1 2 3 4 5 6 (PRODUCT LEVEL)	SEE PAGE
Y	*331-5461*	1	BATTERY GP (HEAVY-DUTY)	92
Y	*367-6032*	1	HEATER GP-JACKET WATER (240-VOLT)	97
Y-SEPARATE ILLUSTRATION				

<END>

MACHINE ARRANGEMENT

341-3109 OPTION AR-REGIONAL—GERMANY

S/N: SEJ1-UP

FOR USE WITH 341-3105—PAGE 3. CANNOT BE USED WITH 329-7496—PAGE 109, 337-6851—PAGE 309

AN ATTACHMENT

SMCS-7000 **i04609393**

NOTE	PART NUMBER	QTY	PART NAME 1 2 3 4 5 6 (PRODUCT LEVEL)	SEE PAGE
Y	*337-6851*	1	FENDER GP-FRONT	309
Y	*214-7024*	1	GUARD GP-BUCKET	560
Y	*360-8982*	1	INSTALLATION AR-WHEEL CHOCK	668
Y	*329-7496*	1	LIGHTING GP-ROADING (DIPPED, RH)	109
Y	*130-8149*	1	LOCKOUT GP-FOURTH GEAR	201
Y	*360-8981*	1	PLATE & FILM GP	672
	252-4670	1	KIT-TOOL (HAND)	
			(INCLUDES SPANNERS, PLIERS, GREASE GUN, SOCKETS, SLIDING T BAR & HEADS, PRESSURE GAUGE, HYDRAULIC CONNECTOR & CLOTH)	

Y-SEPARATE ILLUSTRATION

<END>

340-1748 PREMIER AR

S/N: SEJ1-UP

AN ATTACHMENT

SMCS-7000 **i04650536**

NOTE	PART NUMBER	QTY	PART NAME 1 2 3 4 5 6 (PRODUCT LEVEL)	SEE PAGE
	177-9600	2	FILM-IDENTIFICATION (PREMIER)	
			(ON CAB DOOR)	

<END>

ENGINE ARRANGEMENT

337-9867 ENGINE AR-COMPLETE

S/N: SEJ1-UP

AN ATTACHMENT

SMCS-1000 **i04628797**

NOTE	PART NUMBER	QTY	PART NAME 1 2 3 4 5 6 (PRODUCT LEVEL)	SEE PAGE
Y	*352-1449*	1	AIR CLEANER GP	62
Y	*357-6501*	1	BATTERY & WIRING GP	88
Y	*353-1380*	1	BOX GP-STORAGE	302
Y	*360-8798*	1	BREATHER GP (CRANKCASE)	38
Y	**364-5743**	1	ENGINE AR-PRIMARY	8
Y	*350-3689*	1	EXTENSION GP-EXHAUST	66
Y	*352-3463*	1	GAUGE GP-OIL LEVEL & FILLER (ENGINE)	41
Y	*337-9702*	1	HOOD & GUARD GP	329
Y	*337-9735*	1	LINER GP-SOUND SUPPRESSION	333
Y	*337-9748*	1	LINES GP-AIR	67
Y	*337-9734*	1	LINES GP-FUEL	76
Y	*353-1364*	1	MOUNTING GP-GOVERNOR CONTROL	78
Y	*352-1454*	1	MUFFLER GP	68
Y	*354-7361*	1	TANK & LINES GP-COOLANT (EXPANSION, RADIATOR)	58
Y	*357-3199*	1	WIRING GP-ENGINE (PILOT & MECHANICAL)	138
	178-8465	1	HARNESS AS-FUEL TANK (FUEL SHUTOFF)	
	9X-3401	2	PIN-CONNECTOR (16-GA TO 18-GA)	
	176-1477	1	PLUG AS (2-PIN)	
	102-8802	1	KIT-RECEPTACLE (2-PIN)	
			(INCLUDES RECEPTACLE AS & WEDGE)	
	185-1861	2	SEAL-WIRE	
	8L-8413	2	STRAP-CABLE	
	176-1521	2	TERMINAL	

Y-SEPARATE ILLUSTRATION

ENGINE ARRANGEMENT

364-5743 ENGINE AR-PRIMARY

S/N: C4Z1-UP
75 BRAKE KW (100 BHP) AT 2200 RPM
PART OF 337-9867 ENGINE AR-COMPLETE
AN ATTACHMENT

SMCS-1000 **i04664138**

NOTE	PART NUMBER	QTY	PART NAME 1 2 3 4 5 6 (PRODUCT LEVEL)	SEE PAGE
Y	*317-9776*	1	ALTERNATOR GP-CHARGING	87
Y	*326-9005*	1	CAMSHAFT GP	9
Y	*316-6941*	1	CONNECTION GP-WATER	44
Y	*316-6899*	1	COOLER GP-ENGINE OIL	45
Y	*329-0129*	1	COVER GP-INLET MANIFOLD	64
Y	*326-9008*	1	COVER GP-VALVE MECHANISM	10
Y	*326-9000*	1	CRANKSHAFT GP	12
Y	*326-8999*	1	CYLINDER BLOCK GP	14
Y	*326-9003*	1	CYLINDER HEAD GP	17
Y	*384-4108*	1	DRIVE GP-FAN	18
Y	*309-7555*	1	FILLER GP-ENGINE OIL	40
Y	*303-5768*	1	FLYWHEEL GP	19
Y	*315-3418*	1	GLOW PLUG GP	95
Y	*303-5767*	1	HOUSING GP-FLYWHEEL	20
Y	*304-8760*	1	HOUSING GP-FRONT	21
Y	*326-9013*	1	LIFTING GP-ENGINE	23
Y	*326-9012*	1	LINES GP-FUEL	74
Y	*384-4107*	1	MOUNTING GP-ENGINE	24
Y	*322-9476*	1	PAN GP-OIL	28
Y	*326-9002*	1	PISTON & ROD GP	30
Y	*298-5129*	1	PLUG GP-CYLINDER HEAD	32
Y	*298-5131*	1	PLUG GP-ENGINE	33
Y	*304-8761*	1	PLUG GP-ENGINE	34
Y	*360-7347*	1	PULLEY GP-CRANKSHAFT	35
Y	*298-5112*	1	PUMP GP-ENGINE OIL	43
Y	*326-9149*	1	PUMP GP-FUEL INJECTION	80
Y	*315-3411*	1	PUMP GP-WATER	55
Y	*303-5769*	1	STARTING MOTOR GP-ELECTRIC (12-VOLT)	122
Y	*316-6925*	1	SWITCH GP-PRESSURE	126
Y	*326-9156*	1	TURBOCHARGER GP	69
Y	*326-9004*	1	VALVE MECHANISM GP	37
	359-0744	1	CYLINDER BLOCK GP-SHORT	
			PLEASE USE THE GASKET KIT LINK IN SIS OR CONTACT YOUR LOCAL DEALER FOR THE LATEST GASKET KIT INFORMATION	

Y-SEPARATE ILLUSTRATION

BASIC ENGINE

326-9005 CAMSHAFT GP

S/N: C4Z1-UP
PART OF 364-5743 ENGINE AR-PRIMARY
AN ATTACHMENT

SMCS-1210, 1211, 1212 **i04443634**

NOTE	REF NO	GRAPHIC REF	PART NUMBER	QTY	PART NAME 1 2 3 4 5 6 (PRODUCT LEVEL)	SEE PAGE
	1	1	**278-5126**	8	PUSHROD	
	2	1	**315-3384**	8	TAPPET	
	3	1	**380-2601**	1	CAMSHAFT AS	
	3A	1	**1B-8736**	1	KEY-WOODRUFF	

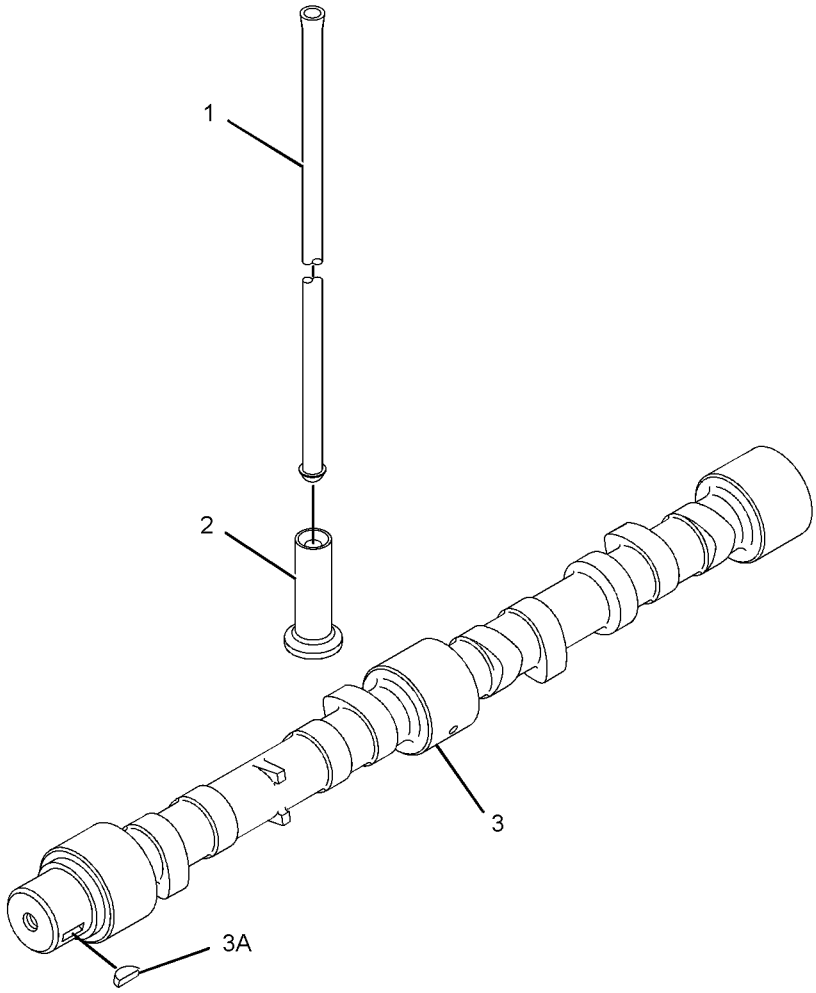

GRAPHIC #1 **<END>** g01611455

BASIC ENGINE

326-9008 COVER GP-VALVE MECHANISM

S/N: C4Z1-UP

PART OF 364-5743 ENGINE AR-PRIMARY

AN ATTACHMENT

SMCS-1107, 1120 **i03127792**

NOTE	REF NO	GRAPHIC REF	PART NUMBER	QTY	PART NAME 1 2 3 4 5 6 (PRODUCT LEVEL)	SEE PAGE
	1	1	**6I-0846**	3	BOLT (M6X1X14-MM)	
	2	1	**6I-0917**	1	BOLT (M6X1X25-MM)	
	3	1	**100-4838**	2	BOLT (M6X20-MM)	
M	4	1	**100-4841**	2	BOLT (M6X1X10-MM)	
	5	1	**230-9127**	1	COVER	
	6	1	**237-0769**	1	SHIELD-HEAT	
	7	1	**287-8573**	1	PIPE-BREATHER	
	8	1	**308-1792**	1	COVER GP-VALVE MECHANISM	
	8A	1	**225-6451**	1	GASKET (VALVE COVER)	
	8B	1	**225-6456**	1	SPRING	
	8C	1	**225-6461**	1	CAP	
	8D	1	**225-6464**	1	DIAPHRAGM (CRANKCASE PRESSURE CONTACTOR)	
	8E	1	**225-6477**	1	PLATE	
	8F	1	**225-6478**	4	SCREW-MACHINE	
	8G	1	**225-6479**	1	CAP	

M-METRIC PART

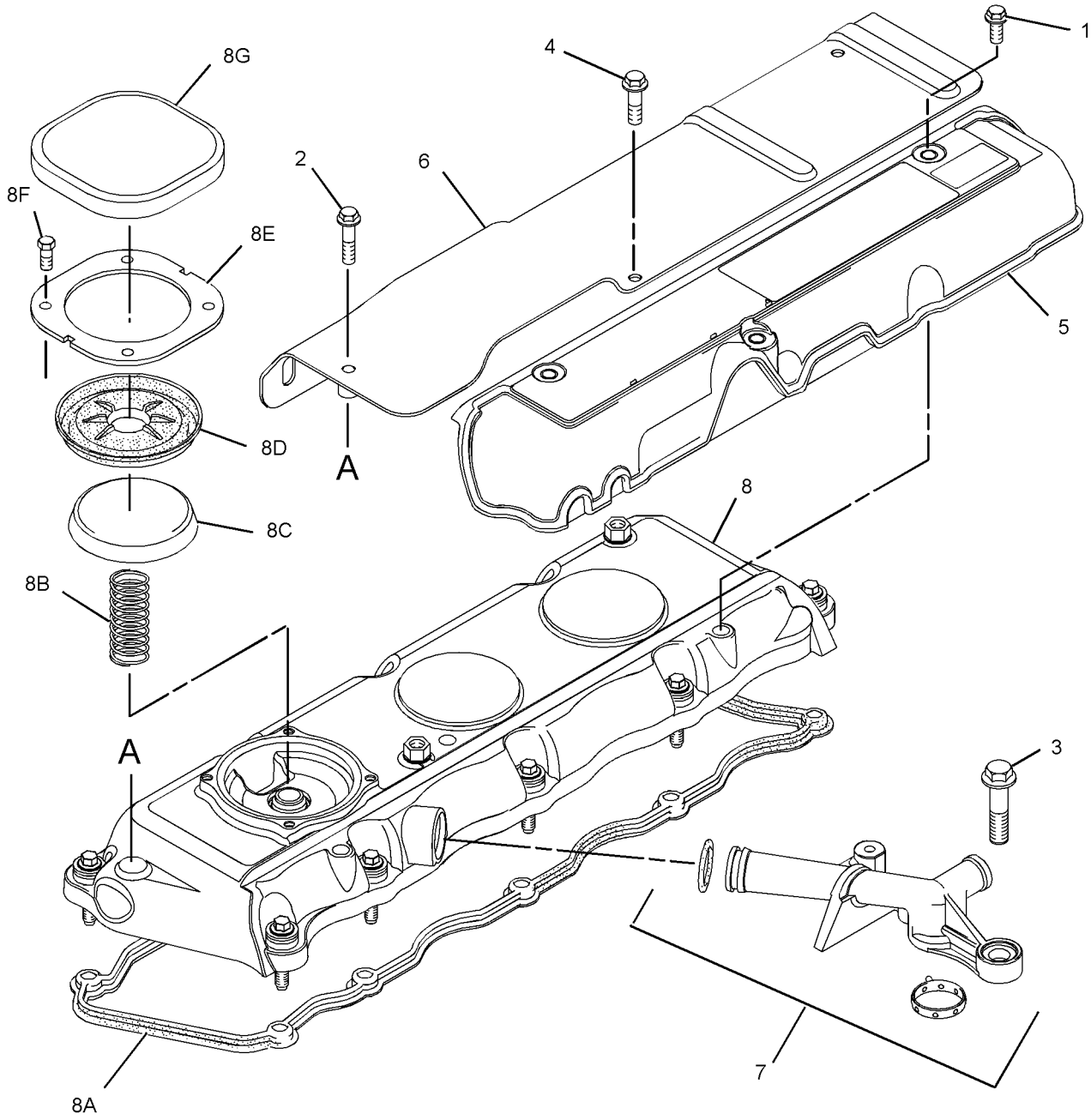

GRAPHIC #1 **<END>** g01615434

BASIC ENGINE

326-9000 CRANKSHAFT GP

S/N: C4Z1-UP
PART OF 364-5743 ENGINE AR-PRIMARY
AN ATTACHMENT

SMCS-1202, 1203, 1204, 1230, 1231, 1232 **i04018871**

NOTE	REF NO	GRAPHIC REF	PART NUMBER	QTY	PART NAME 1 2 3 4 5 6 (PRODUCT LEVEL)	SEE PAGE
	1	1	**216-8314**	1	GEAR-CRANKSHAFT (34-TEETH)	
CY	2	1	**359-0715**	1	CRANKSHAFT GP	13
C	3	1	**1B-8736**	1	KEY-WOODRUFF	
					AVAILABLE REPAIR KIT(S):	
			274-4716	1	KIT-CRANKSHAFT	

C-CHANGE FROM PREVIOUS TYPE
Y-SEPARATE ILLUSTRATION

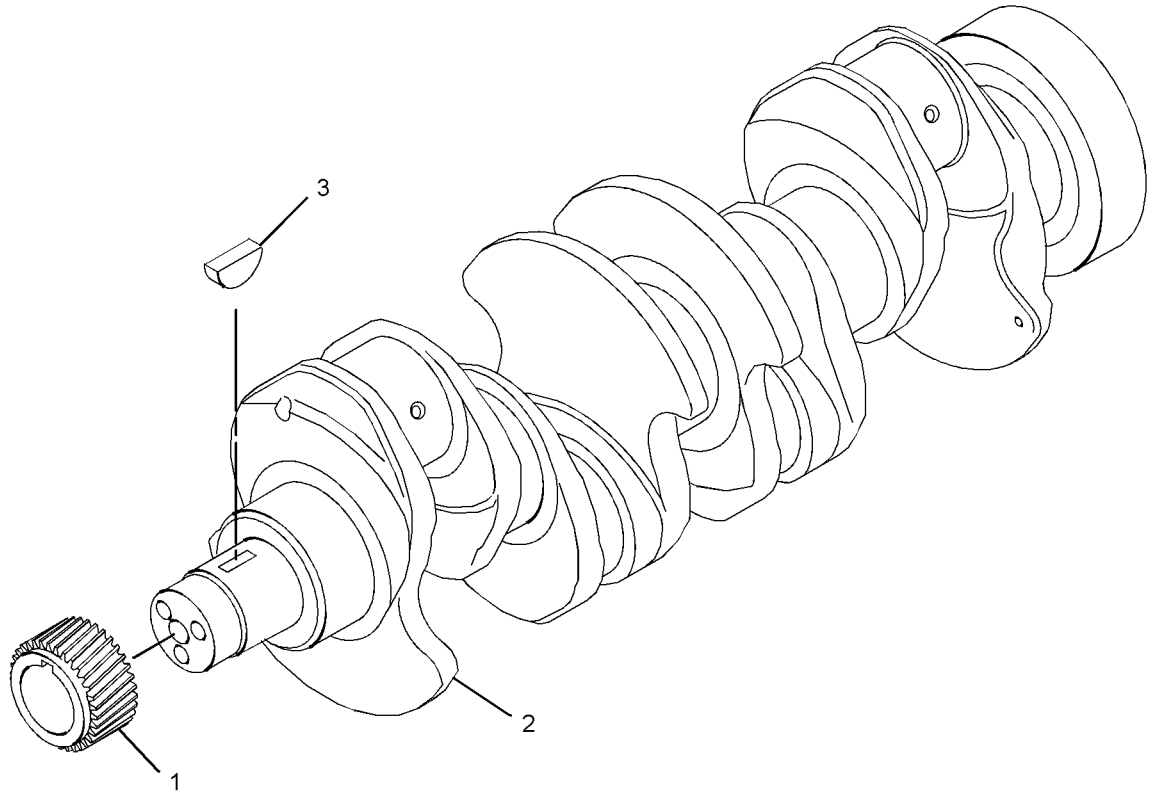

GRAPHIC #1 **<END>** g02163313

359-0715 CRANKSHAFT GP

S/N: C4Z1-UP

PART OF 326-9000 CRANKSHAFT GP

AN ATTACHMENT

SMCS-1202, 1203, 1204, 1230, 1231, 1232 **i03959730**

NOTE	REF NO	GRAPHIC REF	PART NUMBER	QTY	PART NAME 1 2 3 4 5 6 (PRODUCT LEVEL)	SEE PAGE
	1	1	**032-9090**	2	WASHER-THRUST (STANDARD-UPPER)	
AB		1	**067-6873**		WASHER-THRUST (0.18-MM OS)	
	2	1	**032-9091**	2	WASHER-THRUST (STANDARD-LOWER)	
AB		1	**067-6874**		WASHER-THRUST (0.18-MM OS)	
	3	1	**353-7423**	1	KIT-BEARING (MAIN)	
AB		1	**233-3786**		KIT-CRANKSHAFT BEARING (0.030-IN US)	
AB		1	**353-7424**		KIT-BEARING (0.25-MM US)	
AB		1	**353-7425**		KIT-BEARING (0.50-MM US)	
	4	1	**353-9667**	1	KIT-ROD BEARING (STANDARD)	

A-NOT PART OF THIS GROUP
B-USE AS REQUIRED

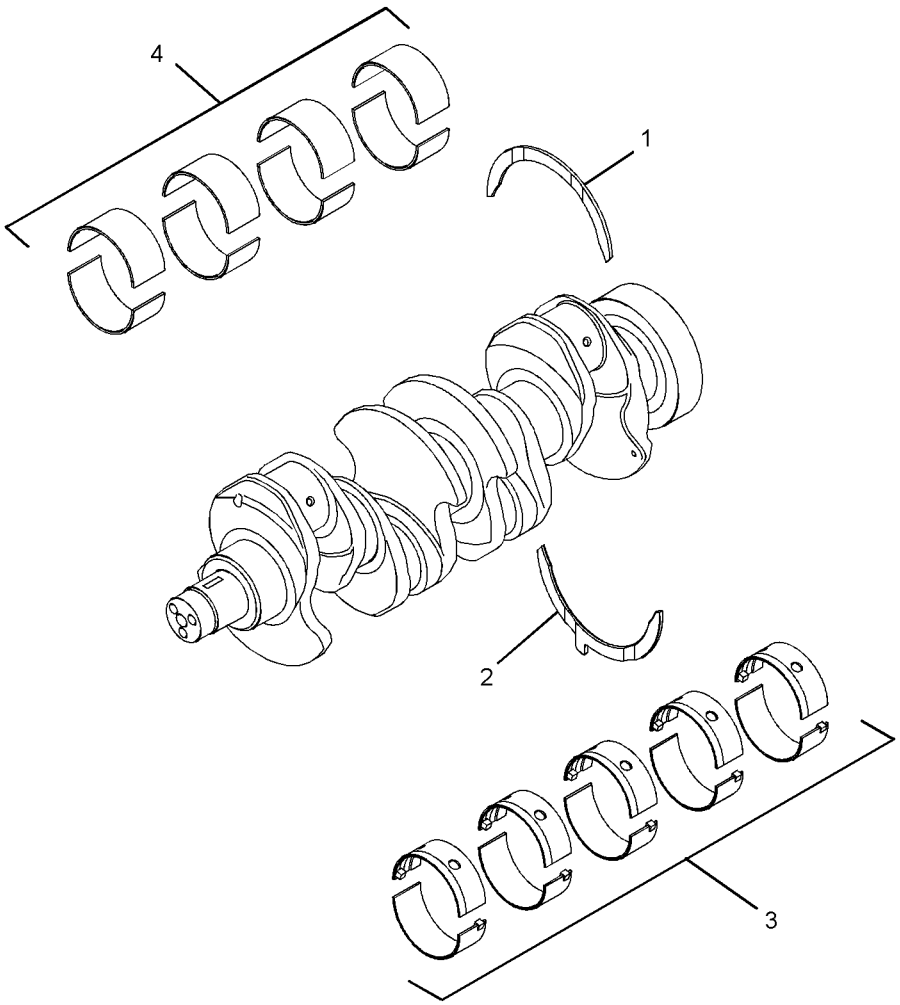

GRAPHIC #1

<END>

g02174712

BASIC ENGINE

326-8999 CYLINDER BLOCK GP

S/N: C4Z1-UP
PART OF 364-5743 ENGINE AR-PRIMARY
AN ATTACHMENT

SMCS-1201 **i04639972**

NOTE	REF NO	GRAPHIC REF	PART NUMBER	QTY	PART NAME 1 2 3 4 5 6 (PRODUCT LEVEL)	SEE PAGE
M	1	1	**209-9219**	10	BOLT (M8X1.25X16-MM)	
	2	1	**232-7449**	1	HOUSING AS	
CY	3	1	**362-2190**	1	CYLINDER BLOCK GP	15

C-CHANGE FROM PREVIOUS TYPE
M-METRIC PART
Y-SEPARATE ILLUSTRATION

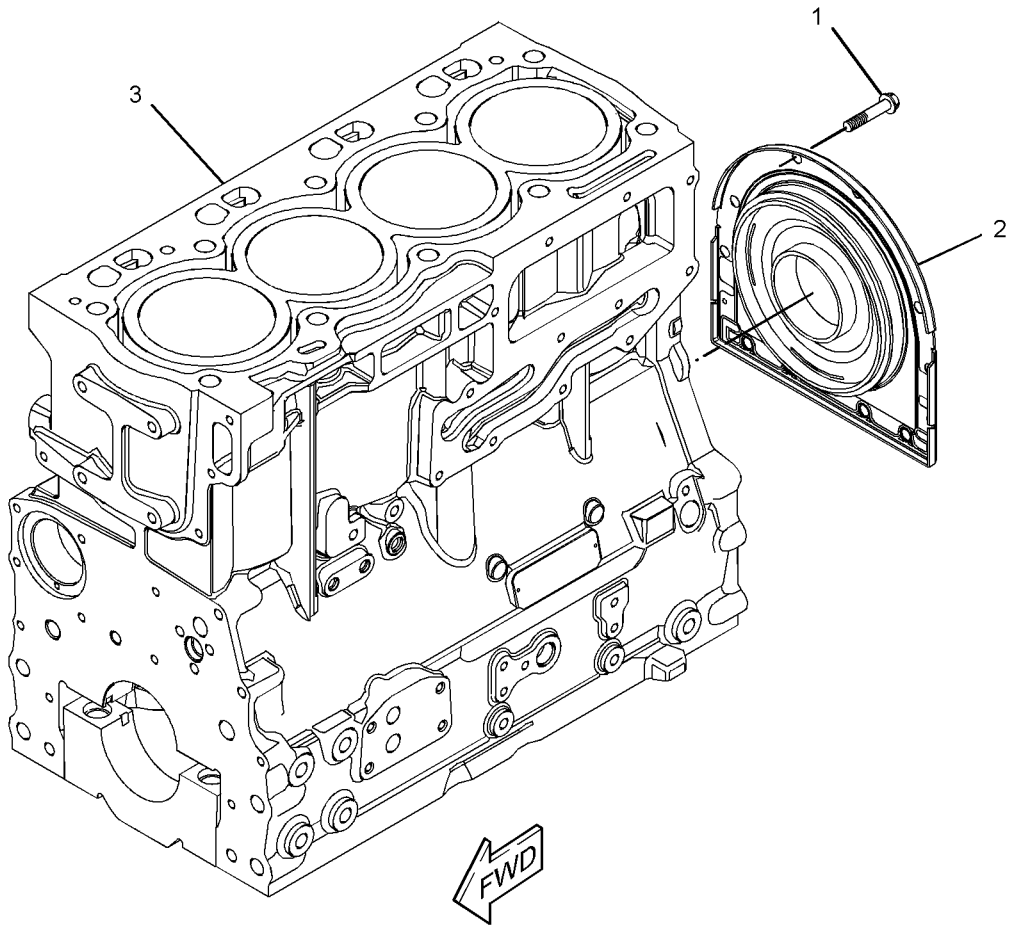

GRAPHIC #1 **<END>** g02500198

BASIC ENGINE

362-2190 CYLINDER BLOCK GP

S/N: C4Z1-UP

PART OF 326-8999 CYLINDER BLOCK GP

AN ATTACHMENT

SMCS-1201 **i04340138**

NOTE	REF NO	GRAPHIC REF	PART NUMBER	QTY	PART NAME 1 2 3 4 5 6 (PRODUCT LEVEL)	SEE PAGE
	1	1	**6I-0572**	1	BOLT (M8X1.25X20-MM)	
	2	1	**6I-0646**	1	BOLT (M10X1.5X14-MM)	
	3	1	**035-8063**	1	PLUG	
M	4	1	**100-4841**	4	BOLT (M6X1X10-MM)	
	5	1	**214-3203**	1	WASHER (SEALING)	
	6	1	**225-7944**	1	GASKET	
	7	1	**232-3751**	1	PLATE	
	8	1	**232-7600**	1	PLUG-CUP	
	9	1	**232-7603**	1	PLUG	
	10	1	**276-5605**	4	JET AS-PISTON COOLING	

M-METRIC PART

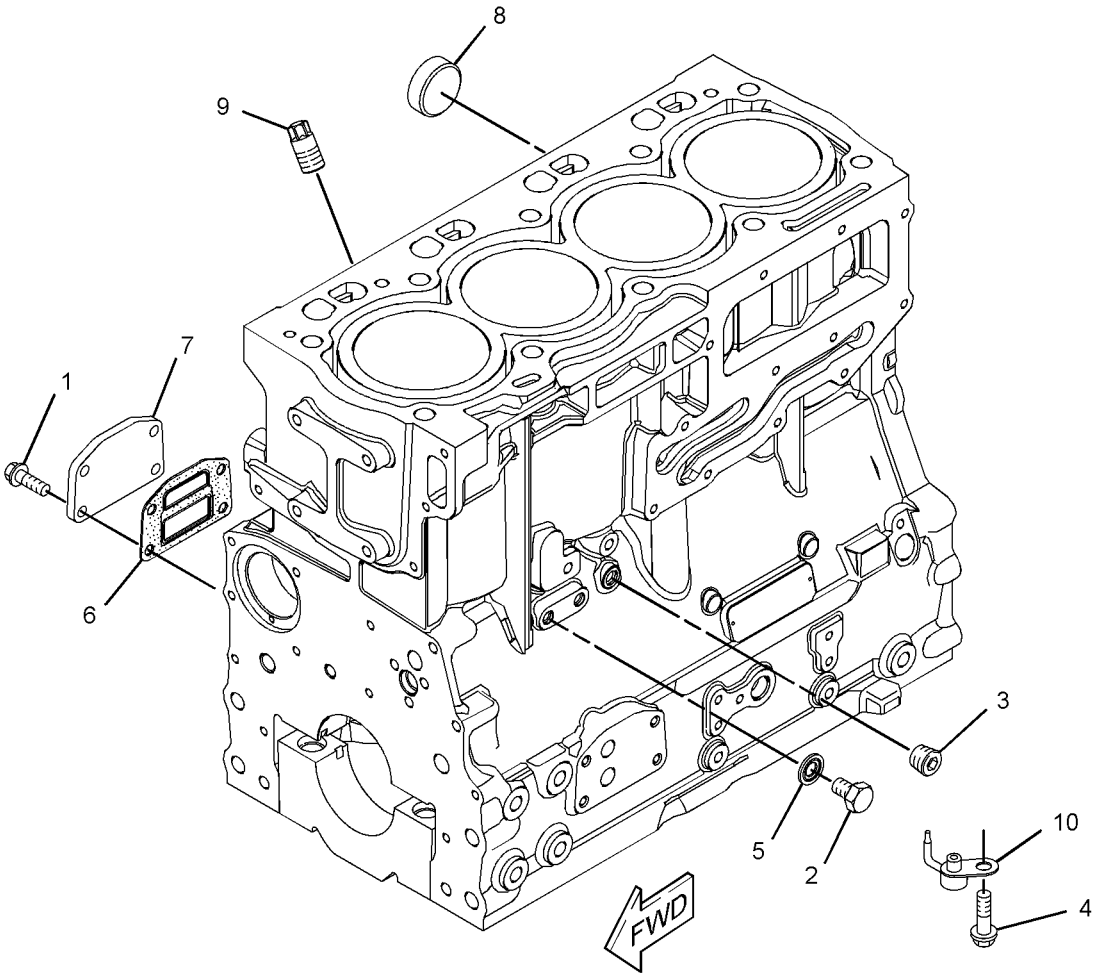

GRAPHIC #1 **<END>** g02500056

BASIC ENGINE

316-7896 CYLINDER HEAD GP

S/N: C4Z1-UP
PART OF 326-9003 CYLINDER HEAD GP
AN ATTACHMENT

SMCS-1100, 1101, 1103, 1104, 1105, 1106, 1108, 1109, 1115, 1117, 1121, 1124, 1125 **i03131134**

NOTE	REF NO	GRAPHIC REF	PART NUMBER	QTY	PART NAME 1 2 3 4 5 6 (PRODUCT LEVEL)	SEE PAGE
	1	1	**2B-0858**	2	PLUG-PIPE	
	2	1	**9Y-5015**	2	PLUG-FREEZE	
	3	1	**067-6006**	4	PLUG	
	4	1	**185-0882**	8	GUIDE-VALVE	
	5	1	**199-9751**	1	SEAL-O-RING	
	6	1	**232-1322**	1	PLUG	
	7	1	**315-3390**	4	VALVE-INLET	
	8	1	**315-3391**	8	SPRING	
	9	1	**315-3392**	8	CAP	
	10	1	**315-3393**	16	COLLET	
	11	1	**315-3394**	4	VALVE-EXHAUST	
	12	1	**252-6438**	4	SEAL-INLET VALVE (GREEN)	
	13	1	**254-3954**	4	SEAL-EXHAUST VALVE (BROWN)	
	14	1	**322-9663**	4	INSERT-VALVE SEAT	
	15	1	**322-9664**	4	SEAT-VALVE	

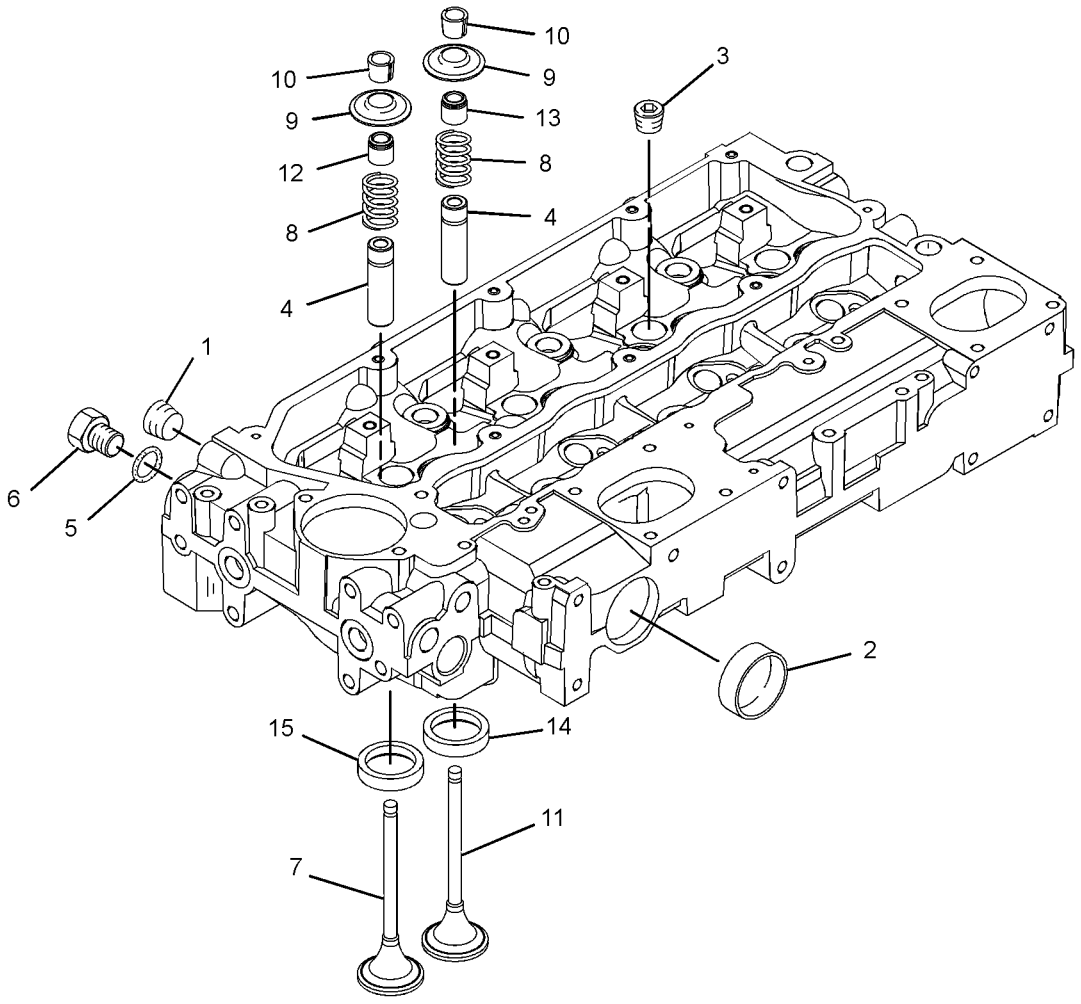

GRAPHIC #1 **<END>** g01542313

326-9003 CYLINDER HEAD GP

S/N: C4Z1-UP

PART OF 364-5743 ENGINE AR-PRIMARY

AN ATTACHMENT

SMCS-1100, 1101, 1103, 1104, 1105, 1106, 1108, 1109, 1115, 1117, 1121, 1124, 1125

i03127782

NOTE	REF NO	GRAPHIC REF	PART NUMBER	QTY	PART NAME 1 2 3 4 5 6 (PRODUCT LEVEL)	SEE PAGE
	1	1	**225-5501**	7	BOLT (M15X1.5X137-MM)	
	2	1	**225-5502**	3	BOLT (M15X1.5X162-MM)	
	3	1	**258-4946**	1	GASKET-HEAD	
Y	4	1	**316-7896**	1	CYLINDER HEAD GP	16

Y-SEPARATE ILLUSTRATION

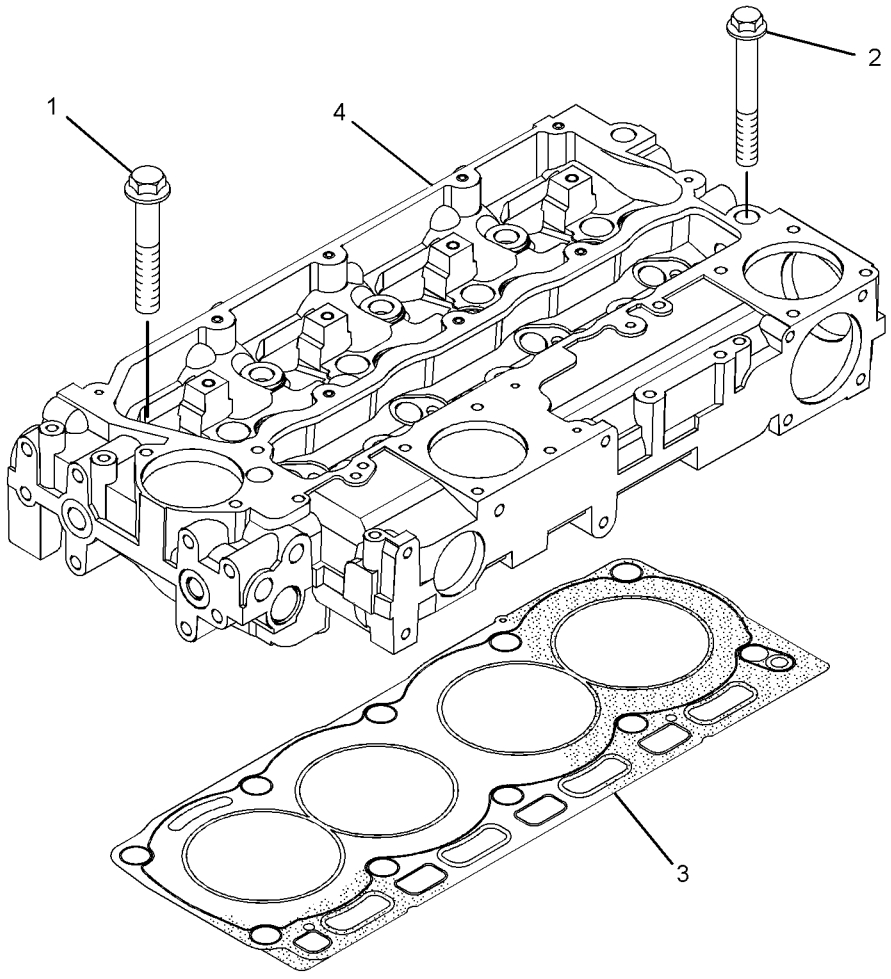

GRAPHIC #1

<END>

g01523242

BASIC ENGINE

384-4108 DRIVE GP-FAN

S/N: C4Z1-UP
PART OF 364-5743 ENGINE AR-PRIMARY
AN ATTACHMENT

SMCS-1357, 1358, 1359, 1390 **i04634259**

NOTE	REF NO	GRAPHIC REF	PART NUMBER	QTY	PART NAME 1 2 3 4 5 6 (PRODUCT LEVEL)	SEE PAGE
	1	1	**111-0859**	4	BOLT (M10X1.5X35-MM)	
	2	1	**289-8336**	1	HOUSING AS	

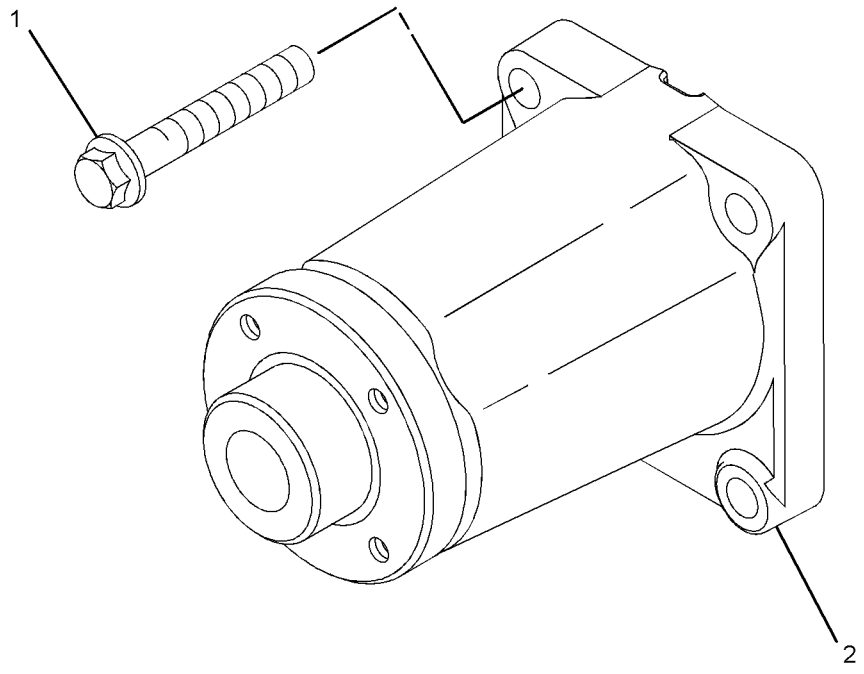

GRAPHIC #1 **<END>** g02780976

303-5768 FLYWHEEL GP

S/N: C4Z1-UP
PART OF 364-5743 ENGINE AR-PRIMARY
AN ATTACHMENT

SMCS-1156, 1158 **i03128301**

NOTE	REF NO	GRAPHIC REF	PART NUMBER	QTY	PART NAME 1 2 3 4 5 6 (PRODUCT LEVEL)	SEE PAGE
	1	1	**245-9828**	1	FLYWHEEL AS	
	1A	1	**033-7687**	1	RING-STARTING MOTOR (126-TEETH)	
	2	1	**0S-1603**	10	BOLT (1/2-20X1.5-IN)	
	3	1	**5P-8245**	10	WASHER-HARD (13.5X25.5X3-MM THK)	

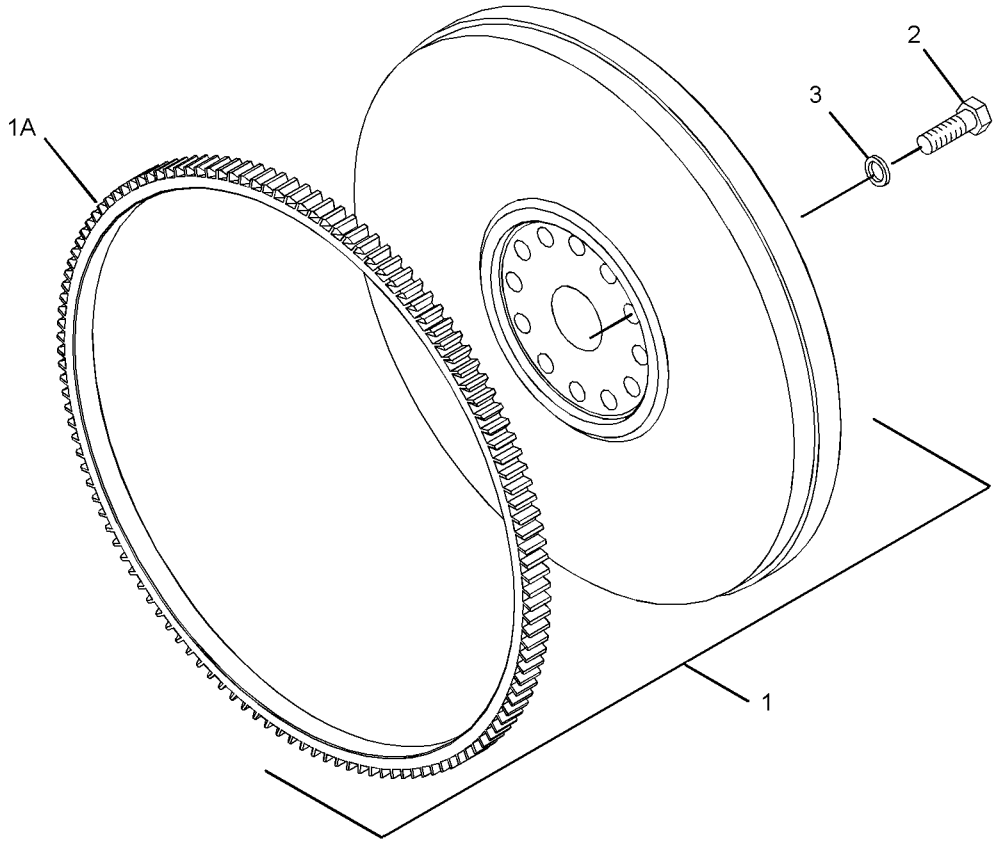

GRAPHIC #1 **<END>** g01372699

BASIC ENGINE

303-5767 HOUSING GP-FLYWHEEL

S/N: C4Z1-UP
PART OF 364-5743 ENGINE AR-PRIMARY
AN ATTACHMENT

SMCS-1157 **i03128293**

NOTE	REF NO	GRAPHIC REF	PART NUMBER	QTY	PART NAME 1 2 3 4 5 6 (PRODUCT LEVEL)	SEE PAGE
M	1	1	**6I-0423**	2	BOLT (M12X1.75X30-MM)	
	2	1	**6I-0847**	2	PLUG	
	3	1	**7W-1176**	1	PLATE-COVER	
	4	1	**7W-4642**	1	SHIELD-DUST	
	5	1	**287-8597**	2	DOWEL	
	6	1	**114-4363**	2	BOLT (M8X1.25X12-MM)	
	7	1	**4H-0408**	3	PLUG-PROTECTION	
M	8	1	**121-0883**	6	BOLT (M10X1.5X30-MM)	
	9	1	**220-8631**	1	HOUSING-FLYWHEEL	

M-METRIC PART

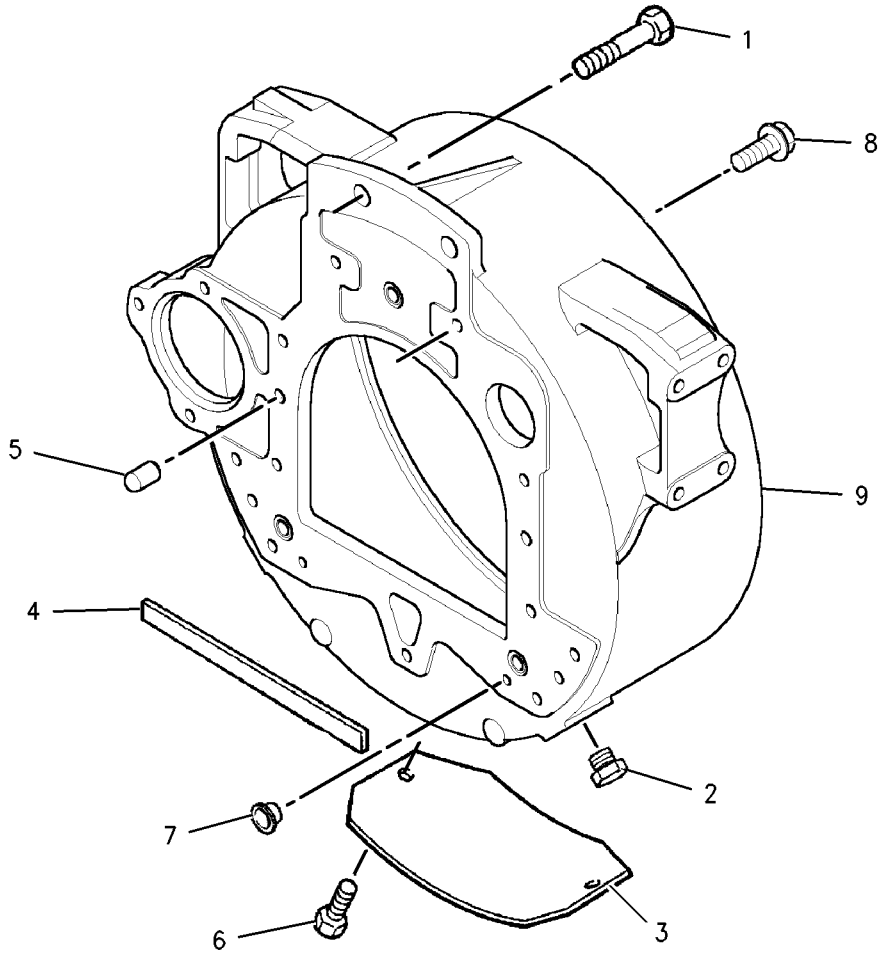

GRAPHIC #1 **<END>** g00902549

BASIC ENGINE

304-8760 HOUSING GP-FRONT

S/N: C4Z1-UP

PART OF 364-5743 ENGINE AR-PRIMARY

AN ATTACHMENT

SMCS-1151, 1162, 1166, 1206 **i03569721**

NOTE	REF NO	GRAPHIC REF	PART NUMBER	QTY	PART NAME 1 2 3 4 5 6 (PRODUCT LEVEL)	SEE PAGE
	1	1	**294-0288**	1	HOUSING-FRONT	
	2	1	**277-3012**	1	GASKET-COVER	
	3	1	**288-0422**	1	SEAL-OIL (FRONT)	
M	4	1	**6I-0217**	6	BOLT (M8X1.25X20-MM)	
M	5	1	**101-3895**	2	BOLT (M8X1.25X35-MM)	
M	6	1	**6I-0645**	4	BOLT (M8X1.25X25-MM)	
CJ	7	1	**346-0407**	1	GEAR-IDLER (73-TEETH)	
	8	1	**324-0444**	1	HUB-IDLER GEAR	
C	9	1	**346-0408**	1	PLATE	
M	10	1	**6I-0650**	3	BOLT (M10X1.5X65-MM)	
	11	1	**216-8634**	1	GEAR-CAMSHAFT (68-TEETH)	
	12	1	**133-1011**	1	WASHER	
	13	1	**067-6179**	1	DOWEL	
	14	1	**232-3666**	1	WASHER-THRUST	
	15	1	**7C-4616**	1	BOLT (M12X1.75X45-MM)	
	16	1	**232-3657**	1	COVER AS-FRONT	
	16A	1	**225-8287**	1	GASKET	
M	17	1	**124-3815**	10	BOLT (M8X16X1.25-MM)	
M	18	1	**100-3751**	5	BOLT (M8X1.25X65-MM)	

C-CHANGE FROM PREVIOUS TYPE
J-CAN ONLY BE USED IN CONJUNCTION WITH 346-0408 & 324-0444
M-METRIC PART

304-8760 **HOUSING GP-FRONT** *(contd.)* **i03569721**

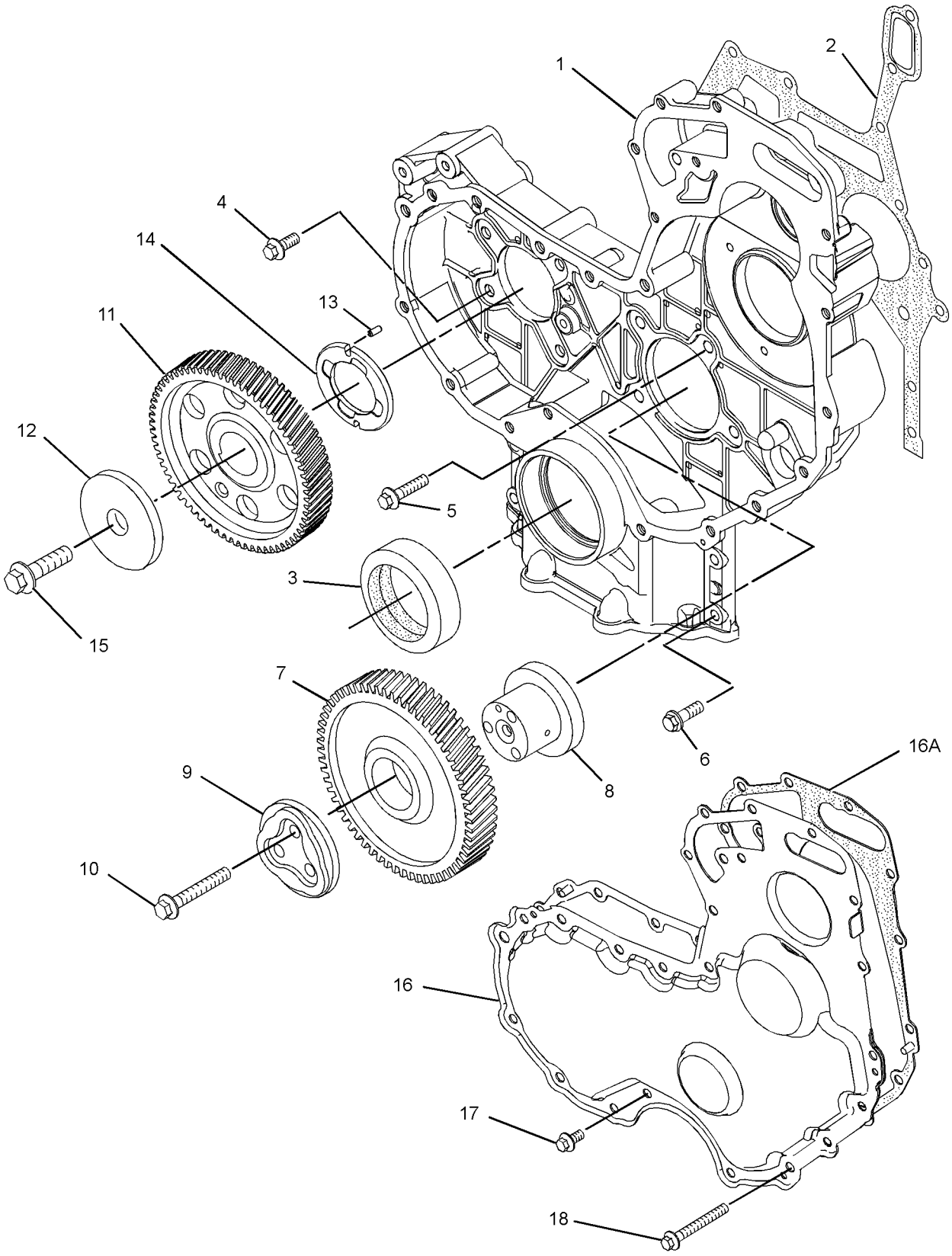

GRAPHIC #1 **<END>** g01900827

326-9013 LIFTING GP-ENGINE

S/N: C4Z1-UP

PART OF 364-5743 ENGINE AR-PRIMARY

AN ATTACHMENT

SMCS-1122 **i03124517**

NOTE	REF NO	GRAPHIC REF	PART NUMBER	QTY	PART NAME 1 2 3 4 5 6 (PRODUCT LEVEL)	SEE PAGE
M	1	1	**100-4830**	4	BOLT (M10X1.5X20-MM)	
	2	1	**225-8848**	2	PLATE-LIFTING	

M-METRIC PART

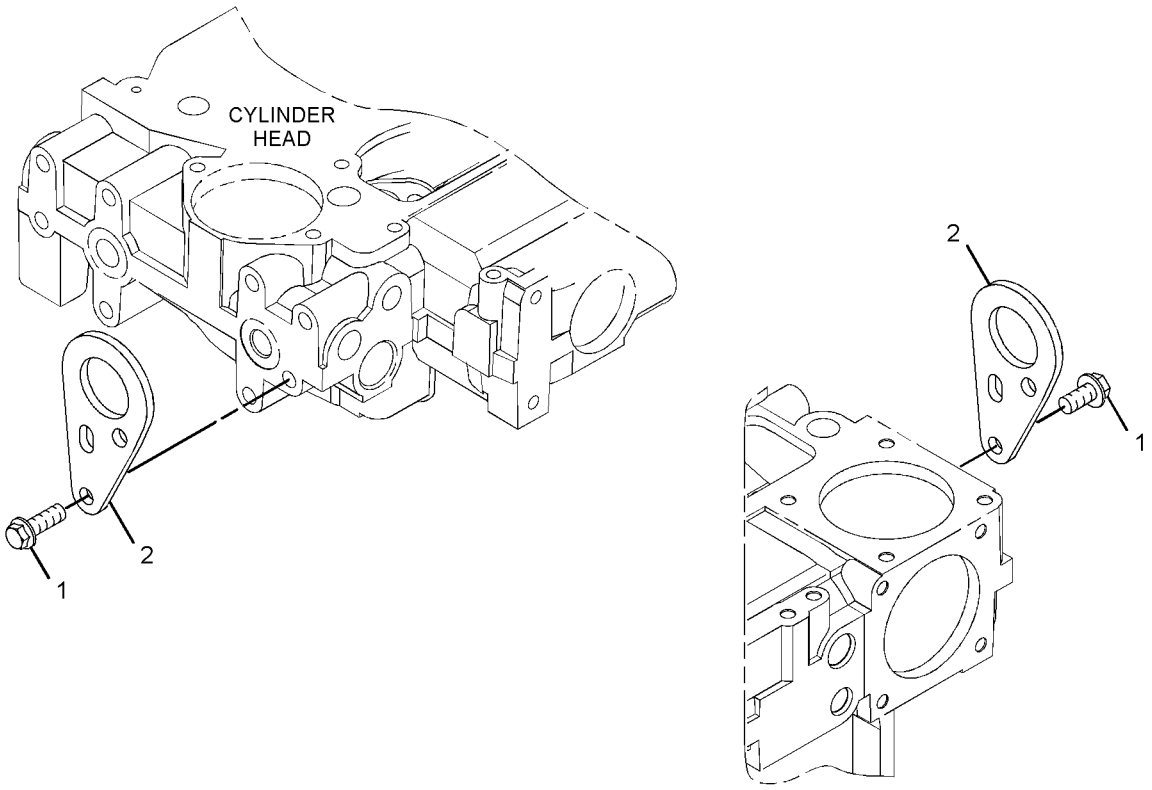

GRAPHIC #1 **<END>** g01636462

BASIC ENGINE

384-4107 MOUNTING GP-ENGINE

S/N: C4Z1-UP

PART OF 364-5743 ENGINE AR-PRIMARY

AN ATTACHMENT

SMCS-1152, 1153, 1154 **i04642291**

NOTE	REF NO	GRAPHIC REF	PART NUMBER	QTY	PART NAME 1 2 3 4 5 6 (PRODUCT LEVEL)	SEE PAGE
	1	1	**195-2136**	8	STUD	
	2	1	**195-2221**	8	NUT (M12X1.75-THD)	
	3	1	**6H-3616**	8	PLUG-PROTECTION	
	4	1	**304-3711**	1	MOUNT-ENGINE	
	5	1	**347-7045**	1	BRACKET	

384-4107 **MOUNTING GP-ENGINE** *(contd.)* **i04642291**

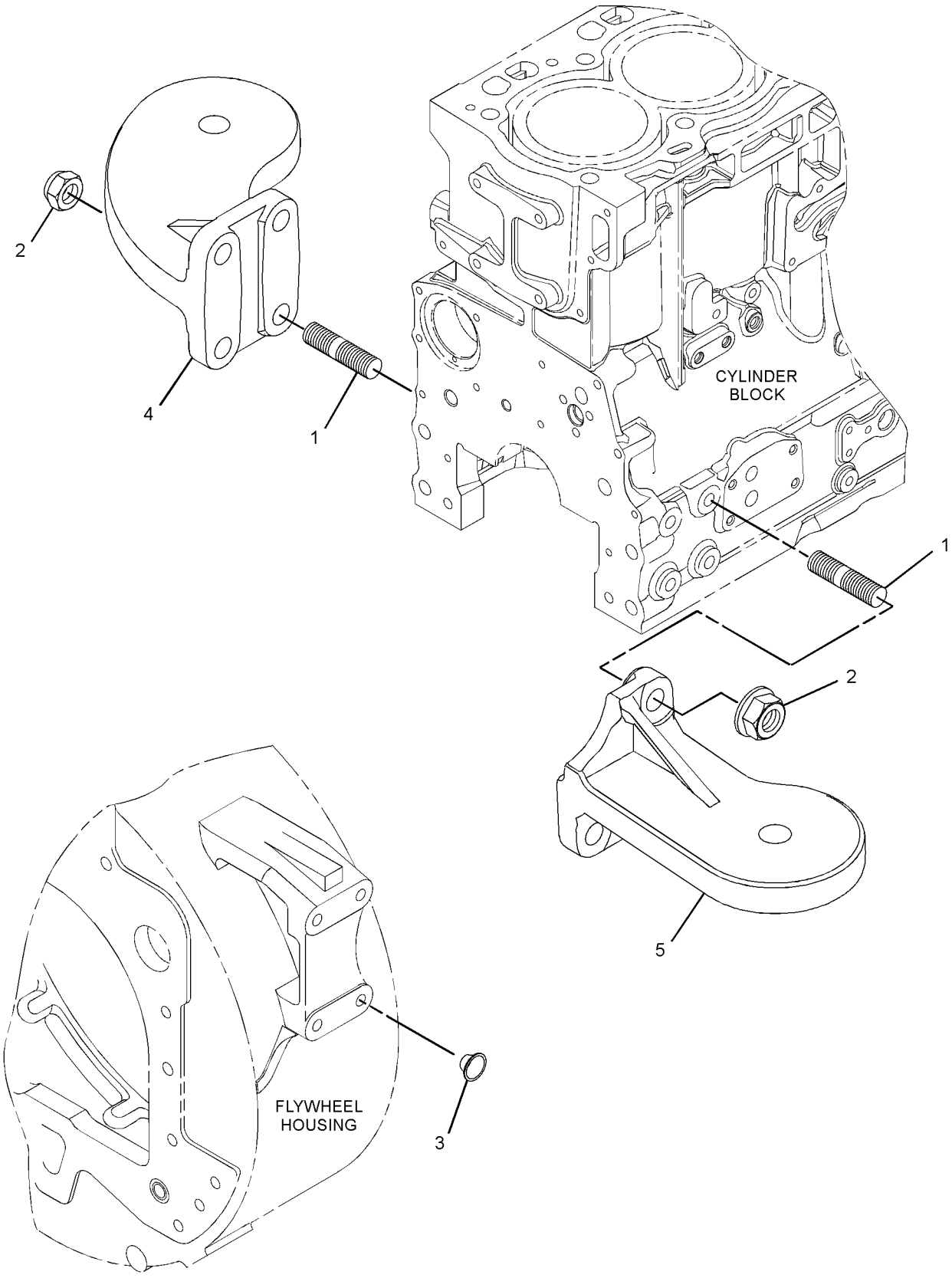

GRAPHIC #1 **<END>** g02783716

BASIC ENGINE

337-9727 MOUNTING GP-ENGINE & XMSN

S/N: SEJ1-UP

PART OF 353-1510, 353-1513 TRANSMISSION AR-POWER SHIFT

AN ATTACHMENT

SMCS-1152, 1153, 1154 **i04597510**

NOTE	REF NO	GRAPHIC REF	PART NUMBER	QTY	PART NAME 1 2 3 4 5 6 (PRODUCT LEVEL)	SEE PAGE
	1	1	**3E-4892**	2	WASHER (16.75X100X6-MM THK)	
	2	1	**9W-9915**	4	MOUNT AS	
	3	1	**9W-9952**	4	WASHER (16.75X86X8-MM THK)	
	4	1	**9W-9953**	4	SLEEVE	
	5	1	**335-1836**	4	BOLT-SPECIAL	
	6	1	**7X-0515**	4	WASHER-HARD (17X35X5-MM THK)	
	7	1	**8T-4121**	12	WASHER-HARD (11X21X2.5-MM THK)	
M	8	1	**8T-4132**	4	NUT (M16X2-THD)	
M	9	1	**8T-4196**	12	BOLT (M10X1.5X35-MM)	

M-METRIC PART

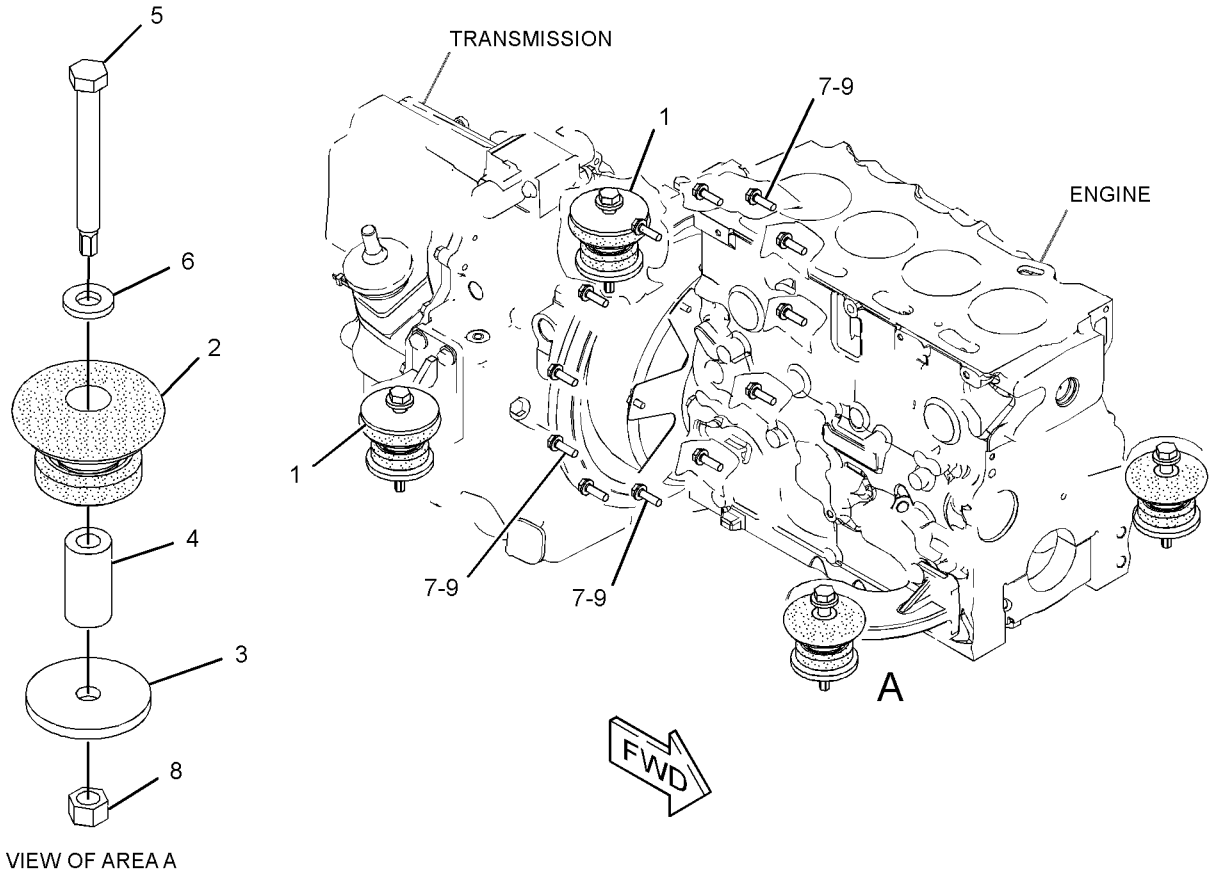

VIEW OF AREA A

GRAPHIC #1 **<END>** g02806179

BASIC ENGINE

337-9728 MOUNTING GP-ENGINE & XMSN

S/N: SEJ1-UP

PART OF 353-1511 TRANSMISSION AR-POWER SHIFT

AN ATTACHMENT

SMCS-1152, 1153, 1154 **i04612369**

NOTE	REF NO	GRAPHIC REF	PART NUMBER	QTY	PART NAME 1 2 3 4 5 6 (PRODUCT LEVEL)	SEE PAGE
	1	1	**3E-4892**	2	WASHER (16.75X100X6-MM THK)	
	2	1	**9W-9915**	4	MOUNT AS (ENGINE, FRONT)	
	3	1	**9W-9952**	4	WASHER (16.75X86X8-MM THK)	
	4	1	**9W-9953**	4	SLEEVE	
	5	1	**335-1836**	4	BOLT-SPECIAL	
	6	1	**7X-0515**	4	WASHER-HARD (17X35X5-MM THK)	
	7	1	**8T-4121**	12	WASHER-HARD (11X21X2.5-MM THK)	
M	8	1	**8T-4132**	4	NUT (M16X2-THD)	
M	9	1	**8T-4185**	12	BOLT (M10X1.5X50-MM)	

M-METRIC PART

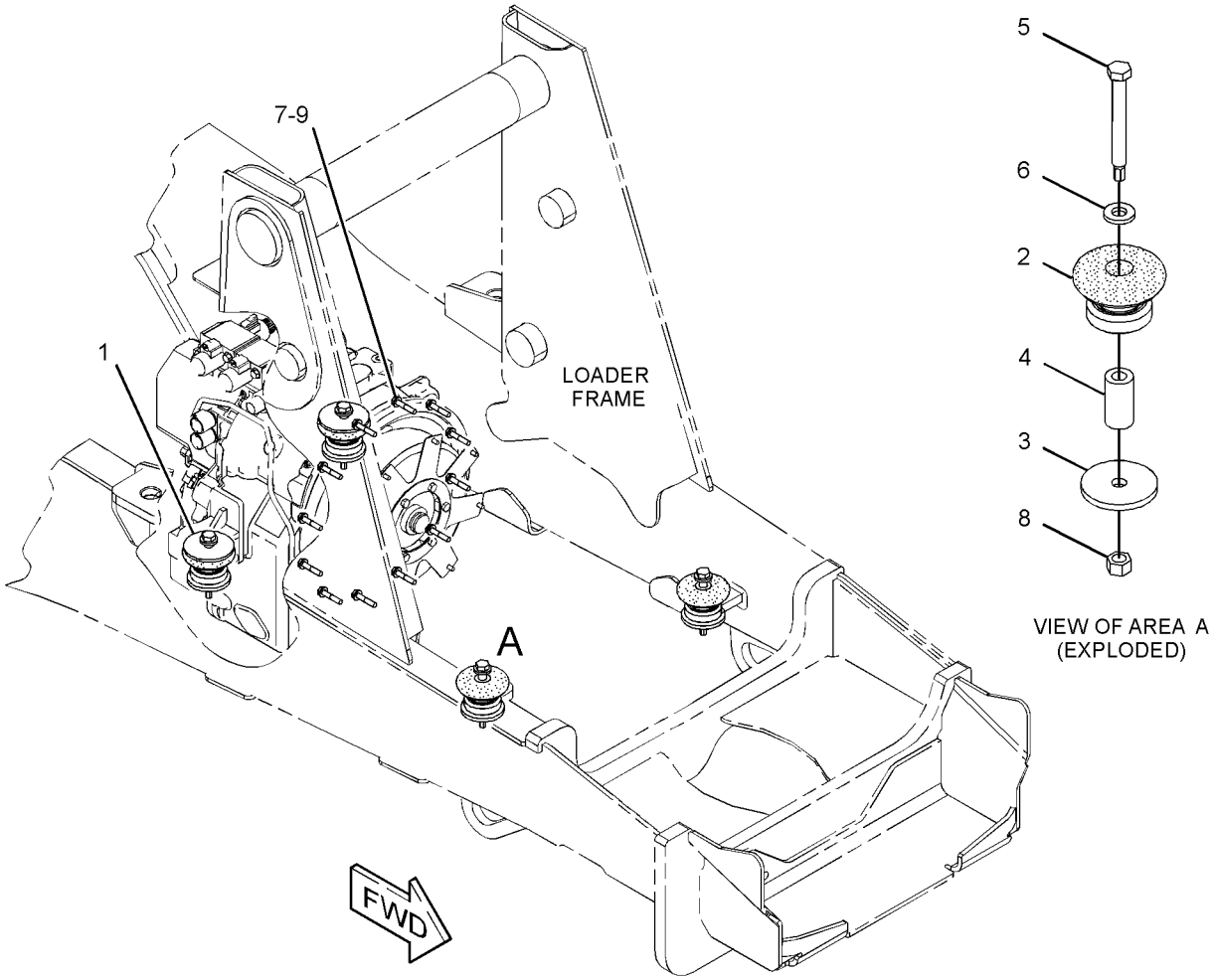

GRAPHIC #1 **<END>** g02822538

BASIC ENGINE

322-9476 PAN GP-OIL

S/N: C4Z1-UP
PART OF 364-5743 ENGINE AR-PRIMARY
AN ATTACHMENT

SMCS-1302 **i04641771**

NOTE	REF NO	GRAPHIC REF	PART NUMBER	QTY	PART NAME 1 2 3 4 5 6 (PRODUCT LEVEL)	SEE PAGE
M	1	1	**6I-0217**	14	BOLT (M8X1.25X20-MM)	
M	2	1	**6I-0260**	2	BOLT (M8X1.25X25-MM)	
	3	1	**6I-0289**	2	PLUG	
M	4	1	**6I-0363**	2	BOLT (M6X1X20-MM)	
	5	1	**6I-0572**	2	BOLT (M8X1.25X20-MM)	
	6	1	**7C-0351**	2	PLUG-DRAIN (ENGINE OIL)	
	7	1	**067-6213**	1	GASKET	
	8	1	**101-3771**	4	BOLT	
	9	1	**225-6005**	1	GASKET	
	10	1	**225-6041**	1	TUBE	
	11	1	**230-8094**	1	BRIDGE	
	12	1	**275-9883**	2	SEAL (DRAIN PLUG)	
C	13	1	**353-5219**	1	PAN-OIL	

C-CHANGE FROM PREVIOUS TYPE
M-METRIC PART

322-9476 **PAN GP-OIL** *(contd.)* **i04641771**

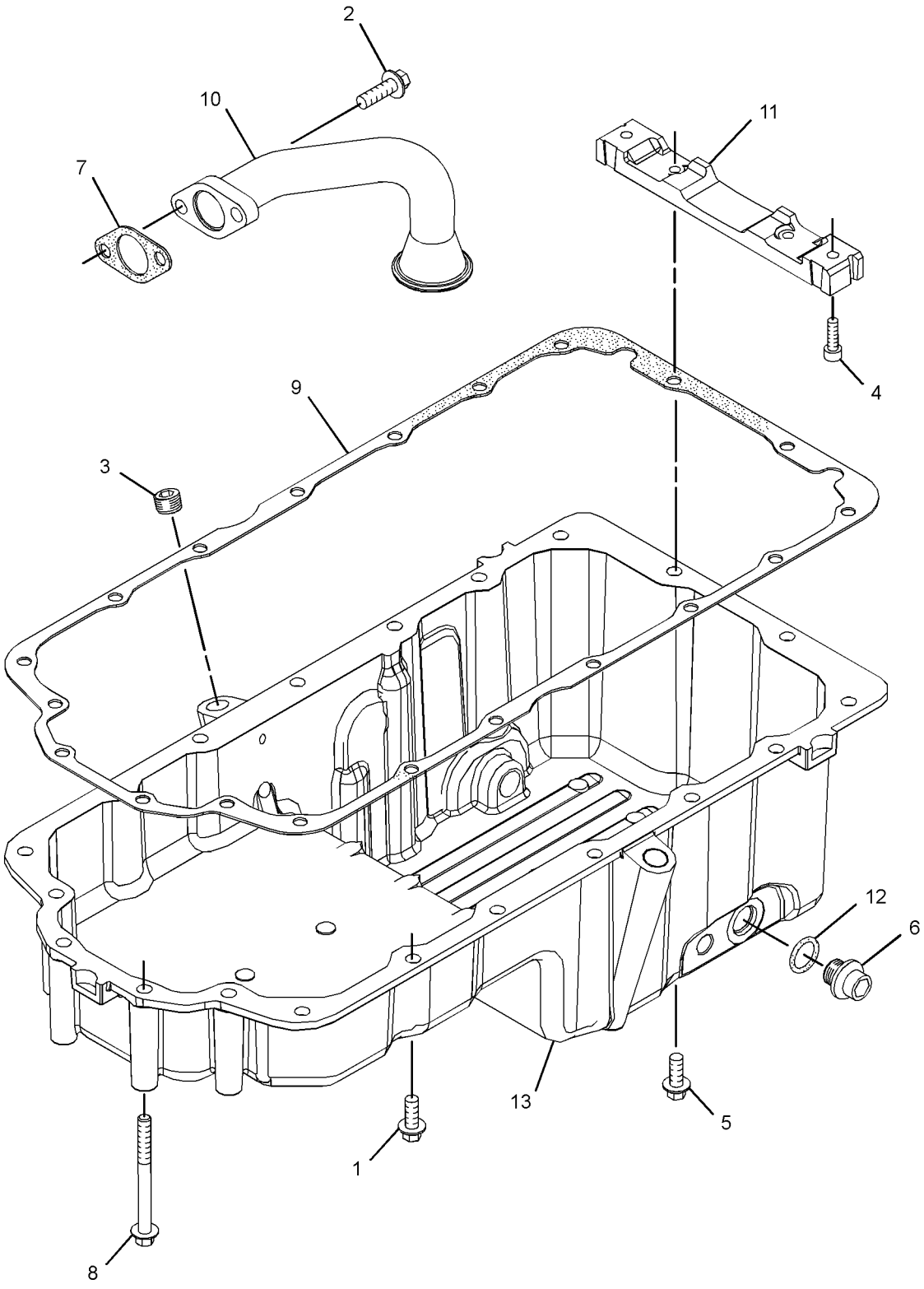

GRAPHIC #1 **<END>** g02788399

326-9002 PISTON & ROD GP

S/N: C4Z1-UP
PART OF 364-5743 ENGINE AR-PRIMARY
AN ATTACHMENT

SMCS-1213, 1214, 1215, 1218, 1219, 1225, 1239 **i04001203**

NOTE	REF NO	GRAPHIC REF	PART NUMBER	QTY	PART NAME 1 2 3 4 5 6 (PRODUCT LEVEL)	SEE PAGE
	1	1	**315-3395**	4	PISTON AS	
					(EACH INCLUDES)	
	1A	1	**124-3536**	2	RING-RETAINING	
	1B	1	**276-7476**	1	KIT-PISTON RING	
BCJ	2	1	**359-0724**	4	ROD AS-CONNECTING (LENGTH B)	
					—OR—	
BCJ		1	**359-0723**	4	ROD AS-CONNECTING (LENGTH P)	
					—OR—	
BCJ		1	**359-0722**	4	ROD AS-CONNECTING (LENGTH G)	
					—OR—	
BCJ		1	**359-0721**	4	ROD AS-CONNECTING (LENGTH W)	
					—OR—	
BCJ		1	**359-0720**	4	ROD AS-CONNECTING (LENGTH O)	
					—OR—	
BCJ		1	**359-0719**	4	ROD AS-CONNECTING (LENGTH R)	
					(EACH INCLUDES)	
	2A	1	**225-5438**	1	BUSHING	
	2B	1	**323-9312**	2	BOLT	

B-USE AS REQUIRED
C-CHANGE FROM PREVIOUS TYPE
J-ENSURE THAT CORRECT ROD LENGTH IS FITTED

326-9002 **PISTON & ROD GP** *(contd.)* **i04001203**

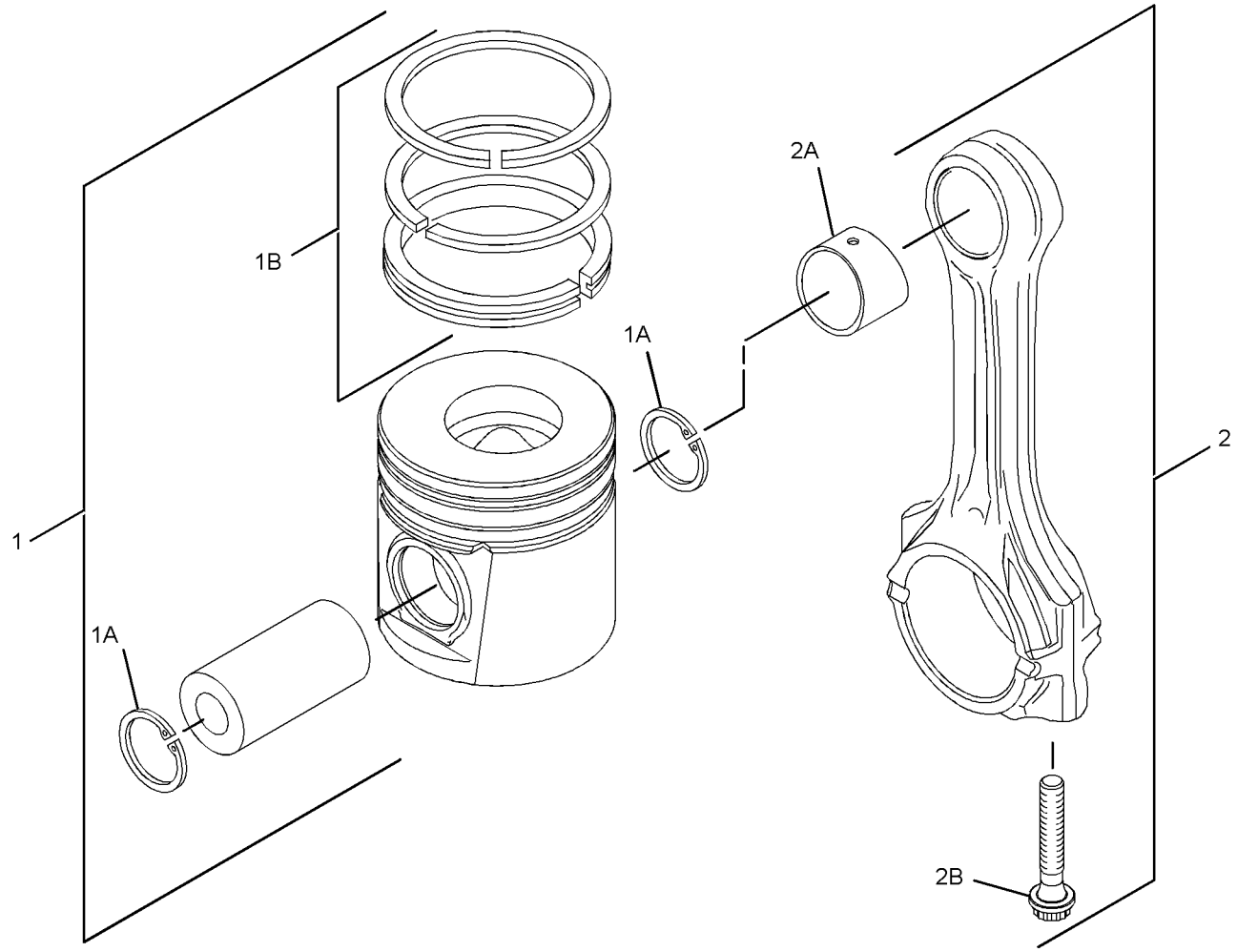

GRAPHIC #1 **<END>** g02178226

BASIC ENGINE

298-5129 PLUG GP-CYLINDER HEAD

S/N: C4Z1-UP
PART OF 364-5743 ENGINE AR-PRIMARY
AN ATTACHMENT

SMCS-1100 **i03128287**

NOTE	REF NO	GRAPHIC REF	PART NUMBER	QTY	PART NAME 1 2 3 4 5 6 (PRODUCT LEVEL)	SEE PAGE
	1	1	**232-1322**	1	PLUG	
	2	1	**199-9751**	1	SEAL-O-RING	

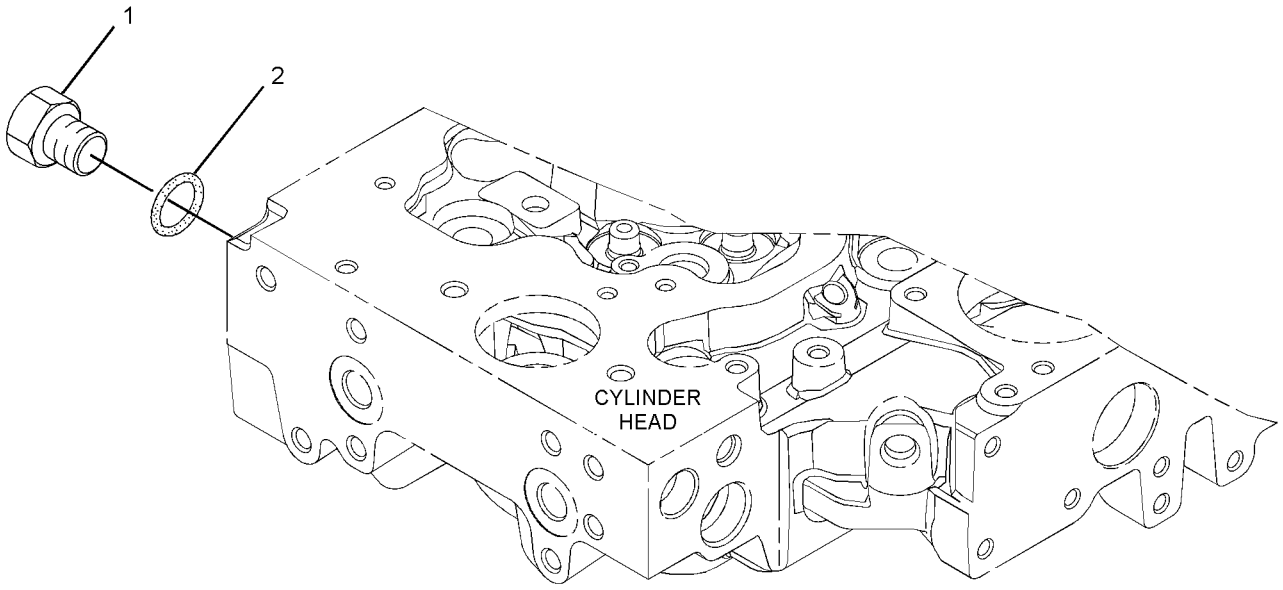

GRAPHIC #1 **<END>** g01305536

BASIC ENGINE

298-5131 PLUG GP-ENGINE

S/N: C4Z1-UP
PART OF 364-5743 ENGINE AR-PRIMARY
AN ATTACHMENT

SMCS-1000 **i03128286**

NOTE	REF NO	GRAPHIC REF	PART NUMBER	QTY	PART NAME 1 2 3 4 5 6 (PRODUCT LEVEL)	SEE PAGE
	1	1	**2B-0858**	3	PLUG-PIPE	

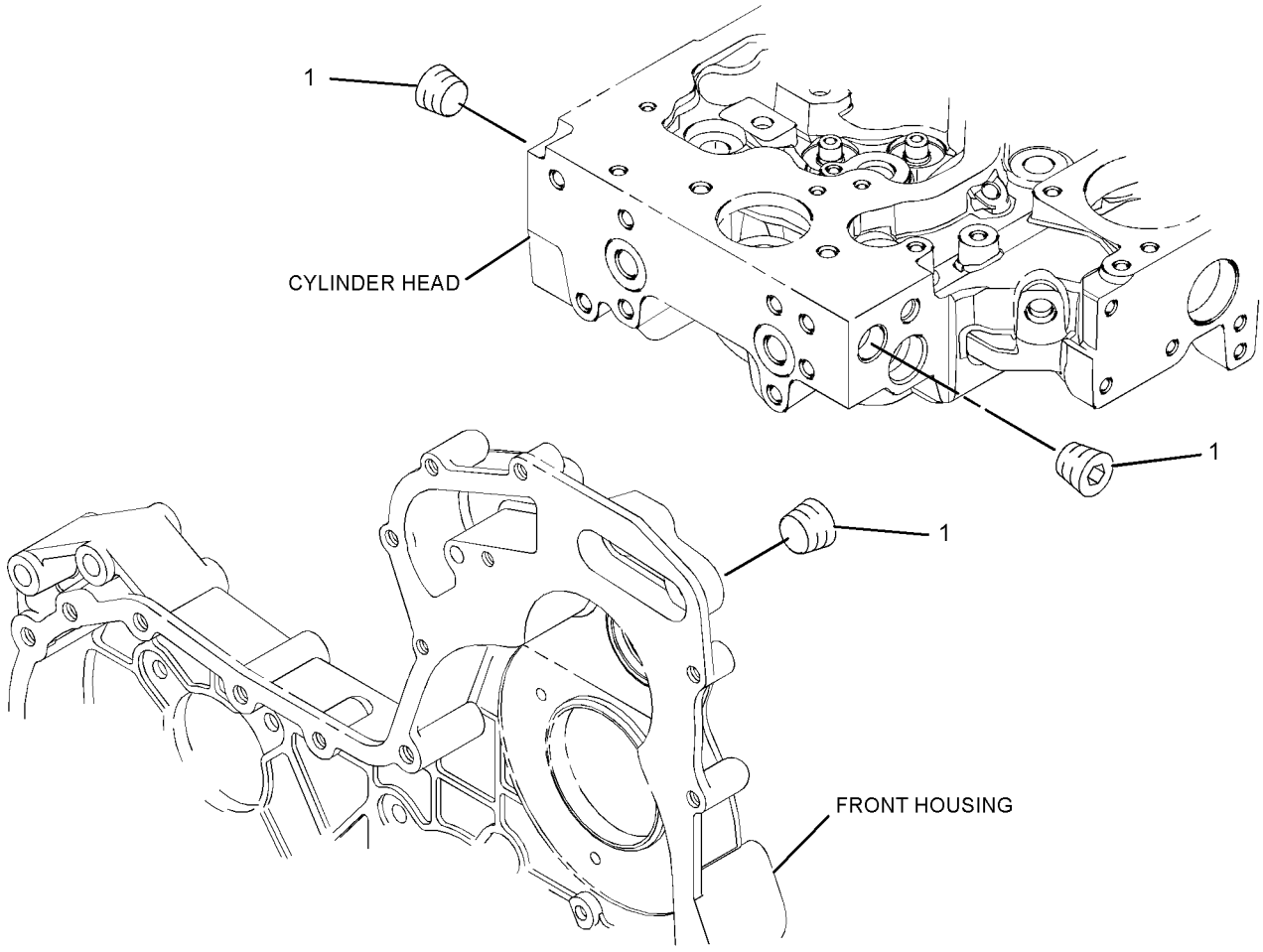

GRAPHIC #1 **<END>** g01305448

BASIC ENGINE

304-8761 PLUG GP-ENGINE

S/N: C4Z1-UP
PART OF 364-5743 ENGINE AR-PRIMARY
AN ATTACHMENT

SMCS-1000 **i03128290**

NOTE	REF NO	GRAPHIC REF	PART NUMBER	QTY	PART NAME 1 2 3 4 5 6 (PRODUCT LEVEL)	SEE PAGE
	1	1	**6I-0646**	1	BOLT (M10X1.5X14-MM)	
	2	1	**214-3203**	1	WASHER (SEALING)	

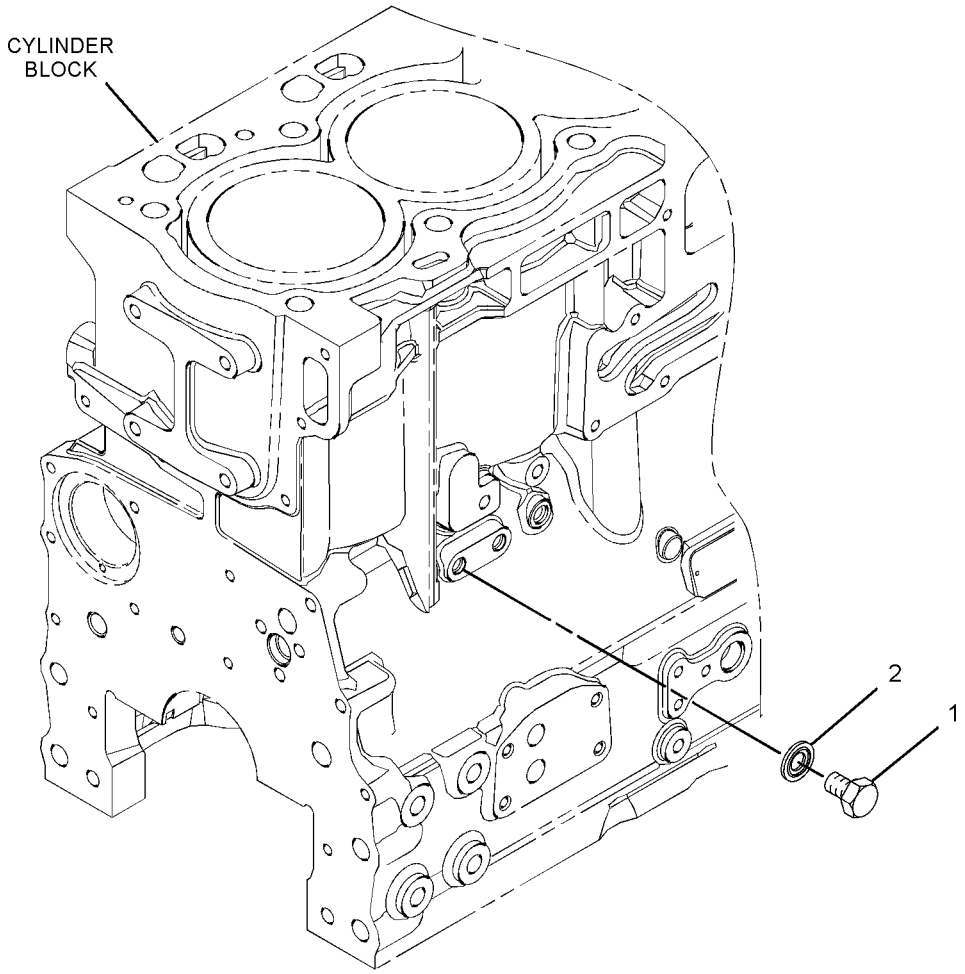

GRAPHIC #1 **<END>** g01373022

360-7347 PULLEY GP-CRANKSHAFT

S/N: C4Z1-UP

PART OF 364-5743 ENGINE AR-PRIMARY

AN ATTACHMENT

SMCS-1205 **i03902916**

NOTE	PART NUMBER	QTY	PART NAME 1 2 3 4 5 6 (PRODUCT LEVEL)	SEE PAGE
M	**102-9941**	3	BOLT (M12X1.75X25-MM)	
	334-9334	3	BOLT	
	286-7848	1	PULLEY GP-ENGINE	
	359-0750	1	PULLEY-CRANKSHAFT	

M-METRIC PART

<END>

315-3385 ROCKER ARM GP

S/N: C4Z1-UP
PART OF 326-9004 VALVE MECHANISM GP
AN ATTACHMENT

SMCS-1102, 1123 **i03131135**

NOTE	REF NO	GRAPHIC REF	PART NUMBER	QTY	PART NAME 1 2 3 4 5 6 (PRODUCT LEVEL)	SEE PAGE
	1	1	**225-5634**	1	SHAFT AS	
	1A	1	**225-5629**	2	PLUG	
	2	1	**225-5638**	3	SPRING	
	3	1	**225-5959**	2	CLIP	
	4	1	**225-5960**	1	BOLT (M8X1.25X60-MM)	
	5	1	**225-5961**	2	WASHER (26.7X34.32X0.38-MM THK)	
	6	1	**225-5962**	3	BOLT (M8X1.25X30-MM)	
	7	1	**315-3386**	4	ROCKER ARM AS	
					(EACH INCLUDES)	
	7A	1	**278-5113**	1	ADJUSTING SCREW (TORX)	
	7B	1	**315-3387**	1	NUT	
	8	1	**315-3388**	4	ROCKER ARM AS	
					(EACH INCLUDES)	
	8A	1	**278-5113**	1	ADJUSTING SCREW (TORX)	
	8B	1	**315-3387**	1	NUT	

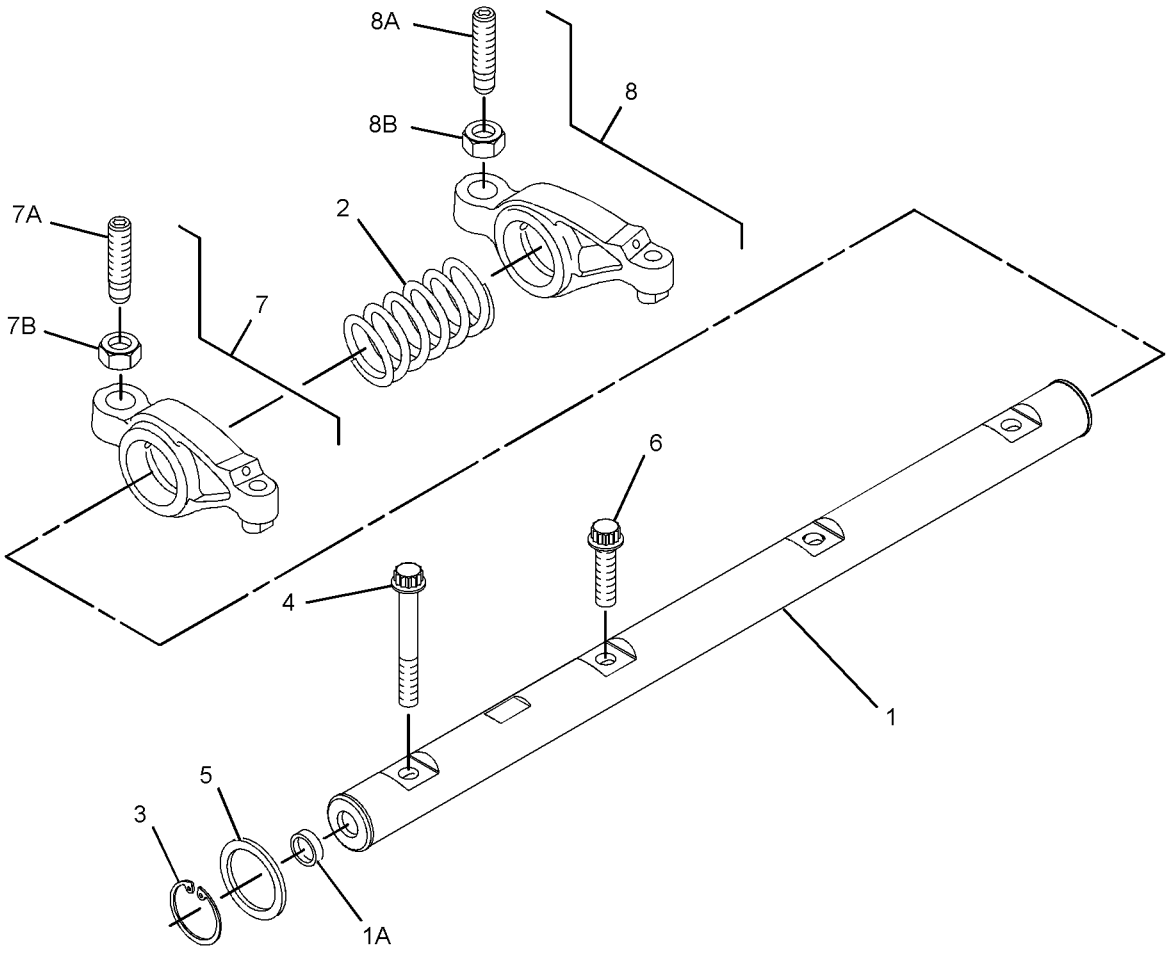

GRAPHIC #1 **<END>** g01399975

326-9004 VALVE MECHANISM GP

S/N: C4Z1-UP

PART OF 364-5743 ENGINE AR-PRIMARY

AN ATTACHMENT

SMCS-1102, 1112, 1121, 1123, 1208, 1209 **i03127783**

NOTE	REF NO	GRAPHIC REF	PART NUMBER	QTY	PART NAME 1 2 3 4 5 6 (PRODUCT LEVEL)	SEE PAGE
Y	1	1	**315-3385**	1	ROCKER ARM GP	36

Y-SEPARATE ILLUSTRATION

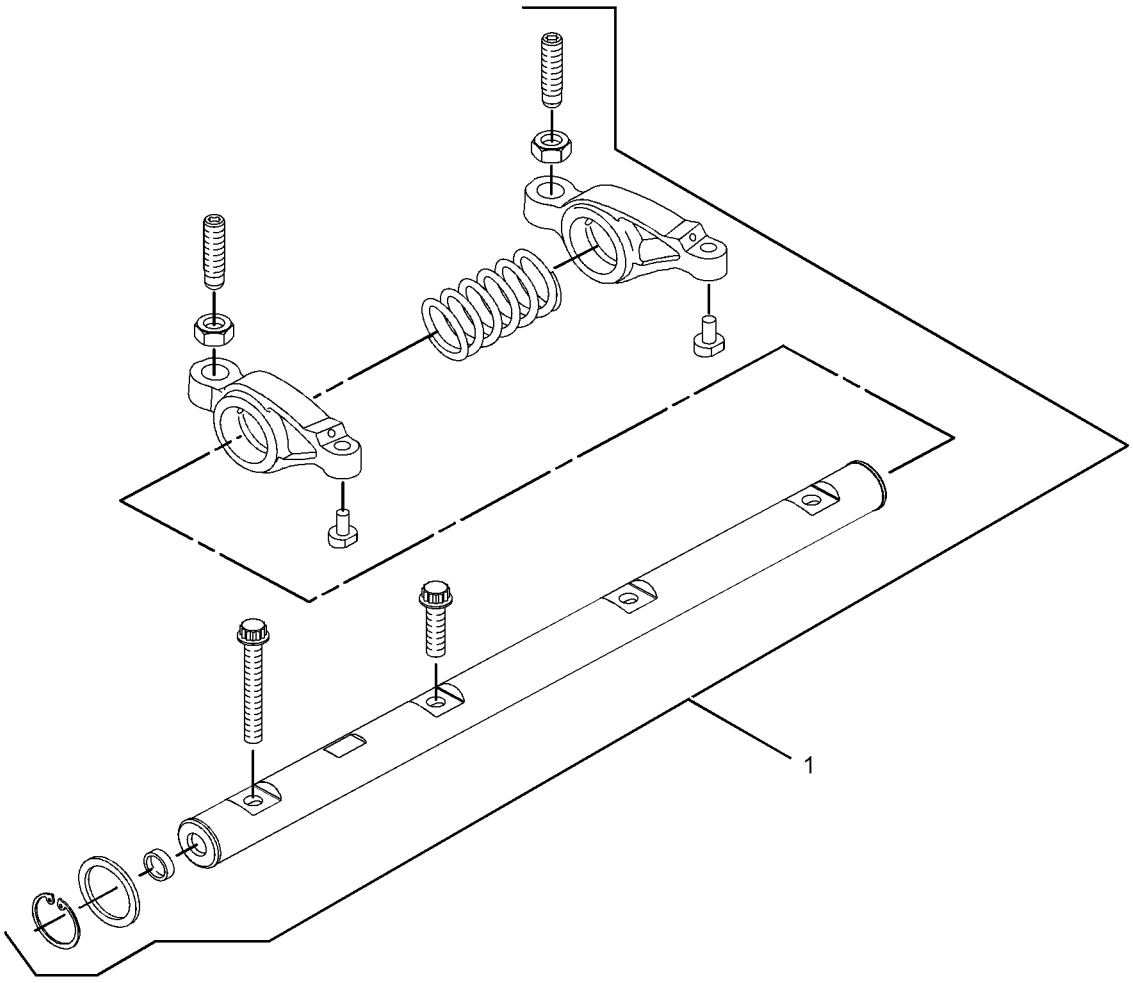

GRAPHIC #1 **<END>** g01611483

LUBRICATION SYSTEM

360-8798 BREATHER GP—CRANKCASE

S/N: SEJ1-UP

PART OF 337-9867 ENGINE AR-COMPLETE

AN ATTACHMENT

SMCS-1317 **i04628872**

NOTE	REF NO	GRAPHIC REF	PART NUMBER	QTY	PART NAME 1 2 3 4 5 6 (PRODUCT LEVEL)	SEE PAGE
	1	1	**6I-1497**	1	SEAL	
	2	1	**165-4021**	1	CANISTER AS-BREATHER (CRANKCASE)	
		1	**185-6643**	1	SEAL (BREATHER)	
	3	1	**178-3620**	1	STRAP-DUAL CLAMP	
	4	1	**202-5909**	1	TUBE AS-OIL	
	5	1	**205-9920**	1	STRAP-CABLE	
	6	1	**298-0663**	1	CLIP	
	7	1	**323-3308**	5	CAP	
	8	1	**361-7547**	1	PLATE AS	
	9	1	**361-7549**	1	HOSE-BREATHER	
	10	1	**3S-2093**	2	STRAP-CABLE	
	11	1	**5D-1026**	2	CLAMP-BAND	
	12	1	**6G-2263**	1	SPACER (10.5X19X28.5-MM THK)	
M	13	1	**7X-0818**	1	BOLT (M8X1.25X45-MM)	
	14	1	**8T-4224**	4	WASHER-HARD (8.8X16X2-MM THK)	
M	15	1	**8T-4908**	3	BOLT (M8X1.25X25-MM)	
M	16	1	**8T-4971**	2	BOLT (M6X1X30-MM)	
	17	1	**8T-9402**	3	CLAMP-HOSE	
	18	1	**9X-8256**	2	WASHER (6.6X12X2-MM THK)	
E	19	1	**5P-1505**		HOSE (82-CM)	
E	20	1	**136-1955**		HOSE (110-CM)	

E-ORDER BY THE CENTIMETER
M-METRIC PART

360-8798 **BREATHER GP** *(contd.)* **i04628872**

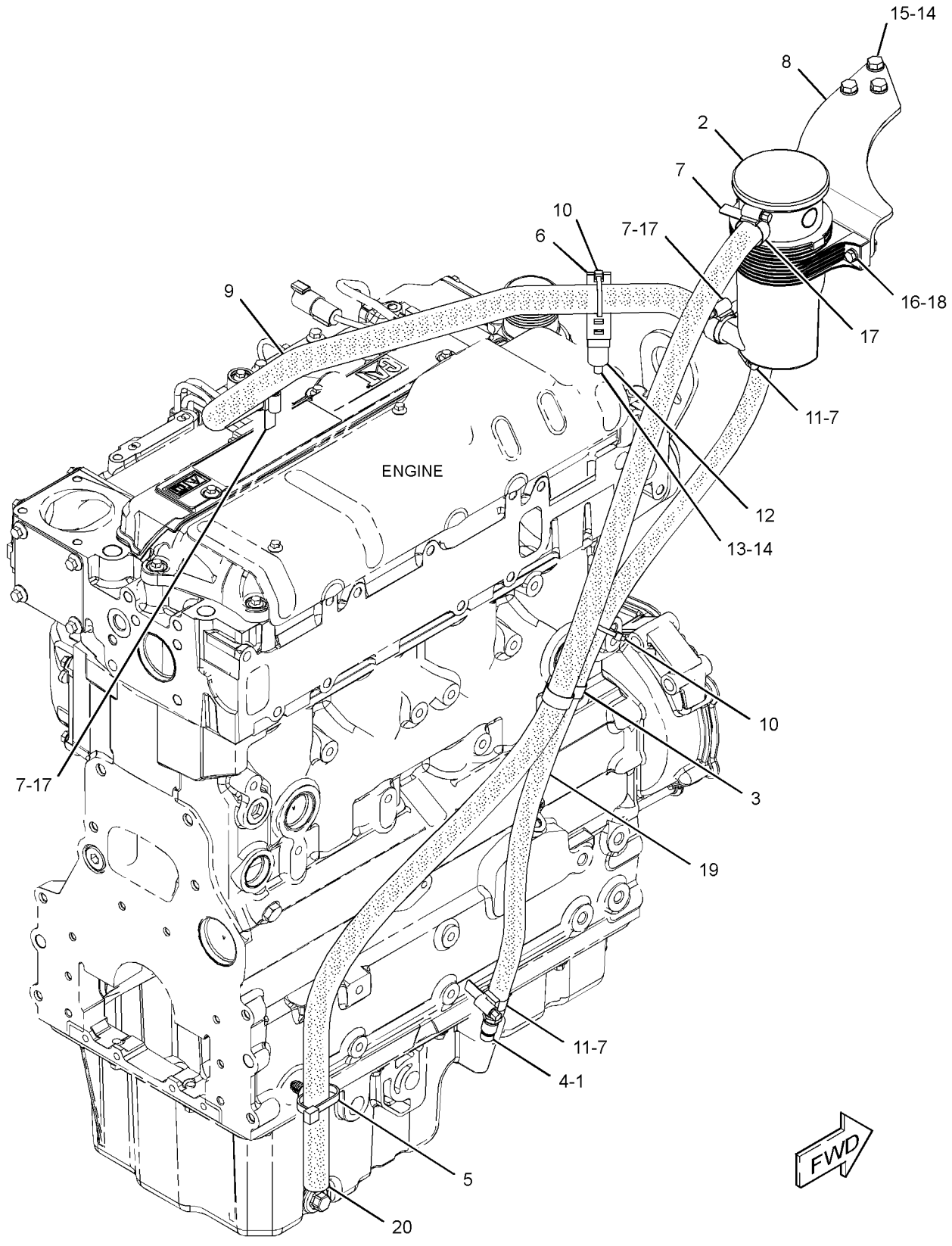

GRAPHIC #1 **<END>** g02822548

309-7555 FILLER GP-ENGINE OIL

S/N: C4Z1-UP
PART OF 364-5743 ENGINE AR-PRIMARY
AN ATTACHMENT

SMCS-1316 **i03128307**

NOTE	REF NO	GRAPHIC REF	PART NUMBER	QTY	PART NAME 1 2 3 4 5 6 (PRODUCT LEVEL)	SEE PAGE
M	1	1	**6I-0260**	2	BOLT (M8X1.25X25-MM)	
	2	1	**225-6522**	1	PLUG-CUP	
	3	1	**317-3769**	1	FILLER GP-ENGINE OIL	
	3A	1	**317-3778**	1	SEAL-O-RING	

M-METRIC PART

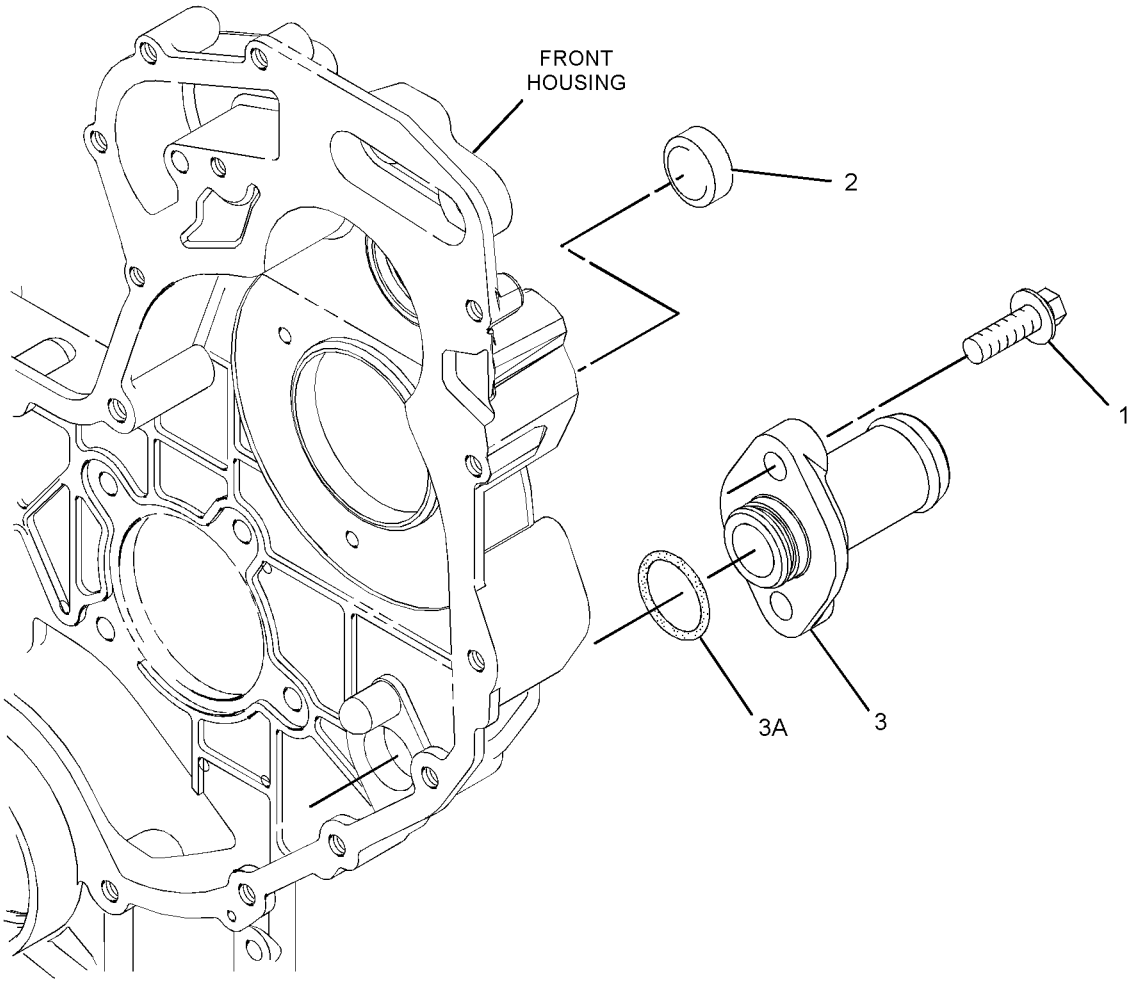

GRAPHIC #1 **<END>** g01378834

352-3463 GAUGE GP-OIL LEVEL & FILLER

S/N: SEJ1-UP
PART OF 337-9867 ENGINE AR-COMPLETE
AN ATTACHMENT

SMCS-1316, 1326 **i04628854**

NOTE	REF NO	GRAPHIC REF	PART NUMBER	QTY	PART NAME 1 2 3 4 5 6 (PRODUCT LEVEL)	SEE PAGE
	1	1	**6I-1497**	1	SEAL	
	2	1	**9M-7958**	1	CLAMP-HOSE	
	3	1	**236-6651**	1	CAP AS-FILLER (ENGINE OIL)	
	4	1	**323-3308**	2	CAP	
Y	5	1	**351-8191**	1	GAUGE GP-OIL LEVEL (DIPSTICK) (ENGINE)	42
	6	1	**352-7601**	1	HOSE	
	7	1	**352-7634**	1	BRACKET AS	
	8	1	**362-8059**	1	TUBE AS	
	9	1	**127-4471**	1	CLAMP-HOSE	
	10	1	**139-1398**	1	CLIP	
	11	1	**7W-2326**	1	FILTER AS-ENGINE OIL	
M	12	1	**8T-4189**	4	BOLT (M8X1.25X20-MM)	
	13	1	**8T-4224**	4	WASHER-HARD (8.8X16X2-MM THK)	

M-METRIC PART
Y-SEPARATE ILLUSTRATION

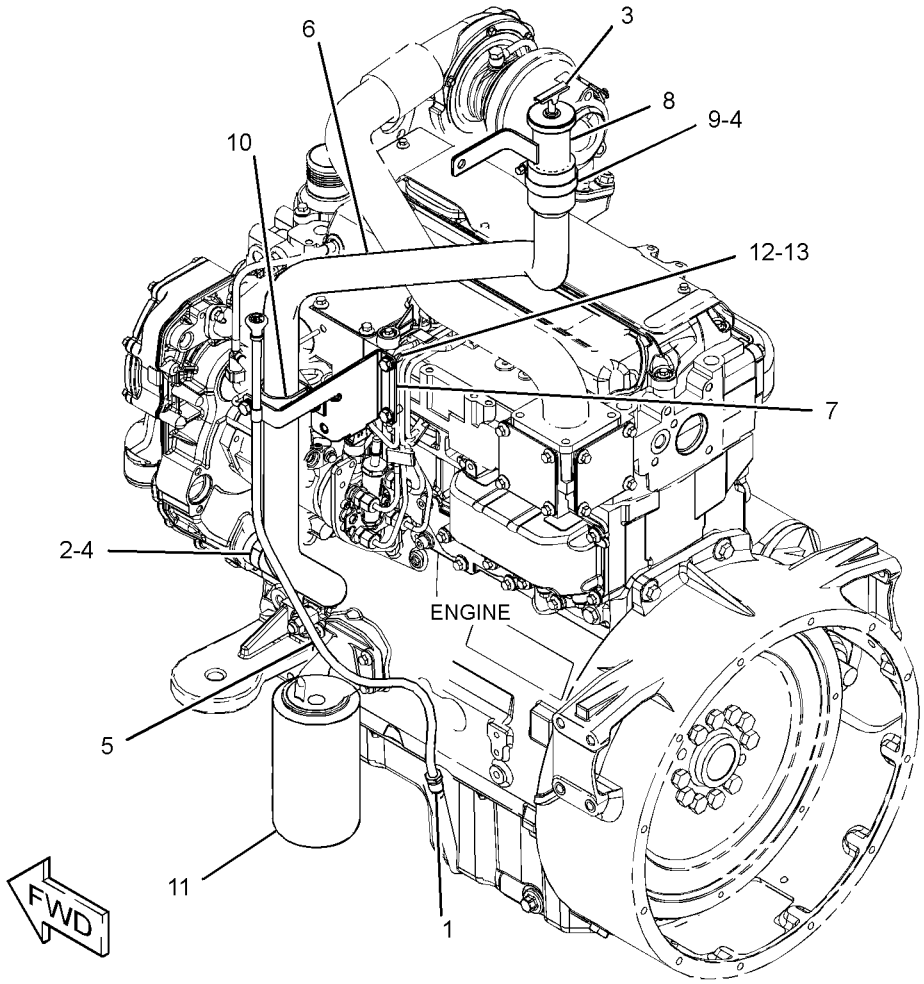

GRAPHIC #1 **<END>** g02823276

351-8191 GAUGE GP-OIL LEVEL (DIPSTICK)

S/N: SEJ1-UP
PART OF 352-3463 GAUGE GP-OIL LEVEL & FILLER
AN ATTACHMENT

SMCS-1326 **i04611721**

NOTE	REF NO	GRAPHIC REF	PART NUMBER	QTY	PART NAME 1 2 3 4 5 6 (PRODUCT LEVEL)	SEE PAGE
	1	1	*351-8190*	1	GAUGE AS-OIL LEVEL (DIPSTICK) (ENGINE)	
		1	**275-9891**	2	SEAL-O-RING	

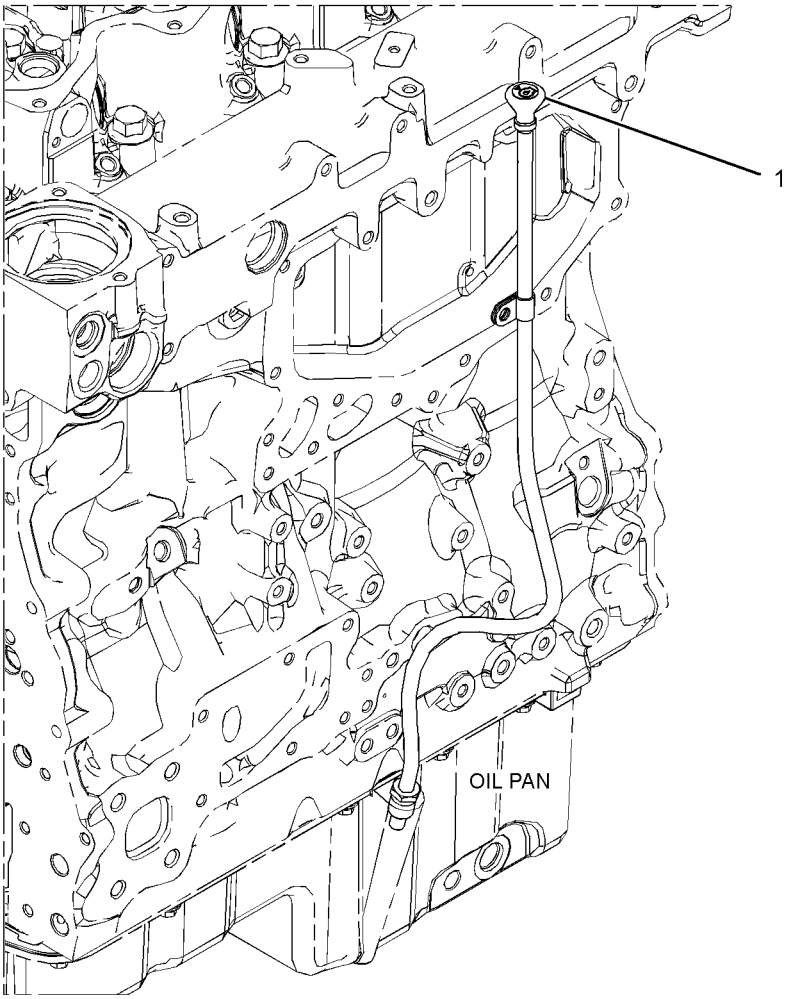

GRAPHIC #1 **<END>** g02828617

298-5112 PUMP GP-ENGINE OIL

S/N: C4Z1-UP
PART OF 364-5743 ENGINE AR-PRIMARY
AN ATTACHMENT

SMCS-1304, 1315 **i03128291**

NOTE	REF NO	GRAPHIC REF	PART NUMBER	QTY	PART NAME 1 2 3 4 5 6 (PRODUCT LEVEL)	SEE PAGE
	1	1	**225-8329**	1	PUMP AS-ENGINE OIL	
M	2	1	**100-4461**	5	BOLT (M10X1.50X50-MM)	

M-METRIC PART

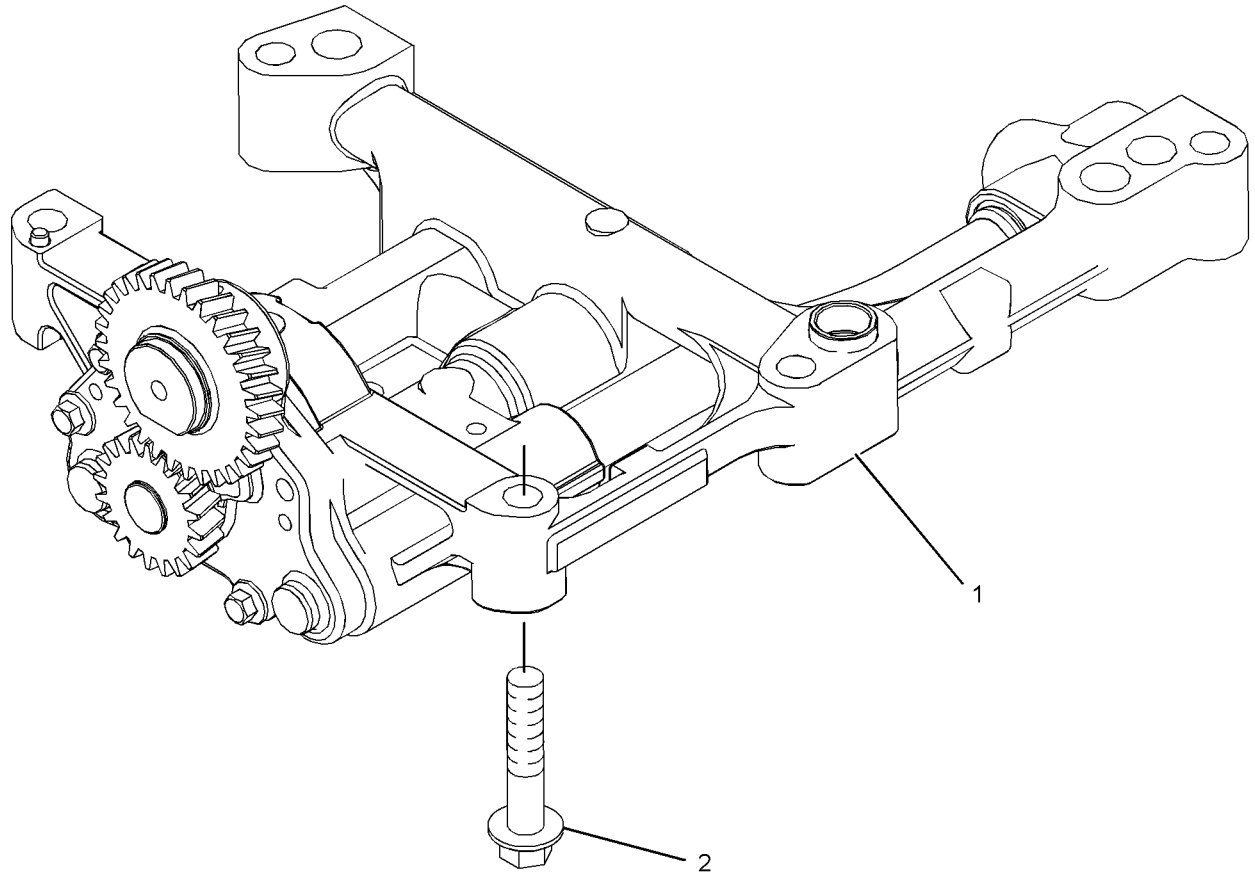

GRAPHIC #1 **<END>** g01304952

316-6941 CONNECTION GP-WATER

S/N: C4Z1-UP

PART OF 364-5743 ENGINE AR-PRIMARY

AN ATTACHMENT

SMCS-1380 **i03128305**

NOTE	REF NO	GRAPHIC REF	PART NUMBER	QTY	PART NAME 1 2 3 4 5 6 (PRODUCT LEVEL)	SEE PAGE
	1	1	**254-2267**	1	REGULATOR GP-TEMPERATURE (INCLUDES CONNECTOR) (WATER)	
	1A	1	**254-2270**	1	SEAL-O-RING	
M	2	1	**6I-0260**	2	BOLT (M8X1.25X25-MM)	

M-METRIC PART

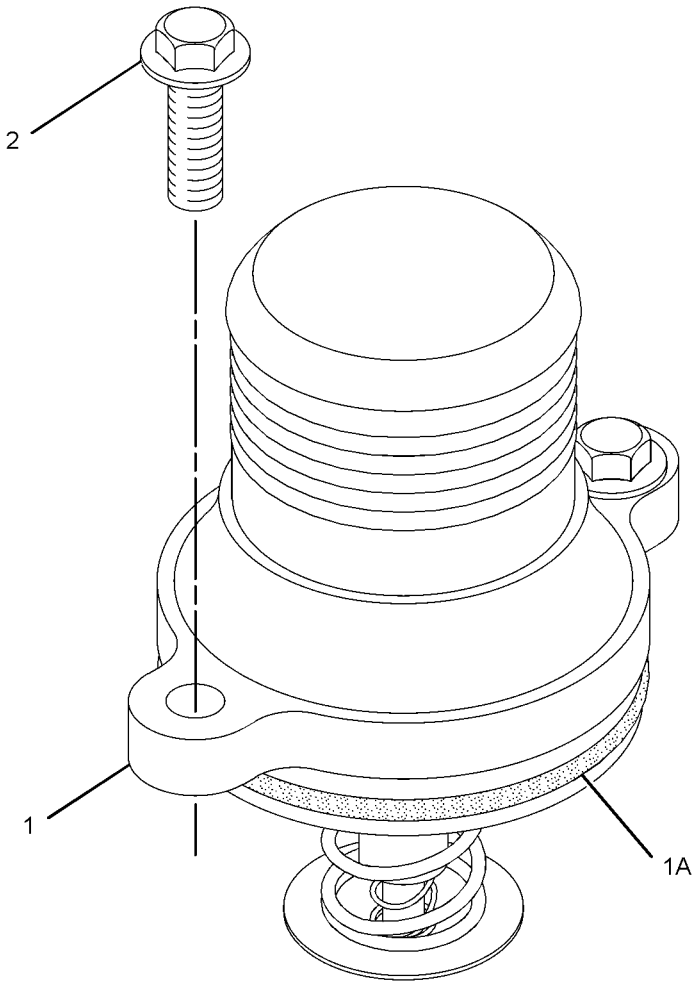

GRAPHIC #1 **<END>** g01319398

316-6899 COOLER GP-ENGINE OIL

S/N: C4Z1-UP

PART OF 364-5743 ENGINE AR-PRIMARY

AN ATTACHMENT

SMCS-1378 **i03919094**

NOTE	REF NO	GRAPHIC REF	PART NUMBER	QTY	PART NAME 1 2 3 4 5 6 (PRODUCT LEVEL)	SEE PAGE
	1	1	**6I-0572**	4	BOLT (M8X1.25X20-MM)	
M	2	1	**6I-0645**	4	BOLT (M8X1.25X25-MM)	
	3	1	**225-7944**	2	GASKET (ENGINE OIL FILTER BASE)	
	4	1	**232-3751**	1	PLATE	
	5	1	**249-0974**	1	HEAD AS-OIL FILTER	
Y	6	1	**354-1274**	1	COOLER GP-ENGINE OIL	46

M-METRIC PART
Y-SEPARATE ILLUSTRATION

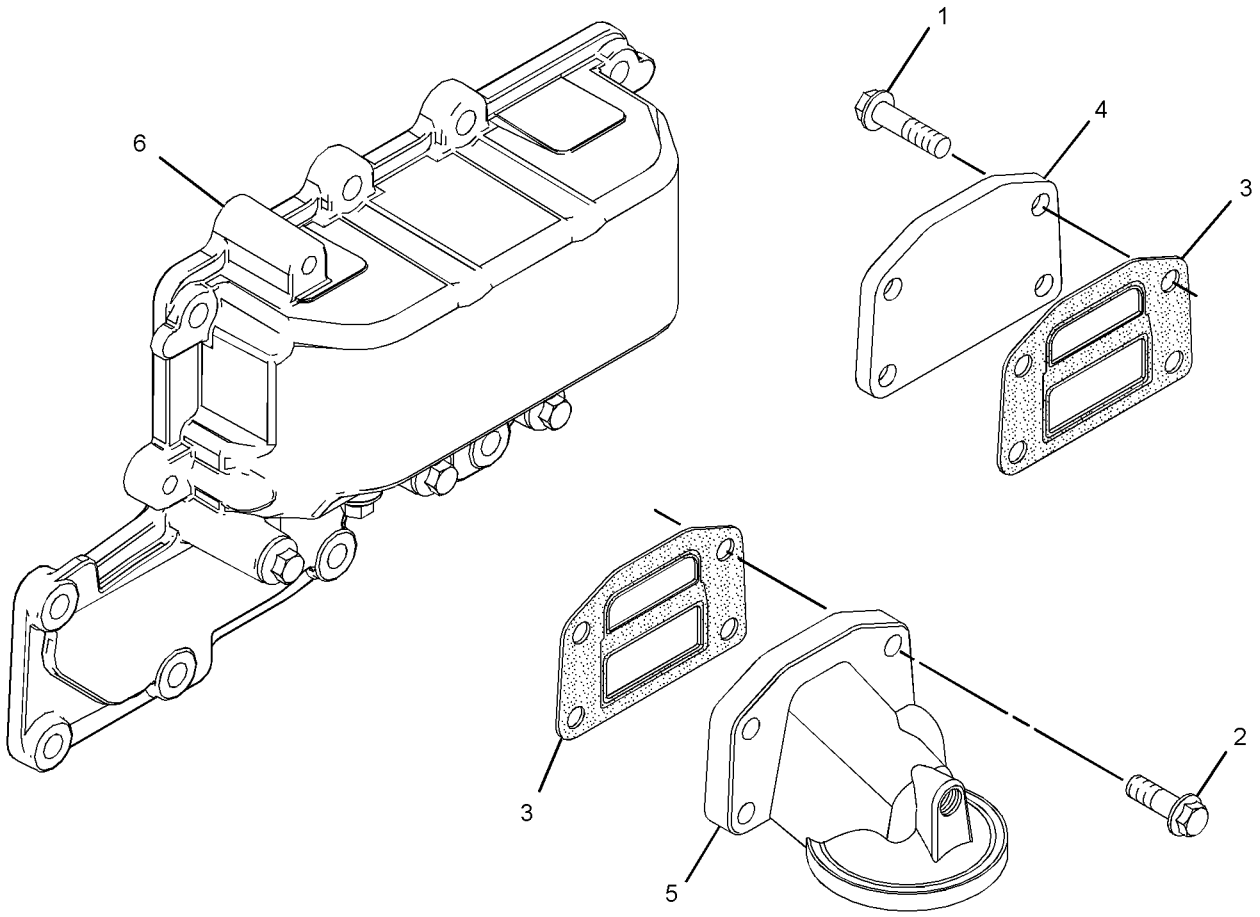

GRAPHIC #1 **<END>** g02151330

COOLING SYSTEM

354-1274 COOLER GP-ENGINE OIL

S/N: C4Z1-UP
PART OF 316-6899 COOLER GP-ENGINE OIL
AN ATTACHMENT

SMCS-1378 **i03900469**

NOTE	REF NO	GRAPHIC REF	PART NUMBER	QTY	PART NAME 1 2 3 4 5 6 (PRODUCT LEVEL)	SEE PAGE
M	1	1	**6I-0260**	10	BOLT (M8X1.25X25-MM)	
	2	1	**6I-4374**	3	BOLT (M8X1.25X60-MM)	
M	3	1	**101-3895**	4	BOLT (M8X1.25X35-MM)	
	4	1	**225-6817**	1	COOLER-OIL	
	5	1	**225-6818**	2	SEAL	
	6	1	**272-2265**	1	SEAL	

M-METRIC PART

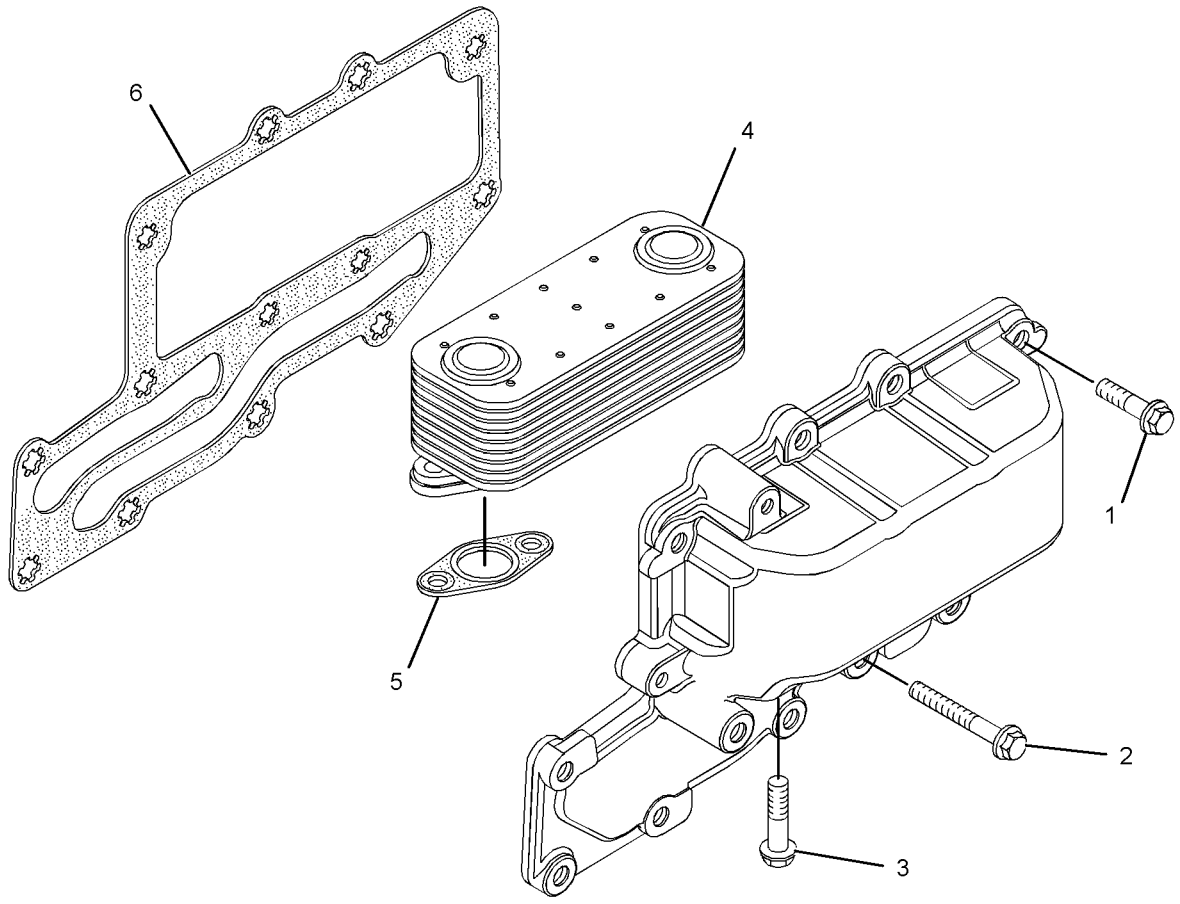

GRAPHIC #1 **<END>** g02140458

375-9569 FAN GP-SUCTION—WITHOUT AIR CONDITIONER

S/N: SEJ1-UP

PART OF 374-6887 HEATER & AIR CONDITIONER AR

AN ATTACHMENT

SMCS-1356, 1360 **i04611449**

NOTE	REF NO	GRAPHIC REF	PART NUMBER	QTY	PART NAME 1 2 3 4 5 6 (PRODUCT LEVEL)	SEE PAGE
	1	1	**261-0406**	1	BELT TENSIONER	
	2	1	**284-1026**	1	PULLEY	
	3	1	**309-6655**	1	BELT-SERPENTINE (FAN)	
	4	1	**349-3261**	1	PLATE-TENSIONER	
	5	1	**352-8358**	1	GUARD AS-FAN	
	6	1	**371-2055**	1	FILM-INFORMATION (BELT ROUTING)	
	7	1	**374-5381**	1	SPIDER AS-FAN (9-BLADE)	
	8	1	**379-2197**	1	SPACER-FAN	
M	9	1	**178-3336**	4	NUT-HEX FLANGE (M8X1.25-THD)	
	10	1	**342-9920**	4	BOLT-FLANGE HEAD (M8X1.25X20-MM)	
	11	1	**5P-4116**	4	WASHER-HARD (8.8X20.5X2-MM THK)	
	12	1	**8T-4121**	3	WASHER-HARD (11X21X2.5-MM THK)	
M	13	1	**8T-4196**	3	BOLT (M10X1.5X35-MM)	
	14	1	**8T-4224**	4	WASHER-HARD (8.8X16X2-MM THK)	
M	15	1	**8T-7547**	4	BOLT (M8X1.25X30-MM)	
M	16	1	**9X-2099**	4	STUD (M8X1.25X52.75-MM)	

M-METRIC PART

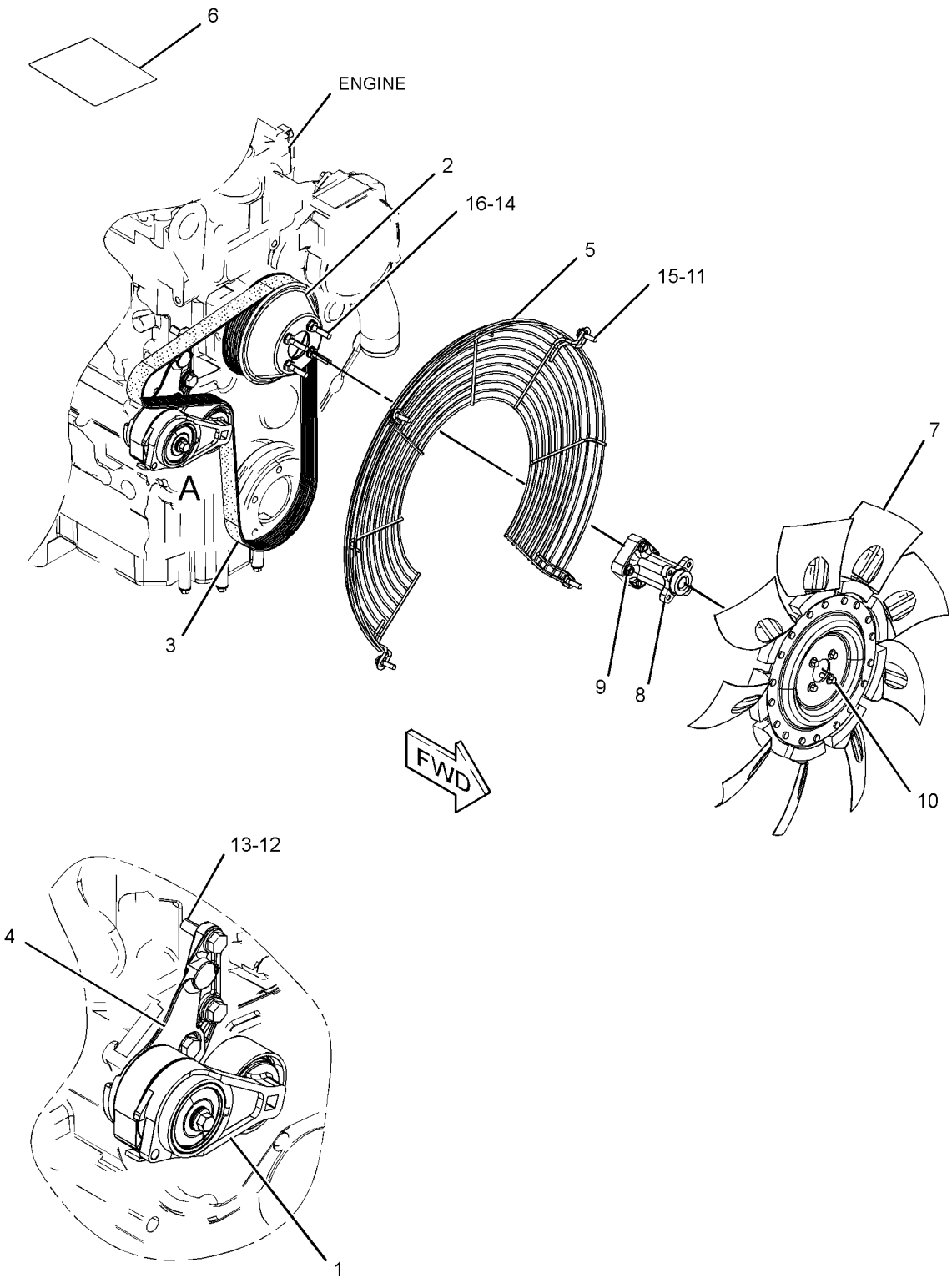

VIEW OF AREA A
(PARTS REMOVED FOR CLARITY)

GRAPHIC #1 **<END>** g02815778

375-9570 FAN GP-SUCTION—WITH AIR CONDITIONER

S/N: SEJ1-UP

PART OF 374-6889 HEATER & AIR CONDITIONER AR

AN ATTACHMENT

SMCS-1356, 1360 **i04611489**

NOTE	REF NO	GRAPHIC REF	PART NUMBER	QTY	PART NAME 1 2 3 4 5 6 (PRODUCT LEVEL)	SEE PAGE
	1	1	**261-0376**	1	BELT TENSIONER	
	2	1	**261-0428**	1	PULLEY AS-IDLER	
M		1	**307-2242**	1	BOLT (M10X1.5X45-MM)	
	3	1	**284-1026**	1	PULLEY	
	4	1	**298-5872**	1	BELT-SERPENTINE (FAN PULLEY)	
	5	1	**348-8149**	1	PLATE-MOUNTING	
	6	1	**352-8358**	1	GUARD AS-FAN	
	7	1	**371-2054**	1	FILM-INFORMATION (BELT ROUTING)	
	8	1	**374-5381**	1	SPIDER AS-FAN (9-BLADE)	
	9	1	**379-2197**	1	SPACER-FAN	
M	10	1	**178-3336**	4	NUT-HEX FLANGE (M8X1.25-THD)	
	11	1	**342-9920**	4	BOLT-FLANGE HEAD (M8X1.25X20-MM)	
	12	1	**5P-4116**	4	WASHER-HARD (8.8X20.5X2-MM THK)	
	13	1	**8T-4121**	3	WASHER-HARD (11X21X2.5-MM THK)	
M	14	1	**8T-4196**	3	BOLT (M10X1.5X35-MM)	
	15	1	**8T-4224**	4	WASHER-HARD (8.8X16X2-MM THK)	
M	16	1	**8T-7547**	4	BOLT (M8X1.25X30-MM)	
M	17	1	**9X-2099**	4	STUD (M8X1.25X52.75-MM)	

M-METRIC PART

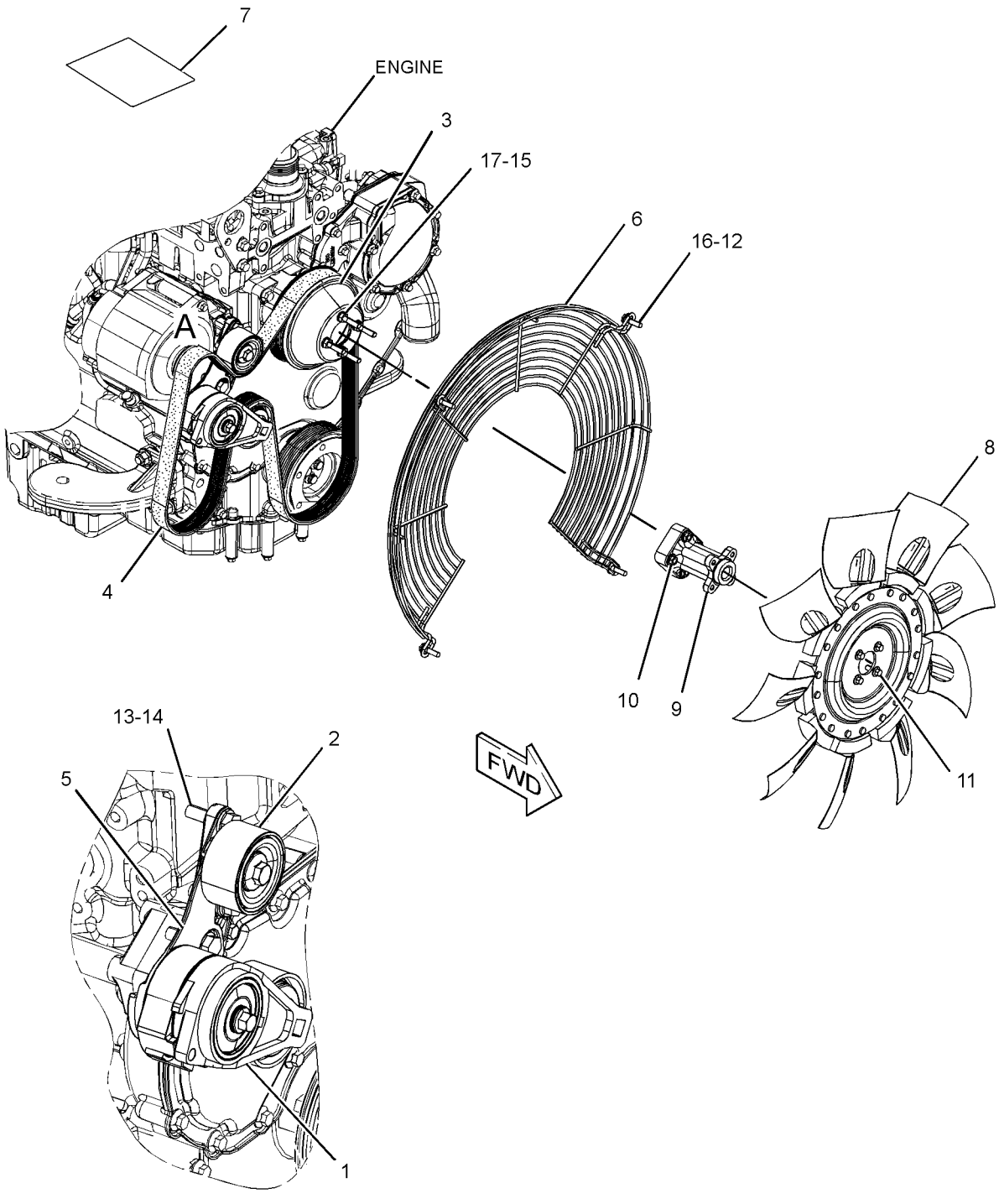

VIEW OF AREA A
(PARTS REMOVED FOR CLARITY)

GRAPHIC #1 **<END>** g02813478

337-9779 LINES GP-POWER TRAIN COOLER

S/N: SEJ1-UP

PART OF 353-1510, 353-1513 TRANSMISSION AR-POWER SHIFT AN ATTACHMENT

SMCS-1375, 3016 **i04555033**

NOTE	REF NO	GRAPHIC REF	PART NUMBER	QTY	PART NAME 1 2 3 4 5 6 (PRODUCT LEVEL)	SEE PAGE
	1	1	**323-3308**	6	CAP	
I	2	1	**364-1940**	1	HOSE AS	
I	3	1	**364-1941**	1	HOSE AS	
G	4	1	**160-2244**		SLEEVE-ABRASION (9.9-IN EACH)	
	5	1	*386-6191*	1	ELBOW AS	
		1	**2M-9780**	1	SEAL-O-RING	
		1	**275-4918**	1	ELBOW	
	6	1	*148-8339*	2	CONNECTOR AS	
					(EACH INCLUDES)	
		1	**6V-8716**	1	CONNECTOR	
		1	**6V-9746**	1	SEAL-O-RING	
		1	**7M-8485**	1	SEAL-O-RING	
	7	1	**164-4227**	1	CLIP	
	8	1	**3E-7445**	6	CLAMP-HOSE	
	9	1	**6D-4246**	2	CLIP	
	10	1	**8T-4121**	1	WASHER-HARD (11X21X2.5-MM THK)	
M	11	1	**8T-4137**	2	BOLT (M10X1.5X20-MM)	
	12	1	**8T-4222**	1	WASHER-PLATED (11X32X2.5-MM THK)	
E	13	1	**262-8088**		HOSE (101.5-CM)	
E	13A	1	**262-8088**		HOSE (54.8-CM)	

E-ORDER BY THE CENTIMETER
G-ORDER BY THE INCH
I-REFER TO HYDRAULIC INFORMATION SYSTEM
M-METRIC PART

337-9779 **LINES GP-POWER TRAIN COOLER** *(contd.)* **i04555033**

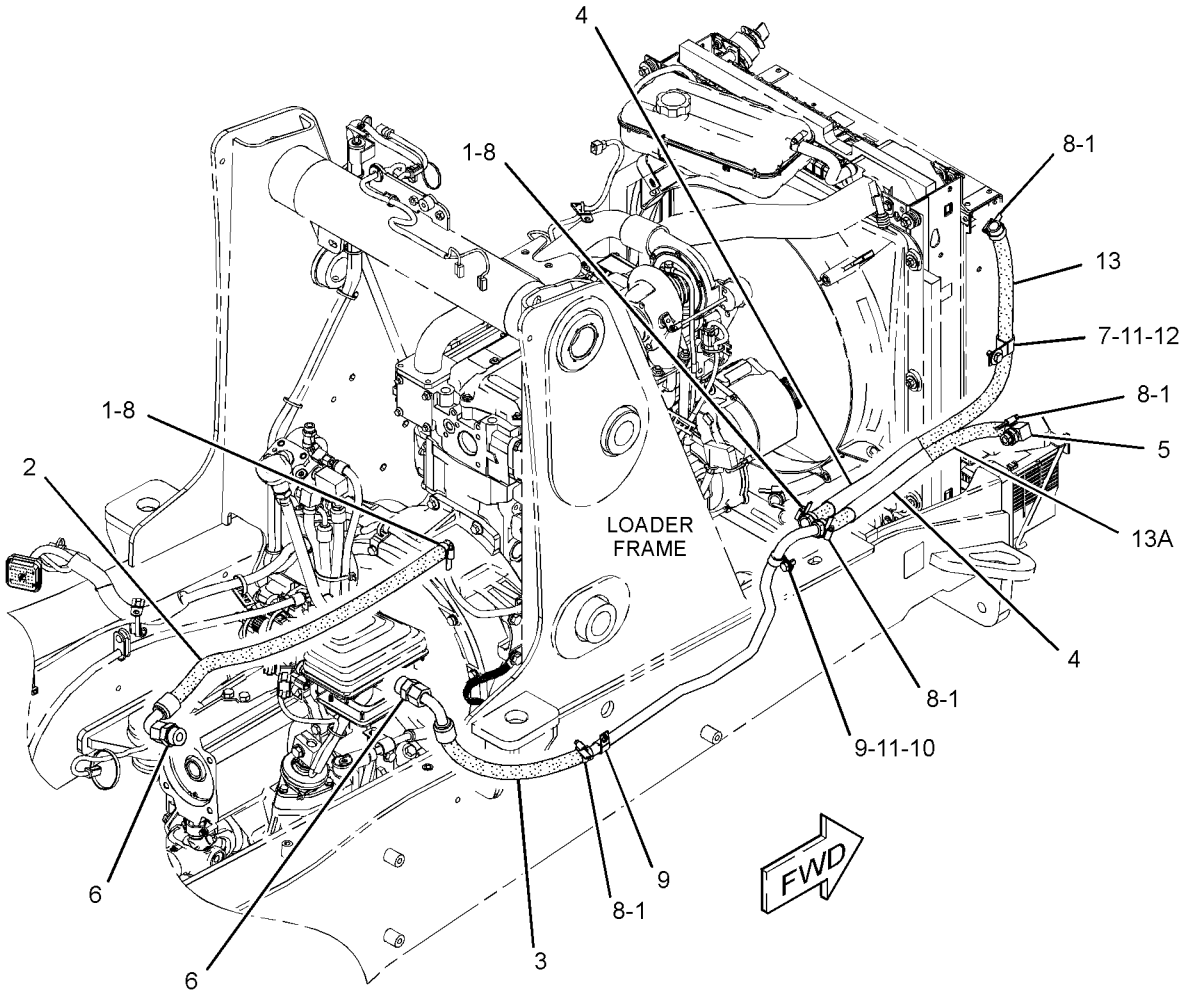

GRAPHIC #1 **<END>** g02807717

COOLING SYSTEM

380-5753 LINES GP-POWER TRAIN COOLER

S/N: SEJ1-UP

PART OF 353-1511 TRANSMISSION AR-POWER SHIFT AN ATTACHMENT

SMCS-1375, 3016 **i04565430**

NOTE	REF NO	GRAPHIC REF	PART NUMBER	QTY	PART NAME 1 2 3 4 5 6 (PRODUCT LEVEL)	SEE PAGE
	1	1	**323-3308**	6	CAP	
I	2	1	**364-1940**	1	HOSE AS	
	3	1	**370-4021**	1	TUBE	
I	4	1	**380-5771**	1	HOSE AS	
	5	1	*386-6191*	1	ELBOW AS	
		1	**2M-9780**	1	SEAL-O-RING	
		1	**275-4918**	1	ELBOW	
	6	1	*148-8339*	2	CONNECTOR AS	
					(EACH INCLUDES)	
		1	**6V-8716**	1	CONNECTOR	
		1	**6V-9746**	1	SEAL-O-RING	
		1	**7M-8485**	1	SEAL-O-RING	
	7	1	**164-4227**	1	CLIP	
	8	1	**3E-7445**	6	CLAMP-HOSE	
	9	1	**6D-4246**	2	CLIP	
	10	1	**8T-4121**	1	WASHER-HARD (11X21X2.5-MM THK)	
M	11	1	**8T-4137**	2	BOLT (M10X1.5X20-MM)	
	12	1	**8T-4222**	1	WASHER-PLATED (11X32X2.5-MM THK)	
E	13	1	**262-8088**		HOSE (102-CM)	
E	13A	1	**262-8088**		HOSE (55-CM)	
G	14	1	**160-2244**		SLEEVE-ABRASION (9.8-IN EACH)	

E-ORDER BY THE CENTIMETER
G-ORDER BY THE INCH
I-REFER TO HYDRAULIC INFORMATION SYSTEM
M-METRIC PART

380-5753 **LINES GP-POWER TRAIN COOLER** *(contd.)* **i04565430**

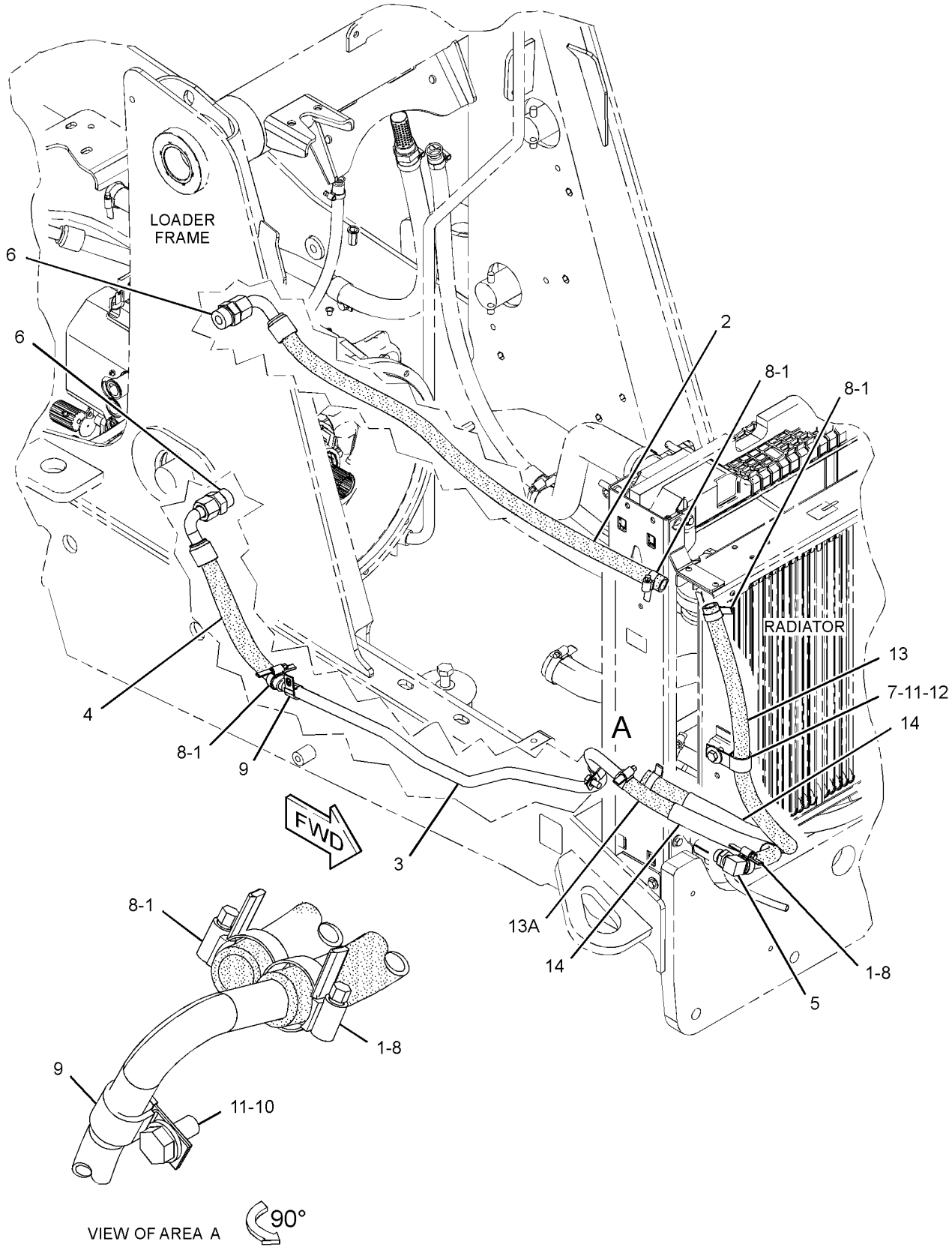

GRAPHIC #1 **<END>** g02834717

315-3411 PUMP GP-WATER

S/N: C4Z1-UP
PART OF 364-5743 ENGINE AR-PRIMARY
AN ATTACHMENT

SMCS-1361 **i03899940**

NOTE	REF NO	GRAPHIC REF	PART NUMBER	QTY	PART NAME 1 2 3 4 5 6 (PRODUCT LEVEL)	SEE PAGE
M	1	1	**6I-0217**	2	BOLT (M8X1.25X20-MM)	
M	2	1	**6I-0254**	2	BOLT (M8X1.25X30-MM)	
M	3	1	**100-3751**	5	BOLT (M8X1.25X65-MM)	
	4	1	**113-8129**	2	BOLT (M8X1.25X75-MM)	
	5	1	**225-7741**	1	CONNECTION AS	
	5A	1	**225-7738**	1	SEAL-O-RING	
	5B	1	**225-7739**	1	SEAL-O-RING	
	6	1	**355-2252**	1	PUMP GP-WATER	
	6A	1	**225-8019**	1	GASKET	

M-METRIC PART

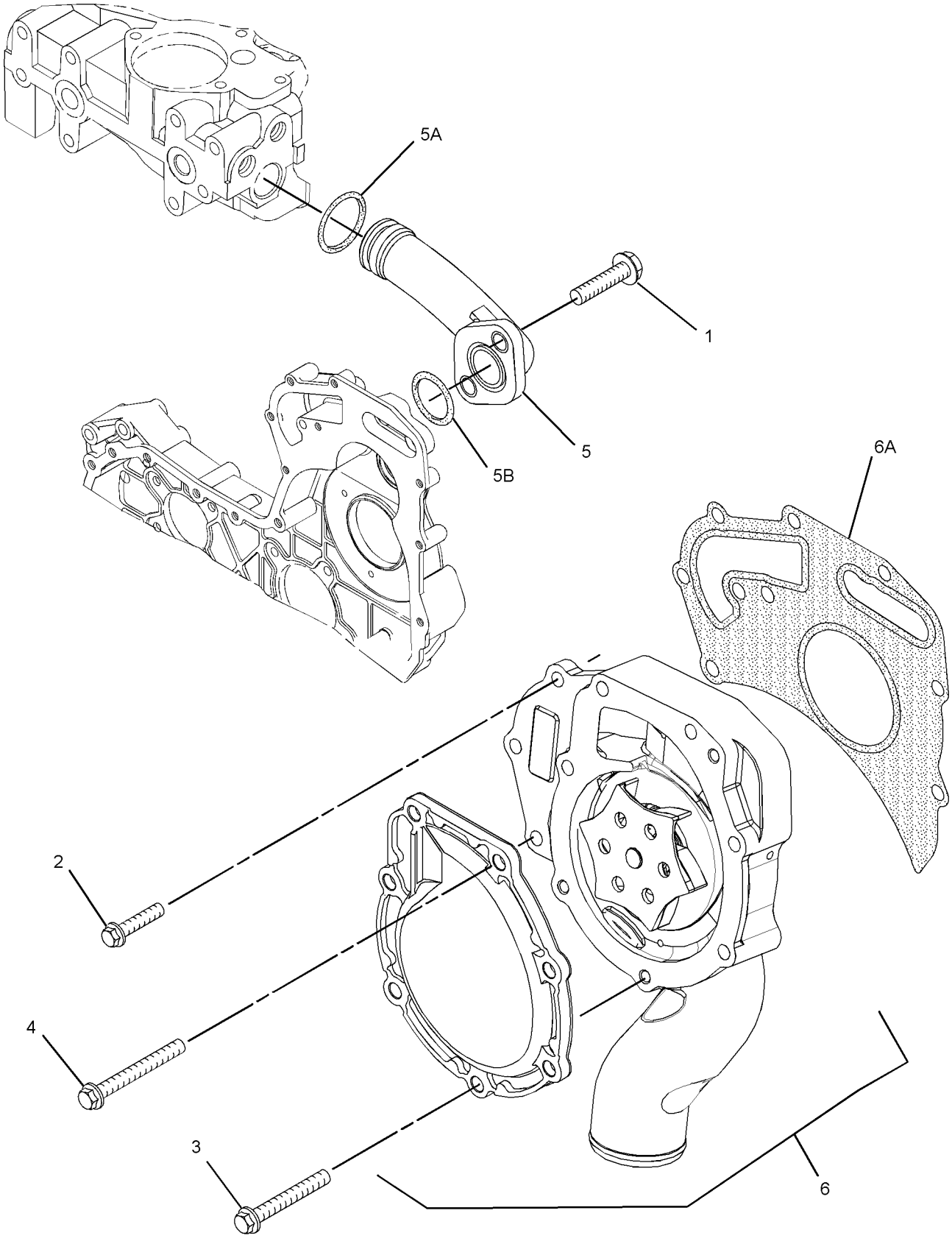

GRAPHIC #1 **<END>** g02146895

358-3844 RADIATOR & HYD OIL COOLER GP

S/N: SEJ1-UP

PART OF 354-7361 TANK & LINES GP-COOLANT

AN ATTACHMENT

SMCS-1353, 1374 **i04628871**

NOTE	REF NO	GRAPHIC REF	PART NUMBER	QTY	PART NAME 1 2 3 4 5 6 (PRODUCT LEVEL)	SEE PAGE
	1	1	**377-5263**	1	RADIATOR GP	
		1	**225-4287**	1	VALVE GP-RADIATOR DRAIN	
		1	**385-8594**	2	RECEPTACLE	
	2	1	**377-5264**	1	AFTERCOOLER GP-AIR	
	3	1	**377-5265**	1	COOLER GP-OIL	
		1	**385-8591**	2	STUD	
		1	**385-8593**	2	RETAINER	

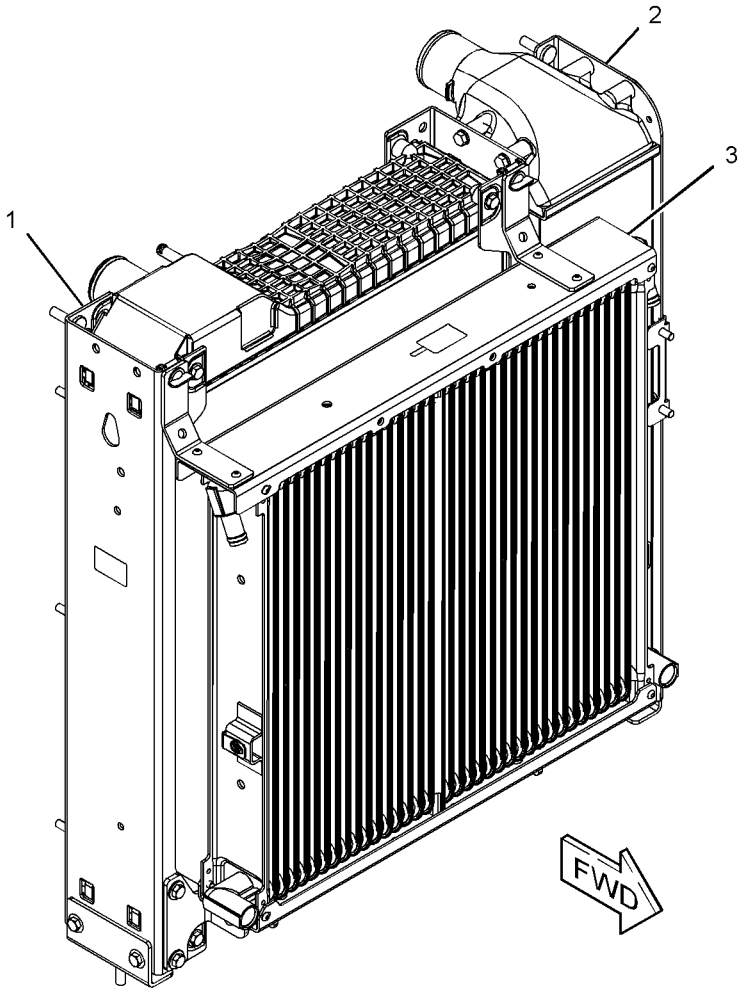

GRAPHIC #1 **<END>** g02824762

COOLING SYSTEM

354-7361 TANK & LINES GP-COOLANT—EXPANSION, RADIATOR

S/N: SEJ1-UP
PART OF 337-9867 ENGINE AR-COMPLETE
AN ATTACHMENT

SMCS-1354, 1380 **i04628873**

NOTE	REF NO	GRAPHIC REF	PART NUMBER	QTY	PART NAME 1 2 3 4 5 6 (PRODUCT LEVEL)	SEE PAGE
	1	1,2	**6N-6984**	4	MOUNT-RUBBER	
	2	2	**9M-7958**	1	CLAMP-HOSE	
	3	1	**247-1385**	1	TANK GP-EXPANSION (COOLANT)	
		1	**251-3227**	1	CAP AS-COOLANT TANK	
	4	1	**275-4918**	1	ELBOW	
	5	1,2	**323-3308**	7	CAP	
	6	2	**323-3309**	4	CAP	
	7	1	**329-5699**	1	HOSE	
	8	2	**343-5421**	2	SHROUD AS	
	9	1	**352-8799**	1	PLATE	
	10	1	**353-8082**	1	SEAL	
	11	2	**354-8258**	1	HOSE-RADIATOR (UPPER)	
Y	12	1	**358-3844**	1	RADIATOR & HYD OIL COOLER GP	57
	13	2	**373-9373**	1	HOSE-RADIATOR (LOWER)	
	14	1	**164-4227**	1	CLIP	
	15	1	**1B-3057**	1	CLIP	
	16	1	**2M-9780**	1	SEAL-O-RING	
	17	2	**3E-7445**	4	CLAMP-HOSE	
	18	2	**4D-7388**	1	CLIP	
M	19	2	**5C-7261**	8	NUT (M8X1.25-THD)	
	20	1	**5D-1026**	2	CLAMP-BAND	
	21	1,2	**5P-4116**	5	WASHER-HARD (8.8X20.5X2-MM THK)	
	22	2	**7X-0579**	10	WASHER-HARD (8.8X25.5X2-MM THK)	
M	23	1,2	**8T-4133**	4	NUT (M10X1.5-THD)	
M	24	1	**8T-4137**	1	BOLT (M10X1.5X20-MM)	
M	25	2	**8T-4200**	3	BOLT (M8X1.25X16-MM)	
	26	1,2	**8T-4222**	7	WASHER-PLATED (11X32X2.5-MM THK)	
M	27	1,2	**8T-4908**	4	BOLT (M8X1.25X25-MM)	
	28	2	**8T-4984**	4	CLAMP-HOSE	
E	29	1	**8C-3681**		HOSE (50-CM)	
E	29A	1	**8C-3681**		HOSE (110-CM)	
E	30	2	**262-8088**		HOSE (62.5-CM)	
E	30A	1	**262-8088**		HOSE (110.5-CM)	
E	31	1	**150-1974**		SEAL (56.5-CM EACH)	
G	32	2	**160-2244**		SLEEVE-ABRASION (10-IN EACH)	

E-ORDER BY THE CENTIMETER
G-ORDER BY THE INCH
M-METRIC PART
Y-SEPARATE ILLUSTRATION

354-7361 **TANK & LINES GP-COOLANT** *(contd.)* **i04628873**

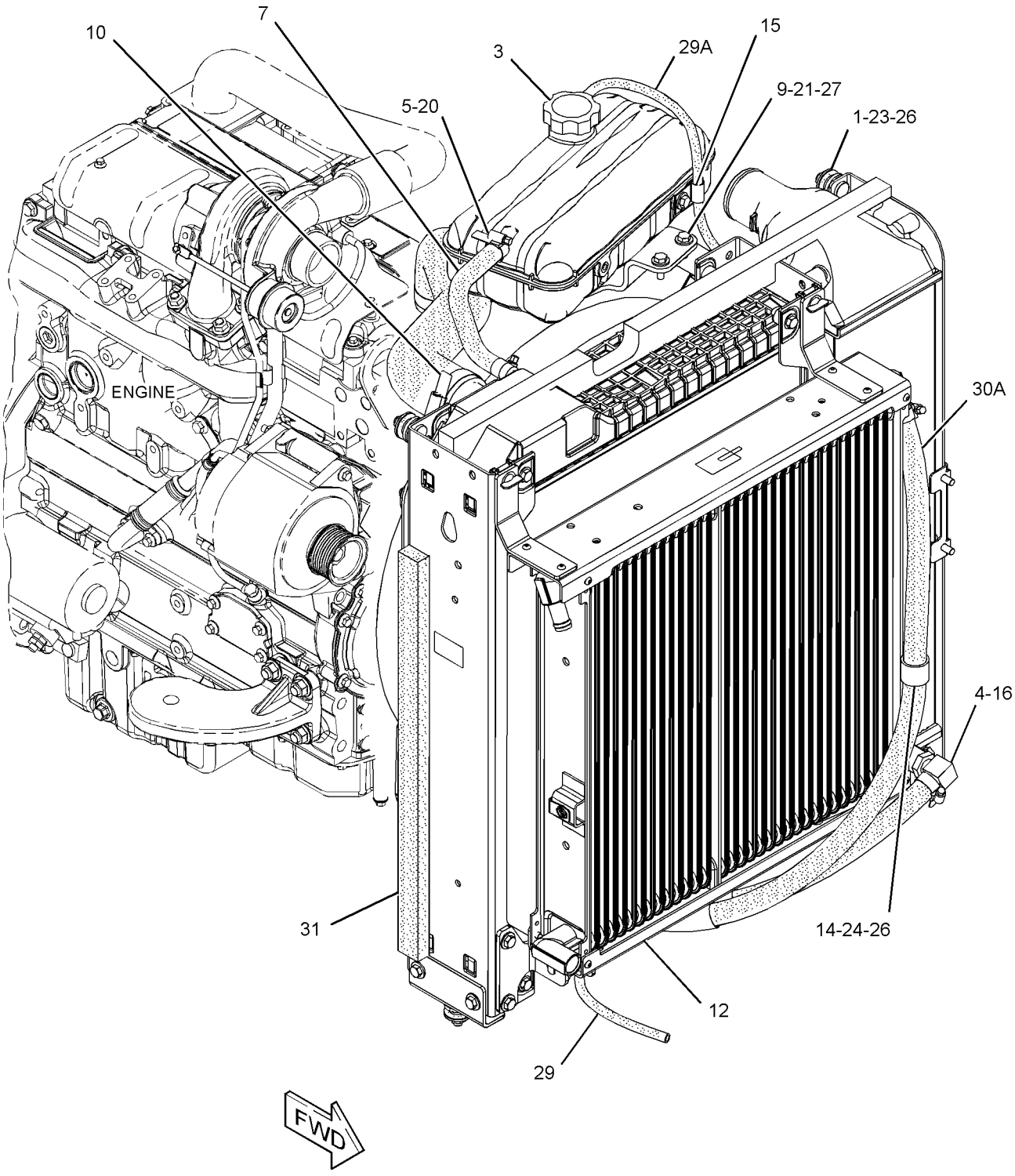

GRAPHIC #1 g02825117

354-7361 **TANK & LINES GP-COOLANT** *(contd.)* **i04628873**

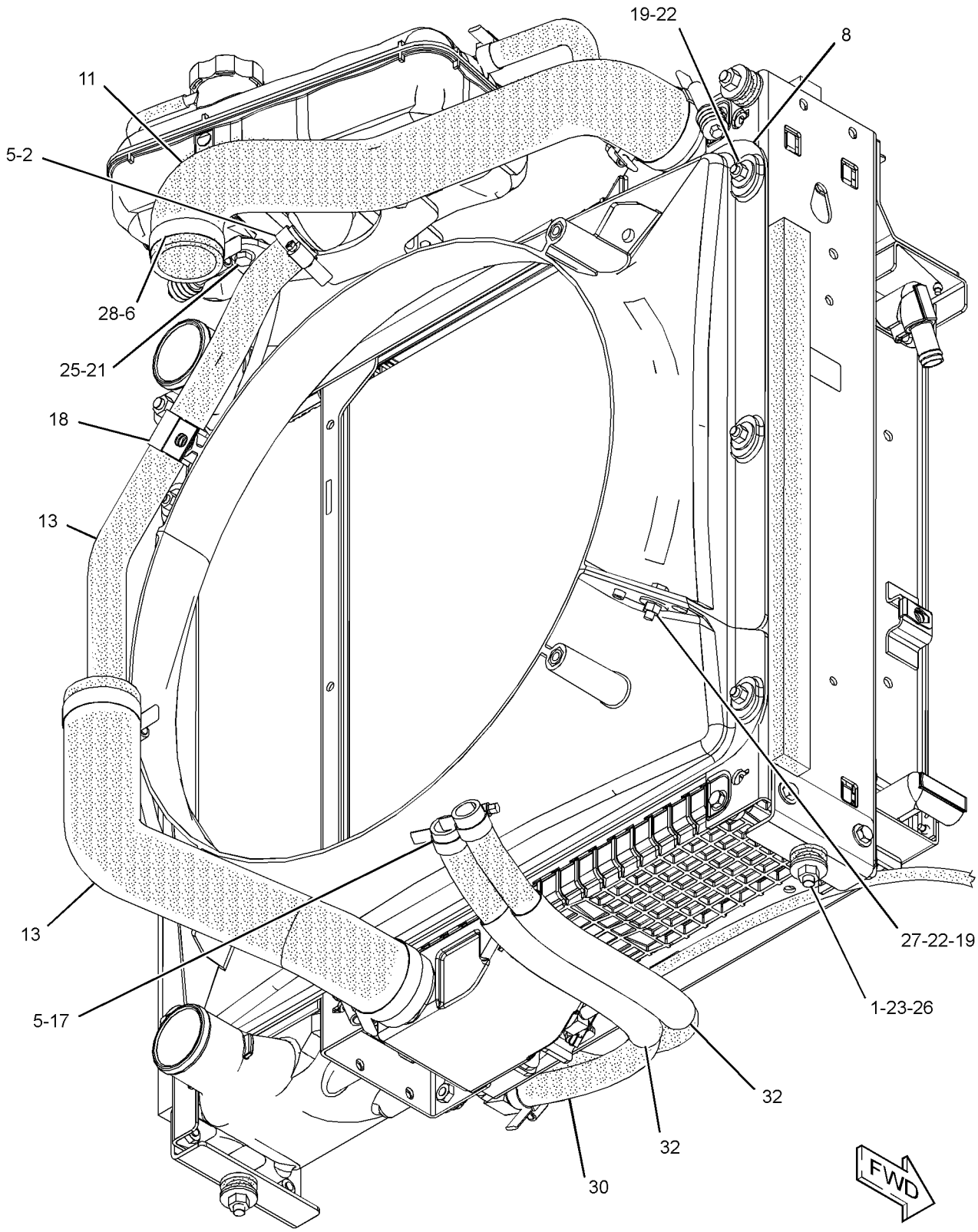

GRAPHIC #2 **<END>** g02825498

343-5643 AIR CLEANER GP

S/N: SEJ1-UP
PART OF 352-1449 AIR CLEANER GP
AN ATTACHMENT

SMCS-1051, 1054 **i04628898**

NOTE	REF NO	GRAPHIC REF	PART NUMBER	QTY	PART NAME 1 2 3 4 5 6 (PRODUCT LEVEL)	SEE PAGE
	1	1	**346-6687**	1	FILTER ELEMENT-AIR (PRIMARY)	
	2	1	**346-6688**	1	FILTER ELEMENT-AIR (SECONDARY)	
	3	1	**353-1641**	1	COVER	
	4	1	**353-4847**	1	VALVE-AIR CLEANER DUST	

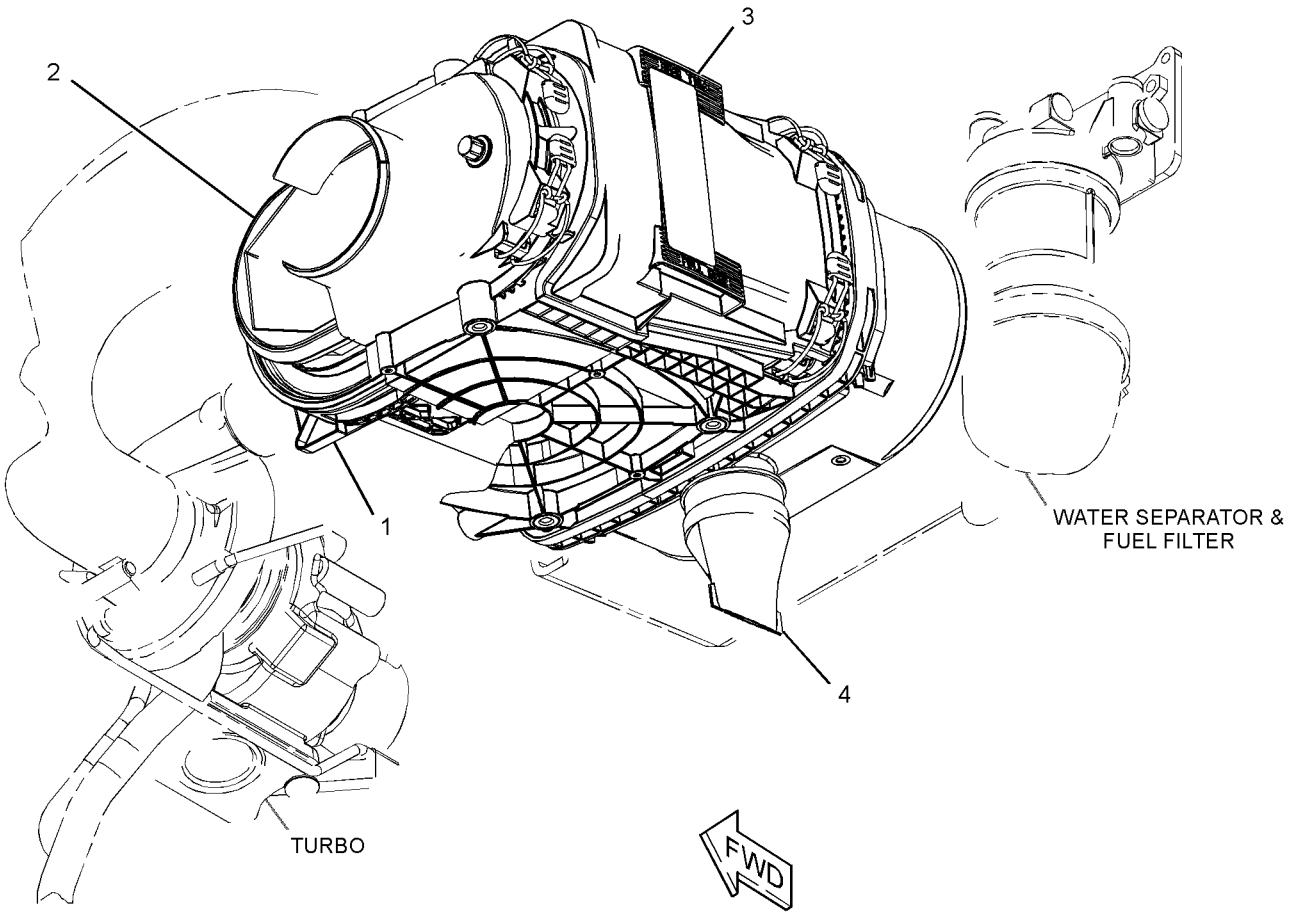

GRAPHIC #1 **<END>** g02823057

AIR INLET AND EXHAUST SYSTEM

352-1449 AIR CLEANER GP

S/N: SEJ1-UP
PART OF 337-9867 ENGINE AR-COMPLETE
AN ATTACHMENT

SMCS-1051, 1054 **i04628856**

NOTE	REF NO	GRAPHIC REF	PART NUMBER	QTY	PART NAME 1 2 3 4 5 6 (PRODUCT LEVEL)	SEE PAGE
	1	1	**276-4836**	1	SWITCH-PRESSURE (AIR CLEANER)	
	2	1	**323-3309**	1	CAP	
	3	1	**323-6645**	1	CAP	
	4	1	**339-3043**	1	DUCT-AIR	
	5	1	**341-8901**	1	SUPPORT AS	
Y	6	1	**343-5643**	1	AIR CLEANER GP	61
	7	1	**352-2717**	1	HOSE	
	8	1	**367-8073**	1	SEAL	
	9	1	**376-0645**	1	PLATE-INSTRUCTION (LUBRICATION POINTS)	
	10	1	**179-6401**	2	SCREW-PAN HEAD (6-32X0.5-IN)	
	11	1	**295-5550**	1	CLAMP-BAND (CONSTANT TENSION)	
	12	1	**4H-3001**	1	PLUG-BUTTON	
M	13	1	**5C-9553**	4	BOLT (M6X1X16-MM)	
	14	1	**5P-1717**	1	CLAMP-HOSE	
	15	1	**5P-4116**	4	WASHER-HARD (8.8X20.5X2-MM THK)	
	16	1	**7X-7729**	2	WASHER (11X25X3-MM THK)	
M	17	1	**8T-4133**	2	NUT (M10X1.5-THD)	
M	18	1	**8T-4908**	4	BOLT (M8X1.25X25-MM)	
	19	1	**9X-6165**	4	WASHER (6.5X22X2.5-MM THK)	

M-METRIC PART
Y-SEPARATE ILLUSTRATION

352-1449 **AIR CLEANER GP** *(contd.)* **i04628856**

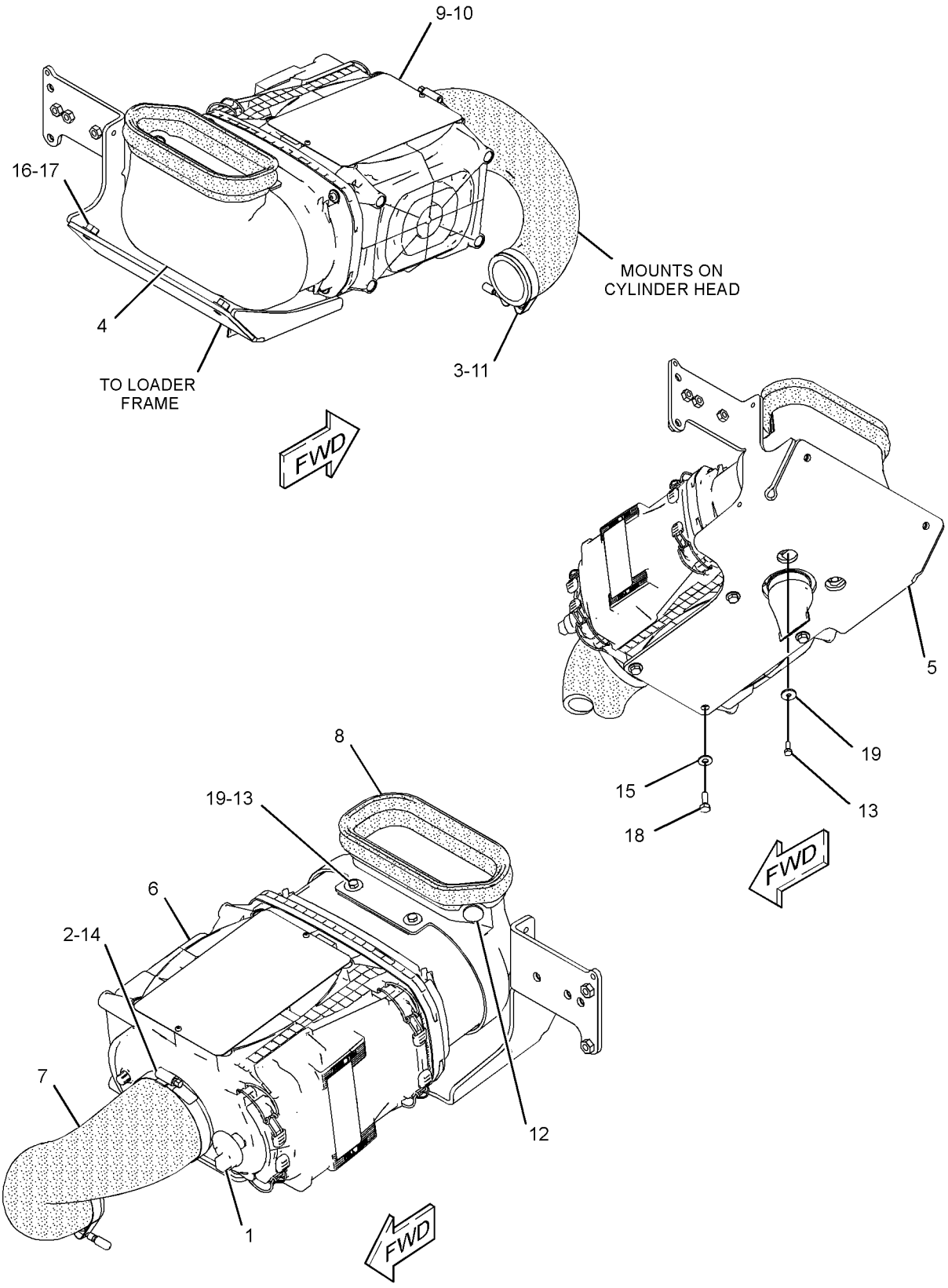

GRAPHIC #1 **<END>** g02826860

AIR INLET AND EXHAUST SYSTEM

329-0129 COVER GP-INLET MANIFOLD

S/N: C4Z1-UP

PART OF 364-5743 ENGINE AR-PRIMARY

AN ATTACHMENT

SMCS-1058 **i03130574**

NOTE	REF NO	GRAPHIC REF	PART NUMBER	QTY	PART NAME 1 2 3 4 5 6 (PRODUCT LEVEL)	SEE PAGE
	1	1	**111-8222**	4	BOLT (M8X16-MM)	
	2	1	**114-2579**	3	GASKET	
M	3	1	**124-3815**	8	BOLT (M8X16X1.25-MM)	
	4	1	**185-6627**	3	PLATE	

M-METRIC PART

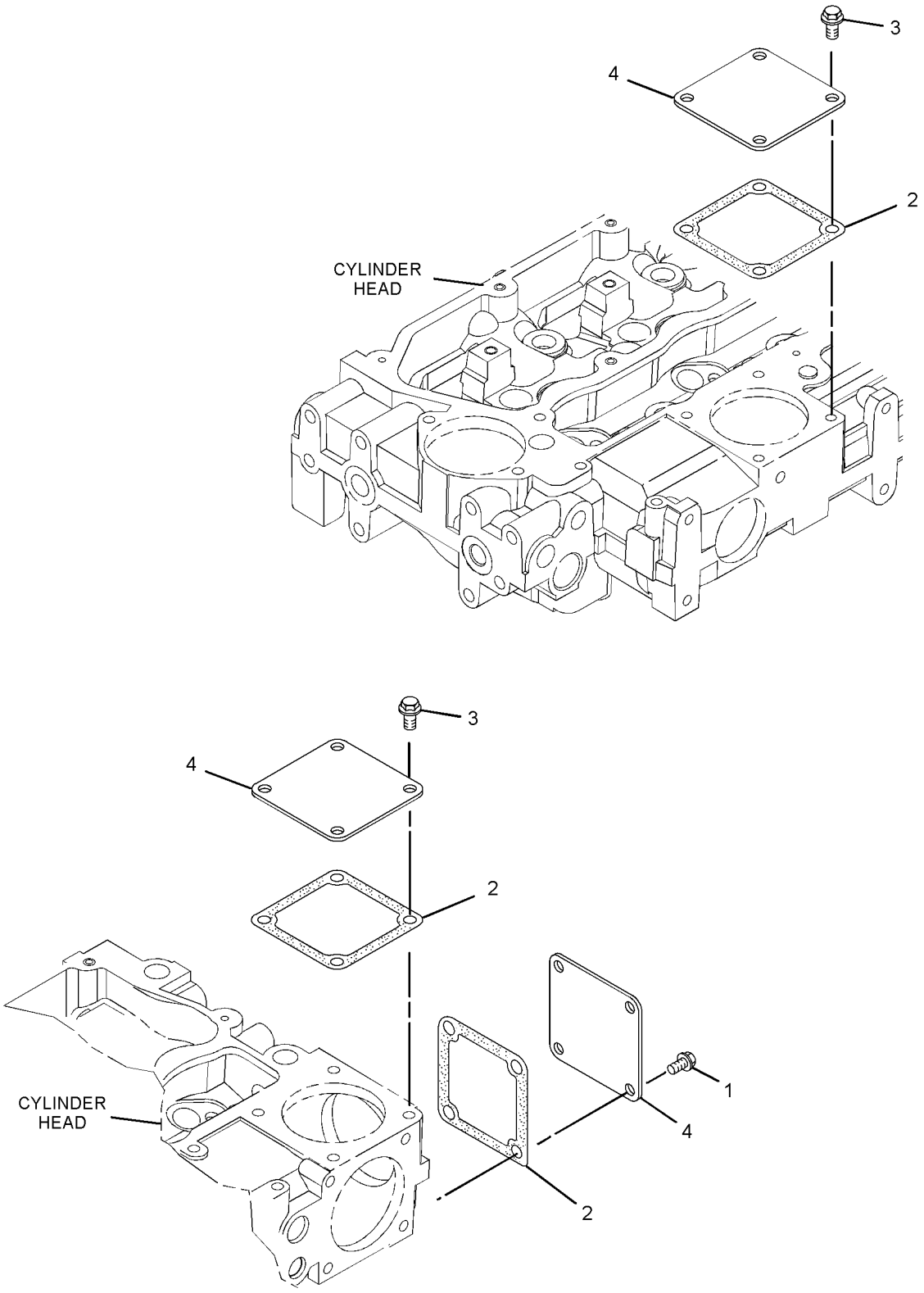

GRAPHIC #1 **<END>** g01619466

AIR INLET AND EXHAUST SYSTEM

350-3689 EXTENSION GP-EXHAUST

S/N: SEJ1-UP
PART OF 337-9867 ENGINE AR-COMPLETE
AN ATTACHMENT

SMCS-1061 **i04582812**

NOTE	REF NO	GRAPHIC REF	PART NUMBER	QTY	PART NAME 1 2 3 4 5 6 (PRODUCT LEVEL)	SEE PAGE
	1	1	**7E-3870**	1	CLAMP-MUFFLER	
	2	1	**239-2270**	1	PIPE-EXTENSION	
	3	1	**350-4310**	1	SUPPORT AS	
	4	1	**7X-7729**	2	WASHER (11X25X3-MM THK)	
M	5	1	**8T-4195**	2	BOLT (M10X1.5X30-MM)	

M-METRIC PART

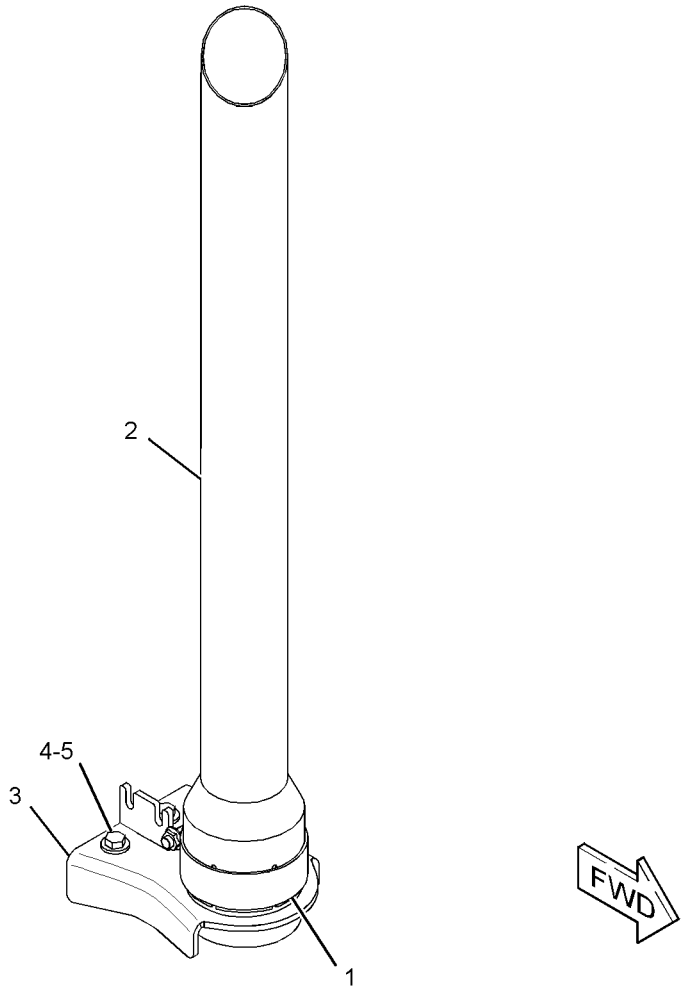

GRAPHIC #1 **<END>** g02806196

AIR INLET AND EXHAUST SYSTEM

337-9748 LINES GP-AIR

S/N: SEJ1-UP

PART OF 337-9867 ENGINE AR-COMPLETE

AN ATTACHMENT

SMCS-1071 **i04628829**

NOTE	REF NO	GRAPHIC REF	PART NUMBER	QTY	PART NAME 1 2 3 4 5 6 (PRODUCT LEVEL)	SEE PAGE
	1	1	**234-3030**	1	GASKET-INLET	
	2	1	**263-5376**	1	HOSE	
	3	1	**305-6917**	1	TUBE AS	
	4	1	**311-2768**	1	HOSE	
	5	1	**323-3309**	8	CAP	
	6	1	**343-6096**	1	HOSE-ELBOW	
	7	1	**358-6523**	1	TUBE-AIR	
	8	1	**358-6524**	1	TUBE-AIR	
	9	1	**358-6684**	1	HOSE-ELBOW	
	10	1	**144-0367**	1	CLAMP-HOSE	
	11	1	**208-9281**	5	BOLT-FLANGE HEAD (M8X1.25X20-MM)	
	12	1	**8T-4224**	2	WASHER-HARD (8.8X16X2-MM THK)	
	13	1	**8T-4984**	1	CLAMP-HOSE	
	14	1	**8T-6703**	6	CLAMP-HOSE	

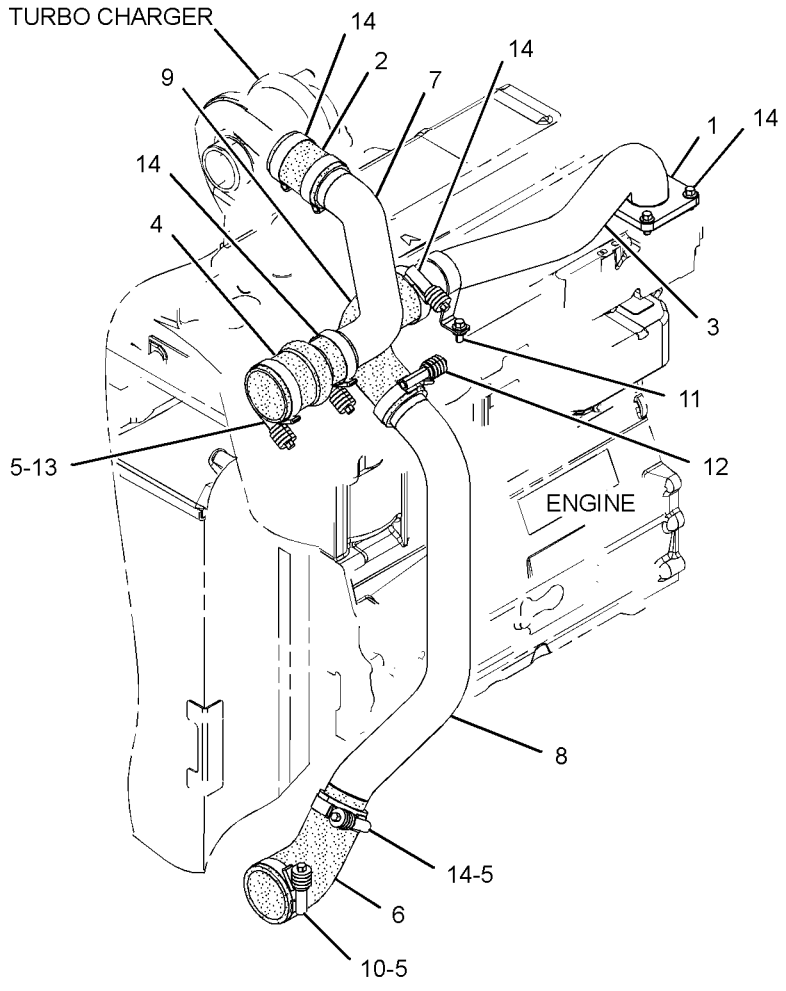

GRAPHIC #1 **<END>** g02813836

AIR INLET AND EXHAUST SYSTEM

352-1454 MUFFLER GP–TURBOCHARGER

S/N: SEJ1-UP

PART OF 337-9867 ENGINE AR-COMPLETE

AN ATTACHMENT

SMCS-1062 **i04580330**

NOTE	REF NO	GRAPHIC REF	PART NUMBER	QTY	PART NAME 1 2 3 4 5 6 (PRODUCT LEVEL)	SEE PAGE
	1	1	**6I-0364**	3	STUD (M10X1.5X30-MM)	
	2	1	**6I-0563**	3	NUT (M10X1.5-THD)	
	3	1	**352-1930**	1	SUPPORT AS	
	4	1	**359-3495**	1	MUFFLER AS	
	5	1	**373-6522**	1	SUPPORT	
	6	1	**5P-4116**	4	WASHER-HARD (8.8X20.5X2-MM THK)	
	7	1	**7X-7729**	6	WASHER (11X25X3-MM THK)	
M	8	1	**8T-4136**	4	BOLT (M10X1.5X25-MM)	
M	9	1	**8T-4189**	2	BOLT (M8X1.25X20-MM)	
M	10	1	**8T-4195**	2	BOLT (M10X1.5X30-MM)	
M	11	1	**8T-4908**	2	BOLT (M8X1.25X25-MM)	

M-METRIC PART

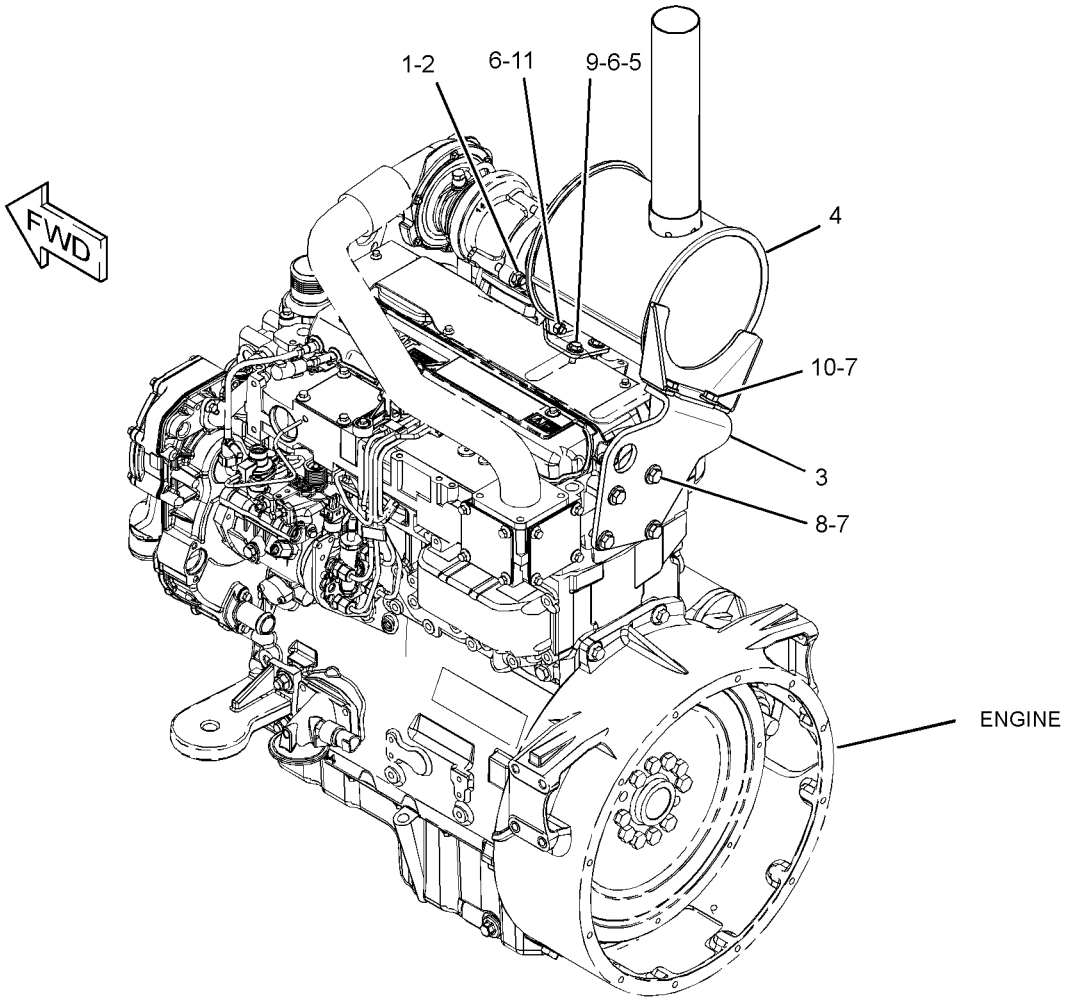

GRAPHIC #1 **<END>** g02809279

AIR INLET AND EXHAUST SYSTEM

326-9156 TURBOCHARGER GP

S/N: C4Z1-UP

PART OF 364-5743 ENGINE AR-PRIMARY

AN ATTACHMENT

SMCS-1052, 1053 **i04641829**

NOTE	REF NO	GRAPHIC REF	PART NUMBER	QTY	PART NAME 1 2 3 4 5 6 (PRODUCT LEVEL)	SEE PAGE
M	1	1	**6I-0217**	2	BOLT (M8X1.25X20-MM)	
	2	1	**6I-0563**	4	NUT (M10X1.5-THD)	
	3	1	**106-8916**	2	BOLT (M6X16-MM)	
	4	1	**147-5553**	4	STUD	
	5	1	**174-9638**	8	BOLT	
	6	1	**194-5390**	1	GASKET-MANIFOLD	
	7	1	**225-8533**	1	GASKET	
	8	1	**225-8534**	1	GASKET	
	9	1	**225-8536**	1	GASKET	
	10	1	**237-3794**	1	BOLT	
	11	1	**237-3921**	1	CLIP	
	12	1	**371-5700**	1	MANIFOLD-EXHAUST	
	13	1	**322-9615**	1	TUBE-TURBOCHARGER	
	14	1	**322-9616**	1	TUBE AS-TURBOCHARGER	
	14A	1	**225-8524**	2	BOLT-SPECIAL (BANJO)	
	14B	1	**225-8526**	4	WASHER (10.4X13.75X1.37-MM THK)	
	15	1	**326-9153**	1	TURBOCHARGER	

M-METRIC PART

326-9156 **TURBOCHARGER GP** *(contd.)* **i04641829**

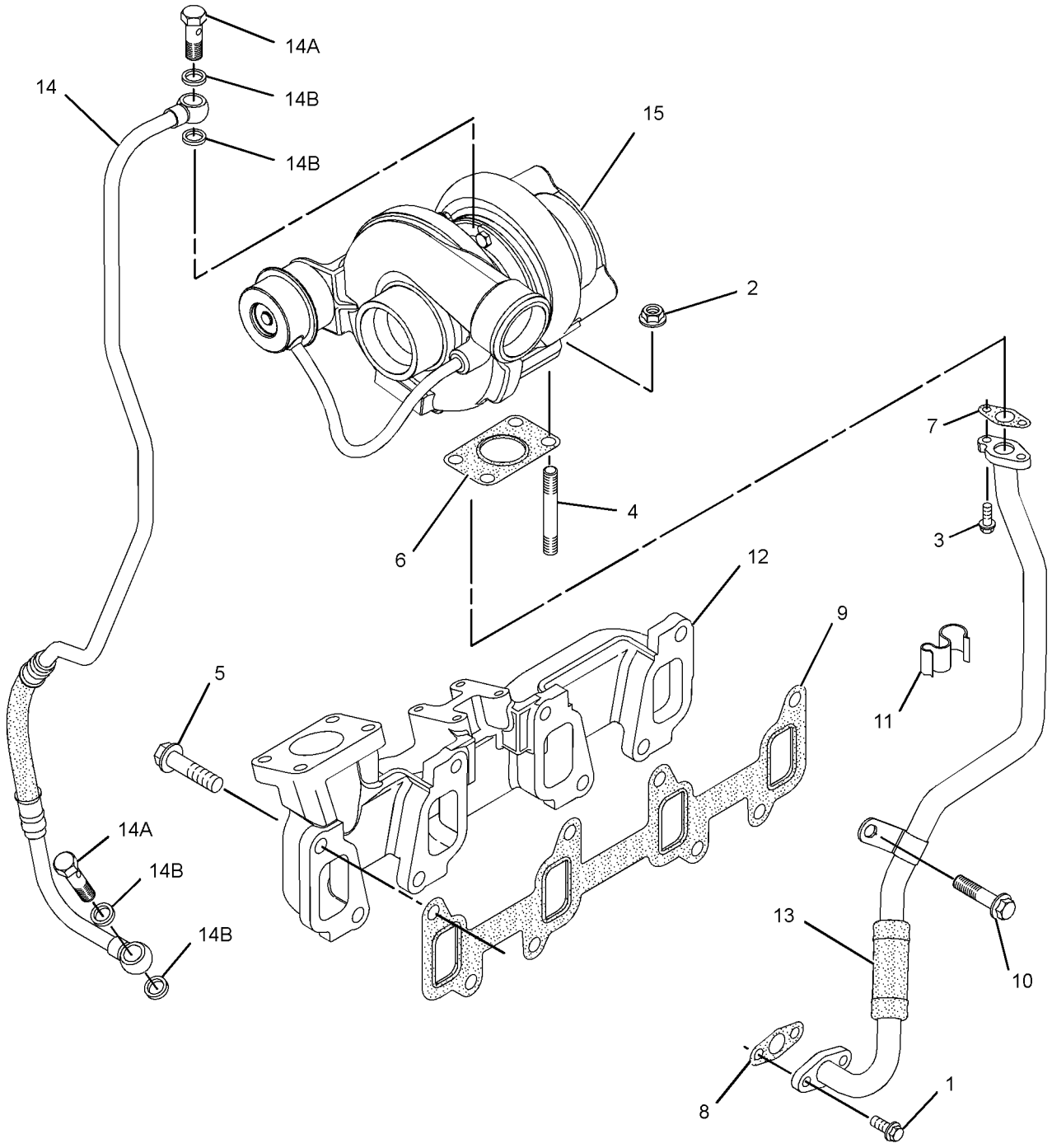

GRAPHIC #1 **<END>** g01615034

341-6719 CONTROL GP-GOVERNOR

S/N: SEJ1-UP
PART OF 353-1454 ELECTRONICS AR-MACHINE
AN ATTACHMENT

SMCS-1265 **i04580997**

NOTE	REF NO	GRAPHIC REF	PART NUMBER	QTY	PART NAME 1 2 3 4 5 6 (PRODUCT LEVEL)	SEE PAGE
	1	1	**7K-1181**	2	STRAP-CABLE	
	2	1	**151-4841**	1	BLOCK	
	3	1	**164-1395**	1	KNOB (GOVERNOR CONTROL)	
	4	1	**206-1345**	1	STRAP-CABLE	
	5	1	**206-1692**	1	COVER AS (CONTROLS, REAR)	
		1	**206-1667**	3	CLIP	
Y	6	1	**209-3367**	1	LEVER GP-GOVERNOR (HANDHELD)	621
Y	7	1	**209-3378**	1	PEDAL GP-GOVERNOR (MECHANICAL)	639
	8	1	**235-0128**	1	CABLE AS	
M		1	**5C-2890**	2	NUT (M6X1-THD)	
		1	**8T-4742**	2	END-YOKE ROD	
		1	**8T-4744**	2	PIN AS-SPRING	
		1	**222-2690**	1	CLIP	
	9	1	**248-2707**	1	GROMMET	
	10	1	**250-7910**	1	FILM-INSTRUCTION (BOOM LOCK)	
	11	1	**250-7911**	1	FILM-INSTRUCTION (VARIABLE SPEED)	
	12	1	**300-1702**	1	BRACKET AS	
	13	1	**356-4070**	1	PLATE	
	14	1	**3S-2093**	2	STRAP-CABLE	
M	15	1	**5C-2890**	2	NUT (M6X1-THD)	
M	16	1	**7X-0818**	1	BOLT (M8X1.25X45-MM)	
M	17	1	**8C-6802**	3	SCREW-FLAT HEAD (6X1X26.3-MM)	
M	18	1	**8T-4138**	3	BOLT (M6X1X20-MM)	
	19	1	**8T-4205**	3	WASHER-HARD (7.2X14.5X2-MM THK)	
	20	1	**8T-4224**	2	WASHER-HARD (8.8X16X2-MM THK)	
M	21	1	**8T-4908**	1	BOLT (M8X1.25X25-MM)	
	22	1	**9X-2038**	4	WASHER (7X19X2-MM THK)	
M	23	1	**9X-2043**	2	SCREW-TRUSS HEAD (M6X1X14-MM)	

M-METRIC PART
Y-SEPARATE ILLUSTRATION

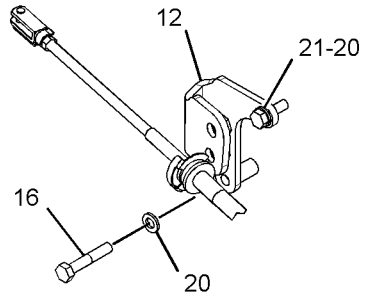

VIEW OF AREA A

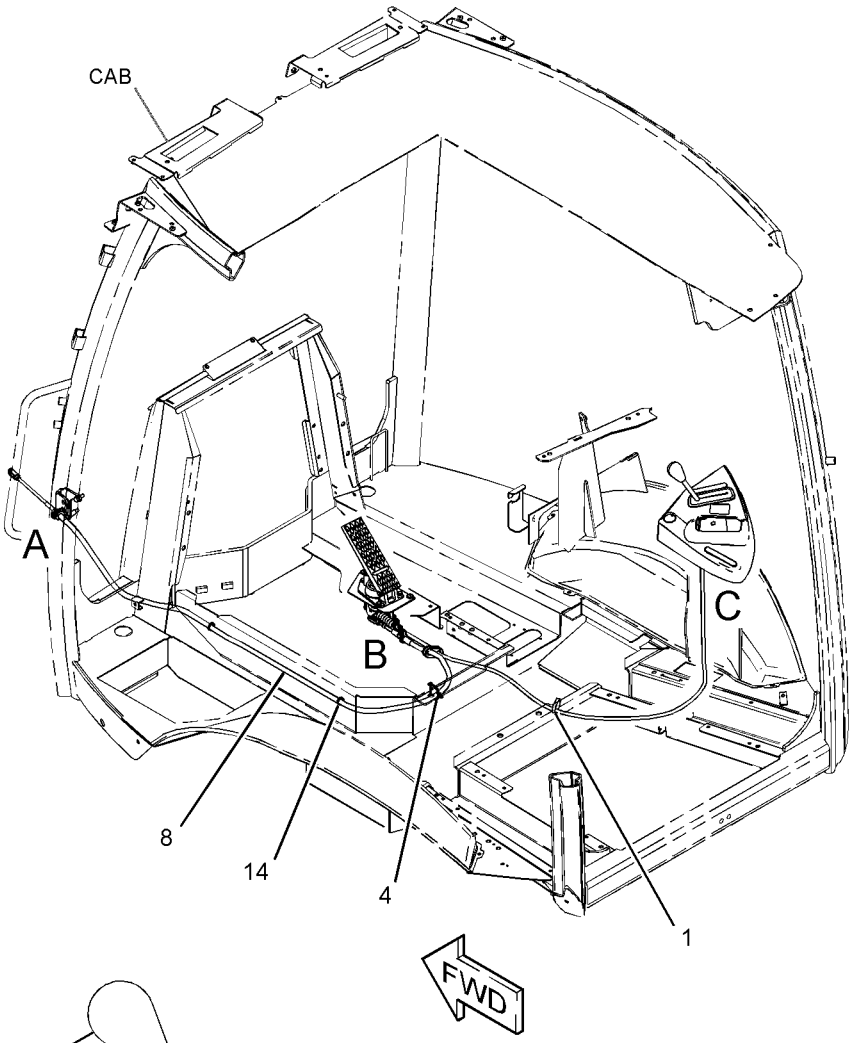

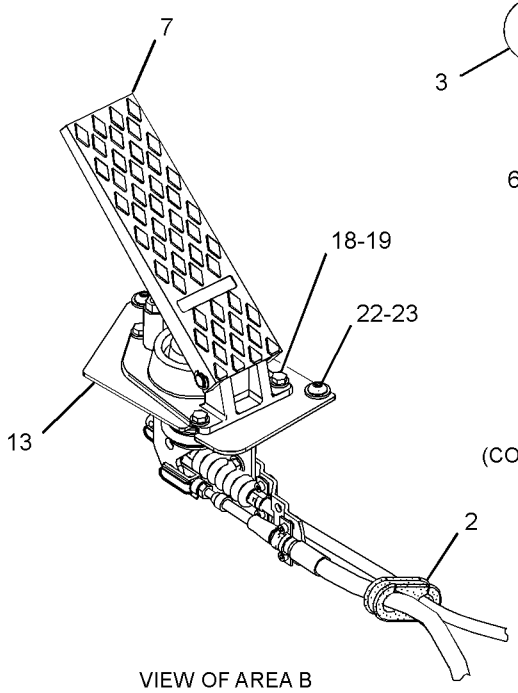

VIEW OF AREA B

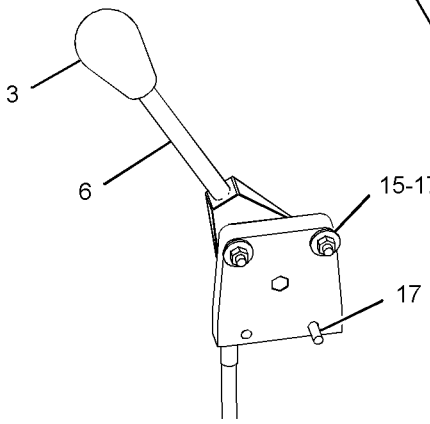

VIEW OF AREA E
(COVER REMOVED FOR CLARITY)

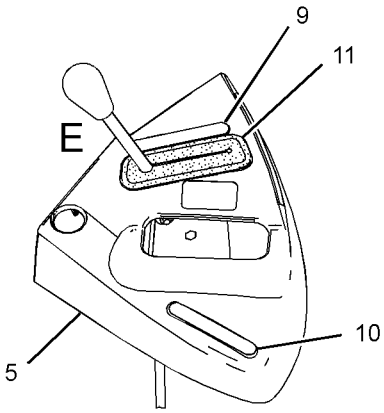

VIEW OF AREA C

GRAPHIC #1 **<END>** g02798430

362-1266 FILTER GP-WATER SEP & FUEL

S/N: SEJ1-UP
FIELD INSTALLATION

SMCS-1261, 1263 **i04629786**

NOTE	REF NO	GRAPHIC REF	PART NUMBER	QTY	PART NAME 1 2 3 4 5 6 (PRODUCT LEVEL)	SEE PAGE
	1	1	**246-2622**	2	ELBOW	
	2	1	**285-5098**	1	FILTER GP-FUEL (WATER SEPARATOR)	
		1	**118-8118**	1	RING-RETAINING	
		1	**118-8119**	1	NUT	
		1	**149-3516**	1	BASE AS	
		1	**156-1200**	1	FILTER ELEMENT-FUEL (WATER SEPARATOR)	
	3	1	**359-0264**	1	SUPPORT AS	
M		1	**159-9540**	2	NUT-WELD (M8X1.25-THD)	
	4	1	**362-2820**	2	CAP	
	5	1	*169-5861*	2	PLUG AS	
					(EACH INCLUDES)	
		1	**3K-8460**	1	PLUG	
		1	**5P-7814**	1	SEAL-O-RING	
	6	1	**359-7323**	2	CLAMP-HOSE	
	7	1	**5P-4116**	2	WASHER-HARD (8.8X20.5X2-MM THK)	
M	8	1	**8T-4189**	2	BOLT (M8X1.25X20-MM)	
	9	1	**8T-4224**	2	WASHER-HARD (8.8X16X2-MM THK)	
M	10	1	**8T-7547**	2	BOLT (M8X1.25X30-MM)	

M-METRIC PART

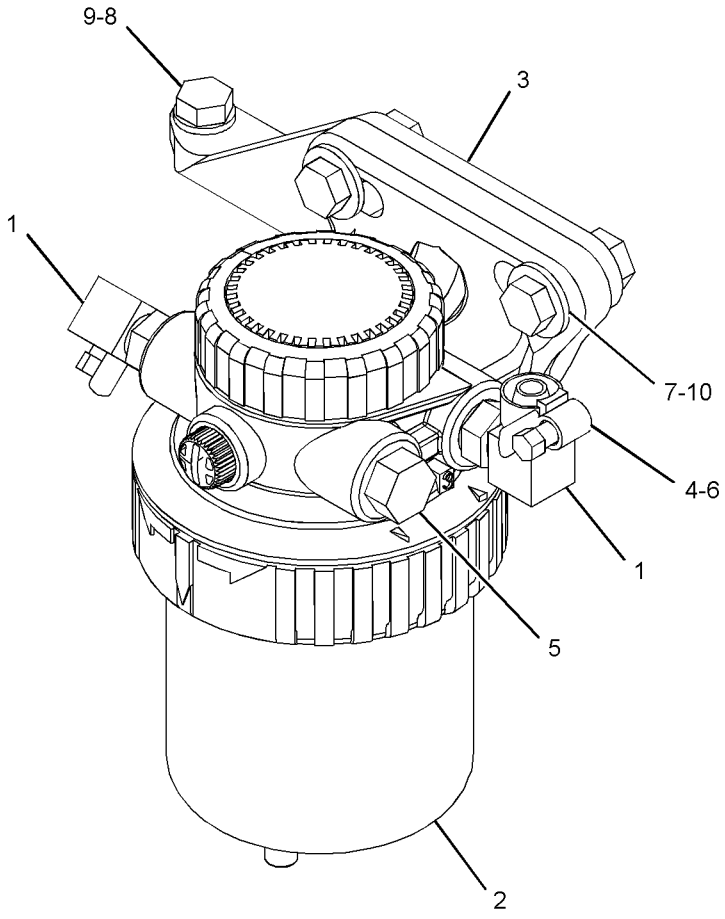

GRAPHIC #1 **<END>** g02809479

FUEL SYSTEM

326-9012 LINES GP-FUEL

S/N: C4Z1-UP
PART OF 364-5743 ENGINE AR-PRIMARY
AN ATTACHMENT

SMCS-1274 **i04641490**

NOTE	REF NO	GRAPHIC REF	PART NUMBER	QTY	PART NAME 1 2 3 4 5 6 (PRODUCT LEVEL)	SEE PAGE
	1	1	**8T-7876**	1	SEAL-O-RING	
	2	1	**035-8017**	1	UNION	
	3	1	**365-3308**	1	NUT-COMPRESSION	
	4	1	**067-6265**	1	FITTING-BRASS	
	5	1	**232-3126**	1	CLIP	
	6	1	**236-2144**	1	TUBE AS	
	6A	1	**067-6999**	1	FERRULE	
	7	1	**247-4884**	1	TUBE AS	
	8	1	**320-9213**	1	CONNECTION	

326-9012 **LINES GP-FUEL** *(contd.)* **i04641490**

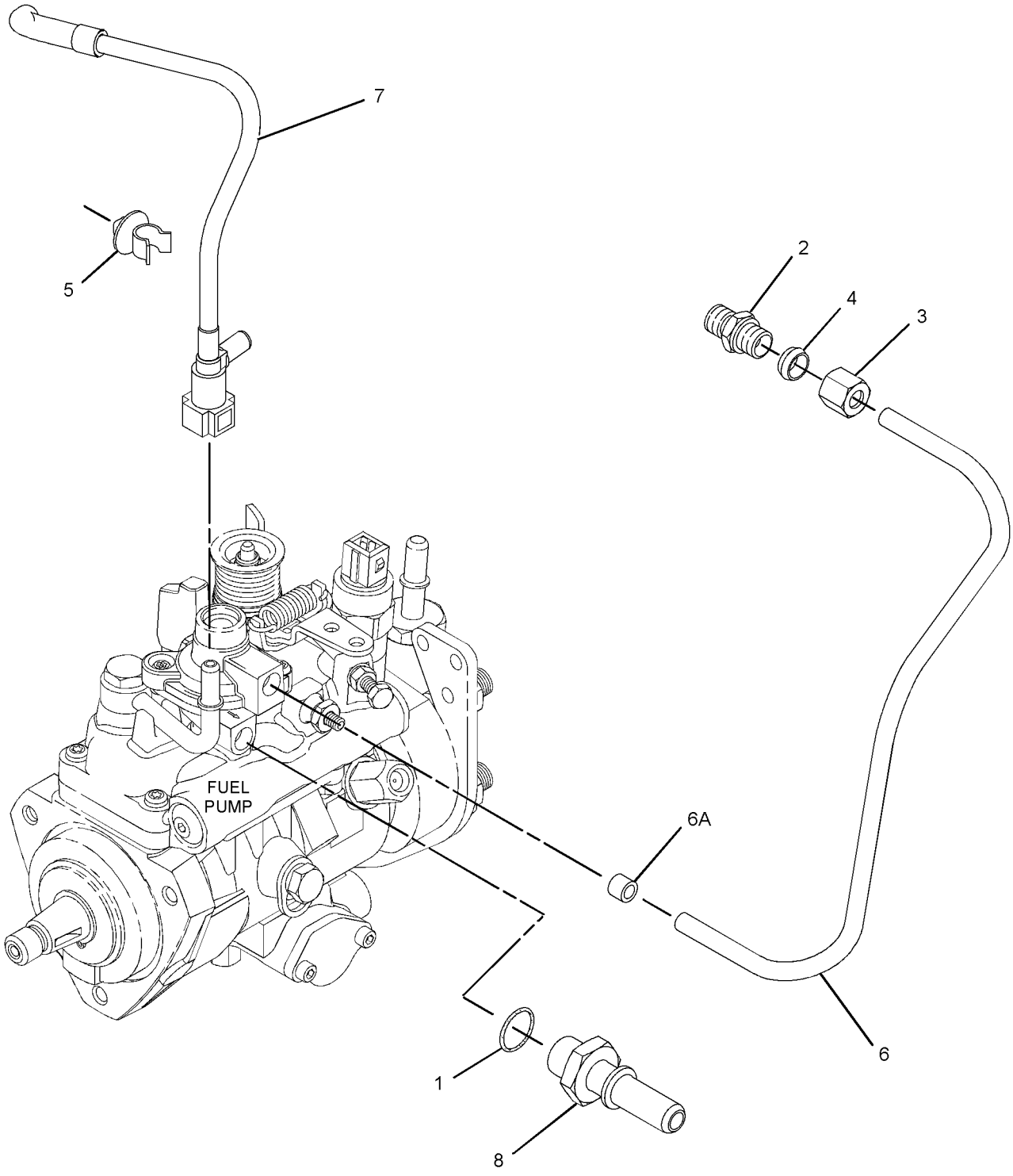

GRAPHIC #1 **<END>** g01613613

FUEL SYSTEM

337-9734 LINES GP-FUEL

S/N: SEJ1-UP
PART OF 337-9867 ENGINE AR-COMPLETE
AN ATTACHMENT

SMCS-1274 **i04553571**

NOTE	REF NO	GRAPHIC REF	PART NUMBER	QTY	PART NAME 1 2 3 4 5 6 (PRODUCT LEVEL)	SEE PAGE
	1	1	**069-4080**	1	FITTING	
	2	1	**215-9513**	1	CONNECTOR-HOSE	
	3	1	**215-9515**	1	CONNECTOR-HOSE (QUICK DISCONNECT)	
	4	1	**222-3518**	1	TEE	
	5	1	**224-5917**	1	CONNECTOR-SPECIAL	
	6	1	**241-4275**	1	TEE-SPECIAL	
	7	1	**246-2622**	1	ELBOW	
	8	1	*297-7958*	1	ADAPTER AS	
		1	**3J-1907**	1	SEAL-O-RING	
		1	**205-3079**	1	ADAPTER	
Y	9	1	**349-1063**	1	PUMP GP-FUEL PRM & PRIM FILTER (WITH WATER SEPARATOR)	83
	10	1	**362-2820**	14	CAP	
	11	1	**090-5725**	1	ELBOW	
	12	1	**100-4336**	4	CLIP	
	13	1	*148-8407*	2	PLUG AS	
					(EACH INCLUDES)	
		1	**3J-1907**	1	SEAL-O-RING	
		1	**9S-4191**	1	PLUG-O-RING	
	14	1	**359-7323**	12	CLAMP-HOSE	
	15	1	**359-7325**	2	CLAMP-HOSE	
	16	1	**3J-1907**	1	SEAL-O-RING	
	17	1	**4D-6466**	1	CLIP	
	18	1	**5P-4116**	4	WASHER-HARD (8.8X20.5X2-MM THK)	
	19	1	**8T-4121**	4	WASHER-HARD (11X21X2.5-MM THK)	
M	20	1	**8T-4189**	2	BOLT (M8X1.25X20-MM)	
M	21	1	**8T-4196**	4	BOLT (M10X1.5X35-MM)	
M	22	1	**8T-7547**	2	BOLT (M8X1.25X30-MM)	
	23	1	**9M-8406**	2	CLIP	
E	24	1	**5P-1442**		HOSE (108-CM)	
E	25	1	**5P-1505**		HOSE (149-CM)	
E	26	1	**5P-1420**		HOSE (65-CM)	
E	26A	1	**5P-1420**		HOSE (39-CM EACH)	
E	26B	1	**5P-1420**		HOSE (4.5-CM)	
E	26C	1	**5P-1420**		HOSE (44.5-CM)	

E-ORDER BY THE CENTIMETER
M-METRIC PART
Y-SEPARATE ILLUSTRATION

337-9734 **LINES GP-FUEL** *(contd.)* **i04553571**

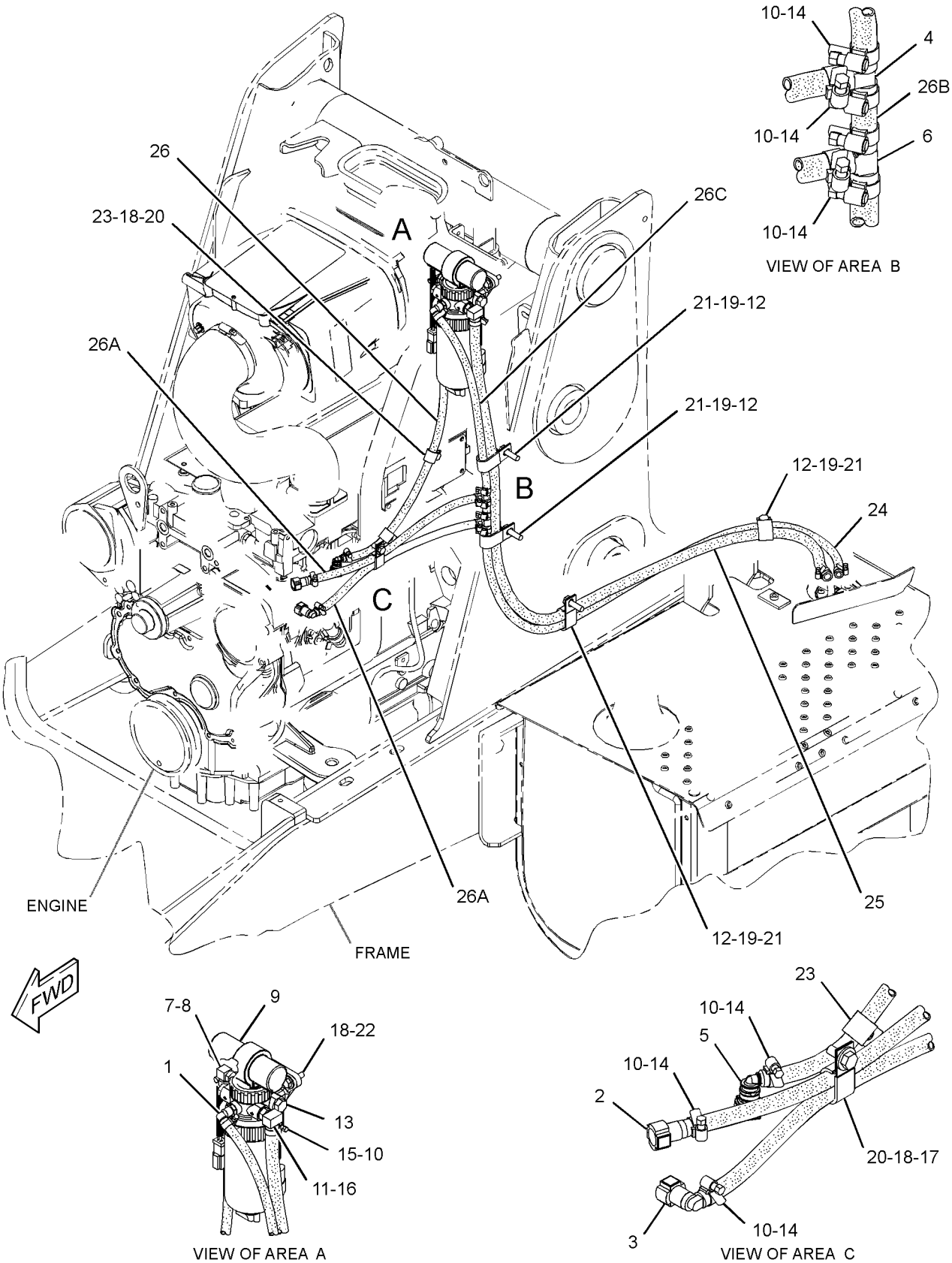

GRAPHIC #1 **<END>** g02827736

353-1364 MOUNTING GP-GOVERNOR CONTROL–ENGINE

S/N: SEJ1-UP
PART OF 337-9867 ENGINE AR-COMPLETE
AN ATTACHMENT

SMCS-1264, 1265 **i04605592**

NOTE	REF NO	GRAPHIC REF	PART NUMBER	QTY	PART NAME 1 2 3 4 5 6 (PRODUCT LEVEL)	SEE PAGE
	1	1	**239-1434**	1	PLATE	
	2	1	**8T-4224**	2	WASHER-HARD (8.8X16X2-MM THK)	
M	3	1	**8T-4908**	2	BOLT (M8X1.25X25-MM)	

M-METRIC PART

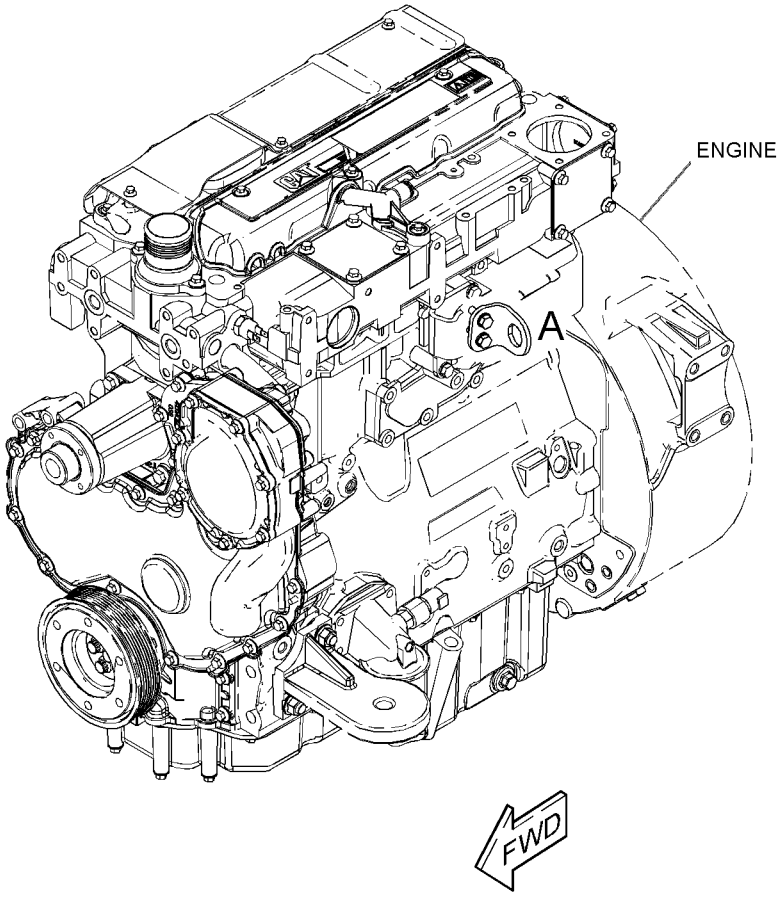

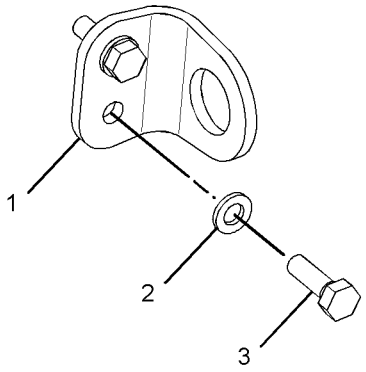

VIEW OF AREA A

GRAPHIC #1 **<END>** g02788564

326-9147 PUMP GP-FUEL INJECTION

S/N: C4Z1-UP

PART OF 326-9149 PUMP GP-FUEL INJECTION

AN ATTACHMENT

SMCS-1251, 1290 **i03718046**

NOTE	REF NO	GRAPHIC REF	PART NUMBER	QTY	PART NAME 1 2 3 4 5 6 (PRODUCT LEVEL)	SEE PAGE
	1	1	**111-3422**	1	NUT	
	2	1	**111-3423**	1	WASHER	
	3	1	**152-3968**	1	SEAL-O-RING	
	4	1	**176-6219**	1	VALVE GP-SOLENOID (12-VOLT) (FUEL SHUTOFF)	

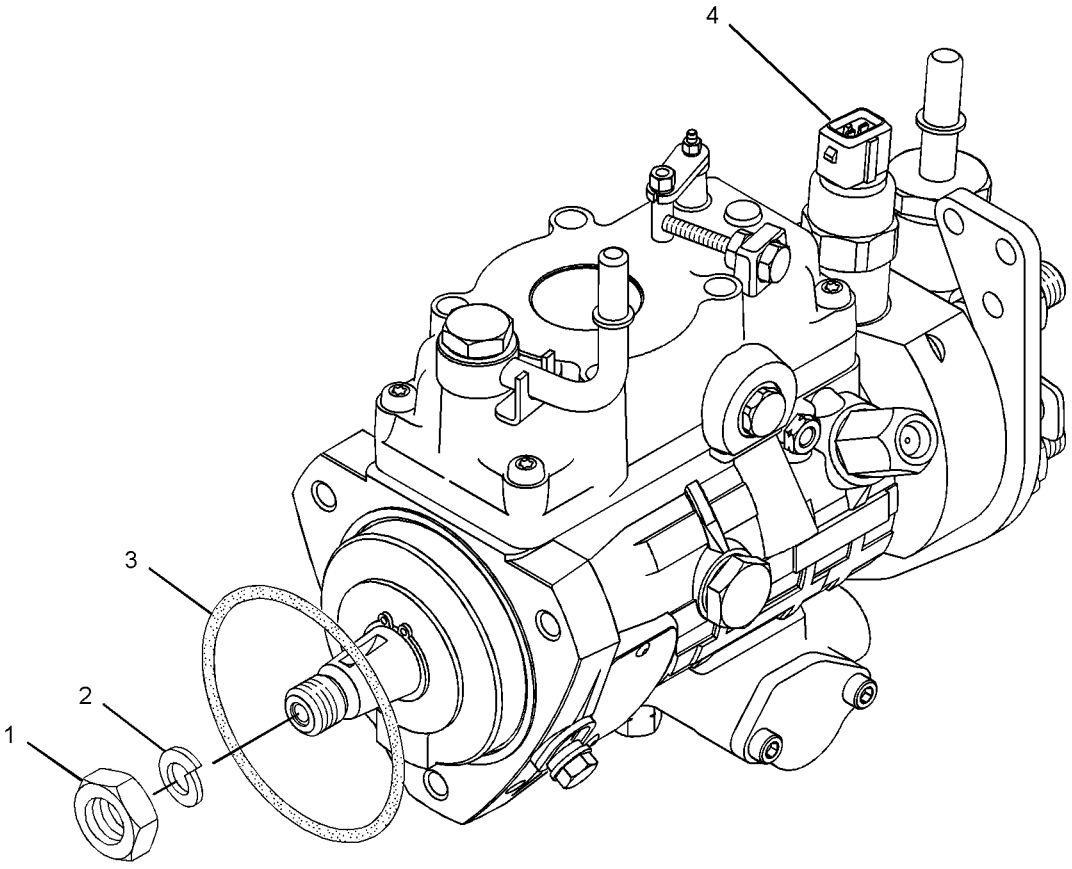

GRAPHIC #1 **<END>** g01615399

326-9149 PUMP GP-FUEL INJECTION

S/N: C4Z1-UP
PART OF 364-5743 ENGINE AR-PRIMARY
AN ATTACHMENT

SMCS-1251, 1290 **i04642330**

NOTE	REF NO	GRAPHIC REF	PART NUMBER	QTY	PART NAME 1 2 3 4 5 6 (PRODUCT LEVEL)	SEE PAGE
M	1	1	**6I-0217**	1	BOLT (M8X1.25X20-MM)	
M	2	1	**6I-0260**	3	BOLT (M8X1.25X25-MM)	
	3	1	**6I-0291**	1	NUT (M8X1.25-THD)	
M	4	1	**100-4830**	1	BOLT (M10X1.5X20-MM)	
M	5	1	**124-3815**	1	BOLT (M8X1.25X16-MM)	
	6	1	**140-8714**	1	CLIP	
	7	2	**169-5326**	1	SWITCH-TEMPERATURE (FUEL)	
	8	1	**230-8989**	1	GEAR-FUEL PUMP (68-TEETH)	
	9	1	**230-8995**	1	TUBE AS (CYL NO. 1)	
	10	1	**230-8996**	1	TUBE AS (CYL NO. 2)	
	11	1	**230-8997**	1	TUBE AS (CYL NO. 3)	
	12	1	**230-8998**	1	TUBE AS (CYL NO. 4)	
	14	1	**232-1328**	1	CAP	
	15	2	**232-1793**	1	CABLE	
	16	1	**232-1794**	3	HOSE	
	17	1	**232-2725**	2	CLIP	
	18	1	**232-2726**	1	CLIP	
	19	1	**232-3126**	1	CLIP	
	20	1	**232-3149**	3	WASHER (8.35X16.85X1.55-MM THK)	
	21	1	**232-3157**	1	BRACKET	
	22	1	**232-3274**	4	BOLT (M8X1.25X48.1-MM)	
	23	1	**238-8671**	4	CLAMP-INJECTOR	
	24	1	**240-5571**	1	BRACKET	
	25	1	**315-3381**	4	ATOMIZER AS	
					(EACH INCLUDES)	
	25A	1	**140-8718**	1	WASHER	
	25B	1	**275-1038**	1	SEAL-O-RING	
Y	26	1	**326-9147**	1	PUMP GP-FUEL INJECTION	79

M-METRIC PART
Y-SEPARATE ILLUSTRATION

326-9149 **PUMP GP-FUEL INJECTION** *(contd.)* **i04642330**

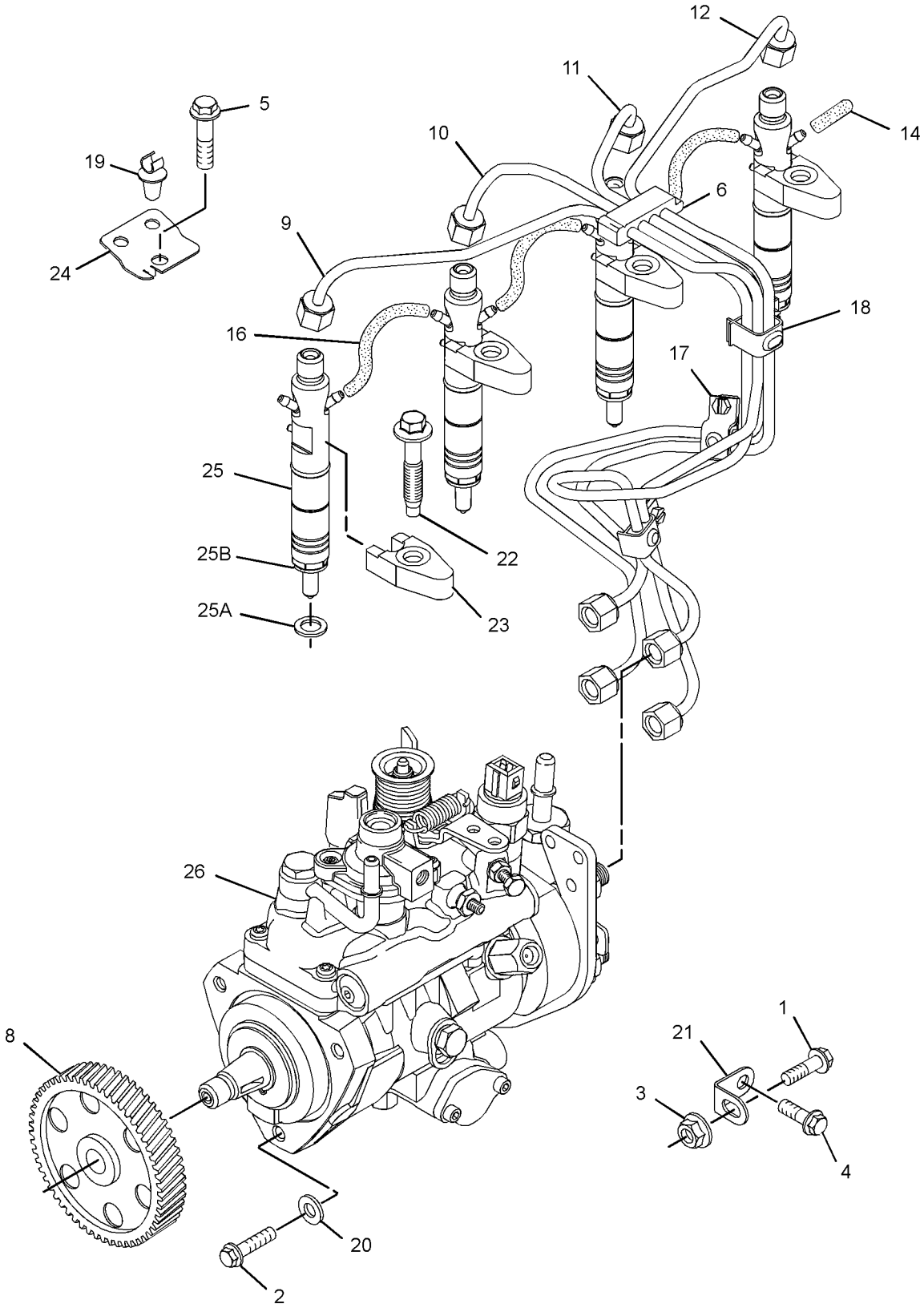

GRAPHIC #1 g01613834

326-9149 **PUMP GP-FUEL INJECTION** *(contd.)* **i04642330**

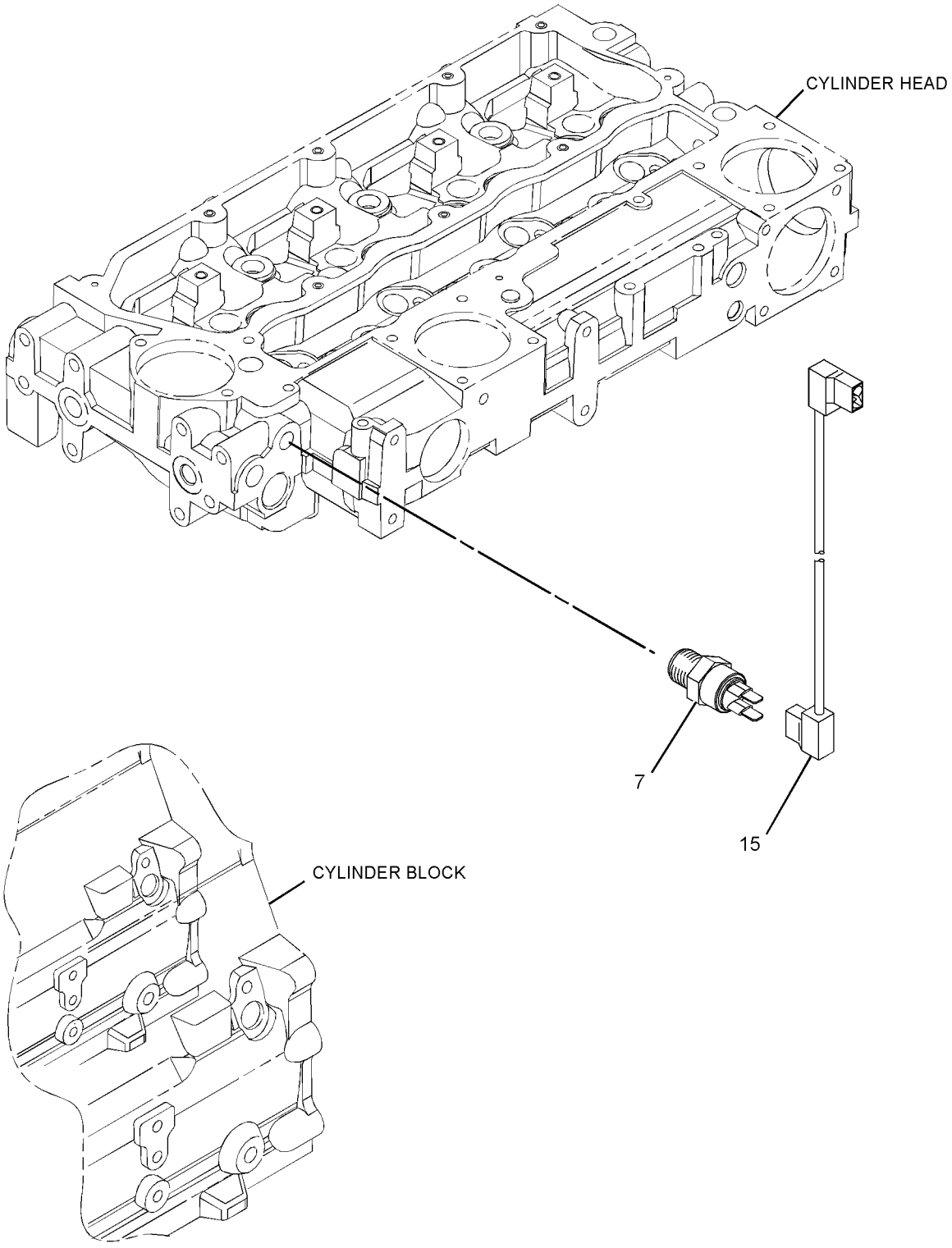

GRAPHIC #2 **<END>** g02788432

349-1063 PUMP GP-FUEL PRM & PRIM FILTER–
WITH WATER SEPARATOR
S/N: SEJ1-UP
PART OF 337-9734 LINES GP-FUEL
AN ATTACHMENT

SMCS-1258, 1260, 1261 **i04583032**

NOTE	REF NO	GRAPHIC REF	PART NUMBER	QTY	PART NAME 1 2 3 4 5 6 (PRODUCT LEVEL)	SEE PAGE
	1	1	**118-8118**	1	RING-RETAINING	
	2	1	**149-9954**	1	DRAIN AS	
	3	1	**193-0618**	1	SENSOR GP-MOISTURE (WATER SEPARATOR)	
		1	**192-7876**	1	SCREW-MOUNTING	
	4	1	**361-9554**	1	ELEMENT-WATER SEPARATOR (FUEL FILTER)	
	5	1	**228-9132**	1	FITTING	

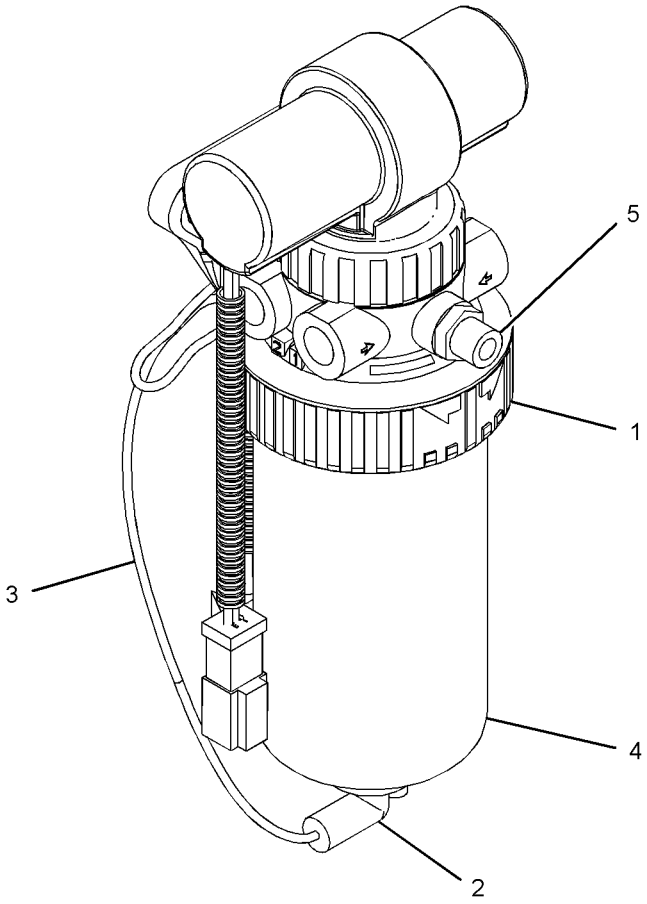

GRAPHIC #1 **<END>** g02736920

FUEL SYSTEM

362-4557 TANK GP-FUEL

S/N: SEJ1-UP

PART OF 362-4625 TANK GP-FUEL

SMCS-1273 **i04547508**

NOTE	REF NO	GRAPHIC REF	PART NUMBER	QTY	PART NAME 1 2 3 4 5 6 (PRODUCT LEVEL)	SEE PAGE
	1	1	**284-9039**	1	CAP-FUEL (LOCKABLE, VENTED)	
	2	1	**314-7618**	1	PLUG AS	
		1	**190-7634**	1	SEAL-O-RING	
	3	1	**362-9029**	1	TANK AS-FUEL	
	4	1	**363-8475**	1	SENDER AS-FUEL LEVEL	
	4A	1	**310-4589**	1	GASKET	
	4B	1	**340-4152**	1	STRAINER (FUEL TANK)	
	4C	1	**102-8802**	1	KIT-RECEPTACLE (2-PIN)	
					(INCLUDES RECEPTACLE AS & WEDGE)	
	4D	1	**8T-8729**	1	PIN-CONNECTOR (16-GA TO 18-GA)	
	5	1	**198-9706**	6	SCREW-TRUSS HEAD (M5X0.8X16-MM)	

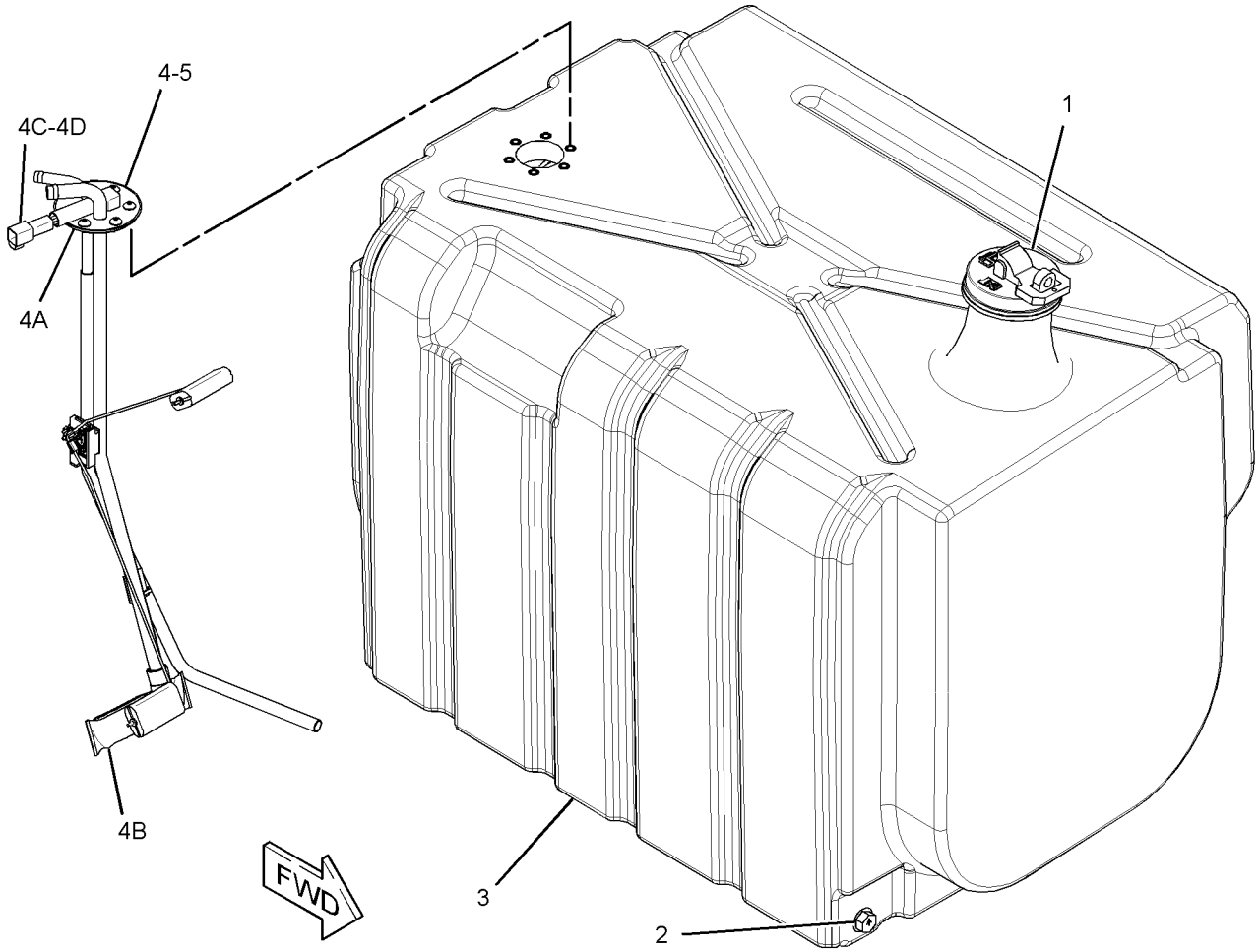

GRAPHIC #1 **<END>** g02777196

362-4625 TANK GP-FUEL

S/N: SEJ1-UP
166-LITERS (43.9-US GAL)
PART OF 340-1693 CHASSIS AR

SMCS-1273 **i04649829**

NOTE	REF NO	GRAPHIC REF	PART NUMBER	QTY	PART NAME 1 2 3 4 5 6 (PRODUCT LEVEL)	SEE PAGE
Y	1	1	*362-4557*	1	TANK GP-FUEL	84
	2	1	**362-4560**	1	TUBE AS	
	3	1	**362-4563**	1	PLATE	
	4	1	**362-4624**	1	TUBE AS	
	5	1	**362-9460**	1	FENDER	
	6	1	**363-8010**	1	STEP AS	
	7	1	**363-8031**	1	TREAD AS	
	8	1	**363-8348**	2	MOUNT	
	9	1	**364-2475**	1	SEAL-STRIP	
	10	1	**371-6659**	1	SEAL-CENTER	
	11	1	**380-8815**	1	PLATE	
	12	1	**156-0283**	3	WASHER-HARD (8.4X35X2.5-MM THK)	
	13	1	**5P-4116**	14	WASHER-HARD (8.8X20.5X2-MM THK)	
M	14	1	**8T-4189**	2	BOLT (M8X1.25X20-MM)	
M	15	1	**8T-4193**	4	BOLT (M16X2X50-MM)	
M	16	1	**8T-4908**	3	BOLT (M8X1.25X25-MM)	
M	17	1	**8T-6869**	8	BOLT (M8X1.25X60-MM)	
	18	1	**9X-8257**	4	WASHER (17.5X30X3.5-MM THK)	
M	19	1	**8T-7547**	4	BOLT (M8X1.25X30-MM)	
	20	1	**193-5913**	2	PLUG	

M-METRIC PART
Y-SEPARATE ILLUSTRATION

362-4625 **TANK GP-FUEL** *(contd.)* **i04649829**

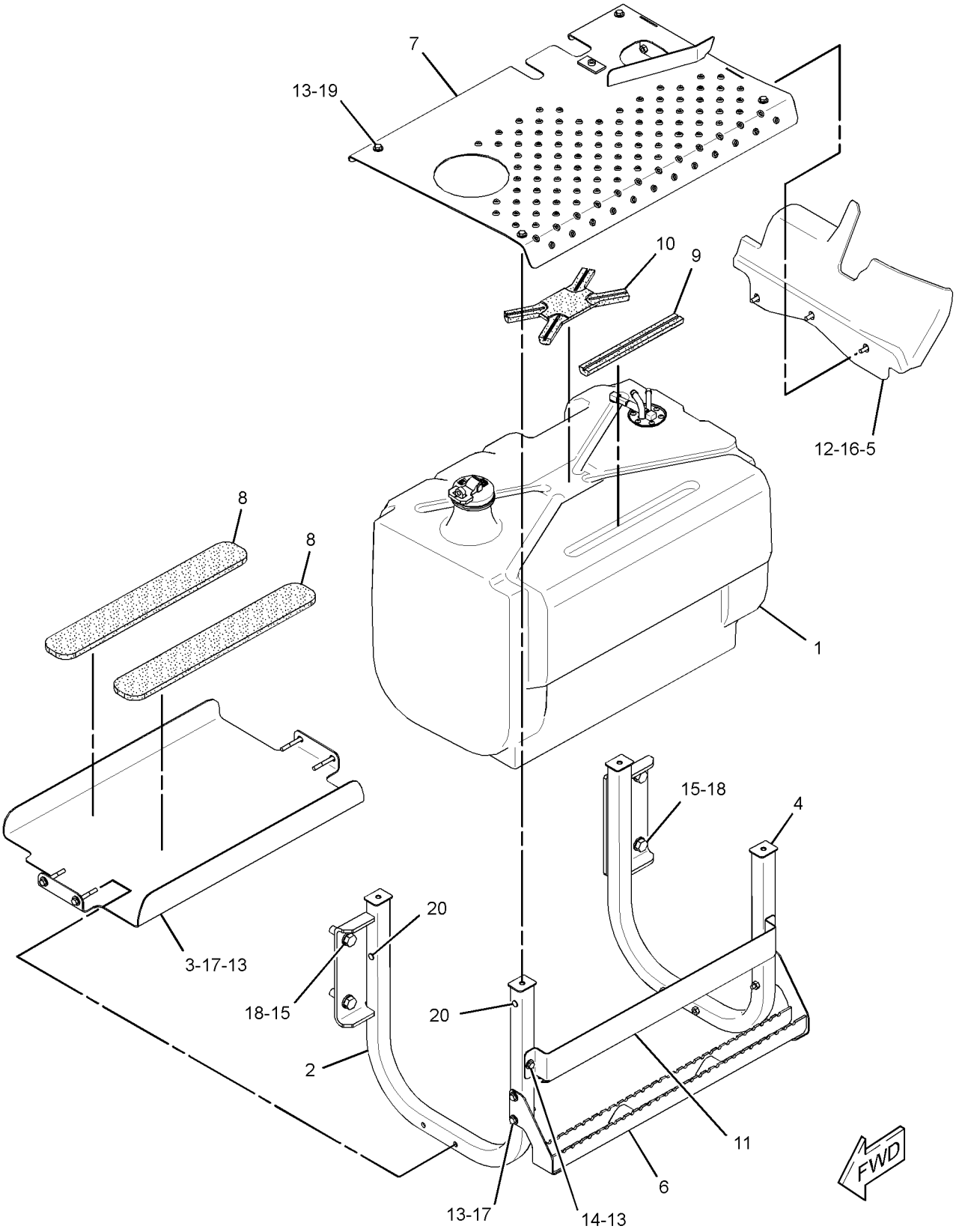

GRAPHIC #1 **<END>** g02829858

317-9776 ALTERNATOR GP-CHARGING

S/N: C4Z1-UP
12 VOLT 120 AMPERE
PART OF 364-5743 ENGINE AR-PRIMARY
AN ATTACHMENT

SMCS-1405, 1425 **i03899392**

NOTE	REF NO	GRAPHIC REF	PART NUMBER	QTY	PART NAME 1 2 3 4 5 6 (PRODUCT LEVEL)	SEE PAGE
M	1	1	**6I-0260**	1	BOLT (M8X1.25X25-MM)	
M	2	1	**6I-0650**	1	BOLT (M10X1.5X65-MM)	
	3	1	**359-9666**	1	BOLT-FLANGE HEAD	
	4	1	**113-6349**	1	NUT (M12X1.75X93-MM)	
M	5	1	**140-8783**	2	BOLT (M10X1.5X45-MM)	
	7	1	**346-9825**	1	ALTERNATOR GP-CHARGING	
	8	1	**284-3425**	1	PULLEY-ALTERNATOR	
	9	1	**305-7881**	1	BRACKET AS-ALTERNATOR	
	9A	1	**161-9820**	1	PIN	

M-METRIC PART

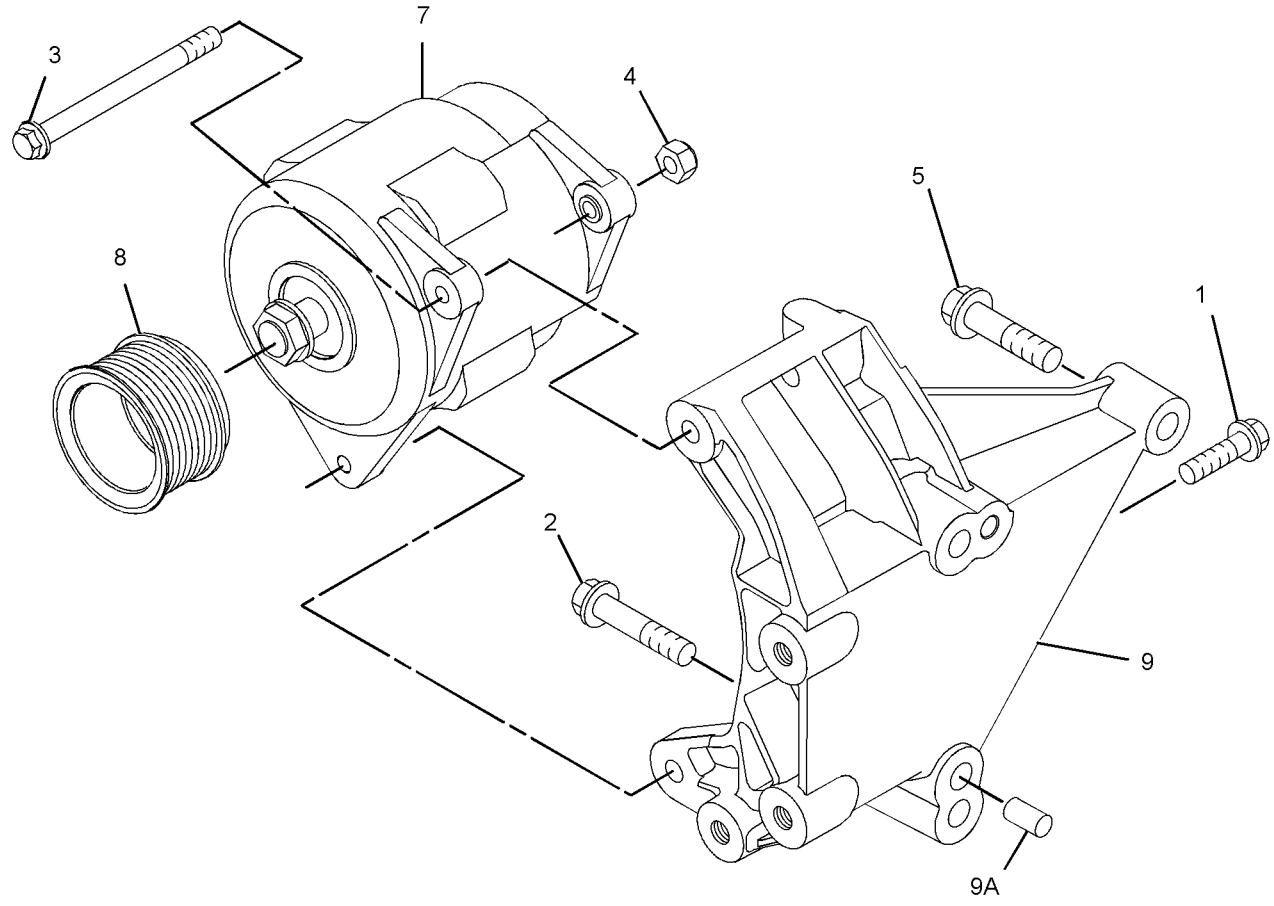

GRAPHIC #1 **<END>** g01953021

ELECTRICAL AND STARTING SYSTEM

357-6501 BATTERY & WIRING GP

S/N: SEJ1-UP
PART OF 337-9867 ENGINE AR-COMPLETE
AN ATTACHMENT

SMCS-1401, 1402, 1408, 1411 **i04577649**

NOTE	REF NO	GRAPHIC REF	PART NUMBER	QTY	PART NAME 1 2 3 4 5 6 (PRODUCT LEVEL)	SEE PAGE
	1	1	**3E-8320**	1	PLATE-INSTRUCTION (BATTERY)	
	2	1	**7K-1181**	3	STRAP-CABLE	
Y	3	1	**7N-0718**	1	SWITCH GP-DISCONNECT (BATTERY)	125
	4	1	**8W-8528**	3	SLEEVE	
	5	2	**8Y-1816**	1	SPACER (12.5X25X25-MM THK)	
	6	2	**8X-5489**	2	SLEEVE	
	7	1	**206-2423**	1	SADDLE	
M	8	1,2	**8T-7963**	2	LOCKNUT (M8X1.25-THD)	
	9	1	**230-6368**	1	BATTERY (12-VOLT, MAINTENANCE FREE)	
	10	2	**263-6556**	1	STUD	
	11	1	**290-6746**	1	CABLE AS	
		1	**312-6455**	1	TERMINAL AS	
E		1	**125-7876**		TUBE-HEAT SHRINK (17.78-MM DIA) (5-CM)	
		1	**311-6184**	1	TERMINAL-RING (2-GA, 3/8-IN SCREW)	
E		1	**125-7876**		TUBE-HEAT SHRINK (17.78-MM DIA) (7-CM)	
	12	1	**331-5550**	1	CABLE AS	
		1	**1S-7252**	1	TERMINAL-CABLE (00-GA, 3/8-IN SCREW)	
M		1	**8U-0767**	1	BOLT (M8X1.25X16-MM)	
		1	**8T-4224**	1	WASHER-HARD (8.8X16X2-MM THK)	
		1	**030-1705**	1	TERMINAL-CABLE (00-GA, 5/16-IN SCREW)	
E		1	**135-5009**		TUBE-HEAT SHRINK (32-MM DIA) (10-CM)	
E		1	**159-8049**		CABLE (00-GA, RED) (59-CM)	
	13	1	**331-5552**	1	CABLE AS	
E		1	**159-8049**		CABLE (00-GA, RED) (147-CM)	
		1	**1S-7252**	2	TERMINAL-CABLE (00-GA, 3/8-IN SCREW)	
E		1	**135-5009**		TUBE-HEAT SHRINK (32-MM DIA) (20-CM)	
	14	1	**331-5555**	1	CABLE AS-BATTERY	
E		1	**159-8050**		CABLE (00-GA, BLACK) (98-CM)	
		1	**9G-8909**	1	COVER-TERMINAL (BLACK)	
M		1	**8U-0767**	1	BOLT (M8X1.25X16-MM)	
		1	**1S-7252**	1	TERMINAL-CABLE (00-GA, 3/8-IN SCREW)	
		1	**030-1705**	1	TERMINAL-CABLE (00-GA, 5/16-IN SCREW)	
E		1	**135-5009**		TUBE-HEAT SHRINK (32-MM DIA) (10-CM)	
		1	**5P-4116**	1	WASHER-HARD (8.8X20.5X2-MM THK)	
	15	1	**331-5556**	1	CABLE AS	
E		1	**159-8050**		CABLE (00-GA, BLACK) (58-CM)	
		1	**9G-8909**	1	COVER-TERMINAL (BLACK)	
		1	**1S-7252**	1	TERMINAL-CABLE (00-GA, 3/8-IN SCREW)	
		1	**274-9183**	1	TERMINAL-RING	
E		1	**135-5009**		TUBE-HEAT SHRINK (32-MM DIA) (10-CM)	
	16	2	**331-5581**	1	BRACKET AS	
	17	1,2	**360-8983**	2	ROD	
	18	1	**360-8984**	1	ANGLE	
	19	1	**362-8030**	1	BRACKET AS	
	20	1	**368-4714**	1	CABLE AS (POSITIVE)	
E		1	**5P-0761**		CABLE (00-GA, RED) (96-CM)	
		1	**8N-0869**	1	COVER-TERMINAL (RED)	
		1	**1S-7252**	2	TERMINAL-CABLE (00-GA, 3/8-IN SCREW)	
E		1	**125-7876**		TUBE-HEAT SHRINK (17.78-MM DIA) (5-CM)	
	21	1	**374-7337**	1	BRACKET AS	
	22	1	**133-3260**	1	SPACER (11X19X10-MM THK)	
	23	1	**138-7500**	1	SPACER (11X25X50-MM THK)	
M	24	2	**148-1899**	1	BOLT-CARRIAGE (M10X1.5X60-MM)	
M	25	1	**198-3899**	2	SCREW-BUTTON HEAD (M8X1.25X20-MM)	
	26	1,2	**1S-0994**	4	CLIP	

357-6501 **BATTERY & WIRING GP** *(contd.)* **i04577649**

NOTE	REF NO	GRAPHIC REF	PART NUMBER	QTY	PART NAME 1 2 3 4 5 6 (PRODUCT LEVEL)	SEE PAGE
	27	1	**353-7957**	1	GROMMET	
	28	1	**362-2904**	1	PLATE AS	
	29	1	**3J-4818**	1	LOCKWASHER	
M	30	2	**5C-7261**	2	NUT (M8X1.25-THD)	
	31	1,2	**5G-3676**	2	GROMMET	
	32	1,2	**5P-4116**	2	WASHER-HARD (8.8X20.5X2-MM THK)	
	33	2	**5T-6374**	1	SPACER (10.5X20X40-MM THK)	
	34	1	**6V-8801**	1	NUT (3/8-16-THD)	
	35	1,2	**7C-4354**	2	CLIP	
	36	1	**7X-7729**	1	WASHER (11X25X3-MM THK)	
	37	2	**8F-3590**	1	LOCKWASHER	
	38	1,2	**8T-1887**	3	CLIP (SLOT)	
	39	1,2	**8T-1888**	3	CLIP (TAB)	
M	40	2	**8T-3998**	2	BOLT (M4X0.7X12-MM)	
	41	1,2	**8T-4121**	13	WASHER-HARD (11X21X2.5-MM THK)	
M	42	1,2	**8T-4133**	3	NUT (M10X1.5-THD)	
M	43	1	**8T-4136**	1	BOLT (M10X1.5X25-MM)	
M	44	1,2	**8T-4137**	4	BOLT (M10X1.5X20-MM)	
M	45	1	**8T-4139**	1	BOLT (M12X1.75X30-MM)	
M	46	1	**8T-4172**	1	BOLT (M10X1.5X80-MM)	
M	47	2	**8T-4189**	1	BOLT (M8X1.25X20-MM)	
M	48	1	**8T-4192**	2	BOLT (M12X1.75X25-MM)	
M	49	1,2	**8T-4196**	4	BOLT (M10X1.5X35-MM)	
	50	1	**8T-4223**	3	WASHER-HARD (13.5X25.5X3-MM THK)	
	51	1,2	**8T-4224**	6	WASHER-HARD (8.8X16X2-MM THK)	
	52	1	**8T-4896**	1	WASHER-HARD (10.2X18.5X2.5-MM THK)	
M	53	2	**8T-5005**	1	BOLT (M10X1.5X70-MM)	
M	54	2	**8T-7547**	2	BOLT (M8X1.25X30-MM)	

E-ORDER BY THE CENTIMETER
M-METRIC PART
Y-SEPARATE ILLUSTRATION

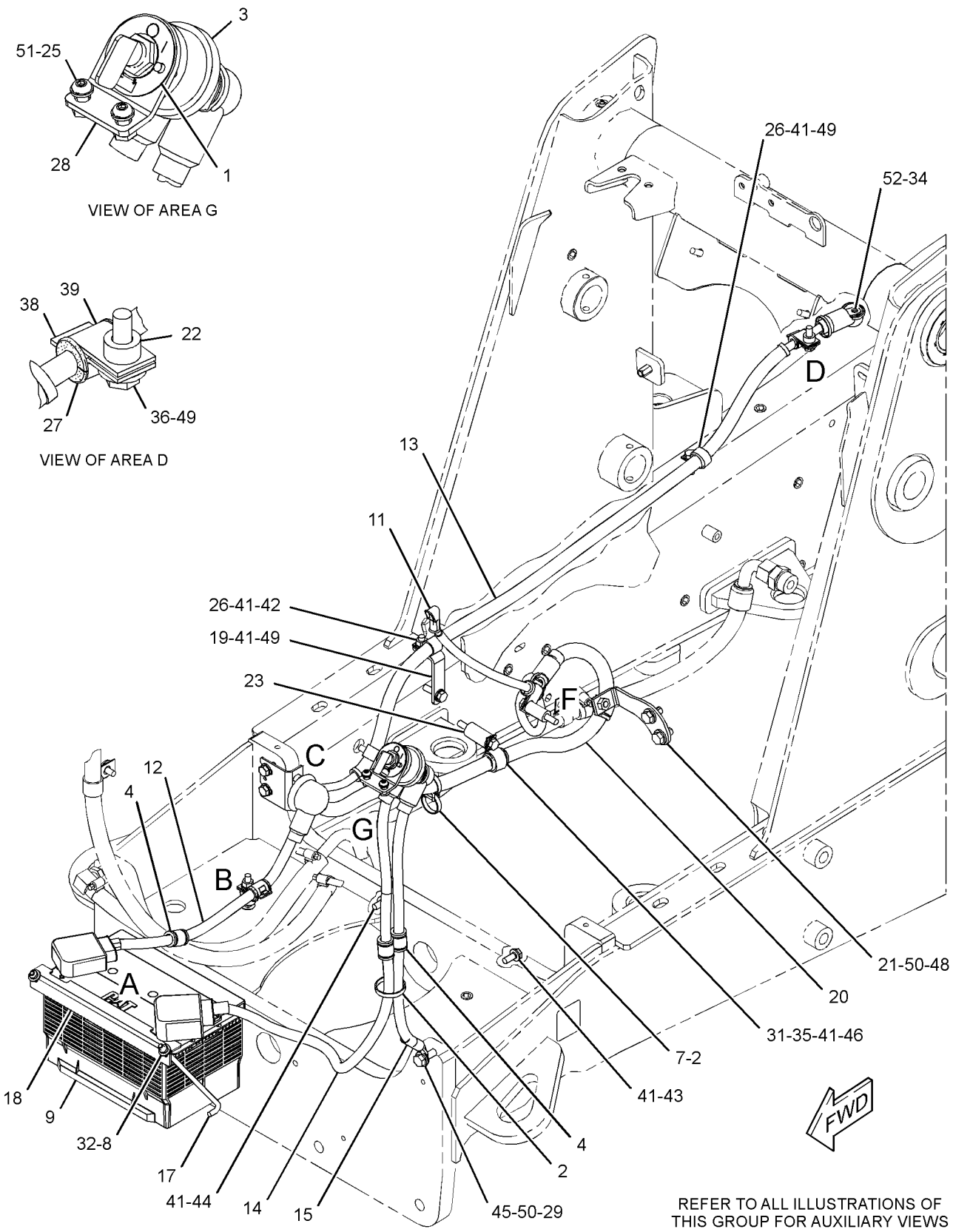

GRAPHIC #1

g02815177

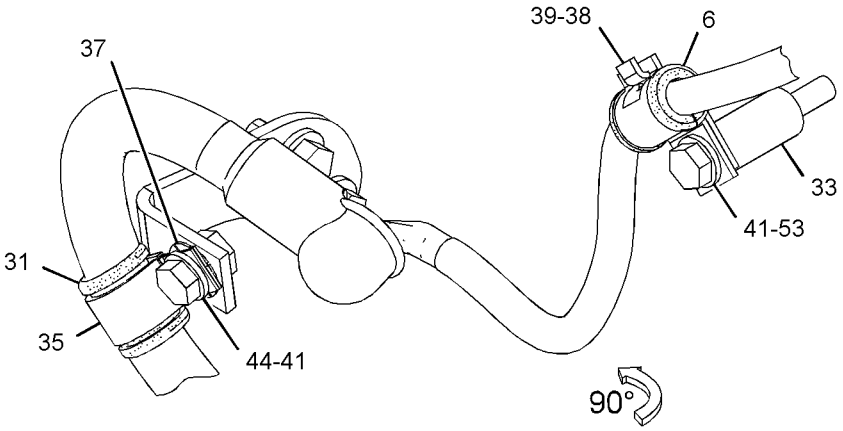

VIEW OF AREA F

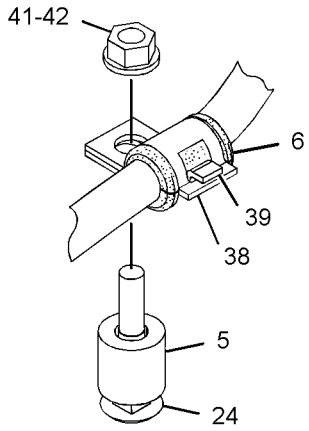

VIEW OF AREA B

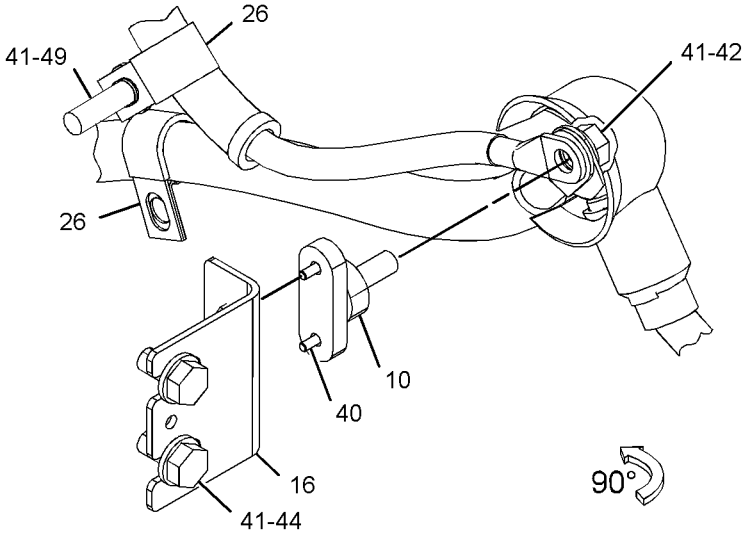

VIEW OF AREA C

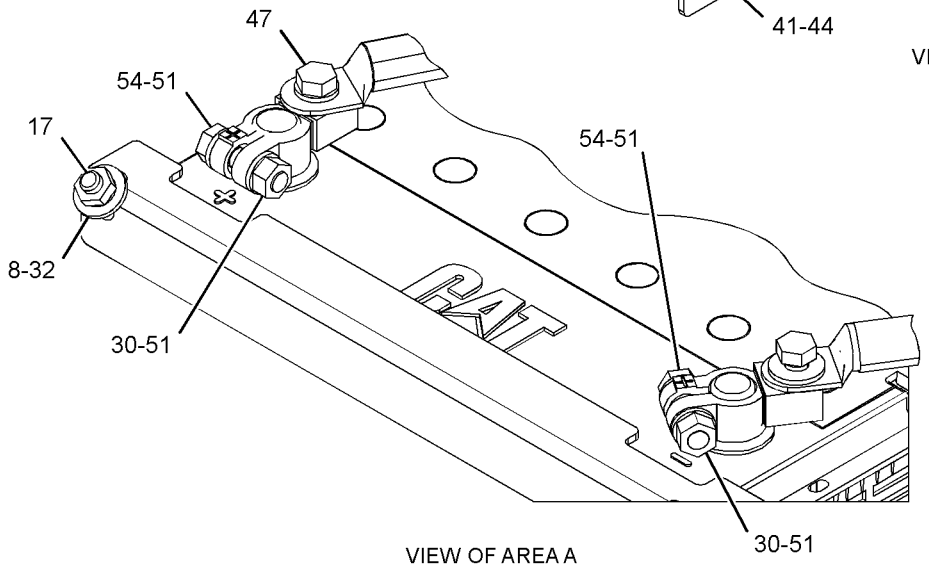

VIEW OF AREA A
(TERMINAL COVERS REMOVED)

GRAPHIC #2 **<END>** g02816577

331-5461 BATTERY GP

S/N: SEJ1-UP
PART OF 377-0023 OPTION AR-BACKHOE
AN ATTACHMENT

SMCS-1401 **i04565414**

NOTE	REF NO	GRAPHIC REF	PART NUMBER	QTY	PART NAME 1 2 3 4 5 6 (PRODUCT LEVEL)	SEE PAGE
	1	1	**230-6368**	1	BATTERY (12-VOLT, MAINTENANCE FREE)	
	2	1	**331-5554**	1	CABLE AS (POSITIVE)	
		1	**9G-0004**	1	COVER AS-TERMINAL (RED)	
		1	**8L-8413**	1	STRAP-CABLE (WHITE)	
E		1	**135-5009**		TUBE-HEAT SHRINK (32-MM DIA) (5-CM)	
E		1	**159-8049**		CABLE (00-GA, RED) (39-CM)	
		1	**1M-6119**	1	BOLT (5/16-18X1.375-IN)	
		1	**1M-6120**	1	NUT (5/16-18-THD)	
		1	**375-2144**	1	TERMINAL-RING	
	3	1	**331-5557**	1	CABLE AS (NEGATIVE)	
		1	**9G-0005**	1	COVER AS-TERMINAL (BLACK)	
		1	**8L-8413**	1	STRAP-CABLE (WHITE)	
E		1	**135-5009**		TUBE-HEAT SHRINK (32-MM DIA) (5-CM)	
E		1	**159-8050**		CABLE (00-GA, BLACK) (38-CM)	
		1	**1M-6119**	1	BOLT (5/16-18X1.375-IN)	
		1	**1M-6120**	1	NUT (5/16-18-THD)	
		1	**375-2144**	1	TERMINAL-RING	
	4	1	**360-8983**	2	ROD	
	5	1	**360-8984**	1	ANGLE	
	6	1	**5P-4116**	2	WASHER-HARD (8.8X20.5X2-MM THK)	
M	7	1	**8T-7963**	2	LOCKNUT (M8X1.25-THD)	

E-ORDER BY THE CENTIMETER
M-METRIC PART

331-5461 **BATTERY GP** ***(contd.)*** **i04565414**

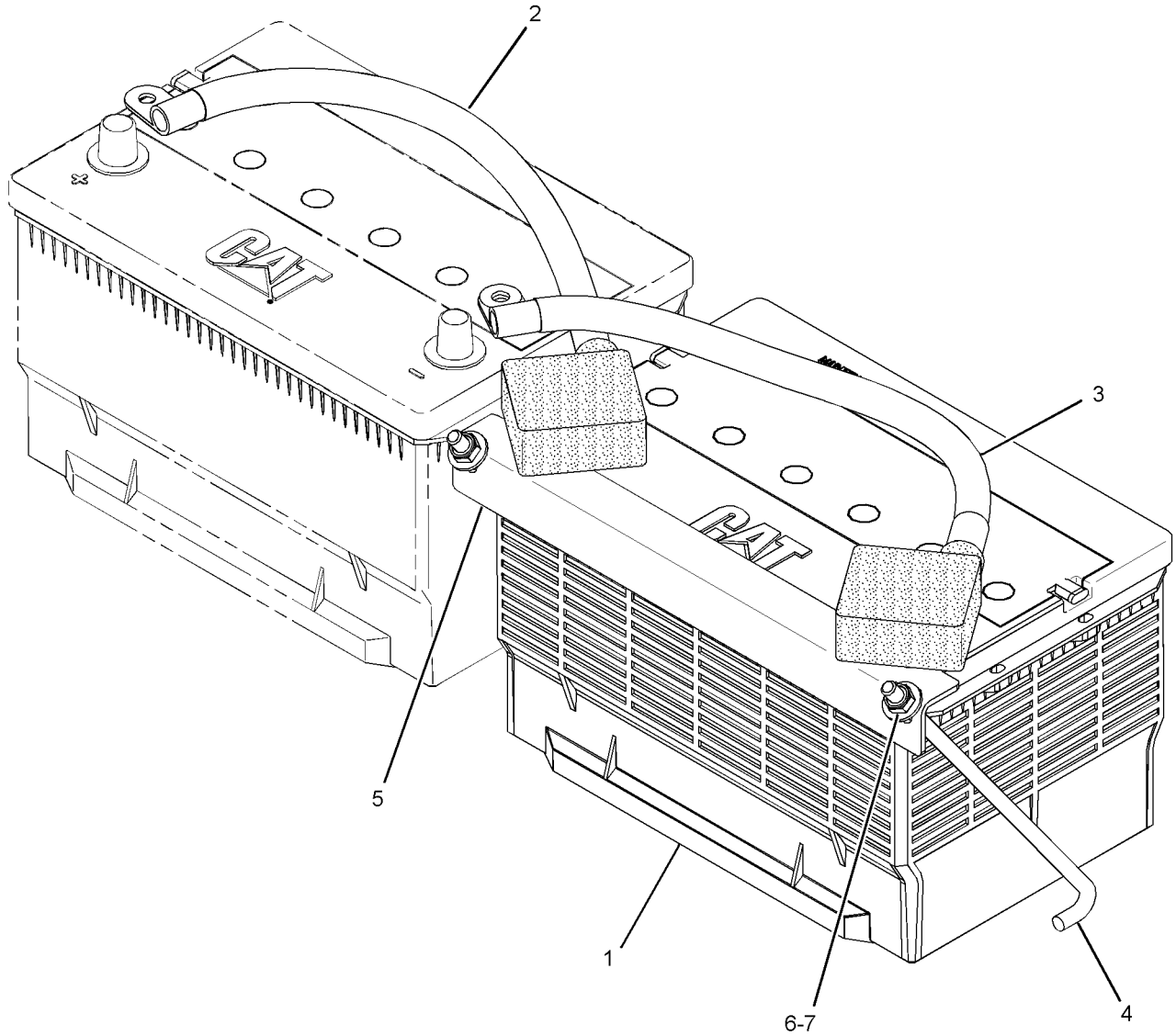

GRAPHIC #1 **<END>** g02804696

ELECTRICAL AND STARTING SYSTEM

380-8260 CONTROL GP-MACHINE

S/N: SEJ1-UP
PART OF 353-1454 ELECTRONICS AR-MACHINE
AN ATTACHMENT

SMCS-7600, 7610 **i04612778**

NOTE	PART NUMBER	QTY	PART NAME 1 2 3 4 5 6 (PRODUCT LEVEL)	SEE PAGE
	382-3404	1	SOFTWARE GP-MACHINE	
			—OR—	
R	**304-5687**	1	CONTROL GP-UNPROGRAMMED (MACHINE ECM)	
			—OR—	
	382-3405	1	SERVICE GP-MACHINE	
			(OPTIONAL SERVICE REPLACEMENT) (INCLUDES CONTROL GP & SOFTWARE)	

R-REMFG PART MAY BE AVAILABLE

<END>

353-1454 ELECTRONICS AR-MACHINE

S/N: SEJ1-UP
PART OF 374-6828, 374-6836, 374-6844 POWER TRAIN AR
AN ATTACHMENT

SMCS-1408, 7000, 7610, 7620 **i04623073**

NOTE	PART NUMBER	QTY	PART NAME 1 2 3 4 5 6 (PRODUCT LEVEL)	SEE PAGE
Y	*341-6719*	1	CONTROL GP-GOVERNOR	71
Y	*380-8260*	1	CONTROL GP-MACHINE	94
Y	*357-3260*	1	WIRING GP-CONSOLE (SIDE, PILOT)	135
Y	*267-5635*	1	WIRING GP-CONTROL (JOYSTICK, LH)	137
Y	*357-3195*	1	WIRING GP-PLATFORM (EAME, PILOT)	149
	386-1737	1	PANEL GP-INSTRUMENT	

Y-SEPARATE ILLUSTRATION

<END>

336-3545 ELECTRONICS GP-COMMUNICATION—PRODUCT LINK 121SR

S/N: SEJ1-UP
PART OF 357-3214 WIRING GP-COMMUNICATION
AN ATTACHMENT

SMCS-7606, 7610, 7620 **i04630041**

NOTE	PART NUMBER	QTY	PART NAME 1 2 3 4 5 6 (PRODUCT LEVEL)	SEE PAGE
	377-4844	1	SOFTWARE GP-COMMUNICATION (PRODUCT LINK 121SR)	

<END>

315-3418 GLOW PLUG GP

S/N: C4Z1-UP
PART OF 364-5743 ENGINE AR-PRIMARY
AN ATTACHMENT

SMCS-1412 **i04641471**

NOTE	REF NO	GRAPHIC REF	PART NUMBER	QTY	PART NAME 1 2 3 4 5 6 (PRODUCT LEVEL)	SEE PAGE
	1	1	**368-3151**	1	BUS BAR GP	
		1	**369-2472**	1	SPACER	
		1	*370-2909*	1	WIRE AS (STARTING AID)	
		1	**276-1151**	1	PIN-CONNECTOR (6-GA)	
		1	**369-0473**	1	LOCKNUT	
	2	1	**232-6662**	4	GLOW PLUG (12-VOLT)	

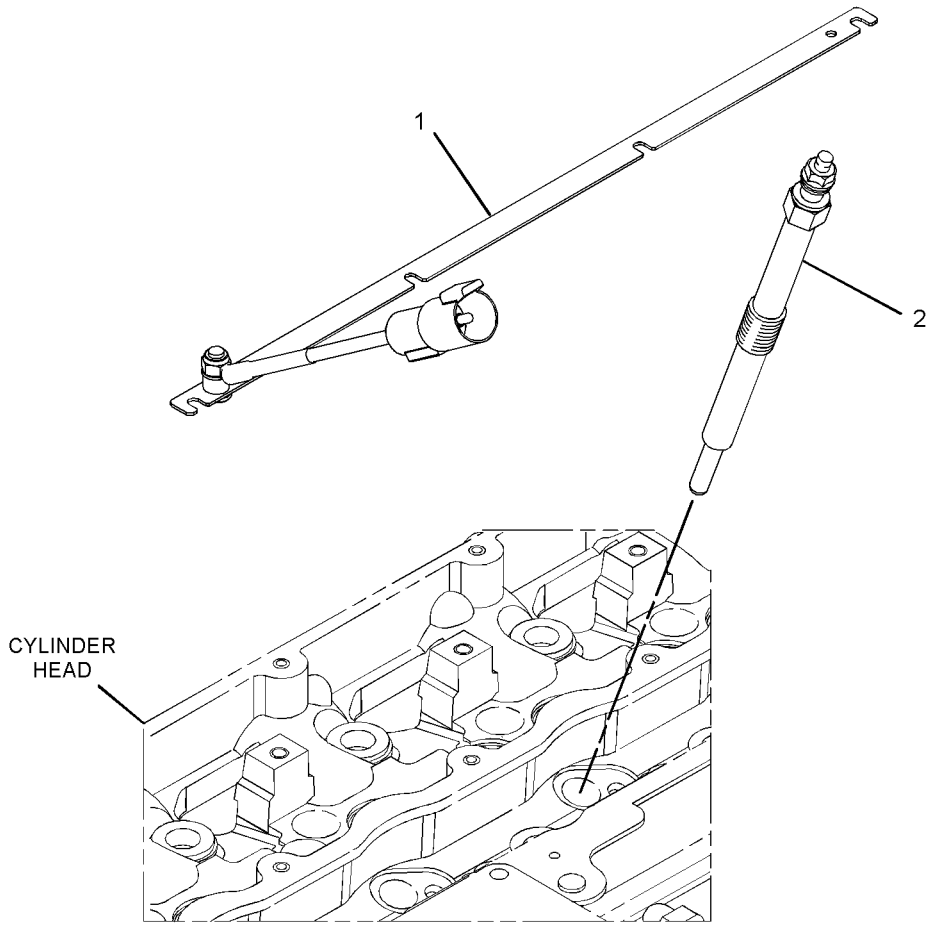

GRAPHIC #1 **<END>** g02788466

231-3058 HEATER GP-JACKET WATER

S/N: SEJ1-UP
240-VOLT, 1000-WATT
PART OF 367-6032 HEATER GP-JACKET WATER
AN ATTACHMENT

SMCS-1383 **i03496460**

NOTE	REF NO	GRAPHIC REF	PART NUMBER	QTY	PART NAME 1 2 3 4 5 6 (PRODUCT LEVEL)	SEE PAGE
	1	1	**219-3271**	1	ELEMENT AS-JACKET WATER HEATER (240-VOLT, 1000-WATT)	
		1	**133-3413**	1	KIT-SEAL	
					(INCLUDES SEAL, SPACER & RINGS)	
		1	**133-6517**	1	CAP AS-DUST	
	2	1	**231-3057**	1	CORD AS-HEATER	

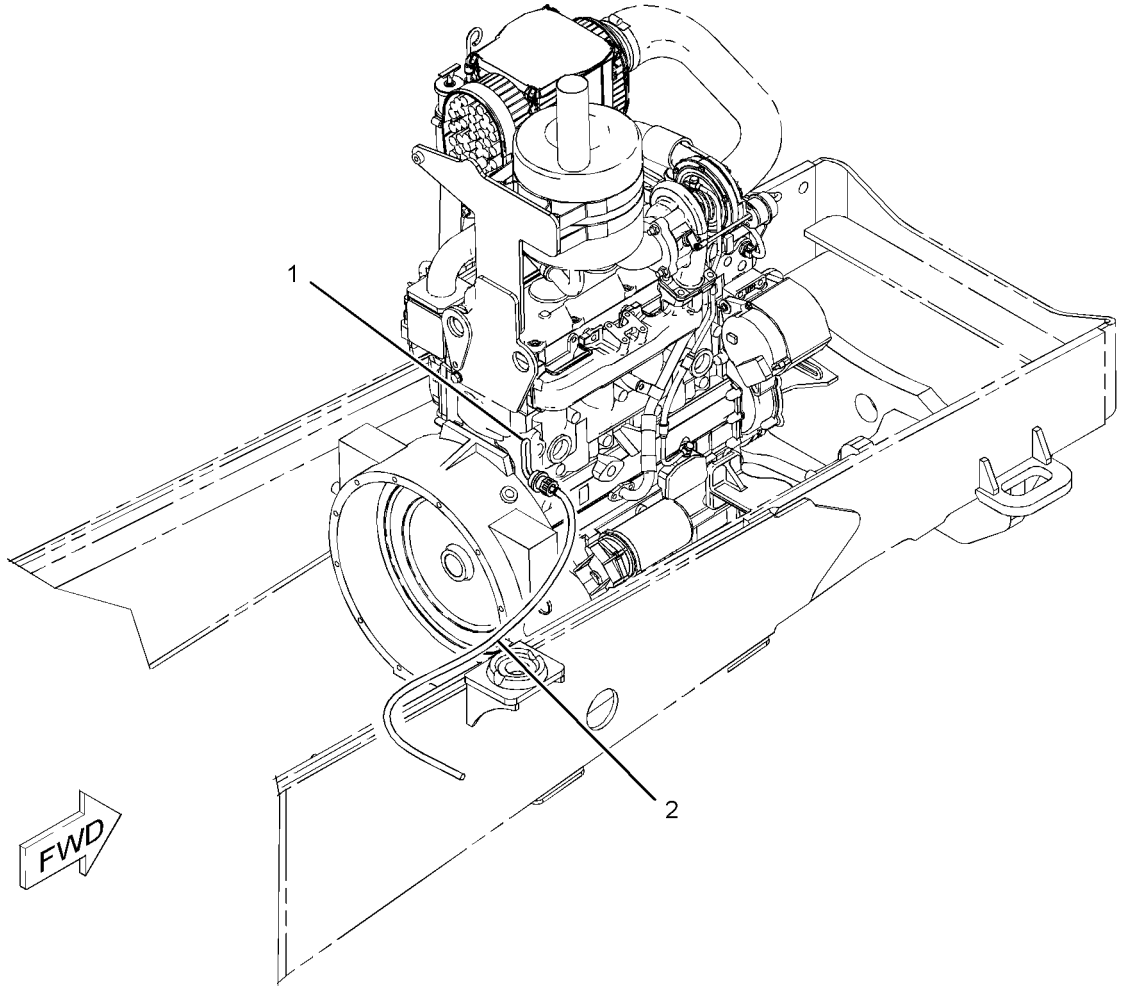

GRAPHIC #1 **<END>** g01105988

367-6032 HEATER GP-JACKET WATER

S/N: SEJ1-UP
240-VOLT, 1000-WATT
PART OF 377-0023 OPTION AR-BACKHOE
AN ATTACHMENT

SMCS-1383 **i04603829**

NOTE	REF NO	GRAPHIC REF	PART NUMBER	QTY	PART NAME 1 2 3 4 5 6 (PRODUCT LEVEL)	SEE PAGE
Y	1	1	*231-3058*	1	HEATER GP-JACKET WATER (240-VOLT)	96
	2	1	**3S-2093**	3	STRAP-CABLE	
	3	1	**4P-7428**	1	CLIP	
	4	1	**4P-8134**	1	CLIP	
	5	1	**8T-4121**	1	WASHER-HARD (11X21X2.5-MM THK)	
M	6	1	**8T-4192**	1	BOLT (M12X1.75X25-MM)	
M	7	1	**8T-4196**	1	BOLT (M10X1.5X35-MM)	
	8	1	**8T-4223**	1	WASHER-HARD (13.5X25.5X3-MM THK)	

M-METRIC PART
Y-SEPARATE ILLUSTRATION

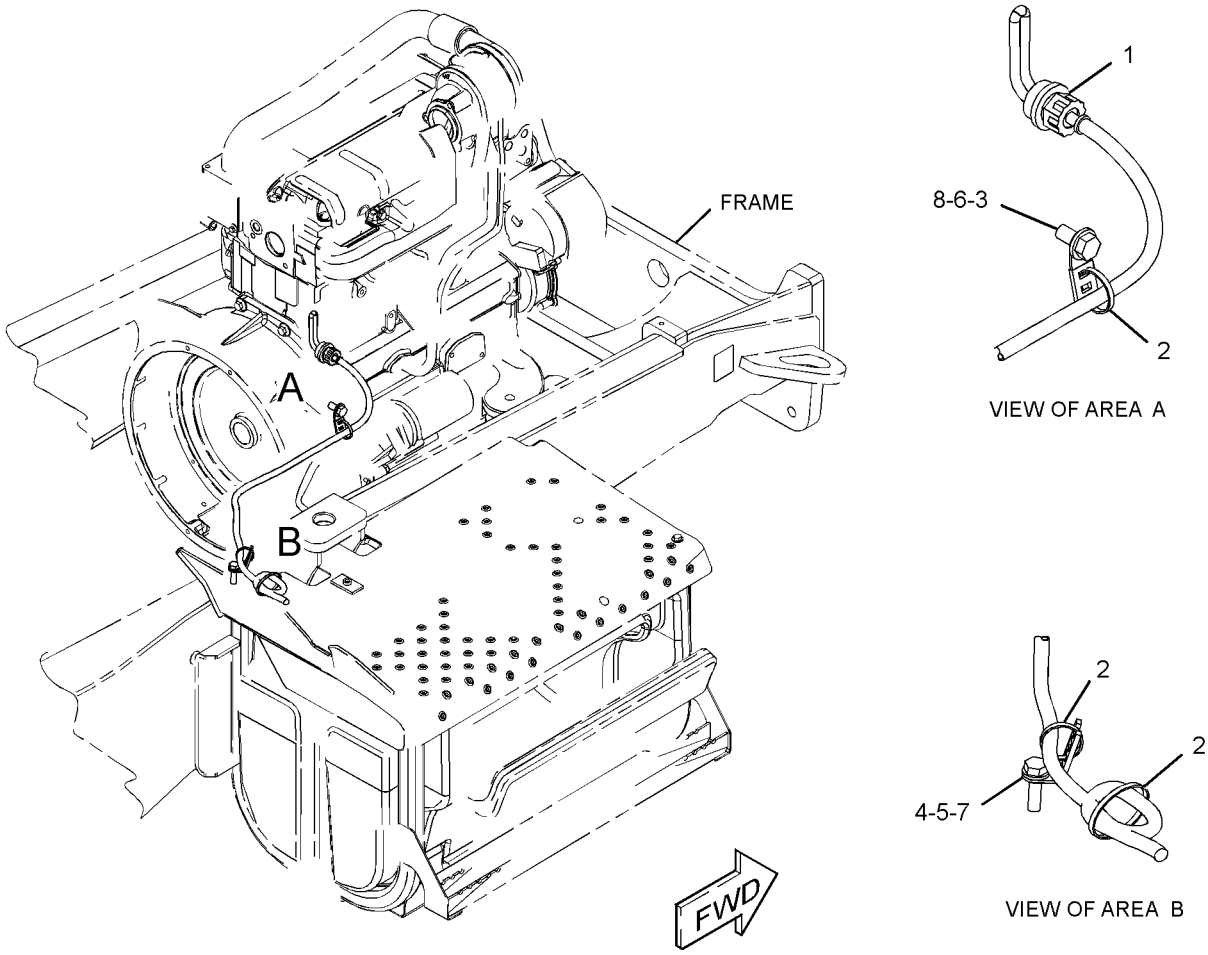

GRAPHIC #1 **<END>** g02818796

214-2968 LAMP GP-FLOOD

S/N: SEJ1-UP
12-VOLT
PART OF 357-3237 WIRING GP-CAB
AN ATTACHMENT

SMCS-1429, 1434 **i03712363**

NOTE	REF NO	GRAPHIC REF	PART NUMBER	QTY	PART NAME 1 2 3 4 5 6 (PRODUCT LEVEL)	SEE PAGE
	1	1	**9W-0607**	1	LAMP (12-VOLT, 55-WATT) (FLOODLIGHT)	
M	2	1	**6V-2317**	1	BOLT (M8X1.25X30-MM)	
M	3	1	**5C-7261**	1	NUT (M8X1.25-THD)	
	4	1	**8T-4224**	2	WASHER-HARD (8.8X16X2-MM THK)	
	5	1	**9X-4244**	2	SCREW-SPECIAL (M4X1.79X25-MM)	
	6	1	**202-6614**	1	LENS AS (FLOODLIGHT)	
	7	1	**175-4292**	1	BODY AS	
	8	1	**164-7556**	1	BRACKET (LAMP RETAINING)	
	9	1	**175-4291**	1	BRACKET AS	

M-METRIC PART

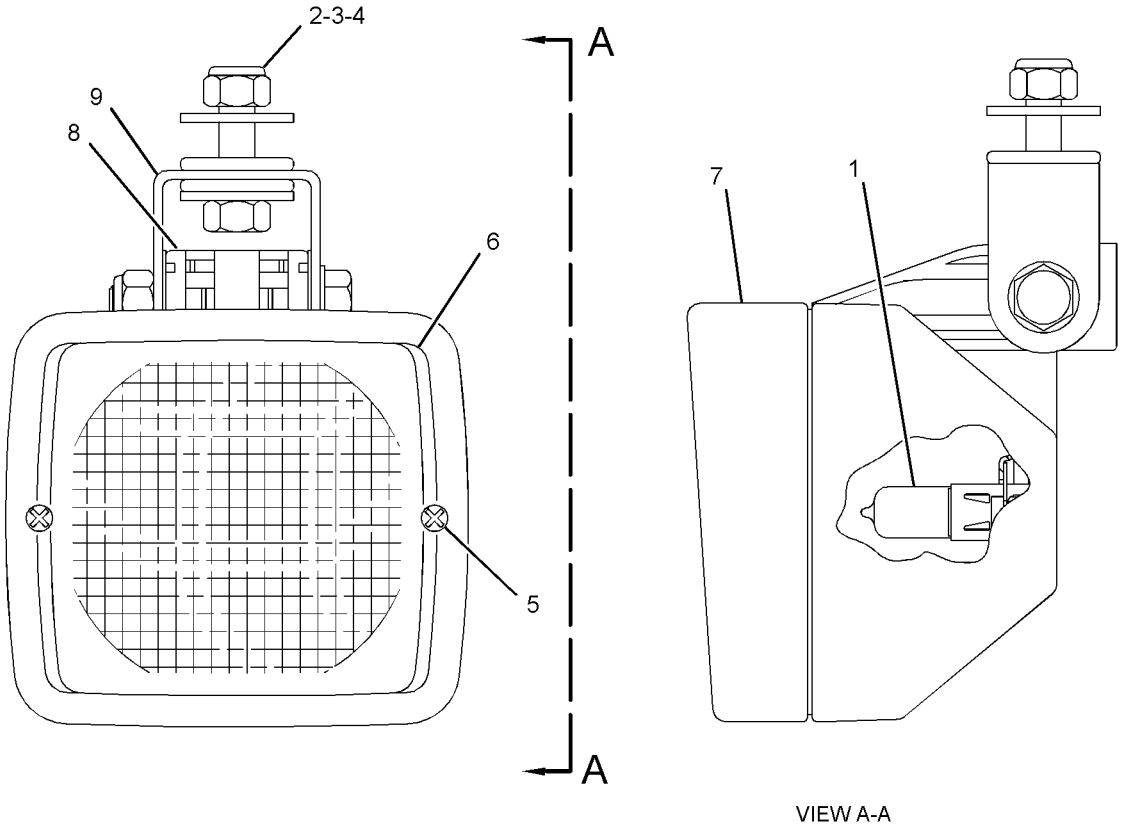

VIEW A-A

GRAPHIC #1 **<END>** g01181714

214-2969 LAMP GP-FLOOD

S/N: SEJ1-UP
12-VOLT
PART OF 372-8664 LIGHTING GP-FLOOD
AN ATTACHMENT

SMCS-1429, 1434 **i03712370**

NOTE	REF NO	GRAPHIC REF	PART NUMBER	QTY	PART NAME 1 2 3 4 5 6 (PRODUCT LEVEL)	SEE PAGE
	1	1	**9W-0607**	1	LAMP (12-VOLT, 55-WATT) (FLOODLIGHT)	
M	2	1	**6V-2317**	1	BOLT (M8X1.25X30-MM)	
M	3	1	**5C-7261**	1	NUT (M8X1.25-THD)	
	4	1	**8T-4224**	2	WASHER-HARD (8.8X16X2-MM THK)	
	5	1	**9X-4244**	2	SCREW-SPECIAL (M4X1.79X25-MM)	
	6	1	**202-6611**	1	LENS AS (FLOODLIGHT)	
	7	1	**175-4292**	1	BODY AS	
	8	1	**164-7556**	1	BRACKET (LAMP RETAINING)	
	9	1	**175-4291**	1	BRACKET AS	

M-METRIC PART

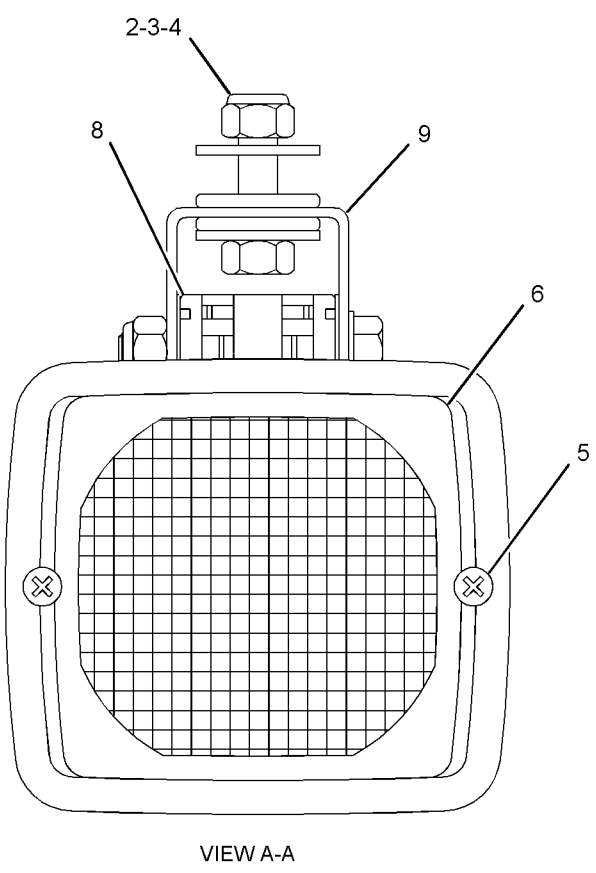

VIEW A-A

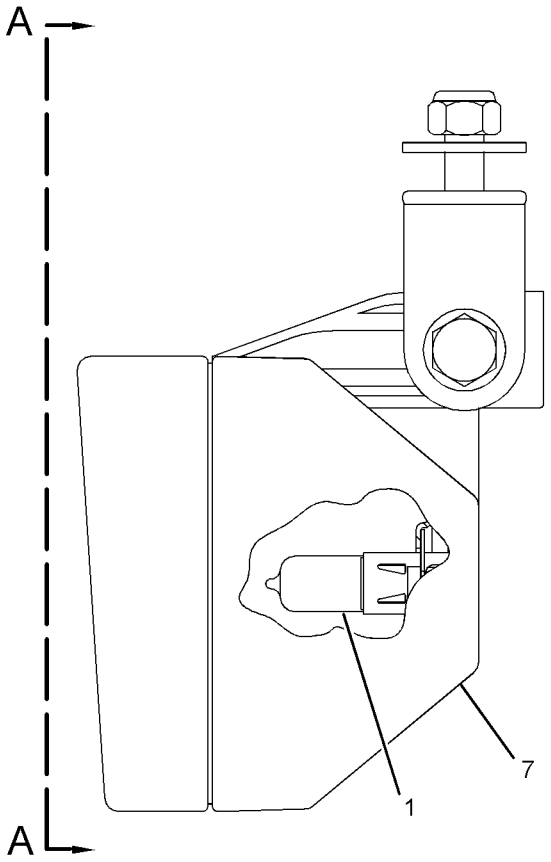

GRAPHIC #1 **<END>** g01971255

195-0189 LAMP GP-HEAD & SIGNAL–RH

S/N: SEJ1-UP
12-VOLT
PART OF 329-7496 LIGHTING GP-ROADING
AN ATTACHMENT

SMCS-1429 **i04476293**

NOTE	REF NO	GRAPHIC REF	PART NUMBER	QTY	PART NAME 1 2 3 4 5 6 (PRODUCT LEVEL)	SEE PAGE
	1	1	**228-6053**	1	BODY AS	
	2	1	**228-6054**	1	BEZEL	
	3	1	**228-6051**	1	LENS AS (HEADLIGHT)	
	4	1	**228-6052**	1	LENS AS (TURN SIGNAL)	
	5	1	**228-6056**	6	SCREW (4-32X1.26-IN)	
	6	1	**9W-3324**	1	LAMP-HEAD (12-VOLT, 60/55-WATT) (CLEAR)	
	7	1	**226-4560**	1	LAMP (12-VOLT, 21-WATT) (AMBER)	
	8	1	**226-4561**	1	LAMP (12-VOLT, 5-WATT) (CLEAR)	
M	9	1	**8T-0389**	1	LOCKNUT (M10X1.5-THD)	
	10	1	**100-3253**	1	SPACER (SPHERICAL)	
	11	1	**100-3254**	1	SPACER (SPHERICAL)	
	12	1	**100-3255**	1	WASHER (SPHERICAL)	
	13	1	**102-8805**	1	KIT-RECEPTACLE (6-PIN)	
					(INCLUDES RECEPTACLE AS & WEDGE)	
	14	1	**8T-8729**	5	PIN-CONNECTOR (16-GA TO 18-GA)	
	15	1	**8T-8737**	1	PLUG-SEAL	

M-METRIC PART

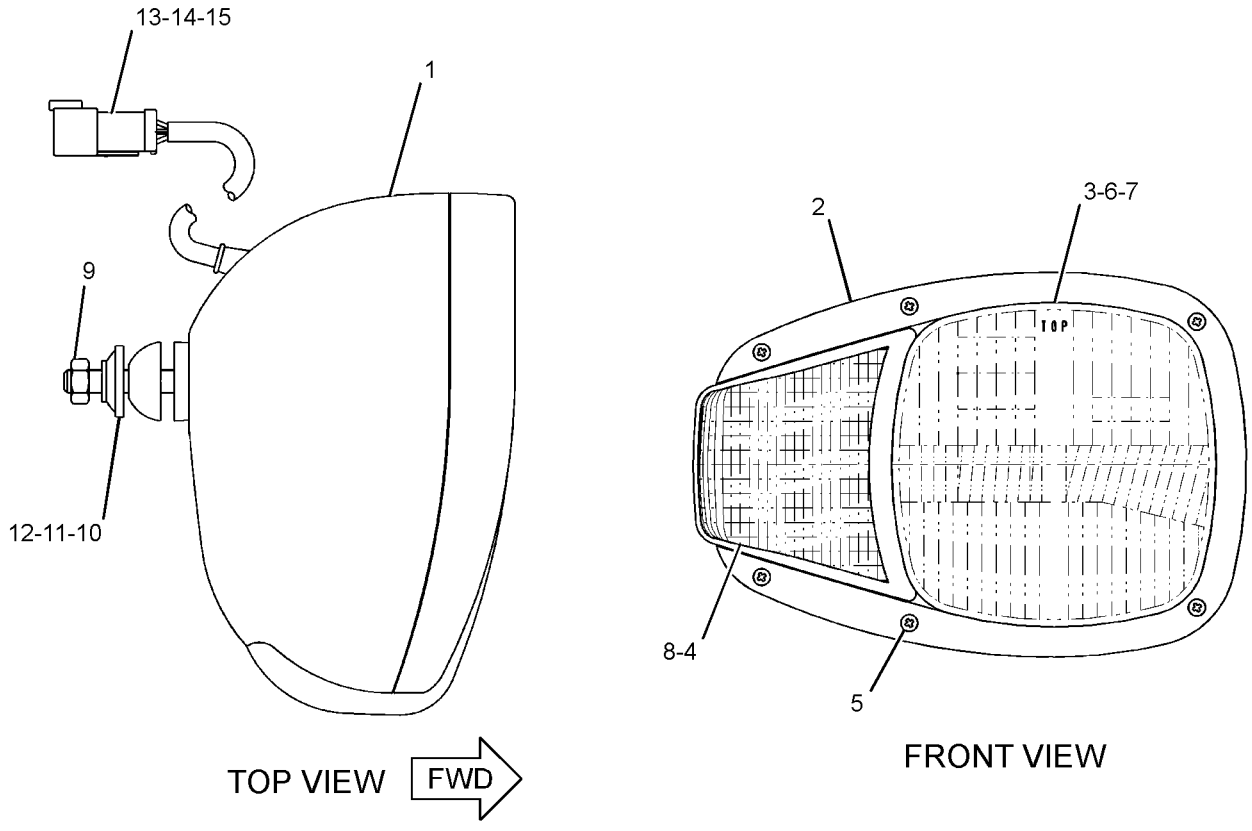

GRAPHIC #1 **<END>** g01313421

195-0190 LAMP GP-HEAD & SIGNAL–LH

S/N: SEJ1-UP
12-VOLT
PART OF 329-7496 LIGHTING GP-ROADING
AN ATTACHMENT

SMCS-1429 **i04476292**

NOTE	REF NO	GRAPHIC REF	PART NUMBER	QTY	PART NAME 1 2 3 4 5 6 (PRODUCT LEVEL)	SEE PAGE
	1	1	**228-6053**	1	BODY AS	
	2	1	**228-6054**	1	BEZEL	
	3	1	**228-6051**	1	LENS AS (HEADLIGHT)	
	4	1	**228-6052**	1	LENS AS (TURN SIGNAL)	
	5	1	**228-6056**	6	SCREW (4-32X1.26-IN)	
	6	1	**9W-3324**	1	LAMP-HEAD (12-VOLT, 60/55-WATT) (CLEAR)	
	7	1	**226-4560**	1	LAMP (12-VOLT, 21-WATT) (AMBER)	
	8	1	**226-4561**	1	LAMP (12-VOLT, 5-WATT) (CLEAR)	
M	9	1	**8T-0389**	1	LOCKNUT (M10X1.5-THD)	
	10	1	**100-3253**	1	SPACER (SPHERICAL)	
	11	1	**100-3254**	1	SPACER (SPHERICAL)	
	12	1	**100-3255**	1	WASHER (SPHERICAL)	
	13	1	**102-8805**	1	KIT-RECEPTACLE (6-PIN)	
					(INCLUDES RECEPTACLE AS & WEDGE)	
	14	1	**8T-8729**	5	PIN-CONNECTOR (16-GA TO 18-GA)	
	15	1	**8T-8737**	1	PLUG-SEAL	

M-METRIC PART

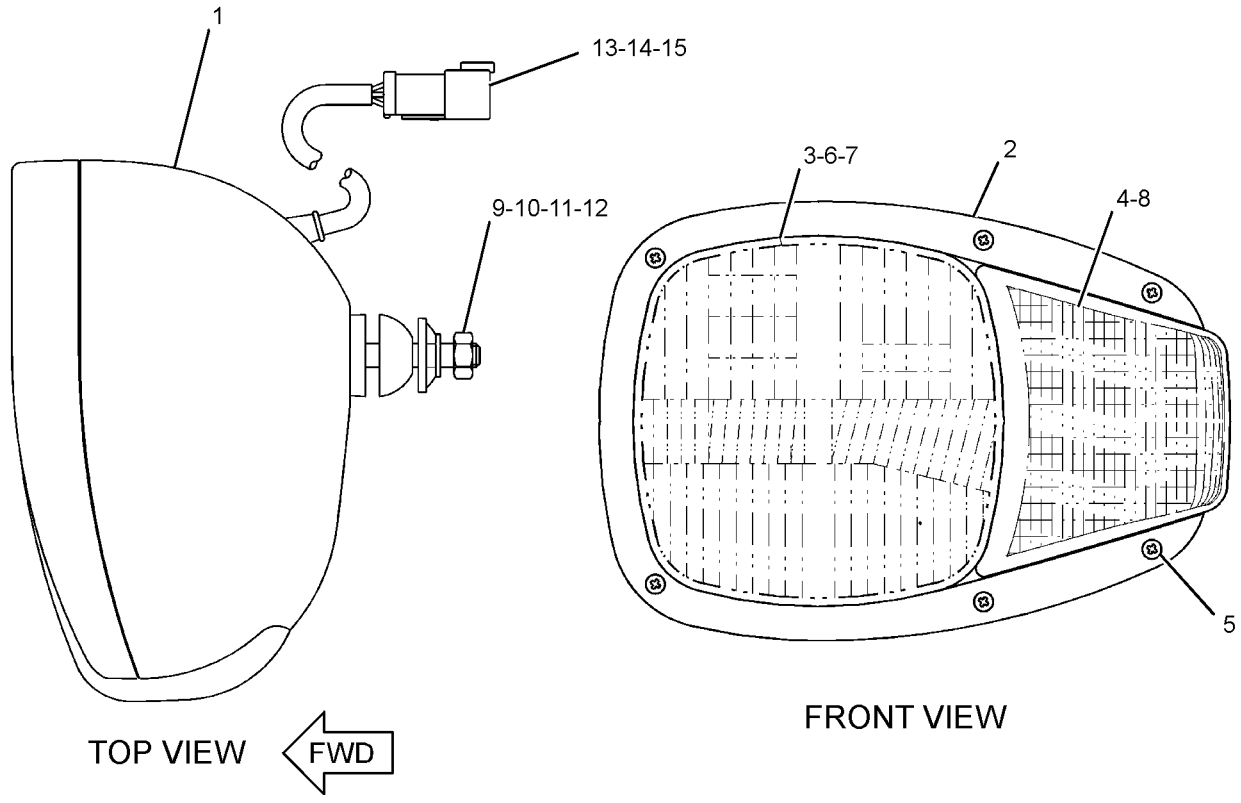

GRAPHIC #1 **<END>** g01313362

195-0191 LAMP GP-HEAD & SIGNAL–RH

S/N: SEJ1-UP
12-VOLT
PART OF 329-7497 LIGHTING GP-ROADING
AN ATTACHMENT

SMCS-1429 **i04476291**

NOTE	REF NO	GRAPHIC REF	PART NUMBER	QTY	PART NAME 1 2 3 4 5 6 (PRODUCT LEVEL)	SEE PAGE
	1	1	**228-6053**	1	BODY AS	
	2	1	**228-6054**	1	BEZEL	
	3	1	**228-6050**	1	LENS AS (HEADLIGHT)	
	4	1	**228-6052**	1	LENS AS (TURN SIGNAL)	
	5	1	**228-6056**	6	SCREW (4-32X1.26-IN)	
	6	1	**9W-3324**	1	LAMP-HEAD (12-VOLT, 60/55-WATT) (CLEAR)	
	7	1	**226-4560**	1	LAMP (12-VOLT, 21-WATT) (AMBER)	
	8	1	**226-4561**	1	LAMP (12-VOLT, 5-WATT) (CLEAR)	
M	9	1	**8T-0389**	1	LOCKNUT (M10X1.5-THD)	
	10	1	**100-3253**	1	SPACER (SPHERICAL)	
	11	1	**100-3254**	1	SPACER (SPHERICAL)	
	12	1	**100-3255**	1	WASHER (SPHERICAL)	
	13	1	**102-8805**	1	KIT-RECEPTACLE (6-PIN)	
					(INCLUDES RECEPTACLE AS & WEDGE)	
	14	1	**8T-8729**	5	PIN-CONNECTOR (16-GA TO 18-GA)	
	15	1	**8T-8737**	1	PLUG-SEAL	

M-METRIC PART

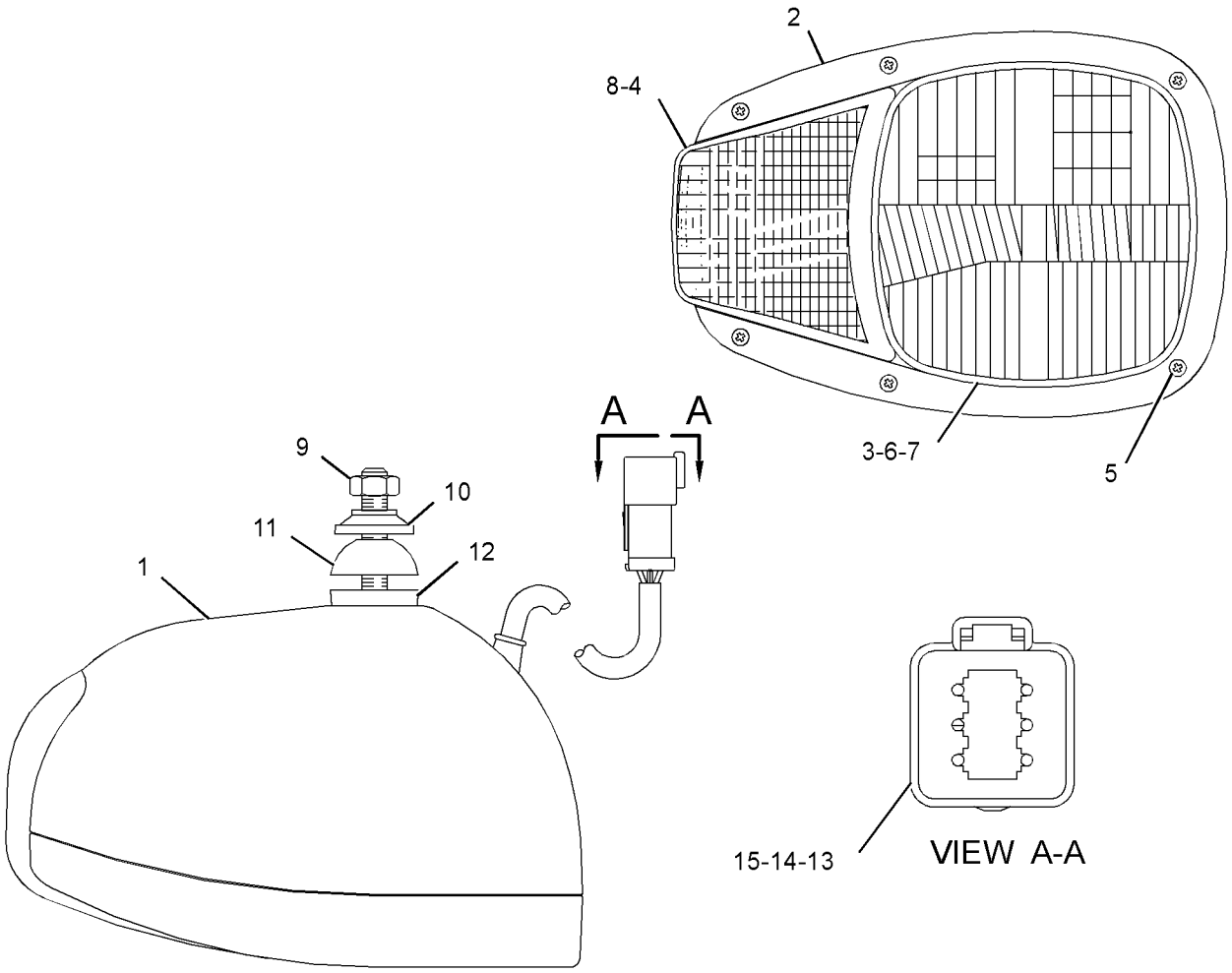

GRAPHIC #1 **<END>** g01948222

195-0192 LAMP GP-HEAD & SIGNAL–LH

S/N: SEJ1-UP
12-VOLT
PART OF 329-7497 LIGHTING GP-ROADING
AN ATTACHMENT

SMCS-1429 **i04476290**

NOTE	REF NO	GRAPHIC REF	PART NUMBER	QTY	PART NAME 1 2 3 4 5 6 (PRODUCT LEVEL)	SEE PAGE
	1	1	**228-6053**	1	BODY AS	
	2	1	**228-6054**	1	BEZEL	
	3	1	**228-6050**	1	LENS AS (HEADLIGHT)	
	4	1	**228-6052**	1	LENS AS (TURN SIGNAL)	
	5	1	**228-6056**	6	SCREW (4-32X1.26-IN)	
	6	1	**9W-3324**	1	LAMP-HEAD (12-VOLT, 60/55-WATT) (CLEAR)	
	7	1	**226-4560**	1	LAMP (12-VOLT, 21-WATT) (AMBER)	
	8	1	**226-4561**	1	LAMP (12-VOLT, 5-WATT) (CLEAR)	
M	9	1	**8T-0389**	1	LOCKNUT (M10X1.5-THD)	
	10	1	**100-3253**	1	SPACER (SPHERICAL)	
	11	1	**100-3254**	1	SPACER (SPHERICAL)	
	12	1	**100-3255**	1	WASHER (SPHERICAL)	
	13	1	**102-8805**	1	KIT-RECEPTACLE (6-PIN)	
					(INCLUDES RECEPTACLE AS & WEDGE)	
	14	1	**8T-8729**	5	PIN-CONNECTOR (16-GA TO 18-GA)	
	15	1	**8T-8737**	1	PLUG-SEAL	

M-METRIC PART

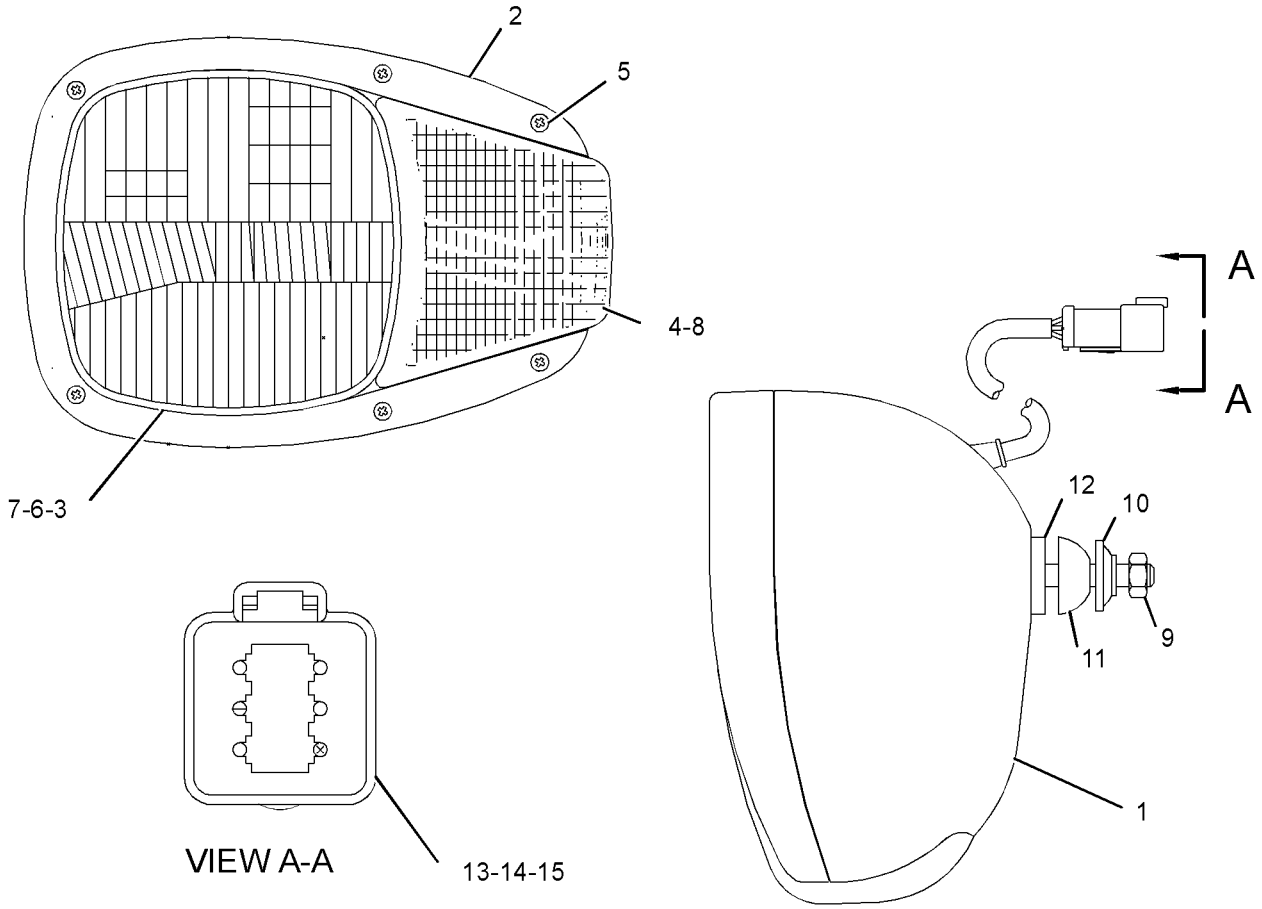

GRAPHIC #1 **<END>** g01948223

196-0030 LAMP GP-REGISTRATION PLATE

S/N: SEJ1-UP
12-VOLT
PART OF 328-1950, 372-8661 LIGHTING GP-ROADING
AN ATTACHMENT

SMCS-1429 **i02224900**

NOTE	REF NO	GRAPHIC REF	PART NUMBER	QTY	PART NAME 1 2 3 4 5 6 (PRODUCT LEVEL)	SEE PAGE
	1	1	**195-9712**	1	LAMP (12-VOLT, 10-WATT)	
M	2	1	**5C-2874**	2	NUT (M5X0.8-THD)	
	3	1	**8F-1434**	2	LOCKWASHER	
M	4	1	**8T-4753**	2	SCREW (M5X0.8X20-MM)	
	5	1	**9M-2307**	2	WASHER (5.2X19X2-MM THK)	
	6	1	**102-8802**	1	KIT-RECEPTACLE (2-PIN)	
					(INCLUDES RECEPTACLE AS & WEDGE)	
	7	1	**186-3735**	2	PIN-CONNECTOR (16-GA TO 18-GA)	

M-METRIC PART

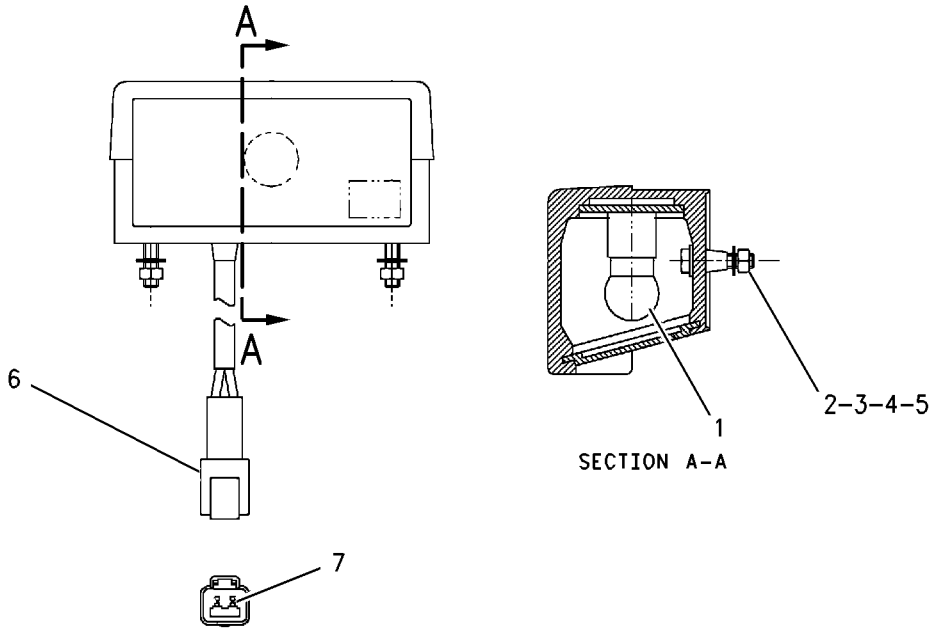

GRAPHIC #1 **<END>** g00890511

309-1325 LAMP GP-WARNING BEACON–AMBER

S/N: SEJ1-UP
12-VOLT
PART OF 211-4291, 343-3433 LIGHTING GP-WARNING BEACON
AN ATTACHMENT

SMCS-1431 **i03631017**

NOTE	REF NO	GRAPHIC REF	PART NUMBER	QTY	PART NAME 1 2 3 4 5 6 (PRODUCT LEVEL)	SEE PAGE
	1	1	**272-9800**	1	LENS (AMBER)	
	2	1	**9X-8118**	1	LAMP (12-VOLT, 55-WATT) (WARNING BEACON)	
	3	1	**9X-8139**	1	BELT-DRIVE (WARNING BEACON)	
	4	1	**9R-7958**	1	CORD AS	
	4A	1	**9R-7942**	1	PLUG AS	

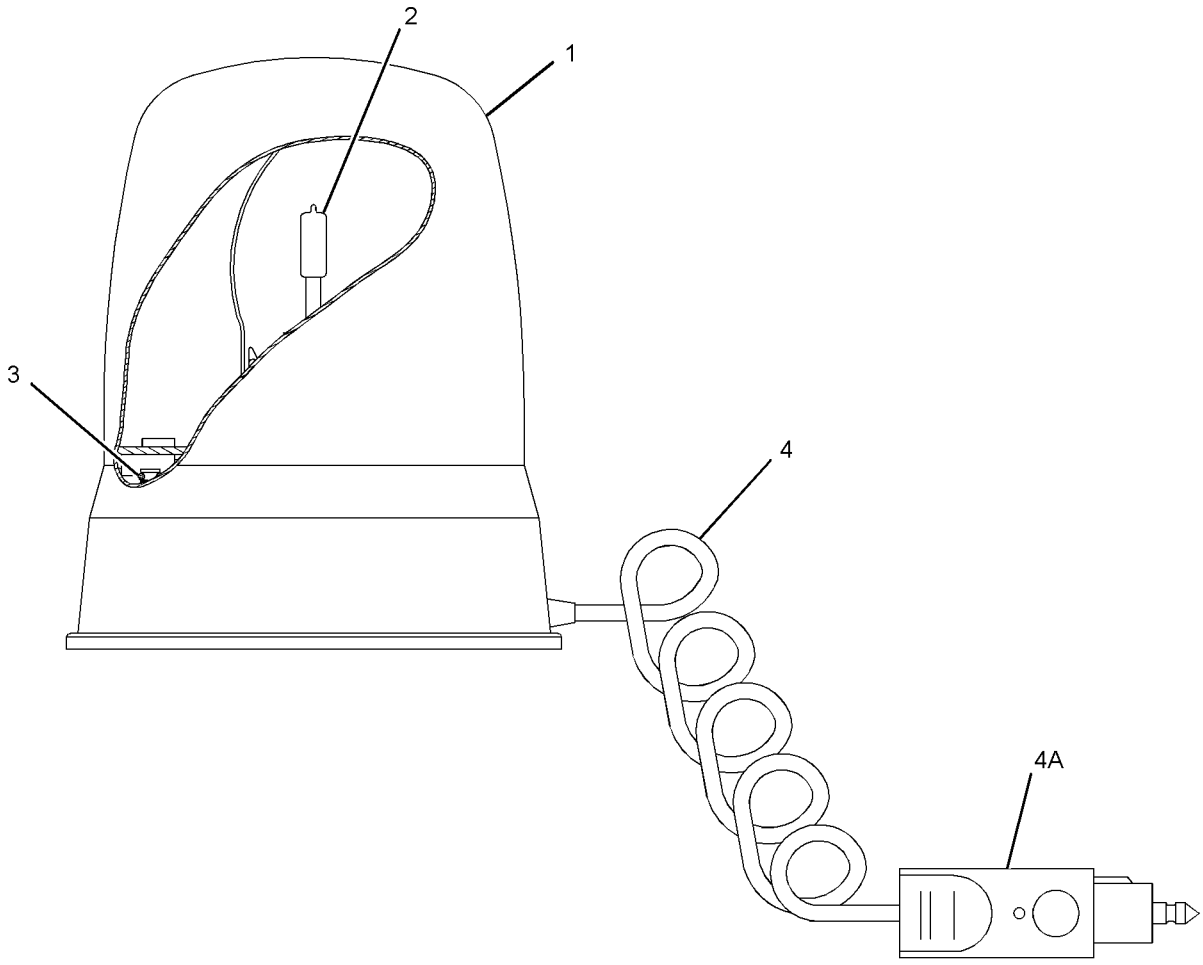

GRAPHIC #1 **<END>** g01382357

372-8664 LIGHTING GP-FLOOD

S/N: SEJ1-UP
PART OF 353-1429, 353-1432 CAB AR
AN ATTACHMENT

SMCS-1434 **i04566185**

NOTE	REF NO	GRAPHIC REF	PART NUMBER	QTY	PART NAME 1 2 3 4 5 6 (PRODUCT LEVEL)	SEE PAGE
Y	1	1	**214-2969**	4	LAMP GP-FLOOD	99
	2	1	**214-4698**	1	SWITCH AS-ROCKER (FLOODLIGHTS, FRONT)	
	3	1	**214-4700**	1	SWITCH AS-ROCKER (FLOODLIGHTS, REAR)	
					(EACH SWITCH AS-ROCKER INCLUDES)	
		1	**111-7899**	1	GASKET	
	4	1	**3S-2093**	4	STRAP-CABLE	

Y-SEPARATE ILLUSTRATION

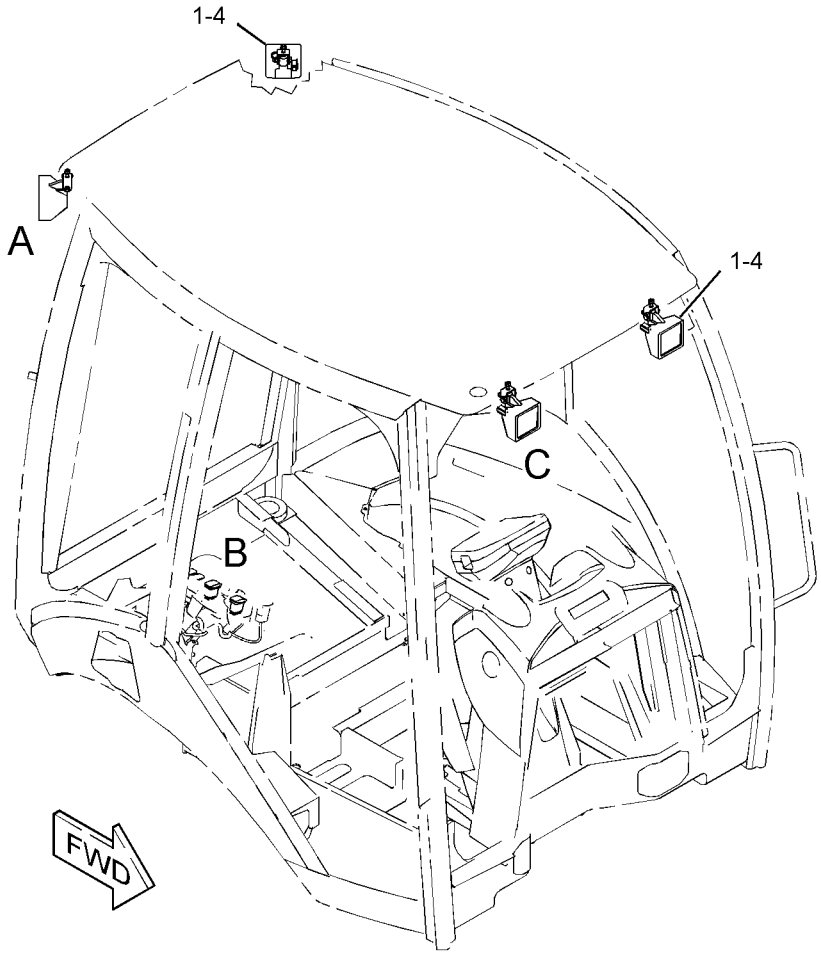

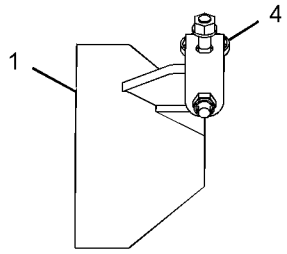

VIEW OF AREA A

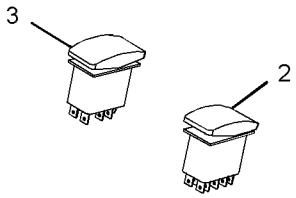

VIEW OF AREA B

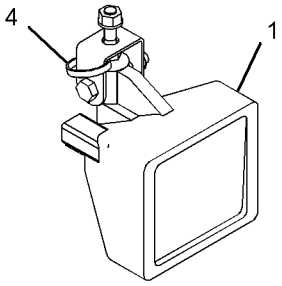

VIEW OF AREA C

GRAPHIC #1 **<END>** g02815836

328-1950 LIGHTING GP-ROADING—FOG

S/N: SEJ1-UP
PART OF 353-6951 KIT-ROADING CONVERSION
AN ATTACHMENT

SMCS-1429 **i03652409**

NOTE	REF NO	GRAPHIC REF	PART NUMBER	QTY	PART NAME 1 2 3 4 5 6 (PRODUCT LEVEL)	SEE PAGE
	1	1	**7K-1181**	3	STRAP-CABLE	
Y	2	1	**196-0030**	1	LAMP GP-REGISTRATION PLATE (12-VOLT)	104
	3	1	**205-9920**	1	STRAP-CABLE	
	4	1	**214-4721**	1	SWITCH AS-ROCKER (FOG LIGHT, REAR)	
		1	**111-7899**	1	GASKET	
	5	1	**262-4727**	1	LAMP GP-ROADING (FOG LIGHT, RED, REAR)	
		1	**9W-3326**	1	LAMP (12-VOLT, 21-WATT) (ROADING LIGHTS)	
		1	**344-7954**	1	LENS	
	6	1	**327-4172**	1	HARNESS AS-REAR LIGHTING	
		1	**266-4157**	2	SLEEVE-BRAIDED	
		1	**230-4011**	1	PLUG AS-CONNECTOR (2-PIN)	
		1	**264-7029**	1	SEAL-CONNECTOR	
		1	**180-9340**	2	SOCKET-CONNECTOR (14-GA TO 18-GA)	
		1	**1S-9593**	2	STRAP-CABLE	
		1	**102-8803**	1	KIT-RECEPTACLE (3-PIN)	
					(INCLUDES RECEPTACLE AS & WEDGE)	
		1	**155-2270**	1	KIT-CONNECTING PLUG (2-PIN)	
					(INCLUDES PLUG AS, WEDGE & INTERFACE SEAL)	
E		1	**125-7874**		TUBE-HEAT SHRINK (5.72-MM DIA) (5-CM)	
		1	**9X-3402**	2	SOCKET-CONNECTOR (16-GA TO 18-GA)	
		1	**9X-3401**	3	PIN-CONNECTOR (16-GA TO 18-GA)	
	7	1	**330-7612**	1	PLATE	
	8	1	**330-7613**	1	PLATE	
	9	1	**3S-2093**	4	STRAP-CABLE	
M	10	1	**5C-2890**	2	NUT (M6X1-THD)	
M	11	1	**5C-7261**	2	NUT (M8X1.25-THD)	
	12	1	**5P-4116**	4	WASHER-HARD (8.8X20.5X2-MM THK)	
	13	1	**8T-4205**	2	WASHER-HARD (7.2X14.5X2-MM THK)	
M	14	1	**8T-7547**	2	BOLT (M8X1.25X30-MM)	

E-ORDER BY THE CENTIMETER
M-METRIC PART
Y-SEPARATE ILLUSTRATION

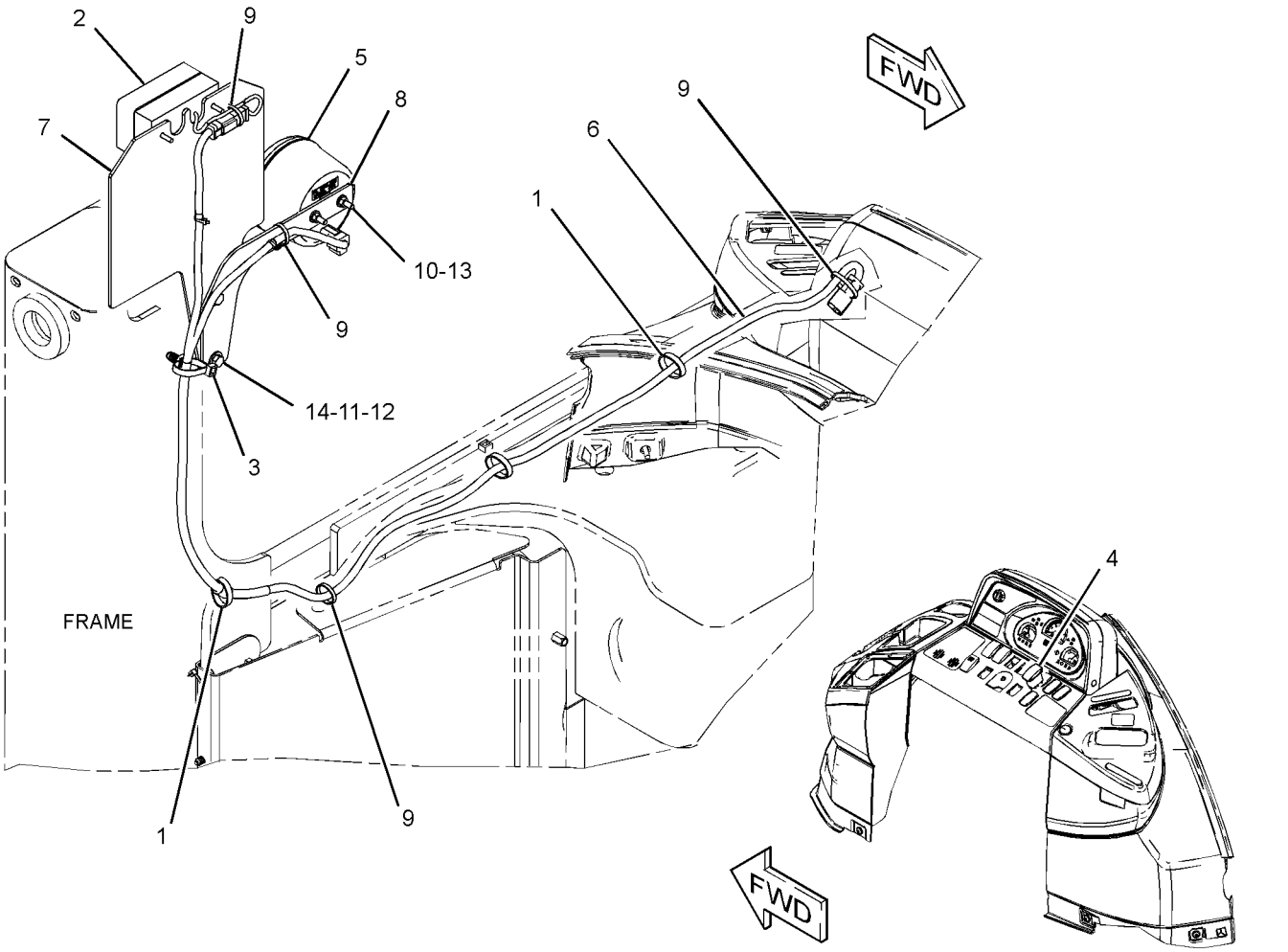

GRAPHIC #1 **<END>** g01963213

329-7496 LIGHTING GP-ROADING—DIPPED, RH

S/N: SEJ1-UP

PART OF 341-3107 CONVERSION AR-ROADING, 341-3109 OPTION AR-REGIONAL AN ATTACHMENT

SMCS-1429 **i04004346**

NOTE	REF NO	GRAPHIC REF	PART NUMBER	QTY	PART NAME 1 2 3 4 5 6 (PRODUCT LEVEL)	SEE PAGE
Y	1	1	**195-0189**	1	LAMP GP-HEAD & SIGNAL (FRONT, RH)	100
Y	2	1	**195-0190**	1	LAMP GP-HEAD & SIGNAL (FRONT, LH)	101
	3	1	**3S-2093**	2	STRAP-CABLE	

Y-SEPARATE ILLUSTRATION

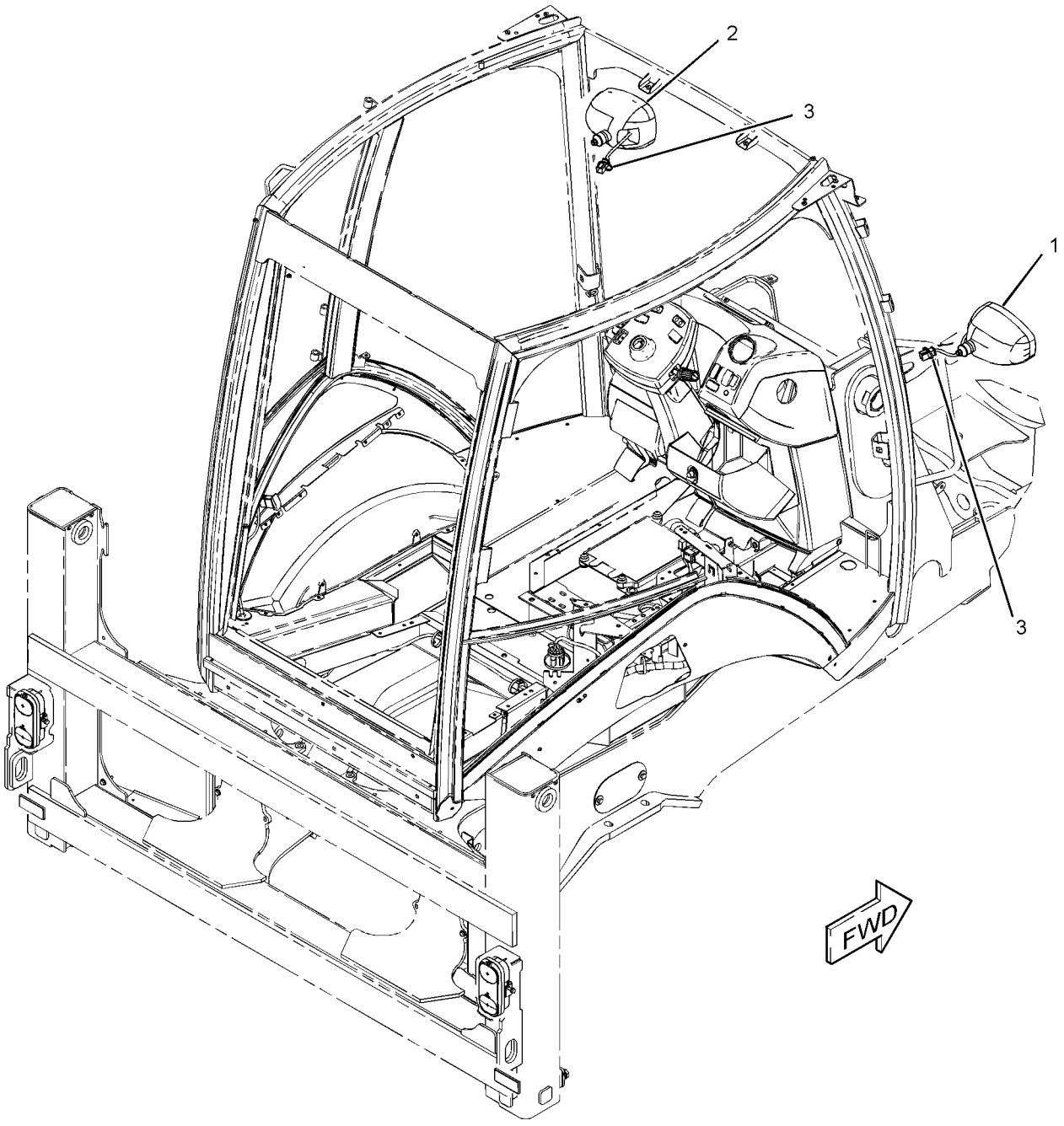

GRAPHIC #1 **<END>** g02181835

329-7497 LIGHTING GP-ROADING—DIPPED, LH

S/N: SEJ1-UP

AN ATTACHMENT

SMCS-1429 **i04004347**

NOTE	REF NO	GRAPHIC REF	PART NUMBER	QTY	PART NAME 1 2 3 4 5 6 (PRODUCT LEVEL)	SEE PAGE
Y	1	1	**195-0191**	1	LAMP GP-HEAD & SIGNAL (RH)	102
Y	2	1	**195-0192**	1	LAMP GP-HEAD & SIGNAL (LH)	103
	3	1	**3S-2093**	2	STRAP-CABLE	

Y-SEPARATE ILLUSTRATION

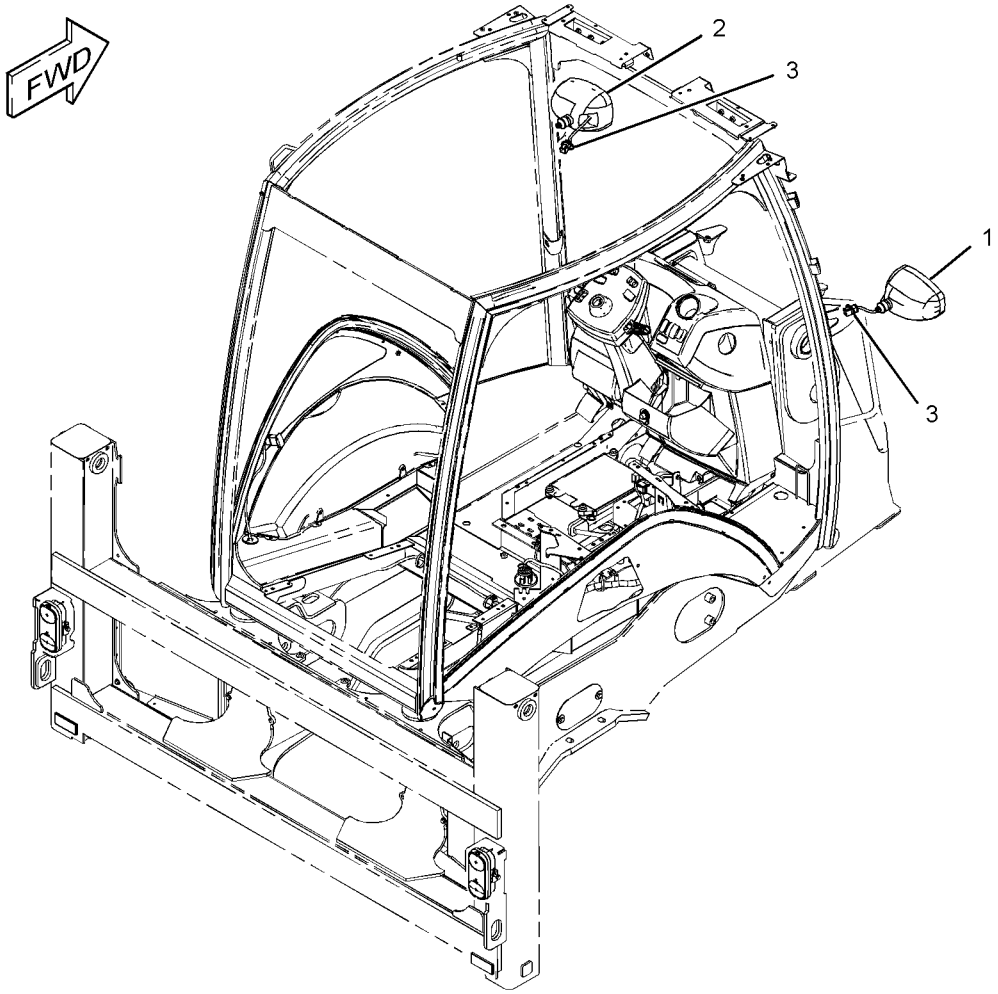

GRAPHIC #1 **<END>** g02178699

ELECTRICAL AND STARTING SYSTEM

372-8661 LIGHTING GP-ROADING—FOG LIGHT

S/N: SEJ1-UP
PART OF 341-3107, 341-3111 CONVERSION AR-ROADING
CANNOT BE USED WITH 341-3111—PAGE 4
AN ATTACHMENT

SMCS-1429 **i04547484**

NOTE	REF NO	GRAPHIC REF	PART NUMBER	QTY	PART NAME 1 2 3 4 5 6 (PRODUCT LEVEL)	SEE PAGE
	1	1	**7K-1181**	3	STRAP-CABLE	
Y	2	1	**196-0030**	1	LAMP GP-REGISTRATION PLATE (12-VOLT)	104
	3	1	**205-9920**	1	STRAP-CABLE	
	4	1	**261-5048**	1	SWITCH AS-ROCKER (FOG LIGHT, REAR)	
		1	**111-7899**	1	GASKET	
	5	1	**262-4727**	1	LAMP GP-ROADING (FOG LIGHT, RED, REAR)	
		1	**9W-3326**	1	LAMP (12-VOLT, 21-WATT) (ROADING LIGHTS)	
		1	**344-7954**	1	LENS	
	6	1	**327-4172**	1	HARNESS AS-REAR LIGHTING	
		1	**266-4157**	2	SLEEVE-BRAIDED	
		1	**9X-3401**	3	PIN-CONNECTOR (16-GA TO 18-GA)	
		1	**155-2270**	1	KIT-CONNECTING PLUG (2-PIN)	
					(INCLUDES PLUG AS, WEDGE & INTERFACE SEAL)	
		1	**230-4011**	1	PLUG AS-CONNECTOR (2-PIN)	
		1	**264-7029**	1	SEAL-CONNECTOR	
		1	**102-8803**	1	KIT-RECEPTACLE (3-PIN)	
					(INCLUDES RECEPTACLE AS & WEDGE)	
		1	**9X-3402**	2	SOCKET-CONNECTOR (16-GA TO 18-GA)	
		1	**180-9340**	2	SOCKET-CONNECTOR (14-GA TO 18-GA)	
		1	**1S-9593**	2	STRAP-CABLE	
E		1	**125-7874**		TUBE-HEAT SHRINK (5.72-MM DIA) (5-CM)	
	7	1	**330-7612**	1	PLATE	
	8	1	**330-7613**	1	PLATE	
	9	1	**3S-2093**	4	STRAP-CABLE	
M	10	1	**5C-2890**	2	NUT (M6X1-THD)	
M	11	1	**5C-7261**	2	NUT (M8X1.25-THD)	
	12	1	**5P-4116**	4	WASHER-HARD (8.8X20.5X2-MM THK)	
	13	1	**8T-4205**	2	WASHER-HARD (7.2X14.5X2-MM THK)	
M	14	1	**8T-7547**	2	BOLT (M8X1.25X30-MM)	

E-ORDER BY THE CENTIMETER
M-METRIC PART
Y-SEPARATE ILLUSTRATION

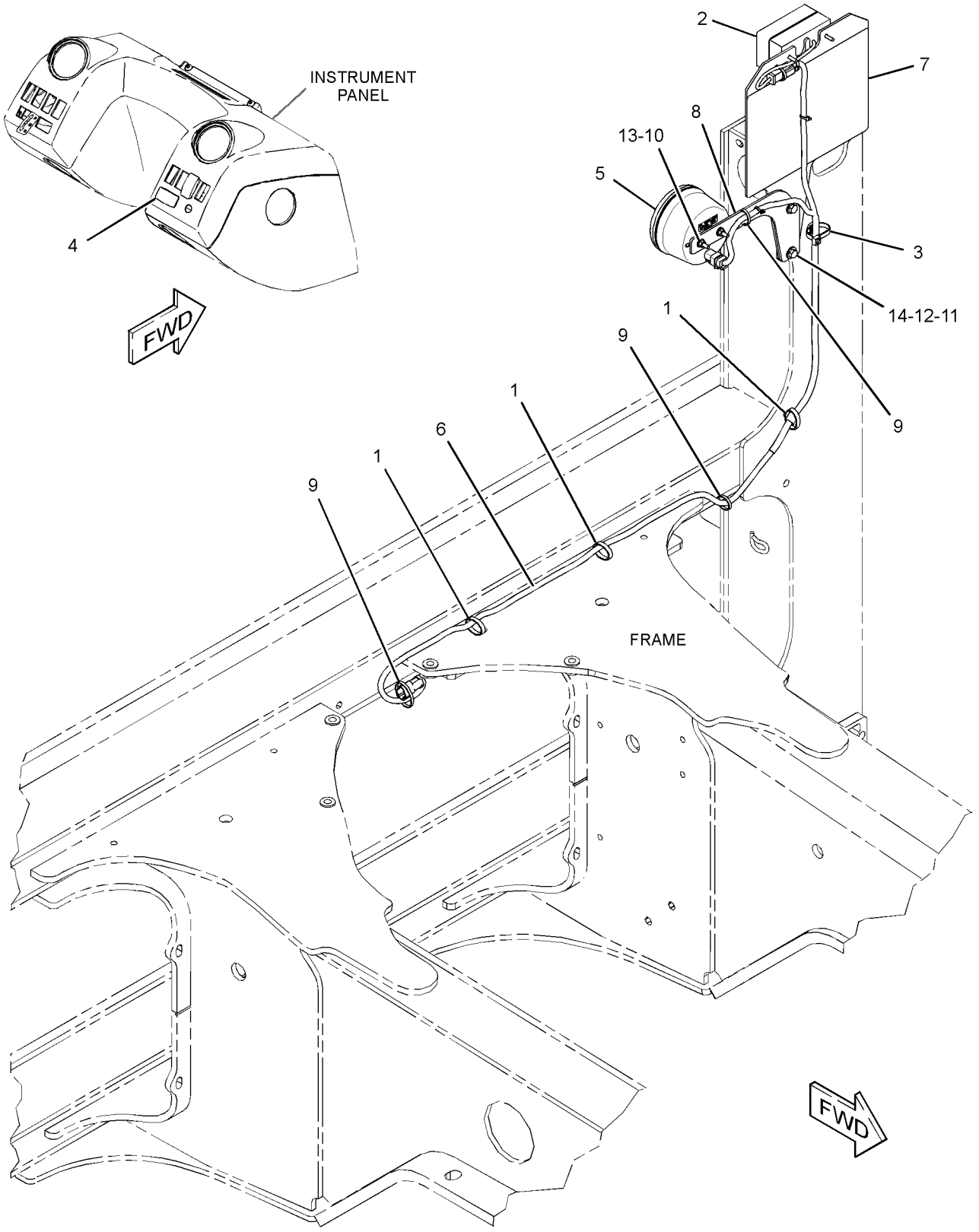

GRAPHIC #1 **<END>** g02776176

211-4291 LIGHTING GP-WARNING BEACON–
AMBER, MAGNETIC MOUNT, ROTATING
S/N: SEJ1-UP
PART OF 341-3111 CONVERSION AR-ROADING
AN ATTACHMENT

SMCS-1431 **i03799093**

NOTE	REF NO	GRAPHIC REF	PART NUMBER	QTY	PART NAME 1 2 3 4 5 6 (PRODUCT LEVEL)	SEE PAGE
Y	1	1	**309-1325**	1	LAMP GP-WARNING BEACON (12-VOLT, AMBER)	105
	2	1	**031-5644**	2	CLIP	

Y-SEPARATE ILLUSTRATION

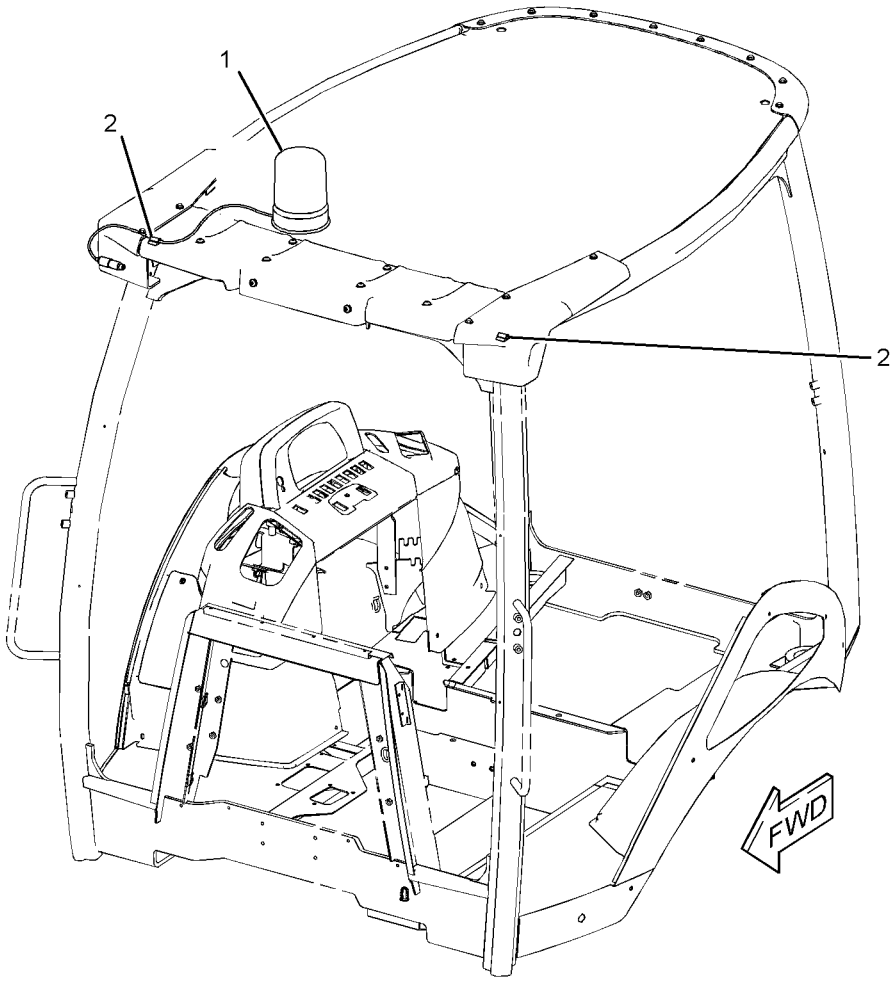

GRAPHIC #1 **<END>** g01228059

343-3433 LIGHTING GP-WARNING BEACON

S/N: SEJ1-UP
PART OF 341-3107 CONVERSION AR-ROADING
AN ATTACHMENT

SMCS-1431 **i03860389**

NOTE	REF NO	GRAPHIC REF	PART NUMBER	QTY	PART NAME 1 2 3 4 5 6 (PRODUCT LEVEL)	SEE PAGE
	1	1	**8T-2427**	2	FILM-INSTRUCTION (BEACON)	
	2	1	**031-5644**	2	CLIP	
Y	3	1	**309-1325**	2	LAMP GP-WARNING BEACON (12-VOLT, AMBER)	105

Y-SEPARATE ILLUSTRATION

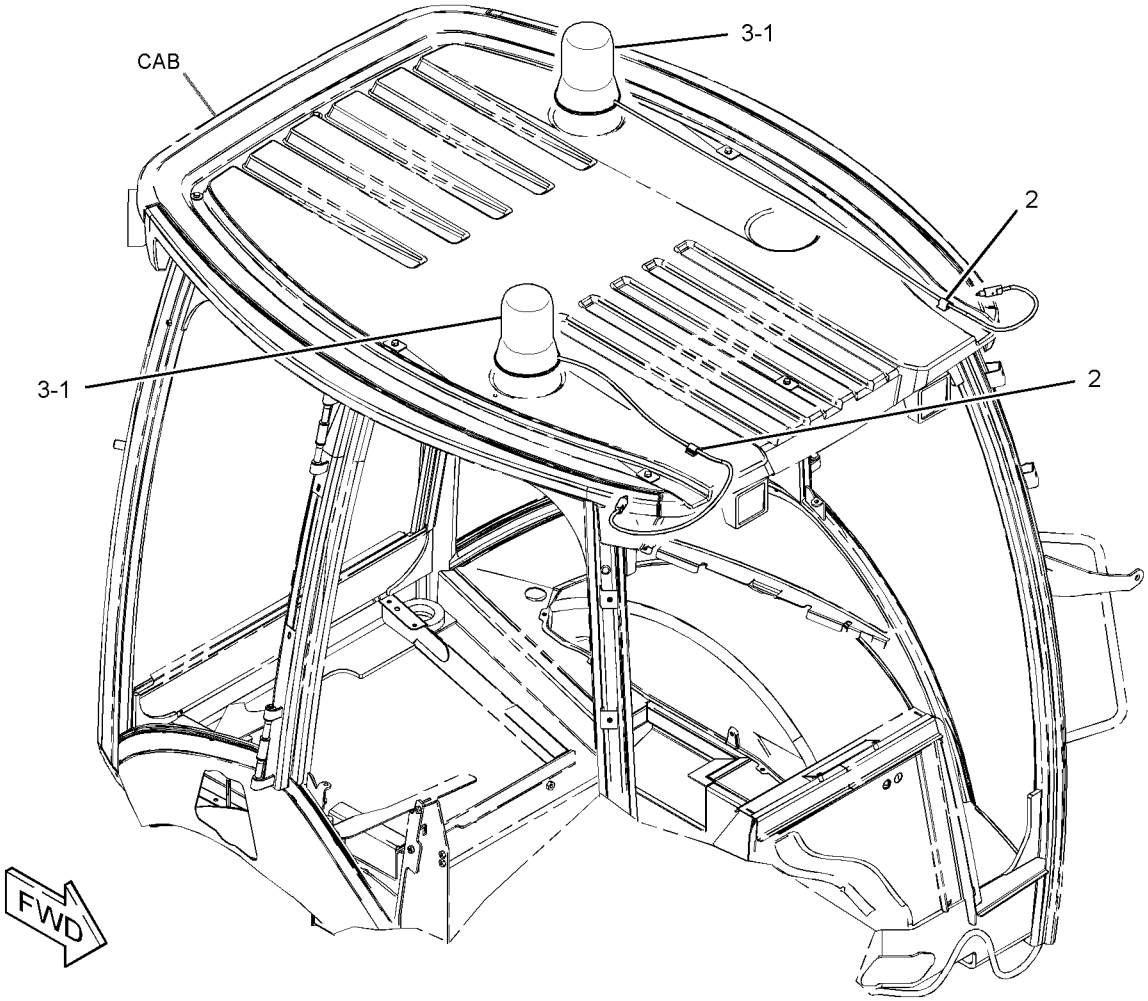

GRAPHIC #1 **<END>** g02110671

276-7287 RELAY GP—POWER DISTRIBUTION

S/N: SEJ1-UP
12-VOLT
PART OF 357-3211 WIRING GP-AIR CONDITIONER, 359-0015 WIRING GP-HEATER
AN ATTACHMENT

SMCS-1422, 4493 **i03325084**

NOTE	REF NO	GRAPHIC REF	PART NUMBER	QTY	PART NAME 1 2 3 4 5 6 (PRODUCT LEVEL)	SEE PAGE
M	1	1	**5C-2890**	2	NUT (M6X1-THD)	
	2	1	**8T-4205**	2	WASHER-HARD (7.2X14.5X2-MM THK)	
	3	1	**1H-3244**	2	LOCKWASHER	
M	4	1	**5C-7261**	1	NUT (M8X1.25-THD)	
	5	1	**8T-4224**	1	WASHER-HARD (8.8X16X2-MM THK)	
	6	1	**267-5213**	1	COVER	
	7	1	**267-5211**	1	SEAL	
	8	1	**278-6377**	1	FUSE (40-AMPERE)	

M-METRIC PART

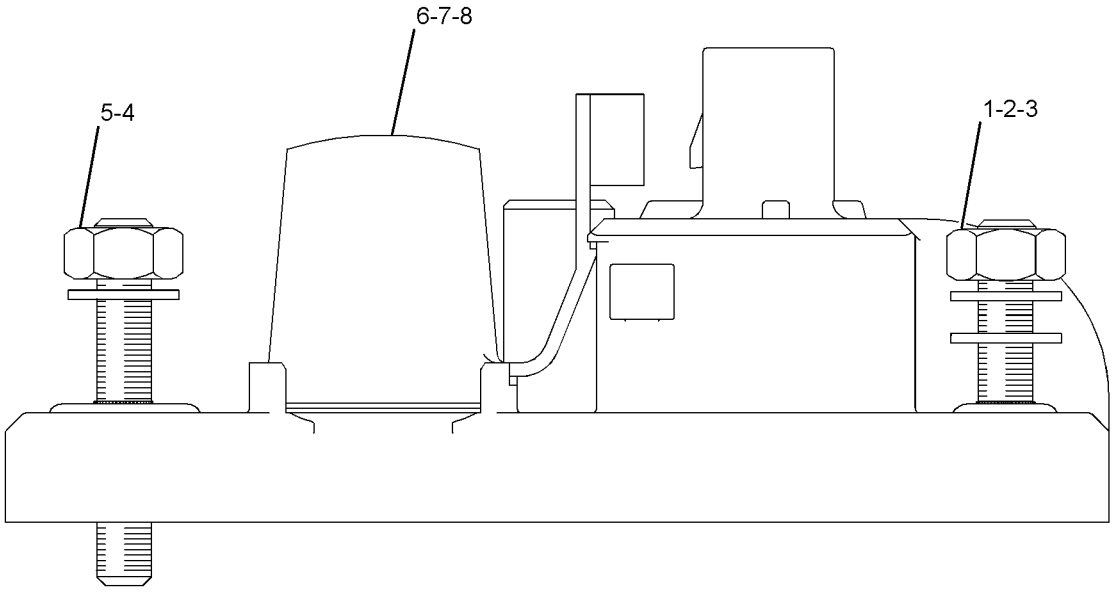

GRAPHIC #1 **<END>** g01290616

276-7290 RELAY GP–POWER, 1

S/N: SEJ1-UP
12-VOLT
PART OF 357-3195 WIRING GP-PLATFORM
AN ATTACHMENT

SMCS-1422, 4493 **i04394021**

NOTE	REF NO	GRAPHIC REF	PART NUMBER	QTY	PART NAME 1 2 3 4 5 6 (PRODUCT LEVEL)	SEE PAGE
M	1	1	**5C-2890**	2	NUT (M6X1-THD)	
	2	1	**8T-4205**	2	WASHER-HARD (7.2X14.5X2-MM THK)	
	3	1	**1H-3244**	2	LOCKWASHER	
M	4	1	**5C-7261**	1	NUT (M8X1.25-THD)	
	5	1	**8T-4224**	1	WASHER-HARD (8.8X16X2-MM THK)	
	6	1	**267-5213**	1	COVER (FUSE)	
	7	1	**267-5211**	1	SEAL	
	8	1	**267-2701**	2	FUSE (60-AMPERE)	

M-METRIC PART

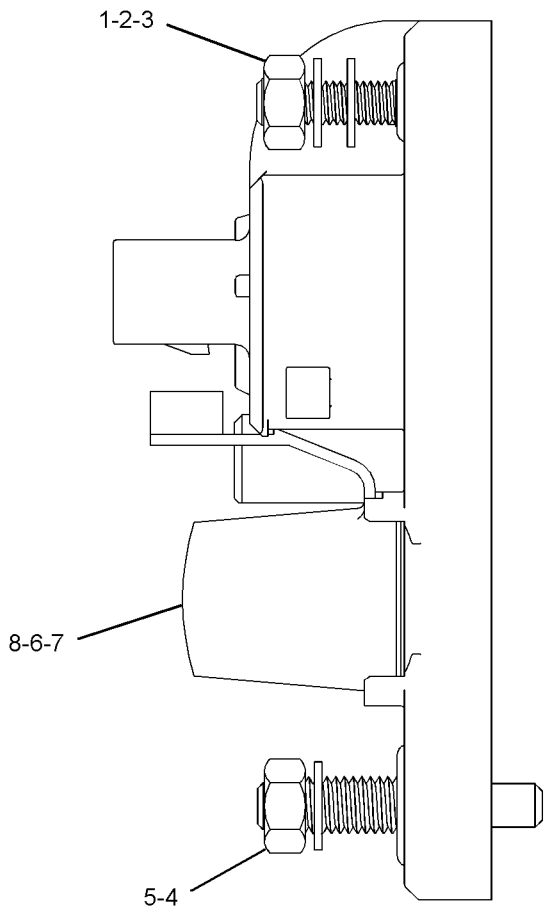

GRAPHIC #1 **<END>** g01278211

276-7291 RELAY GP–POWER, 2

S/N: SEJ1-UP
12-VOLT
PART OF 357-3195 WIRING GP-PLATFORM
AN ATTACHMENT

SMCS-1422, 4493 **i03325141**

NOTE	REF NO	GRAPHIC REF	PART NUMBER	QTY	PART NAME 1 2 3 4 5 6 (PRODUCT LEVEL)	SEE PAGE
M	1	1	**5C-2890**	2	NUT (M6X1-THD)	
	2	1	**8T-4205**	2	WASHER-HARD (7.2X14.5X2-MM THK)	
	3	1	**1H-3244**	2	LOCKWASHER	
M	4	1	**5C-7261**	1	NUT (M8X1.25-THD)	
	5	1	**8T-4224**	1	WASHER-HARD (8.8X16X2-MM THK)	
	6	1	**267-5213**	1	COVER	
	7	1	**267-5211**	1	SEAL	
	8	1	**267-2701**	1	FUSE (60-AMPERE)	

M-METRIC PART

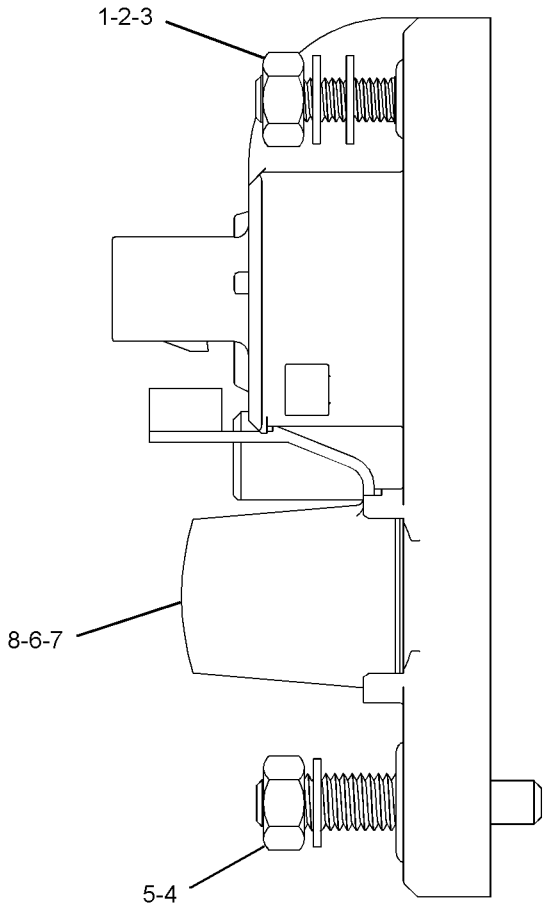

GRAPHIC #1 **<END>** g01278256

322-6827 RELAY GP–STARTING MOTOR

S/N: SEJ1-UP
12-VOLT
PART OF 357-3195 WIRING GP-PLATFORM
AN ATTACHMENT

SMCS-1422, 4493 **i03498280**

NOTE	REF NO	GRAPHIC REF	PART NUMBER	QTY	PART NAME 1 2 3 4 5 6 (PRODUCT LEVEL)	SEE PAGE
	1	1	**274-9872**	1	FUSE (30-AMPERE)	
	2	1	**278-6377**	1	FUSE (40-AMPERE)	
	3	1	**267-5213**	1	COVER (FUSE)	
	4	1	**267-5211**	1	SEAL	
M	5	1	**5C-2890**	2	NUT (M6X1-THD)	
	6	1	**8T-4205**	2	WASHER-HARD (7.2X14.5X2-MM THK)	
	7	1	**1H-3244**	2	LOCKWASHER	
M	8	1	**5C-7261**	1	NUT (M8X1.25-THD)	
	9	1	**8T-4224**	1	WASHER-HARD (8.8X16X2-MM THK)	
	10	1	**9F-5644**	1	LOCKWASHER	

M-METRIC PART

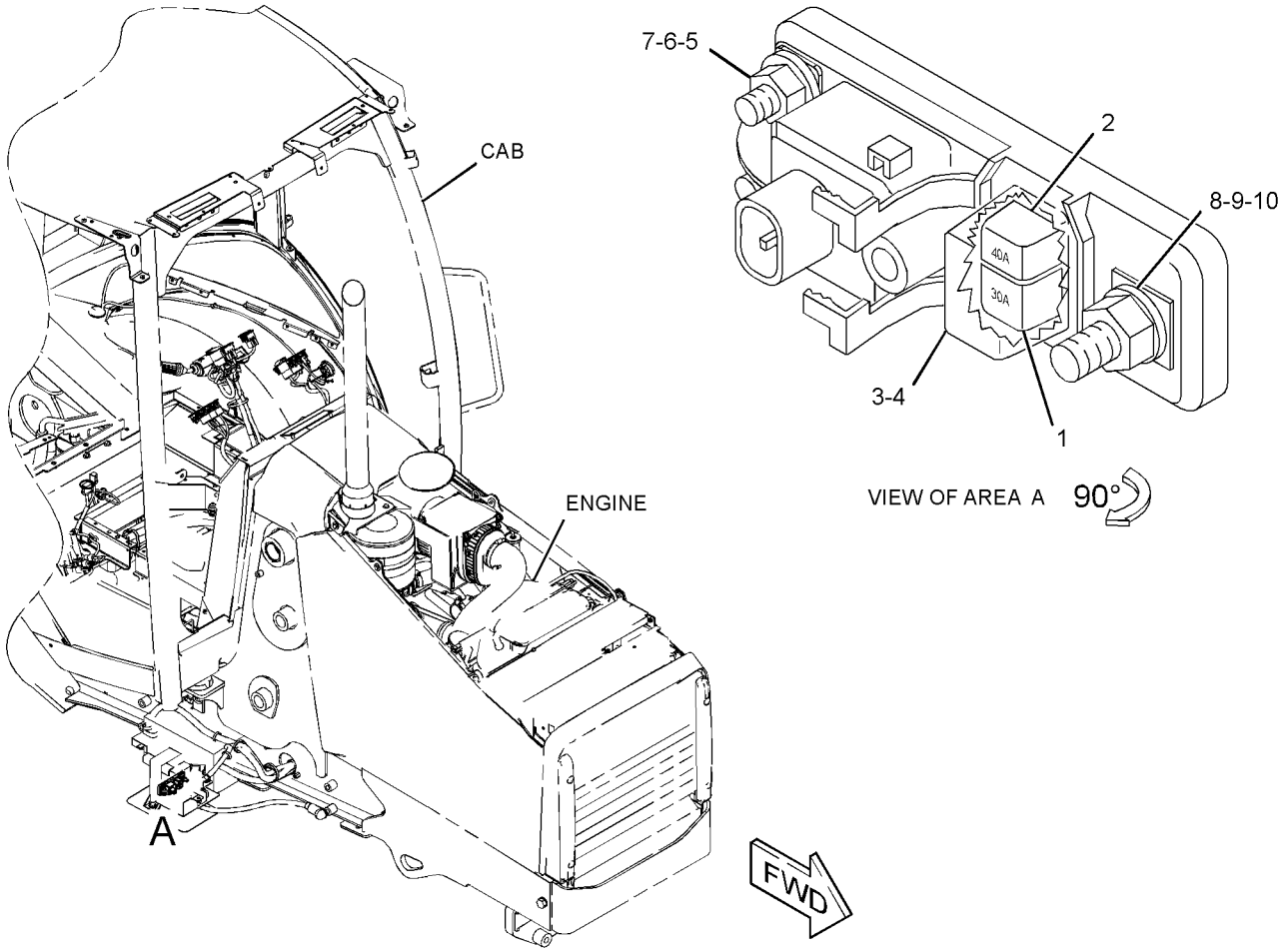

GRAPHIC #1 **<END>** g01571033

357-3230 RELAY GP–STABILIZER, AUTO UP

S/N: SEJ1-UP
12-VOLT
PART OF 353-1448 CONTROL AR-STABILIZER
AN ATTACHMENT

SMCS-1422, 4493 **i04599650**

NOTE	REF NO	GRAPHIC REF	PART NUMBER	QTY	PART NAME 1 2 3 4 5 6 (PRODUCT LEVEL)	SEE PAGE
	1	1	**3E-9362**	1	RELAY AS (12-VOLT) (STABILIZER, AUTO UP)	

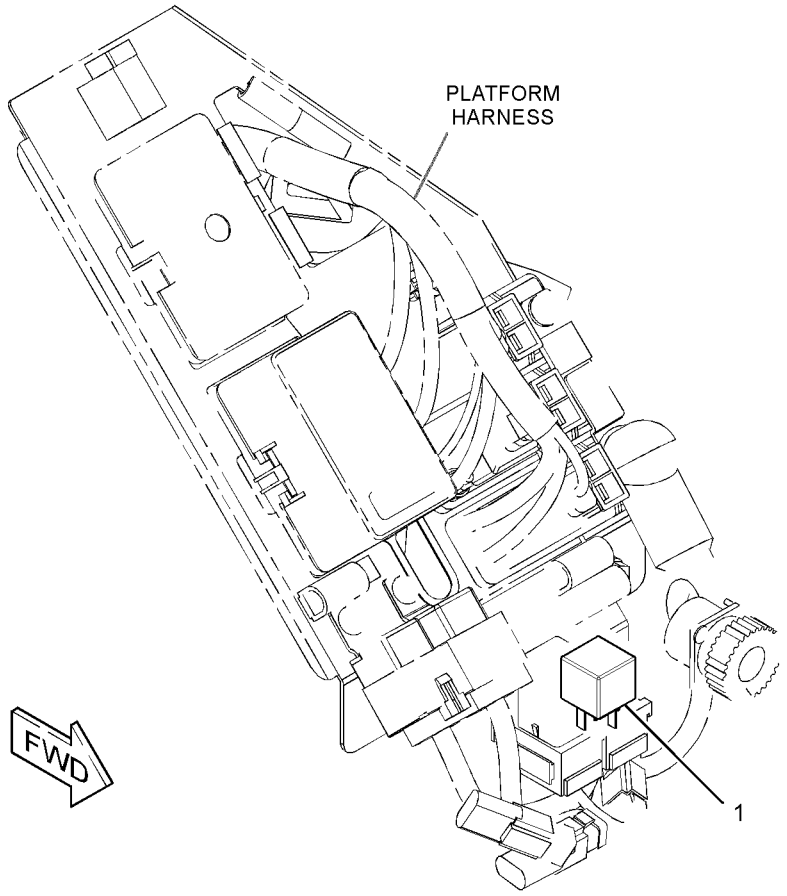

GRAPHIC #1 **<END>** g02805916

189-5746 SENSOR GP-SPEED–TRANSMISSION

S/N: SEJ1-UP
PART OF 359-0394 TRANSMISSION GP-DIRECT DRIVE
AN ATTACHMENT

SMCS-3175 **i04518770**

NOTE	REF NO	GRAPHIC REF	PART NUMBER	QTY	PART NAME 1 2 3 4 5 6 (PRODUCT LEVEL)	SEE PAGE
	1	1	**171-5349**	1	STRAP-MARKER	
	2	1	**102-8802**	1	KIT-RECEPTACLE (2-PIN)	
					(INCLUDES RECEPTACLE AS & WEDGE)	
	3	1	**9X-3401**	2	PIN-CONNECTOR (16-GA TO 18-GA)	
E	4	1	**9X-1386**		SLEEVE (14-CM)	

E-ORDER BY THE CENTIMETER

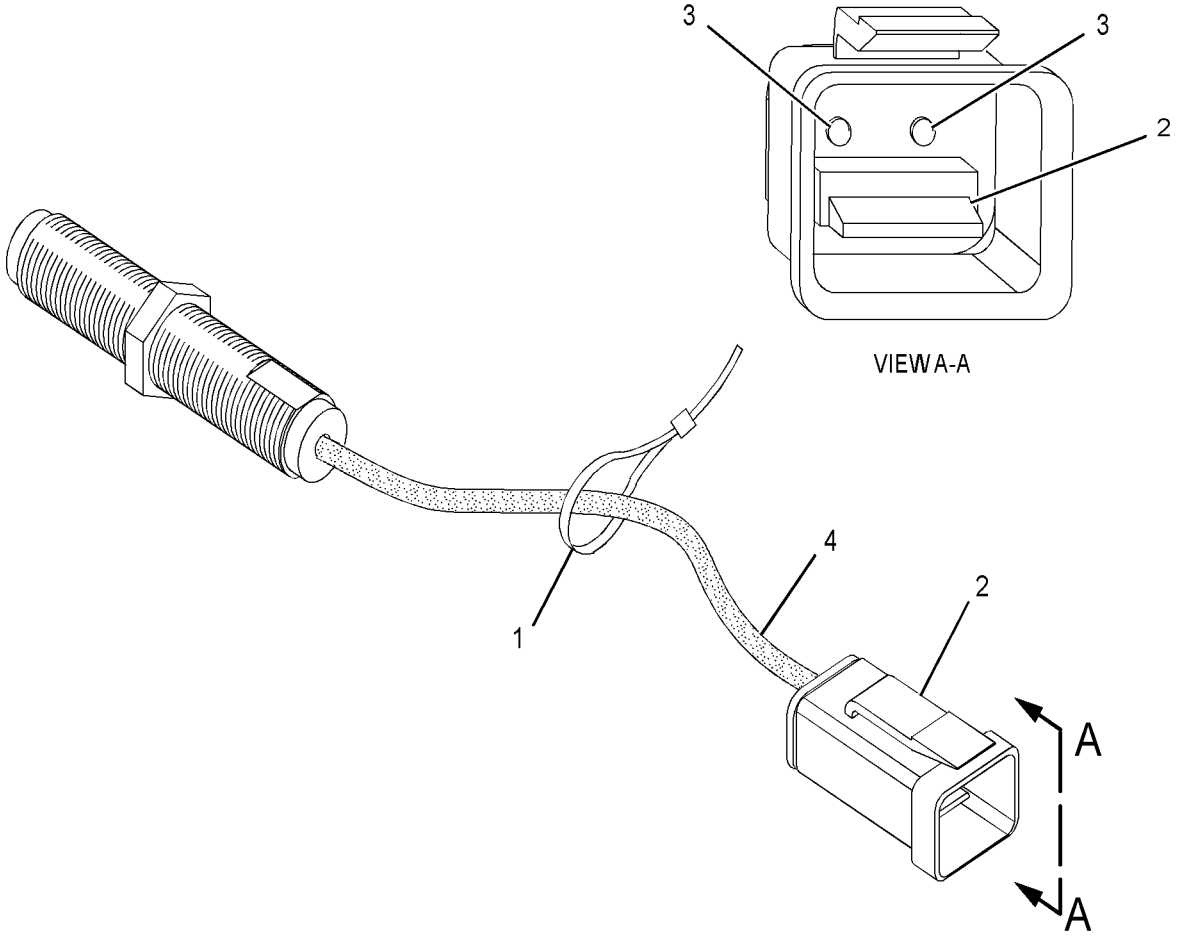

GRAPHIC #1 **<END>** g01353977

ELECTRICAL AND STARTING SYSTEM

303-5769 STARTING MOTOR GP-ELECTRIC–12-VOLT

S/N: C4Z1-UP
PART OF 364-5743 ENGINE AR-PRIMARY
AN ATTACHMENT

SMCS-1453 **i03128303**

NOTE	REF NO	GRAPHIC REF	PART NUMBER	QTY	PART NAME 1 2 3 4 5 6 (PRODUCT LEVEL)	SEE PAGE
	1	1	**6I-0364**	3	STUD (M10X1.5X30-MM)	
	2	1	**6I-0594**	3	NUT (M10X1.5-THD)	
	3	1	**303-5795**	1	STARTING MOTOR-ELECTRIC	

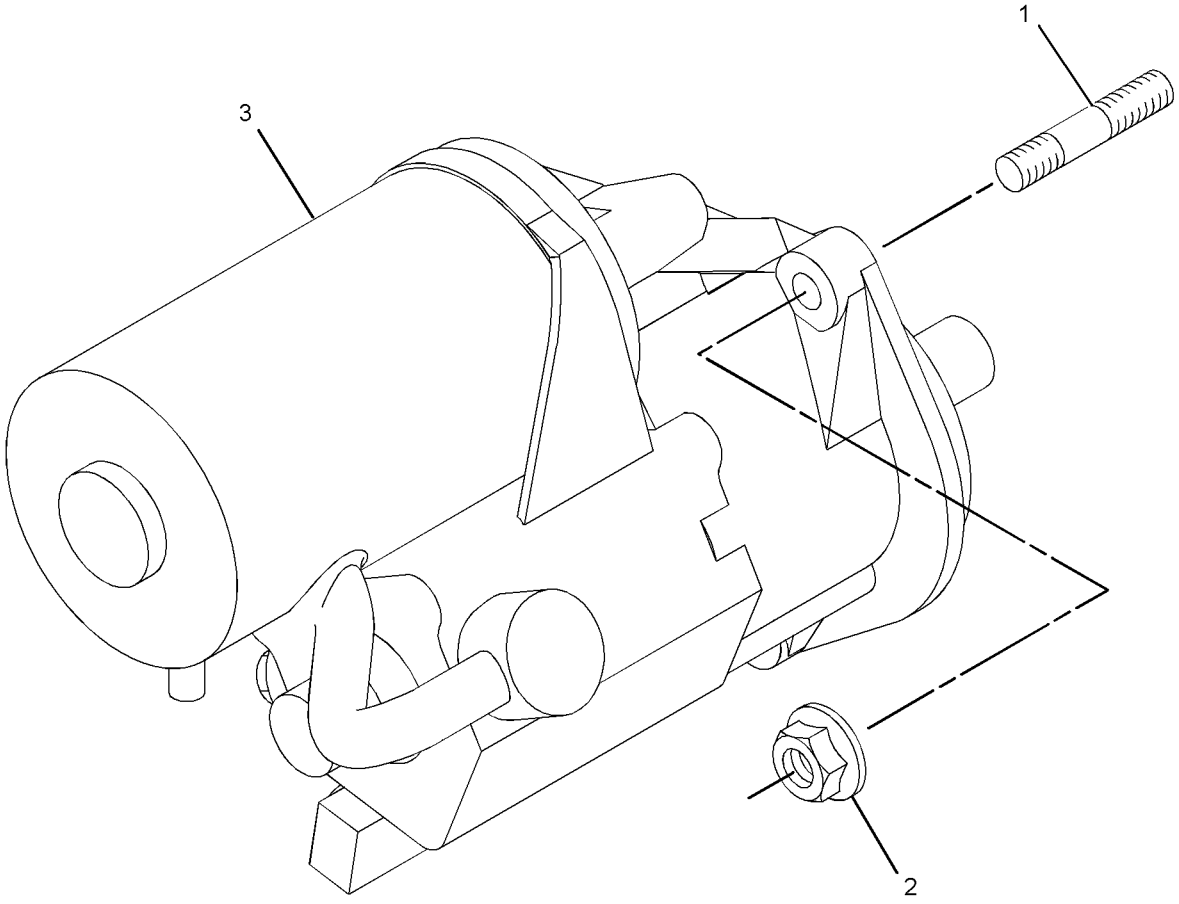

GRAPHIC #1 **<END>** g01376189

331-5456 SWITCH GP-ALL WHEEL DRIVE

S/N: SEJ1-UP

PART OF 353-1510, 353-1511, 353-1513 TRANSMISSION AR-POWER SHIFT AN ATTACHMENT

SMCS-1435, 4493 **i04597511**

NOTE	REF NO	GRAPHIC REF	PART NUMBER	QTY	PART NAME 1 2 3 4 5 6 (PRODUCT LEVEL)	SEE PAGE
	1	1	**362-3298**	1	SWITCH AS-ROCKER (ALL WHEEL DRIVE)	
		1	**111-7899**	1	GASKET	

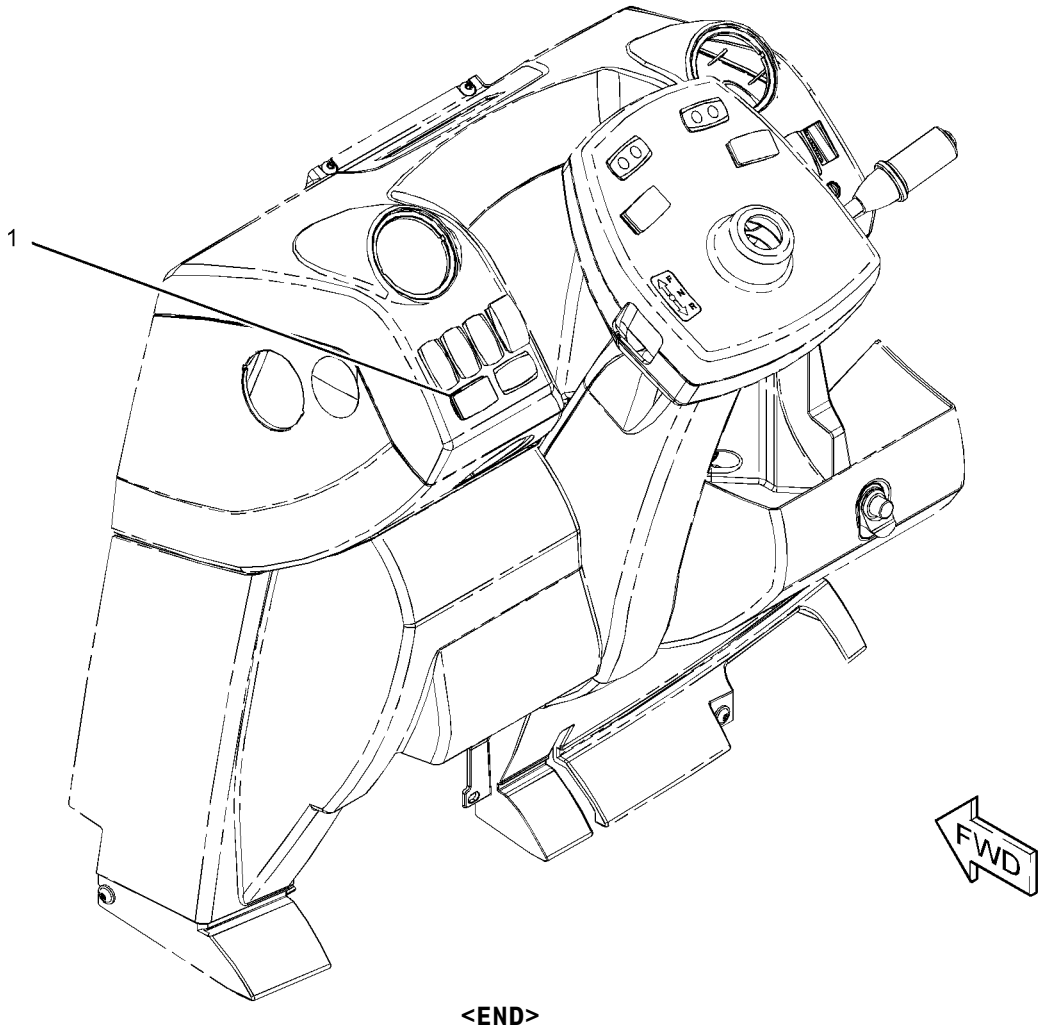

GRAPHIC #1 **<END>** g02806736

308-9973 SWITCH GP-DIFFERENTIAL LOCK

S/N: SEJ1-UP
PART OF 353-1501 DRIVE AR-BACKHOE LOADER
AN ATTACHMENT

SMCS-1435, 3264 **i03906910**

NOTE	REF NO	GRAPHIC REF	PART NUMBER	QTY	PART NAME 1 2 3 4 5 6 (PRODUCT LEVEL)	SEE PAGE
	1	1	**201-9459**	1	BOOT	
	2	1	**204-0775**	1	SWITCH AS-FOOT (DIFFERENTIAL LOCK ON, OFF)	
	3	1	**205-6298**	1	ACTUATOR (DIFFERENTIAL LOCK CONTROL)	

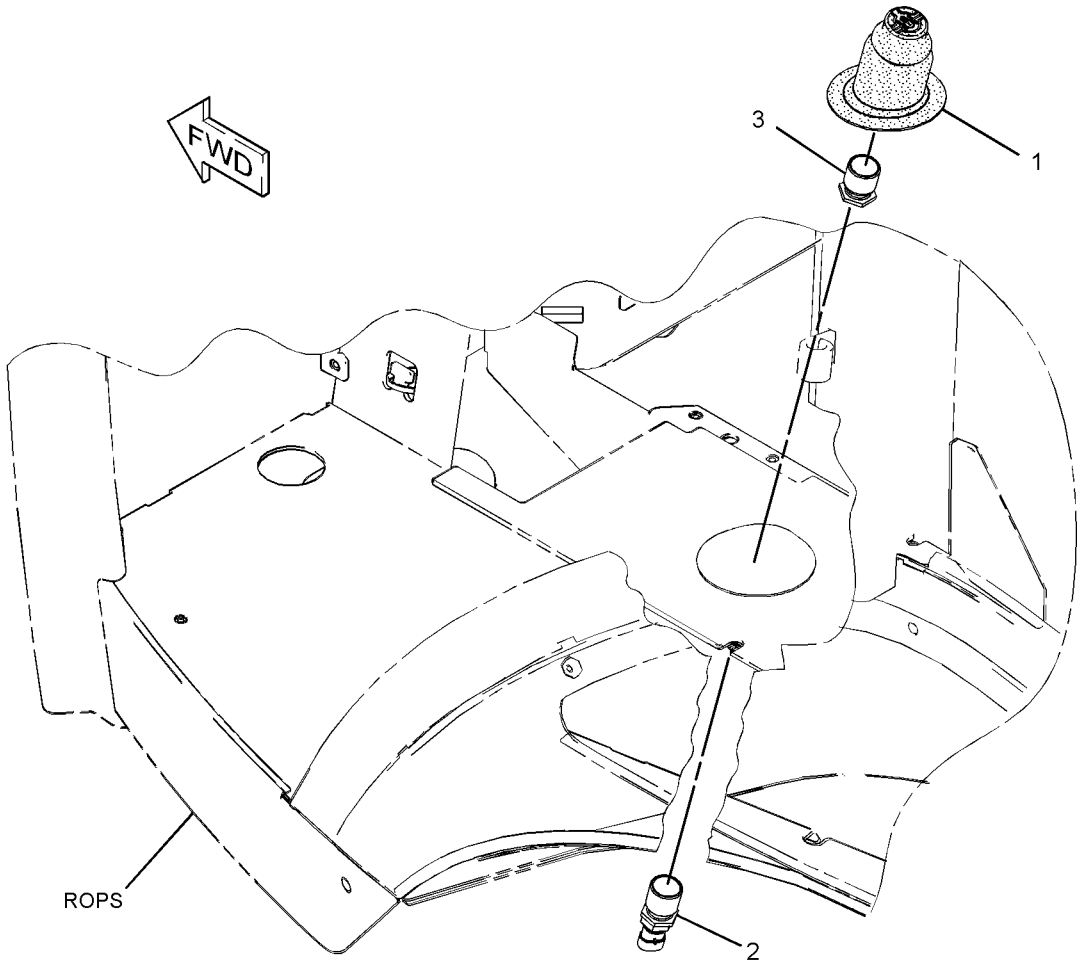

GRAPHIC #1 **<END>** g02148481

7N-0718 SWITCH GP-DISCONNECT–BATTERY

S/N: SEJ1-UP
PART OF 357-6501 BATTERY & WIRING GP
AN ATTACHMENT

SMCS-1411 **i02544993**

NOTE	REF NO	GRAPHIC REF	PART NUMBER	QTY	PART NAME 1 2 3 4 5 6 (PRODUCT LEVEL)	SEE PAGE
	1	1	**8H-5306**	1	KEY (BATTERY DISCONNECT)	
	2	1	**8H-5303**	1	NUT (3/4-16-THD)	
	3	1	**2H-3922**	2	LOCKWASHER	
	4	1	**9F-5644**	2	LOCKWASHER	
	5	1	**6F-7045**	2	NUT-FULL (3/8-24-THD)	

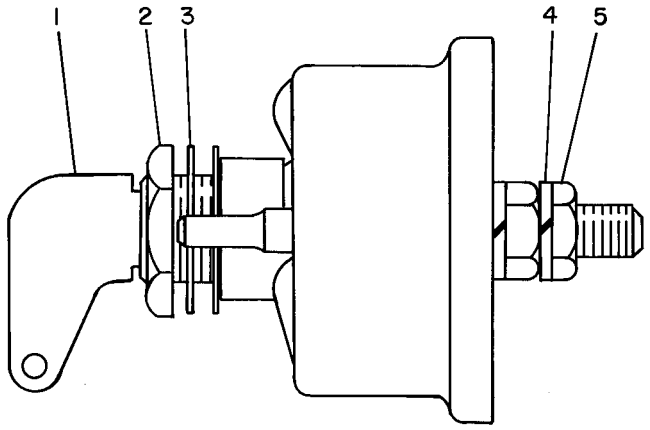

GRAPHIC #1 **<END>** g00084912

316-6925 SWITCH GP-PRESSURE–ENGINE OIL

S/N: C4Z1-UP
PART OF 364-5743 ENGINE AR-PRIMARY
AN ATTACHMENT

SMCS-1435 **i03128304**

NOTE	REF NO	GRAPHIC REF	PART NUMBER	QTY	PART NAME 1 2 3 4 5 6 (PRODUCT LEVEL)	SEE PAGE
	1	1	**035-8063**	1	PLUG	
	2	1	**199-9267**	1	SEAL-O-RING	
	3	1	**225-7941**	1	PLUG	
	4	1	**237-4894**	1	SWITCH AS-PRESSURE (ENGINE OIL)	

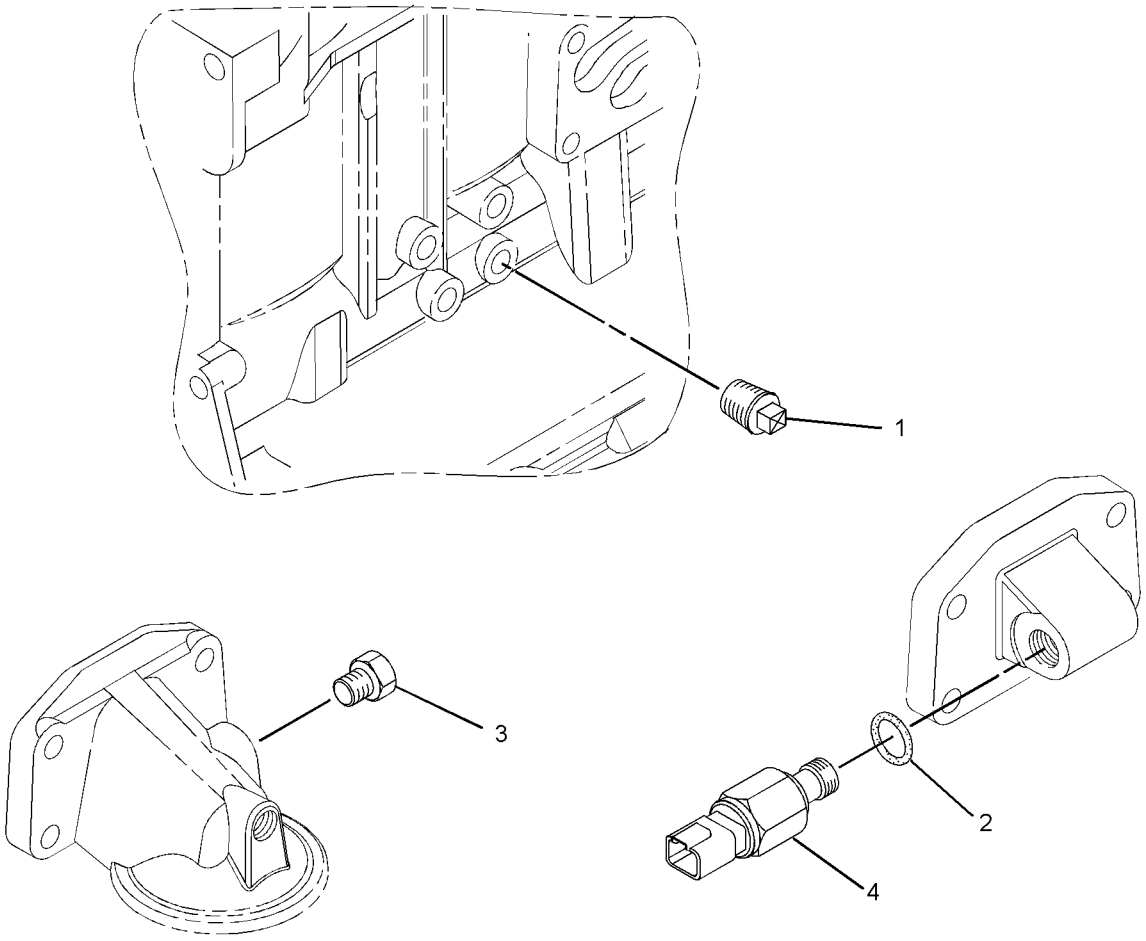

GRAPHIC #1 **<END>** g01400195

353-5561 SWITCH GP-PRESSURE–HYDRAULIC LOCKOUT

S/N: SEJ1-UP

PART OF 373-4275, 373-4277 VALVE AR-BANK 3

AN ATTACHMENT

SMCS-1435 **i03757499**

NOTE	REF NO	GRAPHIC REF	PART NUMBER	QTY	PART NAME 1 2 3 4 5 6 (PRODUCT LEVEL)	SEE PAGE
	1	1	*166-2033*	1	TEE AS	
		1	**4J-5477**	1	SEAL-O-RING	
		1	**7X-2444**	1	TEE-SWIVEL	
	2	1	**194-2553**	1	SWITCH AS-PRESSURE (LOAD CONTROL)	
		1	**102-8803**	1	KIT-RECEPTACLE (3-PIN)	
					(INCLUDES RECEPTACLE AS & WEDGE)	
		1	**8T-8729**	3	PIN-CONNECTOR (16-GA TO 18-GA)	

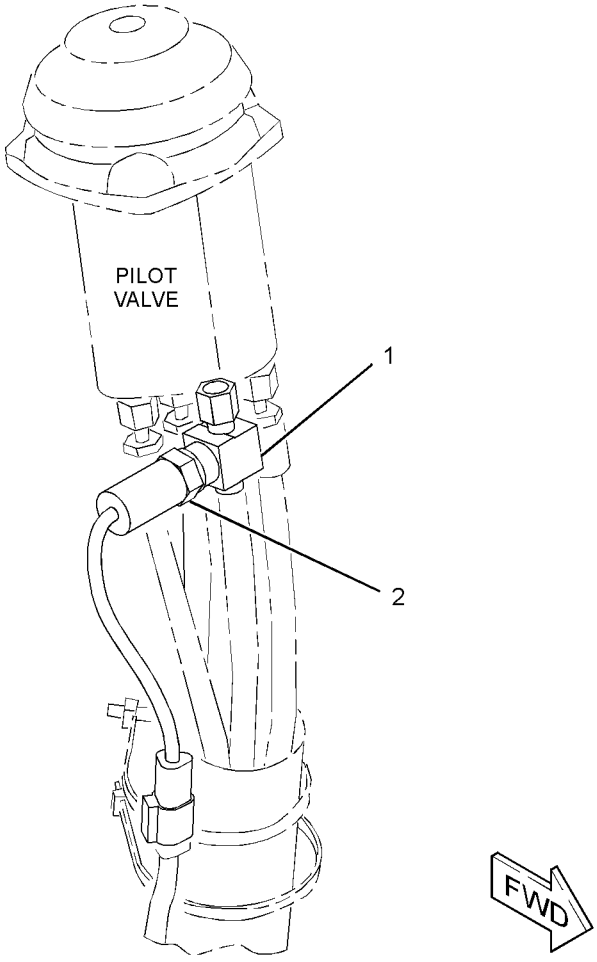

GRAPHIC #1 **<END>** g02107935

ELECTRICAL AND STARTING SYSTEM

357-3211 WIRING GP-AIR CONDITIONER

S/N: SEJ1-UP
PART OF 374-6889 HEATER & AIR CONDITIONER AR
AN ATTACHMENT

SMCS-1408, 7320 **i04586154**

NOTE	REF NO	GRAPHIC REF	PART NUMBER	QTY	PART NAME 1 2 3 4 5 6 (PRODUCT LEVEL)	SEE PAGE
	1	1	**3E-9362**	1	RELAY AS (12-VOLT) (HIGH SPEED)	
	2	1	**6K-0806**	8	STRAP-CABLE	
	3	1	**8T-8799**	1	BOOT	
	4	1	**9X-7378**	1	SEAL-O-RING	
	5	1	**140-9378**	1	RELAY AS (12-VOLT) (AIR CONDITIONER, HEATER)	
	6	1	**189-3158**	1	SUPPRESSOR-ARC	
	7	1	**214-4695**	1	SWITCH AS-ROCKER (BLOWER FAN SPEED)	
	8	1	**214-4718**	1	SWITCH AS-ROCKER (AIR CONDITIONER, HEATER SELECT)	
					(EACH SWITCH AS INCLUDES)	
		1	**111-7899**	1	GASKET	
	9	1	**236-6923**	1	SWITCH AS-PRESSURE (REFRIGERANT)	
	10	1	**238-7492**	1	HARNESS AS-HEATER & AIR COND (COMPRESSOR)	
		1	**9X-3401**	2	PIN-CONNECTOR (16-GA TO 18-GA)	
		1	**155-2270**	2	KIT-CONNECTING PLUG (2-PIN)	
					(EACH INCLUDES PLUG AS, WEDGE & INTERFACE SEAL)	
		1	**102-8802**	1	KIT-RECEPTACLE (2-PIN)	
					(INCLUDES RECEPTACLE AS & WEDGE)	
		1	**100-6674**	2	SEAL-CONNECTOR	
		1	**180-9340**	4	SOCKET-CONNECTOR (14-GA TO 18-GA)	
		1	**124-5640**	2	TERMINAL-SOCKET	
		1	**3S-2093**	1	STRAP-CABLE	
E		1	**125-7874**		TUBE-HEAT SHRINK (5.72-MM DIA) (10-CM)	
	11	1	**275-0570**	1	BAR-BUS	
	12	1	**359-0016**	1	HARNESS AS-HEATER & AIR COND (VENT)	
		1	**228-5856**	2	CONNECTOR	
		1	**111-6795**	1	HOUSING-RELAY	
		1	**111-6816**	1	LOCK	
		1	**213-0139**	5	PIN	
		1	**8T-8729**	5	PIN-CONNECTOR (16-GA TO 18-GA)	
		1	**9X-3401**	2	PIN-CONNECTOR (16-GA TO 18-GA)	
		1	**177-9648**	1	KIT-CONNECTING PLUG (2-PIN)	
		1	**177-9656**	1	KIT-CONNECTING PLUG (4-PIN)	
					(EACH PLUG KIT INCLUDES PLUG AS, WEDGE & INTERFACE SEAL)	
		1	**8T-8737**	1	PLUG-SEAL	
		1	**102-8802**	2	KIT-RECEPTACLE (2-PIN)	
		1	**102-8803**	1	KIT-RECEPTACLE (3-PIN)	
					(EACH RECEPTACLE KIT INCLUDES RECEPTACLE AS & WEDGE)	
		1	**122-4401**	1	TERMINAL	
		1	**2L-8069**	1	TERMINAL-RING (2-GA TO 10-GA, 3/8-IN SCREW)	
		1	**2L-8067**	1	TERMINAL-RING (10-GA TO 12-GA, 1/4-IN SCREW)	
		1	**091-2436**	7	TERMINAL-BLADE (18-GA TO 22-GA)	
		1	**104-1995**	11	TERMINAL-BLADE (14-GA TO 18-GA)	
		1	**111-6792**	2	TERMINAL-RECEPTACLE (18-GA TO 20-GA)	
		1	**111-6794**	2	TERMINAL-RECEPTACLE	
E		1	**119-3662**		TUBE-HEAT SHRINK (10.85-MM DIA) (7-CM)	
E		1	**125-7874**		TUBE-HEAT SHRINK (5.72-MM DIA) (10-CM)	
E		1	**125-7875**		TUBE-HEAT SHRINK (7.44-MM DIA) (10-CM)	
	13	1	**096-6166**	2	WASHER-HARD (4.5X9X1-MM THK)	
Y	14	1	**276-7287**	1	RELAY GP (12-VOLT) (POWER DISTRIBUTION)	116
	15	1	**3S-2093**	6	STRAP-CABLE	
M	16	1	**5C-2890**	1	NUT (M6X1-THD)	

357-3211 **WIRING GP-AIR CONDITIONER** *(contd.)* **i04586154**

NOTE	REF NO	GRAPHIC REF	PART NUMBER	QTY	PART NAME 1 2 3 4 5 6 (PRODUCT LEVEL)	SEE PAGE
M	17	1	**5C-7261**	1	NUT (M8X1.25-THD)	
	18	1	**8C-3398**	1	LOCKWASHER	
M	19	1	**121-4405**	2	BOLT (M4X0.7X12-MM)	
	20	1	**8T-4205**	1	WASHER-HARD (7.2X14.5X2-MM THK)	
	21	1	**8T-4224**	1	WASHER-HARD (8.8X16X2-MM THK)	
M	22	1	**8T-9534**	1	BOLT (M6X1X50-MM)	

E-ORDER BY THE CENTIMETER
M-METRIC PART
Y-SEPARATE ILLUSTRATION

357-3211 **WIRING GP-AIR CONDITIONER** *(contd.)* **i04586154**

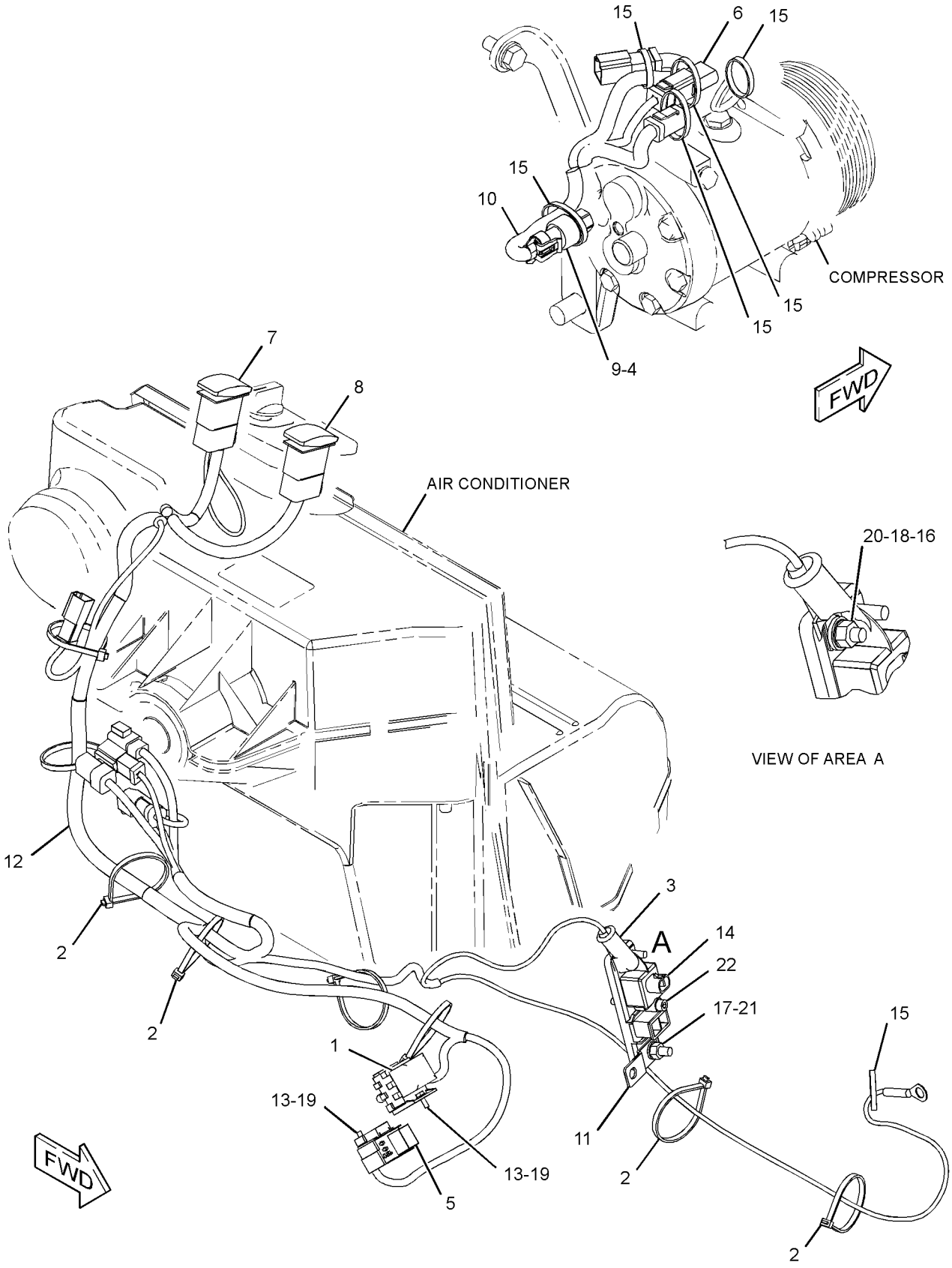

GRAPHIC #1 **<END>** g02814878

357-3237 WIRING GP-CAB–ROOF

S/N: SEJ1-UP
PART OF 353-1429, 353-1432 CAB AR
AN ATTACHMENT

SMCS-1408, 7301 **i04553625**

NOTE	REF NO	GRAPHIC REF	PART NUMBER	QTY	PART NAME 1 2 3 4 5 6 (PRODUCT LEVEL)	SEE PAGE
	1	1	**9R-7941**	2	SOCKET AS	
					(EACH INCLUDES)	
		1	**9R-7980**	1	COVER	
	2	1	**206-1345**	9	STRAP-CABLE	
Y	3	1	**214-2968**	4	LAMP GP-FLOOD (12-VOLT)	98
B	4	1	**214-4697**	1	SWITCH AS-ROCKER (FLOODLIGHTS, FRONT)	
B	5	1	**214-4699**	1	SWITCH AS-ROCKER (FLOODLIGHTS, REAR)	
					(EACH SWITCH AS INCLUDES)	
		1	**111-7899**	1	GASKET	
B	6	1	**274-3776**	1	CAP-SEAL	
B	7	1	**274-3778**	2	CAP-SEAL	
	8	1	**282-7833**	1	GROMMET	
	9	1	**282-7835**	1	PLATE	
	10	1	**357-3238**	1	HARNESS AS-CAB (ROOF)	
		1	**123-7615**	2	CONNECTOR	
		1	**9W-0852**	2	PIN-CONNECTOR (14-GA TO 16-GA)	
		1	**9X-3401**	14	PIN-CONNECTOR (16-GA TO 18-GA)	
		1	**155-2265**	2	KIT-CONNECTING PLUG (8-PIN)	
		1	**155-2270**	8	KIT-CONNECTING PLUG (2-PIN)	
		1	**155-2271**	1	KIT-CONNECTING PLUG (4-PIN)	
					(EACH PLUG KIT INCLUDES PLUG AS, WEDGE & INTERFACE SEAL)	
		1	**8T-8737**	4	PLUG-SEAL	
		1	**102-8805**	1	KIT-RECEPTACLE (6-PIN)	
		1	**102-8801**	1	KIT-RECEPTACLE (12-PIN)	
					(EACH RECEPTACLE KIT INCLUDES RECEPTACLE AS & WEDGE)	
		1	**239-3104**	2	TERMINAL AS	
		1	**9W-0844**	4	SOCKET-CONNECTOR (14-GA TO 16-GA)	
		1	**180-9340**	30	SOCKET-CONNECTOR (14-GA TO 18-GA)	
		1	**097-7234**	2	TERMINAL-BLADE (18-GA TO 22-GA)	
		1	*128-4170*	1	TERMINAL AS	
		1	**6H-3587**	1	TERMINAL-RING (6-GA TO 8-GA, 3/8-IN SCREW)	
E		1	**6V-9023**		TUBE-HEAT SHRINK (12.7-MM DIA) (4-CM)	
		1	**5P-4571**	2	TERMINAL-BLADE (14-GA TO 16-GA)	
		1	**091-2436**	4	TERMINAL-BLADE (18-GA TO 22-GA)	
E		1	**119-3662**		TUBE-HEAT SHRINK (10.85-MM DIA) (13-CM)	
E		1	**125-7874**		TUBE-HEAT SHRINK (5.72-MM DIA) (30-CM)	
E		1	**125-7875**		TUBE-HEAT SHRINK (7.44-MM DIA) (5-CM)	
	11	1	**3S-2093**	20	STRAP-CABLE	
	12	1	**8F-3590**	1	LOCKWASHER	
	13	1	**8T-4121**	2	WASHER-HARD (11X21X2.5-MM THK)	
M	14	1	**8T-4133**	1	NUT (M10X1.5-THD)	
M	15	1	**8C-3798**	2	BOLT-LOCKING (M6X1X30-MM)	
	16	1	**9X-8256**	2	WASHER (6.6X12X2-MM THK)	
E	17	1	**3E-8299**		SEAL (3-CM)	

B-USE AS REQUIRED
E-ORDER BY THE CENTIMETER
M-METRIC PART
Y-SEPARATE ILLUSTRATION

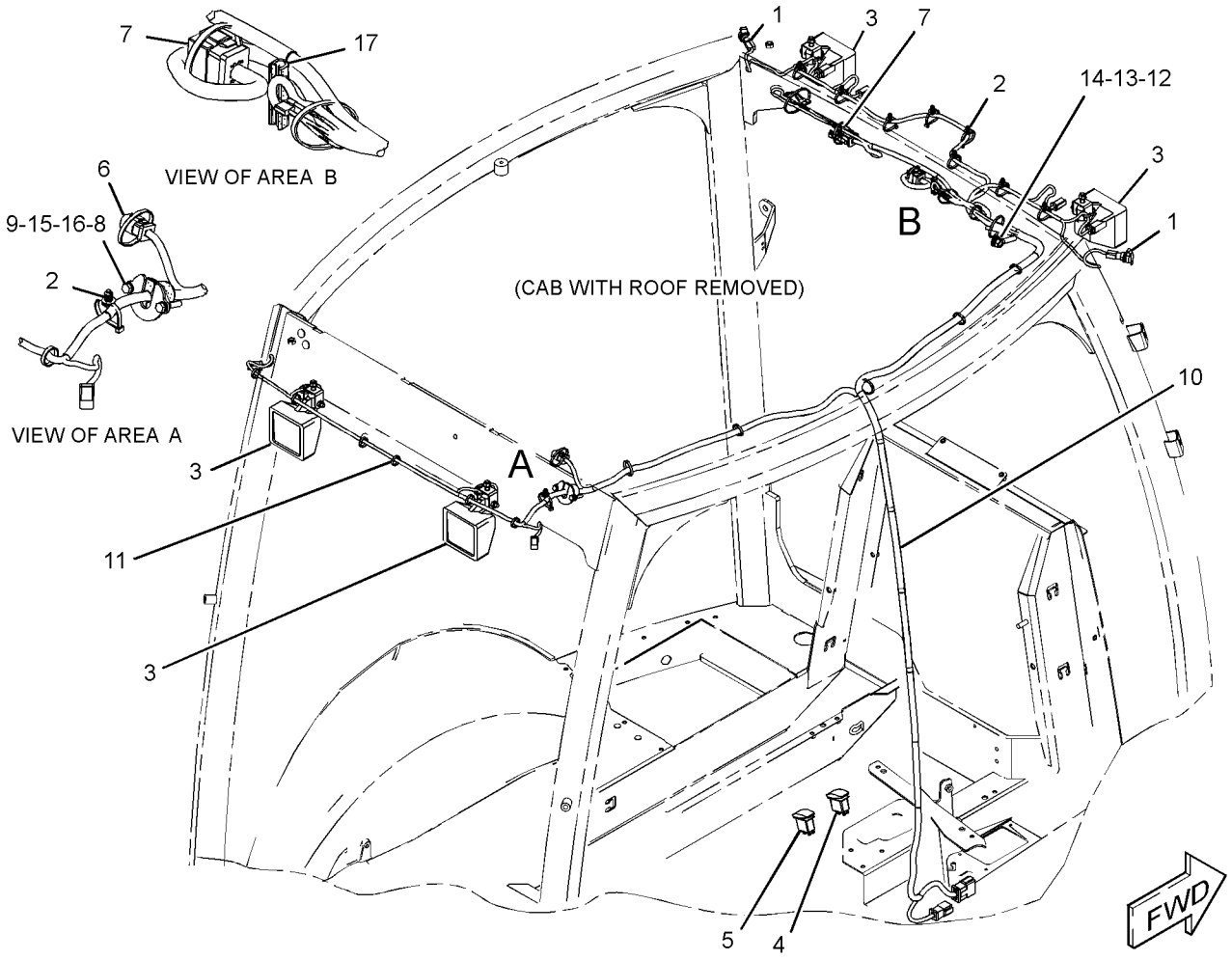

GRAPHIC #1 **<END>** g02774020

357-3214 WIRING GP-COMMUNICATION

S/N: SEJ1-UP
AN ATTACHMENT

SMCS-1408, 7606 **i04580753**

NOTE	REF NO	GRAPHIC REF	PART NUMBER	QTY	PART NAME 1 2 3 4 5 6 (PRODUCT LEVEL)	SEE PAGE
	1	1	**7K-1181**	16	STRAP-CABLE	
	2	1	**249-9076**	6	CLIP	
	3	1	**260-7653**	1	FILM-WARNING (PRODUCT LINK 300, INTL)	
	4	1	**284-8531**	1	ANTENNA AS (MAGNETIC MOUNT, PRODUCT LINK)	
		1	**301-0589**	1	ANTENNA (FLEXIBLE)	
	5	1	**331-5529**	1	HARNESS AS-RADIO (PRODUCT LINK)	
		1	**9X-3401**	9	PIN-CONNECTOR (16-GA TO 18-GA)	
		1	**155-2255**	1	KIT-CONNECTING PLUG (12-PIN)	
					(INCLUDES PLUG AS, WEDGE & INTERFACE SEAL)	
		1	**8T-8737**	8	PLUG-SEAL	
		1	**102-8802**	1	KIT-RECEPTACLE (2-PIN)	
		1	**102-8801**	1	KIT-RECEPTACLE (12-PIN)	
					(EACH RECEPTACLE KIT INCLUDES RECEPTACLE AS & WEDGE)	
		1	**180-9340**	9	SOCKET-CONNECTOR (14-GA TO 18-GA)	
B		1	**329-3734**		TAPE	
	6	1	**331-5635**	1	HARNESS AS-WIRING (PRODUCT LINK)	
		1	**9X-3401**	7	PIN-CONNECTOR (16-GA TO 18-GA)	
		1	**155-2255**	1	KIT-CONNECTING PLUG (12-PIN)	
					(INCLUDES PLUG AS, WEDGE & INTERFACE SEAL)	
		1	**8T-8737**	5	PLUG-SEAL	
		1	**102-8804**	1	KIT-RECEPTACLE (4-PIN)	
					(INCLUDES RECEPTACLE AS & WEDGE)	
		1	**9X-4813**	1	RECEPTACLE AS-CONNECTOR (3-PIN)	
		1	**180-9340**	7	SOCKET-CONNECTOR (14-GA TO 18-GA)	
Y	7	1	**336-3545**	1	ELECTRONICS GP-COMMUNICATION (PRODUCT LINK 121SR)	94
M	8	1	**129-3178**	4	LOCKNUT (M6X1-THD)	
	9	1	**6P-6591**	1	GROMMET	
	10	1	**9X-8256**	4	WASHER (6.6X12X2-MM THK)	

B-USE AS REQUIRED
M-METRIC PART
Y-SEPARATE ILLUSTRATION

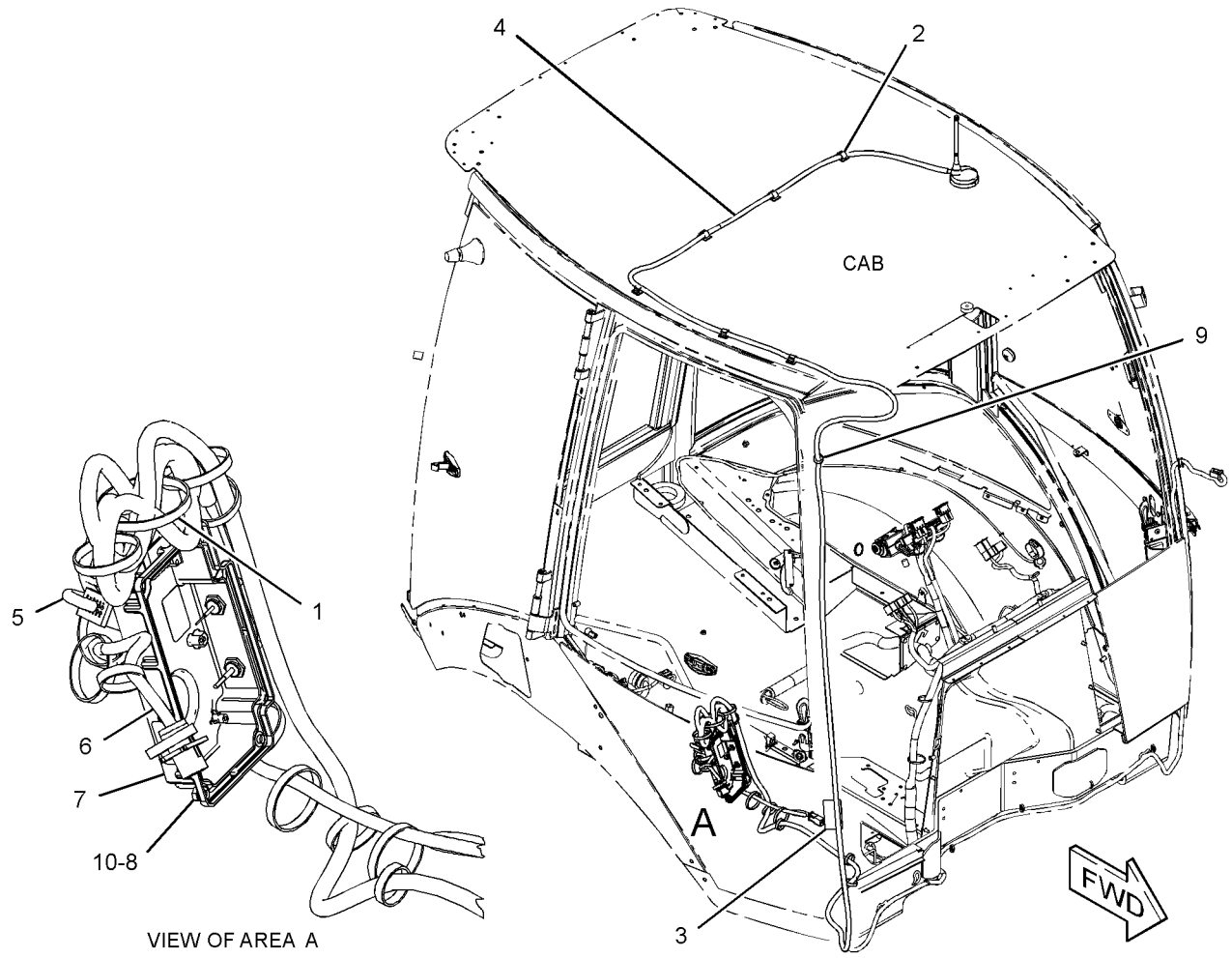

GRAPHIC #1 **<END>** g02808237

357-3260 WIRING GP-CONSOLE–SIDE, PILOT

S/N: SEJ1-UP
PART OF 353-1454 ELECTRONICS AR-MACHINE
AN ATTACHMENT

SMCS-1408 **i04629261**

NOTE	REF NO	GRAPHIC REF	PART NUMBER	QTY	PART NAME 1 2 3 4 5 6 (PRODUCT LEVEL)	SEE PAGE
	1	1	**110-7887**	1	SWITCH AS-START (KEY)	
		1	**7T-6799**	1	NUT-MOUNTING (1-32-THD)	
		1	**8T-8729**	4	PIN-CONNECTOR (16-GA TO 18-GA)	
		1	**102-8804**	1	KIT-RECEPTACLE (4-PIN)	
					(INCLUDES RECEPTACLE AS & WEDGE)	
	2	1	**206-1345**	3	STRAP-CABLE	
	3	1	**214-4722**	1	SWITCH AS-ROCKER (STARTING AID)	
	4	1	**300-4994**	1	SWITCH AS-ROCKER (HYDRAULIC LOCKOUT)	
					(EACH SWITCH AS-ROCKER INCLUDES)	
		1	**111-7899**	1	GASKET	
B	5	1	**227-1057**	5	PLUG-HOLE	
	6	1	**331-5537**	1	HARNESS AS-CONSOLE	
		1	**228-5856**	8	CONNECTOR	
		1	**9X-3401**	2	PIN-CONNECTOR (16-GA TO 18-GA)	
					–OR–	
		1	**126-1767**	2	PIN-CONNECTOR (14-GA TO 16-GA)	
		1	**176-2947**	1	KIT-CONNECTING PLUG (4-PIN)	
					(INCLUDES PLUG AS, WEDGE & INTERFACE SEAL)	
		1	**261-0524**	1	PLUG AS-CONNECTOR (4-PIN)	
		1	**264-7031**	1	SEAL-CONNECTOR	
		1	**272-2838**	1	PLUG AS	
		1	**245-8026**	1	CONNECTOR	
		1	**8T-8737**	5	PLUG-SEAL	
		1	**340-2566**	3	PLUG-SEAL	
		1	**151-9272**	1	KIT-RECEPTACLE (2-PIN)	
					(INCLUDES REEPTACLE AS & WEDGE)	
		1	**9X-3402**	4	SOCKET-CONNECTOR (16-GA TO 18-GA)	
					–OR–	
		1	**126-1768**	4	SOCKET-CONNECTOR (14-GA TO 16-GA)	
		1	**180-9340**	50	SOCKET-CONNECTOR (14-GA TO 18-GA)	
B		1	**329-3734**		TAPE	
		1	**7N-7221**	2	TERMINAL-BLADE (18-GA TO 22-GA)	
E		1	**119-3662**		TUBE-HEAT SHRINK (10.85-MM DIA) (13-CM)	
E		1	**125-7874**		TUBE-HEAT SHRINK (5.72-MM DIA) (50-CM)	
E		1	**125-7875**		TUBE-HEAT SHRINK (7.44-MM DIA) (5-CM)	
	7	1	**343-4355**	1	HORN	
	8	1	**3S-2093**	5	STRAP-CABLE	

B-USE AS REQUIRED
E-ORDER BY THE CENTIMETER

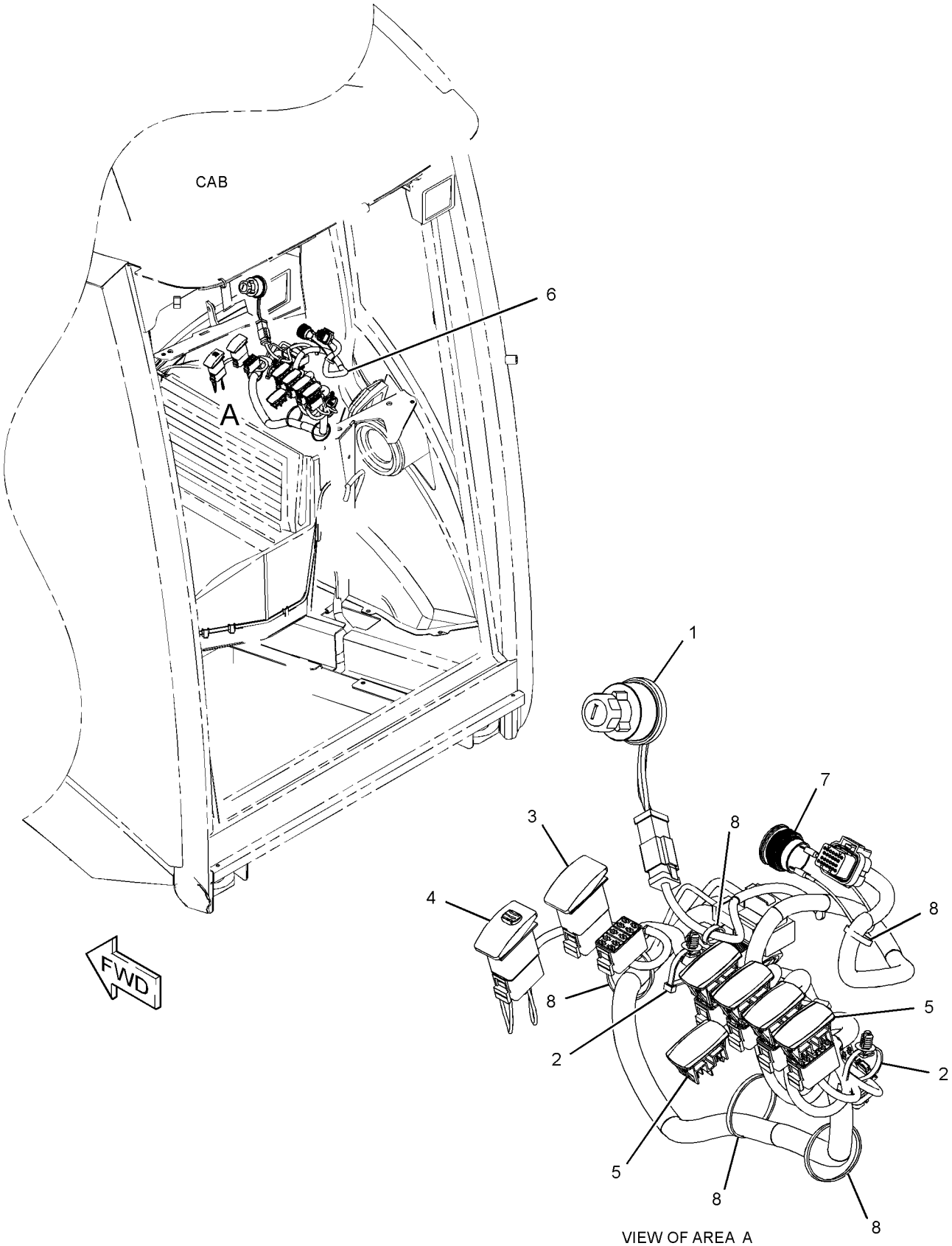

GRAPHIC #1 **<END>** g02826038

267-5635 WIRING GP-CONTROL—JOYSTICK, LH

S/N: SEJ1-UP

PART OF 353-1454 ELECTRONICS AR-MACHINE

AN ATTACHMENT

SMCS-1408 **i03712372**

NOTE	REF NO	GRAPHIC REF	PART NUMBER	QTY	PART NAME 1 2 3 4 5 6 (PRODUCT LEVEL)	SEE PAGE
	1	1	**206-2423**	1	SADDLE	
	2	1	**225-7988**	1	HARNESS AS-AUXILIARY	
		1	**9X-3401**	2	PIN-CONNECTOR (16-GA TO 18-GA)	
		1	**8T-8737**	16	PLUG-SEAL	
		1	**180-9340**	2	SOCKET-CONNECTOR (14-GA TO 18-GA)	
		1	**155-2255**	1	KIT-CONNECTING PLUG (12-PIN)	
					(INCLUDES PLUG AS, WEDGE & INTERFACE SEAL)	
		1	**102-8806**	1	KIT-RECEPTACLE (8-PIN)	
					(INCLUDES RECEPTACLE AS & WEDGE)	
	3	1	**3S-2093**	5	STRAP-CABLE	

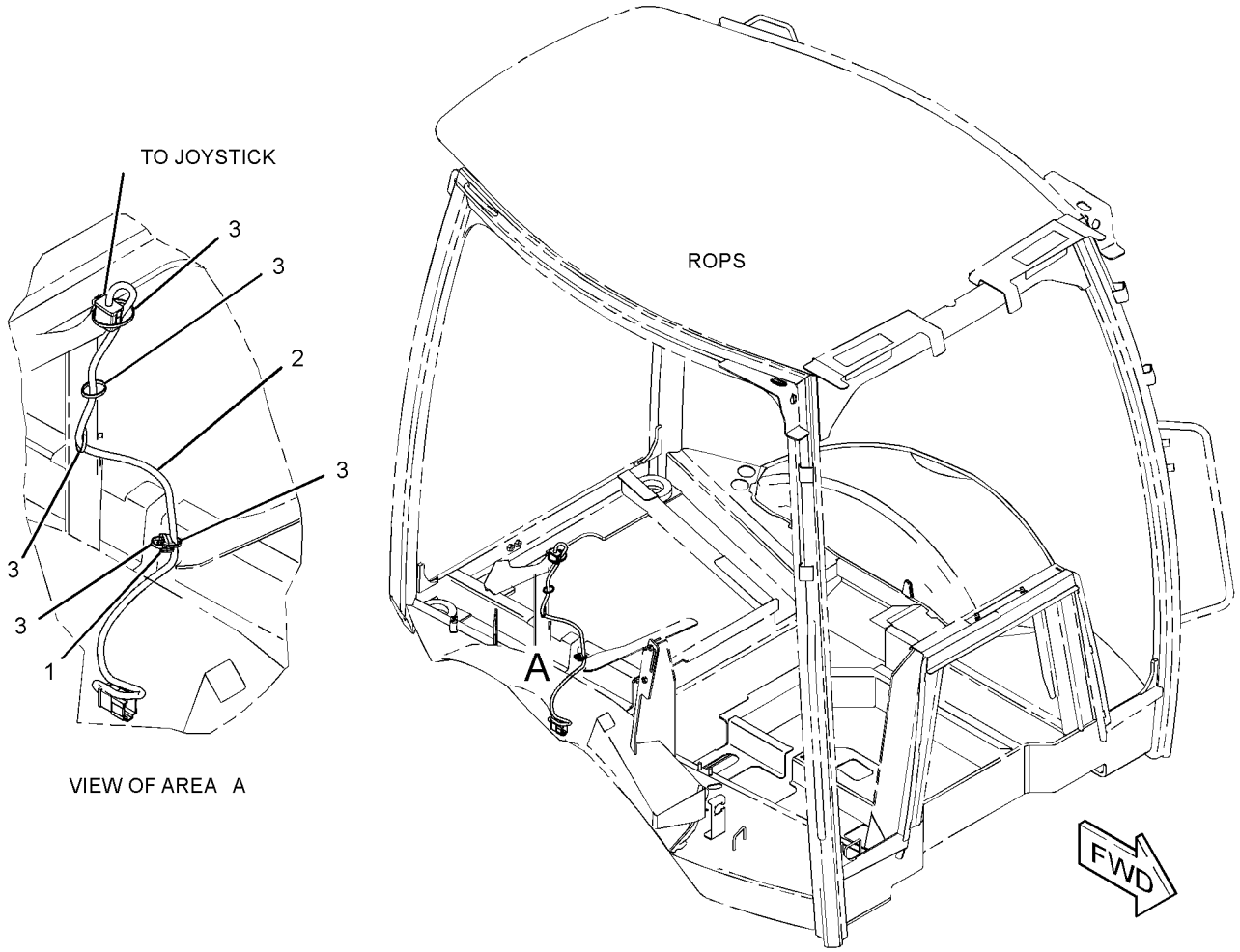

GRAPHIC #1 **<END>** g01367391

357-3199 WIRING GP-ENGINE—PILOT & MECHANICAL

S/N: SEJ1-UP
PART OF 337-9867 ENGINE AR-COMPLETE
AN ATTACHMENT

SMCS-1408 **i04605589**

NOTE	REF NO	GRAPHIC REF	PART NUMBER	QTY	PART NAME 1 2 3 4 5 6 (PRODUCT LEVEL)	SEE PAGE
	1	2	**4E-0724**	1	SPACER (9X20X28-MM THK)	
	2	1,2	**7K-1181**	6	STRAP-CABLE	
	3	1	**134-3355**	1	STRAP AS	
	4	1	**164-9425**	1	HORN AS (12-VOLT, LOW TONE)	
	5	2	**205-9920**	2	STRAP-CABLE	
	6	1,2	**206-1345**	3	STRAP-CABLE	
	7	2	**244-3106**	1	SENDER AS-TEMPERATURE (ENGINE COOLANT)	
		2	**102-8802**	1	KIT-RECEPTACLE (2-PIN)	
					(INCLUDES RECEPTACLE AS & WEDGE)	
		2	**8T-8729**	2	PIN-CONNECTOR (16-GA TO 18-GA)	
	8	2	**274-3774**	1	CAP-CONNECTOR	
	9	1,2	**298-0663**	5	CLIP	
	10	1	**331-5496**	1	HARNESS AS-ALARM	
		1	**8T-8729**	2	PIN-CONNECTOR (16-GA TO 18-GA)	
		1	**155-2270**	1	KIT-CONNECTING PLUG (2-PIN)	
					(INCLUDES PLUG AS, WEDGE & INTERFACE SEAL)	
		1	**102-8802**	1	KIT-RECEPTACLE (2-PIN)	
					(INCLUDES RECEPTACLE AS & WEDGE)	
		1	**8T-8730**	2	SOCKET-CONNECTOR (16-GA TO 18-GA)	
	11	2	**352-3964**	1	CLIP	
	12	1	**357-3200**	1	HARNESS AS-ENGINE	
E		1	**226-5849**		CONDUIT (26-CM)	
		1	**123-7615**	2	CONNECTOR	
		1	**213-0139**	3	PIN	
		1	**176-1477**	1	PLUG AS (2-PIN)	
		1	**258-4172**	1	PLUG AS-CONNECTOR	
		1	**155-2260**	1	KIT-CONNECTING PLUG (3-PIN)	
		1	**155-2270**	8	KIT-CONNECTING PLUG (2-PIN)	
					(EACH PLUG KIT INCLUDES PLUG AS, WEDGE & INTERFACE SEAL)	
		1	**8T-8730**	10	SOCKET-CONNECTOR (16-GA TO 18-GA)	
		1	**169-0705**	18	SEAL	
		1	**185-1861**	2	SEAL-WIRE	
		1	**180-9340**	19	SOCKET-CONNECTOR (14-GA TO 18-GA)	
		1	**204-6195**	1	SOCKET-CONNECTOR (18-PIN)	
		1	**275-0601**	17	SOCKET-CONNECTOR (16-GA TO 20-GA)	
		1	**176-1521**	2	TERMINAL	
		1	**2L-8076**	1	TERMINAL-RING (14-GA TO 16-GA, NO. 10 SCREW)	
		1	**2L-8079**	1	TERMINAL-RING (14-GA TO 16-GA, 3/8-IN SCREW)	
		1	**7N-7221**	1	TERMINAL-BLADE (18-GA TO 22-GA)	
		1	**091-2436**	44	TERMINAL-BLADE (18-GA TO 22-GA)	
		1	**2L-8066**	1	TERMINAL-RING (10-GA TO 12-GA, NO. 10 SCREW)	
		1	**7N-9017**	2	TERMINAL-RING (18-GA TO 22-GA, NO. 10 SCREW)	
E		1	**119-3662**		TUBE-HEAT SHRINK (10.85-MM DIA) (7-CM)	
E		1	**125-7874**		TUBE-HEAT SHRINK (5.72-MM DIA) (11-CM)	
E		1	**125-7875**		TUBE-HEAT SHRINK (7.44-MM DIA) (10-CM)	
D		1	**5P-6006**		TUBE-HEAT SHRINK (9.52-MM DIA) (0.1-M)	
	13	2	**132-5789**	1	CLIP	
	14	2	**230-7732**	1	MOUNTING-CABLE TIE	
	15	1	**3J-4818**	1	LOCKWASHER	
	16	1,2	**3S-2093**	23	STRAP-CABLE	

357-3199 **WIRING GP-ENGINE** *(contd.)* **i04605589**

NOTE	REF NO	GRAPHIC REF	PART NUMBER	QTY	PART NAME 1 2 3 4 5 6 (PRODUCT LEVEL)	SEE PAGE
	17	2	**4P-7429**	1	CLIP	
	18	2	**4P-7581**	3	CLIP	
	19	2	**4P-8134**	4	CLIP	
M	20	2	**5C-2874**	2	NUT (M5X0.8-THD)	
	21	2	**7G-7053**	1	GROMMET	
M	22	2	**7X-0818**	1	BOLT (M8X1.25X45-MM)	
	23	2	**8F-1434**	2	LOCKWASHER	
	24	1	**8F-3590**	1	LOCKWASHER	
	25	2	**8T-0328**	2	WASHER-HARD (5.5X10X1-MM THK)	
	26	1,2	**8T-4121**	7	WASHER-HARD (11X21X2.5-MM THK)	
M	27	1	**8T-4136**	1	BOLT (M10X1.5X25-MM)	
M	28	1,2	**8T-4137**	5	BOLT (M10X1.5X20-MM)	
M	29	2	**8T-4189**	3	BOLT (M8X1.25X20-MM)	
M	30	1,2	**8T-4192**	3	BOLT (M12X1.75X25-MM)	
	31	1,2	**8T-4223**	4	WASHER-HARD (13.5X25.5X3-MM THK)	
	32	2	**8T-4224**	4	WASHER-HARD (8.8X16X2-MM THK)	

D-ORDER BY THE METER
E-ORDER BY THE CENTIMETER
M-METRIC PART

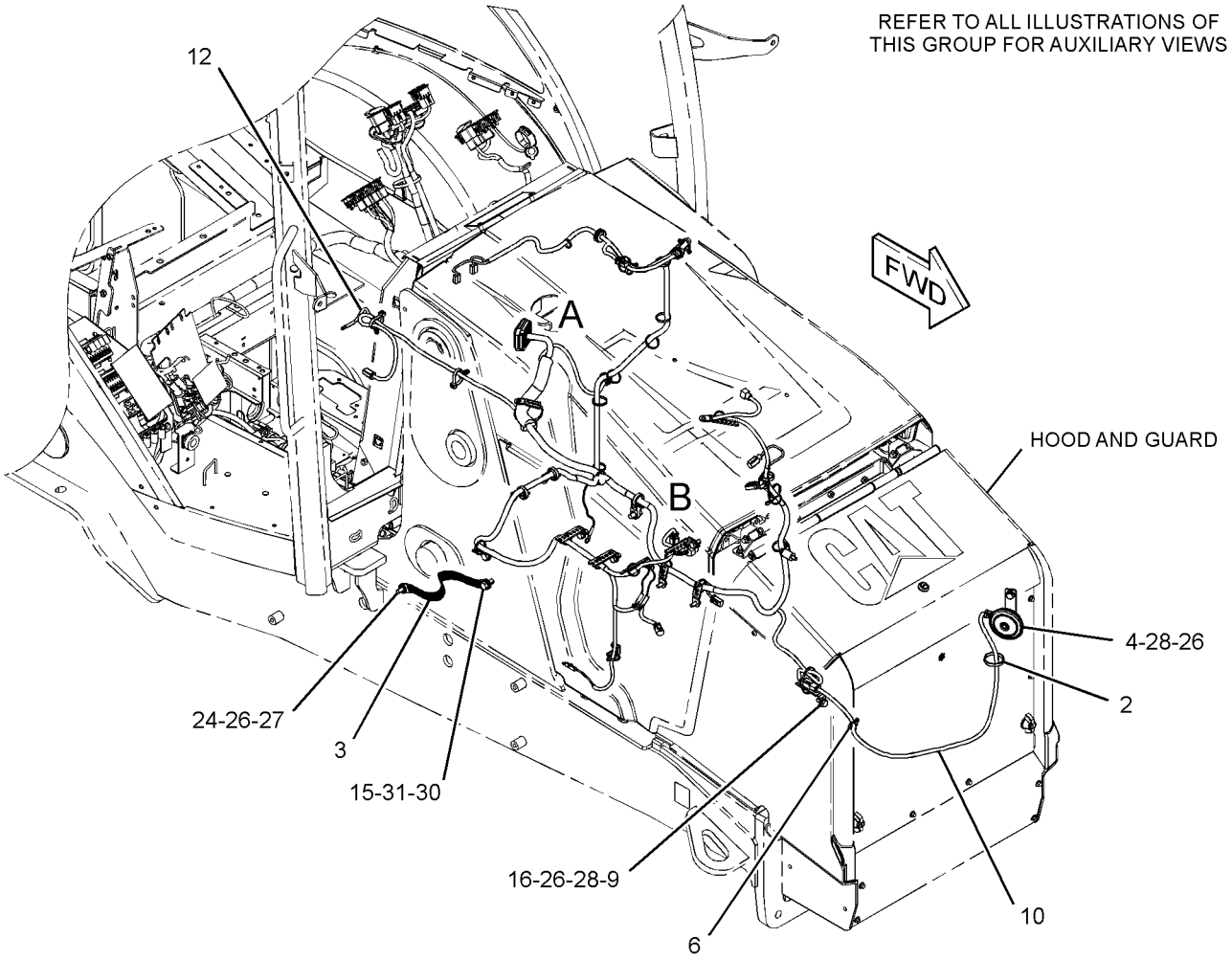

GRAPHIC #1 g02811356

357-3199 **WIRING GP-ENGINE** *(contd.)* **i04605589**

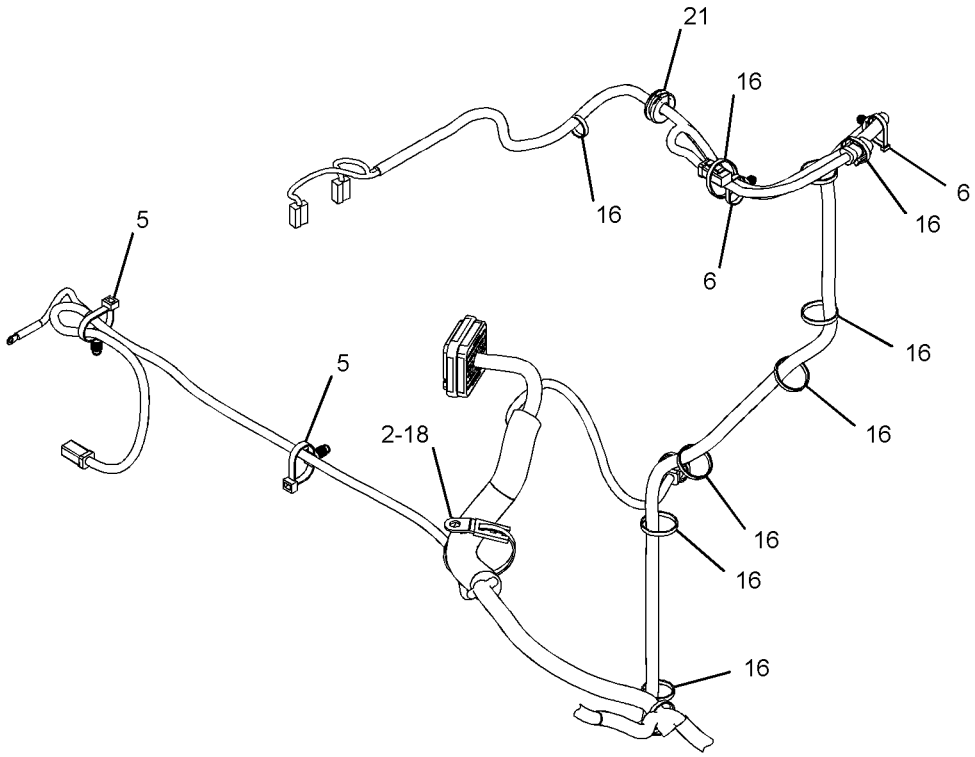

VIEW OF AREA A

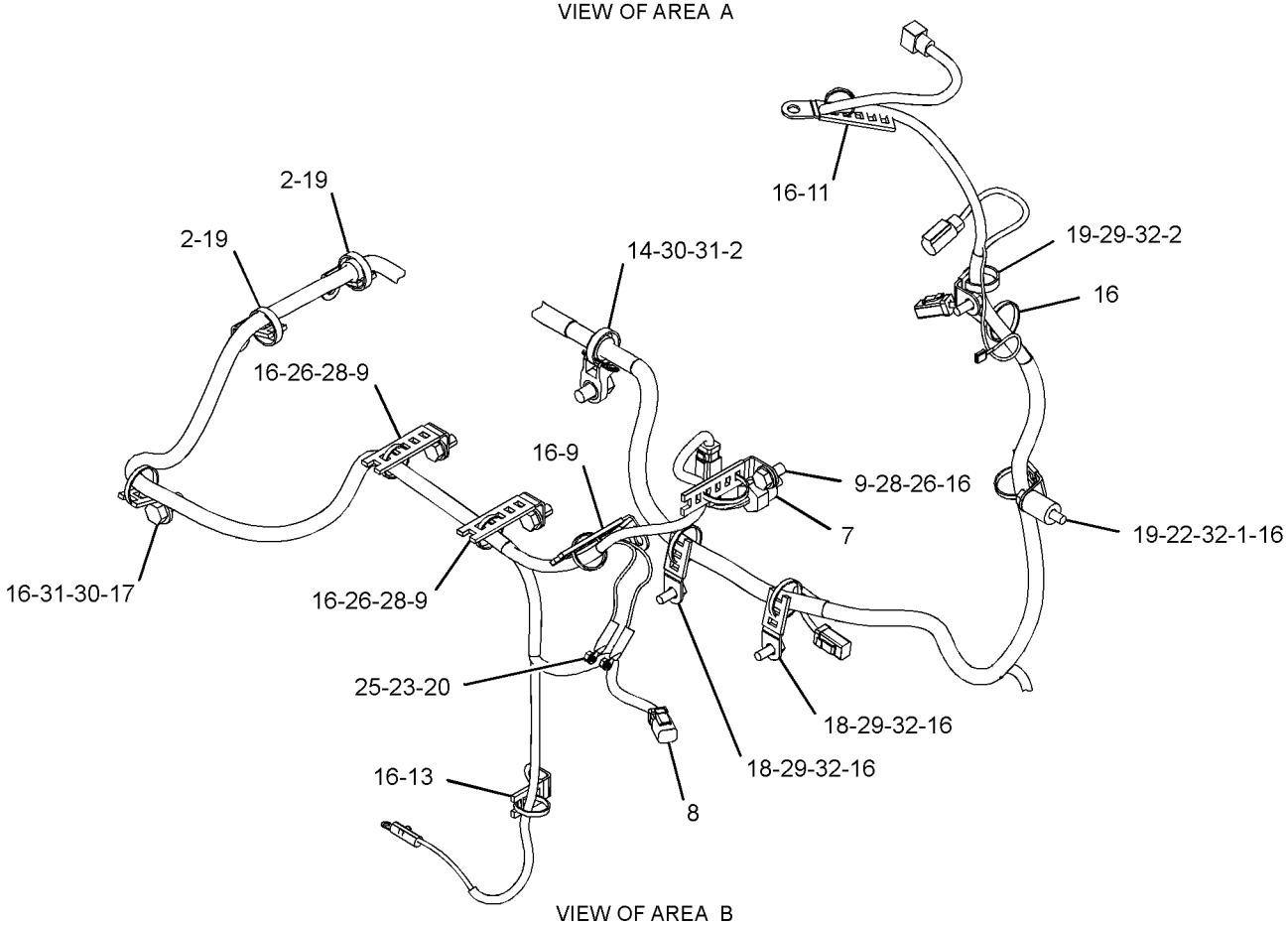

VIEW OF AREA B

GRAPHIC #2 **<END>** g02811357

359-0015 WIRING GP-HEATER

S/N: SEJ1-UP
PART OF 374-6887 HEATER & AIR CONDITIONER AR
AN ATTACHMENT

SMCS-1408, 7304 **i04586212**

NOTE	REF NO	GRAPHIC REF	PART NUMBER	QTY	PART NAME 1 2 3 4 5 6 (PRODUCT LEVEL)	SEE PAGE
	1	1	**3E-9362**	1	RELAY AS (12-VOLT) (HIGH SPEED)	
	2	1	**6K-0806**	8	STRAP-CABLE	
	3	1	**8T-8799**	1	BOOT	
	4	1	**214-4695**	1	SWITCH AS-ROCKER (BLOWER FAN SPEED)	
	5	1	**214-4703**	1	SWITCH AS-ROCKER (HEATER)	
					(EACH SWITCH AS INCLUDES)	
		1	**111-7899**	1	GASKET	
	6	1	**275-0570**	1	BAR-BUS	
	7	1	**359-0016**	1	HARNESS AS-HEATER & AIR COND	
		1	**228-5856**	2	CONNECTOR	
		1	**111-6795**	1	HOUSING-RELAY	
		1	**111-6816**	1	LOCK	
		1	**213-0139**	5	PIN	
		1	**8T-8729**	5	PIN-CONNECTOR (16-GA TO 18-GA)	
		1	**9X-3401**	2	PIN-CONNECTOR (16-GA TO 18-GA)	
		1	**177-9648**	1	KIT-CONNECTING PLUG (2-PIN)	
		1	**177-9656**	1	KIT-CONNECTING PLUG (4-PIN)	
					(EACH PLUG KIT INCLUDES PLUG AS, WEDGE & INTERFACE SEAL)	
		1	**8T-8737**	1	PLUG-SEAL	
		1	**102-8802**	2	KIT-RECEPTACLE (2-PIN)	
		1	**102-8803**	1	KIT-RECEPTACLE (3-PIN)	
					(EACH RECEPTACLE KIT INCLUDES RECEPTACLE AS & WEDGE)	
		1	**122-4401**	1	TERMINAL	
		1	**2L-8069**	1	TERMINAL-RING (2-GA TO 10-GA, 3/8-IN SCREW)	
		1	**2L-8067**	1	TERMINAL-RING (10-GA TO 12-GA, 1/4-IN SCREW)	
		1	**091-2436**	7	TERMINAL-BLADE (18-GA TO 22-GA)	
		1	**104-1995**	11	TERMINAL-BLADE (14-GA TO 18-GA)	
		1	**111-6792**	2	TERMINAL-RECEPTACLE (18-GA TO 20-GA)	
		1	**111-6794**	2	TERMINAL-RECEPTACLE	
E		1	**119-3662**		TUBE-HEAT SHRINK (10.85-MM DIA) (7-CM)	
E		1	**125-7874**		TUBE-HEAT SHRINK (5.72-MM DIA) (10-CM)	
E		1	**125-7875**		TUBE-HEAT SHRINK (7.44-MM DIA) (10-CM)	
	8	1	**096-6166**	2	WASHER-HARD (4.5X9X1-MM THK)	
Y	9	1	**276-7287**	1	RELAY GP (12-VOLT) (POWER DISTRIBUTION)	116
	10	1	**3S-2093**	1	STRAP-CABLE	
M	11	1	**5C-2890**	1	NUT (M6X1-THD)	
M	12	1	**5C-7261**	1	NUT (M8X1.25-THD)	
	13	1	**8C-3398**	1	LOCKWASHER	
M	14	1	**8T-0285**	2	SCREW-MACHINE (M4X0.7X12-MM)	
	15	1	**8T-4205**	1	WASHER-HARD (7.2X14.5X2-MM THK)	
	16	1	**8T-4224**	1	WASHER-HARD (8.8X16X2-MM THK)	
M	17	1	**8T-9534**	1	BOLT (M6X1X50-MM)	

E-ORDER BY THE CENTIMETER
M-METRIC PART
Y-SEPARATE ILLUSTRATION

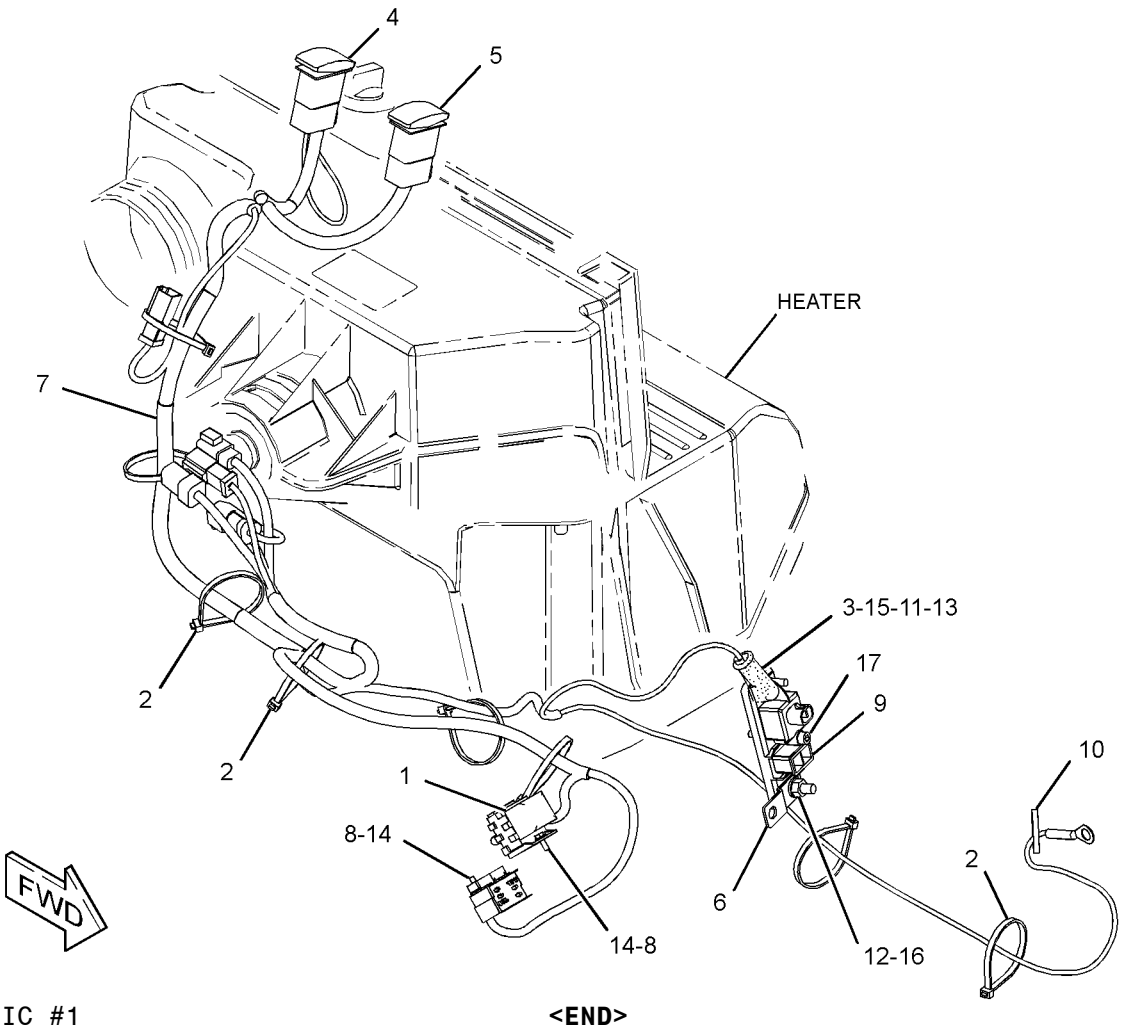

GRAPHIC #1 **<END>** g02806236

357-3221 WIRING GP-KICKOUT & POSITIONER–

PARALLEL LIFT

S/N: SEJ1-UP

PART OF 373-4275, 373-4277 VALVE AR-BANK 3

AN ATTACHMENT

SMCS-5109, 5112, 5734 **i04637833**

NOTE	REF NO	GRAPHIC REF	PART NUMBER	QTY	PART NAME 1 2 3 4 5 6 (PRODUCT LEVEL)	SEE PAGE
	1	1	**7K-1181**	19	STRAP-CABLE	
	2	1	**331-5562**	1	SENSOR AS-POSITION (BUCKET)	
		1	**331-5563**	1	TUBE AS	
		1	**331-5564**	1	ROD AS	
		1	**284-0078**	1	SWITCH AS-PUSH BUTTON (BUCKET POSITIONER)	
		1	**295-8141**	1	CLIP	
		1	**295-8142**	2	SEAL-O-RING	
		1	**295-8143**	2	SEAL-O-RING	
	3	1	**354-5137**	2	SPACER (11X25X25-MM THK)	
	4	1	**357-3222**	1	HARNESS AS-WIRING (KICKOUT, POSITIONER)	
		1	**266-4157**	1	SLEEVE-BRAIDED	
E		1	**6V-8523**		HOSE (259-CM)	
		1	**9X-3401**	2	PIN-CONNECTOR (16-GA TO 18-GA)	
		1	**8T-8737**	1	PLUG-SEAL	
		1	**102-8803**	1	KIT-RECEPTACLE (3-PIN)	
					(INCLUDES RECEPTACLE AS & WEDGE)	
		1	**3S-2093**	1	STRAP-CABLE	
E		1	**8T-6885**		TUBE-HEAT SHRINK (19.05-MM DIA) (10-CM)	
	5	1	**3S-2093**	1	STRAP-CABLE	
M	6	1	**8T-4182**	2	BOLT (M10X1.5X45-MM)	
	7	1	**5G-3676**	2	GROMMET	
	8	1	**8T-1889**	2	CLIP (SLOT)	
	9	1	**8T-1890**	2	CLIP (TAB)	
	10	1	**8T-4121**	2	WASHER-HARD (11X21X2.5-MM THK)	

E-ORDER BY THE CENTIMETER
M-METRIC PART

357-3221 **WIRING GP-KICKOUT & POSITIONER** *(contd.)* **i04637833**

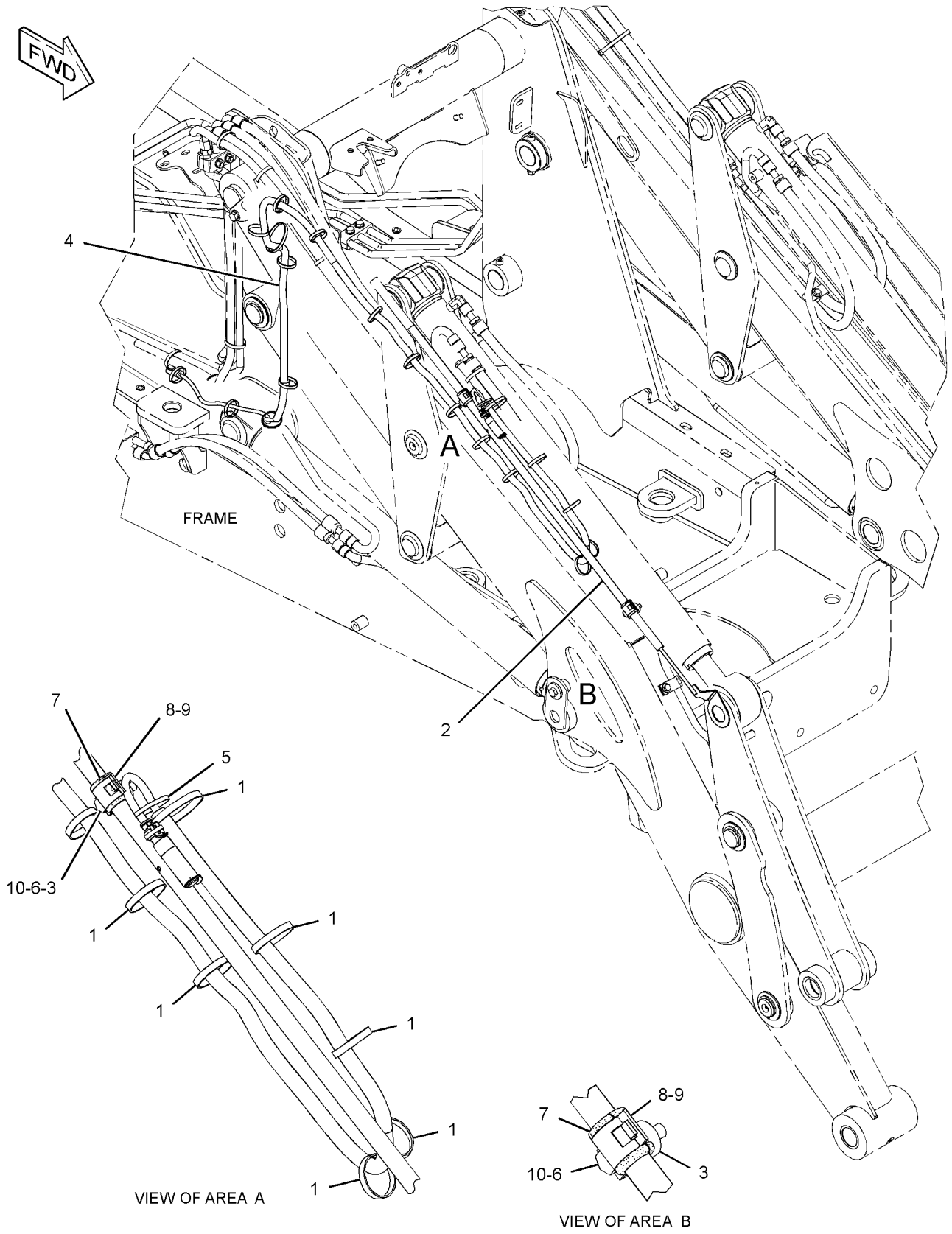

GRAPHIC #1 **<END>** g02823876

385-0559 WIRING GP-KICKOUT & POSITIONER

S/N: SEJ1-UP

PART OF 373-4273 CONVERSION AR-QUICK COUPLER, 373-4271 VALVE AR-BANK 3 AN ATTACHMENT

SMCS-5109, 5112, 5734 **i04623418**

NOTE	REF NO	GRAPHIC REF	PART NUMBER	QTY	PART NAME 1 2 3 4 5 6 (PRODUCT LEVEL)	SEE PAGE
	1	1	**7K-1181**	18	STRAP-CABLE	
	2	1	**331-5562**	1	SENSOR AS-POSITION (BUCKET)	
		1	**284-0078**	1	SWITCH AS-PUSH BUTTON (BUCKET POSITIONER)	
		1	**295-8141**	1	CLIP	
		1	**295-8142**	2	SEAL-O-RING	
		1	**295-8143**	2	SEAL-O-RING	
		1	**331-5563**	1	TUBE AS	
		1	**331-5564**	1	ROD AS	
	3	1	**354-5137**	2	SPACER (11X25X25-MM THK)	
	4	1	**385-0558**	1	HARNESS AS-WIRING (KICKOUT, POSITIONER)	
		1	**266-4157**	1	SLEEVE-BRAIDED	
E		1	**6V-8523**		HOSE (233-CM)	
		1	**9X-3401**	2	PIN-CONNECTOR (16-GA TO 18-GA)	
					—OR—	
		1	**126-1767**	2	PIN-CONNECTOR (14-GA TO 16-GA)	
		1	**222-8935**	1	PLUG	
		1	**102-8803**	1	KIT-RECEPTACLE (3-PIN)	
					(INCLUDES RECEPTACLE AS & WEDGE)	
		1	**3S-2093**	1	STRAP-CABLE	
E		1	**8T-6885**		TUBE-HEAT SHRINK (19.05-MM DIA) (10-CM)	
	5	1	**3S-2093**	1	STRAP-CABLE	
	6	1	**5G-3676**	2	GROMMET	
	7	1	**8T-1889**	2	CLIP (SLOT)	
	8	1	**8T-1890**	2	CLIP (TAB)	
	9	1	**8T-4121**	2	WASHER-HARD (11X21X2.5-MM THK)	
M	10	1	**8T-4182**	2	BOLT (M10X1.5X45-MM)	

E-ORDER BY THE CENTIMETER
M-METRIC PART

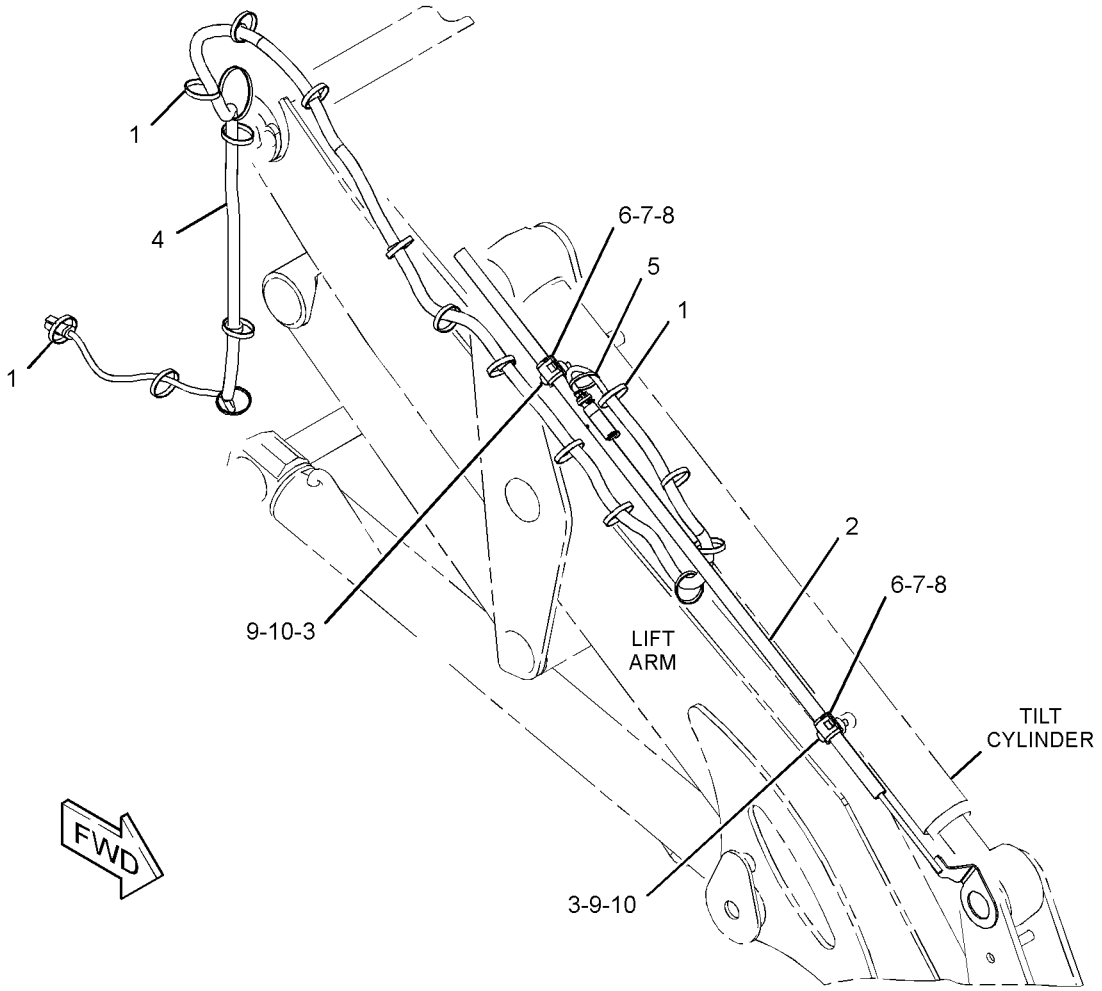

GRAPHIC #1 **<END>** g02821977

357-3246 WIRING GP-LOAD CONTROL–PILOT

S/N: SEJ1-UP
PART OF 373-4275, 373-4277 VALVE AR-BANK 3
AN ATTACHMENT

SMCS-1408 **i04622876**

NOTE	REF NO	GRAPHIC REF	PART NUMBER	QTY	PART NAME 1 2 3 4 5 6 (PRODUCT LEVEL)	SEE PAGE
	1	1	**7K-1181**	4	STRAP-CABLE	
B	2	1	**146-9439**	1	RELAY AS (12-VOLT) (LOAD CONTROL)	
B	3	1	**253-9396**	1	SWITCH AS-ROCKER (RIDE CONTROL, LOAD CONTROL)	
B	4	1	**348-3064**	1	SWITCH AS-ROCKER (LOAD CONTROL)	
					(EACH SWITCH AS INCLUDES)	
		1	**111-7899**	1	GASKET	
	5	1	**357-3247**	1	HARNESS AS-CHASSIS (LOAD CONTROL)	
		1	**9X-3401**	5	PIN-CONNECTOR (16-GA TO 18-GA)	
		1	**9X-1054**	2	PLUG AS-CONNECTOR (4-PIN)	
		1	**155-2260**	1	KIT-CONNECTING PLUG (3-PIN)	
		1	**155-2270**	6	KIT-CONNECTING PLUG (2-PIN)	
					(EACH PLUG KIT INCLUDES PLUG AS, WEDGE & INTERFACE SEAL)	
		1	**8T-8737**	1	PLUG-SEAL	
		1	**102-8805**	1	KIT-RECEPTACLE (6-PIN)	
					(INCLUDES RECEPTACLE AS & WEDGE)	
		1	**180-9340**	15	SOCKET-CONNECTOR (14-GA TO 18-GA)	
		1	**189-3158**	4	SUPPRESSOR-ARC	
		1	**9X-1055**	4	TERMINAL-RECEPTACLE (12-GA)	
		1	**100-5041**	4	TERMINAL-RECEPTACLE (18-GA TO 20-GA)	
E		1	**119-3662**		TUBE-HEAT SHRINK (10.85-MM DIA) (7-CM)	
E		1	**125-7874**		TUBE-HEAT SHRINK (5.72-MM DIA) (20-CM)	
E		1	**125-7875**		TUBE-HEAT SHRINK (7.44-MM DIA) (10-CM)	
	6	1	**115-1615**	2	RELAY AS (12-VOLT) (DEAD ENGINE LOWER)	
	7	1	**3S-2093**	13	STRAP-CABLE	

B-USE AS REQUIRED
E-ORDER BY THE CENTIMETER

357-3246 **WIRING GP-LOAD CONTROL** *(contd.)* **i04622876**

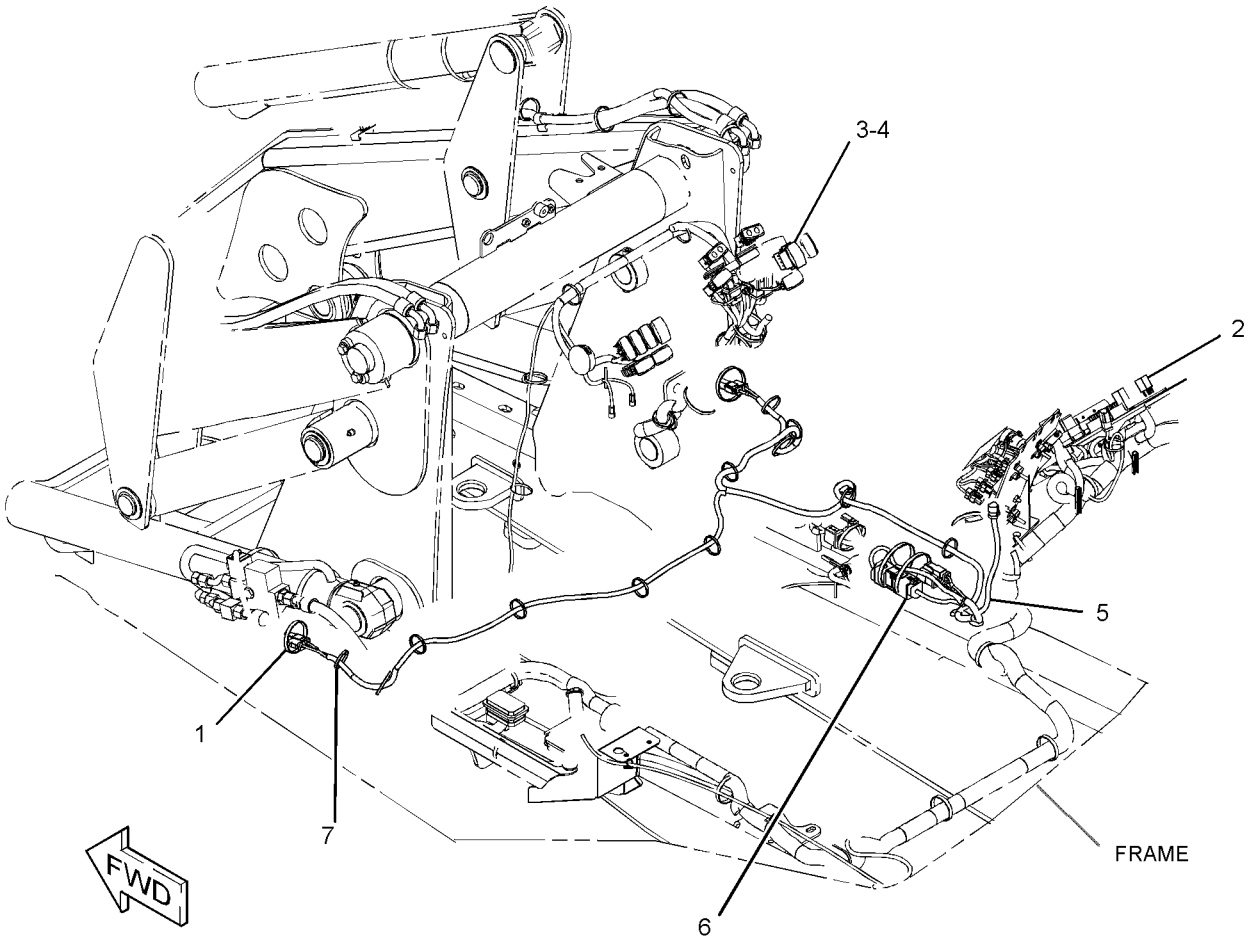

GRAPHIC #1 **<END>** g02827319

ELECTRICAL AND STARTING SYSTEM

357-3195 WIRING GP-PLATFORM–EAME, PILOT

S/N: SEJ1-UP

PART OF 353-1454 ELECTRONICS AR-MACHINE

AN ATTACHMENT

SMCS-1408 **i04597232**

NOTE	REF NO	GRAPHIC REF	PART NUMBER	QTY	PART NAME 1 2 3 4 5 6 (PRODUCT LEVEL)	SEE PAGE
	1	1	**1S-9593**	3	STRAP-CABLE	
	2	2	**3E-9362**	1	RELAY AS (12-VOLT) (START)	
	3	2	**6I-1418**	4	SPACER (8.2X12.7X28.7-MM THK)	
	4	1	**6K-0806**	3	STRAP-CABLE	
	5	1,2,3	**7K-1181**	32	STRAP-CABLE	
	6	2	**7T-4848**	1	FLASHER AS (12-VOLT) (HAZARD)	
	7	2	**8C-6354**	1	CAP-RECEPTACLE (ET CONNECTOR)	
	8	2	**8T-8799**	5	BOOT	
	9	2	**8T-9655**	8	MOUNT-ISOLATION	
	10	1	**8X-9618**	1	STRAP AS-GROUND	
	11	3	**8Y-7833**	1	WIRE AS	
	12	2	**116-7471**	1	PULLER-MINIFUSE	
	13	2	**140-9378**	1	RELAY AS (12-VOLT) (NEUTRAL START)	
	13A	2	**140-9378**	1	RELAY AS (12-VOLT) (FUEL PUMP)	
	14	2	**146-1815**	1	STRAP AS	
	15	2	**146-9439**	3	RELAY AS (12-VOLT) (FUSE BLOCK)	
	16	1	**164-1368**	4	FASTENER-PANEL	
	17	1,3	**178-7539**	2	RECEPTACLE AS (POWER SUPPLY)	
	18	2	**179-6401**	4	SCREW-PAN HEAD (6-32X0.5-IN)	
	19	1	**196-2966**	1	PLUG	
	20	3	**201-1024**	2	BRACKET	
	21	1,2,3	**206-1345**	7	STRAP-CABLE	
	22	1	**212-0862**	3	CLAMP-CABLE	
	23	1	**214-4694**	1	SWITCH AS-ROCKER (MODE SELECT)	
	24	1	**214-4716**	1	SWITCH AS-ROCKER (TRANSMISSION NEUTRAL LOCK)	
					(EACH SWITCH AS INCLUDES)	
		1	**111-7899**	1	GASKET	
	25	1	**214-4717**	1	INDICATOR AS (LH TURN SIGNAL, PARKING BRAKE)	
	26	1	**214-4723**	1	INDICATOR AS (RH TURN SIGNAL, HIGH BEAM)	
					(EACH INDICATOR AS INCLUDES)	
		1	**111-7899**	1	GASKET	
B	27	1	**227-1057**	11	PLUG-HOLE	
	28	2	**258-4178**	1	FLANGE-MOUNTING	
	29	2	**267-2701**	1	FUSE (60-AMPERE) (POWER, 1)	
	30	1	**273-9190**	1	SWITCH AS-MULTIFUNCTION (HD LIGHT, TURN SIG, WDO WIPER)	
		1	**8T-8729**	13	PIN-CONNECTOR (16-GA TO 18-GA)	
		1	**8T-8737**	1	PLUG-SEAL	
		1	**151-9275**	1	KIT-RECEPTACLE (6-PIN)	
		1	**160-3518**	1	KIT-RECEPTACLE (8-PIN)	
					(EACH RECEPTACLE KIT INCLUDES RECEPTACLE AS & WEDGE)	
	31	2	**274-9872**	1	FUSE (30-AMPERE) (MAIN)	
	32	3	**275-0553**	1	BAR-BUS	
	33	3	**275-0570**	1	BAR-BUS	
Y	34	3	**276-7290**	1	RELAY GP (12-VOLT) (POWER, 1)	117
Y	35	3	**276-7291**	1	RELAY GP (12-VOLT) (POWER, 2)	118
	36	2	**278-6377**	1	FUSE (40-AMPERE) (POWER, 2)	
	37	1	**290-6733**	1	BRACKET AS	
	38	2	**298-0663**	1	CLIP	
	39	1	**306-7346**	1	SWITCH AS-ROCKER (HAZARD WARNING LIGHTS)	
		1	**111-7899**	1	GASKET	
	40	2	**312-3083**	1	BRACKET AS	
Y	41	3	**322-6827**	1	RELAY GP (12-VOLT) (STARTING MOTOR)	119
	42	2	**331-5578**	1	BRACKET	

357-3195 **WIRING GP-PLATFORM** *(contd.)* **i04597232**

NOTE	REF NO	GRAPHIC REF	PART NUMBER	QTY	PART NAME 1 2 3 4 5 6 (PRODUCT LEVEL)	SEE PAGE
	43	2	**331-5636**	1	BRACKET AS	
	44	2	**344-2824**	1	PLATE AS	
	45	1	**356-4114**	1	GROMMET	
	46	1	**357-3196**	1	HARNESS AS-PLATFORM	
		1	**275-7877**	1	BLOCK AS-FUSE	
		1	**306-0348**	1	COVER-FUSE	
		1	**8C-3398**	2	LOCKWASHER	
M		1	**5C-2890**	2	NUT (M6X1-THD)	
		1	**306-0351**	1	SEAL-COVER	
		1	**8T-4205**	2	WASHER-HARD (7.2X14.5X2-MM THK)	
		1	**292-9784**	1	BLOCK AS-FUSE	
		1	**8T-8799**	2	BOOT	
		1	**110-0203**	8	CONNECTOR AS	
		1	**228-5856**	8	CONNECTOR	
		1	**113-8490**	9	FUSE (10-AMPERE)	
		1	**113-8491**	12	FUSE (15-AMPERE)	
		1	**112-8492**	6	SCREW	
		1	**111-6795**	3	HOUSING-RELAY	
		1	**111-6816**	3	LOCK	
		1	**8C-3398**	2	LOCKWASHER	
M		1	**5C-2890**	2	NUT (M6X1-THD)	
		1	**211-0052**	2	NUT (1-11/16-18-THD)	
		1	**9X-3401**	56	PIN-CONNECTOR (16-GA TO 18-GA)	
		1	**262-9151**	3	PIN-CONNECTOR (12-GA TO 14-GA)	
		1	**275-0600**	17	PIN-CONNECTOR	
		1	**147-1446**	1	PLUG AS-CONNECTOR (70-PIN)	
		1	**147-1445**	1	PLUG AS-CONNECTOR (70-PIN)	
					(EACH PLUG AS INCLUDES)	
		1	**159-9322**	1	SEAL-O-RING	
		1	**155-2256**	1	KIT-CONNECTING PLUG (12-PIN)	
		1	**155-2255**	5	KIT-CONNECTING PLUG (12-PIN)	
		1	**155-2265**	4	KIT-CONNECTING PLUG (8-PIN)	
		1	**155-2260**	5	KIT-CONNECTING PLUG (3-PIN)	
		1	**155-2270**	12	KIT-CONNECTING PLUG (2-PIN)	
		1	**155-2271**	2	KIT-CONNECTING PLUG (4-PIN)	
		1	**155-2274**	5	KIT-CONNECTING PLUG (6-PIN)	
					(EACH PLUG KIT INCLUDES PLUG AS, WEDGE & INTERFACE SEAL)	
		1	**230-4011**	4	PLUG AS-CONNECTOR (2-PIN)	
					(EACH INCLUDES)	
		1	**264-7029**	1	SEAL-CONNECTOR	
		1	**205-9362**	1	PLUG AS	
		1	**7R-2751**	20	PLUG-CONNECTOR	
		1	**8T-8737**	108	PLUG-SEAL	
		1	**102-8802**	3	KIT-RECEPTACLE (2-PIN)	
		1	**102-8804**	1	KIT-RECEPTACLE (4-PIN)	
		1	**102-8805**	2	KIT-RECEPTACLE (6-PIN)	
		1	**102-8801**	1	KIT-RECEPTACLE (12-PIN)	
					(EACH RECEPTACLE KIT INCLUDES RECEPTACLE AS & WEDGE)	
		1	**134-2540**	2	RESISTOR AS-CONNECTION (3-PIN)	
		1	**167-3692**	11	RECEPTACLE AS-CONNECTOR (31-PIN)	
		1	**225-3861**	1	RECEPTACLE AS (31-PIN)	
		1	**258-4170**	1	RECEPTACLE AS	
		1	**9W-1951**	1	RECEPTACLE-CONNECTOR (9-PIN)	
		1	**169-0705**	19	SEAL	
		1	**100-6674**	2	SEAL-CONNECTOR	
		1	**9W-0844**	13	SOCKET-CONNECTOR (14-GA TO 16-GA)	
		1	**9X-3402**	96	SOCKET-CONNECTOR (16-GA TO 18-GA)	
		1	**180-9340**	168	SOCKET-CONNECTOR (14-GA TO 18-GA)	

357-3195 **WIRING GP-PLATFORM** ***(contd.)*** **i04597232**

NOTE	REF NO	GRAPHIC REF	PART NUMBER	QTY	PART NAME 1 2 3 4 5 6 (PRODUCT LEVEL)	SEE PAGE
		1	**202-0313**	23	TERMINAL AS	
					(EACH INCLUDES)	
		1	**128-5016**	1	SEAL-CABLE	
		1	**202-0314**	27	TERMINAL AS	
					(EACH INCLUDES)	
		1	**128-4123**	1	SEAL	
		1	**8L-8413**	2	STRAP-CABLE (WHITE)	
		1	**189-3158**	4	SUPPRESSOR-ARC	
B		1	**329-3734**		TAPE	
		1	**2L-8067**	1	TERMINAL-RING (10-GA TO 12-GA, 1/4-IN SCREW)	
		1	**2L-8069**	3	TERMINAL-RING (2-GA TO 10-GA, 3/8-IN SCREW)	
		1	**2L-8079**	1	TERMINAL-RING (14-GA TO 16-GA, 3/8-IN SCREW)	
		1	**2L-8050**	6	TERMINAL-RING (6-GA, 1/4-IN SCREW)	
		1	**5P-4571**	4	TERMINAL-BLADE (14-GA TO 16-GA)	
		1	**091-2436**	50	TERMINAL-BLADE (18-GA TO 22-GA)	
		1	**104-1995**	11	TERMINAL-BLADE (14-GA TO 18-GA)	
		1	**111-6792**	7	TERMINAL-RECEPTACLE (18-GA TO 20-GA)	
		1	**111-6793**	2	TERMINAL-RECEPTACLE	
		1	**111-6794**	2	TERMINAL-RECEPTACLE	
E		1	**119-3662**		TUBE-HEAT SHRINK (10.85-MM DIA) (46-CM)	
E		1	**125-7874**		TUBE-HEAT SHRINK (5.72-MM DIA) (275-CM)	
E		1	**125-7875**		TUBE-HEAT SHRINK (7.44-MM DIA) (50-CM)	
		1	**128-4249**	1	LOCKWASHER	
		1	**8T-4205**	2	WASHER-HARD (7.2X14.5X2-MM THK)	
		1	**310-0674**	1	LOCKWASHER	
	47	2	**358-7697**	1	BRACKET AS	
	48	2	**363-8477**	1	CABLE AS	
		2	**6T-5598**	1	TERMINAL-RING (1-GA TO 2-GA, 5/16-IN SCREW)	
E		2	**8C-3056**		CABLE (2-GA, RED) (27-CM)	
		2	**299-6082**	1	COVER-TERMINAL	
		2	**308-8161**	1	COVER-TERMINAL	
	49	1	**367-5026**	1	FILM-IDENTIFICATION (FUSE, RELAY PANEL)	
	50	1	**368-6231**	1	FILM-IDENTIFICATION (FUSE, RELAY PANEL)	
	51	2	**373-9138**	1	TERMINAL	
	52	2	**380-5914**	1	BRACKET	
	53	2	**096-6166**	12	WASHER-HARD (4.5X9X1-MM THK)	
	54	2	**110-2028**	4	SCREW-PAN HEAD (10-14X0.75-IN)	
	55	2	**132-5789**	1	CLIP	
	56	1	**156-6175**	2	CLIP	
	57	2	**274-7409**	4	SCREW-TRUSS HEAD (M8X1.25X45-MM)	
	58	1,2,3	**3S-2093**	16	STRAP-CABLE	
M	59	1,2,3	**5C-2890**	12	NUT (M6X1-THD)	
M	60	2,3	**5C-7261**	7	NUT (M8X1.25-THD)	
M	61	1,2	**5C-9553**	3	BOLT (M6X1X16-MM)	
	62	2	**6V-5764**	8	SCREW-MACHINE (10-32X0.625-IN)	
	63	2	**6V-8801**	1	NUT (3/8-16-THD)	
	64	2	**7X-0579**	7	WASHER-HARD (8.8X25.5X2-MM THK)	
	65	1	**7X-7729**	3	WASHER (11X25X3-MM THK)	
	66	1,2	**8C-3398**	7	LOCKWASHER	
	67	1,2	**8F-3590**	5	LOCKWASHER	
M	68	2	**8T-0285**	4	SCREW-MACHINE (M4X0.7X12-MM)	
	69	2	**8T-0328**	12	WASHER-HARD (5.5X10X1-MM THK)	
	70	1	**8T-4121**	4	WASHER-HARD (11X21X2.5-MM THK)	
M	71	1	**8T-4133**	2	NUT (M10X1.5-THD)	
M	72	1	**8T-4136**	1	BOLT (M10X1.5X25-MM)	
M	73	1	**8T-4137**	2	BOLT (M10X1.5X20-MM)	
M	74	1,2	**8T-4138**	3	BOLT (M6X1X20-MM)	
M	75	2,3	**8T-4200**	5	BOLT (M8X1.25X16-MM)	

357-3195 **WIRING GP-PLATFORM** ***(contd.)*** **i04597232**

NOTE	REF NO	GRAPHIC REF	PART NUMBER	QTY	PART NAME 1 2 3 4 5 6 (PRODUCT LEVEL)	SEE PAGE
	76	1,2,3	**8T-4205**	18	WASHER-HARD (7.2X14.5X2-MM THK)	
	77	2,3	**8T-4224**	8	WASHER-HARD (8.8X16X2-MM THK)	
	78	2	**8T-4896**	1	WASHER-HARD (10.2X18.5X2.5-MM THK)	
M	79	3	**8T-9534**	3	BOLT (M6X1X50-MM)	
	80	1	**9D-3769**	1	GROMMET	
M	81	2	**9X-2043**	2	SCREW-TRUSS HEAD (M6X1X14-MM)	
E	82	1	**3E-6600**		SEAL (5-CM EACH)	
E	83	2	**103-2543**		SEAL (3-CM EACH)	
E	84	1,3	**3E-8299**		SEAL (3-CM EACH)	
E	84A	2	**3E-8299**		SEAL (4-CM)	
E	84B	3	**3E-8299**		SEAL (6-CM EACH)	
E	84C	1	**3E-8299**		SEAL (7-CM)	
E	84D	2	**3E-8299**		SEAL (11-CM)	

B-USE AS REQUIRED
E-ORDER BY THE CENTIMETER
M-METRIC PART
Y-SEPARATE ILLUSTRATION

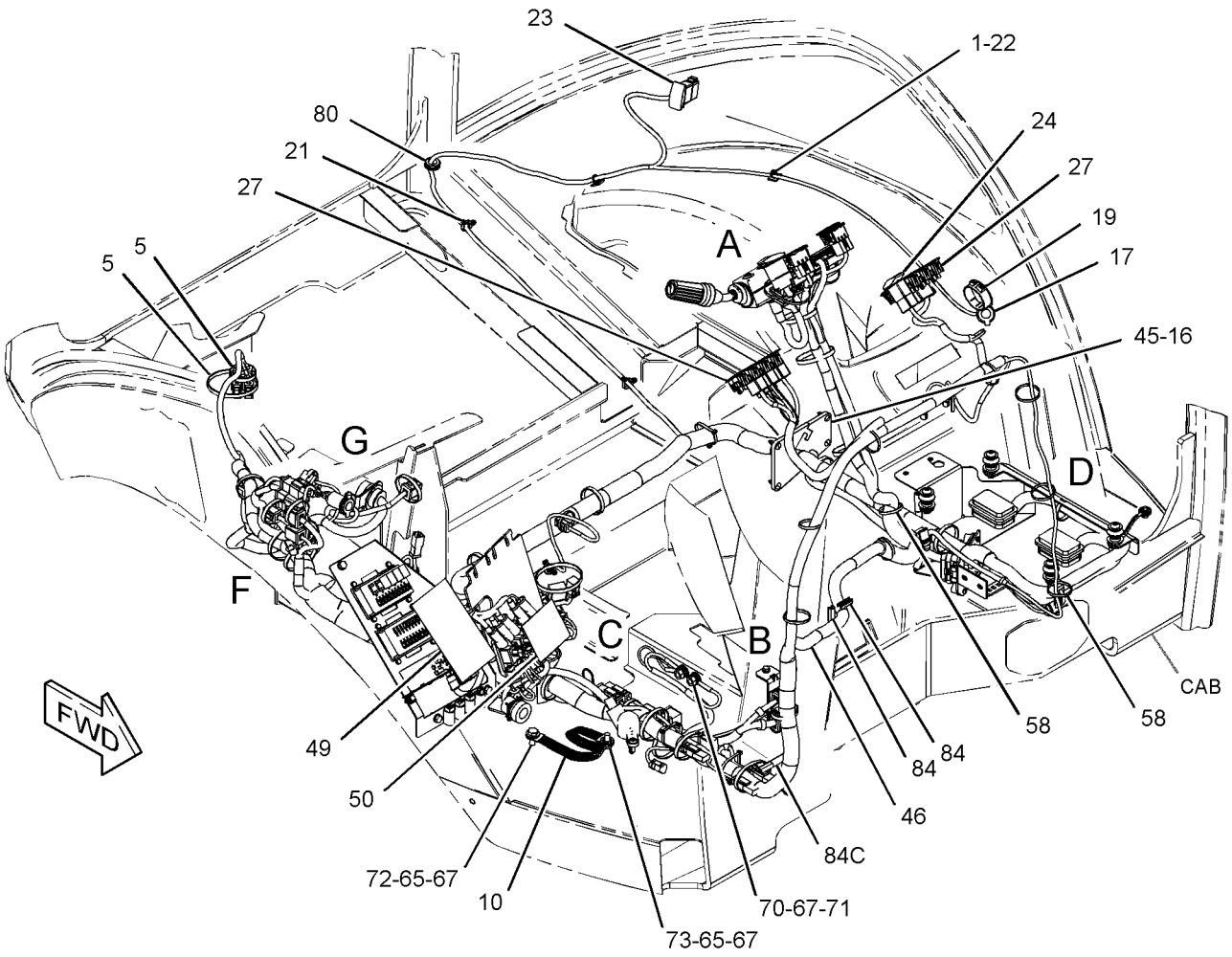

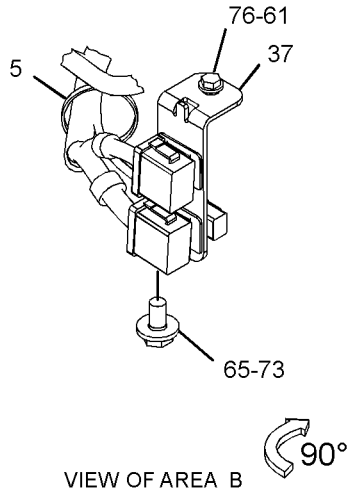

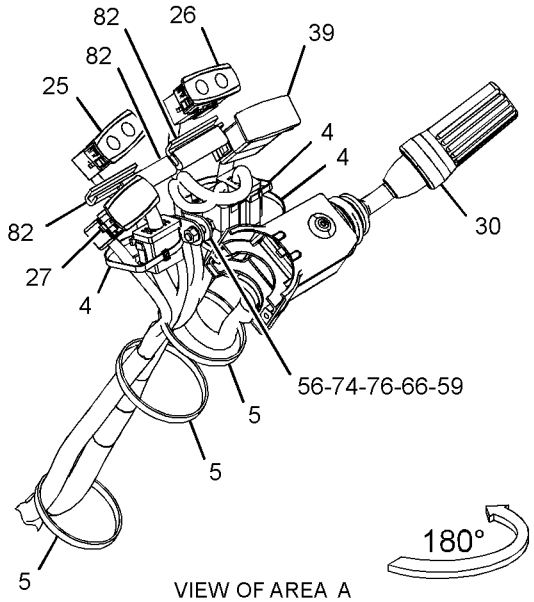

REFER TO ALL ILLUSTRATIONS OF THIS GROUP FOR AUXILIARY VIEWS

GRAPHIC #1

g02817296

357-3195 **WIRING GP-PLATFORM** *(contd.)* **i04597232**

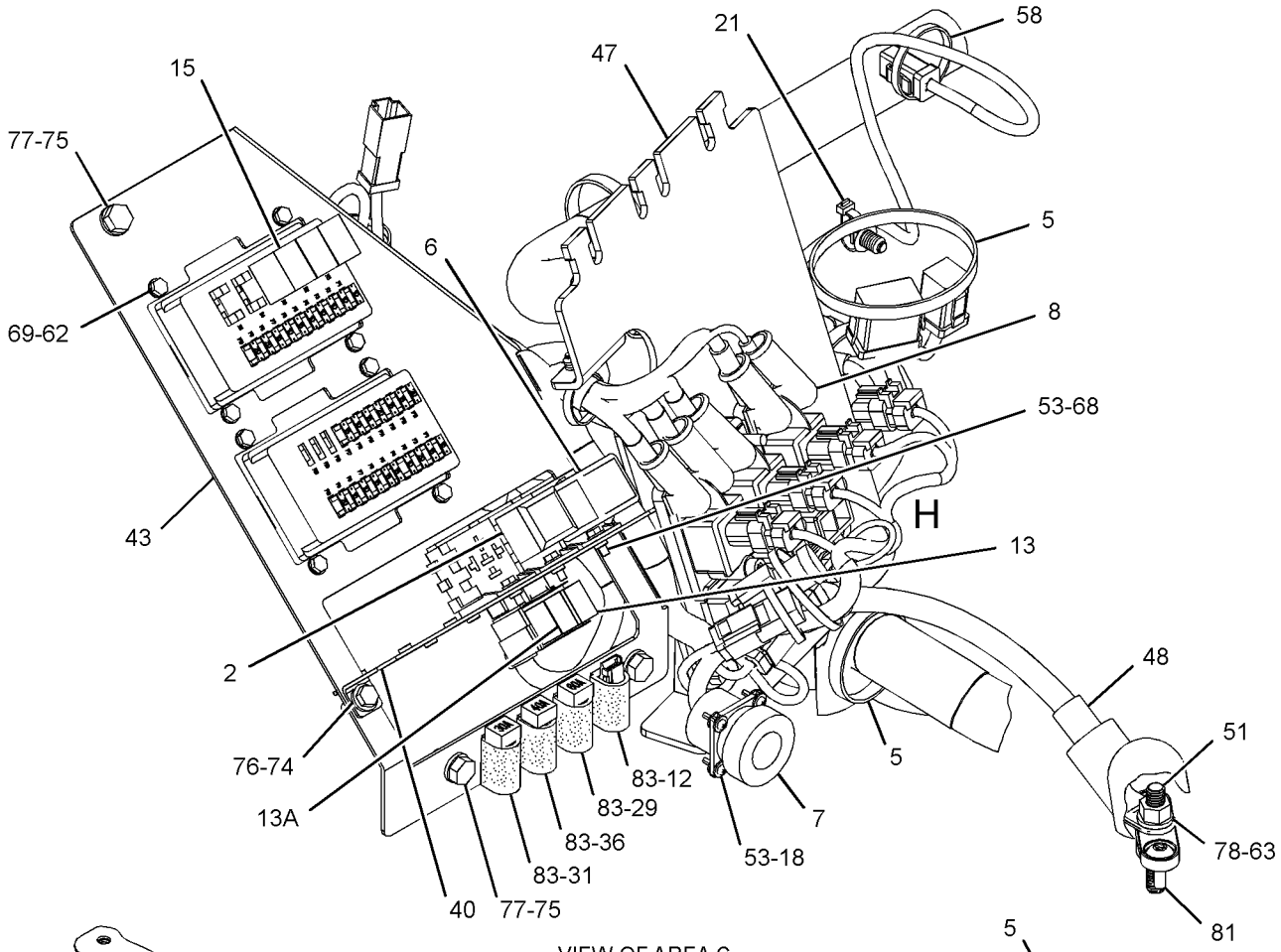

VIEW OF AREA C

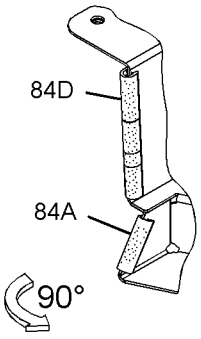

VIEW OF AREA J

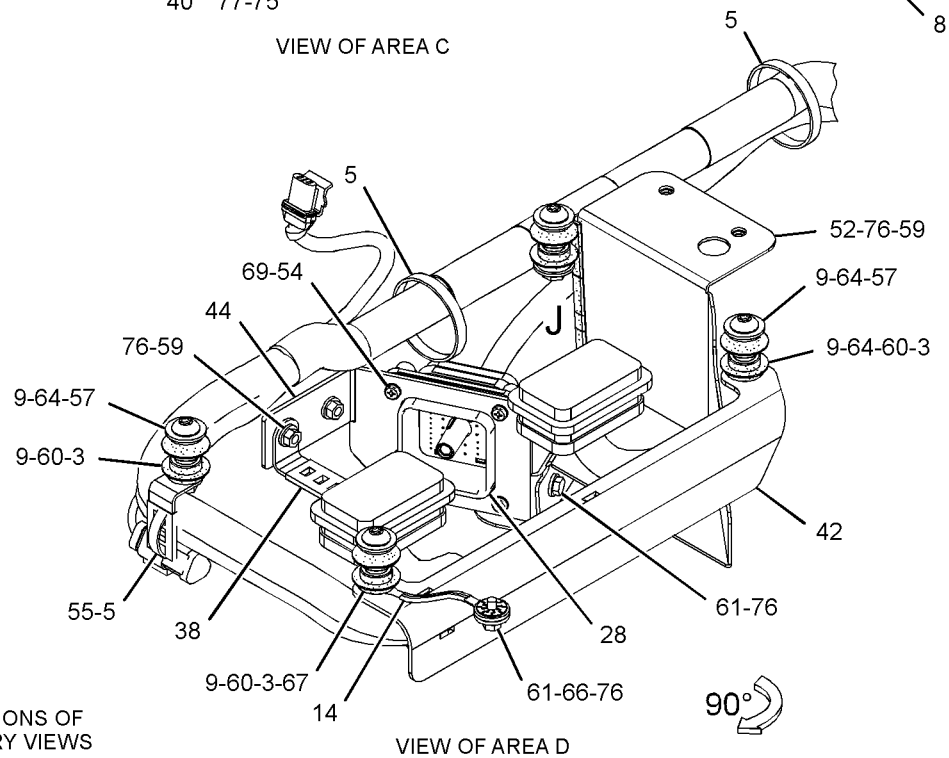

VIEW OF AREA D

REFER TO ALL ILLUSTRATIONS OF THIS GROUP FOR AUXILIARY VIEWS

GRAPHIC #2

g02844216

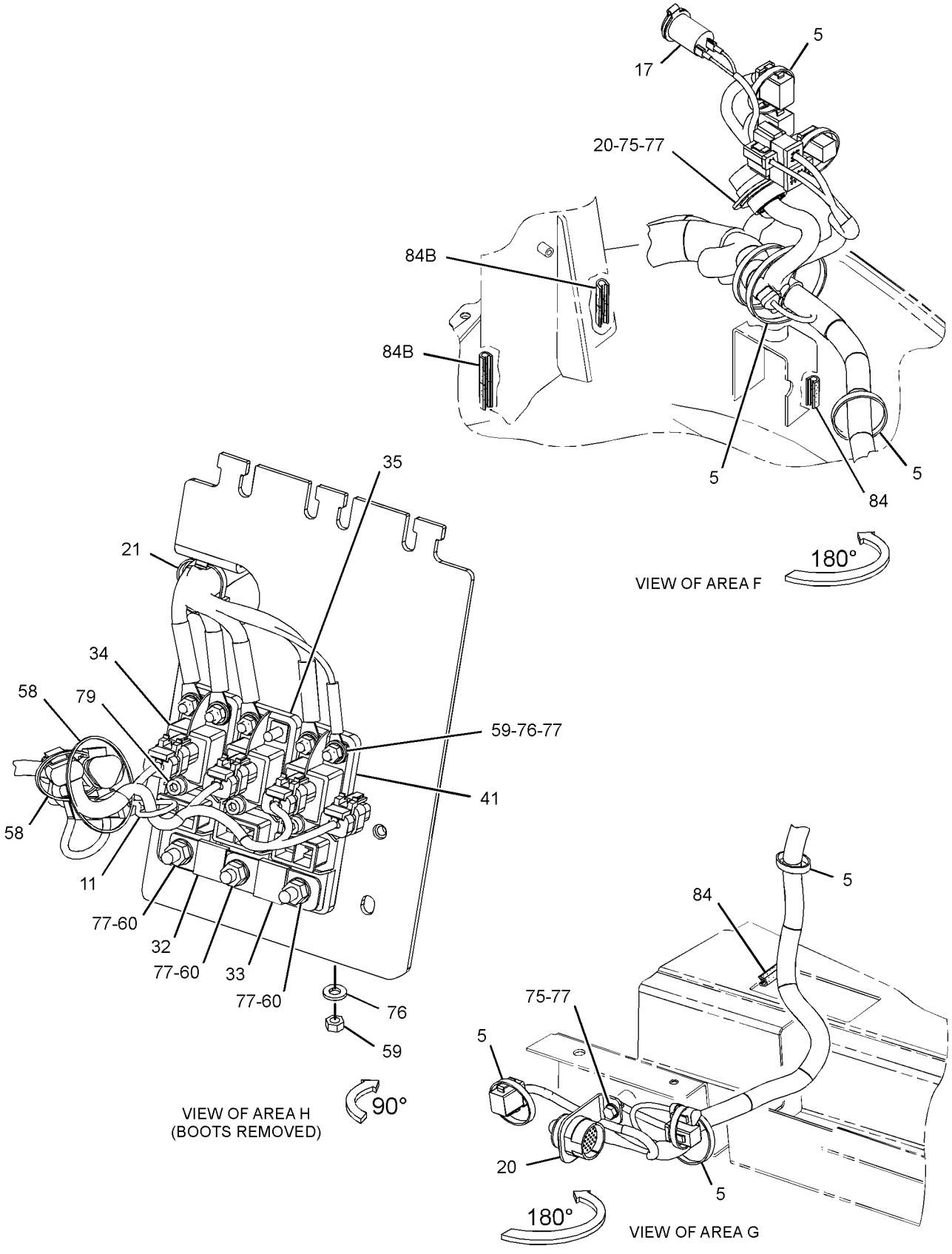

GRAPHIC #3

<END>

g02818798

357-3203 WIRING GP-REAR–PILOT

S/N: SEJ1-UP
PART OF 373-4273 CONVERSION AR-QUICK COUPLER, 373-4271, 373-4275, 373-4277 VALVE AR-BANK 3 AN ATTACHMENT

SMCS-1408 **i04622878**

NOTE	REF NO	GRAPHIC REF	PART NUMBER	QTY	PART NAME 1 2 3 4 5 6 (PRODUCT LEVEL)	SEE PAGE
	1	1	**7K-1181**	1	STRAP-CABLE	
	2	1	**9R-1499**	2	REFLECTOR	
	3	1	**164-9425**	1	HORN AS (12-VOLT, LOW TONE)	
	4	1	**170-0950**	1	ALARM AS (BACKUP)	
		1	**4B-2043**	2	NUT (8-32-THD)	
	5	1	**205-9920**	18	STRAP-CABLE	
	6	1	**206-1345**	4	STRAP-CABLE	
	7	1	**214-4711**	1	SWITCH AS-ROCKER (ROADING LIGHTS)	
	8	1	**214-4713**	1	SWITCH AS-ROCKER (SIDESHIFT, LOCK-UNLOCK)	
					(EACH SWITCH AS INCLUDES)	
		1	**111-7899**	1	GASKET	
B	9	1	**274-3774**	4	CAP-CONNECTOR	
	10	1	**336-9096**	1	LAMP GP-SIGNAL (12-VOLT) (STOP, TAIL, TURN, RH)	
	10A	1	**336-9096**	1	LAMP GP-SIGNAL (12-VOLT) (STOP, TAIL, TURN, LH)	
					(EACH LAMP GP INCLUDES)	
		1	**7S-1800**	1	LAMP (12-VOLT)	
		1	**9W-3326**	1	LAMP (12-VOLT, 21-WATT)	
		1	**352-4645**	1	LENS AS (TURN SIGNAL)	
	11	1	**337-7029**	2	BRACKET AS	
	12	1	**357-3204**	1	HARNESS AS-REAR (PILOT)	
		1	**274-3775**	1	CAP-CONNECTOR	
		1	**9W-0852**	1	PIN-CONNECTOR (14-GA TO 16-GA)	
		1	**9X-3401**	25	PIN-CONNECTOR (16-GA TO 18-GA)	
		1	**155-2255**	1	KIT-CONNECTING PLUG (12-PIN)	
		1	**155-2260**	1	KIT-CONNECTING PLUG (3-PIN)	
		1	**155-2270**	10	KIT-CONNECTING PLUG (2-PIN)	
		1	**155-2271**	2	KIT-CONNECTING PLUG (4-PIN)	
					(EACH PLUG KIT INCLUDES PLUG AS, WEDGE & INTERFACE SEAL)	
		1	**225-3854**	1	PLUG AS-CONNECTOR (31-PIN)	
		1	**8T-8737**	11	PLUG-SEAL	
		1	**9X-3402**	3	SOCKET-CONNECTOR (16-GA TO 18-GA)	
		1	**180-9340**	37	SOCKET-CONNECTOR (14-GA TO 18-GA)	
		1	**189-3158**	1	SUPPRESSOR-ARC	
B		1	**329-3734**		TAPE	
		1	**2L-8075**	2	TERMINAL-RING (14-GA TO 16-GA, NO. 8 SCREW)	
E		1	**125-7874**		TUBE-HEAT SHRINK (5.72-MM DIA) (35-CM)	
E		1	**125-7875**		TUBE-HEAT SHRINK (7.44-MM DIA) (5-CM)	
	13	1	**365-2823**	1	PLATE AS	
	14	1	**132-5789**	2	CLIP	
	15	1	**281-2901**	1	SCREW-BUTTON HEAD (M10X1.5X40-MM)	
	16	1	**3S-2093**	14	STRAP-CABLE	
	17	1	**4P-7428**	2	CLIP	
	18	1	**8T-4121**	6	WASHER-HARD (11X21X2.5-MM THK)	
M	19	1	**8T-4133**	3	NUT (M10X1.5-THD)	
M	20	1	**8T-4189**	4	BOLT (M8X1.25X20-MM)	
M	21	1	**8T-4196**	2	BOLT (M10X1.5X35-MM)	
	22	1	**8T-4224**	6	WASHER-HARD (8.8X16X2-MM THK)	
M	23	1	**8T-4908**	2	BOLT (M8X1.25X25-MM)	
M	24	1	**9X-2044**	2	SCREW-TRUSS HEAD (M6X1X16-MM)	
	25	1	**9X-6165**	2	WASHER (6.5X22X2.5-MM THK)	

357-3203 **WIRING GP-REAR** *(contd.)* **i04622878**

B-USE AS REQUIRED
E-ORDER BY THE CENTIMETER
M-METRIC PART

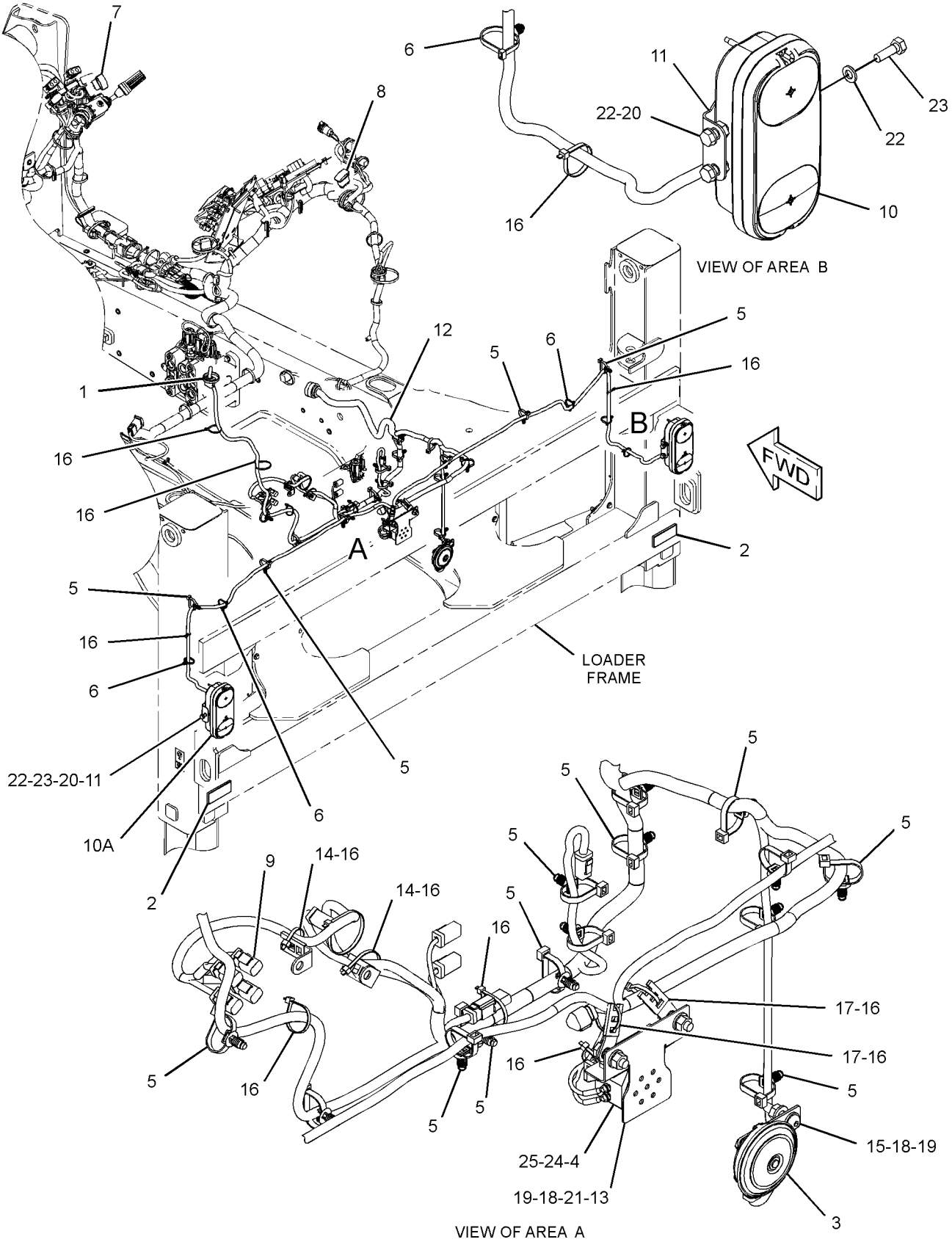

GRAPHIC #1 **<END>** g02827144

ELECTRICAL AND STARTING SYSTEM

331-5470 WIRING GP-RIDE CONTROL

S/N: SEJ1-UP
PART OF 340-1747 CONTROL AR-RIDE
AN ATTACHMENT

SMCS-1408 **i04580718**

NOTE	REF NO	GRAPHIC REF	PART NUMBER	QTY	PART NAME 1 2 3 4 5 6 (PRODUCT LEVEL)	SEE PAGE
	1	1	**146-9439**	1	RELAY AS (12-VOLT) (RIDE CONTROL)	
	2	1	**205-9920**	3	STRAP-CABLE	
	3	1	**214-4710**	1	SWITCH AS-ROCKER (RIDE CONTROL)	
		1	**111-7899**	1	GASKET	
	4	1	**331-5471**	1	HARNESS AS-RIDE CONTROL	
		1	**8T-8729**	5	PIN-CONNECTOR (16-GA TO 18-GA)	
		1	**155-2270**	3	KIT-CONNECTING PLUG (2-PIN)	
					(EACH INCLUDES PLUG AS, WEDGE & INTERFACE SEAL)	
		1	**230-4013**	1	PLUG AS-CONNECTOR (3-PIN)	
		1	**264-7030**	1	SEAL-CONNECTOR	
		1	**8T-8737**	1	PLUG-SEAL	
		1	**102-8805**	1	KIT-RECEPTACLE (6-PIN)	
					(INCLUDES RECEPTACLE AS & WEDGE)	
		1	**8T-8730**	6	SOCKET-CONNECTOR (16-GA TO 18-GA)	
		1	**9X-3402**	3	SOCKET-CONNECTOR (16-GA TO 18-GA)	
		1	**189-3158**	1	SUPPRESSOR-ARC	
E		1	**125-7874**		TUBE-HEAT SHRINK (5.72-MM DIA) (10-CM)	
	5	1	**344-7391**	1	SENSOR GP-PRESSURE (RIDE CONTROL)	
	6	1	**3J-1907**	1	SEAL-O-RING	
	7	1	**3S-2093**	1	STRAP-CABLE	

E-ORDER BY THE CENTIMETER

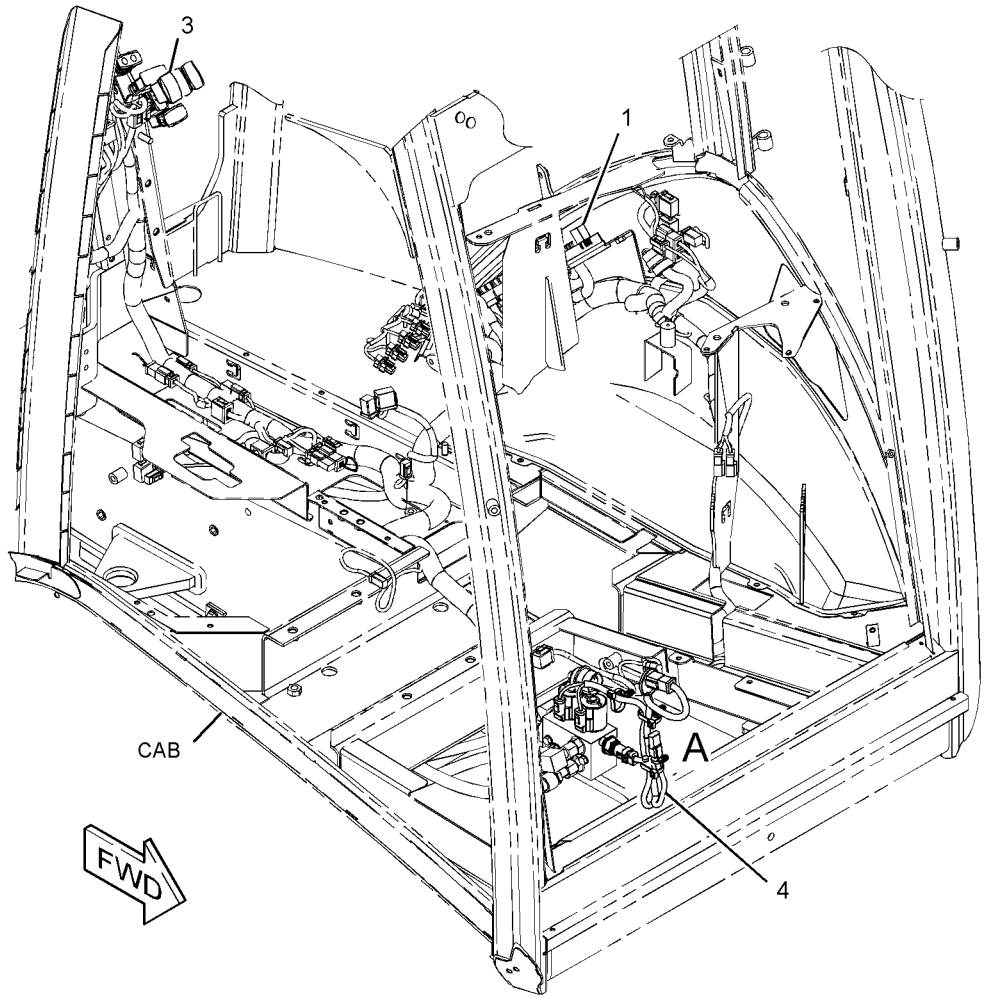

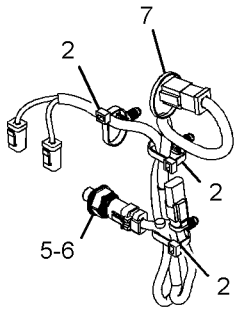

VIEW OF AREA A

GRAPHIC #1 **<END>** g02791924

357-3233 WIRING GP-SENSOR—OBJECT HANDLING

S/N: SEJ1-UP

PART OF 340-1744, 340-1749 LINKAGE AR, 340-1745 LINKAGE AR-BUCKET AN ATTACHMENT

SMCS-1408 **i04580791**

NOTE	REF NO	GRAPHIC REF	PART NUMBER	QTY	PART NAME 1 2 3 4 5 6 (PRODUCT LEVEL)	SEE PAGE
	1	1	**7K-1181**	10	STRAP-CABLE	
	2	1	*148-8447*	1	TEE AS-SWIVEL	
		1	**7J-9108**	1	SEAL-O-RING	
		1	**7X-0872**		TEE-SWIVEL	
	3	1	**206-2423**	2	SADDLE	
B	4	1	**274-3774**	1	CAP-CONNECTOR	
	5	1	**331-5570**	1	HARNESS AS-SWITCH (OBJECT HANDLING)	
		1	**228-5856**	1	CONNECTOR	
		1	**9X-3401**	4	PIN-CONNECTOR (16-GA TO 18-GA)	
		1	**230-4013**	1	PLUG AS-CONNECTOR (3-PIN)	
		1	**264-7030**	1	SEAL-CONNECTOR	
		1	**230-5009**	1	RECEPTACLE AS-CONNECTOR (4-PIN)	
		1	**9X-3402**	3	SOCKET-CONNECTOR (16-GA TO 18-GA)	
		1	**091-2436**	2	TERMINAL-BLADE (18-GA TO 22-GA)	
		1	**104-1995**	2	TERMINAL-BLADE (14-GA TO 18-GA)	
E		1	**125-7874**		TUBE-HEAT SHRINK (5.72-MM DIA) (5-CM)	
	6	1	**331-5571**	1	HARNESS AS-CAB (OBJECT HANDLING)	
		1	**9X-3401**	3	PIN-CONNECTOR (16-GA TO 18-GA)	
		1	**230-4013**	1	PLUG AS-CONNECTOR (3-PIN)	
		1	**264-7030**	1	SEAL-CONNECTOR	
		1	**230-4014**	1	RECEPTACLE AS-CONNECTOR (3-PIN)	
		1	**9X-3402**	3	SOCKET-CONNECTOR (16-GA TO 18-GA)	
	7	1	**349-1100**	1	HARNESS AS-SWITCH (HOE)	
E		1	**188-4651**		HOSE-HYDRAULIC (298-CM)	
		1	**9X-3401**	3	PIN-CONNECTOR (16-GA TO 18-GA)	
		1	**155-2271**	1	KIT-CONNECTING PLUG (4-PIN)	
					(INCLUDES PLUG AS, WEDGE & INTERFACE SEAL)	
		1	**8T-8737**	1	PLUG-SEAL	
		1	**230-4014**	1	RECEPTACLE AS-CONNECTOR (3-PIN)	
		1	**180-9340**	3	SOCKET-CONNECTOR (14-GA TO 18-GA)	
		1	**1S-9593**	2	STRAP-CABLE	
D		1	**5P-5995**		TUBE (0.3-M)	
E		1	**125-7876**		TUBE-HEAT SHRINK (17.78-MM DIA) (5-CM)	
	8	1	**349-2773**	1	FILM-WARNING (TIPPING HAZARD, READ OMM)	
	9	1	**350-1078**	1	SWITCH AS-ROCKER (LOAD STABILITY, BUCKET)	
		1	**111-7899**	1	GASKET	
	10	1	**350-9471**	1	PLATE AS	
	11	1	**357-3234**	1	HARNESS AS-REAR	
E		1	**188-4651**		HOSE-HYDRAULIC (131-CM)	
		1	**9X-3401**	3	PIN-CONNECTOR (16-GA TO 18-GA)	
		1	**155-2270**	1	KIT-CONNECTING PLUG (2-PIN)	
					(INCLUDES PLUG AS, WEDGE & INTERFACE SEAL)	
		1	**230-4013**	1	PLUG AS-CONNECTOR (3-PIN)	
		1	**264-7030**	1	SEAL-CONNECTOR	
		1	**230-4014**	1	RECEPTACLE AS-CONNECTOR (3-PIN)	
		1	**9X-3402**	3	SOCKET-CONNECTOR (16-GA TO 18-GA)	
		1	**180-9340**	2	SOCKET-CONNECTOR (14-GA TO 18-GA)	
		1	**8L-8413**	1	STRAP-CABLE (WHITE)	
D		1	**5P-5995**		TUBE (0.2-M)	
E		1	**125-7874**		TUBE-HEAT SHRINK (5.72-MM DIA) (10-CM)	
E		1	**125-7876**		TUBE-HEAT SHRINK (17.78-MM DIA) (5-CM)	
	12	1	**124-0174**	2	CLIP	
	13	1	*164-6874*	1	FITTING AS-ELBOW (QUICK DISCONNECT, MALE)	

357-3233 **WIRING GP-SENSOR** *(contd.)* **i04580791**

NOTE	REF NO	GRAPHIC REF	PART NUMBER	QTY	PART NAME 1 2 3 4 5 6 (PRODUCT LEVEL)	SEE PAGE
		1	**3J-1907**	1	SEAL-O-RING	
		1	**085-7356**	1	FITTING	
	14	1	**3S-2093**	28	STRAP-CABLE	
	15	1	**5P-4115**	1	WASHER-HARD (7.2X19X2-MM THK)	
	16	1	**7X-3165**	1	ADAPTER	
	17	1	**8M-2770**	1	CLIP	
	18	1	**8T-4121**	1	WASHER-HARD (11X21X2.5-MM THK)	
M	19	1	**8T-4137**	1	BOLT (M10X1.5X20-MM)	
M	20	1	**8T-6974**	1	BOLT (M6X1X80-MM)	

B-USE AS REQUIRED
D-ORDER BY THE METER
E-ORDER BY THE CENTIMETER
M-METRIC PART

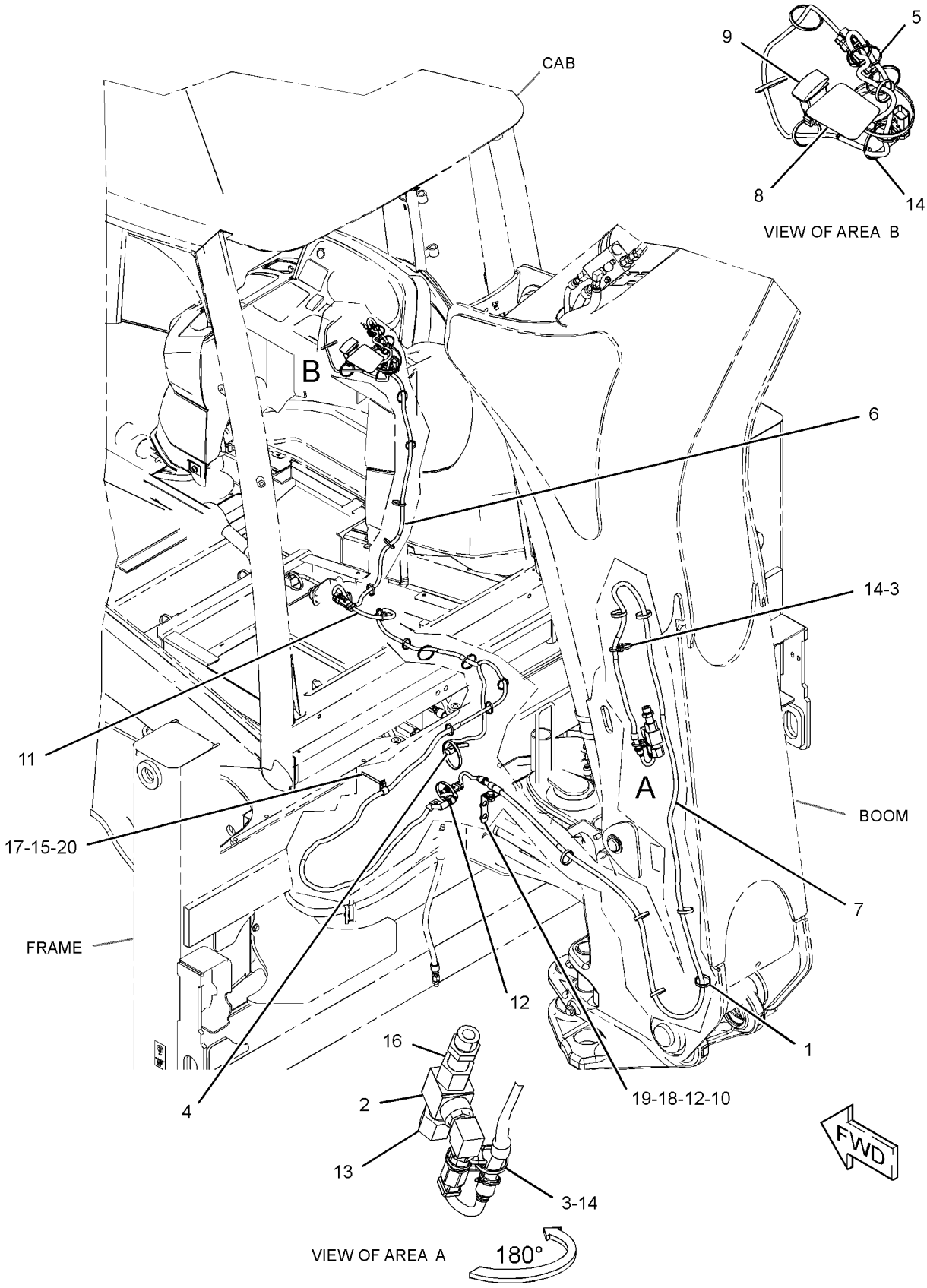

GRAPHIC #1

<END>

g02828416

331-5462 WIRING GP-TRANSMISSION CONTROL–

STANDARD SHIFT

S/N: SEJ1-UP

PART OF 353-1513 TRANSMISSION AR-POWER SHIFT

AN ATTACHMENT

SMCS-1408, 3168 **i04573599**

NOTE	REF NO	GRAPHIC REF	PART NUMBER	QTY	PART NAME 1 2 3 4 5 6 (PRODUCT LEVEL)	SEE PAGE
	1	1	**7K-1181**	6	STRAP-CABLE	
	2	1	**9B-0523**	1	SPACER (0.53X0.75X1-IN THK)	
	3	1	**331-5463**	1	HARNESS AS-TRANSMISSION (STANDARD SHIFT)	
		1	**274-3774**	1	CAP-CONNECTOR	
		1	**9X-3401**	15	PIN-CONNECTOR (16-GA TO 18-GA)	
		1	**155-2270**	7	KIT-CONNECTING PLUG (2-PIN)	
					(EACH INCLUDES PLUG AS, WEDGE & INTERFACE SEAL)	
		1	**230-4013**	1	PLUG AS-CONNECTOR (3-PIN)	
		1	**264-7030**	1	SEAL-CONNECTOR	
		1	**8T-8737**	9	PLUG-SEAL	
		1	**102-8801**	1	KIT-RECEPTACLE (12-PIN)	
		1	**190-7614**	1	KIT-RECEPTACLE (12-PIN)	
					(EACH RECEPTACLE KIT INCLUDES RECEPTACLE AS & WEDGE)	
		1	**274-3781**	1	CAP-SEAL	
		1	**9X-3402**	3	SOCKET-CONNECTOR (16-GA TO 18-GA)	
		1	**180-9340**	14	SOCKET-CONNECTOR (14-GA TO 18-GA)	
		1	**189-3158**	1	SUPPRESSOR-ARC	
		1	**7N-9017**	1	TERMINAL-RING (18-GA TO 22-GA, NO. 10 SCREW)	
E		1	**125-7874**		TUBE-HEAT SHRINK (5.72-MM DIA) (5-CM)	
	4	1	**352-3965**	1	CLIP	
B	5	1	**3S-2093**	6	STRAP-CABLE	
	6	1	**4P-7429**	1	CLIP	
M	7	1	**8T-4194**	1	BOLT (M12X1.75X50-MM)	
	8	1	**8T-4223**	3	WASHER-HARD (13.5X25.5X3-MM THK)	

B-USE AS REQUIRED
E-ORDER BY THE CENTIMETER
M-METRIC PART

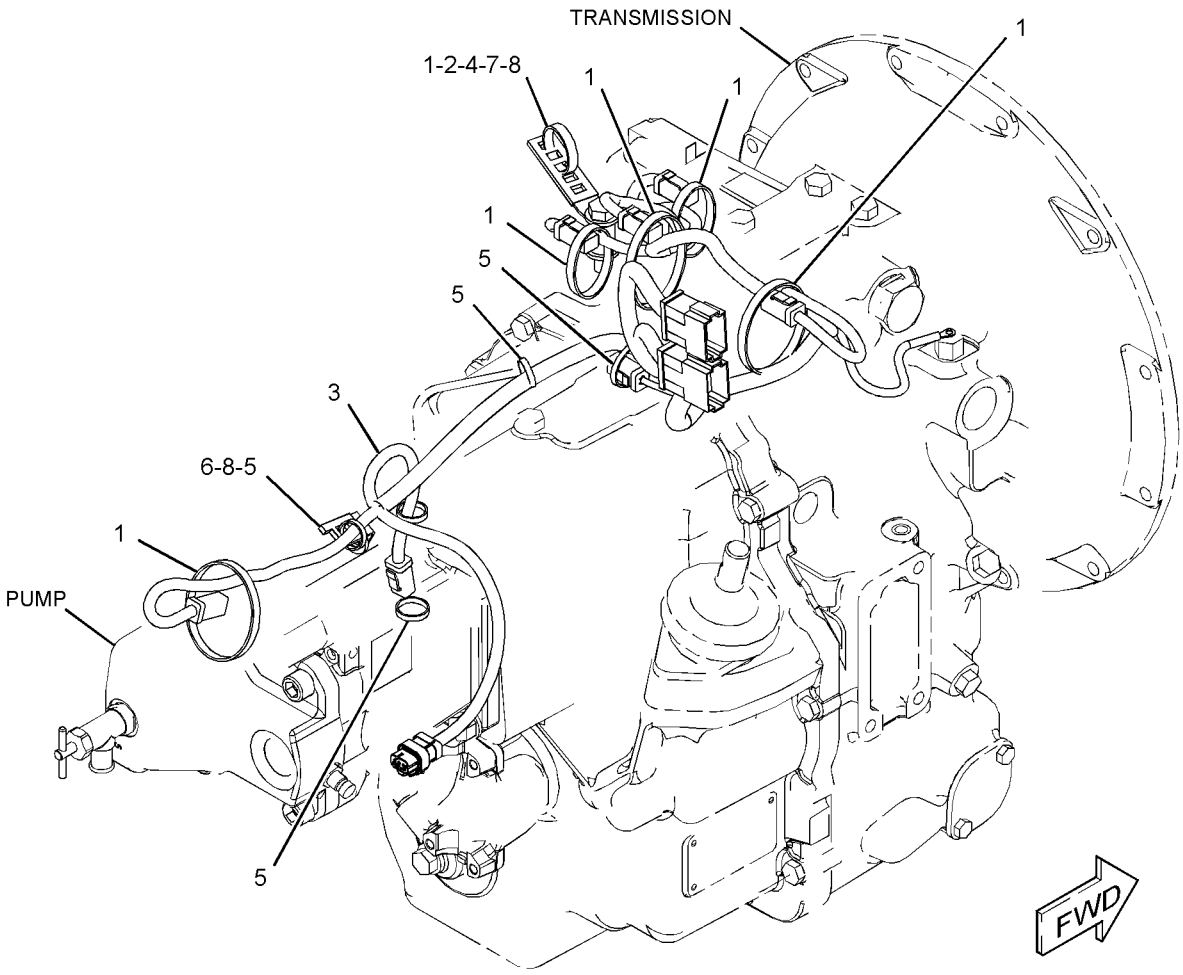

GRAPHIC #1 **<END>** g02838764

331-5464 WIRING GP-TRANSMISSION CONTROL—AUTOSHIFT

S/N: SEJ1-UP

PART OF 353-1510, 353-1511 TRANSMISSION AR-POWER SHIFT AN ATTACHMENT

SMCS-1408, 3168 **i04603169**

NOTE	REF NO	GRAPHIC REF	PART NUMBER	QTY	PART NAME 1 2 3 4 5 6 (PRODUCT LEVEL)	SEE PAGE
	1	1	**7K-1181**	11	STRAP-CABLE	
	2	1	**164-1368**	8	FASTENER-PANEL	
	3	1	**214-4691**	1	SWITCH AS-ROCKER (AUTOSHIFT, STANDARD SHIFT)	
		1	**111-7899**	1	GASKET	
	4	1	**232-1545**	1	PLATE AS	
B	5	1	**274-3774**	1	CAP-CONNECTOR	
B	6	1	**274-3781**	1	CAP-SEAL	
	7	1	**274-9993**	1	PLATE	
	8	1	**310-9354**	1	CONTROL GP-TRANSMISSION	
		1	**8T-8737**	2	PLUG-SEAL	
		1	**174-3091**	1	KIT-RECEPTACLE (12-PIN)	
					(INCLUDES RECEPTACLE AS & WEDGE)	
	9	1	**331-5465**	1	HARNESS AS-TRANSMISSION (AUTOSHIFT)	
		1	**274-3774**	2	CAP-CONNECTOR	
		1	**9X-3401**	21	PIN-CONNECTOR (16-GA TO 18-GA)	
		1	**155-2270**	11	KIT-CONNECTING PLUG (2-PIN)	
					(EACH INCLUDES PLUG AS, WEDGE & INTERFACE SEAL)	
		1	**230-4013**	1	PLUG AS-CONNECTOR (3-PIN)	
		1	**264-7030**	1	SEAL-CONNECTOR	
		1	**8T-8737**	3	PLUG-SEAL	
		1	**102-8801**	1	KIT-RECEPTACLE (12-PIN)	
		1	**190-7614**	1	KIT-RECEPTACLE (12-PIN)	
					(EACH RECEPTACLE KIT INCLUDES RECEPTACLE AS & WEDGE)	
		1	**274-3781**	1	CAP-SEAL	
		1	**9X-3402**	3	SOCKET-CONNECTOR (16-GA TO 18-GA)	
		1	**180-9340**	22	SOCKET-CONNECTOR (14-GA TO 18-GA)	
		1	**7N-9017**	1	TERMINAL-RING (18-GA TO 22-GA, NO. 10 SCREW)	
E		1	**125-7874**		TUBE-HEAT SHRINK (5.72-MM DIA) (15-CM)	
M	10	1	**105-3480**	2	BOLT-SOCKET HEAD (M5X0.8X16-MM)	
	11	1	**3S-2093**	5	STRAP-CABLE	
	12	1	**4P-7429**	2	CLIP	
	13	1	**7X-0620**	1	WASHER-HARD (5.5X13X1.6-MM THK)	
M	14	1	**8T-4179**	1	BOLT (M12X1.75X20-MM)	
	15	1	**8T-4223**	3	WASHER-HARD (13.5X25.5X3-MM THK)	

B-USE AS REQUIRED
E-ORDER BY THE CENTIMETER
M-METRIC PART

331-5464 **WIRING GP-TRANSMISSION CONTROL** *(contd.)* **i04603169**

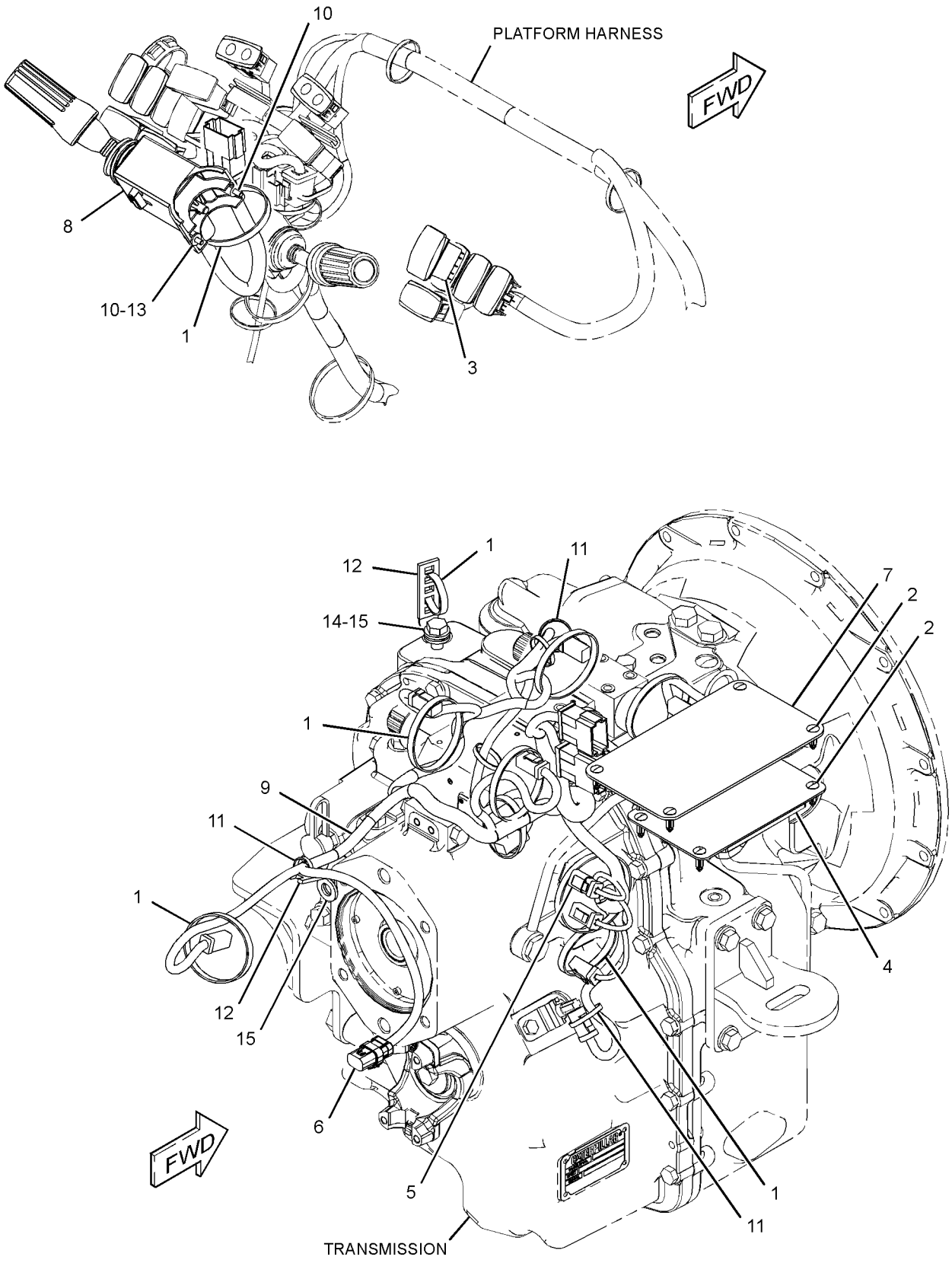

GRAPHIC #1 **<END>** g02828422

311-3639 WIRING GP-WIPER–REAR

S/N: SEJ1-UP
PART OF 315-1270 WINDOW GP-CAB
AN ATTACHMENT

SMCS-1408, 7305 **i03971679**

NOTE	REF NO	GRAPHIC REF	PART NUMBER	QTY	PART NAME 1 2 3 4 5 6 (PRODUCT LEVEL)	SEE PAGE
	1	1	**206-1345**	3	STRAP-CABLE	
	2	1	**311-1218**	1	HARNESS AS-WINDOW WIPER	
		1	**266-4157**	7	SLEEVE-BRAIDED	
E		1	**266-2814**		CONDUIT-FLEXIBLE (9.52-MM ID) (141-CM)	
		1	**9W-0852**	2	PIN-CONNECTOR (14-GA TO 16-GA)	
		1	**9X-3401**	2	PIN-CONNECTOR (16-GA TO 18-GA)	
		1	**155-2271**	1	KIT-CONNECTING PLUG (4-PIN)	
					(INCLUDES PLUG AS, WEDGE & INTERFACE SEAL)	
		1	**102-8804**	1	KIT-RECEPTACLE (4-PIN)	
					(INCLUDES RECEPTACLE AS & WEDGE)	
		1	**9W-0844**	2	SOCKET-CONNECTOR (14-GA TO 16-GA)	
		1	**180-9340**	2	SOCKET-CONNECTOR (14-GA TO 18-GA)	
B		1	**141-8061**		TAPE	
	3	1	**308-3074**	4	CLIP	
	4	1	**3S-2093**	2	STRAP-CABLE	
M	5	1	**8T-4171**	4	BOLT (M6X1X12-MM)	
	6	1	**8T-4205**	5	WASHER-HARD (7.2X14.5X2-MM THK)	

B-USE AS REQUIRED
E-ORDER BY THE CENTIMETER
M-METRIC PART

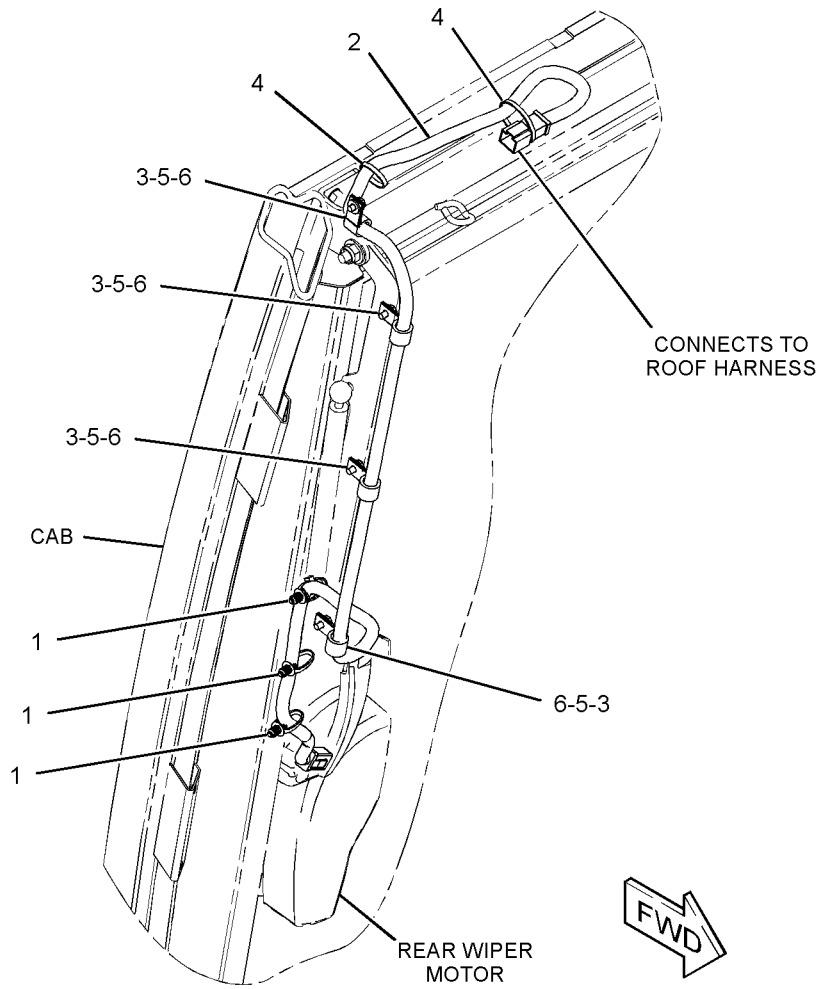

GRAPHIC #1

<END>

g01653654

211-4258 WIRING GP-WORK TOOL–ANGLE BROOM

S/N: SEJ1-UP

PART OF 373-4273 CONVERSION AR-QUICK COUPLER, 373-4277 VALVE AR-BANK 3

AN ATTACHMENT

SMCS-1408 **i03971783**

NOTE	REF NO	GRAPHIC REF	PART NUMBER	QTY	PART NAME 1 2 3 4 5 6 (PRODUCT LEVEL)	SEE PAGE
	1	1	**159-9495**	1	NUT (1-1/2-18-THD)	
	2	1	**159-9496**	1	LOCKWASHER	
	3	1	**211-9461**	1	HARNESS AS-WORK TOOL (ANGLE BROOM)	
		1	**7N-7779**	1	SOCKET-CONNECTOR (14-GA TO 18-GA)	
		1	**7N-7780**	2	PIN-CONNECTOR (14-GA TO 18-GA)	
		1	**7N-7781**	1	HOUSING-RECEPTACLE (14-GA TO 18-GA)	
		1	**7N-7782**	1	HOUSING-PLUG (14-GA TO 18-GA)	
		1	**8T-8737**	4	PLUG-SEAL	
		1	**9G-2265**	1	CLIP	
		1	**9G-3695**	3	PLUG-SEAL	
		1	**186-3736**	3	SOCKET-CONNECTOR (16-GA TO 18-GA)	
		1	**9W-0844**	1	SOCKET-CONNECTOR (14-GA TO 16-GA)	
E		1	**119-3662**		TUBE-HEAT SHRINK (10.85-MM DIA) (7-CM)	
E		1	**125-7874**		TUBE-HEAT SHRINK (5.72-MM DIA) (10-CM)	
		1	**155-2274**	1	KIT-CONNECTING PLUG (6-PIN)	
					(INCLUDES PLUG AS, WEDGE & INTERFACE SEAL)	
		1	**156-1458**	1	COVER	
		1	**156-1460**	1	RECEPTACLE (8-PIN)	
	4	1	**212-7038**	1	BRACKET	
	5	1	**214-4705**	1	SWITCH AS-ROCKER (ANGLE BROOM)	
		1	**111-7899**	1	GASKET	
	6	1	**3S-2093**	2	STRAP-CABLE	
	7	1	**4P-7581**	1	CLIP	
M	8	1	**8T-0389**	2	LOCKNUT (M10X1.5-THD)	
	9	1	**8T-4121**	2	WASHER-HARD (11X21X2.5-MM THK)	
M	10	1	**8T-4136**	2	BOLT (M10X1.5X25-MM)	

E-ORDER BY THE CENTIMETER
M-METRIC PART

211-4258 **WIRING GP-WORK TOOL** *(contd.)* **i03971783**

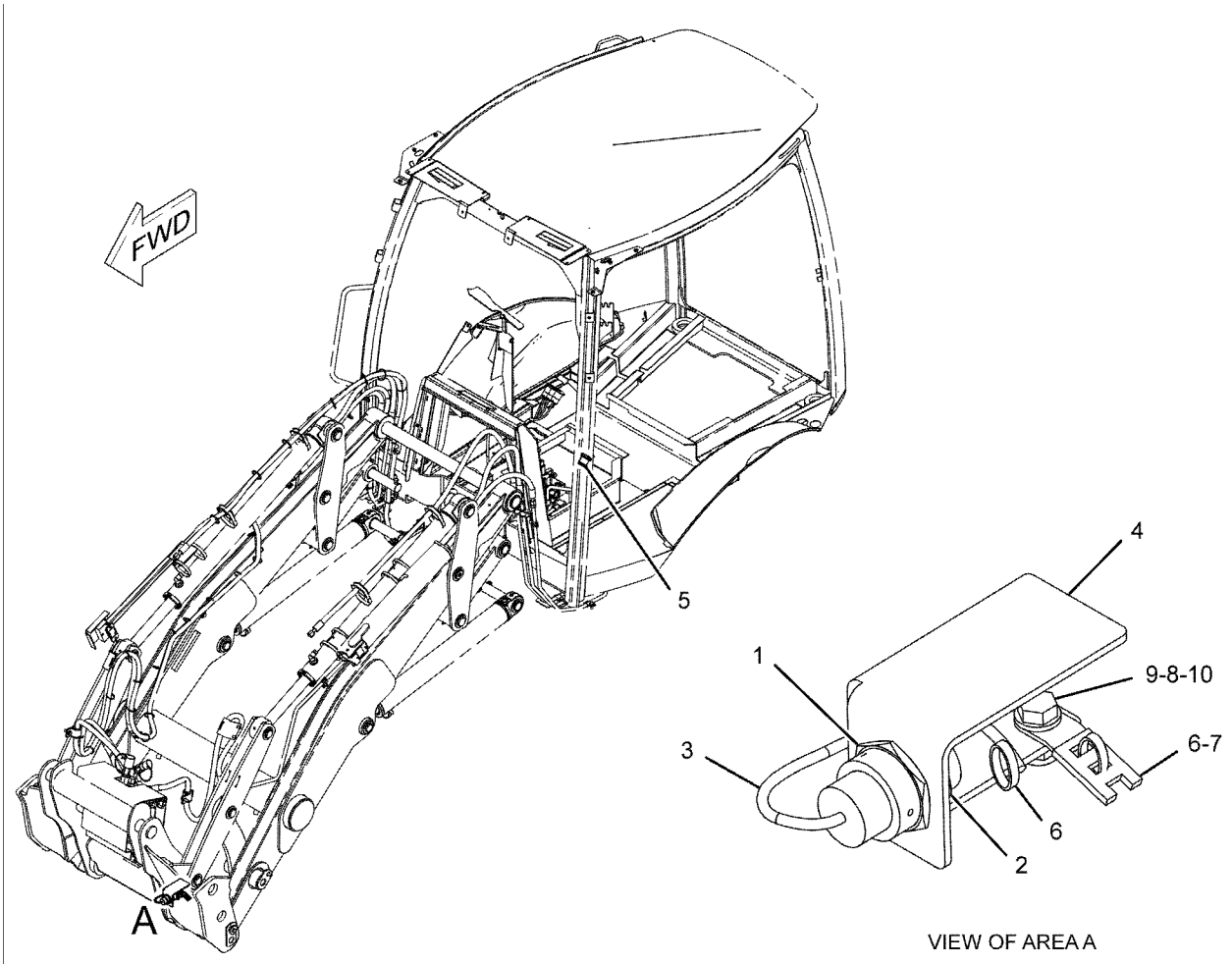

GRAPHIC #1 **<END>** g01109313

331-5476 WIRING GP-WORK TOOL–QUICK COUPLER

S/N: SEJ1-UP

PART OF 373-4273 CONVERSION AR-QUICK COUPLER, 373-4277 VALVE AR-BANK 3 AN ATTACHMENT

SMCS-1408 **i04622877**

NOTE	REF NO	GRAPHIC REF	PART NUMBER	QTY	PART NAME 1 2 3 4 5 6 (PRODUCT LEVEL)	SEE PAGE
	1	1	**7K-1181**	24	STRAP-CABLE	
	2	1	**1S-0994**	1	CLIP	
	3	1	**214-4706**	1	SWITCH AS-ROCKER (AUXILIARY HYDRAULIC FLOW)	
	4	1	**214-4707**	1	SWITCH AS-ROCKER (QUICK COUPLER SWITCH)	
	5	1	**214-4708**	1	SWITCH AS-ROCKER (QUICK COUPLER PIN LOCK)	
					(EACH SWITCH AS INCLUDES)	
		1	**111-7899**	1	GASKET	
	6	1	**331-5477**	1	HARNESS AS-QUICK COUPLER (LOADER)	
		1	**228-5856**	4	CONNECTOR	
		1	**8T-8729**	2	PIN-CONNECTOR (16-GA TO 18-GA)	
		1	**9X-3401**	8	PIN-CONNECTOR (16-GA TO 18-GA)	
		1	**155-2265**	1	KIT-CONNECTING PLUG (8-PIN)	
		1	**155-2270**	3	KIT-CONNECTING PLUG (2-PIN)	
					(EACH PLUG KIT INCLUDES PLUG AS, WEDGE & INTERFACE SEAL)	
		1	**8T-8737**	5	PLUG-SEAL	
		1	**102-8801**	1	KIT-RECEPTACLE (12-PIN)	
					(INCLUDES RECEPTACLE AS & WEDGE)	
		1	**8T-8730**	10	SOCKET-CONNECTOR (16-GA TO 18-GA)	
		1	**189-3158**	3	SUPPRESSOR-ARC	
B		1	**329-3734**		TAPE	
		1	**122-4401**	3	TERMINAL	
		1	**091-2436**	19	TERMINAL-BLADE (18-GA TO 22-GA)	
E		1	**125-7874**		TUBE-HEAT SHRINK (5.72-MM DIA) (25-CM)	
E		1	**125-7875**		TUBE-HEAT SHRINK (7.44-MM DIA) (10-CM)	
	7	1	**357-3228**	1	HARNESS AS-QUICK COUPLER (PLATFORM)	
E		1	**5P-0767**		HOSE (454-CM)	
		1	**9X-3401**	9	PIN-CONNECTOR (16-GA TO 18-GA)	
		1	**155-2270**	1	KIT-CONNECTING PLUG (2-PIN)	
		1	**155-2274**	1	KIT-CONNECTING PLUG (6-PIN)	
					(EACH PLUG KIT INCLUDES PLUG AS, WEDGE & INTERFACE SEAL)	
		1	**8T-8737**	11	PLUG-SEAL	
		1	**102-8805**	1	KIT-RECEPTACLE (6-PIN)	
		1	**102-8806**	1	KIT-RECEPTACLE (8-PIN)	
					(EACH RECEPTACLE KIT INCLUDES RECEPTACLE AS & WEDGE)	
		1	**180-9340**	2	SOCKET-CONNECTOR (14-GA TO 18-GA)	
E		1	**125-7874**		TUBE-HEAT SHRINK (5.72-MM DIA) (5-CM)	
E		1	**210-8958**		TUBE-HEAT SHRINK (24-MM DIA) (10-CM)	
	8	1	**3S-2093**	6	STRAP-CABLE	
E	9	1	**3E-8299**		SEAL (6-CM)	

B-USE AS REQUIRED
E-ORDER BY THE CENTIMETER

331-5476 **WIRING GP-WORK TOOL** *(contd.)* **i04622877**

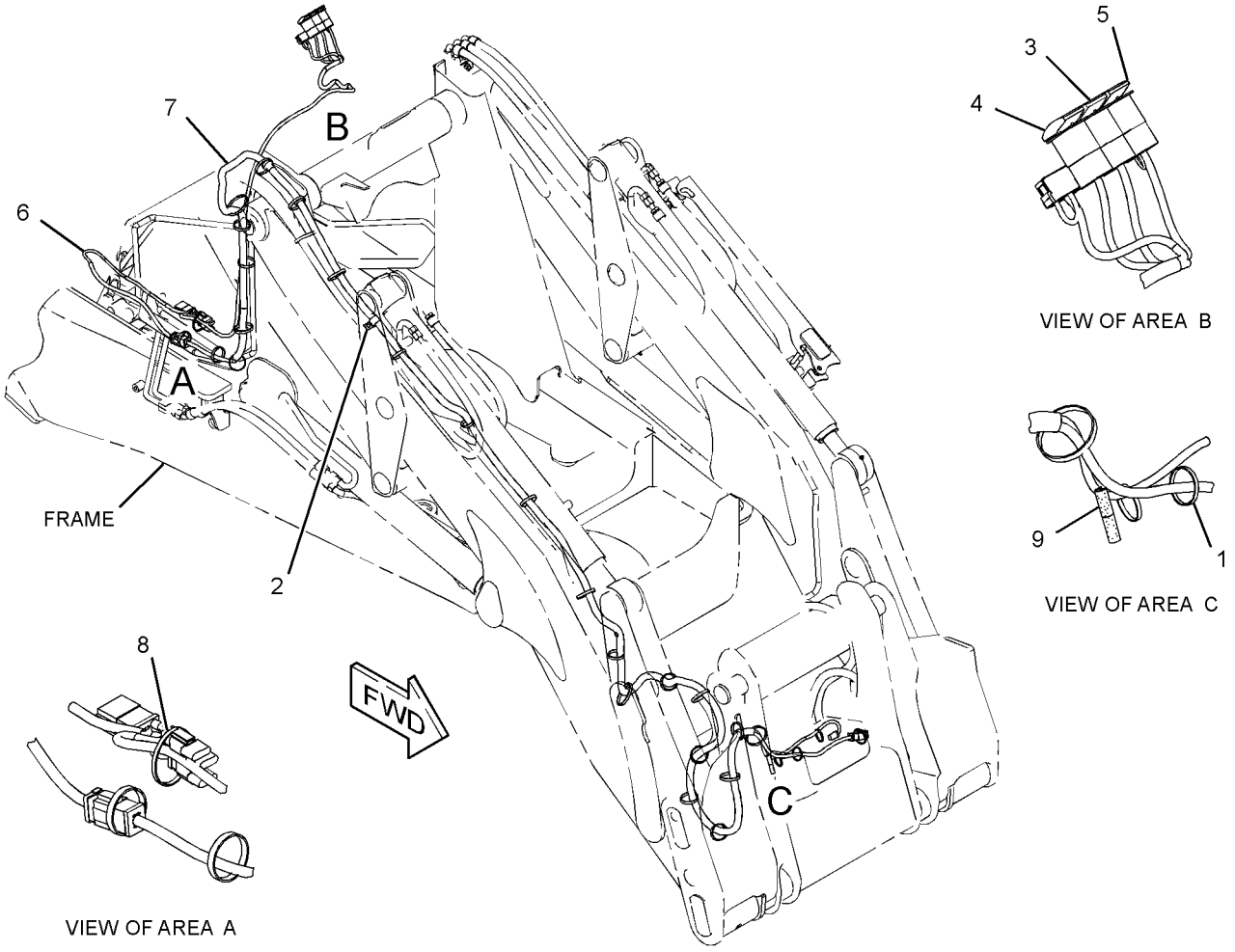

GRAPHIC #1 **<END>** g02829556

230-5743 AXLE GP-DRIVE & STEERING–FRONT

S/N: SEJ1-UP
PART OF 353-1501 DRIVE AR-BACKHOE LOADER
AN ATTACHMENT

SMCS-3020, 3250, 3258, 3259, 3260, 3264, 3278, 4050, 4303, 4313

i04403806

NOTE	REF NO	GRAPHIC REF	PART NUMBER	QTY	PART NAME 1 2 3 4 5 6 (PRODUCT LEVEL)	SEE PAGE
M	1	1	**8C-7505**	4	SCREW-FLAT HEAD (M8X1.25X20-MM)	
M	2	1	**207-4254**	6	BOLT (M20X1.5X80-MM)	
	3	1	**207-4258**	2	NUT (M20X1.5-THD)	
	4	1	**219-8798**	2	SEAL-LIP TYPE	
	5	1	**219-8795**	1	CAP	
	6	1	**209-9875**	2	DOWEL	
	7	1	**209-7456**	2	BUSHING	
	8	1	**152-6144**	4	PLUG AS-DRAIN (MAGNETIC) (AXLE, FRONT)	
					(EACH INCLUDES)	
		1	**6V-6228**	1	SEAL-O-RING	
	9	1	**208-0321**	11	BOLT-FLANGE HEAD (M12X1.75X33-MM)	
	10	1	**209-7464**	2	SEAL	
M	11	1	**199-0683**	16	BOLT (M16X2X38-MM)	
	12	1	**210-5937**	2	WASHER (46X66X3-MM THK)	
Y	13	1	**209-9882**	1	DIFFERENTIAL & BEVEL GEAR GP (FRONT)	181
	14	1	**210-5942**	2	RING	
	15	1	**209-9883**	1	HOUSING	
	16	1	**210-5946**	2	SHAFT GP-AXLE	
					(EACH INCLUDES)	
		1	**174-4671**	1	YOKE	
		1	**174-4643**	2	KIT-SPIDER	
					(EACH INCLUDES SNAP RINGS)	
	17	1	**209-9886**	2	TIE ROD GP	
					(EACH INCLUDES)	
		1	**204-3080**	1	BALL JOINT	
		1	**217-2883**	1	TIE ROD	
		1	**243-5026**	1	NUT-SPECIAL	
	18	1	**209-9887**	1	BUSHING	
	19	1	**210-5947**	2	WASHER-THRUST (44.6X58X7-MM THK)	
	20	1	*216-7473*	4	PIN AS (UPPER)	
					(EACH INCLUDES)	
		1	**3N-4968**	1	CONE-BEARING	
		1	**6D-1734**	1	CUP-BEARING	
		1	**198-7825**	1	SEAL	
		1	**198-7838**	1	PIN	
Y	21	1	**210-5924**	2	PLANETARY GP-FINAL DRIVE (AXLE)	205
Y	22	1	**209-9884**	1	HOUSING & FLANGE GP-AXLE (RH)	194
Y	23	1	**209-9885**	1	HOUSING & FLANGE GP-AXLE (LH)	195
	24	1	**211-6735**	2	SEAL-O-RING	
L	25	1	**214-5097**	1	CYLINDER GP-STEERING (FRONT AXLE)	
		1	**238-5254**	1	ROD	
		1	**238-5255**	2	CYLINDER HEAD	
	26	1	**253-5024**	1	BREATHER (AXLE, FRONT)	
B	27	1	**1U-8846**		SEALANT-GASKET	
	28	1	**154-5404**	2	BEARING	
B	29	1	**198-7841**	8	SHIM (0.15-MM THK)	
B	30	1	**198-7842**	4	SHIM (0.2-MM THK)	
B	31	1	**198-7843**	4	SHIM (0.5-MM THK)	
					AVAILABLE REPAIR KIT(S):	
L			**215-2023**	1	KIT-SEAL	
					(INCLUDES GUIDE RINGS, DUAL RINGS, ROD SEALS, BACKUP WASHERS, ROD WIPERS & PISTON SEAL)	

230-5743 AXLE GP-DRIVE & STEERING *(contd.)* i04403806

B-USE AS REQUIRED
L-KIT MARKED L SERVICES PART MARKED L
M-METRIC PART
Y-SEPARATE ILLUSTRATION

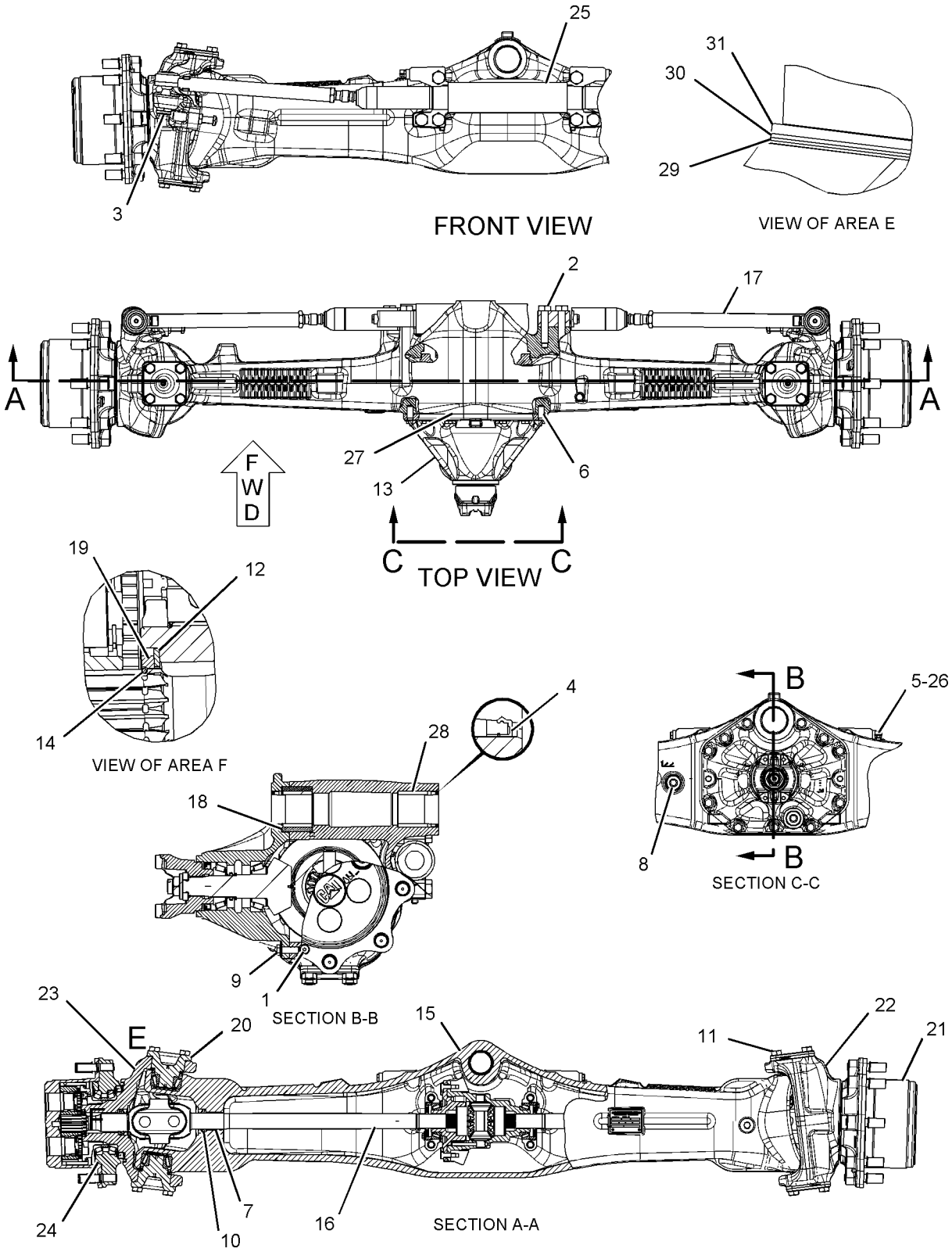

GRAPHIC #1 **<END>** g01094314

POWER TRAIN

230-5738 AXLE GP-REAR

S/N: SEJ1-UP
PART OF 353-1501 DRIVE AR-BACKHOE LOADER
AN ATTACHMENT

SMCS-3278, 3282 **i04139489**

NOTE	REF NO	GRAPHIC REF	PART NUMBER	QTY	PART NAME 1 2 3 4 5 6 (PRODUCT LEVEL)	SEE PAGE
	1	1	**199-0639**	4	SCREW-FLAT HEAD (M8X1.25X20-MM)	
	2	1	**199-0641**	2	BOLT (M8X1.25X25-MM)	
M	3	1	**8T-0292**	2	BOLT (M8X1.25X90-MM)	
	4	1	**199-0652**	2	CLIP-PIN	
	5	1	**210-3097**	2	CLIP	
	6	1	**210-3098**	2	SEAL	
	7	1	**199-0688**	2	SHIM (2.9-MM THK)	
	8	1	**197-9155**	1	BREATHER (AXLE, REAR)	
	9	1	**199-0670**	2	SCREW-PURGE	
	10	1	**198-7811**	2	DOWEL	
	11	1	**152-6144**	4	PLUG AS-DRAIN (MAGNETIC) (AXLE, REAR)	
					(EACH INCLUDES)	
		1	**6V-6228**	1	SEAL-O-RING	
	12	1	**199-0676**	2	SPRING	
M	13	1	**199-0679**	2	BOLT (M16X2X95-MM)	
	14	1	**210-3099**	2	SLEEVE	
	15	1	**210-3100**	2	BUSHING	
	16	1	**199-0706**	1	PISTON	
	17	1	**199-0786**	8	PLATE	
	18	1	**199-0787**	6	PIN	
	19	1	**210-7305**	2	SHAFT	
	20	1	**210-3106**	1	BRACKET	
	21	1	**212-5713**	2	PLUG AS	
	22	1	*216-1608*	2	GEAR GP-RING	
					(EACH INCLUDES)	
		1	**199-0778**	1	RING-SNAP	
		1	**210-7302**	1	GEAR-RING (81-TEETH)	
		1	**226-4364**	1	HUB	
Y	23	1	*216-1609*	2	FLANGE GP-WHEEL	193
Y	24	1	**216-1610**	2	PLANETARY GP-FINAL DRIVE (AXLE)	206
	25	1	**217-2914**	1	COVER (DIFFERENTIAL LOCK)	
	26	1	**231-0699**	1	COVER (DIFFERENTIAL LOCK)	
	27	1	**219-8839**	1	ROD	
	28	1	**174-4647**	1	BUSHING	
	29	1	**174-4650**	1	SPACER (20X32X8-MM THK)	
	30	1	**231-0698**	2	SHAFT-AXLE	
	31	1	**226-4366**	2	NUT-SPANNER	
	32	1	**226-4365**	2	WASHER-TAB	
	33	1	**226-4367**	2	SPACER (110X123X22.99-MM THK)	
	34	1	**226-4370**	6	BOLT-SELF-LOCKING	
	35	1	**238-5291**	6	DISC-BRAKE	
	36	1	**238-5292**	2	HUB-BRAKE	
	37	1	**238-5293**	1	HOUSING-AXLE (LH)	
	38	1	**238-5294**	1	HOUSING-AXLE (RH)	
Y	39	1	*238-5298*	1	DIFFERENTIAL & BEVEL GEAR GP (REAR)	183
	40	1	**199-0658**	2	O-RING-CAP	
	41	1	**219-8799**	2	SEAL-O-RING	
	42	1	**199-0662**	2	SEAL-O-RING	
	43	1	**130-7282**	1	BRACKET	
M	44	1	**7X-2559**	26	BOLT (M16X2X160-MM)	
	45	1	**4L-6454**	2	BOLT (3/8-16X1-IN)	
	46	1	**3J-1907**	1	SEAL-O-RING	
	47	1	**9S-8004**	1	PLUG-O-RING	
	48	1	**219-8795**	1	CAP	
B	49	1	**069-4707**		SEALANT (GASKET)	

230-5738 AXLE GP-REAR *(contd.)* i04139489

NOTE	REF NO	GRAPHIC REF	PART NUMBER	QTY	PART NAME 1 2 3 4 5 6 (PRODUCT LEVEL)	SEE PAGE
J	50	1	**259-0127**	1	BRAKE GP-MECH CALIPER PARKING	
					AVAILABLE REPAIR KIT(S):	
J			**166-9413**	1	KIT-CAM (COUNTERCLOCKWISE)	
					(INCLUDES CAMS, BEARINGS & RETAINER)	
J			**230-3810**	1	KIT-BRAKE LINING	
					(INCLUDES LINERS & SPRING)	
J			**230-3811**	1	KIT-BRAKE CALIPER	
					(INCLUDES SLEEVES, WASHERS, NUTS, BOLT, LININGS, BEARING, BOOT, SEAL, SPRING & O-RINGS)	

B-USE AS REQUIRED
J-KITS MARKED J SERVICES PART(S) MARKED J
M-METRIC PART
Y-SEPARATE ILLUSTRATION

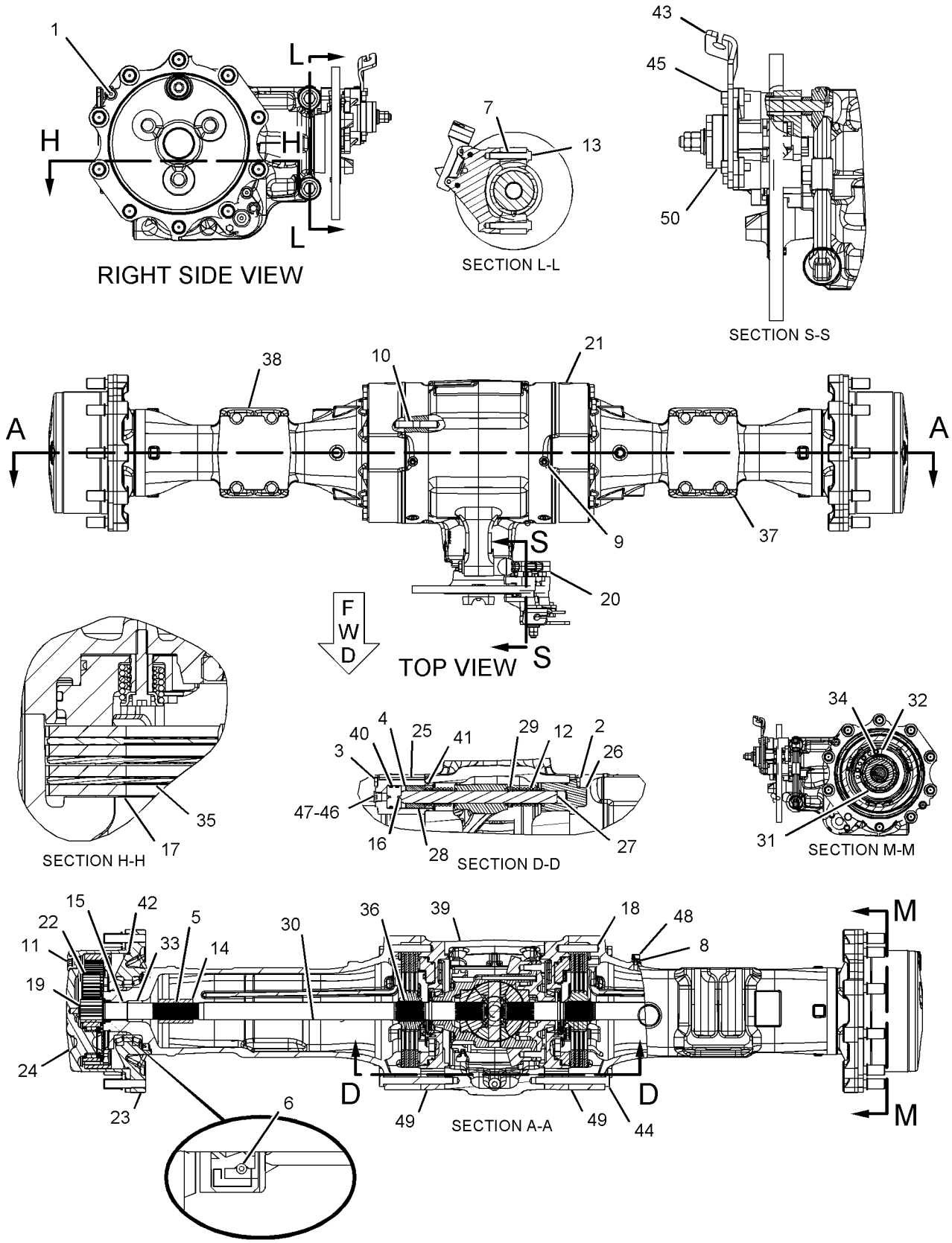

GRAPHIC #1 **<END>** g01093644

275-0468 CASE AS-TRANSMISSION–FRONT

S/N: SEJ1-UP
PART OF 359-0394 TRANSMISSION GP-DIRECT DRIVE
AN ATTACHMENT

SMCS-3030, 3064 **i03978290**

NOTE	REF NO	GRAPHIC REF	PART NUMBER	QTY	PART NAME 1 2 3 4 5 6 (PRODUCT LEVEL)	SEE PAGE
	1	1	**120-9762**	4	SEAL-O-RING	
M	2	1	**6V-5215**	2	BOLT (M8X1.25X16-MM)	
	3	1	**7T-2651**	1	STRAINER-SUCTION (TRANSMISSION)	
	4	1	**106-9861**	1	PLATE-COVER	
	5	1	**7T-3051**	1	PLUG	
	6	1	**005-0469**	1	CUP-BEARING	
	7	1	**8T-1580**	1	CUP	
	8	1	**6Y-2737**	1	CUP-BEARING	
	9	1	**123-8906**	2	CUP-TAPERED ROLLER	
	10	1	**9W-5460**	1	RING	
	11	1	**4J-0522**	1	SEAL-O-RING	
	12	1	**275-0469**	1	CASE AS-FRONT	
		1	**122-3652**	2	PLUG	
		1	**123-2920**	3	PLUG	
		1	**237-5188**	1	PLUG-EXPANSION	
	13	1	**7T-3253**	2	DOWEL	

M-METRIC PART

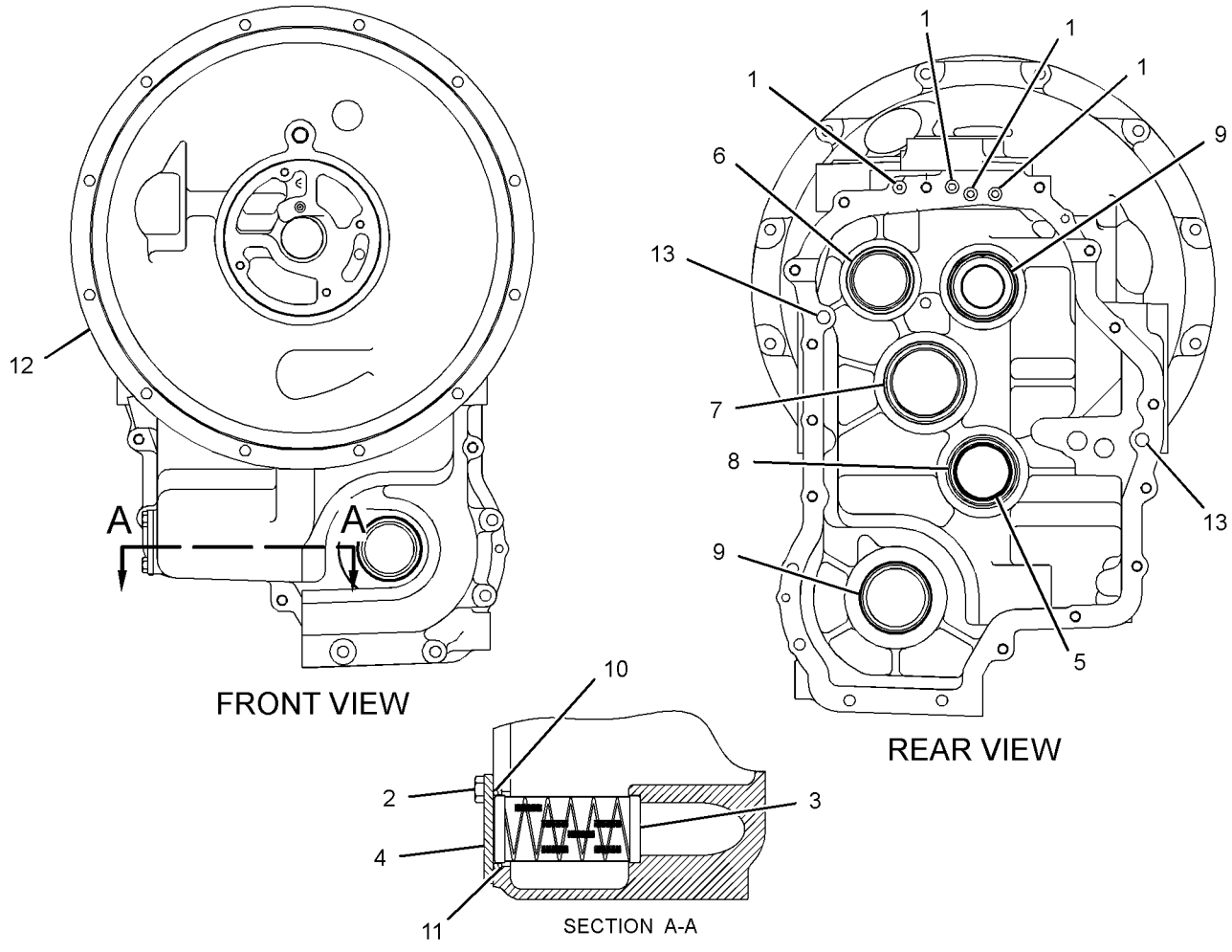

GRAPHIC #1 **<END>** g01220674

365-2814 CASE AS-TRANSMISSION—ALL WHEEL DRIVE

S/N: SEJ1-UP

PART OF 359-0394 TRANSMISSION GP-DIRECT DRIVE

AN ATTACHMENT

SMCS-3030, 3064 **i04647430**

NOTE	REF NO	GRAPHIC REF	PART NUMBER	QTY	PART NAME 1 2 3 4 5 6 (PRODUCT LEVEL)	SEE PAGE
	1	1	**005-0469**	1	CUP-BEARING	
	2	1	**121-7398**	1	SPACER (70X79.5X2-MM THK)	
B	3	1	**121-7399**	1	SHIM (0.05-MM THK)	
B	4	1	**121-7400**	1	SHIM (0.08-MM THK)	
B	5	1	**121-7401**	1	SHIM (0.18-MM THK)	
B	6	1	**121-7402**	1	SHIM (0.6-MM THK)	
	7	1	**123-8908**	2	CUP-TAPERED ROLLER	
	8	1	**123-8910**	1	CUP-TAPERED ROLLER	
	9	1	**302-8432**	1	SEAL-LIP TYPE	
	10	1	**123-8906**	1	CUP-TAPERED ROLLER	
B	11	1	**6T-9142**	1	SHIM (0.508-MM THK)	
B	12	1	**6T-9143**	1	SHIM (0.381-MM THK)	
B	13	1	**6T-9144**	1	SHIM (0.051-MM THK)	
B	14	1	**6T-9145**	1	SHIM (0.178-MM THK)	
B	15	1	**6T-9146**	1	SHIM (0.127-MM THK)	
B	16	1	**6T-9147**	1	SHIM (0.076-MM THK)	
B	17	1	**6T-9163**	2	SHIM (0.599-MM THK)	
B	18	1	**6T-9164**	2	SHIM (0.178-MM THK)	
B	19	1	**6T-9165**	2	SHIM (0.076-MM THK)	
B	20	1	**6T-9166**	2	SHIM (0.051-MM THK)	
	21	1	**7T-2646**	2	SPACER (66X79.5X2.02-MM THK)	
	22	1	**7T-3034**	1	SPACER (56.9X64.5X1.98-MM)	
B	23	1	**104-3288**	1	SHIM (0.05-MM THK)	
B	24	1	**121-2059**	1	SHIM (0.08-MM THK)	
B	25	1	**121-2060**	1	SHIM (0.18-MM THK)	
B	26	1	**121-2061**	1	SHIM (0.6-MM THK)	
	27	1	**122-1879**	1	SPACER (58X67.5X2-MM THK)	

PARTS SHOWN IN GRAPHIC(S) WITHOUT A REFERENCE NUMBER ARE NOT SERVICED SEPARATELY

B-USE AS REQUIRED

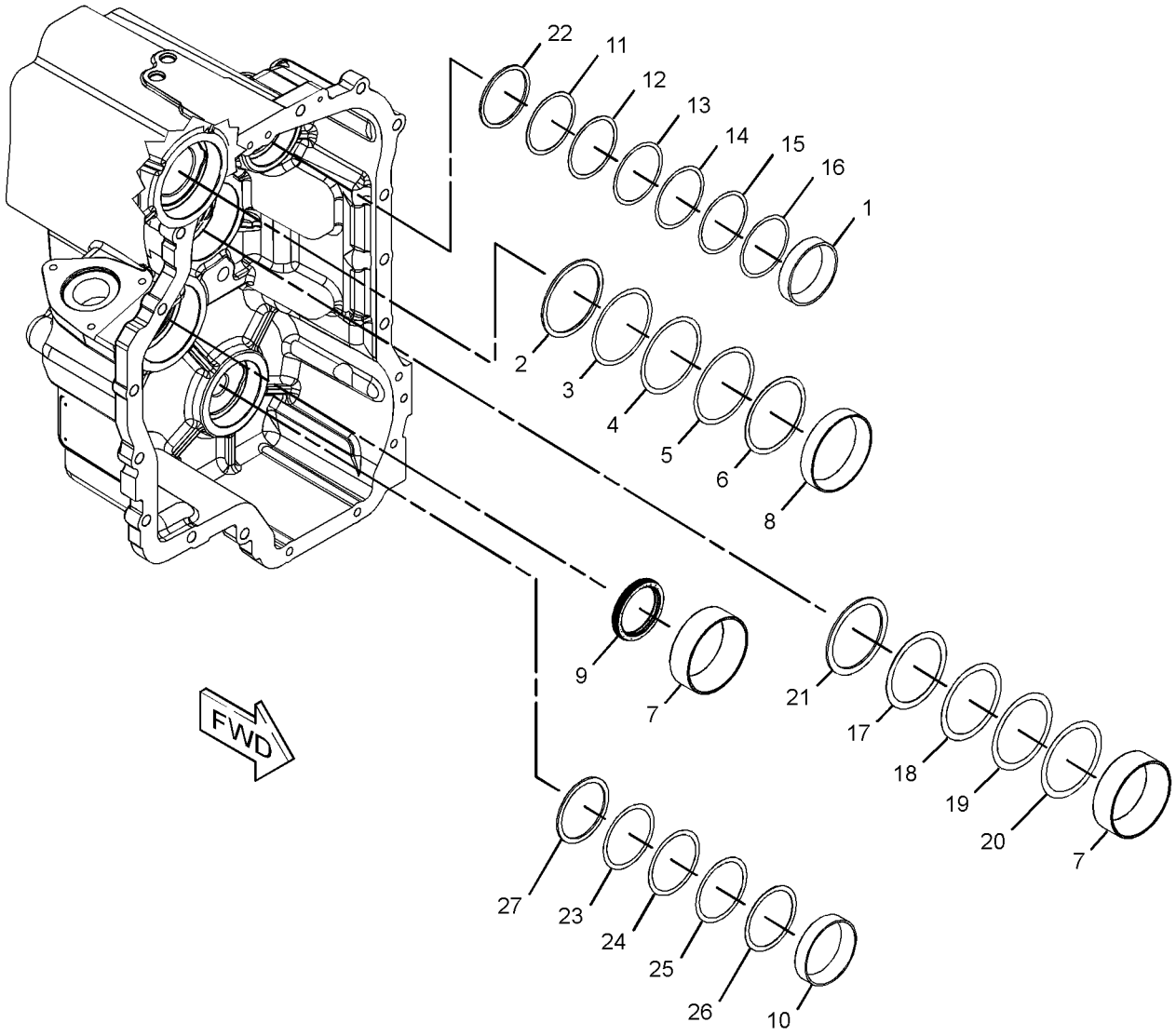

GRAPHIC #1 **<END>** g02823836

209-9882 DIFFERENTIAL & BEVEL GEAR GP–FRONT

S/N: SEJ1-UP
PART OF 230-5743 AXLE GP-DRIVE & STEERING
AN ATTACHMENT

SMCS-3256, 3258, 3281, 3283, 3284 **i03973173**

NOTE	REF NO	GRAPHIC REF	PART NUMBER	QTY	PART NAME 1 2 3 4 5 6 (PRODUCT LEVEL)	SEE PAGE
	1	1	**4J-0520**	1	SEAL-O-RING	
	2	1	**216-4457**	1	SEAL	
	3	1	**216-4458**	2	BEARING	
	4	1	**136-7808**	1	BEARING AS-TAPERED ROLLER	
	5	1	**216-4461**	1	BEARING	
	6	1	**209-7454**	2	NUT (M94X2-THD)	
	7	1	**152-6144**	1	PLUG AS-DRAIN (MAGNETIC) (AXLE, FRONT)	
		1	**6V-6228**	1	SEAL-O-RING	
	8	1	**209-7462**	2	WASHER (40X50X2-MM THK)	
	9	1	**209-7463**	1	SLEEVE	
M	10	1	**199-0695**	2	BOLT (M6X1X14-MM)	
M	11	1	**209-7472**	1	NUT (M24X1.5-THD)	
B	12	1	**209-7473**	1	SHIM (2.5-MM THK)	
B		1	**219-8751**	1	SHIM (2.6-MM THK)	
B		1	**219-8752**	1	SHIM (2.7-MM THK)	
B		1	**219-8753**	1	SHIM (2.8-MM THK)	
B		1	**219-8754**	1	SHIM (2.9-MM THK)	
B		1	**219-8755**	1	SHIM (3-MM THK)	
B		1	**219-8756**	1	SHIM (3.1-MM THK)	
B		1	**219-8757**	1	SHIM (3.2-MM THK)	
B		1	**219-8758**	1	SHIM (3.3-MM THK)	
B		1	**219-8759**	1	SHIM (3.4-MM THK)	
	13	1	**216-4465**	1	WASHER (24.5X52X10-MM THK)	
	14	1	**216-4464**	1	YOKE	
	15	1	**199-0858**	2	RETAINER	
	16	1	**216-4466**	1	KIT-BEVEL GEAR & PINION	
					(INCLUDES SPACER, NUT, WASHERS, O-RING SEAL & BEVEL GEAR AS)	
Y	17	1	**216-9498**	1	DIFFERENTIAL GP (AXLE, FRONT)	185
	18	1	**208-0322**	4	BOLT-FLANGE HEAD (M14X2X75-MM)	

B-USE AS REQUIRED
M-METRIC PART
Y-SEPARATE ILLUSTRATION

209-9882 DIFFERENTIAL & BEVEL GEAR GP *(contd.)* i03973173

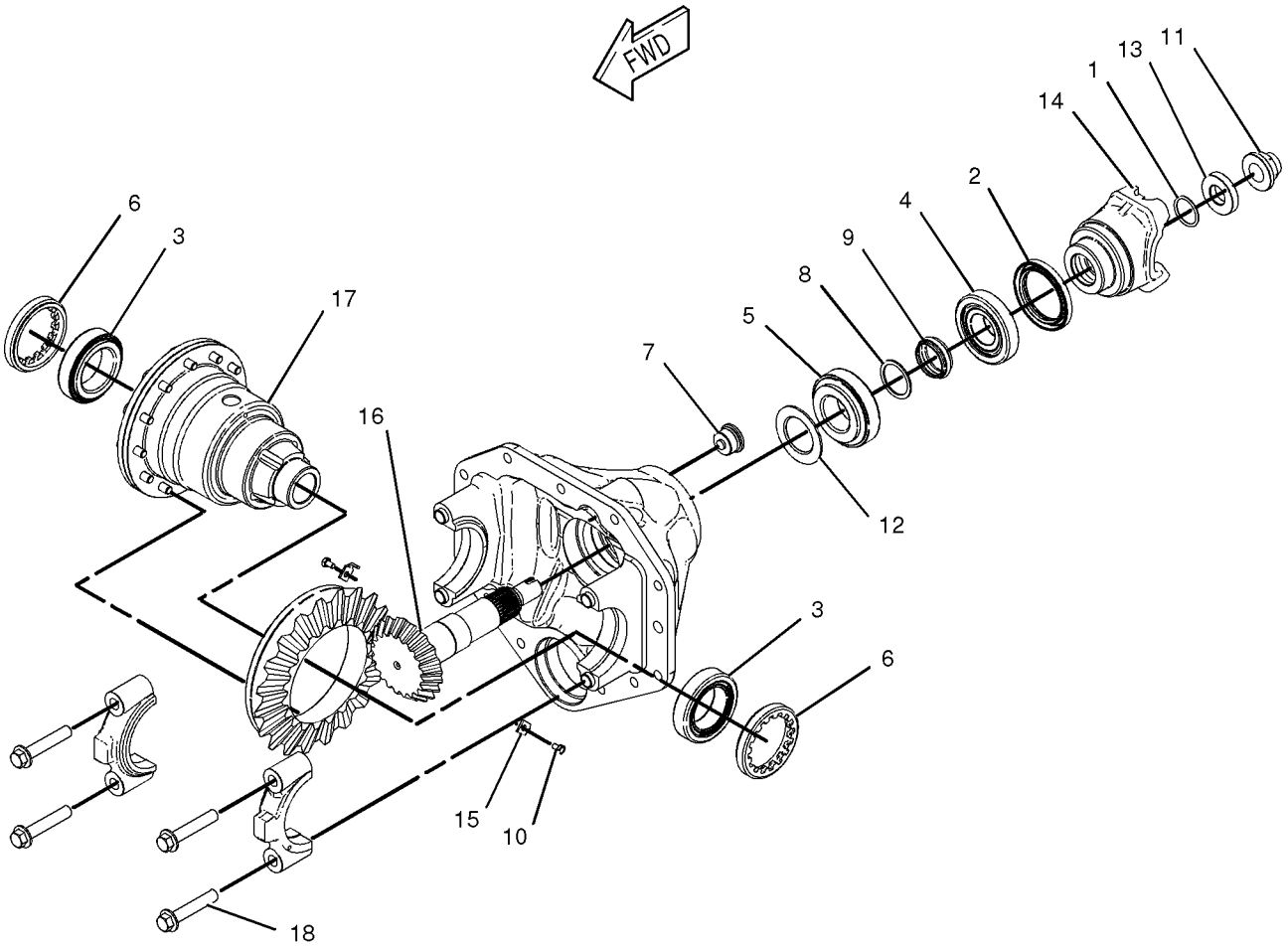

GRAPHIC #1 **<END>** g01028597

238-5298 DIFFERENTIAL & BEVEL GEAR GP–REAR

S/N: SEJ1-UP
PART OF 230-5738 AXLE GP-REAR
AN ATTACHMENT

SMCS-3256, 3258, 3281, 3283, 3284 **i04459585**

NOTE	REF NO	GRAPHIC REF	PART NUMBER	QTY	PART NAME 1 2 3 4 5 6 (PRODUCT LEVEL)	SEE PAGE
	1	1	**199-0646**	4	BOLT	
	2	1	**199-0656**	2	CUP & CONE AS	
L	3	1	**199-0663**	1	SEAL-O-RING	
	4	1	**198-7811**	2	DOWEL	
	5	1	**199-0675**	2	NUT (M104X2-THD)	
L	6	1	**199-0678**	2	WASHER (45.5X55X2-MM THK)	
L	7	1	**199-0680**	1	SPACER (47X50X19.2-MM THK)	
M	8	1	**199-0695**	2	BOLT (M6X1X14-MM)	
	9	1	**199-0697**	1	SEAL	
L	10	1	**199-0785**	1	WASHER (30.5X58X10-MM THK)	
L	11	1	**217-2346**	1	KIT-BEVEL GEAR & PINION	
					(ALSO INCLUDES BEVEL GEAR & PINION)	
	12	1	**199-0858**	2	RETAINER	
L	13	1	**212-5702**	1	NUT (M30X2-THD)	
	14	1	**216-1600**	1	DISC-BRAKE	
	15	1	**095-1041**	1	BEARING AS	
	16	1	**093-8828**	1	BEARING AS	
Y	17	1	**216-1612**	1	CYLINDER GP-BRAKE (RH)	293
Y	18	1	**216-1613**	1	CYLINDER GP-BRAKE (LH)	295
	19	1	**219-8836**	1	FORK	
Y	20	1	**231-0692**	1	DIFFERENTIAL GP (AXLE, REAR)	186
	21	1	**238-5290**	1	HOUSING-CENTER	
B	22	1	**1U-8846**		SEALANT-GASKET	
B	23	1	**199-0684**	1	SHIM (2.5-MM THK)	
B	24	1	**199-0685**	1	SHIM (2.6-MM THK)	
B	25	1	**199-0686**	1	SHIM (2.7-MM THK)	
B	26	1	**199-0687**	1	SHIM (2.8-MM THK)	
B	27	1	**199-0688**	1	SHIM (2.9-MM THK)	
B	28	1	**199-0689**	1	SHIM (3-MM THK)	
B	29	1	**199-0690**	1	SHIM (3.1-MM THK)	
B	30	1	**199-0691**	1	SHIM (3.2-MM THK)	
B	31	1	**199-0692**	1	SHIM (3.3-MM THK)	
B	32	1	**199-0693**	1	SHIM (3.4-MM THK)	
FJ			**199-0808**	1	PIN	
FJ			**231-0670**	1	SHAFT	
FJ			**231-0671**	2	WASHER-THRUST	
FJ			**231-0695**	2	WASHER-THRUST	
					AVAILABLE REPAIR KIT(S):	
J			**217-2345**	1	KIT-DIFFERENTIAL	

B-USE AS REQUIRED
F-NOT SHOWN
J-KIT MARKED J SERVICES PARTS MARKED J
L-KIT MARKED L SERVICES PARTS MARKED L
M-METRIC PART
Y-SEPARATE ILLUSTRATION

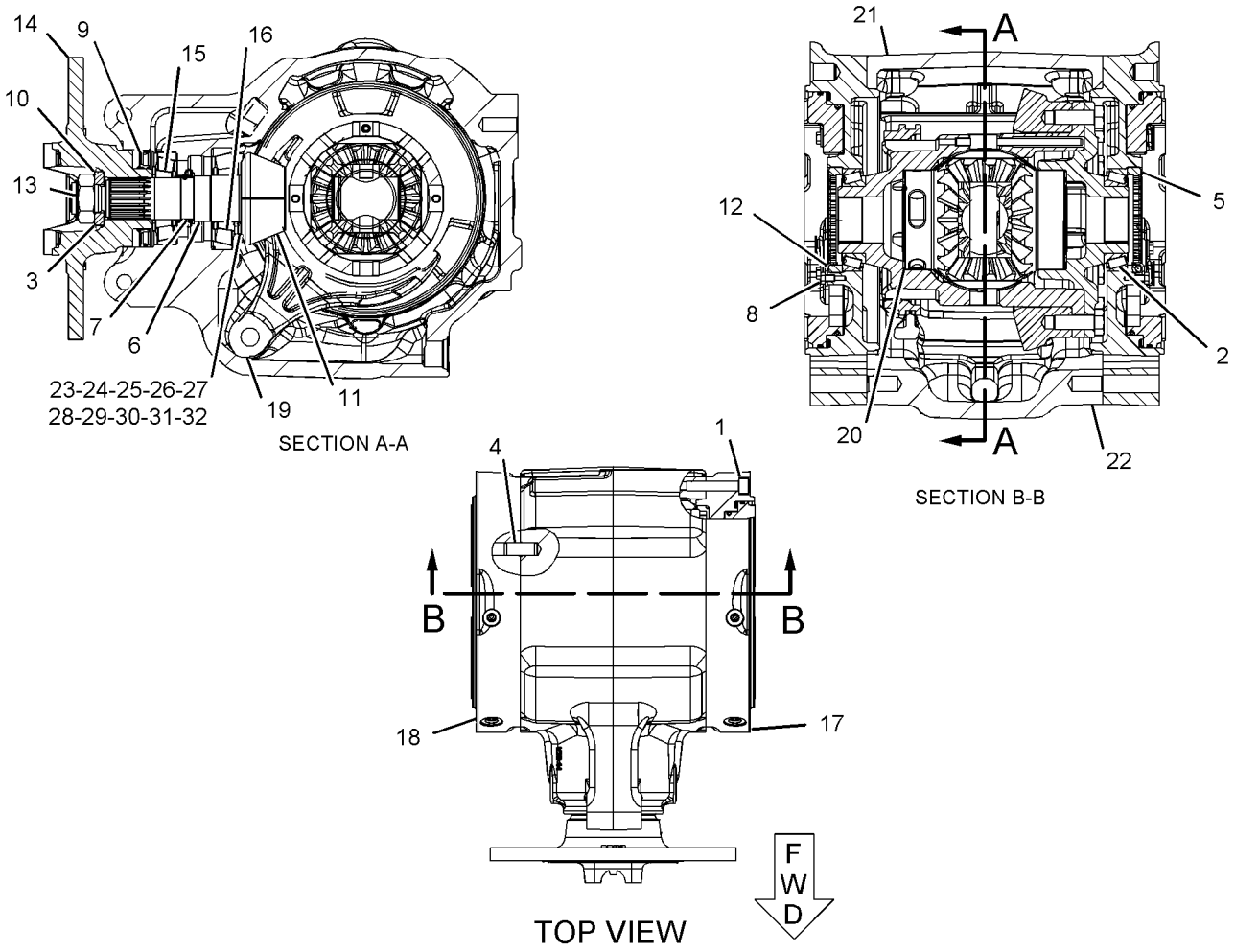

GRAPHIC #1

<END>

g01107896

216-9498 DIFFERENTIAL GP–AXLE, FRONT

S/N: SEJ1-UP

PART OF 209-9882 DIFFERENTIAL & BEVEL GEAR GP

AN ATTACHMENT

SMCS-3258 **i04403755**

NOTE	REF NO	GRAPHIC REF	PART NUMBER	QTY	PART NAME 1 2 3 4 5 6 (PRODUCT LEVEL)	SEE PAGE
	1	1	**211-0092**	2	WASHER-THRUST (22X42X2-MM THK)	
	2	1	**209-7455**	1	PIN	
	3	1	**216-8687**	1	COVER	
	4	1	**216-9497**	1	DIFFERENTIAL & BEVEL GEAR GP	
	5	1	**216-8689**	1	HOUSING-DIFFERENTIAL	
	6	1	**216-8691**	1	RETAINER	
	7	1	**229-5093**	2	WASHER-THRUST (49X72X1.5-MM THK)	
M	8	1	**144-6734**	12	BOLT (M10X1.5X30-MM)	

M-METRIC PART

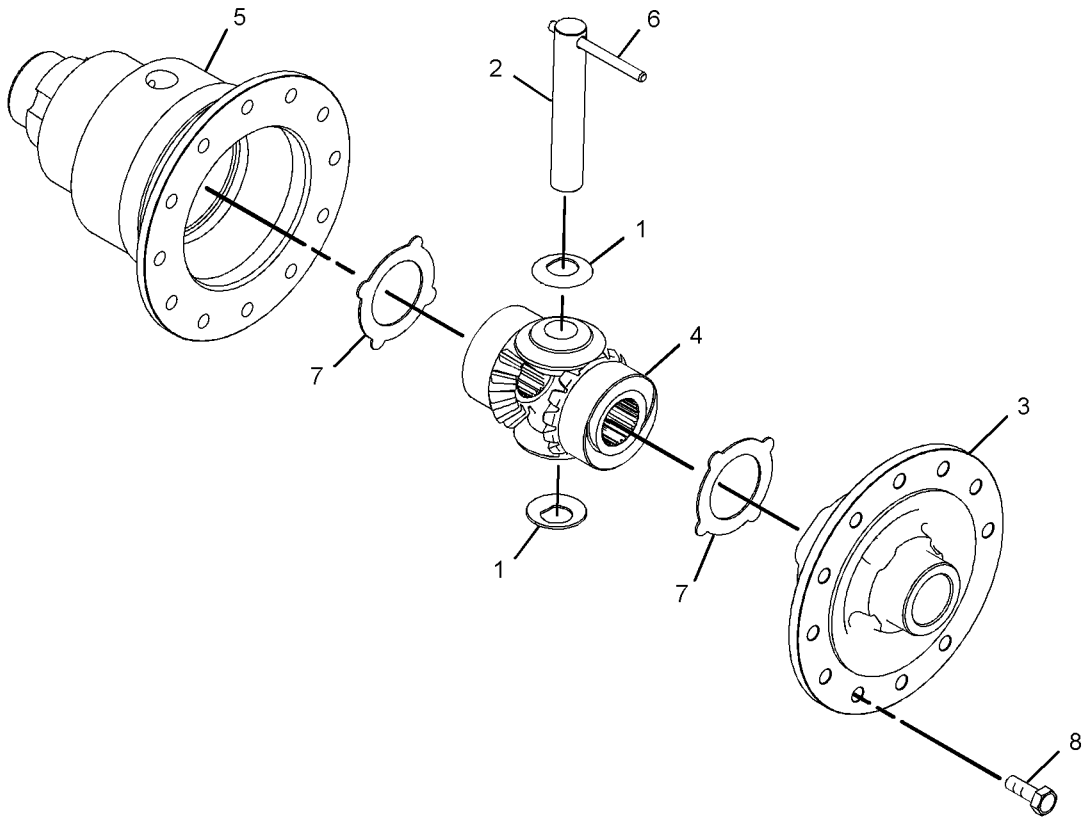

GRAPHIC #1 **<END>** g02596016

231-0692 DIFFERENTIAL GP–AXLE, REAR

S/N: SEJ1-UP
PART OF 238-5298 DIFFERENTIAL & BEVEL GEAR GP
AN ATTACHMENT

SMCS-3258 **i02188622**

NOTE	REF NO	GRAPHIC REF	PART NUMBER	QTY	PART NAME 1 2 3 4 5 6 (PRODUCT LEVEL)	SEE PAGE
	1	1	**199-0673**	2	BUSHING	
	2	1	**199-0694**	12	BOLT (M14X2X40-MM)	
	3	1	**199-0756**	1	COLLAR	
	4	1	**199-0784**	1	COVER-DIFFERENTIAL	
	5	1	**199-0807**	4	PIN	
	6	1	**199-0808**	3	PIN	
	7	1	**231-0670**	1	SHAFT	
	8	1	**231-0671**	4	WASHER-THRUST	
	9	1	**231-0695**	2	WASHER-THRUST	
	10	1	**231-0693**	1	CASE-DIFFERENTIAL	
	11	1	**231-0696**	2	SHAFT	
	12	1	**231-0697**	1	RETAINER	
	13	1	**231-0694**	1	GEAR AS	
	14	1	**199-0659**	4	SEAL-PIN	

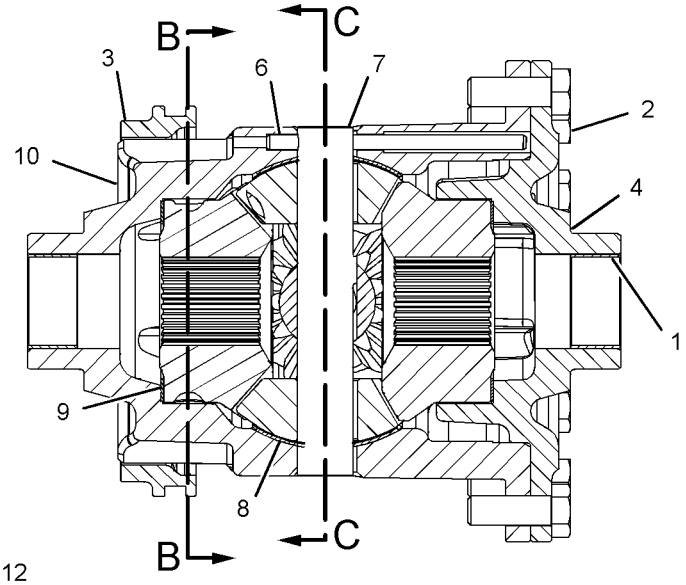

FRONT VIEW
(SECTIONED)

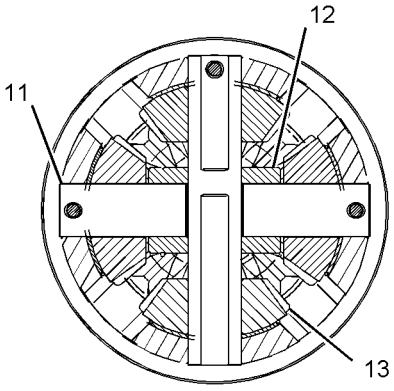

SECTION C-C

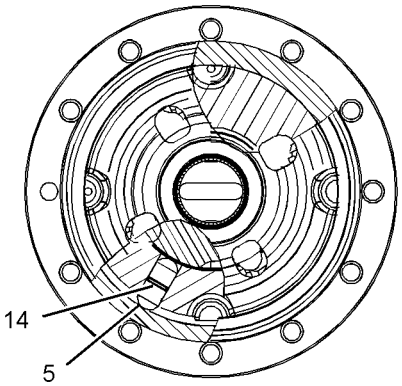

SECTION B-B

GRAPHIC #1 **<END>** g01107764

111-7907 DRIVE GP-FLEXIBLE COUPLING

S/N: SEJ1-UP
PART OF 359-0401 TORQUE CONVERTER AR
AN ATTACHMENT

SMCS-3252 **i02594396**

NOTE	REF NO	GRAPHIC REF	PART NUMBER	QTY	PART NAME 1 2 3 4 5 6 (PRODUCT LEVEL)	SEE PAGE
M	1	1	**8T-4200**	8	BOLT (M8X1.25X16-MM)	
M	2	1	**6V-8455**	6	BOLT (M10X1.5X16-MM)	
	3	1	**117-9713**	1	PLATE-CONVERTER REINFORCEMENT	
	4	1	**8T-4224**	8	WASHER-HARD (8.8X16X2-MM THK)	
	5	1	**111-7906**	1	PLATE-CONVERTER DRIVE	

M-METRIC PART

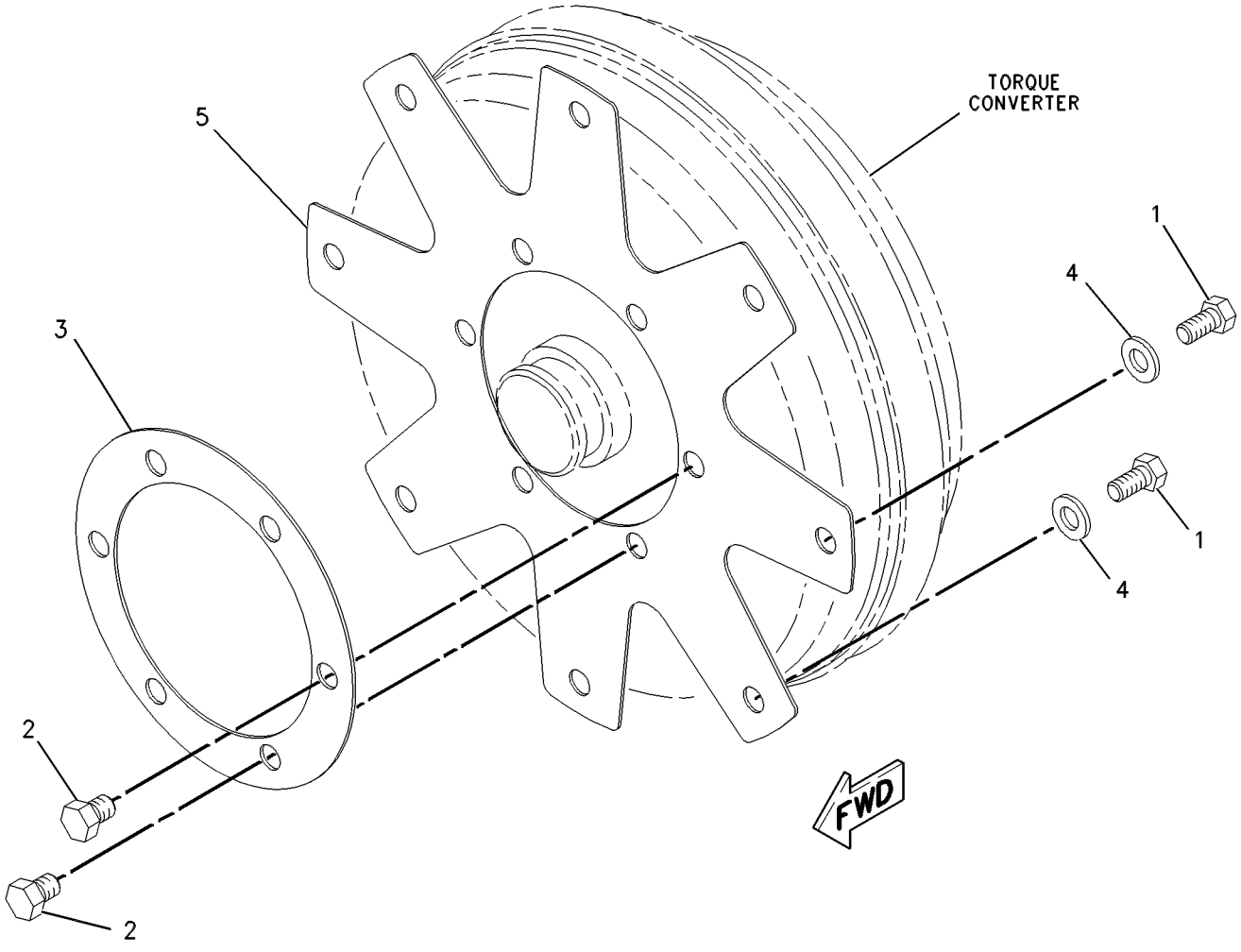

GRAPHIC #1 **<END>** g00547374

355-3845 DRIVE GP-FLEXIBLE COUPLING

S/N: SEJ1-UP
PART OF 359-0407 TORQUE CONVERTER AR
AN ATTACHMENT

SMCS-3252 **i04612475**

NOTE	REF NO	GRAPHIC REF	PART NUMBER	QTY	PART NAME 1 2 3 4 5 6 (PRODUCT LEVEL)	SEE PAGE
	1	1	**355-3843**	1	PLATE-CONVERTER	
	2	1	**355-3844**	1	PLATE-CONVERTER	
M	3	1	**6V-8455**	4	BOLT (M10X1.5X16-MM)	
M	4	1	**8T-4200**	8	BOLT (M8X1.25X16-MM)	
	5	1	**8T-4224**	8	WASHER-HARD (8.8X16X2-MM THK)	

M-METRIC PART

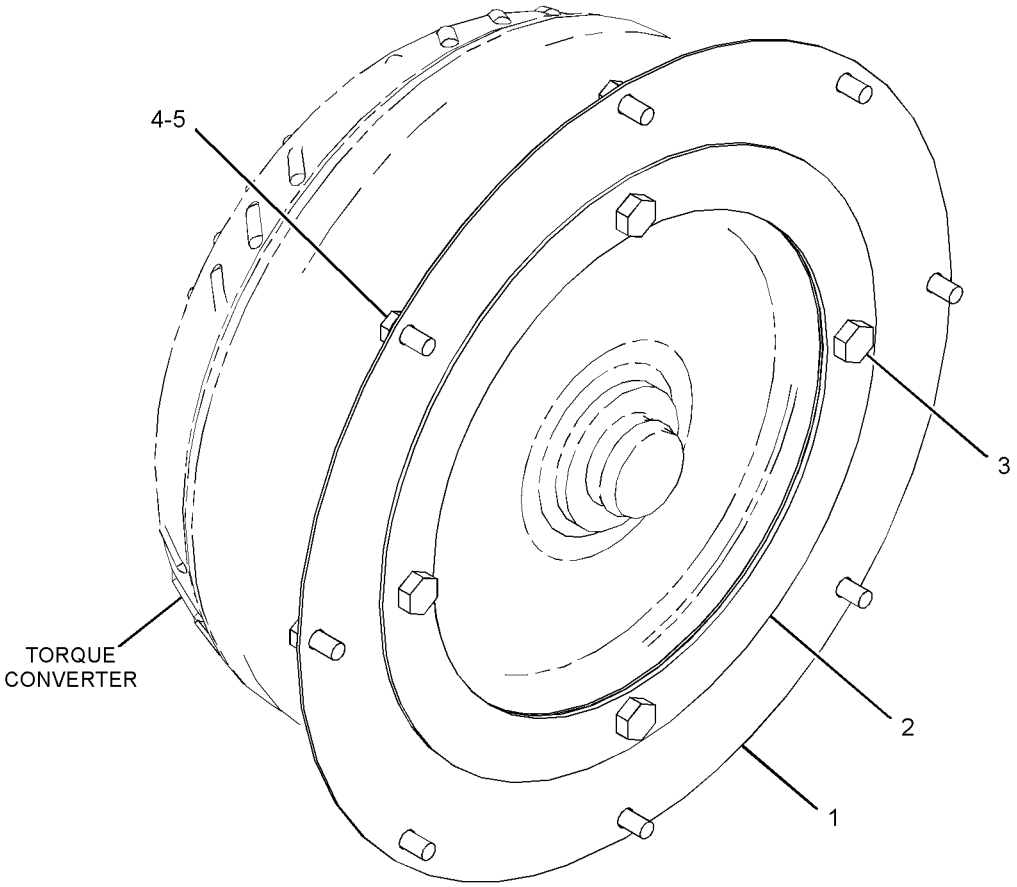

GRAPHIC #1 **<END>** g02811139

337-9701 FILLER GP-POWER TRAIN OIL–AUTOSHIFT

S/N: SEJ1-UP

PART OF 353-1510, 353-1511 TRANSMISSION AR-POWER SHIFT

AN ATTACHMENT

SMCS-3005, 3081 **i04543241**

NOTE	REF NO	GRAPHIC REF	PART NUMBER	QTY	PART NAME 1 2 3 4 5 6 (PRODUCT LEVEL)	SEE PAGE
	1	1	**323-3308**	2	CAP	
	2	1	**361-1727**	1	FLANGE AS	
	3	1	**361-2693**	1	GAUGE-OIL LEVEL (DIPSTICK) (POWER TRAIN)	
	4	1	**361-7032**	1	TUBE AS	
	5	1	**363-9893**	1	BRACKET AS	
M		1	**159-9540**	1	NUT-WELD (M8X1.25-THD)	
	6	1	**3E-7445**	2	CLAMP-HOSE	
	7	1	**4J-0522**	1	SEAL-O-RING	
	8	1	**5P-4116**	2	WASHER-HARD (8.8X20.5X2-MM THK)	
	9	1	**8T-4121**	1	WASHER-HARD (11X21X2.5-MM THK)	
M	10	1	**8T-4189**	1	BOLT (M8X1.25X20-MM)	
M	11	1	**8T-4195**	1	BOLT (M10X1.5X30-MM)	
	12	1	**8T-4223**	2	WASHER-HARD (13.5X25.5X3-MM THK)	
M	13	1	**8T-4908**	1	BOLT (M8X1.25X25-MM)	
M	14	1	**8T-4956**	2	BOLT (M12X1.75X35-MM)	
	15	1	**262-8088**		HOSE (18.5-CM)	

M-METRIC PART

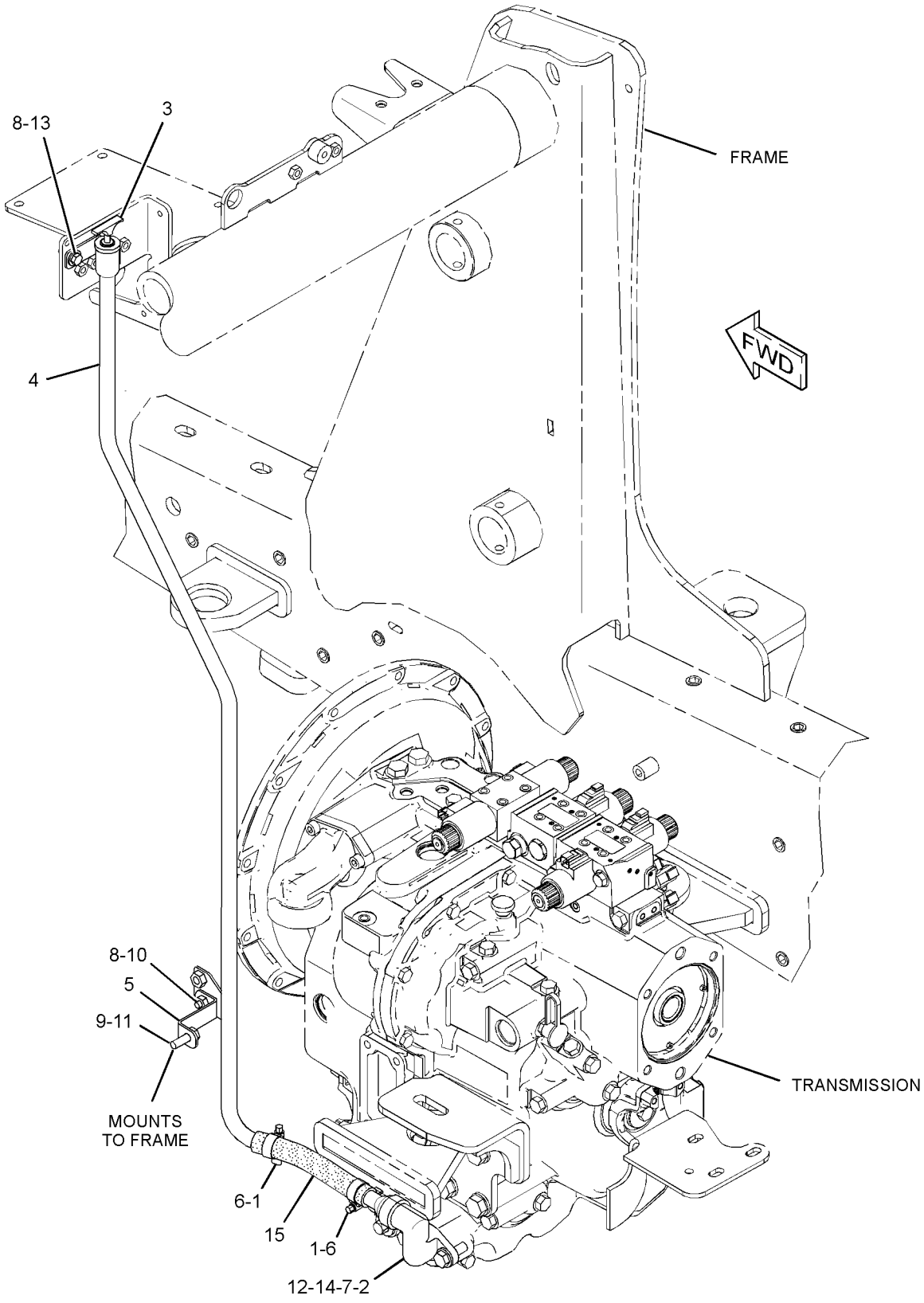

GRAPHIC #1

<END>

g02786397

337-9703 FILLER GP-POWER TRAIN OIL—STANDARD SHIFT

S/N: SEJ1-UP
PART OF 353-1513 TRANSMISSION AR-POWER SHIFT
AN ATTACHMENT

SMCS-3005, 3081 **i04543236**

NOTE	REF NO	GRAPHIC REF	PART NUMBER	QTY	PART NAME 1 2 3 4 5 6 (PRODUCT LEVEL)	SEE PAGE
	1	1	**323-3308**	2	CAP	
	2	1	**361-1725**	1	TUBE AS	
	3	1	**361-1727**	1	FLANGE AS	
	4	1	**361-1728**	1	GAUGE-OIL LEVEL (DIPSTICK) (POWER TRAIN)	
	5	1	**363-9893**	1	BRACKET AS	
M		1	**159-9540**	1	NUT-WELD (M8X1.25-THD)	
	6	1	**3E-7445**	2	CLAMP-HOSE	
	7	1	**4J-0522**	1	SEAL-O-RING	
	8	1	**5P-4116**	2	WASHER-HARD (8.8X20.5X2-MM THK)	
	9	1	**8T-4121**	1	WASHER-HARD (11X21X2.5-MM THK)	
M	10	1	**8T-4189**	1	BOLT (M8X1.25X20-MM)	
M	11	1	**8T-4195**	1	BOLT (M10X1.5X30-MM)	
	12	1	**8T-4223**	2	WASHER-HARD (13.5X25.5X3-MM THK)	
M	13	1	**8T-4908**	1	BOLT (M8X1.25X25-MM)	
M	14	1	**8T-4956**	2	BOLT (M12X1.75X35-MM)	
E	15	1	**262-8088**		HOSE (18.5-CM)	

E-ORDER BY THE CENTIMETER
M-METRIC PART

337-9703 **FILLER GP-POWER TRAIN OIL** *(contd.)* **i04543236**

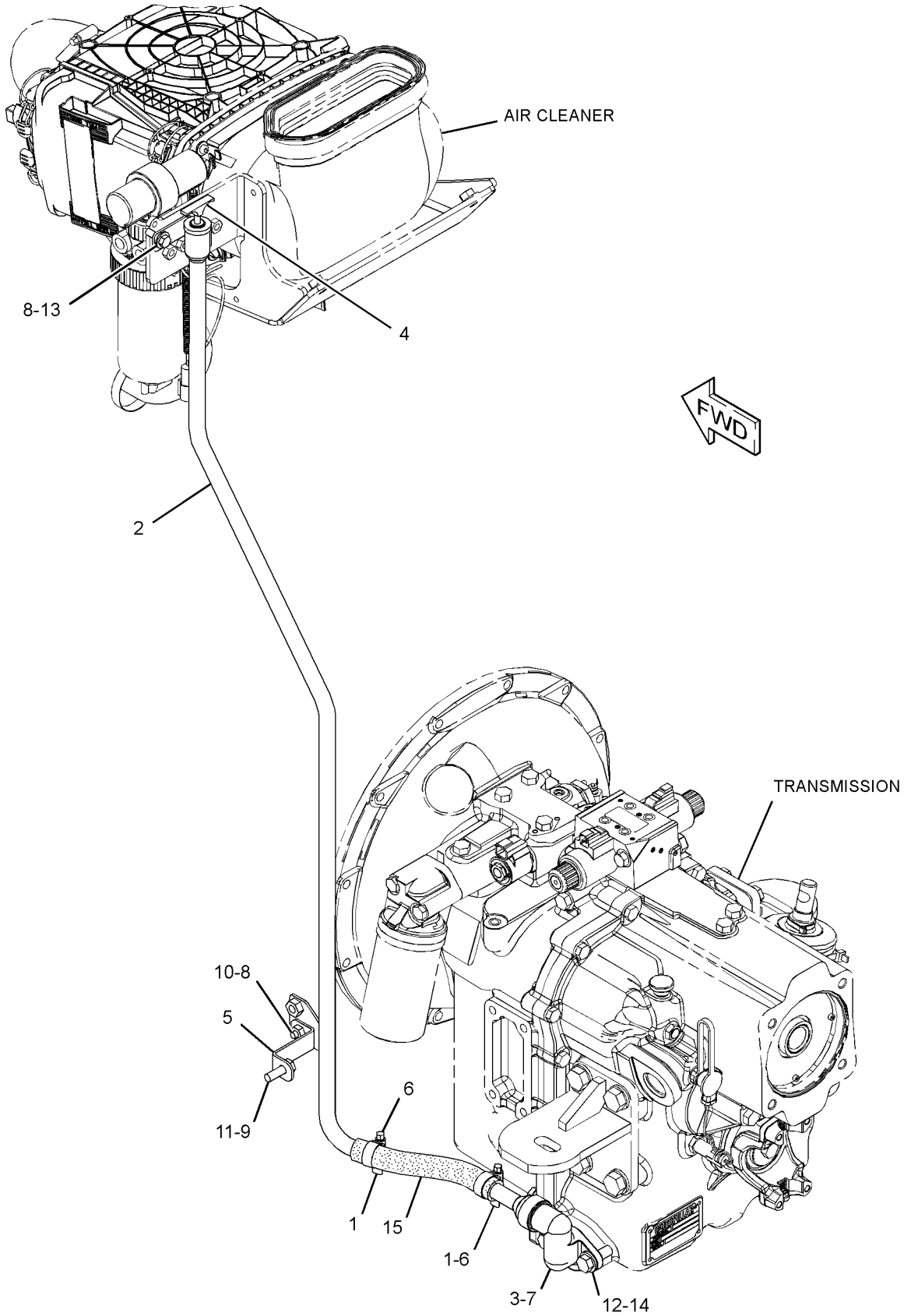

GRAPHIC #1 **<END>** g02785779

216-1609 FLANGE GP-WHEEL

S/N: SEJ1-UP
PART OF 230-5738 AXLE GP-REAR
AN ATTACHMENT

SMCS-4057 **i04369628**

NOTE	REF NO	GRAPHIC REF	PART NUMBER	QTY	PART NAME 1 2 3 4 5 6 (PRODUCT LEVEL)	SEE PAGE
	1	1	**209-4232**	2	BEARING	
	2	1	**331-8538**	1	SEAL	
J	3	1	**226-4346**	10	STUD	
					AVAILABLE REPAIR KIT(S):	
			231-0719	1	KIT-WHEEL FLANGE	
					(ALSO INCLUDES FLANGE WHEEL)	

J-KIT MARKED J SERVICES PARTS MARKED J

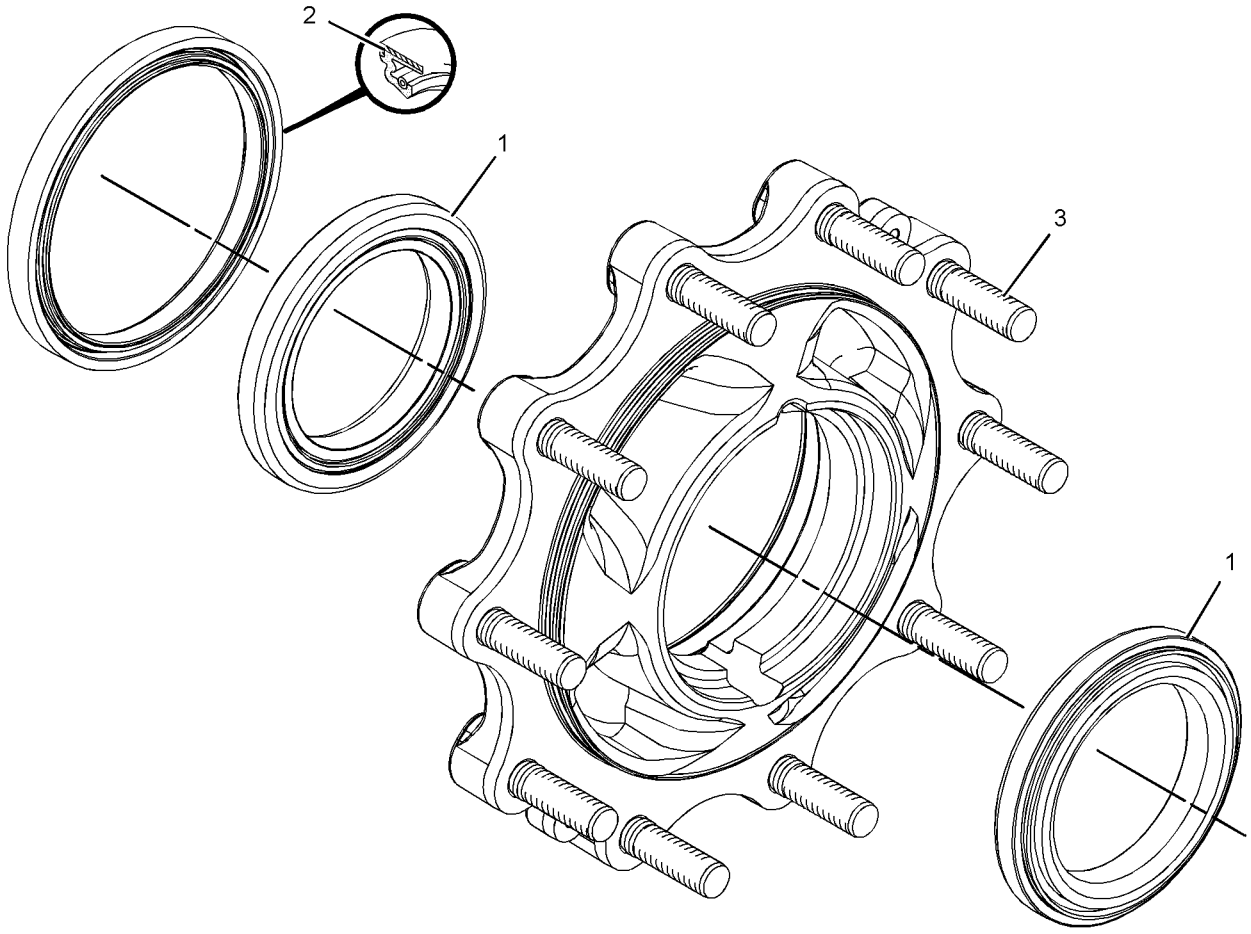

GRAPHIC #1 **<END>** g02531759

209-9884 HOUSING & FLANGE GP-AXLE–RH

S/N: SEJ1-UP
PART OF 230-5743 AXLE GP-DRIVE & STEERING
AN ATTACHMENT

SMCS-4057, 4234 **i03973170**

NOTE	REF NO	GRAPHIC REF	PART NUMBER	QTY	PART NAME 1 2 3 4 5 6 (PRODUCT LEVEL)	SEE PAGE
Y	1	1	**217-2877**	1	HOUSING GP-AXLE (RH)	196
J	2	1	*231-0703*	1	FLANGE AS (AXLE)	
	2A	1	**210-5932**	2	BEARING-WHEEL	
	2B	1	**226-4346**	8	STUD	
	2C	1	**331-8538**	1	SEAL	
	3	1	**226-4366**	1	NUT-SPANNER	
	4	1	**226-4370**	3	BOLT-SELF-LOCKING	
	5	1	**229-5085**	1	SPACER (110X123X18.36-MM THK)	
	6	1	**217-2879**	1	GEAR GP-RING	
	7	1	**226-4365**	1	WASHER-TAB	
					AVAILABLE REPAIR KIT(S):	
J			**238-5256**	1	KIT-FLANGE (AXLE HOUSING)	
					(INCLUDES STUDS & WHEEL FLANGE)	

J-KIT MARKED J SERVICES PART MARKED J
Y-SEPARATE ILLUSTRATION

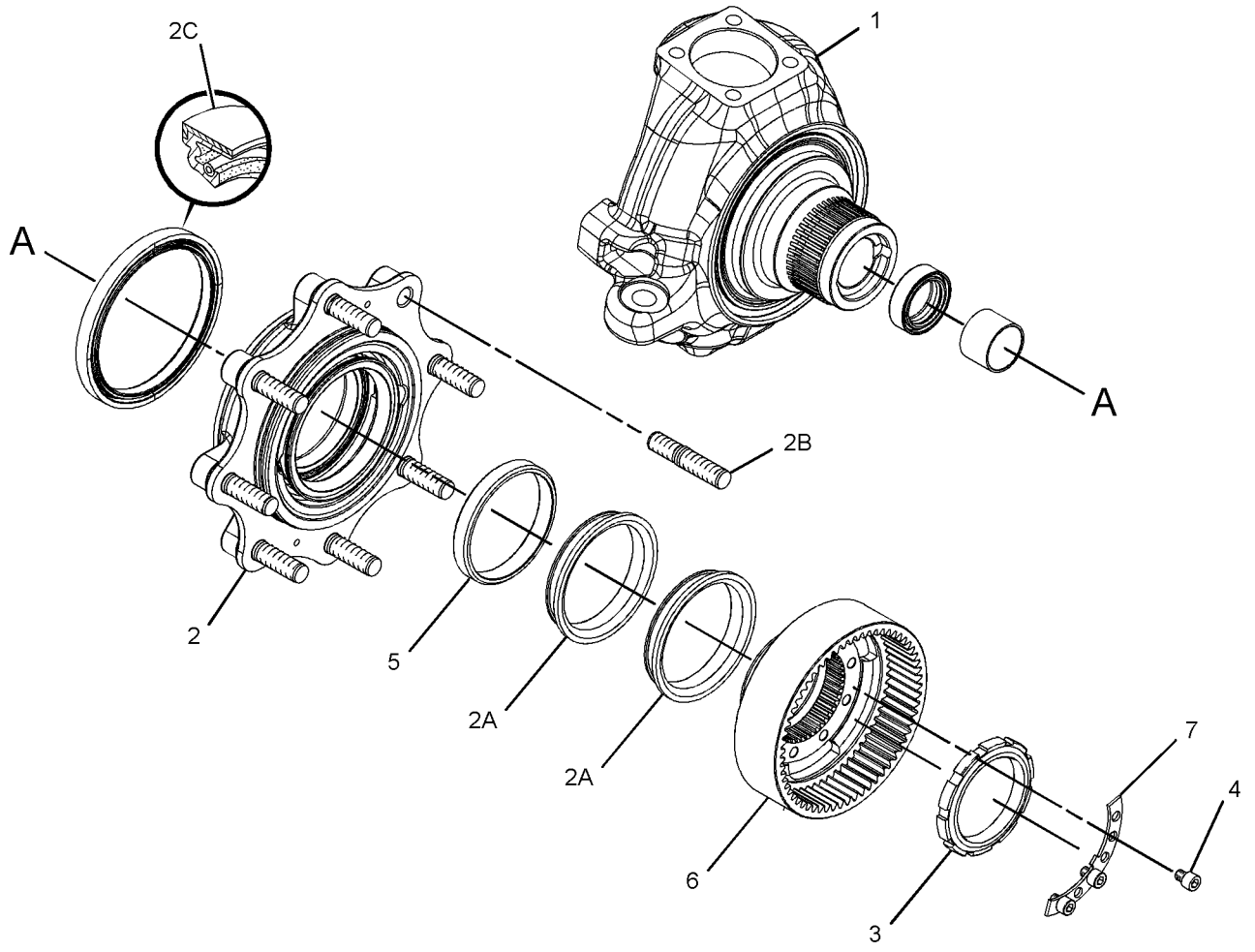

GRAPHIC #1 **<END>** g02164593

209-9885 HOUSING & FLANGE GP-AXLE–LH

S/N: SEJ1-UP
PART OF 230-5743 AXLE GP-DRIVE & STEERING
AN ATTACHMENT

SMCS-4057, 4234 **i03920894**

NOTE	REF NO	GRAPHIC REF	PART NUMBER	QTY	PART NAME 1 2 3 4 5 6 (PRODUCT LEVEL)	SEE PAGE
Y	1	1	**217-2878**	1	HOUSING GP-AXLE (LH)	197
J	2	1	*231-0703*	1	FLANGE AS (AXLE)	
	2A	1	**210-5932**	2	BEARING-WHEEL	
	2B	1	**226-4346**	8	STUD	
	2C	1	**331-8538**	1	SEAL	
	3	1	**226-4366**	1	NUT-SPANNER	
	4	1	**226-4370**	4	BOLT-SELF-LOCKING	
	5	1	**229-5085**	1	SPACER (110X123X18.36-MM THK)	
	6	1	**217-2879**	1	GEAR GP-RING	
	7	1	**226-4365**	1	WASHER-TAB	
					AVAILABLE REPAIR KIT(S):	
J			**238-5256**	1	KIT-FLANGE (AXLE HOUSING)	
					(INCLUDES WHEEL FLANGE & STUDS)	

J-KIT MARKED J SERVICES PART(S) MARKED J
Y-SEPARATE ILLUSTRATION

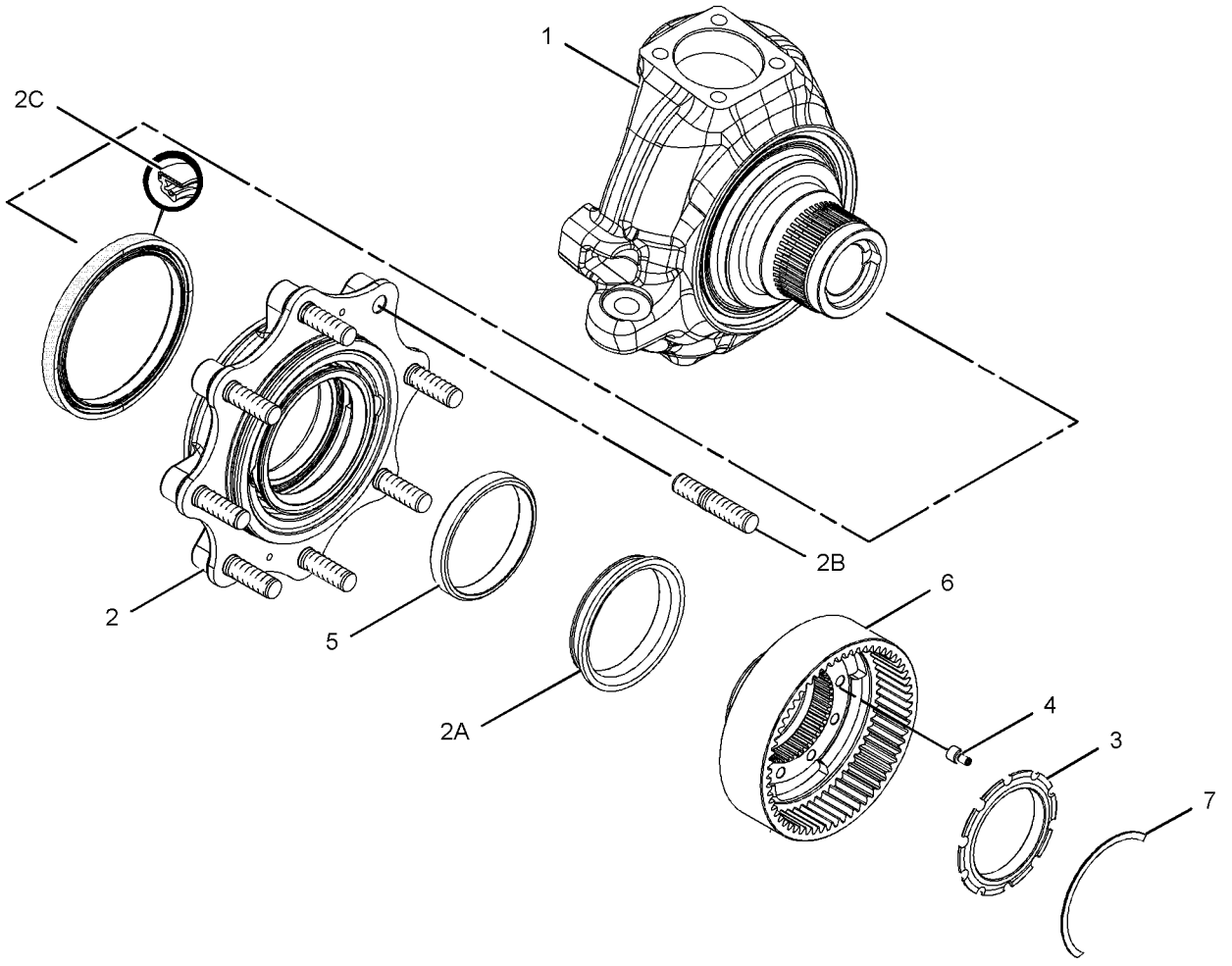

GRAPHIC #1 **<END>** g01180841

217-2877 HOUSING GP-AXLE–RH

S/N: SEJ1-UP

PART OF 209-9884 HOUSING & FLANGE GP-AXLE

AN ATTACHMENT

SMCS-3256, 3258, 3260, 4251 **i02364961**

NOTE	REF NO	GRAPHIC REF	PART NUMBER	QTY	PART NAME 1 2 3 4 5 6 (PRODUCT LEVEL)	SEE PAGE
	1	1	**199-0648**	1	NUT-JAM (M16X2-THD)	
	2	1	**198-7814**	1	BOLT (M16X2X100-MM)	
	3	1	**209-7460**	1	BUSHING	
	4	1	**209-7465**	1	SEAL	
	5	1	**231-0700**	1	HOUSING	

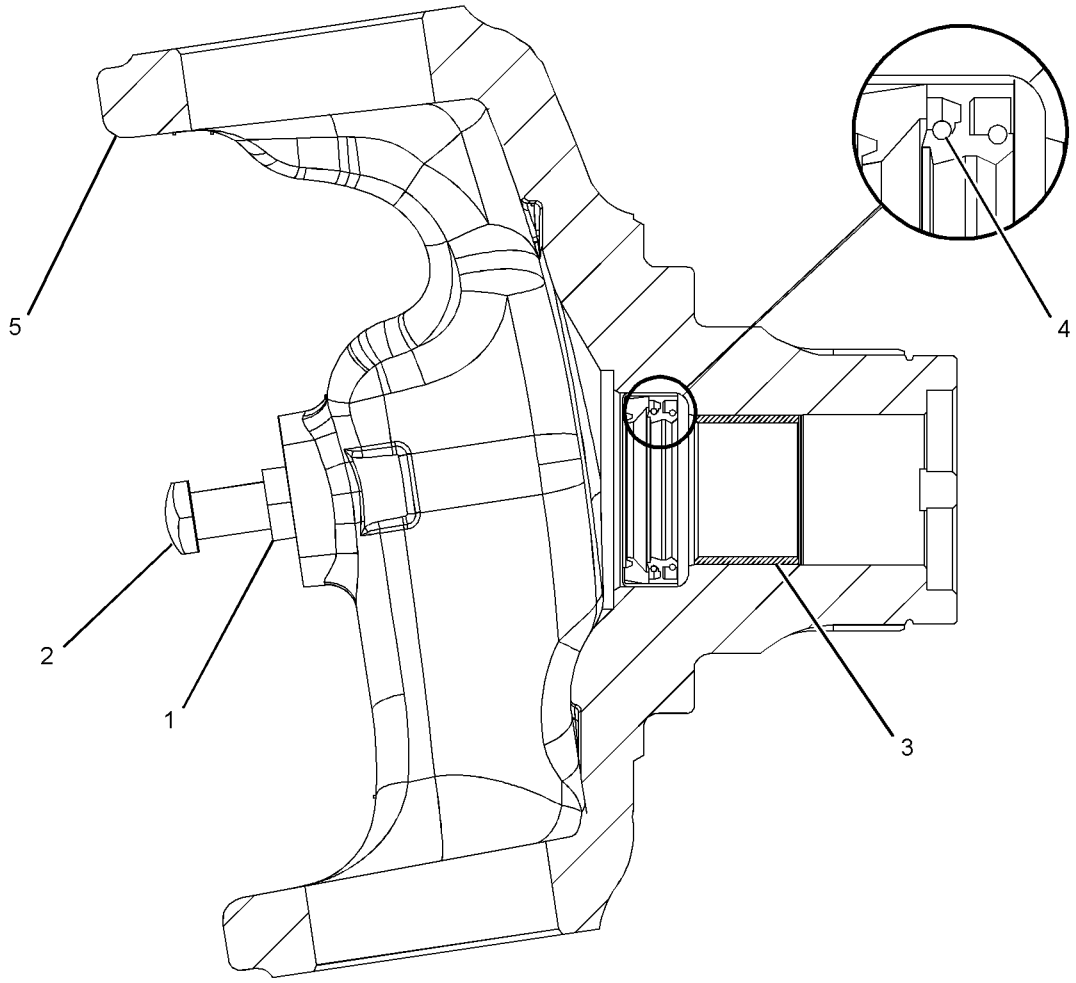

GRAPHIC #1 **<END>** g01181175

217-2878 HOUSING GP-AXLE–LH

S/N: SEJ1-UP
PART OF 209-9885 HOUSING & FLANGE GP-AXLE
AN ATTACHMENT

SMCS-3256, 3258, 3260, 4251 **i02364974**

NOTE	REF NO	GRAPHIC REF	PART NUMBER	QTY	PART NAME 1 2 3 4 5 6 (PRODUCT LEVEL)	SEE PAGE
	1	1	**199-0648**	1	NUT-JAM (M16X2-THD)	
	2	1	**198-7814**	1	BOLT (M16X2X100-MM)	
	3	1	**209-7460**	1	BUSHING	
	4	1	**209-7465**	1	SEAL	
	5	1	**231-0701**	1	HOUSING	

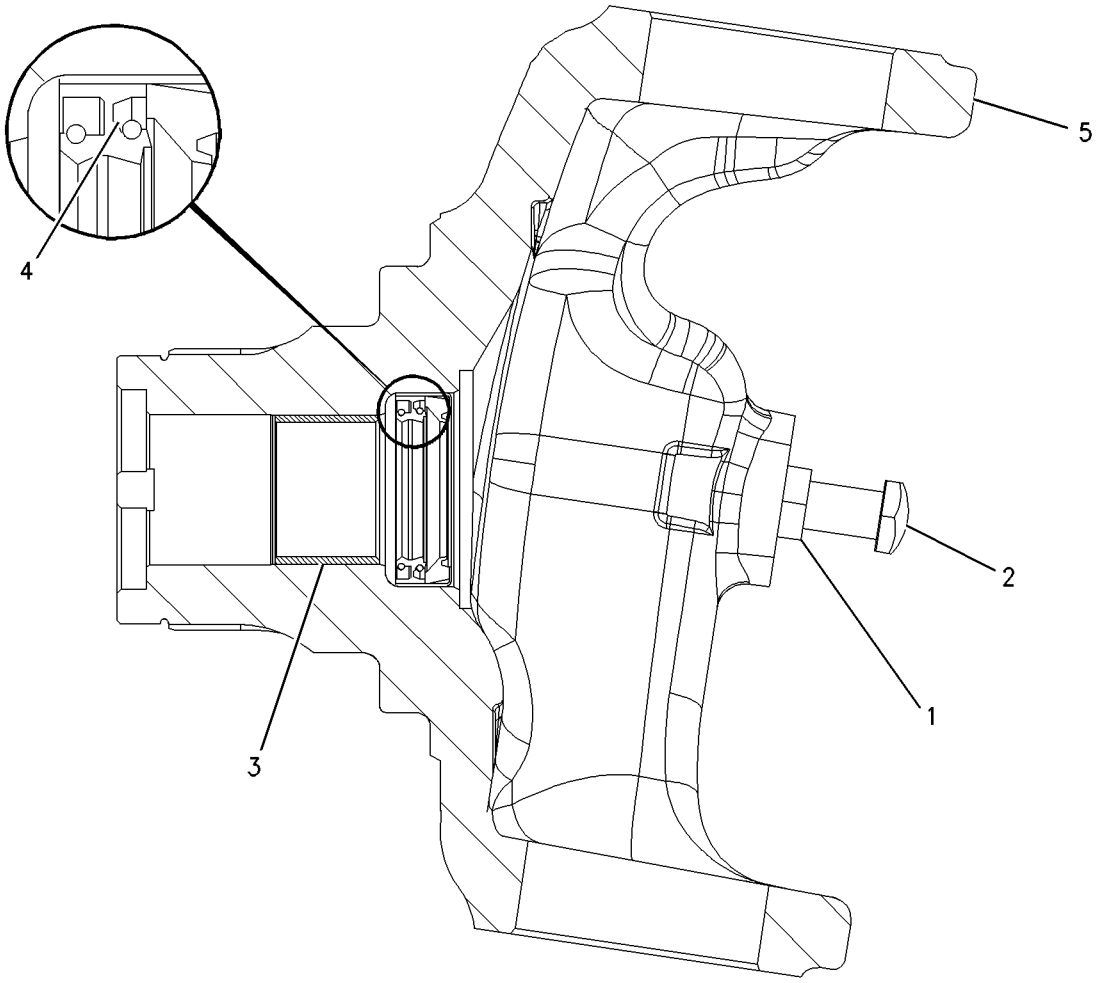

GRAPHIC #1 **<END>** g00926639

337-9717 LINES GP-POWER TRAIN OIL

S/N: SEJ1-UP
PART OF 353-1513 TRANSMISSION AR-POWER SHIFT
AN ATTACHMENT

SMCS-3016, 3154 **i04574730**

NOTE	REF NO	GRAPHIC REF	PART NUMBER	QTY	PART NAME 1 2 3 4 5 6 (PRODUCT LEVEL)	SEE PAGE
	1	1	**9X-6772**	2	STRAP-CABLE	
	2	1	**151-4841**	2	BLOCK	
	3	1	*165-6365*	1	FITTING AS	
		1	**3J-1907**		SEAL-O-RING	
		1	**7W-7381**	1	FITTING-OUTLET	
I	4	1	**362-4915**	1	HOSE AS	
	5	1	*148-8325*	1	CONNECTOR AS	
		1	**3J-1907**	1	SEAL-O-RING	
		1	**4J-5477**	1	SEAL-O-RING	
		1	**6V-8641**	1	CONNECTOR	
	6	1	*148-8368*	1	ELBOW AS	
		1	**3J-1907**	1	SEAL-O-RING	
		1	**4J-5477**	1	SEAL-O-RING	
		1	**6V-8627**	1	ELBOW	

I-REFER TO HYDRAULIC INFORMATION SYSTEM

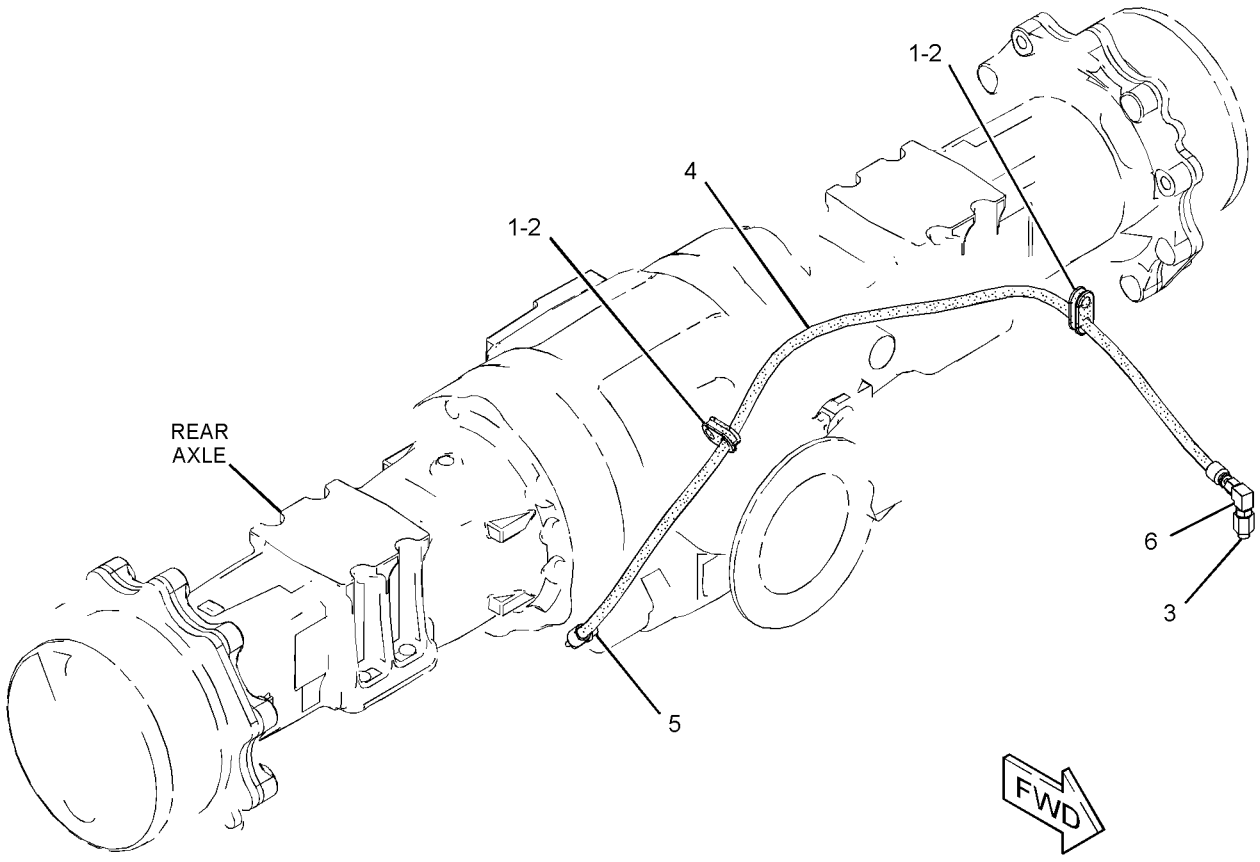

GRAPHIC #1 **<END>** g02806176

337-9719 LOCK GP-DIFFERENTIAL—AUTOSHIFT

S/N: SEJ1-UP

PART OF 353-1510, 353-1511 TRANSMISSION AR-POWER SHIFT

AN ATTACHMENT

SMCS-3264, 3272 **i04602975**

NOTE	REF NO	GRAPHIC REF	PART NUMBER	QTY	PART NAME 1 2 3 4 5 6 (PRODUCT LEVEL)	SEE PAGE
	1	1	**9X-6772**	1	STRAP-CABLE	
	2	1	**151-4841**	1	BLOCK	
Y	3	1	**274-8048**	1	VALVE & MTG GP-SOLENOID (DIFFERENTIAL LOCK)	256
	4	1	**365-2181**	1	TUBE AS	
	5	1	**365-2182**	1	TUBE AS	
I	6	1	**365-2183**	1	HOSE AS	
	7	1	**365-2185**	1	PLATE AS	
	8	1	*148-8325*	3	CONNECTOR AS	
					(EACH INCLUDES)	
		1	**3J-1907**	1	SEAL-O-RING	
		1	**4J-5477**	1	SEAL-O-RING	
		1	**6V-8641**	1	CONNECTOR	
	9	1	*148-8368*	3	ELBOW AS	
					(EACH INCLUDES)	
		1	**3J-1907**	1	SEAL-O-RING	
		1	**4J-5477**	1	SEAL-O-RING	
		1	**6V-8627**	1	ELBOW	
	10	1	**6D-3479**	1	CLIP	
	11	1	**8T-4121**	3	WASHER-HARD (11X21X2.5-MM THK)	
M	12	1	**8T-4179**	2	BOLT (M12X1.75X20-MM)	
M	13	1	**8T-4195**	1	BOLT (M10X1.5X30-MM)	
	14	1	**8T-4223**	2	WASHER-HARD (13.5X25.5X3-MM THK)	
M	15	1	**8T-6466**	2	BOLT (M10X1.5X60-MM)	

I-REFER TO HYDRAULIC INFORMATION SYSTEM
M-METRIC PART
Y-SEPARATE ILLUSTRATION

337-9719 **LOCK GP-DIFFERENTIAL** *(contd.)* **i04602975**

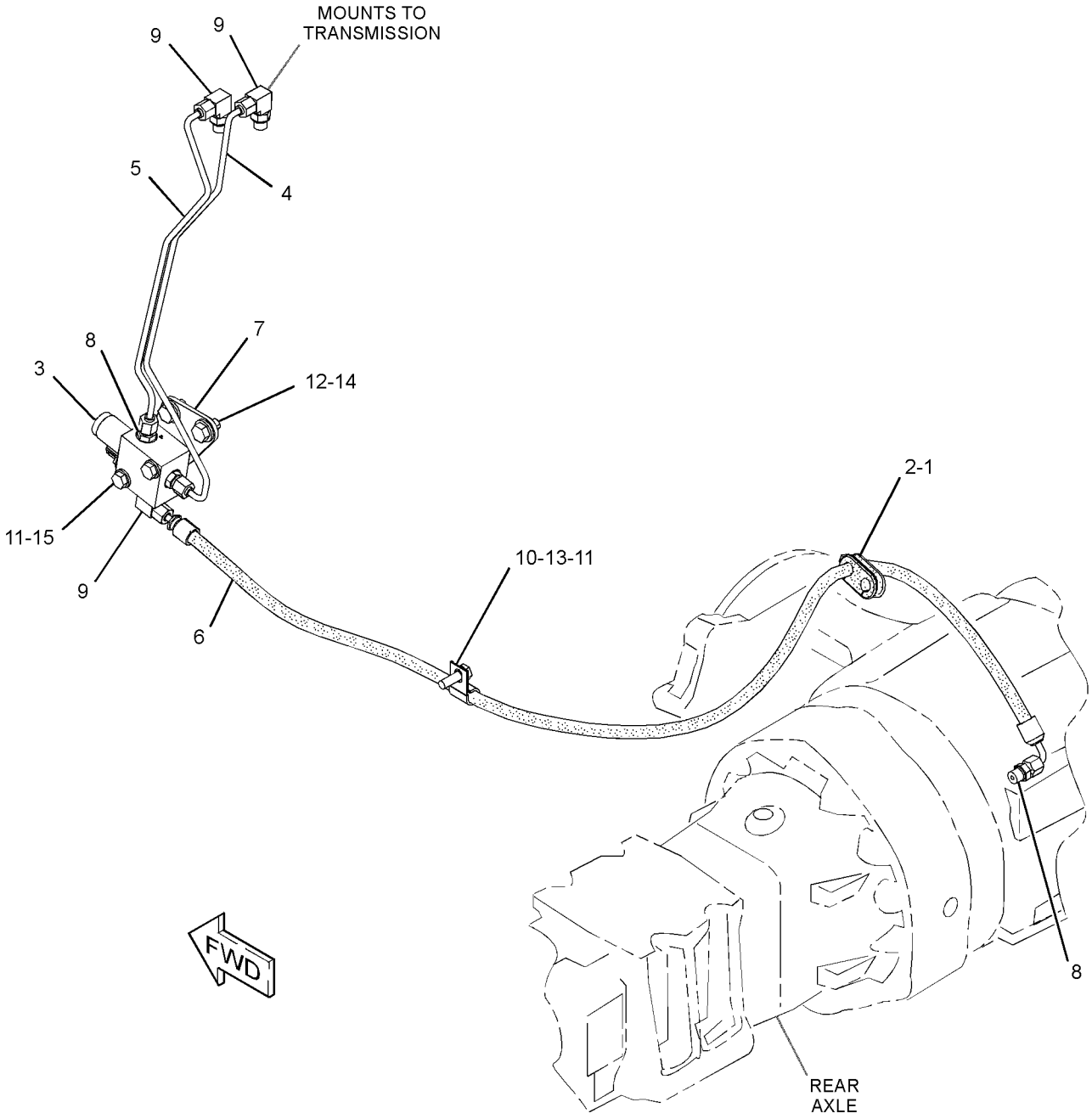

GRAPHIC #1 **<END>** g02806178

130-8149 LOCKOUT GP-FOURTH GEAR

S/N: SEJ1-UP
PART OF 341-3109 OPTION AR-REGIONAL
AN ATTACHMENT

SMCS-7000 **i03569160**

NOTE	REF NO	GRAPHIC REF	PART NUMBER	QTY	PART NAME 1 2 3 4 5 6 (PRODUCT LEVEL)	SEE PAGE
	1	1	**120-9763**	1	PLUG-LOCKOUT	
	2	1	**3J-1907**	1	SEAL-O-RING	
D	3	1	**8C-8418**		LOCKWIRE (0.4-M)	
	4	1	**8S-8158**	1	SEAL-WIRE	
	5	1	**127-5469**	1	LOCKWASHER	

D-ORDER BY THE METER

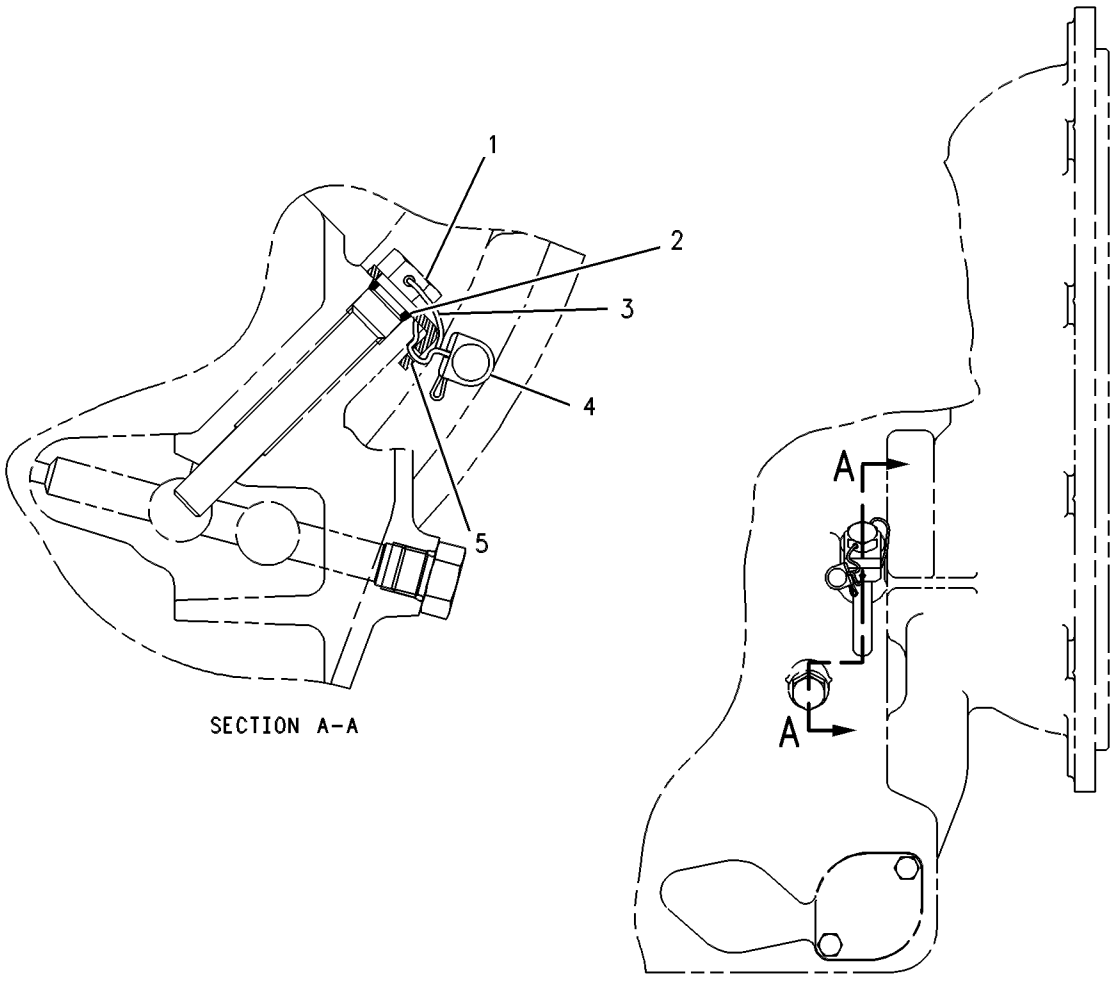

SECTION A-A

GRAPHIC #1 **<END>** g00258869

337-9837 MOUNTING GP-AXLE

S/N: SEJ1-UP
PART OF 353-1501 DRIVE AR-BACKHOE LOADER
AN ATTACHMENT

SMCS-3268 **i04566200**

NOTE	REF NO	GRAPHIC REF	PART NUMBER	QTY	PART NAME 1 2 3 4 5 6 (PRODUCT LEVEL)	SEE PAGE
B	1	1	**1K-7082**	2	WASHER (2.266X4X0.031-IN THK)	
B	2	1	**9R-9702**	5	WASHER (56X100X1.6-MM THK)	
	3	1	**154-1580**	16	WASHER-HARD (22X38X6-MM THK)	
	4	1	**213-6754**	1	BOSS	
	5	1	**258-9999**	2	FILM-IDENTIFICATION (LIFT EYE LOCATION)	
	6	1	**361-5903**	1	PIN AS	
M	7	1	**089-7990**	8	BOLT (M20X2.5X250-MM)	
	8	1	**165-8996**	2	WASHER-THRUST (55.5X100.5X5-MM THK)	
	9	1	**7X-0590**	1	WASHER-HARD (13.5X44.5X6-MM THK)	
M	10	1	**8T-4131**	8	NUT (M20X2.5-THD)	
M	11	1	**8T-4183**	1	BOLT (M12X1.75X40-MM)	

B-USE AS REQUIRED
M-METRIC PART

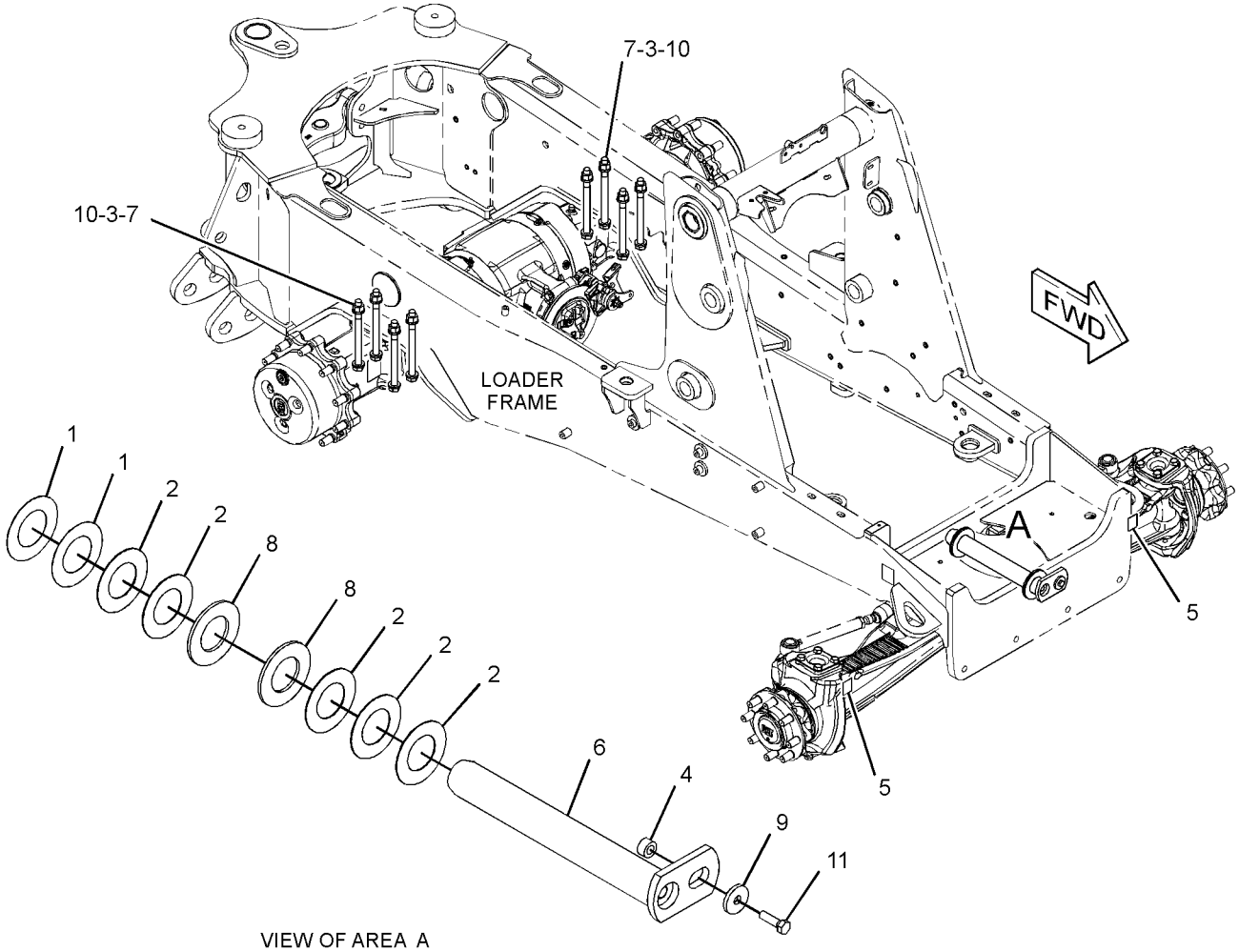

VIEW OF AREA A

GRAPHIC #1 **<END>** g02808238

355-3833 MOUNTING GP-TRANSMISSION

S/N: SEJ1-UP

PART OF 350-8606, 359-0380 TRANSMISSION AR-POWER SHIFT

AN ATTACHMENT

SMCS-3082 **i04597389**

NOTE	REF NO	GRAPHIC REF	PART NUMBER	QTY	PART NAME 1 2 3 4 5 6 (PRODUCT LEVEL)	SEE PAGE
	1	1	**355-3837**	1	SUPPORT AS	
	2	1	**355-3838**	1	SUPPORT AS	
M	3	1	**7X-2553**	4	BOLT (M16X2X40-MM)	
	4	1	**8T-4223**	4	WASHER-HARD (13.5X25.5X3-MM THK)	
M	5	1	**8T-4956**	4	BOLT (M12X1.75X35-MM)	
	6	1	**9X-8257**	4	WASHER (17.5X30X3.5-MM THK)	

M-METRIC PART

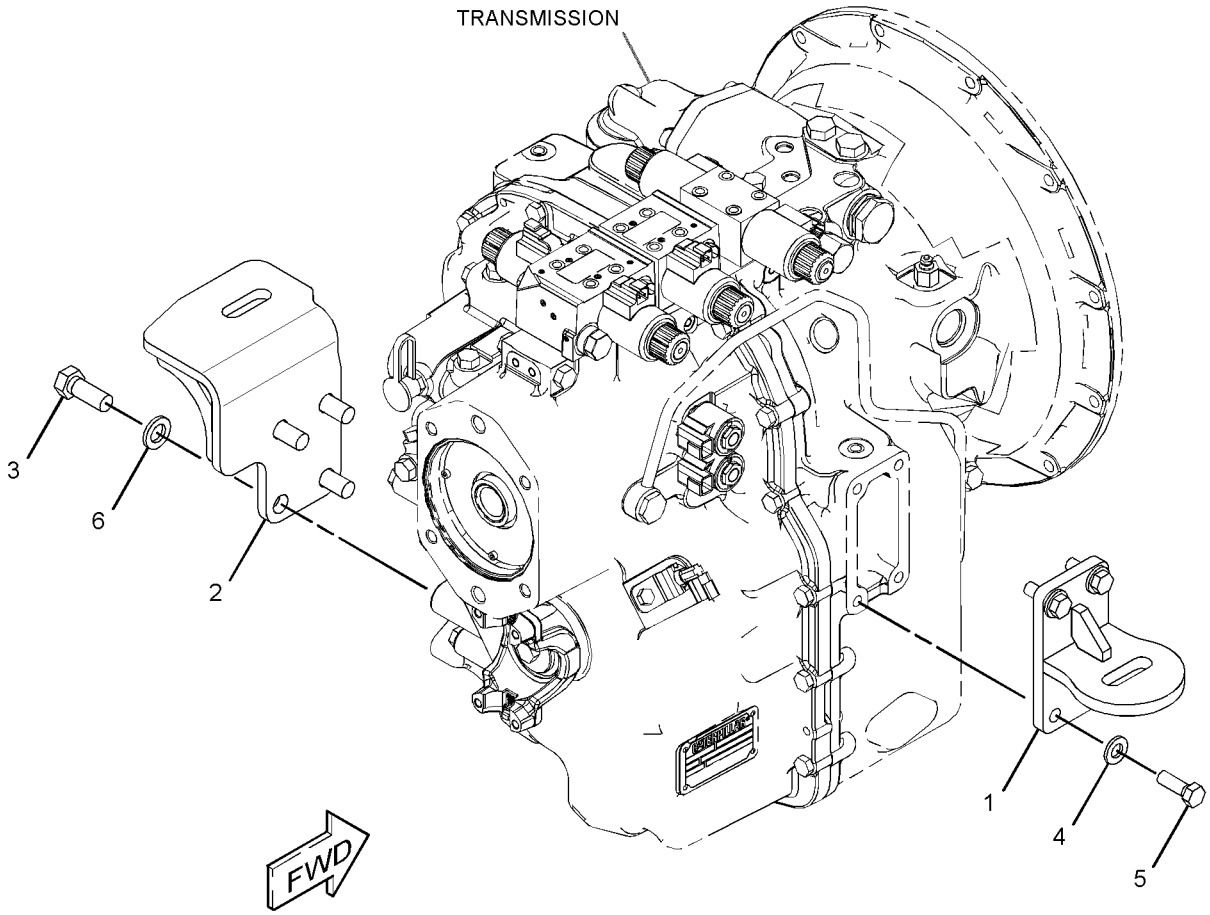

GRAPHIC #1 **<END>** g02788627

355-3841 MOUNTING GP-TRANSMISSION

S/N: SEJ1-UP
PART OF 359-0378 TRANSMISSION AR-DIRECT DRIVE
AN ATTACHMENT

SMCS-3082 **i04577808**

NOTE	REF NO	GRAPHIC REF	PART NUMBER	QTY	PART NAME 1 2 3 4 5 6 (PRODUCT LEVEL)	SEE PAGE
	1	1	**355-3837**	1	SUPPORT AS (LH)	
	2	1	**355-3839**	1	SUPPORT AS (RH)	
M	3	1	**7X-2553**	4	BOLT (M16X2X40-MM)	
	4	1	**8T-4223**	4	WASHER-HARD (13.5X25.5X3-MM THK)	
M	5	1	**8T-4956**	4	BOLT (M12X1.75X35-MM)	
	6	1	**9X-8257**	4	WASHER (17.5X30X3.5-MM THK)	

M-METRIC PART

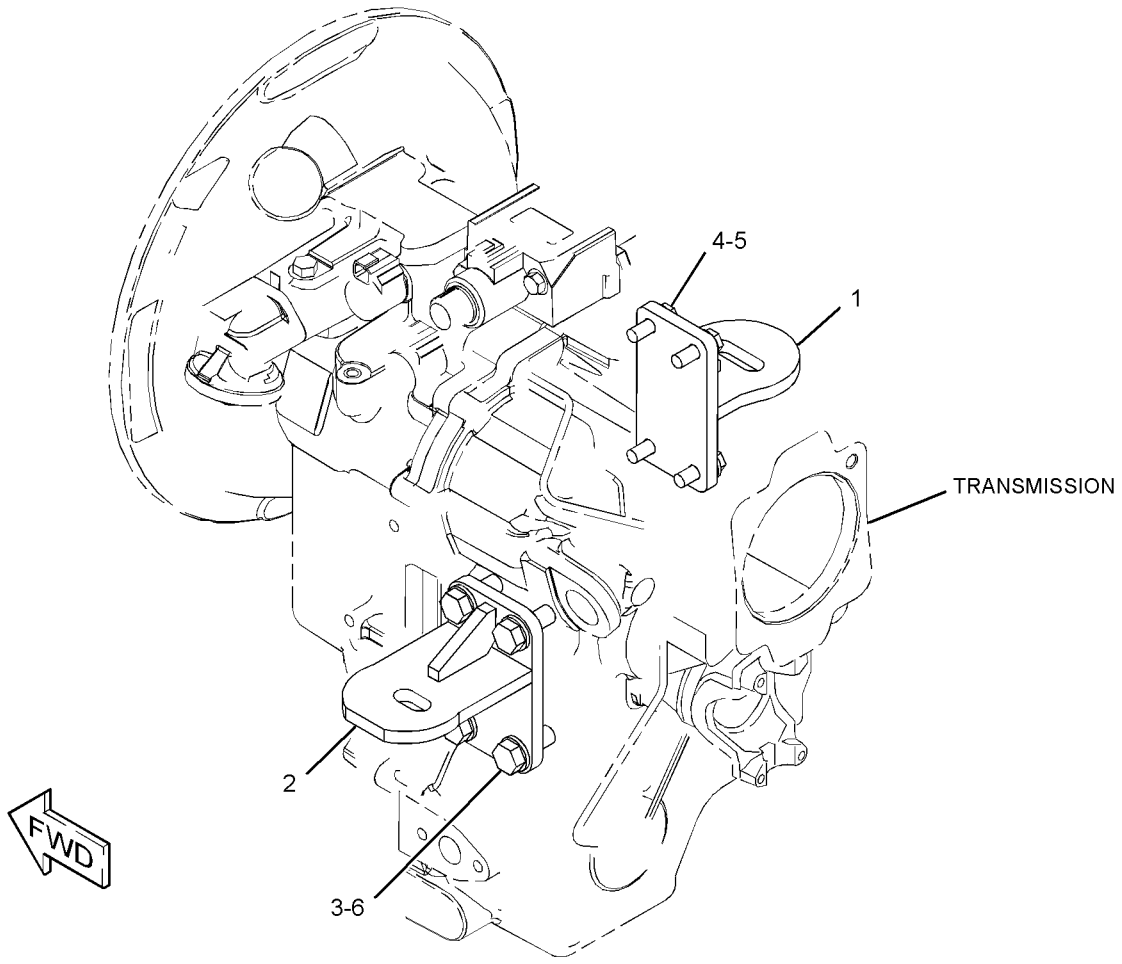

GRAPHIC #1 **<END>** g02806197

210-5924 PLANETARY GP-FINAL DRIVE–AXLE

S/N: SEJ1-UP

PART OF 230-5743 AXLE GP-DRIVE & STEERING

AN ATTACHMENT

SMCS-4050 **i03156043**

NOTE	REF NO	GRAPHIC REF	PART NUMBER	QTY	PART NAME 1 2 3 4 5 6 (PRODUCT LEVEL)	SEE PAGE
	1	1	**210-5931**	4	RETAINER	
	2	1	**209-4157**	4	GEAR (23-TEETH)	
	3	1	**095-0924**	4	RING-RETAINING	
					AVAILABLE REPAIR KIT(S):	
			209-7466	1	KIT-PLANETARY CARRIER	
					(INCLUDES THRUST PLUG, SUN GEAR SHAFT & PLANET CARRIER)	
			219-8783	23	KIT-ROLLER BEARING	
					(EACH INCLUDES 10 NEEDLES)	
					(SERVICED IN QUANITY OF 10, EACH GEAR REQUIRES 56 ROLLERS OR 6 KITS, EACH WHEEL END AS. REQUIRES 224 ROLLERS OR 23 KITS)	

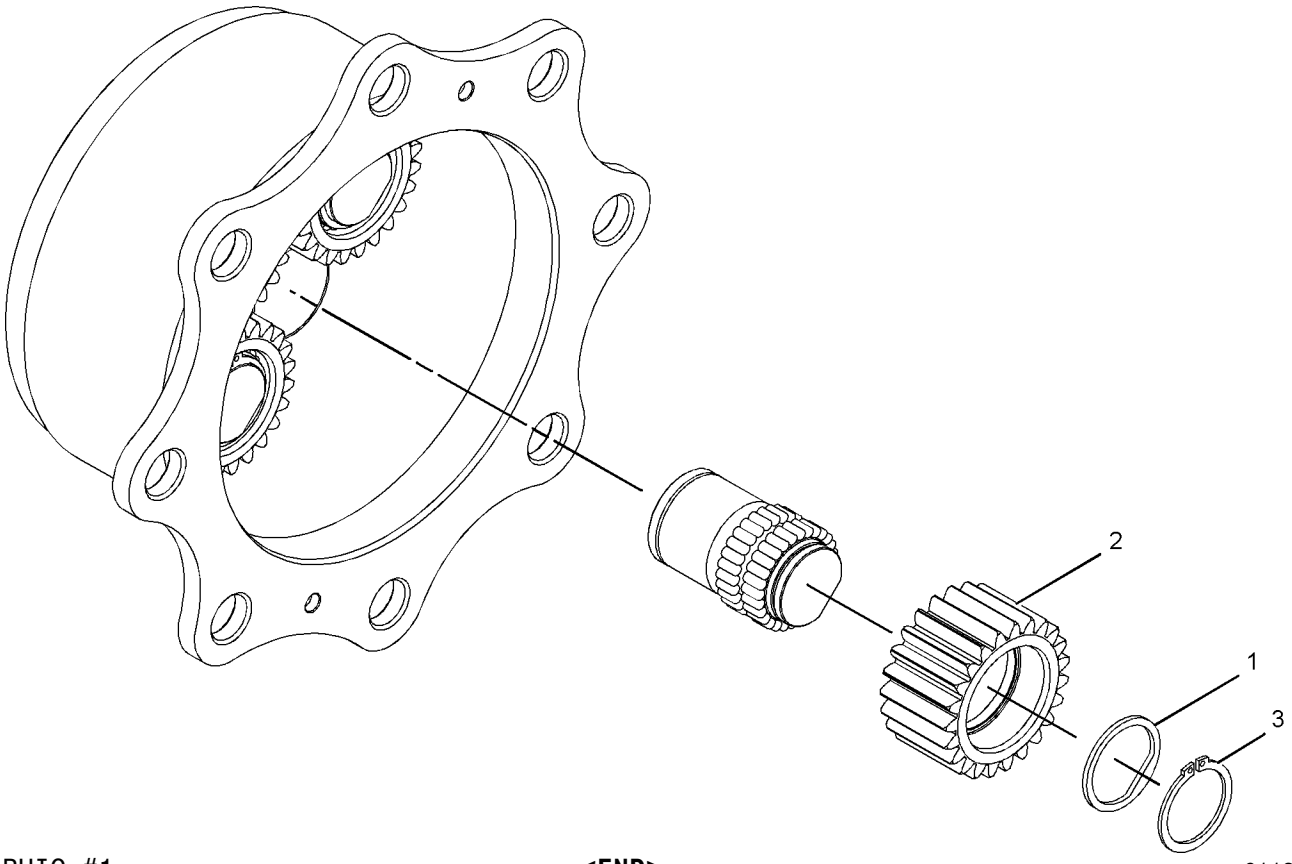

GRAPHIC #1 **<END>** g01132397

216-1610 PLANETARY GP-FINAL DRIVE–AXLE

S/N: SEJ1-UP

PART OF 230-5738 AXLE GP-REAR

AN ATTACHMENT

SMCS-4050 **i03898318**

NOTE	REF NO	GRAPHIC REF	PART NUMBER	QTY	PART NAME 1 2 3 4 5 6 (PRODUCT LEVEL)	SEE PAGE
	1	1	**199-0653**	3	RING-RETAINING	
	2	1	**207-4257**	6	RING-RETAINER	
	3	1	**199-0760**	3	BEARING	
	4	1	**213-4222**	3	WASHER (50.1X61X2.5-MM THK)	
	5	1	**207-5962**	6	WASHER (65X72X2-MM THK)	
	6	1	**216-1606**	3	GEAR-PLANETARY (31-TEETH)	
	7	1	**216-1601**	1	CARRIER	
	8	1	**253-5022**	1	PLUG	

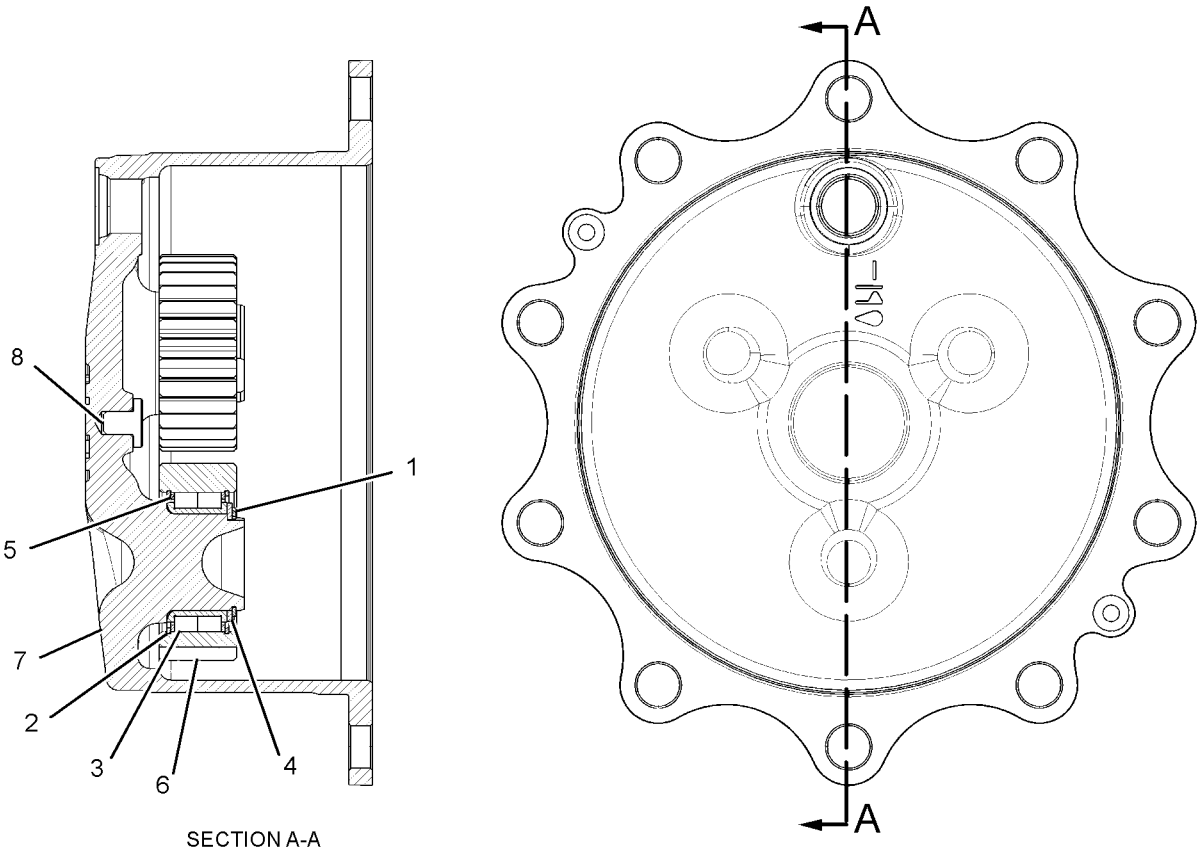

SECTION A-A

GRAPHIC #1 **<END>** g02141640

374-6828 POWER TRAIN AR—4-WHEEL DRIVE, 2-WHEEL STEER

S/N: SEJ1-UP

FOR USE WITH 329-1350—PAGE 266, 329-1352—PAGE 267, 273-5077—PAGE 265, 249-9261—PAGE 264, 249-9263—PAGE 265, 303-0414—PAGE 266, 319-6834—PAGE 266, 329-1351—PAGE 267, 249-9255—PAGE 264, 273-5078—PAGE 265, 249-9262—PAGE 264, 303-0413—PAGE 265, 303-0415—PAGE 266, 341-0596—PAGE 267

AN ATTACHMENT

SMCS-3000, 4000 **i04623071**

NOTE	PART NUMBER	QTY	PART NAME 1 2 3 4 5 6 (PRODUCT LEVEL)	SEE PAGE
Y	*359-0401*	1	TORQUE CONVERTER AR	231
Y	*353-1501*	1	DRIVE AR-BACKHOE LOADER (4-WHEEL DRIVE, 2-WHEEL STEER)	5
Y	*353-1454*	1	ELECTRONICS AR-MACHINE (POWER TRAIN)	94
Y	*353-1513*	1	TRANSMISSION AR-POWER SHIFT (ALL WHEEL DRIVE)	236
Y-SEPARATE ILLUSTRATION				

<END>

374-6836 POWER TRAIN AR—4-WHEEL DRIVE, 2-WHEEL STEER

S/N: SEJ1-UP

FOR USE WITH 329-1350—PAGE 266, 329-1352—PAGE 267, 273-5077—PAGE 265, 249-9261—PAGE 264, 249-9263—PAGE 265, 303-0414—PAGE 266, 319-6834—PAGE 266, 329-1351—PAGE 267, 249-9255—PAGE 264, 273-5078—PAGE 265, 249-9262—PAGE 264, 303-0413—PAGE 265, 303-0415—PAGE 266, 341-0596—PAGE 267

AN ATTACHMENT

SMCS-3000, 4000 **i04628729**

NOTE	PART NUMBER	QTY	PART NAME 1 2 3 4 5 6 (PRODUCT LEVEL)	SEE PAGE
Y	*359-0401*	1	TORQUE CONVERTER AR	231
Y	*353-1501*	1	DRIVE AR-BACKHOE LOADER (4-WHEEL DRIVE, 2-WHEEL STEER)	5
Y	*353-1454*	1	ELECTRONICS AR-MACHINE (POWER TRAIN)	94
Y	*353-1510*	1	TRANSMISSION AR-POWER SHIFT (4-WHEEL DRIVE)	235
Y-SEPARATE ILLUSTRATION				

<END>

374-6844 POWER TRAIN AR

S/N: SEJ1-UP

FOR USE WITH 329-1350—PAGE 266, 329-1352—PAGE 267, 273-5077—PAGE 265, 249-9261—PAGE 264, 249-9263—PAGE 265, 303-0414—PAGE 266, 319-6834—PAGE 266, 329-1351—PAGE 267, 249-9255—PAGE 264, 273-5078—PAGE 265, 249-9262—PAGE 264, 303-0413—PAGE 265, 303-0415—PAGE 266, 341-0596—PAGE 267

AN ATTACHMENT

SMCS-3000, 4000 **i04623091**

NOTE	PART NUMBER	QTY	PART NAME 1 2 3 4 5 6 (PRODUCT LEVEL)	SEE PAGE
Y	*359-0407*	1	TORQUE CONVERTER AR	232
Y	*353-1501*	1	DRIVE AR-BACKHOE LOADER (4-WHEEL DRIVE, 2-WHEEL STEER)	5
Y	*353-1454*	1	ELECTRONICS AR-MACHINE (POWER TRAIN)	94
Y	*353-1511*	1	TRANSMISSION AR-POWER SHIFT (4-WHEEL DRIVE)	235
Y-SEPARATE ILLUSTRATION				

<END>

POWER TRAIN

274-4580 SHAFT GP-COUNTER

S/N: SEJ1-UP
PART OF 359-0396 TRANSMISSION GP-DIRECT DRIVE
AN ATTACHMENT

SMCS-3053, 3063 **i04139511**

NOTE	REF NO	GRAPHIC REF	PART NUMBER	QTY	PART NAME 1 2 3 4 5 6 (PRODUCT LEVEL)	SEE PAGE
	1	1	**6T-9196**	1	SEAL	
	2	1	**6V-5100**	1	SEAL-O-RING	
	3	1	**6V-8757**	1	RING-RETAINING	
	4	1	**6Y-1192**	2	RING-SEAL	
	5	1	**6Y-7929**	8	DISC-FRICTION	
	6	1	**8E-5707**	1	PLATE-END	
	7	1	**122-1877**	1	WASHER-THRUST (40X65X4-MM THK)	
	8	1	**123-8907**	2	CONE-BEARING	
	9	1	**123-8908**	2	CUP-TAPERED ROLLER	
	10	1	**123-8912**	2	BEARING-ROLLER	
	11	1	**147-0203**	1	WASHER-THRUST (45.3X65X5-MM THK)	
	12	1	**147-0215**	1	GEAR (45/19-TEETH)	
	13	1	**147-0216**	1	GEAR (38-TEETH)	
	14	1	**147-0228**	1	PISTON-CLUTCH	
	15	1	**147-0238**	1	SPRING AS	
	16	1	**147-0258**	1	SPACER (46X50X16-MM THK)	
	17	1	**172-6050**	2	BEARING-SPECIAL	
	18	1	**173-0332**	1	SHAFT AS (COUNTERSHAFT)	
		1	**163-9091**	1	PLUG	
	19	1	**211-6752**	1	GEAR (46-TEETH)	
	20	1	**274-4553**	8	DISC-FRICTION	
	21	1	**274-8638**	1	RING-RETAINING	

274-4580 SHAFT GP-COUNTER *(contd.)* **i04139511**

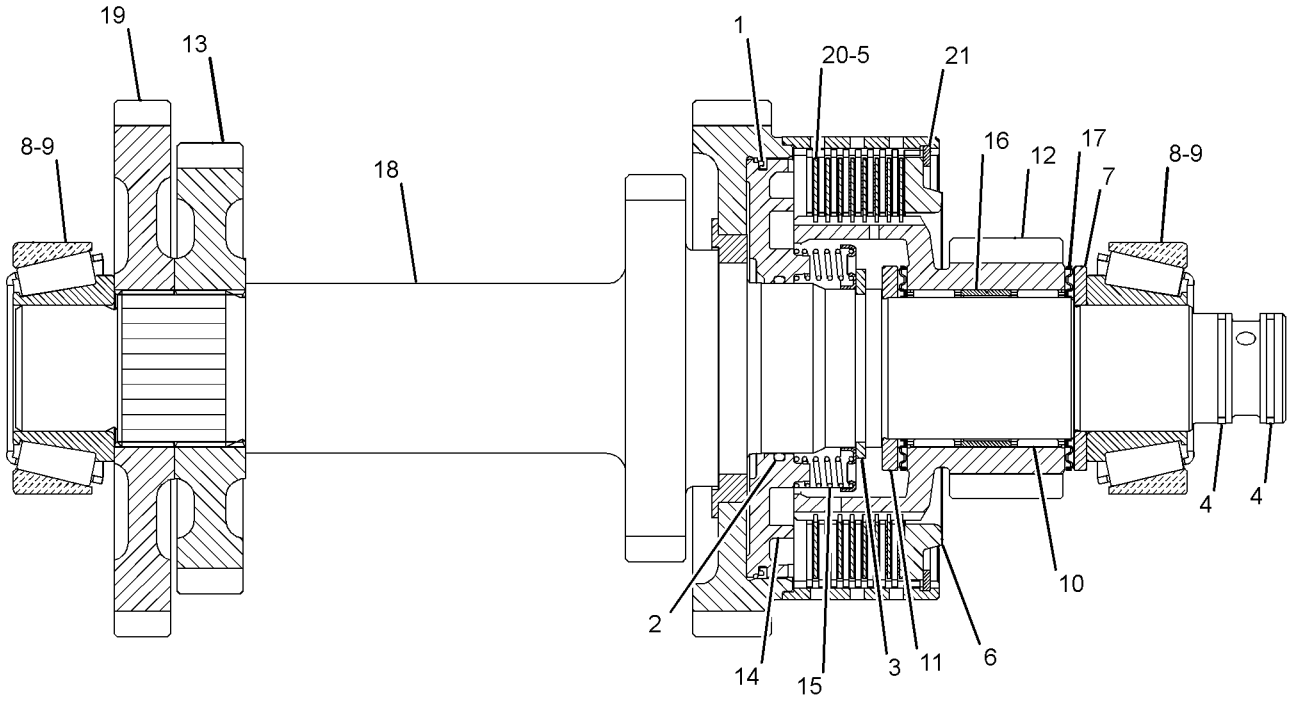

GRAPHIC #1 **<END>** g01216220

374-5112 SHAFT GP-COUNTER

S/N: SEJ1-UP
PART OF 350-8607 TRANSMISSION GP-POWER SHIFT
AN ATTACHMENT

SMCS-3053, 3063 **i04611715**

NOTE	REF NO	GRAPHIC REF	PART NUMBER	QTY	PART NAME 1 2 3 4 5 6 (PRODUCT LEVEL)	SEE PAGE
	1	1	**6Y-1192**	2	RING-SEAL	
	2	1	**6Y-7929**	8	DISC-FRICTION	
	3	1	**8E-5707**	1	PLATE-END	
	4	1	**122-1877**	1	WASHER-THRUST (40X65X4-MM THK)	
	5	1	**123-8907**	2	CONE-BEARING	
	6	1	**123-8908**	2	CUP-TAPERED ROLLER	
	7	1	**123-8912**	2	BEARING-ROLLER	
	8	1	**147-0203**	1	WASHER-THRUST (45.3X65X5-MM THK)	
	9	1	**147-0215**	1	GEAR (45/19-TEETH)	
	10	1	**147-0216**	1	GEAR (38-TEETH)	
	11	1	**147-0238**	1	SPRING AS	
		1	**336-4721**	1	SPRING-RETAINER	
		1	**336-6851**	16	SPRING-PISTON	
	12	1	**147-0258**	1	SPACER (46X50X16-MM THK)	
	13	1	**172-6050**	2	BEARING-SPECIAL	
	14	1	**173-0332**	1	SHAFT AS	
		1	**163-9091**	1	PLUG	
	15	1	**274-4553**	8	DISC-FRICTION	
	16	1	**274-8638**	1	RING-RETAINING	
	17	1	**294-9810**	1	PISTON	
	18	1	**294-9812**	1	RETAINER-SPRING	
	19	1	**6V-8757**	1	RING-RETAINING	

374-5112 **SHAFT GP-COUNTER** *(contd.)* **i04611715**

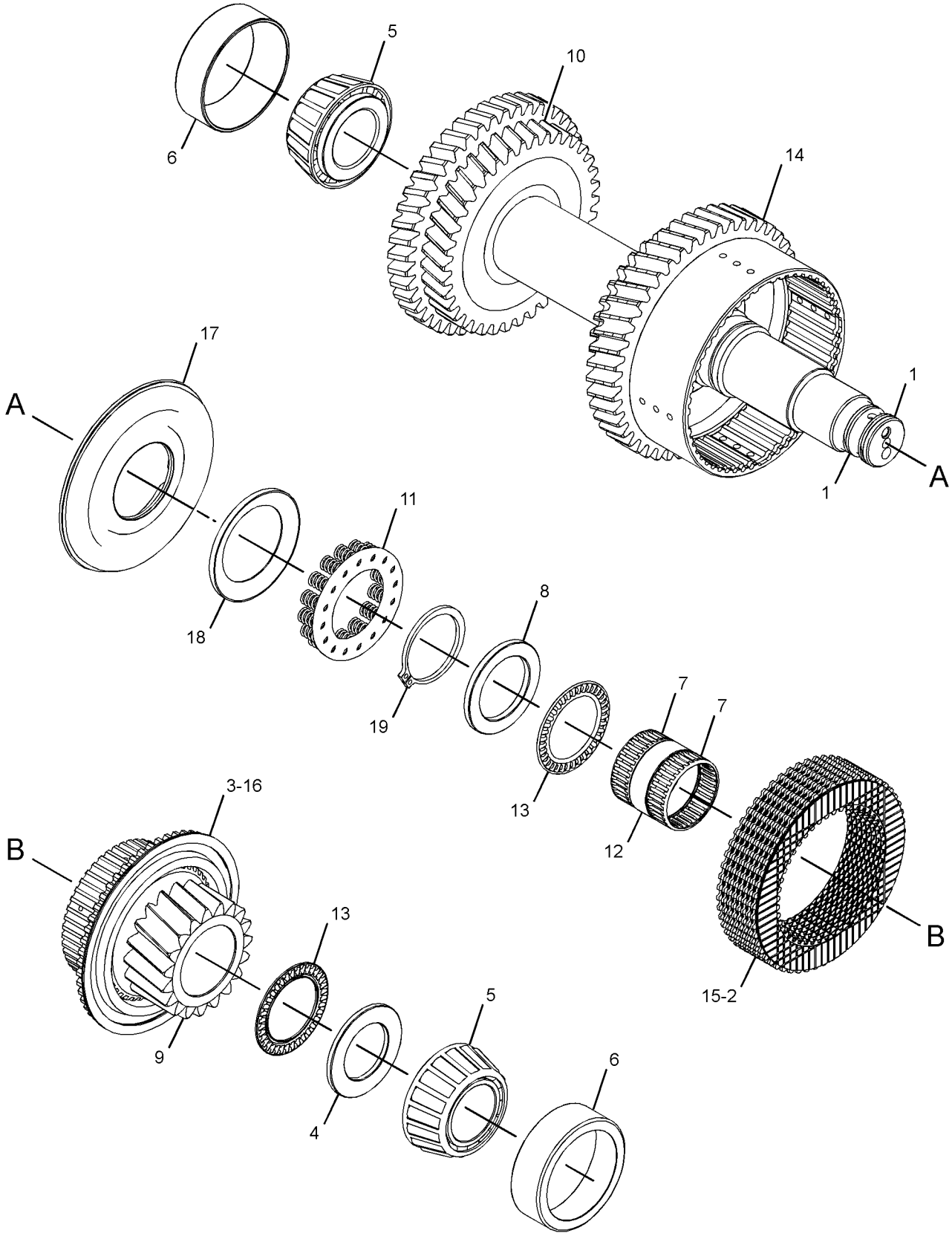

GRAPHIC #1 **<END>** g02797123

POWER TRAIN

353-1335 SHAFT GP-DRIVE

S/N: SEJ1-UP

PART OF 353-1510, 353-1511, 353-1513 TRANSMISSION AR-POWER SHIFT AN ATTACHMENT

SMCS-3253 **i04706671**

NOTE	REF NO	GRAPHIC REF	PART NUMBER	QTY	PART NAME 1 2 3 4 5 6 (PRODUCT LEVEL)	SEE PAGE
M	1	1	**107-6826**	8	BOLT (5/16-24X0.75-IN)	
	2	1	**316-1935**	4	STRAP	
	3	1	**348-7144**	1	SHAFT AS	
		1	**304-3265**	2	KIT-SPIDER & BEARING	

M-METRIC PART

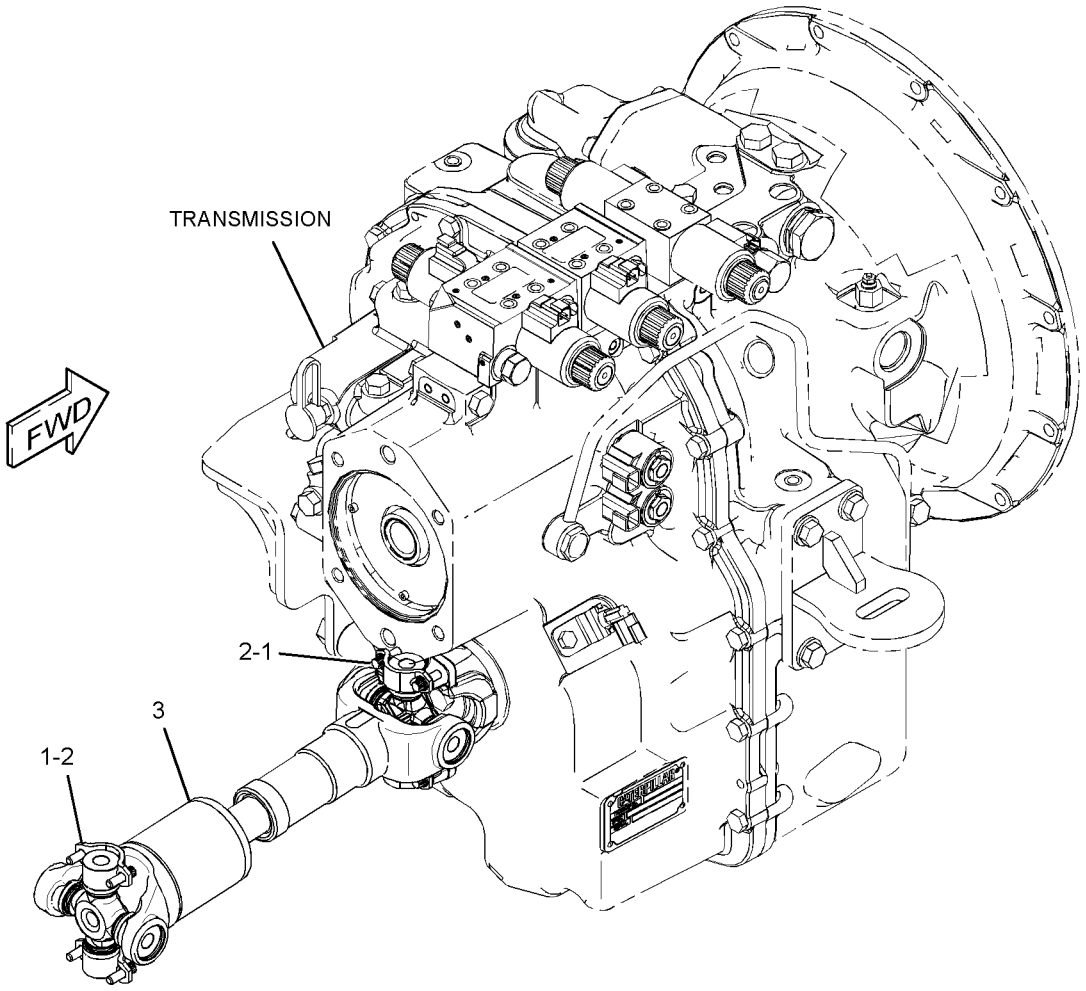

GRAPHIC #1 **<END>** g02809361

353-1336 SHAFT GP-DRIVE

S/N: SEJ1-UP
PART OF 353-1513 TRANSMISSION AR-POWER SHIFT
AN ATTACHMENT

SMCS-3253 **i04577613**

NOTE	REF NO	GRAPHIC REF	PART NUMBER	QTY	PART NAME 1 2 3 4 5 6 (PRODUCT LEVEL)	SEE PAGE
M	1	1	**107-6826**	8	BOLT (5/16-24X0.75-IN)	
	2	1	**316-1935**	4	STRAP	
	3	1	**348-7143**	1	SHAFT AS	
		1	**304-3265**	2	KIT-SPIDER & BEARING	

M-METRIC PART

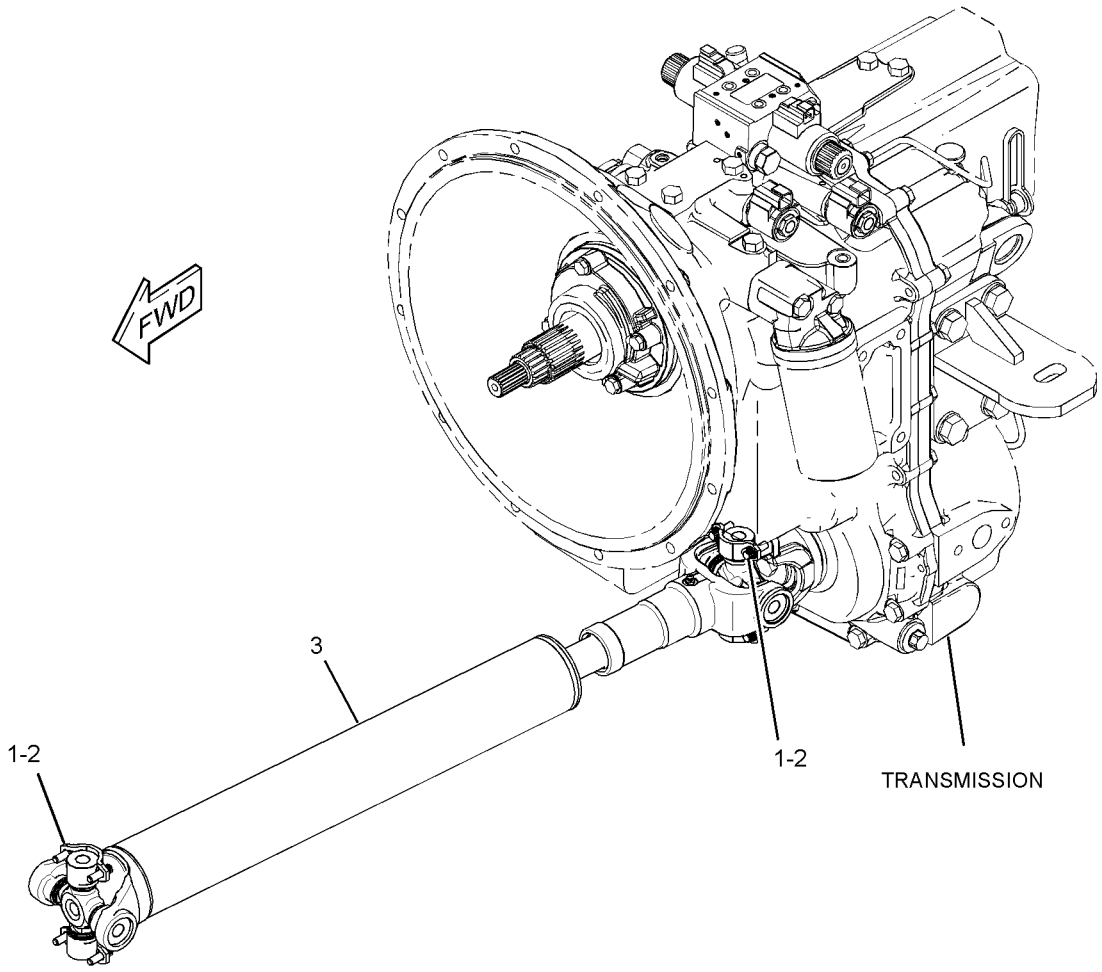

GRAPHIC #1 **<END>** g02809537

353-1337 SHAFT GP-DRIVE

S/N: SEJ1-UP
PART OF 353-1510, 353-1511 TRANSMISSION AR-POWER SHIFT
AN ATTACHMENT

SMCS-3253 **i04605591**

NOTE	REF NO	GRAPHIC REF	PART NUMBER	QTY	PART NAME 1 2 3 4 5 6 (PRODUCT LEVEL)	SEE PAGE
M	1	1	**107-6826**	8	BOLT (5/16-24X0.75-IN)	
	2	1	**316-1935**	4	STRAP	
	3	1	**348-7146**	1	SHAFT AS	
		1	**304-3265**	2	KIT-SPIDER & BEARING (DRIVE SHAFT)	

M-METRIC PART

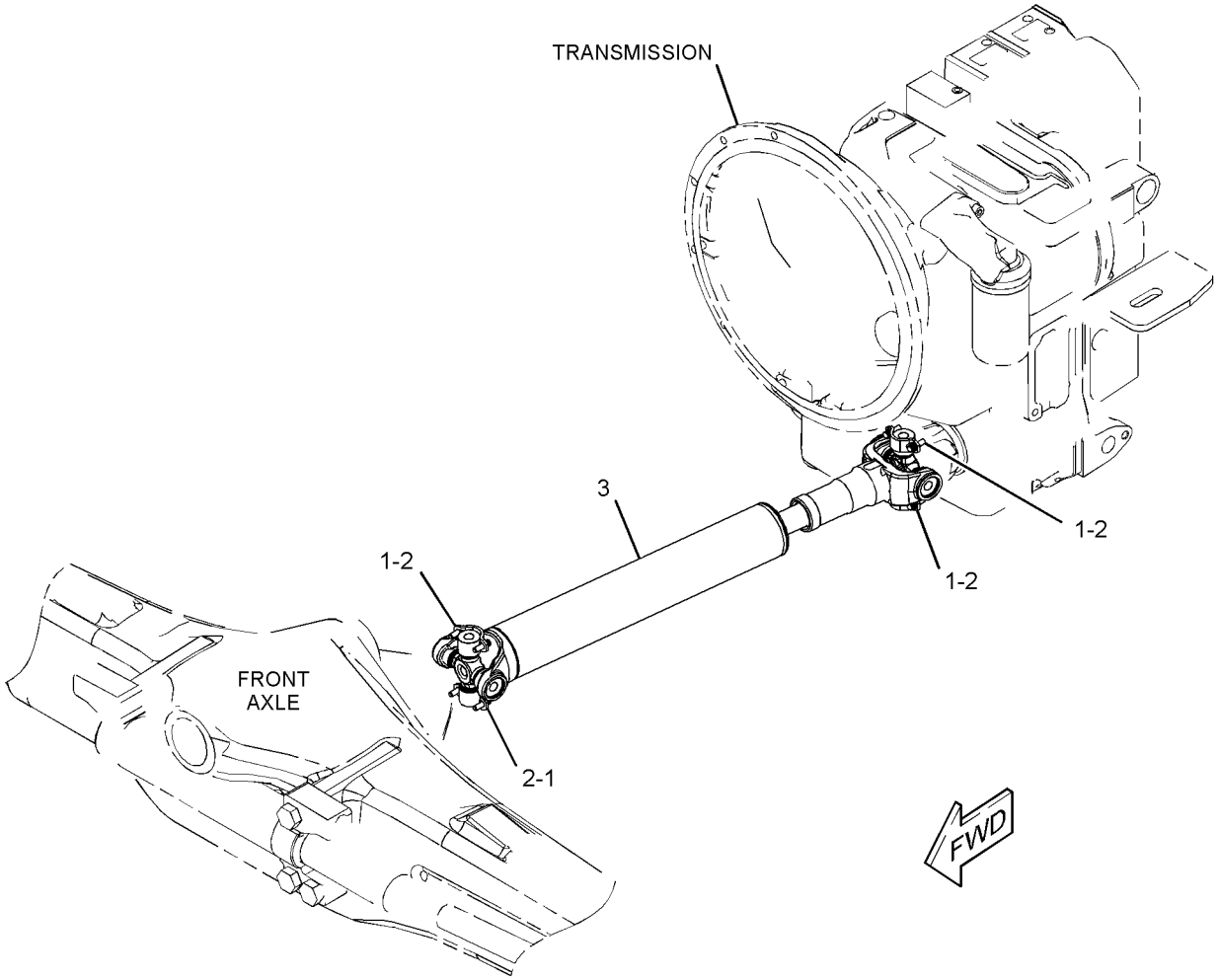

GRAPHIC #1 **<END>** g02811162

274-4561 SHAFT GP-IDLER–POWERSHIFT

S/N: SEJ1-UP
PART OF 359-0396 TRANSMISSION GP-DIRECT DRIVE, 350-8607 TRANSMISSION GP-POWER SHIFT AN ATTACHMENT

SMCS-3063 **i03889089**

NOTE	REF NO	GRAPHIC REF	PART NUMBER	QTY	PART NAME 1 2 3 4 5 6 (PRODUCT LEVEL)	SEE PAGE
	1	1	**147-0256**	1	SHAFT AS-REVERSE	
		1	**163-9091**	1	PLUG	
		1	**147-0270**	1	ORIFICE	
	2	1	**147-0202**	1	GEAR (45/24-TEETH)	
	3	1	**123-8905**	2	CONE-BEARING	
	4	1	**147-0228**	1	PISTON-CLUTCH	
	5	1	**6T-9196**	1	SEAL	
	6	1	**6V-5100**	1	SEAL-O-RING	
	7	1	**147-0238**	1	SPRING AS	
	8	1	**274-4553**	5	DISC-FRICTION	
	9	1	**6Y-7929**	5	DISC-FRICTION	
	10	1	**147-0259**	1	SPACER (51.1X54.9X18.7-MM THK)	
	11	1	**6V-8757**	1	RING-RETAINING (EXTERNAL)	
	12	1	**121-2500**	1	WASHER-THRUST (50X70X4-MM THK)	
	13	1	**172-5317**	2	BEARING-SPECIAL	
	14	1	**121-0694**	1	WASHER-THRUST (40X70X4-MM THK)	
	15	1	**6Y-1192**	2	RING-SEAL	
	16	1	**8E-5707**	1	PLATE-END	
	17	1	**9U-8875**	1	RING-RETAINING (INTERNAL)	
	18	1	**7T-6655**	2	BEARING	
	19	1	**123-8906**	2	CUP-TAPERED ROLLER	

274-4561 SHAFT GP-IDLER *(contd.)* **i03889089**

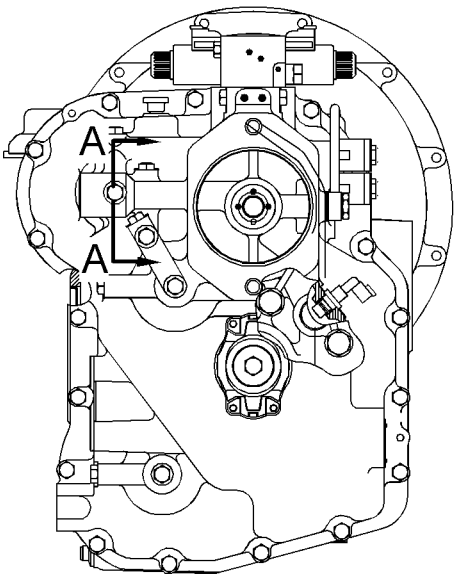

REAR VIEW

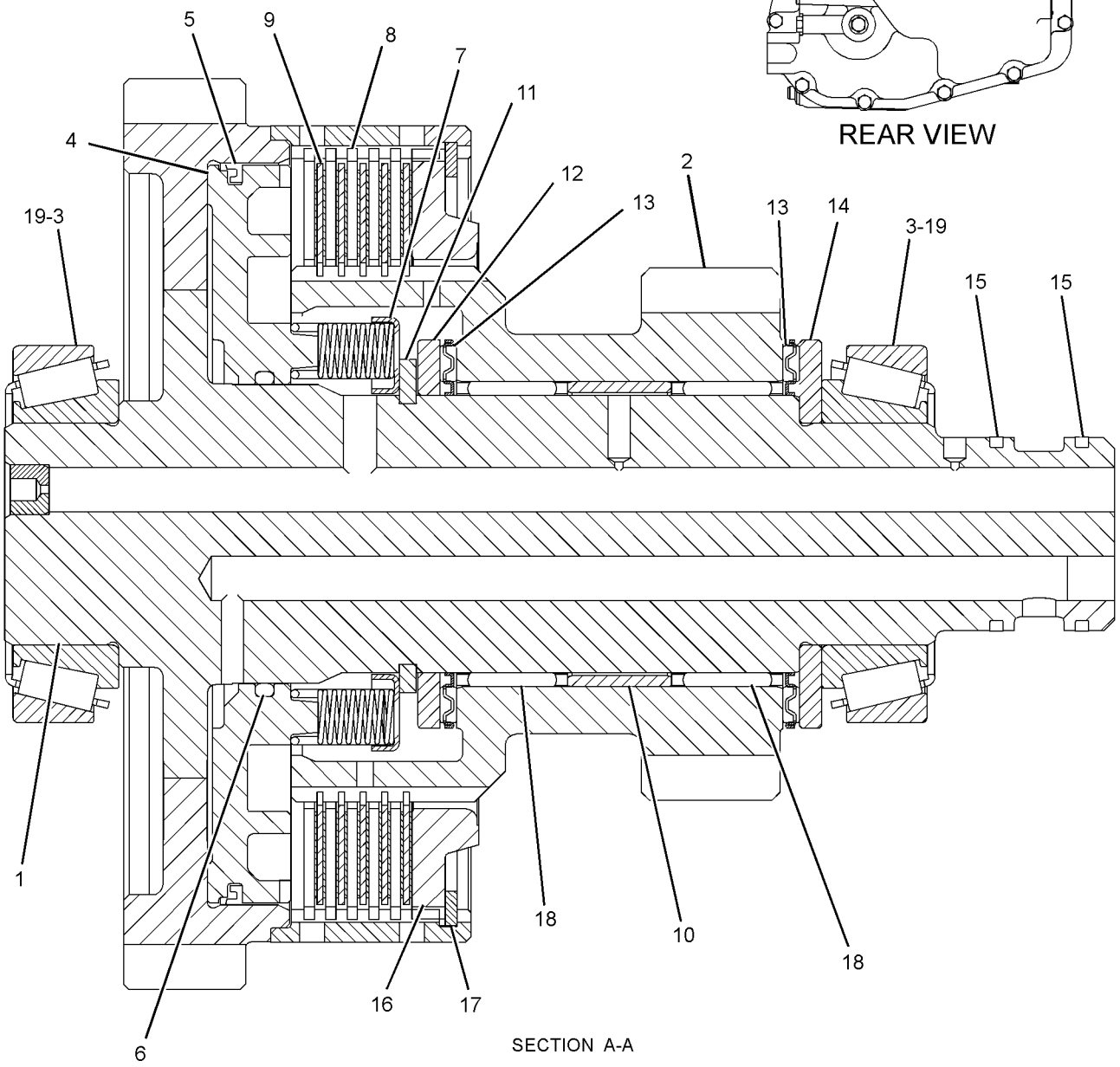

SECTION A-A

GRAPHIC #1 **<END>** g01216120

274-4578 SHAFT GP-INPUT

S/N: SEJ1-UP
PART OF 359-0396 TRANSMISSION GP-DIRECT DRIVE
AN ATTACHMENT

SMCS-3053, 3063 **i03577181**

NOTE	REF NO	GRAPHIC REF	PART NUMBER	QTY	PART NAME 1 2 3 4 5 6 (PRODUCT LEVEL)	SEE PAGE
	1	1	**6T-9196**	2	SEAL	
	2	1	**6V-5100**	2	SEAL-O-RING	
	3	1	**6V-8757**	3	RING-RETAINING	
	4	1	**6Y-7929**	11	DISC-FRICTION	
	5	1	**7T-6655**	2	BEARING	
	6	1	**8E-5707**	2	PLATE-END	
	7	1	**9U-8886**	4	RING-SEAL	
	8	1	**121-0694**	1	WASHER-THRUST (40X70X4-MM THK)	
	9	1	**121-2500**	3	WASHER-THRUST (50X70X4-MM THK)	
	10	1	**122-1886**	1	RING-SEAL	
	11	1	**123-8905**	1	CONE-BEARING	
	12	1	**123-8906**	1	CUP-TAPERED ROLLER	
	13	1	**123-8909**	1	CONE-BEARING	
	14	1	**123-8910**	1	CUP-TAPERED ROLLER	
	15	1	**123-8913**	2	BEARING-ROLLER	
	16	1	**147-0202**	1	GEAR (45/24-TEETH)	
	17	1	**147-0224**	1	GEAR (45/32-TEETH)	
	18	1	**147-0228**	2	PISTON-CLUTCH	
	19	1	**147-0238**	2	SPRING AS	
	20	1	**147-0257**	1	SHAFT AS-INPUT	
		1	**123-0714**	1	BEARING	
		1	**123-2920**	3	PLUG	
	21	1	**147-0259**	1	SPACER (51.1X54.9X18.7-MM THK)	
	22	1	**172-5317**	4	BEARING-SPECIAL	
	23	1	**274-4553**	11	DISC-FRICTION	
	24	1	**274-8638**	2	RING-RETAINING	

274-4578 SHAFT GP-INPUT *(contd.)* **i03577181**

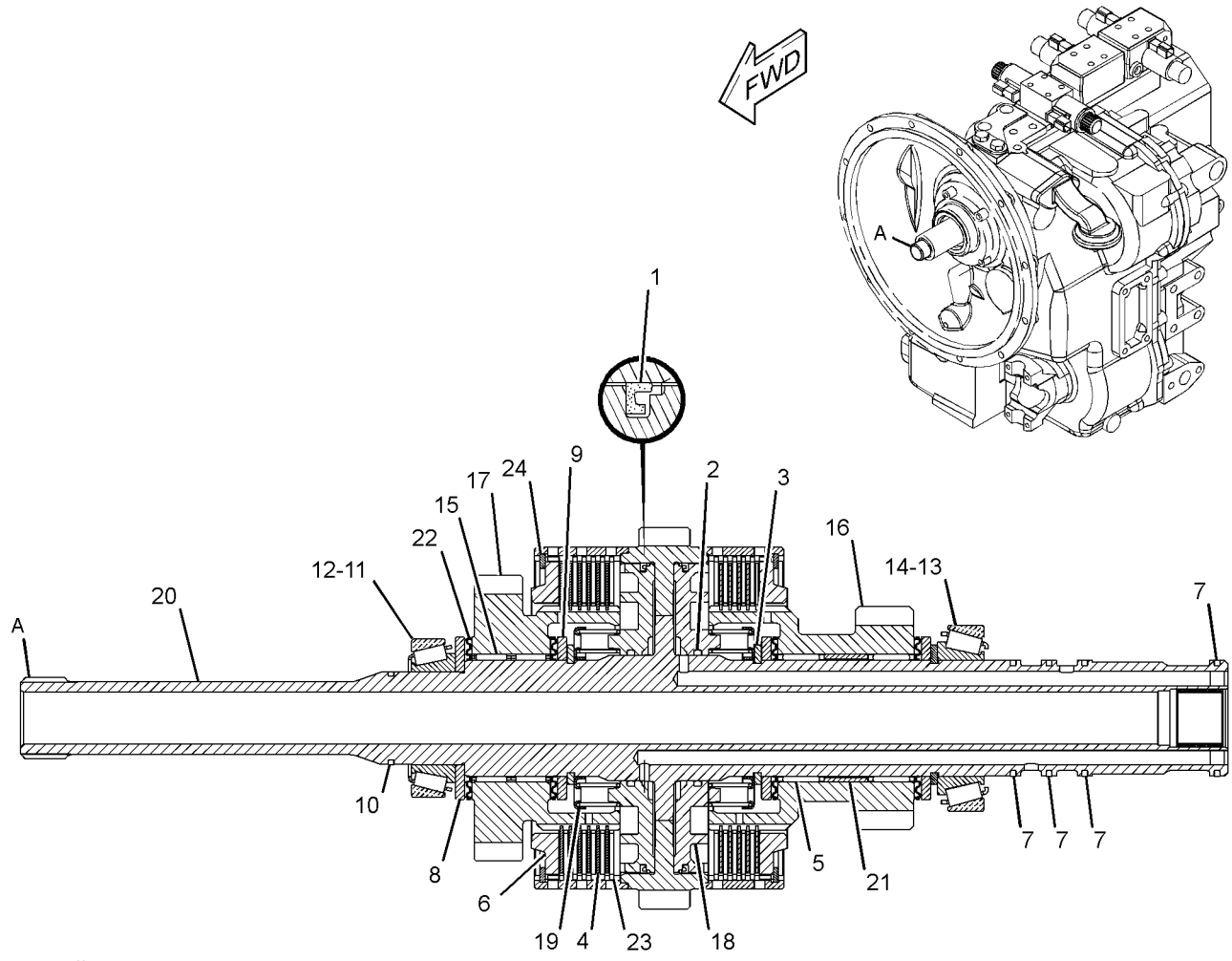

GRAPHIC #1 g01216057

<END>

305-3429 SHAFT GP-INPUT—ALL WHEEL DRIVE

S/N: SEJ1-UP

PART OF 359-0394 TRANSMISSION GP-DIRECT DRIVE

AN ATTACHMENT

SMCS-3053, 3063 **i03043822**

NOTE	REF NO	GRAPHIC REF	PART NUMBER	QTY	PART NAME 1 2 3 4 5 6 (PRODUCT LEVEL)	SEE PAGE
	1	1	**9U-8875**	2	RING-RETAINING	
	2	1	**172-5317**	1	BEARING-SPECIAL	
	3	1	**172-6050**	1	BEARING-SPECIAL	
	4	1	**9U-8886**	4	RING-SEAL	
	5	1	**274-4553**	10	DISC-FRICTION	
	6	1	**122-1886**	1	RING-SEAL	
	7	1	**6V-8757**	3	RING-RETAINING	
	8	1	**121-2500**	2	WASHER-THRUST (50X70X4-MM THK)	
	9	1	**123-8905**	1	CONE-BEARING	
	10	1	**123-8909**	1	CONE-BEARING	
	11	1	**305-3431**	2	PISTON	
	12	1	**147-0238**	2	SPRING AS	
	13	1	**147-0203**	2	WASHER-THRUST (45.3X65X5-MM THK)	
	14	1	**6Y-7929**	10	DISC-FRICTION	
	15	1	**274-8616**	1	GEAR-FORWARD (24-TEETH)	
	16	1	**274-8617**	1	GEAR-REVERSE (27-TEETH)	
	17	1	**274-8628**	1	BEARING-NEEDLE	
	18	1	**274-8629**	1	BEARING-NEEDLE	
	19	1	**294-9821**	1	SPACER	
	20	1	**274-8636**	1	SHAFT AS	
		1	**123-0714**	2	BEARING	
		1	**123-2920**	3	PLUG	
	21	1	**8E-5707**	2	PLATE-END	
	22	1	**294-9812**	2	RETAINER-SPRING	

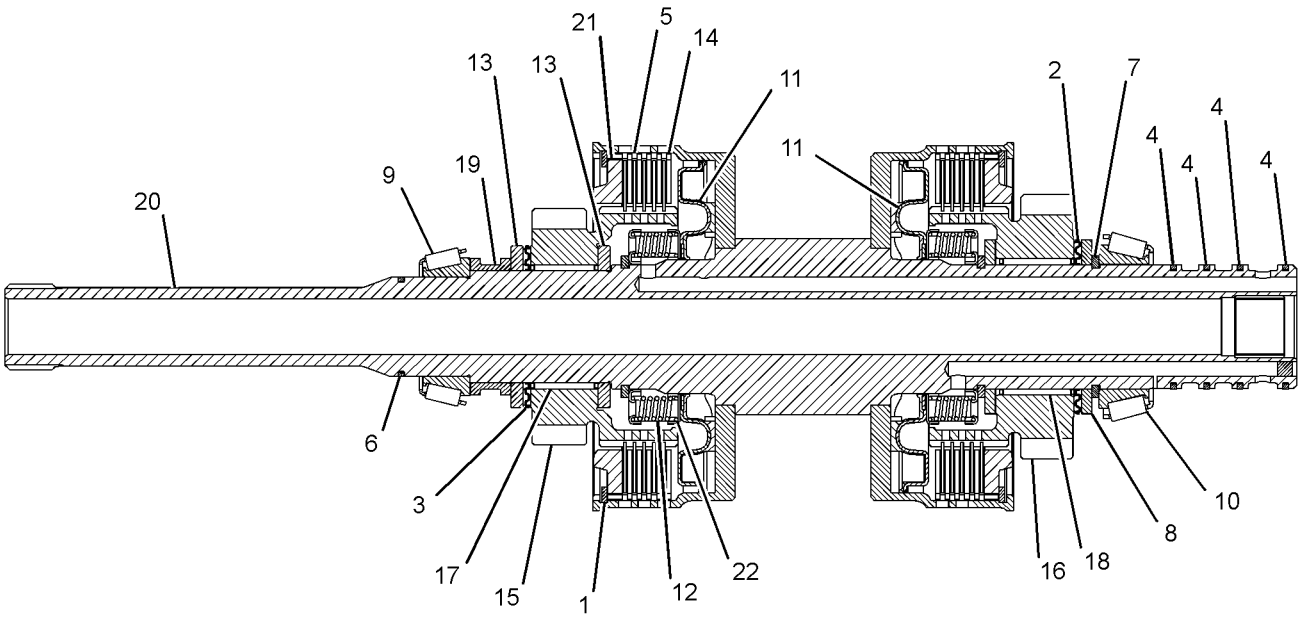

GRAPHIC #1 **<END>** g01383731

374-5110 SHAFT GP-INPUT

S/N: SEJ1-UP
PART OF 350-8607 TRANSMISSION GP-POWER SHIFT
AN ATTACHMENT

SMCS-3053, 3063 **i04611710**

NOTE	REF NO	GRAPHIC REF	PART NUMBER	QTY	PART NAME 1 2 3 4 5 6 (PRODUCT LEVEL)	SEE PAGE
	1	1	**6Y-7929**	11	DISC-FRICTION	
	2	1	**7T-6655**	2	BEARING	
	3	1	**8E-5707**	2	PLATE-END	
	4	1	**9U-8886**	5	RING-SEAL	
	5	1	**121-0694**	1	WASHER-THRUST (40X70X4-MM THK)	
	6	1	**121-2500**	3	WASHER-THRUST (50X70X4-MM THK)	
	7	1	**122-1886**	1	RING-SEAL	
	8	1	**123-8905**	1	CONE-BEARING	
	9	1	**123-8906**	1	CUP-TAPERED ROLLER	
	10	1	**123-8909**	1	CONE-BEARING	
	11	1	**123-8910**	1	CUP-TAPERED ROLLER	
	12	1	**123-8913**	2	BEARING-ROLLER	
	13	1	**147-0202**	1	GEAR (45/24-TEETH)	
	14	1	**147-0224**	1	GEAR (45/32-TEETH)	
	15	1	**147-0238**	2	SPRING AS	
					(EACH INCLUDES)	
		1	**336-4721**	1	SPRING-RETAINER	
		1	**336-6851**	16	SPRING-PISTON	
	16	1	**147-0259**	1	SPACER (51.1X54.9X18.7-MM THK)	
	17	1	**172-5317**	4	BEARING-SPECIAL	
	18	1	**274-4553**	11	DISC-FRICTION	
	19	1	**274-8638**	2	RING-RETAINING	
	20	1	**294-9810**	2	PISTON	
	21	1	**294-9812**	2	RETAINER-SPRING	
	22	1	**374-5109**	1	SHAFT AS-INPUT	
	22A	1	**123-0714**	1	BEARING	
	22B	1	**123-2920**	3	PLUG	
	23	1	**6V-8757**	3	RING-RETAINING	

374-5110 SHAFT GP-INPUT *(contd.)* i04611710

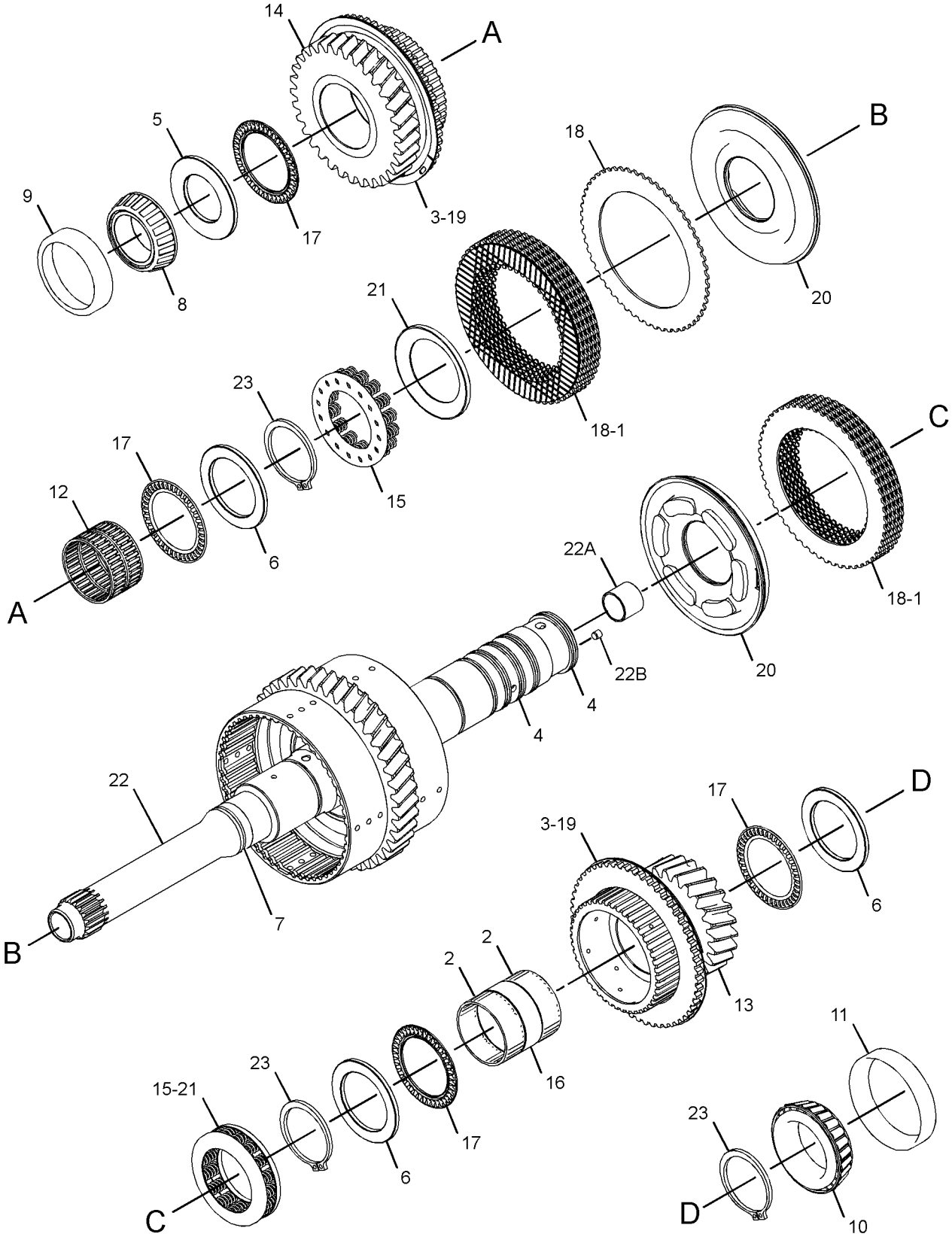

GRAPHIC #1 **<END>** g02797061

274-4582 SHAFT GP-OUTPUT–MAIN

S/N: SEJ1-UP
PART OF 359-0396 TRANSMISSION GP-DIRECT DRIVE
AN ATTACHMENT

SMCS-3053, 3063 **i03577182**

NOTE	REF NO	GRAPHIC REF	PART NUMBER	QTY	PART NAME 1 2 3 4 5 6 (PRODUCT LEVEL)	SEE PAGE
	1	1	**6T-9196**	2	SEAL	
	2	1	**6Y-1192**	3	RING-SEAL	
	3	1	**6Y-7929**	13	DISC-FRICTION	
	4	1	**8E-5707**	2	PLATE-END	
	5	1	**8T-1580**	1	CUP	
	6	1	**8T-1581**	1	CONE	
	7	1	**009-2062**	2	SEAL-O-RING	
	8	1	**095-0927**	1	RING-RETAINING	
	9	1	**095-0928**	1	RING-RETAINING (EXTERNAL)	
	10	1	**121-0885**	1	RETAINER	
	11	1	**122-1877**	1	WASHER-THRUST (40X65X4-MM THK)	
	12	1	**123-8907**	1	CONE-BEARING	
	13	1	**123-8908**	1	CUP-TAPERED ROLLER	
	14	1	**123-8912**	2	BEARING-ROLLER	
	15	1	**147-0203**	1	WASHER-THRUST (45.3X65X5-MM THK)	
	16	1	**147-0205**	2	WASHER (55X78X5-MM THK)	
	17	1	**147-0242**	1	GEAR (48-TEETH)	
	18	1	**147-0248**	1	SPACER (56.2X60X15.8-MM THK)	
	19	1	**147-0260**	1	RETAINER-SPRING	
	20	1	**147-0261**	1	SHAFT AS-OUTPUT (REAR)	
		1	**163-9091**	2	PLUG	
	21	1	**150-3757**	2	BEARING	
	22	1	**157-2088**	2	PISTON AS	
	23	1	**157-2090**	1	GEAR (38-TEETH)	
	24	1	**172-6050**	2	BEARING-SPECIAL	
	25	1	**172-6743**	2	BEARING-SPECIAL	
	26	1	**178-9566**	2	SPRING-PISTON	
	27	1	**211-6753**	1	GEAR (24-TEETH)	
	28	1	**274-4553**	13	DISC-FRICTION	
	29	1	**274-8638**	2	RING-RETAINING	

274-4582 SHAFT GP-OUTPUT *(contd.)* i03577182

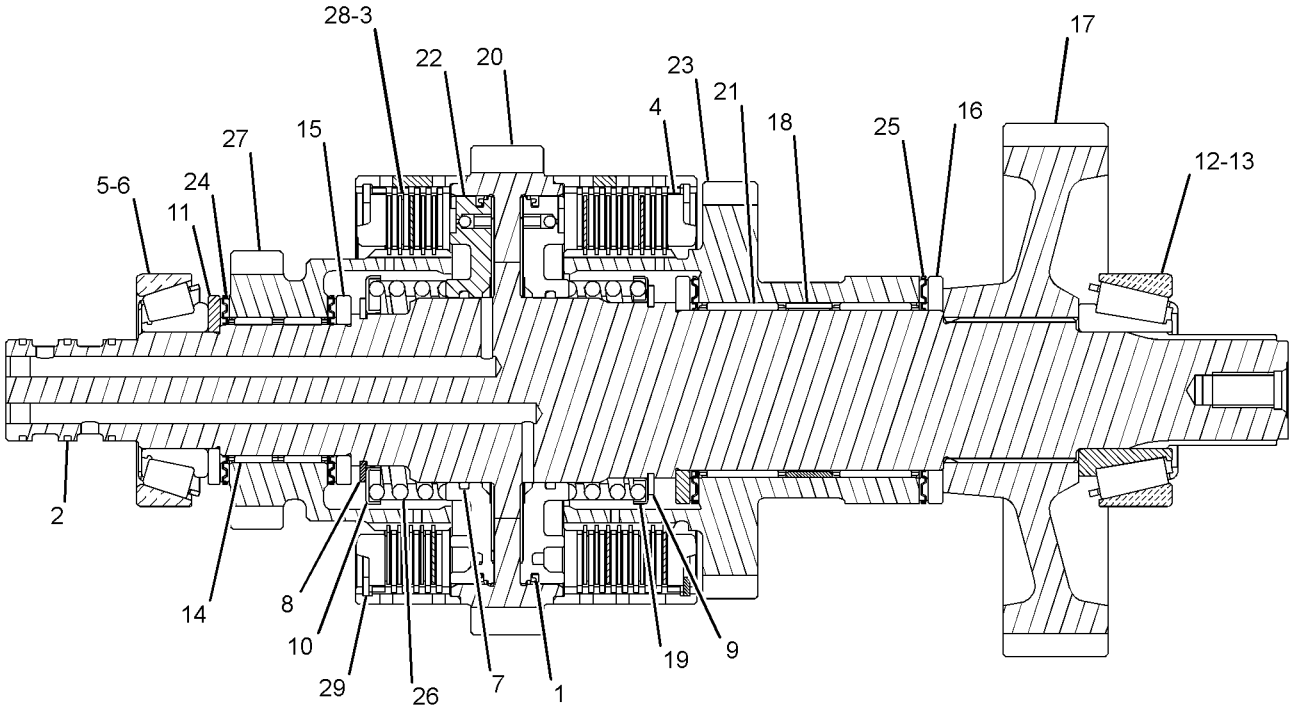

GRAPHIC #1 **<END>** g01216545

275-0478 SHAFT GP-OUTPUT–REAR

S/N: SEJ1-UP
PART OF 359-0394 TRANSMISSION GP-DIRECT DRIVE
AN ATTACHMENT

SMCS-3053, 3063 **i02922492**

NOTE	REF NO	GRAPHIC REF	PART NUMBER	QTY	PART NAME 1 2 3 4 5 6 (PRODUCT LEVEL)	SEE PAGE
	1	1	**7T-3022**	2	SLEEVE	
	2	1	**6V-8500**	4	BEARING	
	3	1	**6T-9160**	1	GEAR (43-TEETH)	
	4	1	**7T-3017**	1	SPACER (52.5X59X9.6-MM THK)	
	5	1	**7T-3021**	2	SYNCHRONIZER GP	
	6	1	**096-5516**	1	RING-RETAINING	
	7	1	**259-1831**	1	GEAR (37-TEETH)	
	8	1	**6Y-2736**	1	CONE-BEARING	
	9	1	**123-8907**	1	CONE-BEARING	
	11	1	**274-8620**	1	GEAR-OUTPUT (37-TEETH)	
	12	1	**274-8621**	1	GEAR-OUTPUT (28-TEETH)	
	13	1	**274-8637**	1	SPACER-BEARING	
	14	1	**278-0215**	1	SHAFT-OUTPUT	
	15	1	**278-0216**	1	GEAR-OUTPUT (17-TEETH)	
	16	1	**278-0217**	1	BEARING-NEEDLE	
	17	1	**278-0218**	2	WASHER-THRUST	
	18	1	**178-8214**	1	CLIP	
	19	1	**7T-3018**	1	SLEEVE	
	20	1	**150-3757**	1	BEARING	
	21	1	**293-8761**	1	BEARING-NEEDLE	

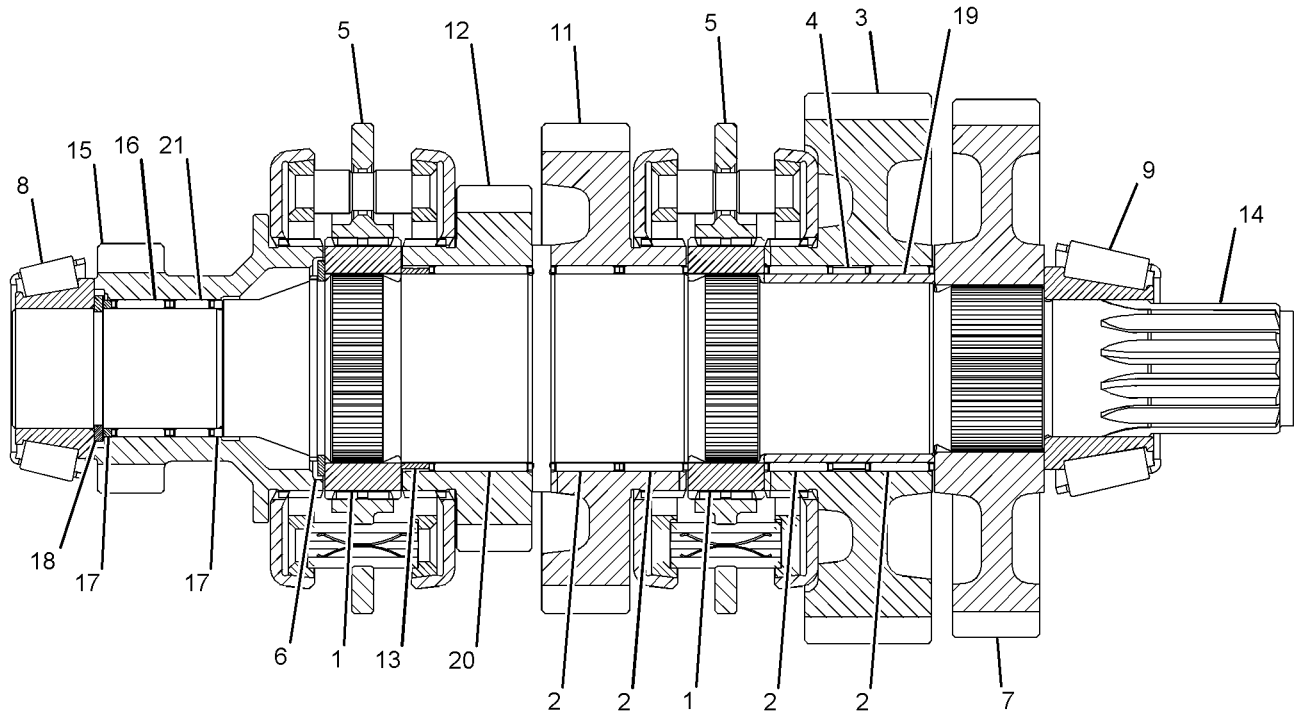

GRAPHIC #1 **<END>** g01508474

POWER TRAIN

280-7007 SHAFT GP-OUTPUT–FRONT

S/N: SEJ1-UP
PART OF 359-0396 TRANSMISSION GP-DIRECT DRIVE, 350-8607 TRANSMISSION GP-POWER SHIFT AN ATTACHMENT

SMCS-3053, 3063 **i04631238**

NOTE	REF NO	GRAPHIC REF	PART NUMBER	QTY	PART NAME 1 2 3 4 5 6 (PRODUCT LEVEL)	SEE PAGE
	1	1	**294-9812**	1	RETAINER-SPRING	
	3	1	**6V-8757**	1	RING-RETAINING	
	4	1	**337-3530**	8	DISC-FRICTION	
	5	1	**8E-5707**	1	PLATE-END	
	6	1	**122-1877**	1	WASHER-THRUST (40X65X4-MM THK)	
	7	1	**122-1878**	1	RING-SEAL	
	8	1	**122-1884**	1	SPACER (45X49X8-MM THK)	
	9	1	**123-8905**	2	CONE-BEARING	
	10	1	**123-8906**	2	CUP-TAPERED ROLLER	
	11	1	**123-8912**	2	BEARING-ROLLER	
	12	1	**147-0203**	1	WASHER-THRUST (45.3X65X5-MM THK)	
	13	1	**147-0207**	1	SHAFT AS-OUTPUT (FRONT)	
	14	1	**147-0210**	1	GEAR (45/36-TEETH)	
	15	1	**305-3431**	1	PISTON	
	16	1	**147-0238**	1	SPRING AS	
	17	1	**161-3249**	1	RING-RETAINING	
	18	1	**172-6050**	2	BEARING-SPECIAL	
	19	1	**274-4553**	8	DISC-FRICTION	

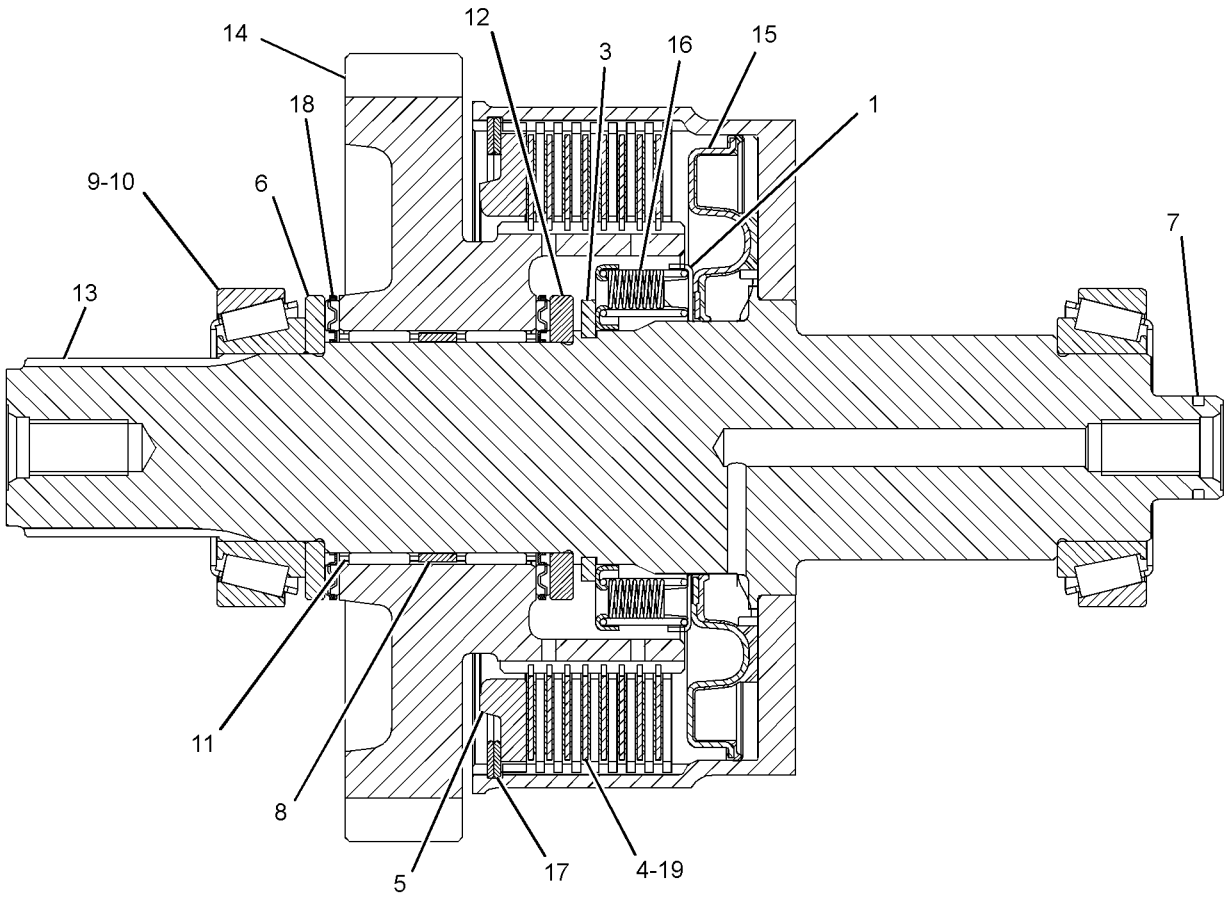

LEFT SIDE VIEW

GRAPHIC #1 **<END>** g01405501

305-3427 SHAFT GP-OUTPUT–FRONT

S/N: SEJ1-UP
PART OF 359-0394 TRANSMISSION GP-DIRECT DRIVE
AN ATTACHMENT

SMCS-3053, 3063 **i02755327**

NOTE	REF NO	GRAPHIC REF	PART NUMBER	QTY	PART NAME 1 2 3 4 5 6 (PRODUCT LEVEL)	SEE PAGE
	1	1	**6V-8757**	1	RING-RETAINING	
	2	1	**274-4553**	8	DISC-FRICTION	
	3	1	**6Y-7957**	8	DISC-FRICTION	
	4	1	**305-3424**	1	WASHER-THRUST	
	5	1	**172-6050**	2	BEARING-SPECIAL	
	6	1	**122-1878**	1	RING-SEAL	
	7	1	**122-1877**	1	WASHER-THRUST (40X65X4-MM THK)	
	8	1	**122-1884**	1	SPACER (45X49X8-MM THK)	
	9	1	**305-3431**	1	PISTON (CLUTCH)	
	10	1	**123-8905**	2	CONE-BEARING	
	11	1	**178-9566**	1	SPRING-PISTON	
	12	1	**161-3249**	1	RING-RETAINING	
	13	1	**123-8912**	2	BEARING-ROLLER	
	14	1	**305-3425**	1	SHAFT AS-OUTPUT	
	15	1	**121-0904**	1	GEAR AS (36-TEETH)	
	16	1	**8E-5707**	1	PLATE-END	
	17	1	**294-9812**	1	RETAINER-SPRING	

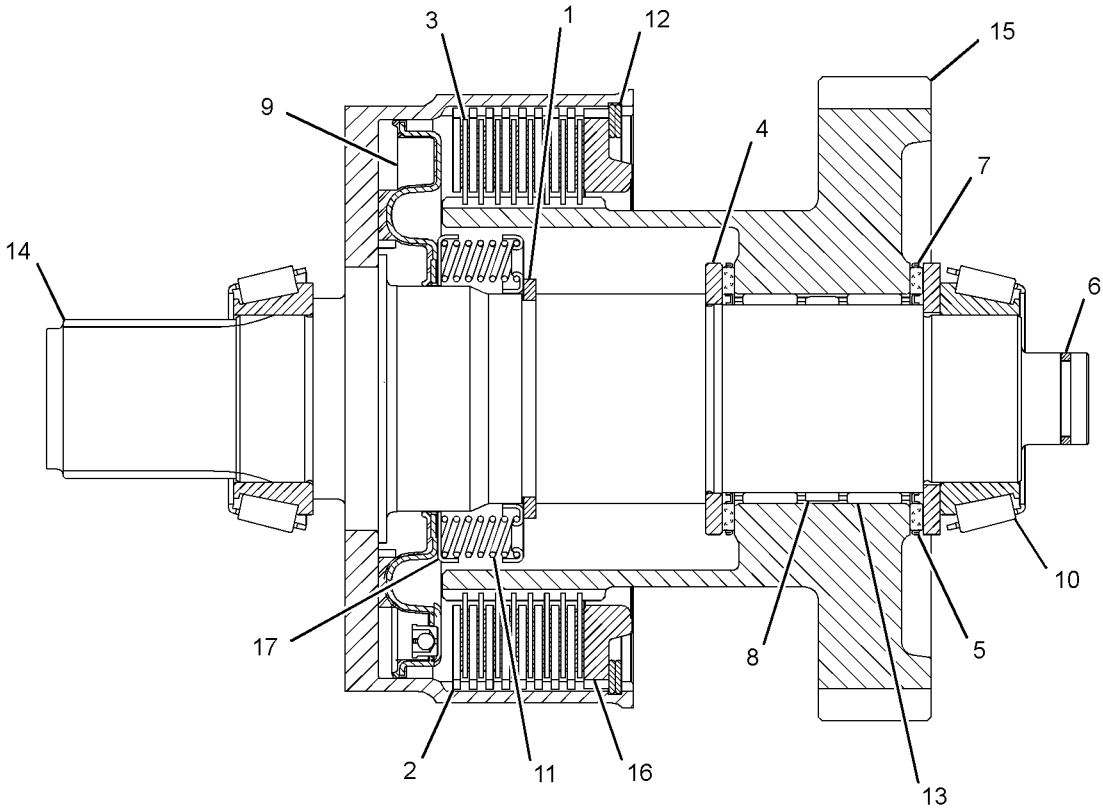

GRAPHIC #1 **<END>** g01382017

374-5113 SHAFT GP-MAIN

S/N: SEJ1-UP
PART OF 350-8607 TRANSMISSION GP-POWER SHIFT
AN ATTACHMENT

SMCS-3053, 3063 **i04611716**

NOTE	REF NO	GRAPHIC REF	PART NUMBER	QTY	PART NAME 1 2 3 4 5 6 (PRODUCT LEVEL)	SEE PAGE
	1	1	**6Y-1192**	3	RING-SEAL	
	2	1	**6Y-7929**	13	DISC-FRICTION	
	3	1	**8E-5707**	2	PLATE-END	
	4	1	**8T-1580**	1	CUP	
	5	1	**8T-1581**	1	CONE	
	6	1	**121-0885**	1	RETAINER	
	7	1	**122-1877**	1	WASHER-THRUST (40X65X4-MM THK)	
	8	1	**123-8907**	1	CONE-BEARING	
	9	1	**123-8908**	1	CUP-TAPERED ROLLER	
	10	1	**123-8912**	2	BEARING-ROLLER	
	11	1	**147-0203**	1	WASHER-THRUST (45.3X65X5-MM THK)	
	12	1	**147-0205**	2	WASHER (55X78X5-MM THK)	
	13	1	**147-0242**	1	GEAR (48-TEETH)	
	14	1	**147-0248**	1	SPACER (56.2X60X15.8-MM THK)	
	15	1	**147-0260**	1	RETAINER-SPRING	
	16	1	**147-0261**	1	SHAFT AS-OUTPUT (REAR)	
		1	**163-9091**	2	PLUG	
	17	1	**150-3757**	2	BEARING	
	18	1	**157-2090**	1	GEAR (38-TEETH)	
	19	1	**172-6050**	2	BEARING-SPECIAL	
	20	1	**172-6743**	2	BEARING-SPECIAL	
	21	1	**274-4553**	13	DISC-FRICTION	
	22	1	**274-8638**	2	RING-RETAINING	
	23	1	**294-9811**	2	PISTON	
	24	1	**294-9813**	2	SPRING-WAVE	
	25	1	**095-0928**	1	RING-RETAINING (EXTERNAL)	
	26	1	**095-0927**	1	RING-RETAINING	

374-5113 **SHAFT GP-MAIN** *(contd.)* **i04611716**

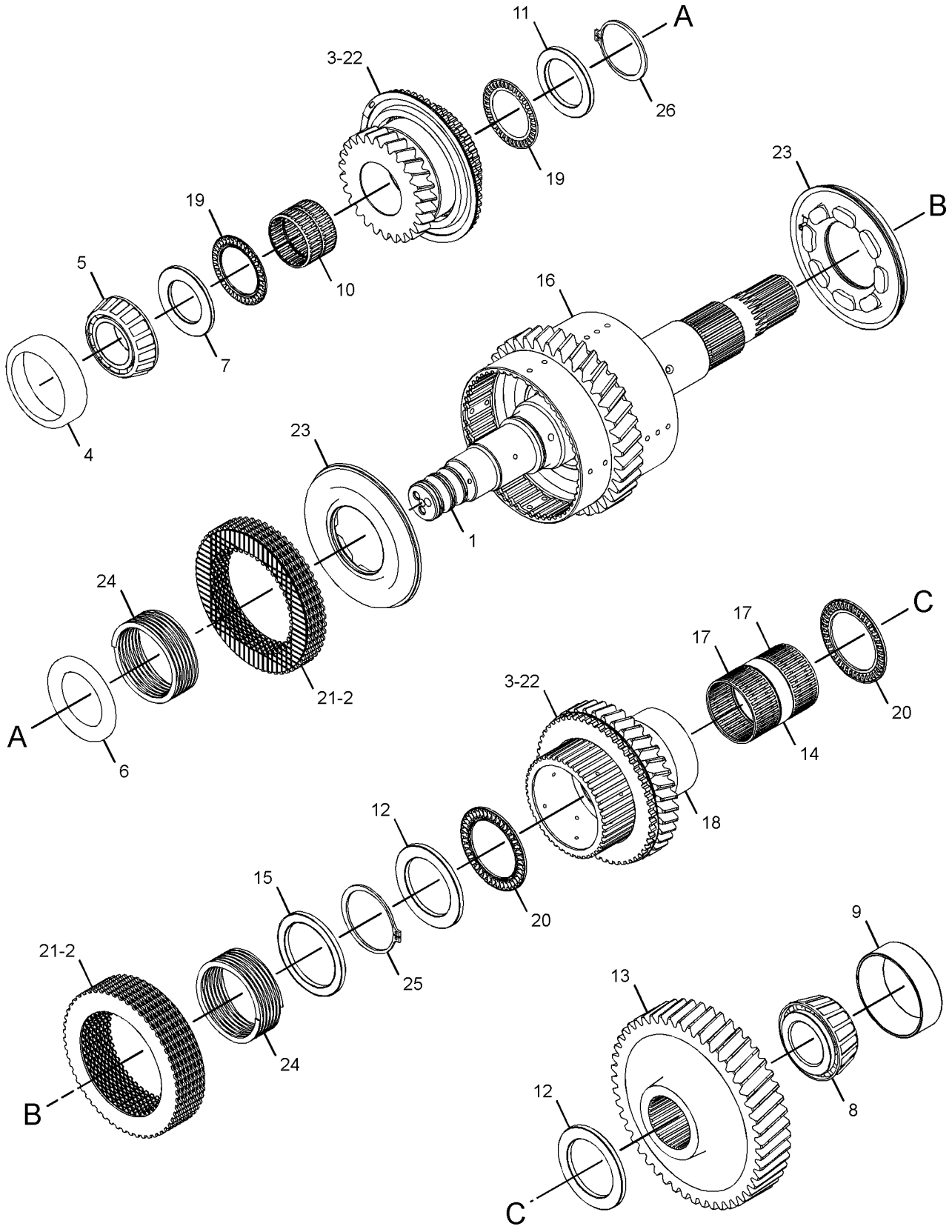

GRAPHIC #1 **<END>** g02797171

311-2230 STOP GP-STEERING

S/N: SEJ1-UP
PART OF 303-0415, 319-6834, 341-0596 WHEEL & TIRE AR
FOR USE WITH 20-IN TIRES LOCATED ON THE FRONT AXLE
AN ATTACHMENT

SMCS-7188 **i02992380**

NOTE	REF NO	GRAPHIC REF	PART NUMBER	QTY	PART NAME 1 2 3 4 5 6 (PRODUCT LEVEL)	SEE PAGE
	1	1	**224-6829**	2	SPACER (17X24.5X17-MM THK)	

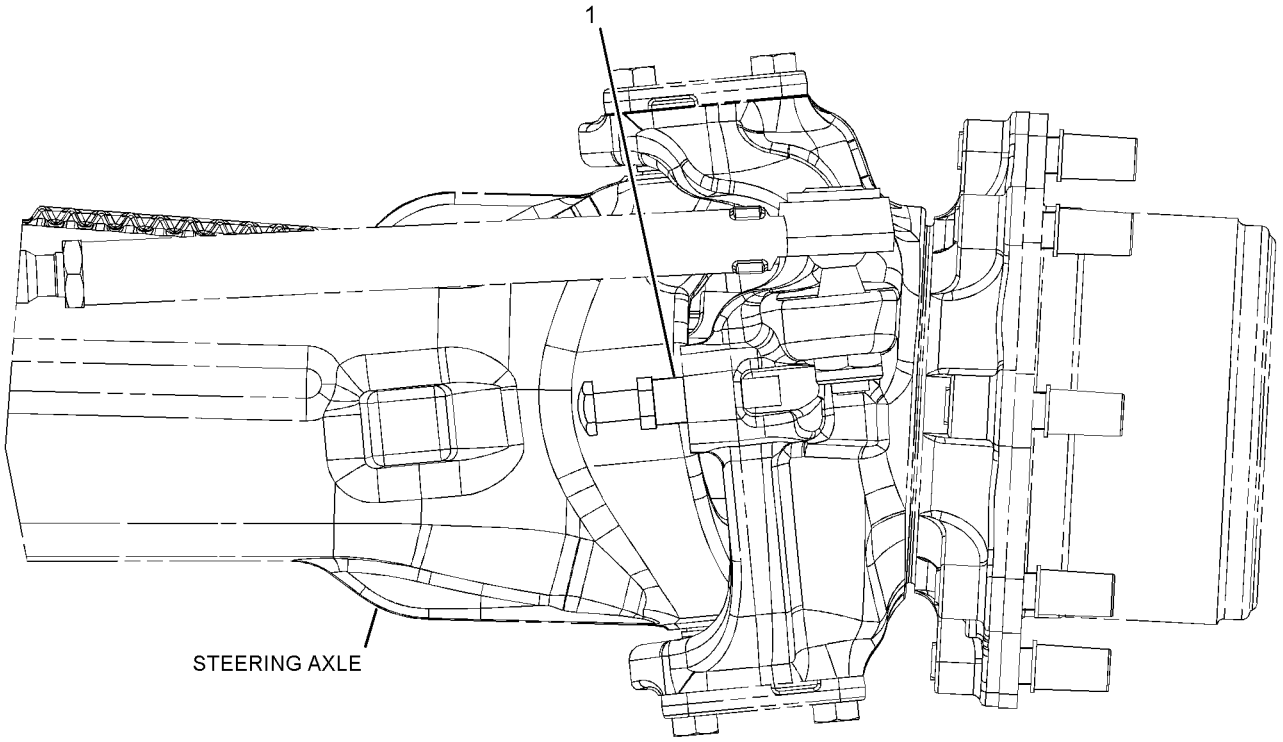

FRONT VIEW

GRAPHIC #1 **<END>** g01618844

359-0401 TORQUE CONVERTER AR

S/N: SEJ1-UP
PART OF 374-6828, 374-6836 POWER TRAIN AR
AN ATTACHMENT

SMCS-3101 **i04597369**

NOTE	REF NO	GRAPHIC REF	PART NUMBER	QTY	PART NAME 1 2 3 4 5 6 (PRODUCT LEVEL)	SEE PAGE
Y	1	1	*111-7907*	1	DRIVE GP-FLEXIBLE COUPLING	187
	2	1	**268-1710**	1	TORQUE CONVERTER AS	

Y-SEPARATE ILLUSTRATION

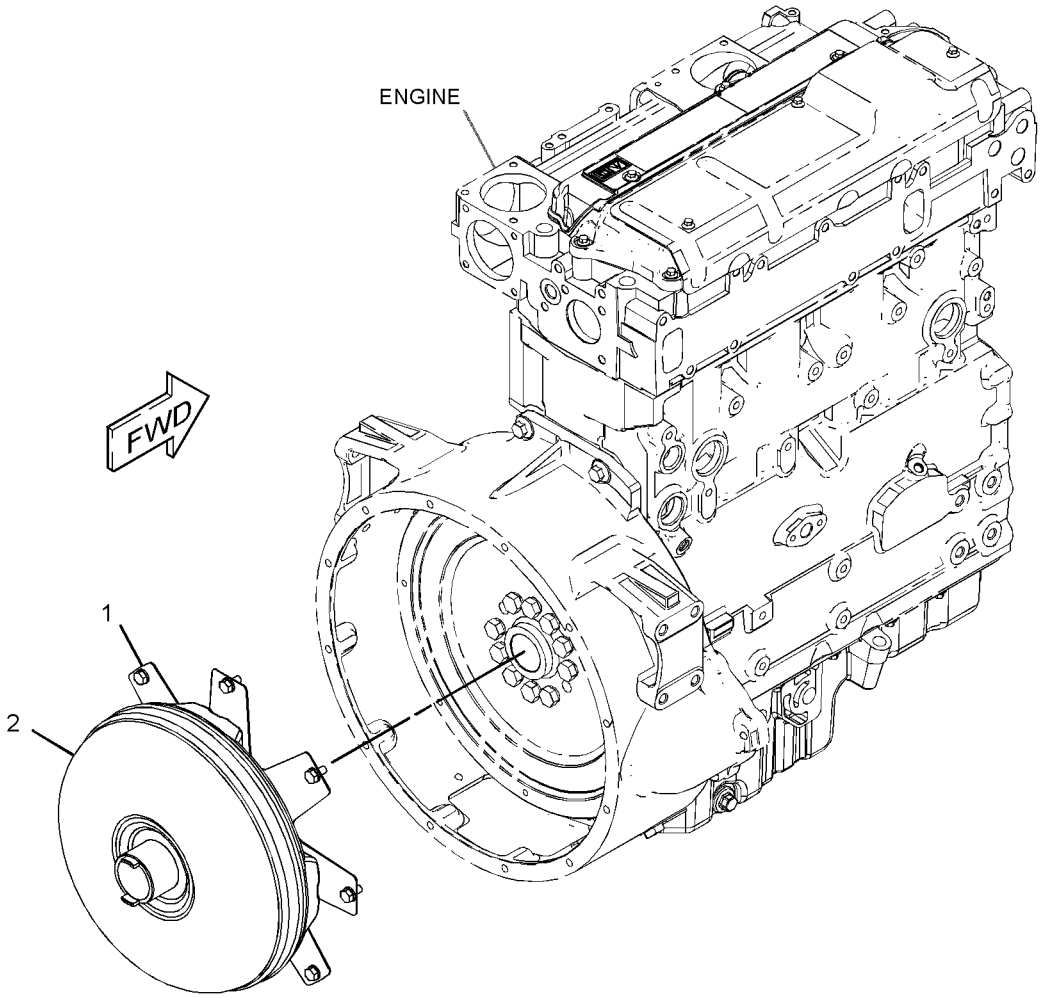

GRAPHIC #1 **<END>** g02788697

359-0407 TORQUE CONVERTER AR

S/N: SEJ1-UP
PART OF 374-6844 POWER TRAIN AR
AN ATTACHMENT

SMCS-3101 **i04623134**

NOTE	REF NO	GRAPHIC REF	PART NUMBER	QTY	PART NAME 1 2 3 4 5 6 (PRODUCT LEVEL)	SEE PAGE
	1	1	**349-0756**	1	TORQUE CONVERTER AS	
Y	2	1	*355-3845*	1	DRIVE GP-FLEXIBLE COUPLING	188

Y-SEPARATE ILLUSTRATION

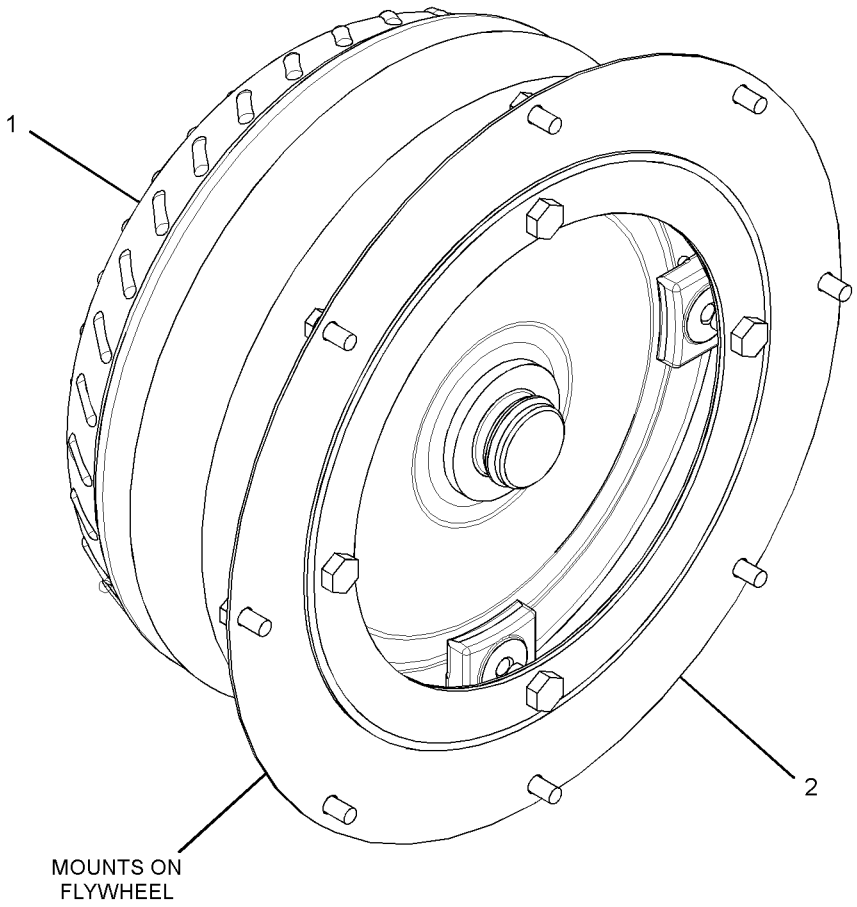

GRAPHIC #1 **<END>** g02821416

359-0378 TRANSMISSION AR-DIRECT DRIVE

S/N: SEJ1-UP

PART OF 353-1513 TRANSMISSION AR-POWER SHIFT

AN ATTACHMENT

SMCS-3030 **i04597234**

NOTE	REF NO	GRAPHIC REF	PART NUMBER	QTY	PART NAME 1 2 3 4 5 6 (PRODUCT LEVEL)	SEE PAGE
Y	1	1	*353-1338*	1	DRIVE & MTG GP-PUMP	360
Y	2	1	*355-3841*	1	MOUNTING GP-TRANSMISSION	204
Y	3	1	*359-0394*	1	TRANSMISSION GP-DIRECT DRIVE (ALL WHEEL DRIVE)	238
	4	1	**119-4740**	1	FILTER-OIL (STANDARD EFFICIENCY) (TRANSMISSION)	

Y-SEPARATE ILLUSTRATION

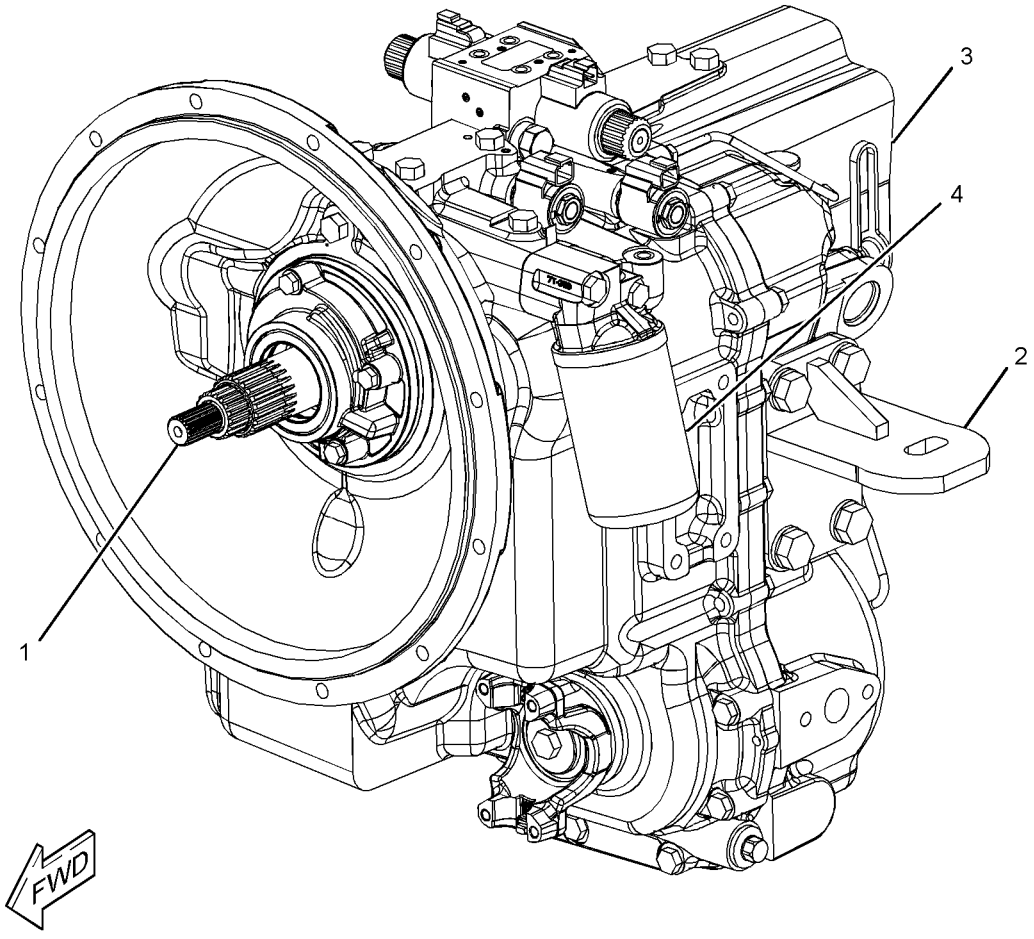

GRAPHIC #1 **<END>** g02831223

350-8606 TRANSMISSION AR-POWER SHIFT

S/N: SEJ1-UP

PART OF 353-1511 TRANSMISSION AR-POWER SHIFT

AN ATTACHMENT

SMCS-3030 **i04612391**

NOTE	REF NO	GRAPHIC REF	PART NUMBER	QTY	PART NAME 1 2 3 4 5 6 (PRODUCT LEVEL)	SEE PAGE
Y	1	1	*350-8607*	1	TRANSMISSION GP-POWER SHIFT	249
Y	2	1	*353-1341*	1	DRIVE & MTG GP-PUMP	361
Y	3	1	*355-3833*	1	MOUNTING GP-TRANSMISSION	203
	4	1	**119-4740**	1	FILTER-OIL (STANDARD EFFICIENCY) (TRANSMISSION)	

Y-SEPARATE ILLUSTRATION

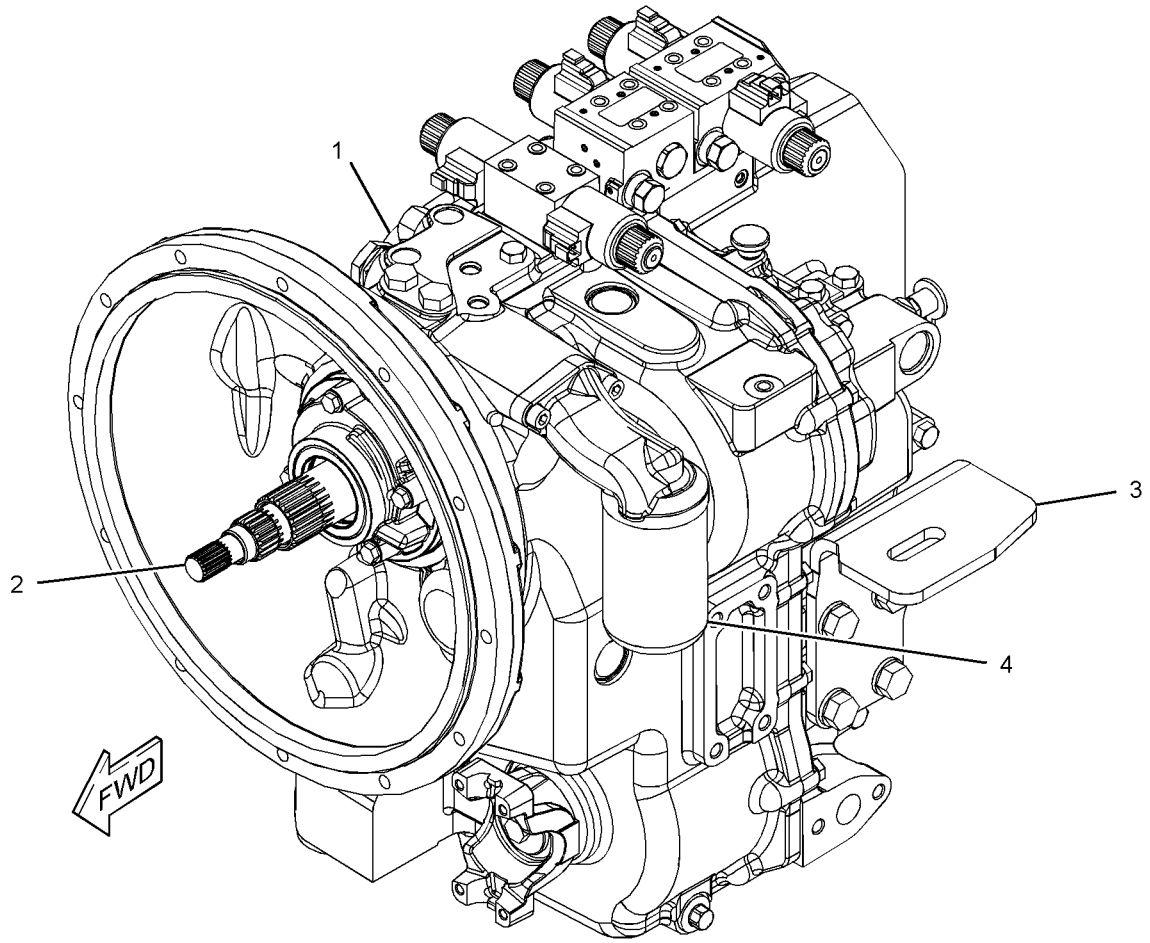

GRAPHIC #1 **<END>** g02823537

353-1510 TRANSMISSION AR-POWER SHIFT–
4-WHEEL DRIVE, AUTO SHIFT
S/N: SEJ1-UP
PART OF 374-6836 POWER TRAIN AR
AN ATTACHMENT

SMCS-3030 **i04602972**

NOTE	PART NUMBER	QTY	PART NAME 1 2 3 4 5 6 (PRODUCT LEVEL)	SEE PAGE
Y	*337-9701*	1	FILLER GP-POWER TRAIN OIL	189
Y	*337-9779*	1	LINES GP-POWER TRAIN COOLER	51
Y	*337-9719*	1	LOCK GP-DIFFERENTIAL	199
Y	*337-9727*	1	MOUNTING GP-ENGINE & XMSN	26
Y	*353-1335*	1	SHAFT GP-DRIVE (REAR)	212
Y	*353-1337*	1	SHAFT GP-DRIVE (FRONT)	214
Y	*331-5456*	1	SWITCH GP-ALL WHEEL DRIVE	123
Y	*359-0380*	1	TRANSMISSION AR-POWER SHIFT	237
Y	*331-5464*	1	WIRING GP-TRANSMISSION CONTROL	165

Y-SEPARATE ILLUSTRATION

<END>

353-1511 TRANSMISSION AR-POWER SHIFT
S/N: SEJ1-UP
PART OF 374-6844 POWER TRAIN AR
AN ATTACHMENT

SMCS-3030 **i04612132**

NOTE	PART NUMBER	QTY	PART NAME 1 2 3 4 5 6 (PRODUCT LEVEL)	SEE PAGE
Y	*337-9701*	1	FILLER GP-POWER TRAIN OIL	189
Y	*380-5753*	1	LINES GP-POWER TRAIN COOLER	53
Y	*337-9719*	1	LOCK GP-DIFFERENTIAL	199
Y	*337-9728*	1	MOUNTING GP-ENGINE & XMSN	27
Y	*353-1335*	1	SHAFT GP-DRIVE	212
Y	*353-1337*	1	SHAFT GP-DRIVE	214
Y	*331-5456*	1	SWITCH GP-ALL WHEEL DRIVE	123
Y	*350-8606*	1	TRANSMISSION AR-POWER SHIFT	234
Y	*331-5464*	1	WIRING GP-TRANSMISSION CONTROL	165

Y-SEPARATE ILLUSTRATION

<END>

353-1513 TRANSMISSION AR-POWER SHIFT–

ALL WHEEL DRIVE

S/N: SEJ1-UP

PART OF 374-6828 POWER TRAIN AR

AN ATTACHMENT

SMCS-3030 **i04597489**

NOTE	PART NUMBER	QTY	PART NAME 1 2 3 4 5 6 (PRODUCT LEVEL)	SEE PAGE
Y	*356-4080*	1	CONTROL GP-TRANSMISSION	596
Y	*337-9703*	1	FILLER GP-POWER TRAIN OIL (STANDARD SHIFT)	191
Y	*337-9779*	1	LINES GP-POWER TRAIN COOLER	51
Y	*337-9717*	1	LINES GP-POWER TRAIN OIL	198
Y	*337-9727*	1	MOUNTING GP-ENGINE & XMSN	26
Y	*353-1335*	1	SHAFT GP-DRIVE (REAR)	212
Y	*353-1336*	1	SHAFT GP-DRIVE (FRONT)	213
Y	*331-5456*	1	SWITCH GP-ALL WHEEL DRIVE	123
Y	*359-0378*	1	TRANSMISSION AR-DIRECT DRIVE	233
Y	*331-5462*	1	WIRING GP-TRANSMISSION CONTROL (STANDARD SHIFT)	163

Y-SEPARATE ILLUSTRATION

<END>

359-0380 TRANSMISSION AR-POWER SHIFT

S/N: SEJ1-UP

PART OF 353-1510 TRANSMISSION AR-POWER SHIFT

AN ATTACHMENT

SMCS-3030 **i04597390**

NOTE	REF NO	GRAPHIC REF	PART NUMBER	QTY	PART NAME 1 2 3 4 5 6 (PRODUCT LEVEL)	SEE PAGE
Y	1	1	*353-1338*	1	DRIVE & MTG GP-PUMP	360
Y	2	1	*355-3833*	1	MOUNTING GP-TRANSMISSION	203
Y	3	1	*359-0396*	1	TRANSMISSION GP-DIRECT DRIVE (ALL WHEEL DRIVE)	243
	4	1	**119-4740**	1	FILTER-OIL (STANDARD EFFICIENCY) (TRANSMISSION)	

Y-SEPARATE ILLUSTRATION

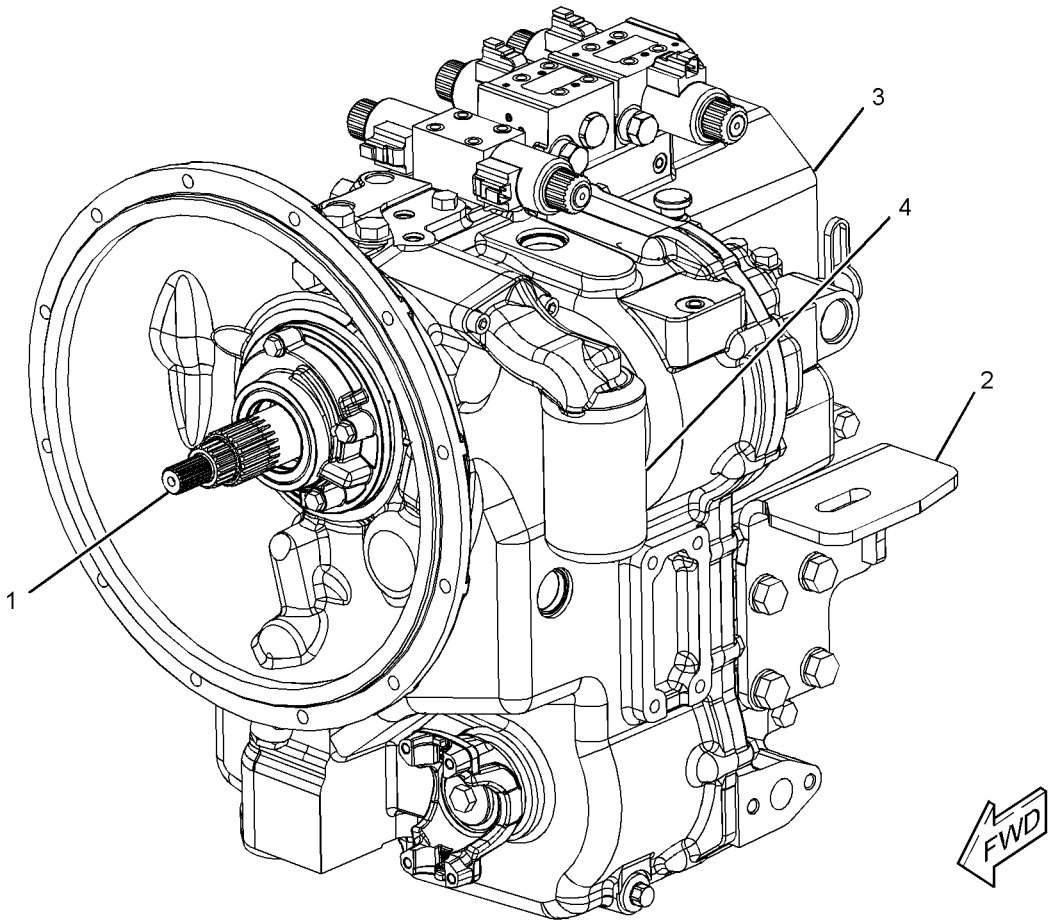

GRAPHIC #1 **<END>** g02831302

359-0394 TRANSMISSION GP-DIRECT DRIVE–

ALL WHEEL DRIVE

S/N: SEJ1-UP

PART OF 359-0378 TRANSMISSION AR-DIRECT DRIVE

AN ATTACHMENT

SMCS-3030 **i04586229**

NOTE	REF NO	GRAPHIC REF	PART NUMBER	QTY	PART NAME 1 2 3 4 5 6 (PRODUCT LEVEL)	SEE PAGE
	1	1,3	**3J-1907**	2	SEAL-O-RING	
	2	3	**4W-9972**	1	SENDER AS-TEMPERATURE (12-VOLT) (TRANSMISSION OIL)	
		3	**6V-8378**	1	NUT (10-32-THD)	
		3	**8F-1434**	1	LOCKWASHER	
		3	**8T-0328**	1	WASHER-HARD (5.5X10X1-MM THK)	
	3	2	**5P-8066**	2	SEAL-O-RING	
	4	3	**365-4592**	1	CLAMP	
	5	1	**6V-0852**	1	CAP-DUST	
	6	1	**6V-3965**	1	FITTING (QUICK DISCONNECT)	
M	7	3	**6V-7731**	2	BOLT (M10X1.5X70-MM)	
M	8	1	**6V-8097**	2	BOLT (M12X1.75X30-MM)	
M	9	1	**161-7632**	14	BOLT-SELF-LOCKING (M10X1.5X40-MM)	
	10	1	**6Y-1341**	2	SPRING	
	11	1	**6Y-1896**	1	PLUG AS-DRAIN (TRANSMISSION)	
		1	**5P-6718**	1	SEAL-O-RING	
	12	3	**6Y-2035**	1	GASKET	
	13	3	**7T-3109**	1	PIN	
	14	3	**7T-3111**	1	COVER	
	15	2	**7T-3195**	2	WASHER (12.3X47X6.35-MM THK)	
	16	1	**7T-3249**	2	SCREW (3/8-24X0.75-IN)	
	17	2	**7X-4741**	1	SEAL	
M	18	2,3	**8C-5748**	7	BOLT (M8X1.25X55-MM)	
	19	3	**9M-1974**	3	WASHER-HARD (8.8X16X2-MM THK)	
	20	2	**9P-9150**	4	WASHER (8.25X18X0.84-MM THK)	
M	21	3	**9X-6615**	4	BOLT (M5X0.8X30-MM)	
	22	1	**014-5645**	3	BALL	
	23	2	**121-7385**	1	PUMP GP-TRANSMISSION (POWER TRAIN)	
		2	**208-8240**	1	SEAL-LIP TYPE	
	24	1	**121-7389**	1	ROD AS-GEARSHIFT (FIRST, SECOND)	
	25	1	**121-7390**	1	ROD AS-GEARSHIFT (THIRD, FOURTH)	
	26	3	**121-7391**	1	LEVER	
	27	3	*121-7396*	1	VALVE GP-RELIEF (TORQUE CONVERTER INLET)	
		3	**6V-4589**	1	SEAL-O-RING	
		3	**8L-2746**	1	SEAL-O-RING	
	28	1	**121-7403**	1	FORK-SHIFT (FIRST, SECOND)	
	29	1	**121-7404**	1	FORK-SHIFT (THIRD, FOURTH)	
	30	1	**121-7875**	4	ANGLE	
	31	2	**122-1883**	1	SPACER (38X45X5-MM THK)	
	32	2	**122-3650**	1	PLUG	
	33	2	**122-6787**	2	YOKE AS	
					(EACH INCLUDES)	
		2	**123-1377**	1	GUARD	
	34	1	**123-2918**	2	SLEEVE	
	35	1	**123-2919**	2	NUT (M11X1-THD)	
	36	3	**127-3017**	1	SEAT AS	
Y	37	3	**147-0209**	1	VALVE GP-RELIEF (TRANSMISSION)	257
	38	3	**174-9711**	1	GASKET	
	39	3	**175-0054**	1	SEAL-O-RING	
	40	1	**3S-2093**	1	STRAP-CABLE	
	41	2	**208-8240**	1	SEAL-LIP TYPE	
	42	1	**237-5186**	1	PLATE-XMSN IDENTIFICATION	
Y	43	2	**275-0468**	1	CASE AS-TRANSMISSION (FRONT)	178
	44	2	**275-0475**	1	SHAFT GP-IDLER (TRANSMISSION)	

359-0394 **TRANSMISSION GP-DIRECT DRIVE** *(contd.)* **i04586229**

NOTE	REF NO	GRAPHIC REF	PART NUMBER	QTY	PART NAME 1 2 3 4 5 6 (PRODUCT LEVEL)	SEE PAGE
		2	**005-0471**	2	CONE-BEARING	
		2	**274-8623**	1	SHAFT-REVERSE	
	45	2	**275-0477**	1	SHAFT GP-COUNTER (TRANSMISSION)	
		2	**8T-1581**	1	CONE	
		2	**123-8907**	1	CONE-BEARING	
		2	**274-8625**	1	GEAR-COUNTERSHAFT (38-TEETH)	
Y	46	2	**275-0478**	1	SHAFT GP-OUTPUT (REAR)	225
	47	1	**293-2147**	1	BREATHER AS (TRANSMISSION)	
		1	**3J-1907**	1	SEAL-O-RING	
		1	**122-6785**	1	PLUG AS	
	48	1	**294-9820**	1	TUBE	
	49	3	**365-4591**	1	CLAMP	
Y	50	2	**305-3427**	1	SHAFT GP-OUTPUT (FRONT)	227
Y	51	2	**305-3429**	1	SHAFT GP-INPUT (ALL WHEEL DRIVE)	219
	52	3	**324-2578**	1	VALVE GP-SOLENOID (12-VOLT) (FORWARD, REVERSE)	
		3	**8L-2779**	4	SEAL-O-RING	
		3	**280-7012**	2	TUBE AS	
					(EACH INCLUDES)	
		3	**6V-8399**	1	SEAL-O-RING	
		3	**274-4560**	1	NUT-SELF LOCKING	
		3	**324-2579**	2	COIL AS (12-VOLT)	
	53	1,3	**334-5131**	12	PLUG AS	
					(EACH INCLUDES)	
		1,3	**3J-1907**	1	SEAL-O-RING	
		1,3	**9S-4191**	1	PLUG-O-RING	
	54	1	**336-5469**	4	RIVET	
	55	3	**344-2608**	1	HOUSING AS-FILTER	
		3	**7T-3119**	1	HOUSING	
Y	56	1	**189-5746**	1	SENSOR GP-SPEED (TACHOMETER)	121
Y	57	2	**365-2814**	1	CASE AS-TRANSMISSION (ALL WHEEL DRIVE)	179
	58	3	**305-3423**	2	VALVE GP-SOLENOID (12-VOLT) (ALL WHEEL DRIVE)	
					(EACH INCLUDES)	
		3	**274-8034**	1	COIL AS (12-VOLT)	
	59	3	**7T-3251**	1	BREATHER (TRANSMISSION)	

M-METRIC PART
Y-SEPARATE ILLUSTRATION

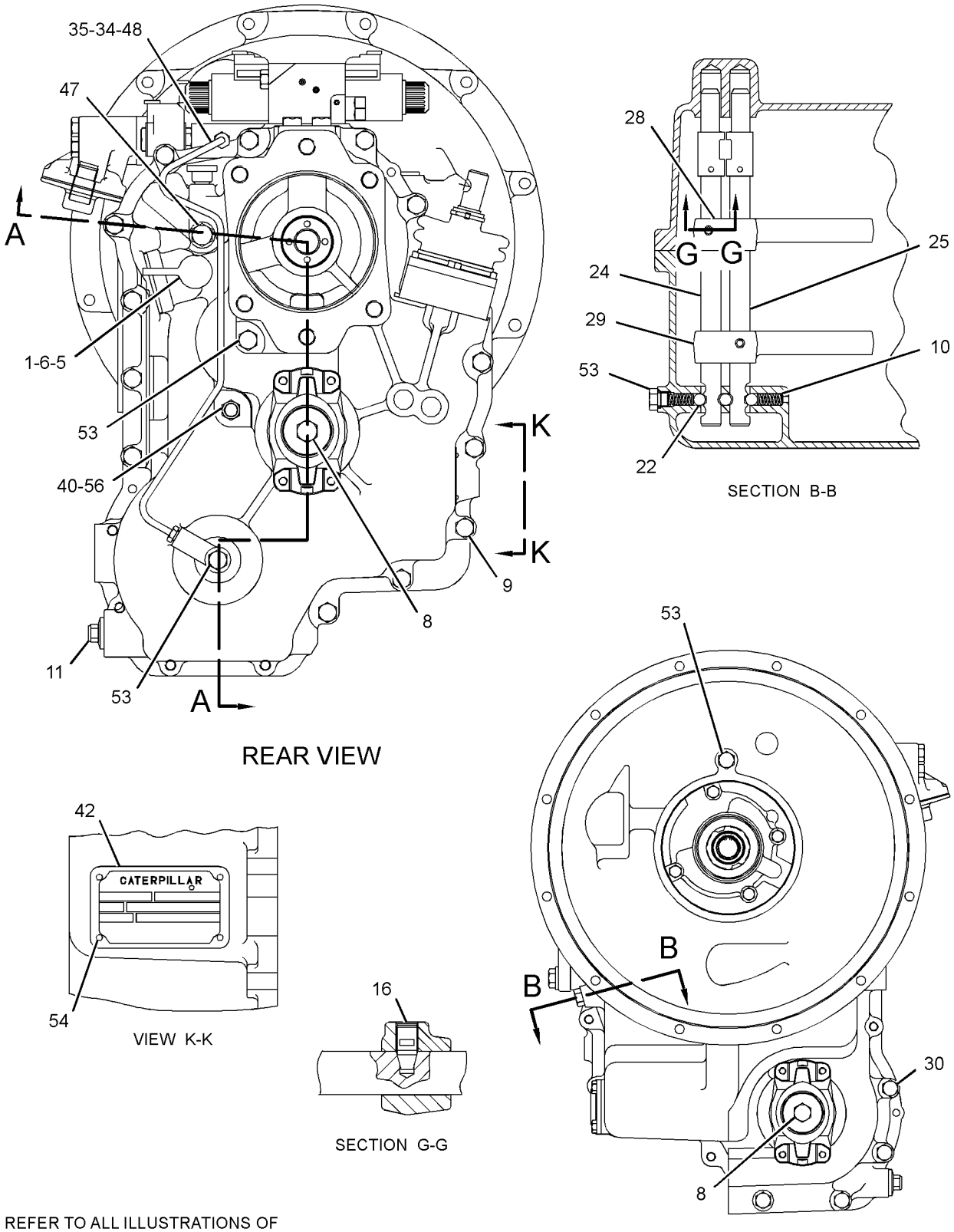

REFER TO ALL ILLUSTRATIONS OF THIS GROUP FOR AUXILIARY VIEWS

GRAPHIC #1

g02819401

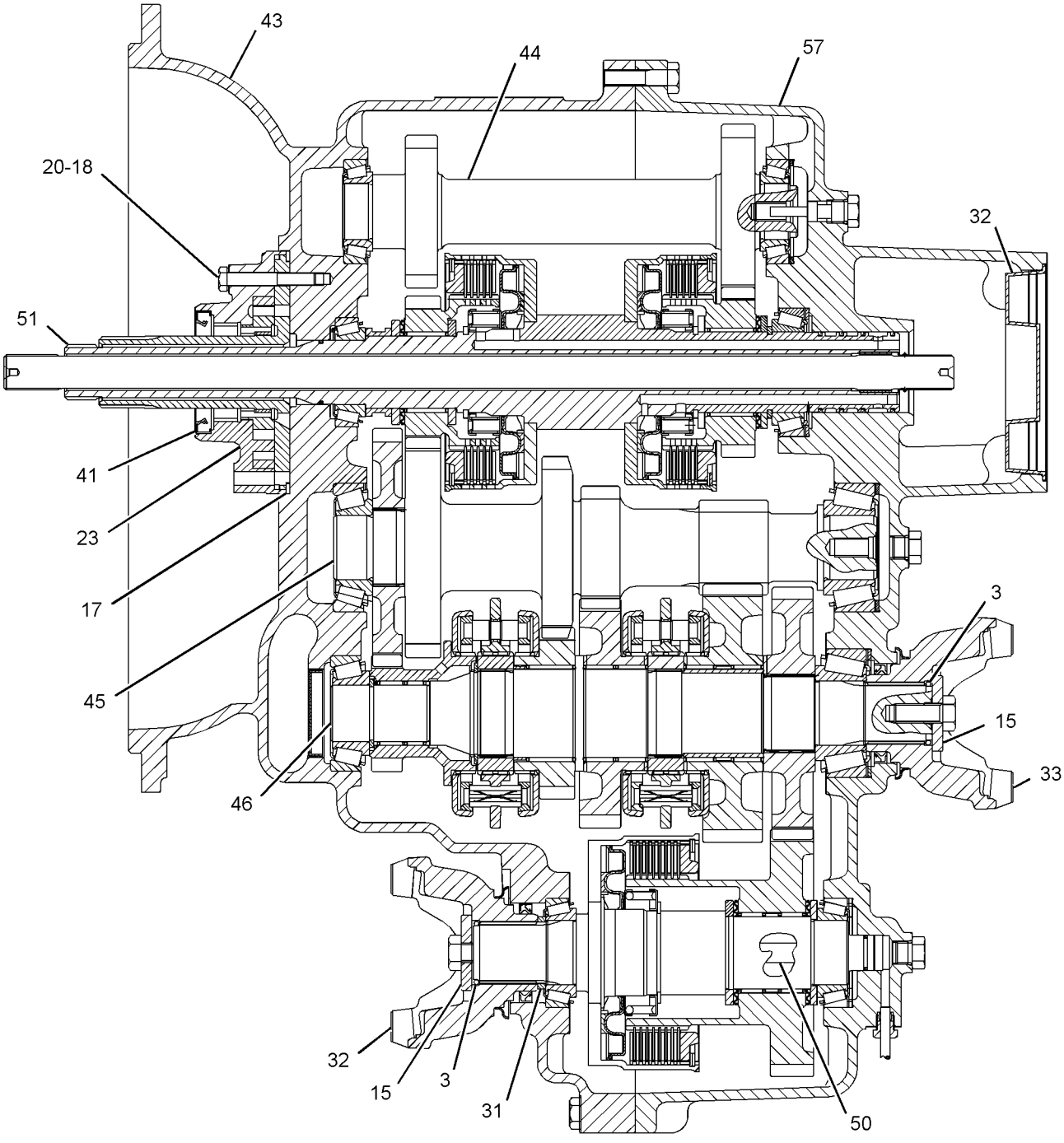

SECTION A-A

GRAPHIC #2

g02819416

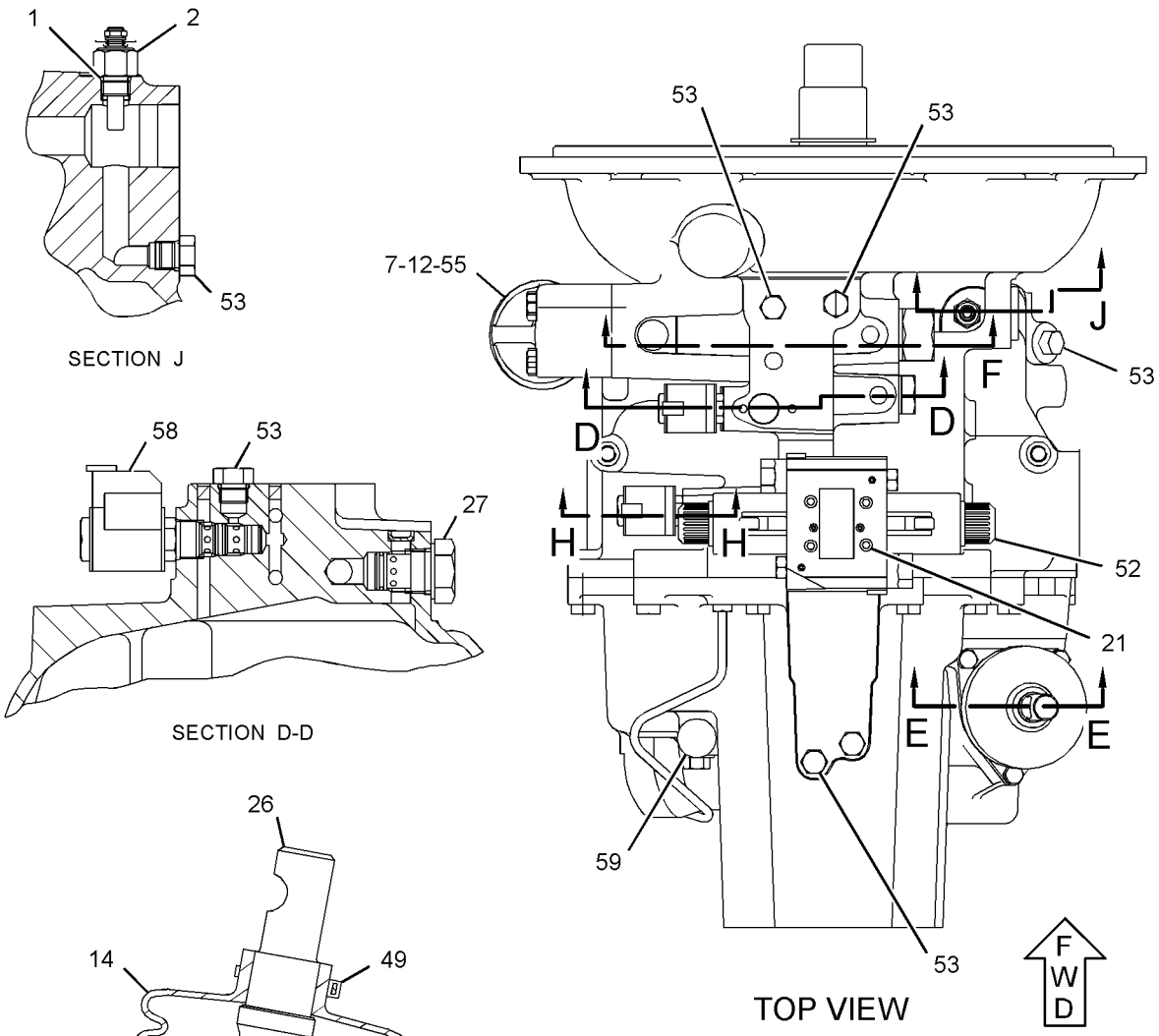

GRAPHIC #3 **<END>** g02822077

359-0396 TRANSMISSION GP-DIRECT DRIVE–

ALL WHEEL DRIVE

S/N: SEJ1-UP

PART OF 359-0380 TRANSMISSION AR-POWER SHIFT

AN ATTACHMENT

SMCS-3030 **i04597409**

NOTE	REF NO	GRAPHIC REF	PART NUMBER	QTY	PART NAME 1 2 3 4 5 6 (PRODUCT LEVEL)	SEE PAGE
	1	1,4	**3J-1907**	1	SEAL-O-RING	
	2	3	**4F-7952**	1	SEAL-O-RING	
	3	4	**4W-9972**	1	SENDER AS-TEMPERATURE (12-VOLT) (TRANSMISSION OIL)	
		4	**6V-8378**	1	NUT (10-32-THD)	
		4	**8F-1434**	1	LOCKWASHER	
		4	**8T-0328**	1	WASHER-HARD (5.5X10X1-MM THK)	
	4	2	**5P-8066**	2	SEAL-O-RING	
	5	2	**6T-9163**	2	SHIM (0.599-MM THK)	
	6	2	**6T-9164**	2	SHIM (0.178-MM THK)	
	7	2	**6T-9165**	2	SHIM (0.076-MM THK)	
	8	2	**6T-9166**	2	SHIM (0.051-MM THK)	
	9	3	**6T-9202**	2	PLUG	
M	10	3	**6V-5215**	3	BOLT (M8X1.25X16-MM)	
M	11	2	**6V-8097**	2	BOLT (M12X1.75X30-MM)	
M	12	1	**161-7632**	16	BOLT-SELF-LOCKING (M10X1.5X40-MM)	
	13	4	**6Y-1896**	1	PLUG AS-DRAIN (TRANSMISSION)	
		4	**5P-6718**	1	SEAL-O-RING	
	14	2	**7T-2646**	2	SPACER (66X79.5X2.02-MM THK)	
	15	3	**7T-2651**	1	STRAINER-SUCTION (TRANSMISSION)	
	16	2	**7T-3195**	2	WASHER (12.3X47X6.35-MM THK)	
	17	4	**7T-3251**	1	BREATHER (TRANSMISSION)	
	18	1	**7T-3253**	2	DOWEL	
	19	2	**7X-4741**	1	SEAL	
	20	1,2,3	**7W-3556**	12	WASHER (14.27X20.57X1.5-MM THK)	
M	21	4	**8C-5748**	4	BOLT (M8X1.25X55-MM)	
M	22	2	**8C-8545**	2	BOLT-SOCKET HEAD (M5X0.8X20-MM)	
M	23	4	**8T-0271**	2	BOLT-SOCKET HEAD (M10X1.5X35-MM)	
M	24	1	**8T-0643**	1	BOLT (M10X1.5X80-MM)	
	25	4	**9P-9150**	4	WASHER (8.25X18X0.84-MM THK)	
	26	3	**9W-5460**	1	RING	
M	27	4	**9X-6615**	12	BOLT (M5X0.8X30-MM)	
	28	1	**104-3288**	2	SHIM (0.05-MM THK)	
	29	3	**106-9861**	1	PLATE-COVER	
	30	1	**117-1385**	1	SEAL-O-RING	
	31	2,4	**120-9762**	3	SEAL-O-RING	
	32	1	**121-2059**	2	SHIM (0.08-MM THK)	
	33	1	**121-2060**	2	SHIM (0.18-MM THK)	
	34	1	**121-2061**	2	SHIM (0.6-MM THK)	
	35	2	**121-7385**	1	PUMP GP-TRANSMISSION (POWER TRAIN)	
		2	**208-8240**	1	SEAL-LIP TYPE	
	36	3	*121-7396*	1	VALVE GP-RELIEF (TORQUE CONVERTER INLET)	
		3	**6V-4589**	1	SEAL-O-RING	
		3	**8L-2746**	1	SEAL-O-RING	
	37	2	**121-7398**	1	SPACER (70X79.5X2-MM THK)	
	38	2	**121-7399**	1	SHIM (0.05-MM THK)	
	39	2	**121-7400**	1	SHIM (0.08-MM THK)	
	40	2	**121-7401**	1	SHIM (0.18-MM THK)	
	41	2	**121-7402**	1	SHIM (0.6-MM THK)	
	42	1	**122-1879**	2	SPACER (58X67.5X2-MM THK)	
	43	2	**122-1883**	1	SPACER (38X45X5-MM THK)	
	44	2	**122-6787**	2	YOKE AS	
					(EACH INCLUDES)	
		2	**123-1377**	1	GUARD	

359-0396 TRANSMISSION GP-DIRECT DRIVE *(contd.)* i04597409

NOTE	REF NO	GRAPHIC REF	PART NUMBER	QTY	PART NAME 1 2 3 4 5 6 (PRODUCT LEVEL)	SEE PAGE
	45	2	**147-0201**	1	TUBE AS	
Y	46	3	**147-0209**	1	VALVE GP-RELIEF (TRANSMISSION)	257
	47	4	**147-0211**	1	ELBOW AS	
		4	**3G-6927**	1	ADAPTER	
	48	2	**147-0218**	1	TUBE AS-TRANSFER	
	49	1	**147-0226**	1	TUBE AS	
	50	1,2,3	**147-0234**	6	BOLT (9/16-18X0.83-IN)	
	51	3	**147-0236**	1	TUBE AS-TRANSFER	
	52	3	**147-0262**	4	WASHER (19.1X24.1X1.5-MM THK)	
	53	3	**147-0266**	2	BOLT (3/4-16X1.417-IN)	
	54	3	**237-5186**	1	PLATE-XMSN IDENTIFICATION	
	55	4	**150-7732**	2	SEAL-O-RING	
	56	1	**191-8304**	1	SENSOR GP-SPEED (TRANSMISSION)	
		1	**137-6645**	1	PAD-CONNECTOR	
	57	1	**205-9244**	2	PLUG	
	58	2	**302-8432**	2	SEAL-LIP TYPE	
	59	3	**305-3423**	2	VALVE GP-SOLENOID (12-VOLT) (DIFFERENTIAL LOCK)	
					(EACH INCLUDES)	
		3	**274-8034**	1	COIL AS (12-VOLT)	
	60	2	**274-4554**	1	CASE AS-FRONT	
		2	**147-0268**	4	PLUG	
		2	**163-9091**	4	PLUG	
	61	4	*274-4556*	3	PLUG AS	
					(EACH INCLUDES)	
		4	**8L-2786**	1	SEAL-O-RING	
		4	**9S-4185**	1	PLUG-O-RING	
Y	62	1	**274-4561**	1	SHAFT GP-IDLER (POWERSHIFT)	215
	63	2	**363-4651**	1	CASE AS-REAR	
Y	64	2	**274-4578**	1	SHAFT GP-INPUT (POWERSHIFT)	217
Y	65	2	**274-4580**	1	SHAFT GP-COUNTER	208
Y	66	2	**274-4582**	1	SHAFT GP-OUTPUT (MAIN)	223
Y	67	4	**280-7010**	1	VALVE GP-SOLENOID (12-VOLT) (TRANSMISSION)	261
Y	68	4	**278-0209**	1	VALVE GP-SOLENOID (12-VOLT) (REVERSE)	258
Y	69	4	**278-0213**	1	VALVE GP-SOLENOID (12-VOLT) (CLUTCH)	260
Y	70	2	**280-7007**	1	SHAFT GP-OUTPUT (FRONT)	226
	71	1,3,4	**334-5131**	15	PLUG AS	
					(EACH INCLUDES)	
		1,3,4	**3J-1907**	1	SEAL-O-RING	
		1,3,4	**9S-4191**	1	PLUG-O-RING	
	72	3	**336-5469**	4	RIVET	
	73	1	**6V-0852**	1	CAP-DUST	
	74	1,4	**6V-3965**	1	FITTING (QUICK DISCONNECT)	
	75	4	**147-0232**	2	PLUG	

M-METRIC PART
Y-SEPARATE ILLUSTRATION

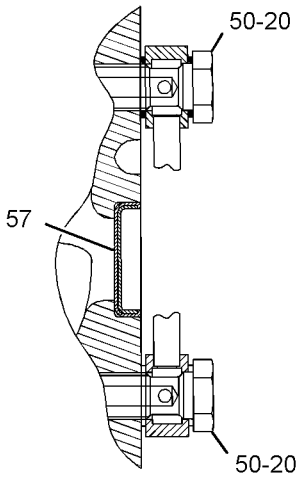

SECTION F-F

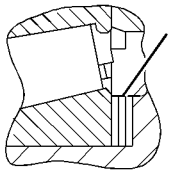

VIEW OF AREA M

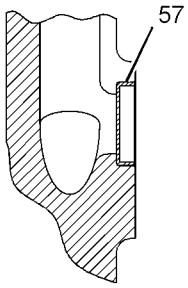

SECTION N-N

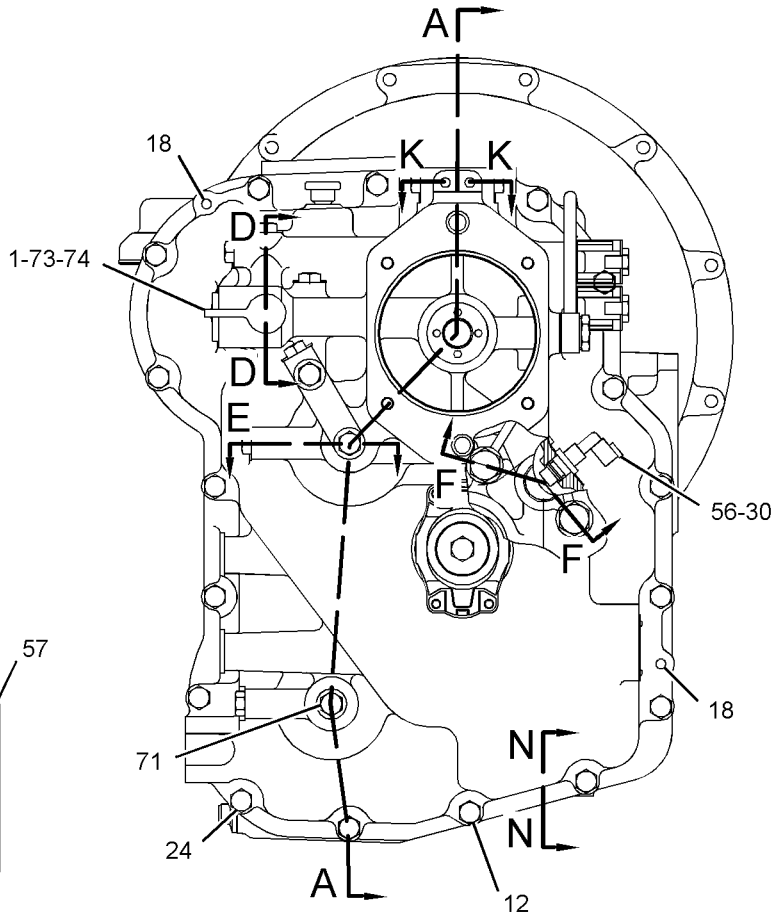

REAR VIEW

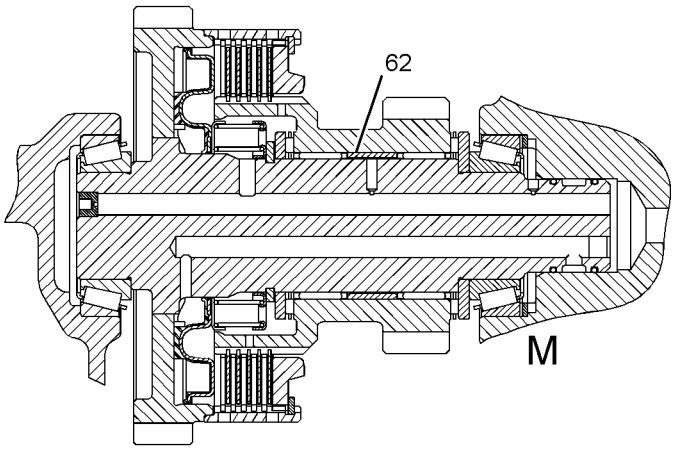

SECTION D-D

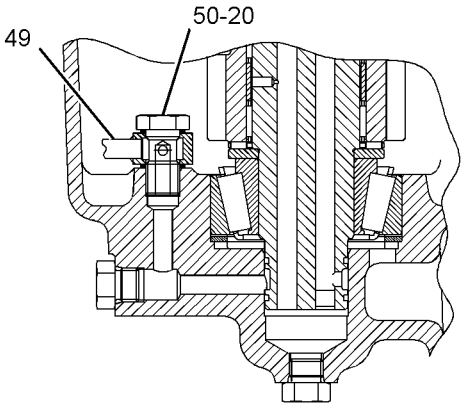

SECTION E

REFER TO ALL ILLUSTRATIONS OF
THIS GROUP FOR AUXILIARY VIEWS

GRAPHIC #1

g02827141

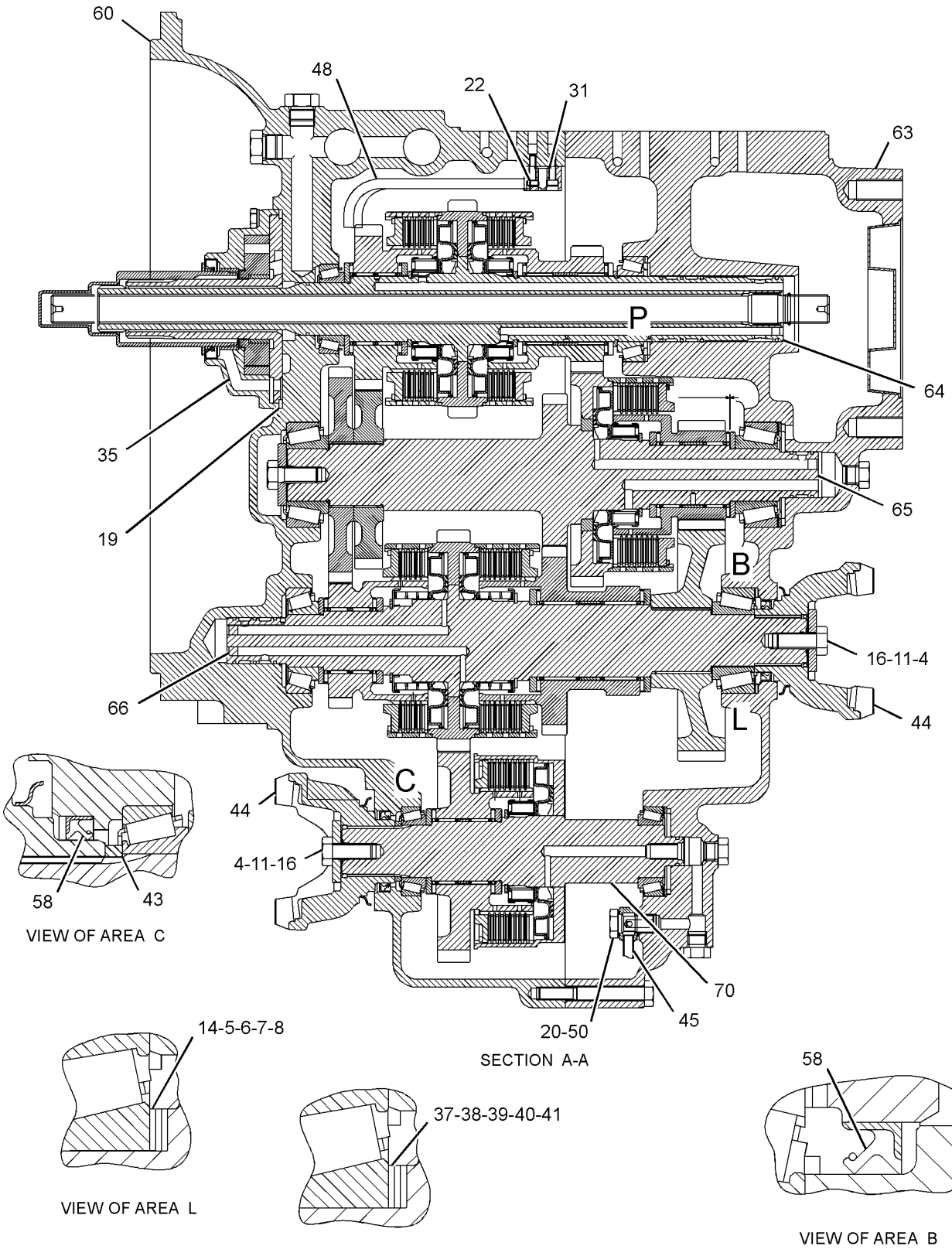

GRAPHIC #2

g02827244

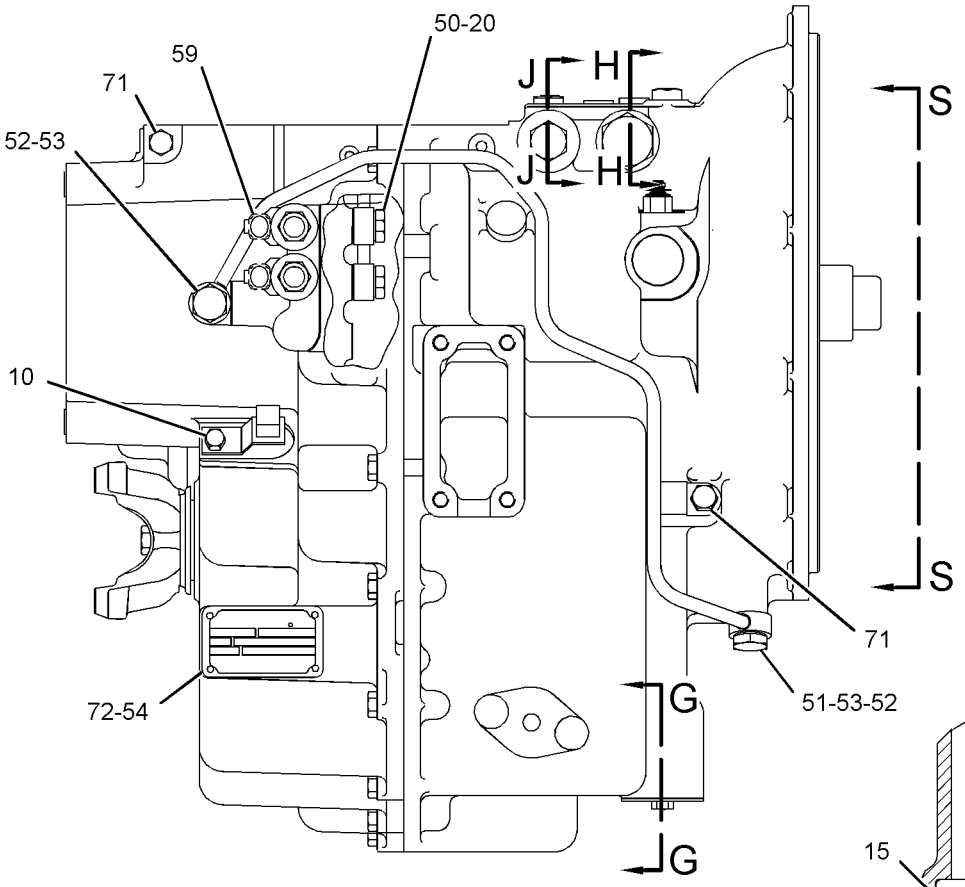

RIGHT SIDE VIEW

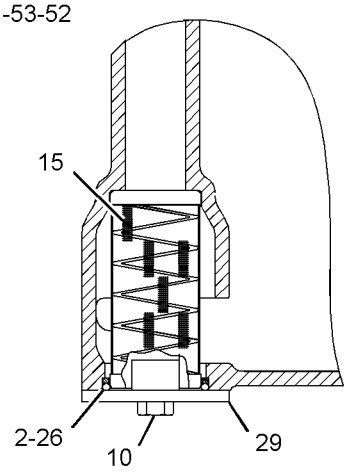

SECTION G-G

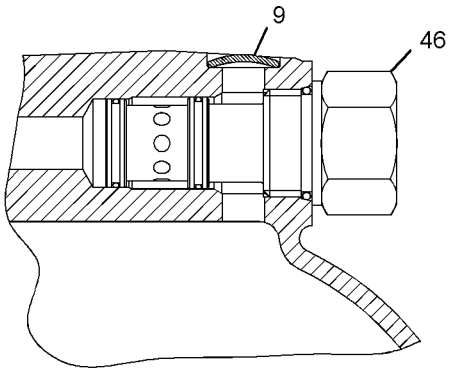

SECTION H-H

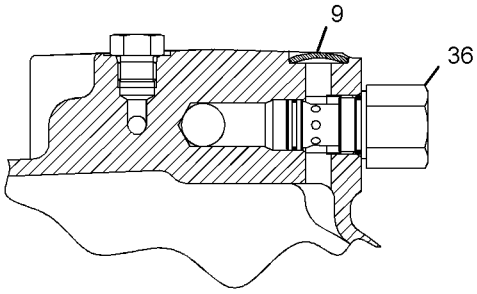

SECTION J-J

REFER TO ALL ILLUSTRATIONS OF
THIS GROUP FOR AUXILIARY VIEWS

GRAPHIC #3

g02827247

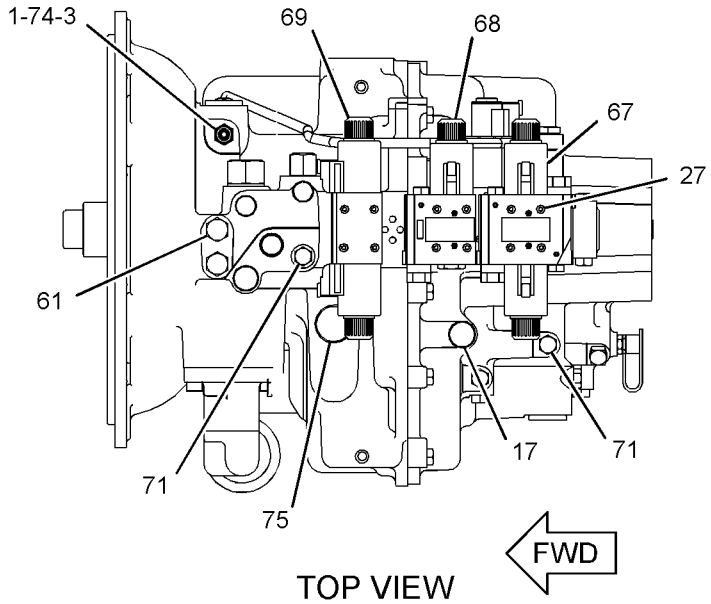

TOP VIEW

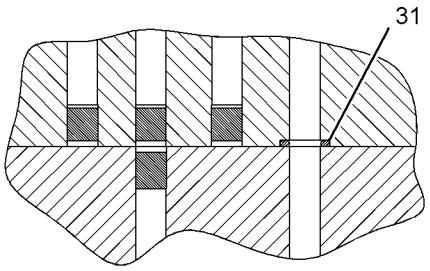

SECTION K-K

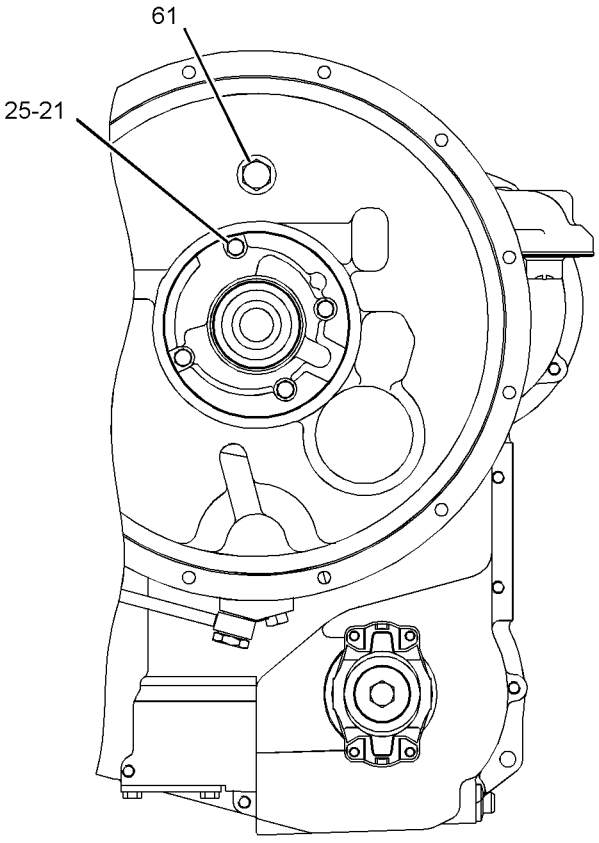

VIEW S-S

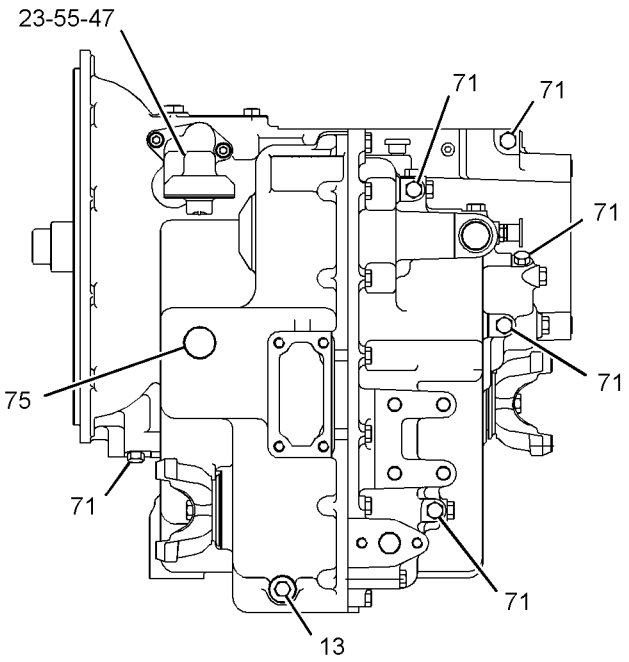

LEFT SIDE VIEW

GRAPHIC #4 **<END>** g02827252

POWER TRAIN

350-8607 TRANSMISSION GP-POWER SHIFT

S/N: SEJ1-UP

PART OF 350-8606 TRANSMISSION AR-POWER SHIFT

AN ATTACHMENT

SMCS-3030 **i04609514**

NOTE	REF NO	GRAPHIC REF	PART NUMBER	QTY	PART NAME 1 2 3 4 5 6 (PRODUCT LEVEL)	SEE PAGE
	1	3	**4W-9972**	1	SENDER AS-TEMPERATURE (12-VOLT) (TRANSMISSION OIL)	
		3	**6V-8378**	1	NUT (10-32-THD)	
		3	**8F-1434**	1	LOCKWASHER	
		3	**8T-0328**	1	WASHER-HARD (5.5X10X1-MM THK)	
B	2	5	**6T-9163**	2	SHIM (0.599-MM THK)	
B	3	5	**6T-9164**	2	SHIM (0.178-MM THK)	
B	4	5	**6T-9165**	2	SHIM (0.076-MM THK)	
B	5	5	**6T-9166**	2	SHIM (0.051-MM THK)	
	6	3	**6T-9202**	2	PLUG	
	7	1	**6V-0852**	1	CAP-DUST	
	8	1	**6Y-1896**	1	PLUG AS-DRAIN (TRANSMISSION)	
		1	**5P-6718**	1	SEAL-O-RING	
	9	5	**7T-2646**	2	SPACER (66X79.5X2.02-MM THK)	
	10	3	**7T-2651**	1	STRAINER-SUCTION (TRANSMISSION)	
	11	4	**7T-3195**	2	WASHER (12.3X47X6.35-MM THK)	
	12	1	**7T-3251**	1	BREATHER (TRANSMISSION)	
	13	1	**7T-3253**	2	DOWEL	
	14	4	**9P-9150**	4	WASHER (8.25X18X0.84-MM THK)	
	15	3	**9W-5460**	1	RING	
B	16	5	**104-3288**	2	SHIM (0.05-MM THK)	
	17	3	**106-9861**	1	PLATE-COVER	
	18	1,2	**120-9762**	3	SEAL-O-RING	
B	19	5	**121-2059**	2	SHIM (0.08-MM THK)	
B	20	5	**121-2060**	2	SHIM (0.18-MM THK)	
B	21	5	**121-2061**	2	SHIM (0.6-MM THK)	
	22	4	**121-7385**	1	PUMP GP-TRANSMISSION	
		4	**208-8240**	1	SEAL-LIP TYPE	
	23	3	*121-7396*	1	VALVE GP-RELIEF (TORQUE CONVERTER INLET)	
		3	**6V-4589**	1	SEAL-O-RING	
		3	**8L-2746**	1	SEAL-O-RING	
	24	5	**121-7398**	1	SPACER (70X79.5X2-MM THK)	
B	25	5	**121-7399**	1	SHIM (0.05-MM THK)	
B	26	5	**121-7400**	1	SHIM (0.08-MM THK)	
B	27	5	**121-7401**	1	SHIM (0.18-MM THK)	
B	28	5	**121-7402**	1	SHIM (0.6-MM THK)	
	29	5	**122-1879**	2	SPACER (58X67.5X2-MM THK)	
	30	5	**122-1883**	1	SPACER (38X45X5-MM THK)	
	31	2	**147-0201**	1	TUBE AS	
Y	32	3	**147-0209**	1	VALVE GP-RELIEF (TRANSMISSION)	257
	33	2	**147-0211**	1	ELBOW AS	
		2	**3G-6927**	1	ADAPTER	
	34	1	**147-0218**	1	TUBE AS-TRANSFER	
	35	1	**147-0226**	1	TUBE AS	
	36	1,2	**147-0232**	2	PLUG	
	37	1,2,3	**147-0234**	6	BOLT (9/16-18X0.83-IN)	
	38	3	**147-0236**	1	TUBE AS-TRANSFER	
	39	1,3	**147-0262**	4	WASHER (19.1X24.1X1.5-MM THK)	
	40	1,3	**147-0266**	2	BOLT (3/4-16X1.417-IN)	
	41	2	**150-7732**	2	SEAL-O-RING	
	42	1	**191-8304**	1	SENSOR GP-SPEED (TRANSMISSION OUTPUT 1)	
	43	1	**205-9244**	1	PLUG	
	44	2,3,4	*274-4556*	4	PLUG AS	
					(EACH INCLUDES)	
		2,3,4	**8L-2786**	1	SEAL-O-RING	

350-8607 TRANSMISSION GP-POWER SHIFT *(contd.)* i04609514

NOTE	REF NO	GRAPHIC REF	PART NUMBER	QTY	PART NAME 1 2 3 4 5 6 (PRODUCT LEVEL)	SEE PAGE
		2,3,4	**9S-4185**	1	PLUG-O-RING	
	45	3	**237-5186**	1	PLATE-XMSN IDENTIFICATION	
Y	46	1	**274-4561**	1	SHAFT GP-IDLER (POWERSHIFT)	215
Y	47	4	**278-0209**	1	VALVE GP-SOLENOID (12-VOLT) (REVERSE)	258
Y	48	4	**278-0213**	1	VALVE GP-SOLENOID (12-VOLT) (CLUTCH)	260
Y	49	4	**280-7007**	1	SHAFT GP-OUTPUT (FRONT)	226
Y	50	4	**280-7010**	1	VALVE GP-SOLENOID (12-VOLT) (TRANSMISSION)	261
	51	5	**302-8432**	2	SEAL-LIP TYPE	
	52	1	**305-3423**	2	VALVE GP-SOLENOID (12-VOLT) (DIFFERENTIAL LOCK)	
					(EACH INCLUDES)	
		1	**274-8034**	1	COIL AS (12-VOLT)	
	53	1,2,3	**334-5131**	16	PLUG AS	
					(EACH INCLUDES)	
		1,2,3	**3J-1907**	1	SEAL-O-RING	
		1,2,3	**9S-4191**	1	PLUG-O-RING	
	54	3	**336-5469**	4	RIVET	
	55	1	**366-1789**	1	VALVE GP-SOLENOID (12-VOLT)	
		1	**238-4626**	1	COIL AS (12-VOLT)	
	56	4	*374-5105*	1	CASE AS-REAR	
		4	**123-2920**	1	PLUG	
		4	**163-9091**	11	PLUG	
		4	**374-5103**	1	CASE-REAR	
		4	**378-8579**	1	PLUG-ORIFICE	
	57	4	*374-5106*	1	CASE AS-FRONT	
		4	**123-2920**	2	PLUG	
		4	**147-0268**	4	PLUG	
		4	**163-9091**	4	PLUG	
		4	**369-5823**	1	CASE-FRONT	
Y	58	4	**374-5110**	1	SHAFT GP-INPUT	221
	59	3	**388-9965**	1	VALVE GP-RELIEF	
		3	**7X-4744**	1	SEAL-O-RING	
		3	**106-9586**	1	SEAL-O-RING	
Y	60	4	*374-5112*	1	SHAFT GP-COUNTER	210
Y	61	4	*374-5113*	1	SHAFT GP-MAIN	228
	62	4	*380-9296*	2	YOKE AS	
					(EACH INCLUDES)	
		4	**123-1377**	1	GUARD	
		4	**362-7687**	1	YOKE-END	
	63	1	**117-1385**	1	SEAL-O-RING	
	64	1,3	**3J-1907**	2	SEAL-O-RING	
	65	3	**4F-7952**	1	SEAL-O-RING	
	66	4	**5P-8066**	2	SEAL-O-RING	
	67	1	**6V-3965**	1	FITTING (QUICK DISCONNECT)	
M	68	1,3	**6V-5215**	3	BOLT (M8X1.25X16-MM)	
M	69	1,2	**6V-5842**	16	BOLT (M10X1.5X40-MM)	
M	70	4	**6V-8097**	2	BOLT (M12X1.75X30-MM)	
	71	1,2,3	**7W-3556**	12	WASHER (14.27X20.57X1.5-MM THK)	
M	72	2	**9X-6615**	12	BOLT (M5X0.8X30-MM)	
	73	4	**7X-4741**	1	SEAL	
M	74	4	**8C-5748**	4	BOLT (M8X1.25X55-MM)	
M	75	1	**8C-8545**	2	BOLT-SOCKET HEAD (M5X0.8X20-MM)	
M	76	2	**8T-0271**	2	BOLT-SOCKET HEAD (M10X1.5X35-MM)	
M	77	1	**8T-0643**	1	BOLT (M10X1.5X80-MM)	

B-USE AS REQUIRED
M-METRIC PART
Y-SEPARATE ILLUSTRATION

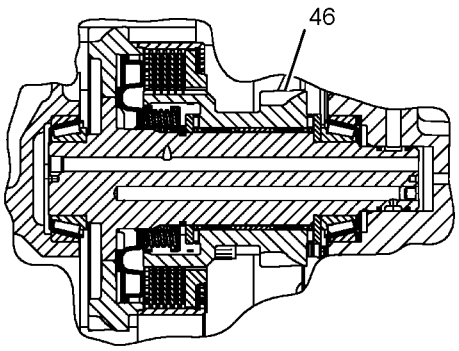

SECTION K-K

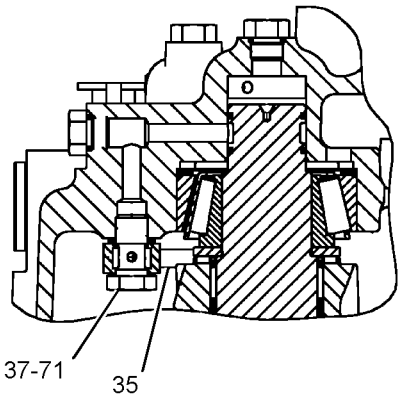

SECTION J-J

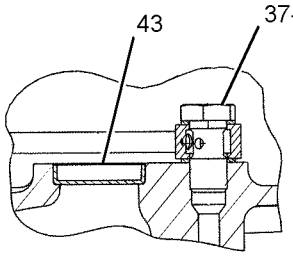

SECTION M-M

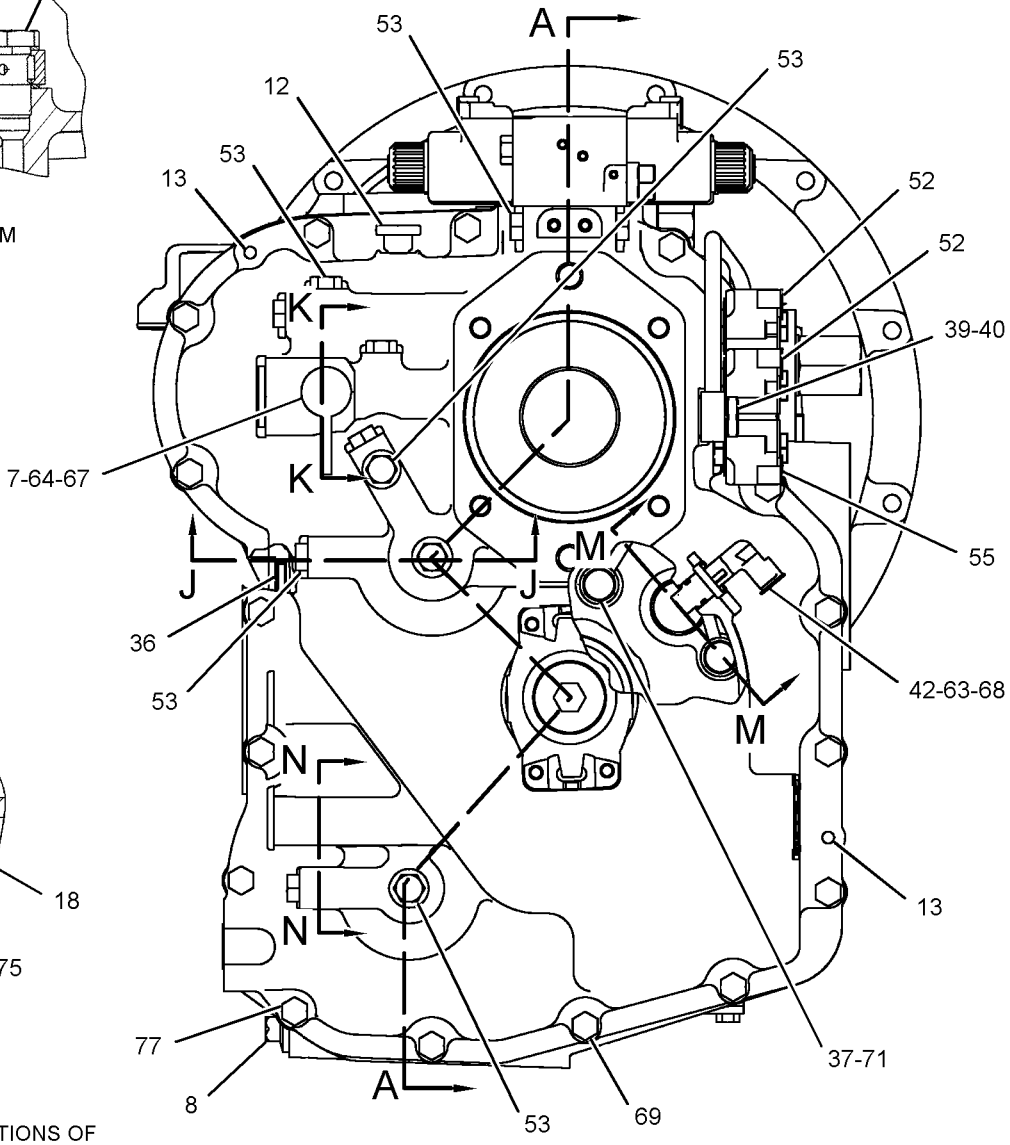

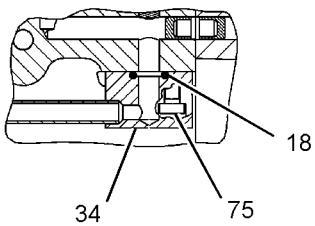

SECTION G-G

REFER TO ALL ILLUSTRATIONS OF
THIS GROUP FOR AUXILIARY VIEWS

GRAPHIC #1

g02848681

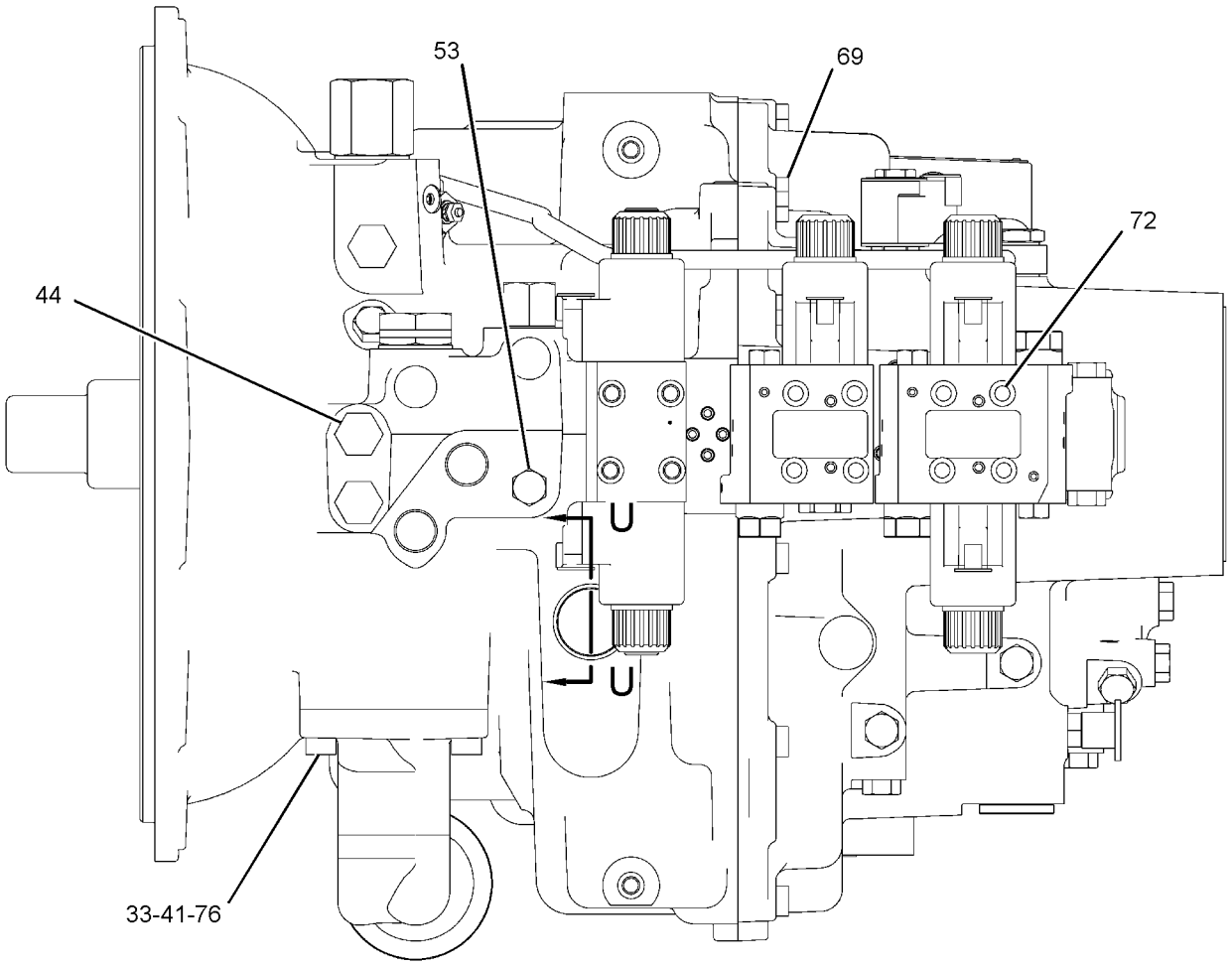

TOP VIEW



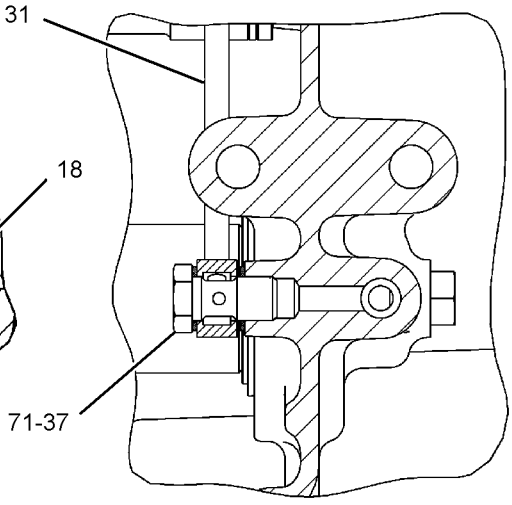

SECTION N-N

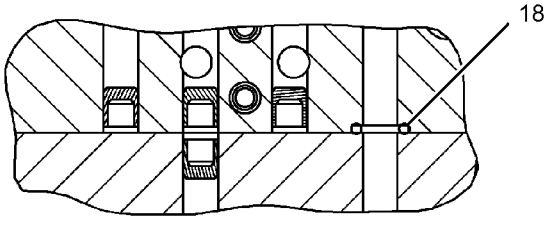

SECTION T-T

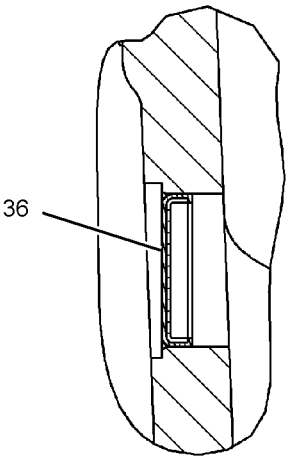

SECTION U-U

GRAPHIC #2

g02848684

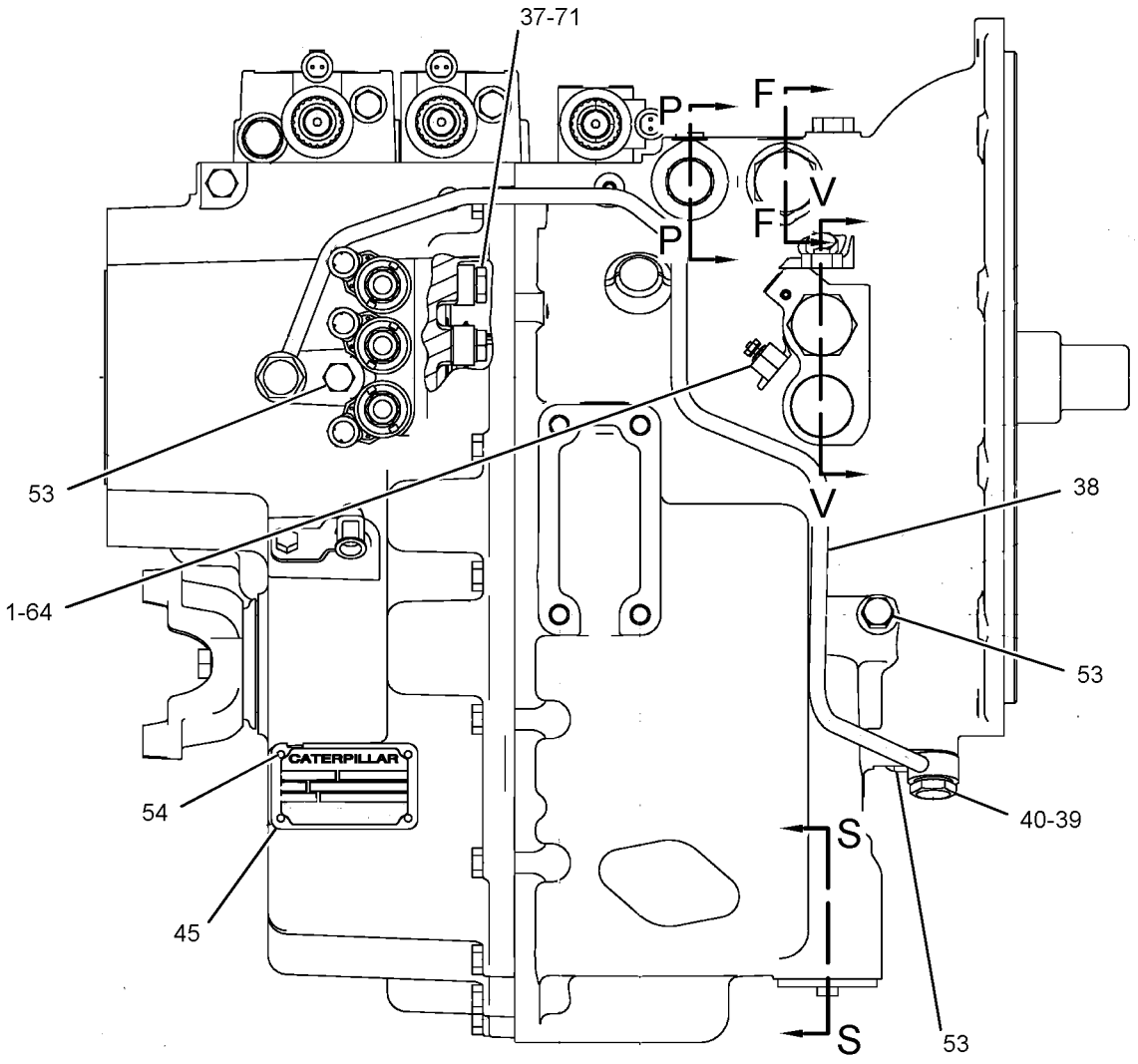

LEFT SIDE VIEW

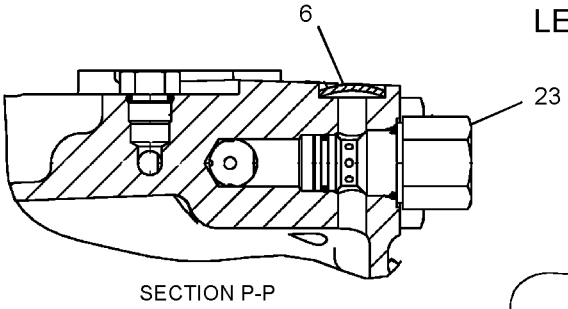

SECTION P-P

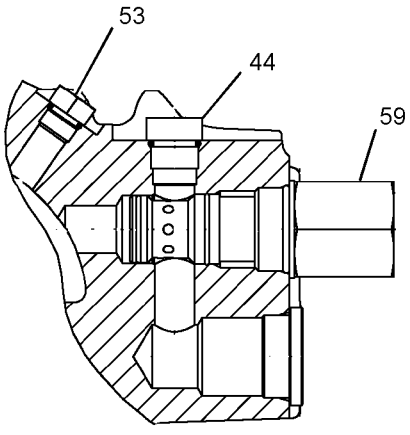

SECTION V-V

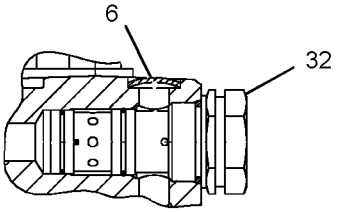

SECTION F-F

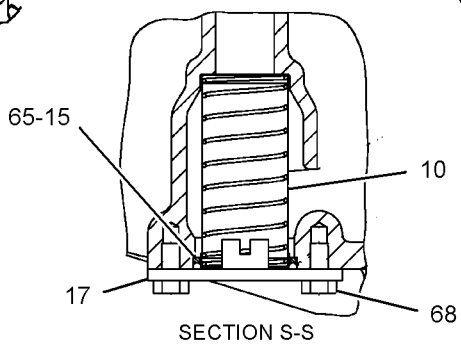

SECTION S-S

GRAPHIC #3

g02848678

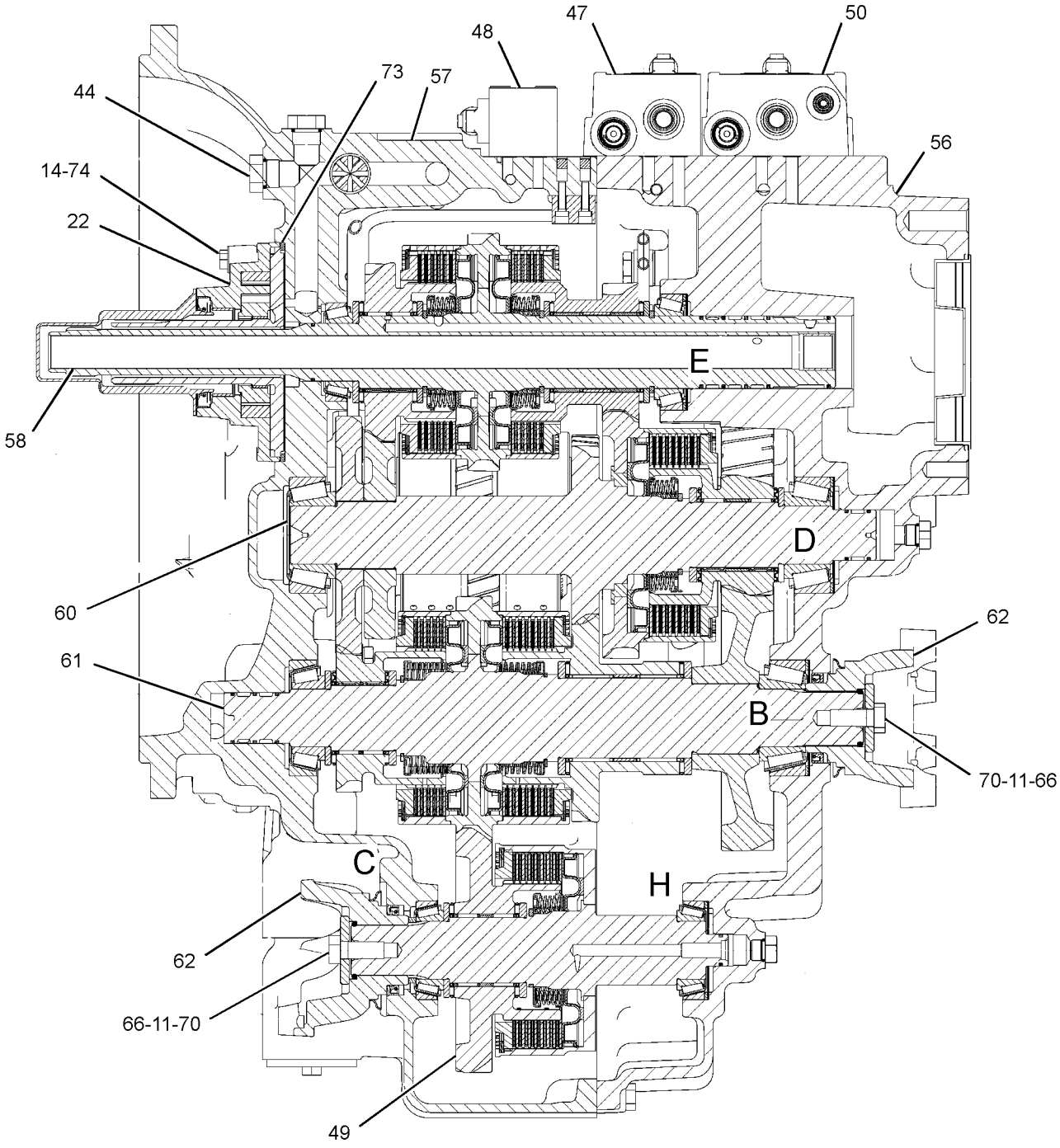

SECTION A-A

REFER TO ALL ILLUSTRATIONS OF
THIS GROUP FOR AUXILIARY VIEWS

GRAPHIC #4

g02848682

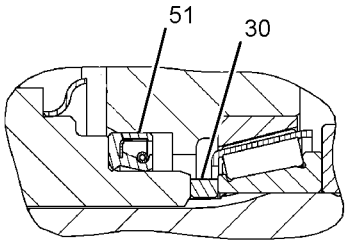

VIEW OF AREA C

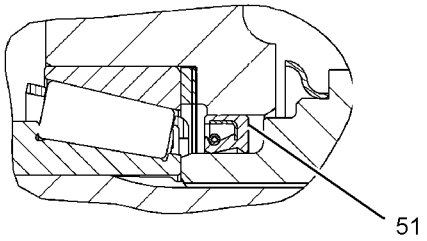

VIEW OF AREA B

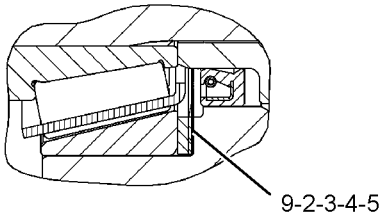

VIEW OF AREA D

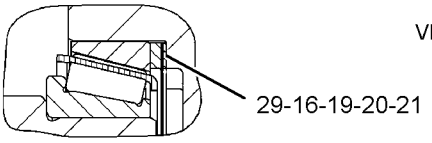

VIEW OF AREA H

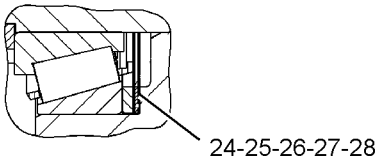

VIEW OF AREA E

GRAPHIC #5 **<END>** g02848683

274-8048 VALVE & MTG GP-SOLENOID

S/N: SEJ1-UP
PART OF 337-9719 LOCK GP-DIFFERENTIAL
AN ATTACHMENT

SMCS-5479 **i04139542**

NOTE	REF NO	GRAPHIC REF	PART NUMBER	QTY	PART NAME 1 2 3 4 5 6 (PRODUCT LEVEL)	SEE PAGE
M	1	1	**096-5968**	2	BOLT-SOCKET HEAD (M5X0.8X8-MM)	
J	2	1	*274-8041*	1	VALVE GP-SOLENOID (12-VOLT) (DIFFERENTIAL LOCK)	
					AVAILABLE REPAIR KIT(S):	
J			**250-8330**	1	KIT-SEAL (VALVE)	
					(INCLUDES O-RINGS)	

J-KIT MARKED J SERVICES PART MARKED J
M-METRIC PART

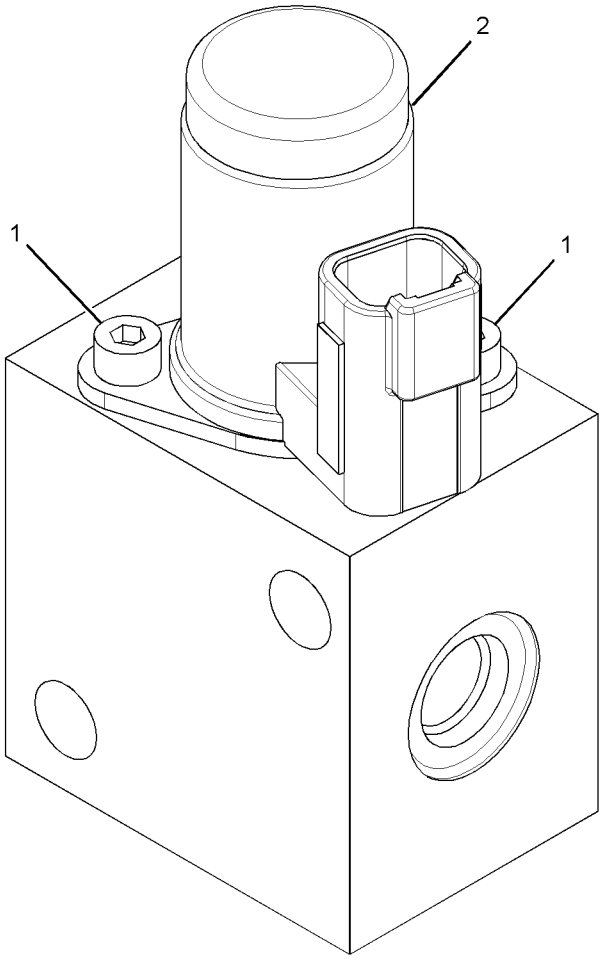

GRAPHIC #1 **<END>** g01346192

147-0209 VALVE GP-RELIEF

S/N: SEJ1-UP
PART OF 359-0394, 359-0396 TRANSMISSION GP-DIRECT DRIVE, 350-8607 TRANSMISSION GP-POWER SHIFT
AN ATTACHMENT

SMCS-3133, 3182, 3210, 3213 **i00724885**

NOTE	REF NO	GRAPHIC REF	PART NUMBER	QTY	PART NAME 1 2 3 4 5 6 (PRODUCT LEVEL)	SEE PAGE
	1	1	**7X-4744**	1	SEAL-O-RING	
	2	1	**6V-9178**	1	SEAL-O-RING	
	3	1	**106-9586**	1	SEAL-O-RING	

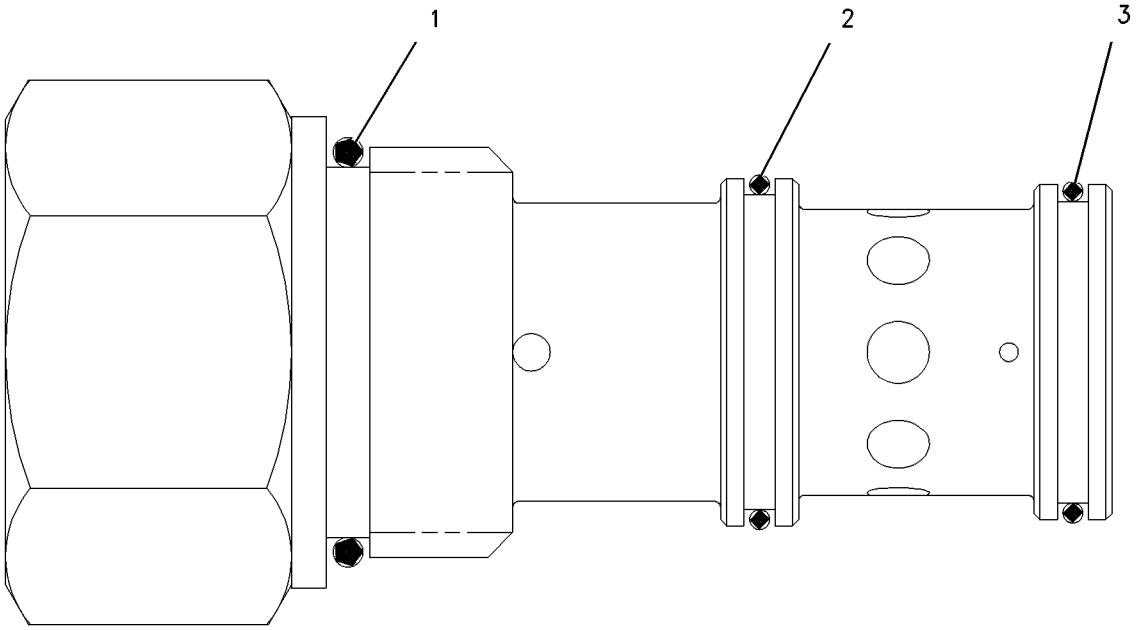

GRAPHIC #1 **<END>** g00304718

278-0209 VALVE GP-SOLENOID

S/N: SEJ1-UP
24-VOLT
PART OF 359-0396 TRANSMISSION GP-DIRECT DRIVE, 350-8607 TRANSMISSION GP-POWER SHIFT AN ATTACHMENT

SMCS-3174, 5479 **i04611676**

NOTE	REF NO	GRAPHIC REF	PART NUMBER	QTY	PART NAME 1 2 3 4 5 6 (PRODUCT LEVEL)	SEE PAGE
	1	1	**336-4713**	1	CARRIER	
	2	1	**336-4714**	2	SPRING-CENTERING	
	3	1	**336-4715**	1	HOUSING-VALVE BODY	
	4	1	**336-4722**	1	POPPET	
	5	1	**336-4729**	1	HEAD	
	6	1	**336-6804**	1	SPACER	
	7	1	**336-6817**	1	PISTON	
	8	1	**336-6822**	1	LABEL	
	9	1	**336-6824**	1	PLUG	
	10	1	**336-6831**	2	SPRING	
	11	1	**336-6839**	1	SPOOL	
	12	1	**336-6846**	1	PLUG	
	13	1	**336-6847**	1	PLUG	
	14	1	**336-6848**	1	PIN	
	15	1	**336-6908**	2	PLUG	
	16	1	**336-6913**	4	PLUG	
	17	1	**336-6914**	1	PLUG	
	18	1	**336-7113**	2	WASHER-SPECIAL	
	19	1	**336-7114**	1	SPRING	
	20	1	**336-7524**	1	SEAL-O-RING	
	21	1	**336-7526**	1	SEAL-O-RING	
	22	1	**336-7529**	1	SEAL-O-RING	
	23	1	**8L-2779**	4	SEAL-O-RING	
	24	1	**280-7009**	1	COIL AS (12-VOLT)	
	25	1	**280-7012**	1	TUBE AS	
		1	**6V-8399**	1	SEAL-O-RING	
		1	**274-4560**	1	NUT-SELF LOCKING	

278-0209 **VALVE GP-SOLENOID** *(contd.)* **i04611676**

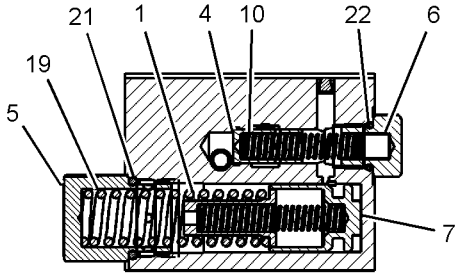

SECTION E-E

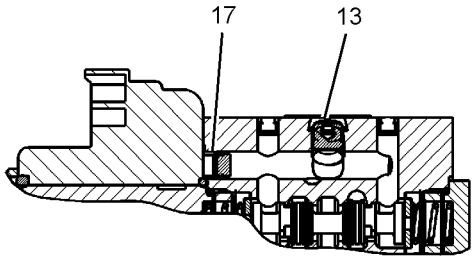

SECTION F-F

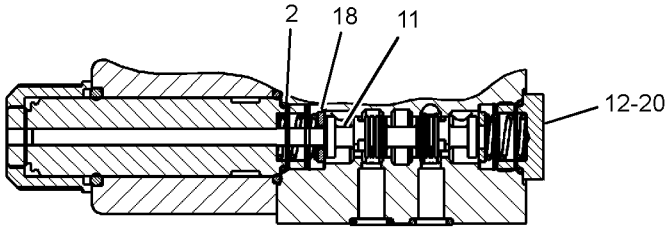

SECTION G-G

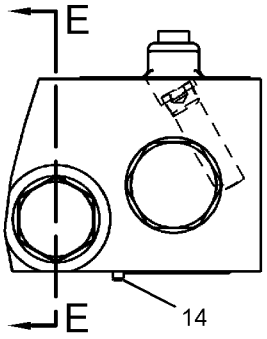

VIEW A-A

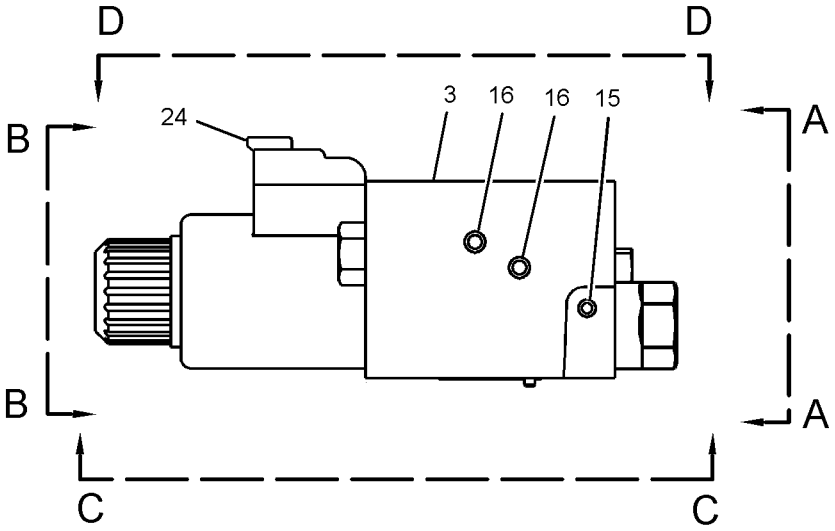

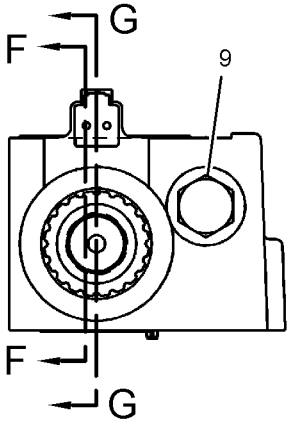

VIEW B-B

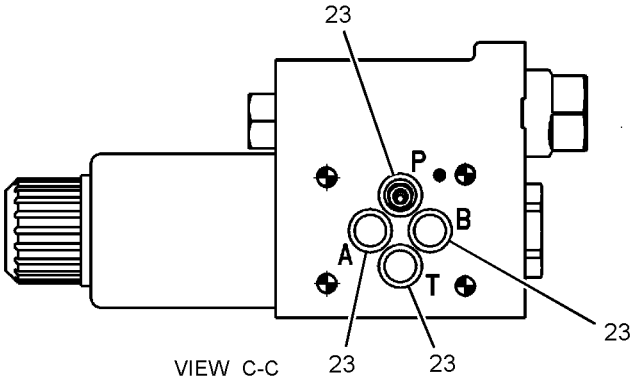

VIEW C-C

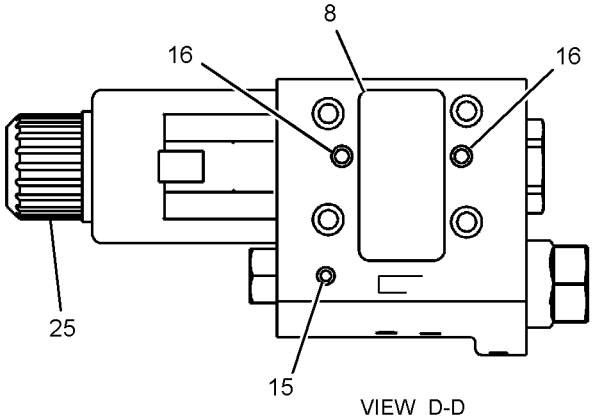

VIEW D-D

GRAPHIC #1 **<END>** g02791891

278-0213 VALVE GP-SOLENOID–CLUTCH

S/N: SEJ1-UP
12-VOLT
PART OF 359-0396 TRANSMISSION GP-DIRECT DRIVE, 350-8607 TRANSMISSION GP-POWER SHIFT AN ATTACHMENT

SMCS-3174, 5479 **i04611677**

NOTE	REF NO	GRAPHIC REF	PART NUMBER	QTY	PART NAME 1 2 3 4 5 6 (PRODUCT LEVEL)	SEE PAGE
	1	1	**8L-2779**	4	SEAL-O-RING	
	2	1	**218-3597**	1	PLUG-ORIFICE	
	3	1	**286-0867**	2	TUBE AS	
					(EACH INCLUDES)	
		1	**6V-8399**	1	SEAL-O-RING	
		1	**274-4560**	1	NUT-SELF LOCKING	
	4	1	**280-7009**	2	COIL AS (12-VOLT)	

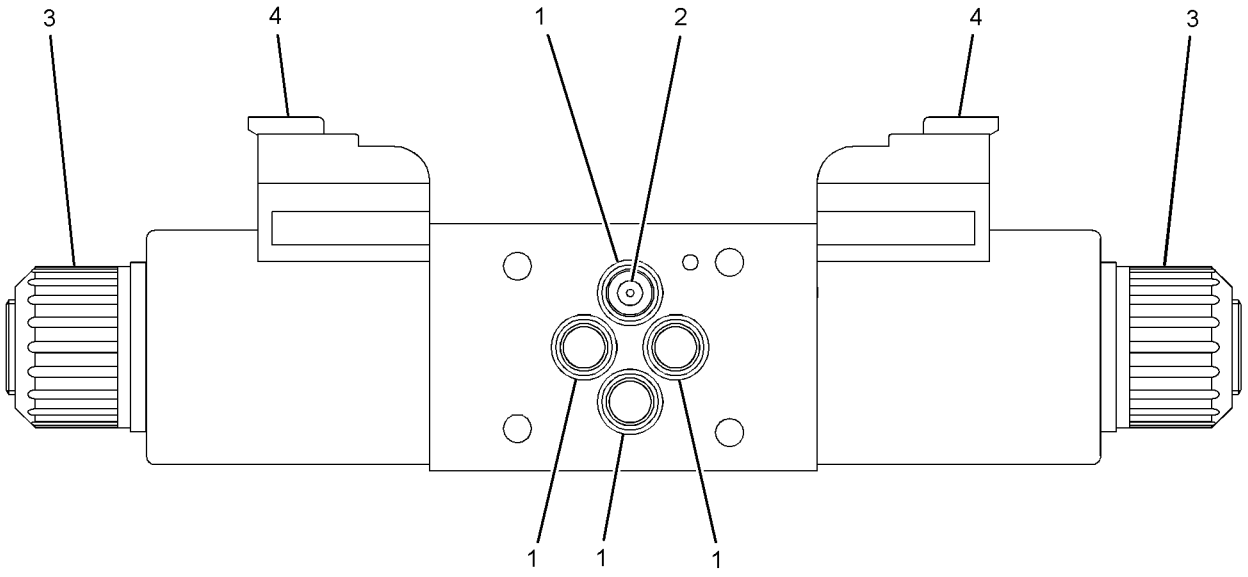

GRAPHIC #1 **<END>** g02791343

280-7010 VALVE GP-SOLENOID—TRANSMISSION

S/N: SEJ1-UP
12-VOLT
PART OF 359-0396 TRANSMISSION GP-DIRECT DRIVE, 350-8607 TRANSMISSION GP-POWER SHIFT
AN ATTACHMENT

SMCS-3174, 5479 **i04611709**

NOTE	REF NO	GRAPHIC REF	PART NUMBER	QTY	PART NAME 1 2 3 4 5 6 (PRODUCT LEVEL)	SEE PAGE
	1	1	**336-4713**	2	CARRIER	
	2	1	**336-4714**	2	SPRING-CENTERING	
	3	1	**336-4722**	2	POPPET	
	4	1	**336-4728**	1	BODY-VALVE	
	5	1	**336-4729**	2	HEAD	
	6	1	**336-6804**	2	SPACER	
	7	1	**336-6817**	2	PISTON	
	8	1	**336-6822**	1	LABEL	
	9	1	**336-6824**	2	PLUG	
	10	1	**336-6831**	4	SPRING	
	11	1	**336-6839**	1	SPOOL	
	12	1	**336-6847**	1	PLUG	
	13	1	**336-6848**	1	PIN	
	14	1	**336-6908**	4	PLUG	
	15	1	**336-6913**	6	PLUG	
	16	1	**336-6914**	1	PLUG	
	17	1	**336-7113**	2	WASHER-SPECIAL	
	18	1	**336-7114**	2	SPRING	
	19	1	**336-7526**	2	SEAL-O-RING	
	20	1	**336-7529**	2	SEAL-O-RING	
	21	1	**8L-2779**	4	SEAL-O-RING	
	22	1	**280-7009**	2	COIL AS (12-VOLT)	
	23	1	**280-7012**	2	TUBE AS	
					(EACH INCLUDES)	
		1	**6V-8399**		SEAL-O-RING	
		1	**274-4560**	1	NUT-SELF LOCKING	

280-7010 **VALVE GP-SOLENOID** *(contd.)* **i04611709**

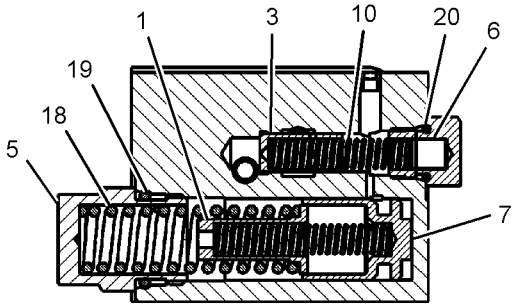

SECTION D-D

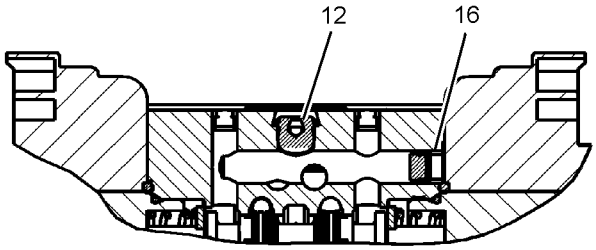

SECTION E-E

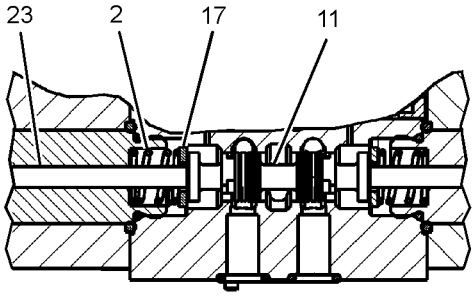

SECTION F-F

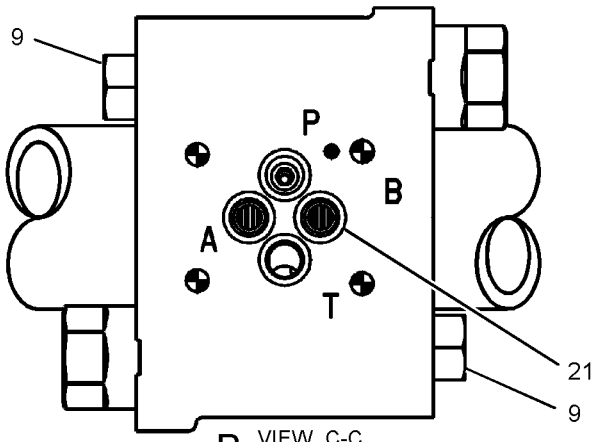

VIEW C-C

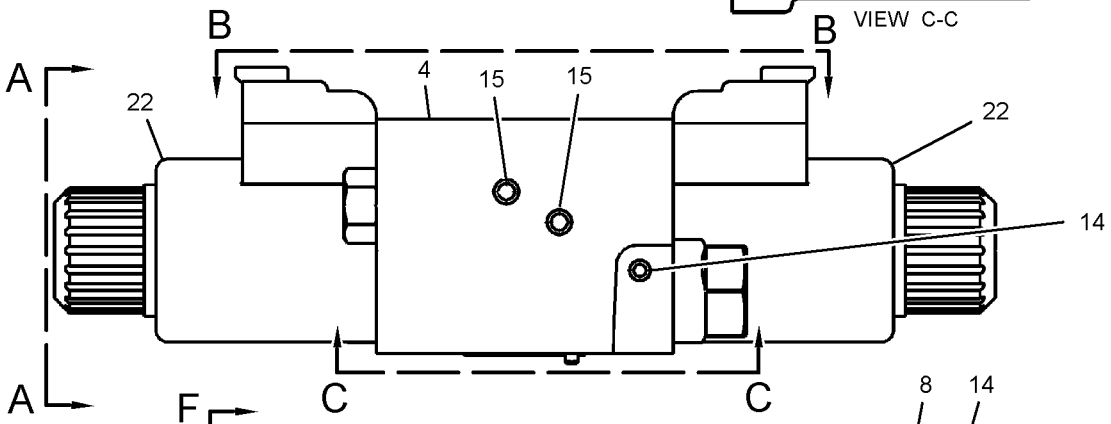

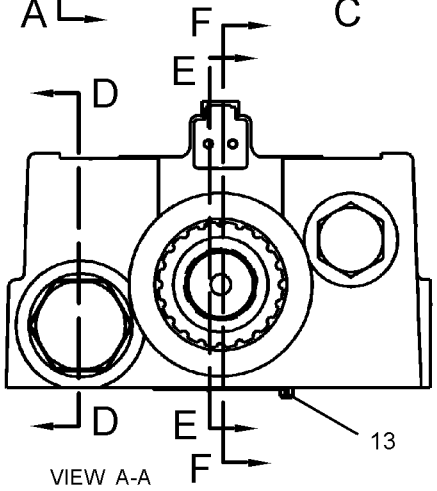

VIEW A-A

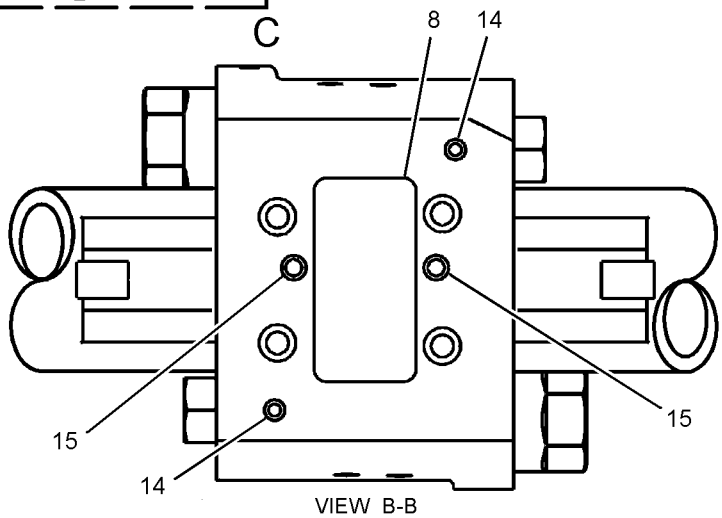

VIEW B-B

GRAPHIC #1 **<END>** g02791407

6D-0337 VALVE GP-TIRE

S/N: SEJ1-UP
PART OF 201-1920 VALVE GP-TIRE
AN ATTACHMENT

SMCS-4203 **i03644348**

NOTE	REF NO	GRAPHIC REF	PART NUMBER	QTY	PART NAME 1 2 3 4 5 6 (PRODUCT LEVEL)	SEE PAGE
	1	1	**6D-0443**	1	HOUSING AS-CORE	
	1A	1	**2D-2628**	1	CORE-VALVE	
	1B	1	**2D-2633**	1	CAP (VALVE STEM)	
	2	1	**8D-2707**	1	SPUD AS	
	2A	1	**2D-2629**	1	GROMMET	
	2B	1	**2D-2630**	1	WASHER	
	2C	1	**2D-2631**	1	NUT (0.482-26-THD)	

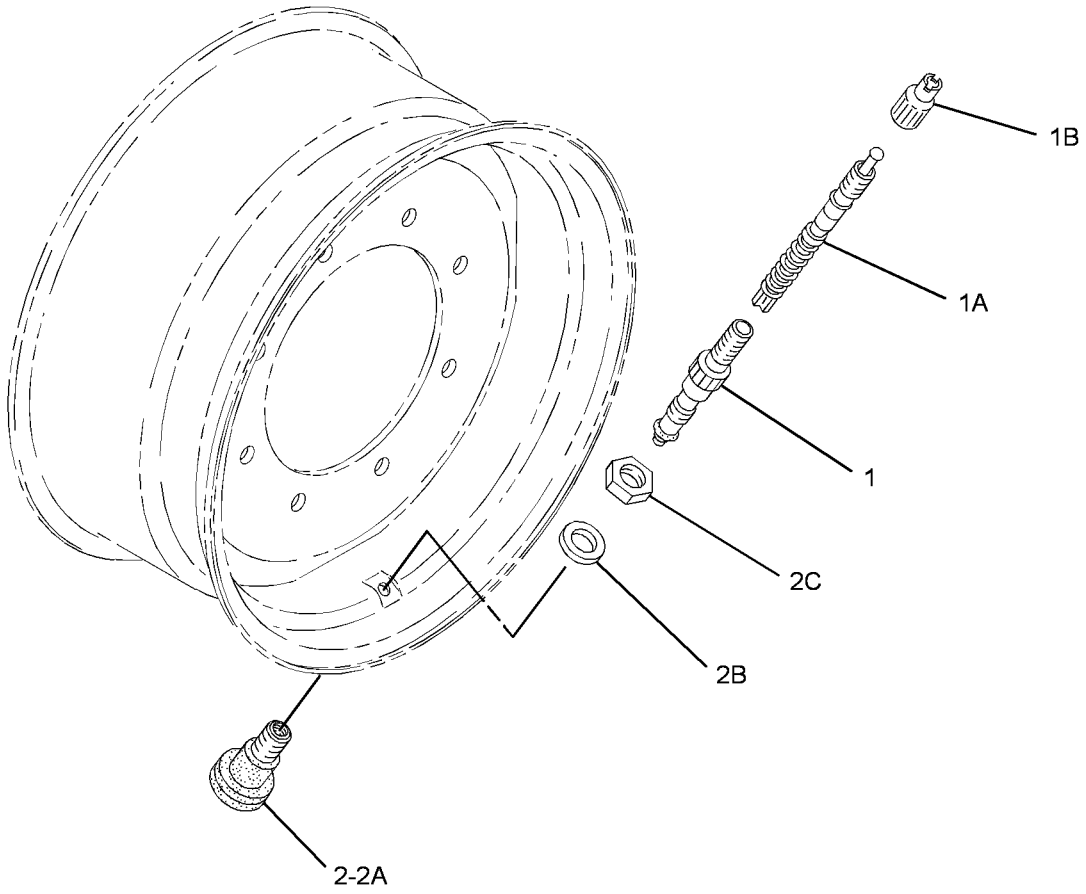

GRAPHIC #1 **<END>** g01955522

201-1920 VALVE GP-TIRE

S/N: SEJ1-UP

PART OF 201-1869, 201-1870, 201-1963, 201-1964, 216-9148, 216-9149, 249-7562, 249-7563, 249-7565, 249-7566, 249-7568, 249-7569, 249-7571, 249-7572, 249-9409, 249-9410, 249-9411, 250-0230, 266-1555, 266-1556, 273-5093, 273-5094, 273-5095, 273-5096, 303-0428, 303-0429, 303-0430, 303-0431, 303-0434, 303-0435, 303-0438, 303-0439, 319-7186, 319-7187, 319-7191, 319-7192, 329-1355, 329-1919, 341-9203, 341-9204 WHEEL & TIRE GP AN ATTACHMENT

SMCS-4203 **i03498408**

NOTE	PART NUMBER	QTY	PART NAME 1 2 3 4 5 6 (PRODUCT LEVEL)	SEE PAGE
Y	**6D-0337**	1	VALVE GP-TIRE	263

Y-SEPARATE ILLUSTRATION

<END>

249-9255 WHEEL & TIRE AR—ALL WHEEL DRIVE

S/N: SEJ1-UP

AN ATTACHMENT

SMCS-4201, 4202, 4203, 4208, 4209 **i02213984**

NOTE	PART NUMBER	QTY	PART NAME 1 2 3 4 5 6 (PRODUCT LEVEL)	SEE PAGE
Y	*216-9147*	1	WHEEL & TIRE GP (FRONT)	269
Y	*249-9392*	1	WHEEL & TIRE GP (REAR)	274

Y-SEPARATE ILLUSTRATION

<END>

249-9261 WHEEL & TIRE AR—ALL WHEEL DRIVE

S/N: SEJ1-UP

AN ATTACHMENT

SMCS-4201, 4202, 4203, 4208, 4209 **i02177124**

NOTE	PART NUMBER	QTY	PART NAME 1 2 3 4 5 6 (PRODUCT LEVEL)	SEE PAGE
Y	*201-1962*	1	WHEEL & TIRE GP (FRONT)	268
Y	*249-9390*	1	WHEEL & TIRE GP (REAR)	274

Y-SEPARATE ILLUSTRATION

<END>

249-9262 WHEEL & TIRE AR—ALL WHEEL DRIVE

S/N: SEJ1-UP

AN ATTACHMENT

SMCS-4201, 4202, 4203, 4208, 4209 **i02171207**

NOTE	PART NUMBER	QTY	PART NAME 1 2 3 4 5 6 (PRODUCT LEVEL)	SEE PAGE
Y	*201-1962*	1	WHEEL & TIRE GP (FRONT)	268
Y	*249-9399*	1	WHEEL & TIRE GP (REAR)	274

Y-SEPARATE ILLUSTRATION

<END>

249-9263 WHEEL & TIRE AR—ALL WHEEL DRIVE

S/N: SEJ1-UP
AN ATTACHMENT

SMCS-4201, 4202, 4203, 4208, 4209 **i02214108**

NOTE	PART NUMBER	QTY	PART NAME 1 2 3 4 5 6 (PRODUCT LEVEL)	SEE PAGE
Y	*201-1868*	1	WHEEL & TIRE GP (FRONT)	267
Y	*249-9400*	1	WHEEL & TIRE GP (REAR)	275

Y-SEPARATE ILLUSTRATION

<END>

273-5077 WHEEL & TIRE AR—ALL WHEEL DRIVE

S/N: SEJ1-UP
AN ATTACHMENT

SMCS-4201, 4202, 4203, 4208, 4209 **i02403925**

NOTE	PART NUMBER	QTY	PART NAME 1 2 3 4 5 6 (PRODUCT LEVEL)	SEE PAGE
Y	*266-1554*	1	WHEEL & TIRE GP (FRONT)	276
Y	*273-5081*	1	WHEEL & TIRE GP (REAR)	278

Y-SEPARATE ILLUSTRATION

<END>

273-5078 WHEEL & TIRE AR—ALL WHEEL DRIVE

S/N: SEJ1-UP
AN ATTACHMENT

SMCS-4201, 4202, 4203, 4208, 4209 **i02404018**

NOTE	PART NUMBER	QTY	PART NAME 1 2 3 4 5 6 (PRODUCT LEVEL)	SEE PAGE
Y	*266-1554*	1	WHEEL & TIRE GP (FRONT)	276
Y	*273-5080*	1	WHEEL & TIRE GP (REAR)	277

Y-SEPARATE ILLUSTRATION

<END>

303-0413 WHEEL & TIRE AR—ALL WHEEL DRIVE

S/N: SEJ1-UP
AN ATTACHMENT

SMCS-4201, 4202, 4203, 4208, 4209 **i02675636**

NOTE	PART NUMBER	QTY	PART NAME 1 2 3 4 5 6 (PRODUCT LEVEL)	SEE PAGE
Y	*303-0418*	1	WHEEL & TIRE GP (FRONT)	279
Y	*303-0419*	1	WHEEL & TIRE GP (REAR)	280

Y-SEPARATE ILLUSTRATION

<END>

303-0414 WHEEL & TIRE AR—ALL WHEEL DRIVE

S/N: SEJ1-UP
AN ATTACHMENT

SMCS-4201, 4202, 4203, 4208, 4209 **i02675689**

NOTE	PART NUMBER	QTY	PART NAME 1 2 3 4 5 6 (PRODUCT LEVEL)	SEE PAGE
Y	*303-0418*	1	WHEEL & TIRE GP (FRONT)	279
Y	*303-0421*	1	WHEEL & TIRE GP (REAR)	280

Y-SEPARATE ILLUSTRATION

<END>

303-0415 WHEEL & TIRE AR—ALL WHEEL DRIVE

S/N: SEJ1-UP
AN ATTACHMENT

SMCS-4201, 4202, 4203, 4208, 4209 **i03325570**

NOTE	PART NUMBER	QTY	PART NAME 1 2 3 4 5 6 (PRODUCT LEVEL)	SEE PAGE
Y	*311-2230*	1	STOP GP-STEERING	230
Y	*303-0421*	1	WHEEL & TIRE GP (REAR)	280
Y	*303-0423*	1	WHEEL & TIRE GP (FRONT)	280

Y-SEPARATE ILLUSTRATION

<END>

319-6834 WHEEL & TIRE AR—ALL WHEEL DRIVE

S/N: SEJ1-UP
AN ATTACHMENT

SMCS-4201, 4202, 4203, 4208, 4209 **i03325572**

NOTE	PART NUMBER	QTY	PART NAME 1 2 3 4 5 6 (PRODUCT LEVEL)	SEE PAGE
Y	*311-2230*	1	STOP GP-STEERING	230
Y	*319-6835*	1	WHEEL & TIRE GP (FRONT)	283
Y	*319-6836*	1	WHEEL & TIRE GP (REAR)	284

Y-SEPARATE ILLUSTRATION

<END>

329-1350 WHEEL & TIRE AR—ALL WHEEL DRIVE, BIAS

S/N: SEJ1-UP
AN ATTACHMENT

SMCS-4201, 4202, 4203, 4208, 4209 **i03097507**

NOTE	PART NUMBER	QTY	PART NAME 1 2 3 4 5 6 (PRODUCT LEVEL)	SEE PAGE
Y	*249-9388*	1	WHEEL & TIRE GP (REAR)	273
Y	*329-1354*	1	WHEEL & TIRE GP (FRONT)	285

Y-SEPARATE ILLUSTRATION

<END>

329-1351 WHEEL & TIRE AR—ALL WHEEL DRIVE, BIAS

S/N: SEJ1-UP
AN ATTACHMENT

SMCS-4201, 4202, 4203, 4208, 4209 **i03099680**

NOTE	PART NUMBER	QTY	PART NAME 1 2 3 4 5 6 (PRODUCT LEVEL)	SEE PAGE
Y	*249-9271*	1	WHEEL & TIRE GP (REAR)	273
Y	*329-1354*	1	WHEEL & TIRE GP (FRONT)	285

Y-SEPARATE ILLUSTRATION

<END>

329-1352 WHEEL & TIRE AR—ALL WHEEL DRIVE, BIAS

S/N: SEJ1-UP
AN ATTACHMENT

SMCS-4201, 4202, 4203, 4208, 4209 **i03091582**

NOTE	PART NUMBER	QTY	PART NAME 1 2 3 4 5 6 (PRODUCT LEVEL)	SEE PAGE
Y	*249-9390*	1	WHEEL & TIRE GP (REAR)	274
Y	*329-1354*	1	WHEEL & TIRE GP (FRONT)	285

Y-SEPARATE ILLUSTRATION

<END>

341-0596 WHEEL & TIRE AR—ALL WHEEL DRIVE

S/N: SEJ1-UP
AN ATTACHMENT

SMCS-4201, 4202, 4203, 4208, 4209 **i03537760**

NOTE	PART NUMBER	QTY	PART NAME 1 2 3 4 5 6 (PRODUCT LEVEL)	SEE PAGE
Y	*311-2230*	1	STOP GP-STEERING	230
Y	*273-5080*	1	WHEEL & TIRE GP (REAR)	277
Y	*341-9202*	1	WHEEL & TIRE GP (FRONT)	286

Y-SEPARATE ILLUSTRATION

<END>

201-1868 WHEEL & TIRE GP—FRONT

S/N: SEJ1-UP
PART OF 249-9263 WHEEL & TIRE AR
AN ATTACHMENT

SMCS-4201, 4202, 4203, 4208, 4209 **i03921369**

NOTE	PART NUMBER	QTY	PART NAME 1 2 3 4 5 6 (PRODUCT LEVEL)	SEE PAGE
Y	*201-1869*	1	WHEEL & TIRE GP (FRONT, LH)	268
Y	*201-1870*	1	WHEEL & TIRE GP (FRONT, RH)	268
	201-1915	1	MOUNTING GP-WHEEL (FRONT)	
M	**178-1304**	8	NUT-HEX FLANGE (M20X1.5-THD)	
	8T-5439	8	WASHER-HARD (21.5X45X6-MM THK)	

M-METRIC PART
Y-SEPARATE ILLUSTRATION

<END>

201-1869 WHEEL & TIRE GP—FRONT, LH

S/N: SEJ1-UP
(10X18)
PART OF 201-1868 WHEEL & TIRE GP
AN ATTACHMENT

SMCS-4201, 4202, 4203, 4208, 4209 **i03498413**

NOTE	PART NUMBER	QTY	PART NAME 1 2 3 4 5 6 (PRODUCT LEVEL)	SEE PAGE
Y	*201-1920*	1	VALVE GP-TIRE	264
	202-6186	1	WHEEL AS (FRONT)	
	194-0832	1	TIRE (340/80-R18)	

Y-SEPARATE ILLUSTRATION

<END>

201-1870 WHEEL & TIRE GP—FRONT, RH

S/N: SEJ1-UP
(10X18)
PART OF 201-1868 WHEEL & TIRE GP
AN ATTACHMENT

SMCS-4201, 4202, 4203, 4208, 4209 **i03498414**

NOTE	PART NUMBER	QTY	PART NAME 1 2 3 4 5 6 (PRODUCT LEVEL)	SEE PAGE
Y	*201-1920*	1	VALVE GP-TIRE	264
	202-6186	1	WHEEL AS (FRONT)	
	194-0832	1	TIRE (340/80-R18)	

Y-SEPARATE ILLUSTRATION

<END>

201-1962 WHEEL & TIRE GP—FRONT

S/N: SEJ1-UP
PART OF 249-9261, 249-9262 WHEEL & TIRE AR
AN ATTACHMENT

SMCS-4201, 4202, 4203, 4208, 4209 **i03921389**

NOTE	PART NUMBER	QTY	PART NAME 1 2 3 4 5 6 (PRODUCT LEVEL)	SEE PAGE
Y	*201-1963*	1	WHEEL & TIRE GP (FRONT, LH)	269
Y	*201-1964*	1	WHEEL & TIRE GP (FRONT, RH)	269
	201-1915	1	MOUNTING GP-WHEEL (FRONT)	
	8T-5439	16	WASHER-HARD (21.5X45X6-MM THK)	
M	**201-1919**	16	NUT (M20X1.5-THD)	

M-METRIC PART
Y-SEPARATE ILLUSTRATION

<END>

201-1963 WHEEL & TIRE GP—FRONT, LH

S/N: SEJ1-UP
(10X18)
PART OF 201-1962 WHEEL & TIRE GP
AN ATTACHMENT

SMCS-4201, 4202, 4203, 4208, 4209 **i03498416**

NOTE	PART NUMBER	QTY	PART NAME 1 2 3 4 5 6 (PRODUCT LEVEL)	SEE PAGE
Y	*201-1920*	1	VALVE GP-TIRE	264
	202-6186	1	WHEEL AS (FRONT)	
	201-1929	1	TIRE (340/80-R18)	

Y-SEPARATE ILLUSTRATION

<END>

201-1964 WHEEL & TIRE GP—FRONT, RH

S/N: SEJ1-UP
(10X18)
PART OF 201-1962 WHEEL & TIRE GP
AN ATTACHMENT

SMCS-4201, 4202, 4203, 4208, 4209 **i03592770**

NOTE	PART NUMBER	QTY	PART NAME 1 2 3 4 5 6 (PRODUCT LEVEL)	SEE PAGE
Y	*201-1920*	1	VALVE GP-TIRE	264
	202-6186	1	WHEEL AS (FRONT)	
	201-1929	1	TIRE (340/80-R18)	

Y-SEPARATE ILLUSTRATION

<END>

216-9147 WHEEL & TIRE GP—FRONT

S/N: SEJ1-UP
PART OF 249-9255 WHEEL & TIRE AR
AN ATTACHMENT

SMCS-4201, 4202, 4203, 4208, 4209 **i03921449**

NOTE	PART NUMBER	QTY	PART NAME 1 2 3 4 5 6 (PRODUCT LEVEL)	SEE PAGE
Y	*216-9148*	1	WHEEL & TIRE GP (FRONT, LH)	270
Y	*216-9149*	1	WHEEL & TIRE GP (FRONT, RH)	270
	201-1915	1	MOUNTING GP-WHEEL (FRONT)	
	8T-5439	16	WASHER-HARD (21.5X45X6-MM THK)	
M	**201-1919**	16	NUT (M20X1.5-THD)	

M-METRIC PART
Y-SEPARATE ILLUSTRATION

<END>

216-9148 WHEEL & TIRE GP—FRONT, LH

S/N: SEJ1-UP
(10X18)
PART OF 216-9147 WHEEL & TIRE GP
AN ATTACHMENT

SMCS-4201, 4202, 4203, 4208, 4209 **i03934117**

NOTE	PART NUMBER	QTY	PART NAME 1 2 3 4 5 6 (PRODUCT LEVEL)	SEE PAGE
Y	*201-1920*	1	VALVE GP-TIRE	264
	202-6186	1	WHEEL AS (FRONT)	
	357-1994	1	TIRE (12.5/80-18)	

Y-SEPARATE ILLUSTRATION

<END>

216-9149 WHEEL & TIRE GP—FRONT, RH

S/N: SEJ1-UP
(10X18)
PART OF 216-9147 WHEEL & TIRE GP
AN ATTACHMENT

SMCS-4201, 4202, 4203, 4208, 4209 **i03934123**

NOTE	PART NUMBER	QTY	PART NAME 1 2 3 4 5 6 (PRODUCT LEVEL)	SEE PAGE
Y	*201-1920*	1	VALVE GP-TIRE	264
	202-6186	1	WHEEL AS (FRONT)	
	357-1994	1	TIRE (12.5/80-18)	

Y-SEPARATE ILLUSTRATION

<END>

249-7562 WHEEL & TIRE GP—REAR, LH

S/N: SEJ1-UP
(15X28)
PART OF 249-9271 WHEEL & TIRE GP
AN ATTACHMENT

SMCS-4201, 4202, 4203, 4208, 4209 **i03922814**

NOTE	PART NUMBER	QTY	PART NAME 1 2 3 4 5 6 (PRODUCT LEVEL)	SEE PAGE
Y	*201-1920*	1	VALVE GP-TIRE	264
	195-6348	1	WHEEL AS (LH, REAR)	
	146-8319	1	TIRE (16.9-28)	

Y-SEPARATE ILLUSTRATION

<END>

249-7563 WHEEL & TIRE GP—REAR, RH

S/N: SEJ1-UP
(15X28)
PART OF 249-9271 WHEEL & TIRE GP
AN ATTACHMENT

SMCS-4201, 4202, 4203, 4208, 4209 **i03592784**

NOTE	PART NUMBER	QTY	PART NAME 1 2 3 4 5 6 (PRODUCT LEVEL)	SEE PAGE
Y	*201-1920*	1	VALVE GP-TIRE	264
	195-6348	1	WHEEL AS (RH,REAR)	
	146-8319	1	TIRE (16.9-28)	

Y-SEPARATE ILLUSTRATION

<END>

249-7565 WHEEL & TIRE GP—REAR, LH

S/N: SEJ1-UP
(15X28)
PART OF 249-9388 WHEEL & TIRE GP
AN ATTACHMENT

SMCS-4201, 4202, 4203, 4208, 4209 **i03592785**

NOTE	PART NUMBER	QTY	PART NAME 1 2 3 4 5 6 (PRODUCT LEVEL)	SEE PAGE
Y	*201-1920*	1	VALVE GP-TIRE	264
	195-6348	1	WHEEL AS (LH,REAR)	
	178-7230	1	TIRE (16.9-28)	

Y-SEPARATE ILLUSTRATION

<END>

249-7566 WHEEL & TIRE GP—REAR, RH

S/N: SEJ1-UP
(15X28)
PART OF 249-9388 WHEEL & TIRE GP
AN ATTACHMENT

SMCS-4201, 4202, 4203, 4208, 4209 **i03592786**

NOTE	PART NUMBER	QTY	PART NAME 1 2 3 4 5 6 (PRODUCT LEVEL)	SEE PAGE
Y	*201-1920*	1	VALVE GP-TIRE	264
	195-6348	1	WHEEL AS (RH,REAR)	
	178-7230	1	TIRE (16.9-28)	

Y-SEPARATE ILLUSTRATION

<END>

249-7568 WHEEL & TIRE GP—REAR, LH

S/N: SEJ1-UP
(15X28)
PART OF 249-9399 WHEEL & TIRE GP
AN ATTACHMENT

SMCS-4201, 4202, 4203, 4208, 4209 **i03592788**

NOTE	PART NUMBER	QTY	PART NAME 1 2 3 4 5 6 (PRODUCT LEVEL)	SEE PAGE
Y	*201-1920*	1	VALVE GP-TIRE	264
	195-6348	1	WHEEL AS (LH,REAR)	
	201-1975	1	TIRE (440/80-R28)	

Y-SEPARATE ILLUSTRATION

<END>

249-7569 WHEEL & TIRE GP—REAR, RH

S/N: SEJ1-UP
(15X28)
PART OF 249-9399 WHEEL & TIRE GP
AN ATTACHMENT

SMCS-4201, 4202, 4203, 4208, 4209 **i03592789**

NOTE	PART NUMBER	QTY	PART NAME 1 2 3 4 5 6 (PRODUCT LEVEL)	SEE PAGE
Y	*201-1920*	1	VALVE GP-TIRE	264
	195-6348	1	WHEEL AS (RH,REAR)	
	201-1975	1	TIRE (440/80-R28)	

Y-SEPARATE ILLUSTRATION

<END>

249-7571 WHEEL & TIRE GP—REAR, LH

S/N: SEJ1-UP
(15X28)
PART OF 249-9400 WHEEL & TIRE GP
AN ATTACHMENT

SMCS-4201, 4202, 4203, 4208, 4209 **i03592790**

NOTE	PART NUMBER	QTY	PART NAME 1 2 3 4 5 6 (PRODUCT LEVEL)	SEE PAGE
Y	*201-1920*	1	VALVE GP-TIRE	264
	195-6348	1	WHEEL AS (LH,REAR)	
	195-6329	1	TIRE (440/80-R28)	

Y-SEPARATE ILLUSTRATION

<END>

249-7572 WHEEL & TIRE GP—REAR, RH

S/N: SEJ1-UP
(15X28)
PART OF 249-9400 WHEEL & TIRE GP
AN ATTACHMENT

SMCS-4201, 4202, 4203, 4208, 4209 **i03592801**

NOTE	PART NUMBER	QTY	PART NAME 1 2 3 4 5 6 (PRODUCT LEVEL)	SEE PAGE
Y	*201-1920*	1	VALVE GP-TIRE	264
	195-6348	1	WHEEL AS (RH,REAR)	
	195-6329	1	TIRE (440/80-R28)	

Y-SEPARATE ILLUSTRATION

<END>

249-9271 WHEEL & TIRE GP—REAR

S/N: SEJ1-UP
PART OF 329-1351 WHEEL & TIRE AR
AN ATTACHMENT

SMCS-4201, 4202, 4203, 4208, 4209 **i03922709**

NOTE	PART NUMBER	QTY	PART NAME 1 2 3 4 5 6 (PRODUCT LEVEL)	SEE PAGE
Y	*249-7562*	1	WHEEL & TIRE GP (REAR, LH)	270
Y	*249-7563*	1	WHEEL & TIRE GP (REAR, RH)	271
	201-1916	1	MOUNTING GP-WHEEL (REAR)	
	8T-5439	20	WASHER-HARD (21.5X45X6-MM THK)	
M	**201-1919**	20	NUT (M20X1.5-THD)	

M-METRIC PART
Y-SEPARATE ILLUSTRATION

<END>

249-9388 WHEEL & TIRE GP—REAR

S/N: SEJ1-UP
PART OF 329-1350 WHEEL & TIRE AR
AN ATTACHMENT

SMCS-4201, 4202, 4203, 4208, 4209 **i03922669**

NOTE	PART NUMBER	QTY	PART NAME 1 2 3 4 5 6 (PRODUCT LEVEL)	SEE PAGE
Y	*249-7565*	1	WHEEL & TIRE GP (REAR, LH)	271
Y	*249-7566*	1	WHEEL & TIRE GP (REAR, RH)	271
	201-1916	1	MOUNTING GP-WHEEL (REAR)	
	8T-5439	20	WASHER-HARD (21.5X45X6-MM THK)	
M	**201-1919**	20	NUT (M20X1.5-THD)	

M-METRIC PART
Y-SEPARATE ILLUSTRATION

<END>

POWER TRAIN

249-9390 WHEEL & TIRE GP–REAR

S/N: SEJ1-UP
PART OF 249-9261, 329-1352 WHEEL & TIRE AR
AN ATTACHMENT

SMCS-4201, 4202, 4203, 4208, 4209 **i03922670**

NOTE	PART NUMBER	QTY	PART NAME 1 2 3 4 5 6 (PRODUCT LEVEL)	SEE PAGE
Y	*249-9409*	1	WHEEL & TIRE GP (REAR, LH)	275
Y	*249-9410*	1	WHEEL & TIRE GP (REAR, RH)	275
	201-1916	1	MOUNTING GP-WHEEL (REAR)	
	8T-5439	20	WASHER-HARD (21.5X45X6-MM THK)	
M	**201-1919**	20	NUT (M20X1.5-THD)	

M-METRIC PART
Y-SEPARATE ILLUSTRATION

<END>

249-9392 WHEEL & TIRE GP–REAR

S/N: SEJ1-UP
PART OF 249-9255 WHEEL & TIRE AR
AN ATTACHMENT

SMCS-4201, 4202, 4203, 4208, 4209 **i03920830**

NOTE	PART NUMBER	QTY	PART NAME 1 2 3 4 5 6 (PRODUCT LEVEL)	SEE PAGE
Y	*249-9411*	1	WHEEL & TIRE GP (REAR, LH)	276
Y	*250-0230*	1	WHEEL & TIRE GP (REAR, RH)	276
	201-1916	1	MOUNTING GP-WHEEL (REAR)	
	8T-5439	20	WASHER-HARD (21.5X45X6-MM THK)	
M	**201-1919**	20	NUT (M20X1.5-THD)	

M-METRIC PART
Y-SEPARATE ILLUSTRATION

<END>

249-9399 WHEEL & TIRE GP–REAR

S/N: SEJ1-UP
PART OF 249-9262 WHEEL & TIRE AR
AN ATTACHMENT

SMCS-4201, 4202, 4203, 4208, 4209 **i03920831**

NOTE	PART NUMBER	QTY	PART NAME 1 2 3 4 5 6 (PRODUCT LEVEL)	SEE PAGE
Y	*249-7568*	1	WHEEL & TIRE GP (REAR, LH)	272
Y	*249-7569*	1	WHEEL & TIRE GP (REAR, RH)	272
	201-1916	1	MOUNTING GP-WHEEL (REAR)	
	8T-5439	20	WASHER-HARD (21.5X45X6-MM THK)	
M	**201-1919**	20	NUT (M20X1.5-THD)	

M-METRIC PART
Y-SEPARATE ILLUSTRATION

<END>

249-9400 WHEEL & TIRE GP—REAR

S/N: SEJ1-UP
PART OF 249-9263 WHEEL & TIRE AR
AN ATTACHMENT

SMCS-4201, 4202, 4203, 4208, 4209 **i02469925**

NOTE	PART NUMBER	QTY	PART NAME 1 2 3 4 5 6 (PRODUCT LEVEL)	SEE PAGE
Y	*249-7571*	1	WHEEL & TIRE GP (LH)	272
Y	*249-7572*	1	WHEEL & TIRE GP (RH)	273
	201-1916	1	MOUNTING GP-WHEEL (REAR)	
	8T-5439	20	WASHER-HARD (21.5X45X6-MM THK)	
M	**201-1919**	20	NUT (M20X1.5-THD)	

M-METRIC PART
Y-SEPARATE ILLUSTRATION

<END>

249-9409 WHEEL & TIRE GP—REAR, LH

S/N: SEJ1-UP
(16X26)
PART OF 249-9390 WHEEL & TIRE GP
AN ATTACHMENT

SMCS-4201, 4202, 4203, 4208, 4209 **i03920828**

NOTE	PART NUMBER	QTY	PART NAME 1 2 3 4 5 6 (PRODUCT LEVEL)	SEE PAGE
Y	*201-1920*	1	VALVE GP-TIRE	264
	195-6345	1	WHEEL AS (REAR, RH)	
	135-5893	1	TIRE (18.4/15-26)	

Y-SEPARATE ILLUSTRATION

<END>

249-9410 WHEEL & TIRE GP—REAR, RH

S/N: SEJ1-UP
(16X26)
PART OF 249-9390 WHEEL & TIRE GP
AN ATTACHMENT

SMCS-4201, 4202, 4203, 4208, 4209 **i03592806**

NOTE	PART NUMBER	QTY	PART NAME 1 2 3 4 5 6 (PRODUCT LEVEL)	SEE PAGE
Y	*201-1920*	1	VALVE GP-TIRE	264
	195-6345	1	WHEEL AS (REAR, RH)	
	135-5893	1	TIRE (18.4/15-26)	

Y-SEPARATE ILLUSTRATION

<END>

249-9411 WHEEL & TIRE GP—REAR, LH

S/N: SEJ1-UP
(16X26)
PART OF 249-9392 WHEEL & TIRE GP
AN ATTACHMENT

SMCS-4201, 4202, 4203, 4208, 4209 **i03934193**

NOTE	PART NUMBER	QTY	PART NAME 1 2 3 4 5 6 (PRODUCT LEVEL)	SEE PAGE
Y	*201-1920*	1	VALVE GP-TIRE	264
	195-6345	1	WHEEL AS (REAR, RH)	
	357-1995	1	TIRE (18.4-26)	

Y-SEPARATE ILLUSTRATION

<END>

250-0230 WHEEL & TIRE GP—REAR, RH

S/N: SEJ1-UP
(16X26)
PART OF 249-9392 WHEEL & TIRE GP
AN ATTACHMENT

SMCS-4201, 4202, 4203, 4208, 4209 **i03934206**

NOTE	PART NUMBER	QTY	PART NAME 1 2 3 4 5 6 (PRODUCT LEVEL)	SEE PAGE
Y	*201-1920*	1	VALVE GP-TIRE	264
	195-6345	1	WHEEL AS (REAR, RH)	
	357-1995	1	TIRE (18.4-26)	

Y-SEPARATE ILLUSTRATION

<END>

266-1554 WHEEL & TIRE GP—FRONT

S/N: SEJ1-UP
PART OF 273-5077, 273-5078 WHEEL & TIRE AR
AN ATTACHMENT

SMCS-4201, 4202, 4203, 4208, 4209 **i02469929**

NOTE	PART NUMBER	QTY	PART NAME 1 2 3 4 5 6 (PRODUCT LEVEL)	SEE PAGE
Y	*266-1555*	1	WHEEL & TIRE GP (FRONT, LH)	277
Y	*266-1556*	1	WHEEL & TIRE GP (FRONT, RH)	277
	201-1915	1	MOUNTING GP-WHEEL (FRONT)	
	8T-5439	16	WASHER-HARD (21.5X45X6-MM THK)	
M	**201-1919**	16	NUT (M20X1.5-THD)	

M-METRIC PART
Y-SEPARATE ILLUSTRATION

<END>

266-1555 WHEEL & TIRE GP—FRONT, LH

S/N: SEJ1-UP
(10X18)
PART OF 266-1554 WHEEL & TIRE GP
AN ATTACHMENT

SMCS-4201, 4202, 4203, 4208, 4209 **i03592812**

NOTE	PART NUMBER	QTY	PART NAME 1 2 3 4 5 6 (PRODUCT LEVEL)	SEE PAGE
Y	*201-1920*	1	VALVE GP-TIRE	264
	202-6186	1	WHEEL AS (FRONT)	
	266-1560	1	TIRE (12.5/80-18)	

Y-SEPARATE ILLUSTRATION

<END>

266-1556 WHEEL & TIRE GP—FRONT, RH

S/N: SEJ1-UP
(10X18)
PART OF 266-1554 WHEEL & TIRE GP
AN ATTACHMENT

SMCS-4201, 4202, 4203, 4208, 4209 **i03592813**

NOTE	PART NUMBER	QTY	PART NAME 1 2 3 4 5 6 (PRODUCT LEVEL)	SEE PAGE
Y	*201-1920*	1	VALVE GP-TIRE	264
	202-6186	1	WHEEL AS (FRONT)	
	266-1560	1	TIRE (12.5/80-18)	

Y-SEPARATE ILLUSTRATION

<END>

273-5080 WHEEL & TIRE GP—REAR

S/N: SEJ1-UP
PART OF 273-5078, 341-0596 WHEEL & TIRE AR
AN ATTACHMENT

SMCS-4201, 4202, 4203, 4208, 4209 **i02469931**

NOTE	PART NUMBER	QTY	PART NAME 1 2 3 4 5 6 (PRODUCT LEVEL)	SEE PAGE
Y	*273-5093*	1	WHEEL & TIRE GP (REAR, LH)	278
Y	*273-5094*	1	WHEEL & TIRE GP (REAR, RH)	278
	201-1916	1	MOUNTING GP-WHEEL (REAR)	
	8T-5439	20	WASHER-HARD (21.5X45X6-MM THK)	
M	**201-1919**	20	NUT (M20X1.5-THD)	

M-METRIC PART
Y-SEPARATE ILLUSTRATION

<END>

273-5081 WHEEL & TIRE GP—REAR

S/N: SEJ1-UP
PART OF 273-5077 WHEEL & TIRE AR
AN ATTACHMENT

SMCS-4201, 4202, 4203, 4208, 4209 **i02469932**

NOTE	PART NUMBER	QTY	PART NAME 1 2 3 4 5 6 (PRODUCT LEVEL)	SEE PAGE
Y	*273-5095*	1	WHEEL & TIRE GP (REAR, LH)	279
Y	*273-5096*	1	WHEEL & TIRE GP (REAR, RH)	279
	201-1916	1	MOUNTING GP-WHEEL (REAR)	
	8T-5439	20	WASHER-HARD (21.5X45X6-MM THK)	
M	**201-1919**	20	NUT (M20X1.5-THD)	

M-METRIC PART
Y-SEPARATE ILLUSTRATION

<END>

273-5093 WHEEL & TIRE GP—REAR, LH

S/N: SEJ1-UP
(16X26)
PART OF 273-5080 WHEEL & TIRE GP
AN ATTACHMENT

SMCS-4201, 4202, 4203, 4208, 4209 **i03592814**

NOTE	PART NUMBER	QTY	PART NAME 1 2 3 4 5 6 (PRODUCT LEVEL)	SEE PAGE
Y	*201-1920*	1	VALVE GP-TIRE	264
	195-6345	1	WHEEL AS (REAR, RH)	
	267-8364	1	TIRE (480/80-R26)	

Y-SEPARATE ILLUSTRATION

<END>

273-5094 WHEEL & TIRE GP—REAR, RH

S/N: SEJ1-UP
(16X26)
PART OF 273-5080 WHEEL & TIRE GP
AN ATTACHMENT

SMCS-4201, 4202, 4203, 4208, 4209 **i03592815**

NOTE	PART NUMBER	QTY	PART NAME 1 2 3 4 5 6 (PRODUCT LEVEL)	SEE PAGE
Y	*201-1920*	1	VALVE GP-TIRE	264
	195-6345	1	WHEEL AS (REAR, RH)	
	267-8364	1	TIRE (480/80-R26)	

Y-SEPARATE ILLUSTRATION

<END>

273-5095 WHEEL & TIRE GP—REAR, LH

S/N: SEJ1-UP
(15X28)
PART OF 273-5081 WHEEL & TIRE GP
AN ATTACHMENT

SMCS-4201, 4202, 4203, 4208, 4209 **i03592817**

NOTE	PART NUMBER	QTY	PART NAME 1 2 3 4 5 6 (PRODUCT LEVEL)	SEE PAGE
Y	*201-1920*	1	VALVE GP-TIRE	264
	195-6348	1	WHEEL AS (REAR)	
	267-8363	1	TIRE (440/80-R28)	

Y-SEPARATE ILLUSTRATION

<END>

273-5096 WHEEL & TIRE GP—REAR, RH

S/N: SEJ1-UP
(15X28)
PART OF 273-5081 WHEEL & TIRE GP
AN ATTACHMENT

SMCS-4201, 4202, 4203, 4208, 4209 **i03592818**

NOTE	PART NUMBER	QTY	PART NAME 1 2 3 4 5 6 (PRODUCT LEVEL)	SEE PAGE
Y	*201-1920*	1	VALVE GP-TIRE	264
	195-6348	1	WHEEL AS (REAR)	
	267-8363	1	TIRE (440/80-R28)	

Y-SEPARATE ILLUSTRATION

<END>

303-0418 WHEEL & TIRE GP—FRONT

S/N: SEJ1-UP
PART OF 303-0413, 303-0414 WHEEL & TIRE AR
AN ATTACHMENT

SMCS-4201, 4202, 4203, 4208, 4209 **i04403882**

NOTE	PART NUMBER	QTY	PART NAME 1 2 3 4 5 6 (PRODUCT LEVEL)	SEE PAGE
Y	*303-0428*	1	WHEEL & TIRE GP (FRONT, LH) (FRONT, LH)	281
Y	*303-0429*	1	WHEEL & TIRE GP (FRONT, RH) (FRONT, RH)	281
	201-1915	1	MOUNTING GP-WHEEL (FRONT)	
	8T-5439	16	WASHER-HARD (21.5X45X6-MM THK)	
M	**201-1919**	16	NUT (M20X1.5-THD)	

M-METRIC PART
Y-SEPARATE ILLUSTRATION

<END>

303-0419 WHEEL & TIRE GP—REAR

S/N: SEJ1-UP
PART OF 303-0413 WHEEL & TIRE AR
AN ATTACHMENT

SMCS-4201, 4202, 4203, 4208, 4209 **i02675652**

NOTE	PART NUMBER	QTY	PART NAME 1 2 3 4 5 6 (PRODUCT LEVEL)	SEE PAGE
Y	*303-0430*	1	WHEEL & TIRE GP (REAR, LH)	281
Y	*303-0431*	1	WHEEL & TIRE GP (REAR, RH)	282
	201-1916	1	MOUNTING GP-WHEEL (REAR)	
	8T-5439	20	WASHER-HARD (21.5X45X6-MM THK)	
M	**201-1919**	20	NUT (M20X1.5-THD)	

M-METRIC PART
Y-SEPARATE ILLUSTRATION

<END>

303-0421 WHEEL & TIRE GP—REAR

S/N: SEJ1-UP
PART OF 303-0414, 303-0415 WHEEL & TIRE AR
AN ATTACHMENT

SMCS-4201, 4202, 4203, 4208, 4209 **i02675691**

NOTE	PART NUMBER	QTY	PART NAME 1 2 3 4 5 6 (PRODUCT LEVEL)	SEE PAGE
Y	*303-0434*	1	WHEEL & TIRE GP (REAR, LH)	282
Y	*303-0435*	1	WHEEL & TIRE GP (REAR, RH)	282
	201-1916	1	MOUNTING GP-WHEEL (REAR)	
	8T-5439	20	WASHER-HARD (21.5X45X6-MM THK)	
M	**201-1919**	20	NUT (M20X1.5-THD)	

M-METRIC PART
Y-SEPARATE ILLUSTRATION

<END>

303-0423 WHEEL & TIRE GP—FRONT

S/N: SEJ1-UP
PART OF 303-0415 WHEEL & TIRE AR
AN ATTACHMENT

SMCS-4201, 4202, 4203, 4208, 4209 **i02675702**

NOTE	PART NUMBER	QTY	PART NAME 1 2 3 4 5 6 (PRODUCT LEVEL)	SEE PAGE
Y	*303-0438*	1	WHEEL & TIRE GP (FRONT, LH)	283
Y	*303-0439*	1	WHEEL & TIRE GP (FRONT, RH)	283
	201-1915	1	MOUNTING GP-WHEEL (FRONT)	
	5T-5439	16	PLATE	
M	**201-1919**	16	NUT (M20X1.5-THD)	

M-METRIC PART
Y-SEPARATE ILLUSTRATION

<END>

303-0428 WHEEL & TIRE GP—FRONT, LH

S/N: SEJ1-UP
(10X18)
PART OF 303-0418 WHEEL & TIRE GP
AN ATTACHMENT

SMCS-4201, 4202, 4203, 4208, 4209 **i03592819**

NOTE	PART NUMBER	QTY	PART NAME 1 2 3 4 5 6 (PRODUCT LEVEL)	SEE PAGE
Y	*201-1920*	1	VALVE GP-TIRE	264
	202-6186	1	WHEEL AS (FRONT)	
	259-2940	1	TIRE (340/80-R18)	

Y-SEPARATE ILLUSTRATION

<END>

303-0429 WHEEL & TIRE GP—FRONT, RH

S/N: SEJ1-UP
(10X18)
PART OF 303-0418 WHEEL & TIRE GP
AN ATTACHMENT

SMCS-4201, 4202, 4203, 4208, 4209 **i03592820**

NOTE	PART NUMBER	QTY	PART NAME 1 2 3 4 5 6 (PRODUCT LEVEL)	SEE PAGE
Y	*201-1920*	1	VALVE GP-TIRE	264
	202-6186	1	WHEEL AS (FRONT)	
	259-2940	1	TIRE (340/80-R18)	

Y-SEPARATE ILLUSTRATION

<END>

303-0430 WHEEL & TIRE GP—REAR, LH

S/N: SEJ1-UP
(15X28)
PART OF 303-0419 WHEEL & TIRE GP
AN ATTACHMENT

SMCS-4201, 4202, 4203, 4208, 4209 **i03592821**

NOTE	PART NUMBER	QTY	PART NAME 1 2 3 4 5 6 (PRODUCT LEVEL)	SEE PAGE
Y	*201-1920*	1	VALVE GP-TIRE	264
	195-6348	1	WHEEL AS (REAR)	
	303-0441	1	TIRE (16.9-R28)	

Y-SEPARATE ILLUSTRATION

<END>

303-0431 WHEEL & TIRE GP–REAR, RH

S/N: SEJ1-UP
(15X28)
PART OF 303-0419 WHEEL & TIRE GP
AN ATTACHMENT

SMCS-4201, 4202, 4203, 4208, 4209 **i03592825**

NOTE	PART NUMBER	QTY	PART NAME 1 2 3 4 5 6 (PRODUCT LEVEL)	SEE PAGE
Y	*201-1920*	1	VALVE GP-TIRE	264
	195-6348	1	WHEEL AS (REAR)	
	303-0441	1	TIRE (16.9-R28)	

Y-SEPARATE ILLUSTRATION

<END>

303-0434 WHEEL & TIRE GP–REAR, LH

S/N: SEJ1-UP
(16X26)
PART OF 303-0421 WHEEL & TIRE GP
AN ATTACHMENT

SMCS-4201, 4202, 4203, 4208, 4209 **i03592826**

NOTE	PART NUMBER	QTY	PART NAME 1 2 3 4 5 6 (PRODUCT LEVEL)	SEE PAGE
Y	*201-1920*	1	VALVE GP-TIRE	264
	195-6345	1	WHEEL AS (REAR, RH)	
	303-0442	1	TIRE (480/80-R26)	

Y-SEPARATE ILLUSTRATION

<END>

303-0435 WHEEL & TIRE GP–REAR, RH

S/N: SEJ1-UP
(16X26)
PART OF 303-0421 WHEEL & TIRE GP
AN ATTACHMENT

SMCS-4201, 4202, 4203, 4208, 4209 **i03592827**

NOTE	PART NUMBER	QTY	PART NAME 1 2 3 4 5 6 (PRODUCT LEVEL)	SEE PAGE
Y	*201-1920*	1	VALVE GP-TIRE	264
	195-6345	1	WHEEL AS (REAR, RH)	
	303-0442	1	TIRE (480/80-R26)	

Y-SEPARATE ILLUSTRATION

<END>

303-0438 WHEEL & TIRE GP—FRONT, LH

S/N: SEJ1-UP
(11X20)
PART OF 303-0423 WHEEL & TIRE GP
AN ATTACHMENT

SMCS-4201, 4202, 4203, 4208, 4209 **i03592828**

NOTE	PART NUMBER	QTY	PART NAME 1 2 3 4 5 6 (PRODUCT LEVEL)	SEE PAGE
Y	*201-1920*	1	VALVE GP-TIRE	264
	9R-3545	1	WHEEL AS (FRONT)	
	303-0443	1	TIRE (335/80-R20)	

Y-SEPARATE ILLUSTRATION

<END>

303-0439 WHEEL & TIRE GP—FRONT, RH

S/N: SEJ1-UP
(11X20)
PART OF 303-0423 WHEEL & TIRE GP
AN ATTACHMENT

SMCS-4201, 4202, 4203, 4208, 4209 **i03592829**

NOTE	PART NUMBER	QTY	PART NAME 1 2 3 4 5 6 (PRODUCT LEVEL)	SEE PAGE
Y	*201-1920*	1	VALVE GP-TIRE	264
	9R-3545	1	WHEEL AS (FRONT)	
	303-0443	1	TIRE (335/80-R20)	

Y-SEPARATE ILLUSTRATION

<END>

319-6835 WHEEL & TIRE GP—FRONT

S/N: SEJ1-UP
PART OF 319-6834 WHEEL & TIRE AR
AN ATTACHMENT

SMCS-4201, 4202, 4203, 4208, 4209 **i02884193**

NOTE	PART NUMBER	QTY	PART NAME 1 2 3 4 5 6 (PRODUCT LEVEL)	SEE PAGE
Y	*319-7186*	1	WHEEL & TIRE GP (FRONT, RH)	284
Y	*319-7187*	1	WHEEL & TIRE GP (FRONT, LH)	284
	201-1915	1	MOUNTING GP-WHEEL (FRONT)	
	8T-5439	16	WASHER-HARD (21.5X45X6-MM THK)	
M	**201-1919**	16	NUT (M20X1.5-THD)	

M-METRIC PART
Y-SEPARATE ILLUSTRATION

<END>

319-6836 WHEEL & TIRE GP—REAR

S/N: SEJ1-UP
PART OF 319-6834 WHEEL & TIRE AR
AN ATTACHMENT

SMCS-4201, 4202, 4203, 4208, 4209 **i03308880**

NOTE	PART NUMBER	QTY	PART NAME 1 2 3 4 5 6 (PRODUCT LEVEL)	SEE PAGE
Y	*319-7191*	1	WHEEL & TIRE GP (REAR, LH)	285
Y	*319-7192*	1	WHEEL & TIRE GP (REAR, RH)	285
	201-1916	1	MOUNTING GP-WHEEL (REAR)	
	8T-5439	20	WASHER-HARD (21.5X45X6-MM THK)	
M	**201-1919**	20	NUT (M20X1.5-THD)	

M-METRIC PART
Y-SEPARATE ILLUSTRATION

<END>

319-7186 WHEEL & TIRE GP—FRONT, RH

S/N: SEJ1-UP
(11X20)
PART OF 319-6835 WHEEL & TIRE GP
AN ATTACHMENT

SMCS-4201, 4202, 4203, 4208, 4209 **i03592830**

NOTE	PART NUMBER	QTY	PART NAME 1 2 3 4 5 6 (PRODUCT LEVEL)	SEE PAGE
Y	*201-1920*	1	VALVE GP-TIRE	264
	9R-3545	1	WHEEL AS (FRONT)	
	319-6837	1	TIRE (340/80-R20)	

Y-SEPARATE ILLUSTRATION

<END>

319-7187 WHEEL & TIRE GP—FRONT, LH

S/N: SEJ1-UP
(11X20)
PART OF 319-6835 WHEEL & TIRE GP
AN ATTACHMENT

SMCS-4201, 4202, 4203, 4208, 4209 **i03592831**

NOTE	PART NUMBER	QTY	PART NAME 1 2 3 4 5 6 (PRODUCT LEVEL)	SEE PAGE
Y	*201-1920*	1	VALVE GP-TIRE	264
	9R-3545	1	WHEEL AS (FRONT)	
	319-6837	1	TIRE (340/80-R20)	

Y-SEPARATE ILLUSTRATION

<END>

319-7191 WHEEL & TIRE GP—REAR, LH

S/N: SEJ1-UP
(16X26)
PART OF 319-6836 WHEEL & TIRE GP
AN ATTACHMENT

SMCS-4201, 4202, 4203, 4208, 4209 **i03592832**

NOTE	PART NUMBER	QTY	PART NAME 1 2 3 4 5 6 (PRODUCT LEVEL)	SEE PAGE
Y	*201-1920*	1	VALVE GP-TIRE	264
	195-6345	1	WHEEL AS (REAR, RH)	
	319-6838	1	TIRE (480/80-R26)	

Y-SEPARATE ILLUSTRATION

<END>

319-7192 WHEEL & TIRE GP—REAR, RH

S/N: SEJ1-UP
(16X26)
PART OF 319-6836 WHEEL & TIRE GP
AN ATTACHMENT

SMCS-4201, 4202, 4203, 4208, 4209 **i03592833**

NOTE	PART NUMBER	QTY	PART NAME 1 2 3 4 5 6 (PRODUCT LEVEL)	SEE PAGE
Y	*201-1920*	1	VALVE GP-TIRE	264
	195-6345	1	WHEEL AS (REAR, RH)	
	319-6838	1	TIRE (480/80-R26)	

Y-SEPARATE ILLUSTRATION

<END>

329-1354 WHEEL & TIRE GP—FRONT

S/N: SEJ1-UP
PART OF 329-1350, 329-1351, 329-1352 WHEEL & TIRE AR
AN ATTACHMENT

SMCS-4201, 4202, 4203, 4208, 4209 **i03091583**

NOTE	PART NUMBER	QTY	PART NAME 1 2 3 4 5 6 (PRODUCT LEVEL)	SEE PAGE
Y	*329-1355*	1	WHEEL & TIRE GP (FRONT, LH)	286
Y	*329-1919*	1	WHEEL & TIRE GP (FRONT, RH)	286
	201-1915	1	MOUNTING GP-WHEEL (FRONT)	
	8T-5439	16	WASHER-HARD (21.5X45X6-MM THK)	
M	**201-1919**	16	NUT (M20X1.5-THD)	

M-METRIC PART
Y-SEPARATE ILLUSTRATION

<END>

329-1355 WHEEL & TIRE GP—FRONT, LH

S/N: SEJ1-UP
(10X18)
PART OF 329-1354 WHEEL & TIRE GP
AN ATTACHMENT

SMCS-4201, 4202, 4203, 4208, 4209 **i03592834**

NOTE	PART NUMBER	QTY	PART NAME 1 2 3 4 5 6 (PRODUCT LEVEL)	SEE PAGE
Y	*201-1920*	1	VALVE GP-TIRE	264
	202-6186	1	WHEEL AS (FRONT)	
	329-1348	1	TIRE (12.5/80-18)	

Y-SEPARATE ILLUSTRATION

<END>

329-1919 WHEEL & TIRE GP—FRONT, RH

S/N: SEJ1-UP
(10X18)
PART OF 329-1354 WHEEL & TIRE GP
AN ATTACHMENT

SMCS-4201, 4202, 4203, 4208, 4209 **i03592835**

NOTE	PART NUMBER	QTY	PART NAME 1 2 3 4 5 6 (PRODUCT LEVEL)	SEE PAGE
Y	*201-1920*	1	VALVE GP-TIRE	264
	202-6186	1	WHEEL AS (FRONT)	
	329-1348	1	TIRE (12.5/80-18)	

Y-SEPARATE ILLUSTRATION

<END>

341-9202 WHEEL & TIRE GP—FRONT

S/N: SEJ1-UP
PART OF 341-0596 WHEEL & TIRE AR
AN ATTACHMENT

SMCS-4201, 4202, 4203, 4208, 4209 **i03640953**

NOTE	PART NUMBER	QTY	PART NAME 1 2 3 4 5 6 (PRODUCT LEVEL)	SEE PAGE
Y	*341-9203*	1	WHEEL & TIRE GP (FRONT, LH)	287
Y	*341-9204*	1	WHEEL & TIRE GP (FRONT, RH)	287
	201-1915	1	MOUNTING GP-WHEEL (FRONT)	
	8T-5439	16	WASHER-HARD (21.5X45X6-MM THK)	
M	**201-1919**	16	NUT (M20X1.5-THD)	

M-METRIC PART
Y-SEPARATE ILLUSTRATION

<END>

341-9203 WHEEL & TIRE GP—FRONT, LH

S/N: SEJ1-UP
(11X20)
PART OF 341-9202 WHEEL & TIRE GP
AN ATTACHMENT

SMCS-4201, 4202, 4203, 4208, 4209 **i03538521**

NOTE	PART NUMBER	QTY	PART NAME 1 2 3 4 5 6 (PRODUCT LEVEL)	SEE PAGE
Y	*201-1920*	1	VALVE GP-TIRE	264
	9R-3545	1	WHEEL AS (FRONT)	
	341-9201	1	TIRE (340/80-R20)	

Y-SEPARATE ILLUSTRATION

<END>

341-9204 WHEEL & TIRE GP—FRONT, RH

S/N: SEJ1-UP
(11X20)
PART OF 341-9202 WHEEL & TIRE GP
AN ATTACHMENT

SMCS-4201, 4202, 4203, 4208, 4209 **i03538524**

NOTE	PART NUMBER	QTY	PART NAME 1 2 3 4 5 6 (PRODUCT LEVEL)	SEE PAGE
Y	*201-1920*	1	VALVE GP-TIRE	264
	9R-3545	1	WHEEL AS (FRONT)	
	341-9201	1	TIRE (340/80-R20)	

Y-SEPARATE ILLUSTRATION

<END>

BRAKING SYSTEM

206-1642 CONTROL GP-PARKING BRAKE

S/N: SEJ1-UP

PART OF 353-1501 DRIVE AR-BACKHOE LOADER

AN ATTACHMENT

SMCS-4282, 4284 **i04643270**

NOTE	REF NO	GRAPHIC REF	PART NUMBER	QTY	PART NAME 1 2 3 4 5 6 (PRODUCT LEVEL)	SEE PAGE
	1	1	**7K-1181**	1	STRAP-CABLE	
	2	1	**154-5416**	1	SWITCH AS (PARKING BRAKE)	
		1	**155-2270**	1	KIT-CONNECTING PLUG (2-PIN)	
					(INCLUDES PLUG AS, WEDGE & INTERFACE SEAL)	
	3	1	**164-1368**	2	FASTENER-PANEL	
	4	1	**261-9635**	1	BOOT (PARKING BRAKE)	
CY	5	1	**389-7167**	1	CONTROL GP-PARKING BRAKE	289
	6	1	**8T-4224**	2	WASHER-HARD (8.8X16X2-MM THK)	
M	7	1	**8T-6912**	2	BOLT (M8X1.25X50-MM)	
	8	1	**9R-2806**	1	PIN	
	9	1	**9R-2807**	1	CLIP	

C-CHANGE FROM PREVIOUS TYPE
M-METRIC PART
Y-SEPARATE ILLUSTRATION

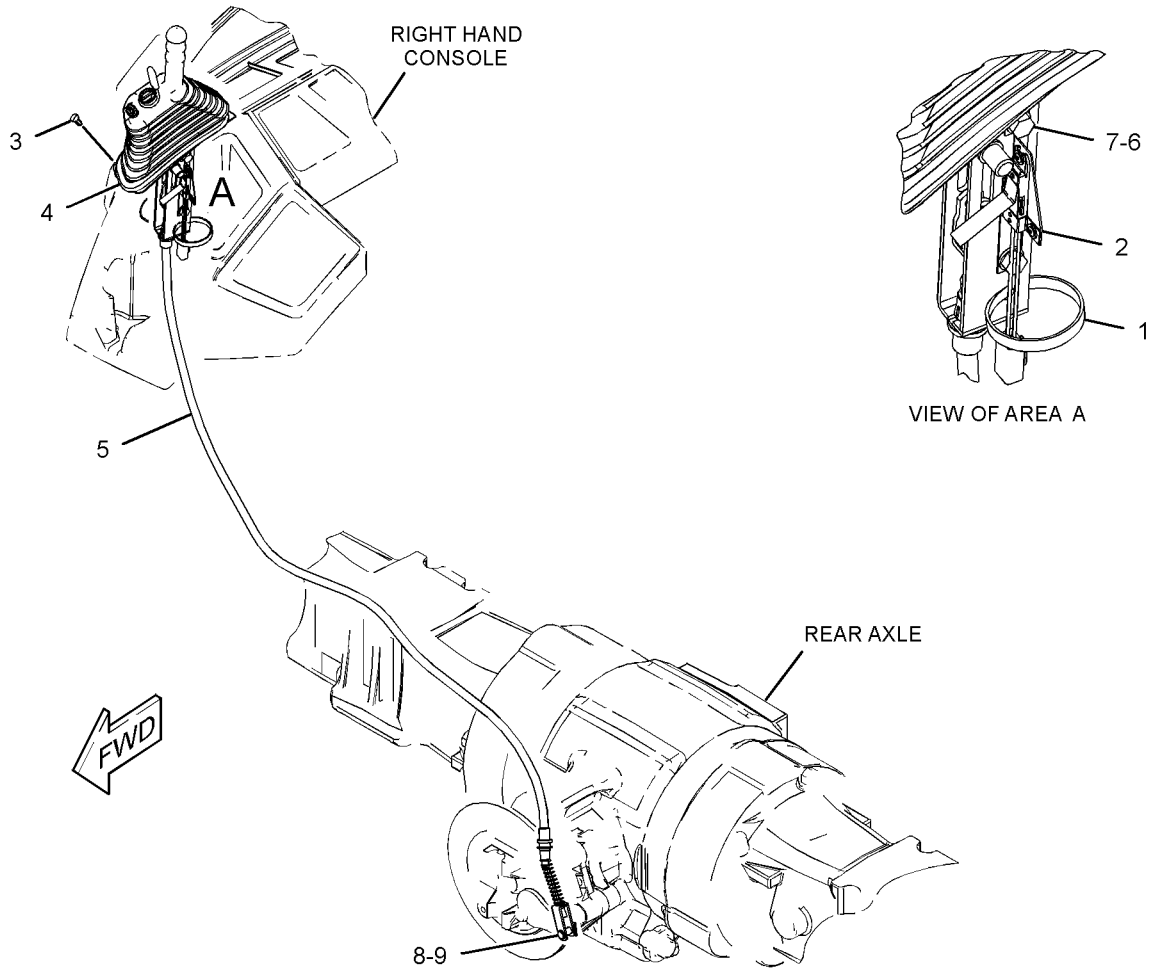

GRAPHIC #1 **<END>** g02821346

389-7167 CONTROL GP-PARKING BRAKE

S/N: SEJ1-UP

PART OF 206-1642 CONTROL GP-PARKING BRAKE

AN ATTACHMENT

SMCS-4282, 4284 **i04643273**

NOTE	REF NO	GRAPHIC REF	PART NUMBER	QTY	PART NAME 1 2 3 4 5 6 (PRODUCT LEVEL)	SEE PAGE
Y	1	1	**163-0753**	1	LEVER GP-HAND CONTROL	297
	2	1	**389-7168**	1	CABLE AS	
		1	**6V-8759**	1	RING-RETAINING	

Y-SEPARATE ILLUSTRATION

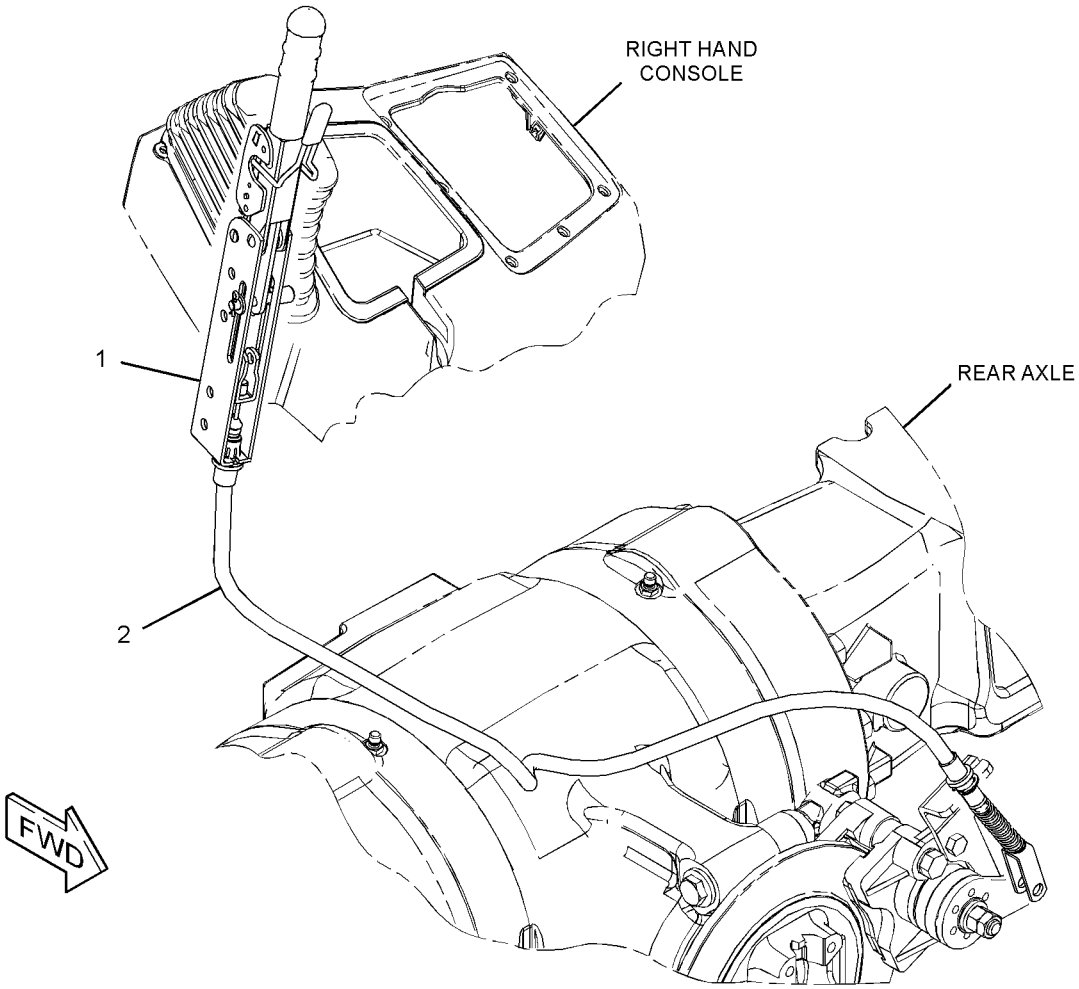

GRAPHIC #1 **<END>** g02822458

BRAKING SYSTEM

341-6684 CONTROL GP-SERVICE BRAKE—STANDARD SHIFT

S/N: SEJ1-UP

PART OF 340-1719 HYDRAULIC AR

SMCS-4269 **i04689390**

NOTE	REF NO	GRAPHIC REF	PART NUMBER	QTY	PART NAME 1 2 3 4 5 6 (PRODUCT LEVEL)	SEE PAGE
E	1	1	**5P-0743**		HOSE (15-CM)	
	2	1	**7K-1181**	4	STRAP-CABLE	
	3	1	**9R-9901**	2	FASTENER	
	4	1	**105-8034**	2	SWITCH AS-LIMIT (SERVICE BRAKE)	
	5	1	**151-4841**	2	BLOCK	
	6	1	**153-2997**	1	FITTING AS (QUICK DISCONNECT, FEMALE)	
	7	1	**156-3631**	1	FITTING AS	
		1	**3K-0360**	1	SEAL-O-RING	
	8	1	**165-6595**	1	PIN AS	
	9	1	*170-0967*	1	ELBOW AS	
		1	**3K-0360**	1	SEAL-O-RING	
		1	**5P-4906**	1	ELBOW	
	10	1	*194-2903*	1	ELBOW AS	
		1	**3K-0360**	1	SEAL-O-RING	
		1	**8T-0119**	1	ELBOW	
	11	1	**202-5993**	1	PLATE	
	12	1	**206-1634**	1	PLATE AS	
M		1	**6V-4248**	2	BOLT (M10X1.5X25-MM)	
M		1	**6V-9632**	5	NUT-WELD (M6X1-THD)	
		1	**7T-1099**	4	LINK	
M		1	**8T-4908**	1	BOLT (M8X1.25X25-MM)	
	13	1	**206-1752**	1	PLATE AS	
	14	1	**206-1766**	2	PIN	
	15	1	**206-1767**	1	SPRING (LH)	
	16	1	**220-8226**	1	VALVE AS-BRAKE (BOOST)	
		1	**262-4084**	2	BOOT	
I	17	1	**253-1549**	1	HOSE AS	
	18	1	**262-4081**	2	END-YOKE ROD	
	19	1	**275-0652**	1	PEDAL AS (LH)	
	19A	1	**202-6029**	2	BUSHING	
	20	1	**275-0653**	1	PEDAL AS (RH)	
	20A	1	**202-6029**	2	BUSHING	
	21	1	**286-1930**	2	RING-RETAINING	
	22	1	**291-8379**	1	COVER-BRAKE	
	23	1	**298-3599**	1	PLATE AS	
	24	1	**356-4064**	1	GROMMET	
I	25	1	**362-5364**	1	HOSE AS	
I	26	1	**365-2868**	1	HOSE AS	
M	27	1	**142-0485**	2	NUT (M10X1.5-THD)	
	28	1	*148-8325*	4	CONNECTOR AS	
					(EACH INCLUDES)	
		1	**3J-1907**	1	SEAL-O-RING	
		1	**4J-5477**	1	SEAL-O-RING	
		1	**6V-8641**	1	CONNECTOR	
	29	1	*148-8374*	1	ELBOW AS	
		1	**3K-0360**	1	SEAL-O-RING	
		1	**6V-8397**	1	SEAL-O-RING	
		1	**6V-8723**	1	ELBOW	
	30	1	*148-8378*	1	ELBOW AS	
		1	**3J-1907**	1	SEAL-O-RING	
		1	**6V-8397**	1	SEAL-O-RING	
		1	**6V-8724**	1	ELBOW	
	31	1	**206-1768**	1	SPRING (RH)	
	32	1	**277-1873**	1	CLIP	
	33	1	**2K-5986**	1	PIN-SPRING	
	34	1	**359-7325**	2	CLAMP-HOSE	

341-6684 CONTROL GP-SERVICE BRAKE *(contd.)* i04689390

NOTE	REF NO	GRAPHIC REF	PART NUMBER	QTY	PART NAME 1 2 3 4 5 6 (PRODUCT LEVEL)	SEE PAGE
	35	1	**3K-0360**	1	SEAL-O-RING	
M	36	1	**5C-2890**	1	NUT (M6X1-THD)	
M	37	1	**5C-7261**	6	NUT (M8X1.25-THD)	
	38	1	**5P-4116**	4	WASHER-HARD (8.8X20.5X2-MM THK)	
M	39	1	**6V-7357**	1	BOLT (M6X1X25-MM)	
	40	1	**7X-7729**	6	WASHER (11X25X3-MM THK)	
	41	1	**8T-4121**	1	WASHER-HARD (11X21X2.5-MM THK)	
M	42	1	**8T-4133**	2	NUT (M10X1.5-THD)	
M	43	1	**8T-4136**	5	BOLT (M10X1.5X25-MM)	
M	44	1	**8T-4138**	1	BOLT (M6X1X20-MM)	
	45	1	**8T-4205**	1	WASHER-HARD (7.2X14.5X2-MM THK)	
	46	1	**8T-4224**	4	WASHER-HARD (8.8X16X2-MM THK)	
M	47	1	**8T-4908**	2	BOLT (M8X1.25X25-MM)	
	48	1	**9R-2807**	2	CLIP	
	49	1	**9R-5615**	2	PLUG	
M	50	1	**9X-2044**	2	SCREW-TRUSS HEAD (M6X1X16-MM)	
M	51	1	**9X-2045**	4	SCREW-TRUSS HEAD (M6X1X20-MM)	

E-ORDER BY THE CENTIMETER
I-REFER TO HYDRAULIC INFORMATION SYSTEM
M-METRIC PART

341-6684 **CONTROL GP-SERVICE BRAKE** *(contd.)* **i04689390**

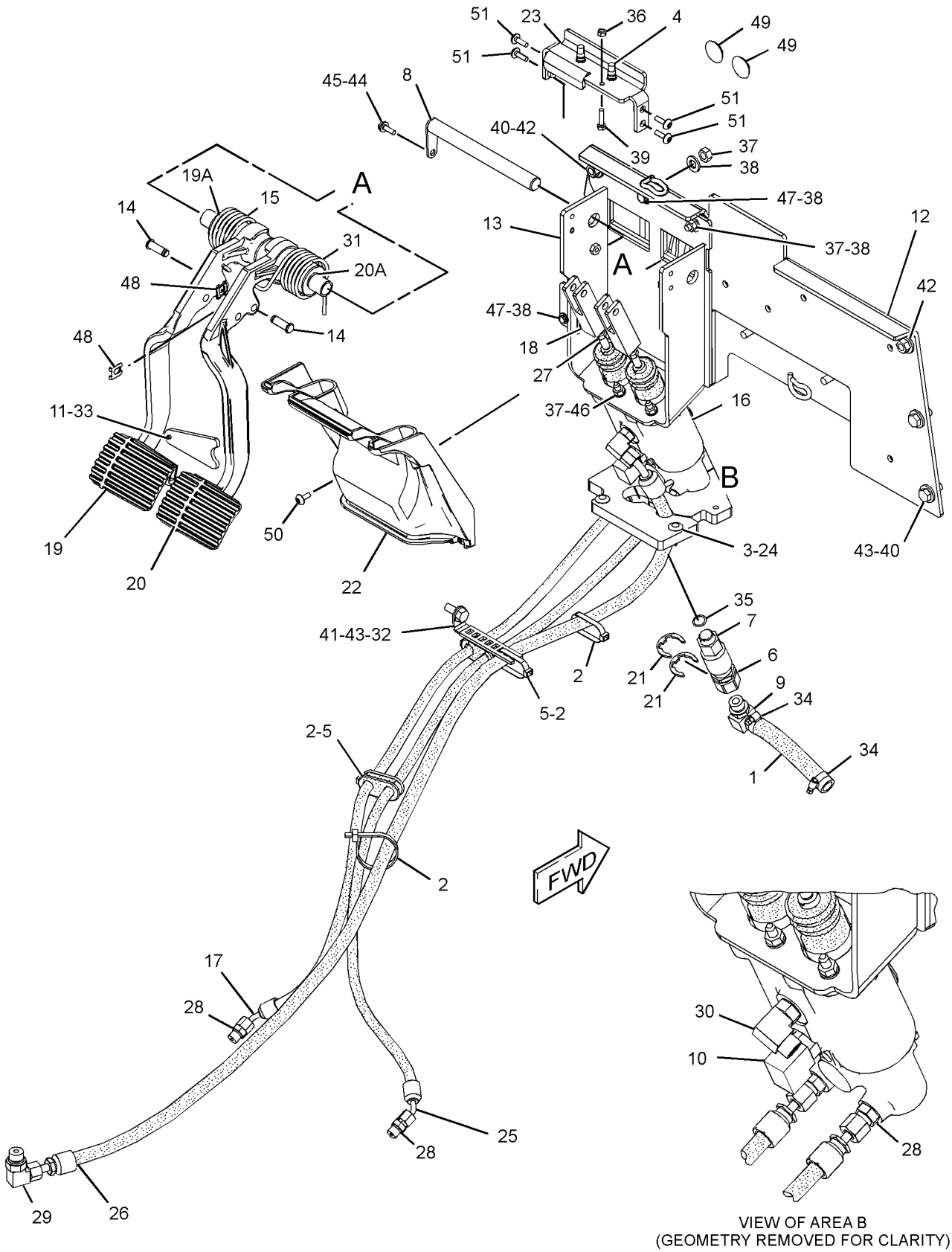

VIEW OF AREA B
(GEOMETRY REMOVED FOR CLARITY)

GRAPHIC #1 **<END>** g02761337

216-1612 CYLINDER GP-BRAKE

S/N: SEJ1-UP
PART OF 238-5298 DIFFERENTIAL & BEVEL GEAR GP
AN ATTACHMENT

SMCS-4262 **i04403972**

NOTE	REF NO	GRAPHIC REF	PART NUMBER	QTY	PART NAME 1 2 3 4 5 6 (PRODUCT LEVEL)	SEE PAGE
JM	1	1	**6V-2315**	3	BOLT (M6X1X35-MM)	
LM	2	1	**1R-5396**	3	BOLT (M6X1X35-MM)	
J	3	1	**199-0672**	3	SPACER-SPECIAL	
J	4	1	**199-0681**	3	WASHER (6.2X16.5X2-MM THK)	
L	5	1	**199-0701**	3	BRAKE-COVER	
L	6	1	**199-0702**	3	SPRING (INNER)	
L	7	1	**199-0703**	3	SPRING (OUTER)	
	8	1	**199-0752**	1	PISTON-BRAKE	
	9	1	**199-0759**	1	O-RING-INNER	
JL	10	1	**212-5712**	6	BUSHING	
	11	1	**219-8834**	1	CYLINDER-BRAKE	
	12	1	**199-0700**	1	O-RING-OUTER	
					AVAILABLE REPAIR KIT(S):	
J			**217-2347**	3	KIT-BRAKE CYLINDER (ADJUSTER)	
					(INCLUDES SPECIAL SPACERS, BUSHINGS, WASHERS & BOLTS)	
L			**217-2349**	3	KIT-BRAKE CYLINDER (SPRING RETENTION)	
					(INCLUDES BOLTS, BRAKE COVERS, SPRINGS & BUSHINGS)	

J-KIT MARKED J SERVICES PARTS MARKED J
L-KIT MARKED L SERVICES PARTS MARKED L
M-METRIC PART

216-1612 CYLINDER GP-BRAKE *(contd.)* **i04403972**

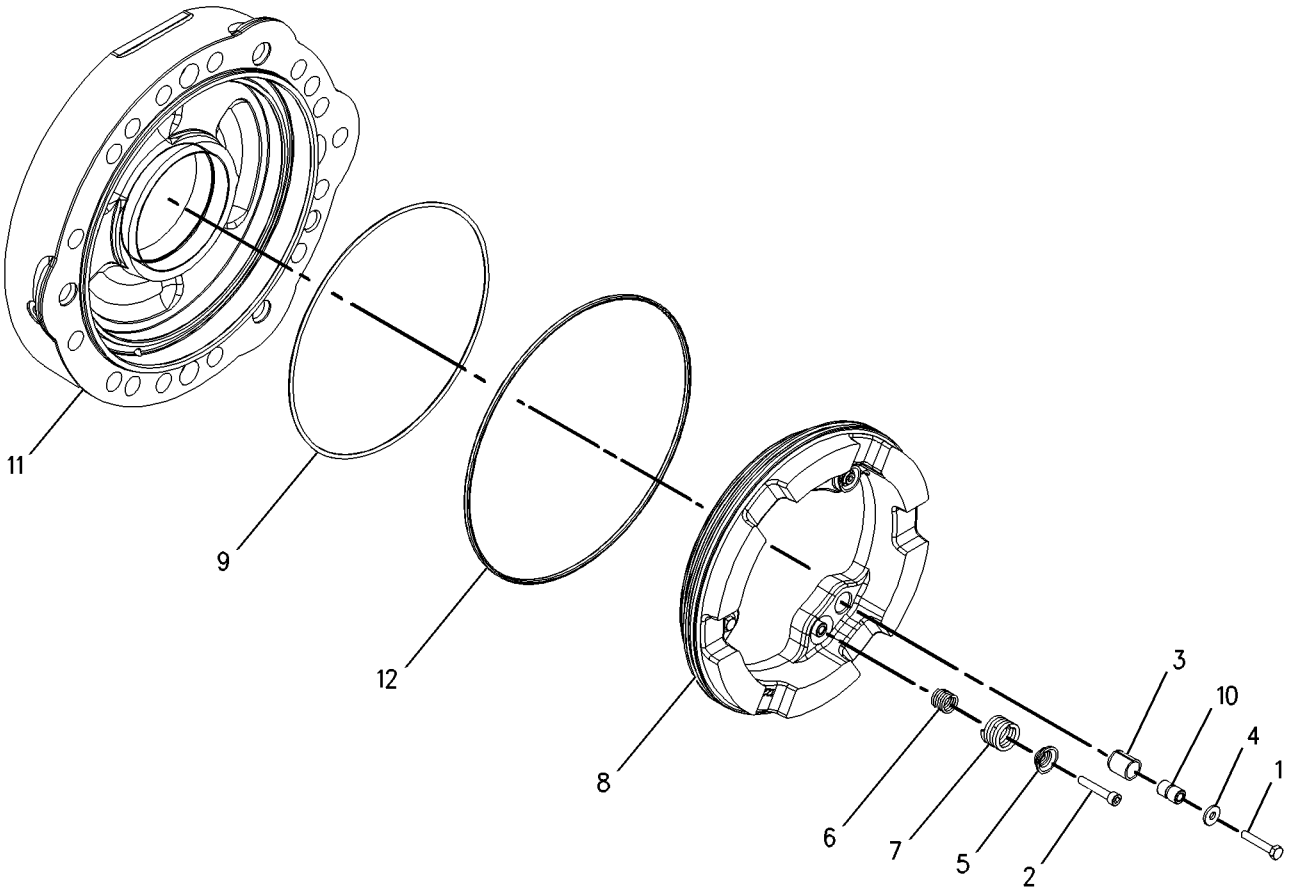

GRAPHIC #1 **<END>** g00953880

216-1613 CYLINDER GP-BRAKE

S/N: SEJ1-UP
PART OF 238-5298 DIFFERENTIAL & BEVEL GEAR GP
AN ATTACHMENT

SMCS-4262 **i04404039**

NOTE	REF NO	GRAPHIC REF	PART NUMBER	QTY	PART NAME 1 2 3 4 5 6 (PRODUCT LEVEL)	SEE PAGE
JM	1	1	**6V-2315**	3	BOLT (M6X1X35-MM)	
LM	2	1	**1R-5396**	3	BOLT (M6X1X35-MM)	
J	3	1	**199-0672**	3	SPACER-SPECIAL	
J	4	1	**199-0681**	3	WASHER (6.2X16.5X2-MM THK)	
L	5	1	**199-0701**	3	BRAKE-COVER	
L	6	1	**199-0702**	3	SPRING (INNER)	
L	7	1	**199-0703**	3	SPRING (OUTER)	
	8	1	**199-0752**	1	PISTON-BRAKE	
	9	1	**199-0759**	1	O-RING-INNER	
JL	10	1	**212-5712**	6	BUSHING	
	11	1	**219-8835**	1	CYLINDER-BRAKE	
	12	1	**199-0700**	1	O-RING-OUTER	
					AVAILABLE REPAIR KIT(S):	
J			**217-2347**	3	KIT-BRAKE CYLINDER (ADJUSTER)	
					(INCLUDES SPECIAL SPACERS, BUSHINGS, WASHERS & BOLTS)	
L			**217-2349**	3	KIT-BRAKE CYLINDER (SPRING RETENTION)	
					(INCLUDES BOLTS, BRAKE COVERS, SPRINGS & BUSHINGS)	

J-KIT MARKED J SERVICES PARTS MARKED J
L-KIT MARKED L SERVICES PARTS MARKED L
M-METRIC PART

216-1613 CYLINDER GP-BRAKE *(contd.)* **i04404039**

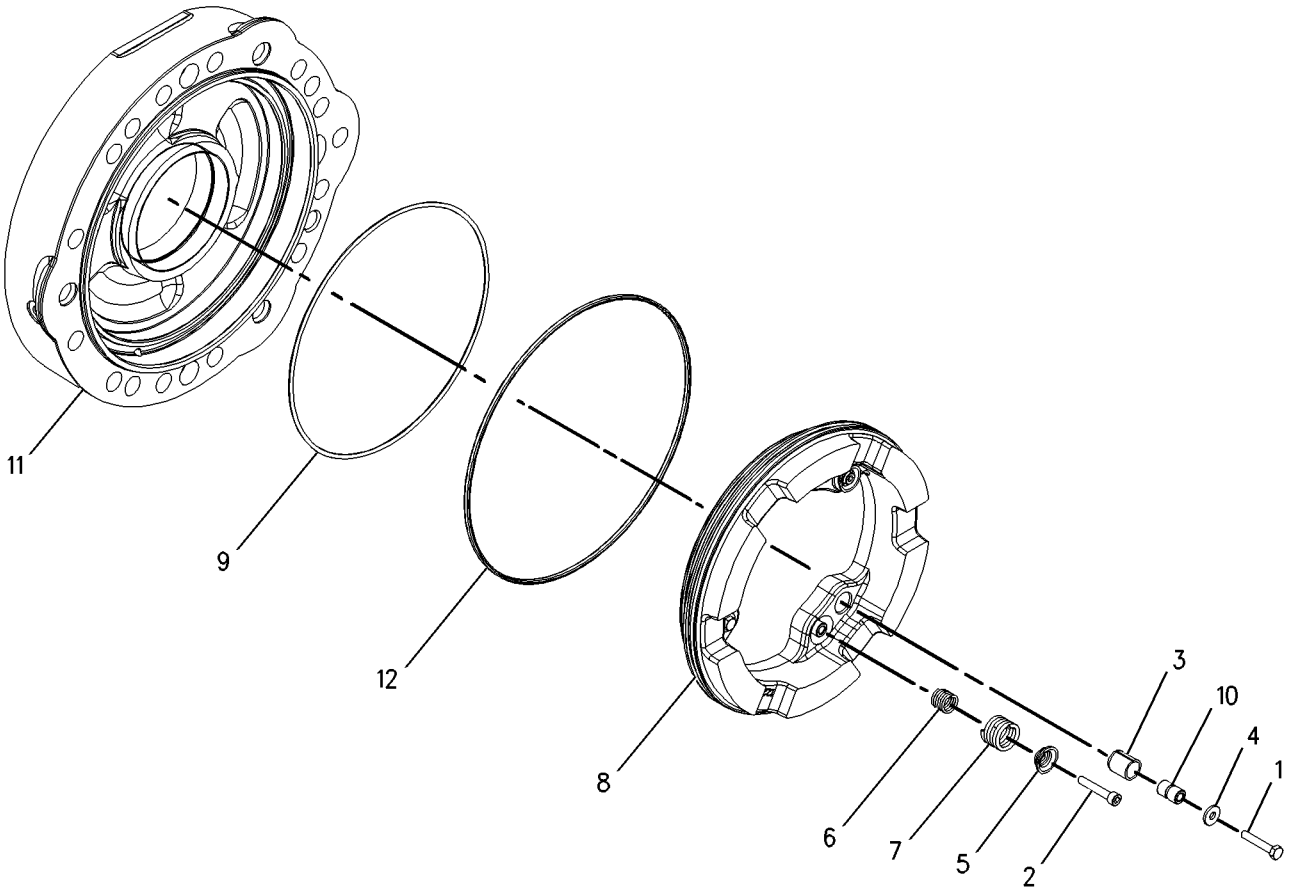

GRAPHIC #1 **<END>** g00995396

163-0753 LEVER GP-HAND CONTROL

S/N: SEJ1-UP
PART OF 389-7167 CONTROL GP-PARKING BRAKE
AN ATTACHMENT

SMCS-4284 **i02156244**

NOTE	REF NO	GRAPHIC REF	PART NUMBER	QTY	PART NAME 1 2 3 4 5 6 (PRODUCT LEVEL)	SEE PAGE
	1	1	**7R-8239**	2	SPACER	
	2	1	**039-9133**	1	PIN	
	3	1	**164-9598**	1	GRIP	
	4	1	**164-9599**	1	COVER	
	5	1	**3B-4610**	1	PIN-COTTER	
	6	1	**8T-4224**	2	WASHER-HARD (8.8X16X2-MM THK)	

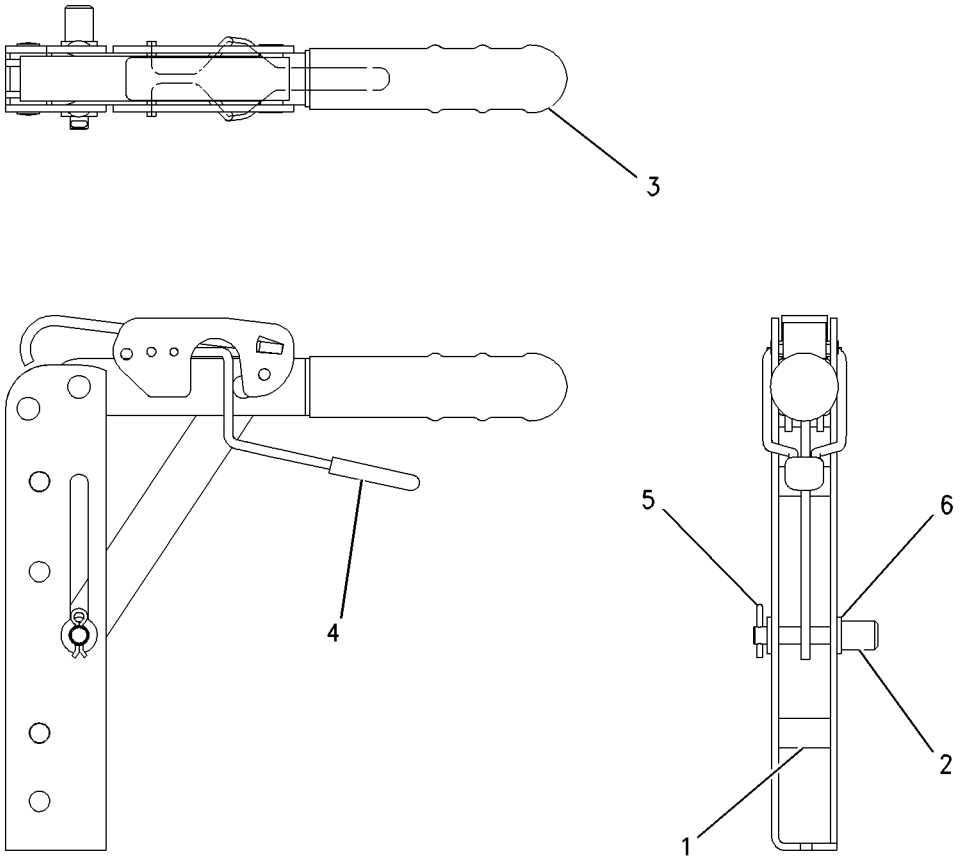

GRAPHIC #1 **<END>** g00729504

STEERING SYSTEM

337-9825 LINES GP-STEERING

S/N: SEJ1-UP
PART OF 353-1501 DRIVE AR-BACKHOE LOADER
AN ATTACHMENT

SMCS-4304 **i04577537**

NOTE	REF NO	GRAPHIC REF	PART NUMBER	QTY	PART NAME 1 2 3 4 5 6 (PRODUCT LEVEL)	SEE PAGE
	1	1	**9X-6772**	6	STRAP-CABLE	
	2	1	*195-2037*	1	FITTING AS	
		1	**3K-0360**	1	SEAL-O-RING	
		1	**034-3679**	1	FITTING	
	3	1	*268-1559*	1	ADAPTER AS	
		1	**3J-1907**	1	SEAL-O-RING	
		1	**4J-5477**	1	SEAL-O-RING	
		1	**209-0939**	1	ADAPTER	
Y	4	1	**341-7654**	1	PUMP GP-METERING (HMU)	300
I	5	1	**361-4654**	1	HOSE AS	
I	6	1	**361-4655**	1	HOSE AS	
I	7	1	**362-9209**	1	HOSE AS	
I	8	1	**362-9239**	1	HOSE AS	
	9	1	**100-4336**	2	CLIP	
	10	1	*148-8318*	1	CONNECTOR AS	
		1	**3K-0360**	1	SEAL-O-RING	
		1	**6V-8397**	1	SEAL-O-RING	
		1	**6V-8634**	1	CONNECTOR	
	11	1	*148-8369*	1	ELBOW AS	
		1	**3J-7354**	1	SEAL-O-RING	
		1	**4J-5477**	1	SEAL-O-RING	
		1	**6V-8628**	1	ELBOW	
	12	1	*148-8374*	2	ELBOW AS	
					(EACH INCLUDES)	
		1	**3K-0360**	1	SEAL-O-RING	
		1	**6V-8397**	1	SEAL-O-RING	
		1	**6V-8723**	1	ELBOW	
	13	1	*148-8383*	3	ELBOW AS	
					(EACH INCLUDES)	
		1	**3K-0360**	1	SEAL-O-RING	
		1	**6V-8397**	1	SEAL-O-RING	
		1	**8T-1683**	1	ELBOW	
	14	1	*150-3026*	1	ELBOW AS	
		1	**3K-0360**	1	SEAL-O-RING	
		1	**6V-4292**	1	ELBOW	
	15	1	**359-7325**	2	CLAMP-HOSE	
	16	1	**4P-7429**	1	CLIP	
	17	1	**8S-0948**	1	CLIP	
	18	1	**8T-4121**	3	WASHER-HARD (11X21X2.5-MM THK)	
	19	1	**2B-0941**	2	SPACER (10.5X19X19-MM THK)	
M	20	1	**8T-4196**	1	BOLT (M10X1.5X35-MM)	
M	21	1	**8T-6466**	2	BOLT (M10X1.5X60-MM)	
E	22	1	**5P-1505**		HOSE (78-CM)	

E-ORDER BY THE CENTIMETER
I-REFER TO HYDRAULIC INFORMATION SYSTEM
M-METRIC PART
Y-SEPARATE ILLUSTRATION

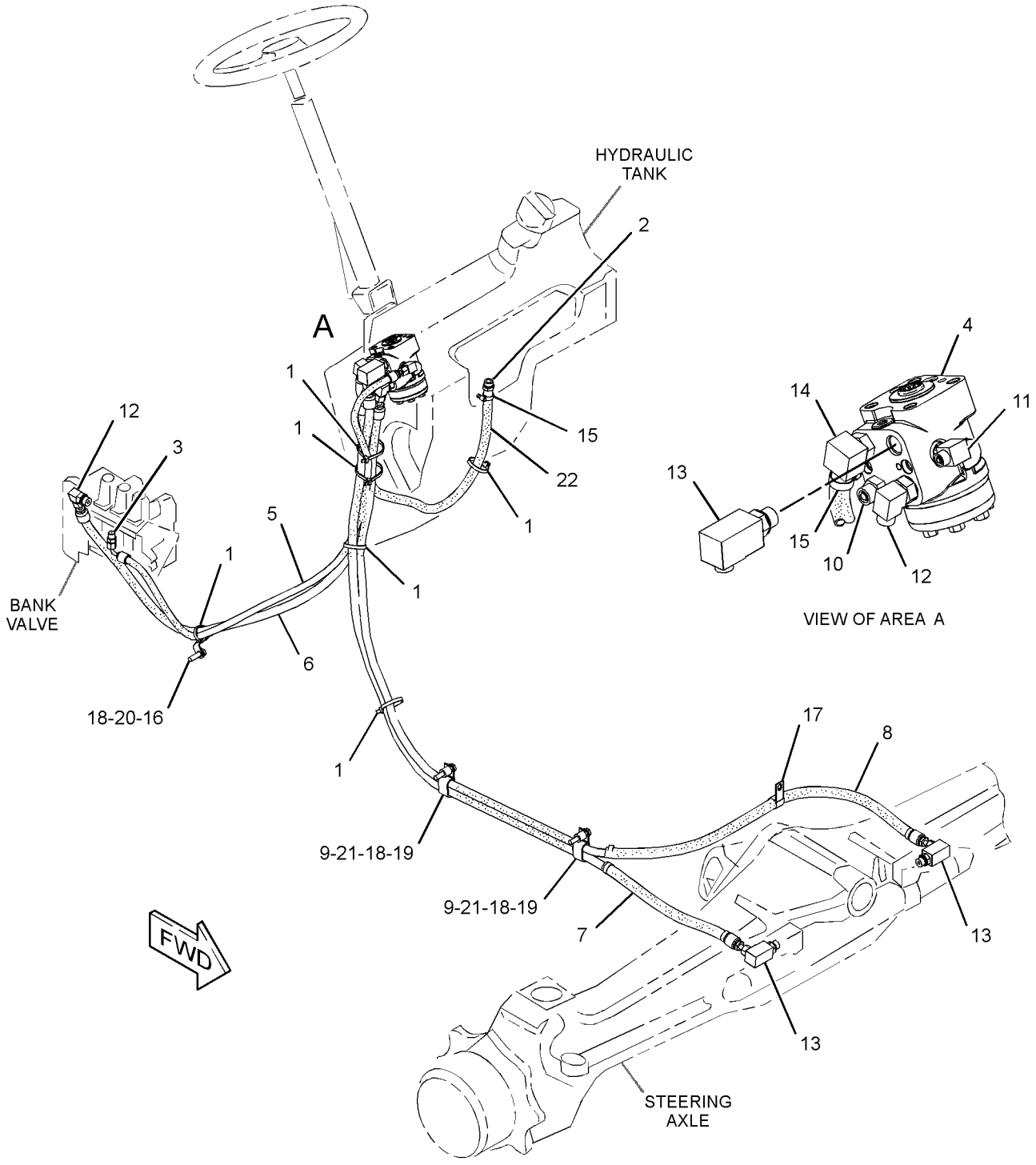

GRAPHIC #1 **<END>** g02796578

STEERING SYSTEM

341-7654 PUMP GP-METERING

S/N: SEJ1-UP

PART OF 337-9825 LINES GP-STEERING

AN ATTACHMENT

SMCS-4312 **i04574413**

NOTE	REF NO	GRAPHIC REF	PART NUMBER	QTY	PART NAME 1 2 3 4 5 6 (PRODUCT LEVEL)	SEE PAGE
J	1	1	**7X-9866**	1	SEAL	
	2	1	**054-6882**	1	BEARING AS	
	3	1	**054-6733**	1	RING	
J	4	1	**7X-9873**	7	WASHER (8.2X11.9X1-MM THK)	
					PARTS SHOWN IN GRAPHIC(S) WITHOUT A REFERENCE NUMBER ARE NOT SERVICED SEPARATELY	
					AVAILABLE REPAIR KIT(S):	
J			**214-7469**	1	KIT-SEAL (HMU)	
					(ALSO INCLUDES SEAL RING & O-RING SEALS)	

J-KIT MARKED J SERVICES PARTS MARKED J

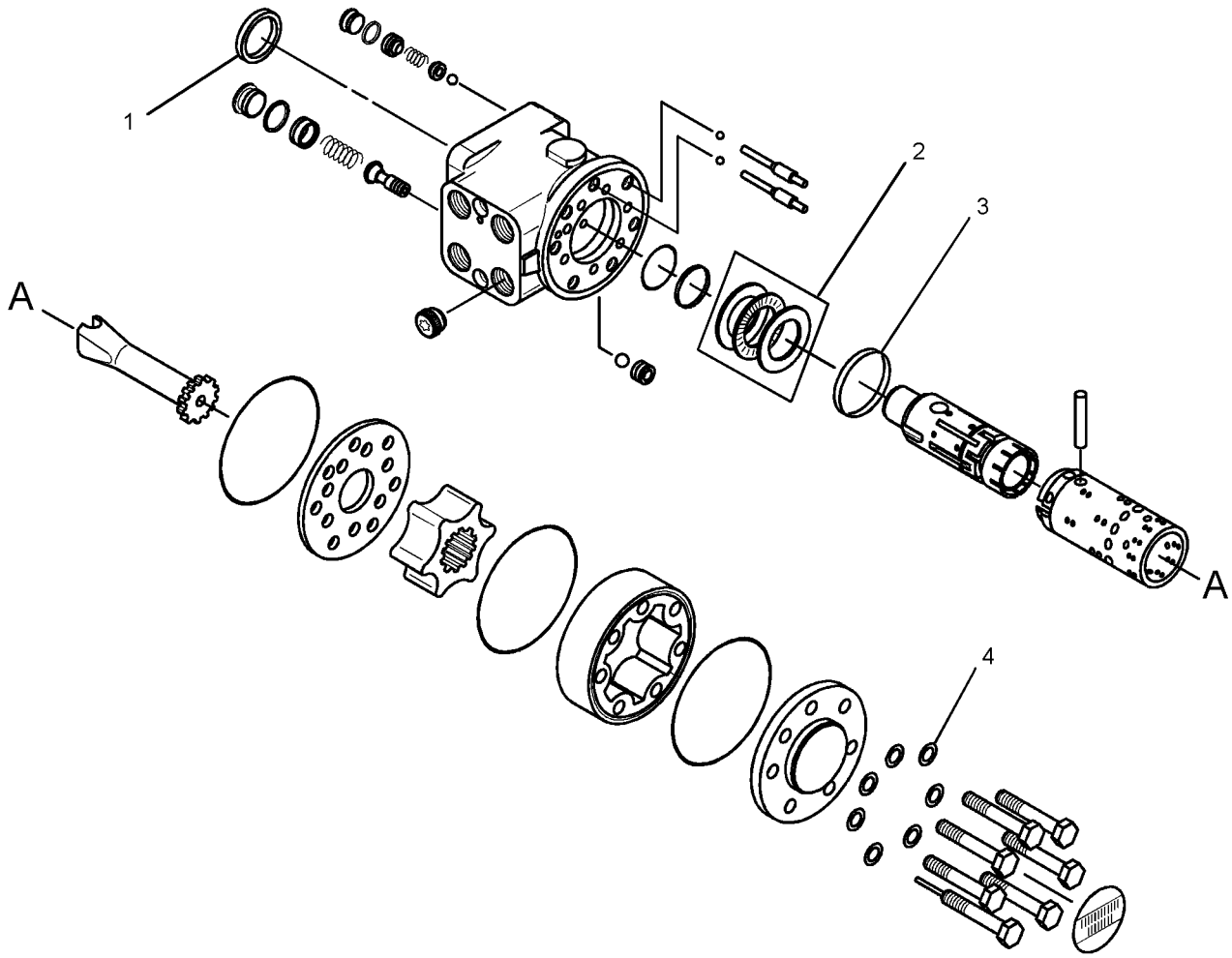

GRAPHIC #1 **<END>** g02812258

310-6216 STEERING COLUMN GP–TILT

S/N: SEJ1-UP

PART OF 356-4120 CONTROL GP-STEERING

AN ATTACHMENT

SMCS-4310, 4338 **i03642520**

NOTE	REF NO	GRAPHIC REF	PART NUMBER	QTY	PART NAME 1 2 3 4 5 6 (PRODUCT LEVEL)	SEE PAGE
M	1	1	**169-3261**	1	NUT (M18X1.5-THD)	
	2	1	**338-1508**	1	SPRING GP-GAS (STEERING COLUMN)	
		1	**146-6347**	2	RING-RETAINING	
	3	1	**254-9926**	1	KIT-TILT PEDAL	
					(INCLUDES BOLT, RING, NUT, SPRING & TILT LEVER)	
M	4	1	**5C-8312**	1	NUT (M4X0.7-THD)	
	5	1	**317-5544**	1	CAM	
M	6	1	**123-0708**	1	SCREW-HEX SOCKET (M4X0.7X30-MM)	

M-METRIC PART

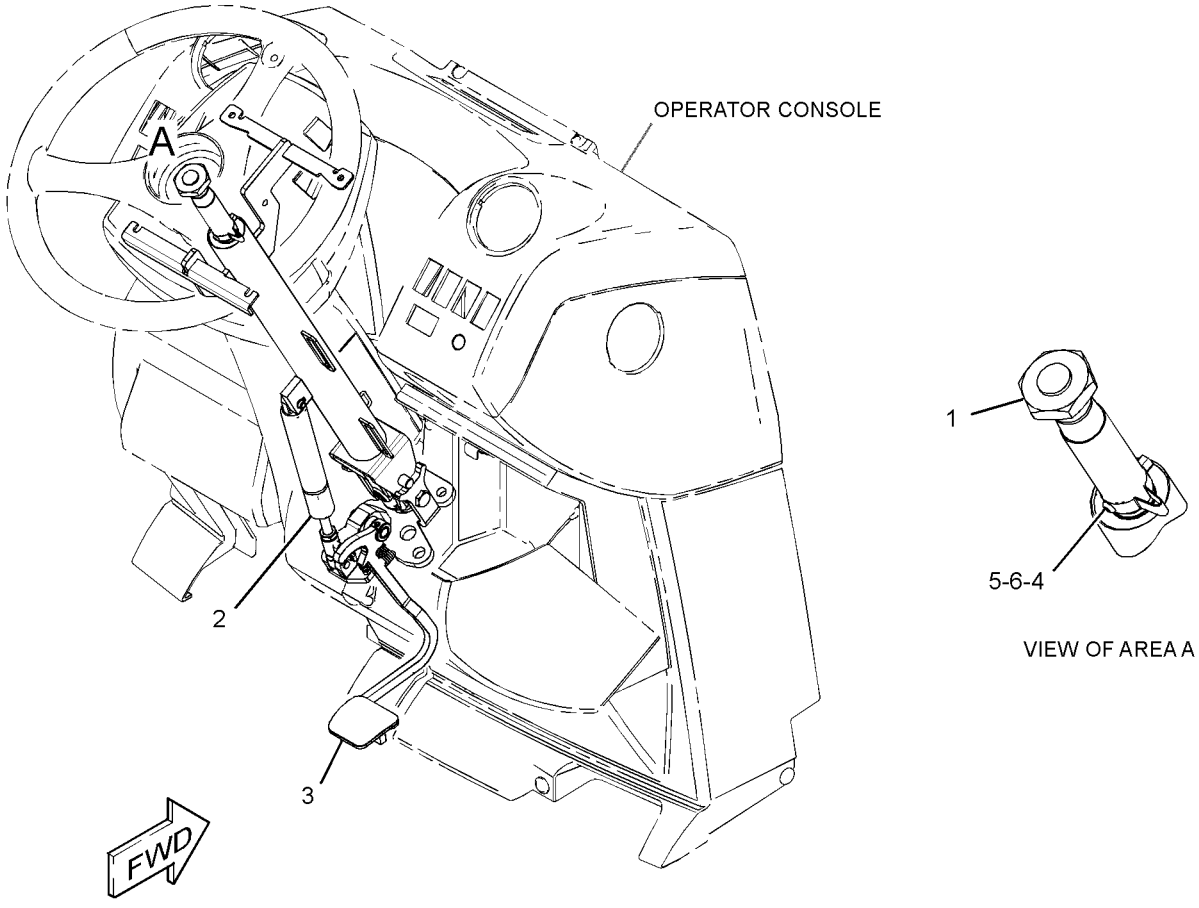

GRAPHIC #1 **<END>** g01960591

FRAME AND BODY

353-1380 BOX GP-STORAGE

S/N: SEJ1-UP
PART OF 337-9867 ENGINE AR-COMPLETE
AN ATTACHMENT

SMCS-7268 **i04577847**

NOTE	REF NO	GRAPHIC REF	PART NUMBER	QTY	PART NAME 1 2 3 4 5 6 (PRODUCT LEVEL)	SEE PAGE
	1	1	**347-5947**	1	FENDER	
	2	1	**362-3069**	1	TUBE AS	
	3	1	**362-3070**	1	TUBE AS	
	4	1	**362-3074**	1	TREAD AS	
Y	5	1	**362-3079**	1	BOX GP-STORAGE	303
	6	1	**362-4563**	1	PLATE	
	7	1	**363-8010**	1	STEP AS	
	8	1	**363-8348**	2	MOUNT	
	9	1	**364-2475**	5	SEAL-STRIP	
	10	1	**156-0283**	3	WASHER-HARD (8.4X35X2.5-MM THK)	
	11	1	**5P-1076**	4	WASHER-HARD (13.5X30X4-MM THK)	
	12	1	**5P-4116**	12	WASHER-HARD (8.8X20.5X2-MM THK)	
M	13	1	**8T-4183**	4	BOLT (M12X1.75X40-MM)	
M	14	1	**8T-4189**	3	BOLT (M8X1.25X20-MM)	
M	15	1	**8T-6869**	8	BOLT (M8X1.25X60-MM)	
M	16	1	**8T-7547**	4	BOLT (M8X1.25X30-MM)	

M-METRIC PART
Y-SEPARATE ILLUSTRATION

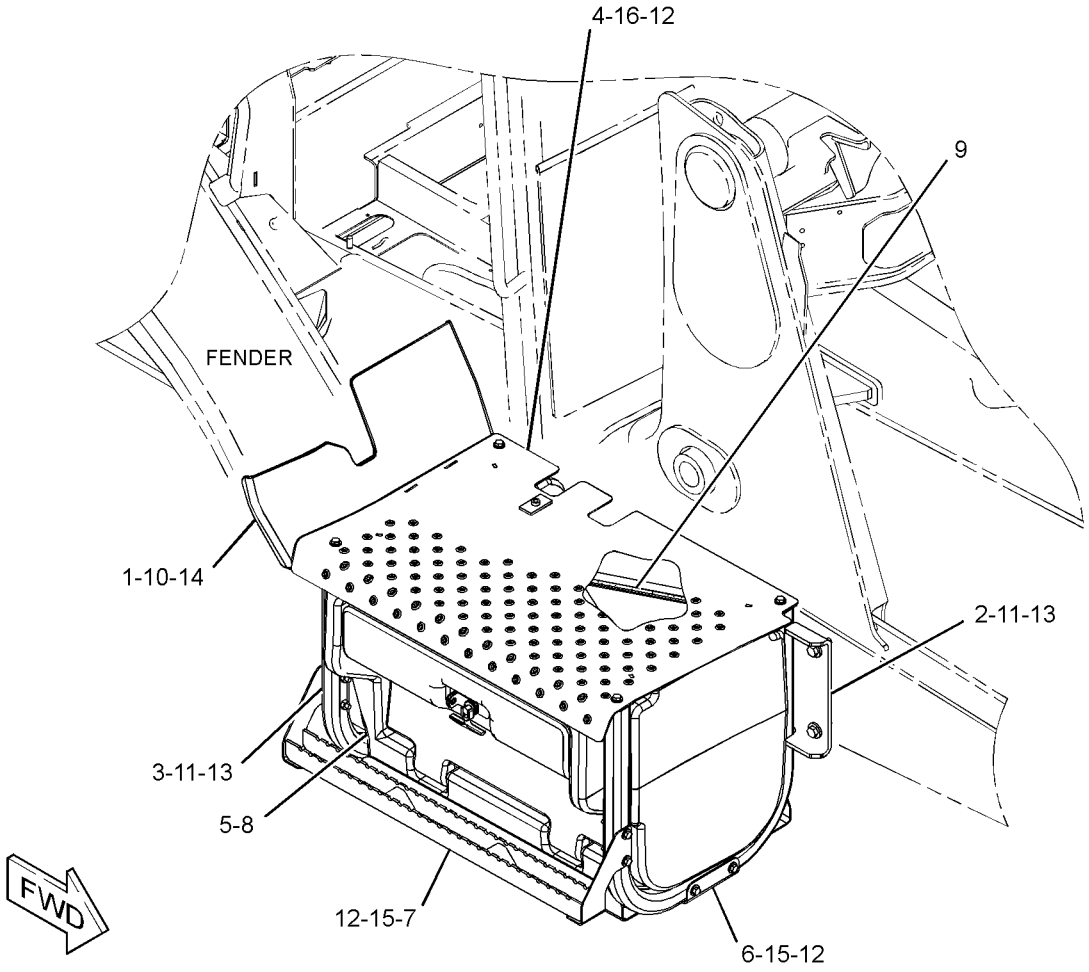

GRAPHIC #1 **<END>** g02811017

362-3079 BOX GP-STORAGE

S/N: SEJ1-UP
PART OF 353-1380 BOX GP-STORAGE
AN ATTACHMENT

SMCS-7268 **i04577679**

NOTE	REF NO	GRAPHIC REF	PART NUMBER	QTY	PART NAME 1 2 3 4 5 6 (PRODUCT LEVEL)	SEE PAGE
M	1	1	**6V-9606**	2	BOLT (M6X1X140-MM)	
	2	1	**129-4741**	1	LATCH AS-T-BAR	
	3	1	**362-3080**	1	DOOR AS-ACCESS	
M	4	1	**129-3178**	2	LOCKNUT (M6X1-THD)	
M	5	1	**6V-7743**	2	LOCKNUT (M6X1-THD)	
M	6	1	**8T-4133**	2	NUT (M10X1.5-THD)	
	7	1	**9M-5732**	4	RIVET-POP	

M-METRIC PART

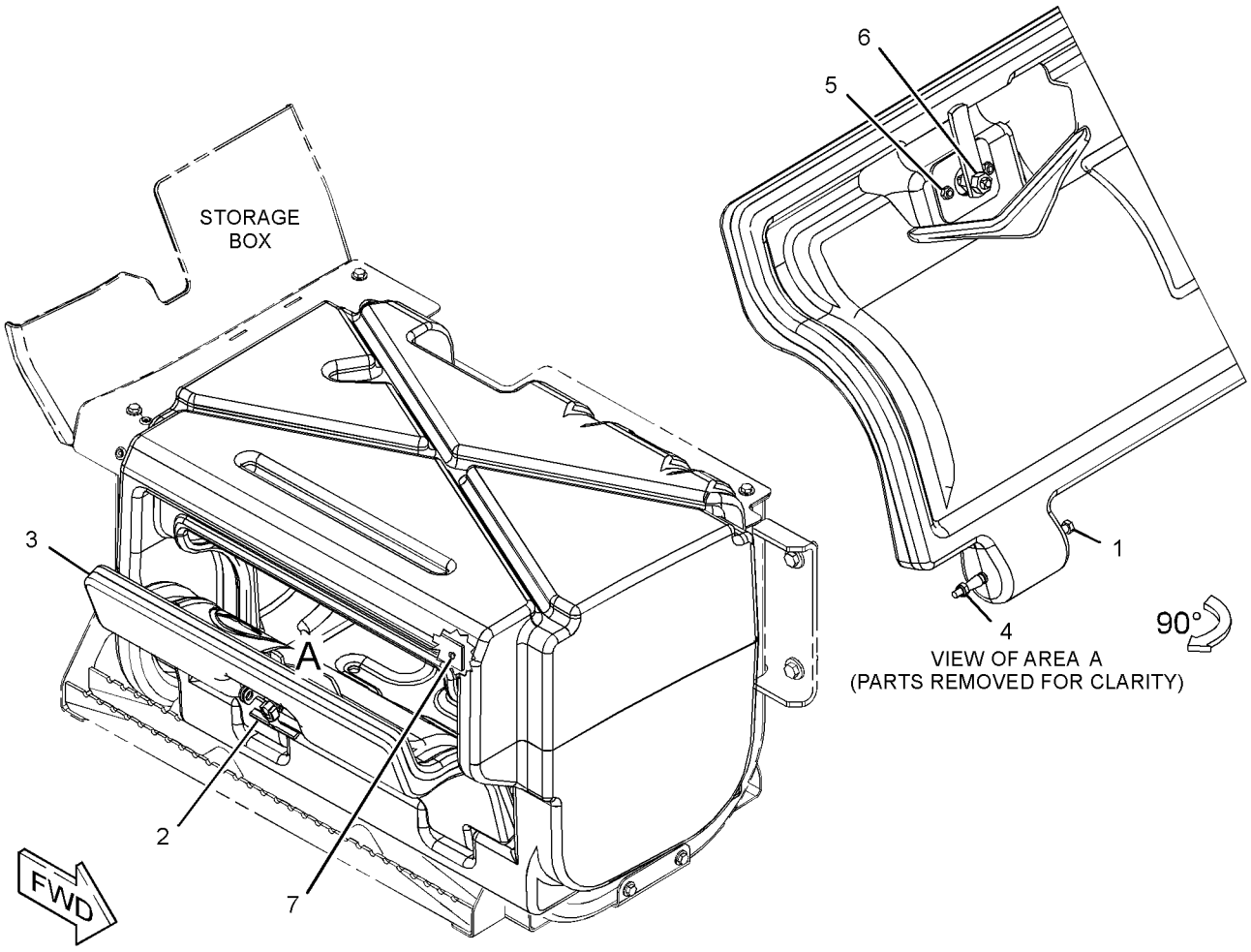

GRAPHIC #1 **<END>** g02818436

FRAME AND BODY

337-9693 COUNTERWEIGHT GP

S/N: SEJ1-UP

AN ATTACHMENT

SMCS-7056 **i04549538**

NOTE	REF NO	GRAPHIC REF	PART NUMBER	QTY	PART NAME 1 2 3 4 5 6 (PRODUCT LEVEL)	SEE PAGE
	1	1	**366-1271**	4	CAP	

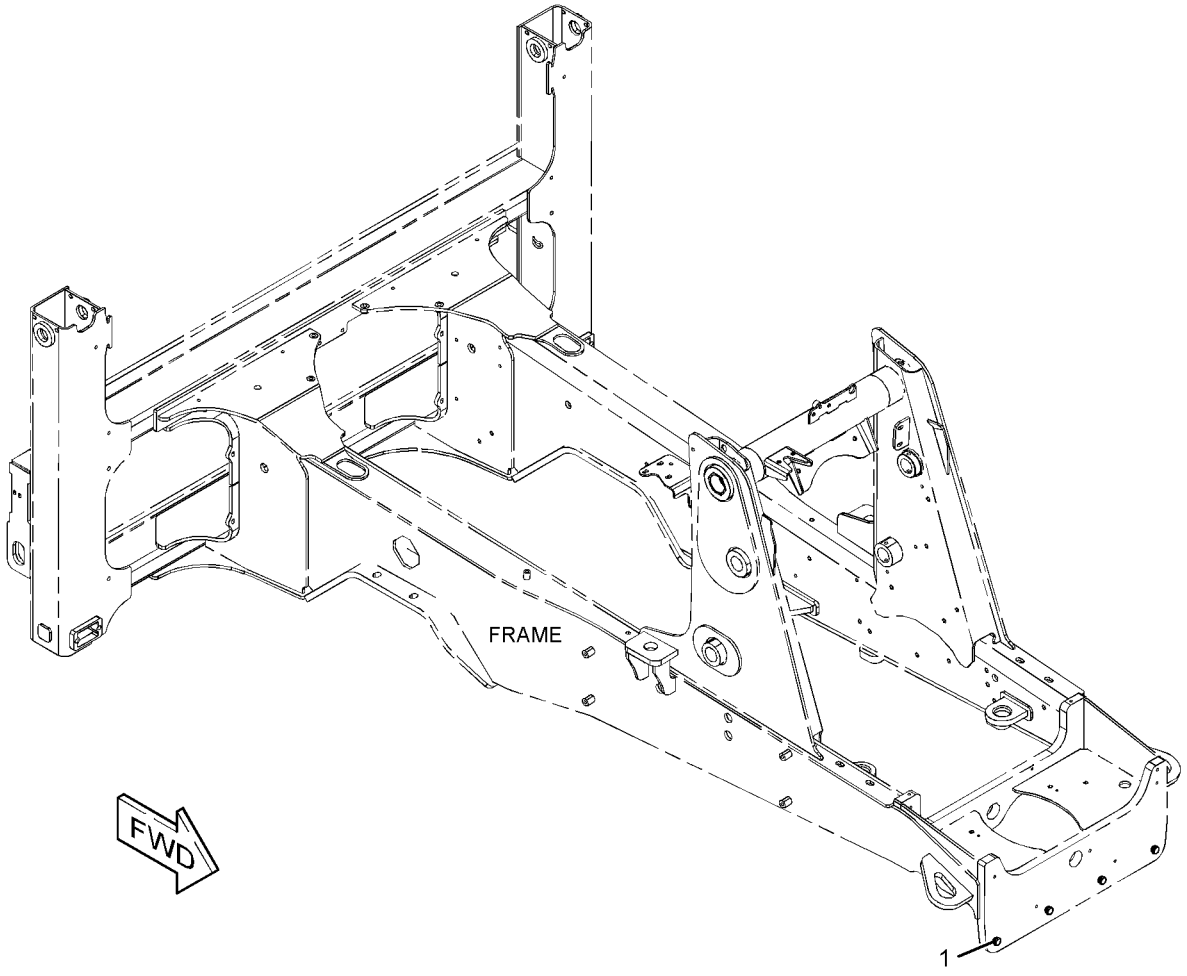

GRAPHIC #1 **<END>** g02773460

FRAME AND BODY

337-9694 COUNTERWEIGHT GP

S/N: SEJ1-UP
116-KG (255-LB)
AN ATTACHMENT

SMCS-7056 **i04697090**

NOTE	REF NO	GRAPHIC REF	PART NUMBER	QTY	PART NAME 1 2 3 4 5 6 (PRODUCT LEVEL)	SEE PAGE
	1	1	**356-0041**	1	COUNTERWEIGHT	
M	2	1	**7X-2579**	2	BOLT (M24X3X240-MM)	
	3	1	**8T-4167**	2	WASHER-HARD (26X44X4-MM THK)	
	4	1	**366-1271**	2	CAP	

M-METRIC PART

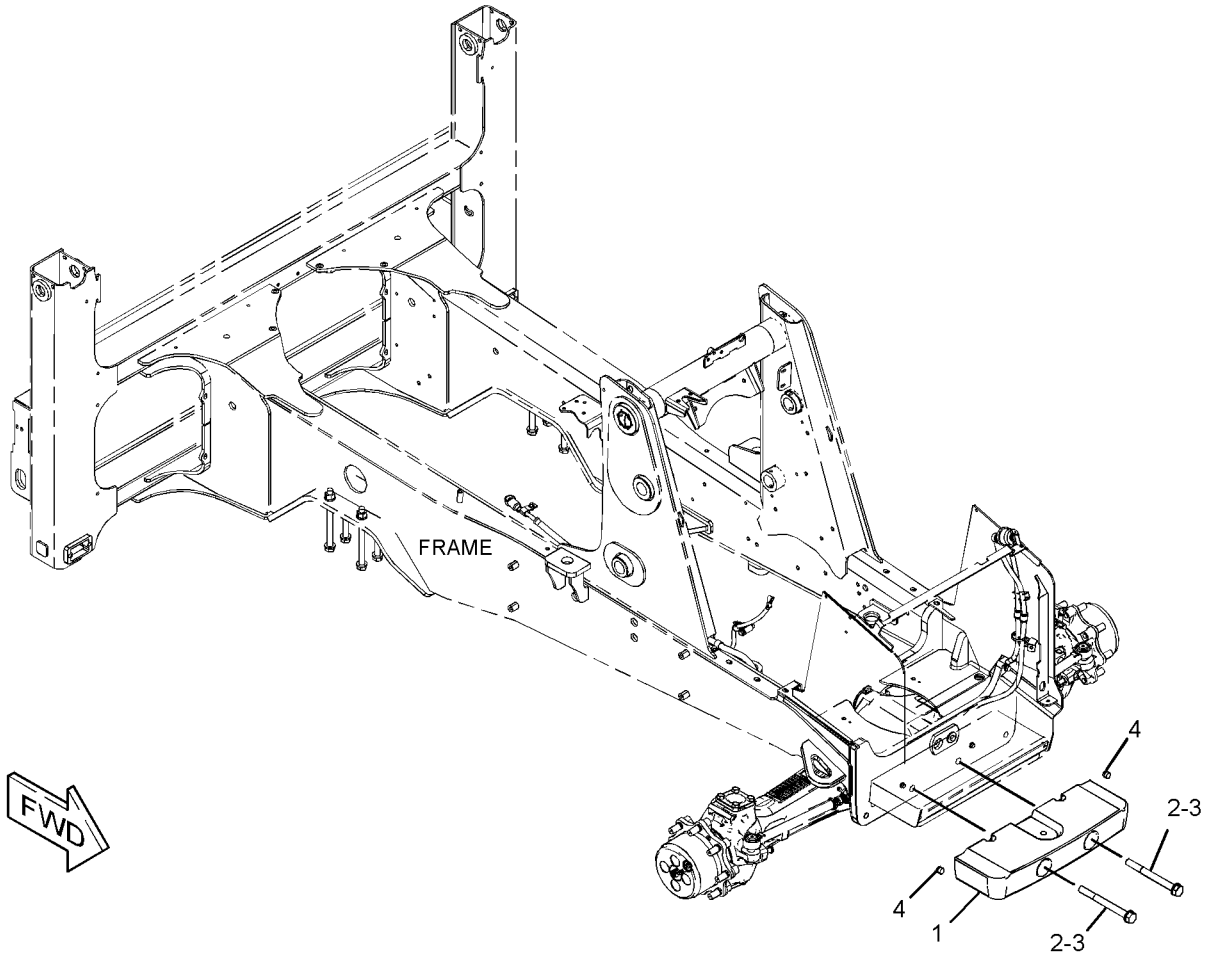

GRAPHIC #1 **<END>** g02806456

FRAME AND BODY

337-9695 COUNTERWEIGHT GP

S/N: SEJ1-UP
240-KG (529-LB)
AN ATTACHMENT

SMCS-7056 **i04549542**

NOTE	REF NO	GRAPHIC REF	PART NUMBER	QTY	PART NAME 1 2 3 4 5 6 (PRODUCT LEVEL)	SEE PAGE
	1	1	**356-0042**	1	COUNTERWEIGHT	
M	2	1	**7X-2579**	4	BOLT (M24X3X240-MM)	
	3	1	**8T-4167**	4	WASHER-HARD (26X44X4-MM THK)	

M-METRIC PART

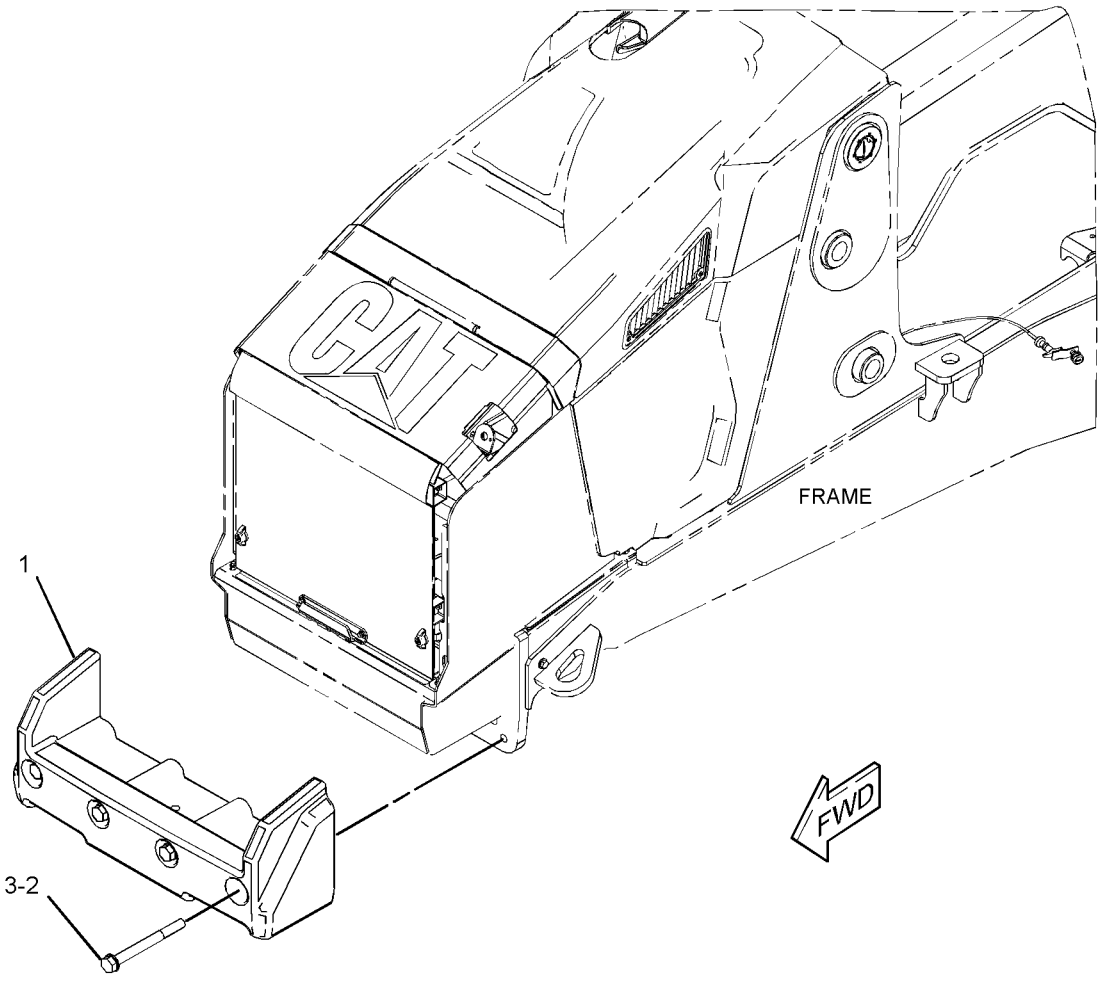

GRAPHIC #1 **<END>** g02812118

FRAME AND BODY

337-9696 COUNTERWEIGHT GP

S/N: SEJ1-UP
460-KG (1015-LB)
AN ATTACHMENT

SMCS-7056 **i04549545**

NOTE	REF NO	GRAPHIC REF	PART NUMBER	QTY	PART NAME 1 2 3 4 5 6 (PRODUCT LEVEL)	SEE PAGE
	1	1	**341-2047**	1	COUNTERWEIGHT	
M	2	1	**7X-2579**	4	BOLT (M24X3X240-MM)	
	3	1	**8T-4167**	4	WASHER-HARD (26X44X4-MM THK)	

M-METRIC PART

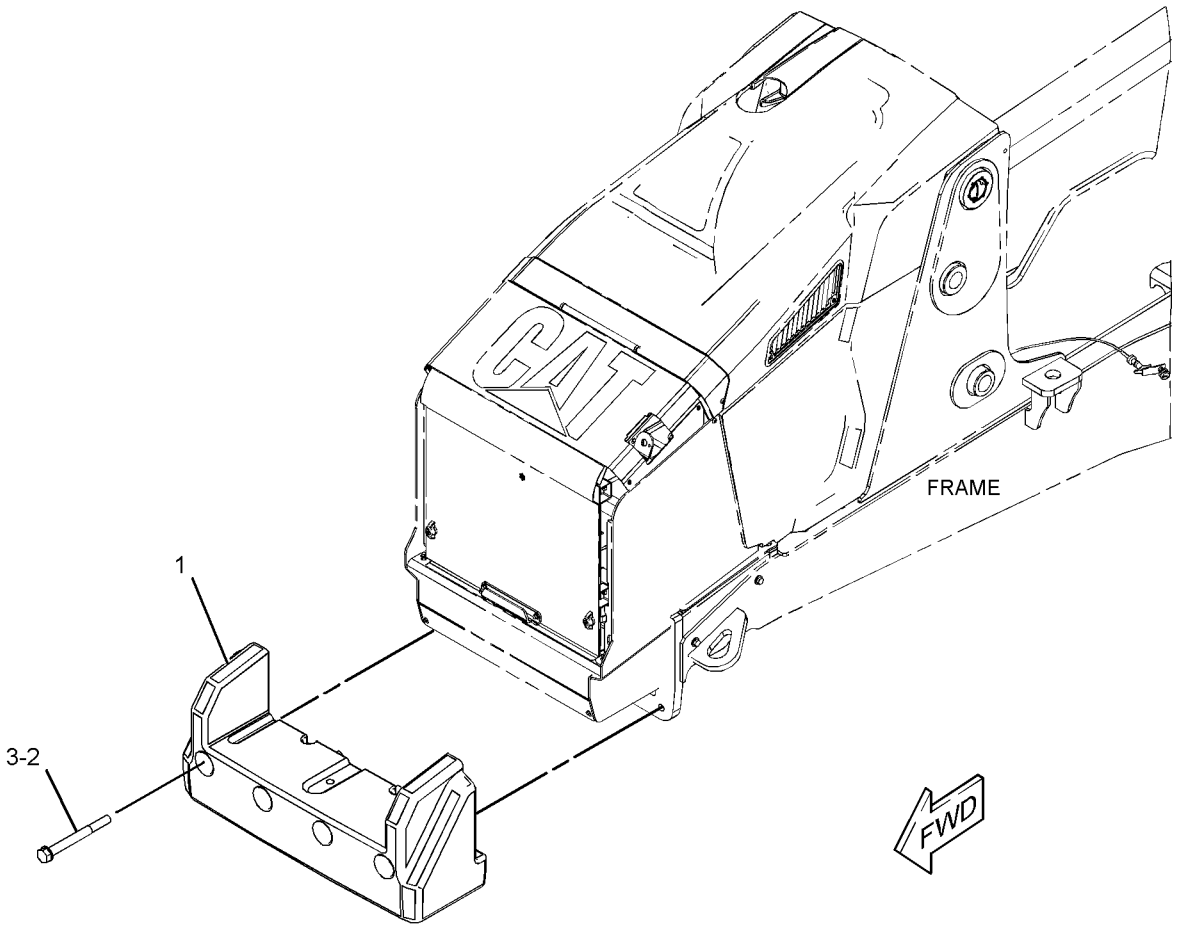

GRAPHIC #1 **<END>** g02812256

343-2901 COVER GP-PROTECTION

S/N: SEJ1-UP
PART OF 340-1743, 340-1744, 340-1749, 374-6882 LINKAGE AR, 340-1740, 340-1745 LINKAGE AR-BUCKET
AN ATTACHMENT

SMCS-7050, 7250, 7315 **i03765830**

NOTE	REF NO	GRAPHIC REF	PART NUMBER	QTY	PART NAME 1 2 3 4 5 6 (PRODUCT LEVEL)	SEE PAGE
	1	1	**3S-2093**	2	STRAP-CABLE	
	2	1	**353-3280**	1	COVER	
M	3	1	**5C-9553**	2	BOLT (M6X1X16-MM)	
	4	1	**7X-0579**	2	WASHER-HARD (8.8X25.5X2-MM THK)	
	5	1	**7X-7702**		CONDUIT-FLEXIBLE (23.35-MM ID, SPLIT) (75-CM EACH)	
	5A	1	**7X-7702**		CONDUIT-FLEXIBLE (23.35-MM ID, SPLIT) (64-CM)	

M-METRIC PART

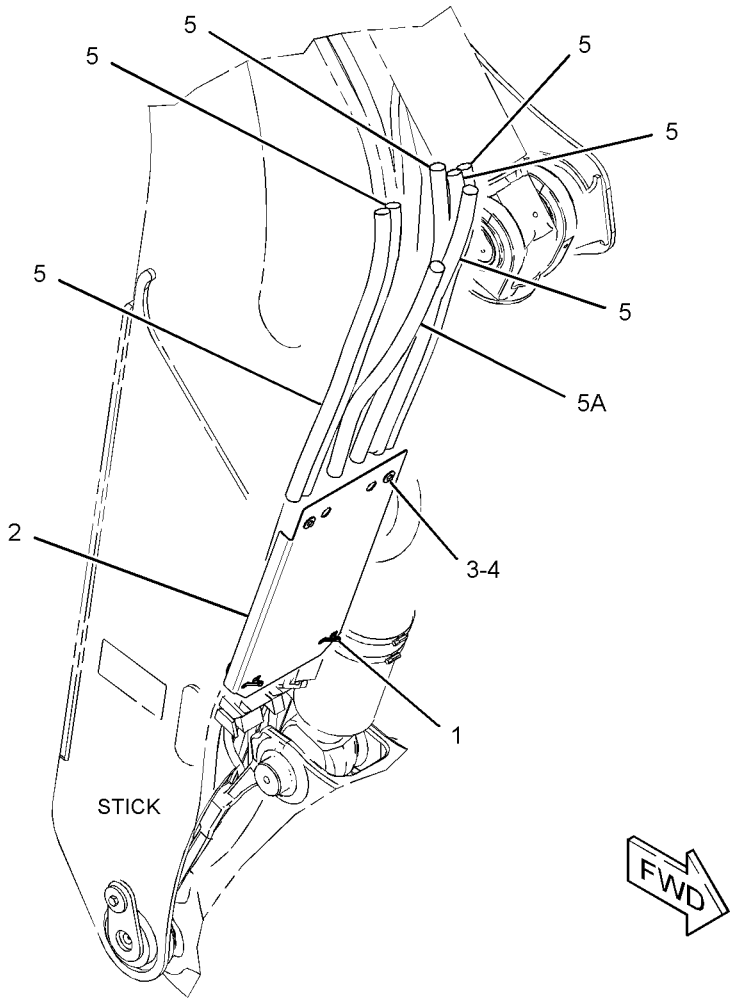

GRAPHIC #1 **<END>** g02108638

337-6851 FENDER GP-FRONT

S/N: SEJ1-UP

PART OF 341-3107 CONVERSION AR-ROADING, 341-3109 OPTION AR-REGIONAL

AN ATTACHMENT

SMCS-7252 **i04549547**

NOTE	REF NO	GRAPHIC REF	PART NUMBER	QTY	PART NAME 1 2 3 4 5 6 (PRODUCT LEVEL)	SEE PAGE
M	1	1	**199-0783**	4	BOLT (M16X2X38-MM)	
	2	1	**375-1372**	1	BRACKET AS (LH)	
	3	1	**375-1373**	1	BRACKET AS (RH)	
	4	1	**377-5319**	2	PLATE	
	5	1	**377-5320**	2	FENDER	
M	6	1	**6V-7744**	4	LOCKNUT (M10X1.5-THD)	
	7	1	**8T-4121**	8	WASHER-HARD (11X21X2.5-MM THK)	
	8	1	**8T-4122**	12	WASHER-HARD (17X32X3.5-MM THK)	
M	9	1	**8T-4137**	4	BOLT (M10X1.5X20-MM)	
M	10	1	**8T-4195**	4	BOLT (M10X1.5X30-MM)	
	11	1	**8T-4222**	4	WASHER-PLATED (11X32X2.5-MM THK)	
M	12	1	**8T-4778**	4	LOCKNUT (M16X2-THD)	

M-METRIC PART

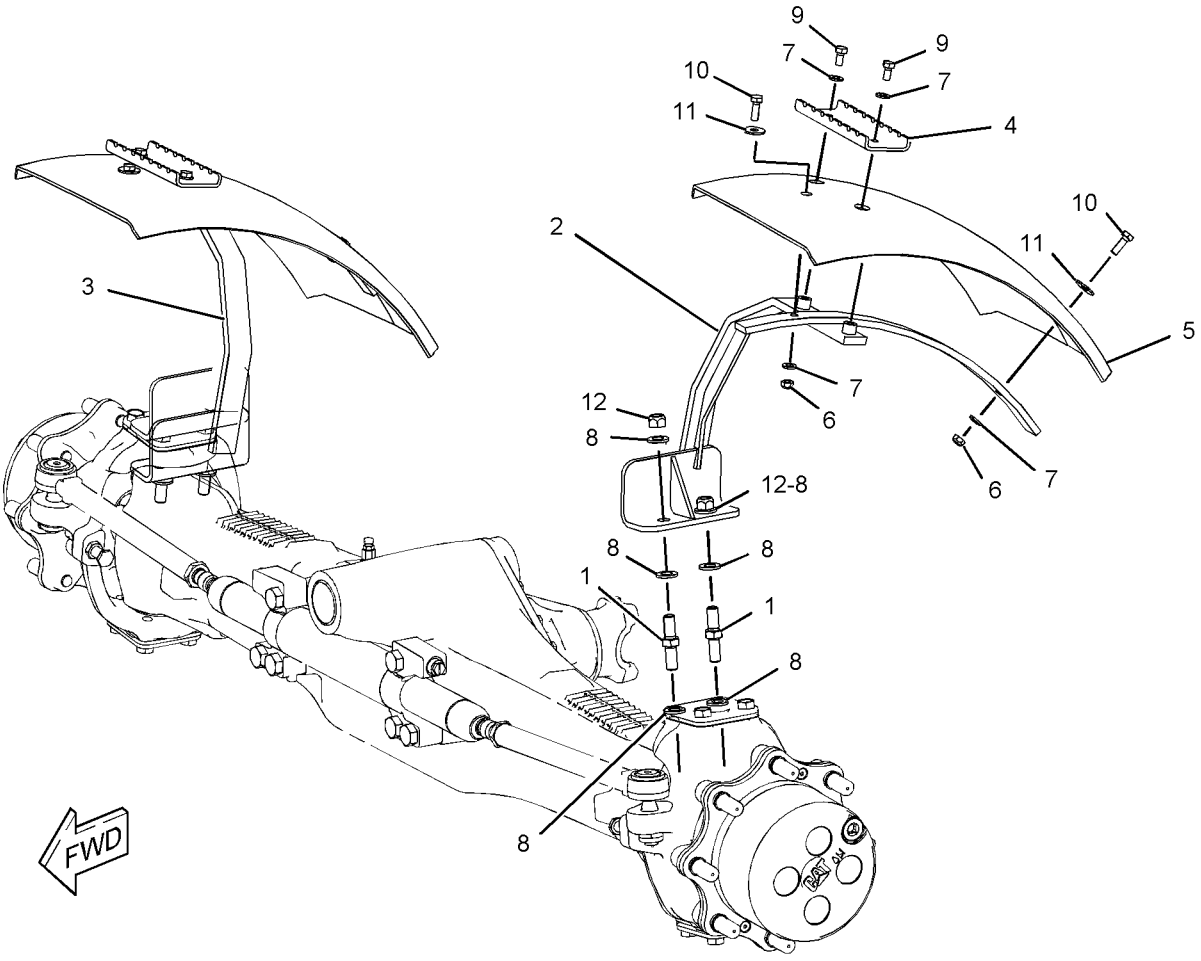

GRAPHIC #1 **<END>** g02760278

211-3782 FENDER GP-REAR

S/N: SEJ1-UP
PART OF 353-1429, 353-1432 CAB AR
AN ATTACHMENT

SMCS-7252 **i04565377**

NOTE	REF NO	GRAPHIC REF	PART NUMBER	QTY	PART NAME 1 2 3 4 5 6 (PRODUCT LEVEL)	SEE PAGE
M	1	1	**8T-4908**	4	BOLT (M8X1.25X25-MM)	
E	2	1	**244-3113**		SEAL (219-CM EACH)	
	3	1	**116-5763**	1	CLIP-SPRING	
	4	1	**376-2119**	2	SCREW-BUTTON HEAD	
	6	1	**213-1889**	1	PLATE	
J	7	1	**226-0291**	1	LOCK AS (PROTECTION)	
	8	1	**227-5556**	1	PLATE	
	9	1	**244-3111**	1	FENDER-REAR (LH)	
	11	1	**247-5557**	1	GUARD	
M	12	1	**7Y-9099**	1	SCREW-TRUSS HEAD (M8X1.25X25-MM)	
	13	1	**156-0283**	22	WASHER-HARD (8.4X35X2.5-MM THK)	
M	14	1	**6V-9189**	4	LOCKNUT (M8X1.25-THD)	
M	15	1	**8T-5093**	14	BOLT-LOCKING (M8X1.25X25-MM)	
E	16	1	**220-0738**		SEAL (118-CM)	
	18	1	*289-6410*	1	FENDER GP (RH)	
		1	**213-1887**	1	COVER-FENDER	
		1	**244-3112**	1	FENDER-REAR (RH)	
D	19	1	**5P-5927**		SEAL (0.8-M)	

D-ORDER BY THE METER
E-ORDER BY THE CENTIMETER
J-REQUIRES CORPORATE KEY
M-METRIC PART

211-3782 **FENDER GP-REAR** *(contd.)* **i04565377**

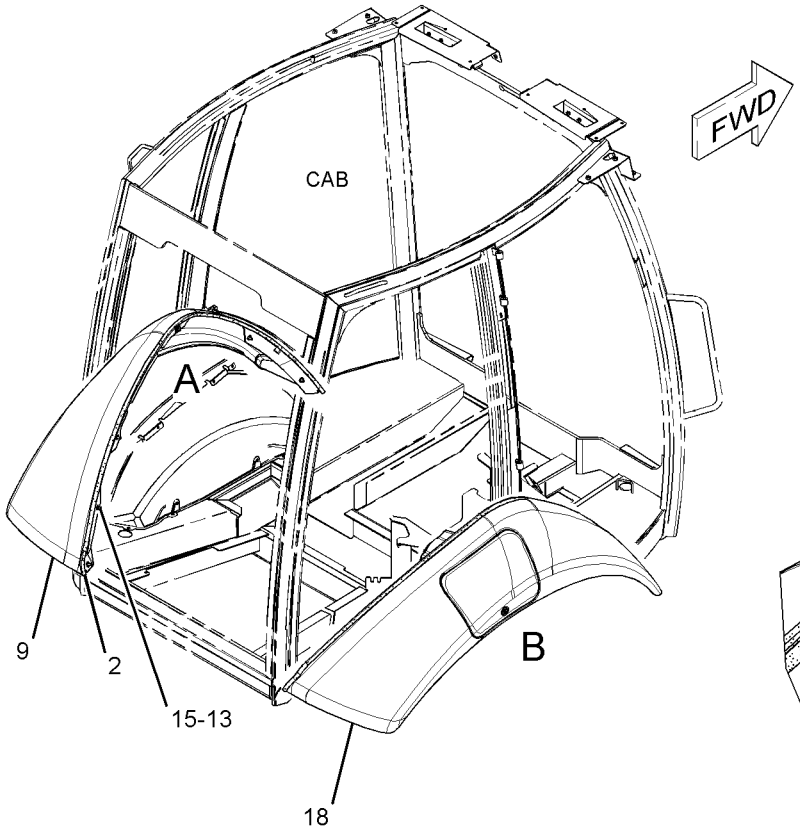

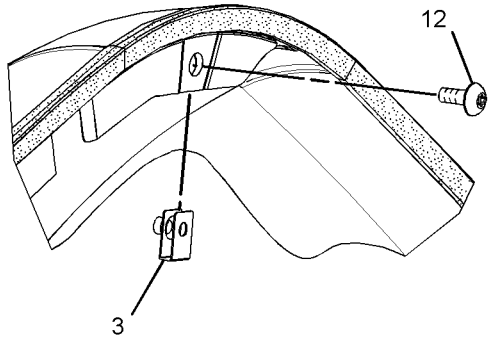

VIEW OF AREA A
(EXPLODED)

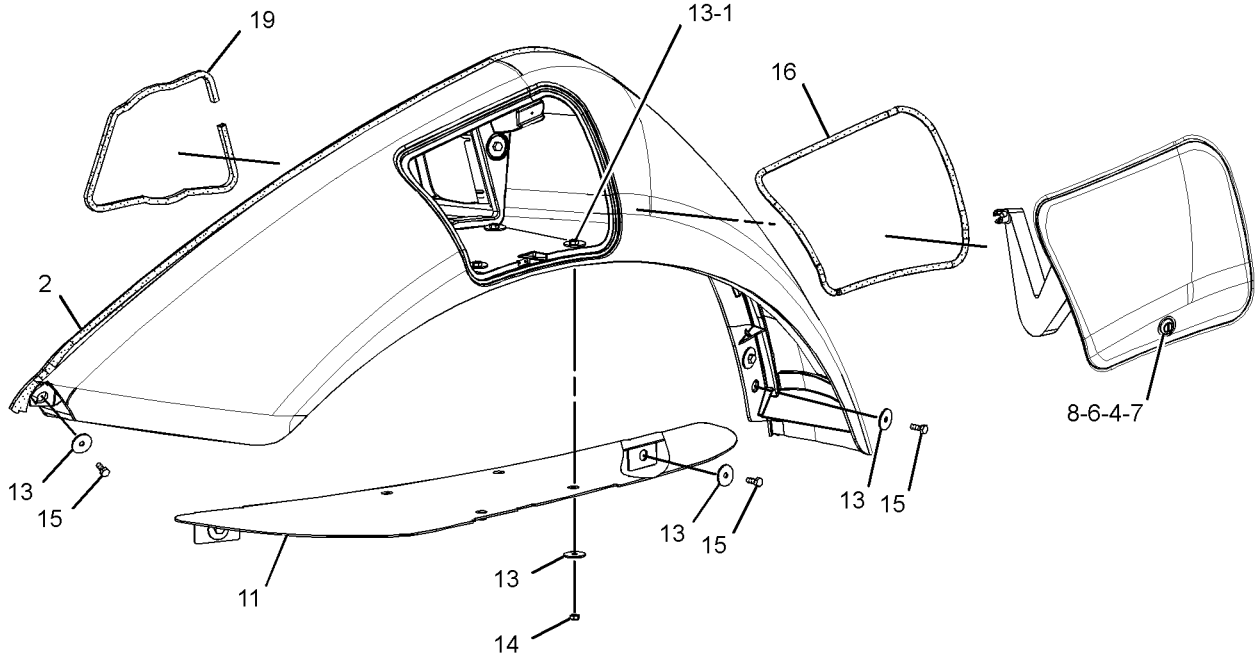

VIEW OF AREA B
(EXPLODED)

GRAPHIC #1

<END>

g01367108

FRAME AND BODY

356-4100 FLOORPLATE GP

S/N: SEJ1-UP
PART OF 373-4273 CONVERSION AR-QUICK COUPLER, 373-4271, 373-4275, 373-4277 VALVE AR-BANK 3
AN ATTACHMENT

SMCS-7265 **i04580772**

NOTE	REF NO	GRAPHIC REF	PART NUMBER	QTY	PART NAME 1 2 3 4 5 6 (PRODUCT LEVEL)	SEE PAGE
E	1	1	**7X-7898**		TRIM (15-CM)	
	2	1	**269-3269**	1	PLATE AS	
	3	1	**283-8563**	1	PLATE AS	
	4	1	**289-9871**	1	PLATE AS	
	5	1	**289-9873**	1	PLATE AS	
	6	1	**289-9874**	1	PLATE AS	
	7	1	**299-4777**	1	PLATE AS	
	8	1	**356-4066**	1	PLATE AS	
	9	1	**356-4108**	1	PLATE AS	
	10	1	**356-4110**	1	PLATE	
	11	1	**356-4112**	1	PLATE AS	
	12	1	**356-4116**	1	PLATE AS	
	13	1	**9X-2038**	38	WASHER (7X19X2-MM THK)	
M	14	1	**9X-2043**	44	SCREW-TRUSS HEAD (M6X1X14-MM)	

E-ORDER BY THE CENTIMETER
M-METRIC PART

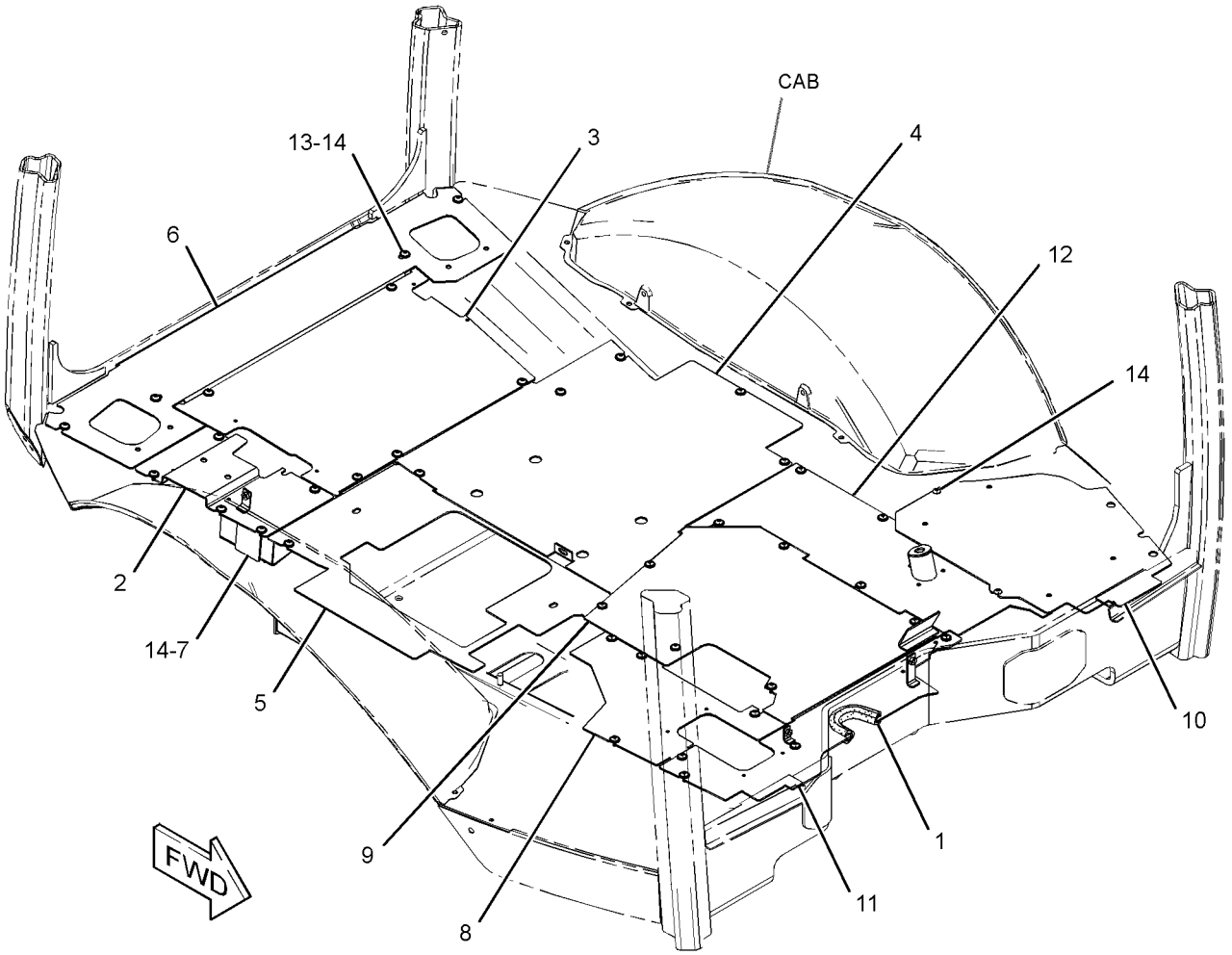

GRAPHIC #1 **<END>** g02791869

373-4295 FRAME AR-LOADER–NARROW

S/N: SEJ1-UP
AN ATTACHMENT

SMCS-7054 **i04602895**

NOTE	PART NUMBER	QTY	PART NAME 1 2 3 4 5 6 (PRODUCT LEVEL)	SEE PAGE
Y	**353-1403**	1	FRAME GP-LOADER	314
Y-SEPARATE ILLUSTRATION				

<END>

373-4296 FRAME AR-LOADER

S/N: SEJ1-UP
AN ATTACHMENT

SMCS-7054 **i04609649**

NOTE	PART NUMBER	QTY	PART NAME 1 2 3 4 5 6 (PRODUCT LEVEL)	SEE PAGE
Y	*353-1404*	1	FRAME GP-LOADER	316
Y-SEPARATE ILLUSTRATION				

<END>

353-1403 FRAME GP-LOADER–NARROW

S/N: SEJ1-UP
PART OF 373-4295 FRAME AR-LOADER
AN ATTACHMENT

SMCS-7054 **i04603213**

NOTE	REF NO	GRAPHIC REF	PART NUMBER	QTY	PART NAME 1 2 3 4 5 6 (PRODUCT LEVEL)	SEE PAGE
B	1	1	**193-1681**	8	PAD (5.2-MM THK)	
B	2	1	**193-1683**	2	PAD (4.2-MM THK)	
B	3	1	**193-1684**	2	PAD (6.2-MM THK)	
M	4	1	**246-7854**	38	NUT-SPECIAL (M10X1.5-THD)	
	5	1	**248-5245**	2	FILM-INFORMATION (LIFT EYE, TIE-DOWN LOCATION)	
	6	1	**252-2157**	2	FILM-INFORMATION (TIE-DOWN)	
	7	1	**330-0798**	2	TUBE AS	
	8	1	**331-2489**	4	WEAR PAD	
	9	1	**331-4365**	2	COVER	
	10	1	**340-9290**	4	PLATE GP-COVER (LOADER FRAME)	
	11	1	**361-4343**	1	FRAME AS	
	12	1	*367-5378*	2	GUARD AS	
					(EACH INCLUDES)	
M		1	**252-6143**	6	NUT-SPECIAL (M8X1.25-THD)	
		1	**377-0002**	1	PLATE	
	13	1	**370-0495**	2	NUT-SPECIAL (M8X1.25-THD)	
	14	1	**370-5555**	2	CAP	
	15	1	**3B-8489**	2	FITTING-GREASE	
	16	1	**5P-4116**	6	WASHER-HARD (8.8X20.5X2-MM THK)	
M	17	1	**8T-4196**	2	BOLT (M10X1.5X35-MM)	
M	18	1	**099-3649**	2	BOLT (M8X1.25X40-MM)	
M	19	1	**8T-7338**	8	BOLT (M16X2X45-MM)	
M	20	1	**8T-7547**	4	BOLT (M8X1.25X30-MM)	
	21	1	**9X-8257**	8	WASHER (17.5X30X3.5-MM THK)	

B-USE AS REQUIRED
M-METRIC PART

353-1403 **FRAME GP-LOADER** *(contd.)* **i04603213**

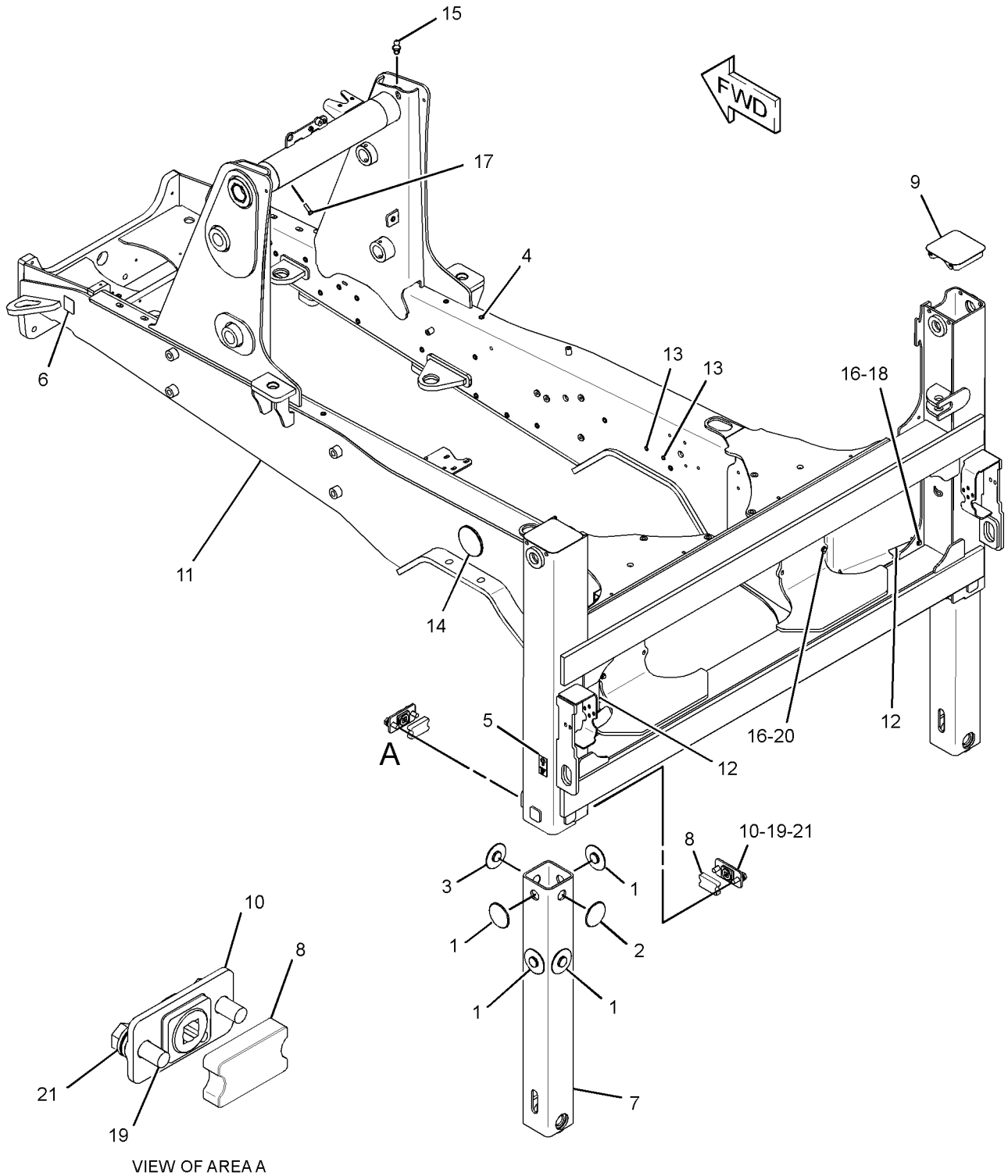

VIEW OF AREA A

GRAPHIC #1 **<END>** g02808083

FRAME AND BODY

353-1404 FRAME GP-LOADER

S/N: SEJ1-UP
PART OF 373-4296 FRAME AR-LOADER
AN ATTACHMENT

SMCS-7054 **i04609653**

NOTE	REF NO	GRAPHIC REF	PART NUMBER	QTY	PART NAME 1 2 3 4 5 6 (PRODUCT LEVEL)	SEE PAGE
B	1	1	**193-1681**	8	PAD (5.2-MM THK)	
B	2	1	**193-1683**	2	PAD (4.2-MM THK)	
B	3	1	**193-1684**	2	PAD (6.2-MM THK)	
M	4	1	**246-7854**	38	NUT-SPECIAL (M10X1.5-THD)	
	5	1	**248-5245**	2	FILM-INFORMATION (LIFT EYE, TIE-DOWN LOCATION)	
	6	1	**252-2157**	2	FILM-INFORMATION (TIE-DOWN)	
	7	1	**330-0798**	2	TUBE AS	
	8	1	**331-2489**	4	WEAR PAD	
	9	1	**331-4365**	2	COVER	
	10	1	**340-9290**	4	PLATE GP-COVER (LOADER FRAME)	
	11	1	**360-6643**	1	FRAME AS	
	12	1	*367-5378*	2	GUARD AS	
					(EACH INCLUDES)	
M		1	**252-6143**	6	NUT-SPECIAL (M8X1.25-THD)	
		1	**377-0002**	1	PLATE	
	13	1	**370-0495**	2	NUT-SPECIAL (M8X1.25-THD)	
	14	1	**370-5555**	2	CAP	
	15	1	**3B-8489**	2	FITTING-GREASE	
	16	1	**5P-4116**	6	WASHER-HARD (8.8X20.5X2-MM THK)	
M	17	1	**8T-4196**	2	BOLT (M10X1.5X35-MM)	
M	18	1	**8T-4197**	2	BOLT (M8X1.25X40-MM)	
M	19	1	**8T-7338**	8	BOLT (M16X2X45-MM)	
M	20	1	**8T-7547**	4	BOLT (M8X1.25X30-MM)	
	21	1	**9X-8257**	8	WASHER (17.5X30X3.5-MM THK)	

B-USE AS REQUIRED
M-METRIC PART

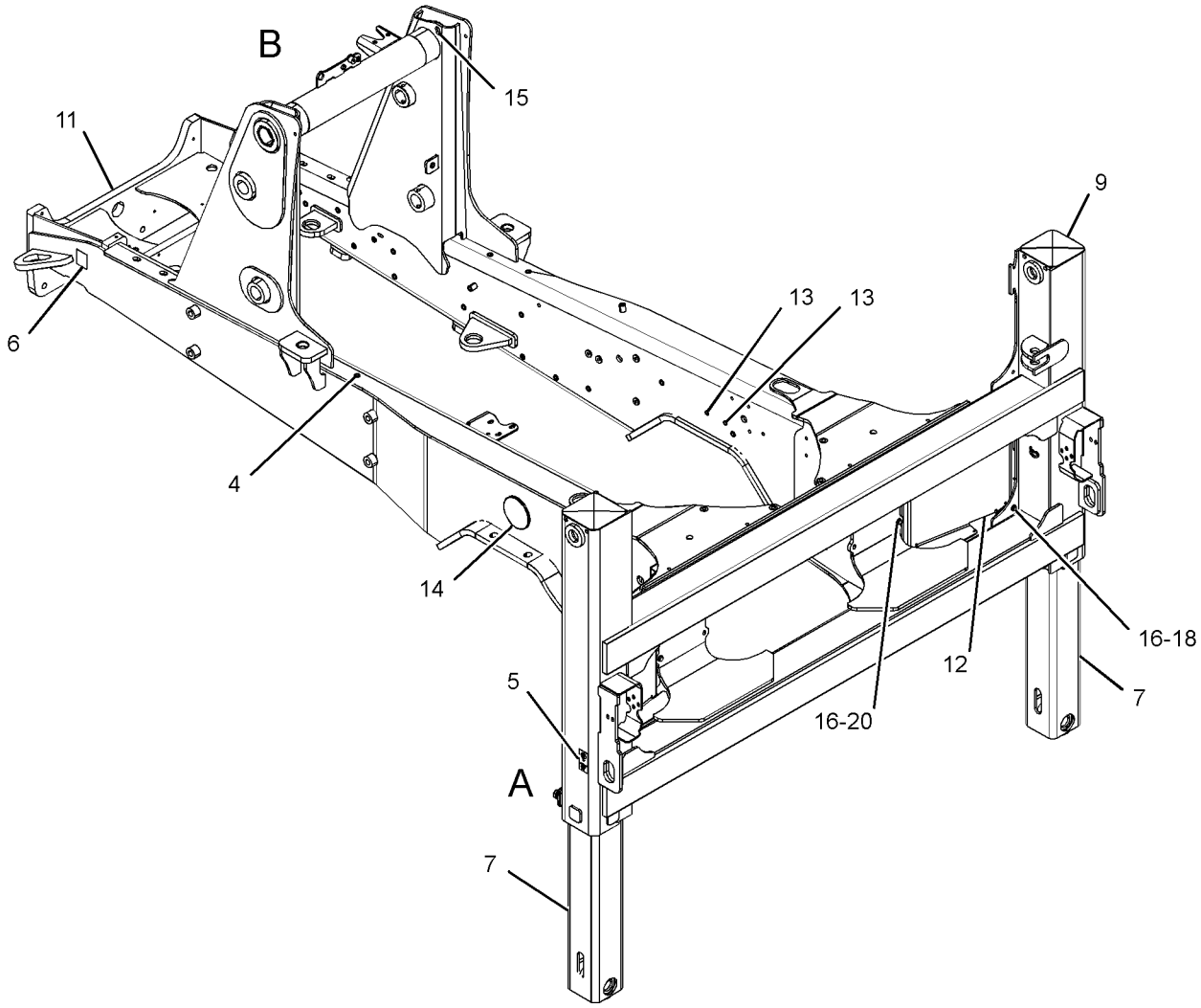

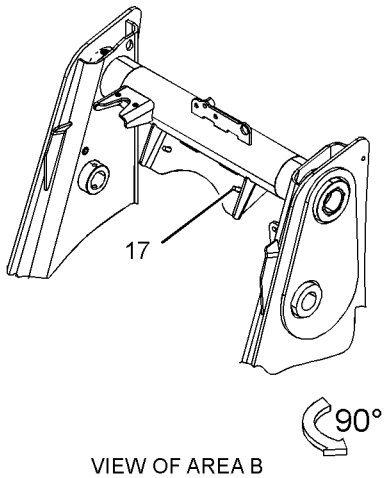

VIEW OF AREA B

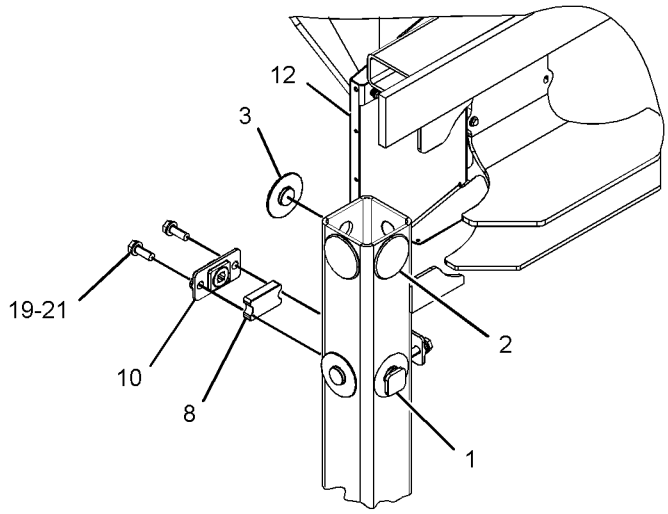

VIEW OF AREA A
(FRAME REMOVED FOR CLARITY)

GRAPHIC #1 **<END>** g02829417

FRAME AND BODY

320-5933 FRAME GP-SLIDING

S/N: SEJ1-UP

PART OF 340-1693 CHASSIS AR

SMCS-5804, 6508 **i04577432**

NOTE	REF NO	GRAPHIC REF	PART NUMBER	QTY	PART NAME 1 2 3 4 5 6 (PRODUCT LEVEL)	SEE PAGE
	1	1	**9R-0481**	2	WASHER (71X110X4-MM THK)	
	2	1	**161-7145**	4	SEAL-PISTON	
CY	3	1	**381-8054**	1	CYLINDER GP-HYDRAULIC (RH)	346
CY	4	1	**381-8055**	1	CYLINDER GP-HYDRAULIC (LH)	348
	5	1	**316-4811**	1	WASHER (66.5X120X8-MM THK)	
	6	1	**320-2948**	4	CAP-CYLINDER END	
	7	1	**320-2949**	2	BAR	
	8	1	**320-3619**	4	PISTON	
	9	1	**320-3620**	2	PAD	
	10	1	**322-3768**	1	CAP & BEARING AS	
	10A	1	**9R-4110**	2	BUSHING	
	11	1	**322-3770**	1	FRAME AS-SLIDING	
	11A	1	**331-1521**	1	BEARING	
	11B	1	**331-1522**	1	BEARING	
	11C	1	**9R-4110**	2	BUSHING	
	12	1	**340-6272**	8	RING-WEAR	
	13	1	**341-4712**	2	BAR	
M	14	1	**112-1533**	12	BOLT (M24X3X160-MM)	
	15	1	**3B-8488**	2	FITTING-GREASE	
	16	1	**3B-8489**	2	FITTING-GREASE	
	17	1	**3P-0439**	4	SEAL-O-RING	
	18	1	**7K-9208**	4	SEAL-LIP TYPE	
	19	1	**8C-3347**	2	PIN-ROLL	
	20	1	**8T-1482**	6	WASHER-HARD (26X50X8-MM THK)	
	21	1	**8T-4121**	4	WASHER-HARD (11X21X2.5-MM THK)	
	22	1	**8T-4167**	6	WASHER-HARD (26X44X4-MM THK)	
M	23	1	**213-5007**	4	BOLT (M20X2.5X80-MM)	
M	24	1	**8T-4648**	16	BOLT (M12X1.75X70-MM)	
M	25	1	**8T-5035**	4	BOLT (M10X1.5X65-MM)	
	26	1	**8T-5439**	4	WASHER-HARD (21.5X45X6-MM THK)	
	27	1	**8T-7971**	16	WASHER-HARD (13.5X25.5X5-MM THK)	
	28	1	**298-4783**	2	DOWEL	
	29	1	**280-9658**	2	FILM-WARNING (NO ENTRANCE, EXIT, READ OMM)	

C-CHANGE FROM PREVIOUS TYPE
M-METRIC PART
Y-SEPARATE ILLUSTRATION

320-5933 **FRAME GP-SLIDING** *(contd.)* **i04577432**

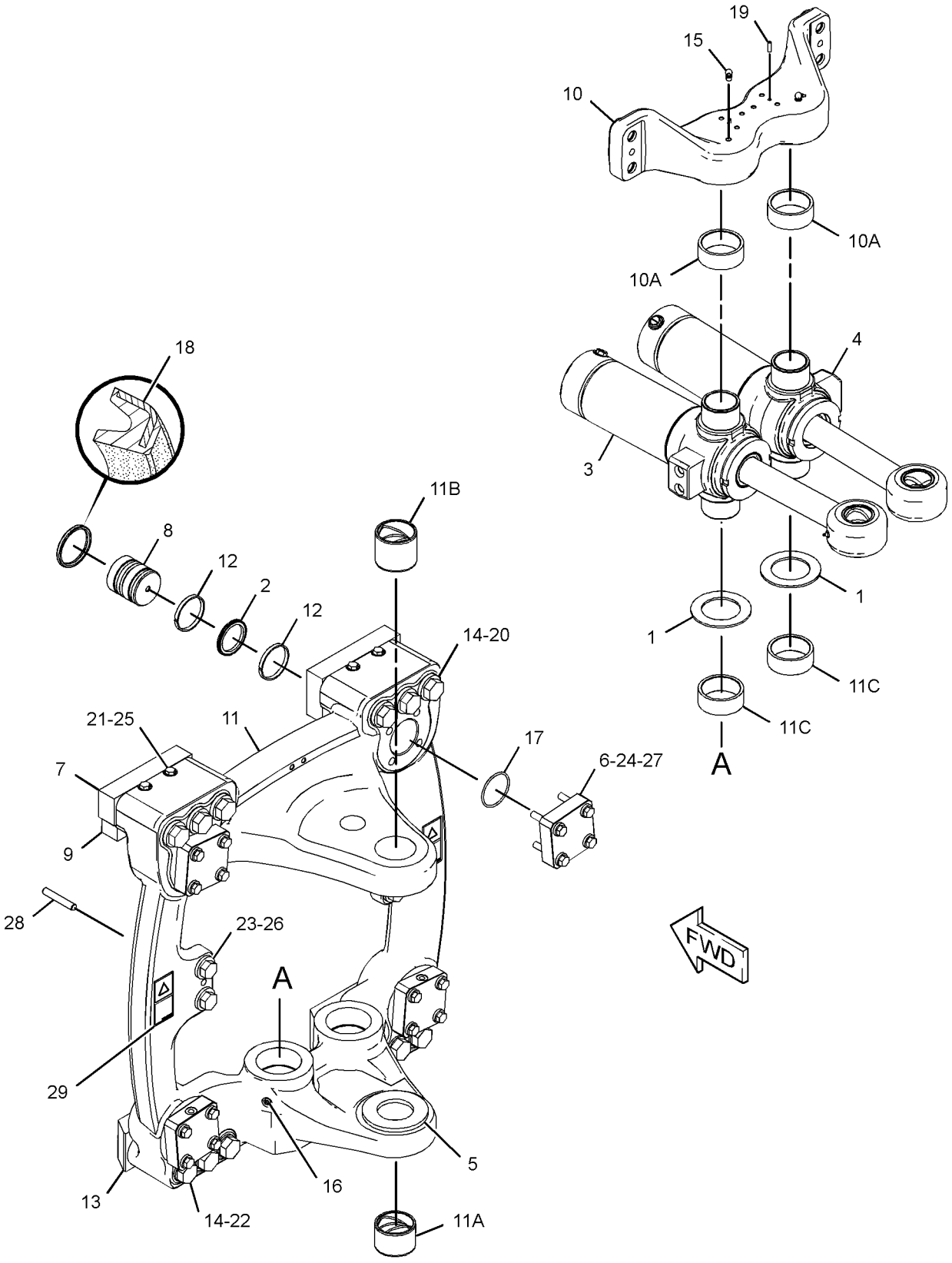

GRAPHIC #1 **<END>** g02131253

FRAME AND BODY

322-3766 FRAME GP-SWING

S/N: SEJ1-UP

PART OF 340-1738 BACKHOE AR-EXTENDABLE STICK

AN ATTACHMENT

SMCS-6506 **i04640149**

NOTE	REF NO	GRAPHIC REF	PART NUMBER	QTY	PART NAME 1 2 3 4 5 6 (PRODUCT LEVEL)	SEE PAGE
	1	1	**2U-9234**	1	BUSHING	
B	2	1	**176-0626**	2	WASHER (67.5X120X3-MM THK)	
B	3	1	**9R-8291**	2	SPACER (66X125X1-MM THK)	
	4	1	**310-0851**	2	PIN	
	5	1	**315-5385**	1	FRAME AS-SWING	
	5A	1	**213-6702**	4	BUSHING	
	5B	1	**331-1521**	2	BEARING	
	6	1	**316-6951**	1	PIN AS	
	7	1	**316-6952**	1	PIN AS	
	8	1	**333-4757**	1	PIN AS	
	9	1	**375-1442**	1	RING-RETAINING	
	10	1	**270-5290**	1	BOLT-SOCKET HEAD (M12X1.75X300-MM)	
	11	1	**3B-8489**	2	FITTING-GREASE	
	12	1	**5P-1076**	2	WASHER-HARD (13.5X30X4-MM THK)	
M	13	1	**6V-7687**	1	LOCKNUT (M12X1.75-THD)	
	14	1	**7X-0632**	2	WASHER-HARD (11X36X6-MM THK)	
M	15	1	**8T-4136**	1	BOLT (M10X1.5X25-MM)	
M	16	1	**8T-4196**	1	BOLT (M10X1.5X35-MM)	

B-USE AS REQUIRED
M-METRIC PART

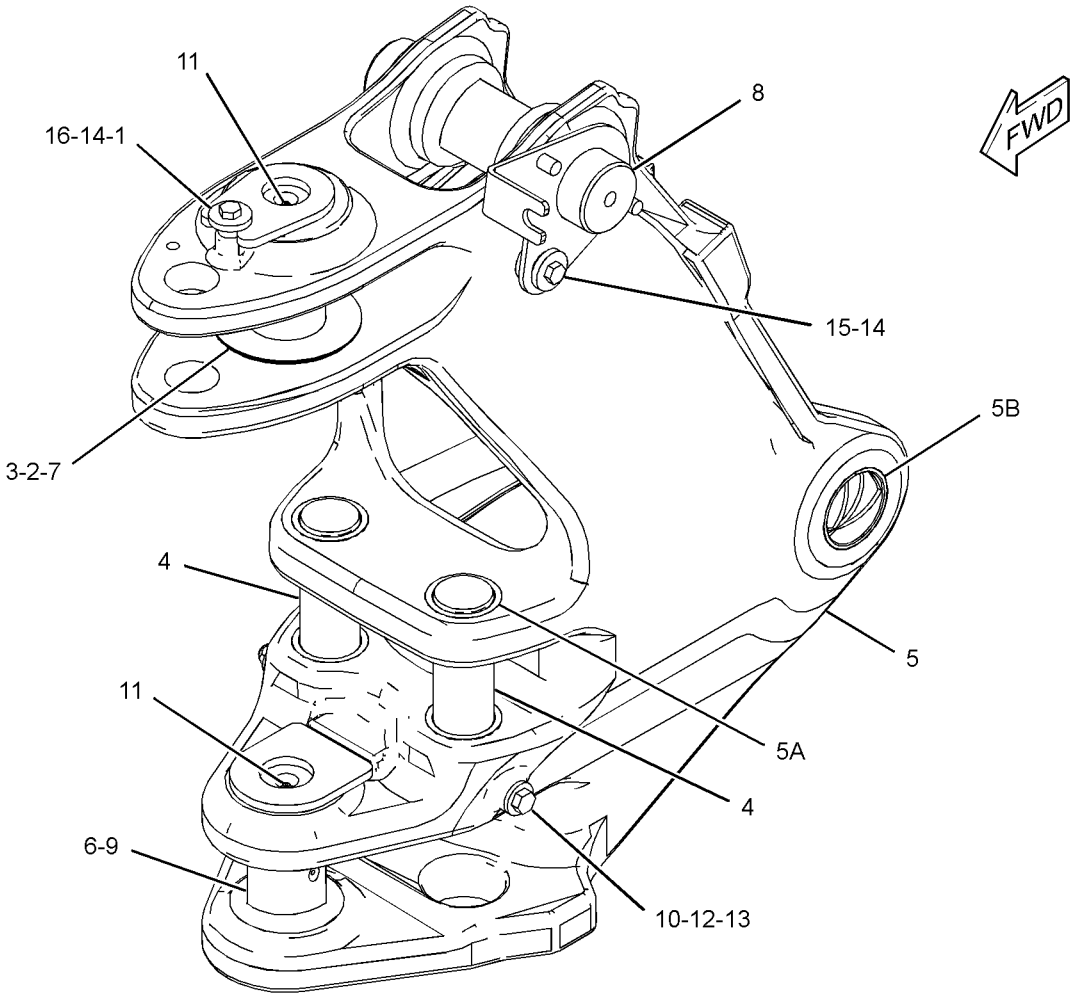

GRAPHIC #1 **<END>** g01986274

378-9623 FRAME GP-SWING

S/N: SEJ1-UP
PART OF 340-1736, 340-1737 BACKHOE AR-EXTENDABLE STICK, 340-1735 BACKHOE AR-STANDARD STICK
AN ATTACHMENT

SMCS-6506 **i04628912**

NOTE	REF NO	GRAPHIC REF	PART NUMBER	QTY	PART NAME 1 2 3 4 5 6 (PRODUCT LEVEL)	SEE PAGE
	1	1	**2U-9234**	1	BUSHING	
B	2	1	**176-0626**	2	WASHER (67.5X120X3-MM THK)	
B	3	1	**9R-8291**	2	SPACER (66X125X1-MM THK)	
	4	1	**310-0851**	2	PIN	
	5	1	**316-6951**	1	PIN AS	
	6	1	**316-6952**	1	PIN AS	
	7	1	**326-0089**	1	PIN AS	
	8	1	**375-1442**	1	RING-RETAINING	
	9	1	**378-9622**	1	FRAME AS-SWING	
	9A	1	**213-6702**	4	BUSHING	
	9B	1	**331-1521**	2	BEARING	
	10	1	**270-5290**	1	BOLT-SOCKET HEAD (M12X1.75X300-MM)	
	11	1	**3B-8489**	2	FITTING-GREASE	
	12	1	**5P-1076**	2	WASHER-HARD (13.5X30X4-MM THK)	
M	13	1	**6V-7687**	1	LOCKNUT (M12X1.75-THD)	
	14	1	**7X-0632**	2	WASHER-HARD (11X36X6-MM THK)	
M	15	1	**8T-4136**	1	BOLT (M10X1.5X25-MM)	
M	16	1	**8T-4196**	1	BOLT (M10X1.5X35-MM)	

B-USE AS REQUIRED
M-METRIC PART

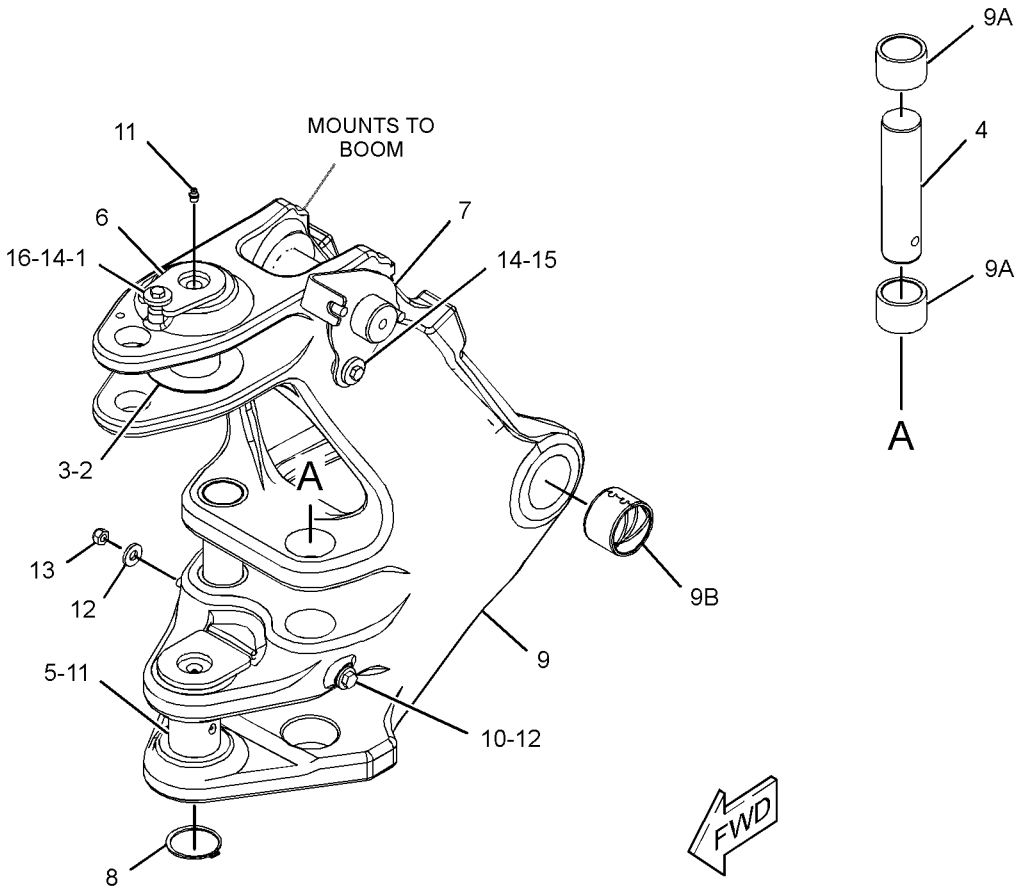

GRAPHIC #1 **<END>** g02823958

368-0291 GRILL GP-RADIATOR

S/N: SEJ1-UP
PART OF 337-9702 HOOD & GUARD GP
AN ATTACHMENT

SMCS-7170 **i04577593**

NOTE	REF NO	GRAPHIC REF	PART NUMBER	QTY	PART NAME 1 2 3 4 5 6 (PRODUCT LEVEL)	SEE PAGE
	1	1	**129-5256**	8	BUSHING	
	2	1	**208-8469**	2	LOCKNUT (M6X1-THD)	
	3	1	**365-2511**	1	CAM-LATCH	
	4	1	**365-4093**	1	GRILL	
	5	1	**369-3473**	1	PIN	
	6	1	**369-3945**	1	BRACKET AS	
	7	1	**372-4600**	1	FRAME AS-GRILL	
	8	1	**372-4605**	1	GUARD AS	
	9	1	**372-4613**	2	PLATE	
	10	1	**382-6675**	2	LATCH-MAGNETIC	
	11	1	**130-1916**	2	STUD-BALL	
M	12	1	**178-3336**	2	NUT-HEX FLANGE (M8X1.25-THD)	
	13	1	**206-6969**	2	PAWL	
E	14	1	**220-0738**		SEAL (63-CM)	
	15	1	**233-5260**	1	LANYARD	
J	16	1	**260-3568**	2	LATCH AS	
	17	1	**277-0584**	1	LOCK AS	
	18	1	**342-9920**	12	BOLT-FLANGE HEAD (M8X1.25X20-MM)	
	19	1	**8S-7803**	2	RING-RETAINING	
	20	1	**8T-4123**	2	WASHER (22X35X3.5-MM THK)	

E-ORDER BY THE CENTIMETER
J-REQUIRES CORPORATE KEY
M-METRIC PART

368-0291 **GRILL GP-RADIATOR** *(contd.)* **i04577593**

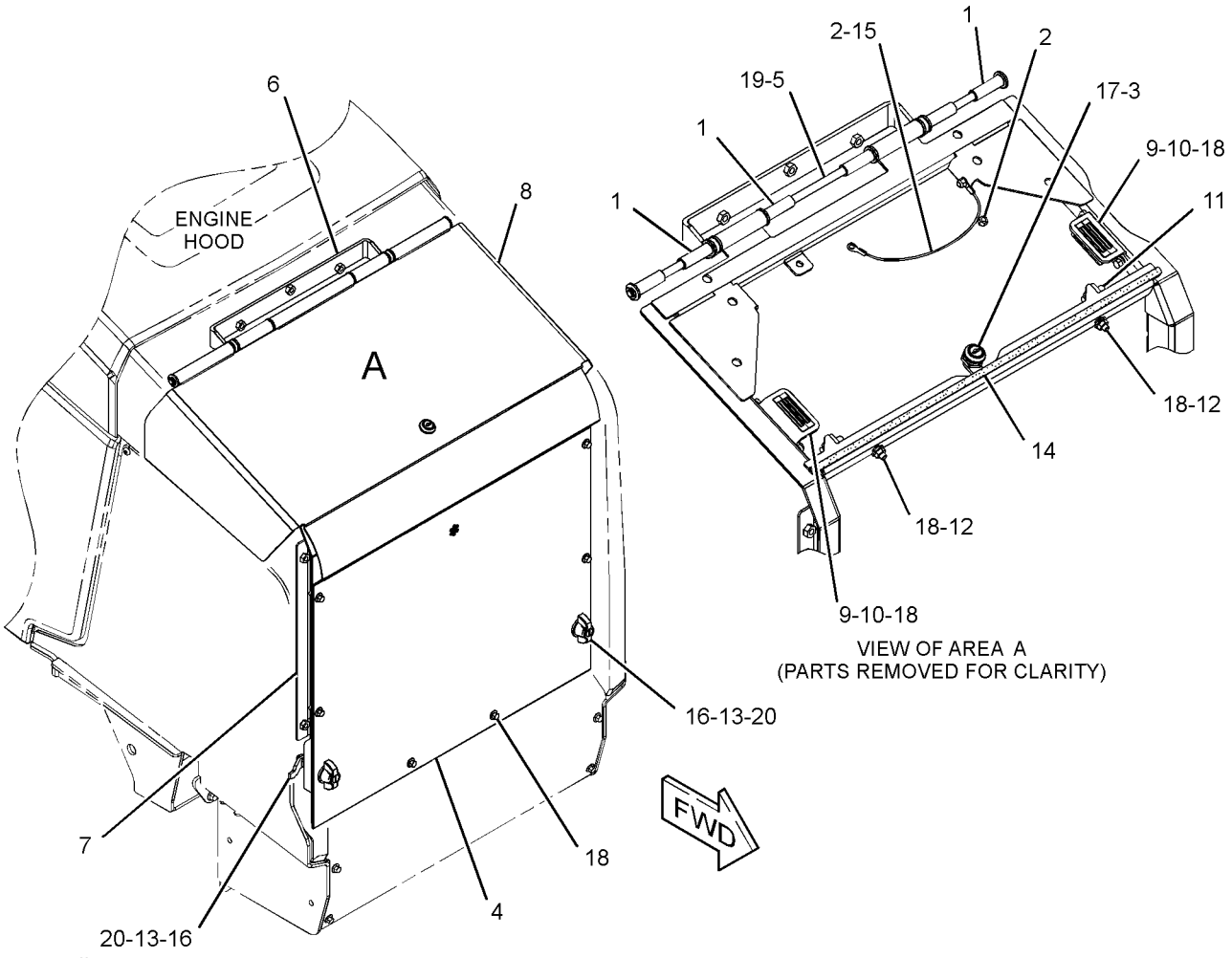

GRAPHIC #1 **<END>** g02818758

380-7775 GUARD GP-DEBRIS–CANOPY

S/N: SEJ1-UP
PART OF 353-1429, 353-1432 CAB AR
AN ATTACHMENT

SMCS-7150, 7158 **i04565310**

NOTE	REF NO	GRAPHIC REF	PART NUMBER	QTY	PART NAME 1 2 3 4 5 6 (PRODUCT LEVEL)	SEE PAGE
	1	1	**164-1368**	6	FASTENER-PANEL	
	2	1	**378-3311**	1	MAT	
	3	1	**378-8059**	2	SEAL (6-GA, 1/4-IN SCREW)	

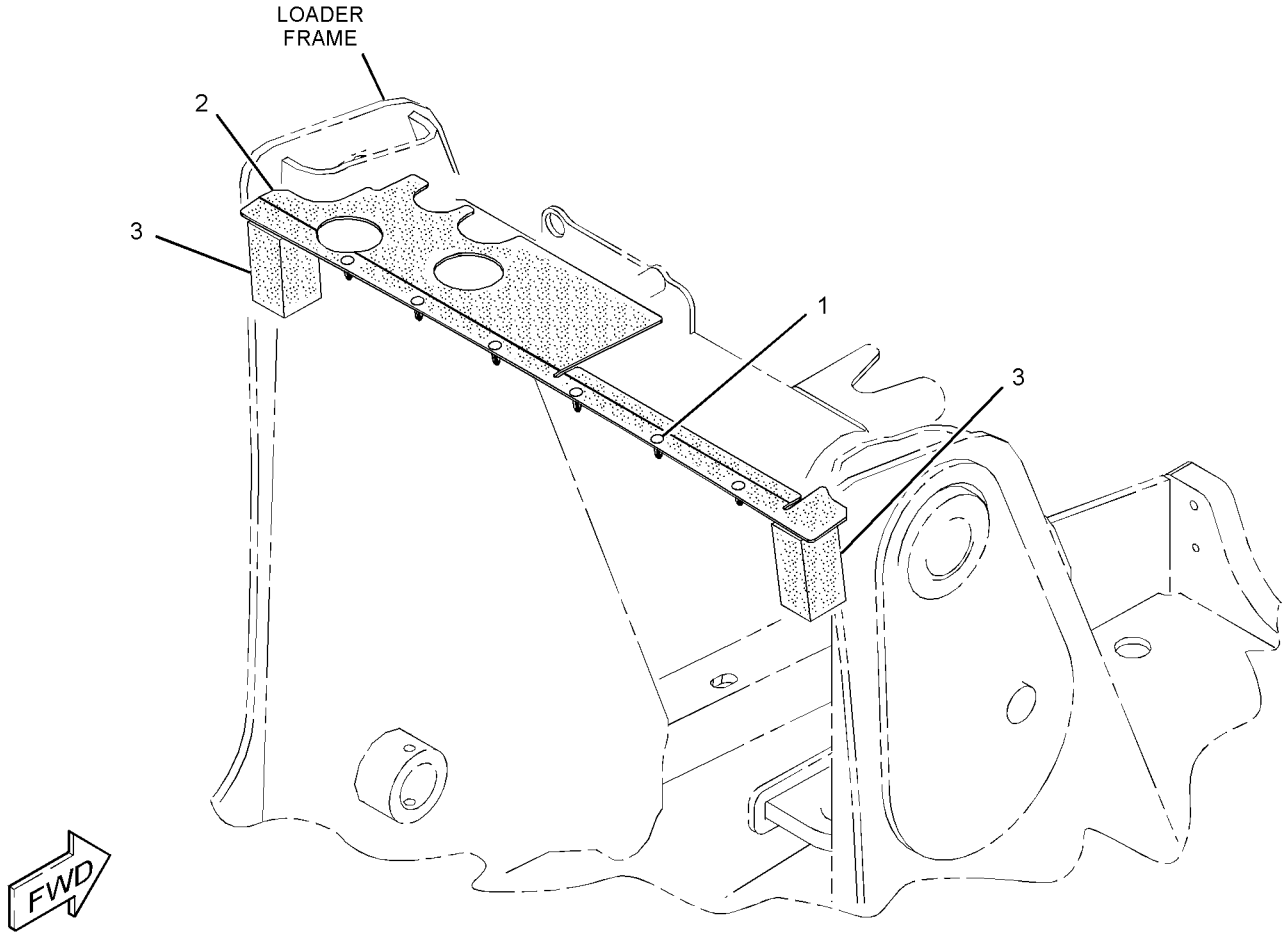

GRAPHIC #1 **<END>** g02809557

337-9697 GUARD GP-DRIVE SHAFT

S/N: SEJ1-UP
AN ATTACHMENT

SMCS-7153 **i04609209**

NOTE	REF NO	GRAPHIC REF	PART NUMBER	QTY	PART NAME 1 2 3 4 5 6 (PRODUCT LEVEL)	SEE PAGE
	1	1	**360-8966**	1	GUARD AS	
M	2	1	**7X-2552**	4	BOLT (M16X2X30-MM)	
	3	1	**8T-4122**	4	WASHER-HARD (17X32X3.5-MM THK)	

M-METRIC PART

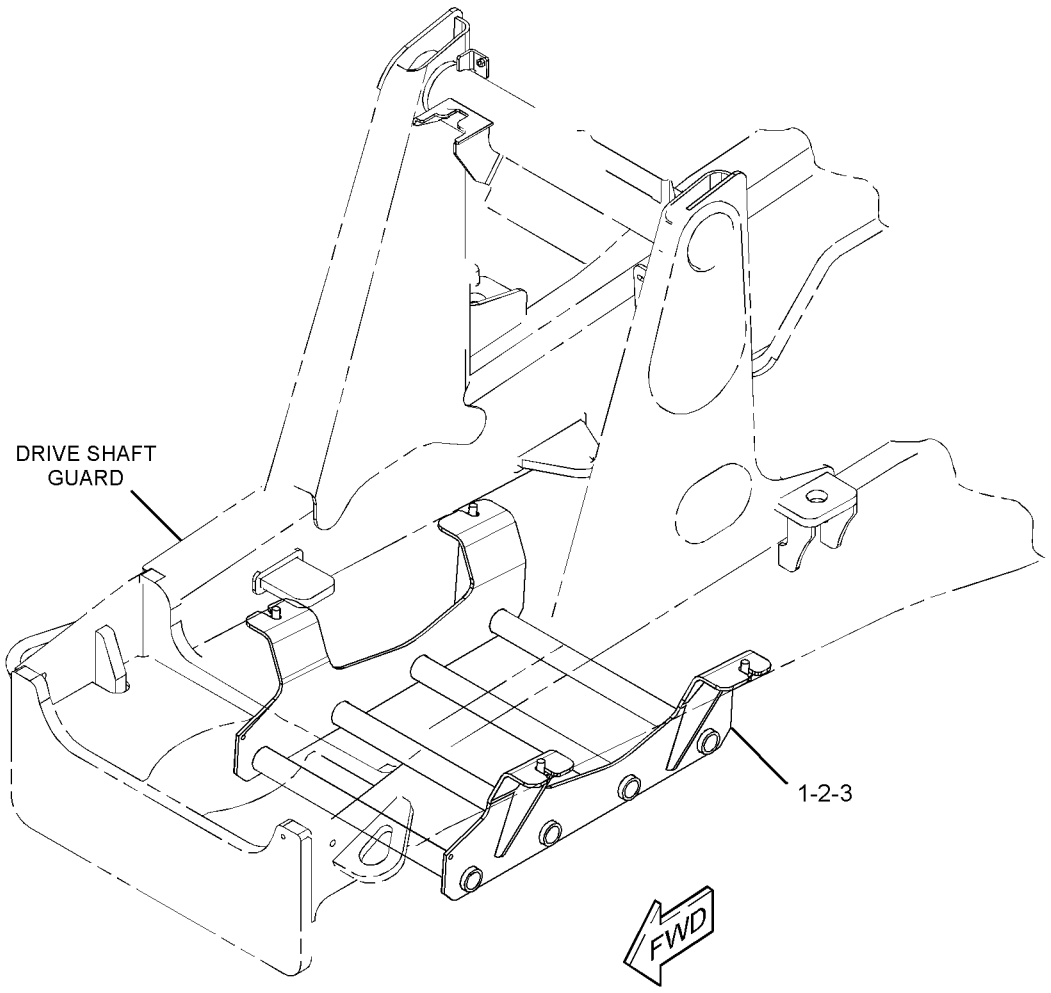

GRAPHIC #1 **<END>** g02798282

FRAME AND BODY

337-9722 GUARD GP-FUEL TANK

S/N: SEJ1-UP
AN ATTACHMENT

SMCS-1273, 7150 **i04603069**

NOTE	REF NO	GRAPHIC REF	PART NUMBER	QTY	PART NAME 1 2 3 4 5 6 (PRODUCT LEVEL)	SEE PAGE
	1	1	**372-7230**	1	PLATE	
	2	1	**372-7231**	1	PLATE	
	3	1	**5P-4116**	2	WASHER-HARD (8.8X20.5X2-MM THK)	
M	4	1	**8T-4189**	2	BOLT (M8X1.25X20-MM)	

M-METRIC PART

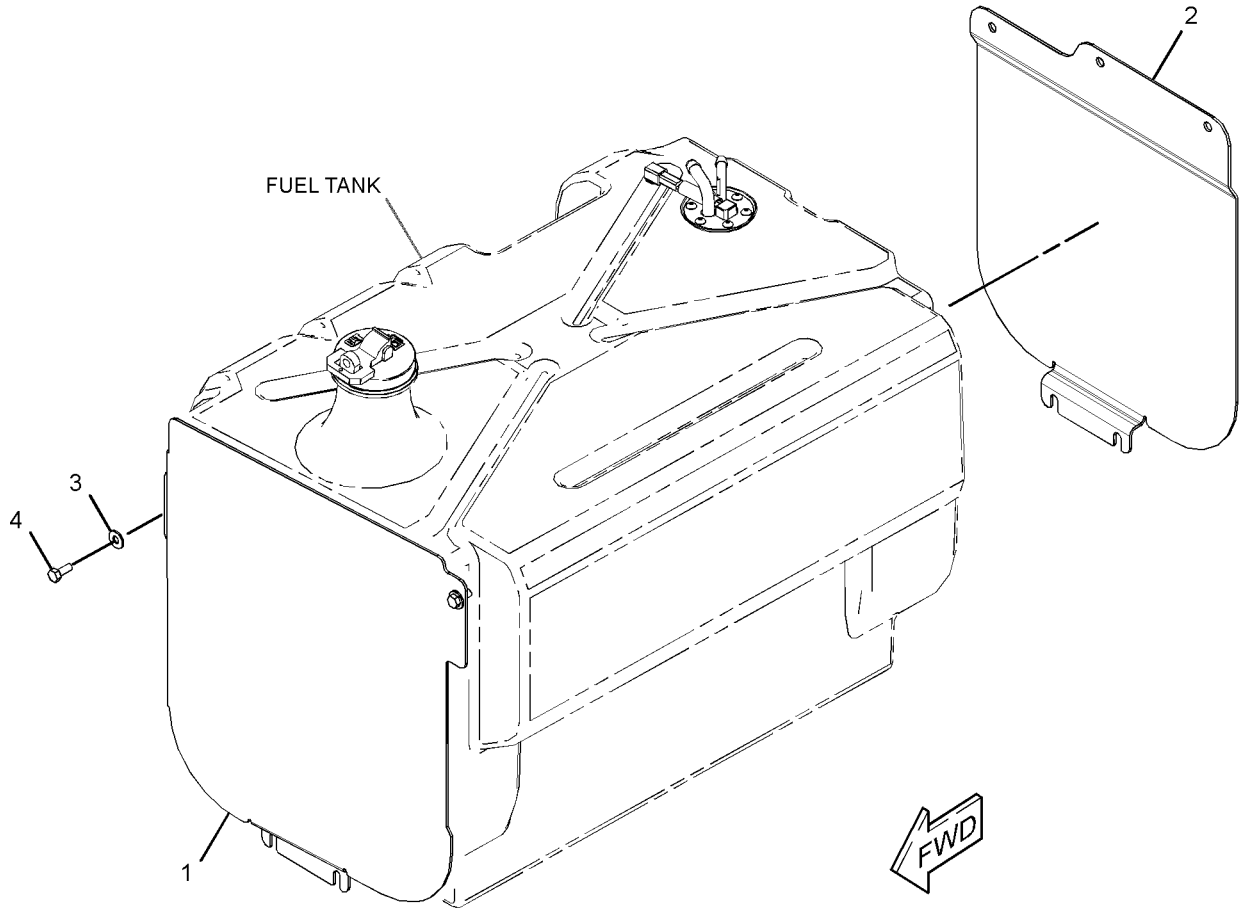

GRAPHIC #1 **<END>** g02788470

338-1421 GUARD GP-LIGHTING

S/N: SEJ1-UP

AN ATTACHMENT

SMCS-715L **i04251354**

NOTE	REF NO	GRAPHIC REF	PART NUMBER	QTY	PART NAME 1 2 3 4 5 6 (PRODUCT LEVEL)	SEE PAGE
	1	1	**337-8655**	2	GUARD	
M	2	1	**7X-2536**	2	BOLT (M8X1.25X14-MM)	
	3	1	**8T-4224**	4	WASHER-HARD (8.8X16X2-MM THK)	
M	4	1	**8T-4189**	2	BOLT (M8X1.25X20-MM)	

M-METRIC PART

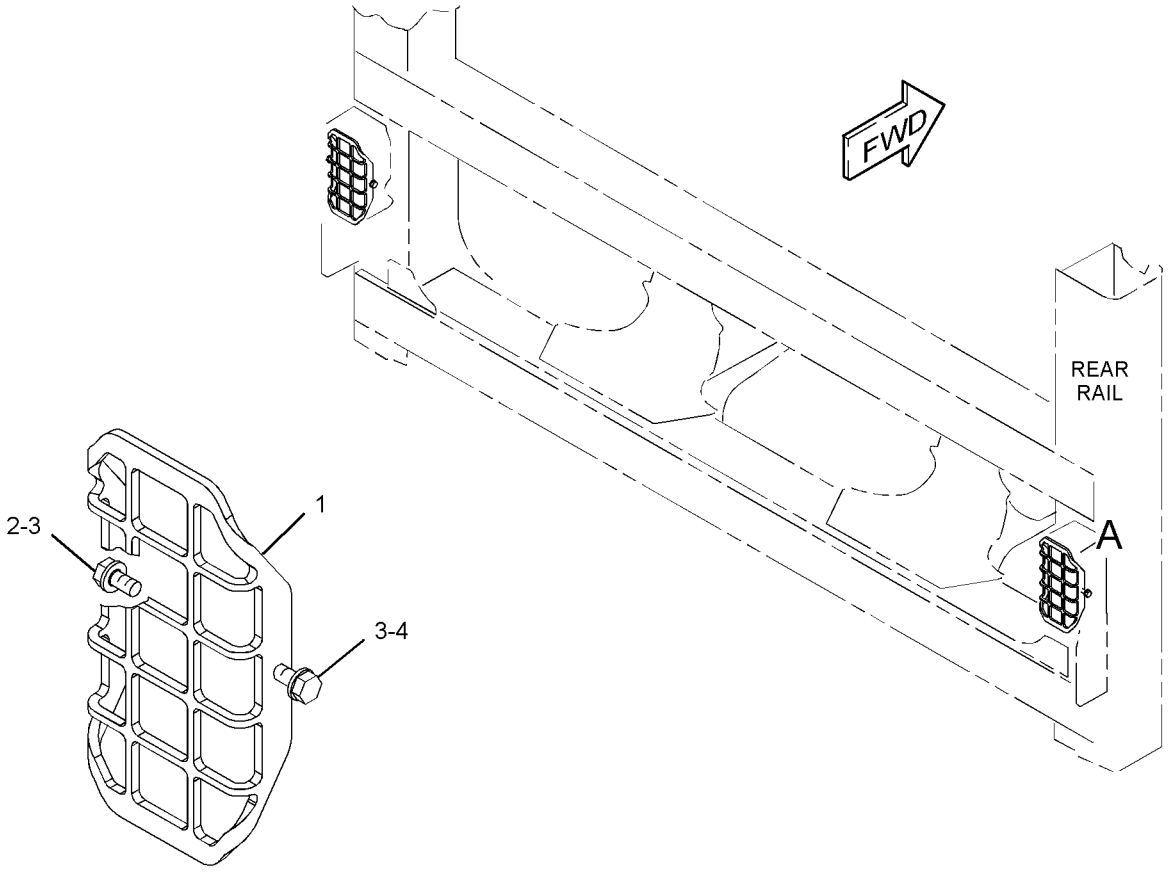

VIEW OF AREA A

GRAPHIC #1 **<END>** g01994458

337-9702 HOOD & GUARD GP

S/N: SEJ1-UP
PART OF 337-9867 ENGINE AR-COMPLETE
AN ATTACHMENT

SMCS-7150, 7170, 7251, 7263 **i04577591**

NOTE	REF NO	GRAPHIC REF	PART NUMBER	QTY	PART NAME 1 2 3 4 5 6 (PRODUCT LEVEL)	SEE PAGE
	1	1	**130-1916**	2	STUD-BALL	
	2	1	**164-1368**	2	FASTENER-PANEL	
	3	1	**185-9777**	1	PLATE	
	4	1	**205-9920**	3	STRAP-CABLE	
J	5	1	**226-0294**	1	LOCK AS	
	6	1	**250-6858**	1	LATCH AS	
	7	1	**351-4746**	1	FILM-IDENTIFICATION (CAT)	
	8	1	**357-4273**	1	HOOD (RH)	
	9	1	**357-4274**	1	HOOD (LH)	
	10	1	**358-1415**	1	GUARD AS	
	11	1	**358-7863**	1	BRACKET AS	
	12	1	**358-7903**	1	CABLE AS	
	13	1	**362-8135**	1	BUMPER AS (RH)	
	14	1	**362-8136**	1	BUMPER AS (LH)	
	15	1	**363-2867**	1	SPRING AS-GAS (HOOD, RH)	
		1	**8T-2444**	2	STUD-BALL	
	16	1	**363-2868**	1	SPRING AS-GAS (GRILL, RH)	
	17	1	**366-9220**	1	MAT	
	18	1	**367-0055**	1	PLATE AS	
	19	1	**367-7625**	1	INSERT AS	
	20	1	**367-7764**	1	PLATE	
Y	21	1	*368-0291*	1	GRILL GP-RADIATOR	323
	22	1	**369-2053**	1	PLATE AS	
	23	1	**372-0739**	1	SPRING AS-GAS (LOCKABLE) (GRILL, LH)	
	24	1	**372-0740**	1	SPRING AS-GAS (LOCKABLE) (HOOD, LH)	
		1	**8T-2444**	2	STUD-BALL	
	25	1	**372-4616**	1	PLATE AS	
Y	26	1	*381-5559*	1	HOOD GP-ENGINE	331
M	27	1	**178-3336**	7	NUT-HEX FLANGE (M8X1.25-THD)	
M	28	1	**198-3899**	10	SCREW-BUTTON HEAD (M8X1.25X20-MM)	
	29	1	**342-9920**	9	BOLT-FLANGE HEAD (M8X1.25X20-MM)	
	30	1	**344-7932**	6	BOLT-FLANGE HEAD (M10X1.5X35-MM)	
M	31	1	**5C-7261**	6	NUT (M8X1.25-THD)	
	32	1	**5P-4116**	10	WASHER-HARD (8.8X20.5X2-MM THK)	
M	33	1	**6V-8949**	2	NUT (M10X1.5-THD)	
M	34	1	**7X-2537**	2	BOLT (M8X1.25X35-MM)	
E	35	1	**220-0738**		SEAL (52-CM EACH)	
E	35A	1	**220-0738**		SEAL (11-CM EACH)	
E	36	1	**9X-6383**		SEAL (27.5-CM EACH)	

E-ORDER BY THE CENTIMETER
J-REQUIRES CORPORATE KEY
M-METRIC PART
Y-SEPARATE ILLUSTRATION

337-9702 **HOOD & GUARD GP** *(contd.)* **i04577591**

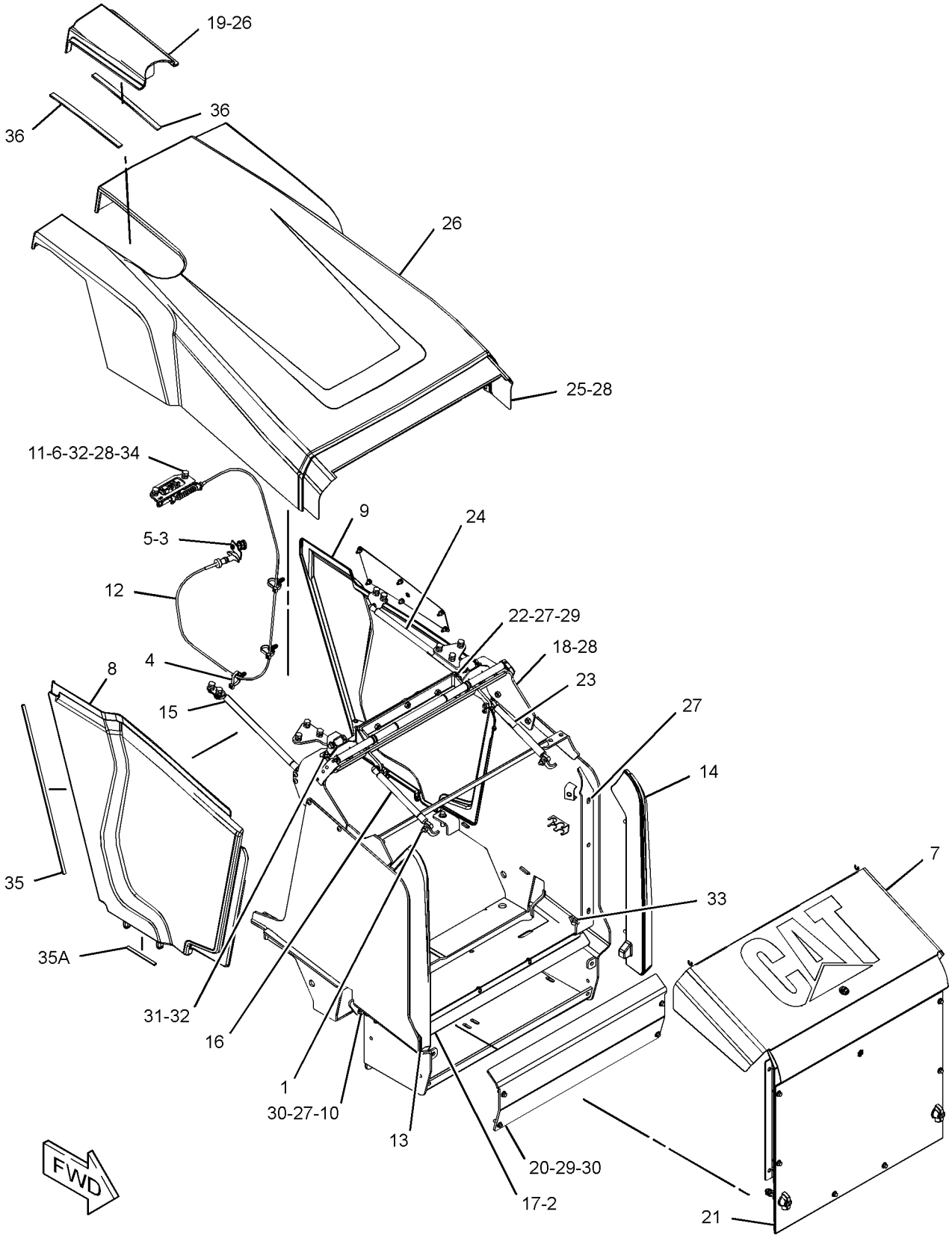

GRAPHIC #1 **<END>** g02817976

FRAME AND BODY

381-5559 HOOD GP-ENGINE

S/N: SEJ1-UP
PART OF 337-9702 HOOD & GUARD GP
AN ATTACHMENT

SMCS-7251 **i04566215**

NOTE	REF NO	GRAPHIC REF	PART NUMBER	QTY	PART NAME 1 2 3 4 5 6 (PRODUCT LEVEL)	SEE PAGE
	1	1	**250-6850**	2	BRACKET AS	
	2	1	**358-7864**	1	BRACKET AS	
	3	1	**361-4643**	1	HOOD AS	
	4	1	**361-7891**	2	BRACKET AS	
	5	1	**371-7076**	1	HINGE AS (RH)	
	6	1	**371-7077**	1	HINGE AS (LH)	
	7	1	**372-4592**	1	GRILL	
M	8	1	**174-9194**	6	BOLT (M8X1.25X16-MM)	
	9	1	**208-9297**	2	BOLT-FLANGE HEAD (M10X1.5X50-MM)	
	10	1	**342-9920**	6	BOLT-FLANGE HEAD (M8X1.25X20-MM)	
M	11	1	**8T-4127**	6	SCREW-MACHINE (M5X0.8X20-MM)	
E	12	1	**220-0738**		SEAL (83-CM)	

E-ORDER BY THE CENTIMETER
M-METRIC PART

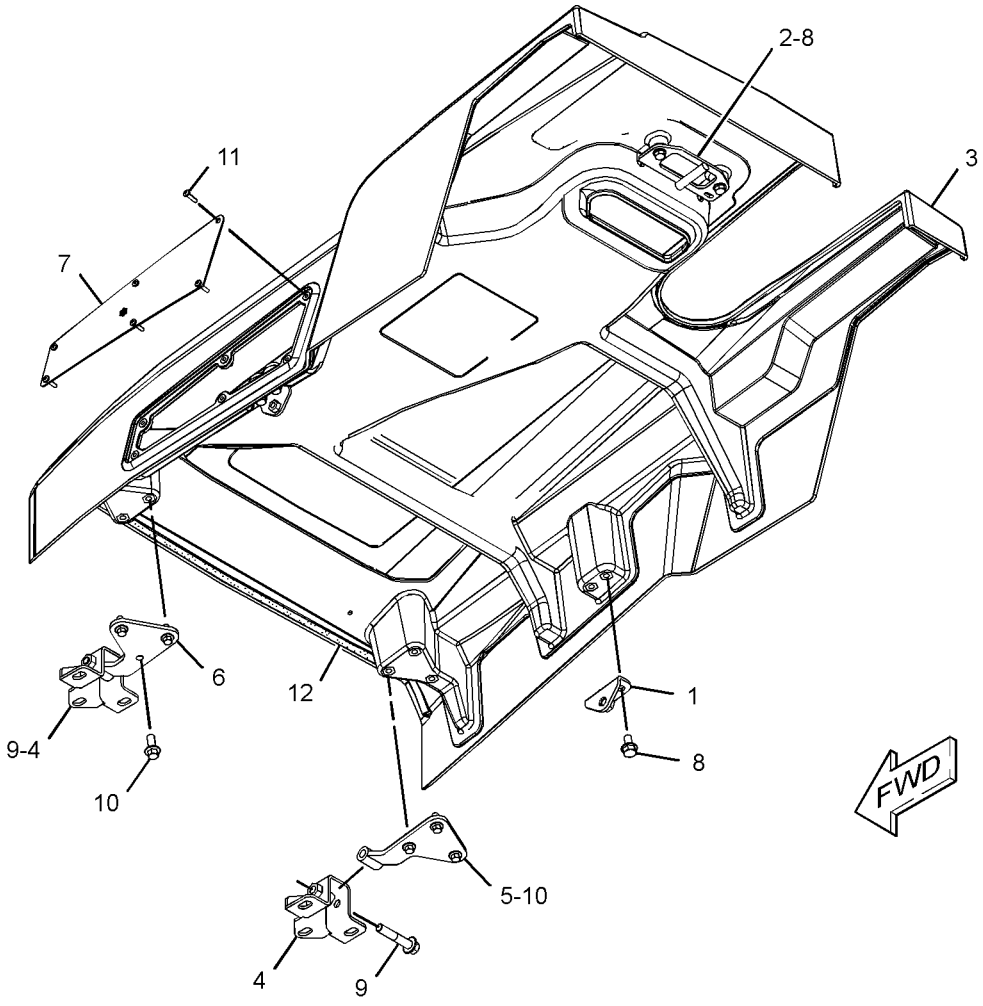

GRAPHIC #1 **<END>** g02790650

353-6955 KIT-GUARD

S/N: SEJ1-UP
AN ATTACHMENT

SMCS-7153, 715L **i03869629**

NOTE	PART NUMBER	QTY	PART NAME 1 2 3 4 5 6 (PRODUCT LEVEL)	SEE PAGE
Y	*214-7024*	1	GUARD GP-BUCKET	560
Y-SEPARATE ILLUSTRATION				

<END>

353-6951 KIT-ROADING CONVERSION–FOG

S/N: SEJ1-UP
AN ATTACHMENT

SMCS-1408, 1429, 1430, 1432, 7000, 7319 **i03869596**

NOTE	PART NUMBER	QTY	PART NAME 1 2 3 4 5 6 (PRODUCT LEVEL)	SEE PAGE
Y	*328-1950*	1	LIGHTING GP-ROADING (FOG)	107
Y-SEPARATE ILLUSTRATION				

<END>

337-9735 LINER GP-SOUND SUPPRESSION

S/N: SEJ1-UP
PART OF 337-9867 ENGINE AR-COMPLETE
AN ATTACHMENT

SMCS-1801 **i04547481**

NOTE	REF NO	GRAPHIC REF	PART NUMBER	QTY	PART NAME 1 2 3 4 5 6 (PRODUCT LEVEL)	SEE PAGE
	1	1	**377-3802**	1	INSULATION (LH)	
	2	1	**377-3803**	1	INSULATION (RH)	

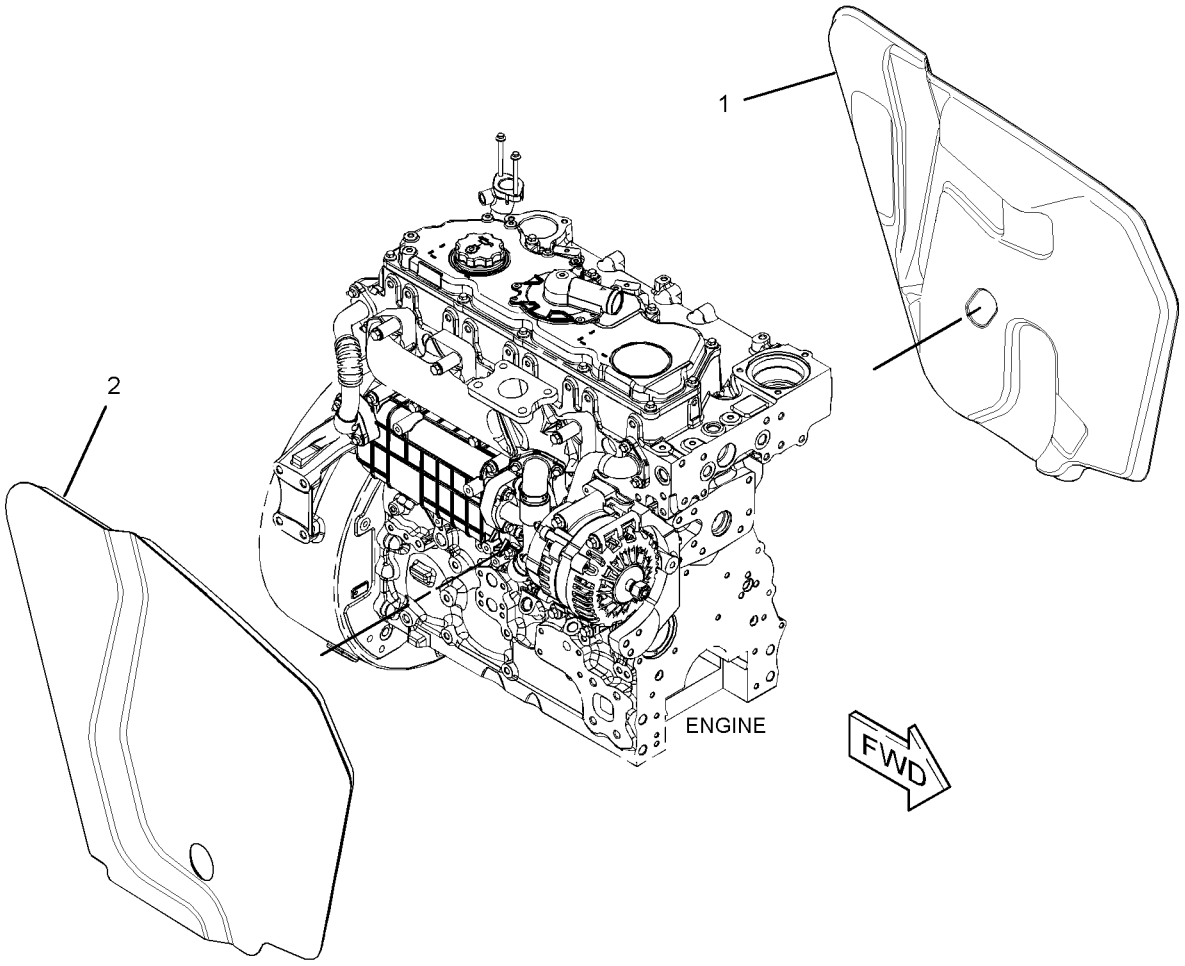

GRAPHIC #1 **<END>** g02772076

152-0184 REFLECTOR GP–SIDE SHIFT

S/N: SEJ1-UP
PART OF 341-3105 CONVERSION AR-CERTIFICATION
AN ATTACHMENT

SMCS-1429 **i03323911**

NOTE	REF NO	GRAPHIC REF	PART NUMBER	QTY	PART NAME 1 2 3 4 5 6 (PRODUCT LEVEL)	SEE PAGE
	1	1	**9R-2404**	4	REFLECTOR-AMBER	

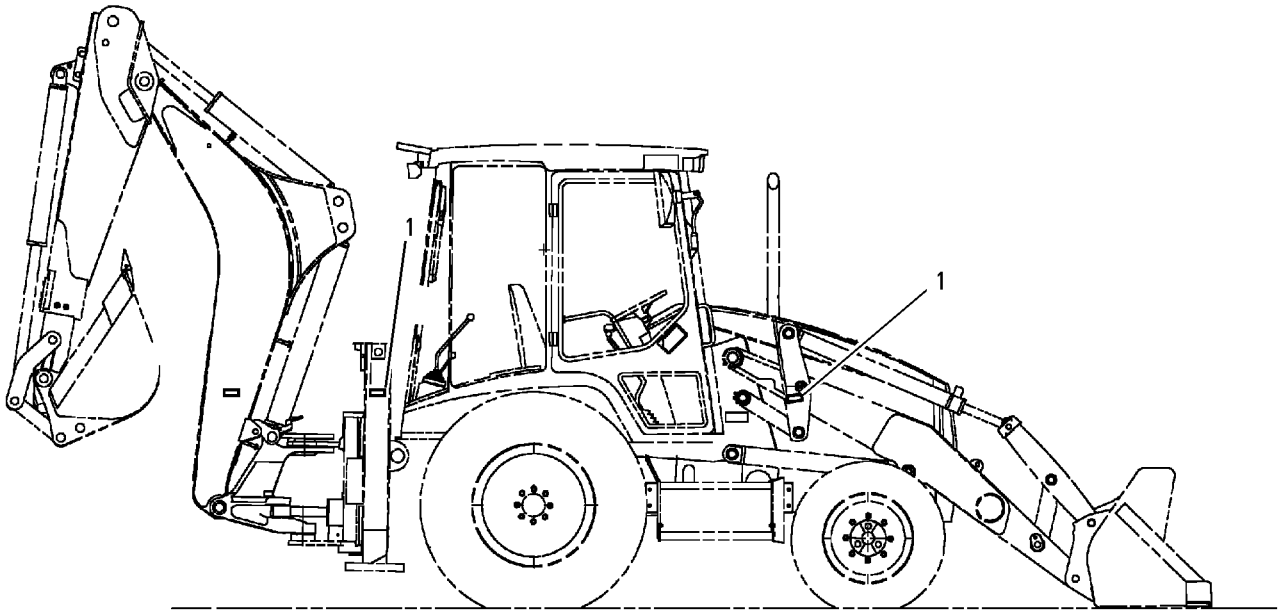

GRAPHIC #1 **<END>** g00816109

226-0420 ACCUMULATOR GP-PILOT OIL–CHARGED

S/N: SEJ1-UP
PART OF 353-1375 ACCUMULATOR GP-HYDRAULIC
FIELD REPLACEMENT ORDER 230-3489–PAGE 337
AN ATTACHMENT

SMCS-5077 **i02174564**

NOTE	PART NUMBER	QTY	PART NAME 1 2 3 4 5 6 (PRODUCT LEVEL)	SEE PAGE
			(NO SERVICED PARTS)	

<END>

HYDRAULIC SYSTEM

353-1375 ACCUMULATOR GP-HYDRAULIC

S/N: SEJ1-UP
PART OF 373-4273 CONVERSION AR-QUICK COUPLER, 373-4271, 373-4275, 373-4277
VALVE AR-BANK 3
AN ATTACHMENT

SMCS-5077 **i04623489**

NOTE	REF NO	GRAPHIC REF	PART NUMBER	QTY	PART NAME 1 2 3 4 5 6 (PRODUCT LEVEL)	SEE PAGE
Y	1	1	*226-0420*	1	ACCUMULATOR GP-HYDRAULIC (CHARGED)	335
	2	1	**3K-0360**	1	SEAL-O-RING	

Y-SEPARATE ILLUSTRATION

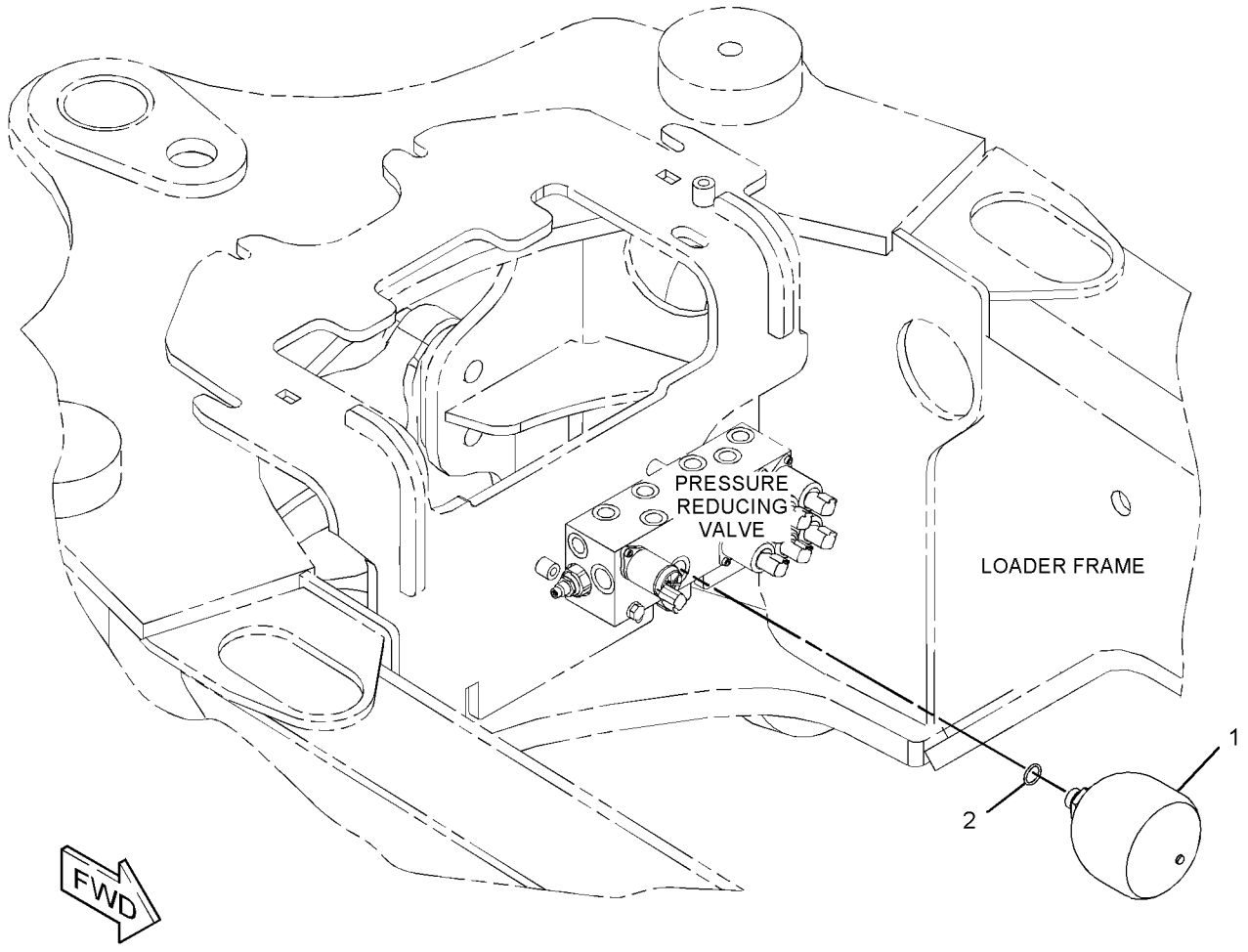

GRAPHIC #1 **<END>** g02819057

230-3489 ACCUMULATOR GP-PILOT OIL—UNCHARGED

S/N: SEJ1-UP

FIELD REPLACEMENT FOR 226-0420—PAGE 335

SMCS-5077 **i02164301**

NOTE	PART NUMBER	QTY	PART NAME 1 2 3 4 5 6 (PRODUCT LEVEL)	SEE PAGE
			(NO SERVICED PARTS)	

<END>

345-3674 ACCUMULATOR GP-RIDE CONTROL–UNCHARGED

S/N: SEJ1-UP

SMCS-5077 **i04061330**

NOTE	REF NO	GRAPHIC REF	PART NUMBER	QTY	PART NAME 1 2 3 4 5 6 (PRODUCT LEVEL)	SEE PAGE
	1	1	**224-5132**	1	CAP (GAS VALVE)	
	2	1	**224-5152**	1	VALVE-GAS (HYDRAULIC ACCUMULATOR)	
	3	1	**3J-7354**	1	SEAL-O-RING	
	4	1	**1J-9671**	1	SEAL-O-RING	
	5	1	**241-0037**	1	FILM-WARNING (HIGH PRESSURE, READ OMM)	

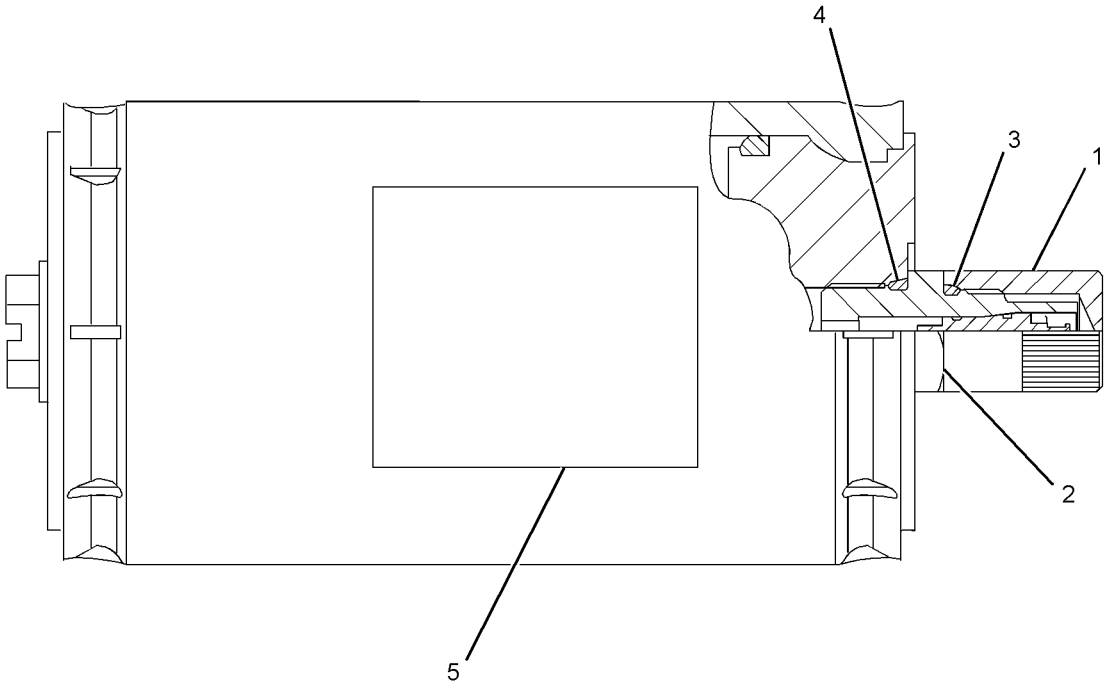

GRAPHIC #1 **<END>** g01966053

382-8033 ACCUMULATOR GP-RIDE CONTROL–CHARGED

S/N: SEJ1-UP
PART OF 337-9793 LINES GP-RIDE CONTROL
FIELD REPLACEMENT ORDER 345-3674–PAGE 338
AN ATTACHMENT

SMCS-5077 **i04556055**

NOTE	REF NO	GRAPHIC REF	PART NUMBER	QTY	PART NAME 1 2 3 4 5 6 (PRODUCT LEVEL)	SEE PAGE
	1	1	**224-5132**	1	CAP (GAS VALVE)	
	2	1	**224-5152**	1	VALVE-GAS (HYDRAULIC ACCUMULATOR)	
	3	1	**3J-7354**	1	SEAL-O-RING	
	4	1	**1J-9671**	1	SEAL-O-RING	
	5	1	**241-0037**	1	FILM-WARNING (HIGH PRESSURE, READ OMM)	

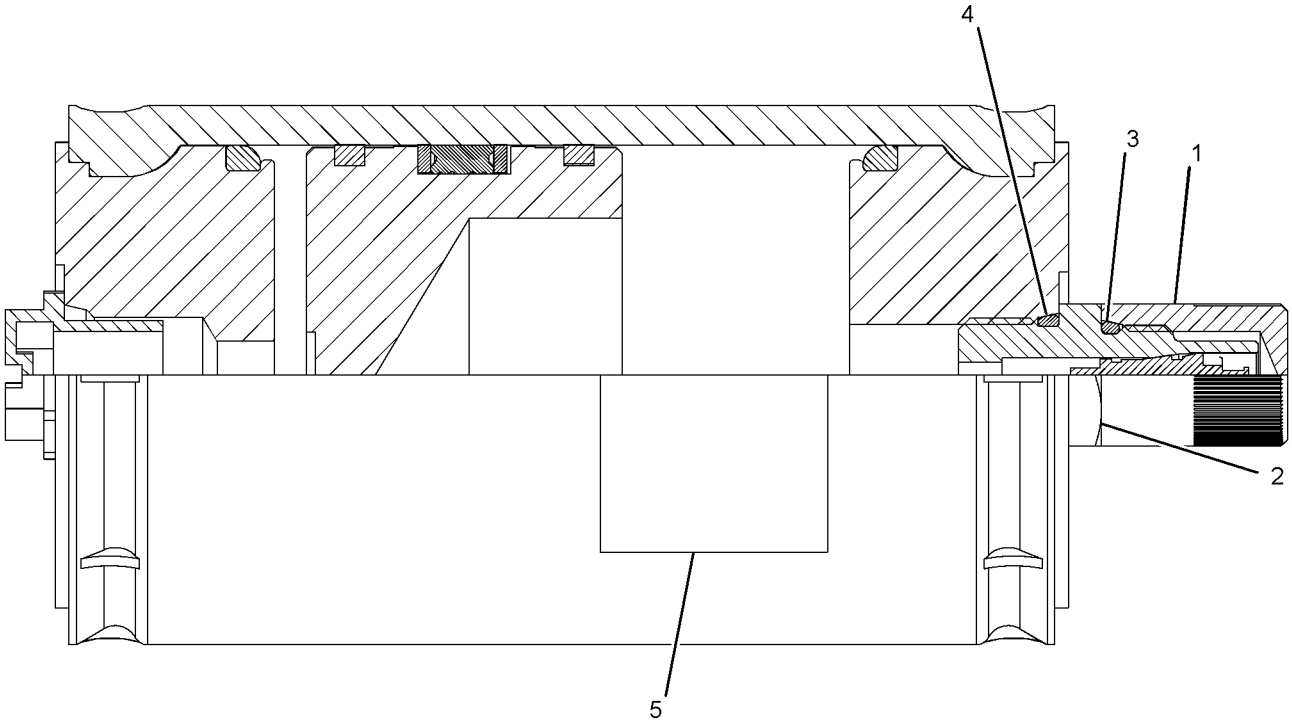

GRAPHIC #1 **<END>** g02780677

HYDRAULIC SYSTEM

340-1747 CONTROL AR-RIDE

S/N: SEJ1-UP

AN ATTACHMENT

SMCS-5004 **i04603050**

NOTE	PART NUMBER	QTY	PART NAME 1 2 3 4 5 6 (PRODUCT LEVEL)	SEE PAGE
Y	*337-9793*	1	LINES GP-RIDE CONTROL	435
Y	*331-5470*	1	WIRING GP-RIDE CONTROL	158

Y-SEPARATE ILLUSTRATION

<END>

320-5937 CYLINDER GP-BACKHOE BUCKET

S/N: SEJ1-UP
90-MM (3.54-IN) BORE X 852-MM (33.54-IN) STROKE
PART OF 340-1736, 340-1737, 340-1738 BACKHOE AR-EXTENDABLE STICK, 340-1735 BACKHOE AR-STANDARD STICK
AN ATTACHMENT

SMCS-5457 **i03973089**

NOTE	REF NO	GRAPHIC REF	PART NUMBER	QTY	PART NAME 1 2 3 4 5 6 (PRODUCT LEVEL)	SEE PAGE
	1	1	**323-2424**	1	ROD AS	
	1A	1	**9R-3092**	2	BUSHING	
	2	1	**323-2431**	1	CYLINDER HEAD AS	
	2A	1	**323-2470**	1	BEARING	
		1	**338-2415**	1	SEAL-WIPER	
		1	**338-2445**	1	SEAL-U-CUP	
		1	**340-9325**	1	SEAL-O-RING	
	3	1	**323-2433**	1	PISTON AS	
		1	**144-5287**	1	SEAL-PISTON	
		1	**340-9308**	1	SEAL-O-RING	
		1	**343-8051**	2	RING-WEAR	
	4	1	**323-2435**	1	CYLINDER AS-HYDRAULIC	
	4A	1	**9R-3092**	2	BUSHING	
	5	1	**350-3842**	2	SET SCREW (M8X1.25X12-MM)	
	6	1	**7J-9108**	2	SEAL-O-RING	
					AVAILABLE REPAIR KIT(S):	
			324-0386	1	KIT-SEAL (BUCKET CYLINDER)	
					(INCLUDES PISTON SEAL, WEAR BEARING, WIPER SEAL, U-CUP SEAL, O-RING SEALS & WEAR RING)	

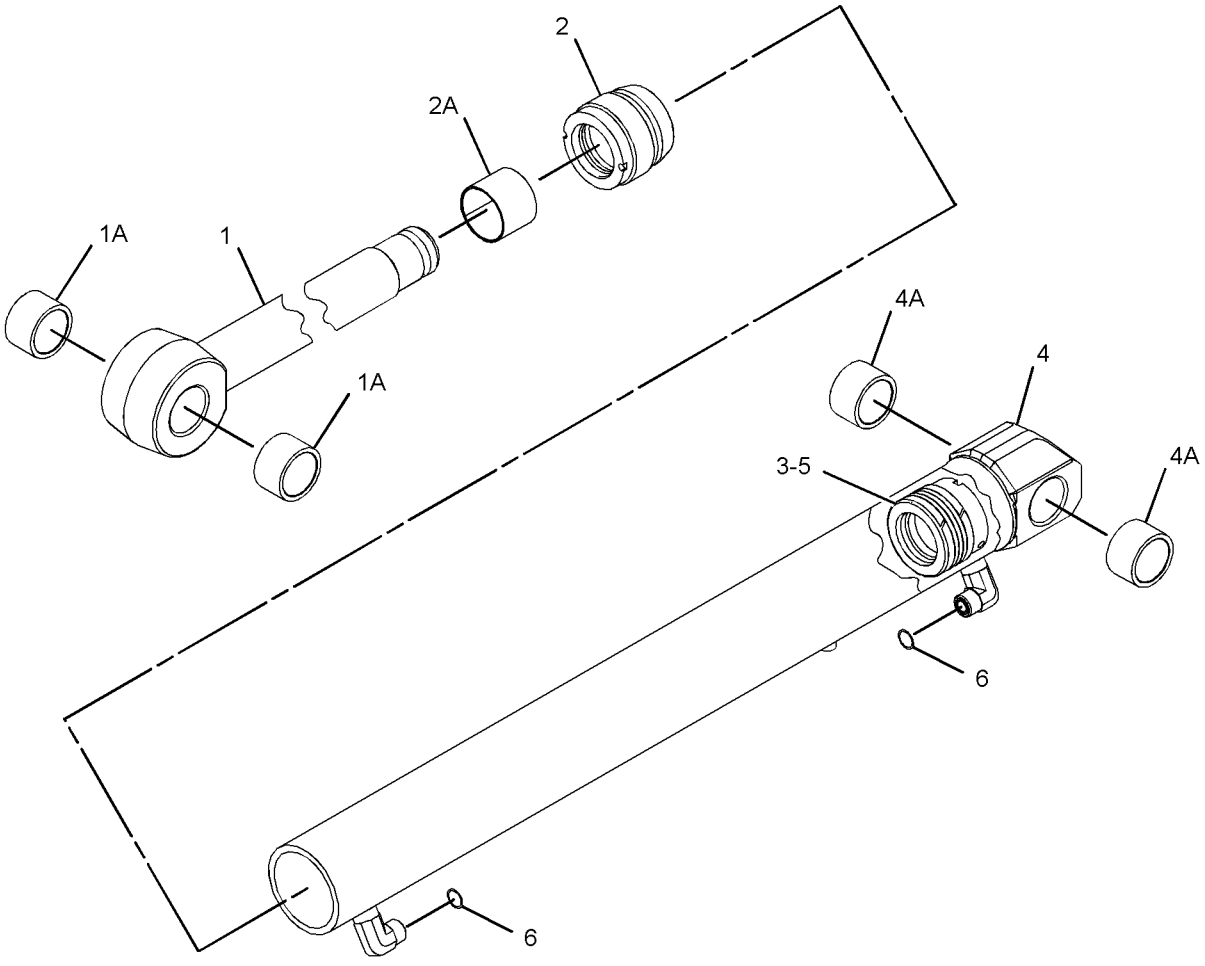

GRAPHIC #1 **<END>** g01993461

320-6520 CYLINDER GP-BOOM

S/N: SEJ1-UP
120-MM (4.7-IN) BORE X 942-MM (37.1-IN) STROKE
PART OF 340-1736, 340-1737 BACKHOE AR-EXTENDABLE STICK, 340-1735 BACKHOE AR-STANDARD STICK
AN ATTACHMENT

SMCS-5456 **i03695644**

NOTE	REF NO	GRAPHIC REF	PART NUMBER	QTY	PART NAME 1 2 3 4 5 6 (PRODUCT LEVEL)	SEE PAGE
	1	1	**324-0361**	1	ROD AS-HYDRAULIC CYLINDER	
	1A	1	**331-1520**	1	BEARING	
	2	1	**324-0367**	1	CYLINDER HEAD AS	
	2A	1	**323-2474**	1	BUSHING	
		1	**338-2416**	1	SEAL-WIPER	
		1	**338-2446**	1	SEAL-U-CUP	
		1	**340-9322**	1	SEAL-O-RING	
	3	1	**324-0369**	1	PISTON AS	
		1	**340-6339**	1	SEAL-PISTON	
		1	**340-9314**	1	SEAL-O-RING	
		1	**343-8053**	2	RING-WEAR	
	4	1	**324-0372**	1	CYLINDER AS	
	4A	1	**212-8960**	2	BEARING	
	5	1	**350-3842**	2	SET SCREW (M8X1.25X12-MM)	
	6	1	**7J-9108**	1	SEAL-O-RING	
					AVAILABLE REPAIR KIT(S):	
			324-0398	1	KIT-SEAL (BOOM CYLINDER)	

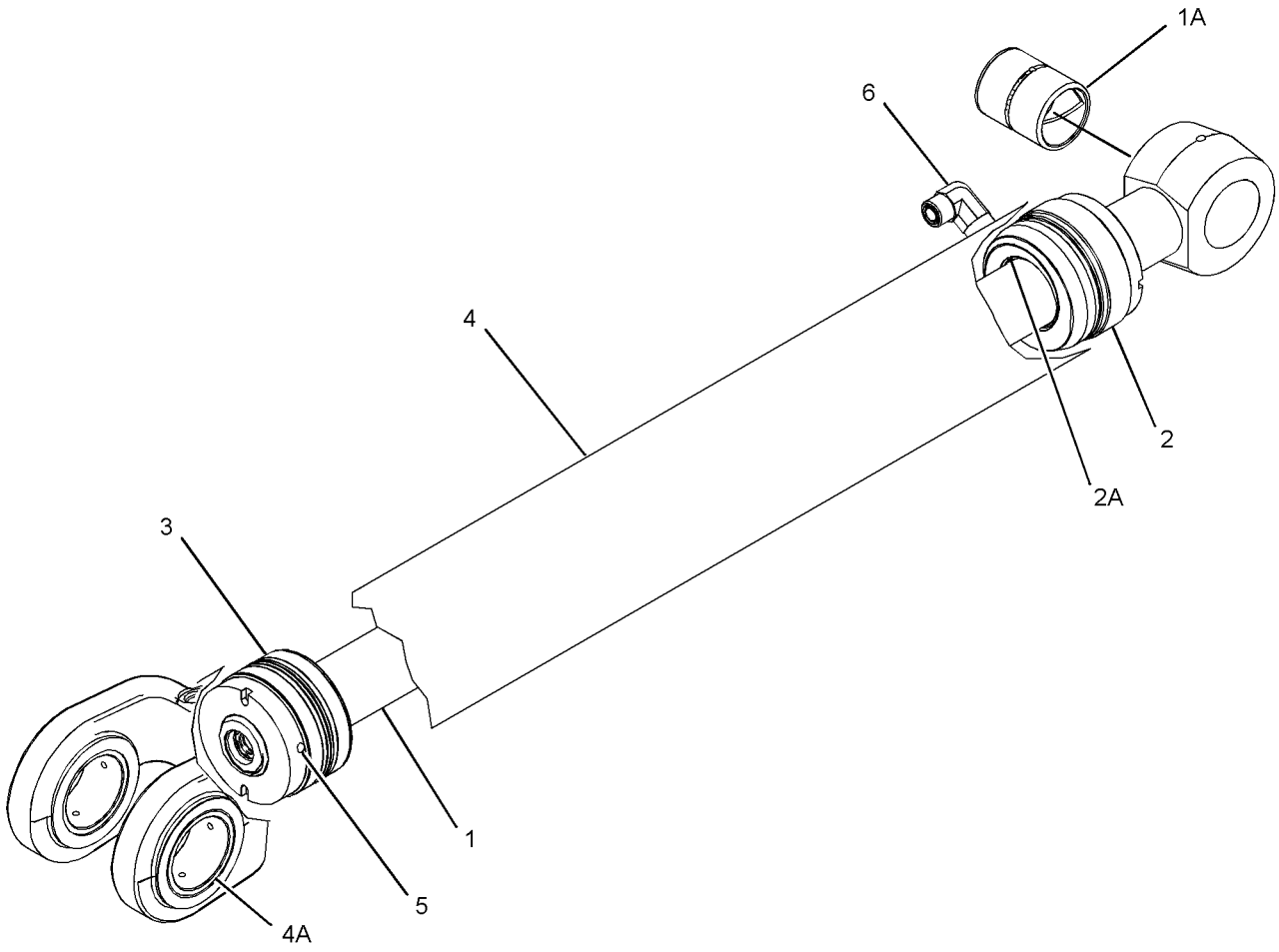

GRAPHIC #1 **<END>** g01991413

HYDRAULIC SYSTEM

320-6522 CYLINDER GP-BOOM

S/N: SEJ1-UP
130-MM (5.11-IN) BORE X 1032-MM (40.62-IN) STROKE
PART OF 340-1738 BACKHOE AR-EXTENDABLE STICK
AN ATTACHMENT

SMCS-5456 **i03973073**

NOTE	REF NO	GRAPHIC REF	PART NUMBER	QTY	PART NAME 1 2 3 4 5 6 (PRODUCT LEVEL)	SEE PAGE
	1	1	**324-0376**	1	ROD AS	
	2	1	**324-0382**	1	CYLINDER HEAD AS	
	2A	1	**323-2476**	1	BUSHING	
		1	**338-2417**	1	SEAL-WIPER	
		1	**338-2447**	1	SEAL-U-CUP	
		1	**340-9323**	1	SEAL-O-RING	
	3	1	**324-0384**	1	PISTON AS	
		1	**340-6340**	1	SEAL-PISTON	
		1	**340-9315**	1	SEAL-O-RING	
		1	**343-8054**	2	RING-WEAR	
	4	1	**324-0387**	1	CYLINDER AS-HYDRAULIC	
	4A	1	**212-8960**	2	BEARING	
	5	1	**350-3842**	2	SET SCREW (M8X1.25X12-MM)	
	6	1	**7J-9108**	1	SEAL-O-RING	
					AVAILABLE REPAIR KIT(S):	
			324-0397	1	KIT-SEAL (BOOM CYLINDER)	
					(INCLUDES PISTON SEAL, WEAR BEARING, WIPER SEAL, U-CUP SEAL, O-RING SEALS & WEAR RING)	

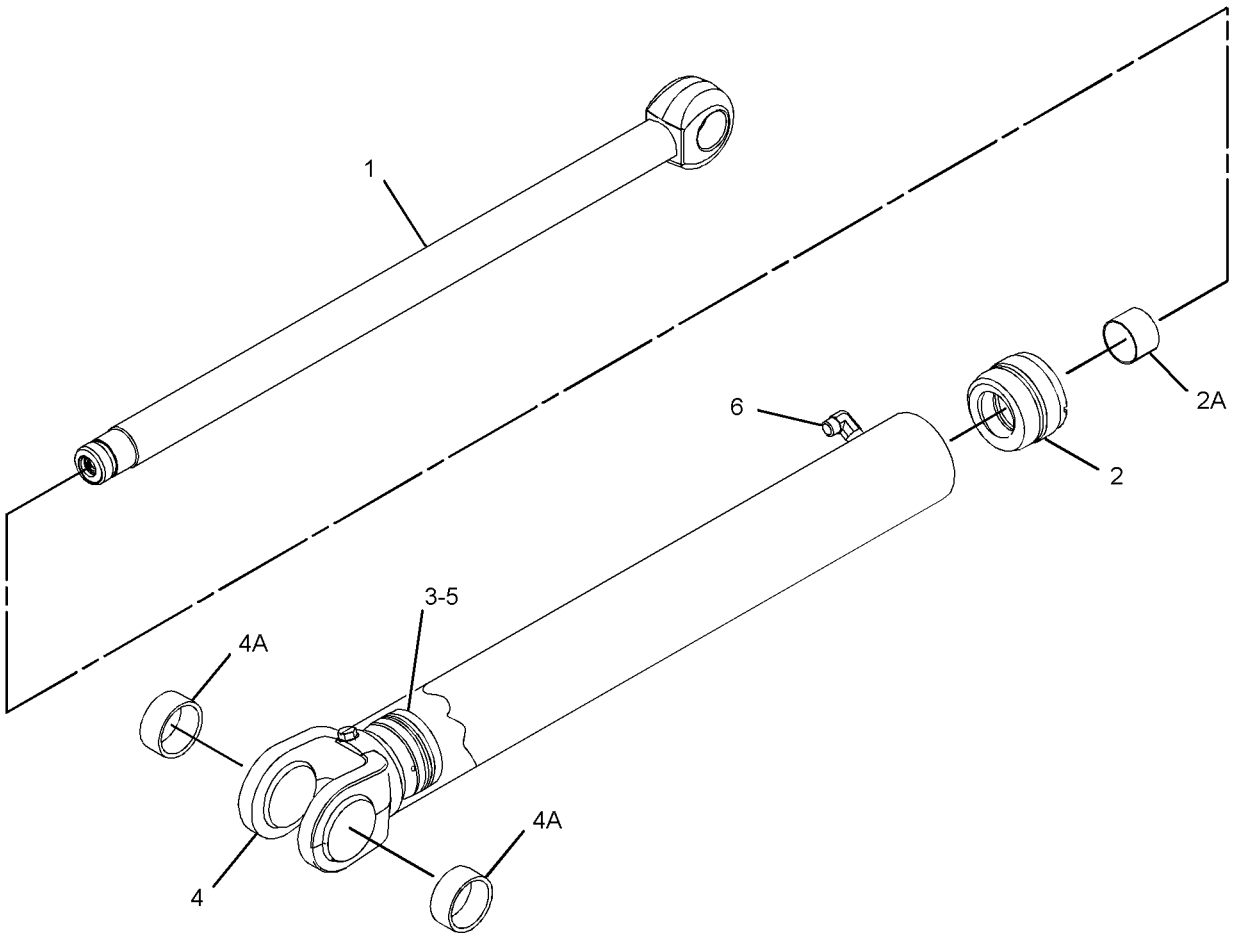

GRAPHIC #1 **<END>** g01993464

178-3713 CYLINDER GP-COUPLER

S/N: SEJ1-UP
50.8-MM (2-IN) BORE X 80.5-MM (3.2-IN) STROKE
PART OF 369-1461 LINES GP-COUPLER
AN ATTACHMENT

SMCS-5133 **i03904430**

NOTE	REF NO	GRAPHIC REF	PART NUMBER	QTY	PART NAME 1 2 3 4 5 6 (PRODUCT LEVEL)	SEE PAGE
	1	1	**178-3893**	2	ROD	
					AVAILABLE REPAIR KIT(S):	
			180-9872	1	KIT-SEAL (COUPLER CYLINDER)	
					(INCLUDES LOCKNUTS, TEFLON PISTON SEALS, PISTON O-RINGS, O-RING SEALS, BACKUP RINGS,	
					SQUARE WIRE RETAINERS, WIPER SEAL, INSTALLATION RING & U-CUP SEALS)	

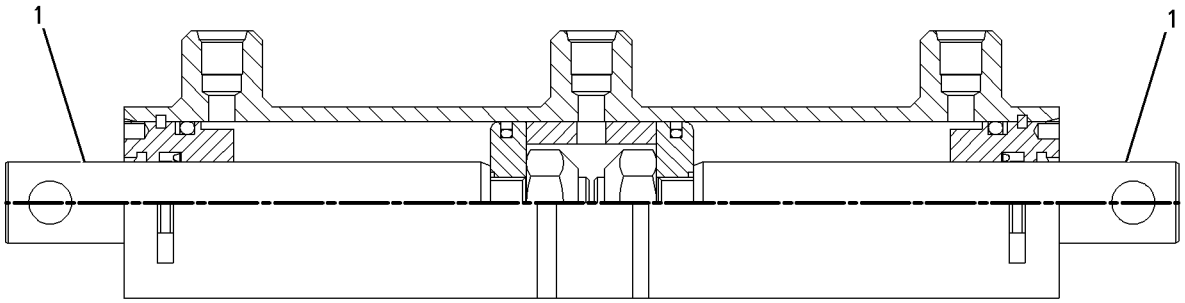

GRAPHIC #1 **<END>** g00753507

HYDRAULIC SYSTEM

381-8054 CYLINDER GP-HYDRAULIC–RH

S/N: SEJ1-UP
100-MM (4-IN) BORE X 254-MM (10-IN) STROKE
PART OF 320-5933 FRAME GP-SLIDING

SMCS-7562 **i04562809**

NOTE	REF NO	GRAPHIC REF	PART NUMBER	QTY	PART NAME 1 2 3 4 5 6 (PRODUCT LEVEL)	SEE PAGE
	1	1	**3B-8489**	1	FITTING-GREASE	
	2	1	**3N-5739**	1	SPRING	
	3	1	**6E-1478**	1	PLUNGER	
	4	1	**102-3582**	1	WASHER (11X19.5X2.5-MM THK)	
J	5	1	**233-0619**	1	SEAL-WIPER	
J	6	1	**233-2589**	1	RING-WEAR	
	7	1	**233-2613**	1	BEARING	
	8	1	**381-8085**	1	CYLINDER AS-HYDRAULIC	
	8A	1	**9T-2883**	2	BEARING	
	9	1	**269-0386**	1	ROD AS	
	9A	1	**274-4274**	1	BUSHING	
	10	1	**269-0388**	1	HEAD	
	11	1	**269-0389**	1	PISTON	
J	12	1	**140-7649**	1	SEAL-PISTON	
J	13	1	**167-2183**	1	SEAL AS-BUFFER	
J	14	1	**167-2303**	1	SEAL-U-CUP	
J	15	1	**2K-6830**	1	RING-BACKUP	
J	16	1	**2Y-5821**	1	RING	
J	17	1	**3E-6735**	1	SEAL-O-RING	
J	18	1	**9X-4611**	1	SEAL-O-RING	
M	19	1	**9X-6611**	1	SETSCREW-SOCKET (M10X1.5X16-MM)	
					AVAILABLE REPAIR KIT(S):	
J			**377-9352**	1	KIT-HYDRAULIC CYLINDER SEAL (RH)	

J-KIT MARKED J SERVICES PARTS MARKED J
M-METRIC PART

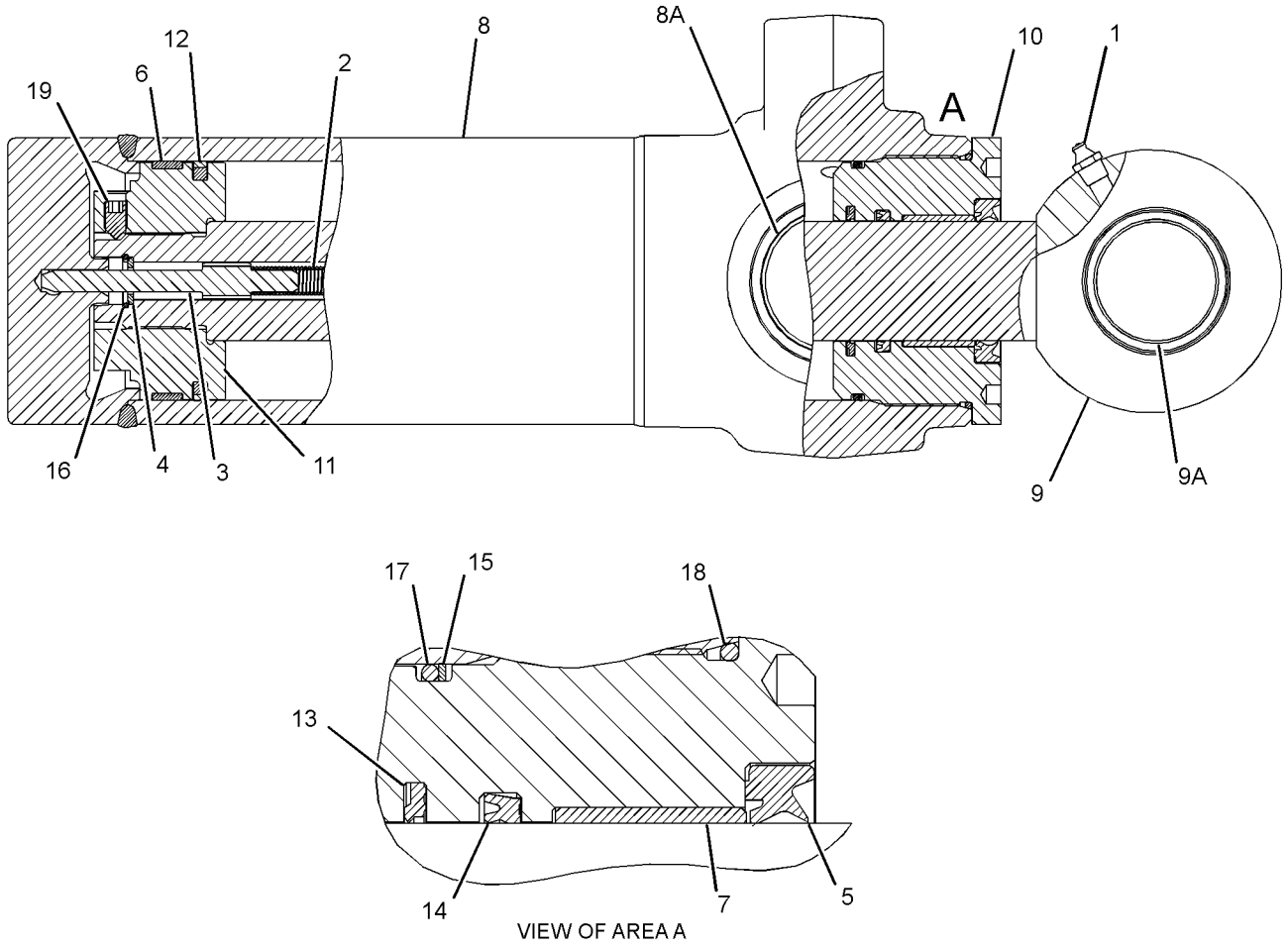

VIEW OF AREA A

GRAPHIC #1 **<END>** g02096053

HYDRAULIC SYSTEM

381-8055 CYLINDER GP-HYDRAULIC–LH

S/N: SEJ1-UP

100-MM (3.9-IN) BORE X 254-MM (10-IN) STROKE. SWING

PART OF 320-5933 FRAME GP-SLIDING

SMCS-7562 **i04577409**

NOTE	REF NO	GRAPHIC REF	PART NUMBER	QTY	PART NAME 1 2 3 4 5 6 (PRODUCT LEVEL)	SEE PAGE
	1	1	**3B-8489**	1	FITTING-GREASE	
	2	1	**3N-5739**	1	SPRING	
	3	1	**6E-1478**	1	PLUNGER	
	4	1	**102-3582**	1	WASHER (11X19.5X2.5-MM THK)	
J	5	1	**140-7649**	1	SEAL-PISTON	
J	6	1	**233-0619**	1	SEAL-WIPER	
J	7	1	**233-2589**	1	RING-WEAR	
	8	1	**233-2613**	1	BEARING	
	9	1	**269-0386**	1	ROD AS	
	9A	1	**274-4274**	1	BUSHING	
	10	1	**269-0388**	1	HEAD	
	11	1	**269-0389**	1	PISTON	
	12	1	**381-8086**	1	CYLINDER AS-HYDRAULIC	
	12A	1	**9T-2883**	2	BEARING	
J	13	1	**167-2183**	1	SEAL AS-BUFFER	
J	14	1	**167-2303**	1	SEAL-U-CUP	
J	15	1	**2K-6830**	1	RING-BACKUP	
J	16	1	**2Y-5821**	1	RING	
J	17	1	**3E-6735**	1	SEAL-O-RING	
J	18	1	**9X-4611**	1	SEAL-O-RING	
M	19	1	**9X-6611**	1	SETSCREW-SOCKET (M10X1.5X16-MM)	
					AVAILABLE REPAIR KIT(S):	
J			**377-9352**	1	KIT-HYDRAULIC CYLINDER SEAL (SWING CYLINDER)	

J-KIT MARKED J SERVICES PARTS MARKED J
M-METRIC PART

381-8055 **CYLINDER GP-HYDRAULIC** *(contd.)* **i04577409**

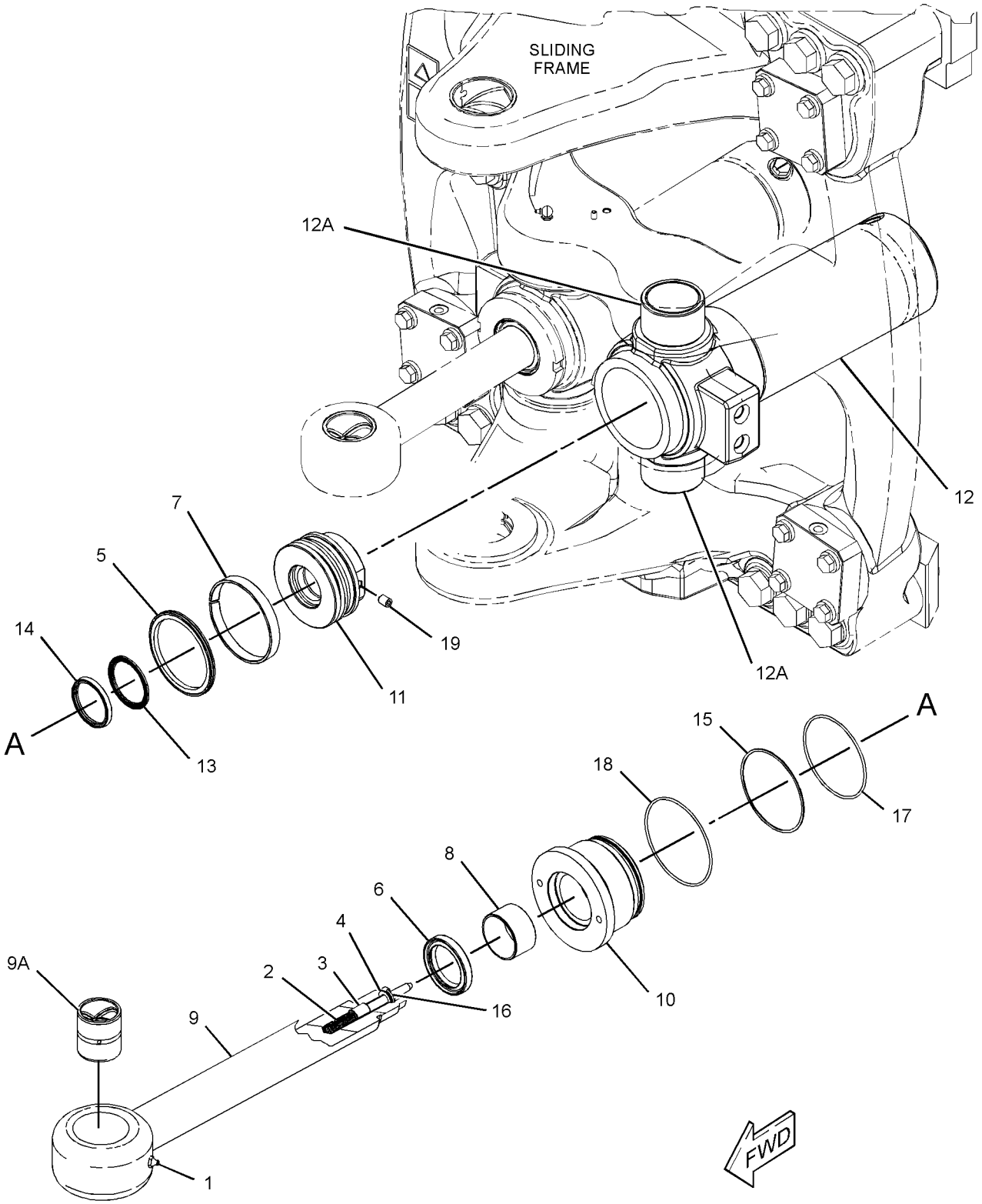

GRAPHIC #1 **<END>** g02832096

HYDRAULIC SYSTEM

358-5034 CYLINDER GP-LIFT

S/N: SEJ1-UP
80-MM(3.2-IN)BORE X 783-MM(30.8-IN)STROKE
PART OF 340-1701 LOADER AR

SMCS-5102 **i04548143**

NOTE	REF NO	GRAPHIC REF	PART NUMBER	QTY	PART NAME 1 2 3 4 5 6 (PRODUCT LEVEL)	SEE PAGE
	1	1	*323-4219*	1	HEAD AS	
J	1A	1	**323-2467**	1	BUSHING	
		1	**323-4218**	1	HEAD	
J		1	**338-2414**	1	SEAL-WIPER	
J		1	**338-2444**	1	SEAL-U-CUP	
	2	1	**323-4221**	1	PISTON AS	
J		1	**161-7147**	1	SEAL-PISTON	
		1	**323-4220**	1	PISTON	
J		1	**340-9312**	1	SEAL-O-RING	
	3	1	**350-3842**	2	SET SCREW (M8X1.25X12-MM)	
	4	1	**360-7060**	1	ROD AS-HYDRAULIC CYLINDER	
	4A	1	**362-5024**	2	BUSHING	
	5	1	**363-0326**	1	CYLINDER AS-LIFT	
	5A	1	**362-5024**	2	BUSHING	
	6	1	**6V-8398**	2	SEAL-O-RING	
					AVAILABLE REPAIR KIT(S):	
J			**324-0356**		KIT-SEAL (LIFT CYLINDER)	
					(ALSO INCLUDES O-RING SEAL & WEAR RINGS)	

J-KIT MARKED J SERVICES PARTS MARKED J

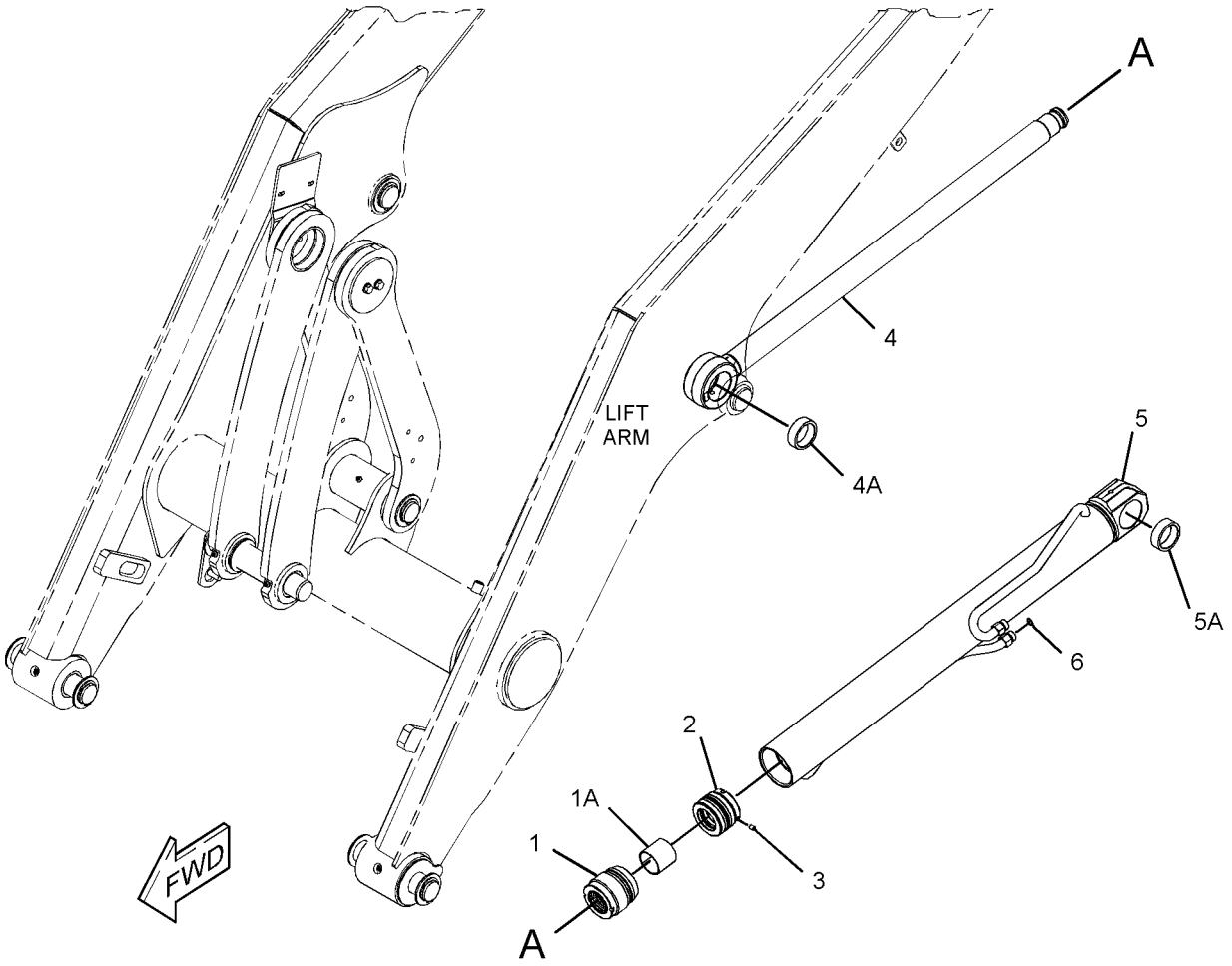

GRAPHIC #1 **<END>** g02831436

358-5035 CYLINDER GP-LIFT

S/N: SEJ1-UP
80-MM(3.2-IN)BORE X 783-MM(30.8-IN)STROKE
PART OF 340-1701 LOADER AR

SMCS-5102 **i04548144**

NOTE	REF NO	GRAPHIC REF	PART NUMBER	QTY	PART NAME 1 2 3 4 5 6 (PRODUCT LEVEL)	SEE PAGE
	1	1	*323-4219*	1	HEAD AS	
J	1A	1	**323-2467**	1	BUSHING	
		1	**323-4218**	1	HEAD	
J		1	**338-2414**	1	SEAL-WIPER	
J		1	**338-2444**	1	SEAL-U-CUP	
	2	1	**323-4221**	1	PISTON AS	
J		1	**161-7147**	1	SEAL-PISTON	
		1	**323-4220**	1	PISTON	
J		1	**340-9312**	1	SEAL-O-RING	
	3	1	**350-3842**	2	SET SCREW (M8X1.25X12-MM)	
	4	1	**360-7056**	1	CYLINDER AS-LIFT	
	4A	1	**362-5024**	2	BUSHING	
	5	1	**360-7060**	1	ROD AS-HYDRAULIC CYLINDER	
	5A	1	**362-5024**	2	BUSHING	
	6	1	**6V-8398**	2	SEAL-O-RING	
					AVAILABLE REPAIR KIT(S):	
J			**324-0356**	1	KIT-SEAL (LIFT CYLINDER)	
					(ALSO INCLUDES O-RING SEAL & WEAR RINGS)	

J-KIT MARKED J SERVICES PARTS MARKED J

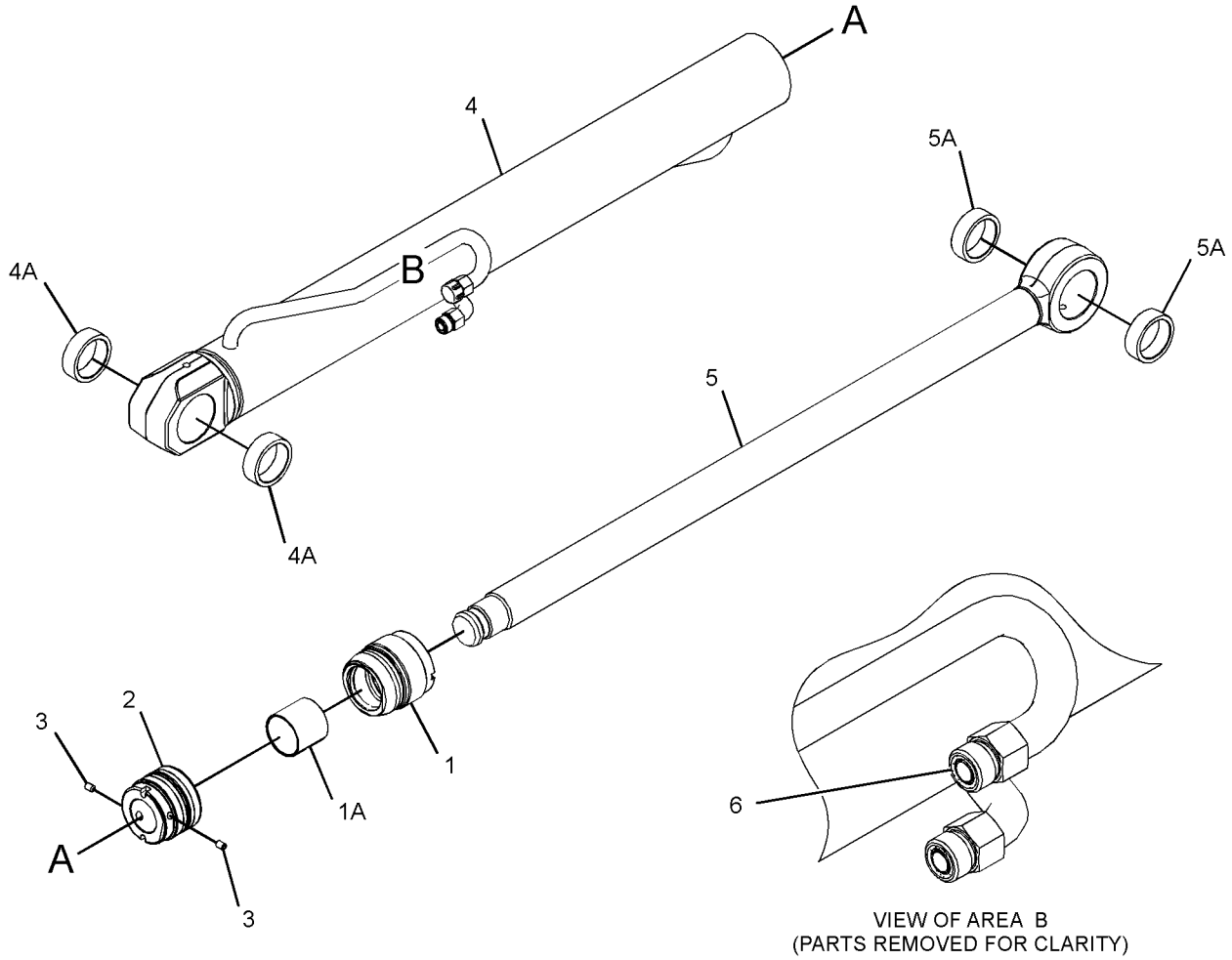

VIEW OF AREA B
(PARTS REMOVED FOR CLARITY)

GRAPHIC #1 **<END>** g02827757

HYDRAULIC SYSTEM

226-5540 CYLINDER GP-MULTIPURPOSE BUKT

S/N: SEJ1-UP
76-MM (2.99-IN) BORE X 262-MM (10.31-IN) STROKE
PART OF 318-7251, 337-7411, 350-1580, 350-1581, 350-1587, 350-1589 BUCKET
AR-MULTIPURPOSE
AN ATTACHMENT

SMCS-5457 **i04404170**

NOTE	REF NO	GRAPHIC REF	PART NUMBER	QTY	PART NAME 1 2 3 4 5 6 (PRODUCT LEVEL)	SEE PAGE
	1	1	**3B-8489**	2	FITTING-GREASE	
	2	1	**9S-8004**	2	PLUG-O-RING	
	3	1	**3J-1907**	2	SEAL-O-RING	
	4	1	**9T-4007**	2	BEARING	
					AVAILABLE REPAIR KIT(S):	
			230-9357	1	KIT-SEAL (BUCKET CYLINDER)	
					(INCLUDES WIPER SEAL, O-RINGS, MOISTURE EXCLUDER, POLYPAK, WEAR RINGS, O-RING LOADER & PISTON RING))	

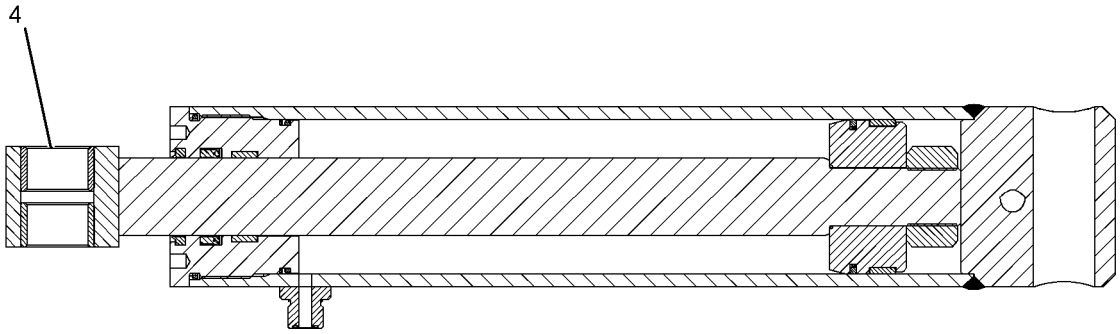

SECTION A-A

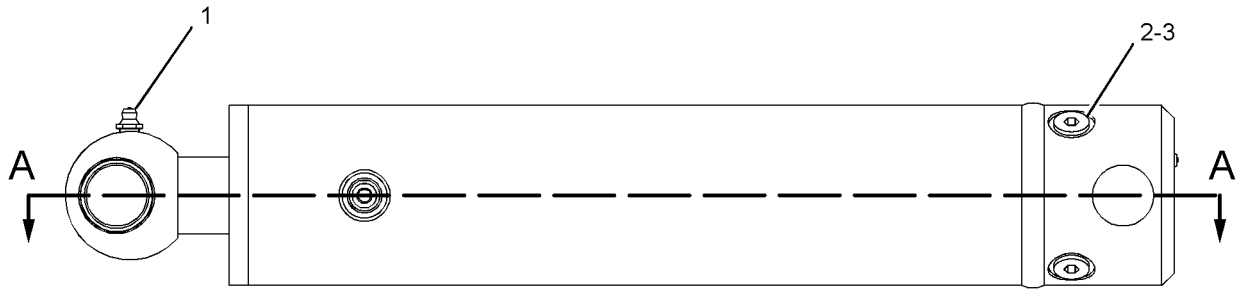

GRAPHIC #1 **<END>** g01086486

HYDRAULIC SYSTEM

320-5938 CYLINDER GP-STABILIZER

S/N: SEJ1-UP
70-MM (2.75-IN) BORE X 700-MM (27.55-IN) STROKE
PART OF 340-1693 CHASSIS AR

SMCS-5468 **i03975129**

NOTE	REF NO	GRAPHIC REF	PART NUMBER	QTY	PART NAME 1 2 3 4 5 6 (PRODUCT LEVEL)	SEE PAGE
	1	1	**324-0496**	1	CYLINDER HEAD AS	
	1A	1	**323-2465**	1	BUSHING	
		1	**338-2412**	1	SEAL-WIPER	
		1	**338-2442**	1	SEAL-U-CUP	
		1	**340-9308**	1	SEAL-O-RING	
	2	1	**324-0498**	1	PISTON AS	
		1	**161-7145**	1	SEAL-PISTON	
		1	**340-6272**	2	RING-WEAR	
		1	**340-9311**	1	SEAL-O-RING	
	3	1	**324-0505**	1	ROD AS-HYDRAULIC CYLINDER	
	4	1	**324-0516**	1	CYLINDER AS-HYDRAULIC	
	5	1	**350-3842**	2	SET SCREW (M8X1.25X12-MM)	
	6	1	**6V-8397**	2	SEAL-O-RING	
					AVAILABLE REPAIR KIT(S):	
			324-0355	1	KIT-SEAL (STABILIZER CYLINDER)	
					(INCLUDES PISTON SEAL, WEAR BEARING, WIPER SEAL, U-CUP SEAL, O-RING SEALS & WEAR RING)	

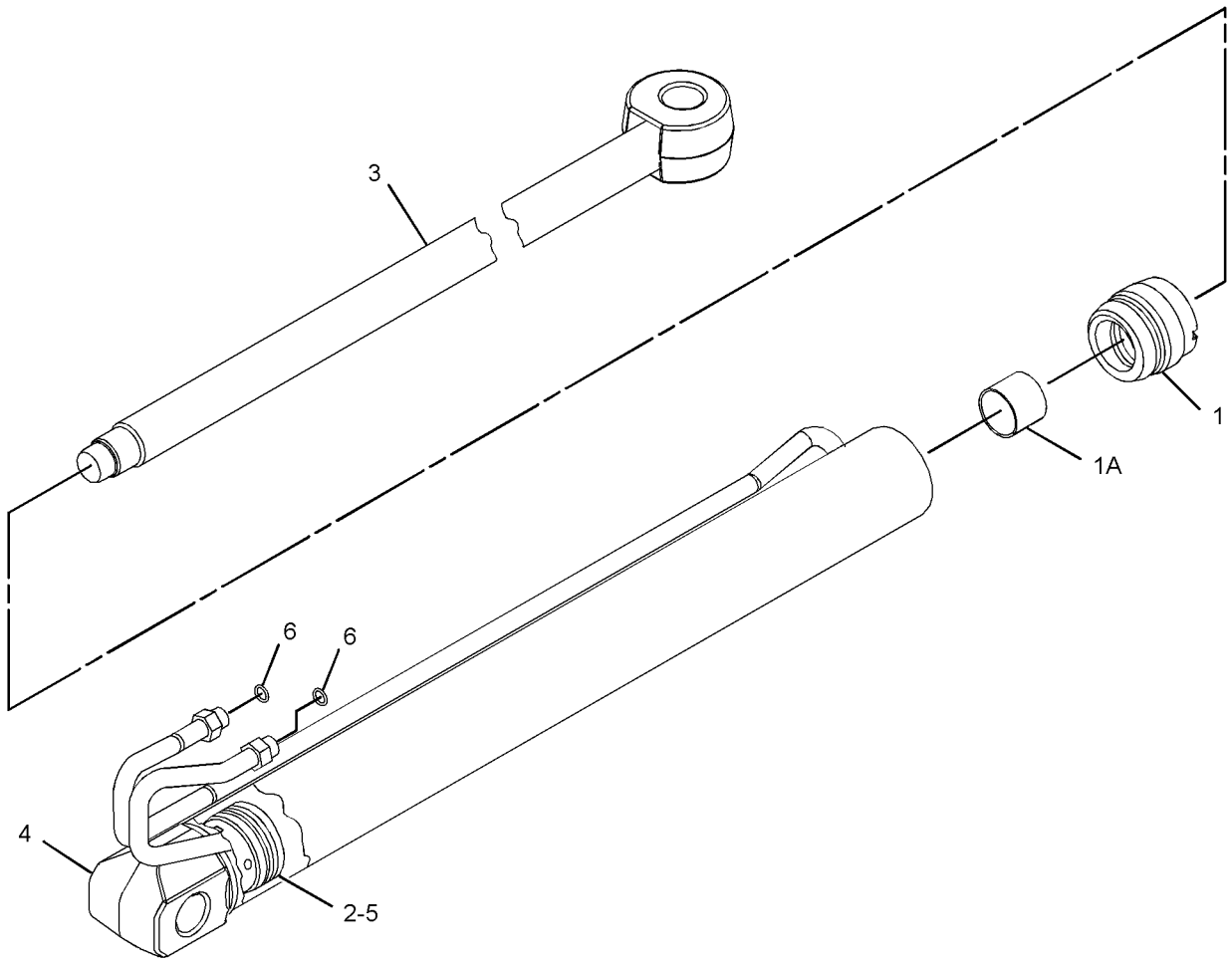

GRAPHIC #1 **<END>** g01993459

HYDRAULIC SYSTEM

320-5935 CYLINDER GP-STICK

S/N: SEJ1-UP
70-MM (2.75-IN) BORE X 1050-MM (41.35-IN) STROKE
PART OF 324-0550, 324-0551, 329-9749 STICK GP-EXTENDABLE
AN ATTACHMENT

SMCS-5458 **i03975131**

NOTE	REF NO	GRAPHIC REF	PART NUMBER	QTY	PART NAME 1 2 3 4 5 6 (PRODUCT LEVEL)	SEE PAGE
	1	1	**6V-8398**	1	SEAL-O-RING	
	2	1	**324-0436**	1	ROD AS	
	3	1	**324-0496**	1	CYLINDER HEAD AS	
	3A	1	**323-2465**	1	BUSHING	
		1	**338-2412**	1	SEAL-WIPER	
		1	**338-2442**	1	SEAL-U-CUP	
		1	**340-9308**	1	SEAL-O-RING	
	4	1	**324-0498**	1	PISTON AS	
		1	**161-7145**	1	SEAL-PISTON	
		1	**340-6272**	2	RING-WEAR	
		1	**340-9311**	1	SEAL-O-RING	
	5	1	**324-0501**	1	CYLINDER AS	
	6	1	**350-3842**	2	SET SCREW (M8X1.25X12-MM)	
					AVAILABLE REPAIR KIT(S):	
			324-0355	1	KIT-SEAL (EXTENDABLE STICK)	
					(INCLUDES PISTON SEAL, WEAR BEARING, WIPER SEAL, U-CUP SEAL, O-RING SEALS & WEAR RING)	

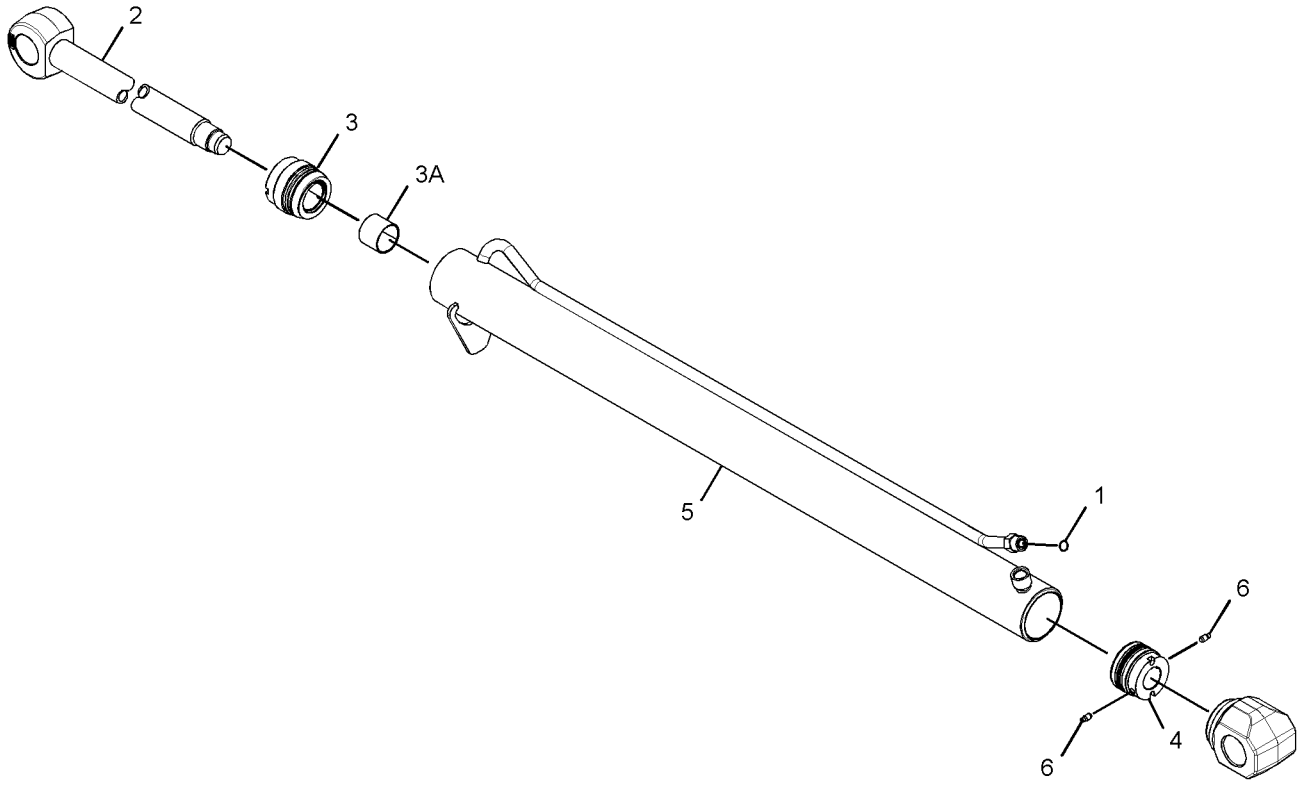

GRAPHIC #1 **<END>** g01991690

320-6521 CYLINDER GP-STICK

S/N: SEJ1-UP
120-MM (4.7-IN) BORE X 677-MM (26.7-IN) STROKE
PART OF 340-1736, 340-1737 BACKHOE AR-EXTENDABLE STICK, 340-1735 BACKHOE AR-STANDARD STICK
AN ATTACHMENT

SMCS-5458 **i03695660**

NOTE	REF NO	GRAPHIC REF	PART NUMBER	QTY	PART NAME 1 2 3 4 5 6 (PRODUCT LEVEL)	SEE PAGE
	1	1	**6V-8398**	1	SEAL-O-RING	
	2	1	**324-0367**	1	CYLINDER HEAD AS	
	2A	1	**323-2474**	1	BUSHING	
		1	**338-2416**	1	SEAL-WIPER	
		1	**338-2446**	1	SEAL-U-CUP	
		1	**340-9322**	1	SEAL-O-RING	
	3	1	**324-0369**	1	PISTON AS	
		1	**340-6339**	1	SEAL-PISTON	
		1	**340-9314**	1	SEAL-O-RING	
		1	**343-8053**	2	RING-WEAR	
	4	1	**324-0406**	1	ROD AS	
	4A	1	**331-1520**	1	BEARING	
	5	1	**324-0417**	1	CYLINDER AS	
	5A	1	**215-1906**	2	BUSHING	
	6	1	**350-3842**	2	SET SCREW (M8X1.25X12-MM)	
	7	1	**7J-9108**	1	SEAL-O-RING	
					AVAILABLE REPAIR KIT(S):	
			324-0398	1	KIT-SEAL (STICK CYLINDER)	

320-6521 CYLINDER GP-STICK *(contd.)* i03695660

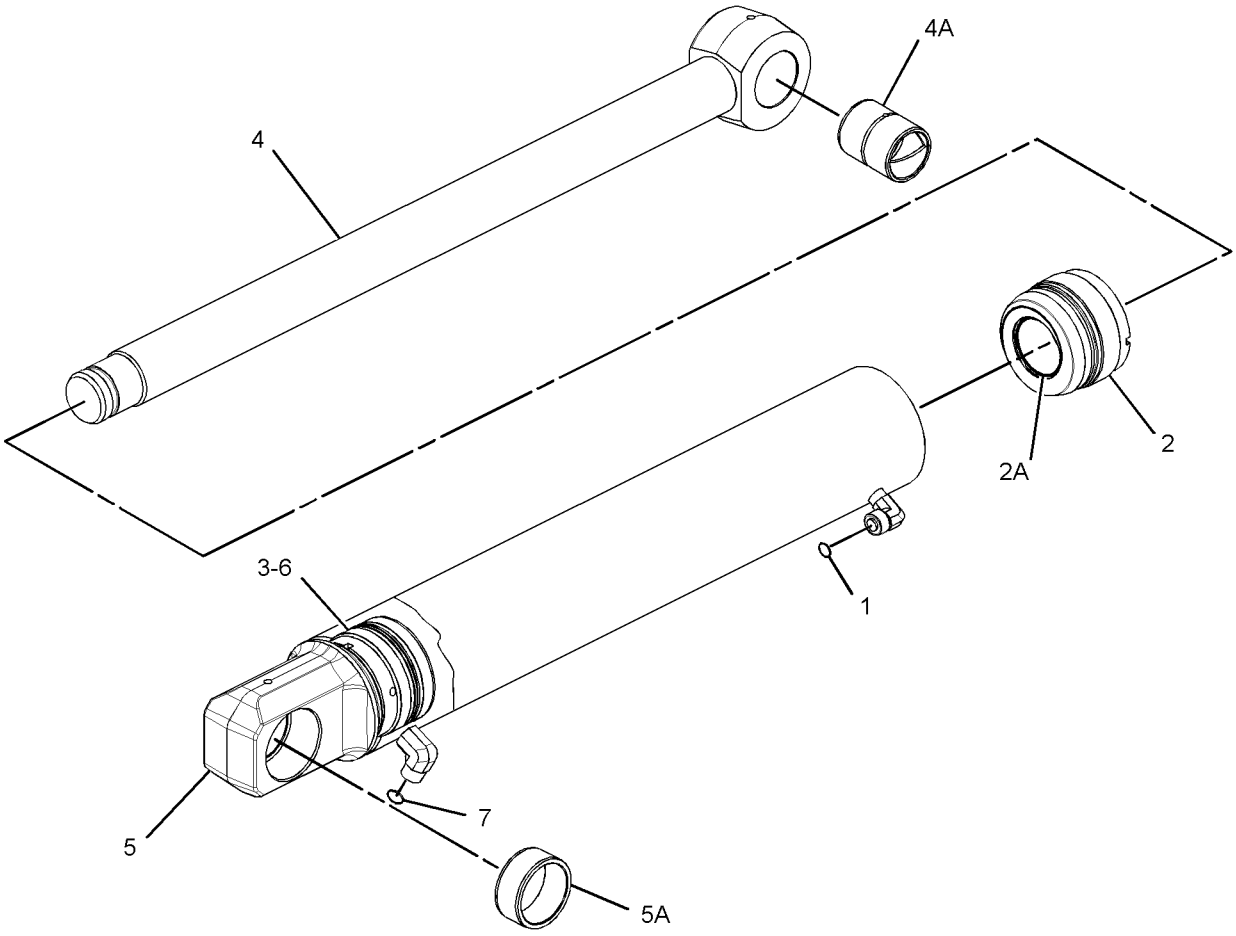

GRAPHIC #1 **<END>** g01993595

320-6523 CYLINDER GP-STICK

S/N: SEJ1-UP
130-MM (5.11-IN) BORE X 690-MM (27.16-IN) STROKE
PART OF 340-1738 BACKHOE AR-EXTENDABLE STICK
AN ATTACHMENT

SMCS-5458 **i03975132**

NOTE	REF NO	GRAPHIC REF	PART NUMBER	QTY	PART NAME 1 2 3 4 5 6 (PRODUCT LEVEL)	SEE PAGE
	1	1	**6V-8398**	1	SEAL-O-RING	
	2	1	**324-0382**	1	CYLINDER HEAD AS	
	2A	1	**323-2476**	1	BUSHING	
		1	**338-2417**	1	SEAL-WIPER	
		1	**338-2447**	1	SEAL-U-CUP	
		1	**340-9323**	1	SEAL-O-RING	
	3	1	**324-0384**	1	PISTON AS	
		1	**340-6340**	1	SEAL-PISTON	
		1	**340-9315**	1	SEAL-O-RING	
		1	**343-8054**	2	RING-WEAR	
	4	1	**324-0421**	1	ROD AS-HYDRAULIC CYLINDER	
	5	1	**324-0432**	1	CYLINDER AS	
	5A	1	**215-1906**	2	BUSHING	
	6	1	**350-3842**	2	SET SCREW (M8X1.25X12-MM)	
	7	1	**7J-9108**	1	SEAL-O-RING	
					AVAILABLE REPAIR KIT(S):	
			324-0397	1	KIT-SEAL (STICK CYLINDER)	
					(INCLUDES PISTON SEAL, WEAR BEARING, WIPER SEAL, U-CUP SEAL, O-RING SEALS & WEAR RING)	

320-6523 CYLINDER GP-STICK *(contd.)* i03975132

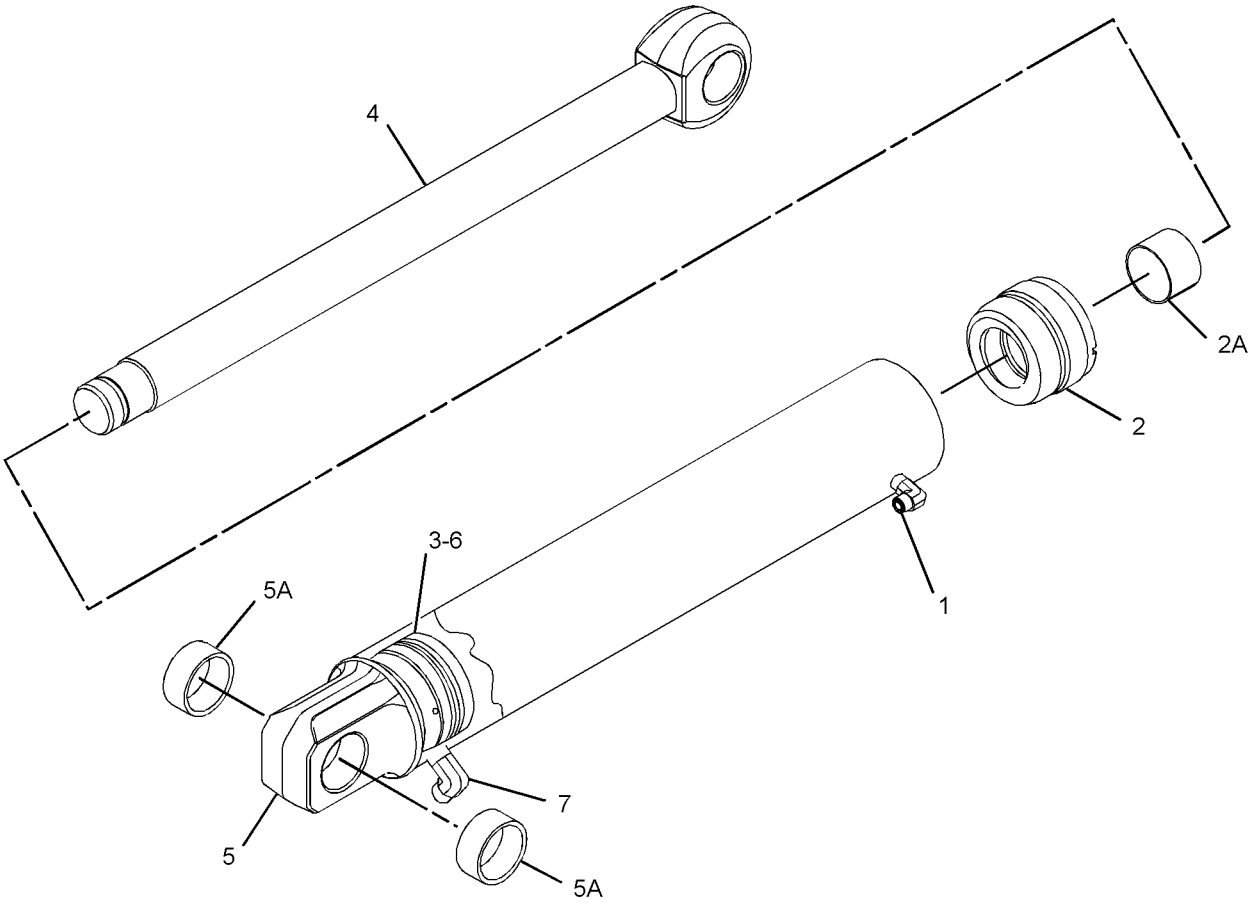

GRAPHIC #1 **<END>** g01993465

358-5045 CYLINDER GP-TILT

S/N: SEJ1-UP
90-MM (3.5-IN) BORE X 881.5-MM (34.7-IN) STROKE
PART OF 340-1701 LOADER AR

SMCS-5104 **i04548486**

NOTE	REF NO	GRAPHIC REF	PART NUMBER	QTY	PART NAME 1 2 3 4 5 6 (PRODUCT LEVEL)	SEE PAGE
	1	1	**324-0512**	1	HEAD AS	
J	1A	1	**323-2466**	1	BEARING	
J		1	**338-2413**	1	SEAL-WIPER	
J		1	**338-2443**	1	SEAL-U-CUP	
J		1	**340-9308**	1	SEAL-O-RING	
	2	1	**324-0525**	1	PISTON AS	
J		1	**161-7145**	1	SEAL-PISTON	
J		1	**340-6272**	2	RING-WEAR	
J		1	**340-9310**	1	SEAL-O-RING	
	3	1	**350-3842**	2	SET SCREW (M8X1.25X12-MM)	
	4	1	**360-9835**	1	ROD AS	
	4A	1	**9R-0153**	2	BUSHING	
	5	1	**360-9841**	1	CYLINDER AS-TILT	
	5A	1	**9R-0153**	2	BUSHING	
	6	1	**6V-8398**	2	SEAL-O-RING	
					AVAILABLE REPAIR KIT(S):	
J			**324-0411**	1	KIT-SEAL (TILT CYLINDER)	

J-KIT MARKED J SERVICES PARTS MARKED J

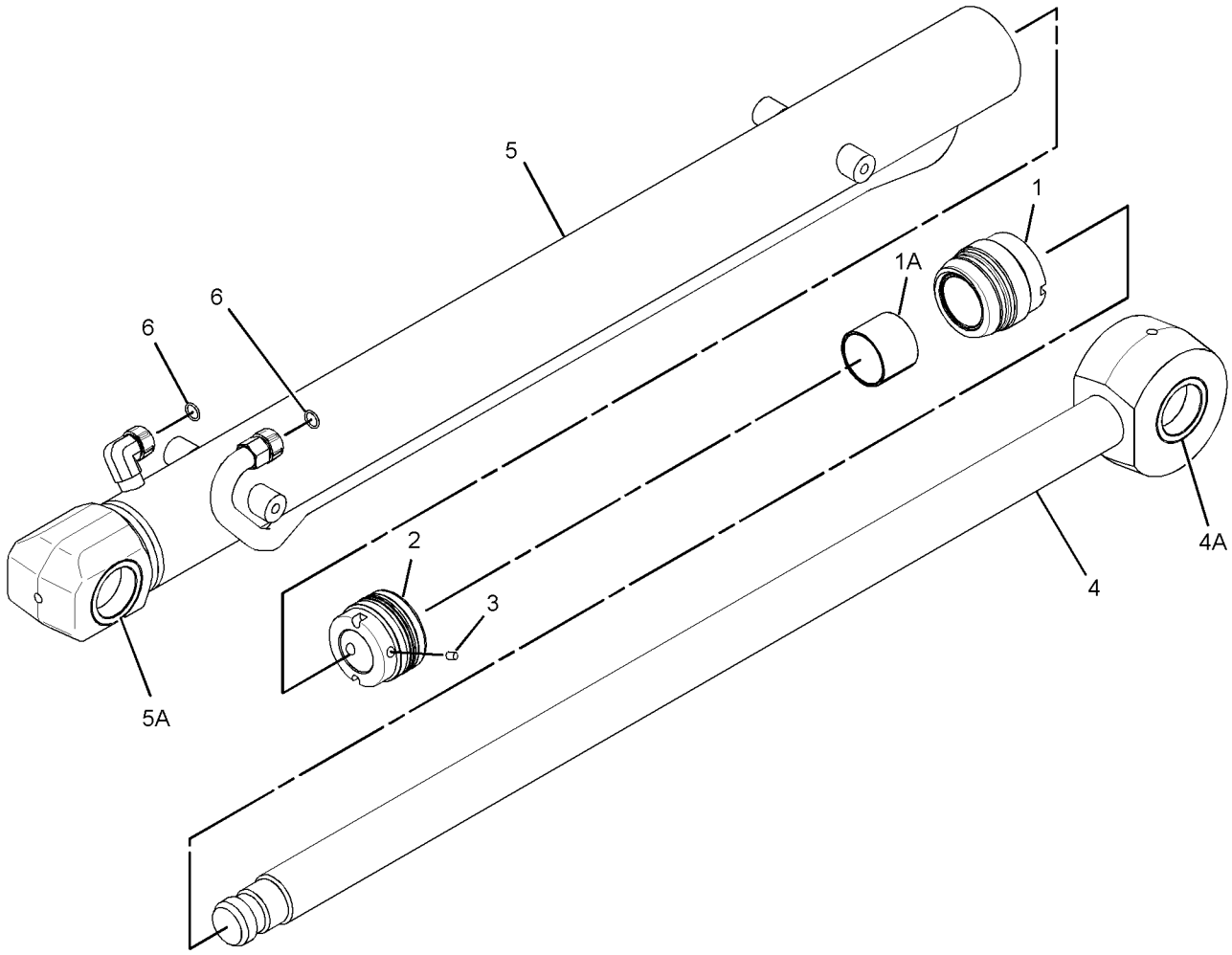

GRAPHIC #1 **<END>** g02774117

HYDRAULIC SYSTEM

353-1338 DRIVE & MTG GP-PUMP

S/N: SEJ1-UP
PART OF 359-0378 TRANSMISSION AR-DIRECT DRIVE, 359-0380 TRANSMISSION AR-POWER SHIFT AN ATTACHMENT

SMCS-3108, 5070 **i04574729**

NOTE	REF NO	GRAPHIC REF	PART NUMBER	QTY	PART NAME 1 2 3 4 5 6 (PRODUCT LEVEL)	SEE PAGE
	1	1	**9U-8886**	1	RING-SEAL	
	2	1	**115-1918**	1	PLATE	
	3	1	**117-3534**	1	ADAPTER	
Y	4	1	**128-5596**	1	SHAFT GP-PUMP DRIVE	451
	5	1	**274-4555**	1	HUB	
M	6	1	**8T-9405**	4	BOLT-SOCKET HEAD (M4X0.7X16-MM)	

M-METRIC PART
Y-SEPARATE ILLUSTRATION

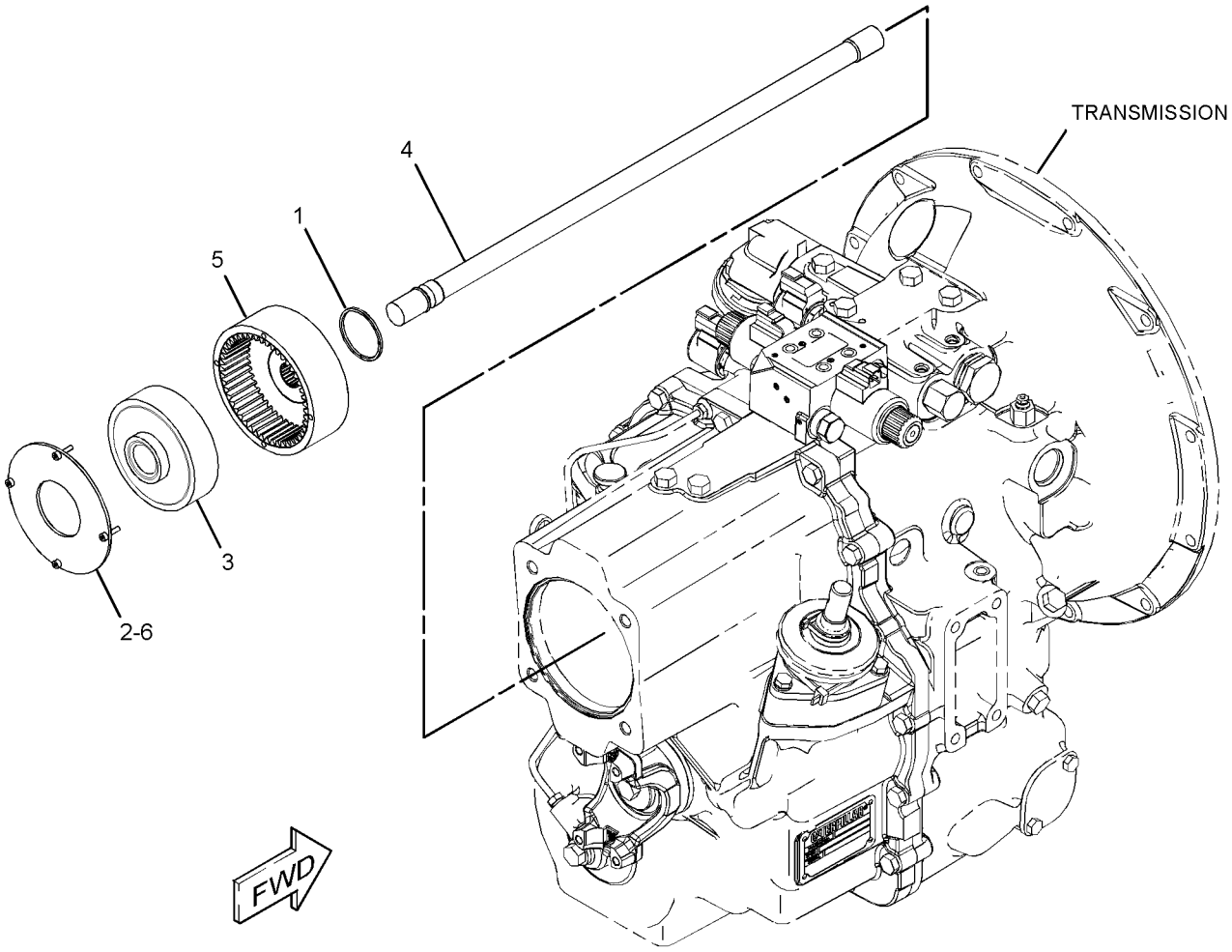

GRAPHIC #1 **<END>** g02809597

HYDRAULIC SYSTEM

353-1341 DRIVE & MTG GP-PUMP

S/N: SEJ1-UP
PART OF 350-8606 TRANSMISSION AR-POWER SHIFT
AN ATTACHMENT

SMCS-3108, 5070 **i04612430**

NOTE	REF NO	GRAPHIC REF	PART NUMBER	QTY	PART NAME 1 2 3 4 5 6 (PRODUCT LEVEL)	SEE PAGE
	1	1	**9U-8886**	1	RING-SEAL	
	2	1	**115-1918**	1	PLATE	
	3	1	**117-3534**	1	ADAPTER	
	4	1	**274-4555**	1	HUB	
	5	1	**359-0389**	1	SHAFT GP-POWER TAKE-OFF (TRANSMISSION)	
		1	**130-8150**	1	RING-RETAINING	
M	6	1	**8T-9405**	4	BOLT-SOCKET HEAD (M4X0.7X16-MM)	

M-METRIC PART

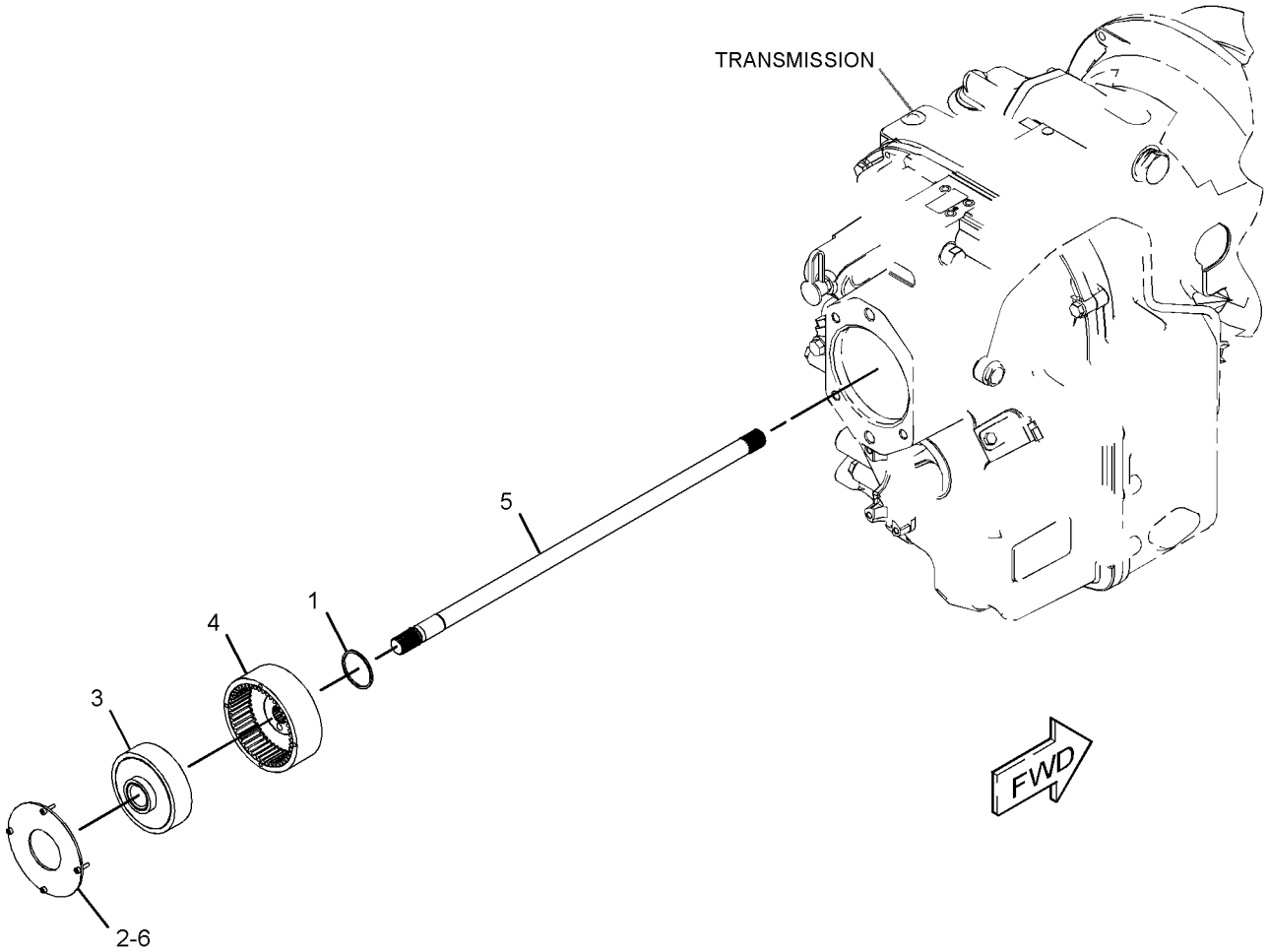

GRAPHIC #1 **<END>** g02820076

HYDRAULIC SYSTEM

337-9740 FILTER & MTG GP-OIL–HYDRAULIC

S/N: SEJ1-UP

PART OF 340-1719 HYDRAULIC AR

SMCS-3004, 5068, 5091 **i04549414**

NOTE	REF NO	GRAPHIC REF	PART NUMBER	QTY	PART NAME 1 2 3 4 5 6 (PRODUCT LEVEL)	SEE PAGE
	1	1	**264-4297**	1	SENSOR AS-TEMPERATURE (HYDRAULIC OIL)	
Y	2	1	**359-7232**	1	FILTER GP-OIL (HYDRAULIC)	363
M	3	1	**8T-4137**	3	BOLT (M10X1.5X20-MM)	
	4	1	*148-8318*	1	CONNECTOR AS	
		1	**3K-0360**	1	SEAL-O-RING	
		1	**6V-8397**	1	SEAL-O-RING	
		1	**6V-8634**	1	CONNECTOR	
	5	1	*148-8347*	1	ELBOW AS	
		1	**3D-2824**	1	SEAL-O-RING	
		1	**6V-9007**	1	ELBOW	
		1	**6V-9746**	1	SEAL-O-RING	
	6	1	**3K-0360**	1	SEAL-O-RING	
B	7	1	**5K-9090**	1	SEAL-O-RING	
B	8	1	**6V-9829**	1	CAP AS	
B	9	1	**6V-9833**	1	CAP AS	
	10	1	**7X-7729**	3	WASHER (11X25X3-MM THK)	
	11	1	**377-3861**	1	FILM-IDENTIFICATION (HYDRAULIC OIL FILTER)	

B-USE AS REQUIRED
M-METRIC PART
Y-SEPARATE ILLUSTRATION

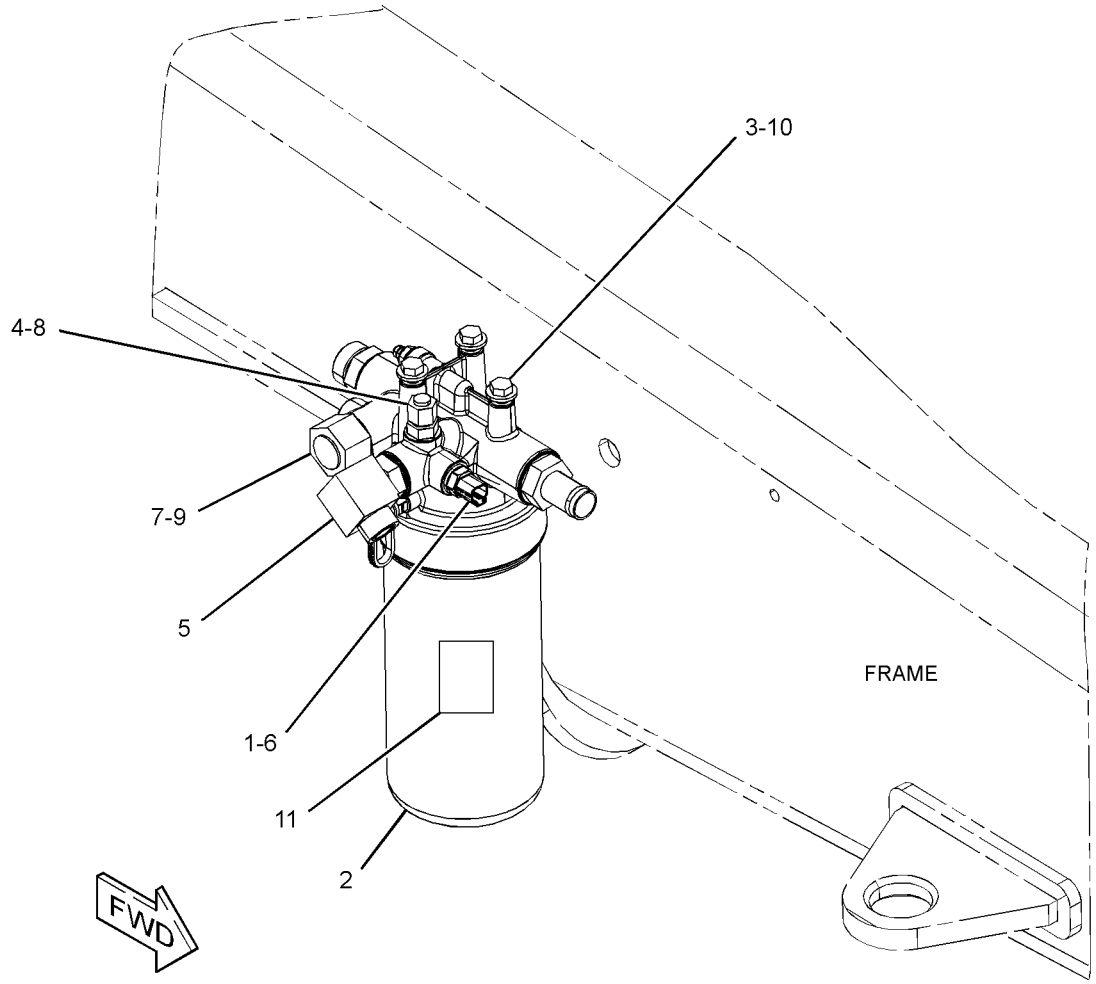

GRAPHIC #1 **<END>** g02838236

HYDRAULIC SYSTEM

359-7232 FILTER GP-OIL

S/N: SEJ1-UP

PART OF 337-9740 FILTER & MTG GP-OIL

SMCS-5068 **i04739122**

NOTE	REF NO	GRAPHIC REF	PART NUMBER	QTY	PART NAME 1 2 3 4 5 6 (PRODUCT LEVEL)	SEE PAGE
	1	1	**134-0404**	1	SWITCH AS-PRESSURE (HYDRAULIC OIL)	
	2	1	**362-1164**	1	HOUSING AS-FILTER	
	2A	1	**362-1163**	1	HOUSING-HYDRAULIC OIL FILTER	
		1	**2M-9780**	1	SEAL-O-RING	
		1	**6S-3002**	2	SEAL-O-RING	
		1	**9S-8006**	1	PLUG-O-RING	

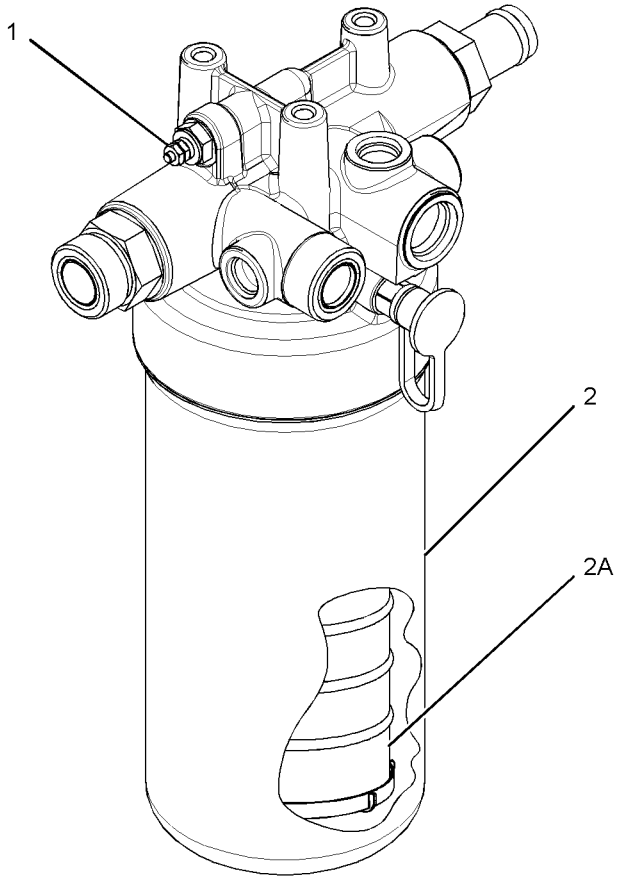

GRAPHIC #1 **<END>** g02838341

132-8769 FITTING GP-HYDRAULIC–QUICK DISCONNECT

S/N: SEJ1-UP

AN ATTACHMENT

SMCS-5057 **i01499420**

NOTE	REF NO	GRAPHIC REF	PART NUMBER	QTY	PART NAME 1 2 3 4 5 6 (PRODUCT LEVEL)	SEE PAGE
	1	1	**106-0406**	1	FITTING (QUICK DISCONNECT, MALE)	
	2	1	**106-0401**	1	FITTING (QUICK DISCONNECT, FEMALE)	

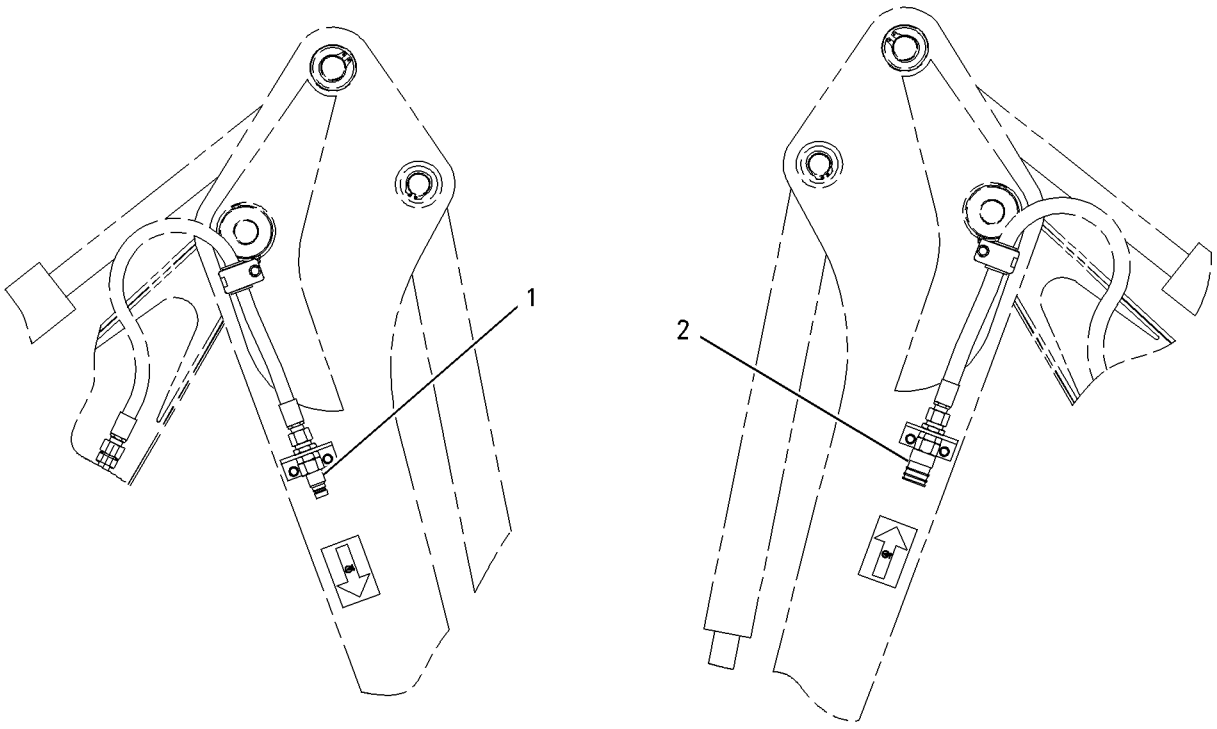

GRAPHIC #1 **<END>** g00778121

HYDRAULIC SYSTEM

340-1719 HYDRAULIC AR

S/N: SEJ1-UP

PART OF 367-5958 COMMON AR

SMCS-5050 **i04549416**

NOTE	PART NUMBER	QTY	PART NAME 1 2 3 4 5 6 (PRODUCT LEVEL)	SEE PAGE
Y	*341-6684*	1	CONTROL GP-SERVICE BRAKE	290
Y	*337-9740*	1	FILTER & MTG GP-OIL	362
Y	*337-9774*	1	LINES GP-PUMP	431
Y	*337-9777*	1	LINES GP-RETURN	433
Y	*337-9770*	1	LINES GP-PILOT (SIGNAL)	418
Y	*326-1803*	1	LINES GP-SWING	443
Y	*337-9699*	1	PUMP & MTG GP-HYDRAULIC	450
Y	*351-5888*	1	TANK & MTG GP-HYDRAULIC	452

Y-SEPARATE ILLUSTRATION

<END>

HYDRAULIC SYSTEM

337-9812 LINES GP-AUXILIARY HYDRAULIC—PARALLEL LIFT

S/N: SEJ1-UP
PART OF 373-4273 CONVERSION AR-QUICK COUPLER, 373-4271, 373-4275, 373-4277
VALVE AR-BANK 3
AN ATTACHMENT

SMCS-5057 **i04618170**

NOTE	REF NO	GRAPHIC REF	PART NUMBER	QTY	PART NAME 1 2 3 4 5 6 (PRODUCT LEVEL)	SEE PAGE
	1	1	*281-5969*	2	ELBOW AS	
					(EACH INCLUDES)	
		1	**6V-8398**	1	SEAL-O-RING	
		1	**6V-9796**	1	ELBOW	
		1	**7J-9108**	1	SEAL-O-RING	
I	2	1	**362-1590**	2	HOSE AS	
	3	1	**362-1595**	1	TUBE AS	
	4	1	**362-1600**	1	TUBE AS	
	5	1	**371-8714**	1	TUBE AS	
	6	1	**371-8715**	1	TUBE AS	
	7	1	*148-8382*	2	ELBOW AS	
					(EACH INCLUDES)	
		1	**3D-2824**	1	SEAL-O-RING	
		1	**7J-9108**	1	SEAL-O-RING	
		1	**8T-0404**	1	ELBOW	
	8	1	**5G-3676**	2	GROMMET	
	9	1	**5P-4116**	2	WASHER-HARD (8.8X20.5X2-MM THK)	
	10	1	**6V-8398**	4	SEAL-O-RING	
	11	1	**6V-9170**	2	NUT-BULKHEAD (1-14-THD)	
	12	1	**6V-9830**	2	CAP AS	
	13	1	**8T-1889**	2	CLIP (SLOT)	
	14	1	**8T-1890**	2	CLIP (TAB)	
M	15	1	**099-3649**	2	BOLT (M8X1.25X40-MM)	
	16	1	**9R-1004**	2	CLIP (TAB)	
	17	1	**9R-1005**	2	CLIP (SLOT)	

I-REFER TO HYDRAULIC INFORMATION SYSTEM
M-METRIC PART

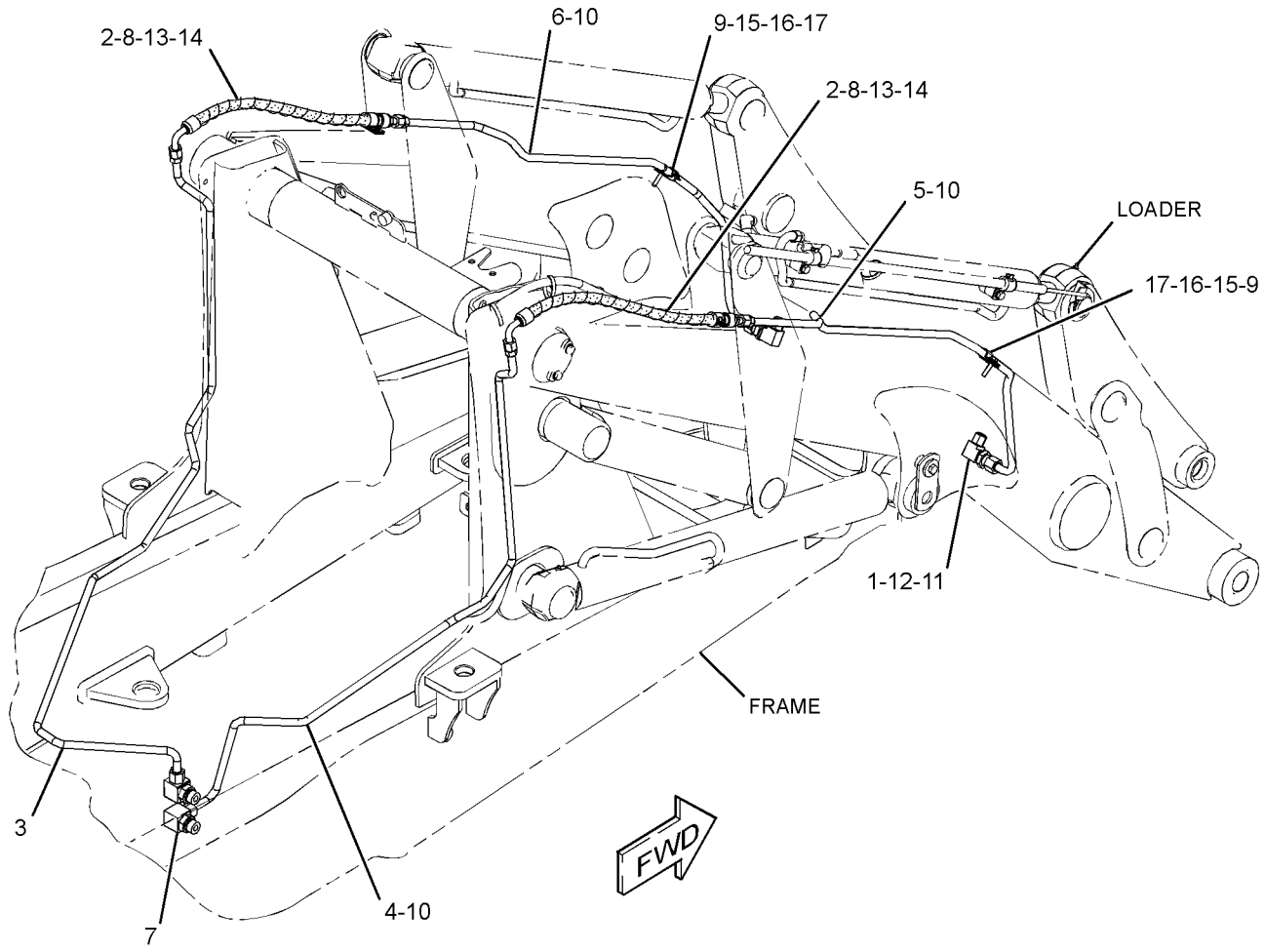

GRAPHIC #1 **<END>** g02798191

353-1490 LINES GP-AUXILIARY HYDRAULIC–EXTENDABLE STICK

S/N: SEJ1-UP

FOR USE WITH 340-1736–PAGE 1, 340-1737–PAGE 1, 132-8769–PAGE 364

AN ATTACHMENT

SMCS-5057 **i04577652**

NOTE	PART NUMBER	QTY	PART NAME 1 2 3 4 5 6 (PRODUCT LEVEL)	SEE PAGE
Y	*371-5095*	1	LINES GP-AUXILIARY HYDRAULIC (SIDESHIFT)	373
Y	*374-6861*	1	LINES GP-AUXILIARY HYDRAULIC (EXTENDABLE STICK)	375

Y-SEPARATE ILLUSTRATION

<END>

353-1494 LINES GP-AUXILIARY HYDRAULIC

S/N: SEJ1-UP
AN ATTACHMENT

SMCS-5057 **i04547482**

NOTE	REF NO	GRAPHIC REF	PART NUMBER	QTY	PART NAME 1 2 3 4 5 6 (PRODUCT LEVEL)	SEE PAGE
	1	1	*268-1548*	2	CONNECTOR AS	
					(EACH INCLUDES)	
		1	**6V-8398**	1	SEAL-O-RING	
		1	**7J-9108**	1	SEAL-O-RING	
		1	**268-1547**	1	CONNECTOR	
I	2	1	**324-7602**	1	HOSE AS	
I	3	1	**324-7603**	1	HOSE AS	
	4	1	*148-8364*	1	ELBOW AS	
		1	**3K-0360**	1	SEAL-O-RING	
		1	**6V-8398**	1	SEAL-O-RING	
		1	**6V-8625**	1	ELBOW	
	5	1	**6V-9170**	2	NUT-BULKHEAD (1-14-THD)	

I-REFER TO HYDRAULIC INFORMATION SYSTEM

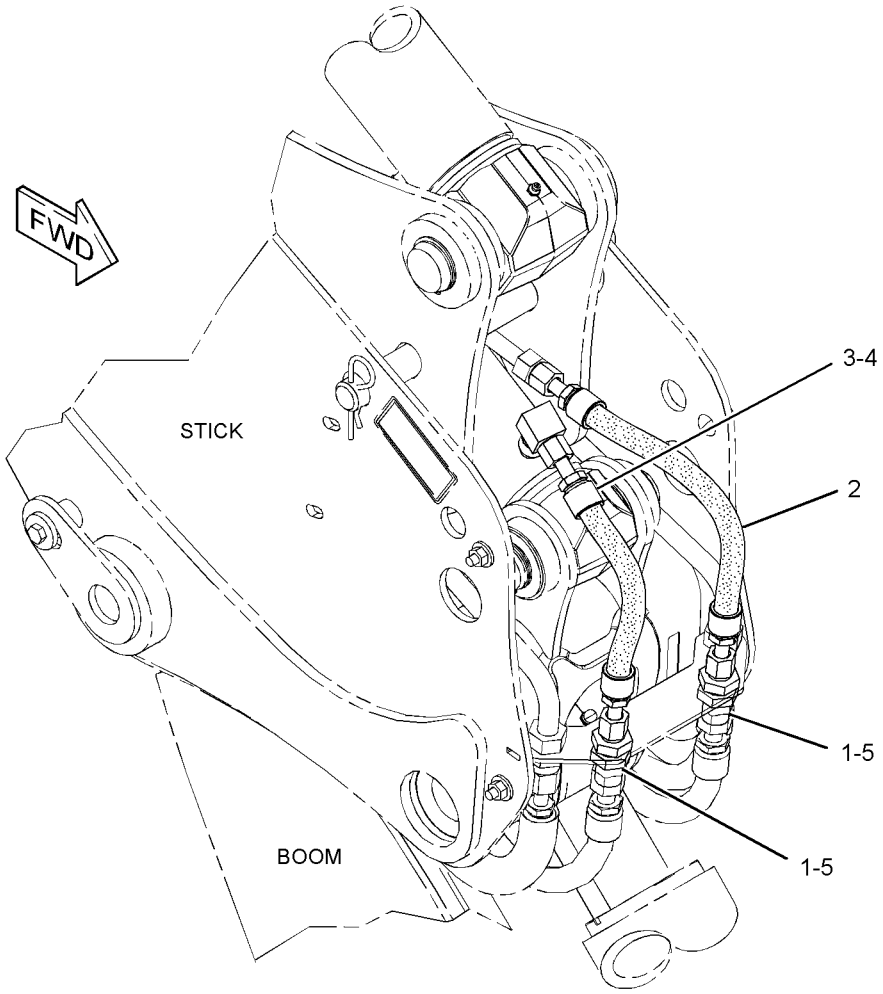

GRAPHIC #1 **<END>** g02773942

HYDRAULIC SYSTEM

353-1495 LINES GP-AUXILIARY HYDRAULIC

S/N: SEJ1-UP

AN ATTACHMENT

SMCS-5057 **i04552074**

NOTE	REF NO	GRAPHIC REF	PART NUMBER	QTY	PART NAME 1 2 3 4 5 6 (PRODUCT LEVEL)	SEE PAGE
	1	1	*268-1548*	2	CONNECTOR AS	
					(EACH INCLUDES)	
		1	**6V-8398**	1	SEAL-O-RING	
		1	**7J-9108**	1	SEAL-O-RING	
		1	**268-1547**	1	CONNECTOR	
I	2	1	**328-6706**	1	HOSE AS	
I	3	1	**332-3886**	1	HOSE AS	
	4	1	*148-8364*	1	ELBOW AS	
		1	**3K-0360**	1	SEAL-O-RING	
		1	**6V-8398**	1	SEAL-O-RING	
		1	**6V-8625**	1	ELBOW	
	5	1	**6V-9170**	2	NUT-BULKHEAD (1-14-THD)	

I-REFER TO HYDRAULIC INFORMATION SYSTEM

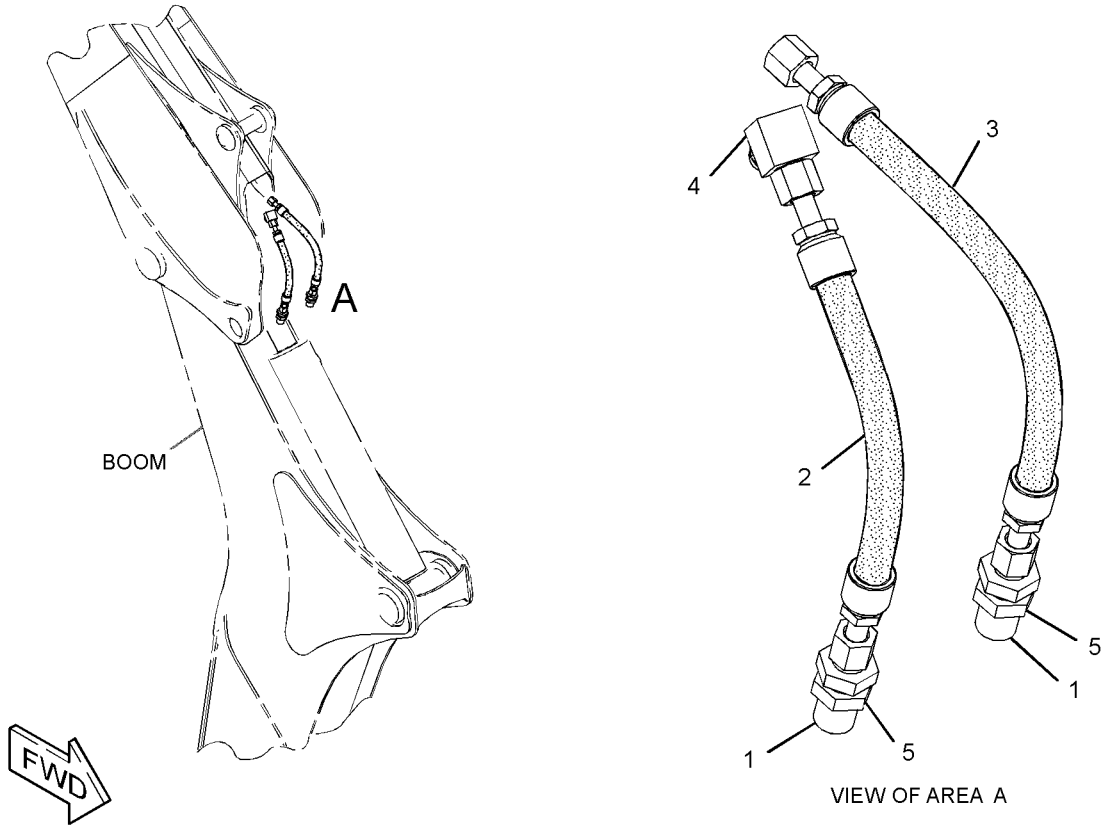

GRAPHIC #1 **<END>** g02825317

365-3335 LINES GP-AUXILIARY HYDRAULIC–
STANDARD STICK, 1-WAY
S/N: SEJ1-UP
PART OF 364-3389 LINES GP-BACKHOE AUXILIARY
AN ATTACHMENT

SMCS-5057 **i04549494**

NOTE	REF NO	GRAPHIC REF	PART NUMBER	QTY	PART NAME 1 2 3 4 5 6 (PRODUCT LEVEL)	SEE PAGE
	1	1	**123-7637**	2	CAP	
	2	1	*241-6226*	1	TEE AS	
		1	**6V-8398**	1	SEAL-O-RING	
		1	**6V-9746**	1	SEAL-O-RING	
		1	**7J-9108**	1	SEAL-O-RING	
		1	**241-6225**	1	TEE	
	3	1	**241-8450**	2	FILM-WARNING (HYD PRESS, READ OMM, INTL)	
	4	1	**281-4726**	2	FILM-INSTRUCTION (OIL FLOW DIRECTION)	
	5	1	**321-6387**	1	TUBE AS	
I	6	1	**324-7599**	1	HOSE AS	
I	7	1	**324-7611**	1	HOSE AS	
	8	1	**327-8298**	1	TUBE AS	
	9	1	**329-0143**	1	TUBE AS	
	10	1	**331-3779**	1	PLATE	
I	11	1	**331-6299**	1	HOSE AS	
	12	1	**332-1829**	1	PLATE	
	13	1	*150-3052*	1	CONNECTOR AS	
		1	**5K-9090**	1	SEAL-O-RING	
		1	**7M-8485**	1	SEAL-O-RING	
		1	**107-6709**	1	CONNECTOR	
	14	1	*150-3053*	1	CONNECTOR AS	
		1	**6V-9746**	1	SEAL-O-RING	
		1	**7M-8485**	1	SEAL-O-RING	
		1	**108-3872**	1	CONNECTOR	
	15	1	**2P-1293**	1	LOCKNUT (1-3/16-12-THD)	
	16	1	**6V-8398**	1	SEAL-O-RING	
	17	1	**6V-9170**	1	NUT-BULKHEAD (1-14-THD)	
	18	1	**6V-9172**	1	NUT (1-7/16-12-THD)	
	19	1	**6V-9746**	3	SEAL-O-RING	
	20	1	**6V-9830**	1	CAP AS	
	21	1	**8K-1117**	1	CLAMP	
	22	1	**8T-1889**	2	CLIP (SLOT)	
	23	1	**8T-1890**	2	CLIP (TAB)	
	24	1	**8T-4121**	8	WASHER-HARD (11X21X2.5-MM THK)	
M	25	1	**8T-4133**	4	NUT (M10X1.5-THD)	
M	26	1	**8T-4136**	1	BOLT (M10X1.5X25-MM)	
M	27	1	**8T-4195**	3	BOLT (M10X1.5X30-MM)	

I-REFER TO HYDRAULIC INFORMATION SYSTEM
M-METRIC PART

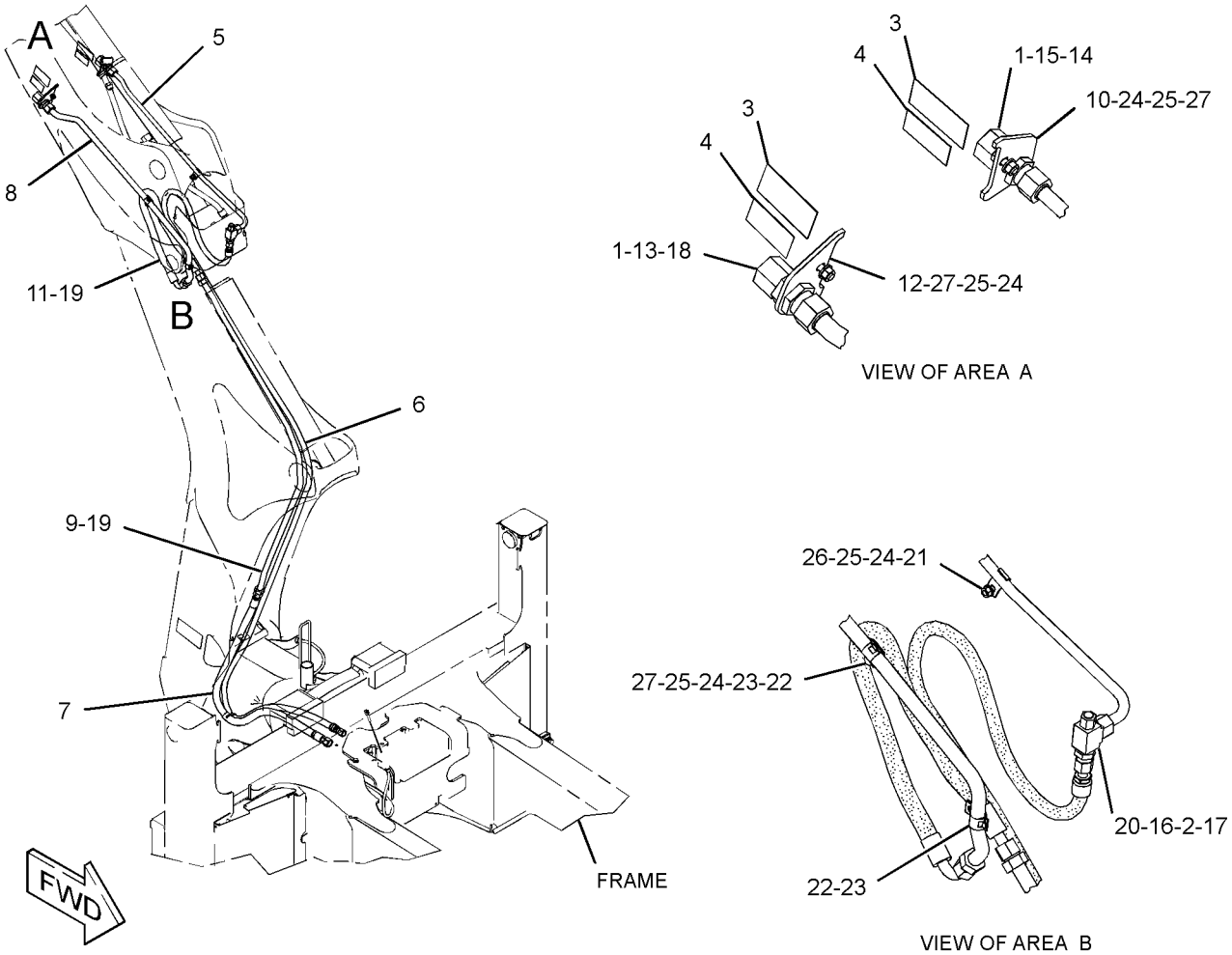

GRAPHIC #1 **<END>** g02764177

HYDRAULIC SYSTEM

371-5095 LINES GP-AUXILIARY HYDRAULIC—SIDESHIFT

S/N: SEJ1-UP

PART OF 353-1490 LINES GP-AUXILIARY HYDRAULIC, 353-1491, 353-1492, 353-1493, 364-3389 LINES GP-BACKHOE AUXILIARY AN ATTACHMENT

SMCS-5057 **i04549459**

NOTE	REF NO	GRAPHIC REF	PART NUMBER	QTY	PART NAME 1 2 3 4 5 6 (PRODUCT LEVEL)	SEE PAGE
	1	1	*313-3477*	2	TEE AS	
					(EACH INCLUDES)	
		1	**5K-9090**	1	SEAL-O-RING	
		1	**7J-9108**	2	SEAL-O-RING	
		1	**313-3476**	1	TEE	
	2	1	**321-3096**	1	TUBE AS	
	3	1	**321-3101**	1	BRACKET	
I	4	1	**321-7303**	2	HOSE AS	
	5	1	**368-4842**	1	TUBE AS	
	6	1	**371-5659**	1	HOSE AS	
	7	1	**2P-1293**	1	LOCKNUT (1-3/16-12-THD)	
	8	1	**5K-9090**	1	SEAL-O-RING	
	9	1	**6V-1249**	2	GROMMET	
	10	1	**6V-9746**	1	SEAL-O-RING	
	11	1	**8T-1889**	1	CLIP (SLOT)	
	12	1	**8T-1890**	1	CLIP (TAB)	
	13	1	**8T-4121**	1	WASHER-HARD (11X21X2.5-MM THK)	
M	14	1	**8T-4196**	1	BOLT (M10X1.5X35-MM)	
	15	1	**8T-4224**	2	WASHER-HARD (8.8X16X2-MM THK)	
M	16	1	**8T-4908**	2	BOLT (M8X1.25X25-MM)	

I-REFER TO HYDRAULIC INFORMATION SYSTEM
M-METRIC PART

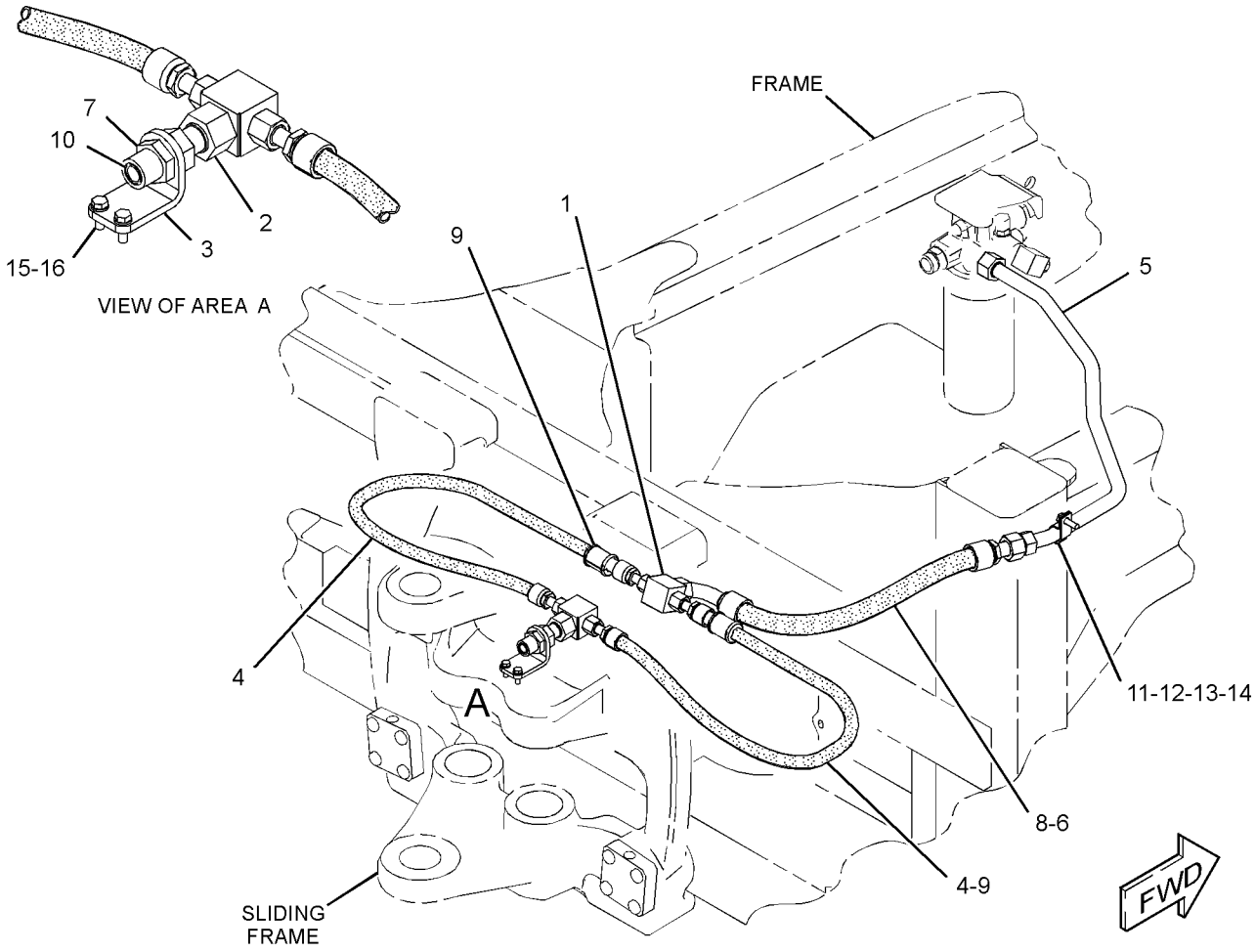

GRAPHIC #1 **<END>** g02816156

374-6861 LINES GP-AUXILIARY HYDRAULIC–
EXTENDABLE STICK, 1-WAY
S/N: SEJ1-UP
PART OF 353-1490 LINES GP-AUXILIARY HYDRAULIC
AN ATTACHMENT

SMCS-5057 **i04553436**

NOTE	REF NO	GRAPHIC REF	PART NUMBER	QTY	PART NAME 1 2 3 4 5 6 (PRODUCT LEVEL)	SEE PAGE
	1	1	**123-7637**	2	CAP	
	2	1	*241-6226*	1	TEE AS	
		1	**6V-8398**	1	SEAL-O-RING	
		1	**6V-9746**	1	SEAL-O-RING	
		1	**7J-9108**	1	SEAL-O-RING	
		1	**241-6225**	1	TEE	
	3	1	**241-8450**	2	FILM-WARNING (HYD PRESS, READ OMM, INTL)	
	4	1	**281-4726**	2	FILM-INSTRUCTION (OIL FLOW DIRECTION)	
	5	1	**321-6387**	1	TUBE AS	
I	6	1	**324-7611**	1	HOSE AS	
	7	1	**327-8298**	1	TUBE AS	
	8	1	**329-0143**	1	TUBE AS	
	9	1	**331-3779**	1	PLATE	
I	10	1	**331-6299**	1	HOSE AS	
I	11	1	**331-7306**	1	HOSE AS	
	12	1	**332-1829**	1	PLATE	
	13	1	*150-3052*	1	CONNECTOR AS	
		1	**5K-9090**	1	SEAL-O-RING	
		1	**7M-8485**	1	SEAL-O-RING	
		1	**107-6709**	1	CONNECTOR	
	14	1	*150-3053*	1	CONNECTOR AS	
		1	**6V-9746**	1	SEAL-O-RING	
		1	**7M-8485**	1	SEAL-O-RING	
		1	**108-3872**	1	CONNECTOR	
	15	1	**2P-1293**	1	LOCKNUT (1-3/16-12-THD)	
	16	1	**6V-8398**	1	SEAL-O-RING	
	17	1	**6V-9170**	2	NUT-BULKHEAD (1-14-THD)	
	18	1	**6V-9172**	1	NUT (1-7/16-12-THD)	
	19	1	**6V-9746**	3	SEAL-O-RING	
	20	1	**8K-1117**	1	CLAMP	
	21	1	**8T-1889**	2	CLIP (SLOT)	
	22	1	**8T-1890**	2	CLIP (TAB)	
	23	1	**8T-4121**	8	WASHER-HARD (11X21X2.5-MM THK)	
M	24	1	**8T-4133**	4	NUT (M10X1.5-THD)	
M	25	1	**8T-4136**	1	BOLT (M10X1.5X25-MM)	
M	26	1	**8T-4195**	3	BOLT (M10X1.5X30-MM)	
	27	1	*268-1548*	1	CONNECTOR AS	
		1	**6V-8398**	1	SEAL-O-RING	
		1	**7J-9108**	1	SEAL-O-RING	
		1	**268-1547**	1	CONNECTOR	
I	28	1	**324-7603**	1	HOSE AS	
	29	1	*148-8364*	1	ELBOW AS	
		1	**3K-0360**	1	SEAL-O-RING	
		1	**6V-8398**	1	SEAL-O-RING	
		1	**6V-8625**	1	ELBOW	

I-REFER TO HYDRAULIC INFORMATION SYSTEM
M-METRIC PART

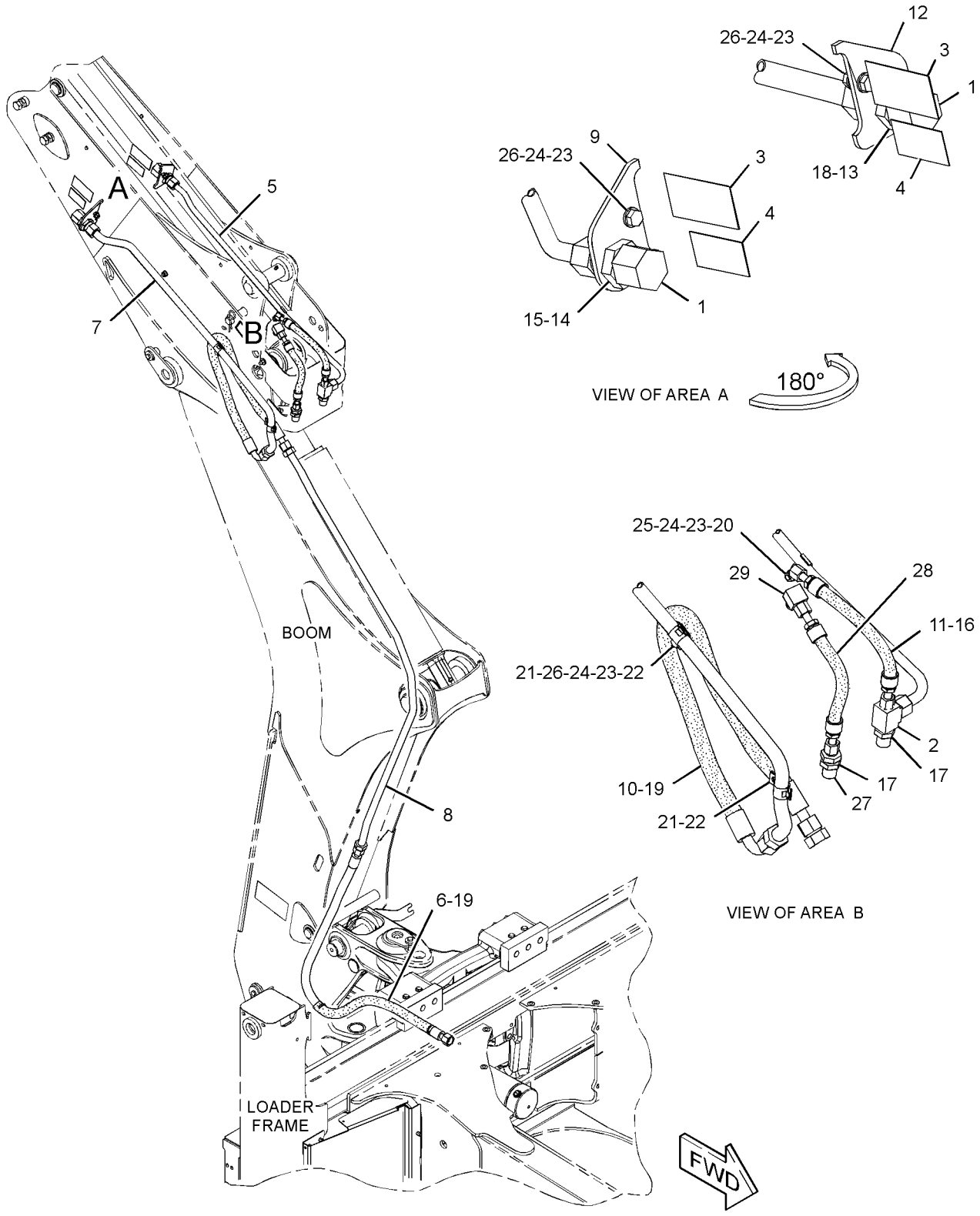

GRAPHIC #1 **<END>** g02829699

HYDRAULIC SYSTEM

321-7231 LINES GP-BACKHOE

S/N: SEJ1-UP

PART OF 340-1736, 340-1737, 340-1738 BACKHOE AR-EXTENDABLE STICK, 340-1735 BACKHOE AR-STANDARD STICK

AN ATTACHMENT

SMCS-5057 **i03871531**

NOTE	REF NO	GRAPHIC REF	PART NUMBER	QTY	PART NAME 1 2 3 4 5 6 (PRODUCT LEVEL)	SEE PAGE
	1	1	**6U-0456**	12	STRAP	
	2	1	*260-9214*	5	CONNECTOR AS	
					(EACH INCLUDES)	
		1	**3D-2824**	1	SEAL-O-RING	
		1	**7J-9108**	1	SEAL-O-RING	
		1	**260-9213**	1	CONNECTOR	
	3	1	**319-6906**	4	HOSE AS	
I	4	1	**319-6907**	2	HOSE AS	
	5	1	**319-6908**	2	HOSE AS	
	6	1	**320-8438**	4	CLAMP	
	7	1	**323-9083**	1	TUBE AS	
	8	1	**323-9084**	1	TUBE AS	
	9	1	**323-9085**	1	TUBE AS	
	10	1	**323-9086**	1	TUBE AS	
	11	1	**333-0739**	4	PLATE	
	12	1	*344-2170*	1	FITTING & MTG GP-HYDRAULIC	
		1	**6V-8398**	2	SEAL-O-RING	
		1	**7J-9108**	6	SEAL-O-RING	
		1	**327-0223**	1	FITTING & MTG GP-HYDRAULIC	
	13	1	*344-2171*	1	FITTING & MTG GP-HYDRAULIC	
		1	**6V-8398**	2	SEAL-O-RING	
		1	**7J-9108**	6	SEAL-O-RING	
		1	**327-0222**	1	FITTING & MTG GP-HYDRAULIC	
	14	1	*148-8328*	2	CONNECTOR AS	
					(EACH INCLUDES)	
		1	**3D-2824**	1	SEAL-O-RING	
		1	**6V-8398**	1	SEAL-O-RING	
		1	**6V-8633**	1	CONNECTOR	
	15	1	*148-8341*	1	CONNECTOR AS	
		1	**3D-2824**	1	SEAL-O-RING	
		1	**6V-8713**	1	CONNECTOR	
		1	**7J-9108**	1	SEAL-O-RING	
M	16	1	**5C-2890**	5	NUT (M6X1-THD)	
	17	1	**6V-8398**	2	SEAL-O-RING	
B	18	1	**6V-9831**	2	CAP AS	
	19	1	**7J-9108**	2	SEAL-O-RING	
M	20	1	**8T-3844**	6	BOLT (M6X1X70-MM)	
	21	1	**8T-4205**	12	WASHER-HARD (7.2X14.5X2-MM THK)	
	22	1	**8T-4224**	4	WASHER-HARD (8.8X16X2-MM THK)	
M	23	1	**8T-4908**	4	BOLT (M8X1.25X25-MM)	

B-USE AS REQUIRED
I-REFER TO HYDRAULIC INFORMATION SYSTEM
M-METRIC PART

321-7231 **LINES GP-BACKHOE** *(contd.)* **i03871531**

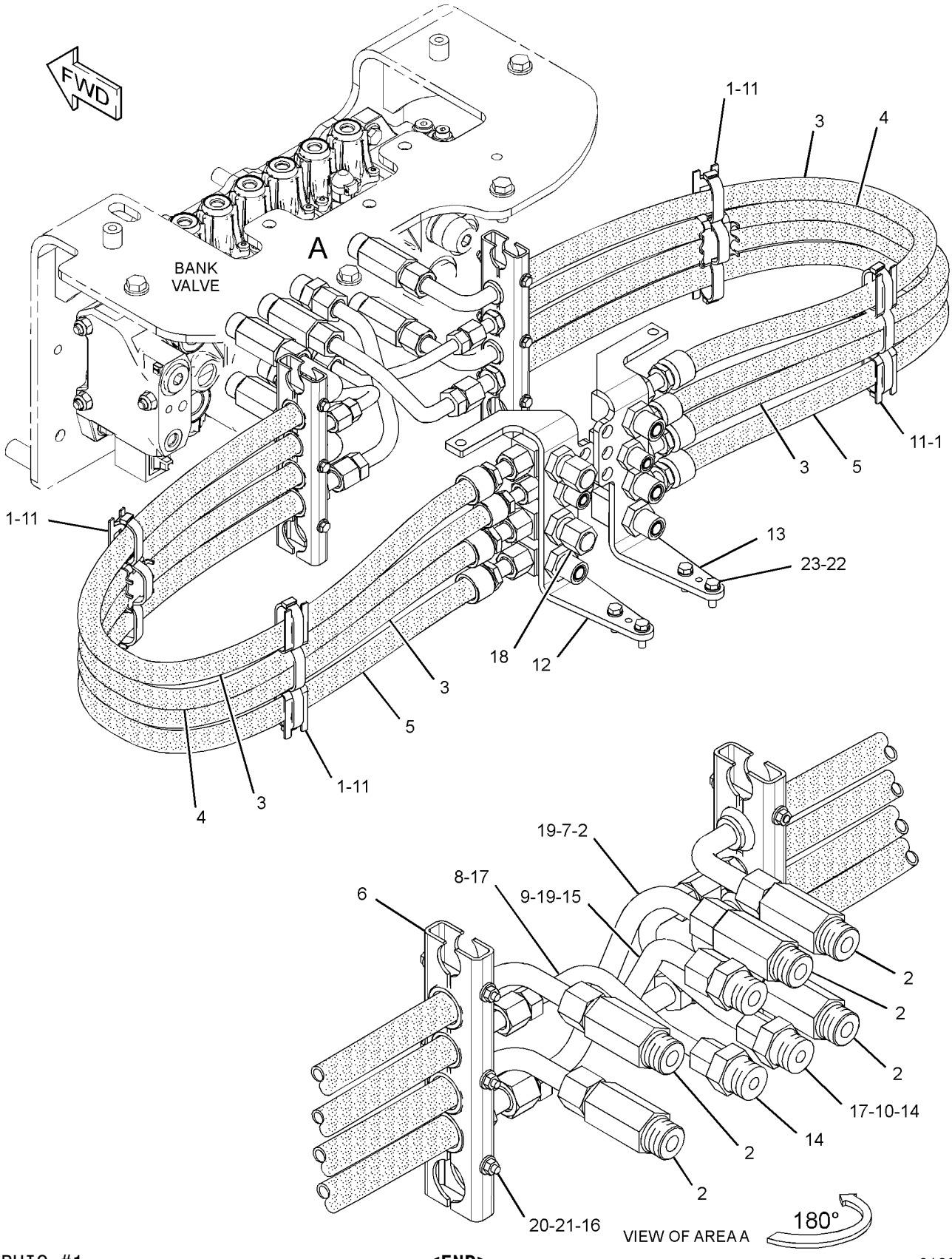

GRAPHIC #1 **<END>** g01989253

353-1491 LINES GP-BACKHOE AUXILIARY–
EXTENDABLE STICK, 1-WAY
S/N: SEJ1-UP
FOR USE WITH 340-1738–PAGE 2, 132-8769–PAGE 364
AN ATTACHMENT

SMCS-5057 **i04549458**

NOTE	PART NUMBER	QTY	PART NAME 1 2 3 4 5 6 (PRODUCT LEVEL)	SEE PAGE
Y	*371-5095*	1	LINES GP-AUXILIARY HYDRAULIC (SIDESHIFT)	373
Y	*374-6862*	1	LINES GP-BACKHOE AUXILIARY (1-WAY)	381

Y-SEPARATE ILLUSTRATION

<END>

353-1492 LINES GP-BACKHOE AUXILIARY–
EXTENDABLE STICK, 2-WAY
S/N: SEJ1-UP
FOR USE WITH 340-1736–PAGE 1, 340-1737–PAGE 1, 132-8769–PAGE 364
AN ATTACHMENT

SMCS-5057 **i04549497**

NOTE	PART NUMBER	QTY	PART NAME 1 2 3 4 5 6 (PRODUCT LEVEL)	SEE PAGE
Y	*371-5095*	1	LINES GP-AUXILIARY HYDRAULIC (SIDESHIFT)	373
Y	*374-6863*	1	LINES GP-BACKHOE AUXILIARY (EXTENDABLE STICK, 2-WAY)	383

Y-SEPARATE ILLUSTRATION

<END>

353-1493 LINES GP-BACKHOE AUXILIARY–
EXTENDABLE STICK, 1-WAY
S/N: SEJ1-UP
FOR USE WITH 340-1738–PAGE 2, 132-8769–PAGE 364
AN ATTACHMENT

SMCS-5057 **i04549504**

NOTE	PART NUMBER	QTY	PART NAME 1 2 3 4 5 6 (PRODUCT LEVEL)	SEE PAGE
Y	*371-5095*	1	LINES GP-AUXILIARY HYDRAULIC (SIDESHIFT)	373
Y	*374-6864*	1	LINES GP-BACKHOE AUXILIARY (EXTENDABLE STICK, 2-WAY)	386

Y-SEPARATE ILLUSTRATION

<END>

HYDRAULIC SYSTEM

364-3389 LINES GP-BACKHOE AUXILIARY–
STANDARD STICK, 1-WAY
S/N: SEJ1-UP

FOR USE WITH 340-1735–PAGE 2, 132-8769–PAGE 364

AN ATTACHMENT

SMCS-5057 **i04549493**

NOTE	PART NUMBER	QTY	PART NAME 1 2 3 4 5 6 (PRODUCT LEVEL)	SEE PAGE
Y	*365-3335*	1	LINES GP-AUXILIARY HYDRAULIC (STANDARD STICK, 1-WAY)	371
Y	*371-5095*	1	LINES GP-AUXILIARY HYDRAULIC (SIDESHIFT)	373

Y-SEPARATE ILLUSTRATION

<END>

HYDRAULIC SYSTEM

374-6862 LINES GP-BACKHOE AUXILIARY—1-WAY

S/N: SEJ1-UP

PART OF 353-1491 LINES GP-BACKHOE AUXILIARY

AN ATTACHMENT

SMCS-5057 **i04549460**

NOTE	REF NO	GRAPHIC REF	PART NUMBER	QTY	PART NAME 1 2 3 4 5 6 (PRODUCT LEVEL)	SEE PAGE
	1	1	**123-7637**	2	CAP	
	2	1	*241-6226*	1	TEE AS	
		1	**6V-8398**	1	SEAL-O-RING	
		1	**6V-9746**	1	SEAL-O-RING	
		1	**7J-9108**	1	SEAL-O-RING	
		1	**241-6225**	1	TEE	
	3	1	**241-8450**	2	FILM-WARNING (HYD PRESS, READ OMM, INTL)	
	4	1	**281-4726**	2	FILM-INSTRUCTION (OIL FLOW DIRECTION)	
	5	1	**327-8299**	1	TUBE AS	
	6	1	**327-9079**	1	TUBE AS	
	7	1	**327-9080**	1	TUBE AS	
I	8	1	**327-9081**	1	HOSE AS	
I	9	1	**328-6681**	1	HOSE AS	
	10	1	**331-3779**	1	PLATE	
	11	1	**332-1829**	1	PLATE	
I	12	1	**337-2962**	1	HOSE AS	
	13	1	*150-3052*	1	CONNECTOR AS	
		1	**5K-9090**	1	SEAL-O-RING	
		1	**7M-8485**	1	SEAL-O-RING	
		1	**107-6709**	1	CONNECTOR	
	14	1	*150-3053*	1	CONNECTOR AS	
		1	**6V-9746**	1	SEAL-O-RING	
		1	**7M-8485**	1	SEAL-O-RING	
		1	**108-3872**	1	CONNECTOR	
	15	1	**2P-1293**	1	LOCKNUT (1-3/16-12-THD)	
	16	1	**6V-9170**	2	NUT-BULKHEAD (1-14-THD)	
	17	1	**6V-9172**	1	NUT (1-7/16-12-THD)	
	18	1	**6V-9746**	3	SEAL-O-RING	
	19	1	**8K-1117**	1	CLAMP	
	20	1	**8T-1889**	2	CLIP (SLOT)	
	21	1	**8T-1890**	2	CLIP (TAB)	
	22	1	**8T-4121**	8	WASHER-HARD (11X21X2.5-MM THK)	
M	23	1	**8T-4133**	4	NUT (M10X1.5-THD)	
M	24	1	**8T-4136**	1	BOLT (M10X1.5X25-MM)	
M	25	1	**8T-4195**	3	BOLT (M10X1.5X30-MM)	
	26	1	*268-1548*	1	CONNECTOR AS	
		1	**6V-8398**	1	SEAL-O-RING	
		1	**7J-9108**	1	SEAL-O-RING	
		1	**268-1547**	1	CONNECTOR	
I	27	1	**328-6706**	1	HOSE AS	
	28	1	*148-8364*	1	ELBOW AS	
		1	**3K-0360**	1	SEAL-O-RING	
		1	**6V-8398**	1	SEAL-O-RING	
		1	**6V-8625**	1	ELBOW	

I-REFER TO HYDRAULIC INFORMATION SYSTEM
M-METRIC PART

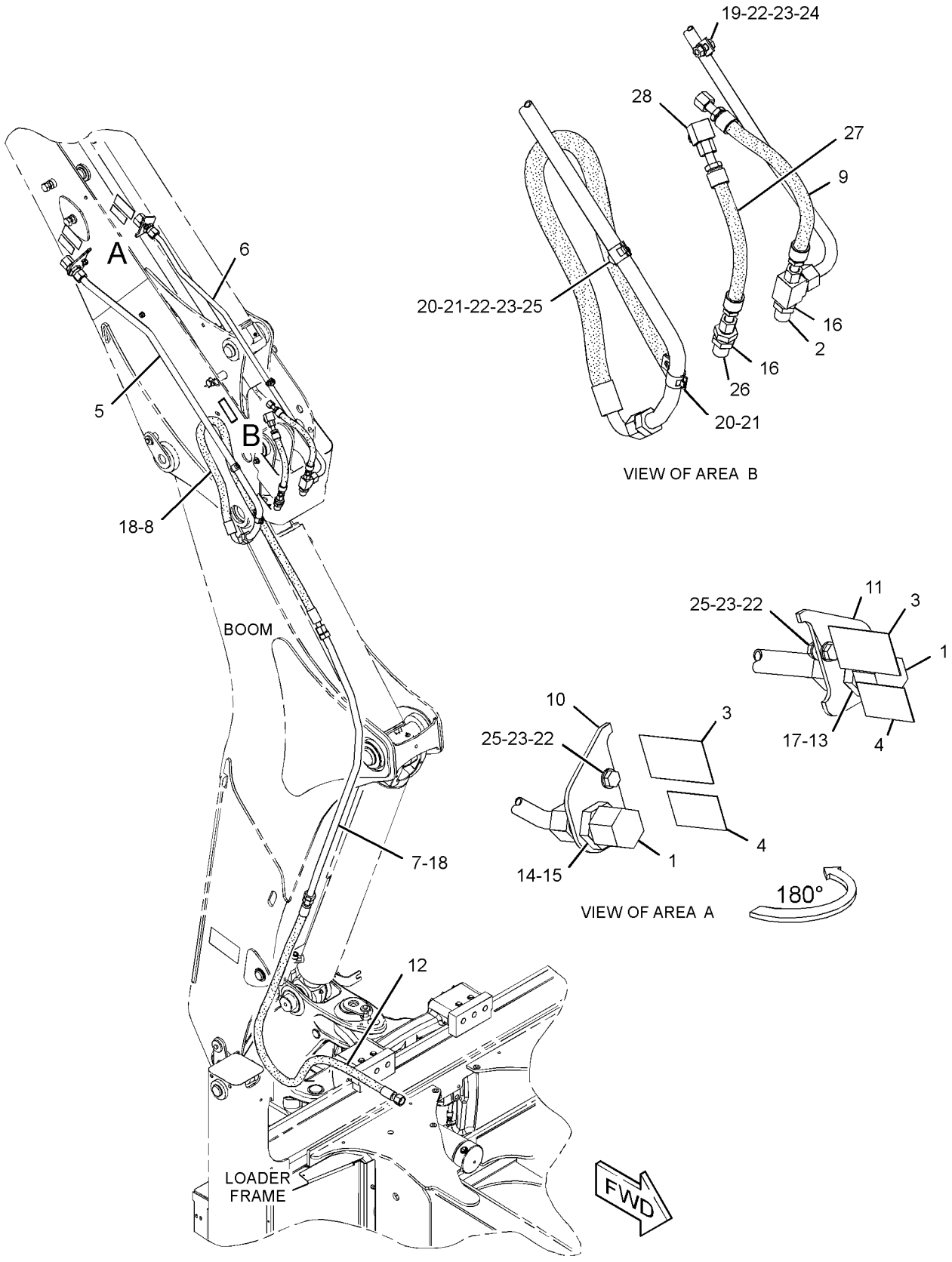

GRAPHIC #1 **<END>** g02829536

HYDRAULIC SYSTEM

374-6863 LINES GP-BACKHOE AUXILIARY–
EXTENDABLE STICK, 2-WAY
S/N: SEJ1-UP
PART OF 353-1492 LINES GP-BACKHOE AUXILIARY
AN ATTACHMENT

SMCS-5057 **i04549498**

NOTE	REF NO	GRAPHIC REF	PART NUMBER	QTY	PART NAME 1 2 3 4 5 6 (PRODUCT LEVEL)	SEE PAGE
	1	1	**123-7637**	3	CAP	
	2	1	**171-1357**	1	CONNECTOR AS	
		1	**3K-0360**	1	SEAL-O-RING	
		1	**7J-9108**	1	SEAL-O-RING	
		1	**160-5083**	1	CONNECTOR	
	3	1	*241-6226*	1	TEE AS	
		1	**6V-8398**	1	SEAL-O-RING	
		1	**6V-9746**	1	SEAL-O-RING	
		1	**7J-9108**	1	SEAL-O-RING	
		1	**241-6225**	1	TEE	
	4	1	**241-8450**	2	FILM-WARNING (HYD PRESS, READ OMM, INTL)	
	5	1	**269-2150**	1	FILM-INSTRUCTION (AUXILIARY CONTROL VALVE)	
	6	1	**281-4726**	2	FILM-INSTRUCTION (OIL FLOW DIRECTION)	
	7	1	**321-6383**	1	TUBE AS	
	8	1	**321-6387**	1	TUBE AS	
I	9	1	**324-7611**	1	HOSE AS	
I	10	1	**324-7612**	1	HOSE AS	
	11	1	**327-8298**	1	TUBE AS	
	12	1	**329-0143**	1	TUBE AS	
	13	1	**331-3770**	1	PLATE	
	14	1	**331-3779**	1	PLATE	
I	15	1	**331-6299**	1	HOSE AS	
I	16	1	**331-7306**	1	HOSE AS	
	17	1	**333-1320**	1	VALVE-MANUAL	
	18	1	*148-8311*	1	ADAPTER AS	
		1	**3K-0360**	1	SEAL-O-RING	
		1	**8T-1715**	1	ADAPTER	
	19	1	*148-8340*	1	CONNECTOR AS	
		1	**3K-0360**	1	SEAL-O-RING	
		1	**6V-8398**	1	SEAL-O-RING	
		1	**6V-8639**	1	CONNECTOR	
	20	1	*148-8359*	1	ELBOW AS	
		1	**3K-0360**	1	SEAL-O-RING	
		1	**6V-9746**	1	SEAL-O-RING	
		1	**6V-9877**	1	ELBOW	
	21	1	*150-3052*	1	CONNECTOR AS	
		1	**5K-9090**	1	SEAL-O-RING	
		1	**7M-8485**	1	SEAL-O-RING	
		1	**107-6709**	1	CONNECTOR	
	22	1	*150-3053*	2	CONNECTOR AS	
					(EACH INCLUDES)	
		1	**6V-9746**	1	SEAL-O-RING	
		1	**7M-8485**	1	SEAL-O-RING	
		1	**108-3872**	1	CONNECTOR	
	23	1	**2P-1293**	2	LOCKNUT (1-3/16-12-THD)	
	24	1	**6V-9170**	2	NUT-BULKHEAD (1-14-THD)	
	25	1	**6V-9172**	1	NUT (1-7/16-12-THD)	
	26	1	**6V-9746**	3	SEAL-O-RING	
	27	1	**8K-1117**	2	CLAMP	
	28	1	**8T-1889**	2	CLIP (SLOT)	
	29	1	**8T-1890**	2	CLIP (TAB)	
	30	1	**8T-4121**	10	WASHER-HARD (11X21X2.5-MM THK)	
M	31	1	**8T-4133**	5	NUT (M10X1.5-THD)	
M	32	1	**8T-4136**	1	BOLT (M10X1.5X25-MM)	

374-6863 LINES GP-BACKHOE AUXILIARY *(contd.)* i04549498

NOTE	REF NO	GRAPHIC REF	PART NUMBER	QTY	PART NAME 1 2 3 4 5 6 (PRODUCT LEVEL)	SEE PAGE
M	33	1	**8T-4195**	4	BOLT (M10X1.5X30-MM)	
	34	1	*148-8364*	1	ELBOW AS	
		1	**3K-0360**	1	SEAL-O-RING	
		1	**6V-8398**	1	SEAL-O-RING	
		1	**6V-8625**	1	ELBOW	

I-REFER TO HYDRAULIC INFORMATION SYSTEM
M-METRIC PART

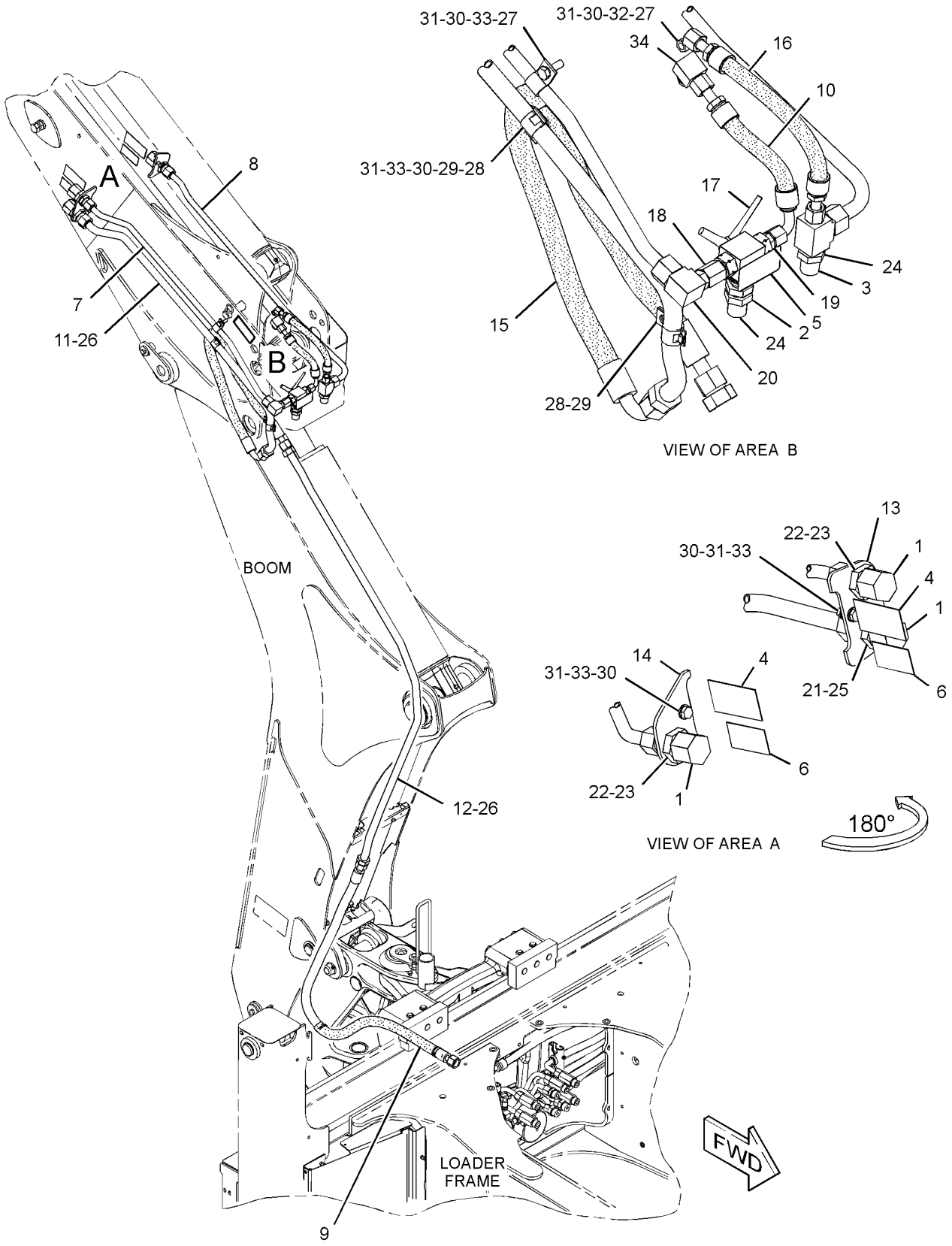

GRAPHIC #1 **<END>** g02828577

HYDRAULIC SYSTEM

374-6864 LINES GP-BACKHOE AUXILIARY–
EXTENDABLE STICK, 2-WAY
S/N: SEJ1-UP

PART OF 353-1493 LINES GP-BACKHOE AUXILIARY

AN ATTACHMENT

SMCS-5057 **i04549501**

NOTE	REF NO	GRAPHIC REF	PART NUMBER	QTY	PART NAME 1 2 3 4 5 6 (PRODUCT LEVEL)	SEE PAGE
	1	1	**123-7637**	3	CAP	
	2	1	*171-1357*	1	CONNECTOR AS	
		1	**3K-0360**	1	SEAL-O-RING	
		1	**7J-9108**	1	SEAL-O-RING	
		1	**160-5083**	1	CONNECTOR	
	3	1	*241-6226*	1	TEE AS	
		1	**6V-8398**	1	SEAL-O-RING	
		1	**6V-9746**	1	SEAL-O-RING	
		1	**7J-9108**	1	SEAL-O-RING	
		1	**241-6225**	1	TEE	
	4	1	**241-8450**	2	FILM-WARNING (HYD PRESS, READ OMM, INTL)	
	5	1	**269-2150**	1	FILM-INSTRUCTION (AUXILIARY CONTROL VALVE)	
	6	1	**281-4726**	2	FILM-INSTRUCTION (OIL FLOW DIRECTION)	
	7	1	**327-8299**	1	TUBE AS	
	8	1	**327-9079**	1	TUBE AS	
	9	1	**327-9080**	1	TUBE AS	
I	10	1	**327-9081**	1	HOSE AS	
I	11	1	**328-6681**	1	HOSE AS	
	12	1	**331-3770**	1	PLATE	
	13	1	**331-3779**	1	PLATE	
I	14	1	**332-3871**	1	HOSE AS	
	15	1	**333-1320**	1	VALVE-MANUAL (2-WAY)	
	16	1	**334-4436**	1	TUBE AS	
I	17	1	**337-2962**	1	HOSE AS	
	18	1	*148-8311*	1	ADAPTER AS	
		1	**3K-0360**	1	SEAL-O-RING	
		1	**8T-1715**	1	ADAPTER	
	19	1	*148-8340*	1	CONNECTOR AS	
		1	**3K-0360**	1	SEAL-O-RING	
		1	**6V-8398**	1	SEAL-O-RING	
		1	**6V-8639**	1	CONNECTOR	
	20	1	*148-8359*	1	ELBOW AS	
		1	**3K-0360**	1	SEAL-O-RING	
		1	**6V-9746**	1	SEAL-O-RING	
		1	**6V-9877**	1	ELBOW	
	21	1	*150-3052*	1	CONNECTOR AS	
		1	**5K-9090**	1	SEAL-O-RING	
		1	**7M-8485**	1	SEAL-O-RING	
		1	**107-6709**	1	CONNECTOR	
	22	1	*150-3053*	2	CONNECTOR AS	
					(EACH INCLUDES)	
		1	**6V-9746**	1	SEAL-O-RING	
		1	**7M-8485**	1	SEAL-O-RING	
		1	**108-3872**	1	CONNECTOR	
	23	1	**2P-1293**	2	LOCKNUT (1-3/16-12-THD)	
	24	1	**6V-9170**	2	NUT-BULKHEAD (1-14-THD)	
	25	1	**6V-9172**	1	NUT (1-7/16-12-THD)	
	26	1	**6V-9746**	3	SEAL-O-RING	
	27	1	**8K-1117**	2	CLAMP	
	28	1	**8T-1889**	2	CLIP (SLOT)	
	29	1	**8T-1890**	2	CLIP (TAB)	
	30	1	**8T-4121**	10	WASHER-HARD (11X21X2.5-MM THK)	
M	31	1	**8T-4133**	5	NUT (M10X1.5-THD)	
M	32	1	**8T-4136**	2	BOLT (M10X1.5X25-MM)	

374-6864 LINES GP-BACKHOE AUXILIARY *(contd.)* i04549501

NOTE	REF NO	GRAPHIC REF	PART NUMBER	QTY	PART NAME 1 2 3 4 5 6 (PRODUCT LEVEL)	SEE PAGE
M	33	1	**8T-4195**	3	BOLT (M10X1.5X30-MM)	
	34	1	*148-8364*	1	ELBOW AS	
		1	**3K-0360**	1	SEAL-O-RING	
		1	**6V-8398**	1	SEAL-O-RING	
		1	**6V-8625**	1	ELBOW	

I-REFER TO HYDRAULIC INFORMATION SYSTEM
M-METRIC PART

374-6864 **LINES GP-BACKHOE AUXILIARY** *(contd.)* **i04549501**

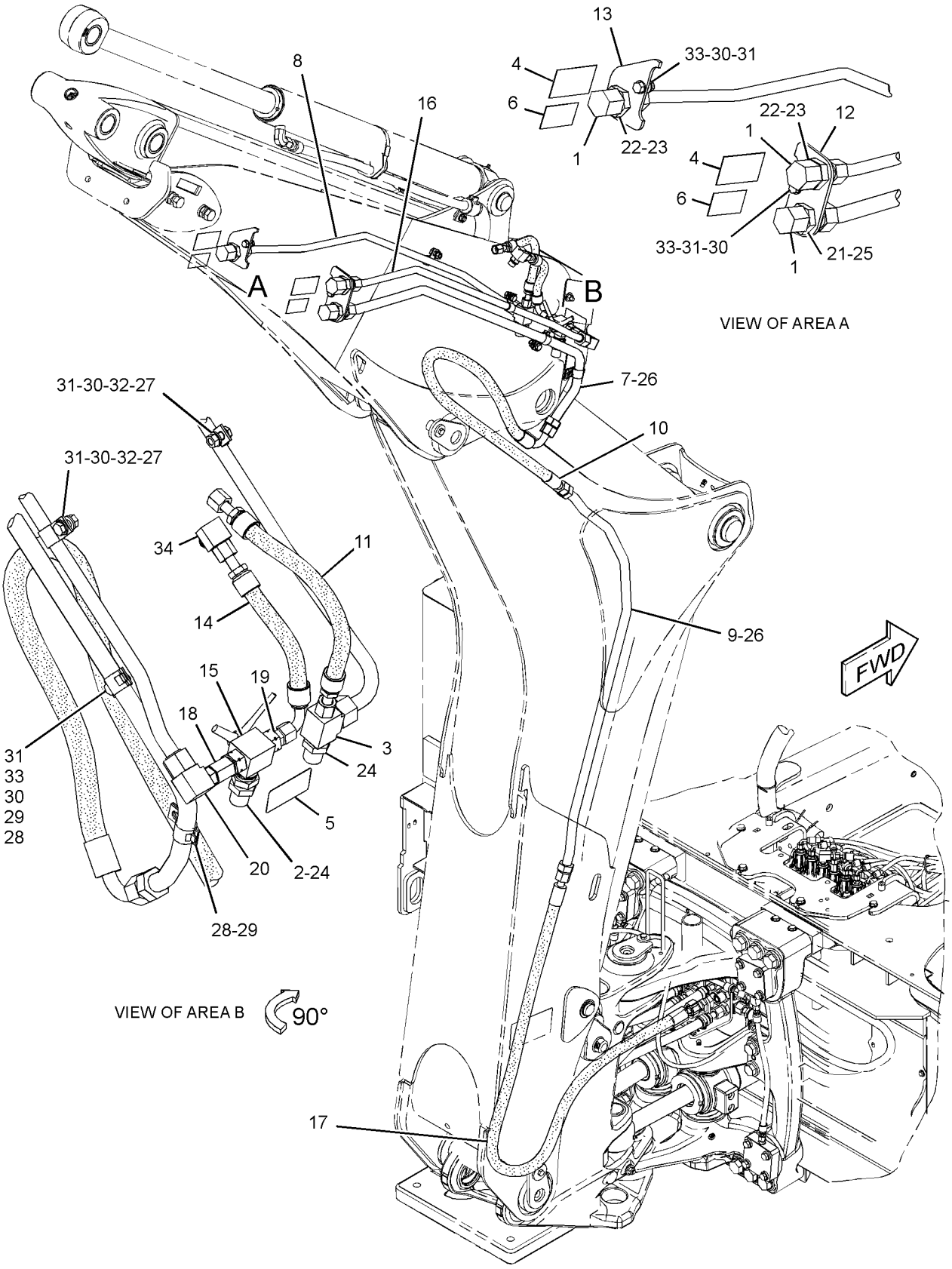

GRAPHIC #1 **<END>** g02762417

365-3331 LINES GP-BOOM

S/N: SEJ1-UP

PART OF 340-1743 LINKAGE AR, 340-1740 LINKAGE AR-BUCKET AN ATTACHMENT

SMCS-5057, 5456 **i04582956**

NOTE	REF NO	GRAPHIC REF	PART NUMBER	QTY	PART NAME 1 2 3 4 5 6 (PRODUCT LEVEL)	SEE PAGE
I	1	1	**324-7594**	1	HOSE AS	
I	2	1	**324-7597**	1	HOSE AS	
	3	1	*148-8390*	1	ELBOW AS	
		1	**2M-9780**	1	SEAL-O-RING	
		1	**6V-8626**	1	ELBOW	
		1	**7J-9108**	1	SEAL-O-RING	

I-REFER TO HYDRAULIC INFORMATION SYSTEM

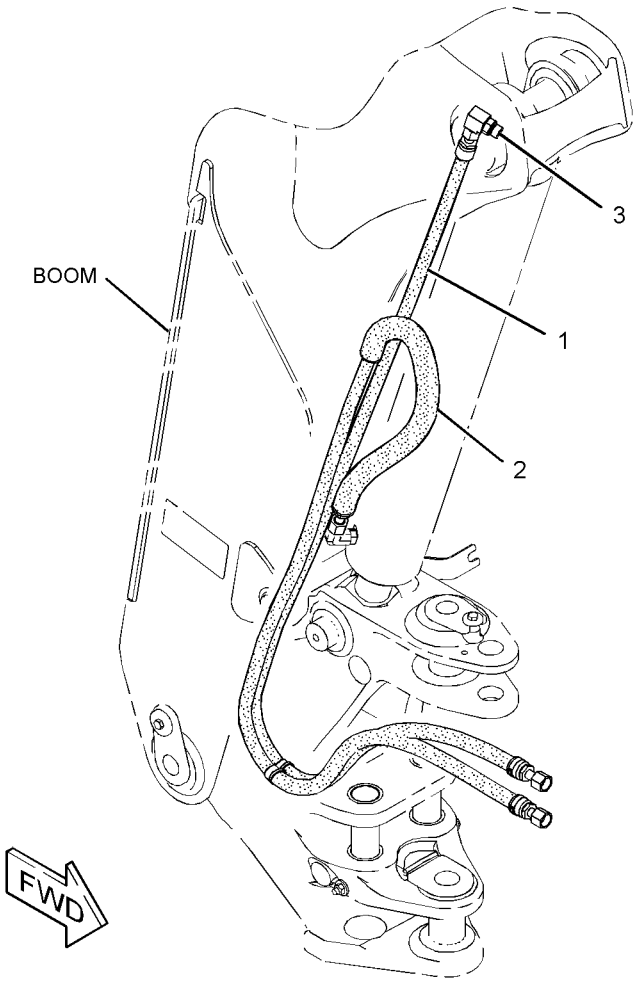

GRAPHIC #1 **<END>** g02819656

HYDRAULIC SYSTEM

365-3332 LINES GP-BOOM

S/N: SEJ1-UP
PART OF 374-6882 LINKAGE AR
AN ATTACHMENT

SMCS-5057, 5456 **i04583040**

NOTE	REF NO	GRAPHIC REF	PART NUMBER	QTY	PART NAME 1 2 3 4 5 6 (PRODUCT LEVEL)	SEE PAGE
I	1	1	**327-8993**	1	HOSE AS	
I	2	1	**327-8994**	1	HOSE AS	
	3	1	*148-8390*	1	ELBOW AS	
		1	**2M-9780**	1	SEAL-O-RING	
		1	**6V-8626**	1	ELBOW	
		1	**7J-9108**	1	SEAL-O-RING	

I-REFER TO HYDRAULIC INFORMATION SYSTEM

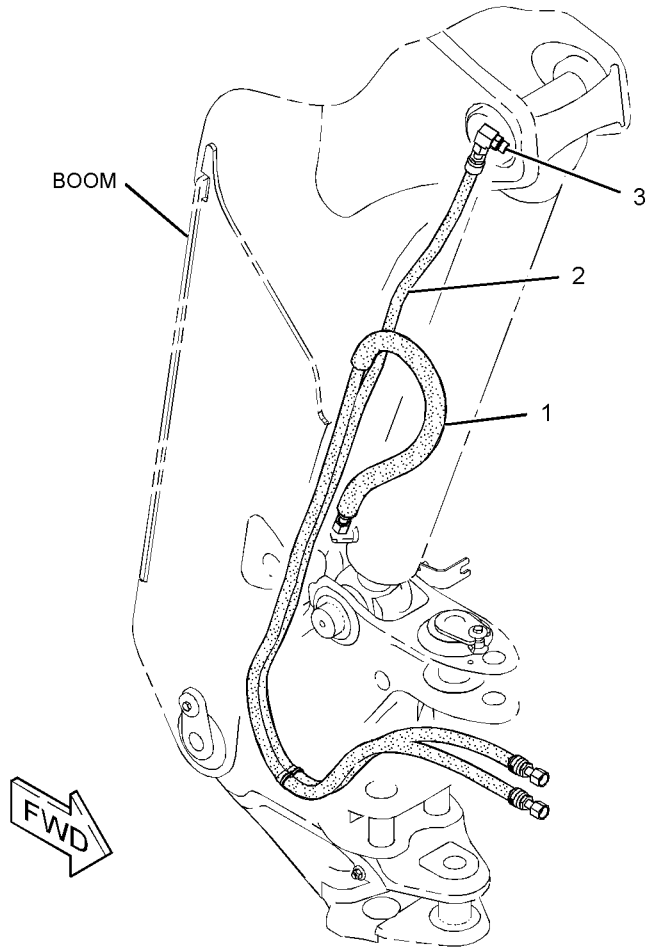

GRAPHIC #1 **<END>** g02819076

365-3333 LINES GP-BUCKET—EXTENDABLE STICK

S/N: SEJ1-UP

PART OF 340-1736, 340-1737 BACKHOE AR-EXTENDABLE STICK

AN ATTACHMENT

SMCS-5057, 5457 **i04552084**

NOTE	REF NO	GRAPHIC REF	PART NUMBER	QTY	PART NAME 1 2 3 4 5 6 (PRODUCT LEVEL)	SEE PAGE
	1	1	**5P-0599**	1	CLAMP-BAND	
	2	1	**9R-5948**	1	BLOCK	
	3	1	**091-0081**	1	SPACER (10.5X20X10-MM THK)	
I	4	1	**324-7598**	1	HOSE AS	
I	5	1	**324-7599**	3	HOSE AS	
I	6	1	**324-7604**	1	HOSE AS	
I	7	1	**334-7931**	1	HOSE AS	
	8	1	**341-5752**	1	TUBE AS	
	9	1	**364-4125**	1	TUBE AS	
	10	1	**364-4126**	1	TUBE AS	
	11	1	**5P-7464**	1	CLIP (SLOT)	
	12	1	**5P-7465**	1	CLIP (TAB)	
	13	1	**6V-7359**	1	GROMMET	
	14	1	**6V-9170**	2	NUT-BULKHEAD (1-14-THD)	
	15	1	**7J-9108**	5	SEAL-O-RING	
M	16	1	**8T-0389**	1	LOCKNUT (M10X1.5-THD)	
	17	1	**8T-1887**	2	CLIP (SLOT)	
	18	1	**8T-1888**	2	CLIP (TAB)	
	19	1	**8T-4121**	6	WASHER-HARD (11X21X2.5-MM THK)	
M	20	1	**8T-4133**	2	NUT (M10X1.5-THD)	
M	21	1	**8T-4191**	1	BOLT (M10X1.5X16-MM)	
M	22	1	**8T-4195**	2	BOLT (M10X1.5X30-MM)	
	23	1	**9R-1004**	1	CLIP (TAB)	
	24	1	**9R-1005**	1	CLIP (SLOT)	
M	25	1	**9X-6418**	1	BOLT (M10X1.5X45-MM)	

I-REFER TO HYDRAULIC INFORMATION SYSTEM
M-METRIC PART

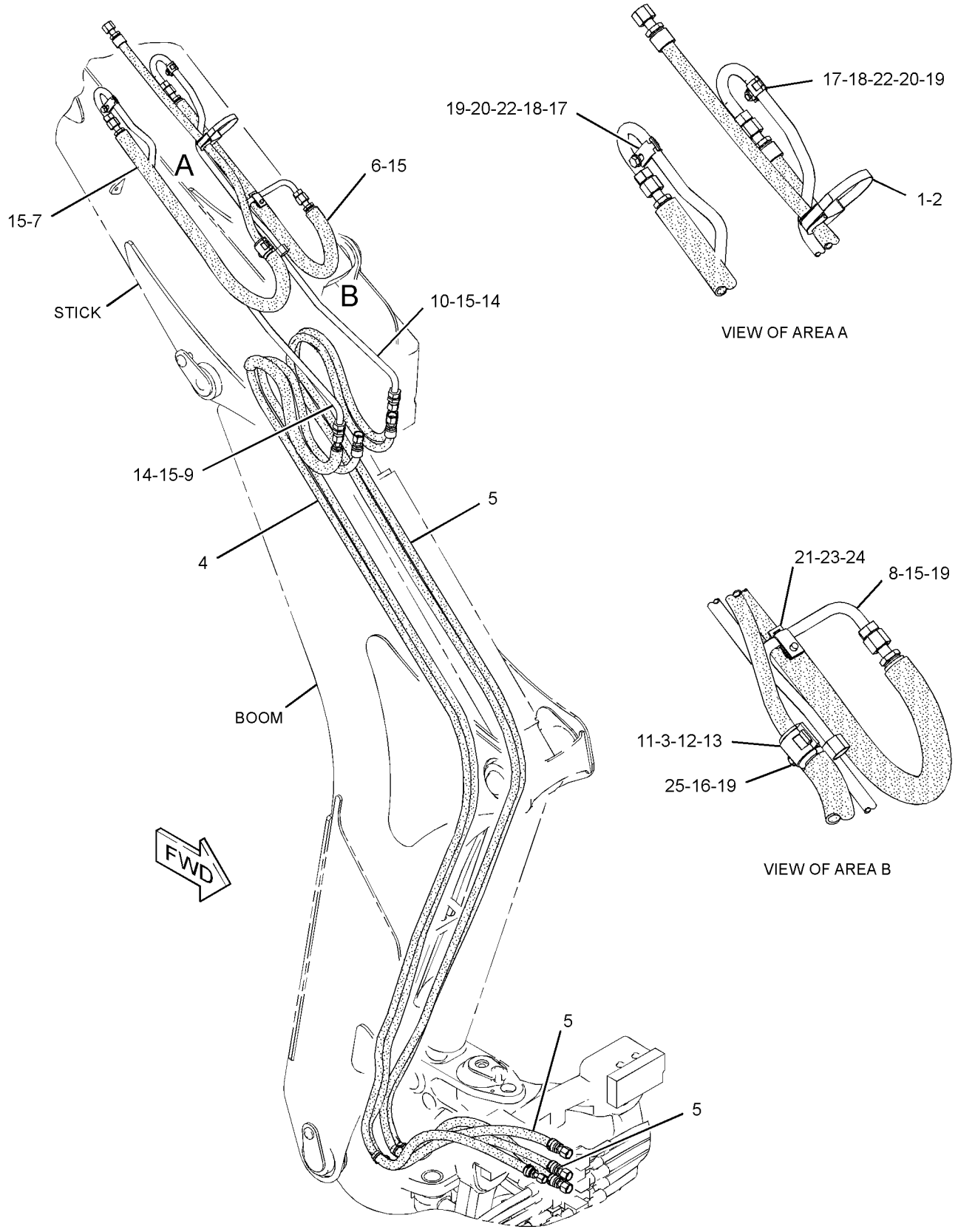

GRAPHIC #1 **<END>** g02763258

HYDRAULIC SYSTEM

323-2023 LINES GP-BUCKET CYLINDER—STANDARD STICK

S/N: SEJ1-UP

PART OF 340-1735 BACKHOE AR-STANDARD STICK

AN ATTACHMENT

SMCS-5057, 5457 **i04428794**

NOTE	REF NO	GRAPHIC REF	PART NUMBER	QTY	PART NAME 1 2 3 4 5 6 (PRODUCT LEVEL)	SEE PAGE
	1	1	**5P-0599**	1	CLAMP-BAND	
	2	1	**9R-5948**	1	BLOCK	
	3	1	*281-5983*	2	ELBOW AS	
					(EACH INCLUDES)	
		1	**6V-8989**	1	ELBOW	
		1	**228-7091**	2	SEAL-O-RING	
I	4	1	**324-7598**	1	HOSE AS	
I	5	1	**324-7599**	1	HOSE AS	
I	6	1	**332-1025**	1	HOSE AS	
I	7	1	**334-7947**	1	HOSE AS	
	8	1	*148-8393*	1	ELBOW AS	
		1	**6V-9852**	1	ELBOW	
		1	**7J-9108**	1	SEAL-O-RING	
	9	1	**6V-9170**	2	NUT-BULKHEAD (1-14-THD)	
	10	1	**7J-9108**	1	SEAL-O-RING	

I-REFER TO HYDRAULIC INFORMATION SYSTEM

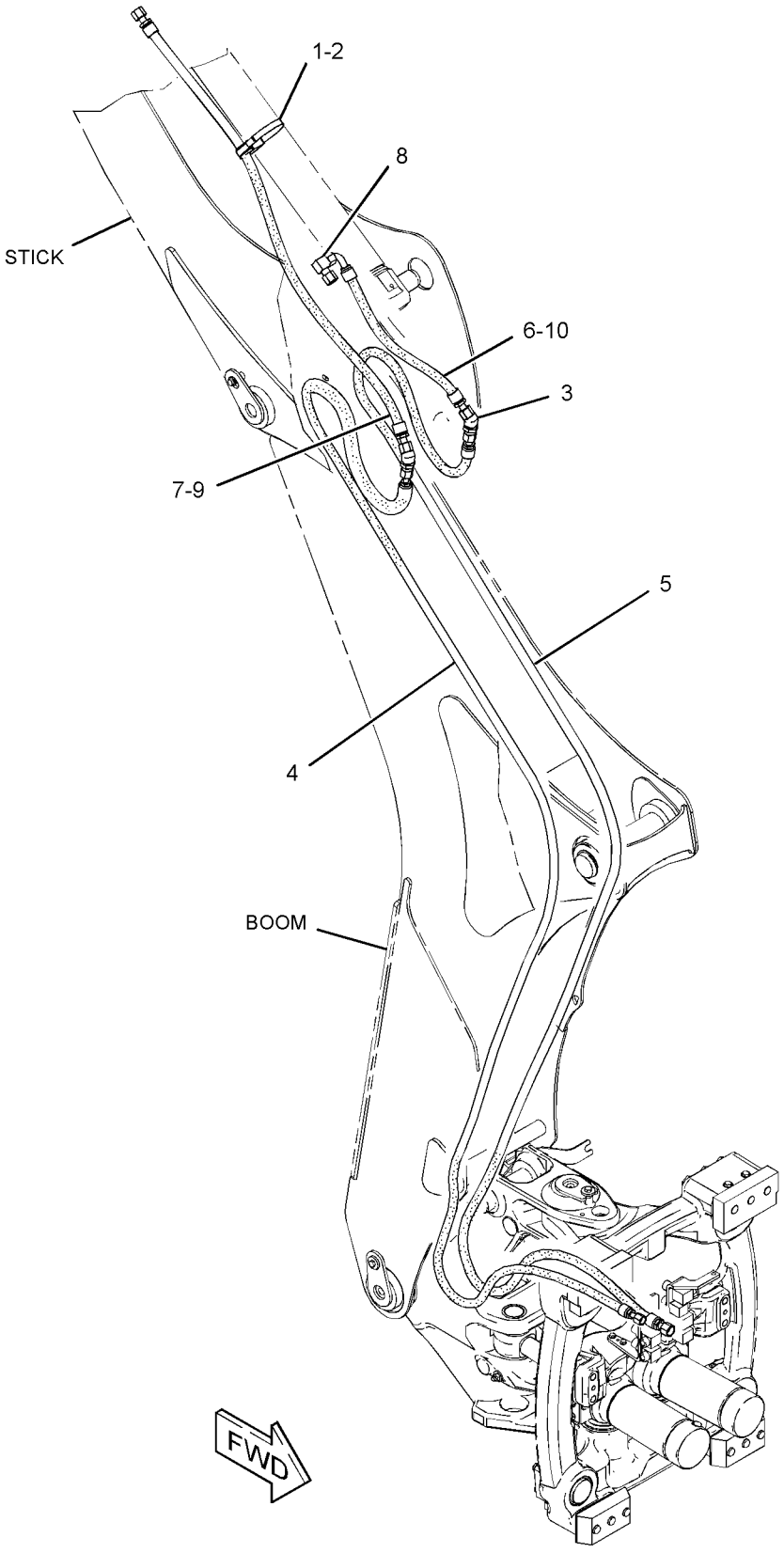

GRAPHIC #1 **<END>** g02615241

365-3334 LINES GP-BUCKET CYLINDER–EXTENDABLE STICK

S/N: SEJ1-UP

PART OF 340-1738 BACKHOE AR-EXTENDABLE STICK

AN ATTACHMENT

SMCS-5057, 5457 **i04552138**

NOTE	REF NO	GRAPHIC REF	PART NUMBER	QTY	PART NAME 1 2 3 4 5 6 (PRODUCT LEVEL)	SEE PAGE
	1	1	**5P-0599**	1	CLAMP-BAND	
	2	1	**9R-5948**	1	BLOCK	
	3	1	**091-0081**	1	SPACER (10.5X20X10-MM THK)	
I	4	1	**324-7604**	1	HOSE AS	
I	5	1	**327-9010**	3	HOSE AS	
I	6	1	**327-9012**	1	HOSE AS	
I	7	1	**334-7931**	1	HOSE AS	
	8	1	**341-5752**	1	TUBE AS	
	9	1	**364-4135**	1	TUBE AS	
	10	1	**364-4136**	1	TUBE AS	
	11	1	**5P-7464**	1	CLIP (SLOT)	
	12	1	**5P-7465**	1	CLIP (TAB)	
	13	1	**6V-7359**	1	GROMMET	
	14	1	**6V-9170**	2	NUT-BULKHEAD (1-14-THD)	
	15	1	**7J-9108**	5	SEAL-O-RING	
M	16	1	**8T-0389**	1	LOCKNUT (M10X1.5-THD)	
	17	1	**8T-1887**	2	CLIP (SLOT)	
	18	1	**8T-1888**	2	CLIP (TAB)	
	19	1	**8T-4121**	6	WASHER-HARD (11X21X2.5-MM THK)	
M	20	1	**8T-4133**	2	NUT (M10X1.5-THD)	
M	21	1	**8T-4191**	1	BOLT (M10X1.5X16-MM)	
M	22	1	**8T-4195**	2	BOLT (M10X1.5X30-MM)	
	23	1	**9R-1004**	1	CLIP (TAB)	
	24	1	**9R-1005**	1	CLIP (SLOT)	
M	25	1	**9X-6418**	1	BOLT (M10X1.5X45-MM)	

I-REFER TO HYDRAULIC INFORMATION SYSTEM
M-METRIC PART

365-3334 **LINES GP-BUCKET CYLINDER** *(contd.)* **i04552138**

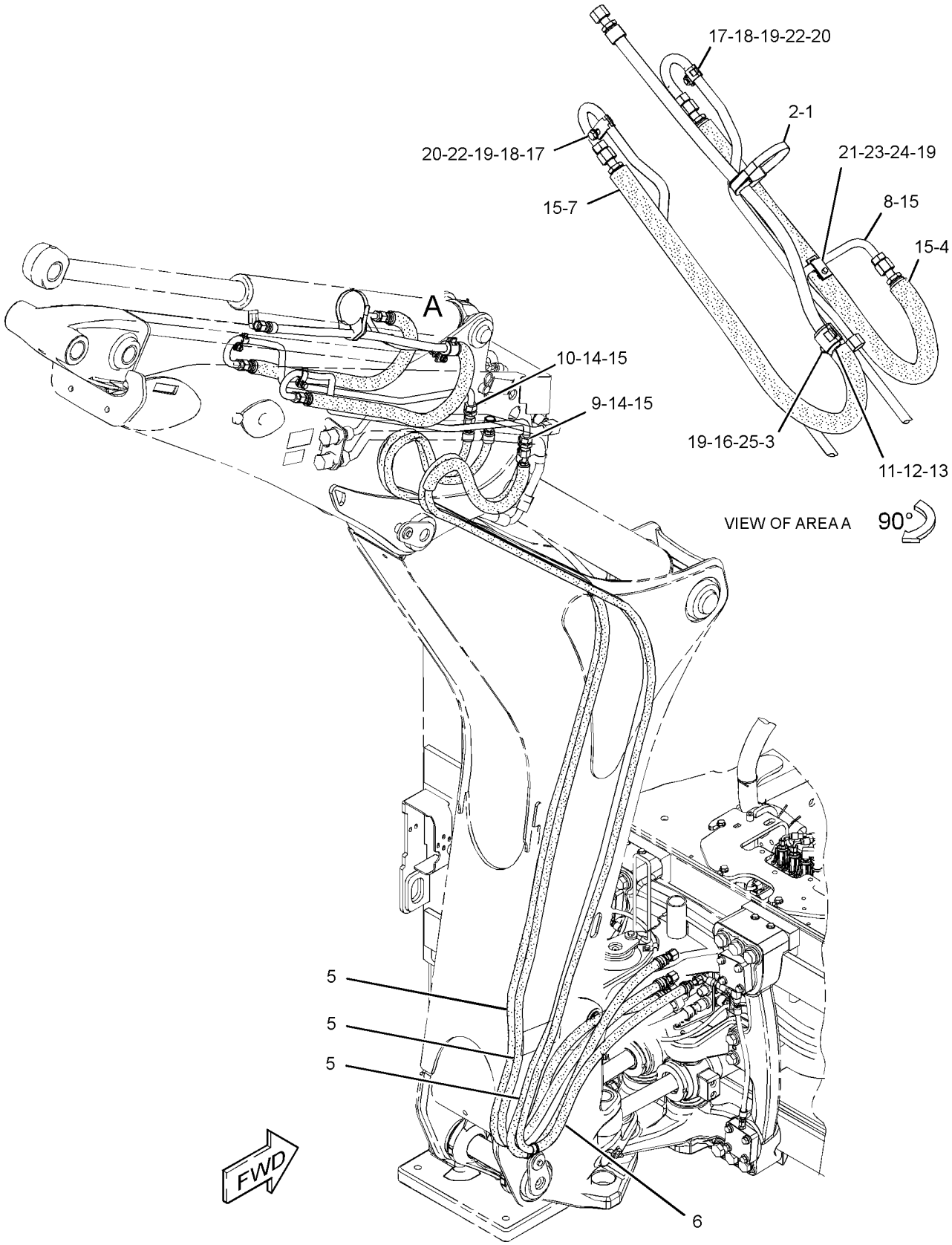

GRAPHIC #1 **<END>** g02765296

196-1136 LINES GP-CONNECTING

S/N: SEJ1-UP
PART OF 318-7267 BUCKET AR-MULTIPURPOSE
AN ATTACHMENT

SMCS-5057 **i01449103**

NOTE	REF NO	GRAPHIC REF	PART NUMBER	QTY	PART NAME 1 2 3 4 5 6 (PRODUCT LEVEL)	SEE PAGE
	1	1	**195-6525**	1	FITTING AS (QUICK DISCONNECT, FEMALE)	
	2	1	**195-6527**	1	FITTING AS (QUICK DISCONNECT, MALE)	
	3	1	**195-9877**	1	CAP-DUST	
	4	1	**195-9878**	1	CAP-DUST	
I	5	1	**196-0039**	1	HOSE AS	
I	6	1	**196-0040**	1	HOSE AS	
	7	1	**3D-2824**	2	SEAL-O-RING	
	8	1	**6V-8398**	2	SEAL-O-RING	

I-REFER TO HYDRAULIC INFORMATION SYSTEM

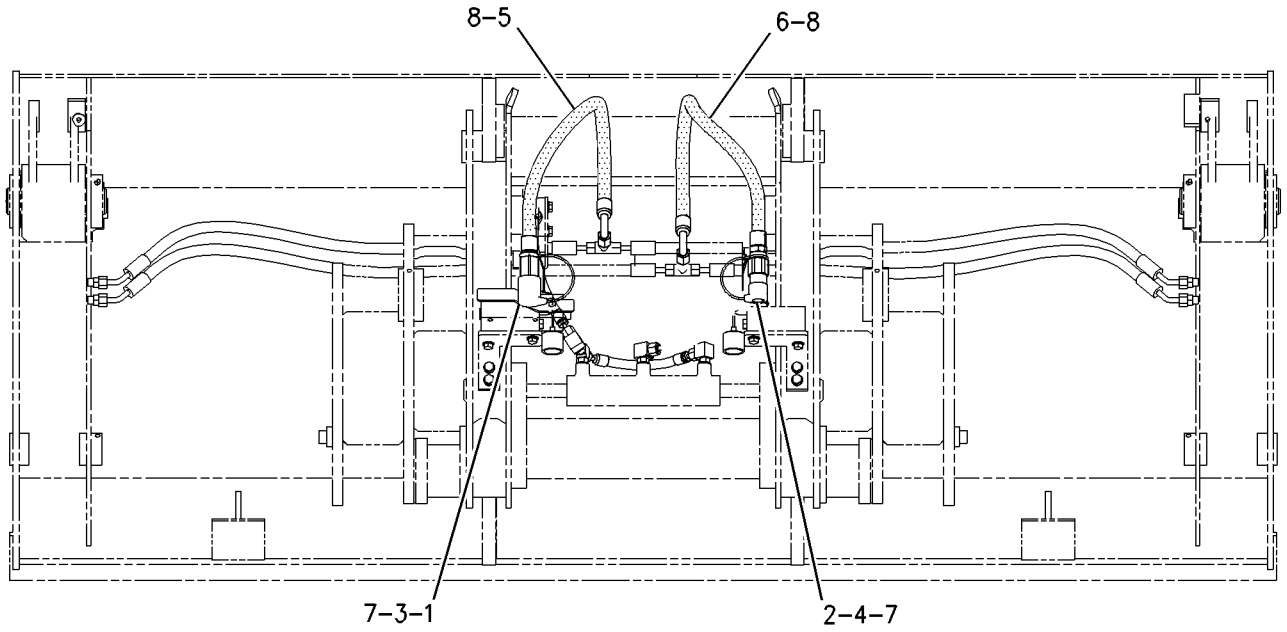

GRAPHIC #1 **<END>** g00758420

HYDRAULIC SYSTEM

369-1461 LINES GP-COUPLER—PARALLEL LIFT

S/N: SEJ1-UP

PART OF 373-4273 CONVERSION AR-QUICK COUPLER, 373-4277 VALVE AR-BANK 3 AN ATTACHMENT

SMCS-5057, 5133, 6129 **i04622871**

NOTE	REF NO	GRAPHIC REF	PART NUMBER	QTY	PART NAME 1 2 3 4 5 6 (PRODUCT LEVEL)	SEE PAGE
	1	1	**359-7228**	1	VALVE GP-CONTROL (REMOTE CONTROL)	
	2	1	**6W-5761**	2	PIN	
	3	1	**152-5717**	1	CAP-DUST	
	4	1	**152-5718**	1	CAP-DUST	
Y	5	1	**178-3713**	1	CYLINDER GP-COUPLER	345
	6	1	**195-6525**	1	FITTING AS (QUICK DISCONNECT, FEMALE)	
	7	1	**195-6526**	1	FITTING AS (QUICK DISCONNECT, MALE)	
	8	1	*208-5149*	2	ELBOW AS	
					(EACH INCLUDES)	
		1	**3D-2824**	1	SEAL-O-RING	
		1	**208-5148**	1	ELBOW	
I	9	1	**362-1606**	2	HOSE AS	
I	10	1	**362-1607**	2	HOSE AS	
	11	1	**362-1610**	1	TUBE AS	
	12	1	*148-8315*	2	CONNECTOR AS	
					(EACH INCLUDES)	
		1	**2M-9780**	1	SEAL-O-RING	
		1	**6V-8642**	1	CONNECTOR	
		1	**7J-9108**	1	SEAL-O-RING	
	13	1	*148-8336*	2	CONNECTOR AS	
					(EACH INCLUDES)	
		1	**3J-1907**	1	SEAL-O-RING	
		1	**6V-8397**	1	SEAL-O-RING	
		1	**6V-8636**	1	CONNECTOR	
	14	1	*148-8345*	2	CONNECTOR AS	
					(EACH INCLUDES)	
		1	**2M-9780**	1	SEAL-O-RING	
		1	**6V-8398**	1	SEAL-O-RING	
		1	**6V-8638**	1	CONNECTOR	
	15	1	*148-8378*	2	ELBOW AS	
					(EACH INCLUDES)	
		1	**3J-1907**	1	SEAL-O-RING	
		1	**6V-8397**	1	SEAL-O-RING	
		1	**6V-8724**	1	ELBOW	
	16	1	*148-8439*	1	TEE AS	
		1	**3J-1907**	1	SEAL-O-RING	
		1	**6V-8397**	2	SEAL-O-RING	
		1	**6V-8774**	1	TEE	
	17	1	**211-9032**	2	WASHER-HARD (8.8X13X2-MM THK)	
	18	1	**5P-7465**	2	CLIP (TAB)	
	19	1	**6V-7359**	2	GROMMET	
M	20	1	**6V-8213**	2	BOLT-SOCKET HEAD (M8X1.25X70-MM)	
	21	1	**6W-5760**	2	DOWEL	
	22	1	**8T-4121**	4	WASHER-HARD (11X21X2.5-MM THK)	
M	23	1	**8T-4133**	2	NUT (M10X1.5-THD)	
M	24	1	**8T-4186**	2	BOLT (M10X1.5X40-MM)	
	25	1	**8T-4646**	2	CLIP (SLOT)	

I-REFER TO HYDRAULIC INFORMATION SYSTEM
M-METRIC PART
Y-SEPARATE ILLUSTRATION

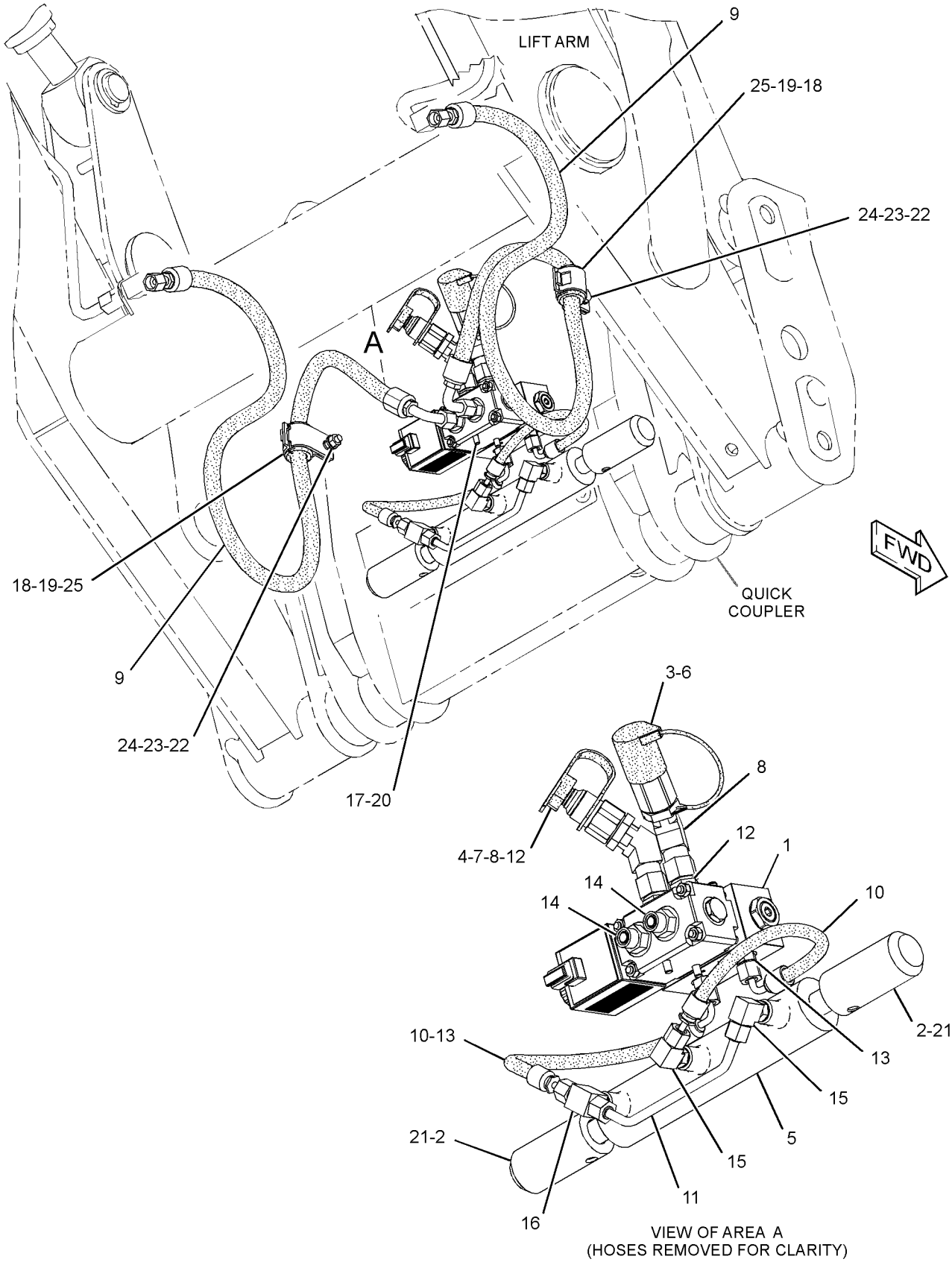

GRAPHIC #1 **<END>** g02827480

HYDRAULIC SYSTEM

337-9811 LINES GP-LIFT & TILT

S/N: SEJ1-UP
PART OF 373-4273 CONVERSION AR-QUICK COUPLER, 373-4271, 373-4275, 373-4277
VALVE AR-BANK 3
AN ATTACHMENT

SMCS-5057 **i04618153**

NOTE	REF NO	GRAPHIC REF	PART NUMBER	QTY	PART NAME 1 2 3 4 5 6 (PRODUCT LEVEL)	SEE PAGE
	1	1	**6W-2463**	4	CLAMP	
	2	1	**102-8703**	2	PLATE-COVER	
	3	1	*260-9137*	2	UNION AS-CROSS	
					(EACH INCLUDES)	
		1	**7J-9108**	4	SEAL-O-RING	
		1	**260-9136**	1	CROSS-UNION	
	4	1	*287-7269*	2	CONNECTOR AS	
					(EACH INCLUDES)	
		1	**3D-2824**	1	SEAL-O-RING	
		1	**7J-9108**	1	SEAL-O-RING	
		1	**287-7268**	1	CONNECTOR	
	5	1	**329-3820**	6	CLAMP	
	6	1	*330-9752*	2	ELBOW AS	
					(EACH INCLUDES)	
		1	**3D-2824**	1	SEAL-O-RING	
		1	**330-9591**	1	ELBOW	
	7	1	**362-1602**	1	TUBE AS	
	8	1	**362-1603**	1	TUBE AS	
	9	1	**362-2077**	1	TUBE AS	
	10	1	**362-2078**	1	TUBE AS	
	11	1	**362-2079**	1	TUBE AS	
	12	1	**362-2080**	1	TUBE AS	
	13	1	**363-6273**	1	TUBE AS	
	14	1	**363-6274**	1	TUBE AS	
	15	1	**367-9557**	2	PLATE	
	16	1	**373-5978**	1	PLATE	
	17	1	**374-0840**	1	PLATE	
M	18	1	**085-8091**	4	BOLT (M10X1.5X55-MM)	
	19	1	*150-4031*	2	TEE AS	
					(EACH INCLUDES)	
		1	**6V-9845**	1	TEE-SWIVEL	
		1	**7J-9108**	2	SEAL-O-RING	
	20	1	**6V-8398**	8	SEAL-O-RING	
	21	1	**6V-9831**	2	CAP AS	
M	22	1	**7X-2537**	2	BOLT (M8X1.25X35-MM)	
	23	1	**8T-4121**	16	WASHER-HARD (11X21X2.5-MM THK)	
M	24	1	**8T-4133**	8	NUT (M10X1.5-THD)	
M	25	1	**8T-4185**	2	BOLT (M10X1.5X50-MM)	
M	26	1	**8T-4195**	2	BOLT (M10X1.5X30-MM)	

M-METRIC PART

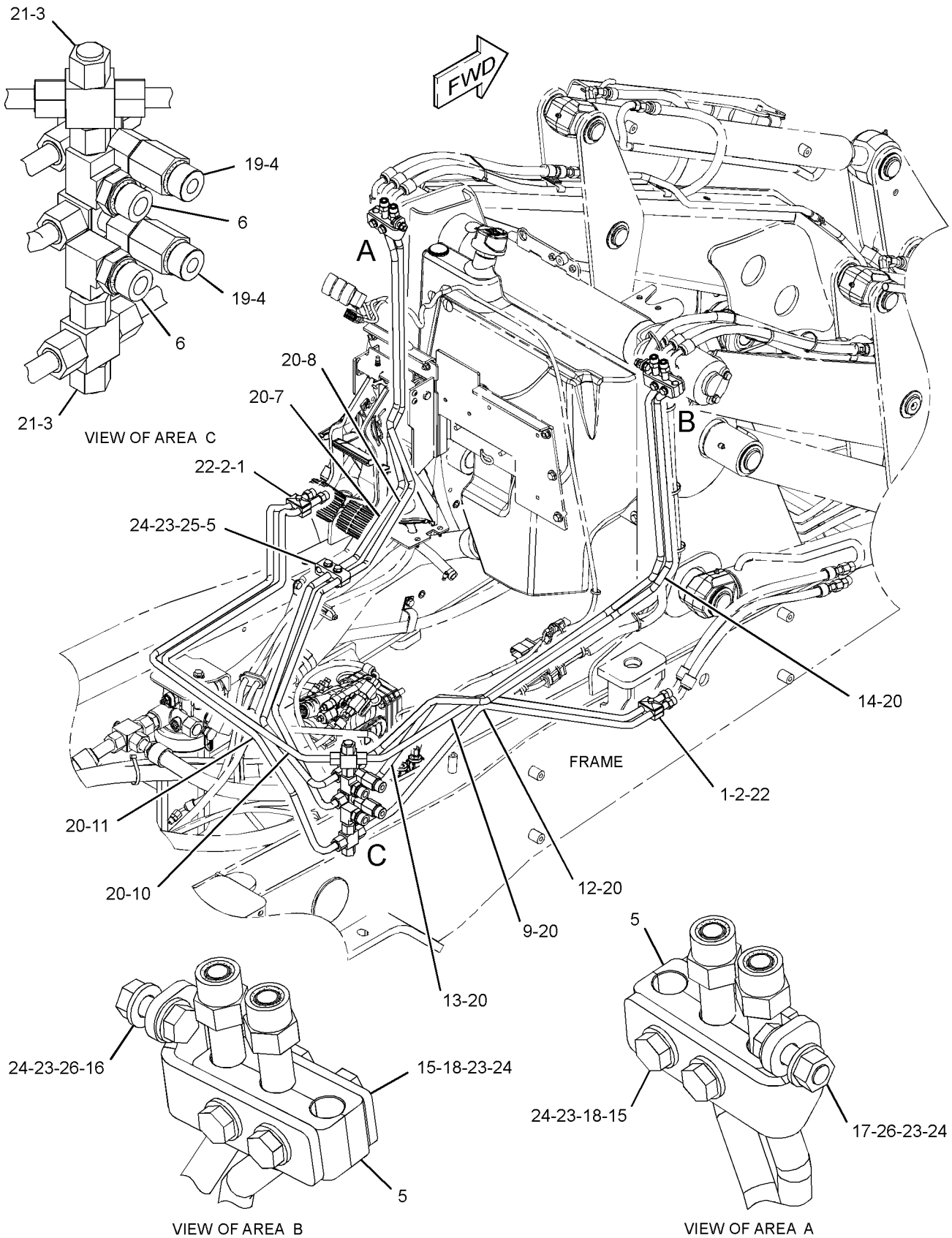

GRAPHIC #1 **<END>** g02797616

HYDRAULIC SYSTEM

337-9810 LINES GP-LIFT CYLINDER–PARALLEL LIFT

S/N: SEJ1-UP

PART OF 373-4273 CONVERSION AR-QUICK COUPLER, 373-4271 VALVE AR-BANK 3 AN ATTACHMENT

SMCS-5057, 5102 **i04577353**

NOTE	REF NO	GRAPHIC REF	PART NUMBER	QTY	PART NAME 1 2 3 4 5 6 (PRODUCT LEVEL)	SEE PAGE
	1	1	**7K-1181**	2	STRAP-CABLE	
	2	1	**362-1426**	4	CLAMP	
I	3	1	**362-1583**	4	HOSE AS	
I	4	1	**371-8717**	2	HOSE AS	
I	5	1	**371-8718**	2	HOSE AS	
	6	1	**373-6484**	4	PLATE	
	7	1	**5P-4116**	4	WASHER-HARD (8.8X20.5X2-MM THK)	
M	8	1	**8T-6869**	4	BOLT (M8X1.25X60-MM)	

I-REFER TO HYDRAULIC INFORMATION SYSTEM
M-METRIC PART

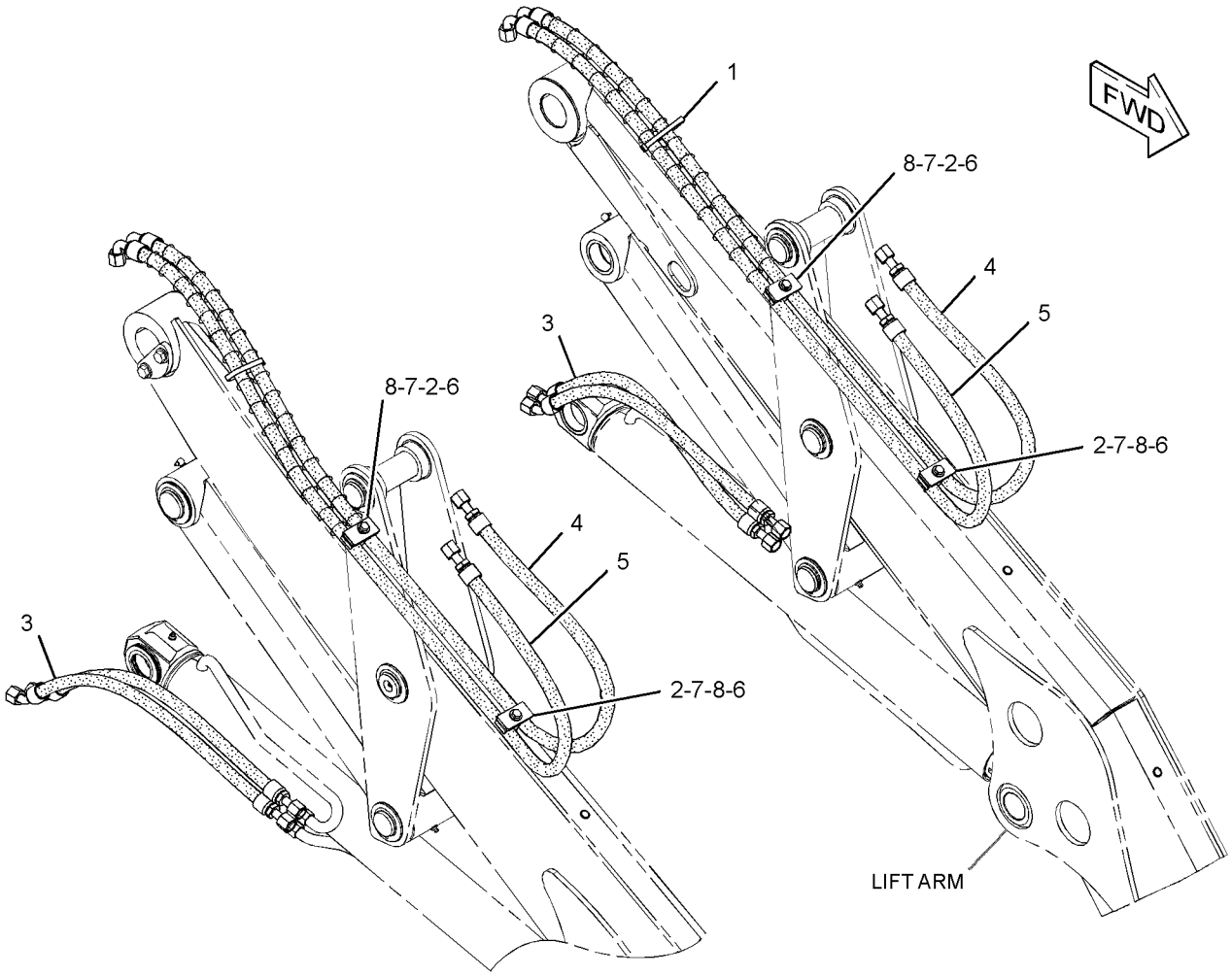

GRAPHIC #1 **<END>** g02797654

HYDRAULIC SYSTEM

362-9359 LINES GP-LIFT CYLINDER

S/N: SEJ1-UP

PART OF 373-4275, 373-4277 VALVE AR-BANK 3

AN ATTACHMENT

SMCS-5057, 5102 **i04618172**

NOTE	REF NO	GRAPHIC REF	PART NUMBER	QTY	PART NAME 1 2 3 4 5 6 (PRODUCT LEVEL)	SEE PAGE
	1	1,2	**8T-6726**	4	CLAMP-HOSE	
	2	1,2	**9M-6738**	4	CLAMP-HOSE	
	3	1,2	*161-9916*	2	ADAPTER AS	
					(EACH INCLUDES)	
		1,2	**2M-9780**	1	SEAL-O-RING	
		1,2	**6V-7420**	1	ADAPTER	
	4	1,2	*250-1440*	2	ADAPTER AS	
					(EACH INCLUDES)	
		1,2	**3K-0360**	1	SEAL-O-RING	
		1,2	**7X-3164**	1	ADAPTER-SWIVEL	
	5	1,2	**262-7079**	2	VALVE GP-CHECK (PILOT CONTROL)	
	6	1,2	**262-7081**	2	VALVE GP-LOAD CONTROL (LIFT & TILT)	
	7	1,2	**279-4969**	2	BRACKET	
	8	1,2	*287-7252*	2	TEE AS	
					(EACH INCLUDES)	
		1,2	**3J-1907**	1	SEAL-O-RING	
		1,2	**6V-8398**	2	SEAL-O-RING	
		1,2	**287-7251**	1	TEE	
	9	1,2	**346-5517**	2	BRACKET	
	10	1,2	**362-1426**	4	CLAMP	
I	11	1,2	**362-1591**	2	HOSE AS	
I	12	1,2	**362-1592**	2	HOSE AS	
	13	1,2	**366-4280**	2	TUBE AS	
	14	1,2	**366-4281**	2	TUBE AS	
	15	1,2	**366-4354**	2	TUBE AS	
I	16	1	**371-8717**	2	HOSE AS	
	17	1,2	**373-6484**	4	PLATE	
I	18	1	**374-7889**	2	HOSE AS	
	19	1,2	*148-8345*	6	CONNECTOR AS	
					(EACH INCLUDES)	
		1,2	**2M-9780**	1	SEAL-O-RING	
		1,2	**6V-8398**	1	SEAL-O-RING	
		1,2	**6V-8638**	1	CONNECTOR	
	20	1,2	*148-8378*	2	ELBOW AS	
					(EACH INCLUDES)	
		1,2	**3J-1907**	1	SEAL-O-RING	
		1,2	**6V-8397**	1	SEAL-O-RING	
		1,2	**6V-8724**	1	ELBOW	
	21	1,2	*206-5123*	2	TEE AS	
					(EACH INCLUDES)	
		1,2	**6V-8397**	1	SEAL-O-RING	
		1,2	**6V-8398**	1	SEAL-O-RING	
		1,2	**206-5122**	1	TEE	
	22	1,2	**5P-4116**	4	WASHER-HARD (8.8X20.5X2-MM THK)	
	23	1,2	**8T-4224**	16	WASHER-HARD (8.8X16X2-MM THK)	
M	24	1,2	**8T-6869**	4	BOLT (M8X1.25X60-MM)	
M	25	1,2	**8T-6912**	8	BOLT (M8X1.25X50-MM)	
M	26	1,2	**8T-7963**	8	LOCKNUT (M8X1.25-THD)	

I-REFER TO HYDRAULIC INFORMATION SYSTEM
M-METRIC PART

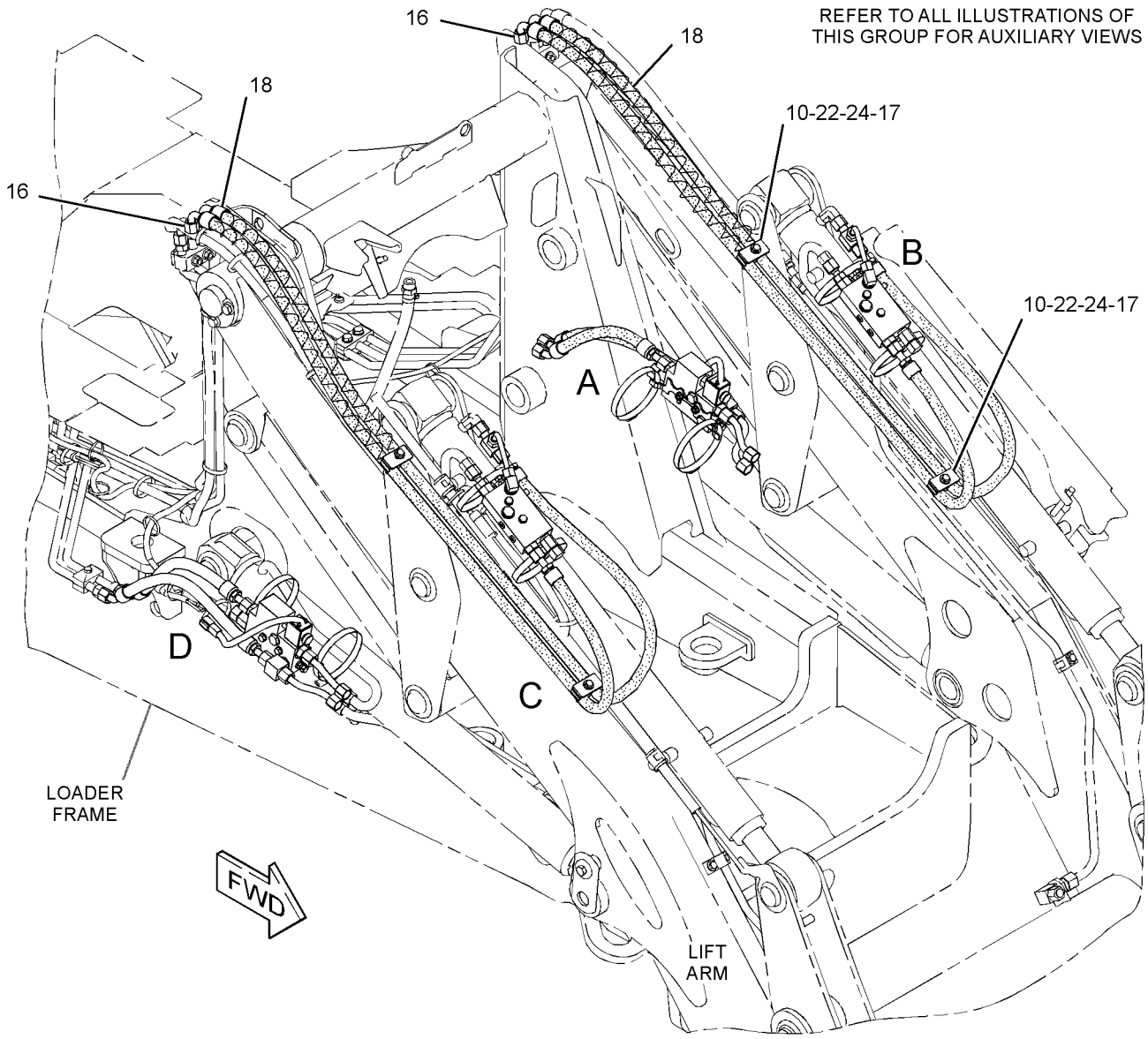

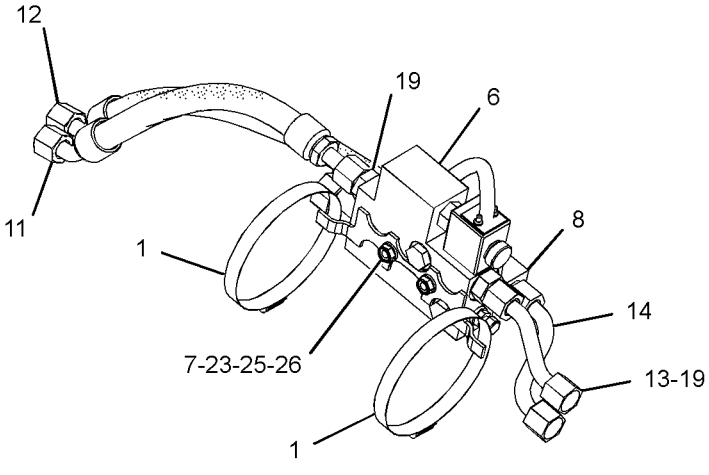

VIEW OF AREA A

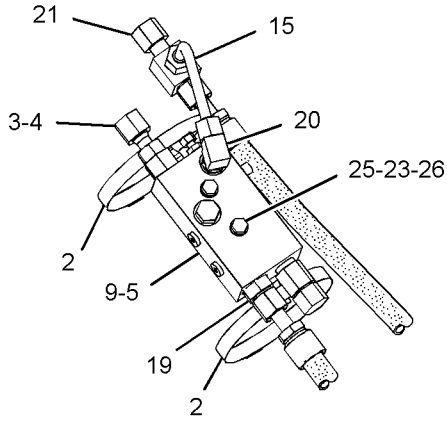

VIEW OF AREA B

GRAPHIC #1

g02797846

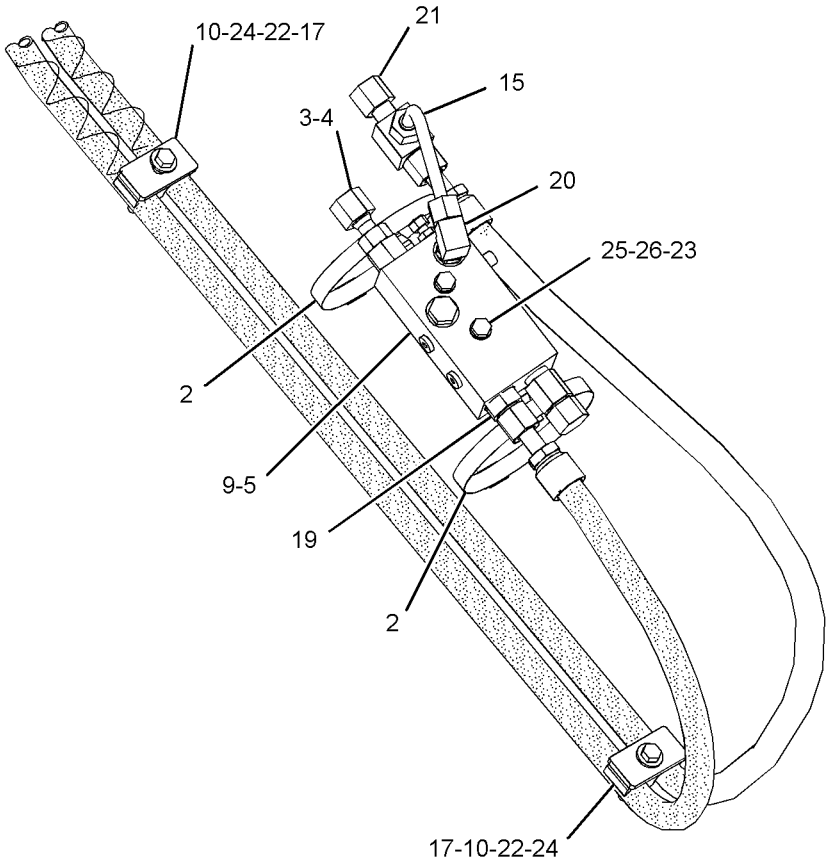

VIEW OF AREA C

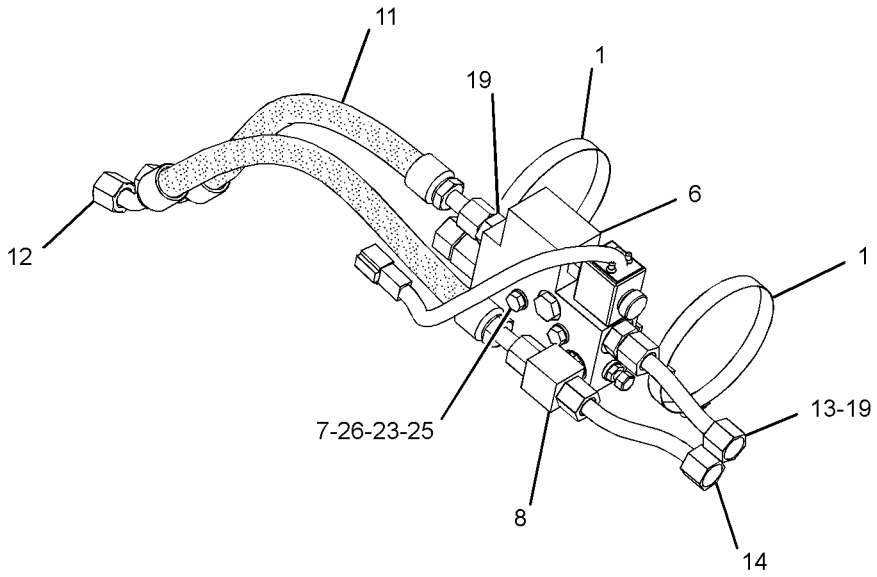

VIEW OF AREA D

GRAPHIC #2 **<END>** g02798158

HYDRAULIC SYSTEM

365-3336 LINES GP-LOAD CONTROL VALVE–PILOT

S/N: SEJ1-UP
PART OF 340-1744, 340-1749 LINKAGE AR
AN ATTACHMENT

SMCS-5057, 5811 **i04553435**

NOTE	REF NO	GRAPHIC REF	PART NUMBER	QTY	PART NAME 1 2 3 4 5 6 (PRODUCT LEVEL)	SEE PAGE
	1	1	**3S-2093**	1	STRAP-CABLE	
	2	1	*161-9916*	1	ADAPTER AS	
		1	**2M-9780**	1	SEAL-O-RING	
		1	**6V-7420**	1	ADAPTER	
	3	1	**205-7198**	1	TEE AS	
		1	**3J-1907**	1	SEAL-O-RING	
		1	**4J-5477**	2	SEAL-O-RING	
	4	1	*250-1440*	1	ADAPTER AS	
		1	**3K-0360**	1	SEAL-O-RING	
		1	**7X-3164**	1	ADAPTER-SWIVEL	
	5	1	*302-1413*	1	ADAPTER AS	
		1	**2M-9780**	1	SEAL-O-RING	
		1	**7X-3165**	1	ADAPTER	
I	6	1	**329-4508**	1	HOSE AS	
I	7	1	**330-6126**	2	HOSE AS	
I	8	1	**339-0007**	1	HOSE AS	
I	9	1	**339-0010**	1	HOSE AS	
I	10	1	**339-2886**	1	HOSE AS	
I	11	1	**339-2935**	1	HOSE AS	
	12	1	**339-4287**	2	BRACKET	
	13	1	**347-1128**	1	VALVE GP-LOAD CONTROL (BOOM)	
	14	1	**347-1129**	1	VALVE GP-LOAD CONTROL (STICK)	
I	15	1	**368-6911**	1	HOSE AS	
	16	1	*148-8315*	1	CONNECTOR AS	
		1	**2M-9780**	1	SEAL-O-RING	
		1	**6V-8642**	1	CONNECTOR	
		1	**7J-9108**	1	SEAL-O-RING	
	17	1	*148-8325*	1	CONNECTOR AS	
		1	**3J-1907**	1	SEAL-O-RING	
		1	**4J-5477**	1	SEAL-O-RING	
		1	**6V-8641**	1	CONNECTOR	
	18	1	*148-8345*	1	CONNECTOR AS	
		1	**2M-9780**	1	SEAL-O-RING	
		1	**6V-8398**	1	SEAL-O-RING	
		1	**6V-8638**	1	CONNECTOR	
	19	1	*148-8368*	2	ELBOW AS	
					(EACH INCLUDES)	
		1	**3J-1907**	1	SEAL-O-RING	
		1	**4J-5477**	1	SEAL-O-RING	
		1	**6V-8627**	1	ELBOW	
	20	1	*148-8423*	2	TEE AS	
					(EACH INCLUDES)	
		1	**3J-1907**	1	SEAL-O-RING	
		1	**4J-5477**	1	SEAL-O-RING	
		1	**8T-3311**	1	TEE	
	21	1	*148-8448*	1	TEE AS	
		1	**4J-5477**	2	SEAL-O-RING	
		1	**6V-9842**	1	TEE-SWIVEL	
	22	1	*150-4052*	3	UNION AS	
					(EACH INCLUDES)	
		1	**4J-5477**	2	SEAL-O-RING	
		1	**6V-8993**	1	UNION	
	23	1	**2P-1279**	3	LOCKNUT (9/16-18-THD)	
	24	1	**5P-0599**	4	CLAMP-BAND	
M	25	1	**6V-9189**	4	LOCKNUT (M8X1.25-THD)	

365-3336 LINES GP-LOAD CONTROL VALVE *(contd.)* i04553435

NOTE	REF NO	GRAPHIC REF	PART NUMBER	QTY	PART NAME 1 2 3 4 5 6 (PRODUCT LEVEL)	SEE PAGE
	26	1	**8T-4224**	4	WASHER-HARD (8.8X16X2-MM THK)	
	27	1	**343-4301**	1	HOSE AS	
M	28	1	**8T-7329**	4	BOLT (M8X1.25X55-MM)	

I-REFER TO HYDRAULIC INFORMATION SYSTEM
M-METRIC PART

365-3336 **LINES GP-LOAD CONTROL VALVE** *(contd.)* **i04553435**

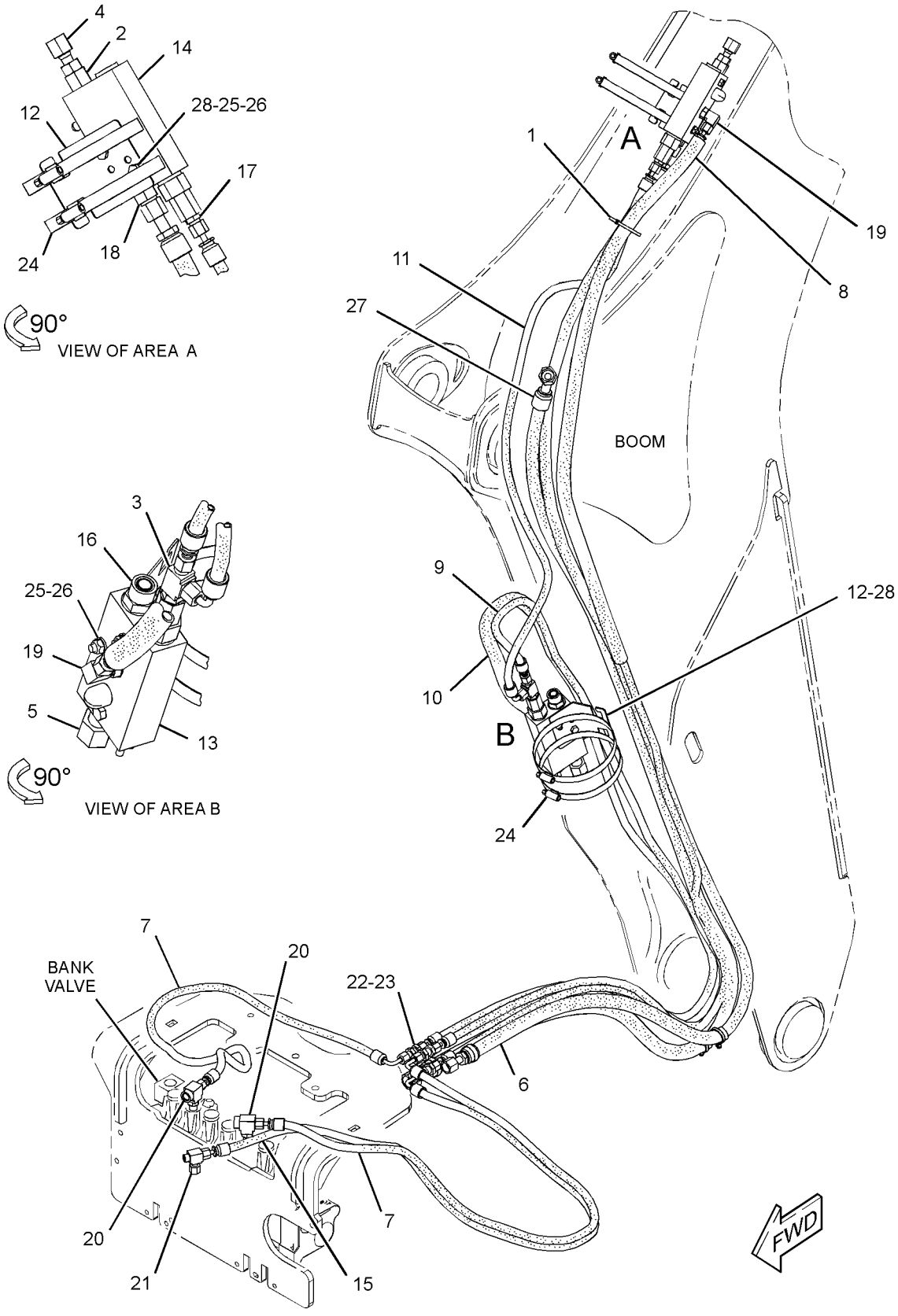

GRAPHIC #1 **<END>** g02827236

HYDRAULIC SYSTEM

365-3337 LINES GP-LOAD CONTROL VALVE

S/N: SEJ1-UP

PART OF 340-1745 LINKAGE AR-BUCKET

AN ATTACHMENT

SMCS-5057, 5811 **i04562786**

NOTE	REF NO	GRAPHIC REF	PART NUMBER	QTY	PART NAME 1 2 3 4 5 6 (PRODUCT LEVEL)	SEE PAGE
	1	1	**3S-2093**	1	STRAP-CABLE	
	2	1	*161-9916*	1	ADAPTER AS	
		1	**2M-9780**	1	SEAL-O-RING	
		1	**6V-7420**	1	ADAPTER	
	3	1	**205-7198**	1	TEE AS	
		1	**3J-1907**	1	SEAL-O-RING	
		1	**4J-5477**	2	SEAL-O-RING	
	4	1	*250-1440*	1	ADAPTER AS	
		1	**3K-0360**	1	SEAL-O-RING	
		1	**7X-3164**	1	ADAPTER-SWIVEL	
	5	1	*302-1413*	1	ADAPTER AS	
		1	**2M-9780**	1	SEAL-O-RING	
		1	**7X-3165**	1	ADAPTER	
I	6	1	**328-6608**	1	HOSE AS	
I	7	1	**329-4507**	1	HOSE AS	
I	8	1	**330-6126**	2	HOSE AS	
I	9	1	**330-8144**	1	HOSE AS	
I	10	1	**330-8145**	1	HOSE AS	
I	11	1	**330-8146**	1	HOSE AS	
	12	1	**339-4287**	2	BRACKET	
	13	1	**347-1128**	1	VALVE GP-LOAD CONTROL (BOOM)	
	14	1	**347-1129**	1	VALVE GP-LOAD CONTROL (STICK)	
I	15	1	**368-6911**	1	HOSE AS	
	16	1	*148-8315*	1	CONNECTOR AS	
		1	**2M-9780**	1	SEAL-O-RING	
		1	**6V-8642**	1	CONNECTOR	
		1	**7J-9108**	1	SEAL-O-RING	
	17	1	*148-8325*	1	CONNECTOR AS	
		1	**3J-1907**	1	SEAL-O-RING	
		1	**4J-5477**	1	SEAL-O-RING	
		1	**6V-8641**	1	CONNECTOR	
	18	1	*148-8345*	1	CONNECTOR AS	
		1	**2M-9780**	1	SEAL-O-RING	
		1	**6V-8398**	1	SEAL-O-RING	
		1	**6V-8638**	1	CONNECTOR	
	19	1	*148-8368*	2	ELBOW AS	
					(EACH INCLUDES)	
		1	**3J-1907**	1	SEAL-O-RING	
		1	**4J-5477**	1	SEAL-O-RING	
		1	**6V-8627**	1	ELBOW	
	20	1	*148-8423*	2	TEE AS	
					(EACH INCLUDES)	
		1	**3J-1907**	1	SEAL-O-RING	
		1	**4J-5477**	1	SEAL-O-RING	
		1	**8T-3311**	1	TEE	
	21	1	*148-8448*	1	TEE AS	
		1	**4J-5477**	2	SEAL-O-RING	
		1	**6V-9842**	1	TEE-SWIVEL	
	22	1	*150-4052*	3	UNION AS	
					(EACH INCLUDES)	
		1	**4J-5477**	2	SEAL-O-RING	
		1	**6V-8993**	1	UNION	
	23	1	**2P-1279**	3	LOCKNUT (9/16-18-THD)	
	24	1	**5P-0599**	4	CLAMP-BAND	
M	25	1	**6V-9189**	4	LOCKNUT (M8X1.25-THD)	

365-3337 LINES GP-LOAD CONTROL VALVE *(contd.)* i04562786

NOTE	REF NO	GRAPHIC REF	PART NUMBER	QTY	PART NAME 1 2 3 4 5 6 (PRODUCT LEVEL)	SEE PAGE
	26	1	**8T-4224**	4	WASHER-HARD (8.8X16X2-MM THK)	
	27	1	**343-4333**	1	HOSE AS	
M	28	1	**8T-7329**	4	BOLT (M8X1.25X55-MM)	

I-REFER TO HYDRAULIC INFORMATION SYSTEM
M-METRIC PART

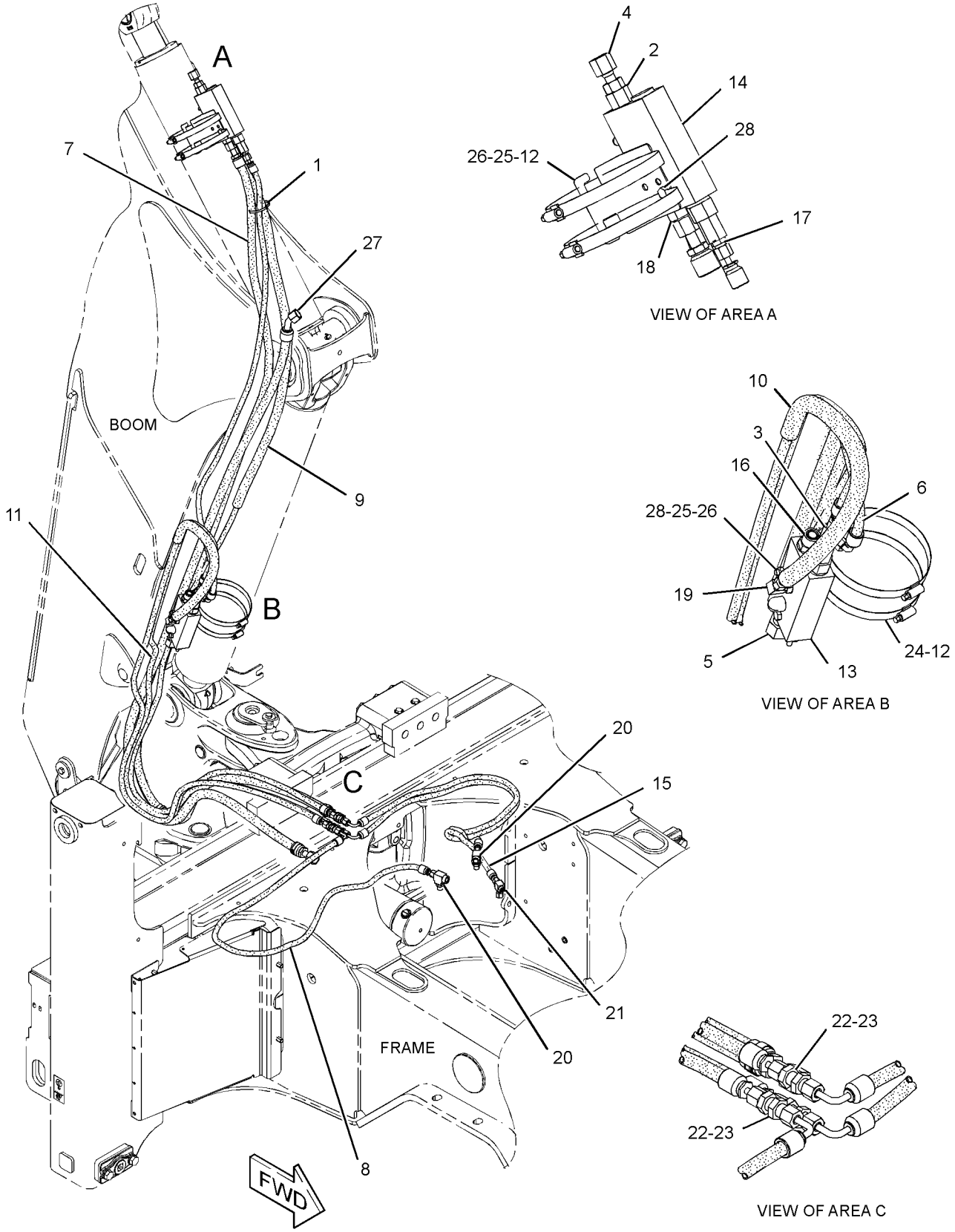

GRAPHIC #1 **<END>** g02828221

HYDRAULIC SYSTEM

317-4362 LINES GP-MULTIPURPOSE BUCKET

S/N: SEJ1-UP
PART OF 318-7251 BUCKET AR-MULTIPURPOSE
AN ATTACHMENT

SMCS-5057 **i03479101**

NOTE	REF NO	GRAPHIC REF	PART NUMBER	QTY	PART NAME 1 2 3 4 5 6 (PRODUCT LEVEL)	SEE PAGE
	1	1	**8T-6726**	2	CLAMP-HOSE	
	2	1	**9R-8870**	2	BLOCK	
I	3	1	**292-8339**	1	HOSE AS	
I	4	1	**317-4359**	1	HOSE AS	
I	5	1	**317-4360**	1	HOSE AS	
I	6	1	**317-4361**	1	HOSE AS	
	7	1	*148-8378*	2	ELBOW AS	
					(EACH INCLUDES)	
		1	**3J-1907**	1	SEAL-O-RING	
		1	**6V-8397**	1	SEAL-O-RING	
		1	**6V-8724**	1	ELBOW	
	8	1	*150-3060*	2	TEE AS	
					(EACH INCLUDES)	
		1	**6V-8397**	2	SEAL-O-RING	
		1	**6V-8398**	1	SEAL-O-RING	
		1	**8T-3444**	1	TEE-UNION	
	9	1	**6V-8397**	2	SEAL-O-RING	
	10	1	**6V-9830**	2	CAP AS	
	11	1	**8T-1893**	4	CLIP (SLOT)	
	12	1	**8T-1894**	4	CLIP (TAB)	
	13	1	**8T-4121**	2	WASHER-HARD (11X21X2.5-MM THK)	
M	14	1	**8T-4136**	2	BOLT (M10X1.5X25-MM)	

I-REFER TO HYDRAULIC INFORMATION SYSTEM
M-METRIC PART

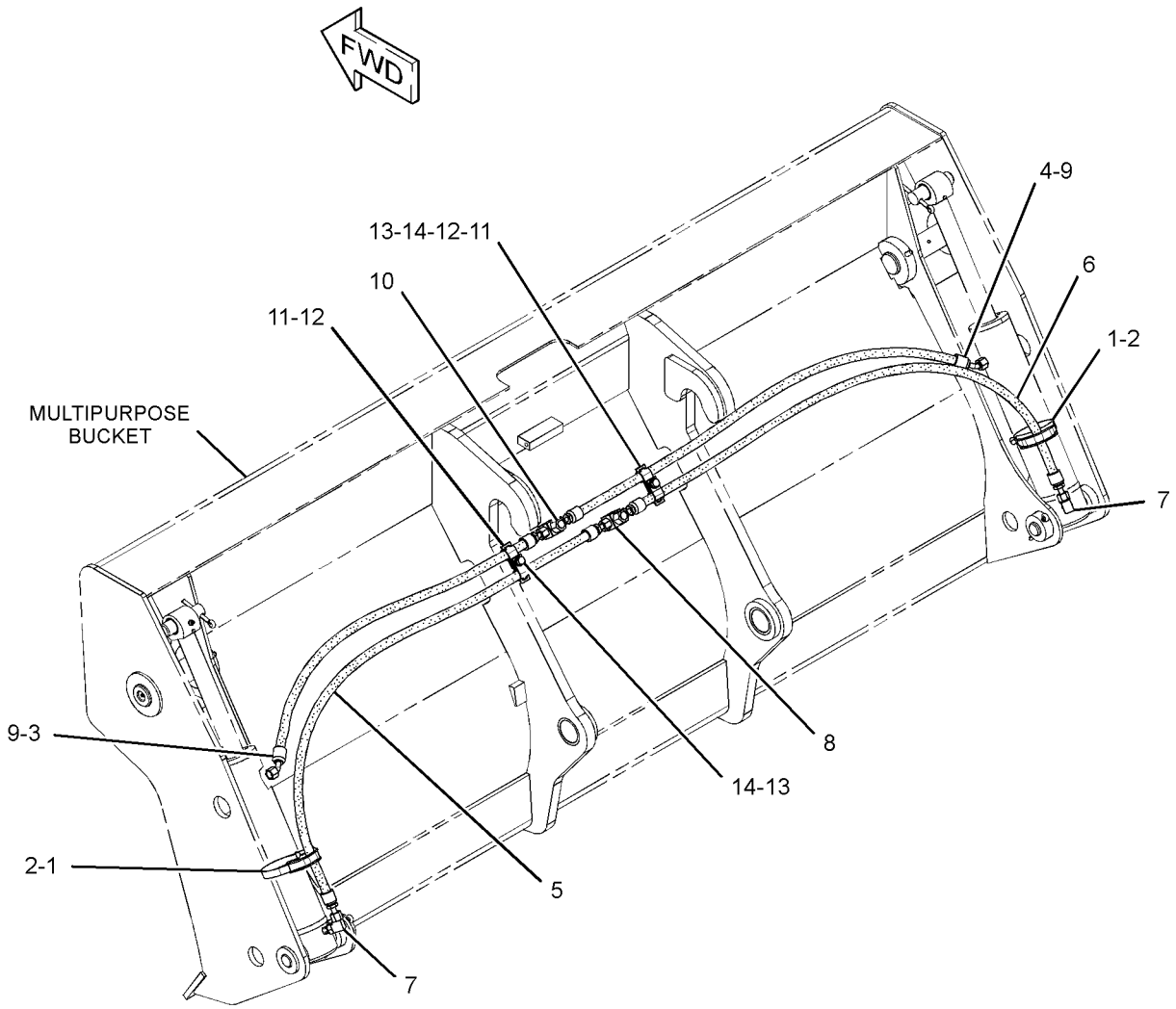

GRAPHIC #1 **<END>** g01858933

HYDRAULIC SYSTEM

350-1591 LINES GP-MULTIPURPOSE BUCKET

S/N: SEJ1-UP

PART OF 337-7411, 350-1581, 350-1587 BUCKET AR-MULTIPURPOSE AN ATTACHMENT

SMCS-5057 **i04586530**

NOTE	REF NO	GRAPHIC REF	PART NUMBER	QTY	PART NAME 1 2 3 4 5 6 (PRODUCT LEVEL)	SEE PAGE
	1	1	**8T-6726**	2	CLAMP-HOSE	
	2	1	**9R-8870**	2	BLOCK	
I	3	1	**9U-0361**	1	HOSE AS	
I	4	1	**227-3509**	1	HOSE AS	
I	5	1	**291-3654**	1	HOSE AS	
I	6	1	**317-2242**	1	HOSE AS	
I	7	1	**317-2243**	1	HOSE AS	
I	8	1	**317-2244**	1	HOSE AS	
	9	1	*148-8378*	2	ELBOW AS	
					(EACH INCLUDES)	
		1	**3J-1907**	1	SEAL-O-RING	
		1	**6V-8397**	1	SEAL-O-RING	
		1	**6V-8724**	1	ELBOW	
	10	1	*150-3060*	2	TEE AS	
					(EACH INCLUDES)	
		1	**6V-8397**	2	SEAL-O-RING	
		1	**6V-8398**	1	SEAL-O-RING	
		1	**8T-3444**	1	TEE-UNION	
	11	1	**5P-7464**	2	CLIP (SLOT)	
	12	1	**5P-7465**	2	CLIP (TAB)	
	13	1	**6V-1249**	2	GROMMET	
	14	1	**6V-8397**	2	SEAL-O-RING	
	15	1	**8T-1893**	8	CLIP (SLOT)	
	16	1	**8T-1894**	8	CLIP (TAB)	
	17	1	**8T-4121**	4	WASHER-HARD (11X21X2.5-MM THK)	
M	18	1	**8T-4136**	4	BOLT (M10X1.5X25-MM)	
M	19	1	**8T-4192**	2	BOLT (M12X1.75X25-MM)	
	20	1	**8T-4223**	2	WASHER-HARD (13.5X25.5X3-MM THK)	

I-REFER TO HYDRAULIC INFORMATION SYSTEM
M-METRIC PART

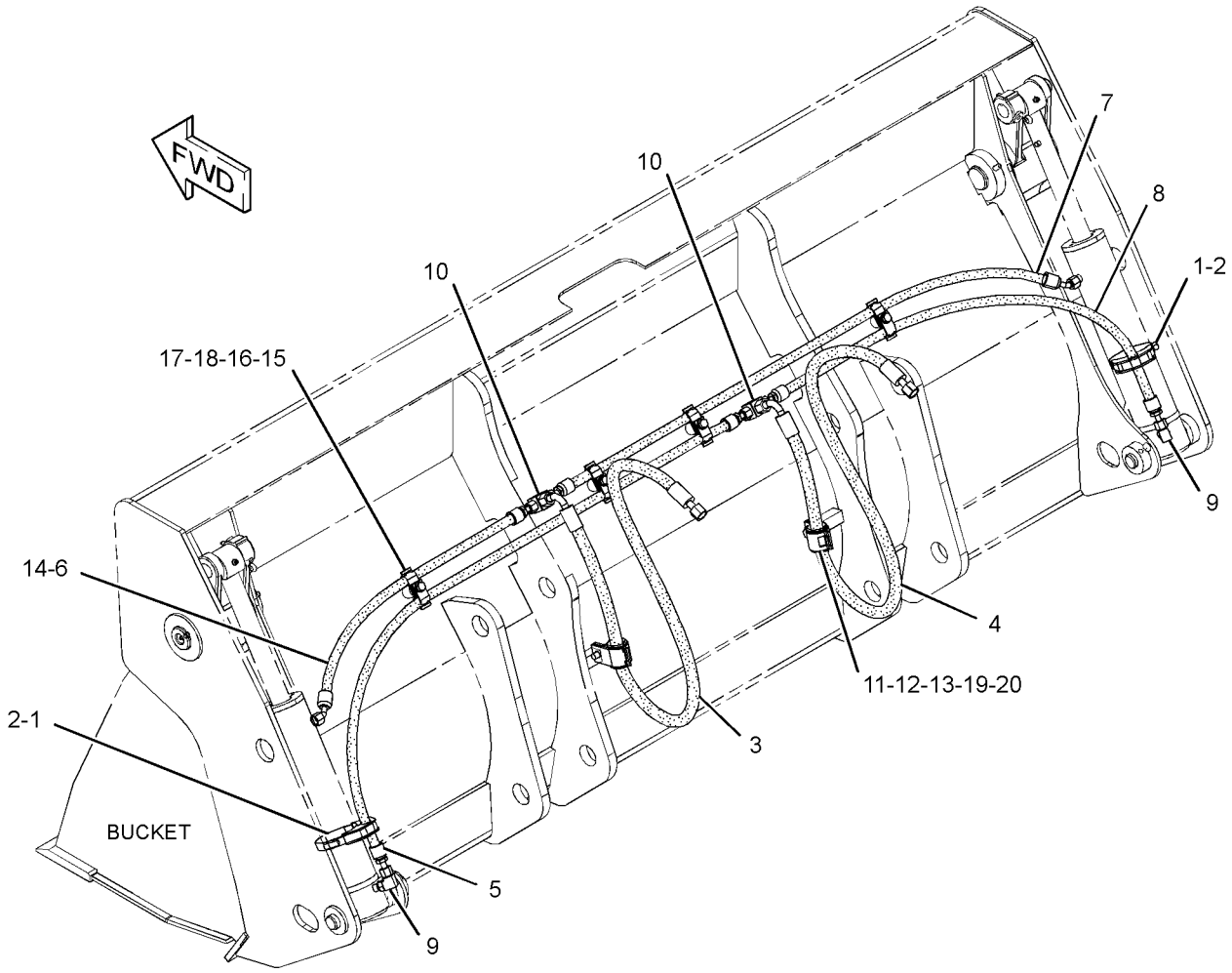

GRAPHIC #1 **<END>** g02761917

HYDRAULIC SYSTEM

350-1594 LINES GP-MULTIPURPOSE BUCKET

S/N: SEJ1-UP

PART OF 350-1580, 350-1589 BUCKET AR-MULTIPURPOSE

AN ATTACHMENT

SMCS-5057 **i04597075**

NOTE	REF NO	GRAPHIC REF	PART NUMBER	QTY	PART NAME 1 2 3 4 5 6 (PRODUCT LEVEL)	SEE PAGE
	1	1	**8T-6726**	2	CLAMP-HOSE	
	2	1	**9R-8870**	2	BLOCK	
I	3	1	**9U-0361**	1	HOSE AS	
I	4	1	**227-3509**	1	HOSE AS	
I	5	1	**346-5927**	1	HOSE AS	
I	6	1	**355-7516**	1	HOSE AS	
I	7	1	**362-4273**	1	HOSE AS	
I	8	1	**362-4274**	1	HOSE AS	
	9	1	*148-8378*	2	ELBOW AS	
					(EACH INCLUDES)	
		1	**3J-1907**	1	SEAL-O-RING	
		1	**6V-8397**	1	SEAL-O-RING	
		1	**6V-8724**	1	ELBOW	
	10	1	*150-3060*	2	TEE AS	
					(EACH INCLUDES)	
		1	**6V-8397**	2	SEAL-O-RING	
		1	**6V-8398**	1	SEAL-O-RING	
		1	**8T-3444**	1	TEE-UNION	
	11	1	**5P-7464**	2	CLIP (SLOT)	
	12	1	**5P-7465**	2	CLIP (TAB)	
	13	1	**6V-1249**	2	GROMMET	
	14	1	**6V-8397**	2	SEAL-O-RING	
	15	1	**8T-1893**	8	CLIP (SLOT)	
	16	1	**8T-1894**	8	CLIP (TAB)	
	17	1	**8T-4121**	4	WASHER-HARD (11X21X2.5-MM THK)	
M	18	1	**8T-4136**	4	BOLT (M10X1.5X25-MM)	
M	19	1	**8T-4192**	2	BOLT (M12X1.75X25-MM)	
	20	1	**8T-4223**	2	WASHER-HARD (13.5X25.5X3-MM THK)	

I-REFER TO HYDRAULIC INFORMATION SYSTEM
M-METRIC PART

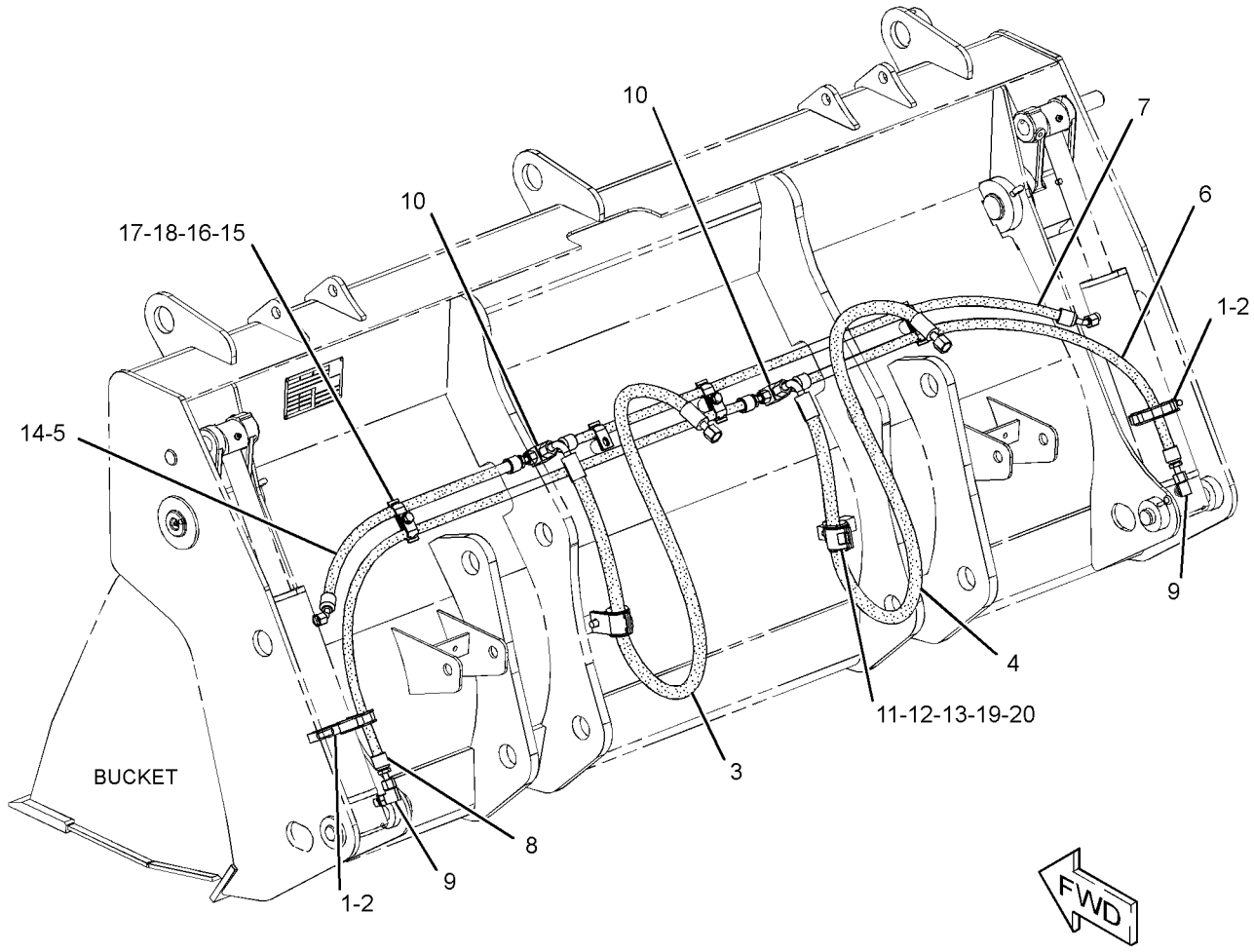

GRAPHIC #1 **<END>** g02761837

HYDRAULIC SYSTEM

337-9770 LINES GP-PILOT

S/N: SEJ1-UP

PART OF 340-1719 HYDRAULIC AR

SMCS-5057, 5059 **i04548422**

NOTE	REF NO	GRAPHIC REF	PART NUMBER	QTY	PART NAME 1 2 3 4 5 6 (PRODUCT LEVEL)	SEE PAGE
	1	1	**6V-0852**	1	CAP-DUST	
	2	1	*164-5567*	1	COUPLER AS-QUICK DISCONNECT (MALE)	
		1	**6V-3965**	1	FITTING (QUICK DISCONNECT)	
		1	**214-7568**	1	SEAL-O-RING	
	3	1	**9X-6772**	3	STRAP-CABLE	
	4	1	*229-5336*	1	TEE AS	
		1	**3J-1907**	1	SEAL-O-RING	
		1	**4J-5477**	1	SEAL-O-RING	
		1	**081-5648**	1	TEE	
	5	1	*351-0290*	1	ADAPTER AS	
		1	**3J-7354**	1	SEAL-O-RING	
		1	**4J-5477**	1	SEAL-O-RING	
		1	**308-9568**	1	ADAPTER-TEE	
I	6	1	**361-9929**	1	HOSE AS	
I	7	1	**361-9930**	1	HOSE AS	
	8	1	*148-8325*	1	CONNECTOR AS	
		1	**3J-1907**	1	SEAL-O-RING	
		1	**4J-5477**	1	SEAL-O-RING	
		1	**6V-8641**	1	CONNECTOR	
	9	1	*150-3033*	1	ELBOW AS	
		1	**3J-1907**	1	SEAL-O-RING	
		1	**4J-5477**	1	SEAL-O-RING	
		1	**8T-0164**	1	ELBOW	

I-REFER TO HYDRAULIC INFORMATION SYSTEM

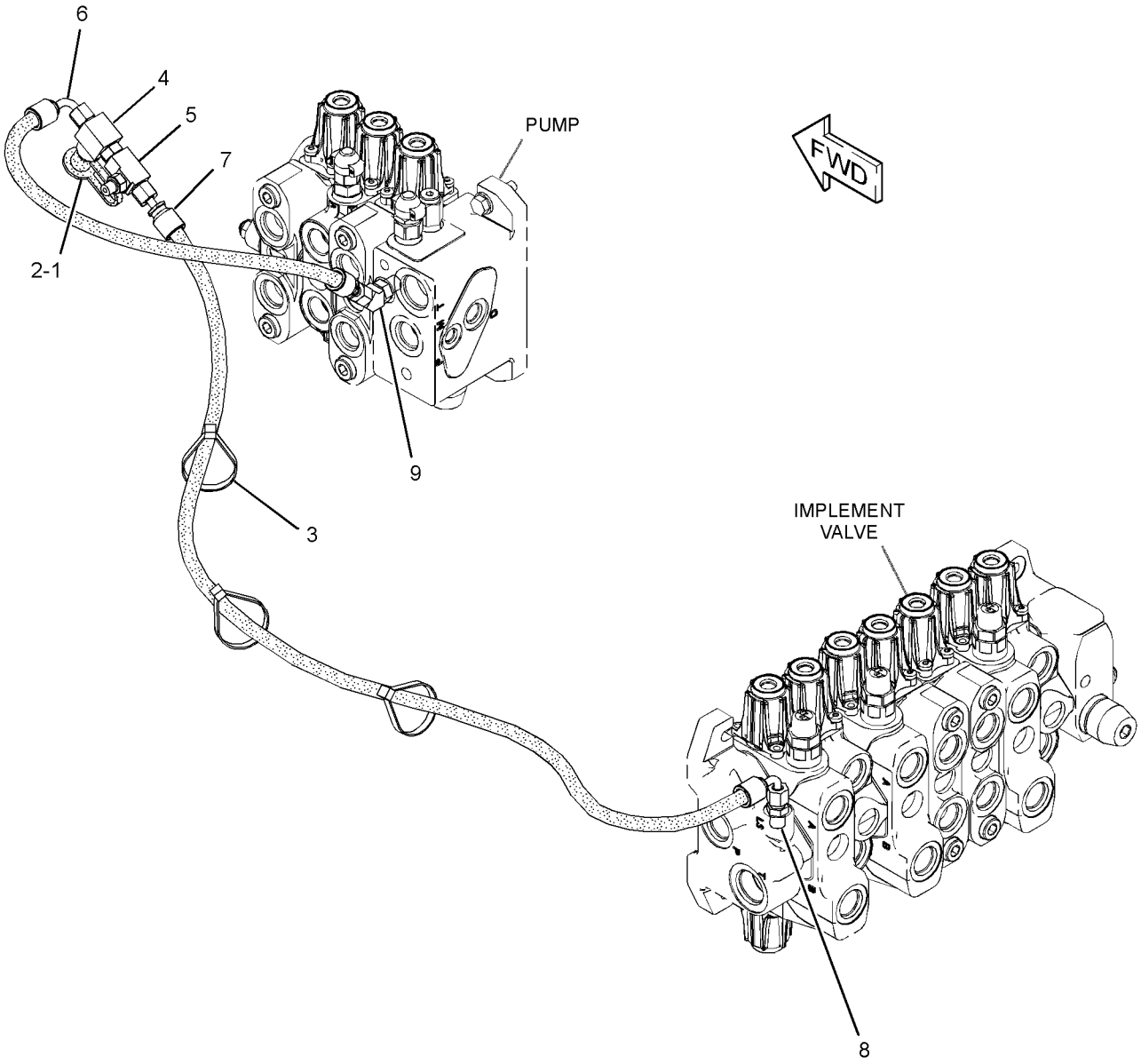

GRAPHIC #1 **<END>** g02783505

HYDRAULIC SYSTEM

337-9785 LINES GP-PILOT—SUPPLY

S/N: SEJ1-UP
PART OF 373-4273 CONVERSION AR-QUICK COUPLER, 373-4271, 373-4275, 373-4277
VALVE AR-BANK 3
AN ATTACHMENT

SMCS-5057, 5059 **i04580730**

NOTE	REF NO	GRAPHIC REF	PART NUMBER	QTY	PART NAME 1 2 3 4 5 6 (PRODUCT LEVEL)	SEE PAGE
	1	1	**6V-0852**	1	CAP-DUST	
	2	1	**7C-0754**	1	TEE	
	3	1	**133-5813**	6	BAND-MARKER (GRAY, P)	
	4	1	**238-1842**	1	ELBOW AS	
		1	**9X-6581**	1	NUT-O-RING SEAL (1-14-THD)	
I	5	1	**358-7570**	2	HOSE AS	
I	6	1	**361-9947**	1	HOSE AS	
I	7	1	**363-5882**	1	HOSE AS	
I	8	1	**363-5887**	2	HOSE AS	
I	9	1	**365-2869**	1	HOSE AS	
	10	1	*385-5775*	1	CONNECTOR AS	
		1	**2M-9780**	1	SEAL-O-RING	
		1	**131-2171**	1	CONNECTOR	
	11	1	*148-8325*	9	CONNECTOR AS	
					(EACH INCLUDES)	
		1	**3J-1907**	1	SEAL-O-RING	
		1	**4J-5477**	1	SEAL-O-RING	
		1	**6V-8641**	1	CONNECTOR	
	12	1	*148-8338*	1	CONNECTOR AS	
		1	**3J-1907**	1	SEAL-O-RING	
		1	**6V-8397**	1	SEAL-O-RING	
		1	**8T-0075**	1	CONNECTOR	
	13	1	*148-8342*	1	CONNECTOR AS	
		1	**3K-0360**	1	SEAL-O-RING	
		1	**6V-8632**	1	CONNECTOR	
		1	**7J-9108**	1	SEAL-O-RING	
	14	1	*148-8353*	1	ELBOW AS	
		1	**3J-1907**	1	SEAL-O-RING	
		1	**6V-8397**	1	SEAL-O-RING	
		1	**6V-9001**	1	ELBOW	
	15	1	*148-8368*	1	ELBOW AS	
		1	**3J-1907**	1	SEAL-O-RING	
		1	**4J-5477**	1	SEAL-O-RING	
		1	**6V-8627**	1	ELBOW	
	16	1	*150-5968*	1	TEE AS	
		1	**4J-5477**	2	SEAL-O-RING	
		1	**6V-9835**	1	TEE-SWIVEL	
	17	1	*164-5567*	1	COUPLER AS-QUICK DISCONNECT (MALE)	
		1	**6V-3965**	1	FITTING (QUICK DISCONNECT)	
		1	**214-7568**	1	SEAL-O-RING	
	18	1	**359-7325**	4	CLAMP-HOSE	
	19	1	**3E-4321**	1	CLIP	
	20	1	**6V-9828**	1	CAP AS	
M	21	1	**8T-4200**	1	BOLT (M8X1.25X16-MM)	
	22	1	**8T-4224**	1	WASHER-HARD (8.8X16X2-MM THK)	
E	23	1	**5P-0743**		HOSE (47-CM)	
E	23A	1	**5P-0743**		HOSE (143-CM)	
	24	1	**205-7198**	1	TEE AS	
		1	**3J-1907**	1	SEAL-O-RING	
		1	**4J-5477**	2	SEAL-O-RING	

E-ORDER BY THE CENTIMETER
I-REFER TO HYDRAULIC INFORMATION SYSTEM
M-METRIC PART

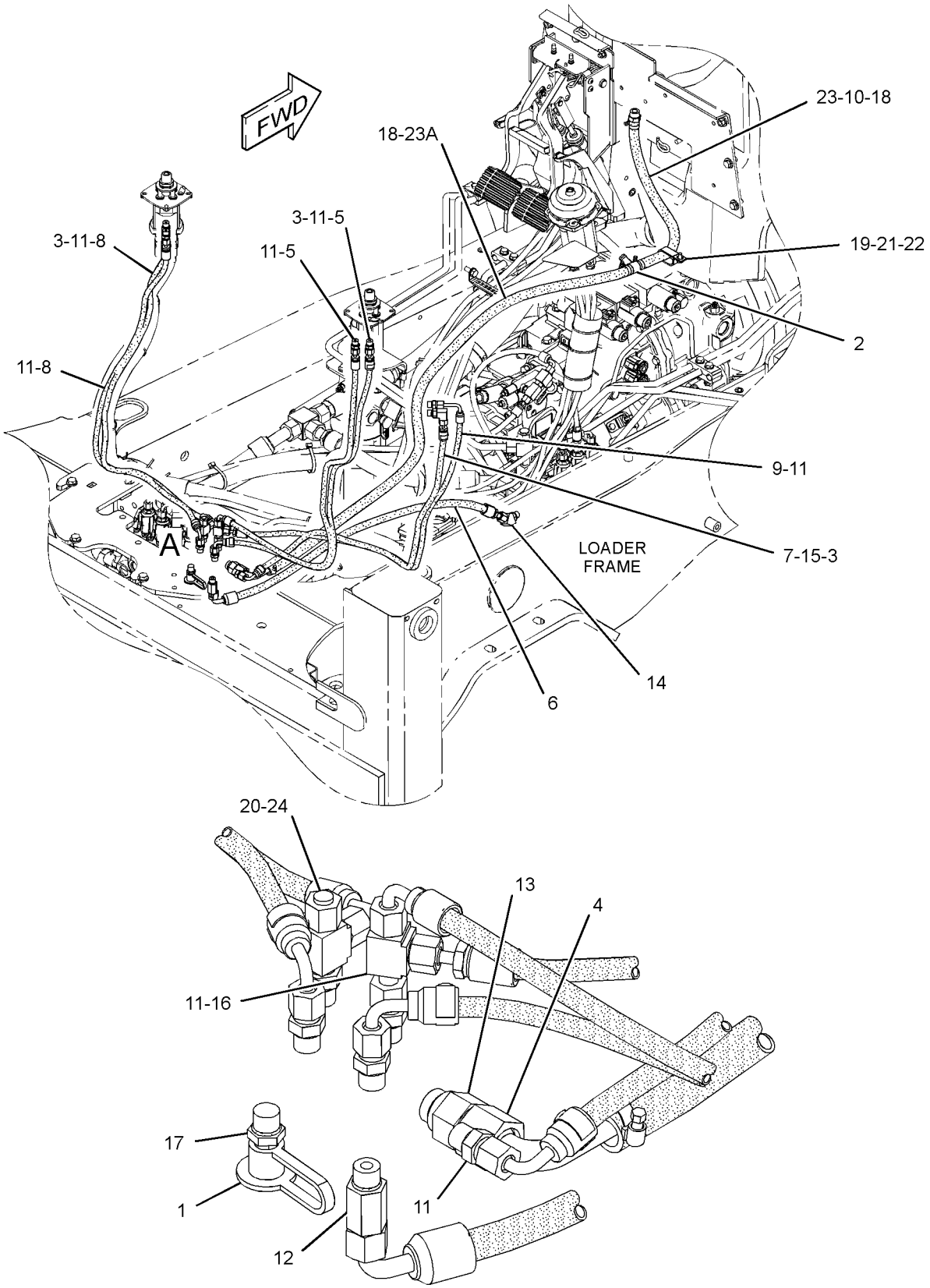

GRAPHIC #1

<END>

g02806940

HYDRAULIC SYSTEM

337-9786 LINES GP-PILOT—BACKHOE

S/N: SEJ1-UP
PART OF 373-4273 CONVERSION AR-QUICK COUPLER, 373-4271, 373-4275, 373-4277
VALVE AR-BANK 3
AN ATTACHMENT

SMCS-5057, 5059 **i04580738**

NOTE	REF NO	GRAPHIC REF	PART NUMBER	QTY	PART NAME 1 2 3 4 5 6 (PRODUCT LEVEL)	SEE PAGE
	1	2	**4I-9521**	2	BAND-MARKER (RED, L1)	
	2	2	**4I-9522**	2	BAND-MARKER (YELLOW, L2)	
	3	2	**4I-9523**	2	BAND-MARKER (BLUE, L3)	
	4	2	**4I-9524**	2	BAND-MARKER (BROWN, L4)	
	5	2	**4I-9525**	2	BAND-MARKER (ORANGE, R1)	
	6	2	**4I-9526**	2	BAND-MARKER (WHITE, R2)	
	7	2	**4I-9527**	2	BAND-MARKER (GREEN, R3)	
	8	2	**4I-9528**	2	BAND-MARKER (PURPLE, R4)	
	9	2	**9X-6772**	10	STRAP-CABLE	
	10	2	*164-9640*	1	CONNECTOR AS	
		2	**3J-1907**	1	SEAL-O-RING	
		2	**4J-5477**	1	SEAL-O-RING	
		2	**145-2237**	1	CONNECTOR	
	11	2	*241-6215*	2	ELBOW AS	
					(EACH INCLUDES)	
		2	**3J-1907**	1	SEAL-O-RING	
		2	**6V-8076**	1	ELBOW	
Y	12	2	**300-4491**	1	MANIFOLD GP-CONTROL (PATTERN CHANGE)	445
	13	2	*268-1559*	6	ADAPTER AS	
					(EACH INCLUDES)	
		2	**3J-1907**	1	SEAL-O-RING	
		2	**4J-5477**	1	SEAL-O-RING	
		2	**209-0939**	1	ADAPTER	
	14	1	**311-1741**	1	FILM-INSTRUCTION (OPERATOR CONTROLS, READ OMM)	
I	15	2	**358-7573**	1	HOSE AS	
	16	2	**359-7227**	2	VALVE GP-PILOT	
I	17	2	**361-9942**	1	HOSE AS	
I	18	2	**361-9944**	2	HOSE AS	
I	19	2	**361-9946**	1	HOSE AS	
I	20	2	**363-5885**	1	HOSE AS	
I	21	2	**363-5886**	2	HOSE AS	
I	22	2	**363-5887**	1	HOSE AS	
I	23	2	**363-5888**	1	HOSE AS	
I	24	2	**363-5890**	1	HOSE AS	
I	25	2	**371-8501**	1	HOSE AS	
	26	2	*148-8325*	11	CONNECTOR AS	
					(EACH INCLUDES)	
		2	**3J-1907**	1	SEAL-O-RING	
		2	**4J-5477**	1	SEAL-O-RING	
		2	**6V-8641**	1	CONNECTOR	
	27	2	*148-8368*	5	ELBOW AS	
					(EACH INCLUDES)	
		2	**3J-1907**	1	SEAL-O-RING	
		2	**4J-5477**	1	SEAL-O-RING	
		2	**6V-8627**	1	ELBOW	
	28	2	*150-3033*	1	ELBOW AS	
		2	**3J-1907**	1	SEAL-O-RING	
		2	**4J-5477**	1	SEAL-O-RING	
		2	**8T-0164**	1	ELBOW	
	29	2	**156-6175**	1	CLIP	
	30	2	**8T-4224**	2	WASHER-HARD (8.8X16X2-MM THK)	
M	31	2	**8T-6869**	2	BOLT (M8X1.25X60-MM)	
	32	2	**9X-2038**	1	WASHER (7X19X2-MM THK)	

337-9786 **LINES GP-PILOT** *(contd.)* **i04580738**

NOTE	REF NO	GRAPHIC REF	PART NUMBER	QTY	PART NAME 1 2 3 4 5 6 (PRODUCT LEVEL)	SEE PAGE
M	33	2	**9X-2043**	1	SCREW-TRUSS HEAD (M6X1X14-MM)	
D	34	2	**160-2248**		SLEEVE-ABRASION (28.1-IN)	
D	34A	2	**160-2248**		SLEEVE-ABRASION (14.4-IN)	

D-ORDER BY THE METER
I-REFER TO HYDRAULIC INFORMATION SYSTEM
M-METRIC PART
Y-SEPARATE ILLUSTRATION

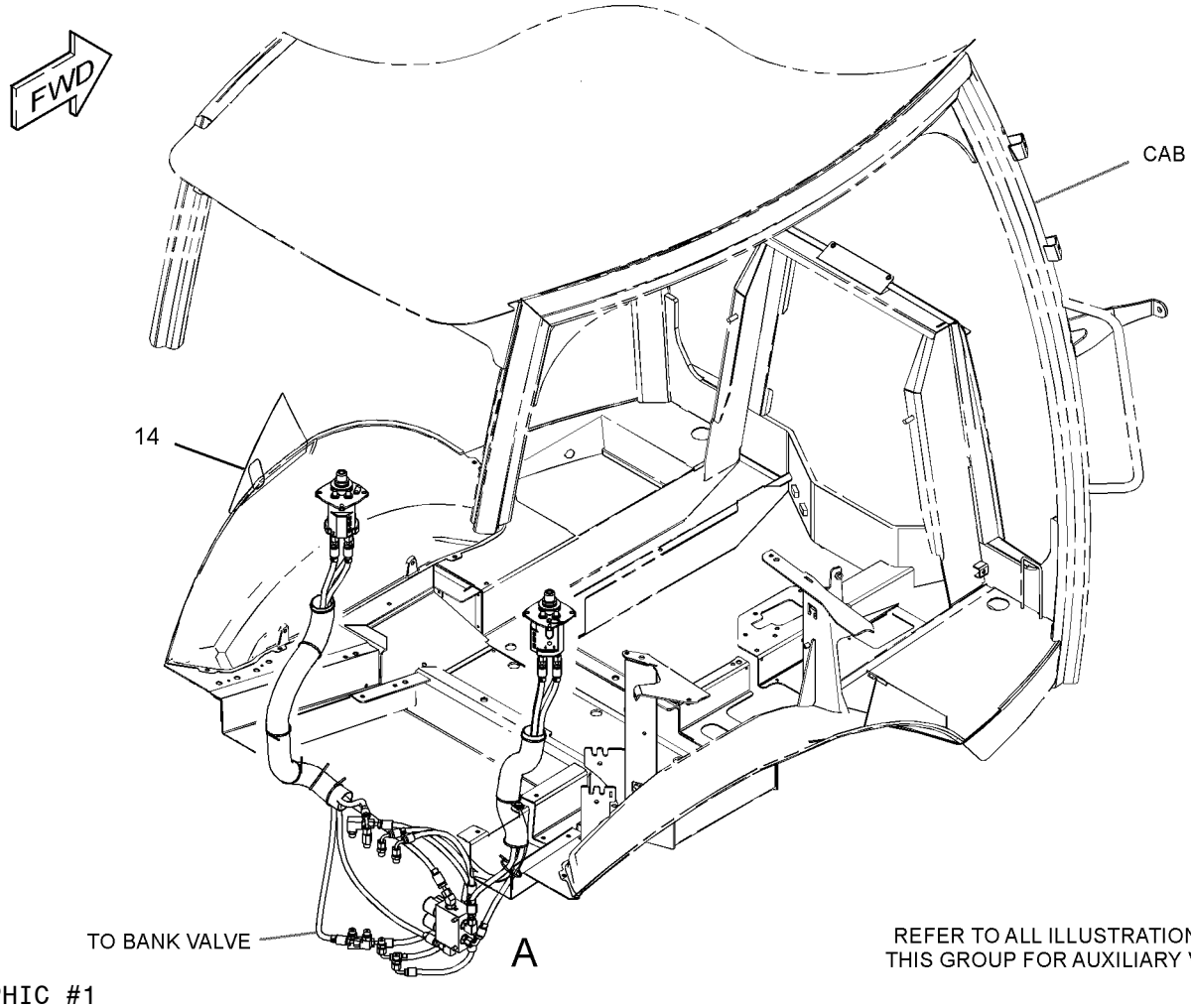

REFER TO ALL ILLUSTRATIONS OF THIS GROUP FOR AUXILIARY VIEWS

GRAPHIC #1

g02789606

337-9786 **LINES GP-PILOT** *(contd.)* **i04580738**

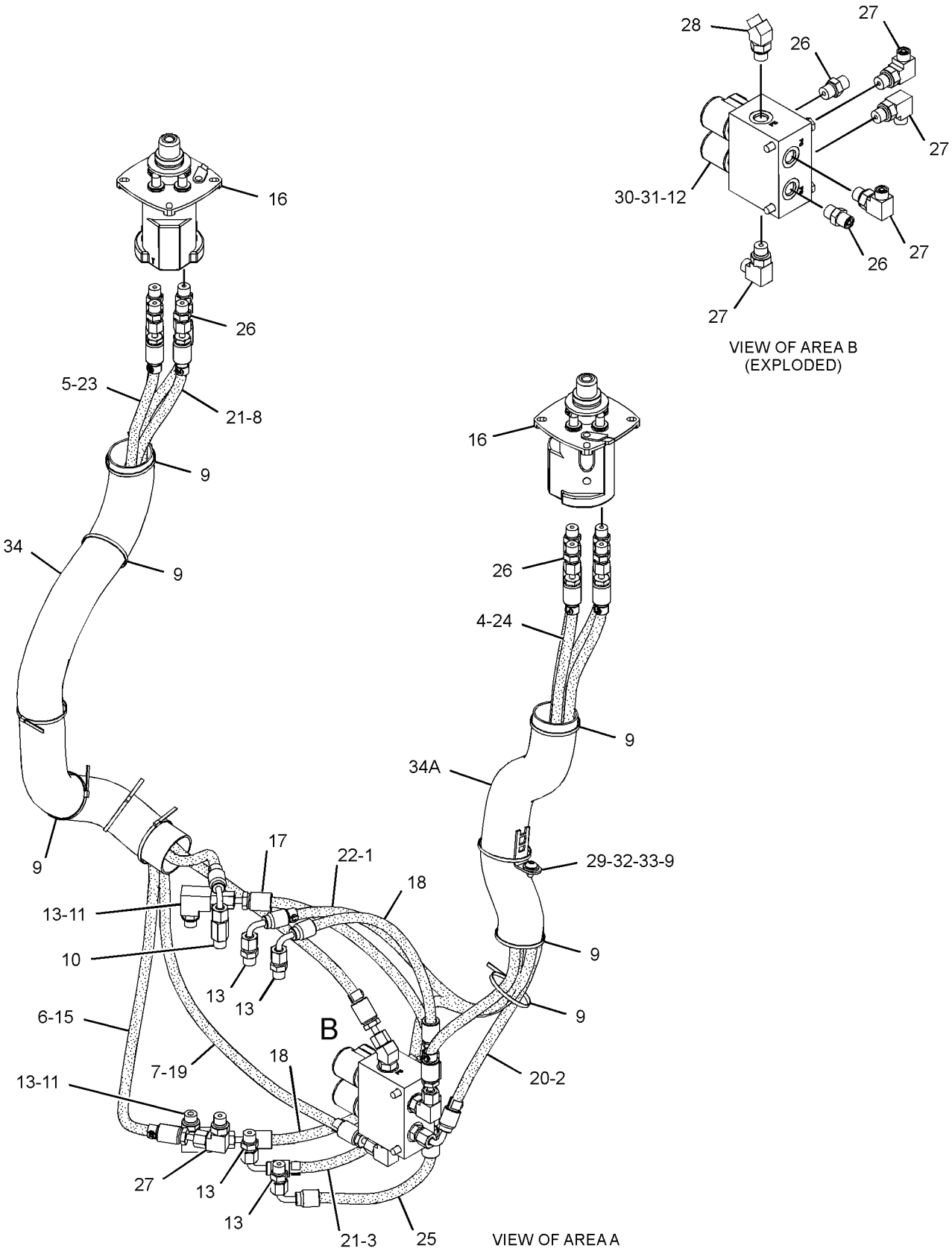

GRAPHIC #2 **<END>** g02789611

337-9787 LINES GP-PILOT—STABILIZER

S/N: SEJ1-UP
PART OF 373-4273 CONVERSION AR-QUICK COUPLER, 373-4271, 373-4275, 373-4277
VALVE AR-BANK 3
AN ATTACHMENT

SMCS-5057, 5059 **i04580739**

NOTE	REF NO	GRAPHIC REF	PART NUMBER	QTY	PART NAME 1 2 3 4 5 6 (PRODUCT LEVEL)	SEE PAGE
	1	1	**9X-6772**	3	STRAP-CABLE	
	2	1	**195-0260**	2	MARKER (BEIGE, L1)	
	3	1	**195-0261**	2	BAND-MARKER (BLACK, L2)	
	4	1	**195-0262**	2	BAND-MARKER (GREEN)	
	5	1	**195-0263**	2	BAND-MARKER (PINK, R2)	
	6	1	**206-1851**	1	SEAL	
I	7	1	**363-5883**	1	HOSE AS	
I	8	1	**363-5886**	1	HOSE AS	
I	9	1	**363-5888**	1	HOSE AS	
I	10	1	**363-5889**	1	HOSE AS	
	11	1	*148-8325*	6	CONNECTOR AS	
					(EACH INCLUDES)	
		1	**3J-1907**	1	SEAL-O-RING	
		1	**4J-5477**	1	SEAL-O-RING	
		1	**6V-8641**	1	CONNECTOR	
	12	1	*148-8368*	2	ELBOW AS	
					(EACH INCLUDES)	
		1	**3J-1907**	1	SEAL-O-RING	
		1	**4J-5477**	1	SEAL-O-RING	
		1	**6V-8627**	1	ELBOW	
G	13	1	**160-2248**		SLEEVE-ABRASION (13.8-IN)	

G-ORDER BY THE INCH
I-REFER TO HYDRAULIC INFORMATION SYSTEM

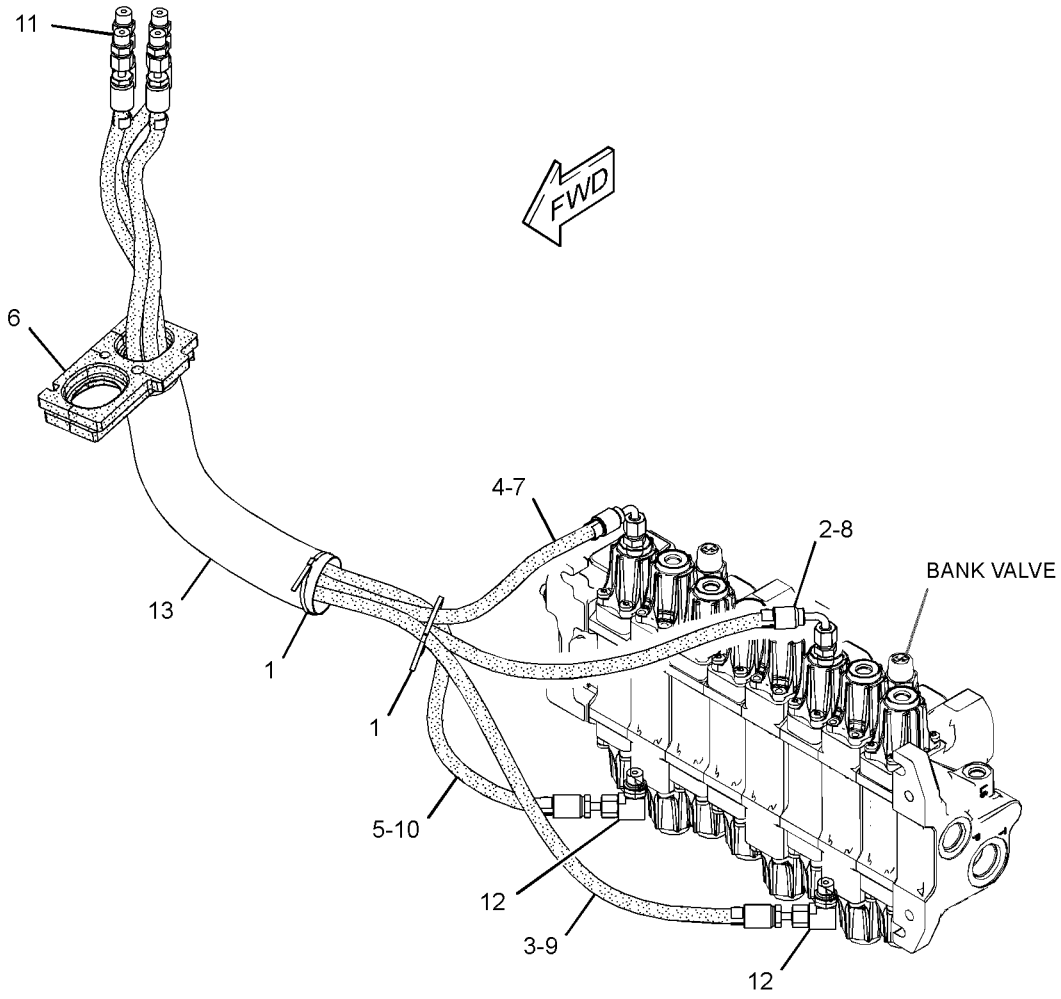

GRAPHIC #1 **<END>** g02789444

HYDRAULIC SYSTEM

337-9788 LINES GP-PILOT—LOADER

S/N: SEJ1-UP
PART OF 373-4273 CONVERSION AR-QUICK COUPLER, 373-4271, 373-4275, 373-4277
VALVE AR-BANK 3
AN ATTACHMENT

SMCS-5057, 5059 **i04622872**

NOTE	REF NO	GRAPHIC REF	PART NUMBER	QTY	PART NAME 1 2 3 4 5 6 (PRODUCT LEVEL)	SEE PAGE
	1	1	**9X-6772**	6	STRAP-CABLE	
G	2	1	**160-2248**		SLEEVE-ABRASION (8.3-IN)	
	3	1	**133-5813**	2	BAND-MARKER (GRAY, P)	
	4	1	*164-9639*	4	CONNECTOR AS	
					(EACH INCLUDES)	
		1	**3J-1907**	1	SEAL-O-RING	
		1	**4J-5477**	1	SEAL-O-RING	
		1	**148-7925**	1	CONNECTOR	
	5	1	**195-0256**	2	BAND-MARKER (PINK)	
	6	1	**195-0257**	2	BAND-MARKER (BLUE)	
	7	1	**195-0258**	2	BAND-MARKER (MARINE BLUE)	
	8	1	**195-0259**	2	BAND-MARKER (GREEN)	
	9	1	**272-5420**	1	FILM-CONTROL (LOADER, JOYSTICK)	
	10	1	**299-3270**	1	HOSE AS	
	11	1	**299-6938**	2	HOSE AS	
	12	1	**299-6940**	1	HOSE AS	
I	13	1	**372-4431**	1	HOSE AS	
I	14	1	**374-6727**	1	HOSE AS	
	15	1	**382-4996**	1	VALVE GP-PILOT (LOADER)	
		1	**260-3020**	1	KIT-SEAL	
					(INCLUDES O-RING SEALS & RETAINING RINGS)	
		1	**260-3021**	2	KIT-DETENT	
					(EACH INCLUDES RETAINING RING, PLUNGER & COIL AS)	
		1	**102-8805**	1	KIT-RECEPTACLE (6-PIN)	
					(INCLUDES RECPETACLE AS & WEDGE)	
		1	**316-7091**	1	KIT-JOINT	
	16	1	*148-8325*	6	CONNECTOR AS	
					(EACH INCLUDES)	
		1	**3J-1907**	1	SEAL-O-RING	
		1	**4J-5477**	1	SEAL-O-RING	
		1	**6V-8641**	1	CONNECTOR	
	17	1	*150-5968*	1	TEE AS	
		1	**4J-5477**	2	SEAL-O-RING	
		1	**6V-9835**	1	TEE-SWIVEL	

G-ORDER BY THE INCH
I-REFER TO HYDRAULIC INFORMATION SYSTEM

337-9788 **LINES GP-PILOT** *(contd.)* **i04622872**

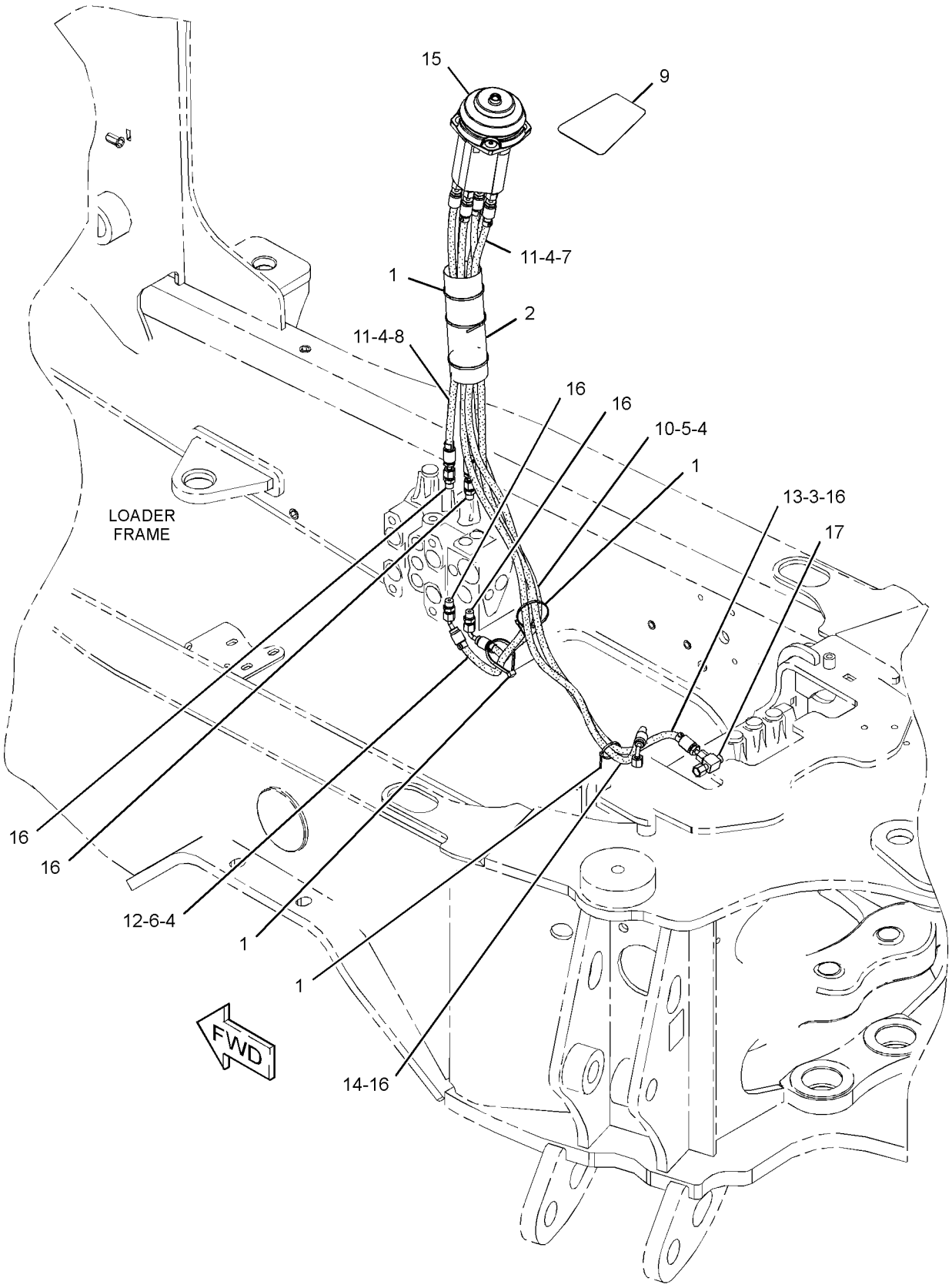

GRAPHIC #1 **<END>** g02828197

337-9828 LINES GP-PILOT–AUXILIARY

S/N: SEJ1-UP
PART OF 373-4273 CONVERSION AR-QUICK COUPLER, 373-4271, 373-4275, 373-4277
VALVE AR-BANK 3
AN ATTACHMENT

SMCS-5057, 5059 **i04622873**

NOTE	REF NO	GRAPHIC REF	PART NUMBER	QTY	PART NAME 1 2 3 4 5 6 (PRODUCT LEVEL)	SEE PAGE
I	1	1	**358-7573**	1	HOSE AS	
I	2	1	**363-5887**	1	HOSE AS	
	3	1	*148-8325*	2	CONNECTOR AS	
					(EACH INCLUDES)	
		1	**3J-1907**	1	SEAL-O-RING	
		1	**4J-5477**	1	SEAL-O-RING	
		1	**6V-8641**	1	CONNECTOR	
	4	1	*148-8368*	2	ELBOW AS	
					(EACH INCLUDES)	
		1	**3J-1907**	1	SEAL-O-RING	
		1	**4J-5477**	1	SEAL-O-RING	
		1	**6V-8627**	1	ELBOW	

I-REFER TO HYDRAULIC INFORMATION SYSTEM

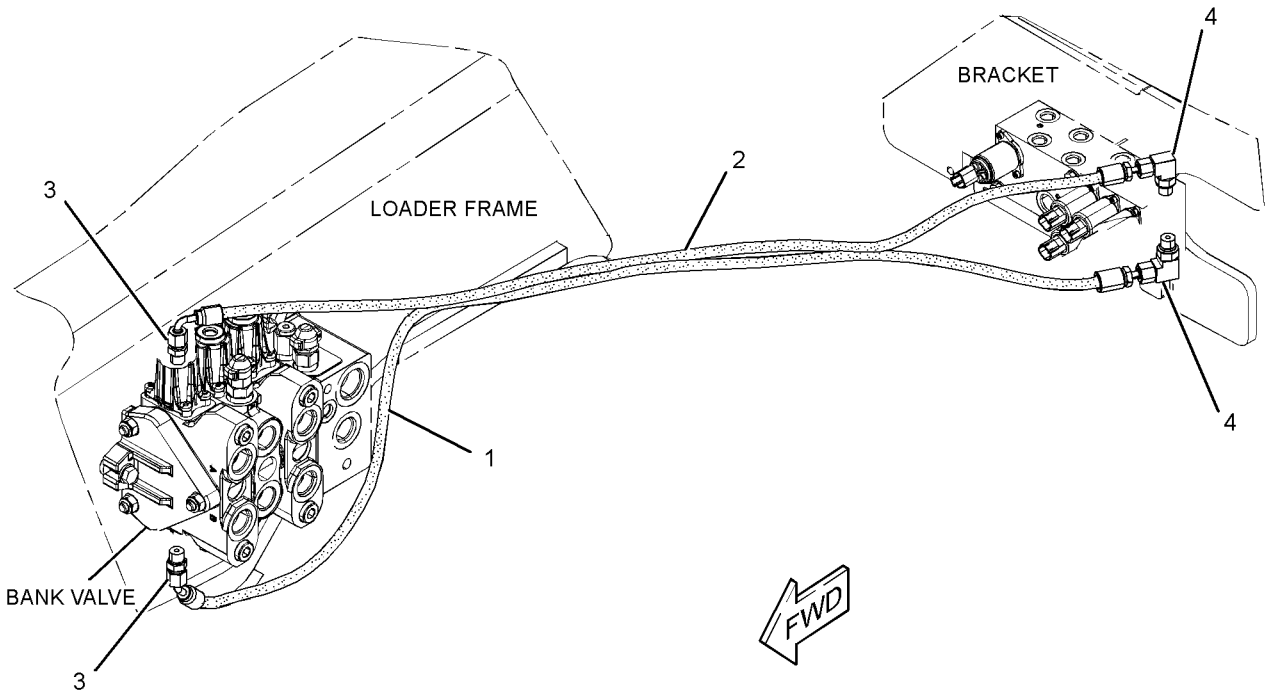

GRAPHIC #1 **<END>** g02813397

HYDRAULIC SYSTEM

337-9829 LINES GP-PILOT–AUXILIARY

S/N: SEJ1-UP
PART OF 373-4273 CONVERSION AR-QUICK COUPLER, 373-4271, 373-4275, 373-4277
VALVE AR-BANK 3
AN ATTACHMENT

SMCS-5057, 5059 **i04611674**

NOTE	REF NO	GRAPHIC REF	PART NUMBER	QTY	PART NAME 1 2 3 4 5 6 (PRODUCT LEVEL)	SEE PAGE
I	1	1	**361-9945**	2	HOSE AS	
	2	1	*148-8325*	4	CONNECTOR AS	
					(EACH INCLUDES)	
		1	**3J-1907**	1	SEAL-O-RING	
		1	**4J-5477**	1	SEAL-O-RING	
		1	**6V-8641**	1	CONNECTOR	

I-REFER TO HYDRAULIC INFORMATION SYSTEM

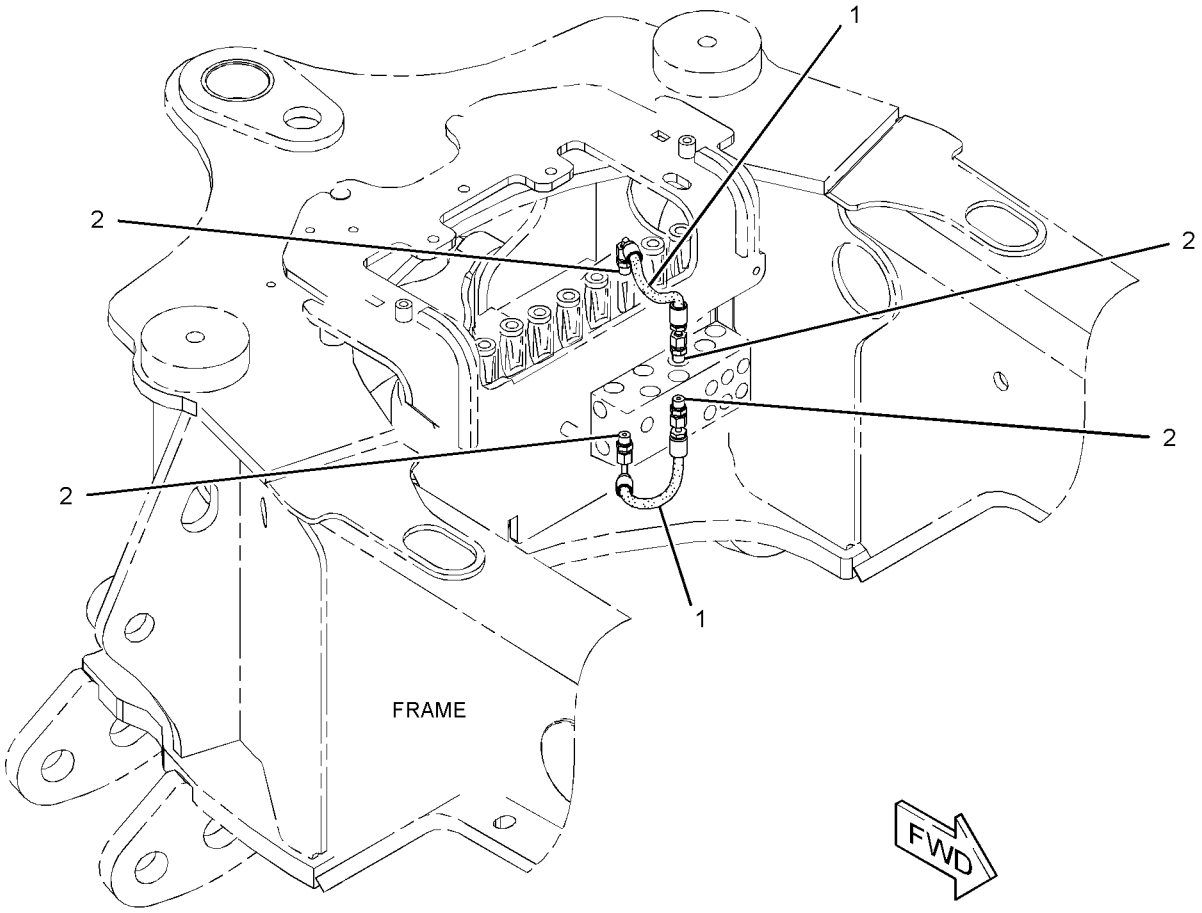

GRAPHIC #1 **<END>** g02819658

HYDRAULIC SYSTEM

337-9774 LINES GP-PUMP

S/N: SEJ1-UP

PART OF 340-1719 HYDRAULIC AR

SMCS-5057 **i04548423**

NOTE	REF NO	GRAPHIC REF	PART NUMBER	QTY	PART NAME 1 2 3 4 5 6 (PRODUCT LEVEL)	SEE PAGE
	1	1	**335-9214**	1	CLAMP-BAND	
I	2	1	**363-0443**	1	HOSE AS	
I	3	1	**363-1316**	1	HOSE AS	
I	4	1	**363-2679**	1	HOSE AS	
	5	1	**370-3970**	1	TUBE AS	
	6	1	**370-4010**	1	HOSE	
	7	1	**375-2087**	1	HOSE AS	
	8	1	*148-8335*	3	CONNECTOR AS	
					(EACH INCLUDES)	
		1	**5K-9090**	1	SEAL-O-RING	
		1	**6V-8635**	1	CONNECTOR	
		1	**7M-8485**	1	SEAL-O-RING	
	9	1	*148-8362*	2	ELBOW AS	
					(EACH INCLUDES)	
		1	**3D-2824**	1	SEAL-O-RING	
		1	**5K-9090**	1	SEAL-O-RING	
		1	**8T-6684**	1	ELBOW	
	10	1	*148-8429*	2	TEE AS	
					(EACH INCLUDES)	
		1	**5K-9090**	2	SEAL-O-RING	
		1	**6V-9840**	1	TEE-SWIVEL	
	11	1	**1P-4584**	2	FLANGE-HALF	
	12	1	**5P-4868**	1	CLAMP-HOSE	
	13	1	**6J-2680**	1	SEAL-O-RING	
M	14	1	**8T-4183**	4	BOLT (M12X1.75X40-MM)	
	15	1	**8T-4223**	4	WASHER-HARD (13.5X25.5X3-MM THK)	

I-REFER TO HYDRAULIC INFORMATION SYSTEM
M-METRIC PART

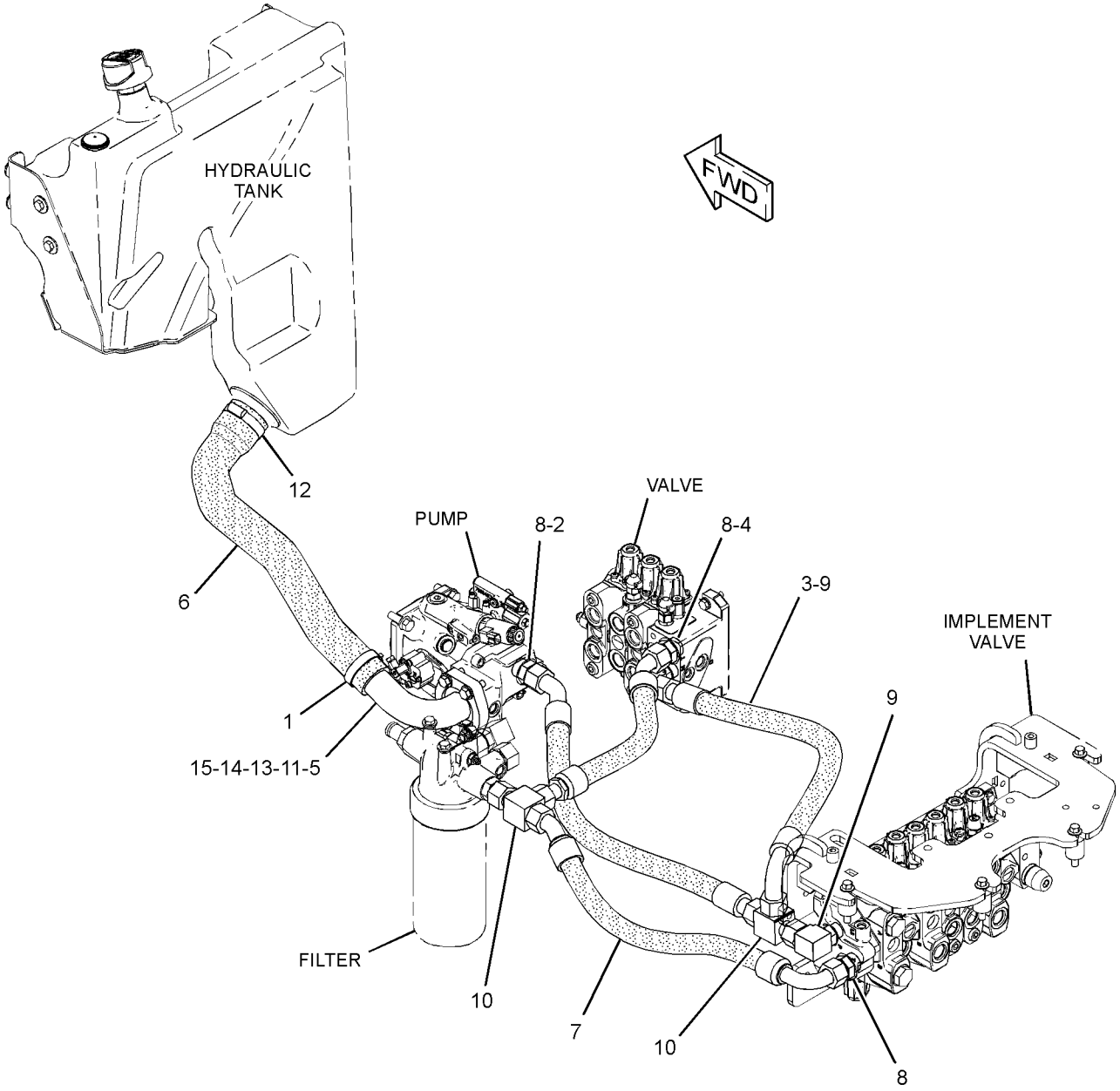

GRAPHIC #1 **<END>** g02783640

HYDRAULIC SYSTEM

337-9777 LINES GP-RETURN

S/N: SEJ1-UP

PART OF 340-1719 HYDRAULIC AR

SMCS-5057 **i04548424**

NOTE	REF NO	GRAPHIC REF	PART NUMBER	QTY	PART NAME 1 2 3 4 5 6 (PRODUCT LEVEL)	SEE PAGE
	1	1	**130-9984**	1	CLIP	
	2	1	**323-3308**	5	CAP	
	3	1	*357-4621*	1	CONNECTOR AS	
		1	**033-6783**	1	FITTING	
		1	**238-5082**	1	SEAL-O-RING	
	4	1	**363-8466**	1	TUBE AS	
I	5	1	**371-1670**	1	HOSE AS	
	6	1	**380-5076**	1	DIFFUSER	
		1	**7M-8485**	1	SEAL-O-RING	
	7	1	**2B-0941**	1	SPACER (10.5X19X19-MM THK)	
	8	1	**2S-3440**	2	CLAMP-HOSE	
	9	1	**3E-7445**	3	CLAMP-HOSE	
	10	1	**5P-7854**	1	CLIP	
	11	1	**8T-4121**	4	WASHER-HARD (11X21X2.5-MM THK)	
M	12	1	**8T-4186**	1	BOLT (M10X1.5X40-MM)	
M	13	1	**8T-4196**	2	BOLT (M10X1.5X35-MM)	
M	14	1	**8T-6466**	1	BOLT (M10X1.5X60-MM)	
	15	1	**8T-7529**	1	CLIP	
	16	1	**205-9920**	1	STRAP-CABLE	
E	17	1	**136-1955**		HOSE (98-CM)	
E	18	1	**146-7453**		HOSE (108-CM)	

E-ORDER BY THE CENTIMETER
I-REFER TO HYDRAULIC INFORMATION SYSTEM
M-METRIC PART

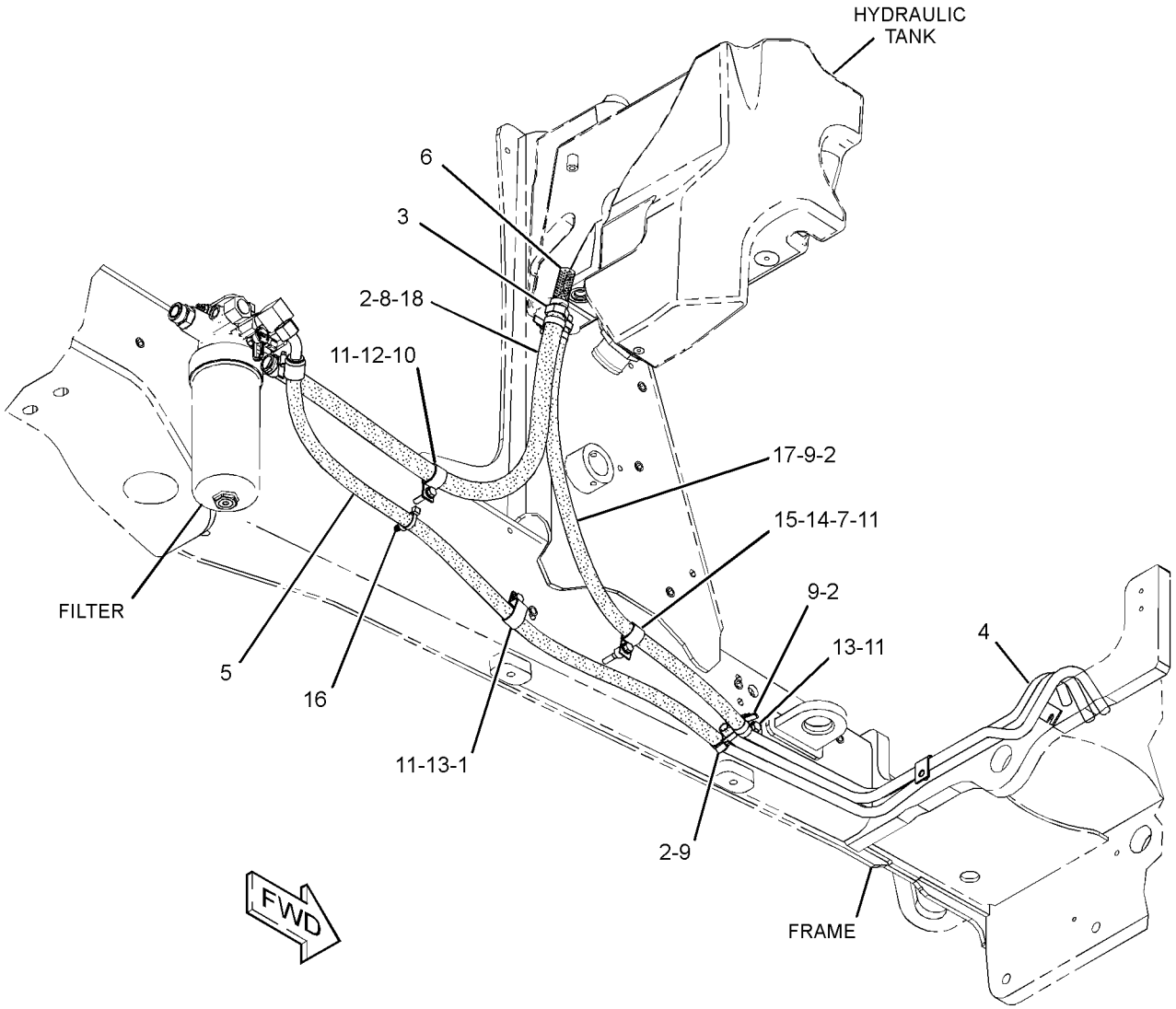

GRAPHIC #1 **<END>** g02784184

HYDRAULIC SYSTEM

337-9793 LINES GP-RIDE CONTROL

S/N: SEJ1-UP
PART OF 340-1747 CONTROL AR-RIDE
AN ATTACHMENT

SMCS-5057, 5077, 5264 **i04555851**

NOTE	REF NO	GRAPHIC REF	PART NUMBER	QTY	PART NAME 1 2 3 4 5 6 (PRODUCT LEVEL)	SEE PAGE
Y	1	1	**245-8780**	1	MANIFOLD GP-RIDE CONTROL	446
	2	1	**276-2334**	1	FILM-WARNING (HIGH PRESS CYLINDER, READ OMM)	
I	3	1	**361-9950**	1	HOSE AS	
I	4	1	**361-9951**	1	HOSE AS	
I	5	1	**361-9952**	1	HOSE AS	
I	6	1	**363-5880**	1	HOSE AS	
Y	7	1	*382-8033*	1	ACCUMULATOR GP-RIDE CONTROL (CHARGED)	339
	8	1	**131-8201**	2	CLIP (SLOT)	
	9	1	**131-8202**	2	CLIP (TAB)	
	10	1	*148-8336*	1	CONNECTOR AS	
		1	**3J-1907**	1	SEAL-O-RING	
		1	**6V-8397**	1	SEAL-O-RING	
		1	**6V-8636**	1	CONNECTOR	
	11	1	*148-8340*	1	CONNECTOR AS	
		1	**3K-0360**	1	SEAL-O-RING	
		1	**6V-8398**	1	SEAL-O-RING	
		1	**6V-8639**	1	CONNECTOR	
	12	1	*148-8345*	1	CONNECTOR AS	
		1	**2M-9780**	1	SEAL-O-RING	
		1	**6V-8398**	1	SEAL-O-RING	
		1	**6V-8638**	1	CONNECTOR	
	13	1	*148-8363*	1	ELBOW AS	
		1	**3K-0360**	1	SEAL-O-RING	
		1	**6V-8397**	1	SEAL-O-RING	
		1	**6V-9876**	1	ELBOW	
	14	1	*148-8370*	1	ELBOW AS	
		1	**6V-8398**	1	SEAL-O-RING	
		1	**6V-9851**	1	ELBOW	
	15	1	*148-8372*	1	ELBOW AS	
		1	**2M-9780**	1	SEAL-O-RING	
		1	**6V-8398**	1	SEAL-O-RING	
		1	**6V-8721**	1	ELBOW	
	16	1	**8T-4121**	1	WASHER-HARD (11X21X2.5-MM THK)	
M	17	1	**8T-4177**	2	BOLT (M8X1.25X90-MM)	
M	18	1	**8T-4196**	1	BOLT (M10X1.5X35-MM)	
	19	1	**8T-4224**	2	WASHER-HARD (8.8X16X2-MM THK)	

I-REFER TO HYDRAULIC INFORMATION SYSTEM
M-METRIC PART
Y-SEPARATE ILLUSTRATION

337-9793 **LINES GP-RIDE CONTROL** *(contd.)* **i04555851**

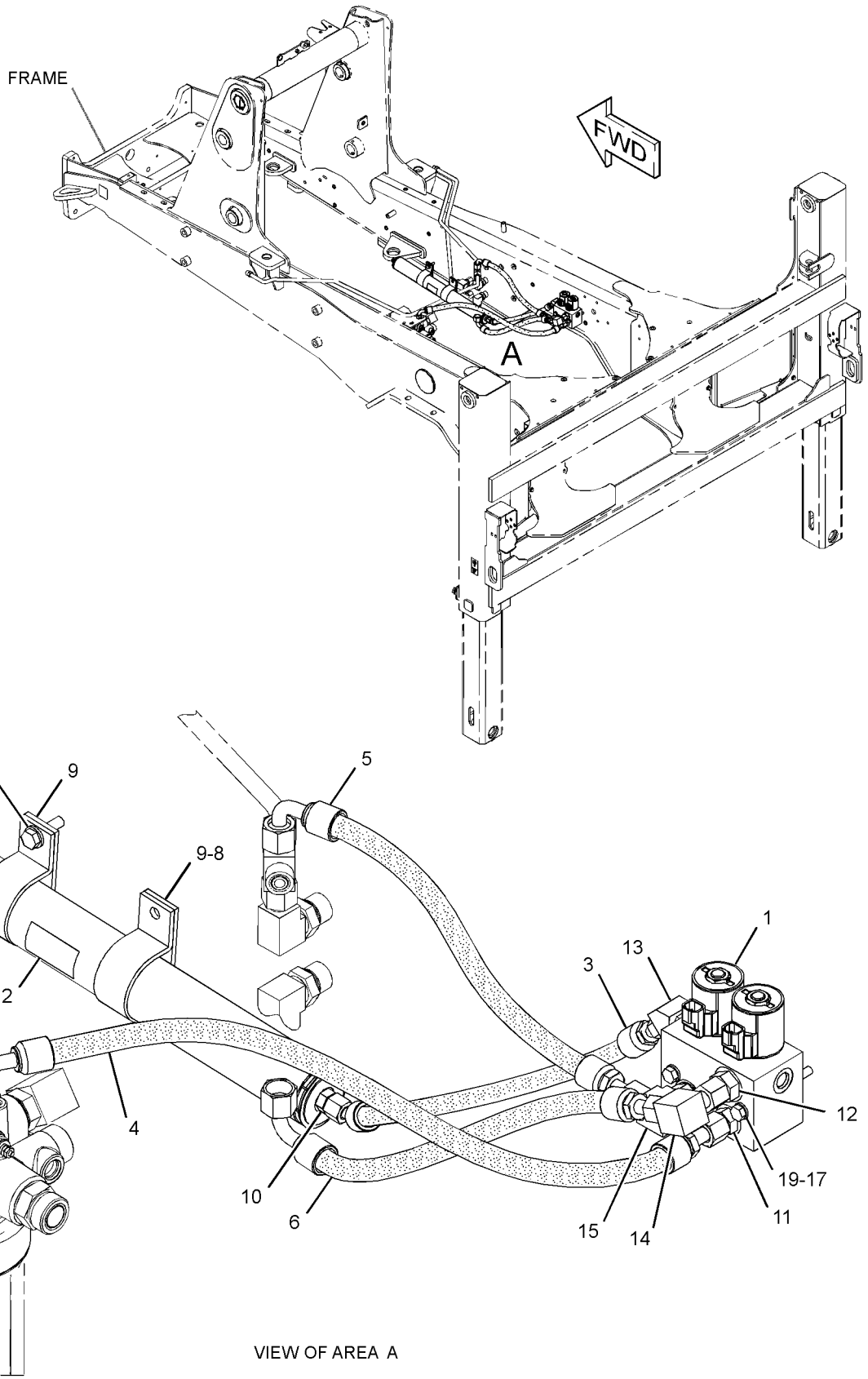

VIEW OF AREA A

GRAPHIC #1 **<END>** g02778896

HYDRAULIC SYSTEM

368-5465 LINES GP-SIDESHIFT

S/N: SEJ1-UP

PART OF 340-1736, 340-1737, 340-1738 BACKHOE AR-EXTENDABLE STICK, 340-1735 BACKHOE AR-STANDARD STICK

AN ATTACHMENT

SMCS-5057 **i04553457**

NOTE	REF NO	GRAPHIC REF	PART NUMBER	QTY	PART NAME 1 2 3 4 5 6 (PRODUCT LEVEL)	SEE PAGE
I	1	1	**324-7815**	1	HOSE AS	
I	2	1	**324-7816**	2	HOSE AS	
I	3	1	**324-7817**	1	HOSE AS	
	4	1	*148-8316*	2	CONNECTOR AS	
					(EACH INCLUDES)	
		1	**3J-7354**	1	SEAL-O-RING	
		1	**4J-5477**	1	SEAL-O-RING	
		1	**6V-8647**	1	CONNECTOR	
	5	1	*148-8325*	1	CONNECTOR AS	
		1	**3J-1907**	1	SEAL-O-RING	
		1	**4J-5477**	1	SEAL-O-RING	
		1	**6V-8641**	1	CONNECTOR	
	6	1	*150-4029*	2	TEE AS	
					(EACH INCLUDES)	
		1	**3J-7354**	1	SEAL-O-RING	
		1	**4J-5477**	2	SEAL-O-RING	
		1	**6V-8780**	1	TEE-FACE SEAL	
	7	1	*150-5968*	1	TEE AS	
		1	**4J-5477**	2	SEAL-O-RING	
		1	**6V-9835**	1	TEE-SWIVEL	

I-REFER TO HYDRAULIC INFORMATION SYSTEM

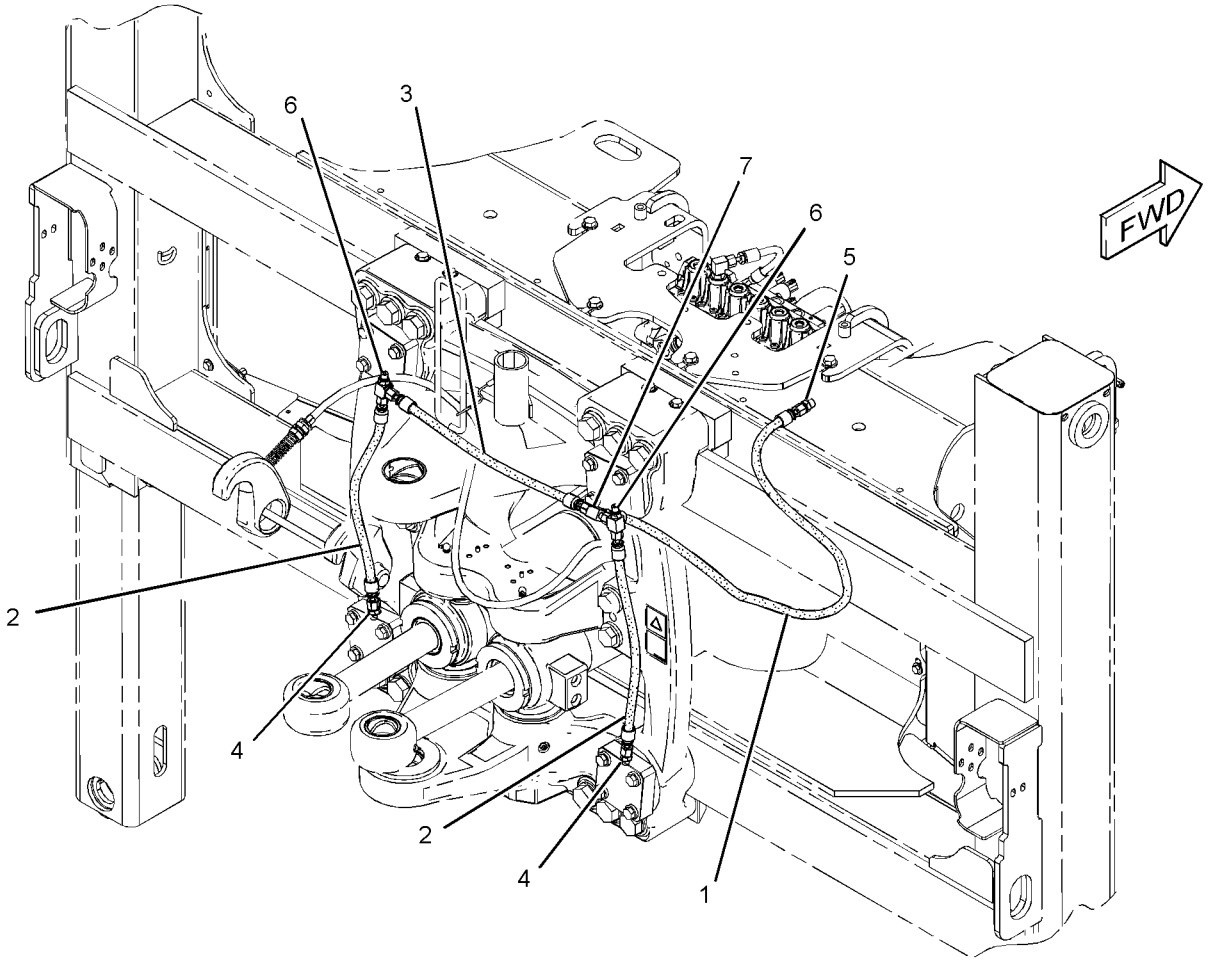

GRAPHIC #1 **<END>** g02774378

HYDRAULIC SYSTEM

337-9821 LINES GP-STABILIZER

S/N: SEJ1-UP

PART OF 340-1693 CHASSIS AR

SMCS-5057, 5468 **i04549392**

NOTE	REF NO	GRAPHIC REF	PART NUMBER	QTY	PART NAME 1 2 3 4 5 6 (PRODUCT LEVEL)	SEE PAGE
	1	1	**3S-2093**	6	STRAP-CABLE	
	2	1	**154-2302**	2	SPACER (11X20X15-MM THK)	
	3	1	*205-2357*	4	CONNECTOR AS	
					(EACH INCLUDES)	
		1	**3D-2824**	1	SEAL-O-RING	
		1	**6V-8398**	1	SEAL-O-RING	
		1	**8T-7968**	1	CONNECTOR	
	4	1	**292-4251**	2	SCREW-TRUSS HEAD (M8X1.25X60-MM)	
	5	1	**308-3437**	2	VALVE GP-LOAD CONTROL (STABILIZER)	
I	6	1	**331-0797**	1	HOSE AS	
I	7	1	**331-0798**	3	HOSE AS	
	8	1	*148-8336*	4	CONNECTOR AS	
					(EACH INCLUDES)	
		1	**3J-1907**	1	SEAL-O-RING	
		1	**6V-8397**	1	SEAL-O-RING	
		1	**6V-8636**	1	CONNECTOR	
	9	1	*164-5549*	2	COUPLING AS	
					(EACH INCLUDES)	
		1	**3J-1907**	1	SEAL-O-RING	
		1	**4I-6287**	1	COUPLING	
	10	1	*340-1650*	2	ADAPTER AS	
					(EACH INCLUDES)	
		1	**3J-1907**	1	SEAL-O-RING	
		1	**341-0076**	1	ADAPTER	
	11	1	**5I-3978**	2	CLIP	
	12	1	**8T-4224**	2	WASHER-HARD (8.8X16X2-MM THK)	

I-REFER TO HYDRAULIC INFORMATION SYSTEM

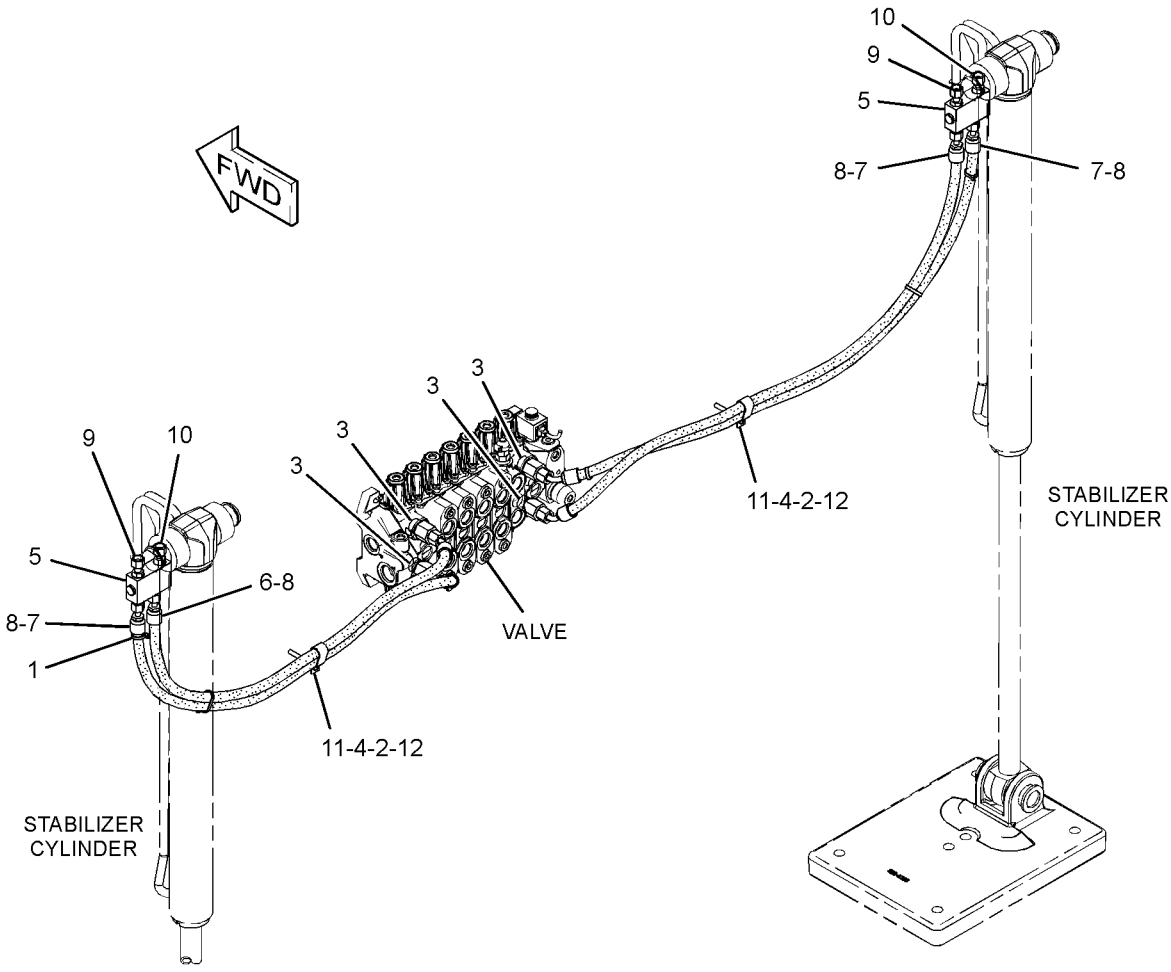

GRAPHIC #1 **<END>** g02772256

321-7192 LINES GP-STICK

S/N: SEJ1-UP

PART OF 340-1743 LINKAGE AR, 340-1740 LINKAGE AR-BUCKET AN ATTACHMENT

SMCS-5057 **i03690282**

NOTE	REF NO	GRAPHIC REF	PART NUMBER	QTY	PART NAME 1 2 3 4 5 6 (PRODUCT LEVEL)	SEE PAGE
I	1	1	**324-7596**	1	HOSE AS	
	2	1	**343-4301**	1	HOSE AS	

I-REFER TO HYDRAULIC INFORMATION SYSTEM

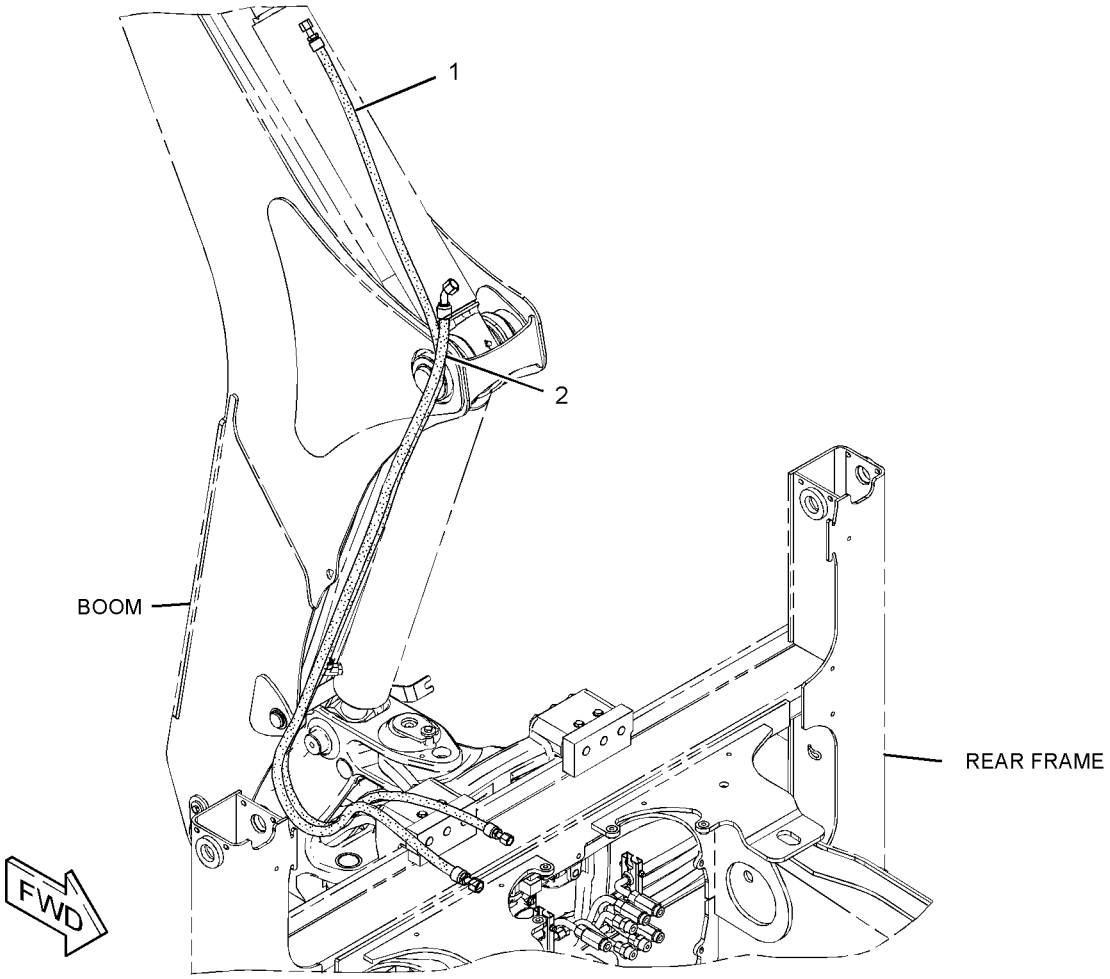

GRAPHIC #1 **<END>** g01989920

HYDRAULIC SYSTEM

327-8957 LINES GP-STICK

S/N: SEJ1-UP
PART OF 374-6882 LINKAGE AR
AN ATTACHMENT

SMCS-5057 **i03642975**

NOTE	REF NO	GRAPHIC REF	PART NUMBER	QTY	PART NAME 1 2 3 4 5 6 (PRODUCT LEVEL)	SEE PAGE
I	1	1	**327-8995**	1	HOSE AS	
	2	1	**343-4333**	1	HOSE AS	

I-REFER TO HYDRAULIC INFORMATION SYSTEM



GRAPHIC #1 **<END>** g01987317

HYDRAULIC SYSTEM

326-1803 LINES GP-SWING

S/N: SEJ1-UP

PART OF 340-1719 HYDRAULIC AR

SMCS-5057, 5105 **i03642535**

NOTE	REF NO	GRAPHIC REF	PART NUMBER	QTY	PART NAME 1 2 3 4 5 6 (PRODUCT LEVEL)	SEE PAGE
	1	1	**204-2281**	2	STRAP-CABLE	
	2	1	*287-7252*	1	TEE AS	
		1	**3J-1907**	1	SEAL-O-RING	
		1	**6V-8398**	2	SEAL-O-RING	
		1	**287-7251**	1	TEE	
	3	1	**320-7812**	1	VALVE GP-PRESSURE CONTROL (290-BAR)	
I	4	1	**328-5333**	2	HOSE AS	
I	5	1	**328-5358**	2	HOSE AS	
	6	1	*341-0121*	1	TEE AS	
		1	**3D-2824**	1	SEAL-O-RING	
		1	**4J-5477**	1	SEAL-O-RING	
		1	**6V-8398**	1	SEAL-O-RING	
		1	**119-6346**	1	TEE-FACE SEAL	
	7	1	**344-8098**	1	TUBE AS	
I	8	1	**344-8154**	1	HOSE AS	
	9	1	**344-8163**	1	TUBE AS	
	10	1	*148-8325*	1	CONNECTOR AS	
		1	**3J-1907**	1	SEAL-O-RING	
		1	**4J-5477**	1	SEAL-O-RING	
		1	**6V-8641**	1	CONNECTOR	
	11	1	*148-8328*	1	CONNECTOR AS	
		1	**3D-2824**	1	SEAL-O-RING	
		1	**6V-8398**	1	SEAL-O-RING	
		1	**6V-8633**	1	CONNECTOR	
	12	1	*148-8340*	4	CONNECTOR AS	
					(EACH INCLUDES)	
		1	**3K-0360**	1	SEAL-O-RING	
		1	**6V-8398**	1	SEAL-O-RING	
		1	**6V-8639**	1	CONNECTOR	
	13	1	*148-8364*	2	ELBOW AS	
					(EACH INCLUDES)	
		1	**3K-0360**	1	SEAL-O-RING	
		1	**6V-8398**	1	SEAL-O-RING	
		1	**6V-8625**	1	ELBOW	
	14	1	**6V-1249**	2	GROMMET	
	15	1	**6V-8398**	1	SEAL-O-RING	
	16	1	**8T-1899**	2	CLIP (SLOT)	
	17	1	**8T-1900**	2	CLIP (TAB)	
	18	1	**8T-4121**	4	WASHER-HARD (11X21X2.5-MM THK)	
M	19	1	**8T-4133**	2	NUT (M10X1.5-THD)	
M	20	1	**8T-4195**	2	BOLT (M10X1.5X30-MM)	

I-REFER TO HYDRAULIC INFORMATION SYSTEM
M-METRIC PART

326-1803 **LINES GP-SWING** *(contd.)* **i03642535**

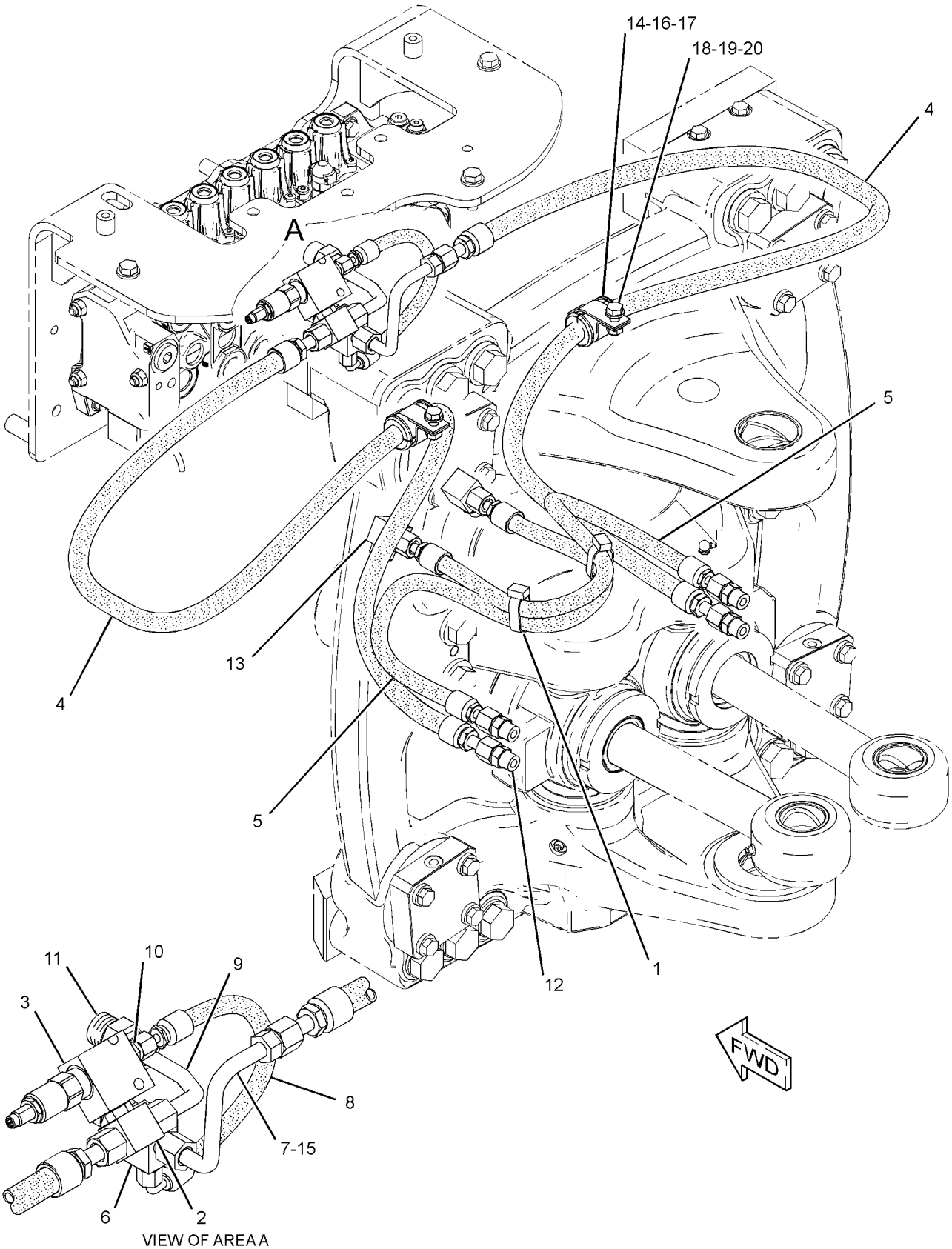

VIEW OF AREA A

GRAPHIC #1 **<END>** g01986077

300-4491 MANIFOLD GP-CONTROL–PATTERN CHANGE

S/N: SEJ1-UP
PART OF 337-9786 LINES GP-PILOT
AN ATTACHMENT

SMCS-5264 **i04139599**

NOTE	REF NO	GRAPHIC REF	PART NUMBER	QTY	PART NAME 1 2 3 4 5 6 (PRODUCT LEVEL)	SEE PAGE
J	1	1	**240-6866**	2	VALVE GP-SOLENOID (12-VOLT) (FLOW CONTROL)	
					(EACH INCLUDES)	
		1	**250-6148**	1	COIL AS (24-VOLT)	
					AVAILABLE REPAIR KIT(S):	
J			**106-3108**	1	KIT-SEAL	

J-KIT MARKED J SERVICES PART MARKED J

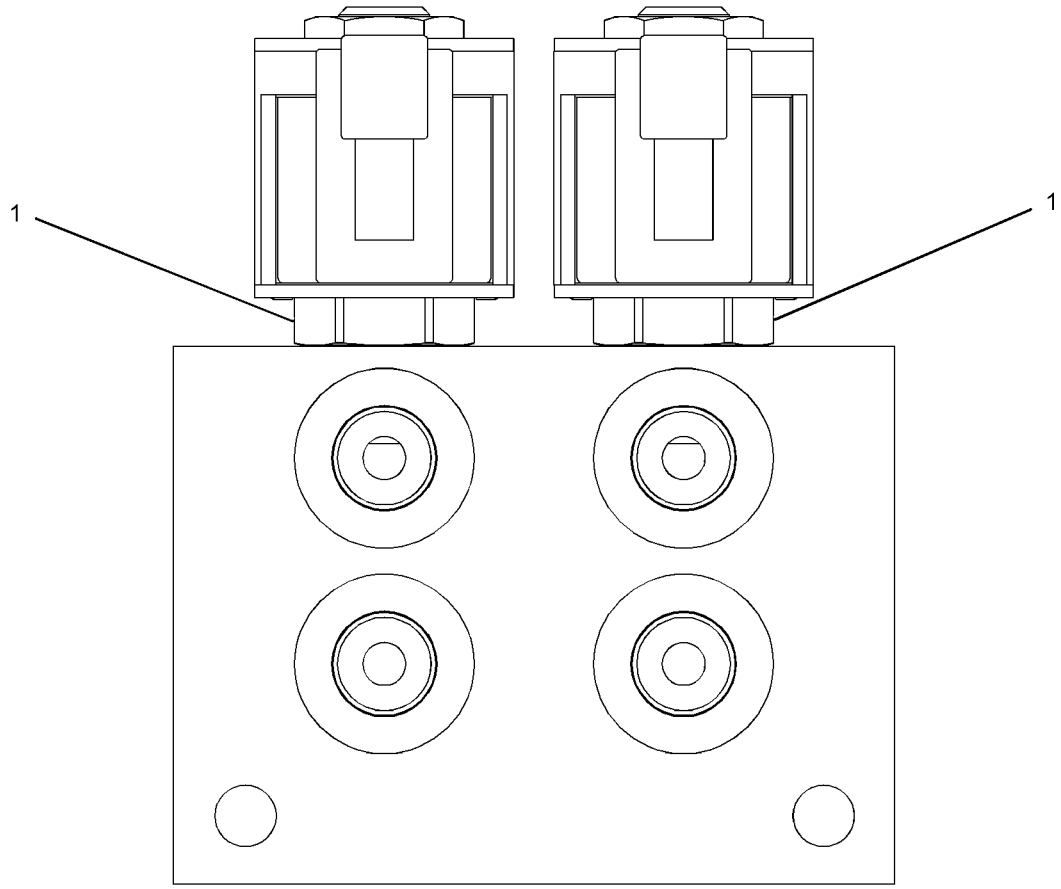

GRAPHIC #1 **<END>** g01388429

HYDRAULIC SYSTEM

245-8780 MANIFOLD GP-RIDE CONTROL

S/N: SEJ1-UP
PART OF 337-9793 LINES GP-RIDE CONTROL
AN ATTACHMENT

SMCS-5264 **i04478830**

NOTE	REF NO	GRAPHIC REF	PART NUMBER	QTY	PART NAME 1 2 3 4 5 6 (PRODUCT LEVEL)	SEE PAGE
J	1	1	**249-3124**	1	VALVE GP-SOLENOID (12-VOLT) (RIDE CONTROL, SWITCH)	
L	2	1	**249-3125**	1	VALVE GP-SOLENOID (12-VOLT) (ACCUMULATOR)	
	3	1	**238-4628**	2	COIL AS (12-VOLT)	
					AVAILABLE REPAIR KIT(S):	
J			**141-0888**	1	KIT-SEAL (RIDE CONTROL, SWITCH)	
					(INCLUDES O-RING SEALS & BACK-UP RING)	
L			**227-5509**	1	KIT-SEAL (ACCUMULATOR)	

J-KIT MARKED J SERVICES PART MARKED J
L-KIT MARKED L SERVICES PART MARKED L

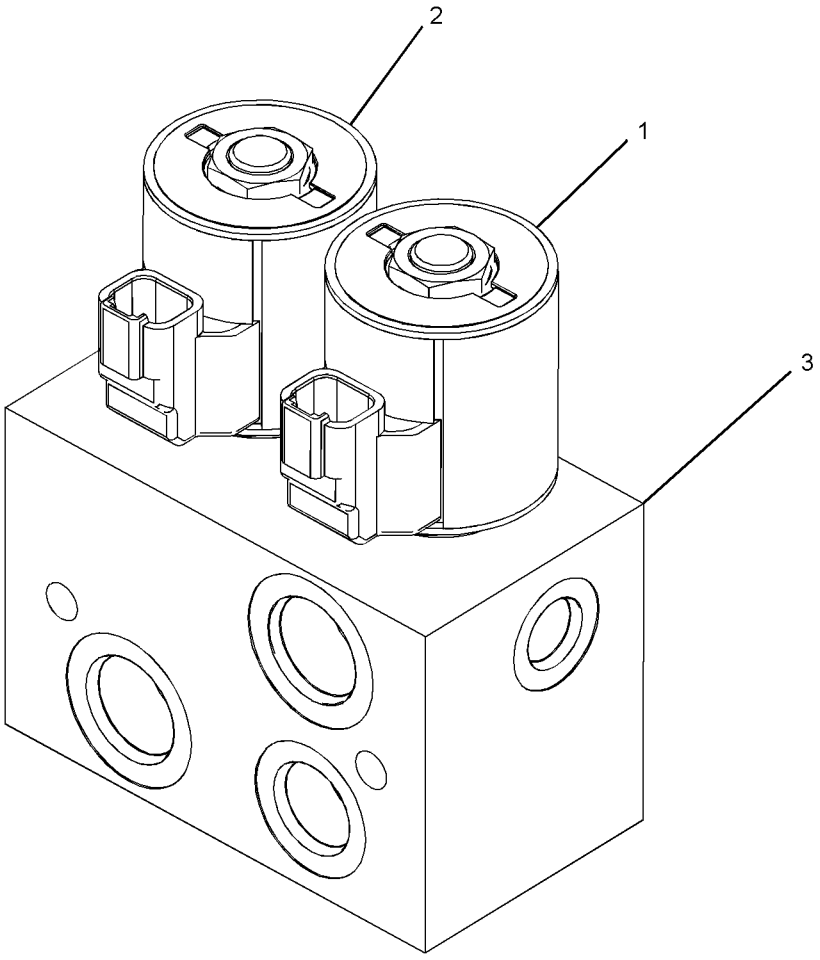

GRAPHIC #1 **<END>** g01646794

9R-4668 MOUNTING GP-CYLINDER—MULTIPURPOSE BUCKET

S/N: SEJ1-UP

PART OF 318-7251 BUCKET AR-MULTIPURPOSE

AN ATTACHMENT

SMCS-5102, 6068, 7562 **i00528574**

NOTE	REF NO	GRAPHIC REF	PART NUMBER	QTY	PART NAME 1 2 3 4 5 6 (PRODUCT LEVEL)	SEE PAGE
	1	1	**9R-4677**	2	PIN	
	2	1	**3B-5317**	4	PIN-COTTER	
	3	1	**9R-4678**	2	PIN	
	4	1	**3B-8489**	4	FITTING-GREASE	

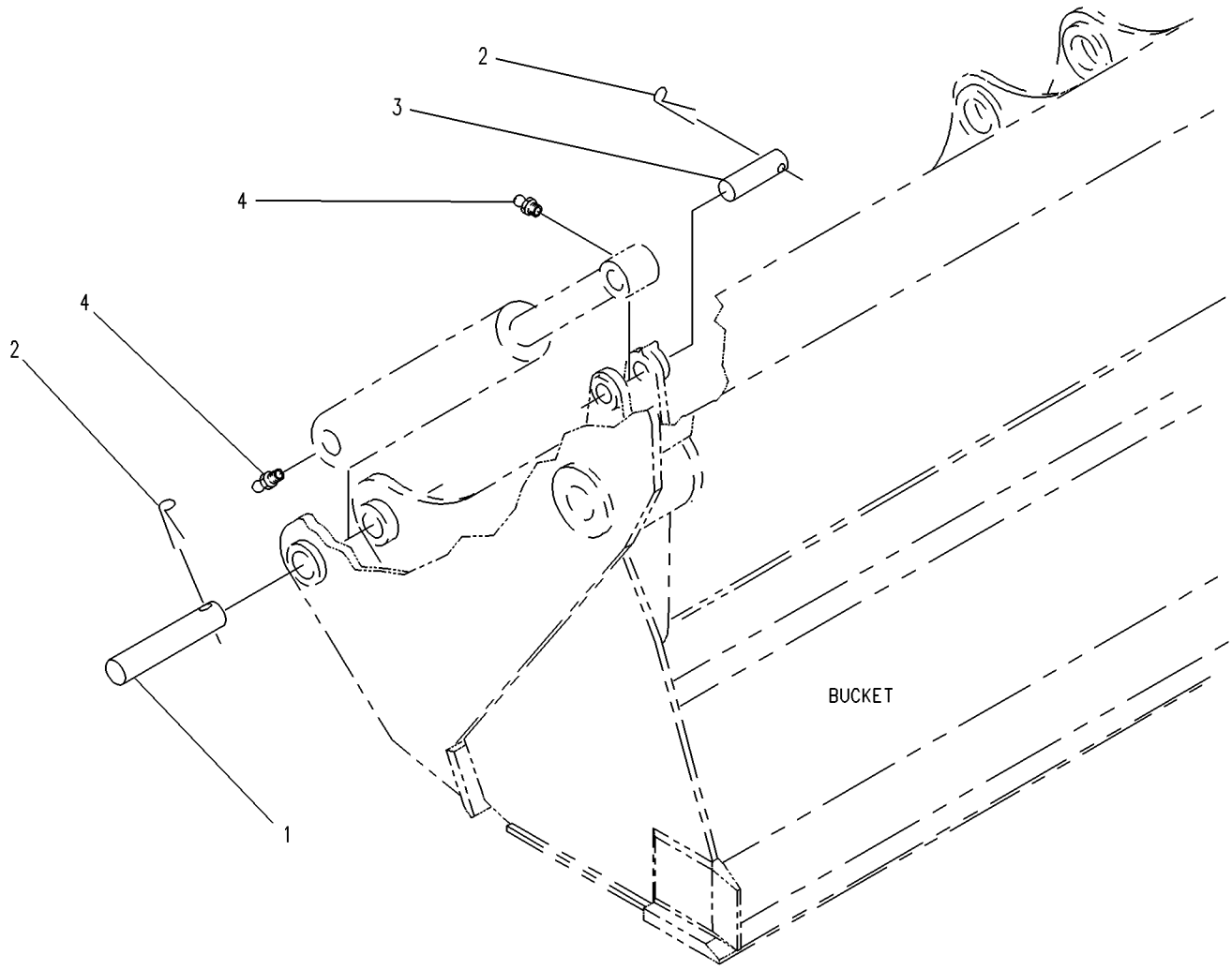

GRAPHIC #1 **<END>** g00219196

HYDRAULIC SYSTEM

337-8935 MOUNTING GP-CYLINDER—MULTIPURPOSE BUCKET

S/N: SEJ1-UP

PART OF 337-7411, 350-1580, 350-1581, 350-1587, 350-1589 BUCKET

AR-MULTIPURPOSE

AN ATTACHMENT

SMCS-5102, 6068, 7562 **i03872772**

NOTE	REF NO	GRAPHIC REF	PART NUMBER	QTY	PART NAME 1 2 3 4 5 6 (PRODUCT LEVEL)	SEE PAGE
	1	1	**3B-5317**	4	PIN-COTTER	
	2	1	**9R-4677**	2	PIN	
	3	1	**9R-4678**	2	PIN	

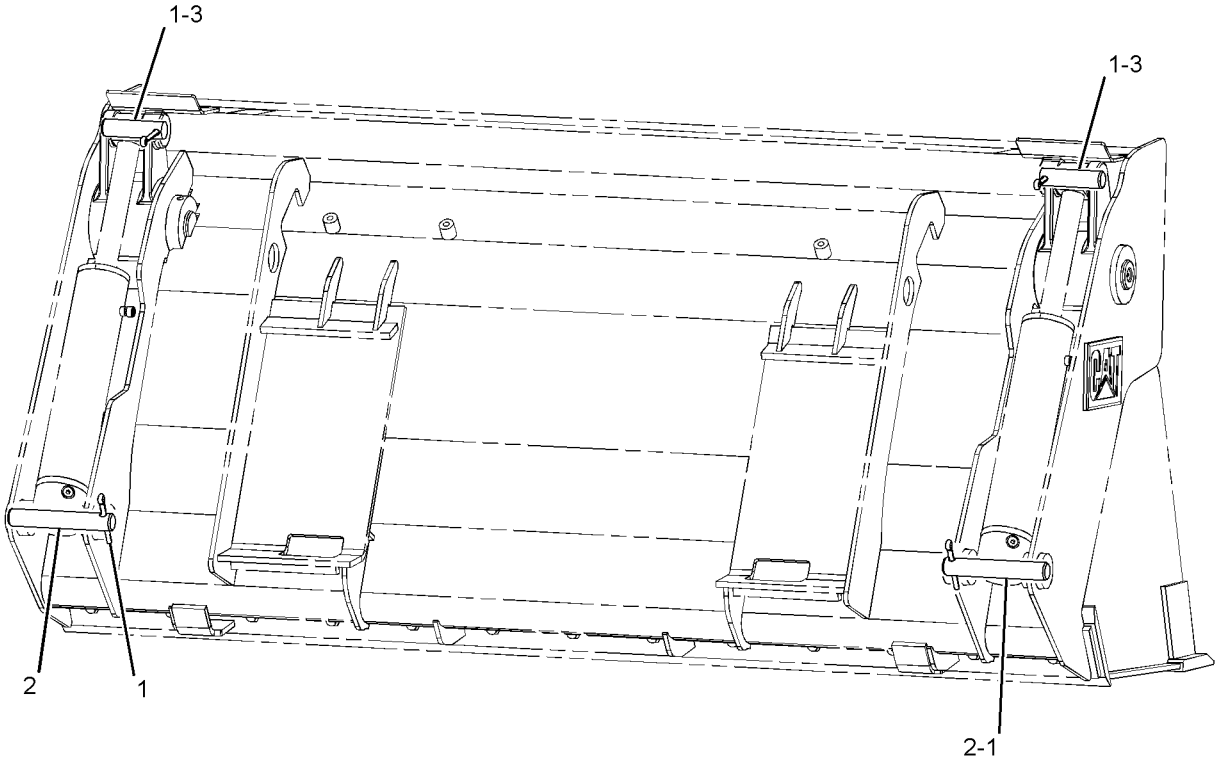

REAR VIEW

GRAPHIC #1 **<END>** g02138259

323-2096 MOUNTING GP-LINES

S/N: SEJ1-UP

PART OF 340-1736, 340-1737, 340-1738 BACKHOE AR-EXTENDABLE STICK, 340-1735 BACKHOE AR-STANDARD STICK AN ATTACHMENT

SMCS-5057 **i04546121**

NOTE	REF NO	GRAPHIC REF	PART NUMBER	QTY	PART NAME 1 2 3 4 5 6 (PRODUCT LEVEL)	SEE PAGE
	1	1	**5P-5148**	3	STRAP-CABLE	
	2	1	**315-7645**	1	CLAMP	
	3	1	**315-7646**	1	CLAMP	
	4	1	**315-7647**	1	CLAMP	
	5	1	**327-3753**	1	PLATE	
	6	1	**332-0092**	2	BLOCK	
	7	1	**343-7400**	1	CLAMP	
M	8	1	**8T-6870**	2	BOLT (M8X1.25X70-MM)	
	9	1	**367-9552**	2	PLATE	
	10	1	**8T-4224**	4	WASHER-HARD (8.8X16X2-MM THK)	
M	11	1	**8T-6869**	4	BOLT (M8X1.25X60-MM)	

M-METRIC PART

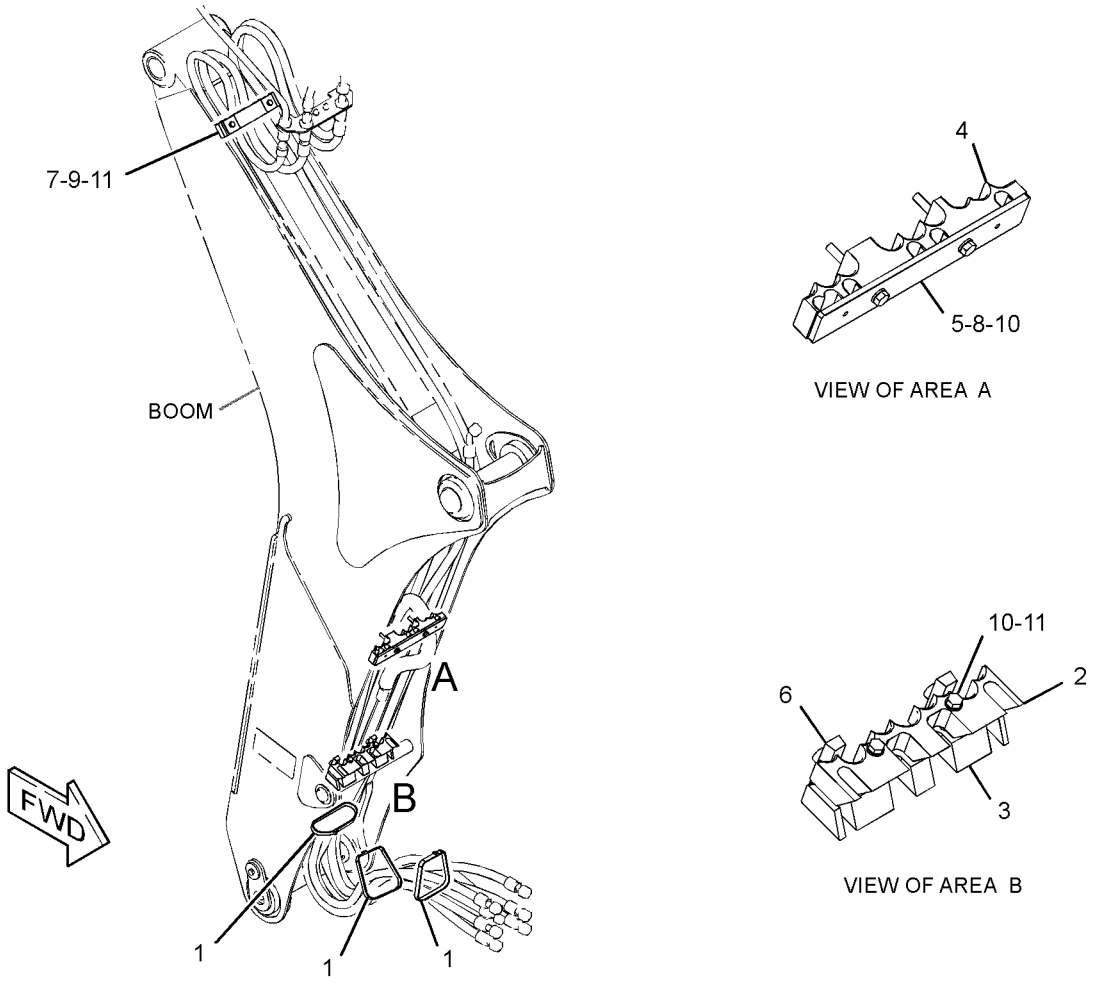

GRAPHIC #1 **<END>** g02791656

HYDRAULIC SYSTEM

337-9699 PUMP & MTG GP-HYDRAULIC

S/N: SEJ1-UP

PART OF 340-1719 HYDRAULIC AR

SMCS-1387, 4324, 5055, 5070, 5073, 5084 **i04640930**

NOTE	REF NO	GRAPHIC REF	PART NUMBER	QTY	PART NAME 1 2 3 4 5 6 (PRODUCT LEVEL)	SEE PAGE
	1	1	*161-9916*	1	ADAPTER AS	
		1	**2M-9780**	1	SEAL-O-RING	
		1	**6V-7420**	1	ADAPTER	
	2	1	*164-5567*	1	COUPLER AS-QUICK DISCONNECT (MALE)	
		1	**6V-3965**	1	FITTING (QUICK DISCONNECT)	
		1	**214-7568**	1	SEAL-O-RING	
	3	1	*165-2273*	1	VALVE GP-SHUTOFF (HYDRAULIC OIL)	
		1	**3K-0360**	1	SEAL-O-RING	
		1	**6V-7238**	1	VALVE-SHUTOFF (HYDRAULIC OIL)	
	4	1	*216-1304*	1	TEE AS	
		1	**3J-7354**	1	SEAL-O-RING	
		1	**216-1302**	1	TEE	
	5	1	**307-3069**	1	PUMP GP-PISTON (HYDRAULIC)	
	6	1	**344-7391**	1	SENSOR GP-PRESSURE (HYDRAULIC OIL)	
	7	1	**175-7904**	1	SEAL-O-RING	
	8	1	**3J-1907**	1	SEAL-O-RING	
	9	1	**5P-2566**	4	BOLT (1/2-13X1.5-IN)	
	10	1	**8T-4223**	4	WASHER-HARD (13.5X25.5X3-MM THK)	
	11	1	**6V-0852**	1	CAP-DUST	

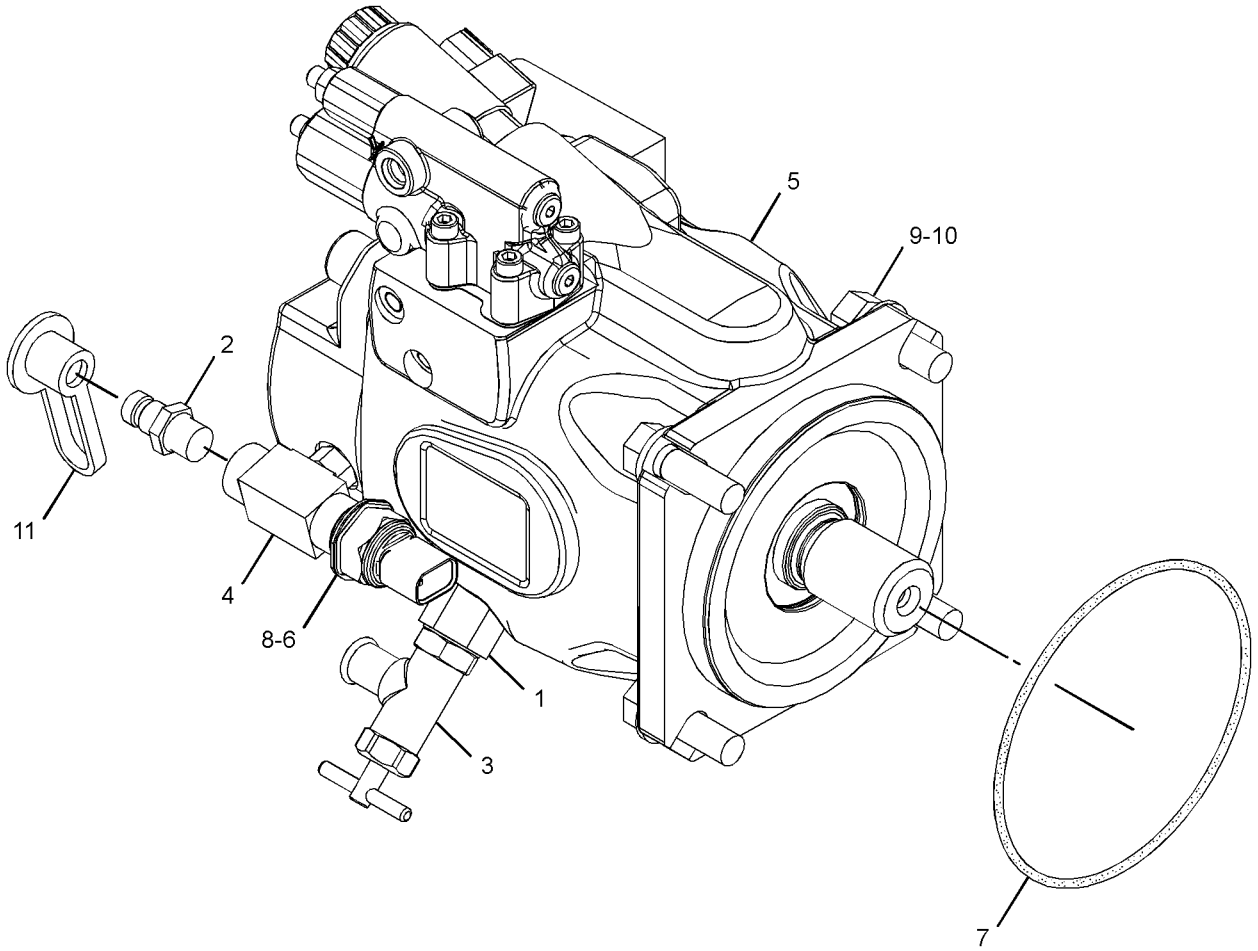

GRAPHIC #1 **<END>** g02823816

HYDRAULIC SYSTEM

128-5596 SHAFT GP-PUMP DRIVE

S/N: SEJ1-UP
PART OF 353-1338 DRIVE & MTG GP-PUMP
AN ATTACHMENT

SMCS-3108 **i00535584**

NOTE	REF NO	GRAPHIC REF	PART NUMBER	QTY	PART NAME 1 2 3 4 5 6 (PRODUCT LEVEL)	SEE PAGE
	1	1	**130-8150**	1	RING-RETAINING	

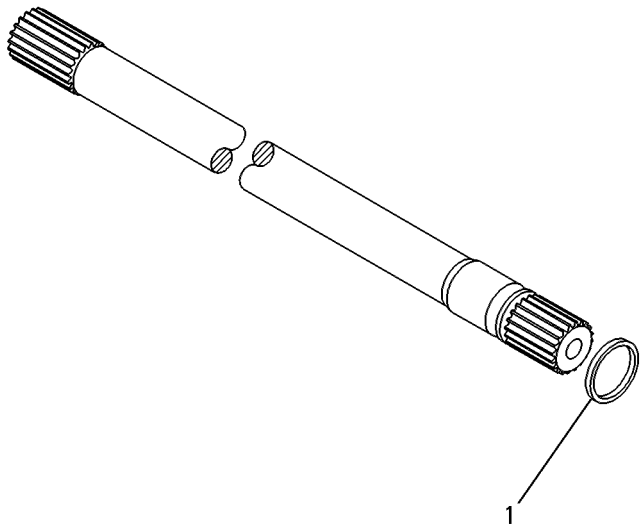

GRAPHIC #1 **<END>** g00131851

HYDRAULIC SYSTEM

351-5888 TANK & MTG GP-HYDRAULIC

S/N: SEJ1-UP

PART OF 340-1719 HYDRAULIC AR

SMCS-5056 **i04548428**

NOTE	REF NO	GRAPHIC REF	PART NUMBER	QTY	PART NAME 1 2 3 4 5 6 (PRODUCT LEVEL)	SEE PAGE
	1	1	**254-1098**	1	STRAINER (HYDRAULIC TANK)	
	2	1	**334-4603**	1	FILM-INFORMATION (HYDO ADVANCED 10)	
	3	1	**358-9301**	1	TANK AS-HYDRAULIC	
	4	1	**361-9918**	1	BREATHER (HYDRAULIC TANK)	
	5	1	**363-9649**	1	GAUGE (HYDRAULIC TANK)	
	6	1	**371-1282**	1	BRACKET AS	
	7	1	**222-9151**	2	WASHER-HARD (11X32X5-MM THK)	
M	8	1	**8T-4186**	2	BOLT (M10X1.5X40-MM)	
M	9	1	**8T-4191**	5	BOLT (M10X1.5X16-MM)	
M	10	1	**8T-4195**	2	BOLT (M10X1.5X30-MM)	
	11	1	**8T-4222**	7	WASHER-PLATED (11X32X2.5-MM THK)	

M-METRIC PART

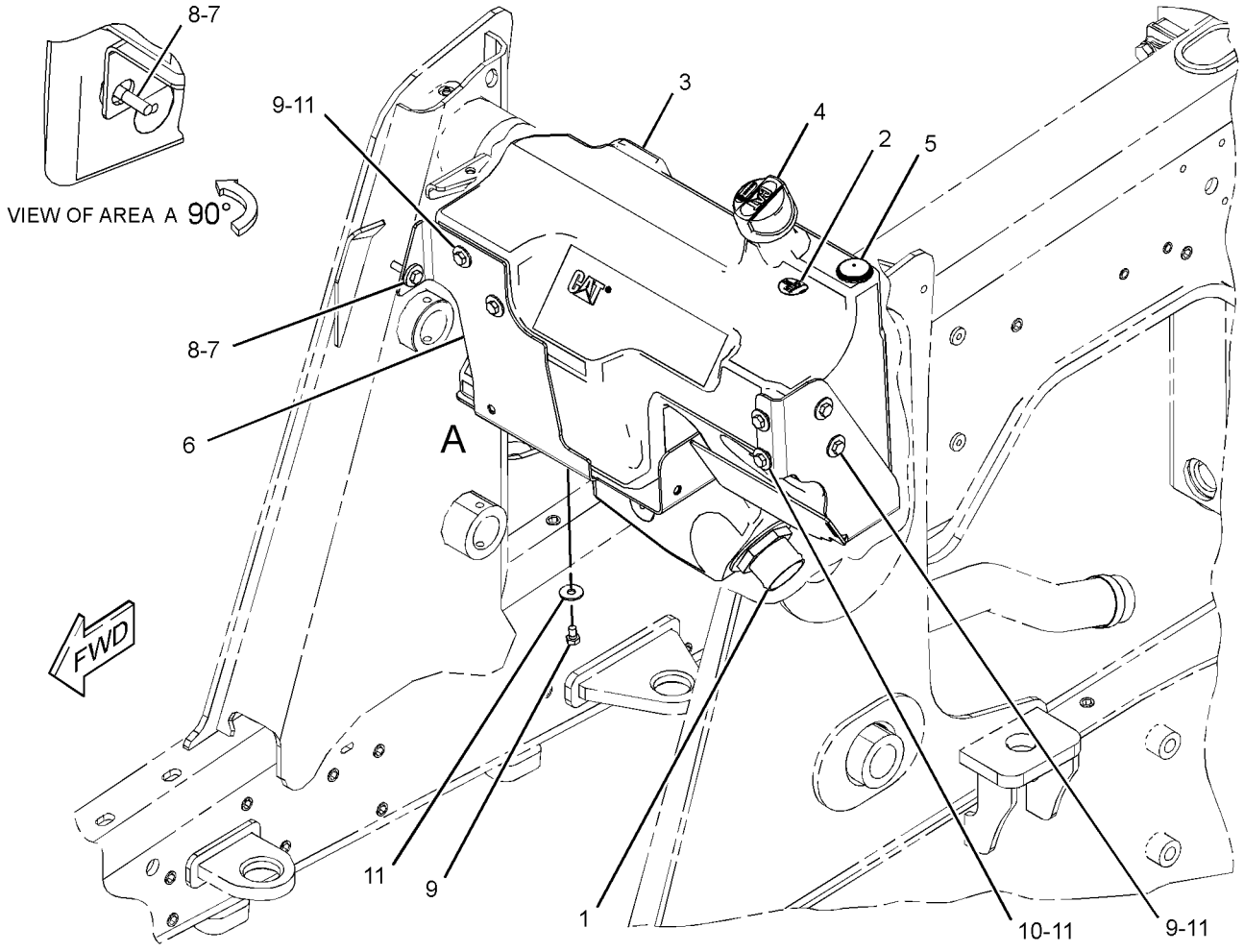

GRAPHIC #1 **<END>** g02789492

337-9815 VALVE & MTG GP-AUXILIARY

S/N: SEJ1-UP
PART OF 373-4273 CONVERSION AR-QUICK COUPLER, 373-4271, 373-4275, 373-4277
VALVE AR-BANK 3
AN ATTACHMENT

SMCS-5051 **i04611574**

NOTE	REF NO	GRAPHIC REF	PART NUMBER	QTY	PART NAME 1 2 3 4 5 6 (PRODUCT LEVEL)	SEE PAGE
Y	1	1	**359-7224**	1	VALVE GP-SOLENOID & PRESS REDC	462
M	2	1	**096-5866**	2	BOLT (M8X1.25X75-MM)	
	3	1	**8T-4224**	2	WASHER-HARD (8.8X16X2-MM THK)	

M-METRIC PART
Y-SEPARATE ILLUSTRATION

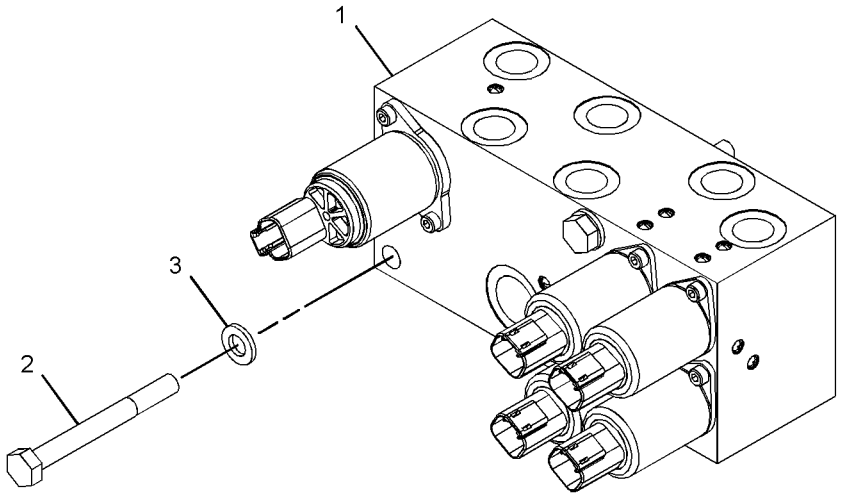

GRAPHIC #1 **<END>** g02813857

HYDRAULIC SYSTEM

337-9706 VALVE & MTG GP-BANK–3-BANK

S/N: SEJ1-UP
PART OF 373-4273 CONVERSION AR-QUICK COUPLER, 373-4271, 373-4275, 373-4277
VALVE AR-BANK 3
AN ATTACHMENT

SMCS-5051, 5057, 7265 **i04622875**

NOTE	REF NO	GRAPHIC REF	PART NUMBER	QTY	PART NAME 1 2 3 4 5 6 (PRODUCT LEVEL)	SEE PAGE
	1	1	**344-7932**	3	BOLT-FLANGE HEAD (M10X1.5X35-MM)	
Y	2	1	**359-7211**	1	VALVE GP-BANK 3 (PILOT CONTROL)	459

Y-SEPARATE ILLUSTRATION

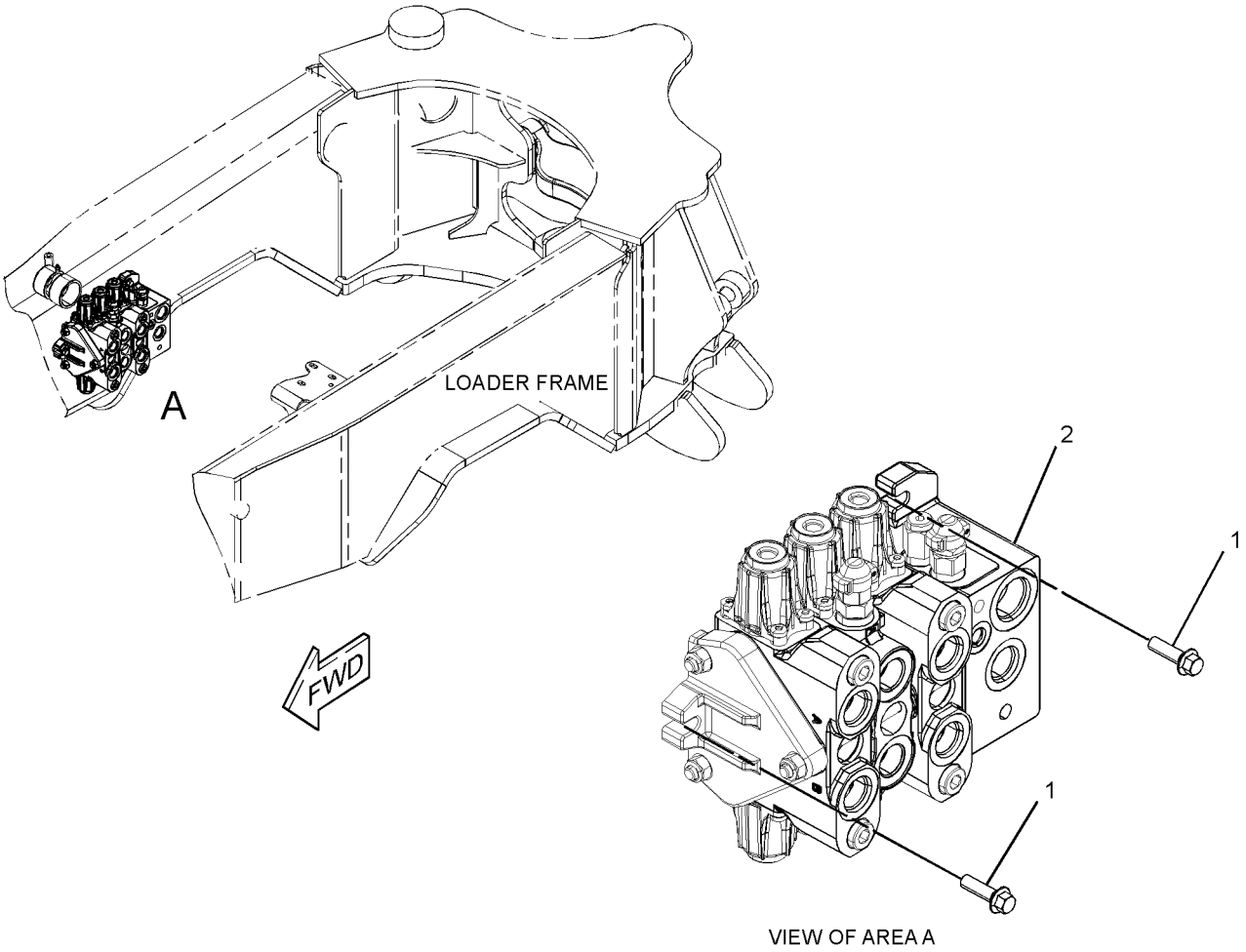

VIEW OF AREA A

GRAPHIC #1 **<END>** g02812516

HYDRAULIC SYSTEM

337-9714 VALVE & MTG GP-BANK–7-BANK

S/N: SEJ1-UP
PART OF 373-4273 CONVERSION AR-QUICK COUPLER, 373-4271, 373-4275, 373-4277
VALVE AR-BANK 3
AN ATTACHMENT

SMCS-5051, 5057, 7265 **i04622874**

NOTE	REF NO	GRAPHIC REF	PART NUMBER	QTY	PART NAME 1 2 3 4 5 6 (PRODUCT LEVEL)	SEE PAGE
Y	1	1	**359-7216**	1	VALVE GP-BANK 7 (PILOT CONTROL)	460
	2	1	**361-9737**	1	BRACKET AS	
	3	1	**8T-4121**	4	WASHER-HARD (11X21X2.5-MM THK)	
M	4	1	**8T-4133**	1	NUT (M10X1.5-THD)	
M	5	1	**8T-4182**	3	BOLT (M10X1.5X45-MM)	
M	6	1	**8T-4183**	4	BOLT (M12X1.75X40-MM)	
	7	1	**8T-4223**	4	WASHER-HARD (13.5X25.5X3-MM THK)	

M-METRIC PART
Y-SEPARATE ILLUSTRATION

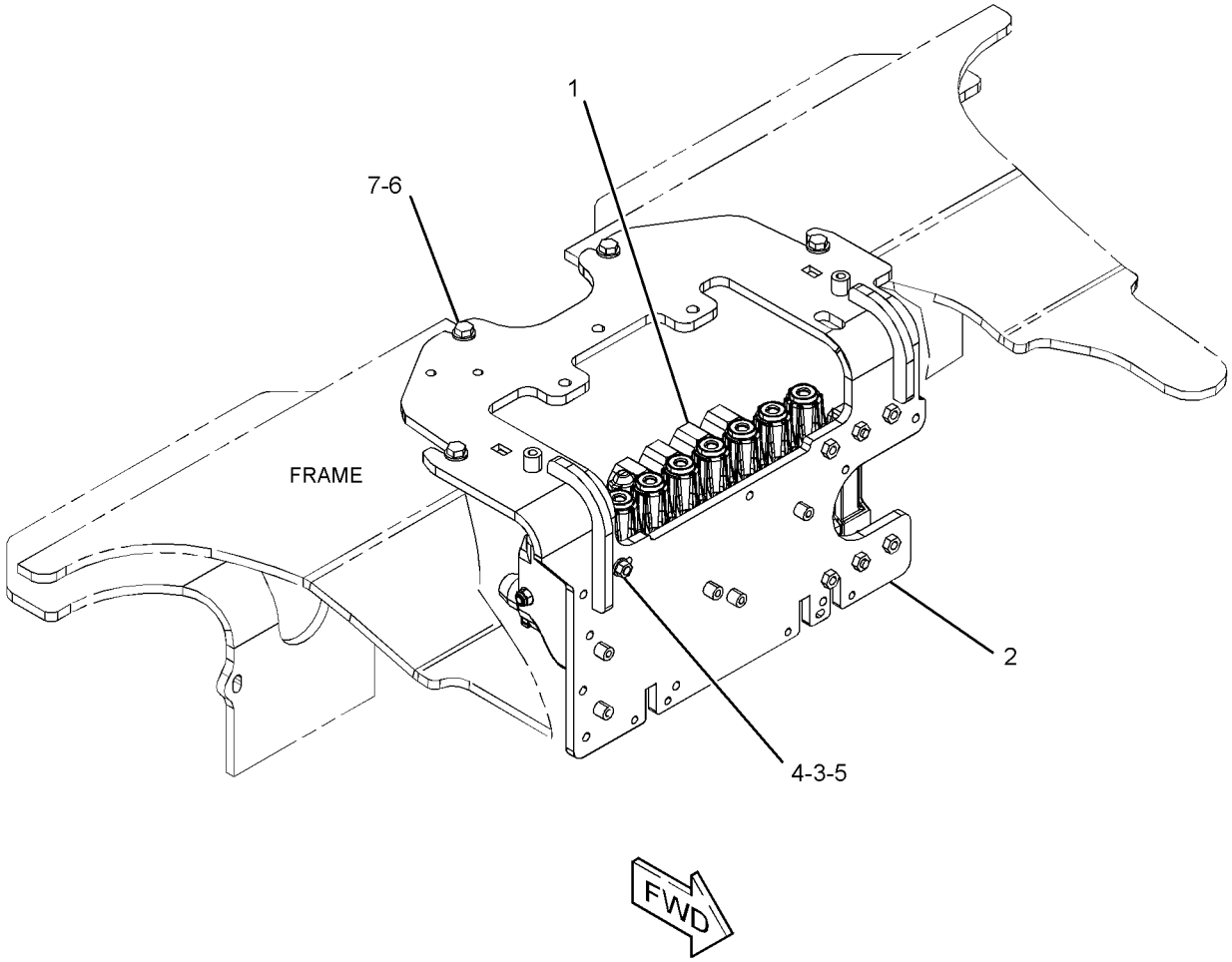

GRAPHIC #1 **<END>** g02812916

HYDRAULIC SYSTEM

373-4271 VALVE AR-BANK 3—MULTIPURPOSE

S/N: SEJ1-UP
FOR USE WITH PIN-ON
AN ATTACHMENT

SMCS-5051 **i04623042**

NOTE	PART NUMBER	QTY	PART NAME 1 2 3 4 5 6 (PRODUCT LEVEL)	SEE PAGE
Y	*353-1375*	1	ACCUMULATOR GP-HYDRAULIC	336
Y	*269-3201*	1	CONTROL & MTG GP-JOYSTICK	588
Y	**271-3097**	1	CONTROL GP-HANDLE (LH)	590
Y	**272-9700**	1	CONTROL GP-HANDLE (RH, JOYSTICK)	591
Y	**271-3096**	1	CONTROL GP-JOYSTICK (RH)	594
Y	*356-4100*	1	FLOORPLATE GP	312
Y	*337-9812*	1	LINES GP-AUXILIARY HYDRAULIC (PARALLEL LIFT)	366
Y	*337-9811*	1	LINES GP-LIFT & TILT	400
Y	*337-9810*	1	LINES GP-LIFT CYLINDER (PARALLEL LIFT)	402
Y	*337-9785*	1	LINES GP-PILOT (SUPPLY)	420
Y	*337-9786*	1	LINES GP-PILOT (BACKHOE)	422
Y	*337-9787*	1	LINES GP-PILOT (STABILIZER)	425
Y	*337-9788*	1	LINES GP-PILOT (LOADER)	427
Y	*337-9828*	1	LINES GP-PILOT (3-BANK)	429
Y	*337-9829*	1	LINES GP-PILOT (7-BANK)	430
Y	*269-3247*	1	MOUNTING GP-BACKHOE CONTROL (PILOT)	634
Y	*353-1385*	1	MOUNTING GP-BUCKET (PARALLEL LIFT)	563
Y	*337-9815*	1	VALVE & MTG GP-AUXILIARY	453
Y	*337-9706*	1	VALVE & MTG GP-BANK (3-BANK)	454
Y	*337-9714*	1	VALVE & MTG GP-BANK (7-BANK)	455
Y	*385-0559*	1	WIRING GP-KICKOUT & POSITIONER (RETURN TO DIG)	145
Y	*357-3203*	1	WIRING GP-REAR (PILOT)	156

Y-SEPARATE ILLUSTRATION

<END>

HYDRAULIC SYSTEM

373-4275 VALVE AR-BANK 3

S/N: SEJ1-UP
FOR USE WITH PIN-ON
AN ATTACHMENT

SMCS-5051 **i04623035**

NOTE	PART NUMBER	QTY	PART NAME 1 2 3 4 5 6 (PRODUCT LEVEL)	SEE PAGE
Y	*353-1375*	1	ACCUMULATOR GP-HYDRAULIC	336
Y	*269-3201*	1	CONTROL & MTG GP-JOYSTICK	588
Y	**271-3097**	1	CONTROL GP-HANDLE (LH)	590
Y	**272-9700**	1	CONTROL GP-HANDLE (RH, JOYSTICK)	591
Y	**271-3096**	1	CONTROL GP-JOYSTICK (RH)	594
Y	*356-4100*	1	FLOORPLATE GP	312
Y	*337-9812*	1	LINES GP-AUXILIARY HYDRAULIC (PARALLEL LIFT)	366
Y	*337-9811*	1	LINES GP-LIFT & TILT	400
Y	*362-9359*	1	LINES GP-LIFT CYLINDER	403
Y	*337-9785*	1	LINES GP-PILOT (SUPPLY)	420
Y	*337-9786*	1	LINES GP-PILOT (BACKHOE)	422
Y	*337-9787*	1	LINES GP-PILOT (STABILIZER)	425
Y	*337-9788*	1	LINES GP-PILOT (LOADER)	427
Y	*337-9828*	1	LINES GP-PILOT (3-BANK)	429
Y	*337-9829*	1	LINES GP-PILOT (7-BANK)	430
Y	*269-3247*	1	MOUNTING GP-BACKHOE CONTROL (PILOT)	634
Y	*353-1385*	1	MOUNTING GP-BUCKET (PARALLEL LIFT)	563
Y	*353-5561*	1	SWITCH GP-PRESSURE (HYDRAULIC LOCKOUT)	127
Y	*337-9815*	1	VALVE & MTG GP-AUXILIARY	453
Y	*337-9714*	1	VALVE & MTG GP-BANK (7-BANK)	455
Y	*337-9706*	1	VALVE & MTG GP-BANK (3-BANK)	454
Y	*357-3221*	1	WIRING GP-KICKOUT & POSITIONER (PARALLEL LIFT)	143
Y	*357-3246*	1	WIRING GP-LOAD CONTROL (PILOT)	147
Y	*357-3203*	1	WIRING GP-REAR (PILOT)	156

Y-SEPARATE ILLUSTRATION

<END>

HYDRAULIC SYSTEM

373-4277 VALVE AR-BANK 3—QUICK COUPLER LOCK

S/N: SEJ1-UP
FOR USE WITH HOOK-ON WORK TOOLS
AN ATTACHMENT

SMCS-5051 **i04622849**

NOTE	PART NUMBER	QTY	PART NAME 1 2 3 4 5 6 (PRODUCT LEVEL)	SEE PAGE
Y	*353-1375*	1	ACCUMULATOR GP-HYDRAULIC	336
Y	*269-3201*	1	CONTROL & MTG GP-JOYSTICK	588
Y	**271-3097**	1	CONTROL GP-HANDLE (LH)	590
Y	**272-9700**	1	CONTROL GP-HANDLE (RH, JOYSTICK)	591
Y	**271-3096**	1	CONTROL GP-JOYSTICK (RH)	594
Y	*358-8165*	1	COUPLER GP-QUICK (PARALLEL LIFT)	556
Y	*356-4100*	1	FLOORPLATE GP	312
Y	*337-9812*	1	LINES GP-AUXILIARY HYDRAULIC (PARALLEL LIFT)	366
Y	*369-1461*	1	LINES GP-COUPLER (PARALLEL LIFT)	398
Y	*337-9811*	1	LINES GP-LIFT & TILT	400
Y	*362-9359*	1	LINES GP-LIFT CYLINDER	403
Y	*337-9785*	1	LINES GP-PILOT (SUPPLY)	420
Y	*337-9786*	1	LINES GP-PILOT (BACKHOE)	422
Y	*337-9787*	1	LINES GP-PILOT (STABILIZER)	425
Y	*337-9788*	1	LINES GP-PILOT (LOADER)	427
Y	*337-9828*	1	LINES GP-PILOT (3-BANK)	429
Y	*337-9829*	1	LINES GP-PILOT (7-BANK)	430
Y	*269-3247*	1	MOUNTING GP-BACKHOE CONTROL (PILOT)	634
Y	*353-5561*	1	SWITCH GP-PRESSURE (HYDRAULIC LOCKOUT)	127
Y	*337-9815*	1	VALVE & MTG GP-AUXILIARY	453
Y	*337-9714*	1	VALVE & MTG GP-BANK (7-BANK)	455
Y	*337-9706*	1	VALVE & MTG GP-BANK (3-BANK)	454
Y	*357-3221*	1	WIRING GP-KICKOUT & POSITIONER (PARALLEL LIFT)	143
Y	*357-3246*	1	WIRING GP-LOAD CONTROL (PILOT)	147
Y	*357-3203*	1	WIRING GP-REAR (PILOT)	156
Y	*331-5476*	1	WIRING GP-WORK TOOL (QUICK COUPLER)	171
Y	*211-4258*	1	WIRING GP-WORK TOOL (ANGLE BROOM)	169

Y-SEPARATE ILLUSTRATION

<END>

359-7211 VALVE GP-BANK 3—PILOT CONTROL

S/N: SEJ1-UP
PART OF 337-9706 VALVE & MTG GP-BANK
AN ATTACHMENT

SMCS-5051 **i04622952**

NOTE	REF NO	GRAPHIC REF	PART NUMBER	QTY	PART NAME 1 2 3 4 5 6 (PRODUCT LEVEL)	SEE PAGE
	1	1	**6V-8978**	12	SEAL-O-RING	
	2	1	**363-9807**	1	VALVE GP-CONTROL (LIFT)	
	3	1	**363-9808**	1	VALVE GP-CONTROL (TILT)	
	4	1	**363-9809**	1	VALVE GP-CONTROL (AUX)	
	5	1	**308-2160**	1	COVER GP (OUTLET)	
	6	1	**308-2161**	1	KIT-FASTENER (BANK VALVE)	
					(INCLUDES LOCKNUTS & TIE RODS)	
	7	1	**4J-9535**	4	SEAL-O-RING	
	8	1	**363-9783**	1	MANIFOLD GP-CONTROL (INLET)	

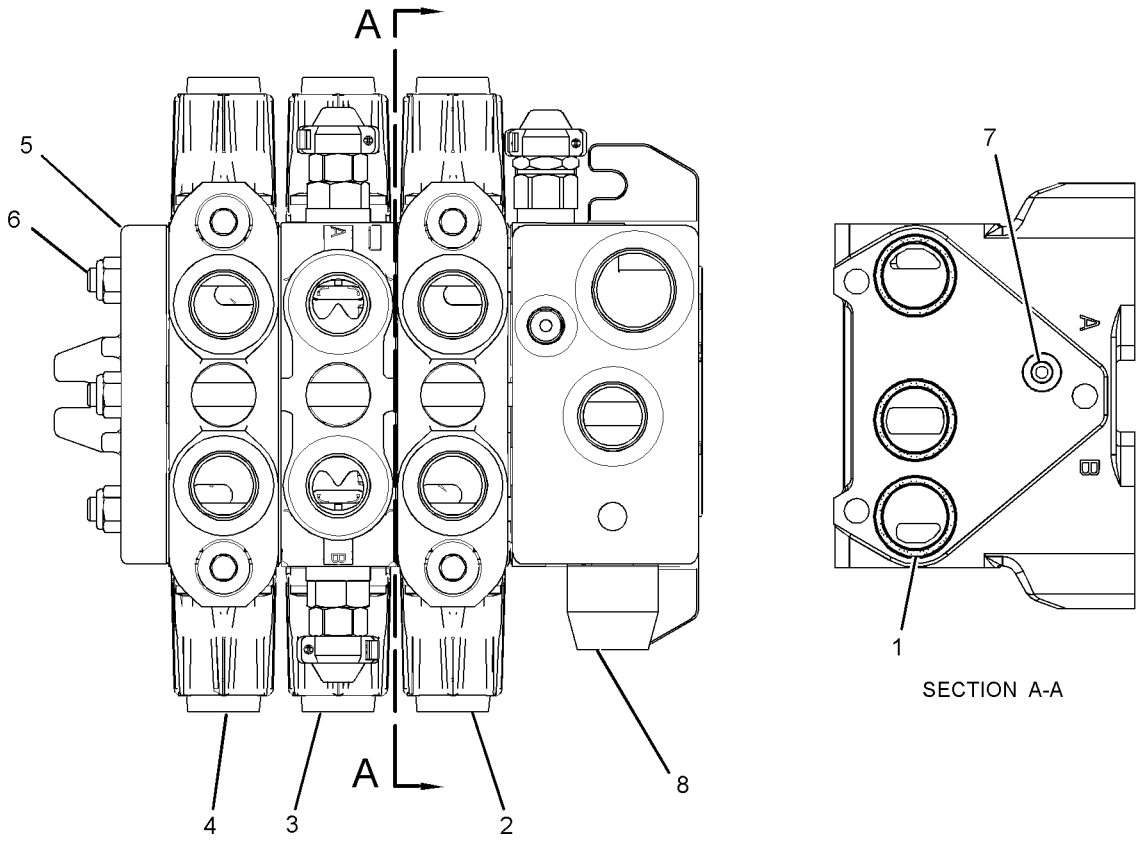

GRAPHIC #1 **<END>** g02826436

HYDRAULIC SYSTEM

359-7216 VALVE GP-BANK 7—PILOT CONTROL

S/N: SEJ1-UP

PART OF 337-9714 VALVE & MTG GP-BANK

AN ATTACHMENT

SMCS-5051 **i04629251**

NOTE	REF NO	GRAPHIC REF	PART NUMBER	QTY	PART NAME 1 2 3 4 5 6 (PRODUCT LEVEL)	SEE PAGE
					(NO BREAKDOWN OF SERVICEABLE PARTS AVAILABLE AT TIME OF PUBLICATION)	

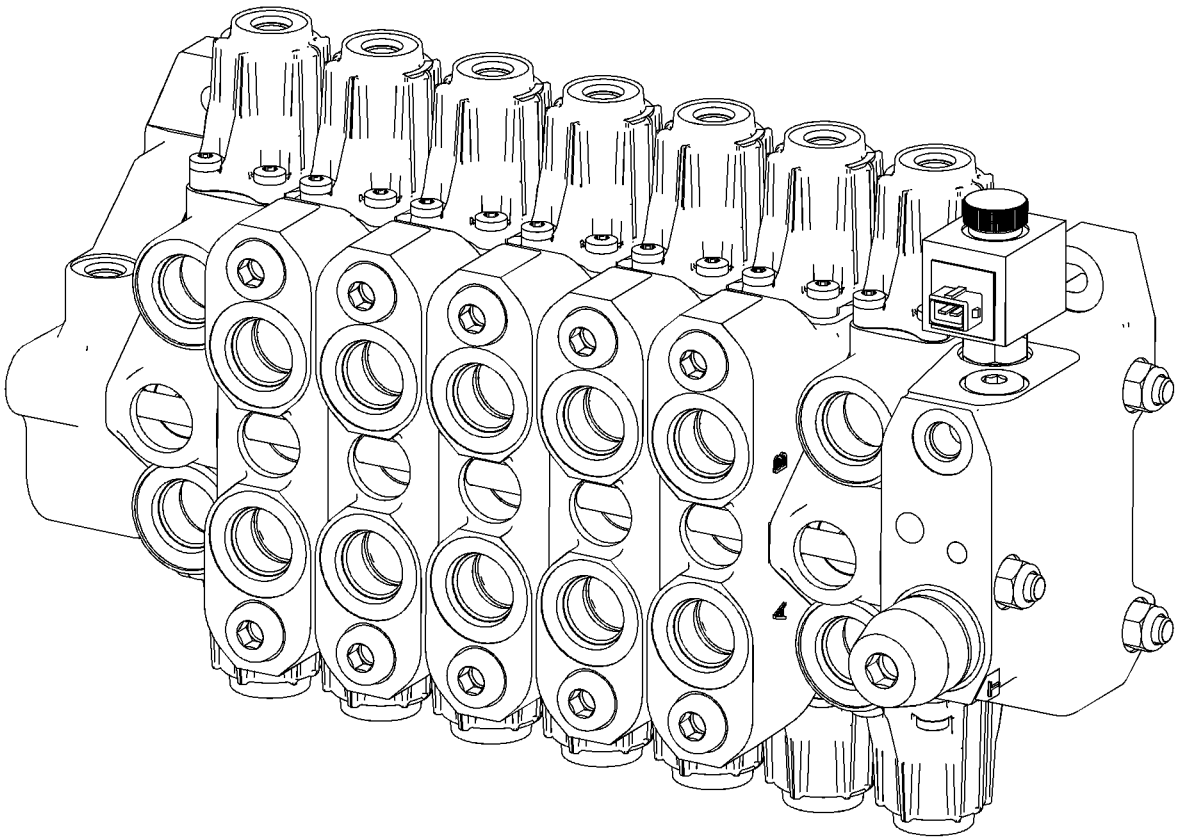

GRAPHIC #1 **<END>** g02825079

HYDRAULIC SYSTEM

359-7248 VALVE GP-PILOT–STABILIZER CONTROL

S/N: SEJ1-UP

PART OF 353-1448 CONTROL AR-STABILIZER

AN ATTACHMENT

SMCS-5059 **i04623191**

NOTE	REF NO	GRAPHIC REF	PART NUMBER	QTY	PART NAME 1 2 3 4 5 6 (PRODUCT LEVEL)	SEE PAGE
					(NO SERVICED PARTS)	

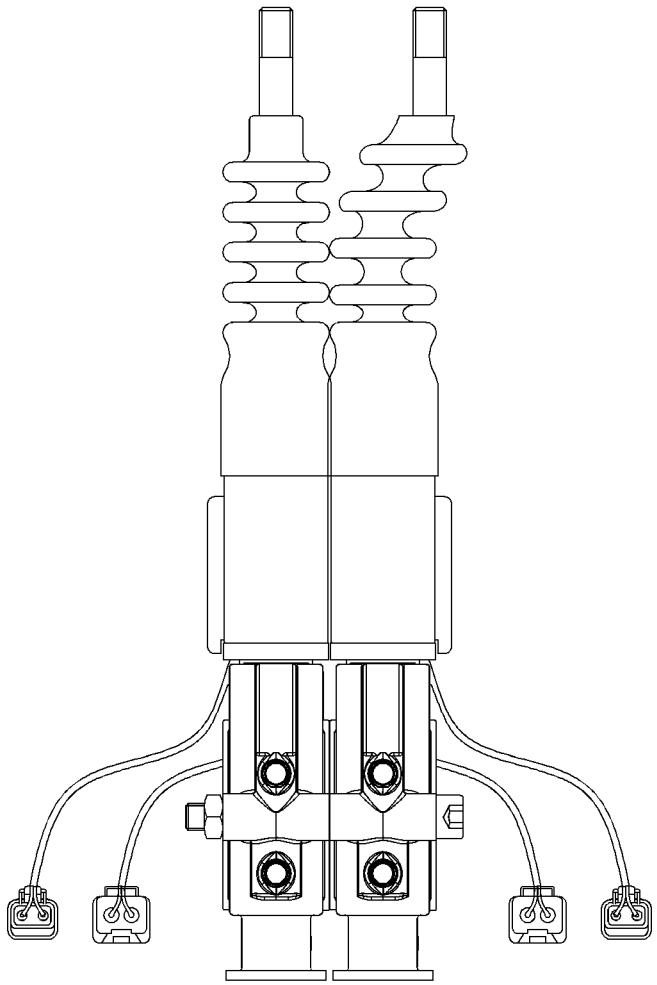

GRAPHIC #1 **<END>** g02825002

HYDRAULIC SYSTEM

359-7224 VALVE GP-SOLENOID & PRESS REDC

S/N: SEJ1-UP

PART OF 337-9815 VALVE & MTG GP-AUXILIARY

AN ATTACHMENT

SMCS-5467, 5479 **i04611573**

NOTE	REF NO	GRAPHIC REF	PART NUMBER	QTY	PART NAME 1 2 3 4 5 6 (PRODUCT LEVEL)	SEE PAGE
	1	1	**359-7226**	1	VALVE GP-PRESSURE REDUCING (BRAKE)	
	2	1	**362-3212**	4	VALVE GP-SOLENOID (12 VDC) (AUXILIARY)	
M	3	1	**095-0641**	10	BOLT-SOCKET HEAD (M4X0.7X10-MM)	
	4	1	**373-6995**	1	VALVE GP-SOLENOID (12-VOLT) (PILOT SHUTOFF)	

M-METRIC PART

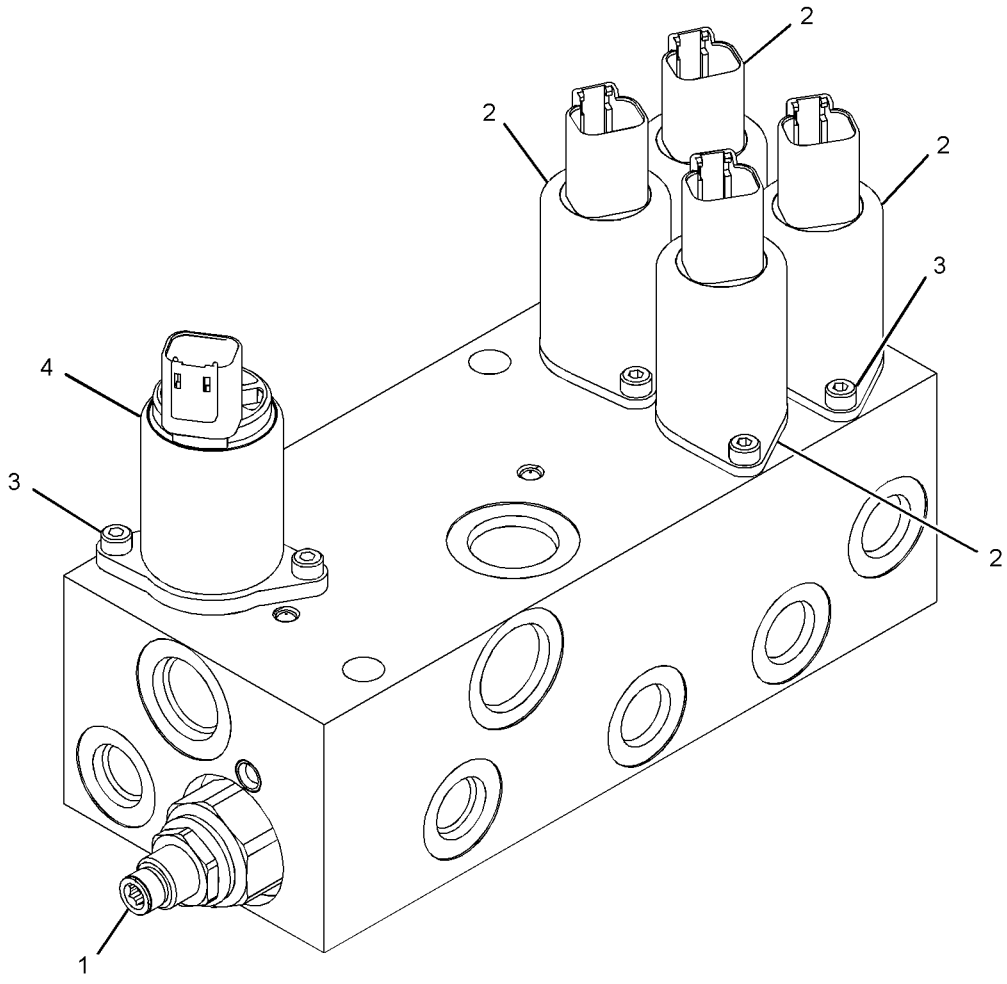

GRAPHIC #1 **<END>** g02821917

337-9846 ARM GP-LIFT

S/N: SEJ1-UP

PART OF 340-1701 LOADER AR

SMCS-6118, 6119 **i04549413**

NOTE	REF NO	GRAPHIC REF	PART NUMBER	QTY	PART NAME 1 2 3 4 5 6 (PRODUCT LEVEL)	SEE PAGE
B	1	1,2	**111-4337**	40	WASHER (46X70X1-MM THK)	
B	2	1	**128-7903**	2	SPACER (61X114.3X3-MM THK)	
B	3	1	**128-7905**	3	SPACER (61X114.3X1-MM THK)	
	4	1	**340-1789**	1	ARM & BEARING AS	
	4A	1	**9R-0411**	12	BUSHING	
	5	1	**341-6152**	1	PIN	
	6	2	**358-4817**	2	LINK AS	
					(EACH INCLUDES)	
	6A	2	**9R-0153**	2	BUSHING	
	6B	2	**9R-3700**	2	BUSHING	
	7	2	**358-4842**	4	PLATE	
	8	2	**358-5379**	2	LINK AS	
					(EACH INCLUDES)	
	8A	2	**9R-0153**	4	BUSHING	
	9	2	**358-5381**	4	PLATE	
	10	2	**360-2813**	6	PIN	
	11	2	**360-2814**	4	PIN	
	12	1,2	**360-2815**	2	PIN	
	13	1,2	**360-2816**	4	PIN	
	14	2	**360-2820**	4	SPACER (46X63.5X22-MM THK)	
	16	1	**370-0495**	8	NUT-SPECIAL (M8X1.25-THD)	
	17	1	**372-5024**	2	PLATE	
	18	1	**372-5085**	2	PIN AS	
B	19	1,2	**373-8390**	8	SHIM (1-MM THK)	
	20	2	**3B-8488**	2	FITTING-GREASE	
	21	1,2	**3B-8489**	22	FITTING-GREASE	
	22	1,2	**6V-3213**	24	RING-RETAINING	
	23	1,2	**6V-4364**	4	RING-RETAINING	
M	24	1,2	**6V-7744**	4	LOCKNUT (M10X1.5-THD)	
B	25	1,2	**7X-0542**	10	WASHER-HARD (51X74X3-MM THK)	
	26	1	**7X-0590**	2	WASHER-HARD (13.5X44.5X6-MM THK)	
M	27	1	**8T-4139**	6	BOLT (M12X1.75X30-MM)	
	28	1	**8T-4223**	4	WASHER-HARD (13.5X25.5X3-MM THK)	
B	29	1,2	**9R-0158**	25	WASHER (46X69X3-MM THK)	
M	30	1,2	**9X-2158**	4	BOLT-SOCKET HEAD (M10X1.5X90-MM)	

B-USE AS REQUIRED
M-METRIC PART

337-9846 **ARM GP-LIFT** *(contd.)* **i04549413**

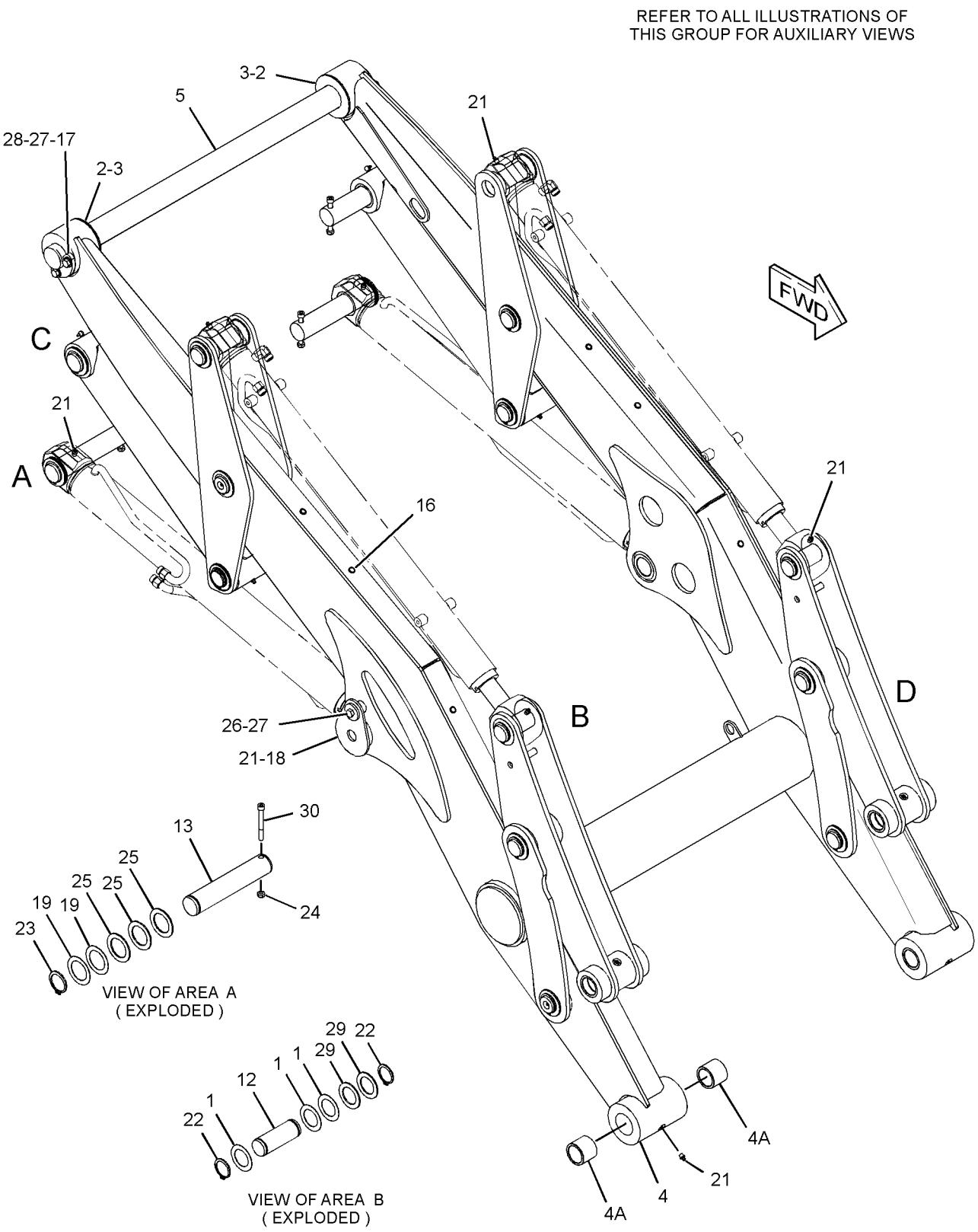

GRAPHIC #1 g02805079

337-9846 **ARM GP-LIFT** *(contd.)* **i04549413**

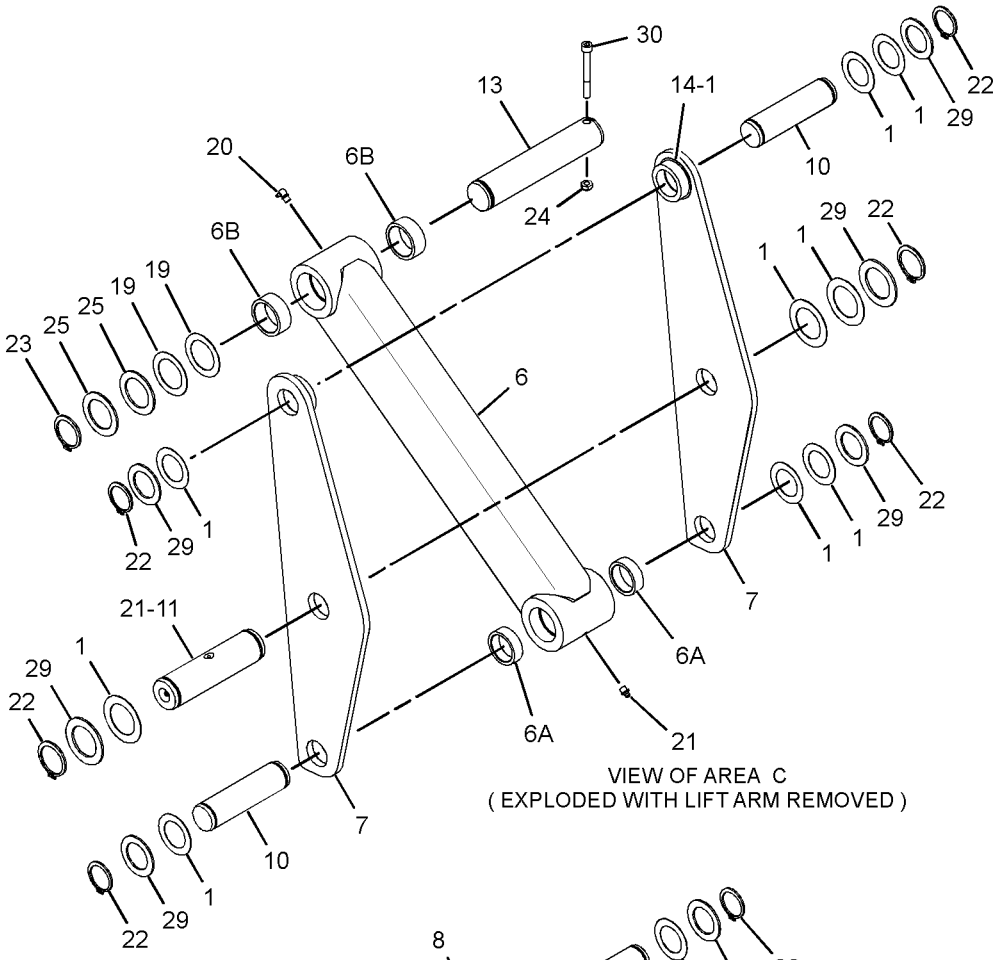

VIEW OF AREA C
(EXPLODED WITH LIFT ARM REMOVED)

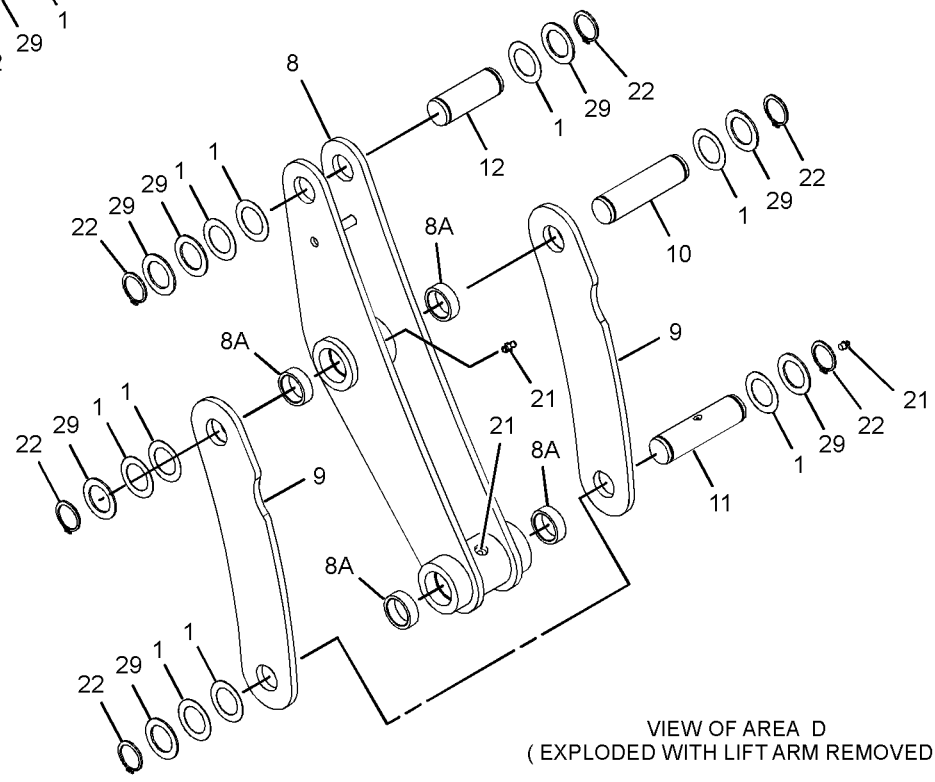

VIEW OF AREA D
(EXPLODED WITH LIFT ARM REMOVED)

GRAPHIC #2 **<END>** g02807103

324-0548 BOOM GP

S/N: SEJ1-UP

PART OF 340-1736, 340-1737 BACKHOE AR-EXTENDABLE STICK, 340-1735 BACKHOE AR-STANDARD STICK AN ATTACHMENT

SMCS-6501 **i04629955**

NOTE	REF NO	GRAPHIC REF	PART NUMBER	QTY	PART NAME 1 2 3 4 5 6 (PRODUCT LEVEL)	SEE PAGE
B	1	1	**9R-0481**	2	WASHER (71X110X4-MM THK)	
B	2	1	**9R-8291**	2	SPACER (66X125X1-MM THK)	
	3	1	**190-4374**	2	WASHER (38X60X2.5-MM THK)	
M	4	1	**246-7853**	6	NUT-SPECIAL (M8X1.25-THD)	
	5	1	**358-2307**	1	BOOM AS	
	5A	1	**213-6683**	2	BUSHING	
	6	1	**316-6945**	1	PIN	
	7	1	**320-4725**	1	PIN AS	
	8	1	**322-3736**	1	PIN-BOOM LOCK	
	9	1	**095-7950**	2	RING-RETAINING	
	10	1	**115-6433**	1	WASHER (11X50X6-MM THK)	
	11	1	**3B-8488**	4	FITTING-GREASE	
	12	1	**3B-8489**	2	FITTING-GREASE	
	13	1	**095-0924**	2	RING-RETAINING	
M	14	1	**8T-4136**	1	BOLT (M10X1.5X25-MM)	

B-USE AS REQUIRED
M-METRIC PART

324-0548 **BOOM GP** ***(contd.)*** **i04629955**

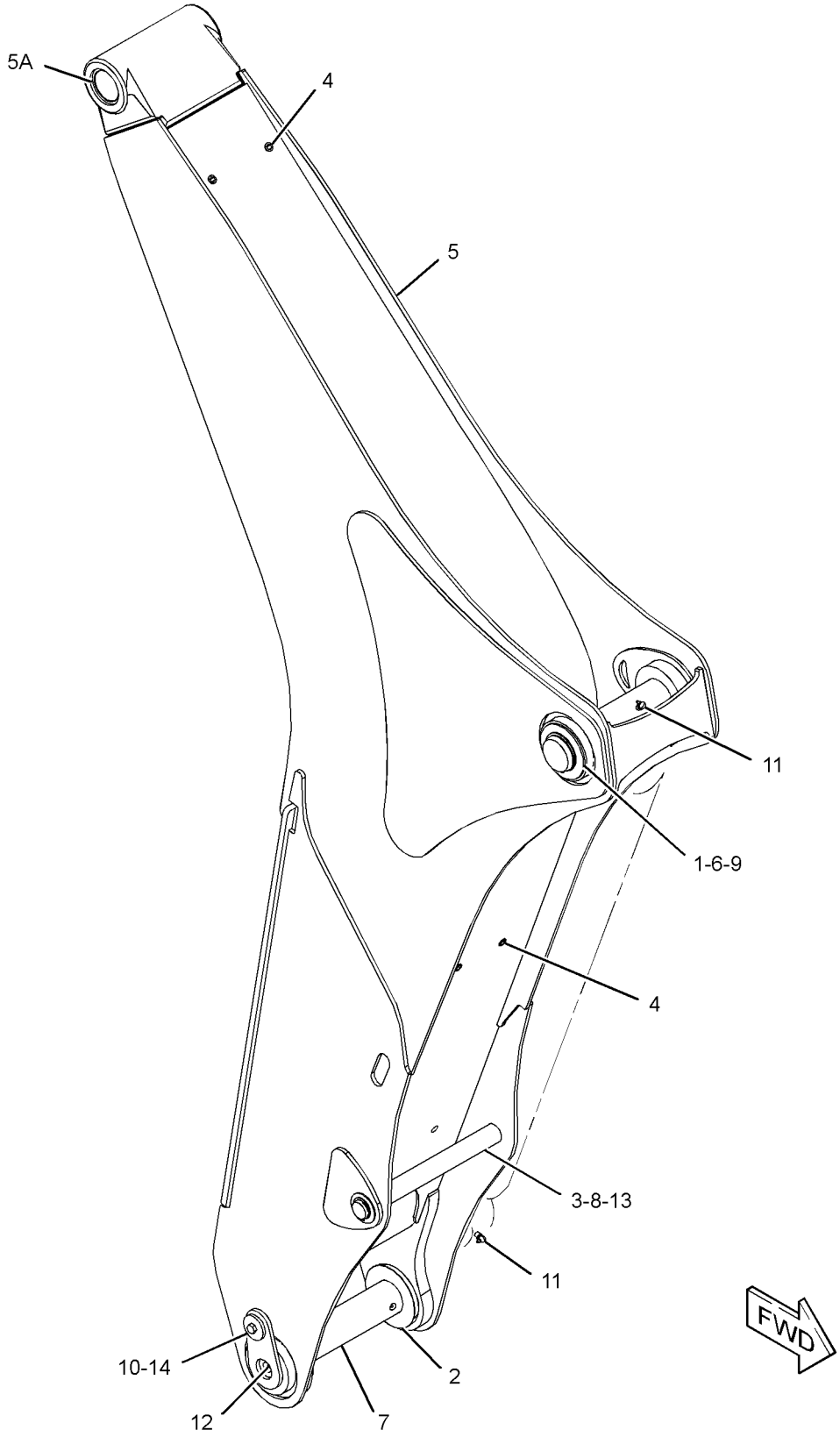

GRAPHIC #1 **<END>** g02789797

324-0549 BOOM GP

S/N: SEJ1-UP
PART OF 340-1738 BACKHOE AR-EXTENDABLE STICK
AN ATTACHMENT

SMCS-6501 **i04629206**

NOTE	REF NO	GRAPHIC REF	PART NUMBER	QTY	PART NAME 1 2 3 4 5 6 (PRODUCT LEVEL)	SEE PAGE
B	1	1	**9R-0481**	2	WASHER (71X110X4-MM THK)	
B	2	1	**9R-8291**	2	SPACER (66X125X1-MM THK)	
	3	1	**353-3158**	1	PLATE AS	
M	4	1	**246-7853**	6	NUT-SPECIAL (M8X1.25-THD)	
	5	1	**316-6945**	1	PIN	
	6	1	**319-4505**	1	BOOM AS	
	6A	1	**9R-4602**	2	BUSHING	
	7	1	**320-4725**	1	PIN AS	
	8	1	**322-3736**	1	PIN-BOOM LOCK	
	9	1	**095-7950**	2	RING-RETAINING	
	10	1	**115-6433**	1	WASHER (11X50X6-MM THK)	
	11	1	**3B-8488**	4	FITTING-GREASE	
	12	1	**3B-8489**	2	FITTING-GREASE	
	13	1	**095-0924**	2	RING-RETAINING	
M	14	1	**8T-4136**	1	BOLT (M10X1.5X25-MM)	
	15	1	**190-4374**	2	WASHER (38X60X2.5-MM THK)	

B-USE AS REQUIRED
M-METRIC PART

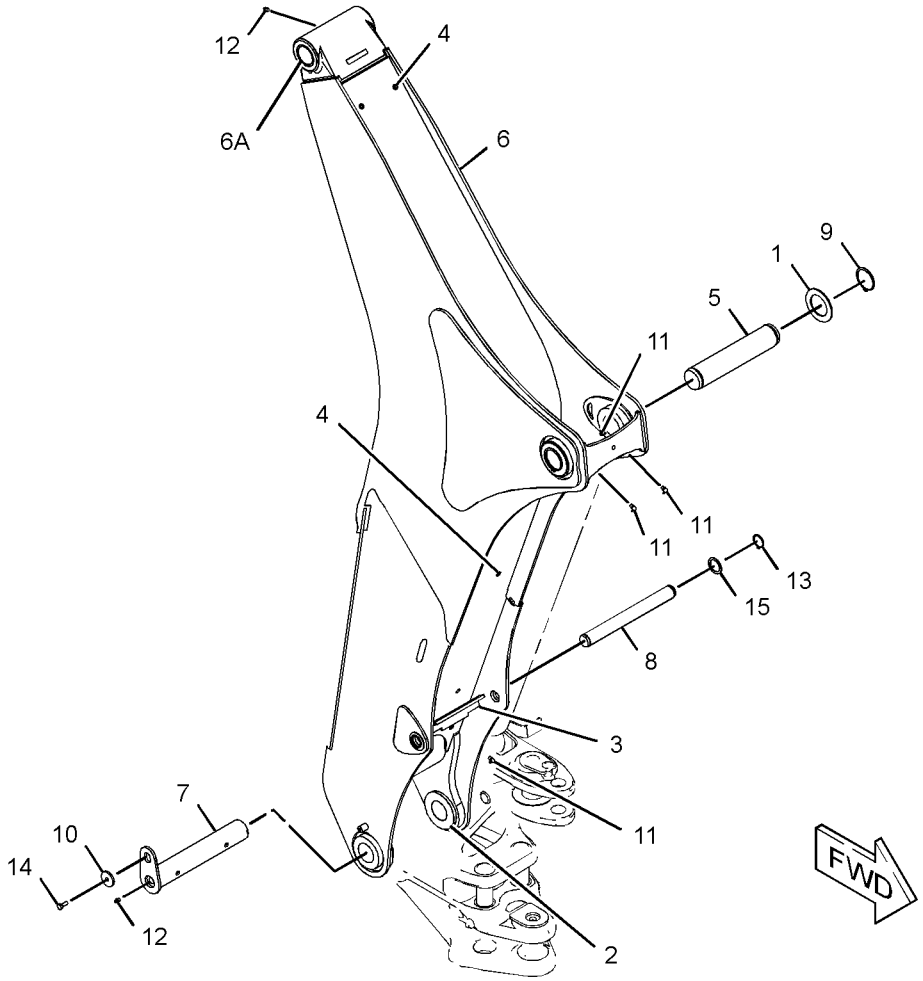

GRAPHIC #1 **<END>** g02795643

337-9841 BRACE GP-LIFT CYLINDER

S/N: SEJ1-UP

PART OF 340-1701 LOADER AR

SMCS-7507 **i04553589**

NOTE	REF NO	GRAPHIC REF	PART NUMBER	QTY	PART NAME 1 2 3 4 5 6 (PRODUCT LEVEL)	SEE PAGE
	1	1	**118-1348**	1	PIN	
	2	1	**371-7649**	1	PLATE	
	3	1	**371-9284**	1	PLATE AS	
	4	1	**377-0774**	1	BLOCK AS	
	5	1	**389-1833**	1	BRACE AS	
		1	**376-8918**	1	BRACE	
	6	1	**5P-4116**	1	WASHER-HARD (8.8X20.5X2-MM THK)	
	7	1	**8T-4121**	2	WASHER-HARD (11X21X2.5-MM THK)	
M	8	1	**8T-4137**	2	BOLT (M10X1.5X20-MM)	
M	9	1	**8T-4200**	1	BOLT (M8X1.25X16-MM)	
	10	1	**9R-5301**	1	PIN-COTTER	

M-METRIC PART

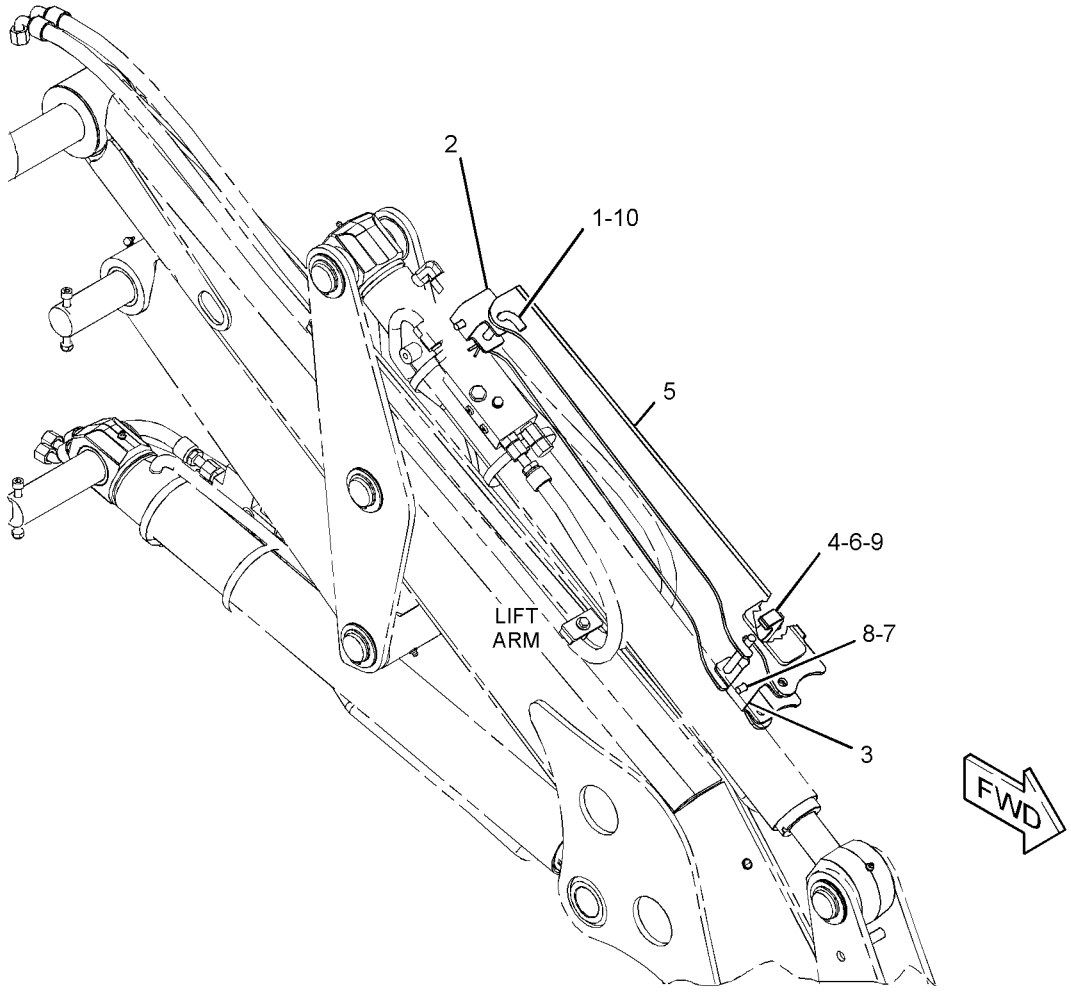

GRAPHIC #1 **<END>** g02808097

IMPLEMENTS

340-1743 LINKAGE AR

S/N: SEJ1-UP
FOR USE WITH 340-1737—PAGE 1
AN ATTACHMENT

SMCS-6000 **i04583129**

NOTE	PART NUMBER	QTY	PART NAME 1 2 3 4 5 6 (PRODUCT LEVEL)	SEE PAGE
Y	*343-2901*	1	COVER GP-PROTECTION	308
Y	*365-3331*	1	LINES GP-BOOM	389
Y	*321-7192*	1	LINES GP-STICK	441
Y	*348-5464*	1	LINKAGE GP-BACKHOE BUCKET (WITHOUT LIFTING EYE)	476

Y-SEPARATE ILLUSTRATION

<END>

340-1744 LINKAGE AR—WITH LIFTING EYE

S/N: SEJ1-UP
14-FT
FOR USE WITH 340-1737—PAGE 1
AN ATTACHMENT

SMCS-6000 **i04580832**

NOTE	PART NUMBER	QTY	PART NAME 1 2 3 4 5 6 (PRODUCT LEVEL)	SEE PAGE
Y	*343-2901*	1	COVER GP-PROTECTION	308
Y	*365-3336*	1	LINES GP-LOAD CONTROL VALVE (PILOT)	406
Y	*334-0752*	1	LINKAGE GP-BACKHOE BUCKET	474
Y	*357-3233*	1	WIRING GP-SENSOR (OBJECT HANDLING)	160

Y-SEPARATE ILLUSTRATION

<END>

340-1749 LINKAGE AR

S/N: SEJ1-UP
FOR USE WITH 340-1735—PAGE 2, 340-1736—PAGE 1
AN ATTACHMENT

SMCS-6000 **i04580531**

NOTE	PART NUMBER	QTY	PART NAME 1 2 3 4 5 6 (PRODUCT LEVEL)	SEE PAGE
Y	*343-2901*	1	COVER GP-PROTECTION	308
Y	*365-3336*	1	LINES GP-LOAD CONTROL VALVE (PILOT)	406
Y	*334-0751*	1	LINKAGE GP-BACKHOE BUCKET (LIFTING)	472
Y	*357-3233*	1	WIRING GP-SENSOR (OBJECT HANDLING)	160

Y-SEPARATE ILLUSTRATION

<END>

374-6882 LINKAGE AR

S/N: SEJ1-UP
16-FT
FOR USE WITH 340-1738—PAGE 2
AN ATTACHMENT

SMCS-6000 **i04602870**

NOTE	PART NUMBER	QTY	PART NAME 1 2 3 4 5 6 (PRODUCT LEVEL)	SEE PAGE
Y	*343-2901*	1	COVER GP-PROTECTION	308
Y	*365-3332*	1	LINES GP-BOOM	390
Y	*327-8957*	1	LINES GP-STICK	442
Y	*348-5465*	1	LINKAGE GP-BACKHOE BUCKET (WITHOUT LIFTING EYE)	477

Y-SEPARATE ILLUSTRATION

<END>

340-1740 LINKAGE AR-BUCKET—WITHOUT LIFTING EYE

S/N: SEJ1-UP
FOR USE WITH 340-1735—PAGE 2, 340-1736—PAGE 1
AN ATTACHMENT

SMCS-6513 **i04608670**

NOTE	PART NUMBER	QTY	PART NAME 1 2 3 4 5 6 (PRODUCT LEVEL)	SEE PAGE
Y	*343-2901*	1	COVER GP-PROTECTION	308
Y	*365-3331*	1	LINES GP-BOOM	389
Y	*321-7192*	1	LINES GP-STICK	441
Y	*348-5465*	1	LINKAGE GP-BACKHOE BUCKET (WITHOUT LIFTING EYE)	477

Y-SEPARATE ILLUSTRATION

<END>

340-1745 LINKAGE AR-BUCKET—WITH LIFTING EYE

S/N: SEJ1-UP
FOR USE WITH 340-1738—PAGE 2
AN ATTACHMENT

SMCS-6513 **i04602889**

NOTE	PART NUMBER	QTY	PART NAME 1 2 3 4 5 6 (PRODUCT LEVEL)	SEE PAGE
Y	*343-2901*	1	COVER GP-PROTECTION	308
Y	*365-3337*	1	LINES GP-LOAD CONTROL VALVE	409
Y	*334-0751*	1	LINKAGE GP-BACKHOE BUCKET (LIFTING)	472
Y	*357-3233*	1	WIRING GP-SENSOR (OBJECT HANDLING)	160

Y-SEPARATE ILLUSTRATION

<END>

334-0751 LINKAGE GP-BACKHOE BUCKET—LIFTING

S/N: SEJ1-UP

PART OF 340-1749 LINKAGE AR, 340-1745 LINKAGE AR-BUCKET

AN ATTACHMENT

SMCS-6513 **i04506871**

NOTE	REF NO	GRAPHIC REF	PART NUMBER	QTY	PART NAME 1 2 3 4 5 6 (PRODUCT LEVEL)	SEE PAGE
	1	1	**9R-0158**	2	WASHER (46X69X3-MM THK)	
	2	1	**9R-1510**	2	WASHER (51X82X4-MM THK)	
B	3	1	**111-4337**	2	WASHER (46X70X1-MM THK)	
	4	1	**154-5280**	1	PIN	
B	5	1	**210-1707**	2	SHIM (1-MM THK)	
B	6	1	**220-7108**	6	WASHER (51X85X1-MM THK)	
	7	1	**320-9164**	1	PIN	
	8	1	**320-9241**	1	PIN	
	9	1	**328-5234**	1	PIN	
C	10	1	**359-4737**	1	LINK AS	
	10A	1	**9R-0139**	2	BUSHING	
	10B	1	**213-6703**	2	BEARING	
	11	1	**330-5738**	1	LINK	
	12	1	**330-5739**	1	LINK	
	13	1	**096-5516**	2	RING-RETAINING	
	14	1	**154-5279**	1	PIN	
	15	1	**3B-5319**	4	PIN-COTTER	
	16	1	**3B-8489**	4	FITTING-GREASE	
	17	1	**8T-4241**	4	RING-RETAINING (EXTERNAL)	

B-USE AS REQUIRED
C-CHANGE FROM PREVIOUS TYPE

334-0751 **LINKAGE GP-BACKHOE BUCKET** *(contd.)* **i04506871**

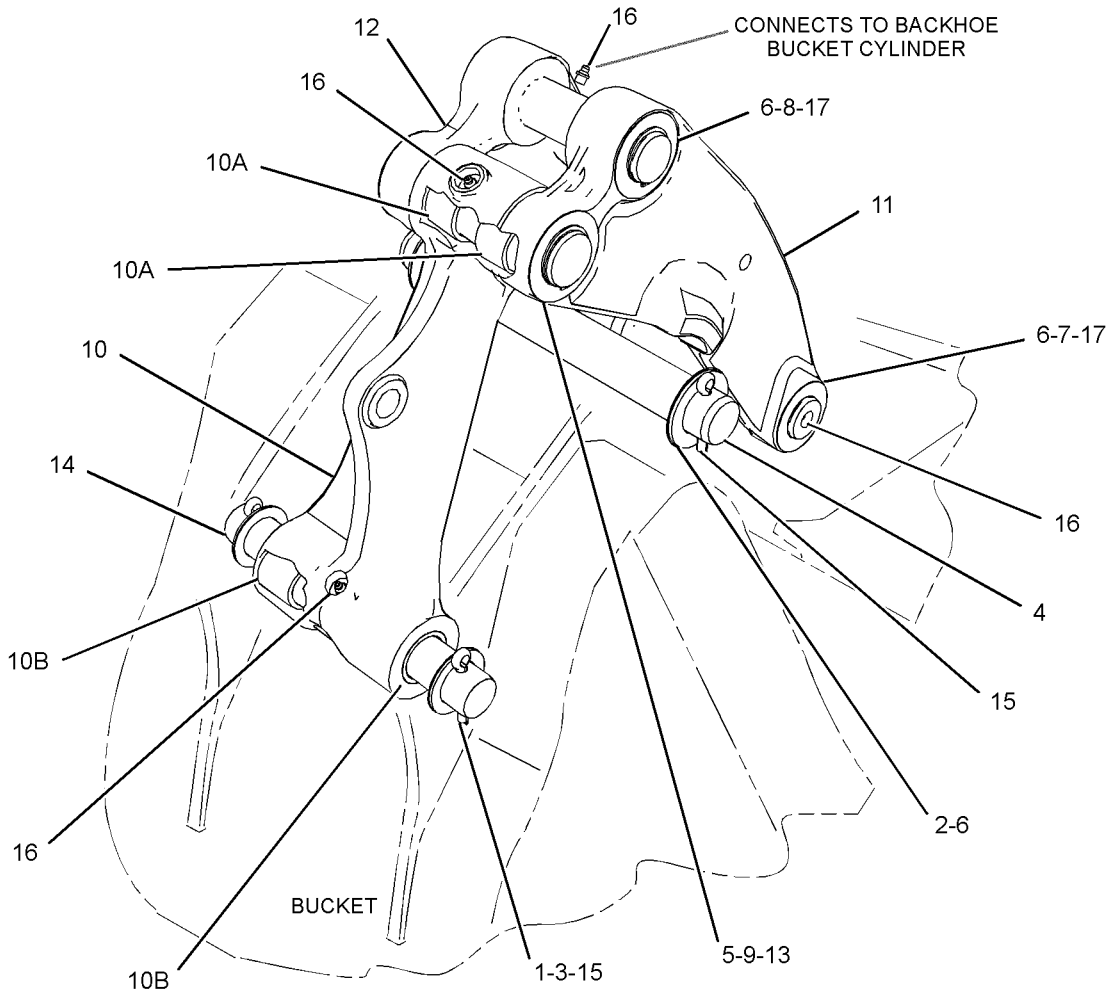

GRAPHIC #1 **<END>** g02793104

334-0752 LINKAGE GP-BACKHOE BUCKET—WITH LIFTING EYE

S/N: SEJ1-UP
PART OF 340-1744 LINKAGE AR
AN ATTACHMENT

SMCS-6513 **i03920822**

NOTE	REF NO	GRAPHIC REF	PART NUMBER	QTY	PART NAME 1 2 3 4 5 6 (PRODUCT LEVEL)	SEE PAGE
	1	1	**9R-0158**	2	WASHER (46X69X3-MM THK)	
	2	1	**9R-9105**	2	PIN AS	
B	3	1	**111-4337**	4	WASHER (46X70X1-MM THK)	
B	4	1	**210-1707**	2	SHIM (1-MM THK)	
B	5	1	**220-7108**	4	WASHER (51X85X1-MM THK)	
	6	1	**308-4315**	2	SPACER (51X115X51-MM THK)	
Y	7	1	**356-4606**	1	LINKAGE GP-BUCKET (LIFTING)	479
	8	1	**332-2578**	1	PLATE AS (LH)	
	9	1	**332-2579**	1	PLATE AS (RH)	
	10	1	**333-0790**	1	PIN	
	11	1	**333-0791**	1	PIN	
	12	1	**333-0792**	1	PIN	
	13	1	**096-5516**	2	RING-RETAINING	
	14	1	**3B-5319**	2	PIN-COTTER	
	15	1	**3B-8489**	4	FITTING-GREASE	
	16	1	**8T-4241**	4	RING-RETAINING	

B-USE AS REQUIRED
Y-SEPARATE ILLUSTRATION

334-0752 **LINKAGE GP-BACKHOE BUCKET** *(contd.)* **i03920822**

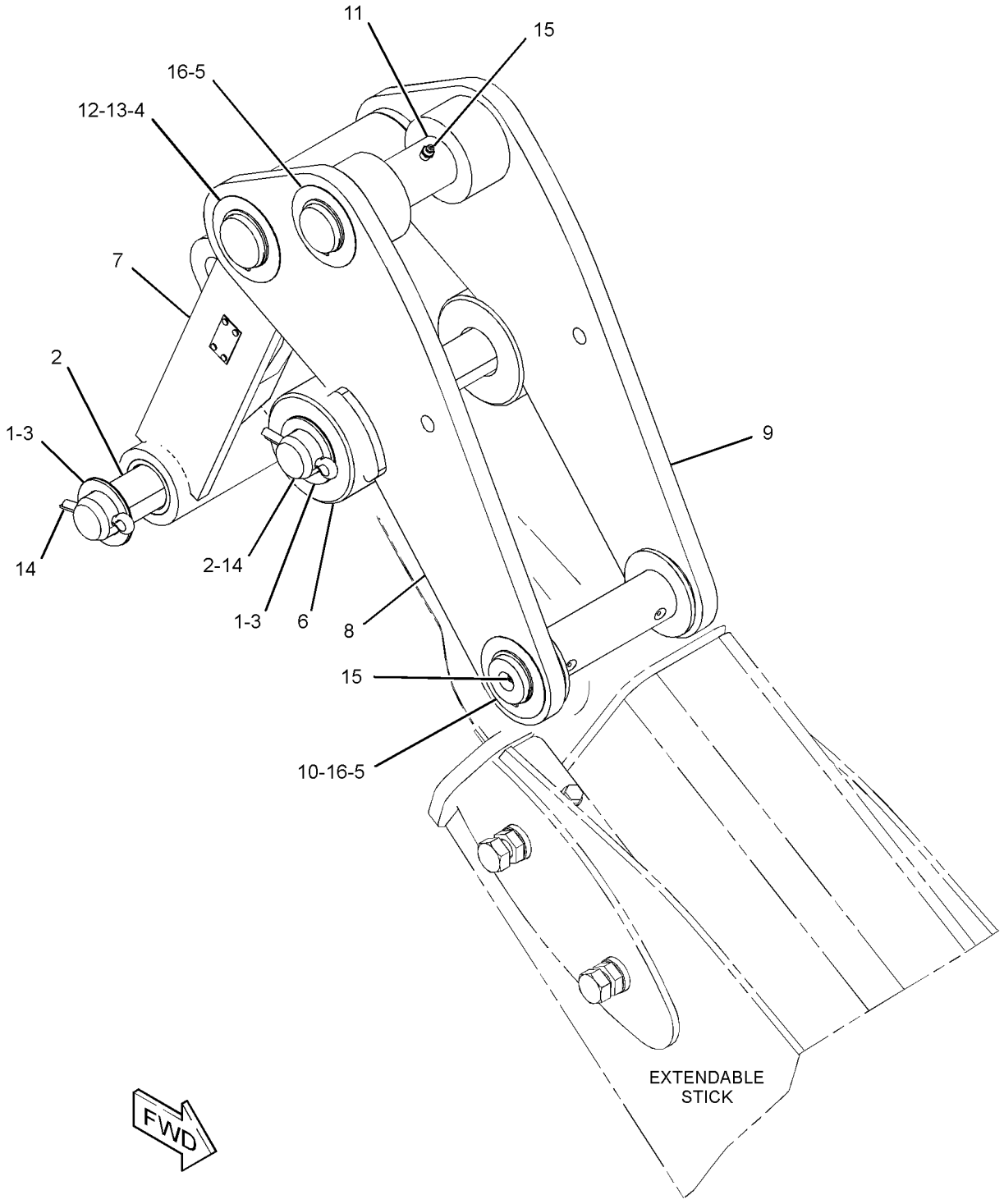

GRAPHIC #1 **<END>** g02139595

348-5464 LINKAGE GP-BACKHOE BUCKET–

WITHOUT LIFTING EYE

S/N: SEJ1-UP

PART OF 340-1743 LINKAGE AR

AN ATTACHMENT

SMCS-6513 **i03920789**

NOTE	REF NO	GRAPHIC REF	PART NUMBER	QTY	PART NAME 1 2 3 4 5 6 (PRODUCT LEVEL)	SEE PAGE
	1	1	**9R-0158**	2	WASHER (46X69X3-MM THK)	
	2	1	**9R-9105**	2	PIN AS	
B	3	1	**111-4337**	4	WASHER (46X70X1-MM THK)	
B	4	1	**210-1707**	2	SHIM (1-MM THK)	
B	5	1	**220-7108**	4	WASHER (51X85X1-MM THK)	
	6	1	**308-4315**	2	SPACER (51X115X51-MM THK)	
	7	1	**332-2578**	1	PLATE AS (LH)	
	8	1	**332-2579**	1	PLATE AS (RH)	
	9	1	**333-0790**	1	PIN	
	10	1	**333-0791**	1	PIN	
	11	1	**333-0792**	1	PIN	
	12	1	**348-5460**	1	LINKAGE GP-BUCKET (WITHOUT LIFTING EYE)	
	12A	1	**9R-0147**	2	BUSHING	
	12B	1	**9R-0170**	2	BUSHING	
	13	1	**096-5516**	2	RING-RETAINING	
	14	1	**3B-5319**	2	PIN-COTTER	
	15	1	**3B-8489**	4	FITTING-GREASE	
	16	1	**8T-4241**	4	RING-RETAINING	

B-USE AS REQUIRED

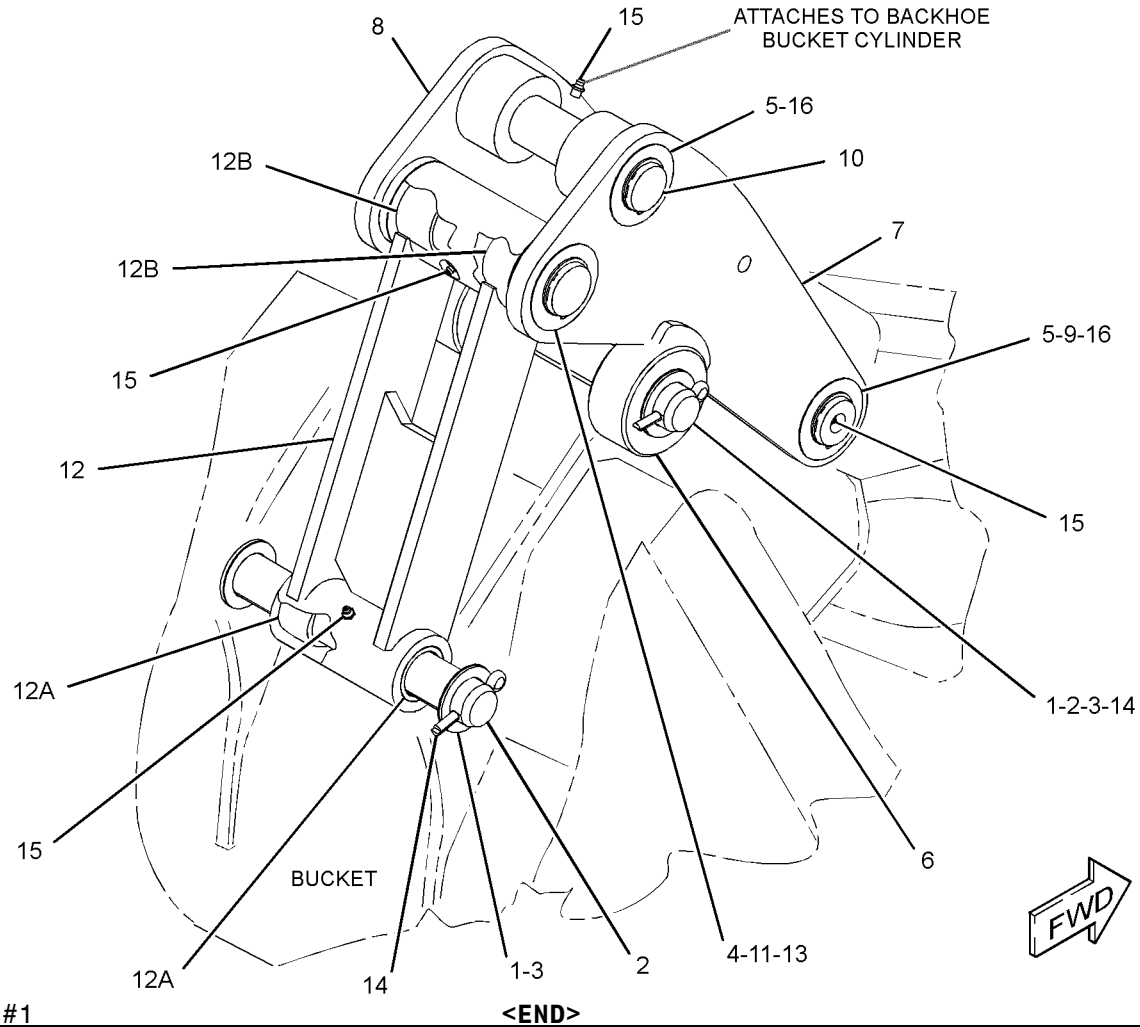

GRAPHIC #1 **<END>** g01994435

348-5465 LINKAGE GP-BACKHOE BUCKET–

WITHOUT LIFTING EYE

S/N: SEJ1-UP

PART OF 374-6882 LINKAGE AR, 340-1740 LINKAGE AR-BUCKET

AN ATTACHMENT

SMCS-6513 **i04454689**

NOTE	REF NO	GRAPHIC REF	PART NUMBER	QTY	PART NAME 1 2 3 4 5 6 (PRODUCT LEVEL)	SEE PAGE
	1	1	**9R-0158**	2	WASHER (46X69X3-MM THK)	
	2	1	**9R-1510**	2	WASHER (51X82X4-MM THK)	
B	3	1	**111-4337**	2	WASHER (46X70X1-MM THK)	
	4	1	**154-5280**	1	PIN	
B	5	1	**210-1707**	2	SHIM (1-MM THK)	
B	6	1	**220-7108**	6	WASHER (51X85X1-MM THK)	
	7	1	**320-9164**	1	PIN	
	8	1	**320-9241**	1	PIN	
	9	1	**328-5234**	1	PIN	
	10	1	**330-5738**	1	LINK	
	11	1	**330-5739**	1	LINK	
C	12	1	**359-4738**	1	LINK AS	
	12A	1	**9R-0170**	2	BUSHING	
	12B	1	**213-6703**	2	BEARING	
	13	1	**096-5516**	2	RING-RETAINING	
	14	1	**154-5279**	1	PIN	
	15	1	**3B-5319**	4	PIN-COTTER	
	16	1	**3B-8489**	4	FITTING-GREASE	
	17	1	**8T-4241**	4	RING-RETAINING (EXTERNAL)	

B-USE AS REQUIRED
C-CHANGE FROM PREVIOUS TYPE

348-5465 **LINKAGE GP-BACKHOE BUCKET** *(contd.)* **i04454689**

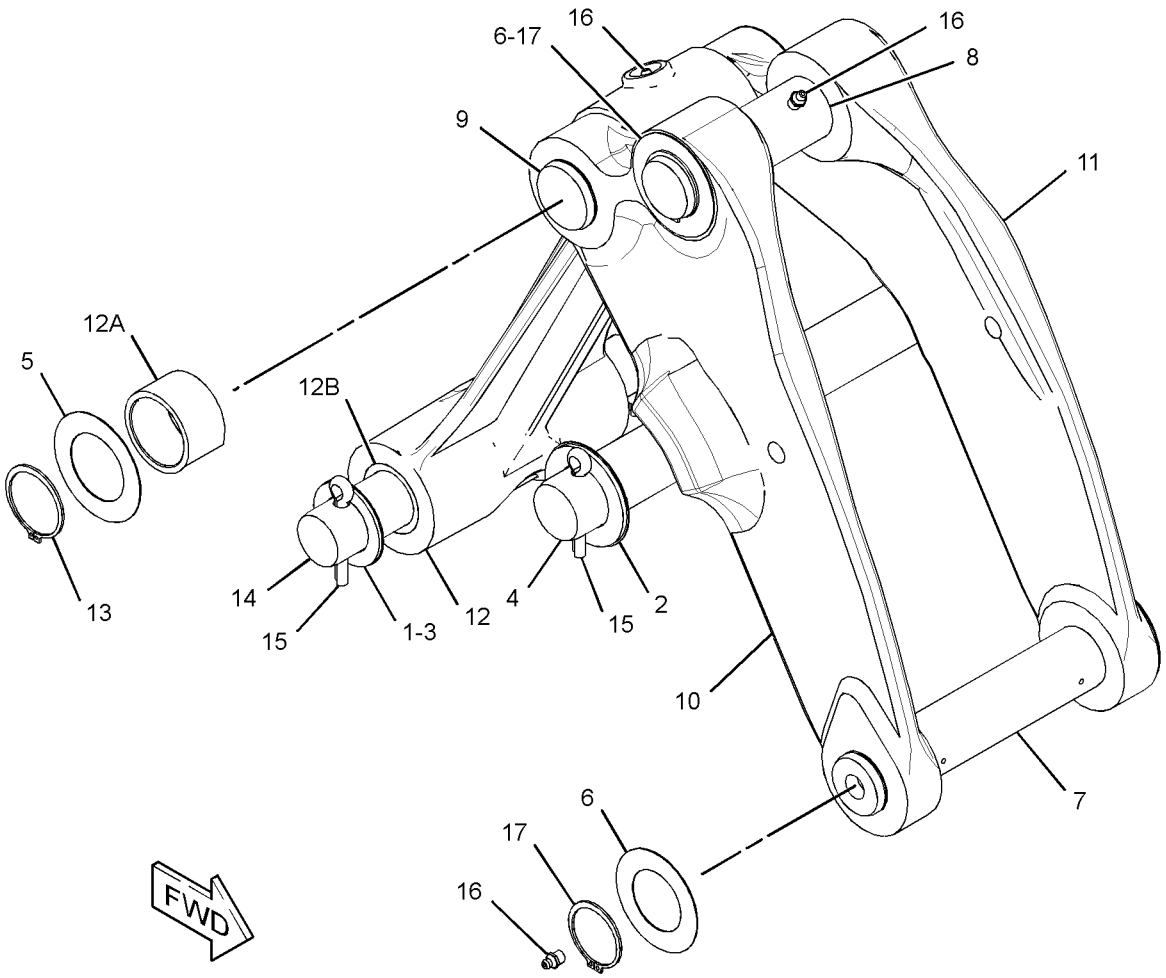

GRAPHIC #1 **<END>** g02827498

356-4606 LINKAGE GP-BUCKET–LIFTING

S/N: SEJ1-UP
PART OF 334-0752 LINKAGE GP-BACKHOE BUCKET
AN ATTACHMENT

SMCS-6107, 6117, 6513 **i03879282**

NOTE	REF NO	GRAPHIC REF	PART NUMBER	QTY	PART NAME 1 2 3 4 5 6 (PRODUCT LEVEL)	SEE PAGE
	1	1	**331-8037**	1	LINKAGE GP-BUCKET (LIFTING)	
	1A	1	**9R-0147**	2	BUSHING	
	1B	1	**9R-0170**	2	BUSHING	

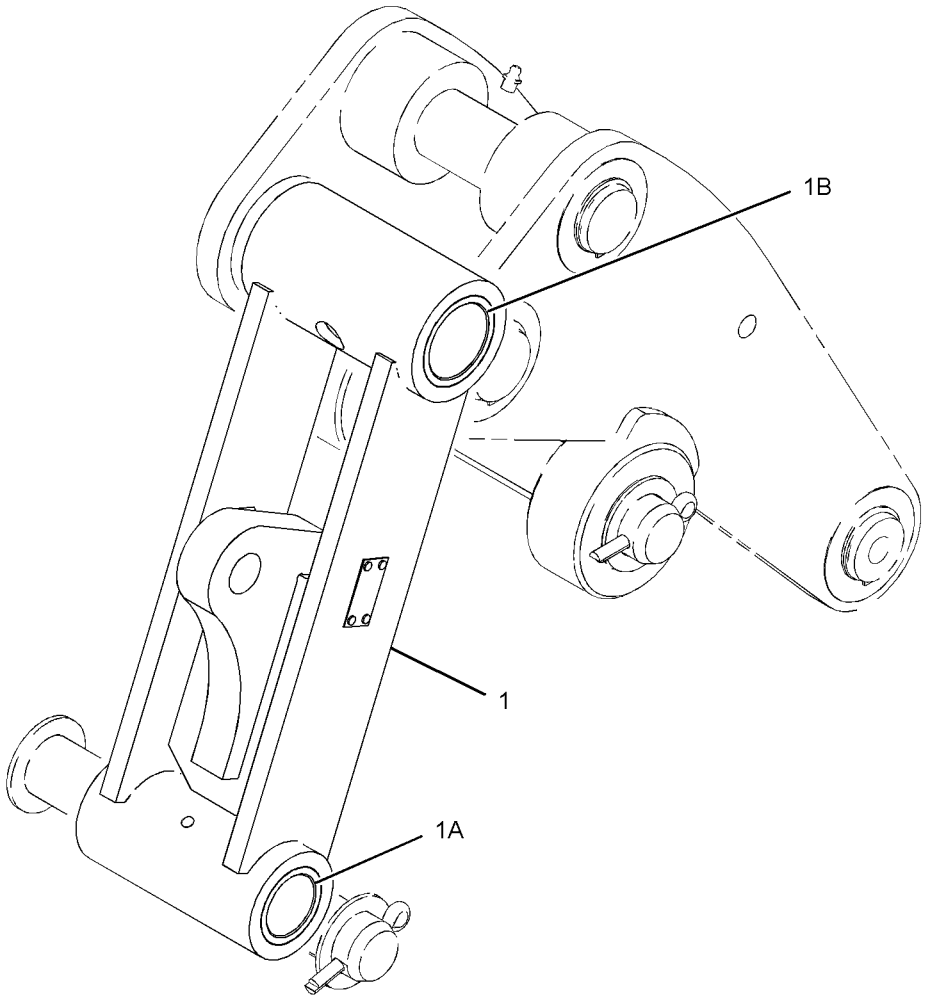

GRAPHIC #1 **<END>** g02139306

216-1238 LOCK GP-STABILIZER LEG

S/N: SEJ1-UP
PART OF 341-3105 CONVERSION AR-CERTIFICATION
AN ATTACHMENT

SMCS-7222 **i04394896**

NOTE	REF NO	GRAPHIC REF	PART NUMBER	QTY	PART NAME 1 2 3 4 5 6 (PRODUCT LEVEL)	SEE PAGE
	1	1	**115-1858**	2	BRACKET	
	2	1	**231-3803**	2	CABLE AS	
B	3	1	**8T-4122**	2	WASHER-HARD (17X32X3.5-MM THK)	
BM	4	1	**8T-4132**	2	NUT (M16X2-THD)	
BM	5	1	**8T-4193**	2	BOLT (M16X2X50-MM)	
M	6	1	**5C-7261**	2	NUT (M8X1.25-THD)	
	7	1	**7X-0579**	2	WASHER-HARD (8.8X25.5X2-MM THK)	

B-USE AS REQUIRED
M-METRIC PART

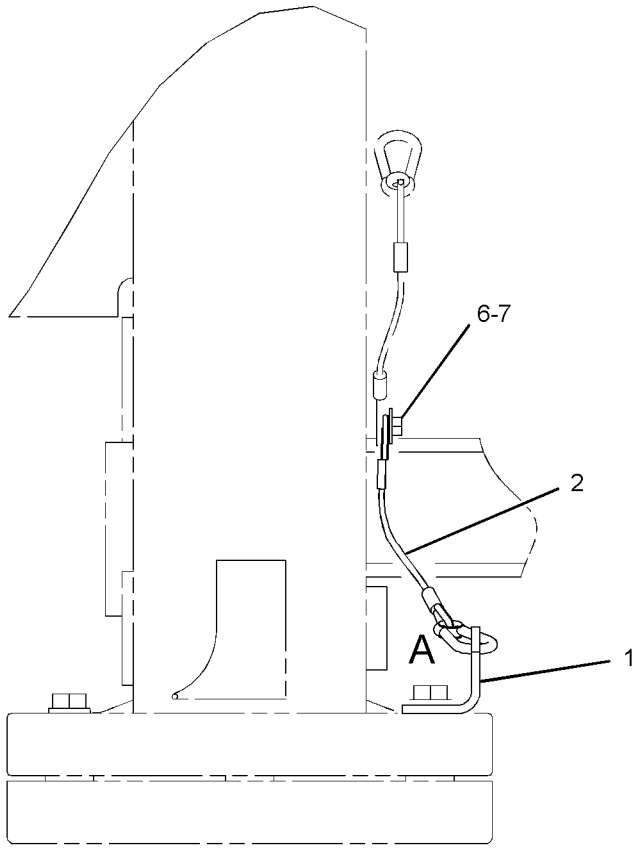

RIGHT SIDE VIEW

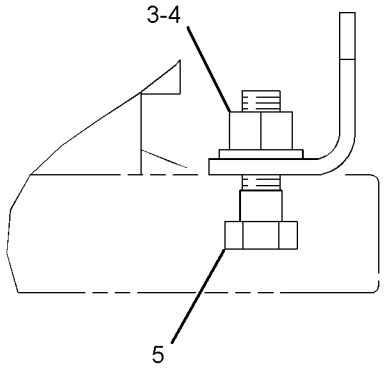

VIEW OF AREA A

GRAPHIC #1 **<END>** g02608177

206-1641 LOCK GP-TRANSPORT–STABILIZER

S/N: SEJ1-UP
PART OF 353-1447, 353-1448 CONTROL AR-STABILIZER
AN ATTACHMENT

SMCS-7505 **i03577612**

NOTE	REF NO	GRAPHIC REF	PART NUMBER	QTY	PART NAME 1 2 3 4 5 6 (PRODUCT LEVEL)	SEE PAGE
	1	1	**9R-8165**	1	BEARING	
	2	1	**164-1398**	2	KNOB	
	3	1	**183-6084**	1	BEARING	
	4	1	**206-1871**	1	BRACKET AS	
M		1	**6V-9632**	3	NUT-WELD (M6X1-THD)	
M		1	**8T-3612**	9	NUT-WELD (M8X1.25-THD)	
	5	1	**206-1874**	1	LEVER AS	
	6	1	**229-5745**	1	SPACER (8X15.875X11.6-MM THK)	
	7	1	**248-2710**	1	GROMMET	
	8	1	**164-1395**	1	KNOB	
	9	1	**5P-4116**	6	WASHER-HARD (8.8X20.5X2-MM THK)	
B	10	1	**6E-5431**	1	SHIM (0.5-MM THK)	
M	11	1	**8T-4138**	1	BOLT (M6X1X20-MM)	
M	12	1	**8T-4189**	8	BOLT (M8X1.25X20-MM)	
	13	1	**8T-4224**	4	WASHER-HARD (8.8X16X2-MM THK)	
	14	1	**8T-6902**	1	CLIP	
M	15	1	**8T-7547**	1	BOLT (M8X1.25X30-MM)	
	16	1	**9X-8256**	1	WASHER (6.6X12X2-MM THK)	

B-USE AS REQUIRED
M-METRIC PART

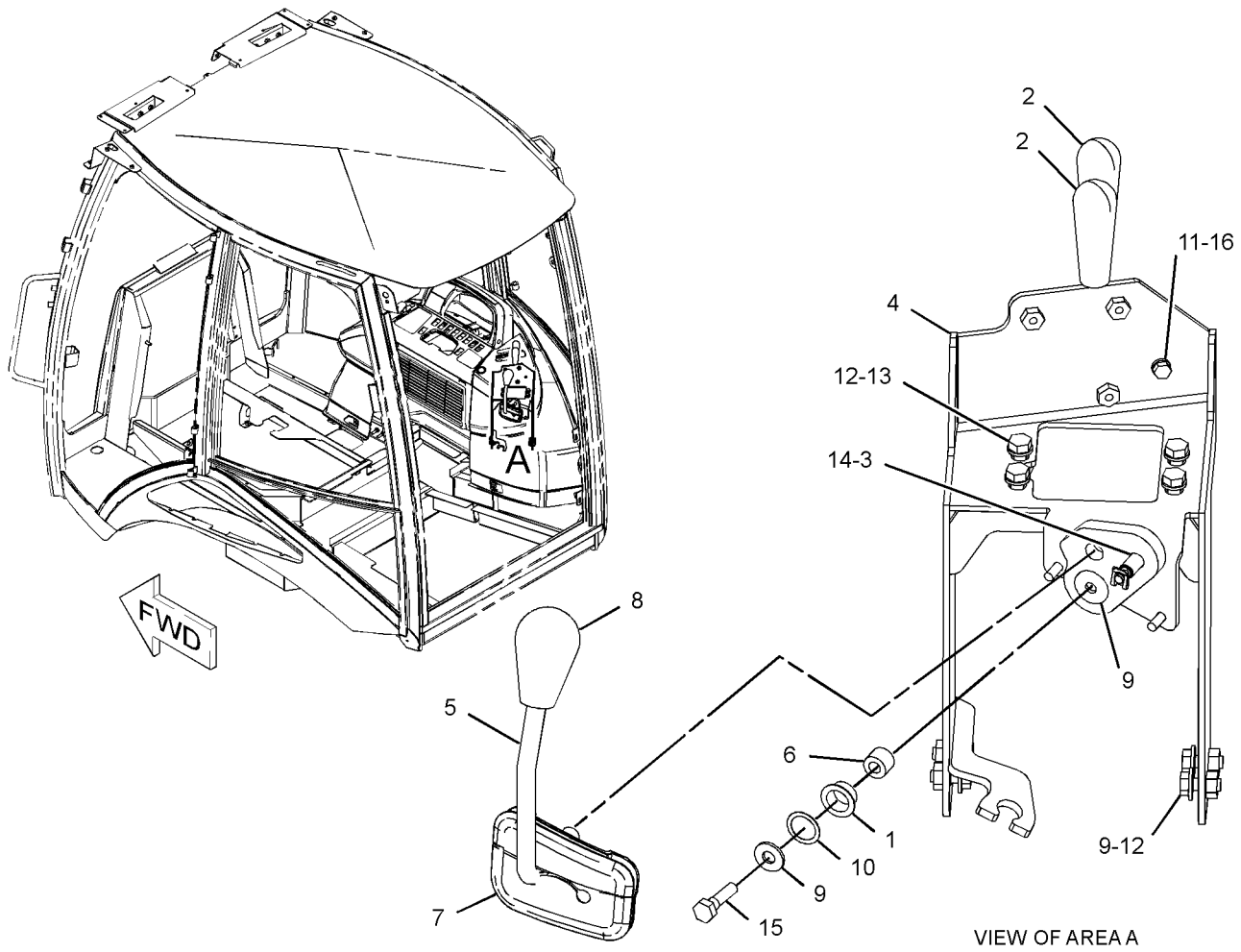

GRAPHIC #1 **<END>** g01207186

252-4660 LOCK GP-TRANSPORT—BACKHOE BUCKET

S/N: SEJ1-UP

PART OF 341-3107 CONVERSION AR-ROADING, 353-6953 LOCK GP-TRANSPORT AN ATTACHMENT

SMCS-7505 **i02210128**

NOTE	REF NO	GRAPHIC REF	PART NUMBER	QTY	PART NAME 1 2 3 4 5 6 (PRODUCT LEVEL)	SEE PAGE
	1	1	**9R-9028**	1	PIN	
	2	1	**252-4659**	1	CABLE AS	
	3	1	**9R-5301**	2	PIN-COTTER	

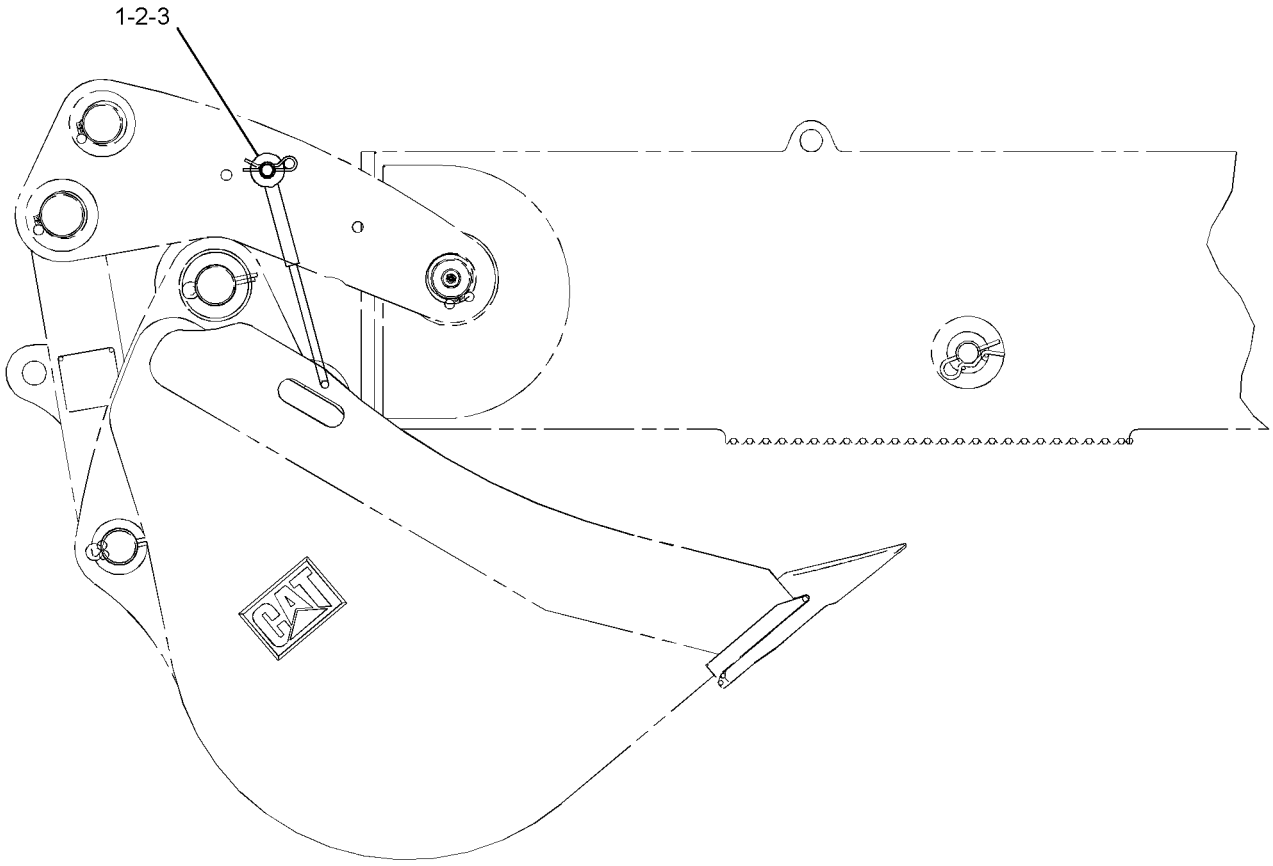

RIGHT SIDE VIEW

GRAPHIC #1 **<END>** g01116719

IMPLEMENTS

343-3428 LOCK GP-TRANSPORT

S/N: SEJ1-UP
PART OF 353-6956 LOCK GP-TRANSPORT
AN ATTACHMENT

SMCS-7505 **i03775116**

NOTE	REF NO	GRAPHIC REF	PART NUMBER	QTY	PART NAME 1 2 3 4 5 6 (PRODUCT LEVEL)	SEE PAGE
	1	1	**118-1348**	1	PIN	
	2	1	**160-7599**	1	RESTRAINER-BUCKET	
	3	1	**349-3643**	1	BRACE	
	4	1	**9R-5301**	1	PIN-COTTER	

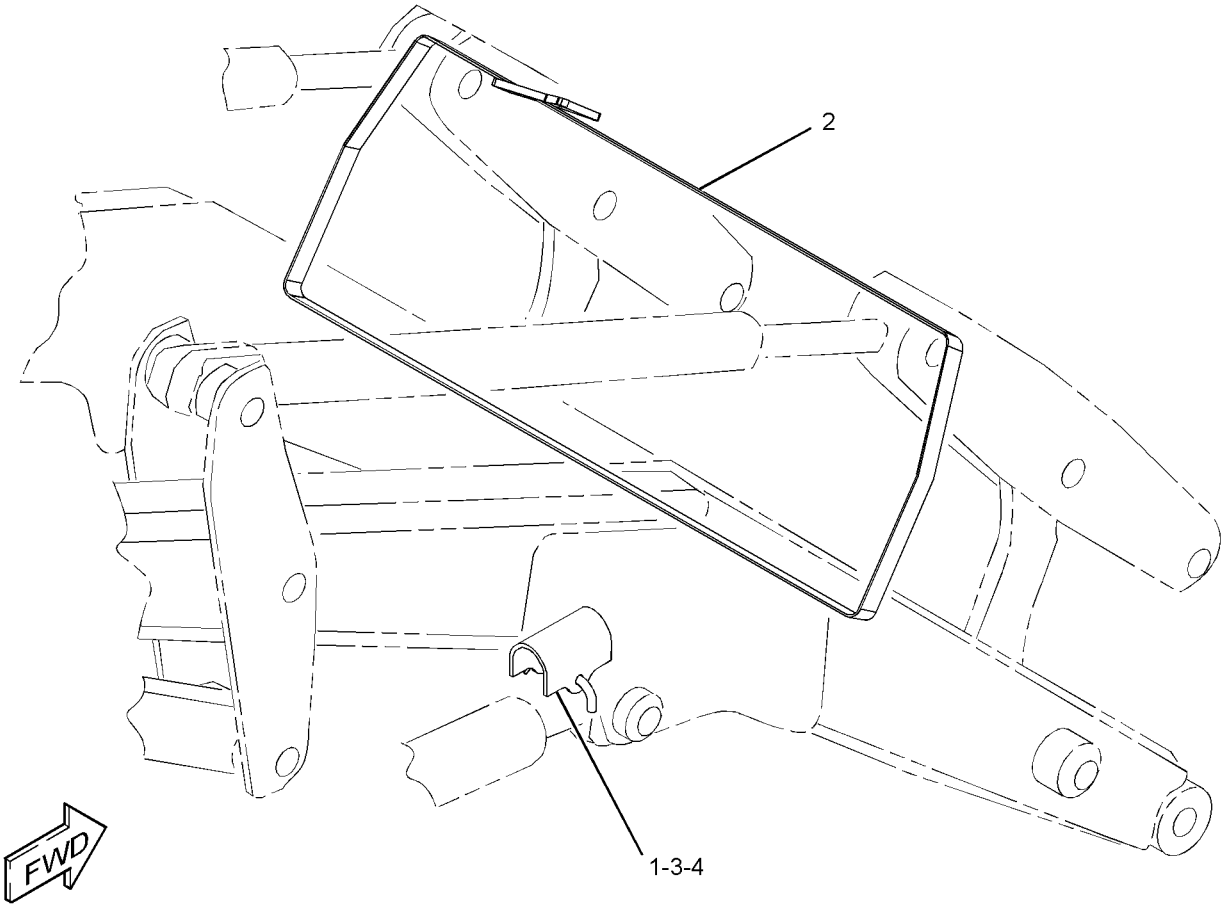

GRAPHIC #1 **<END>** g02107813

353-1418 LOCK GP-TRANSPORT—SIDESHIFT

S/N: SEJ1-UP

PART OF 340-1736, 340-1737 BACKHOE AR-EXTENDABLE STICK, 340-1735 BACKHOE AR-STANDARD STICK

AN ATTACHMENT

SMCS-7505 **i04556138**

NOTE	REF NO	GRAPHIC REF	PART NUMBER	QTY	PART NAME 1 2 3 4 5 6 (PRODUCT LEVEL)	SEE PAGE
	1	1	**5P-7958**	1	SLEEVE-CABLE SPLICE	
	2	1	**134-0143**	1	CABLE	
	3	1	**214-4285**	2	PAD AS	
	4	1	**214-7043**	1	SPACER (6.15X7.94X10-MM THK)	
	5	1	**310-3933**	1	CABLE AS	
		1	**2R-0364**	1	RING-RETAINING	
		1	**4D-9517**	1	CLIP	
		1	**5D-6523**	1	CLIP	
		1	**8W-8909**	1	SLEEVE	
	6	1	**315-4533**	1	BRACKET AS	
	7	1	**317-4928**	1	PIN AS	
	8	1	**329-1329**	1	HOOK	
	9	1	**329-1330**	1	HOOK	
	10	1	**329-1331**	1	PIN	
	11	1	**370-8941**	1	PLATE AS	
M	12	1	**134-8273**	2	SCREW-FLAT HEAD (M10X1.5X25-MM)	
	13	1	**2B-0941**	1	SPACER (10.5X19X19-MM THK)	
	14	1	**3B-8489**	2	FITTING-GREASE	
M	15	1	**5A-3604**	2	BOLT-SOCKET HEAD (M8X1.25X25-MM)	
	16	1	**6E-1135**	2	PIN	
	17	1	**7X-3383**	2	WASHER (22X50X3-MM THK)	
	18	1	**8T-1887**	1	CLIP (SLOT)	
	19	1	**8T-1888**	1	CLIP (TAB)	
	20	1	**8T-4121**	4	WASHER-HARD (11X21X2.5-MM THK)	
M	21	1	**8T-4138**	1	BOLT (M6X1X20-MM)	
M	22	1	**8T-4186**	1	BOLT (M10X1.5X40-MM)	
M	23	1	**8T-4195**	2	BOLT (M10X1.5X30-MM)	
M	24	1	**8T-4196**	1	BOLT (M10X1.5X35-MM)	
	25	1	**8T-4224**	1	WASHER-HARD (8.8X16X2-MM THK)	
M	26	1	**8T-4908**	1	BOLT (M8X1.25X25-MM)	

M-METRIC PART

353-1418 **LOCK GP-TRANSPORT** *(contd.)* **i04556138**

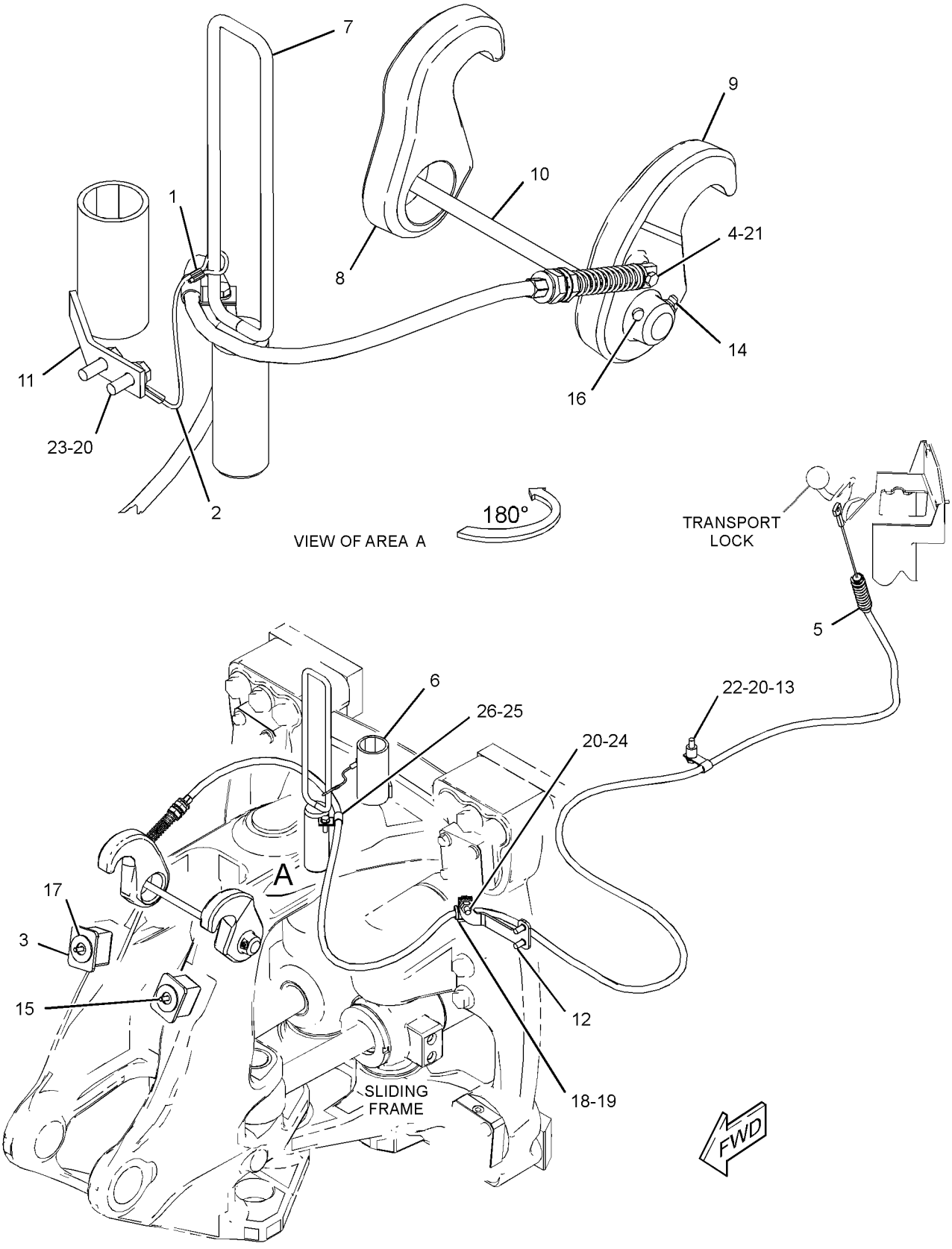

GRAPHIC #1 **<END>** g02828516

353-1419 LOCK GP-TRANSPORT–BOOM

S/N: SEJ1-UP

PART OF 340-1738 BACKHOE AR-EXTENDABLE STICK

AN ATTACHMENT

SMCS-7505 **i04599750**

NOTE	REF NO	GRAPHIC REF	PART NUMBER	QTY	PART NAME 1 2 3 4 5 6 (PRODUCT LEVEL)	SEE PAGE
	1	1	**5P-7958**	1	SLEEVE-CABLE SPLICE	
	2	1	**134-0143**	1	CABLE	
	3	1	**214-4285**	2	PAD AS	
	4	1	**214-7043**	1	SPACER (6.15X7.94X10-MM THK)	
	5	1	**310-3933**	1	CABLE AS	
		1	**2R-0364**	1	RING-RETAINING	
		1	**4D-9517**	1	CLIP	
		1	**5D-6523**	1	CLIP	
		1	**8W-8909**	1	SLEEVE	
	6	1	**315-4533**	1	BRACKET AS	
	7	1	**317-4928**	1	PIN AS	
	8	1	**329-1327**	1	HOOK	
	9	1	**329-1328**	1	HOOK	
	10	1	**329-1331**	1	PIN	
	11	1	**370-8941**	1	PLATE AS	
M	12	1	**134-8273**	2	SCREW-FLAT HEAD (M10X1.5X25-MM)	
	13	1	**294-9322**	2	WASHER-HARD (26X47X29-MM THK)	
	14	1	**2B-0941**	1	SPACER (10.5X19X19-MM THK)	
	15	1	**3B-8489**	2	FITTING-GREASE	
M	16	1	**3E-8025**	2	BOLT-SOCKET HEAD (M8X1.25X50-MM)	
	17	1	**6E-1135**	2	PIN	
	18	1	**8T-1887**	1	CLIP (SLOT)	
	19	1	**8T-1888**	1	CLIP (TAB)	
	20	1	**8T-4121**	4	WASHER-HARD (11X21X2.5-MM THK)	
M	21	1	**8T-4138**	1	BOLT (M6X1X20-MM)	
M	22	1	**8T-4186**	1	BOLT (M10X1.5X40-MM)	
M	23	1	**8T-4195**	2	BOLT (M10X1.5X30-MM)	
M	24	1	**8T-4196**	1	BOLT (M10X1.5X35-MM)	
	25	1	**8T-4224**	1	WASHER-HARD (8.8X16X2-MM THK)	
M	26	1	**8T-4908**	1	BOLT (M8X1.25X25-MM)	

M-METRIC PART

353-1419 **LOCK GP-TRANSPORT** *(contd.)* **i04599750**

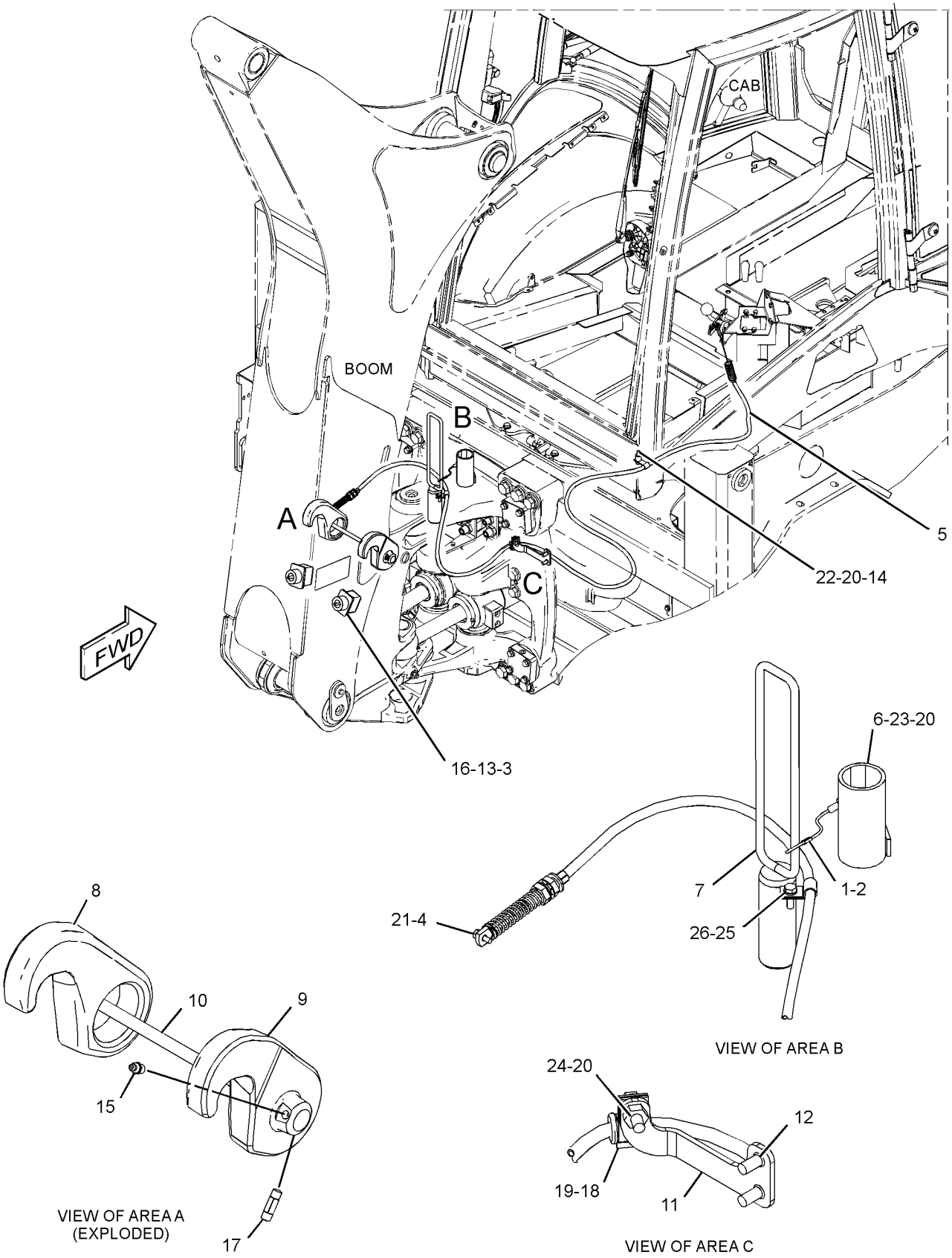

GRAPHIC #1 **<END>** g02827500

IMPLEMENTS

353-6953 LOCK GP-TRANSPORT

S/N: SEJ1-UP

AN ATTACHMENT

SMCS-7505 **i03869598**

NOTE	PART NUMBER	QTY	PART NAME 1 2 3 4 5 6 (PRODUCT LEVEL)	SEE PAGE
Y	*252-4660*	1	LOCK GP-TRANSPORT (BACKHOE BUCKET)	482

Y-SEPARATE ILLUSTRATION

<END>

353-6956 LOCK GP-TRANSPORT

S/N: SEJ1-UP

AN ATTACHMENT

SMCS-7505 **i03920809**

NOTE	PART NUMBER	QTY	PART NAME 1 2 3 4 5 6 (PRODUCT LEVEL)	SEE PAGE
Y	*343-3428*	1	LOCK GP-TRANSPORT (LOADER)	483

Y-SEPARATE ILLUSTRATION

<END>

374-6872 LOCK GP-TRANSPORT

S/N: SEJ1-UP
PART OF 341-3107 CONVERSION AR-ROADING
AN ATTACHMENT

SMCS-7505 **i04609334**

NOTE	REF NO	GRAPHIC REF	PART NUMBER	QTY	PART NAME 1 2 3 4 5 6 (PRODUCT LEVEL)	SEE PAGE
	1	1	**160-7599**	1	RESTRAINER-BUCKET	
	2	1	**232-7612**	1	PIN	
	3	1	**377-0774**	1	BLOCK AS	
	4	1	**378-0598**	1	PLATE AS	
	5	1	**5P-4116**	1	WASHER-HARD (8.8X20.5X2-MM THK)	
M	6	1	**8T-4200**	1	BOLT (M8X1.25X16-MM)	
	7	1	**9R-5301**	1	PIN-COTTER	

M-METRIC PART

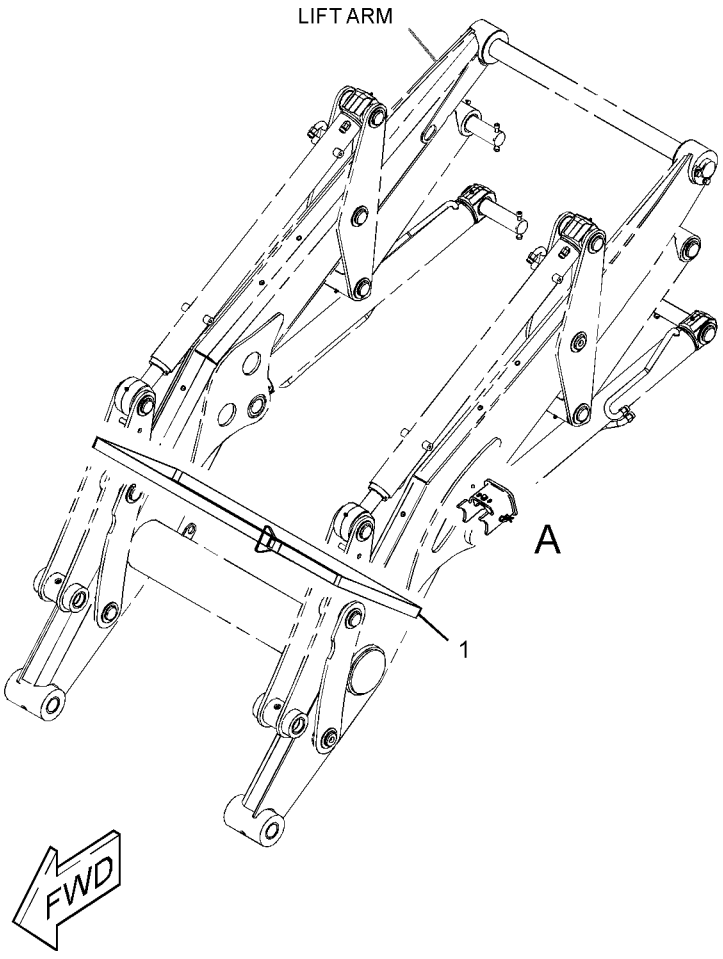

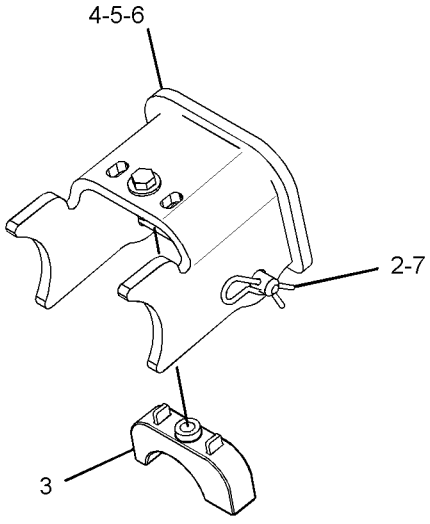

VIEW OF AREA A
(PART REMOVED FOR CLARITY)

GRAPHIC #1 **<END>** g02798307

9R-0868 PAD GP-STABILIZER–STREET

S/N: SEJ1-UP
FOR USE WITH 9R-1259 STABILIZER GP-SIDESHIFT
AN ATTACHMENT

SMCS-7222 **i01238045**

NOTE	REF NO	GRAPHIC REF	PART NUMBER	QTY	PART NAME 1 2 3 4 5 6 (PRODUCT LEVEL)	SEE PAGE
	1	1	**166-7870**	4	PAD AS-STABILIZER (STREET)	
M	2	1	**8T-4193**	12	BOLT (M16X2X50-MM)	
	3	1	**9X-8257**	12	WASHER (17.5X30X3.5-MM THK)	

M-METRIC PART

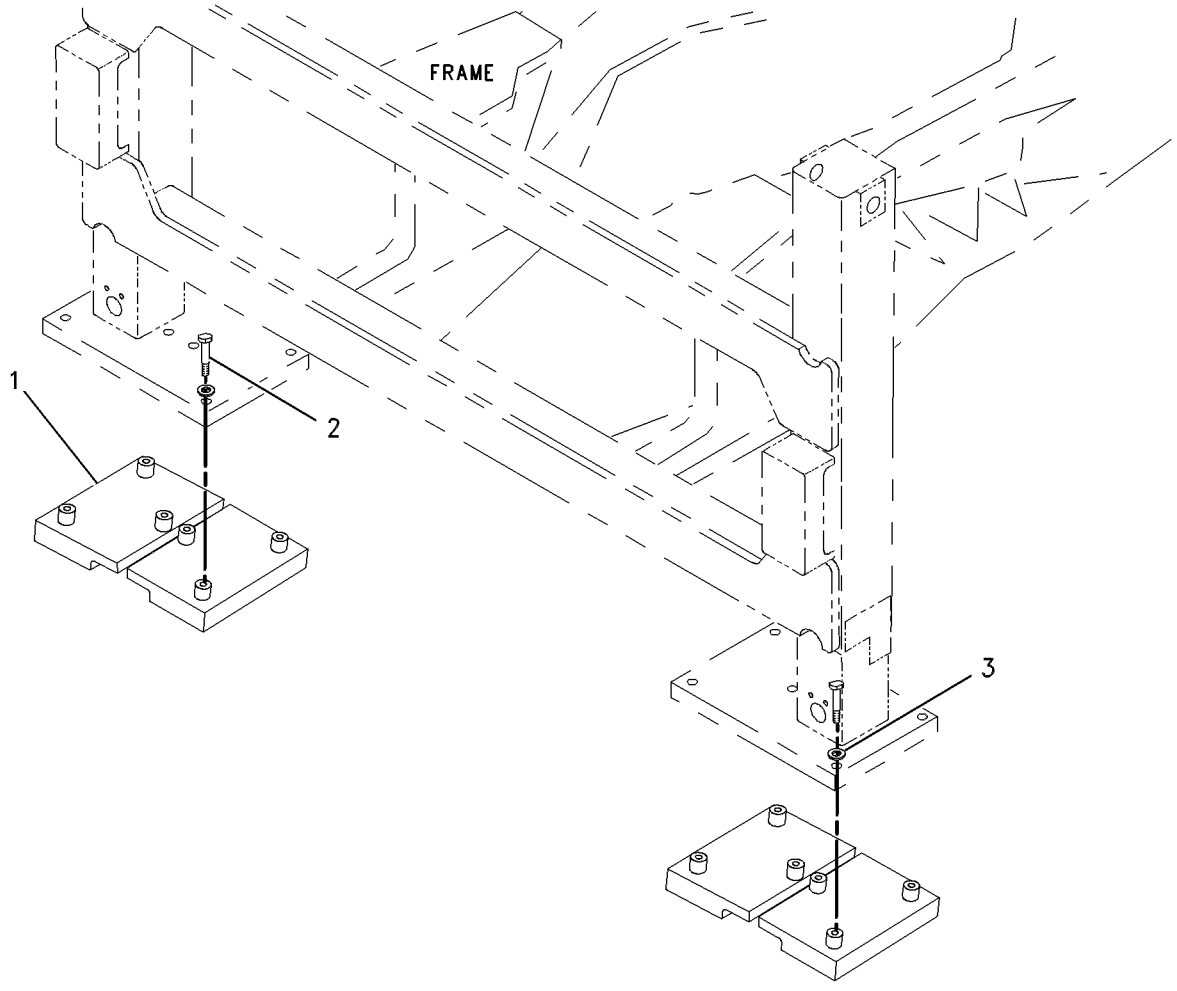

GRAPHIC #1 **<END>** g00661392

IMPLEMENTS

328-5964 STABILIZER GP-BACKHOE

S/N: SEJ1-UP

PART OF 340-1693 CHASSIS AR

SMCS-7222 **i03642982**

NOTE	REF NO	GRAPHIC REF	PART NUMBER	QTY	PART NAME 1 2 3 4 5 6 (PRODUCT LEVEL)	SEE PAGE
	1	1	**325-7563**	4	SPACER (45.5X75X35-MM THK)	
	2	1	**328-5196**	2	PAD-STABILIZER	
	3	1	**330-9669**	2	PIN	
	4	1	**330-9670**	2	PIN AS	
	5	1	**6V-5204**	6	RING-RETAINING	

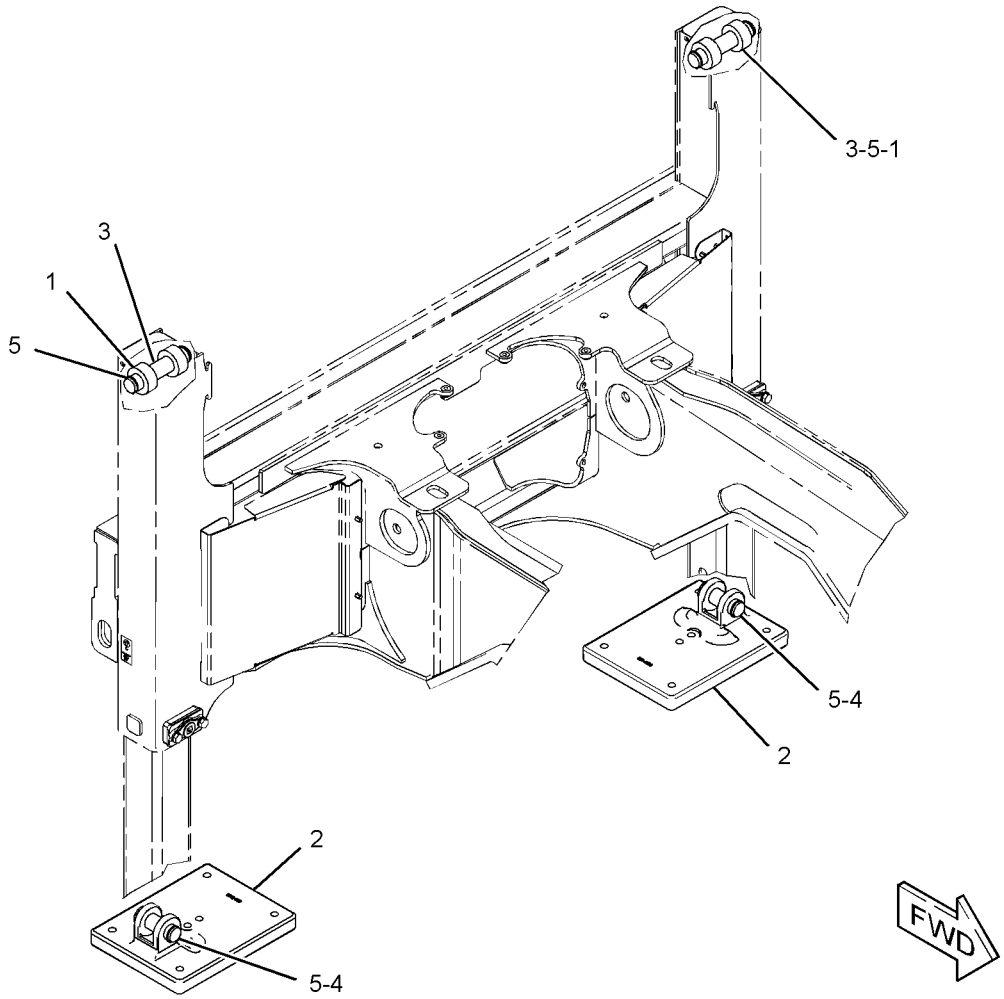

GRAPHIC #1 **<END>** g01986675

IMPLEMENTS

324-0552 STICK GP

S/N: SEJ1-UP
PART OF 340-1735 BACKHOE AR-STANDARD STICK
AN ATTACHMENT

SMCS-6502 **i03865281**

NOTE	REF NO	GRAPHIC REF	PART NUMBER	QTY	PART NAME 1 2 3 4 5 6 (PRODUCT LEVEL)	SEE PAGE
B	1	1	**9R-8292**	2	SPACER (61X135X1-MM THK)	
	2	1	**316-6946**	1	PIN AS	
	3	1	**316-6947**	1	PIN	
	4	1	**319-4504**	1	STICK AS	
	4A	1	**9R-0162**	2	BUSHING	
	4B	1	**9R-3092**	2	BUSHING	
	5	1	**328-9650**	1	PIN	
	6	1	**344-2543**	1	PLATE	
	7	1	**3B-8488**	1	FITTING-GREASE	
	8	1	**3B-8489**	2	FITTING-GREASE	
	9	1	**7X-0632**	1	WASHER-HARD (11X36X6-MM THK)	
M	10	1	**7X-2543**	1	BOLT (M10X1.5X120-MM)	
	11	1	**7X-7729**	4	WASHER (11X25X3-MM THK)	
M	12	1	**8T-0389**	1	LOCKNUT (M10X1.5-THD)	
	13	1	**8T-4121**	3	WASHER-HARD (11X21X2.5-MM THK)	
M	14	1	**8T-4133**	5	NUT (M10X1.5-THD)	
M	15	1	**8T-4195**	1	BOLT (M10X1.5X30-MM)	
M	16	1	**8T-6685**	1	BOLT (M10X1.5X110-MM)	
M	17	1	**9X-2060**	4	BOLT (M10X1.5X30-MM)	

B-USE AS REQUIRED
M-METRIC PART

324-0552 **STICK GP** ***(contd.)*** **i03865281**

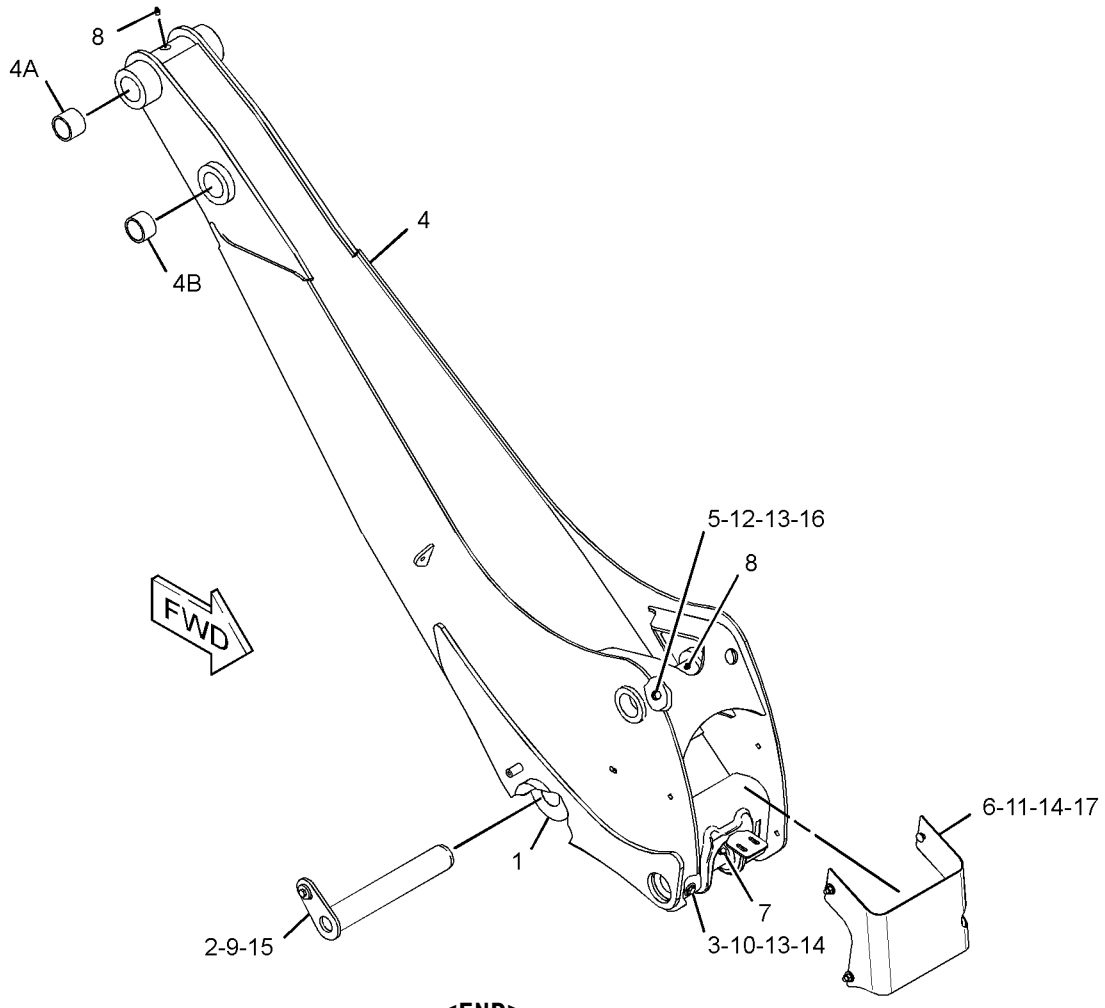

GRAPHIC #1 **<END>** g02115196

324-0550 STICK GP-EXTENDABLE

S/N: SEJ1-UP
PART OF 340-1736 BACKHOE AR-EXTENDABLE STICK
AN ATTACHMENT

SMCS-6533 **i03865282**

NOTE	REF NO	GRAPHIC REF	PART NUMBER	QTY	PART NAME 1 2 3 4 5 6 (PRODUCT LEVEL)	SEE PAGE
B	1	1	**9R-0158**	4	WASHER (46X69X3-MM THK)	
	2	1	**9R-2959**	2	CLIP	
B	3	1	**9R-8292**	2	SPACER (61X135X1-MM THK)	
	4	1	**111-4337**	2	WASHER (46X70X1-MM THK)	
	5	1	**316-4742**	1	STICK AS	
	5A	1	**9R-0162**	2	BUSHING	
	5B	1	**9R-3092**	2	BUSHING	
	6	1	**316-4743**	1	STICK AS	
	7	1	**316-6946**	1	PIN AS	
	8	1	**316-6947**	1	PIN	
	9	1	**316-6948**	1	PIN	
	10	1	**316-6949**	2	PIN	
	11	1	**319-9667**	4	PAD AS	
	12	1	**319-9668**	4	PAD AS	
Y	13	1	**320-5935**	1	CYLINDER GP-STICK	354
	14	1	**334-4169**	1	LOCKPIN	
	15	1	**336-6396**	1	PLATE	
	16	1	**346-5631**	2	SPACER	
	17	1	**346-6559**	4	ADJUSTER	
	18	1	**346-6560**	4	ADJUSTER	
	19	1	**350-3733**	1	FILM-INSTRUCTION (EXTENDABLE STICK PIN, READ OMM)	
M	20	1	**105-3478**	2	BOLT-SOCKET HEAD (M10X1.5X35-MM)	
M	21	1	**208-7492**	8	NUT (M20X2.5-THD)	
	22	1	**3B-8488**	1	FITTING-GREASE	
	23	1	**3B-8489**	2	FITTING-GREASE	
	24	1	**6V-5204**	4	RING-RETAINING	
	25	1	**7X-0632**	1	WASHER-HARD (11X36X6-MM THK)	
M	26	1	**7X-2543**	1	BOLT (M10X1.5X120-MM)	
	27	1	**7X-7729**	4	WASHER (11X25X3-MM THK)	
M	28	1	**8T-0389**	2	LOCKNUT (M10X1.5-THD)	
	29	1	**8T-4121**	11	WASHER-HARD (11X21X2.5-MM THK)	
M	30	1	**8T-4133**	5	NUT (M10X1.5-THD)	
M	31	1	**8T-4195**	1	BOLT (M10X1.5X30-MM)	
M	32	1	**8T-4196**	8	BOLT (M10X1.5X35-MM)	
	33	1	**8T-4241**	2	RING-RETAINING	
M	34	1	**9X-2060**	4	BOLT (M10X1.5X30-MM)	

B-USE AS REQUIRED
M-METRIC PART
Y-SEPARATE ILLUSTRATION

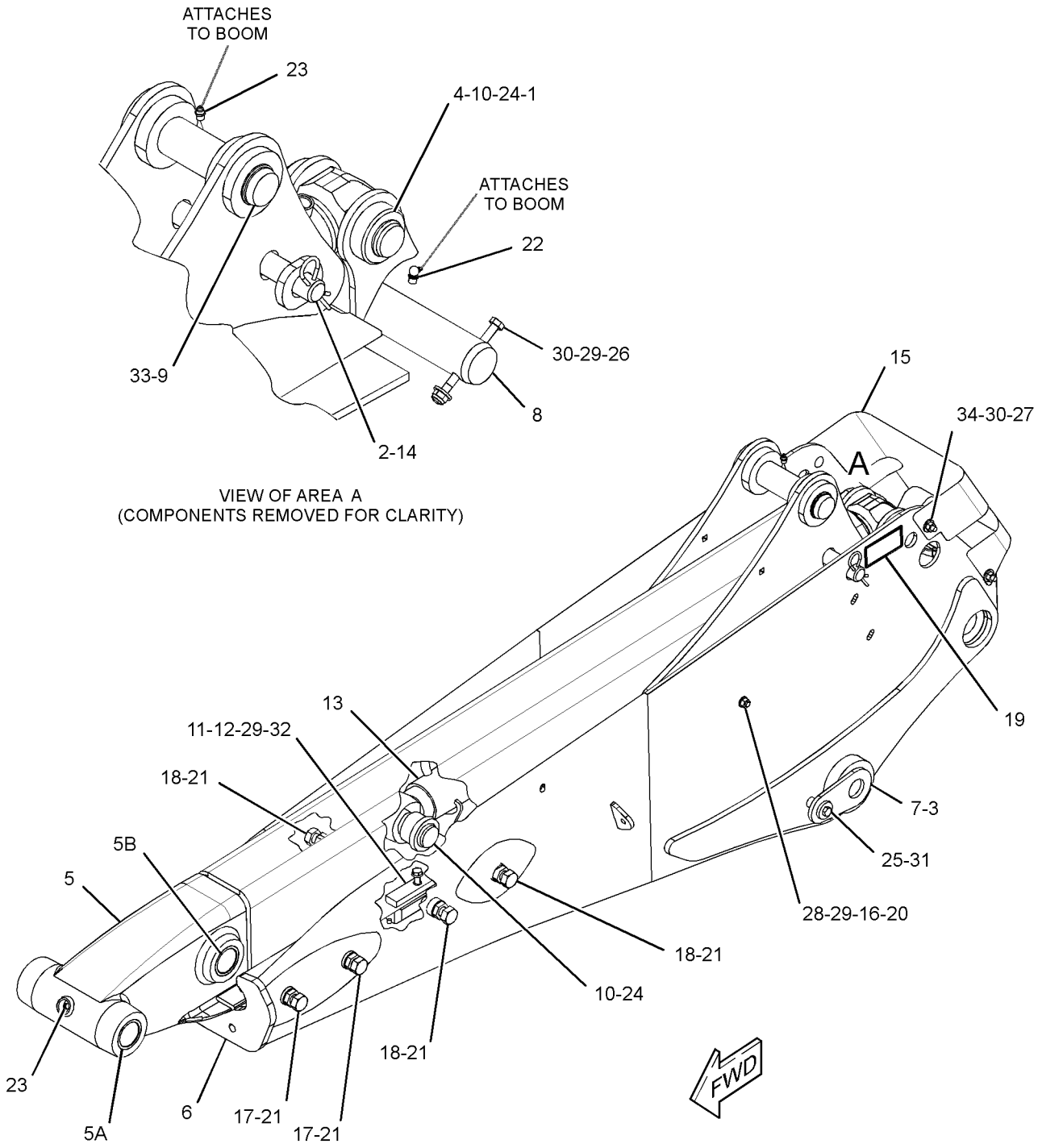

GRAPHIC #1 **<END>** g02115953

324-0551 STICK GP-EXTENDABLE

S/N: SEJ1-UP

PART OF 340-1738 BACKHOE AR-EXTENDABLE STICK

AN ATTACHMENT

SMCS-6533 **i03855470**

NOTE	REF NO	GRAPHIC REF	PART NUMBER	QTY	PART NAME 1 2 3 4 5 6 (PRODUCT LEVEL)	SEE PAGE
B	1	1	**9R-0158**	4	WASHER (46X69X3-MM THK)	
	2	1	**9R-2959**	2	CLIP	
B	3	1	**9R-8291**	2	SPACER (66X125X1-MM THK)	
	4	1	**355-1394**	1	PIN AS	
	5	1	**316-6948**	1	PIN	
	6	1	**316-6949**	2	PIN	
	7	1	**319-4506**	1	STICK AS	
	7A	1	**9R-0162**	2	BUSHING	
	7B	1	**9R-3092**	2	BUSHING	
	8	1	**319-4507**	1	STICK AS	
	9	1	**319-9667**	4	PAD AS	
	10	1	**319-9668**	4	PAD AS	
Y	11	1	**320-5935**	1	CYLINDER GP-STICK	354
	12	1	**333-4760**	1	PIN	
	13	1	**334-4169**	1	LOCKPIN	
	14	1	**336-6396**	1	PLATE	
	15	1	**346-5631**	2	SPACER	
	16	1	**346-6559**	4	ADJUSTER	
	17	1	**346-6560**	4	ADJUSTER	
	18	1	**350-3733**	1	FILM-INSTRUCTION (EXTENDABLE STICK PIN, READ OMM)	
M	19	1	**208-7492**	8	NUT (M20X2.5-THD)	
	20	1	**3B-8488**	1	FITTING-GREASE	
	21	1	**3B-8489**	2	FITTING-GREASE	
	22	1	**6V-5204**	4	RING-RETAINING	
	23	1	**7X-0632**	1	WASHER-HARD (11X36X6-MM THK)	
M	24	1	**7X-2543**	1	BOLT (M10X1.5X120-MM)	
	25	1	**7X-7729**	4	WASHER (11X25X3-MM THK)	
M	26	1	**105-3478**	2	BOLT-SOCKET HEAD (M10X1.5X35-MM)	
M	27	1	**8T-0389**	2	LOCKNUT (M10X1.5-THD)	
	28	1	**8T-4121**	11	WASHER-HARD (11X21X2.5-MM THK)	
M	29	1	**8T-4133**	5	NUT (M10X1.5-THD)	
M	30	1	**8T-4195**	1	BOLT (M10X1.5X30-MM)	
M	31	1	**8T-4196**	8	BOLT (M10X1.5X35-MM)	
	32	1	**8T-4241**	2	RING-RETAINING	
M	33	1	**9X-2060**	4	BOLT (M10X1.5X30-MM)	
	34	1	**111-4337**	2	WASHER (46X70X1-MM THK)	

B-USE AS REQUIRED
M-METRIC PART
Y-SEPARATE ILLUSTRATION

324-0551 **STICK GP-EXTENDABLE** *(contd.)* **i03855470**

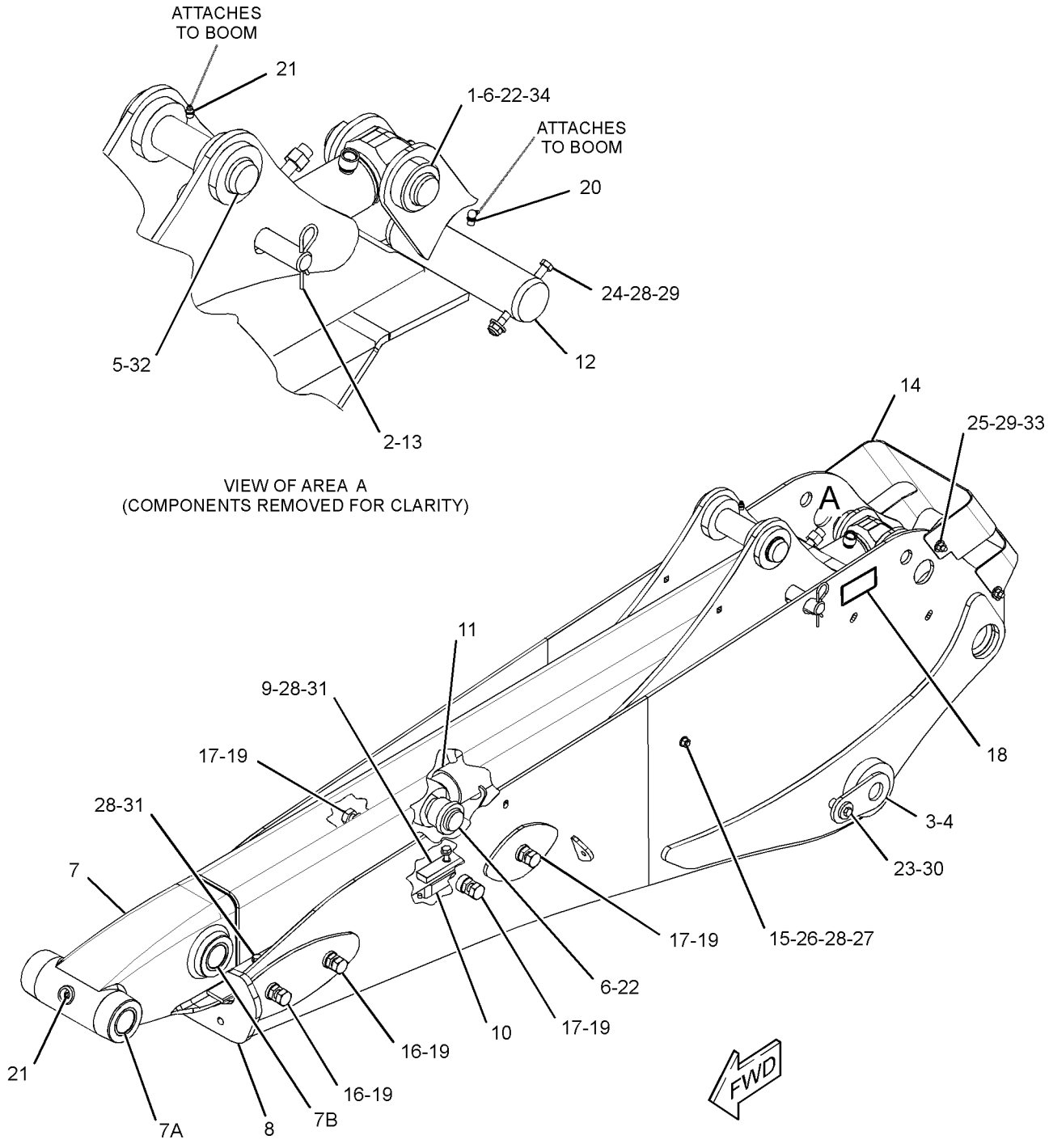

GRAPHIC #1 **<END>** g02142155

329-9749 STICK GP-EXTENDABLE

S/N: SEJ1-UP

PART OF 340-1737 BACKHOE AR-EXTENDABLE STICK

AN ATTACHMENT

SMCS-6533 **i03865279**

NOTE	REF NO	GRAPHIC REF	PART NUMBER	QTY	PART NAME 1 2 3 4 5 6 (PRODUCT LEVEL)	SEE PAGE
B	1	1	**9R-0158**	4	WASHER (46X69X3-MM THK)	
	2	1	**9R-2959**	2	CLIP	
B	3	1	**9R-8292**	2	SPACER (61X135X1-MM THK)	
	4	1	**111-4337**	2	WASHER (46X70X1-MM THK)	
	5	1	**316-4743**	1	STICK AS	
	6	1	**316-6946**	1	PIN AS	
	7	1	**316-6947**	1	PIN	
	8	1	**316-6948**	1	PIN	
	9	1	**316-6949**	2	PIN	
	10	1	**319-9667**	4	PAD AS	
	11	1	**319-9668**	4	PAD AS	
Y	12	1	**320-5935**	1	CYLINDER GP-STICK	354
	13	1	**329-9748**	1	STICK AS	
	13A	1	**9R-3092**	2	BUSHING	
	13B	1	**9R-7891**	2	BUSHING	
	14	1	**334-4169**	1	LOCKPIN	
	15	1	**336-6396**	1	PLATE	
	16	1	**346-5631**	2	SPACER	
	17	1	**346-6559**	4	ADJUSTER	
	18	1	**346-6560**	4	ADJUSTER	
	19	1	**350-3733**	1	FILM-INSTRUCTION (EXTENDABLE STICK PIN, READ OMM)	
M	20	1	**105-3478**	2	BOLT-SOCKET HEAD (M10X1.5X35-MM)	
M	21	1	**208-7492**	8	NUT (M20X2.5-THD)	
	22	1	**3B-8488**	1	FITTING-GREASE	
	23	1	**3B-8489**	2	FITTING-GREASE	
	24	1	**6V-5204**	4	RING-RETAINING	
	25	1	**7X-0632**	1	WASHER-HARD (11X36X6-MM THK)	
M	26	1	**7X-2543**	1	BOLT (M10X1.5X120-MM)	
	27	1	**7X-7729**	4	WASHER (11X25X3-MM THK)	
M	28	1	**8T-0389**	2	LOCKNUT (M10X1.5-THD)	
	29	1	**8T-4121**	11	WASHER-HARD (11X21X2.5-MM THK)	
M	30	1	**8T-4133**	5	NUT (M10X1.5-THD)	
M	31	1	**8T-4195**	1	BOLT (M10X1.5X30-MM)	
M	32	1	**8T-4196**	8	BOLT (M10X1.5X35-MM)	
	33	1	**8T-4241**	2	RING-RETAINING	
M	34	1	**9X-2060**	4	BOLT (M10X1.5X30-MM)	

B-USE AS REQUIRED
M-METRIC PART
Y-SEPARATE ILLUSTRATION

329-9749 **STICK GP-EXTENDABLE** *(contd.)* **i03865279**

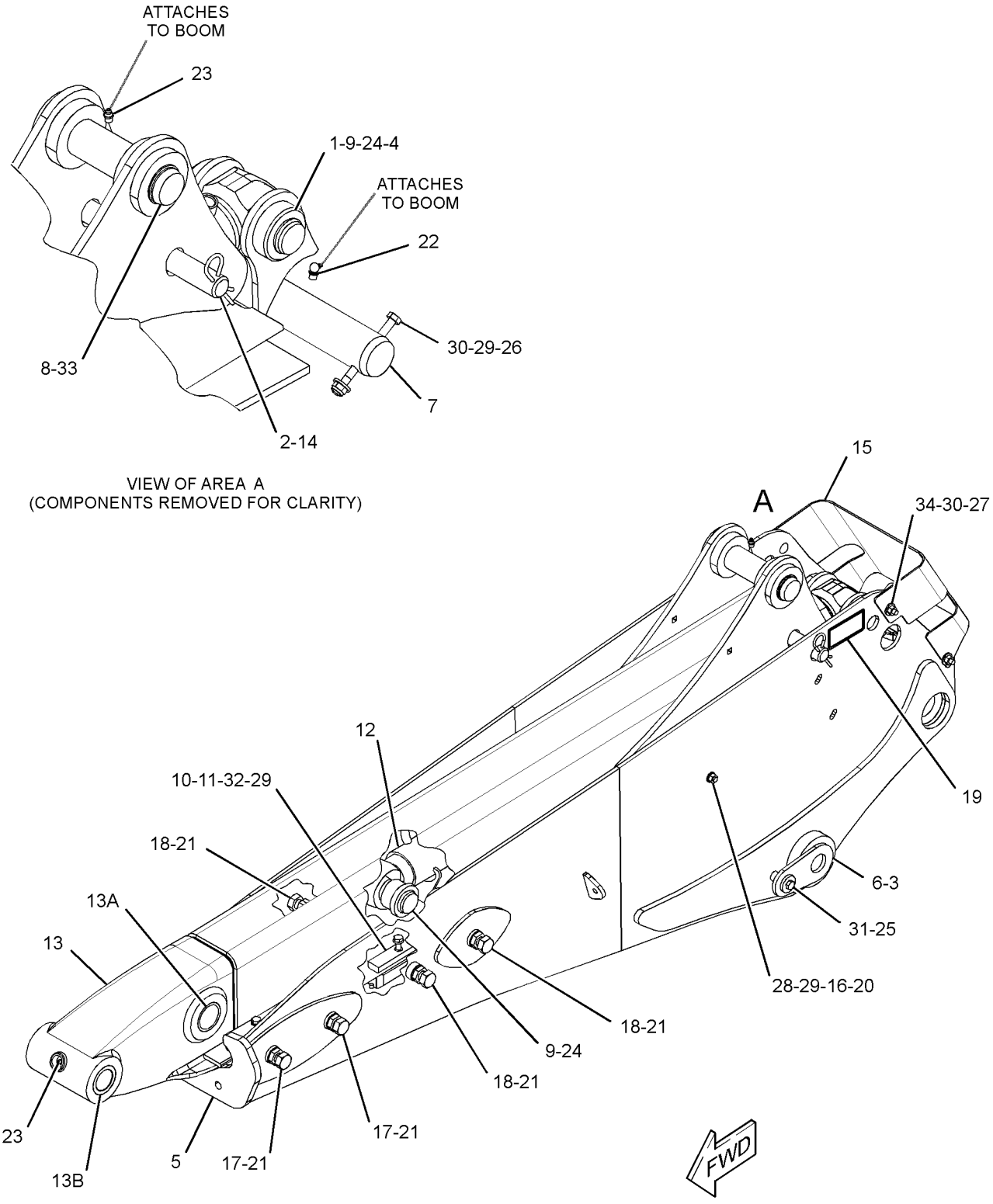

GRAPHIC #1 **<END>** g02115996

WORK TOOLS

318-7251 BUCKET AR-MULTIPURPOSE

S/N: SEJ1-UP

PART OF 318-7267 BUCKET AR-MULTIPURPOSE

AN ATTACHMENT

SMCS-6104 **i02988949**

NOTE	REF NO	GRAPHIC REF	PART NUMBER	QTY	PART NAME 1 2 3 4 5 6 (PRODUCT LEVEL)	SEE PAGE
Y	1	1	*9R-4668*	1	MOUNTING GP-CYLINDER (MULTIPURPOSE BUCKET)	447
Y	2	1	**226-5540**	2	CYLINDER GP-MULTIPURPOSE BUKT	352
Y	3	1	*252-9068*	1	BUCKET GP-MULTIPURPOSE	542
Y	4	1	*317-4362*	1	LINES GP-MULTIPURPOSE BUCKET	412
Y-SEPARATE ILLUSTRATION						

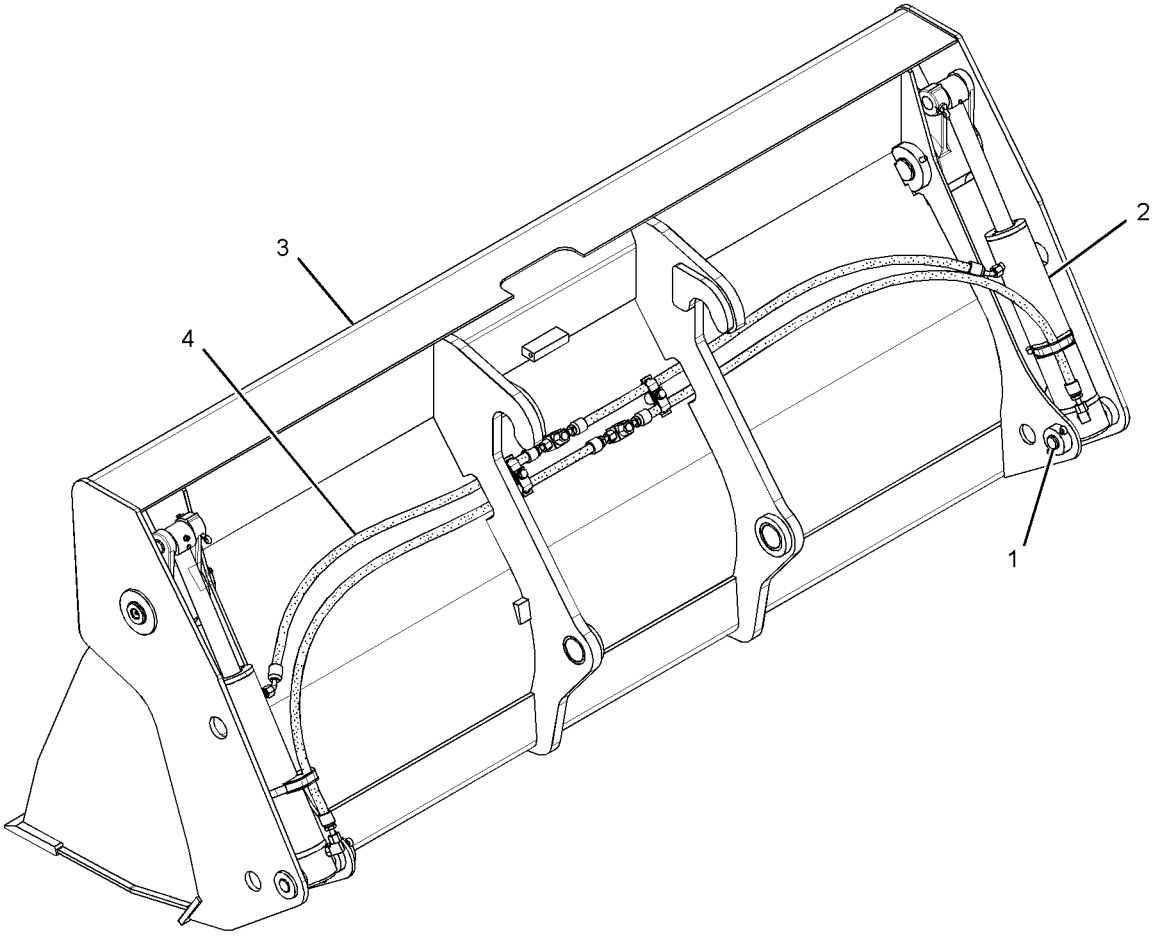

GRAPHIC #1 **<END>** g01517273

WORK TOOLS

318-7267 BUCKET AR-MULTIPURPOSE

S/N: SEJ1-UP
AN ATTACHMENT

SMCS-6104 **i02988923**

NOTE	REF NO	GRAPHIC REF	PART NUMBER	QTY	PART NAME 1 2 3 4 5 6 (PRODUCT LEVEL)	SEE PAGE
	1	1	**137-4234**	1	PLATE-IDENTIFICATION (WORK TOOL)	
	2	1	**168-8389**	4	TACK-FASTENER	
Y	3	1	*196-1136*	1	LINES GP-CONNECTING	397
Y	4	1	*318-7251*	1	BUCKET AR-MULTIPURPOSE	500

Y-SEPARATE ILLUSTRATION

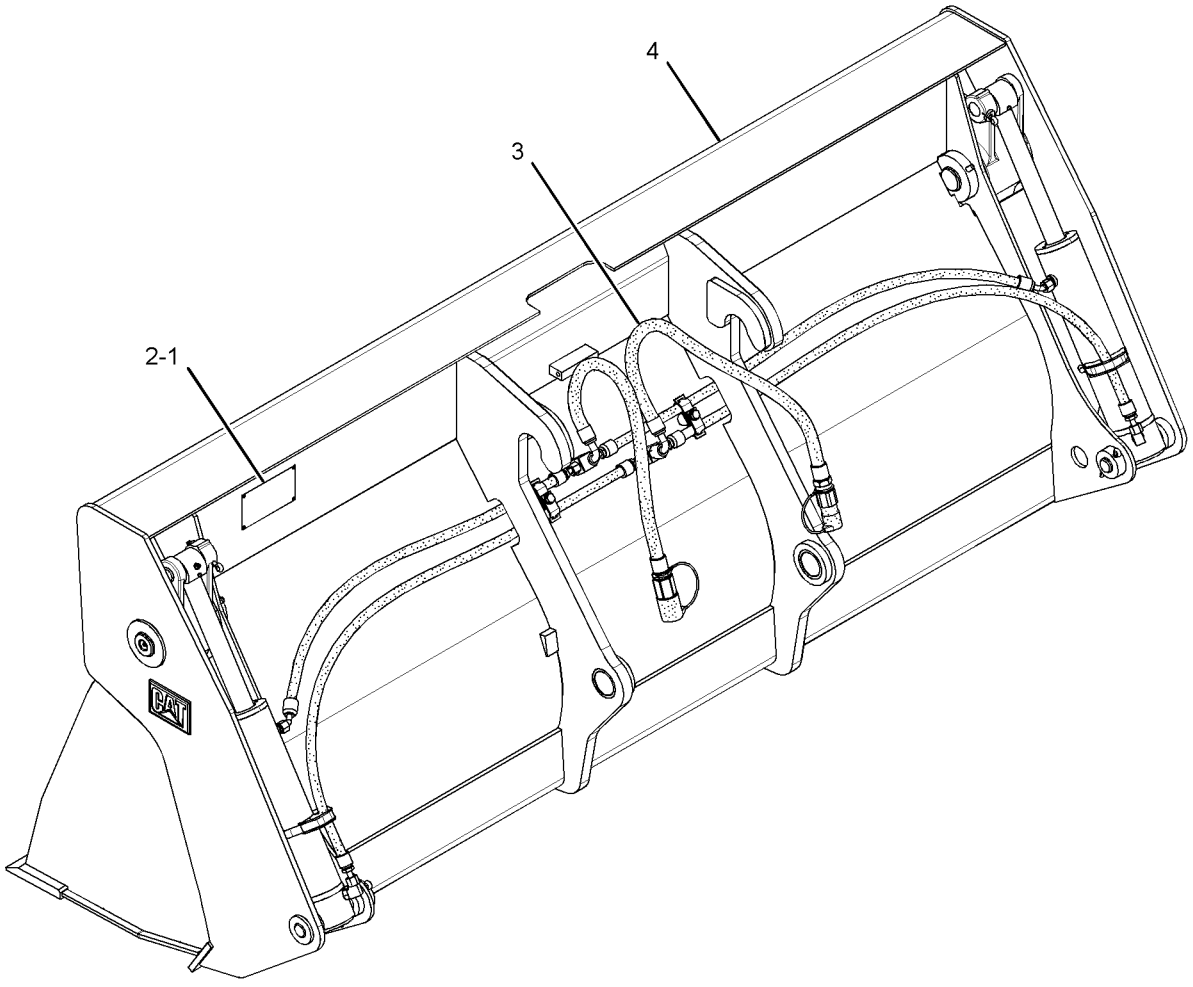

GRAPHIC #1 **<END>** g01515830

WORK TOOLS

337-7411 BUCKET AR-MULTIPURPOSE

S/N: SEJ1-UP
PART OF 337-7412 BUCKET AR-MULTIPURPOSE
AN ATTACHMENT

SMCS-6104 **i04586616**

NOTE	REF NO	GRAPHIC REF	PART NUMBER	QTY	PART NAME 1 2 3 4 5 6 (PRODUCT LEVEL)	SEE PAGE
Y	1	1	**226-5540**	2	CYLINDER GP-MULTIPURPOSE BUKT	352
Y	2	1	*337-7435*	1	BUCKET GP-MULTIPURPOSE	543
Y	3	1	*337-8935*	1	MOUNTING GP-CYLINDER (MULTIPURPOSE BUCKET)	448
Y	4	1	*350-1591*	1	LINES GP-MULTIPURPOSE BUCKET	414

Y-SEPARATE ILLUSTRATION

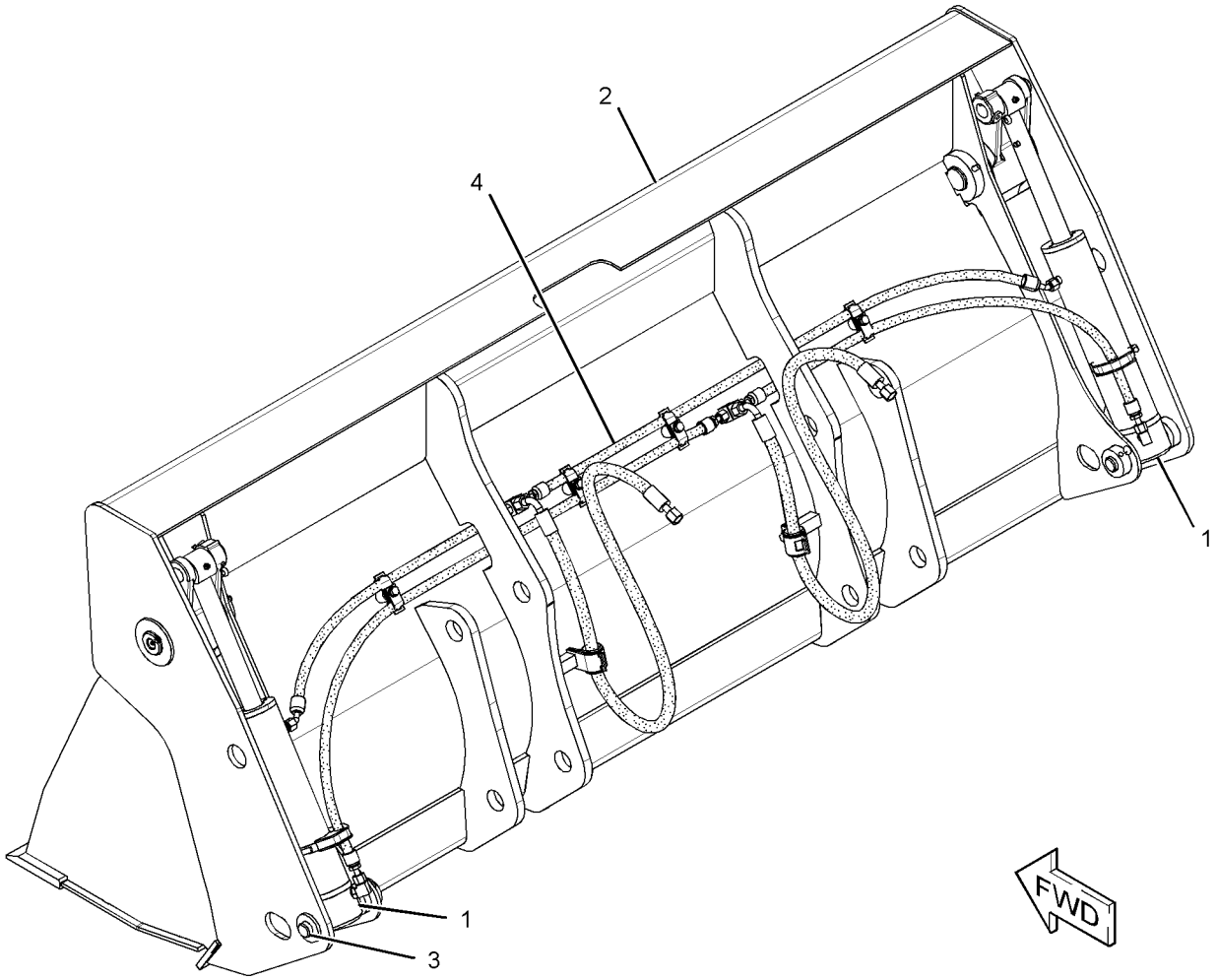

GRAPHIC #1 **<END>** g02761901

WORK TOOLS

337-7412 BUCKET AR-MULTIPURPOSE

S/N: SEJ1-UP

AN ATTACHMENT

SMCS-6104 **i04586711**

NOTE	REF NO	GRAPHIC REF	PART NUMBER	QTY	PART NAME 1 2 3 4 5 6 (PRODUCT LEVEL)	SEE PAGE
	1	1	**168-8389**	4	TACK-FASTENER	
Y	2	1	*337-7411*	1	BUCKET AR-MULTIPURPOSE	502
	3	1	**356-8635**	1	PLATE-IDENTIFICATION (WORK TOOL)	

Y-SEPARATE ILLUSTRATION

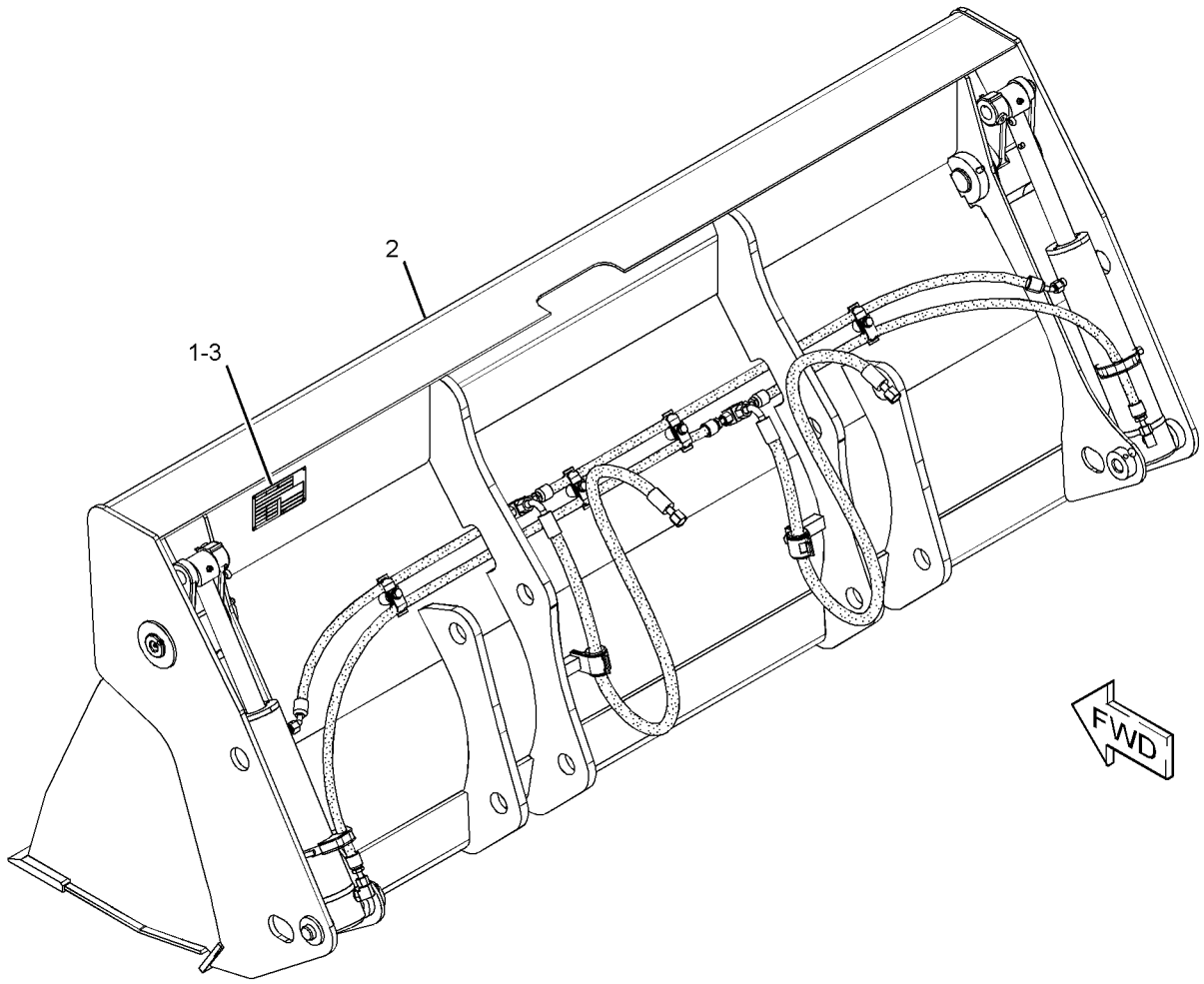

GRAPHIC #1 **<END>** g02763190

WORK TOOLS

350-1580 BUCKET AR-MULTIPURPOSE

S/N: SEJ1-UP

AN ATTACHMENT

SMCS-6104 **i04597202**

NOTE	REF NO	GRAPHIC REF	PART NUMBER	QTY	PART NAME 1 2 3 4 5 6 (PRODUCT LEVEL)	SEE PAGE
	1	1	**168-8389**	4	TACK-FASTENER	
Y	2	1	**226-5540**	2	CYLINDER GP-MULTIPURPOSE BUKT	352
Y	3	1	*337-8935*	1	MOUNTING GP-CYLINDER (MULTIPURPOSE BUCKET)	448
Y	4	1	*350-1594*	1	LINES GP-MULTIPURPOSE BUCKET	416
Y	5	1	*350-7008*	1	BUCKET GP-MULTIPURPOSE	545
	6	1	**356-8635**	1	PLATE-IDENTIFICATION (WORK TOOL)	

Y-SEPARATE ILLUSTRATION

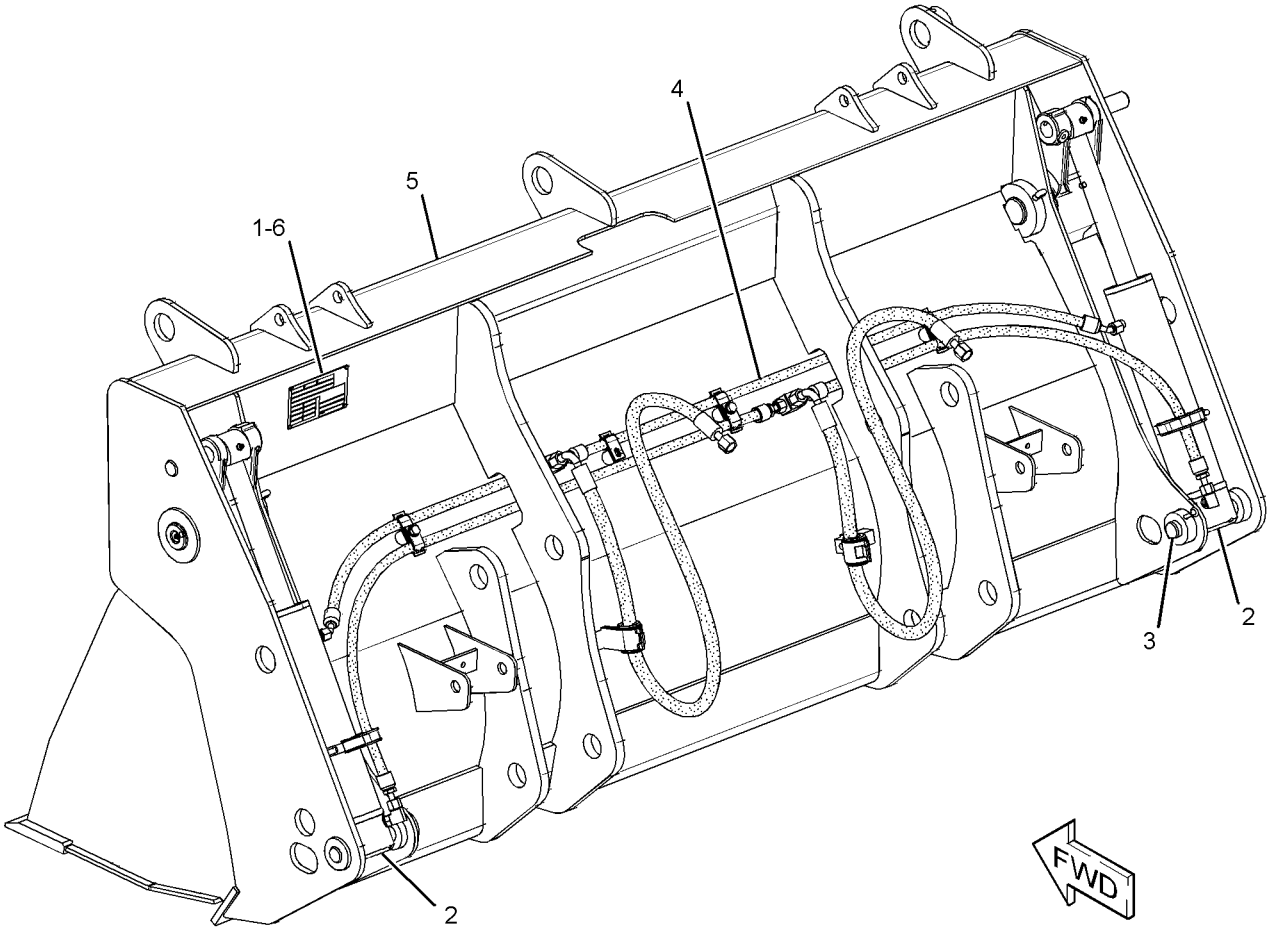

GRAPHIC #1 **<END>** g02760677

350-1581 BUCKET AR-MULTIPURPOSE

S/N: SEJ1-UP
AN ATTACHMENT

SMCS-6104 **i04597270**

NOTE	REF NO	GRAPHIC REF	PART NUMBER	QTY	PART NAME 1 2 3 4 5 6 (PRODUCT LEVEL)	SEE PAGE
	1	1	**168-8389**	4	TACK-FASTENER	
Y	2	1	**226-5540**	2	CYLINDER GP-MULTIPURPOSE BUKT	352
Y	3	1	*337-8935*	1	MOUNTING GP-CYLINDER (MULTIPURPOSE BUCKET)	448
Y	4	1	*350-1575*	1	BUCKET GP-MULTIPURPOSE	544
Y	5	1	*350-1591*	1	LINES GP-MULTIPURPOSE BUCKET	414
	6	1	**356-8635**	1	PLATE-IDENTIFICATION (WORK TOOL)	

Y-SEPARATE ILLUSTRATION

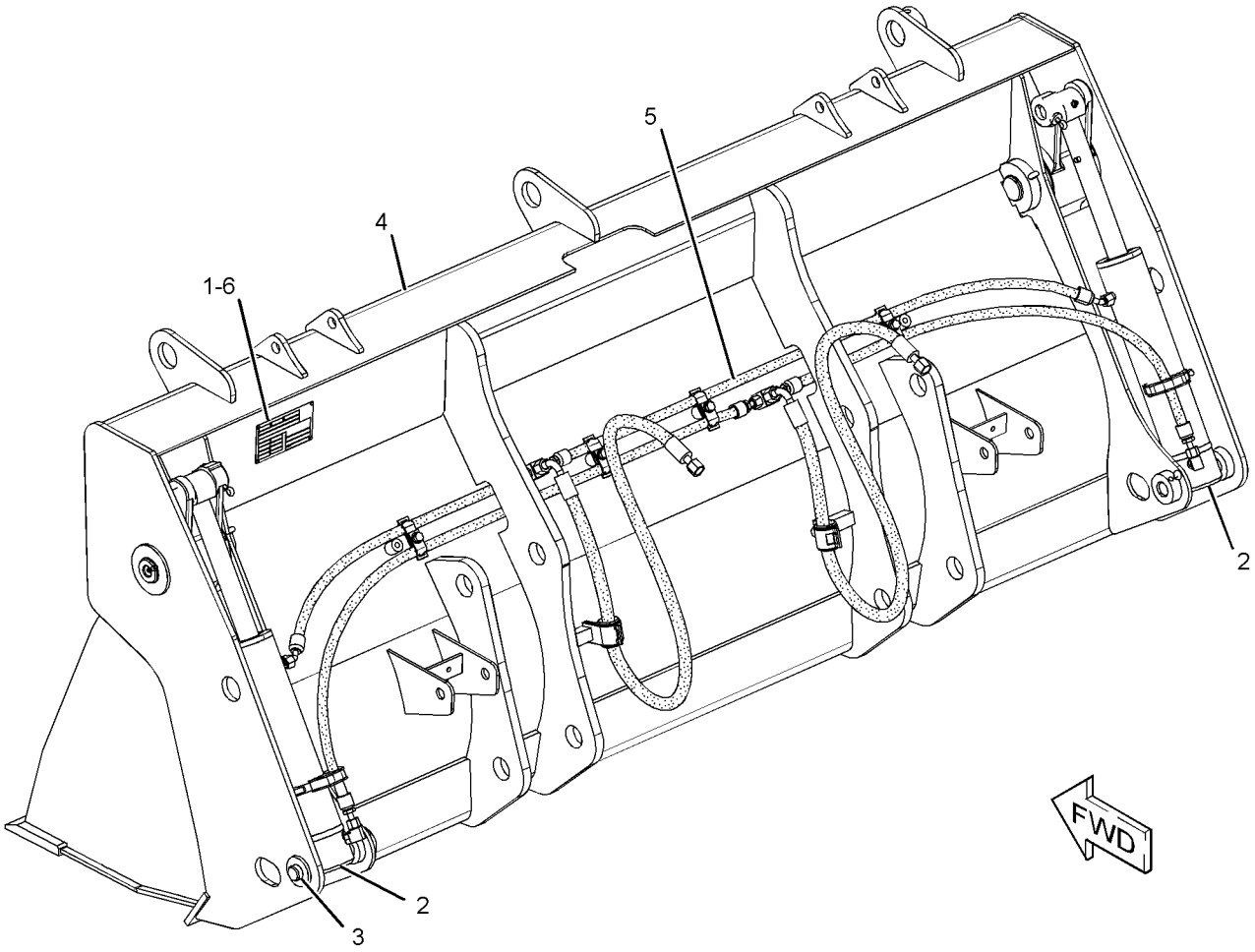

GRAPHIC #1 **<END>** g02760176

350-1587 BUCKET AR-MULTIPURPOSE

S/N: SEJ1-UP
PART OF 350-1588 BUCKET AR-MULTIPURPOSE
AN ATTACHMENT

SMCS-6104 **i04597291**

NOTE	REF NO	GRAPHIC REF	PART NUMBER	QTY	PART NAME 1 2 3 4 5 6 (PRODUCT LEVEL)	SEE PAGE
	1	1	**5D-8159**	2	PIN AS	
	2	1	**8T-4159**	4	BUMPER	
	3	1	**168-8389**	4	TACK-FASTENER	
Y	4	1	**226-5540**	1	CYLINDER GP-MULTIPURPOSE BUKT	352
	5	1	**250-1057**	2	PIN	
Y	6	1	*252-6005*	1	MOUNTING GP-FORK (MULTIPURPOSE BUCKET)	564
Y	7	1	*337-8935*	1	MOUNTING GP-CYLINDER (MULTIPURPOSE BUCKET)	448
Y	8	1	*350-1575*	1	BUCKET GP-MULTIPURPOSE	544
Y	9	1	*350-1591*	1	LINES GP-MULTIPURPOSE BUCKET	414
	10	1	**356-8635**	1	PLATE-IDENTIFICATION (WORK TOOL)	
M	11	1	**5C-7261**	8	NUT (M8X1.25-THD)	
	12	1	**8T-4122**	4	WASHER-HARD (17X32X3.5-MM THK)	
	13	1	**8T-4224**	4	WASHER-HARD (8.8X16X2-MM THK)	

M-METRIC PART
Y-SEPARATE ILLUSTRATION

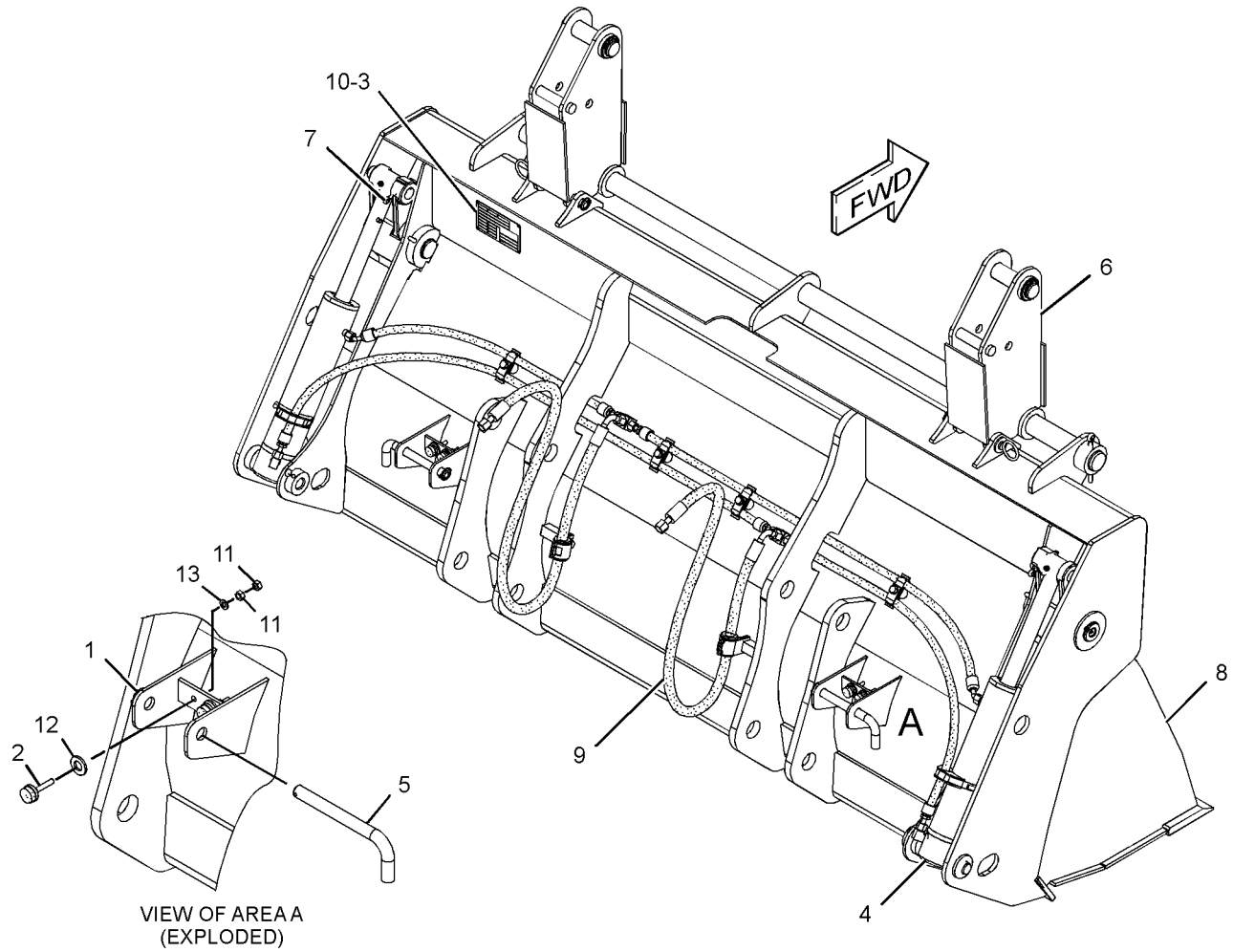

GRAPHIC #1 **<END>** g02824776

WORK TOOLS

350-1588 BUCKET AR-MULTIPURPOSE

S/N: SEJ1-UP
AN ATTACHMENT

SMCS-6104 **i04597290**

NOTE	REF NO	GRAPHIC REF	PART NUMBER	QTY	PART NAME 1 2 3 4 5 6 (PRODUCT LEVEL)	SEE PAGE
	1	1	**104-6312**	2	FORK AS	
Y	2	1	*350-1587*	1	BUCKET AR-MULTIPURPOSE	506

Y-SEPARATE ILLUSTRATION

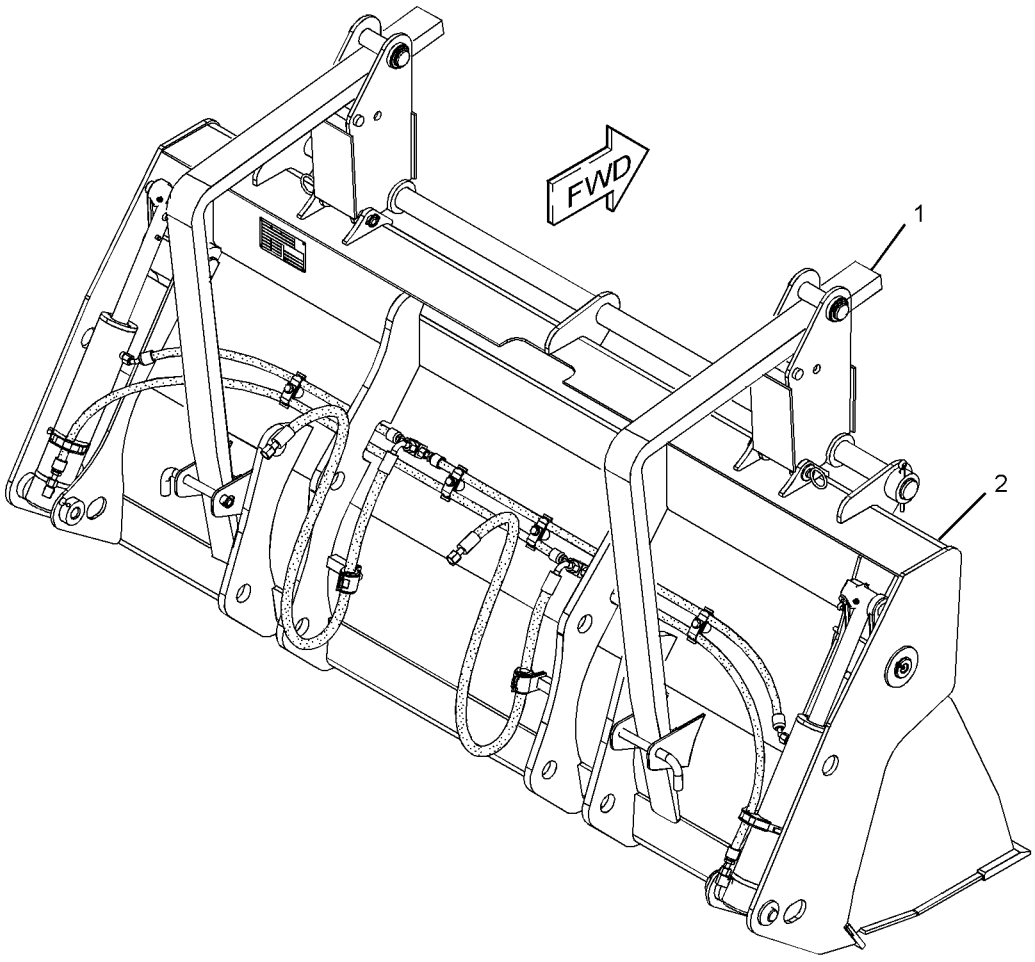

GRAPHIC #1 **<END>** g02831225

WORK TOOLS

350-1589 BUCKET AR-MULTIPURPOSE

S/N: SEJ1-UP
PART OF 350-1590 BUCKET AR-MULTIPURPOSE
AN ATTACHMENT

SMCS-6104 **i04603170**

NOTE	REF NO	GRAPHIC REF	PART NUMBER	QTY	PART NAME 1 2 3 4 5 6 (PRODUCT LEVEL)	SEE PAGE
	1	1	**5D-8159**	2	PIN AS	
	2	1	**8T-4159**	4	BUMPER	
	3	1	**168-8389**	4	TACK-FASTENER	
Y	4	1	**226-5540**	2	CYLINDER GP-MULTIPURPOSE BUKT	352
	5	1	**250-1057**	2	PIN	
Y	6	1	*252-6005*	1	MOUNTING GP-FORK	564
Y	7	1	*337-8935*	1	MOUNTING GP-CYLINDER (MULTIPURPOSE BUCKET)	448
Y	8	1	*350-1594*	1	LINES GP-MULTIPURPOSE BUCKET	416
Y	9	1	*350-7008*	1	BUCKET GP-MULTIPURPOSE	545
	10	1	**356-8635**	1	PLATE-IDENTIFICATION (WORK TOOL)	
M	11	1	**5C-7261**	8	NUT (M8X1.25-THD)	
	12	1	**8T-4122**	4	WASHER-HARD (17X32X3.5-MM THK)	
	13	1	**8T-4224**	4	WASHER-HARD (8.8X16X2-MM THK)	

M-METRIC PART
Y-SEPARATE ILLUSTRATION

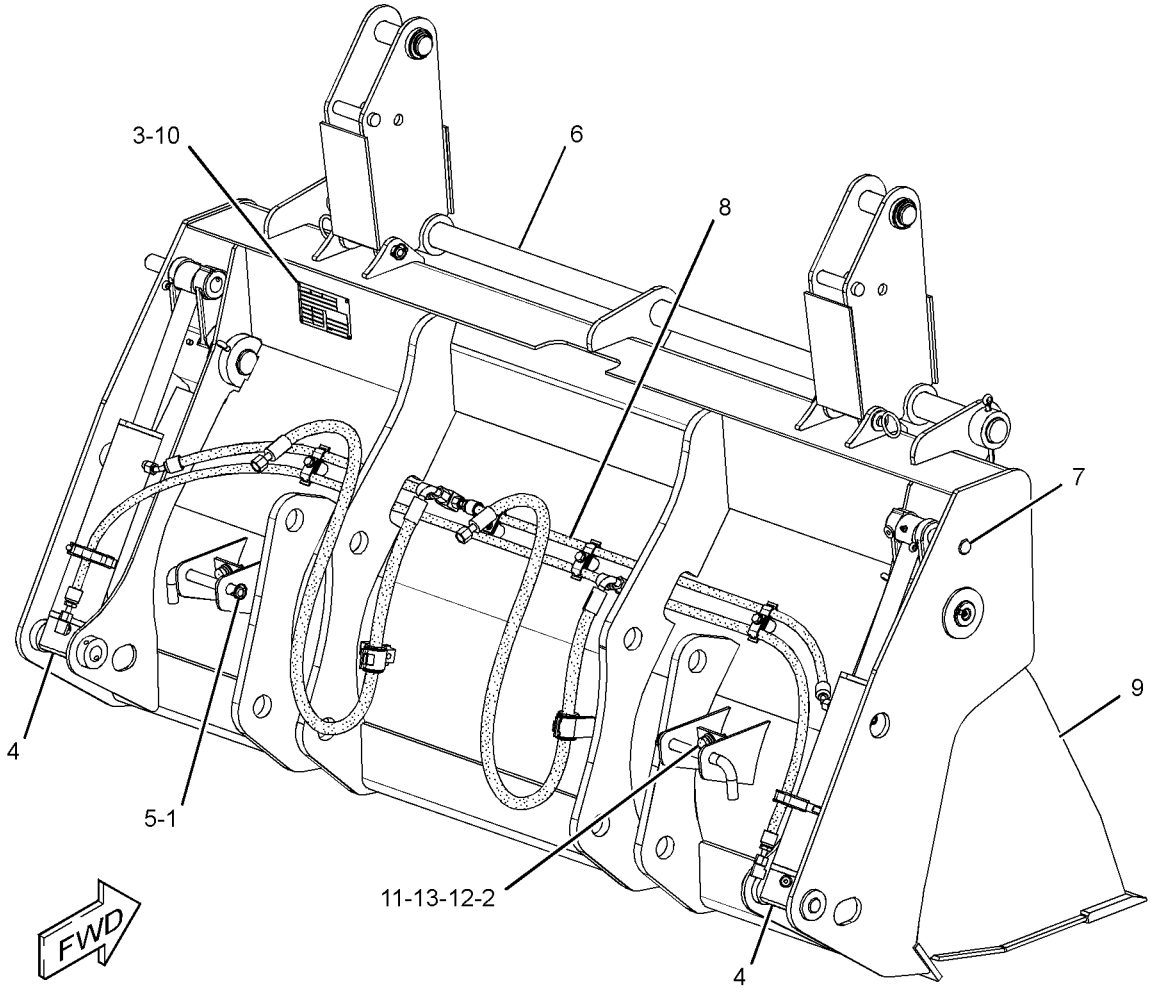

GRAPHIC #1 **<END>** g02760756

WORK TOOLS

350-1590 BUCKET AR-MULTIPURPOSE

S/N: SEJ1-UP
AN ATTACHMENT

SMCS-6104 **i04603293**

NOTE	REF NO	GRAPHIC REF	PART NUMBER	QTY	PART NAME 1 2 3 4 5 6 (PRODUCT LEVEL)	SEE PAGE
	1	1	**104-6312**	2	FORK AS	
Y	2	1	*350-1589*	1	BUCKET AR-MULTIPURPOSE	508

Y-SEPARATE ILLUSTRATION

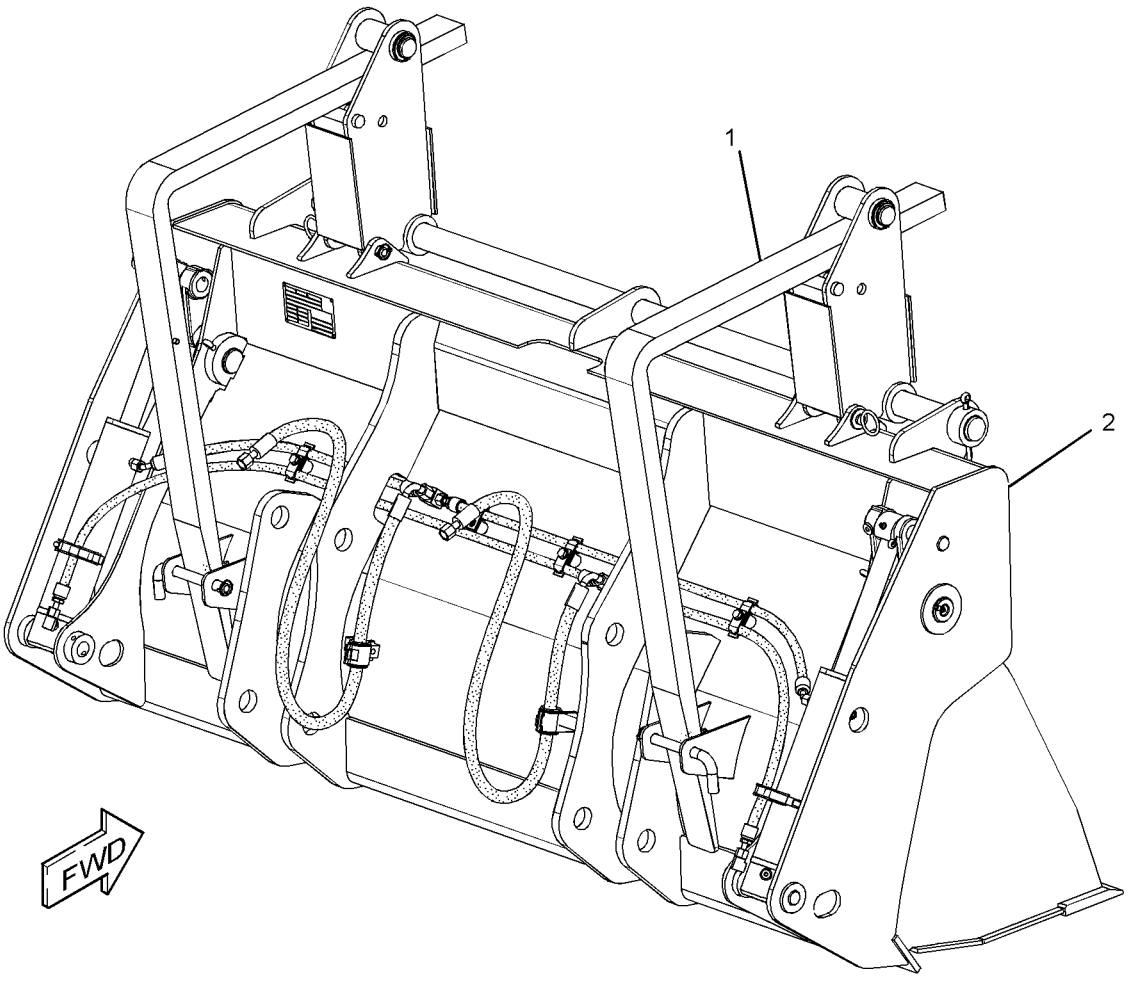

GRAPHIC #1 **<END>** g02761357

118-1984 BUCKET AS-GENERAL PURPOSE

S/N: SEJ1-UP

AN ATTACHMENT

SMCS-6101 **i03811649**

NOTE	REF NO	GRAPHIC REF	PART NUMBER	QTY	PART NAME 1 2 3 4 5 6 (PRODUCT LEVEL)	SEE PAGE
	1	1	**137-4234**	1	PLATE-IDENTIFICATION (WORK TOOL)	
	2	1	**168-8389**	4	TACK-FASTENER	
Y	3	1	*190-7605*	1	BUCKET AS-GENERAL PURPOSE	511

Y-SEPARATE ILLUSTRATION

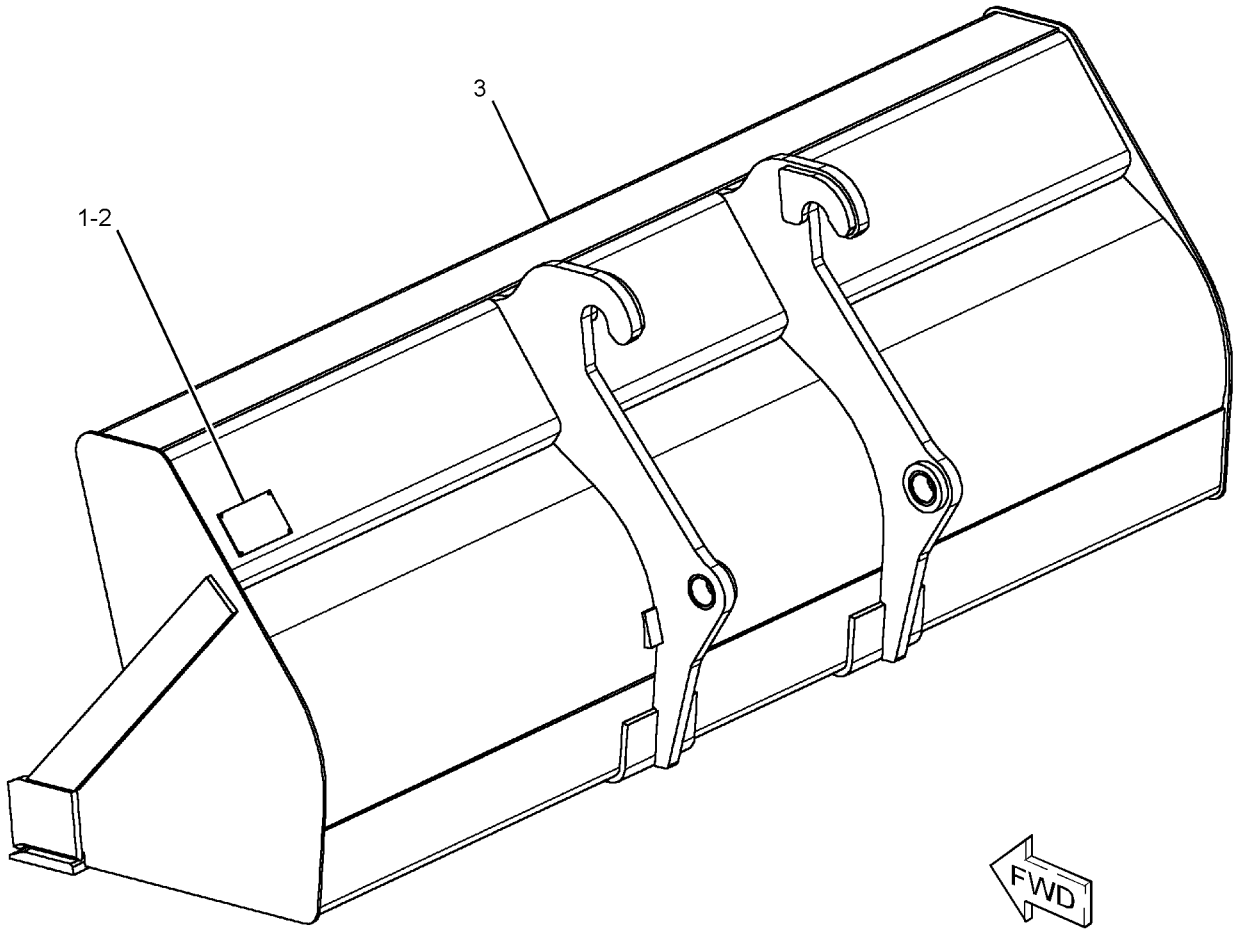

GRAPHIC #1 **<END>** g02098053

WORK TOOLS

190-7605 BUCKET AS-GENERAL PURPOSE

S/N: SEJ1-UP
1-CU M (1.31-CU YD)
PART OF 118-1984 BUCKET AS-GENERAL PURPOSE
AN ATTACHMENT

SMCS-6101 **i03811450**

NOTE	REF NO	GRAPHIC REF	PART NUMBER	QTY	PART NAME 1 2 3 4 5 6 (PRODUCT LEVEL)	SEE PAGE
	1	1	**9R-5205**	1	EDGE (LH)	
	2	1	**9R-5206**	1	EDGE (RH)	
	3	1	**9R-5313**	1	EDGE	
	4	1	**9R-5832**	2	EDGE	
	5	1	*118-1977*	1	PLATE AS (RH)	
	5A	1	**6K-4076**	1	BEARING-SLEEVE	
	6	1	*118-1978*	1	PLATE AS (LH)	
	6A	1	**6K-4076**	1	BEARING-SLEEVE	

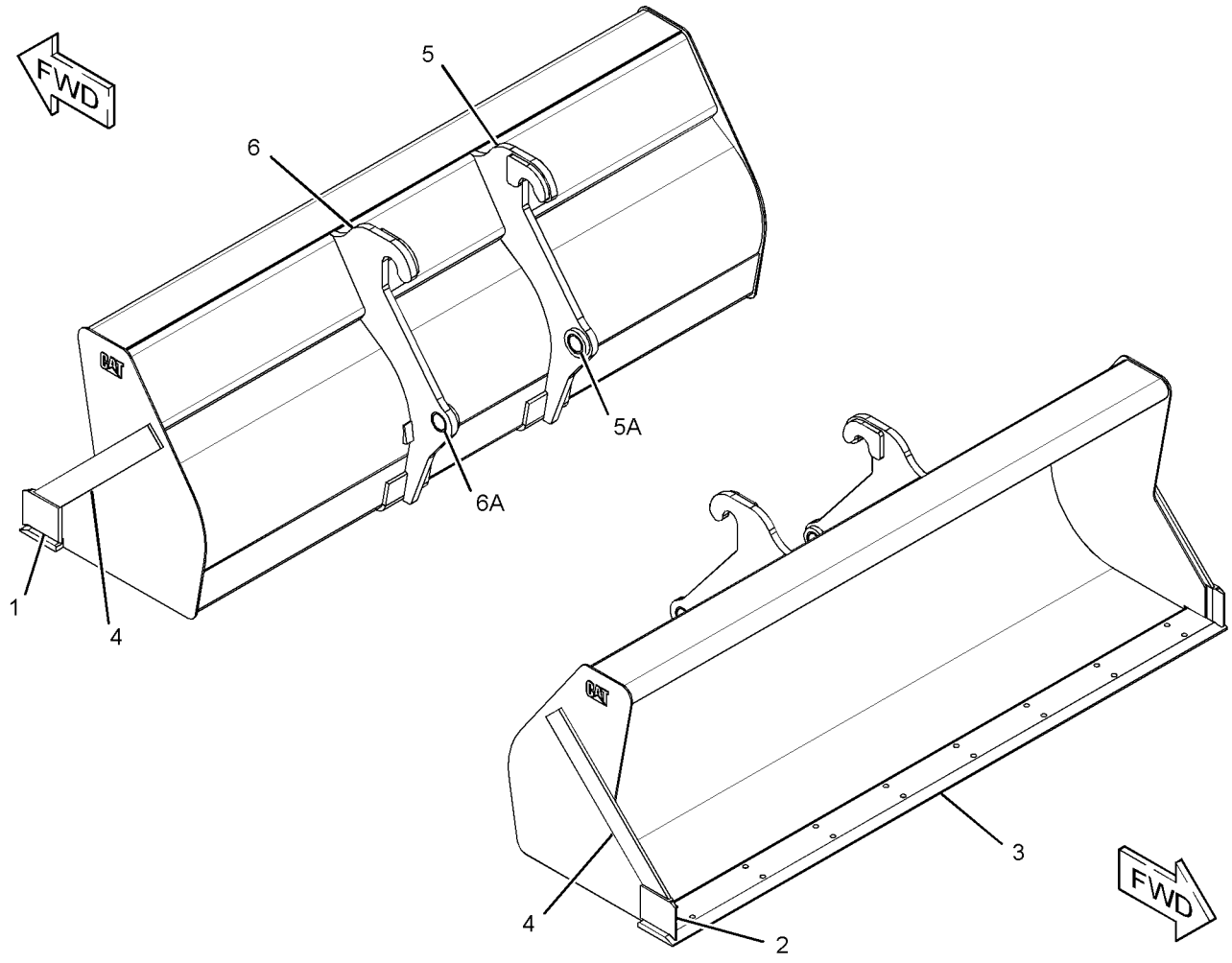

GRAPHIC #1 **<END>** g02139699

WORK TOOLS

337-7395 BUCKET AS-GENERAL PURPOSE

S/N: SEJ1-UP
2406-MM (94.8-IN) WIDE X 1-CU M (1.3-CU YD) CAPACITY
PART OF 337-7394 BUCKET GP-GENERAL PURPOSE
AN ATTACHMENT

SMCS-6101 **i04608614**

NOTE	REF NO	GRAPHIC REF	PART NUMBER	QTY	PART NAME 1 2 3 4 5 6 (PRODUCT LEVEL)	SEE PAGE
	1	1	**9R-5205**	1	EDGE (LH)	
	2	1	**9R-5206**	1	EDGE (RH)	
	3	1	**9R-5313**	1	EDGE	
	4	1	**9R-5832**	2	EDGE	

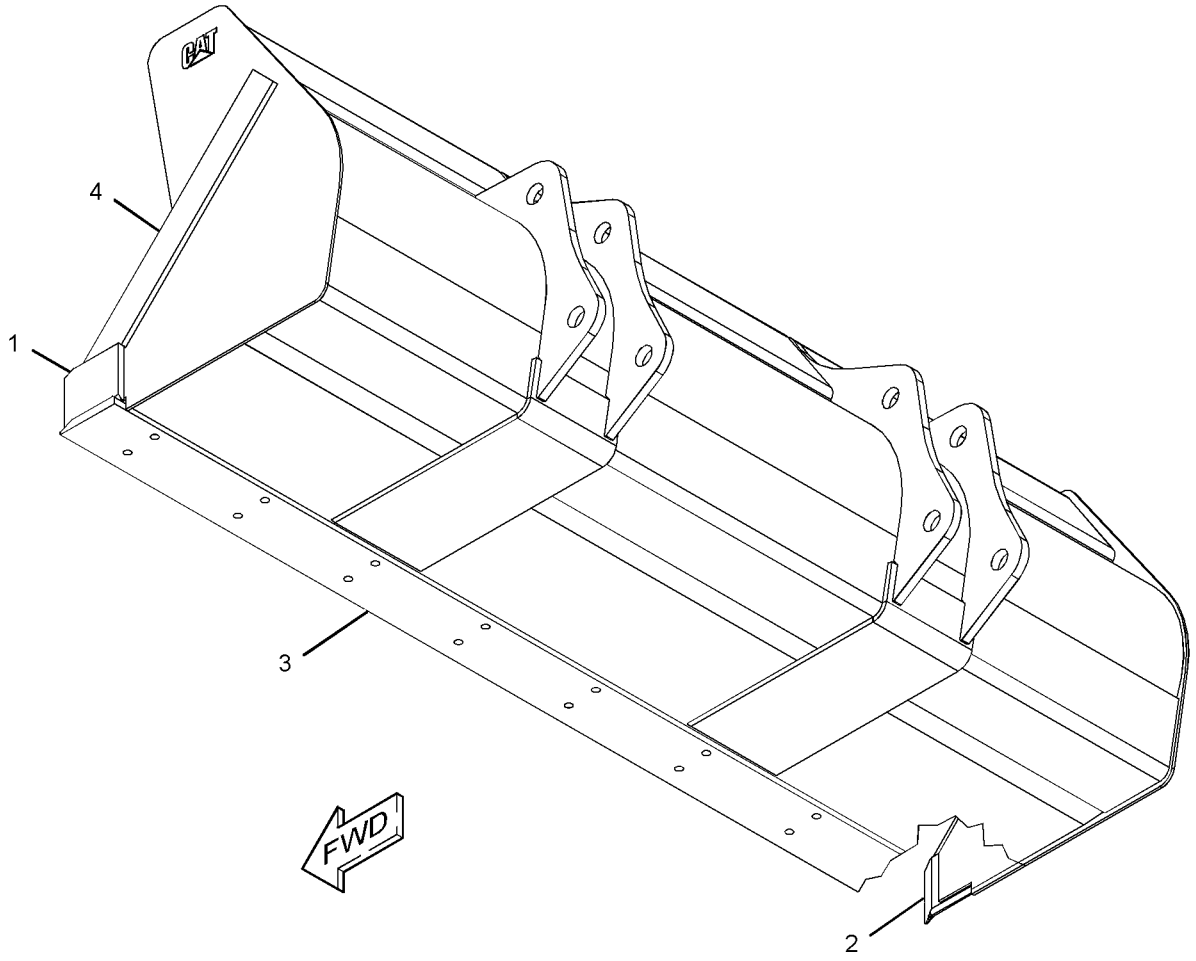

GRAPHIC #1 **<END>** g02823723

151-7829 BUCKET AS-HOE—HIGH CAPACITY

S/N: SEJ1-UP
458-MM (18-IN)
PART OF 151-7887 BUCKET GP-HOE
AN ATTACHMENT

SMCS-6503 **i02686003**

NOTE	REF NO	GRAPHIC REF	PART NUMBER	QTY	PART NAME 1 2 3 4 5 6 (PRODUCT LEVEL)	SEE PAGE
	1	1	**128-3778**	1	EDGE	
	2	1	*151-7902*	1	BRACKET AS (LH)	
	2A	1	**9R-0162**	1	BEARING-SLEEVE	
	2B	1	**168-0480**	1	BEARING-SLEEVE	
	3	1	**9R-8987**	1	EDGE (LH)	
	4	1	**9R-8988**	1	EDGE (RH)	
	5	1	*151-7903*	1	BRACKET AS (RH)	
	5A	1	**9R-0162**	1	BEARING-SLEEVE	
	5B	1	**168-0480**	1	BEARING-SLEEVE	

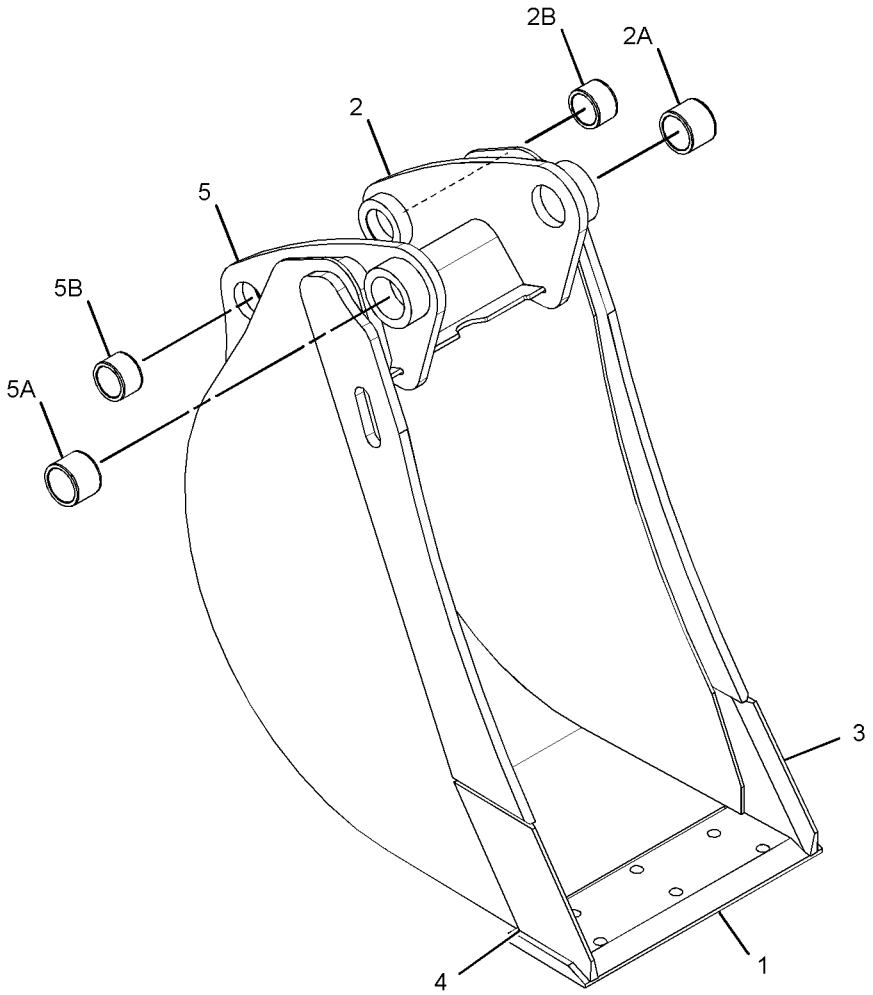

GRAPHIC #1 **<END>** g01424314

151-7830 BUCKET AS-HOE—HIGH CAPACITY

S/N: SEJ1-UP
610-MM (24-IN)
PART OF 151-7888 BUCKET GP-HOE
AN ATTACHMENT

SMCS-6503 **i02685979**

NOTE	REF NO	GRAPHIC REF	PART NUMBER	QTY	PART NAME 1 2 3 4 5 6 (PRODUCT LEVEL)	SEE PAGE
	1	1	**9R-8987**	1	EDGE (LH)	
	2	1	**9R-8988**	1	EDGE (RH)	
	3	1	**128-3094**	1	EDGE	
	4	1	*151-7902*	1	BRACKET AS (LH)	
	4A	1	**168-0480**	1	BEARING-SLEEVE	
	4B	1	**9R-0162**	1	BEARING-SLEEVE	
	5	1	*151-7903*	1	BRACKET AS (RH)	
	5A	1	**168-0480**	1	BEARING-SLEEVE	
	5B	1	**9R-0162**	1	BEARING-SLEEVE	

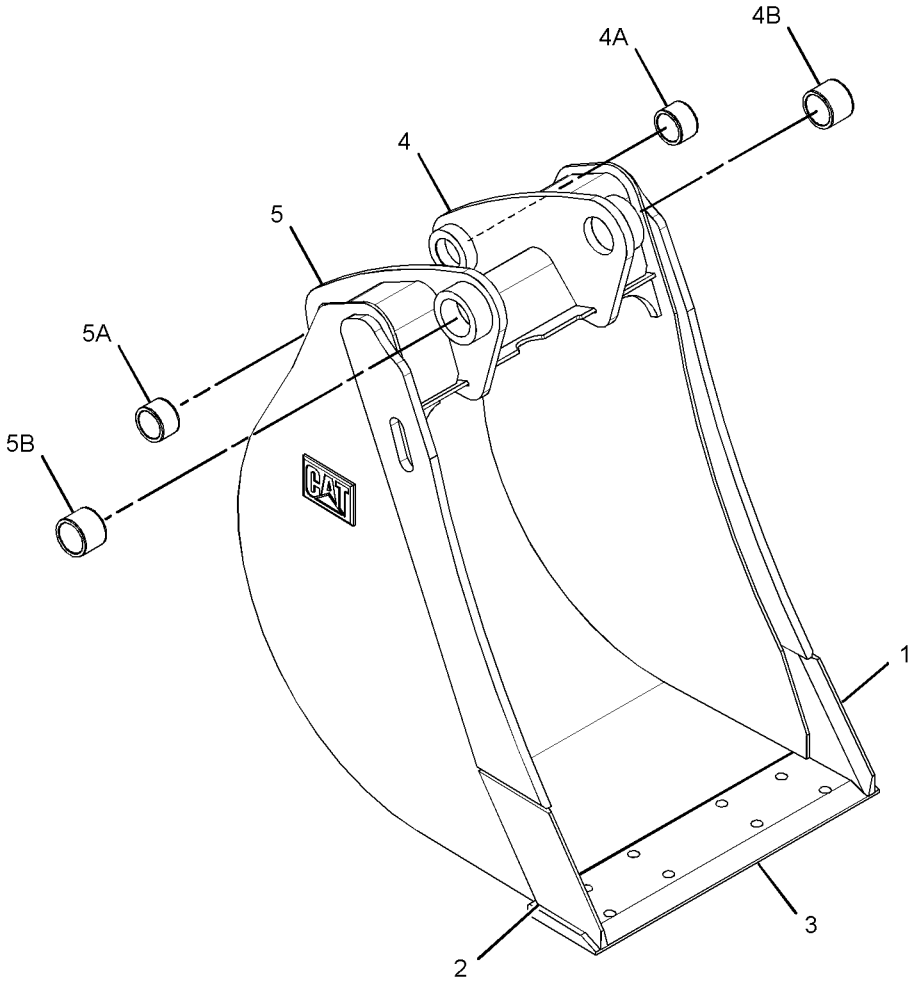

GRAPHIC #1 **<END>** g01398979

151-7831 BUCKET AS-HOE—HIGH CAPACITY

S/N: SEJ1-UP
762-MM (30-IN)
PART OF 151-7889 BUCKET GP-HOE
AN ATTACHMENT

SMCS-6503 **i02686105**

NOTE	REF NO	GRAPHIC REF	PART NUMBER	QTY	PART NAME 1 2 3 4 5 6 (PRODUCT LEVEL)	SEE PAGE
	1	1	*151-7902*	1	BRACKET AS (LH)	
	1A	1	**9R-0162**	1	BEARING-SLEEVE	
	1B	1	**168-0480**	1	BEARING-SLEEVE	
	2	1	**9R-8987**	1	EDGE (LH)	
	3	1	**9R-8988**	1	EDGE (RH)	
	4	1	**131-2117**	1	EDGE	
	5	1	*151-7903*	1	BRACKET AS (RH)	
	5A	1	**9R-0162**	1	BEARING-SLEEVE	
	5B	1	**168-0480**	1	BEARING-SLEEVE	

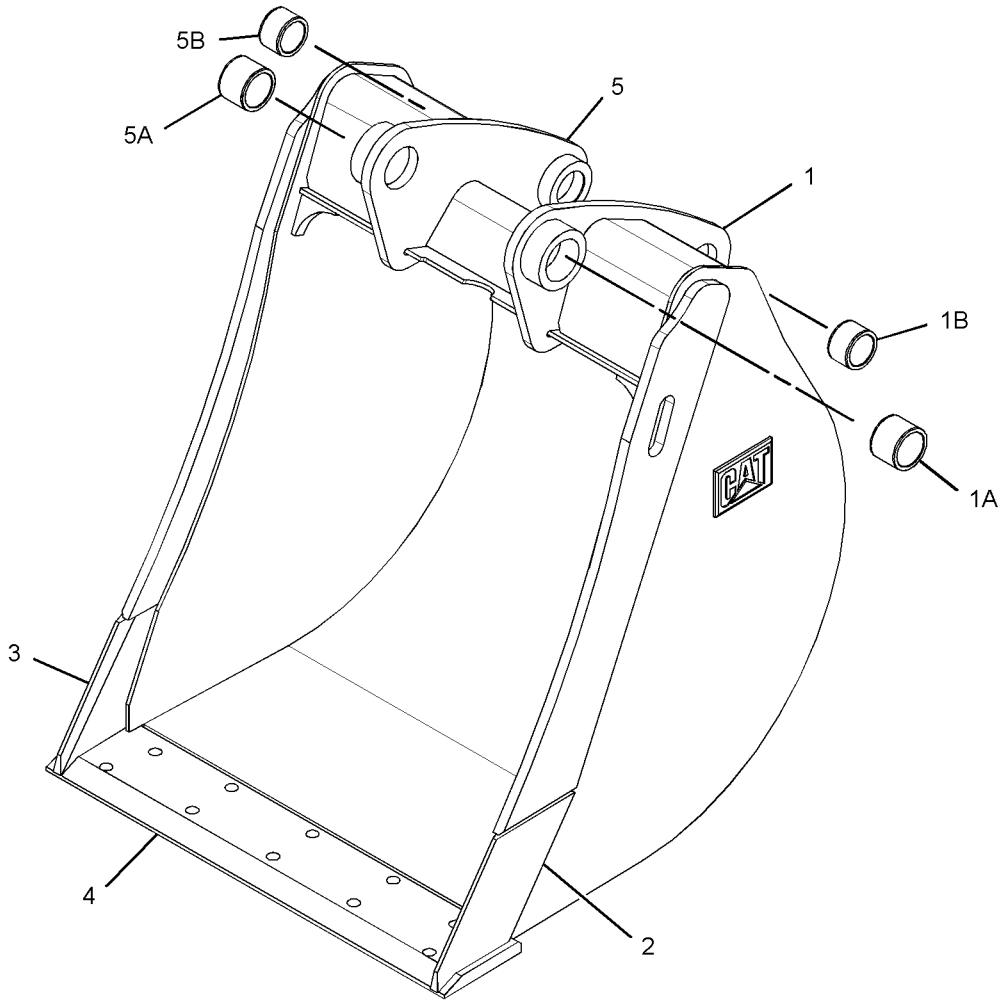

GRAPHIC #1 **<END>** g01359127

249-4220 BUCKET AS-HOE—HEAVY-DUTY

S/N: SEJ1-UP
610-MM (24-IN)
PART OF 249-4221 BUCKET GP-HOE
AN ATTACHMENT

SMCS-6503 **i03726361**

NOTE	REF NO	GRAPHIC REF	PART NUMBER	QTY	PART NAME 1 2 3 4 5 6 (PRODUCT LEVEL)	SEE PAGE
	1	1	**201-1235**	5	ADAPTER (2-STRAP)	
	2	1	**219-9488**	1	EDGE	
	3	1	*249-4209*	1	PLATE AS (RH)	
		1	**249-4207**	1	EDGE (RH)	
	4	1	*249-4210*	1	PLATE AS (LH)	
		1	**273-3622**	1	EDGE (LH)	

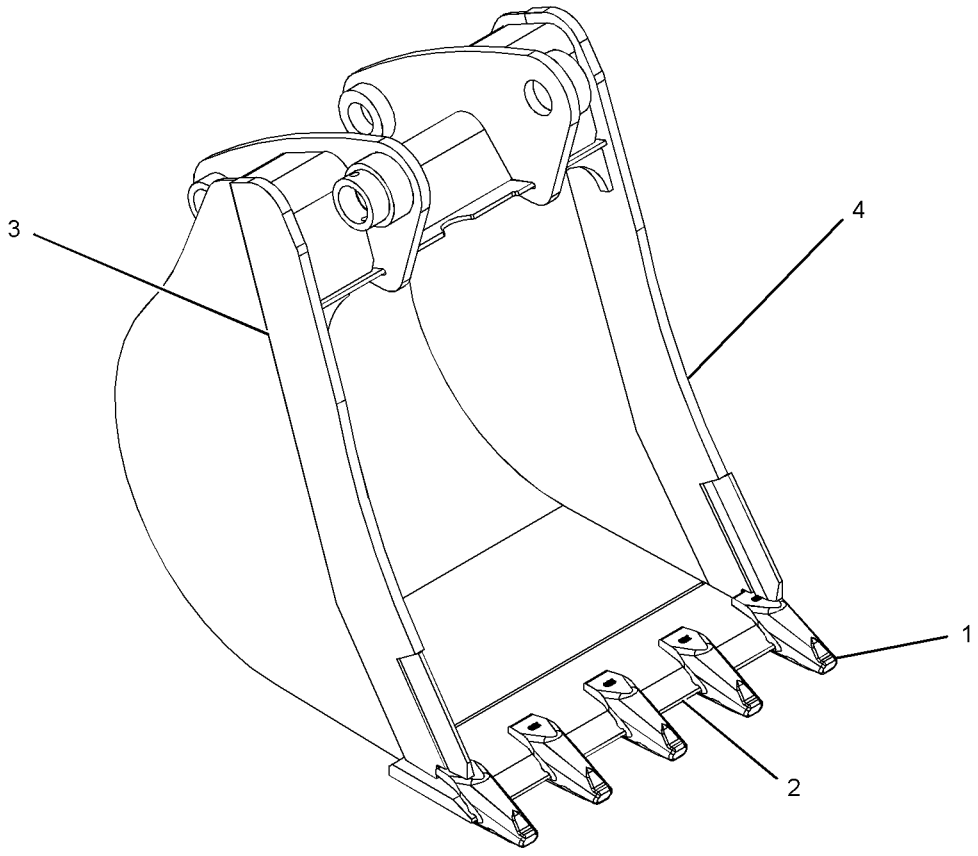

GRAPHIC #1 **<END>** g01226709

272-6411 BUCKET AS-HOE—HEAVY-DUTY

S/N: SEJ1-UP
458-MM (18-IN)
PART OF 272-6410 BUCKET GP-HOE
AN ATTACHMENT

SMCS-6503 **i03726342**

NOTE	REF NO	GRAPHIC REF	PART NUMBER	QTY	PART NAME 1 2 3 4 5 6 (PRODUCT LEVEL)	SEE PAGE
	1	1	**136-6887**	1	EDGE	
	2	1	**201-1235**	4	ADAPTER (2-STRAP)	
	3	1	*249-4209*	1	PLATE AS (RH)	
		1	**249-4207**	1	EDGE (RH)	
	4	1	*249-4210*	1	PLATE AS (LH)	
		1	**273-3622**	1	EDGE (LH)	
	5	1	**272-6369**	4	PLATE	

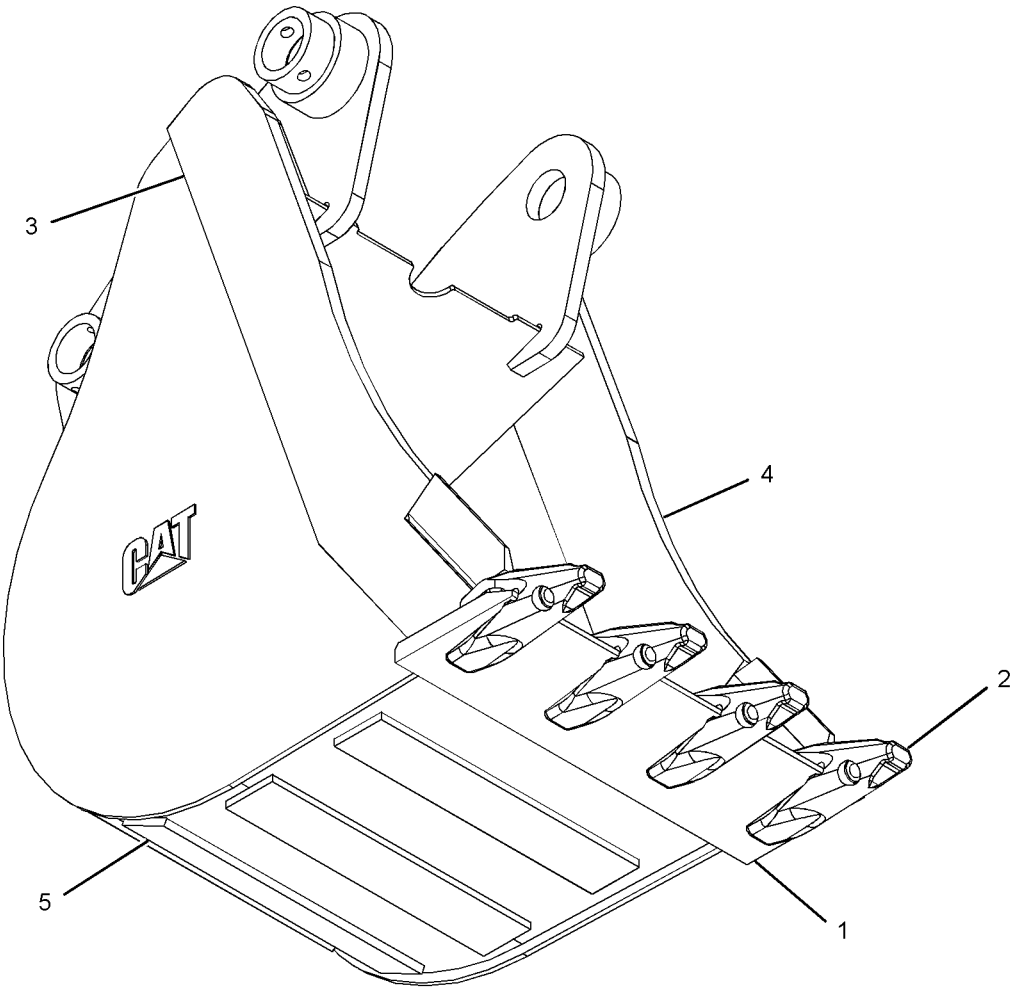

GRAPHIC #1 **<END>** g01214815

272-7873 BUCKET AS-HOE—HEAVY-DUTY

S/N: SEJ1-UP
762-MM (30-IN)
PART OF 272-7872 BUCKET GP-HOE
AN ATTACHMENT

SMCS-6503 **i03726600**

NOTE	REF NO	GRAPHIC REF	PART NUMBER	QTY	PART NAME 1 2 3 4 5 6 (PRODUCT LEVEL)	SEE PAGE
	1	1	**136-6889**	1	EDGE	
	2	1	**201-1235**	5	ADAPTER (2-STRAP)	
	3	1	*249-4209*	1	PLATE AS (RH)	
		1	**249-4207**	1	EDGE (RH)	
	4	1	*249-4210*	1	PLATE AS (LH)	
		1	**273-3622**	1	EDGE (LH)	
	5	1	**272-7914**	4	PLATE	

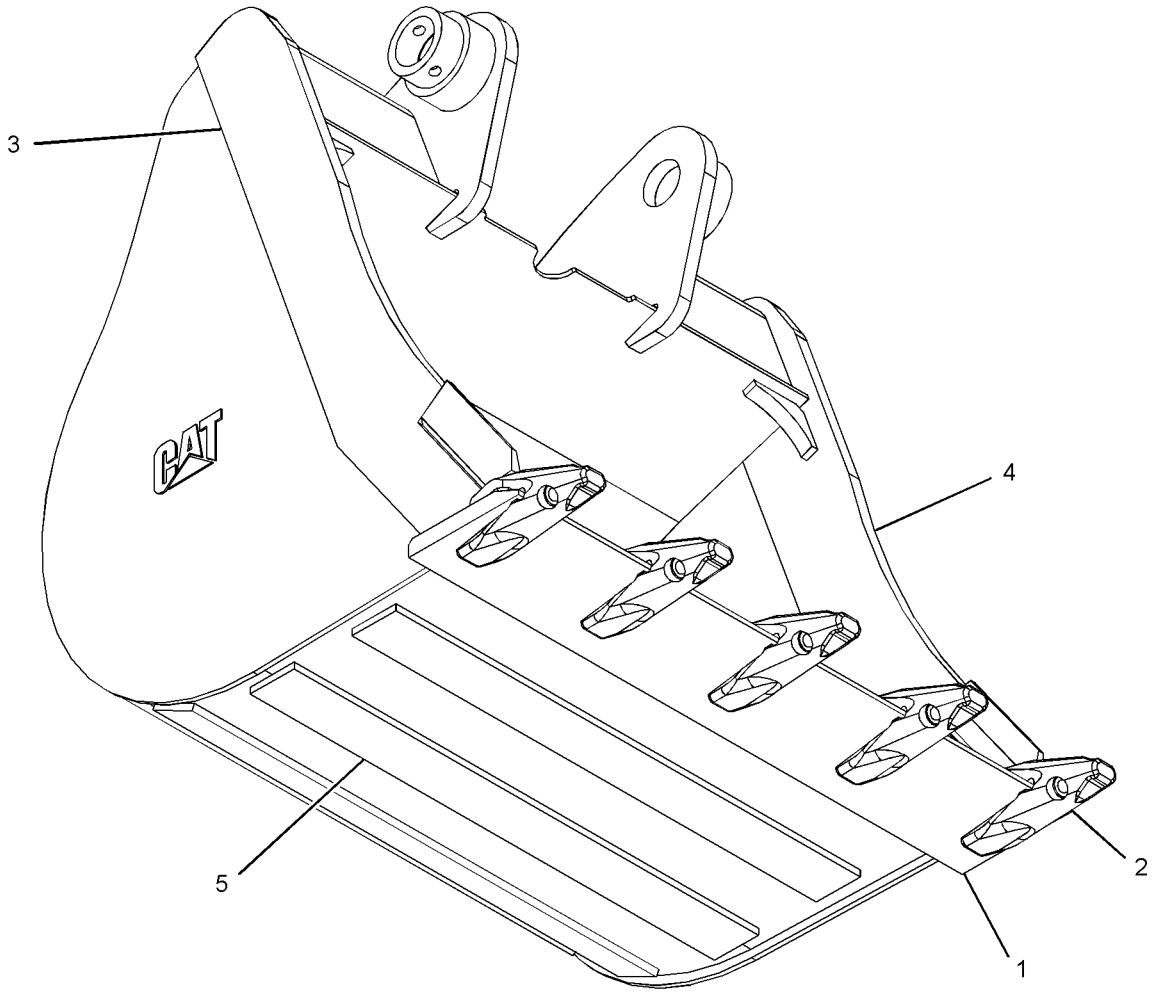

GRAPHIC #1 **<END>** g01215272

WORK TOOLS

272-9235 BUCKET AS-HOE—HEAVY-DUTY

S/N: SEJ1-UP
914-MM (36-IN)
PART OF 272-9234 BUCKET GP-HOE
AN ATTACHMENT

SMCS-6503 **i03726364**

NOTE	REF NO	GRAPHIC REF	PART NUMBER	QTY	PART NAME 1 2 3 4 5 6 (PRODUCT LEVEL)	SEE PAGE
	1	1	**201-1235**	6	ADAPTER (2-STRAP)	
	2	1	*249-4209*	1	PLATE AS (RH)	
		1	**249-4207**	1	EDGE (RH)	
	3	1	*249-4210*	1	PLATE AS (LH)	
		1	**273-3622**	1	EDGE (LH)	
	4	1	**272-7916**	4	PLATE	
	5	1	**136-6890**	1	EDGE	

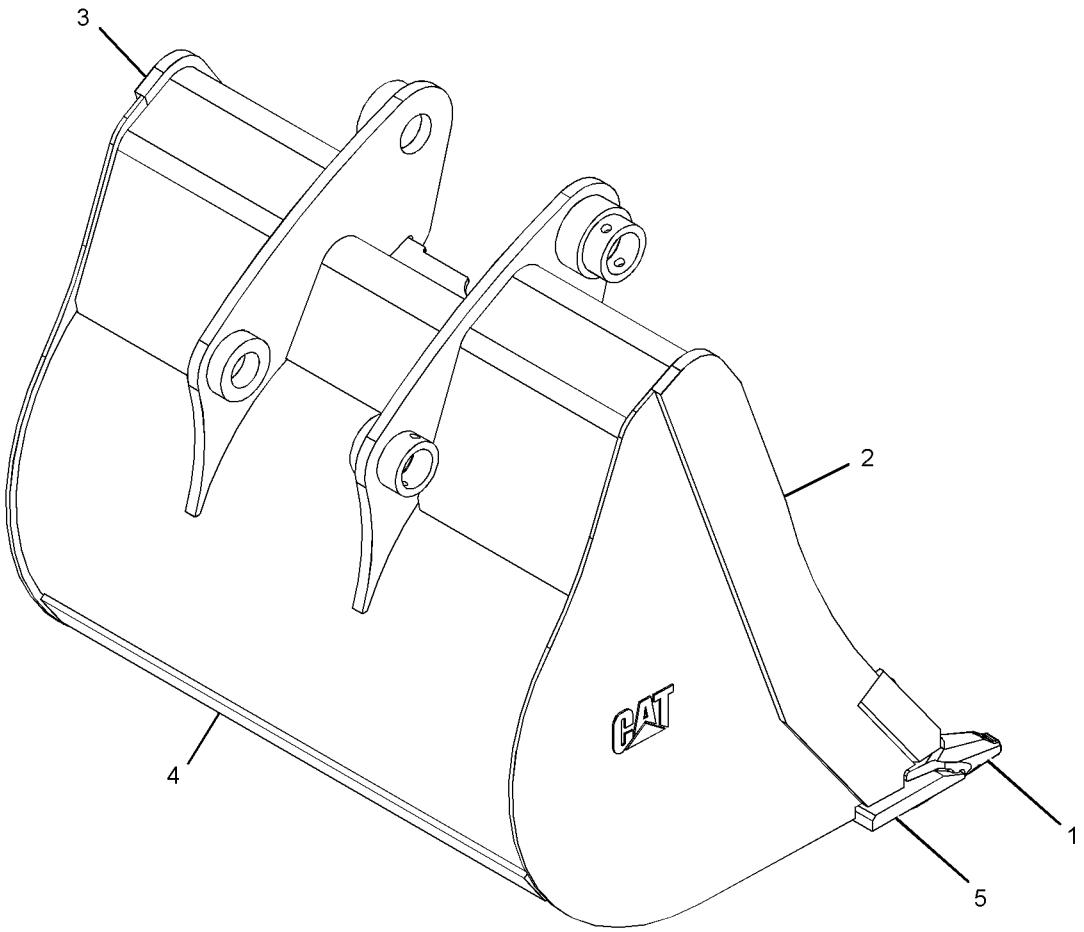

GRAPHIC #1 **<END>** g02009296

WORK TOOLS

273-0043 BUCKET AS-HOE—HEAVY-DUTY

S/N: SEJ1-UP
762-MM (30-IN)
PART OF 273-0042 BUCKET GP-HOE
AN ATTACHMENT

SMCS-6503 **i02427539**

NOTE	REF NO	GRAPHIC REF	PART NUMBER	QTY	PART NAME 1 2 3 4 5 6 (PRODUCT LEVEL)	SEE PAGE
	1	1	**272-7914**	4	PLATE	
	2	1	*272-7920*	1	PLATE AS (RH)	
		1	**272-7918**	1	EDGE (RH)	
	3	1	*272-7921*	1	PLATE AS (LH)	
		1	**272-7919**	1	EDGE (LH)	
	4	1	**273-1465**	1	EDGE	

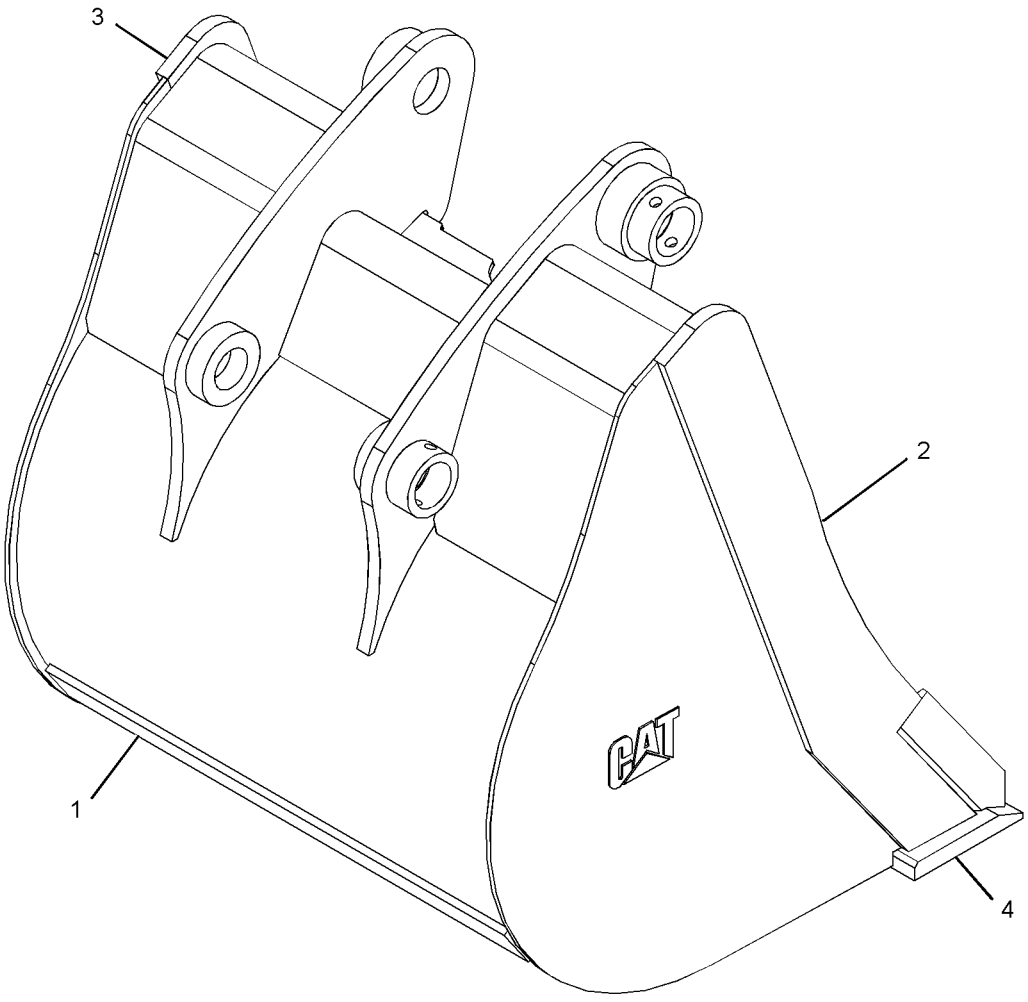

GRAPHIC #1 **<END>** g01214211

WORK TOOLS

273-0094 BUCKET AS-HOE—HEAVY-DUTY

S/N: SEJ1-UP
408-MM (16-IN)
PART OF 273-0093 BUCKET GP-HOE
AN ATTACHMENT

SMCS-6503 **i03726561**

NOTE	REF NO	GRAPHIC REF	PART NUMBER	QTY	PART NAME 1 2 3 4 5 6 (PRODUCT LEVEL)	SEE PAGE
	1	1	**201-1235**	3	ADAPTER (2-STRAP)	
	2	1	*249-4209*	1	PLATE AS (RH)	
		1	**249-4207**	1	EDGE (RH)	
	3	1	*249-4210*	1	PLATE AS (LH)	
		1	**273-3622**	1	EDGE (LH)	
	4	1	**272-7922**	1	EDGE	
	5	1	**273-5532**	4	PLATE	

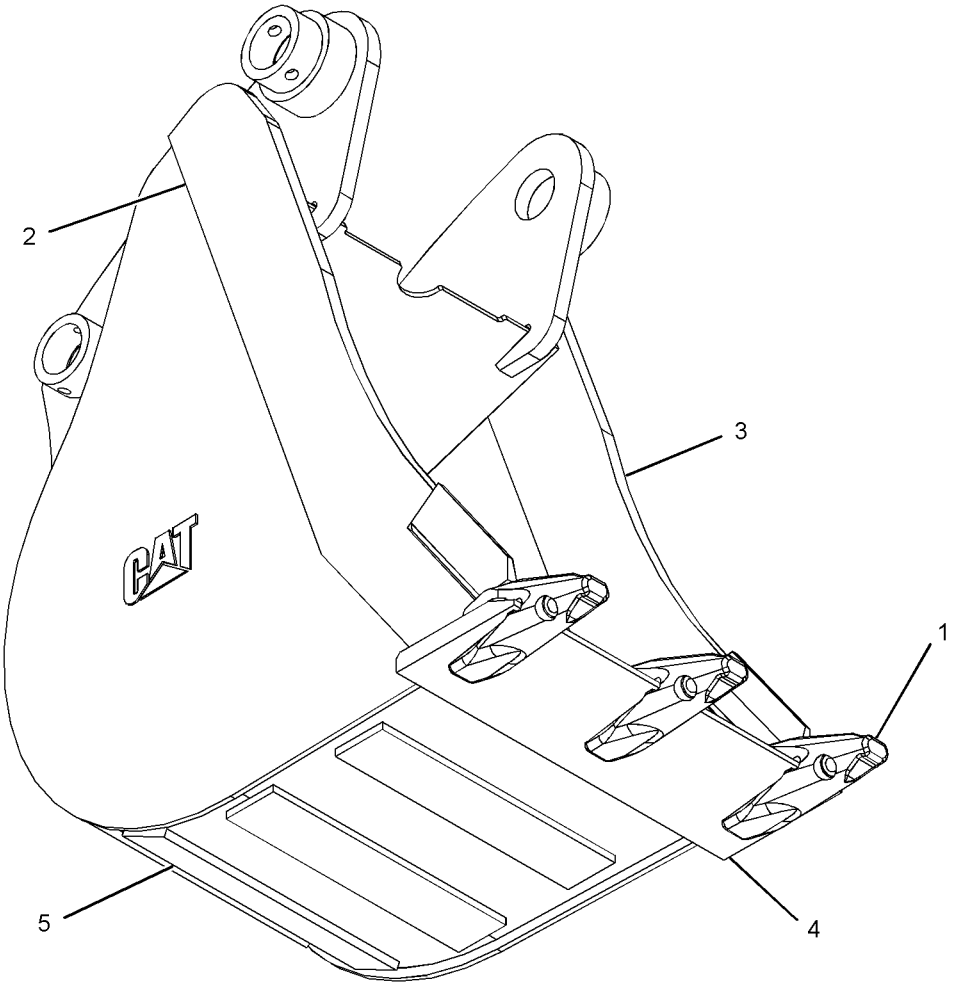

GRAPHIC #1 **<END>** g01214848

273-0800 BUCKET AS-HOE—HEAVY-DUTY

S/N: SEJ1-UP
610-MM (24-IN)
PART OF 273-0799 BUCKET GP-HOE
AN ATTACHMENT

SMCS-6503 **i02427585**

NOTE	REF NO	GRAPHIC REF	PART NUMBER	QTY	PART NAME 1 2 3 4 5 6 (PRODUCT LEVEL)	SEE PAGE
	1	1	**249-4211**	4	PLATE	
	2	1	*272-7920*	1	PLATE AS (RH)	
		1	**272-7918**	1	EDGE (RH)	
	3	1	*272-7921*	1	PLATE AS (LH)	
		1	**272-7919**	1	EDGE (LH)	
	4	1	**273-1463**	1	EDGE	

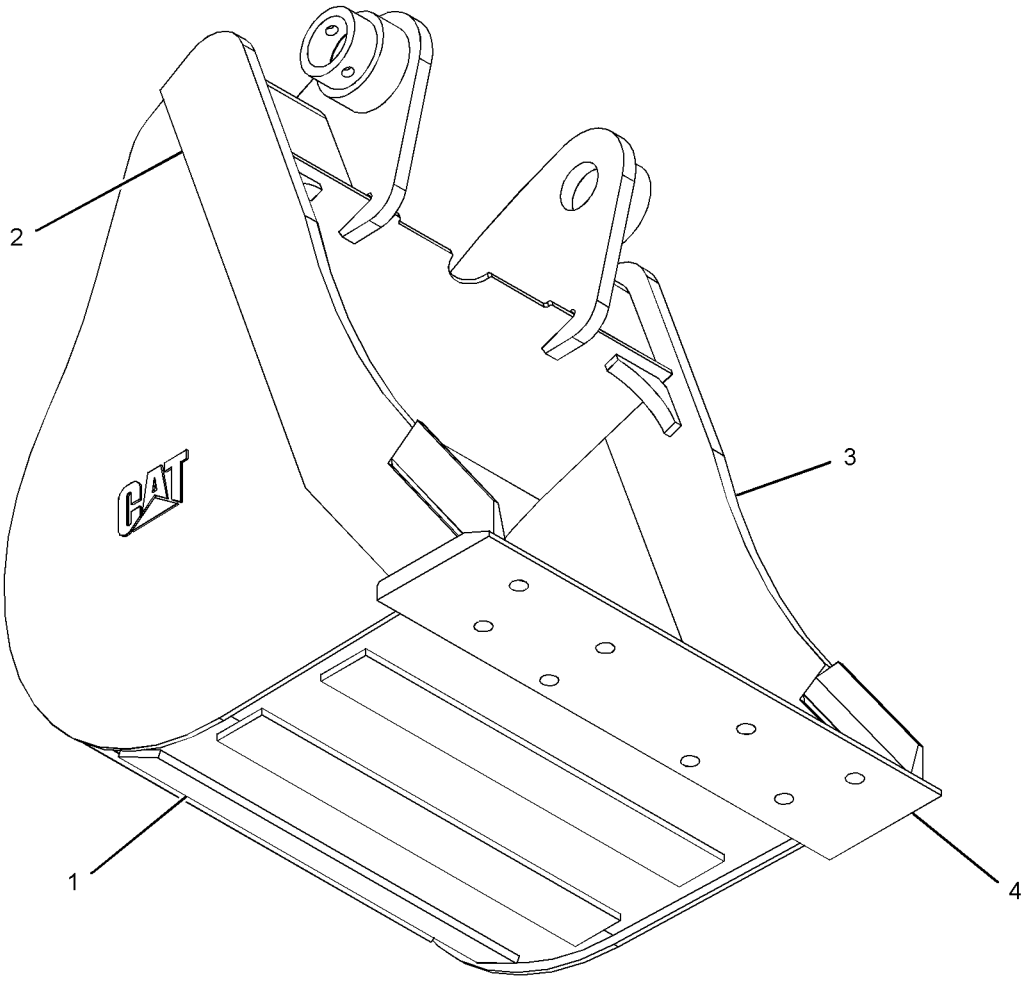

GRAPHIC #1 **<END>** g01214857

WORK TOOLS

273-0863 BUCKET AS-HOE—HEAVY-DUTY

S/N: SEJ1-UP
458-MM (18-IN)
PART OF 273-0862 BUCKET GP-HOE
AN ATTACHMENT

SMCS-6503 **i02427594**

NOTE	REF NO	GRAPHIC REF	PART NUMBER	QTY	PART NAME 1 2 3 4 5 6 (PRODUCT LEVEL)	SEE PAGE
	1	1	**272-6369**	4	PLATE	
	2	1	*272-7920*	1	PLATE AS (RH)	
		1	**272-7918**	1	EDGE (RH)	
	3	1	*272-7921*	1	PLATE AS (LH)	
		1	**272-7919**	1	EDGE (LH)	
	4	1	**273-1462**	1	EDGE	

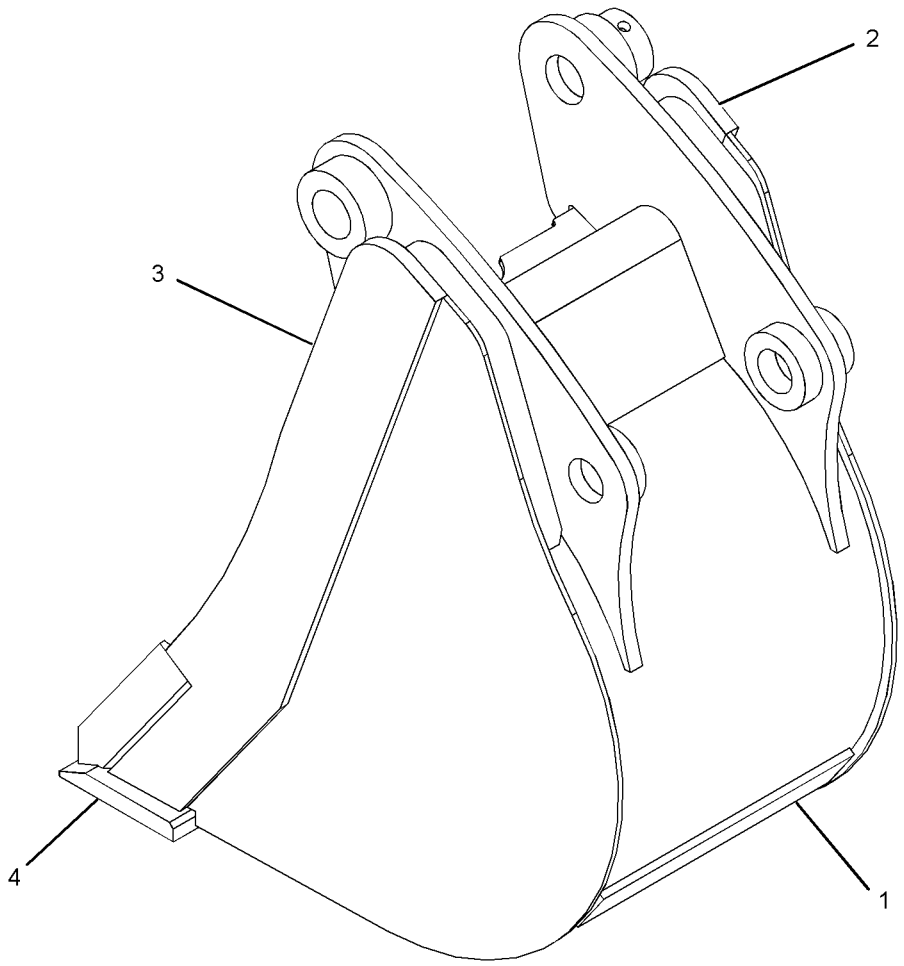

GRAPHIC #1 **<END>** g01215030

273-3733 BUCKET AS-HOE—HEAVY-DUTY

S/N: SEJ1-UP
305-MM (12-IN)
PART OF 273-3732 BUCKET GP-HOE
AN ATTACHMENT

SMCS-6503 **i02560416**

NOTE	REF NO	GRAPHIC REF	PART NUMBER	QTY	PART NAME 1 2 3 4 5 6 (PRODUCT LEVEL)	SEE PAGE
	1	1	*286-9340*	1	BRACKET AS (LH)	
		1	**9R-0320**	1	BEARING-SLEEVE	
		1	**154-5257**	1	BEARING-SLEEVE	
	2	1	*286-9338*	1	BRACKET AS (RH)	
		1	**9R-0320**	1	BEARING-SLEEVE	
		1	**154-5257**	1	BEARING-SLEEVE	
	3	1	**273-3599**	4	PLATE	
	4	1	**273-3730**	1	EDGE	
	5	1	*273-3755*	1	PLATE AS (RH)	
		1	**272-7918**	1	EDGE (RH)	
	6	1	*273-3756*	1	PLATE AS (LH)	
		1	**272-7919**	1	EDGE (LH)	

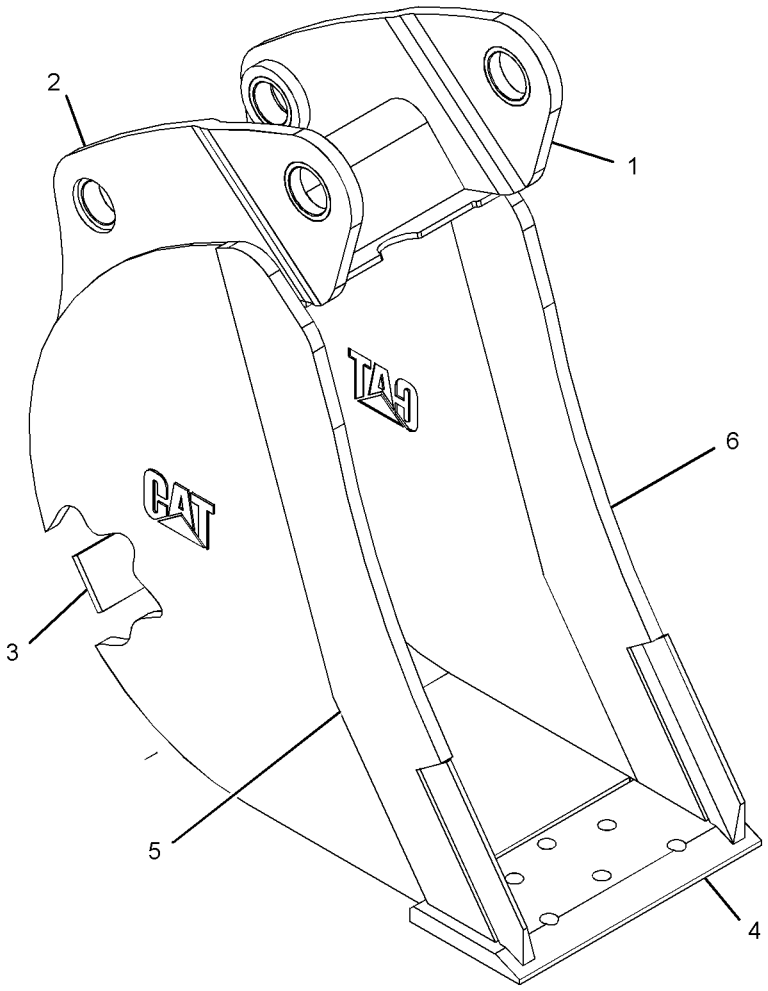

GRAPHIC #1 **<END>** g01215630

319-9397 BUCKET AS-HOE—HEAVY-DUTY

S/N: SEJ1-UP
305-MM (12-IN)
PART OF 319-9394 BUCKET GP-HOE
AN ATTACHMENT

SMCS-6503 **i03740165**

NOTE	REF NO	GRAPHIC REF	PART NUMBER	QTY	PART NAME 1 2 3 4 5 6 (PRODUCT LEVEL)	SEE PAGE
	1	1	*305-6815*	1	EDGE AS	
		1	**201-1235**	3	ADAPTER	
		1	**319-8968**	1	EDGE	
	2	1	*320-0267*	1	BRACKET AS (RH)	
	2A	1	**9R-0320**	1	BEARING-SLEEVE	
	2B	1	**154-5257**	1	BEARING-SLEEVE	
	3	1	**319-8975**	4	PLATE	
	4	1	*320-0268*	1	BRACKET AS (LH)	
	4A	1	**9R-0320**	1	BEARING-SLEEVE	
	4B	1	**154-5257**	1	BEARING-SLEEVE	
	5	1	*320-0256*	1	PLATE AS (RH)	
		1	**249-4207**	1	EDGE	
	6	1	*320-0257*	1	PLATE AS (LH)	
		1	**273-3622**	1	EDGE	

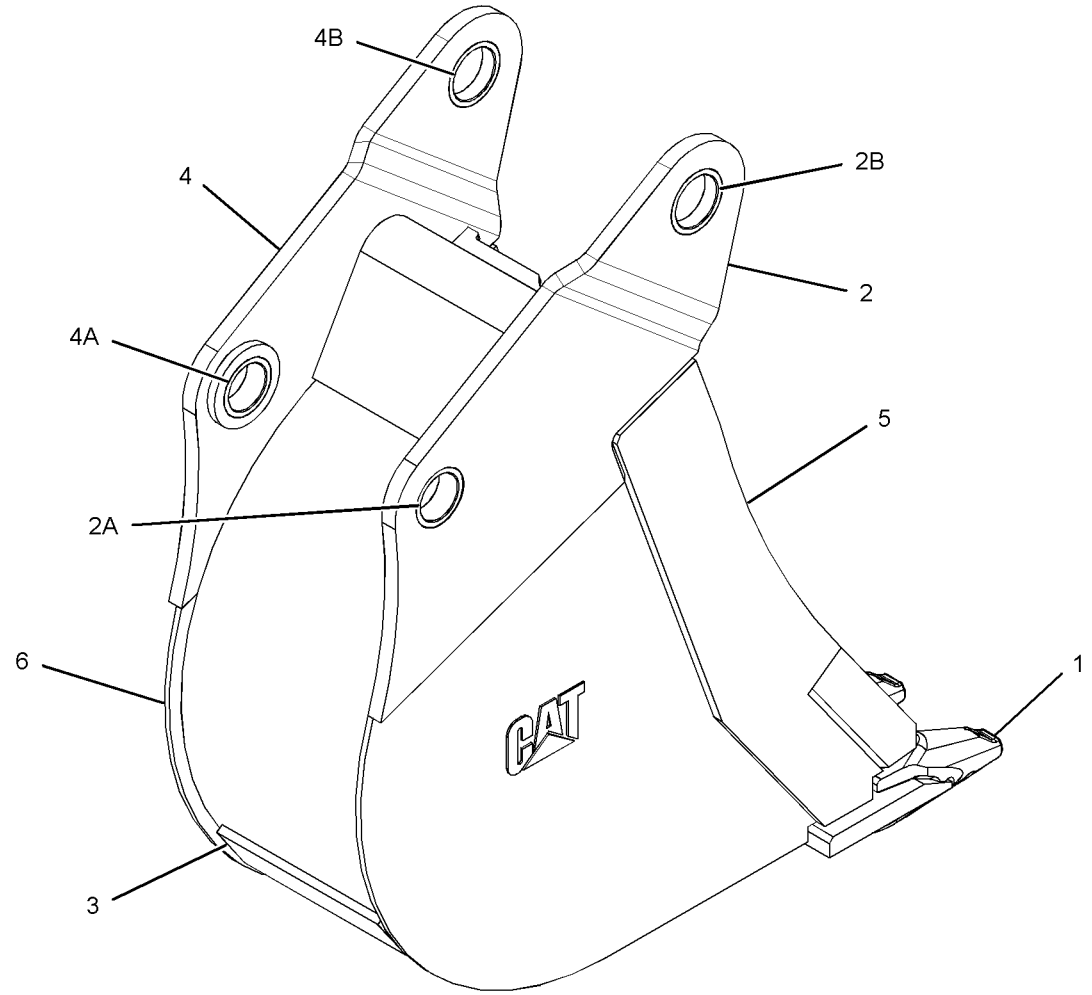

GRAPHIC #1 **<END>** g02113634

WORK TOOLS

337-7394 BUCKET GP-GENERAL PURPOSE

S/N: SEJ1-UP

AN ATTACHMENT

SMCS-6101 **i04603410**

NOTE	REF NO	GRAPHIC REF	PART NUMBER	QTY	PART NAME 1 2 3 4 5 6 (PRODUCT LEVEL)	SEE PAGE
	1	1	**137-4234**	1	PLATE-IDENTIFICATION (WORK TOOL)	
	2	1	**168-8389**	4	TACK-FASTENER	
Y	3	1	*337-7395*	1	BUCKET AS-GENERAL PURPOSE	512

Y-SEPARATE ILLUSTRATION

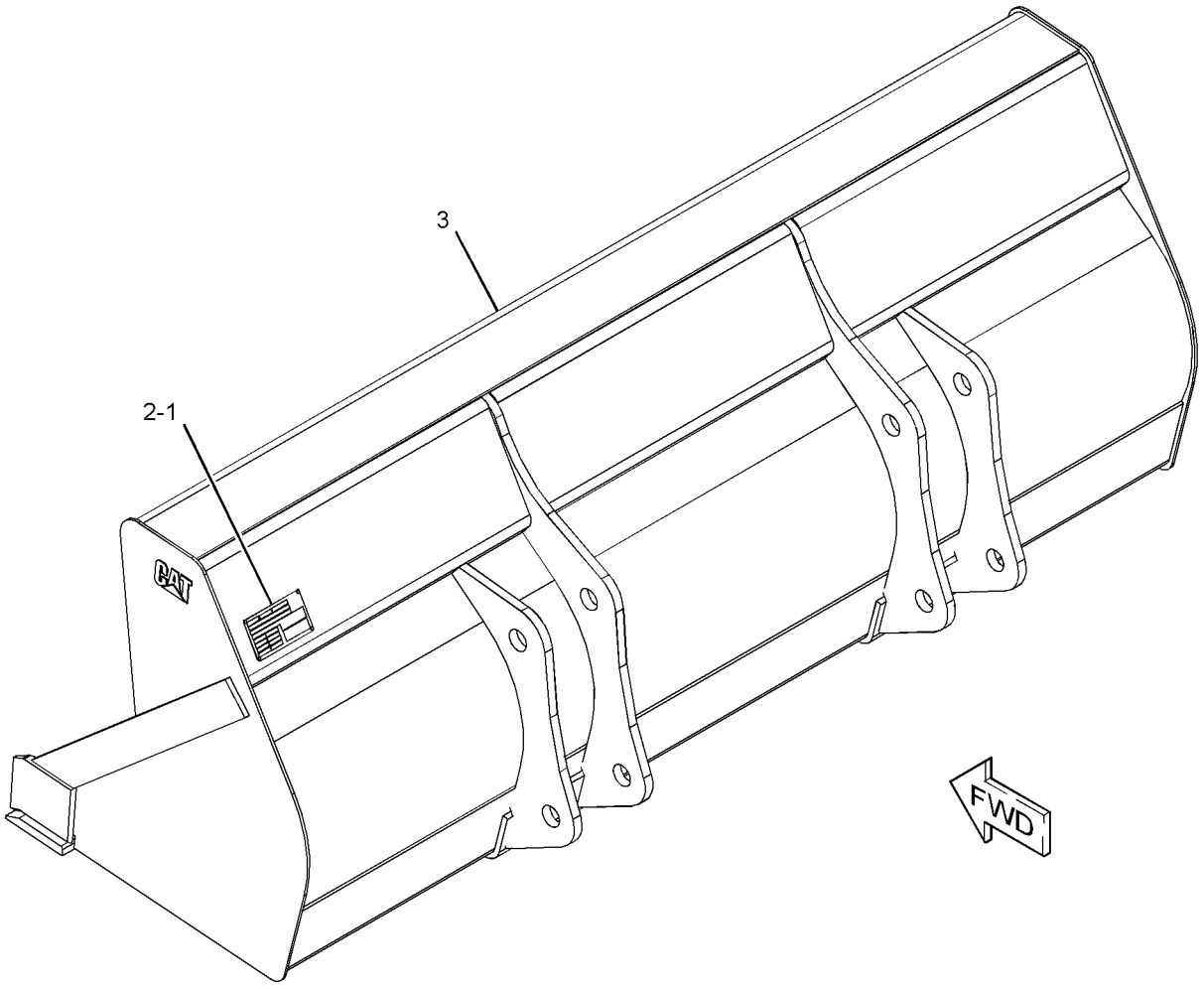

GRAPHIC #1 **<END>** g02762938

WORK TOOLS

151-7887 BUCKET GP-HOE—HIGH CAPACITY

S/N: SEJ1-UP
AN ATTACHMENT

SMCS-6503 **i03595462**

NOTE	REF NO	GRAPHIC REF	PART NUMBER	QTY	PART NAME 1 2 3 4 5 6 (PRODUCT LEVEL)	SEE PAGE
C	1	1	*135-8206*	3	TOOTH GP-UNI	
					(EACH INCLUDES)	
		1	**4F-3657**	2	BOLT-PLOW (5/8-11X2.75-IN)	
		1	**4K-0367**	2	NUT-FULL (5/8-11-THD)	
		1	**135-8203**	1	TOOTH-UNI	
	2	1	**137-4234**	1	PLATE-IDENTIFICATION (WORK TOOL)	
Y	3	1	*151-7829*	1	BUCKET AS-HOE	513
C	4	1	**168-8389**	4	TACK-FASTENER	

C-CHANGE FROM PREVIOUS TYPE
Y-SEPARATE ILLUSTRATION

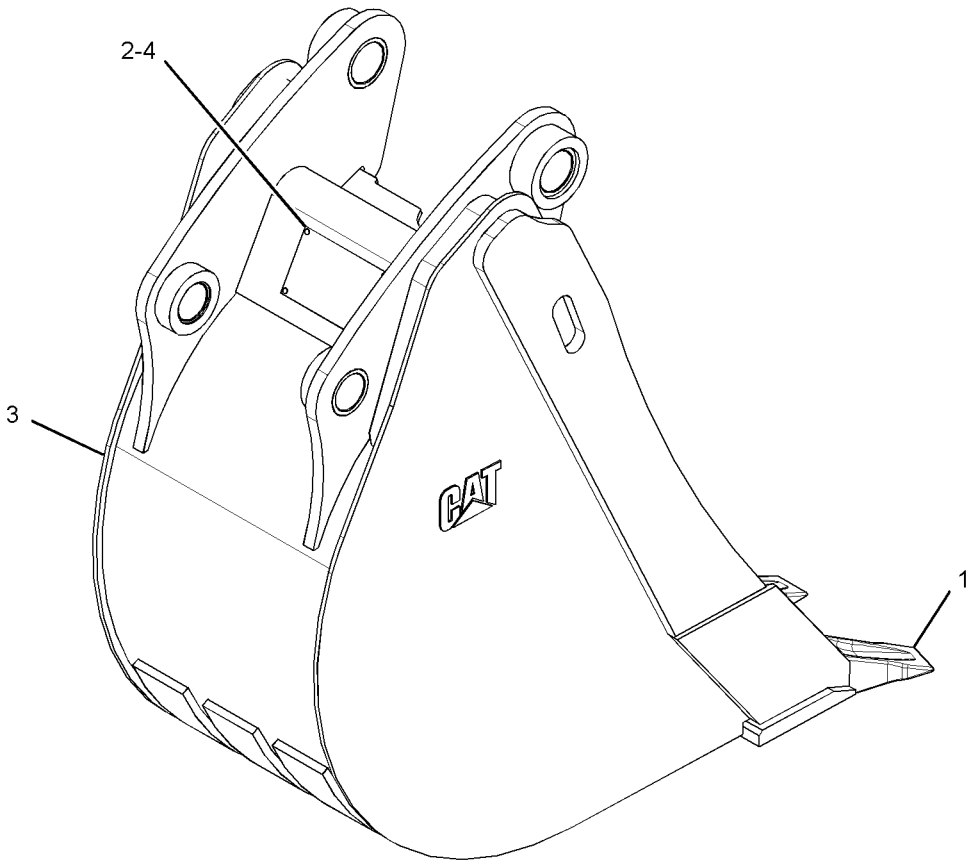

GRAPHIC #1 **<END>** g01398326

WORK TOOLS

151-7888 BUCKET GP-HOE—HIGH CAPACITY

S/N: SEJ1-UP

AN ATTACHMENT

SMCS-6503 **i03595481**

NOTE	REF NO	GRAPHIC REF	PART NUMBER	QTY	PART NAME 1 2 3 4 5 6 (PRODUCT LEVEL)	SEE PAGE
C	1	1	*135-8206*	4	TOOTH GP-UNI	
					(EACH INCLUDES)	
		1	**4F-3657**	2	BOLT-PLOW (5/8-11X2.75-IN)	
		1	**4K-0367**	2	NUT-FULL (5/8-11-THD)	
		1	**135-8203**	1	TOOTH-UNI	
	2	1	**137-4234**	1	PLATE-IDENTIFICATION (WORK TOOL)	
Y	3	1	*151-7830*	1	BUCKET AS-HOE	514
C	4	1	**168-8389**	4	TACK-FASTENER	

C-CHANGE FROM PREVIOUS TYPE
Y-SEPARATE ILLUSTRATION

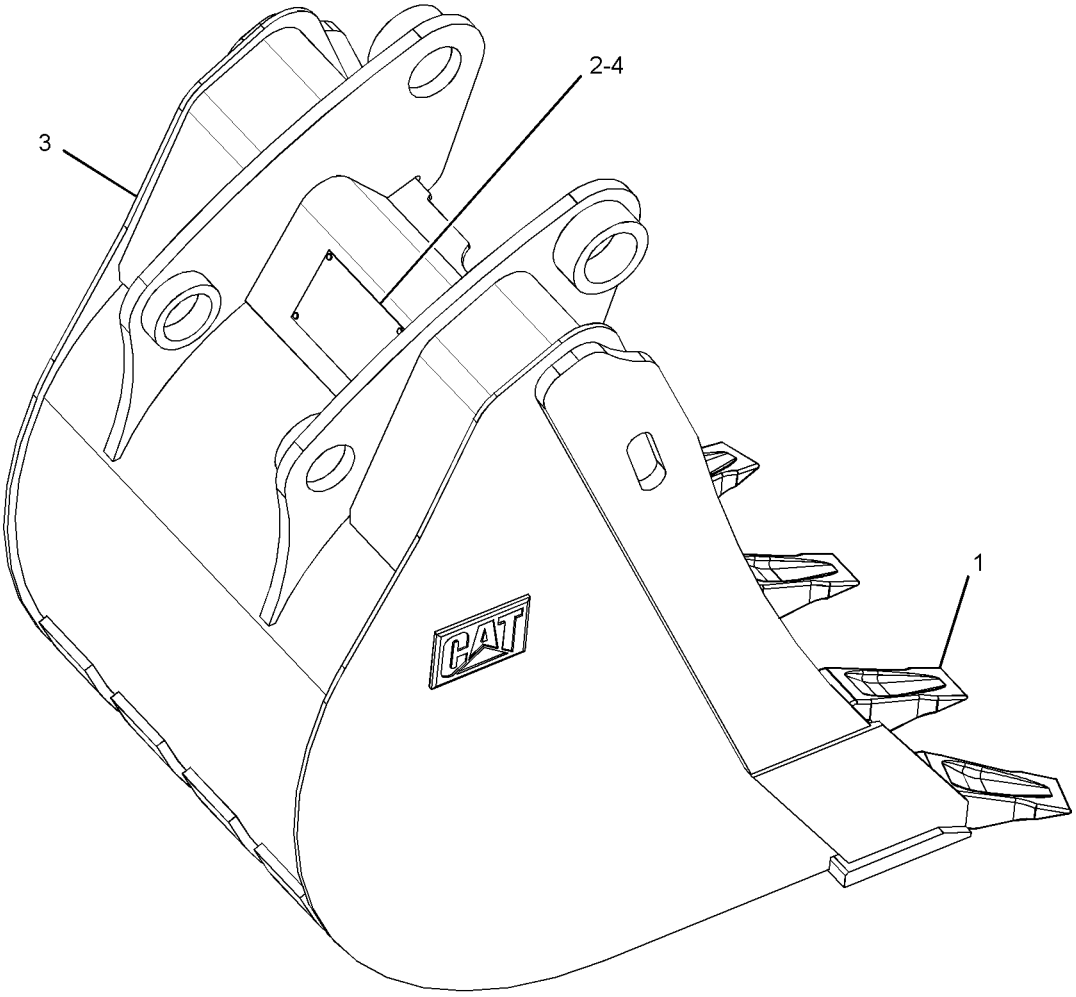

GRAPHIC #1 **<END>** g01398597

WORK TOOLS

151-7889 BUCKET GP-HOE—HIGH CAPACITY

S/N: SEJ1-UP
AN ATTACHMENT

SMCS-6503 **i03595500**

NOTE	REF NO	GRAPHIC REF	PART NUMBER	QTY	PART NAME 1 2 3 4 5 6 (PRODUCT LEVEL)	SEE PAGE
C	1	1	*135-8206*	5	TOOTH GP-UNI	
					(EACH INCLUDES)	
		1	**4F-3657**	2	BOLT-PLOW (5/8-11X2.75-IN)	
		1	**4K-0367**	2	NUT-FULL (5/8-11-THD)	
		1	**135-8203**	1	TOOTH-UNI	
	2	1	**137-4234**	1	PLATE-IDENTIFICATION (WORK TOOL)	
Y	3	1	*151-7831*	1	BUCKET AS-HOE	515
C	4	1	**168-8389**	4	TACK-FASTENER	

C-CHANGE FROM PREVIOUS TYPE
Y-SEPARATE ILLUSTRATION

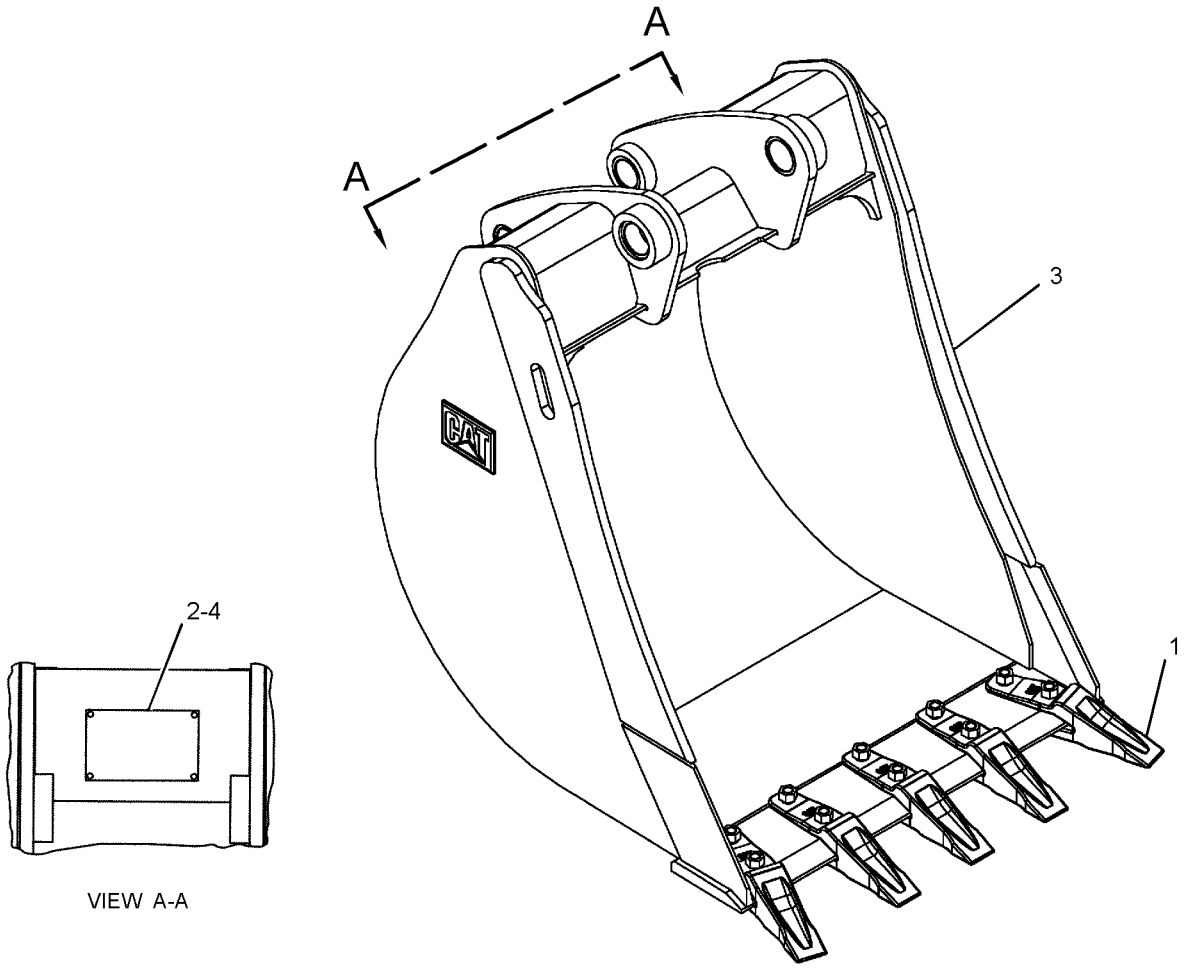

GRAPHIC #1 **<END>** g01356630

249-4221 BUCKET GP-HOE—HEAVY-DUTY

S/N: SEJ1-UP
AN ATTACHMENT

SMCS-6503 **i02399270**

NOTE	REF NO	GRAPHIC REF	PART NUMBER	QTY	PART NAME 1 2 3 4 5 6 (PRODUCT LEVEL)	SEE PAGE
	1	1	**137-4234**	1	PLATE-IDENTIFICATION (WORK TOOL)	
	2	1	**168-8389**	4	TACK-FASTENER	
	3	1	*208-5245*	5	TIP GP-PENETRATION	
					(EACH INCLUDES)	
		1	**201-1238**	1	PIN	
		1	**201-1239**	1	RETAINER AS	
		1	**208-5235**	1	TIP-PENETRATION	
Y	4	1	*249-4220*	1	BUCKET AS-HOE	516
M	5	1	**8T-4133**	4	NUT (M10X1.5-THD)	
M	6	1	**8T-4178**	2	BOLT (M10X1.5X90-MM)	

M-METRIC PART
Y-SEPARATE ILLUSTRATION

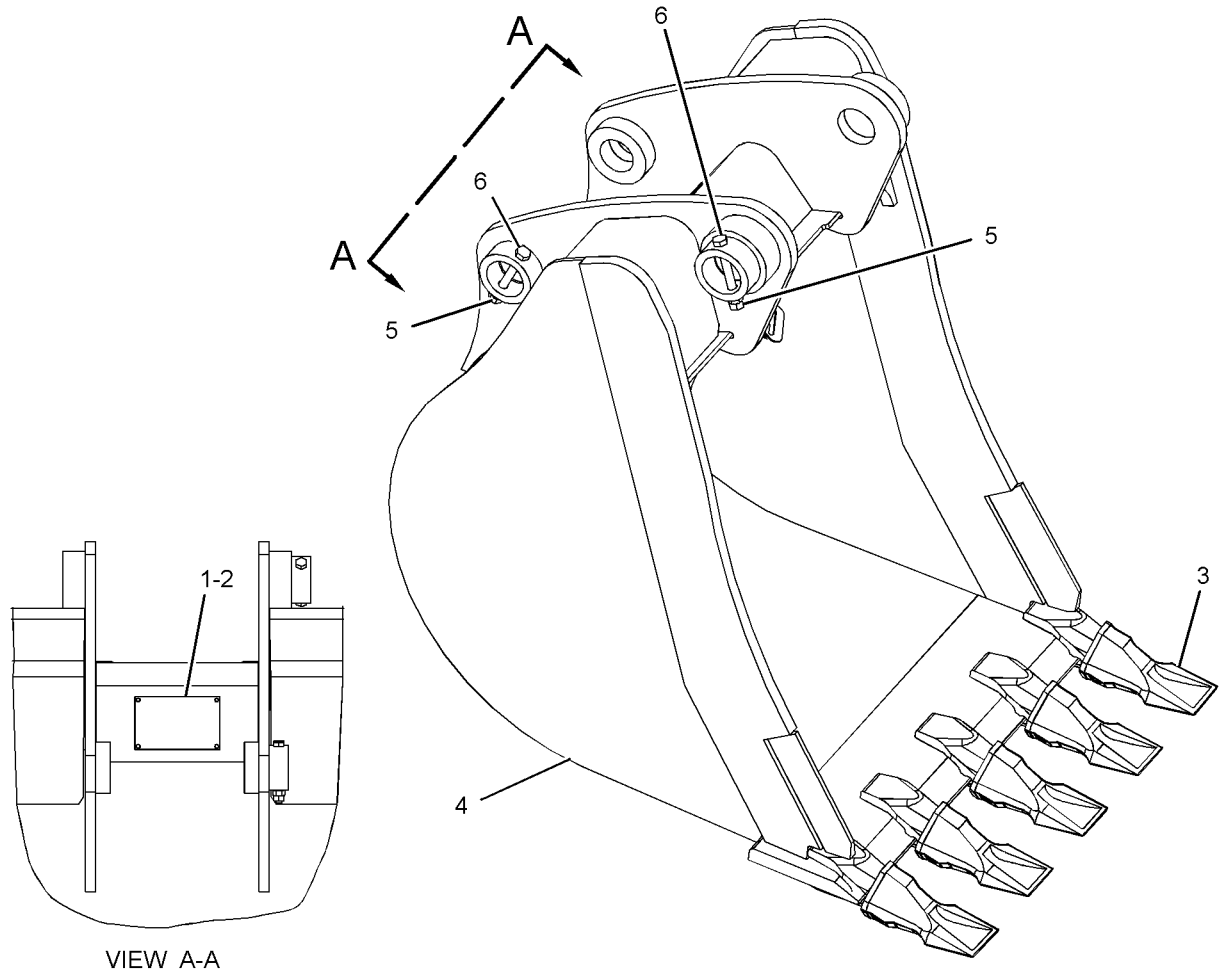

VIEW A-A

GRAPHIC #1 **<END>** g01200276

WORK TOOLS

272-6410 BUCKET GP-HOE—HEAVY-DUTY

S/N: SEJ1-UP
AN ATTACHMENT

SMCS-6503 **i02425851**

NOTE	REF NO	GRAPHIC REF	PART NUMBER	QTY	PART NAME 1 2 3 4 5 6 (PRODUCT LEVEL)	SEE PAGE
	1	1	**137-4234**	1	PLATE-IDENTIFICATION (WORK TOOL)	
	2	1	**168-8389**	4	TACK-FASTENER	
	3	1	*208-5245*	4	TIP GP-PENETRATION	
					(EACH INCLUDES)	
		1	**201-1238**	1	PIN	
		1	**201-1239**	1	RETAINER AS	
		1	**208-5235**	1	TIP-PENETRATION	
Y	4	1	*272-6411*	1	BUCKET AS-HOE	517
M	5	1	**8T-4133**	4	NUT (M10X1.5-THD)	
M	6	1	**8T-4178**	2	BOLT (M10X1.5X90-MM)	

M-METRIC PART
Y-SEPARATE ILLUSTRATION

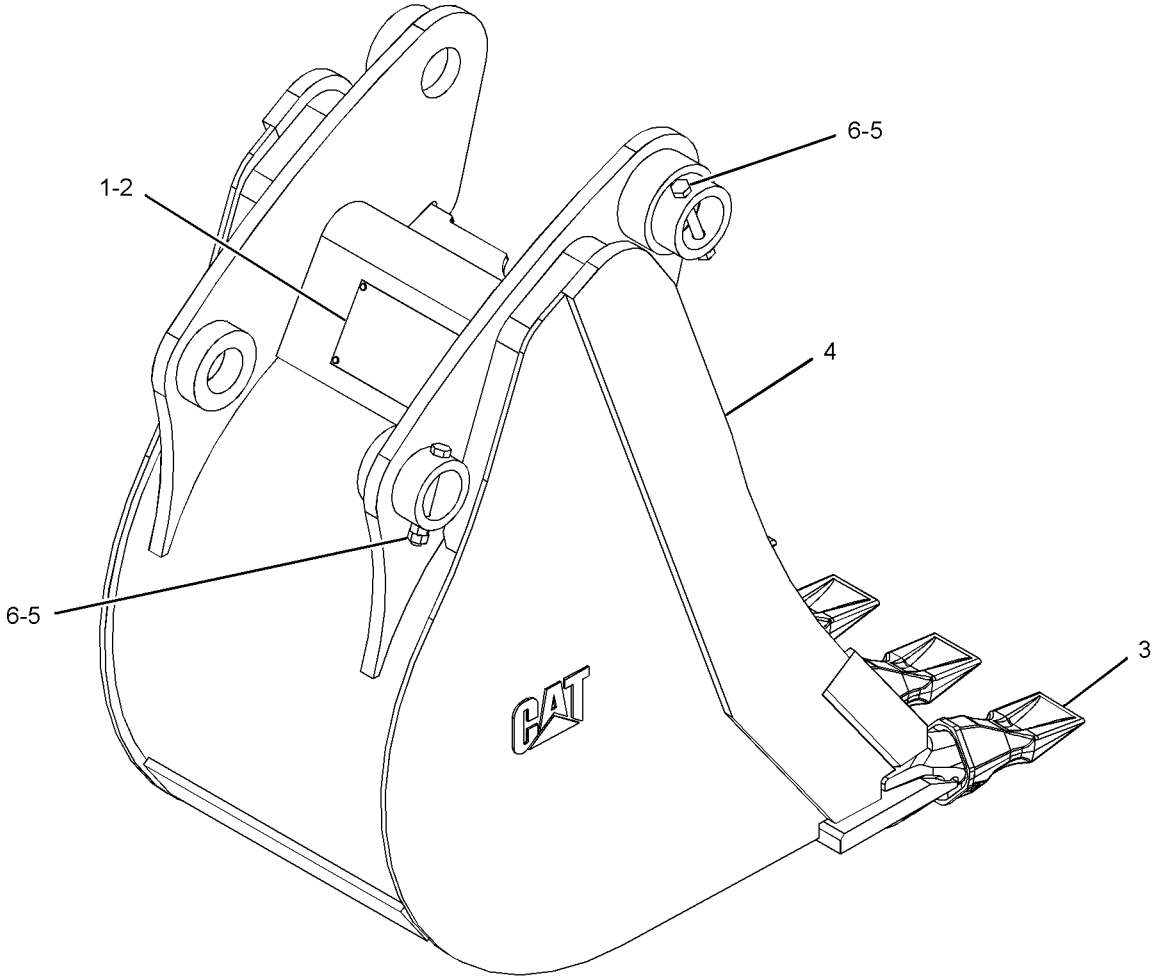

GRAPHIC #1 **<END>** g01214807

WORK TOOLS

272-7872 BUCKET GP-HOE—HEAVY-DUTY

S/N: SEJ1-UP

AN ATTACHMENT

SMCS-6503 **i02425880**

NOTE	REF NO	GRAPHIC REF	PART NUMBER	QTY	PART NAME 1 2 3 4 5 6 (PRODUCT LEVEL)	SEE PAGE
	1	1	**137-4234**	1	PLATE-IDENTIFICATION (WORK TOOL)	
	2	1	**168-8389**	4	TACK-FASTENER	
	3	1	*208-5245*	5	TIP GP-PENETRATION	
					(EACH INCLUDES)	
		1	**201-1238**	1	PIN	
		1	**201-1239**	1	RETAINER AS	
		1	**208-5235**	1	TIP-PENETRATION	
Y	4	1	*272-7873*	1	BUCKET AS-HOE	518
M	5	1	**8T-4133**	4	NUT (M10X1.5-THD)	
M	6	1	**8T-4178**	2	BOLT (M10X1.5X90-MM)	

M-METRIC PART
Y-SEPARATE ILLUSTRATION

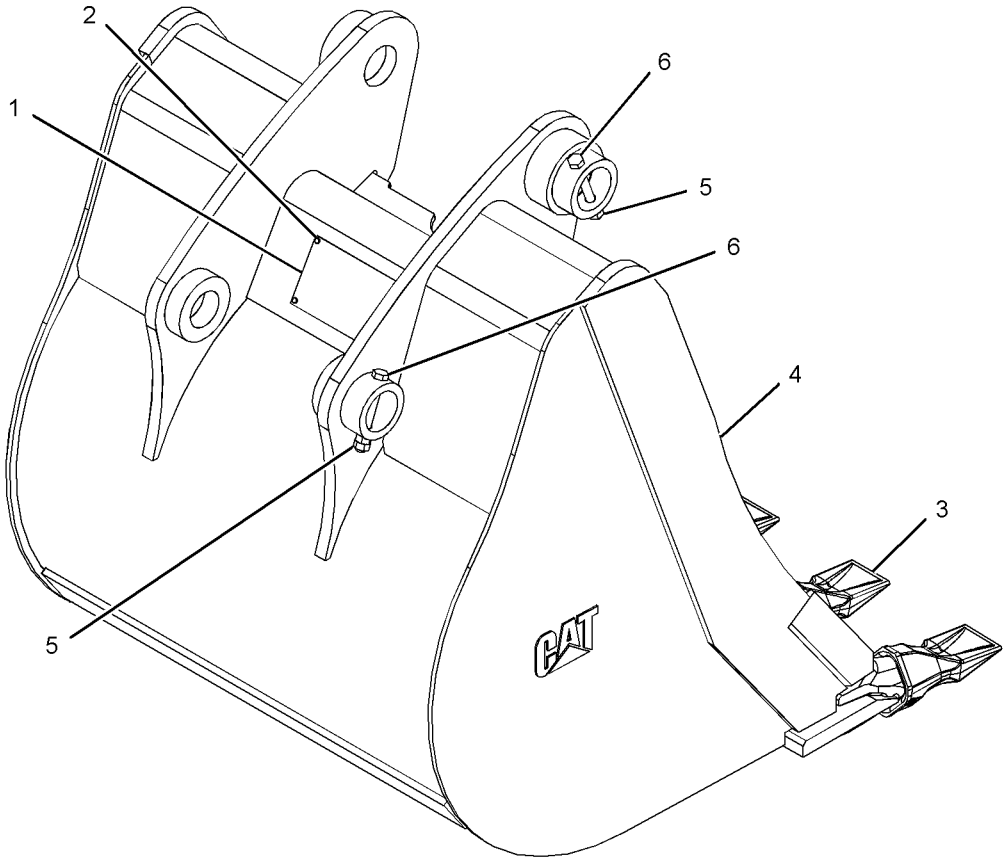

GRAPHIC #1 **<END>** g01215020

272-9234 BUCKET GP-HOE—HEAVY-DUTY

S/N: SEJ1-UP
AN ATTACHMENT

SMCS-6503 **i02427535**

NOTE	REF NO	GRAPHIC REF	PART NUMBER	QTY	PART NAME 1 2 3 4 5 6 (PRODUCT LEVEL)	SEE PAGE
	1	1	**137-4234**	1	PLATE-IDENTIFICATION (WORK TOOL)	
	2	1	**168-8389**	4	TACK-FASTENER	
	3	1	*208-5245*	6	TIP GP-PENETRATION	
					(EACH INCLUDES)	
		1	**201-1238**	1	PIN	
		1	**201-1239**	1	RETAINER AS	
		1	**208-5235**	1	TIP-PENETRATION	
Y	4	1	*272-9235*	1	BUCKET AS-HOE	519
M	5	1	**8T-4133**	4	NUT (M10X1.5-THD)	
M	6	1	**8T-4178**	2	BOLT (M10X1.5X90-MM)	

M-METRIC PART
Y-SEPARATE ILLUSTRATION

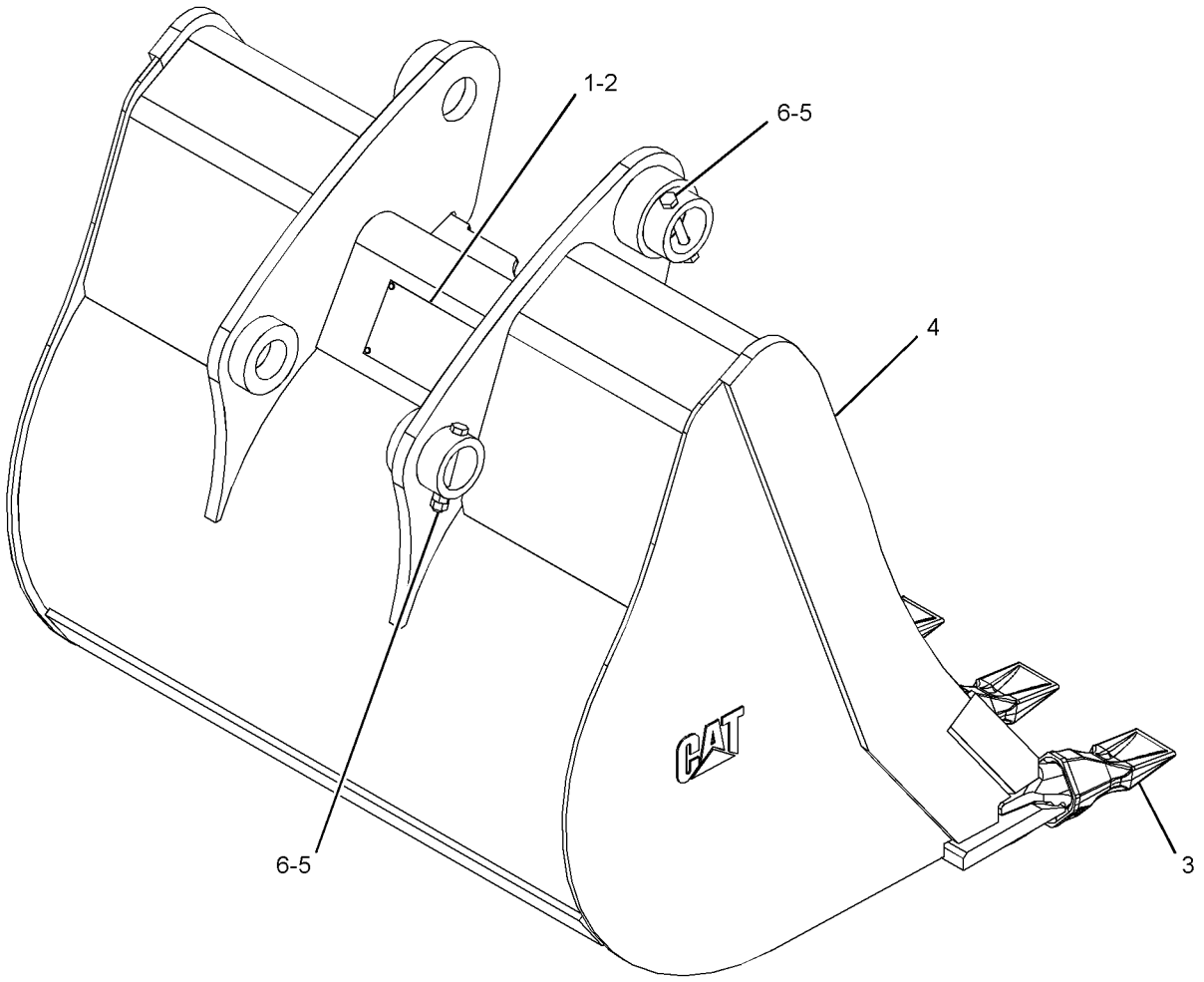

GRAPHIC #1 **<END>** g01214243

WORK TOOLS

273-0042 BUCKET GP-HOE—HEAVY-DUTY

S/N: SEJ1-UP

AN ATTACHMENT

SMCS-6503 **i03599042**

NOTE	REF NO	GRAPHIC REF	PART NUMBER	QTY	PART NAME 1 2 3 4 5 6 (PRODUCT LEVEL)	SEE PAGE
	1	1	*135-8206*	5	TOOTH GP-UNI	
					(EACH INCLUDES)	
		1	**4F-3657**	2	BOLT-PLOW (5/8-11X2.75-IN)	
		1	**4K-0367**	2	NUT-FULL (5/8-11-THD)	
		1	**135-8203**	1	TOOTH-UNI	
	2	1	**137-4234**	1	PLATE-IDENTIFICATION (WORK TOOL)	
	3	1	**168-8389**	4	TACK-FASTENER	
Y	4	1	*273-0043*	1	BUCKET AS-HOE	520
M	5	1	**8T-4133**	4	NUT (M10X1.5-THD)	
M	6	1	**8T-4178**	2	BOLT (M10X1.5X90-MM)	

M-METRIC PART
Y-SEPARATE ILLUSTRATION

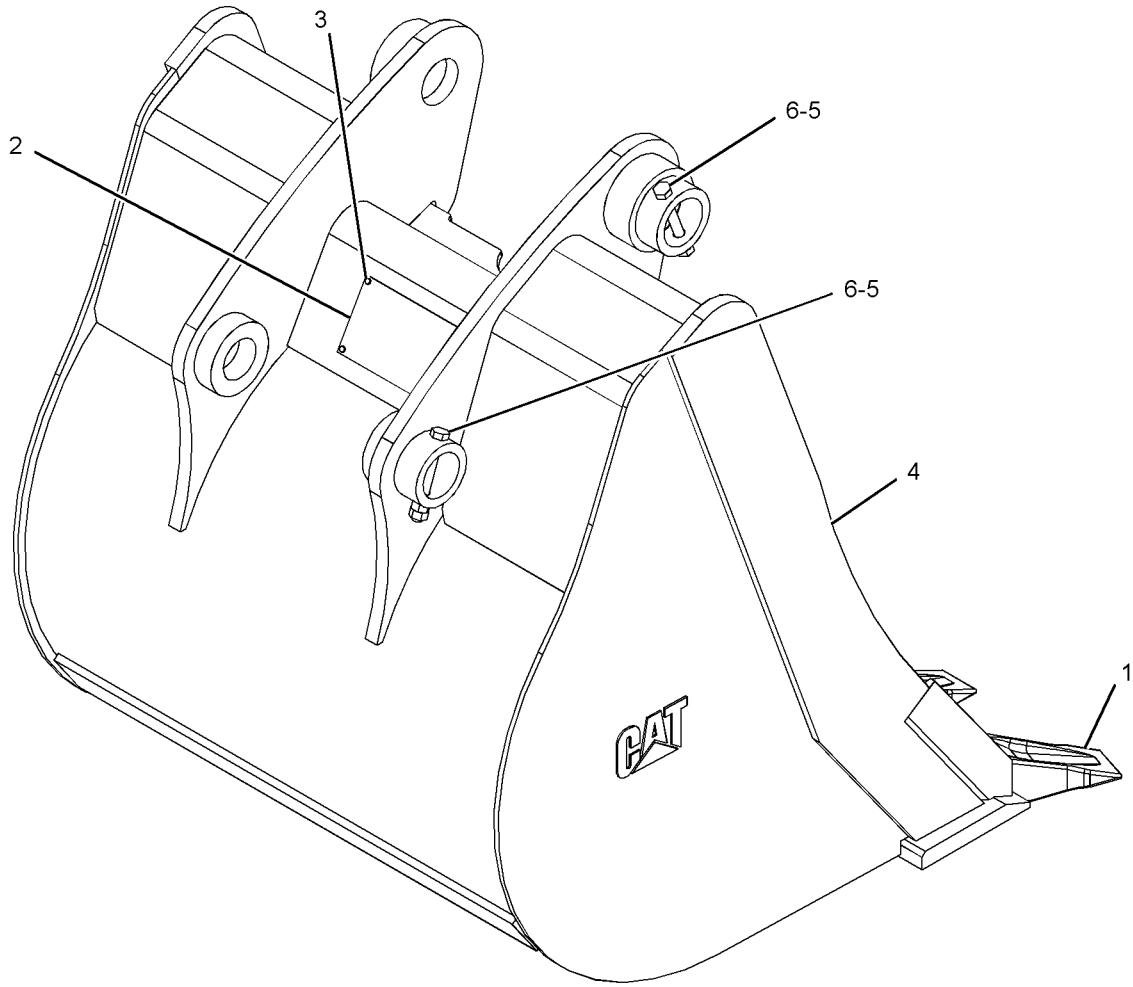

GRAPHIC #1 **<END>** g01214208

WORK TOOLS

273-0093 BUCKET GP-HOE—HEAVY-DUTY

S/N: SEJ1-UP

AN ATTACHMENT

SMCS-6503 **i02427582**

NOTE	REF NO	GRAPHIC REF	PART NUMBER	QTY	PART NAME 1 2 3 4 5 6 (PRODUCT LEVEL)	SEE PAGE
	1	1	**137-4234**	1	PLATE-IDENTIFICATION (WORK TOOL)	
	2	1	**168-8389**	4	TACK-FASTENER	
	3	1	*208-5245*	3	TIP GP-PENETRATION	
					(EACH INCLUDES)	
		1	**201-1238**	1	PIN	
		1	**201-1239**	1	RETAINER AS	
		1	**208-5235**	1	TIP-PENETRATION	
Y	4	1	*273-0094*	1	BUCKET AS-HOE	521
M	5	1	**8T-4133**	4	NUT (M10X1.5-THD)	
M	6	1	**8T-4178**	2	BOLT (M10X1.5X90-MM)	

M-METRIC PART
Y-SEPARATE ILLUSTRATION

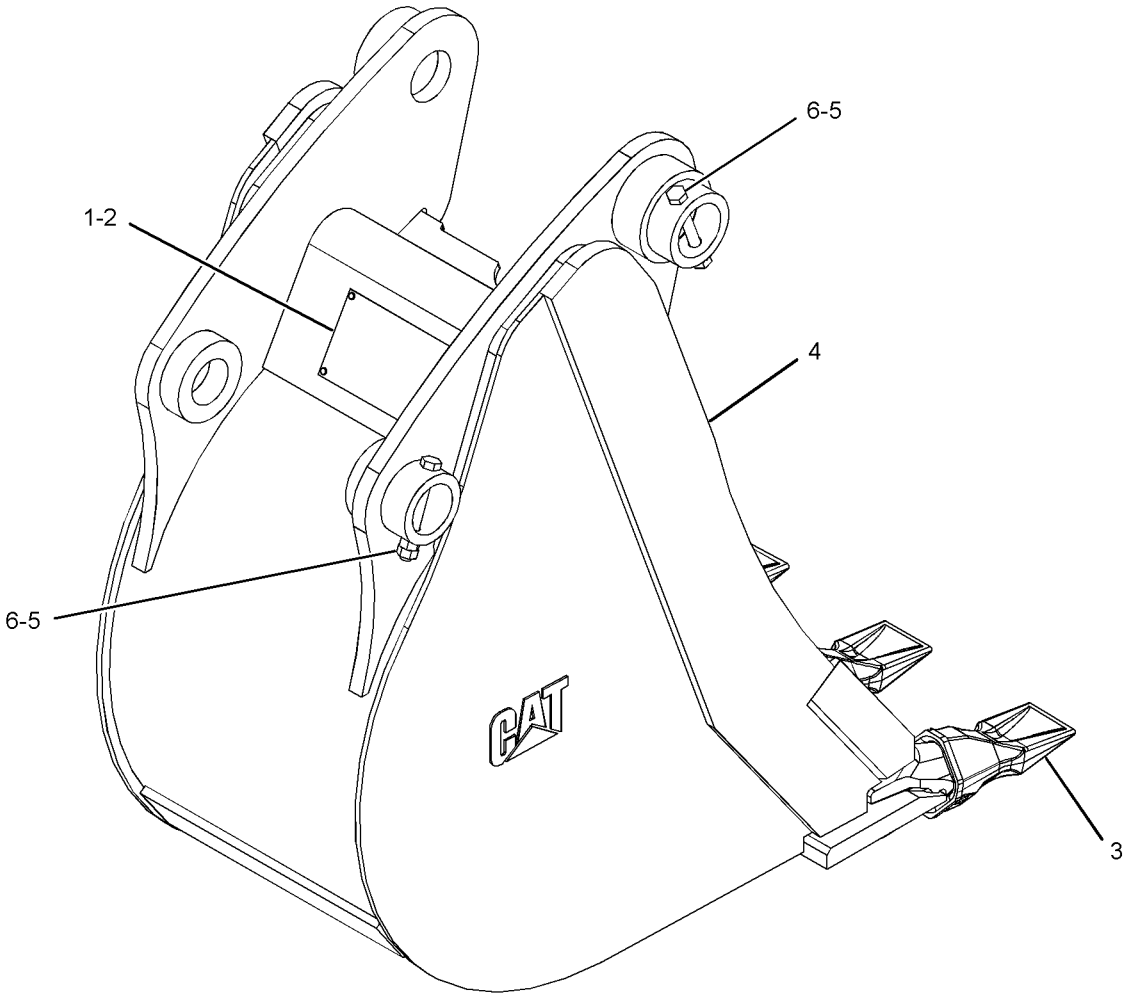

GRAPHIC #1 **<END>** g01214837

273-0799 BUCKET GP-HOE—HEAVY-DUTY

S/N: SEJ1-UP
AN ATTACHMENT

SMCS-6503 **i03599045**

NOTE	REF NO	GRAPHIC REF	PART NUMBER	QTY	PART NAME 1 2 3 4 5 6 (PRODUCT LEVEL)	SEE PAGE
	1	1	*135-8206*	4	TOOTH GP-UNI	
					(EACH INCLUDES)	
		1	**4F-3657**	2	BOLT-PLOW (5/8-11X2.75-IN)	
		1	**4K-0367**	2	NUT-FULL (5/8-11-THD)	
		1	**135-8203**	1	TOOTH-UNI	
	2	1	**137-4234**	1	PLATE-IDENTIFICATION (WORK TOOL)	
	3	1	**168-8389**	4	TACK-FASTENER	
Y	4	1	*273-0800*	1	BUCKET AS-HOE	522
M	5	1	**8T-4133**	4	NUT (M10X1.5-THD)	
M	6	1	**8T-4178**	2	BOLT (M10X1.5X90-MM)	

M-METRIC PART
Y-SEPARATE ILLUSTRATION

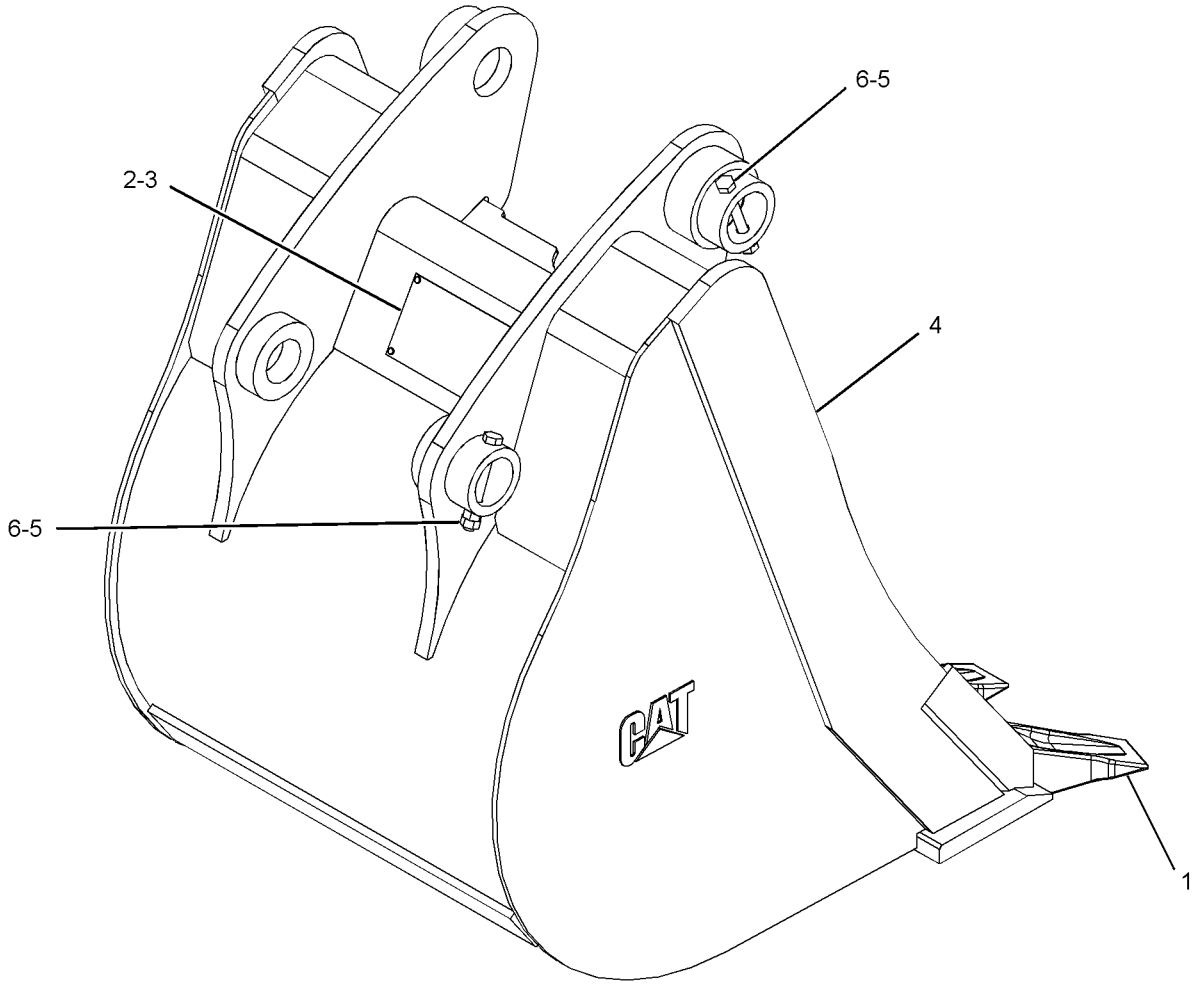

GRAPHIC #1 **<END>** g01214824

WORK TOOLS

273-0862 BUCKET GP-HOE—HEAVY-DUTY

S/N: SEJ1-UP

AN ATTACHMENT

SMCS-6503 **i03599047**

NOTE	REF NO	GRAPHIC REF	PART NUMBER	QTY	PART NAME 1 2 3 4 5 6 (PRODUCT LEVEL)	SEE PAGE
	1	1	*135-8206*	3	TOOTH GP-UNI	
					(EACH INCLUDES)	
		1	**4F-3657**	2	BOLT-PLOW (5/8-11X2.75-IN)	
		1	**4K-0367**	2	NUT-FULL (5/8-11-THD)	
		1	**135-8203**	1	TOOTH-UNI	
	2	1	**137-4234**	1	PLATE-IDENTIFICATION (WORK TOOL)	
	3	1	**168-8389**	4	TACK-FASTENER	
Y	4	1	*273-0863*	1	BUCKET AS-HOE	523
M	5	1	**8T-4133**	4	NUT (M10X1.5-THD)	
M	6	1	**8T-4178**	2	BOLT (M10X1.5X90-MM)	

M-METRIC PART
Y-SEPARATE ILLUSTRATION

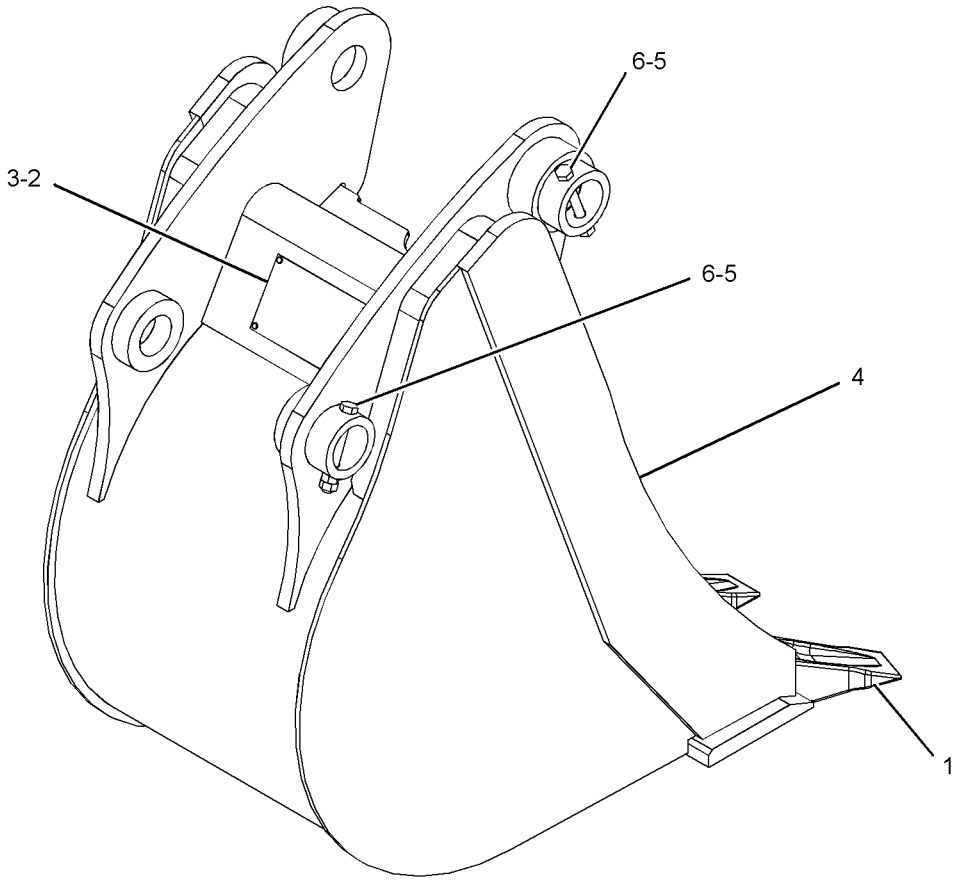

GRAPHIC #1 **<END>** g01220738

WORK TOOLS

273-3731 BUCKET GP-HOE—HEAVY-DUTY

S/N: SEJ1-UP

AN ATTACHMENT

SMCS-6503 **i02427621**

NOTE	REF NO	GRAPHIC REF	PART NUMBER	QTY	PART NAME 1 2 3 4 5 6 (PRODUCT LEVEL)	SEE PAGE
	1	1	**9R-0158**	5	WASHER (46X69X3-MM THK)	
	2	1	**9R-1510**	3	WASHER (51X82X4-MM THK)	
	3	1	**168-0443**	1	PIN	
	4	1	**168-0444**	1	PIN	
Y	5	1	**273-3732**	1	BUCKET GP-HOE (HEAVY-DUTY)	539
	6	1	**6V-3213**	2	RING-RETAINING	
	7	1	**6V-4364**	2	RING-RETAINING	

Y-SEPARATE ILLUSTRATION

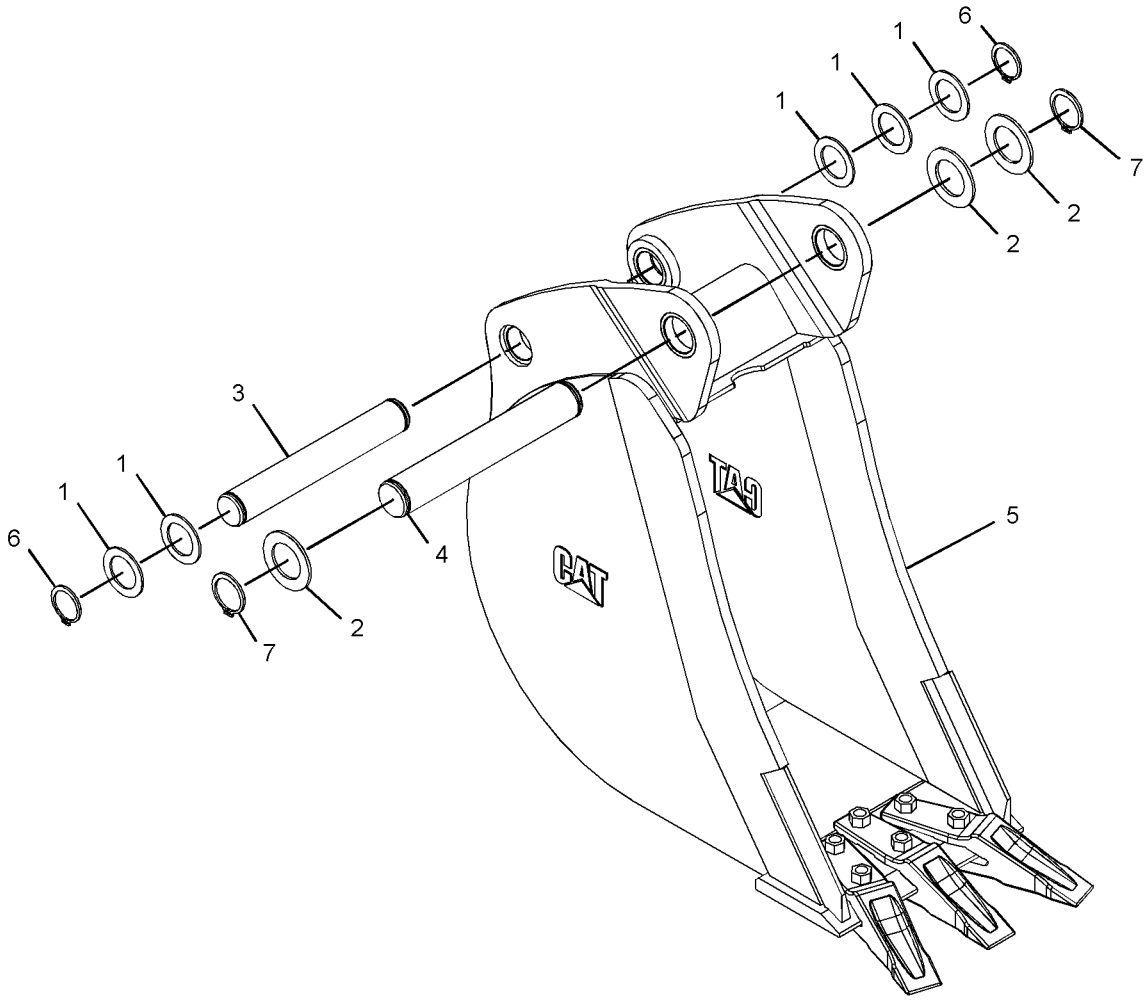

GRAPHIC #1 **<END>** g01215645

WORK TOOLS

273-3732 BUCKET GP-HOE—HEAVY-DUTY

S/N: SEJ1-UP

PART OF 273-3731 BUCKET GP-HOE

AN ATTACHMENT

SMCS-6503 **i03599052**

NOTE	REF NO	GRAPHIC REF	PART NUMBER	QTY	PART NAME 1 2 3 4 5 6 (PRODUCT LEVEL)	SEE PAGE
	1	1	*135-8206*	3	TOOTH GP-UNI	
					(EACH INCLUDES)	
		1	**4F-3657**	2	BOLT-PLOW (5/8-11X2.75-IN)	
		1	**4K-0367**	2	NUT-FULL (5/8-11-THD)	
		1	**135-8203**	1	TOOTH-UNI	
	2	1	**137-4234**	1	PLATE-IDENTIFICATION (WORK TOOL)	
	3	1	**168-8389**	4	TACK-FASTENER	
Y	4	1	*273-3733*	1	BUCKET AS-HOE	524

Y-SEPARATE ILLUSTRATION

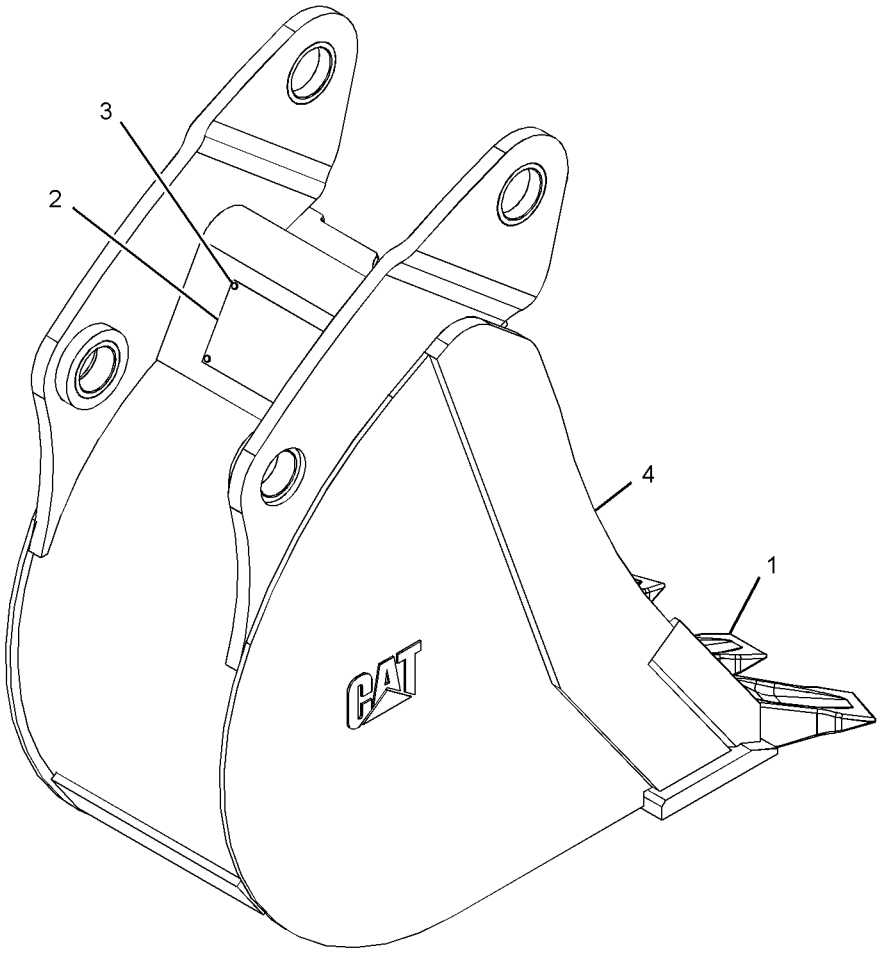

GRAPHIC #1 **<END>** g01228335

WORK TOOLS

319-8978 BUCKET GP-HOE—HEAVY-DUTY

S/N: SEJ1-UP

AN ATTACHMENT

SMCS-6503 **i03740140**

NOTE	REF NO	GRAPHIC REF	PART NUMBER	QTY	PART NAME 1 2 3 4 5 6 (PRODUCT LEVEL)	SEE PAGE
	1	1	**9R-1510**	3	WASHER (51X82X4-MM THK)	
	2	1	**168-0443**	1	PIN	
	3	1	**168-0444**	1	PIN	
Y	4	1	**319-9394**	1	BUCKET GP-HOE (HEAVY-DUTY)	541
	5	1	**6V-3213**	2	RING-RETAINING	
	6	1	**6V-4364**	2	RING-RETAINING	
	7	1	**9R-0158**	8	WASHER (46X69X3-MM THK)	

Y-SEPARATE ILLUSTRATION

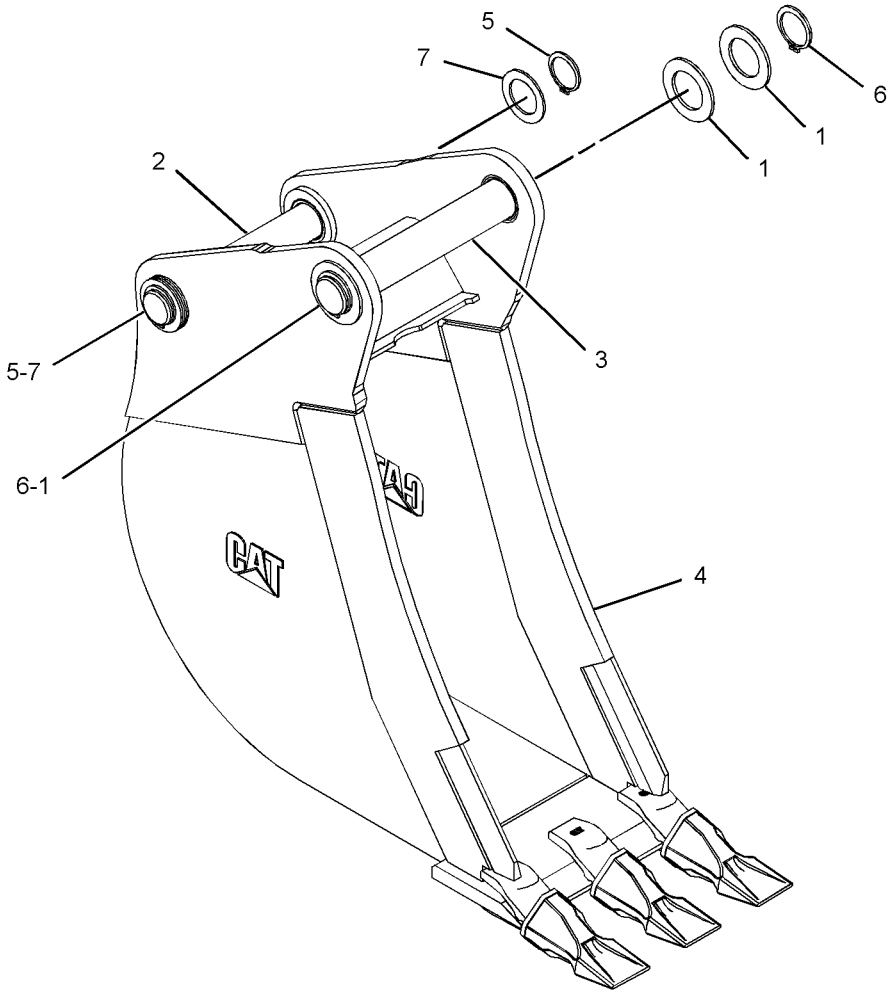

GRAPHIC #1 **<END>** g02108624

319-9394 BUCKET GP-HOE—HEAVY-DUTY

S/N: SEJ1-UP
PART OF 319-8978 BUCKET GP-HOE
AN ATTACHMENT

SMCS-6503 **i03740160**

NOTE	REF NO	GRAPHIC REF	PART NUMBER	QTY	PART NAME 1 2 3 4 5 6 (PRODUCT LEVEL)	SEE PAGE
	1	1	**137-4234**	1	PLATE-IDENTIFICATION (WORK TOOL)	
	2	1	**168-8389**	4	TACK-FASTENER	
	3	1	*208-5245*	3	TIP GP-PENETRATION	
					(EACH INCLUDES)	
		1	**201-1238**	1	PIN	
		1	**201-1239**	1	RETAINER AS	
		1	**208-5235**	1	TIP-PENETRATION	
Y	4	1	*319-9397*	1	BUCKET AS-HOE	525

Y-SEPARATE ILLUSTRATION

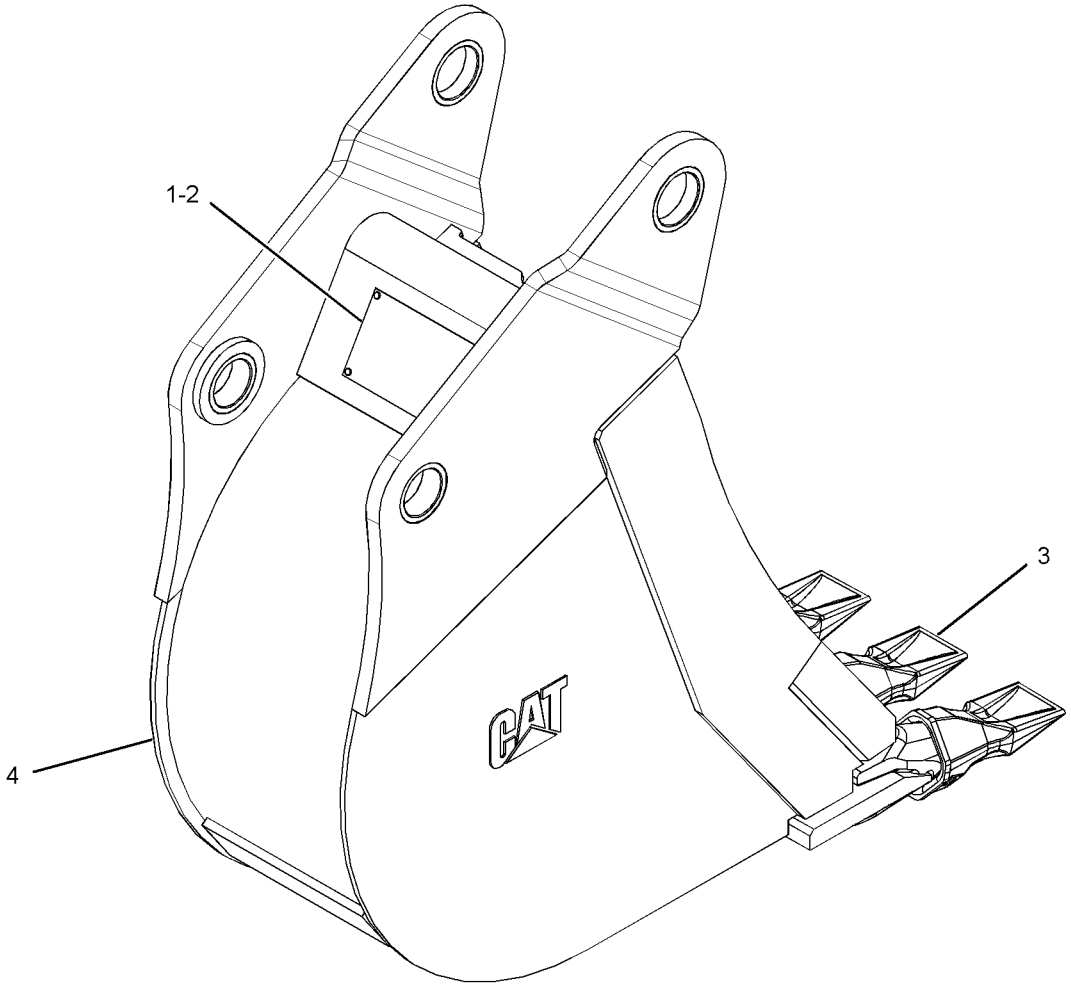

GRAPHIC #1 **<END>** g02113588

WORK TOOLS

252-9068 BUCKET GP-MULTIPURPOSE

S/N: SEJ1-UP
1.03-CU M (1.35-CU YD)
PART OF 318-7251 BUCKET AR-MULTIPURPOSE
AN ATTACHMENT

SMCS-6104 **i02223594**

NOTE	REF NO	GRAPHIC REF	PART NUMBER	QTY	PART NAME 1 2 3 4 5 6 (PRODUCT LEVEL)	SEE PAGE
	1	1	**9R-4676**	2	PIN	
Y	2	1	**252-9051**	1	CLAM AS-MULTIPURPOSE BUCKET	554
Y	3	1	**252-9069**	1	BULLDOZER AS (MULTIPURPOSE BUCKET)	546
	4	1	**3B-8489**	2	FITTING-GREASE	
	5	1	**4J-1888**	2	PIN-COTTER	

Y-SEPARATE ILLUSTRATION

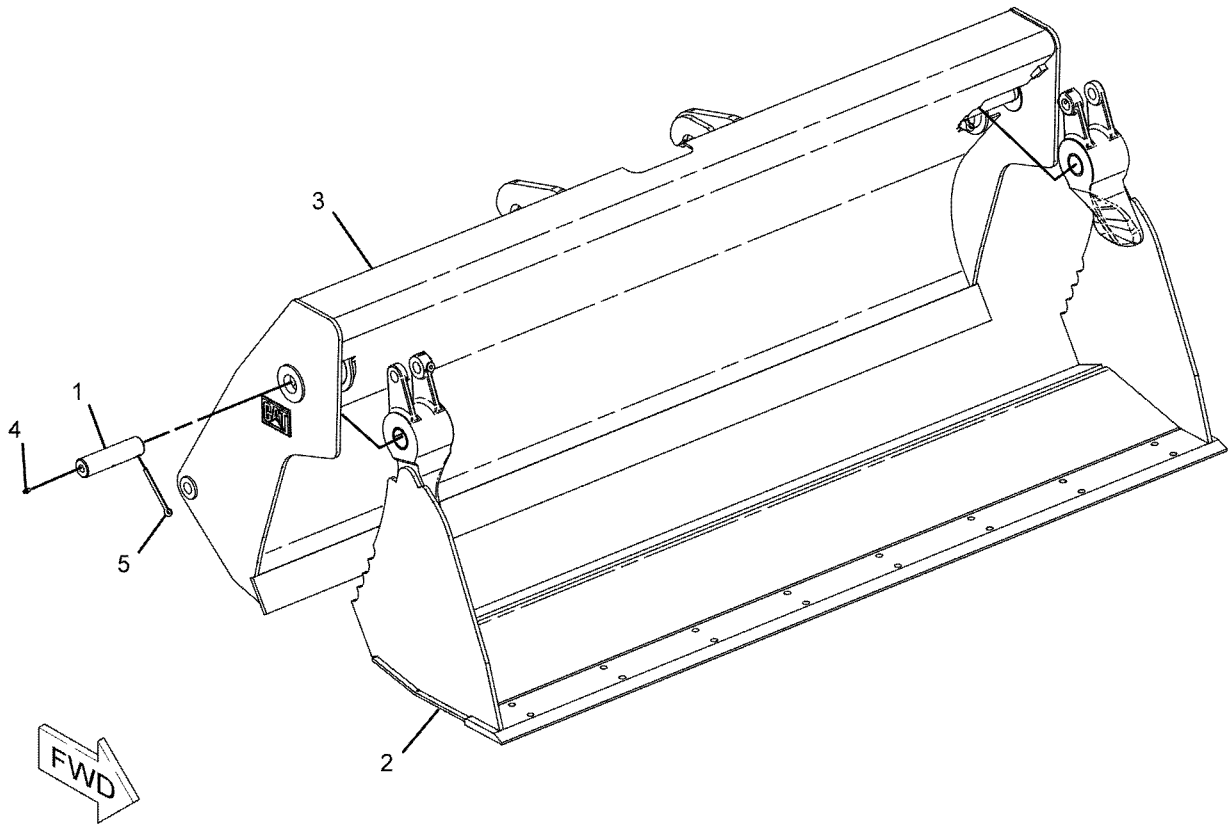

GRAPHIC #1 **<END>** g01101021

WORK TOOLS

337-7435 BUCKET GP-MULTIPURPOSE

S/N: SEJ1-UP
2341-MM (92.2-IN) WIDE X 1.03-CU M (1.4-CU YD) CAPACITY
PART OF 337-7411 BUCKET AR-MULTIPURPOSE
AN ATTACHMENT

SMCS-6104 **i04586512**

NOTE	REF NO	GRAPHIC REF	PART NUMBER	QTY	PART NAME 1 2 3 4 5 6 (PRODUCT LEVEL)	SEE PAGE
	1	1	**9R-4676**	2	PIN	
Y	2	1	**252-9051**	1	CLAM AS-MULTIPURPOSE BUCKET	554
Y	3	1	**337-7410**	1	BULLDOZER AS (MULTIPURPOSE BUCKET)	548
	4	1	**3B-8489**	2	FITTING-GREASE	
	5	1	**4J-1888**	2	PIN-COTTER	

Y-SEPARATE ILLUSTRATION

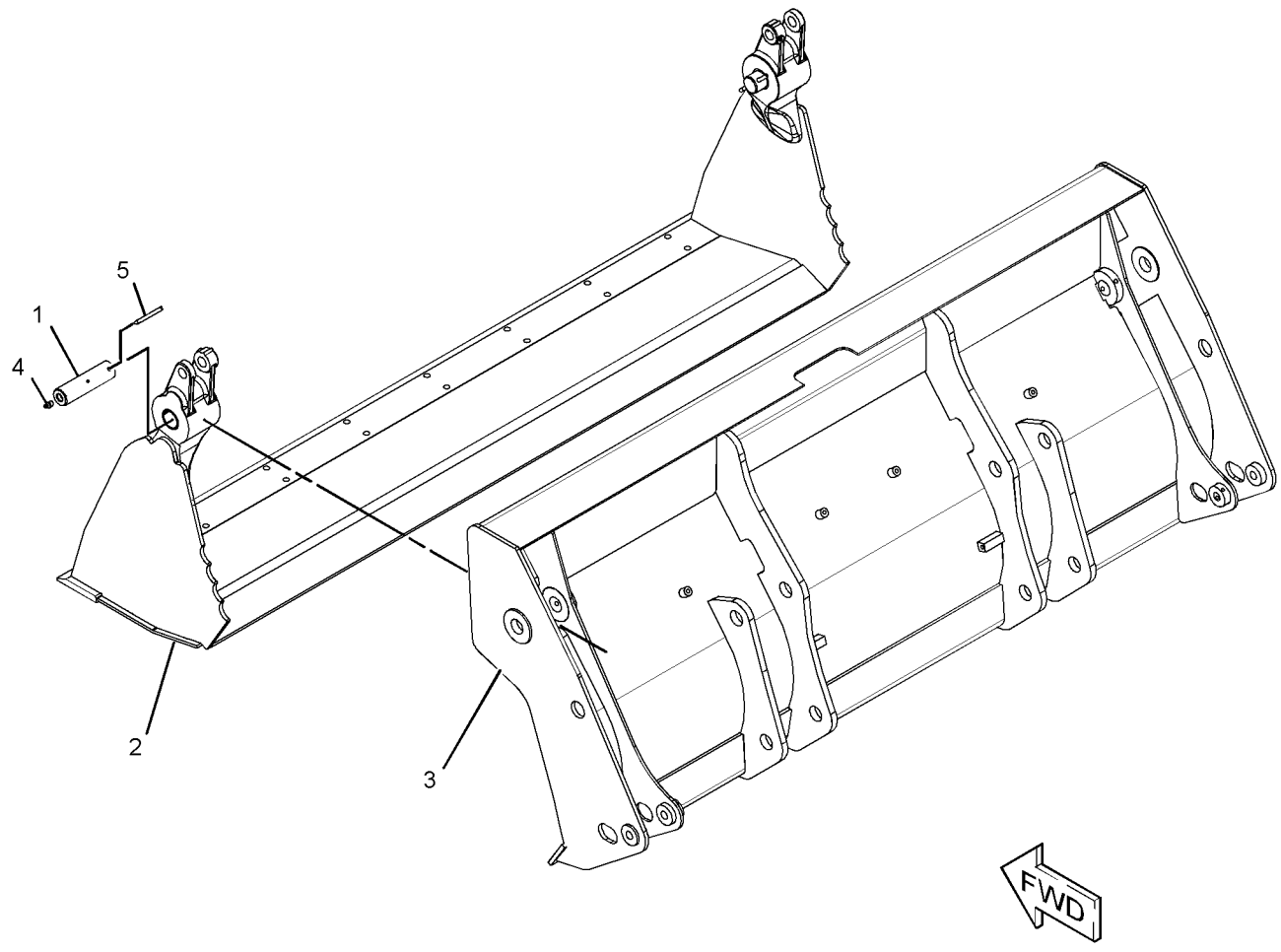

GRAPHIC #1 **<END>** g02761936

WORK TOOLS

350-1575 BUCKET GP-MULTIPURPOSE

S/N: SEJ1-UP
2341-MM (92.2-IN) WIDE X 1.03-CU M (1.4-CU YD) CAPACITY
PART OF 350-1581, 350-1587 BUCKET AR-MULTIPURPOSE
AN ATTACHMENT

SMCS-6104 **i04597249**

NOTE	REF NO	GRAPHIC REF	PART NUMBER	QTY	PART NAME 1 2 3 4 5 6 (PRODUCT LEVEL)	SEE PAGE
	1	1	**9R-4676**	2	PIN	
Y	2	1	**252-9051**	1	CLAM AS-MULTIPURPOSE BUCKET	554
Y	3	1	**350-1574**	1	BULLDOZER AS (MULTIPURPOSE BUCKET)	551
	4	1	**3B-8489**	2	FITTING-GREASE	
	5	1	**4J-1888**	2	PIN-COTTER	

Y-SEPARATE ILLUSTRATION

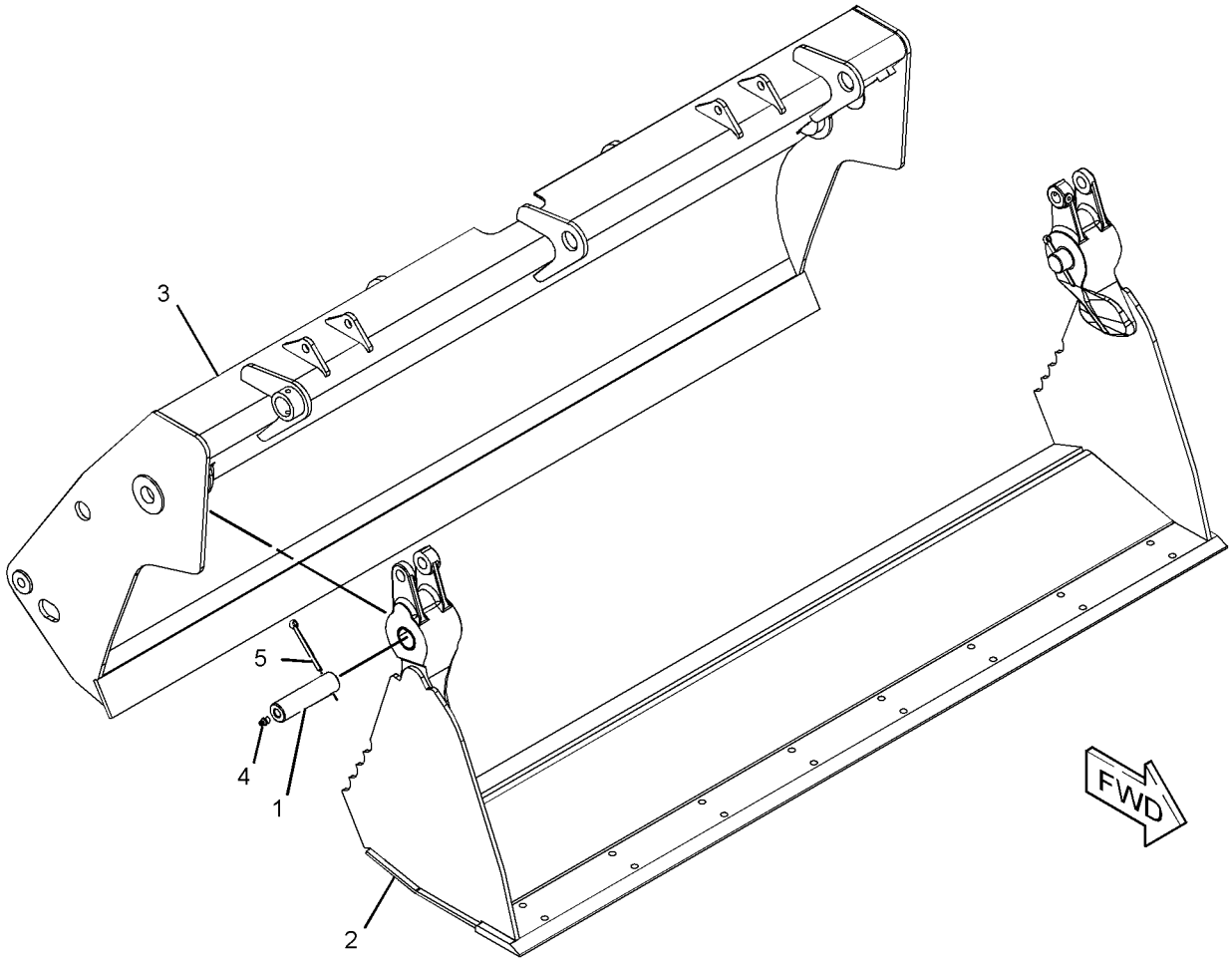

GRAPHIC #1 **<END>** g02763104

350-7008 BUCKET GP-MULTIPURPOSE

S/N: SEJ1-UP
2197-MM (86.5-IN) WIDE X 0.96-CU M (1.3-CU YD) CAPACITY
PART OF 350-1580, 350-1589 BUCKET AR-MULTIPURPOSE
AN ATTACHMENT

SMCS-6104 **i04597165**

NOTE	REF NO	GRAPHIC REF	PART NUMBER	QTY	PART NAME 1 2 3 4 5 6 (PRODUCT LEVEL)	SEE PAGE
	1	1	**9R-4676**	2	PIN	
Y	2	1	**337-7483**	1	BULLDOZER AS (MULTIPURPOSE BUCKET)	550
Y	3	1	**252-9046**	1	CLAM AS-MULTIPURPOSE BUCKET	553
	4	1	**3B-8489**	2	FITTING-GREASE	
	5	1	**4J-1888**	2	PIN-COTTER	

Y-SEPARATE ILLUSTRATION

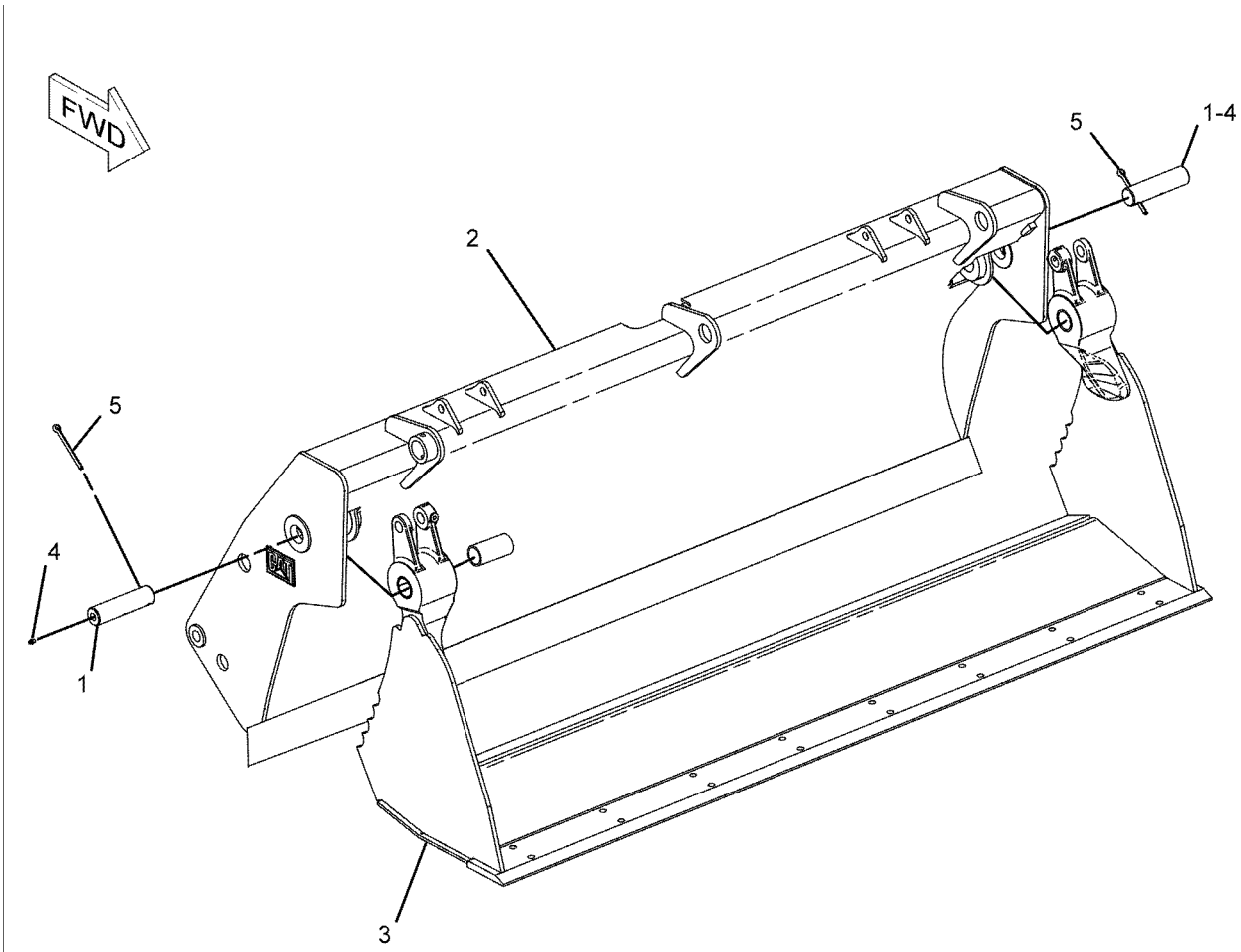

GRAPHIC #1 **<END>** g01121333

252-9069 BULLDOZER AS—MULTIPURPOSE BUCKET

S/N: SEJ1-UP
1.03-CU M (1.35-CU YD)
PART OF 252-9068 BUCKET GP-MULTIPURPOSE
AN ATTACHMENT

SMCS-6050 **i03202141**

NOTE	REF NO	GRAPHIC REF	PART NUMBER	QTY	PART NAME 1 2 3 4 5 6 (PRODUCT LEVEL)	SEE PAGE
M	1	1	**9R-5271**	2	BOSS (M10X1.5X25-MM)	
	2	1	*118-1979*	1	PLATE AS (RH)	
	2A	1	**6K-4076**	1	BEARING-SLEEVE	
	2B	1	**9R-4649**	1	BOSS	
	3	1	*118-1980*	1	PLATE AS (LH)	
	3A	1	**6K-4076**	1	BEARING-SLEEVE	
	3B	1	**9R-4649**	1	BOSS	
	4	1	**256-9600**	1	EDGE	

M-METRIC PART

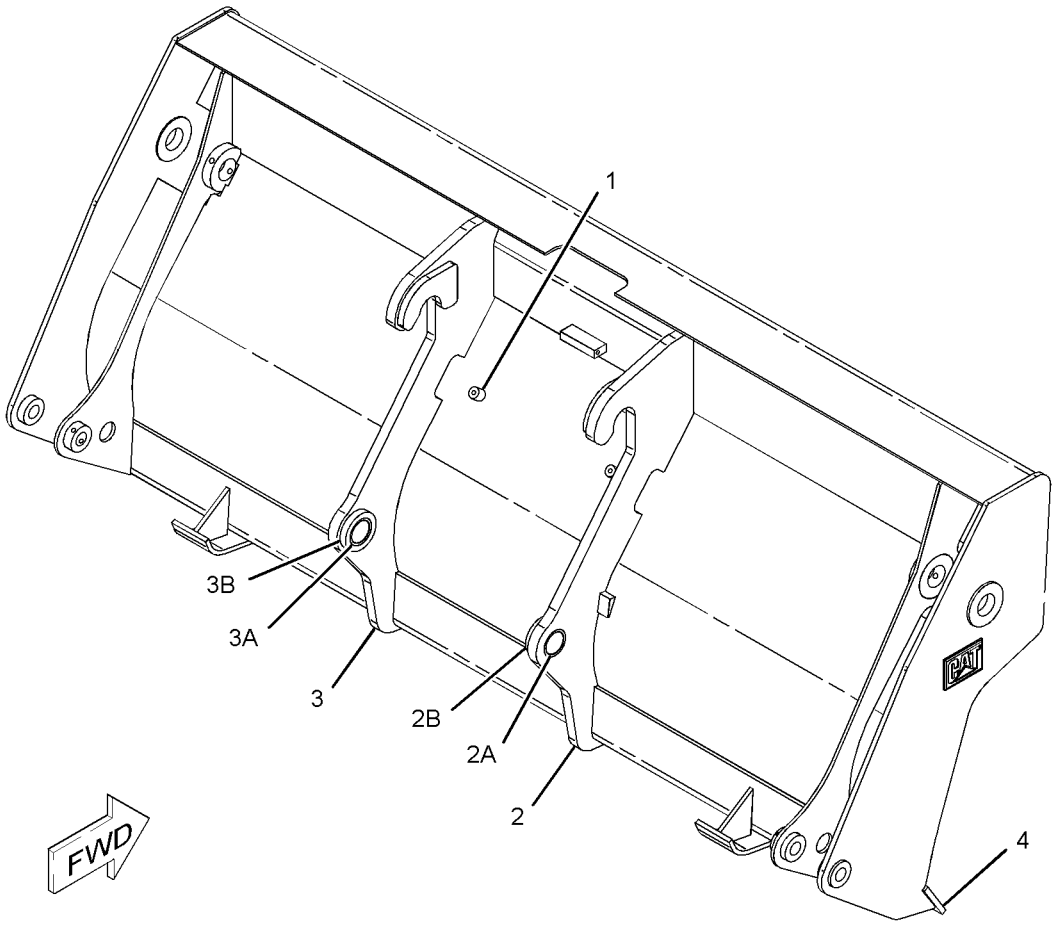

GRAPHIC #1 **<END>** g01634414

337-7410 BULLDOZER AS—MULTIPURPOSE BUCKET

S/N: SEJ1-UP
1-CU M (1.4-CU YD)
PART OF 337-7435 BUCKET GP-MULTIPURPOSE, 350-1574 BULLDOZER AS
AN ATTACHMENT

SMCS-6050 **i04599913**

NOTE	REF NO	GRAPHIC REF	PART NUMBER	QTY	PART NAME 1 2 3 4 5 6 (PRODUCT LEVEL)	SEE PAGE
	1	1	**256-9600**	1	EDGE	
M	2	1	**9R-5271**	4	BOSS (M10X1.5X25-MM)	

M-METRIC PART

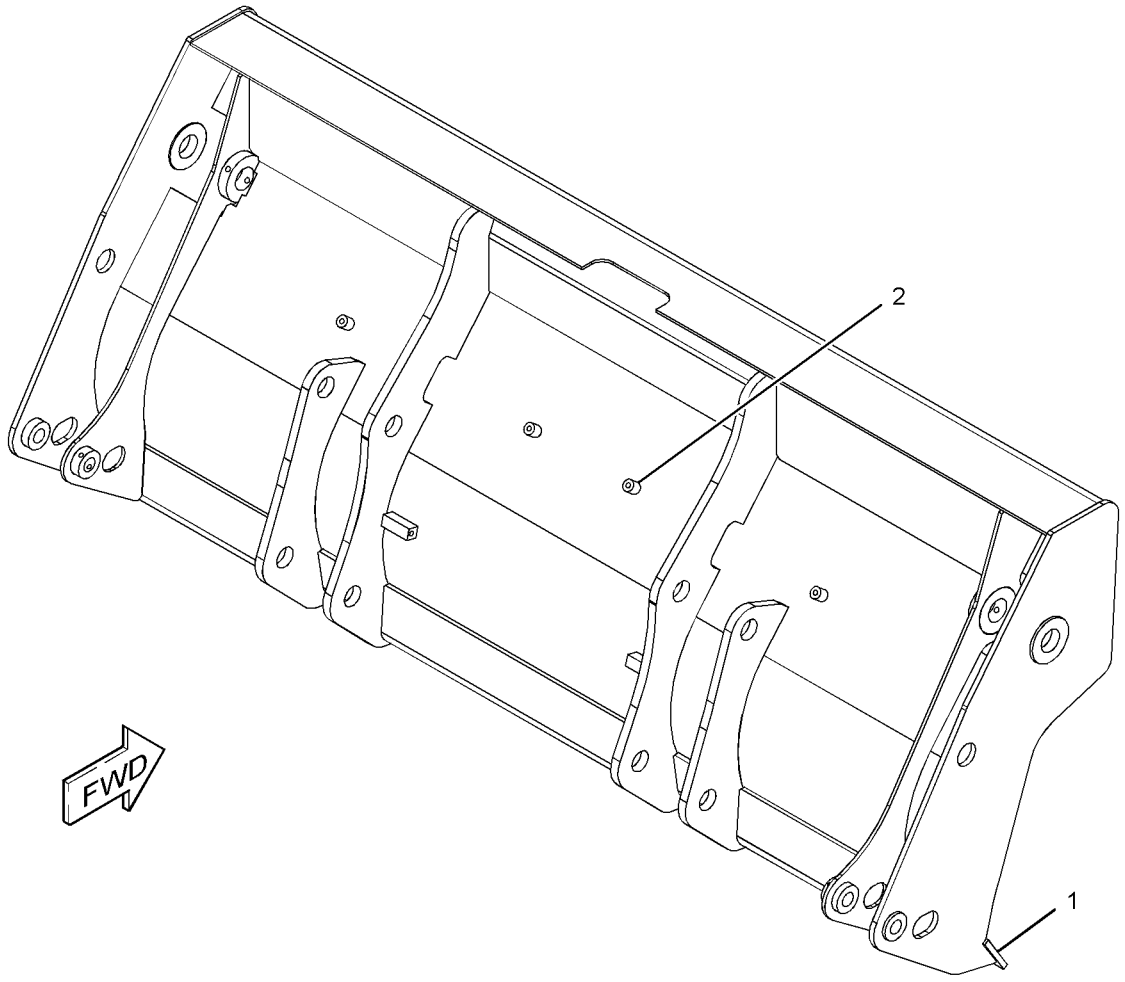

GRAPHIC #1 **<END>** g02837356

WORK TOOLS

337-7482 BULLDOZER AS—MULTIPURPOSE BUCKET

S/N: SEJ1-UP
1-CU M (1.3-CU YD) CAPACITY
PART OF 337-7483 BULLDOZER AS
AN ATTACHMENT

SMCS-6050 **i04603171**

NOTE	REF NO	GRAPHIC REF	PART NUMBER	QTY	PART NAME 1 2 3 4 5 6 (PRODUCT LEVEL)	SEE PAGE
	1	1	**252-9100**	1	EDGE	
M	2	1	**9R-5271**	4	BOSS (M10X1.5X25-MM)	

M-METRIC PART

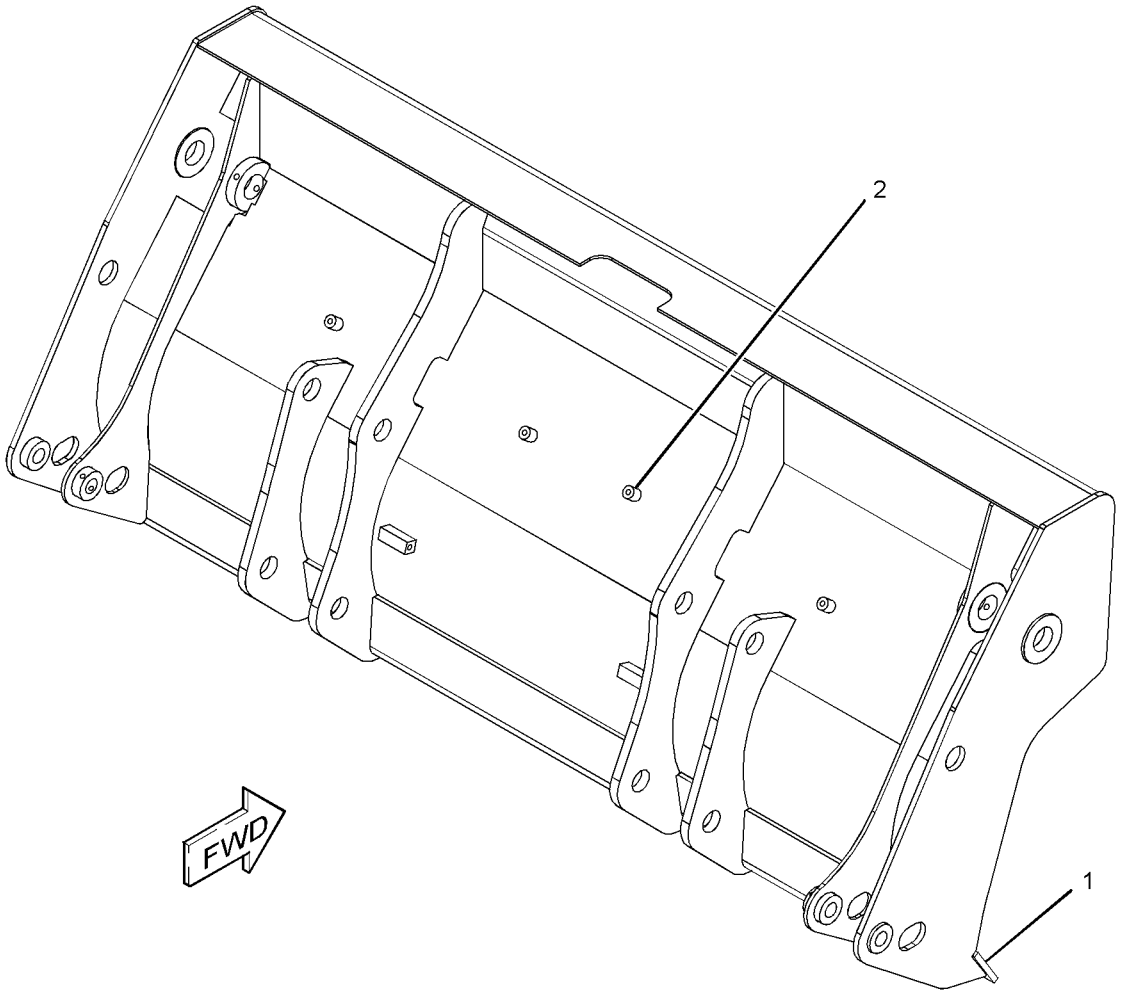

GRAPHIC #1 **<END>** g02829696

337-7483 BULLDOZER AS—MULTIPURPOSE BUCKET

S/N: SEJ1-UP
1-CU M (1.3-CU YD) CAPACITY
PART OF 350-7008 BUCKET GP-MULTIPURPOSE
AN ATTACHMENT

SMCS-6050 **i04603032**

NOTE	REF NO	GRAPHIC REF	PART NUMBER	QTY	PART NAME 1 2 3 4 5 6 (PRODUCT LEVEL)	SEE PAGE
	1	1	**104-6313**	1	BRACKET AS	
		1	**106-9388**	1	BRACKET	
	2	1	**106-9388**	2	BRACKET	
	3	1	**110-2861**	4	BRACKET	
	4	1	**250-6587**	2	PLATE	
	5	1	**252-9095**	4	PLATE	
Y	6	1	*337-7482*	1	BULLDOZER AS (MULTIPURPOSE BUCKET)	549

Y-SEPARATE ILLUSTRATION

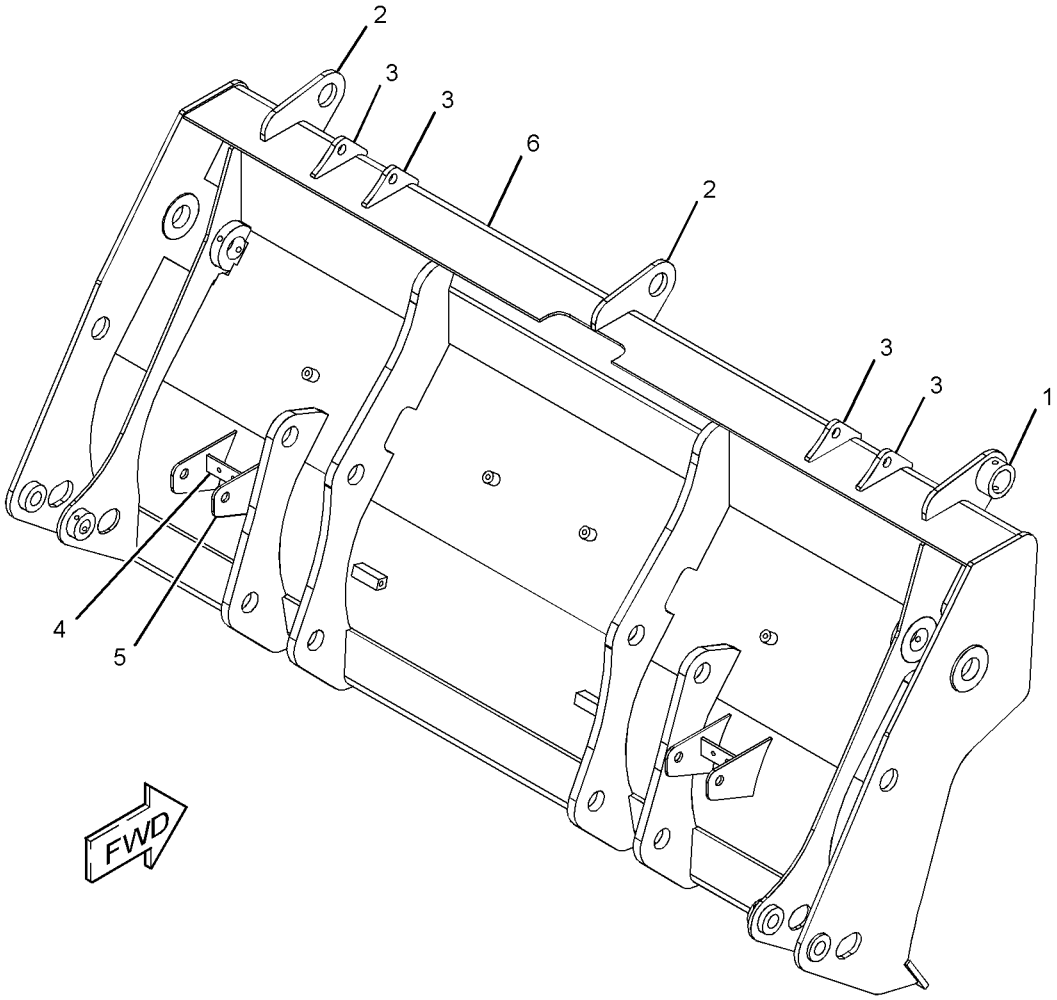

GRAPHIC #1 **<END>** g02824101

350-1574 BULLDOZER AS—MULTIPURPOSE BUCKET

S/N: SEJ1-UP

PART OF 350-1575 BUCKET GP-MULTIPURPOSE

AN ATTACHMENT

SMCS-6050 **i04597269**

NOTE	REF NO	GRAPHIC REF	PART NUMBER	QTY	PART NAME 1 2 3 4 5 6 (PRODUCT LEVEL)	SEE PAGE
	1	1	**104-6313**	1	BRACKET AS	
		1	**106-9388**	1	BRACKET	
	2	1	**106-9388**	2	BRACKET	
	3	1	**110-2861**	4	BRACKET	
	4	1	**250-6587**	2	PLATE	
	5	1	**252-9095**	4	PLATE	
Y	6	1	**337-7410**	1	BULLDOZER AS	548

Y-SEPARATE ILLUSTRATION

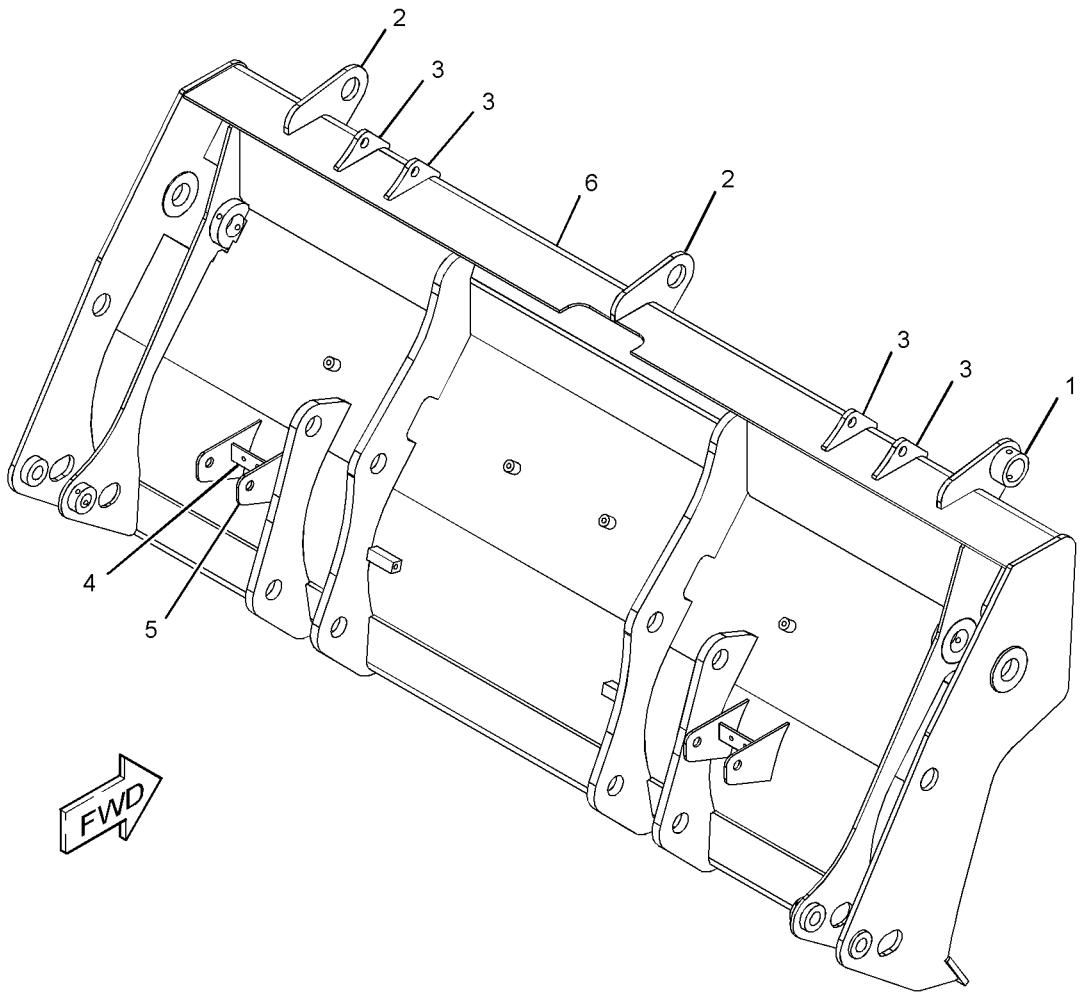

GRAPHIC #1 **<END>** g02814119

6W-8832 CARRIAGE AS-FORK—QUICK COUPLER

S/N: SEJ1-UP

AN ATTACHMENT

SMCS-6402 **i03516388**

NOTE	REF NO	GRAPHIC REF	PART NUMBER	QTY	PART NAME 1 2 3 4 5 6 (PRODUCT LEVEL)	SEE PAGE
	1	1	**9V-9077**	1	PLATE	
	2	1	**251-4309**	1	PLATE-INSTRUCTION	
	3	1	**168-8389**	4	TACK-FASTENER	

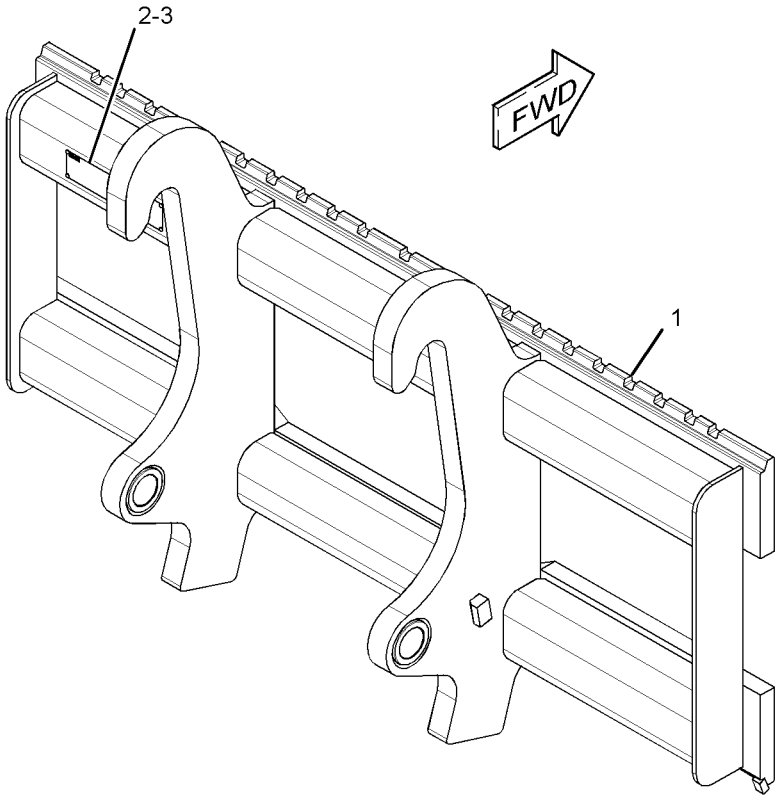

GRAPHIC #1 **<END>** g01861836

252-9046 CLAM AS-MULTIPURPOSE BUCKET

S/N: SEJ1-UP
PART OF 350-7008 BUCKET GP-MULTIPURPOSE
AN ATTACHMENT

SMCS-6104 **i02223551**

NOTE	REF NO	GRAPHIC REF	PART NUMBER	QTY	PART NAME 1 2 3 4 5 6 (PRODUCT LEVEL)	SEE PAGE
	1	1	*252-9078*	1	PLATE AS (LH)	
	1A	1	**9R-4675**	1	BUSHING-TERMINAL	
	1B	1	**9R-5294**	1	HINGE	
	2	1	*252-9080*	1	PLATE AS (RH)	
	2A	1	**9R-4675**	1	BUSHING-TERMINAL	
	2B	1	**9R-5294**	1	HINGE	
	3	1	*252-9081*	1	PLATE AS	
	3A	1	**9R-4672**	1	EDGE	
	3B	1	**252-9087**	1	EDGE	

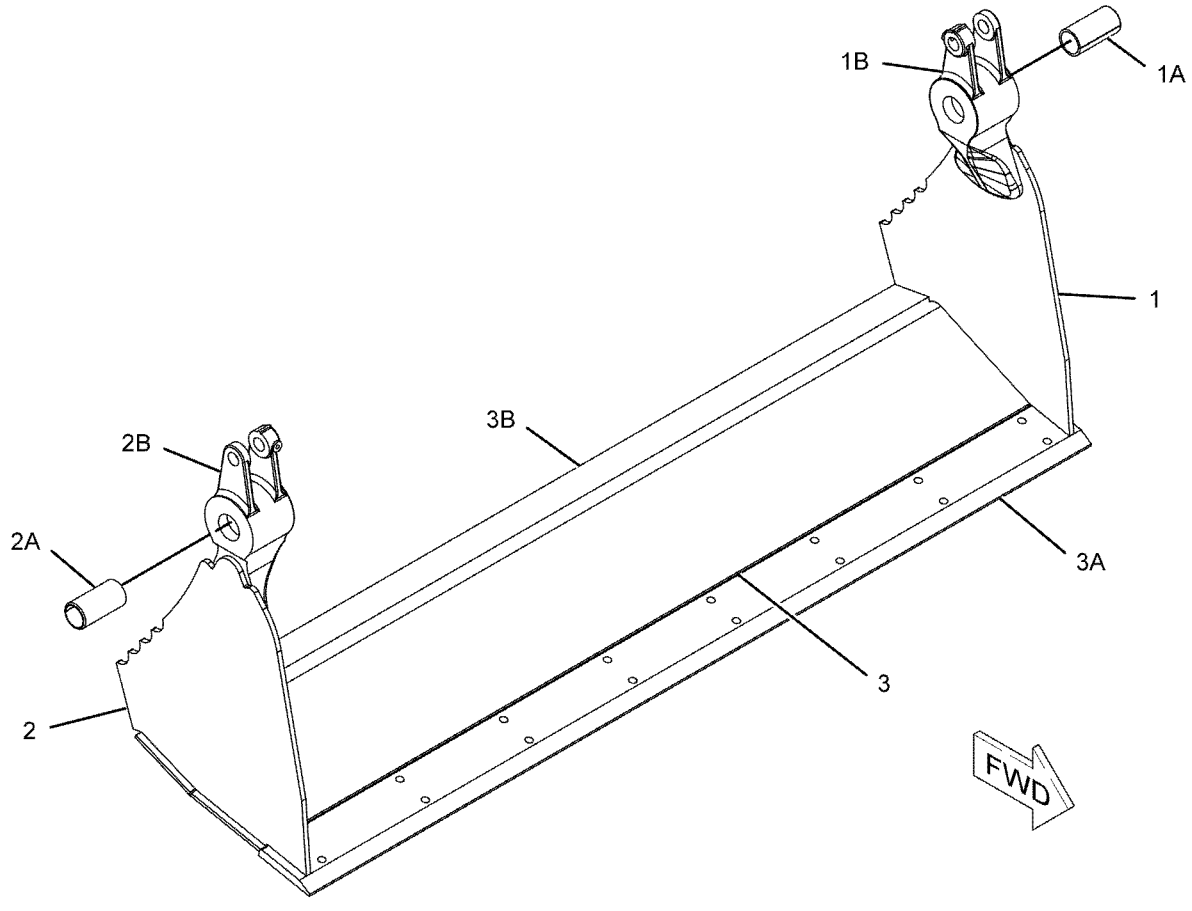

GRAPHIC #1 **<END>** g01121639

WORK TOOLS

252-9051 CLAM AS-MULTIPURPOSE BUCKET

S/N: SEJ1-UP

PART OF 252-9068, 337-7435, 350-1575 BUCKET GP-MULTIPURPOSE

AN ATTACHMENT

SMCS-6104 **i02223563**

NOTE	REF NO	GRAPHIC REF	PART NUMBER	QTY	PART NAME 1 2 3 4 5 6 (PRODUCT LEVEL)	SEE PAGE
	1	1	*252-9078*	1	PLATE AS (LH)	
	1A	1	**9R-4675**	1	BUSHING-TERMINAL	
	1B	1	**9R-5294**	1	HINGE	
	2	1	*252-9080*	1	PLATE AS (RH)	
	2A	1	**9R-4675**	1	BUSHING-TERMINAL	
	2B	1	**9R-5294**	1	HINGE	
	3	1	*252-9084*	1	PLATE AS	
	3A	1	**9R-5313**	1	EDGE	
	3B	1	**252-9088**	1	EDGE	

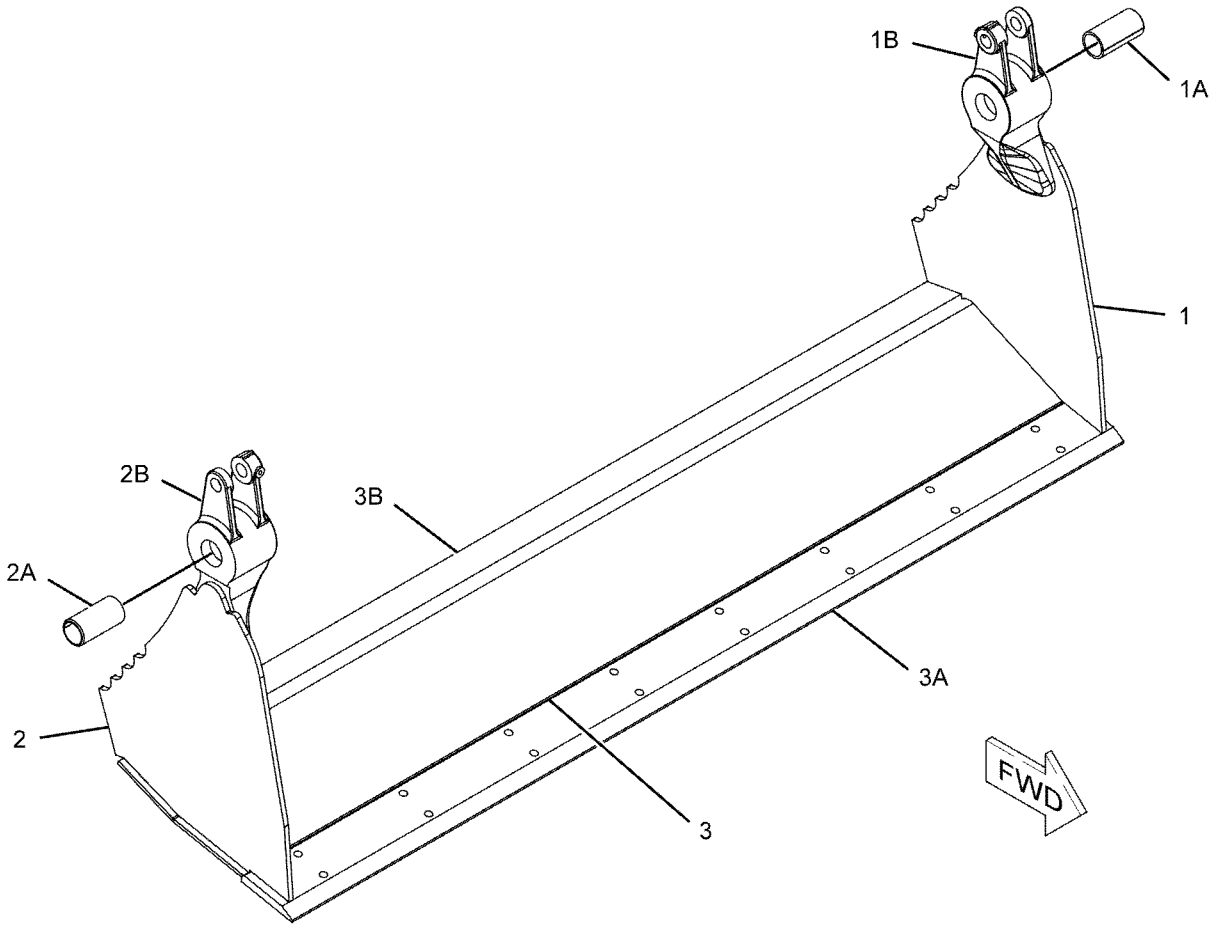

GRAPHIC #1 **<END>** g01121768

WORK TOOLS

373-4273 CONVERSION AR-QUICK COUPLER

S/N: SEJ1-UP

AN ATTACHMENT

SMCS-6129 **i04623040**

NOTE	PART NUMBER	QTY	PART NAME 1 2 3 4 5 6 (PRODUCT LEVEL)	SEE PAGE
Y	*353-1375*	1	ACCUMULATOR GP-HYDRAULIC	336
Y	*269-3201*	1	CONTROL & MTG GP-JOYSTICK	588
Y	**271-3097**	1	CONTROL GP-HANDLE (LH)	590
Y	**272-9700**	1	CONTROL GP-HANDLE (RH, JOYSTICK)	591
Y	**271-3096**	1	CONTROL GP-JOYSTICK (RH)	594
Y	*358-8165*	1	COUPLER GP-QUICK (PARALLEL LIFT)	556
Y	*356-4100*	1	FLOORPLATE GP	312
Y	*337-9812*	1	LINES GP-AUXILIARY HYDRAULIC (PARALLEL LIFT)	366
Y	*369-1461*	1	LINES GP-COUPLER (PARALLEL LIFT)	398
Y	*337-9811*	1	LINES GP-LIFT & TILT	400
Y	*337-9810*	1	LINES GP-LIFT CYLINDER (PARALLEL LIFT)	402
Y	*337-9785*	1	LINES GP-PILOT (SUPPLY)	420
Y	*337-9786*	1	LINES GP-PILOT (BACKHOE)	422
Y	*337-9787*	1	LINES GP-PILOT (STABILIZER)	425
Y	*337-9788*	1	LINES GP-PILOT (LOADER)	427
Y	*337-9828*	1	LINES GP-PILOT (3-BANK)	429
Y	*337-9829*	1	LINES GP-PILOT (7-BANK)	430
Y	*269-3247*	1	MOUNTING GP-BACKHOE CONTROL (PILOT)	634
Y	*337-9815*	1	VALVE & MTG GP-AUXILIARY	453
Y	*337-9714*	1	VALVE & MTG GP-BANK (7-BANK)	455
Y	*337-9706*	1	VALVE & MTG GP-BANK (3-BANK)	454
Y	*385-0559*	1	WIRING GP-KICKOUT & POSITIONER (RETURN TO DIG)	145
Y	*357-3203*	1	WIRING GP-REAR (PILOT)	156
Y	*331-5476*	1	WIRING GP-WORK TOOL (QUICK COUPLER)	171
Y	*211-4258*	1	WIRING GP-WORK TOOL (ANGLE BROOM)	169

Y-SEPARATE ILLUSTRATION

<END>

WORK TOOLS

358-8165 COUPLER GP-QUICK—PARALLEL LIFT

S/N: SEJ1-UP

PART OF 373-4273 CONVERSION AR-QUICK COUPLER, 373-4277 VALVE AR-BANK 3

AN ATTACHMENT

SMCS-6129 **i04622870**

NOTE	REF NO	GRAPHIC REF	PART NUMBER	QTY	PART NAME 1 2 3 4 5 6 (PRODUCT LEVEL)	SEE PAGE
M	1	1	**252-6143**	3	NUT-SPECIAL (M8X1.25-THD)	
	2	1	**357-5950**	1	COUPLER AS	
	3	1	**360-2812**	4	PIN AS	
	4	1	**360-7255**	1	COVER AS	
	5	1	**362-5366**	1	COVER AS	
	6	1	**362-5367**	1	COVER	
B	7	1	**363-2855**	7	SHIM (1-MM THK)	
B	8	1	**363-2856**	6	SHIM (3-MM THK)	
B	9	1	**7X-0550**	8	WASHER-HARD (13.5X32X5-MM THK)	
	10	1	**7X-0618**	4	WASHER-HARD (13.5X40X5-MM THK)	
	11	1	**8C-9987**	5	WASHER (8.3X28X2.5-MM THK)	
M	12	1	**8T-4189**	2	BOLT (M8X1.25X20-MM)	
	13	1	**8T-4224**	2	WASHER-HARD (8.8X16X2-MM THK)	
M	14	1	**8T-4908**	5	BOLT (M8X1.25X25-MM)	
M	15	1	**8T-4956**	4	BOLT (M12X1.75X35-MM)	

B-USE AS REQUIRED
M-METRIC PART

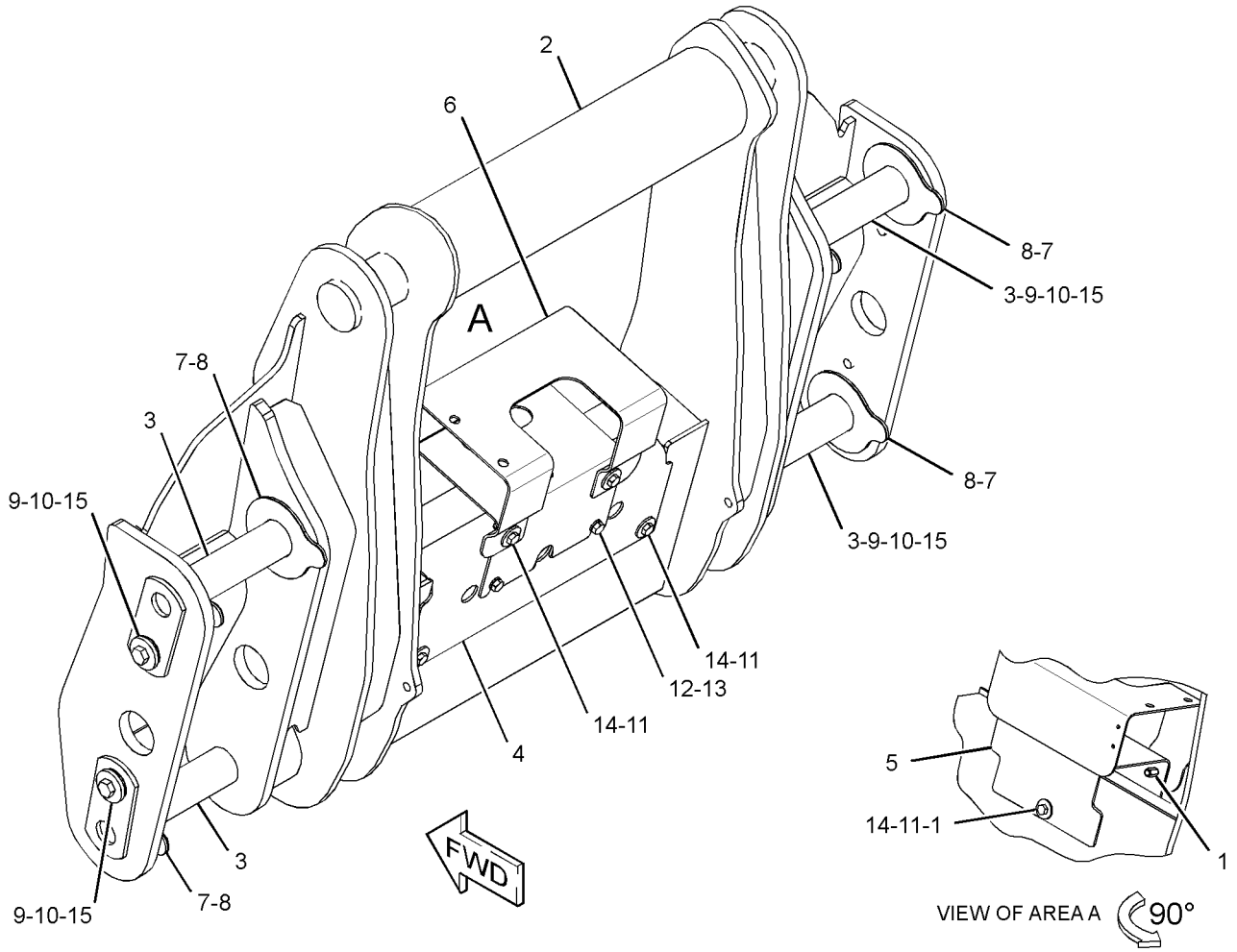

GRAPHIC #1 **<END>** g02826857

WORK TOOLS

9R-5320 EDGE GP-CUTTING

S/N: SEJ1-UP
CANNOT BE USED WITH 9R-5866—PAGE 565
AN ATTACHMENT

SMCS-6801 **i00530080**

NOTE	REF NO	GRAPHIC REF	PART NUMBER	QTY	PART NAME 1 2 3 4 5 6 (PRODUCT LEVEL)	SEE PAGE
	1	1	**118-7110**	2	EDGE-CUTTING	
	2	1	**4F-3657**	8	BOLT-PLOW (5/8-11X2.75-IN)	
	3	1	**4K-0367**	8	NUT-FULL (5/8-11-THD)	
	4	1	**8T-4122**	8	WASHER-HARD (17X32X3.5-MM THK)	

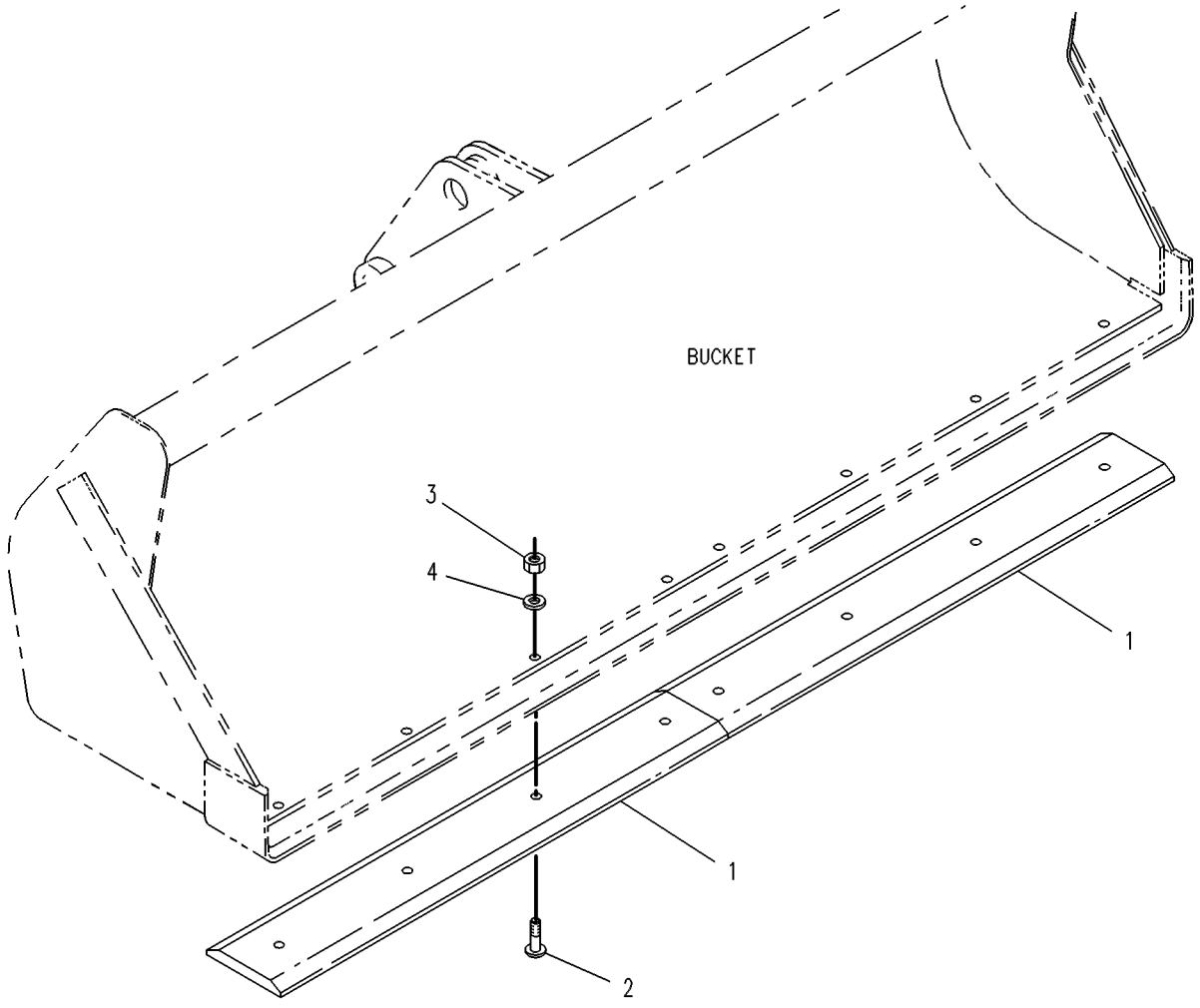

GRAPHIC #1 **<END>** g00131376

WORK TOOLS

9R-5321 EDGE GP-CUTTING

S/N: SEJ1-UP
CANNOT BE USED WITH 9R-5866—PAGE 565
AN ATTACHMENT

SMCS-6801 **i00530701**

NOTE	REF NO	GRAPHIC REF	PART NUMBER	QTY	PART NAME 1 2 3 4 5 6 (PRODUCT LEVEL)	SEE PAGE
	1	1	**9W-8215**	2	EDGE-CUTTING	
	2	1	**3F-5108**	8	BOLT-PLOW (5/8-11X2.25-IN)	
	3	1	**4K-0367**	8	NUT-FULL (5/8-11-THD)	
	4	1	**8T-4122**	8	WASHER-HARD (17X32X3.5-MM THK)	

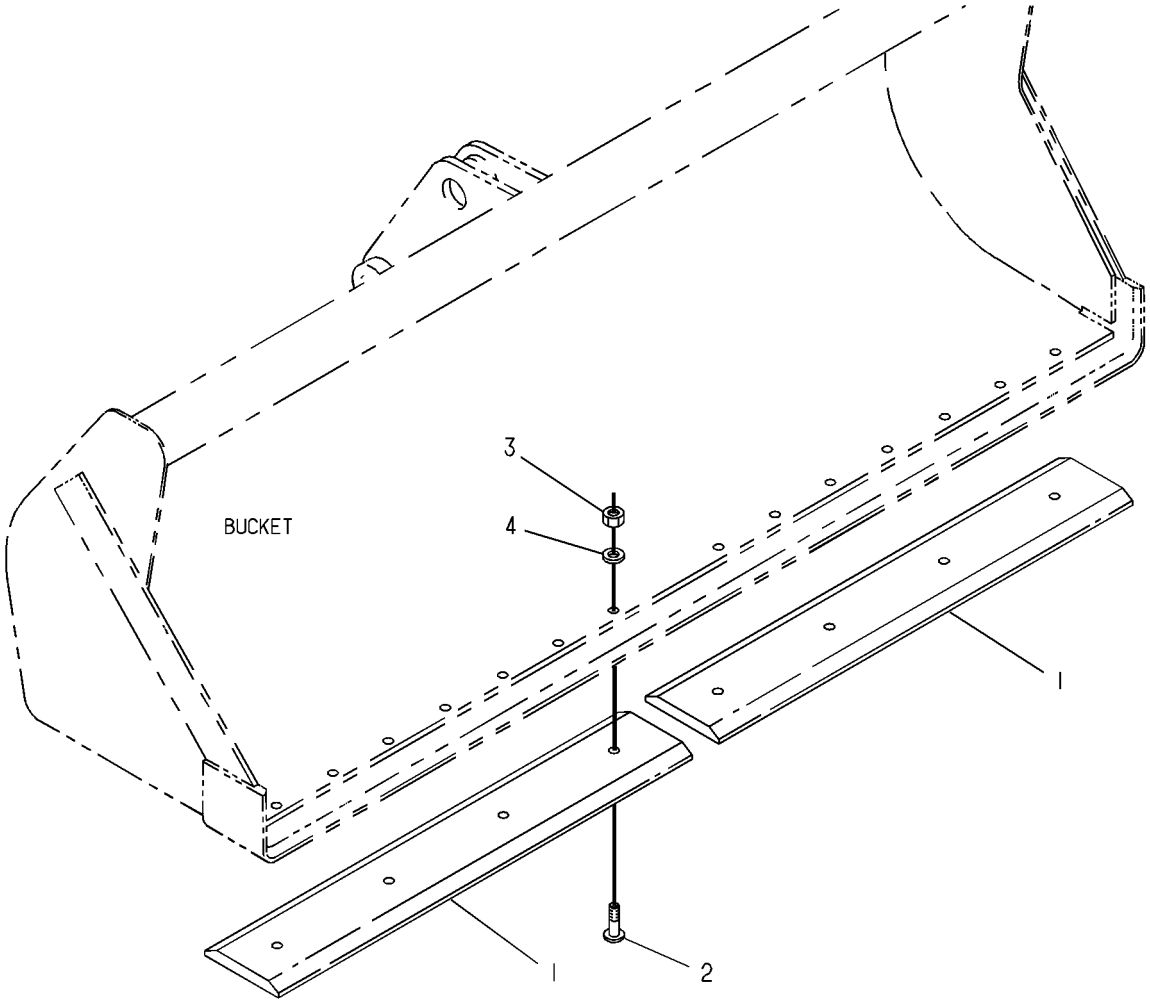

GRAPHIC #1 **<END>** g00130834

WORK TOOLS

6W-8900 FORK GP-PALLET

S/N: SEJ1-UP
1200-MM (47.2-IN)
AN ATTACHMENT

SMCS-6136 **i03765911**

NOTE	PART NUMBER	QTY	PART NAME 1 2 3 4 5 6 (PRODUCT LEVEL)	SEE PAGE
	091-1637	1	SERVICE GP-FORK POSITIONER	
	8T-0255	1	PIN-SPRING	
	091-1745	1	WASHER (16.6X24X1.2-MM THK)	

<END>

6W-9739 FORK GP-PALLET

S/N: SEJ1-UP
1350-MM (53.1-IN)
AN ATTACHMENT

SMCS-6136 **i03765916**

NOTE	PART NUMBER	QTY	PART NAME 1 2 3 4 5 6 (PRODUCT LEVEL)	SEE PAGE
	091-1637	1	SERVICE GP-FORK POSITIONER	
	8T-0255	1	PIN-SPRING	
	091-1745	1	WASHER (16.6X24X1.2-MM THK)	

<END>

214-7024 GUARD GP-BUCKET

S/N: SEJ1-UP
PART OF 341-3107 CONVERSION AR-ROADING, 353-6955 KIT-GUARD, 341-3109 OPTION AR-REGIONAL
AN ATTACHMENT

SMCS-6001, 6800, 6805 **i03310000**

NOTE	REF NO	GRAPHIC REF	PART NUMBER	QTY	PART NAME 1 2 3 4 5 6 (PRODUCT LEVEL)	SEE PAGE
	1	1	**101-4415**	1	FILM (REFLECTOR)	
Y	2	1	*214-7025*	1	GUARD GP-BUCKET	561

Y-SEPARATE ILLUSTRATION

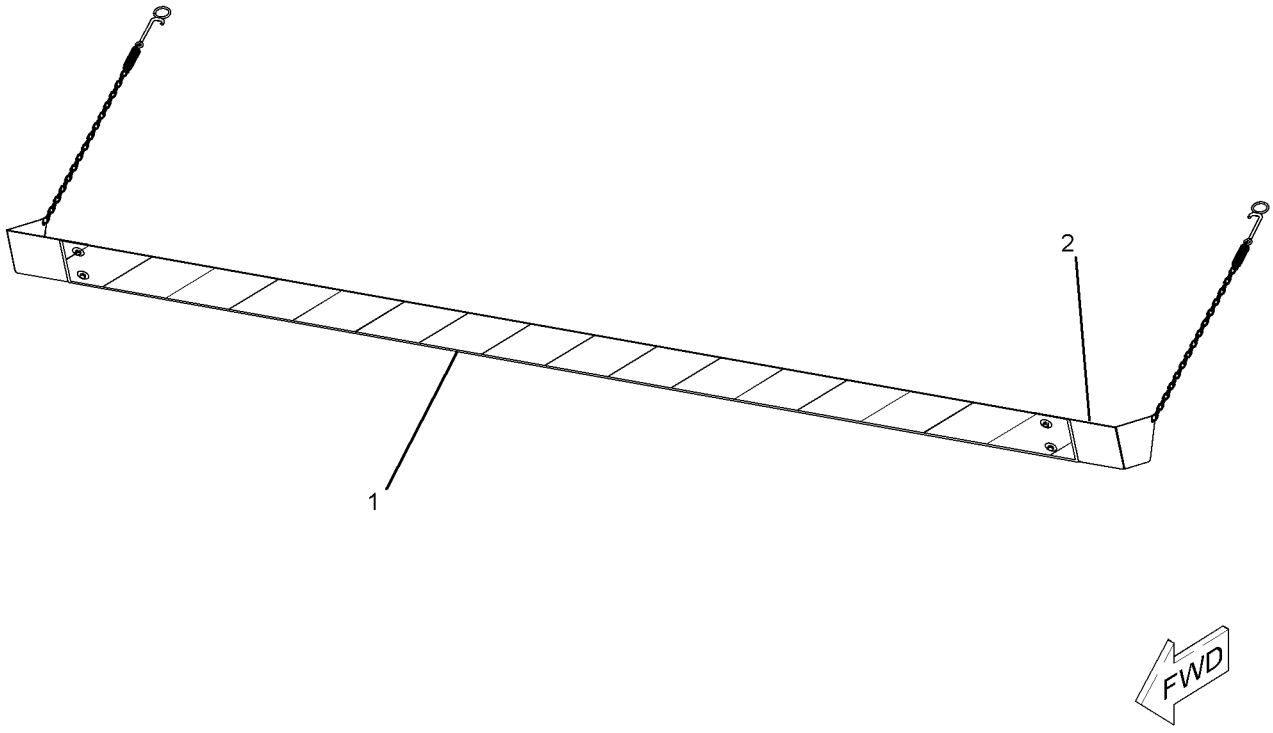

GRAPHIC #1 **<END>** g01120346

214-7025 GUARD GP-BUCKET

S/N: SEJ1-UP
PART OF 214-7024 GUARD GP-BUCKET
AN ATTACHMENT

SMCS-6001, 6800, 6805 **i04169749**

NOTE	REF NO	GRAPHIC REF	PART NUMBER	QTY	PART NAME 1 2 3 4 5 6 (PRODUCT LEVEL)	SEE PAGE
	1	1	**214-7026**	1	PLATE	
	2	1	**101-4411**	2	RETAINER AS (GUARD)	
					(EACH INCLUDES)	
	2A	1	**101-4412**	1	CHAIN	
	2B	1	**101-4413**	1	SPRING	
	2C	1	**101-4414**	1	HOOK AS	
	3	1	**204-5258**	1	PLATE AS	
	4	1	**204-5259**	1	PLATE AS	
					(EACH PLATE AS INCLUDES)	
M		1	**6V-9632**	2	NUT-WELD (M6X1-THD)	
	5	1	**6V-7646**	4	WASHER-HARD (7.2X25X2-MM THK)	
M	6	1	**8T-4171**	4	BOLT (M6X1X12-MM)	
	7	1	**034-1432**	9	STRAP-CABLE	

M-METRIC PART

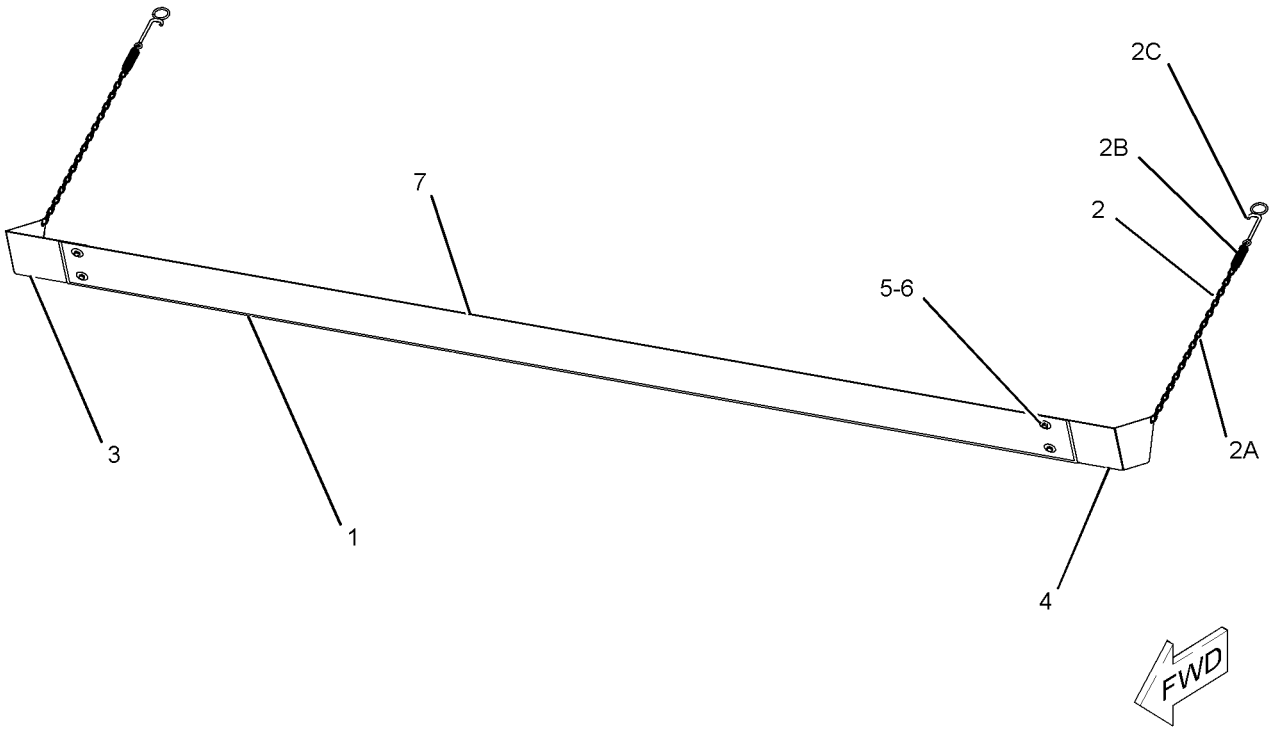

GRAPHIC #1 **<END>** g01121793

WORK TOOLS

318-9902 MOUNTING GP-BUCKET—BACKHOE, QUICK COUPLER

S/N: SEJ1-UP

AN ATTACHMENT

SMCS-6101 **i02990524**

NOTE	PART NUMBER	QTY	PART NAME 1 2 3 4 5 6 (PRODUCT LEVEL)	SEE PAGE
	154-5279	1	PIN	
	154-5280	1	PIN	
	3B-5319	4	PIN-COTTER	
B	**9R-0158**	5	WASHER (46X69X3-MM THK)	
B	**9R-1510**	5	WASHER (51X82X4-MM THK)	

B-USE AS REQUIRED

<END>

353-1385 MOUNTING GP-BUCKET—PARALLEL LIFT

S/N: SEJ1-UP
PART OF 373-4271, 373-4275 VALVE AR-BANK 3
AN ATTACHMENT

SMCS-6101 **i04618169**

NOTE	REF NO	GRAPHIC REF	PART NUMBER	QTY	PART NAME 1 2 3 4 5 6 (PRODUCT LEVEL)	SEE PAGE
	1	1	**111-4337**	8	WASHER (46X70X1-MM THK)	
B	2	1	**363-2855**	8	SHIM (1-MM THK)	
B	3	1	**363-2856**	6	SHIM (3-MM THK)	
	4	1	**364-3760**	4	PIN	
	5	1	**6V-3213**	8	RING-RETAINING	
	6	1	**9R-0158**	12	WASHER (46X69X3-MM THK)	

B-USE AS REQUIRED

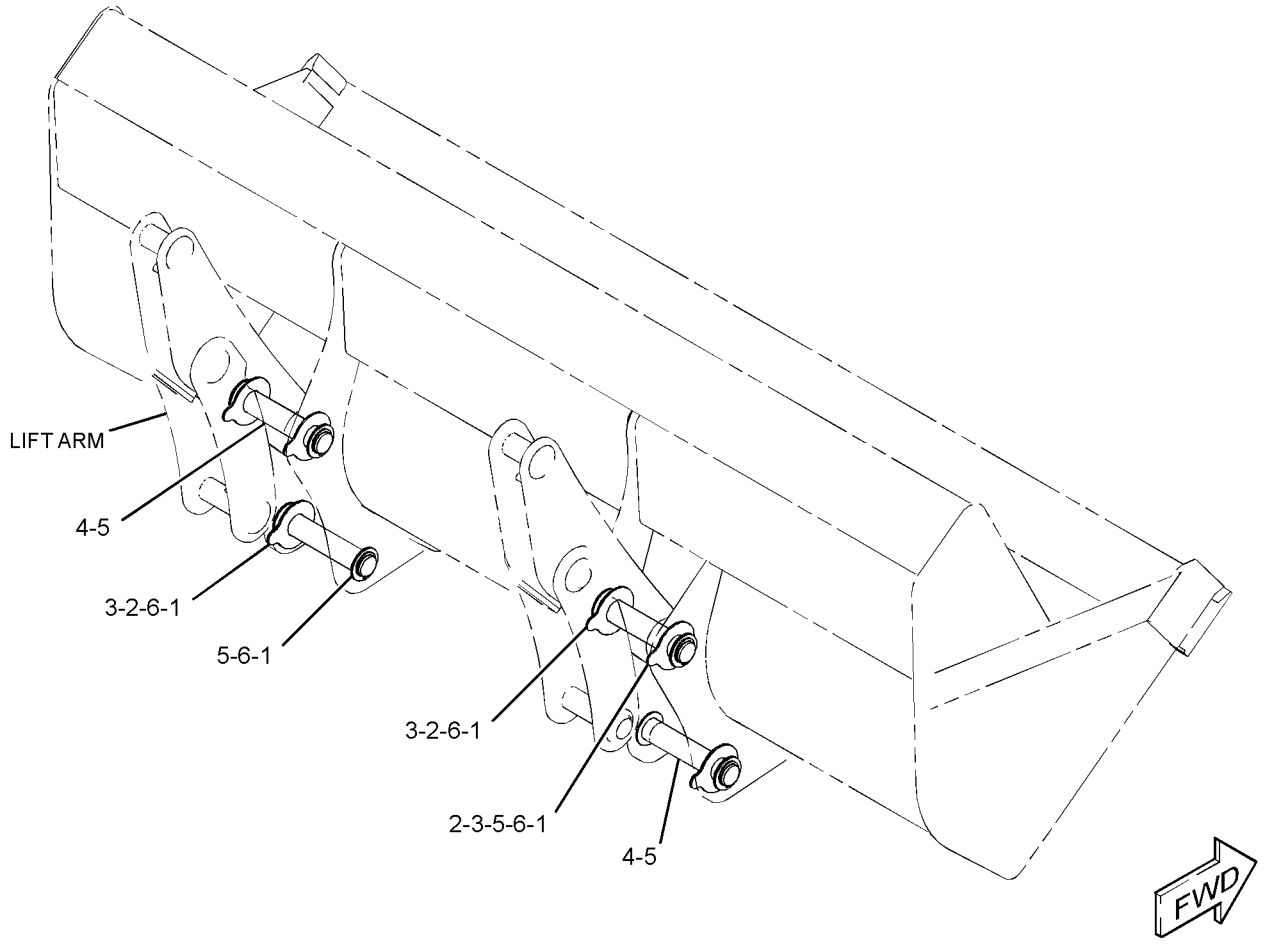

GRAPHIC #1 **<END>** g02839016

252-6005 MOUNTING GP-FORK—MULTIPURPOSE BUCKET

S/N: SEJ1-UP

PART OF 350-1587, 350-1589 BUCKET AR-MULTIPURPOSE

AN ATTACHMENT

SMCS-6405 **i02164351**

NOTE	REF NO	GRAPHIC REF	PART NUMBER	QTY	PART NAME 1 2 3 4 5 6 (PRODUCT LEVEL)	SEE PAGE
	1	1	**5D-8159**	2	PIN AS	
	2	1	**104-6311**	2	BRACKET AS	
	3	1	**104-6316**	1	PIN	
	4	1	**104-6317**	2	PIN	
	5	1	**112-1776**	2	PIN AS	
	6	1	**4J-1888**	1	PIN-COTTER	
	7	1	**6V-8144**	4	RING-RETAINING	
	8	1	**9R-0109**	4	WASHER (41X64X3-MM THK)	

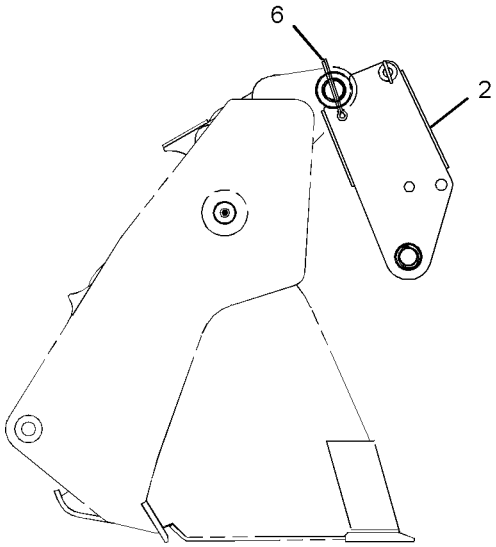

RIGHT SIDE VIEW

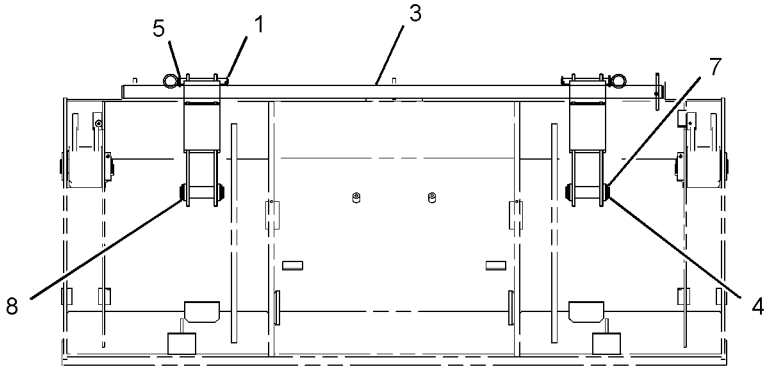

REAR VIEW

GRAPHIC #1 **<END>** g01097992

9R-5866 TOOTH GP-UNI

S/N: SEJ1-UP

FOR USE WITH LOADER BUCKETS. CANNOT BE USED WITH 9R-5321—PAGE 558, 9R-5320—PAGE 557 AN ATTACHMENT

SMCS-6822 **i01789850**

NOTE	REF NO	GRAPHIC REF	PART NUMBER	QTY	PART NAME 1 2 3 4 5 6 (PRODUCT LEVEL)	SEE PAGE
	1	1	**135-8203**	8	TOOTH-UNI	
	2	1	**4F-3657**	16	BOLT-PLOW (5/8-11X2.75 IN)	
	3	1	**4K-0367**	16	NUT-FULL (5/8-11 THD)	

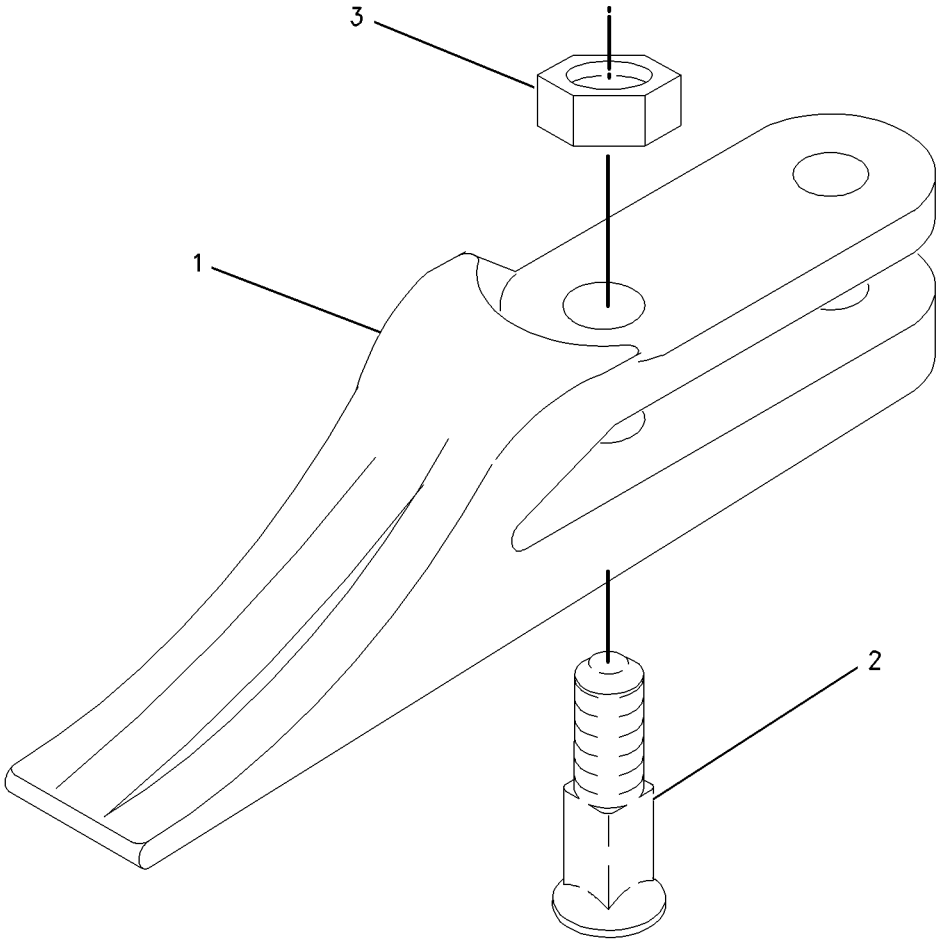

GRAPHIC #1 **<END>** g00915931

OPERATOR STATION

344-7511 AIR CONDITIONER & MOUNTING GP

S/N: SEJ1-UP

PART OF 374-6889 HEATER & AIR CONDITIONER AR

AN ATTACHMENT

SMCS-7320 **i04586150**

NOTE	REF NO	GRAPHIC REF	PART NUMBER	QTY	PART NAME 1 2 3 4 5 6 (PRODUCT LEVEL)	SEE PAGE
	1	2	**6L-4725**	2	CLAMP-HOSE	
	2	2	**9N-2231**	1	GROMMET AS	
	3	2	**110-6109**	1	KNOB-CONTROL (AIR CONDITIONER)	
	4	2	**164-1368**	4	FASTENER-PANEL	
	5	2	**189-0881**	1	CONTROL AS	
		2	**129-1831**	1	CLAMP	
	6	2	**206-1648**	1	LOUVER	
	7	2	**206-1682**	1	PANEL-CONTROL	
	8	2	**206-1684**	1	COVER (CAB FILTER)	
	9	2	**206-1804**	1	GASKET	
	10	2	**206-1807**	1	GASKET	
	11	2	**206-1808**	1	PLATE	
	12	2	**206-1809**	1	ROD AS	
	13	2	**206-1818**	1	DUCT AS-AIR	
	14	2	**211-2661**	1	FILTER ELEMENT AS-AIR (CAB HEATER)	
	15	2	**255-0795**	1	FILM-IDENTIFICATION (TEMPERATURE CONTROL)	
	16	2	**319-8524**	1	HOSE-AIR	
	17	1	**356-4056**	1	INSULATION	
	18	1	**356-4057**	1	INSULATION	
Y	19	2	**358-7087**	1	HEATER & AIR CONDITIONER GP	605
M	20	2	**111-4627**	3	SCREW-MACHINE (M6X1X30-MM)	
	21	2	**4H-2558**	2	GROMMET	
	22	2	**5P-4116**	1	WASHER-HARD (8.8X20.5X2-MM THK)	
	23	2	**7X-0579**	1	WASHER-HARD (8.8X25.5X2-MM THK)	
M	24	2	**8T-4200**	1	BOLT (M8X1.25X16-MM)	
	25	2	**9X-2038**	2	WASHER (7X19X2-MM THK)	
M	26	2	**9X-2045**	2	SCREW-TRUSS HEAD (M6X1X20-MM)	
E	27	2	**220-0738**		SEAL (87-CM)	
D	28	2	**5P-6129**		TUBE (0.5-M EACH)	

D-ORDER BY THE METER
E-ORDER BY THE CENTIMETER
M-METRIC PART
Y-SEPARATE ILLUSTRATION

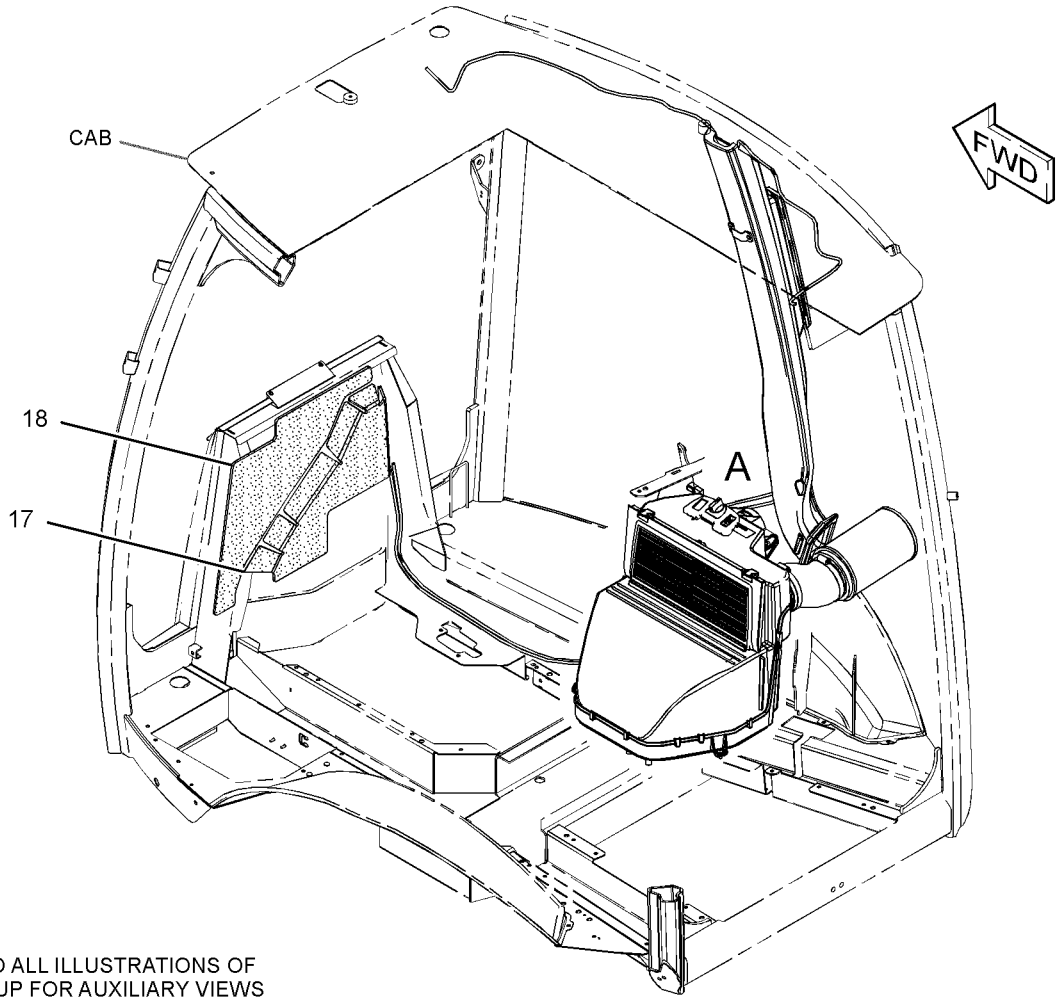

REFER TO ALL ILLUSTRATIONS OF
THIS GROUP FOR AUXILIARY VIEWS

GRAPHIC #1

g02790765

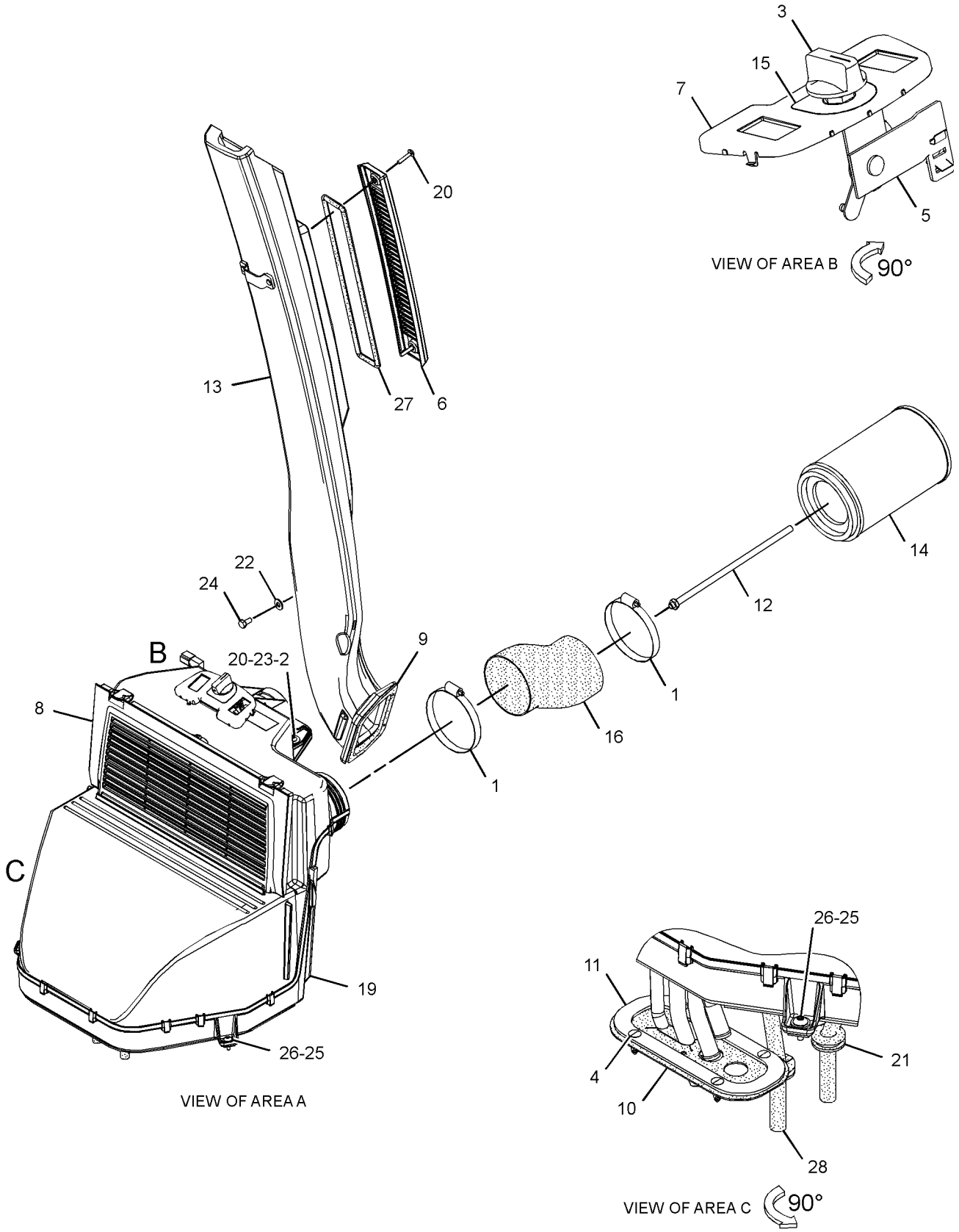

GRAPHIC #2 **<END>** g02790766

OPERATOR STATION

353-1429 CAB AR

S/N: SEJ1-UP

PART OF 374-6857, 374-6858 CAB AR

AN ATTACHMENT

SMCS-7301, 7325 **i04611675**

NOTE	PART NUMBER	QTY	PART NAME 1 2 3 4 5 6 (PRODUCT LEVEL)	SEE PAGE
Y	*353-1399*	1	DUCT GP-CAB AIR	602
Y	*356-4104*	1	CAB GP	572
Y	*206-1702*	1	CONSOLE GP-OPERATOR (LH)	582
Y	*317-5539*	1	CONSOLE GP-OPERATOR (FRONT)	584
Y	*341-6677*	1	CONSOLE GP-OPERATOR (RH)	586
Y	*356-4120*	1	CONTROL GP-STEERING (TILT)	595
Y	*211-3782*	1	FENDER GP-REAR	310
Y	*206-1618*	1	FLOOR MAT GP	603
Y	*380-7775*	1	GUARD GP-DEBRIS	325
Y	*372-8664*	1	LIGHTING GP-FLOOD (CAB)	106
Y	*317-5543*	1	LINER GP-CAB	622
Y	*259-6276*	1	MIRROR GP-REAR VIEW (INTERIOR)	629
Y	*336-9168*	1	MIRROR GP-REAR VIEW (EXTERIOR)	630
Y	*204-4248*	1	MOUNTING GP-CAB	637
Y	*334-7225*	1	ROOF GP-CAB	640
Y	*206-1857*	1	VISOR GP-CAB	654
Y	*353-1366*	1	WIPER & WASHER GP-WINDOW	663
Y	*357-3237*	1	WIRING GP-CAB (ROOF)	131
	285-1207	1	MAT-PROTECTIVE	

Y-SEPARATE ILLUSTRATION

<END>

OPERATOR STATION

353-1432 CAB AR-TRIM—DELUXE

S/N: SEJ1-UP

PART OF 373-4297 CAB AR, 373-4298 CAB AR-ENCLOSED ROPS

AN ATTACHMENT

SMCS-7301, 7325 **i04611412**

NOTE	PART NUMBER	QTY	PART NAME 1 2 3 4 5 6 (PRODUCT LEVEL)	SEE PAGE
Y	*353-1399*	1	DUCT GP-CAB AIR	602
Y	*356-4105*	1	CAB GP (DELUXE)	575
Y	*206-1702*	1	CONSOLE GP-OPERATOR (LH)	582
Y	*317-5539*	1	CONSOLE GP-OPERATOR (FRONT)	584
Y	*341-6677*	1	CONSOLE GP-OPERATOR (RH)	586
Y	*356-4120*	1	CONTROL GP-STEERING (TILT)	595
Y	*211-3782*	1	FENDER GP-REAR	310
Y	*206-1618*	1	FLOOR MAT GP	603
Y	*380-7775*	1	GUARD GP-DEBRIS	325
Y	*372-8664*	1	LIGHTING GP-FLOOD (CAB)	106
Y	*317-5543*	1	LINER GP-CAB	622
Y	*259-6276*	1	MIRROR GP-REAR VIEW (INTERIOR)	629
Y	*336-9168*	1	MIRROR GP-REAR VIEW (EXTERIOR)	630
Y	*204-4248*	1	MOUNTING GP-CAB	637
Y	*206-1701*	1	PROTECTION GP-VANDALISM (ROTATING GUARD)	677
Y	*334-7225*	1	ROOF GP-CAB	640
Y	*206-1857*	1	VISOR GP-CAB	654
Y	*353-1366*	1	WIPER & WASHER GP-WINDOW	663
Y	*357-3237*	1	WIRING GP-CAB (ROOF)	131
	285-1207	1	MAT-PROTECTIVE	

Y-SEPARATE ILLUSTRATION

<END>

373-4297 CAB AR—DELUXE

S/N: SEJ1-UP

AN ATTACHMENT

SMCS-7301, 7325 **i04611410**

NOTE	PART NUMBER	QTY	PART NAME 1 2 3 4 5 6 (PRODUCT LEVEL)	SEE PAGE
Y	*353-1432*	1	CAB AR-TRIM (DELUXE)	570
Y	*353-1448*	1	CONTROL AR-STABILIZER (AUTO UP)	589
Y	*374-6887*	1	HEATER & AIR CONDITIONER AR	604
Y	*315-9891*	1	SEAT GP-SUSPENSION (DELUXE, CLOTH)	649

Y-SEPARATE ILLUSTRATION

<END>

OPERATOR STATION

374-6857 CAB AR—SIDESHIFT

S/N: SEJ1-UP
AN ATTACHMENT

SMCS-7301, 7325 **i04618375**

NOTE	PART NUMBER	QTY	PART NAME 1 2 3 4 5 6 (PRODUCT LEVEL)	SEE PAGE
Y	*353-1429*	1	CAB AR (TRIM)	569
Y	*353-1447*	1	CONTROL AR-STABILIZER (SIDESHIFT)	589
Y	*374-6887*	1	HEATER & AIR CONDITIONER AR	604
Y	*315-9890*	1	SEAT GP-SUSPENSION (CLOTH)	649
Y-SEPARATE ILLUSTRATION				

<END>

374-6858 CAB AR—PILOT, AIR CONDITIONER

S/N: SEJ1-UP
AN ATTACHMENT

SMCS-7301, 7325 **i04628889**

NOTE	PART NUMBER	QTY	PART NAME 1 2 3 4 5 6 (PRODUCT LEVEL)	SEE PAGE
Y	*353-1429*	1	CAB AR (TRIM)	569
Y	*353-1447*	1	CONTROL AR-STABILIZER (SIDESHIFT)	589
Y	*374-6889*	1	HEATER & AIR CONDITIONER AR	604
Y	*315-9890*	1	SEAT GP-SUSPENSION (CLOTH)	649
Y-SEPARATE ILLUSTRATION				

<END>

373-4298 CAB AR-ENCLOSED ROPS—DELUXE, WITH A/C

S/N: SEJ1-UP
AN ATTACHMENT

SMCS-7301, 7325 **i04611469**

NOTE	PART NUMBER	QTY	PART NAME 1 2 3 4 5 6 (PRODUCT LEVEL)	SEE PAGE
Y	*353-1432*	1	CAB AR-TRIM (DELUXE)	570
Y	*353-1448*	1	CONTROL AR-STABILIZER (AUTO UP)	589
Y	*374-6889*	1	HEATER & AIR CONDITIONER AR	604
Y	*315-9891*	1	SEAT GP-SUSPENSION (DELUXE, CLOTH)	649
Y-SEPARATE ILLUSTRATION				

<END>

OPERATOR STATION

356-4104 CAB GP–STANDARD

S/N: SEJ1-UP
PART OF 353-1429 CAB AR
AN ATTACHMENT

SMCS-7301 **i04611679**

NOTE	REF NO	GRAPHIC REF	PART NUMBER	QTY	PART NAME 1 2 3 4 5 6 (PRODUCT LEVEL)	SEE PAGE
	1	1	**3S-2093**	6	STRAP-CABLE	
	2	1,2	**8Y-7309**	2	RETAINER	
	3	1	**129-3738**	2	GUARD-STRIKER	
	4	1,2	**129-5256**	12	BUSHING	
	5	1,2	**129-5257**	8	BUSHING	
	6	1	**205-9608**	1	GLASS (REAR, RH)	
	7	2	**205-9609**	1	GLASS (REAR, LH)	
	8	1,2	**205-9629**	4	SPACER (15.9X21.4X50-MM THK)	
	9	1,2	**206-1590**	4	PIN	
	10	1	**210-6475**	2	PLATE	
	11	1	**215-2913**	1	GROMMET	
	12	1	**219-0302**	1	FILM-WARNING (NO WELD, NO DRILL, READ OMM)	
	13	1,2	**223-2030**	2	LATCH AS (HOLD OPEN)	
					(EACH INCLUDES)	
M		1,2	**6V-7743**	2	LOCKNUT (M6X1-THD)	
M		1,2	**9X-2045**	2	SCREW-TRUSS HEAD (M6X1X20-MM)	
		1,2	**143-2827**	1	SPRING	
Y	14	2	*315-1270*	1	WINDOW GP-CAB (REAR)	655
Y	15	1	**329-1167**	1	DOOR GP-CAB (RH)	598
Y	16	2	**329-1168**	1	DOOR GP-CAB (LH)	600
	17	1	**338-3328**	2	BOLT-STRIKER	
	18	1	**356-0804**	1	CAB AS (STANDARD)	
	19	1	**356-4054**	1	PLATE	
	20	1	**357-3241**	1	HARNESS AS-LIGHTING	
		1	**9W-0852**	3	PIN-CONNECTOR (14-GA TO 16-GA)	
		1	**9X-3401**	4	PIN-CONNECTOR (16-GA TO 18-GA)	
		1	**155-2274**	2	KIT-CONNECTING PLUG (6-PIN)	
					(EACH INCLUDES PLUG AS, WEDGE & INTERFACE SEAL)	
		1	**8T-8737**	3	PLUG-SEAL	
		1	**102-8806**	1	KIT-RECEPTACLE (8-PIN)	
					(INCLUDES RECEPTACLE AS & WEDGE)	
		1	**9W-0844**	2	SOCKET-CONNECTOR (14-GA TO 16-GA)	
		1	**180-9340**	8	SOCKET-CONNECTOR (14-GA TO 18-GA)	
E		1	**125-7874**		TUBE-HEAT SHRINK (5.72-MM DIA) (15-CM)	
	21	1	**371-2051**	1	FILM-CERTIFICATION (ROPS, FOPS, READ OMM)	
	22	1	**380-7826**	1	GLASS (FRONT, LH)	
	23	1	**380-7827**	1	GLASS (FRONT, RH)	
	24	1	**380-7828**	1	GLASS	
M	25	1,2	**5C-7261**	2	NUT (M8X1.25-THD)	
	26	1	**5P-4116**	11	WASHER-HARD (8.8X20.5X2-MM THK)	
	27	1	**5P-7648**	2	GROMMET	
	28	1	**7X-0618**	2	WASHER-HARD (13.5X40X5-MM THK)	
	29	1,2	**7X-2393**	2	BUMPER-CONICAL	
	30	1,2	**8S-7803**	8	RING-RETAINING	
M	31	1	**8T-4200**	11	BOLT (M8X1.25X16-MM)	
E	32	1,2	**322-8414**		SEAL-CAB (368-CM EACH)	

E-ORDER BY THE CENTIMETER
M-METRIC PART
Y-SEPARATE ILLUSTRATION

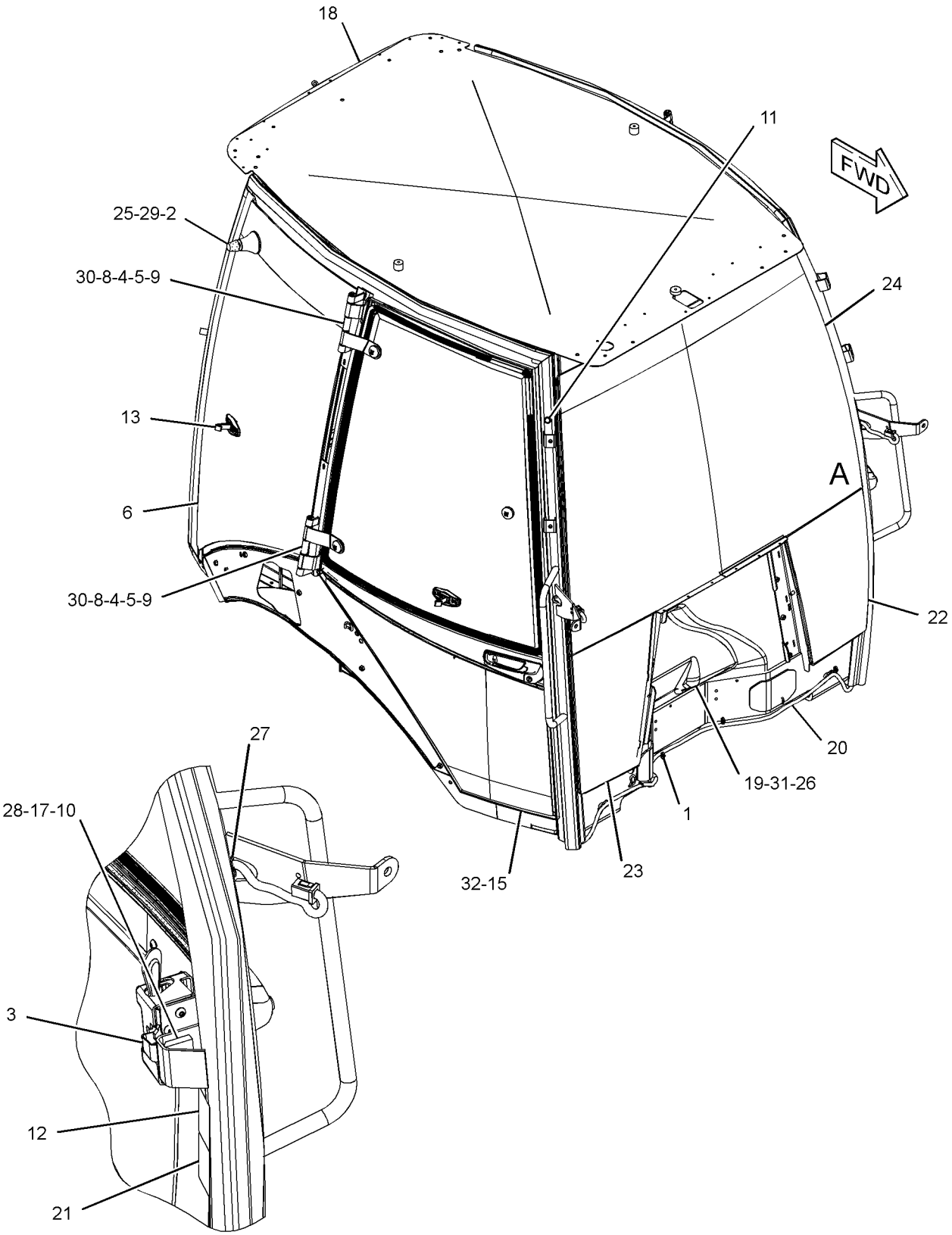

VIEW OF AREA A
(PARTS REMOVED FOR CLARITY)

GRAPHIC #1 g02797878

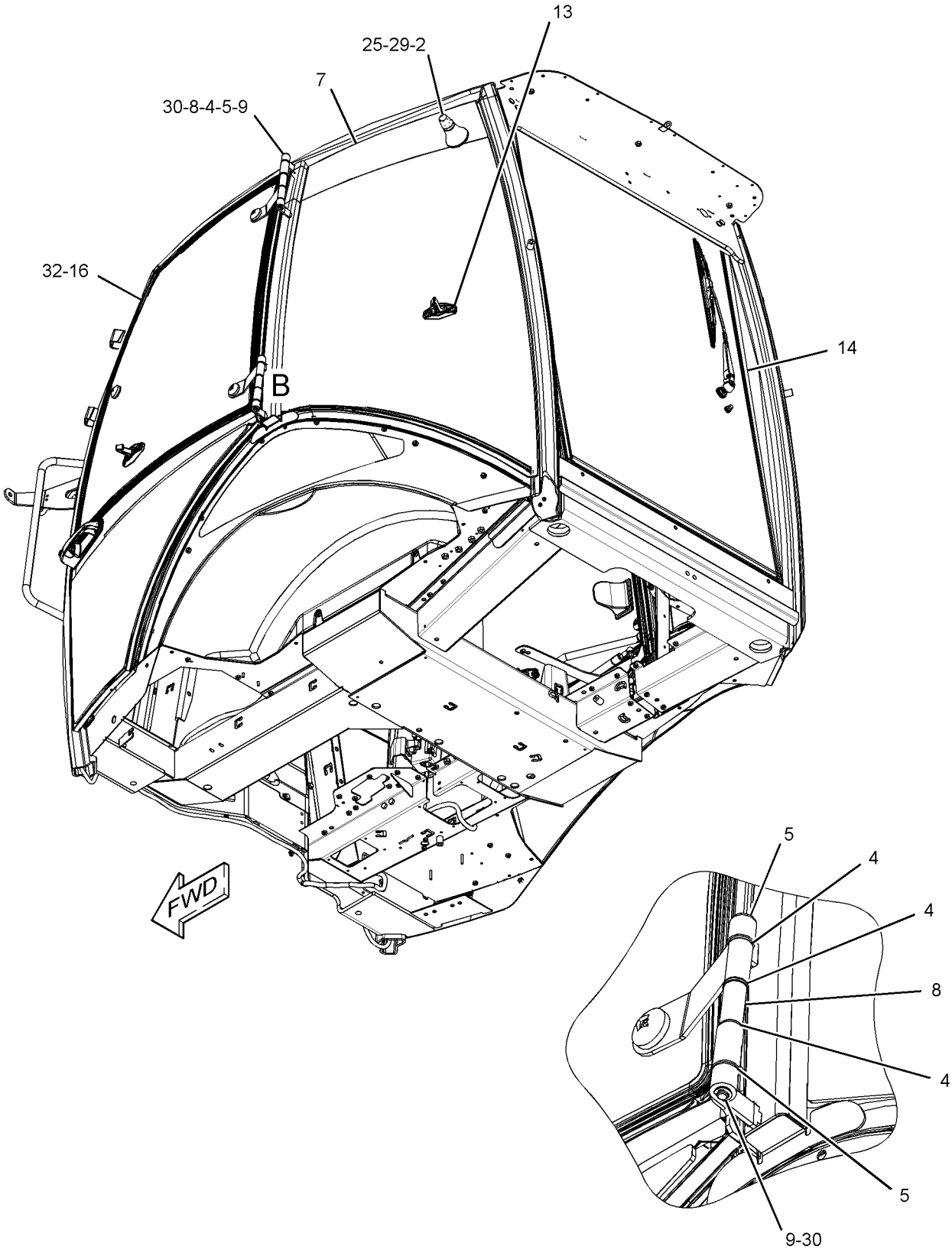

VIEW OF AREA B

GRAPHIC #2 **<END>** g02797880

OPERATOR STATION

356-4105 CAB GP–DELUXE

S/N: SEJ1-UP
PART OF 353-1432 CAB AR
AN ATTACHMENT

SMCS-7301 **i04611432**

NOTE	REF NO	GRAPHIC REF	PART NUMBER	QTY	PART NAME 1 2 3 4 5 6 (PRODUCT LEVEL)	SEE PAGE
	1	1,2	**129-3738**	2	GUARD-STRIKER	
	2	1,2	**129-5256**	12	BUSHING	
	3	1,2	**129-5257**	8	BUSHING	
	4	3	**159-4945**	2	KEEPER	
B	5	3	**177-4877**	4	SHIM (1-MM THK)	
	6	2	**205-9622**	1	GLASS (LOWER, LH)	
	7	1	**205-9631**	1	GLASS (LOWER, RH)	
	8	1,2	**206-1590**	4	PIN	
	9	1,2	**210-6475**	2	PLATE	
	10	1	**215-2913**	1	GROMMET	
	11	2	**219-0302**	1	FILM-WARNING (NO WELD, NO DRILL, READ OMM)	
Y	12	2	*315-1270*	1	WINDOW GP-CAB (REAR)	655
Y	13	2	**327-7601**	1	WINDOW GP-CAB (LH)	657
Y	14	1	**327-7637**	1	WINDOW GP-CAB (RH)	659
Y	15	1	**329-1167**	1	DOOR GP-CAB (RH)	598
Y	16	2	**329-1168**	1	DOOR GP-CAB (LH)	600
	17	1,2	**338-3328**	2	BOLT-STRIKER	
	18	1	**356-0805**	1	CAB AS (DELUXE)	
	19	1	**356-4054**	1	PLATE	
	20	1	**357-3241**	1	HARNESS AS-LIGHTING	
		1	**9W-0852**	3	PIN-CONNECTOR (14-GA TO 16-GA)	
		1	**9X-3401**	4	PIN-CONNECTOR (16-GA TO 18-GA)	
		1	**155-2274**	2	KIT-CONNECTING PLUG (6-PIN)	
					(EACH INCLUDES PLUG AS, WEDGE & INTERFACE SEAL)	
		1	**8T-8737**	3	PLUG-SEAL	
		1	**102-8806**	1	KIT-RECEPTACLE (8-PIN)	
					(INCLUDES RECEPTACLE AS & WEDGE)	
		1	**9W-0844**	2	SOCKET-CONNECTOR (14-GA TO 16-GA)	
		1	**180-9340**	8	SOCKET-CONNECTOR (14-GA TO 18-GA)	
E		1	**125-7874**		TUBE-HEAT SHRINK (5.72-MM DIA) (15-CM)	
	21	2	**371-2051**	1	FILM-CERTIFICATION (ROPS, FOPS, READ OMM)	
	22	1	**380-7826**	1	GLASS (FRONT, LH)	
	23	1	**380-7827**	1	GLASS (FRONT, RH)	
	24	1	**380-7828**	1	GLASS	
	25	3	**159-4946**	2	KEEPER	
M	26	3	**174-8131**	8	SCREW-TRUSS HEAD (M4X0.7X12-MM)	
	27	1	**3S-2093**	6	STRAP-CABLE	
	28	3	**4B-4863**	8	WASHER (4.7X11X1.2-MM THK)	
M	29	3	**5C-8312**	8	NUT (M4X0.7-THD)	
	30	1	**5P-4116**	11	WASHER-HARD (8.8X20.5X2-MM THK)	
	31	1	**5P-7648**	2	GROMMET	
	32	1,2	**7X-0618**	2	WASHER-HARD (13.5X40X5-MM THK)	
	33	1,2	**8S-7803**	8	RING-RETAINING	
M	34	1	**8T-4200**	11	BOLT (M8X1.25X16-MM)	
E	35	1,2	**322-8414**		SEAL-CAB (258-CM EACH)	
E	35A	1,2	**322-8414**		SEAL-CAB (340-CM EACH)	

B-USE AS REQUIRED
E-ORDER BY THE CENTIMETER
M-METRIC PART
Y-SEPARATE ILLUSTRATION

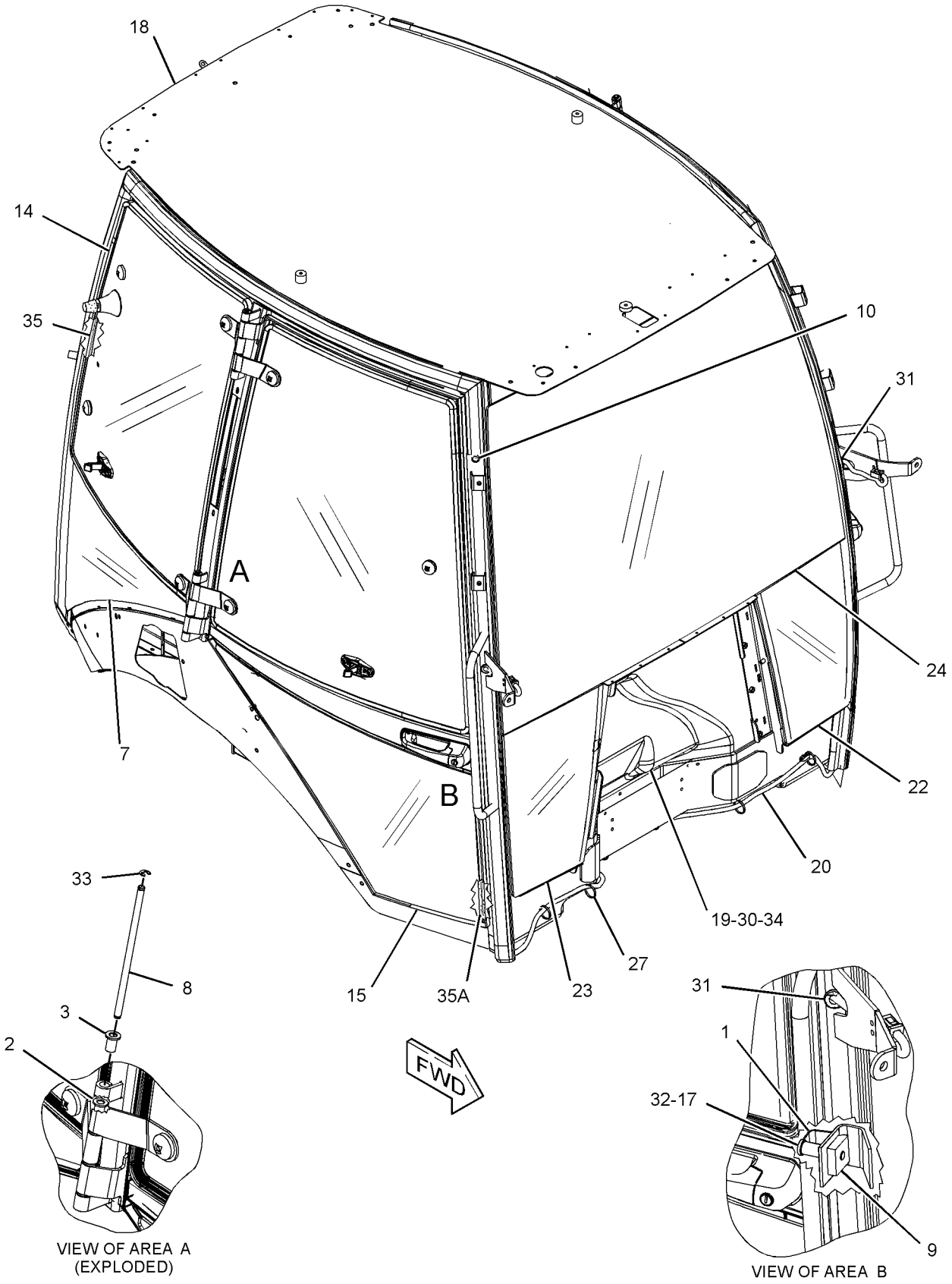

GRAPHIC #1 g02827079

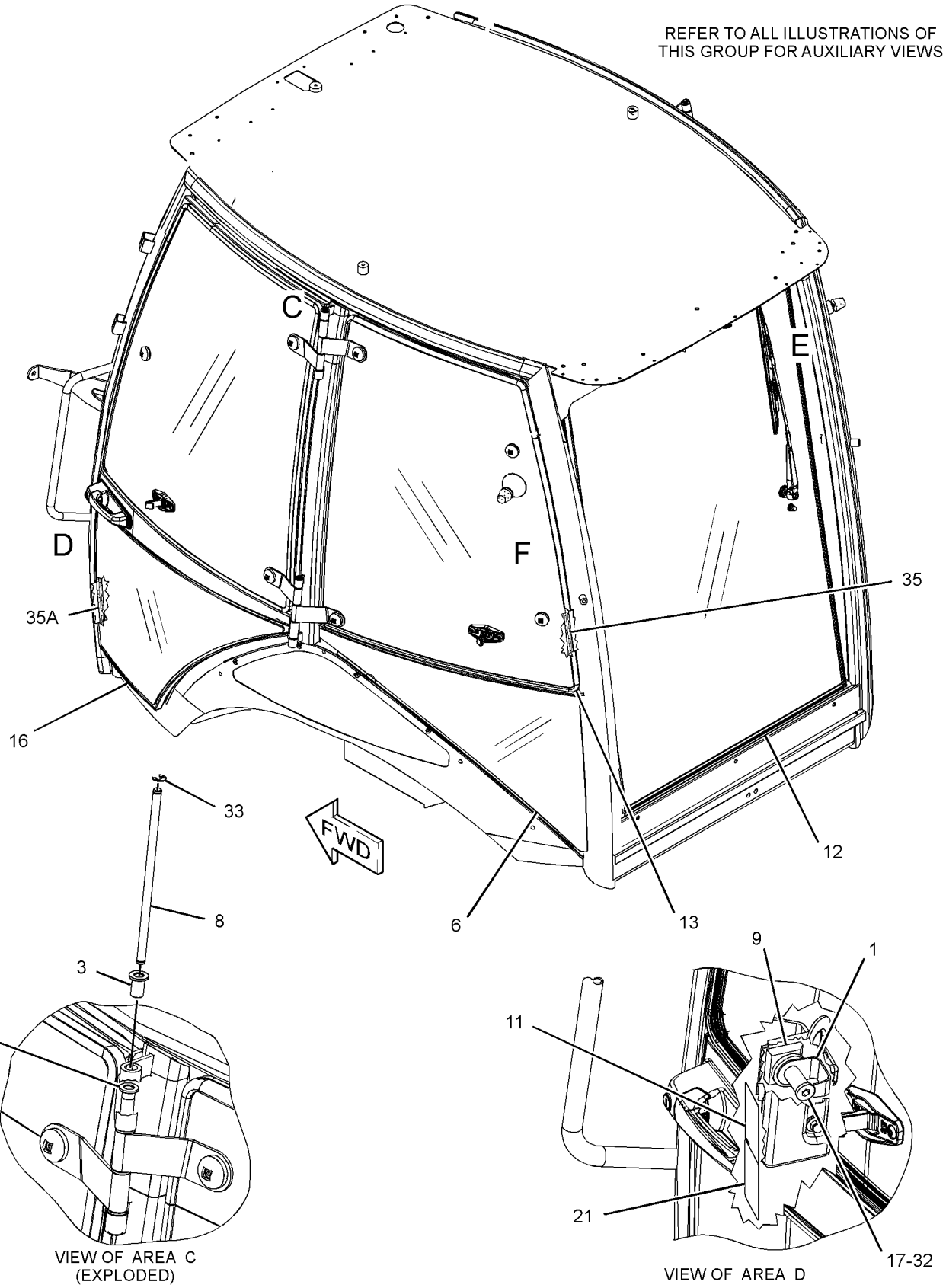

GRAPHIC #2

g02832796

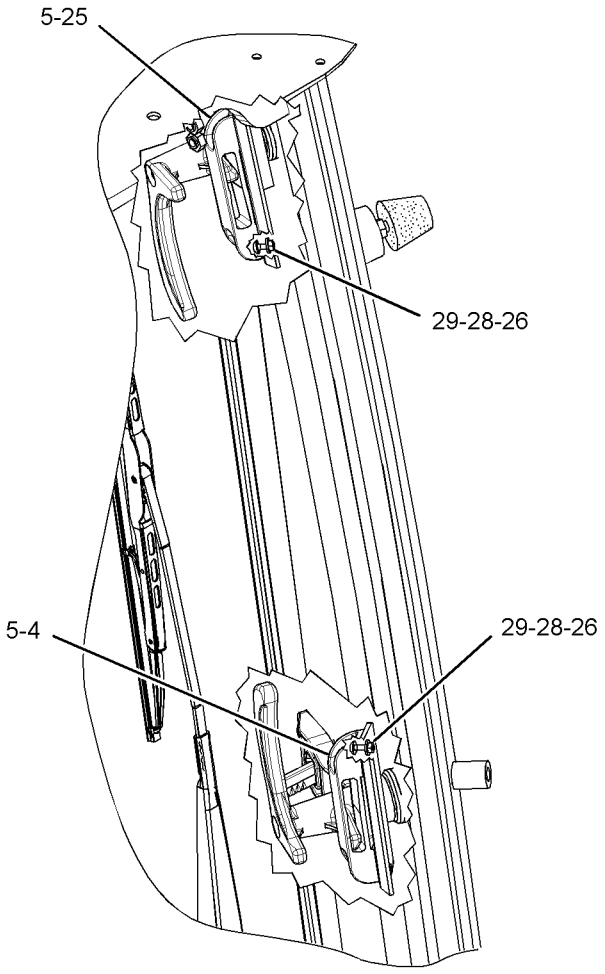

VIEW OF AREA E

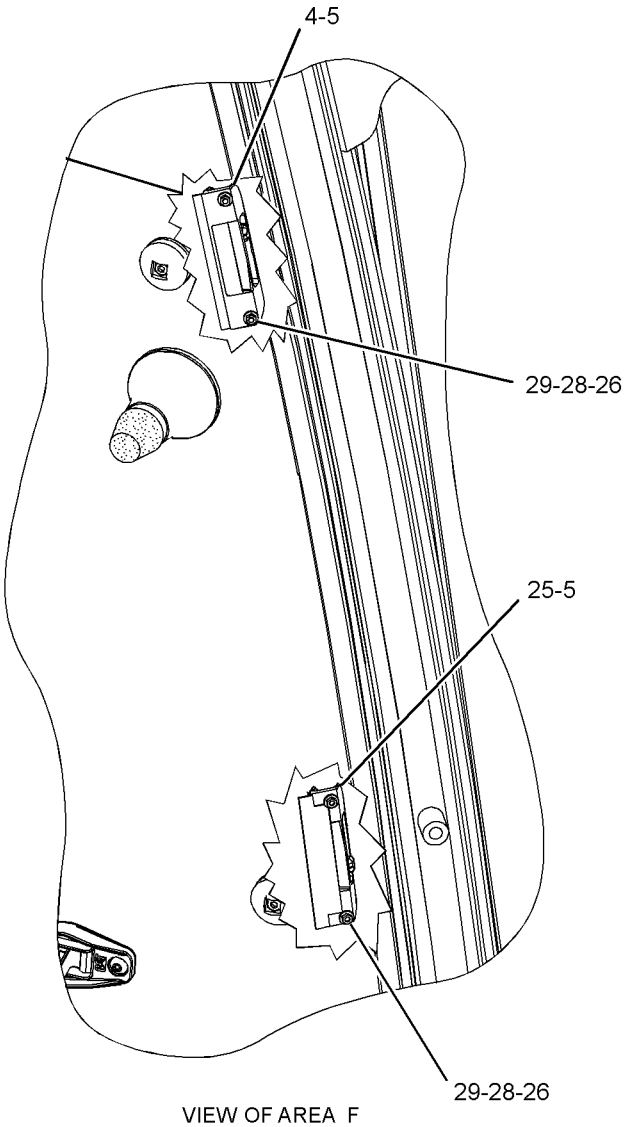

VIEW OF AREA F

GRAPHIC #3 **<END>** g02832797

299-2212 COMPRESSOR GP-REFRIGERANT

S/N: SEJ1-UP

PART OF 321-7038 COMPRESSOR GP-REFRIGERANT

AN ATTACHMENT

SMCS-1802 **i03729560**

NOTE	REF NO	GRAPHIC REF	PART NUMBER	QTY	PART NAME 1 2 3 4 5 6 (PRODUCT LEVEL)	SEE PAGE
	1	1	**126-1767**	2	PIN-CONNECTOR (14-GA TO 16-GA)	
	2	1	**102-8802**	1	KIT-RECEPTACLE (2-PIN)	
					(INCLUDES RECEPTACLE AS & WEDGE)	
	3	1	**314-4018**	1	VALVE AS-PRESSURE RELIEF (REFRIGERANT COMPRESSOR)	
	4	1	**7T-4532**	1	PLUG AS	
	5	1	**9X-7385**	2	SEAL-O-RING	

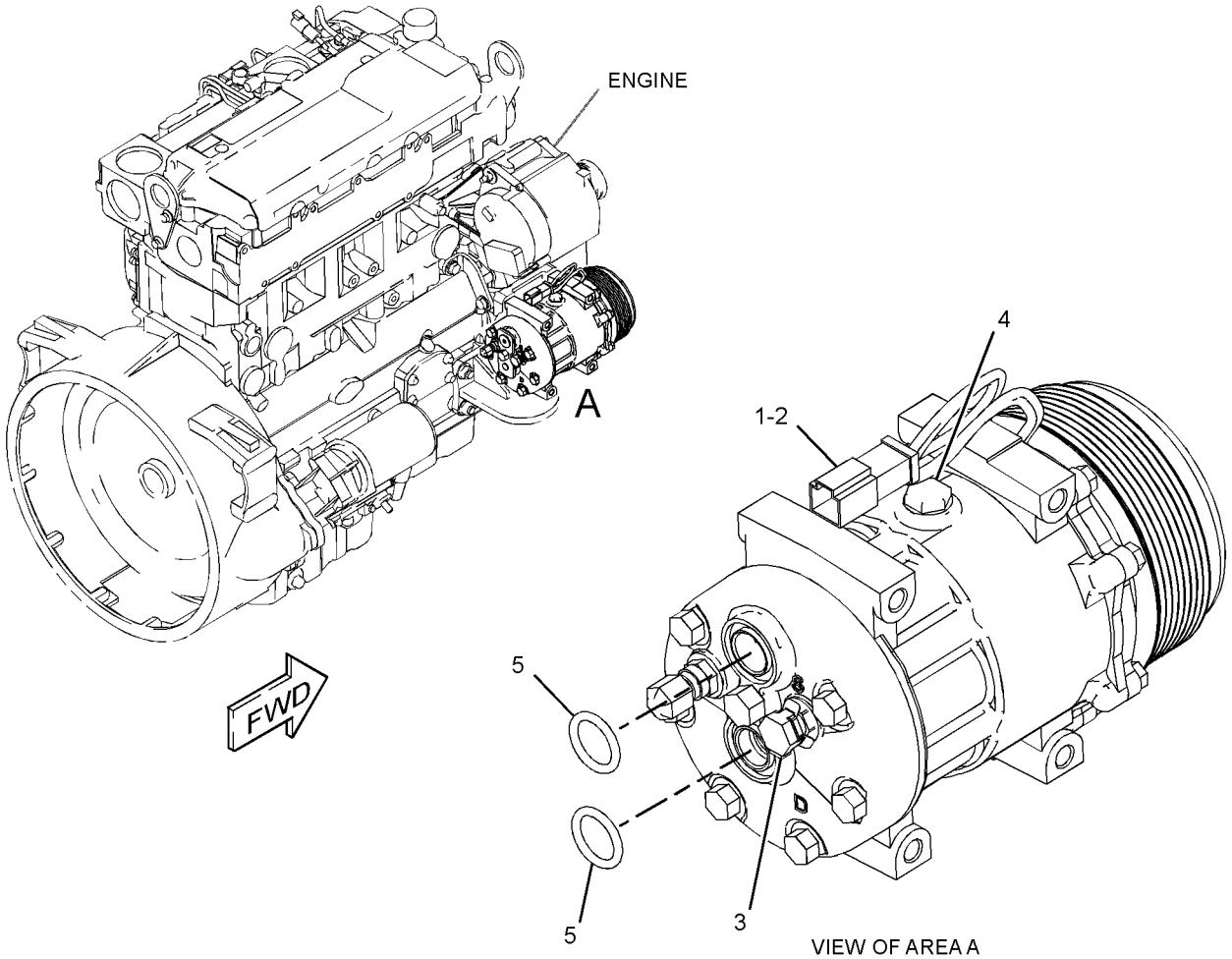

GRAPHIC #1

<END>

g01513535

OPERATOR STATION

321-7038 COMPRESSOR GP-REFRIGERANT

S/N: SEJ1-UP
PART OF 374-6889 HEATER & AIR CONDITIONER AR
AN ATTACHMENT

SMCS-1802 **i03035509**

NOTE	REF NO	GRAPHIC REF	PART NUMBER	QTY	PART NAME 1 2 3 4 5 6 (PRODUCT LEVEL)	SEE PAGE
	1	1	**288-9734**	1	BRACKET	
	2	1	**290-7831**	1	BRACKET	
Y	3	1	**299-2212**	1	COMPRESSOR GP-REFRIGERANT	579
M	4	1	**7X-2538**	4	BOLT (M8X1.25X100-MM)	
M	5	1	**7X-2553**	2	BOLT (M16X2X40-MM)	
	6	1	**8T-4121**	2	WASHER-HARD (11X21X2.5-MM THK)	
M	7	1	**8T-4136**	2	BOLT (M10X1.5X25-MM)	
	8	1	**8T-4224**	4	WASHER-HARD (8.8X16X2-MM THK)	
	9	1	**9X-8257**	2	WASHER (17.5X30X3.5-MM THK)	

M-METRIC PART
Y-SEPARATE ILLUSTRATION

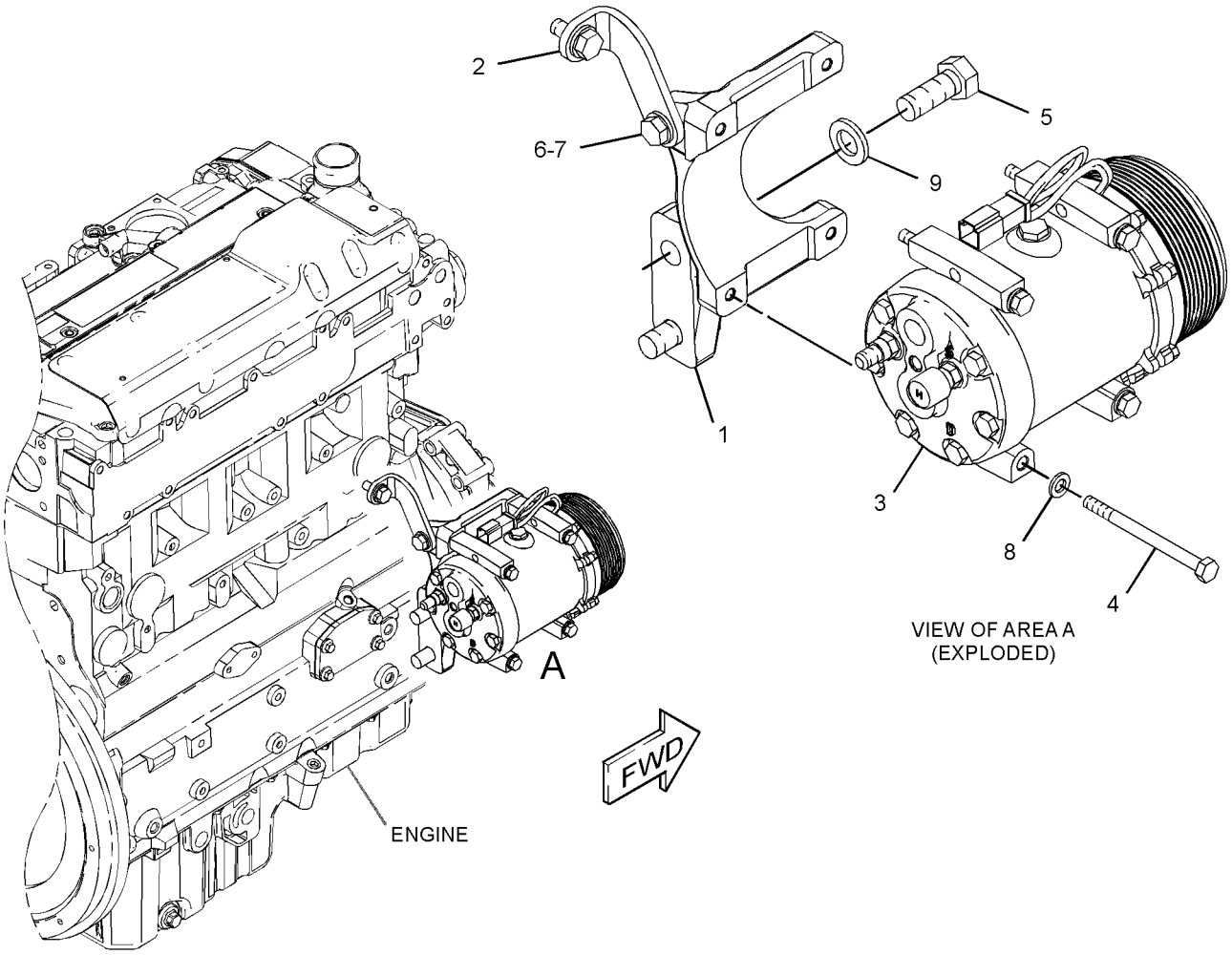

GRAPHIC #1 **<END>** g01570153

OPERATOR STATION

337-9765 CONDENSER & MTG GP-REFRIGERANT

S/N: SEJ1-UP

PART OF 374-6889 HEATER & AIR CONDITIONER AR

AN ATTACHMENT

SMCS-1805 **i04586129**

NOTE	REF NO	GRAPHIC REF	PART NUMBER	QTY	PART NAME 1 2 3 4 5 6 (PRODUCT LEVEL)	SEE PAGE
	1	1	**359-9885**	1	CONDENSER AS	
		1	**317-8141**	4	MOUNT	
	2	1	**7X-0579**	4	WASHER-HARD (8.8X25.5X2-MM THK)	
M	3	1	**8T-7547**	4	BOLT (M8X1.25X30-MM)	

M-METRIC PART

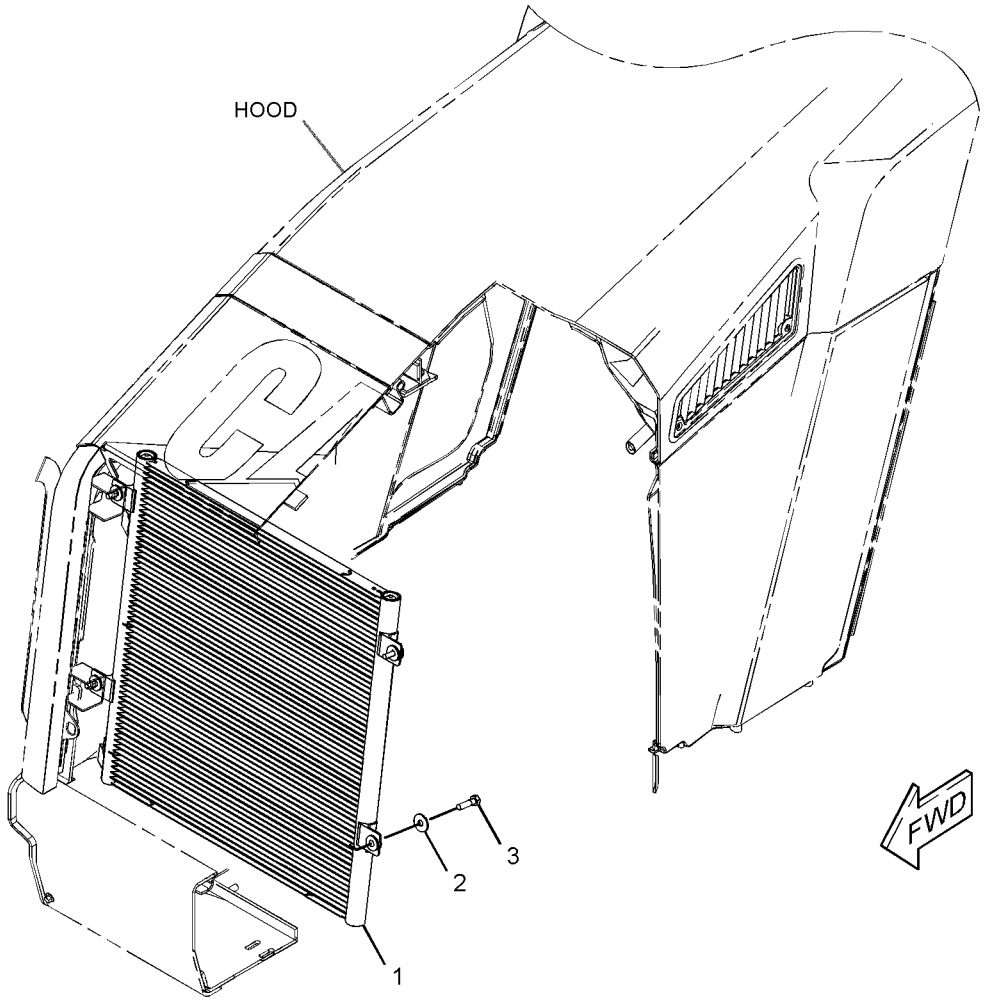

GRAPHIC #1 **<END>** g02788536

OPERATOR STATION

206-1702 CONSOLE GP-OPERATOR—LH

S/N: SEJ1-UP
PART OF 353-1429, 353-1432 CAB AR
AN ATTACHMENT

SMCS-5258, 7451 **i03126124**

NOTE	REF NO	GRAPHIC REF	PART NUMBER	QTY	PART NAME 1 2 3 4 5 6 (PRODUCT LEVEL)	SEE PAGE
E	1	1	**3E-6600**		SEAL (34-CM)	
D	2	1	**5P-5927**		SEAL (1.7-M)	
	3	1	**206-1696**	1	CONSOLE AS (LH)	
	4	1	**206-1698**	1	DOOR-STORAGE	
	5	1	**206-1699**	1	CUP HOLDER	
	6	1	**206-1706**	1	BOX AS-STORAGE	
J	7	1	**206-1708**	1	LOCK AS	
	8	1	**206-1712**	1	HINGE-DOOR	
	9	1	**210-6491**	1	CUP HOLDER	
	10	1	**249-2482**	1	PLATE	
	11	1	**261-9636**	1	BRACKET-SUPPORT	
	12	1	**261-9637**	2	BRACKET AS	
	13	1	**261-9639**	3	SCREW-PAN HEAD (12X0.5-IN)	
E	14	1	**293-1980**		SEAL (71-CM)	
E	14A	1	**293-1980**		SEAL (77-CM)	
M	15	1	**5C-2890**	3	NUT (M6X1-THD)	
	16	1	**8T-4205**	3	WASHER-HARD (7.2X14.5X2-MM THK)	
	17	1	**9X-2038**	6	WASHER (7X19X2-MM THK)	
M	18	1	**9X-2044**	19	SCREW-TRUSS HEAD (M6X1X16-MM)	

D-ORDER BY THE METER
E-ORDER BY THE CENTIMETER
J-REQUIRES CORPORATE KEY
M-METRIC PART

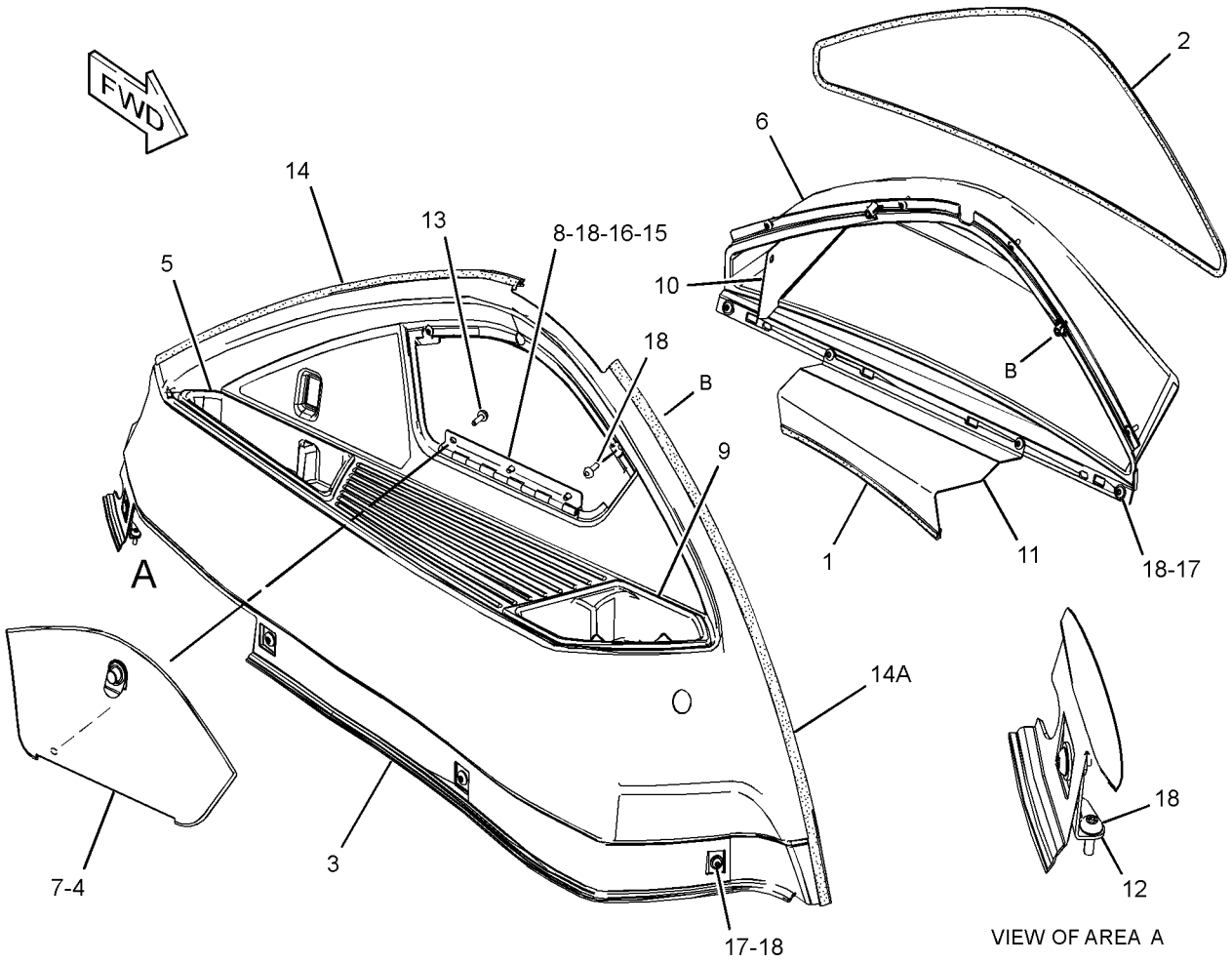

GRAPHIC #1 **<END>** g01520782

OPERATOR STATION

317-5539 CONSOLE GP-OPERATOR—FRONT

S/N: SEJ1-UP
PART OF 353-1429, 353-1432 CAB AR
AN ATTACHMENT

SMCS-5258, 7451 **i04556060**

NOTE	REF NO	GRAPHIC REF	PART NUMBER	QTY	PART NAME 1 2 3 4 5 6 (PRODUCT LEVEL)	SEE PAGE
	1	1	**4I-3038**	2	WASHER (3.3X8X0.5-MM THK)	
	2	1	**206-1659**	1	DOOR-STORAGE	
	3	1	**206-1662**	1	CONSOLE AS-FRONT (UPPER)	
		1	**206-1667**	8	CLIP	
	4	1	**206-1663**	1	CONSOLE-FRONT (MIDDLE)	
J	5	1	**206-1708**	1	LOCK AS	
	6	1	**224-2147**	1	CONSOLE AS-FRONT (LOWER, LH)	
	7	1	**224-2149**	1	CONSOLE AS-FRONT (LOWER, RH)	
BC	8	1	**227-1057**	1	PLUG-HOLE	
	9	1	**233-5260**	2	LANYARD	
	10	1	**258-2354**	1	BRACKET-LATCH	
	11	1	**261-9639**	10	SCREW-PAN HEAD (12.0X0.5-IN)	
	12	1	**313-6711**	1	COVER AS-STEERING COLUMN (UPPER)	
		1	**206-1667**	2	CLIP	
	13	1	**313-6712**	1	COVER AS-STEERING COLUMN (FRONT)	
	14	1	**313-6713**	1	COVER AS-STEERING COLUMN (REAR)	
					(EACH COVER AS INCLUDES)	
		1	**206-1667**	4	CLIP	
	15	1	**320-9835**	1	FILM-INSTRUCTION (FORWARD, NEUTRAL, REVERSE)	
M	16	1	**120-9027**	2	SCREW-PAN HEAD (M3X0.5X16-MM)	
	17	1	**206-1854**	1	HINGE	
M	18	1	**8T-2658**	2	LOCKNUT (M3X0.5-THD)	
	19	1	**9X-2038**	3	WASHER (7X19X2-MM THK)	
M	20	1	**9X-2044**	2	SCREW-TRUSS HEAD (M6X1X16-MM)	
M	21	1	**9X-2045**	16	SCREW-TRUSS HEAD (M6X1X20-MM)	
D	22	1	**5P-7070**		INSULATION-STRIP (0.1-M EACH)	
E	23	1	**220-0738**		SEAL (22-CM)	

B-USE AS REQUIRED
C-CHANGE FROM PREVIOUS TYPE
D-ORDER BY THE METER
E-ORDER BY THE CENTIMETER
J-REQUIRES CORPORATE KEY
M-METRIC PART

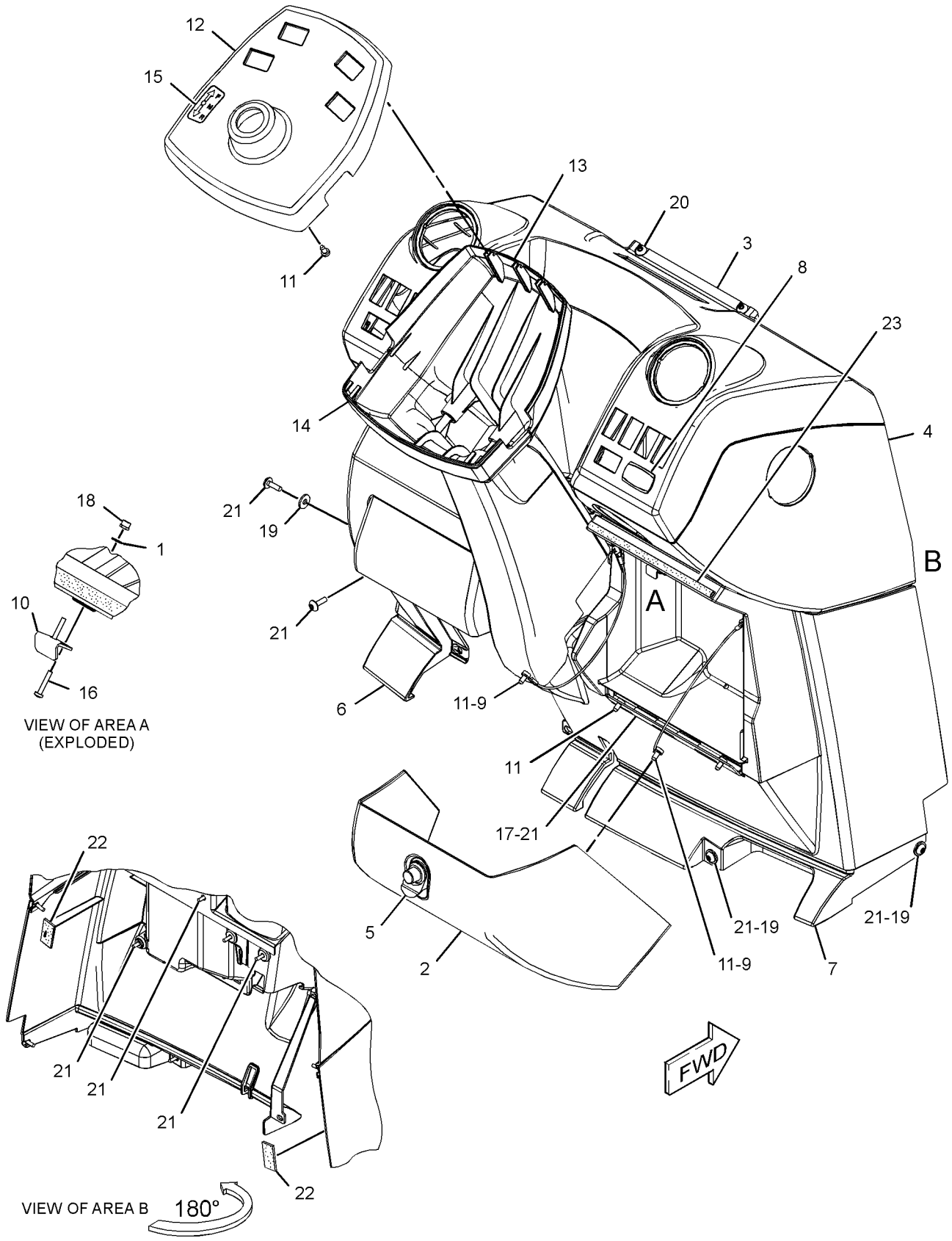

GRAPHIC #1 **<END>** g02779417

OPERATOR STATION

341-6677 CONSOLE GP-OPERATOR—RH

S/N: SEJ1-UP
PART OF 353-1429, 353-1432 CAB AR
AN ATTACHMENT

SMCS-5258, 7451 **i04548496**

NOTE	REF NO	GRAPHIC REF	PART NUMBER	QTY	PART NAME 1 2 3 4 5 6 (PRODUCT LEVEL)	SEE PAGE
B	1	1	**2S-3163**	1	PLUG	
	2	1	**164-1178**	1	CLIP	
	3	1	**167-8251**	1	FASTENER	
	4	1	**206-1678**	1	HOUSING AS (UPPER)	
	5	1	**206-1681**	1	PANEL AS (LOWER)	
		1	**172-8591**	5	NUT-SPRING	
	6	1	**206-1687**	1	COVER-FUSE	
	7	1	**206-1690**	1	COVER (FENDER, REAR)	
B	8	1	**248-2709**	2	PLUG	
	9	1	**261-9644**	1	COVER AS (CONTROLS, FRONT, LOWER)	
		1	**206-1667**	1	CLIP	
	10	1	**261-9645**	1	COVER AS (CONTROLS, FRONT, UPPER)	
		1	**206-1667**	4	CLIP	
	11	1	**269-9115**	1	COVER AS (FENDER, FRONT)	
		1	**172-8591**	1	NUT-SPRING	
E	12	1	**293-1980**		SEAL (73-CM)	
E	12A	1	**293-1980**		SEAL (77.5-CM)	
	13	1	**336-7533**	1	PANEL AS-GAUGE	
		1	**206-1667**	2	CLIP	
	14	1	**337-5351**	1	FILM-INSTRUCTION (START SWITCH)	
	15	1	**9X-2038**	5	WASHER (7X19X2-MM THK)	
M	16	1	**9X-2045**	16	SCREW-TRUSS HEAD (M6X1X20-MM)	

B-USE AS REQUIRED
E-ORDER BY THE CENTIMETER
M-METRIC PART

341-6677 **CONSOLE GP-OPERATOR** *(contd.)* **i04548496**

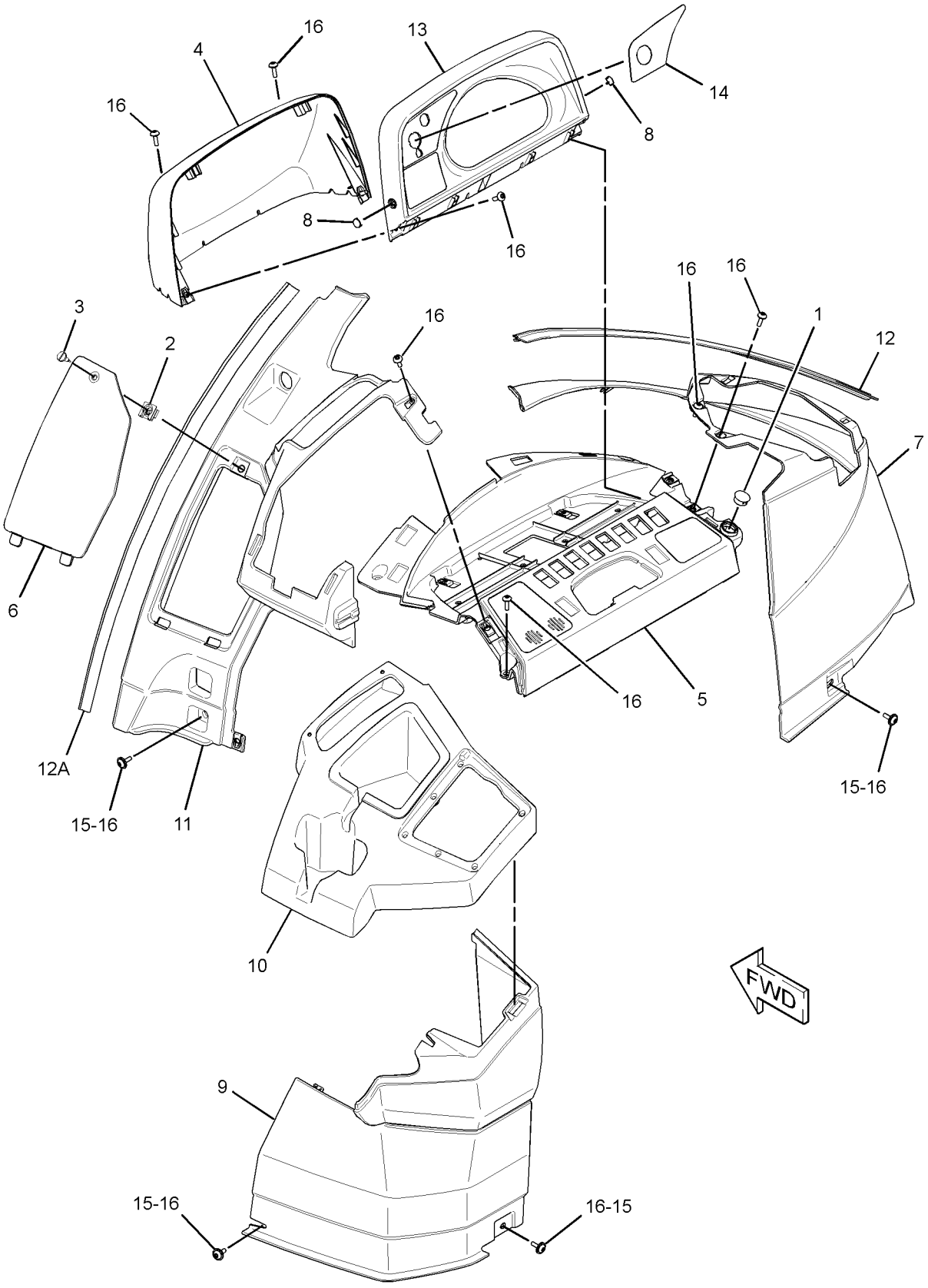

GRAPHIC #1 **<END>** g02788839

OPERATOR STATION

269-3201 CONTROL & MTG GP-JOYSTICK

S/N: SEJ1-UP
PART OF 373-4273 CONVERSION AR-QUICK COUPLER, 373-4271, 373-4275, 373-4277 VALVE AR-BANK 3 AN ATTACHMENT

SMCS-5059, 5705 **i03126127**

NOTE	REF NO	GRAPHIC REF	PART NUMBER	QTY	PART NAME 1 2 3 4 5 6 (PRODUCT LEVEL)	SEE PAGE
	1	1	**164-1368**	12	FASTENER-PANEL	
	2	1	**269-4159**	1	BRACKET AS	
	3	1	**269-4161**	1	BRACKET AS	
	4	1	**270-0149**	1	BOOT	
	5	1	**270-2795**	1	PLATE	
	6	1	**275-8869**	1	BRACKET AS	
	7	1	**291-5108**	1	GASKET	
M	8	1	**3T-0849**	4	BOLT-SOCKET HEAD (M6X1X25-MM)	
M	9	1	**6V-7744**	2	LOCKNUT (M10X1.5-THD)	
	10	1	**7X-7729**	4	WASHER (11X25X3-MM THK)	
M	11	1	**8T-4189**	8	BOLT (M8X1.25X20-MM)	
	12	1	**8T-4224**	4	WASHER-HARD (8.8X16X2-MM THK)	
M	13	1	**9X-2040**	2	SCREW-TRUSS HEAD (M10X1.5X25-MM)	
	14	1	**9X-8256**	4	WASHER (6.6X12X2-MM THK)	
	15	1	**5P-4116**	4	WASHER-HARD (8.8X20.5X2-MM THK)	
E	16	1	**3E-6600**		SEAL (7-CM)	
M	17	1	**8T-4244**	1	NUT (M12X1.75-THD)	

E-ORDER BY THE CENTIMETER
M-METRIC PART

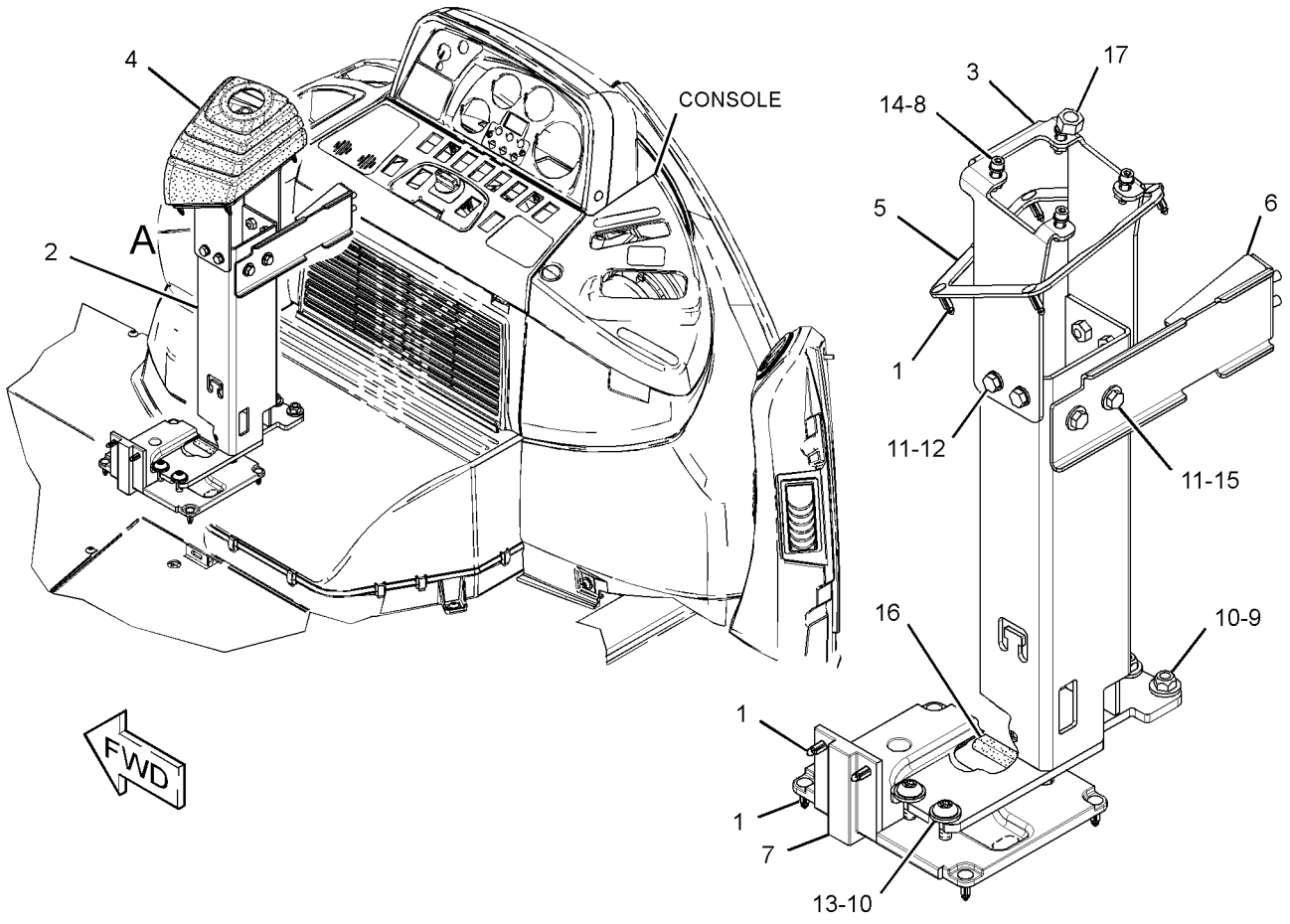

VIEW OF AREA A
(BOOT REMOVED FOR CLARITY)

GRAPHIC #1 **<END>** g01385649

353-1447 CONTROL AR-STABILIZER—SIDESHIFT

S/N: SEJ1-UP
PART OF 374-6857, 374-6858 CAB AR
AN ATTACHMENT

SMCS-1408, 7222 **i04618111**

NOTE	PART NUMBER	QTY	PART NAME 1 2 3 4 5 6 (PRODUCT LEVEL)	SEE PAGE
Y	*206-1641*	1	LOCK GP-TRANSPORT (STABILIZER)	481
	359-7247	1	VALVE GP-PILOT	
	251-5627	1	FILM-INSTRUCTION (STABILIZER, SIDESHIFT)	
			(ON RH CONSOLE NEXT TO STAB CONTROLS INSIDE CAB & CANOPIES)	

Y-SEPARATE ILLUSTRATION

<END>

353-1448 CONTROL AR-STABILIZER—AUTO UP

S/N: SEJ1-UP
PART OF 373-4297 CAB AR, 373-4298 CAB AR-ENCLOSED ROPS
AN ATTACHMENT

SMCS-1408, 7222 **i04611413**

NOTE	PART NUMBER	QTY	PART NAME 1 2 3 4 5 6 (PRODUCT LEVEL)	SEE PAGE
Y	*206-1641*	1	LOCK GP-TRANSPORT (STABILIZER)	481
Y	*357-3230*	1	RELAY GP	120
Y	**359-7248**	1	VALVE GP-PILOT (STABILIZER CONTROL)	461
	251-5629	1	FILM-IDENTIFICATION (STABILIZER, AUTO UP)	

Y-SEPARATE ILLUSTRATION

<END>

OPERATOR STATION

271-3097 CONTROL GP-HANDLE–LH

S/N: SEJ1-UP
PART OF 373-4273 CONVERSION AR-QUICK COUPLER, 373-4271, 373-4275, 373-4277 VALVE AR-BANK 3
AN ATTACHMENT

SMCS-5063, 5705 **i03321224**

NOTE	REF NO	GRAPHIC REF	PART NUMBER	QTY	PART NAME 1 2 3 4 5 6 (PRODUCT LEVEL)	SEE PAGE
	1	1	**271-3103**	1	HANDLE GP-MODULAR (LH)	
		1	**8T-8737**	10	PLUG-SEAL	
		1	**174-3091**	1	KIT-RECEPTACLE (12-PIN)	
					(INCLUDES RECEPTACLE AS & WEDGE)	
		1	**186-3735**	2	PIN-CONNECTOR (16-GA TO 18-GA)	
	2	1	**278-7469**	1	ADAPTER (LH)	
	3	1	**254-3437**	1	BOOT	

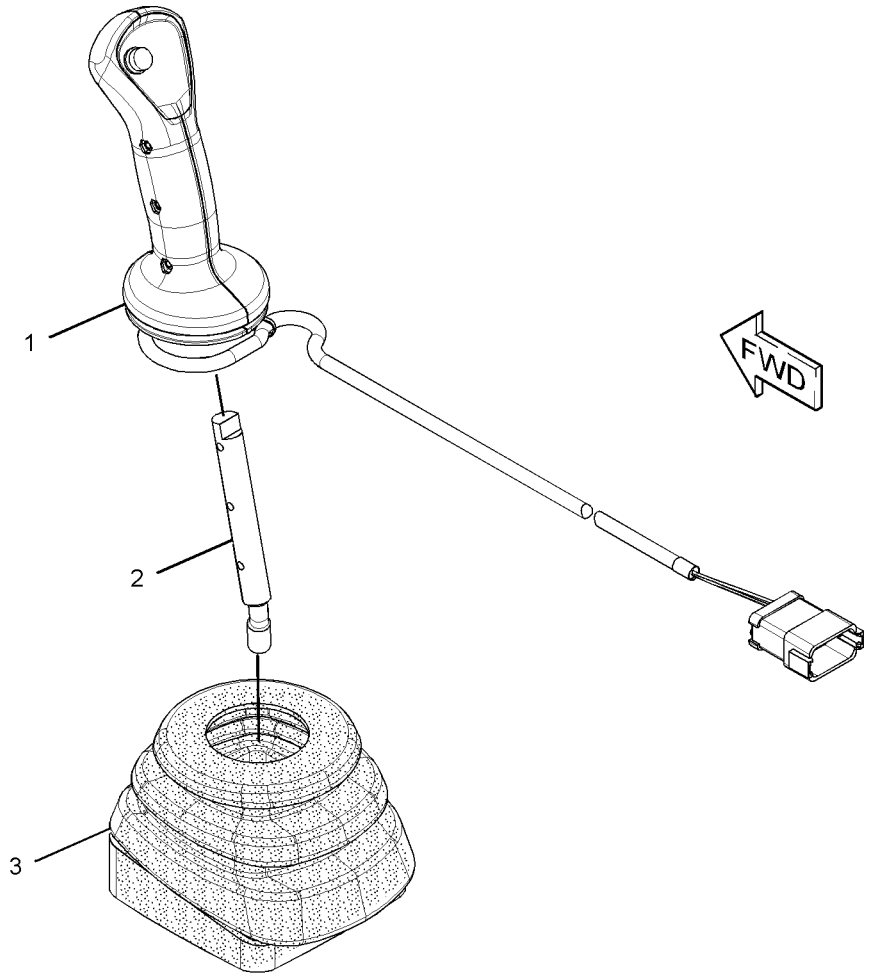

GRAPHIC #1 **<END>** g01473695

OPERATOR STATION

272-9700 CONTROL GP-HANDLE–RH, JOYSTICK

S/N: SEJ1-UP
PART OF 373-4273 CONVERSION AR-QUICK COUPLER, 373-4271, 373-4275, 373-4277
VALVE AR-BANK 3
AN ATTACHMENT

SMCS-5063, 5705 **i03712373**

NOTE	REF NO	GRAPHIC REF	PART NUMBER	QTY	PART NAME 1 2 3 4 5 6 (PRODUCT LEVEL)	SEE PAGE
	1	1	**263-2901**	1	HANDLE GP-MODULAR (RH)	
		1	**8T-8737**	5	PLUG-SEAL	
		1	**174-3091**	1	KIT-RECEPTACLE (12-PIN)	
					(INCLUDES RECEPTACLE AS & WEDGE)	
		1	**186-3735**	7	PIN-CONNECTOR (16-GA TO 18-GA)	
	2	1	**272-9701**	1	ADAPTER (RH)	

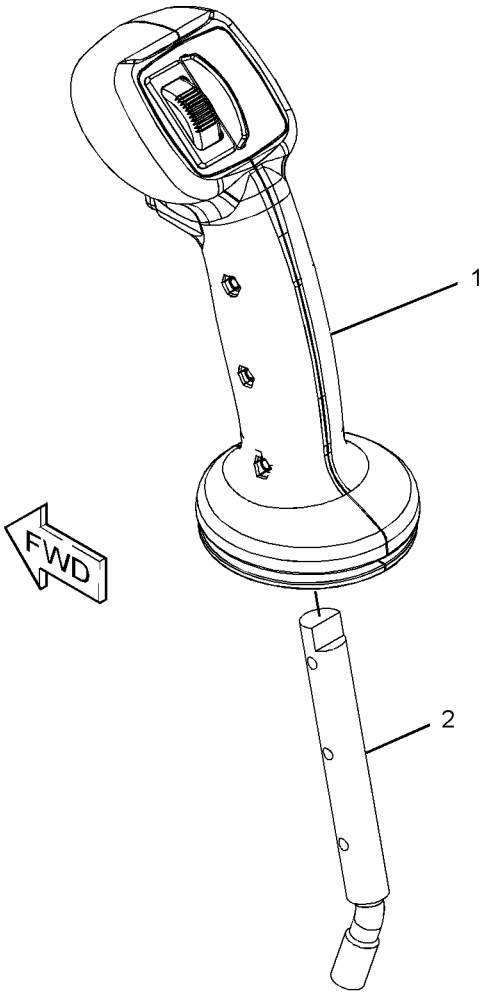

GRAPHIC #1 **<END>** g01214739

OPERATOR STATION

231-2879 CONTROL GP-HYDRAULIC LOCKOUT–

PEDAL, BACKHOE

S/N: SEJ1-UP

PART OF 341-3107 CONVERSION AR-ROADING

AN ATTACHMENT

SMCS-5001 **i03371829**

NOTE	REF NO	GRAPHIC REF	PART NUMBER	QTY	PART NAME 1 2 3 4 5 6 (PRODUCT LEVEL)	SEE PAGE
	1	1	**184-5382**	1	PIN	
	2	1	**179-8235**	1	LOCK PIN	

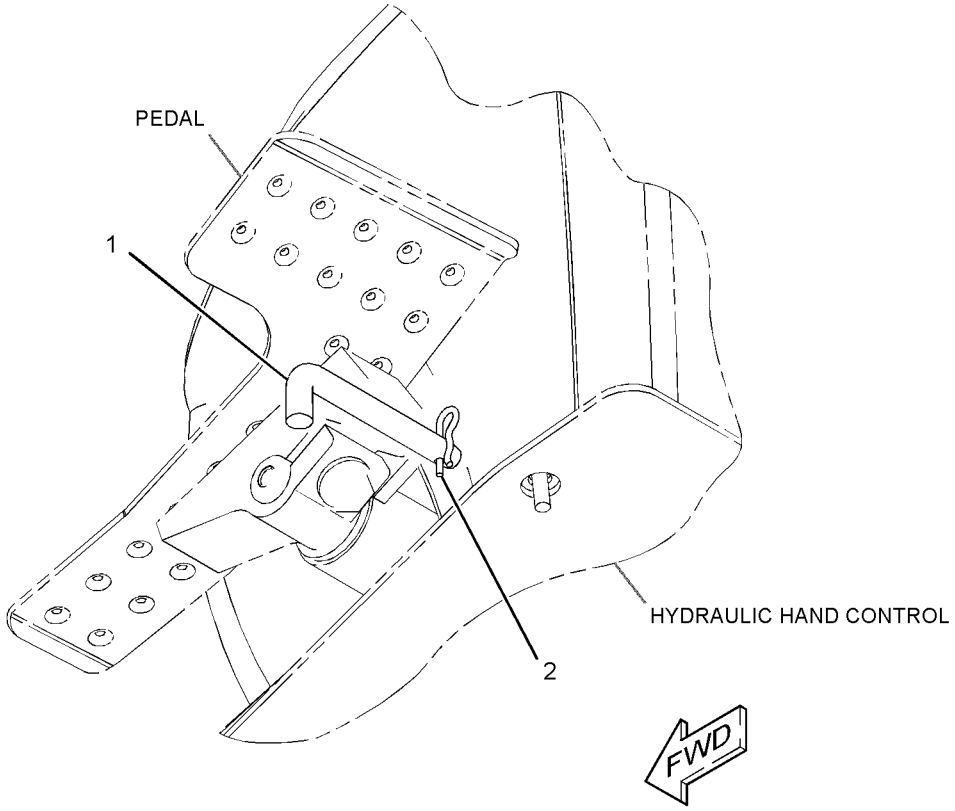

GRAPHIC #1 **<END>** g01809176

332-4254 CONTROL GP-HYDRAULIC LOCKOUT–HAND THROTTLE

S/N: SEJ1-UP

PART OF 341-3107 CONVERSION AR-ROADING

AN ATTACHMENT

SMCS-5001 **i03860355**

NOTE	REF NO	GRAPHIC REF	PART NUMBER	QTY	PART NAME 1 2 3 4 5 6 (PRODUCT LEVEL)	SEE PAGE
	1	1	**183-6438**	2	SPACER (10.5X20X14-MM THK)	
	2	1	**297-1330**	1	PIN	
	3	1	**330-6992**	1	BLOCK	
	4	1	**346-5063**	1	PIN	
	5	1	**352-9742**	2	BLOCK	
M	6	1	**5C-7261**	2	NUT (M8X1.25-THD)	
	7	1	**8T-4121**	2	WASHER-HARD (11X21X2.5-MM THK)	
M	8	1	**8T-4137**	2	BOLT (M10X1.5X20-MM)	
M	9	1	**8T-4197**	2	BOLT (M8X1.25X40-MM)	
	10	1	**8T-4224**	4	WASHER-HARD (8.8X16X2-MM THK)	

M-METRIC PART

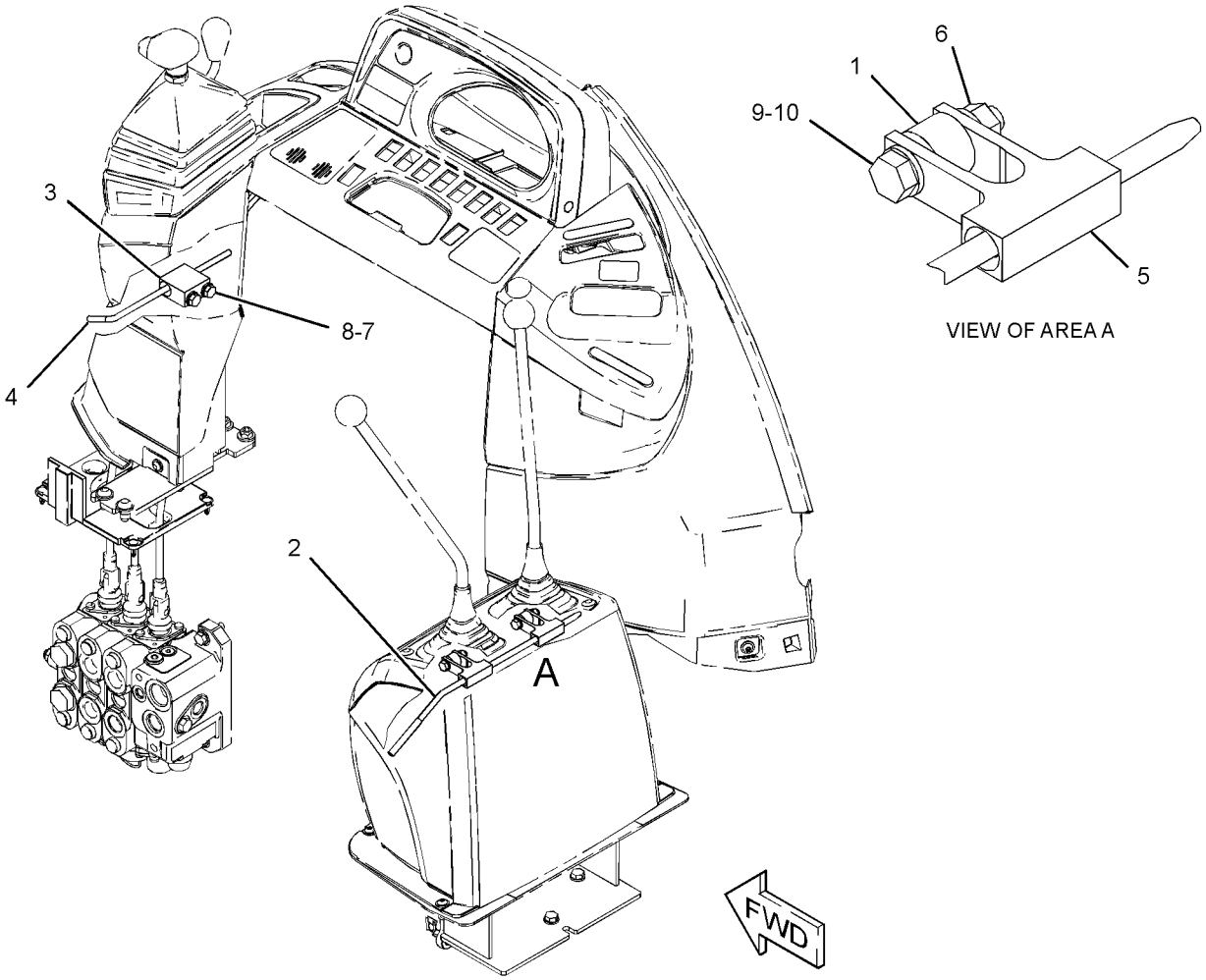

GRAPHIC #1 **<END>** g02113733

OPERATOR STATION

271-3096 CONTROL GP-JOYSTICK–RH

S/N: SEJ1-UP
PART OF 373-4273 CONVERSION AR-QUICK COUPLER, 373-4271, 373-4275, 373-4277 VALVE AR-BANK 3 AN ATTACHMENT

SMCS-5705 **i03321223**

NOTE	REF NO	GRAPHIC REF	PART NUMBER	QTY	PART NAME 1 2 3 4 5 6 (PRODUCT LEVEL)	SEE PAGE
	1	1	**271-3101**	1	HANDLE GP-MODULAR (RH)	
		1	**8T-8737**	8	PLUG-SEAL	
		1	**174-3091**	1	KIT-RECEPTACLE (12-PIN)	
					(INCLUDES RECEPTACLE AS & WEDGE)	
		1	**186-3735**	4	PIN-CONNECTOR (16-GA TO 18-GA)	
	2	1	**272-9701**	1	ADAPTER (RH)	
	3	1	**254-3437**	1	BOOT	

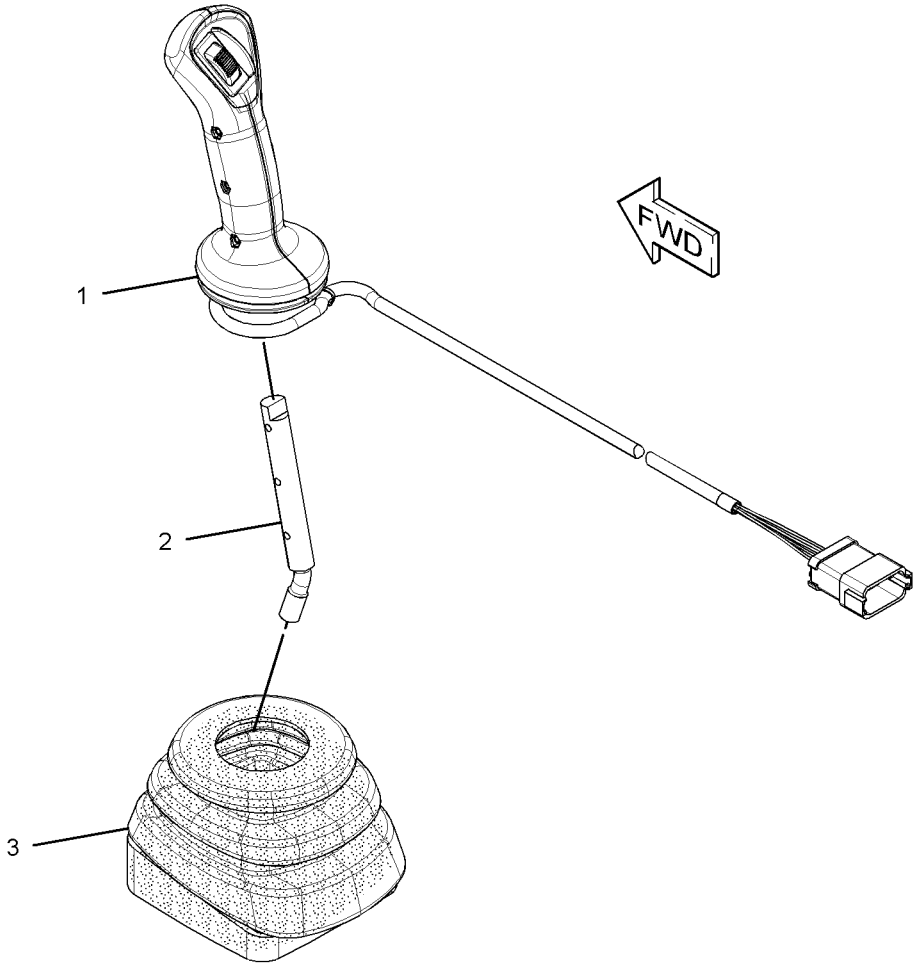

GRAPHIC #1 **<END>** g01478115

356-4120 CONTROL GP-STEERING–TILT

S/N: SEJ1-UP

PART OF 353-1429, 353-1432 CAB AR

AN ATTACHMENT

SMCS-4309, 4310, 4338 **i04565291**

NOTE	REF NO	GRAPHIC REF	PART NUMBER	QTY	PART NAME 1 2 3 4 5 6 (PRODUCT LEVEL)	SEE PAGE
	1	1	**8R-2916**	1	COVER AS (CAT STEERING WHEEL)	
	2	1	**255-2749**	1	PLUG	
Y	3	1	**310-6216**	1	STEERING COLUMN GP	301
	4	1	**317-5541**	1	STEERING WHEEL	
	5	1	**325-9308**	1	KNOB AS	
	6	1	**356-4121**	1	PLATE AS	
	7	1	**7X-7729**	6	WASHER (11X25X3-MM THK)	
	8	1	**8T-4121**	4	WASHER-HARD (11X21X2.5-MM THK)	
M	9	1	**8T-4133**	2	NUT (M10X1.5-THD)	
M	10	1	**8T-4136**	4	BOLT (M10X1.5X25-MM)	
M	11	1	**8T-4195**	4	BOLT (M10X1.5X30-MM)	
M	12	1	**101-7401**	1	BOLT-SOCKET HEAD (M10X1.5X20-MM)	

M-METRIC PART
Y-SEPARATE ILLUSTRATION

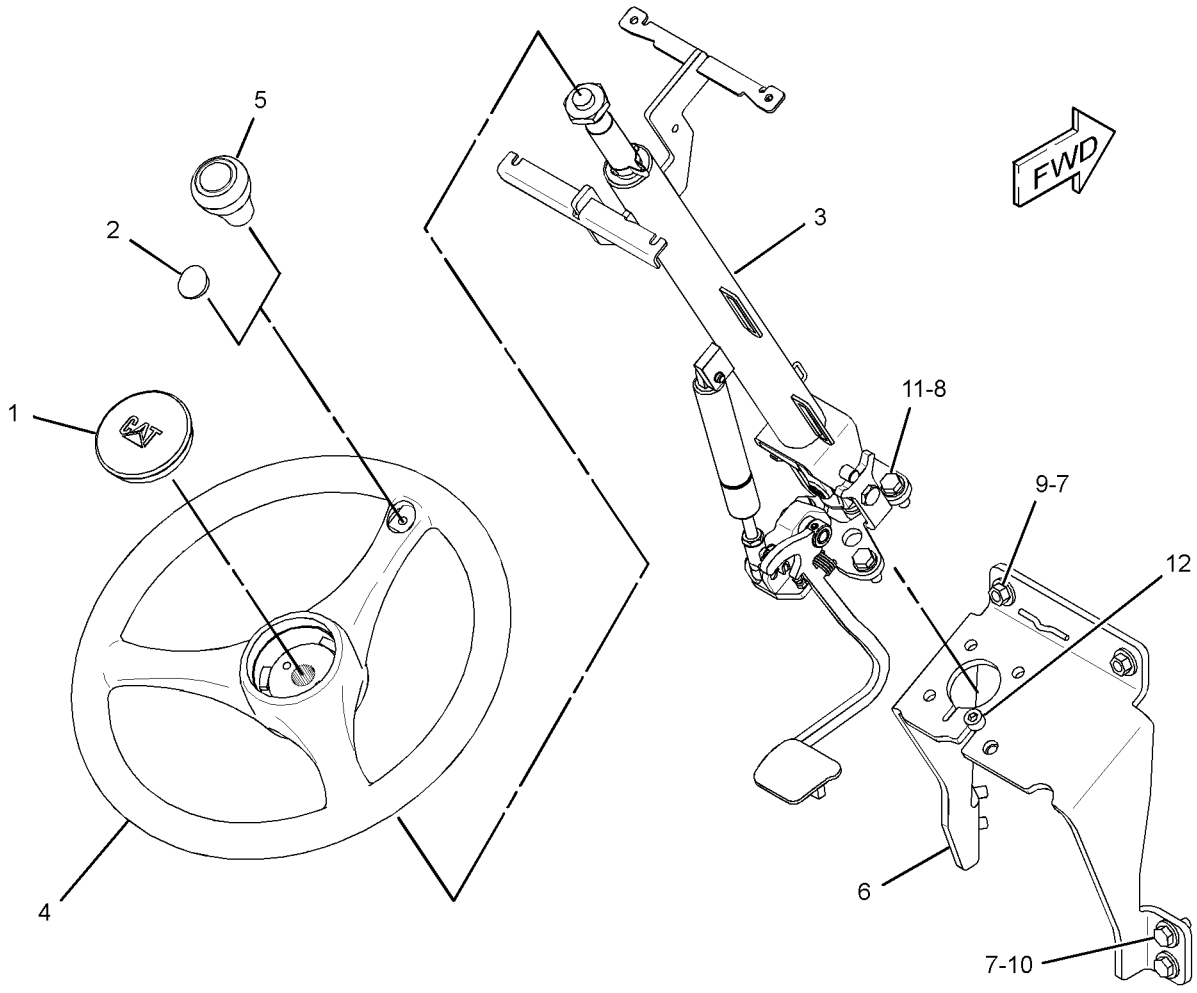

GRAPHIC #1 **<END>** g02809681

OPERATOR STATION

356-4080 CONTROL GP-TRANSMISSION

S/N: SEJ1-UP

PART OF 353-1513 TRANSMISSION AR-POWER SHIFT

AN ATTACHMENT

SMCS-3065, 3168 **i04580749**

NOTE	REF NO	GRAPHIC REF	PART NUMBER	QTY	PART NAME 1 2 3 4 5 6 (PRODUCT LEVEL)	SEE PAGE
	1	1	**8T-9501**	2	SCREW (10-16X0.75-IN)	
	2	1	**3S-2093**	1	STRAP-CABLE	
	3	1	**9R-1766**	1	COVER-BOTTOM	
	4	1	**9R-1767**	1	BOOT	
	5	1	**107-5591**	1	NUT-JAM (3/4-16-THD)	
	6	1	**164-1153**	1	KNOB (UPPER)	
	7	1	**164-1368**	8	FASTENER-PANEL	
	8	1	**206-1669**	1	BOOT	
	9	1	**220-3470**	1	BOOT-SEAL	
	10	1	**230-2389**	1	PLATE	
	11	1	**230-2390**	1	PLATE	
	12	1	**263-7261**	1	SWITCH GP-PUSH BUTTON (NEUTRALIZER)	
	13	1	**310-9355**	1	CONTROL GP-TRANSMISSION (FORWARD, NEUTRAL, REVERSE)	
		1	**8T-8737**	6	PLUG-SEAL	
		1	**174-3091**	1	KIT-RECEPTACLE (12-PIN)	
					(INCLUDES RECEPTACLE AS & WEDGE)	
	14	1	**356-4074**	1	ROD AS	
M	15	1	**105-3480**	2	BOLT-SOCKET HEAD (M5X0.8X16-MM)	
	16	1	**102-8802**	1	KIT-RECEPTACLE (2-PIN)	
					(INCLUDES RECEPTACLE AS & WEDGE)	
	17	1	**7X-0620**	1	WASHER-HARD (5.5X13X1.6-MM THK)	
	18	1	**8T-4223**	1	WASHER-HARD (13.5X25.5X3-MM THK)	
M	19	1	**8T-4956**	1	BOLT (M12X1.75X35-MM)	

M-METRIC PART

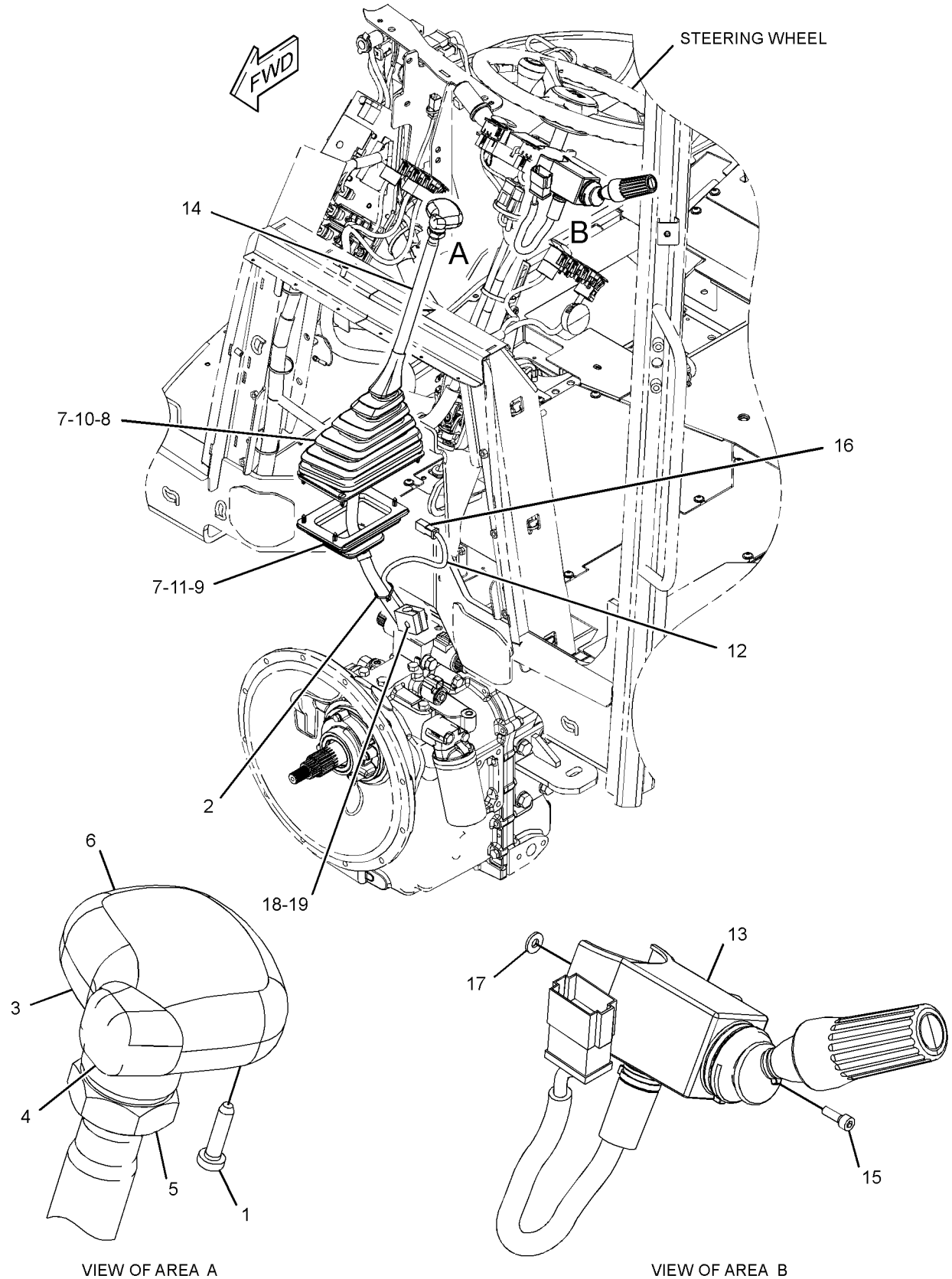

GRAPHIC #1 **<END>** g02809018

OPERATOR STATION

329-1167 DOOR GP-CAB–RH

S/N: SEJ1-UP
PART OF 356-4104, 356-4105 CAB GP
AN ATTACHMENT

SMCS-7308 **i04633190**

NOTE	REF NO	GRAPHIC REF	PART NUMBER	QTY	PART NAME 1 2 3 4 5 6 (PRODUCT LEVEL)	SEE PAGE
	1	1	**132-2249**	2	SPACER (7.4X12.7X24-MM THK)	
J	2	1	**159-4269**	1	SPRING GP-GAS (CAB DOOR)	
	3	1	**159-4945**	1	KEEPER	
B	4	1	**177-4877**	1	SHIM (1-MM THK)	
	5	1	**205-9598**	1	GLASS (RH)	
	6	1	**248-2714**	2	NUT-ACORN (M6X1-THD)	
N	7	1	**252-1862**	1	HANDLE AS (PULL)	
	8	1	**252-1863**	1	GASKET	
	9	1	**252-1865**	1	LATCH AS (RH)	
	10	1	**253-1817**	1	SPACER (6.5X14.5X12-MM THK)	
	11	1	**253-1857**	1	PLATE	
	12	1	**253-1858**	1	COVER (LATCH)	
	13	1	**254-1126**	1	PLATE	
	14	1	**254-1127**	1	PLATE	
	15	1	**258-3697**	2	WASHER-NYLON (7X20X2-MM THK)	
	16	1	**329-1169**	1	DOOR AS (RH)	
Y	17	1	*333-9902*	1	WINDOW GP-DOOR (RH)	662
	18	1	**223-2029**	1	SEAL AS (RH)	
M	19	1	**174-8131**	2	SCREW-TRUSS HEAD (M4X0.7X12-MM)	
	20	1	**197-5107**	2	SCREW-TRUSS HEAD (M6X1X60-MM)	
	21	1	**205-7048**	2	INSERT-THREADED (M6X1-THD)	
M	22	1	**5C-9553**	3	BOLT (M6X1X16-MM)	
M	23	1	**8T-6974**	1	BOLT (M6X1X80-MM)	
	24	1	**9X-2038**	4	WASHER (7X19X2-MM THK)	
M	25	1	**9X-2045**	4	SCREW-TRUSS HEAD (M6X1X20-MM)	
E	26	1	**322-8414**		SEAL-CAB (347-CM)	
					PARTS SHOWN IN GRAPHIC(S) WITHOUT A REFERENCE NUMBER ARE NOT SERVICED SEPARATELY	
					AVAILABLE REPAIR KIT(S):	
J			**161-9044**	1	KIT-FITTING	
					(INCLUDES FITTING AS & NUT)	

B-USE AS REQUIRED
E-ORDER BY THE CENTIMETER
J-KIT MARKED J SERVICES PART MARKED J
M-METRIC PART
N-REQUIRES CORPORATE KEY
Y-SEPARATE ILLUSTRATION

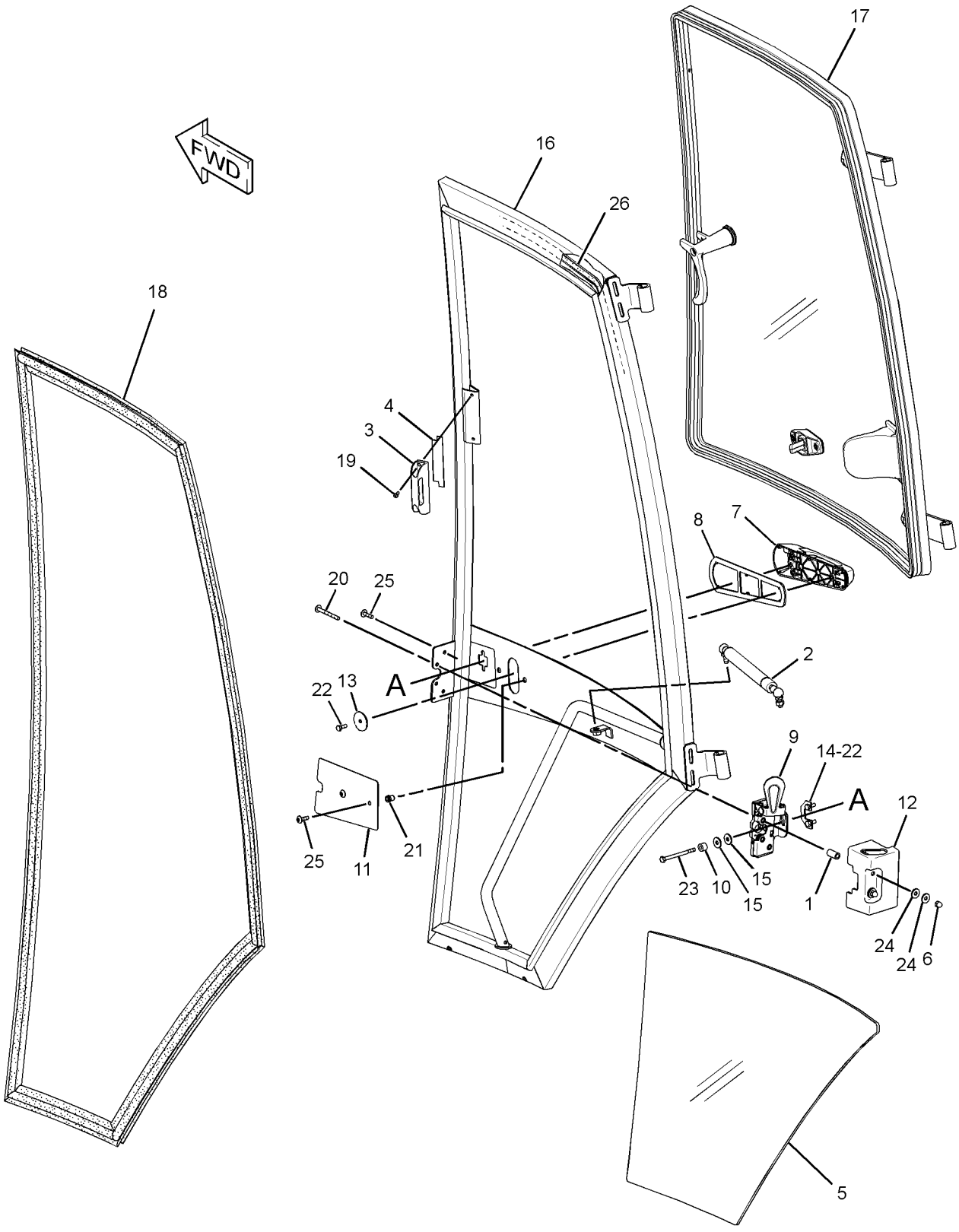

GRAPHIC #1 **<END>** g01819794

OPERATOR STATION

329-1168 DOOR GP-CAB—LH

S/N: SEJ1-UP
PART OF 356-4104, 356-4105 CAB GP
AN ATTACHMENT

SMCS-7308 **i04631251**

NOTE	REF NO	GRAPHIC REF	PART NUMBER	QTY	PART NAME 1 2 3 4 5 6 (PRODUCT LEVEL)	SEE PAGE
	1	1	**132-2249**	2	SPACER (7.4X12.7X24-MM THK)	
J	2	1	**159-4269**	1	SPRING GP-GAS (CAB DOOR)	
B	3	1	**177-4877**	1	SHIM (1-MM THK)	
	4	1	**205-9588**	1	GLASS (LH)	
	5	1	**248-2714**	2	NUT-ACORN (M6X1-THD)	
N	6	1	**252-1862**	1	HANDLE AS (PULL)	
	7	1	**252-1863**	1	GASKET	
	8	1	**252-1864**	1	LATCH AS (LH)	
	9	1	**253-1817**	1	SPACER (6.5X14.5X12-MM THK)	
	10	1	**253-1857**	1	PLATE	
	11	1	**253-1858**	1	COVER (LATCH)	
	12	1	**254-1126**	1	PLATE	
	13	1	**254-1127**	1	PLATE	
	14	1	**258-3697**	2	WASHER-NYLON (7X20X2-MM THK)	
	15	1	**329-1170**	1	DOOR AS (LH)	
Y	16	1	**333-9901**	1	WINDOW GP-DOOR (LH)	661
	17	1	**223-2028**	1	SEAL AS (LH)	
M	18	1	**174-8131**	2	SCREW-TRUSS HEAD (M4X0.7X12-MM)	
	19	1	**159-4946**	1	KEEPER	
	20	1	**197-5107**	2	SCREW-TRUSS HEAD (M6X1X60-MM)	
	21	1	**205-7048**	2	INSERT-THREADED (M6X1-THD)	
M	22	1	**5C-9553**	3	BOLT (M6X1X16-MM)	
M	23	1	**8T-6974**	1	BOLT (M6X1X80-MM)	
	24	1	**9X-2038**	4	WASHER (7X19X2-MM THK)	
M	25	1	**9X-2045**	4	SCREW-TRUSS HEAD (M6X1X20-MM)	
E	26	1	**322-8414**		SEAL-CAB (347-CM)	
					PARTS SHOWN IN GRAPHIC(S) WITHOUT A REFERENCE NUMBER ARE NOT SERVICED SEPARATELY	
					AVAILABLE REPAIR KIT(S):	
J			**161-9044**	1	KIT-FITTING	
					(INCLUDES NUT & FITTING AS)	

B-USE AS REQUIRED
E-ORDER BY THE CENTIMETER
J-KIT MARKED J SERVICES PART MARKED J
M-METRIC PART
N-REQUIRES CORPORATE KEY
Y-SEPARATE ILLUSTRATION

329-1168 DOOR GP-CAB *(contd.)* **i04631251**

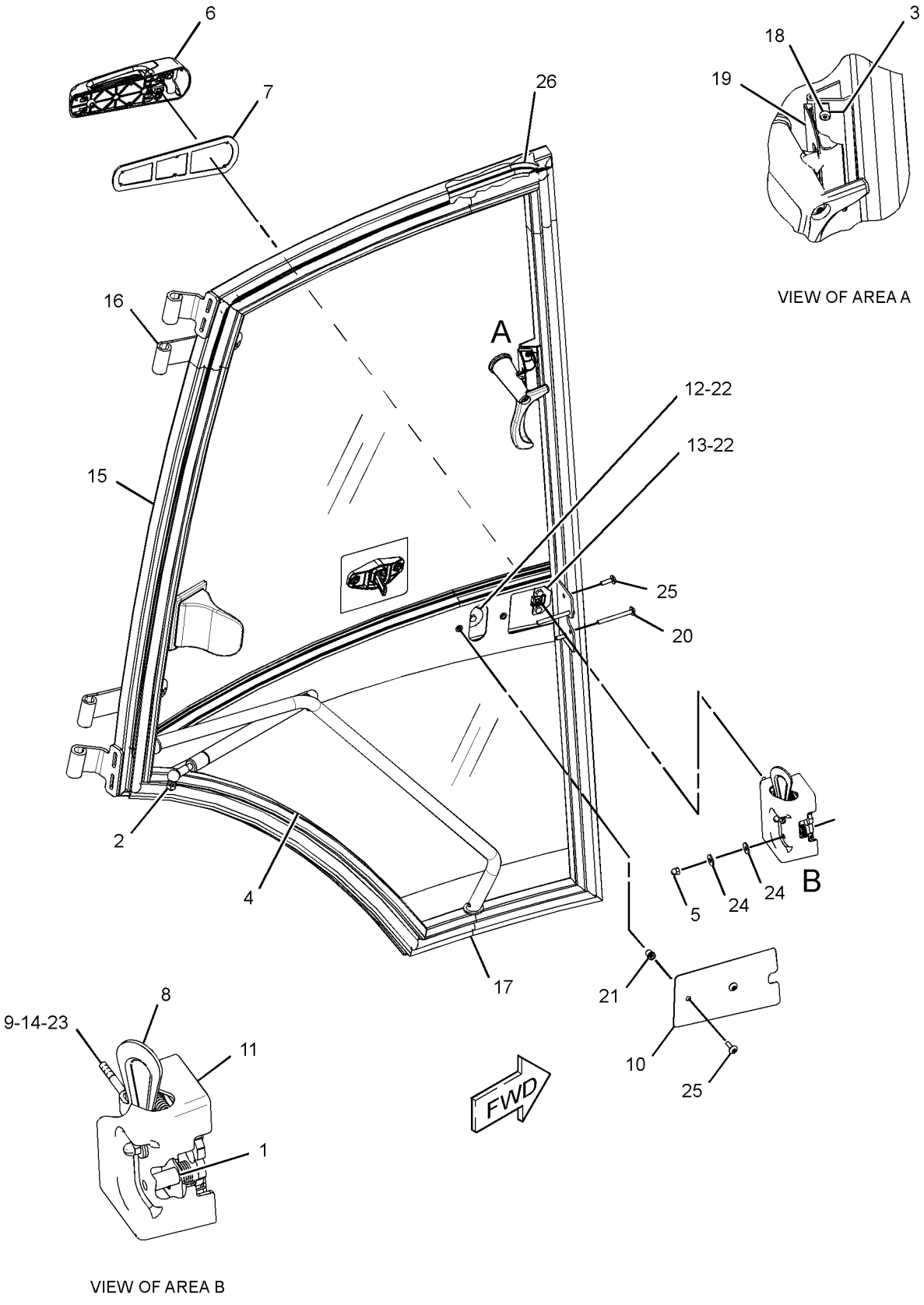

GRAPHIC #1 **<END>** g02797040

OPERATOR STATION

353-1399 DUCT GP-CAB AIR

S/N: SEJ1-UP
PART OF 353-1429, 353-1432 CAB AR
AN ATTACHMENT

SMCS-734D **i04611429**

NOTE	REF NO	GRAPHIC REF	PART NUMBER	QTY	PART NAME 1 2 3 4 5 6 (PRODUCT LEVEL)	SEE PAGE
	1	1	**8Y-6352**	1	LOUVER AS	
	2	1	**8Y-6967**	6	LOUVER AS-VENT	
	3	1	**9M-7959**	4	CLAMP-HOSE	
	4	1	**164-8474**	2	LOUVER AS-VENT	
	5	1	**206-1653**	4	GASKET	
	6	1	**206-1803**	2	GASKET	
	7	1	**206-1805**	1	GASKET	
	8	1	**206-1810**	1	DUCT-AIR	
	9	1	**206-1815**	1	DUCT-AIR	
	10	1	**206-1816**	1	DUCT-AIR	
	11	1	**206-1817**	2	DUCT-AIR	
	12	1	**218-0666**	6	LOUVER AS	
	13	1	**221-2420**	2	HOSE-AIR	
	14	1	**313-6709**	1	DUCT-AIR	
	15	1	**313-6710**	1	DUCT-AIR	
	16	1	**8T-4205**	4	WASHER-HARD (7.2X14.5X2-MM THK)	
	17	1	**9X-2038**	2	WASHER (7X19X2-MM THK)	
M	18	1	**9X-2045**	6	SCREW-TRUSS HEAD (M6X1X20-MM)	

M-METRIC PART

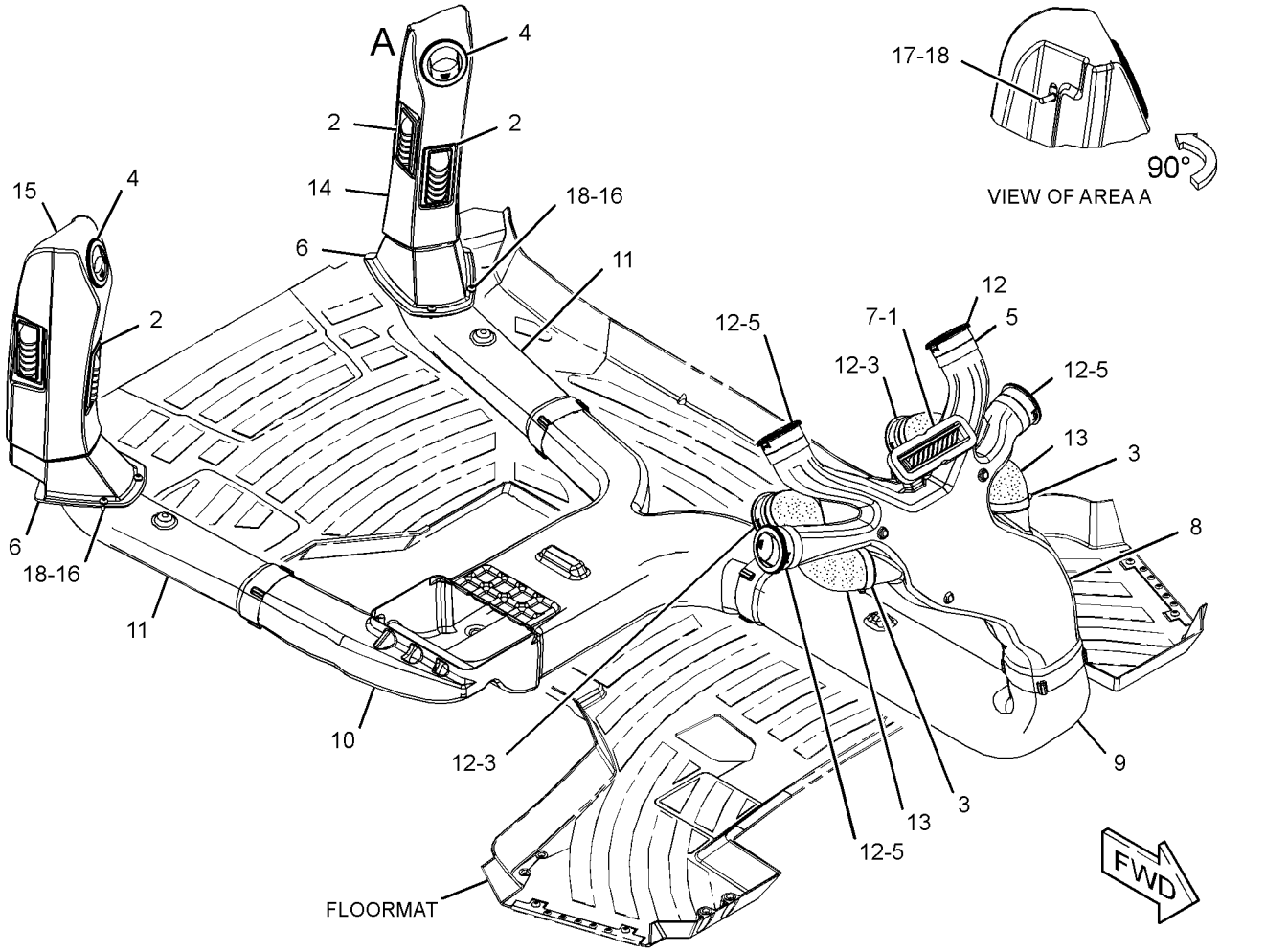

GRAPHIC #1 **<END>** g02827056

OPERATOR STATION

206-1618 FLOOR MAT GP

S/N: SEJ1-UP

PART OF 353-1429, 353-1432 CAB AR

AN ATTACHMENT

SMCS-7265 **i04253750**

NOTE	REF NO	GRAPHIC REF	PART NUMBER	QTY	PART NAME 1 2 3 4 5 6 (PRODUCT LEVEL)	SEE PAGE
C	1	1	**285-5914**	2	PLATE	
	2	1	**284-1602**	1	FLOOR MAT	
	3	1	**1H-3244**	4	LOCKWASHER	
M	4	1	**9X-2045**	4	SCREW-TRUSS HEAD (M6X1X20-MM)	

C-CHANGE FROM PREVIOUS TYPE
M-METRIC PART

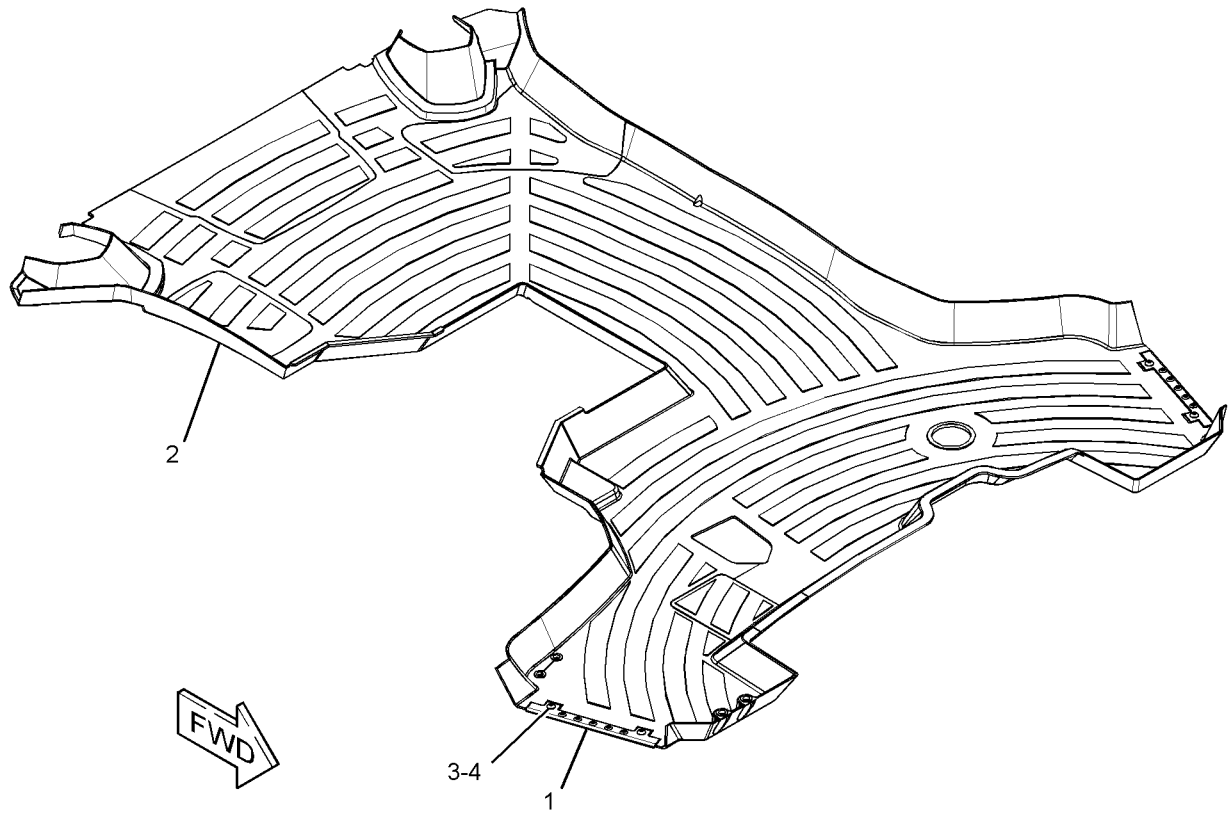

GRAPHIC #1 **<END>** g02437956

OPERATOR STATION

374-6887 HEATER & AIR CONDITIONER AR

S/N: SEJ1-UP
PART OF 373-4297, 374-6857 CAB AR
AN ATTACHMENT

SMCS-7304, 7309, 7320, 7337 **i04611414**

NOTE	PART NUMBER	QTY	PART NAME 1 2 3 4 5 6 (PRODUCT LEVEL)	SEE PAGE
Y	*375-9569*	1	FAN GP-SUCTION (WITHOUT AIR CONDITIONER)	47
Y	*341-6710*	1	HEATER GP-CAB	607
Y	*337-9781*	1	LINES GP-HEATER	624
Y	*359-0015*	1	WIRING GP-HEATER	141

Y-SEPARATE ILLUSTRATION

<END>

374-6889 HEATER & AIR CONDITIONER AR

S/N: SEJ1-UP
PART OF 374-6858 CAB AR, 373-4298 CAB AR-ENCLOSED ROPS
AN ATTACHMENT

SMCS-7304, 7309, 7320, 7337 **i04611470**

NOTE	PART NUMBER	QTY	PART NAME 1 2 3 4 5 6 (PRODUCT LEVEL)	SEE PAGE
Y	*344-7511*	1	AIR CONDITIONER & MOUNTING GP	566
Y	*321-7038*	1	COMPRESSOR GP-REFRIGERANT	580
Y	*337-9765*	1	CONDENSER & MTG GP-REFRIGERANT	581
Y	*375-9570*	1	FAN GP-SUCTION (WITH AIR CONDITIONER)	49
Y	*337-9783*	1	LINES GP-HEATER & AIR COND	626
Y	*357-3211*	1	WIRING GP-AIR CONDITIONER	128

Y-SEPARATE ILLUSTRATION

<END>

OPERATOR STATION

358-7087 HEATER & AIR CONDITIONER GP

S/N: SEJ1-UP
PART OF 344-7511 AIR CONDITIONER & MOUNTING GP
AN ATTACHMENT

SMCS-7304, 7309, 7320, 7337 **i04404158**

NOTE	REF NO	GRAPHIC REF	PART NUMBER	QTY	PART NAME 1 2 3 4 5 6 (PRODUCT LEVEL)	SEE PAGE
	1	1	**8C-3756**	1	FILM-IDENTIFICATION (GROUP NO., SEQUENCE NO.)	
	2	1	**119-9631**	1	SWITCH-TEMPERATURE (HVAC) (AIR CONDITIONER)	
	3	1	**185-4015**	11	CLIP	
M	4	1	**187-7719**	3	SCREW-HEX FLANGE (M5X2.24X14-MM)	
	5	1	**204-9921**	1	RESISTOR AS	
	6	1	**210-7665**	1	HOUSING-TOP	
	7	1	**210-7666**	1	BAFFLE	
	8	1	**210-8401**	1	COIL AS-EVAPORATOR	
D		1	**5P-5688**	1	SEAL (1-M)	
		1	**219-6283**	1	LATCH	
	9	1	**211-2660**	1	FILTER ELEMENT-AIR (CAB HEATER)	
	10	1	**219-6281**	1	COVER AS	
		1	**6C-3680**	1	RIVET-POP	
		1	**219-6283**	1	LATCH	
	15	1	**219-6292**	1	HOUSING AS	
		1	**7H-3937**	4	LOCKWASHER (EXTERNAL TOOTH)	
M		1	**129-3178**	4	LOCKNUT (M6X1-THD)	
	16	1	**220-3762**	1	HARNESS AS-HEATER & AIR COND (CAB)	
		1	**128-7716**	1	CONNECTOR	
		1	**7T-6739**	1	HOUSING-PLUG	
		1	**7T-0093**	3	PIN-CONNECTOR (12-GA TO 14-GA)	
		1	**155-2270**	1	KIT-CONNECTING PLUG (2-PIN)	
					(INCLUDES PLUG AS, WEDGE & INTERFACE SEAL)	
		1	**8T-8737**	1	PLUG-SEAL	
		1	**177-9653**	1	KIT-RECEPTACLE (4-PIN)	
					(INCLUDES RECEPTACLE AS & WEDGE)	
		1	**8T-8730**	2	SOCKET-CONNECTOR (16-GA TO 18-GA)	
		1	**192-2112**	5	SOCKET-TERMINAL	
	17	1	**253-9510**	1	GUARD	
	18	1	**304-8965**	1	BLOWER GP-CAB (HEATER)	
		1	**7T-0093**		PIN-CONNECTOR (12-GA TO 14-GA)	
		1	**177-9645**	1	KIT-RECEPTACLE (2-PIN)	
					(INCLUDES RECEPTACLE AS & WEDGE)	
	19	1	**2S-3745**	4	SCREW-TAPPING (10-16XO.5-IN)	
M	20	1	**6V-7357**	4	BOLT (M6X1X25-MM)	
	21	1	**8T-4205**	5	WASHER-HARD (7.2X14.5X2-MM THK)	
D	22	1	**5P-5655**		SEAL (O.5-M)	
DJ	23	1	**5P-5637**		SEAL (O.8-M)	
EJ	24	1	**8C-7524**		SEAL (35-CM)	
					AVAILABLE REPAIR KIT(S):	
J			**285-9109**	1	KIT-SEAL (HVAC)	
					(INCLUDES GASKETS & SEALS)	

D-ORDER BY THE METER
E-ORDER BY THE CENTIMETER
J-KIT MARKED J SERVICES PARTS MARKED J
M-METRIC PART

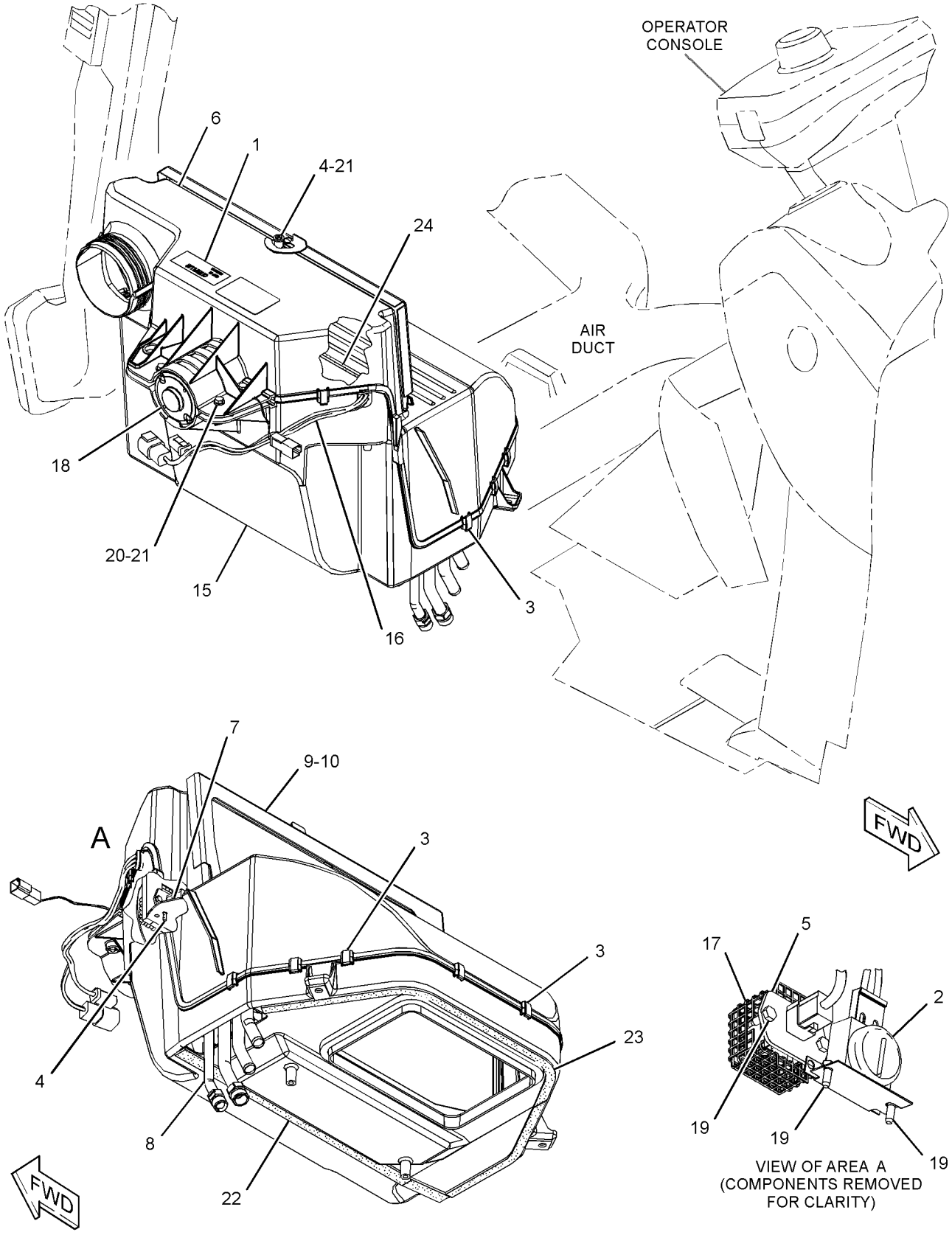

GRAPHIC #1 **<END>** g02178000

OPERATOR STATION

341-6710 HEATER GP-CAB

S/N: SEJ1-UP
PART OF 374-6887 HEATER & AIR CONDITIONER AR
AN ATTACHMENT

SMCS-7304 **i04586210**

NOTE	REF NO	GRAPHIC REF	PART NUMBER	QTY	PART NAME 1 2 3 4 5 6 (PRODUCT LEVEL)	SEE PAGE
	1	1	**6L-4725**	2	CLAMP-HOSE	
	2	1	**9N-2231**	1	GROMMET AS	
	3	1	**110-6109**	1	KNOB-CONTROL (TEMPERATURE)	
	4	1	**164-1368**	4	FASTENER-PANEL	
	5	1	**189-0881**	1	CONTROL AS	
		1	**129-1831**	1	CLAMP	
	6	1	**206-1648**	1	LOUVER	
	7	1	**206-1682**	1	PANEL-CONTROL	
	8	1	**206-1684**	1	COVER (CAB FILTER)	
	9	1	**206-1804**	1	GASKET	
	10	1	**206-1807**	1	GASKET	
	11	1	**206-1808**	1	PLATE	
	12	1	**206-1809**	1	ROD AS	
	13	1	**206-1818**	1	DUCT AS-AIR	
	14	1	**211-2661**	1	FILTER ELEMENT AS-AIR (CAB HEATER)	
	15	1	**255-0795**	1	FILM-IDENTIFICATION (TEMPERATURE CONTROL)	
	16	1	**319-8524**	1	HOSE-AIR	
Y	17	1	**358-7086**	1	HEATER GP-CAB	609
M	18	1	**111-4627**	3	SCREW-MACHINE (M6X1X30-MM)	
	19	1	**5P-4116**	1	WASHER-HARD (8.8X20.5X2-MM THK)	
	20	1	**7X-0579**	1	WASHER-HARD (8.8X25.5X2-MM THK)	
M	21	1	**8T-4200**	1	BOLT (M8X1.25X16-MM)	
	22	1	**9X-2038**	2	WASHER (7X19X2-MM THK)	
M	23	1	**9X-2045**	2	SCREW-TRUSS HEAD (M6X1X20-MM)	
E	24	1	**220-0738**		SEAL (87-CM)	

E-ORDER BY THE CENTIMETER
M-METRIC PART
Y-SEPARATE ILLUSTRATION

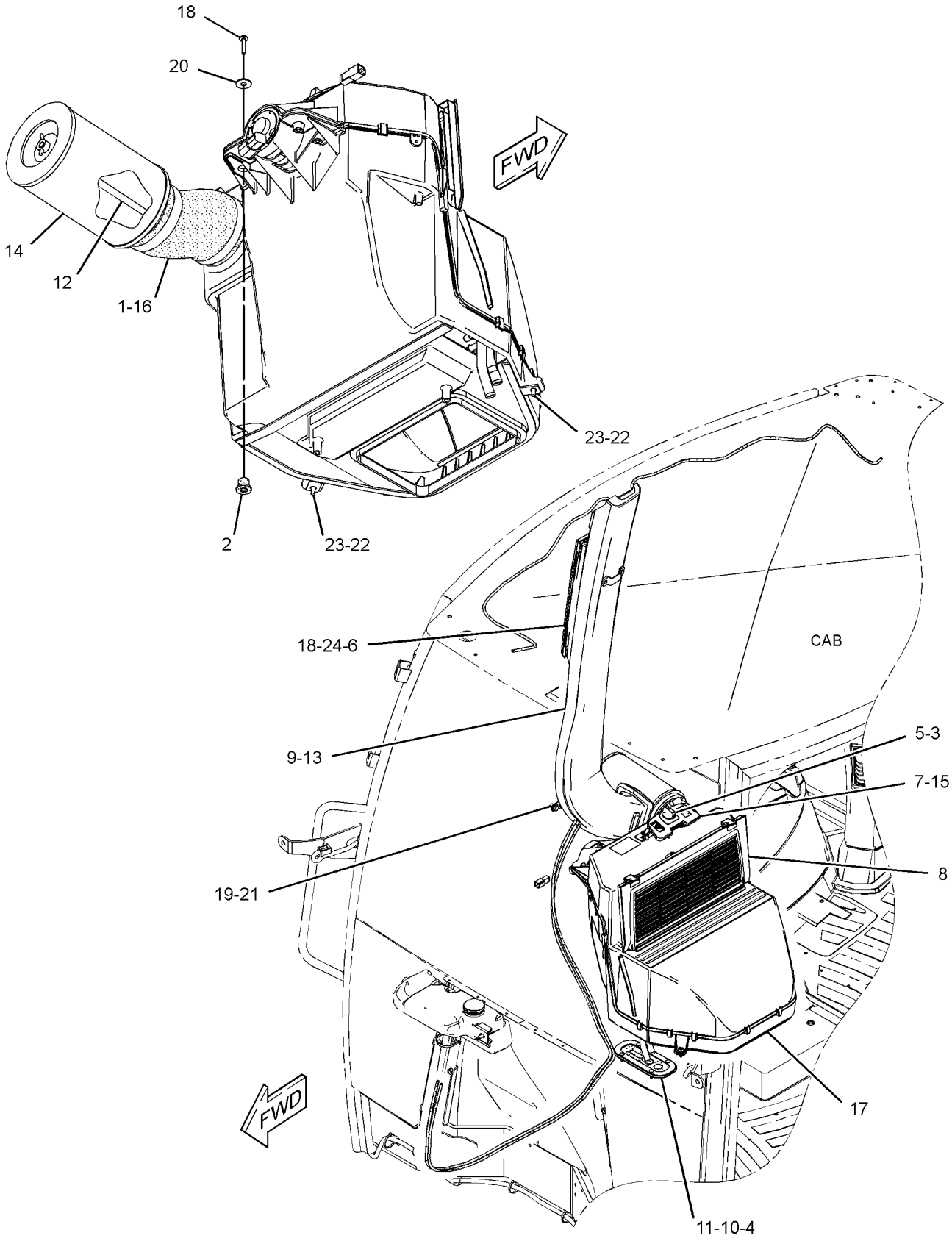

GRAPHIC #1 **<END>** g02815297

OPERATOR STATION

358-7086 HEATER GP-CAB

S/N: SEJ1-UP
PART OF 341-6710 HEATER GP-CAB
AN ATTACHMENT

SMCS-7304 **i04404157**

NOTE	REF NO	GRAPHIC REF	PART NUMBER	QTY	PART NAME 1 2 3 4 5 6 (PRODUCT LEVEL)	SEE PAGE
	1	1	**8C-3756**	1	FILM-IDENTIFICATION (GROUP NO., SEQUENCE NO.)	
	2	1	**185-4015**	11	CLIP	
M	3	1	**187-7719**	3	SCREW-HEX FLANGE (M5X2.24X14-MM)	
	4	1	**204-9921**	1	RESISTOR AS	
	5	1	**210-7665**	1	HOUSING-TOP	
	6	1	**210-7666**	1	BAFFLE	
	7	1	**210-8402**	1	COIL AS-HEATER	
D		1	**5P-5688**	1	SEAL (1-M)	
		1	**219-6283**	1	LATCH	
	8	1	**211-2660**	1	FILTER ELEMENT-AIR (CAB HEATER)	
	9	1	**219-6281**	1	COVER AS	
		1	**6C-3680**	1	RIVET-POP	
		1	**219-6283**	1	LATCH	
	14	1	**219-6292**	1	HOUSING AS	
		1	**7H-3937**	4	LOCKWASHER (EXTERNAL TOOTH)	
M		1	**129-3178**	4	LOCKNUT (M6X1-THD)	
	15	1	**253-2470**	1	HARNESS AS-HEATER (CAB)	
		1	**128-7716**	1	CONNECTOR	
		1	**220-5725**	1	GROMMET	
		1	**7T-0093**	3	PIN-CONNECTOR (12-GA TO 14-GA)	
		1	**8T-8737**	1	PLUG-SEAL	
		1	**177-9653**	1	KIT-RECEPTACLE (4-PIN)	
					(INCLUDES RECEPTACLE AS & WEDGE)	
		1	**192-2112**	3	SOCKET-TERMINAL	
	16	1	**253-9510**	1	GUARD	
	17	1	**304-8965**	1	BLOWER GP-CAB (HEATER)	
		1	**7T-0093**		PIN-CONNECTOR (12-GA TO 14-GA)	
		1	**177-9645**	1	KIT-RECEPTACLE (2-PIN)	
					(INCLUDES RECEPTACLE AS & WEDGE)	
	18	1	**2S-3745**	2	SCREW-TAPPING (10-16XO.5-IN)	
M	19	1	**6V-7357**	4	BOLT (M6X1X25-MM)	
	20	1	**8T-4205**	5	WASHER-HARD (7.2X14.5X2-MM THK)	
D	21	1	**5P-5655**		SEAL (O.5-M)	
DJ	22	1	**5P-5637**		SEAL (O.8-M)	
EJ	23	1	**8C-7524**		SEAL (35-CM)	
					AVAILABLE REPAIR KIT(S):	
J			**285-9109**	1	KIT-SEAL (HVAC)	
					(INCLUDES GASKETS & SEALS)	

D-ORDER BY THE METER
E-ORDER BY THE CENTIMETER
J-KIT MARKED J SERVICES PARTS MARKED J
M-METRIC PART

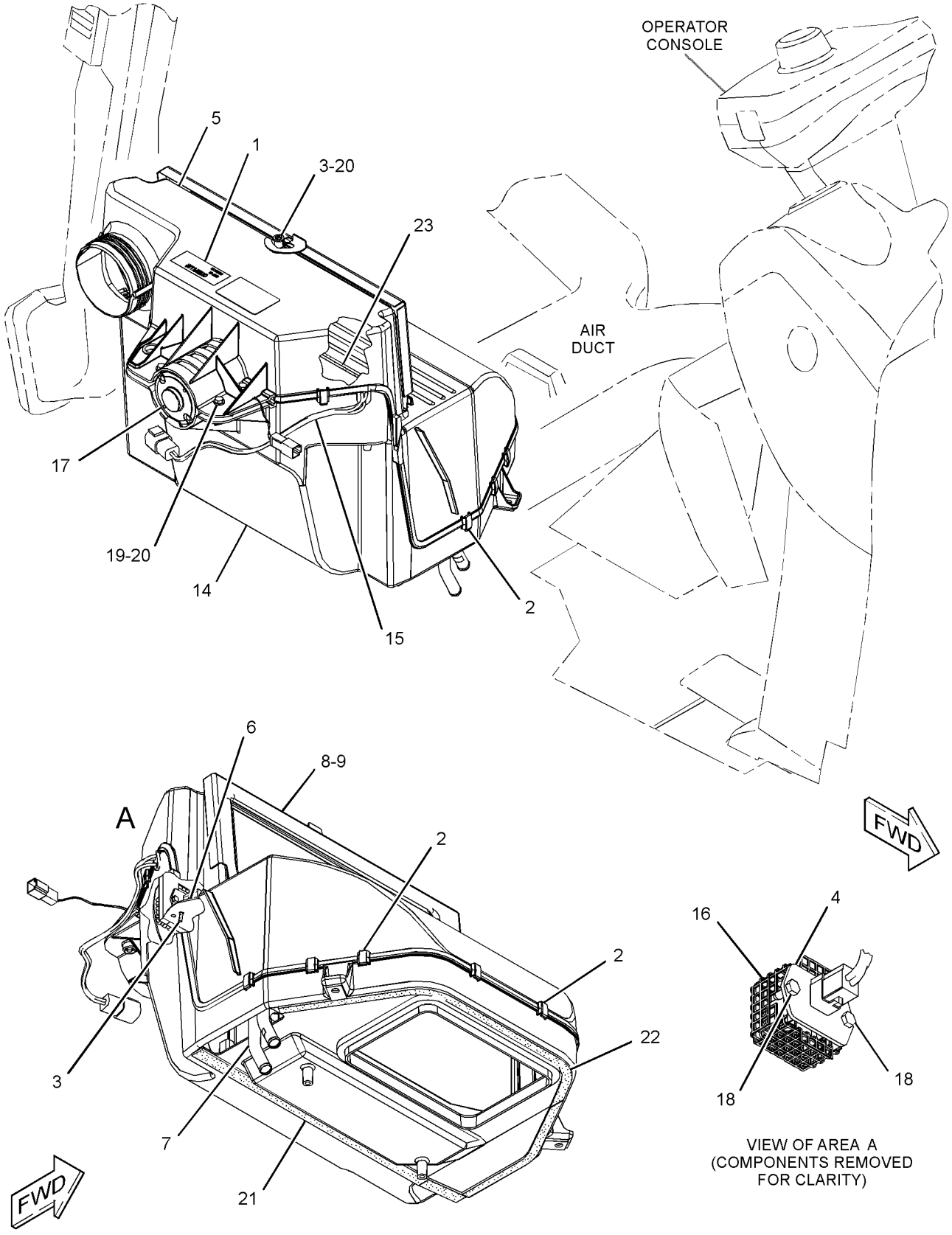

GRAPHIC #1 **<END>** g02177999

OPERATOR STATION

270-3217 INSTALLATION GP-RADIO

S/N: SEJ1-UP
PART OF 353-6954 KIT-RADIO
AN ATTACHMENT

SMCS-1408, 7338 **i04004976**

NOTE	REF NO	GRAPHIC REF	PART NUMBER	QTY	PART NAME 1 2 3 4 5 6 (PRODUCT LEVEL)	SEE PAGE
	1	1	**200-5728**	1	HARNESS AS-RADIO (FLANGE)	
		1	**172-8039**	11	TERMINAL (RADIO)	
		1	**8T-8737**	1	PLUG-SEAL	
		1	**160-3518**	1	KIT-RECEPTACLE (8-PIN)	
					(INCLUDES RECEPTACLE AS & WEDGE)	
		1	**172-8037**	1	CONNECTOR (RADIO)	
		1	**8T-8729**	7	PIN-CONNECTOR (16-GA TO 18-GA)	
	2	1	**262-2781**	1	RADIO	
F			**6K-0806**	1	STRAP-CABLE	

F-NOT SHOWN

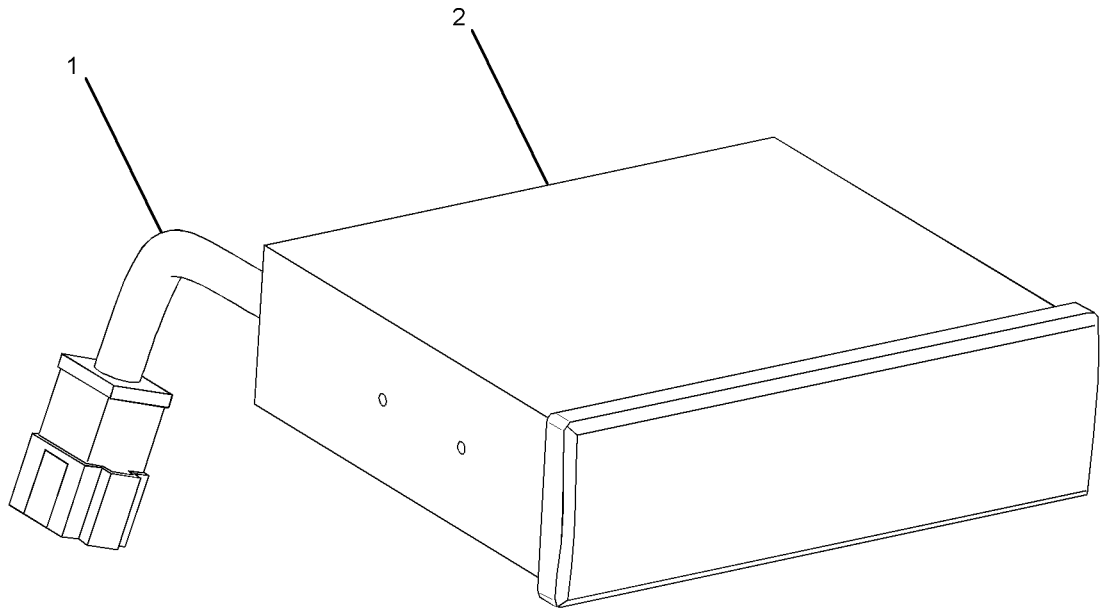

GRAPHIC #1 **<END>** g02126699

OPERATOR STATION

353-6954 KIT-RADIO

S/N: SEJ1-UP

AN ATTACHMENT

SMCS-7338 **i03869609**

NOTE	PART NUMBER	QTY	PART NAME 1 2 3 4 5 6 (PRODUCT LEVEL)	SEE PAGE
Y	*270-3217*	1	INSTALLATION GP-RADIO	611

Y-SEPARATE ILLUSTRATION

<END>

OPERATOR STATION

324-2897 KIT-SEAT FRAME

S/N: SEJ1-UP
PART OF 324-2896 SEAT GP
AN ATTACHMENT

SMCS-7321 **i03121860**

NOTE	REF NO	GRAPHIC REF	PART NUMBER	QTY	PART NAME 1 2 3 4 5 6 (PRODUCT LEVEL)	SEE PAGE
	1	1	**164-1255**	1	SECTOR	
	2	1	**164-1256**	2	SPACER (19X25.4X12.5-MM THK)	
	3	1	**161-9283**	1	WASHER (19.8X31.8X1.6-MM THK)	
	4	1	**164-1249**	1	LEVER AS (RECLINER CONTROL)	
	5	1	**164-1251**	1	SPRING (RECLINER)	
	6	1	**164-1252**	1	SPRING (SEAT RECLINER)	
	7	1	**164-1253**	1	PLATE	
	8	1	**164-1254**	1	SECTOR	
					PARTS SHOWN IN GRAPHIC(S) WITHOUT A REFERENCE NUMBER ARE NOT SERVICED SEPARATELY	

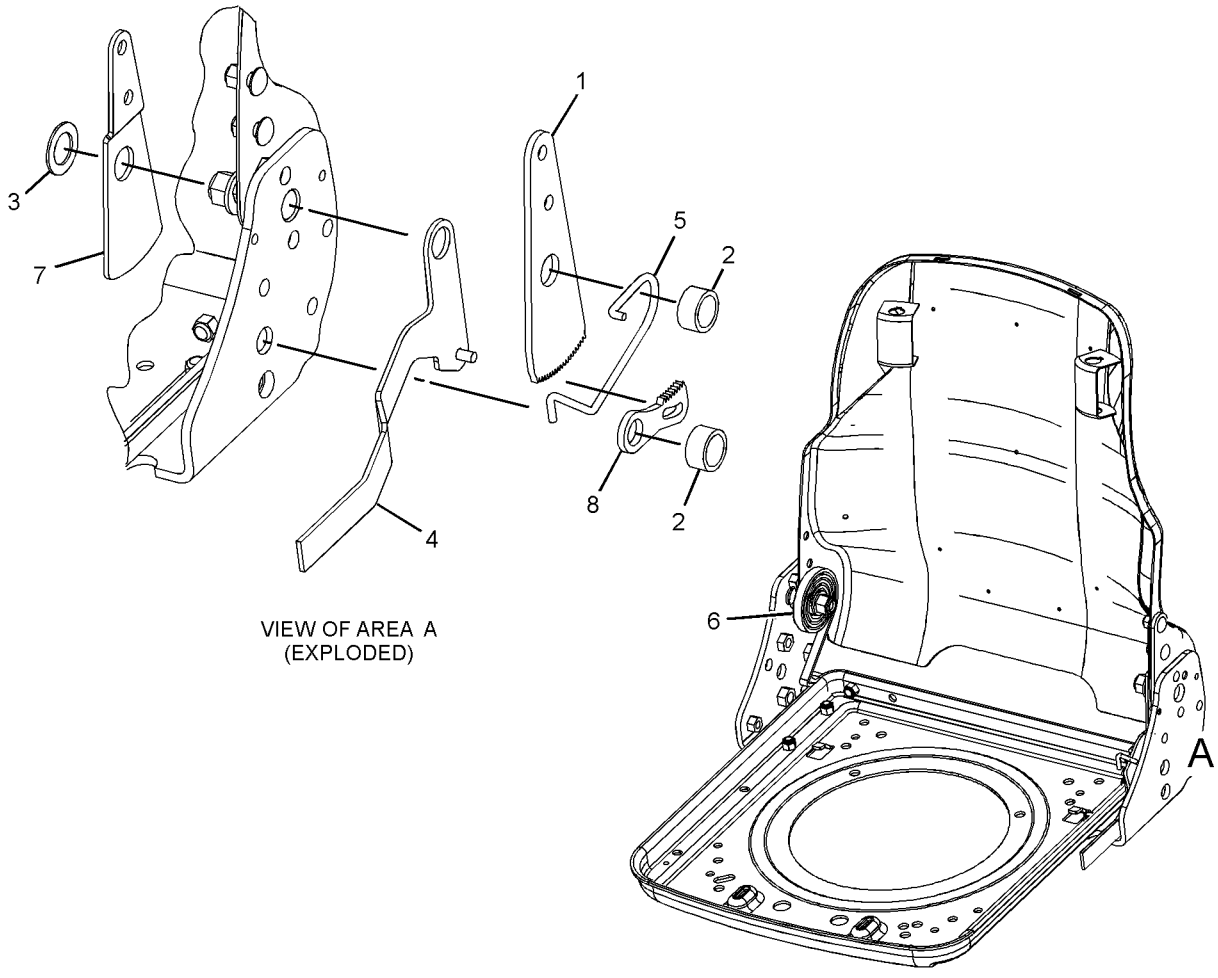

VIEW OF AREA A
(EXPLODED)

GRAPHIC #1 **<END>** g01626962

OPERATOR STATION

324-2906 KIT-SEAT PAN

S/N: SEJ1-UP
PART OF 324-2903 SEAT GP
AN ATTACHMENT

SMCS-7321 **i03121864**

NOTE	REF NO	GRAPHIC REF	PART NUMBER	QTY	PART NAME 1 2 3 4 5 6 (PRODUCT LEVEL)	SEE PAGE
	1	1	**5P-1076**	2	WASHER-HARD (13.5X30X4-MM THK)	
M	2	1	**6V-5217**	2	BOLT (M8X1.25X20-MM)	
M	3	1	**105-3481**	2	BOLT-SOCKET HEAD (M8X1.25X20-MM)	
	4	1	**161-9283**	1	WASHER (19.8X31.8X1.6-MM THK)	
	5	1	**164-1249**	1	LEVER AS (RECLINER CONTROL)	
	6	1	**164-1251**	1	SPRING (RECLINER)	
	7	1	**164-1252**	1	SPRING (SEAT RECLINER)	
	8	1	**164-1253**	1	PLATE	
	9	1	**164-1254**	1	SECTOR	
	10	1	**164-1255**	1	SECTOR	
	11	1	**164-1256**	2	SPACER (19X25.4X12.5-MM THK)	
	12	1	**164-1274**	1	BLOCK	
	13	1	**180-5785**	1	SPRING	
	14	1	**180-5786**	4	PUCK	
	15	1	**180-5789**	1	NUT	
	16	1	**324-9976**	1	LATCH (SLIDE)	
	17	1	**324-9977**	1	LINK	
	18	1	**2P-7864**	1	SCREW-TAPPING	
M	19	1	**3T-0852**	12	LOCKNUT (M8X1.25-THD)	
	20	1	**4H-1641**	1	PIN-SPRING	
	21	1	**4K-9890**	4	WASHER (8.6X17.3X1.6-MM THK)	

M-METRIC PART

324-2906 KIT-SEAT PAN *(contd.)* **i03121864**

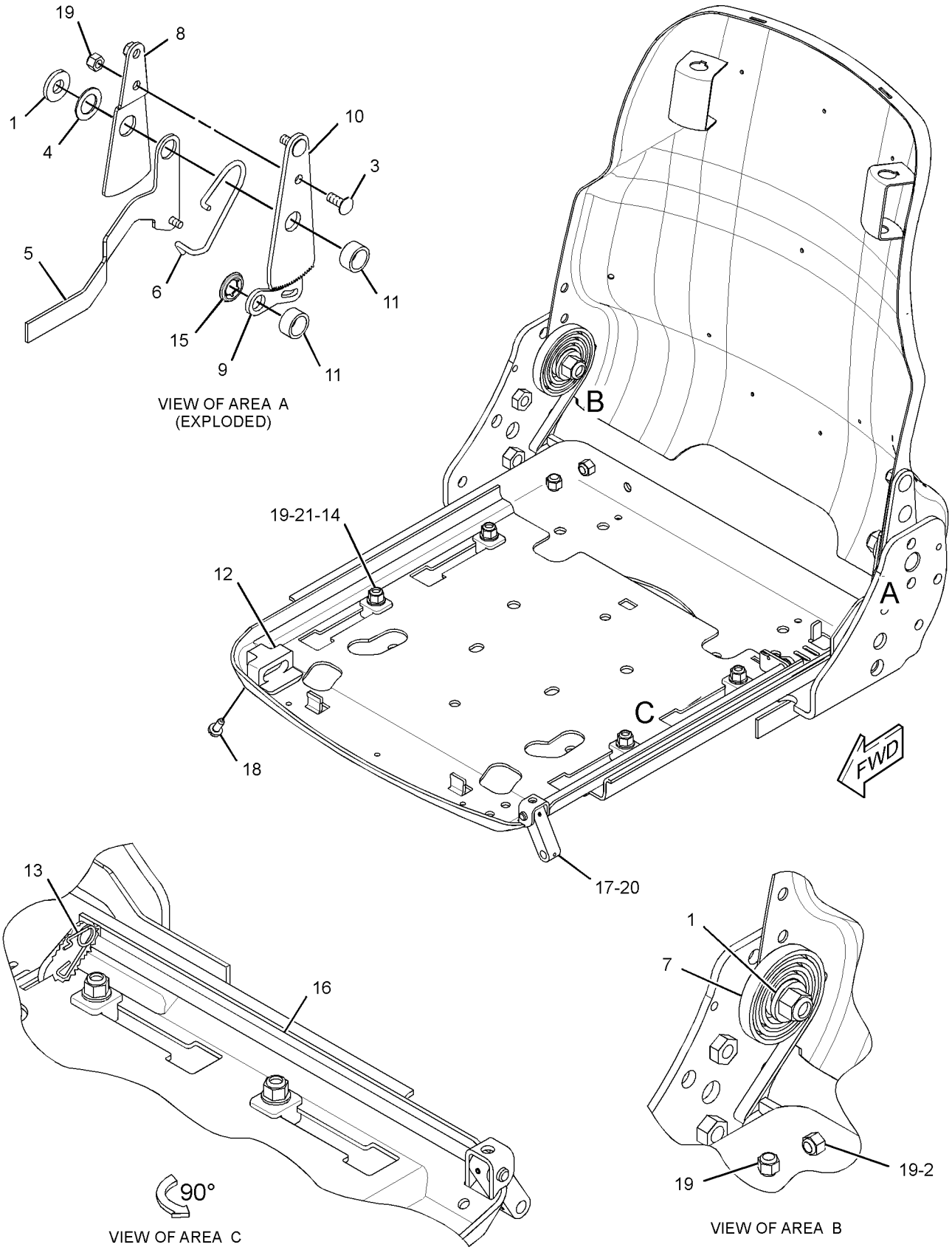

GRAPHIC #1 **<END>** g01624350

OPERATOR STATION

324-2894 KIT-SEAT SUSPENSION–AIR

S/N: SEJ1-UP
PART OF 324-2890 SUSPENSION GP-SEAT
AN ATTACHMENT

SMCS-7312, 7324 **i03724323**

NOTE	REF NO	GRAPHIC REF	PART NUMBER	QTY	PART NAME 1 2 3 4 5 6 (PRODUCT LEVEL)	SEE PAGE
	1	1	**163-1135**	1	SPRING	
	2	1	**186-5110**	2	BOLT-SHOULDER	
	3	1	**192-7805**	1	HARNESS AS-VALVE (SEAT AIR COMPRESSOR)	
		1	**5P-4571**	2	TERMINAL-BLADE (14-GA TO 16-GA)	
		1	**102-8802**	1	KIT-RECEPTACLE (2-PIN)	
					(INCLUDES RECEPTACLE AS & WEDGE)	
		1	**186-3735**	2	PIN-CONNECTOR (16-GA TO 18-GA)	
E		1	**211-5358**		CONDUIT-FLEXIBLE (64-CM)	
	4	1	**237-3943**	1	BRACKET	
	5	1	**4F-4879**	1	BOLT (3/8-16X0.5-IN)	
	6	1	**328-7749**	1	HARNESS AS-WIRING (SEAT AIR COMPRESSOR)	
	7	1	**328-7750**	1	TEE	
	8	1	**328-7751**	1	ELBOW	
	9	1	**328-7752**	1	ELBOW	
	10	1	**330-9687**	1	TUBE	
	11	1	**331-7798**	1	TUBE	
	12	1	**331-7799**	1	TUBE	
	13	1	**108-4311**	1	SCREW-MACHINE (3/8-16X0.75-IN)	
	14	1	**3E-4337**	1	RIVET-POP	
	15	1	**4V-2264**	1	NUT-PUSH	
	16	1	**216-4554**	2	SHIM (1.4-MM THK)	
	17	1	**338-9831**	1	CLIP	

E-ORDER BY THE CENTIMETER

324-2894 KIT-SEAT SUSPENSION *(contd.)* **i03724323**

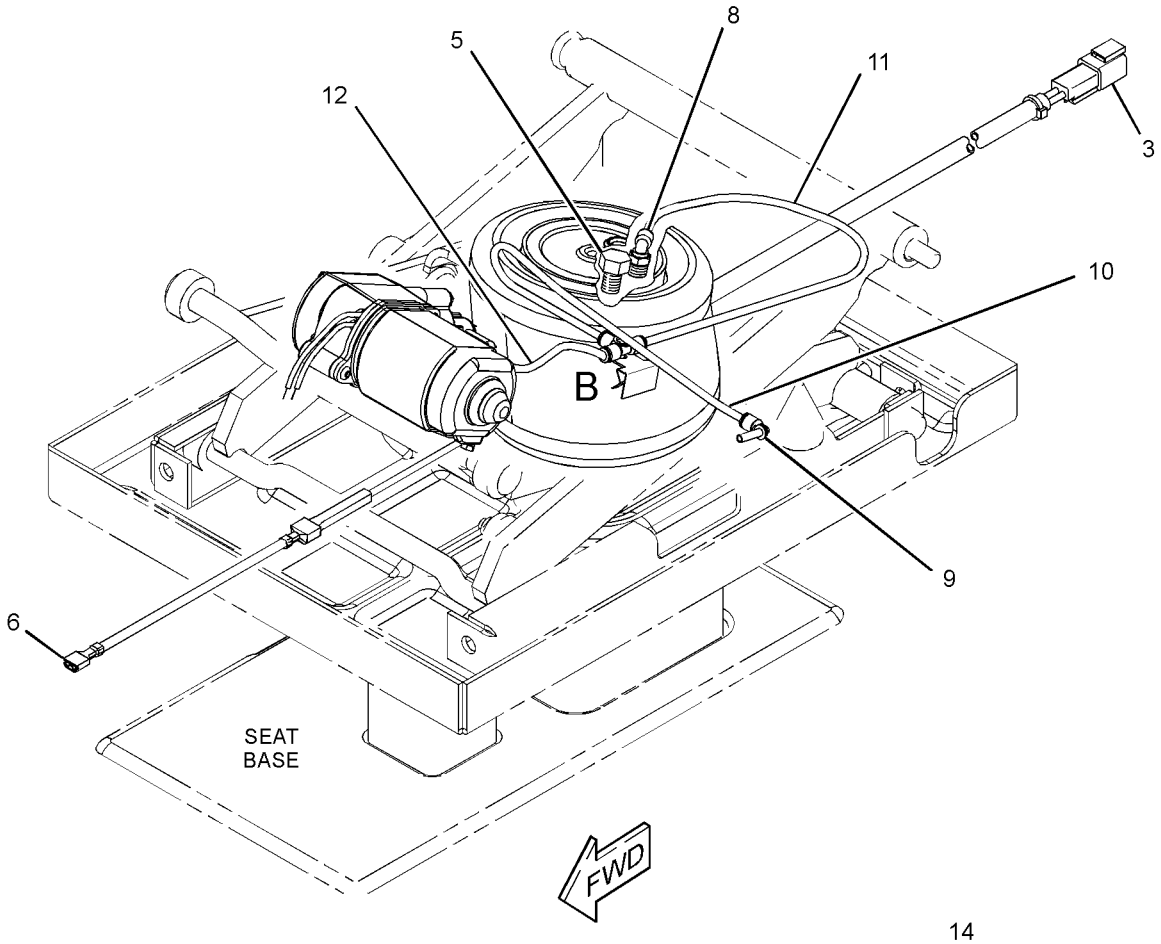

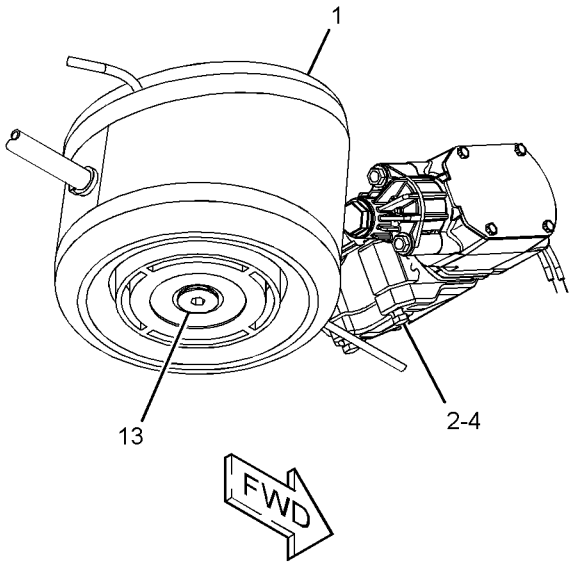

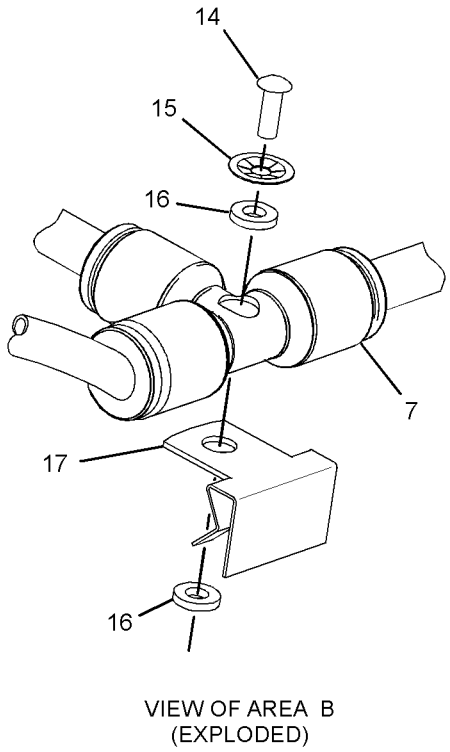

VIEW OF AREA B
(EXPLODED)

GRAPHIC #1 **<END>** g01783376

OPERATOR STATION

299-6985 LATCH GP-CAB DOOR & WINDOW

S/N: SEJ1-UP

PART OF 327-7601, 327-7637 WINDOW GP-CAB, 333-9902 WINDOW GP-DOOR

AN ATTACHMENT

SMCS-7308, 7310 **i02693060**

NOTE	REF NO	GRAPHIC REF	PART NUMBER	QTY	PART NAME 1 2 3 4 5 6 (PRODUCT LEVEL)	SEE PAGE
M	1	1	**161-6984**	1	SCREW-TRUSS HEAD (M5X0.8X20-MM)	
	2	1	**161-6987**	1	WASHER-HARD (5.2X16X1.5-MM THK)	
	3	1	**161-9294**	1	SPRING-FLAT WIRE	
M	4	1	**162-6556**	1	LOCKNUT (M6X1-THD)	
M	5	1	**5C-2874**	1	NUT (M5X0.8-THD)	

M-METRIC PART

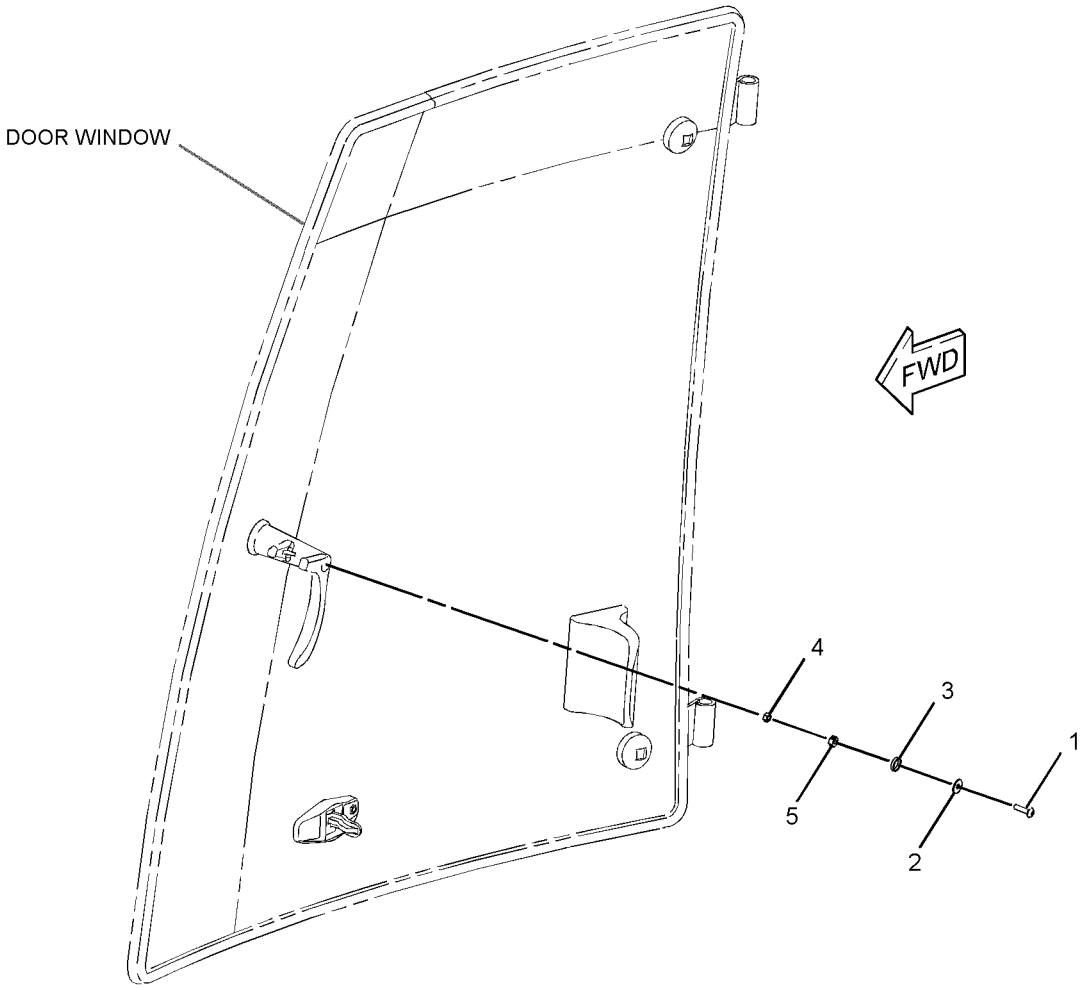

GRAPHIC #1 **<END>** g01353996

299-6986 LATCH GP-CAB DOOR & WINDOW

S/N: SEJ1-UP

PART OF 327-7601, 327-7637 WINDOW GP-CAB, 333-9901 WINDOW GP-DOOR

AN ATTACHMENT

SMCS-7308, 7310 **i02693061**

NOTE	REF NO	GRAPHIC REF	PART NUMBER	QTY	PART NAME 1 2 3 4 5 6 (PRODUCT LEVEL)	SEE PAGE
M	1	1	**161-6984**	1	SCREW-TRUSS HEAD (M5X0.8X20-MM)	
	2	1	**161-6987**	1	WASHER-HARD (5.2X16X1.5-MM THK)	
	3	1	**161-9294**	1	SPRING-FLAT WIRE	
M	4	1	**162-6556**	1	LOCKNUT (M6X1-THD)	
M	5	1	**5C-2874**	1	NUT (M5X0.8-THD)	

M-METRIC PART

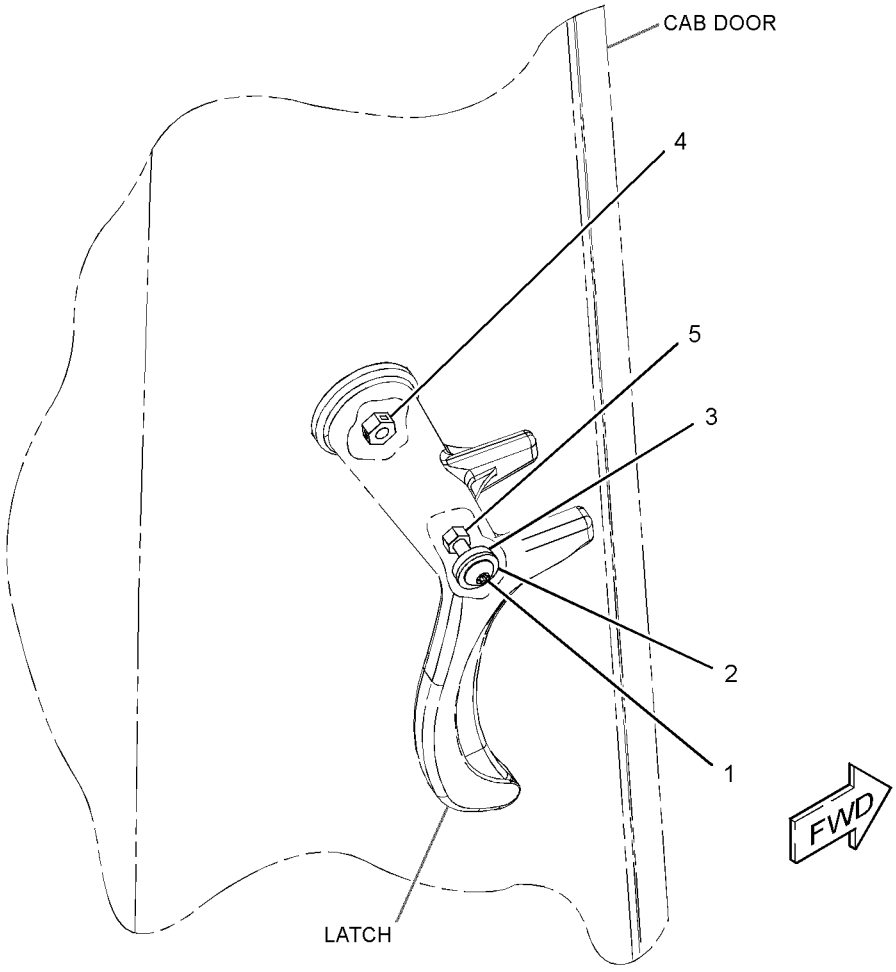

GRAPHIC #1 **<END>** g01354326

OPERATOR STATION

344-2432 LATCH GP-CONSOLE

S/N: SEJ1-UP
PART OF 269-3247 MOUNTING GP-BACKHOE CONTROL
AN ATTACHMENT

SMCS-5258 **i04079173**

NOTE	REF NO	GRAPHIC REF	PART NUMBER	QTY	PART NAME 1 2 3 4 5 6 (PRODUCT LEVEL)	SEE PAGE
	1	1	**8T-4742**	2	END-YOKE ROD	
	2	1	**8T-4744**	2	PIN AS-SPRING	
	3	1	**110-5602**	1	KNOB	
	4	1	**183-6085**	2	BEARING	
	5	1	**316-3436**	1	LATCH AS	
	6	1	**316-3437**	1	LATCH AS	
	7	1	**319-9444**	2	PLATE	
	8	1	**344-2429**	2	ROD	
	9	1	**344-2430**	1	LEVER AS	
M	10	1	**099-3649**	1	BOLT (M8X1.25X40-MM)	
	11	1	**156-0283**	3	WASHER-HARD (8.4X35X2.5-MM THK)	
	12	1	**183-4912**	1	SLEEVE	
M	13	1	**5C-2890**	2	NUT (M6X1-THD)	

M-METRIC PART

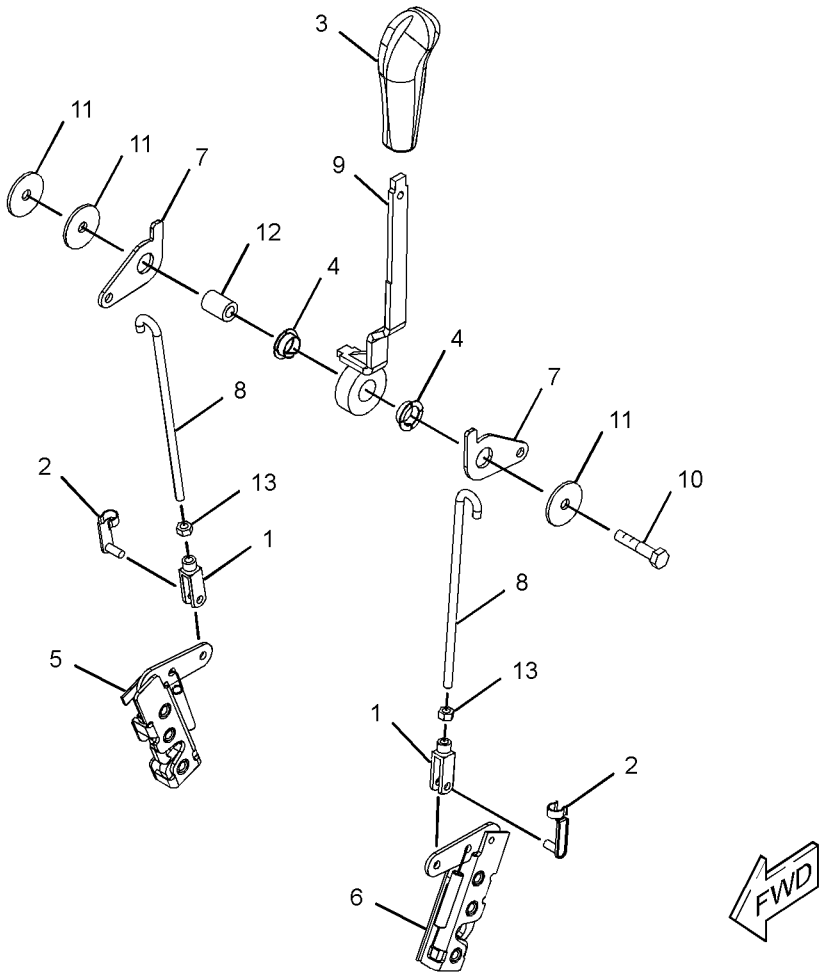

GRAPHIC #1 **<END>** g02309519

OPERATOR STATION

209-3367 LEVER GP-GOVERNOR–HANDHELD

S/N: SEJ1-UP

PART OF 341-6719 CONTROL GP-GOVERNOR

AN ATTACHMENT

SMCS-1265 **i02159826**

NOTE	REF NO	GRAPHIC REF	PART NUMBER	QTY	PART NAME 1 2 3 4 5 6 (PRODUCT LEVEL)	SEE PAGE
	1	1	**209-3366**	1	CABLE AS	
	2	1	**219-0343**	1	LEVER AS	
	3	1	**8T-4742**	1	END-YOKE ROD	
	4	1	**8T-4744**	1	PIN AS-SPRING	
M	5	1	**8T-4971**	1	BOLT (M6X1X30-MM)	
M	6	1	**129-3178**	1	LOCKNUT (M6X1-THD)	

M-METRIC PART

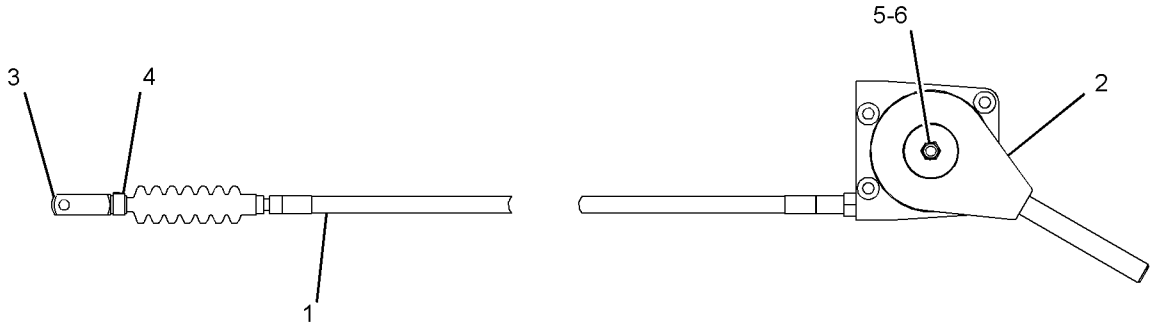

GRAPHIC #1 **<END>** g01096744

OPERATOR STATION

317-5543 LINER GP-CAB

S/N: SEJ1-UP

PART OF 353-1429, 353-1432 CAB AR

AN ATTACHMENT

SMCS-7329 **i04552028**

NOTE	REF NO	GRAPHIC REF	PART NUMBER	QTY	PART NAME 1 2 3 4 5 6 (PRODUCT LEVEL)	SEE PAGE
	1	1	**325-9311**	3	FASTENER	
	2	1	**5G-2003**	2	SPACER (6.8X13X10-MM THK)	
	3	1	**8E-1118**	1	ANTENNA AS	
	4	1	**8R-6111**	1	CABLE AS-COAXIAL	
	5	1	**9U-8263**	1	COVER	
	6	1	**084-4277**	1	LAMP GP-DOME (12-VOLT) (CAB)	
		1	**210-8754**	1	LAMP (12-VOLT)	
	7	1	**132-2249**	1	SPACER (7.4X12.7X24-MM THK)	
	8	1	**145-0981**	2	SPACER (8.5X12.7X18-MM)	
	9	1	**169-7291**	2	COVER-SPEAKER	
	10	1	**209-4716**	2	PLATE	
	11	1	**262-9567**	2	SPEAKER	
M	12	1	**8C-4982**	8	BOLT-SOCKET HEAD (M4X0.7X20-MM)	
	13	1	**9X-2038**	3	WASHER (7X19X2-MM THK)	
	14	1	**292-5773**	1	COVER	
	15	1	**317-5542**	1	LINER AS-CAB	
		1	**263-5781**	2	PLATE AS	
					(EACH INCLUDES)	
		1	**205-7047**	8	INSERT-THREADED (M4X0.7-THD)	
M	16	1	**113-0920**	8	BOLT-SOCKET HEAD (M4X0.7X35-MM)	
M	17	1	**121-9870**	5	SCREW-MACHINE (M6X1X40-MM)	
	18	1	**282-7835**	1	PLATE	
	19	1	**282-7832**	1	GROMMET	
	20	1	**9X-8256**	2	WASHER (6.6X12X2-MM THK)	
M	21	1	**8C-3798**	2	BOLT-LOCKING (M6X1X30-MM)	

M-METRIC PART

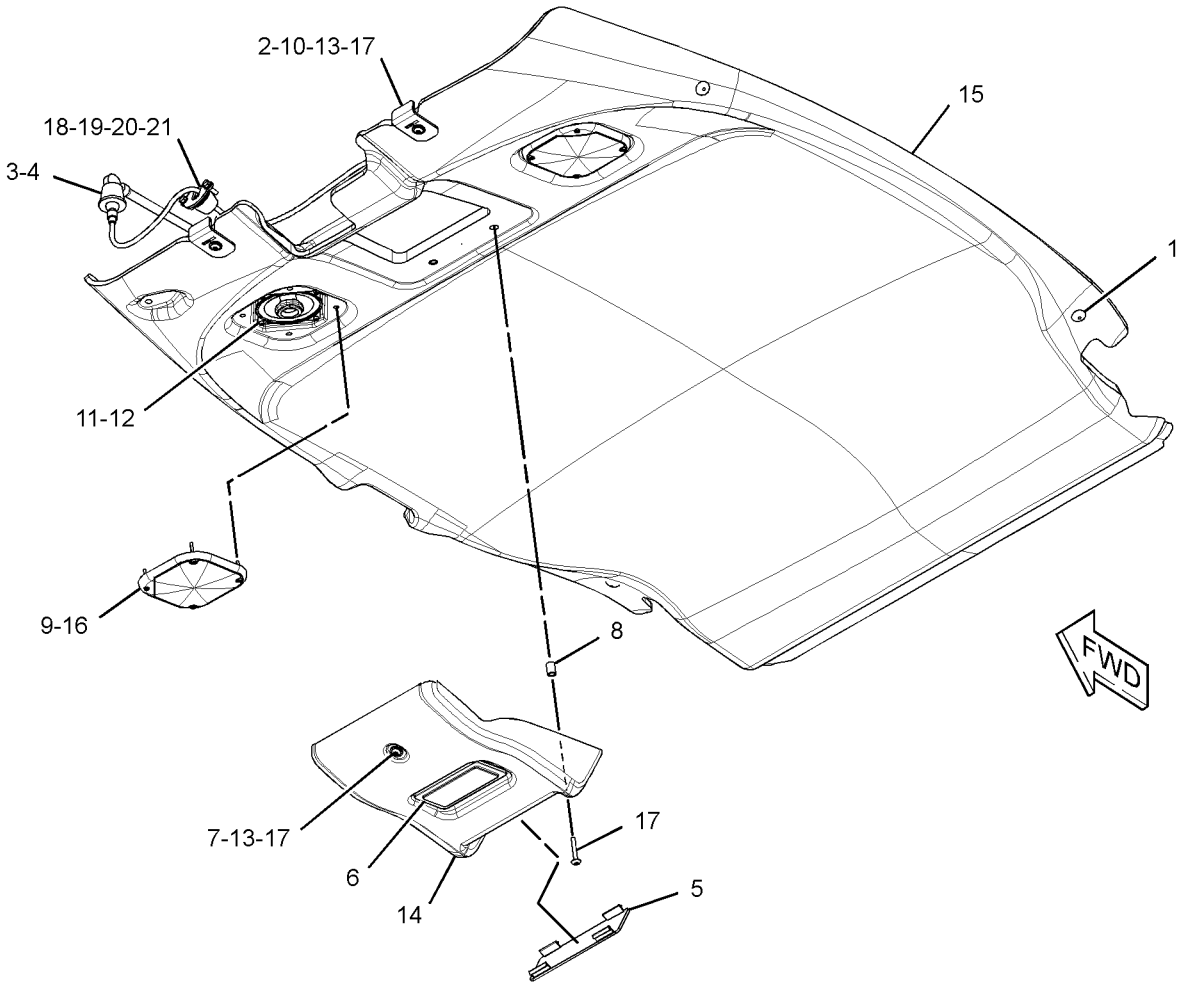

GRAPHIC #1 **<END>** g02468683

OPERATOR STATION

337-9781 LINES GP-HEATER

S/N: SEJ1-UP

PART OF 374-6887 HEATER & AIR CONDITIONER AR

AN ATTACHMENT

SMCS-1812 **i04585931**

NOTE	REF NO	GRAPHIC REF	PART NUMBER	QTY	PART NAME 1 2 3 4 5 6 (PRODUCT LEVEL)	SEE PAGE
	1	1	**5D-1026**	8	CLAMP-BAND	
	2	1	**6P-8855**	1	SPACER-SPECIAL	
	3	1	**7K-1181**	3	STRAP-CABLE	
	4	1	**8Y-5737**	1	CLAMP	
	5	1	**134-3856**	1	ELBOW	
	6	1	**194-5622**	1	VALVE AS-WATER (AIR CONDITIONER)	
		1	**6V-6717**	1	SCREW-WASHER HEAD (8-32X9.52-MM)	
		1	**124-0312**	2	SCREW-PAN HEAD (8-16X0.32-IN)	
	7	1	**323-3309**	8	CAP	
	8	1	**344-2846**	1	BRACKET	
	9	1	**361-4239**	1	CABLE AS	
	10	1	**124-0312**	2	SCREW-PAN HEAD (8-16X0.32-IN)	
	11	1	**2V-9121**	1	FITTING	
	12	1	**3E-4321**	4	CLIP	
	13	1	**8T-4121**	2	WASHER-HARD (11X21X2.5-MM THK)	
M	14	1	**8T-4138**	1	BOLT (M6X1X20-MM)	
M	15	1	**8T-4196**	2	BOLT (M10X1.5X35-MM)	
	16	1	**8T-4205**	1	WASHER-HARD (7.2X14.5X2-MM THK)	
E	17	1	**5P-0767**		HOSE (241.5-CM)	
E	17A	1	**5P-0767**		HOSE (228-CM)	
E	17B	1	**5P-0767**		HOSE (32-CM)	
E	17C	1	**5P-0767**		HOSE (30.5-CM)	

E-ORDER BY THE CENTIMETER
M-METRIC PART

337-9781 **LINES GP-HEATER** *(contd.)* **i04585931**

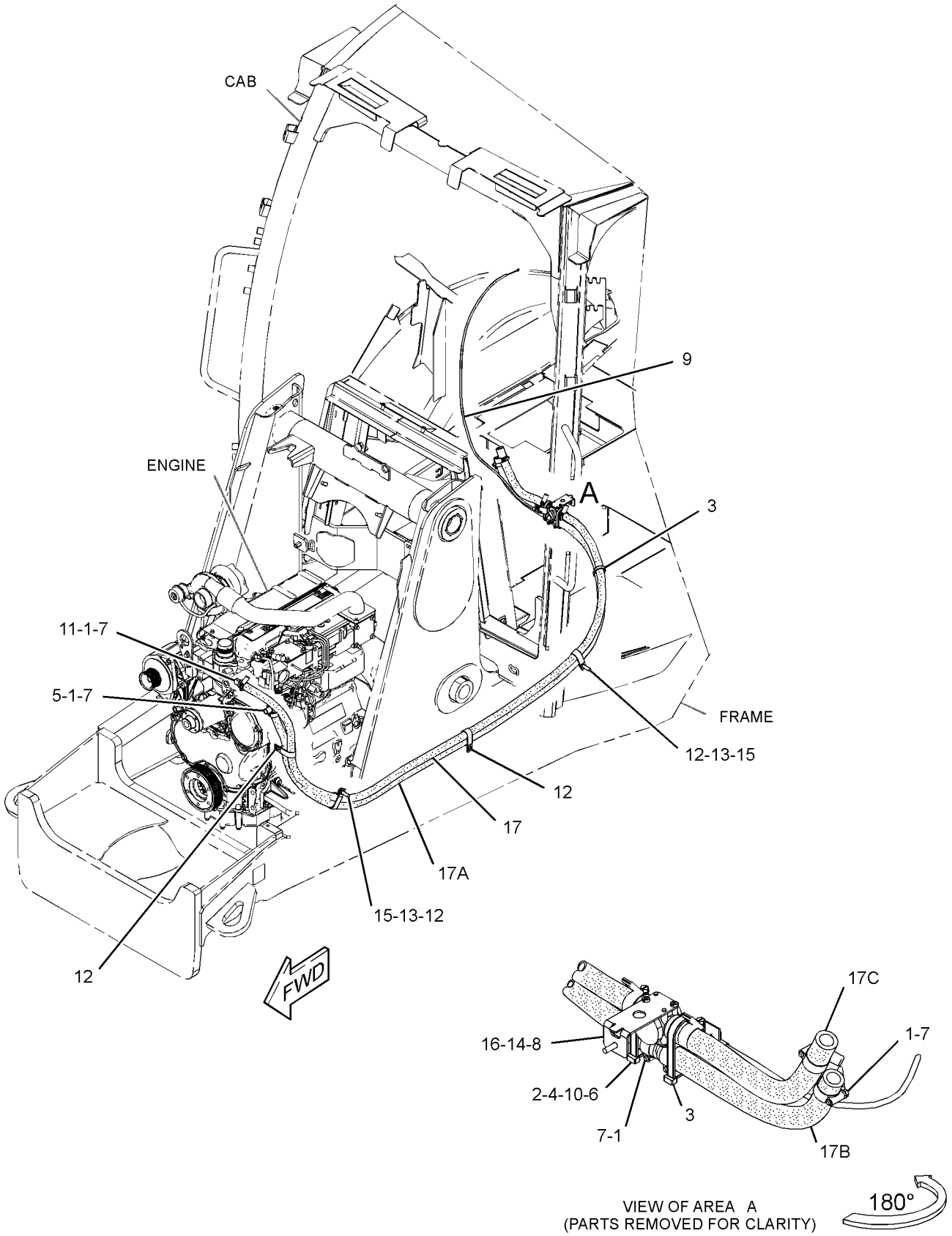

GRAPHIC #1 **<END>** g02816902

OPERATOR STATION

337-9783 LINES GP-HEATER & AIR COND

S/N: SEJ1-UP

PART OF 374-6889 HEATER & AIR CONDITIONER AR

AN ATTACHMENT

SMCS-1380, 1808, 1812 **i04586149**

NOTE	REF NO	GRAPHIC REF	PART NUMBER	QTY	PART NAME 1 2 3 4 5 6 (PRODUCT LEVEL)	SEE PAGE
	1	1	**3S-2093**	1	STRAP-CABLE	
	2	1	**5D-1026**	8	CLAMP-BAND	
	3	1	**6P-8855**	1	SPACER-SPECIAL	
	4	1	**7K-1181**	9	STRAP-CABLE	
	5	1	**8Y-5737**	1	CLAMP	
	6	1	**130-9984**	3	CLIP	
	7	1	**9X-3959**	1	ELBOW	
	8	1	**151-4841**	2	BLOCK	
	9	1	**177-2215**	1	STRAP-DUAL CLAMP	
	10	1	**194-5622**	1	VALVE AS-WATER (AIR CONDITIONER)	
		1	**6V-6717**	1	SCREW-WASHER HEAD (8-32X9.52-MM)	
		1	**124-0312**	2	SCREW-PAN HEAD (8-16X0.32-IN)	
	11	1	**205-9920**	1	STRAP-CABLE	
	12	1	**255-0800**	1	PLATE	
	13	1	**274-5909**	1	ACCUMULATOR-REFRIGERANT	
	14	1	**283-4236**	1	DRYER AS-AIR	
		1	**3E-0068**	1	TUBE AS-REFRIGERANT ORIFICE	
	15	1	**315-7790**	1	PLATE	
	16	1	**317-4270**	1	BRACKET AS	
	17	1	**323-3309**	8	CAP	
	18	1	**344-2846**	1	BRACKET	
	19	1	**361-4239**	1	CABLE AS	
	20	1	**361-8151**	1	HOSE AS	
	21	1	**361-8157**	1	HOSE AS	
	22	1	**361-8158**	1	HOSE AS	
	23	1	**362-8670**	1	HOSE AS	
	24	1	**363-7486**	1	HOSE AS	
	25	1	**377-5823**	1	BRACKET AS	
	26	1	**109-1633**	1	CLIP (SLOT)	
	27	1	**109-1634**	1	CLIP (TAB)	
	28	1	**124-0312**	2	SCREW-PAN HEAD (8-16X0.32-IN)	
	29	1	**2P-4556**	2	CLIP	
	30	1	**2V-9121**	1	FITTING	
	31	1	**3E-4321**	4	CLIP	
	32	1	**4D-7388**	1	CLIP	
M	33	1	**5C-7261**	1	NUT (M8X1.25-THD)	
	34	1	**5K-5338**	1	CLIP	
	35	1	**5P-4116**	2	WASHER-HARD (8.8X20.5X2-MM THK)	
	36	1	**8T-4121**	8	WASHER-HARD (11X21X2.5-MM THK)	
M	37	1	**8T-4136**	3	BOLT (M10X1.5X25-MM)	
M	38	1	**8T-4138**	1	BOLT (M6X1X20-MM)	
M	39	1	**8T-4139**	1	BOLT (M12X1.75X30-MM)	
M	40	1	**8T-4189**	2	BOLT (M8X1.25X20-MM)	
M	41	1	**8T-4196**	5	BOLT (M10X1.5X35-MM)	
	42	1	**8T-4205**	1	WASHER-HARD (7.2X14.5X2-MM THK)	
	43	1	**8T-4223**	1	WASHER-HARD (13.5X25.5X3-MM THK)	
	44	1	**8T-4224**	1	WASHER-HARD (8.8X16X2-MM THK)	
	45	1	**9X-7380**	2	SEAL-O-RING	
	46	1	**9X-7381**	3	SEAL-O-RING	
	47	1	**9X-7382**	1	SEAL-O-RING	
	48	1	**9X-7383**	2	SEAL-O-RING	
E	49	1	**5P-0767**		HOSE (30.5-CM)	
E	49A	1	**5P-0767**		HOSE (32-CM)	
E	49B	1	**5P-0767**		HOSE (228-CM)	
E	49C	1	**5P-0767**		HOSE (241.5-CM)	

337-9783 LINES GP-HEATER & AIR COND *(contd.)* i04586149

NOTE	REF NO	GRAPHIC REF	PART NUMBER	QTY	PART NAME 1 2 3 4 5 6 (PRODUCT LEVEL)	SEE PAGE
D	50	1	**160-2246**		SLEEVE-ABRASION (47.6-IN)	

D-ORDER BY THE METER
E-ORDER BY THE CENTIMETER
M-METRIC PART

337-9783 LINES GP-HEATER & AIR COND *(contd.)* i04586149

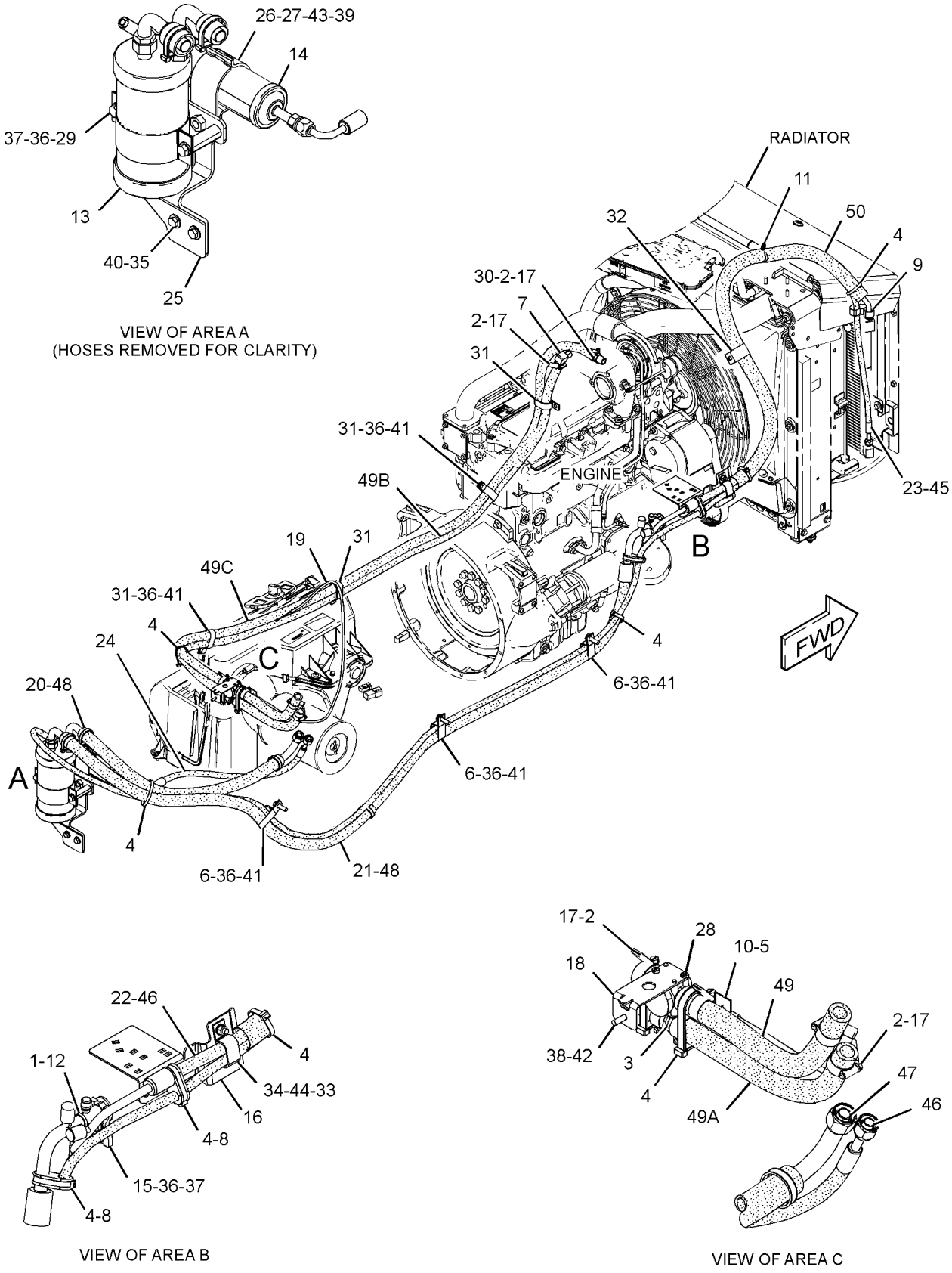

GRAPHIC #1 **<END>** g02789511

OPERATOR STATION

259-6276 MIRROR GP-REAR VIEW–INTERIOR

S/N: SEJ1-UP
PART OF 353-1429, 353-1432 CAB AR
AN ATTACHMENT

SMCS-7319 **i04403125**

NOTE	REF NO	GRAPHIC REF	PART NUMBER	QTY	PART NAME 1 2 3 4 5 6 (PRODUCT LEVEL)	SEE PAGE
M	1	1	**197-7499**	2	BOLT (M4X0.7X25-MM)	
	2	1	**199-0929**	1	MIRROR AS	
	3	1	**096-6166**	2	WASHER-HARD (4.5X9X1-MM THK)	

M-METRIC PART

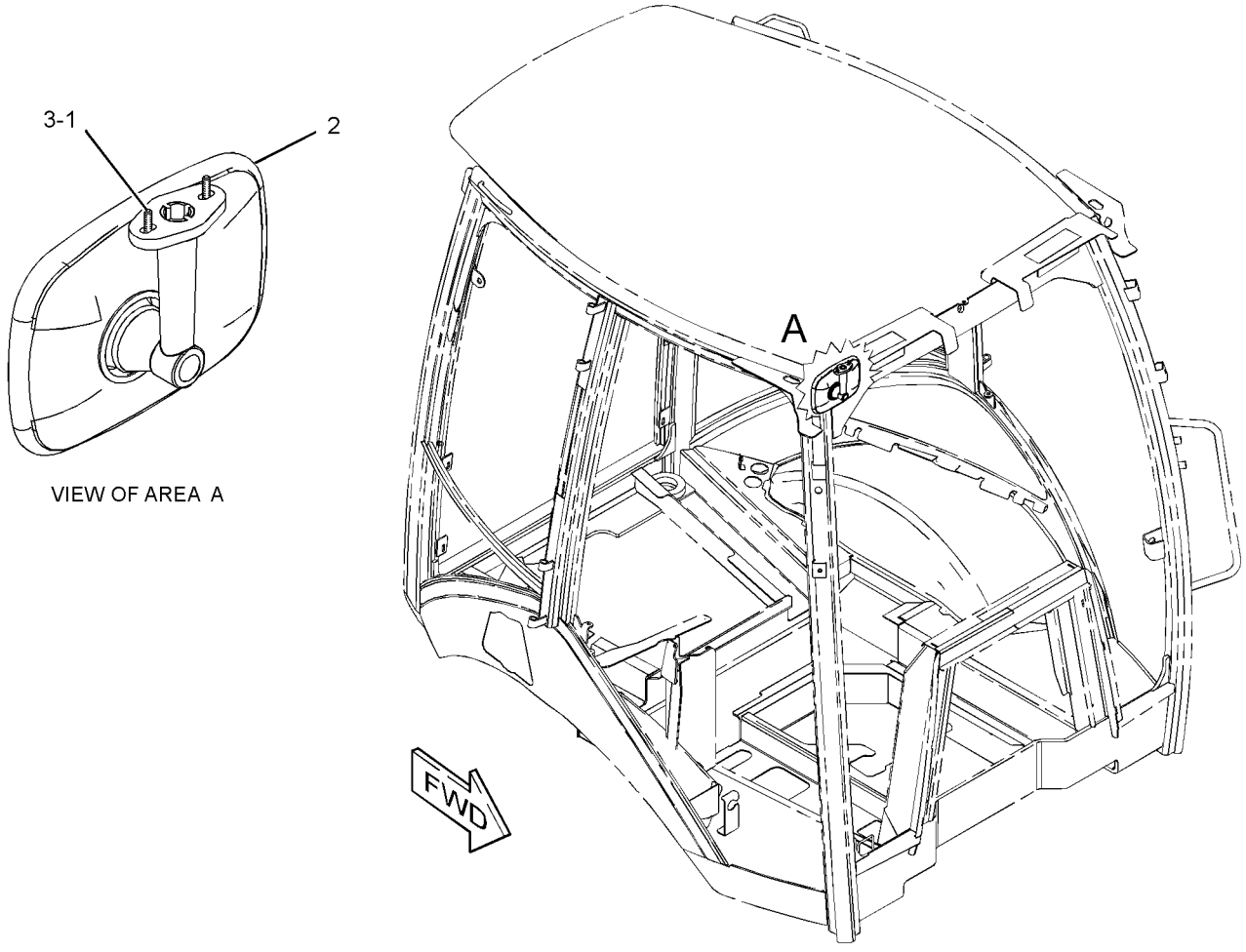

VIEW OF AREA A

GRAPHIC #1 **<END>** g01214241

OPERATOR STATION

336-9168 MIRROR GP-REAR VIEW—EXTERIOR

S/N: SEJ1-UP
PART OF 353-1429, 353-1432 CAB AR
AN ATTACHMENT

SMCS-7319 **i03338640**

NOTE	REF NO	GRAPHIC REF	PART NUMBER	QTY	PART NAME 1 2 3 4 5 6 (PRODUCT LEVEL)	SEE PAGE
	1	1	**180-0448**	2	MIRROR AS	
	2	1	**159-7105**	1	BRACKET & MOUNTING AS (LH)	
	3	1	**159-7106**	1	BRACKET & MOUNTING AS (RH)	
	4	1	**8T-4224**	4	WASHER-HARD (8.8X16X2-MM THK)	
M	5	1	**8T-4908**	4	BOLT (M8X1.25X25-MM)	

M-METRIC PART

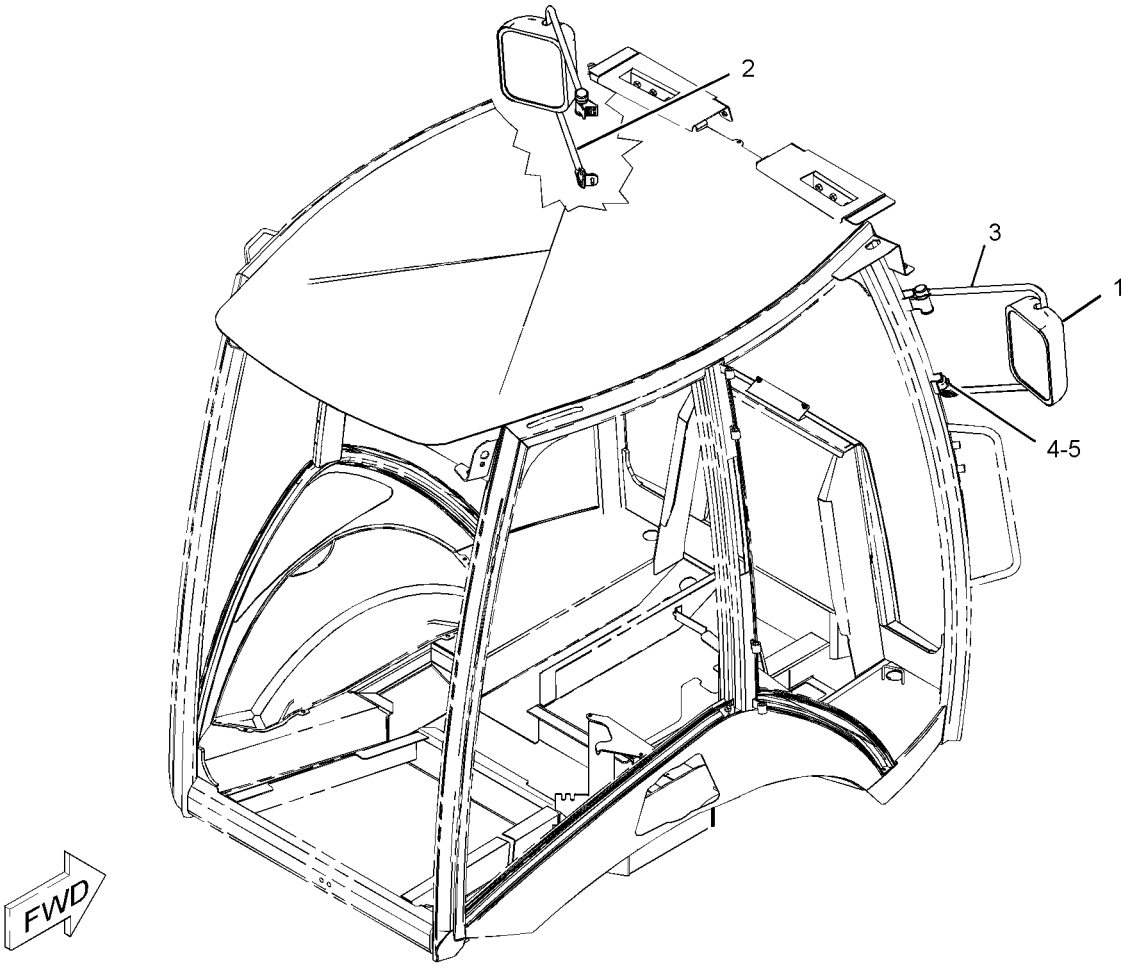

GRAPHIC #1 **<END>** g01090966

347-4525 MIRROR GP-REAR VIEW–EXTERIOR

S/N: SEJ1-UP
PART OF 341-3105 CONVERSION AR-CERTIFICATION
AN ATTACHMENT

SMCS-7319 **i03765847**

NOTE	REF NO	GRAPHIC REF	PART NUMBER	QTY	PART NAME 1 2 3 4 5 6 (PRODUCT LEVEL)	SEE PAGE
	1	1	**220-4050**	1	MIRROR (EXTERIOR, REAR)	
	2	1	**344-1001**	1	BRACKET AS-MOUNTING	
	3	1	**8T-4121**	2	WASHER-HARD (11X21X2.5-MM THK)	
M	4	1	**8T-4136**	2	BOLT (M10X1.5X25-MM)	

M-METRIC PART

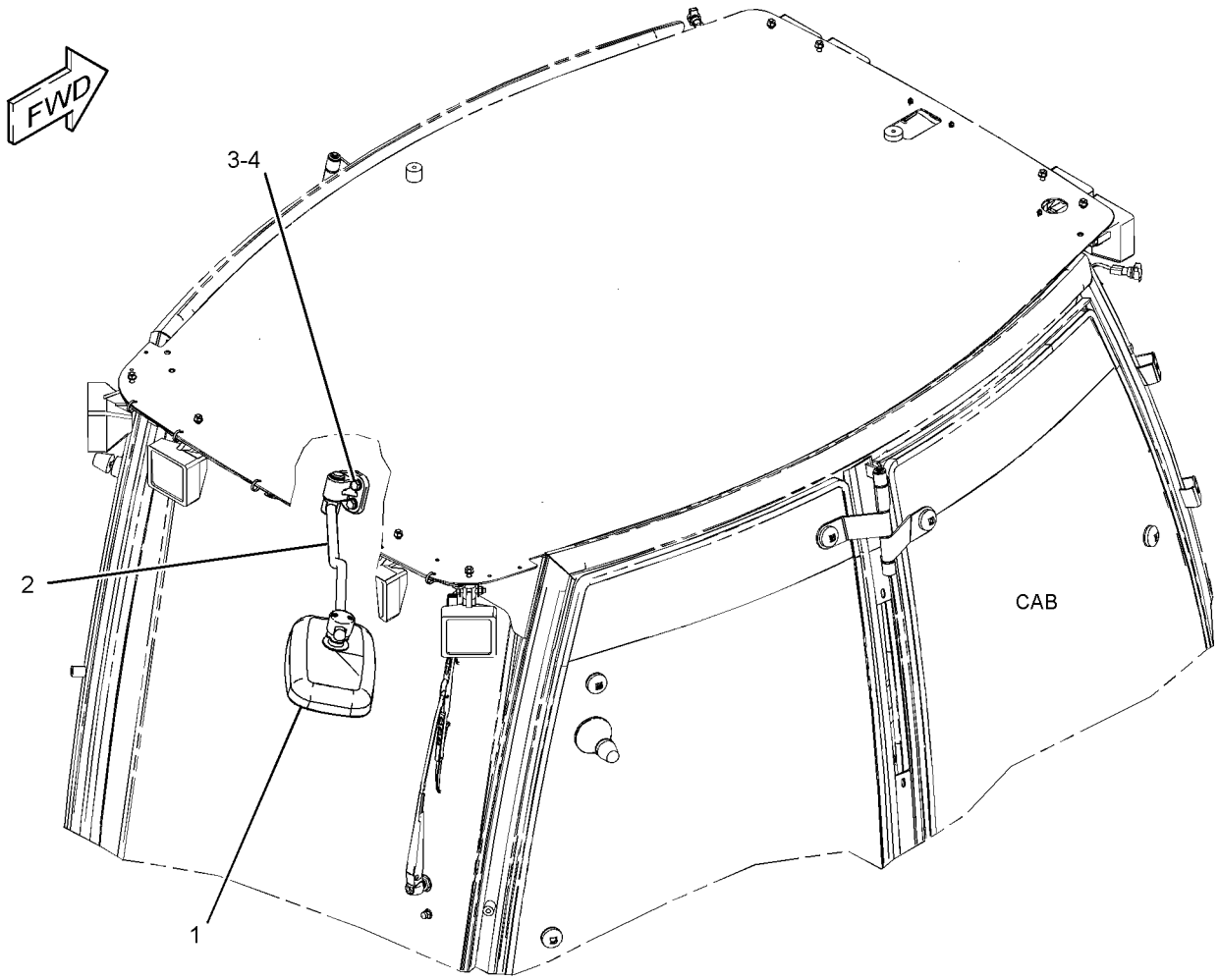

GRAPHIC #1 **<END>** g02108679

OPERATOR STATION

313-3752 MOTOR GP-WINDOW WIPER

S/N: SEJ1-UP
12-VOLT
PART OF 353-1366 WIPER & WASHER GP-WINDOW
AN ATTACHMENT

SMCS-7305 **i03500282**

NOTE	REF NO	GRAPHIC REF	PART NUMBER	QTY	PART NAME 1 2 3 4 5 6 (PRODUCT LEVEL)	SEE PAGE
	1	1	**102-8806**	1	KIT-RECEPTACLE (8-PIN)	
					(INCLUDES RECEPTACLE AS & WEDGE)	
	2	1	**8T-8737**	1	PLUG-SEAL	
	3	1	**186-3735**	7	PIN-CONNECTOR (16-GA TO 18-GA)	
	4	1	**206-5823**	1	CAP (MOTOR)	
	5	1	**3F-9556**	1	LOCKWASHER	
M	6	1	**5C-7261**	1	NUT (M8X1.25-THD)	

M-METRIC PART

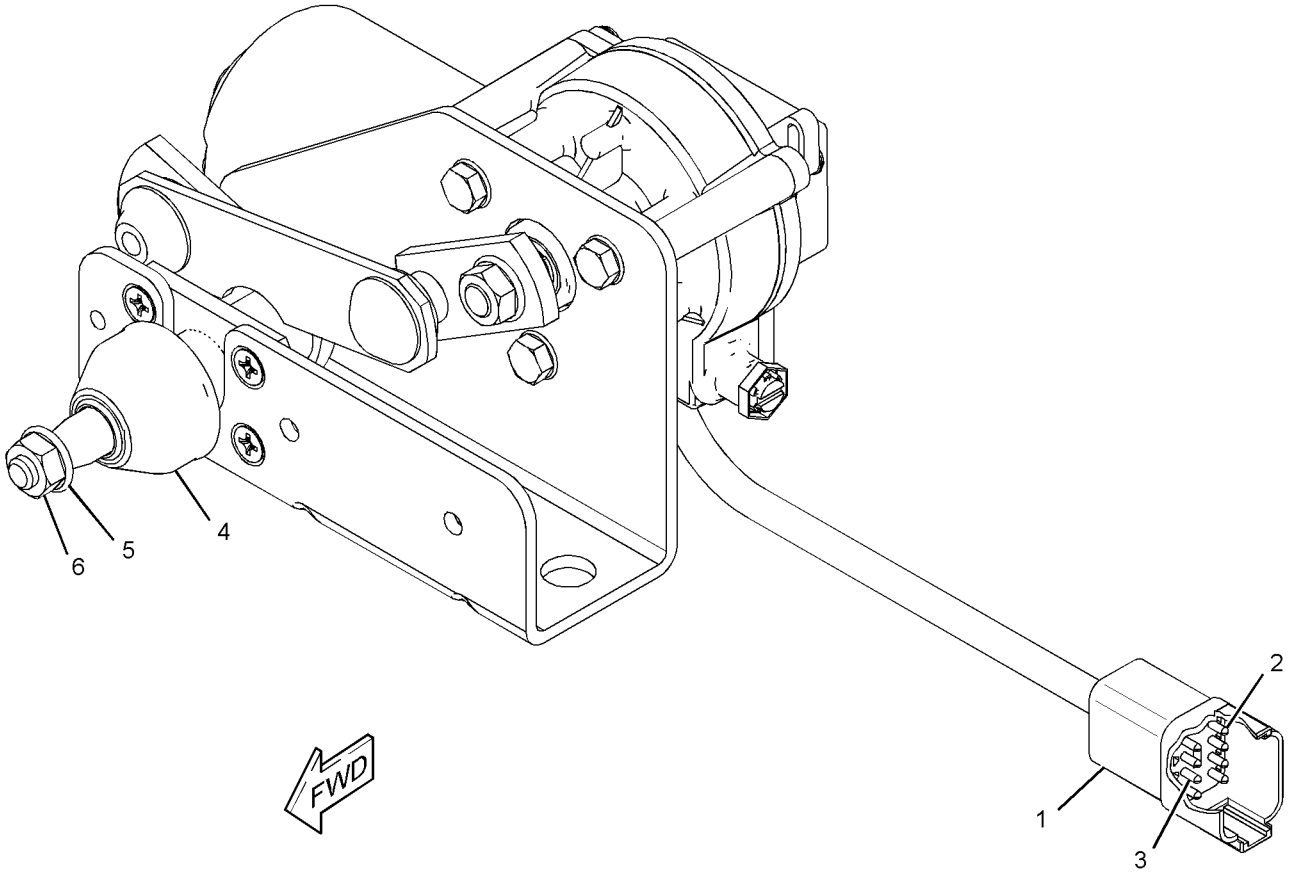

GRAPHIC #1 **<END>** g01570360

315-1318 MOTOR GP-WINDOW WIPER–REAR

S/N: SEJ1-UP
PART OF 315-1272 WIPER GP-WINDOW
AN ATTACHMENT

SMCS-7305 **i04156381**

NOTE	REF NO	GRAPHIC REF	PART NUMBER	QTY	PART NAME 1 2 3 4 5 6 (PRODUCT LEVEL)	SEE PAGE
	1	1	**102-8804**	1	KIT-RECEPTACLE (4-PIN)	
					(INCLUDES RECEPTACLE AS & WEDGE)	
	2	1	**263-3823**	1	CAP-WIPER	
M	3	1	**5C-7261**	1	NUT (M8X1.25-THD)	
M	4	1	**8C-6437**	1	NUT (M16X1-THD)	

M-METRIC PART

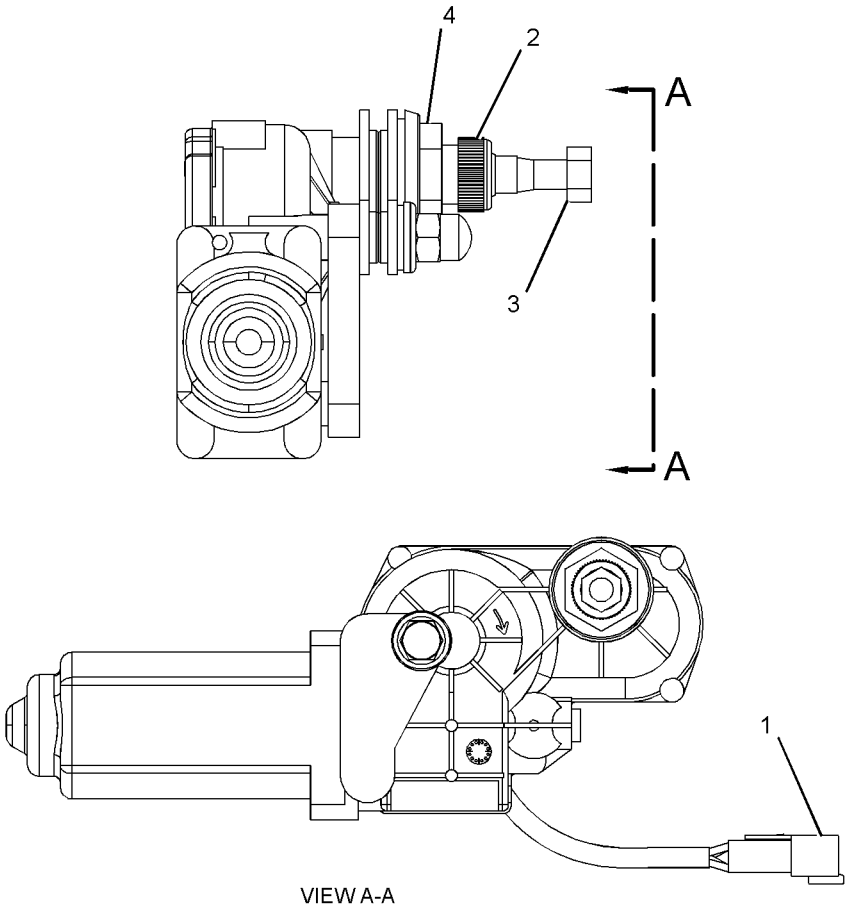

VIEW A-A

GRAPHIC #1 **<END>** g02351501

OPERATOR STATION

269-3247 MOUNTING GP-BACKHOE CONTROL—PILOT

S/N: SEJ1-UP
PART OF 373-4273 CONVERSION AR-QUICK COUPLER, 373-4271, 373-4275, 373-4277
VALVE AR-BANK 3
AN ATTACHMENT

SMCS-5063, 5258, 5705 **i04251334**

NOTE	REF NO	GRAPHIC REF	PART NUMBER	QTY	PART NAME 1 2 3 4 5 6 (PRODUCT LEVEL)	SEE PAGE
	1	1,2	**7K-1181**	2	STRAP-CABLE	
	2	1,2	**164-1368**	15	FASTENER-PANEL	
	3	1,2	**183-4934**	2	BEARING-SELF-ALIGNING	
B	4	1,2	**195-7602**	3	SHIM (1.6-MM THK)	
E	5	1	**261-9634**		SEAL-BULK (8.5-CM EACH)	
	6	2	**261-9642**	1	COVER-CONSOLE (LH)	
	7	2	**267-5225**	1	BOOT	
CY	8	1	*344-2432*	1	LATCH GP-CONSOLE	620
	9	2	**269-3254**	1	SUPPORT AS (LH)	
B	10	2	**269-3262**	4	SHIM (1-MM THK)	
	11	1,2	**270-2794**	2	INSULATION	
	12	2	**270-5161**	1	GASKET	
	13	2	**272-7079**	1	PLATE	
	14	1	**273-1473**	1	GROMMET	
	15	1	**273-1475**	1	COVER-CONSOLE (RH)	
	16	1	**273-1476**	1	BOOT	
	17	1	**273-1477**	1	PLATE	
	18	1	**273-1478**	1	BUMPER AS	
	19	1	**283-3467**	1	PLATE AS	
M		1	**6V-9632**	7	NUT-WELD (M6X1-THD)	
M		1	**8T-3490**	3	NUT-WELD (M10X1.5-THD)	
M		1	**8T-3612**	1	NUT-WELD (M8X1.25-THD)	
	20	2	**283-3477**	1	TUBE AS	
	21	1	**283-7981**	1	PLATE AS	
	22	1	**283-8053**	2	STRIKER	
	23	1	**039-8557**	2	WASHER (13X26X6-MM THK)	
M	24	1,2	**3T-0849**	8	BOLT-SOCKET HEAD (M6X1X25-MM)	
M	25	1	**7X-2533**	6	BOLT (M6X1X35-MM)	
	26	1,2	**8T-4121**	9	WASHER-HARD (11X21X2.5-MM THK)	
M	27	1	**8T-4134**	6	NUT (M6X1-THD)	
M	28	1,2	**8T-4138**	2	BOLT (M6X1X20-MM)	
M	29	2	**8T-4186**	5	BOLT (M10X1.5X40-MM)	
M	30	1	**8T-4189**	2	BOLT (M8X1.25X20-MM)	
M	31	1	**8T-4195**	4	BOLT (M10X1.5X30-MM)	
	32	1,2	**8T-4224**	4	WASHER-HARD (8.8X16X2-MM THK)	
M	33	1,2	**8T-4244**	2	NUT (M12X1.75-THD)	
M	34	1	**8T-4956**	2	BOLT (M12X1.75X35-MM)	
M	35	1	**8T-4971**	2	BOLT (M6X1X30-MM)	
M	36	2	**8T-7547**	2	BOLT (M8X1.25X30-MM)	
	37	1,2	**9X-2038**	14	WASHER (7X19X2-MM THK)	
M	38	1,2	**9X-2045**	6	SCREW-TRUSS HEAD (M6X1X20-MM)	
	39	1,2	**9X-8256**	26	WASHER (6.6X12X2-MM THK)	
M	40	1	**9X-2043**	2	SCREW-TRUSS HEAD (M6X1X14-MM)	

B-USE AS REQUIRED
C-CHANGE FROM PREVIOUS TYPE
E-ORDER BY THE CENTIMETER
M-METRIC PART
Y-SEPARATE ILLUSTRATION

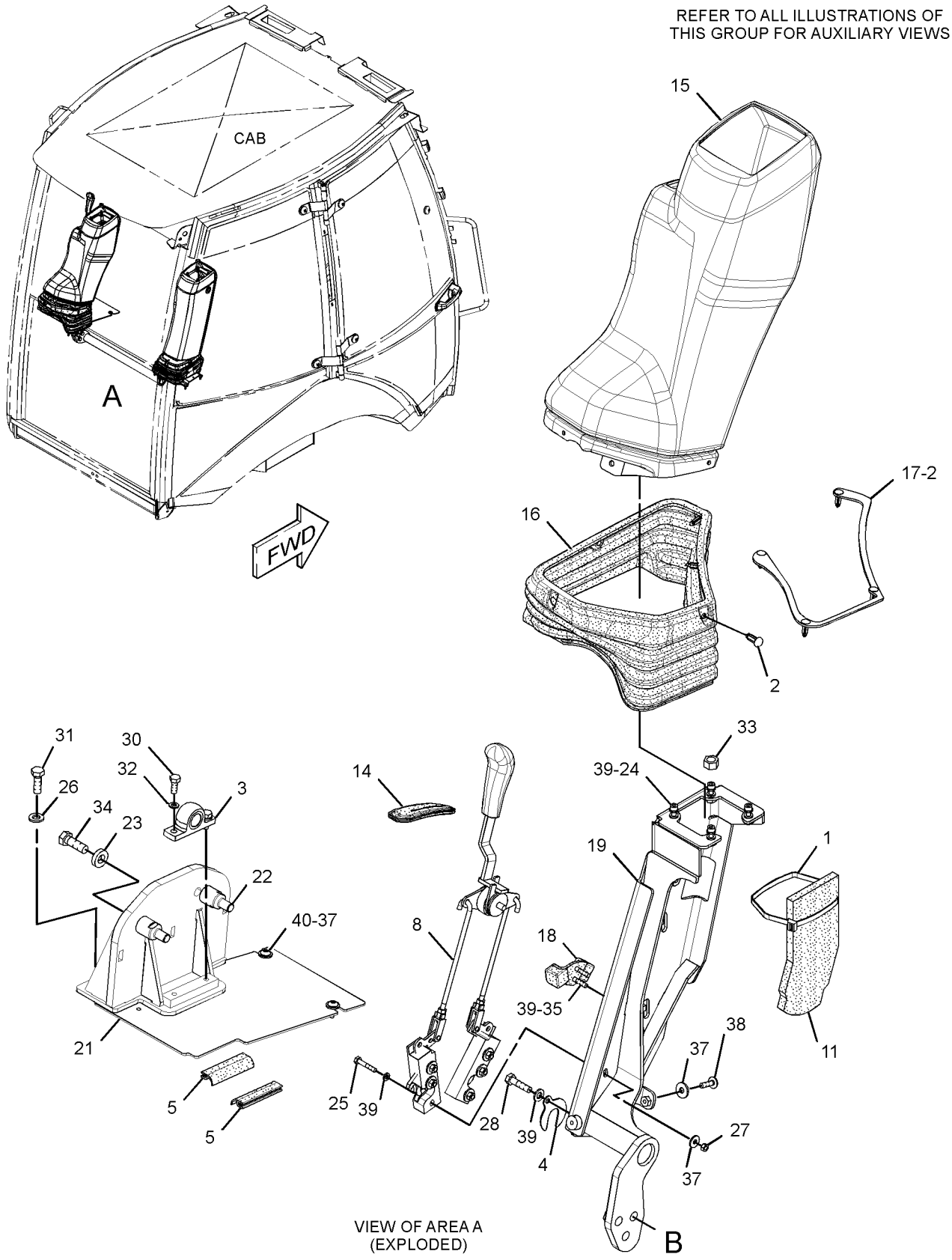

GRAPHIC #1

g02468598

269-3247 **MOUNTING GP-BACKHOE CONTROL** *(contd.)* **i04251334**

REFER TO ALL ILLUSTRATIONS OF
THIS GROUP FOR AUXILIARY VIEWS

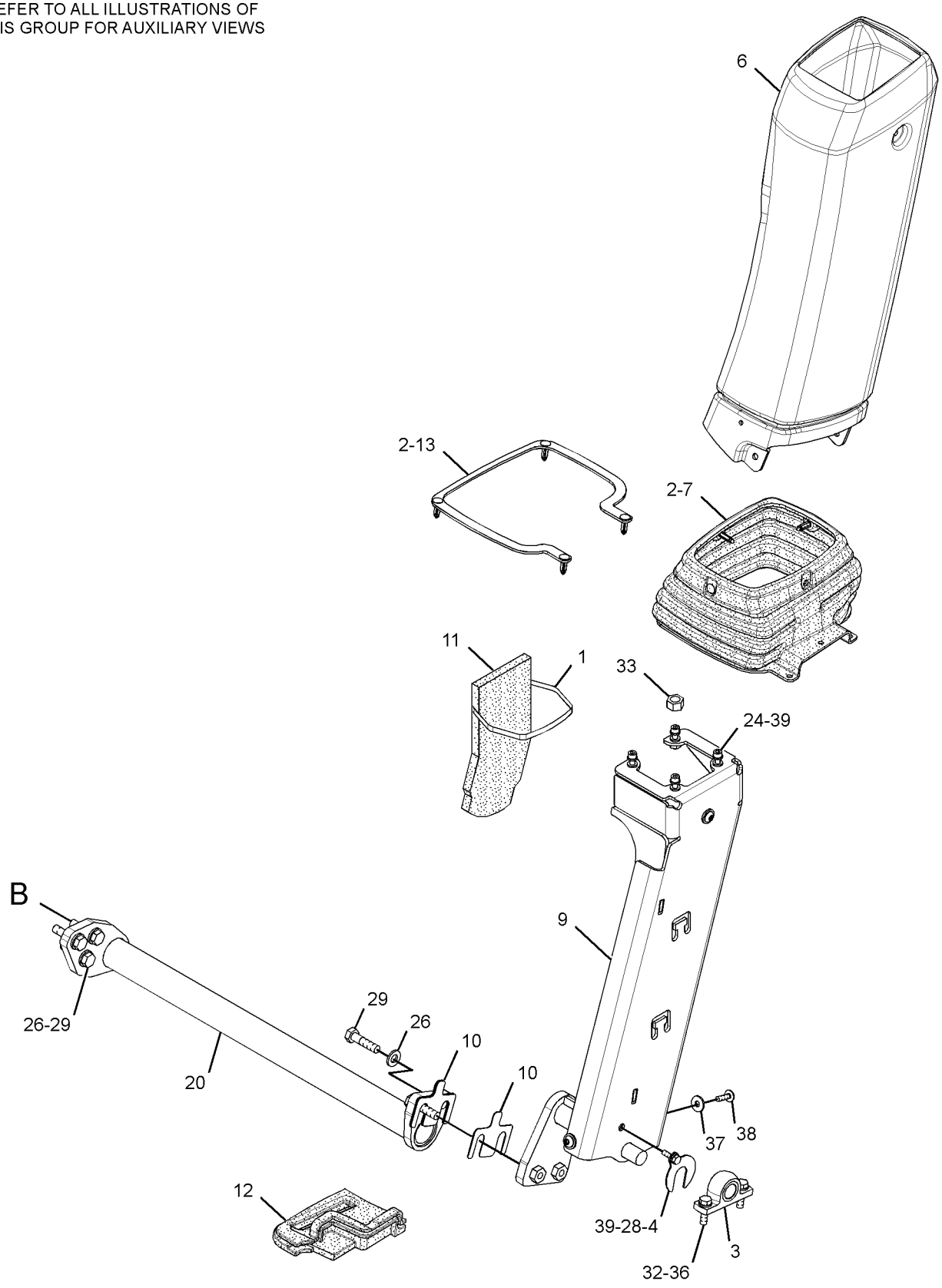

GRAPHIC #2 **<END>** g02475266

OPERATOR STATION

204-4248 MOUNTING GP-CAB

S/N: SEJ1-UP
PART OF 353-1429, 353-1432 CAB AR
AN ATTACHMENT

SMCS-7301 **i04439890**

NOTE	REF NO	GRAPHIC REF	PART NUMBER	QTY	PART NAME 1 2 3 4 5 6 (PRODUCT LEVEL)	SEE PAGE
	1	1	**6Y-9930**	2	MOUNT AS	
	2	1	**118-2990**	2	MOUNT AS	
	3	1	**9W-6582**	2	SLEEVE	
M	4	1	**7X-2532**	2	BOLT (M20X2.5X130-MM)	
	5	1	**297-5849**	2	WASHER-HARD (17X75X10-MM THK)	
	6	1	**8T-4123**	4	WASHER (22X35X3.5-MM THK)	
M	7	1	**8T-4131**	2	NUT (M20X2.5-THD)	
M	8	1	**8T-4132**	2	NUT (M16X2-THD)	
	9	1	**335-1836**	2	BOLT-SPECIAL	
	10	1	**9W-6584**	2	WASHER (20.5X114X10-MM THK)	
	11	1	**9X-8257**	4	WASHER (17.5X30X3.5-MM THK)	
	12	1	**1L-6377**	2	BUTTON-PLUG	

M-METRIC PART

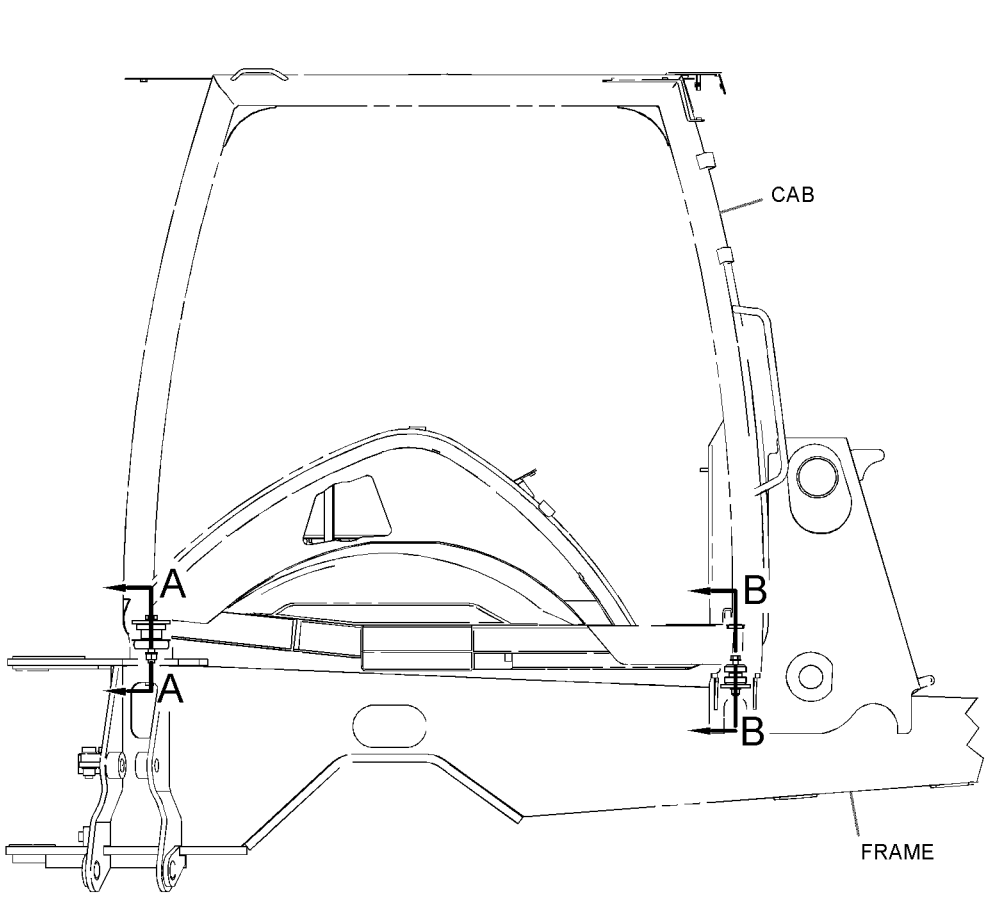

RIGHT SIDE VIEW

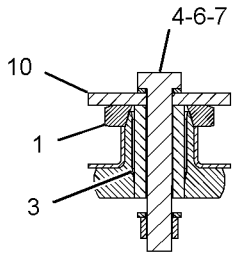

SECTION A-A

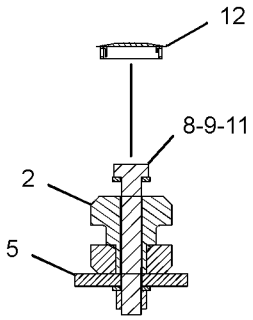

SECTION B-B

GRAPHIC #1 **<END>** g02820219

OPERATOR STATION

278-8223 MOUNTING GP-HYDRAULIC LOCKOUT

S/N: SEJ1-UP
PART OF 341-3107 CONVERSION AR-ROADING
AN ATTACHMENT

SMCS-5001 **i03374169**

NOTE	REF NO	GRAPHIC REF	PART NUMBER	QTY	PART NAME 1 2 3 4 5 6 (PRODUCT LEVEL)	SEE PAGE
	1	1	**279-8725**	4	CLIP	
	2	1	**096-5962**	4	WASHER-HARD (3.4X7X0.8-MM THK)	
M	3	1	**155-4098**	4	SCREW-BUTTON HEAD (M3X0.5X1-MM)	
M	4	1	**3C-6969**	4	NUT (M3X0.5-THD)	

M-METRIC PART

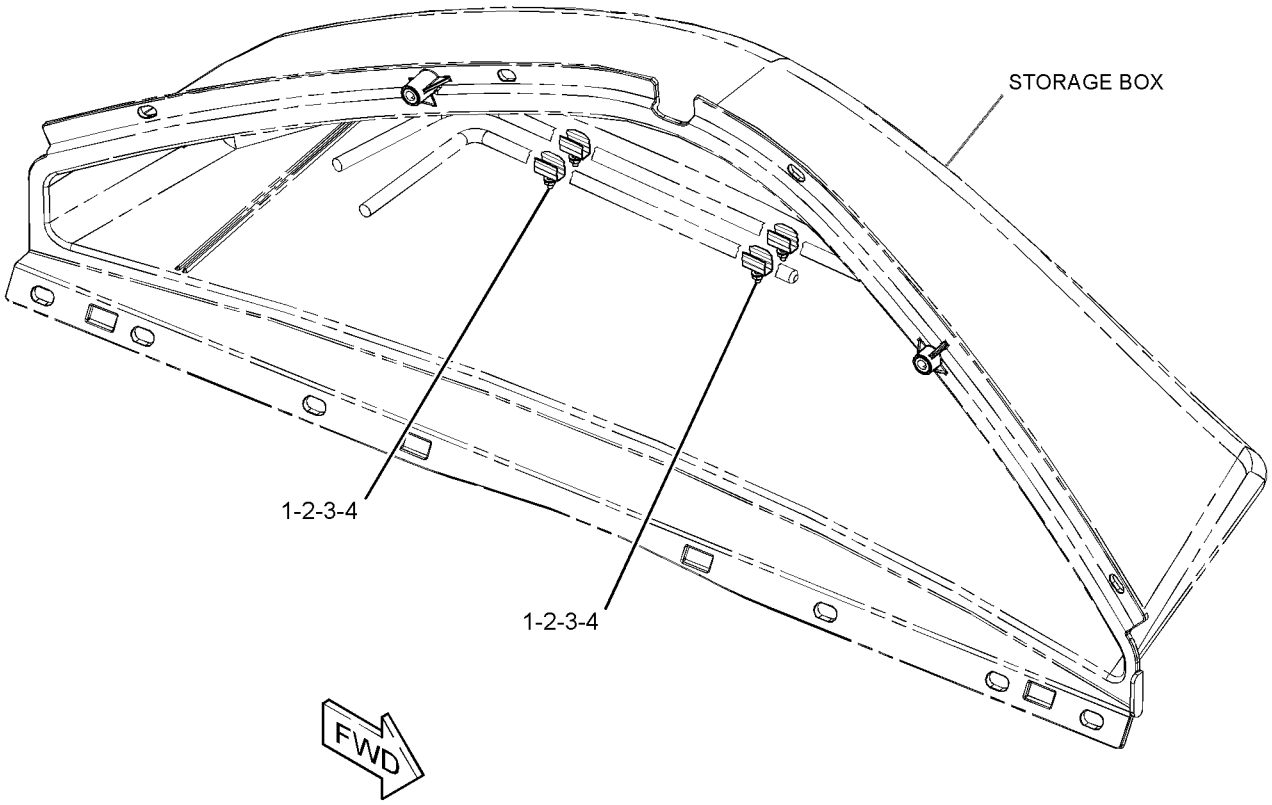

GRAPHIC #1 **<END>** g01792393

OPERATOR STATION

209-3378 PEDAL GP-GOVERNOR

S/N: SEJ1-UP
PART OF 341-6719 CONTROL GP-GOVERNOR
AN ATTACHMENT

SMCS-1265 **i03592816**

NOTE	REF NO	GRAPHIC REF	PART NUMBER	QTY	PART NAME 1 2 3 4 5 6 (PRODUCT LEVEL)	SEE PAGE
M	1	1	**129-3178**	1	LOCKNUT (M6X1-THD)	
M	2	1	**5C-7261**	1	NUT (M8X1.25-THD)	
M	3	1	**5C-9553**	1	BOLT (M6X1X16-MM)	
	4	1	**8T-4205**	1	WASHER-HARD (7.2X14.5X2-MM THK)	
M	5	1	**095-0641**	4	BOLT-SOCKET HEAD (M4X0.7X10-MM)	
	6	1	**243-0063**	1	BOOT	
	7	1	**3F-9556**	2	LOCKWASHER	
	8	1	**6V-8186**	2	NUT-FULL (5/16-24-THD)	
	9	1	**8T-6902**	3	CLIP	
M	10	1	**9X-2842**	1	BOLT (M8X1.25X45-MM)	
					AVAILABLE REPAIR KIT(S):	
			164-1154	1	KIT-SERVICE	
					(INCLUDES CLAMP & SCREWS)	
			243-0062	1	KIT-REPAIR (GOVERNOR PEDAL)	
					(INCLUDES SHAFT, CLIPS & BEARINGS)	

M-METRIC PART

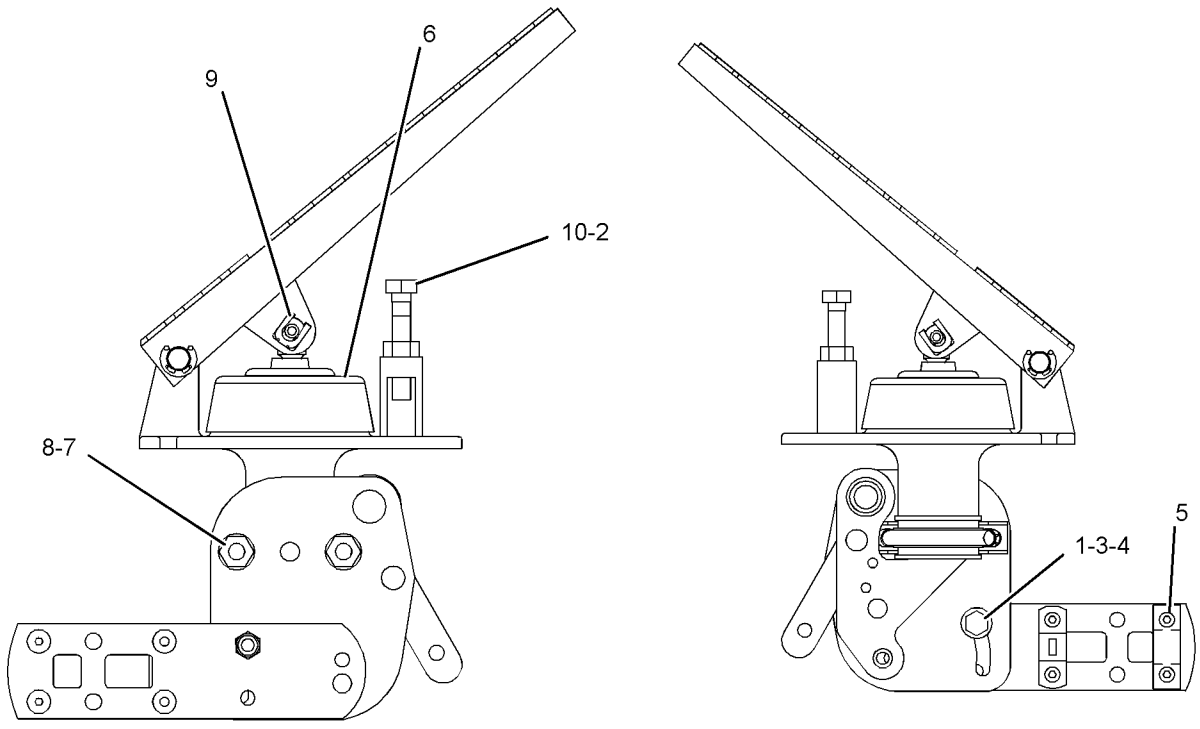

RIGHT SIDE VIEW **LEFT SIDE VIEW**

GRAPHIC #1 **<END>** g01081364

OPERATOR STATION

334-7225 ROOF GP-CAB

S/N: SEJ1-UP
PART OF 353-1429, 353-1432 CAB AR
AN ATTACHMENT

SMCS-7301 **i03686780**

NOTE	REF NO	GRAPHIC REF	PART NUMBER	QTY	PART NAME 1 2 3 4 5 6 (PRODUCT LEVEL)	SEE PAGE
	1	1	**193-5915**	2	PLUG	
	2	1	**334-7227**	1	CAP AS	
	3	1	**341-5749**	5	SPACER (8.5X12.7X4.3-MM THK)	
	4	1	**341-5750**	5	PLATE	
	5	1	**8C-9987**	3	WASHER (8.3X28X2.5-MM THK)	
M	6	1	**8T-4189**	8	BOLT (M8X1.25X20-MM)	
B	7	1	**193-5914**	2	PLUG	
	8	1	**8T-4224**	5	WASHER-HARD (8.8X16X2-MM THK)	

B-USE AS REQUIRED
M-METRIC PART

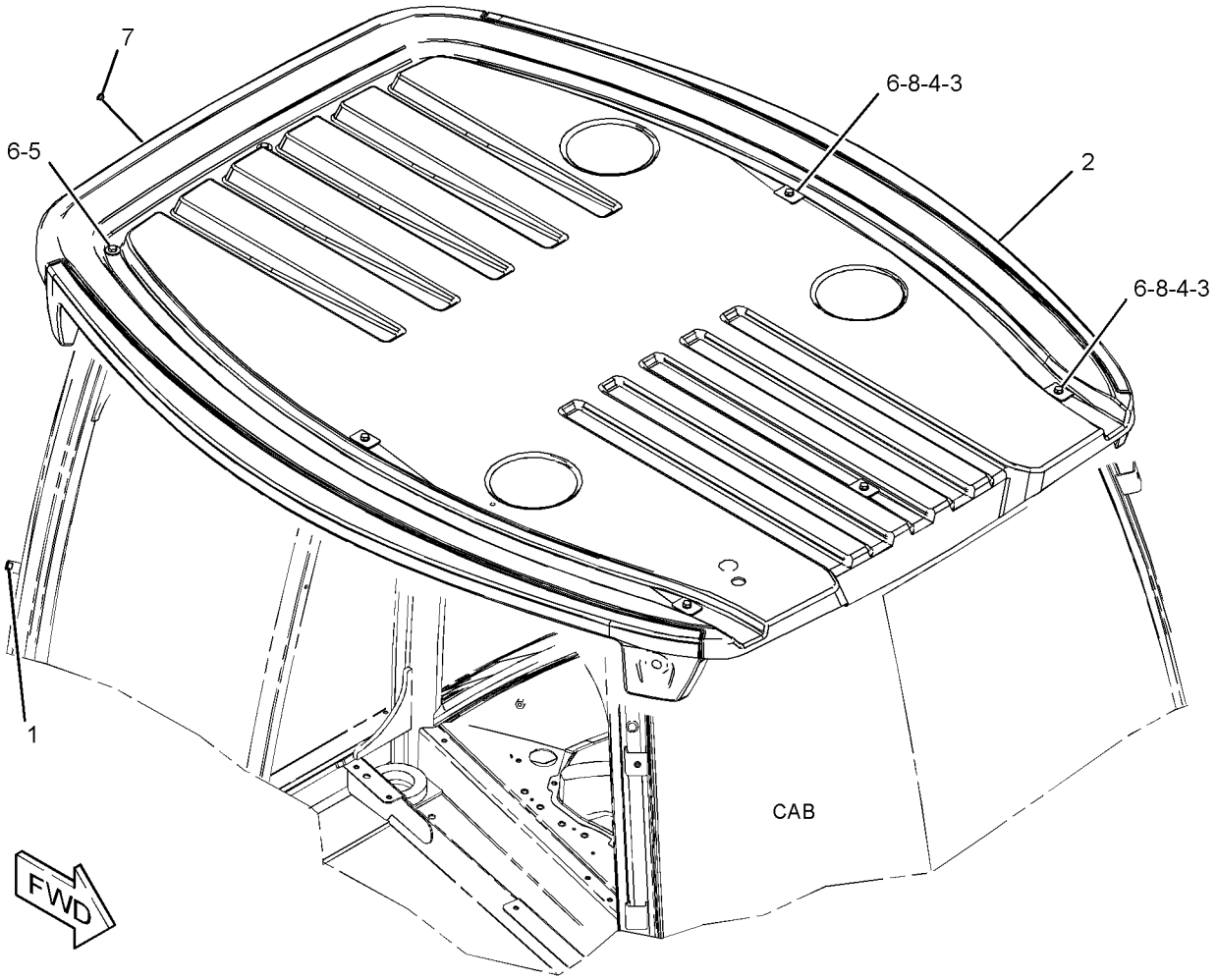

GRAPHIC #1 **<END>** g01983395

OPERATOR STATION

324-2896 SEAT GP–CLOTH

S/N: SEJ1-UP
PART OF 314-4290 SEAT GP-SUSPENSION
AN ATTACHMENT

SMCS-7312, 7321, 7324, 7336 **i04004956**

NOTE	REF NO	GRAPHIC REF	PART NUMBER	QTY	PART NAME 1 2 3 4 5 6 (PRODUCT LEVEL)	SEE PAGE
	1	1	**1V-0358**	4	WASHER (8.6X33.3X1.2-MM THK)	
	2	1	**164-1244**	1	CUSHION AS-BACK	
	3	1	**180-5796**	1	CUSHION AS-SEAT	
	4	1	**197-4521**	1	KIT-KNOB (RECLINER)	
	5	1	**203-9858**	1	SPACER (8.5X20X12-MM THK)	
	6	1	**220-3790**	1	ARMREST AS (RH)	
	7	1	**220-3791**	1	ARMREST AS (LH)	
					EACH ARMREST AS INCLUDES	
M		1	**6A-9083**	1	SCREW-MACHINE (M6X1X15-MM)	
	8	1	**119-3859**	2	SCREW-PAN HEAD (10-16X0.75-IN)	
Y	9	1	**324-2897**	1	KIT-SEAT FRAME	613
	10	1	**324-2900**	1	BRACKET	
	11	1	**324-2901**	1	BRACKET	
	12	1	**0S-1595**	2	BOLT (1/2-13X1.25-IN)	
	13	1	**1K-6872**	2	LOCKNUT (1/2-13-THD)	
	14	1	**5P-8245**	2	WASHER-HARD (13.5X25.5X3-MM THK)	
M	15	1	**6V-9189**	1	LOCKNUT (M8X1.25-THD)	
M	16	1	**8C-6431**	1	SCREW-FLAT HEAD	
M	17	1	**8T-4908**	4	BOLT (M8X1.25X25-MM)	
	18	1	**8T-9501**	2	SCREW (10-16X0.75-IN)	

M-METRIC PART
Y-SEPARATE ILLUSTRATION

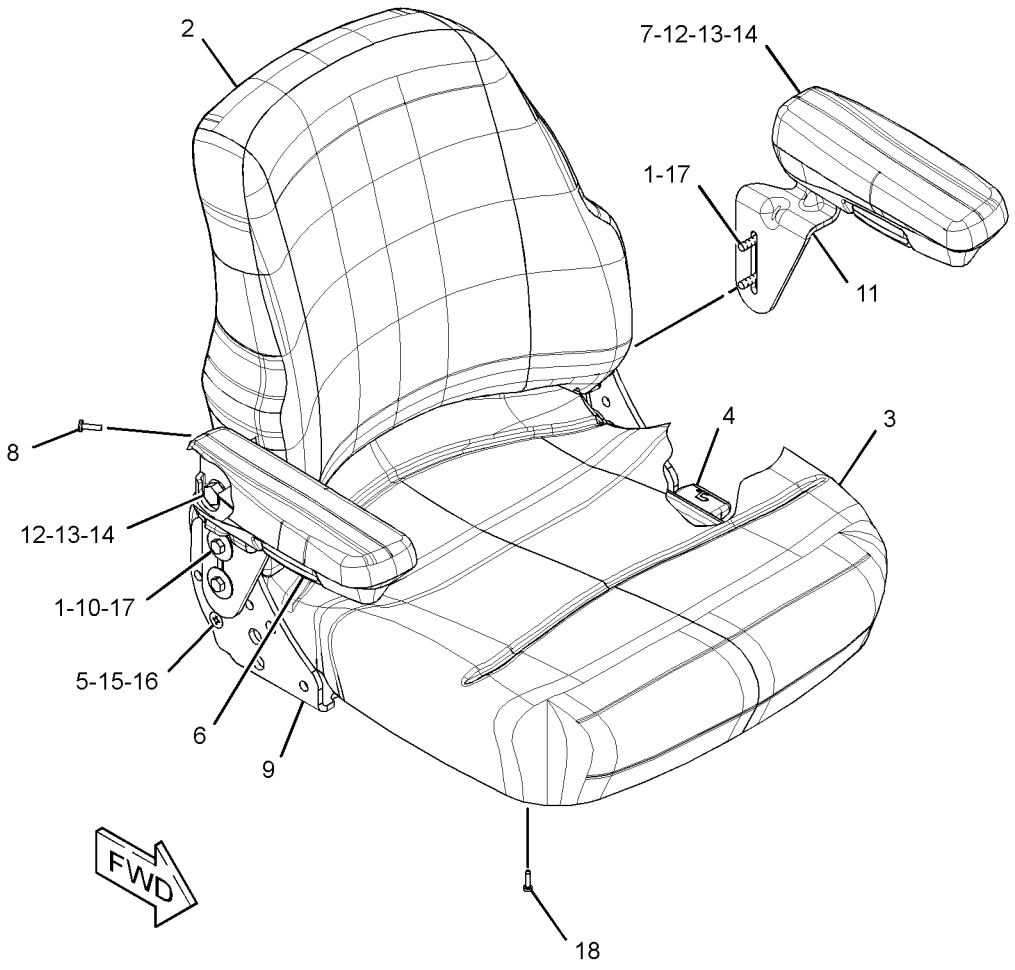

GRAPHIC #1 **<END>** g01625312

OPERATOR STATION

324-2903 SEAT GP—DELUXE, CLOTH

S/N: SEJ1-UP

PART OF 314-4291 SEAT GP-SUSPENSION

AN ATTACHMENT

SMCS-7312, 7321, 7324, 7336 **i04004954**

NOTE	REF NO	GRAPHIC REF	PART NUMBER	QTY	PART NAME 1 2 3 4 5 6 (PRODUCT LEVEL)	SEE PAGE
	1	1	**1V-0358**	4	WASHER (8.6X33.3X1.2-MM THK)	
	2	1	**121-3040**	6	FASTENER-PANEL	
	3	1	**164-1246**	1	CUSHION AS (BACK)	
	4	1	**164-1269**	1	BOOT	
	5	1	**164-1271**	2	SPRING	
	6	1	**164-1272**	1	ROD AS	
	7	1	**164-1273**	2	SPRING-EXTENSION (TILT)	
	8	1	**164-1274**	1	BLOCK	
	9	1	**164-1276**	2	TUBE	
	10	1	**164-1277**	2	CLIP-SPRING	
	11	1	**180-5787**	1	KNOB	
	12	1	**180-5788**	1	BLOCK	
	13	1	**180-5791**	1	SUPPORT AS-SEAT (LUMBAR)	
	14	1	**186-5113**	2	SCREW	
	15	1	**197-4521**	1	KIT-KNOB (RECLINER)	
	16	1	**203-9858**	1	SPACER (8.5X20X12-MM THK)	
	17	1	**220-3790**	1	ARMREST AS (RH)	
	18	1	**220-3791**	1	ARMREST AS (LH)	
					(EACH ARMREST AS INCLUDES)	
M		1	**6A-9083**	1	SCREW-MACHINE (M6X1X15-MM)	
	19	1	**119-3859**	2	SCREW-PAN HEAD (10-16X0.75-IN)	
	20	1	**324-2900**	1	BRACKET	
	21	1	**324-2901**	1	BRACKET	
	22	1	**324-2905**	1	KNOB	
Y	23	1	**324-2906**	1	KIT-SEAT FRAME	614
	24	1	**324-2907**	1	CUSHION AS-SEAT	
	25	1	**324-2909**	1	HEADREST	
	26	1	**324-2910**	1	HANDLE (TILT)	
	27	1	**324-9978**	1	PIN	
	28	1	**0S-1595**	2	BOLT (1/2-13X1.25-IN)	
	29	1	**1K-6872**	2	LOCKNUT (1/2-13-THD)	
	30	1	**2P-7864**	1	SCREW-TAPPING	
	31	1	**4H-1641**	3	PIN-SPRING	
	32	1	**5P-8245**	2	WASHER-HARD (13.5X25.5X3-MM THK)	
M	33	1	**6V-9189**	1	LOCKNUT (M8X1.25-THD)	
M	34	1	**8C-6431**	1	SCREW-FLAT HEAD	
M	35	1	**8T-4908**	4	BOLT (M8X1.25X25-MM)	

M-METRIC PART
Y-SEPARATE ILLUSTRATION

324-2903 SEAT GP *(contd.)* **i04004954**

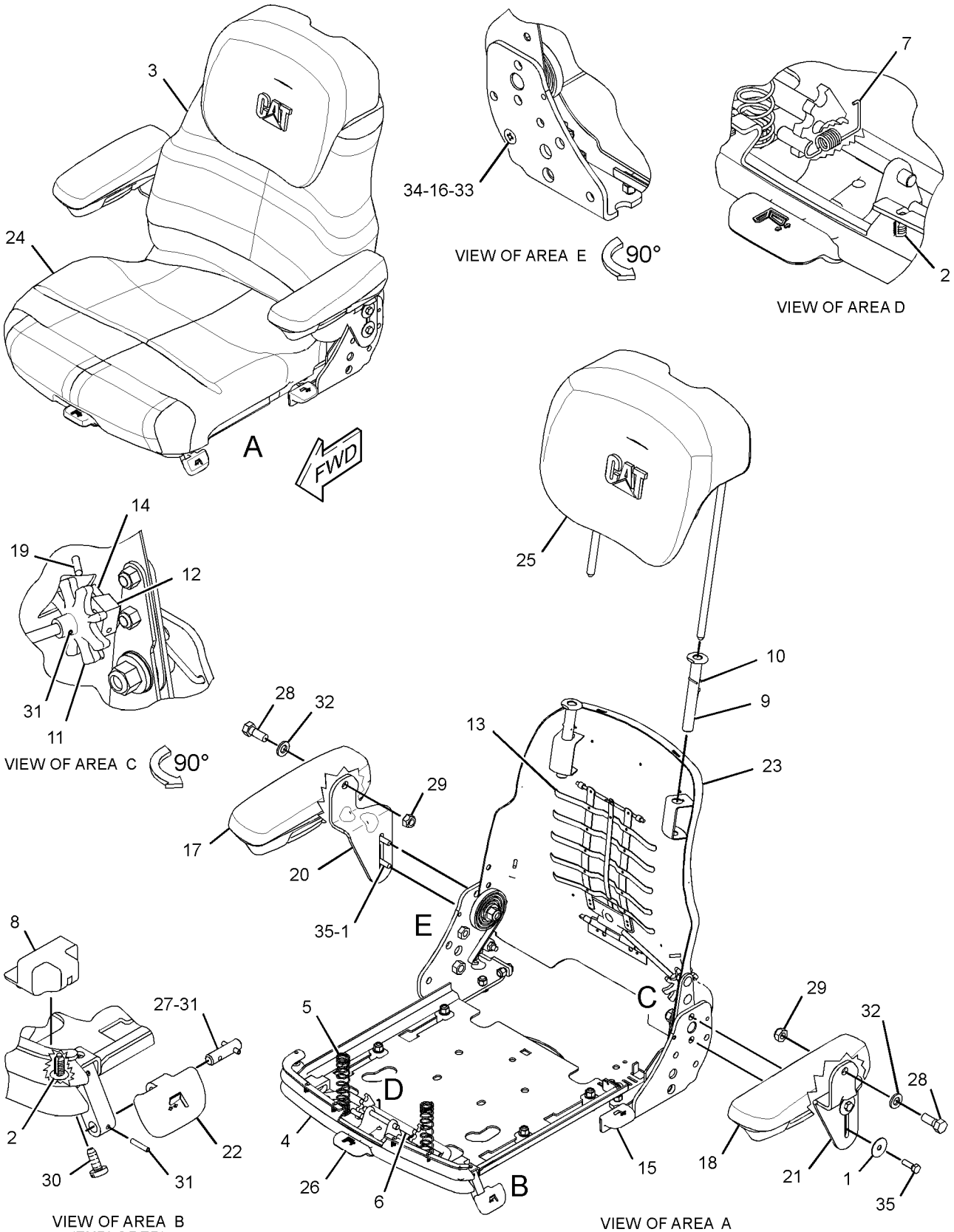

GRAPHIC #1 **<END>** g01624167

OPERATOR STATION

314-4290 SEAT GP-SUSPENSION—CLOTH

S/N: SEJ1-UP

PART OF 315-9890 SEAT GP-SUSPENSION

AN ATTACHMENT

SMCS-7324, 7336 **i04004953**

NOTE	REF NO	GRAPHIC REF	PART NUMBER	QTY	PART NAME 1 2 3 4 5 6 (PRODUCT LEVEL)	SEE PAGE
	1	1	**0S-1594**	4	BOLT (3/8-16X1-IN)	
	2	1	**2K-4973**	4	LOCKNUT (3/8-16-THD)	
	3	1	**308-3554**	8	SPACER (9.9X28.4X3.2-MM THK)	
	4	1	**322-9480**	1	KIT-SEAT BELT (RETRACTABLE, 2-IN)	
					(INCLUDES SPACER, WASHERS & BOLTS)	
	5	1	**322-9481**	1	BASE-SEAT	
Y	6	1	**322-9486**	1	SWIVEL GP-SEAT	652
Y	7	1	**324-2890**	1	SUSPENSION GP-SEAT	650
Y	8	1	**324-2896**	1	SEAT GP (CLOTH)	641

Y-SEPARATE ILLUSTRATION

314-4290 SEAT GP-SUSPENSION *(contd.)* i04004953

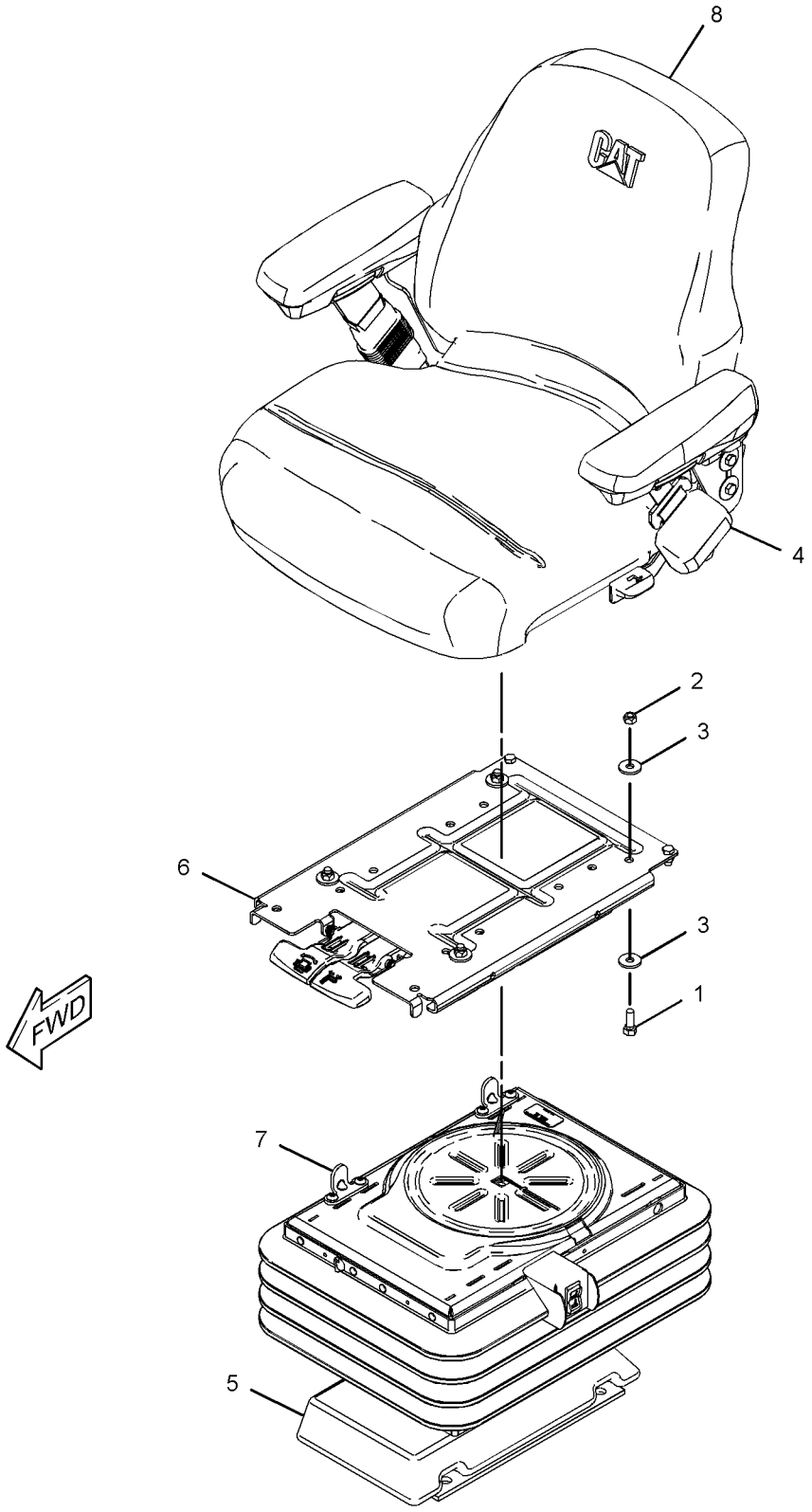

GRAPHIC #1 **<END>** g01625141

OPERATOR STATION

314-4291 SEAT GP-SUSPENSION—DELUXE, CLOTH

S/N: SEJ1-UP

PART OF 315-9891 SEAT GP-SUSPENSION

AN ATTACHMENT

SMCS-7324, 7336 **i04004930**

NOTE	REF NO	GRAPHIC REF	PART NUMBER	QTY	PART NAME 1 2 3 4 5 6 (PRODUCT LEVEL)	SEE PAGE
	1	1	**0S-1594**	2	BOLT (3/8-16X1-IN)	
	2	1	**2K-4973**	4	LOCKNUT (3/8-16-THD)	
	3	1	**234-3017**	2	BOLT (3/8-16X0.875-IN)	
	4	1	**7X-7729**	8	WASHER (11X25X3-MM THK)	
	5	1	**308-3554**	8	SPACER (9.9X28.4X3.2-MM THK)	
	6	1	**322-9480**	1	KIT-SEAT BELT (RETRACTABLE, 2-IN)	
					(INCLUDES SPACER, WASHERS & BOLTS)	
	7	1	**322-9481**	1	BASE-SEAT	
Y	8	1	**322-9486**	1	SWIVEL GP-SEAT	652
Y	9	1	**324-2890**	1	SUSPENSION GP-SEAT (DELUXE, CLOTH)	650
Y	10	1	**324-2903**	1	SEAT GP (DELUXE, CLOTH)	643

Y-SEPARATE ILLUSTRATION

314-4291 SEAT GP-SUSPENSION *(contd.)* i04004930

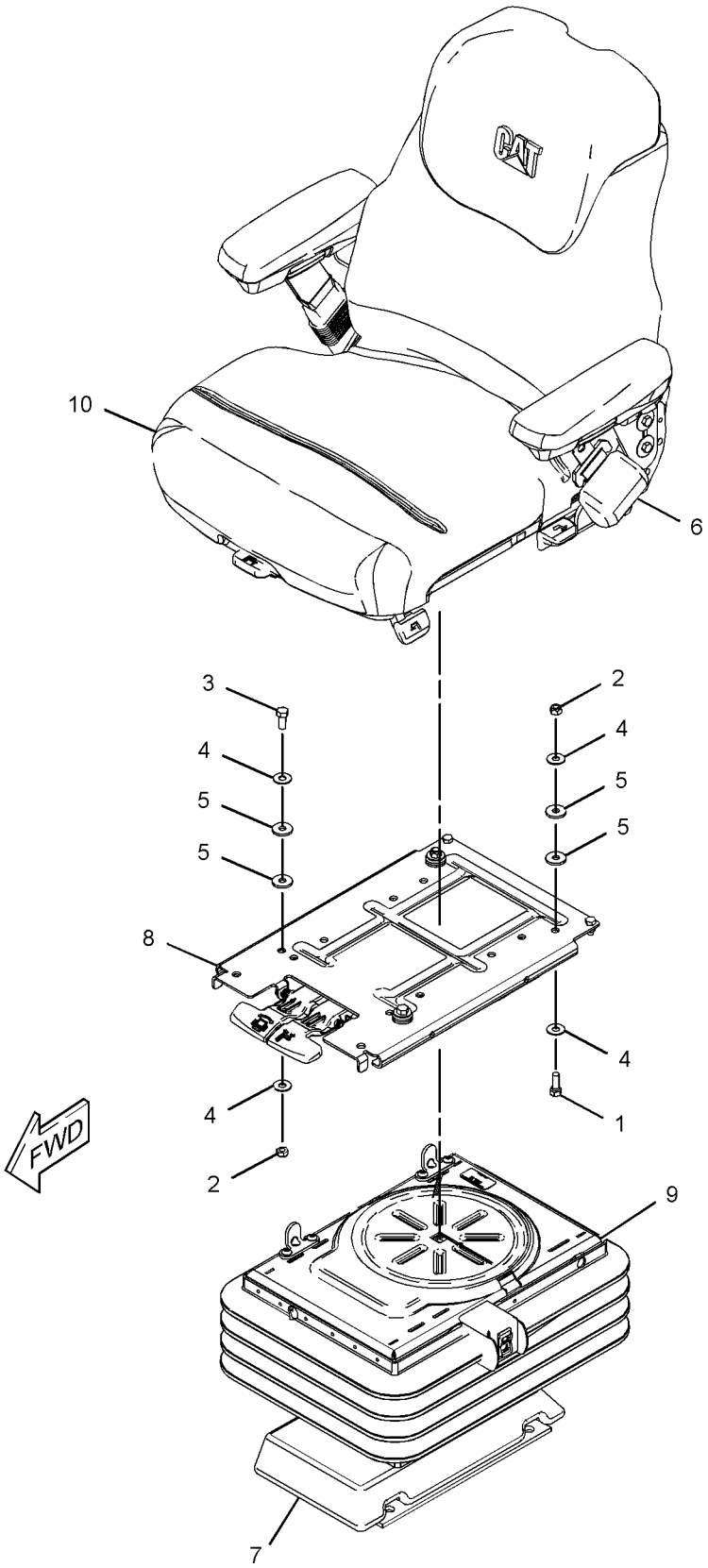

GRAPHIC #1 **<END>** g01625673

315-9890 SEAT GP-SUSPENSION—CLOTH

S/N: SEJ1-UP
PART OF 374-6857, 374-6858 CAB AR
AN ATTACHMENT

SMCS-7324, 7336 **i03164824**

NOTE	PART NUMBER	QTY	PART NAME 1 2 3 4 5 6 (PRODUCT LEVEL)	SEE PAGE
Y	**314-4290**	1	SEAT GP-SUSPENSION (CLOTH)	645
M	**8T-4139**	4	BOLT (M12X1.75X30-MM)	
	3S-2093	1	STRAP-CABLE	
	8T-4223	4	WASHER-HARD (13.5X25.5X3-MM THK)	

M-METRIC PART
Y-SEPARATE ILLUSTRATION

<END>

315-9891 SEAT GP-SUSPENSION—DELUXE, CLOTH

S/N: SEJ1-UP
PART OF 373-4297 CAB AR, 373-4298 CAB AR-ENCLOSED ROPS
AN ATTACHMENT

SMCS-7324, 7336 **i03164361**

NOTE	PART NUMBER	QTY	PART NAME 1 2 3 4 5 6 (PRODUCT LEVEL)	SEE PAGE
Y	**314-4291**	1	SEAT GP-SUSPENSION (DELUXE, CLOTH)	647
M	**8T-4139**	4	BOLT (M12X1.75X30-MM)	
	3S-2093	1	STRAP-CABLE	
	8T-4223	4	WASHER-HARD (13.5X25.5X3-MM THK)	

M-METRIC PART
Y-SEPARATE ILLUSTRATION

<END>

OPERATOR STATION

324-2890 SUSPENSION GP-SEAT—DELUXE, CLOTH

S/N: SEJ1-UP

PART OF 314-4290, 314-4291 SEAT GP-SUSPENSION

AN ATTACHMENT

SMCS-7312, 7324 **i04253669**

NOTE	REF NO	GRAPHIC REF	PART NUMBER	QTY	PART NAME 1 2 3 4 5 6 (PRODUCT LEVEL)	SEE PAGE
	1	1	**164-1230**	4	BEARING	
	2	1	**204-1682**	4	STRAP-CABLE	
	3	1	**304-1021**	4	ROLLER	
	4	1	**304-1023**	2	BUMPER	
	7	1	**305-4353**	2	SPACER (6.4X24X6-MM THK)	
	8	1	**313-3280**	2	NUT (M6X1-THD)	
	9	1	**321-5776**	1	RING-RETAINING	
	10	1	**322-9507**	2	SHAFT	
	11	1	**322-9509**	2	BRACKET-STOP	
	12	1	**345-4230**	1	BASE-SEAT	
	13	1	**324-2889**	1	HOUSING-UPPER	
	14	1	**366-2574**	1	ARM AS-SCISSORS	
	15	1	**324-2892**	2	PLATE	
	16	1	**324-2893**	2	STOP	
Y	17	1	**324-2894**	1	KIT-SEAT SUSPENSION (AIR)	616
	18	1	**324-2895**	1	SWITCH-TOGGLE (SUSPENSION SEAT)	
	19	1	**328-7742**	1	SHOCK ABSORBER	
	20	1	**031-4155**	2	LOCKNUT (5/16-18-THD)	
M	21	1	**129-3178**	1	LOCKNUT (M6X1-THD)	
	22	1	**1B-2705**	2	BOLT-CARRIAGE (5/16-18X0.75-IN)	
	23	1	**2K-4973**	2	LOCKNUT (3/8-16-THD)	
	24	1	**4K-9890**	2	WASHER (8.6X17.3X1.6-MM THK)	
M	25	1	**6V-7743**	4	LOCKNUT (M6X1-THD)	
M	26	1	**9X-2044**	4	SCREW-TRUSS HEAD (M6X1X16-MM)	
	27	1	**366-2575**	1	PIN	

M-METRIC PART
Y-SEPARATE ILLUSTRATION

324-2890 SUSPENSION GP-SEAT *(contd.)* i04253669

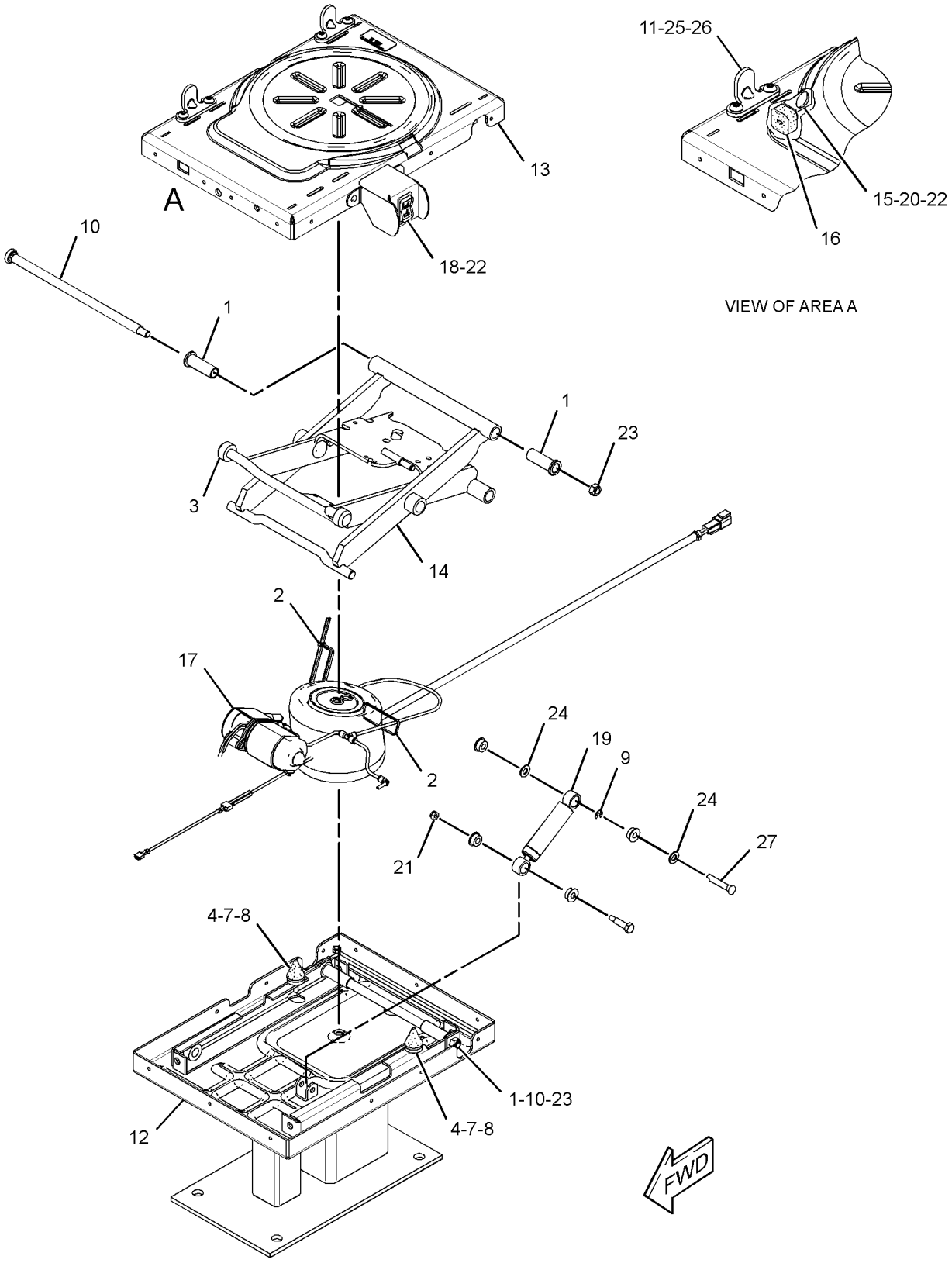

GRAPHIC #1 **<END>** g02458839

OPERATOR STATION

322-9486 SWIVEL GP-SEAT

S/N: SEJ1-UP

PART OF 314-4290, 314-4291 SEAT GP-SUSPENSION

AN ATTACHMENT

SMCS-7312, 7321 **i04004929**

NOTE	REF NO	GRAPHIC REF	PART NUMBER	QTY	PART NAME 1 2 3 4 5 6 (PRODUCT LEVEL)	SEE PAGE
	1	1	**161-9283**	1	WASHER (19.8X31.8X1.6-MM THK)	
	2	1	**161-9285**	1	NUT (3/4-10-THD)	
	3	1	**161-9288**	1	SHAFT-PIVOT	
	5	1	**215-1242**	1	RING	
	6	1	**260-0030**	1	SHAFT-PIVOT	
	7	1	**260-0033**	1	SPRING-TORSION	
	8	1	**260-0034**	1	SPRING-RETURN	
	9	1	**260-0035**	1	SPRING-RETURN	
	10	1	**260-0041**	1	BOLT (3/4-10X1.42-IN)	
	11	1	**260-0057**	1	LATCH AS-SLIDE	
	12	1	**313-5637**	2	BOLT (5/16-18X0.75-IN)	
	13	1	**322-9490**	1	HANDLE (SWIVEL)	
	14	1	**322-9491**	1	HANDLE (SLIDE)	
	15	1	**322-9492**	1	SPRING	
	16	1	**322-9493**	1	PLATE AS-SLIDE	
	17	1	**322-9494**	1	KIT-BLOCK	
					(INCLUDES SLIDER BLOCKS & SETSCREWS)	
	18	1	**322-9495**	1	PLATE AS-UPPER	
	19	1	**322-9496**	1	LATCH (SWIVEL)	
	20	1	**031-4155**	2	LOCKNUT (5/16-18-THD)	
	21	1	**2L-5893**	1	PIN-SPRING	
	22	1	**3B-4631**	1	PIN-COTTER	
	23	1	**4B-9784**	8	BALL	
	24	1	**4B-4283**	1	WASHER (20.6X37.5X3.5-MM THK)	
	25	1	**8S-7803**	3	RING-RETAINING	
	26	1	**9R-5708**	2	LOCKWASHER	

322-9486 SWIVEL GP-SEAT *(contd.)* i04004929

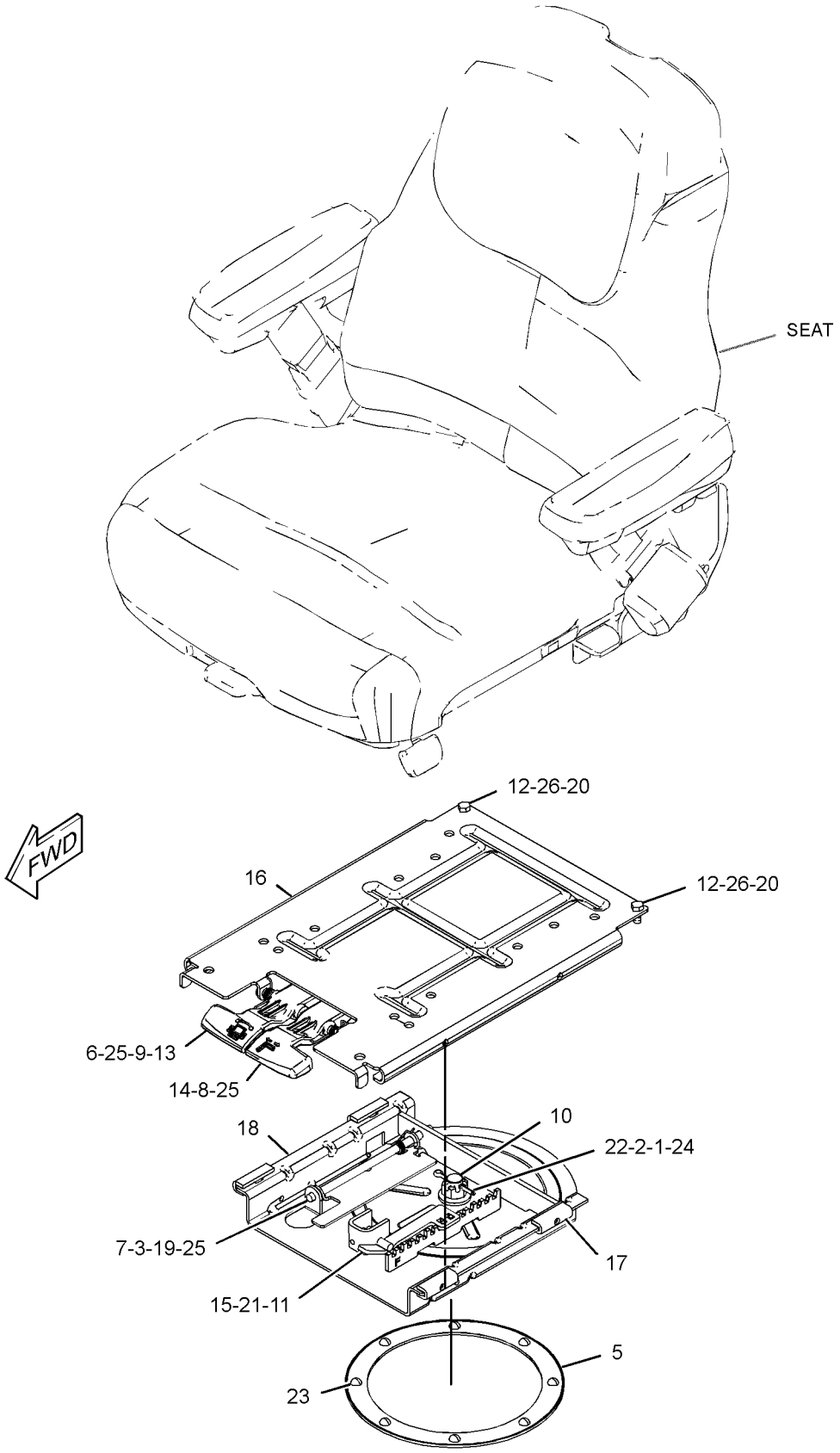

GRAPHIC #1

<END>

g01623695

OPERATOR STATION

206-1857 VISOR GP-CAB

S/N: SEJ1-UP
PART OF 353-1429, 353-1432 CAB AR
AN ATTACHMENT

SMCS-7301 **i02704721**

NOTE	REF NO	GRAPHIC REF	PART NUMBER	QTY	PART NAME 1 2 3 4 5 6 (PRODUCT LEVEL)	SEE PAGE
CE	1	1	**8C-3681**		HOSE (2.5-CM EACH)	
	2	1	**9R-3205**	1	VISOR AS	
C	3	1	**5P-9297**	2	CLIP	

C-CHANGE FROM PREVIOUS TYPE
E-ORDER BY THE CENTIMETER

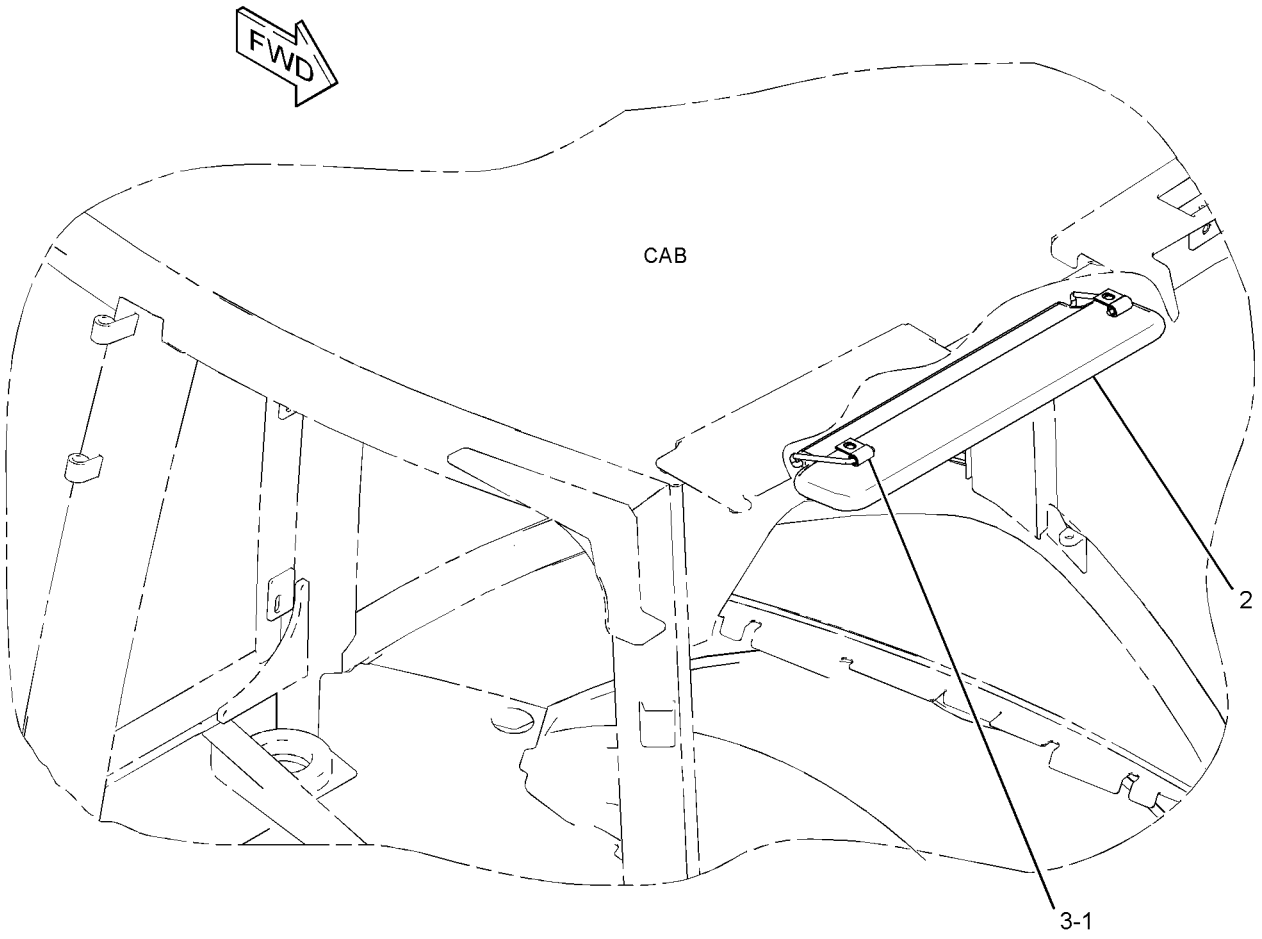

GRAPHIC #1 **<END>** g01384970

OPERATOR STATION

315-1270 WINDOW GP-CAB–REAR

S/N: SEJ1-UP
PART OF 356-4104, 356-4105 CAB GP
AN ATTACHMENT

SMCS-7310 **i03651202**

NOTE	REF NO	GRAPHIC REF	PART NUMBER	QTY	PART NAME 1 2 3 4 5 6 (PRODUCT LEVEL)	SEE PAGE
	1	1	**5C-6588**	2	WASHER (13X22X2-MM THK)	
	2	1	**7H-3937**	4	LOCKWASHER (EXTERNAL TOOTH)	
	3	1	**146-4023**	2	PLUG	
	4	1	**167-8182**	2	BUMPER	
	5	1	**180-3748**	8	INSERT-THREADED (M8X1.25-THD)	
Y	6	1	*311-3639*	1	WIRING GP-WIPER (REAR)	167
Y	7	1	*315-1272*	1	WIPER GP-WINDOW (REAR)	665
	8	1	**315-1277**	1	FRAME AS	
	9	1	**315-1282**	1	PLATE AS	
	10	1	**315-1299**	1	GLASS (REAR)	
	11	1	**315-1300**	2	ROLLER	
	12	1	**315-1301**	2	ROLLER	
	13	1	**315-1302**	1	HANDLE GP-DOOR (LH)	
	14	1	**315-1303**	1	HANDLE GP-DOOR (RH)	
					(EACH HANDLE GP INCLUDES)	
		1	**317-4261**	1	AXLE	
		1	**317-4262**	1	SPRING	
		1	**317-4263**	1	PIN	
	15	1	**315-1304**	2	PIVOT	
	16	1	**315-1306**	1	BRACKET	
	17	1	**315-1311**	2	SPRING-GAS	
	18	1	**315-1312**	2	CAP	
	19	1	**315-1313**	1	SEAL	
	20	1	**315-1314**	1	SEAL	
	21	1	**344-1004**	1	SEAL	
	22	1	**316-8228**	2	SCREW-BUTTON HEAD (M8X1.25X45-MM)	
	23	1	**323-6066**	1	SEAL	
	24	1	**325-1968**	2	PLATE	
	25	1	**325-9315**	2	CORNER	
	26	1	**326-6389**	1	BRACKET AS	
	27	1	**335-2224**	2	FOAM	
M	28	1	**131-3540**	2	LOCKNUT (M8X1.25-THD)	
M	29	1	**172-4018**	8	BOLT-SOCKET HEAD (M8X1.25X35-MM)	
	30	1	**3F-9556**	4	LOCKWASHER	
	31	1	**4D-6433**	2	WASHER-HARD (12X25.5X2-MM THK)	
M	32	1	**5C-7261**	8	NUT (M8X1.25-THD)	
	33	1	**5P-4116**	2	WASHER-HARD (8.8X20.5X2-MM THK)	
M	34	1	**8T-0389**	2	LOCKNUT (M10X1.5-THD)	
M	35	1	**8T-4133**	2	NUT (M10X1.5-THD)	
	36	1	**9P-2553**	2	SPACER (6.83X10.28X11-MM THK)	
M	37	1	**9X-2045**	2	SCREW-TRUSS HEAD (M6X1X20-MM)	
E	38	1	**9X-2092**		TRIM-EDGE (88-CM)	
	39	1	**6C-9089**	2	NUT-CAP	

E-ORDER BY THE CENTIMETER
M-METRIC PART
Y-SEPARATE ILLUSTRATION

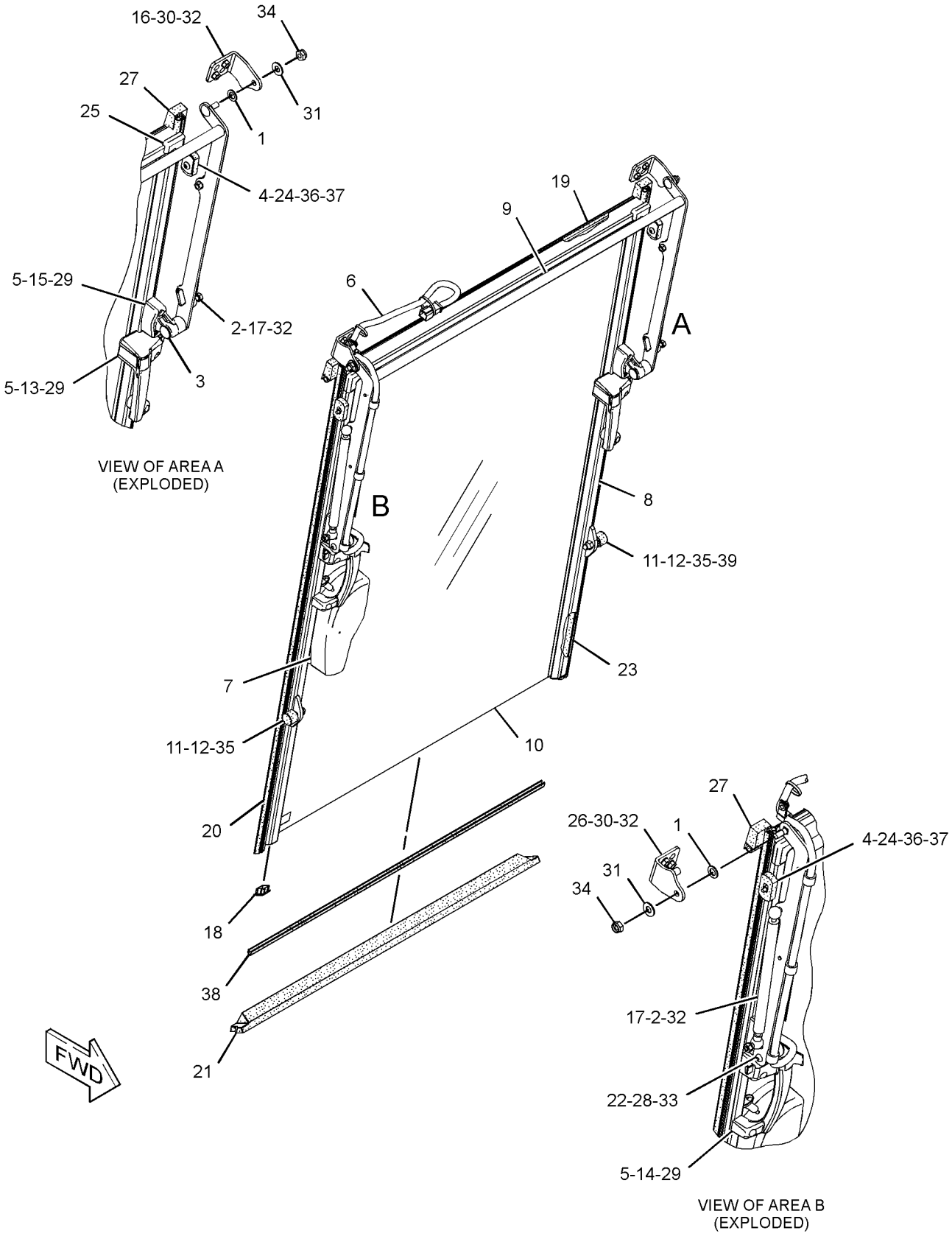

GRAPHIC #1 **<END>** g01960733

OPERATOR STATION

327-7601 WINDOW GP-CAB—LH

S/N: SEJ1-UP
PART OF 356-4105 CAB GP
AN ATTACHMENT

SMCS-7310 **i04354050**

NOTE	REF NO	GRAPHIC REF	PART NUMBER	QTY	PART NAME 1 2 3 4 5 6 (PRODUCT LEVEL)	SEE PAGE
	1	1	**8Y-7309**	1	RETAINER	
	2	1	**100-7608**	1	HANDLE (LH)	
	3	1	**129-8542**	6	RETAINER	
	4	1	**129-8545**	8	WASHER (13X40X3-MM THK)	
M	5	1	**136-4192**	4	BOLT (M6X1X35-MM)	
	6	1	**154-5423**	2	SPACER (6.6X12.7X17-MM THK)	
	7	1	**205-9623**	1	HINGE (LOWER, LH)	
	8	1	**205-9624**	1	HINGE (UPPER, LH)	
Y	9	1	**299-6985**	1	LATCH GP-CAB DOOR & WINDOW (LOWER)	618
Y	10	1	**299-6986**	1	LATCH GP-CAB DOOR & WINDOW (UPPER)	619
	11	1	**325-9300**	1	GLASS (REAR, LH)	
	12	1	*330-0427*	1	LATCH GP (LH)	
M		1	**6V-7743**	2	LOCKNUT (M6X1-THD)	
M		1	**9X-2045**	2	SCREW-TRUSS HEAD (M6X1X20-MM)	
		1	**143-2827**	1	SPRING	
		1	**330-0422**	2	GASKET	
M	13	1	**5C-7261**	1	NUT (M8X1.25-THD)	
M	14	1	**6V-7743**	2	LOCKNUT (M6X1-THD)	
	15	1	**7X-2393**	1	BUMPER-CONICAL	
E	16	1	**148-5353**		SEAL (342-CM)	

E-ORDER BY THE CENTIMETER
M-METRIC PART
Y-SEPARATE ILLUSTRATION

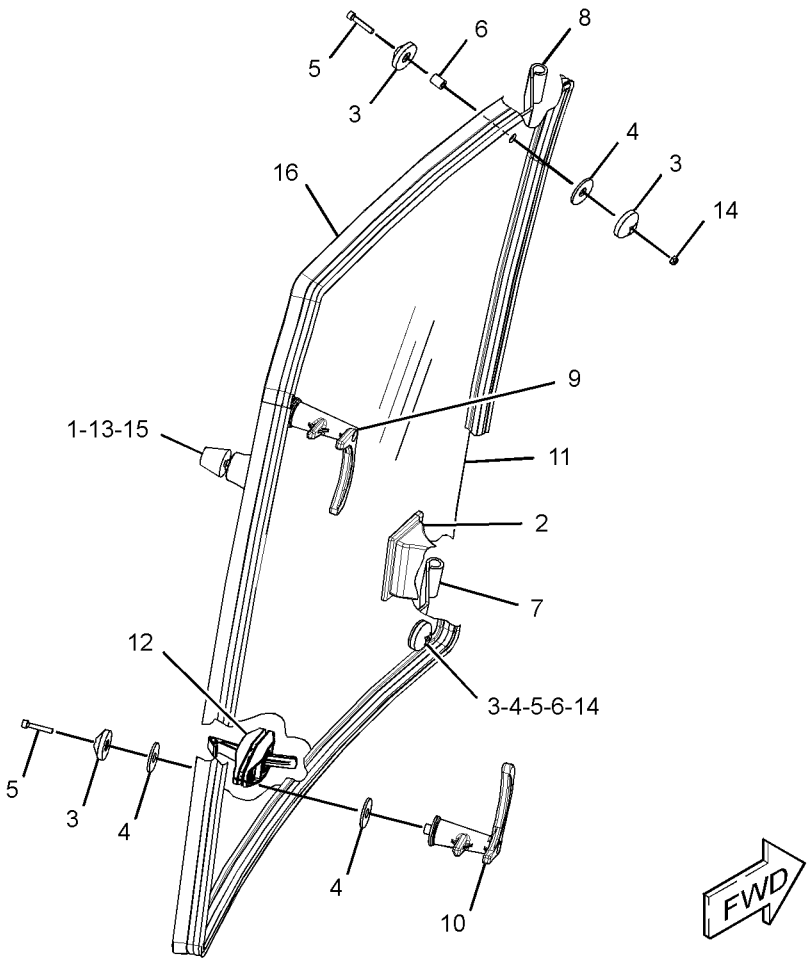

GRAPHIC #1 **<END>** g02512551

OPERATOR STATION

327-7637 WINDOW GP-CAB—RH

S/N: SEJ1-UP
PART OF 356-4105 CAB GP
AN ATTACHMENT

SMCS-7310 **i04354051**

NOTE	REF NO	GRAPHIC REF	PART NUMBER	QTY	PART NAME 1 2 3 4 5 6 (PRODUCT LEVEL)	SEE PAGE
	1	1	**8Y-7309**	1	RETAINER	
	2	1	**100-7608**	1	HANDLE (RH)	
	3	1	**129-8542**	6	RETAINER	
	4	1	**129-8545**	8	WASHER (13X40X3-MM THK)	
M	5	1	**136-4192**	4	BOLT (M6X1X35-MM)	
	6	1	**154-5423**	2	SPACER (6.6X12.7X17-MM THK)	
	7	1	**205-9633**	1	HINGE (LOWER, RH)	
	8	1	**205-9634**	1	HINGE (UPPER, RH)	
Y	9	1	**299-6985**	1	LATCH GP-CAB DOOR & WINDOW (LOWER)	618
Y	10	1	**299-6986**	1	LATCH GP-CAB DOOR & WINDOW (UPPER)	619
	11	1	**325-9301**	1	GLASS (REAR, RH)	
	12	1	*330-0428*	1	LATCH GP (RH)	
M		1	**6V-7743**	2	LOCKNUT (M6X1-THD)	
M		1	**9X-2045**	2	SCREW-TRUSS HEAD (M6X1X20-MM)	
		1	**143-2827**	1	SPRING	
		1	**330-0422**	2	GASKET	
M	13	1	**5C-7261**	1	NUT (M8X1.25-THD)	
M	14	1	**6V-7743**	2	LOCKNUT (M6X1-THD)	
	15	1	**7X-2393**	1	BUMPER-CONICAL	
E	16	1	**148-5353**		SEAL (342-CM)	

E-ORDER BY THE CENTIMETER
M-METRIC PART
Y-SEPARATE ILLUSTRATION

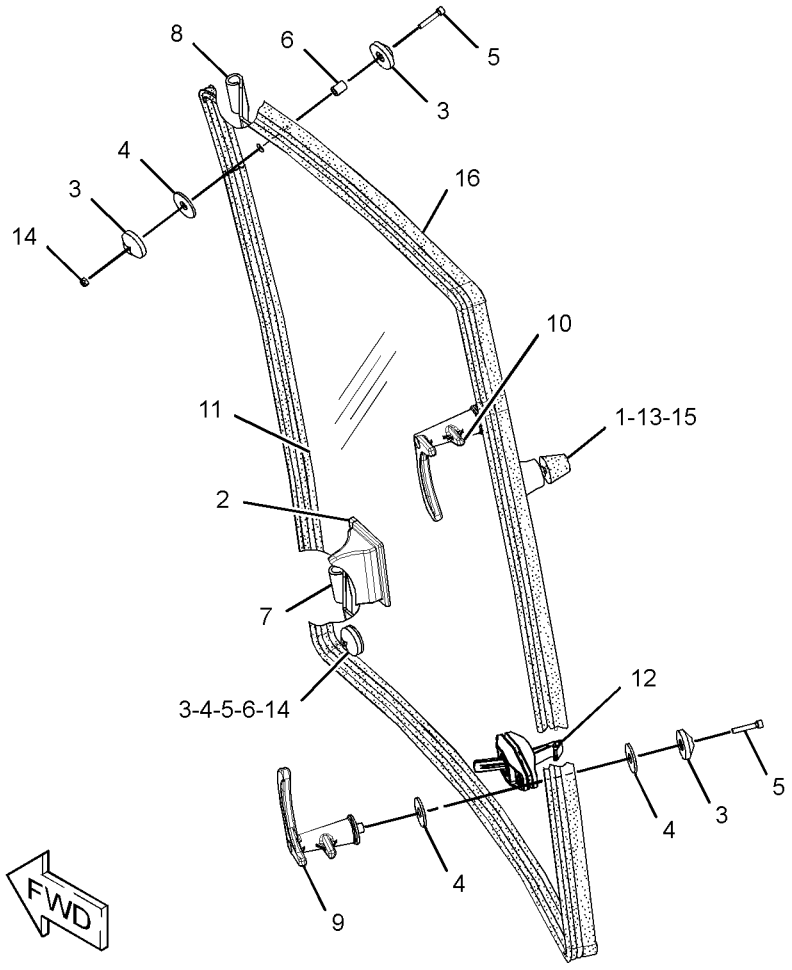

GRAPHIC #1 **<END>** g02512676

OPERATOR STATION

333-9901 WINDOW GP-DOOR–LH

S/N: SEJ1-UP
PART OF 329-1168 DOOR GP-CAB
AN ATTACHMENT

SMCS-7308, 7310 **i04354069**

NOTE	REF NO	GRAPHIC REF	PART NUMBER	QTY	PART NAME 1 2 3 4 5 6 (PRODUCT LEVEL)	SEE PAGE
E	1	1	**148-5353**		SEAL (354-CM)	
	2	1	**100-7608**	1	HANDLE (LH)	
	3	1	**129-8542**	5	RETAINER	
	4	1	**129-8545**	6	WASHER (13X40X3-MM THK)	
M	5	1	**136-4192**	3	BOLT (M6X1X35-MM)	
	6	1	**154-5423**	2	SPACER (6.6X12.7X17-MM THK)	
	7	1	**205-9587**	1	GLASS (LH)	
	8	1	**205-9590**	1	HINGE (UPPER)	
	9	1	**205-9591**	1	HINGE (LOWER)	
Y	10	1	**299-6986**	1	LATCH GP-CAB DOOR & WINDOW (LH)	619
	11	1	*330-0427*	1	LATCH GP (LH)	
M		1	**6V-7743**	2	LOCKNUT (M6X1-THD)	
M		1	**9X-2045**	2	SCREW-TRUSS HEAD (M6X1X20-MM)	
		1	**143-2827**	1	SPRING	
		1	**330-0422**	2	GASKET	
M	12	1	**6V-7743**	2	LOCKNUT (M6X1-THD)	

E-ORDER BY THE CENTIMETER
M-METRIC PART
Y-SEPARATE ILLUSTRATION

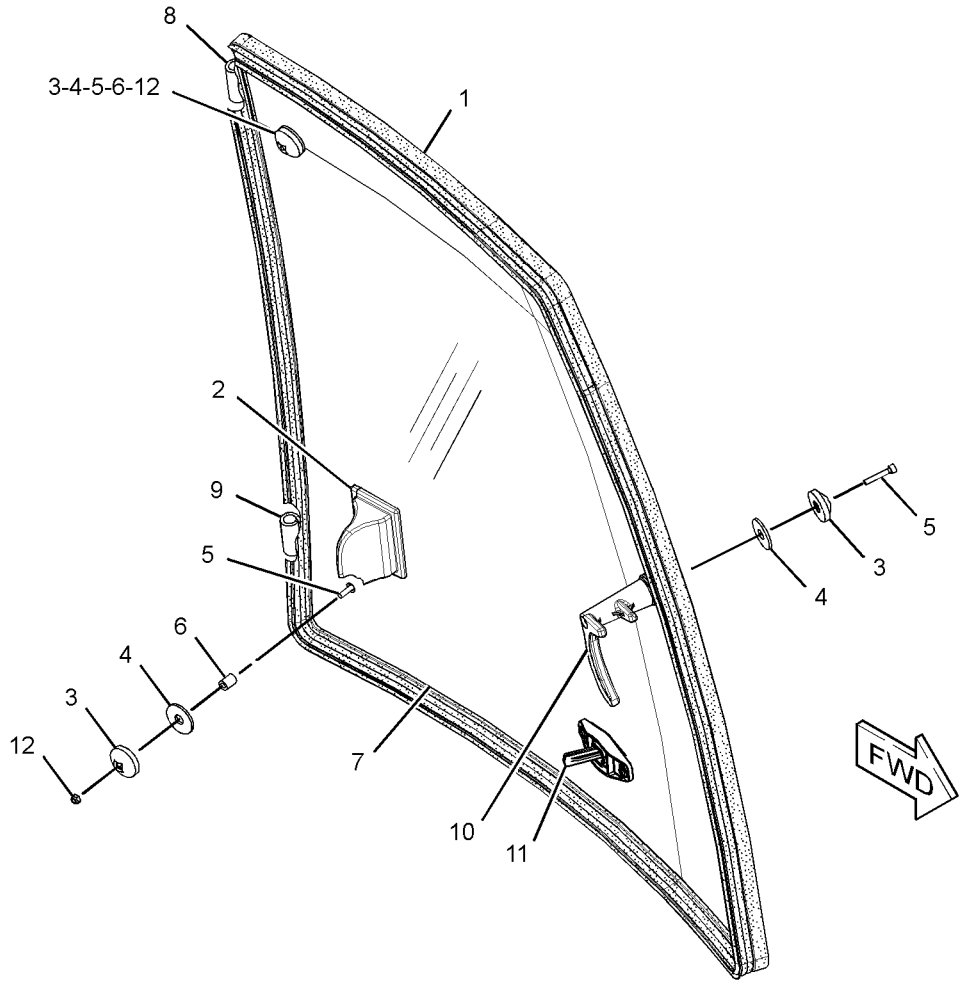

GRAPHIC #1 **<END>** g02512736

OPERATOR STATION

333-9902 WINDOW GP-DOOR–RH

S/N: SEJ1-UP
PART OF 329-1167 DOOR GP-CAB
AN ATTACHMENT

SMCS-7308, 7310 **i04354070**

NOTE	REF NO	GRAPHIC REF	PART NUMBER	QTY	PART NAME 1 2 3 4 5 6 (PRODUCT LEVEL)	SEE PAGE
E	1	1	**148-5353**		SEAL (354-CM)	
	2	1	**100-7608**	1	HANDLE (RH)	
	3	1	**129-8542**	5	RETAINER	
	4	1	**129-8545**	6	WASHER (13X40X3-MM THK)	
M	5	1	**136-4192**	3	BOLT (M6X1X35-MM)	
	6	1	**154-5423**	2	SPACER (6.6X12.7X17-MM THK)	
	7	1	**205-9597**	1	GLASS (RH)	
	8	1	**205-9614**	1	HINGE (LOWER)	
	9	1	**205-9615**	1	HINGE (UPPER)	
Y	10	1	**299-6985**	1	LATCH GP-CAB DOOR & WINDOW (RH)	618
	11	1	*330-0428*	1	LATCH GP (RH)	
M		1	**6V-7743**	2	LOCKNUT (M6X1-THD)	
M		1	**9X-2045**	2	SCREW-TRUSS HEAD (M6X1X20-MM)	
		1	**143-2827**	1	SPRING	
		1	**330-0422**	2	GASKET	
M	12	1	**6V-7743**	2	LOCKNUT (M6X1-THD)	

E-ORDER BY THE CENTIMETER
M-METRIC PART
Y-SEPARATE ILLUSTRATION

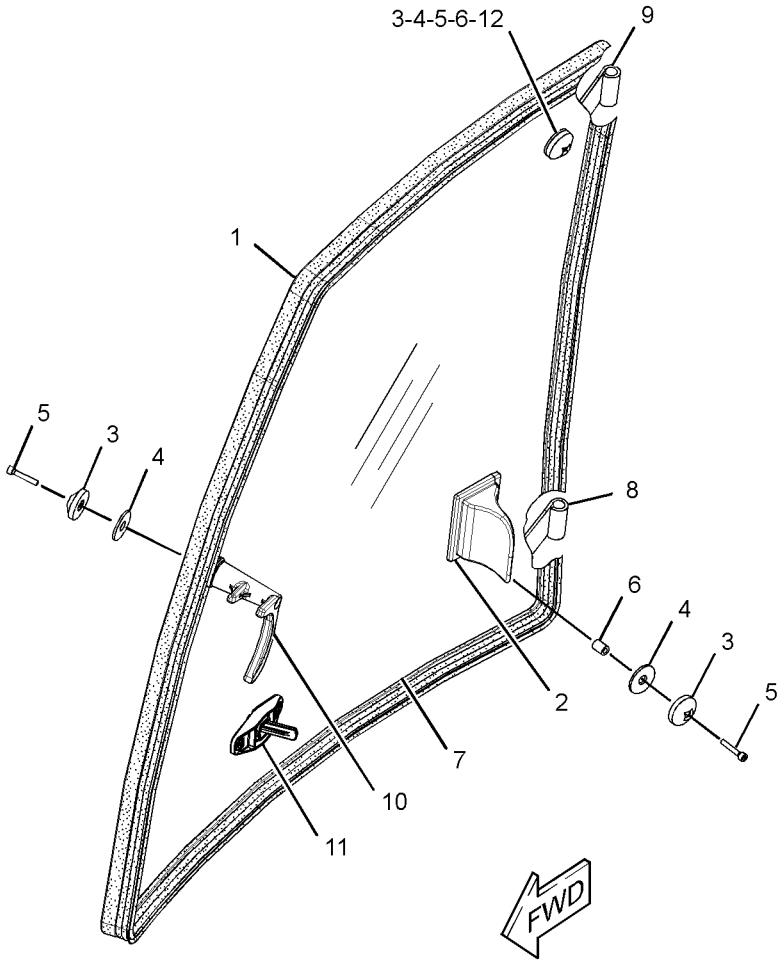

GRAPHIC #1 **<END>** g02512776

OPERATOR STATION

353-1366 WIPER & WASHER GP-WINDOW

S/N: SEJ1-UP
PART OF 353-1429, 353-1432 CAB AR
AN ATTACHMENT

SMCS-7305, 7306 **i04611431**

NOTE	REF NO	GRAPHIC REF	PART NUMBER	QTY	PART NAME 1 2 3 4 5 6 (PRODUCT LEVEL)	SEE PAGE
E	1	1	**144-0195**		HOSE (72-CM)	
E	1A	1	**144-0195**		HOSE (21-CM)	
E	1B	1	**144-0195**		HOSE (52-CM)	
E	1C	1	**144-0195**		HOSE (40-CM)	
E	1D	1	**144-0195**		HOSE (42.5-CM)	
	2	1	**3S-2093**	10	STRAP-CABLE	
	3	1	**8T-1118**	1	NOZZLE AS-WASHER	
	4	1	**9R-3469**	2	DIAPHRAGM	
	5	1	**101-0745**	1	BLADE AS-WIPER (600-MM) (FRONT)	
	6	1	**121-6936**	1	CONNECTOR	
	7	1	**154-5410**	1	ARM-WINDOW WIPER	
	8	1	**214-4709**	1	SWITCH AS-ROCKER (WIPER, WASHER, REAR)	
		1	**111-7899**	1	GASKET	
	9	1	**276-8791**	1	CLIP	
	10	1	**283-3451**	2	CONNECTOR AS	
Y	11	1	**313-3752**	1	MOTOR GP-WINDOW WIPER (12-VOLT) (FRONT)	632
	12	1	**315-1284**	1	NOZZLE	
	13	1	**346-5168**	1	TANK AS-WINDOW WASHER	
E		1	**9X-6383**		SEAL (57-CM)	
	14	1	**5P-4116**	1	WASHER-HARD (8.8X20.5X2-MM THK)	
M	15	1	**6V-7357**	1	BOLT (M6X1X25-MM)	
M	16	1	**8T-4189**	1	BOLT (M8X1.25X20-MM)	
	17	1	**8T-4205**		WASHER-HARD (7.2X14.5X2-MM THK)	

E-ORDER BY THE CENTIMETER
M-METRIC PART
Y-SEPARATE ILLUSTRATION

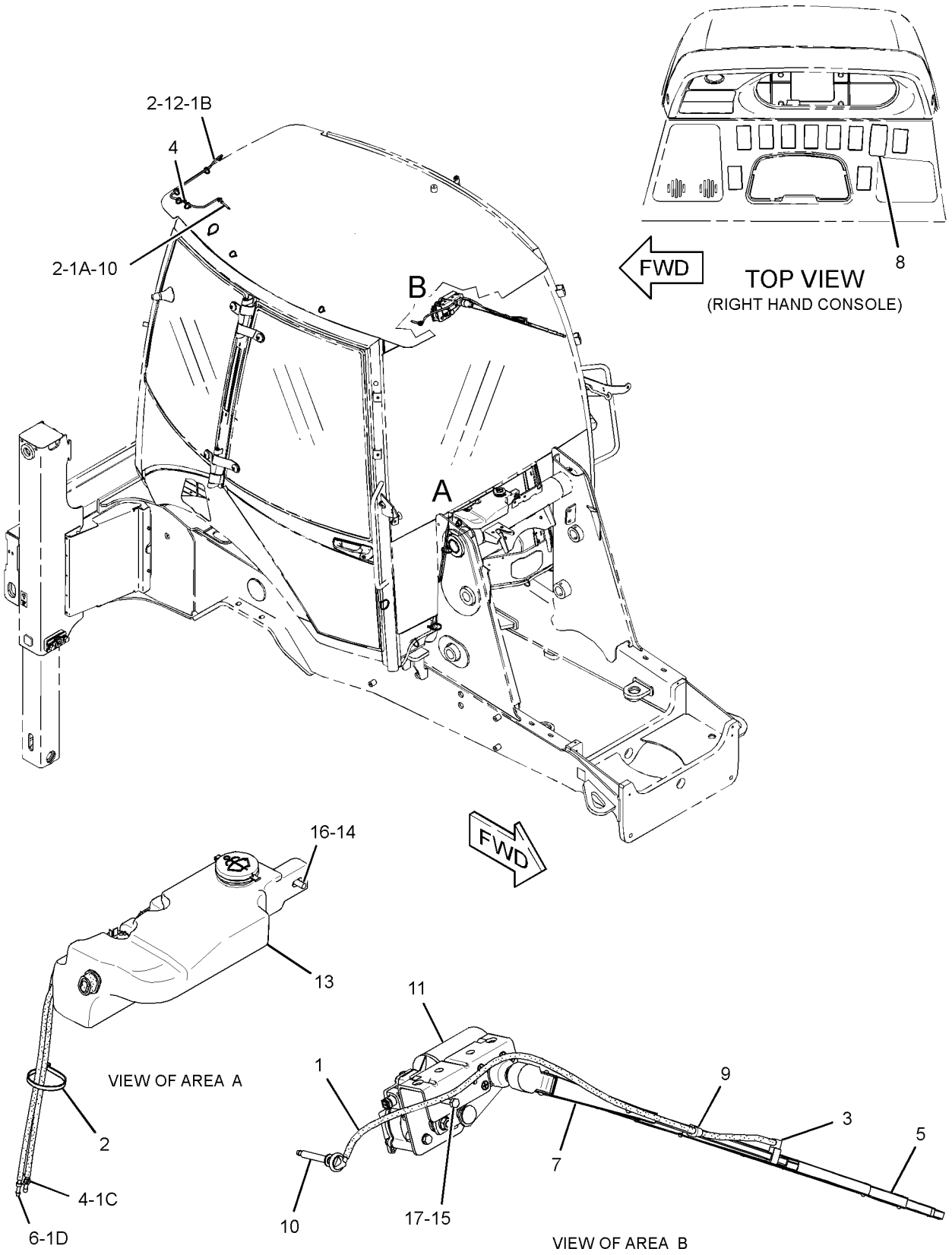

GRAPHIC #1 **<END>** g02807669

OPERATOR STATION

315-1272 WIPER GP-WINDOW–REAR

S/N: SEJ1-UP
PART OF 315-1270 WINDOW GP-CAB
AN ATTACHMENT

SMCS-7305 **i04156382**

NOTE	REF NO	GRAPHIC REF	PART NUMBER	QTY	PART NAME 1 2 3 4 5 6 (PRODUCT LEVEL)	SEE PAGE
	1	1	**315-1316**	1	BLADE AS-WIPER (450-MM) (REAR)	
	2	1	**315-1317**	1	ARM GP-WINDOW WIPER (REAR)	
Y	3	1	**315-1318**	1	MOTOR GP-WINDOW WIPER (REAR)	633
	4	1	**315-1319**	1	COVER	
	5	1	**369-2189**	1	SHIM (0.5-MM THK)	

Y-SEPARATE ILLUSTRATION

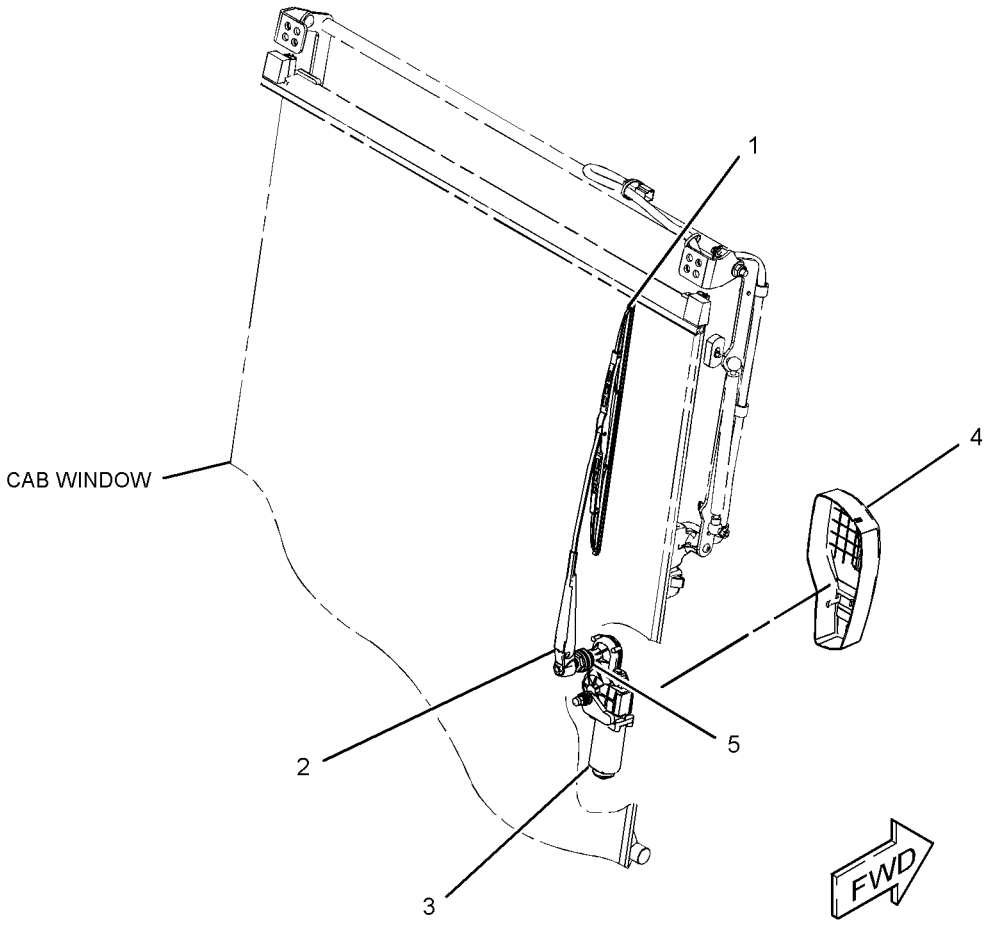

GRAPHIC #1 **<END>** g02351496

SERVICE EQUIPMENT AND SUPPLIES

367-5835 FILM GP

S/N: SEJ1-UP

PART OF 367-5958 COMMON AR

SMCS-7405, 7557 **i04555161**

NOTE	REF NO	GRAPHIC REF	PART NUMBER	QTY	PART NAME 1 2 3 4 5 6 (PRODUCT LEVEL)	SEE PAGE
	1	1	**370-3943**	1	FILM-IDENTIFICATION (432F, LIFT ARM, RH)	
	2	1	**370-3957**	1	FILM-IDENTIFICATION (CAT, BOOM, RH)	
	3	1	**370-3942**	1	FILM-IDENTIFICATION (432F, LIFT ARM, LH)	
	4	1	**370-3956**	1	FILM-IDENTIFICATION (CAT, BOOM, LH)	

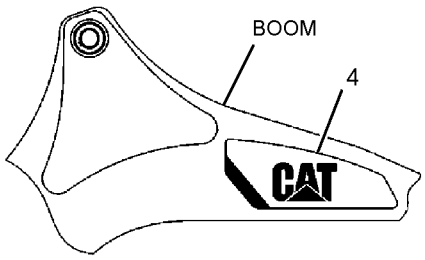

LEFT SIDE VIEW

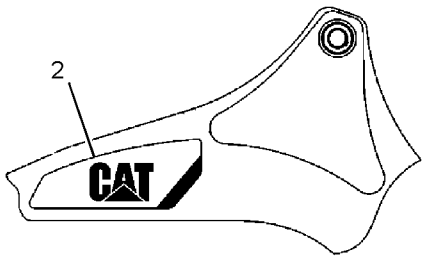

RIGHT SIDE VIEW

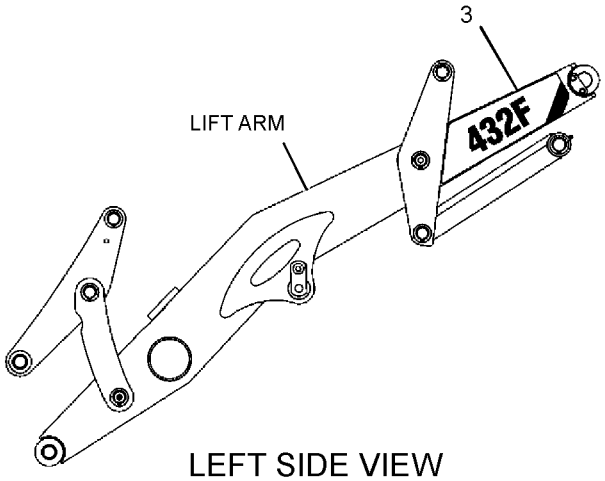

LEFT SIDE VIEW

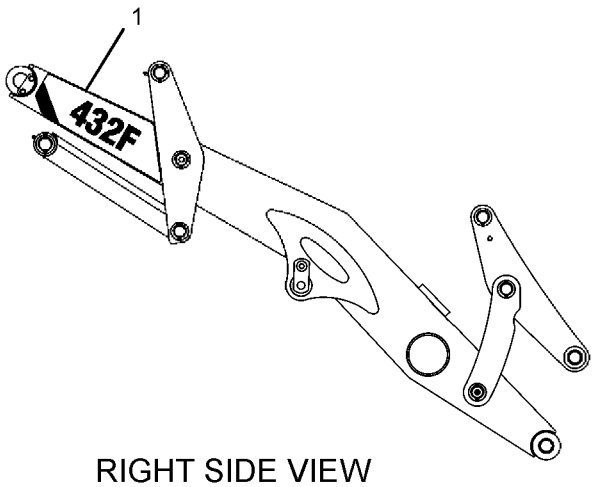

RIGHT SIDE VIEW

GRAPHIC #1 **<END>** g02759899

SERVICE EQUIPMENT AND SUPPLIES

353-1392 FILM GP-INTERNATIONAL

S/N: SEJ1-UP

PART OF 367-5958 COMMON AR

SMCS-7405, 7557 **i04549343**

NOTE	REF NO	GRAPHIC REF	PART NUMBER	QTY	PART NAME 1 2 3 4 5 6 (PRODUCT LEVEL)	SEE PAGE
	1	1	**224-8946**	1	FILM-WARNING (NO ETHER SPRAY/AIR INTK, INTL)	
	2	1	**225-0312**	1	FILM-WARNING (JUMP START, READ OMM, INTL)	
	3	1	**226-1240**	2	FILM-WARNING (CRUSH HAZARD, STAY BACK, INTL)	
	4	1	**228-7316**	1	FILM-WARNING (HOT SURFACE, HANDS CLEAR, INTL)	
	5	1	**239-9430**	1	FILM-WARNING (ARM BRACE, READ OMM, INTL)	
	6	1	**240-7095**	2	FILM-WARNING (NO ENTRANCE, EXIT, READ OMM)	
	7	1	**241-8450**	2	FILM-WARNING (HYD PRESS, READ OMM, INTL)	
	8	1	**255-0793**	1	FILM-WARNING (READ OMM)	
	9	1	**255-0794**	1	FILM-WARNING (SEAT BELT)	
	10	1	**259-4402**	1	FILM-WARNING (HOT FLUID UNDER PRESSURE)	
	11	1	**260-7653**	1	FILM-WARNING (PRODUCT LINK 300, INTL)	
	12	1	**276-2334**	1	FILM-WARNING (HIGH PRESS CYLINDER, READ OMM)	
	13	1	**280-9658**	2	FILM-WARNING (NO ENTRANCE, EXIT, READ OMM)	
	14	1	**282-9043**	1	FILM-WARNING (QUICK COUPLER)	
	15	1	**373-2673**	1	FILM-WARNING (HOT SURFACE, HANDS CLEAR, OMM)	

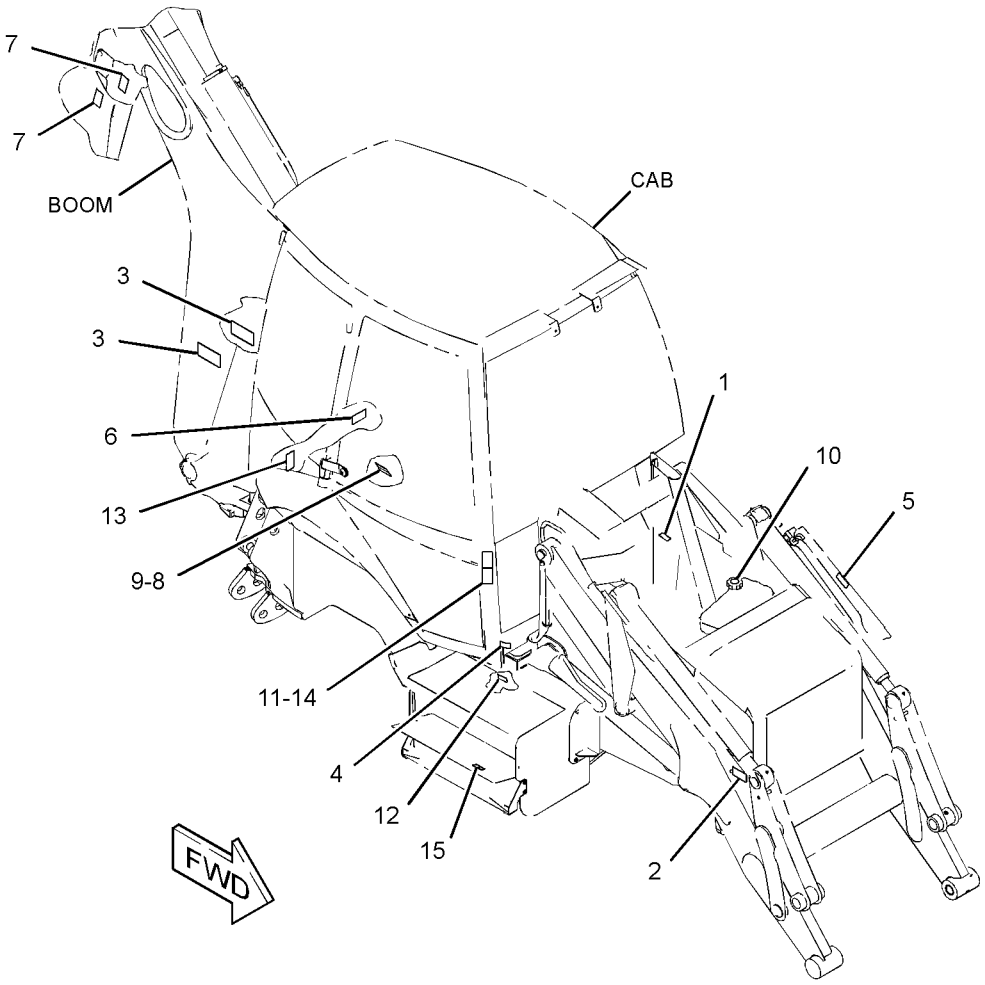

GRAPHIC #1 **<END>** g02773756

SERVICE EQUIPMENT AND SUPPLIES

360-8982 INSTALLATION AR-WHEEL CHOCK

S/N: SEJ1-UP
PART OF 341-3109 OPTION AR-REGIONAL
AN ATTACHMENT

SMCS-7000 **i04609429**

NOTE	REF NO	GRAPHIC REF	PART NUMBER	QTY	PART NAME 1 2 3 4 5 6 (PRODUCT LEVEL)	SEE PAGE
	1	1	**114-9342**	2	CHOCK GP-WHEEL	

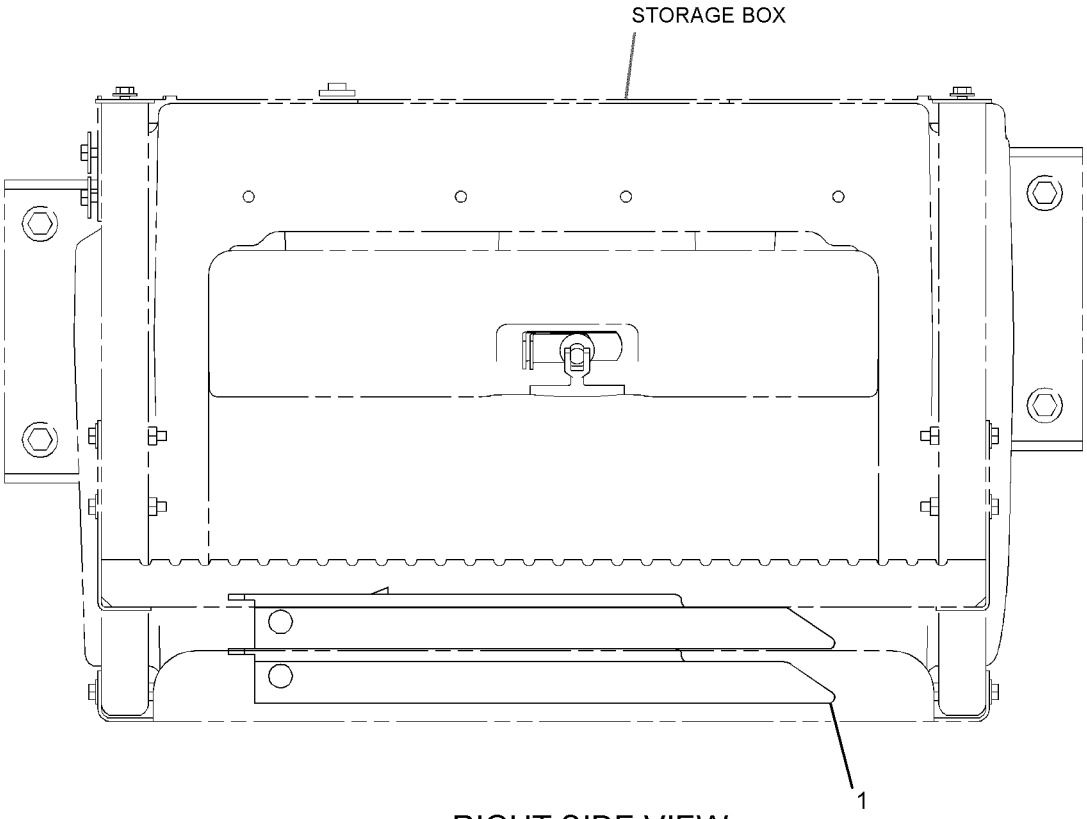

RIGHT SIDE VIEW

GRAPHIC #1 **<END>** g02798161

SERVICE EQUIPMENT AND SUPPLIES

353-6952 KIT-TOOL–HAND

S/N: SEJ1-UP

AN ATTACHMENT

SMCS-0600, 0701 **i04650570**

NOTE	PART NUMBER	QTY	PART NAME 1 2 3 4 5 6 (PRODUCT LEVEL)	SEE PAGE
	252-4670	1	KIT-TOOL (HAND)	
			(INCLUDES SPANNERS, PLIERS, GREASE GUN, TUBE, CONNECTOR, SOCKETS, SLIDING T BARS, TIRE PRESSURE GAUGE & TOOL WRAP)	

<END>

SERVICE EQUIPMENT AND SUPPLIES

175-7877 LINK GP-SHIPPING

S/N: SEJ1-UP

AN ATTACHMENT

SMCS-6513 **i04555809**

NOTE	REF NO	GRAPHIC REF	PART NUMBER	QTY	PART NAME 1 2 3 4 5 6 (PRODUCT LEVEL)	SEE PAGE
	1	1	**120-9286**	1	PLATE	
					PARTS SHOWN IN GRAPHIC(S) WITHOUT A REFERENCE NUMBER ARE NOT SERVICED SEPARATELY	

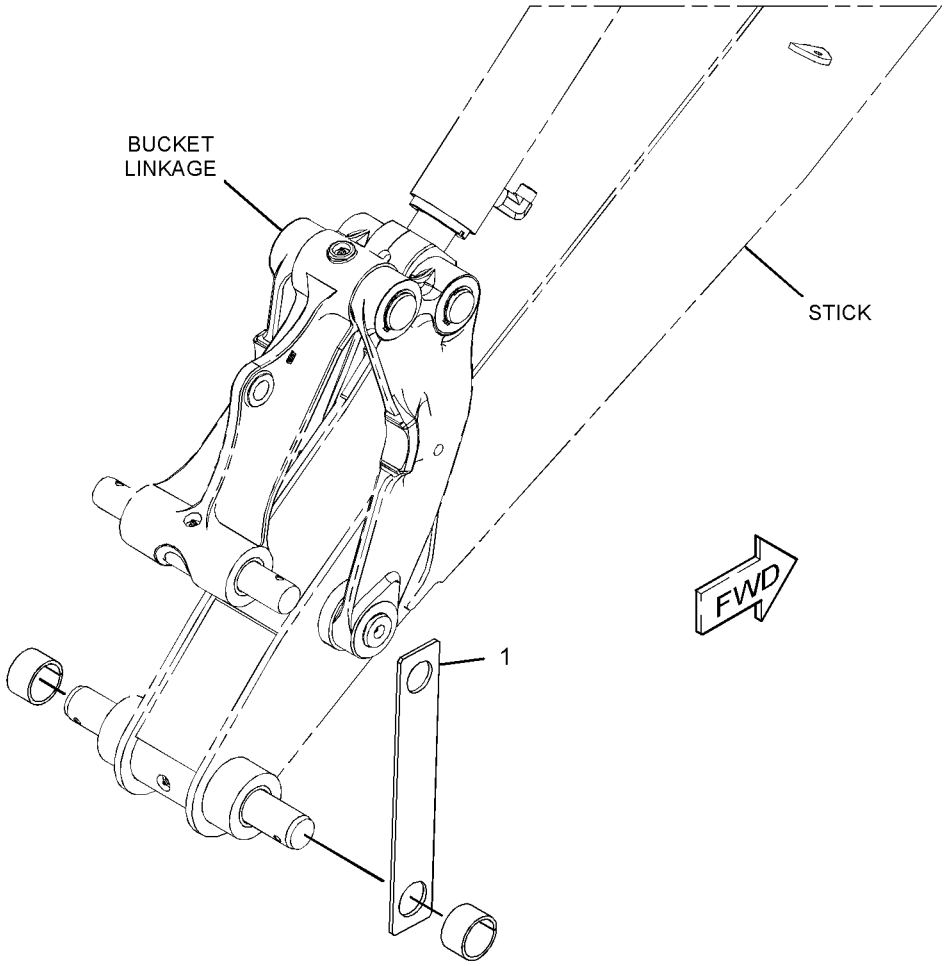

GRAPHIC #1 **<END>** g02778216

SERVICE EQUIPMENT AND SUPPLIES

216-0910 LOCK GP-VANDALISM

S/N: SEJ1-UP

PART OF 340-1693 CHASSIS AR

SMCS-7315 **i03326060**

NOTE	REF NO	GRAPHIC REF	PART NUMBER	QTY	PART NAME 1 2 3 4 5 6 (PRODUCT LEVEL)	SEE PAGE
	1	1	**246-2641**	3	PADLOCK GP	
					(EACH INCLUDES)	
		1	**5P-8500**	1	KEY	

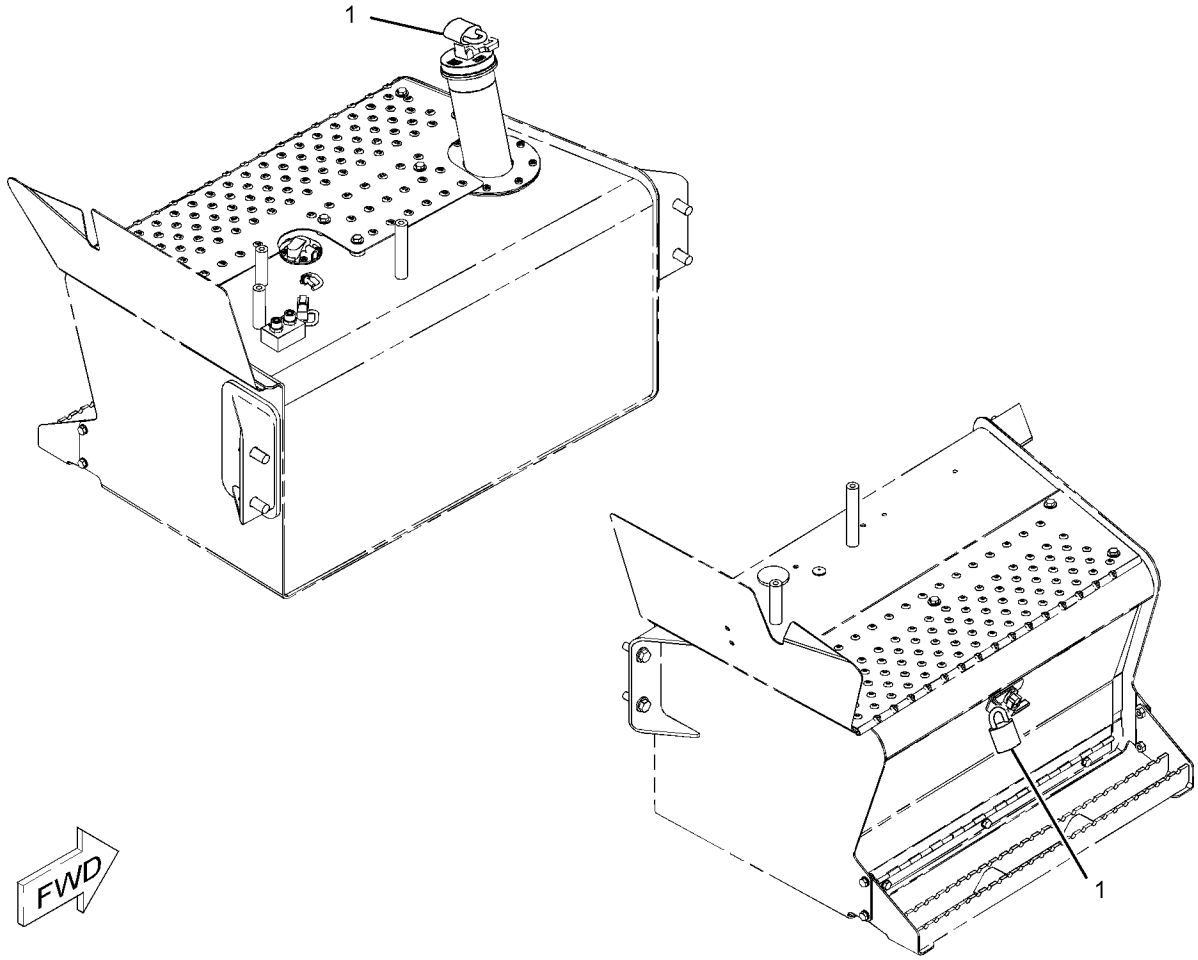

GRAPHIC #1 **<END>** g01096994

SERVICE EQUIPMENT AND SUPPLIES

360-8981 PLATE & FILM GP

S/N: SEJ1-UP
PART OF 341-3109 OPTION AR-REGIONAL
AN ATTACHMENT

SMCS-7405 **i04609416**

NOTE	REF NO	GRAPHIC REF	PART NUMBER	QTY	PART NAME 1 2 3 4 5 6 (PRODUCT LEVEL)	SEE PAGE
	1	1	**8T-9530**	4	TACK-FASTENER	
	2	1	**106-0827**	4	FILM-IDENTIFICATION (20-KM/H)	
	3	1	**131-6010**	1	FILM-INSTRUCTION (WHEEL CHOCK)	
	4	1	**159-7342**	1	PLATE-INFORMATION (MAXIMUM WEIGHT)	

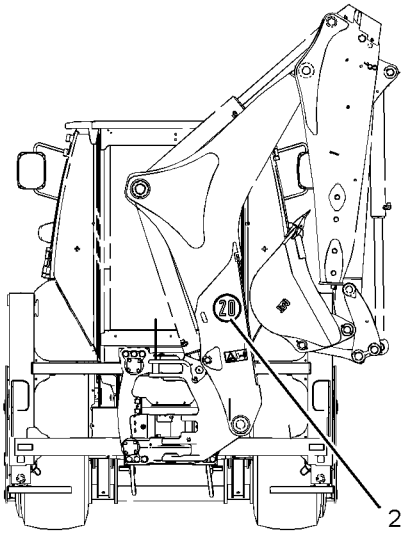

REAR VIEW

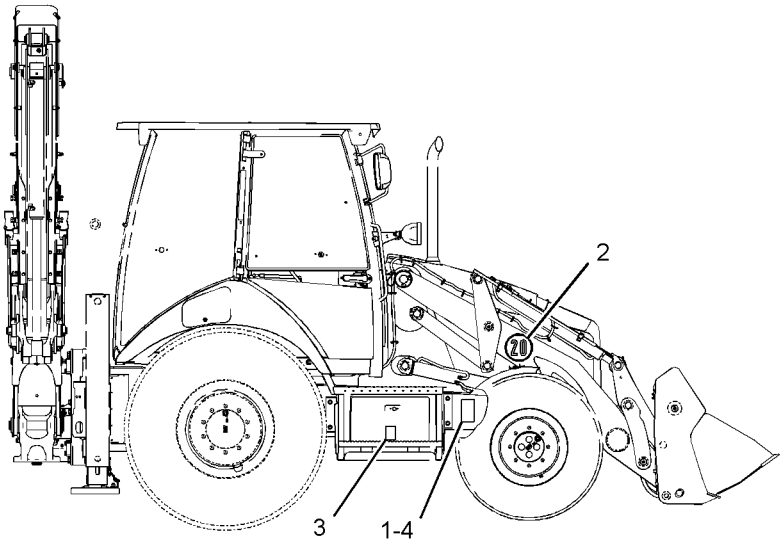

RIGHT SIDE VIEW

GRAPHIC #1 **<END>** g02829539

SERVICE EQUIPMENT AND SUPPLIES

374-7439 PLATE & FILM GP

S/N: SEJ1-UP
PART OF 341-3107 CONVERSION AR-ROADING
AN ATTACHMENT

SMCS-7405 **i04609310**

NOTE	REF NO	GRAPHIC REF	PART NUMBER	QTY	PART NAME 1 2 3 4 5 6 (PRODUCT LEVEL)	SEE PAGE
	1	1	**233-6513**	1	PLATE-SERIAL NUMBER (ENGINE)	

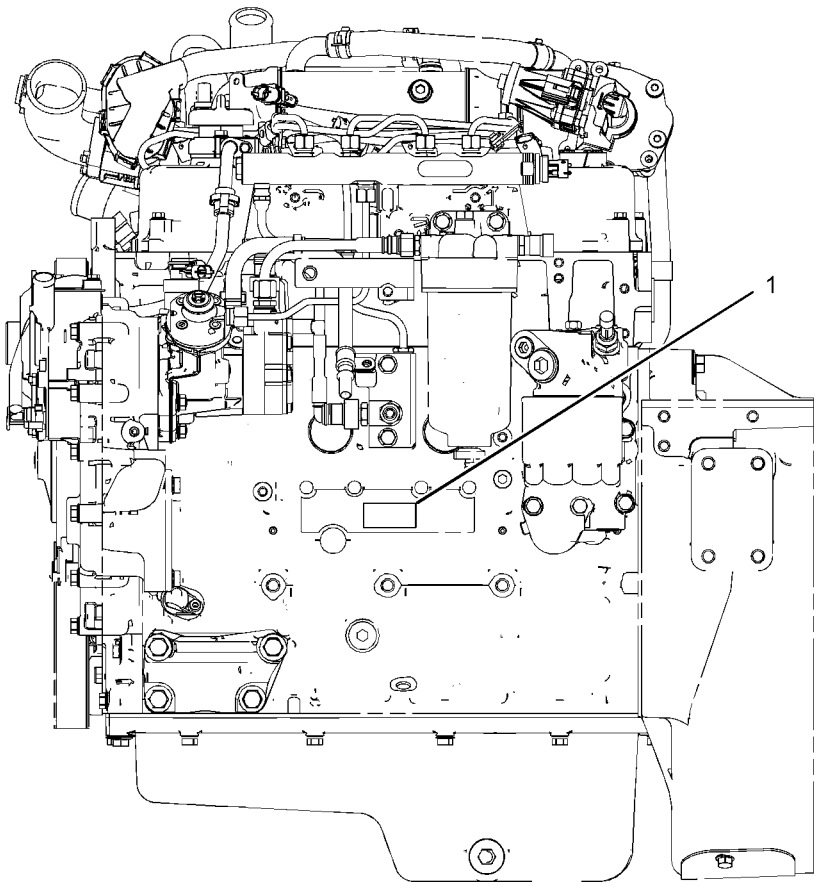

LEFT SIDE VIEW

GRAPHIC #1 **<END>** g02798369

SERVICE EQUIPMENT AND SUPPLIES

374-7440 PLATE & FILM GP

S/N: SEJ1-UP
PART OF 341-3107 CONVERSION AR-ROADING
AN ATTACHMENT

SMCS-7405 **i04609309**

NOTE	REF NO	GRAPHIC REF	PART NUMBER	QTY	PART NAME 1 2 3 4 5 6 (PRODUCT LEVEL)	SEE PAGE
	1	1	**8T-9530**	4	TACK-FASTENER	
	2	1	**159-7342**	1	PLATE-INFORMATION (MAXIMUM WEIGHT)	
	3	1	**170-3492**	1	FILM-INSTRUCTION (PARKING BRAKE)	

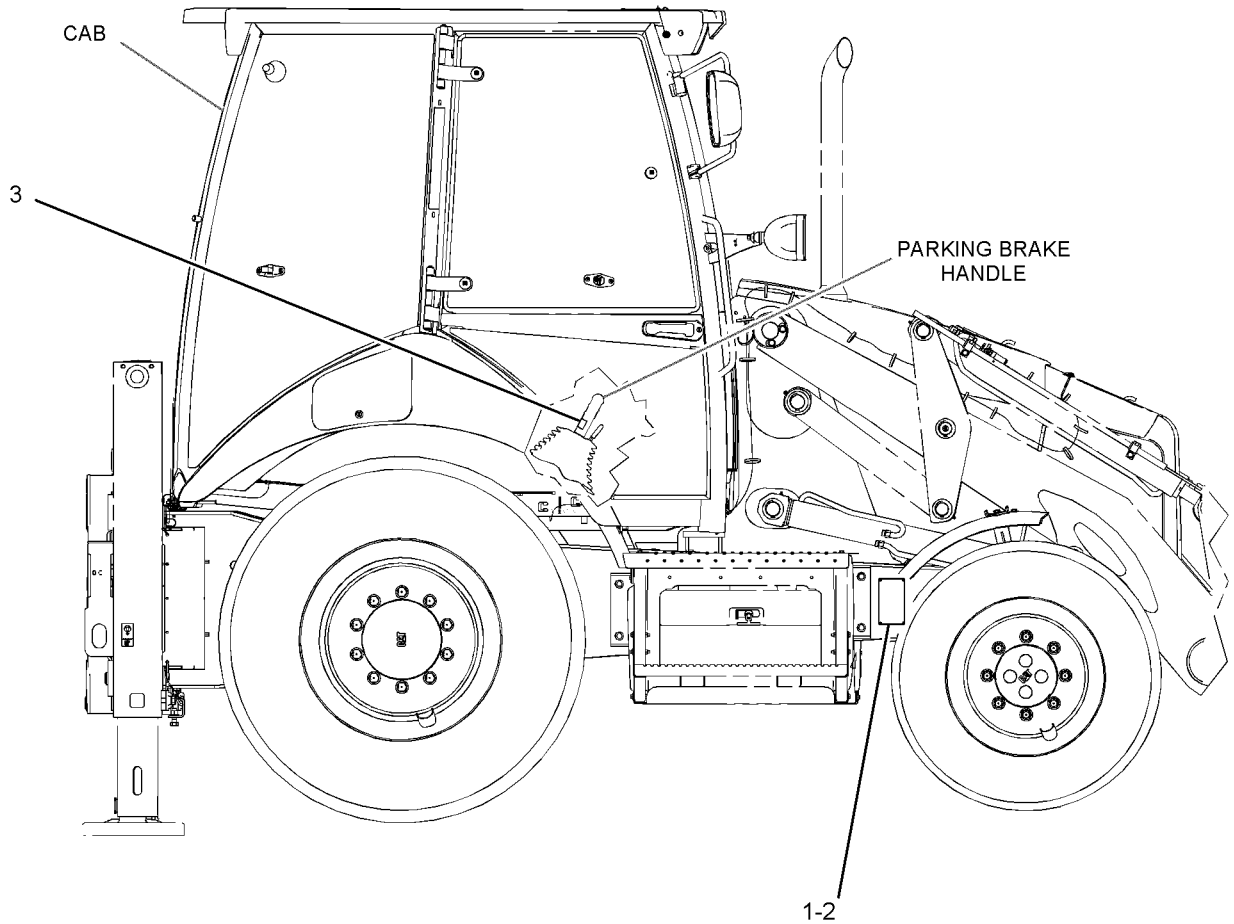

RIGHT SIDE VIEW

GRAPHIC #1 **<END>** g02798450

SERVICE EQUIPMENT AND SUPPLIES

101-4419 PLATE AS-SIDE REFLECTIVE

S/N: SEJ1-UP
PART OF 341-3107 CONVERSION AR-ROADING
AN ATTACHMENT

SMCS-7405 **i00534481**

NOTE	REF NO	GRAPHIC REF	PART NUMBER	QTY	PART NAME 1 2 3 4 5 6 (PRODUCT LEVEL)	SEE PAGE
	1	1	**101-4420**	1	PLATE	
	2	1	**101-4421**	1	BRACKET AS	
M		1	**5C-7261**	1	NUT (M8X1.25-THD)	
M		1	**8T-4244**	1	NUT (M12X1.75-THD)	
	3	1	**101-4422**	1	MAGNET AS	
	4	1	**101-4423**	1	REFLECTOR	
M	5	1	**8T-4179**	1	BOLT (M12X1.75X20-MM)	
	6	1	**8T-4223**	1	WASHER-HARD (13.5X25.5X3-MM THK)	
M	7	1	**101-4424**	1	SCREW-THUMB (M8X1.25-THD)	
M	8	1	**8T-0287**	1	BOLT (M5X0.8X10-MM)	
	9	1	**8F-1434**	1	LOCKWASHER	
	10	1	**4B-4274**	1	WASHER (5.5X13X1.2-MM THK)	
	11	1	**5P-1076**	1	WASHER-HARD (13.5X30X4-MM THK)	

M-METRIC PART

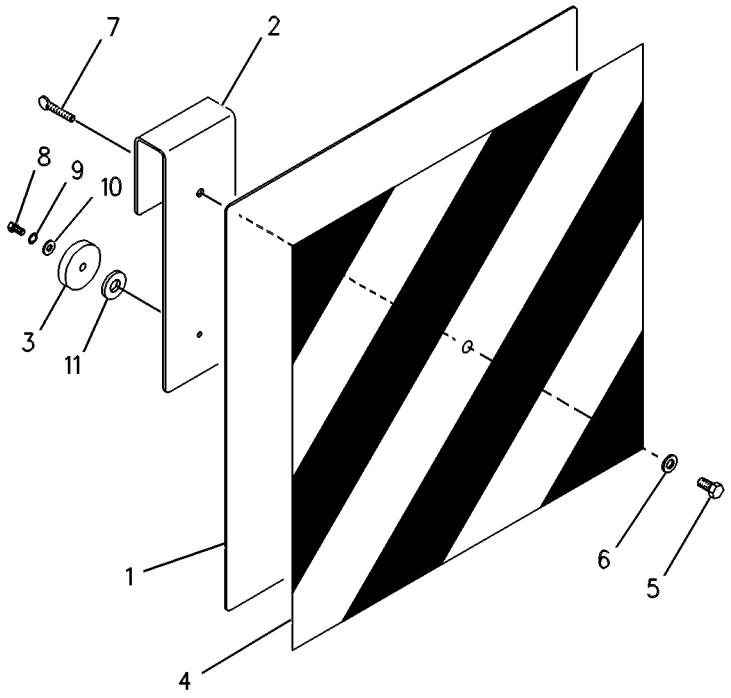

GRAPHIC #1 **<END>** g00260486

SERVICE EQUIPMENT AND SUPPLIES

374-7438 PLATE GP-IDENTIFICATION

S/N: SEJ1-UP

PART OF 367-5958 COMMON AR

SMCS-7557 **i04548441**

NOTE	REF NO	GRAPHIC REF	PART NUMBER	QTY	PART NAME 1 2 3 4 5 6 (PRODUCT LEVEL)	SEE PAGE
	1	1	**225-4150**	1	PLATE-SERVICE INFORMATION (MACHINE)	
	2	1	**239-6989**	1	PLATE-SERIAL NUMBER (MACHINE)	

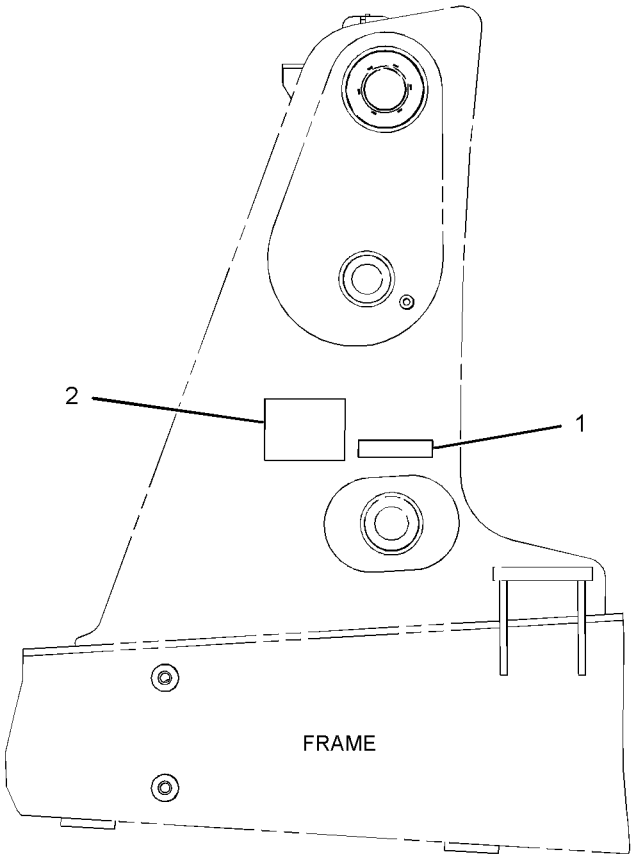

LEFT SIDE VIEW

GRAPHIC #1 **<END>** g02777322

SERVICE EQUIPMENT AND SUPPLIES

206-1701 PROTECTION GP-VANDALISM—ROTATING GUARD

S/N: SEJ1-UP
PART OF 353-1432 CAB AR
AN ATTACHMENT

SMCS-7315 **i03500322**

NOTE	REF NO	GRAPHIC REF	PART NUMBER	QTY	PART NAME 1 2 3 4 5 6 (PRODUCT LEVEL)	SEE PAGE
	1	1	**206-1852**	1	COVER-VANDALISM	
	2	1	**206-1853**	2	BUSHING	
	3	1	**206-1855**	1	PLATE	
	4	1	**206-1856**	1	BRACKET	
J	5	1	**226-0291**	1	LOCK AS	
M	6	1	**129-3178**	2	LOCKNUT (M6X1-THD)	
M	7	1	**174-8131**	1	SCREW-TRUSS HEAD (M4X0.7X12-MM)	
	8	1	**232-4636**	2	BOLT-CARRIAGE (M6X1-THD)	
	9	1	**8C-9660**	1	WASHER (4.6X7.9X0.8-MM THK)	
M	10	1	**8T-2659**	1	LOCKNUT (M4X0.7-THD)	
	11	1	**9X-2038**	2	WASHER (7X19X2-MM THK)	

J-REQUIRES 5P-8500 KEY
M-METRIC PART

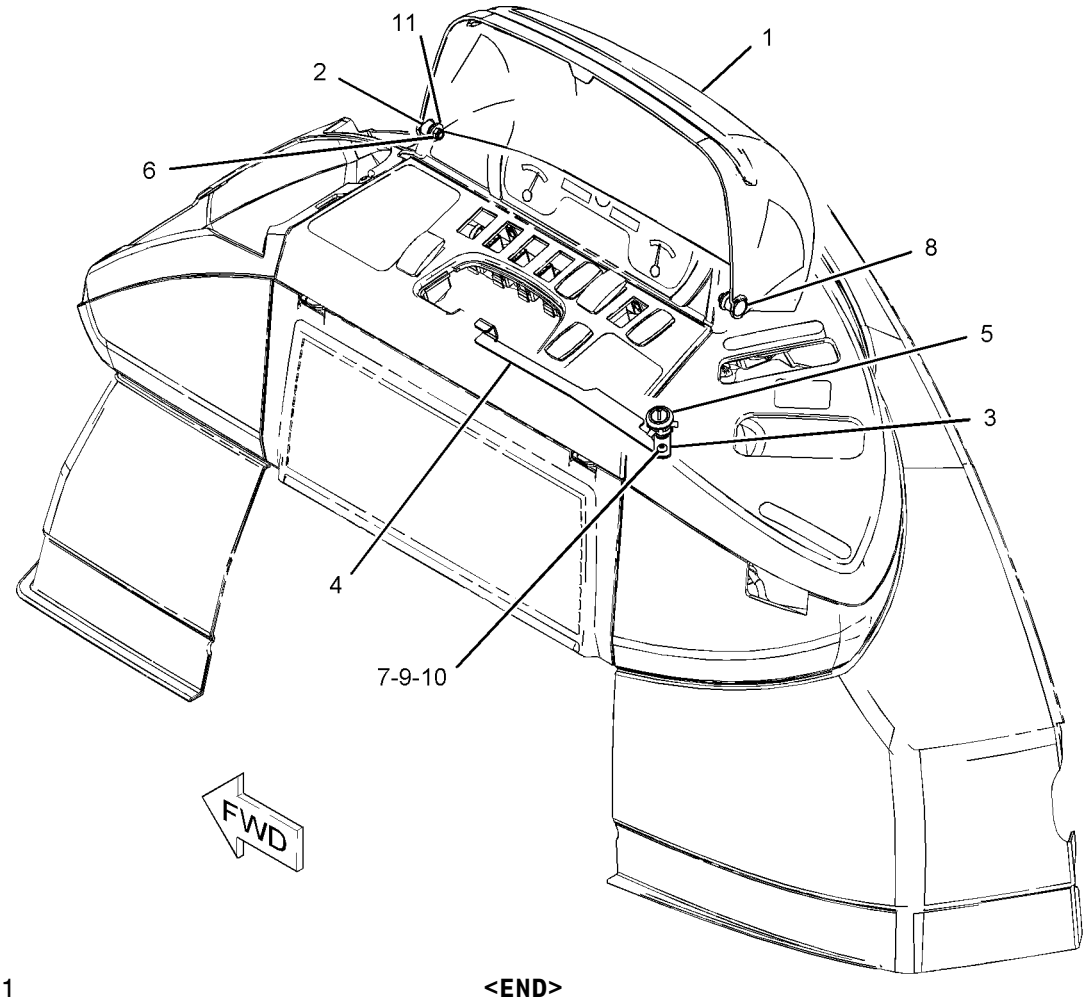

GRAPHIC #1 **<END>** g01083362

MEMORANDA

PART NUMBER INDEX

Part	Page
0	
0S-1594	645
	647
0S-1595	641
	643
0S-1603	19
1	
1B-2705	650
1B-3057	58
1B-8736	9
	12
1H-3244	116
	117
	118
	119
	603
1J-9671	338
	339
1K-6872	641
	643
1K-7082	202
1L-6377	637
1M-6119	92
1M-6120	92
1P-4584	431
1R-5396	293
	295
1S-0994	88
	171
1S-7252	88
1S-9593	107
	112
	149
	160
1U-8846	173
	183
1V-0358	641
	643
2	
2B-0858	16
	33
2B-0941	298
	433
	484
	486
2D-2628	263
2D-2629	263
2D-2630	263
2D-2631	263
2D-2633	263
2H-3922	125
2K-4973	645
	647
	650
2K-5986	290
2K-6830	346
	348
2L-5893	652
2L-8050	151
2L-8066	138
2L-8067	128
	141
	151
2L-8069	128
	141
	151
2L-8075	156
2L-8076	138
2L-8079	138
	151
2M-9780	51
	53
	58
	363
	389
	390
	398
	403
	406
	409
	420
	435
	450
2P-1279	406
	409
2P-1293	371
	373
	375
	381
	383
	386
2P-4556	626
2P-7864	614
	643
2R-0364	484
	486
2S-3163	586
2S-3440	433
2S-3745	605
	609
2U-9234	320
	321
2V-9121	624
	626
2Y-5821	346
	348
3	
3B-4610	297
3B-4631	652
3B-5317	447
	448
3B-5319	472
	474
	476
	477
	562
3B-8488	318
	463
	466
	468
	492
	494
	496
	498
3B-8489	314
	316
	318
	320
	321
	346
	348
	352
	447
	463
	466
	468
	472
	474
	476
	477
	484
	486
	492
	494
	496
	498
	542
	543
	544
	545
3C-6969	638
3D-2824	362
	366
	377
	397
	398
	400
	431
	439
	443
3E-0068	626
3E-4321	420
	624
	626
3E-4337	616
3E-4892	26
	27
3E-6600	152
	582
	588
3E-6735	346
	348
3E-7445	51
	53
	58
	189
	191
	433
3E-8025	486
3E-8299	131
	152
	171
3E-8320	88
3E-9362	120
	128
	141
	149
3F-5108	558
3F-9556	632
	639
	655
3G-6927	244
	249
3J-1907	76
	158
	161
	175
	198
	199
	201
	238
	239
	243
	244
	250
	290
	298
	352
	398
	403
	406
	409
	412
	414
	416
	418
	420
	422
	425
	427
	429
	430
	435
	437
	439
	443
	450
3J-4818	89
	138
3J-7354	298
	338
	339
	418
	437
	450
3K-0360	290
	291
	298
	336
	362
	369
	370
	375
	381
	383
	384
	386
	387
	403
	406
	409

► **PRIMARY REFERENCE**

PART NUMBER INDEX

Part	Page
	420
	435
	443
	450
3K-8460	73
3N-4968	173
3N-5739	346
	348
3P-0439	318
3S-2093	38
	71
	97
	106
	107
	109
	111
	112
	128
	131
	135
	137
	138
	141
	143
	145
	147
	151
	156
	158
	161
	163
	165
	167
	169
	171
	238
	308
	406
	409
	439
	572
	575
	596
	626
	649
	663
3T-0849	588
	634
3T-0852	614

4

Part	Page
4B-2043	156
4B-4274	675
4B-4283	652
4B-4863	575
4B-9784	652
4D-6433	655
4D-6466	76
4D-7388	58
	626
4D-9517	484
	486
4E-0724	138
4F-3657	527
	528
	529
	534
	536
	537
	539
	557
	565
4F-4879	616
4F-7952	243
	250
4H-0408	20
4H-1641	614
	643
4H-2558	566
4H-3001	62
4I-3038	584
4I-6287	439
4I-9521	422
4I-9522	422
4I-9523	422
4I-9524	422
4I-9525	422
4I-9526	422
4I-9527	422
4I-9528	422
4J-0520	181
4J-0522	178
	189
	191
4J-1888	542
	543
	544
	545
	564
4J-5477	127
	198
	199
	290
	298
	406
	409
	418
	420
	422
	425
	427
	429
	430
	437
	443
4J-9535	459
4K-0367	527
	528
	529
	534
	536
	537
	539
	557
	558
	565
4K-9890	614
	650
4L-6454	175
4P-7428	97
	156
4P-7429	139
	163
	165
	298
4P-7581	139
	169
4P-8134	97
	139
4V-2264	616
4W-9972	238
	243
	249

5

Part	Page
5A-3604	484
5C-2874	104
	139
	618
	619
5C-2890	71
	107
	112
	116
	117
	118
	119
	128
	141
	150
	151
	291
	377
	582
	620
5C-6588	655
5C-7261	58
	89
	98
	99
	107
	112
	116
	117
	118
	119
	129
	141
	151
	291
	329
	480
	506
	508
	572
	593
	626
	632
	633
	639
	655
	657
	659
	675
5C-8312	301
	575
5C-9553	62
	151
	308
	598
	600
	639
5D-1026	38
	58
	624
	626
5D-6523	484
	486
5D-8159	506
	508
	564
5G-2003	622
5G-3676	89
	143
	145
	366
5I-3978	439
5K-5338	626
5K-9090	362
	371
	373
	375
	381
	383
	386
	431
5P-0599	391
	393
	395
	406
	409
5P-0743	290
	420
5P-0761	88
5P-0767	171
	624
	626
5P-1076	302
	320
	321
	614
	675
5P-1420	76
5P-1442	76
5P-1505	38
	76
	298
5P-1717	62
5P-2566	450
5P-4115	161
5P-4116	47
	49
	58
	62
	68
	73

► **PRIMARY REFERENCE**

PART NUMBER INDEX

Part	Page
	76
	85
	88
	89
	92
	107
	112
	189
	191
	291
	302
	314
	316
	327
	329
	366
	402
	403
	469
	481
	489
	566
	572
	575
	588
	607
	626
	655
	663
5P-4571	131
	151
	616
5P-4868	431
5P-4906	290
5P-5148	449
5P-5637	605
	609
5P-5655	605
	609
5P-5688	605
	609
5P-5927	310
	582
5P-5995	160
5P-6006	138
5P-6129	566
5P-6718	238
	243
	249
5P-7070	584
5P-7464	391
	395
	414
	416
5P-7465	391
	395
	398
	414
	416
5P-7648	572
	575
5P-7814	73
5P-7854	433
5P-7958	484
	486
5P-8066	238
	243
	250
5P-8245	19
	641
	643
5P-8500	671
5P-9297	654
5T-5439	280
5T-6374	89
6	
6A-9083	641
	643
6C-3680	605
	609
6C-9089	655
6D-0337	▶263
	264
6D-0443	263
6D-1734	173
6D-3479	199
6D-4246	51
	53
6E-1135	484
	486
6E-1478	346
	348
6E-5431	481
6F-7045	125
6G-2263	38
6H-3587	131
6H-3616	24
6I-0217	21
	28
	55
	69
	80
6I-0254	55
6I-0260	28
	40
	44
	46
	80
	87
6I-0289	28
6I-0291	80
6I-0363	28
6I-0364	68
	122
6I-0423	20
6I-0563	68
	69
6I-0572	15
	28
	45
6I-0594	122
6I-0645	21
	45
6I-0646	15
	34
6I-0650	21
	87
6I-0846	10
6I-0847	20
6I-0917	10
6I-1418	149
6I-1497	38
	41
6I-4374	46
6J-2680	431
6K-0806	128
	141
	149
	611
6K-4076	511
	546
6L-4725	566
	607
6N-6984	58
6P-6591	133
6P-8855	624
	626
6S-3002	363
6T-5598	151
6T-9142	179
6T-9143	179
6T-9144	179
6T-9145	179
6T-9146	179
6T-9147	179
6T-9160	225
6T-9163	179
	243
	249
6T-9164	179
	243
	249
6T-9165	179
	243
	249
6T-9166	179
	243
	249
6T-9196	208
	215
	217
	223
6T-9202	243
	249
6U-0456	377
6V-0852	238
	244
	249
	418
	420
	450
6V-1249	373
	414
	416
	443
6V-2315	293
	295
6V-2317	98
	99
6V-3213	463
	538
	540
6V-3965	238
	244
	250
	418
	420
	450
6V-4248	290
6V-4292	298
6V-4364	463
	538
	540
6V-4589	238
	243
	249
6V-5100	208
	215
	217
6V-5204	491
	494
	496
	498
6V-5215	178
	243
	250
6V-5217	614
6V-5764	151
6V-5842	250
6V-6228	173
	175
	181
6V-6717	624
	626
6V-7238	450
6V-7357	291
	605
	609
	663
6V-7359	391
	395
	398
6V-7420	403
	406
	409
	450
6V-7646	561
6V-7687	320
	321
6V-7731	238
6V-7743	303
	572
	650
	657
	659
	661
	662
6V-7744	309
	463
	588
6V-8076	422
6V-8097	238
	243
	250
6V-8144	564
6V-8186	639

▶ **PRIMARY REFERENCE**

PART NUMBER INDEX

Part	Page
6V-8213	398
6V-8378	238
	243
	249
6V-8397	290
	298
	353
	362
	398
	403
	412
	414
	416
	420
	435
	439
6V-8398	350
	351
	354
	355
	357
	359
	366
	369
	370
	371
	375
	377
	381
	383
	384
	386
	387
	397
	398
	400
	403
	406
	409
	412
	414
	416
	435
	439
	443
6V-8399	239
	258
	260
	261
6V-8455	187
	188
6V-8500	225
6V-8523	143
	145
6V-8625	369
	370
	375
	381
	384
	387
	443
6V-8626	389
	390
6V-8627	198
	199
	406
	409
	420
	422
	425
	427
	429
	430
	437
	443
6V-8628	298
6V-8632	420
6V-8633	377
	443
6V-8634	298
	362
6V-8635	431
6V-8636	398
	435
	439
6V-8638	398
	403
	406
	409
	435
6V-8639	383
	386
	435
	443
6V-8641	198
	199
	290
	406
	409
	418
	420
	422
	425
	427
	429
	430
	437
	443
6V-8642	398
	406
	409
6V-8647	437
6V-8713	377
6V-8716	51
	53
6V-8721	435
6V-8723	290
	298
6V-8724	290
	398
	403
	412
	414
	416
6V-8757	208
	210
	215
	217
	219
	221
	226
	227
6V-8759	289
6V-8774	398
6V-8780	437
6V-8801	89
	151
6V-8949	329
6V-8978	459
6V-8989	393
6V-8993	406
	409
6V-9001	420
6V-9007	362
6V-9023	131
6V-9170	366
	369
	370
	371
	375
	381
	383
	386
	391
	393
	395
6V-9172	371
	375
	381
	383
	386
6V-9178	257
6V-9189	310
	406
	409
	641
	643
6V-9606	303
6V-9632	290
	481
	561
	634
6V-9746	51
	53
	362
	371
	373
	375
	381
	383
	386
6V-9796	366
6V-9828	420
6V-9829	362
6V-9830	366
	371
	412
6V-9831	377
	400
6V-9833	362
6V-9835	420
	427
	437
6V-9840	431
6V-9842	406
	409
6V-9845	400
6V-9851	435
6V-9852	393
6V-9876	435
6V-9877	383
	386
6W-2463	400
6W-5760	398
6W-5761	398
6W-8832	▶552
6W-8900	▶559
6W-9739	▶559
6Y-1192	208
	210
	215
	223
	228
6Y-1341	238
6Y-1896	238
	243
	249
6Y-2035	238
6Y-2736	225
6Y-2737	178
6Y-7929	208
	210
	215
	217
	219
	221
	223
	228
6Y-7957	227
6Y-9930	637
7C-0351	28
7C-0754	420
7C-4354	89
7C-4616	21
7E-3870	66
7G-7053	139
7H-3937	605
	609
	655
7J-9108	160
	341
	343
	344
	355
	357
	366
	369
	370
	371
	373
	375
	377
	381
	383
	386
	389
	390
	391
	393
	395

7

▶ PRIMARY REFERENCE

PART NUMBER INDEX

Part	Page
	398
	400
	406
	409
	420
7K-1181	71
	88
	107
	112
	133
	138
	143
	145
	147
	149
	156
	160
	163
	165
	171
	288
	290
	402
	624
	626
	634
7K-9208	318
7M-8485	51
	53
	371
	375
	381
	383
	386
	431
	433
7N-0718	88
	▶125
7N-7221	135
	138
7N-7779	169
7N-7780	169
7N-7781	169
7N-7782	169
7N-9017	138
	163
	165
7R-2751	150
7R-8239	297
7S-1800	156
7T-0093	605
	609
7T-1099	290
7T-2646	179
	243
	249
7T-2651	178
	243
	249
7T-3017	225
7T-3018	225
7T-3021	225
7T-3022	225
7T-3034	179
7T-3051	178
7T-3109	238
7T-3111	238
7T-3119	239
7T-3195	238
	243
	249
7T-3249	238
7T-3251	239
	243
	249
7T-3253	178
	243
	249
7T-4532	579
7T-4848	149
7T-6655	215
	217
	221
7T-6739	605
7T-6799	135
7W-1176	20
7W-2326	41
7W-3556	243
	250
7W-4642	20
7W-7381	198
7X-0515	26
	27
7X-0542	463
7X-0550	556
7X-0579	58
	151
	308
	480
	566
	581
	607
7X-0590	202
	463
7X-0618	556
	572
	575
7X-0620	165
	596
7X-0632	320
	321
	492
	494
	496
	498
7X-0818	38
	71
	139
7X-0872	160
7X-2393	572
	657
	659
7X-2444	127
7X-2532	637
7X-2533	634
7X-2536	328
7X-2537	329
	400
7X-2538	580
7X-2543	492
	494
	496
	498
7X-2552	326
7X-2553	203
	204
	580
7X-2559	175
7X-2579	305
	306
	307
7X-3164	403
	406
	409
7X-3165	161
	406
	409
7X-3383	484
7X-4741	238
	243
	250
7X-4744	250
	257
7X-7702	308
7X-7729	62
	66
	68
	89
	151
	291
	362
	492
	494
	496
	498
	588
	595
	647
7X-7898	312
7X-9866	300
7X-9873	300
7Y-9099	310
	8
8C-3056	151
8C-3347	318
8C-3398	129
	141
	150
	151
8C-3681	58
	654
8C-3756	605
	609
8C-3798	131
	622
8C-4982	622
8C-5748	238
	243
	250
8C-6354	149
8C-6431	641
	643
8C-6437	633
8C-6802	71
8C-7505	173
8C-7524	605
	609
8C-8418	201
8C-8545	243
	250
8C-9660	677
8C-9987	556
	640
8D-2707	263
8E-1118	622
8E-5707	208
	210
	215
	217
	219
	221
	223
	226
	227
	228
8F-1434	104
	139
	238
	243
	249
	675
8F-3590	89
	131
	139
	151
8H-5303	125
8H-5306	125
8K-1117	371
	375
	381
	383
	386
8L-2746	238
	243
	249
8L-2779	239
	258
	260
	261
8L-2786	244
	249
8L-8413	7
	92
	151
	160
8M-2770	161
8N-0869	88
8R-2916	595
8R-6111	622
8S-0948	298
8S-7803	323
	572
	575
	652
8S-8158	201
8T-0075	420
8T-0119	290

▶ **PRIMARY REFERENCE**

PART NUMBER INDEX

Part	Page
8T-0164	418
	422
8T-0255	559
8T-0271	243
	250
8T-0285	141
	151
8T-0287	675
8T-0292	175
8T-0328	139
	151
	238
	243
	249
8T-0389	100
	101
	102
	103
	169
	391
	395
	492
	494
	496
	498
	655
8T-0404	366
8T-0643	243
	250
8T-1118	663
8T-1482	318
8T-1580	178
	223
	228
8T-1581	223
	228
	239
8T-1683	298
8T-1715	383
	386
8T-1887	89
	391
	395
	484
	486
8T-1888	89
	391
	395
	484
	486
8T-1889	143
	145
	366
	371
	373
	375
	381
	383
	386
8T-1890	143
	145
	366
	371
	373
	375
	381
	383
	386
8T-1893	412
	414
	416
8T-1894	412
	414
	416
8T-1899	443
8T-1900	443
8T-2427	115
8T-2444	329
8T-2658	584
8T-2659	677
8T-3311	406
	409
8T-3444	412
	414
	416
8T-3490	634
8T-3612	481
	634
8T-3844	377
8T-3998	89
8T-4121	26
	27
	47
	49
	51
	53
	76
	89
	97
	131
	139
	143
	145
	151
	156
	161
	169
	189
	191
	199
	291
	298
	309
	318
	371
	373
	375
	381
	383
	386
	391
	395
	398
	400
	412
	414
	416
	433
	435
	443
	455
	469
	484
	486
	492
	494
	496
	498
	580
	593
	595
	624
	626
	631
	634
8T-4122	309
	326
	480
	506
	508
	557
	558
8T-4123	323
	637
8T-4127	331
8T-4131	202
	637
8T-4132	26
	27
	480
	637
8T-4133	58
	62
	89
	131
	151
	156
	291
	303
	371
	375
	381
	383
	386
	391
	395
	398
	400
	443
	455
	492
	494
	496
	498
	530
	531
	532
	533
	534
	535
	536
	537
8T-4134	634
8T-4136	68
	89
	139
	151
	169
	291
	320
	321
	371
	375
	381
	383
	386
	412
	414
	416
	466
	468
	580
	595
	626
	631
8T-4137	51
	53
	58
	89
	139
	151
	161
	309
	362
	469
	593
8T-4138	71
	151
	291
	481
	484
	486
	624
	626
	634
8T-4139	89
	463
	626
	649
8T-4159	506
	508
8T-4167	305
	306
	307
	318
8T-4171	167
	561
8T-4172	89
8T-4177	435
8T-4178	530
	531
	532
	533
	534
	535
	536
	537
8T-4179	165

► **PRIMARY REFERENCE**

PART NUMBER INDEX

Part	Page	Part	Page	Part	Page	Part	Page
	199		484		663		484
	675		486	8T-4222	51		486
8T-4182	143		492		53		506
	145		494		58		508
	455		496		309		556
8T-4183	202		498		452		580
	302		595	8T-4223	89		588
	431		634		97		593
	455	8T-4196	26		139		626
8T-4185	27		47		163		630
	400		49		165		634
8T-4186	398		76		189		640
	433		89		191	8T-4241	472
	452		97		199		474
	484		156		203		476
	486		298		204		477
	634		314		414		494
8T-4189	41		316		416		496
	68		320		431		498
	73		321		450	8T-4244	588
	76		373		455		634
	85		433		463		675
	89		435		596	8T-4646	398
	139		484		626	8T-4648	318
	156		486		649	8T-4742	71
	189		494		675		620
	191		496	8T-4224	38		621
	302		498		41	8T-4744	71
	327		624		47		620
	328		626		49		621
	481	8T-4197	316		67	8T-4753	104
	556		593		71	8T-4778	309
	588	8T-4200	58		73	8T-4896	89
	626		151		78		152
	634		187		88	8T-4908	38
	640		188		89		58
	663		420		98		62
8T-4191	391		469		99		68
	395		489		116		71
	452		566		117		78
8T-4192	89		572		118		85
	97		575		119		156
	139		607		129		189
	414	8T-4205	71		139		191
	416		107		141		290
8T-4193	85		112		152		291
	480		116		156		310
	490		117		187		373
8T-4194	163		118		188		377
8T-4195	66		119		288		484
	68		129		291		486
	189		141		297		556
	191		150		328		630
	199		151		373		641
	309		152		377		643
	371		167		403	8T-4956	189
	375		291		407		191
	381		377		410		203
	384		582		420		204
	387		602		422		556
	391		605		435		596
	395		609		439		634
	400		624		449	8T-4971	38
	443		626		453		621
	452		639		481		634

► **PRIMARY REFERENCE**

PART NUMBER INDEX

Part	Page
8T-4984	58
	67
8T-5005	89
8T-5035	318
8T-5093	310
8T-5439	267
	268
	269
	273
	274
	275
	276
	277
	278
	279
	280
	283
	284
	285
	286
	318
8T-6466	199
	298
	433
8T-6684	431
8T-6685	492
8T-6703	67
8T-6726	403
	412
	414
	416
8T-6869	85
	302
	402
	403
	422
	449
8T-6870	449
8T-6885	143
	145
8T-6902	481
	639
8T-6912	288
	403
8T-6974	161
	598
	600
8T-7329	407
	410
8T-7338	314
	316
8T-7529	433
8T-7547	47
	49
	73
	76
	85
	89
	107
	112
	302
	314
	316
	481
	581
	634
8T-7876	74
8T-7963	88
	92
	403
8T-7968	439
8T-7971	318
8T-8729	84
	100
	101
	102
	103
	127
	128
	135
	138
	141
	149
	158
	171
	611
8T-8730	138
	158
	171
	605
8T-8737	100
	101
	102
	103
	128
	131
	133
	135
	137
	141
	143
	147
	149
	150
	156
	158
	160
	163
	165
	169
	171
	572
	575
	590
	591
	594
	596
	605
	609
	611
	632
8T-8799	128
	141
	149
	150
8T-9402	38
8T-9405	360
	361
8T-9501	596
	641
8T-9530	672
	674
8T-9534	129
	141
	152
8T-9655	149
8U-0767	88
8W-8528	88
8W-8909	484
	486
8X-5489	88
8X-9618	149
8Y-1816	88
8Y-5737	624
	626
8Y-6352	602
8Y-6967	602
8Y-7309	572
	657
	659
8Y-7833	4
	149
9	
9B-0523	163
9D-3769	152
9F-5644	119
	125
9G-0004	92
9G-0005	92
9G-2265	169
9G-3695	169
9G-8909	88
9M-1974	238
9M-2307	104
9M-5732	303
9M-6738	403
9M-7958	41
	58
9M-7959	602
9M-8406	76
9N-2231	566
	607
9P-2553	655
9P-9150	238
	243
	249
9R-0109	564
9R-0139	472
9R-0147	476
	479
9R-0153	359
	463
9R-0158	463
	472
	474
	476
	477
	494
	496
	498
	538
	540
	562
9R-0162	492
	494
	496
	513
	514
	515
9R-0170	476
	477
	479
9R-0320	524
	525
9R-0411	463
9R-0481	318
	466
	468
9R-0868	▶490
9R-1004	366
	391
	395
9R-1005	366
	391
	395
9R-1499	156
9R-1510	472
	477
	538
	540
	562
9R-1766	596
9R-1767	596
9R-2404	334
9R-2806	288
9R-2807	288
	291
9R-2959	494
	496
	498
9R-3092	341
	492
	494
	496
	498
9R-3205	654
9R-3469	663
9R-3545	283
	284
	287
9R-3700	463
9R-4110	318
9R-4602	468
9R-4649	546
9R-4668	▶447
	500
9R-4672	553
9R-4675	553
	554
9R-4676	542
	543
	544
	545
9R-4677	447
	448
9R-4678	447

▶ **PRIMARY REFERENCE**

PART NUMBER INDEX

Part	Page
	448
9R-5205	511
	512
9R-5206	511
	512
9R-5271	546
	548
	549
9R-5294	553
	554
9R-5301	469
	482
	483
	489
9R-5313	511
	512
	554
9R-5320	▶557
9R-5321	▶558
9R-5615	291
9R-5708	652
9R-5832	511
	512
9R-5866	▶565
9R-5948	391
	393
	395
9R-7891	498
9R-7941	131
9R-7942	105
9R-7958	105
9R-7980	131
9R-8165	481
9R-8291	320
	321
	466
	468
	496
9R-8292	492
	494
	498
9R-8870	412
	414
	416
9R-8987	513
	514
	515
9R-8988	513
	514
	515
9R-9028	482
9R-9105	474
	476
9R-9702	202
9R-9901	290
9S-4185	244
	250
9S-4191	76
	239
	244
	250
9S-8004	175
	352
9S-8006	363
9T-2883	346
9T-4007	352
9U-0361	414
	416
9U-8263	622
9U-8875	215
	219
9U-8886	217
	219
	221
	360
	361
9V-9077	552
9W-0607	98
	99
9W-0844	131
	150
	167
	169
	572
	575
9W-0852	131
	156
	167
	572
	575
9W-1951	150
9W-3324	100
	101
	102
	103
9W-3326	107
	112
	156
9W-5460	178
	243
	249
9W-6582	637
9W-6584	637
9W-8215	558
9W-9915	26
	27
9W-9952	26
	27
9W-9953	26
	27
9X-1054	147
9X-1055	147
9X-1386	121
9X-2038	71
	312
	422
	566
	582
	584
	586
	598
	600
	602
	607
	622
	634
9X-2040	588
9X-2043	71
	152
	312
	423
	634
9X-2044	156
	291
	582
	584
	650
9X-2045	291
	566
	572
	584
	586
	598
	600
	602
	603
	607
	634
	655
	657
	659
	661
	662
9X-2060	492
	494
	496
	498
9X-2092	655
9X-2099	47
	49
9X-2158	463
9X-2842	639
9X-3401	7
	107
	112
	121
	128
	131
	133
	135
	137
	141
	143
	145
	147
	150
	156
	160
	163
	165
	167
	171
	572
	575
9X-3402	107
	112
	135
	150
	156
	158
	160
	163
	165
9X-3959	626
9X-4244	98
	99
9X-4611	346
	348
9X-4813	133
9X-6165	62
	156
9X-6383	329
	663
9X-6418	391
	395
9X-6581	420
9X-6611	346
	348
9X-6615	238
	243
	250
9X-6772	198
	199
	298
	418
	422
	425
	427
9X-7378	128
9X-7380	626
9X-7381	626
9X-7382	626
9X-7383	626
9X-7385	579
9X-8118	105
9X-8139	105
9X-8256	38
	131
	133
	481
	588
	622
	634
9X-8257	85
	203
	204
	314
	316
	490
	580
	637
9Y-5015	16
005-0469	178
	179
005-0471	239
009-2062	223
014-5645	238
030-1705	88
031-4155	650
	652
031-5644	114
	115
032-9090	13
032-9091	13

0

▶ **PRIMARY REFERENCE**

PART NUMBER INDEX

Part	Page
033-6783	433
033-7687	19
034-1432	561
034-3679	298
035-8017	74
035-8063	15
	126
039-8557	634
039-9133	297
054-6733	300
054-6882	300
067-6006	16
067-6179	21
067-6213	28
067-6265	74
067-6873	13
067-6874	13
067-6999	74
069-4080	76
069-4707	175
081-5648	418
084-4277	622
085-7356	161
085-8091	400
089-7990	202
090-5725	76
091-0081	391
	395
091-1637	559
091-1745	559
091-2436	128
	131
	138
	141
	151
	160
	171
093-8828	183
095-0641	462
	639
095-0924	205
	466
	468
095-0927	223
	228
095-0928	223
	228
095-1041	183
095-7950	466
	468
096-5516	225
	472
	474
	476
	477
096-5866	453
096-5962	638
096-5968	256
096-6166	128
	141
	151
	629
097-7234	131
099-3649	314
	366
	620

1

Part	Page
100-3253	100
	101
	102
	103
100-3254	100
	101
	102
	103
100-3255	100
	101
	102
	103
100-3751	21
	55
100-4336	76
	298
100-4461	43
100-4830	23
	80
100-4838	10
100-4841	10
	15
100-5041	147
100-6674	128
	150
100-7608	657
	659
	661
	662
101-0745	663
101-3771	28
101-3895	21
	46
101-4411	561
101-4412	561
101-4413	561
101-4414	561
101-4415	560
101-4416	4
101-4419	4
	▶675
101-4420	675
101-4421	675
101-4422	675
101-4423	675
101-4424	675
101-7401	595
102-3582	346
	348
102-8703	400
102-8801	131
	133
	150
	163
	165
	171
102-8802	7
	84
	104
	121

Part	Page
	128
	133
	138
	141
	150
	579
	596
	616
102-8803	107
	112
	127
	128
	141
	143
	145
102-8804	133
	135
	150
	167
	633
102-8805	100
	101
	102
	103
	131
	147
	158
	171
	427
102-8806	137
	171
	572
	575
	632
102-9941	35
103-2543	152
104-1995	128
	141
	151
	160
104-3288	179
	243
	249
104-6311	564
104-6312	507
	509
104-6313	550
	551
104-6316	564
104-6317	564
105-3478	494
	496
	498
105-3480	165
	596
105-3481	614
105-8034	290
106-0401	364
106-0406	364
106-0827	672
106-3108	445
106-8916	69
106-9388	550
	551

Part	Page
106-9586	250
	257
106-9861	178
	243
	249
107-5591	596
107-6709	371
	375
	381
	383
	386
107-6826	212
	213
	214
108-3872	371
	375
	381
	383
	386
108-4311	616
109-1633	626
109-1634	626
110-0203	150
110-2028	151
110-2861	550
	551
110-5602	620
110-6109	566
	607
110-7887	135
111-0859	18
111-3422	79
111-3423	79
111-4337	463
	472
	474
	476
	477
	494
	496
	498
	563
111-4627	566
	607
111-6792	128
	141
	151
111-6793	151
111-6794	128
	141
	151
111-6795	128
	141
	150
111-6816	128
	141
	150
111-7899	4
	106
	107
	112
	123
	128
	131
	135

▶ **PRIMARY REFERENCE**

PART NUMBER INDEX

Part	Page
	141
	147
	149
	156
	158
	160
	165
	169
	171
	663
111-7906	187
111-7907	▶187
	231
111-8222	64
112-1533	318
112-1776	564
112-8492	150
113-0920	622
113-6349	87
113-8129	55
113-8490	150
113-8491	150
114-2579	64
114-4363	20
114-9342	668
115-1615	147
115-1858	480
115-1918	360
	361
115-6433	466
	468
116-5763	310
116-7471	149
117-1385	243
	250
117-3534	360
	361
117-9713	187
118-1348	469
	483
118-1977	511
118-1978	511
118-1979	546
118-1980	546
118-1984	▶510
118-2990	637
118-7110	557
118-8118	73
	83
118-8119	73
119-3662	128
	131
	135
	138
	141
	147
	151
	169
119-3859	641
	643
119-4740	233
	234
	237
119-6346	443
119-9631	605
120-9027	584
120-9286	670
120-9762	178
	243
	249
120-9763	201
121-0694	215
	217
	221
121-0883	20
121-0885	223
	228
121-0904	227
121-2059	179
	243
	249
121-2060	179
	243
	249
121-2061	179
	243
	249
121-2500	215
	217
	219
	221
121-3040	643
121-4405	129
121-6936	663
121-7385	238
	243
	249
121-7389	238
121-7390	238
121-7391	238
121-7396	238
	243
	249
121-7398	179
	243
	249
121-7399	179
	243
	249
121-7400	179
	243
	249
121-7401	179
	243
	249
121-7402	179
	243
	249
121-7403	238
121-7404	238
121-7875	238
121-9870	622
122-1877	208
	210
	223
	226
	227
	228
122-1878	226
	227
122-1879	179
	243
	249
122-1883	238
	243
	249
122-1884	226
	227
122-1886	217
	219
	221
122-3650	238
122-3652	178
122-4401	128
	141
	171
122-6785	239
122-6787	238
	243
123-0708	301
123-0714	217
	219
	221
123-1377	238
	243
	250
123-2918	238
123-2919	238
123-2920	178
	217
	219
	221
	250
123-7615	131
	138
123-7637	371
	375
	381
	383
	386
123-8905	215
	217
	219
	221
	226
	227
123-8906	178
	179
	215
	217
	221
	226
123-8907	208
	210
	223
	225
	228
	239
123-8908	179
	208
	210
	223
	228
123-8909	217
	219
123-8910	179
	217
	221
123-8912	208
	210
	223
	226
	227
	228
123-8913	217
	221
124-0174	160
124-0312	624
	626
124-3536	30
124-3815	21
	64
	80
124-5640	128
125-7874	107
	112
	128
	131
	135
	138
	141
	147
	151
	156
	158
	160
	163
	165
	169
	171
	572
	575
125-7875	128
	131
	135
	138
	141
	147
	151
	156
	171
125-7876	88
	160
126-1767	135
	145
	579
126-1768	135
127-3017	238
127-4471	41
127-5469	201
128-3094	514
128-3778	513
128-4123	151
128-4170	131
128-4249	151
128-5016	151
128-5596	360
	▶451
128-7716	605

▶ **PRIMARY REFERENCE**

PART NUMBER INDEX

Part	Page
	609
128-7903	463
128-7905	463
129-1831	566
	607
129-3178	133
	303
	605
	609
	621
	639
	650
	677
129-3738	572
	575
129-4741	303
129-5256	323
	572
	575
129-5257	572
	575
129-8542	657
	659
	661
	662
129-8545	657
	659
	661
	662
130-1916	323
	329
130-7282	175
130-8149	6
	▶201
130-8150	361
	451
130-9984	433
	626
131-2117	515
131-2171	420
131-3540	655
131-6010	672
131-8201	435
131-8202	435
132-2249	598
	600
	622
132-5789	138
	151
	156
132-8769	▶364
133-1011	21
133-3260	88
133-3413	96
133-5813	420
	427
133-6517	96
134-0143	484
	486
134-0404	363
134-2540	150
134-3355	138
134-3856	624
134-8273	484
	486
135-5009	88
	92
135-5893	275
135-8203	527
	528
	529
	534
	536
	537
	539
	565
135-8206	527
	528
	529
	534
	536
	537
	539
136-1955	38
	433
136-4192	657
	659
	661
	662
136-6887	517
136-6889	518
136-6890	519
136-7808	181
137-4234	501
	510
	526
	527
	528
	529
	530
	531
	532
	533
	534
	535
	536
	537
	539
	541
137-6645	244
138-7500	88
139-1398	41
140-7649	346
	348
140-8714	80
140-8718	80
140-8783	87
140-9378	128
	149
141-0888	446
141-8061	167
142-0485	290
143-2827	572
	657
	659
	661
	662
144-0195	663
144-0367	67
144-5287	341
144-6734	185
145-0981	622
145-2237	422
146-1815	149
146-4023	655
146-6347	301
146-7453	433
146-8319	270
	271
146-9439	147
	149
	158
147-0201	244
	249
147-0202	215
	217
	221
147-0203	208
	210
	219
	223
	226
	228
147-0205	223
	228
147-0207	226
147-0209	238
	244
	249
	▶257
147-0210	226
147-0211	244
	249
147-0215	208
	210
147-0216	208
	210
147-0218	244
	249
147-0224	217
	221
147-0226	244
	249
147-0228	208
	215
	217
147-0232	244
	249
147-0234	244
	249
147-0236	244
	249
147-0238	208
	210
	215
	217
	219
	221
	226
147-0242	223
	228
147-0248	223
	228
147-0256	215
147-0257	217
147-0258	208
	210
147-0259	215
	217
	221
147-0260	223
	228
147-0261	223
	228
147-0262	244
	249
147-0266	244
	249
147-0268	244
	250
147-0270	215
147-1445	150
147-1446	150
147-5553	69
148-1899	88
148-5353	657
	659
	661
	662
148-7925	427
148-8311	383
	386
148-8315	398
	406
	409
148-8316	437
148-8318	298
	362
148-8325	198
	199
	290
	406
	409
	418
	420
	422
	425
	427
	429
	430
	437
	443
148-8328	377
	443
148-8335	431
148-8336	398
	435
	439
148-8338	420
148-8339	51
	53
148-8340	383
	386
	435
	443
148-8341	377
148-8342	420
148-8345	398
	403
	406

▶ **PRIMARY REFERENCE**

PART NUMBER INDEX

Part	Page	Part	Page	Part	Page	Part	Page
	409		416	155-2256	150		189
	435	150-3757	223	155-2260	138		191
148-8347	362		225		147	160-2244	51
148-8353	420		228		150		53
148-8359	383	150-4029	437		156		58
	386	150-4031	400	155-2265	131	160-2246	627
148-8362	431	150-4052	406		150	160-2248	423
148-8363	435		409		171		425
148-8364	369	150-5968	420	155-2270	107		427
	370		427		112	160-3518	149
	375		437		128		611
	381	150-7732	244		131	160-5083	383
	384		249		138		386
	387	151-4841	71		147	160-7599	4
	443		198		150		483
148-8368	198		199		156		489
	199		290		158	161-3249	226
	406		626		160		227
	409	151-7829	▶513		163	161-6984	618
	420		527		165		619
	422	151-7830	▶514		171	161-6987	618
	425		528		288		619
	429	151-7831	▶515		605	161-7145	318
148-8369	298		529	155-2271	131		353
148-8370	435	151-7887	▶527		150		354
148-8372	435	151-7888	▶528		156		359
148-8374	290	151-7889	▶529		160	161-7147	350
	298	151-7902	513		167		351
148-8378	290		514	155-2274	150	161-7632	238
	398		515		169		243
	403	151-7903	513		171	161-9044	598
	412		514		572		600
	414		515		575	161-9283	613
	416	151-9272	135	155-4098	638		614
148-8382	366	151-9275	149	156-0283	85		652
148-8383	298	152-0184	3		302	161-9285	652
148-8390	389		▶334		310	161-9288	652
	390	152-3968	79		620	161-9294	618
148-8393	393	152-5717	398	156-1200	73		619
148-8407	76	152-5718	398	156-1458	169	161-9820	87
148-8423	406	152-6144	173	156-1460	169	161-9916	403
	409		175	156-3631	290		406
148-8429	431		181	156-6175	151		409
148-8439	398	153-2997	290		422		450
148-8447	160	154-1580	202	157-2088	223	162-6556	618
148-8448	406	154-2302	439	157-2090	223		619
	409	154-5257	524		228	163-0753	289
149-3516	73		525	159-4269	598		▶297
149-9954	83	154-5279	472		600	163-1135	616
150-1974	58		477	159-4945	575	163-9091	208
150-3026	298		562		598		210
150-3033	418	154-5280	472	159-4946	575		215
	422		477		600		223
150-3052	371		562	159-7105	630		228
	375	154-5404	173	159-7106	630		244
	381	154-5410	663	159-7342	672		250
	383	154-5416	288		674	164-1153	596
	386	154-5423	657	159-8049	88	164-1154	639
150-3053	371		659		92	164-1178	586
	375		661	159-8050	88	164-1230	650
	381		662		92	164-1244	641
	383	155-2255	133	159-9322	150	164-1246	643
	386		137	159-9495	169	164-1249	613
150-3060	412		150	159-9496	169		614
	414		156	159-9540	73	164-1251	613

▶ **PRIMARY REFERENCE**

PART NUMBER INDEX

Part	Page
	614
164-1252	613
	614
164-1253	613
	614
164-1254	613
	614
164-1255	613
	614
164-1256	613
	614
164-1269	643
164-1271	643
164-1272	643
164-1273	643
164-1274	614
	643
164-1276	643
164-1277	643
164-1368	149
	165
	288
	325
	329
	566
	588
	596
	607
	634
164-1395	71
	481
164-1398	481
164-4227	51
	53
	58
164-5549	439
164-5567	418
	420
	450
164-6874	160
164-7556	98
	99
164-8474	602
164-9425	138
	156
164-9598	297
164-9599	297
164-9639	427
164-9640	422
165-2273	450
165-4021	38
165-6365	198
165-6595	290
165-8996	202
166-2033	127
166-7870	490
166-9413	176
167-2183	346
	348
167-2303	346
	348
167-3692	150
167-8182	655
167-8251	586
168-0443	538
	540
168-0444	538
	540
168-0480	513
	514
	515
168-8389	501
	503
	504
	505
	506
	508
	510
	526
	527
	528
	529
	530
	531
	532
	533
	534
	535
	536
	537
	539
	541
	552
169-0705	138
	150
169-3261	301
169-5326	80
169-5861	73
169-7291	622
170-0950	156
170-0967	290
170-3492	674
171-1357	383
	386
171-5349	121
172-4018	655
172-5317	215
	217
	219
	221
172-6050	208
	210
	219
	223
	226
	227
	228
172-6743	223
	228
172-8037	611
172-8039	611
172-8591	586
173-0332	208
	210
174-3091	165
	590
	591
	594
	596
174-4643	173
174-4647	175
174-4650	175
174-4671	173
174-8131	575
	598
	600
	677
174-9194	331
174-9638	69
174-9711	238
175-0054	238
175-4291	98
	99
175-4292	98
	99
175-7877	▶670
175-7904	450
176-0626	320
	321
176-1477	7
	138
176-1521	7
	138
176-2947	135
176-6219	79
177-2215	626
177-4877	575
	598
	600
177-9600	6
177-9645	605
	609
177-9648	128
	141
177-9653	605
	609
177-9656	128
	141
178-1304	267
178-3336	47
	49
	323
	329
178-3620	38
178-3713	▶345
	398
178-3893	345
178-7230	271
178-7539	149
178-8214	225
178-8465	7
178-9566	223
	227
179-6401	62
	149
179-8235	592
180-0448	630
180-3748	655
180-5785	614
180-5786	614
180-5787	643
180-5788	643
180-5789	614
180-5791	643
180-5796	641
180-9340	107
	112
	128
	131
	133
	135
	137
	138
	147
	150
	156
	160
	163
	165
	167
	171
	572
	575
180-9872	345
183-4912	620
183-4934	634
183-6084	481
183-6085	620
183-6438	593
184-5382	592
185-0882	16
185-1861	7
	138
185-4015	605
	609
185-6627	64
185-6643	38
185-9777	329
186-3735	104
	590
	591
	594
	616
	632
186-3736	169
186-5110	616
186-5113	643
187-7719	605
	609
188-4651	160
189-0881	566
	607
189-3158	128
	147
	151
	156
	158
	163
	171
189-5746	▶121
	239
190-4374	466
	468
190-7605	510
	▶511
190-7614	163
	165
190-7634	84
191-8304	244
	249

▶ **PRIMARY REFERENCE**

PART NUMBER INDEX

Part	Page
192-2112	605
	609
192-7805	616
192-7876	83
193-0618	83
193-1681	314
	316
193-1683	314
	316
193-1684	314
	316
193-5913	85
193-5914	3
	640
193-5915	3
	640
194-0832	268
194-2553	127
194-2903	290
194-5390	69
194-5622	624
	626
195-0189	▶100
	109
195-0190	▶101
	109
195-0191	▶102
	111
195-0192	▶103
	111
195-0256	427
195-0257	427
195-0258	427
195-0259	427
195-0260	425
195-0261	425
195-0262	425
195-0263	425
195-2037	298
195-2136	24
195-2221	24
195-6329	272
	273
195-6345	275
	276
	278
	282
	285
195-6348	270
	271
	272
	273
	279
	281
	282
195-6525	397
	398
195-6526	398
195-6527	397
195-7602	634
195-9712	104
195-9877	397
195-9878	397
196-0030	▶104
	107
	112
196-0039	397
196-0040	397
196-1136	▶397
	501
196-2966	149
197-4521	641
	643
197-5107	598
	600
197-7499	629
197-9155	175
198-3899	88
	329
198-7811	175
	183
198-7814	196
	197
198-7825	173
198-7838	173
198-7841	173
198-7842	173
198-7843	173
198-9706	84
199-0639	175
199-0641	175
199-0646	183
199-0648	196
	197
199-0652	175
199-0653	206
199-0656	183
199-0658	175
199-0659	186
199-0662	175
199-0663	183
199-0670	175
199-0672	293
	295
199-0673	186
199-0675	183
199-0676	175
199-0678	183
199-0679	175
199-0680	183
199-0681	293
	295
199-0683	173
199-0684	183
199-0685	183
199-0686	183
199-0687	183
199-0688	175
	183
199-0689	183
199-0690	183
199-0691	183
199-0692	183
199-0693	183
199-0694	186
199-0695	181
	183
199-0697	183
199-0700	293
	295
199-0701	293
	295
199-0702	293
	295
199-0703	293
	295
199-0706	175
199-0752	293
	295
199-0756	186
199-0759	293
	295
199-0760	206
199-0778	175
199-0783	309
199-0784	186
199-0785	183
199-0786	175
199-0787	175
199-0807	186
199-0808	183
	186
199-0858	181
	183
199-0929	629
199-9267	126
199-9751	16
	32
200-5728	611
201-1024	149
201-1235	516
	517
	518
	519
	521
	525
201-1238	530
	531
	532
	533
	535
	541
201-1239	530
	531
	532
	533
	535
	541
201-1868	265
	▶267
201-1869	267
	▶268
201-1870	267
	▶268
201-1915	267
	268
	269
	276
	279
	280
	283
	285
	286
201-1916	273
	274
	275
	277
	278
	280
	284
201-1919	268
	269
	273
	274
	275
	276
	277
	278
	279
	280
	283
	284
	285
	286
201-1920	▶264
	268
	269
	270
	271
	272
	273
	275
	276
	277
	278
	279
	281
	282
	283
	284
	285
	286
201-1929	269
201-1962	264
	▶268
201-1963	268
	▶269
201-1964	268
	▶269
201-1975	272
201-9459	124
202-0313	151
202-0314	151
202-5909	38
202-5993	290
202-6029	290
202-6186	268
	269
	270
	277
	281
	286
202-6611	99
202-6614	98
203-9858	641

2

▶ **PRIMARY REFERENCE**

PART NUMBER INDEX

Part	Page	Part	Page	Part	Page	Part	Page
	643		589	206-2423	88		▶194
204-0775	124	206-1642	5		137	209-9885	173
204-1682	650		▶288		160		▶195
204-2281	443	206-1648	566	206-5122	403	209-9886	173
204-3080	173		607	206-5123	403	209-9887	173
204-4248	569	206-1653	602	206-5823	632	210-1707	472
	570	206-1659	584	206-6969	323		474
	▶637	206-1662	584	207-4254	173		476
204-5258	561	206-1663	584	207-4257	206		477
204-5259	561	206-1667	71	207-4258	173	210-3097	175
204-6195	138		584	207-5962	206	210-3098	175
204-9921	605		586	208-0321	173	210-3099	175
	609	206-1669	596	208-0322	181	210-3100	175
205-2357	439	206-1678	586	208-5148	398	210-3106	175
205-3079	76	206-1681	586	208-5149	398	210-5924	173
205-6298	124	206-1682	566	208-5235	530		▶205
205-7047	622		607		531	210-5931	205
205-7048	598	206-1684	566		532	210-5932	194
	600		607		533		195
205-7198	406	206-1687	586		535	210-5937	173
	409	206-1690	586		541	210-5942	173
	420	206-1692	71	208-5245	530	210-5946	173
205-9244	244	206-1696	582		531	210-5947	173
	249	206-1698	582		532	210-6475	572
205-9362	150	206-1699	582		533		575
205-9587	661	206-1701	570		535	210-6491	582
205-9588	600		▶677		541	210-7302	175
205-9590	661	206-1702	569	208-7492	494	210-7305	175
205-9591	661		570		496	210-7665	605
205-9597	662		▶582		498		609
205-9598	598	206-1706	582	208-8240	238	210-7666	605
205-9608	572	206-1708	582		243		609
205-9609	572		584		249	210-8401	605
205-9614	662	206-1712	582	208-8469	323	210-8402	609
205-9615	662	206-1752	290	208-9281	67	210-8754	622
205-9622	575	206-1766	290	208-9297	331	210-8958	171
205-9623	657	206-1767	290	209-0939	298	211-0052	150
205-9624	657	206-1768	290		422	211-0092	185
205-9629	572	206-1803	602	209-3366	621	211-2660	605
205-9631	575	206-1804	566	209-3367	71		609
205-9633	659		607		▶621	211-2661	566
205-9634	659	206-1805	602	209-3378	71		607
205-9920	38	206-1807	566		▶639	211-3782	▶310
	107		607	209-4157	205		569
	112	206-1808	566	209-4232	193		570
	138		607	209-4716	622	211-4258	▶169
	156	206-1809	566	209-7454	181		458
	158		607	209-7455	185		555
	329	206-1810	602	209-7456	173	211-4291	4
	433	206-1815	602	209-7460	196		▶114
	626	206-1816	602		197	211-5358	616
206-1345	71	206-1817	602	209-7462	181	211-6735	173
	131	206-1818	566	209-7463	181	211-6752	208
	135		607	209-7464	173	211-6753	223
	138	206-1851	425	209-7465	196	211-9032	398
	149	206-1852	677		197	211-9461	169
	156	206-1853	677	209-7466	205	212-0862	149
	167	206-1854	584	209-7472	181	212-5702	183
206-1590	572	206-1855	677	209-7473	181	212-5712	293
	575	206-1856	677	209-9219	14		295
206-1618	569	206-1857	569	209-9875	173	212-5713	175
	570		570	209-9882	173	212-7038	169
	▶603		▶654		▶181	212-8960	343
206-1634	290	206-1871	481	209-9883	173		344
206-1641	▶481	206-1874	481	209-9884	173	213-0139	128

PART NUMBER INDEX

Part	Page
	138
	141
213-1887	310
213-1889	310
213-4222	206
213-5007	318
213-6683	466
213-6702	320
	321
213-6703	472
	477
213-6754	202
214-2968	▶98
	131
214-2969	▶99
	106
214-3203	15
	34
214-4285	484
	486
214-4691	165
214-4694	149
214-4695	128
	141
214-4697	131
214-4698	106
214-4699	131
214-4700	106
214-4703	141
214-4705	169
214-4706	171
214-4707	171
214-4708	171
214-4709	663
214-4710	158
214-4711	156
214-4713	156
214-4716	149
214-4717	149
214-4718	128
214-4721	107
214-4722	135
214-4723	149
214-5097	173
214-7024	4
	6
	332
	▶560
214-7025	560
	▶561
214-7026	561
214-7043	484
	486
214-7469	300
214-7568	418
	420
	450
215-1242	652
215-1906	355
	357
215-2023	173
215-2913	572
	575
215-9513	76
215-9515	76
216-0910	3
	▶671
216-1238	3
	▶480
216-1302	450
216-1304	450
216-1600	183
216-1601	206
216-1606	206
216-1608	175
216-1609	175
	▶193
216-1610	175
	▶206
216-1612	183
	▶293
216-1613	183
	▶295
216-4457	181
216-4458	181
216-4461	181
216-4464	181
216-4465	181
216-4466	181
216-4554	616
216-7473	173
216-8314	12
216-8634	21
216-8687	185
216-8689	185
216-8691	185
216-9147	264
	▶269
216-9148	269
	▶270
216-9149	269
	▶270
216-9497	185
216-9498	181
	▶185
217-2345	183
217-2346	183
217-2347	293
	295
217-2349	293
	295
217-2877	194
	▶196
217-2878	195
	▶197
217-2879	194
	195
217-2883	173
217-2914	175
218-0666	602
218-3597	260
219-0302	572
	575
219-0343	621
219-3271	96
219-6281	605
	609
219-6283	605
	609
219-6292	605
	609
219-8751	181
219-8752	181
219-8753	181
219-8754	181
219-8755	181
219-8756	181
219-8757	181
219-8758	181
219-8759	181
219-8783	205
219-8795	173
	175
219-8798	173
219-8799	175
219-8834	293
219-8835	295
219-8836	183
219-8839	175
219-9488	516
220-0738	310
	323
	329
	331
	566
	584
	607
220-3470	596
220-3762	605
220-3790	641
	643
220-3791	641
	643
220-4050	631
220-5725	609
220-7108	472
	474
	476
	477
220-8226	290
220-8631	20
221-2420	602
222-2690	71
222-3518	76
222-8935	145
222-9151	452
223-2028	600
223-2029	598
223-2030	572
224-2147	584
224-2149	584
224-5132	338
	339
224-5152	338
	339
224-5917	76
224-6829	230
224-8946	667
225-0312	667
225-3854	156
225-3861	150
225-4150	676
225-4287	57
225-5438	30
225-5501	17
225-5502	17
225-5629	36
225-5634	36
225-5638	36
225-5959	36
225-5960	36
225-5961	36
225-5962	36
225-6005	28
225-6041	28
225-6451	10
225-6456	10
225-6461	10
225-6464	10
225-6477	10
225-6478	10
225-6479	10
225-6522	40
225-6817	46
225-6818	46
225-7738	55
225-7739	55
225-7741	55
225-7941	126
225-7944	15
	45
225-7988	137
225-8019	55
225-8287	21
225-8329	43
225-8524	69
225-8526	69
225-8533	69
225-8534	69
225-8536	69
225-8848	23
226-0291	310
	677
226-0294	329
226-0420	▶335
	336
226-1240	667
226-4346	193
	194
	195
226-4364	175
226-4365	175
	194
	195
226-4366	175
	194
	195
226-4367	175
226-4370	175
	194
	195
226-4560	100
	101
	102
	103
226-4561	100
	101
	102
	103
226-5540	▶352

▶ **PRIMARY REFERENCE**

PART NUMBER INDEX

Part	Page	Part	Page	Part	Page	Part	Page
	500		▶173		348	243-0062	639
	502	230-6368	88	233-3786	13	243-0063	639
	504		92	233-5260	323	243-5026	173
	505	230-7732	138		584	244-3106	138
	506	230-8094	28	233-6513	673	244-3111	310
	508	230-8989	80	234-3017	647	244-3112	310
226-5849	138	230-8995	80	234-3030	67	244-3113	310
227-1057	135	230-8996	80	235-0128	71	245-8026	135
	149	230-8997	80	236-2144	74	245-8780	435
	584	230-8998	80	236-6651	41		▶446
227-3509	414	230-9127	10	236-6923	128	245-9828	19
	416	230-9357	352	237-0769	10	246-2622	73
227-5509	446	231-0670	183	237-3794	69		76
227-5556	310		186	237-3921	69	246-2641	671
228-5856	128	231-0671	183	237-3943	616	246-3229	4
	135		186	237-4894	126	246-7853	466
	141	231-0692	183	237-5186	238		468
	150		▶186		244	246-7854	314
	160	231-0693	186		250		316
	171	231-0694	186	237-5188	178	247-1385	58
228-6050	102	231-0695	183	238-1842	420	247-4884	74
	103		186	238-4626	250	247-5557	310
228-6051	100	231-0696	186	238-4628	446	248-2707	71
	101	231-0697	186	238-5082	433	248-2709	586
228-6052	100	231-0698	175	238-5254	173	248-2710	481
	101	231-0699	175	238-5255	173	248-2714	598
	102	231-0700	196	238-5256	194		600
	103	231-0701	197		195	248-5245	314
228-6053	100	231-0703	194	238-5290	183		316
	101		195	238-5291	175	249-0974	45
	102	231-0719	193	238-5292	175	249-2482	582
	103	231-2879	4	238-5293	175	249-3124	446
228-6054	100		▶592	238-5294	175	249-3125	446
	101	231-3057	96	238-5298	175	249-4207	516
	102	231-3058	▶96		▶183		517
	103		97	238-7492	128		518
228-6056	100	231-3803	480	238-8671	80		519
	101	232-1322	16	239-1434	78		521
	102		32	239-2270	66		525
	103	232-1328	80	239-3104	131	249-4209	516
228-7091	393	232-1545	165	239-6989	676		517
228-7316	667	232-1793	80	239-9430	667		518
228-9132	83	232-1794	80	240-5571	80		519
229-5085	194	232-2725	80	240-6866	445		521
	195	232-2726	80	240-7095	667	249-4210	516
229-5093	185	232-3126	74	241-0037	338		517
229-5336	418		80		339		518
229-5745	481	232-3149	80	241-4275	76		519
230-2389	596	232-3157	80	241-6215	422		521
230-2390	596	232-3274	80	241-6225	371	249-4211	522
230-3489	▶337	232-3657	21		375	249-4220	▶516
230-3810	176	232-3666	21		381		530
230-3811	176	232-3751	15		383	249-4221	▶530
230-4011	107		45		386	249-7562	▶270
	112	232-4636	677	241-6226	371		273
	150	232-6662	95		375	249-7563	▶271
230-4013	158	232-7449	14		381		273
	160	232-7600	15		383	249-7565	▶271
	163	232-7603	15		386		273
	165	232-7612	489	241-8450	371	249-7566	▶271
230-4014	160	233-0619	346		375		273
230-5009	160		348		381	249-7568	▶272
230-5738	5	233-2589	346		383		274
	▶175		348		386	249-7569	▶272
230-5743	5	233-2613	346		667		274

▶ **PRIMARY REFERENCE**

PART NUMBER INDEX

Part	Page
249-7571	▶272
	275
249-7572	▶273
	275
249-9076	133
249-9255	▶264
249-9261	▶264
249-9262	▶264
249-9263	▶265
249-9271	267
	▶273
249-9388	266
	▶273
249-9390	264
	267
	▶274
249-9392	264
	▶274
249-9399	264
	▶274
249-9400	265
	▶275
249-9409	274
	▶275
249-9410	274
	▶275
249-9411	274
	▶276
250-0230	274
	▶276
250-1057	506
	508
250-1440	403
	406
	409
250-6148	445
250-6587	550
	551
250-6850	331
250-6858	329
250-7910	71
250-7911	71
250-8330	256
251-3227	58
251-4309	552
251-5627	589
251-5629	589
252-1862	598
	600
252-1863	598
	600
252-1864	600
252-1865	598
252-2157	314
	316
252-4659	482
252-4660	4
	▶482
	488
252-4670	6
	669
252-6005	506
	508
	▶564
252-6143	314
252-6438	16
252-9046	545
	▶553
252-9051	542
	543
	544
	▶554
252-9068	500
	▶542
252-9069	542
	▶546
252-9078	553
	554
252-9080	553
	554
252-9081	553
252-9084	554
252-9087	553
252-9088	554
252-9095	550
	551
252-9100	549
253-1549	290
253-1817	598
	600
253-1857	598
	600
253-1858	598
	600
253-2470	609
253-5022	206
253-5024	173
253-9396	147
253-9510	605
	609
254-1098	452
254-1126	598
	600
254-1127	598
	600
254-2267	44
254-2270	44
254-3437	590
	594
254-3954	16
254-9926	301
255-0793	667
255-0794	667
255-0795	566
	607
255-0800	626
255-2749	595
256-9600	546
	548
258-2354	584
258-3697	598
	600
258-4170	150
258-4172	138
258-4178	149
258-4946	17
258-9999	202
259-0127	176
259-1831	225
259-2940	281
259-4402	667
259-6276	569
	570
	▶629
260-0030	652
260-0033	652
260-0034	652
260-0035	652
260-0041	652
260-0057	652
260-3020	427
260-3021	427
260-3568	323
260-7653	133
	667
260-9136	400
260-9137	400
260-9213	377
260-9214	377
261-0376	49
261-0406	47
261-0428	49
261-0524	135
261-5048	112
261-9634	634
261-9635	288
261-9636	582
261-9637	582
261-9639	582
	584
261-9642	634
261-9644	586
261-9645	586
262-2781	611
262-4081	290
262-4084	290
262-4727	107
	112
262-7079	403
262-7081	403
262-8088	51
	53
	58
	189
	191
262-9151	150
262-9567	622
263-2901	591
263-3823	633
263-5376	67
263-5781	622
263-6556	88
263-7261	596
264-4297	362
264-7029	107
	112
	150
264-7030	158
	160
	163
	165
264-7031	135
266-1554	265
266-1555	276
	▶277
266-1556	276
	▶277
266-1560	277
266-2814	167
266-4157	107
	112
	143
	145
	167
267-2701	117
	118
	149
267-5211	116
	117
	118
267-5213	116
	117
	118
267-5225	634
267-5635	94
	▶137
267-8363	279
267-8364	278
268-1547	369
	370
	375
	381
268-1548	369
	370
	375
	381
268-1559	298
	422
268-1710	231
269-0386	346
	348
269-0388	346
	348
269-0389	346
	348
269-2150	383
	386
269-3201	456
	457
	458
	555
	▶588
269-3247	456
	457
	458
	555
	▶634
269-3254	634
269-3262	634
269-3269	312
269-4159	588
269-4161	588
269-9115	586
270-0149	588
270-2794	634

▶ **PRIMARY REFERENCE**

PART NUMBER INDEX

Part	Page
270-2795	588
270-3217	▶611
	612
270-5161	634
270-5290	320
	321
271-3096	456
	457
	458
	555
	▶594
271-3097	456
	457
	458
	555
	▶590
271-3101	594
271-3103	590
272-2265	46
272-2838	135
272-5420	427
272-6369	517
	523
272-6410	▶531
272-6411	▶517
	531
272-7079	634
272-7872	▶532
272-7873	▶518
	532
272-7914	518
	520
272-7916	519
272-7918	520
	522
	523
	524
272-7919	520
	522
	523
	524
272-7920	520
	522
	523
272-7921	520
	522
	523
272-7922	521
272-9234	▶533
272-9235	▶519
	533
272-9700	456
	457
	458
	555
	▶591
272-9701	591
	594
272-9800	105
273-0042	▶534
273-0043	▶520
	534
273-0093	▶535
273-0094	▶521
	535
273-0799	▶536
273-0800	▶522
	536
273-0862	▶537
273-0863	▶523
	537
273-1462	523
273-1463	522
273-1465	520
273-1473	634
273-1475	634
273-1476	634
273-1477	634
273-1478	634
273-3599	524
273-3622	516
	517
	518
	519
	521
	525
273-3730	524
273-3731	▶538
273-3732	538
	▶539
273-3733	▶524
	539
273-3755	524
273-3756	524
273-5077	▶265
273-5078	▶265
273-5080	265
	267
	▶277
273-5081	265
	▶278
273-5093	277
	▶278
273-5094	277
	▶278
273-5095	278
	▶279
273-5096	278
	▶279
273-5532	521
273-9190	149
274-3774	138
	156
	160
	163
	165
274-3775	156
274-3776	131
274-3778	131
274-3781	163
	165
274-4274	346
	348
274-4553	208
	210
	215
	217
	219
	221
	223
	226
	227
	228
274-4554	244
274-4555	360
	361
274-4556	244
	249
274-4560	239
	258
	260
	261
274-4561	▶215
	244
	250
274-4578	▶217
	244
274-4580	▶208
	244
274-4582	▶223
	244
274-4716	12
274-5909	626
274-7409	151
274-8034	239
	244
	250
274-8041	256
274-8048	199
	▶256
274-8616	219
274-8617	219
274-8620	225
274-8621	225
274-8623	239
274-8625	239
274-8628	219
274-8629	219
274-8636	219
274-8637	225
274-8638	208
	210
	217
	221
	223
	228
274-9183	88
274-9872	119
	149
274-9993	165
275-0468	▶178
	238
275-0469	178
275-0475	238
275-0477	239
275-0478	▶225
	239
275-0553	149
275-0570	128
	141
	149
275-0600	150
275-0601	138
275-0652	290
275-0653	290
275-1038	80
275-4918	51
	53
	58
275-7877	150
275-8869	588
275-9883	28
275-9891	42
276-1151	95
276-2334	435
	667
276-4836	62
276-5605	15
276-7287	▶116
	128
	141
276-7290	▶117
	149
276-7291	▶118
	149
276-7476	30
276-8791	663
277-0584	323
277-1873	290
277-3012	21
278-0209	244
	250
	▶258
278-0213	244
	250
	▶260
278-0215	225
278-0216	225
278-0217	225
278-0218	225
278-5113	36
278-5126	9
278-6377	116
	119
	149
278-7469	590
278-8223	4
	▶638
279-4969	403
279-8725	638
280-7007	▶226
	244
	250
280-7009	258
	260
	261
280-7010	244
	250
	▶261
280-7012	239
	258
	261
280-9658	318
	667
281-2901	156
281-4726	371
	375
	381
	383
	386

▶ **PRIMARY REFERENCE**

PART NUMBER INDEX

Part	Page	Part	Page	Part	Page	Part	Page
281-5969	366	294-9810	210	303-0418	265	306-0348	150
281-5983	393		221		266	306-0351	150
282-7832	622	294-9811	228		▶279	306-7346	149
282-7833	131	294-9812	210	303-0419	265	307-2242	49
282-7835	131		219		▶280	307-3069	450
	622		221	303-0421	266	308-1792	10
282-9043	667		226		▶280	308-2160	459
283-3451	663		227	303-0423	266	308-2161	459
283-3467	634	294-9813	228		▶280	308-3074	167
283-3477	634	294-9820	239	303-0428	279	308-3437	439
283-4236	626	294-9821	219		▶281	308-3554	645
283-7616	4	295-5550	62	303-0429	279		647
283-7981	634	295-8141	143		▶281	308-4315	474
283-8053	634		145	303-0430	280		476
283-8563	312	295-8142	143		▶281	308-8161	151
284-0078	143		145	303-0431	280	308-9568	418
	145	295-8143	143		▶282	308-9973	5
284-1026	47		145	303-0434	280		▶124
	49	297-1330	593		▶282	309-1325	▶105
284-1602	603	297-5849	637	303-0435	280		114
284-3425	87	297-7958	76		▶282		115
284-8531	133	298-0663	38	303-0438	280	309-6655	47
284-9039	84		138		▶283	309-7555	8
285-1207	569		149	303-0439	280		▶40
	570	298-3599	290		▶283	310-0674	151
285-5098	73	298-4783	318	303-0441	281	310-0851	320
285-5914	603	298-5112	8		282		321
285-9109	605		▶43	303-0442	282	310-3933	484
	609	298-5129	8	303-0443	283		486
286-0867	260		▶32	303-5767	8	310-4589	84
286-1930	290	298-5131	8		▶20	310-6216	▶301
286-7848	35		▶33	303-5768	8		595
286-9338	524	298-5872	49		▶19	310-9354	165
286-9340	524	299-2212	▶579	303-5769	8	310-9355	596
287-7251	403		580		▶122	311-1218	167
	443	299-3270	427	303-5795	122	311-1741	422
287-7252	403	299-4777	312	304-1021	650	311-2230	▶230
	443	299-6082	151	304-1023	650		266
287-7268	400	299-6938	427	304-3265	212		267
287-7269	400	299-6940	427		213	311-2768	67
287-8573	10	299-6985	▶618		214	311-3639	▶167
287-8597	20		657	304-3711	24		655
288-0422	21		659	304-5687	94	311-6184	88
288-9734	580		662	304-8760	8	312-3083	149
289-6410	310	299-6986	▶619		▶21	312-6455	88
289-8336	18		657	304-8761	8	313-3280	650
289-9871	312		659		▶34	313-3476	373
289-9873	312		661	304-8965	605	313-3477	373
289-9874	312				609	313-3752	▶632
290-6733	149			305-3423	239		663
290-6746	88				244	313-5637	652
290-7831	580				250	313-6709	602
291-3654	414	300-1702	71	305-3424	227	313-6710	602
291-5108	588	300-4491	422	305-3425	227	313-6711	584
291-8379	290		▶445	305-3427	▶227	313-6712	584
292-4251	439	300-4994	135		239	313-6713	584
292-5773	622	301-0589	133	305-3429	▶219	314-4018	579
292-8339	412	302-1413	406		239	314-4290	▶645
292-9784	150		409	305-3431	219		649
293-1980	582	302-8432	179		226	314-4291	▶647
	586		244		227		649
293-2147	239		250	305-4353	650	314-7618	84
293-8761	225	303-0413	▶265	305-6815	525	315-1270	572
294-0288	21	303-0414	▶266	305-6917	67		575
294-9322	486	303-0415	▶266	305-7881	87		▶655

3

▶ **PRIMARY REFERENCE**

PART NUMBER INDEX

Part	Page
315-1272	655
	▶665
315-1277	655
315-1282	655
315-1284	663
315-1299	655
315-1300	655
315-1301	655
315-1302	655
315-1303	655
315-1304	655
315-1306	655
315-1311	655
315-1312	655
315-1313	655
315-1314	655
315-1316	665
315-1317	665
315-1318	▶633
	665
315-1319	665
315-3381	80
315-3384	9
315-3385	▶36
	37
315-3386	36
315-3387	36
315-3388	36
315-3390	16
315-3391	16
315-3392	16
315-3393	16
315-3394	16
315-3395	30
315-3411	8
	▶55
315-3418	8
	▶95
315-4533	484
	486
315-5385	320
315-7645	449
315-7646	449
315-7647	449
315-7790	626
315-9890	571
	▶649
315-9891	570
	571
	▶649
316-1935	212
	213
	214
316-3436	620
316-3437	620
316-4742	494
316-4743	494
	498
316-4811	318
316-6899	8
	▶45
316-6925	8
	▶126
316-6941	8
	▶44
316-6945	466
	468
316-6946	492
	494
	498
316-6947	492
	494
	498
316-6948	494
	496
	498
316-6949	494
	496
	498
316-6951	320
	321
316-6952	320
	321
316-7091	427
316-7896	▶16
	17
316-8228	655
317-2242	414
317-2243	414
317-2244	414
317-3769	40
317-3778	40
317-4261	655
317-4262	655
317-4263	655
317-4270	626
317-4359	412
317-4360	412
317-4361	412
317-4362	▶412
	500
317-4928	484
	486
317-5539	569
	570
	▶584
317-5541	595
317-5542	622
317-5543	569
	570
	▶622
317-5544	301
317-8141	581
317-9776	8
	▶87
318-7251	▶500
	501
318-7267	▶501
318-9902	▶562
319-4504	492
319-4505	468
319-4506	496
319-4507	496
319-6834	▶266
319-6835	266
	▶283
319-6836	266
	▶284
319-6837	284
319-6838	285
319-6906	377
319-6907	377
319-6908	377
319-7186	283
	▶284
319-7187	283
	▶284
319-7191	284
	▶285
319-7192	284
	▶285
319-8524	566
	607
319-8968	525
319-8975	525
319-8978	▶540
319-9394	540
	▶541
319-9397	▶525
	541
319-9444	620
319-9667	494
	496
	498
319-9668	494
	496
	498
320-0256	525
320-0257	525
320-0267	525
320-0268	525
320-2948	318
320-2949	318
320-3619	318
320-3620	318
320-4725	466
	468
320-5933	3
	▶318
320-5935	▶354
	494
	496
	498
320-5937	1
	2
	▶341
320-5938	3
	▶353
320-6520	1
	2
	▶343
320-6521	1
	2
	▶355
320-6522	2
	▶344
320-6523	2
	▶357
320-7812	443
320-8438	377
320-9164	472
	477
320-9213	74
320-9241	472
	477
320-9835	584
321-3096	373
321-3101	373
321-5776	650
321-6383	383
321-6387	371
	375
	383
321-7038	▶580
	604
321-7192	▶441
	470
	471
321-7231	1
	2
	▶377
321-7303	373
322-3736	466
	468
322-3766	2
	▶320
322-3768	318
322-3770	318
322-6827	▶119
	149
322-8414	572
	575
	598
	600
322-9476	8
	▶28
322-9480	645
	647
322-9481	645
	647
322-9486	645
	647
	▶652
322-9490	652
322-9491	652
322-9492	652
322-9493	652
322-9494	652
322-9495	652
322-9496	652
322-9507	650
322-9509	650
322-9615	69
322-9616	69
322-9663	16
322-9664	16
323-2023	2
	▶393
323-2096	1
	2
	▶449
323-2424	341
323-2431	341
323-2433	341
323-2435	341
323-2465	353
	354
323-2466	359
323-2467	350
	351

▶ **PRIMARY REFERENCE**

PART NUMBER INDEX

Part	Page	Part	Page	Part	Page	Part	Page
323-2470	341	324-0501	354	324-9978	643		332
323-2474	343	324-0505	353	325-1968	655	328-5196	491
	355	324-0512	359	325-7563	491	328-5234	472
323-2476	344	324-0516	353	325-9300	657		477
	357	324-0525	359	325-9301	659	328-5333	443
323-3308	38	324-0548	1	325-9308	595	328-5358	443
	41		2	325-9311	622	328-5964	3
	51		▶466	325-9315	655		▶491
	53	324-0549	2	326-0089	321	328-6608	409
	58		▶468	326-1803	365	328-6681	381
	189	324-0550	1		▶443		386
	191		▶494	326-6389	655	328-6706	370
	433	324-0551	2	326-8999	8		381
323-3309	58		▶496		▶14	328-7742	650
	62	324-0552	2	326-9000	8	328-7749	616
	67		▶492		▶12	328-7750	616
	624	324-2578	239	326-9002	8	328-7751	616
	626	324-2579	239		▶30	328-7752	616
323-4218	350	324-2889	650	326-9003	8	328-9650	492
	351	324-2890	645		▶17	329-0129	8
323-4219	350		647	326-9004	8		▶64
	351		▶650		▶37	329-0143	371
323-4220	350	324-2892	650	326-9005	8		375
	351	324-2893	650		▶9		383
323-4221	350	324-2894	▶616	326-9008	8	329-1167	572
	351		650		▶10		575
323-6066	655	324-2895	650	326-9012	8		▶598
323-6645	62	324-2896	▶641		▶74	329-1168	572
323-9083	377		645	326-9013	8		575
323-9084	377	324-2897	▶613		▶23		▶600
323-9085	377		641	326-9147	▶79	329-1169	598
323-9086	377	324-2900	641		80	329-1170	600
323-9312	30		643	326-9149	8	329-1327	486
324-0355	353	324-2901	641		▶80	329-1328	486
	354		643	326-9153	69	329-1329	484
324-0356	350	324-2903	▶643	326-9156	8	329-1330	484
	351		647		▶69	329-1331	484
324-0361	343	324-2905	643	327-0222	377		486
324-0367	343	324-2906	▶614	327-0223	377	329-1348	286
	355		643	327-3753	449	329-1350	▶266
324-0369	343	324-2907	643	327-4172	107	329-1351	▶267
	355	324-2909	643		112	329-1352	▶267
324-0372	343	324-2910	643	327-7601	575	329-1354	266
324-0376	344	324-7594	389		▶657		267
324-0382	344	324-7596	441	327-7637	575		▶285
	357	324-7597	389		▶659	329-1355	285
324-0384	344	324-7598	391	327-8298	371		▶286
	357		393		375	329-1919	285
324-0386	341	324-7599	371		383		▶286
324-0387	344		391	327-8299	381	329-3734	133
324-0397	344		393		386		135
	357	324-7602	369	327-8957	▶442		151
324-0398	343	324-7603	369		471		156
	355		375	327-8993	390		171
324-0406	355	324-7604	391	327-8994	390	329-3820	400
324-0411	359		395	327-8995	442	329-4507	409
324-0417	355	324-7611	371	327-9010	395	329-4508	406
324-0421	357		375	327-9012	395	329-5699	58
324-0432	357		383	327-9079	381	329-7496	4
324-0436	354	324-7612	383		386		6
324-0444	21	324-7815	437	327-9080	381		▶109
324-0496	353	324-7816	437		386	329-7497	▶111
	354	324-7817	437	327-9081	381	329-9748	498
324-0498	353	324-9976	614		386	329-9749	1
	354	324-9977	614	328-1950	▶107		▶498

▶ **PRIMARY REFERENCE**

PART NUMBER INDEX

Part	Page
330-0422	657
	659
	661
	662
330-0427	657
	661
330-0428	659
	662
330-0798	314
	316
330-5738	472
	477
330-5739	472
	477
330-6126	406
	409
330-6992	593
330-7612	107
	112
330-7613	107
	112
330-8144	409
330-8145	409
330-8146	409
330-9591	400
330-9669	491
330-9670	491
330-9687	616
330-9752	400
331-0797	439
331-0798	439
331-1520	343
	355
331-1521	318
	320
	321
331-1522	318
331-2489	314
	316
331-3770	383
	386
331-3779	371
	375
	381
	383
	386
331-4365	314
	316
331-5456	▶123
	235
	236
331-5461	5
	▶92
331-5462	▶163
	236
331-5463	163
331-5464	▶165
	235
331-5465	165
331-5470	▶158
	340
331-5471	158
331-5476	▶171
	458
	555
331-5477	171
331-5496	138
331-5529	133
331-5537	135
331-5550	88
331-5552	88
331-5554	92
331-5555	88
331-5556	88
331-5557	92
331-5562	143
	145
331-5563	143
	145
331-5564	143
	145
331-5570	160
331-5571	160
331-5578	149
331-5581	88
331-5635	133
331-5636	150
331-6299	371
	375
331-7306	375
	383
331-7798	616
331-7799	616
331-8037	479
331-8538	193
	194
	195
332-0092	449
332-1025	393
332-1829	371
	375
332-2578	474
	476
332-2579	474
	476
332-3871	386
332-3886	370
332-4254	4
	▶593
333-0739	377
333-0790	474
	476
333-0791	474
	476
333-0792	474
	476
333-1320	383
	386
333-4757	320
333-4760	496
333-9901	600
	▶661
333-9902	598
	▶662
334-0751	470
	471
	▶472
334-0752	470
	▶474
334-4169	494
	496
	498
334-4436	386
334-4603	452
334-5131	239
	244
	250
334-7225	569
	570
	▶640
334-7227	640
334-7931	391
	395
334-7947	393
334-9334	35
335-1836	26
	27
	637
335-2224	655
335-9214	431
336-3545	▶94
	133
336-4713	258
	261
336-4714	258
	261
336-4715	258
336-4721	210
	221
336-4722	258
	261
336-4728	261
336-4729	258
	261
336-5469	239
	244
	250
336-6396	494
	496
	498
336-6804	258
	261
336-6817	258
	261
336-6822	258
	261
336-6824	258
	261
336-6831	258
	261
336-6839	258
	261
336-6846	258
336-6847	258
	261
336-6848	258
	261
336-6851	210
	221
336-6908	258
	261
336-6913	258
	261
336-6914	258
	261
336-7113	258
	261
336-7114	258
	261
336-7524	258
336-7526	258
	261
336-7529	258
	261
336-7533	586
336-9096	156
336-9168	569
	570
	▶630
337-2962	381
	386
337-3530	226
337-5351	586
337-6851	4
	6
	▶309
337-7029	156
337-7394	▶526
337-7395	▶512
	526
337-7410	543
	▶548
	551
337-7411	▶502
	503
337-7412	▶503
337-7435	502
	▶543
337-7482	▶549
	550
337-7483	545
	▶550
337-8655	328
337-8935	▶448
	502
	504
	505
	506
	508
337-9693	▶304
337-9694	▶305
337-9695	▶306
337-9696	▶307
337-9697	▶326
337-9699	365
	▶450
337-9701	▶189
	235
337-9702	7
	▶329
337-9703	▶191
	236
337-9706	▶454
	456
	457
	458
	555
337-9714	▶455

▶ **PRIMARY REFERENCE**

PART NUMBER INDEX

Part	Page
	456
	457
	458
	555
337-9717	▶198
	236
337-9719	▶199
	235
337-9722	▶327
337-9727	▶26
	235
	236
337-9728	▶27
	235
337-9734	7
	▶76
337-9735	7
	▶333
337-9740	▶362
	365
337-9748	7
	▶67
337-9765	▶581
	604
337-9770	365
	▶418
337-9774	365
	▶431
337-9777	365
	▶433
337-9779	▶51
	235
	236
337-9781	604
	▶624
337-9783	604
	▶626
337-9785	▶420
	456
	457
	458
	555
337-9786	▶422
	456
	457
	458
	555
337-9787	▶425
	456
	457
	458
	555
337-9788	▶427
	456
	457
	458
	555
337-9793	340
	▶435
337-9810	▶402
	456
	555
337-9811	▶400
	456
	457
	458
337-9812	▶366
	456
	457
	458
	555
337-9815	▶453
	456
	457
	458
	555
337-9821	3
	▶439
337-9825	5
	▶298
337-9828	▶429
	456
	457
	458
	555
337-9829	▶430
	456
	457
	458
	555
337-9837	5
	▶202
337-9841	5
	▶469
337-9846	5
	▶463
337-9867	▶7
338-1421	▶328
338-1508	301
338-2412	353
	354
338-2413	359
338-2414	350
	351
338-2415	341
338-2416	343
	355
338-2417	344
	357
338-2442	353
	354
338-2443	359
338-2444	350
	351
338-2445	341
338-2446	343
	355
338-2447	344
	357
338-3328	572
	575
338-9831	616
339-0007	406
339-0010	406
339-2886	406
339-2935	406
339-3043	62
339-4287	406
	409
340-1650	439
340-1693	▶3
340-1701	3
	▶5
340-1719	3
	▶365
340-1735	▶2
340-1736	▶1
340-1737	▶1
340-1738	▶2
340-1740	▶471
340-1743	▶470
340-1744	▶470
340-1745	▶471
340-1747	▶340
340-1748	▶6
340-1749	▶470
340-1789	463
340-2566	135
340-4152	84
340-6272	318
	353
	354
	359
340-6339	343
	355
340-6340	344
	357
340-9290	314
	316
340-9308	341
	353
	354
	359
340-9310	359
340-9311	353
	354
340-9312	350
	351
340-9314	343
	355
340-9315	344
	357
340-9322	343
	355
340-9323	344
	357
340-9325	341
341-0076	439
341-0121	443
341-0596	▶267
341-2047	307
341-3105	▶3
341-3107	▶4
341-3109	▶6
341-3111	▶4
341-4712	318
341-5749	640
341-5750	640
341-5752	391
	395
341-6152	463
341-6677	569
	570
	▶586
341-6684	▶290
	365
341-6710	604
	▶607
341-6719	▶71
	94
341-7654	298
	▶300
341-8901	62
341-9201	287
341-9202	267
	▶286
341-9203	286
	▶287
341-9204	286
	▶287
342-9920	47
	49
	323
	329
	331
343-2901	▶308
	470
	471
343-3428	▶483
	488
343-3433	4
	▶115
343-4301	407
	441
343-4333	410
	442
343-4355	135
343-5421	58
343-5643	▶61
	62
343-6096	67
343-7400	449
343-8051	341
343-8053	343
	355
343-8054	344
	357
344-1001	631
344-1004	655
344-2170	377
344-2171	377
344-2429	620
344-2430	620
344-2432	▶620
	634
344-2543	492
344-2608	239
344-2824	150
344-2846	624
	626
344-7391	158
	450
344-7511	▶566
	604
344-7932	329
	454
344-7954	107
	112
344-8098	443

▶ **PRIMARY REFERENCE**

PART NUMBER INDEX

Part	Page
344-8154	443
344-8163	443
345-3674	▶338
345-4230	650
346-0407	21
346-0408	21
346-5063	593
346-5168	663
346-5517	403
346-5631	494
	496
	498
346-5927	416
346-6559	494
	496
	498
346-6560	494
	496
	498
346-6687	61
346-6688	61
346-9825	87
347-1128	406
	409
347-1129	406
	409
347-4525	3
	▶631
347-5947	302
347-7045	24
348-3064	147
348-5460	476
348-5464	470
	▶476
348-5465	471
	▶477
348-7143	213
348-7144	212
348-7146	214
348-8149	49
349-0756	232
349-1063	76
	▶83
349-1100	160
349-2773	160
349-3261	47
349-3643	483
349-3644	4
350-1078	160
350-1574	544
	▶551
350-1575	505
	506
	▶544
350-1580	▶504
350-1581	▶505
350-1587	▶506
	507
350-1588	▶507
350-1589	▶508
	509
350-1590	▶509
350-1591	▶414
	502
	505
	506
350-1594	▶416
	504
	508
350-3689	7
	▶66
350-3733	494
	496
	498
350-3842	341
	343
	344
	350
	351
	353
	354
	355
	357
	359
350-4310	66
350-7008	504
	508
	▶545
350-8606	▶234
	235
350-8607	234
	▶249
350-9471	160
351-0290	418
351-4746	329
351-5888	365
	▶452
351-8190	42
351-8191	41
	▶42
352-1449	7
	▶62
352-1454	7
	▶68
352-1930	68
352-2717	62
352-3463	7
	▶41
352-3964	138
352-3965	163
352-4645	156
352-7601	41
352-7634	41
352-8358	47
	49
352-8799	58
352-9742	593
353-1335	▶212
	235
	236
353-1336	▶213
	236
353-1337	▶214
	235
353-1338	233
	237
	▶360
353-1341	234
	▶361
353-1364	7
	▶78
353-1366	569
	570
	▶663
353-1375	▶336
	456
	457
	458
	555
353-1380	7
	▶302
353-1385	456
	457
	▶563
353-1392	3
	▶667
353-1399	569
	570
	▶602
353-1403	313
	▶314
353-1404	313
	▶316
353-1418	1
	2
	▶484
353-1419	2
	▶486
353-1429	▶569
	571
353-1432	▶570
	571
353-1447	571
	▶589
353-1448	570
	571
	▶589
353-1454	▶94
	207
353-1490	▶368
353-1491	▶379
353-1492	▶379
353-1493	▶379
353-1494	▶369
353-1495	▶370
353-1501	▶5
	207
353-1510	207
	▶235
353-1511	207
	▶235
353-1513	207
	▶236
353-1641	61
353-3158	468
353-3280	308
353-4847	61
353-5219	28
353-5561	▶127
	457
	458
353-6951	▶332
353-6952	▶669
353-6953	▶488
353-6954	▶612
353-6955	▶332
353-6956	▶488
353-7423	13
353-7424	13
353-7425	13
353-7957	89
353-8082	58
353-9667	13
354-1274	45
	▶46
354-5137	143
	145
354-7361	7
	▶58
354-8258	58
355-1394	496
355-2252	55
355-3833	▶203
	234
	237
355-3837	203
	204
355-3838	203
355-3839	204
355-3841	▶204
	233
355-3843	188
355-3844	188
355-3845	▶188
	232
355-7516	416
356-0041	305
356-0042	306
356-0804	572
356-0805	575
356-4054	572
	575
356-4056	566
356-4057	566
356-4064	290
356-4066	312
356-4070	71
356-4074	596
356-4080	236
	▶596
356-4100	▶312
	456
	457
	458
	555
356-4104	569
	▶572
356-4105	570
	▶575
356-4108	312
356-4110	312
356-4112	312
356-4114	150
356-4116	312
356-4120	569
	570
	▶595
356-4121	595
356-4606	474
	▶479

▶ **PRIMARY REFERENCE**

PART NUMBER INDEX

Part	Page	Part	Page	Part	Page	Part	Page
356-8635	503	358-6523	67	359-7325	76	362-1164	363
	504	358-6524	67		290	362-1266	▶73
	505	358-6684	67		298	362-1426	402
	506	358-7086	607		420		403
	508		▶609	359-9666	87	362-1583	402
357-1994	270	358-7087	566	359-9885	581	362-1590	366
357-1995	276		▶605	360-2812	556	362-1591	403
357-3195	94	358-7570	420	360-2813	463	362-1592	403
	▶149	358-7573	422	360-2814	463	362-1595	366
357-3196	150		429	360-2815	463	362-1600	366
357-3199	7	358-7697	151	360-2816	463	362-1602	400
	▶138	358-7863	329	360-2820	463	362-1603	400
357-3200	138	358-7864	331	360-6643	316	362-1606	398
357-3203	▶156	358-7903	329	360-7056	351	362-1607	398
	456	358-8165	458	360-7060	350	362-1610	398
	457		555		351	362-2077	400
	458		▶556	360-7255	556	362-2078	400
	555	358-9301	452	360-7347	8	362-2079	400
357-3204	156	359-0015	▶141		▶35	362-2080	400
357-3211	▶128		604	360-8798	7	362-2190	14
	604	359-0016	128		▶38		▶15
357-3214	▶133		141	360-8966	326	362-2820	73
357-3221	▶143	359-0264	73	360-8981	6		76
	457	359-0378	▶233		▶672	362-2904	89
	458		236	360-8982	6	362-3069	302
357-3222	143	359-0380	235		▶668	362-3070	302
357-3228	171		▶237	360-8983	88	362-3074	302
357-3230	▶120	359-0389	361		92	362-3079	302
	589	359-0394	233	360-8984	88		▶303
357-3233	▶160		▶238		92	362-3080	303
	470	359-0396	237	360-9835	359	362-3212	462
	471		▶243	360-9841	359	362-3298	123
357-3234	160	359-0401	207	361-1725	191	362-4273	416
357-3237	▶131		▶231	361-1727	189	362-4274	416
	569	359-0407	207		191	362-4557	▶84
	570		▶232	361-1728	191		85
357-3238	131	359-0715	12	361-2693	189	362-4560	85
357-3241	572		▶13	361-4239	624	362-4563	85
	575	359-0719	30		626		302
357-3246	▶147	359-0720	30	361-4343	314	362-4624	85
	457	359-0721	30	361-4643	331	362-4625	3
	458	359-0722	30	361-4654	298		▶85
357-3247	147	359-0723	30	361-4655	298	362-4915	198
357-3260	94	359-0724	30	361-5903	202	362-5024	350
	▶135	359-0744	8	361-7032	189		351
357-4273	329	359-0750	35	361-7547	38	362-5364	290
357-4274	329	359-3495	68	361-7549	38	362-5366	556
357-4621	433	359-4737	472	361-7891	331	362-5367	556
357-5950	556	359-4738	477	361-8151	626	362-7687	250
357-6501	7	359-7211	454	361-8157	626	362-8030	88
	▶88		▶459	361-8158	626	362-8059	41
358-1415	329	359-7216	455	361-9554	83	362-8135	329
358-2307	466		▶460	361-9737	455	362-8136	329
358-3844	▶57	359-7224	453	361-9918	452	362-8670	626
	58		▶462	361-9929	418	362-9029	84
358-4817	463	359-7226	462	361-9930	418	362-9209	298
358-4842	463	359-7227	422	361-9942	422	362-9239	298
358-5034	5	359-7228	398	361-9944	422	362-9359	▶403
	▶350	359-7232	362	361-9945	430		457
358-5035	5		▶363	361-9946	422		458
	▶351	359-7247	589	361-9947	420	362-9460	85
358-5045	5	359-7248	▶461	361-9950	435	363-0326	350
	▶359		589	361-9951	435	363-0443	431
358-5379	463	359-7323	73	361-9952	435	363-1316	431
358-5381	463		76	362-1163	363	363-2679	431

▶ **PRIMARY REFERENCE**

PART NUMBER INDEX

Part	Page
363-2855	556
	563
363-2856	556
	563
363-2867	329
363-2868	329
363-4651	244
363-5880	435
363-5882	420
363-5883	425
363-5885	422
363-5886	422
	425
363-5887	420
	422
	429
363-5888	422
	425
363-5889	425
363-5890	422
363-6273	400
363-6274	400
363-7486	626
363-8010	85
	302
363-8031	85
363-8348	85
	302
363-8466	433
363-8475	84
363-8477	151
363-9649	452
363-9783	459
363-9807	459
363-9808	459
363-9809	459
363-9893	189
	191
364-1940	51
	53
364-1941	51
364-2475	85
	302
364-3389	▶380
364-3760	563
364-4125	391
364-4126	391
364-4135	395
364-4136	395
364-5743	7
	▶8
365-2181	199
365-2182	199
365-2183	199
365-2185	199
365-2511	323
365-2814	▶179
	239
365-2823	156
365-2868	290
365-2869	420
365-3308	74
365-3331	▶389
	470
	471
365-3332	▶390
	471
365-3333	1
	▶391
365-3334	2
	▶395
365-3335	▶371
	380
365-3336	▶406
	470
365-3337	▶409
	471
365-4093	323
365-4591	239
365-4592	238
366-1271	304
	305
366-1789	250
366-2574	650
366-2575	650
366-4280	403
366-4281	403
366-4354	403
366-9220	329
367-0055	329
367-5026	151
367-5378	314
	316
367-5835	3
	▶666
367-5958	▶3
367-6032	5
	▶97
367-7625	329
367-7764	329
367-8073	62
367-9552	449
367-9557	400
368-0291	▶323
	329
368-3151	95
368-4714	88
368-4842	373
368-5465	1
	2
	▶437
368-6231	151
368-6911	406
	409
369-0473	95
369-1461	▶398
	458
	555
369-2053	329
369-2189	665
369-2472	95
369-3473	323
369-3945	323
369-5823	250
370-0495	314
	316
	463
370-2909	95
370-3942	666
370-3943	666
370-3956	666
370-3957	666
370-3970	431
370-4010	431
370-4021	53
370-5555	314
	316
370-8941	484
	486
371-1282	452
371-1670	433
371-2051	572
	575
371-2054	49
371-2055	47
371-5095	368
	▶373
	379
	380
371-5659	373
371-5700	69
371-6659	85
371-7076	331
371-7077	331
371-7649	469
371-8501	422
371-8714	366
371-8715	366
371-8717	402
	403
371-8718	402
371-9284	469
372-0739	329
372-0740	329
372-4431	427
372-4592	331
372-4600	323
372-4605	323
372-4613	323
372-4616	329
372-5024	463
372-5085	463
372-7230	327
372-7231	327
372-8661	4
	▶112
372-8664	▶106
	569
	570
373-2673	667
373-4271	▶456
373-4273	▶555
373-4275	▶457
373-4277	▶458
373-4295	▶313
373-4296	▶313
373-4297	▶570
373-4298	▶571
373-5978	400
373-6484	402
	403
373-6522	68
373-6995	462
373-8390	463
373-9138	151
373-9373	58
374-0840	400
374-5103	250
374-5105	250
374-5106	250
374-5109	221
374-5110	▶221
	250
374-5112	▶210
	250
374-5113	▶228
	250
374-5381	47
	49
374-6727	427
374-6828	▶207
374-6836	▶207
374-6844	▶207
374-6857	▶571
374-6858	▶571
374-6861	368
	▶375
374-6862	379
	▶381
374-6863	379
	▶383
374-6864	379
	▶386
374-6872	4
	▶489
374-6882	▶471
374-6887	570
	571
	▶604
374-6889	571
	▶604
374-7337	88
374-7438	3
	▶676
374-7439	4
	▶673
374-7440	4
	▶674
374-7889	403
375-1372	309
375-1373	309
375-1442	320
	321
375-2087	431
375-2144	92
375-9569	▶47
	604
375-9570	▶49
	604
376-0645	62
376-2119	310
376-8918	469
377-0002	314
	316
377-0023	▶5
377-0774	469
	489
377-3802	333
377-3803	333
377-3861	362

▶ **PRIMARY REFERENCE**

PART NUMBER INDEX

Part	Page	Part	Page	Part	Page	Part	Page
377-4844	94		53				
377-5263	57	388-9965	250				
377-5264	57	389-1833	469				
377-5265	57	389-7167	288				
377-5319	309		▶289				
377-5320	309	389-7168	289				
377-5823	626						
377-9352	346						
	348						
378-0598	489						
378-3311	325						
378-8059	325						
378-8579	250						
378-9622	321						
378-9623	1						
	2						
	▶321						
379-2197	47						
	49						
380-2601	9						
380-5076	433						
380-5753	▶53						
	235						
380-5771	53						
380-5914	151						
380-7775	▶325						
	569						
	570						
380-7826	572						
	575						
380-7827	572						
	575						
380-7828	572						
	575						
380-8260	▶94						
380-8815	85						
380-9296	250						
381-5559	329						
	▶331						
381-8054	318						
	▶346						
381-8055	318						
	▶348						
381-8085	346						
381-8086	348						
382-3404	94						
382-3405	94						
382-4996	427						
382-6675	323						
382-8033	▶339						
	435						
384-4107	8						
	▶24						
384-4108	8						
	▶18						
385-0558	145						
385-0559	▶145						
	456						
	555						
385-5775	420						
385-8591	57						
385-8593	57						
385-8594	57						
386-1737	94						
386-6191	51						

▶ **PRIMARY REFERENCE**

MEMORANDA



© 2012 CATERPILLAR
ALL RIGHTS
RESERVED

CAT, CATERPILLAR, THEIR RESPECTIVE LOGOS, “CATERPILLAR YELLOW” AND THE POWER EDGE TRADE DRESS, AS WELL AS CORPORATE AND PRODUCT IDENTITY USED HEREIN, ARE TRADEMARKS OF CATERPILLAR AND MAY NOT BE USED WITHOUT PERMISSION.