CATERPILLAR®

SEBP5078
October 2009

RUTHZIL TRATOR COMERCIAL DE PEÇAS LTDA 11 97083-6812 ROLANDO

Parts Manual

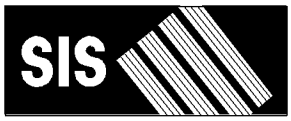

See "General Information" for New Parts Manual Features.

434E Backhoe Loader

SJL1-Up (Machine)
C4Z1-Up (Engine)
CRS1-Up (Engine)

Powered By C4.4 Engine, 3054C Engine

This Parts Manual is also available in .pdf Format on Compact Disc (CD - ROM) Caterpillar Form No. SERP5078.

Product and Dealer Information

Note: For product identification plate locations, see the section “Product Identification Information” in the Operation and Maintenance Manual.

Delivery Date: _____

Product Information

Model: _____

Product Identification Number: _____

Engine Serial Number: _____

Transmission Serial Number: _____

Generator Serial Number: _____

Attachment Serial Numbers: _____

Attachment Information: _____

Customer Equipment Number: _____

Dealer Equipment Number: _____

Dealer Information

Name: _____ Branch: _____

Address: _____

_____

_____

	Dealer Contact	Phone Number	Hours
Sales:	_____	_____	_____
Parts:	_____	_____	_____
Service:	_____	_____	_____

MEMORANDA

TABLE OF CONTENTS

Name	Page
GENERAL INFORMATION	A4
REPAIR ALTERNATIVES	A7
SUPPLEMENTAL COOLANT ADDITIVES	A8
MAINTENANCE PARTS	A9
INDEX	A12
MACHINE ARRANGEMENT	1
BACKHOE AR-EXTENDABLE STICK	1
BACKHOE AR-STANDARD STICK	4
CHASSIS AR	5
COMMON AR	5
CONVERSION AR-ROADING	5
DRIVE AR-BACKHOE LOADER	6
LOADER AR	6
PREMIER AR	6
ENGINE ARRANGEMENT	7
ENGINE AR	7
ENGINE AR-PRIMARY	11
BASIC ENGINE	13
CAMSHAFT GP	13
COVER GP-VALVE MECHANISM	15
CRANKSHAFT GP	19
CYLINDER BLOCK GP	23
CYLINDER HEAD GP	29
DRIVE GP-AUXILIARY	33
DRIVE GP-FAN	35
FLYWHEEL GP	37
HOUSING GP-FLYWHEEL	39
HOUSING GP-FRONT	41
LIFTING GP-ENGINE	45
MOUNTING GP-ENGINE	47
MOUNTING GP-ENGINE & XMSN	49
PAN GP-OIL	50
PISTON & ROD GP	54
PLUG GP-CYLINDER HEAD	57
PLUG GP-ENGINE	58
ROCKER ARM GP	63
VALVE MECHANISM GP	65
LUBRICATION SYSTEM	67
BREATHER GP	67
FILLER GP-ENGINE OIL	68
GAUGE GP-OIL LEVEL & FILLER	69
PUMP GP-ENGINE OIL	70
COOLING SYSTEM	72
CONNECTION GP-WATER	72
COOLER GP-ENGINE OIL	74
COOLER GP-FLTR BASE & ENG OIL	76
FAN GP-SUCTION	77
LINES GP-POWER TRAIN COOLER	80
LINES GP-RADIATOR	82
PUMP GP-WATER	84
RADIATOR & HYD OIL COOLER GP	88
TANK & LINES GP-COOLANT	92
AIR INLET AND EXHAUST SYSTEM	94
AIR CLEANER GP	94
COVER GP-INLET MANIFOLD	99
EXTENSION GP-EXHAUST	102
LINES GP-AIR	103
MUFFLER GP	104
TURBOCHARGER GP	105
FUEL SYSTEM	109
CONTROL GP-GOVERNOR	109
FILTER GP-WATER SEP & FUEL	110
LINES GP-FUEL	112
LINES GP-FUEL FILTER	118
PUMP GP-FUEL INJECTION	119
PUMP GP-FUEL PRM & PRIM FILTER	127
TANK GP-FUEL	130
ELECTRICAL AND STARTING SYSTEM	132
ALTERNATOR GP-CHARGING	132
BATTERY & WIRING GP	134
BATTERY GP	136
CONTROL GP-POSITION	137
ELECTRONICS GP-MACHINE	138
GLOW PLUG GP	139
HEATER GP-JACKET WATER	141
INSTALLATION GP-SECURITY	143
LAMP GP-FLOOD	150
LAMP GP-HEAD & SIGNAL	152
LAMP GP-REGISTRATION PLATE	156
LAMP GP-WARNING BEACON	158
LIGHTING GP-FLOOD	159
LIGHTING GP-ROADING	160
LIGHTING GP-WARNING BEACON	165
RELAY GP	166
STARTING MOTOR GP-ELECTRIC	171
SWITCH GP-ALL WHEEL DRIVE	175
SWITCH GP-DIFFERENTIAL LOCK	176
SWITCH GP-PRESSURE	177
WARNING GP-BACKUP	179
WIRING GP-AIR CONDITIONER	180
WIRING GP-CAB	183
WIRING GP-CONSOLE	185
WIRING GP-CONTROL	187
WIRING GP-ENGINE	188
WIRING GP-HEATER	191
WIRING GP-KICKOUT & POSITIONER	193
WIRING GP-LOAD CONTROL	194
WIRING GP-MACHINE	196

TABLE OF CONTENTS

Name	Page
WIRING GP-PLATFORM	198
WIRING GP-POWER RECEPTACLE	203
WIRING GP-REAR	204
WIRING GP-RIDE CONTROL	206
WIRING GP-SENSOR	208
WIRING GP-STEERING	212
WIRING GP-TRANSMISSION CONTROL	215
WIRING GP-WIPER	217
WIRING GP-WORK TOOL	219
POWER TRAIN	223
AXLE GP-DRIVE & STEERING	223
CONTROL GP-DIFFERENTIAL LOCK	229
DIFFERENTIAL & BEVEL GEAR GP	230
DIFFERENTIAL GP	232
DRIVE GP-FLEXIBLE COUPLING	234
FILLER GP-POWER TRAIN OIL	235
FLANGE GP-WHEEL	237
HOUSING & FLANGE GP-AXLE	238
HOUSING GP-AXLE	243
MOUNTING GP-AXLE	249
MOUNTING GP-TRANSMISSION	250
PLANETARY GP-FINAL DRIVE	251
POWER TRAIN AR	253
SHAFT GP-COUNTER	254
SHAFT GP-DRIVE	256
SHAFT GP-IDLER	257
SHAFT GP-INPUT	259
SHAFT GP-OUTPUT	261
TRANSMISSION AR-POWER SHIFT	264
TRANSMISSION GP-POWER SHIFT	265
VALVE & MTG GP-SOLENOID	270
VALVE GP-RELIEF	271
VALVE GP-TIRE	272
WHEEL & TIRE AR	273
WHEEL & TIRE GP	275
BRAKING SYSTEM	281
CONTROL GP-PARKING BRAKE	281
CONTROL GP-SERVICE BRAKE	283
CYLINDER GP-BRAKE	286
LEVER GP-HAND CONTROL	288
STEERING SYSTEM	289
CYLINDER GP-STEERING	289
LINES GP-STEERING	290
STEERING COLUMN GP	292
FRAME AND BODY	293
BOX GP-BATTERY	293
COUNTERWEIGHT GP	295
EXTENSION GP-FENDER	296
FENDER GP-FRONT	298
FENDER GP-REAR	300
FLOORPLATE GP	302
FRAME AR-LOADER	303
FRAME GP-LOADER	304
FRAME GP-SLIDING	306
FRAME GP-SWING	308
GUARD GP-DRIVE SHAFT	309
GUARD GP-LIGHTING	310
GUARD GP-RADIATOR	311
HOOD & GUARD GP	312
HOOD GP-ENGINE	314
LINER GP-SOUND SUPPRESSION	317
STEP GP	318
SUPPRESSION AR-SOUND	319
HYDRAULIC SYSTEM	320
ACCUMULATOR GP-HYDRAULIC	320
ACCUMULATOR GP-RIDE CONTROL	321
CONTROL AR-RIDE	323
COOLER GP-HYD & XMSN OIL	324
CYLINDER GP-BACKHOE BUCKET	326
CYLINDER GP-BOOM	327
CYLINDER GP-COUPLER	328
CYLINDER GP-HYDRAULIC	329
CYLINDER GP-LIFT	331
CYLINDER GP-MULTIPURPOSE BUKT	333
CYLINDER GP-STABILIZER	334
CYLINDER GP-STICK	335
CYLINDER GP-TILT	338
DRIVE & MTG GP-PUMP	339
FILTER GP-OIL	340
FITTING GP-HYDRAULIC	341
HYDRAULIC AR	342
LINES GP-AUXILIARY HYDRAULIC	343
LINES GP-BACKHOE	350
LINES GP-BACKHOE AUXILIARY	352
LINES GP-BOOM	357
LINES GP-BUCKET	358
LINES GP-BUCKET CYLINDER	362
LINES GP-DRAIN	364
LINES GP-HYDRAULIC	365
LINES GP-LIFT & TILT	368
LINES GP-LIFT & TILT CYLINDER	370
LINES GP-LOAD CONTROL VALVE	375
LINES GP-MULTIPURPOSE BUCKET	378
LINES GP-PILOT	380
LINES GP-PUMP	390
LINES GP-RETURN	392
LINES GP-RIDE CONTROL	394
LINES GP-SIDESHIFT LOCK	396
LINES GP-STABILIZER	397
LINES GP-STICK	400
LINES GP-SWING	401
MANIFOLD & SOLENOID GP-CONTROL	403

TABLE OF CONTENTS

Name	Page
MANIFOLD GP-CONTROL	404
MANIFOLD GP-RIDE CONTROL	408
MOUNTING GP-CYLINDER	409
MOUNTING GP-LINES	410
PUMP GP-PISTON	411
ROTATING GP-PUMP	413
SHAFT GP-PUMP DRIVE	414
TANK & MTG GP-HYDRAULIC	415
TANK GP-HYDRAULIC	417
VALVE & MTG GP-BANK	418
VALVE AR-BANK 2	420
VALVE AR-BANK 3	420
VALVE GP-BANK 3	422
VALVE GP-BANK 7	423
VALVE GP-CONTROL	424
VALVE GP-LOAD CONTROL	433
VALVE GP-PILOT	434
VALVE GP-PUMP CONTROL	438
VALVE GP-SOLENOID	439
IMPLEMENTS	441
ARM GP-LIFT	441
BOOM GP	444
BRACE GP-LIFT CYLINDER	446
LINKAGE GP-BACKHOE BUCKET	447
LOCK GP-TRANSPORT	454
PAD GP-STABILIZER	459
STABILIZER GP-BACKHOE	460
STICK GP	461
STICK GP-EXTENDABLE	463
WORK TOOLS	467
BUCKET AR-MULTIPURPOSE	467
BUCKET AS-GENERAL PURPOSE	474
BUCKET AS-HOE	477
BUCKET GP-GENERAL PURPOSE	500
BUCKET GP-HOE	501
BUCKET GP-MULTIPURPOSE	526
BULLDOZER AS	529
CARRIAGE AS-FORK	532
CLAM AS-MULTIPURPOSE BUCKET	533
CONVERSION AR-QUICK COUPLER	535
COUPLER GP-QUICK	536
EDGE GP-CUTTING	542
FORK GP	543
FORK GP-PALLET	545
GUARD GP-BUCKET	546
MOUNTING GP-BUCKET	548
MOUNTING GP-FORK	553
TOOTH GP-UNI	555
OPERATOR STATION	556
CAB AR	556
CAB AR-ENCLOSED ROPS	559
CAB GP	560
COMPRESSOR GP-REFRIGERANT	564
CONDENSER & MTG GP-REFRIGERANT	566
CONSOLE GP-OPERATOR	567
CONTROL & MTG GP-JOYSTICK	573
CONTROL GP-HANDLE	574
CONTROL GP-JOYSTICK	575
CONTROL GP-STEERING	577
DOOR GP-CAB	579
FLOOR MAT GP	583
HEATER & MTG GP-CAB	584
HEATER GP-CAB	589
HORN GP-ELECTRIC	593
INSTALLATION GP-RADIO	594
KIT-SEAT FRAME	595
KIT-SEAT PAN	596
KIT-SEAT SUSPENSION	598
LATCH GP-CAB DOOR & WINDOW	600
LATCH GP-CONSOLE	602
LEVER GP-GOVERNOR	603
LINER GP-CAB	604
LINES GP-HEATER	606
LINES GP-HEATER & AIR COND	607
MIRROR GP-REAR VIEW	609
MOTOR GP-WINDOW WIPER	611
MOUNTING GP-BACKHOE CONTROL	613
MOUNTING GP-CAB	616
PEDAL GP-GOVERNOR	617
ROOF GP-CAB	618
SEAT GP	619
SEAT GP-SUSPENSION	623
SUSPENSION GP-SEAT	628
SWIVEL GP-SEAT	630
VISOR GP-CAB	632
WASHER GP-WINDOW	633
WINDOW GP-CAB	635
WINDOW GP-DOOR	641
WIPER GP-WINDOW	643
SERVICE EQUIPMENT AND SUPPLIES	644
FILM GP	644
LINK GP-SHIPPING	645
LOCK GP-VANDALISM	646
PLATE & FILM GP	647
PROTECTION GP-VANDALISM	648
SERVICE GP-FILTER	649
PART NUMBER INDEX	B1

GENERAL INFORMATION

1. MACHINE IDENTIFICATION

Caterpillar machines are identified by Product Identification Numbers (PIN). Some components included in a machine may be identified by Serial Numbers (S/N). Typical components that will be serialized include engines, transmissions, bulldozers, and rippers. The machine and engine are further identified by arrangement numbers and in some cases modification numbers. These numbers are shown on the product identification plate(s) and on the master plate in the operator's compartment.

Caterpillar dealers need all of these numbers to determine accurate parts identification.

SIS *New Feature*

Effective First Quarter 2001 the Caterpillar Product Identification Number (PIN) changed from 8 to 17 characters. In an effort to provide uniform equipment identification, Caterpillar and other construction equipment manufacturers are moving to comply with the latest version of the product identification numbering standard. Non-road machine PINs are defined by ISO 10261. The new PIN format will apply to all Caterpillar machines and generator sets. The PIN plates and frame marking will display the 17 character PIN. The new format will look like the following:

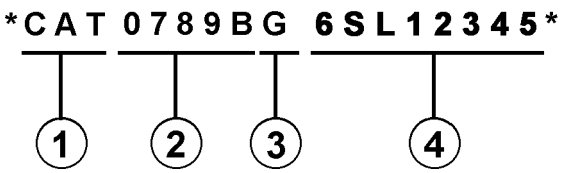

Where:

1. Caterpillar's World Manufacturing Code (characters 1-3)

2. Machine Descriptor (characters 4-8)

3. Check Character (character 9)

4. Machine Indicator Section (MIS) or Product Sequence Number (characters 10-17). These were previously referred to as the Serial Number.

Machines and generator sets produced before First Quarter 2001 will maintain their 8 character PIN format.

Components such as engines, transmissions, axles, etc. and work tools will continue to use an 8 character Serial Number (S/N).

2. ORDERING PARTS

⚠ WARNING

When replacement parts are required for this product Caterpillar recommends using Caterpillar replacement parts or parts with equivalent specifications including, but not limited to, physical dimensions, type, strength and material.

Failure to heed this warning can lead to premature failures, product damage, personal injury or death.

Quality Caterpillar replacement parts are available from Caterpillar dealers throughout the world. Their parts inventories are up to date and include all parts normally required to protect your investment in Caterpillar machines. Dealers may offer repair kits or remanufactured parts to allow selection of the most effective repair alternative for a particular situation. When ordering parts, your order should specify the quantity, part number, part name, and the serial number/product identification number of the machine for which the parts are needed.

3. PARTS MANUAL ORGANIZATION

Product information in this manual is presented as "information elements" that represent all of the components for the specific model. Engine Arrangement and Seat Group are examples of information elements. The information elements are organized alphabetically by part name and secondarily by part number within each major section of the manual.

4. TABLE OF CONTENTS

A table of contents (TOC) is found at the beginning of the manual. The TOC lists each section of the manual with a complete list of all information elements organized as they appear in the manual. Page numbers are provided for quick reference to detailed parts identification illustrations and serviceable consist lists.

5. MAINTENANCE PARTS INDEX

The Maintenance Parts Index, located near the beginning of the manual, references most frequently used maintenance part numbers, providing description, quantity, usage and page number. This information is organized alphabetically by part description.

6. INDEX

The index located near the front of the manual is an alphabetical listing of all information elements included in the manual. Page numbers are provided for quick reference to detailed parts identification illustrations and serviceable consist lists.

7. PART NUMBER INDEX

A numerical index listing all part numbers and the corresponding page number(s) appears at the back of the manual.

8. CAPTIONS

Captions located at the beginning of each information element identify the part number and part name along with additional descriptive information. PIN and S/N information found in each caption should be used to select correct information for a specific machine. Field replacement options, identification of optional attachment components, and where used ("part of") information is also provided.

The first line of a caption is shown in larger type font to indicate the beginning of an information element. Captions for additional pages that may be required to illustrate an information element will be shown in standard type font and will include the term *(contd.)* .

9. NON-SERVICED PARTS

In some instances it is necessary to display non-serviced parts that are a link to a lower level serviceable consist lists. These non-serviced part numbers are shown in *italic* type indicating that they are not available.

10. PARTS LIST REFERENCE NUMBERS

Numbers shown in the Ref No column correspond to numbers used in the associated graphic(s). An alphabetic suffix may be added to a reference number to identify lower level consist items. Numbers shown in the Graphic Ref column refer to the graphic number identifier displayed in the lower left corner of each illustration. The Graphic Ref number may be used in combination with the item Ref No to determine the correct part number. There may be intentional omission of a Ref No in a consist list as information is updated to reflect the latest serviceable part numbers.

11. INDENTED PART NAMES

When a part name is indented in a parts list, it is part of (included in) the group or assembly under which it is indented.

12. ILLUSTRATION REFERENCE LETTERS

When necessary, illustrations contain reference letters (A, B, C etc.) that are intended to track lines and harnesses from one point to another. They are also used to show where to reconnect illustrations that have been separated.

13. ABBREVIATIONS AND SYMBOLS

O.D. – Outside Diameter
I.D. – Inside Diameter
A – Not Part Of This Group
B – Use As Required
C – Change From Previous Type
D – Order By The Meter
E – Order By The Centimeter
F – Not Shown
G – Order By The Inch
I – Refer To Hydraulic Information System
M – Metric Part
R – Remfg Part May Be Available
Y – Separate Illustration
Z – Not Serviced Separately

SIS *New Feature*

14. DESCRIPTION OF TYPE CHANGES

Type - A type is defined as any configuration change that requires an additional Information Element for an Arrangement, Group, or Assembly. If serial number breaks for types are not available, a type # (Type 1, Type 2, etc.) will be displayed in the caption. These "type" changes are identified with a "C" note (change from previous type) in the Parts List. Only the "types" that apply to this Parts Manual will be included. Additional types may exist causing "C" notes to appear on an Information Element when no other types are shown.

15.<END>

This symbol indicates the end of an information element.

NOTE:

Continuing improvement and advancement of product design may cause changes to your machine which may not be included in this publication. Whenever a question arises regarding your Caterpillar product or this publication, please consult your Caterpillar dealer for the latest available information.

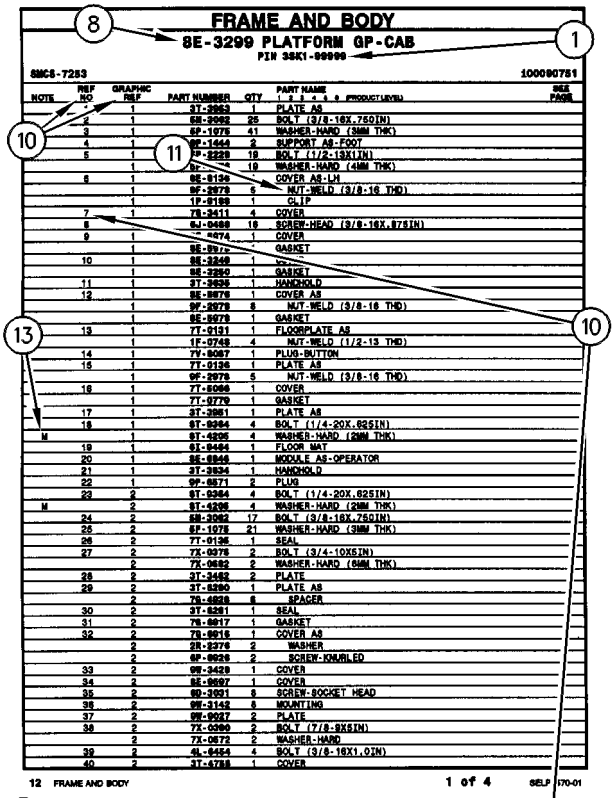
FRAME AND BODY
8E-3299 PLATFORM GP-CAB
PIN 3SK1-99999
SMCS-7283
100090751
1
8
10
11
13
10
12 FRAME AND BODY
1 of 4
SELP4570-01

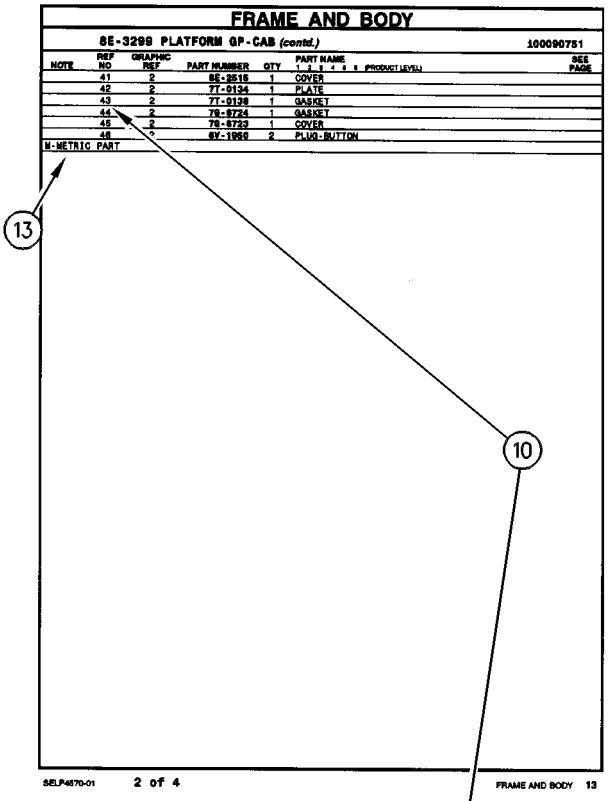
FRAME AND BODY
8E-3299 PLATFORM GP-CAB (contd.)
100090751
13
10
M-METRIC PART
SELP4570-01
2 of 4
FRAME AND BODY 13

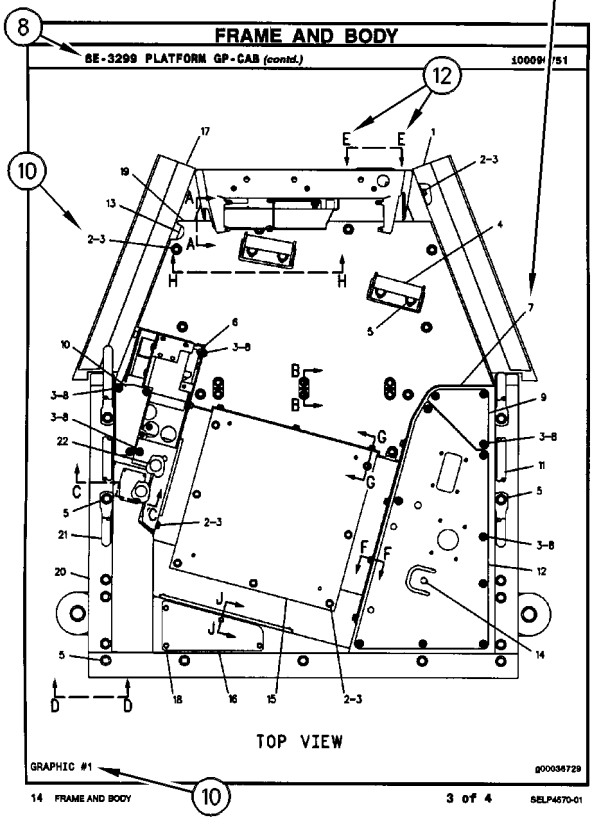
FRAME AND BODY
8E-3299 PLATFORM GP-CAB (contd.)
100090751
8
12
10
TOP VIEW
GRAPHIC #1
g00036729
10
14 FRAME AND BODY
3 of 4
SELP4570-01

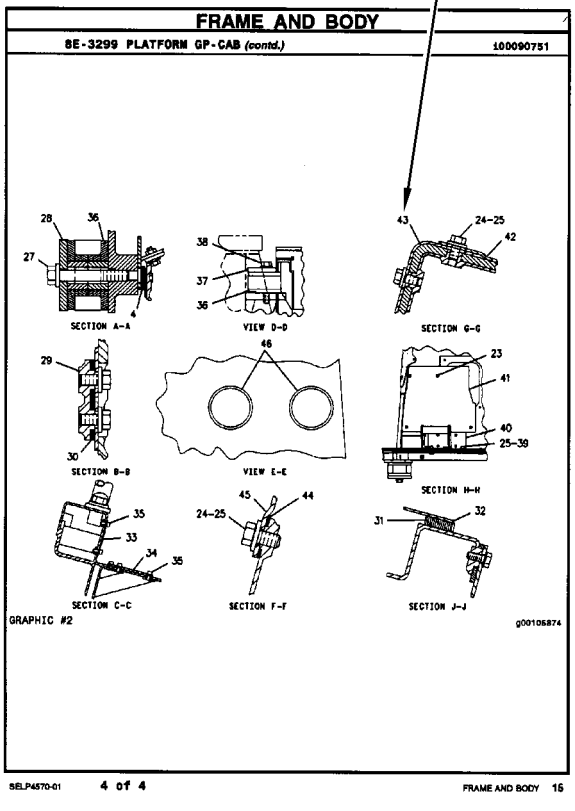
FRAME AND BODY
8E-3299 PLATFORM GP-CAB (contd.)
100090751
SECTION A-A
VIEW D-D
SECTION G-G
SECTION B-B
VIEW E-E
SECTION H-H
SECTION C-C
SECTION F-F
SECTION J-J
GRAPHIC #2
g00105874
SELP4570-01
4 of 4
FRAME AND BODY 15

REPAIR ALTERNATIVES

REMANUFACTURED COMPONENTS

As an option when making repairs consider Caterpillar Remanufactured Components. Components that are available through the Caterpillar Remanufactured Program are identified three ways in the parts book:

- with the letter R in the note field of the parts list
- with an R* at the beginning of the first line of the caption
- with an *R at the end of the first line of the caption

Typical components included in the Remanufacturing Program include:

ALTERNATORS
CONNECTING RODS
CRANKSHAFTS - UNDERSIZE
CRANKSHAFTS - UPGRADE TO NEW
CYLINDER HEADS
ELECTRONIC CONTROL MODULES (ECM)
ELECTRONIC SENSORS
FUEL INJECTORS
FUEL NOZZLES
FUEL PUMPS
GOVERNORS
OIL PUMPS
PISTONS
SHORT BLOCKS
STARTERS
TURBOCHARGERS - COMPLETE
TURBOCHARGER CARTRIDGES
WATER PUMPS

Caterpillar Remanufactured engines for many engine arrangements are also available.

SUPPLEMENTAL COOLANT ADDITIVES

CUSTOMER BENEFITS:

Protects against cavitation, foam, erosion, corrosion, and scale buildup in cooling systems.

- Provides measured coolant conditioner.

DESCRIPTION:

Additives deplete from the coolant with normal operation. For this reason, Supplemental Coolant Additives (SCA) must be added to all heavy duty coolants at regular intervals. In addition, when not using a fully formulated, pre-charged antifreeze, like Caterpillar's DEAC, an initial charge of SCA must be added to the cooling system. The amount of SCA added to the system is dependent on the capacity of the system.

The SCA for initial fill is provided as a liquid. SCA's for maintenance intervals are available in liquid form and as a spin-on element. (No Spin-on available for 3600 Family of Engines)

NOTE:

The amount of SCA added at initial fill is not the same as the amount added at maintenance intervals.

The coolant additive elements can be used with any ethylene or propylene glycol type antifreeze which meets ASTM D4985 or ASTM D5345 Specifications.

NOTE:

For use with standard heavy duty coolant only, not for use with Extended Life Coolant.

PARTS NEEDED:

Cooling System Capacity		Liquid SCA at Initial Fill	Liquid SCA at Maintenance*	Spin-on SCA Maintenance Element*
Liters	Gallons			
22-30	(6-8)	3P-2044 (1)	6V-3542 (1)	111-2370 (1)
30-38	(8-10)	3P-2044 (1) 6V-3542 (1)	111-2372 (1)	111-2369 (1)
38-49	(10-13)	3P-2044 (1) 8T-1589 (1)	111-2372 (1)	111-2369 (1)
49-64	(13-17)	3P-2044 (2)	8T-1589 (1)	9N-3368 (1)
64-83	(17-22)	3P-2044 (2) 8T-1589 (1)	111-2372 (1) 6V-3542 (1)	111-2371 (1)
83-114	(22-30)	3P-2044 (3) 8T-1589 (1)	3P-2044 (1)	9N-3718 (1)
114-163	(30-43)	3P-2044 (5)	3P-2044 (1) 6V-3542 (1)	111-2371 (2)
163-242	(43-64)	3P-2044 (8)	3P-2044 (2)	9N-3718 (2)

** Normal maintenance period is 250 hrs. See your Operation and Maintenance Manual for complete coolant maintenance instructions.*

( ) Indicates quantity required.

MAINTENANCE PARTS

DESCRIPTION	PART NUMBER	QTY	WHERE USED	PAGE
AIR INLET AND EXHAUST SYSTEM				
FILTER ELEMENT-AIR (PRIMARY)	293-4053	1	AIR CLEANER GP	94
FILTER ELEMENT-AIR (SECONDARY)	227-7449	1	AIR CLEANER GP	94
BASIC ENGINE				
GASKET (VALVE COVER)	225-6451	1	COVER GP-VALVE MECHANISM	15
		1	COVER GP-VALVE MECHANISM	17
PLUG-DRAIN (ENGINE OIL)	7C-0351	2	PAN GP-OIL	50
		2	PAN GP-OIL	52
COOLING SYSTEM				
BELT-SERPENTINE	212-9353	1	FAN GP-SUCTION	77
	324-3408	1	FAN GP-SUCTION	78
BELT-SERPENTINE (ALTERNATOR)	212-9353	1	FAN GP-SUCTION	79
CAP AS-COOLANT TANK	251-3227	1	LINES GP-RADIATOR	82
		1	TANK & LINES GP-COOLANT	92
HOSE-RADIATOR	210-6139	1	TANK & LINES GP-COOLANT	92
	325-5855	1	LINES GP-RADIATOR	82
		1	TANK & LINES GP-COOLANT	92
REGULATOR GP-TEMPERATURE (INCLUDES CONNECTOR)	254-2267	1	CONNECTION GP-WATER	72
REGULATOR GP-TEMPERATURE (INCLUDES CONNECTOR) (WATER)	254-2267	1	CONNECTION GP-WATER	73

MAINTENANCE PARTS

DESCRIPTION	PART NUMBER	QTY	WHERE USED	PAGE
ELECTRICAL AND STARTING SYSTEM				
BATTERY (12-VOLT, MAINTENANCE FREE, WET)	3T-5760	1	BATTERY & WIRING GP	134
		1	BATTERY GP	136
BELT-DRIVE (WARNING BEACON)	9X-8139	1	LAMP GP-WARNING BEACON	158
CAP AS-FILLER (BATTERY)	123-1373	6	BATTERY & WIRING GP	134
FLASHER AS (12-VOLT) (HAZARD)	7T-4848	1	WIRING GP-PLATFORM	198
FUSE (10-AMPERE)	113-8490	9	WIRING GP-PLATFORM	199
FUSE (15-AMPERE)	113-8491	10	WIRING GP-PLATFORM	199
FUSE (20-AMPERE)	113-8492	7	WIRING GP-PLATFORM	199
FUSE (30-AMPERE)	274-9872	1	RELAY GP	170
		1	WIRING GP-PLATFORM	198
FUSE (40-AMPERE)	278-6377	1	RELAY GP	166
		1	RELAY GP	170
		1	WIRING GP-PLATFORM	198
FUSE (60-AMPERE)	267-2701	2	RELAY GP	167
		1	RELAY GP	168
		1	WIRING GP-PLATFORM	198
GLOW PLUG (12-VOLT)	232-6662	4	GLOW PLUG GP	139
		4	GLOW PLUG GP	140
LAMP (12-VOLT)	7X-9065	1	WIRING GP-STEERING	212
LAMP (12-VOLT, 10-WATT)	195-9712	1	LAMP GP-REGISTRATION PLATE	156
LAMP (12-VOLT, 21-WATT) (AMBER)	226-4560	1	LAMP GP-HEAD & SIGNAL	152
		1	LAMP GP-HEAD & SIGNAL	153
		1	LAMP GP-HEAD & SIGNAL	154
		1	LAMP GP-HEAD & SIGNAL	155
LAMP (12-VOLT, 21-WATT) (ROADING LIGHTS)	9W-3326	1	LIGHTING GP-ROADING	160
LAMP (12-VOLT, 5-WATT) (CLEAR)	226-4561	1	LAMP GP-HEAD & SIGNAL	152
		1	LAMP GP-HEAD & SIGNAL	153
		1	LAMP GP-HEAD & SIGNAL	154
		1	LAMP GP-HEAD & SIGNAL	155
LAMP (12-VOLT, 55-WATT) (FLOODLIGHT)	9W-0607	1	LAMP GP-FLOOD	150
		1	LAMP GP-FLOOD	151
LAMP (12-VOLT, 55-WATT) (WARNING BEACON)	9X-8118	1	LAMP GP-WARNING BEACON	158
LAMP GP-SIGNAL (12-VOLT) (STOP, TAIL, TURN)	336-9096	2	LIGHTING GP-ROADING	162
		2	LIGHTING GP-ROADING	164
LAMP-HEAD (12-VOLT, 60/55-WATT) (CLEAR)	9W-3324	1	LAMP GP-HEAD & SIGNAL	152
		1	LAMP GP-HEAD & SIGNAL	153
		1	LAMP GP-HEAD & SIGNAL	154
		1	LAMP GP-HEAD & SIGNAL	155
FUEL SYSTEM				
CAP-FUEL (LOCKABLE, VENTED)	284-9039	1	TANK GP-FUEL	130
FILTER AS-WATER SEP & FUEL	228-9130	1	PUMP GP-FUEL PRM & PRIM FILTER	127
FILTER ELEMENT-FUEL (WATER SEPARATOR)	131-1812	1	FILTER GP-WATER SEP & FUEL	110
STRAINER (FUEL TANK)	311-6886	1	TANK GP-FUEL	130
STRAINER-FUEL (FILLER NECK SCREEN)	180-3730	1	TANK GP-FUEL	130

MAINTENANCE PARTS

DESCRIPTION	PART NUMBER	QTY	WHERE USED	PAGE
HYDRAULIC SYSTEM				
CAP-FILL (HYDRAULIC OIL)	237-3797	1	TANK & MTG GP-HYDRAULIC	415
FILTER ELEMENT-BREATHER (HYDRAULIC TANK)	9R-9925	1	TANK & MTG GP-HYDRAULIC	415
FILTER-OIL (FLOW REGULATOR)	227-1197	1	MANIFOLD GP-CONTROL	407
FILTER-OIL (ULTRA HIGH EFFICIENCY)	126-1817	1	FILTER GP-OIL	340
LUBRICATION SYSTEM				
FILTER AS-ENGINE OIL	7W-2326	1	GAUGE GP-OIL LEVEL & FILLER	69
OPERATOR STATION				
BLADE AS (WIPER, REAR)	315-1316	1	WIPER GP-WINDOW	643
BLADE AS-WIPER (600-MM) (FRONT)	101-0745	1	WASHER GP-WINDOW	633
FILTER ELEMENT AS-AIR (CAB HEATER)	211-2661	1	HEATER & MTG GP-CAB	584
		1	HEATER & MTG GP-CAB	586
FILTER ELEMENT-AIR (CAB HEATER, AIR CONDITIONER)	211-2660	1	HEATER GP-CAB	591
FILTER ELEMENT-AIR (RECIRCULATION)	211-2660	1	HEATER GP-CAB	589
LAMP (12-VOLT)	210-8754	1	LINER GP-CAB	604
POWER TRAIN				
BREATHER (AXLE)	197-9155	1	AXLE GP-DRIVE & STEERING	226
BREATHER (FRONT AXLE)	253-5024	1	AXLE GP-DRIVE & STEERING	223
BREATHER (TRANSMISSION)	7T-3251	1	TRANSMISSION GP-POWER SHIFT	265
FILTER-OIL (STANDARD EFFICIENCY) (POWER TRAIN)	119-4740	1	POWER TRAIN AR	253
PLUG AS-DRAIN (MAGNETIC)	152-6144	3	AXLE GP-DRIVE & STEERING	223
		4	AXLE GP-DRIVE & STEERING	226
		1	DIFFERENTIAL & BEVEL GEAR GP	230
STRAINER (SUCTION)	7T-2651	1	TRANSMISSION GP-POWER SHIFT	265
SERVICE EQUIPMENT AND SUPPLIES				
FILTER AS-ENGINE OIL	7W-2326	1	SERVICE GP-FILTER	649
FILTER AS-WATER SEP & FUEL	228-9130	1	SERVICE GP-FILTER	649
FILTER-OIL (STANDARD EFFICIENCY) (HYDRAULIC)	119-4740	1	SERVICE GP-FILTER	649
FILTER-OIL (ULTRA HIGH EFFICIENCY)	126-1817	1	SERVICE GP-FILTER	649

INDEX

Name	Page
A	
ACCUMULATOR GP-HYDRAULIC (UNCHARGED) (PILOT)	320
ACCUMULATOR GP-HYDRAULIC–CHARGED	320
ACCUMULATOR GP-HYDRAULIC–UNCHARGED	320
ACCUMULATOR GP-RIDE CONTROL–CHARGED	321
ACCUMULATOR GP-RIDE CONTROL–UNCHARGED	322
ACCUMULATOR-REFRIGERANT (AIR CONDITIONER)	607
AFTERCOOLER GP-AIR	89
AIR CLEANER GP–BASIC	94
AIR CLEANER GP–TURBO	95
	97
ALTERNATOR GP-CHARGING	132
	133
ARM GP-LIFT	441
ARM GP-WINDOW WIPER (REAR)	643
AXLE GP-DRIVE & STEERING–FRONT	223
AXLE GP-DRIVE & STEERING–REAR	226
B	
BACKHOE AR-EXTENDABLE STICK	1
	2
	3
BACKHOE AR-STANDARD STICK	4
BATTERY & WIRING GP	134
BATTERY (12-VOLT, MAINTENANCE FREE, WET)	134
	136
BATTERY GP–HEAVY-DUTY	136
BELT-DRIVE (WARNING BEACON)	158
BELT-SERPENTINE	77
	78
BELT-SERPENTINE (ALTERNATOR)	79
BLADE AS (WIPER, REAR)	643
BLADE AS-WIPER (600-MM) (FRONT)	633
BLOWER GP-CAB (HEATER)	589
	591
BOOM GP	444
BOX GP-BATTERY	293
BRACE GP-LIFT CYLINDER	446
BRAKE GP-HYDRAULIC CALIPER	227
BREATHER (AXLE)	226
BREATHER (FRONT AXLE)	223
BREATHER (TRANSMISSION)	265
BREATHER GP–ENGINE	67
BUCKET AR-MULTIPURPOSE	467
	468
	469
	470
	471
BUCKET AR-MULTIPURPOSE–QUICK COUPLER	472
	473
BUCKET AS-GENERAL PURPOSE	474
	475
	476
BUCKET AS-HOE	494
	495
	496
	497
	499
BUCKET AS-HOE–HEAVY-DUTY	485
	486
	487
	488
	489
	490
	491
	492
	493
	498
BUCKET AS-HOE–HIGH CAPACITY	477
	478
	479
	480
	481
	482
	483
	484
BUCKET GP-GENERAL PURPOSE	500
BUCKET GP-HOE	518
	519
	520
	521
	524
	525
BUCKET GP-HOE–HEAVY-DUTY	509
	510
	511
	512
	513
	514
	515
	516
	517
	522
	523
BUCKET GP-HOE–HIGH CAPACITY	501
	502
	503
	504
	505
	506

INDEX

Name	Page
	507
	508
BUCKET GP-MULTIPURPOSE	526
	527
	528
BULLDOZER AS	529
	530
	531

C

CAB AR–DELUXE, WITH A/C	558
CAB AR–PILOT, AIR CONDITIONER	557
CAB AR–PILOT, NON-A/C	556
CAB AR-ENCLOSED ROPS–PILOT, NON-A/C	559
CAB GP–DELUXE	562
CAB GP–STANDARD	560
CAMSHAFT GP	13
	14
CAP AS-COOLANT TANK	82
	92
CAP AS-FILLER (BATTERY)	134
CAP-FILL (HYDRAULIC OIL)	415
CAP-FUEL (LOCKABLE, VENTED)	130
CARRIAGE AS-FORK–QUICK COUPLER	532
CHASSIS AR	5
CLAM AS-MULTIPURPOSE BUCKET	533
	534
COMMON AR	5
COMPRESSOR GP-REFRIGERANT	564
	565
CONDENSER & MTG GP-REFRIGERANT	566
CONNECTION GP-WATER	72
	73
CONSOLE GP-OPERATOR–FRONT	569
CONSOLE GP-OPERATOR–LH	567
CONSOLE GP-OPERATOR–RH	571
CONTROL & MTG GP-JOYSTICK	573
CONTROL AR-RIDE–PILOT	323
CONTROL GP-DIFFERENTIAL LOCK–TRANSMISSION AUTOSHIFT	229
CONTROL GP-ELECTRONIC	185
CONTROL GP-GOVERNOR	109
CONTROL GP-HANDLE–RH, JOYSTICK	574
CONTROL GP-JOYSTICK–LH	576
CONTROL GP-JOYSTICK–RH	575
CONTROL GP-PARKING BRAKE	281
	282
CONTROL GP-POSITION–BUCKET	137
CONTROL GP-SERVICE BRAKE–STANDARD SHIFT	283
CONTROL GP-STEERING–TILT	577
CONTROL GP-TRANSMISSION	215
CONTROL GP-UNPROGRAMMED (MACHINE)	138
CONVERSION AR-QUICK COUPLER	535
CONVERSION AR-ROADING–UNITED KINGDOM	5
COOLER GP-ENGINE OIL	74
	75
COOLER GP-FLTR BASE & ENG OIL	76
COOLER GP-HYD & XMSN OIL	324
	325
CORE AS-OIL COOLER (11 PLATE)	325
CORE AS-OIL COOLER (12 PLATE)	324
CORE AS-OIL COOLER (19 PLATE)	324
CORE AS-OIL COOLER (HYDRAULIC) (18 PLATE)	325
COUNTERWEIGHT GP	295
COUPLER GP-QUICK	539
	540
	541
COUPLER GP-QUICK–BACKHOE	536
	537
	540
COUPLER GP-QUICK–JCB	538
COVER GP	422
COVER GP-INLET MANIFOLD	99
	100
COVER GP-VALVE MECHANISM	15
	17
CRANKSHAFT GP	19
	21
	22
CYLINDER BLOCK GP	23
	25
	26
	27
CYLINDER GP-BACKHOE BUCKET	326
CYLINDER GP-BOOM	327
CYLINDER GP-BRAKE–LH	287
CYLINDER GP-BRAKE–RH	286
CYLINDER GP-COUPLER	328
CYLINDER GP-HYDRAULIC	329
	330
CYLINDER GP-LIFT	331
	332
CYLINDER GP-MULTIPURPOSE BUKT	333
CYLINDER GP-STABILIZER	334
CYLINDER GP-STEERING	223
	226
	289
CYLINDER GP-STICK	335
	336
CYLINDER GP-TILT	338
CYLINDER HEAD GP	29
	30
	31
	32

INDEX

Name	Page
D	
DIFFERENTIAL & BEVEL GEAR GP–LH	230
DIFFERENTIAL GP	232
DIFFERENTIAL GP–AXLE	233
DOOR GP-CAB–LH	581
DOOR GP-CAB–RH	579
DRIVE & MTG GP-PUMP	339
DRIVE AR-BACKHOE LOADER–ALL WHEEL DRIVE, ALL WHEEL STEER	6
DRIVE GP-AUXILIARY	33, 34
DRIVE GP-FAN	35, 36
DRIVE GP-FLEXIBLE COUPLING	234
E	
EDGE GP-CUTTING	542
ELECTRONICS GP-MACHINE	138
ENGINE AR	7, 8, 9, 10
ENGINE AR-PRIMARY	11, 12
EXTENSION GP-EXHAUST	102
EXTENSION GP-FENDER	296
F	
FAN GP-SUCTION–WITH AIR CONDITIONER	77, 79
FAN GP-SUCTION–WITHOUT AIR CONDITIONER	78
FASTENER GP-VALVE	440
FENDER GP-FRONT	298, 299
FENDER GP-REAR	300
FILLER GP-ENGINE OIL	68
FILLER GP-POWER TRAIN OIL–AUTOSHIFT	235
FILM (REFLECTOR)	546
FILM (START SW, READ OMM, SECURITY)	147
FILM (TEMPERATURE CONTROL)	584, 586
FILM GP	644
FILM-CERTIFICATION (OPS, READ OMM)	560, 562
FILM-CONTROL (BACKHOE, JOYSTICK)	556, 557, 558, 559
FILM-CONTROL (LOADER, JOYSTICK)	342
FILM-COVER (PROTECT)	293
FILM-IDENTIFICATION (12-VOLT)	293
FILM-IDENTIFICATION (CAT)	314
FILM-IDENTIFICATION (CATERPILLAR)	556, 557
FILM-IDENTIFICATION (CATERPILLAR, FRONT)	558, 559
FILM-IDENTIFICATION (FUSE PANEL)	571
FILM-IDENTIFICATION (FUSE, RELAY)	571
FILM-IDENTIFICATION (GROUP NO., SEQUENCE NO.)	589, 591
FILM-IDENTIFICATION (PREMIER)	6
FILM-IDENTIFICATION (STABILIZER, AUTO UP)	434
FILM-IDENTIFICATION (START SWITCH, READ OMM)	143
FILM-IDENTIFICATION (WATER SEPARATOR)	304
FILM-INFORMATION (HYDO ADVANCED 10)	415
FILM-INFORMATION (LIFT EYE, TIE-DOWN LOCATION)	304
FILM-INSTRUCTION (BOOM LOCK)	571
FILM-INSTRUCTION (EXTENDABLE STICK PIN, READ OMM)	463, 465
FILM-INSTRUCTION (FORWARD, NEUTRAL, REVERSE)	569
FILM-INSTRUCTION (KICKOUT, POSITIONER CONTROL)	137
FILM-INSTRUCTION (MACHINE SECURITY, READ OMM)	143, 147
FILM-INSTRUCTION (NO STEP)	293
FILM-INSTRUCTION (OIL FLOW DIRECTION)	344, 348
FILM-INSTRUCTION (RELAY CONNECTION)	188
FILM-INSTRUCTION (STABILIZER, SIDESHIFT)	434
FILM-INSTRUCTION (START SWITCH)	571
FILM-INSTRUCTION (UNLOCK)	316
FILM-INSTRUCTION (VARIABLE SPEED)	571
FILM-INSTRUCTION (WASHER FILL)	633
FILM-NOTICE (BATTERY CABLES DISCONNECT)	293
FILM-NOTICE (ROADING HEIGHT)	5
FILM-STRIPE (YELLOW)	312, 314
FILM-WARNING (CRUSH HAZARD, STAY BACK, INTL)	444
FILM-WARNING (HIGH PRESS CYLINDER, READ OMM)	385, 394
FILM-WARNING (HIGH PRESSURE, READ OMM)	321, 322

INDEX

Name	Page
FILM-WARNING (HYD PRESS, READ OMM, INTL)	344, 348
FILM-WARNING (JUMP START, READ OMM)	293
FILM-WARNING (NO WELD, NO DRILL, READ OMM)	560, 562
FILM-WARNING (QUICK COUPLER)	421, 535
FILM-WARNING (READ OMM)	571
FILM-WARNING (SEAT BELT)	571
FILM-WARNING (TIPPING HAZARD, READ OMM)	209
FILTER AS-ENGINE OIL	69, 649
FILTER AS-WATER SEP & FUEL	127, 649
FILTER BASE & ENG OIL COOLER	76
FILTER ELEMENT AS-AIR (CAB HEATER)	584, 586
FILTER ELEMENT-AIR (CAB HEATER, AIR CONDITIONER)	591
FILTER ELEMENT-AIR (PRIMARY)	94
FILTER ELEMENT-AIR (RECIRCULATION)	589
FILTER ELEMENT-AIR (SECONDARY)	94
FILTER ELEMENT-BREATHER (HYDRAULIC TANK)	415
FILTER ELEMENT-FUEL (WATER SEPARATOR)	110
FILTER GP-OIL	340
FILTER GP-WATER SEP & FUEL	110, 111
FILTER-OIL (FLOW REGULATOR)	407
FILTER-OIL (STANDARD EFFICIENCY) (HYDRAULIC)	649
FILTER-OIL (STANDARD EFFICIENCY) (POWER TRAIN)	253
FILTER-OIL (ULTRA HIGH EFFICIENCY)	340, 649
FITTING & MTG GP-HYDRAULIC	350
FITTING GP-HYDRAULIC–QUICK DISCONNECT	341
FLANGE GP-WHEEL	237, 238, 239
FLASHER AS (12-VOLT) (HAZARD)	198
FLOOR MAT	583
FLOOR MAT GP	583
FLOORPLATE GP	302
FLYWHEEL GP	37, 38
FORK GP	543
FORK GP–KIT	544
FORK GP-PALLET	545
FRAME AR-LOADER	303
FRAME GP-LOADER	304
FRAME GP-SLIDING	306
FRAME GP-SWING	308
FUSE (10-AMPERE)	199
FUSE (15-AMPERE)	199
FUSE (20-AMPERE)	199
FUSE (30-AMPERE)	170, 198
FUSE (40-AMPERE)	166, 170, 198
FUSE (60-AMPERE)	167, 168, 198

G

Name	Page
GASKET (VALVE COVER)	15, 17
GAUGE AS-OIL LEVEL (DIPSTICK) (POWER TRAIN)	235
GAUGE GP-OIL LEVEL & FILLER–ENGINE	69
GAUGE-OIL LEVEL (DIPSTICK) (ENGINE)	69
GAUGE-SIGHT (HYDRAULIC OIL LEVEL)	417
GEAR GP-BEVEL & PINION (RIGHT AXLE HOUSING)	247
GEAR GP-RING	238, 239, 240, 241
GLOW PLUG (12-VOLT)	139, 140
GLOW PLUG GP	139, 140
GUARD GP-BUCKET	546, 547
GUARD GP-DRIVE SHAFT	309
GUARD GP-LIGHTING	310
GUARD GP-RADIATOR	311

H

Name	Page
HANDLE GP-DOOR (LH)	635
HANDLE GP-DOOR (RH)	635
HANDLE GP-MODULAR (LH)	576
HANDLE GP-MODULAR (RH)	574, 575
HARNESS AS-AUXILIARY	187
HARNESS AS-CAB	221
HARNESS AS-CHASSIS	183
HARNESS AS-CHASSIS (LOAD CONTROL)	194
HARNESS AS-CONSOLE	185, 209
HARNESS AS-CONTROL (MACHINE SECURITY SYSTEM)	147

INDEX

Name	Page
	196
HARNESS AS-CONTROL (PLATFORM)	147
	196
HARNESS AS-DASH	212
HARNESS AS-ENGINE	188
HARNESS AS-FRONT	221
HARNESS AS-FUEL TANK (FUEL SHUTOFF)	7
	8
	9
	10
HARNESS AS-HEATER	591
HARNESS AS-HEATER & AIR COND	191
	589
HARNESS AS-HEATER & AIR COND (COMPRESSOR)	180
HARNESS AS-HEATER & AIR COND (POWER)	180
HARNESS AS-HEATER & AIR COND (VENT)	180
HARNESS AS-LIGHTING (REGISTRATION PLATE)	157
HARNESS AS-LIGHTING (ROADING)	560
	562
HARNESS AS-PLATFORM	198
	212
HARNESS AS-RADIO	594
HARNESS AS-REAR	204
HARNESS AS-REAR LIGHTING	160
HARNESS AS-RIDE CONTROL	206
HARNESS AS-SENSOR	208
HARNESS AS-STEERING	212
HARNESS AS-SWITCH (CAB)	209
HARNESS AS-SWITCH (HOE)	209
HARNESS AS-SWITCH (REAR)	209
HARNESS AS-TRANSMISSION	215
HARNESS AS-VALVE (SEAT AIR COMPRESSOR)	598
HARNESS AS-WINDOW WIPER	217
HARNESS AS-WIRING (KICKOUT, POSITIONER)	193
HARNESS AS-WIRING (SEAT AIR COMPRESSOR)	598
HARNESS AS-WORK TOOL (ANGLE BROOM)	219
HEATER & MTG GP-CAB	584
	586
HEATER GP-CAB	584
	589
	591
HEATER GP-JACKET WATER	141
	142
HOOD & GUARD GP	312
HOOD GP-ENGINE	314
	316
HORN GP-ELECTRIC–REAR	593
HOSE-RADIATOR	82
	92
HOUSING & FLANGE GP-AXLE–LH	239
	240
HOUSING & FLANGE GP-AXLE–RH	238
	241
HOUSING GP-AXLE–LH	244
	245
HOUSING GP-AXLE–REAR	247
HOUSING GP-AXLE–RH	243
	246
HOUSING GP-FLYWHEEL	39
	40
HOUSING GP-FRONT	41
	43
HYDRAULIC AR	342

I

INDICATOR AS (HIGH BEAM, TURN SIGNAL RH)	198
INDICATOR AS (TURN SIGNAL LH, PARKING BRAKE)	198
INDICATOR GP-AIR FILTER CHANGE	95
	97
INDICATOR GP-STEERING (REAR)	212
INSTALLATION GP-RADIO	594
INSTALLATION GP-SECURITY	143
	145
INSTALLATION GP-SECURITY–TURBO	147

K

KIT-SEAT FRAME	595
KIT-SEAT PAN	596
KIT-SEAT SUSPENSION–AIR	598

L

LAMP (12-VOLT)	212
	604
LAMP (12-VOLT, 10-WATT)	156
LAMP (12-VOLT, 21-WATT) (AMBER)	152
	153
	154
	155
LAMP (12-VOLT, 21-WATT) (ROADING LIGHTS)	160
LAMP (12-VOLT, 5-WATT) (CLEAR)	152
	153
	154
	155
LAMP (12-VOLT, 55-WATT) (FLOODLIGHT)	150
	151
LAMP (12-VOLT, 55-WATT) (WARNING BEACON)	158

INDEX

Name	Page
LAMP GP-DOME (12-VOLT)	604
LAMP GP-FLOOD	150
	151
LAMP GP-HEAD & SIGNAL–LH	153
	155
LAMP GP-HEAD & SIGNAL–RH	152
	154
LAMP GP-REGISTRATION PLATE	156
	157
LAMP GP-ROADING (FOG; RED, REAR)	160
LAMP GP-SIGNAL (12-VOLT) (STOP, TAIL, TURN)	162
	164
LAMP GP-WARNING BEACON–12-VOLT, AMBER	158
LAMP-HEAD (12-VOLT, 60/55-WATT) (CLEAR)	152
	153
	154
	155
LATCH GP-CAB DOOR & WINDOW	600
	601
LATCH GP-CONSOLE	602
LEVER GP-GOVERNOR (HANDHELD)	109
LEVER GP-GOVERNOR–HANDHELD	603
LEVER GP-HAND CONTROL–PARKING BRAKE	288
LIFTING GP-ENGINE	45
	46
LIGHTING GP-FLOOD–FRONT, REAR, COSA	159
LIGHTING GP-ROADING–DIPPED, LH	164
LIGHTING GP-ROADING–DIPPED, RH	162
LIGHTING GP-ROADING–FOG	160
LIGHTING GP-WARNING BEACON–AMBER, MAGNETIC MOUNT, ROTATING	165
LINER GP-CAB	604
LINER GP-SOUND SUPPRESSION	317
LINES GP-AIR	103
LINES GP-AUXILIARY HYDRAULIC	346
LINES GP-AUXILIARY HYDRAULIC–EXTENDABLE STICK	344
LINES GP-AUXILIARY HYDRAULIC–SIDESHIFT	343
LINES GP-AUXILIARY HYDRAULIC–STANDARD STICK, 1-WAY	348
LINES GP-BACKHOE	350
LINES GP-BACKHOE AUXILIARY–EXTENDABLE STICK, 1-WAY	356
LINES GP-BACKHOE AUXILIARY–EXTENDABLE STICK, 2-WAY	352
	354
LINES GP-BACKHOE AUXILIARY–STANDARD STICK, 1-WAY	356
LINES GP-BOOM	357
LINES GP-BUCKET	358
LINES GP-BUCKET CYLINDER–STANDARD STICK	362
LINES GP-BUCKET–EXTENDABLE STICK	360
LINES GP-DRAIN	364
LINES GP-FUEL	112
	114
	116
LINES GP-FUEL FILTER	118
LINES GP-HEATER	606
LINES GP-HEATER & AIR COND	607
LINES GP-HYDRAULIC	365
LINES GP-LIFT & TILT	368
LINES GP-LIFT & TILT CYLINDER	370
	372
LINES GP-LOAD CONTROL VALVE–PILOT	375
LINES GP-MULTIPURPOSE BUCKET	378
LINES GP-PILOT	380
LINES GP-PILOT–BACKHOE	383
LINES GP-PILOT–LOADER	381
LINES GP-PILOT–SIGNAL	388
LINES GP-PILOT–SUPPLY	385
LINES GP-POWER TRAIN COOLER	80
LINES GP-PUMP	390
LINES GP-RADIATOR	82
LINES GP-RETURN	392
LINES GP-RIDE CONTROL	394
LINES GP-SIDESHIFT LOCK	396
LINES GP-STABILIZER	397
	398
LINES GP-STEERING–ALL WHEEL DRIVE, ALL WHEEL STEER	290
LINES GP-STICK	400
LINES GP-SWING	401
LINK GP-SHIPPING	5
	645
LINKAGE GP-BACKHOE BUCKET	449
	452
LINKAGE GP-BACKHOE BUCKET–LIFTING	447
LINKAGE GP-BACKHOE BUCKET–WITHOUT LIFTING EYE	451
LINKAGE GP-BUCKET	452
LOADER AR	6
LOCK GP-TRANSPORT	458
LOCK GP-TRANSPORT–BACKHOE BUCKET	455
LOCK GP-TRANSPORT–BOOM	456
LOCK GP-TRANSPORT–STABILIZER	454
LOCK GP-VANDALISM	646

M

MANIFOLD & SOLENOID GP-CONTROL	385
	403
MANIFOLD GP-CONTROL	404
	406
MANIFOLD GP-CONTROL–INLET	407

INDEX

Name	Page
MANIFOLD GP-CONTROL–OUTLET	405
MANIFOLD GP-RIDE CONTROL	408
MANIFOLD GP-STEERING (ALL WHEEL STEER)	290
MIRROR GP-REAR VIEW–EXTERIOR	610
MIRROR GP-REAR VIEW–INTERIOR	609
MOTOR GP-WINDOW WIPER–12-VOLT	611
MOTOR GP-WINDOW WIPER–REAR	612
MOUNTING GP-AXLE	249
MOUNTING GP-BACKHOE CONTROL–PILOT	613
MOUNTING GP-BUCKET	552
MOUNTING GP-BUCKET–BACKHOE	549
MOUNTING GP-BUCKET–BACKHOE, QUICK COUPLER	548
	551
MOUNTING GP-BUCKET–ROADING	550
MOUNTING GP-CAB	616
MOUNTING GP-CYLINDER–MULTIPURPOSE BUCKET	409
MOUNTING GP-ENGINE	47
	48
MOUNTING GP-ENGINE & XMSN	49
MOUNTING GP-FORK	554
MOUNTING GP-FORK–MULTIPURPOSE BUCKET	553
MOUNTING GP-LINES	410
MOUNTING GP-TRANSMISSION	250
MOUNTING GP-WHEEL	273
	274
MOUNTING GP-WHEEL (REAR)	275
MUFFLER GP	104

P

Name	Page
PAD GP-STABILIZER–STREET	459
PADLOCK GP	646
PAN GP-OIL	50
	52
PEDAL GP-GOVERNOR	617
PISTON & ROD GP	54
	55
PLANETARY GP-FINAL DRIVE	252
PLANETARY GP-FINAL DRIVE–AXLE	251
PLATE & FILM GP	647
PLATE GP-COVER	304
PLATE-IDENTIFICATION (CAT)	481
	482
	483
	484
PLATE-IDENTIFICATION (WORK TOOL)	468
	470
	471
	472
	476
	500
	505
	506
	507
	508
	509
	510
	511
	512
	515
PLUG AS-DRAIN (MAGNETIC)	223
	226
	230
PLUG GP-CONTROL MANIFOLD	406
PLUG GP-CYLINDER HEAD	57
PLUG GP-ENGINE	58
	59
	60
	61
	62
PLUG-DRAIN (ENGINE OIL)	50
	52
POWER TRAIN AR–AUTOSHIFT	253
PREMIER AR	6
PROTECTION GP-VANDALISM–ROTATING GUARD	648
PULLEY GP-ENGINE	33
	34
PUMP GP-ENGINE OIL	70
	71
PUMP GP-FUEL INJECTION	119
	120
	123
	124
PUMP GP-FUEL PRM & PRIM FILTER–WITH MOUNTING	128
PUMP GP-FUEL PRM & PRIM FILTER–WITH WATER SEPARATOR	127
PUMP GP-METERING (STEERING LINES)	290
PUMP GP-PISTON	411
PUMP GP-TRANSMISSION	265
PUMP GP-WATER	84
	86

R

Name	Page
RADIATOR & HYD OIL COOLER GP	88
	90
	91
RADIATOR & HYD OIL COOLER GP–INCLUDES AFTCLR, XMSN COOLER	89
RADIATOR GP	88
	89
REGULATOR GP-TEMPERATURE (INCLUDES CONNECTOR)	72

INDEX

Name	Page
REGULATOR GP-TEMPERATURE (INCLUDES CONNECTOR) (WATER)	73
RELAY AS (12-VOLT) (AIR CONDITIONER)	191
RELAY AS (12-VOLT) (ALL WHEEL DRIVE)	175
RELAY AS (12-VOLT) (ALL WHEEL STEER)	212
RELAY AS (12-VOLT) (BACKUP ALARM)	179
RELAY AS (12-VOLT) (DEAD ENGINE LOWER)	194
RELAY AS (12-VOLT) (DIFFERENTIAL LOCK)	198
RELAY AS (12-VOLT) (DISABLE START)	147, 196
RELAY AS (12-VOLT) (FRONT HORN)	198
RELAY AS (12-VOLT) (FUEL PUMP)	198
RELAY AS (12-VOLT) (FUEL SHUTOFF)	147, 196
RELAY AS (12-VOLT) (HIGH SPEED)	181
RELAY AS (12-VOLT) (IMPLEMENT DISABLE)	198
RELAY AS (12-VOLT) (NEUTRAL START)	198
RELAY AS (12-VOLT) (QUICK COUPLER)	221
RELAY AS (12-VOLT) (REAR HORN)	198
RELAY AS (12-VOLT) (RIDE CONTROL)	206
RELAY AS (12-VOLT) (SHUTOFF)	180
RELAY AS (12-VOLT) (STARTING AID)	188
RELAY AS (12-VOLT) (TORQUE LIMITER)	198
RELAY AS-TIMER (12-VOLT, PLATFORM)	169
RELAY GP (12-VOLT) (STARTING MOTOR)	188
RELAY GP–POWER DISTRIBUTION	166
RELAY GP–POWER, 1	167
RELAY GP–POWER, 2	168
RELAY GP–STABILIZER, AUTO UP	169
RELAY GP–STARTING MOTOR	170
ROCKER ARM GP	63, 64
ROOF GP-CAB	618
ROTATING GP-PUMP	413

S

Name	Page
SEAT GP	619
SEAT GP–DELUXE	621
SEAT GP-SUSPENSION (DELUXE, CLOTH)	627
SEAT GP-SUSPENSION–CLOTH	623, 627
SEAT GP-SUSPENSION–DELUXE, CLOTH	625, 627
SENDER AS-FUEL LEVEL	130
SENDER AS-TEMPERATURE (12-VOLT) (TRANSMISSION OIL)	265
SENDER AS-TEMPERATURE (ENGINE COOLANT)	188
SENSOR AS (KEY READER)	147, 196
SENSOR AS-POSITION (ALL WHEEL STEER)	212
SENSOR GP-MOISTURE (WATER SEPARATOR)	127
SENSOR GP-SPEED (TRANSMISSION OUTPUT, HIGH)	266
SENSOR GP-TEMPERATURE (HYDRAULIC OIL)	208
SERVICE GP-FILTER–KIT	649
SERVICE GP-FORK POSITIONER	545
SERVICE GP-MACHINE	138
SHAFT GP-AXLE (LH)	223
SHAFT GP-AXLE (RH)	223
SHAFT GP-COUNTER	254
SHAFT GP-DRIVE–POWERSHIFT	256
SHAFT GP-DRIVE–REAR	256
SHAFT GP-IDLER	257
SHAFT GP-INPUT	259
SHAFT GP-OUTPUT	263
SHAFT GP-OUTPUT–MAIN	261
SHAFT GP-PUMP DRIVE	414
SOFTWARE GP-MACHINE	138
SOLENOID AS (REMOTE CONTROL)	440
SPRING AS-GAS	316
SPRING AS-GAS (LOCKABLE)	316
SPRING GP-GAS (CAB DOOR)	579, 581
SPRING GP-GAS (STEERING COLUMN)	292
STABILIZER GP-BACKHOE	460
STARTING MOTOR GP-ELECTRIC–12-VOLT	171, 173, 174
STEERING COLUMN GP–TILT	292
STEP GP	318
STICK GP	461
STICK GP-EXTENDABLE	463, 465
STRAINER (FUEL TANK)	130
STRAINER (SUCTION)	265
STRAINER-FUEL (FILLER NECK SCREEN)	130
SUN VISOR	632
SUPPRESSION AR-SOUND	319
SUSPENSION GP-SEAT	628
SWITCH AS (PARKING BRAKE)	281
SWITCH AS (STARTING MOTOR, 12-VOLT)	171
SWITCH AS-FOOT (DIFFERENTIAL LOCK ON, OFF)	176
SWITCH AS-LIMIT (BRAKE PEDAL)	283
SWITCH AS-MULTIFUNCTION (HD LIGHT, TURN SIG, WDO WIPER)	198
SWITCH AS-PRESSURE (ALL WHEEL STEER)	212
SWITCH AS-PRESSURE (ENGINE OIL)	177, 178
SWITCH AS-PRESSURE (HYDRAULIC OIL FILTER BYPASS)	208
SWITCH AS-PRESSURE (REFRIGERANT COMPR, HIGH SIDE)	180
SWITCH AS-PRESSURE (RIDE CONTROL)	206

INDEX

Name	Page
SWITCH AS-ROCKER (AIR CONDITIONER, HEATER SELECT)	180
SWITCH AS-ROCKER (ALL WHEEL DRIVE)	175
SWITCH AS-ROCKER (ALL WHEEL STEER)	212
SWITCH AS-ROCKER (ANGLE BROOM)	219
SWITCH AS-ROCKER (AUTOSHIFT, STANDARD SHIFT)	215
SWITCH AS-ROCKER (AUXILIARY HYDRAULIC FLOW)	221
SWITCH AS-ROCKER (BLOWER FAN SPEED)	180 191
SWITCH AS-ROCKER (ELECTRIC POWER)	221
SWITCH AS-ROCKER (FLOODLIGHTS, FRONT)	159 183
SWITCH AS-ROCKER (FLOODLIGHTS, REAR)	159 183
SWITCH AS-ROCKER (FOG LIGHT, REAR)	160
SWITCH AS-ROCKER (HAZARD WARNING LIGHTS)	198
SWITCH AS-ROCKER (HEATER)	191
SWITCH AS-ROCKER (HYDRAULIC LOCKOUT)	185
SWITCH AS-ROCKER (LOAD STABILITY, BUCKET)	209
SWITCH AS-ROCKER (MODE SELECT)	198
SWITCH AS-ROCKER (QUICK COUPLER PIN LOCK)	221
SWITCH AS-ROCKER (RIDE CONTROL)	206
SWITCH AS-ROCKER (RIDE CONTROL, LOAD CONTROL)	194
SWITCH AS-ROCKER (ROADING LIGHTS)	162 164
SWITCH AS-ROCKER (SIDESHIFT, LOCK-UNLOCK)	204
SWITCH AS-ROCKER (STARTING AID)	185
SWITCH AS-ROCKER (STEERING MODE SELECT)	212
SWITCH AS-ROCKER (TRANSMISSION NEUTRAL LOCK)	198
SWITCH AS-ROCKER (WARNING BEACON)	185
SWITCH AS-ROCKER (WIPER, WASHER, REAR)	633
SWITCH AS-START (KEY)	185
SWITCH GP-ALL WHEEL DRIVE	175
SWITCH GP-DIFFERENTIAL LOCK	176
SWITCH GP-PRESSURE	177
SWITCH GP-PRESSURE (BRAKE)	283
SWITCH GP-PRESSURE–ENGINE OIL	178
SWITCH-TEMPERATURE (AIR CONDITIONER)	589
SWITCH-TEMPERATURE (ENGINE COOLANT)	188
SWITCH-TEMPERATURE (FUEL)	124
SWITCH-TEMPERATURE (TIMING ADVANCE)	120
SWITCH-TOGGLE (SUSPENSION SEAT)	628
SWIVEL GP-SEAT	630

T

Name	Page
TANK & LINES GP-COOLANT–EXPANSION, RADIATOR	92
TANK & MTG GP-HYDRAULIC	415
TANK GP-EXPANSION (COOLANT)	82 92
TANK GP-FUEL	130 131
TANK GP-HYDRAULIC	417
TANK GP-WINDOW WASHER	633
TIP GP-PENETRATION	505 506 507 508 509 510 511 512 515
TOOTH GP-UNI	501 502 503 504 513 514 516 517 518 519 520 521 523 525 555
TRANSMISSION AR-POWER SHIFT–ALL WHEEL DRIVE	264
TRANSMISSION GP-POWER SHIFT	265
TURBOCHARGER GP	105 107

V

Name	Page
VALVE & MTG GP-BANK–PILOT	419
VALVE & MTG GP-BANK–PILOT CONTROL	418
VALVE & MTG GP-SOLENOID–DIFFERENTIAL LOCK	270
VALVE AR-BANK 2	420
VALVE AR-BANK 3	420

INDEX

Name	Page
VALVE AR-BANK 3–QUICK COUPLER	421
VALVE GP-BANK 3–PILOT CONTROL	422
VALVE GP-BANK 7–PILOT CONTROL	423
VALVE GP-CHECK	328 372
VALVE GP-CHECK (300-BAR)	383
VALVE GP-CHECK (BOOM CONTROL VALVE)	425
VALVE GP-CHECK (PILOT OPERATED HYDRAULIC)	365
VALVE GP-CHECK (REVERSING FAN)	403
VALVE GP-CHECK (STABILIZER CONTROL)	424
VALVE GP-CONTROL–AUXILIARY	432
VALVE GP-CONTROL–BOOM	425
VALVE GP-CONTROL–BUCKET	427
VALVE GP-CONTROL–EXTENDABLE STICK	429
VALVE GP-CONTROL–LIFT	430
VALVE GP-CONTROL–STABILIZER	424
VALVE GP-CONTROL–STICK	428
VALVE GP-CONTROL–SWING	426
VALVE GP-CONTROL–TILT	431
VALVE GP-FLOW CONTROL (AUXILIARY, INLET)	407
VALVE GP-LOAD CONTROL (BOOM)	375
VALVE GP-LOAD CONTROL (LIFT & TILT)	372
VALVE GP-LOAD CONTROL (STICK)	375
VALVE GP-LOAD CONTROL–STABILIZER	433
VALVE GP-PILOT (BACKHOE)	383
VALVE GP-PILOT (LOADER)	381
VALVE GP-PILOT–STABILIZER	434 435 436
VALVE GP-PILOT–STABILIZER, SIDESHIFT, AUTO UP	434
VALVE GP-PRESSURE CONTROL (290-BAR)	401
VALVE GP-PRESSURE REDUCING	403
VALVE GP-PUMP CONTROL (PRESSURE, FLOW COMPENSATOR)	411
VALVE GP-PUMP CONTROL–POWER COMPENSATOR	438
VALVE GP-RADIATOR DRAIN	88 89
VALVE GP-RELIEF (160-BAR)	431
VALVE GP-RELIEF (165-BAR)	425
VALVE GP-RELIEF (240-BAR)	432
VALVE GP-RELIEF (270-BAR)	426 428 429
VALVE GP-RELIEF (290-BAR)	428
VALVE GP-RELIEF (300-BAR)	425 427 431
VALVE GP-RELIEF (LOAD SENSING SIGNAL)	407
VALVE GP-RELIEF (TORQUE CONVERTER INLET)	265
VALVE GP-RELIEF–PRESSURE REGULATOR	271
VALVE GP-SHUTOFF	364
VALVE GP-SOLENOID (12-VDC) (DIFFERENTIAL LOCK)	266
VALVE GP-SOLENOID (12-VOLT) (AUXILIARY)	403
VALVE GP-SOLENOID (ACCUMULATOR)	408
VALVE GP-SOLENOID (CLUTCH)	266
VALVE GP-SOLENOID (FLOW CONTROL)	404
VALVE GP-SOLENOID (LOAD SENSING PRESSURE)	411
VALVE GP-SOLENOID (REVERSE)	266
VALVE GP-SOLENOID (RIDE CONTROL, SWITCH)	408
VALVE GP-SOLENOID (TRANSMISSION)	266
VALVE GP-SOLENOID–12-VOLT	439
VALVE GP-SOLENOID–REMOTE CONTROL	440
VALVE GP-TIRE	272 273
VALVE MECHANISM GP	65 66
VISOR GP-CAB	632

W

Name	Page
WARNING GP-BACKUP	179
WASHER GP-WINDOW	633
WHEEL & TIRE AR	273 274
WHEEL & TIRE AR–ALL WHEEL DRIVE	275
WHEEL & TIRE GP–LH	277 279
WHEEL & TIRE GP–REAR, LH	275 276 277 278 279
WHEEL & TIRE GP–REAR, RH	276 278 280
WHEEL & TIRE GP–RH	277 279
WINDOW GP-CAB–LH	637
WINDOW GP-CAB–REAR	635
WINDOW GP-CAB–RH	639
WINDOW GP-DOOR–LH	641
WINDOW GP-DOOR–RH	642
WIPER GP-WINDOW–REAR	643
WIRING GP-AIR CONDITIONER	180
WIRING GP-CAB–ROOF	183
WIRING GP-CONSOLE–SIDE, PILOT	185
WIRING GP-CONTROL–JOYSTICK, LH	187
WIRING GP-ENGINE	188
WIRING GP-HEATER	191

INDEX

Name	Page	Name	Page
WIRING GP-KICKOUT & POSITIONER	193		
WIRING GP-LOAD CONTROL	194		
WIRING GP-MACHINE–MACHINE SECURITY SYSTEM	196		
WIRING GP-PLATFORM	198		
WIRING GP-POWER RECEPTACLE	203		
WIRING GP-REAR–PILOT	204		
WIRING GP-RIDE CONTROL	206		
WIRING GP-SENSOR	209		
WIRING GP-SENSOR–DELUXE CAB	208		
WIRING GP-STEERING–ALL WHEEL STEER	212		
WIRING GP-TRANSMISSION CONTROL–POWERSHIFT	215		
WIRING GP-WIPER–REAR	217		
WIRING GP-WORK TOOL	221		
WIRING GP-WORK TOOL–ANGLE BROOM	219		

MACHINE ARRANGEMENT

334-0686 BACKHOE AR-EXTENDABLE STICK

S/N: SJL1-UP

FOR USE WITH 338-0837—PAGE 375, 344-1303—PAGE 356, 321-7183—PAGE 352. CANNOT BE USED WITH 344-1302—PAGE 356

AN ATTACHMENT

SMCS-6504, 6533 **i03695640**

NOTE	PART NUMBER	QTY	PART NAME 1 2 3 4 5 6 (PRODUCT LEVEL)	SEE PAGE
Y	*324-0548*	1	BOOM GP	444
Y	**320-6520**	1	CYLINDER GP-BOOM	327
Y	**320-5937**	1	CYLINDER GP-BACKHOE BUCKET	326
Y	**320-6521**	1	CYLINDER GP-STICK	336
Y	*321-7178*	1	LINES GP-BOOM	357
Y	*321-7179*	1	LINES GP-BUCKET (EXTENDABLE STICK)	360
Y	*321-7192*	1	LINES GP-STICK	400
Y	*334-0751*	1	LINKAGE GP-BACKHOE BUCKET	447
Y	*323-2096*	1	MOUNTING GP-LINES	410
Y	*324-0550*	1	STICK GP-EXTENDABLE	463
Y-SEPARATE ILLUSTRATION				

<END>

334-0691 BACKHOE AR-EXTENDABLE STICK

S/N: SJL1-UP

FOR USE WITH 338-0837—PAGE 375, 344-1303—PAGE 356, 321-7183—PAGE 352. CANNOT BE USED WITH 344-1302—PAGE 356

AN ATTACHMENT

SMCS-6504, 6533 **i03695662**

NOTE	PART NUMBER	QTY	PART NAME 1 2 3 4 5 6 (PRODUCT LEVEL)	SEE PAGE
Y	*324-0548*	1	BOOM GP	444
Y	**320-6520**	1	CYLINDER GP-BOOM	327
Y	**320-5937**	1	CYLINDER GP-BACKHOE BUCKET	326
Y	**320-6521**	1	CYLINDER GP-STICK	336
Y	*321-7178*	1	LINES GP-BOOM	357
Y	*321-7179*	1	LINES GP-BUCKET (EXTENDABLE STICK)	360
Y	*321-7192*	1	LINES GP-STICK	400
Y	*334-0752*	1	LINKAGE GP-BACKHOE BUCKET	449
Y	*323-2096*	1	MOUNTING GP-LINES	410
Y	*329-9749*	1	STICK GP-EXTENDABLE	465
Y-SEPARATE ILLUSTRATION				

<END>

MACHINE ARRANGEMENT

350-6934 BACKHOE AR-EXTENDABLE STICK

S/N: SJL1-UP

FOR USE WITH 338-0837—PAGE 375, 344-1303—PAGE 356, 321-7183—PAGE 352. CANNOT BE USED WITH 344-1302—PAGE 356

AN ATTACHMENT

SMCS-6504, 6533 **i03695681**

NOTE	PART NUMBER	QTY	PART NAME 1 2 3 4 5 6 (PRODUCT LEVEL)	SEE PAGE
Y	*324-0548*	1	BOOM GP	444
Y	**320-6520**	1	CYLINDER GP-BOOM	327
Y	**320-5937**	1	CYLINDER GP-BACKHOE BUCKET	326
Y	**320-6521**	1	CYLINDER GP-STICK	336
Y	*321-7178*	1	LINES GP-BOOM	357
Y	*321-7179*	1	LINES GP-BUCKET (EXTENDABLE STICK)	360
Y	*321-7192*	1	LINES GP-STICK	400
Y	*348-5465*	1	LINKAGE GP-BACKHOE BUCKET	452
Y	*323-2096*	1	MOUNTING GP-LINES	410
Y	*324-0550*	1	STICK GP-EXTENDABLE	463

Y-SEPARATE ILLUSTRATION

<END>

350-6935 BACKHOE AR-EXTENDABLE STICK

S/N: SJL1-UP

FOR USE WITH 338-0837—PAGE 375, 344-1303—PAGE 356, 321-7183—PAGE 352. CANNOT BE USED WITH 344-1302—PAGE 356

AN ATTACHMENT

SMCS-6504, 6533 **i03695700**

NOTE	PART NUMBER	QTY	PART NAME 1 2 3 4 5 6 (PRODUCT LEVEL)	SEE PAGE
Y	*324-0548*	1	BOOM GP	444
Y	**320-6520**	1	CYLINDER GP-BOOM	327
Y	**320-5937**	1	CYLINDER GP-BACKHOE BUCKET	326
Y	**320-6521**	1	CYLINDER GP-STICK	336
Y	*321-7178*	1	LINES GP-BOOM	357
Y	*321-7179*	1	LINES GP-BUCKET (EXTENDABLE STICK)	360
Y	*321-7192*	1	LINES GP-STICK	400
Y	*348-5464*	1	LINKAGE GP-BACKHOE BUCKET	451
Y	*323-2096*	1	MOUNTING GP-LINES	410
Y	*329-9749*	1	STICK GP-EXTENDABLE	465

Y-SEPARATE ILLUSTRATION

<END>

MACHINE ARRANGEMENT

350-6944 BACKHOE AR-EXTENDABLE STICK

S/N: SJL1-UP

FOR USE WITH 338-0837—PAGE 375, 344-1303—PAGE 356, 321-7183—PAGE 352. CANNOT BE USED WITH 248-0960—PAGE 476, 344-1302—PAGE 356

AN ATTACHMENT

SMCS-6504, 6533 **i03695701**

NOTE	PART NUMBER	QTY	PART NAME 1 2 3 4 5 6 (PRODUCT LEVEL)	SEE PAGE
Y	*324-0548*	1	BOOM GP	444
Y	**320-6520**	1	CYLINDER GP-BOOM	327
Y	**320-5937**	1	CYLINDER GP-BACKHOE BUCKET	326
Y	**320-6521**	1	CYLINDER GP-STICK	336
Y	*321-7178*	1	LINES GP-BOOM	357
Y	*321-7179*	1	LINES GP-BUCKET (EXTENDABLE STICK)	360
Y	*338-0837*	1	LINES GP-LOAD CONTROL VALVE	375
Y	*321-7192*	1	LINES GP-STICK	400
Y	*334-0751*	1	LINKAGE GP-BACKHOE BUCKET	447
Y	*323-2096*	1	MOUNTING GP-LINES	410
Y	*324-0550*	1	STICK GP-EXTENDABLE	463
Y	*349-1101*	1	WIRING GP-SENSOR	209

Y-SEPARATE ILLUSTRATION

<END>

350-6945 BACKHOE AR-EXTENDABLE STICK

S/N: SJL1-UP

FOR USE WITH 338-0837—PAGE 375, 344-1303—PAGE 356, 321-7183—PAGE 352. CANNOT BE USED WITH 344-1302—PAGE 356, 248-0960—PAGE 476

AN ATTACHMENT

SMCS-6504, 6533 **i03695664**

NOTE	PART NUMBER	QTY	PART NAME 1 2 3 4 5 6 (PRODUCT LEVEL)	SEE PAGE
Y	*324-0548*	1	BOOM GP	444
Y	**320-6520**	1	CYLINDER GP-BOOM	327
Y	**320-5937**	1	CYLINDER GP-BACKHOE BUCKET	326
Y	**320-6521**	1	CYLINDER GP-STICK	336
Y	*321-7178*	1	LINES GP-BOOM	357
Y	*321-7179*	1	LINES GP-BUCKET (EXTENDABLE STICK)	360
Y	*338-0837*	1	LINES GP-LOAD CONTROL VALVE	375
Y	*321-7192*	1	LINES GP-STICK	400
Y	*334-0752*	1	LINKAGE GP-BACKHOE BUCKET	449
Y	*323-2096*	1	MOUNTING GP-LINES	410
Y	*329-9749*	1	STICK GP-EXTENDABLE	465
Y	*349-1101*	1	WIRING GP-SENSOR	209

Y-SEPARATE ILLUSTRATION

<END>

MACHINE ARRANGEMENT

334-0694 BACKHOE AR-STANDARD STICK

S/N: SJL1-UP

FOR USE WITH 344-1302—PAGE 356, 338-0837—PAGE 375. CANNOT BE USED WITH 344-1303—PAGE 356, 321-7183—PAGE 352

AN ATTACHMENT

SMCS-6502, 6504 **i03695680**

NOTE	PART NUMBER	QTY	PART NAME 1 2 3 4 5 6 (PRODUCT LEVEL)	SEE PAGE
Y	*324-0548*	1	BOOM GP	444
Y	**320-6520**	1	CYLINDER GP-BOOM	327
Y	**320-5937**	1	CYLINDER GP-BACKHOE BUCKET	326
Y	**320-6521**	1	CYLINDER GP-STICK	336
Y	*321-7178*	1	LINES GP-BOOM	357
Y	*323-2023*	1	LINES GP-BUCKET CYLINDER	362
Y	*321-7192*	1	LINES GP-STICK	400
Y	*334-0751*	1	LINKAGE GP-BACKHOE BUCKET	447
Y	*323-2096*	1	MOUNTING GP-LINES	410
Y	*324-0552*	1	STICK GP	461

Y-SEPARATE ILLUSTRATION

<END>

350-6933 BACKHOE AR-STANDARD STICK

S/N: SJL1-UP

FOR USE WITH 338-0837—PAGE 375, 344-1302—PAGE 356. CANNOT BE USED WITH 344-1303—PAGE 356, 321-7183—PAGE 352

AN ATTACHMENT

SMCS-6502, 6504 **i03695720**

NOTE	PART NUMBER	QTY	PART NAME 1 2 3 4 5 6 (PRODUCT LEVEL)	SEE PAGE
Y	*324-0548*	1	BOOM GP	444
Y	**320-6520**	1	CYLINDER GP-BOOM	327
Y	**320-5937**	1	CYLINDER GP-BACKHOE BUCKET	326
Y	**320-6521**	1	CYLINDER GP-STICK	336
Y	*321-7178*	1	LINES GP-BOOM	357
Y	*323-2023*	1	LINES GP-BUCKET CYLINDER	362
Y	*321-7192*	1	LINES GP-STICK	400
Y	*348-5465*	1	LINKAGE GP-BACKHOE BUCKET	452
Y	*323-2096*	1	MOUNTING GP-LINES	410
Y	*324-0552*	1	STICK GP	461

Y-SEPARATE ILLUSTRATION

<END>

MACHINE ARRANGEMENT

329-0296 CHASSIS AR

S/N: SJL1-UP

PART OF 329-0080 COMMON AR

SMCS-7000 **i03657469**

NOTE	PART NUMBER	QTY	PART NAME 1 2 3 4 5 6 (PRODUCT LEVEL)	SEE PAGE
Y	*313-3379*	1	BATTERY & WIRING GP	134
Y	*341-0694*	1	BOX GP-BATTERY	293
Y	*343-7811*	1	FILM GP	644
Y	*320-5933*	1	FRAME GP-SLIDING	306
Y	*322-3764*	1	FRAME GP-SWING	308
Y	*311-8061*	1	HOOD & GUARD GP	312
Y	*175-7877*	1	LINK GP-SHIPPING	645
Y	*206-1641*	1	LOCK GP-TRANSPORT (STABILIZER)	454
Y	*329-1322*	1	LOCK GP-TRANSPORT	456
Y	*204-4249*	1	MOUNTING GP-CAB	616
Y	*342-8061*	1	PLATE & FILM GP	647
Y	*341-0697*	1	TANK GP-FUEL	131
Y	*338-5737*	1	WIRING GP-ENGINE	188
Y	*328-1942*	1	WIRING GP-REAR (PILOT)	204

Y-SEPARATE ILLUSTRATION

<END>

329-0080 COMMON AR

S/N: SJL1-UP

SMCS-7000 **i03688473**

NOTE	PART NUMBER	QTY	PART NAME 1 2 3 4 5 6 (PRODUCT LEVEL)	SEE PAGE
Y	*329-0296*	1	CHASSIS AR	5
Y	*329-0124*	1	HYDRAULIC AR	342
Y	*329-0092*	1	LOADER AR	6

Y-SEPARATE ILLUSTRATION

<END>

343-0656 CONVERSION AR-ROADING—UNITED KINGDOM

S/N: SJL1-UP

AN ATTACHMENT

SMCS-7000 **i03690262**

NOTE	PART NUMBER	QTY	PART NAME 1 2 3 4 5 6 (PRODUCT LEVEL)	SEE PAGE
	349-3644	1	FILM-NOTICE (ROADING HEIGHT)	
			(INSIDE OF THE FRONT WINDSCREEN IN THE TOP LH CORNER, BELOW THE SUN-VISOR)	
	160-7599	2	RESTRAINER-BUCKET	

<END>

MACHINE ARRANGEMENT

329-0320 DRIVE AR-BACKHOE LOADER–
ALL WHEEL DRIVE, ALL WHEEL STEER
S/N: SJL1-UP
PART OF 329-0311 POWER TRAIN AR
AN ATTACHMENT

SMCS-3268, 3278, 3282, 4304, 4313, 4334 **i03693964**

NOTE	PART NUMBER	QTY	PART NAME 1 2 3 4 5 6 (PRODUCT LEVEL)	SEE PAGE
Y	**216-9083**	1	AXLE GP-DRIVE & STEERING (FRONT)	223
Y	**315-2318**	1	AXLE GP-DRIVE & STEERING (REAR)	226
Y	*338-0434*	1	LINES GP-STEERING	290
Y	*222-1529*	1	MOUNTING GP-AXLE	249
Y	*216-4475*	1	SHAFT GP-DRIVE (REAR)	256
Y	*305-3295*	1	SWITCH GP-ALL WHEEL DRIVE (INCLUDES RELAY)	175
Y	*340-0150*	1	WIRING GP-STEERING (ALL WHEEL STEER)	212
Y-SEPARATE ILLUSTRATION				

<END>

329-0092 LOADER AR
S/N: SJL1-UP
PART OF 329-0080 COMMON AR

SMCS-6100 **i03662960**

NOTE	PART NUMBER	QTY	PART NAME 1 2 3 4 5 6 (PRODUCT LEVEL)	SEE PAGE
Y	*343-7355*	1	ARM GP-LIFT	441
Y	*268-9910*	1	BRACE GP-LIFT CYLINDER	446
Y	**249-6710**	1	CYLINDER GP-LIFT (LH)	331
Y	**249-6711**	1	CYLINDER GP-LIFT (RH)	332
Y	**210-7101**	2	CYLINDER GP-TILT	338
Y	*269-8456*	1	STEP GP	318
Y	*295-5902*	1	WIRING GP-KICKOUT & POSITIONER	193
Y-SEPARATE ILLUSTRATION				

<END>

344-6354 PREMIER AR
S/N: SJL1-UP
FOR USE WITH 329-0311–PAGE 253, 335-3054–PAGE 559, 335-3055–PAGE 558. CANNOT BE USED WITH 344-5290–PAGE 323
AN ATTACHMENT

SMCS-7000 **i03662286**

NOTE	PART NUMBER	QTY	PART NAME 1 2 3 4 5 6 (PRODUCT LEVEL)	SEE PAGE
Y	*331-8676*	1	LINES GP-RIDE CONTROL	394
Y	*323-0991*	1	WIRING GP-RIDE CONTROL	206
	177-9600	2	FILM-IDENTIFICATION (PREMIER) (ON CAB DOOR)	
Y-SEPARATE ILLUSTRATION				

<END>

ENGINE ARRANGEMENT

339-4987 ENGINE AR

S/N: SJL1-UP

CANNOT BE USED WITH 335-3053—PAGE 557, 335-3055—PAGE 558

AN ATTACHMENT

SMCS-1000 **i03664241**

NOTE	PART NUMBER	QTY	PART NAME 1 2 3 4 5 6 (PRODUCT LEVEL)	SEE PAGE
Y	*310-2644*	1	AIR CLEANER GP	95
Y	*206-1640*	1	CONTROL GP-GOVERNOR	109
Y	**322-1924**	1	ENGINE AR-PRIMARY	12
Y	*210-6807*	1	EXTENSION GP-EXHAUST	102
Y	*299-4729*	1	FAN GP-SUCTION	78
Y	*307-2033*	1	GAUGE GP-OIL LEVEL & FILLER (ENGINE)	69
Y	*345-7477*	1	LINES GP-FUEL	114
Y	*334-7152*	1	MOUNTING GP-ENGINE & XMSN	49
Y	*325-3036*	1	MUFFLER GP	104
Y	*314-6700*	1	PUMP GP-FUEL PRM & PRIM FILTER	128
Y	*309-9105*	1	RADIATOR & HYD OIL COOLER GP	90
Y	*324-6213*	1	TANK & LINES GP-COOLANT (EXPANSION, RADIATOR)	92
	178-8465	1	HARNESS AS-FUEL TANK (FUEL SHUTOFF)	
	9X-3401	2	PIN-CONNECTOR (16-GA TO 18-GA)	
	176-1477	1	PLUG AS (2-PIN)	
	102-8802	1	KIT-RECEPTACLE (2-PIN)	
			(INCLUDES RECEPTACEL AS & WEDGE)	
	185-1861	1	SEAL-WIRE	
	8L-8413	2	STRAP-CABLE	
	176-1521	2	TERMINAL	

Y-SEPARATE ILLUSTRATION

ENGINE ARRANGEMENT

339-4989 ENGINE AR

S/N: SJL1-UP

CANNOT BE USED WITH 335-3053—PAGE 557, 335-3055—PAGE 558

AN ATTACHMENT

SMCS-1000 **i03664243**

NOTE	PART NUMBER	QTY	PART NAME 1 2 3 4 5 6 (PRODUCT LEVEL)	SEE PAGE
Y	*332-6587*	1	AIR CLEANER GP	97
Y	*323-9307*	1	BREATHER GP	67
Y	*206-1640*	1	CONTROL GP-GOVERNOR	109
Y	**321-7705**	1	ENGINE AR-PRIMARY	11
Y	*210-6807*	1	EXTENSION GP-EXHAUST	102
Y	*299-4729*	1	FAN GP-SUCTION	78
Y	*307-2033*	1	GAUGE GP-OIL LEVEL & FILLER (ENGINE)	69
Y	*304-3920*	1	LINES GP-AIR	103
Y	*345-7478*	1	LINES GP-FUEL	116
Y	*304-4022*	1	LINES GP-RADIATOR	82
Y	*334-7152*	1	MOUNTING GP-ENGINE & XMSN	49
Y	*325-3036*	1	MUFFLER GP	104
Y	*314-6700*	1	PUMP GP-FUEL PRM & PRIM FILTER	128
Y	*309-9106*	1	RADIATOR & HYD OIL COOLER GP	91
	178-8465	1	HARNESS AS-FUEL TANK (FUEL SHUTOFF)	
	9X-3401	2	PIN-CONNECTOR (16-GA TO 18-GA)	
	176-1477	1	PLUG AS (2-PIN)	
	102-8802	1	KIT-RECEPTACLE (2-PIN)	
			(INCLUDES RECEPTACEL AS & WEDGE)	
	185-1861	1	SEAL-WIRE	
	8L-8413	2	STRAP-CABLE	
	176-1521	2	TERMINAL	

Y-SEPARATE ILLUSTRATION

ENGINE ARRANGEMENT

339-4991 ENGINE AR

S/N: SJL1-UP

CANNOT BE USED WITH 335-3052—PAGE 556, 335-3054—PAGE 559

AN ATTACHMENT

SMCS-1000 **i03664244**

NOTE	PART NUMBER	QTY	PART NAME 1 2 3 4 5 6 (PRODUCT LEVEL)	SEE PAGE
Y	*310-2644*	1	AIR CLEANER GP	95
Y	*206-1640*	1	CONTROL GP-GOVERNOR	109
Y	**322-1924**	1	ENGINE AR-PRIMARY	12
Y	*210-6807*	1	EXTENSION GP-EXHAUST	102
Y	*299-4716*	1	FAN GP-SUCTION	77
Y	*307-2033*	1	GAUGE GP-OIL LEVEL & FILLER (ENGINE)	69
Y	*345-7477*	1	LINES GP-FUEL	114
Y	*334-7152*	1	MOUNTING GP-ENGINE & XMSN	49
Y	*325-3036*	1	MUFFLER GP	104
Y	*314-6700*	1	PUMP GP-FUEL PRM & PRIM FILTER	128
Y	*309-9105*	1	RADIATOR & HYD OIL COOLER GP	90
Y	*324-6213*	1	TANK & LINES GP-COOLANT (EXPANSION, RADIATOR)	92
	178-8465	1	HARNESS AS-FUEL TANK (FUEL SHUTOFF)	
	9X-3401	2	PIN-CONNECTOR (16-GA TO 18-GA)	
	176-1477	1	PLUG AS (2-PIN)	
	102-8802	1	KIT-RECEPTACLE (2-PIN)	
			(INCLUDES RECEPTACEL AS & WEDGE)	
	185-1861	1	SEAL-WIRE	
	8L-8413	2	STRAP-CABLE	
	176-1521	2	TERMINAL	

Y-SEPARATE ILLUSTRATION

ENGINE ARRANGEMENT

339-4993 ENGINE AR

S/N: SJL1-UP

CANNOT BE USED WITH 335-3052—PAGE 556, 335-3054—PAGE 559

AN ATTACHMENT

SMCS-1000 **i03664260**

NOTE	PART NUMBER	QTY	PART NAME 1 2 3 4 5 6 (PRODUCT LEVEL)	SEE PAGE
Y	*332-6587*	1	AIR CLEANER GP	97
Y	*323-9307*	1	BREATHER GP	67
Y	*206-1640*	1	CONTROL GP-GOVERNOR	109
Y	**321-7705**	1	ENGINE AR-PRIMARY	11
Y	*210-6807*	1	EXTENSION GP-EXHAUST	102
Y	*321-3113*	1	FAN GP-SUCTION	79
Y	*307-2033*	1	GAUGE GP-OIL LEVEL & FILLER (ENGINE)	69
Y	*304-3920*	1	LINES GP-AIR	103
Y	*345-7478*	1	LINES GP-FUEL	116
Y	*304-4022*	1	LINES GP-RADIATOR	82
Y	*334-7152*	1	MOUNTING GP-ENGINE & XMSN	49
Y	*325-3036*	1	MUFFLER GP	104
Y	*314-6700*	1	PUMP GP-FUEL PRM & PRIM FILTER	128
Y	*309-9106*	1	RADIATOR & HYD OIL COOLER GP	91
	178-8465	1	HARNESS AS-FUEL TANK (FUEL SHUTOFF)	
	9X-3401	2	PIN-CONNECTOR (16-GA TO 18-GA)	
	176-1477	1	PLUG AS (2-PIN)	
	102-8802	1	KIT-RECEPTACLE (2-PIN)	
			(INCLUDES RECEPTACEL AS & WEDGE)	
	185-1861	1	SEAL-WIRE	
	8L-8413	2	STRAP-CABLE	
	176-1521	2	TERMINAL	

Y-SEPARATE ILLUSTRATION

ENGINE ARRANGEMENT

321-7705 ENGINE AR-PRIMARY

S/N: C4Z1-UP
75 BRAKE KW (100 BHP) AT 2200 RPM
PART OF 339-4989, 339-4993 ENGINE AR
AN ATTACHMENT

SMCS-1000 **i03427301**

NOTE	PART NUMBER	QTY	PART NAME 1 2 3 4 5 6 (PRODUCT LEVEL)	SEE PAGE
Y	*317-9776*	1	ALTERNATOR GP-CHARGING	132
Y	*326-9005*	1	CAMSHAFT GP	13
Y	*316-6941*	1	CONNECTION GP-WATER	73
Y	*316-6899*	1	COOLER GP-ENGINE OIL	75
Y	*329-0129*	1	COVER GP-INLET MANIFOLD	100
Y	*326-9008*	1	COVER GP-VALVE MECHANISM	15
Y	*326-9000*	1	CRANKSHAFT GP	21
Y	*326-8999*	1	CYLINDER BLOCK GP	25
Y	*326-9003*	1	CYLINDER HEAD GP	31
Y	*326-9009*	1	DRIVE GP-AUXILIARY	33
Y	*303-5770*	1	DRIVE GP-FAN	35
Y	*309-7555*	1	FILLER GP-ENGINE OIL	68
Y	*303-5768*	1	FLYWHEEL GP	38
Y	*315-3418*	1	GLOW PLUG GP	140
Y	*303-5767*	1	HOUSING GP-FLYWHEEL	40
Y	*304-8760*	1	HOUSING GP-FRONT	41
Y	*326-9013*	1	LIFTING GP-ENGINE	46
Y	*326-9012*	1	LINES GP-FUEL	112
Y	*303-5778*	1	MOUNTING GP-ENGINE	48
Y	*322-9476*	1	PAN GP-OIL	50
Y	*326-9002*	1	PISTON & ROD GP	54
Y	*298-5129*	1	PLUG GP-CYLINDER HEAD	57
Y	*298-5131*	1	PLUG GP-ENGINE (THREADED)	61
Y	*304-8761*	1	PLUG GP-ENGINE	62
Y	*298-5112*	1	PUMP GP-ENGINE OIL	71
Y	*326-9149*	1	PUMP GP-FUEL INJECTION	124
Y	*315-3411*	1	PUMP GP-WATER	86
Y	*303-5769*	1	STARTING MOTOR GP-ELECTRIC	174
Y	*316-6925*	1	SWITCH GP-PRESSURE	178
Y	*326-9156*	1	TURBOCHARGER GP	107
Y	*326-9004*	1	VALVE MECHANISM GP	65
	321-7782	1	CYLINDER BLOCK GP-SHORT	

Y-SEPARATE ILLUSTRATION

ENGINE ARRANGEMENT

322-1924 ENGINE AR-PRIMARY

S/N: CRS1-UP
75 BRAKE KW (100 BHP) AT 2200 RPM
PART OF 339-4987, 339-4991 ENGINE AR
AN ATTACHMENT

SMCS-1000 **i03235801**

NOTE	PART NUMBER	QTY	PART NAME 1 2 3 4 5 6 (PRODUCT LEVEL)	SEE PAGE
Y	*334-3756*	1	ALTERNATOR GP-CHARGING	133
Y	*334-4208*	1	CAMSHAFT GP	14
Y	*231-0033*	1	CONNECTION GP-WATER	72
Y	*238-2799*	1	COOLER GP-FLTR BASE & ENG OIL	76
Y	*231-0149*	1	COVER GP-INLET MANIFOLD	99
Y	*335-9798*	1	COVER GP-VALVE MECHANISM	17
Y	*334-4203*	1	CRANKSHAFT GP	22
Y	*334-4202*	1	CYLINDER BLOCK GP	26
Y	*334-4205*	1	CYLINDER HEAD GP	32
Y	*334-3755*	1	DRIVE GP-AUXILIARY	34
Y	*334-3754*	1	DRIVE GP-FAN	36
Y	*230-7300*	1	FLYWHEEL GP	37
Y	*232-6661*	1	GLOW PLUG GP	139
Y	*236-8238*	1	HOUSING GP-FLYWHEEL	39
Y	*334-3757*	1	HOUSING GP-FRONT	43
Y	*233-7432*	1	LIFTING GP-ENGINE	45
Y	*247-4885*	1	LINES GP-FUEL FILTER	118
Y	*237-3658*	1	MOUNTING GP-ENGINE	47
Y	*335-9799*	1	PAN GP-OIL	52
Y	*334-4204*	1	PISTON & ROD GP	55
Y	*225-4317*	1	PLUG GP-ENGINE	58
Y	*230-7569*	1	PLUG GP-ENGINE	59
Y	*232-6204*	1	PLUG GP-ENGINE	60
Y	*230-7578*	1	PUMP GP-ENGINE OIL	70
Y	*236-8229*	1	PUMP GP-FUEL INJECTION	120
Y	*230-7355*	1	PUMP GP-WATER	84
Y	*237-0024*	1	STARTING MOTOR GP-ELECTRIC	173
Y	*237-4896*	1	SWITCH GP-PRESSURE	177
Y	*237-3924*	1	TURBOCHARGER GP	105
Y	*334-4207*	1	VALVE MECHANISM GP	66
	268-0867	1	CYLINDER BLOCK GP-SHORT	
			AVAILABLE GASKET KIT(S):	
	272-2232	1	KIT-GASKET (BOTTOM)	
	277-5156	1	KIT-GASKET (TOP)	

Y-SEPARATE ILLUSTRATION

326-9005 CAMSHAFT GP

S/N: C4Z1-UP
PART OF 321-7705 ENGINE AR-PRIMARY
AN ATTACHMENT

SMCS-1210, 1211, 1212 **i03127790**

NOTE	REF NO	GRAPHIC REF	PART NUMBER	QTY	PART NAME 1 2 3 4 5 6 (PRODUCT LEVEL)	SEE PAGE
	1	1	**278-5126**	8	PUSHROD	
	2	1	**315-3384**	8	TAPPET	
	3	1	**326-8992**	1	CAMSHAFT	
	3A	1	**1B-8736**	1	KEY-WOODRUFF	

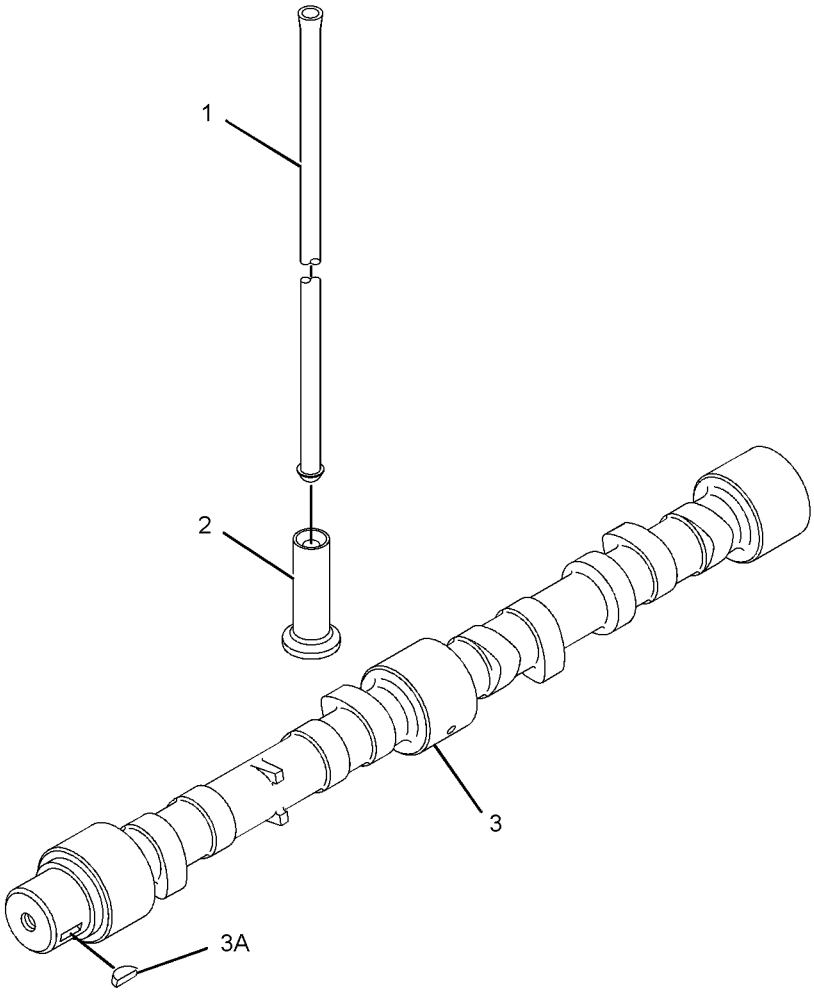

GRAPHIC #1 **<END>** g01611455

BASIC ENGINE

334-4208 CAMSHAFT GP

S/N: CRS1-UP
PART OF 322-1924 ENGINE AR-PRIMARY
AN ATTACHMENT

SMCS-1210, 1211, 1212 **i03653916**

NOTE	REF NO	GRAPHIC REF	PART NUMBER	QTY	PART NAME 1 2 3 4 5 6 (PRODUCT LEVEL)	SEE PAGE
	1	1	**067-6095**	8	ROD	
	2	1	**138-2053**	8	TAPPET	
	3	1	**350-2374**	1	CAMSHAFT AS	
	3A	1	**1B-8736**	1	KEY-WOODRUFF	

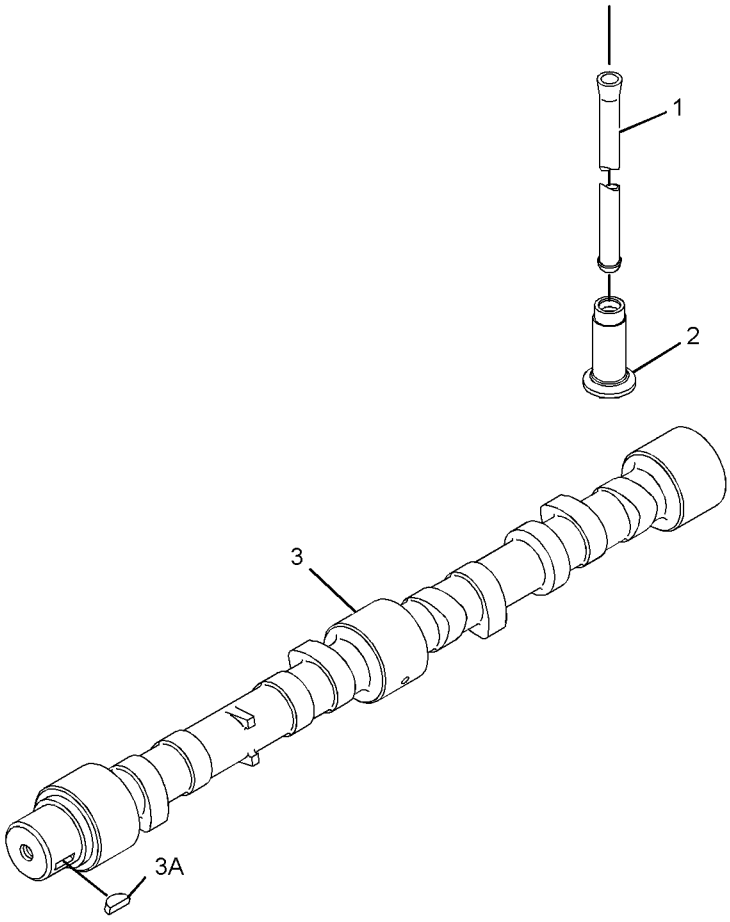

GRAPHIC #1 **<END>** g01964670

326-9008 COVER GP-VALVE MECHANISM

S/N: C4Z1-UP

PART OF 321-7705 ENGINE AR-PRIMARY

AN ATTACHMENT

SMCS-1107, 1120 **i03127792**

NOTE	REF NO	GRAPHIC REF	PART NUMBER	QTY	PART NAME 1 2 3 4 5 6 (PRODUCT LEVEL)	SEE PAGE
	1	1	**6I-0846**	3	BOLT (M6X1X14-MM)	
	2	1	**6I-0917**	1	BOLT (M6X1X25-MM)	
	3	1	**100-4838**	2	BOLT (M6X20-MM)	
M	4	1	**100-4841**	2	BOLT (M6X1X10-MM)	
	5	1	**230-9127**	1	COVER	
	6	1	**237-0769**	1	SHIELD-HEAT	
	7	1	**287-8573**	1	PIPE-BREATHER	
	8	1	**308-1792**	1	COVER GP-VALVE MECHANISM	
	8A	1	**225-6451**	1	GASKET (VALVE COVER)	
	8B	1	**225-6456**	1	SPRING	
	8C	1	**225-6461**	1	CAP	
	8D	1	**225-6464**	1	DIAPHRAGM (CRANKCASE PRESSURE CONTACTOR)	
	8E	1	**225-6477**	1	PLATE	
	8F	1	**225-6478**	4	SCREW-MACHINE	
	8G	1	**225-6479**	1	CAP	

M-METRIC PART

326-9008 **COVER GP-VALVE MECHANISM** *(contd.)* **i03127792**

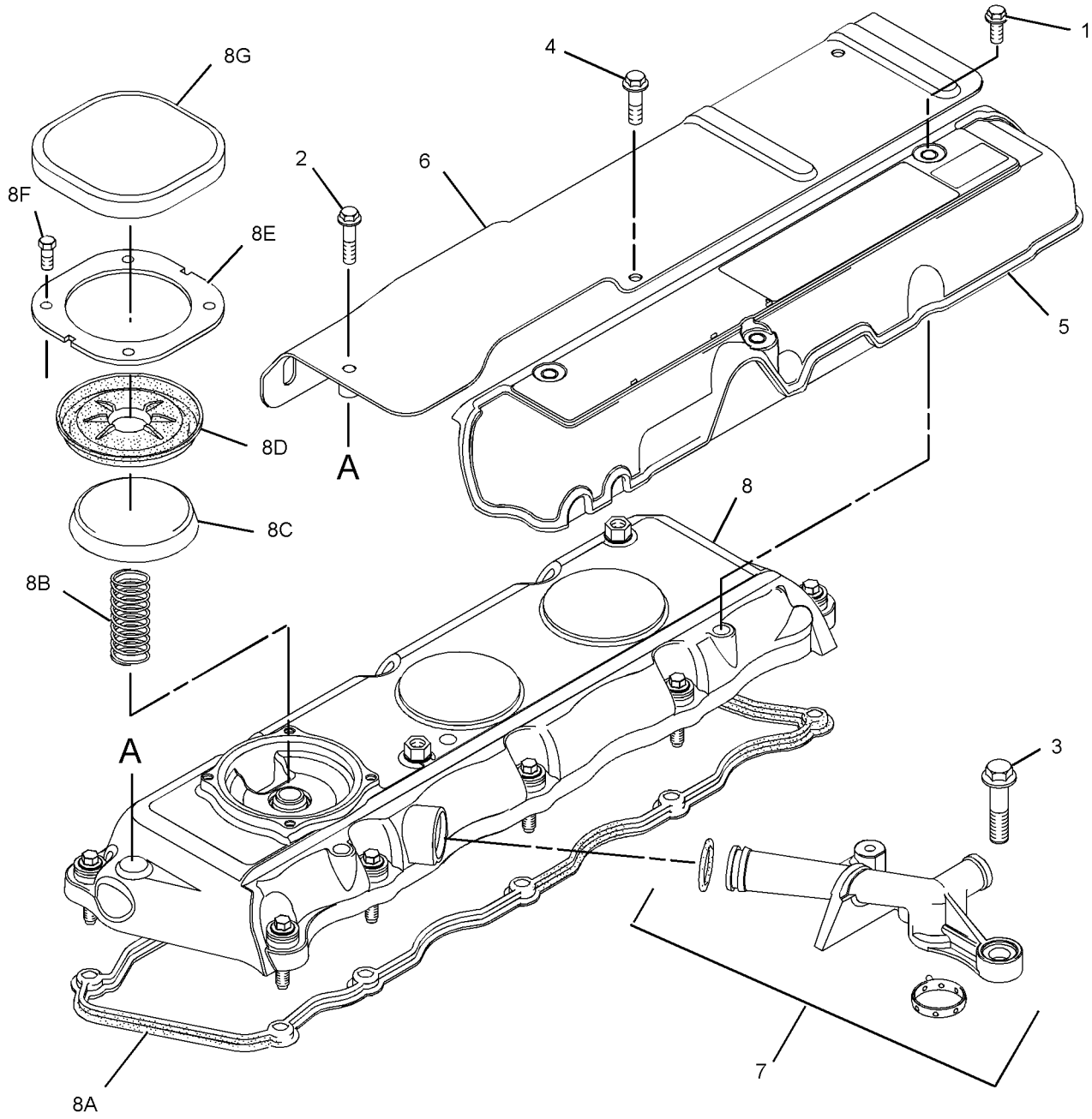

GRAPHIC #1 **<END>** g01615434

335-9798 COVER GP-VALVE MECHANISM

S/N: CRS1-UP

PART OF 322-1924 ENGINE AR-PRIMARY

AN ATTACHMENT

SMCS-1107, 1120 **i03325025**

NOTE	REF NO	GRAPHIC REF	PART NUMBER	QTY	PART NAME 1 2 3 4 5 6 (PRODUCT LEVEL)	SEE PAGE
M	1	1	**6I-0260**	2	BOLT (M8X1.25X25-MM)	
	2	1	**6I-0846**	3	BOLT (M6X1X14-MM)	
	3	1	**6I-0917**	1	BOLT (M6X1X25-MM)	
	4	1	**100-4838**	2	BOLT (M6X20-MM)	
M	5	1	**100-4841**	2	BOLT (M6X1X10-MM)	
	6	1	**225-6522**	1	PLUG-CUP	
	7	1	**230-9127**	1	COVER	
	8	1	**237-0769**	1	SHIELD-HEAT	
	9	1	**246-1163**	1	FILLER AS-OIL	
	9A	1	**229-4896**	1	SEAL-O-RING	
	10	1	**287-8573**	1	PIPE-BREATHER	
	11	1	**308-1792**	1	COVER GP-VALVE MECHANISM	
	11A	1	**225-6451**	1	GASKET (VALVE COVER)	
	11B	1	**225-6456**	1	SPRING	
	11C	1	**225-6461**	1	CAP (VALVE COVER)	
	11D	1	**225-6464**	1	DIAPHRAGM (CRANKCASE PRESSURE CONTACTOR)	
	11E	1	**225-6477**	1	PLATE	
	11F	1	**225-6478**	4	SCREW-MACHINE	
	11G	1	**225-6479**	1	CAP (VALVE COVER)	

M-METRIC PART

335-9798 **COVER GP-VALVE MECHANISM** *(contd.)* **i03325025**

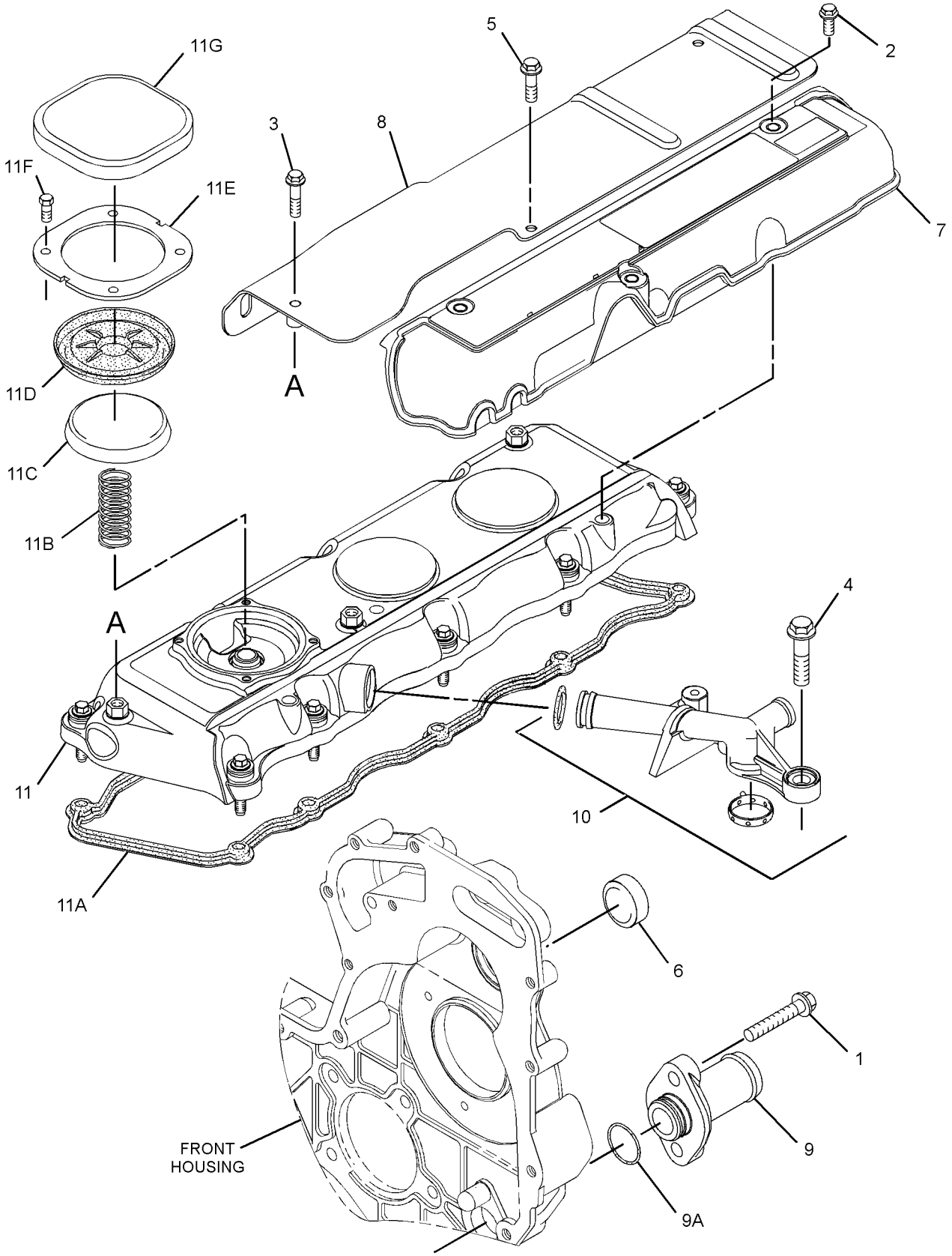

GRAPHIC #1 **<END>** g01651288

232-7400 CRANKSHAFT GP

S/N: CRS1-UP; C4Z1-UP

PART OF 326-9000, 334-4203 CRANKSHAFT GP

AN ATTACHMENT

SMCS-1202, 1203, 1204, 1230, 1231, 1232 **i03331702**

NOTE	REF NO	GRAPHIC REF	PART NUMBER	QTY	PART NAME 1 2 3 4 5 6 (PRODUCT LEVEL)	SEE PAGE
	1	1	**1B-8736**	1	KEY-WOODRUFF	
	2	1	**225-7772**	1	BEARING SET-MAIN (STANDARD)	
AB		1	**233-3785**		KIT-CRANKSHAFT BEARING (0.020-IN US ID)	
AB		1	**233-3784**		KIT-CRANKSHAFT BEARING (0.010-IN US ID)	
AB		1	**233-3786**		KIT-CRANKSHAFT BEARING (0.030-IN US ID)	
	3	1	**032-9090**	2	WASHER-THRUST (STANDARD-UPPER)	
AB		1	**067-6873**		WASHER-THRUST (0.18-MM OS)	
	4	1	**032-9091**	2	WASHER-THRUST (STANDARD-LOWER)	
AB		1	**067-6874**		WASHER-THRUST (0.18-MM OS)	
	5	1	**298-4524**	1	KIT-BEARING	
AB		1	**315-3396**		KIT-BEARING (0.25-MM OS)	
AB		1	**315-3397**		KIT-BEARING (0.5-MM OS)	
AB		1	**315-3398**		KIT-BEARING (0.75-MM OS)	

A-NOT PART OF THIS GROUP
B-USE AS REQUIRED

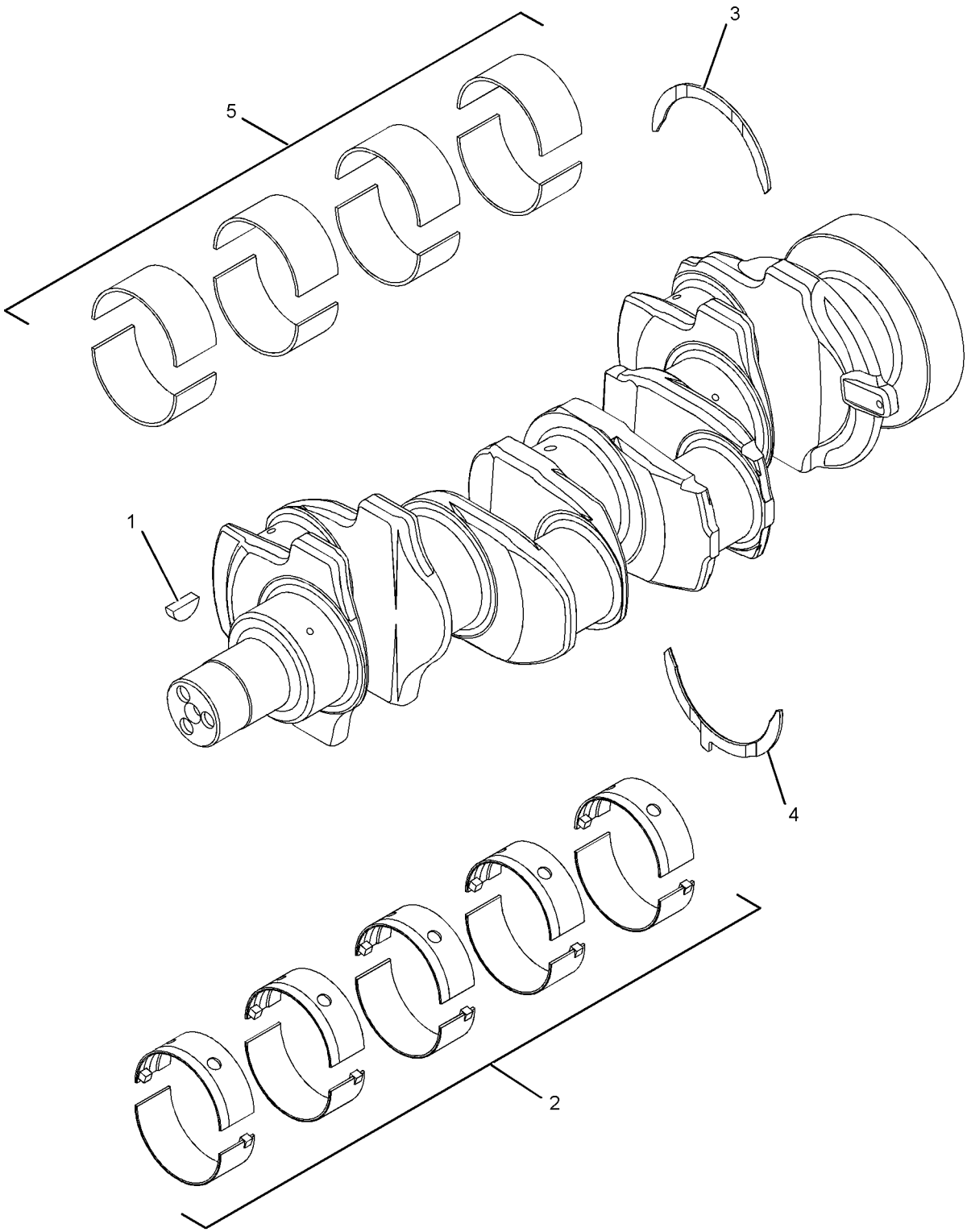

GRAPHIC #1 **<END>** g01369317

BASIC ENGINE

326-9000 CRANKSHAFT GP

S/N: C4Z1-UP

PART OF 321-7705 ENGINE AR-PRIMARY

AN ATTACHMENT

SMCS-1202, 1203, 1204, 1230, 1231, 1232 **i03631869**

NOTE	REF NO	GRAPHIC REF	PART NUMBER	QTY	PART NAME 1 2 3 4 5 6 (PRODUCT LEVEL)	SEE PAGE
	1	1	**216-8314**	1	GEAR-CRANKSHAFT (34-TEETH)	
Y	2	1	**232-7400**	1	CRANKSHAFT GP	19
					AVAILABLE REPAIR KIT(S):	
			274-4716	1	KIT-CRANKSHAFT	

Y-SEPARATE ILLUSTRATION

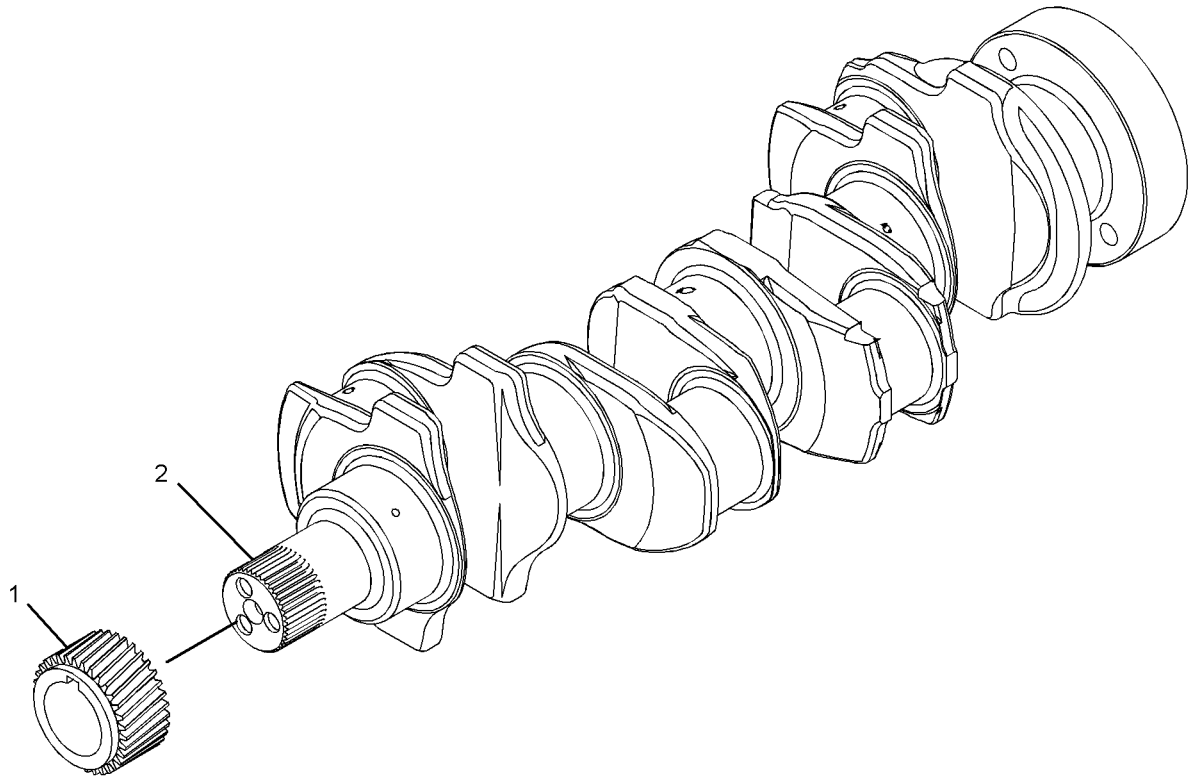

GRAPHIC #1 **<END>** g01420823

BASIC ENGINE

334-4203 CRANKSHAFT GP

S/N: CRS1-UP

PART OF 322-1924 ENGINE AR-PRIMARY

AN ATTACHMENT

SMCS-1202, 1203, 1204, 1230, 1231, 1232 **i03143142**

NOTE	REF NO	GRAPHIC REF	PART NUMBER	QTY	PART NAME 1 2 3 4 5 6 (PRODUCT LEVEL)	SEE PAGE
	1	1	**216-8314**	1	GEAR-CRANKSHAFT (34-TEETH)	
Y	2	1	**232-7400**	1	CRANKSHAFT GP	19

Y-SEPARATE ILLUSTRATION

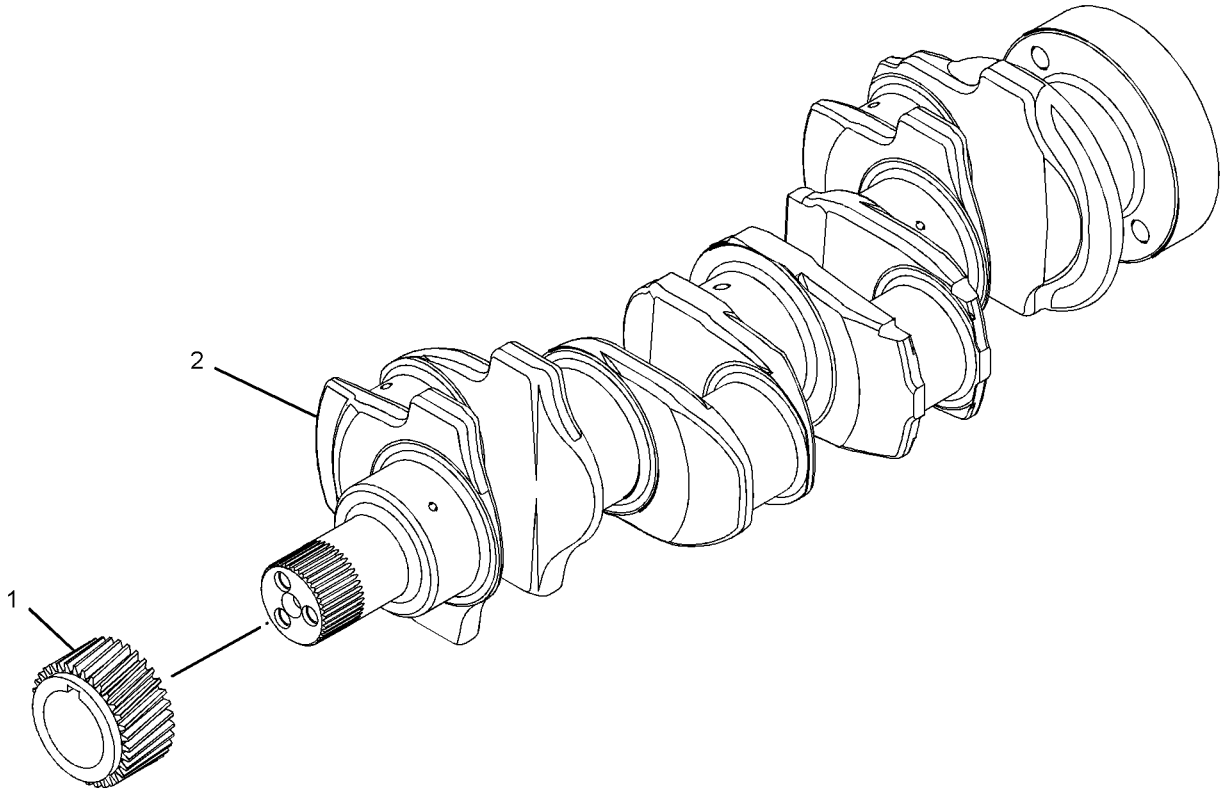

GRAPHIC #1 **<END>** g01402486

232-7604 CYLINDER BLOCK GP

S/N: CRS1-UP

PART OF 334-4202 CYLINDER BLOCK GP

AN ATTACHMENT

SMCS-1201 **i03251707**

NOTE	REF NO	GRAPHIC REF	PART NUMBER	QTY	PART NAME 1 2 3 4 5 6 (PRODUCT LEVEL)	SEE PAGE
	1	1	**6I-0572**	4	BOLT (M8X1.25X20-MM)	
	2	1	**035-8068**	10	BOLT (5/8-18X3.75-IN)	
	3	1	**067-6002**	10	DOWEL	
	4	1	**067-6006**	1	PLUG	
	5	1	**067-6043**	1	PLUG-SIDE	
M	6	1	**100-4841**	4	BOLT (M6X1X10-MM)	
	7	1	**185-0884**	2	DOWEL	
	8	1	**225-7944**	1	GASKET (ENGINE OIL FILTER BASE)	
	9	1	**225-8858**	2	PLUG	
	10	1	**232-3751**	1	PLATE	
	11	1	**232-7440**	1	BEARING	
	12	1	**276-5605**	4	JET AS-PISTON COOLING	
	13	1	**232-7596**	1	PLUG	
	14	1	**232-7597**	2	PLUG	
	15	1	**232-7599**	1	PLUG	
	16	1	**232-7600**	1	PLUG-CUP	
	17	1	**232-7603**	1	PLUG	

M-METRIC PART

232-7604 CYLINDER BLOCK GP *(contd.)* i03251707

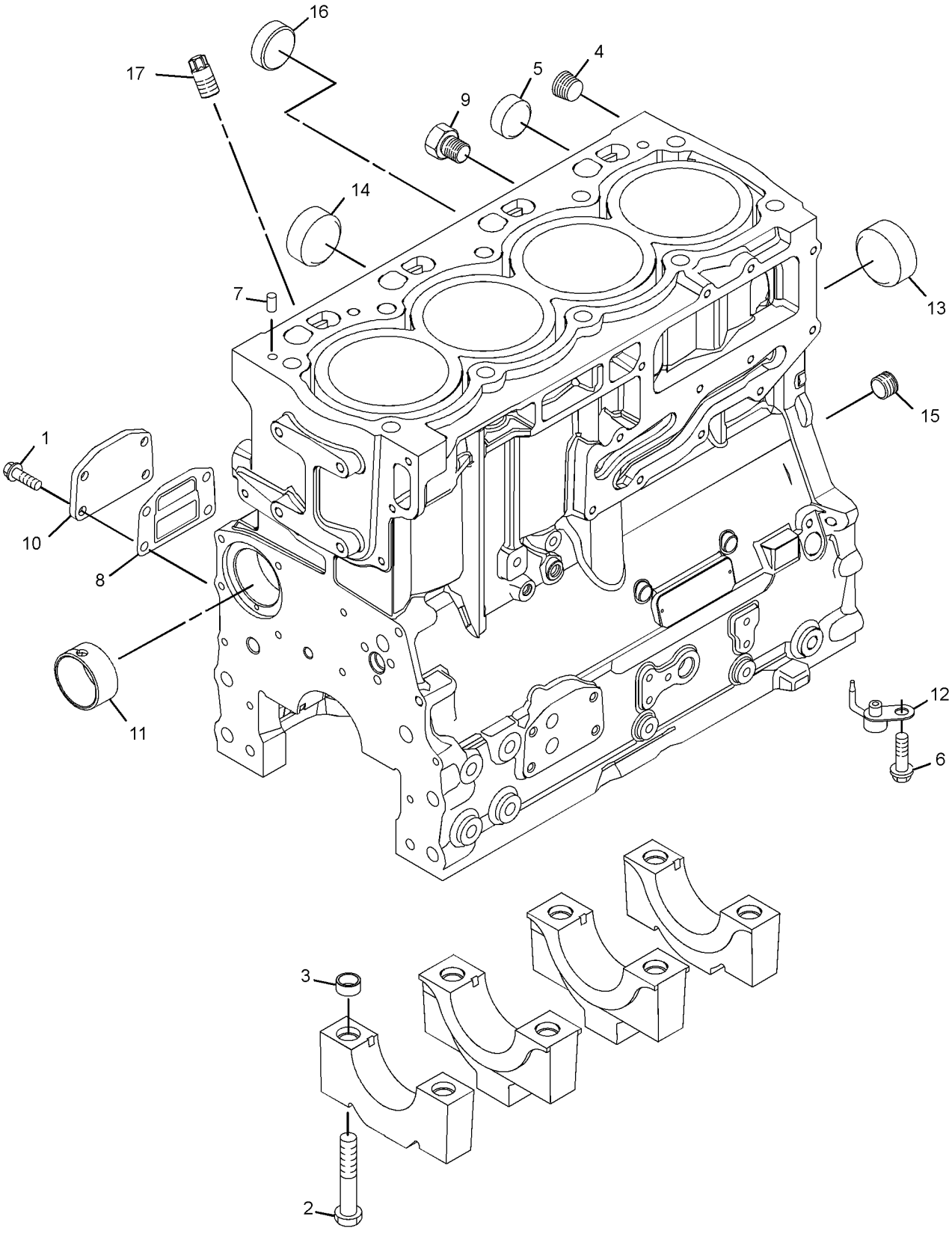

GRAPHIC #1 **<END>** g01652625

326-8999 CYLINDER BLOCK GP

S/N: C4Z1-UP

PART OF 321-7705 ENGINE AR-PRIMARY

AN ATTACHMENT

SMCS-1201 **i03410100**

NOTE	REF NO	GRAPHIC REF	PART NUMBER	QTY	PART NAME 1 2 3 4 5 6 (PRODUCT LEVEL)	SEE PAGE
M	1	1	**209-9219**	10	BOLT (M8X1.25X16-MM)	
	2	1	**232-7449**	1	HOUSING AS	
Y	3	1	**335-1584**	1	CYLINDER BLOCK GP	27

M-METRIC PART
Y-SEPARATE ILLUSTRATION

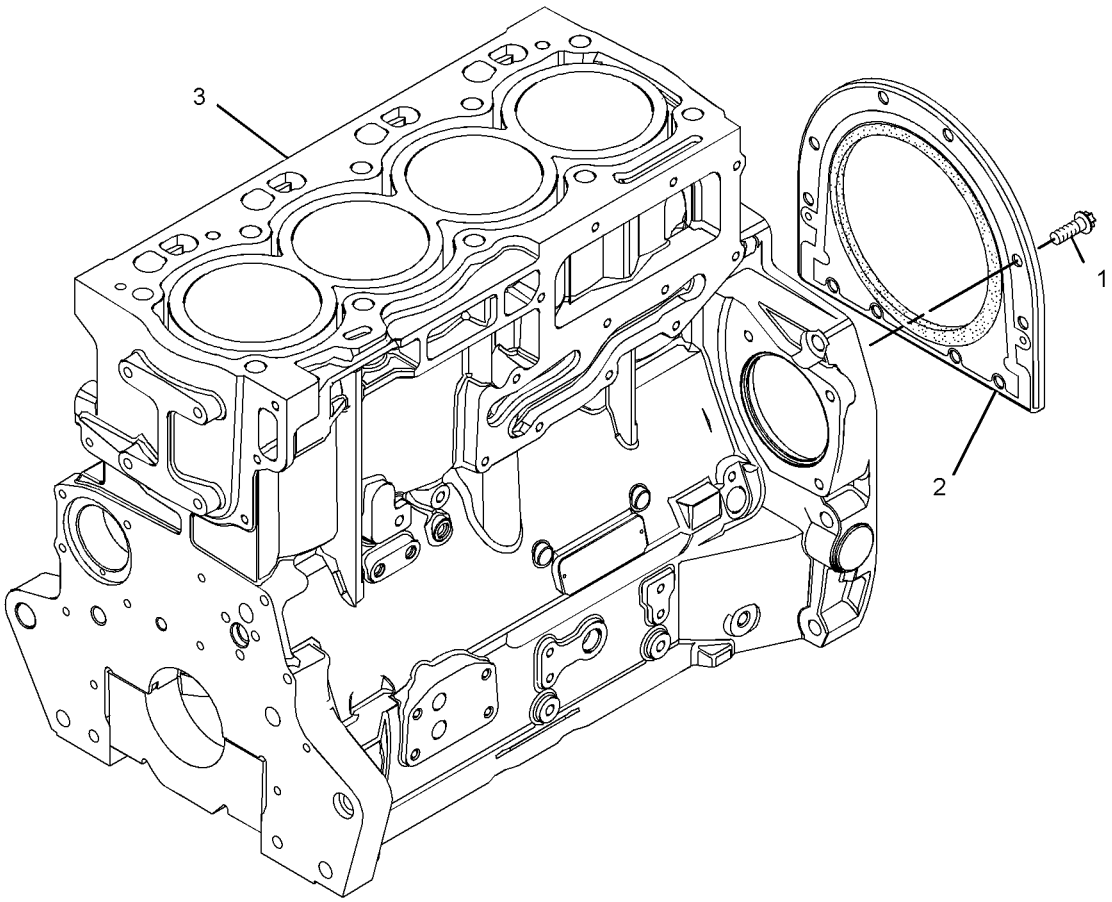

GRAPHIC #1 **<END>** g01770793

BASIC ENGINE

334-4202 CYLINDER BLOCK GP

S/N: CRS1-UP
PART OF 322-1924 ENGINE AR-PRIMARY
AN ATTACHMENT

SMCS-1201 **i03235927**

NOTE	REF NO	GRAPHIC REF	PART NUMBER	QTY	PART NAME 1 2 3 4 5 6 (PRODUCT LEVEL)	SEE PAGE
M	1	1	**209-9219**	10	BOLT (M8X1.25X16-MM)	
	2	1	**232-7449**	1	HOUSING AS	
Y	3	1	**232-7604**	1	CYLINDER BLOCK GP	23

M-METRIC PART
Y-SEPARATE ILLUSTRATION

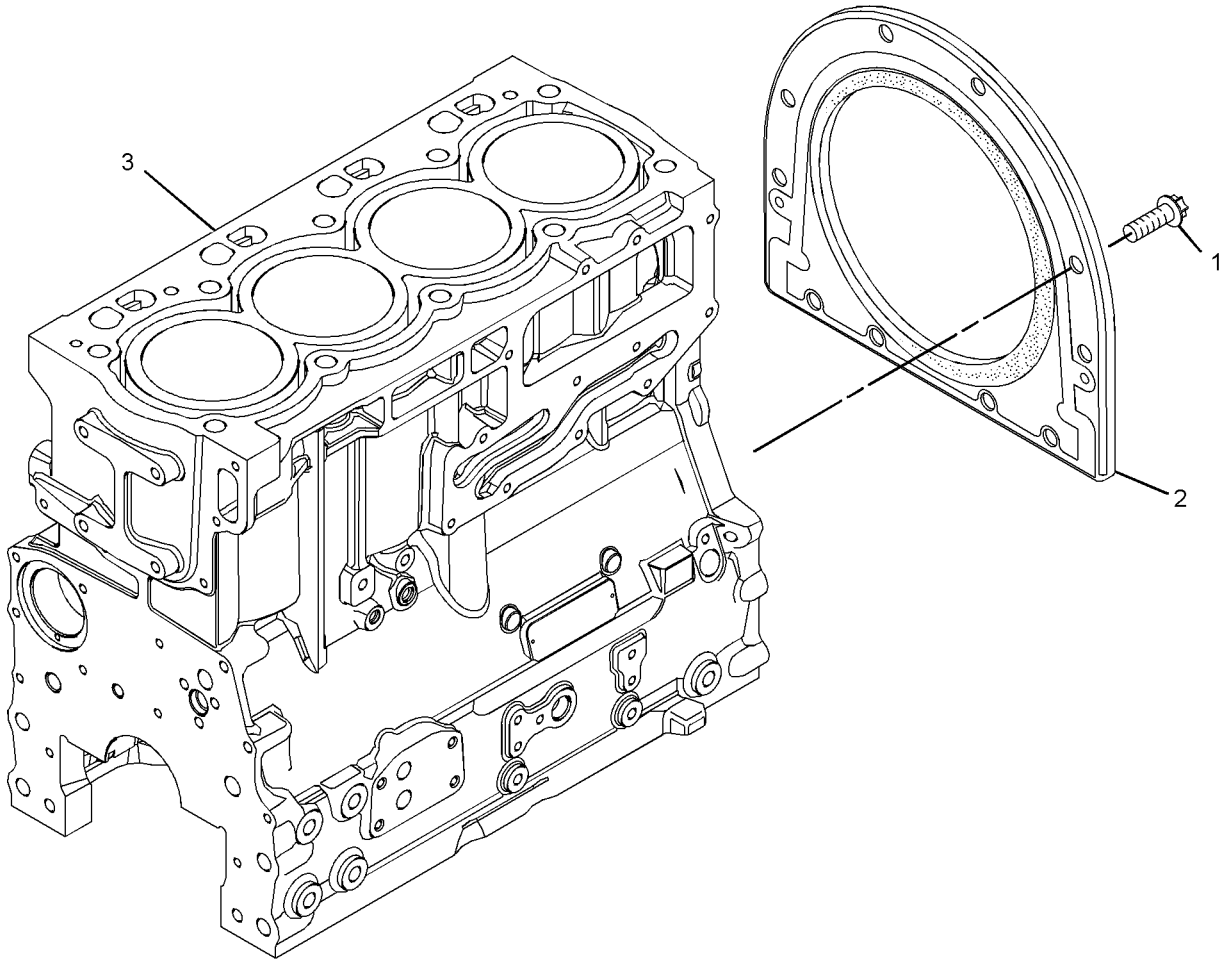

GRAPHIC #1 **<END>** g01652474

335-1584 CYLINDER BLOCK GP

S/N: C4Z1-UP

PART OF 326-8999 CYLINDER BLOCK GP

AN ATTACHMENT

SMCS-1201 **i03411464**

NOTE	REF NO	GRAPHIC REF	PART NUMBER	QTY	PART NAME 1 2 3 4 5 6 (PRODUCT LEVEL)	SEE PAGE
	1	1	**6I-0572**	4	BOLT (M8X1.25X20-MM)	
	2	1	**6I-0646**	1	BOLT (M10X1.5X14-MM)	
	3	1	**035-8063**	1	PLUG	
	4	1	**035-8068**	10	BOLT (5/8-18X3.75-IN)	
	5	1	**067-6002**	10	DOWEL	
	6	1	**067-6006**	1	PLUG	
	7	1	**067-6043**	1	PLUG-SIDE	
M	8	1	**100-4841**	4	BOLT (M6X1X10-MM)	
	9	1	**185-0884**	2	DOWEL	
	10	1	**214-3203**	1	WASHER (SEALING)	
	11	1	**225-7944**	1	GASKET	
	12	1	**225-8858**	2	PLUG	
	13	1	**232-3751**	1	PLATE	
	14	1	**232-7440**	1	BEARING	
	15	1	**232-7596**	1	PLUG	
	16	1	**232-7597**	2	PLUG	
	17	1	**232-7599**	1	PLUG	
	18	1	**276-5605**	4	JET AS-PISTON COOLING	

M-METRIC PART

335-1584 CYLINDER BLOCK GP *(contd.)* i03411464

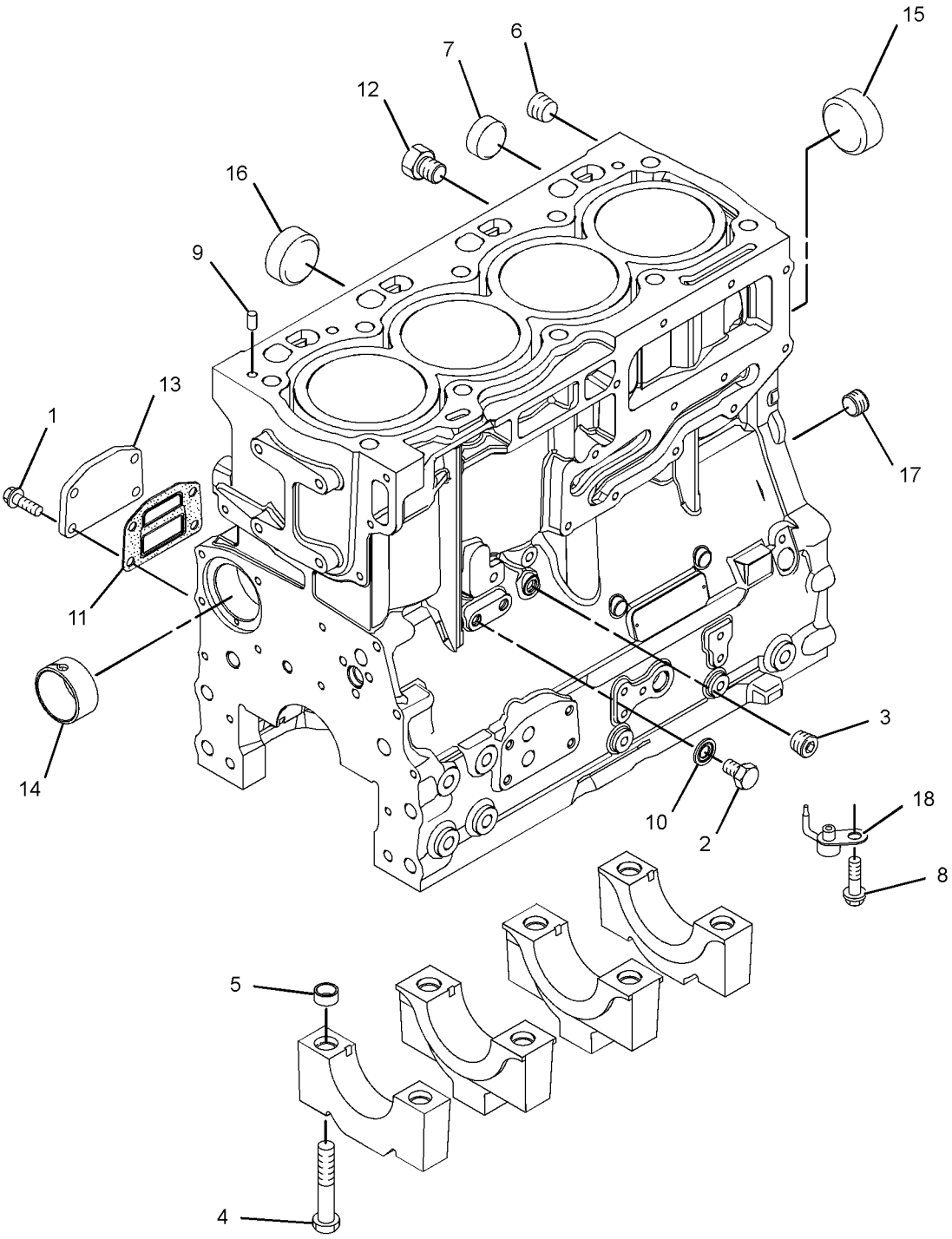

GRAPHIC #1 **<END>** g01769514

247-4868 CYLINDER HEAD GP

S/N: CRS1-UP
PART OF 334-4205 CYLINDER HEAD GP
AN ATTACHMENT

SMCS-1100, 1101, 1103, 1104, 1105, 1106, 1108, 1109, 1115, 1117, 1121, 1124, 1125

i03304183

NOTE	REF NO	GRAPHIC REF	PART NUMBER	QTY	PART NAME 1 2 3 4 5 6 (PRODUCT LEVEL)	SEE PAGE
	1	1	**2B-0858**	1	PLUG-PIPE	
	2	1	**9Y-5015**	2	PLUG-FREEZE	
	3	1	**067-6006**	4	PLUG	
	4	1	**147-1979**	16	RETAINER-VALVE SPRING	
	5	1	**185-0882**	8	GUIDE-VALVE (INTAKE)	
	6	1	**199-9751**	1	SEAL-O-RING	
	7	1	**329-6655**	4	INSERT-VALVE SEAT	
	8	1	**322-9663**	4	INSERT-VALVE SEAT (EXHAUST)	
	9	1	**225-5495**	8	VALVE-INLET	
	10	1	**225-5496**	8	SPRING-VALVE	
	11	1	**225-5498**	8	CAP	
	12	1	**225-5499**	4	VALVE-EXHAUST	
	13	1	**232-1322**	1	PLUG	
	14	1	**252-6438**	4	SEAL-INLET VALVE	
	15	1	**254-3954**	4	SEAL-EXHAUST VALVE	

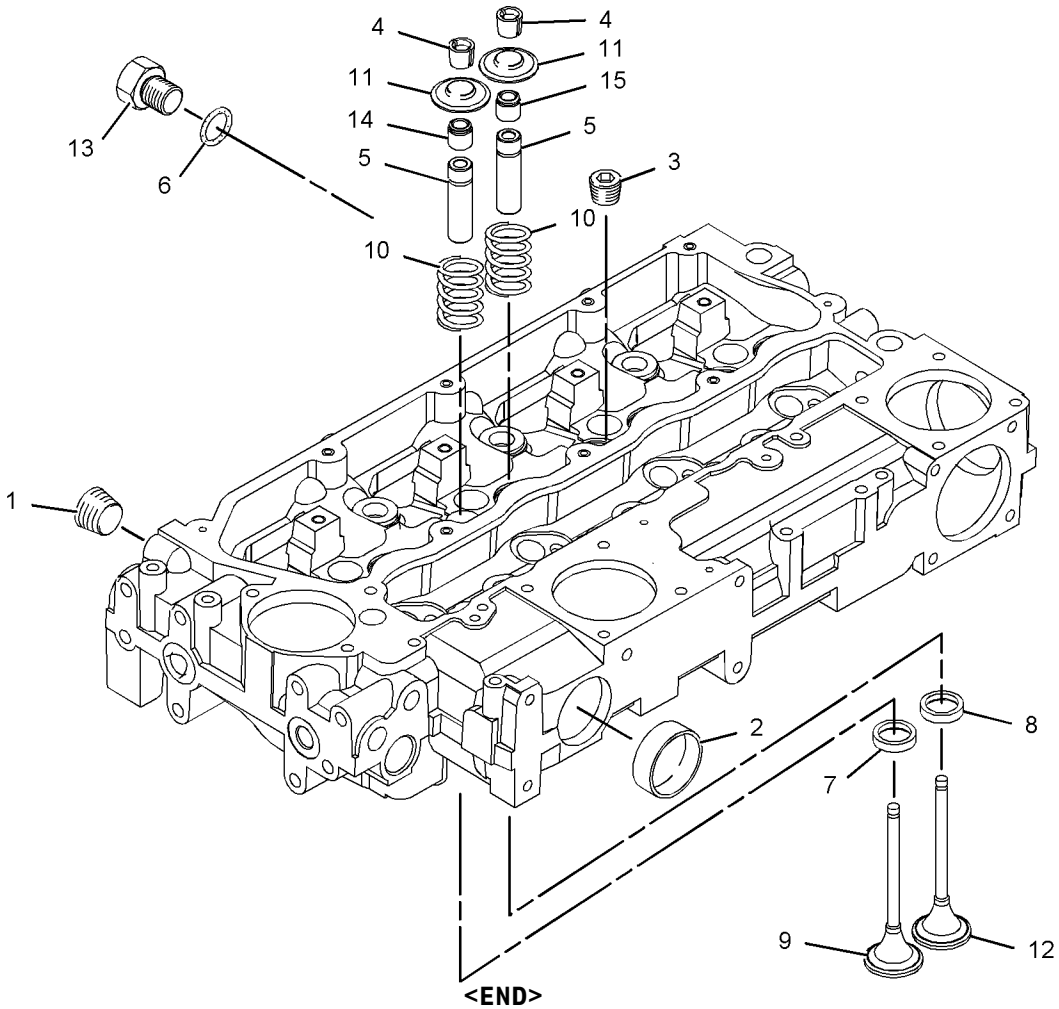

GRAPHIC #1

<END>

g01078948

BASIC ENGINE

316-7896 CYLINDER HEAD GP

S/N: C4Z1-UP
PART OF 326-9003 CYLINDER HEAD GP
AN ATTACHMENT

SMCS-1100, 1101, 1103, 1104, 1105, 1106, 1108, 1109, 1115, 1117, 1121, 1124, 1125 **i03131134**

NOTE	REF NO	GRAPHIC REF	PART NUMBER	QTY	PART NAME 1 2 3 4 5 6 (PRODUCT LEVEL)	SEE PAGE
	1	1	**2B-0858**	2	PLUG-PIPE	
	2	1	**9Y-5015**	2	PLUG-FREEZE	
	3	1	**067-6006**	4	PLUG	
	4	1	**185-0882**	8	GUIDE-VALVE (INTAKE)	
	5	1	**199-9751**	1	SEAL-O-RING	
	6	1	**232-1322**	1	PLUG	
	7	1	**315-3390**	4	VALVE-INLET	
	8	1	**315-3391**	8	SPRING	
	9	1	**315-3392**	8	CAP	
	10	1	**315-3393**	16	COLLET	
	11	1	**315-3394**	4	VALVE-EXHAUST	
	12	1	**252-6438**	4	SEAL-INLET VALVE (GREEN)	
	13	1	**254-3954**	4	SEAL-EXHAUST VALVE (BROWN)	
	14	1	**322-9663**	4	INSERT-VALVE SEAT	
	15	1	**322-9664**	4	SEAT-VALVE	

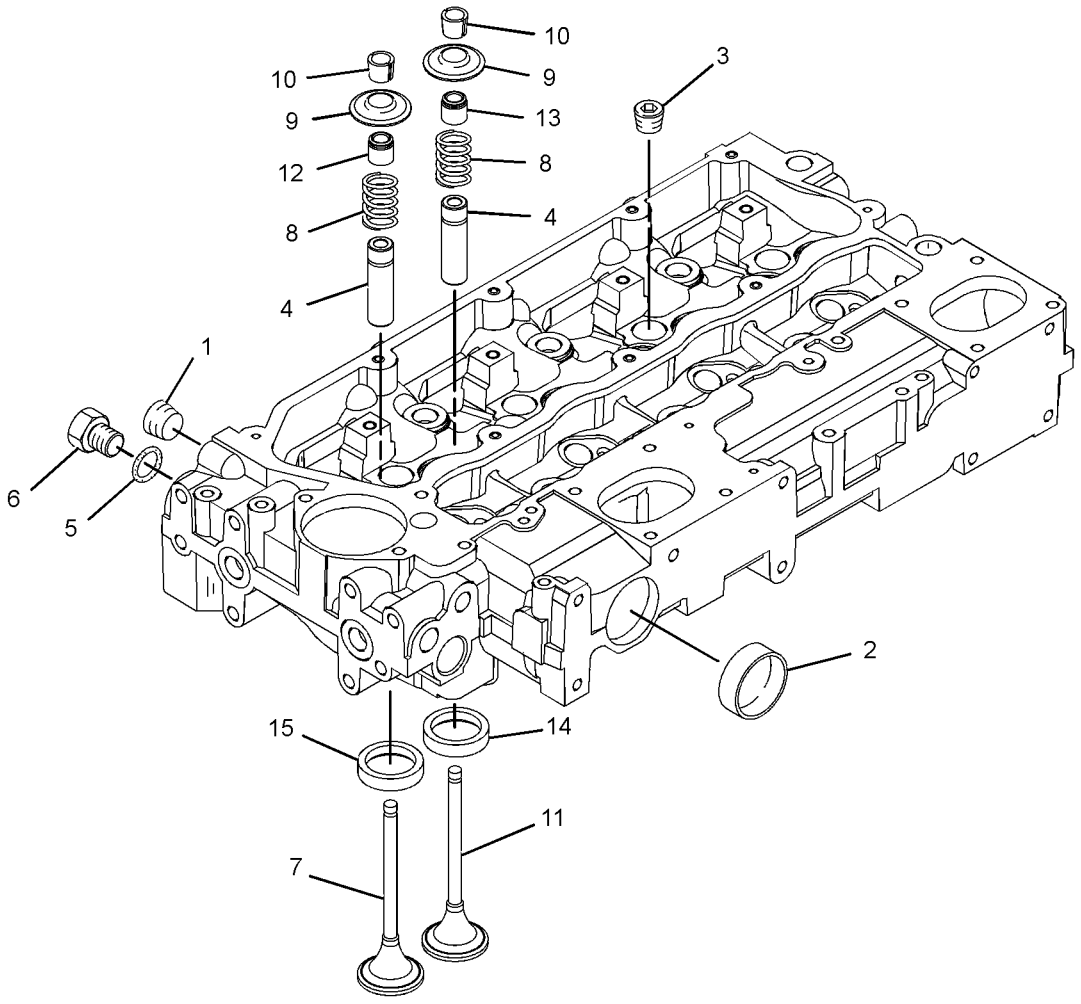

GRAPHIC #1 **<END>** g01542313

326-9003 CYLINDER HEAD GP

S/N: C4Z1-UP

PART OF 321-7705 ENGINE AR-PRIMARY

AN ATTACHMENT

SMCS-1100, 1101, 1103, 1104, 1105, 1106, 1108, 1109, 1115, 1117, 1121, 1124, 1125

i03127782

NOTE	REF NO	GRAPHIC REF	PART NUMBER	QTY	PART NAME 1 2 3 4 5 6 (PRODUCT LEVEL)	SEE PAGE
	1	1	**225-5501**	7	BOLT (M15X1.5X137-MM)	
	2	1	**225-5502**	3	BOLT (M15X1.5X162-MM)	
	3	1	**258-4946**	1	GASKET-HEAD	
Y	4	1	**316-7896**	1	CYLINDER HEAD GP	30

Y-SEPARATE ILLUSTRATION

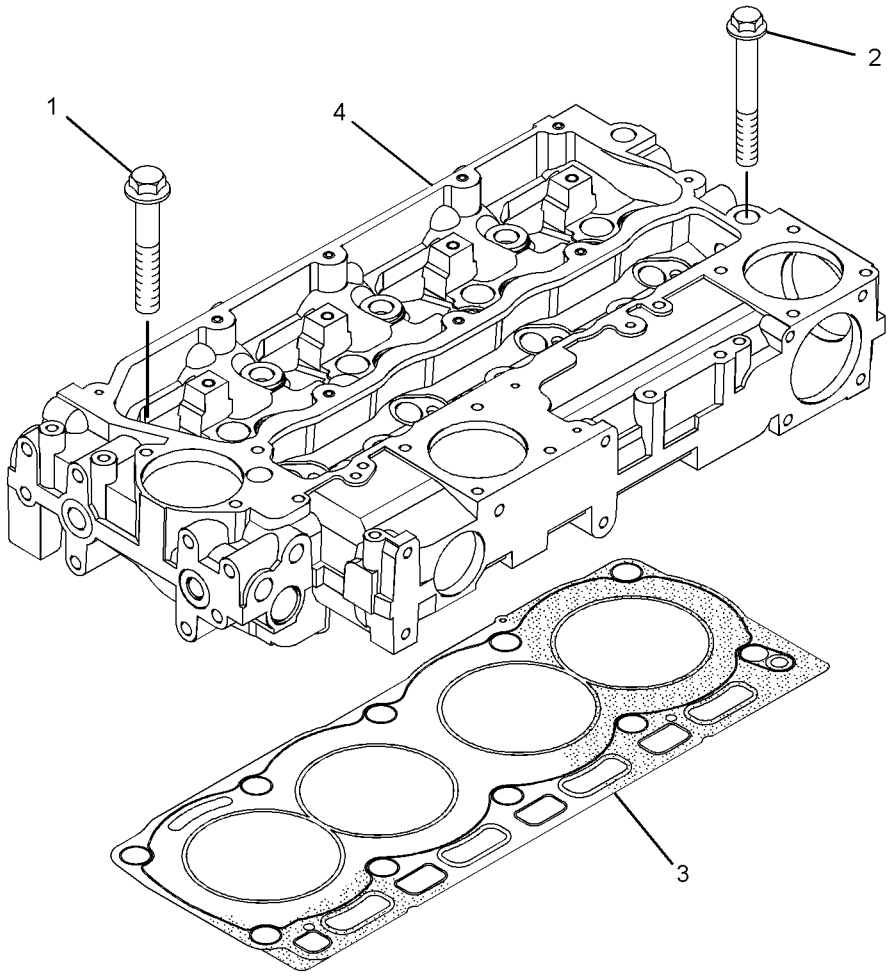

GRAPHIC #1

<END>

g01523242

334-4205 CYLINDER HEAD GP

S/N: CRS1-UP
PART OF 322-1924 ENGINE AR-PRIMARY
AN ATTACHMENT

SMCS-1100, 1101, 1103, 1104, 1105, 1106, 1108, 1109, 1115, 1117, 1121, 1124, 1125 **i03143144**

NOTE	REF NO	GRAPHIC REF	PART NUMBER	QTY	PART NAME 1 2 3 4 5 6 (PRODUCT LEVEL)	SEE PAGE
	1	1	**225-5501**	7	BOLT (M15X1.5X137-MM)	
	2	1	**225-5502**	3	BOLT (M15X1.5X162-MM)	
Y	3	1	**247-4868**	1	CYLINDER HEAD GP	29
	4	1	**258-4946**	1	GASKET-HEAD	

Y-SEPARATE ILLUSTRATION

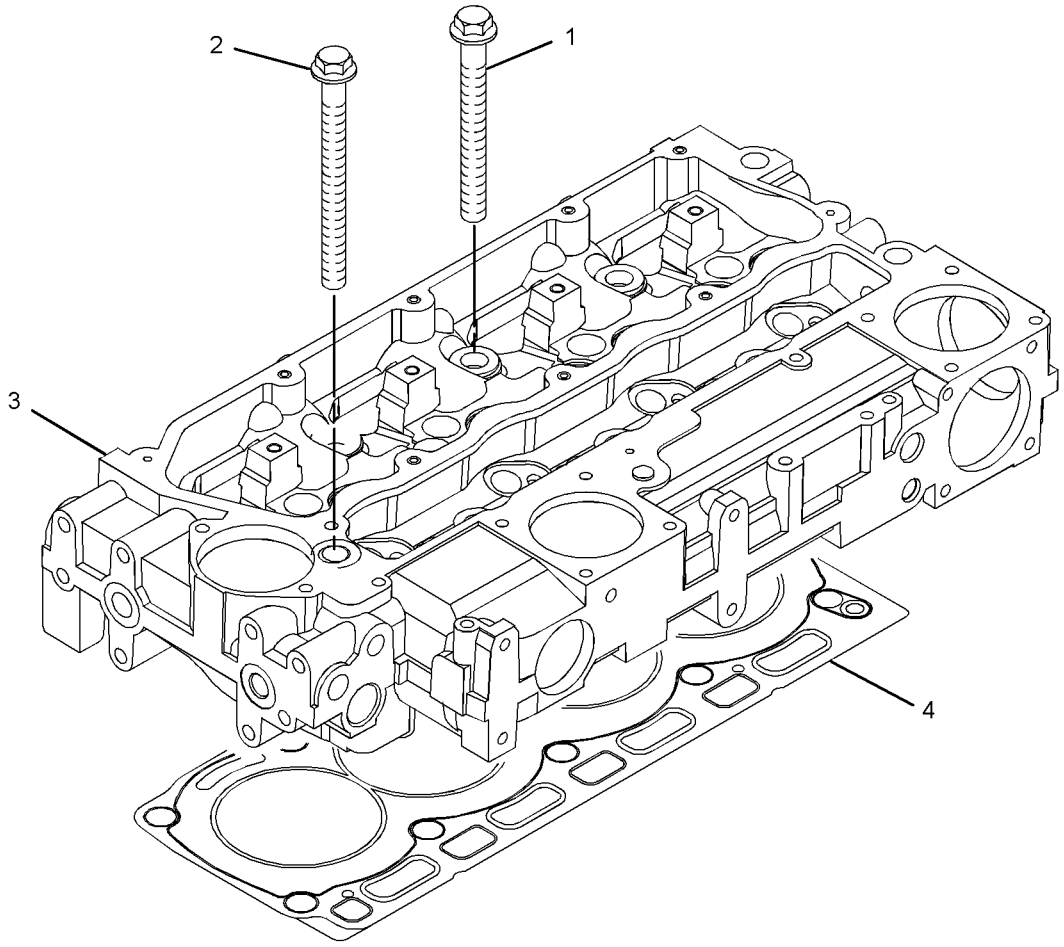

GRAPHIC #1 **<END>** g01619771

326-9009 DRIVE GP-AUXILIARY

S/N: C4Z1-UP

PART OF 321-7705 ENGINE AR-PRIMARY

AN ATTACHMENT

SMCS-1207 **i03127787**

NOTE	REF NO	GRAPHIC REF	PART NUMBER	QTY	PART NAME 1 2 3 4 5 6 (PRODUCT LEVEL)	SEE PAGE
	1	1	**6I-0501**	1	BLOCK	
	2	1	**7W-4634**	3	BOLT (7/16-20X1.5-IN)	
M	3	1	**102-9941**	3	BOLT (M12X1.75X25-MM)	
	4	1	**286-7848**	1	PULLEY GP-ENGINE	
	5	1	**306-8857**	1	HUB	

M-METRIC PART

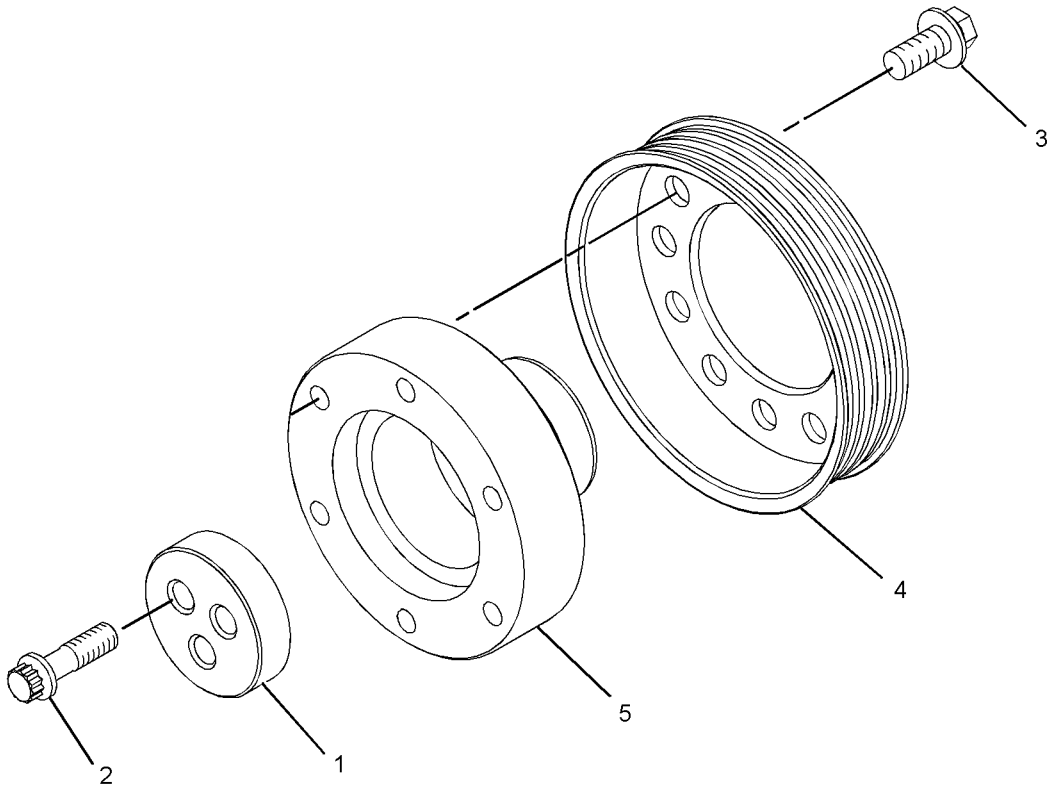

GRAPHIC #1 **<END>** g01615550

BASIC ENGINE

334-3755 DRIVE GP-AUXILIARY

S/N: CRS1-UP

PART OF 322-1924 ENGINE AR-PRIMARY

AN ATTACHMENT

SMCS-1207 **i03143104**

NOTE	REF NO	GRAPHIC REF	PART NUMBER	QTY	PART NAME 1 2 3 4 5 6 (PRODUCT LEVEL)	SEE PAGE
	1	1	**6I-0501**	1	BLOCK	
	2	1	**7W-4634**	3	BOLT (7/16-20X1.5-IN)	
M	3	1	**102-9941**	3	BOLT (M12X1.75X25-MM)	
	4	1	**286-7848**	1	PULLEY GP-ENGINE	
	5	1	**306-8857**	1	HUB	

M-METRIC PART

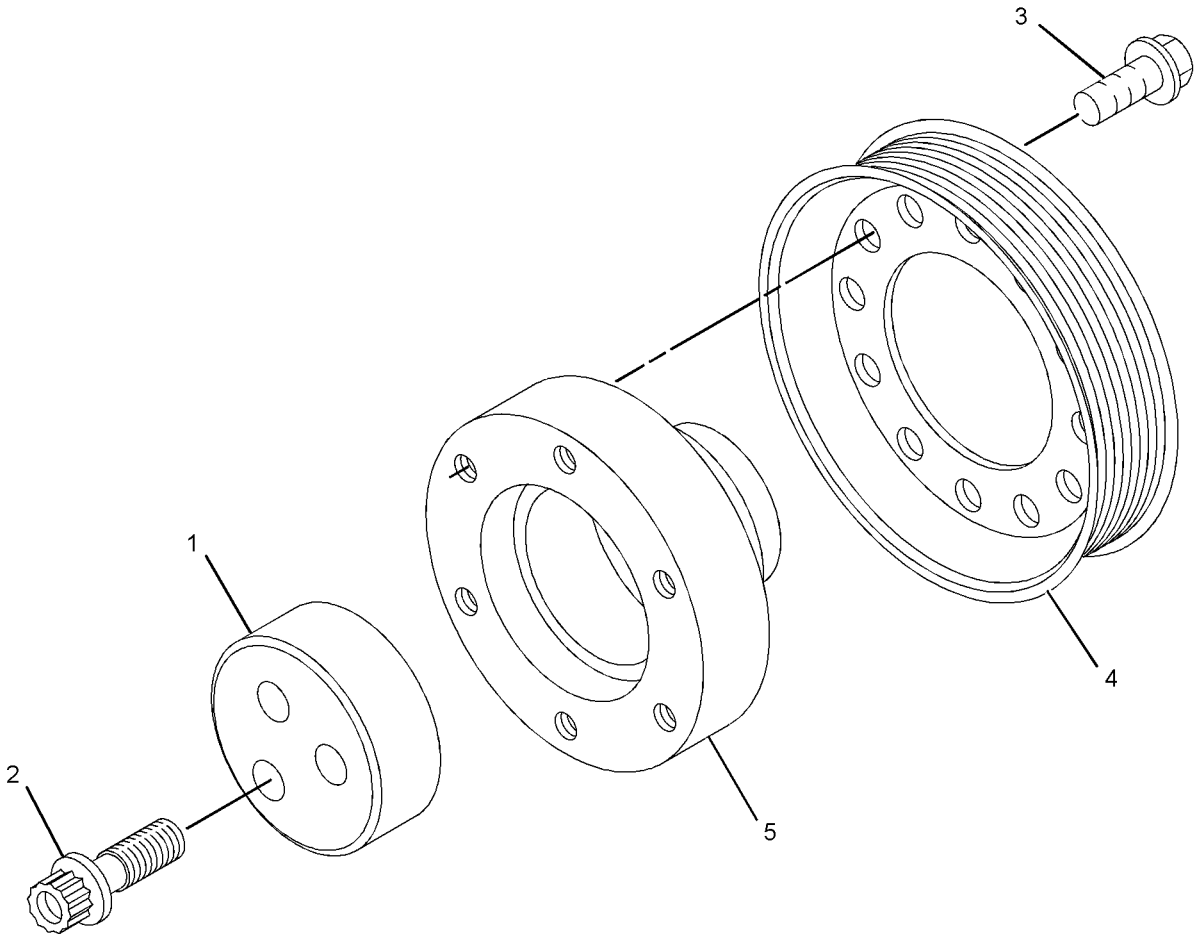

GRAPHIC #1 **<END>** g01619099

BASIC ENGINE

303-5770 DRIVE GP-FAN

S/N: C4Z1-UP
PART OF 321-7705 ENGINE AR-PRIMARY
AN ATTACHMENT

SMCS-1357, 1358, 1359, 1390 **i03128283**

NOTE	REF NO	GRAPHIC REF	PART NUMBER	QTY	PART NAME 1 2 3 4 5 6 (PRODUCT LEVEL)	SEE PAGE
	1	1	**326-1880**	1	HOUSING-FAN DRIVE	
	2	1	**251-2437**	1	PLATE	
	3	1	**111-0859**	8	BOLT (M10X1.5X35-MM)	

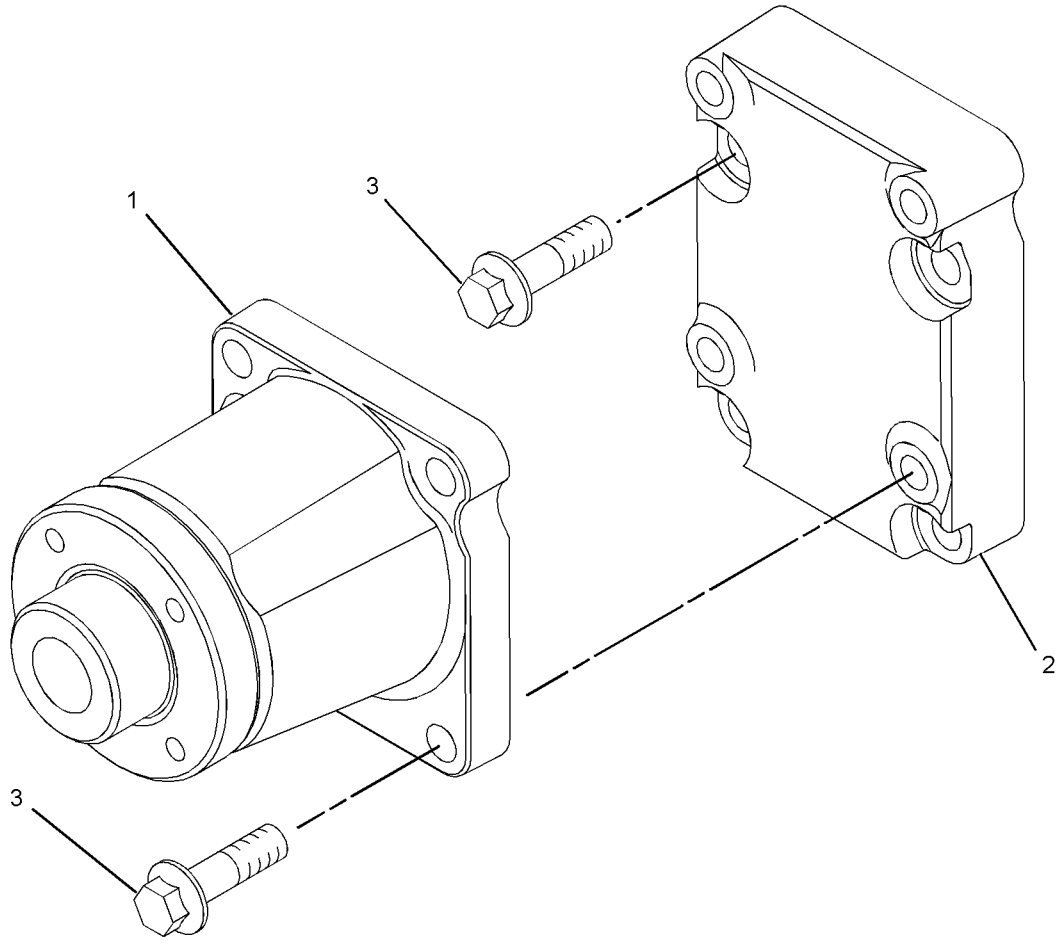

GRAPHIC #1 **<END>** g01340877

BASIC ENGINE

334-3754 DRIVE GP-FAN

S/N: CRS1-UP
PART OF 322-1924 ENGINE AR-PRIMARY
AN ATTACHMENT

SMCS-1357, 1358, 1359, 1390 **i03143103**

NOTE	REF NO	GRAPHIC REF	PART NUMBER	QTY	PART NAME 1 2 3 4 5 6 (PRODUCT LEVEL)	SEE PAGE
	1	1	**111-0859**	8	BOLT (M10X1.5X35-MM)	
	2	1	**251-2437**	1	PLATE	
	3	1	**326-1880**	1	HOUSING-FAN DRIVE	

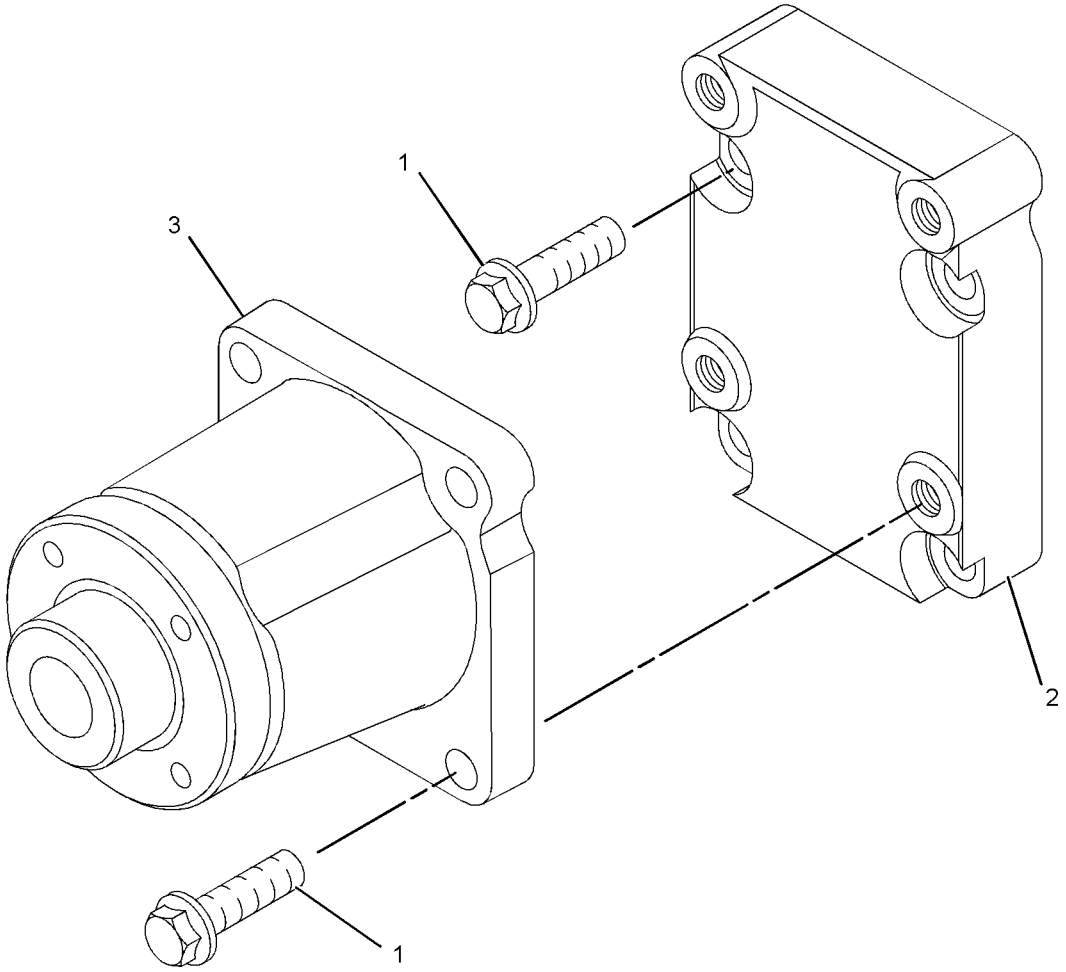

GRAPHIC #1 **<END>** g01619123

230-7300 FLYWHEEL GP

S/N: CRS1-UP
PART OF 322-1924 ENGINE AR-PRIMARY
AN ATTACHMENT

SMCS-1156, 1158 **i02004994**

NOTE	REF NO	GRAPHIC REF	PART NUMBER	QTY	PART NAME 1 2 3 4 5 6 (PRODUCT LEVEL)	SEE PAGE
	1	1	**0S-1603**	6	BOLT (1/2-20X1.5-IN)	
	2	1	**5P-8245**	6	WASHER-HARD (13.5X25.5X3-MM THK)	
	3	1	**245-9828**	1	FLYWHEEL AS	
	4	1	**033-7687**	1	RING-STARTING MOTOR (126-TEETH)	

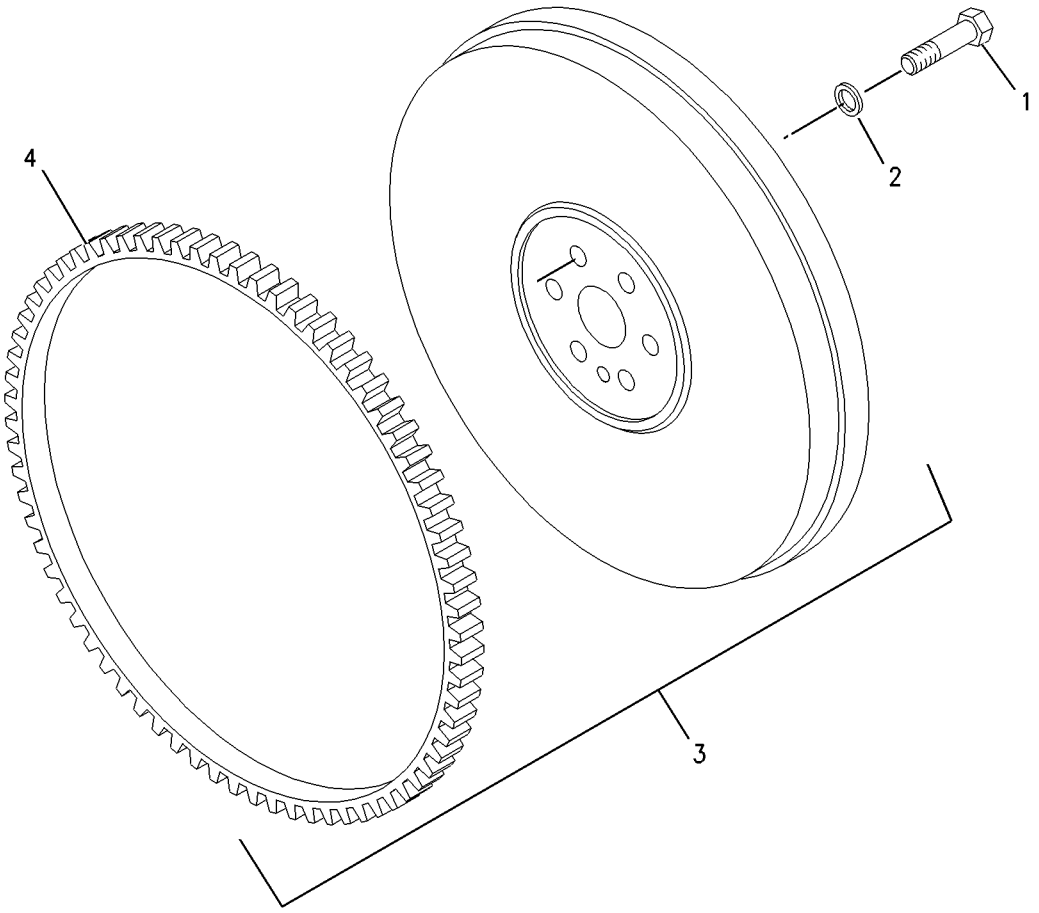

GRAPHIC #1 **<END>** g00955555

303-5768 FLYWHEEL GP

S/N: C4Z1-UP
PART OF 321-7705 ENGINE AR-PRIMARY
AN ATTACHMENT

SMCS-1156, 1158 **i03128301**

NOTE	REF NO	GRAPHIC REF	PART NUMBER	QTY	PART NAME 1 2 3 4 5 6 (PRODUCT LEVEL)	SEE PAGE
	1	1	**245-9828**	1	FLYWHEEL AS	
	1A	1	**033-7687**	1	RING-STARTING MOTOR (126-TEETH)	
	2	1	**0S-1603**	10	BOLT (1/2-20X1.5-IN)	
	3	1	**5P-8245**	10	WASHER-HARD (13.5X25.5X3-MM THK)	

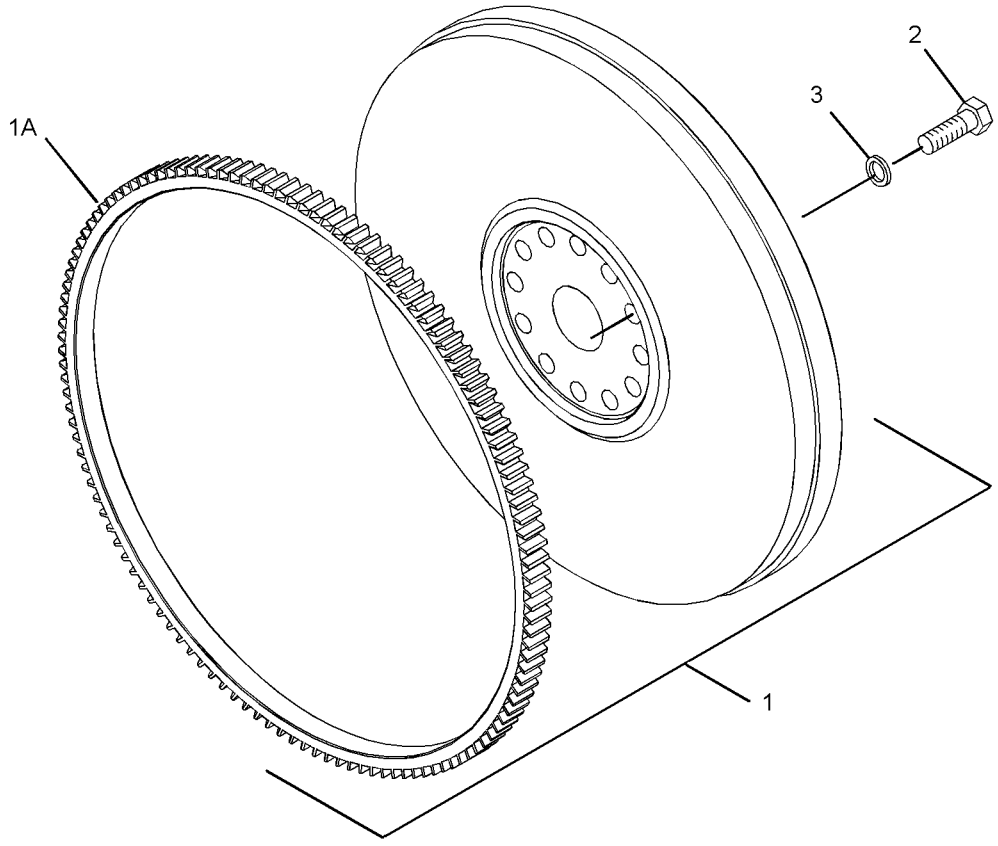

GRAPHIC #1 **<END>** g01372699

236-8238 HOUSING GP-FLYWHEEL

S/N: CRS1-UP
PART OF 322-1924 ENGINE AR-PRIMARY
AN ATTACHMENT

SMCS-1157 **i02527247**

NOTE	REF NO	GRAPHIC REF	PART NUMBER	QTY	PART NAME 1 2 3 4 5 6 (PRODUCT LEVEL)	SEE PAGE
M	1	1	**6I-0423**	2	BOLT (M12X1.75X30-MM)	
	2	1	**6I-0847**	2	PLUG	
	3	1	**7W-1176**	1	PLATE-COVER	
	4	1	**7W-4642**	1	SHIELD-DUST	
	5	1	**287-8597**	2	DOWEL	
	6	1	**114-4363**	2	BOLT (M8X1.25X12-MM)	
	7	1	**101-3617**	3	PLUG	
M	8	1	**121-0883**	6	BOLT (M10X1.5X30-MM)	
	9	1	**220-8631**	1	HOUSING-FLYWHEEL	

M-METRIC PART

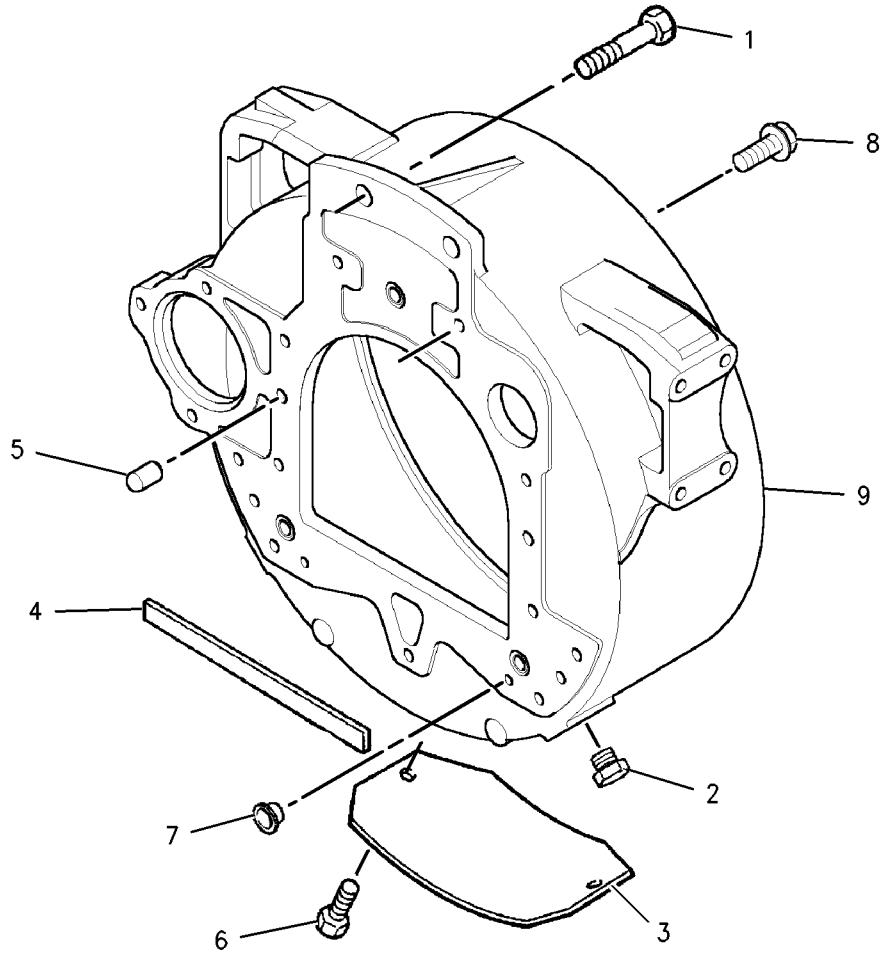

GRAPHIC #1 **<END>** g00902549

BASIC ENGINE

303-5767 HOUSING GP-FLYWHEEL

S/N: C4Z1-UP
PART OF 321-7705 ENGINE AR-PRIMARY
AN ATTACHMENT

SMCS-1157 **i03128293**

NOTE	REF NO	GRAPHIC REF	PART NUMBER	QTY	PART NAME 1 2 3 4 5 6 (PRODUCT LEVEL)	SEE PAGE
M	1	1	**6I-0423**	2	BOLT (M12X1.75X30-MM)	
	2	1	**6I-0847**	2	PLUG	
	3	1	**7W-1176**	1	PLATE-COVER	
	4	1	**7W-4642**	1	SHIELD-DUST	
	5	1	**287-8597**	2	DOWEL	
	6	1	**114-4363**	2	BOLT (M8X1.25X12-MM)	
	7	1	**4H-0408**	3	PLUG-PROTECTION	
M	8	1	**121-0883**	6	BOLT (M10X1.5X30-MM)	
	9	1	**220-8631**	1	HOUSING-FLYWHEEL	

M-METRIC PART

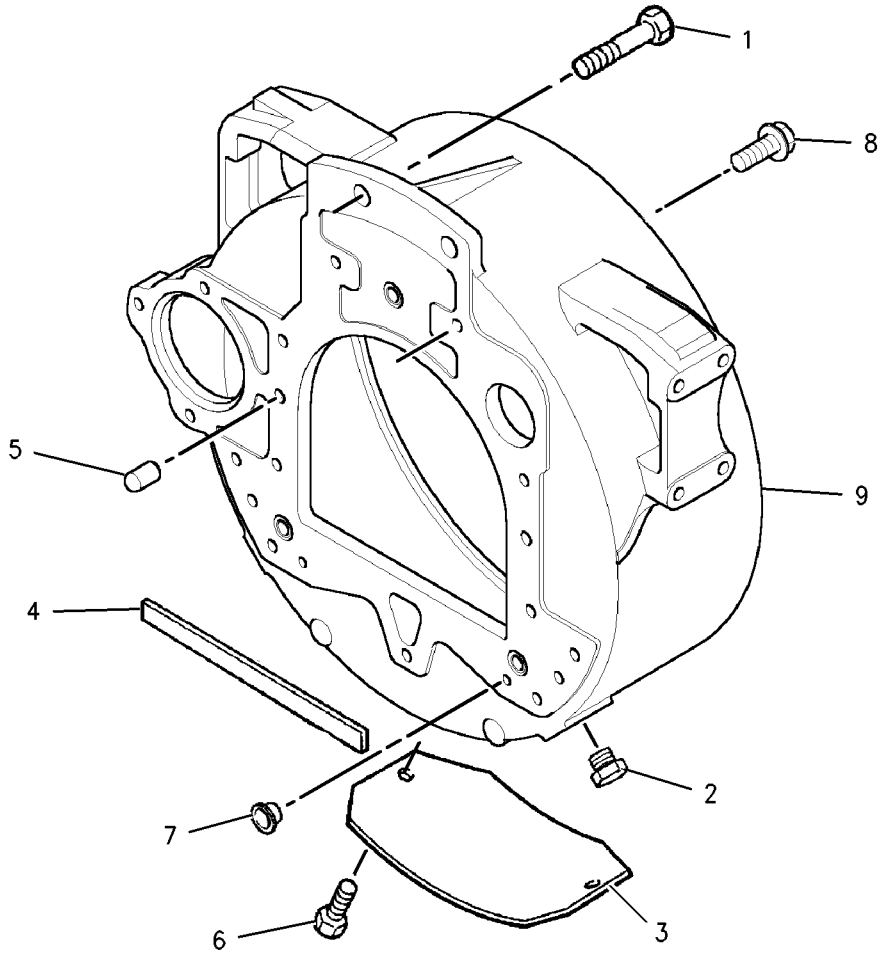

GRAPHIC #1 **<END>** g00902549

BASIC ENGINE

304-8760 HOUSING GP-FRONT

S/N: C4Z1-UP

PART OF 321-7705 ENGINE AR-PRIMARY

AN ATTACHMENT

SMCS-1151, 1162, 1166, 1206 **i03569721**

NOTE	REF NO	GRAPHIC REF	PART NUMBER	QTY	PART NAME 1 2 3 4 5 6 (PRODUCT LEVEL)	SEE PAGE
	1	1	**294-0288**	1	HOUSING-FRONT	
	2	1	**277-3012**	1	GASKET-COVER	
	3	1	**288-0422**	1	SEAL-OIL (FRONT)	
M	4	1	**6I-0217**	6	BOLT (M8X1.25X20-MM)	
M	5	1	**101-3895**	2	BOLT (M8X1.25X35-MM)	
M	6	1	**6I-0645**	4	BOLT (M8X1.25X25-MM)	
CJ	7	1	**346-0407**	1	GEAR-IDLER (73-TEETH)	
	8	1	**324-0444**	1	HUB-IDLER GEAR	
C	9	1	**346-0408**	1	PLATE	
M	10	1	**6I-0650**	3	BOLT (M10X1.5X65-MM)	
	11	1	**216-8634**	1	GEAR-CAMSHAFT (68-TEETH)	
	12	1	**133-1011**	1	WASHER	
	13	1	**067-6179**	1	DOWEL	
	14	1	**232-3666**	1	WASHER-THRUST	
	15	1	**7C-4616**	1	BOLT (M12X1.75X45-MM)	
	16	1	**232-3657**	1	COVER AS-FRONT	
	16A	1	**225-8287**	1	GASKET	
M	17	1	**124-3815**	10	BOLT (M8X16X1.25-MM)	
M	18	1	**100-3751**	5	BOLT (M8X1.25X65-MM)	

C-CHANGE FROM PREVIOUS TYPE
J-CAN ONLY BE USED IN CONJUNCTION WITH 346-0408 & 324-0444
M-METRIC PART

304-8760 **HOUSING GP-FRONT** *(contd.)* **i03569721**

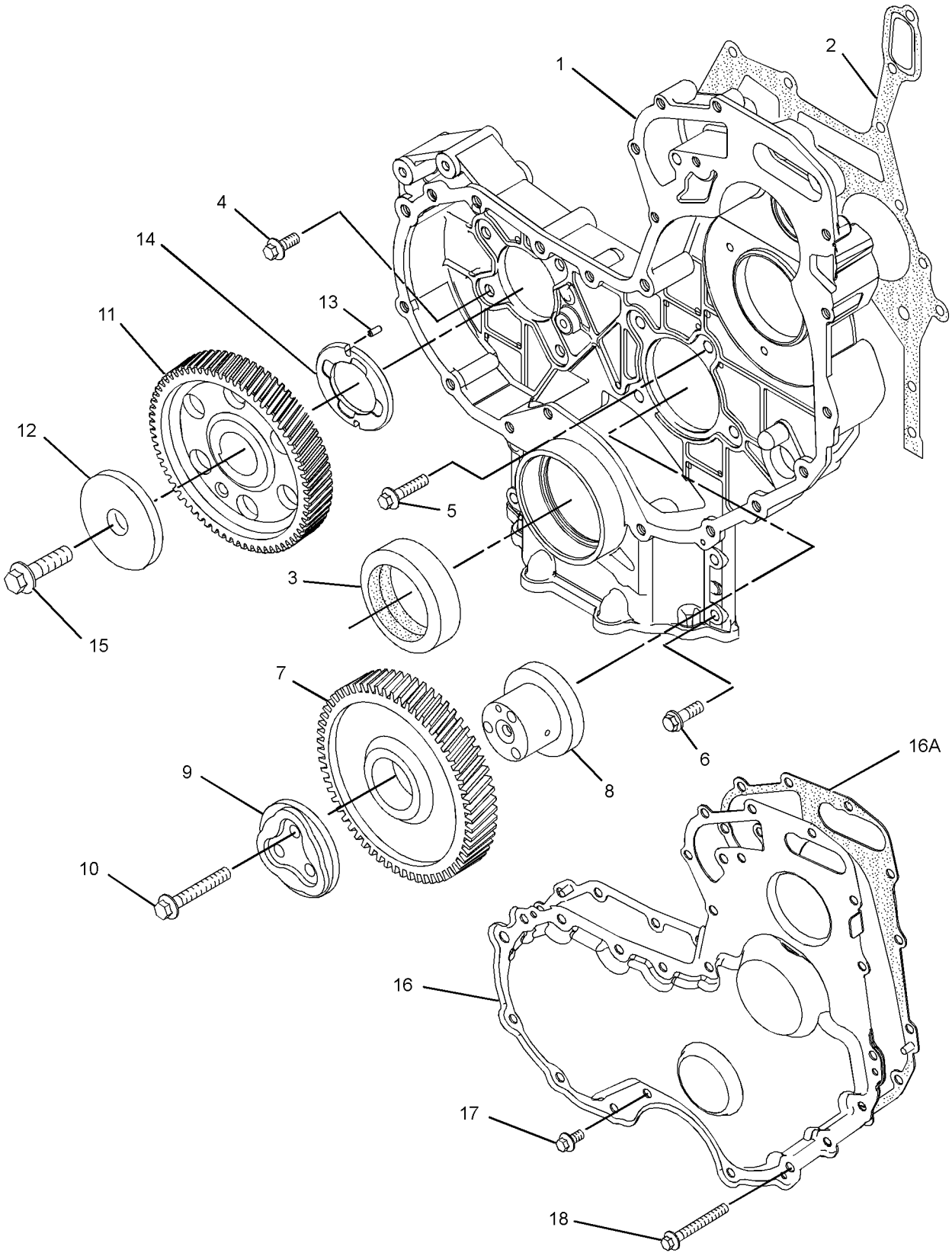

GRAPHIC #1 **<END>** g01900827

334-3757 HOUSING GP-FRONT

S/N: CRS1-UP
PART OF 322-1924 ENGINE AR-PRIMARY
AN ATTACHMENT

SMCS-1151, 1162, 1166, 1206 **i03570220**

NOTE	REF NO	GRAPHIC REF	PART NUMBER	QTY	PART NAME 1 2 3 4 5 6 (PRODUCT LEVEL)	SEE PAGE
	1	1	**1B-8736**	1	KEY-WOODRUFF	
M	2	1	**6I-0217**	6	BOLT (M8X1.25X20-MM)	
M	3	1	**6I-0645**	4	BOLT (M8X1.25X25-MM)	
M	4	1	**6I-0650**	3	BOLT (M10X1.5X65-MM)	
	5	1	**7C-4616**	1	BOLT (M12X1.75X45-MM)	
	6	1	**067-6179**	1	DOWEL	
M	7	1	**100-3751**	5	BOLT (M8X1.25X65-MM)	
M	8	1	**101-3895**	2	BOLT (M8X1.25X35-MM)	
M	9	1	**124-3815**	10	BOLT (M8X16X1.25-MM)	
	10	1	**133-1011**	1	WASHER	
	11	1	**216-8634**	1	GEAR-CAMSHAFT (68-TEETH)	
	12	1	**232-3657**	1	COVER AS-FRONT	
	12A	1	**225-8287**	1	GASKET	
	13	1	**232-3666**	1	WASHER-THRUST	
C	14	1	**346-0407**	1	GEAR-IDLER (73-TEETH)	
	15	1	**277-3012**	1	GASKET-COVER	
	16	1	**288-0422**	1	SEAL-OIL	
	17	1	**294-0288**	1	HOUSING-FRONT	
C	18	1	**346-0408**	1	PLATE	
	19	1	**324-0444**	1	HUB-IDLER GEAR	

C-CHANGE FROM PREVIOUS TYPE
M-METRIC PART

334-3757 **HOUSING GP-FRONT** *(contd.)* **i03570220**

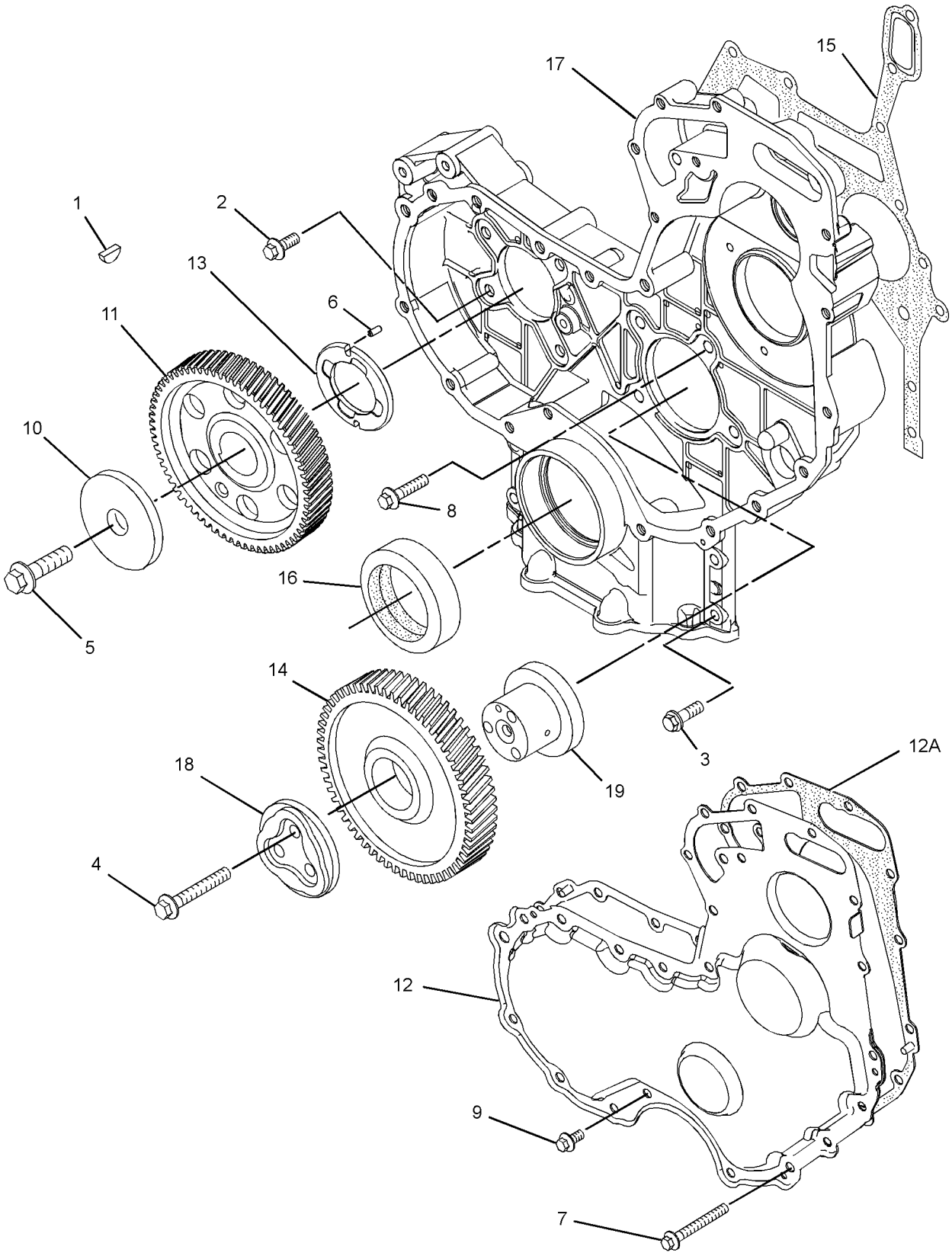

GRAPHIC #1 **<END>** g01932637

233-7432 LIFTING GP-ENGINE

S/N: CRS1-UP
PART OF 322-1924 ENGINE AR-PRIMARY
AN ATTACHMENT

SMCS-1122 **i01998680**

NOTE	REF NO	GRAPHIC REF	PART NUMBER	QTY	PART NAME 1 2 3 4 5 6 (PRODUCT LEVEL)	SEE PAGE
M	1	1	**100-4830**	4	BOLT (M10X1.5X20-MM)	
	2	1	**225-8848**	2	PLATE-LIFTING	

M-METRIC PART

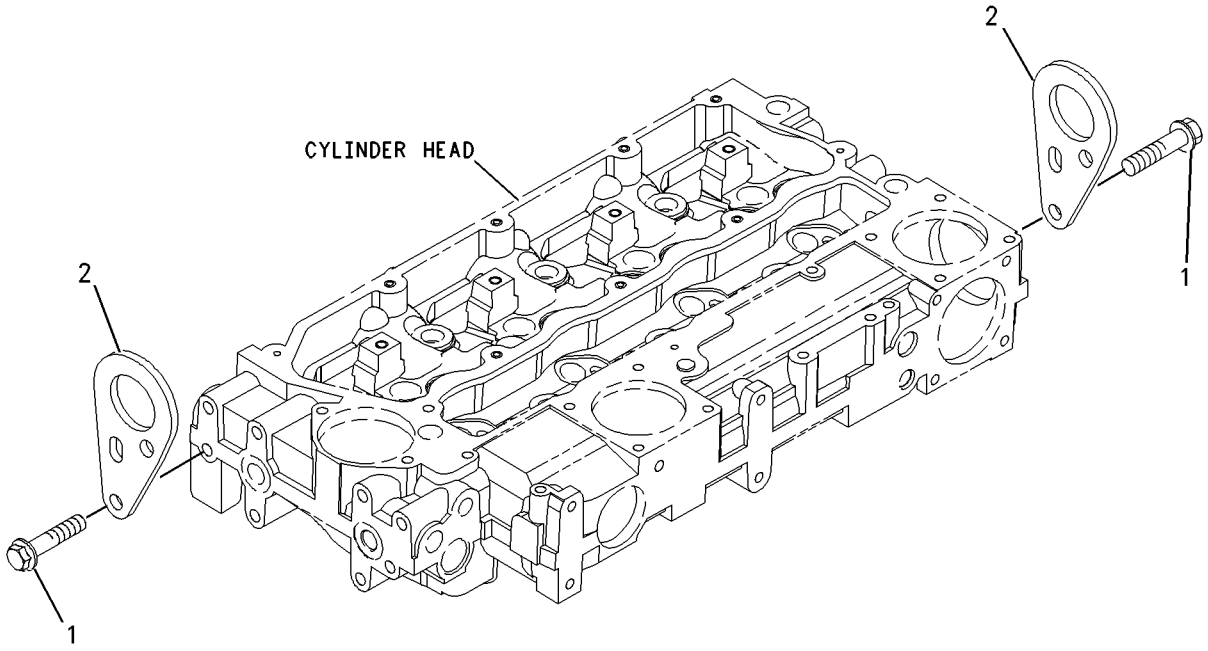

GRAPHIC #1 **<END>** g00955299

326-9013 LIFTING GP-ENGINE

S/N: C4Z1-UP
PART OF 321-7705 ENGINE AR-PRIMARY
AN ATTACHMENT

SMCS-1122 **i03124517**

NOTE	REF NO	GRAPHIC REF	PART NUMBER	QTY	PART NAME 1 2 3 4 5 6 (PRODUCT LEVEL)	SEE PAGE
M	1	1	**100-4830**	4	BOLT (M10X1.5X20-MM)	
	2	1	**225-8848**	2	PLATE-LIFTING	

M-METRIC PART

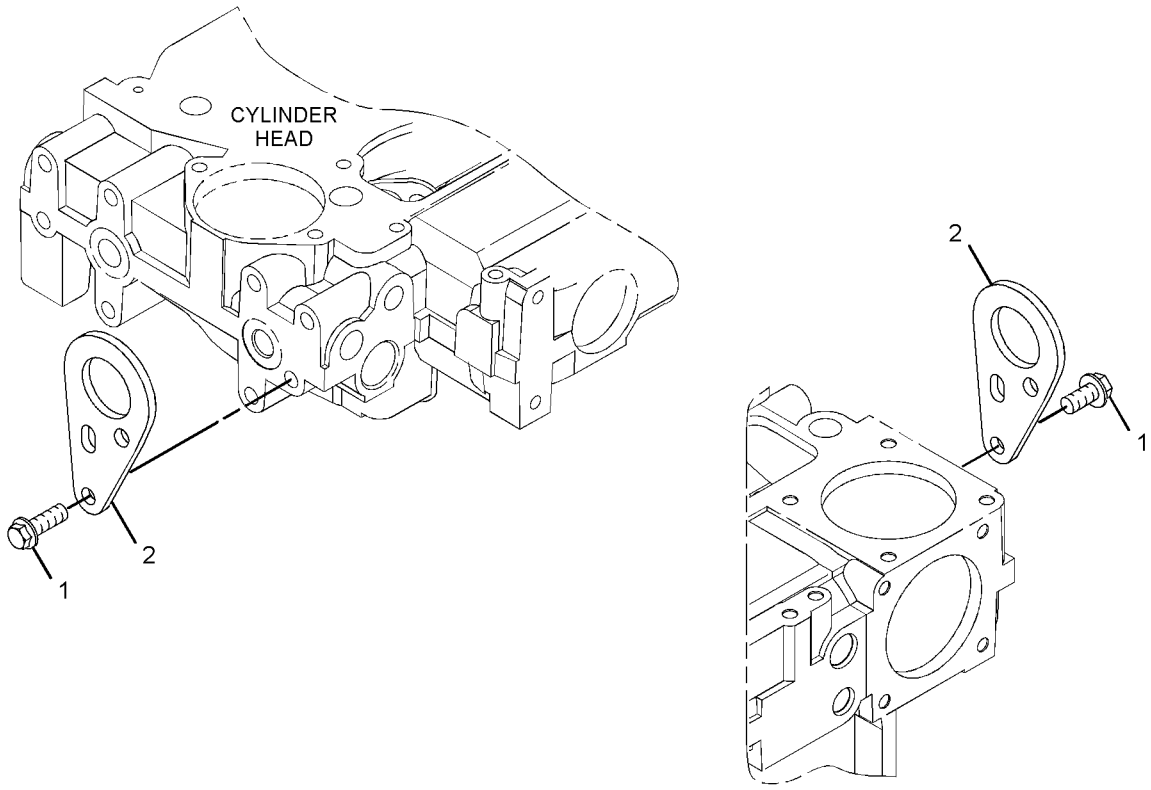

GRAPHIC #1 **<END>** g01636462

237-3658 MOUNTING GP-ENGINE

S/N: CRS1-UP
PART OF 322-1924 ENGINE AR-PRIMARY
AN ATTACHMENT

SMCS-1152, 1153, 1154 **i01998683**

NOTE	REF NO	GRAPHIC REF	PART NUMBER	QTY	PART NAME 1 2 3 4 5 6 (PRODUCT LEVEL)	SEE PAGE
	1	1	**101-2987**	6	PLUG	
	2	1	**6H-3616**	3	PLUG-PROTECTION	
	3	1	**195-2132**	1	SUPPORT-FRONT	
	4	1	**195-2134**	1	SUPPORT-FRONT	
	5	1	**195-2136**	8	STUD	
	6	1	**195-2221**	8	NUT	

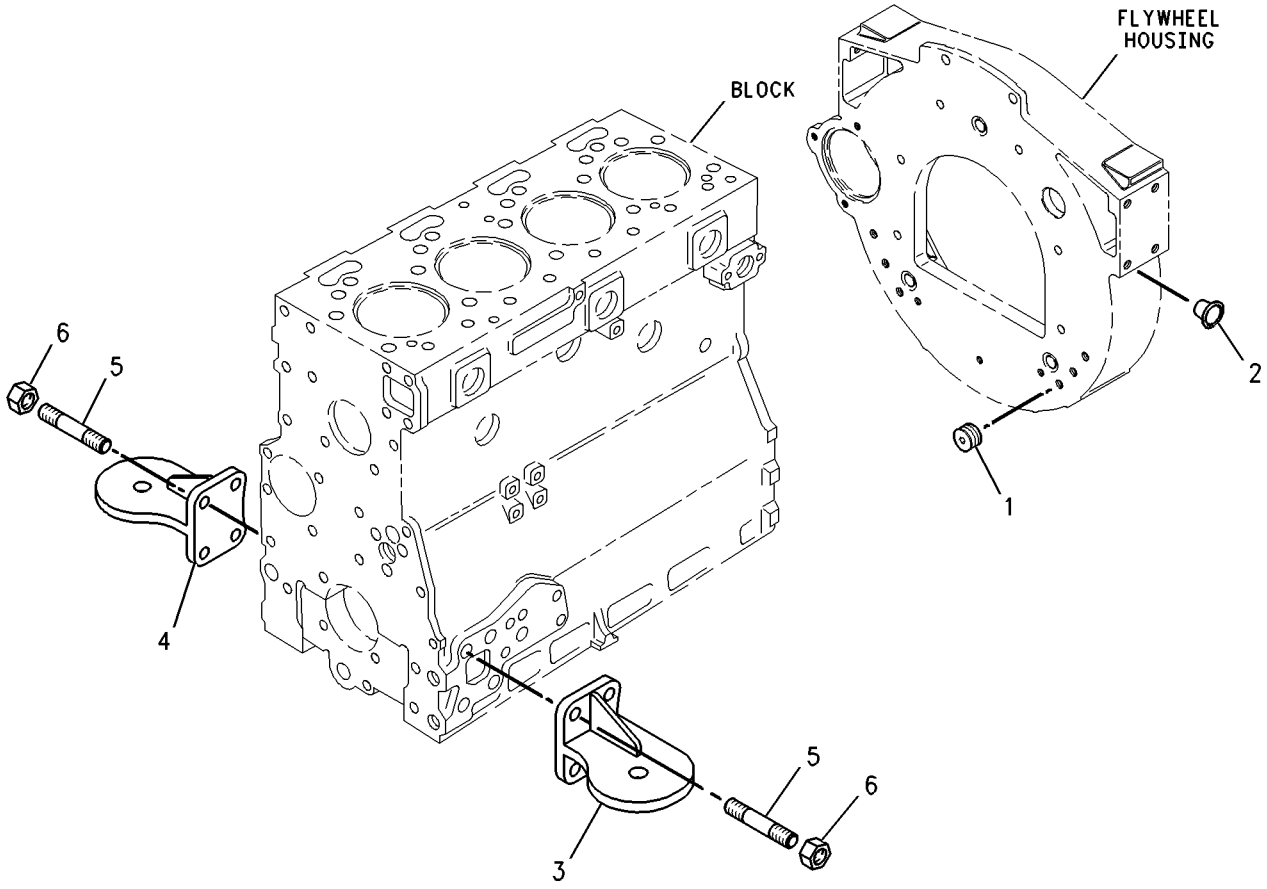

GRAPHIC #1 **<END>** g00738284

303-5778 MOUNTING GP-ENGINE

S/N: C4Z1-UP
PART OF 321-7705 ENGINE AR-PRIMARY
AN ATTACHMENT

SMCS-1152, 1153, 1154 **i03128292**

NOTE	REF NO	GRAPHIC REF	PART NUMBER	QTY	PART NAME 1 2 3 4 5 6 (PRODUCT LEVEL)	SEE PAGE
	1	1	**6H-3616**	3	PLUG-PROTECTION	
	2	1	**101-2987**	6	PLUG	
	3	1	**195-2132**	1	SUPPORT-FRONT	
	4	1	**195-2134**	1	SUPPORT-FRONT	
	5	1	**195-2136**	8	STUD	
	6	1	**195-2221**	8	NUT (M12X1.75-THD)	

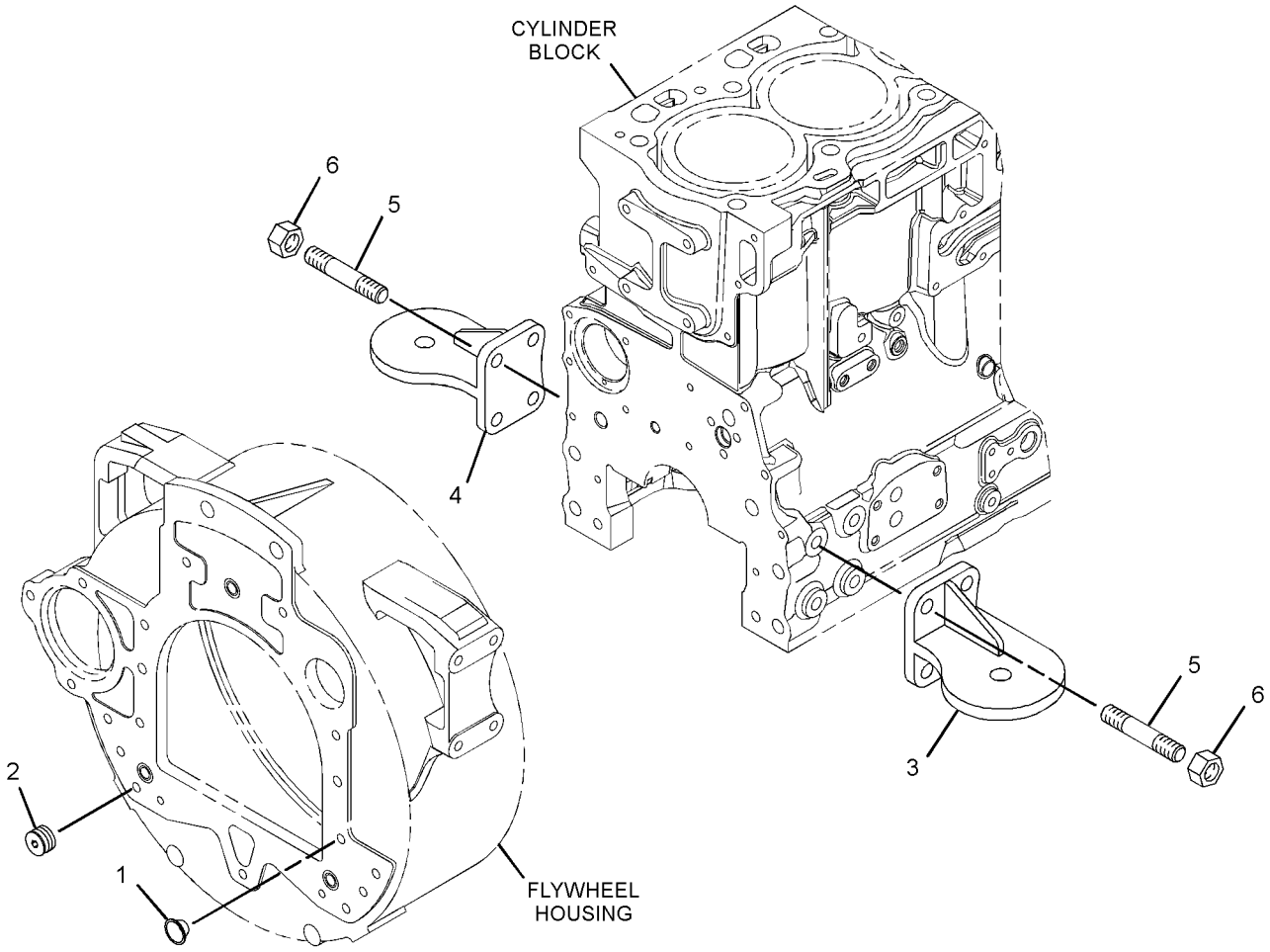

GRAPHIC #1 **<END>** g01378883

334-7152 MOUNTING GP-ENGINE & XMSN

S/N: SJL1-UP

PART OF 339-4987, 339-4989, 339-4991, 339-4993 ENGINE AR

AN ATTACHMENT

SMCS-1152, 1153, 1154 **i03288365**

NOTE	REF NO	GRAPHIC REF	PART NUMBER	QTY	PART NAME 1 2 3 4 5 6 (PRODUCT LEVEL)	SEE PAGE
	1	1	**9W-9910**	2	MOUNT AS	
	2	1	**9W-9915**	2	MOUNT AS	
	3	1	**9W-9952**	4	WASHER (16.75X86X8-MM THK)	
	4	1	**9W-9953**	4	SLEEVE	
	5	1	**335-1836**	4	BOLT	
	6	1	**8T-4121**	12	WASHER-HARD (11X21X2.5-MM THK)	
	7	1	**8T-4122**	8	WASHER-HARD (17X32X3.5-MM THK)	
M	8	1	**8T-4132**	4	NUT (M16X2-THD)	
M	9	1	**8T-4196**	12	BOLT (M10X1.5X35-MM)	

M-METRIC PART

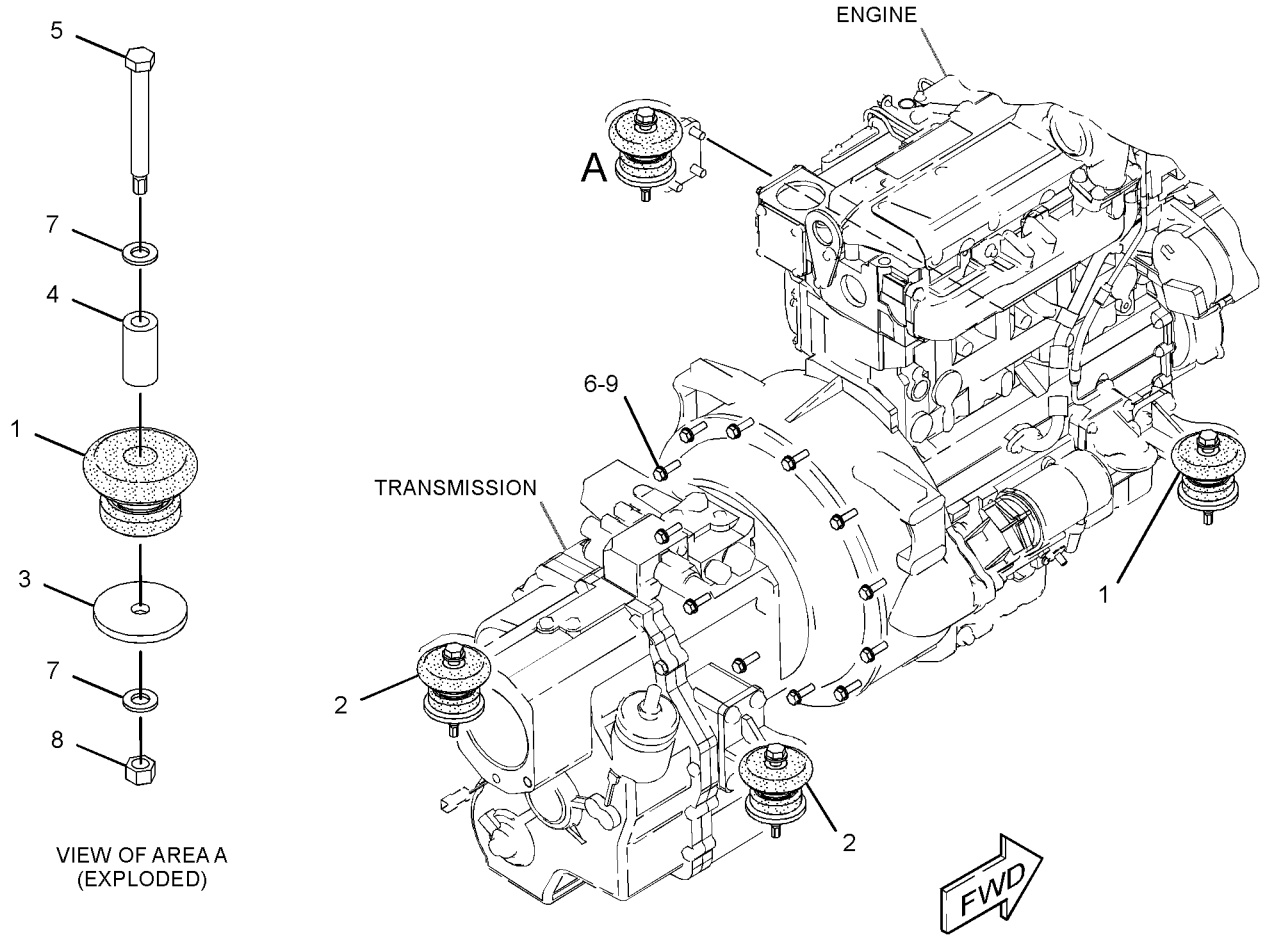

GRAPHIC #1 **<END>** g01682213

BASIC ENGINE

322-9476 PAN GP-OIL

S/N: C4Z1-UP
PART OF 321-7705 ENGINE AR-PRIMARY
AN ATTACHMENT

SMCS-1302 **i03128288**

NOTE	REF NO	GRAPHIC REF	PART NUMBER	QTY	PART NAME 1 2 3 4 5 6 (PRODUCT LEVEL)	SEE PAGE
M	1	1	**6I-0217**	14	BOLT (M8X1.25X20-MM)	
M	2	1	**6I-0260**	2	BOLT (M8X1.25X25-MM)	
	3	1	**6I-0289**	2	PLUG	
M	4	1	**6I-0363**	2	BOLT (M6X1X20-MM)	
	5	1	**6I-0572**	2	BOLT (M8X1.25X20-MM)	
	6	1	**7C-0351**	2	PLUG-DRAIN (ENGINE OIL)	
	7	1	**067-6213**	1	GASKET	
	8	1	**101-3771**	4	BOLT	
	9	1	**225-6005**	1	GASKET	
	10	1	**225-6041**	1	TUBE	
	11	1	**230-8094**	1	BRIDGE	
	12	1	**275-9883**	2	SEAL (DRAIN PLUG)	
	13	1	**304-8764**	1	PAN AS-OIL (ENGINE) (ENGINE)	
	13A	1	**7C-1224**	2	INSERT	

M-METRIC PART

322-9476 **PAN GP-OIL** *(contd.)* **i03128288**

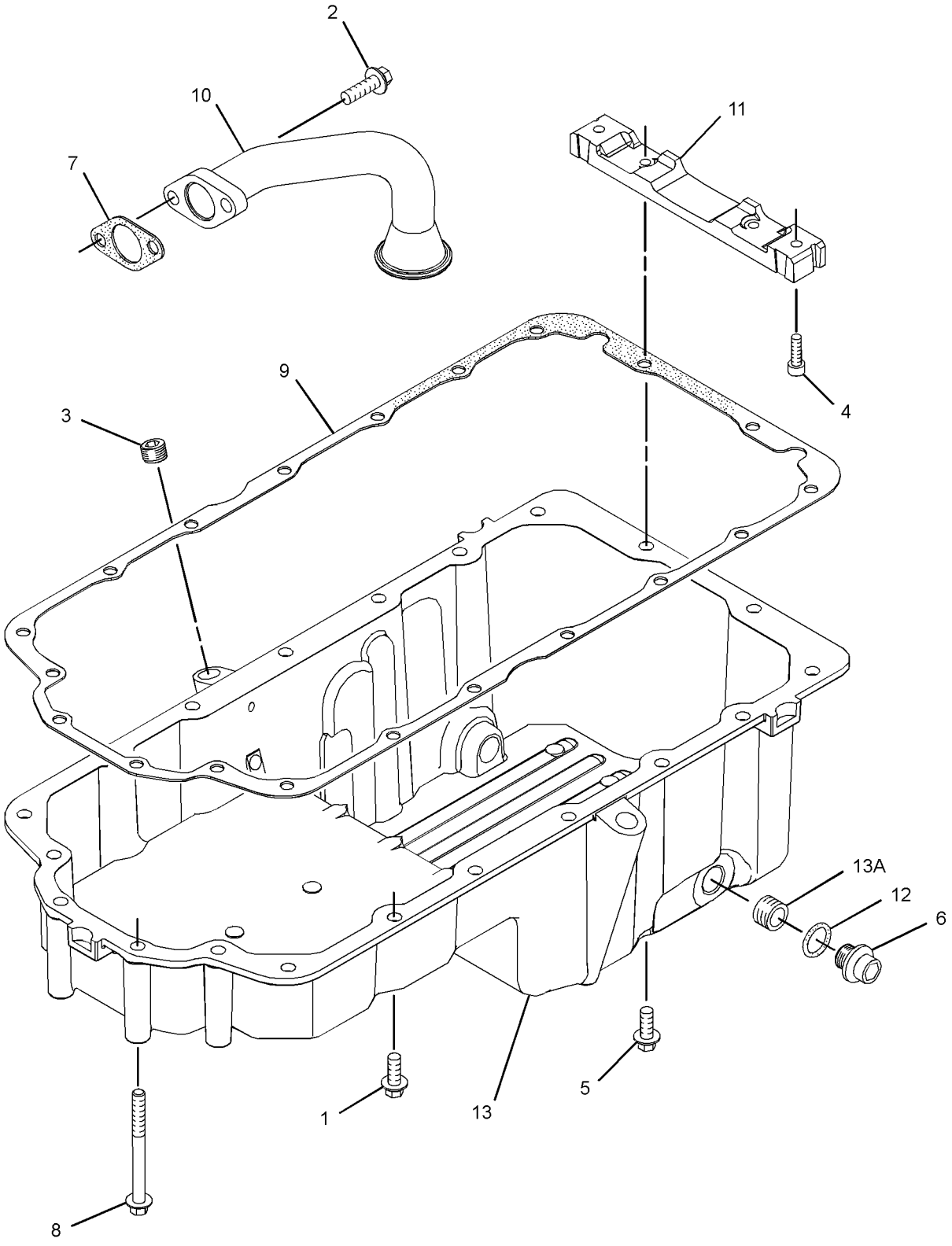

GRAPHIC #1 **<END>** g01442277

BASIC ENGINE

335-9799 PAN GP-OIL

S/N: CRS1-UP
PART OF 322-1924 ENGINE AR-PRIMARY
AN ATTACHMENT

SMCS-1302 **i03235802**

NOTE	REF NO	GRAPHIC REF	PART NUMBER	QTY	PART NAME 1 2 3 4 5 6 (PRODUCT LEVEL)	SEE PAGE
M	1	1	**6I-0217**	14	BOLT (M8X1.25X20-MM)	
M	2	1	**6I-0260**	2	BOLT (M8X1.25X25-MM)	
	3	1	**6I-0289**	2	PLUG	
M	4	1	**6I-0363**	2	BOLT (M6X1X20-MM)	
	5	1	**6I-0572**	2	BOLT (M8X1.25X20-MM)	
	6	1	**7C-0351**	2	PLUG-DRAIN (ENGINE OIL)	
	7	1	**067-6213**	1	GASKET	
	8	1	**101-3771**	4	BOLT	
	9	1	**225-6005**	1	GASKET	
	10	1	**225-6041**	1	TUBE	
	11	1	**230-8094**	1	BRIDGE	
	12	1	**275-9883**	2	SEAL (DRAIN PLUG)	
	13	1	**304-8764**	1	PAN AS-OIL (ENGINE)	
	13A	1	**7C-1224**	2	INSERT	

M-METRIC PART

335-9799 **PAN GP-OIL** *(contd.)* **i03235802**

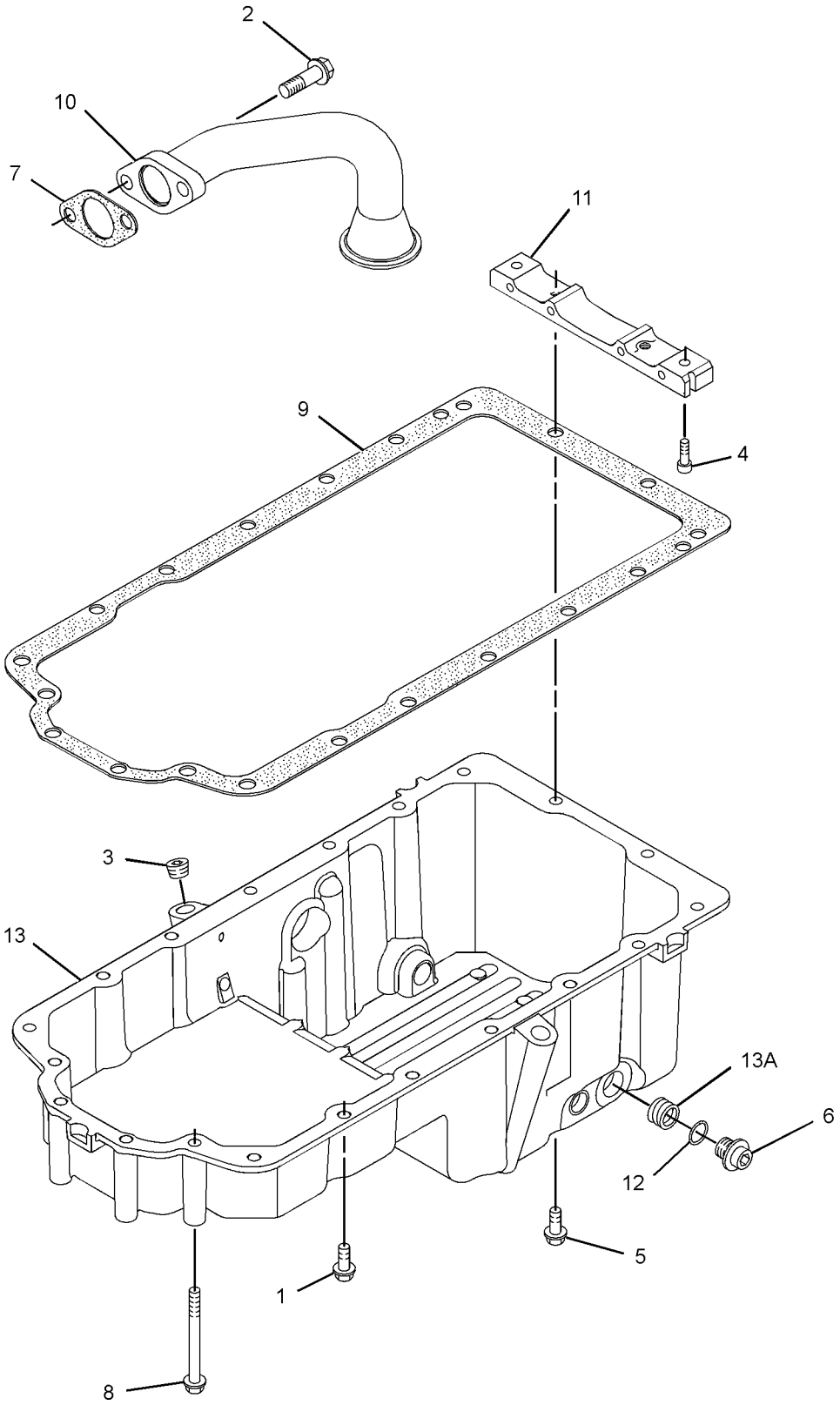

GRAPHIC #1 **<END>** g01653214

BASIC ENGINE

326-9002 PISTON & ROD GP

S/N: C4Z1-UP
PART OF 321-7705 ENGINE AR-PRIMARY
AN ATTACHMENT

SMCS-1213, 1214, 1215, 1218, 1219, 1225, 1239 **i03127789**

NOTE	REF NO	GRAPHIC REF	PART NUMBER	QTY	PART NAME 1 2 3 4 5 6 (PRODUCT LEVEL)	SEE PAGE
	1	1	**315-3395**	4	PISTON AS	
					(EACH INCLUDES)	
	1A	1	**124-3536**	2	RING-RETAINING	
	1B	1	**276-7476**	1	KIT-PISTON RING	
BJ	2	1	**225-5441**	1	ROD AS-CONNECTING (LENGTH L)	
					—OR—	
BJ		1	**225-5451**	4	ROD AS-CONNECTING (LENGTH K)	
					—OR—	
BJ		1	**225-5453**	4	ROD AS-CONNECTING (LENGTH J)	
					—OR—	
BJ		1	**225-5454**	4	ROD AS-CONNECTING (LENGTH H)	
					—OR—	
BJ		1	**225-5458**	4	ROD AS-CONNECTING (LENGTH G)	
					—OR—	
BJ		1	**225-5459**	4	ROD AS-CONNECTING (LENGTH F)	
					(EACH INCLUDES)	
	2A	1	**225-5438**	1	BUSHING	
	2B	1	**225-5439**	2	BOLT-SPECIAL (CONNECTING ROD)	

B-USE AS REQUIRED
J-ENSURE THAT CORRECT ROD LENGTH IS FITTED

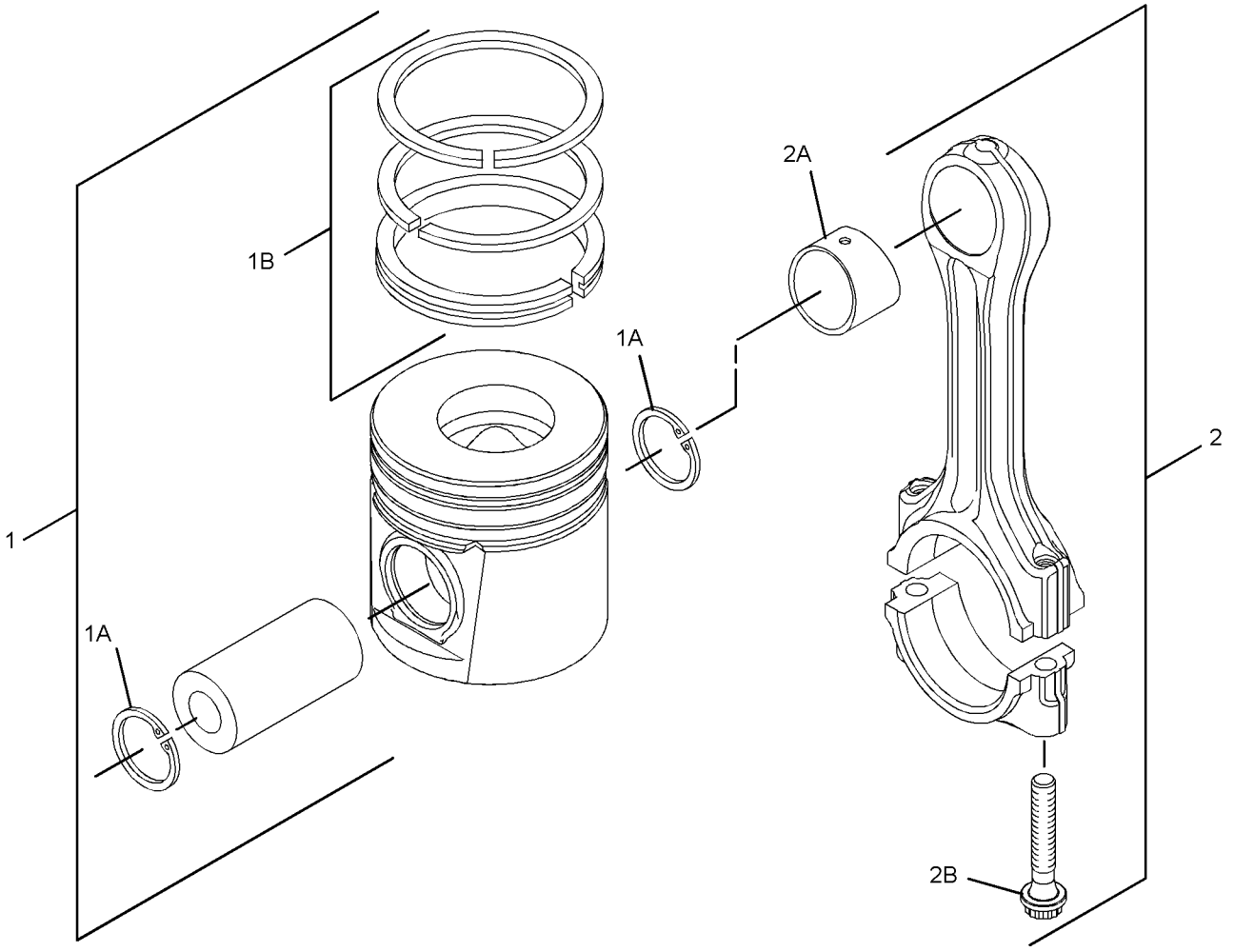

GRAPHIC #1 **<END>** g01523198

334-4204 PISTON & ROD GP

S/N: CRS1-UP
PART OF 322-1924 ENGINE AR-PRIMARY
AN ATTACHMENT

SMCS-1213, 1214, 1215, 1218, 1219, 1225, 1239 **i03143143**

NOTE	REF NO	GRAPHIC REF	PART NUMBER	QTY	PART NAME 1 2 3 4 5 6 (PRODUCT LEVEL)	SEE PAGE
	1	1	**225-5437**	4	PISTON AS	
					(EACH INCLUDES)	
AB		1	**288-1394**	1	PISTON AS (0.5-MM OS)	
AB		1	**288-1395**	1	PISTON AS (1.0-MM OS)	
	1A	1	**124-3536**	2	RING-RETAINING	
	1B	1	**225-5436**	1	KIT-PISTON RING	
AB		1	**334-2318**	1	KIT-PISTON RING (1.0-MM OS)	
AB		1	**334-2319**	1	KIT-PISTON RING (0.5-MM OS)	
BJ	2	1	**225-5441**	4	ROD AS-CONNECTING (LENGTH L)	
					—OR—	
BJ		1	**225-5451**	4	ROD AS-CONNECTING (LENGTH K)	
					—OR—	
BJ		1	**225-5453**	4	ROD AS-CONNECTING (LENGTH J)	
					—OR—	
BJ		1	**225-5454**	4	ROD AS-CONNECTING (LENGTH H)	
					—OR—	
BJ		1	**225-5458**	4	ROD AS-CONNECTING (LENGTH G)	
					—OR—	
BJ		1	**225-5459**	4	ROD AS-CONNECTING (LENGTH F)	
					(EACH ROD ASSEMBLY INCLUDES)	
	2A	1	**225-5438**	1	BUSHING	
	2B	1	**225-5439**	2	BOLT-SPECIAL (CONNECTING ROD)	

A-NOT PART OF THIS GROUP
B-USE AS REQUIRED
J-INSURE CORRECT ROD LENGTH IS FITTED

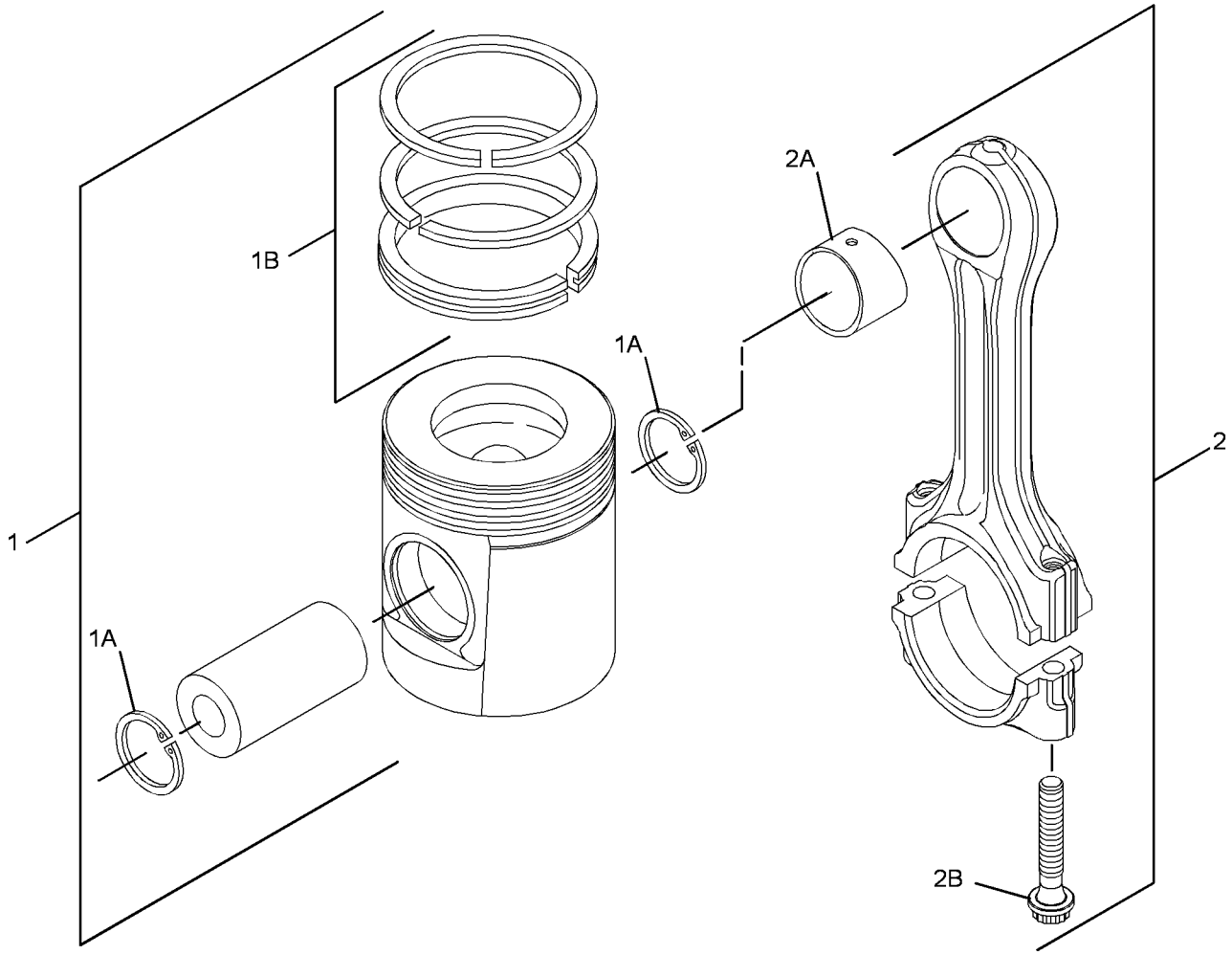

GRAPHIC #1 **<END>** g01374535

298-5129 PLUG GP-CYLINDER HEAD

S/N: C4Z1-UP
PART OF 321-7705 ENGINE AR-PRIMARY
AN ATTACHMENT

SMCS-1100 **i03128287**

NOTE	REF NO	GRAPHIC REF	PART NUMBER	QTY	PART NAME 1 2 3 4 5 6 (PRODUCT LEVEL)	SEE PAGE
	1	1	**232-1322**	1	PLUG	
	2	1	**199-9751**	1	SEAL-O-RING	

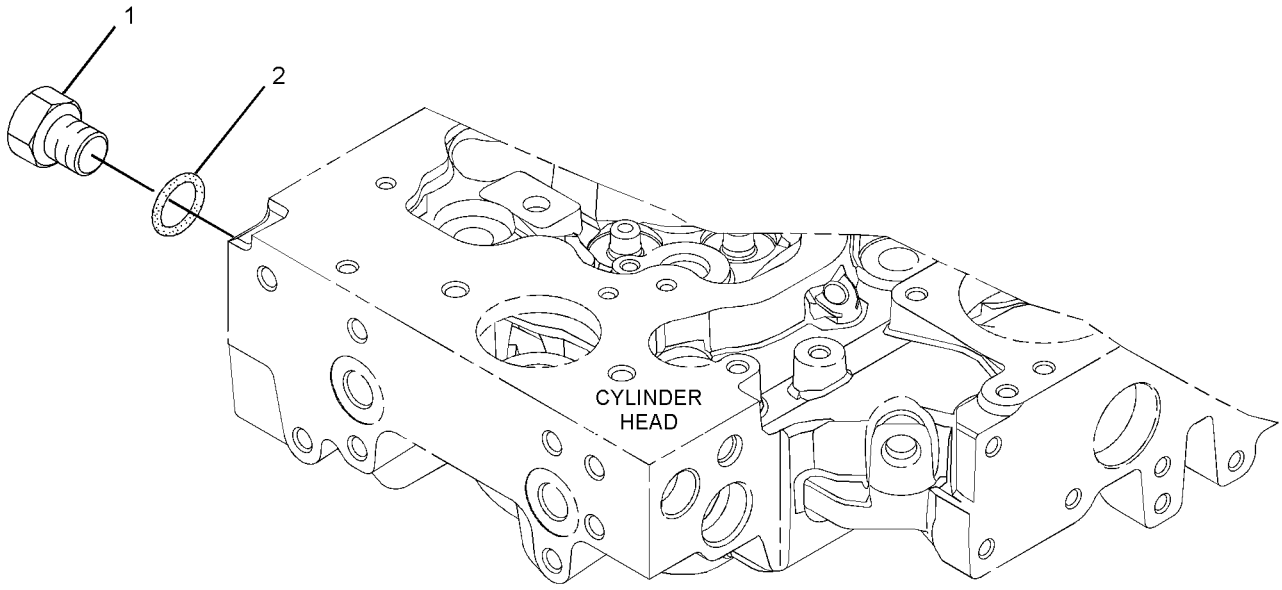

GRAPHIC #1 **<END>** g01305536

BASIC ENGINE

225-4317 PLUG GP-ENGINE

S/N: CRS1-UP
FRONT HOUSING, CYLINDER HEAD
PART OF 322-1924 ENGINE AR-PRIMARY
AN ATTACHMENT

SMCS-1000 **i01772005**

NOTE	REF NO	GRAPHIC REF	PART NUMBER	QTY	PART NAME 1 2 3 4 5 6 (PRODUCT LEVEL)	SEE PAGE
	1	1	**2B-0858**	3	PLUG-PIPE	

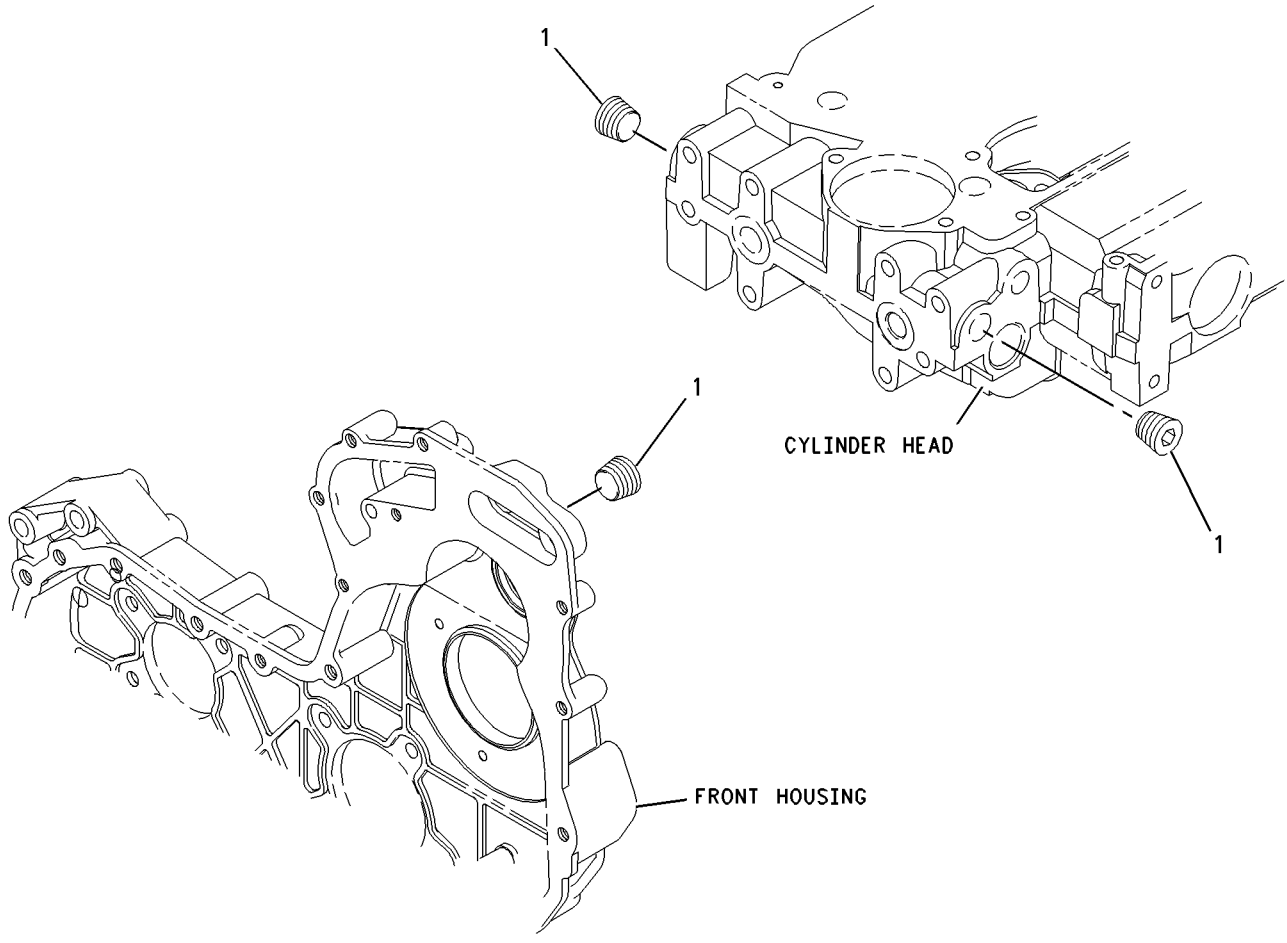

GRAPHIC #1 **<END>** g00911937

230-7569 PLUG GP-ENGINE

S/N: CRS1-UP
PART OF 322-1924 ENGINE AR-PRIMARY
AN ATTACHMENT

SMCS-1000 **i01896487**

NOTE	REF NO	GRAPHIC REF	PART NUMBER	QTY	PART NAME 1 2 3 4 5 6 (PRODUCT LEVEL)	SEE PAGE
	1	1	**231-0046**	1	PLUG	

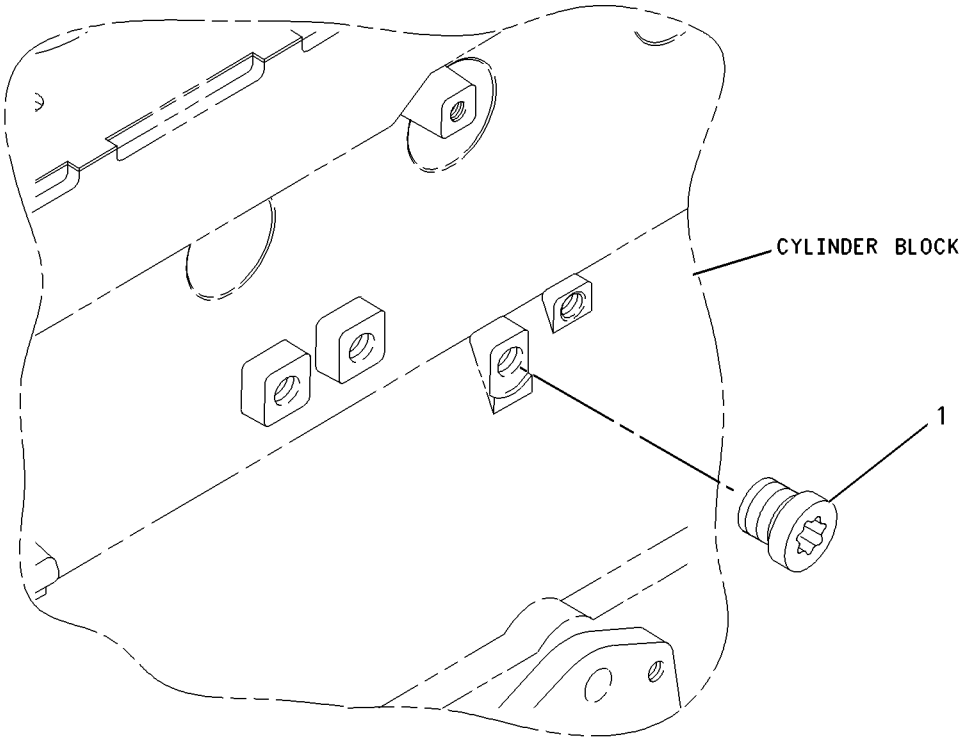

GRAPHIC #1 **<END>** g00911955

BASIC ENGINE

232-6204 PLUG GP-ENGINE

S/N: CRS1-UP
PART OF 322-1924 ENGINE AR-PRIMARY
AN ATTACHMENT

SMCS-1000 **i02160472**

NOTE	REF NO	GRAPHIC REF	PART NUMBER	QTY	PART NAME 1 2 3 4 5 6 (PRODUCT LEVEL)	SEE PAGE
	1	1	**199-9751**	1	SEAL-O-RING	
	2	1	**232-1322**	1	PLUG	

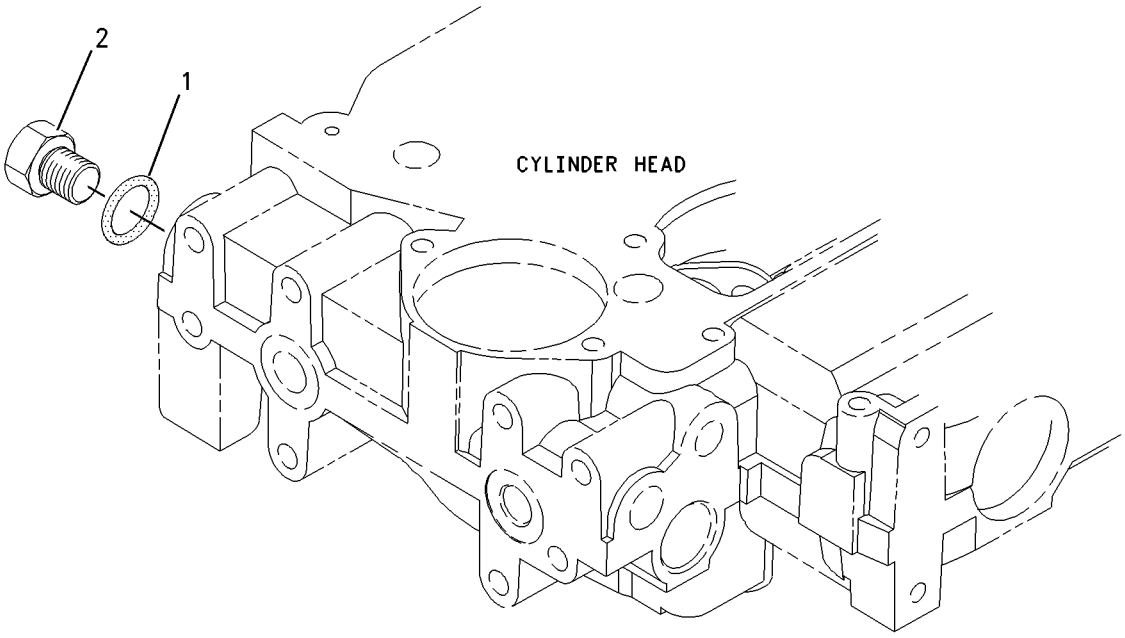

GRAPHIC #1 **<END>** g00950934

298-5131 PLUG GP-ENGINE

S/N: C4Z1-UP
PART OF 321-7705 ENGINE AR-PRIMARY
AN ATTACHMENT

SMCS-1000 **i03128286**

NOTE	REF NO	GRAPHIC REF	PART NUMBER	QTY	PART NAME 1 2 3 4 5 6 (PRODUCT LEVEL)	SEE PAGE
	1	1	**2B-0858**	3	PLUG-PIPE	

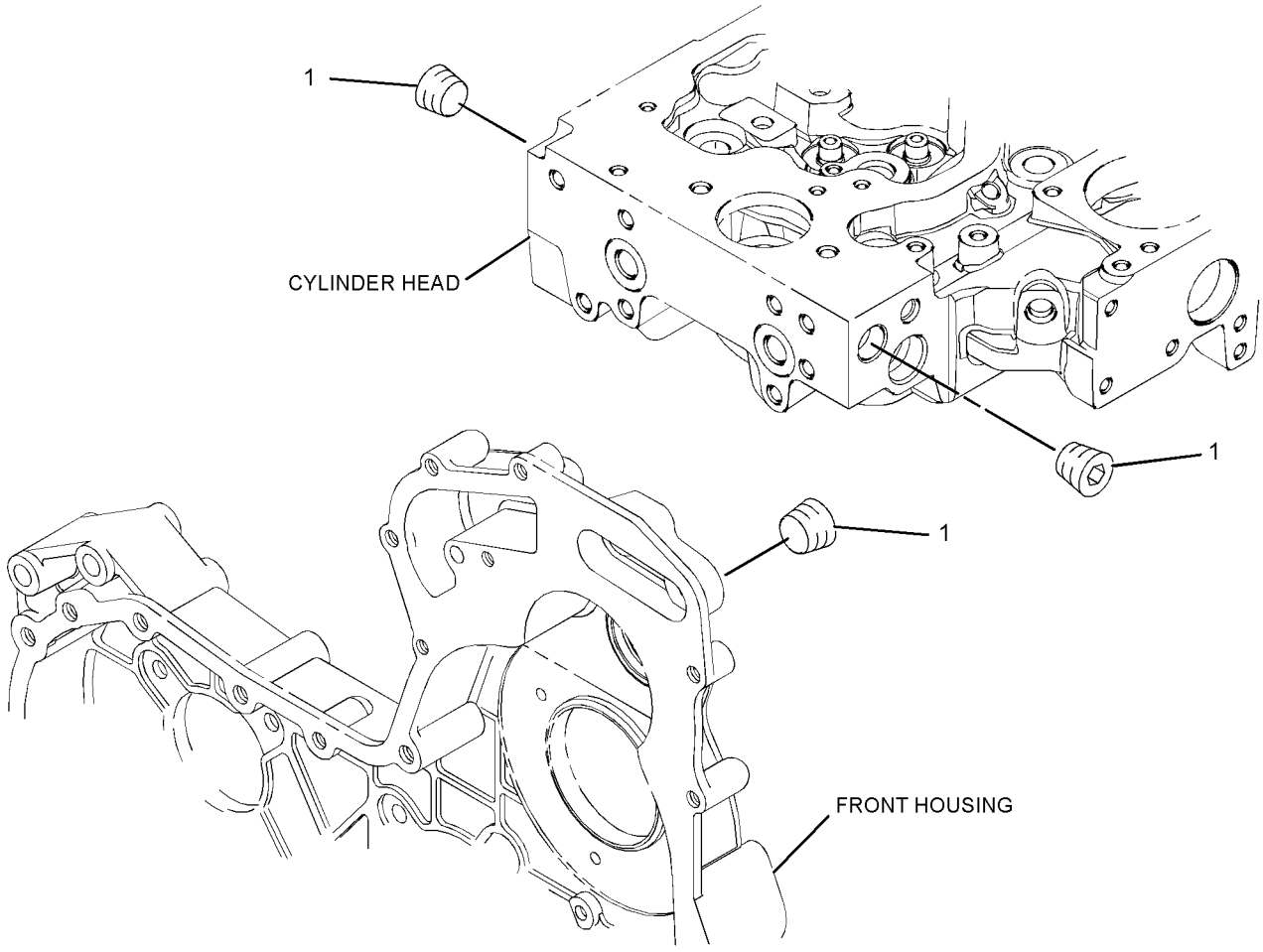

GRAPHIC #1 **<END>** g01305448

304-8761 PLUG GP-ENGINE

S/N: C4Z1-UP
PART OF 321-7705 ENGINE AR-PRIMARY
AN ATTACHMENT

SMCS-1000 **i03128290**

NOTE	REF NO	GRAPHIC REF	PART NUMBER	QTY	PART NAME 1 2 3 4 5 6 (PRODUCT LEVEL)	SEE PAGE
	1	1	**6I-0646**	1	BOLT (M10X1.5X14-MM)	
	2	1	**214-3203**	1	WASHER (SEALING)	

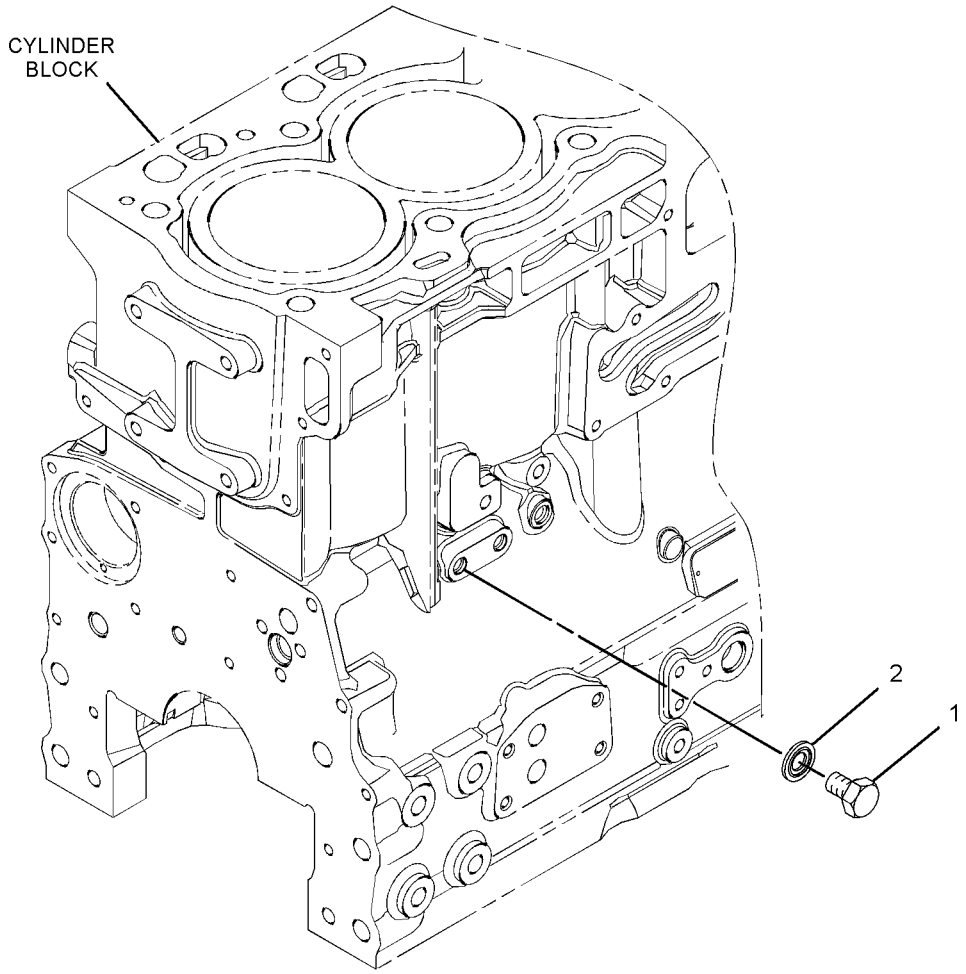

GRAPHIC #1 **<END>** g01373022

225-5963 ROCKER ARM GP

S/N: CRS1-UP

PART OF 334-4207 VALVE MECHANISM GP

AN ATTACHMENT

SMCS-1102, 1123 **i03304187**

NOTE	REF NO	GRAPHIC REF	PART NUMBER	QTY	PART NAME 1 2 3 4 5 6 (PRODUCT LEVEL)	SEE PAGE
	1	1	**225-5625**	4	LEVER AS	
					(EACH INCLUDES)	
	1A	1	**5B-9079**	1	NUT-JAM (3/8-24-THD)	
	1B	1	**185-1546**	1	SCREW	
	2	1	**225-5634**	1	SHAFT AS	
	2A	1	**225-5629**	2	PLUG	
	3	1	**225-5638**	3	SPRING	
	4	1	**225-5640**	4	LEVER AS	
					(EACH INCLUDES)	
	4A	1	**5B-9079**	1	NUT-JAM (3/8-24-THD)	
	4B	1	**185-1546**	1	SCREW	
	5	1	**225-5959**	2	CLIP	
	6	1	**225-5960**	1	BOLT (M8X1.25X60-MM)	
	7	1	**225-5961**	2	WASHER (26.7X34.32X0.38-MM THK)	
	8	1	**225-5962**	3	BOLT (M8X1.25X30-MM)	

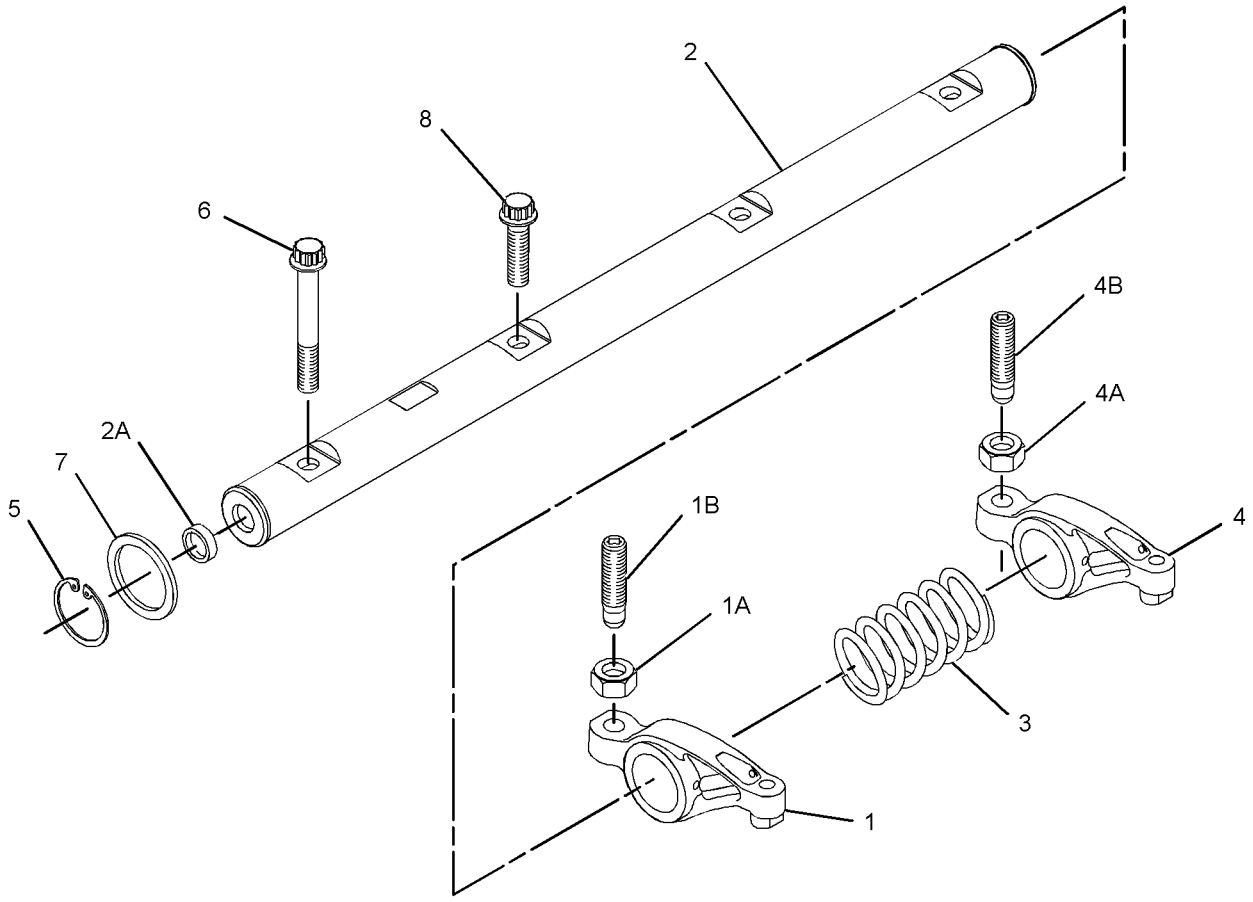

GRAPHIC #1 **<END>** g01368510

BASIC ENGINE

315-3385 ROCKER ARM GP

S/N: C4Z1-UP

PART OF 326-9004 VALVE MECHANISM GP

AN ATTACHMENT

SMCS-1102, 1123 **i03131135**

NOTE	REF NO	GRAPHIC REF	PART NUMBER	QTY	PART NAME 1 2 3 4 5 6 (PRODUCT LEVEL)	SEE PAGE
	1	1	**225-5634**	1	SHAFT AS	
	1A	1	**225-5629**	2	PLUG	
	2	1	**225-5638**	3	SPRING	
	3	1	**225-5959**	2	CLIP	
	4	1	**225-5960**	1	BOLT (M8X1.25X60-MM)	
	5	1	**225-5961**	2	WASHER (26.7X34.32X0.38-MM THK)	
	6	1	**225-5962**	3	BOLT (M8X1.25X30-MM)	
	7	1	**315-3386**	4	ROCKER ARM AS	
					(EACH INCLUDES)	
	7A	1	**278-5113**	1	ADJUSTING SCREW (TORX)	
	7B	1	**315-3387**	1	NUT	
	8	1	**315-3388**	4	ROCKER ARM AS	
					(EACH INCLUDES)	
	8A	1	**278-5113**	1	ADJUSTING SCREW (TORX)	
	8B	1	**315-3387**	1	NUT	

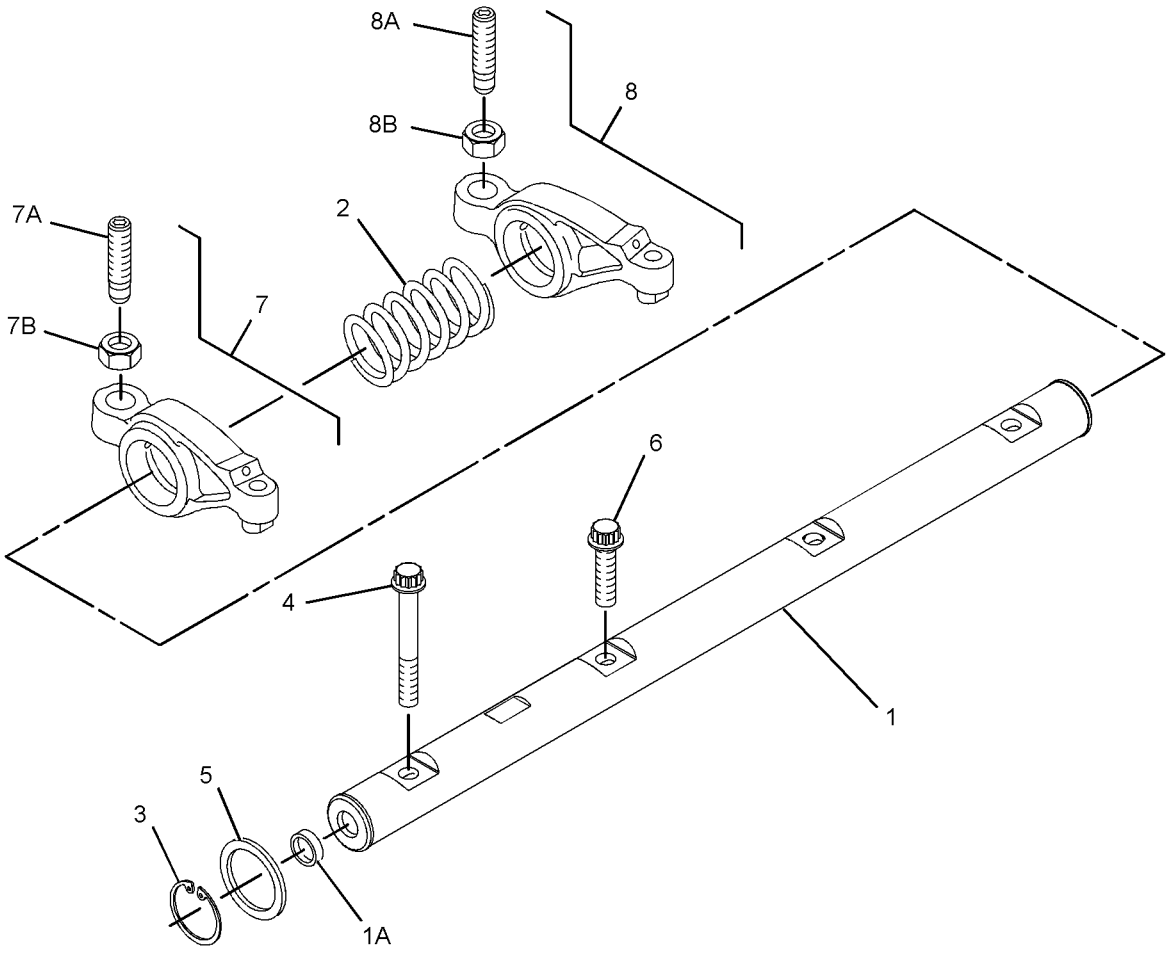

GRAPHIC #1 **<END>** g01399975

326-9004 VALVE MECHANISM GP

S/N: C4Z1-UP

PART OF 321-7705 ENGINE AR-PRIMARY

AN ATTACHMENT

SMCS-1102, 1112, 1121, 1123, 1208, 1209 **i03127783**

NOTE	REF NO	GRAPHIC REF	PART NUMBER	QTY	PART NAME 1 2 3 4 5 6 (PRODUCT LEVEL)	SEE PAGE
Y	1	1	**315-3385**	1	ROCKER ARM GP	64

Y-SEPARATE ILLUSTRATION

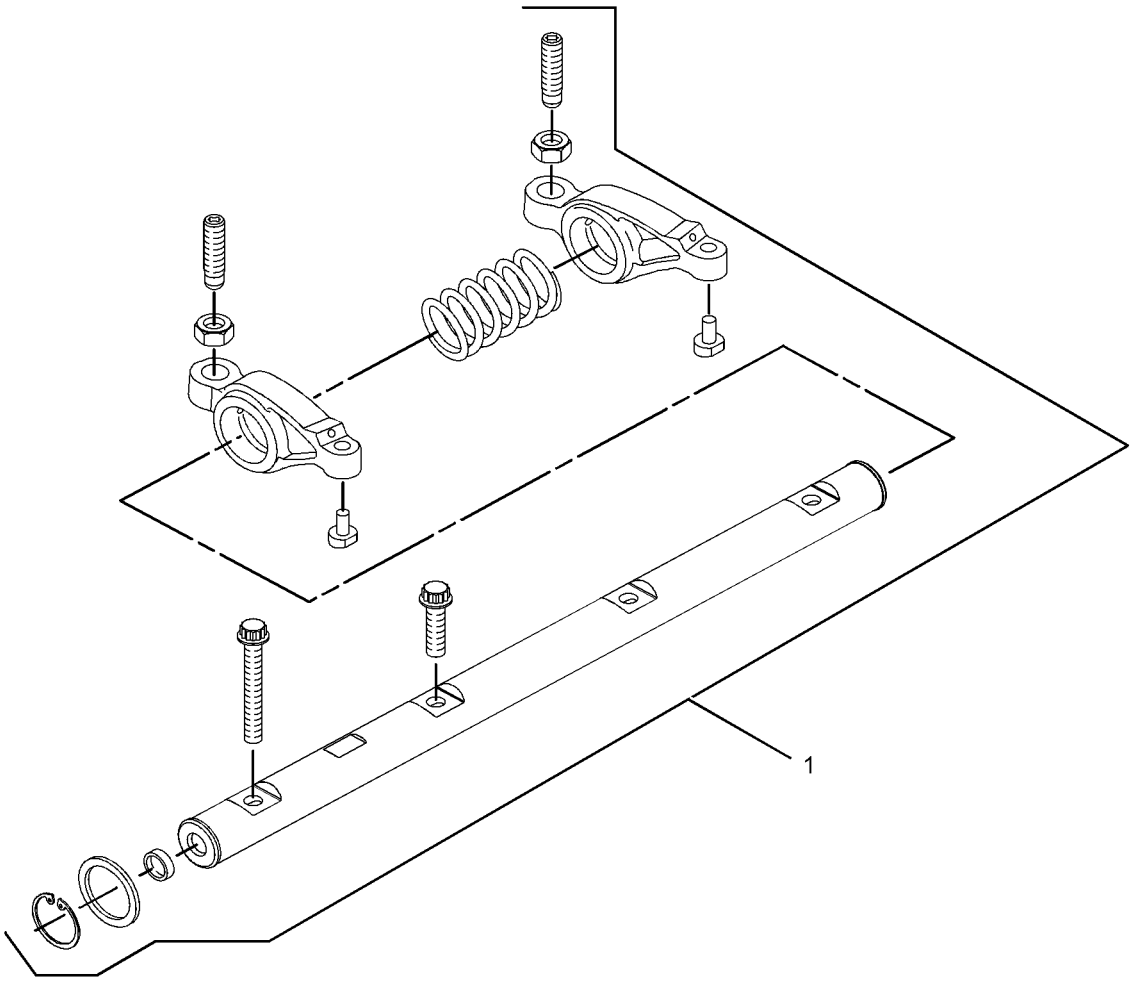

GRAPHIC #1 **<END>** g01611483

334-4207 VALVE MECHANISM GP

S/N: CRS1-UP
PART OF 322-1924 ENGINE AR-PRIMARY
AN ATTACHMENT

SMCS-1102, 1112, 1121, 1123, 1208, 1209 **i03143145**

NOTE	REF NO	GRAPHIC REF	PART NUMBER	QTY	PART NAME 1 2 3 4 5 6 (PRODUCT LEVEL)	SEE PAGE
Y	1	1	**225-5963**	1	ROCKER ARM GP	63

Y-SEPARATE ILLUSTRATION

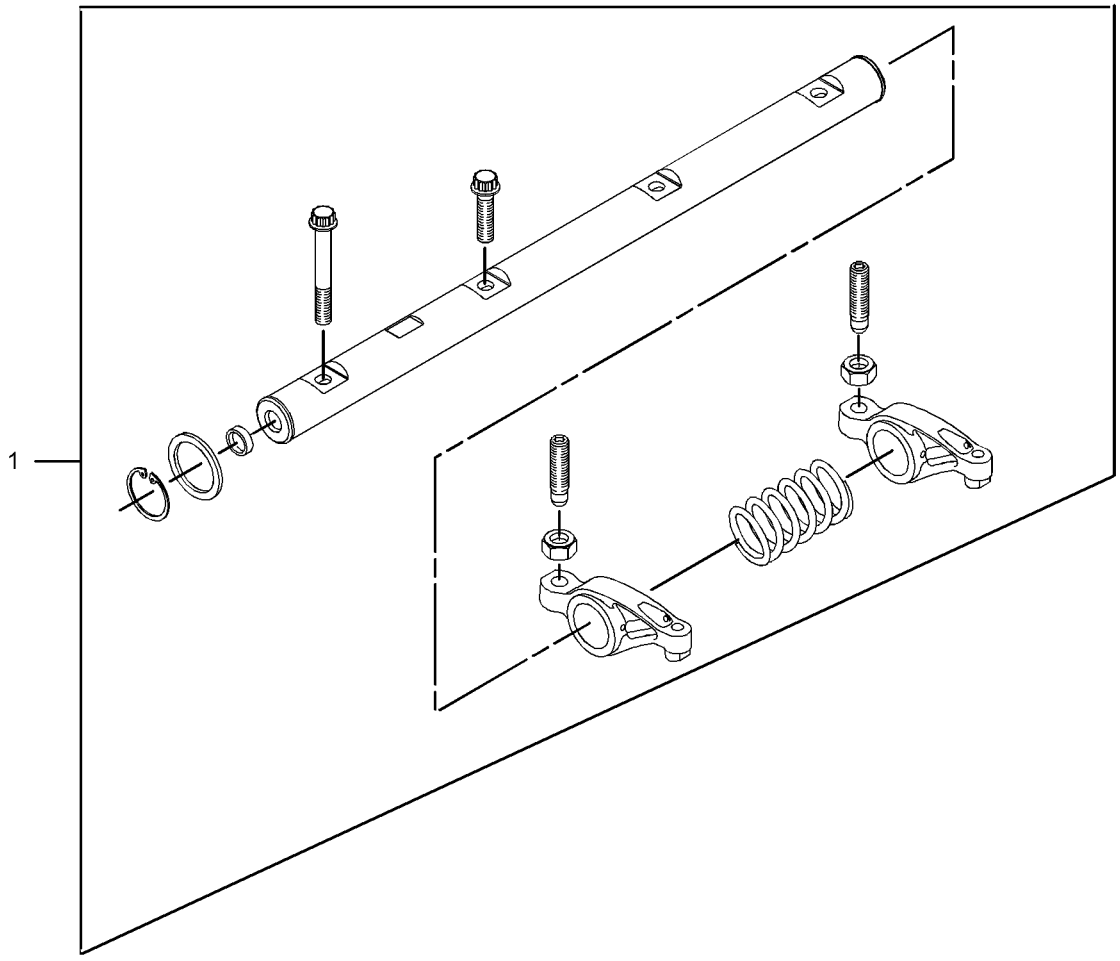

GRAPHIC #1 **<END>** g01619790

323-9307 BREATHER GP–ENGINE

S/N: SJL1-UP
PART OF 339-4989, 339-4993 ENGINE AR
AN ATTACHMENT

SMCS-1317 **i03564702**

NOTE	REF NO	GRAPHIC REF	PART NUMBER	QTY	PART NAME 1 2 3 4 5 6 (PRODUCT LEVEL)	SEE PAGE
	1	1	**6I-1497**	1	SEAL	
	2	1	**8T-9402**	3	CLAMP-HOSE	
	3	1	**165-4021**	1	CANISTER AS-BREATHER (CRANKCASE)	
		1	**185-6643**	1	SEAL (BREATHER)	
	4	1	**202-5909**	1	TUBE AS-OIL	
	5	1	**254-4418**	1	HOSE	
	6	1	**311-6094**	1	PLATE AS	
	7	1	**315-5496**	1	HOSE	
	8	1	**5D-1026**	2	CLAMP-BAND	
	9	1	**5P-4116**	2	WASHER-HARD (8.8X20.5X2-MM THK)	
M	10	1	**8C-3798**	2	BOLT-LOCKING (M6X1X30-MM)	
M	11	1	**8T-4138**	2	BOLT (M6X1X20-MM)	
M	12	1	**8T-4189**	2	BOLT (M8X1.25X20-MM)	
	13	1	**8T-4205**	4	WASHER-HARD (7.2X14.5X2-MM THK)	
	14	1	**8T-7529**	2	CLIP	
E	15	1	**136-1955**		HOSE (82-CM)	

E-ORDER BY THE CENTIMETER
M-METRIC PART

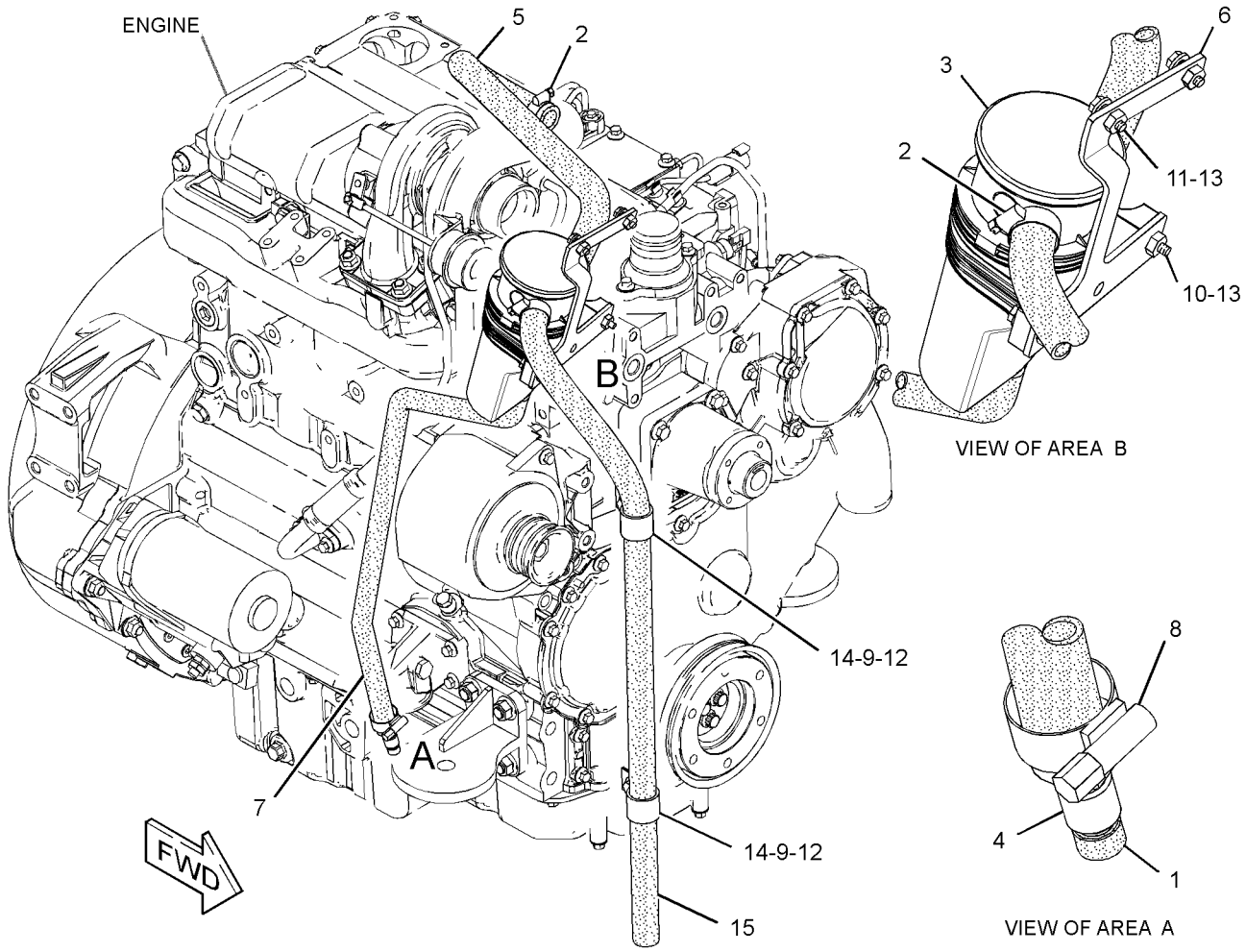

GRAPHIC #1 **<END>** g01890134

309-7555 FILLER GP-ENGINE OIL

S/N: C4Z1-UP
PART OF 321-7705 ENGINE AR-PRIMARY
AN ATTACHMENT

SMCS-1316 **i03128307**

NOTE	REF NO	GRAPHIC REF	PART NUMBER	QTY	PART NAME 1 2 3 4 5 6 (PRODUCT LEVEL)	SEE PAGE
M	1	1	**6I-0260**	2	BOLT (M8X1.25X25-MM)	
	2	1	**225-6522**	1	PLUG-CUP	
	3	1	**317-3769**	1	FILLER GP-ENGINE OIL	
	3A	1	**317-3778**	1	SEAL-O-RING	

M-METRIC PART

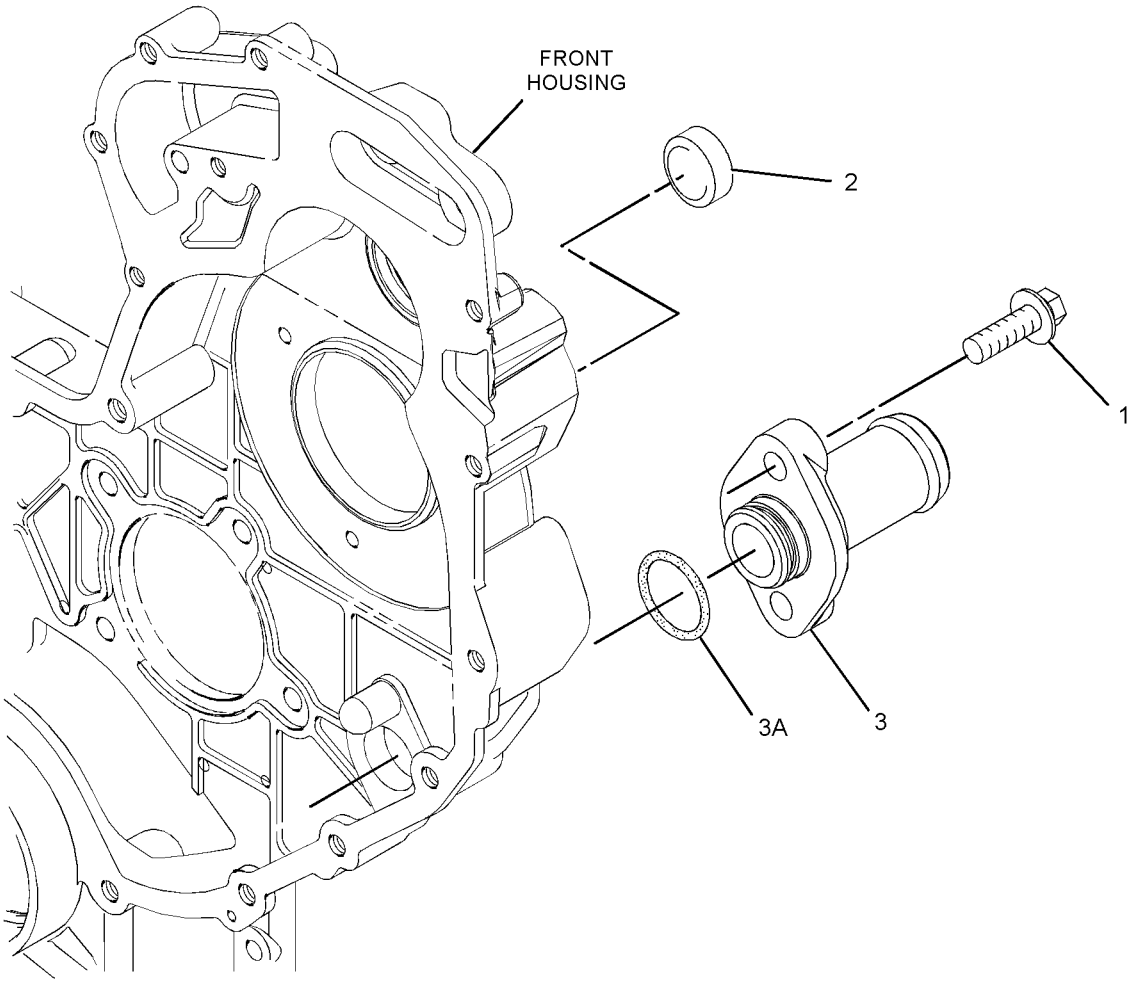

GRAPHIC #1 **<END>** g01378834

307-2033 GAUGE GP-OIL LEVEL & FILLER–ENGINE

S/N: SJL1-UP

PART OF 339-4987, 339-4989, 339-4991, 339-4993 ENGINE AR

AN ATTACHMENT

SMCS-1316, 1326 **i03577106**

NOTE	REF NO	GRAPHIC REF	PART NUMBER	QTY	PART NAME 1 2 3 4 5 6 (PRODUCT LEVEL)	SEE PAGE
	1	1	**6I-1497**	1	SEAL	
	2	1	**9M-7958**	1	CLAMP-HOSE	
	3	1	**127-4471**	1	CLAMP-HOSE	
	4	1	**236-6651**	1	CAP AS (ENGINE OIL FILLER)	
	5	1	**293-4671**	1	TUBE AS	
	6	1	**299-4684**	1	TUBE AS	
	7	1	**299-4687**	1	GAUGE-OIL LEVEL (DIPSTICK) (ENGINE)	
	8	1	**304-9457**	1	BRACKET AS	
M		1	**8T-3490**	1	NUT-WELD (M10X1.5-THD)	
	9	1	**321-7031**	1	HOSE (OIL FILLER)	
	10	1	**119-5708**	1	CLIP	
	11	1	**7D-7233**	1	CLIP	
	12	1	**7W-2326**	1	FILTER AS-ENGINE OIL	
	13	1	**8T-4121**	3	WASHER-HARD (11X21X2.5-MM THK)	
M	14	1	**8T-4136**	3	BOLT (M10X1.5X25-MM)	
M	15	1	**8T-4970**	2	BOLT (M6X1X14-MM)	
	16	1	**9X-8256**	2	WASHER (6.6X12X2-MM THK)	

M-METRIC PART

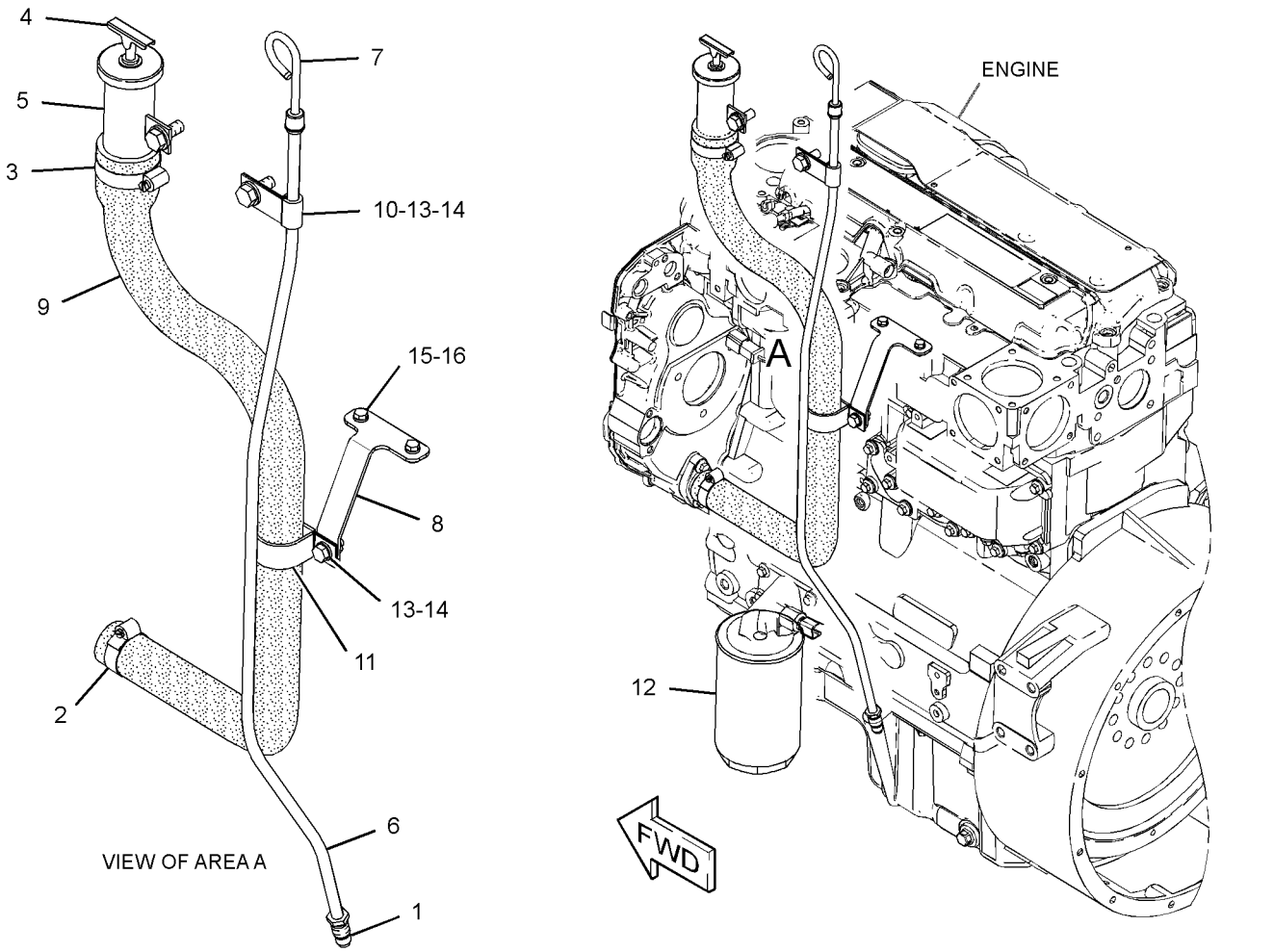

GRAPHIC #1 **<END>** g01607355

LUBRICATION SYSTEM

230-7578 PUMP GP-ENGINE OIL

S/N: CRS1-UP
PART OF 322-1924 ENGINE AR-PRIMARY
AN ATTACHMENT

SMCS-1304, 1315 **i01896485**

NOTE	REF NO	GRAPHIC REF	PART NUMBER	QTY	PART NAME 1 2 3 4 5 6 (PRODUCT LEVEL)	SEE PAGE
M	1	1	**100-4461**	5	BOLT (M10X1.50X50-MM)	
	2	1	**225-8329**	1	PUMP AS-ENGINE OIL	

M-METRIC PART

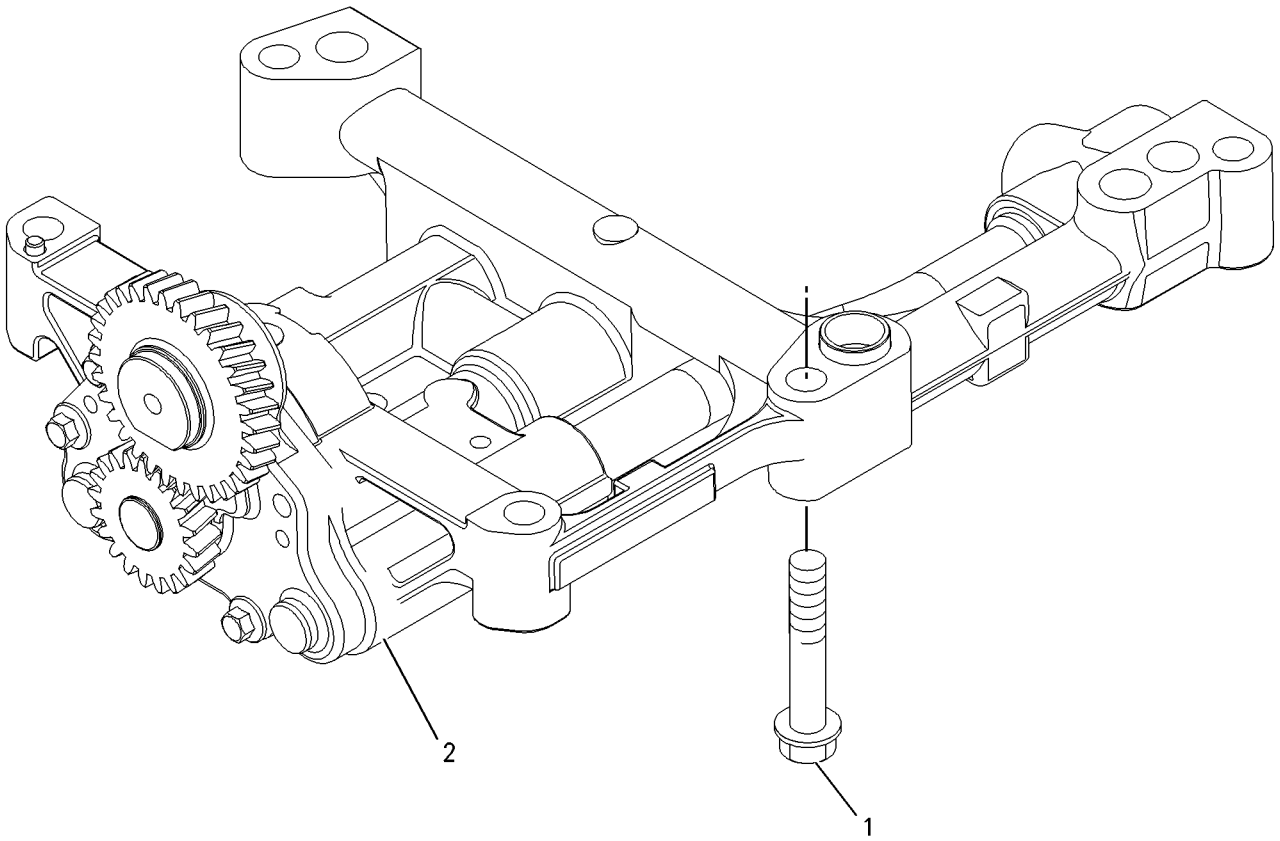

GRAPHIC #1 **<END>** g00911993

298-5112 PUMP GP-ENGINE OIL

S/N: C4Z1-UP
PART OF 321-7705 ENGINE AR-PRIMARY
AN ATTACHMENT

SMCS-1304, 1315 **i03128291**

NOTE	REF NO	GRAPHIC REF	PART NUMBER	QTY	PART NAME 1 2 3 4 5 6 (PRODUCT LEVEL)	SEE PAGE
	1	1	**225-8329**	1	PUMP AS-ENGINE OIL	
M	2	1	**100-4461**	5	BOLT (M10X1.50X50-MM)	

M-METRIC PART

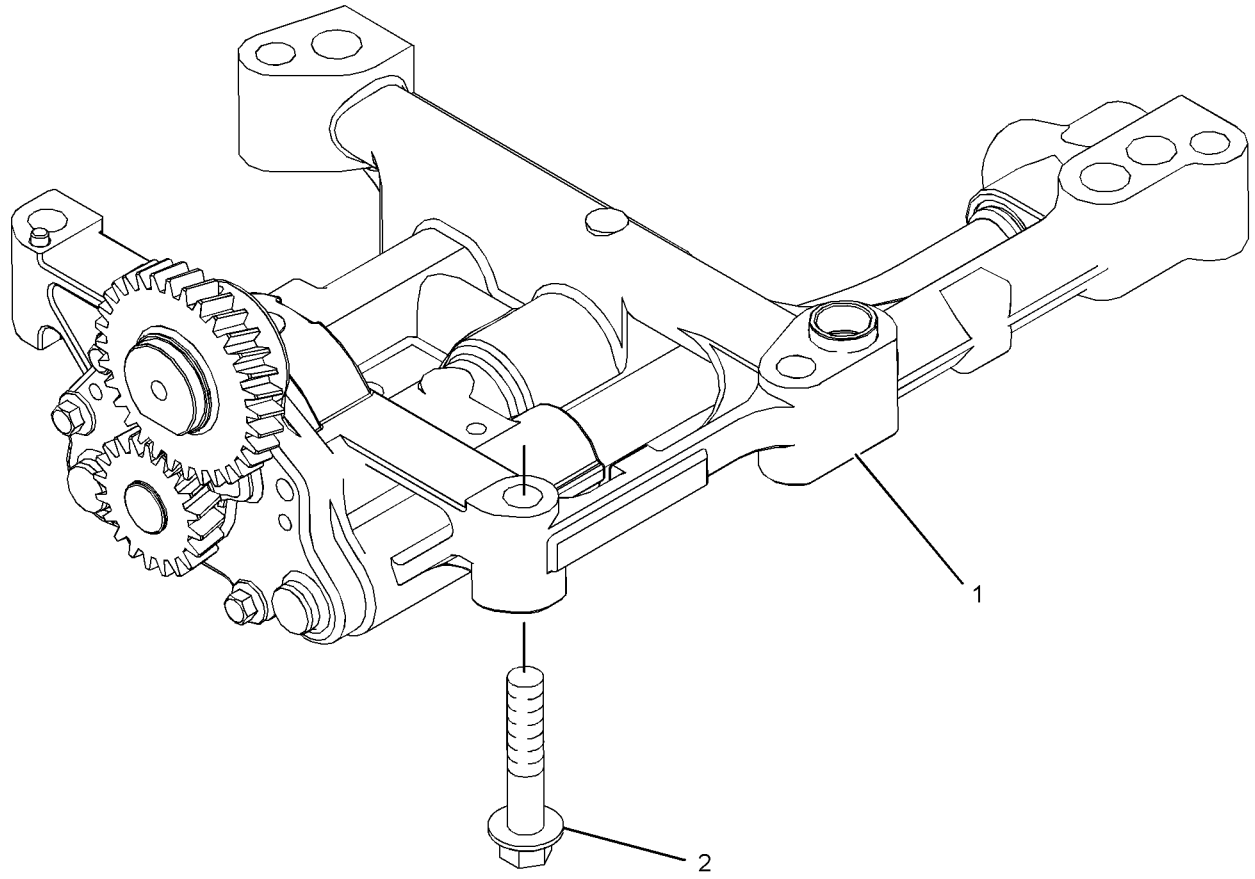

GRAPHIC #1 **<END>** g01304952

COOLING SYSTEM

231-0033 CONNECTION GP-WATER

S/N: CRS1-UP
PART OF 322-1924 ENGINE AR-PRIMARY
AN ATTACHMENT

SMCS-1380 **i03304223**

NOTE	REF NO	GRAPHIC REF	PART NUMBER	QTY	PART NAME 1 2 3 4 5 6 (PRODUCT LEVEL)	SEE PAGE
M	1	1	**6I-0260**	2	BOLT (M8X1.25X25-MM)	
	2	1	**254-2267**	1	REGULATOR GP-TEMPERATURE (INCLUDES CONNECTOR)	
	2A	1	**254-2270**	1	SEAL-O-RING (WATER TEMPERATURE REGULATOR)	

M-METRIC PART

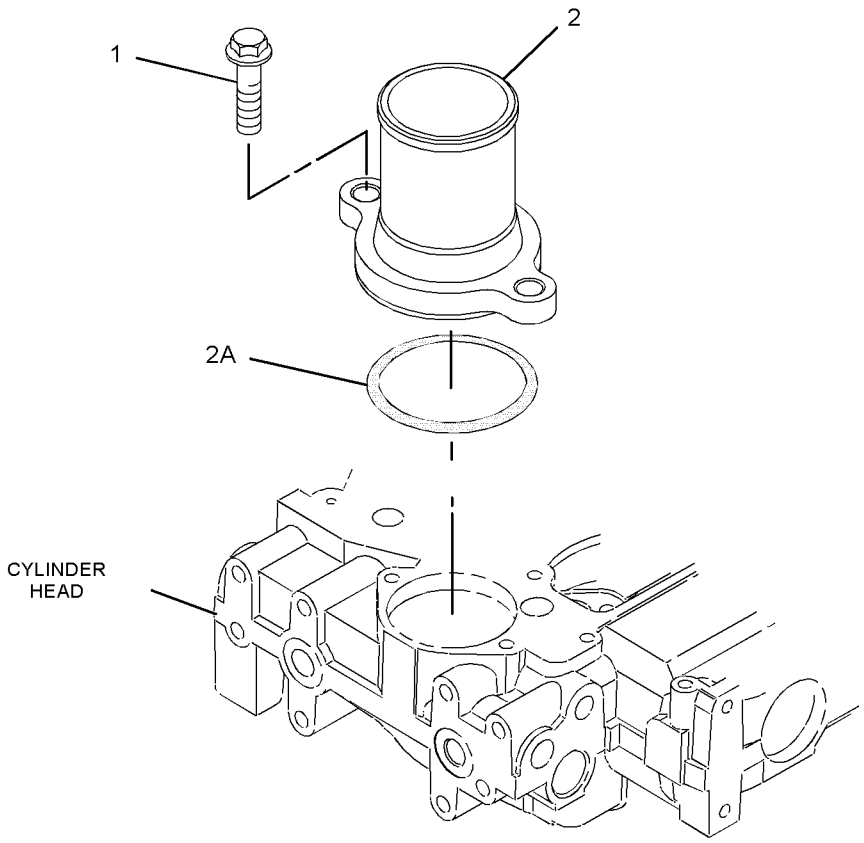

GRAPHIC #1 **<END>** g01081626

COOLING SYSTEM

316-6941 CONNECTION GP-WATER

S/N: C4Z1-UP

PART OF 321-7705 ENGINE AR-PRIMARY

AN ATTACHMENT

SMCS-1380 **i03128305**

NOTE	REF NO	GRAPHIC REF	PART NUMBER	QTY	PART NAME 1 2 3 4 5 6 (PRODUCT LEVEL)	SEE PAGE
	1	1	**254-2267**	1	REGULATOR GP-TEMPERATURE (INCLUDES CONNECTOR) (WATER)	
	1A	1	**254-2270**	1	SEAL-O-RING	
M	2	1	**6I-0260**	2	BOLT (M8X1.25X25-MM)	

M-METRIC PART

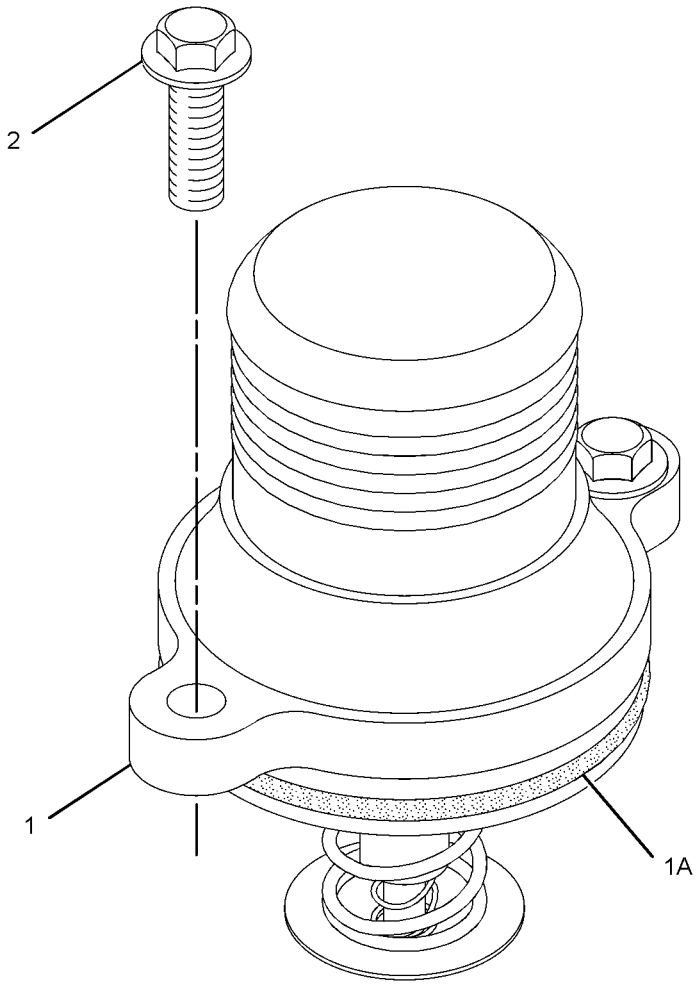

GRAPHIC #1 **<END>** g01319398

COOLING SYSTEM

296-5616 COOLER GP-ENGINE OIL

S/N: CRS1-UP; C4Z1-UP
PART OF 316-6899 COOLER GP-ENGINE OIL, 238-2799 COOLER GP-FLTR BASE & ENG OIL
AN ATTACHMENT

SMCS-1378 **i02626881**

NOTE	REF NO	GRAPHIC REF	PART NUMBER	QTY	PART NAME 1 2 3 4 5 6 (PRODUCT LEVEL)	SEE PAGE
	1	1	**6I-0218**	2	BOLT (M8X1.25X25-MM)	
M	2	1	**6I-0260**	8	BOLT (M8X1.25X25-MM)	
	3	1	**6I-4374**	3	BOLT (M8X1.25X60-MM)	
M	4	1	**101-3895**	4	BOLT (M8X1.25X35-MM)	
	5	1	**225-6817**	1	COOLER-OIL (ENGINE)	
	6	1	**225-6818**	2	SEAL	
	7	1	**272-2265**	1	SEAL	

M-METRIC PART

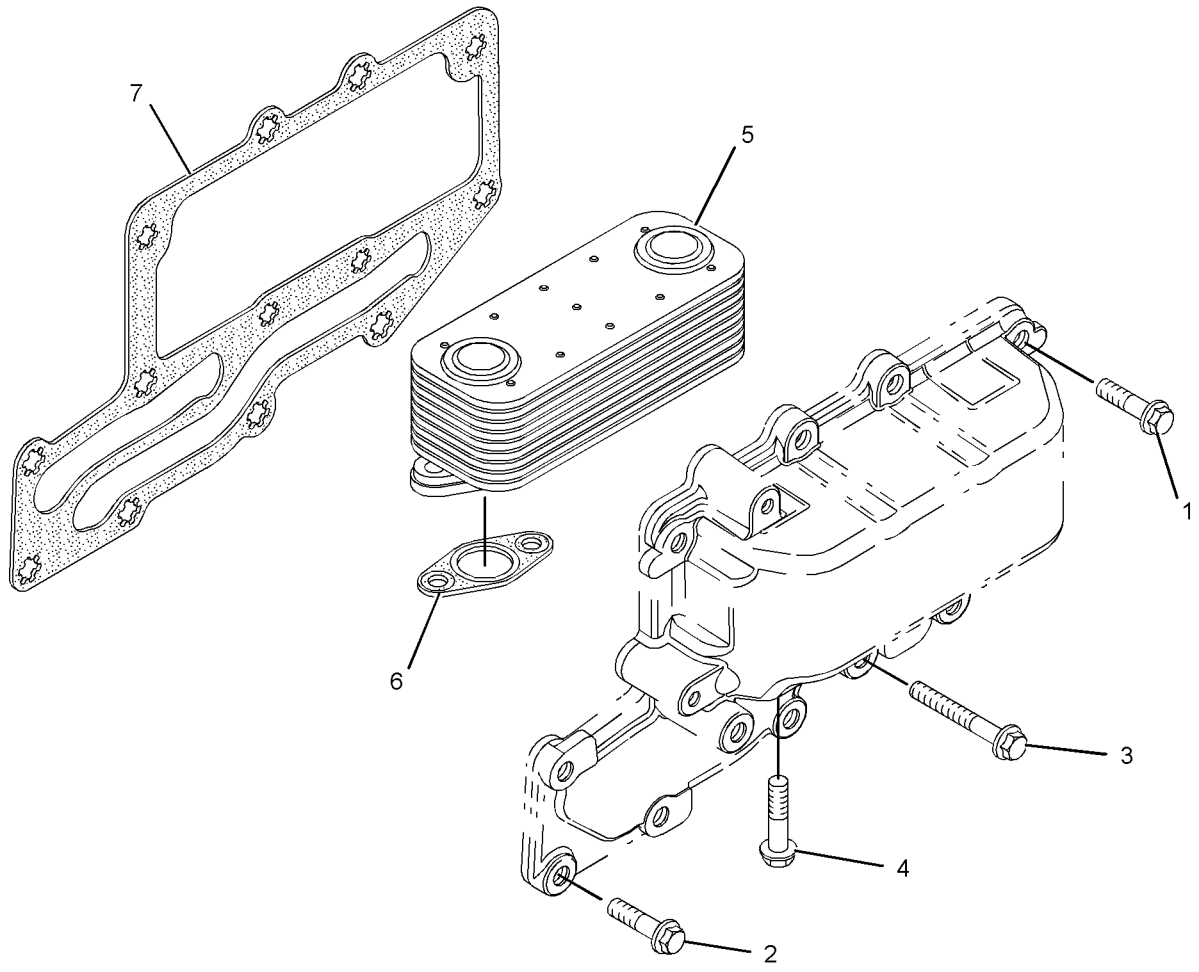

GRAPHIC #1 **<END>** g01204996

316-6899 COOLER GP-ENGINE OIL

S/N: C4Z1-UP
PART OF 321-7705 ENGINE AR-PRIMARY
AN ATTACHMENT

SMCS-1378 **i03332452**

NOTE	REF NO	GRAPHIC REF	PART NUMBER	QTY	PART NAME 1 2 3 4 5 6 (PRODUCT LEVEL)	SEE PAGE
	1	1	**6I-0572**	4	BOLT (M8X1.25X20-MM)	
M	2	1	**6I-0645**	4	BOLT (M8X1.25X25-MM)	
	3	1	**225-7944**	2	GASKET (ENGINE OIL FILTER BASE)	
	4	1	**232-3751**	1	PLATE	
	5	1	**249-0974**	1	HEAD AS-OIL FILTER	
Y	6	1	**296-5616**	1	COOLER GP-ENGINE OIL	74

M-METRIC PART
Y-SEPARATE ILLUSTRATION

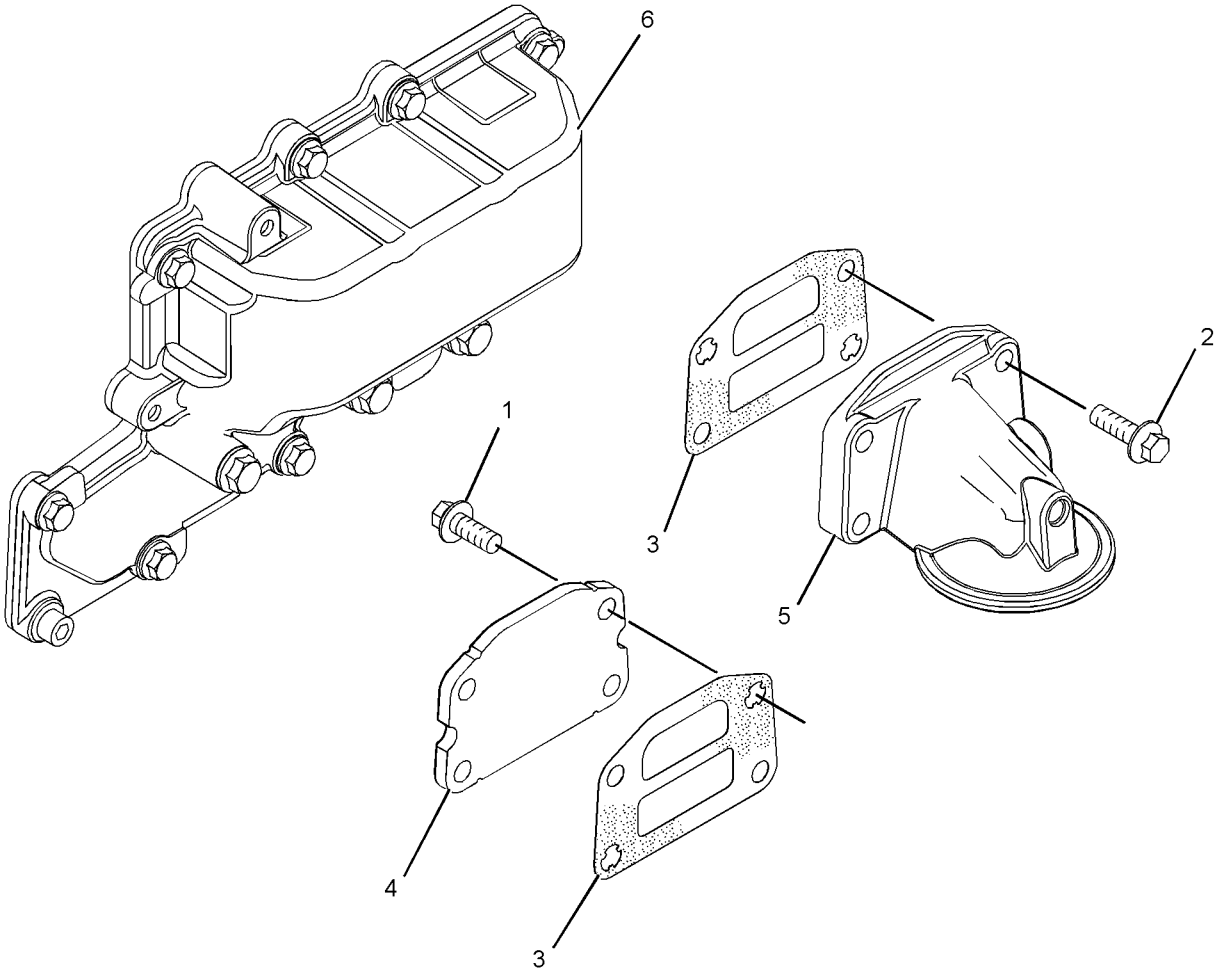

GRAPHIC #1 **<END>** g01400153

238-2799 COOLER GP-FLTR BASE & ENG OIL

S/N: CRS1-UP
PART OF 322-1924 ENGINE AR-PRIMARY
AN ATTACHMENT

SMCS-1306, 1378 **i03145903**

NOTE	REF NO	GRAPHIC REF	PART NUMBER	QTY	PART NAME 1 2 3 4 5 6 (PRODUCT LEVEL)	SEE PAGE
	1	1	**6I-0572**	4	BOLT (M8X1.25X20-MM)	
M	2	1	**6I-0645**	4	BOLT (M8X1.25X25-MM)	
	3	1	**8T-7876**	1	SEAL-O-RING	
	4	1	**225-7941**	1	PLUG	
	5	1	**225-7944**	2	GASKET	
	6	1	**249-0974**	1	HEAD AS-OIL FILTER	
Y	7	1	**296-5616**	1	COOLER GP-ENGINE OIL	74
	8	1	**232-3751**	1	PLATE	

M-METRIC PART
Y-SEPARATE ILLUSTRATION

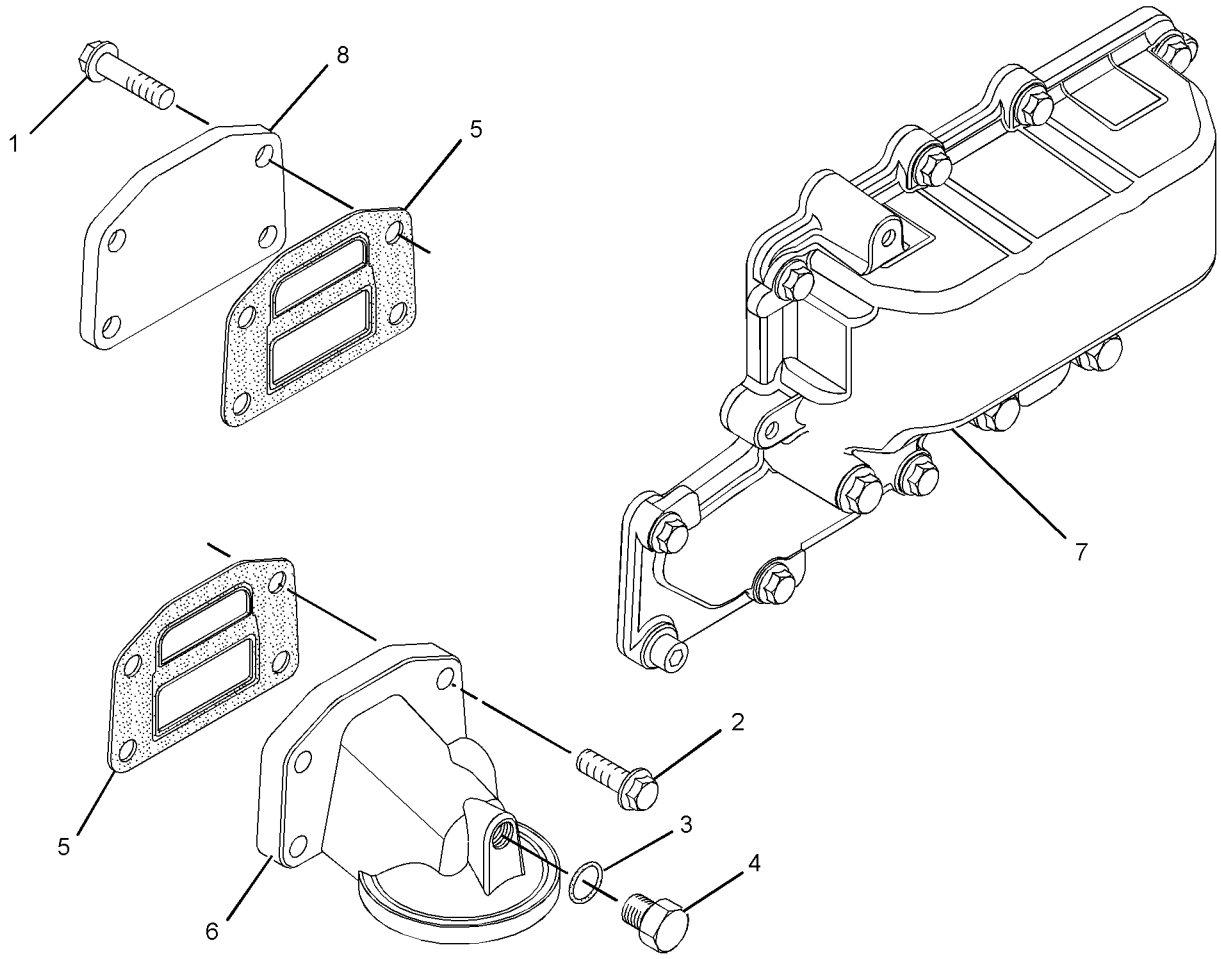

GRAPHIC #1 **<END>** g01621027

299-4716 FAN GP-SUCTION—WITH AIR CONDITIONER

S/N: SJL1-UP
PART OF 339-4991 ENGINE AR
AN ATTACHMENT

SMCS-1356, 1360 **i03035584**

NOTE	REF NO	GRAPHIC REF	PART NUMBER	QTY	PART NAME 1 2 3 4 5 6 (PRODUCT LEVEL)	SEE PAGE
	1	1	**130-7881**	1	SPACER	
	2	1	**142-3391**	1	SPIDER AS (9-BLADE)	
	3	1	**212-9353**	1	BELT-SERPENTINE	
	4	1	**242-9751**	1	GUARD AS (FAN)	
	5	1	**261-0376**	1	BELT TENSIONER	
	6	1	**261-0423**	1	PLATE	
	7	1	**261-0428**	1	PULLEY AS-IDLER	
M		1	**307-2242**	1	BOLT (M10X1.5X45-MM)	
	8	1	**299-4732**	1	PULLEY	
	9	1	**5P-4116**	4	WASHER-HARD (8.8X20.5X2-MM THK)	
M	10	1	**7X-2540**	4	BOLT (M8X1.25X120-MM)	
	11	1	**7X-7729**	1	WASHER (11X25X3-MM THK)	
	12	1	**8T-4121**	3	WASHER-HARD (11X21X2.5-MM THK)	
M	13	1	**8T-4172**	1	BOLT (M10X1.5X80-MM)	
M	14	1	**8T-4196**	3	BOLT (M10X1.5X35-MM)	
	15	1	**8T-4224**	4	WASHER-HARD (8.8X16X2-MM THK)	
M	16	1	**8T-4908**	4	BOLT (M8X1.25X25-MM)	

M-METRIC PART

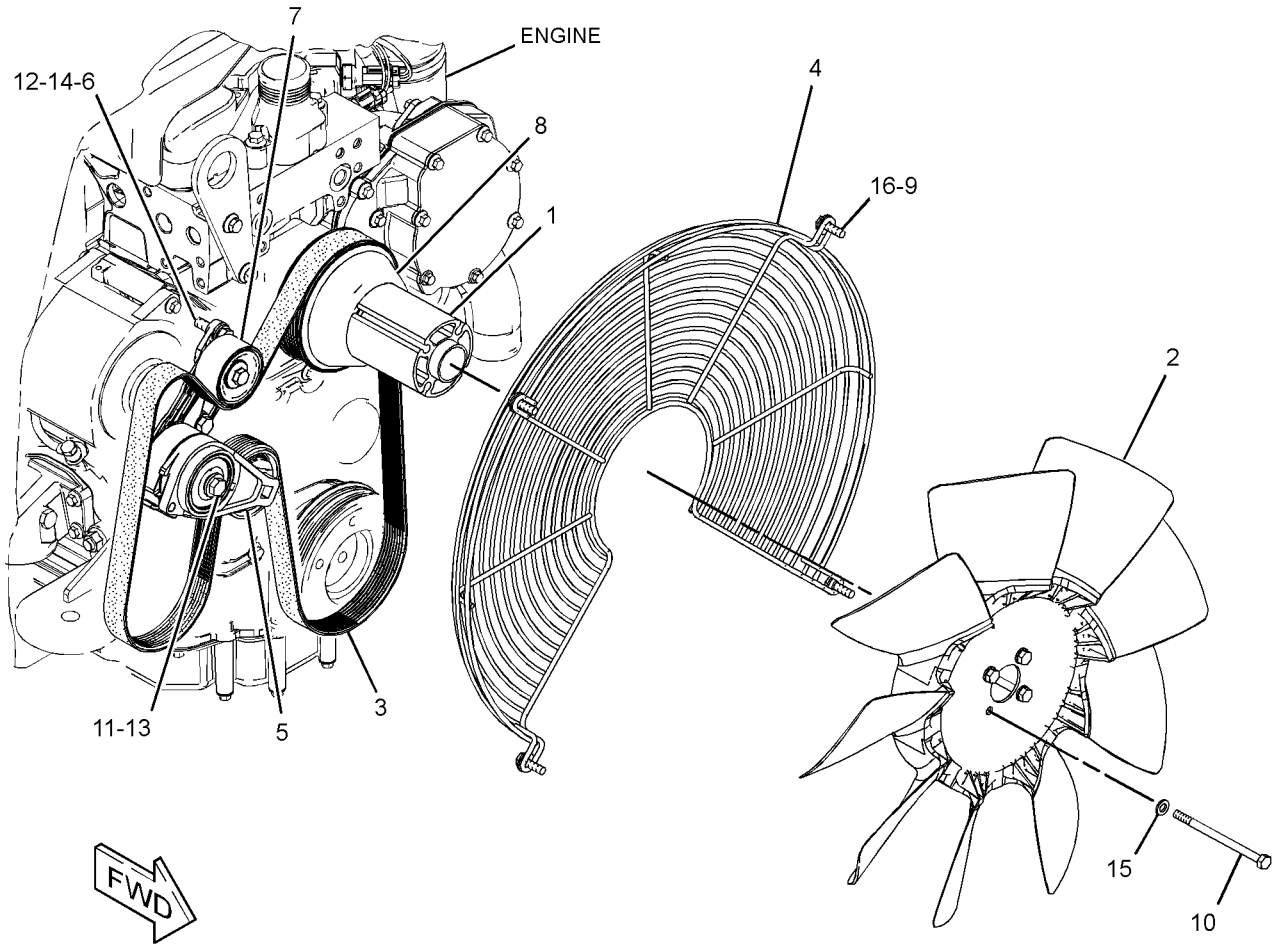

GRAPHIC #1 **<END>** g01520651

COOLING SYSTEM

299-4729 FAN GP-SUCTION—WITHOUT AIR CONDITIONER

S/N: SJL1-UP

PART OF 339-4987, 339-4989 ENGINE AR

AN ATTACHMENT

SMCS-1356, 1360 **i03527872**

NOTE	REF NO	GRAPHIC REF	PART NUMBER	QTY	PART NAME 1 2 3 4 5 6 (PRODUCT LEVEL)	SEE PAGE
	1	1	**130-7881**	1	SPACER	
	2	1	**142-3391**	1	SPIDER AS (9-BLADE)	
	3	1	**242-9751**	1	GUARD AS (FAN)	
	4	1	**261-0371**	1	PLATE	
	5	1	**261-0406**	1	BELT TENSIONER	
	6	1	**299-4732**	1	PULLEY	
	7	1	**324-3408**	1	BELT-SERPENTINE	
	8	1	**5P-4116**	4	WASHER-HARD (8.8X20.5X2-MM THK)	
M	9	1	**7X-2540**	4	BOLT (M8X1.25X120-MM)	
	10	1	**7X-7729**	1	WASHER (11X25X3-MM THK)	
	11	1	**8T-4121**	3	WASHER-HARD (11X21X2.5-MM THK)	
M	12	1	**8T-4172**	1	BOLT (M10X1.5X80-MM)	
M	13	1	**8T-4196**	3	BOLT (M10X1.5X35-MM)	
	14	1	**8T-4224**	4	WASHER-HARD (8.8X16X2-MM THK)	
M	15	1	**8T-4908**	4	BOLT (M8X1.25X25-MM)	

M-METRIC PART

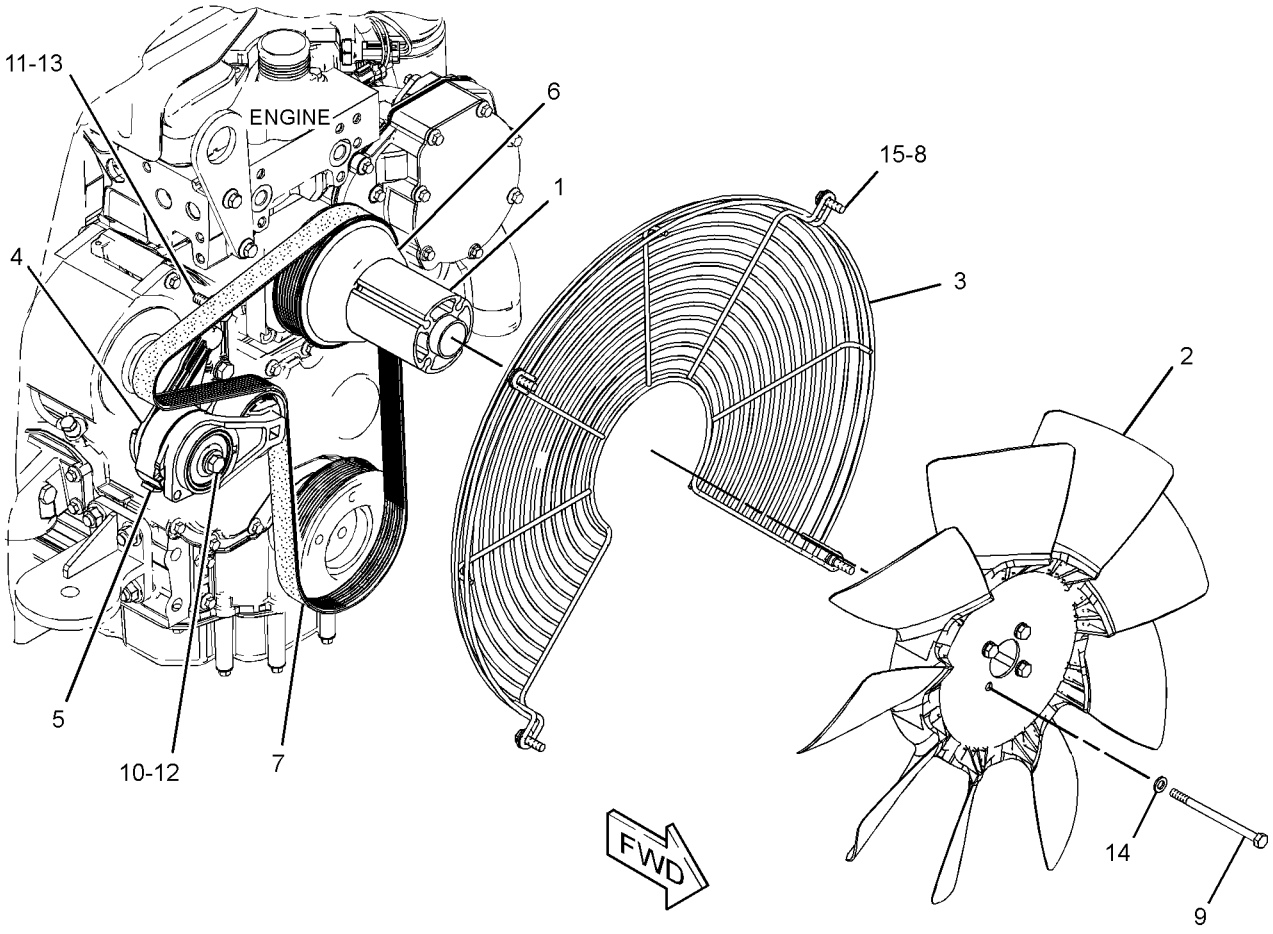

GRAPHIC #1 **<END>** g01520127

321-3113 FAN GP-SUCTION—WITH AIR CONDITIONER

S/N: SJL1-UP
PART OF 339-4993 ENGINE AR
AN ATTACHMENT

SMCS-1356, 1360 **i03713780**

NOTE	REF NO	GRAPHIC REF	PART NUMBER	QTY	PART NAME 1 2 3 4 5 6 (PRODUCT LEVEL)	SEE PAGE
	1	1	**130-7881**	1	SPACER	
	2	1	**142-3391**	1	SPIDER AS (9-BLADE)	
	3	1	**212-9353**	1	BELT-SERPENTINE (ALTERNATOR)	
	4	1	**242-9751**	1	GUARD AS (FAN)	
	5	1	**261-0376**	1	BELT TENSIONER	
	6	1	**261-0423**	1	PLATE	
	7	1	**261-0428**	1	PULLEY AS-IDLER	
M		1	**307-2242**	1	BOLT (M10X1.5X45-MM)	
	8	1	**304-6673**	1	PULLEY	
	9	1	**5P-4116**	4	WASHER-HARD (8.8X20.5X2-MM THK)	
M	10	1	**7X-2540**	4	BOLT (M8X1.25X120-MM)	
	11	1	**7X-7729**	1	WASHER (11X25X3-MM THK)	
	12	1	**8T-4121**	3	WASHER-HARD (11X21X2.5-MM THK)	
M	13	1	**8T-4172**	1	BOLT (M10X1.5X80-MM)	
M	14	1	**8T-4196**	3	BOLT (M10X1.5X35-MM)	
	15	1	**8T-4224**	4	WASHER-HARD (8.8X16X2-MM THK)	
M	16	1	**8T-4908**	4	BOLT (M8X1.25X25-MM)	

M-METRIC PART

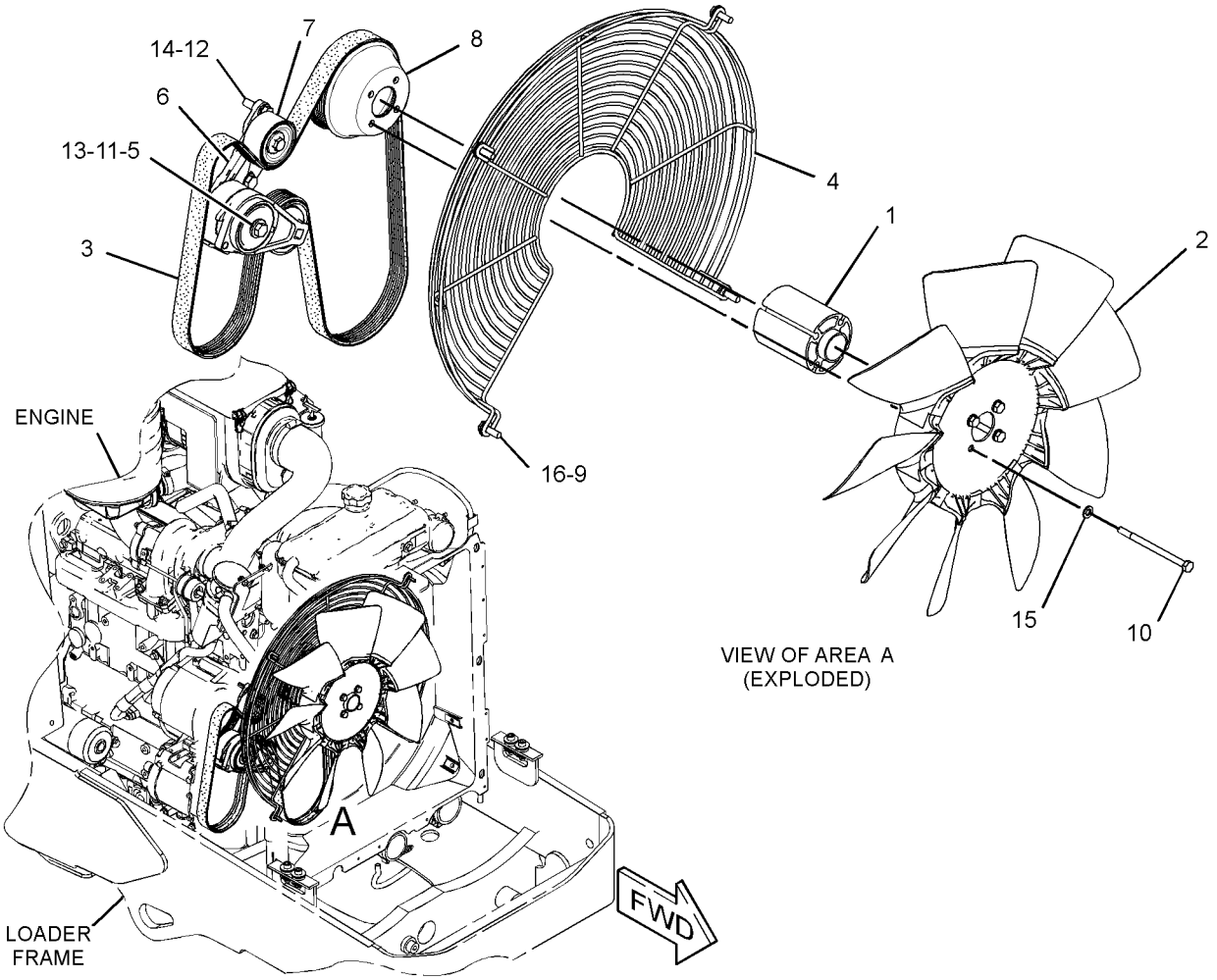

GRAPHIC #1 **<END>** g01592056

COOLING SYSTEM

315-1369 LINES GP-POWER TRAIN COOLER

S/N: SJL1-UP
PART OF 329-0311 POWER TRAIN AR
AN ATTACHMENT

SMCS-1375, 3016 **i03627134**

NOTE	REF NO	GRAPHIC REF	PART NUMBER	QTY	PART NAME 1 2 3 4 5 6 (PRODUCT LEVEL)	SEE PAGE
	1	1	**118-7286**	1	BRACKET AS	
M		1	**8T-3490**	1	NUT-WELD (M10X1.5-THD)	
	2	1	**130-9984**	1	CLIP	
	3	1	**332-7541**	1	HOSE AS	
	4	1	**332-7542**	1	HOSE AS	
	5	1	**315-5401**	1	TUBE AS	
	6	1	*148-8339*	1	CONNECTOR AS	
		1	**6V-8716**	1	CONNECTOR	
		1	**6V-9746**	1	SEAL-O-RING	
		1	**7M-8485**	1	SEAL-O-RING	
	7	1	*148-8360*	1	ELBOW AS	
		1	**6V-9182**	1	ELBOW	
		1	**6V-9746**	1	SEAL-O-RING	
		1	**7M-8485**	1	SEAL-O-RING	
	8	1	**159-1503**	6	CLAMP-HOSE	
	9	1	**8T-4121**	2	WASHER-HARD (11X21X2.5-MM THK)	
M	10	1	**5C-7261**	2	NUT (M8X1.25-THD)	
M	11	1	**8T-4136**	2	BOLT (M10X1.5X25-MM)	
M	12	1	**8T-4192**	2	BOLT (M12X1.75X25-MM)	
	13	1	**8T-4223**	2	WASHER-HARD (13.5X25.5X3-MM THK)	
	14	1	**8T-7529**	3	CLIP	
E	15	1	**262-8088**		HOSE (80-CM)	
E	15A	1	**262-8088**		HOSE (70-CM)	
	16	1	**5P-4116**	2	WASHER-HARD (8.8X20.5X2-MM THK)	

E-ORDER BY THE CENTIMETER
M-METRIC PART

315-1369 **LINES GP-POWER TRAIN COOLER** *(contd.)* **i03627134**

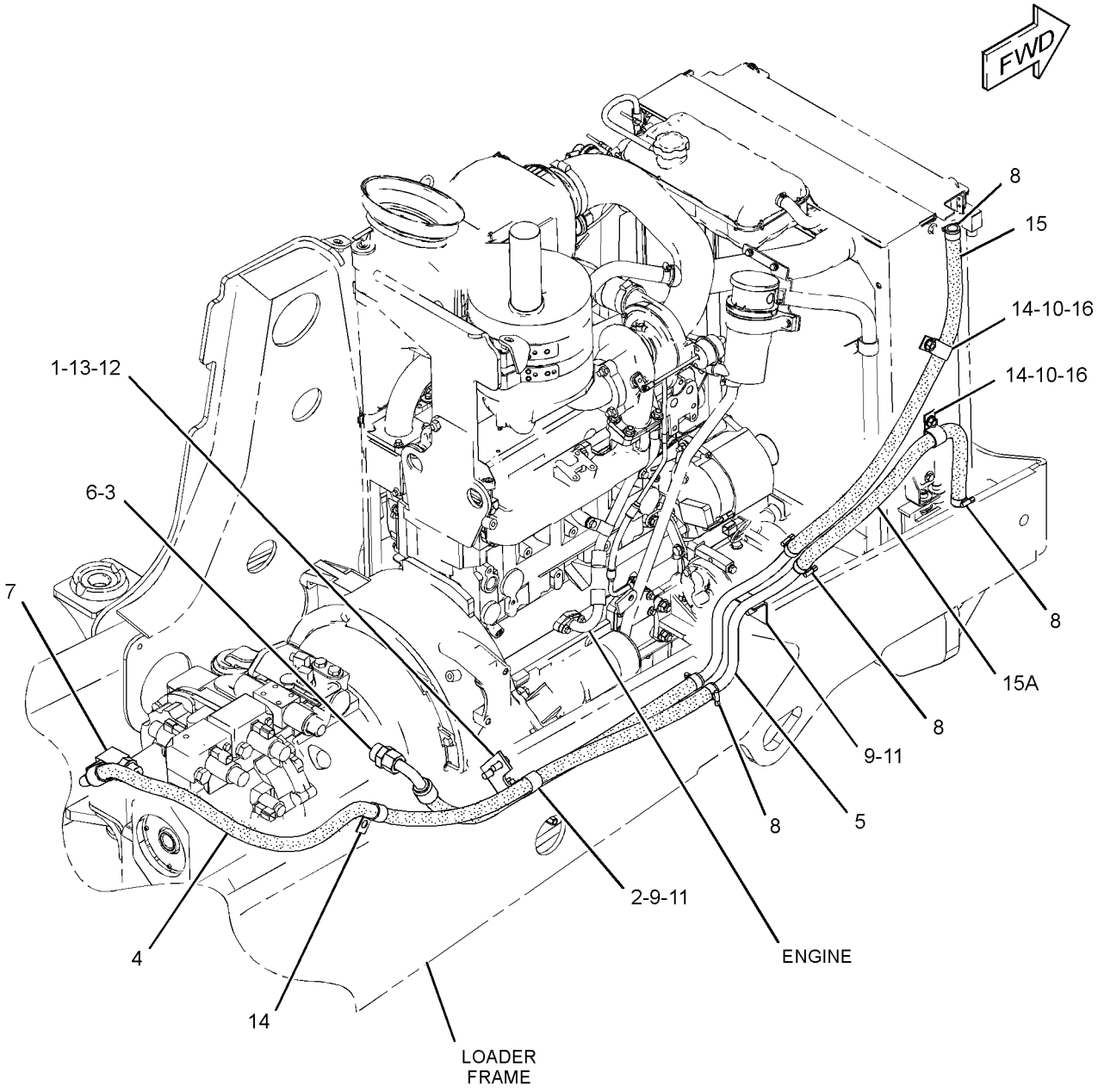

GRAPHIC #1 **<END>** g01636336

COOLING SYSTEM

304-4022 LINES GP-RADIATOR

S/N: SJL1-UP
PART OF 339-4989, 339-4993 ENGINE AR
AN ATTACHMENT

SMCS-1353, 1380 **i03530380**

NOTE	REF NO	GRAPHIC REF	PART NUMBER	QTY	PART NAME 1 2 3 4 5 6 (PRODUCT LEVEL)	SEE PAGE
	1	1	**2W-9710**	4	MOUNT AS	
	2	1	**5D-1026**	2	CLAMP-BAND	
	3	1	**6N-6984**	2	MOUNT-RUBBER	
	4	1	**9M-7958**	1	CLAMP-HOSE	
	5	1	**031-5644**	2	CLIP	
	6	1	**140-3640**	2	PLATE	
	7	1	**247-1385**	1	TANK GP-EXPANSION (COOLANT)	
		1	**251-3227**	1	CAP AS-COOLANT TANK	
	8	1	**250-2314**	1	BRACKET AS	
M		1	**8T-3612**	2	NUT-WELD (M8X1.25-THD)	
	9	1	**304-7848**	1	HOSE AS	
	10	1	**325-5855**	1	HOSE-RADIATOR	
	11	1	**329-5700**	1	HOSE	
	12	1	**4D-7388**	1	CLIP	
M	13	1	**5C-7261**	2	NUT (M8X1.25-THD)	
	14	1	**7X-0579**	7	WASHER-HARD (8.8X25.5X2-MM THK)	
	15	1	**7X-0603**	4	WASHER-HARD (9.9X35X2.5-MM THK)	
M	16	1	**8T-2223**	4	BOLT-SOCKET HEAD (M10X1.5X45-MM)	
M	17	1	**8T-4133**	4	NUT (M10X1.5-THD)	
M	18	1	**8T-4189**	2	BOLT (M8X1.25X20-MM)	
M	19	1	**8T-4200**	4	BOLT (M8X1.25X16-MM)	
	20	1	**8T-4222**	8	WASHER-PLATED (11X32X2.5-MM THK)	
	21	1	**8T-4984**	3	CLAMP-HOSE	
	22	1	**8T-6703**	1	CLAMP-HOSE	
M	23	1	**8T-7547**	2	BOLT (M8X1.25X30-MM)	
E	24	1	**8C-3681**		HOSE (110.5-CM)	
E	24A	1	**8C-3681**		HOSE (30.2-CM)	
M	25	1	**8T-4908**	1	BOLT (M8X1.25X25-MM)	

E-ORDER BY THE CENTIMETER
M-METRIC PART

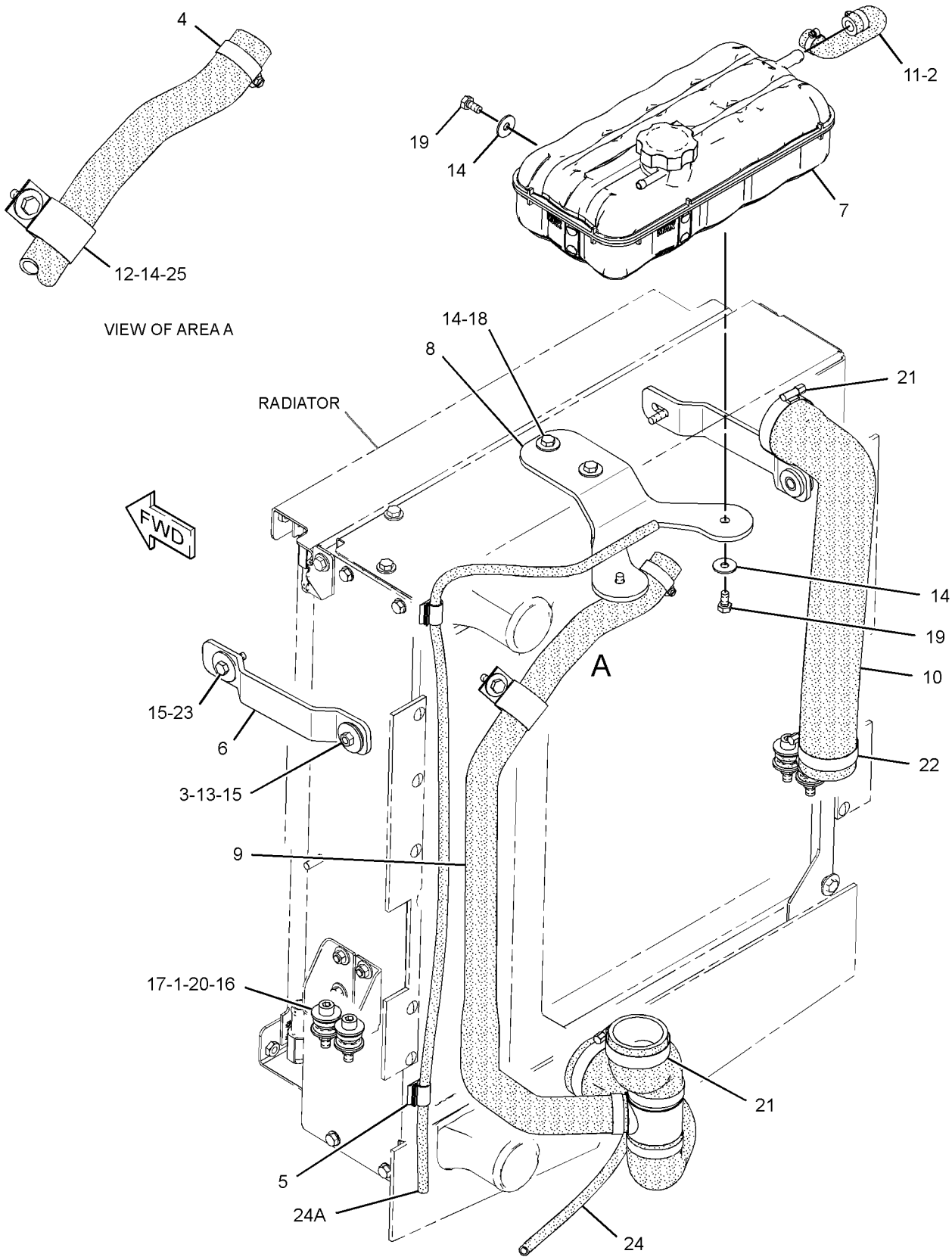

GRAPHIC #1 **<END>** g01869628

COOLING SYSTEM

230-7355 PUMP GP-WATER

S/N: CRS1-UP
PART OF 322-1924 ENGINE AR-PRIMARY
AN ATTACHMENT

SMCS-1361 **i03568520**

NOTE	REF NO	GRAPHIC REF	PART NUMBER	QTY	PART NAME 1 2 3 4 5 6 (PRODUCT LEVEL)	SEE PAGE
M	1	1	**6I-0217**	2	BOLT (M8X1.25X20-MM)	
M	2	1	**6I-0254**	2	BOLT (M8X1.25X30-MM)	
M	3	1	**100-3751**	5	BOLT (M8X1.25X65-MM)	
	4	1	**113-8129**	2	BOLT (M8X1.25X75-MM)	
	5	1	**225-7741**	1	CONNECTION AS	
	6	1	**225-7738**	1	SEAL-O-RING	
	7	1	**225-7739**	1	SEAL-O-RING	
	8	1	**225-8016**	1	PUMP GP-WATER	
	8A	1	**225-8019**	1	GASKET	
	8B	1	**286-3592**	1	GEAR-WATER PUMP	
					AVAILABLE REPAIR KIT(S):	
			247-0144	1	KIT-WATER PUMP	
					(INCLUDES 2 DIFFERENT GASKETS)	

M-METRIC PART

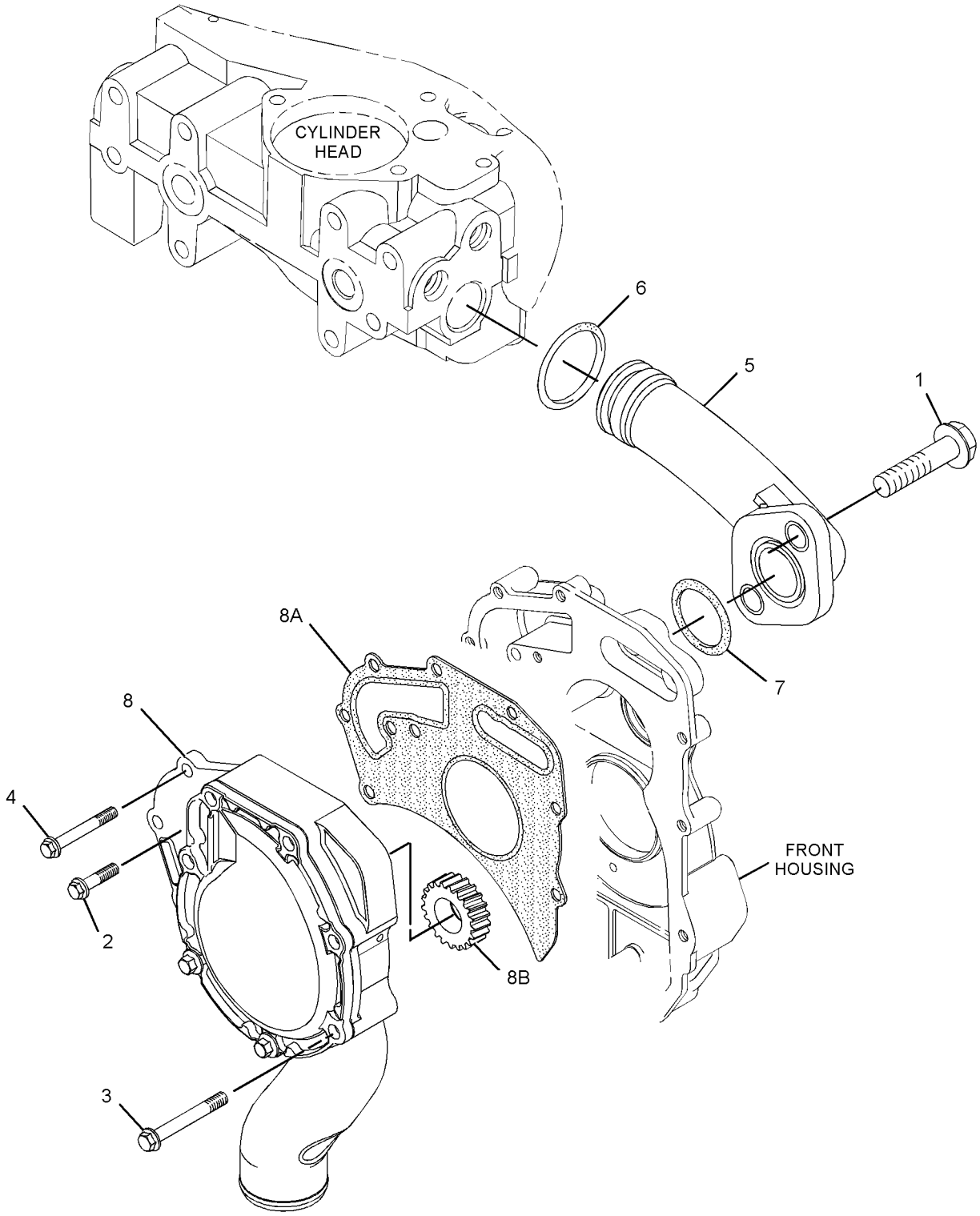

GRAPHIC #1 **<END>** g01897273

COOLING SYSTEM

315-3411 PUMP GP-WATER

S/N: C4Z1-UP
PART OF 321-7705 ENGINE AR-PRIMARY
AN ATTACHMENT

SMCS-1361 **i03128294**

NOTE	REF NO	GRAPHIC REF	PART NUMBER	QTY	PART NAME 1 2 3 4 5 6 (PRODUCT LEVEL)	SEE PAGE
M	1	1	**6I-0217**	2	BOLT (M8X1.25X20-MM)	
M	2	1	**6I-0254**	2	BOLT (M8X1.25X30-MM)	
M	3	1	**100-3751**	5	BOLT (M8X1.25X65-MM)	
	4	1	**113-8129**	2	BOLT (M8X75-MM)	
	5	1	**225-7741**	1	CONNECTION AS	
	5A	1	**225-7738**	1	SEAL-O-RING	
	5B	1	**225-7739**	1	SEAL-O-RING	
	6	1	**315-3379**	1	PUMP AS-WATER	
	6A	1	**225-8019**	1	GASKET	
	6B	1	**267-8321**	1	GASKET-COVER	

M-METRIC PART

315-3411 **PUMP GP-WATER** *(contd.)* **i03128294**

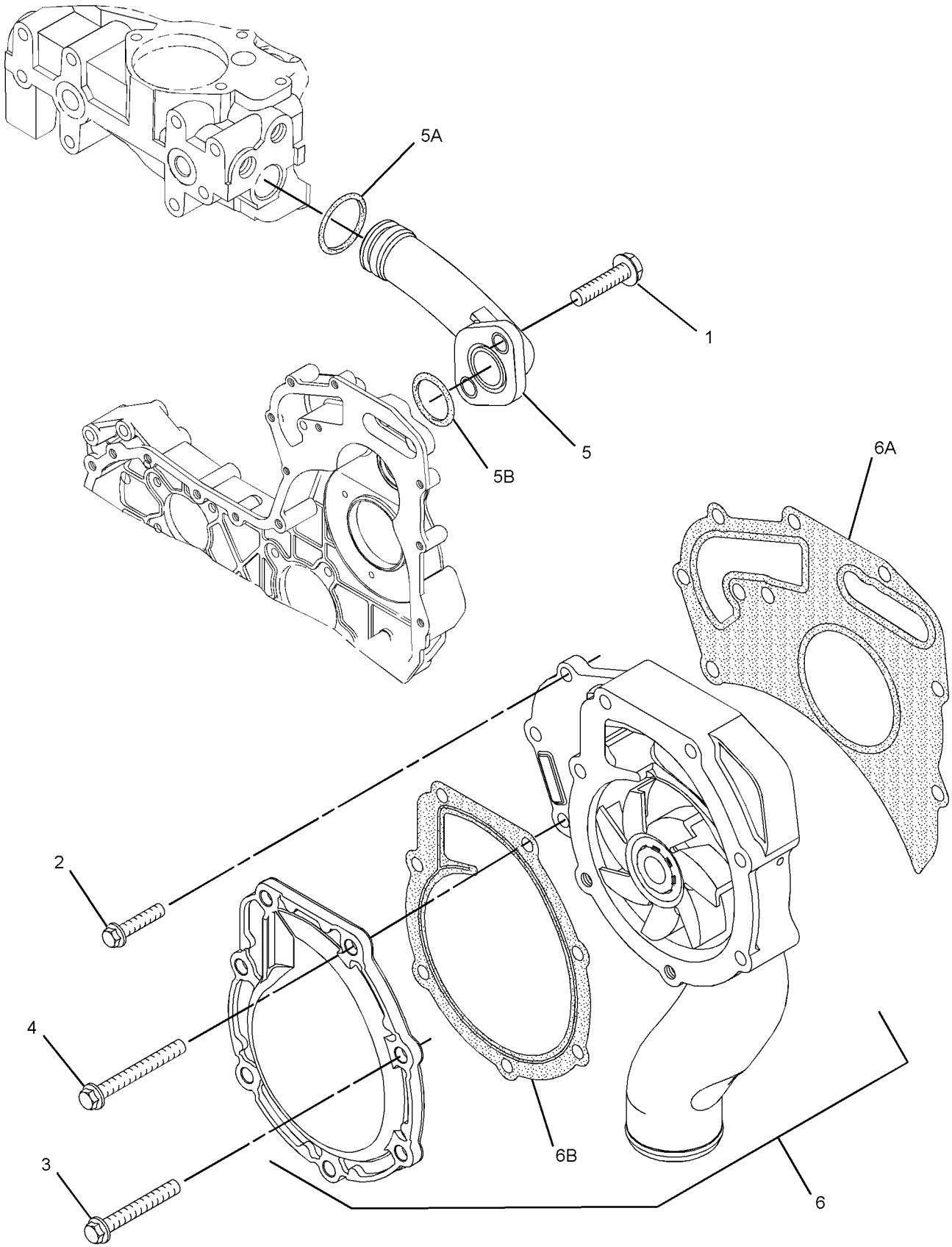

GRAPHIC #1 **<END>** g01399392

COOLING SYSTEM

297-3233 RADIATOR & HYD OIL COOLER GP

S/N: SJL1-UP
PART OF 309-9105 RADIATOR & HYD OIL COOLER GP
AN ATTACHMENT

SMCS-1353, 1374 **i03330902**

NOTE	REF NO	GRAPHIC REF	PART NUMBER	QTY	PART NAME 1 2 3 4 5 6 (PRODUCT LEVEL)	SEE PAGE
Y	1	1	**299-4246**	1	COOLER GP-HYD & XMSN OIL	324
	2	1	**301-9672**	1	RADIATOR GP	
		1	**315-5667**	2	GASKET	
		1	**225-4287**	1	VALVE GP-RADIATOR DRAIN	
	3	1	**5P-4116**	2	WASHER-HARD (8.8X20.5X2-MM THK)	
M	4	1	**8T-4200**	2	BOLT (M8X1.25X16-MM)	

M-METRIC PART
Y-SEPARATE ILLUSTRATION

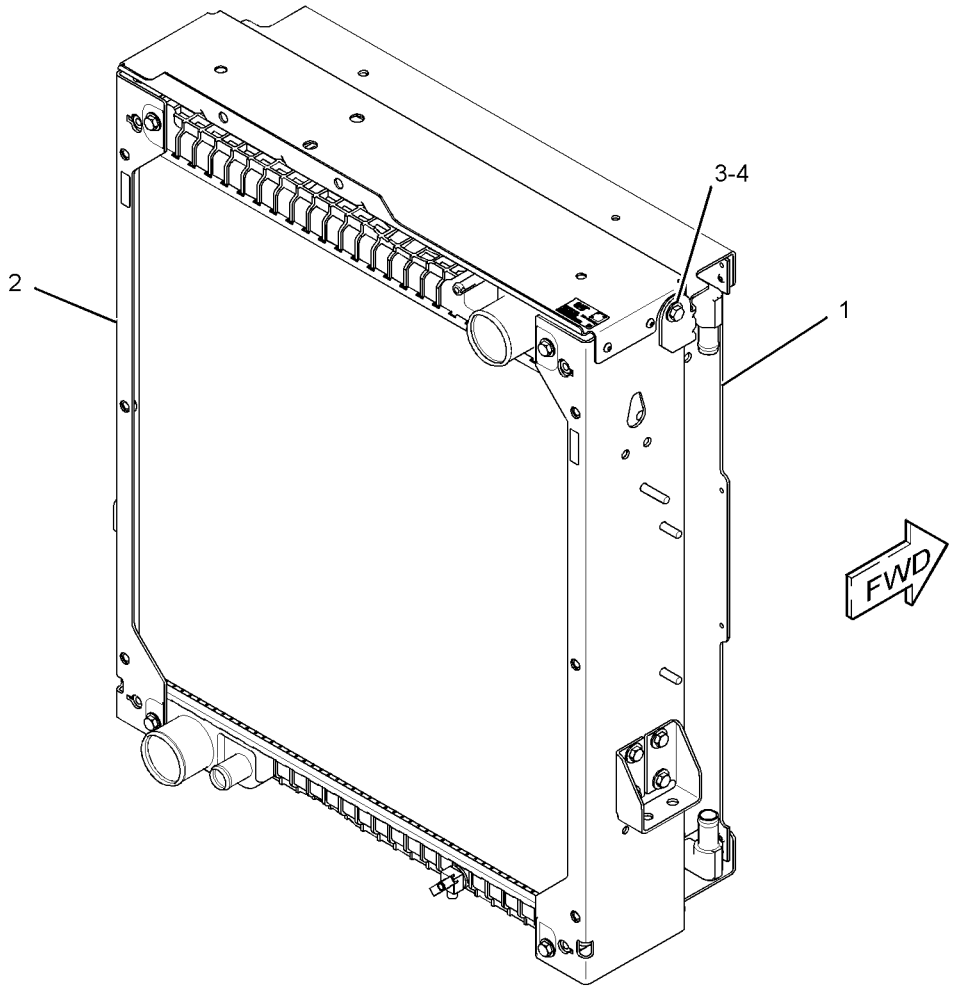

GRAPHIC #1 **<END>** g01514076

304-4023 RADIATOR & HYD OIL COOLER GP–

INCLUDES AFTCLR, XMSN COOLER

S/N: SJL1-UP

PART OF 309-9106 RADIATOR & HYD OIL COOLER GP

AN ATTACHMENT

SMCS-1353, 1374 **i03110260**

NOTE	REF NO	GRAPHIC REF	PART NUMBER	QTY	PART NAME 1 2 3 4 5 6 (PRODUCT LEVEL)	SEE PAGE
Y	1	1	**304-7847**	1	COOLER GP-HYD & XMSN OIL	325
	2	1	**304-7850**	1	AFTERCOOLER GP-AIR	
	3	1	**304-7851**	1	RADIATOR GP	
		1	**225-4287**	1	VALVE GP-RADIATOR DRAIN	
		1	**315-0033**	2	GASKET	
	4	1	**310-7304**	1	PLATE	
M	5	1	**5C-7261**	4	NUT (M8X1.25-THD)	
	6	1	**5P-4116**	6	WASHER-HARD (8.8X20.5X2-MM THK)	
M	7	1	**8T-4189**	2	BOLT (M8X1.25X20-MM)	
M	8	1	**8T-4200**	4	BOLT (M8X1.25X16-MM)	
	9	1	**8T-4224**	4	WASHER-HARD (8.8X16X2-MM THK)	
E	10	1	**145-2350**		SEAL (68-CM)	

E-ORDER BY THE CENTIMETER
M-METRIC PART
Y-SEPARATE ILLUSTRATION

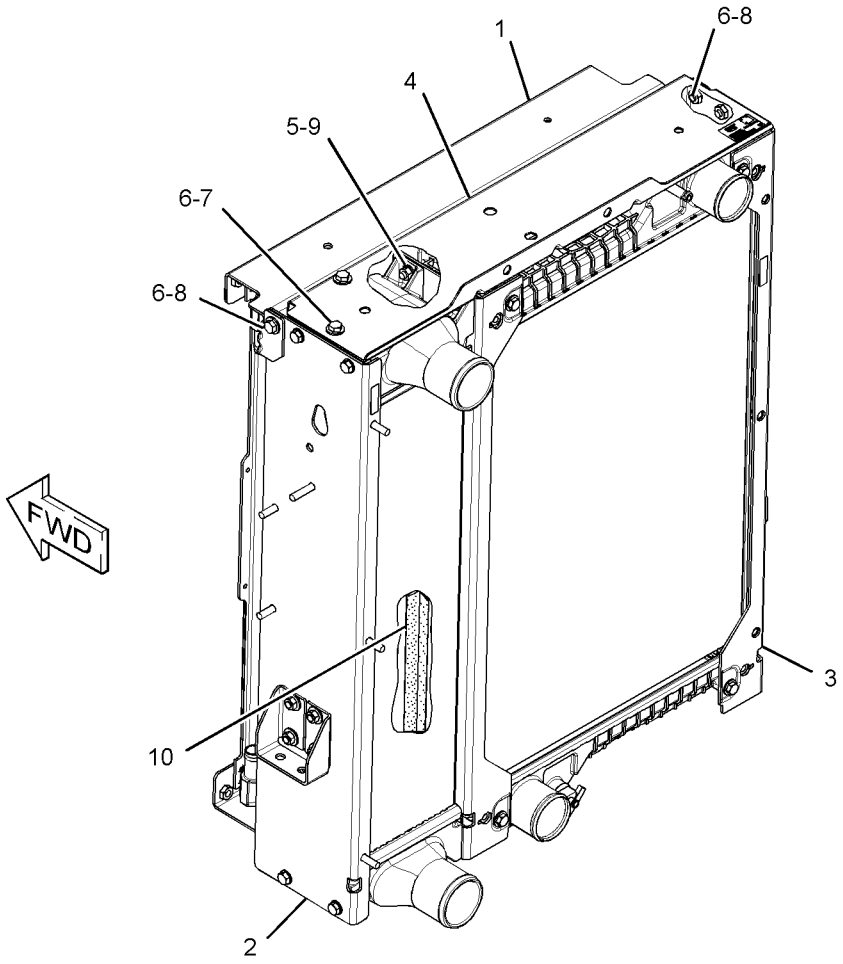

GRAPHIC #1 **<END>** g01618115

COOLING SYSTEM

309-9105 RADIATOR & HYD OIL COOLER GP

S/N: SJL1-UP
PART OF 339-4987, 339-4991 ENGINE AR
AN ATTACHMENT

SMCS-1353, 1374 **i03627135**

NOTE	REF NO	GRAPHIC REF	PART NUMBER	QTY	PART NAME 1 2 3 4 5 6 (PRODUCT LEVEL)	SEE PAGE
	1	1	**322-9761**	1	SHROUD AS-RADIATOR	
Y	2	1	**297-3233**	1	RADIATOR & HYD OIL COOLER GP	88
	3	1	**324-3851**	2	SKIRT	
	4	1	**214-3647**	1	BAFFLE (LOWER)	
	5	1	**123-4065**	16	RIVET-POP	
	6	1	**7X-0579**	6	WASHER-HARD (8.8X25.5X2-MM THK)	
M	7	1	**8T-4189**	6	BOLT (M8X1.25X20-MM)	

M-METRIC PART
Y-SEPARATE ILLUSTRATION

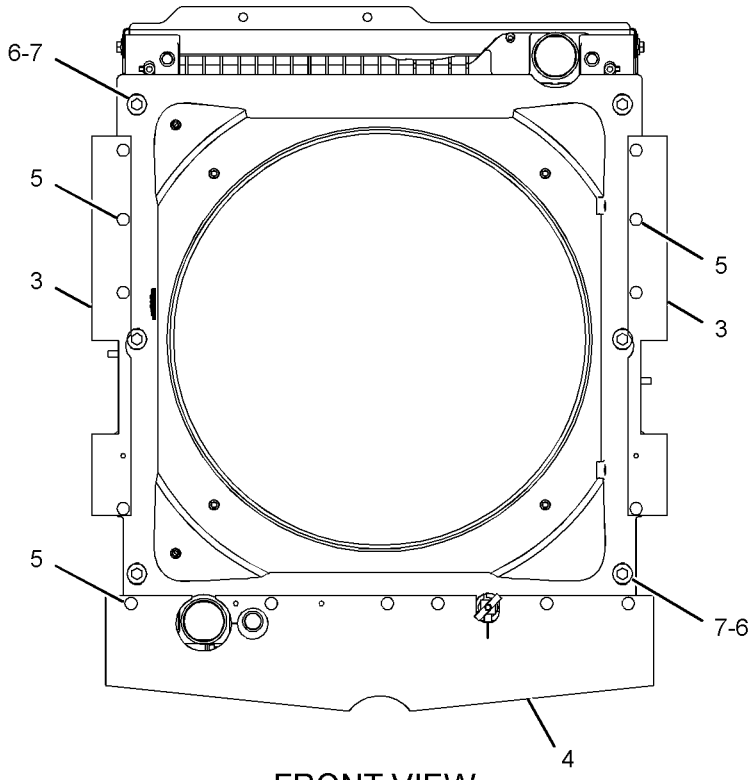

FRONT VIEW

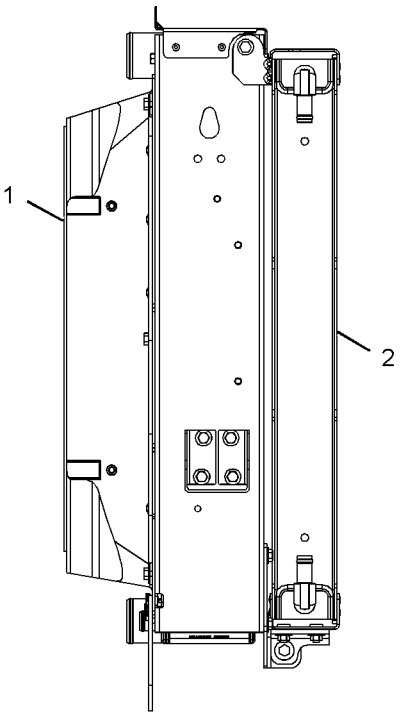

RIGHT SIDE VIEW

GRAPHIC #1 **<END>** g01572923

309-9106 RADIATOR & HYD OIL COOLER GP

S/N: SJL1-UP
PART OF 339-4989, 339-4993 ENGINE AR
AN ATTACHMENT

SMCS-1353, 1374 **i03712189**

NOTE	REF NO	GRAPHIC REF	PART NUMBER	QTY	PART NAME 1 2 3 4 5 6 (PRODUCT LEVEL)	SEE PAGE
Y	1	1	**304-4023**	1	RADIATOR & HYD OIL COOLER GP	89
	2	1	**305-6918**	1	BAFFLE (LOWER)	
	3	1	**322-9761**	1	SHROUD AS-RADIATOR	
	4	1	**324-3851**	2	SKIRT	
	5	1	**123-4065**	16	RIVET-POP	
M	6	1	**5C-7261**	3	NUT (M8X1.25-THD)	
	7	1	**7X-0579**	6	WASHER-HARD (8.8X25.5X2-MM THK)	
M	8	1	**8T-4189**	3	BOLT (M8X1.25X20-MM)	

M-METRIC PART
Y-SEPARATE ILLUSTRATION

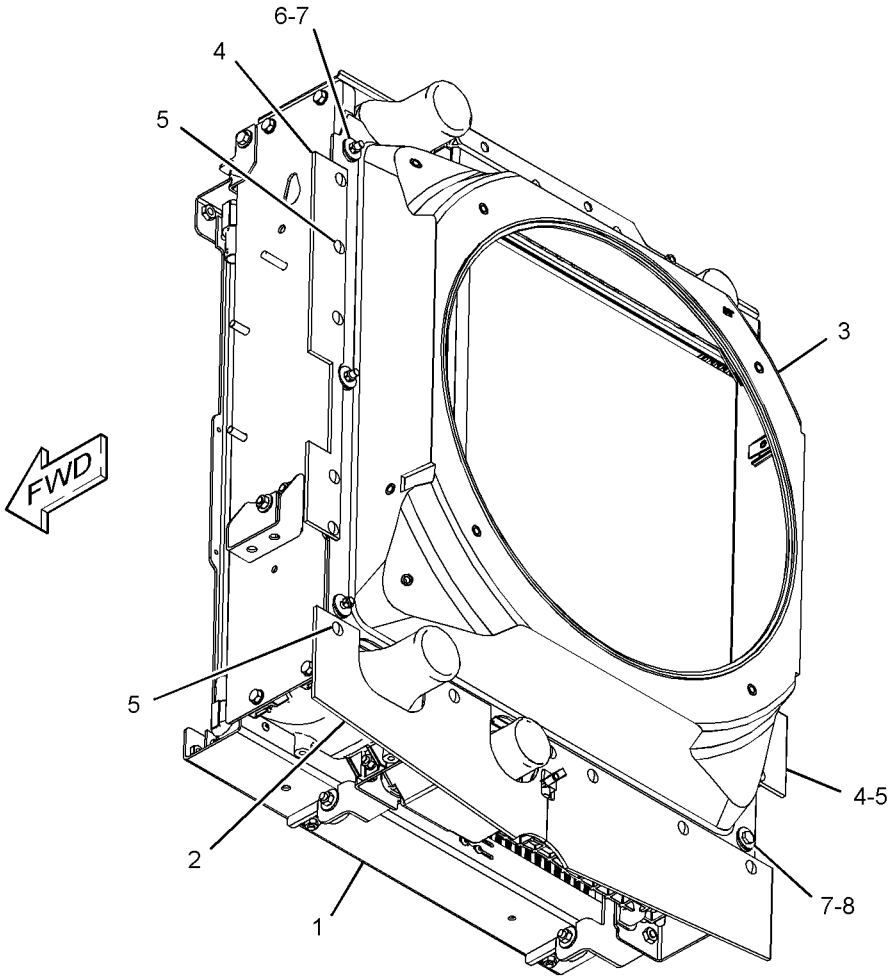

GRAPHIC #1 **<END>** g01599896

COOLING SYSTEM

324-6213 TANK & LINES GP-COOLANT–EXPANSION, RADIATOR

S/N: SJL1-UP
PART OF 339-4987, 339-4991 ENGINE AR
AN ATTACHMENT

SMCS-1354, 1380 **i03542293**

NOTE	REF NO	GRAPHIC REF	PART NUMBER	QTY	PART NAME 1 2 3 4 5 6 (PRODUCT LEVEL)	SEE PAGE
	1	1	**2W-9710**	4	MOUNT AS	
	2	1	**5D-1026**	2	CLAMP-BAND	
	3	1	**6N-6984**	2	MOUNT-RUBBER	
	4	1	**9M-7958**	2	CLAMP-HOSE	
	5	1	**031-5644**	2	CLIP	
	6	1	**140-3640**	2	PLATE	
	7	1	**210-6139**	1	HOSE-RADIATOR	
	8	1	**247-1385**	1	TANK GP-EXPANSION (COOLANT)	
		1	**251-3227**	1	CAP AS-COOLANT TANK	
	9	1	**250-2314**	1	BRACKET AS	
M		1	**8T-3612**	2	NUT-WELD (M8X1.25-THD)	
	10	1	**259-8417**	1	HOSE	
	11	1	**325-5855**	1	HOSE-RADIATOR	
	12	1	**329-5699**	1	HOSE	
	13	1	**4D-7388**	2	CLIP	
M	14	1	**5C-7261**	2	NUT (M8X1.25-THD)	
	15	1	**7X-0579**	8	WASHER-HARD (8.8X25.5X2-MM THK)	
	16	1	**7X-0603**	4	WASHER-HARD (9.9X35X2.5-MM THK)	
M	17	1	**8T-2223**	4	BOLT-SOCKET HEAD (M10X1.5X45-MM)	
M	18	1	**8T-4133**	4	NUT (M10X1.5-THD)	
M	19	1	**8T-4189**	2	BOLT (M8X1.25X20-MM)	
M	20	1	**8T-4200**	4	BOLT (M8X1.25X16-MM)	
	21	1	**8T-4222**	8	WASHER-PLATED (11X32X2.5-MM THK)	
	22	1	**8T-4984**	3	CLAMP-HOSE	
	23	1	**8T-6703**	1	CLAMP-HOSE	
M	24	1	**8T-7547**	2	BOLT (M8X1.25X30-MM)	
E	25	1	**8C-3681**		HOSE (111-CM)	
E	25A	1	**8C-3681**		HOSE (30-CM)	
M	26	1	**8T-4908**	2	BOLT (M8X1.25X25-MM)	

E-ORDER BY THE CENTIMETER
M-METRIC PART

324-6213 **TANK & LINES GP-COOLANT** *(contd.)* **i03542293**

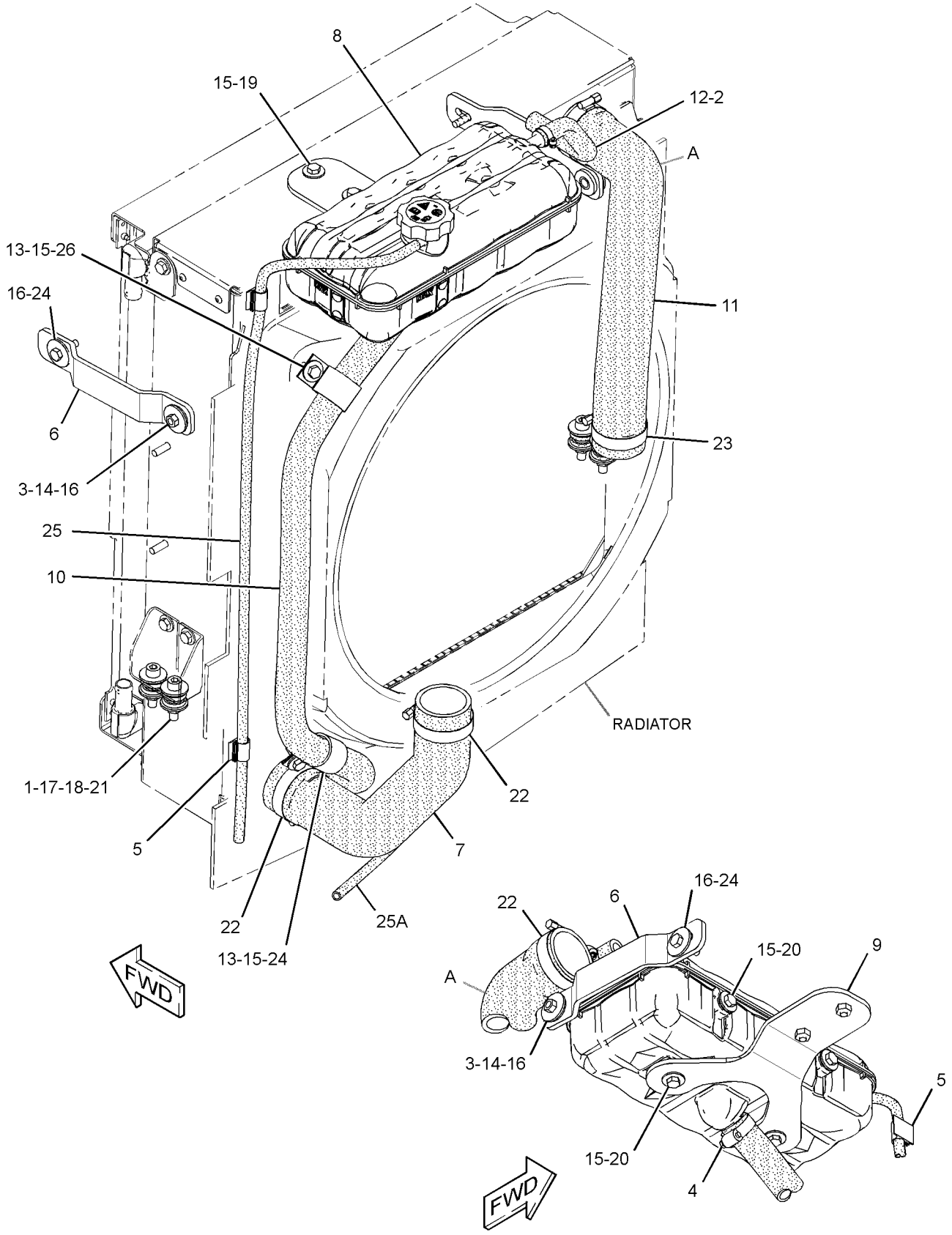

GRAPHIC #1 **<END>** g01872458

AIR INLET AND EXHAUST SYSTEM

234-1981 AIR CLEANER GP–BASIC

S/N: SJL1-UP

PART OF 310-2644, 332-6587 AIR CLEANER GP

AN ATTACHMENT

SMCS-1051, 1054 **i03126100**

NOTE	REF NO	GRAPHIC REF	PART NUMBER	QTY	PART NAME 1 2 3 4 5 6 (PRODUCT LEVEL)	SEE PAGE
	1	1	**227-7449**	1	FILTER ELEMENT-AIR (SECONDARY)	
	2	1	**237-4157**	1	COVER	
	3	1	**262-9786**	1	FRAME (ELEMENT)	
	4	1	**293-4053**	1	FILTER ELEMENT-AIR (PRIMARY)	

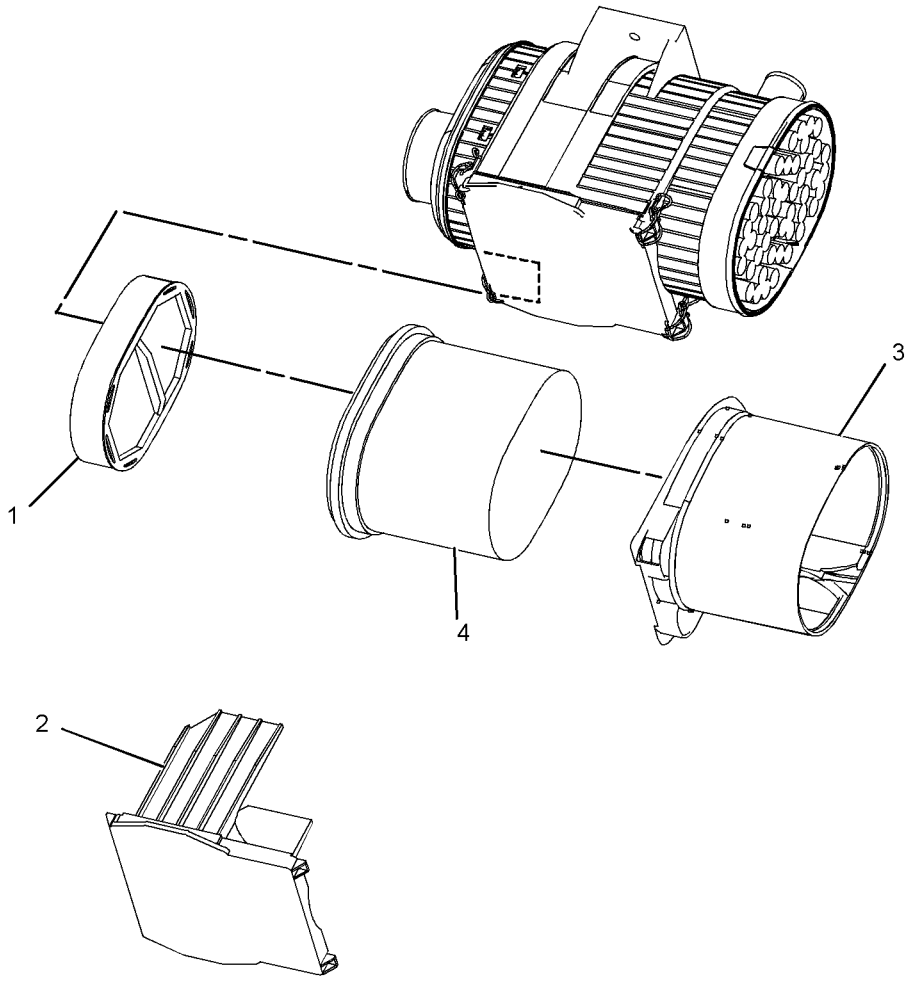

GRAPHIC #1 **<END>** g01601293

AIR INLET AND EXHAUST SYSTEM

310-2644 AIR CLEANER GP–TURBO

S/N: SJL1-UP
PART OF 339-4987, 339-4991 ENGINE AR
AN ATTACHMENT

SMCS-1051, 1054 **i03627136**

NOTE	REF NO	GRAPHIC REF	PART NUMBER	QTY	PART NAME 1 2 3 4 5 6 (PRODUCT LEVEL)	SEE PAGE
	1	1	**8T-6726**	1	CLAMP-HOSE	
	2	1	**8T-9402**	2	CLAMP-HOSE	
	3	1	**110-2445**	1	CLAMP-HOSE	
	4	1	**124-6259**	3	CLAMP-HOSE	
Y	5	1	**234-1981**	1	AIR CLEANER GP (BASIC)	94
	6	1	**247-9730**	1	VALVE AS-CHECK (AIR CLEANER)	
	7	1	**248-3231**	1	DUCT-AIR	
	8	1	**249-5512**	1	SEAL	
E	9	1	**253-4137**	1	SEAL	
	10	1	**253-4138**	1	STUD	
	11	1	**255-4692**	1	CONNECTOR-FILTER	
	12	1	**260-0634**	1	TUBE	
	13	1	**260-1393**	1	HOSE	
	14	1	**284-2917**	1	HOSE AS	
	15	1	**284-5165**	1	HOSE	
	16	1	**293-5352**	1	HOSE-AIR	
	17	1	**298-5901**	1	PLATE AS	
	18	1	**332-7333**	1	INDICATOR GP-AIR FILTER CHANGE	
		1	**205-1627**	1	BRACKET	
M	19	1	**129-3178**	1	LOCKNUT (M6X1-THD)	
	20	1	**226-0449**	1	CLAMP-HOSE	
	21	1	**4B-4863**	4	WASHER (4.7X11X1.2-MM THK)	
M	22	1	**5C-8312**	2	NUT (M4X0.7-THD)	
	23	1	**5P-4116**	6	WASHER-HARD (8.8X20.5X2-MM THK)	
	24	1	**7X-0586**	2	WASHER-HARD (7.2X32X2-MM THK)	
M	25	1	**8T-4189**	2	BOLT (M8X1.25X20-MM)	
M	26	1	**8T-4908**	4	BOLT (M8X1.25X25-MM)	
M	27	1	**8T-9405**	2	BOLT-SOCKET HEAD (M4X0.7X16-MM)	
D	28	1	**6V-1363**		HOSE (0.3-M)	

D-ORDER BY THE METER
E-ORDER BY THE CENTIMETER
M-METRIC PART
Y-SEPARATE ILLUSTRATION

310-2644 **AIR CLEANER GP** *(contd.)* **i03627136**

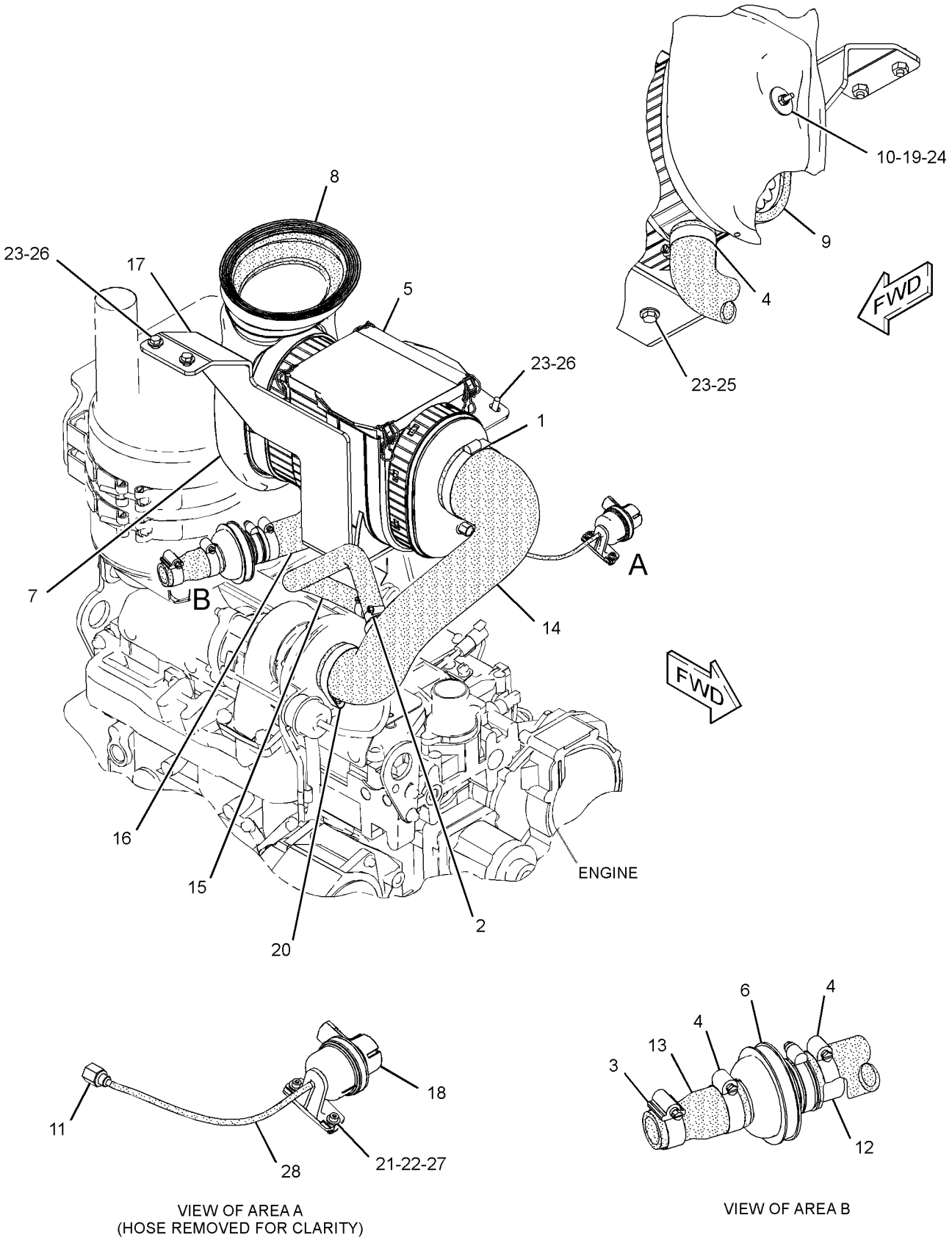

GRAPHIC #1 **<END>** g01625250

AIR INLET AND EXHAUST SYSTEM

332-6587 AIR CLEANER GP–TURBO

S/N: SJL1-UP
PART OF 339-4989, 339-4993 ENGINE AR
AN ATTACHMENT

SMCS-1051, 1054 **i03627137**

NOTE	REF NO	GRAPHIC REF	PART NUMBER	QTY	PART NAME 1 2 3 4 5 6 (PRODUCT LEVEL)	SEE PAGE
	1	1	**8T-6726**	1	CLAMP-HOSE	
	2	1	**110-2445**	1	CLAMP-HOSE	
	3	1	**124-6259**	3	CLAMP-HOSE	
Y	4	1	**234-1981**	1	AIR CLEANER GP (BASIC)	94
	5	1	**247-9730**	1	VALVE AS-CHECK (AIR CLEANER)	
	6	1	**248-3231**	1	DUCT-AIR	
	7	1	**249-5512**	1	SEAL	
	8	1	**253-4137**	1	SEAL	
	9	1	**253-4138**	1	STUD	
	10	1	**255-4692**	1	CONNECTOR-FILTER	
	11	1	**260-0634**	1	TUBE	
	12	1	**260-1393**	1	HOSE	
	13	1	**293-5352**	1	HOSE-AIR	
	14	1	**298-5901**	1	PLATE AS	
	15	1	**330-6734**	1	HOSE	
	16	1	**332-7333**	1	INDICATOR GP-AIR FILTER CHANGE	
		1	**205-1627**	1	BRACKET	
M	17	1	**129-3178**	1	LOCKNUT (M6X1-THD)	
	18	1	**295-5550**	1	CLAMP-BAND (CONSTANT TENSION)	
	19	1	**4B-4863**	4	WASHER (4.7X11X1.2-MM THK)	
M	20	1	**5C-8312**	2	NUT (M4X0.7-THD)	
	21	1	**5P-4116**	6	WASHER-HARD (8.8X20.5X2-MM THK)	
	22	1	**7X-0586**	2	WASHER-HARD (7.2X32X2-MM THK)	
M	23	1	**8T-4189**	2	BOLT (M8X1.25X20-MM)	
M	24	1	**8T-4908**	4	BOLT (M8X1.25X25-MM)	
M	25	1	**8T-9405**	2	BOLT-SOCKET HEAD (M4X0.7X16-MM)	
D	26	1	**6V-1363**		HOSE (0.3-M)	

D-ORDER BY THE METER
M-METRIC PART
Y-SEPARATE ILLUSTRATION

332-6587 **AIR CLEANER GP** ***(contd.)*** **i03627137**

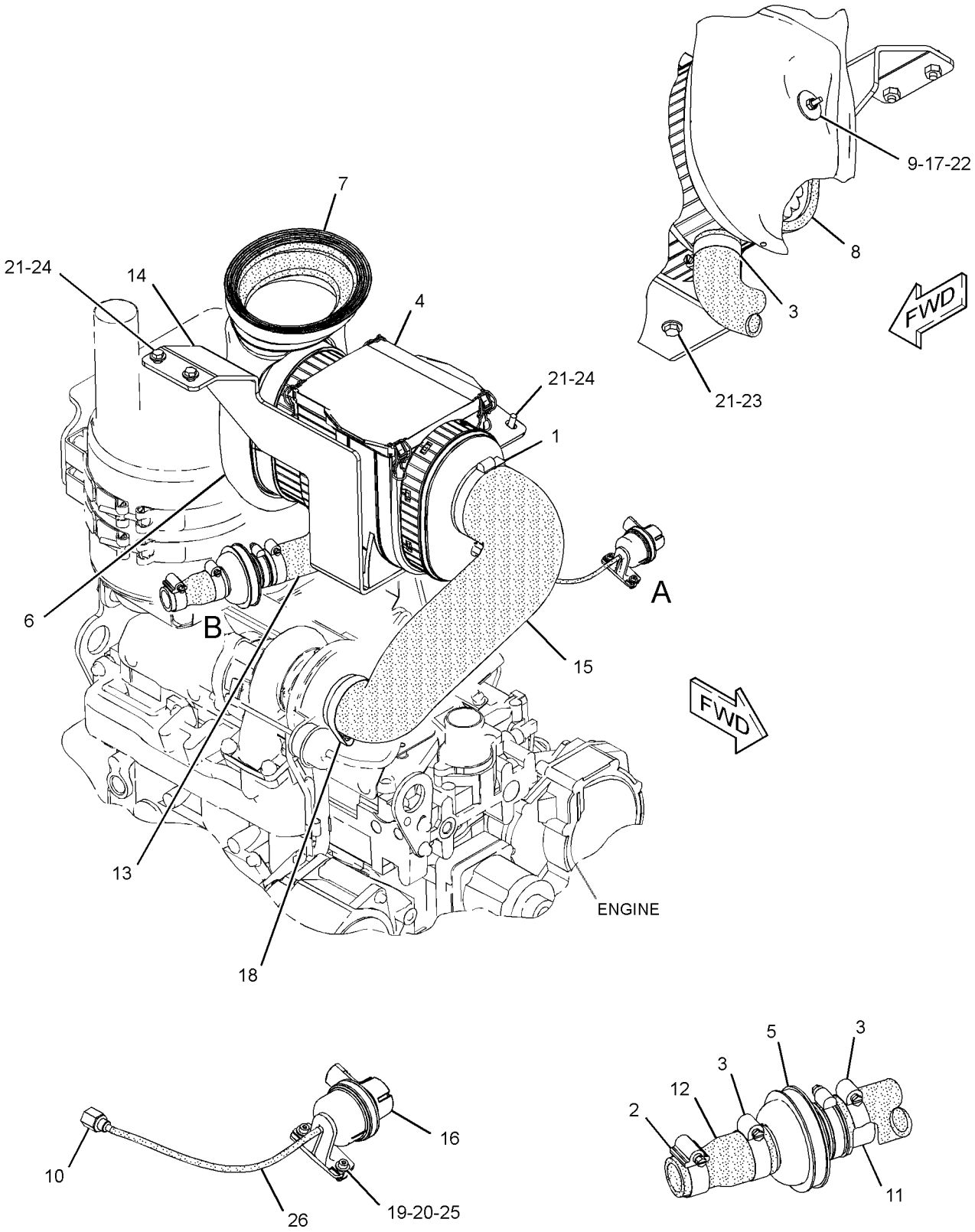

GRAPHIC #1 **<END>** g01625273

231-0149 COVER GP-INLET MANIFOLD

S/N: CRS1-UP
PART OF 322-1924 ENGINE AR-PRIMARY
AN ATTACHMENT

SMCS-1058 **i01892308**

NOTE	REF NO	GRAPHIC REF	PART NUMBER	QTY	PART NAME 1 2 3 4 5 6 (PRODUCT LEVEL)	SEE PAGE
	1	1	**6I-0572**	12	BOLT (M8X1.25X20-MM)	
	2	1	**114-2579**	3	GASKET	
	3	1	**115-1162**	3	PLATE	

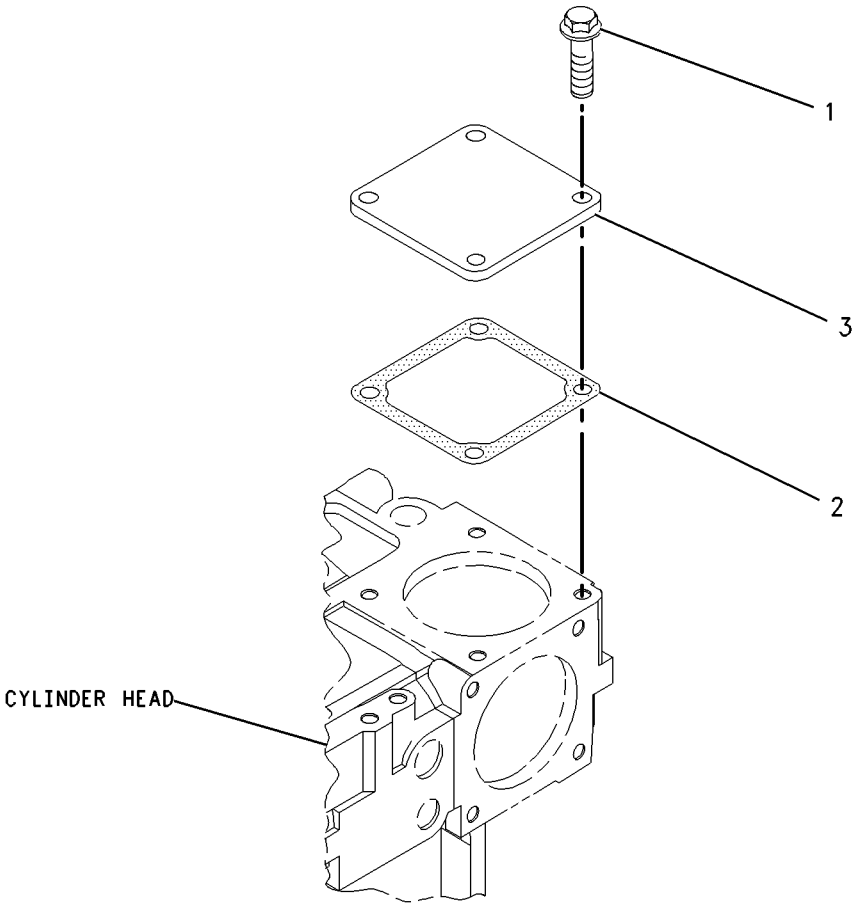

GRAPHIC #1 **<END>** g00986215

AIR INLET AND EXHAUST SYSTEM

329-0129 COVER GP-INLET MANIFOLD

S/N: C4Z1-UP
PART OF 321-7705 ENGINE AR-PRIMARY
AN ATTACHMENT

SMCS-1058 **i03130574**

NOTE	REF NO	GRAPHIC REF	PART NUMBER	QTY	PART NAME 1 2 3 4 5 6 (PRODUCT LEVEL)	SEE PAGE
	1	1	**111-8222**	4	BOLT (M8X16-MM)	
	2	1	**114-2579**	3	GASKET	
M	3	1	**124-3815**	8	BOLT (M8X16X1.25-MM)	
	4	1	**185-6627**	3	PLATE	

M-METRIC PART

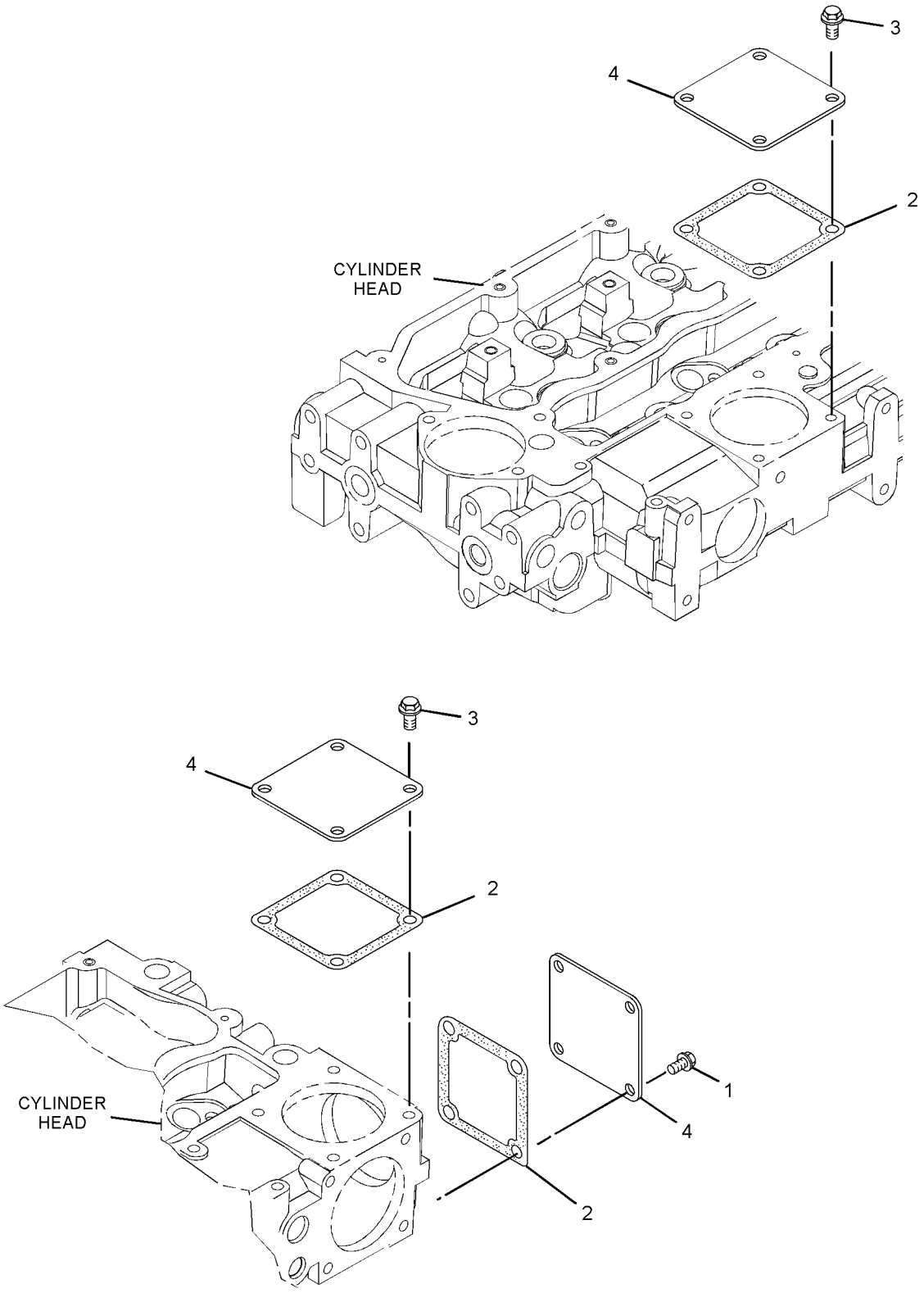

GRAPHIC #1 **<END>** g01619466

AIR INLET AND EXHAUST SYSTEM

210-6807 EXTENSION GP-EXHAUST

S/N: SJL1-UP

PART OF 339-4987, 339-4989, 339-4991, 339-4993 ENGINE AR

AN ATTACHMENT

SMCS-1061 **i02159788**

NOTE	REF NO	GRAPHIC REF	PART NUMBER	QTY	PART NAME 1 2 3 4 5 6 (PRODUCT LEVEL)	SEE PAGE
	1	1	**7E-3870**	1	CLAMP-MUFFLER	
	2	1	**239-2270**	1	PIPE-EXTENSION	

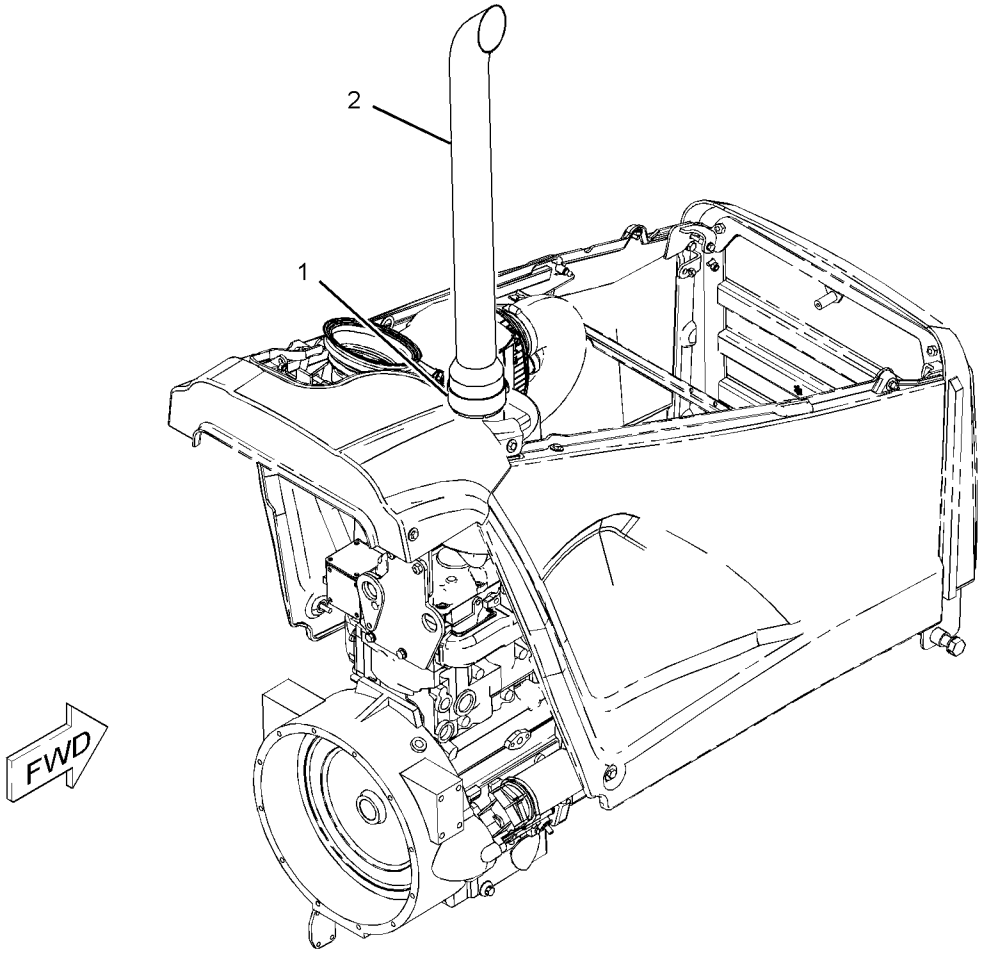

GRAPHIC #1 **<END>** g01098165

AIR INLET AND EXHAUST SYSTEM

304-3920 LINES GP-AIR

S/N: SJL1-UP
PART OF 339-4989, 339-4993 ENGINE AR
AN ATTACHMENT

SMCS-1071 **i03035045**

NOTE	REF NO	GRAPHIC REF	PART NUMBER	QTY	PART NAME 1 2 3 4 5 6 (PRODUCT LEVEL)	SEE PAGE
	1	1	**141-1667**	2	CLAMP-HOSE	
	2	1	**234-3030**	1	GASKET	
	3	1	**263-5376**	1	HOSE	
	4	1	**301-9765**	1	TUBE	
	5	1	**301-9766**	1	HOSE	
	6	1	**304-3922**	1	TUBE	
	7	1	**305-6917**	1	TUBE AS	
	8	1	**311-2768**	1	HOSE	
	9	1	**317-5502**	1	HOSE	
	10	1	**208-9281**	5	BOLT-FLANGE HEAD (M8X1.25X20-MM)	
	11	1	**209-4573**	2	CLAMP-V BAND	
	12	1	**212-6934**	2	CLAMP	
	13	1	**215-4012**	1	CLAMP	
	14	1	**216-4983**	1	CLAMP	

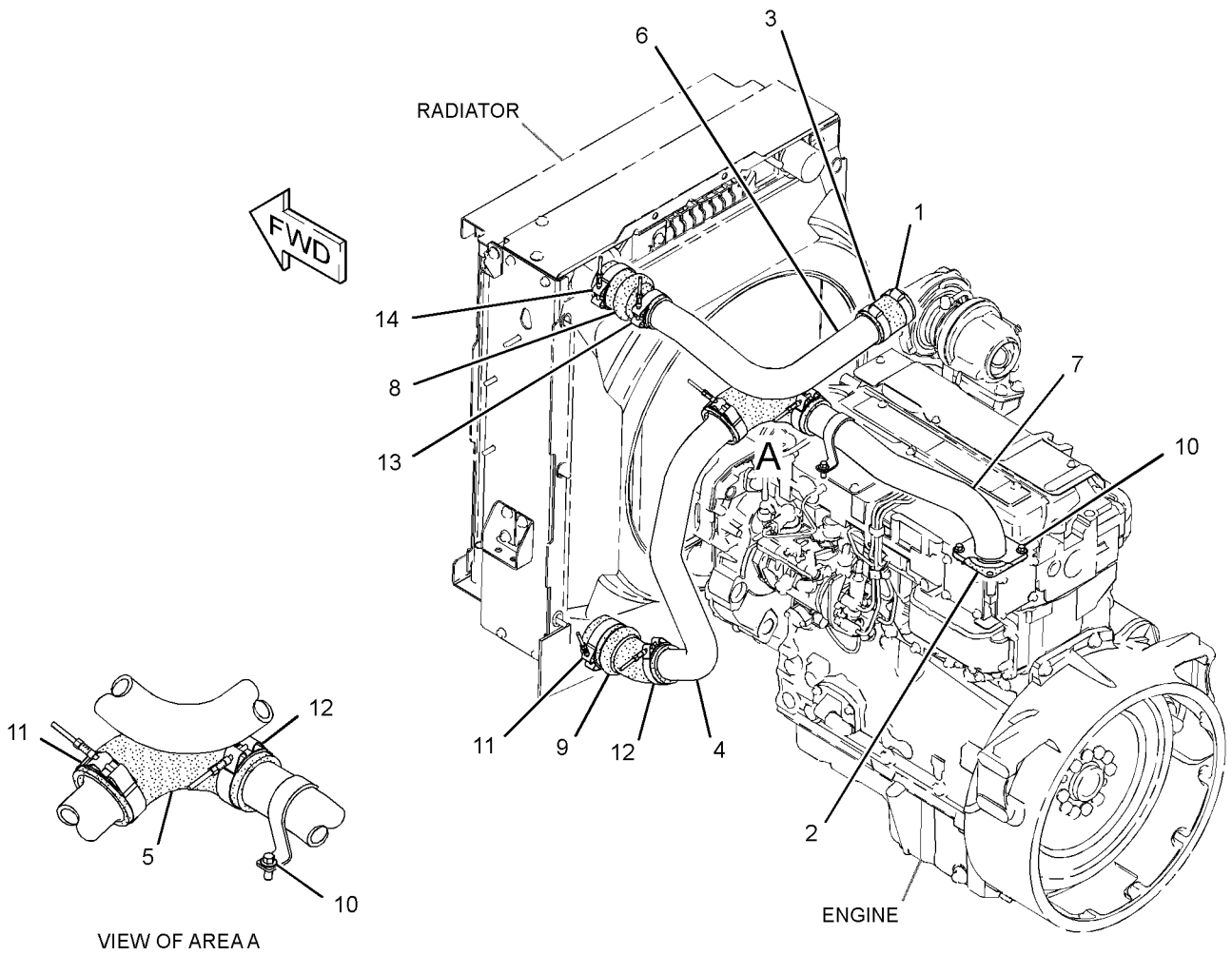

GRAPHIC #1 **<END>** g01574854

AIR INLET AND EXHAUST SYSTEM

325-3036 MUFFLER GP

S/N: SJL1-UP

PART OF 339-4987, 339-4989, 339-4991, 339-4993 ENGINE AR

AN ATTACHMENT

SMCS-1062 **i03105226**

NOTE	REF NO	GRAPHIC REF	PART NUMBER	QTY	PART NAME 1 2 3 4 5 6 (PRODUCT LEVEL)	SEE PAGE
	1	1	**6I-0364**	3	STUD (M10X1.5X30-MM)	
	2	1	**6I-0563**	3	NUT (M10X1.5-THD)	
	3	1	**237-0975**	1	PLATE AS	
M		1	**8T-3490**	4	NUT-WELD (M10X1.5-THD)	
	4	1	**247-4001**	1	PLATE AS	
	5	1	**254-2187**	2	CLAMP AS	
	6	1	**325-3495**	1	MUFFLER AS	
	7	1	**8T-4121**	16	WASHER-HARD (11X21X2.5-MM THK)	
M	8	1	**8T-4133**	4	NUT (M10X1.5-THD)	
M	9	1	**8T-4136**	4	BOLT (M10X1.5X25-MM)	
M	10	1	**8T-4195**	8	BOLT (M10X1.5X30-MM)	

M-METRIC PART

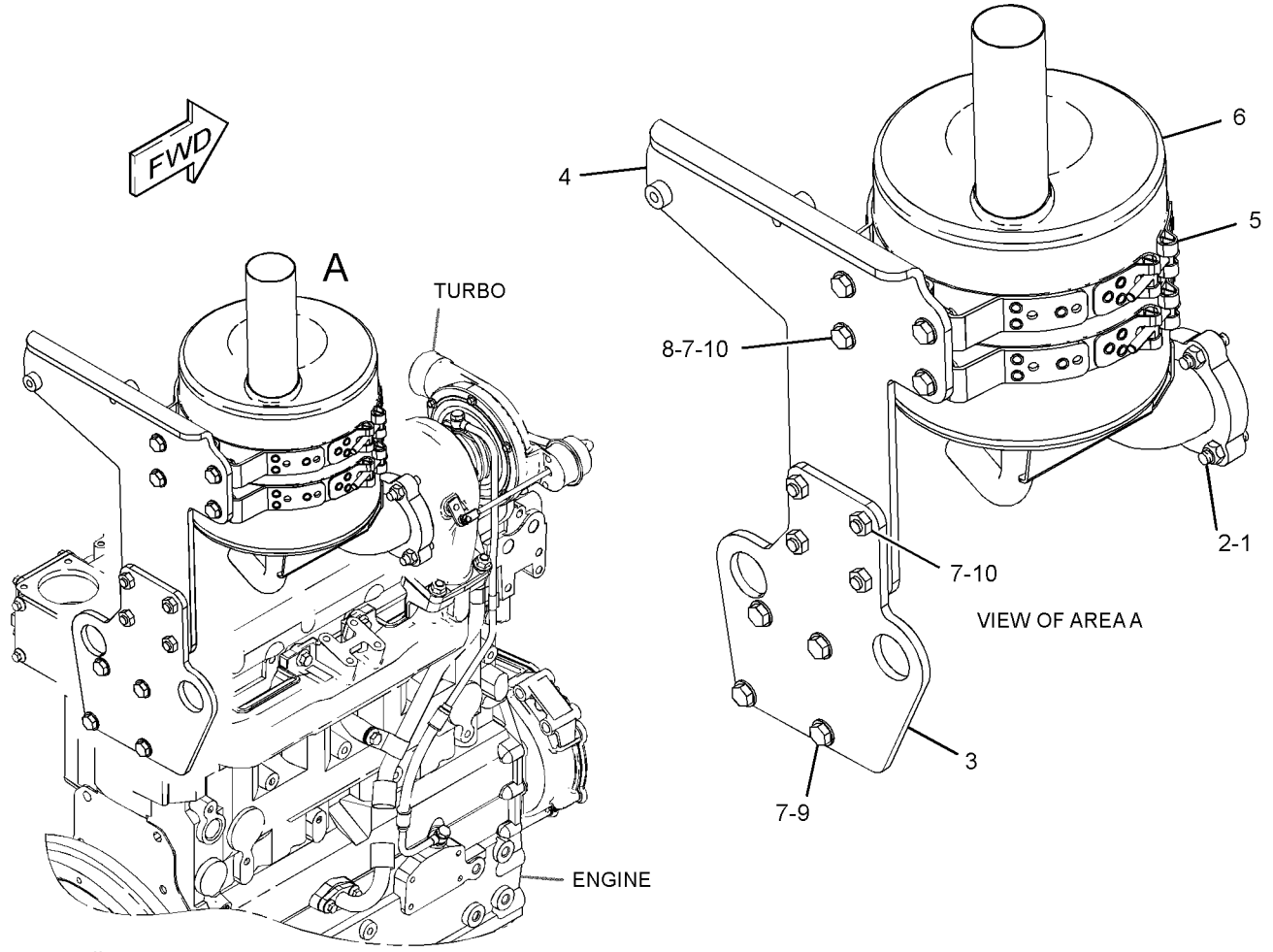

GRAPHIC #1 **<END>** g01592347

AIR INLET AND EXHAUST SYSTEM

237-3924 TURBOCHARGER GP

S/N: CRS1-UP

PART OF 322-1924 ENGINE AR-PRIMARY

AN ATTACHMENT

SMCS-1052, 1053 **i02903001**

NOTE	REF NO	GRAPHIC REF	PART NUMBER	QTY	PART NAME 1 2 3 4 5 6 (PRODUCT LEVEL)	SEE PAGE
M	1	1	**6I-0217**	2	BOLT (M8X1.25X20-MM)	
	2	1	**6I-0563**	4	NUT (M10X1.5-THD)	
	3	1	**6I-0572**	4	BOLT (M8X1.25X20-MM)	
	4	1	**106-8916**	2	BOLT (M6X16-MM)	
	5	1	**141-1667**	2	CLAMP-HOSE	
	6	1	**149-4236**	4	STUD	
	7	1	**174-9638**	8	BOLT	
	8	1	**194-5390**	1	GASKET-MANIFOLD	
	10	1	**225-8533**	1	GASKET (TURBOCHARGER)	
	11	1	**225-8534**	1	GASKET (TURBOCHARGER)	
	12	1	**225-8536**	1	GASKET (MANIFOLD)	
	13	1	**263-5376**	1	HOSE	
	14	1	**234-3030**	1	GASKET	
	15	1	**322-9616**	1	TUBE AS-TURBOCHARGER	
	15A	1	**225-8524**	2	BOLT-SPECIAL (BANJO)	
	15B	1	**225-8526**	4	WASHER (10.4X13.75X1.37-MM THK)	
	16	1	**237-3786**	1	TURBOCHARGER GP	
	17	1	**322-9615**	1	TUBE-TURBOCHARGER	
	18	1	**237-3794**	1	BOLT	
	19	1	**237-3921**	1	CLIP	
	20	1	**237-3922**	1	TUBE	
	21	1	**255-3447**	1	MANIFOLD-EXHAUST	

M-METRIC PART

237-3924 **TURBOCHARGER GP** *(contd.)* **i02903001**

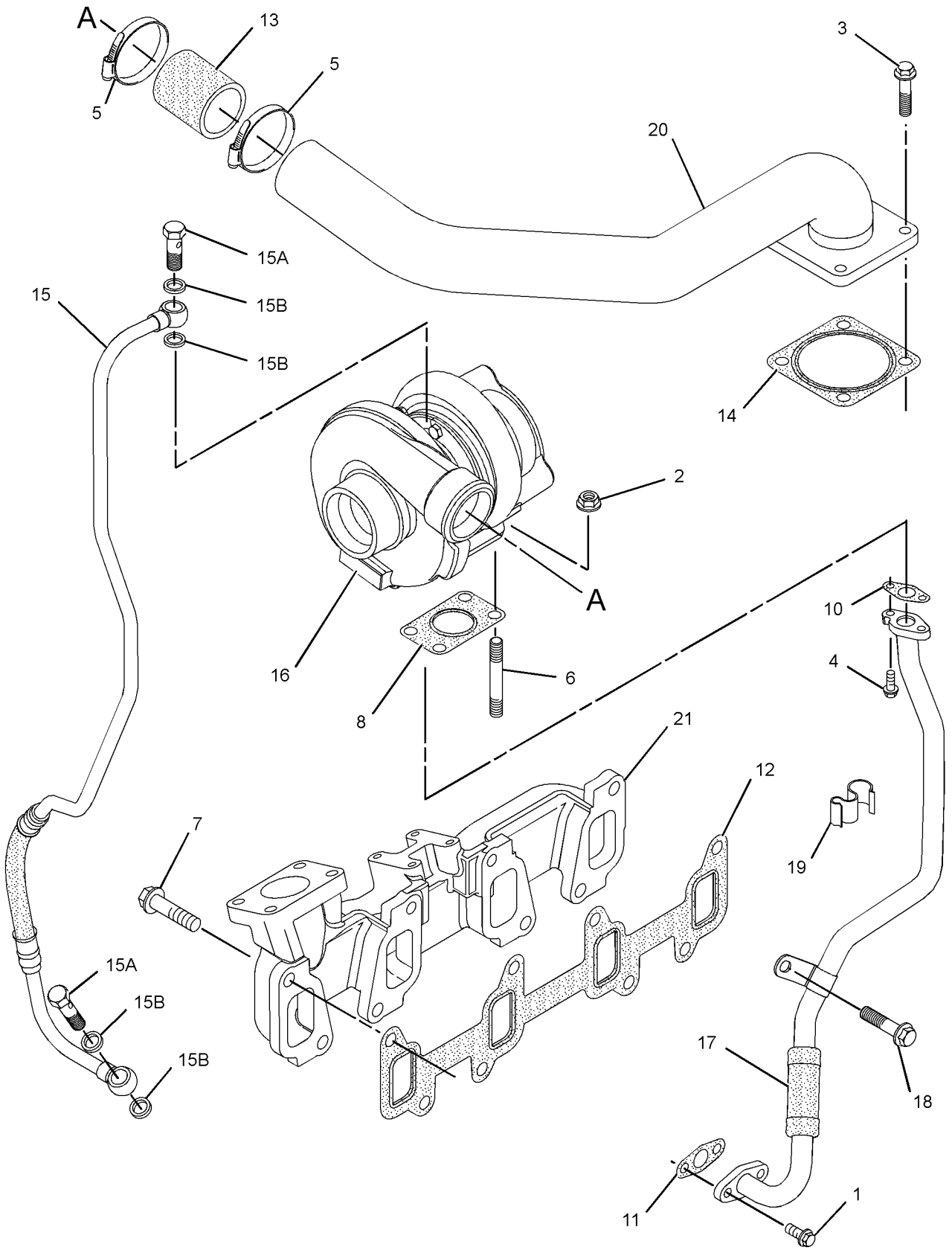

GRAPHIC #1 **<END>** g01450826

AIR INLET AND EXHAUST SYSTEM

326-9156 TURBOCHARGER GP

S/N: C4Z1-UP

PART OF 321-7705 ENGINE AR-PRIMARY

AN ATTACHMENT

SMCS-1052, 1053 **i03128316**

NOTE	REF NO	GRAPHIC REF	PART NUMBER	QTY	PART NAME 1 2 3 4 5 6 (PRODUCT LEVEL)	SEE PAGE
M	1	1	**6I-0217**	2	BOLT (M8X1.25X20-MM)	
	2	1	**6I-0563**	4	NUT (M10X1.5-THD)	
	3	1	**106-8916**	2	BOLT (M6X16-MM)	
	4	1	**147-5553**	4	STUD	
	5	1	**174-9638**	8	BOLT	
	6	1	**194-5390**	1	GASKET-MANIFOLD	
	7	1	**225-8533**	1	GASKET	
	8	1	**225-8534**	1	GASKET	
	9	1	**225-8536**	1	GASKET	
	10	1	**237-3794**	1	BOLT	
	11	1	**237-3921**	1	CLIP	
	12	1	**255-3447**	1	MANIFOLD-EXHAUST	
	13	1	**322-9615**	1	TUBE-TURBOCHARGER	
	14	1	**322-9616**	1	TUBE AS-TURBOCHARGER	
	14A	1	**225-8524**	2	BOLT-SPECIAL (BANJO)	
	14B	1	**225-8526**	4	WASHER (10.4X13.75X1.37-MM THK)	
	15	1	**326-9153**	1	TURBOCHARGER	

M-METRIC PART

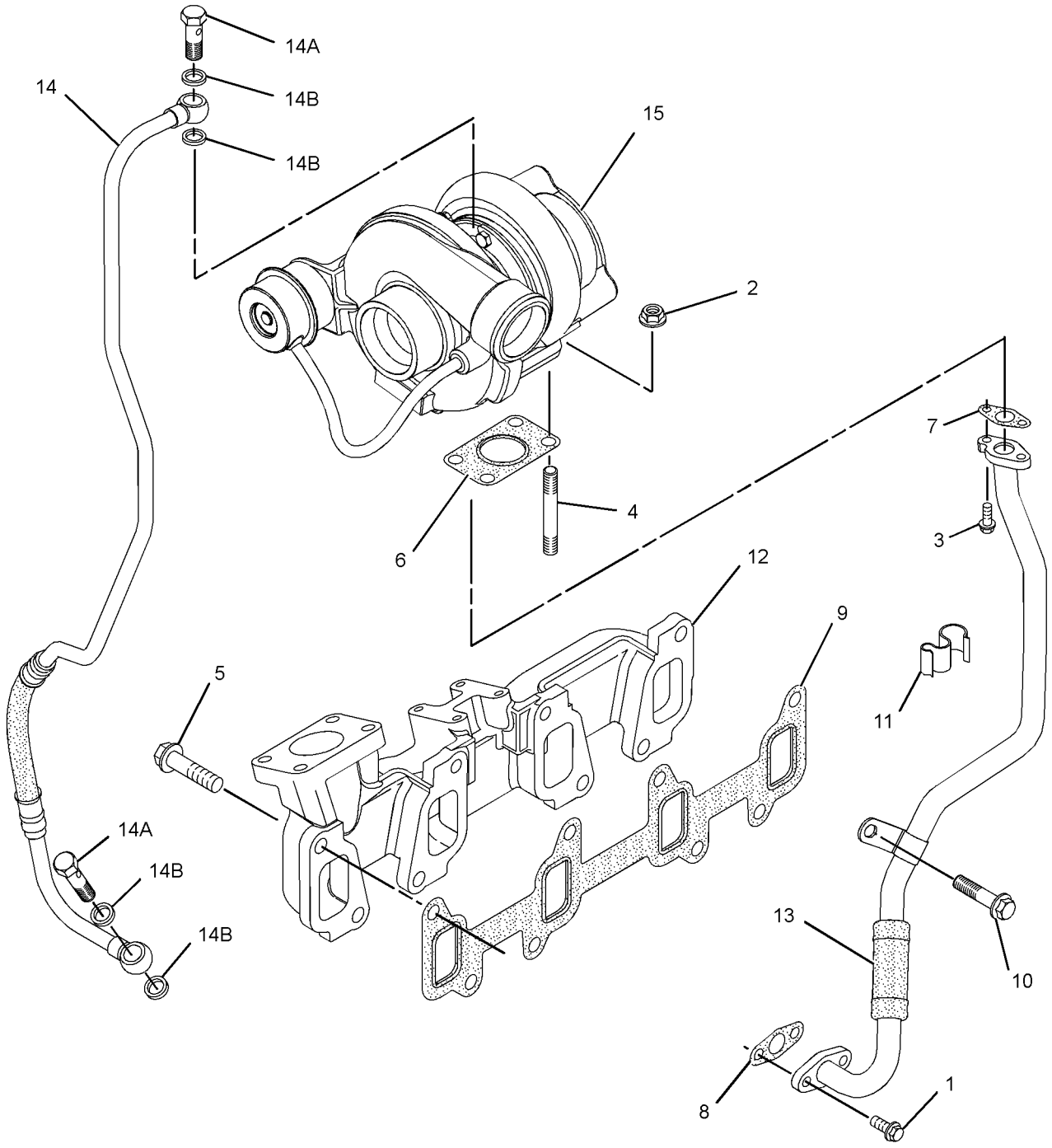

GRAPHIC #1 **<END>** g01615034

206-1640 CONTROL GP-GOVERNOR

S/N: SJL1-UP

PART OF 339-4987, 339-4989, 339-4991, 339-4993 ENGINE AR

AN ATTACHMENT

SMCS-1265 **i03627139**

NOTE	REF NO	GRAPHIC REF	PART NUMBER	QTY	PART NAME 1 2 3 4 5 6 (PRODUCT LEVEL)	SEE PAGE
	1	1	**151-4841**	3	BLOCK	
Y	2	1	**209-3378**	1	PEDAL GP-GOVERNOR (MECHANICAL)	617
	3	1	**235-0128**	1	CABLE AS	
	4	1	**239-1434**	1	PLATE	
C	5	1	**300-1702**	1	BRACKET AS	
		1	**6T-5017**	1	SPACER (2.11X12.7X24-MM THK)	
M		1	**8T-3612**	2	NUT-WELD (M8X1.25-THD)	
	6	1	**248-2707**	1	GROMMET	
M	7	1	**119-5025**	3	SCREW-FLAT HEAD (M6X1X25-MM)	
	8	1	**164-1395**	1	KNOB (GOVERNOR CONTROL)	
Y	9	1	**209-3367**	1	LEVER GP-GOVERNOR (HANDHELD)	603
C	11	1	**7K-1181**	4	STRAP-CABLE	
M	12	1	**8T-4138**	3	BOLT (M6X1X20-MM)	
	13	1	**8T-4205**	3	WASHER-HARD (7.2X14.5X2-MM THK)	
	14	1	**8T-4224**	4	WASHER-HARD (8.8X16X2-MM THK)	
CM	15	1	**8T-4908**	3	BOLT (M8X1.25X25-MM)	
CM	16	1	**7X-0818**	1	BOLT (M8X1.25X45-MM)	

C-CHANGE FROM PREVIOUS TYPE
M-METRIC PART
Y-SEPARATE ILLUSTRATION

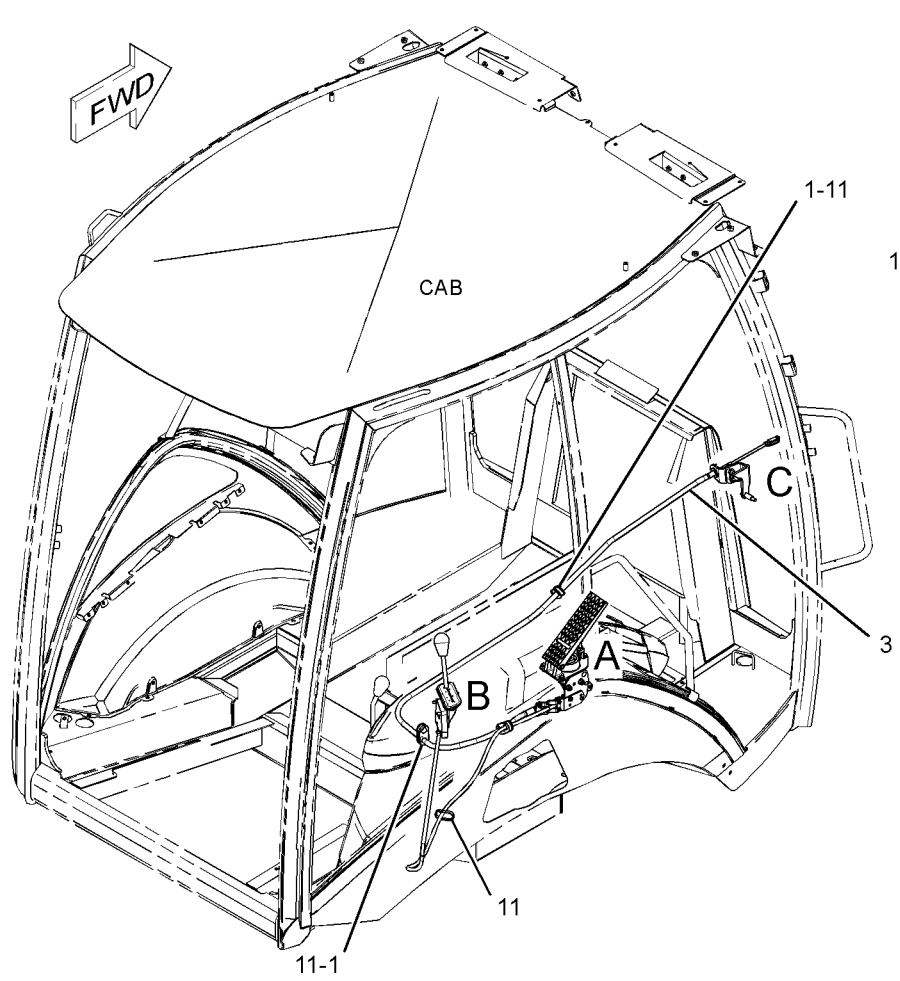

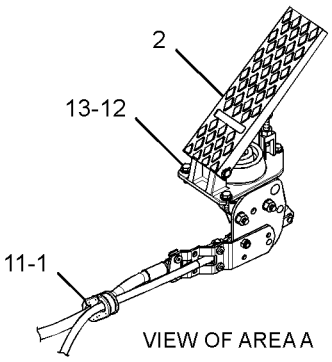

VIEW OF AREA A

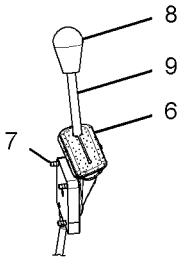

VIEW OF AREA B

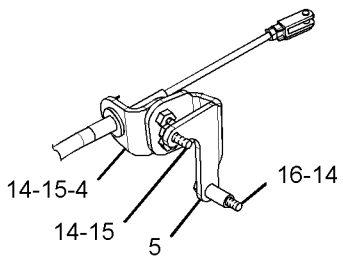

VIEW OF AREA C

GRAPHIC #1 **<END>** g01347506

130-7092 FILTER GP-WATER SEP & FUEL

S/N: SJL1-UP
PART OF 287-3923 FILTER GP-WATER SEP & FUEL
AN ATTACHMENT

SMCS-1261, 1263 **i03527870**

NOTE	REF NO	GRAPHIC REF	PART NUMBER	QTY	PART NAME 1 2 3 4 5 6 (PRODUCT LEVEL)	SEE PAGE
	1	1	**118-8118**	1	RING-RETAINING	
	2	1	**118-8119**	1	NUT	
	3	1	**131-1812**	1	FILTER ELEMENT-FUEL (WATER SEPARATOR)	
					AVAILABLE REPAIR KIT(S):	
			121-4480	1	KIT-WATER BASE (WATER SEPARATOR)	
					(INCLUDES NUT, CAP, SEALS, PLUGS & RING)	

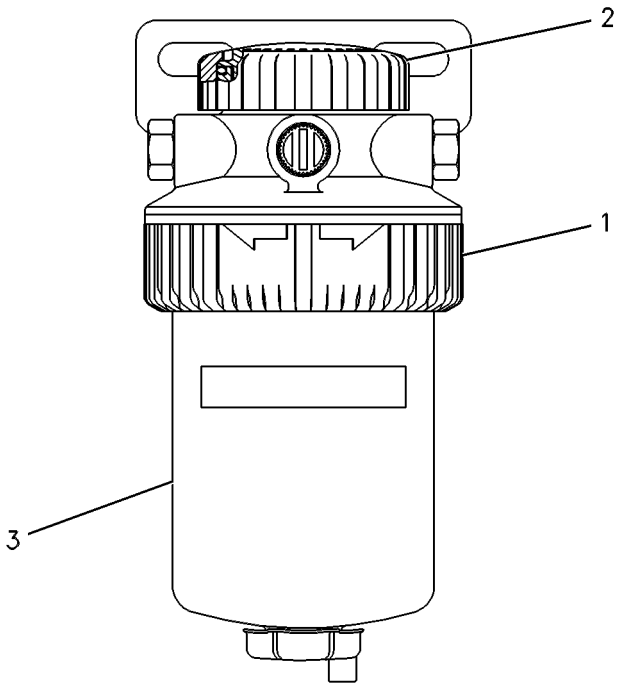

GRAPHIC #1 **<END>** g00259641

287-3923 FILTER GP-WATER SEP & FUEL

S/N: SJL1-UP
AN ATTACHMENT

SMCS-1261, 1263 **i03500480**

NOTE	REF NO	GRAPHIC REF	PART NUMBER	QTY	PART NAME 1 2 3 4 5 6 (PRODUCT LEVEL)	SEE PAGE
	1	1	**1P-4278**	2	CLAMP-HOSE	
	2	1	**6V-3305**	1	ADAPTER-O-RING	
Y	3	1	**130-7092**	1	FILTER GP-WATER SEP & FUEL	110
	4	1	**151-1975**	2	CONNECTOR	
	5	1	**266-2275**	1	BRACKET AS	
M		1	**8T-3490**	4	NUT-WELD (M10X1.5-THD)	
	6	1	*169-5861*	2	PLUG AS	
					(EACH INCLUDES)	
		1	**3K-8460**	1	PLUG	
		1	**5P-7814**	1	SEAL-O-RING	
	7	1	**5P-7814**	3	SEAL-O-RING	
	8	1	**8T-4121**	2	WASHER-HARD (11X21X2.5-MM THK)	
M	9	1	**8T-4195**	2	BOLT (M10X1.5X30-MM)	
E	10	1	**5P-1420**		HOSE (23-CM)	

E-ORDER BY THE CENTIMETER
M-METRIC PART
Y-SEPARATE ILLUSTRATION

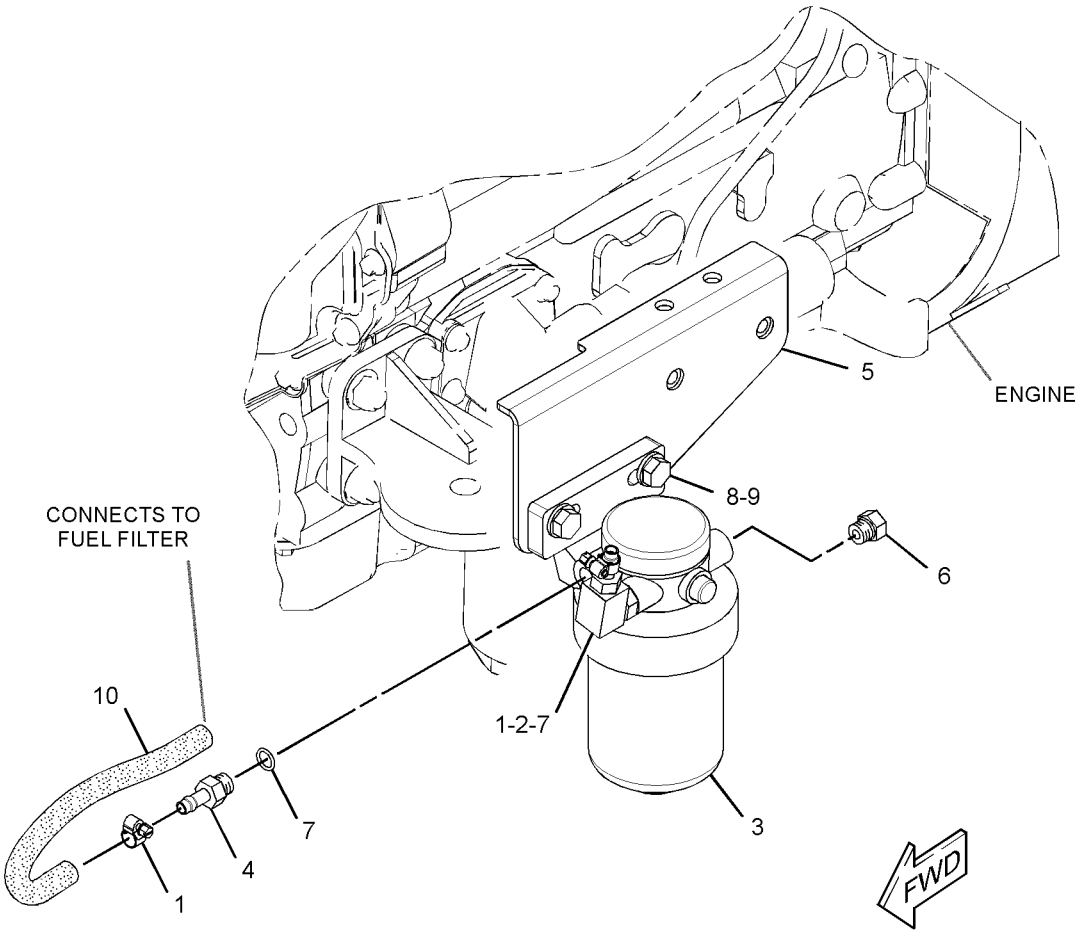

GRAPHIC #1 **<END>** g01817393

FUEL SYSTEM

326-9012 LINES GP-FUEL

S/N: C4Z1-UP
PART OF 321-7705 ENGINE AR-PRIMARY
AN ATTACHMENT

SMCS-1274 **i03127784**

NOTE	REF NO	GRAPHIC REF	PART NUMBER	QTY	PART NAME 1 2 3 4 5 6 (PRODUCT LEVEL)	SEE PAGE
	1	1	**8T-7876**	1	SEAL-O-RING	
	2	1	**035-8017**	1	UNION	
	3	1	**067-6264**	1	FITTING-FLARED	
	4	1	**067-6265**	1	FITTING-BRASS	
	5	1	**232-3126**	1	CLIP	
	6	1	**236-2144**	1	TUBE AS	
	6A	1	**067-6999**	1	FERRULE	
	7	1	**247-4884**	1	TUBE AS	
	8	1	**320-9213**	1	CONNECTION	

326-9012 **LINES GP-FUEL** *(contd.)* **i03127784**

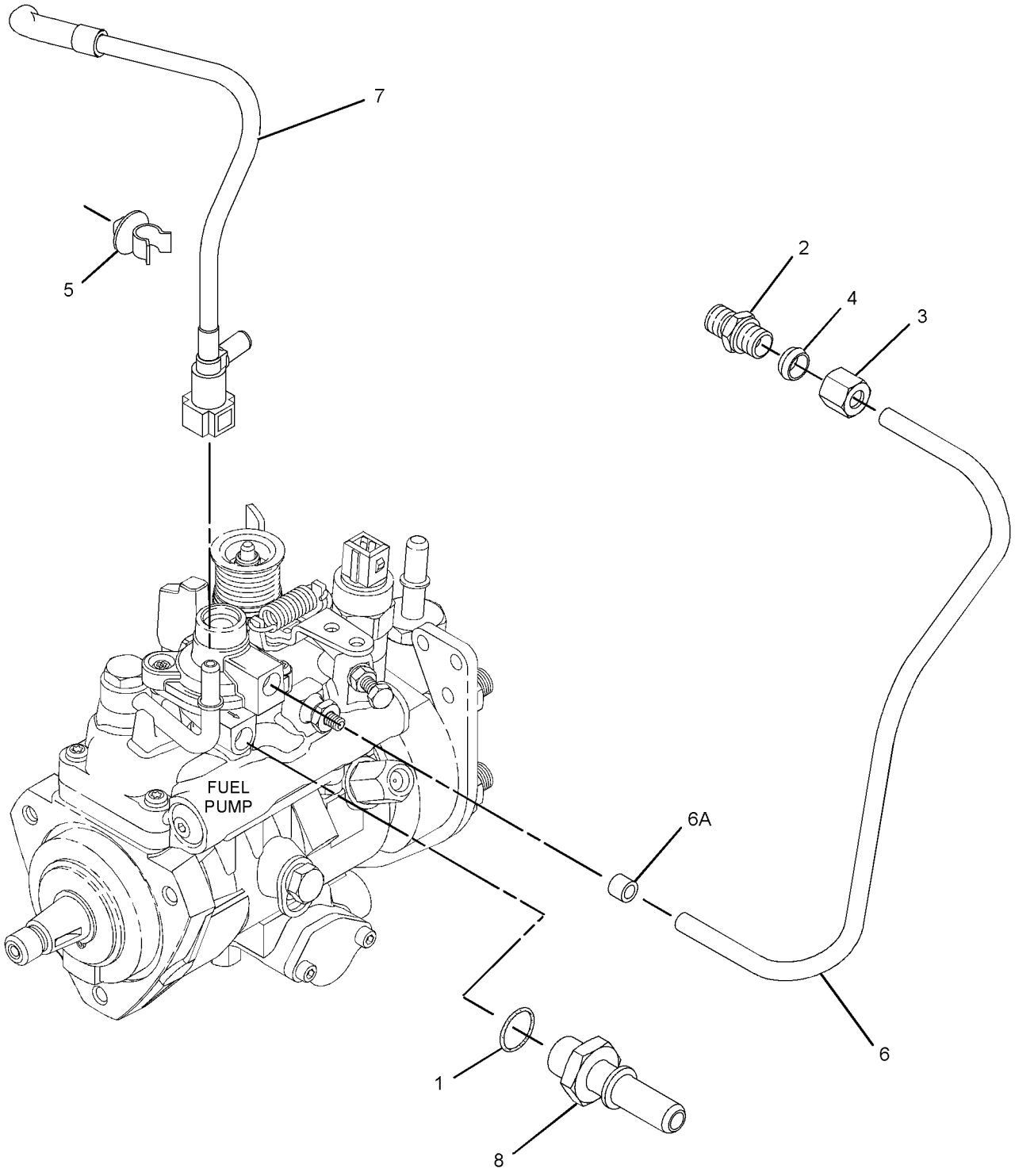

GRAPHIC #1 **<END>** g01613613

FUEL SYSTEM

345-7477 LINES GP-FUEL

S/N: SJL1-UP
PART OF 339-4987, 339-4991 ENGINE AR
AN ATTACHMENT

SMCS-1274 **i03663340**

NOTE	REF NO	GRAPHIC REF	PART NUMBER	QTY	PART NAME 1 2 3 4 5 6 (PRODUCT LEVEL)	SEE PAGE
B	1	1	**1P-4278**	10	CLAMP-HOSE	
	2	1	**7K-1181**	1	STRAP-CABLE	
	3	1	**151-4841**	1	BLOCK	
	4	1	**215-9515**	1	CONNECTOR-HOSE (QUICK DISCONNECT)	
	5	1	**222-3518**	1	TEE	
	6	1	**224-5917**	1	CONNECTOR-SPECIAL	
	7	1	**6K-8178**	1	CLIP	
	8	1	**7C-4354**	1	CLIP	
	9	1	**7S-1912**	1	CLIP	
	10	1	**8M-2773**	3	CLIP	
	11	1	**8T-4121**	2	WASHER-HARD (11X21X2.5-MM THK)	
M	12	1	**8T-4133**	1	NUT (M10X1.5-THD)	
M	13	1	**8T-4136**	1	BOLT (M10X1.5X25-MM)	
M	14	1	**8T-4179**	1	BOLT (M12X1.75X20-MM)	
M	15	1	**8T-4189**	1	BOLT (M8X1.25X20-MM)	
	16	1	**8T-4223**	1	WASHER-HARD (13.5X25.5X3-MM THK)	
	17	1	**8T-4224**	1	WASHER-HARD (8.8X16X2-MM THK)	
	18	1	**9M-8406**	1	CLIP	
E	19	1	**5P-1442**		HOSE (117.5-CM)	
E	20	1	**5P-1420**		HOSE (118-CM)	
E	20A	1	**5P-1420**		HOSE (13.5-CM)	
E	20B	1	**5P-1420**		HOSE (55-CM)	
E	20C	1	**5P-1420**		HOSE (59-CM)	

B-USE AS REQUIRED
E-ORDER BY THE CENTIMETER
M-METRIC PART

345-7477 **LINES GP-FUEL** *(contd.)* **i03663340**

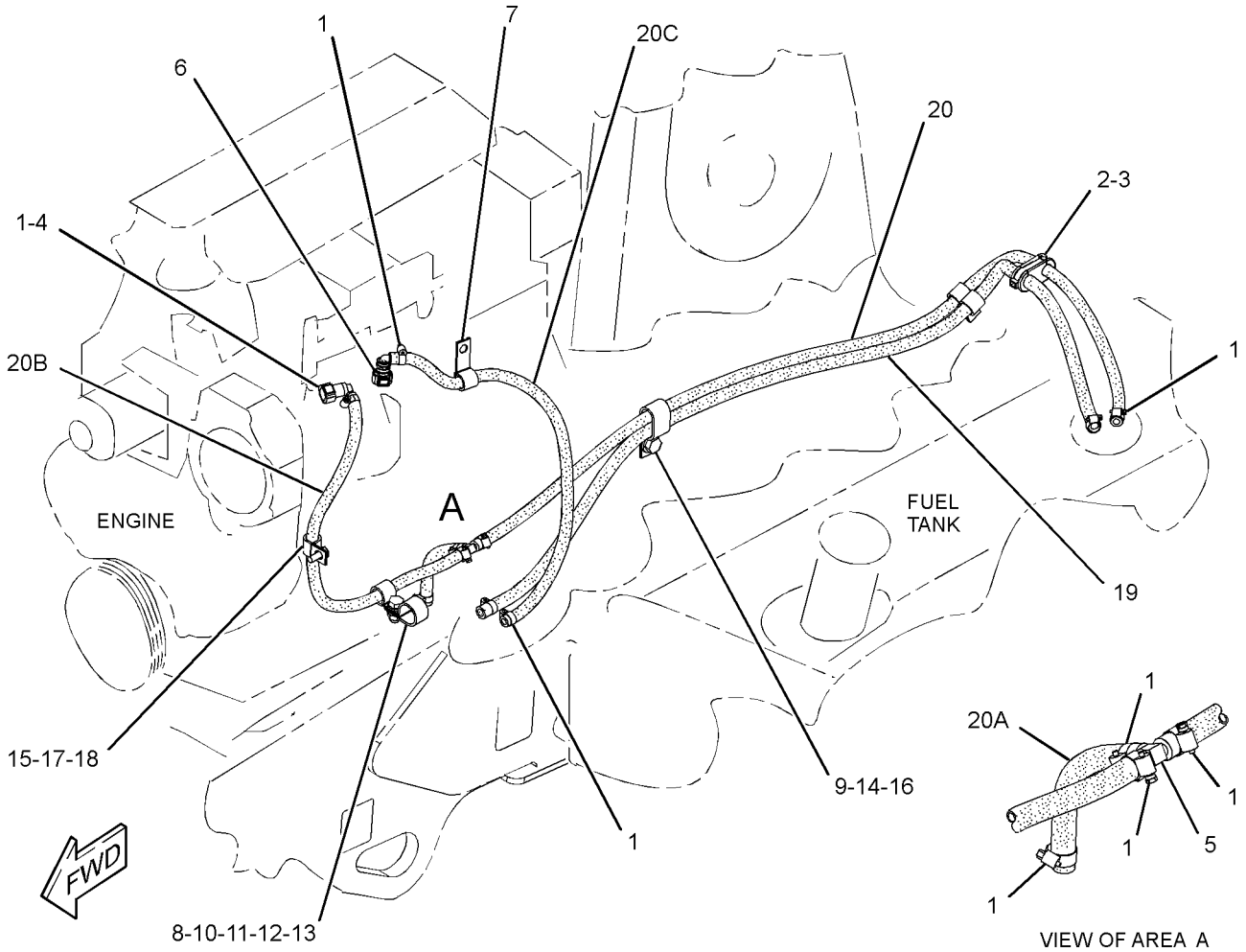

GRAPHIC #1 **<END>** g01967182

FUEL SYSTEM

345-7478 LINES GP-FUEL

S/N: SJL1-UP
PART OF 339-4989, 339-4993 ENGINE AR
AN ATTACHMENT

SMCS-1274 **i03664242**

NOTE	REF NO	GRAPHIC REF	PART NUMBER	QTY	PART NAME 1 2 3 4 5 6 (PRODUCT LEVEL)	SEE PAGE
B	1	1	**1P-4278**	14	CLAMP-HOSE	
	2	1	**7K-1181**	2	STRAP-CABLE	
	3	1	**151-4841**	1	BLOCK	
	4	1	**215-9515**	2	CONNECTOR-HOSE (QUICK DISCONNECT)	
	5	1	**222-3518**	2	TEE	
	6	1	**224-5917**	1	CONNECTOR-SPECIAL	
	7	1	**6K-8178**	1	CLIP	
	8	1	**7C-4354**	1	CLIP	
	9	1	**7S-1912**	1	CLIP	
	10	1	**8M-2773**	2	CLIP	
	11	1	**8T-4121**	2	WASHER-HARD (11X21X2.5-MM THK)	
M	12	1	**8T-4133**	1	NUT (M10X1.5-THD)	
M	13	1	**8T-4136**	1	BOLT (M10X1.5X25-MM)	
M	14	1	**8T-4179**	1	BOLT (M12X1.75X20-MM)	
M	15	1	**8T-4189**	1	BOLT (M8X1.25X20-MM)	
	16	1	**8T-4223**	1	WASHER-HARD (13.5X25.5X3-MM THK)	
	17	1	**8T-4224**	1	WASHER-HARD (8.8X16X2-MM THK)	
	18	1	**9M-8406**	2	CLIP	
E	19	1	**5P-1442**		HOSE (118-CM)	
E	20	1	**5P-1420**		HOSE (118-CM)	
E	20A	1	**5P-1420**		HOSE (59-CM)	
E	20B	1	**5P-1420**		HOSE (32-CM)	
E	20C	1	**5P-1420**		HOSE (8.5-CM)	
E	20D	1	**5P-1420**		HOSE (45-CM)	
E	20E	1	**5P-1420**		HOSE (13.5-CM)	

B-USE AS REQUIRED
E-ORDER BY THE CENTIMETER
M-METRIC PART

345-7478 **LINES GP-FUEL** *(contd.)* **i03664242**

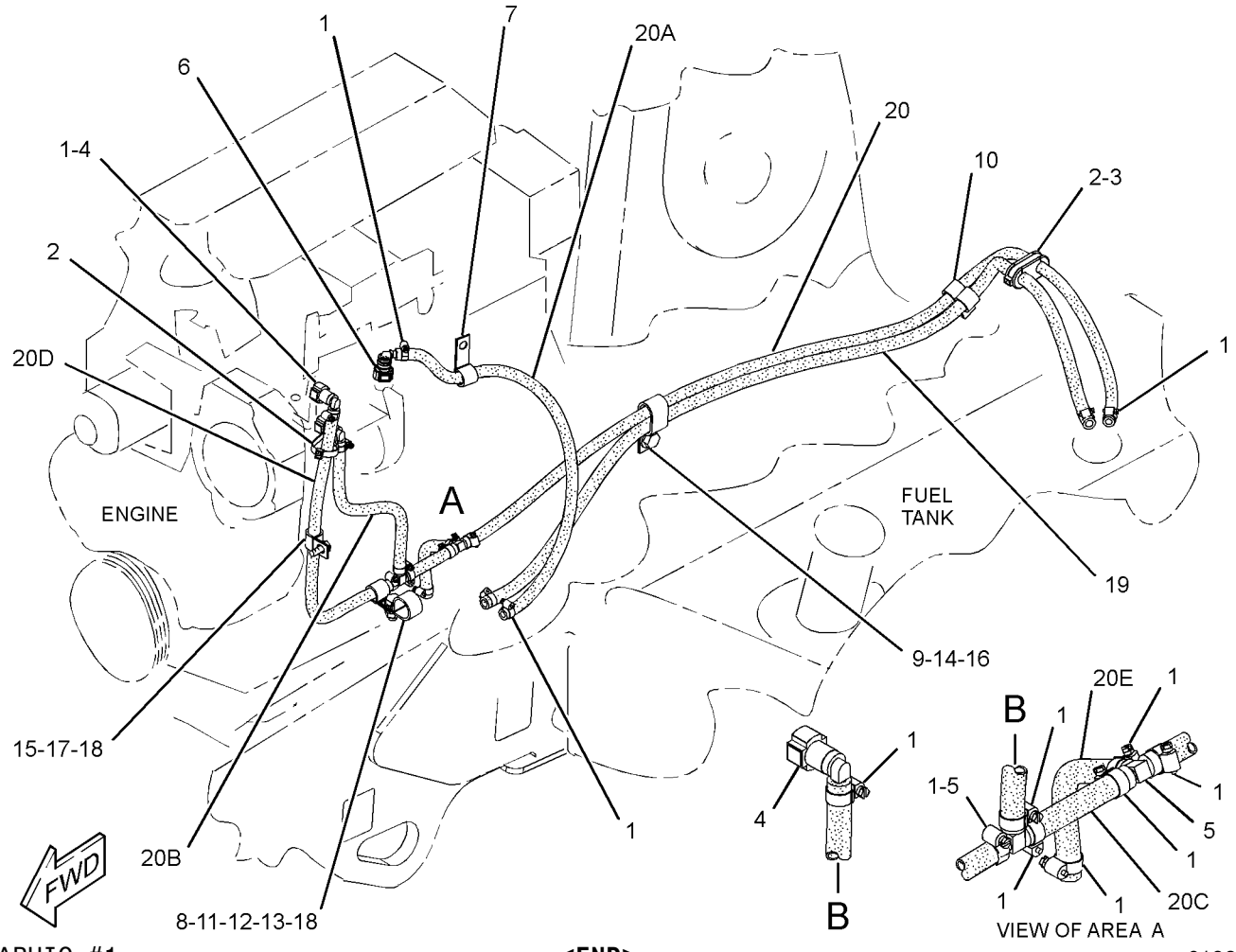

GRAPHIC #1

<END>

g01967298

FUEL SYSTEM

247-4885 LINES GP-FUEL FILTER

S/N: CRS1-UP
PART OF 322-1924 ENGINE AR-PRIMARY
AN ATTACHMENT

SMCS-1261, 1274 **i02225714**

NOTE	REF NO	GRAPHIC REF	PART NUMBER	QTY	PART NAME 1 2 3 4 5 6 (PRODUCT LEVEL)	SEE PAGE
	1	1	**247-4884**	1	TUBE AS	
	2	1	**232-3126**	1	CLIP	

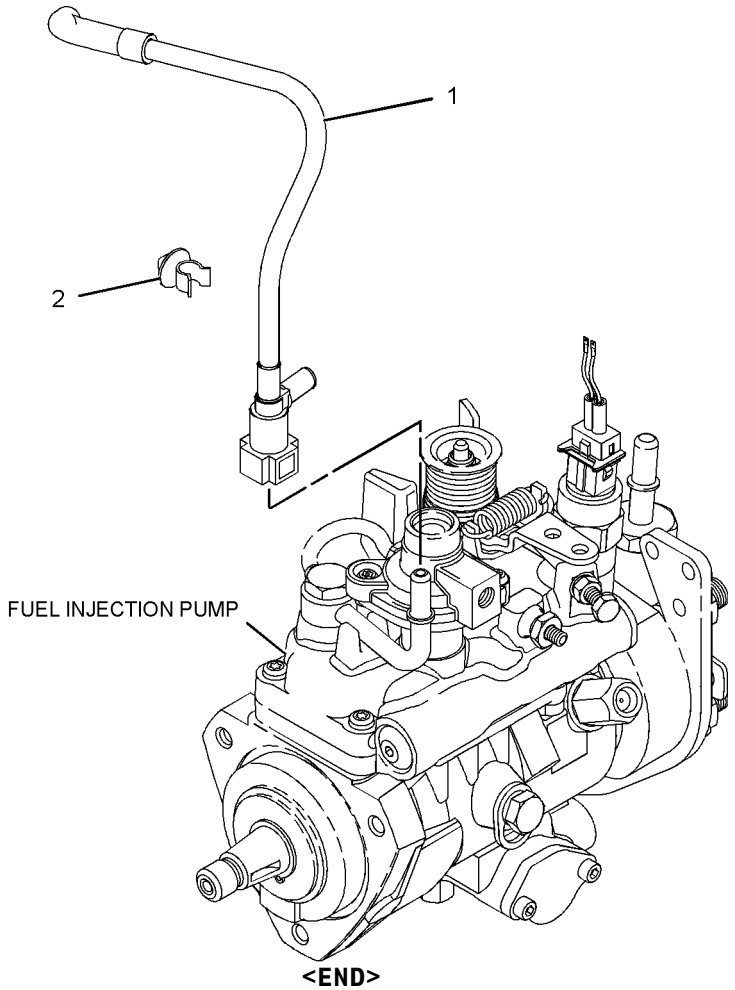

GRAPHIC #1

<END>

g01123693

236-8228 PUMP GP-FUEL INJECTION

S/N: CRS1-UP
PART OF 236-8229 PUMP GP-FUEL INJECTION
AN ATTACHMENT

SMCS-1251, 1290 **i01999156**

NOTE	REF NO	GRAPHIC REF	PART NUMBER	QTY	PART NAME 1 2 3 4 5 6 (PRODUCT LEVEL)	SEE PAGE
	1	1	**152-3968**	1	SEAL-O-RING	
	2	1	**176-6219**	1	VALVE GP-SOLENOID (12-VOLT) (AIR FUEL RATIO CONTROL)	
	3	1	**193-0161**	1	CABLE AS-ADAPTER	

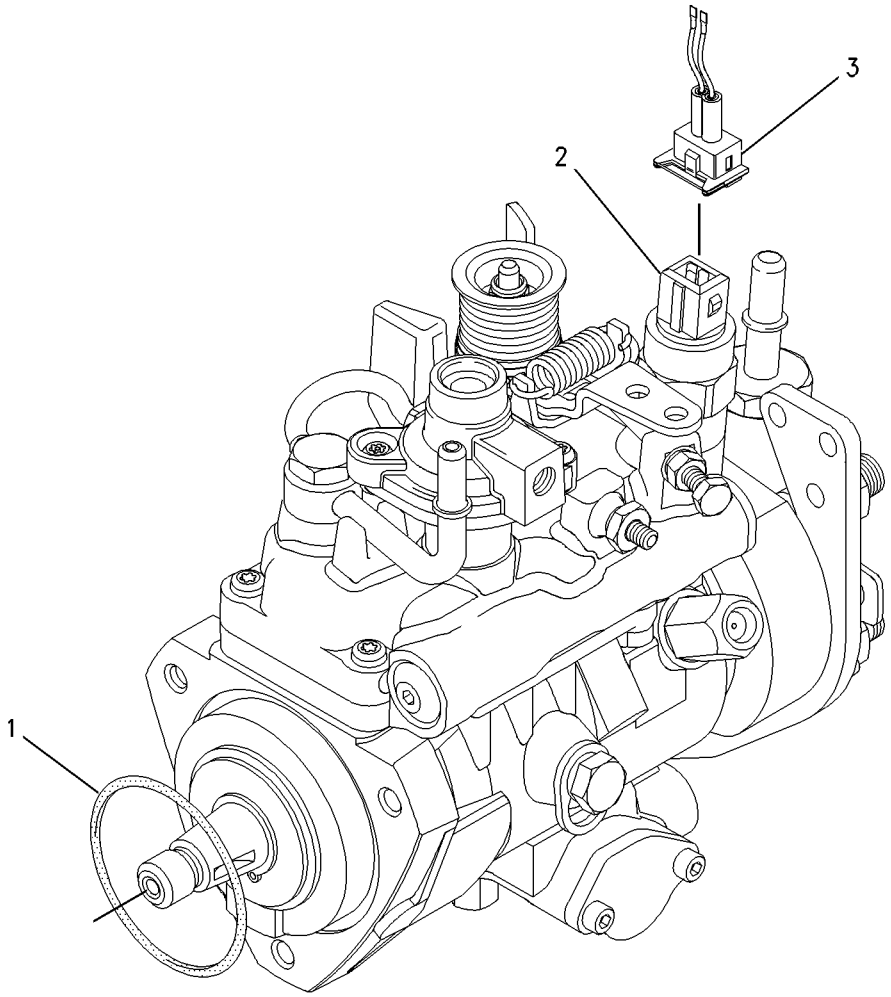

GRAPHIC #1 **<END>** g01006440

FUEL SYSTEM

236-8229 PUMP GP-FUEL INJECTION

S/N: CRS1-UP
PART OF 322-1924 ENGINE AR-PRIMARY
AN ATTACHMENT

SMCS-1251, 1290 **i03601387**

NOTE	REF NO	GRAPHIC REF	PART NUMBER	QTY	PART NAME 1 2 3 4 5 6 (PRODUCT LEVEL)	SEE PAGE
M	1	1	**6I-0217**	1	BOLT (M8X1.25X20-MM)	
M	2	1	**6I-0260**	3	BOLT (M8X1.25X25-MM)	
	3	1	**6I-0291**	1	NUT (M8X1.25-THD)	
	4	1	**035-8017**	1	UNION	
	5	1	**067-6264**	1	FITTING-FLARED	
	6	1	**067-6265**	1	FITTING-BRASS	
M	7	1	**100-4830**	1	BOLT (M10X1.5X20-MM)	
	8	1	**111-3422**	1	NUT	
	9	1	**111-3423**	1	WASHER	
	10	1	**140-8714**	1	CLIP	
	11	1	**230-7886**	1	TUBE AS	
	11A	1	**067-6999**	1	FERRULE	
	11B	1	**106-8835**	1	NUT	
	12	1	**230-8989**	1	GEAR-FUEL PUMP (68-TEETH)	
	13	1	**230-8995**	1	TUBE AS (CYL NO.1)	
	14	1	**230-8996**	1	TUBE AS (CYL NO.2)	
	15	1	**230-8997**	1	TUBE AS (CYL NO.3)	
	16	1	**230-8998**	1	TUBE AS (CYL NO.4)	
	17	2	**232-1323**	1	PLUG-CUP	
	18	1	**232-1328**	1	CAP (FUEL INJECTOR)	
	19	1	**232-1794**	3	HOSE	
	20	1	**232-2725**	2	CLIP	
	21	1	**232-2726**	1	CLIP	
	22	1	**232-3149**	1	WASHER (8.35X16.85X1.55-MM THK) (SEALING)	
	23	1	**232-3157**	1	BRACKET	
	24	1	**238-8671**	4	CLAMP-INJECTOR	
	25	1	**232-3274**	4	BOLT (M8X1.25X48.1-MM)	
	26	2	**235-1790**	1	SWITCH-TEMPERATURE (TIMING ADVANCE)	
	27	1	**236-1674**	4	INJECTOR AS-FUEL	
					(EACH INCLUDES)	
	27A	1	**236-1673**	1	NOZZLE	
	27B	1	**140-8718**	1	WASHER	
	27C	1	**275-1038**	1	SEAL-O-RING	
Y	28	1	**236-8228**	1	PUMP GP-FUEL INJECTION	119
	29	1	**318-2365**	1	CLIP	

M-METRIC PART
Y-SEPARATE ILLUSTRATION

236-8229 **PUMP GP-FUEL INJECTION** *(contd.)* **i03601387**

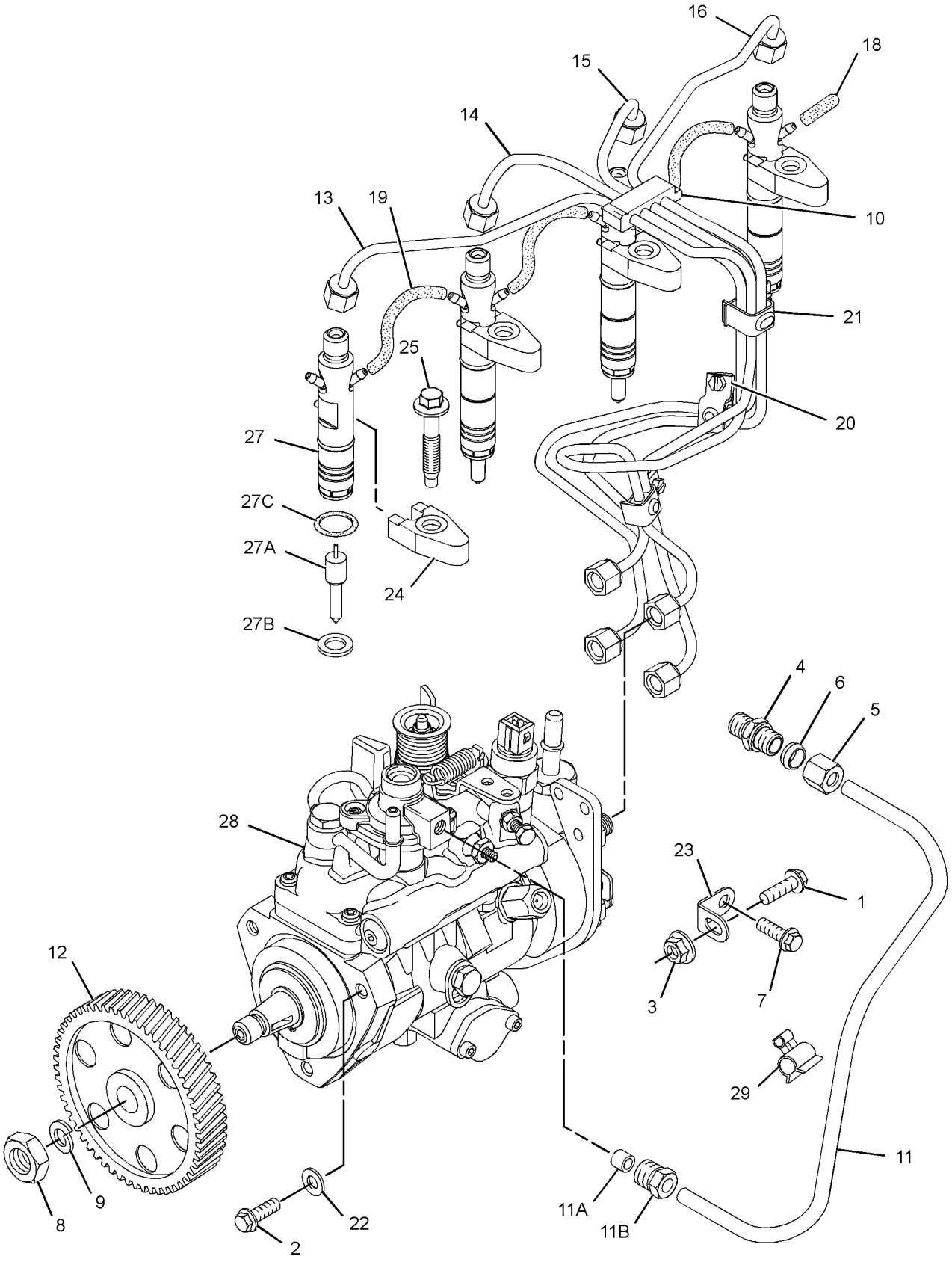

GRAPHIC #1 g01619129

236-8229 **PUMP GP-FUEL INJECTION** *(contd.)* **i03601387**

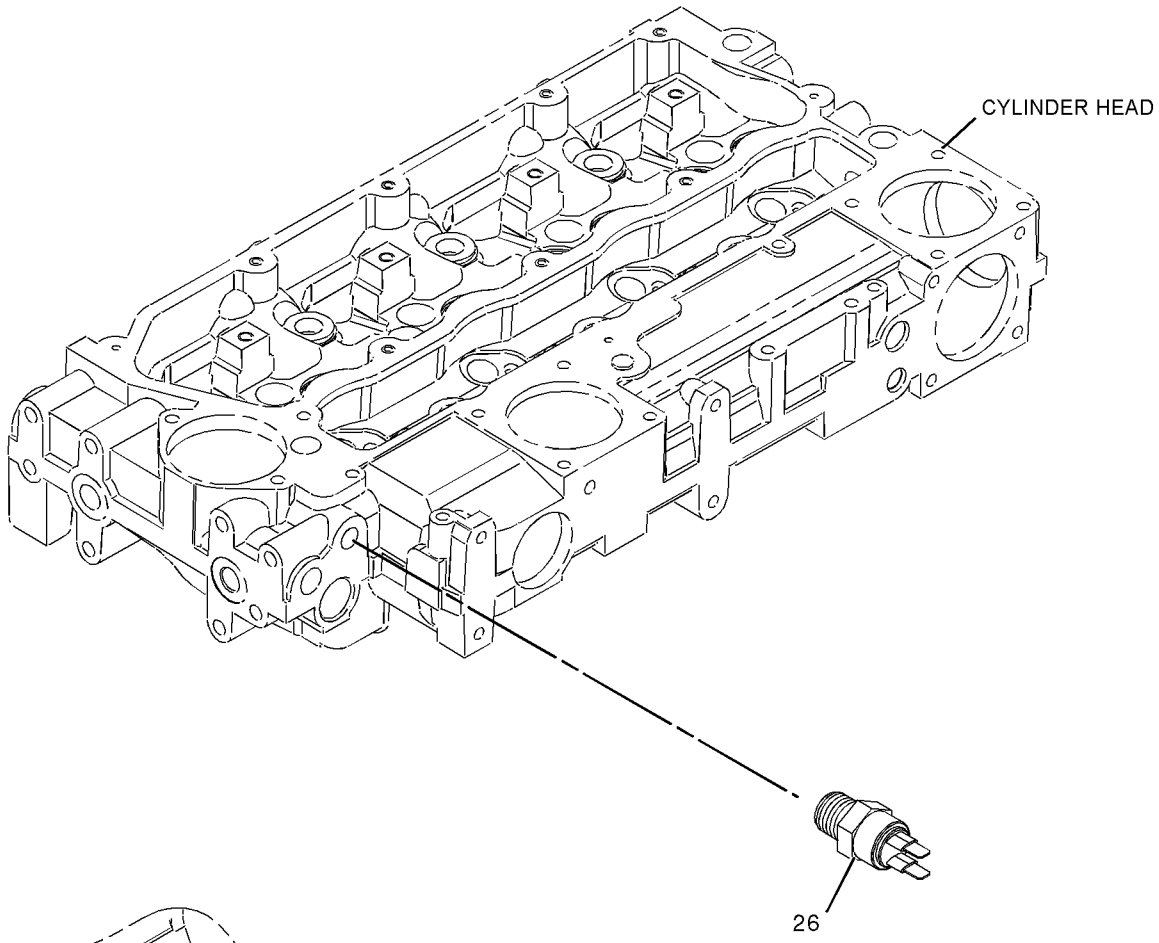

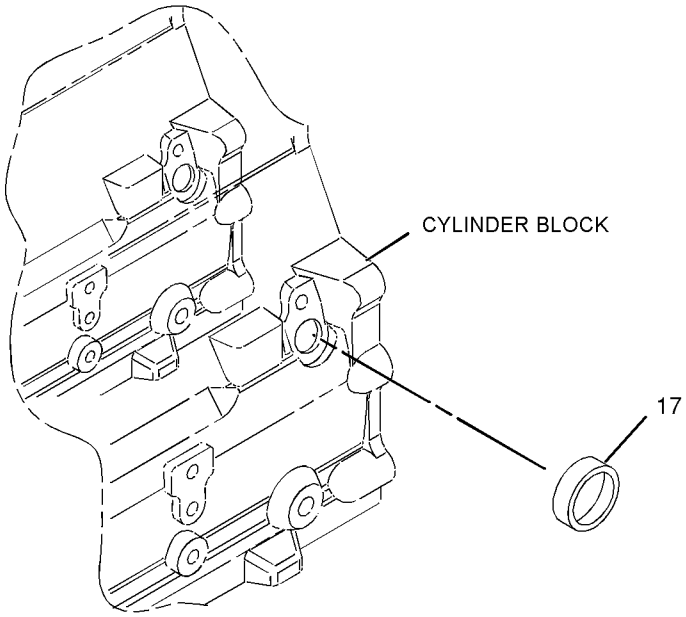

GRAPHIC #2 **<END>** g01022785

326-9147 PUMP GP-FUEL INJECTION

S/N: C4Z1-UP
PART OF 326-9149 PUMP GP-FUEL INJECTION
AN ATTACHMENT

SMCS-1251, 1290 **i03718046**

NOTE	REF NO	GRAPHIC REF	PART NUMBER	QTY	PART NAME 1 2 3 4 5 6 (PRODUCT LEVEL)	SEE PAGE
	1	1	**111-3422**	1	NUT	
	2	1	**111-3423**	1	WASHER	
	3	1	**152-3968**	1	SEAL-O-RING	
	4	1	**176-6219**	1	VALVE GP-SOLENOID (12-VOLT) (FUEL SHUTOFF)	

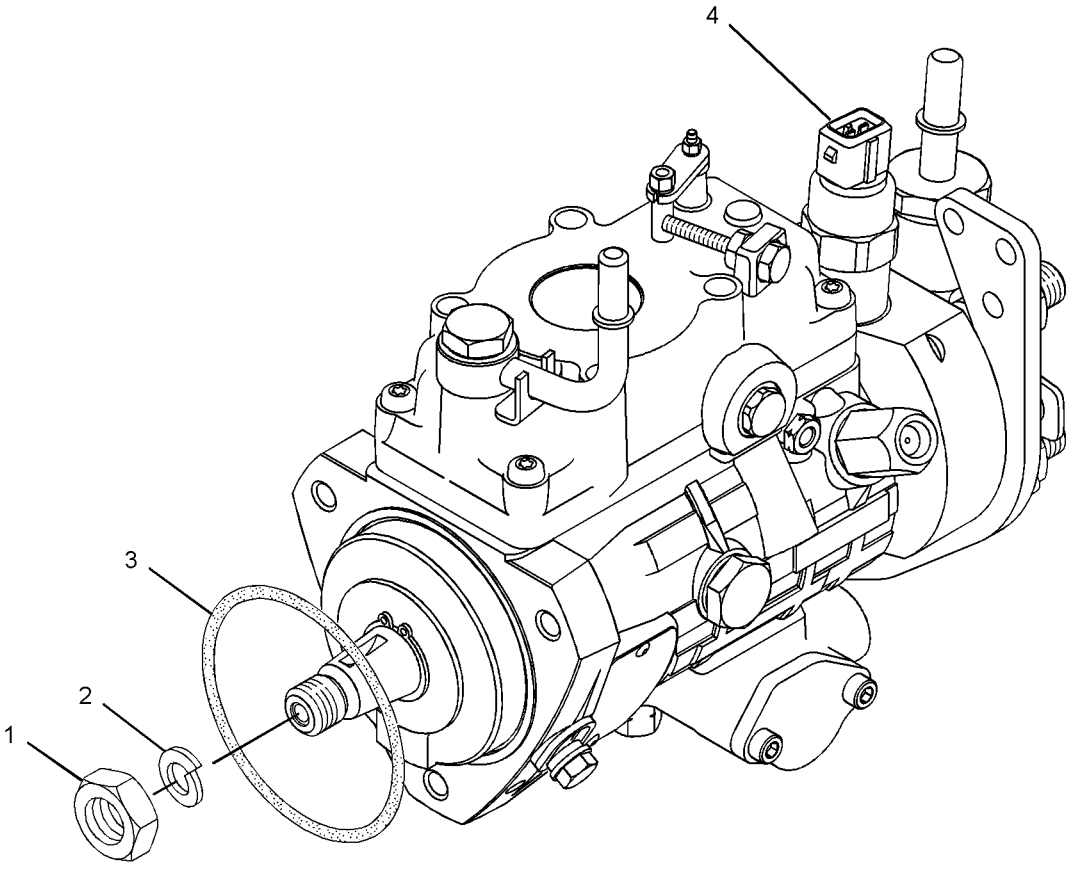

GRAPHIC #1 **<END>** g01615399

326-9149 PUMP GP-FUEL INJECTION

S/N: C4Z1-UP
PART OF 321-7705 ENGINE AR-PRIMARY
AN ATTACHMENT

SMCS-1251, 1290 **i03313740**

NOTE	REF NO	GRAPHIC REF	PART NUMBER	QTY	PART NAME 1 2 3 4 5 6 (PRODUCT LEVEL)	SEE PAGE
M	1	1	**6I-0217**	1	BOLT (M8X1.25X20-MM)	
M	2	1	**6I-0260**	3	BOLT (M8X1.25X25-MM)	
	3	1	**6I-0291**	1	NUT (M8X1.25-THD)	
M	4	1	**100-4830**	1	BOLT (M10X1.5X20-MM)	
M	5	1	**124-3815**	1	BOLT (M8X16X1.25-MM)	
	6	1	**140-8714**	1	CLIP	
	7	2	**169-5326**	1	SWITCH-TEMPERATURE (FUEL)	
	8	1	**230-8989**	1	GEAR-FUEL PUMP (68-TEETH)	
	9	1	**230-8995**	1	TUBE AS (CYL NO.1)	
	10	1	**230-8996**	1	TUBE AS (CYL NO.2)	
	11	1	**230-8997**	1	TUBE AS (CYL NO.3)	
	12	1	**230-8998**	1	TUBE AS (CYL NO.4)	
	13	2	**232-1323**	1	PLUG-CUP	
	14	1	**232-1328**	1	CAP	
	15	2	**232-1793**	1	CABLE	
	16	1	**232-1794**	3	HOSE	
	17	1	**232-2725**	2	CLIP	
	18	1	**232-2726**	1	CLIP	
	19	1	**232-3126**	1	CLIP	
	20	1	**232-3149**	3	WASHER (8.35X16.85X1.55-MM THK)	
	21	1	**232-3157**	1	BRACKET	
	22	1	**232-3274**	4	BOLT (M8X1.25X48.1-MM)	
	23	1	**238-8671**	4	CLAMP-INJECTOR	
	24	1	**240-5571**	1	BRACKET	
	25	1	**315-3381**	4	ATOMIZER AS	
					(EACH INCLUDES)	
	25A	1	**140-8718**	1	WASHER	
	25B	1	**275-1038**	1	SEAL-O-RING	
Y	26	1	**326-9147**	1	PUMP GP-FUEL INJECTION	123

M-METRIC PART
Y-SEPARATE ILLUSTRATION

326-9149 **PUMP GP-FUEL INJECTION** *(contd.)* **i03313740**

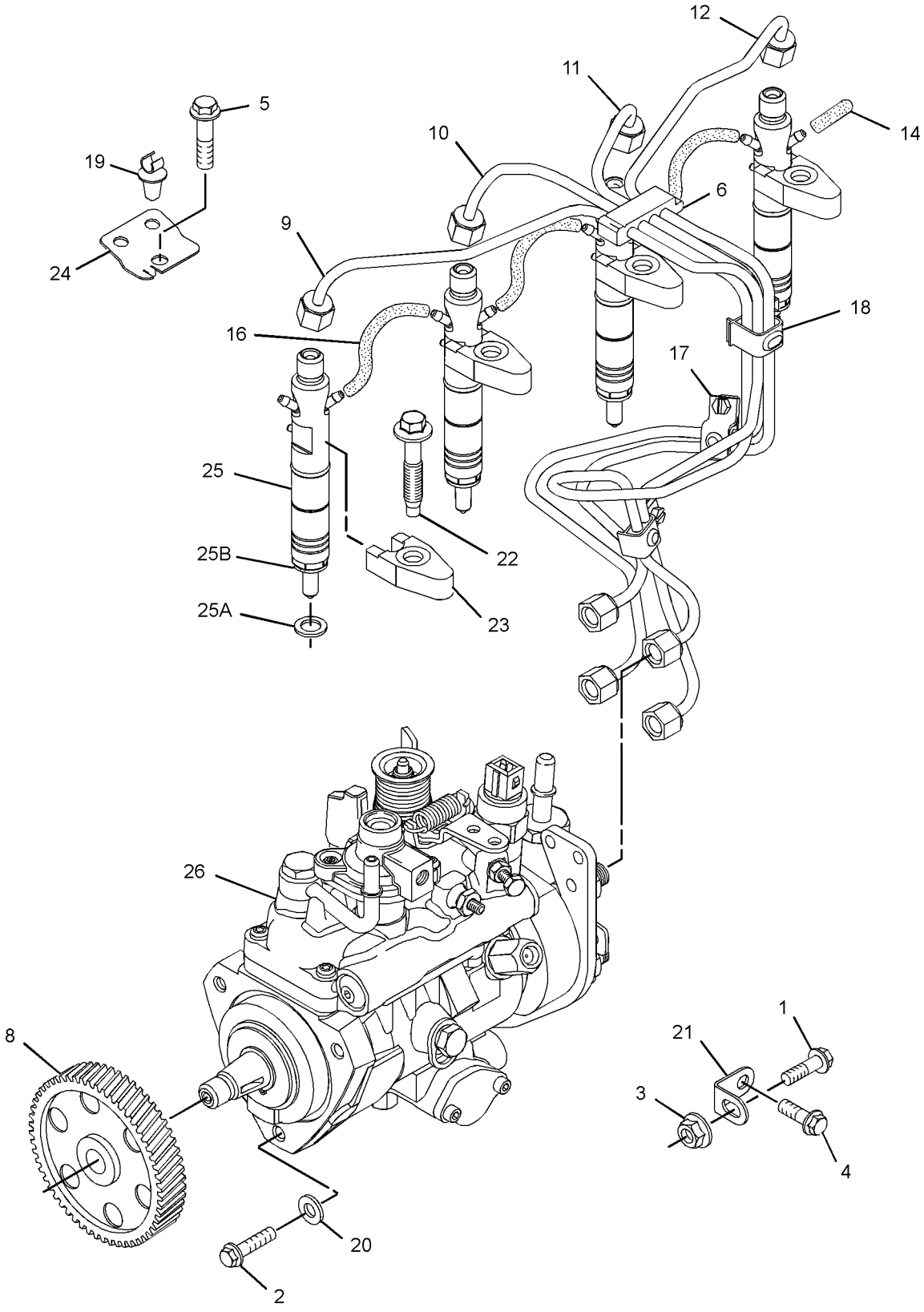

GRAPHIC #1 g01613834

326-9149 **PUMP GP-FUEL INJECTION** *(contd.)* **i03313740**

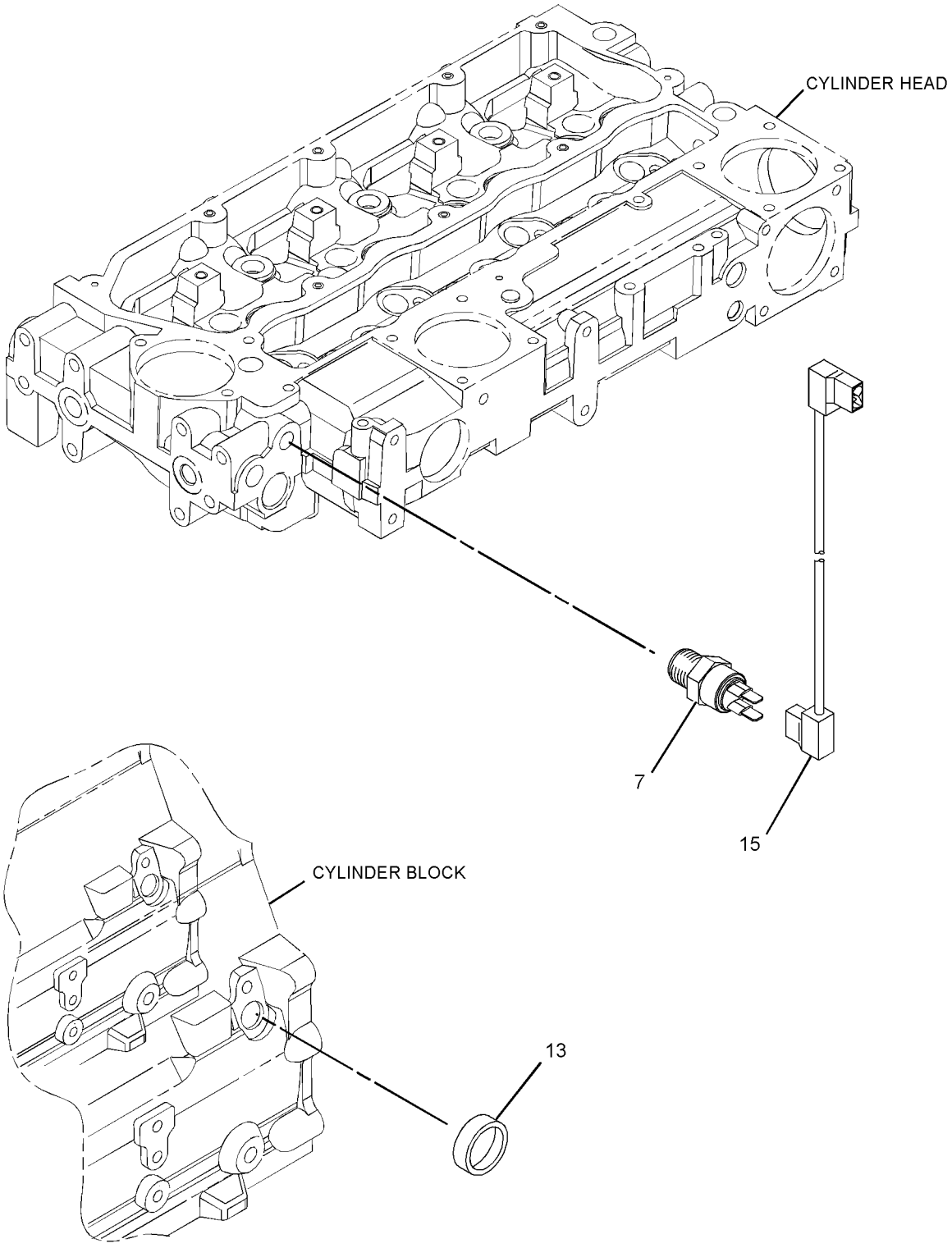

GRAPHIC #2 **<END>** g01611701

249-7669 PUMP GP-FUEL PRM & PRIM FILTER–

WITH WATER SEPARATOR

S/N: SJL1-UP

PART OF 314-6700 PUMP GP-FUEL PRM & PRIM FILTER

AN ATTACHMENT

SMCS-1258, 1260, 1261 **i03712190**

NOTE	REF NO	GRAPHIC REF	PART NUMBER	QTY	PART NAME 1 2 3 4 5 6 (PRODUCT LEVEL)	SEE PAGE
	1	1	**118-8118**	1	RING-RETAINING	
	2	1	**149-9954**	1	DRAIN AS	
	3	1	**193-0618**	1	SENSOR GP-MOISTURE (WATER SEPARATOR)	
		1	**192-7876**	1	SCREW-MOUNTING	
	4	1	**228-9130**	1	FILTER AS-WATER SEP & FUEL	
	5	1	**228-9132**	1	FITTING (FUEL PUMP)	

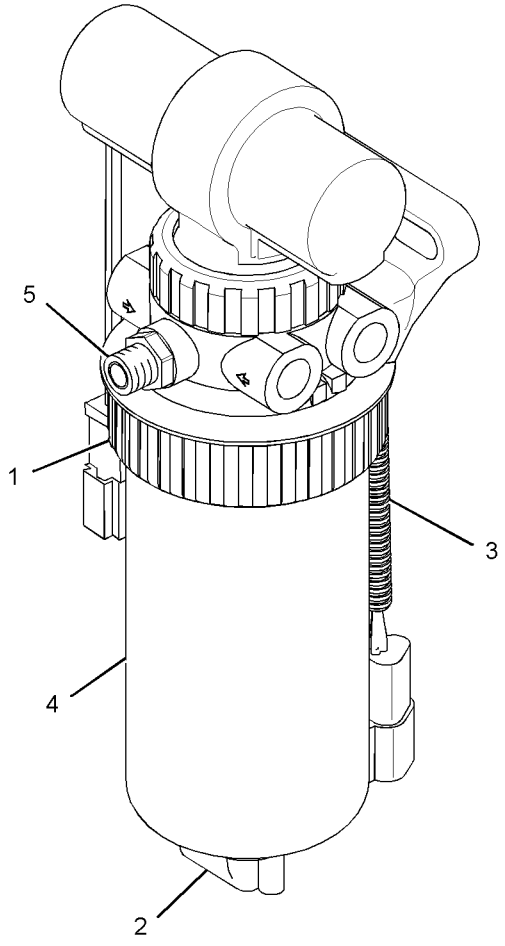

GRAPHIC #1 **<END>** g01825141

314-6700 PUMP GP-FUEL PRM & PRIM FILTER–

WITH MOUNTING

S/N: SJL1-UP

PART OF 339-4987, 339-4989, 339-4991, 339-4993 ENGINE AR

AN ATTACHMENT

SMCS-1258, 1260, 1261 **i03295970**

NOTE	REF NO	GRAPHIC REF	PART NUMBER	QTY	PART NAME 1 2 3 4 5 6 (PRODUCT LEVEL)	SEE PAGE
	1	1	**3S-2093**	1	STRAP-CABLE	
	2	1	**069-4080**	1	FITTING	
	3	1	*165-7951*	1	CONNECTOR AS	
		1	**3J-1907**	1	SEAL-O-RING	
		1	**157-1669**	1	CONNECTOR	
	4	1	*184-6581*	1	CONNECTOR AS	
		1	**3J-1907**	1	SEAL-O-RING	
		1	**195-5830**	1	CONNECTOR	
Y	5	1	**249-7669**	1	PUMP GP-FUEL PRM & PRIM FILTER (WITH WATER SEPARATOR)	127
	6	1	**253-0354**	1	BRACKET AS	
M	7	1	**101-7404**	2	BOLT-SOCKET HEAD (M10X1.5X30-MM)	
	8	1	*148-8407*	2	PLUG AS	
					(EACH INCLUDES)	
		1	**3J-1907**	1	SEAL-O-RING	
		1	**9S-4191**	1	PLUG-O-RING	
	9	1	**8T-4121**	4	WASHER-HARD (11X21X2.5-MM THK)	
M	10	1	**8T-8894**	2	BOLT-SOCKET HEAD (M10X1.5X20-MM)	

M-METRIC PART
Y-SEPARATE ILLUSTRATION

314-6700 **PUMP GP-FUEL PRM & PRIM FILTER** *(contd.)* **i03295970**

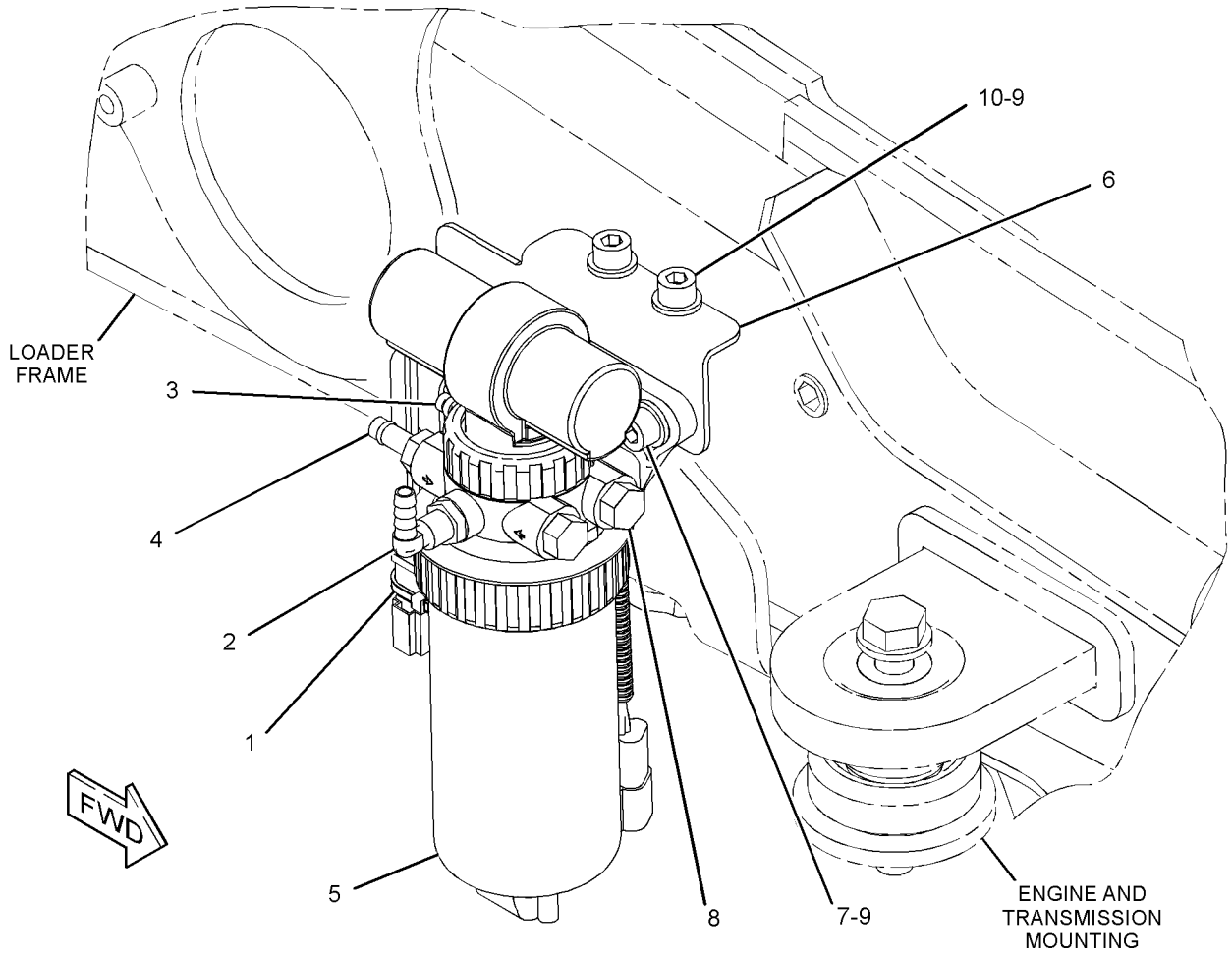

GRAPHIC #1 **<END>** g01679983

FUEL SYSTEM

338-9360 TANK GP-FUEL

S/N: SJL1-UP

PART OF 341-0697 TANK GP-FUEL

SMCS-1273 **i03657482**

NOTE	REF NO	GRAPHIC REF	PART NUMBER	QTY	PART NAME 1 2 3 4 5 6 (PRODUCT LEVEL)	SEE PAGE
	1	1	**272-0537**	1	PLUG AS	
		1	**190-7634**	1	SEAL-O-RING	
	2	1	**284-9039**	1	CAP-FUEL (LOCKABLE, VENTED)	
	3	1	**321-1327**	1	SENDER AS-FUEL LEVEL	
		1	**9R-7240**	1	GASKET	
		1	**102-8802**	1	KIT-RECEPTACLE (2-PIN)	
					(INCLUDES RECEPTACLE AS & WEDGE)	
		1	**186-3735**	1	PIN-CONNECTOR (16-GA TO 18-GA)	
		1	**311-6886**	1	STRAINER (FUEL TANK)	
	4	1	**321-5657**	1	TUBE AS	
M	5	1	**184-0982**	13	SCREW-PAN HEAD (M6X1X16-MM)	
	6	1	**106-8020**	1	GASKET	
F			**180-3730**	1	STRAINER-FUEL (FILLER NECK SCREEN)	

F-NOT SHOWN
M-METRIC PART

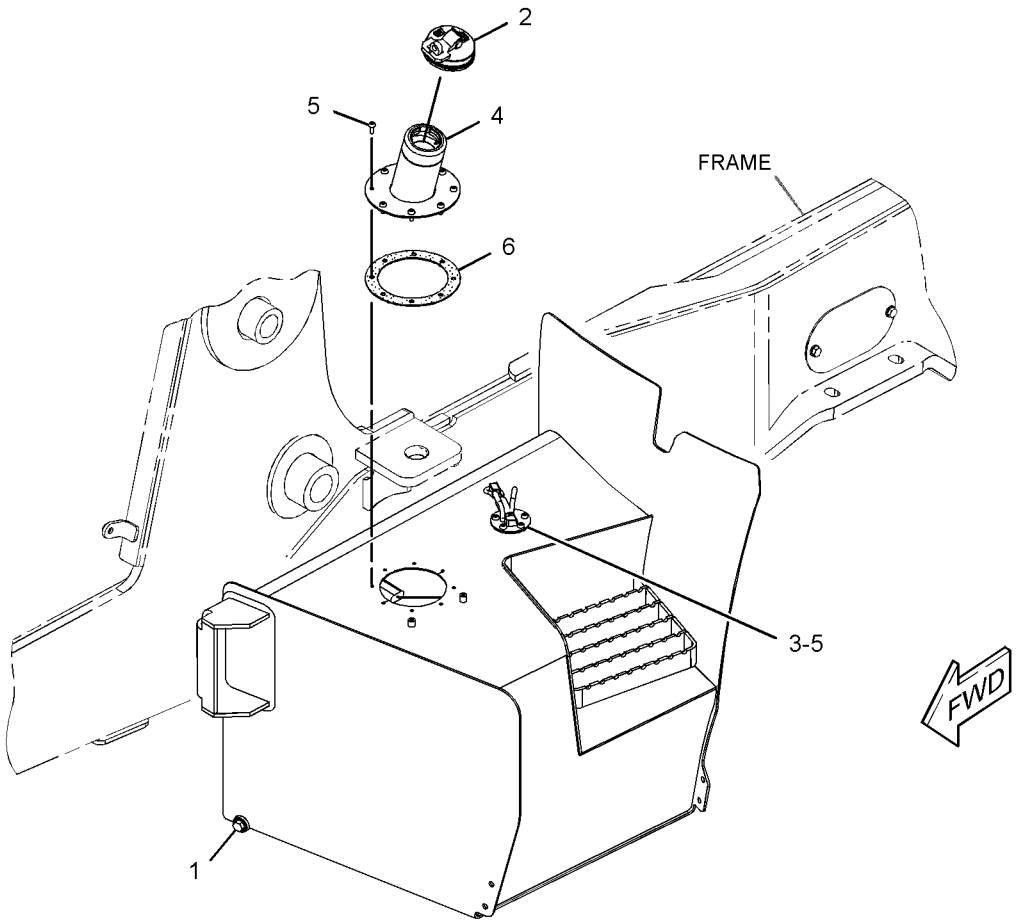

GRAPHIC #1 **<END>** g01989036

341-0697 TANK GP-FUEL

S/N: SJL1-UP
187-LITERS (49.5-US GAL)
PART OF 329-0296 CHASSIS AR

SMCS-1273 **i03657481**

NOTE	REF NO	GRAPHIC REF	PART NUMBER	QTY	PART NAME 1 2 3 4 5 6 (PRODUCT LEVEL)	SEE PAGE
	1	1	**216-3338**	1	TREAD-NONSKID	
	2	1	**221-9719**	1	STEP AS	
Y	3	1	**338-9360**	1	TANK GP-FUEL	130
	4	1	**5P-4116**	4	WASHER-HARD (8.8X20.5X2-MM THK)	
M	5	1	**8T-4171**	2	BOLT (M6X1X12-MM)	
M	6	1	**8T-4189**	4	BOLT (M8X1.25X20-MM)	
M	7	1	**8T-4193**	4	BOLT (M16X2X50-MM)	
	8	1	**8T-4205**	2	WASHER-HARD (7.2X14.5X2-MM THK)	
	9	1	**9X-8257**	4	WASHER (17.5X30X3.5-MM THK)	

M-METRIC PART
Y-SEPARATE ILLUSTRATION

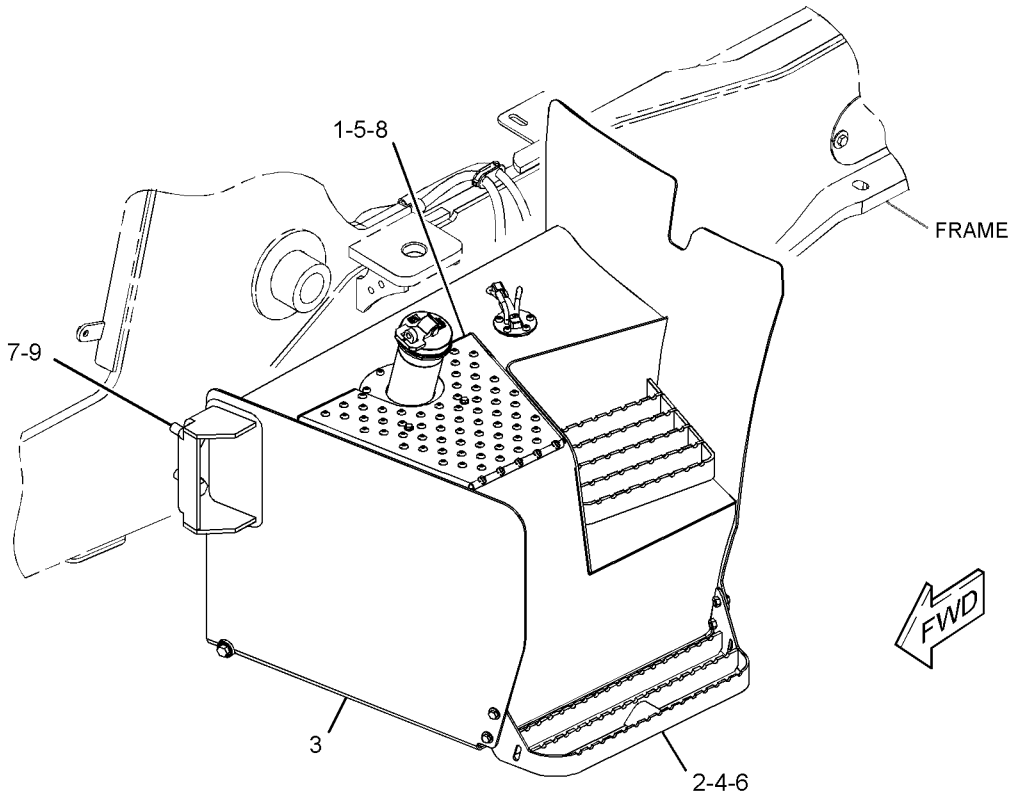

GRAPHIC #1 **<END>** g01986336

317-9776 ALTERNATOR GP-CHARGING

S/N: C4Z1-UP
PART OF 321-7705 ENGINE AR-PRIMARY
AN ATTACHMENT

SMCS-1405, 1425 **i03635370**

NOTE	REF NO	GRAPHIC REF	PART NUMBER	QTY	PART NAME 1 2 3 4 5 6 (PRODUCT LEVEL)	SEE PAGE
M	1	1	**6I-0260**	1	BOLT (M8X1.25X25-MM)	
M	2	1	**6I-0650**	1	BOLT (M10X1.5X65-MM)	
	3	1	**100-8451**	1	BOLT (M8X1.25X130-MM)	
	4	1	**113-6349**	1	NUT (M12X1.75X93-MM)	
M	5	1	**140-8783**	2	BOLT (M10X1.5X45-MM)	
	7	1	**346-9825**	1	ALTERNATOR GP-CHARGING	
	8	1	**284-3425**	1	PULLEY-ALTERNATOR	
	9	1	**305-7881**	1	BRACKET AS-ALTERNATOR	
	9A	1	**161-9820**	1	PIN	

M-METRIC PART

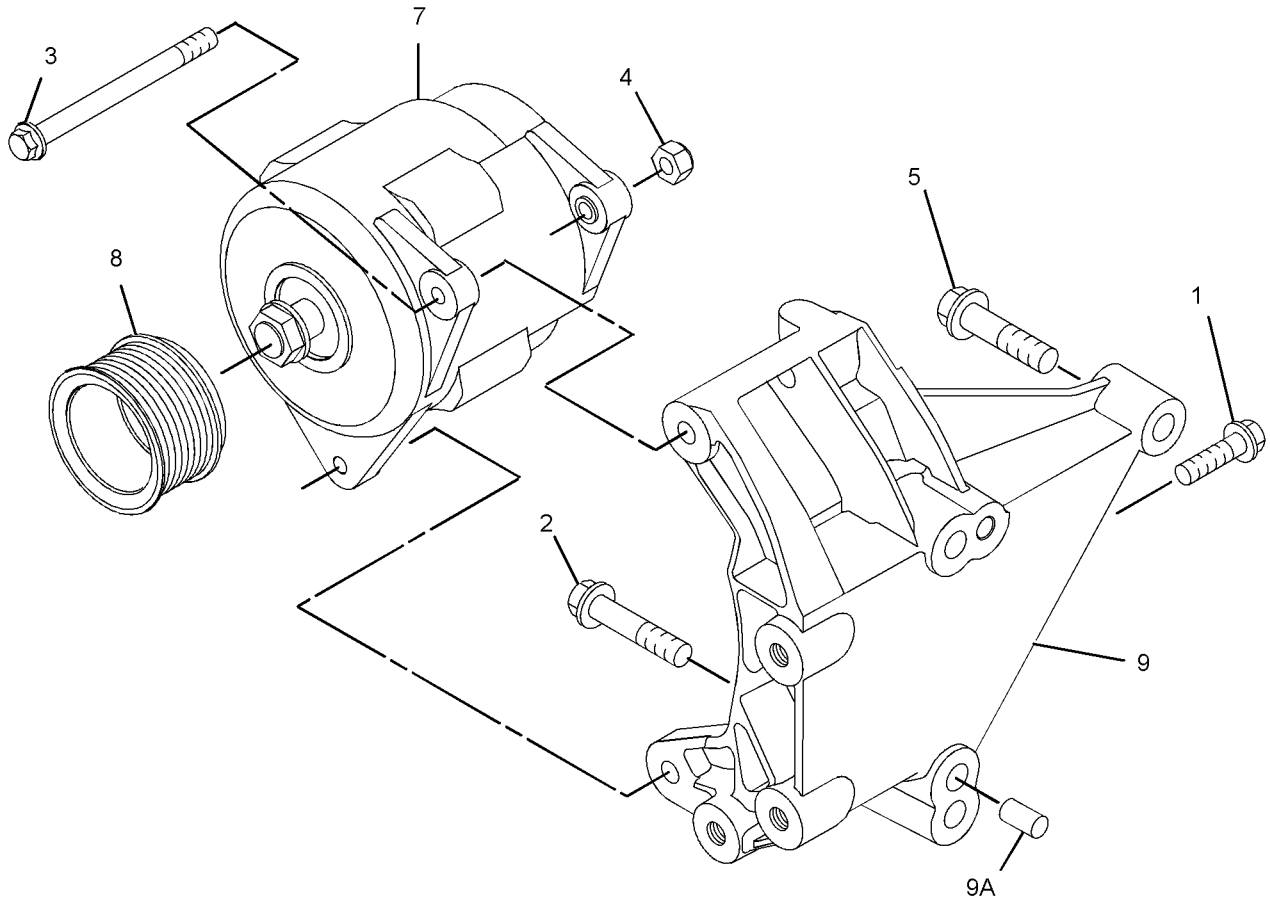

GRAPHIC #1 **<END>** g01953021

334-3756 ALTERNATOR GP-CHARGING

S/N: CRS1-UP
PART OF 322-1924 ENGINE AR-PRIMARY
AN ATTACHMENT

SMCS-1405, 1425 **i03635529**

NOTE	REF NO	GRAPHIC REF	PART NUMBER	QTY	PART NAME 1 2 3 4 5 6 (PRODUCT LEVEL)	SEE PAGE
M	1	1	**6I-0260**	1	BOLT (M8X1.25X25-MM)	
M	2	1	**6I-0650**	1	BOLT (M10X1.5X65-MM)	
	3	1	**100-8451**	1	BOLT (M8X1.25X130-MM)	
	4	1	**113-6349**	1	NUT (M12X1.75X93-MM)	
M	5	1	**140-8783**	2	BOLT (M10X1.5X45-MM)	
	6	1	**346-9825**	1	ALTERNATOR GP-CHARGING	
	7	1	**284-3425**	1	PULLEY-ALTERNATOR	
	8	1	**305-7881**	1	BRACKET AS-ALTERNATOR	
	8A	1	**161-9820**	2	PIN	

M-METRIC PART

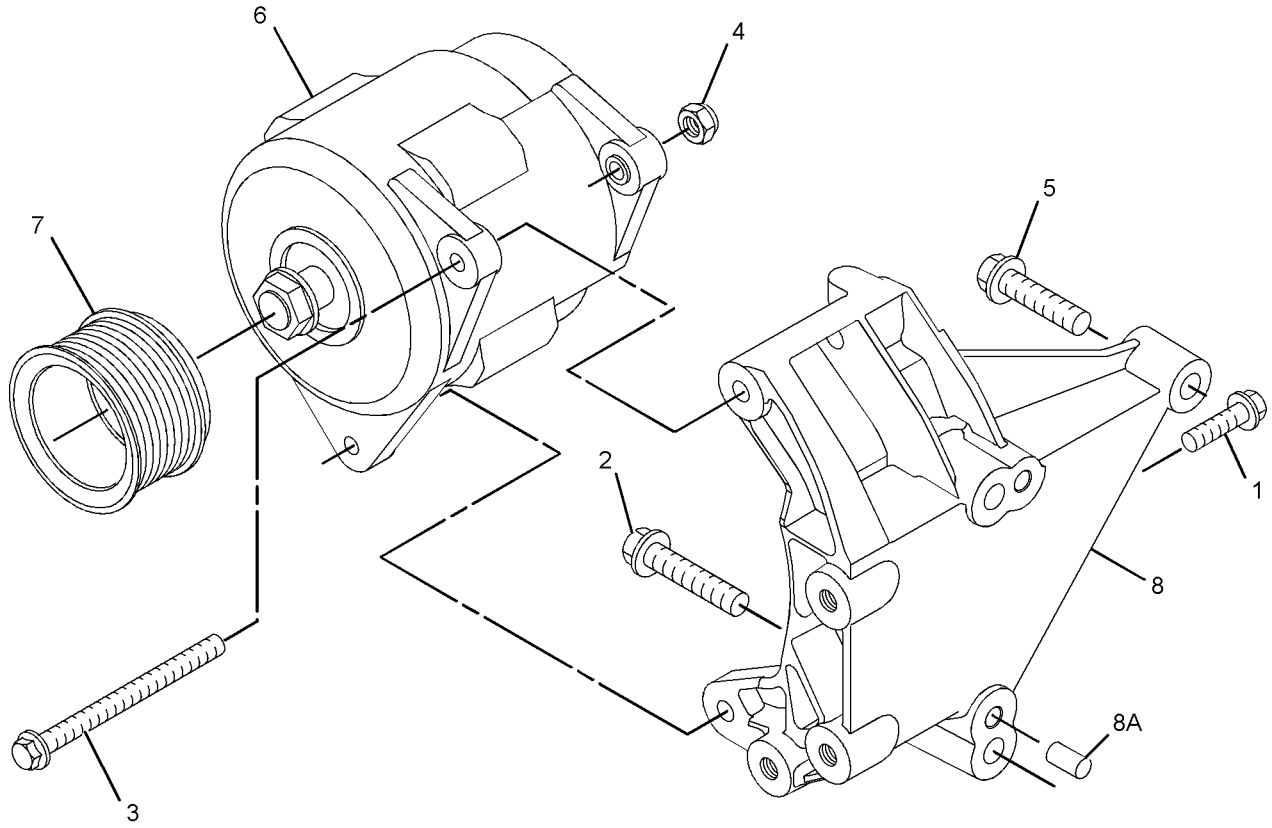

GRAPHIC #1 **<END>** g01953881

ELECTRICAL AND STARTING SYSTEM

313-3379 BATTERY & WIRING GP

S/N: SJL1-UP

PART OF 329-0296 CHASSIS AR

SMCS-1401, 1402, 1408, 1411 **i03652105**

NOTE	REF NO	GRAPHIC REF	PART NUMBER	QTY	PART NAME 1 2 3 4 5 6 (PRODUCT LEVEL)	SEE PAGE
	1	1	**6T-0465**	1	COVER-TERMINAL (BLACK)	
	2	1	**7K-1181**	7	STRAP-CABLE	
	3	1	**038-9317**	1	TREAD-NONSKID	
	4	1	**178-1781**	1	CLIP	
	5	1	**178-9242**	1	BRACKET AS	
	6	1	**228-5088**	1	CABLE AS	
		1	**1S-7252**	1	TERMINAL-CABLE (00-GA, 3/8-IN SCREW)	
E		1	**5P-0761**		CABLE (00-GA, RED) (98-CM)	
		1	**8L-8413**	1	STRAP-CABLE	
		1	**8N-0869**	1	COVER-TERMINAL (RED)	
E		1	**8Y-8081**		TUBE-CONVOLUTED (98-CM)	
		1	*235-8634*	1	TERMINAL AS-BATTERY (POSITIVE)	
		1	**1M-6119**	1	BOLT (5/16-18X1.375-IN)	
		1	**1M-6120**	1	NUT (5/16-18-THD)	
		1	**6V-8801**	2	NUT (3/8-16-THD)	
	7	1	**228-5089**	1	CABLE AS	
		1	**1S-7251**	1	TERMINAL-CABLE (00-GA, 1/2-IN SCREW)	
E		1	**5P-0747**		CABLE (00-GA, BLACK) (58-CM)	
		1	*229-9855*	1	TERMINAL AS-BATTERY (NEGATIVE)	
		1	**1M-6119**	1	BOLT (5/16-18X1.375-IN)	
		1	**1M-6120**	2	NUT (5/16-18-THD)	
	8	1	**228-5090**	1	CABLE AS	
		1	**3S-2093**	1	STRAP-CABLE	
		1	**6T-5598**	1	TERMINAL-RING (1-GA TO 2-GA, 5/16-IN SCREW)	
E		1	**8C-3056**		CABLE (2-GA, RED) (222-CM)	
		1	**8T-8799**	1	BOOT	
E		1	**8Y-8080**		TUBE-CONVOLUTED (222-CM)	
	9	1	**243-5027**	1	NUT AS (M6X1-THD)	
	10	1	**246-8058**	1	CABLE AS (ALTERNATOR)	
E		1	**125-7876**		TUBE-HEAT SHRINK (17.78-MM DIA) (7-CM)	
		1	*242-3291*	1	TERMINAL AS	
E		1	**125-7876**		TUBE-HEAT SHRINK (17.78-MM DIA) (5-CM)	
	11	1	**091-9035**	2	SPACER (11X25X20-MM THK)	
	12	1	**132-5789**	1	CLIP	
	13	1	**3T-5760**	1	BATTERY (12-VOLT, MAINTENANCE FREE, WET)	
		1	**123-1373**	6	CAP AS-FILLER (BATTERY)	
	14	1	**4D-6466**	2	CLIP	
	15	1	**7X-7729**	2	WASHER (11X25X3-MM THK)	
	16	1	**8T-4121**	4	WASHER-HARD (11X21X2.5-MM THK)	
M	17	1	**8T-4133**	1	NUT (M10X1.5-THD)	
M	18	1	**8T-4137**	2	BOLT (M10X1.5X20-MM)	
M	19	1	**8T-5005**	1	BOLT (M10X1.5X70-MM)	
M	20	1	**8T-6466**	2	BOLT (M10X1.5X60-MM)	
	21	1	**206-2423**	1	SADDLE	
	22	1	**3S-2093**	2	STRAP-CABLE	

E-ORDER BY THE CENTIMETER
M-METRIC PART

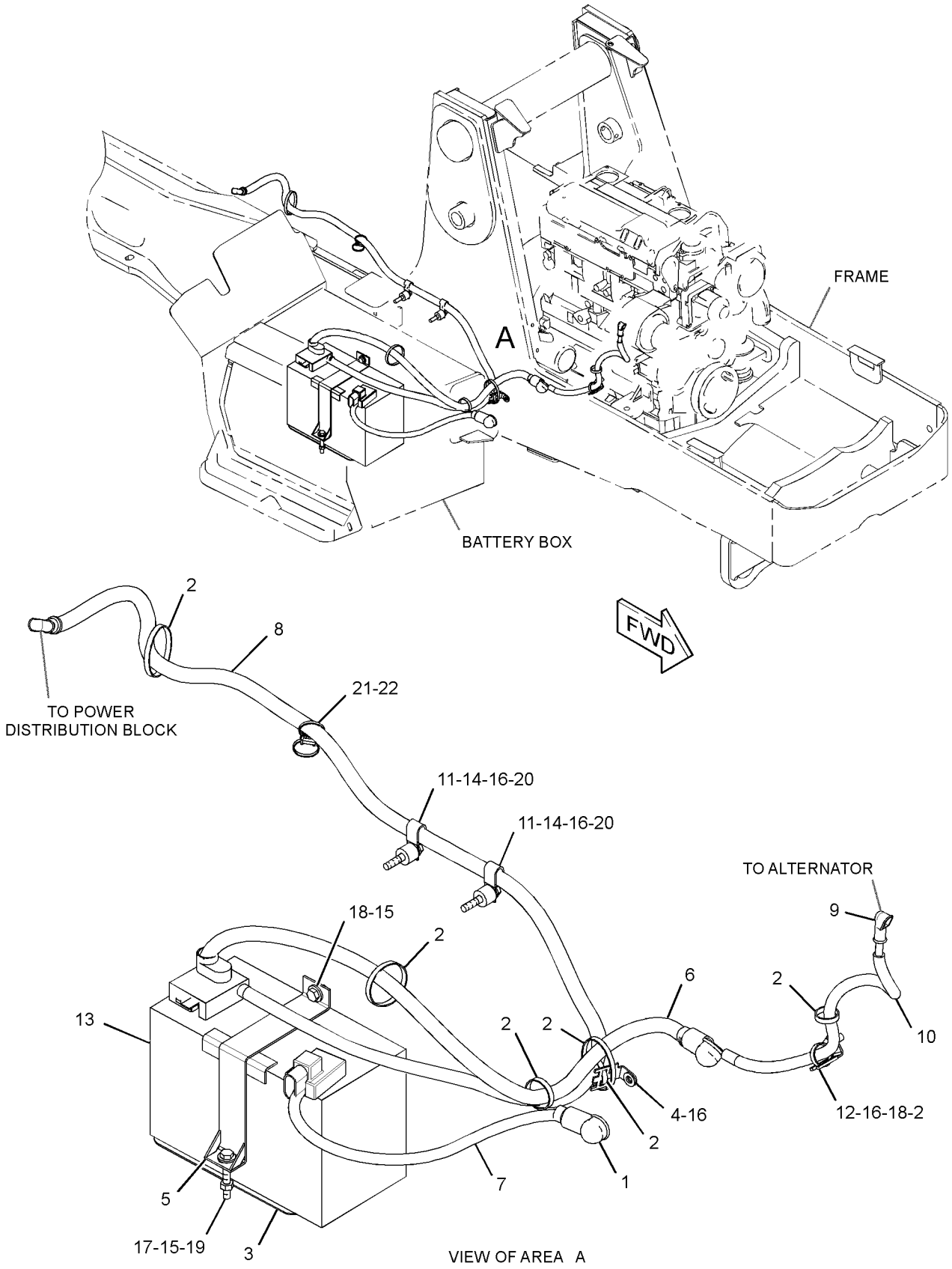

GRAPHIC #1

<END>

g01962982

228-5087 BATTERY GP–HEAVY-DUTY

S/N: SJL1-UP

AN ATTACHMENT

SMCS-1401 **i02532636**

NOTE	REF NO	GRAPHIC REF	PART NUMBER	QTY	PART NAME 1 2 3 4 5 6 (PRODUCT LEVEL)	SEE PAGE
	1	1	**038-9317**	1	TREAD-NONSKID	
	2	1	**228-4668**	1	BRACKET AS	
	3	1	**228-5092**	1	CABLE AS-BATTERY (POSITIVE)	
		1	**1S-7251**	1	TERMINAL-CABLE (00-GA, 1/2-IN BOLT)	
		1	**3S-2093**	1	STRAP-CABLE	
E		1	**5P-0761**		CABLE (00-GA, RED) (17-CM)	
		1	**7T-9987**	1	COVER-TERMINAL (RED)	
	4	1	**228-5093**	1	CABLE AS-BATTERY (NEGATIVE)	
		1	**1S-7252**	1	TERMINAL-CABLE (00-GA, 3/8-IN BOLT)	
E		1	**5P-0747**		CABLE (00-GA, BLACK) (20-CM)	
		1	**7N-5274**	1	COVER-TERMINAL (BLACK)	
	5	1	**3T-5760**	1	BATTERY (12-VOLT, MAINTENANCE FREE, WET)	
	6	1	**8T-4121**	1	WASHER-HARD (11X21X2.5-MM THK)	
	7	1	**8T-4224**	1	WASHER-HARD (8.8X16X2-MM THK)	

E-ORDER BY THE CENTIMETER

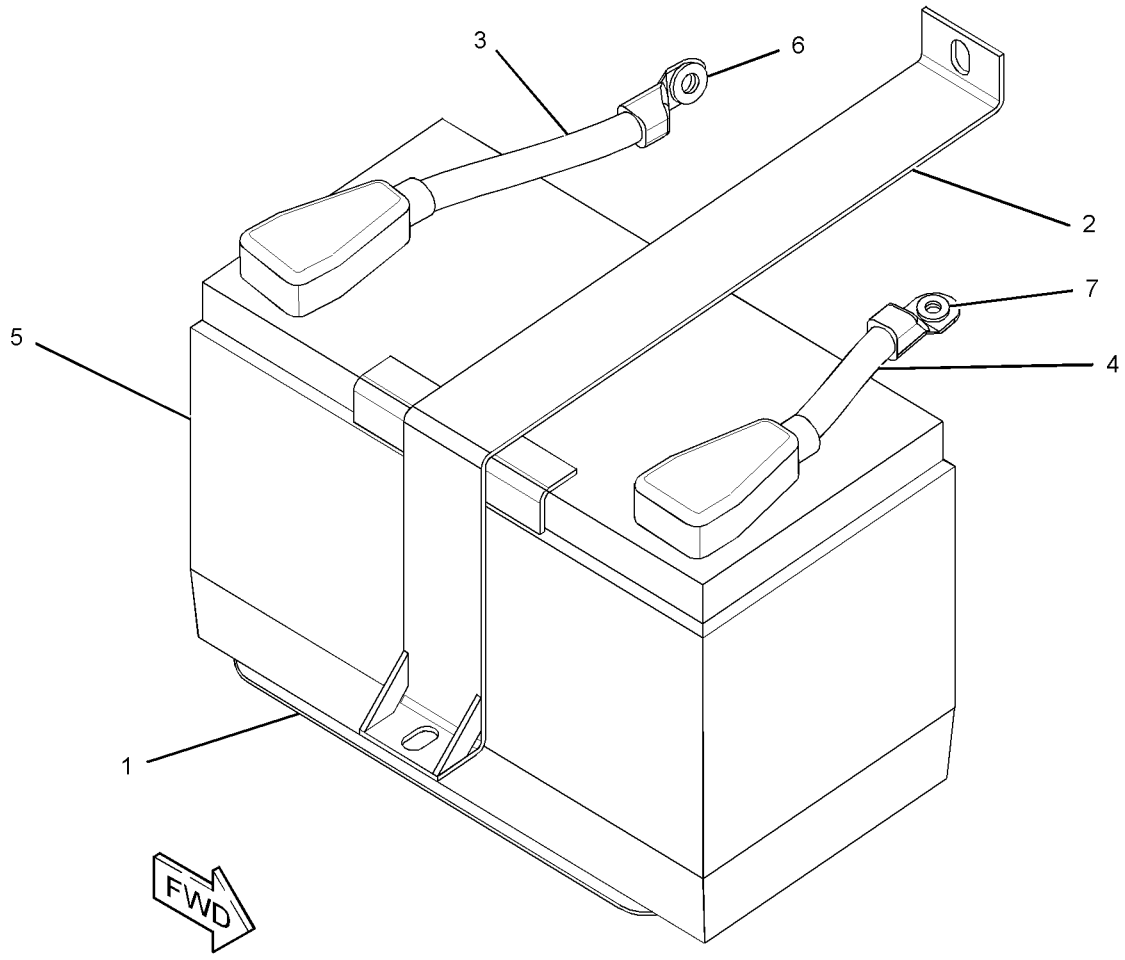

GRAPHIC #1 **<END>** g01307462

3E-7843 CONTROL GP-POSITION–BUCKET

S/N: SJL1-UP

PART OF 295-5902 WIRING GP-KICKOUT & POSITIONER

SMCS-5112 **i02599055**

NOTE	REF NO	GRAPHIC REF	PART NUMBER	QTY	PART NAME 1 2 3 4 5 6 (PRODUCT LEVEL)	SEE PAGE
	1	1	**9X-5617**	1	FILM-INSTRUCTION (KICKOUT, POSITIONER CONTROL)	
	2	1	**8T-8730**	3	SOCKET-CONNECTOR (16-GA TO 18-GA)	
	3	1	**155-2260**	1	KIT-CONNECTING PLUG (3-PIN)	
					(INCLUDES PLUG AS, WEDGE, & INTERFACE SEAL)	

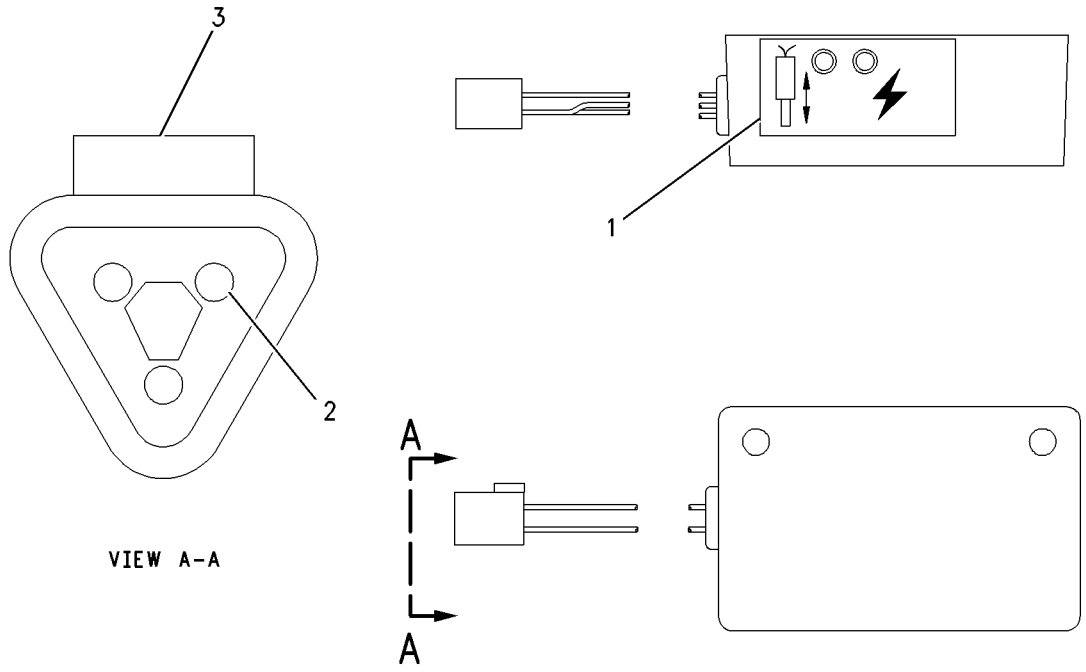

GRAPHIC #1 **<END>** g00868780

ELECTRICAL AND STARTING SYSTEM

325-5950 ELECTRONICS GP-MACHINE

S/N: SJL1-UP

PART OF 338-5738 WIRING GP-PLATFORM

AN ATTACHMENT

SMCS-7610, 7620 **i03542040**

NOTE	PART NUMBER	QTY	PART NAME 1 2 3 4 5 6 (PRODUCT LEVEL)	SEE PAGE
	344-1053	1	SOFTWARE GP-MACHINE	
			-OR-	
R	**304-5691**	1	CONTROL GP-UNPROGRAMMED (MACHINE)	
			-OR-	
	344-1055	1	SERVICE GP-MACHINE	
			(OPTIONAL SERVICE REPLACEMENT) (INCLUDES CONTROL GP & SOFTWARE)	

R-REMFG PART MAY BE AVAILABLE

<END>

232-6661 GLOW PLUG GP

S/N: CRS1-UP
PART OF 322-1924 ENGINE AR-PRIMARY
AN ATTACHMENT

SMCS-1412 **i02757127**

NOTE	REF NO	GRAPHIC REF	PART NUMBER	QTY	PART NAME 1 2 3 4 5 6 (PRODUCT LEVEL)	SEE PAGE
	1	1	**286-4880**	1	BUS BAR AS	
	2	1	**232-6662**	4	GLOW PLUG (12-VOLT)	
	3	1	**232-3126**	1	CLIP	

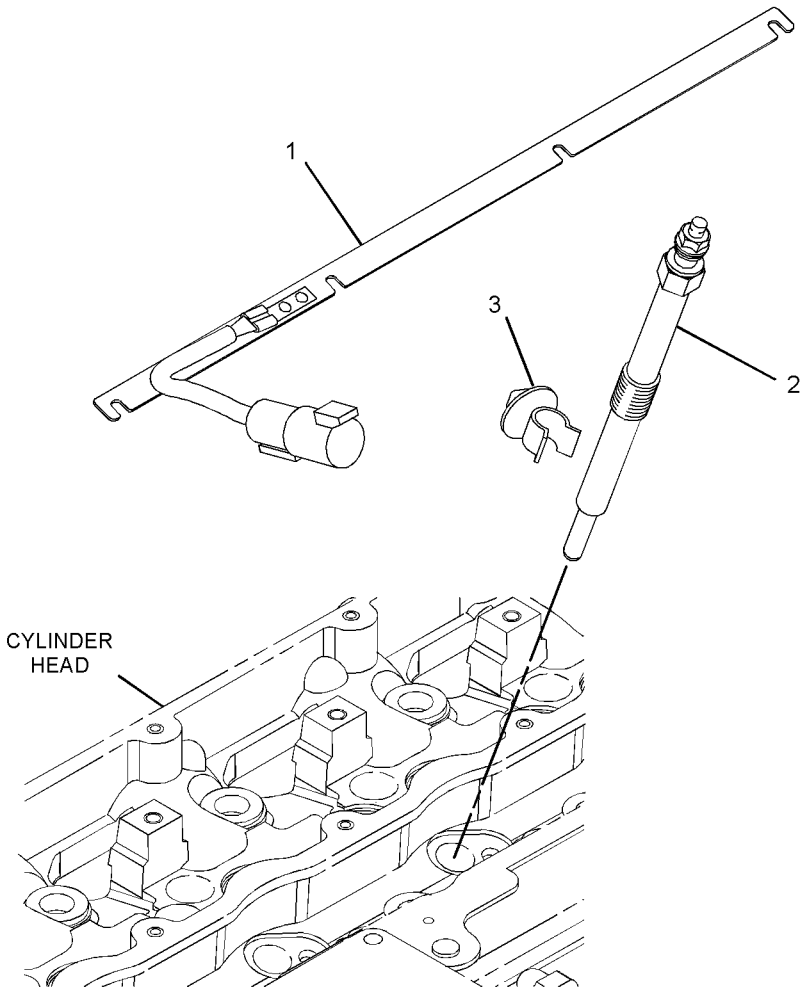

GRAPHIC #1 **<END>** g01392990

315-3418 GLOW PLUG GP

S/N: C4Z1-UP
PART OF 321-7705 ENGINE AR-PRIMARY
AN ATTACHMENT

SMCS-1412 **i03128300**

NOTE	REF NO	GRAPHIC REF	PART NUMBER	QTY	PART NAME 1 2 3 4 5 6 (PRODUCT LEVEL)	SEE PAGE
	1	1	**286-4880**	1	BUS BAR AS	
	2	1	**232-6662**	4	GLOW PLUG (12-VOLT)	

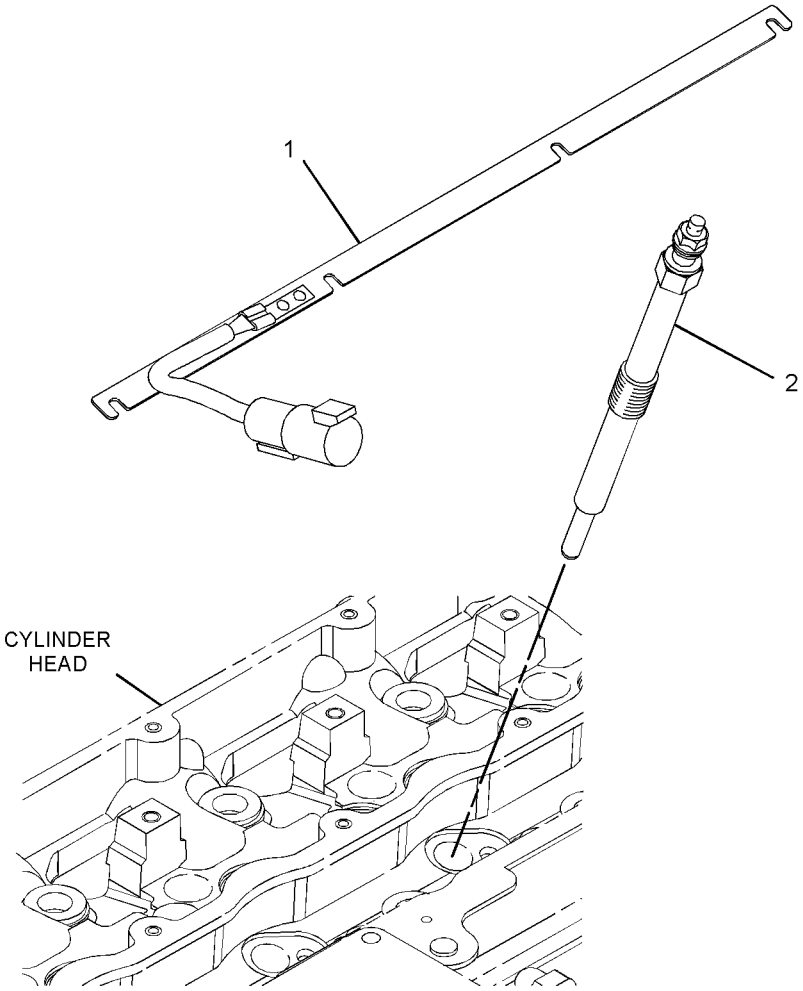

GRAPHIC #1 **<END>** g01398213

231-3058 HEATER GP-JACKET WATER

S/N: SJL1-UP

PART OF 248-2215 HEATER GP-JACKET WATER

AN ATTACHMENT

SMCS-1383 **i03496460**

NOTE	REF NO	GRAPHIC REF	PART NUMBER	QTY	PART NAME 1 2 3 4 5 6 (PRODUCT LEVEL)	SEE PAGE
	1	1	**219-3271**	1	ELEMENT AS-JACKET WATER HEATER (240-VOLT, 1000-WATT)	
		1	**133-3413**	1	KIT-SEAL	
					(INCLUDES SEAL, SPACER & RINGS)	
		1	**133-6517**	1	CAP AS-DUST	
	2	1	**231-3057**	1	CORD AS-HEATER	

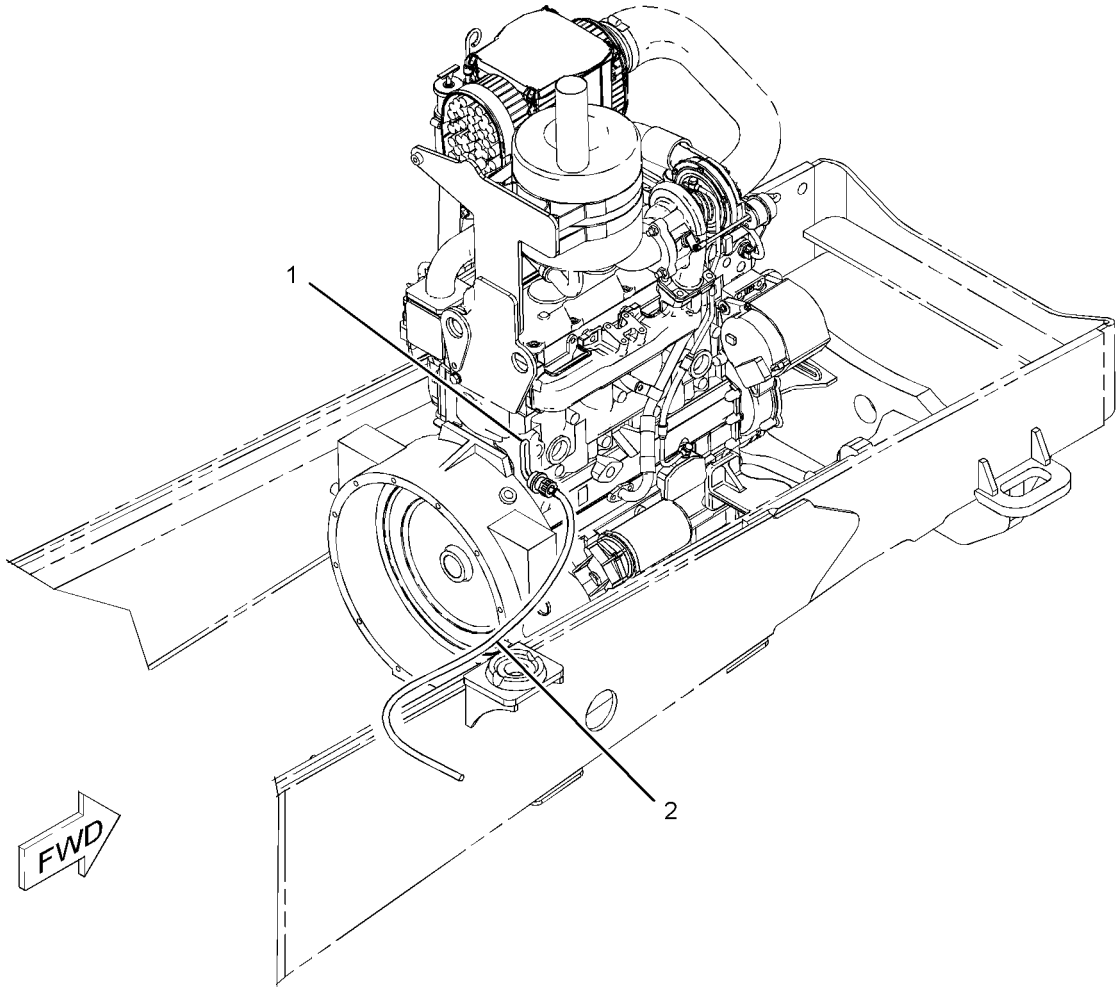

GRAPHIC #1 **<END>** g01105988

ELECTRICAL AND STARTING SYSTEM

248-2215 HEATER GP-JACKET WATER

S/N: SJL1-UP

AN ATTACHMENT

SMCS-1383 **i02174455**

NOTE	REF NO	GRAPHIC REF	PART NUMBER	QTY	PART NAME 1 2 3 4 5 6 (PRODUCT LEVEL)	SEE PAGE
	1	1	**3S-2093**	2	STRAP-CABLE	
Y	2	1	*231-3058*	1	HEATER GP-JACKET WATER	141

Y-SEPARATE ILLUSTRATION

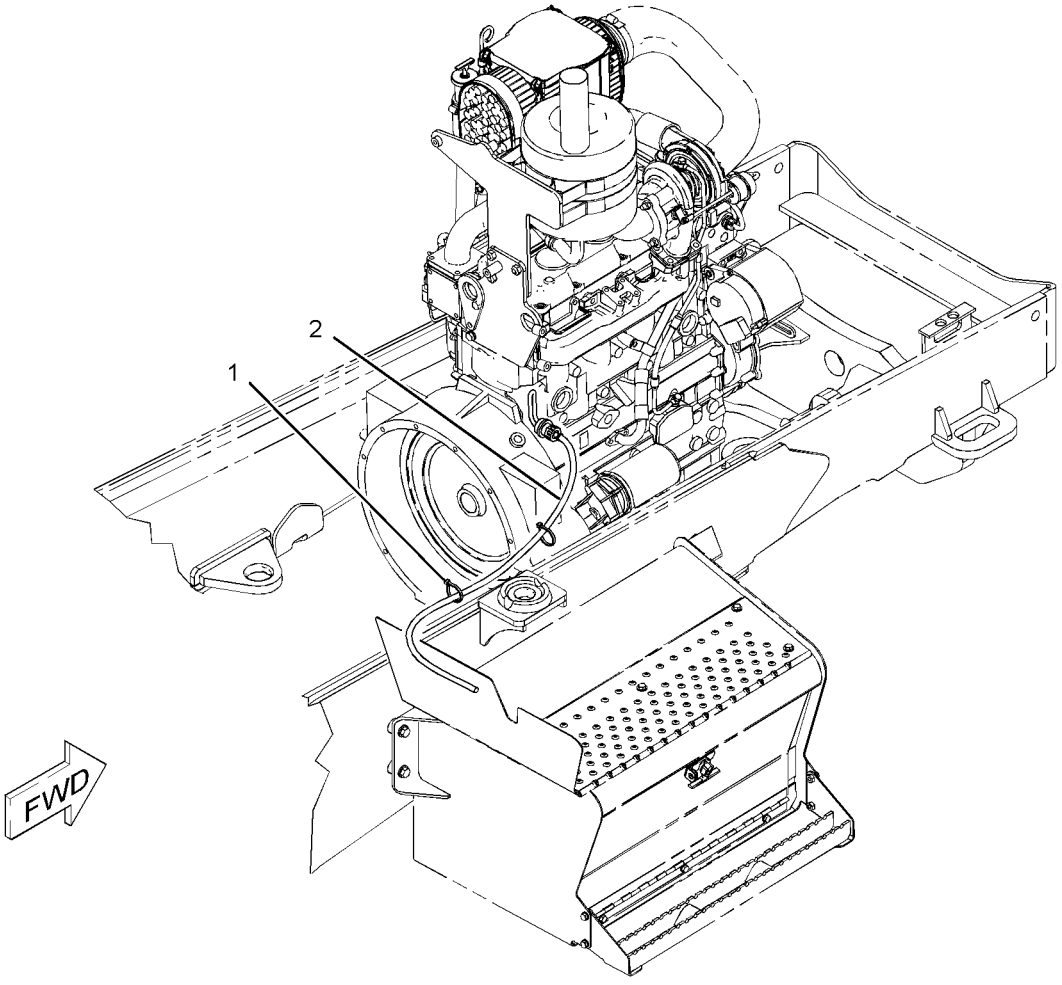

GRAPHIC #1 **<END>** g01104597

322-3037 INSTALLATION GP-SECURITY

S/N: SJL1-UP
AN ATTACHMENT

SMCS-7631 **i03633298**

NOTE	REF NO	GRAPHIC REF	PART NUMBER	QTY	PART NAME 1 2 3 4 5 6 (PRODUCT LEVEL)	SEE PAGE
	1	1	**206-1345**	2	STRAP-CABLE	
	2	1	**225-5927**	2	FILM-INSTRUCTION (MACHINE SECURITY, READ OMM)	
	3	1	**337-5352**	1	FILM-IDENTIFICATION (START SWITCH, READ OMM)	
	4	1	**262-3705**	1	BRACKET AS	
M	5	1	**262-4341**	3	BOLT-SPECIAL	
	6	1	**322-3040**	1	GUARD AS	
Y	7	1	*326-7959*	1	INSTALLATION GP-SECURITY	145
M	8	1	**5C-7261**	1	NUT (M8X1.25-THD)	
M	9	1	**8T-4138**	2	BOLT (M6X1X20-MM)	
M	10	1	**8T-4189**	1	BOLT (M8X1.25X20-MM)	
M	11	1	**8T-4200**	4	BOLT (M8X1.25X16-MM)	
	12	1	**8T-4205**	2	WASHER-HARD (7.2X14.5X2-MM THK)	
	13	1	**8T-4224**	9	WASHER-HARD (8.8X16X2-MM THK)	
	14	1	**9M-8406**	1	CLIP	

M-METRIC PART
Y-SEPARATE ILLUSTRATION

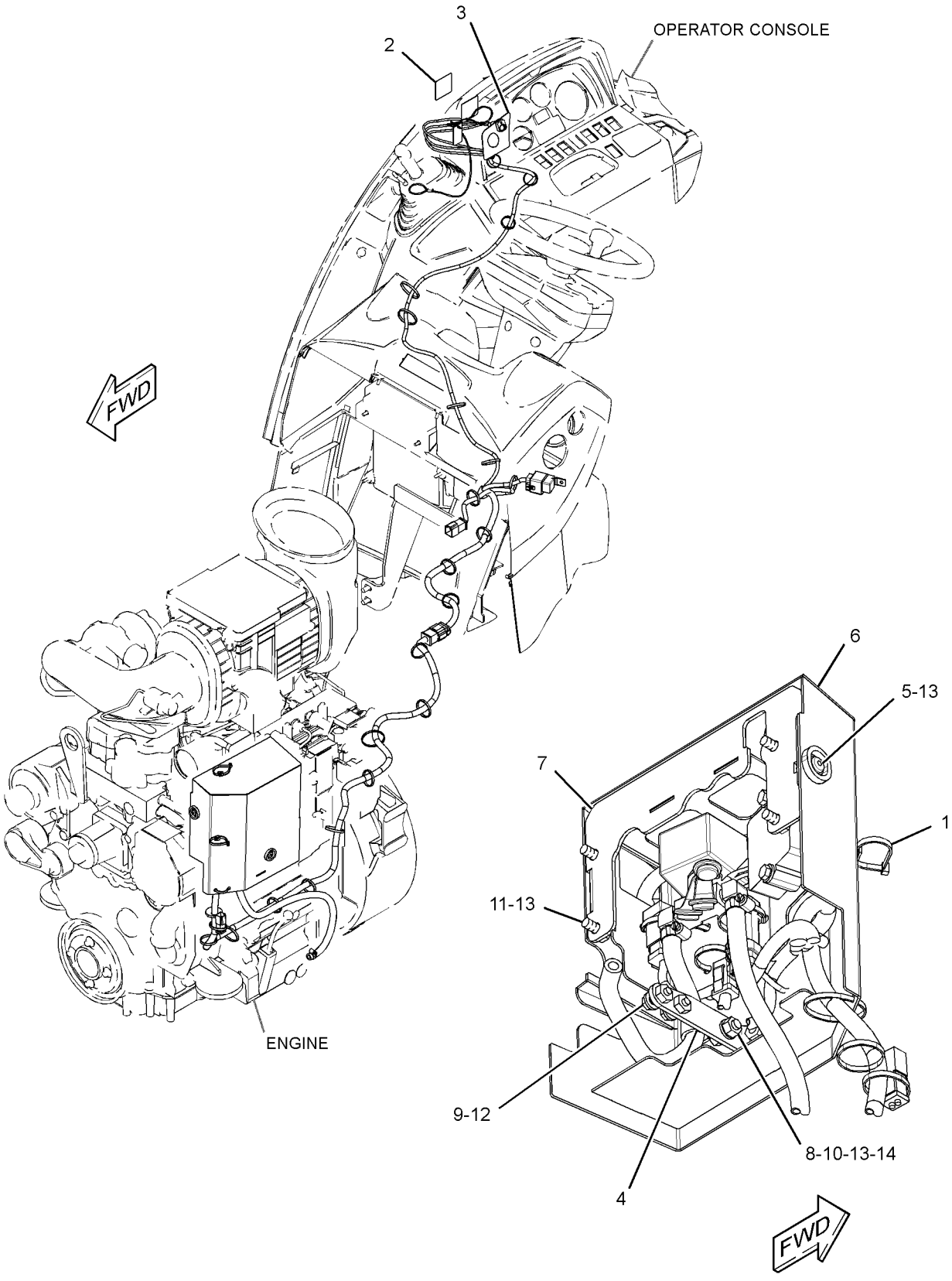

GRAPHIC #1 **<END>** g01626843

326-7959 INSTALLATION GP-SECURITY

S/N: SJL1-UP

PART OF 322-3037 INSTALLATION GP-SECURITY

AN ATTACHMENT

SMCS-7631 **i03628895**

NOTE	REF NO	GRAPHIC REF	PART NUMBER	QTY	PART NAME 1 2 3 4 5 6 (PRODUCT LEVEL)	SEE PAGE
	1	1	**1P-4278**	3	CLAMP-HOSE	
	2	1	**269-0986**	2	FITTING-COUPLING	
Y	3	1	*328-1485*	1	WIRING GP-MACHINE	196
	4	1	**328-1907**	1	BRACKET AS	
M	5	1	**138-8454**	4	SCREW-TRUSS HEAD (M4X0.7X10-MM)	
M	6	1	**7X-2533**	2	BOLT (M6X1X35-MM)	
	7	1	**8T-4205**	2	WASHER-HARD (7.2X14.5X2-MM THK)	
E	8	1	**5P-1420**		HOSE (27.5-CM)	
E	8A	1	**5P-1420**		HOSE (76-CM)	

E-ORDER BY THE CENTIMETER
M-METRIC PART
Y-SEPARATE ILLUSTRATION

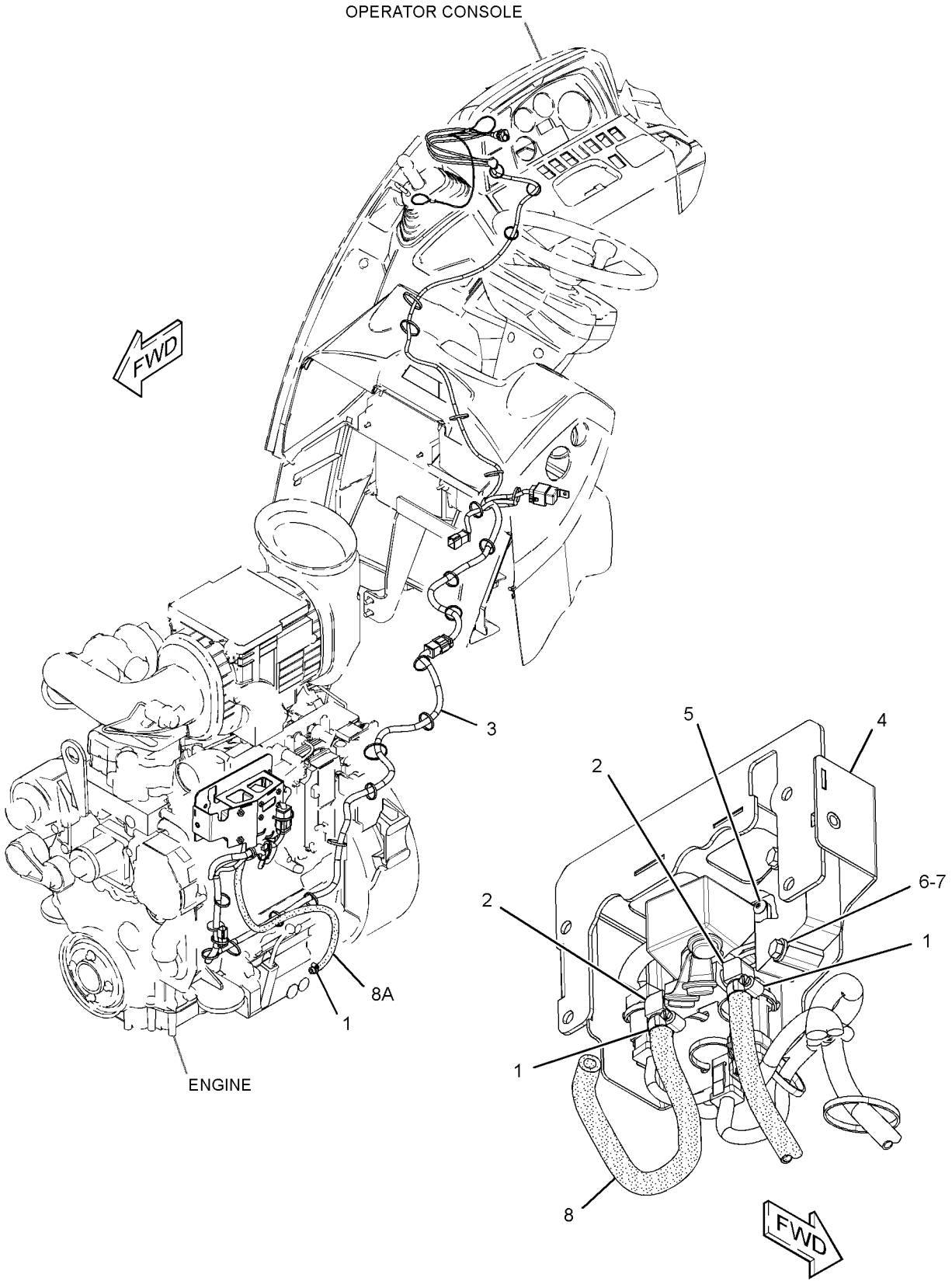

GRAPHIC #1 **<END>** g01626895

328-2481 INSTALLATION GP-SECURITY—TURBO

S/N: SJL1-UP

AN ATTACHMENT

SMCS-7631 **i03579027**

NOTE	REF NO	GRAPHIC REF	PART NUMBER	QTY	PART NAME 1 2 3 4 5 6 (PRODUCT LEVEL)	SEE PAGE
	1	1	**1P-4278**	4	CLAMP-HOSE	
	3	1	**5P-7958**	2	SLEEVE-CABLE SPLICE	
	4	1	**8T-8737**	2	PLUG-SEAL	
	5	1	**123-6758**	1	LANYARD	
	6	1	**200-1898**	1	SUPPRESSOR-ARC	
	7	1	**206-1345**	2	STRAP-CABLE	
	8	1	**219-6314**	1	KEY RING (IDENTIFICATION)	
	9	1	**225-5927**	2	FILM-INSTRUCTION (MACHINE SECURITY, READ OMM)	
	10	1	**257-7211**	1	VALVE AS-SOLENOID (FUEL SHUTOFF)	
		1	**9X-3401**	8	PIN-CONNECTOR (16-GA TO 18-GA)	
		1	**160-3518**	1	KIT-RECEPTACLE (8-PIN)	
					(INCLUDES RECEPTACLE AS & WEDGE)	
		1	**263-8850**	1	KEY AS-ELECTRONIC (BLACK)	
	11	1	**257-7212**	1	SENSOR AS (KEY READER)	
		1	**186-3735**	3	PIN-CONNECTOR (16-GA TO 18-GA)	
		1	**286-1072**	1	SENSOR AS (KEY READER)	
	12	1	**257-7214**	1	HARNESS AS-CONTROL (PLATFORM)	
		1	**102-8806**	1	KIT-RECEPTACLE (8-PIN)	
					(INCLUDES RECEPTACLE AS & WEDGE)	
		1	**8L-8413**	4	STRAP-CABLE	
E		1	**8T-8737**	1	PLUG-SEAL	
		1	**125-7874**		TUBE-HEAT SHRINK (5.72-MM DIA) (15-CM)	
		1	**126-1766**	4	SOCKET-CONNECTOR (14-GA TO 18-GA)	
		1	**155-2270**	1	KIT-CONNECTING PLUG (2-PIN)	
		1	**155-2265**	1	KIT-CONNECTING PLUG (8-PIN)	
					(EACH INCLUDES PLUG AS, WEDGE & INTERFACE SEAL)	
		1	**180-9339**	8	PIN-CONNECTOR (14-GA TO 18-GA)	
		1	**180-9340**	13	SOCKET-CONNECTOR (14-GA TO 18-GA)	
		1	**230-5008**	1	PLUG AS-CONNECTOR (4-PIN)	
		1	**264-7031**	1	SEAL-CONNECTOR	
	13	1	**261-7694**	1	FILM (START SW, READ OMM, SECURITY)	
	14	1	**262-3705**	1	BRACKET AS	
M	15	1	**262-4341**	3	BOLT-SPECIAL	
	16	1	**269-0986**	2	FITTING-COUPLING	
	17	1	**276-5450**	1	RELAY AS (12-VOLT) (FUEL SHUTOFF)	
		1	**186-3735**	4	PIN-CONNECTOR (16-GA TO 18-GA)	
		1	**230-5009**	1	RECEPTACLE AS-CONNECTOR (4-PIN)	
	18	1	**295-5893**	1	HARNESS AS-CONTROL (MACHINE SECURITY SYSTEM)	
		1	**180-9339**	6	PIN-CONNECTOR (14-GA TO 18-GA)	
		1	**180-9340**	11	SOCKET-CONNECTOR (14-GA TO 18-GA)	
		1	**102-8805**	1	KIT-RECEPTACLE (6-PIN)	
					(INCLUDES RECEPTACLE AS & WEDGE)	
E		1	**125-7874**		TUBE-HEAT SHRINK (5.72-MM DIA) (5-CM)	
E		1	**141-8061**		TAPE (2-M)	
		1	**155-2265**	1	KIT-CONNECTING PLUG (8-PIN)	
		1	**155-2260**	1	KIT-CONNECTING PLUG (3-PIN)	
					(EACH INCLUDES PLUG AS, WEDGE & INTERFACE SEAL)	
	19	1	**322-3040**	1	GUARD AS	
	20	1	**328-1907**	1	BRACKET AS	
	21	1	**115-1615**	1	RELAY AS (12-VOLT) (DISABLE START)	
M	22	1	**138-8454**	4	SCREW-TRUSS HEAD (M4X0.7X10-MM)	
	23	1	**102-8802**	1	KIT-RECEPTACLE (2-PIN)	
					(INCLUDES RECEPTACLE AS & WEDGE)	

328-2481 **INSTALLATION GP-SECURITY** *(contd.)* **i03579027**

NOTE	REF NO	GRAPHIC REF	PART NUMBER	QTY	PART NAME 1 2 3 4 5 6 (PRODUCT LEVEL)	SEE PAGE
	24	1	**102-8803**	1	KIT-RECEPTACLE (3-PIN)	
					(INCLUDES RECEPTACLE AS & WEDGE)	
	25	1	**3S-2093**	30	STRAP-CABLE	
M	26	1	**5C-7261**	1	NUT (M8X1.25-THD)	
M	27	1	**7X-2533**	2	BOLT (M6X1X35-MM)	
M	28	1	**8T-4138**	2	BOLT (M6X1X20-MM)	
M	29	1	**8T-4189**	1	BOLT (M8X1.25X20-MM)	
M	30	1	**8T-4200**	4	BOLT (M8X1.25X16-MM)	
	31	1	**8T-4205**	4	WASHER-HARD (7.2X14.5X2-MM THK)	
	32	1	**8T-4224**	9	WASHER-HARD (8.8X16X2-MM THK)	
	33	1	**9M-8406**	1	CLIP	
E	34	1	**5P-1420**		HOSE (76-CM)	
E	34A	1	**5P-1420**		HOSE (27.5-CM)	

E-ORDER BY THE CENTIMETER
M-METRIC PART

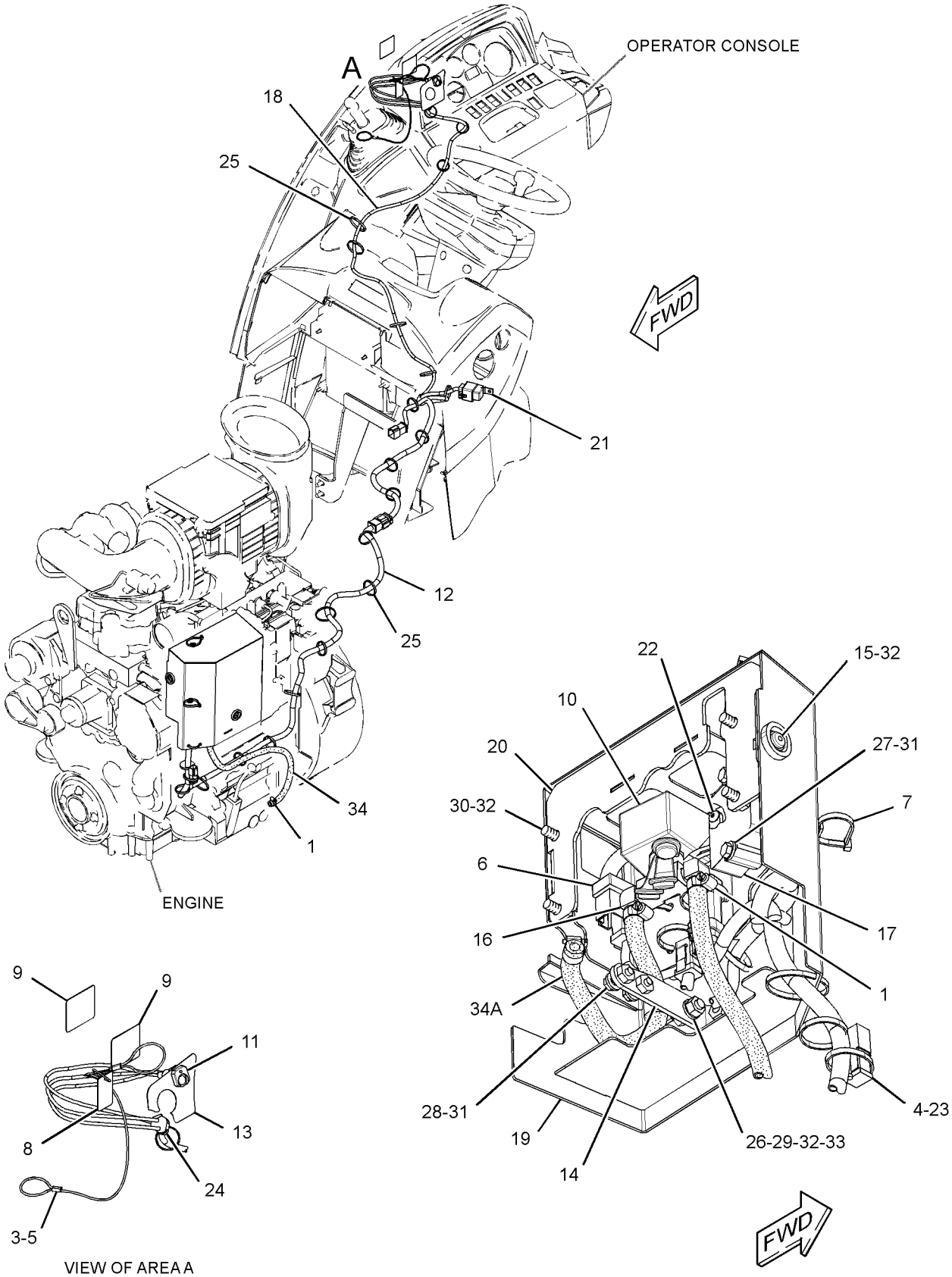

GRAPHIC #1

<END>

g01636341

214-2968 LAMP GP-FLOOD

S/N: SJL1-UP
12-VOLT
PART OF 340-3552 WIRING GP-CAB
AN ATTACHMENT

SMCS-1429, 1434 **i03712363**

NOTE	REF NO	GRAPHIC REF	PART NUMBER	QTY	PART NAME 1 2 3 4 5 6 (PRODUCT LEVEL)	SEE PAGE
	1	1	**9W-0607**	1	LAMP (12-VOLT, 55-WATT) (FLOODLIGHT)	
M	2	1	**6V-2317**	1	BOLT (M8X1.25X30-MM)	
M	3	1	**5C-7261**	1	NUT (M8X1.25-THD)	
	4	1	**8T-4224**	2	WASHER-HARD (8.8X16X2-MM THK)	
	5	1	**9X-4244**	2	SCREW-SPECIAL (M4X1.79X25-MM)	
	6	1	**202-6614**	1	LENS AS (FLOODLIGHT)	
	7	1	**175-4292**	1	BODY AS	
	8	1	**164-7556**	1	BRACKET (LAMP RETAINING)	
	9	1	**175-4291**	1	BRACKET AS	

M-METRIC PART

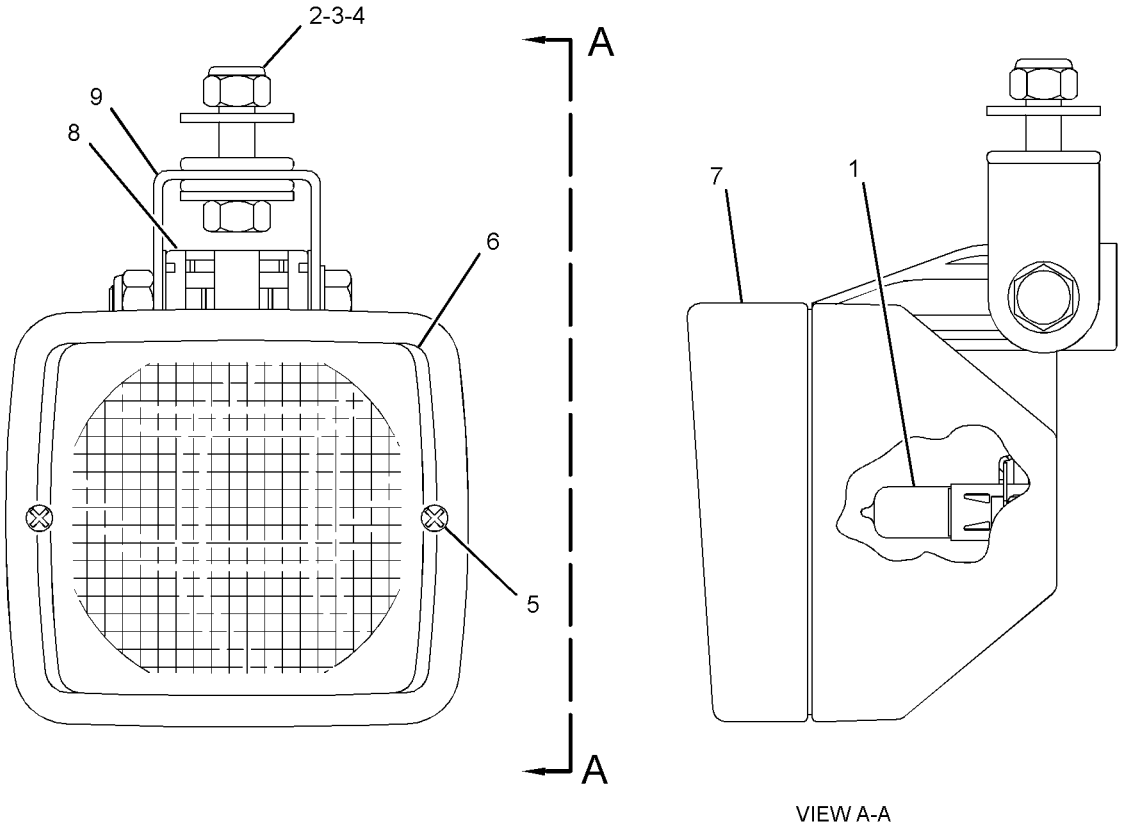

VIEW A-A

GRAPHIC #1 **<END>** g01181714

214-2969 LAMP GP-FLOOD

S/N: SJL1-UP
12-VOLT
PART OF 340-6918 LIGHTING GP-FLOOD
AN ATTACHMENT

SMCS-1429, 1434 **i03712370**

NOTE	REF NO	GRAPHIC REF	PART NUMBER	QTY	PART NAME 1 2 3 4 5 6 (PRODUCT LEVEL)	SEE PAGE
	1	1	**9W-0607**	1	LAMP (12-VOLT, 55-WATT) (FLOODLIGHT)	
M	2	1	**6V-2317**	1	BOLT (M8X1.25X30-MM)	
M	3	1	**5C-7261**	1	NUT (M8X1.25-THD)	
	4	1	**8T-4224**	2	WASHER-HARD (8.8X16X2-MM THK)	
	5	1	**9X-4244**	2	SCREW-SPECIAL (M4X1.79X25-MM)	
	6	1	**202-6611**	1	LENS AS (FLOODLIGHT)	
	7	1	**175-4292**	1	BODY AS	
	8	1	**164-7556**	1	BRACKET (LAMP RETAINING)	
	9	1	**175-4291**	1	BRACKET AS	

M-METRIC PART

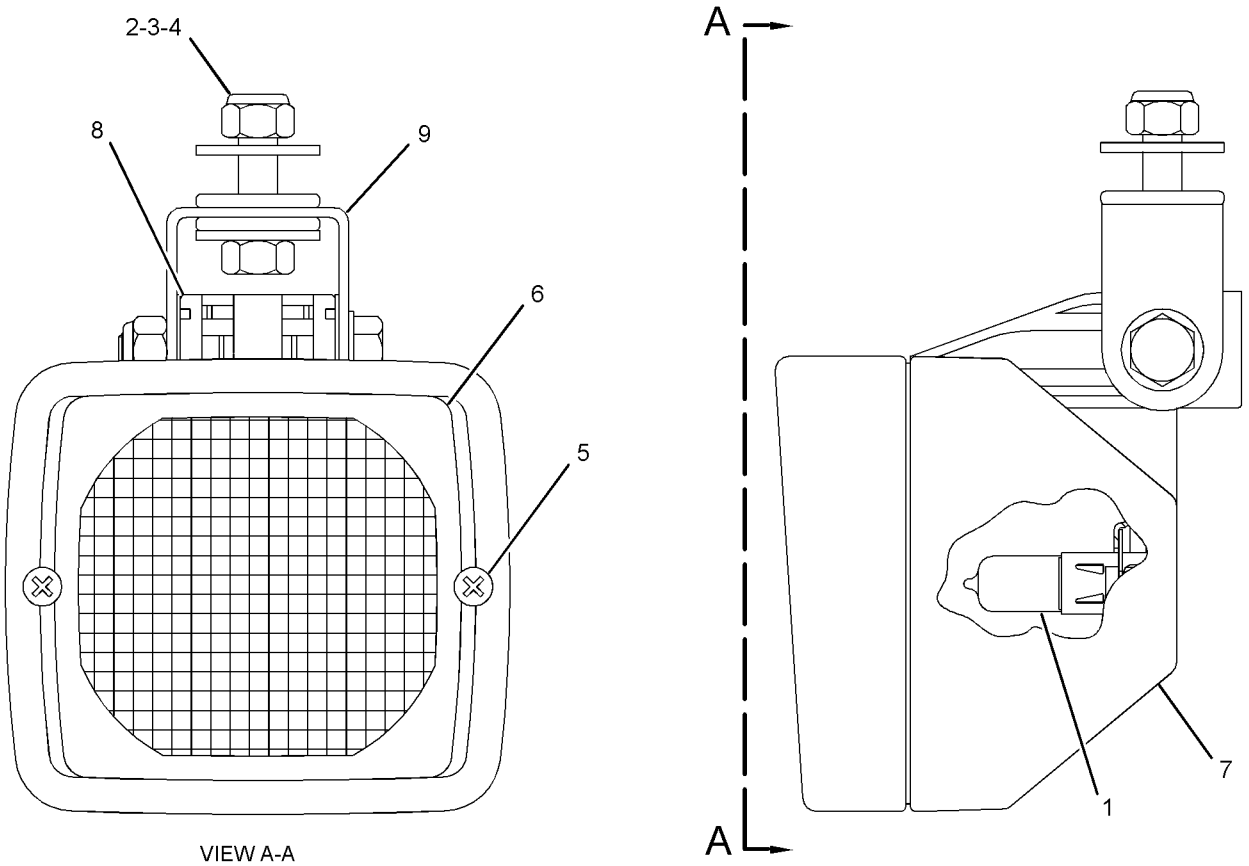

VIEW A-A

GRAPHIC #1 **<END>** g01971255

195-0189 LAMP GP-HEAD & SIGNAL–RH

S/N: SJL1-UP
PART OF 329-7496 LIGHTING GP-ROADING
AN ATTACHMENT

SMCS-1429 **i03631003**

NOTE	REF NO	GRAPHIC REF	PART NUMBER	QTY	PART NAME 1 2 3 4 5 6 (PRODUCT LEVEL)	SEE PAGE
	1	1	**228-6053**	1	BODY AS	
	2	1	**228-6054**	1	BEZEL	
	3	1	**228-6051**	1	LENS AS (HEADLIGHT)	
	4	1	**228-6052**	1	LENS AS (TURN SIGNAL)	
	5	1	**228-6056**	6	SCREW (4-32X1.26-IN)	
	6	1	**9W-3324**	1	LAMP-HEAD (12-VOLT, 60/55-WATT) (CLEAR)	
	7	1	**226-4560**	1	LAMP (12-VOLT, 21-WATT) (AMBER)	
	8	1	**226-4561**	1	LAMP (12-VOLT, 5-WATT) (CLEAR)	
M	9	1	**8T-0389**	1	LOCKNUT (M10X1.5-THD)	
	10	1	**100-3253**	1	SPACER	
	11	1	**100-3254**	1	SPACER	
	12	1	**100-3255**	1	WASHER (SPHERICAL)	
	13	1	**102-8805**	1	KIT-RECEPTACLE (6-PIN)	
					(INCLUDES RECEPTACLE AS & WEDGE)	
	14	1	**186-3735**	5	PIN-CONNECTOR (16-GA TO 18-GA)	
	15	1	**8T-8737**	1	PLUG-SEAL	

M-METRIC PART

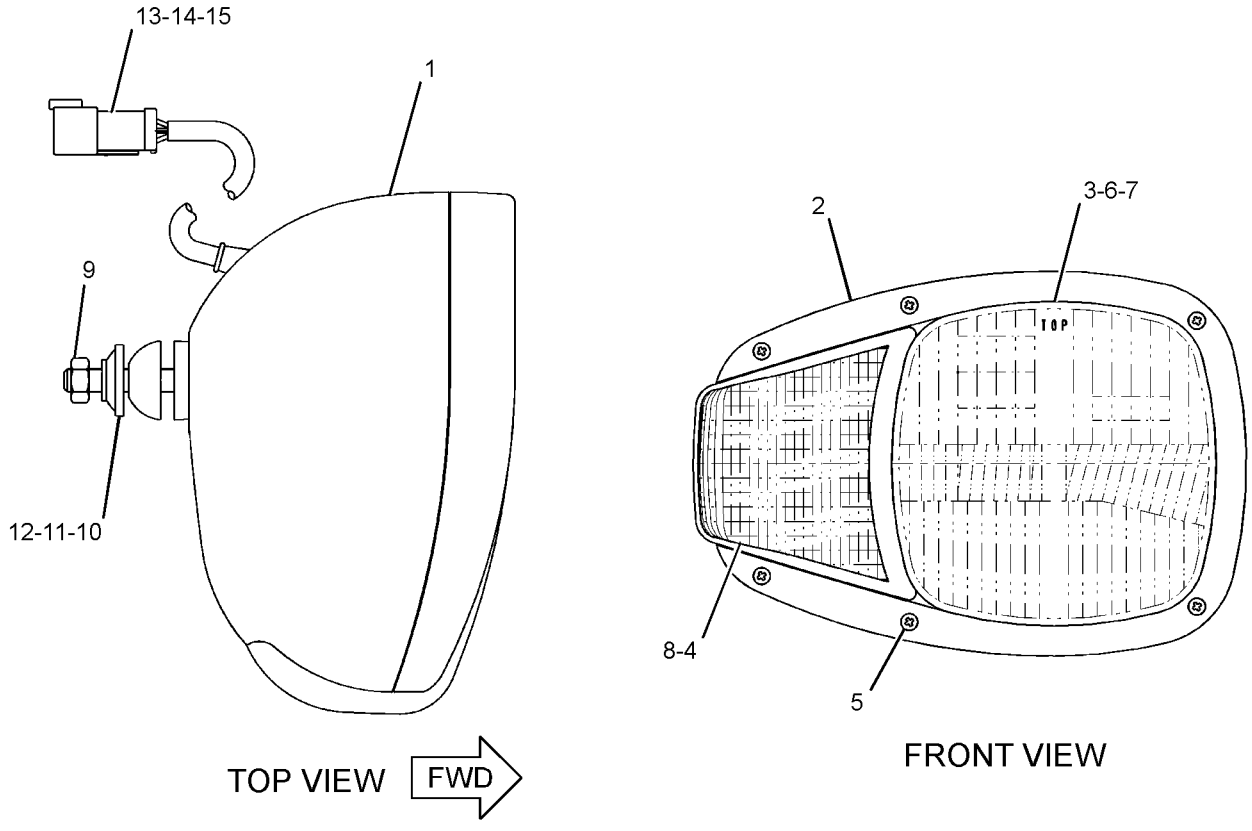

GRAPHIC #1 **<END>** g01313421

195-0190 LAMP GP-HEAD & SIGNAL–LH

S/N: SJL1-UP
PART OF 329-7496 LIGHTING GP-ROADING
AN ATTACHMENT

SMCS-1429 **i03630995**

NOTE	REF NO	GRAPHIC REF	PART NUMBER	QTY	PART NAME 1 2 3 4 5 6 (PRODUCT LEVEL)	SEE PAGE
	1	1	**228-6053**	1	BODY AS	
	2	1	**228-6054**	1	BEZEL	
	3	1	**228-6051**	1	LENS AS (HEADLIGHT)	
	4	1	**228-6052**	1	LENS AS (TURN SIGNAL)	
	5	1	**228-6056**	6	SCREW (4-32X1.26-IN)	
	6	1	**9W-3324**	1	LAMP-HEAD (12-VOLT, 60/55-WATT) (CLEAR)	
	7	1	**226-4560**	1	LAMP (12-VOLT, 21-WATT) (AMBER)	
	8	1	**226-4561**	1	LAMP (12-VOLT, 5-WATT) (CLEAR)	
M	9	1	**8T-0389**	1	LOCKNUT (M10X1.5-THD)	
	10	1	**100-3253**	1	SPACER	
	11	1	**100-3254**	1	SPACER	
	12	1	**100-3255**	1	WASHER (SPHERICAL)	
	13	1	**102-8805**	1	KIT-RECEPTACLE (6-PIN)	
					(INCLUDES RECEPTACLE AS & WEDGE)	
	14	1	**186-3735**	5	PIN-CONNECTOR (16-GA TO 18-GA)	
	15	1	**8T-8737**	1	PLUG-SEAL	

M-METRIC PART

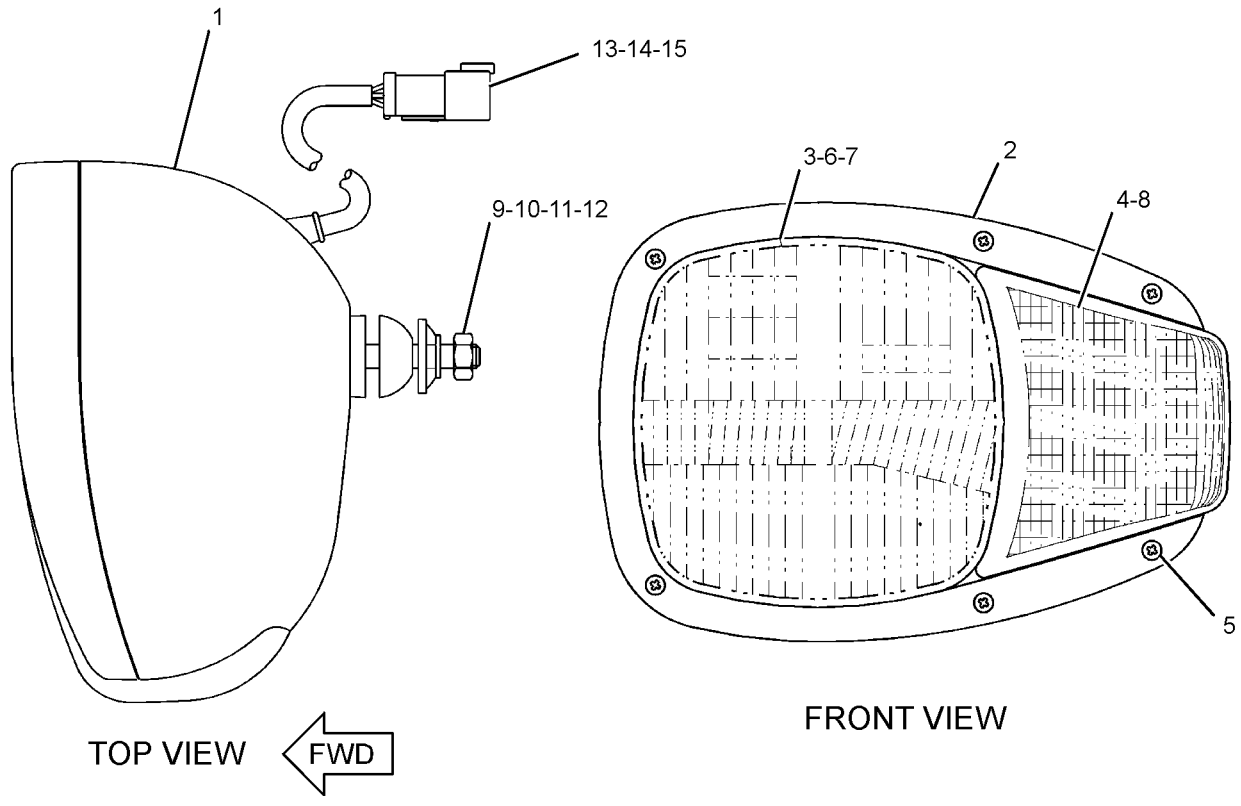

GRAPHIC #1 **<END>** g01313362

195-0191 LAMP GP-HEAD & SIGNAL–RH

S/N: SJL1-UP
PART OF 329-7497 LIGHTING GP-ROADING
AN ATTACHMENT

SMCS-1429 **i03630988**

NOTE	REF NO	GRAPHIC REF	PART NUMBER	QTY	PART NAME 1 2 3 4 5 6 (PRODUCT LEVEL)	SEE PAGE
	1	1	**228-6053**	1	BODY AS	
	2	1	**228-6054**	1	BEZEL	
	3	1	**228-6050**	1	LENS AS (HEADLIGHT)	
	4	1	**228-6052**	1	LENS AS (TURN SIGNAL)	
	5	1	**228-6056**	6	SCREW (4-32X1.26-IN)	
	6	1	**9W-3324**	1	LAMP-HEAD (12-VOLT, 60/55-WATT) (CLEAR)	
	7	1	**226-4560**	1	LAMP (12-VOLT, 21-WATT) (AMBER)	
	8	1	**226-4561**	1	LAMP (12-VOLT, 5-WATT) (CLEAR)	
M	9	1	**8T-0389**	1	LOCKNUT (M10X1.5-THD)	
	10	1	**100-3253**	1	SPACER	
	11	1	**100-3254**	1	SPACER	
	12	1	**100-3255**	1	WASHER (SPHERICAL)	
	13	1	**102-8805**	1	KIT-RECEPTACLE (6-PIN) (INCLUDES RECEPTACLE AS & WEDGE)	
	14	1	**186-3735**	5	PIN-CONNECTOR (16-GA TO 18-GA)	
	15	1	**8T-8737**	1	PLUG-SEAL	

M-METRIC PART

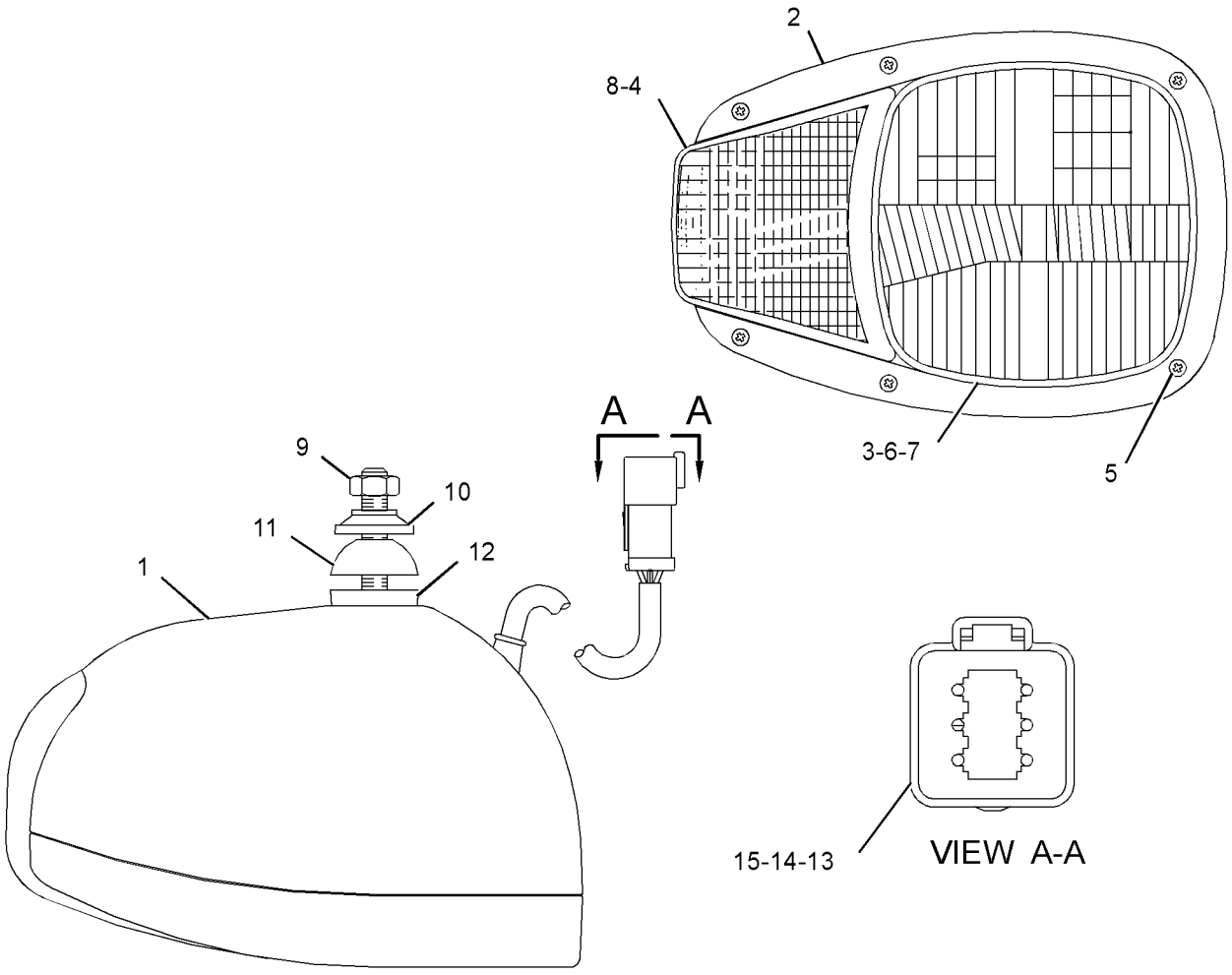

GRAPHIC #1 **<END>** g01948222

195-0192 LAMP GP-HEAD & SIGNAL–LH

S/N: SJL1-UP
PART OF 329-7497 LIGHTING GP-ROADING
AN ATTACHMENT

SMCS-1429 **i03631761**

NOTE	REF NO	GRAPHIC REF	PART NUMBER	QTY	PART NAME 1 2 3 4 5 6 (PRODUCT LEVEL)	SEE PAGE
	1	1	**228-6053**	1	BODY AS	
	2	1	**228-6054**	1	BEZEL	
	3	1	**228-6050**	1	LENS AS (HEADLIGHT)	
	4	1	**228-6052**	1	LENS AS (TURN SIGNAL)	
	5	1	**228-6056**	6	SCREW (4-32X1.26-IN)	
	6	1	**9W-3324**	1	LAMP-HEAD (12-VOLT, 60/55-WATT) (CLEAR)	
	7	1	**226-4560**	1	LAMP (12-VOLT, 21-WATT) (AMBER)	
	8	1	**226-4561**	1	LAMP (12-VOLT, 5-WATT) (CLEAR)	
M	9	1	**8T-0389**	1	LOCKNUT (M10X1.5-THD)	
	10	1	**100-3253**	1	SPACER	
	11	1	**100-3254**	1	SPACER	
	12	1	**100-3255**	1	WASHER (SPHERICAL)	
	13	1	**102-8805**	1	KIT-RECEPTACLE (6-PIN)	
					(INCLUDES RECEPTACLE AS & WEDGE)	
	14	1	**186-3735**	5	PIN-CONNECTOR (16-GA TO 18-GA)	
	15	1	**8T-8737**	1	PLUG-SEAL	

M-METRIC PART

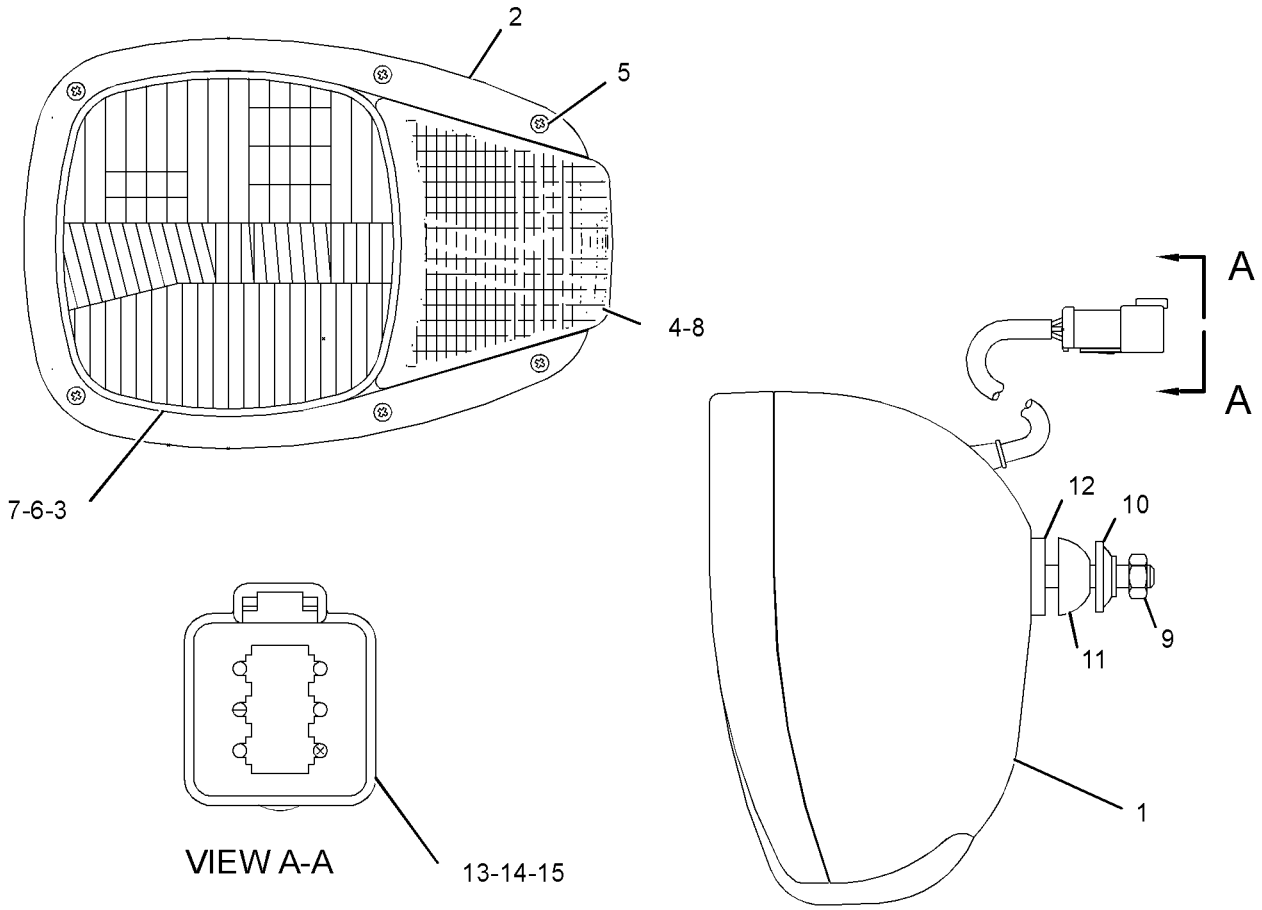

GRAPHIC #1 **<END>** g01948223

196-0030 LAMP GP-REGISTRATION PLATE

S/N: SJL1-UP

PART OF 328-1953 LAMP GP-REGISTRATION PLATE, 328-1950 LIGHTING GP-ROADING AN ATTACHMENT

SMCS-1429 **i02224900**

NOTE	REF NO	GRAPHIC REF	PART NUMBER	QTY	PART NAME 1 2 3 4 5 6 (PRODUCT LEVEL)	SEE PAGE
	1	1	**195-9712**	1	LAMP (12-VOLT, 10-WATT)	
M	2	1	**5C-2874**	2	NUT (M5X0.8-THD)	
	3	1	**8F-1434**	2	LOCKWASHER	
M	4	1	**8T-4753**	2	SCREW (M5X0.8X20-MM)	
	5	1	**9M-2307**	2	WASHER (5.2X19X2-MM THK)	
	6	1	**102-8802**	1	KIT-RECEPTACLE (2-PIN)	
					(INCLUDES RECEPTACLE AS & WEDGE)	
	7	1	**186-3735**	2	PIN-CONNECTOR (16-GA TO 18-GA)	

M-METRIC PART

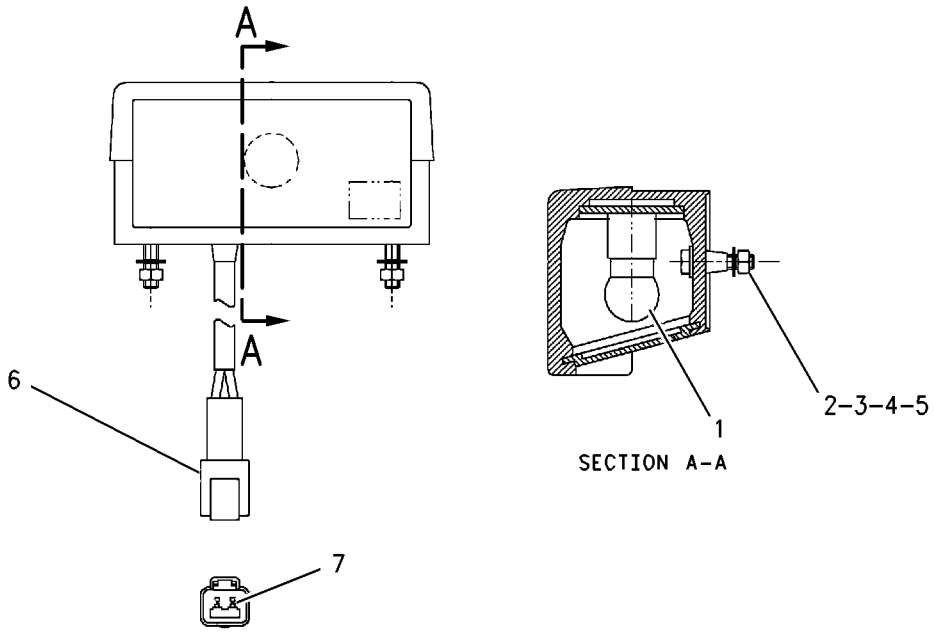

GRAPHIC #1 **<END>** g00890511

328-1953 LAMP GP-REGISTRATION PLATE

S/N: SJL1-UP
AN ATTACHMENT

SMCS-1429 **i03713821**

NOTE	REF NO	GRAPHIC REF	PART NUMBER	QTY	PART NAME 1 2 3 4 5 6 (PRODUCT LEVEL)	SEE PAGE
	1	1	**7K-1181**	3	STRAP-CABLE	
Y	2	1	**196-0030**	1	LAMP GP-REGISTRATION PLATE (12-VOLT)	156
	3	1	**205-9920**	1	STRAP-CABLE	
	4	1	**328-7020**	1	HARNESS AS-LIGHTING (REGISTRATION PLATE)	
		1	**1S-9593**	1	STRAP-CABLE	
		1	**102-8803**	1	KIT-RECEPTACLE (3-PIN)	
					(INCLUDES RECEPTACLE AS & WEDGE)	
		1	**8T-8737**	1	PLUG-SEAL	
		1	**155-2270**	1	KIT-CONNECTING PLUG (2-PIN)	
					(INCLUDES PLUG AS, WEDGE & INTERFACE SEAL)	
		1	**9X-3401**	2	PIN-CONNECTOR (16-GA TO 18-GA)	
		1	**180-9340**	2	SOCKET-CONNECTOR (14-GA TO 18-GA)	
		1	**266-4157**	1	SLEEVE-BRAIDED	
	5	1	**330-7612**	1	PLATE	
	6	1	**3S-2093**	4	STRAP-CABLE	
M	7	1	**5C-7261**	2	NUT (M8X1.25-THD)	
	8	1	**5P-4116**	4	WASHER-HARD (8.8X20.5X2-MM THK)	
M	9	1	**8T-7547**	2	BOLT (M8X1.25X30-MM)	

M-METRIC PART
Y-SEPARATE ILLUSTRATION

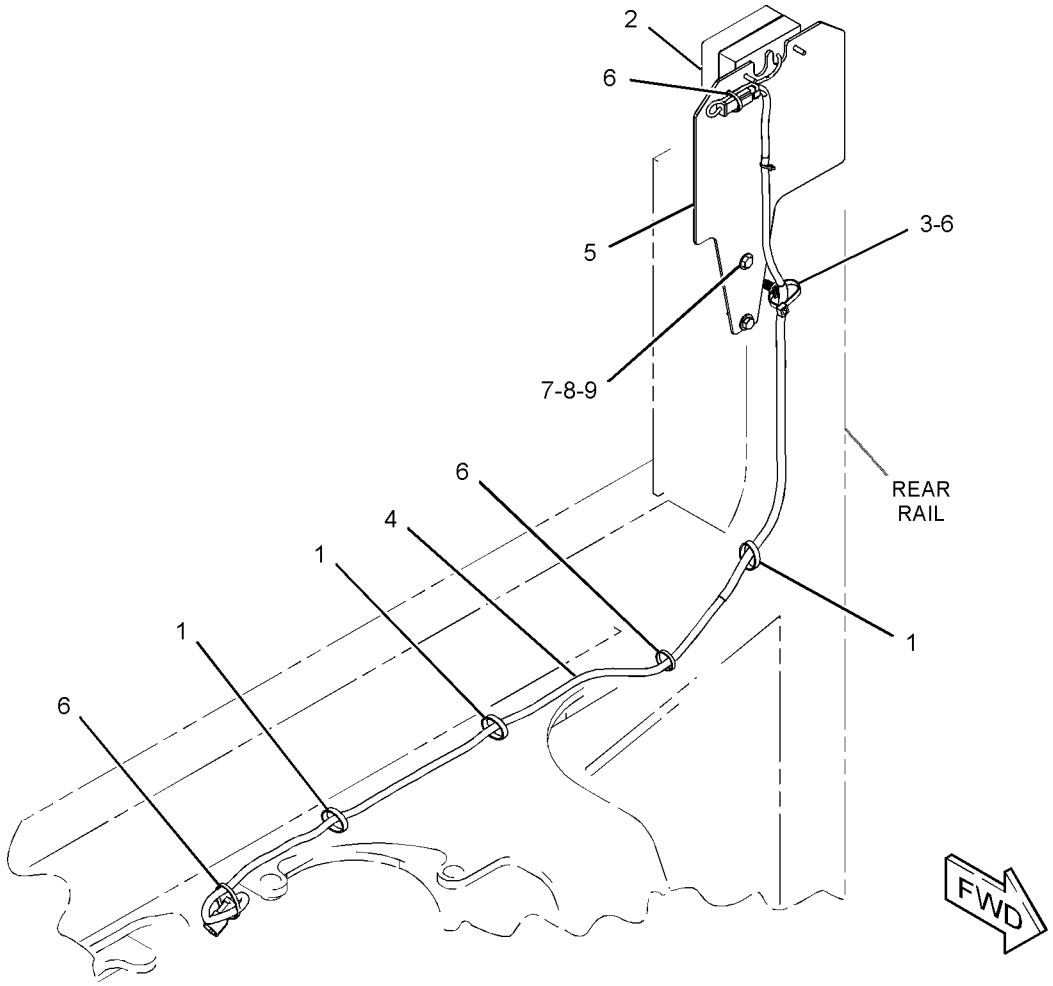

GRAPHIC #1 **<END>** g01963520

309-1325 LAMP GP-WARNING BEACON–12-VOLT, AMBER

S/N: SJL1-UP

PART OF 211-4291 LIGHTING GP-WARNING BEACON

AN ATTACHMENT

SMCS-1431 **i03631017**

NOTE	REF NO	GRAPHIC REF	PART NUMBER	QTY	PART NAME 1 2 3 4 5 6 (PRODUCT LEVEL)	SEE PAGE
	1	1	**272-9800**	1	LENS (AMBER)	
	2	1	**9X-8118**	1	LAMP (12-VOLT, 55-WATT) (WARNING BEACON)	
	3	1	**9X-8139**	1	BELT-DRIVE (WARNING BEACON)	
	4	1	**9R-7958**	1	CORD AS	
	4A	1	**9R-7942**	1	PLUG AS	

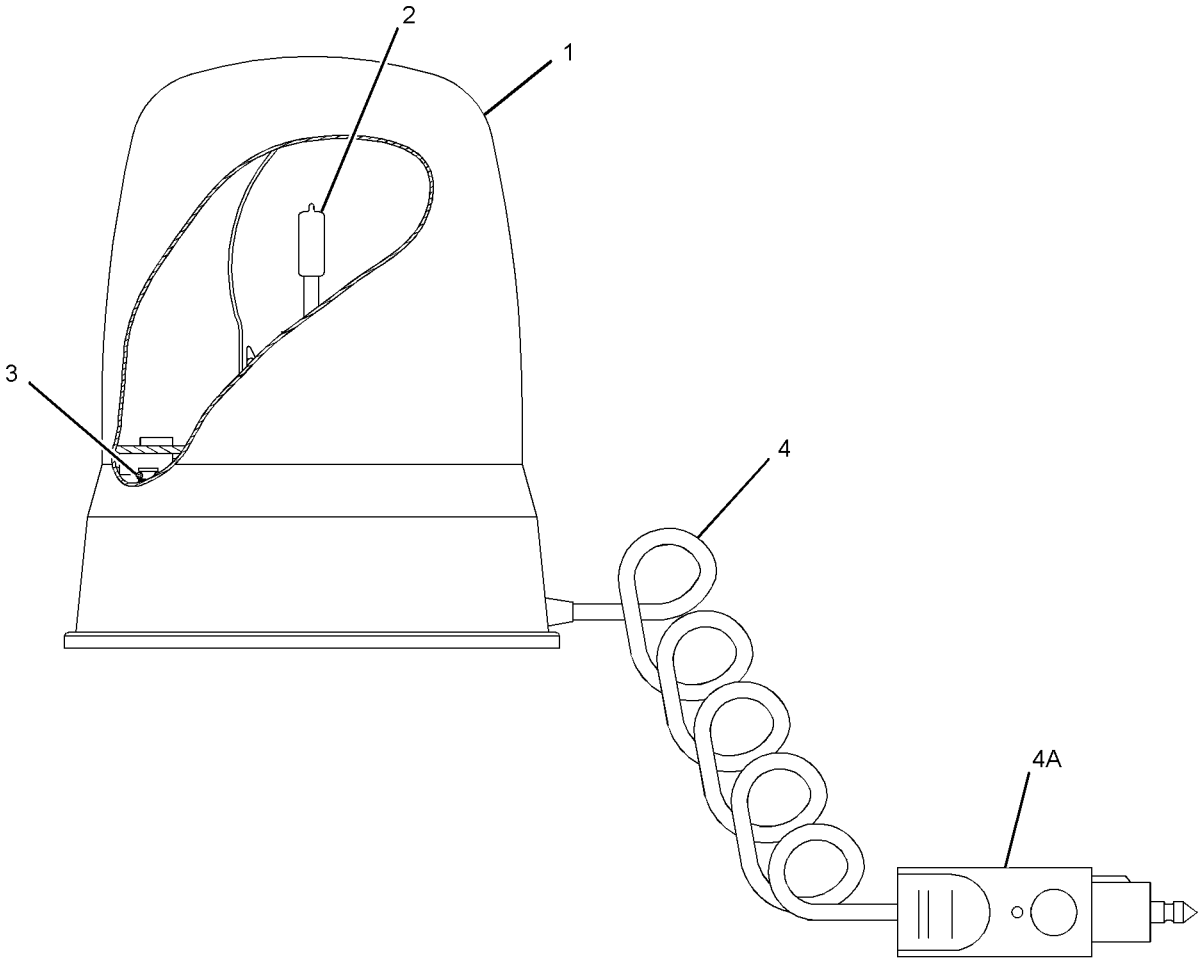

GRAPHIC #1 **<END>** g01382357

340-6918 LIGHTING GP-FLOOD–FRONT, REAR, COSA

S/N: SJL1-UP

PART OF 335-3052, 335-3053, 335-3055 CAB AR, 335-3054 CAB AR-ENCLOSED ROPS AN ATTACHMENT

SMCS-1434 **i03642562**

NOTE	REF NO	GRAPHIC REF	PART NUMBER	QTY	PART NAME 1 2 3 4 5 6 (PRODUCT LEVEL)	SEE PAGE
Y	1	1	*214-2969*	4	LAMP GP-FLOOD	151
	2	1	**214-4698**	1	SWITCH AS-ROCKER (FLOODLIGHTS, FRONT)	
	3	1	**214-4700**	1	SWITCH AS-ROCKER (FLOODLIGHTS, REAR)	
					(EACH SWITCH AS-ROCKER INCLUDES)	
		1	**111-7899**	1	GASKET	
	4	1	**3S-2093**	4	STRAP-CABLE	

Y-SEPARATE ILLUSTRATION

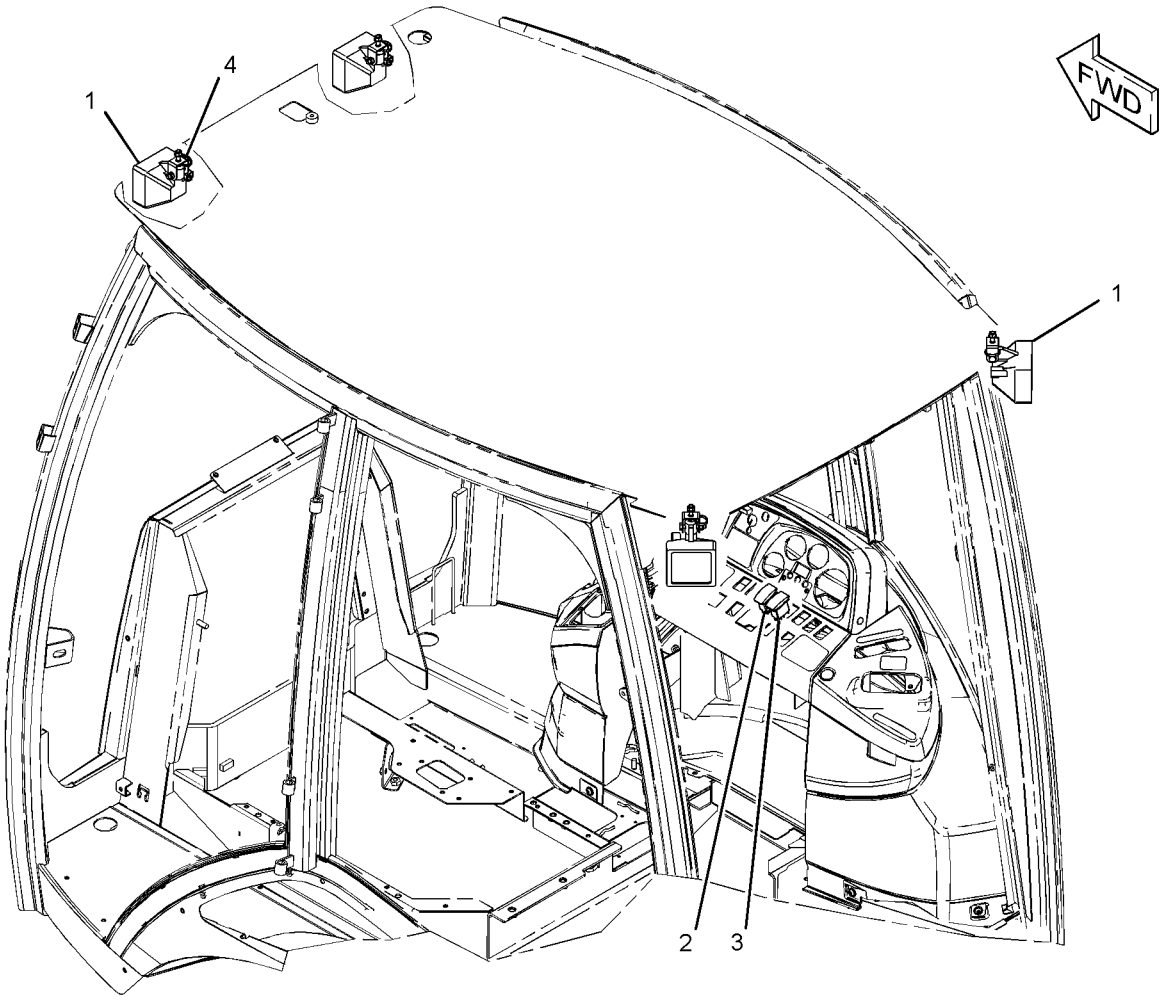

GRAPHIC #1 **<END>** g01970873

328-1950 LIGHTING GP-ROADING—FOG

S/N: SJL1-UP

AN ATTACHMENT

SMCS-1429 **i03652409**

NOTE	REF NO	GRAPHIC REF	PART NUMBER	QTY	PART NAME 1 2 3 4 5 6 (PRODUCT LEVEL)	SEE PAGE
	1	1	**7K-1181**	3	STRAP-CABLE	
Y	2	1	**196-0030**	1	LAMP GP-REGISTRATION PLATE	156
	3	1	**205-9920**	1	STRAP-CABLE	
	4	1	**214-4721**	1	SWITCH AS-ROCKER (FOG LIGHT, REAR)	
		1	**111-7899**	1	GASKET	
	5	1	**262-4727**	1	LAMP GP-ROADING (FOG; RED, REAR)	
		1	**9W-3326**	1	LAMP (12-VOLT, 21-WATT) (ROADING LIGHTS)	
		1	**344-7954**	1	LENS	
	6	1	**327-4172**	1	HARNESS AS-REAR LIGHTING	
		1	**266-4157**	2	SLEEVE-BRAIDED	
		1	**230-4011**	1	PLUG AS-CONNECTOR (2-PIN)	
		1	**264-7029**	1	SEAL-CONNECTOR	
		1	**180-9340**	2	SOCKET-CONNECTOR (14-GA TO 18-GA)	
		1	**1S-9593**	2	STRAP-CABLE	
		1	**102-8803**	1	KIT-RECEPTACLE (3-PIN)	
					(INCLUDES RECEPTACLE AS & WEDGE)	
		1	**155-2270**	1	KIT-CONNECTING PLUG (2-PIN)	
					(INCLUDES PLUG AS, WEDGE & INTERFACE SEAL)	
E		1	**125-7874**		TUBE-HEAT SHRINK (5.72-MM DIA) (5-CM)	
		1	**9X-3402**	2	SOCKET-CONNECTOR (16-GA TO 18-GA)	
		1	**9X-3401**	3	PIN-CONNECTOR (16-GA TO 18-GA)	
	7	1	**330-7612**	1	PLATE	
	8	1	**330-7613**	1	PLATE	
	9	1	**3S-2093**	4	STRAP-CABLE	
M	10	1	**5C-2890**	2	NUT (M6X1-THD)	
M	11	1	**5C-7261**	2	NUT (M8X1.25-THD)	
	12	1	**5P-4116**	4	WASHER-HARD (8.8X20.5X2-MM THK)	
	13	1	**8T-4205**	2	WASHER-HARD (7.2X14.5X2-MM THK)	
M	14	1	**8T-7547**	2	BOLT (M8X1.25X30-MM)	

E-ORDER BY THE CENTIMETER
M-METRIC PART
Y-SEPARATE ILLUSTRATION

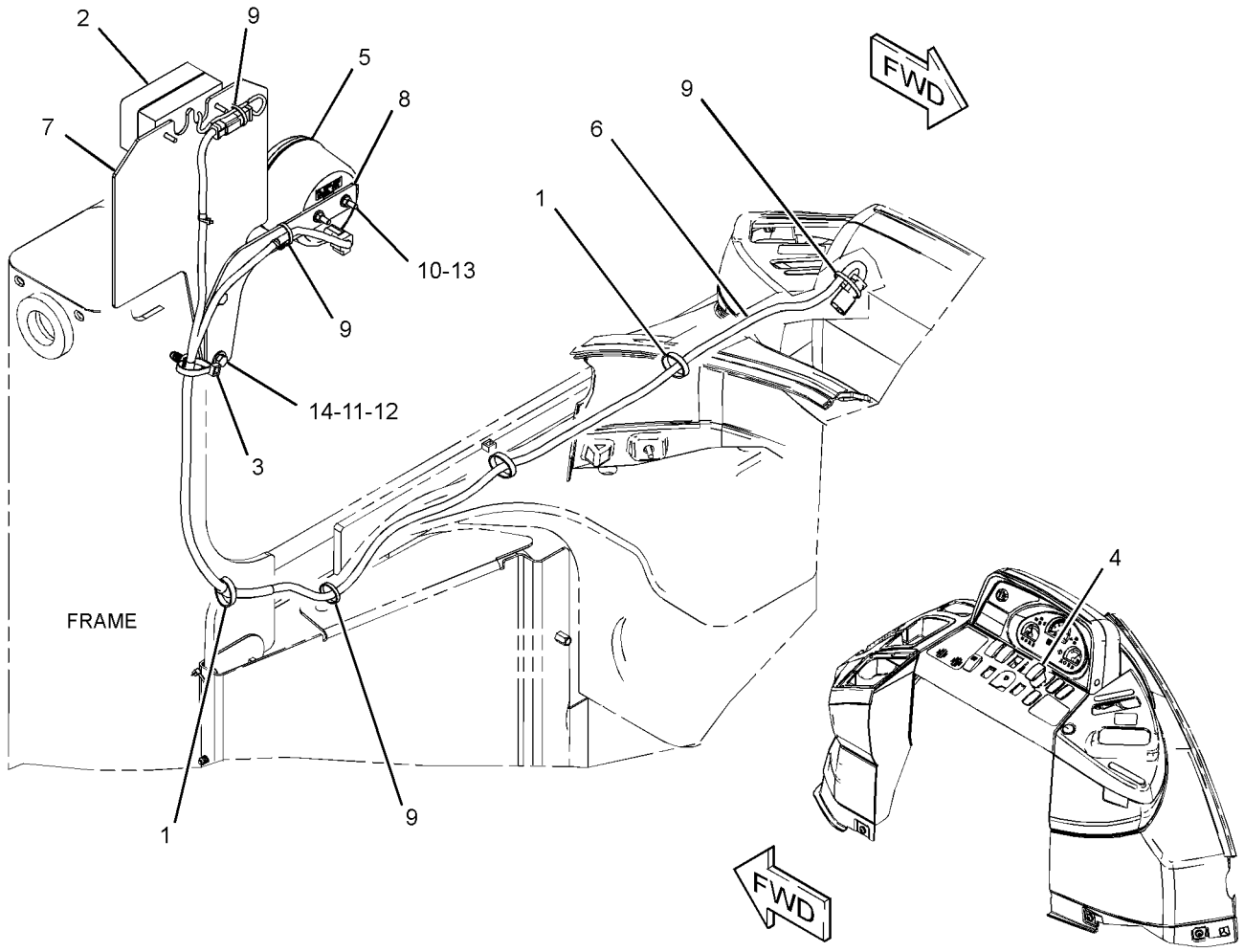

GRAPHIC #1 **<END>** g01963213

ELECTRICAL AND STARTING SYSTEM

329-7496 LIGHTING GP-ROADING—DIPPED, RH

S/N: SJL1-UP

AN ATTACHMENT

SMCS-1429 **i03690297**

NOTE	REF NO	GRAPHIC REF	PART NUMBER	QTY	PART NAME 1 2 3 4 5 6 (PRODUCT LEVEL)	SEE PAGE
	1	1	**9R-1499**	2	REFLECTOR	
Y	2	1	**195-0189**	1	LAMP GP-HEAD & SIGNAL (RH)	152
Y	3	1	**195-0190**	1	LAMP GP-HEAD & SIGNAL (LH)	153
	4	1	**214-4711**	1	SWITCH AS-ROCKER (ROADING LIGHTS)	
		1	**111-7899**	1	GASKET	
	5	1	**336-9096**	2	LAMP GP-SIGNAL (12-VOLT) (STOP, TAIL, TURN)	
	6	1	**337-7029**	2	BRACKET AS	
	7	1	**3S-2093**	2	STRAP-CABLE	
M	8	1	**8T-4189**	2	BOLT (M8X1.25X20-MM)	
	9	1	**8T-4224**	4	WASHER-HARD (8.8X16X2-MM THK)	
M	10	1	**8T-4908**	2	BOLT (M8X1.25X25-MM)	

M-METRIC PART
Y-SEPARATE ILLUSTRATION

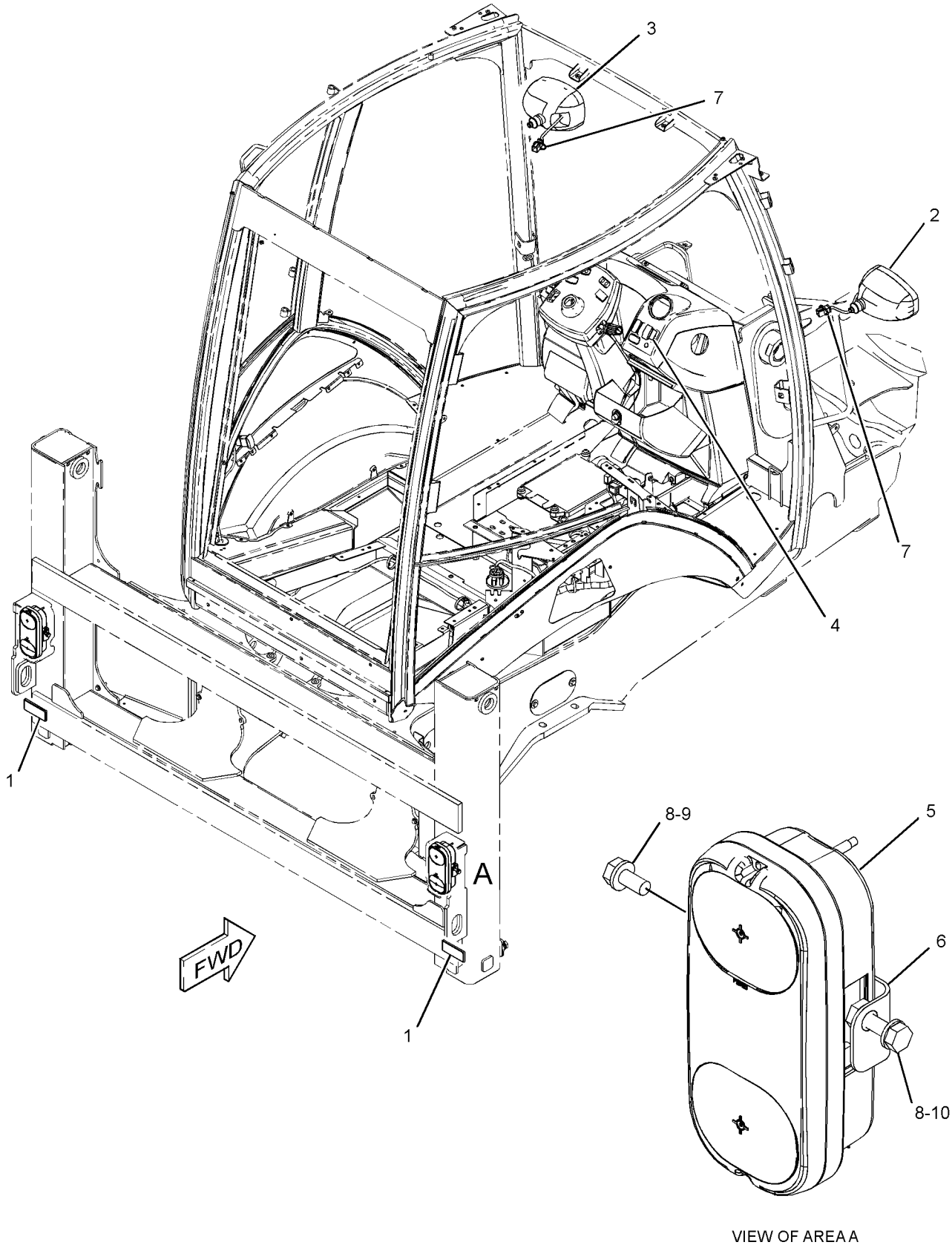

GRAPHIC #1 **<END>** g01990054

329-7497 LIGHTING GP-ROADING—DIPPED, LH

S/N: SJL1-UP

AN ATTACHMENT

SMCS-1429 **i03690303**

NOTE	REF NO	GRAPHIC REF	PART NUMBER	QTY	PART NAME 1 2 3 4 5 6 (PRODUCT LEVEL)	SEE PAGE
	1	1	**9R-1499**	2	REFLECTOR	
Y	2	1	**195-0191**	1	LAMP GP-HEAD & SIGNAL (RH)	154
Y	3	1	**195-0192**	1	LAMP GP-HEAD & SIGNAL (LH)	155
	4	1	**214-4711**	1	SWITCH AS-ROCKER (ROADING LIGHTS)	
		1	**111-7899**	1	GASKET	
	5	1	**336-9096**	2	LAMP GP-SIGNAL (12-VOLT) (STOP, TAIL, TURN)	
	6	1	**337-7029**	2	BRACKET AS	
	7	1	**3S-2093**	2	STRAP-CABLE	
M	8	1	**8T-4189**	2	BOLT (M8X1.25X20-MM)	
	9	1	**8T-4224**	4	WASHER-HARD (8.8X16X2-MM THK)	
M	10	1	**8T-4908**	2	BOLT (M8X1.25X25-MM)	

M-METRIC PART
Y-SEPARATE ILLUSTRATION

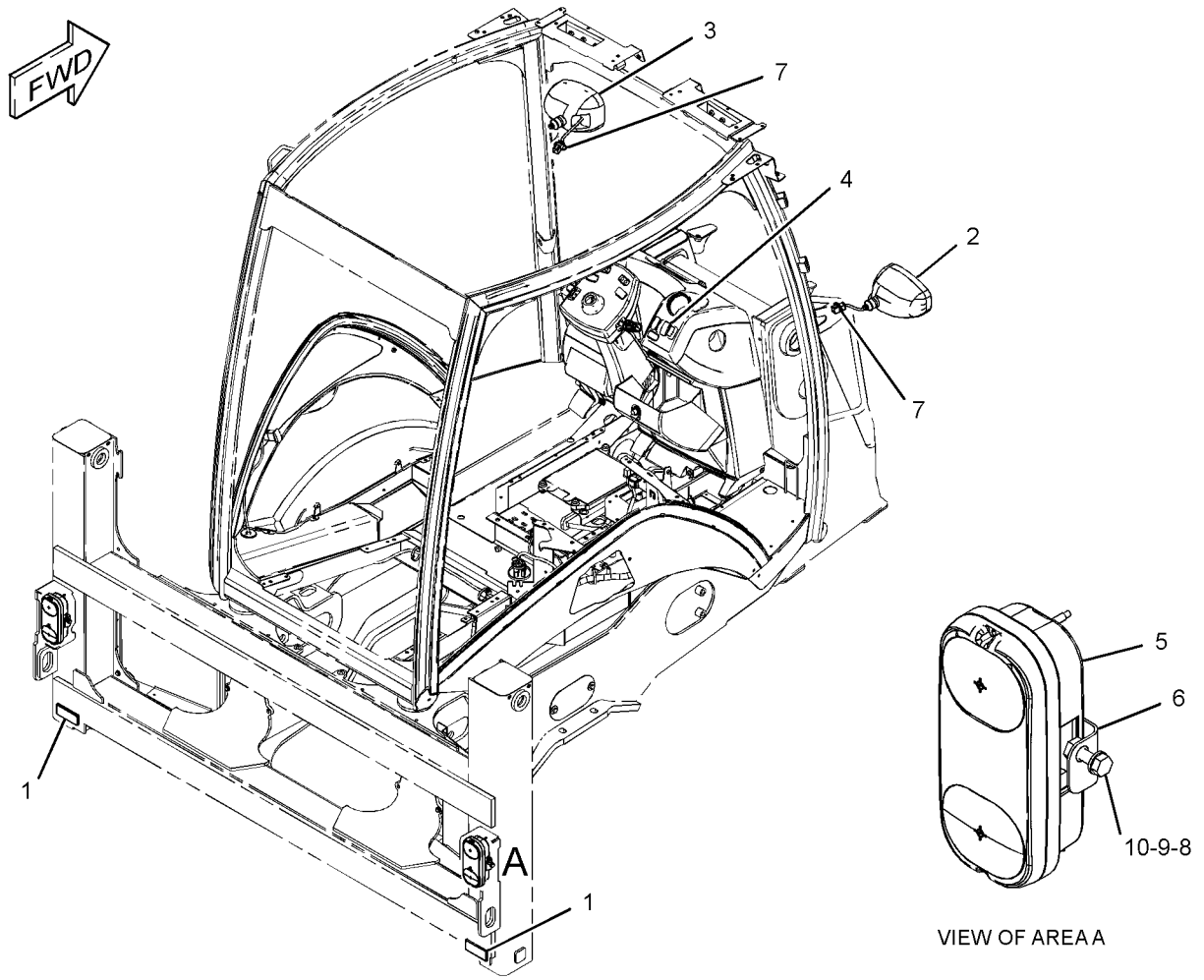

VIEW OF AREA A

GRAPHIC #1 **<END>** g01986742

211-4291 LIGHTING GP-WARNING BEACON–
AMBER, MAGNETIC MOUNT, ROTATING
S/N: SJL1-UP
AN ATTACHMENT

SMCS-1431 **i03628950**

NOTE	REF NO	GRAPHIC REF	PART NUMBER	QTY	PART NAME 1 2 3 4 5 6 (PRODUCT LEVEL)	SEE PAGE
Y	1	1	**309-1325**	1	LAMP GP-WARNING BEACON	158
	2	1	**031-5644**	2	CLIP	

Y-SEPARATE ILLUSTRATION

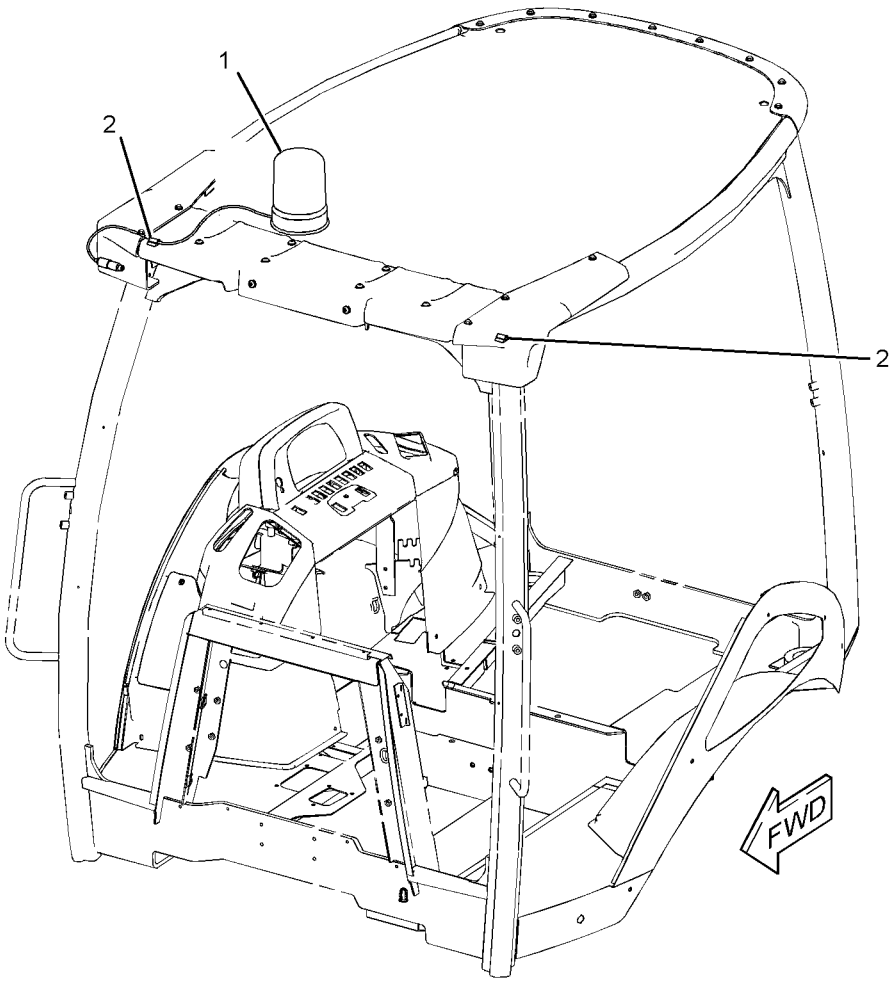

GRAPHIC #1 **<END>** g01228059

276-7287 RELAY GP—POWER DISTRIBUTION

S/N: SJL1-UP
12-VOLT
PART OF 338-5733 WIRING GP-AIR CONDITIONER, 310-5613 WIRING GP-HEATER
AN ATTACHMENT

SMCS-1422, 4493 **i03325084**

NOTE	REF NO	GRAPHIC REF	PART NUMBER	QTY	PART NAME 1 2 3 4 5 6 (PRODUCT LEVEL)	SEE PAGE
M	1	1	**5C-2890**	2	NUT (M6X1-THD)	
	2	1	**8T-4205**	2	WASHER-HARD (7.2X14.5X2-MM THK)	
	3	1	**1H-3244**	2	LOCKWASHER	
M	4	1	**5C-7261**	1	NUT (M8X1.25-THD)	
	5	1	**8T-4224**	1	WASHER-HARD (8.8X16X2-MM THK)	
	6	1	**267-5213**	1	COVER	
	7	1	**267-5211**	1	SEAL	
	8	1	**278-6377**	1	FUSE (40-AMPERE)	

M-METRIC PART

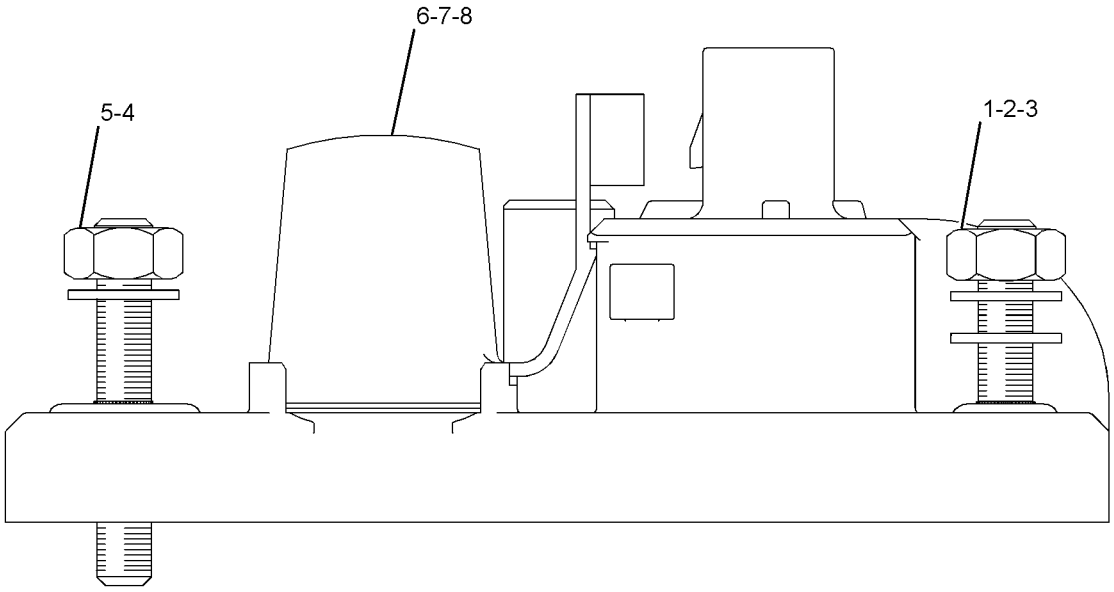

GRAPHIC #1 **<END>** g01290616

276-7290 RELAY GP–POWER, 1

S/N: SJL1-UP
12-VOLT
PART OF 338-5738 WIRING GP-PLATFORM
AN ATTACHMENT

SMCS-1422, 4493 **i03325122**

NOTE	REF NO	GRAPHIC REF	PART NUMBER	QTY	PART NAME 1 2 3 4 5 6 (PRODUCT LEVEL)	SEE PAGE
M	1	1	**5C-2890**	2	NUT (M6X1-THD)	
	2	1	**8T-4205**	2	WASHER-HARD (7.2X14.5X2-MM THK)	
	3	1	**1H-3244**	2	LOCKWASHER	
M	4	1	**5C-7261**	1	NUT (M8X1.25-THD)	
	5	1	**8T-4224**	1	WASHER-HARD (8.8X16X2-MM THK)	
	6	1	**267-5213**	1	COVER	
	7	1	**267-5211**	1	SEAL	
	8	1	**267-2701**	2	FUSE (60-AMPERE)	

M-METRIC PART

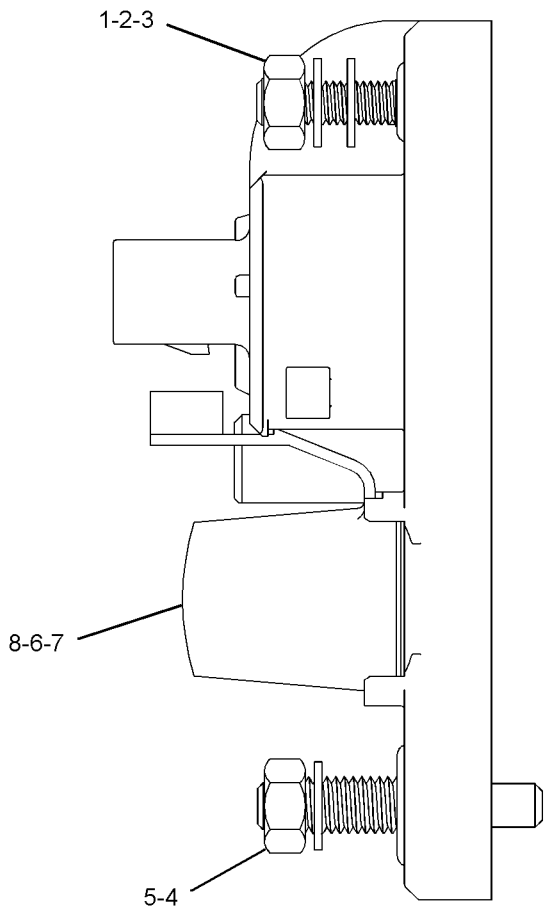

GRAPHIC #1 **<END>** g01278211

276-7291 RELAY GP–POWER, 2

S/N: SJL1-UP
12-VOLT
PART OF 338-5738 WIRING GP-PLATFORM
AN ATTACHMENT

SMCS-1422, 4493 **i03325141**

NOTE	REF NO	GRAPHIC REF	PART NUMBER	QTY	PART NAME 1 2 3 4 5 6 (PRODUCT LEVEL)	SEE PAGE
M	1	1	**5C-2890**	2	NUT (M6X1-THD)	
	2	1	**8T-4205**	2	WASHER-HARD (7.2X14.5X2-MM THK)	
	3	1	**1H-3244**	2	LOCKWASHER	
M	4	1	**5C-7261**	1	NUT (M8X1.25-THD)	
	5	1	**8T-4224**	1	WASHER-HARD (8.8X16X2-MM THK)	
	6	1	**267-5213**	1	COVER	
	7	1	**267-5211**	1	SEAL	
	8	1	**267-2701**	1	FUSE (60-AMPERE)	

M-METRIC PART

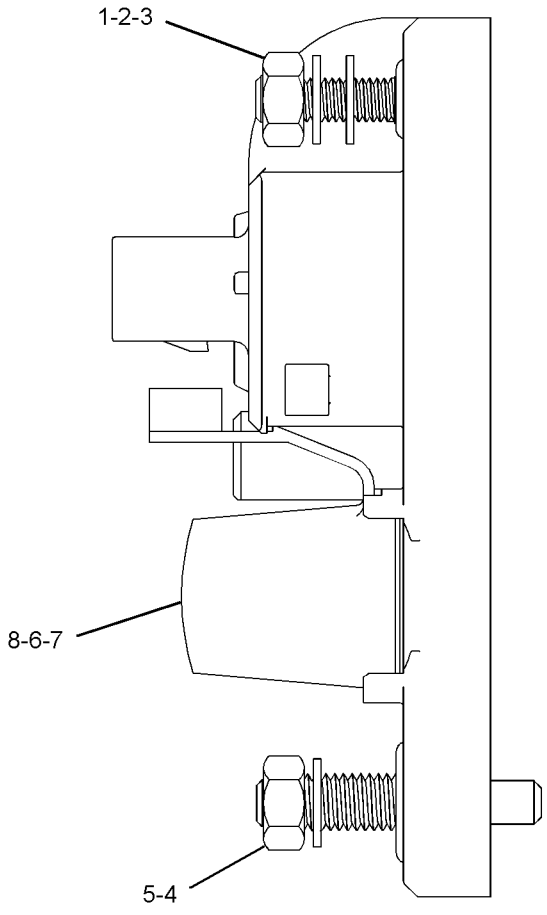

GRAPHIC #1 **<END>** g01278256

295-5903 RELAY GP–STABILIZER, AUTO UP

S/N: SJL1-UP
PART OF 253-1055 VALVE GP-PILOT
AN ATTACHMENT

SMCS-1422, 4493 **i03628916**

NOTE	REF NO	GRAPHIC REF	PART NUMBER	QTY	PART NAME 1 2 3 4 5 6 (PRODUCT LEVEL)	SEE PAGE
	1	1	**173-7003**	1	RELAY AS-TIMER (12-VOLT, PLATFORM)	
	2	1	**3S-2093**	1	STRAP-CABLE	

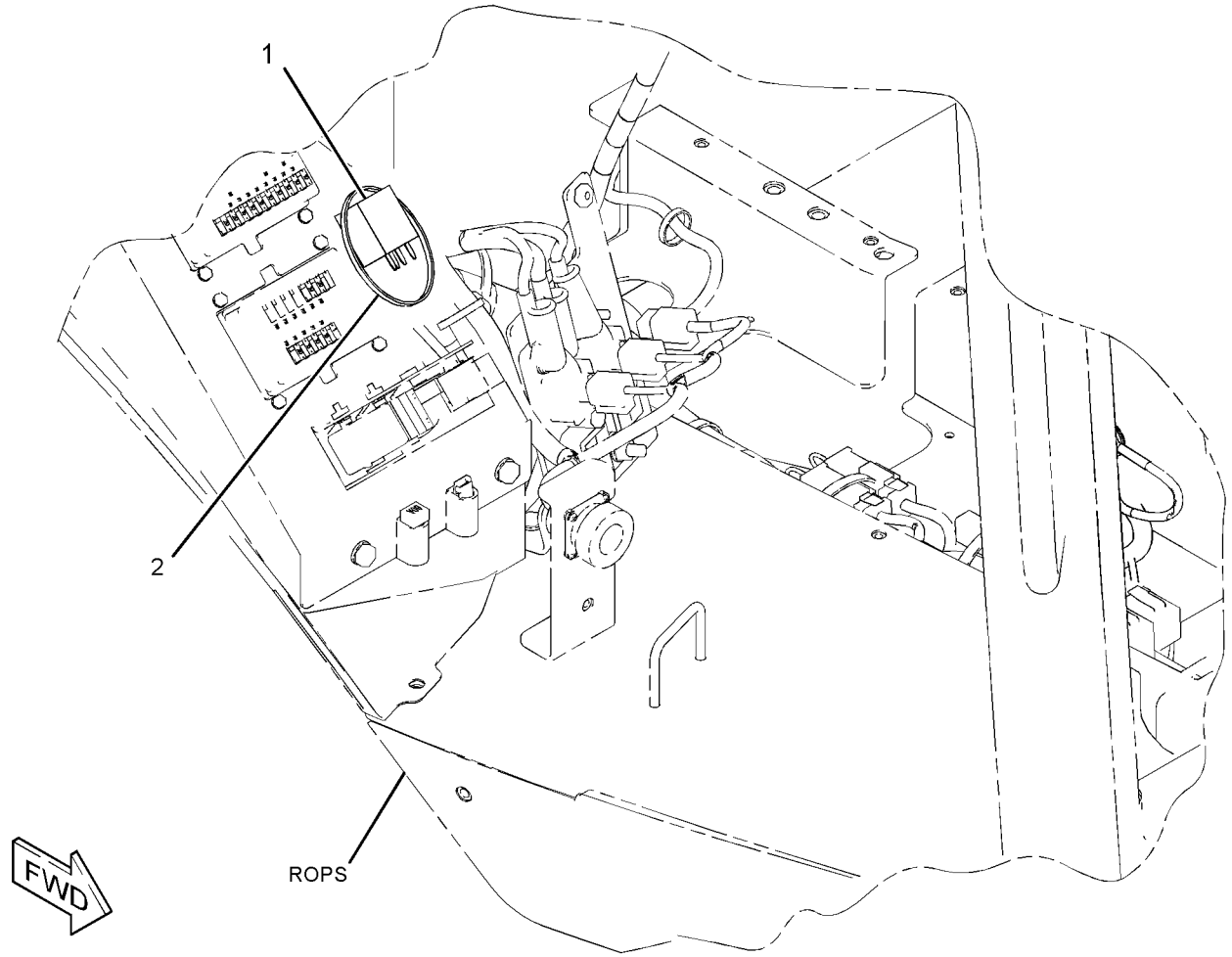

GRAPHIC #1 **<END>** g01387406

322-6827 RELAY GP—STARTING MOTOR

S/N: SJL1-UP
12-VOLT
PART OF 338-5737 WIRING GP-ENGINE

SMCS-1422, 4493 **i03498280**

NOTE	REF NO	GRAPHIC REF	PART NUMBER	QTY	PART NAME 1 2 3 4 5 6 (PRODUCT LEVEL)	SEE PAGE
	1	1	**274-9872**	1	FUSE (30-AMPERE)	
	2	1	**278-6377**	1	FUSE (40-AMPERE)	
	3	1	**267-5213**	1	COVER (FUSE)	
	4	1	**267-5211**	1	SEAL	
M	5	1	**5C-2890**	2	NUT (M6X1-THD)	
	6	1	**8T-4205**	2	WASHER-HARD (7.2X14.5X2-MM THK)	
	7	1	**1H-3244**	2	LOCKWASHER	
M	8	1	**5C-7261**	1	NUT (M8X1.25-THD)	
	9	1	**8T-4224**	1	WASHER-HARD (8.8X16X2-MM THK)	
	10	1	**9F-5644**	1	LOCKWASHER	

M-METRIC PART

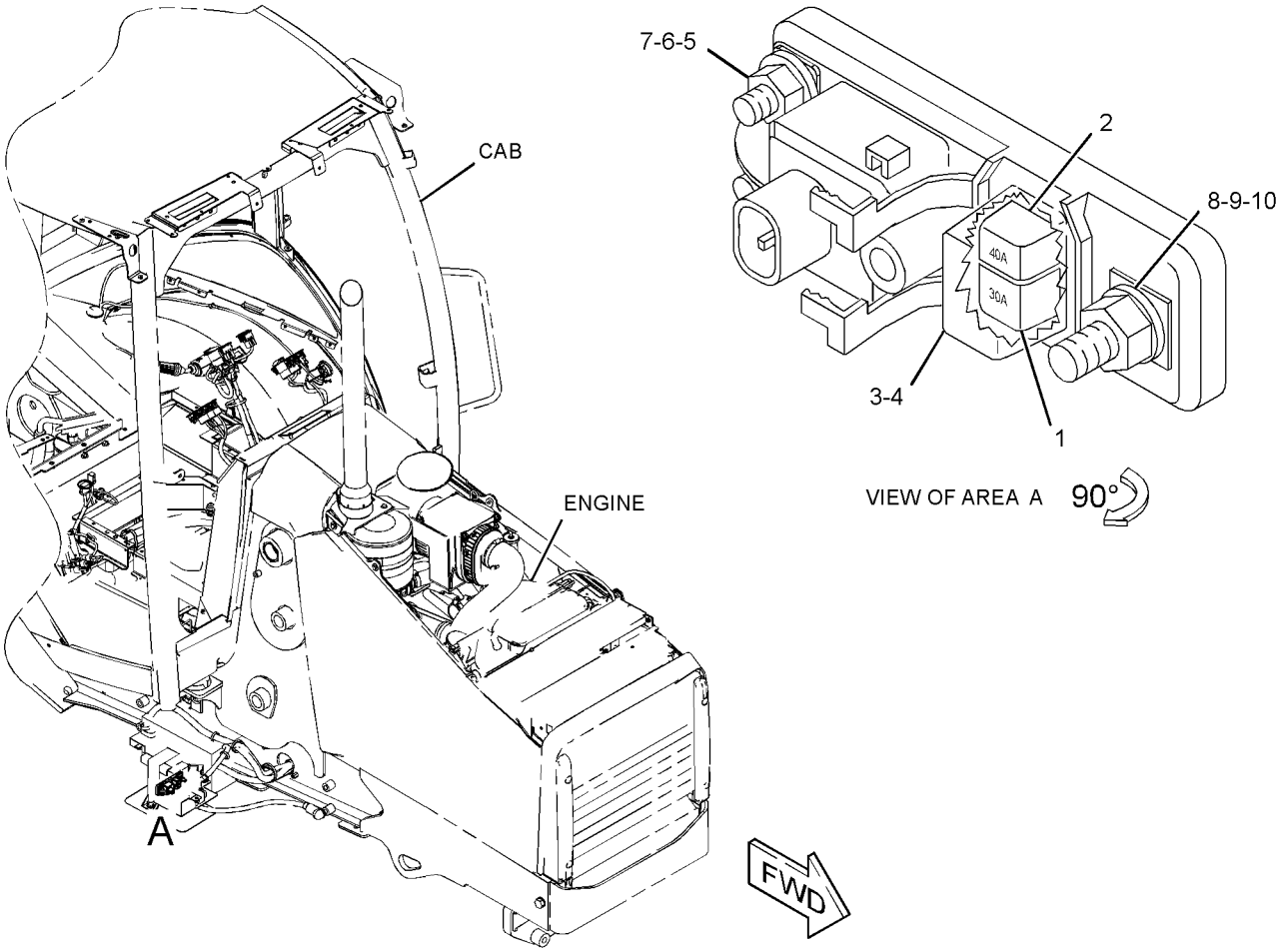

GRAPHIC #1 **<END>** g01571033

143-0539 STARTING MOTOR GP-ELECTRIC–12-VOLT*R

S/N: CRS1-UP

PART OF 237-0024 STARTING MOTOR GP-ELECTRIC

AN ATTACHMENT

SMCS-1453 **i02603749**

NOTE	REF NO	GRAPHIC REF	PART NUMBER	QTY	PART NAME 1 2 3 4 5 6 (PRODUCT LEVEL)	SEE PAGE
	1	1	**8C-9778**	1	PLUNGER AS	
	2	1	**8C-9783**	1	GASKET	
	3	1	**2P-8104**	1	BEARING	
	4	1	**7T-6092**	1	HOLDER AS-BRUSH	
M	5	1	**8T-4133**	2	NUT (M10X1.5-THD)	
	6	1	**7T-6088**	1	BEARING AS	
	7	1	**7T-6087**	1	WASHER (15.2X40X0.5-MM THK)	
	8	1	**7T-6093**	1	CLUTCH AS	
	9	1	**8J-4455**	1	BALL	
	10	1	**7T-6090**	1	SPRING	
	11	1	**8T-4121**	2	WASHER-HARD (11X21X2.5-MM THK)	
	12	1	**3E-5153**	1	COVER-STARTING MOTOR	
M	13	1	**9X-2036**	1	SCREW-PAN HEAD	
	14	1	**8F-1434**	1	LOCKWASHER	
	15	1	**100-4113**	1	SWITCH AS (STARTING MOTOR, 12-VOLT)	
	16	1	**100-4119**	1	ARMATURE AS	
	17	1	**100-4118**	1	CASE AS-STARTING MOTOR	
	18	1	**100-4115**	1	HOUSING-STARTING MOTOR	
	19	1	**143-1344**	1	FRAME-STARTER	
	20	1	**100-3685**	1	CAP	
	21	1	**3E-5154**	1	BUSHING-STARTING MOTOR	
					AVAILABLE REPAIR KIT(S):	
			7T-6099	1	KIT-GEAR (STARTING MOTOR)	
					(INCLUDES RETAINER, PINION & ROLLERS)	
			8C-5457	1	KIT-CONTACT (STARTING MOTOR)	
					(INCLUDES NUT, WASHER, PLATE, BUSHINGS, & BOLT)	
			146-6729	1	KIT-HARDWARE (STARTING MOTOR)	
					(INCLUDES BOLTS, SCREWS, SCREW ASSEMBLIES & PLATE)	
			100-4112	1	KIT-CONTACT (STARTING MOTOR)	
					(INCLUDES NUT, WASHERS, SEAL, BUSHINGS, PLATE & BOLT)	

M-METRIC PART

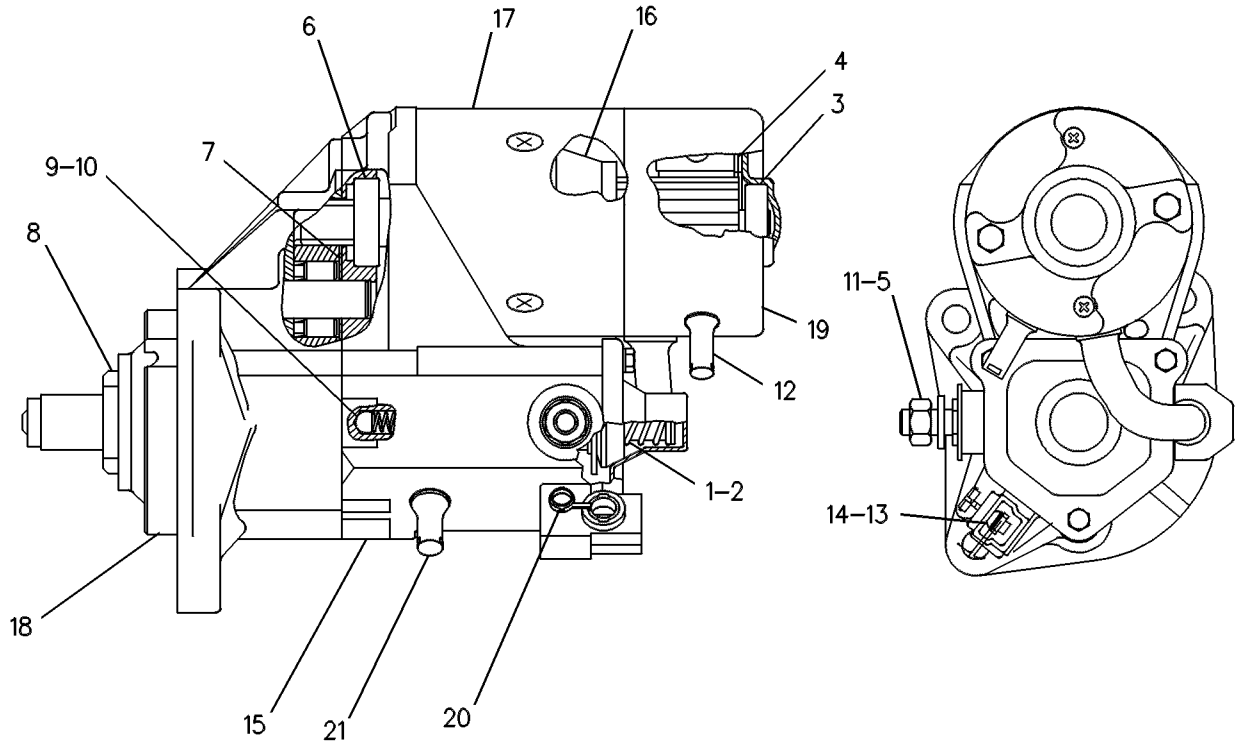

GRAPHIC #1 **<END>** g00131126

237-0024 STARTING MOTOR GP-ELECTRIC—12-VOLT

S/N: CRS1-UP
PART OF 322-1924 ENGINE AR-PRIMARY
AN ATTACHMENT

SMCS-1453 **i03331920**

NOTE	REF NO	GRAPHIC REF	PART NUMBER	QTY	PART NAME 1 2 3 4 5 6 (PRODUCT LEVEL)	SEE PAGE
	1	1	**6I-0364**	3	STUD (M10X1.5X30-MM)	
	2	1	**6I-0594**	3	NUT (M10X1.5-THD)	
YR	3	1	**143-0539**	1	STARTING MOTOR GP-ELECTRIC (12-VOLT)	171

R-REMFG PART MAY BE AVAILABLE
Y-SEPARATE ILLUSTRATION

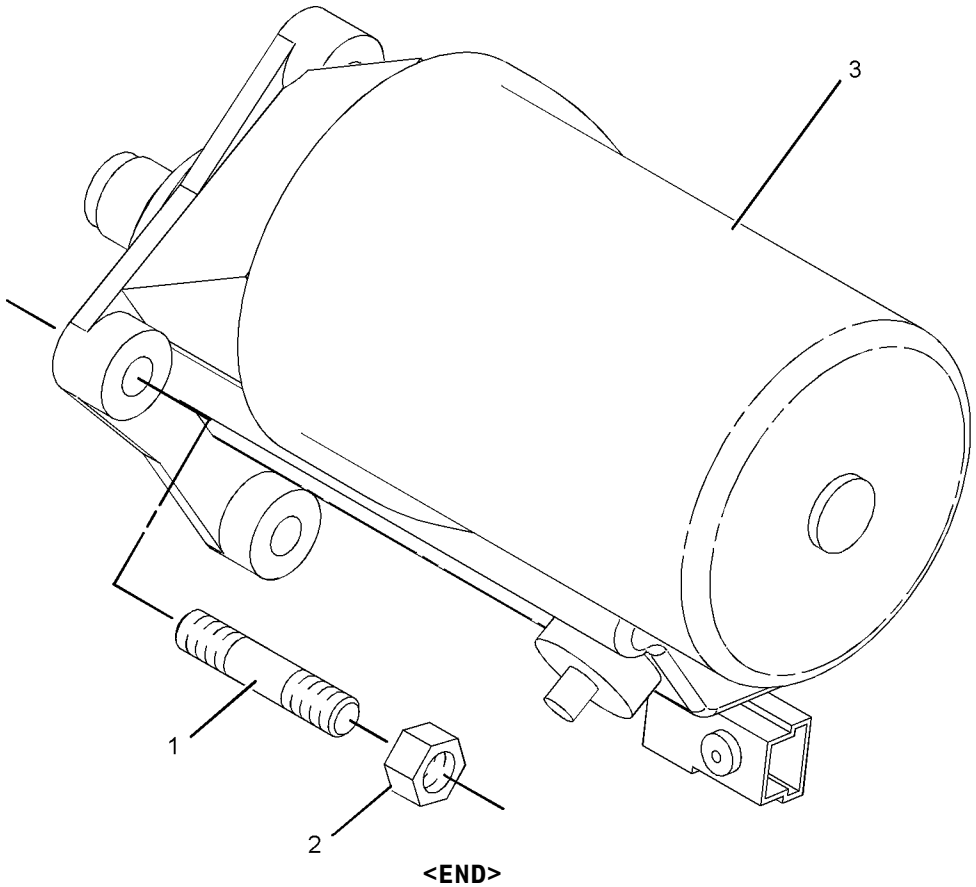

GRAPHIC #1 **<END>** g01039910

303-5769 STARTING MOTOR GP-ELECTRIC–12-VOLT

S/N: C4Z1-UP
PART OF 321-7705 ENGINE AR-PRIMARY
AN ATTACHMENT

SMCS-1453 **i03128303**

NOTE	REF NO	GRAPHIC REF	PART NUMBER	QTY	PART NAME 1 2 3 4 5 6 (PRODUCT LEVEL)	SEE PAGE
	1	1	**6I-0364**	3	STUD (M10X1.5X30-MM)	
	2	1	**6I-0594**	3	NUT (M10X1.5-THD)	
	3	1	**303-5795**	1	STARTING MOTOR-ELECTRIC	

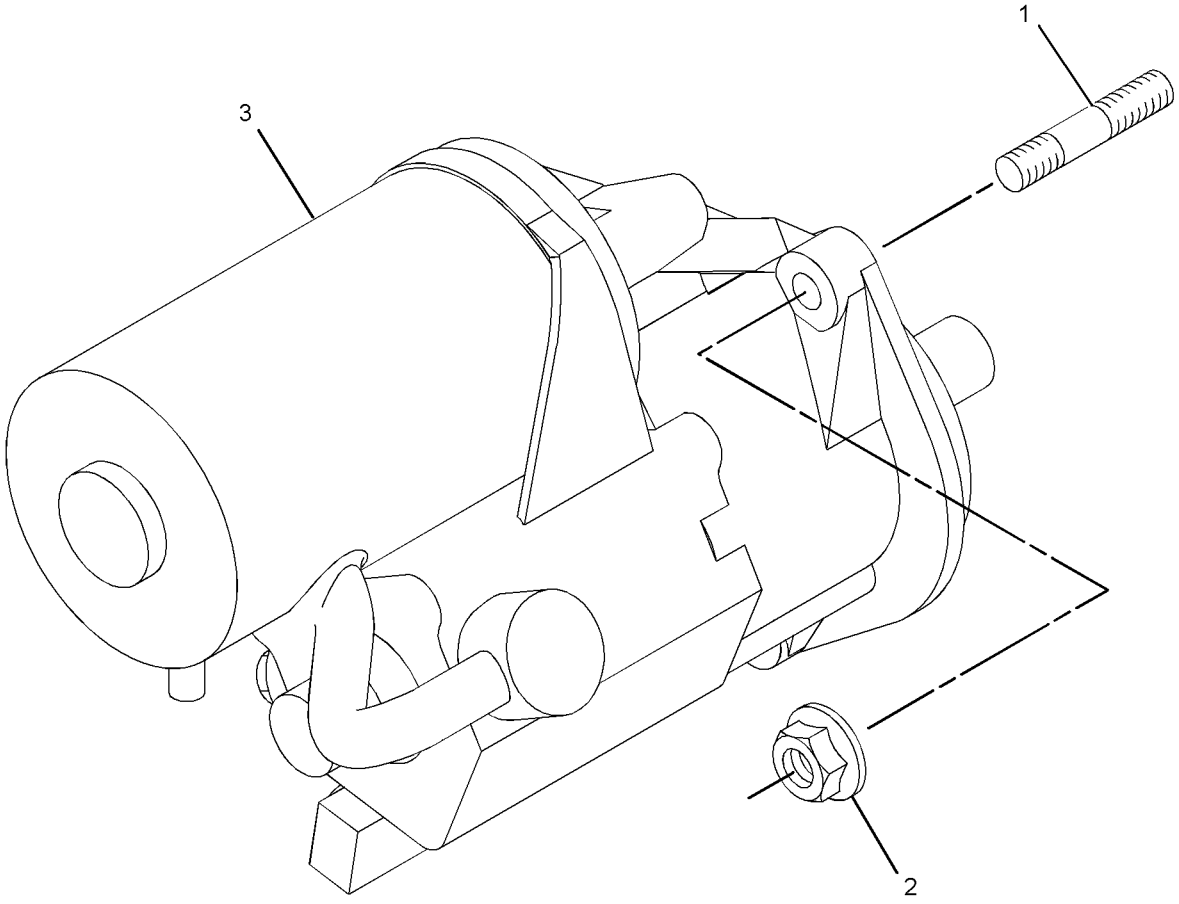

GRAPHIC #1 **<END>** g01376189

305-3295 SWITCH GP-ALL WHEEL DRIVE

S/N: SJL1-UP

PART OF 329-0320 DRIVE AR-BACKHOE LOADER

AN ATTACHMENT

SMCS-1435, 4493 **i03331923**

NOTE	REF NO	GRAPHIC REF	PART NUMBER	QTY	PART NAME 1 2 3 4 5 6 (PRODUCT LEVEL)	SEE PAGE
	1	1	**146-9439**	1	RELAY AS (12-VOLT) (ALL WHEEL DRIVE)	
	2	1	**214-4692**	1	SWITCH AS-ROCKER (ALL WHEEL DRIVE)	

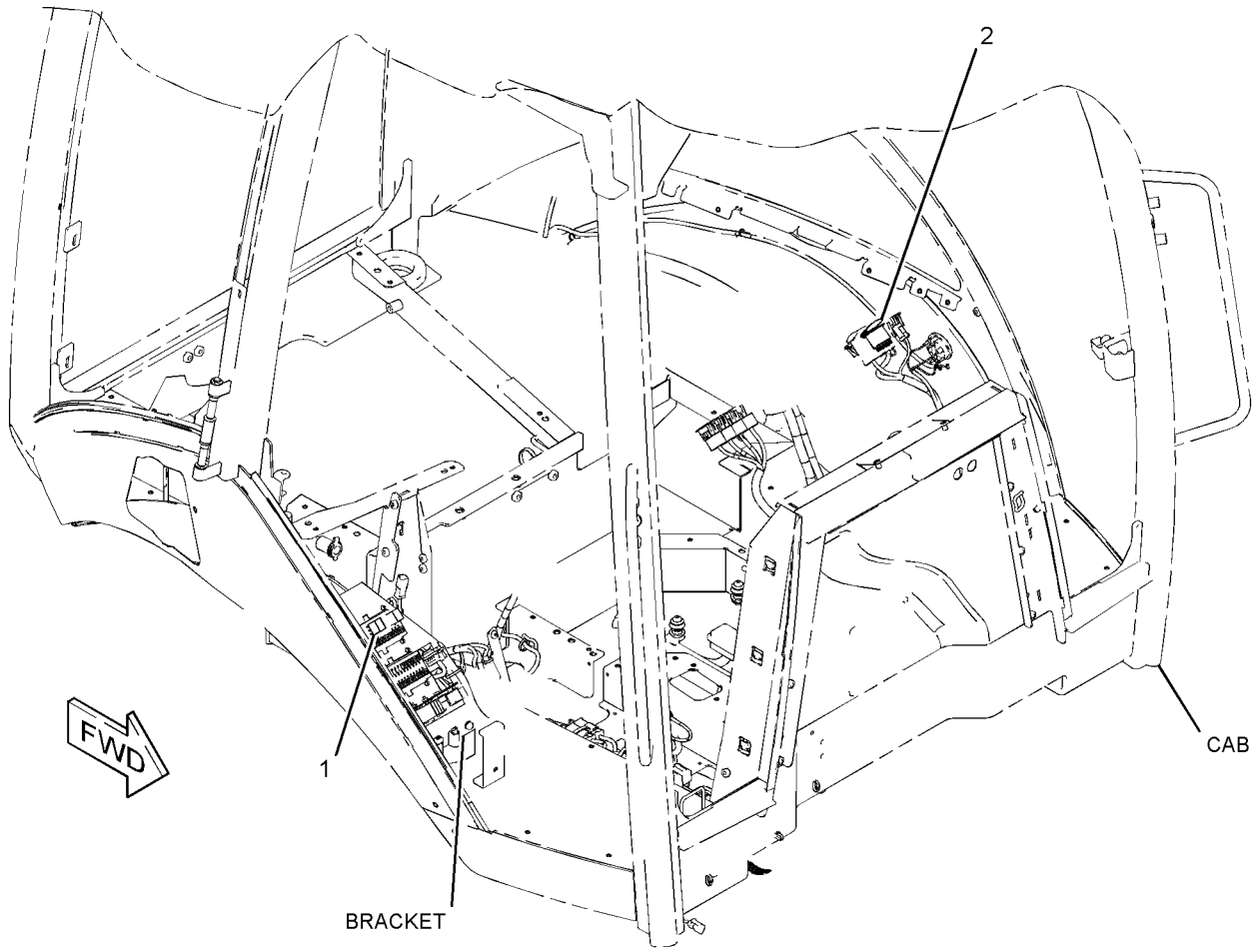

GRAPHIC #1 **<END>** g01391236

308-9973 SWITCH GP-DIFFERENTIAL LOCK

S/N: SJL1-UP
PART OF 329-0311 POWER TRAIN AR
AN ATTACHMENT

SMCS-1435, 3264 **i03627145**

NOTE	REF NO	GRAPHIC REF	PART NUMBER	QTY	PART NAME 1 2 3 4 5 6 (PRODUCT LEVEL)	SEE PAGE
	1	1	**201-9459**	1	BOOT	
	2	1	**202-6017**	1	BRACKET AS	
M		1	**6V-9632**	3	NUT-WELD (M6X1-THD)	
	3	1	**204-0775**	1	SWITCH AS-FOOT (DIFFERENTIAL LOCK ON, OFF)	
	4	1	**205-6298**	1	ACTUATOR	
M	5	1	**9X-2042**	3	SCREW-TRUSS HEAD (M6X1X12-MM)	

M-METRIC PART

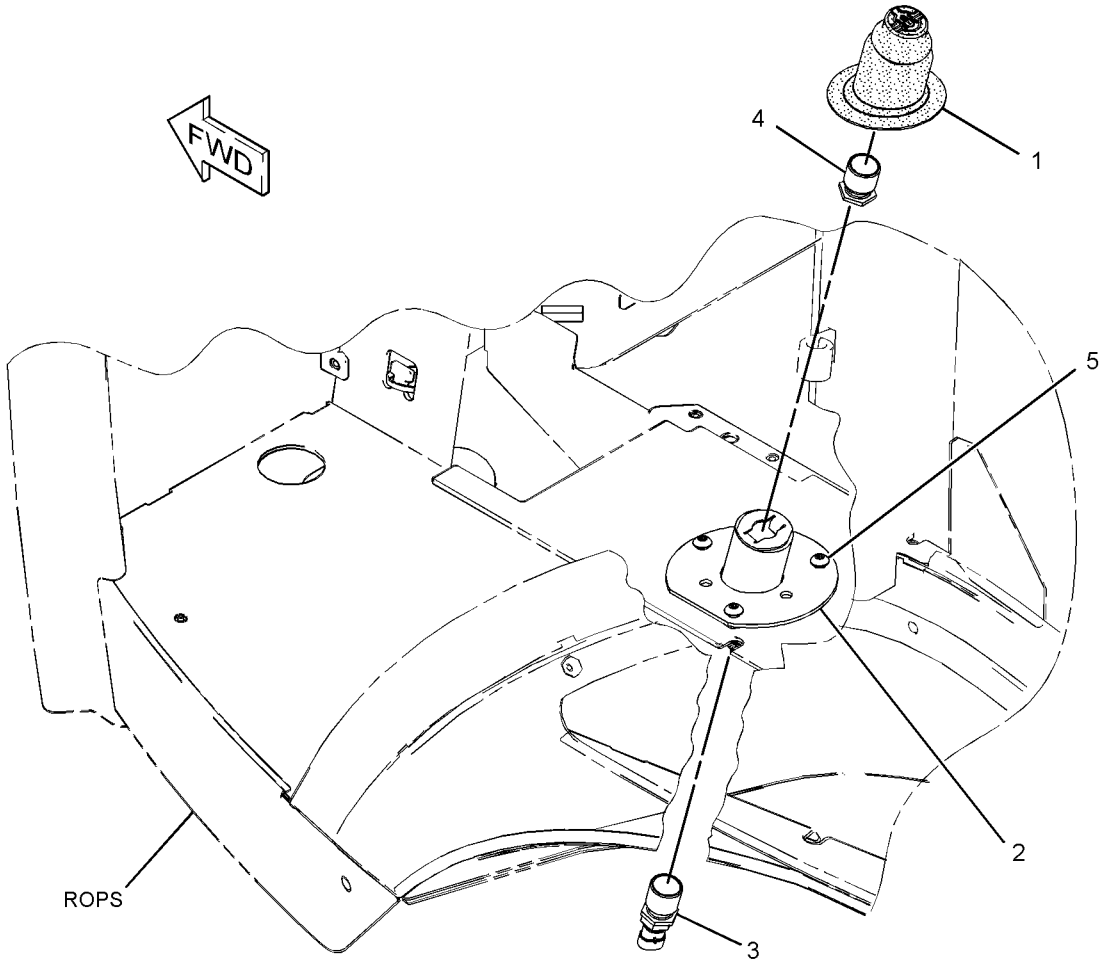

GRAPHIC #1 **<END>** g01390521

237-4896 SWITCH GP-PRESSURE

S/N: CRS1-UP
PART OF 322-1924 ENGINE AR-PRIMARY
AN ATTACHMENT

SMCS-1435 **i02270981**

NOTE	REF NO	GRAPHIC REF	PART NUMBER	QTY	PART NAME 1 2 3 4 5 6 (PRODUCT LEVEL)	SEE PAGE
	1	1	**237-4894**	1	SWITCH AS-PRESSURE (ENGINE OIL)	
	2	1	**199-9267**	1	SEAL-O-RING	

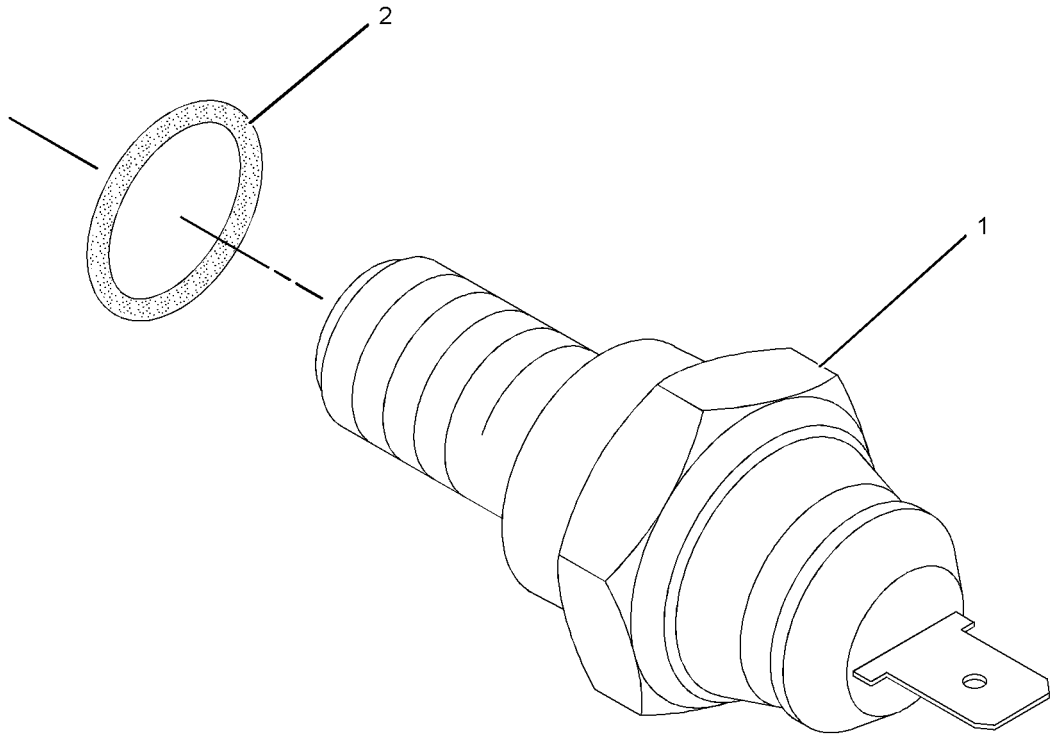

GRAPHIC #1 **<END>** g01138232

316-6925 SWITCH GP-PRESSURE–ENGINE OIL

S/N: C4Z1-UP

PART OF 321-7705 ENGINE AR-PRIMARY

AN ATTACHMENT

SMCS-1435 **i03128304**

NOTE	REF NO	GRAPHIC REF	PART NUMBER	QTY	PART NAME 1 2 3 4 5 6 (PRODUCT LEVEL)	SEE PAGE
	1	1	**035-8063**	1	PLUG	
	2	1	**199-9267**	1	SEAL-O-RING	
	3	1	**225-7941**	1	PLUG	
	4	1	**237-4894**	1	SWITCH AS-PRESSURE (ENGINE OIL)	

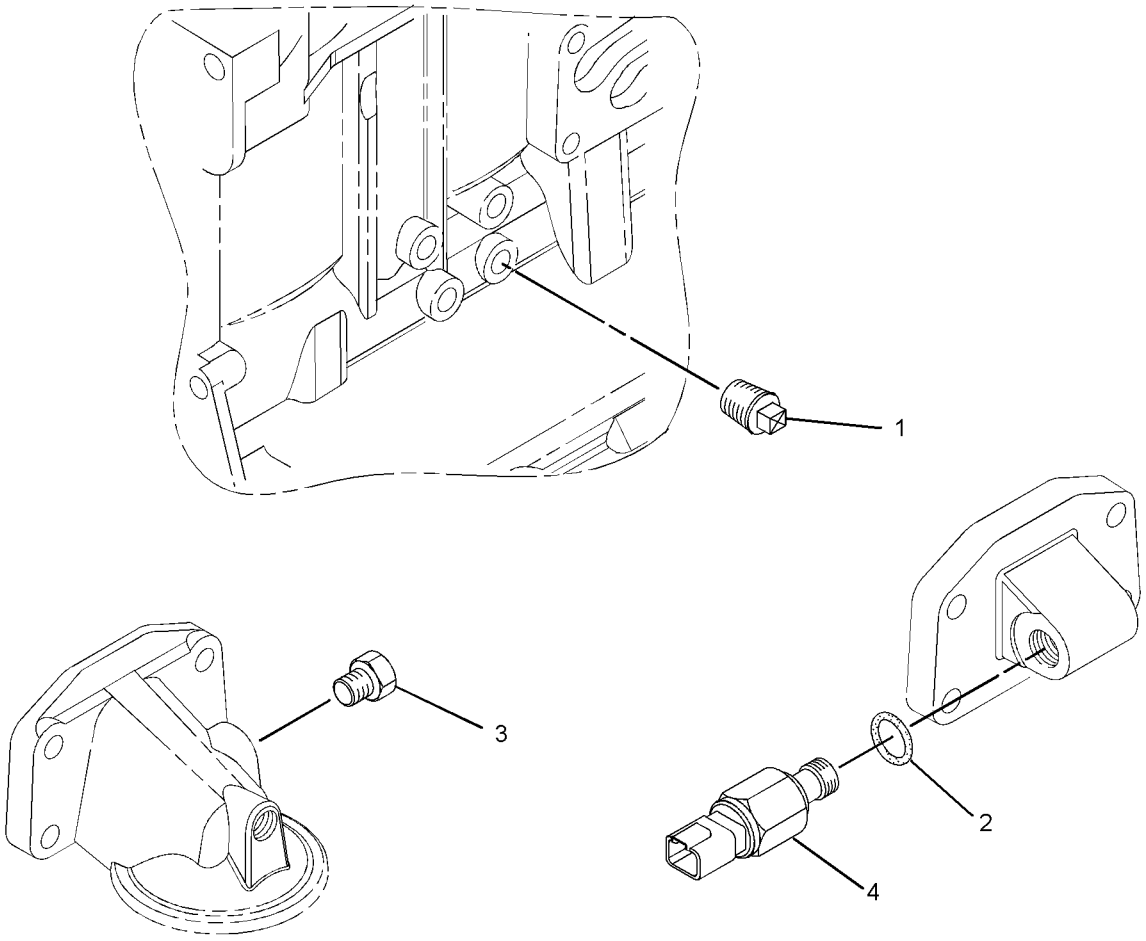

GRAPHIC #1 **<END>** g01400195

328-1954 WARNING GP-BACKUP

S/N: SJL1-UP
EAME MARKET
AN ATTACHMENT

SMCS-7406 **i03713781**

NOTE	REF NO	GRAPHIC REF	PART NUMBER	QTY	PART NAME 1 2 3 4 5 6 (PRODUCT LEVEL)	SEE PAGE
B	1	1	**146-9439**	1	RELAY AS (12-VOLT) (BACKUP ALARM)	
	2	1	**170-0950**	1	ALARM AS (BACKUP)	
		1	**4B-2043**	2	NUT (8-32-THD)	
	3	1	**206-1345**	3	STRAP-CABLE	
	4	1	**332-2577**	1	BRACKET AS	
M	5	1	**5C-2890**	2	NUT (M6X1-THD)	
	6	1	**8T-4121**	2	WASHER-HARD (11X21X2.5-MM THK)	
M	7	1	**8T-4196**	2	BOLT (M10X1.5X35-MM)	
M	8	1	**9X-2045**	2	SCREW-TRUSS HEAD (M6X1X20-MM)	
	9	1	**9X-6165**	4	WASHER (6.5X22X2.5-MM THK)	

B-USE AS REQUIRED
M-METRIC PART

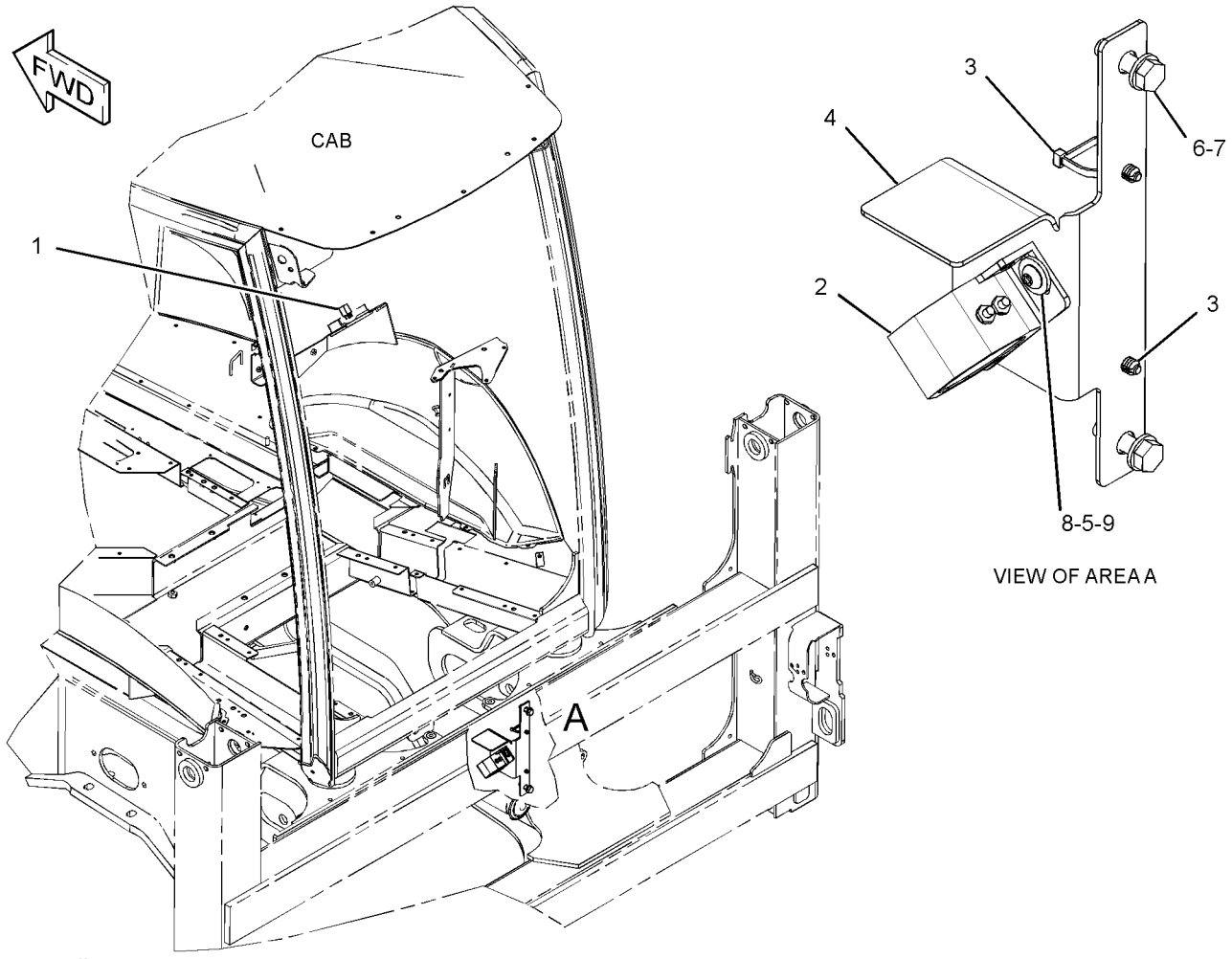

GRAPHIC #1 **<END>** g01986502

ELECTRICAL AND STARTING SYSTEM

338-5733 WIRING GP-AIR CONDITIONER

S/N: SJL1-UP
PART OF 335-3053, 335-3055 CAB AR
AN ATTACHMENT

SMCS-1408, 7320 **i03642947**

NOTE	REF NO	GRAPHIC REF	PART NUMBER	QTY	PART NAME 1 2 3 4 5 6 (PRODUCT LEVEL)	SEE PAGE
	1	1	**3E-9362**	1	RELAY AS (12-VOLT) (SHUTOFF)	
	2	1	**6K-0806**	7	STRAP-CABLE	
	3	1	**8T-8799**	1	BOOT	
	4	1	**189-3158**	1	SUPPRESSOR-ARC	
	5	1	**206-1345**	4	STRAP-CABLE	
	6	1	**213-6055**	1	HARNESS AS-HEATER & AIR COND (VENT)	
		1	**228-5856**	2	CONNECTOR	
		1	**213-0139**	5	PIN	
		1	**9X-3401**	5	PIN-CONNECTOR (16-GA TO 18-GA)	
		1	**155-2270**	1	KIT-CONNECTING PLUG (2-PIN)	
		1	**177-9648**	1	KIT-CONNECTING PLUG (2-PIN)	
		1	**177-9656**	1	KIT-CONNECTING PLUG (4-PIN)	
					(EACH PLUG KIT INCLUDES PLUG AS, WEDGE & INTERFACE SEAL)	
		1	**9X-1054**	1	PLUG AS-CONNECTOR (4-PIN)	
		1	**8T-8737**	1	PLUG-SEAL	
		1	**102-8802**	1	KIT-RECEPTACLE (2-PIN)	
		1	**102-8803**	1	KIT-RECEPTACLE (3-PIN)	
					(EACH RECEPTACLE KIT INCLUDES RECEPTACLE AS & WEDGE)	
		1	**180-9340**	2	SOCKET-CONNECTOR (14-GA TO 18-GA)	
		1	**8L-8413**	29	STRAP-CABLE	
		1	**122-4401**	1	TERMINAL	
		1	**2L-8069**	1	TERMINAL-RING (2-GA TO 10-GA, 3/8-IN SCREW)	
		1	**2L-8067**	1	TERMINAL-RING (10-GA TO 12-GA, 1/4-IN SCREW)	
		1	**091-2436**	7	TERMINAL-BLADE (18-GA TO 22-GA)	
		1	**104-1995**	11	TERMINAL-BLADE (14-GA TO 18-GA)	
		1	**9X-1055**	2	TERMINAL-RECEPTACLE (12-GA)	
		1	**100-5041**	2	TERMINAL-RECEPTACLE (18-GA TO 20-GA)	
E		1	**119-3662**		TUBE-HEAT SHRINK (10.85-MM DIA) (20-CM)	
E		1	**125-7874**		TUBE-HEAT SHRINK (5.72-MM DIA) (10-CM)	
	7	1	**214-4695**	1	SWITCH AS-ROCKER (BLOWER FAN SPEED)	
	8	1	**214-4718**	1	SWITCH AS-ROCKER (AIR CONDITIONER, HEATER SELECT)	
					(EACH SWITCH AS-ROCKER INCLUDES)	
		1	**111-7899**	1	GASKET	
	9	1	**236-6923**	1	SWITCH AS-PRESSURE (REFRIGERANT COMPR, HIGH SIDE)	
	10	1	**238-7492**	1	HARNESS AS-HEATER & AIR COND (COMPRESSOR)	
		1	**9X-3401**	2	PIN-CONNECTOR (16-GA TO 18-GA)	
		1	**155-2270**	2	KIT-CONNECTING PLUG (2-PIN)	
					(EACH INCLUDES PLUG AS, WEDGE & INTERFACE SEAL)	
		1	**102-8802**	1	KIT-RECEPTACLE (2-PIN)	
					(INCLUDES RECEPTACLE AS & WEDGE)	
		1	**100-6674**	2	SEAL-CONNECTOR	
		1	**180-9340**	4	SOCKET-CONNECTOR (14-GA TO 18-GA)	
		1	**124-5640**	2	TERMINAL-SOCKET	
		1	**8L-8413**	1	STRAP-CABLE	
E		1	**125-7874**		TUBE-HEAT SHRINK (5.72-MM DIA) (10-CM)	
	11	1	**275-0570**	1	BAR-BUS	
	12	1	**319-6385**	1	BRACKET	
	13	1	**338-5731**	1	HARNESS AS-HEATER & AIR COND (POWER)	
		1	**111-6795**	1	HOUSING-RELAY	
		1	**111-6816**	1	LOCK	

338-5733 **WIRING GP-AIR CONDITIONER** *(contd.)* **i03642947**

NOTE	REF NO	GRAPHIC REF	PART NUMBER	QTY	PART NAME 1 2 3 4 5 6 (PRODUCT LEVEL)	SEE PAGE
		1	**186-3735**	4	PIN-CONNECTOR (16-GA TO 18-GA)	
		1	**102-8802**	2	KIT-RECEPTACLE (2-PIN)	
					(EACH INCLUDES RECEPTACLE AS & WEDGE)	
		1	**111-6792**	4	TERMINAL-RECEPTACLE (18-GA TO 20-GA)	
	14	1	**115-1615**	1	RELAY AS (12-VOLT) (HIGH SPEED)	
Y	15	1	**276-7287**	1	RELAY GP (12-VOLT) (POWER DISTRIBUTION)	166
	16	1	**3S-2093**	5	STRAP-CABLE	
M	17	1	**5C-2890**	1	NUT (M6X1-THD)	
M	18	1	**5C-7261**	1	NUT (M8X1.25-THD)	
M	19	1	**7X-2534**	1	BOLT (M6X1X50-MM)	
M	20	1	**8T-4171**	1	BOLT (M6X1X12-MM)	
	21	1	**8T-4205**	2	WASHER-HARD (7.2X14.5X2-MM THK)	
	22	1	**8T-4224**	1	WASHER-HARD (8.8X16X2-MM THK)	
	23	1	**9X-7378**	1	SEAL-O-RING	

E-ORDER BY THE CENTIMETER
M-METRIC PART
Y-SEPARATE ILLUSTRATION

338-5733 **WIRING GP-AIR CONDITIONER** *(contd.)* **i03642947**

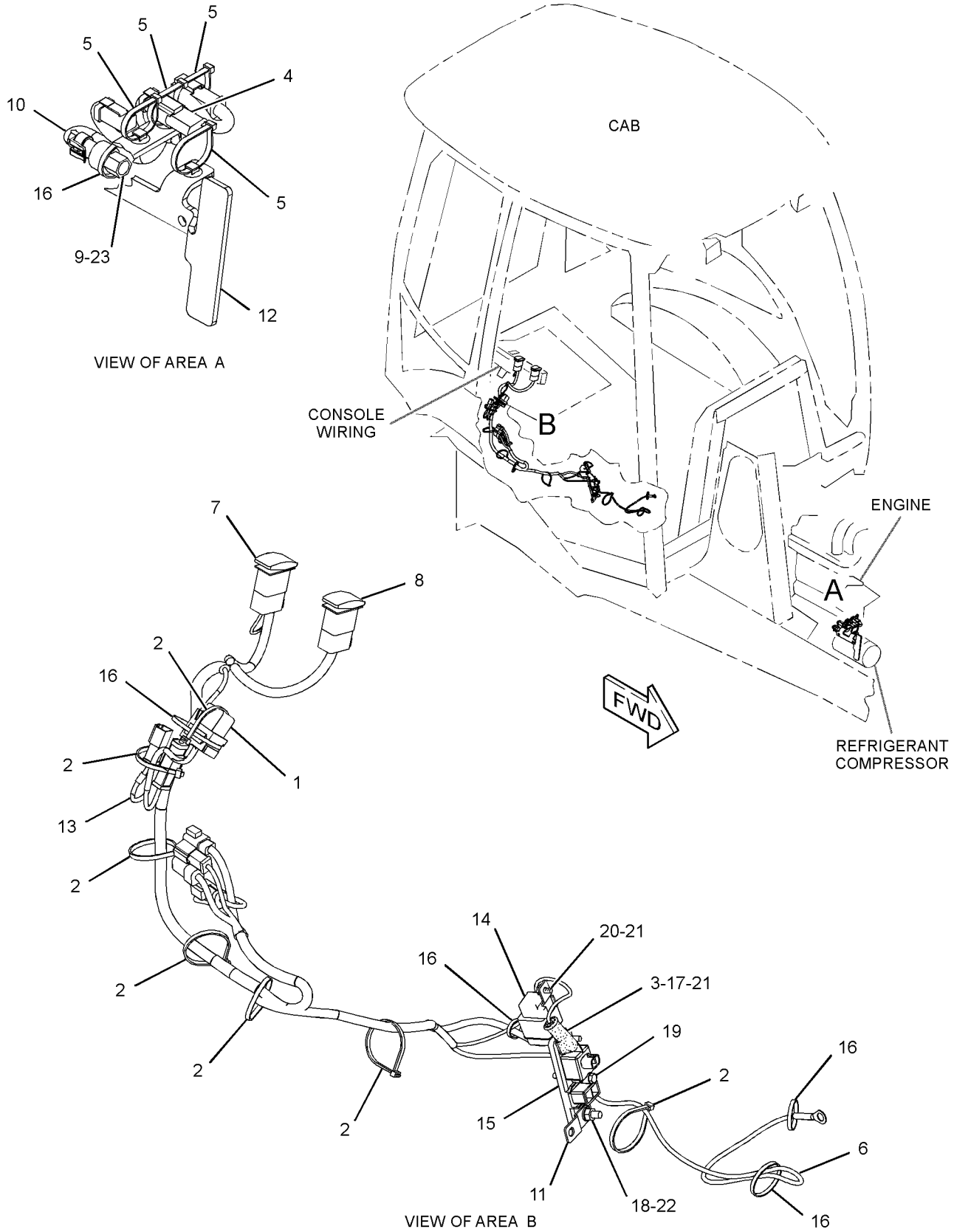

GRAPHIC #1

<END>

g01971656

340-3552 WIRING GP-CAB–ROOF

S/N: SJL1-UP

PART OF 335-3052, 335-3053, 335-3055 CAB AR, 335-3054 CAB AR-ENCLOSED ROPS AN ATTACHMENT

SMCS-1408, 7301 **i03642943**

NOTE	REF NO	GRAPHIC REF	PART NUMBER	QTY	PART NAME 1 2 3 4 5 6 (PRODUCT LEVEL)	SEE PAGE
	1	1	**9R-7941**	2	SOCKET AS	
					(EACH INCLUDES)	
		1	**9R-7980**	1	COVER	
	2	1	**206-1345**	9	STRAP-CABLE	
Y	3	1	**214-2968**	4	LAMP GP-FLOOD (12-VOLT)	150
B	4	1	**214-4697**	1	SWITCH AS-ROCKER (FLOODLIGHTS, FRONT)	
B	5	1	**214-4699**	1	SWITCH AS-ROCKER (FLOODLIGHTS, REAR)	
					(EACH SWITCH AS-ROCKER INCLUDES)	
		1	**111-7899**	1	GASKET	
	6	1	**282-7833**	1	GROMMET	
	7	1	**282-7835**	1	PLATE	
	8	1	**340-3551**	1	HARNESS AS-CHASSIS	
		1	**123-7615**	2	CONNECTOR	
		1	**9W-0852**	2	PIN-CONNECTOR (14-GA)	
		1	**9X-3401**	14	PIN-CONNECTOR (16-GA TO 18-GA)	
		1	**155-2265**	2	KIT-CONNECTING PLUG (8-PIN)	
		1	**155-2270**	8	KIT-CONNECTING PLUG (2-PIN)	
		1	**155-2271**	1	KIT-CONNECTING PLUG (4-PIN)	
					(EACH PLUG KIT INCLUDES PLUG AS, WEDGE & INTERFACE SEAL)	
		1	**8T-8737**	4	PLUG-SEAL	
		1	**102-8805**	1	KIT-RECEPTACLE (6-PIN)	
		1	**102-8801**	1	KIT-RECEPTACLE (12-PIN)	
					(EACH RECEPTACLE KIT INCLUDES RECEPTACLE AS & WEDGE)	
		1	**9W-0844**	4	SOCKET-CONNECTOR (14-GA)	
		1	**180-9340**	30	SOCKET-CONNECTOR (14-GA TO 18-GA)	
		1	**097-7234**	2	TERMINAL (18-GA TO 22-GA)	
		1	*128-4170*	1	TERMINAL AS	
		1	**6H-3587**	1	TERMINAL-RING (6-GA TO 8-GA, 3/8-IN SCREW)	
E		1	**6V-9023**		TUBE-HEAT SHRINK (12.7-MM DIA) (4-CM)	
		1	**5P-4571**	2	TERMINAL-BLADE (14-GA TO 16-GA)	
		1	**091-2436**	4	TERMINAL-BLADE (18-GA TO 22-GA)	
E		1	**119-3662**		TUBE-HEAT SHRINK (10.85-MM DIA) (13-CM)	
E		1	**125-7874**		TUBE-HEAT SHRINK (5.72-MM DIA) (30-CM)	
E		1	**125-7875**		TUBE-HEAT SHRINK (7.44-MM DIA) (5-CM)	
	9	1	**3S-2093**	20	STRAP-CABLE	
M	10	1	**8C-3798**	2	BOLT-LOCKING (M6X1X30-MM)	
	11	1	**8F-3590**	1	LOCKWASHER	
	12	1	**8T-4121**	2	WASHER-HARD (11X21X2.5-MM THK)	
M	13	1	**8T-4133**	1	NUT (M10X1.5-THD)	
	14	1	**9X-8256**	2	WASHER (6.6X12X2-MM THK)	

B-USE AS REQUIRED
E-ORDER BY THE CENTIMETER
M-METRIC PART
Y-SEPARATE ILLUSTRATION

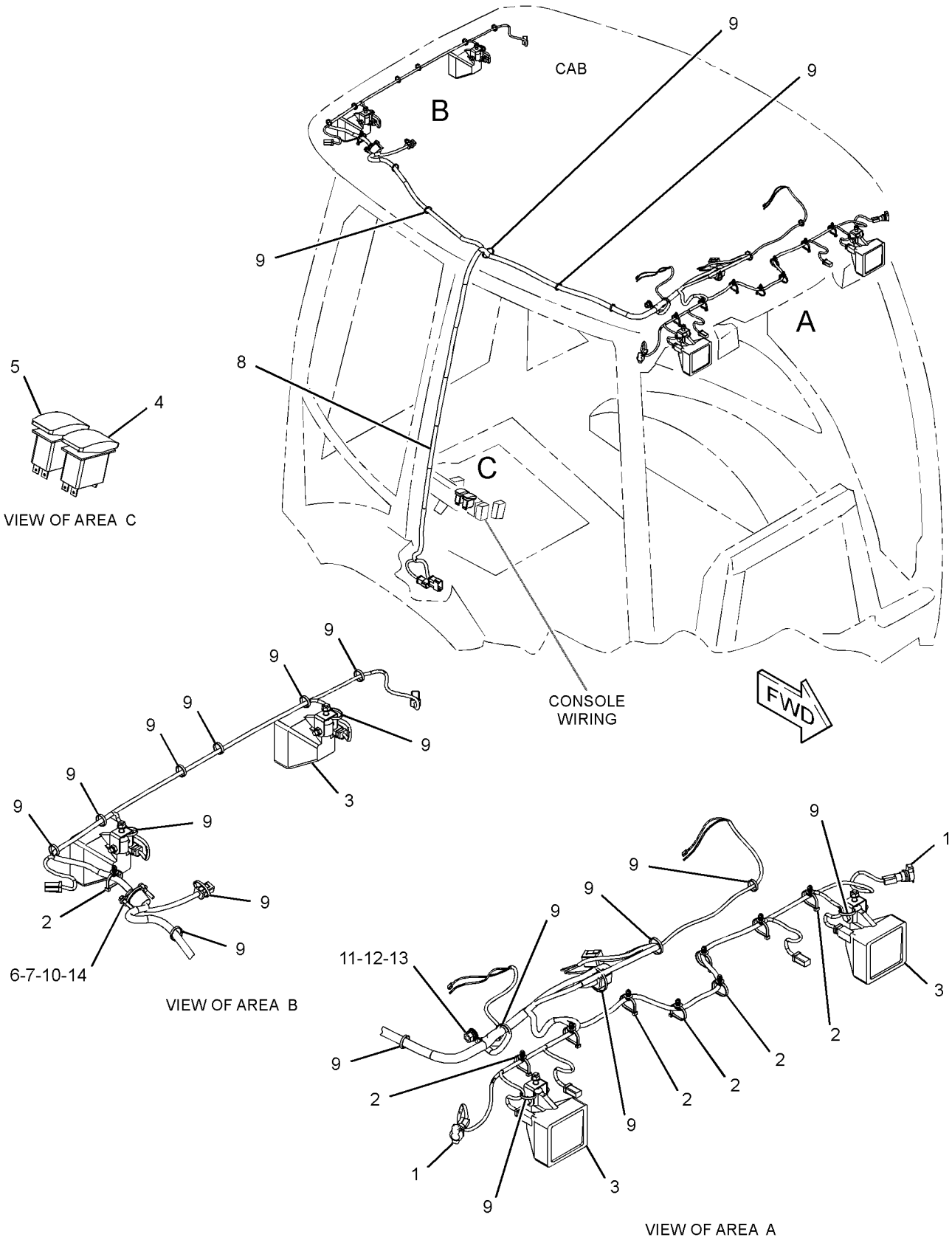

GRAPHIC #1 **<END>** g01971597

338-5740 WIRING GP-CONSOLE–SIDE, PILOT

S/N: SJL1-UP

PART OF 335-3052, 335-3053, 335-3055 CAB AR, 335-3054 CAB AR-ENCLOSED ROPS AN ATTACHMENT

SMCS-1408 **i03664427**

NOTE	REF NO	GRAPHIC REF	PART NUMBER	QTY	PART NAME 1 2 3 4 5 6 (PRODUCT LEVEL)	SEE PAGE
J	1	1	**110-7887**	1	SWITCH AS-START (KEY)	
		1	**7T-6799**	1	NUT-MOUNTING (1-32-THD)	
		1	**102-8804**	1	KIT-RECEPTACLE (4-PIN)	
					(INCLUDES RECEPTACLE AS & WEDGE)	
		1	**186-3735**	4	PIN-CONNECTOR (16-GA TO 18-GA)	
	2	1	**206-1345**	3	STRAP-CABLE	
	3	1	**214-4693**	1	SWITCH AS-ROCKER (WARNING BEACON)	
	4	1	**214-4722**	1	SWITCH AS-ROCKER (STARTING AID)	
					(EACH SWITCH AS-ROCKER INCLUDES)	
		1	**111-7899**	1	GASKET	
B	5	1	**227-1057**	5	PLUG-HOLE	
	6	1	**300-4994**	1	SWITCH AS-ROCKER (HYDRAULIC LOCKOUT)	
		1	**111-7899**	1	GASKET	
	7	1	**338-5723**	1	HARNESS AS-CONSOLE	
		1	**228-5856**	10	CONNECTOR	
		1	**126-1767**	2	PIN-CONNECTOR (14-GA)	
		1	**176-2947**	1	PLUG KIT-CONN	
					(INCLUDES PLUG AS, WEDGE & INTERFACE SEAL)	
		1	**261-0524**	1	PLUG AS-CONNECTOR (4-PIN)	
		1	**264-7031**	1	SEAL-CONNECTOR	
		1	**245-8026**	1	PLUG AS	
		1	**8T-8737**	2	PLUG-SEAL	
		1	**151-9272**	1	KIT-RECEPTACLE (2-PIN)	
					(INCLUDES RECEPTACLE AS & WEDGE)	
		1	**126-1768**	4	SOCKET-CONNECTOR (14-GA)	
		1	**180-9340**	53	SOCKET-CONNECTOR (14-GA TO 18-GA)	
		1	**7N-7221**	2	TERMINAL-BLADE (18-GA TO 22-GA)	
E		1	**119-3662**		TUBE-HEAT SHRINK (10.85-MM DIA) (13-CM)	
E		1	**125-7874**		TUBE-HEAT SHRINK (5.72-MM DIA) (50-CM)	
	8	1	**339-3067**	1	CONTROL GP-ELECTRONIC	
	9	1	**343-4355**	1	HORN	
	10	1	**3S-2093**	5	STRAP-CABLE	

B-USE AS REQUIRED
E-ORDER BY THE CENTIMETER
J-REQUIRES CORPORATE KEY

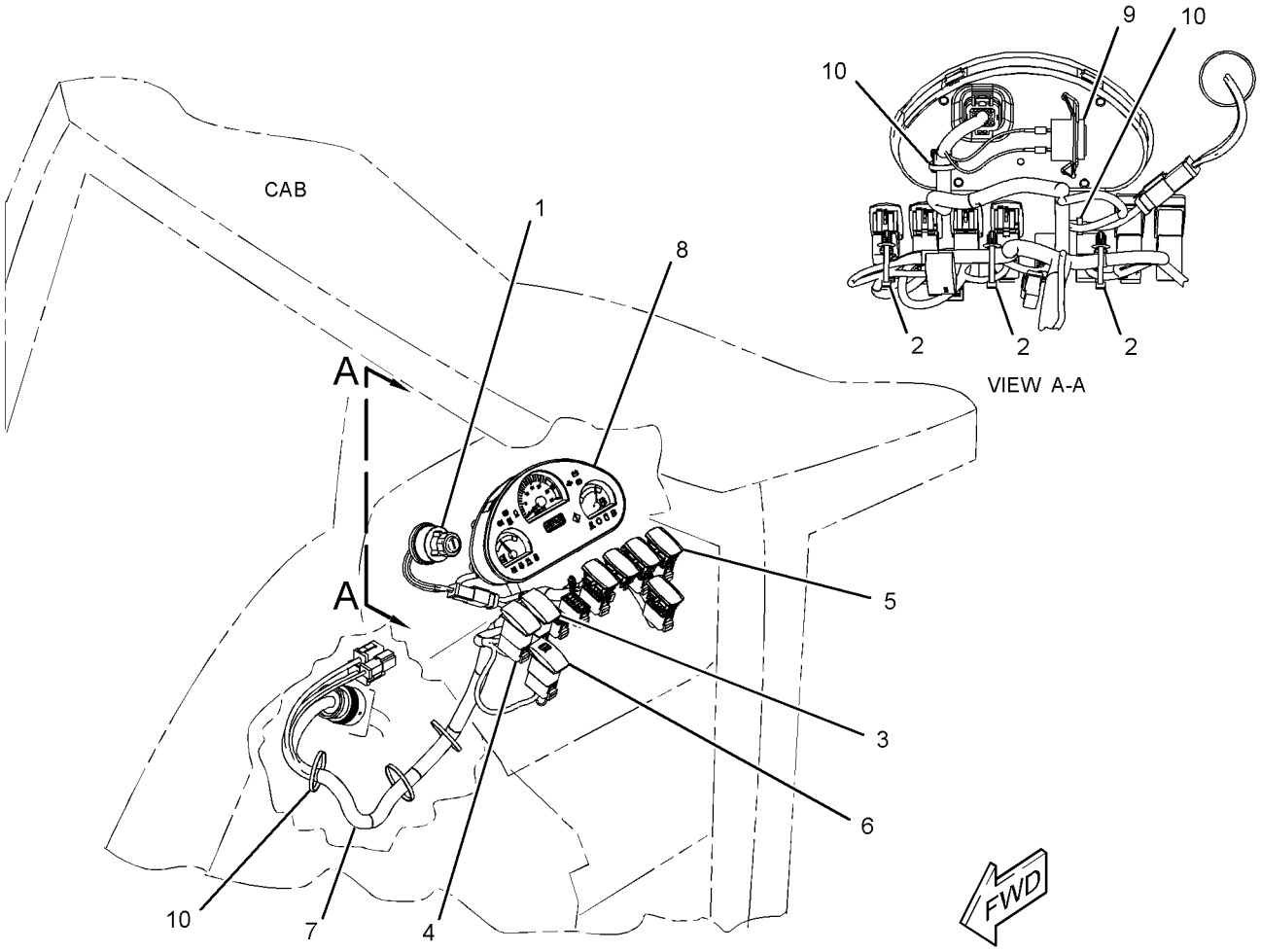

GRAPHIC #1 **<END>** g01971214

267-5635 WIRING GP-CONTROL–JOYSTICK, LH

S/N: SJL1-UP

PART OF 329-0124 HYDRAULIC AR

SMCS-1408 **i03712372**

NOTE	REF NO	GRAPHIC REF	PART NUMBER	QTY	PART NAME 1 2 3 4 5 6 (PRODUCT LEVEL)	SEE PAGE
	1	1	**206-2423**	1	SADDLE	
	2	1	**225-7988**	1	HARNESS AS-AUXILIARY	
		1	**9X-3401**	2	PIN-CONNECTOR (16-GA TO 18-GA)	
		1	**8T-8737**	16	PLUG-SEAL	
		1	**180-9340**	2	SOCKET-CONNECTOR (14-GA TO 18-GA)	
		1	**155-2255**	1	KIT-CONNECTING PLUG (12-PIN)	
					(INCLUDES PLUG AS, WEDGE & INTERFACE SEAL)	
		1	**102-8806**	1	KIT-RECEPTACLE (8-PIN)	
					(INCLUDES RECEPTACLE AS & WEDGE)	
	3	1	**3S-2093**	5	STRAP-CABLE	

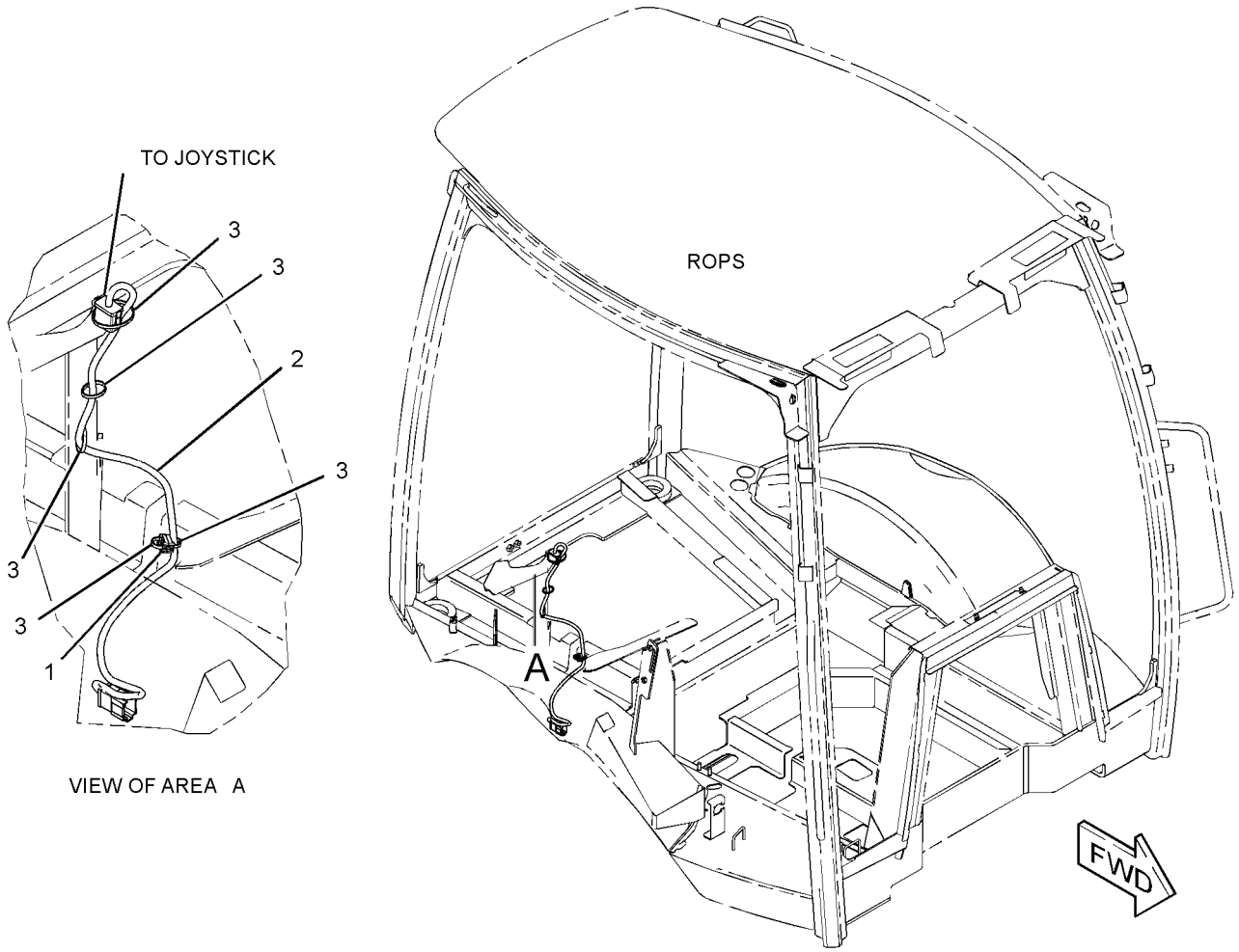

GRAPHIC #1 **<END>** g01367391

ELECTRICAL AND STARTING SYSTEM

338-5737 WIRING GP-ENGINE

S/N: SJL1-UP

PART OF 329-0296 CHASSIS AR

SMCS-1408 **i03657456**

NOTE	REF NO	GRAPHIC REF	PART NUMBER	QTY	PART NAME 1 2 3 4 5 6 (PRODUCT LEVEL)	SEE PAGE
	1	1	**7K-1181**	11	STRAP-CABLE	
	2	1	**7Y-3883**	1	CABLE AS	
		1	**1S-7251**	2	TERMINAL-CABLE (00-GA, 1/2-IN SCREW)	
E		1	**5P-0747**		CABLE (00-GA, BLACK) (40-CM)	
	3	1	**8T-8799**	3	BOOT	
	4	1	**189-3158**	1	SUPPRESSOR-ARC	
	5	1	**205-9920**	7	STRAP-CABLE	
	6	1	**206-1345**	7	STRAP-CABLE	
	7	1	**235-8747**	1	SWITCH-TEMPERATURE (ENGINE COOLANT)	
	8	1	**244-3106**	1	SENDER AS-TEMPERATURE (ENGINE COOLANT)	
		1	**102-8802**	1	KIT-RECEPTACLE (2-PIN)	
					(INCLUDES RECEPTACLE AS & WEDGE)	
		1	**186-3735**	2	PIN-CONNECTOR (16-GA TO 18-GA)	
	9	1	**274-3774**	2	CAP-CONNECTOR	
	10	1	**310-2330**	1	HARNESS AS-ENGINE	
		1	**180-9340**	63	SOCKET-CONNECTOR (14-GA TO 18-GA)	
		1	**230-4011**	1	PLUG AS-CONNECTOR (2-PIN)	
		1	**264-7029**	1	SEAL-CONNECTOR	
B		1	**141-8061**		TAPE	
		1	**155-2270**	16	KIT-CONNECTING PLUG (2-PIN)	
		1	**155-2260**	1	KIT-CONNECTING PLUG (3-PIN)	
					(EACH PLUG KIT INCLUDES PLUG AS, WEDGE & INTERFACE SEAL)	
		1	**8L-8413**	12	STRAP-CABLE	
		1	**8T-8737**	3	PLUG-SEAL	
		1	**9X-1054**	1	PLUG AS-CONNECTOR (4-PIN)	
		1	**167-3693**	1	PLUG AS-CONNECTOR (31-PIN)	
		1	**123-7615**	2	CONNECTOR	
		1	**124-5640**	2	TERMINAL-SOCKET	
		1	**9X-3402**	2	SOCKET-CONNECTOR (16-GA TO 18-GA)	
		1	**128-4168**	1	TERMINAL AS	
		1	**128-4172**	1	TERMINAL AS-RING (6-GA TO 8-GA)	
		1	**2L-8067**	2	TERMINAL-RING (10-GA TO 12-GA, 1/4-IN SCREW)	
		1	**2L-8066**	1	TERMINAL-RING (10-GA TO 12-GA, NO. 10 SCREW)	
		1	**2L-8079**	1	TERMINAL-RING (14-GA TO 16-GA, 3/8-IN SCREW)	
		1	**7N-7221**	1	TERMINAL-BLADE (18-GA TO 22-GA)	
		1	**2L-8066**	1	TERMINAL-RING (10-GA TO 12-GA, NO. 10 SCREW)	
		1	**7N-9017**	3	TERMINAL-RING (18-GA TO 22-GA, NO. 10 SCREW)	
		1	**9X-1055**	2	TERMINAL-RECEPTACLE (12-GA)	
		1	**091-2436**	4	TERMINAL-BLADE (18-GA TO 22-GA)	
		1	**100-5041**	2	TERMINAL-RECEPTACLE (18-GA TO 20-GA)	
		1	**100-6674**	2	SEAL-CONNECTOR	
D		1	**5P-6006**		TUBE-HEAT SHRINK (9.52-MM DIA) (0.1-M)	
E		1	**125-7874**		TUBE-HEAT SHRINK (5.72-MM DIA) (18-CM)	
E		1	**125-7875**		TUBE-HEAT SHRINK (7.44-MM DIA) (15-CM)	
E		1	**119-3662**		TUBE-HEAT SHRINK (10.85-MM DIA) (7-CM)	
	11	1	**315-3371**	1	PLATE AS	
Y	12	1	**322-6827**	1	RELAY GP (12-VOLT) (STARTING MOTOR)	170
	13	1	**325-8341**	1	FILM-INSTRUCTION (RELAY CONNECTION)	
	14	1	**115-1615**	1	RELAY AS (12-VOLT) (STARTING AID)	
	15	1	**132-5789**	1	CLIP	
	16	1	**164-9425**	1	HORN AS (24-VOLT, LOW TONE)	

338-5737 **WIRING GP-ENGINE** *(contd.)* **i03657456**

NOTE	REF NO	GRAPHIC REF	PART NUMBER	QTY	PART NAME 1 2 3 4 5 6 (PRODUCT LEVEL)	SEE PAGE
	17	1	**199-9751**	1	SEAL-O-RING	
	18	1	**3F-9556**	1	LOCKWASHER	
	19	1	**3J-4818**	1	LOCKWASHER	
	20	1	**3S-2093**	20	STRAP-CABLE	
	21	1	**4P-7428**	1	CLIP	
	22	1	**4P-7581**	6	CLIP	
	23	1	**4P-8134**	5	CLIP	
M	24	1	**5C-2874**	2	NUT (M5X0.8-THD)	
M	25	1	**5C-2890**	2	NUT (M6X1-THD)	
M	26	1	**5C-7261**	1	NUT (M8X1.25-THD)	
	27	1	**8C-3398**	2	LOCKWASHER	
	28	1	**8F-1434**	2	LOCKWASHER	
	29	1	**8F-3590**	1	LOCKWASHER	
	30	1	**8T-0328**	2	WASHER-HARD (5.5X10X1-MM THK)	
	31	1	**8T-4121**	9	WASHER-HARD (11X21X2.5-MM THK)	
M	32	1	**8T-4133**	2	NUT (M10X1.5-THD)	
M	33	1	**8T-4137**	7	BOLT (M10X1.5X20-MM)	
M	34	1	**8T-4171**	1	BOLT (M6X1X12-MM)	
M	35	1	**8T-4179**	2	BOLT (M12X1.75X20-MM)	
M	36	1	**8T-4189**	3	BOLT (M8X1.25X20-MM)	
	37	1	**8T-4205**	3	WASHER-HARD (7.2X14.5X2-MM THK)	
	38	1	**8T-4223**	2	WASHER-HARD (13.5X25.5X3-MM THK)	
	39	1	**8T-4224**	4	WASHER-HARD (8.8X16X2-MM THK)	
M	40	1	**9X-2480**	1	BOLT (M6X1X45-MM)	

B-USE AS REQUIRED
D-ORDER BY THE METER
E-ORDER BY THE CENTIMETER
M-METRIC PART
Y-SEPARATE ILLUSTRATION

338-5737 **WIRING GP-ENGINE** *(contd.)* **i03657456**

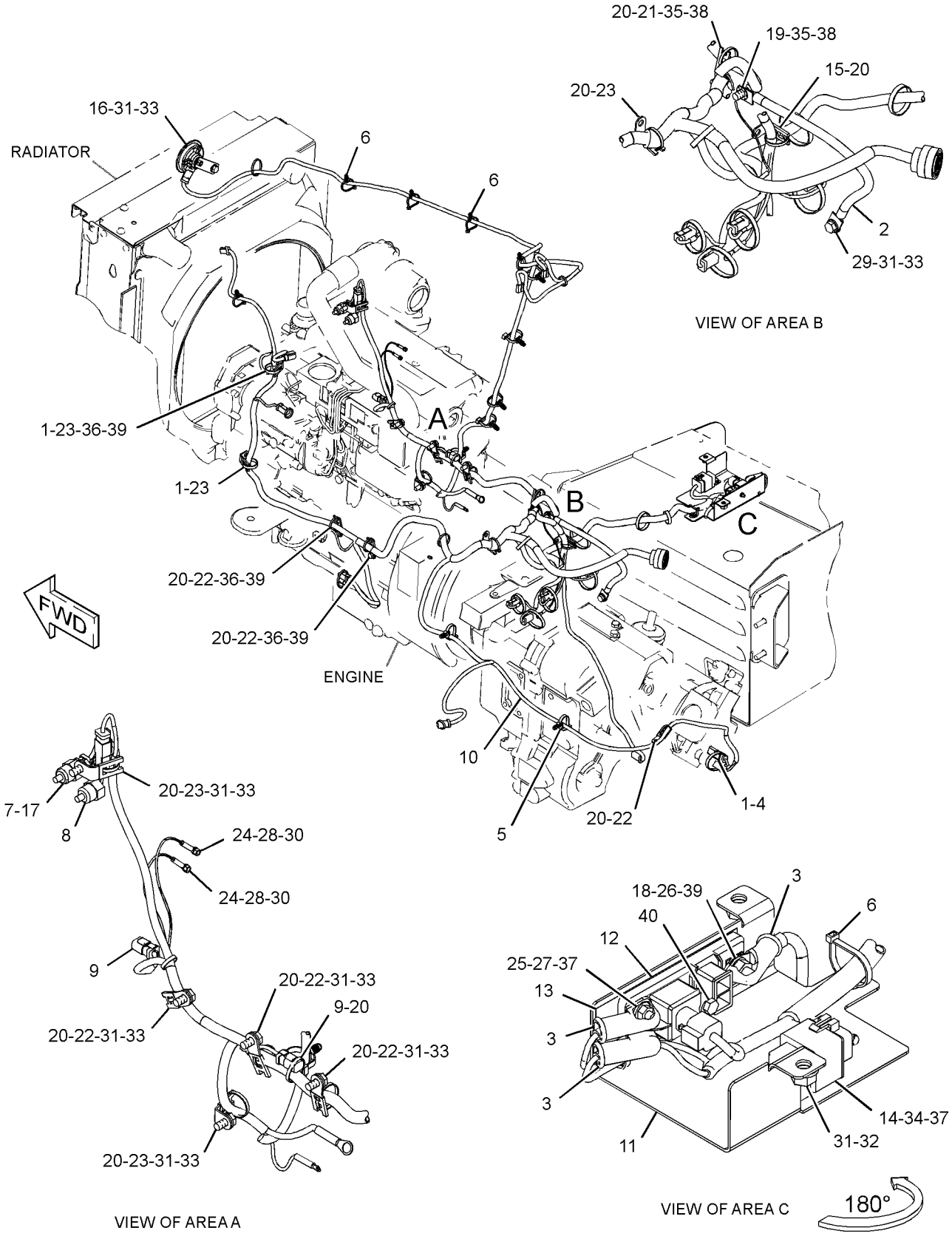

GRAPHIC #1 **<END>** g01990776

310-5613 WIRING GP-HEATER

S/N: SJL1-UP

PART OF 335-3052 CAB AR, 335-3054 CAB AR-ENCLOSED ROPS AN ATTACHMENT

SMCS-1408, 7304 **i03579082**

NOTE	REF NO	GRAPHIC REF	PART NUMBER	QTY	PART NAME 1 2 3 4 5 6 (PRODUCT LEVEL)	SEE PAGE
M	1	1	**8T-4171**	1	BOLT (M6X1X12-MM)	
	2	1	**8T-8799**	1	BOOT	
	3	1	**213-6055**	1	HARNESS AS-HEATER & AIR COND	
		1	**228-5856**	2	CONNECTOR	
		1	**213-0139**	5	PIN	
		1	**180-9339**	5	PIN-CONNECTOR (14-GA TO 18-GA)	
		1	**9X-1054**	1	PLUG AS-CONNECTOR (4-PIN)	
		1	**155-2270**	1	KIT-CONNECTING PLUG (2-PIN)	
		1	**177-9648**	1	KIT-CONNECTING PLUG (2-PIN)	
		1	**177-9656**	1	KIT-CONNECTING PLUG (4-PIN)	
					(EACH PLUG KIT INCLUDES PLUG AS, WEDGE & INTERFACE SEAL)	
		1	**8T-8737**	1	PLUG-SEAL	
		1	**102-8802**	1	KIT-RECEPTACLE (2-PIN)	
		1	**102-8803**	1	KIT-RECEPTACLE (3-PIN)	
					(EACH RECEPTACLE KIT INCLUDES RECEPTACLE AS & WEDGE)	
		1	**180-9340**	2	SOCKET-CONNECTOR (14-GA TO 18-GA)	
		1	**8L-8413**	29	STRAP-CABLE	
E		1	**125-7874**		TUBE-HEAT SHRINK (5.72-MM DIA) (10-CM)	
E		1	**119-3662**		TUBE-HEAT SHRINK (10.85-MM DIA) (20-CM)	
	4	1	**214-4695**	1	SWITCH AS-ROCKER (BLOWER FAN SPEED)	
	5	1	**214-4703**	1	SWITCH AS-ROCKER (HEATER)	
					(EACH SWITCH AS-ROCKER INCLUDES)	
		1	**111-7899**	1	GASKET	
	6	1	**275-0570**	1	BAR-BUS	
Y	7	1	**276-7287**	1	RELAY GP (12-VOLT) (POWER DISTRIBUTION)	166
	8	1	**115-1615**	1	RELAY AS (12-VOLT) (AIR CONDITIONER)	
	9	1	**3S-2093**	4	STRAP-CABLE	
M	10	1	**5C-2890**	1	NUT (M6X1-THD)	
M	11	1	**5C-7261**	1	NUT (M8X1.25-THD)	
M	12	1	**7X-2534**	1	BOLT (M6X1X50-MM)	
	13	1	**8T-4205**	2	WASHER-HARD (7.2X14.5X2-MM THK)	
	14	1	**8T-4224**	1	WASHER-HARD (8.8X16X2-MM THK)	
	15	1	**6K-0806**	5	STRAP-CABLE	

E-ORDER BY THE CENTIMETER
M-METRIC PART
Y-SEPARATE ILLUSTRATION

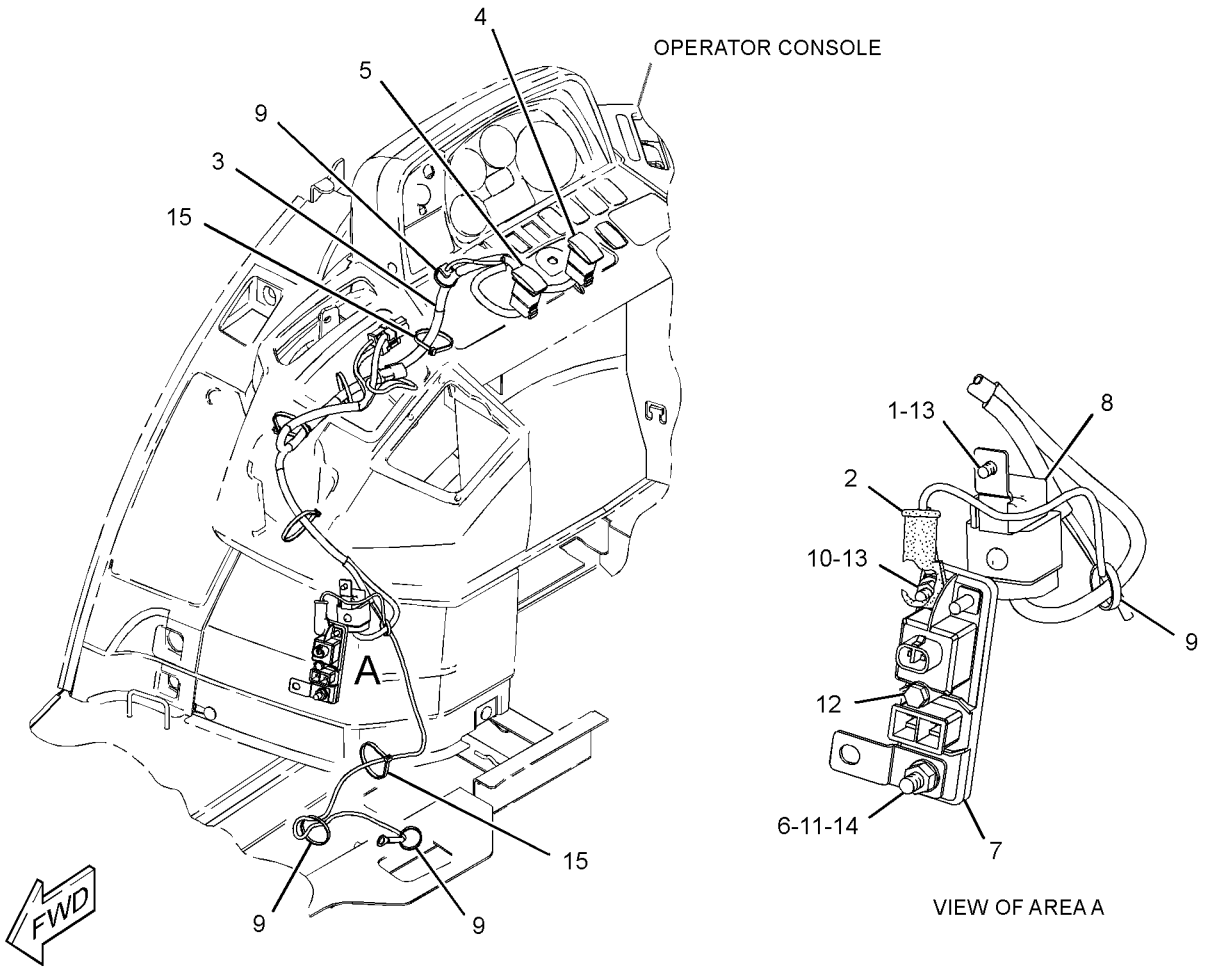

GRAPHIC #1 **<END>** g01869576

295-5902 WIRING GP-KICKOUT & POSITIONER

S/N: SJL1-UP

PART OF 329-0092 LOADER AR

SMCS-5109, 5112, 5734 **i03712379**

NOTE	REF NO	GRAPHIC REF	PART NUMBER	QTY	PART NAME 1 2 3 4 5 6 (PRODUCT LEVEL)	SEE PAGE
Y	1	1	**3E-7843**	1	CONTROL GP-POSITION	137
	2	1	**5G-7820**	1	MAGNET AS	
	3	1	**8T-4985**	2	CLAMP-HOSE	
	4	1	**246-8047**	1	HARNESS AS-WIRING (KICKOUT, POSITIONER)	
E		1	**6V-8523**		HOSE (331-CM)	
		1	**9X-3401**	6	PIN-CONNECTOR (16-GA TO 18-GA)	
		1	**102-8803**	2	KIT-RECEPTACLE (3-PIN)	
					(EACH RECEPTACLE KIT INCLUDES RECEPTACLE AS & WEDGE)	
E		1	**8T-6885**		TUBE-HEAT SHRINK (19.05-MM DIA) (10-CM)	
	5	1	**265-5645**	1	BRACKET AS	
	6	1	**163-6290**	2	PLATE	
	7	1	**3S-2093**	15	STRAP-CABLE	
M	8	1	**8T-4199**	2	BOLT (M8X1.25X12-MM)	
	9	1	**8T-4224**	2	WASHER-HARD (8.8X16X2-MM THK)	
M	10	1	**8T-4908**	2	BOLT (M8X1.25X25-MM)	
G	11	1	**160-2246**		SLEEVE-ABRASION (12-IN)	

E-ORDER BY THE CENTIMETER
G-ORDER BY THE INCH
M-METRIC PART
Y-SEPARATE ILLUSTRATION

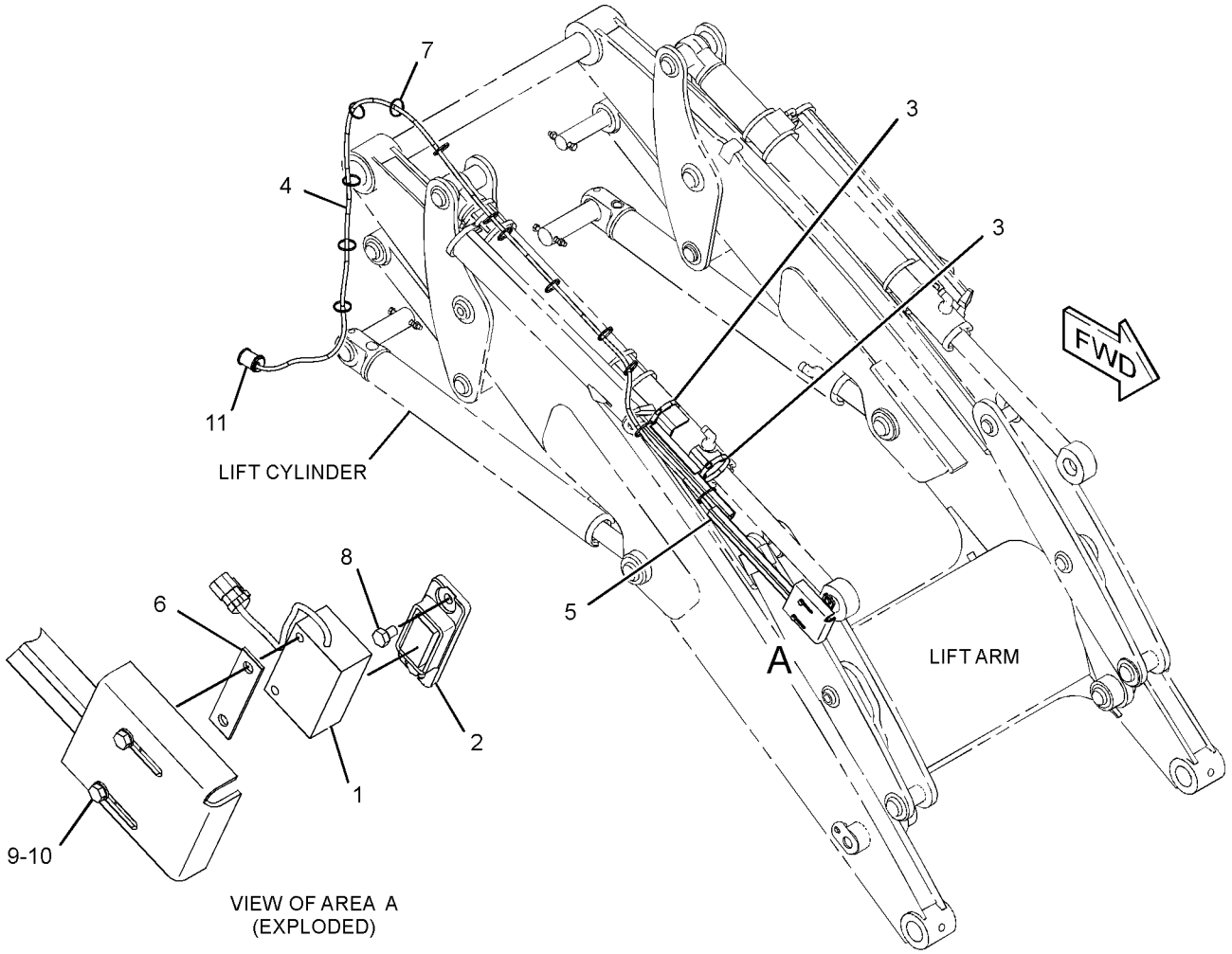

GRAPHIC #1 **<END>** g01356687

323-0992 WIRING GP-LOAD CONTROL

S/N: SJL1-UP

PART OF 332-7962, 332-7963 VALVE AR-BANK 3

AN ATTACHMENT

SMCS-1408 **i03719500**

NOTE	REF NO	GRAPHIC REF	PART NUMBER	QTY	PART NAME 1 2 3 4 5 6 (PRODUCT LEVEL)	SEE PAGE
	1	1	**7K-1181**	2	STRAP-CABLE	
	2	1	**189-3158**	2	SUPPRESSOR-ARC	
	3	1	**213-6064**	1	HARNESS AS-CHASSIS (LOAD CONTROL)	
		1	**180-9339**	4	PIN-CONNECTOR (14-GA TO 18-GA)	
		1	**155-2270**	4	KIT-CONNECTING PLUG (2-PIN)	
		1	**155-2260**	1	KIT-CONNECTING PLUG (3-PIN)	
					(EACH PLUG KIT INCLUDES PLUG AS, WEDGE & INTERFACE SEAL)	
		1	**9X-1054**	2	PLUG AS-CONNECTOR (4-PIN)	
		1	**102-8804**	1	KIT-RECEPTACLE (4-PIN)	
					(INCLUDES RECEPTACLE AS & WEDGE)	
		1	**180-9340**	10	SOCKET-CONNECTOR (14-GA TO 18-GA)	
		1	**9W-0844**	1	SOCKET-CONNECTOR (14-GA)	
		1	**8L-8413**	2	STRAP-CABLE	
E		1	**119-3662**		TUBE-HEAT SHRINK (10.85-MM DIA) (20-CM)	
E		1	**125-7874**		TUBE-HEAT SHRINK (5.72-MM DIA) (15-CM)	
	4	1	**253-9396**	1	SWITCH AS-ROCKER (RIDE CONTROL, LOAD CONTROL)	
		1	**111-7899**	1	GASKET	
	5	1	**115-1615**	2	RELAY AS (12-VOLT) (DEAD ENGINE LOWER)	
	6	1	**3S-2093**	13	STRAP-CABLE (PLASTIC)	

E-ORDER BY THE CENTIMETER

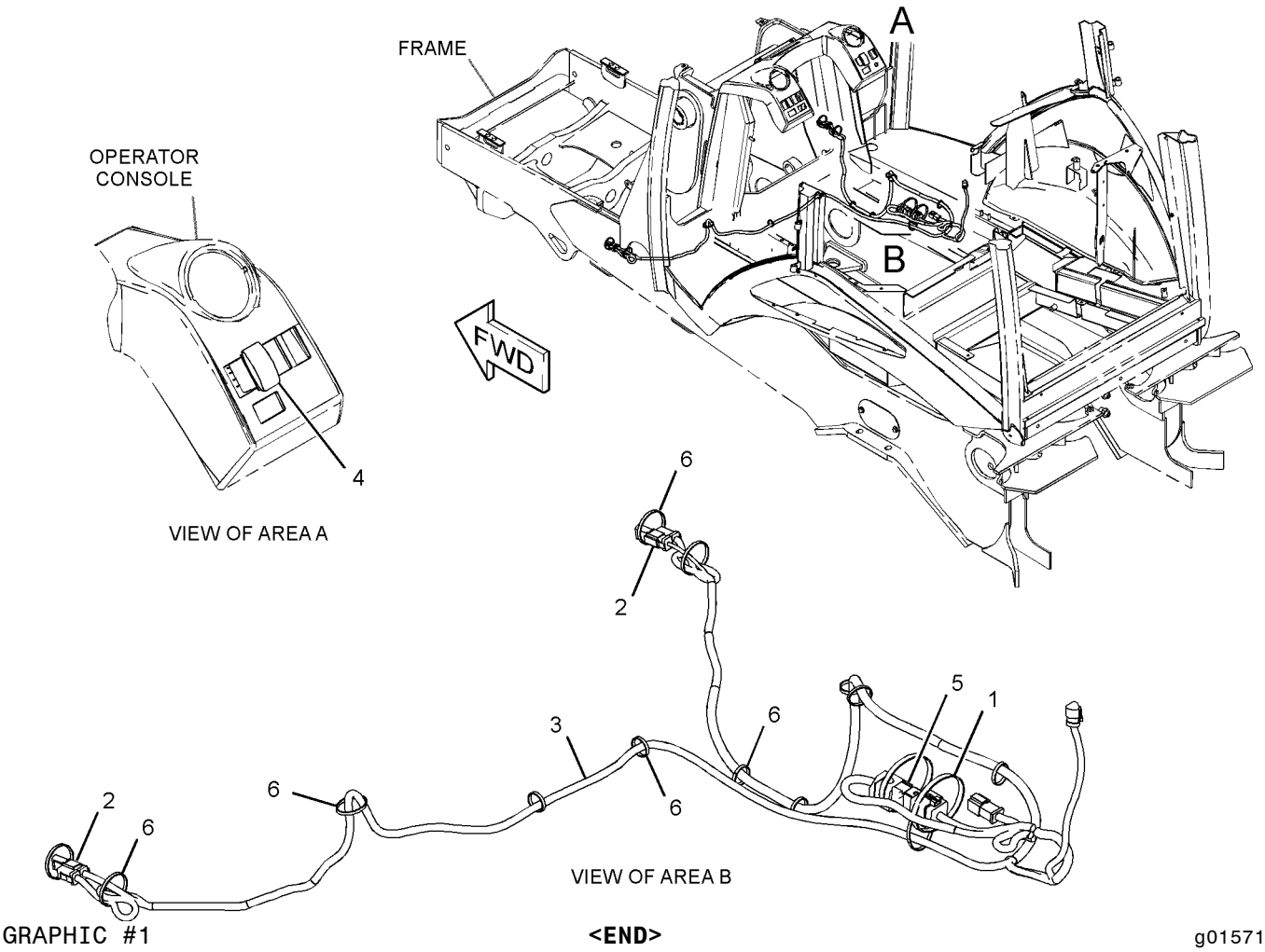

GRAPHIC #1

<END>

g01571916

328-1485 WIRING GP-MACHINE–MACHINE SECURITY SYSTEM

S/N: SJL1-UP

PART OF 326-7959 INSTALLATION GP-SECURITY

AN ATTACHMENT

SMCS-1408 **i03579091**

NOTE	REF NO	GRAPHIC REF	PART NUMBER	QTY	PART NAME 1 2 3 4 5 6 (PRODUCT LEVEL)	SEE PAGE
	1	1	**3E-3371**	1	WEDGE-RECEPTACLE LOCK (3-PIN)	
	2	1	**5P-7958**	2	SLEEVE-CABLE SPLICE (LITERATURE LANYARD)	
	3	1	**8T-8737**	2	PLUG-SEAL	
	4	1	**123-6758**	1	LANYARD	
	5	1	**200-1898**	1	SUPPRESSOR-ARC	
	6	1	**219-6314**	1	KEY RING (IDENTIFICATION)	
	7	1	**257-7211**	1	VALVE AS-SOLENOID (FUEL SHUTOFF)	
		1	**9X-3401**	8	PIN-CONNECTOR (16-GA TO 18-GA)	
		1	**160-3518**	1	KIT-RECEPTACLE (8-PIN)	
					(INCLUDES RECEPTACLE AS & WEDGE)	
		1	**263-8850**	1	KEY AS-ELECTRONIC (BLACK)	
	8	1	**257-7212**	1	SENSOR AS (KEY READER)	
		1	**186-3735**	3	PIN-CONNECTOR (16-GA TO 18-GA)	
		1	**286-1072**	1	SENSOR AS (KEY READER)	
	9	1	**257-7214**	1	HARNESS AS-CONTROL (PLATFORM)	
		1	**102-8806**	1	KIT-RECEPTACLE (8-PIN)	
					(INCLUDES RECEPTACLE AS & WEDGE)	
		1	**8L-8413**	4	STRAP-CABLE	
		1	**8T-8737**	1	PLUG-SEAL	
E		1	**125-7874**		TUBE-HEAT SHRINK (5.72-MM DIA) (15-CM)	
		1	**126-1766**	4	SOCKET-CONNECTOR (14-GA TO 18-GA)	
		1	**155-2270**	1	KIT-CONNECTING PLUG (2-PIN)	
		1	**155-2271**	1	KIT-CONNECTING PLUG (4-PIN)	
					(EACH INCLUDES PLUG AS, WEDGE & INTERFACE SEAL)	
		1	**180-9339**	8	PIN-CONNECTOR (14-GA TO 18-GA)	
		1	**180-9340**	13	SOCKET-CONNECTOR (14-GA TO 18-GA)	
		1	**230-5008**	1	PLUG AS-CONNECTOR (4-PIN)	
		1	**264-7031**	1	SEAL-CONNECTOR	
	10	1	**276-5450**	1	RELAY AS (12-VOLT) (FUEL SHUTOFF)	
		1	**186-3735**	4	PIN-CONNECTOR (16-GA TO 18-GA)	
		1	**230-5009**	1	RECEPTACLE AS-CONNECTOR (4-PIN)	
	11	1	**295-5893**	1	HARNESS AS-CONTROL (MACHINE SECURITY SYSTEM)	
		1	**180-9339**	6	PIN-CONNECTOR (14-GA TO 18-GA)	
		1	**180-9340**	11	SOCKET-CONNECTOR (14-GA TO 18-GA)	
		1	**102-8805**	1	KIT-RECEPTACLE (6-PIN)	
					(INCLUDES RECEPTACLE AS & WEDGE)	
E		1	**125-7874**		TUBE-HEAT SHRINK (5.72-MM DIA) (5-CM)	
D		1	**141-8061**		TAPE (2-M)	
		1	**155-2265**	1	KIT-CONNECTING PLUG (8-PIN)	
		1	**155-2260**	1	KIT-CONNECTING PLUG (3-PIN)	
					(EACH INCLUDES PLUG AS, WEDGE & INTERFACE SEAL)	
	12	1	**115-1615**	1	RELAY AS (12-VOLT) (DISABLE START)	
	13	1	**102-8802**	1	KIT-RECEPTACLE (2-PIN)	
					(INCLUDES RECEPTACLE AS & WEDGE)	
	14	1	**102-8803**	1	KIT-RECEPTACLE (3-PIN)	
					(INCLUDES RECEPTACLE AS & WEDGE)	
	15	1	**3S-2093**	30	STRAP-CABLE	

D-ORDER BY THE METER
E-ORDER BY THE CENTIMETER

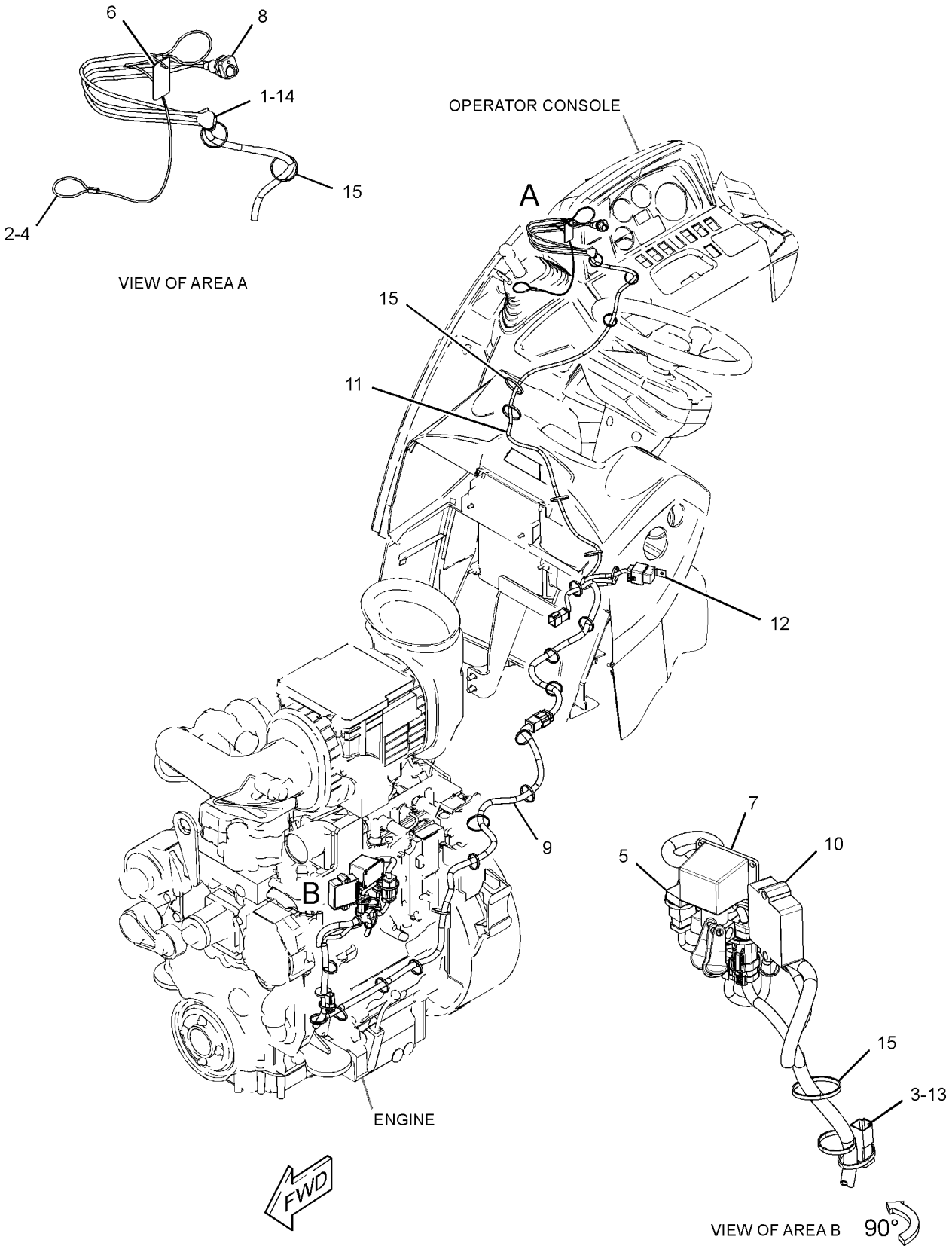

GRAPHIC #1 **<END>** g01626177

ELECTRICAL AND STARTING SYSTEM

338-5738 WIRING GP-PLATFORM

S/N: SJL1-UP

PART OF 335-3052, 335-3053, 335-3055 CAB AR, 335-3054 CAB AR-ENCLOSED ROPS AN ATTACHMENT

SMCS-1408 **i03642941**

NOTE	REF NO	GRAPHIC REF	PART NUMBER	QTY	PART NAME 1 2 3 4 5 6 (PRODUCT LEVEL)	SEE PAGE
	1	1	**1S-9593**	3	STRAP-CABLE	
	2	2	**6I-1418**	4	SPACER (8.2X12.7X28.7-MM THK)	
	3	1	**6K-0806**	3	STRAP-CABLE	
	4	2	**7K-1181**	32	STRAP-CABLE	
	5	2	**7T-4848**	1	FLASHER AS (12-VOLT) (HAZARD)	
	6	2	**8C-6354**	1	CAP-RECEPTACLE	
	7	2	**8T-8799**	3	BOOT	
	8	2	**8T-9655**	8	MOUNT-ISOLATION	
	9	2	**8X-9618**	1	STRAP AS-GROUND	
	10	2	**116-7471**	1	PULLER-MINIFUSE	
	11	2	**140-9378**	1	RELAY AS (12-VOLT) (IMPLEMENT DISABLE)	
	11A	2	**140-9378**	1	RELAY AS (12-VOLT) (DIFFERENTIAL LOCK)	
	11B	2	**140-9378**	1	RELAY AS (12-VOLT) (NEUTRAL START)	
	11C	2	**140-9378**	1	RELAY AS (12-VOLT) (FUEL PUMP)	
	12	2	**146-9439**	1	RELAY AS (12-VOLT) (FRONT HORN)	
	12A	2	**146-9439**	1	RELAY AS (12-VOLT) (REAR HORN)	
	13	1	**178-7539**	1	RECEPTACLE AS (POWER SUPPLY)	
	14	2	**179-6401**	4	SCREW-PAN HEAD (6-32X0.5-IN)	
	15	2	**189-3158**	1	SUPPRESSOR-ARC	
	16	1	**201-1024**	2	BRACKET	
	17	1	**212-0862**	3	CLAMP-CABLE	
	18	1	**214-4694**	1	SWITCH AS-ROCKER (MODE SELECT)	
	19	1	**214-4716**	1	SWITCH AS-ROCKER (TRANSMISSION NEUTRAL LOCK)	
					(EACH SWITCH AS-ROCKER INCLUDES)	
		1	**111-7899**	1	GASKET	
	20	1	**214-4717**	1	INDICATOR AS (TURN SIGNAL LH, PARKING BRAKE)	
	21	1	**214-4723**	1	INDICATOR AS (HIGH BEAM, TURN SIGNAL RH)	
					(EACH INDICATOR AS INCLUDES)	
		1	**111-7899**	1	GASKET	
	22	2	**216-9069**	1	BRACKET AS	
M		2	**6V-9632**	1	NUT-WELD (M6X1-THD)	
B	23	1	**227-1057**	11	PLUG-HOLE	
	24	2	**267-2701**	1	FUSE (60-AMPERE)	
	25	1	**273-9190**	1	SWITCH AS-MULTIFUNCTION (HD LIGHT, TURN SIG, WDO WIPER)	
		1	**8T-8737**	1	PLUG-SEAL	
		1	**151-9275**	1	KIT-RECEPTACLE (6-PIN)	
		1	**160-3518**	1	KIT-RECEPTACLE (8-PIN)	
					(EACH RECEPTACLE KIT INCLUDES RECEPTACLE AS & WEDGE)	
		1	**186-3735**	13	PIN-CONNECTOR (16-GA TO 18-GA)	
	26	2	**274-7409**	4	SCREW-TRUSS HEAD (M8X1.25X45-MM)	
	27	2	**274-9872**	1	FUSE (30-AMPERE)	
	28	2	**275-0553**	1	BAR-BUS	
Y	29	2	**276-7290**	1	RELAY GP (12-VOLT) (POWER, 1)	167
Y	30	2	**276-7291**	1	RELAY GP (12-VOLT) (POWER, 2)	168
	31	2	**278-0461**	1	RELAY AS (12-VOLT) (TORQUE LIMITER)	
	32	2	**278-6377**	1	FUSE (40-AMPERE)	
	33	2	**299-4996**	1	BRACKET AS	
	34	1	**306-7346**	1	SWITCH AS-ROCKER (HAZARD WARNING LIGHTS)	
		1	**111-7899**	1	GASKET	
	35	1	**310-2345**	1	HARNESS AS-PLATFORM	
		1	**7N-7221**	3	TERMINAL-BLADE (18-GA TO 22-GA)	
		1	**134-2540**	2	RESISTOR AS-CONNECTION (3-PIN)	
B		1	**141-8061**		TAPE	

338-5738 **WIRING GP-PLATFORM** *(contd.)* **i03642941**

NOTE	REF NO	GRAPHIC REF	PART NUMBER	QTY	PART NAME 1 2 3 4 5 6 (PRODUCT LEVEL)	SEE PAGE
		1	**147-1445**	1	PLUG AS-CONNECTOR (70-PIN)	
		1	**147-1446**	1	PLUG AS-CONNECTOR (70-PIN)	
					(EACH PLUG AS INCLUDES)	
		1	**159-9322**	1	SEAL-O-RING	
		1	**155-2255**	4	KIT-CONNECTING PLUG (12-PIN)	
		1	**155-2270**	7	KIT-CONNECTING PLUG (2-PIN)	
		1	**155-2271**	5	KIT-CONNECTING PLUG (4-PIN)	
		1	**155-2274**	5	KIT-CONNECTING PLUG (6-PIN)	
		1	**155-2265**	4	KIT-CONNECTING PLUG (8-PIN)	
		1	**174-0503**	2	KIT-CONNECTING PLUG (3-PIN)	
					(EACH PLUG KIT INCLUDES PLUG AS, WEDGE & INTERFACE SEAL)	
		1	**155-2264**	4	PLUG AS-CONNECTOR	
		1	**167-3692**	2	RECEPTACLE AS-CONNECTOR (31-PIN)	
E		1	**119-3662**		TUBE-HEAT SHRINK (10.85-MM DIA) (65-CM)	
		1	**122-4401**	1	TERMINAL	
E		1	**125-7874**		TUBE-HEAT SHRINK (5.72-MM DIA) (240-CM)	
E		1	**125-7875**		TUBE-HEAT SHRINK (7.44-MM DIA) (25-CM)	
		1	**126-1766**	83	SOCKET-CONNECTOR (14-GA TO 18-GA)	
		1	**2L-8069**	2	TERMINAL-RING (2-GA TO 10-GA, 3/8-IN SCREW)	
		1	**2L-8079**	2	TERMINAL-RING (14-GA TO 16-GA, 3/8-IN SCREW)	
		1	**128-4190**	5	TERMINAL AS	
		1	**128-4249**	3	LOCKWASHER	
		1	**5P-4571**	4	TERMINAL-BLADE (14-GA TO 16-GA)	
		1	**100-6674**	2	SEAL-CONNECTOR	
		1	**104-1995**	5	TERMINAL-BLADE (14-GA TO 18-GA)	
		1	**110-0203**	2	CONNECTOR AS	
		1	**111-6792**	6	TERMINAL-RECEPTACLE (18-GA TO 20-GA)	
		1	**111-6795**	2	HOUSING-RELAY	
		1	**111-6816**	2	LOCK	
		1	**113-8490**	9	FUSE (10-AMPERE)	
		1	**113-8491**	10	FUSE (15-AMPERE)	
		1	**113-8492**	7	FUSE (20-AMPERE)	
		1	**9W-0844**	11	SOCKET-CONNECTOR (14-GA)	
		1	**102-8802**	4	KIT-RECEPTACLE (2-PIN)	
		1	**102-8804**	3	KIT-RECEPTACLE (4-PIN)	
		1	**102-8805**	2	KIT-RECEPTACLE (6-PIN)	
		1	**102-8801**	1	KIT-RECEPTACLE (12-PIN)	
					(EACH RECEPTACLE KIT INCLUDES RECEPTACLE AS & WEDGE)	
		1	**7R-2751**	22	PLUG-CONNECTOR	
		1	**8L-8413**	2	STRAP-CABLE	
		1	**8T-8737**	114	PLUG-SEAL	
		1	**8T-8799**	2	BOOT	
		1	**9W-1951**	1	RECEPTACLE-CONNECTOR (9-PIN)	
		1	**091-2436**	47	TERMINAL-BLADE (18-GA TO 22-GA)	
	36	2	**311-8070**	1	BRACKET AS	
	37	2	**312-3083**	1	BRACKET AS	
Y	38	2	*325-5950*	1	ELECTRONICS GP-MACHINE	138
	39	2	**096-6166**	12	WASHER-HARD (4.5X9X1-MM THK)	
	40	1	**156-6175**	2	CLIP	
	41	1	**170-9360**	1	GROMMET	
	42	1	**196-2966**	1	PLUG	
	43	1,2	**3S-2093**	23	STRAP-CABLE	
	44	2	**4P-8134**	2	CLIP	
M	45	1,2	**5C-2890**	4	NUT (M6X1-THD)	
M	46	2	**5C-7261**	6	NUT (M8X1.25-THD)	
	47	2	**6V-5764**	8	SCREW-MACHINE (10-32X0.625-IN)	
	48	2	**7X-0579**	8	WASHER-HARD (8.8X25.5X2-MM THK)	

338-5738 **WIRING GP-PLATFORM** *(contd.)* **i03642941**

NOTE	REF NO	GRAPHIC REF	PART NUMBER	QTY	PART NAME 1 2 3 4 5 6 (PRODUCT LEVEL)	SEE PAGE
M	49	2	**7X-2534**	2	BOLT (M6X1X50-MM)	
	50	2	**7X-7729**	3	WASHER (11X25X3-MM THK)	
	51	1	**8C-3398**	1	LOCKWASHER	
	52	2	**8F-3590**	4	LOCKWASHER	
M	53	2	**8T-0285**	4	SCREW-MACHINE (M4X0.7X12-MM)	
	54	2	**8T-0328**	8	WASHER-HARD (5.5X10X1-MM THK)	
	55	2	**8T-4121**	4	WASHER-HARD (11X21X2.5-MM THK)	
M	56	2	**8T-4133**	2	NUT (M10X1.5-THD)	
M	57	2	**8T-4136**	1	BOLT (M10X1.5X25-MM)	
M	58	2	**8T-4137**	2	BOLT (M10X1.5X20-MM)	
M	59	1,2	**8T-4138**	5	BOLT (M6X1X20-MM)	
M	60	1,2	**8T-4200**	6	BOLT (M8X1.25X16-MM)	
	61	1,2	**8T-4205**	8	WASHER-HARD (7.2X14.5X2-MM THK)	
	62	1,2	**8T-4224**	8	WASHER-HARD (8.8X16X2-MM THK)	
E	63	1	**3E-6600**		SEAL (5-CM EACH)	
E	64	2	**103-2543**		SEAL (3-CM EACH)	
E	65	1	**3E-8299**		SEAL (3-CM EACH)	
E	65A	2	**3E-8299**		SEAL (7-CM)	

B-USE AS REQUIRED
E-ORDER BY THE CENTIMETER
M-METRIC PART
Y-SEPARATE ILLUSTRATION

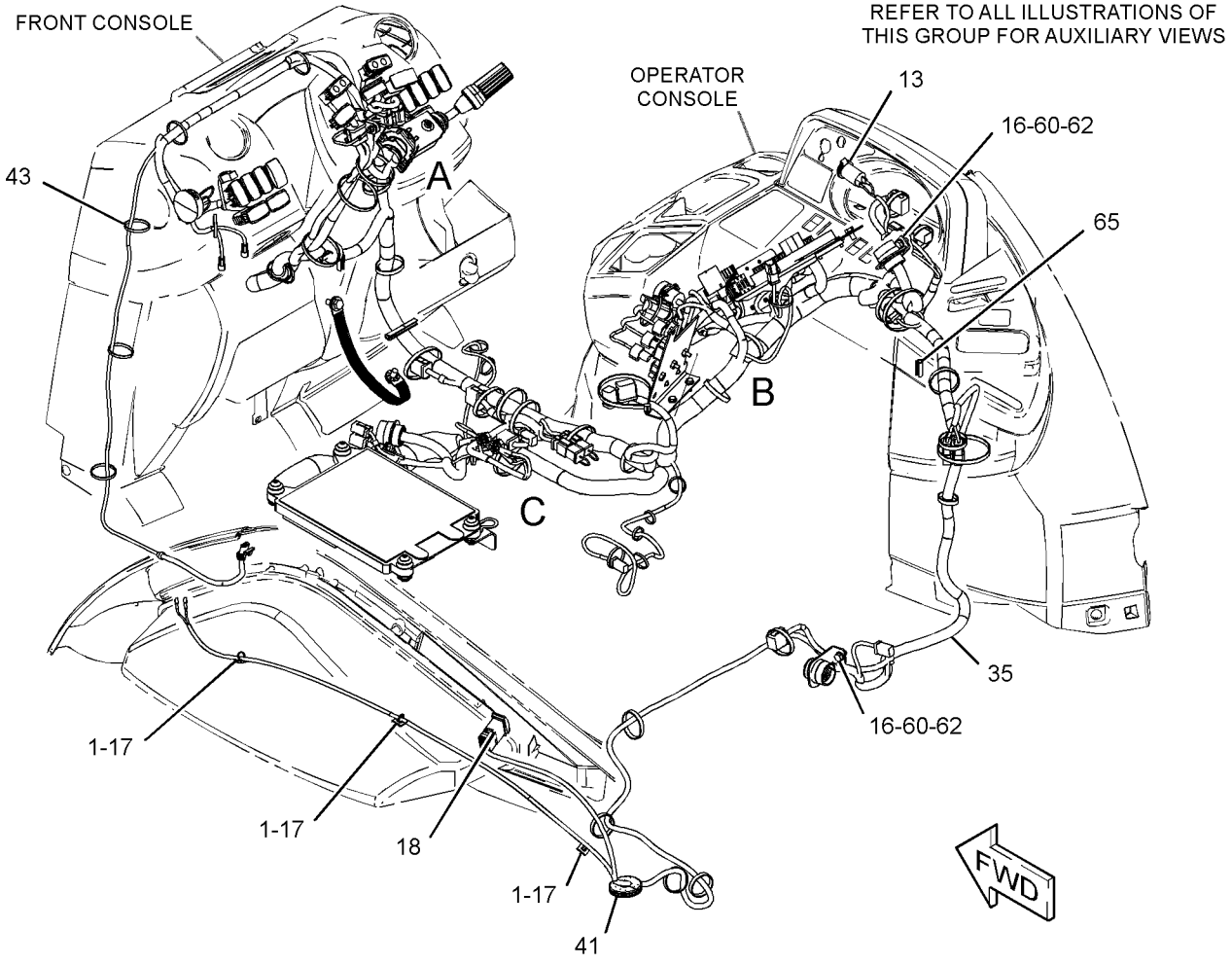

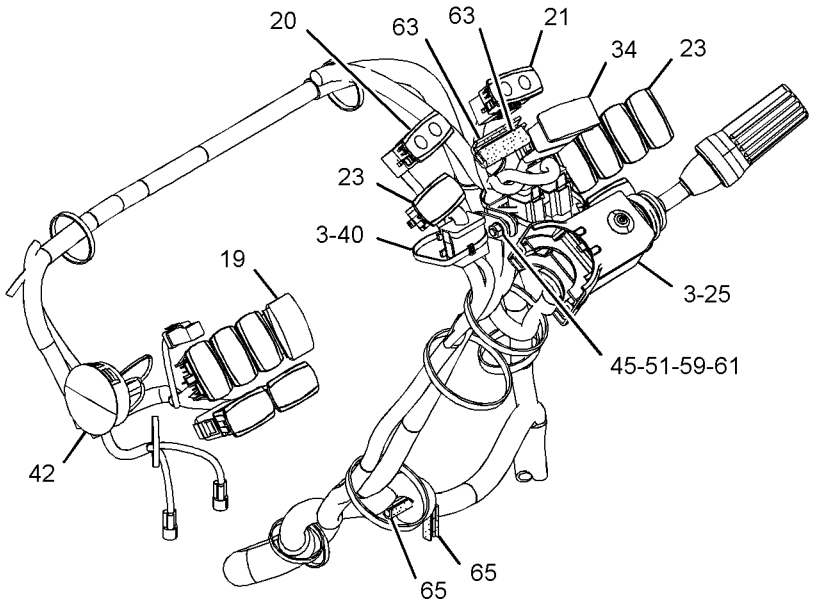

VIEW OF AREA A

GRAPHIC #1 g01991593

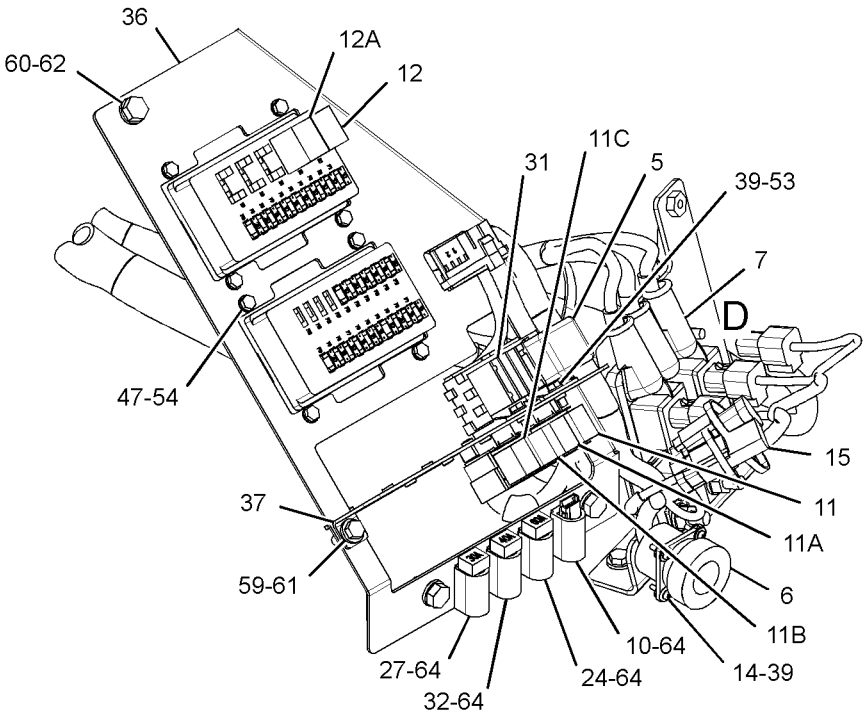

VIEW OF AREA B 180°

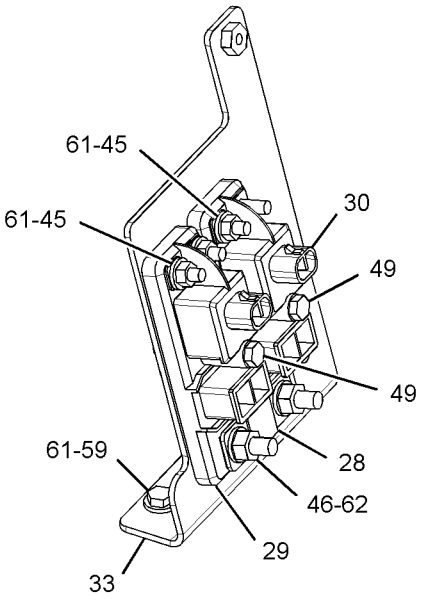

VIEW OF AREA D
(PARTS REMOVED FOR CLARITY)

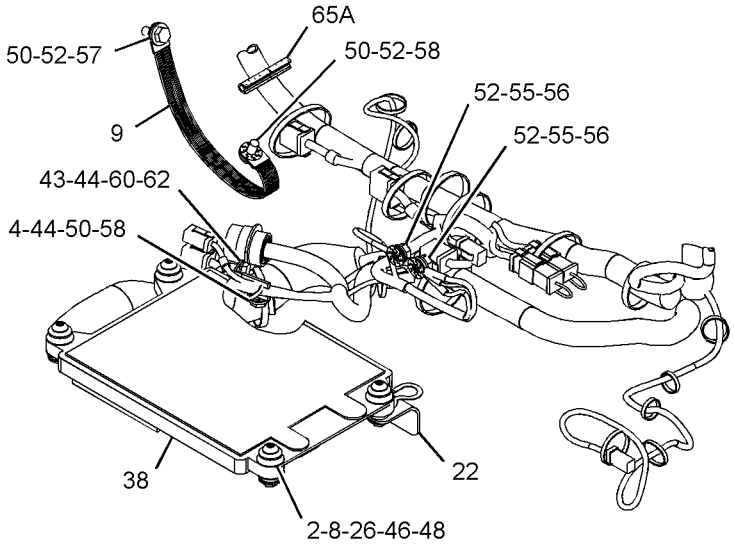

VIEW OF AREA C

GRAPHIC #2 **<END>** g01991594

211-4271 WIRING GP-POWER RECEPTACLE

S/N: SJL1-UP

PART OF 335-3052, 335-3053, 335-3055 CAB AR, 335-3054 CAB AR-ENCLOSED ROPS AN ATTACHMENT

SMCS-1408, 7301 **i03029014**

NOTE	REF NO	GRAPHIC REF	PART NUMBER	QTY	PART NAME 1 2 3 4 5 6 (PRODUCT LEVEL)	SEE PAGE
	1	1	**178-7539**	1	RECEPTACLE AS (POWER SUPPLY)	

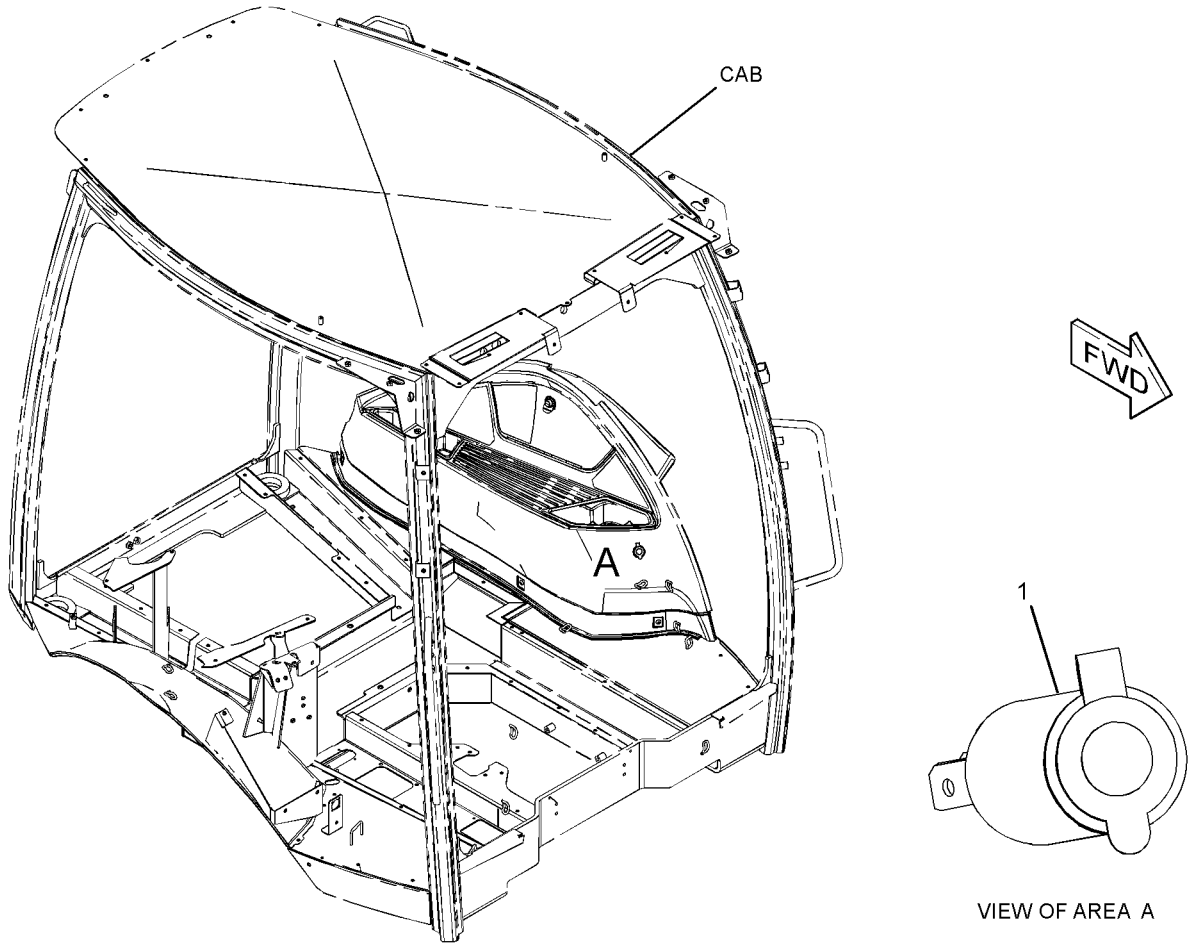

VIEW OF AREA A

GRAPHIC #1 **<END>** g01520595

328-1942 WIRING GP-REAR—PILOT

S/N: SJL1-UP

PART OF 329-0296 CHASSIS AR

SMCS-1408 **i03642976**

NOTE	REF NO	GRAPHIC REF	PART NUMBER	QTY	PART NAME 1 2 3 4 5 6 (PRODUCT LEVEL)	SEE PAGE
	1	1	**3S-2093**	14	STRAP-CABLE	
	2	1	**7K-1181**	1	STRAP-CABLE	
	3	1	**189-3158**	2	SUPPRESSOR-ARC	
	4	1	**205-9920**	11	STRAP-CABLE	
	5	1	**206-1345**	4	STRAP-CABLE	
	6	1	**214-4713**	1	SWITCH AS-ROCKER (SIDESHIFT, LOCK-UNLOCK)	
		1	**111-7899**	1	GASKET	
B	7	1	**274-3774**	1	CAP-CONNECTOR	
	8	1	**327-2269**	1	HARNESS AS-REAR	
		1	**274-3775**	1	CAP-CONNECTOR	
		1	**9W-0852**	1	PIN-CONNECTOR (14-GA)	
		1	**9X-3401**	23	PIN-CONNECTOR (16-GA TO 18-GA)	
		1	**155-2255**	1	KIT-CONNECTING PLUG (12-PIN)	
		1	**155-2260**	2	KIT-CONNECTING PLUG (3-PIN)	
		1	**155-2270**	11	KIT-CONNECTING PLUG (2-PIN)	
		1	**155-2271**	2	KIT-CONNECTING PLUG (4-PIN)	
					(EACH PLUG KIT INCLUDES PLUG AS, WEDGE & INTERFACE SEAL)	
		1	**225-3854**	1	PLUG AS	
		1	**8T-8737**	17	PLUG-SEAL	
		1	**180-9340**	38	SOCKET-CONNECTOR (14-GA TO 18-GA)	
		1	**2L-8075**	2	TERMINAL-RING (14-GA TO 16-GA, NO. 8 SCREW)	
E		1	**119-3662**		TUBE-HEAT SHRINK (10.85-MM DIA) (7-CM)	
E		1	**125-7874**		TUBE-HEAT SHRINK (5.72-MM DIA) (40-CM)	
	9	1	**4P-7428**	2	CLIP	
	10	1	**8T-4121**	4	WASHER-HARD (11X21X2.5-MM THK)	
M	11	1	**8T-4133**	2	NUT (M10X1.5-THD)	
M	12	1	**8T-4195**	2	BOLT (M10X1.5X30-MM)	

B-USE AS REQUIRED
E-ORDER BY THE CENTIMETER
M-METRIC PART

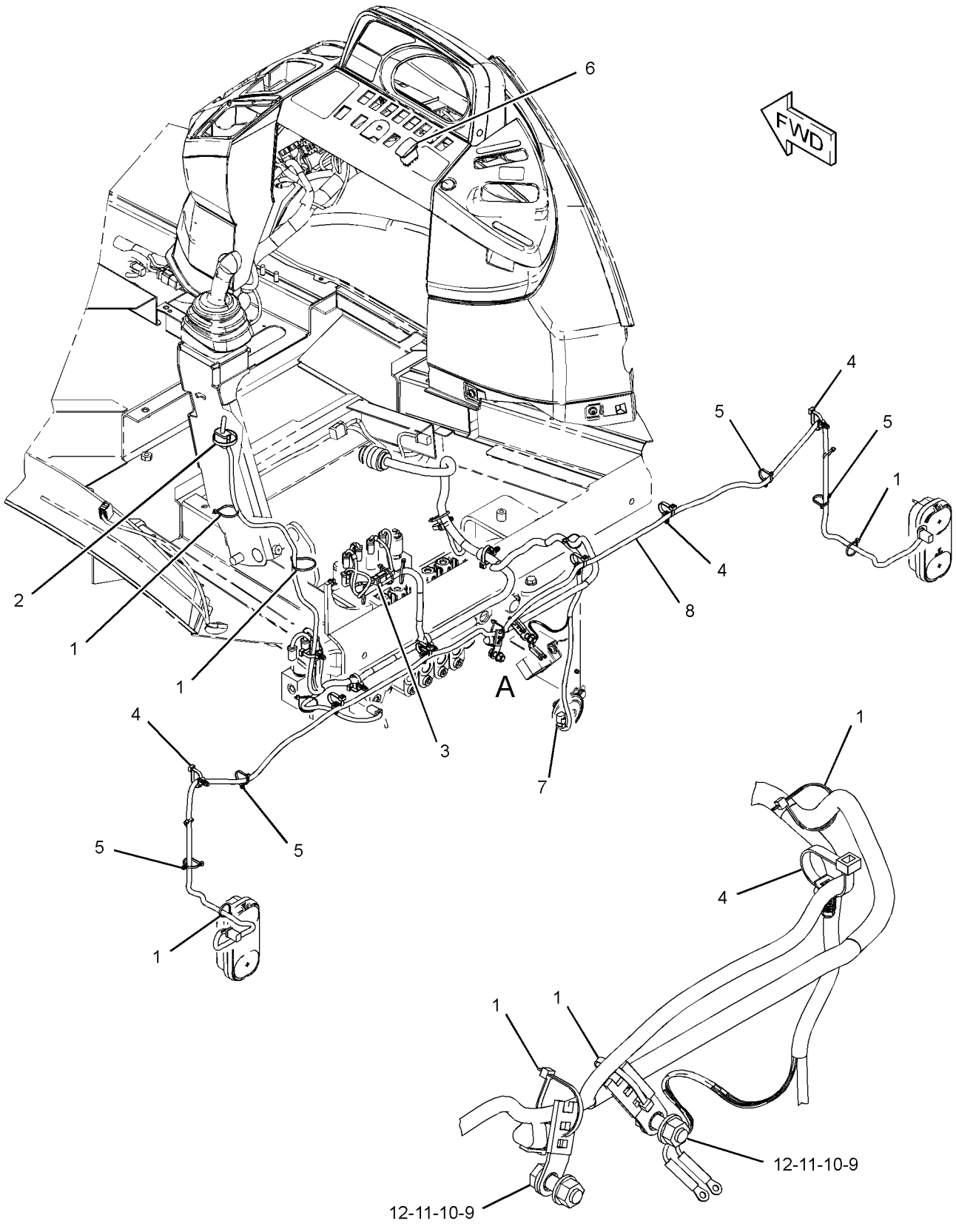

VIEW OF AREA A

GRAPHIC #1 **<END>** g01988114

323-0991 WIRING GP-RIDE CONTROL

S/N: SJL1-UP
PART OF 344-5290 CONTROL AR-RIDE, 344-6354 PREMIER AR, 332-7962, 332-7963 VALVE AR-BANK 3 AN ATTACHMENT

SMCS-1408 **i03713800**

NOTE	REF NO	GRAPHIC REF	PART NUMBER	QTY	PART NAME 1 2 3 4 5 6 (PRODUCT LEVEL)	SEE PAGE
	1	1	**146-9439**	1	RELAY AS (12-VOLT) (RIDE CONTROL)	
	2	1	**189-3158**	1	SUPPRESSOR-ARC	
	3	1	**206-2423**	3	SADDLE	
	4	1	**214-4710**	1	SWITCH AS-ROCKER (RIDE CONTROL)	
		1	**111-7899**	1	GASKET	
	5	1	**246-8038**	1	HARNESS AS-RIDE CONTROL	
		1	**102-8804**	1	KIT-RECEPTACLE (4-PIN)	
					(INCLUDES RECEPTACLE AS & WEDGE)	
		1	**8L-8413**	4	STRAP-CABLE	
		1	**8T-8737**	1	PLUG-SEAL	
		1	**186-3735**	2	PIN-CONNECTOR (16-GA TO 18-GA)	
		1	**186-3736**	8	SOCKET-CONNECTOR (16-GA TO 18-GA)	
E		1	**125-7874**		TUBE-HEAT SHRINK (5.72-MM DIA) (10-CM)	
		1	**155-2270**	3	KIT-CONNECTING PLUG (2-PIN)	
		1	**155-2260**	1	KIT-CONNECTING PLUG (3-PIN)	
					(EACH KIT INCLUDES PLUG AS, WEDGE & INTERFACE SEAL)	
		1	**180-9339**	2	PIN-CONNECTOR (14-GA TO 18-GA)	
	6	1	**304-5696**	1	SWITCH AS-PRESSURE (RIDE CONTROL)	
		1	**186-3735**	3	PIN-CONNECTOR (16-GA TO 18-GA)	
		1	**102-8803**	1	KIT-RECEPTACLE (3-PIN)	
					(KIT INCLUDES RECEPTACLE AS & WEDGE)	
	7	1	**3J-1907**	1	SEAL-O-RING	
	8	1	**3S-2093**	7	STRAP-CABLE	

E-ORDER BY THE CENTIMETER

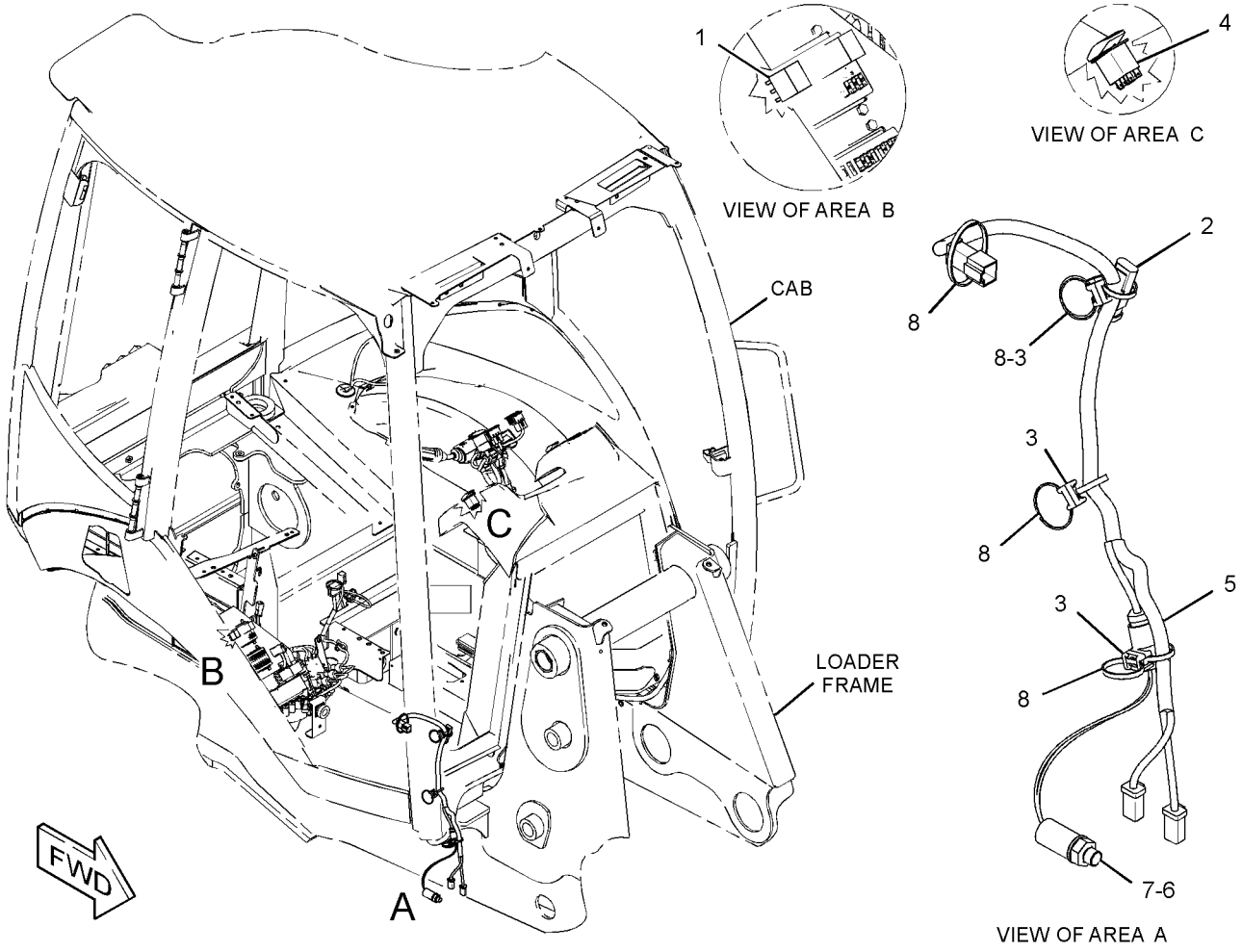

GRAPHIC #1 **<END>** g01575974

338-5732 WIRING GP-SENSOR–DELUXE CAB

S/N: SJL1-UP

PART OF 335-3055 CAB AR, 335-3054 CAB AR-ENCLOSED ROPS AN ATTACHMENT

SMCS-1408 **i03642949**

NOTE	REF NO	GRAPHIC REF	PART NUMBER	QTY	PART NAME 1 2 3 4 5 6 (PRODUCT LEVEL)	SEE PAGE
	1	1	**134-0404**	1	SWITCH AS-PRESSURE (HYDRAULIC OIL FILTER BYPASS)	
	2	1	**250-1448**	1	CONNECTOR	
	3	1	**263-9484**	1	HARNESS AS-SENSOR	
		1	**9X-3401**	3	PIN-CONNECTOR (16-GA TO 18-GA)	
		1	**155-2270**	1	KIT-CONNECTING PLUG (2-PIN)	
					(INCLDUES PLUG AS, WEDGE & INTERFACE SEAL)	
		1	**8T-8737**	1	PLUG-SEAL	
		1	**102-8804**	1	KIT-RECEPTACLE (4-PIN)	
					(INCLDUES RECEPTACLE AS & WEDGE)	
		1	**180-9340**	2	SOCKET-CONNECTOR (14-GA TO 18-GA)	
		1	**2L-8076**	1	TERMINAL-RING (14-GA TO 16-GA, NO. 10 SCREW)	
	4	1	**264-4297**	1	SENSOR GP-TEMPERATURE (HYDRAULIC OIL)	
	5	1	**3J-1907**	1	SEAL-O-RING	
	6	1	**3K-0360**	1	SEAL-O-RING	
	7	1	**3S-2093**	4	STRAP-CABLE	
	8	1	**4P-7581**	1	CLIP	

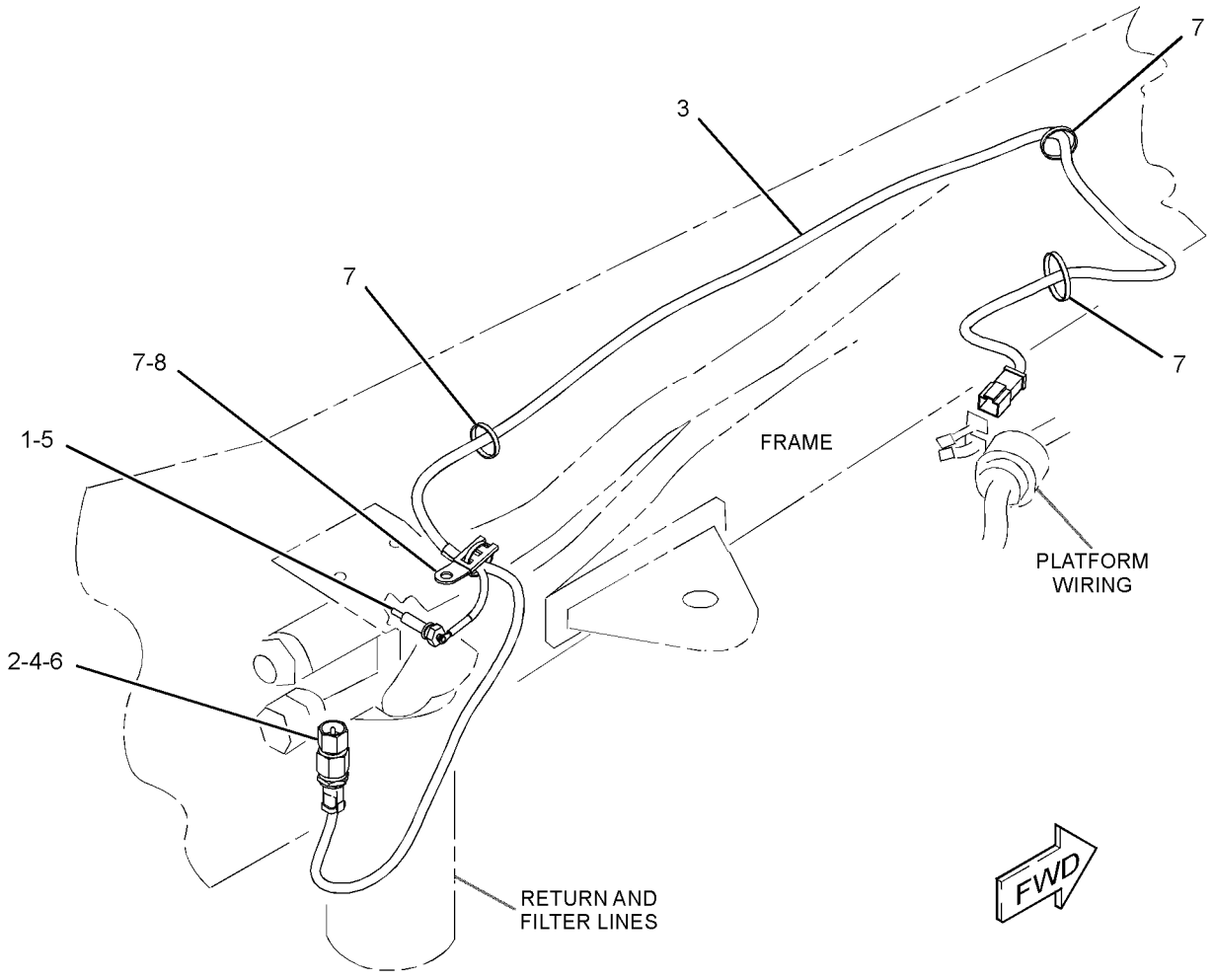

GRAPHIC #1 **<END>** g01971658

349-1101 WIRING GP-SENSOR

S/N: SJL1-UP

PART OF 350-6944, 350-6945 BACKHOE AR-EXTENDABLE STICK AN ATTACHMENT

SMCS-1408 **i03694800**

NOTE	REF NO	GRAPHIC REF	PART NUMBER	QTY	PART NAME 1 2 3 4 5 6 (PRODUCT LEVEL)	SEE PAGE
	1	1	**7K-1181**	12	STRAP-CABLE	
	2	1	*148-8447*	1	TEE AS-SWIVEL	
		1	**7J-9108**	1	SEAL-O-RING	
		1	**7X-0872**	1	TEE-SWIVEL	
	3	1	*165-6365*	1	FITTING AS	
		1	**3J-1907**	1	SEAL-O-RING	
		1	**7W-7381**	1	FITTING-OUTLET	
	4	1	**206-2423**	1	SADDLE	
	5	1	*241-6215*	1	ELBOW AS	
		1	**3J-1907**	1	SEAL-O-RING	
		1	**6V-8076**	1	ELBOW	
	6	1	**349-1098**	1	HARNESS AS-SWITCH (CAB)	
		1	**230-4013**	1	PLUG AS-CONNECTOR (3-PIN)	
		1	**264-7030**	1	SEAL-CONNECTOR	
		1	**230-4014**	1	RECEPTACLE AS-CONNECTOR (3-PIN)	
		1	**9X-3401**	3	PIN-CONNECTOR (16-GA TO 18-GA)	
		1	**9X-3402**	3	SOCKET-CONNECTOR (16-GA TO 18-GA)	
	7	1	**349-1099**	1	HARNESS AS-SWITCH (REAR)	
		1	**230-4014**	1	RECEPTACLE AS-CONNECTOR (3-PIN)	
E		1	**188-4651**		HOSE-HYDRAULIC (131-CM)	
		1	**9X-3401**	3	PIN-CONNECTOR (16-GA TO 18-GA)	
		1	**230-4013**	1	PLUG AS-CONNECTOR (3-PIN)	
		1	**264-7030**	1	SEAL-CONNECTOR	
		1	**9X-3402**	3	SOCKET-CONNECTOR (16-GA TO 18-GA)	
D		1	**5P-5995**		TUBE (0.2-M)	
E		1	**125-7876**		TUBE-HEAT SHRINK (17.78-MM DIA) (5-CM)	
	8	1	**349-1100**	1	HARNESS AS-SWITCH (HOE)	
		1	**155-2271**	1	KIT-CONNECTING PLUG (4-PIN) (INCLUDES PLUG AS, WEDGE & INTERFACE SEAL)	
		1	**8T-8737**	1	PLUG-SEAL	
		1	**230-4014**	1	RECEPTACLE AS-CONNECTOR (3-PIN)	
E		1	**188-4651**		HOSE-HYDRAULIC (298-CM)	
		1	**9X-3401**	3	PIN-CONNECTOR (16-GA TO 18-GA)	
		1	**180-9340**	3	SOCKET-CONNECTOR (14-GA TO 18-GA)	
D		1	**5P-5995**		TUBE (0.3-M)	
E		1	**125-7876**		TUBE-HEAT SHRINK (17.78-MM DIA) (5-CM)	
	9	1	**349-2773**	1	FILM-WARNING (TIPPING HAZARD, READ OMM)	
	10	1	**350-1078**	1	SWITCH AS-ROCKER (LOAD STABILITY, BUCKET)	
		1	**111-7899**	1	GASKET	
	11	1	**350-1101**	1	HARNESS AS-CONSOLE	
		1	**228-5856**	1	CONNECTOR	
		1	**9X-3401**	4	PIN-CONNECTOR (16-GA TO 18-GA)	
		1	**230-4013**	1	PLUG AS-CONNECTOR (3-PIN)	
		1	**264-7030**	1	SEAL-CONNECTOR	
		1	**230-5009**	1	RECEPTACLE AS-CONNECTOR (4-PIN)	
		1	**9X-3402**	3	SOCKET-CONNECTOR (16-GA TO 18-GA)	
		1	**091-2436**	4	TERMINAL-BLADE (18-GA TO 22-GA)	
E		1	**125-7874**		TUBE-HEAT SHRINK (5.72-MM DIA) (5-CM)	
	12	1	**350-9471**	1	PLATE AS	
	13	1	**124-0174**	2	CLIP	
	14	1	**3S-2093**	27	STRAP-CABLE	
	15	1	**5P-4115**	1	WASHER-HARD (7.2X19X2-MM THK)	
	16	1	**7X-3165**	1	ADAPTER AS-SWIVEL	
	17	1	**8M-2770**	1	CLIP	

349-1101 **WIRING GP-SENSOR** *(contd.)* **i03694800**

NOTE	REF NO	GRAPHIC REF	PART NUMBER	QTY	PART NAME 1 2 3 4 5 6 (PRODUCT LEVEL)	SEE PAGE
	18	1	**8T-4121**	1	WASHER-HARD (11X21X2.5-MM THK)	
M	19	1	**8T-4137**	1	BOLT (M10X1.5X20-MM)	

D-ORDER BY THE METER
E-ORDER BY THE CENTIMETER
M-METRIC PART

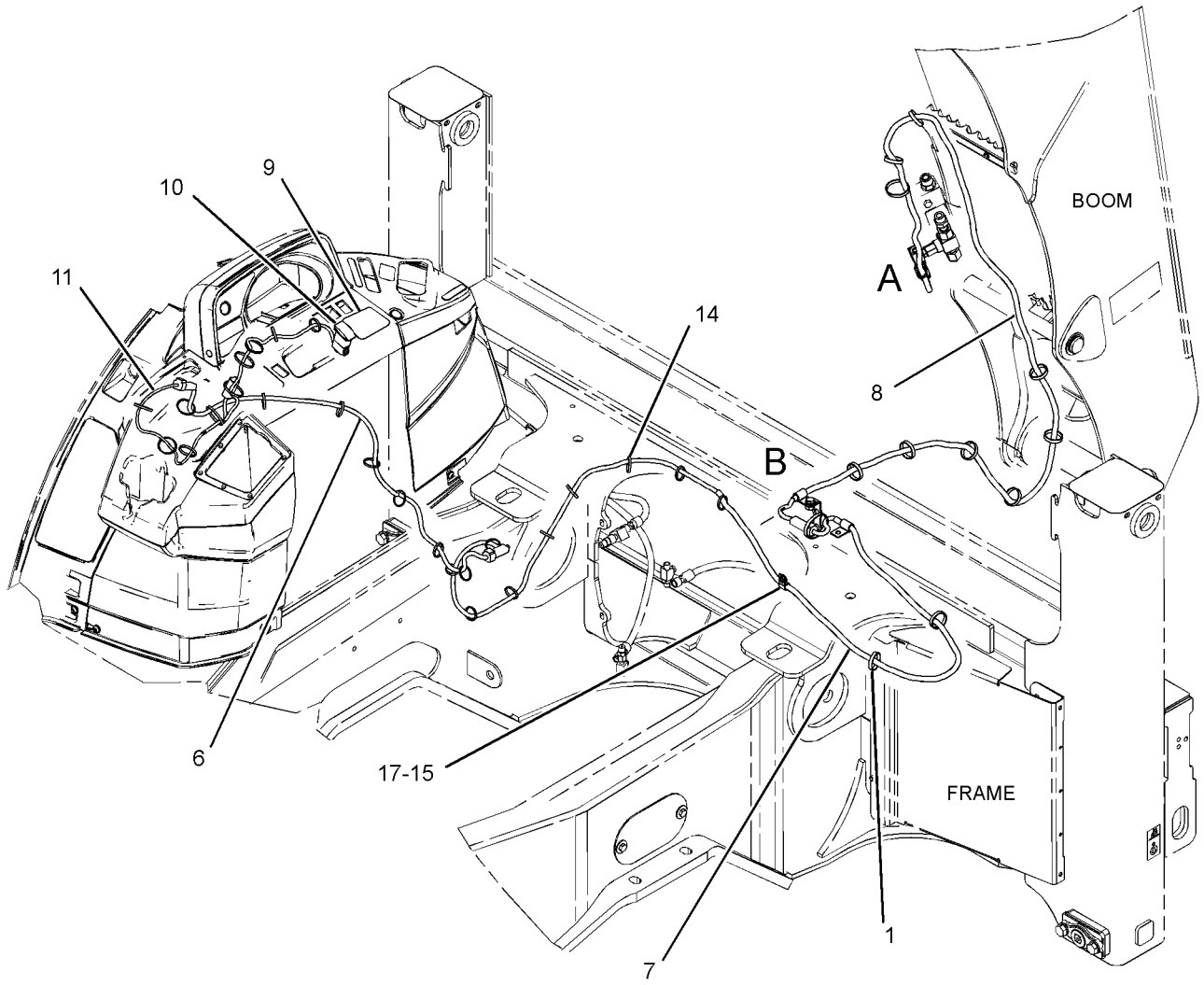

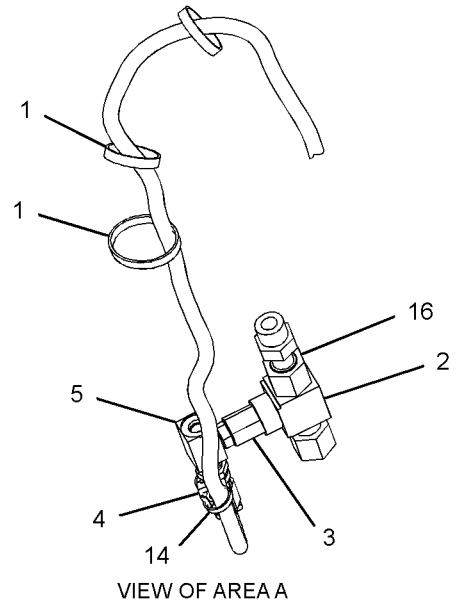

VIEW OF AREA A

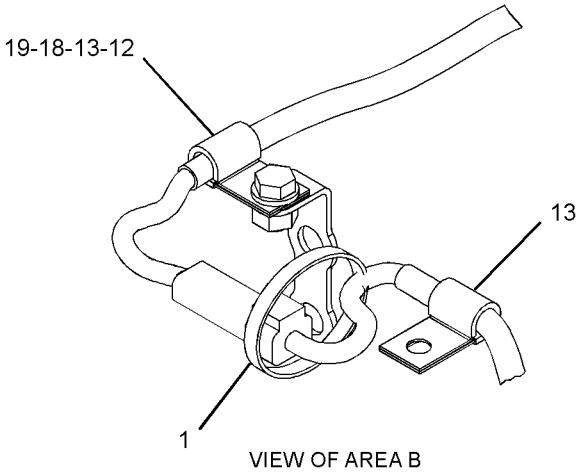

VIEW OF AREA B

GRAPHIC #1 **<END>** g01990794

ELECTRICAL AND STARTING SYSTEM

340-0150 WIRING GP-STEERING—ALL WHEEL STEER

S/N: SJL1-UP
PART OF 329-0320 DRIVE AR-BACKHOE LOADER
AN ATTACHMENT

SMCS-1408, 4334 **i03693983**

NOTE	REF NO	GRAPHIC REF	PART NUMBER	QTY	PART NAME 1 2 3 4 5 6 (PRODUCT LEVEL)	SEE PAGE
	1	1	**3E-7689**	1	SWITCH AS-PRESSURE (ALL WHEEL STEER)	
		1	**102-8803**	1	KIT-RECEPTACLE (3-PIN)	
					(INCLUDES RECEPTACLE AS & WEDGE)	
		1	**186-3735**	3	PIN-CONNECTOR (16-GA TO 18-GA)	
	2	1	**3E-9362**	1	RELAY AS (12-VOLT) (ALL WHEEL STEER)	
	3	1	**7K-1181**	1	STRAP-CABLE	
	4	1	**107-9677**	1	SENSOR AS-POSITION (ALL WHEEL STEER)	
		1	**186-3735**	2	PIN-CONNECTOR (16-GA TO 18-GA)	
E		1	**9X-1813**		SLEEVE (15-CM)	
		1	**102-8802**	1	KIT-RECEPTACLE (2-PIN)	
					(INCLUDES RECEPTACLE AS & WEDGE)	
	5	1	**205-9920**	2	STRAP-CABLE	
	6	1	**206-1345**	2	STRAP-CABLE	
	7	1	**206-1709**	1	HOUSING-GAUGE	
	8	1	**222-7106**	1	COVER	
	9	1	**223-9079**	1	LEVER AS	
	10	1	**223-9080**	1	CLAMP AS	
	11	1	**311-2701**	1	HARNESS AS-DASH	
		1	**9X-3401**	4	PIN-CONNECTOR (16-GA TO 18-GA)	
		1	**102-8804**	1	KIT-RECEPTACLE (4-PIN)	
					(INCLUDES RECEPTACLE AS & WEDGE)	
		1	**2L-8075**	3	TERMINAL-RING (14-GA TO 16-GA, NO. 8 SCREW)	
		1	**7N-7221**	1	TERMINAL-BLADE (18-GA TO 22-GA)	
	12	1	**340-0146**	1	HARNESS AS-PLATFORM	
		1	**228-5856**	2	CONNECTOR	
		1	**9X-3401**	14	PIN-CONNECTOR (16-GA TO 18-GA)	
		1	**155-2271**	1	KIT-CONNECTING PLUG (4-PIN)	
					(INCLUDES PLUG AS, WEDGE & INTERFACE SEAL)	
		1	**8T-8737**	6	PLUG-SEAL	
		1	**102-8806**	1	KIT-RECEPTACLE (8-PIN)	
		1	**102-8801**	1	KIT-RECEPTACLE (12-PIN)	
					(EACH RECEPTACLE KIT INCLUDES RECEPTACLE AS & WEDGE)	
		1	**180-9340**	4	SOCKET-CONNECTOR (14-GA TO 18-GA)	
		1	**091-2436**	11	TERMINAL-BLADE (18-GA TO 22-GA)	
E		1	**125-7874**		TUBE-HEAT SHRINK (5.72-MM DIA) (20-CM)	
	13	1	**340-0147**	1	HARNESS AS-STEERING	
		1	**155-2255**	1	KIT-CONNECTING PLUG (12-PIN)	
		1	**155-2270**	5	KIT-CONNECTING PLUG (2-PIN)	
					(EACH PLUG KIT INCLUDES PLUG AS, WEDGE & INTERFACE SEAL)	
		1	**8T-8737**	2	PLUG-SEAL	
		1	**180-9340**	20	SOCKET-CONNECTOR (14-GA TO 18-GA)	
	14	1	**343-6503**	1	SWITCH AS-ROCKER (ALL WHEEL STEER)	
	15	1	**343-6504**	1	SWITCH AS-ROCKER (STEERING MODE SELECT)	
					(EACH SWITCH AS-ROCKER INCLUDES)	
		1	**111-7899**	1	GASKET	
	16	1	**096-6166**	1	WASHER-HARD (4.5X9X1-MM THK)	
	17	1	**104-2091**	1	SCREW-FLAT HEAD (6-20X0.5-IN)	
	18	1	**134-2305**	1	SEAL	
	19	1	**170-6307**	1	INDICATOR GP-STEERING (REAR)	
		1	**4B-2043**	3	NUT (8-32-THD)	
		1	**7X-9065**	1	LAMP (12-VOLT)	
		1	**9B-7233**	3	LOCKWASHER	

340-0150 **WIRING GP-STEERING** *(contd.)* **i03693983**

NOTE	REF NO	GRAPHIC REF	PART NUMBER	QTY	PART NAME 1 2 3 4 5 6 (PRODUCT LEVEL)	SEE PAGE
	20	1	**175-3265**	2	SCREW (8-16X0.63-IN)	
	21	1	**3K-0360**	1	SEAL-O-RING	
	22	1	**3S-2093**	19	STRAP-CABLE	
	23	1	**4B-4863**	3	WASHER (4.7X11X1.2-MM THK)	
	24	1	**4P-8134**	1	CLIP	
M	25	1	**6V-9327**	1	SETSCREW-SOCKET (M6X1-THD)	
M	26	1	**8T-0285**	1	SCREW-MACHINE (M4X0.7X12-MM)	
M	27	1	**8T-0337**	3	SCREW-MACHINE (M4X0.7X12-MM)	
	28	1	**8T-4121**	4	WASHER-HARD (11X21X2.5-MM THK)	
M	29	1	**8T-4133**	1	NUT (M10X1.5-THD)	
M	30	1	**8T-4136**	1	BOLT (M10X1.5X25-MM)	
M	31	1	**8T-4138**	2	BOLT (M6X1X20-MM)	
	32	1	**8T-4205**	3	WASHER-HARD (7.2X14.5X2-MM THK)	
M	33	1	**8T-4971**	1	BOLT (M6X1X30-MM)	
	34	1	**9R-2807**	1	CLIP	

E-ORDER BY THE CENTIMETER
M-METRIC PART

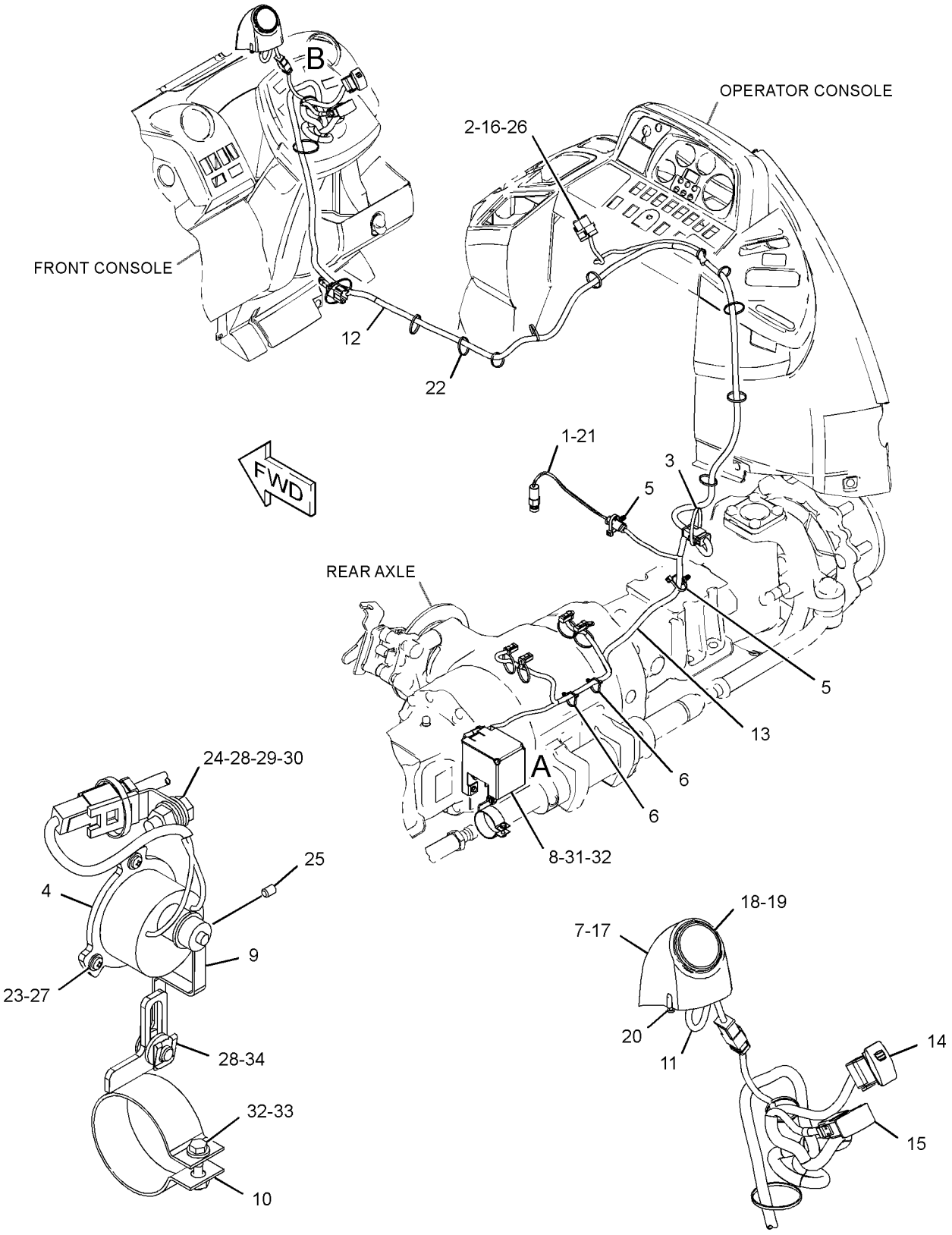

VIEW OF AREA A
(COVER REMOVED FOR CLARITY)

VIEW OF AREA B

GRAPHIC #1 **<END>** g01990274

310-2352 WIRING GP-TRANSMISSION CONTROL—POWERSHIFT

S/N: SJL1-UP
PART OF 329-0311 POWER TRAIN AR
AN ATTACHMENT

SMCS-1408, 3168 **i03579162**

NOTE	REF NO	GRAPHIC REF	PART NUMBER	QTY	PART NAME 1 2 3 4 5 6 (PRODUCT LEVEL)	SEE PAGE
	1	1	**7K-1181**	7	STRAP-CABLE	
	2	1	**164-1368**	8	FASTENER-PANEL	
	3	1	**206-2423**	1	SADDLE	
	4	1	**214-4691**	1	SWITCH AS-ROCKER (AUTOSHIFT, STANDARD SHIFT)	
		1	**111-7899**	1	GASKET	
	5	1	**232-1545**	1	PLATE AS	
	6	1	**246-8052**	1	HARNESS AS-TRANSMISSION	
		1	**102-8802**	4	KIT-RECEPTACLE (2-PIN)	
		1	**102-8805**	1	KIT-RECEPTACLE (6-PIN)	
					(EACH KIT INCLUDES RECEPTACLE AS & WEDGE)	
		1	**8L-8413**	1	STRAP-CABLE	
		1	**8T-8737**	1	PLUG-SEAL	
E		1	**125-7875**		TUBE-HEAT SHRINK (7.44-MM DIA) (5-CM)	
		1	**155-2270**	8	KIT-CONNECTING PLUG (2-PIN)	
					(EACH KIT INCLUDES PLUG AS, WEDGE & INTERFACE SEAL)	
		1	**180-9339**	13	PIN-CONNECTOR (14-GA TO 18-GA)	
		1	**180-9340**	16	SOCKET-CONNECTOR (14-GA TO 18-GA)	
	7	1	**274-9993**	1	PLATE	
	8	1	**310-9354**	1	CONTROL GP-TRANSMISSION	
		1	**8T-8737**	2	PLUG-SEAL	
		1	**174-3091**	1	KIT-RECEPTACLE (12-PIN)	
					(INCLUDES RECEPTACLE AS & WEDGE)	
M	9	1	**105-3480**	2	BOLT-SOCKET HEAD (M5X0.8X16-MM)	
	10	1	**3S-2093**	3	STRAP-CABLE	
	11	1	**7X-0620**	1	WASHER-HARD (5.5X13X1.6-MM THK)	

E-ORDER BY THE CENTIMETER
M-METRIC PART

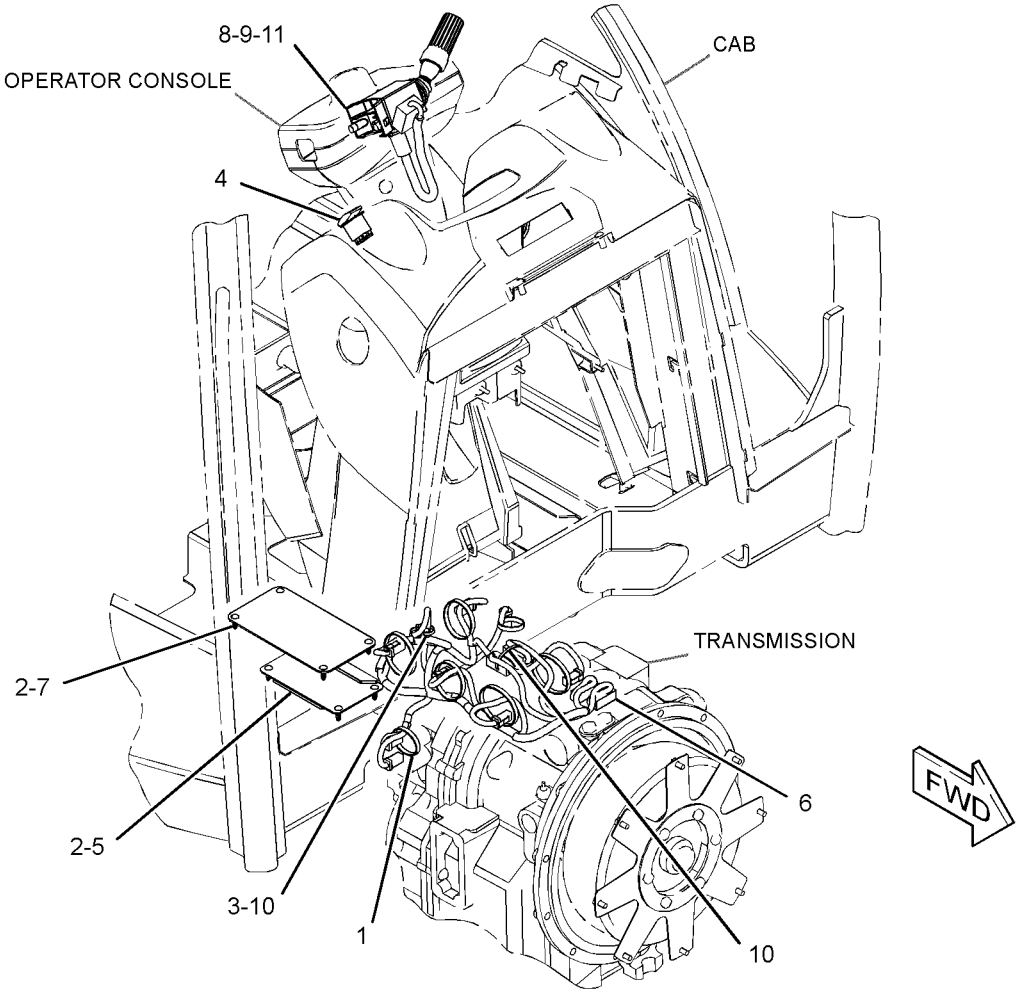

GRAPHIC #1 **<END>** g01764333

311-3639 WIRING GP-WIPER–REAR

S/N: SJL1-UP
PART OF 315-1270 WINDOW GP-CAB
AN ATTACHMENT

SMCS-1408, 7305 **i03579181**

NOTE	REF NO	GRAPHIC REF	PART NUMBER	QTY	PART NAME 1 2 3 4 5 6 (PRODUCT LEVEL)	SEE PAGE
	1	1	**206-1345**	3	STRAP-CABLE	
	2	1	**311-1218**	1	HARNESS AS-WINDOW WIPER	
		1	**266-4157**	7	SLEEVE-BRAIDED	
E		1	**266-2814**		CONDUIT-FLEXIBLE (141-CM)	
		1	**9W-0852**	2	PIN-CONNECTOR (14-GA)	
		1	**180-9339**	2	PIN-CONNECTOR (14-GA TO 18-GA)	
		1	**155-2271**	1	KIT-CONNECTING PLUG (4-PIN)	
					(INCLUDES PLUG AS, WEDGE & INTERFACE SEAL)	
		1	**102-8804**	1	KIT-RECEPTACLE (4-PIN)	
					(INCLUDES RECEPTACLE AS & WEDGE)	
		1	**9W-0844**	2	SOCKET-CONNECTOR (14-GA)	
		1	**180-9340**	2	SOCKET-CONNECTOR (14-GA TO 18-GA)	
D		1	**141-8061**		TAPE (1-M)	
	3	1	**308-3074**	4	CLIP	
	4	1	**3S-2093**	2	STRAP-CABLE	
M	5	1	**8T-4171**	4	BOLT (M6X1X12-MM)	
	6	1	**8T-4205**	5	WASHER-HARD (7.2X14.5X2-MM THK)	

D-ORDER BY THE METER
E-ORDER BY THE CENTIMETER
M-METRIC PART

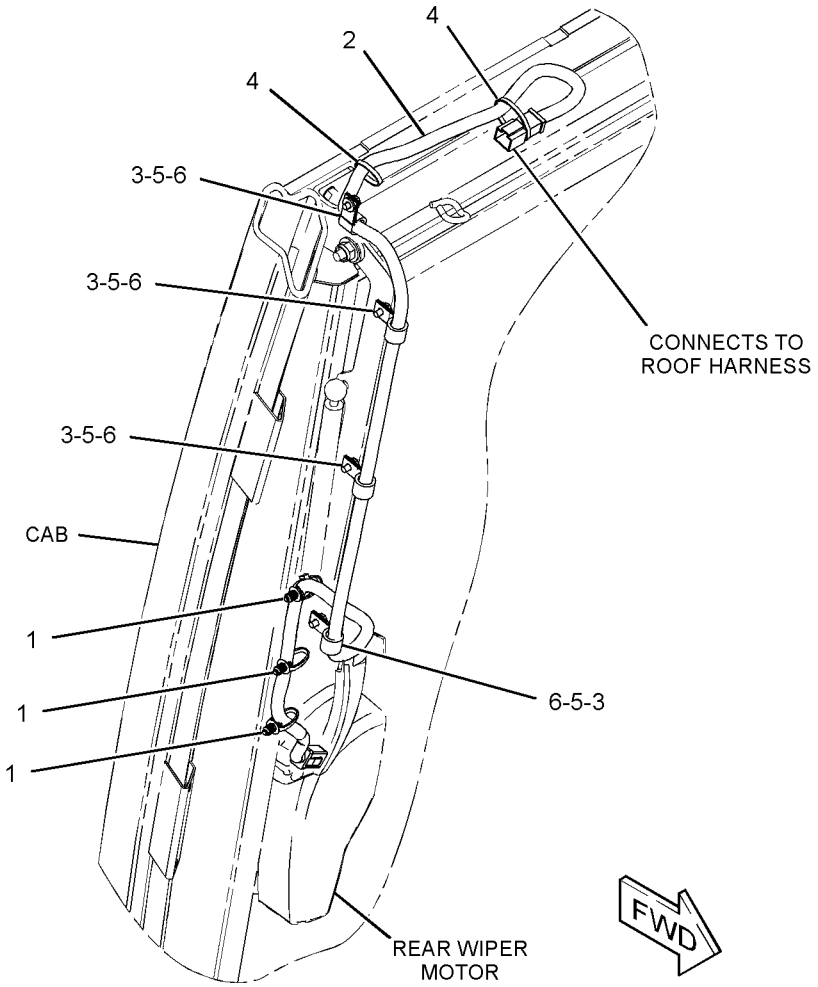

GRAPHIC #1 **<END>** g01653654

211-4258 WIRING GP-WORK TOOL–ANGLE BROOM

S/N: SJL1-UP

AN ATTACHMENT

SMCS-1408 **i03579220**

NOTE	REF NO	GRAPHIC REF	PART NUMBER	QTY	PART NAME 1 2 3 4 5 6 (PRODUCT LEVEL)	SEE PAGE
	1	1	**159-9495**	1	NUT (1-1/2-18-THD)	
	2	1	**159-9496**	1	LOCKWASHER	
	3	1	**211-9461**	1	HARNESS AS-WORK TOOL (ANGLE BROOM)	
		1	**7N-7779**	1	SOCKET-CONNECTOR (14-GA TO 18-GA)	
		1	**7N-7780**	2	PIN-CONNECTOR (14-GA TO 18-GA)	
		1	**7N-7781**	1	HOUSING-RECEPTACLE (14-GA TO 18-GA)	
		1	**7N-7782**	1	HOUSING-PLUG (14-GA TO 18-GA)	
		1	**8T-8737**	4	PLUG-SEAL	
		1	**9G-2265**	1	CLIP	
		1	**9G-3695**	3	PLUG-SEAL	
		1	**186-3736**	3	SOCKET-CONNECTOR (16-GA TO 18-GA)	
		1	**9W-0844**	1	SOCKET-CONNECTOR (14-GA)	
E		1	**119-3662**		TUBE-HEAT SHRINK (10.85-MM DIA) (7-CM)	
E		1	**125-7874**		TUBE-HEAT SHRINK (5.72-MM DIA) (10-CM)	
		1	**155-2274**	1	KIT-CONNECTING PLUG (6-PIN)	
					(KIT INCLUDES PLUG AS, WEDGE & INTERFACE SEAL)	
		1	**156-1458**	1	COVER	
		1	**156-1460**	1	RECEPTACLE (8-PIN)	
	4	1	**212-7038**	1	BRACKET	
	5	1	**214-4705**	1	SWITCH AS-ROCKER (ANGLE BROOM)	
		1	**111-7899**	1	GASKET	
	6	1	**3S-2093**	2	STRAP-CABLE	
	7	1	**4P-7581**	1	CLIP	
M	8	1	**8T-0389**	2	LOCKNUT (M10X1.5-THD)	
	9	1	**8T-4121**	2	WASHER-HARD (11X21X2.5-MM THK)	
M	10	1	**8T-4136**	2	BOLT (M10X1.5X25-MM)	

E-ORDER BY THE CENTIMETER
M-METRIC PART

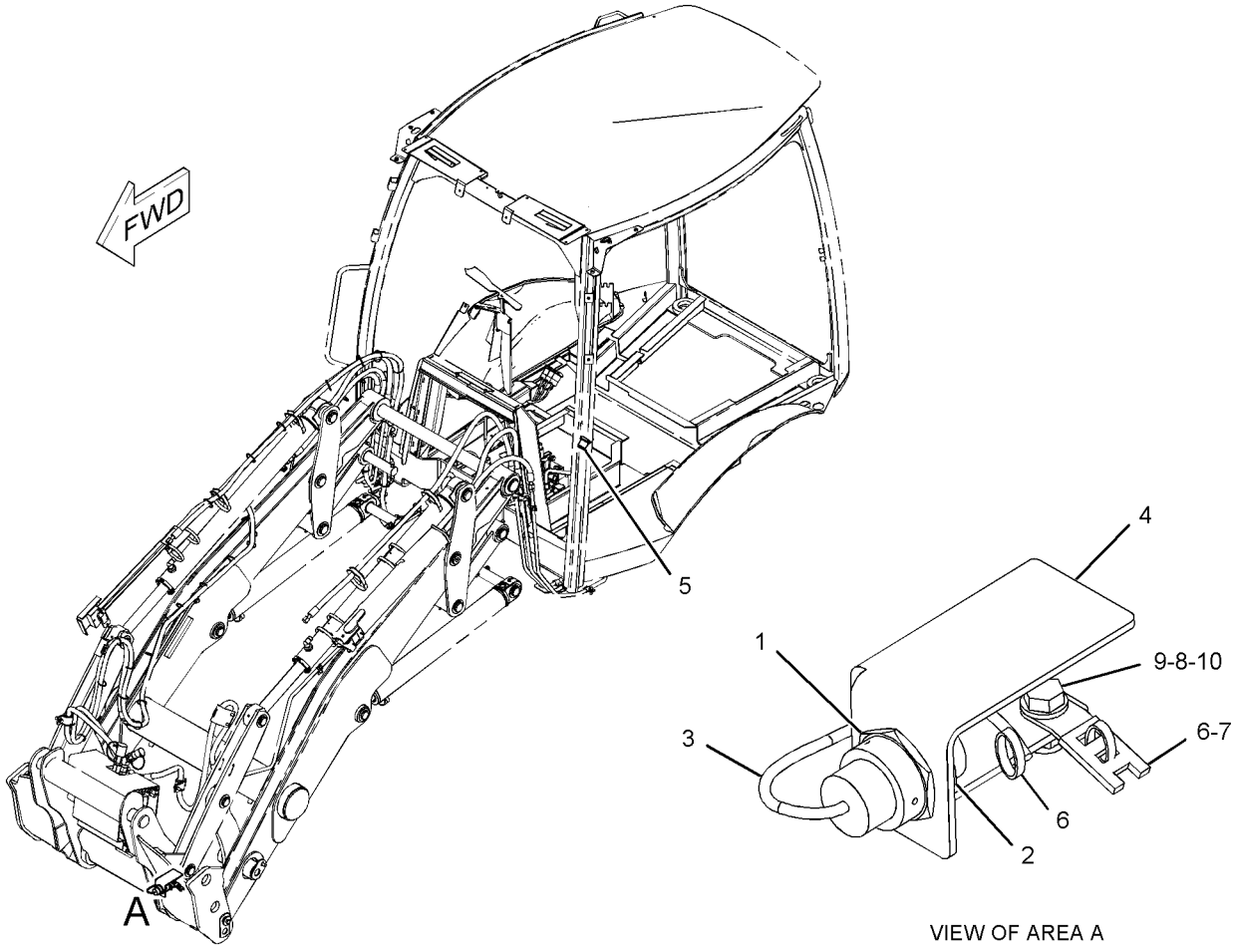

VIEW OF AREA A

GRAPHIC #1 **<END>** g01109313

296-0376 WIRING GP-WORK TOOL

S/N: SJL1-UP

PART OF 332-7952 CONVERSION AR-QUICK COUPLER, 332-7963 VALVE AR-BANK 3 AN ATTACHMENT

SMCS-1408 **i03629786**

NOTE	REF NO	GRAPHIC REF	PART NUMBER	QTY	PART NAME 1 2 3 4 5 6 (PRODUCT LEVEL)	SEE PAGE
	1	1	**189-3158**	5	SUPPRESSOR-ARC	
	2	1	**213-6077**	1	HARNESS AS-FRONT	
E		1	**5P-0767**		HOSE (541-CM)	
		1	**180-9339**	10	PIN-CONNECTOR (14-GA TO 18-GA)	
		1	**155-2270**	1	KIT-CONNECTING PLUG (2-PIN)	
		1	**155-2274**	1	KIT-CONNECTING PLUG (6-PIN)	
					(EACH PLUG KIT INCLUDES PLUG AS, WEDGE & INTERFACE SEAL)	
		1	**8T-8737**	10	PLUG-SEAL	
		1	**102-8805**	1	KIT-RECEPTACLE (6-PIN)	
		1	**102-8806**	1	KIT-RECEPTACLE (8-PIN)	
					(EACH RECEPTACLE KIT INCLUDES RECEPTACLE AS & WEDGE)	
		1	**180-9340**	2	SOCKET-CONNECTOR (14-GA TO 18-GA)	
		1	**8L-8413**	3	STRAP-CABLE	
	3	1	**214-4706**	1	SWITCH AS-ROCKER (AUXILIARY HYDRAULIC FLOW)	
	4	1	**214-4707**	1	SWITCH AS-ROCKER (ELECTRIC POWER)	
	5	1	**214-4708**	1	SWITCH AS-ROCKER (QUICK COUPLER PIN LOCK)	
					(EACH SWITCH AS-ROCKER INCLUDES)	
		1	**111-7899**	1	GASKET	
	6	1	**296-0375**	1	HARNESS AS-CAB	
		1	**228-5856**	4	CONNECTOR	
		1	**180-9339**	10	PIN-CONNECTOR (14-GA TO 18-GA)	
		1	**9X-1054**	1	PLUG AS-CONNECTOR (4-PIN)	
		1	**155-2265**	1	KIT-CONNECTING PLUG (8-PIN)	
		1	**155-2270**	5	KIT-CONNECTING PLUG (2-PIN)	
					(EACH PLUG KIT INCLUDES PLUG AS, WEDGE & INTERFACE SEAL)	
		1	**8T-8737**	4	PLUG-SEAL	
		1	**102-8801**	1	KIT-RECEPTACLE (12-PIN)	
					(INCLUDES RECEPTACLE AS & WEDGE)	
		1	**180-9340**	16	SOCKET-CONNECTOR (14-GA TO 18-GA)	
B		1	**141-8061**		TAPE	
E		1	**125-7874**		TUBE-HEAT SHRINK (5.72-MM DIA) (40-CM)	
E		1	**125-7875**		TUBE-HEAT SHRINK (7.44-MM DIA) (20-CM)	
	7	1	**115-1615**	1	RELAY AS (12-VOLT) (QUICK COUPLER)	
	8	1	**3S-2093**	36	STRAP-CABLE	
	9	1	**3S-8665**	3	CLIP	
E	10	1	**149-7372**		SLEEVE-ABRASION (55-CM)	

B-USE AS REQUIRED
E-ORDER BY THE CENTIMETER

296-0376 **WIRING GP-WORK TOOL** *(contd.)* **i03629786**

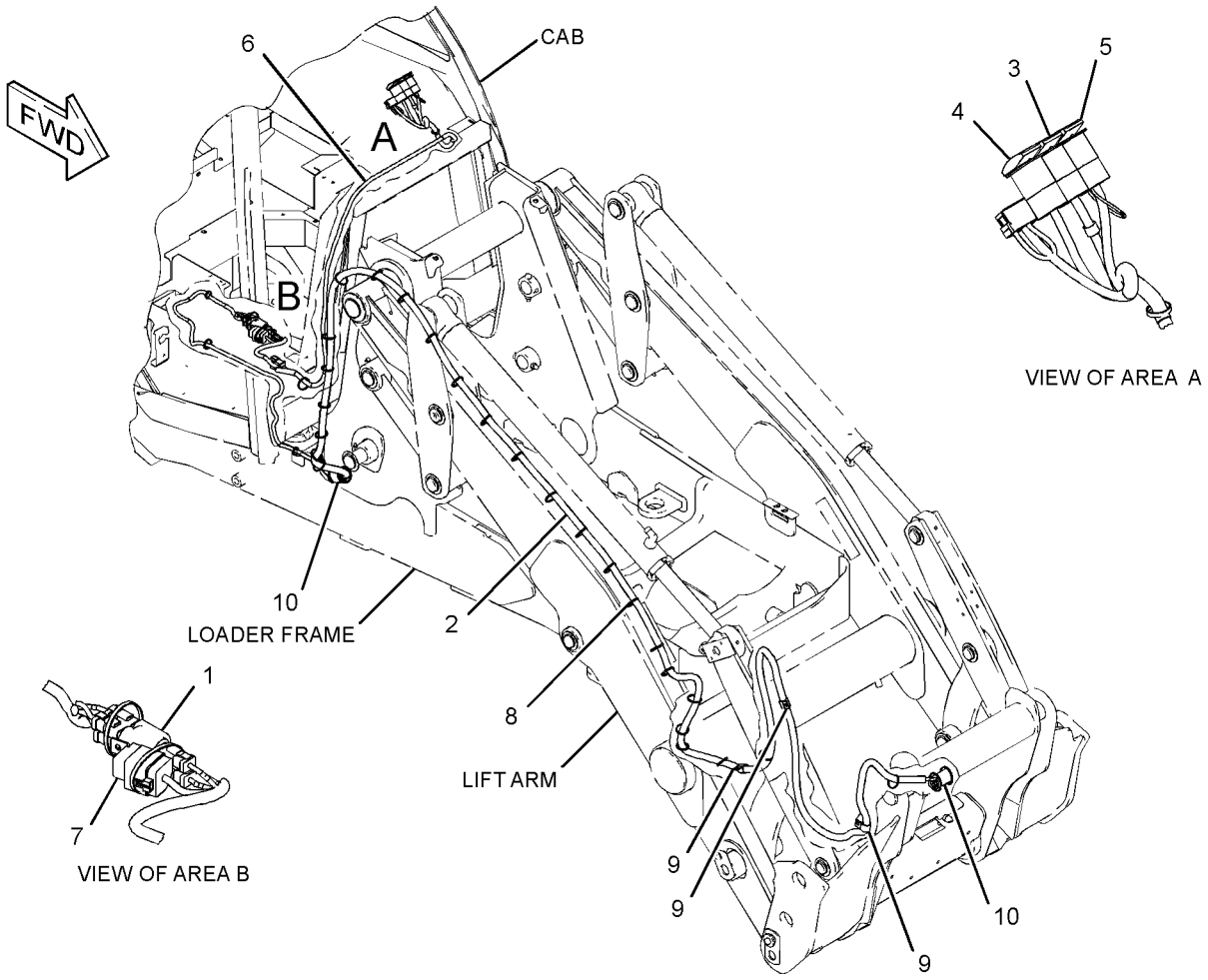

GRAPHIC #1 **<END>** g01394557

216-9083 AXLE GP-DRIVE & STEERING–FRONT

S/N: SJL1-UP
PART OF 329-0320 DRIVE AR-BACKHOE LOADER
AN ATTACHMENT

SMCS-3020, 3250, 3258, 3259, 3260, 3264, 3278, 4050, 4303, 4313

i03331981

NOTE	REF NO	GRAPHIC REF	PART NUMBER	QTY	PART NAME 1 2 3 4 5 6 (PRODUCT LEVEL)	SEE PAGE
	1	1	**199-0639**	4	SCREW-FLAT HEAD (M8X1.25X20-MM)	
	3	1	**219-8798**	2	SEAL-LIP TYPE	
	4	1	**219-8795**	1	CAP (PLASTIC)	
	5	1	**198-7811**	2	DOWEL	
	6	1	**198-7815**	2	BUSHING (TRUMPET)	
	7	1	**152-6144**	3	PLUG AS-DRAIN (MAGNETIC)	
	8	1	**199-0677**	9	BOLT (M14X2X40-MM)	
M	9	1	**199-0683**	8	BOLT (M16X2X38-MM)	
	10	1	**198-7822**	2	SEAL	
M	11	1	**199-0783**	8	BOLT (M16X2X38-MM)	
M	12	1	**198-7835**	2	NUT-TIE ROD (M27X1.5-THD)	
	13	1	**213-4227**	2	RETAINER	
	14	1	**213-4223**	2	WASHER (57X66X8.5-MM THK)	
	15	1	*216-7473*	2	PIN AS (UPPER)	
					(EACH INCLUDES)	
		1	**198-7823**	1	BEARING AS	
		1	**198-7825**	1	SEAL	
		1	**198-7838**	1	PIN	
	16	1	*216-7474*	2	PIN AS (LOWER)	
					(EACH INCLUDES)	
		1	**198-7826**	1	SEAL	
		1	**198-7839**	1	PIN	
		1	**217-0049**	1	BEARING	
	17	1	**213-4225**	2	WASHER-THRUST	
	18	1	**238-5275**	1	BEAM	
Y	19	1	**238-5286**	1	DIFFERENTIAL & BEVEL GEAR GP	230
J	20	1	**238-5296**	1	SHAFT GP-AXLE (LH)	
		1	**238-5229**	1	YOKE	
		1	**238-5241**	1	SHAFT	
J	21	1	**238-5297**	1	SHAFT GP-AXLE (RH)	
		1	**238-5229**	1	YOKE	
		1	**238-5241**	1	SHAFT	
Y	22	1	**238-5277**	1	HOUSING & FLANGE GP-AXLE (LH)	240
Y	23	1	**238-5278**	1	HOUSING & FLANGE GP-AXLE (RH)	241
Y	24	1	**238-5276**	2	PLANETARY GP-FINAL DRIVE	252
	25	1	**253-5024**	1	BREATHER (FRONT AXLE)	
	26	1	**199-0662**	2	SEAL-O-RING	
	27	1	**154-5404**	2	BEARING	
B	28	1	**1U-8846**	1	SEALANT-GASKET	
	29	1	**238-5285**	1	CYLINDER GP-STEERING	
		1	**280-7013**	1	KIT-SEAL	
					(INCLUDES RINGS, SEALS, WASHERS & RODS)	
		1	**280-7014**	2	CYLINDER HEAD	
		1	**280-7015**	1	ROD	
	30	1	**238-5236**	1	TIE ROD AS (RH)	
	31	1	**238-5237**	1	TIE ROD AS (LH)	
B	32	1	**198-7841**	4	SHIM (0.15-MM THK)	
B	33	1	**198-7842**	4	SHIM (0.2-MM THK)	
B	34	1	**198-7843**	4	SHIM (0.5-MM THK)	
	35	1	**212-4678**	6	WASHER-HARD (20.5X36.5X5-MM THK)	
	36	1	**290-4164**	6	BOLT (M20X1.5X80-MM)	
					AVAILABLE REPAIR KIT(S):	
J			**238-5230**		KIT-SPIDER	
					(INCLUDES SPIDER & 4 RETAINING RINGS)	

B-USE AS REQUIRED
J-KIT MARKED J SERVICES PARTS MARKED J
M-METRIC PART
Y-SEPARATE ILLUSTRATION

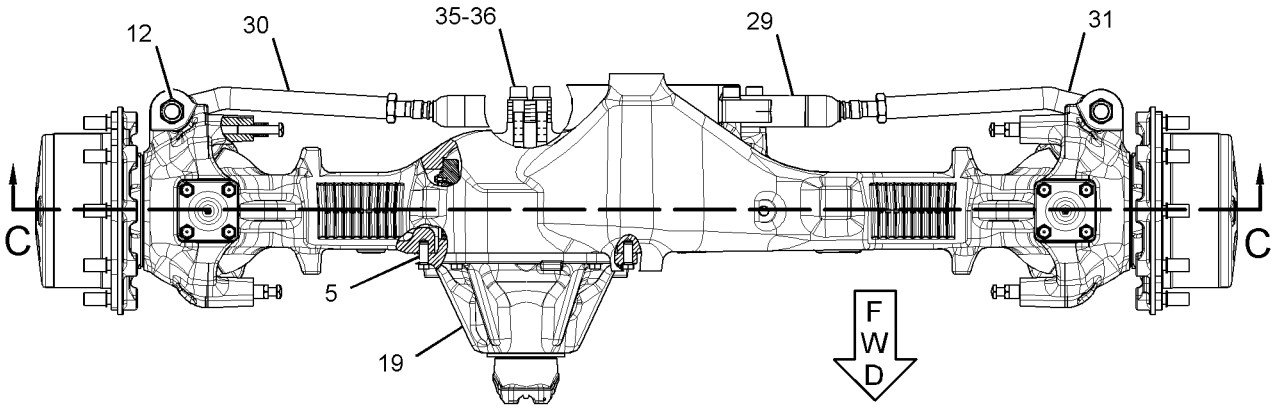

TOP VIEW

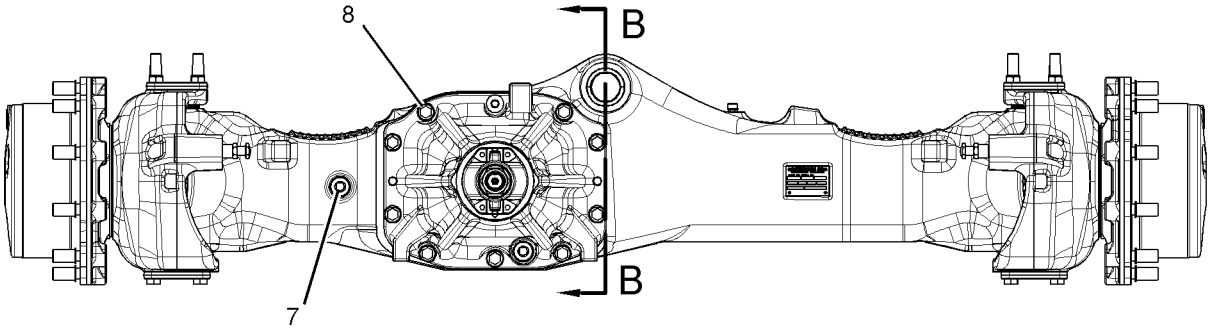

FRONT VIEW

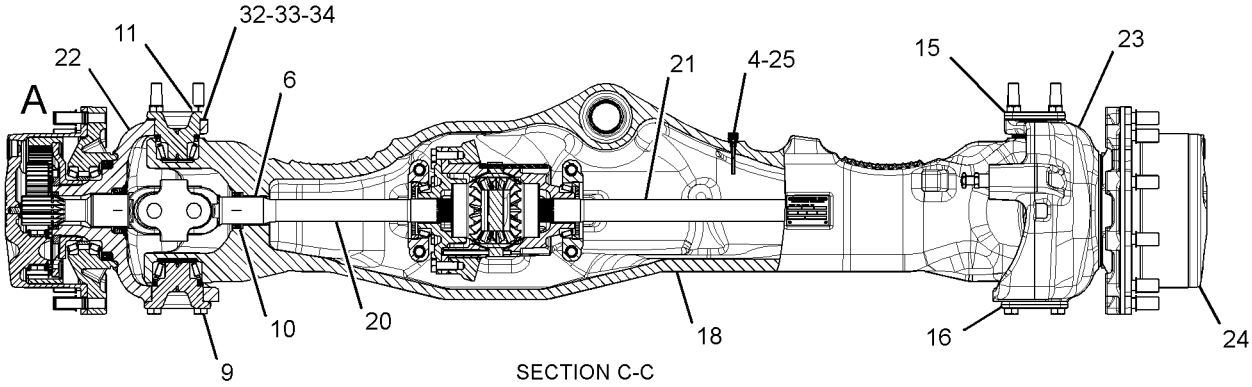

SECTION C-C

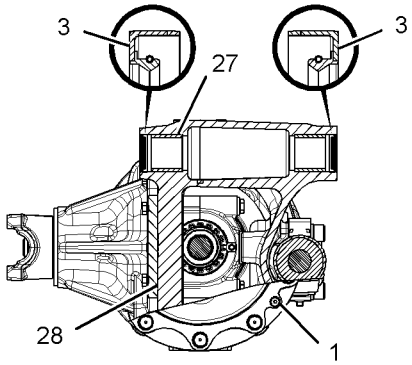

SECTION B-B

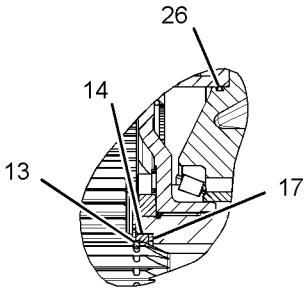

VIEW OF AREA A

GRAPHIC #1 **<END>** g01351797

315-2318 AXLE GP-DRIVE & STEERING–REAR

S/N: SJL1-UP

PART OF 329-0320 DRIVE AR-BACKHOE LOADER

AN ATTACHMENT

SMCS-3020, 3250, 3258, 3259, 3260, 3264, 3278, 4050, 4303, 4313

i03332003

NOTE	REF NO	GRAPHIC REF	PART NUMBER	QTY	PART NAME 1 2 3 4 5 6 (PRODUCT LEVEL)	SEE PAGE
	1	1	**199-0652**	2	CLIP-PIN	
	2	1	**219-8795**	1	CAP (PLASTIC)	
	3	1	**199-0668**	2	BRACKET	
	4	1	**197-9155**	1	BREATHER (AXLE)	
	5	1	**198-7811**	2	DOWEL	
	6	1	**198-7815**	2	BUSHING	
	7	1	**152-6144**	4	PLUG AS-DRAIN (MAGNETIC)	
	8	1	**199-0676**	2	SPRING	
M	9	1	**199-0679**	2	BOLT (M16X2X95-MM)	
M	10	1	**199-0683**	16	BOLT (M16X2X38-MM)	
	11	1	**199-0706**	1	PISTON	
	12	1	**198-7822**	2	SEAL	
M	13	1	**198-7835**	2	NUT-TIE ROD (M27X1.5-THD)	
	14	1	**210-3106**	1	BRACKET	
	15	1	**213-4227**	2	RETAINER	
	16	1	**212-5713**	2	PLUG	
	17	1	**213-4223**	2	WASHER (57X66X8.5-MM THK)	
Y	18	1	**216-1610**	2	PLANETARY GP-FINAL DRIVE	251
	19	1	*216-7473*	2	PIN AS (UPPER)	
					(EACH INCLUDES)	
		1	**198-7823**	1	BEARING AS	
		1	**198-7825**	1	SEAL	
		1	**198-7838**	1	PIN	
	20	1	*216-7474*	2	PIN AS (LOWER)	
					(EACH INCLUDES)	
		1	**198-7826**	1	SEAL	
		1	**198-7839**	1	PIN	
		1	**217-0049**	1	BEARING	
	21	1	**213-4225**	2	WASHER-THRUST	
Y	22	1	**216-7476**	1	HOUSING & FLANGE GP-AXLE (RH)	238
Y	23	1	**216-7477**	1	HOUSING & FLANGE GP-AXLE (LH)	239
	24	1	**217-2914**	1	COVER (DIFFERENTIAL LOCK)	
	25	1	**231-0699**	1	COVER (DIFFERENTIAL LOCK)	
	26	1	**219-8839**	1	ROD	
	27	1	**174-4647**	1	BUSHING	
	28	1	**174-4650**	1	SPACER (20X32X8-MM THK)	
	29	1	*316-1926*	2	DISC AS-BRAKE	
					(EACH INCLUDES)	
		1	**199-0786**	4	PLATE	
		1	**199-0787**	3	PIN	
		1	**238-5291**	3	DISC-BRAKE	
		1	**238-5292**	1	HUB-BRAKE	
	30	1	**312-7617**	2	SHAFT AS	
					(EACH INCLUDES)	
		1	**226-4355**	2	SPIDER (15-TEETH)	
		1	**226-4356**	1	SHAFT	
		1	**226-4357**	1	YOKE	
		1	**312-7618**	1	SHAFT-AXLE	
Y	31	1	**316-1925**	1	HOUSING GP-AXLE (REAR)	247
	32	1	**253-4979**	1	HOUSING-AXLE (RH)	
	33	1	**253-4980**	1	HOUSING-AXLE (LH)	
	34	1	**238-5236**	1	TIE ROD AS (RH)	
	35	1	**238-5237**	1	TIE ROD AS (LH)	
Y	36	1	**238-5238**	1	CYLINDER GP-STEERING	289

315-2318 AXLE GP-DRIVE & STEERING *(contd.)* i03332003

NOTE	REF NO	GRAPHIC REF	PART NUMBER	QTY	PART NAME 1 2 3 4 5 6 (PRODUCT LEVEL)	SEE PAGE
M	37	1	**8T-0292**	2	BOLT (M8X1.25X90-MM)	
	38	1	**222-7108**	1	BRACKET AS	
M		1	**6V-9632**	2	NUT-WELD (M6X1-THD)	
M	39	1	**8C-7505**	4	SCREW-FLAT HEAD (M8X1.25X20-MM)	
M	40	1	**6V-3940**	2	BOLT (M8X1.25X25-MM)	
	41	1	**4L-6454**	2	BOLT (3/8-16X1-IN)	
	42	1	**9S-8004**	1	PLUG	
M	43	1	**095-9805**	3	BOLT-SOCKET HEAD (M14X2X40-MM)	
	44	1	**4F-9029**	2	SEAL	
	45	1	**9X-7684**	2	SEAL-O-RING	
	46	1	**5H-4909**	2	SEAL-O-RING	
	47	1	**130-7282**	1	BRACKET	
	48	1	**259-0127**	1	BRAKE GP-HYDRAULIC CALIPER	
		1	**166-9413**	1	KIT-CAM (COUNTERCLOCKWISE)	
					(INCLUDES CAMS, BALL BEARINGS & RETAINER RING)	
		1	**259-0128**	1	KIT-BRAKE LINING	
					(INCLUDES LINING AS & SPRING)	
		1	**259-0129**	1	KIT-BRAKE CALIPER	
					(INCLUDES SLEEVES, WASHERS, NUT-HEXES, BOOTS, SPRINGS, SPACERS & O-RINGS)	
M	49	1	**7X-2559**	26	BOLT (M16X2X160-MM)	
B	51	1	**1U-8846**	1	SEALANT-GASKET	

B-USE AS REQUIRED
M-METRIC PART
Y-SEPARATE ILLUSTRATION

315-2318 AXLE GP-DRIVE & STEERING *(contd.)* i03332003

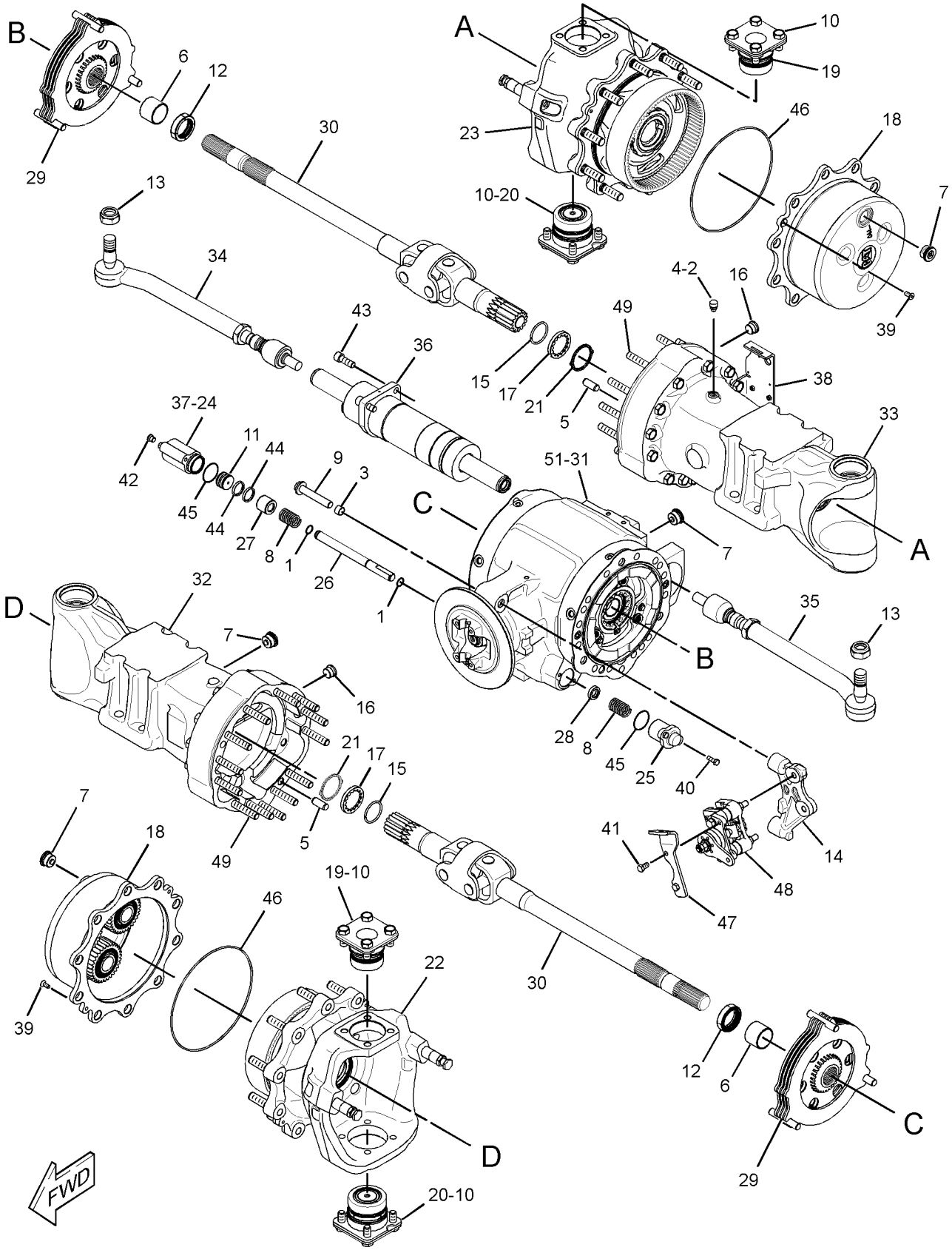

GRAPHIC #1 **<END>** g01472098

320-7233 CONTROL GP-DIFFERENTIAL LOCK–

TRANSMISSION AUTOSHIFT

S/N: SJL1-UP

PART OF 329-0311 POWER TRAIN AR

AN ATTACHMENT

SMCS-3264, 3272, 3273 **i03016061**

NOTE	REF NO	GRAPHIC REF	PART NUMBER	QTY	PART NAME 1 2 3 4 5 6 (PRODUCT LEVEL)	SEE PAGE
	1	1	**7K-1181**	2	STRAP-CABLE	
	2	1	**151-4841**	2	BLOCK	
I	3	1	**256-0548**	2	HOSE AS	
I	4	1	**256-0549**	1	HOSE AS	
Y	5	1	**274-8048**	1	VALVE & MTG GP-SOLENOID (DIFFERENTIAL LOCK)	270
	6	1	*148-8325*	1	CONNECTOR AS	
		1	**3J-1907**	1	SEAL-O-RING	
		1	**4J-5477**	1	SEAL-O-RING	
		1	**6V-8641**	1	CONNECTOR	
	7	1	*148-8368*	3	ELBOW AS	
					(EACH INCLUDES)	
		1	**3J-1907**	1	SEAL-O-RING	
		1	**4J-5477**	1	SEAL-O-RING	
		1	**6V-8627**	1	ELBOW	
	8	1	**8T-4121**	2	WASHER-HARD (11X21X2.5-MM THK)	
M	9	1	**8T-4172**	2	BOLT (M10X1.5X80-MM)	

I-REFER TO HYDRAULIC INFORMATION SYSTEM
M-METRIC PART
Y-SEPARATE ILLUSTRATION

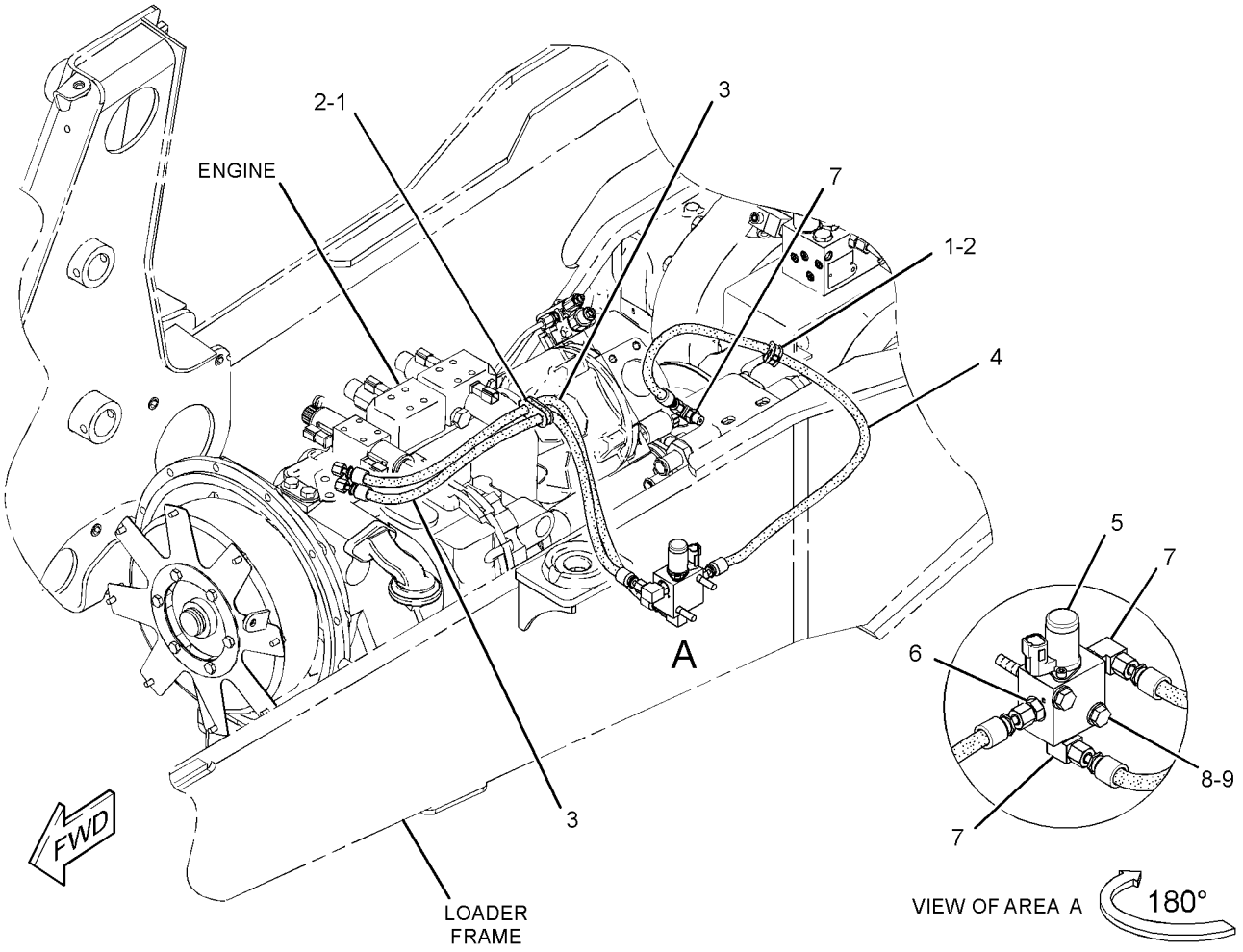

GRAPHIC #1 **<END>** g01574393

238-5286 DIFFERENTIAL & BEVEL GEAR GP–LH

S/N: SJL1-UP

PART OF 216-9083 AXLE GP-DRIVE & STEERING

AN ATTACHMENT

SMCS-3256, 3258, 3281, 3283, 3284 **i02207257**

NOTE	REF NO	GRAPHIC REF	PART NUMBER	QTY	PART NAME 1 2 3 4 5 6 (PRODUCT LEVEL)	SEE PAGE
	1	1	**199-0656**	2	BEARING	
J	2	1	**199-0663**	1	SEAL-O-RING	
	3	1	**152-6144**	1	PLUG AS-DRAIN (MAGNETIC)	
	4	1	**199-0675**	2	NUT (M104X2-THD)	
J	5	1	**199-0678**	2	WASHER (45.5X55X2-MM THK)	
J	6	1	**199-0680**	1	SPACER (47X50X19.2-MM THK)	
M	7	1	**199-0695**	2	BOLT (M6X1X14-MM)	
	8	1	**199-0697**	1	SEAL	
J	9	1	**199-0785**	1	WASHER (30.5X58X10-MM THK)	
J	10	1	**217-2346**	1	KIT-BEVEL GEAR & PINION	
					(INCLUDES BEVEL GEAR,PINION, WASHERS, SEAL, NUT & SPACERS)	
	11	1	**199-0858**	2	RETAINER	
J	12	1	**212-5702**	1	NUT (M30X2-THD)	
	13	1	**095-1041**	1	BEARING AS	
	14	1	**093-8828**	1	BEARING AS	
Y	15	1	**212-5710**	1	DIFFERENTIAL GP	232
	16	1	**219-8828**	1	YOKE	
	17	1	**238-5288**	1	SUPPORT AS	
	17A	1	**199-0668**	4	BRACKET	
M	17B	1	**199-0679**	4	BOLT (M16X2X95-MM)	
B	18	1	**199-0684**	1	SHIM (2.5-MM THK)	
B			**199-0685**	1	SHIM (2.6-MM THK)	
B			**199-0686**	1	SHIM (2.7-MM THK)	
B			**199-0687**	1	SHIM (2.8-MM THK)	
B			**199-0688**	1	SHIM (2.9-MM THK)	
B			**199-0689**	1	SHIM (3-MM THK)	
B			**199-0690**	1	SHIM (3.1-MM THK)	
B			**199-0691**	1	SHIM (3.2-MM THK)	
B			**199-0692**	1	SHIM (3.3-MM THK)	
B			**199-0693**	1	SHIM (3.4-MM THK)	

B-USE AS REQUIRED
J-KIT MARKED J INCLUDES PARTS MARKED J
M-METRIC PART
Y-SEPARATE ILLUSTRATION

238-5286 DIFFERENTIAL & BEVEL GEAR GP *(contd.)* **i02207257**

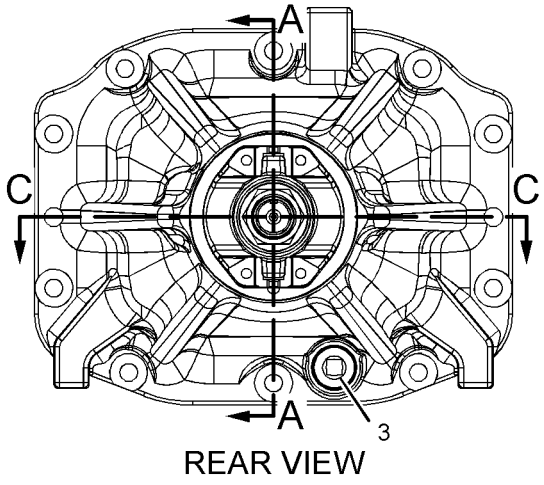

REAR VIEW

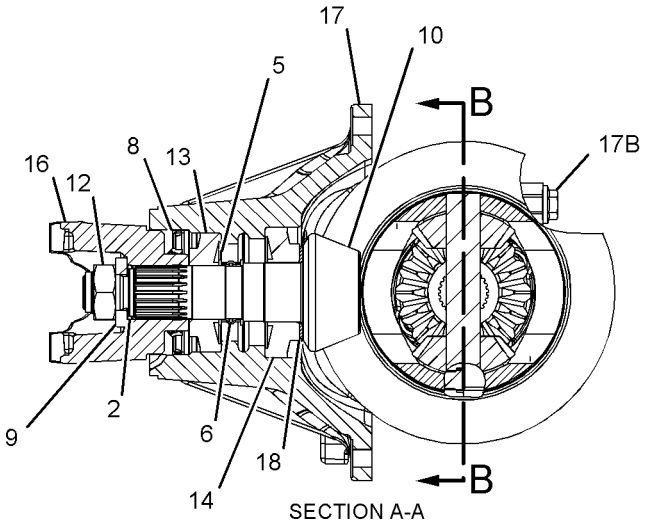

SECTION A-A

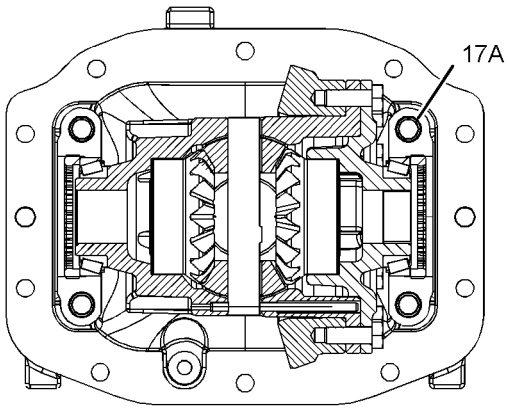

SECTION B-B

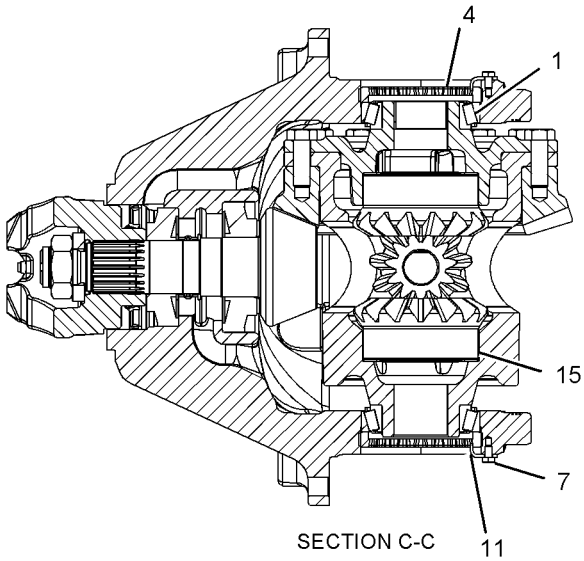

SECTION C-C

GRAPHIC #1 **<END>** g01110834

POWER TRAIN

212-5710 DIFFERENTIAL GP

S/N: SJL1-UP
PART OF 238-5286 DIFFERENTIAL & BEVEL GEAR GP
AN ATTACHMENT

SMCS-3258 **i02194336**

NOTE	REF NO	GRAPHIC REF	PART NUMBER	QTY	PART NAME 1 2 3 4 5 6 (PRODUCT LEVEL)	SEE PAGE
	1	1	**199-0673**	1	BUSHING	
	2	1	**199-0694**	12	BOLT (M14X2X40-MM)	
	3	1	**199-0784**	1	COVER-DIFFERENTIAL	
	4	1	**199-0791**	1	GEAR AS	
	5	1	**199-0808**	1	PIN	
	6	1	**219-8838**	1	HOUSING-DIFFERENTIAL	
	7	1	**231-0670**	1	SHAFT	
	8	1	**231-0671**	2	WASHER-THRUST	
	9	1	**231-0695**	2	WASHER-THRUST	

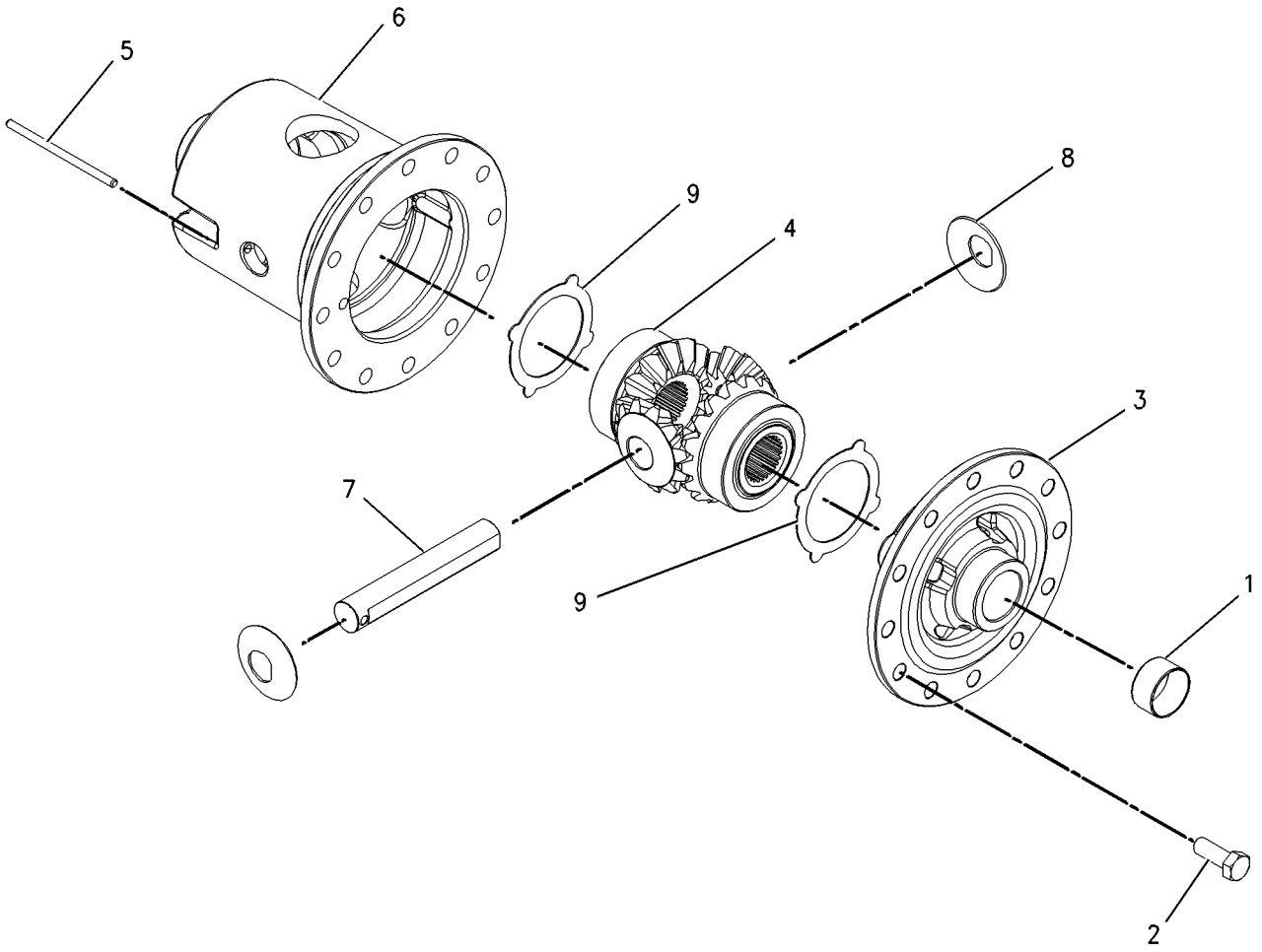

GRAPHIC #1 **<END>** g00993274

231-0692 DIFFERENTIAL GP–AXLE

S/N: SJL1-UP
PART OF 316-1925 HOUSING GP-AXLE
AN ATTACHMENT

SMCS-3258 **i02188622**

NOTE	REF NO	GRAPHIC REF	PART NUMBER	QTY	PART NAME 1 2 3 4 5 6 (PRODUCT LEVEL)	SEE PAGE
	1	1	**199-0673**	2	BUSHING	
	2	1	**199-0694**	12	BOLT (M14X2X40-MM)	
	3	1	**199-0756**	1	COLLAR	
	4	1	**199-0784**	1	COVER-DIFFERENTIAL	
	5	1	**199-0807**	4	PIN	
	6	1	**199-0808**	3	PIN	
	7	1	**231-0670**	1	SHAFT	
	8	1	**231-0671**	4	WASHER-THRUST	
	9	1	**231-0695**	2	WASHER-THRUST	
	10	1	**231-0693**	1	CASE-DIFFERENTIAL	
	11	1	**231-0696**	2	SHAFT	
	12	1	**231-0697**	1	RETAINER	
	13	1	**231-0694**	1	GEAR AS	
	14	1	**199-0659**	4	SEAL-PIN	

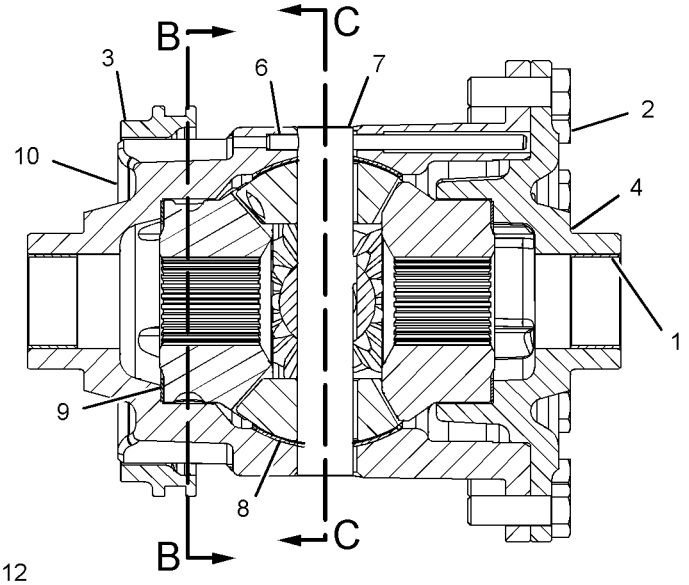

FRONT VIEW
(SECTIONED)

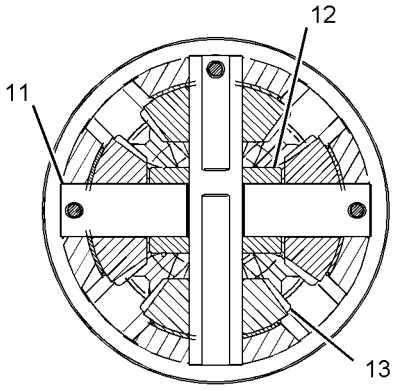

SECTION C-C

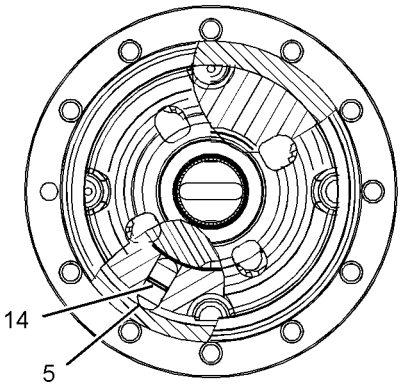

SECTION B-B

GRAPHIC #1 **<END>** g01107764

111-7907 DRIVE GP-FLEXIBLE COUPLING

S/N: SJL1-UP
PART OF 245-6789 TRANSMISSION AR-POWER SHIFT
AN ATTACHMENT

SMCS-3252 **i02594396**

NOTE	REF NO	GRAPHIC REF	PART NUMBER	QTY	PART NAME 1 2 3 4 5 6 (PRODUCT LEVEL)	SEE PAGE
M	1	1	**8T-4200**	8	BOLT (M8X1.25X16-MM)	
M	2	1	**6V-8455**	6	BOLT (M10X1.5X16-MM)	
	3	1	**117-9713**	1	PLATE-CONVERTER REINFORCEMENT	
	4	1	**8T-4224**	8	WASHER-HARD (8.8X16X2-MM THK)	
	5	1	**111-7906**	1	PLATE-CONVERTER DRIVE	

M-METRIC PART

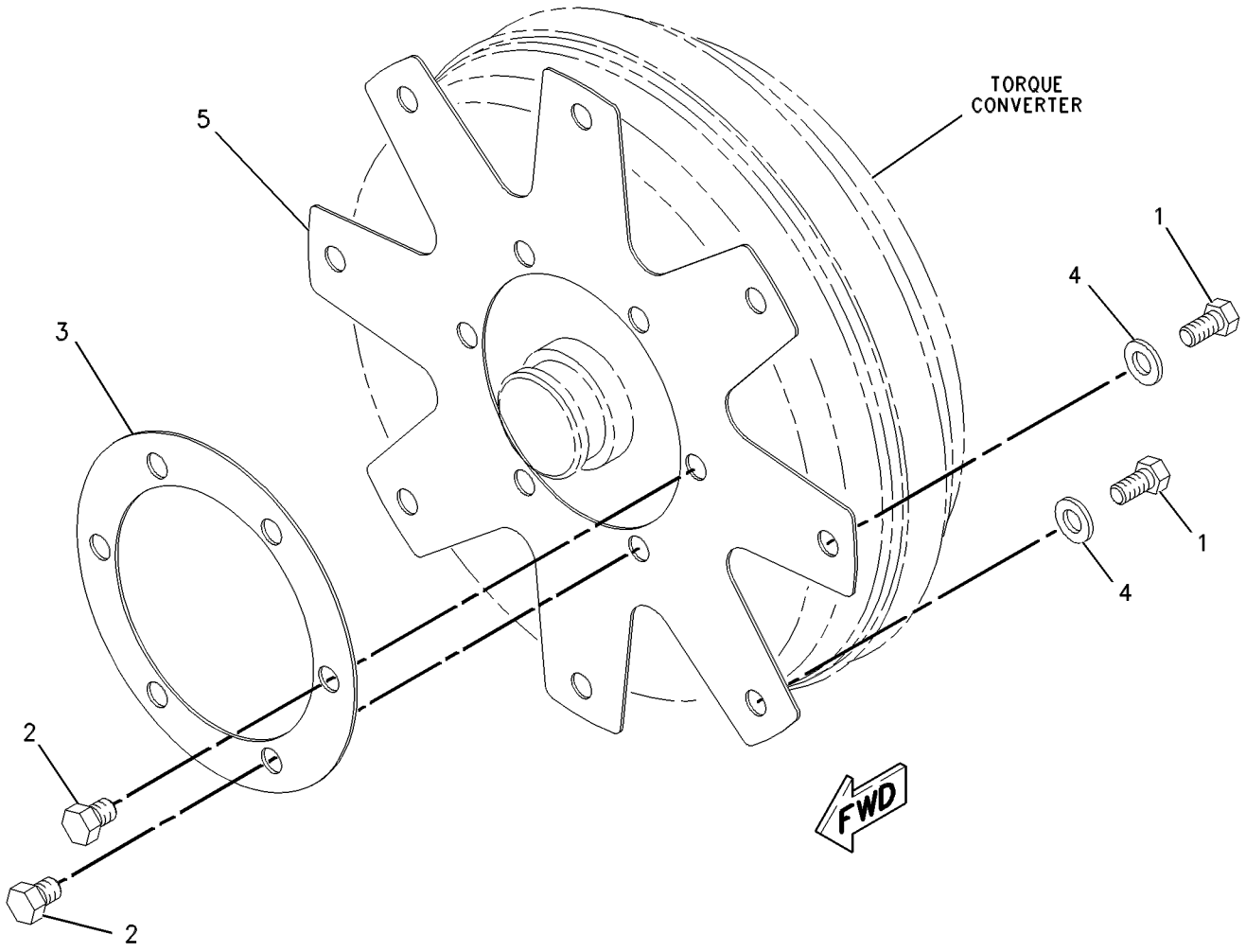

GRAPHIC #1 **<END>** g00547374

211-0073 FILLER GP-POWER TRAIN OIL–AUTOSHIFT

S/N: SJL1-UP
PART OF 329-0311 POWER TRAIN AR
AN ATTACHMENT

SMCS-3005, 3081 **i03538561**

NOTE	REF NO	GRAPHIC REF	PART NUMBER	QTY	PART NAME 1 2 3 4 5 6 (PRODUCT LEVEL)	SEE PAGE
B	1	1	**2B-0941**	1	SPACER (10.5X19X19-MM THK)	
	4	1	**214-3745**	1	TUBE AS	
	5	1	**218-9984**	1	GAUGE AS-OIL LEVEL (DIPSTICK) (POWER TRAIN)	
	6	1	**236-1583**	1	BOSS	
	7	1	*148-8368*	2	ELBOW AS	
					(EACH INCLUDES)	
		1	**3J-1907**	1	SEAL-O-RING	
		1	**4J-5477**	1	SEAL-O-RING	
		1	**6V-8627**	1	ELBOW	
	9	1	**4J-0522**	1	SEAL-O-RING	
	10	1	**5P-4116**	1	WASHER-HARD (8.8X20.5X2-MM THK)	
M	11	1	**7X-0818**	1	BOLT (M8X1.25X45-MM)	
	12	1	**8S-0023**	3	CLIP (SLOT)	
	13	1	**8S-0024**	3	CLIP (TAB)	
	14	1	**8T-4121**	1	WASHER-HARD (11X21X2.5-MM THK)	
M	15	1	**8T-4136**	1	BOLT (M10X1.5X25-MM)	
M	16	1	**8T-4176**	1	BOLT (M12X1.75X90-MM)	
	17	1	**8T-4223**	3	WASHER-HARD (13.5X25.5X3-MM THK)	
M	18	1	**8T-4956**	2	BOLT (M12X1.75X35-MM)	
B	19	1	**164-1404**	1	SPACER (10.67X16.95X23-MM THK)	

B-USE AS REQUIRED
M-METRIC PART

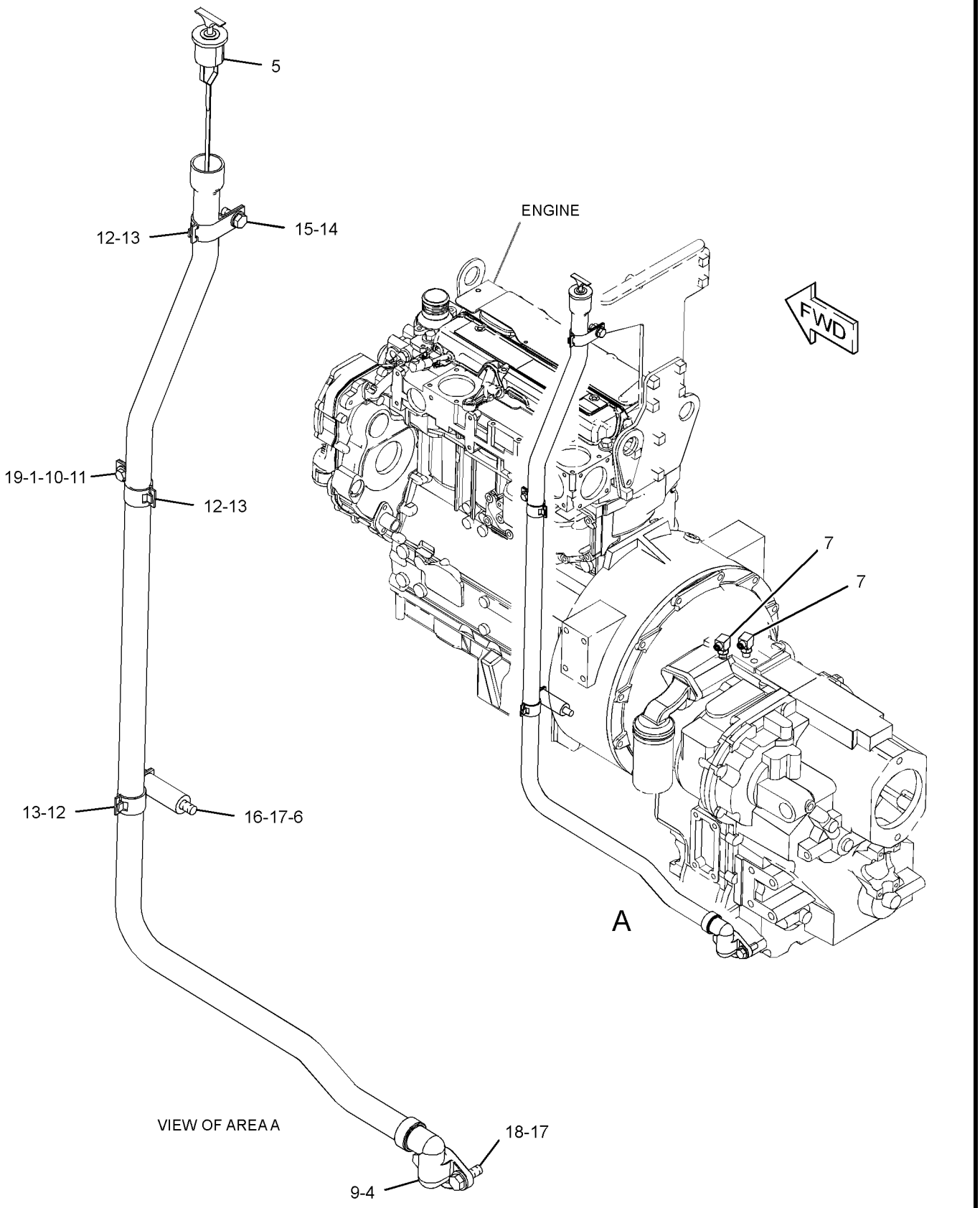

GRAPHIC #1 **<END>** g01869580

216-1609 FLANGE GP-WHEEL

S/N: SJL1-UP

PART OF 216-7476, 216-7477 HOUSING & FLANGE GP-AXLE

AN ATTACHMENT

SMCS-4057 **i02361154**

NOTE	REF NO	GRAPHIC REF	PART NUMBER	QTY	PART NAME 1 2 3 4 5 6 (PRODUCT LEVEL)	SEE PAGE
	1	1	**210-5932**	2	BEARING-WHEEL	
	2	1	**216-1602**	1	FLANGE	
	3	1	**226-4346**	10	STUD	
	4	1	**229-5092**	1	SEAL	

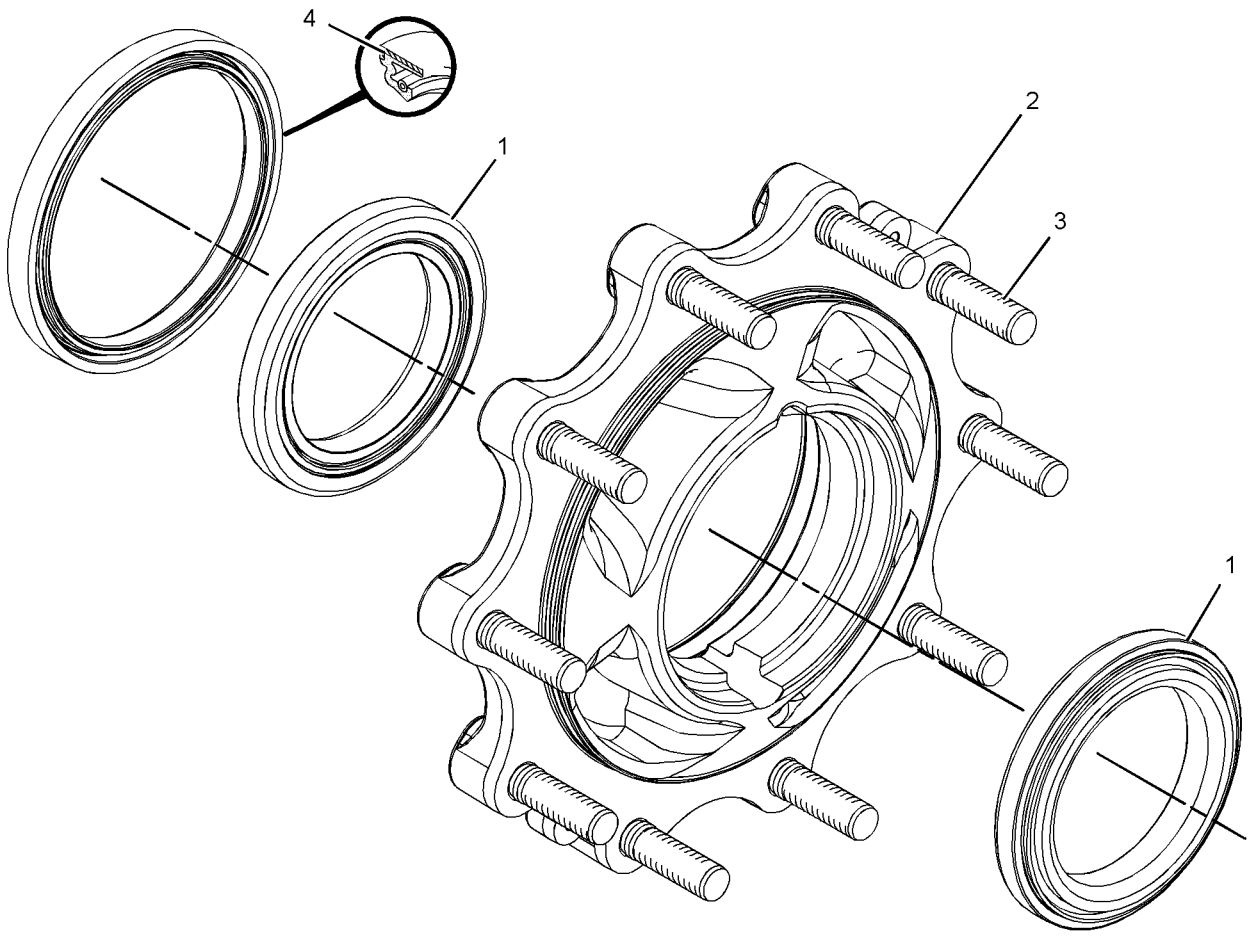

GRAPHIC #1 **<END>** g01180592

216-7476 HOUSING & FLANGE GP-AXLE–RH

S/N: SJL1-UP
PART OF 315-2318 AXLE GP-DRIVE & STEERING
AN ATTACHMENT

SMCS-4057, 4234 **i02377936**

NOTE	REF NO	GRAPHIC REF	PART NUMBER	QTY	PART NAME 1 2 3 4 5 6 (PRODUCT LEVEL)	SEE PAGE
	1	1	**226-4367**	1	SPACER (110X123X22.99-MM THK)	
	2	1	**226-4366**	1	NUT-SPANNER	
	3	1	**226-4370**	3	BOLT-SELF-LOCKING	
	4	1	*216-1608*	1	GEAR GP-RING	
		1	**210-7302**	1	GEAR-RING (81-TEETH)	
		1	**226-4364**	1	HUB	
		1	**199-0778**	1	RING-SNAP	
Y	5	1	*216-1609*	1	FLANGE GP-WHEEL	237
Y	6	1	**216-7479**	1	HOUSING GP-AXLE (RH)	243
	7	1	**226-4365**	1	WASHER-TAB	

Y-SEPARATE ILLUSTRATION

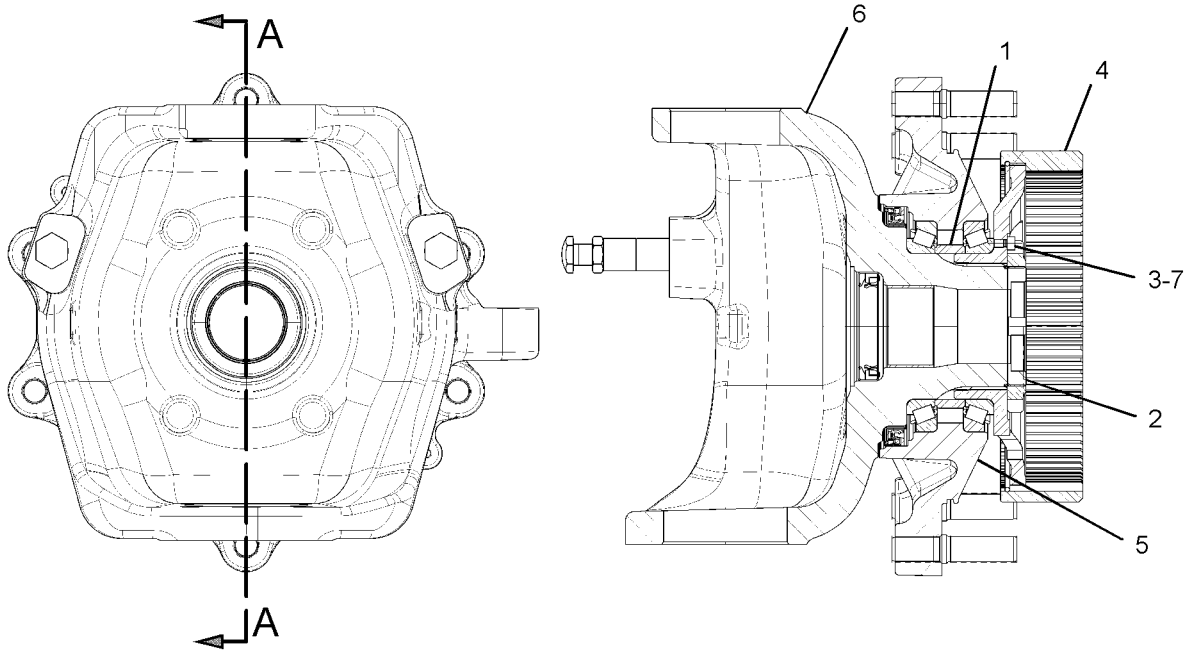

GRAPHIC #1 **<END>** g01187326

216-7477 HOUSING & FLANGE GP-AXLE–LH

S/N: SJL1-UP
PART OF 315-2318 AXLE GP-DRIVE & STEERING
AN ATTACHMENT

SMCS-4057, 4234 **i02170294**

NOTE	REF NO	GRAPHIC REF	PART NUMBER	QTY	PART NAME 1 2 3 4 5 6 (PRODUCT LEVEL)	SEE PAGE
	1	1	**216-1608**	1	GEAR GP-RING	
		1	**199-0778**	1	RING-SNAP	
		1	**210-7302**	1	GEAR-RING (81-TEETH)	
		1	**226-4364**	1	HUB	
Y	2	1	*216-1609*	1	FLANGE GP-WHEEL	237
Y	3	1	**216-7481**	1	HOUSING GP-AXLE (LH)	244
	4	1	**226-4366**	1	NUT-SPANNER	
	5	1	**226-4365**	1	WASHER-TAB	
	6	1	**226-4367**	1	SPACER (110X123X22.99-MM THK)	
	7	1	**226-4370**	3	BOLT-SELF-LOCKING	

Y-SEPARATE ILLUSTRATION

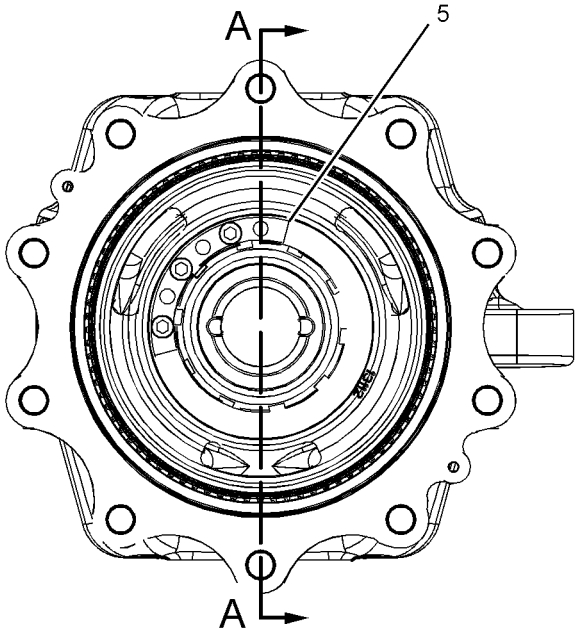

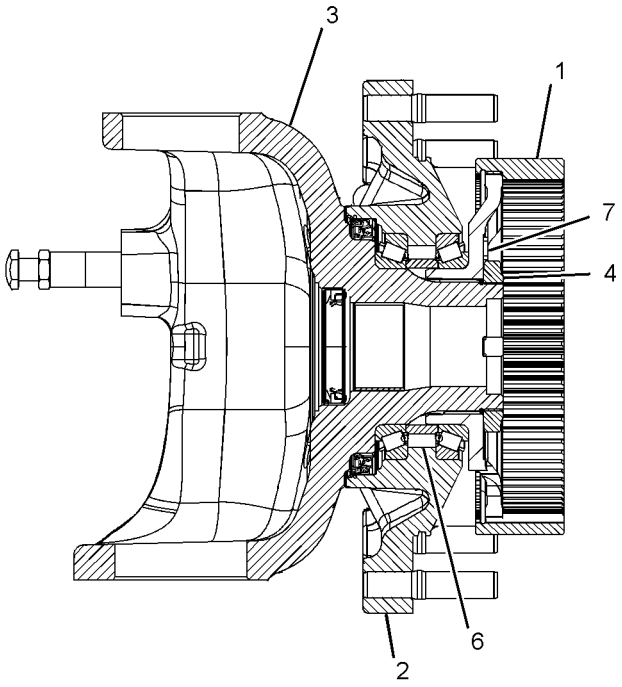

SECTION A-A

GRAPHIC #1 **<END>** g01104742

238-5277 HOUSING & FLANGE GP-AXLE—LH

S/N: SJL1-UP
PART OF 216-9083 AXLE GP-DRIVE & STEERING
AN ATTACHMENT

SMCS-4057, 4234 **i02198957**

NOTE	REF NO	GRAPHIC REF	PART NUMBER	QTY	PART NAME 1 2 3 4 5 6 (PRODUCT LEVEL)	SEE PAGE
	1	1	**216-1608**	1	GEAR GP-RING	
	1A	1	**199-0778**	1	RING-SNAP	
	1B	1	**210-7302**	1	GEAR-RING (81-TEETH)	
	1C	1	**226-4364**	1	HUB	
	2	1	**226-4366**	1	NUT-SPANNER	
	3	1	**226-4365**	1	WASHER-TAB	
	4	1	**226-4367**	1	SPACER (110X123X22.99-MM THK)	
	5	1	**226-4370**	3	BOLT-SELF-LOCKING	
	6	1	**238-5281**	1	FLANGE GP-WHEEL	
	6A	1	**209-4232**	2	BEARING	
	6B	1	**226-4346**	10	STUD	
	6C	1	**238-5282**	1	FLANGE-WHEEL	
	6D	1	**253-4976**	1	SEAL	
Y	7	1	*238-5279*	1	HOUSING GP-AXLE (LH)	245

Y-SEPARATE ILLUSTRATION

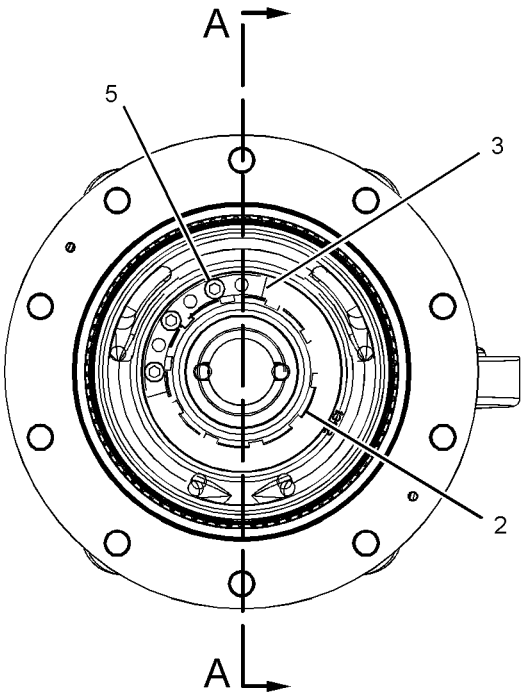

RIGHT SIDE VIEW

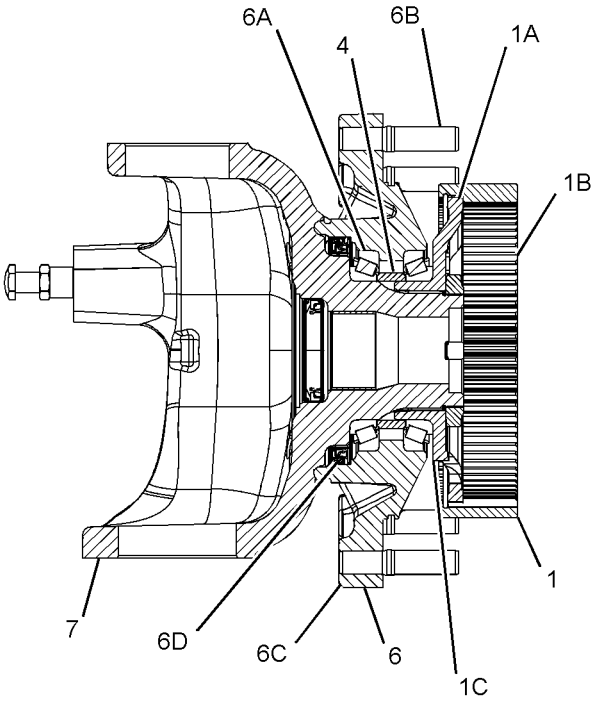

SECTION A-A

GRAPHIC #1 **<END>** g01110678

238-5278 HOUSING & FLANGE GP-AXLE—RH

S/N: SJL1-UP

PART OF 216-9083 AXLE GP-DRIVE & STEERING

AN ATTACHMENT

SMCS-4057, 4234 **i02198955**

NOTE	REF NO	GRAPHIC REF	PART NUMBER	QTY	PART NAME 1 2 3 4 5 6 (PRODUCT LEVEL)	SEE PAGE
	1	1	**216-1608**	1	GEAR GP-RING	
	1A	1	**199-0778**	1	RING-SNAP	
	1B	1	**210-7302**	1	GEAR-RING (81-TEETH)	
	1C	1	**226-4364**	1	HUB	
	2	1	**226-4366**	1	NUT-SPANNER	
	3	1	**226-4365**	1	WASHER-TAB	
	4	1	**226-4367**	1	SPACER (110X123X22.99-MM THK)	
	5	1	**226-4370**	3	BOLT-SELF-LOCKING	
	6	1	**238-5281**	1	FLANGE GP-WHEEL	
	6A	1	**209-4232**	2	BEARING	
	6B	1	**226-4346**	10	STUD	
	6C	1	**238-5282**	1	FLANGE-WHEEL	
	6D	1	**253-4976**	1	SEAL	
Y	7	1	*238-5280*	1	HOUSING GP-AXLE (RH)	246

Y-SEPARATE ILLUSTRATION

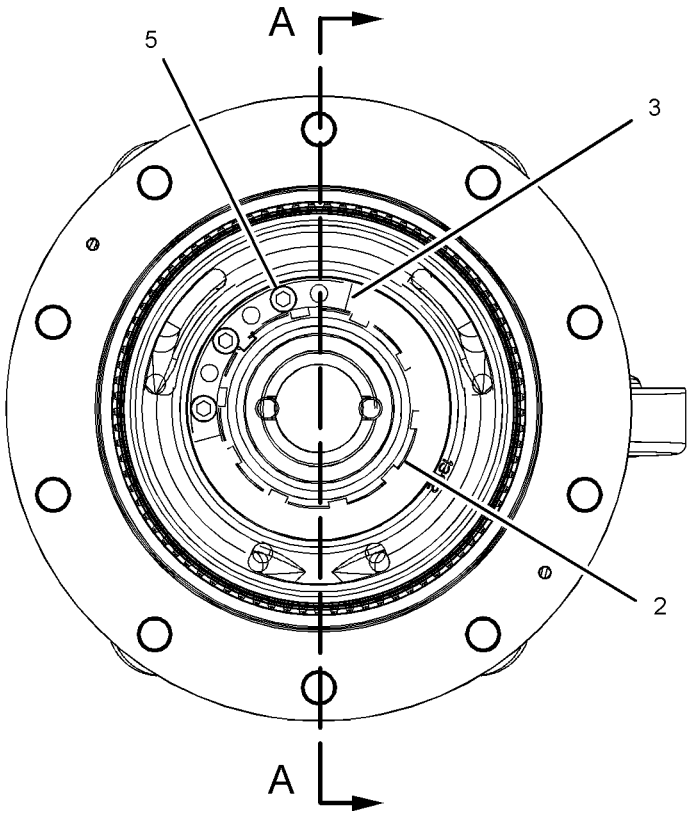

RIGHT SIDE VIEW

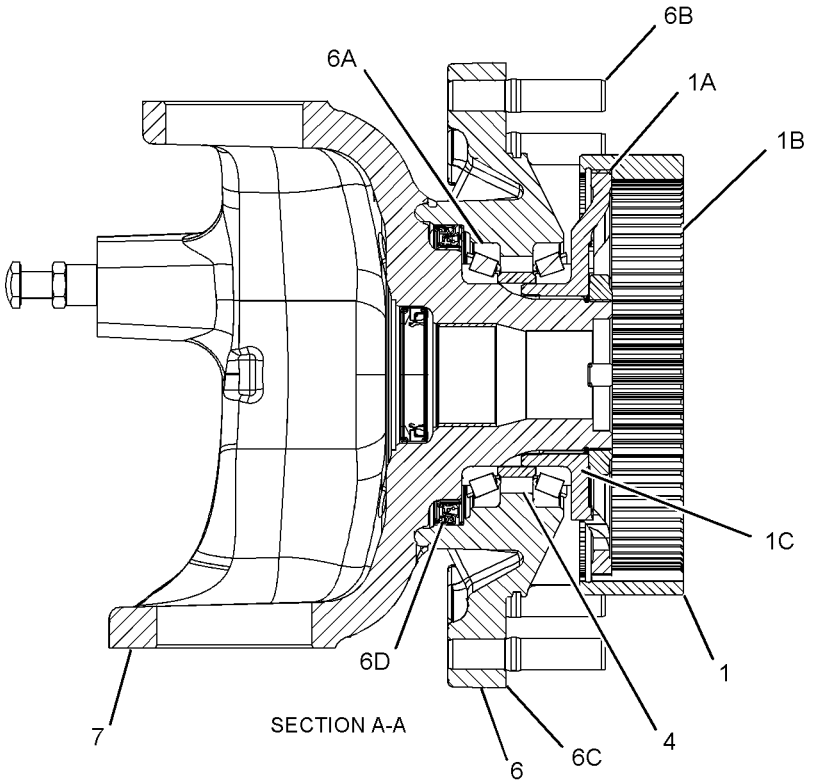

SECTION A-A

GRAPHIC #1 **<END>** g01098626

216-7479 HOUSING GP-AXLE–RH

S/N: SJL1-UP
PART OF 216-7476 HOUSING & FLANGE GP-AXLE
AN ATTACHMENT

SMCS-3256, 3258, 3260, 4251 **i02377974**

NOTE	REF NO	GRAPHIC REF	PART NUMBER	QTY	PART NAME 1 2 3 4 5 6 (PRODUCT LEVEL)	SEE PAGE
	1	1	**199-0648**	2	NUT-JAM (M16X2-THD)	
	2	1	**198-7819**	4	BUSHING	
	3	1	**199-0705**	2	BOLT (M16X130-MM)	
	4	1	**199-0707**	1	SEAL	
	5	1	**199-0779**	1	BUSHING	
	6	1	**226-4372**	1	HOUSING (RH)	

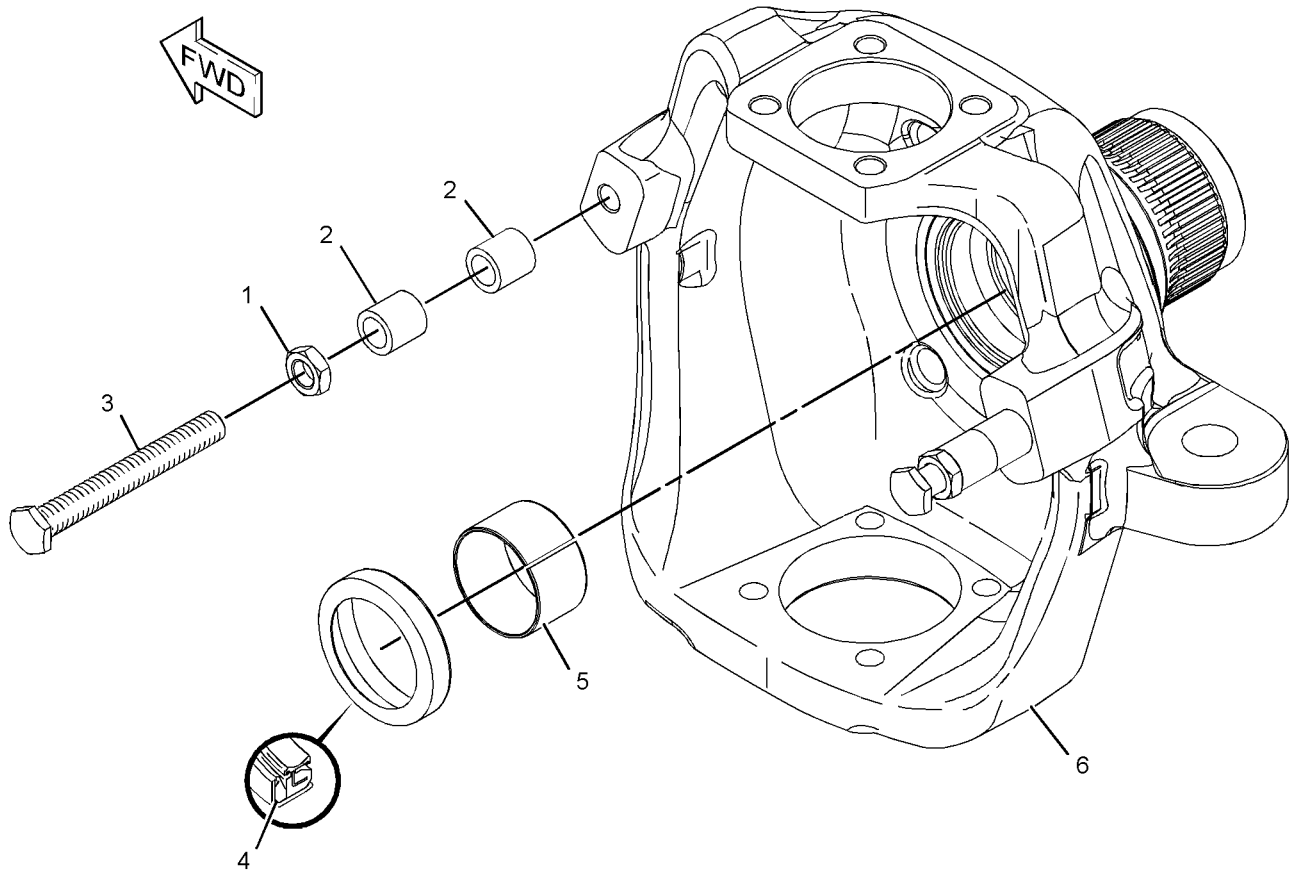

GRAPHIC #1 **<END>** g01190192

216-7481 HOUSING GP-AXLE—LH

S/N: SJL1-UP
PART OF 216-7477 HOUSING & FLANGE GP-AXLE
AN ATTACHMENT

SMCS-3256, 3258, 3260, 4251 **i02186458**

NOTE	REF NO	GRAPHIC REF	PART NUMBER	QTY	PART NAME 1 2 3 4 5 6 (PRODUCT LEVEL)	SEE PAGE
	1	1	**199-0648**	2	NUT-JAM (M16X2-THD)	
	2	1	**199-0705**	2	BOLT (M16X130-MM)	
	3	1	**199-0707**	1	SEAL	
	4	1	**199-0779**	1	BUSHING	
	5	1	**202-0181**	4	BOSS	

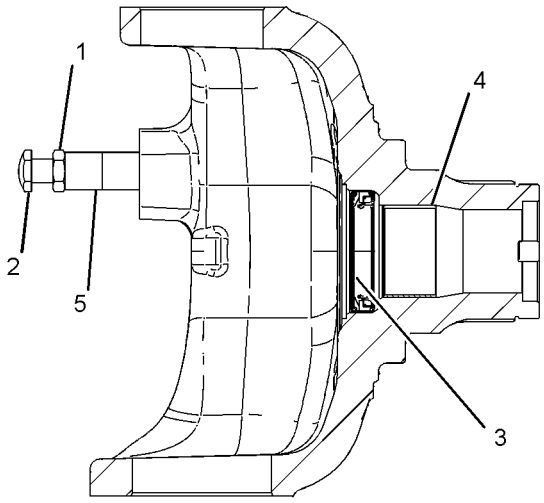

SECTION A-A

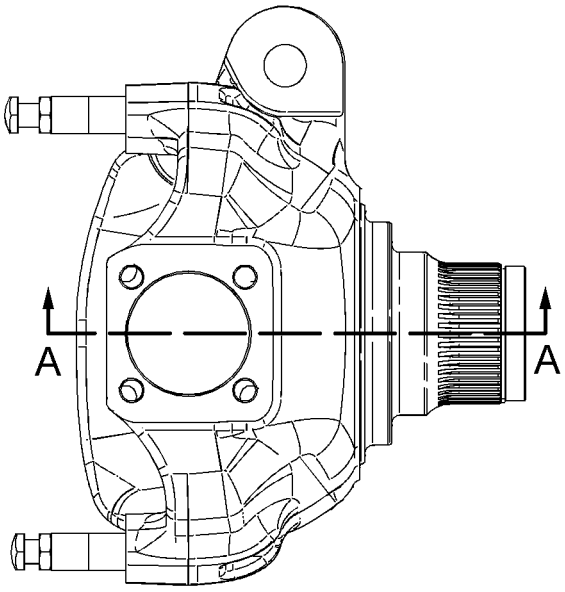

TOP VIEW

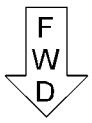

GRAPHIC #1 **<END>** g01105950

238-5279 HOUSING GP-AXLE–LH

S/N: SJL1-UP

PART OF 238-5277 HOUSING & FLANGE GP-AXLE

AN ATTACHMENT

SMCS-3256, 3258, 3260, 4251 **i02199132**

NOTE	REF NO	GRAPHIC REF	PART NUMBER	QTY	PART NAME 1 2 3 4 5 6 (PRODUCT LEVEL)	SEE PAGE
	1	1	**199-0648**	2	NUT-JAM (M16X2-THD)	
	2	1	**207-4262**	2	BOLT (STEERING STOP)	
	3	1	**199-0707**	1	SEAL	
	4	1	**199-0779**	1	BUSHING	
	5	1	**229-5091**	2	SLEEVE	
	6	1	**238-5283**	1	HOUSING	

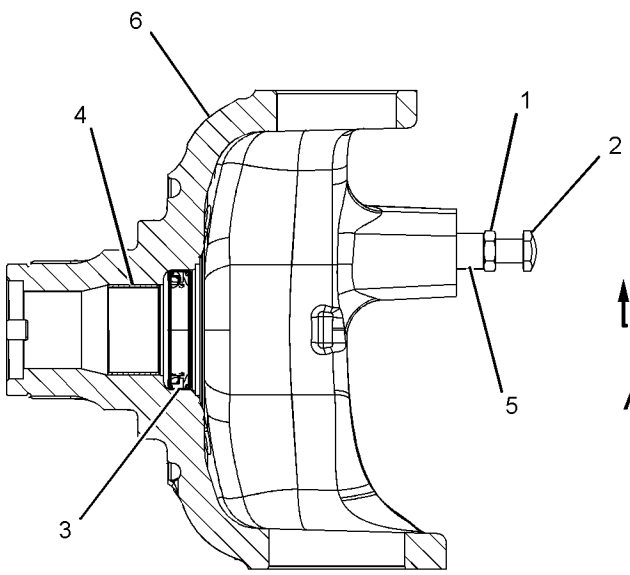

SECTION A-A

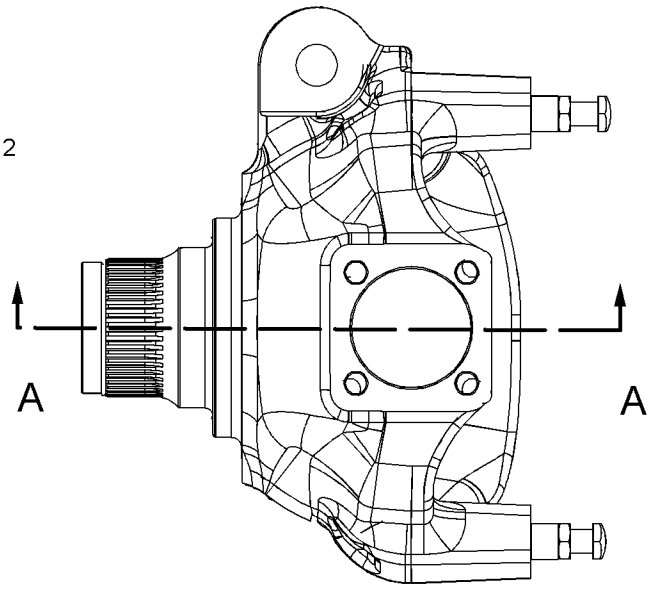

TOP VIEW

GRAPHIC #1 **<END>** g01110687

238-5280 HOUSING GP-AXLE–RH

S/N: SJL1-UP

PART OF 238-5278 HOUSING & FLANGE GP-AXLE

AN ATTACHMENT

SMCS-3256, 3258, 3260, 4251 **i02169799**

NOTE	REF NO	GRAPHIC REF	PART NUMBER	QTY	PART NAME 1 2 3 4 5 6 (PRODUCT LEVEL)	SEE PAGE
	1	1	**199-0648**	2	NUT-JAM (M16X2-THD)	
	2	1	**207-4262**	2	BOLT (STEERING STOP)	
	3	1	**199-0707**	1	SEAL	
	4	1	**199-0779**	1	BUSHING	
	5	1	**229-5091**	2	SLEEVE	
	6	1	**238-5284**	1	HOUSING	

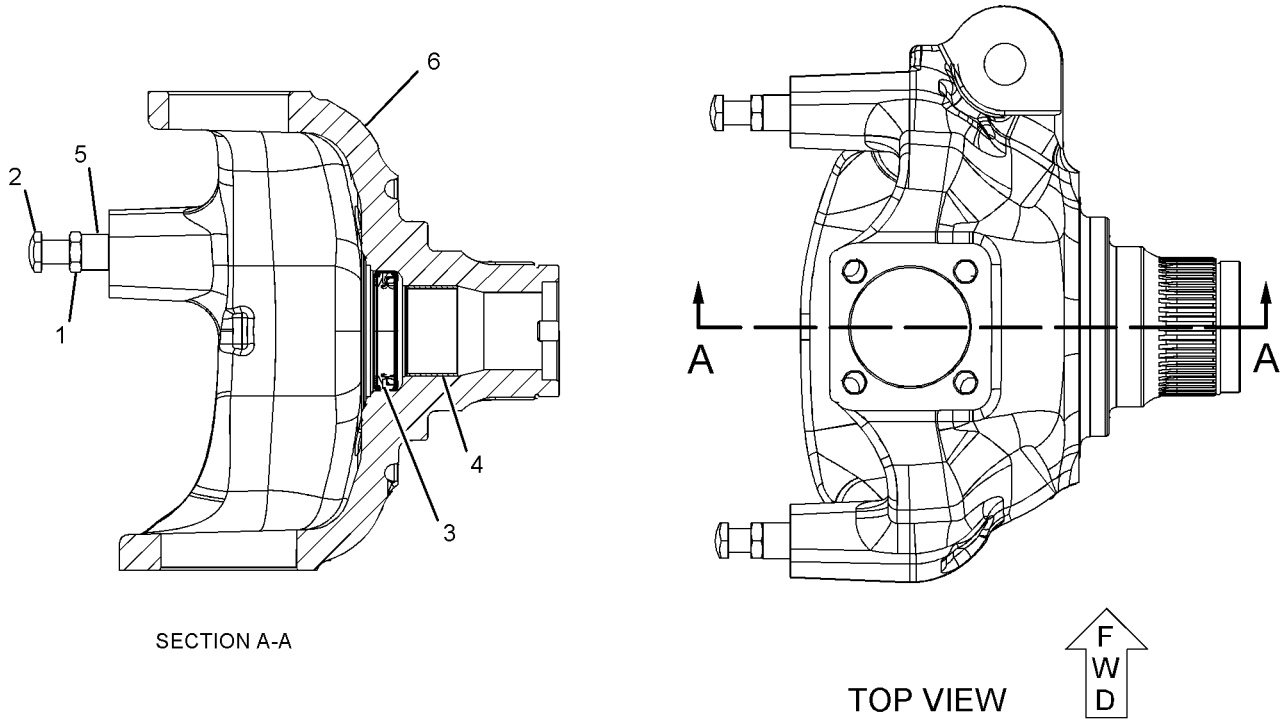

SECTION A-A

TOP VIEW

GRAPHIC #1 **<END>** g01100111

316-1925 HOUSING GP-AXLE–REAR

S/N: SJL1-UP
PART OF 315-2318 AXLE GP-DRIVE & STEERING
AN ATTACHMENT

SMCS-3256, 3258, 3260, 4251 **i02880515**

NOTE	REF NO	GRAPHIC REF	PART NUMBER	QTY	PART NAME 1 2 3 4 5 6 (PRODUCT LEVEL)	SEE PAGE
	1	1	**199-0656**	2	BEARING	
	2	1	**199-0663**	1	SEAL-O-RING	
	3	1	**198-7811**	2	DOWEL	
	4	1	**199-0675**	2	NUT (M104X2-THD)	
	5	1	**199-0678**	2	WASHER (45.5X55X2-MM THK)	
	6	1	**199-0680**	1	SPACER (47X50X19.2-MM THK)	
M	7	1	**095-0674**	4	BOLT-SOCKET HEAD (M12X1.75X65-MM)	
M	8	1	**199-0695**	2	BOLT (M6X1X14-MM)	
	9	1	**199-0697**	1	SEAL	
	10	1	**199-0785**	1	WASHER (30.5X58X10-MM THK)	
	11	1	*210-3108*	1	GEAR GP-BEVEL & PINION (RIGHT AXLE HOUSING)	
	12	1	**199-0858**	2	RETAINER	
	13	1	**212-5702**	1	NUT (M30X2-THD)	
	14	1	**216-1600**	1	DISC-BRAKE	
Y	15	1	**216-1612**	1	CYLINDER GP-BRAKE	286
Y	16	1	**216-1613**	1	CYLINDER GP-BRAKE	287
	17	1	**219-8836**	1	FORK	
Y	18	1	**231-0692**	1	DIFFERENTIAL GP (AXLE)	233
	20	1	**095-1041**	1	BEARING AS (TAPERED ROLLER)	
	21	1	**093-8828**	1	BEARING AS (TAPERED ROLLER)	
	22	1	**199-0684**	1	SHIM (2.5-MM THK)	
B		1	**199-0685**	1	SHIM (2.6-MM THK)	
B		1	**199-0686**	1	SHIM (2.7-MM THK)	
B		1	**199-0687**	1	SHIM (2.8-MM THK)	
B		1	**199-0688**	1	SHIM (2.9-MM THK)	
B		1	**199-0689**	1	SHIM (3-MM THK)	
B		1	**199-0690**	1	SHIM (3.1-MM THK)	
B		1	**199-0691**	1	SHIM (3.2-MM THK)	
B		1	**199-0692**	1	SHIM (3.3-MM THK)	
B		1	**199-0693**	1	SHIM (3.4-MM THK)	
BF			**1U-8846**		SEALANT-GASKET	

B-USE AS REQUIRED
F-NOT SHOWN
M-METRIC PART
Y-SEPARATE ILLUSTRATION

316-1925 **HOUSING GP-AXLE** *(contd.)* **i02880515**

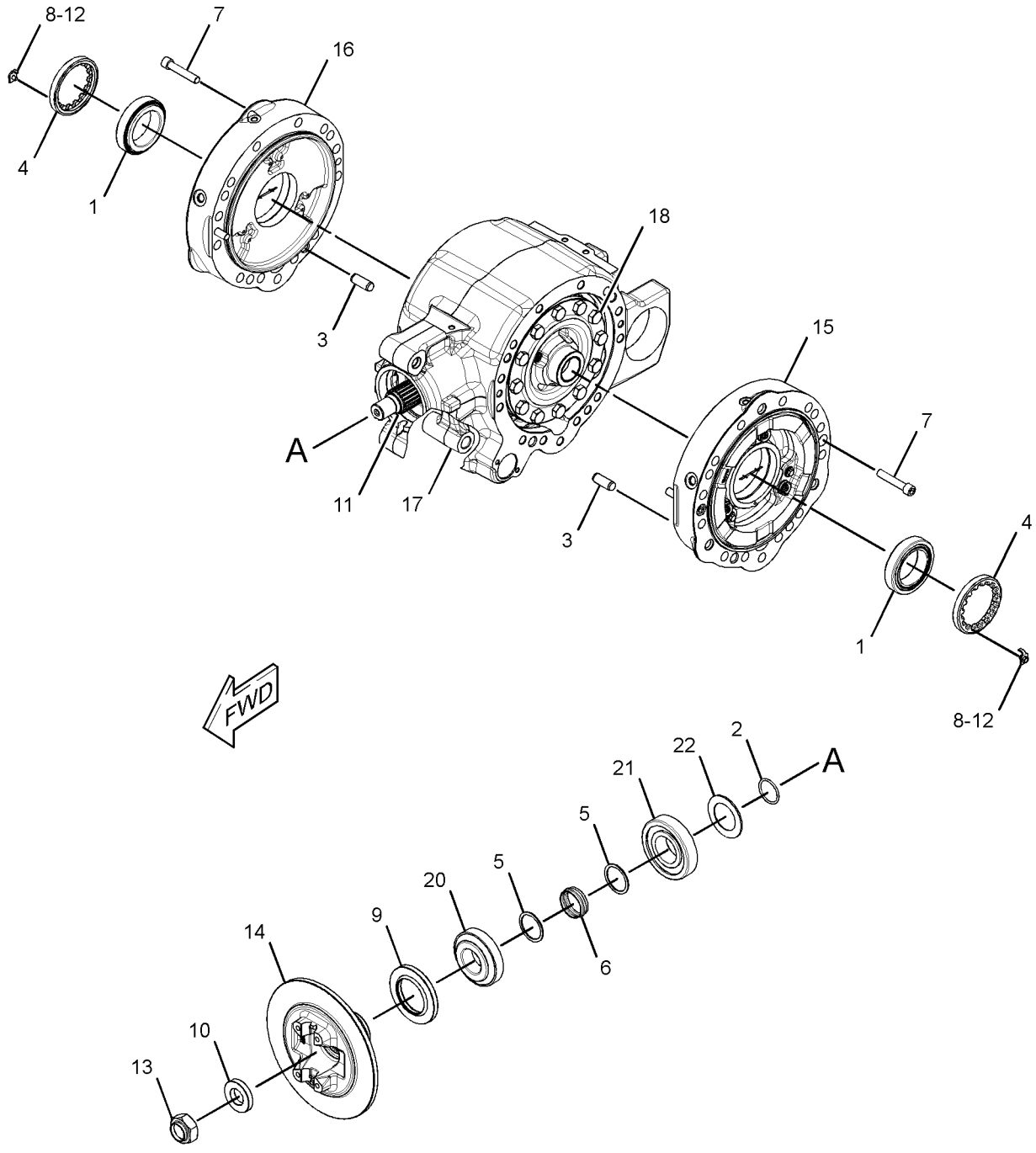

GRAPHIC #1 **<END>** g01662922

222-1529 MOUNTING GP-AXLE

S/N: SJL1-UP
PART OF 329-0320 DRIVE AR-BACKHOE LOADER
AN ATTACHMENT

SMCS-3268 **i02646177**

NOTE	REF NO	GRAPHIC REF	PART NUMBER	QTY	PART NAME 1 2 3 4 5 6 (PRODUCT LEVEL)	SEE PAGE
B	1	1	**1K-7082**	1	WASHER (2.266X4X0.031-IN THK)	
B	2	1	**9R-9702**	2	WASHER (56X100X1.6-MM THK)	
	3	1	**165-8996**	2	WASHER-THRUST (55.5X100.5X5-MM THK)	
	4	1	**293-9289**	4	BLOCK	
	5	1	**222-1530**	1	PIN AS	
M	6	1	**089-7990**	8	BOLT (M20X2.5X250-MM)	
	7	1	**8T-5439**	8	WASHER-HARD (21.5X45X6-MM THK)	
	8	1	**7X-0618**	1	WASHER-HARD (13.5X40X5-MM THK)	
M	10	1	**8T-4192**	1	BOLT (M12X1.75X25-MM)	

B-USE AS REQUIRED
M-METRIC PART

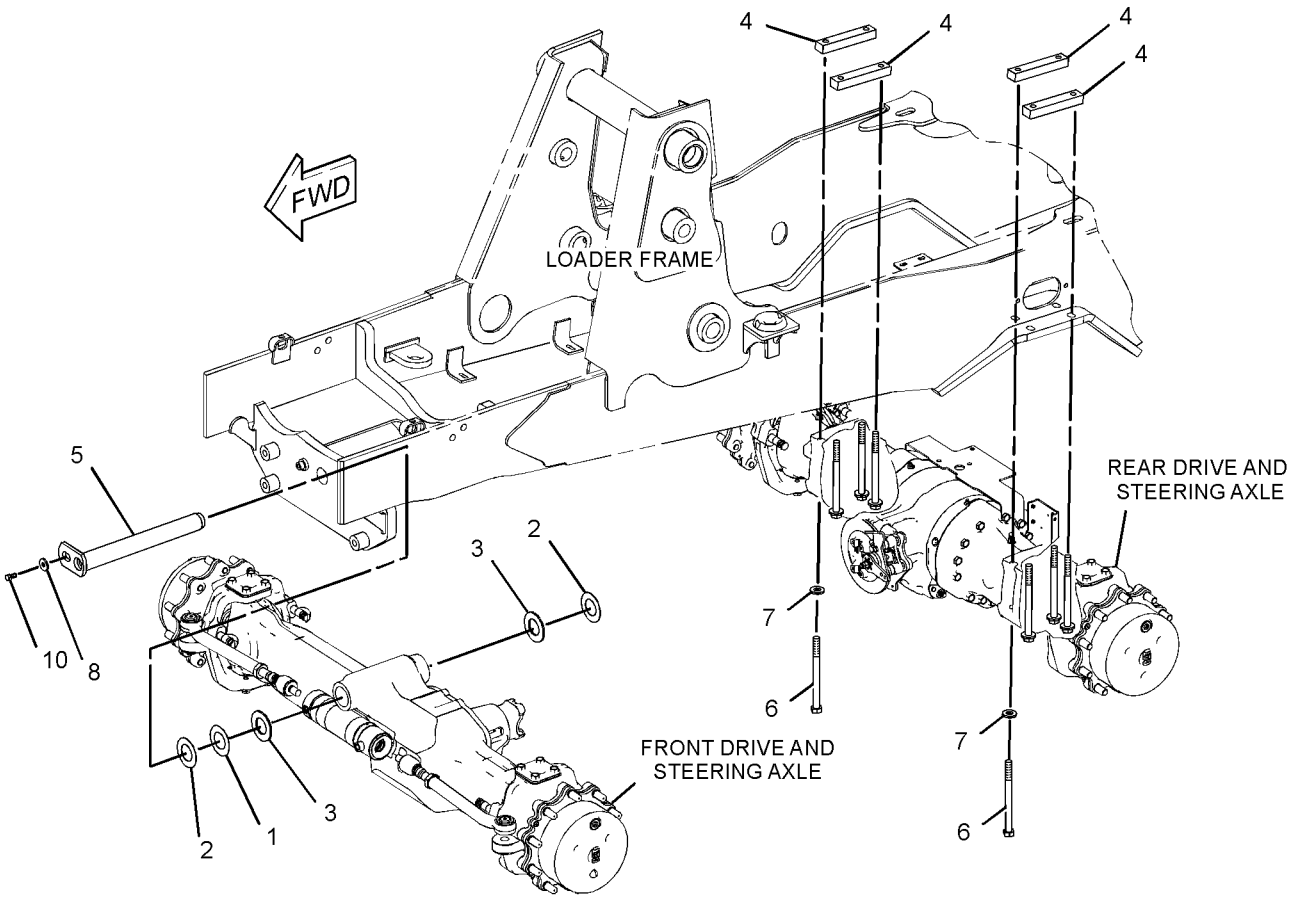

GRAPHIC #1 **<END>** g01338693

254-5703 MOUNTING GP-TRANSMISSION

S/N: SJL1-UP
PART OF 329-0311 POWER TRAIN AR
AN ATTACHMENT

SMCS-3082 **i02433177**

NOTE	REF NO	GRAPHIC REF	PART NUMBER	QTY	PART NAME 1 2 3 4 5 6 (PRODUCT LEVEL)	SEE PAGE
	1	1	**271-7308**	1	SUPPORT AS (LH)	
	2	1	**245-4827**	1	SUPPORT AS (RH)	
M	3	1	**7X-2553**	4	BOLT (M16X2X40-MM)	
	4	1	**8T-4223**	4	WASHER-HARD (13.5X25.5X3-MM THK)	
M	5	1	**8T-4956**	4	BOLT (M12X1.75X35-MM)	
	6	1	**9X-8257**	4	WASHER (17.5X30X3.5-MM THK)	

M-METRIC PART

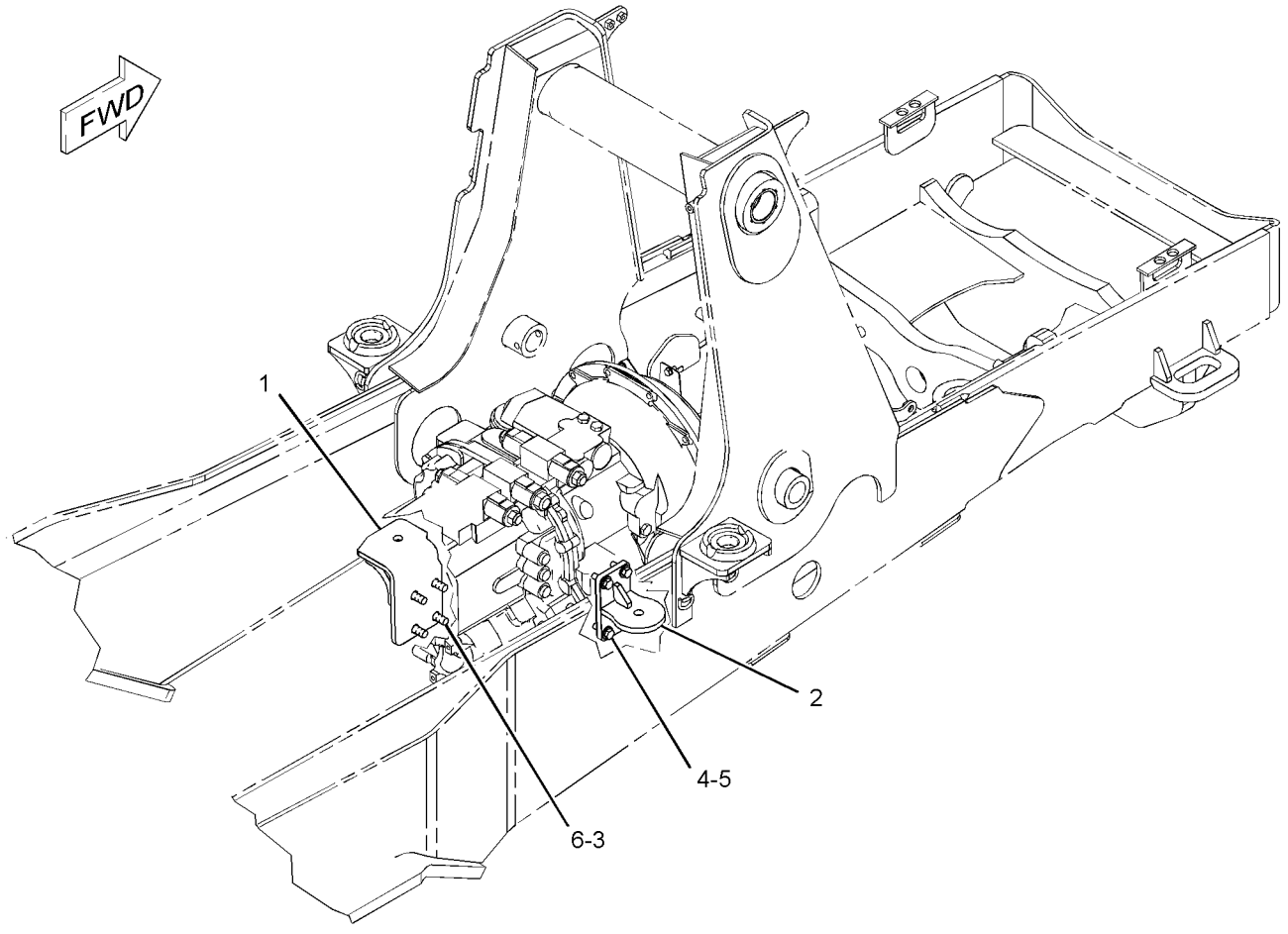

GRAPHIC #1 **<END>** g01216019

216-1610 PLANETARY GP-FINAL DRIVE–AXLE

S/N: SJL1-UP
PART OF 315-2318 AXLE GP-DRIVE & STEERING
AN ATTACHMENT

SMCS-4050 **i02196607**

NOTE	REF NO	GRAPHIC REF	PART NUMBER	QTY	PART NAME 1 2 3 4 5 6 (PRODUCT LEVEL)	SEE PAGE
	1	1	**199-0653**	3	RING-RETAINING	
	2	1	**207-4257**	6	RING-RETAINER	
	4	1	**199-0760**	3	BEARING	
	5	1	**213-4222**	3	WASHER (50.1X61X2.5-MM THK)	
	6	1	**207-5962**	6	WASHER (145.1X179.5X8-MM THK)	
	7	1	**216-1606**	3	GEAR-PLANETARY (31-TEETH)	
	8	1	**216-1601**	1	CARRIER	

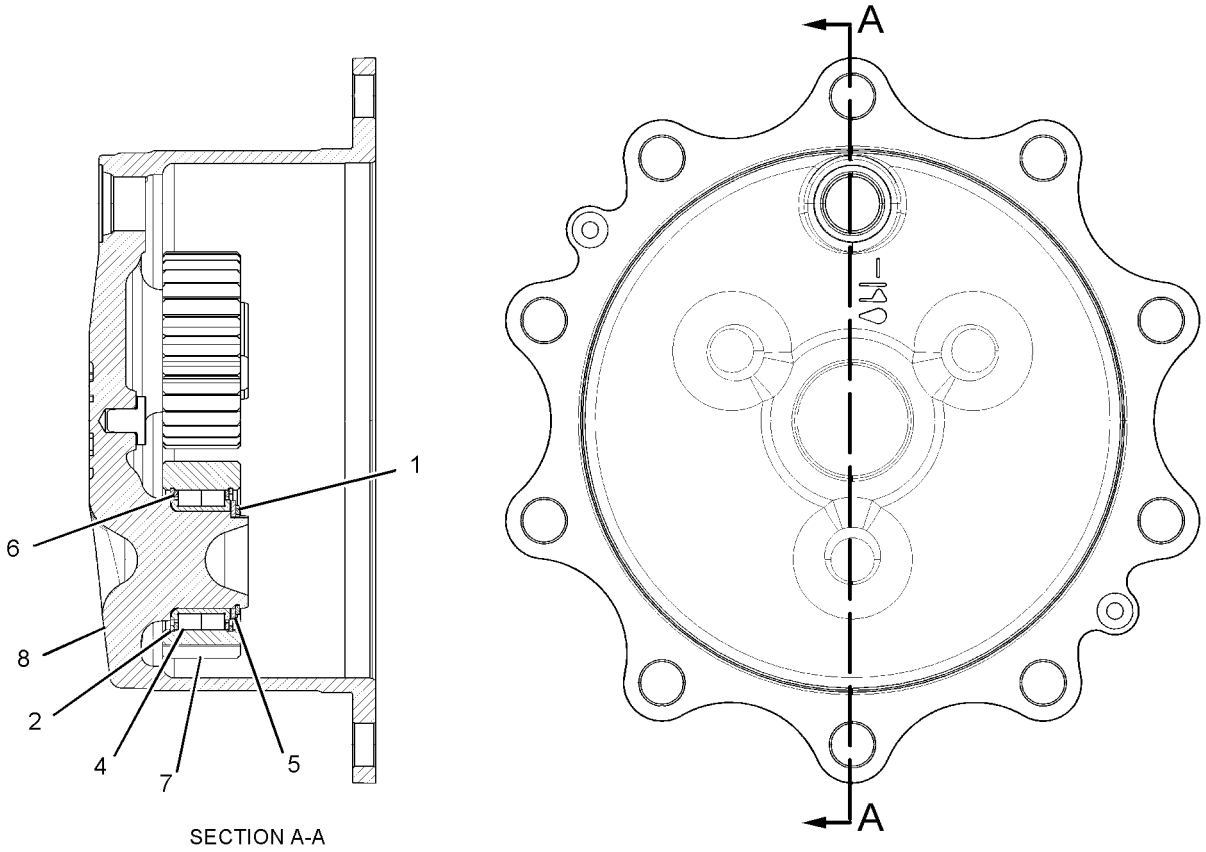

SECTION A-A

GRAPHIC #1 **<END>** g01113985

238-5276 PLANETARY GP-FINAL DRIVE

S/N: SJL1-UP

PART OF 216-9083 AXLE GP-DRIVE & STEERING

AN ATTACHMENT

SMCS-4050 **i02165292**

NOTE	REF NO	GRAPHIC REF	PART NUMBER	QTY	PART NAME 1 2 3 4 5 6 (PRODUCT LEVEL)	SEE PAGE
	1	1	**199-0653**	3	RING-RETAINING	
	2	1	**207-4257**	6	RING-RETAINER	
	3	1	**199-0669**	1	PLUG	
	4	1	**199-0760**	3	BEARING	
	5	1	**213-4222**	3	WASHER (50.1X61X2.5-MM THK)	
	6	1	**207-5962**	6	WASHER (145.1X179.5X8-MM THK)	
	7	1	**216-1606**	3	GEAR-PLANETARY (31-TEETH)	
	8	1	**216-1601**	1	CARRIER	

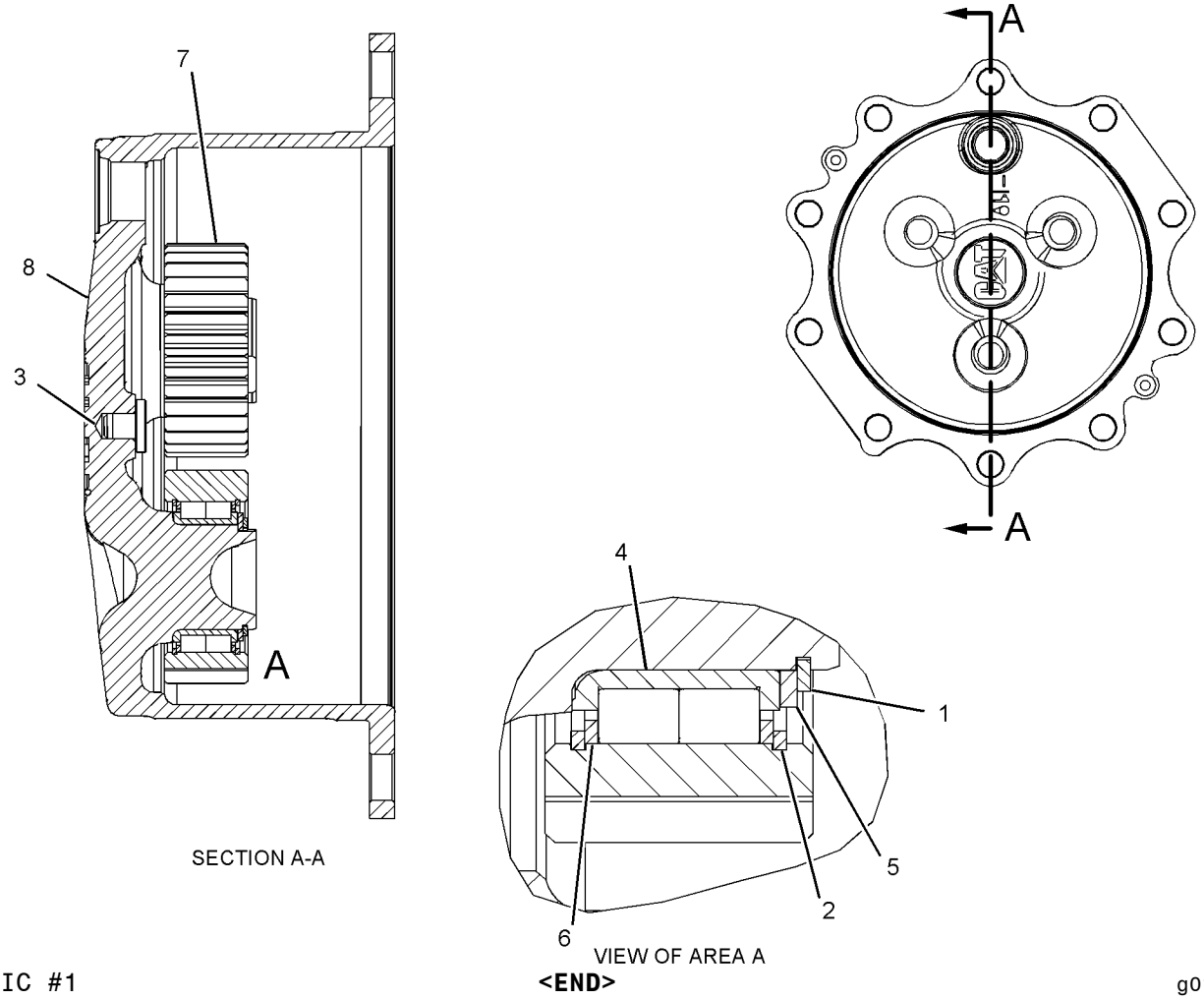

GRAPHIC #1

<END>

g01098489

329-0311 POWER TRAIN AR—AUTOSHIFT

S/N: SJL1-UP

FOR USE WITH 344-6354—PAGE 6. CANNOT BE USED WITH 344-5290—PAGE 323 AN ATTACHMENT

SMCS-3000, 4000 **i03693961**

NOTE	PART NUMBER	QTY	PART NAME 1 2 3 4 5 6 (PRODUCT LEVEL)	SEE PAGE
Y	*320-7233*	1	CONTROL GP-DIFFERENTIAL LOCK	229
Y	*206-1642*	1	CONTROL GP-PARKING BRAKE	281
Y	*206-1639*	1	CONTROL GP-SERVICE BRAKE (STANDARD SHIFT)	283
Y	*112-1826*	1	DRIVE & MTG GP-PUMP	339
Y	*329-0320*	1	DRIVE AR-BACKHOE LOADER	6
Y	*211-0073*	1	FILLER GP-POWER TRAIN OIL	235
Y	*315-1369*	1	LINES GP-POWER TRAIN COOLER	80
Y	*254-5703*	1	MOUNTING GP-TRANSMISSION	250
Y	*304-3264*	1	SHAFT GP-DRIVE	256
Y	*308-9973*	1	SWITCH GP-DIFFERENTIAL LOCK	176
Y	*245-6789*	1	TRANSMISSION AR-POWER SHIFT (ALL WHEEL DRIVE, AUTOSHIFT)	264
Y	*310-2352*	1	WIRING GP-TRANSMISSION CONTROL (POWERSHIFT)	215
	119-4740	1	FILTER-OIL (STANDARD EFFICIENCY) (POWER TRAIN)	

Y-SEPARATE ILLUSTRATION

<END>

POWER TRAIN

274-4580 SHAFT GP-COUNTER

S/N: SJL1-UP

PART OF 294-9818 TRANSMISSION GP-POWER SHIFT

AN ATTACHMENT

SMCS-3053, 3063 **i02432350**

NOTE	REF NO	GRAPHIC REF	PART NUMBER	QTY	PART NAME 1 2 3 4 5 6 (PRODUCT LEVEL)	SEE PAGE
	1	1	**6T-9196**	1	SEAL	
	2	1	**6V-5100**	1	SEAL-O-RING	
	3	1	**6V-8757**	1	RING-RETAINING	
	4	1	**6Y-1192**	2	RING-SEAL	
	5	1	**6Y-7929**	8	DISC-FRICTION	
	6	1	**8E-5707**	1	PLATE-END	
	7	1	**122-1877**	1	WASHER-THRUST (40X65X4-MM THK)	
	8	1	**123-8907**	2	CONE-BEARING	
	9	1	**123-8908**	2	CUP-TAPERED ROLLER	
	10	1	**123-8912**	2	BEARING-ROLLER	
	11	1	**147-0203**	1	WASHER-THRUST (45.3X65X5-MM THK)	
	12	1	**147-0215**	1	GEAR (45/19-TEETH)	
	13	1	**147-0216**	1	GEAR (38-TEETH)	
	14	1	**147-0228**	1	PISTON-CLUTCH	
	15	1	**147-0238**	1	SPRING AS	
	16	1	**147-0258**	1	SPACER (46X50X16-MM THK)	
	17	1	**172-6050**	2	BEARING-SPECIAL	
	18	1	**173-0332**	1	SHAFT AS	
		1	**163-9091**	1	PLUG	
	19	1	**211-6752**	1	GEAR (46-TEETH)	
	20	1	**274-4553**	8	DISC-FRICTION	
	21	1	**274-8638**	1	RING-RETAINING	

274-4580 SHAFT GP-COUNTER *(contd.)* **i02432350**

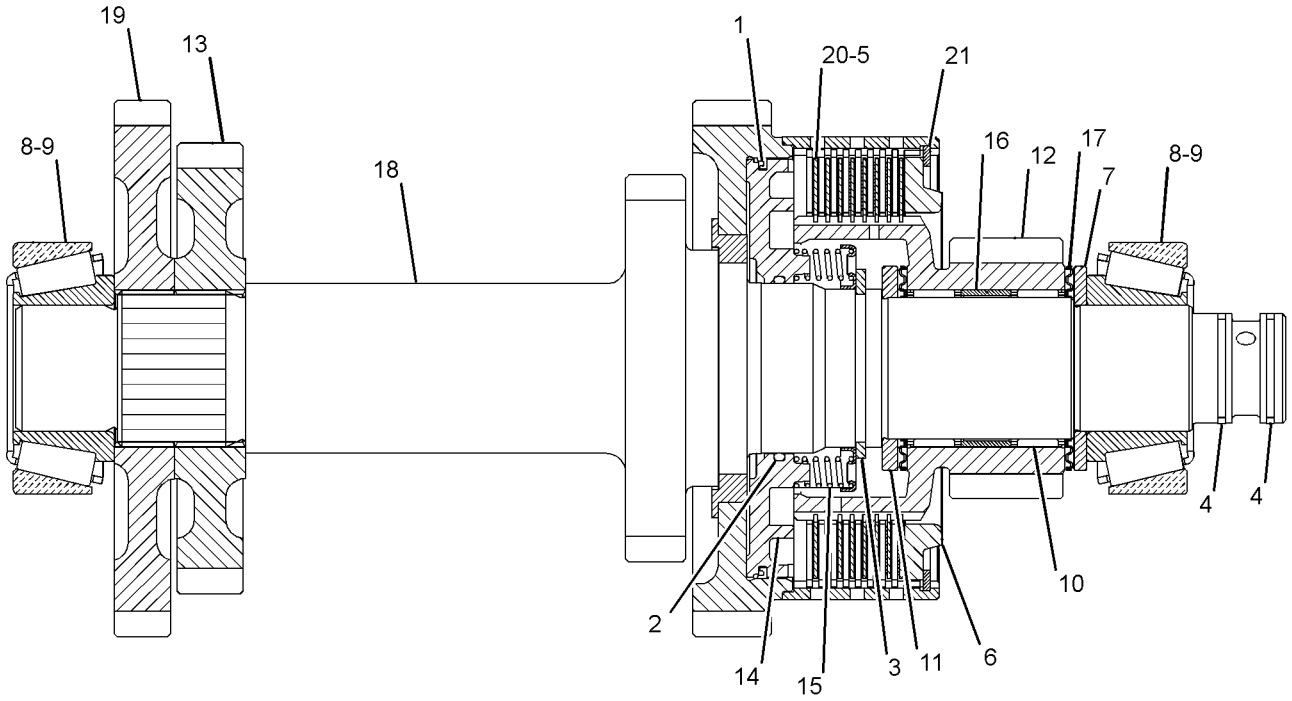

GRAPHIC #1 **<END>** g01216220

216-4475 SHAFT GP-DRIVE—REAR

S/N: SJL1-UP
PART OF 329-0320 DRIVE AR-BACKHOE LOADER
AN ATTACHMENT

SMCS-3253 **i03498387**

NOTE	PART NUMBER	QTY	PART NAME 1 2 3 4 5 6 (PRODUCT LEVEL)	SEE PAGE
J	**304-3269**	1	SHAFT AS (REAR)	
M	**107-6826**	8	BOLT (M24X19.1-MM)	
	5V-2545	4	STRAP	
			AVAILABLE REPAIR KIT(S):	
J	**117-9887**	2	KIT-SPIDER & BEARING (DRIVE SHAFT)	
			(EACH INCLUDES SPIDER & RINGS)	

J-KITS MARKED J SERVICES PART MARKED J
M-METRIC PART

<END>

304-3264 SHAFT GP-DRIVE—POWERSHIFT

S/N: SJL1-UP
PART OF 329-0311 POWER TRAIN AR
AN ATTACHMENT

SMCS-3253 **i02814460**

NOTE	PART NUMBER	QTY	PART NAME 1 2 3 4 5 6 (PRODUCT LEVEL)	SEE PAGE
J	**304-3263**	1	SHAFT AS	
M	**107-6826**	8	BOLT (M24X19.1-MM)	
	5V-2545	4	STRAP	
			AVAILABLE REPAIR KIT(S):	
J	**117-9887**	2	KIT-SPIDER & BEARING	
			(EACH KIT INCLUDES SPIDER & RING)	

J-KIT MARKED J SERVICES PART MARKED J
M-METRIC PART

<END>

274-4561 SHAFT GP-IDLER

S/N: SJL1-UP
PART OF 294-9818 TRANSMISSION GP-POWER SHIFT
AN ATTACHMENT

SMCS-3063 **i03577165**

NOTE	REF NO	GRAPHIC REF	PART NUMBER	QTY	PART NAME 1 2 3 4 5 6 (PRODUCT LEVEL)	SEE PAGE
	1	1	**147-0256**	1	SHAFT AS-REVERSE	
		1	**163-9091**	1	PLUG	
		1	**147-0270**	1	ORIFICE	
	2	1	**147-0202**	1	GEAR (45/24-TEETH)	
	3	1	**123-8905**	2	CUP-TAPERED ROLLER	
	4	1	**147-0228**	1	PISTON-CLUTCH	
	5	1	**6T-9196**	1	SEAL	
	6	1	**6V-5100**	1	SEAL-O-RING	
	7	1	**147-0238**	1	SPRING AS	
	8	1	**274-4553**	5	DISC-FRICTION	
	9	1	**6Y-7929**	5	DISC-FRICTION	
	10	1	**147-0259**	1	SPACER (51.1X54.9X18.7-MM THK)	
	11	1	**6V-8757**	1	RING-RETAINING	
	12	1	**121-2500**	1	WASHER-THRUST (50X70X4-MM THK)	
	13	1	**172-5317**	2	BEARING-SPECIAL	
	14	1	**121-0694**	1	WASHER-THRUST (40X70X4-MM THK)	
	15	1	**6Y-1192**	2	RING-SEAL	
	16	1	**8E-5707**	1	PLATE-END	
	17	1	**9U-8875**	1	RING-RETAINING	
	18	1	**7T-6655**	2	BEARING	
	19	1	**123-8906**	2	CUP-TAPERED ROLLER	

274-4561 SHAFT GP-IDLER *(contd.)* **i03577165**

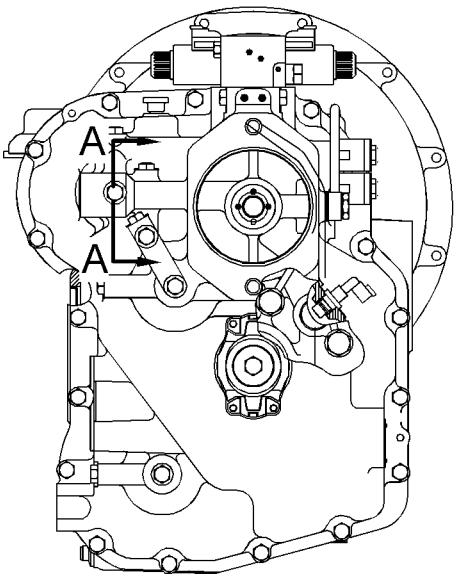

REAR VIEW

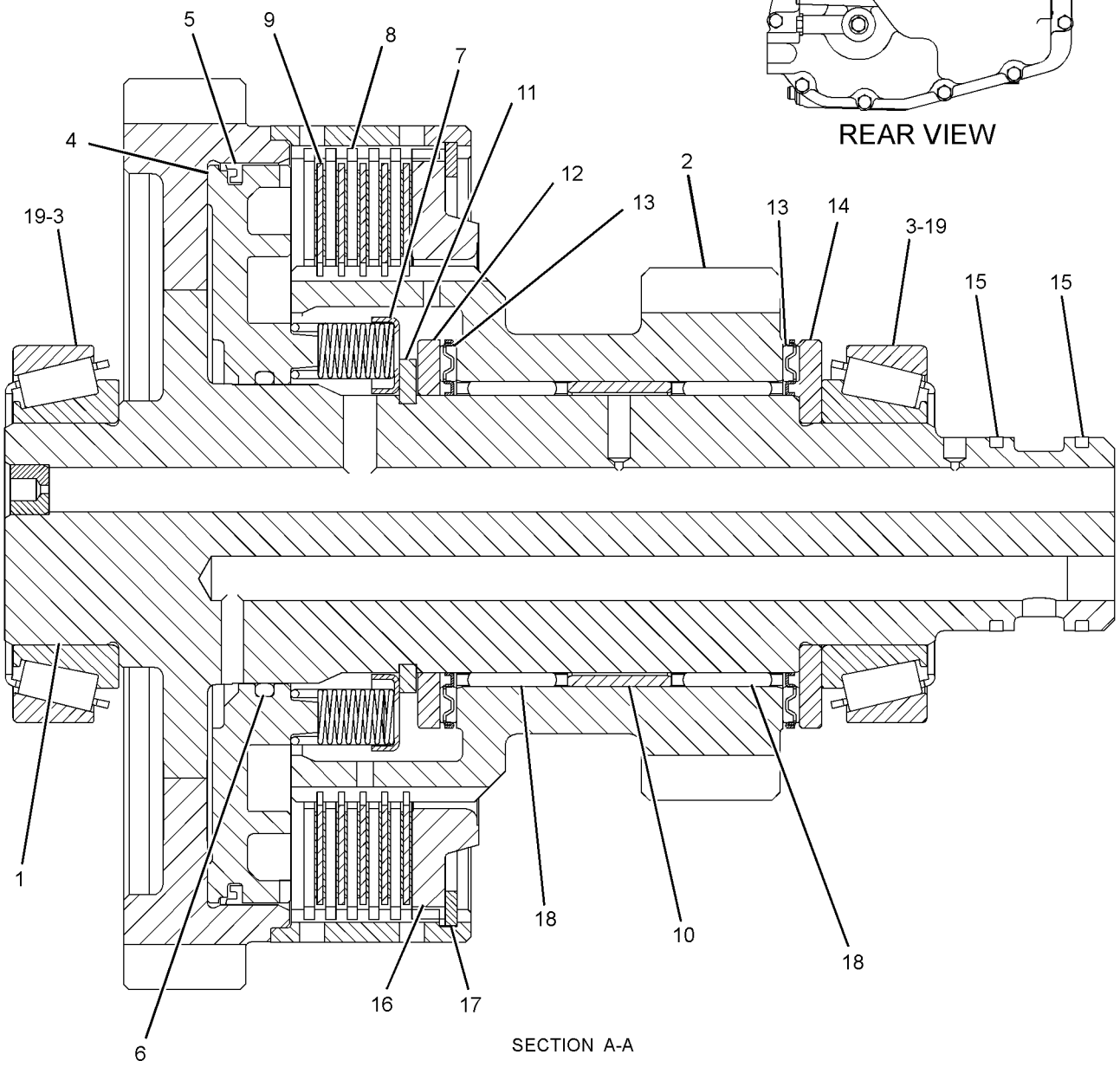

SECTION A-A

GRAPHIC #1 **<END>** g01216120

274-4578 SHAFT GP-INPUT

S/N: SJL1-UP
PART OF 294-9818 TRANSMISSION GP-POWER SHIFT
AN ATTACHMENT

SMCS-3053, 3063 **i03577181**

NOTE	REF NO	GRAPHIC REF	PART NUMBER	QTY	PART NAME 1 2 3 4 5 6 (PRODUCT LEVEL)	SEE PAGE
	1	1	**6T-9196**	2	SEAL	
	2	1	**6V-5100**	2	SEAL-O-RING	
	3	1	**6V-8757**	3	RING-RETAINING	
	4	1	**6Y-7929**	11	DISC-FRICTION	
	5	1	**7T-6655**	2	BEARING	
	6	1	**8E-5707**	2	PLATE-END	
	7	1	**9U-8886**	4	RING-SEAL	
	8	1	**121-0694**	1	WASHER-THRUST (40X70X4-MM THK)	
	9	1	**121-2500**	3	WASHER-THRUST (50X70X4-MM THK)	
	10	1	**122-1886**	1	RING-SEAL	
	11	1	**123-8905**	1	CUP-TAPERED ROLLER	
	12	1	**123-8906**	1	CUP-TAPERED ROLLER	
	13	1	**123-8909**	1	CONE-BEARING	
	14	1	**123-8910**	1	CUP-TAPERED ROLLER	
	15	1	**123-8913**	2	BEARING-ROLLER	
	16	1	**147-0202**	1	GEAR (45/24-TEETH)	
	17	1	**147-0224**	1	GEAR (45/32-TEETH)	
	18	1	**147-0228**	2	PISTON-CLUTCH	
	19	1	**147-0238**	2	SPRING AS	
	20	1	**147-0257**	1	SHAFT AS-INPUT	
		1	**123-0714**	1	BEARING	
		1	**123-2920**	3	PLUG	
	21	1	**147-0259**	1	SPACER (51.1X54.9X18.7-MM THK)	
	22	1	**172-5317**	4	BEARING-SPECIAL	
	23	1	**274-4553**	11	DISC-FRICTION	
	24	1	**274-8638**	2	RING-RETAINING	

274-4578 SHAFT GP-INPUT *(contd.)* **i03577181**

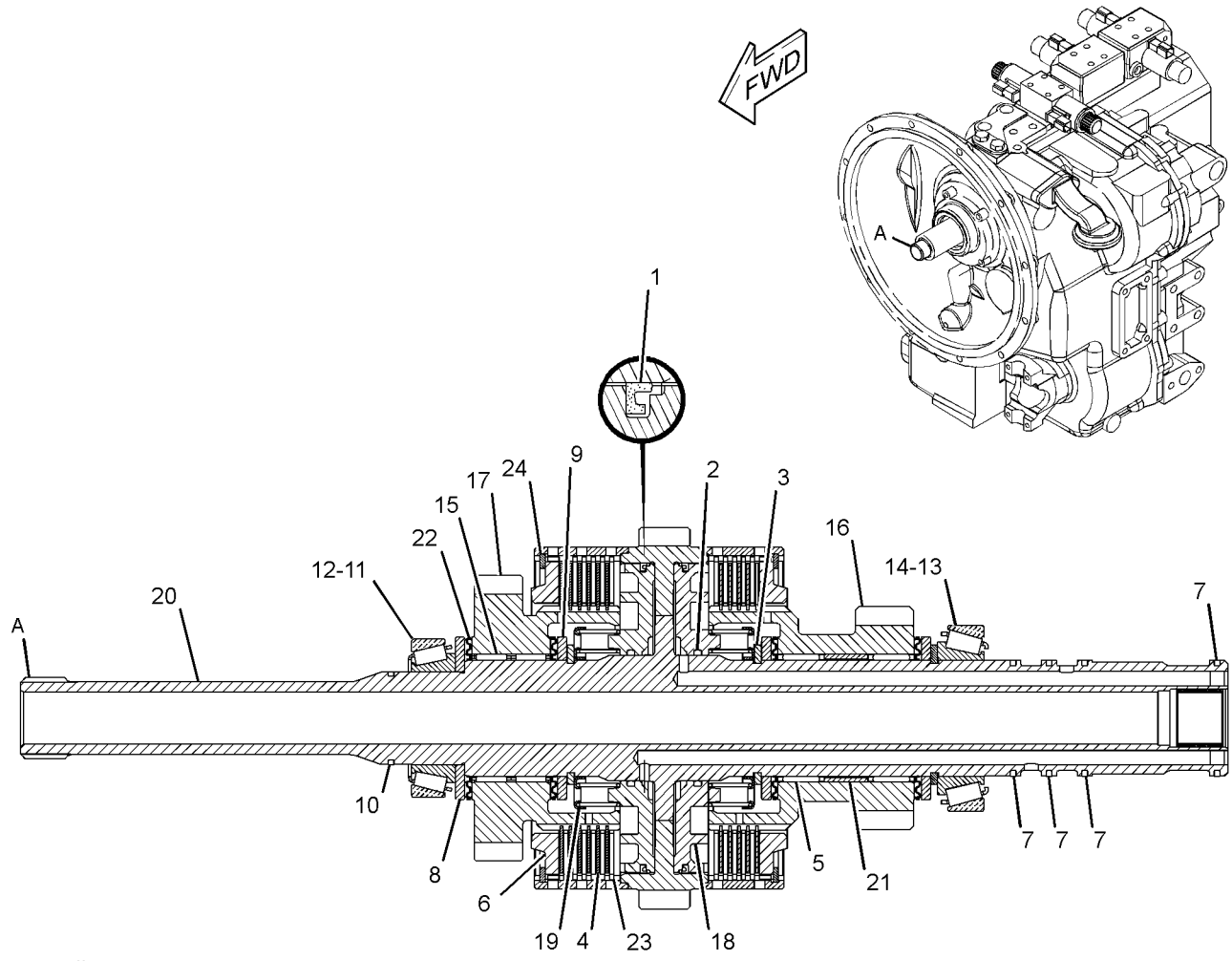

GRAPHIC #1 g01216057

<END>

274-4582 SHAFT GP-OUTPUT—MAIN

S/N: SJL1-UP

PART OF 294-9818 TRANSMISSION GP-POWER SHIFT

AN ATTACHMENT

SMCS-3053, 3063 **i03577182**

NOTE	REF NO	GRAPHIC REF	PART NUMBER	QTY	PART NAME 1 2 3 4 5 6 (PRODUCT LEVEL)	SEE PAGE
	1	1	**6T-9196**	2	SEAL	
	2	1	**6Y-1192**	3	RING-SEAL	
	3	1	**6Y-7929**	13	DISC-FRICTION	
	4	1	**8E-5707**	2	PLATE-END	
	5	1	**8T-1580**	1	CUP	
	6	1	**8T-1581**	1	CONE	
	7	1	**009-2062**	2	SEAL-O-RING	
	8	1	**095-0927**	1	RING-RETAINING	
	9	1	**095-0928**	1	RING-RETAINING (EXTERNAL)	
	10	1	**121-0885**	1	RETAINER	
	11	1	**122-1877**	1	WASHER-THRUST (40X65X4-MM THK)	
	12	1	**123-8907**	1	CONE-BEARING	
	13	1	**123-8908**	1	CUP-TAPERED ROLLER	
	14	1	**123-8912**	2	BEARING-ROLLER	
	15	1	**147-0203**	1	WASHER-THRUST (45.3X65X5-MM THK)	
	16	1	**147-0205**	2	WASHER (55X78X5-MM THK)	
	17	1	**147-0242**	1	GEAR (48-TEETH)	
	18	1	**147-0248**	1	SPACER (56.2X60X15.8-MM THK)	
	19	1	**147-0260**	1	RETAINER-SPRING	
	20	1	**147-0261**	1	SHAFT AS-OUTPUT (REAR)	
		1	**163-9091**	2	PLUG	
	21	1	**150-3757**	2	BEARING	
	22	1	**157-2088**	2	PISTON AS	
	23	1	**157-2090**	1	GEAR (38-TEETH)	
	24	1	**172-6050**	2	BEARING-SPECIAL	
	25	1	**172-6743**	2	BEARING-SPECIAL	
	26	1	**178-9566**	2	SPRING-PISTON	
	27	1	**211-6753**	1	GEAR (24-TEETH)	
	28	1	**274-4553**	13	DISC-FRICTION	
	29	1	**274-8638**	2	RING-RETAINING	

274-4582 SHAFT GP-OUTPUT *(contd.)* i03577182

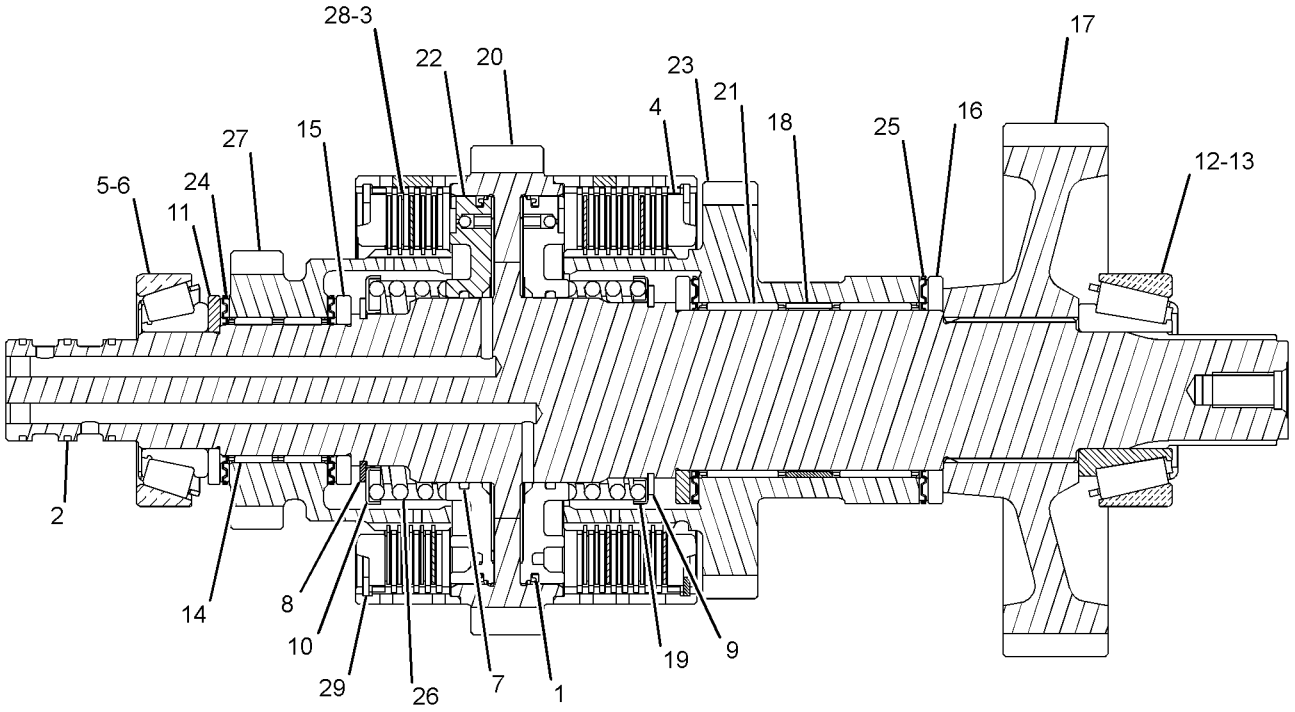

GRAPHIC #1 **<END>** g01216545

280-7008 SHAFT GP-OUTPUT

S/N: SJL1-UP
PART OF 294-9818 TRANSMISSION GP-POWER SHIFT
AN ATTACHMENT

SMCS-3053, 3063 **i02432588**

NOTE	REF NO	GRAPHIC REF	PART NUMBER	QTY	PART NAME 1 2 3 4 5 6 (PRODUCT LEVEL)	SEE PAGE
	1	1	**6T-9196**	1	SEAL	
	2	1	**6V-5100**	1	SEAL-O-RING	
	3	1	**6V-8757**	1	RING-RETAINING	
	4	1	**6Y-7957**	8	DISC-FRICTION	
	5	1	**8E-5707**	1	PLATE-END	
	6	1	**122-1877**	1	WASHER-THRUST (40X65X4-MM THK)	
	7	1	**122-1878**	1	RING-SEAL	
	8	1	**122-1884**	1	SPACER (45X49X8-MM THK)	
	9	1	**123-8905**	2	CUP-TAPERED ROLLER	
	10	1	**123-8906**	2	CUP-TAPERED ROLLER	
	11	1	**123-8912**	2	BEARING-ROLLER	
	12	1	**147-0203**	1	WASHER-THRUST (45.3X65X5-MM THK)	
	13	1	**147-0207**	1	SHAFT AS-OUTPUT (FRONT)	
	14	1	**238-5259**	1	GEAR (37-TEETH)	
	15	1	**147-0227**	1	PISTON-CLUTCH	
	16	1	**147-0238**	1	SPRING AS	
	17	1	**161-3249**	1	RING-RETAINING	
	18	1	**172-6050**	2	BEARING-SPECIAL	
	19	1	**274-4553**	8	DISC-FRICTION	

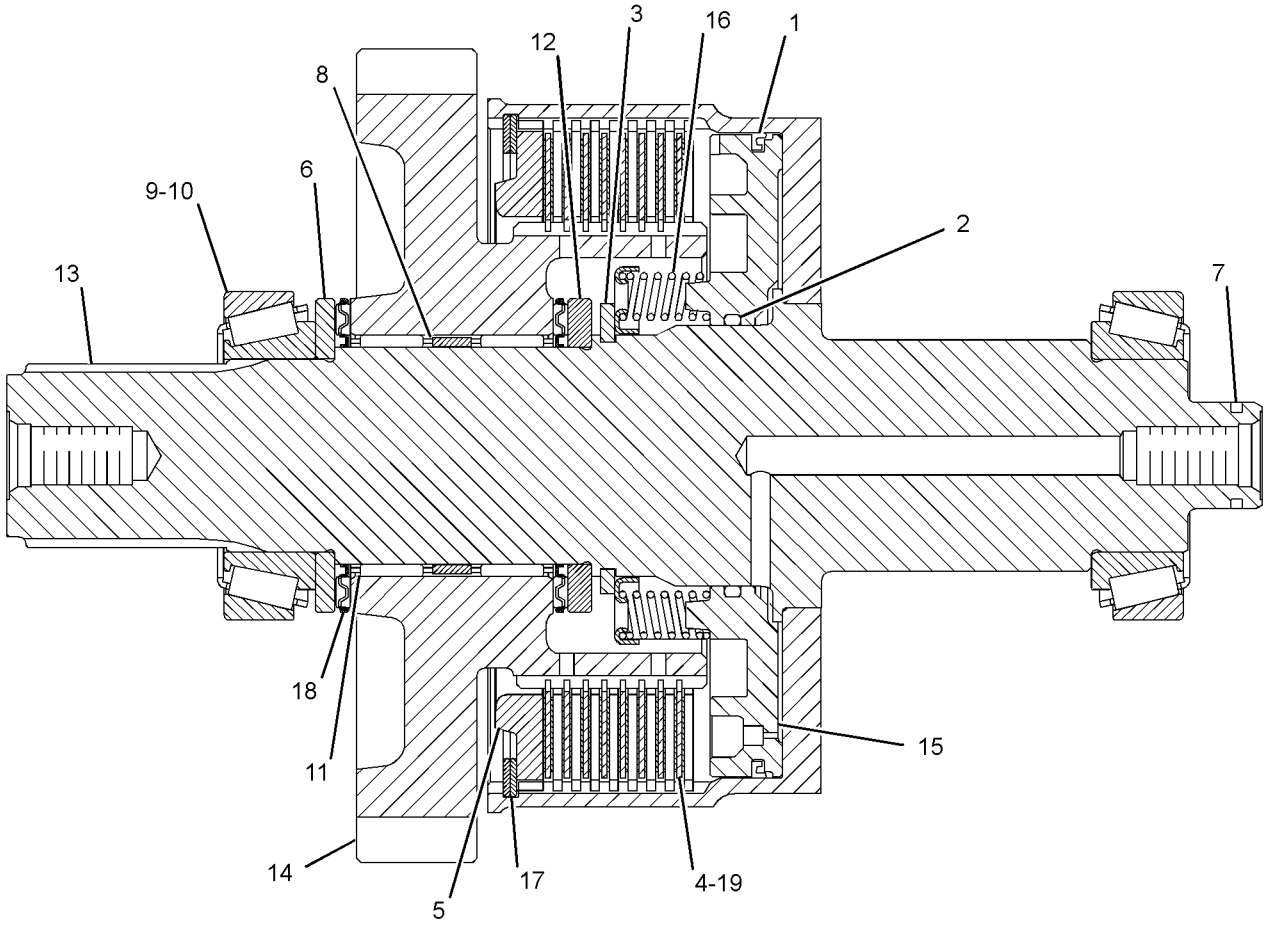

GRAPHIC #1 **<END>** g01216324

245-6789 TRANSMISSION AR-POWER SHIFT–

ALL WHEEL DRIVE

S/N: SJL1-UP

PART OF 329-0311 POWER TRAIN AR

AN ATTACHMENT

SMCS-3030 **i02755780**

NOTE	PART NUMBER	QTY	PART NAME 1 2 3 4 5 6 (PRODUCT LEVEL)	SEE PAGE
Y	*111-7907*	1	DRIVE GP-FLEXIBLE COUPLING	234
Y	*294-9818*	1	TRANSMISSION GP-POWER SHIFT	265
	212-6215	1	TORQUE CONVERTER AS	

Y-SEPARATE ILLUSTRATION

<END>

294-9818 TRANSMISSION GP-POWER SHIFT

S/N: SJL1-UP

PART OF 245-6789 TRANSMISSION AR-POWER SHIFT

AN ATTACHMENT

SMCS-3030 **i03712385**

NOTE	REF NO	GRAPHIC REF	PART NUMBER	QTY	PART NAME 1 2 3 4 5 6 (PRODUCT LEVEL)	SEE PAGE
	1	1,2	**3J-1907**	2	SEAL-O-RING	
	2	2	**4J-0522**	1	SEAL-O-RING	
	3	1	**4W-9972**	1	SENDER AS-TEMPERATURE (12-VOLT) (TRANSMISSION OIL)	
		1	**6V-8378**	1	NUT (10-32-THD)	
		1	**8F-1434**	1	LOCKWASHER	
		1	**8T-0328**	1	WASHER-HARD (5.5X10X1-MM THK)	
	4	3	**5P-8066**	2	SEAL-O-RING	
	5	3	**6T-9163**	2	SHIM (0.599-MM THK)	
	6	3	**6T-9164**	2	SHIM (0.178-MM THK)	
	7	3	**6T-9165**	2	SHIM (0.076-MM THK)	
	8	3	**6T-9166**	2	SHIM (0.051-MM THK)	
	9	2	**6T-9202**	2	PLUG	
M	10	1,2	**6V-5215**	3	BOLT (M8X1.25X16-MM)	
M	11	1	**6V-5842**	18	BOLT (M10X1.5X40-MM)	
M	12	3	**6V-8097**	2	BOLT (M12X1.75X30-MM)	
	13	1	**6Y-1896**	1	PLUG AS	
	14	3	**7T-2646**	2	SPACER (66X79.5X2.02-MM THK)	
	15	2	**7T-2651**	1	STRAINER (SUCTION)	
	16	3	**7T-3195**	2	WASHER (12.3X47X6.35-MM THK)	
	17	1	**7T-3251**	1	BREATHER (TRANSMISSION)	
	18	1	**7T-3253**	2	DOWEL	
	19	1,2,3	**7W-3556**	12	WASHER (14.27X20.57X1.5-MM THK)	
	20	3	**7X-4741**	1	SEAL	
M	21	3	**8C-5748**	4	BOLT (M8X1.25X55-MM)	
M	22	3	**8C-8545**	2	BOLT-SOCKET HEAD (M5X0.8X20-MM)	
M	23	2	**8T-0271**	2	BOLT-SOCKET HEAD (M10X1.5X35-MM)	
M	24	1	**8T-0643**	1	BOLT (M10X1.5X80-MM)	
	25	3	**9P-9150**	4	WASHER (8.25X18X0.84-MM THK)	
	26	2	**9W-5460**	1	RING	
M	27	2	**9X-6615**	12	BOLT (M5X0.8X30-MM)	
	28	2	**104-3288**	2	SHIM (0.05-MM THK)	
	29	2	**106-9861**	1	PLATE-COVER	
	30	1	**117-1385**	1	SEAL-O-RING	
	31	1,3	**120-9762**	3	SEAL-O-RING	
	32	2	**121-2059**	2	SHIM (0.08-MM THK)	
	33	2	**121-2060**	2	SHIM (0.18-MM THK)	
	34	2	**121-2061**	2	SHIM (0.6-MM THK)	
	35	3	**121-7385**	1	PUMP GP-TRANSMISSION	
	36	1	**121-7396**	1	VALVE GP-RELIEF (TORQUE CONVERTER INLET)	
	37	3	**121-7398**	1	SPACER (70X79.5X2-MM THK)	
	38	3	**121-7399**	1	SHIM (0.05-MM THK)	
	39	3	**121-7400**	1	SHIM (0.08-MM THK)	
	40	3	**121-7401**	1	SHIM (0.18-MM THK)	
	41	3	**121-7402**	1	SHIM (0.6-MM THK)	
	42	2	**122-1879**	2	SPACER (58X67.5X2-MM THK)	
	43	3	**122-1883**	1	SPACER (38X45X5-MM THK)	
	44	3	**122-6787**	2	YOKE AS	
	45	3	**147-0201**	1	TUBE AS	
Y	46	1	**147-0209**	1	VALVE GP-RELIEF (PRESSURE REGULATOR)	271
	47	2	**147-0211**	1	ELBOW AS	
		2	**3G-6927**	1	ADAPTER	
	48	3	**147-0218**	1	TUBE AS-TRANSFER	
	49	2	**147-0226**	1	TUBE AS	
	50	1,2,3	**147-0234**	6	BOLT (9/16-18X0.83-IN)	

294-9818 TRANSMISSION GP-POWER SHIFT *(contd.)* i03712385

NOTE	REF NO	GRAPHIC REF	PART NUMBER	QTY	PART NAME 1 2 3 4 5 6 (PRODUCT LEVEL)	SEE PAGE
	51	1	**147-0236**	1	TUBE AS-TRANSFER	
	52	1	**147-0262**	4	WASHER (19.1X24.1X1.5-MM THK)	
	53	1	**147-0266**	2	BOLT (3/4-16X1.417-IN)	
	54	1,2	*148-8407*	15	PLUG AS	
					(EACH INCLUDES)	
		1,2	**3J-1907**	1	SEAL-O-RING	
		1,2	**9S-4191**	1	PLUG-O-RING	
	55	2	**150-7732**	2	SEAL-O-RING	
	56	1	**191-8304**	1	SENSOR GP-SPEED (TRANSMISSION OUTPUT, HIGH)	
	57	1,2	**205-9244**	4	PLUG	
	58	3	**302-8432**	2	SEAL-LIP TYPE	
	59	1	**305-3423**	2	VALVE GP-SOLENOID (12-VDC) (DIFFERENTIAL LOCK)	
					(EACH INCLUDES)	
		1	**274-8034**	1	COIL AS	
	60	3	**274-4554**	1	CASE AS-FRONT	
	61	2,3	**274-4556**	3	PLUG AS	
					(EACH INCLUDES)	
		2,3	**8L-2786**	1	SEAL-O-RING	
		2,3	**9S-4185**	1	PLUG-O-RING	
Y	62	2	**274-4561**	1	SHAFT GP-IDLER	257
	63	3	**274-4569**	1	CASE AS-REAR	
Y	64	3	**274-4578**	1	SHAFT GP-INPUT	259
Y	65	3	**274-4580**	1	SHAFT GP-COUNTER	254
Y	66	3	**274-4582**	1	SHAFT GP-OUTPUT (MAIN)	261
	67	3	**280-7010**	1	VALVE GP-SOLENOID (TRANSMISSION)	
		3	**8L-2779**	4	SEAL-O-RING	
		3	**280-7009**	2	COIL AS (12-VOLT)	
		3	**280-7012**	2	TUBE AS	
	68	3	**278-0209**	1	VALVE GP-SOLENOID (REVERSE)	
		3	**8L-2779**	4	SEAL-O-RING	
		3	**280-7009**	1	COIL AS (12-VOLT)	
		3	**280-7012**	1	TUBE AS	
	69	3	**278-0213**	1	VALVE GP-SOLENOID (CLUTCH)	
		3	**8L-2779**	4	SEAL-O-RING	
		3	**218-3597**	1	PLUG-ORIFICE	
		3	**280-7009**	2	COIL AS	
		3	**286-0867**	2	TUBE AS	
Y	70	3	**280-7008**	1	SHAFT GP-OUTPUT	263
	71	2	**6V-3965**	1	FITTING (QUICK DISCONNECT)	
	72	2	**6V-0852**	1	CAP-DUST	

M-METRIC PART
Y-SEPARATE ILLUSTRATION

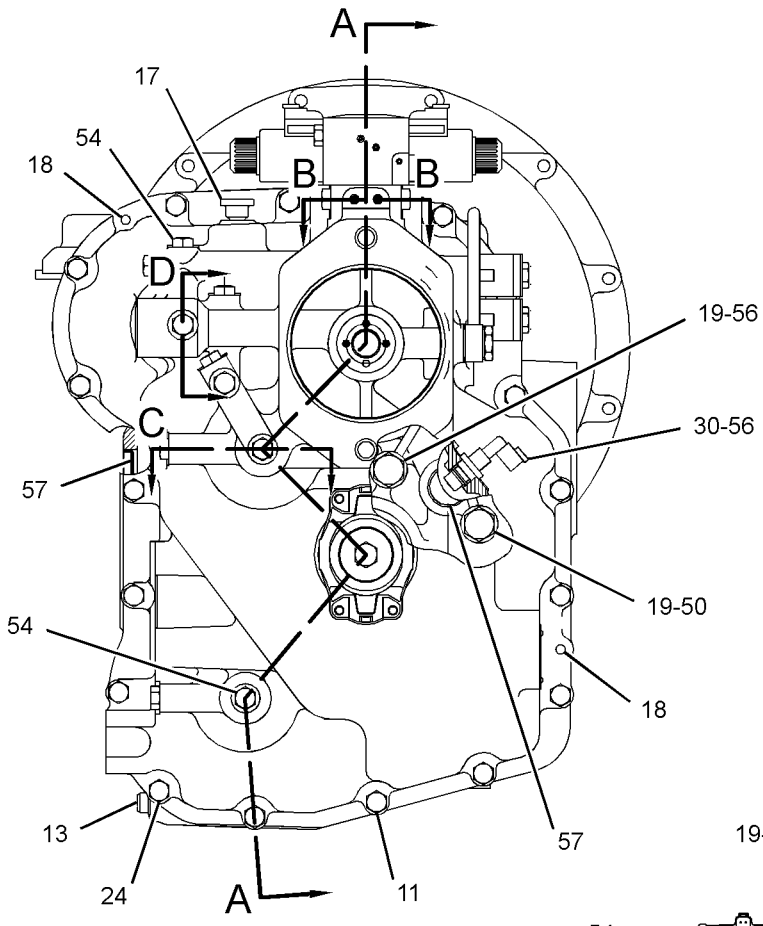

REAR VIEW

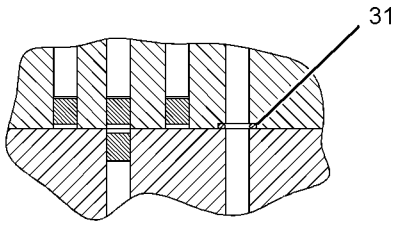

SECTION B-B

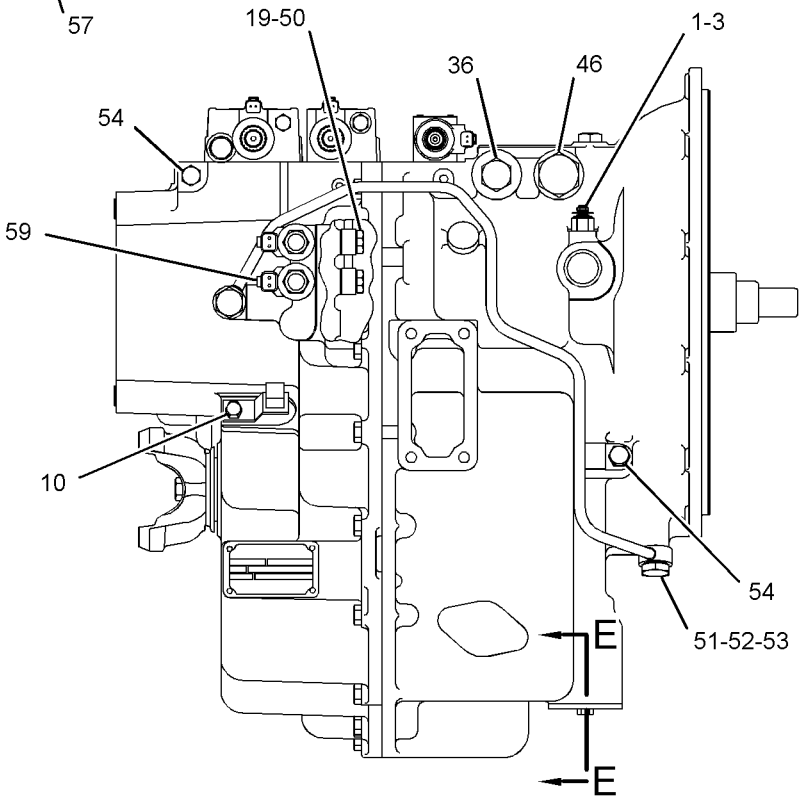

RIGHT SIDE VIEW

REFER TO ALL ILLUSTRATIONS OF
THIS GROUP FOR AUXILIARY VIEWS

GRAPHIC #1

g01396417

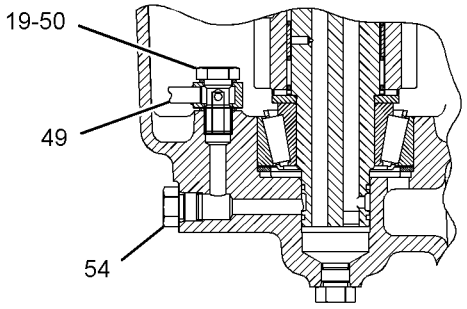

SECTION C

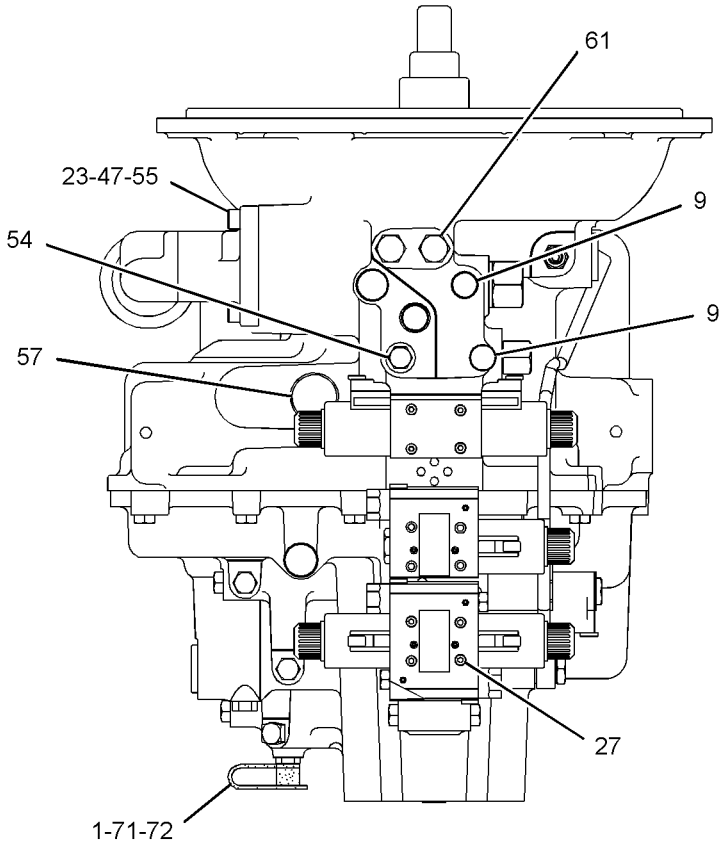

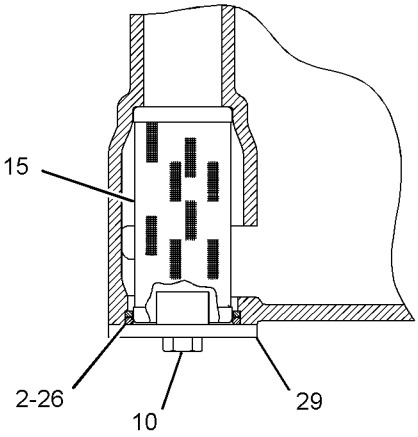

SECTION E-E

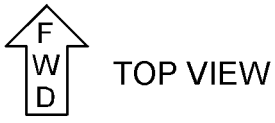

TOP VIEW

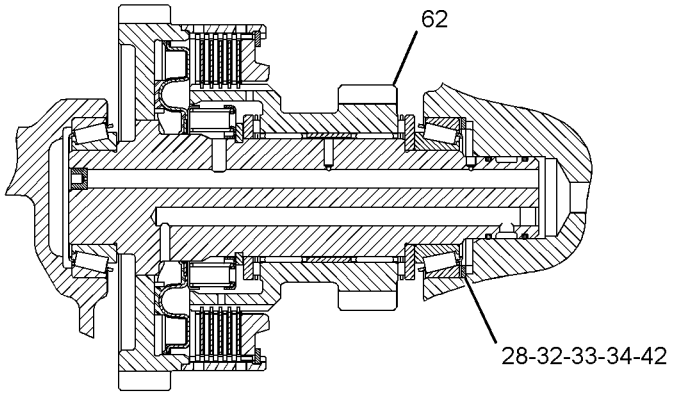

SECTION D

GRAPHIC #2

g01396418

294-9818 TRANSMISSION GP-POWER SHIFT *(contd.)* i03712385

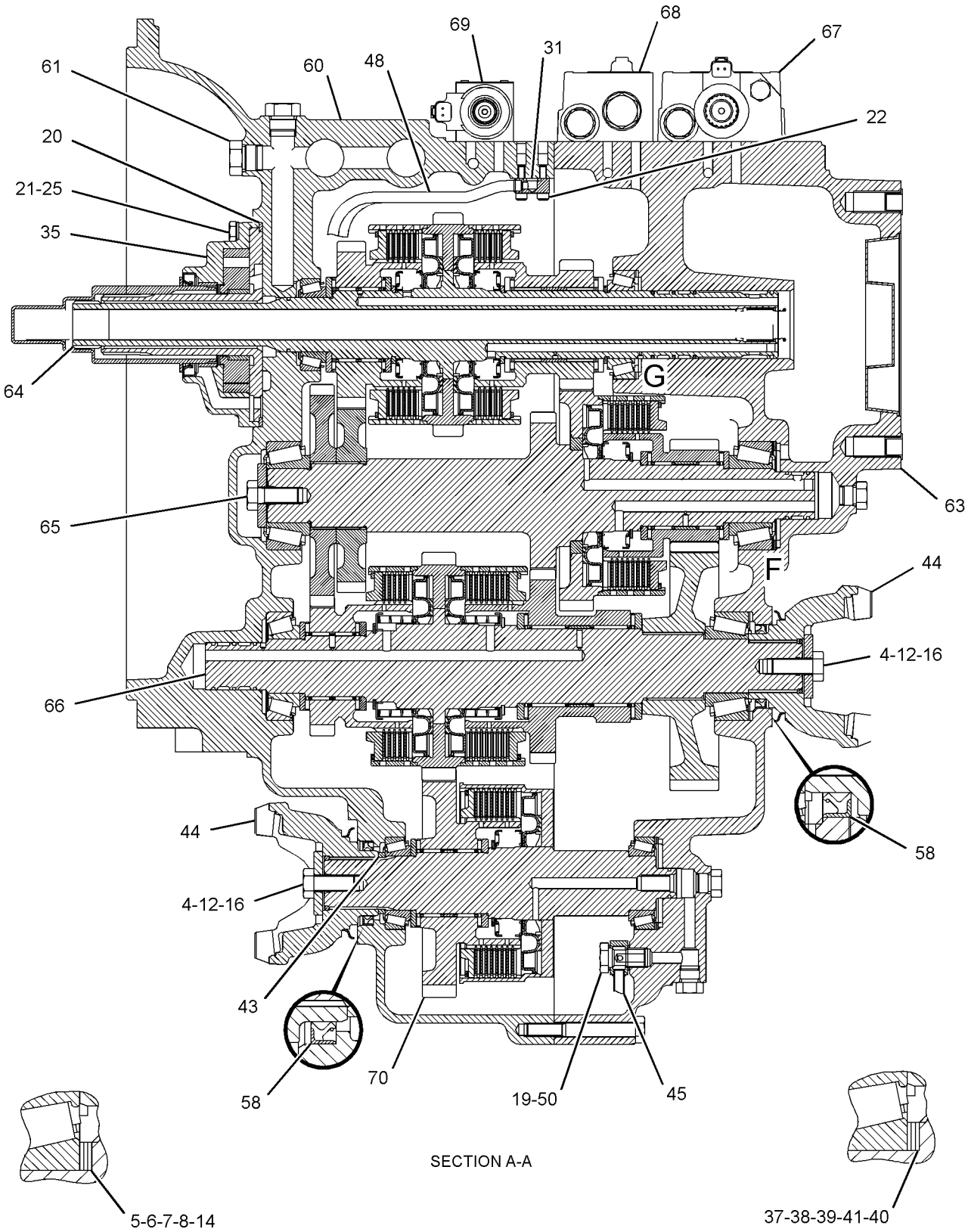

GRAPHIC #3

<END>

g01396419

274-8048 VALVE & MTG GP-SOLENOID–DIFFERENTIAL LOCK

S/N: SJL1-UP
PART OF 320-7233 CONTROL GP-DIFFERENTIAL LOCK
AN ATTACHMENT

SMCS-5479 **i02450168**

NOTE	REF NO	GRAPHIC REF	PART NUMBER	QTY	PART NAME 1 2 3 4 5 6 (PRODUCT LEVEL)	SEE PAGE
M	1	1	**096-5968**	2	BOLT-SOCKET HEAD (M5X0.8X8-MM)	
J	2	1	*274-8041*	1	VALVE GP-SOLENOID (12-VOLT DC)	
					AVAILABLE REPAIR KIT(S):	
J			**250-8330**	1	KIT-SEAL (VALVE)	
					(INCLUDES O-RINGS)	

J-KIT MARKED J SERVICES PART MARKED J
M-METRIC PART

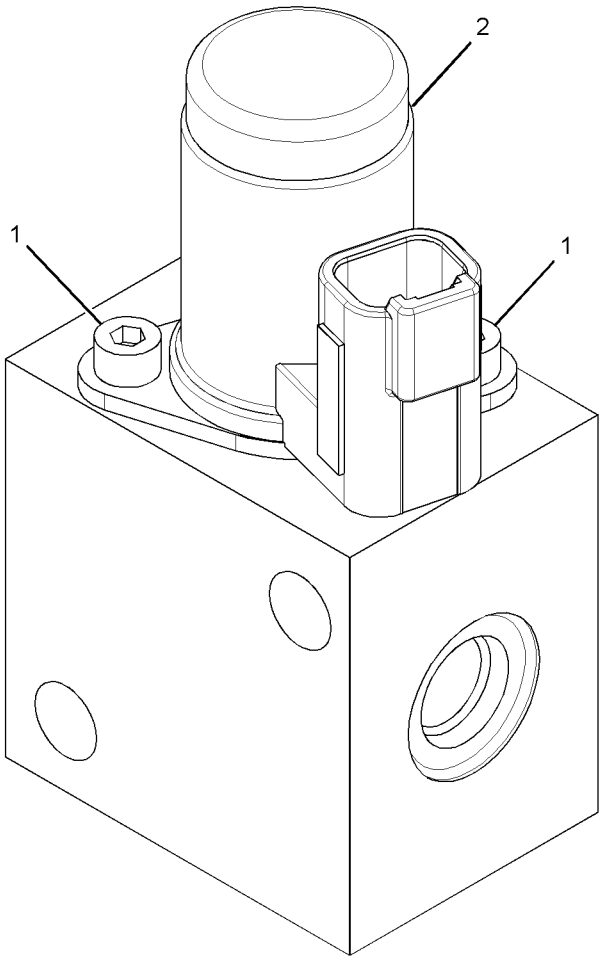

GRAPHIC #1 **<END>** g01346192

147-0209 VALVE GP-RELIEF–PRESSURE REGULATOR

S/N: SJL1-UP

PART OF 294-9818 TRANSMISSION GP-POWER SHIFT

AN ATTACHMENT

SMCS-3133, 3182, 3210, 3213 **i00724885**

NOTE	REF NO	GRAPHIC REF	PART NUMBER	QTY	PART NAME 1 2 3 4 5 6 (PRODUCT LEVEL)	SEE PAGE
	1	1	**7X-4744**	1	SEAL-O-RING	
	2	1	**6V-9178**	1	SEAL-O-RING	
	3	1	**106-9586**	1	SEAL-O-RING	

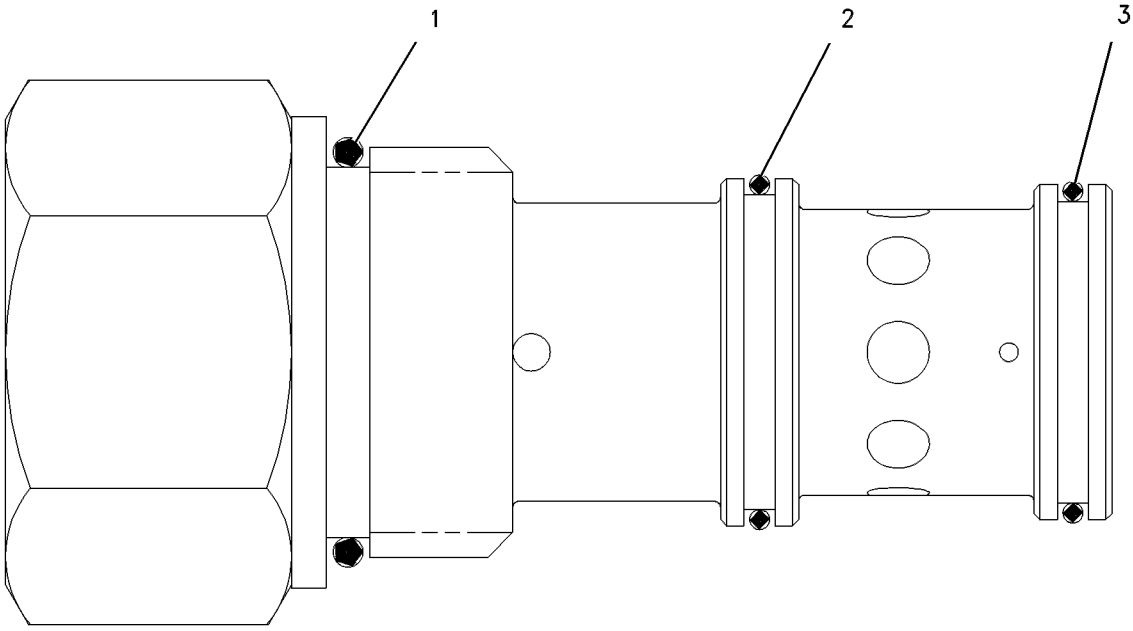

GRAPHIC #1 **<END>** g00304718

6D-0337 VALVE GP-TIRE

S/N: SJL1-UP
PART OF 201-1920 VALVE GP-TIRE
AN ATTACHMENT

SMCS-4203 **i03644348**

NOTE	REF NO	GRAPHIC REF	PART NUMBER	QTY	PART NAME 1 2 3 4 5 6 (PRODUCT LEVEL)	SEE PAGE
	1	1	**6D-0443**	1	HOUSING AS-CORE	
	1A	1	**2D-2628**	1	CORE-VALVE	
	1B	1	**2D-2633**	1	CAP (VALVE STEM)	
	2	1	**8D-2707**	1	SPUD AS	
	2A	1	**2D-2629**	1	GROMMET	
	2B	1	**2D-2630**	1	WASHER	
	2C	1	**2D-2631**	1	NUT (0.482-26-THD)	

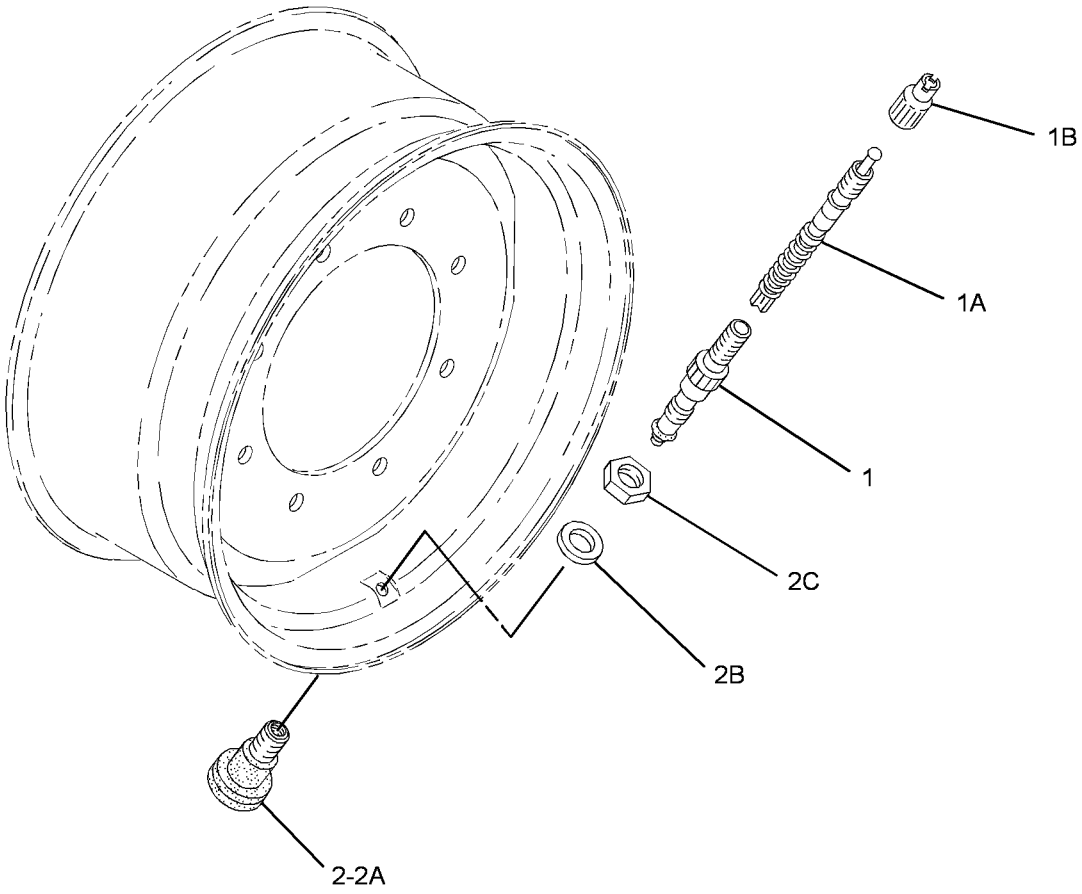

GRAPHIC #1 **<END>** g01955522

201-1920 VALVE GP-TIRE

S/N: SJL1-UP
PART OF 249-7568, 249-7569, 249-7571, 249-7572, 250-2158, 250-2159, 273-5095, 273-5096, 282-3875, 282-3876, 303-0426, 303-0427, 303-0430, 303-0431 WHEEL & TIRE GP
AN ATTACHMENT

SMCS-4203 **i03498408**

NOTE	PART NUMBER	QTY	PART NAME 1 2 3 4 5 6 (PRODUCT LEVEL)	SEE PAGE
Y	**6D-0337**	1	VALVE GP-TIRE	272

Y-SEPARATE ILLUSTRATION

<END>

249-7570 WHEEL & TIRE AR

S/N: SJL1-UP
AN ATTACHMENT

SMCS-4201, 4202, 4203, 4208, 4209 **i02211074**

NOTE	PART NUMBER	QTY	PART NAME 1 2 3 4 5 6 (PRODUCT LEVEL)	SEE PAGE
Y	*249-7568*	2	WHEEL & TIRE GP (LH)	275
Y	*249-7569*	2	WHEEL & TIRE GP (RH)	276
	201-1916	2	MOUNTING GP-WHEEL	
			(EACH INCLUDES)	
	8T-5439	20	WASHER-HARD (21.5X45X6-MM THK)	
M	**201-1919**	20	NUT (M20X1.5-THD)	

M-METRIC PART
Y-SEPARATE ILLUSTRATION

<END>

249-7573 WHEEL & TIRE AR

S/N: SJL1-UP
AN ATTACHMENT

SMCS-4201, 4202, 4203, 4208, 4209 **i03332161**

NOTE	PART NUMBER	QTY	PART NAME 1 2 3 4 5 6 (PRODUCT LEVEL)	SEE PAGE
Y	*249-7571*	2	WHEEL & TIRE GP (LH) (REAR)	276
Y	*249-7572*	2	WHEEL & TIRE GP (RH) (REAR)	276
	201-1916	2	MOUNTING GP-WHEEL	
			(EACH INCLUDES)	
	8T-5439	20	WASHER-HARD (21.5X45X6-MM THK)	
M	**201-1919**	20	NUT (M20X1.5-THD)	

M-METRIC PART
Y-SEPARATE ILLUSTRATION

<END>

250-2160 WHEEL & TIRE AR

S/N: SJL1-UP
AN ATTACHMENT

SMCS-4201, 4202, 4203, 4208, 4209 **i02351162**

NOTE	PART NUMBER	QTY	PART NAME 1 2 3 4 5 6 (PRODUCT LEVEL)	SEE PAGE
Y	*250-2158*	2	WHEEL & TIRE GP	277
Y	*250-2159*	2	WHEEL & TIRE GP	277
	201-1916	2	MOUNTING GP-WHEEL	
			(EACH INCLUDES)	
	8T-5439	20	WASHER-HARD (21.5X45X6-MM THK)	
M	**201-1919**	20	NUT (M20X1.5-THD)	

M-METRIC PART
Y-SEPARATE ILLUSTRATION

<END>

273-5140 WHEEL & TIRE AR

S/N: SJL1-UP
AN ATTACHMENT

SMCS-4201, 4202, 4203, 4208, 4209 **i02404032**

NOTE	PART NUMBER	QTY	PART NAME 1 2 3 4 5 6 (PRODUCT LEVEL)	SEE PAGE
Y	*273-5095*	2	WHEEL & TIRE GP (REAR, LH)	277
Y	*273-5096*	2	WHEEL & TIRE GP (REAR, RH)	278
	201-1916	2	MOUNTING GP-WHEEL	
			(EACH INCLUDES)	
	8T-5439	20	WASHER-HARD (21.5X45X6-MM THK)	
M	**201-1919**	20	NUT (M20X1.5-THD)	

M-METRIC PART
Y-SEPARATE ILLUSTRATION

<END>

282-3874 WHEEL & TIRE AR

S/N: SJL1-UP
AN ATTACHMENT

SMCS-4201, 4202, 4203, 4208, 4209 **i02478571**

NOTE	PART NUMBER	QTY	PART NAME 1 2 3 4 5 6 (PRODUCT LEVEL)	SEE PAGE
Y	*282-3875*	2	WHEEL & TIRE GP	278
Y	*282-3876*	2	WHEEL & TIRE GP	278
	201-1916	2	MOUNTING GP-WHEEL	
			(EACH INCLUDES)	
	8T-5439	20	WASHER-HARD (21.5X45X6-MM THK)	
M	**201-1919**	20	NUT (M20X1.5-THD)	

M-METRIC PART
Y-SEPARATE ILLUSTRATION

<END>

303-0416 WHEEL & TIRE AR—ALL WHEEL DRIVE

S/N: SJL1-UP
AN ATTACHMENT

SMCS-4201, 4202, 4203, 4208, 4209 **i02675711**

NOTE	PART NUMBER	QTY	PART NAME 1 2 3 4 5 6 (PRODUCT LEVEL)	SEE PAGE
Y	*303-0430*	2	WHEEL & TIRE GP (REAR, LH)	279
Y	*303-0431*	2	WHEEL & TIRE GP (REAR, RH)	280
	201-1916	2	MOUNTING GP-WHEEL (REAR)	
			(EACH INCLUDES)	
	8T-5439	20	WASHER-HARD (21.5X45X6-MM THK)	
M	**201-1919**	20	NUT (M20X1.5-THD)	

M-METRIC PART
Y-SEPARATE ILLUSTRATION

<END>

303-0417 WHEEL & TIRE AR—ALL WHEEL DRIVE

S/N: SJL1-UP
AN ATTACHMENT

SMCS-4201, 4202, 4203, 4208, 4209 **i03712400**

NOTE	PART NUMBER	QTY	PART NAME 1 2 3 4 5 6 (PRODUCT LEVEL)	SEE PAGE
Y	*303-0426*	2	WHEEL & TIRE GP (LH)	279
Y	*303-0427*	2	WHEEL & TIRE GP (RH)	279
	201-1916	2	MOUNTING GP-WHEEL (REAR)	
			(EACH INCLUDES)	
	8T-5439	20	WASHER-HARD (21.5X45X6-MM THK)	
M	**201-1919**	20	NUT (M20X1.5-THD)	

M-METRIC PART
Y-SEPARATE ILLUSTRATION

<END>

249-7568 WHEEL & TIRE GP—REAR, LH

S/N: SJL1-UP
(15X28)
PART OF 249-7570 WHEEL & TIRE AR
AN ATTACHMENT

SMCS-4201, 4202, 4203, 4208, 4209 **i03592788**

NOTE	PART NUMBER	QTY	PART NAME 1 2 3 4 5 6 (PRODUCT LEVEL)	SEE PAGE
Y	*201-1920*	1	VALVE GP-TIRE	273
	195-6348	1	WHEEL AS (LH,REAR)	
	201-1975	1	TIRE (440/80-R28)	

Y-SEPARATE ILLUSTRATION

<END>

249-7569 WHEEL & TIRE GP–REAR, RH

S/N: SJL1-UP
(15X28)
PART OF 249-7570 WHEEL & TIRE AR
AN ATTACHMENT

SMCS-4201, 4202, 4203, 4208, 4209 **i03592789**

NOTE	PART NUMBER	QTY	PART NAME 1 2 3 4 5 6 (PRODUCT LEVEL)	SEE PAGE
Y	*201-1920*	1	VALVE GP-TIRE	273
	195-6348	1	WHEEL AS (RH,REAR)	
	201-1975	1	TIRE (440/80-R28)	

Y-SEPARATE ILLUSTRATION

<END>

249-7571 WHEEL & TIRE GP–REAR, LH

S/N: SJL1-UP
(15X28)
PART OF 249-7573 WHEEL & TIRE AR
AN ATTACHMENT

SMCS-4201, 4202, 4203, 4208, 4209 **i03592790**

NOTE	PART NUMBER	QTY	PART NAME 1 2 3 4 5 6 (PRODUCT LEVEL)	SEE PAGE
Y	*201-1920*	1	VALVE GP-TIRE	273
	195-6348	1	WHEEL AS (LH,REAR)	
	195-6329	1	TIRE (440/80-R28)	

Y-SEPARATE ILLUSTRATION

<END>

249-7572 WHEEL & TIRE GP–REAR, RH

S/N: SJL1-UP
(15X28)
PART OF 249-7573 WHEEL & TIRE AR
AN ATTACHMENT

SMCS-4201, 4202, 4203, 4208, 4209 **i03592801**

NOTE	PART NUMBER	QTY	PART NAME 1 2 3 4 5 6 (PRODUCT LEVEL)	SEE PAGE
Y	*201-1920*	1	VALVE GP-TIRE	273
	195-6348	1	WHEEL AS (RH,REAR)	
	195-6329	1	TIRE (440/80-R28)	

Y-SEPARATE ILLUSTRATION

<END>

250-2158 WHEEL & TIRE GP—LH

S/N: SJL1-UP
(15X24)
PART OF 250-2160 WHEEL & TIRE AR
AN ATTACHMENT

SMCS-4201, 4202, 4203, 4208, 4209 **i02351173**

NOTE	PART NUMBER	QTY	PART NAME 1 2 3 4 5 6 (PRODUCT LEVEL)	SEE PAGE
Y	*201-1920*	1	VALVE GP-TIRE	273
	195-6343	1	WHEEL AS	
	250-1738	1	TIRE (440/80-R24)	

Y-SEPARATE ILLUSTRATION

<END>

250-2159 WHEEL & TIRE GP—RH

S/N: SJL1-UP
(15X24)
PART OF 250-2160 WHEEL & TIRE AR
AN ATTACHMENT

SMCS-4201, 4202, 4203, 4208, 4209 **i02351172**

NOTE	PART NUMBER	QTY	PART NAME 1 2 3 4 5 6 (PRODUCT LEVEL)	SEE PAGE
Y	*201-1920*	1	VALVE GP-TIRE	273
	195-6343	1	WHEEL AS	
	250-1738	1	TIRE (440/80-R24)	

Y-SEPARATE ILLUSTRATION

<END>

273-5095 WHEEL & TIRE GP—REAR, LH

S/N: SJL1-UP
(15X28)
PART OF 273-5140 WHEEL & TIRE AR
AN ATTACHMENT

SMCS-4201, 4202, 4203, 4208, 4209 **i03592817**

NOTE	PART NUMBER	QTY	PART NAME 1 2 3 4 5 6 (PRODUCT LEVEL)	SEE PAGE
Y	*201-1920*	1	VALVE GP-TIRE	273
	195-6348	1	WHEEL AS (REAR)	
	267-8363	1	TIRE (440/80-R28)	

Y-SEPARATE ILLUSTRATION

<END>

273-5096 WHEEL & TIRE GP—REAR, RH

S/N: SJL1-UP
(15X28)
PART OF 273-5140 WHEEL & TIRE AR
AN ATTACHMENT

SMCS-4201, 4202, 4203, 4208, 4209 **i03592818**

NOTE	PART NUMBER	QTY	PART NAME 1 2 3 4 5 6 (PRODUCT LEVEL)	SEE PAGE
Y	*201-1920*	1	VALVE GP-TIRE	273
	195-6348	1	WHEEL AS (REAR)	
	267-8363	1	TIRE (440/80-R28)	

Y-SEPARATE ILLUSTRATION

<END>

282-3875 WHEEL & TIRE GP—REAR, LH

S/N: SJL1-UP
(15X24)
PART OF 282-3874 WHEEL & TIRE AR
AN ATTACHMENT

SMCS-4201, 4202, 4203, 4208, 4209 **i02478573**

NOTE	PART NUMBER	QTY	PART NAME 1 2 3 4 5 6 (PRODUCT LEVEL)	SEE PAGE
Y	*201-1920*	1	VALVE GP-TIRE	273
	195-6343	1	WHEEL AS	
	282-3877	1	TIRE (440/80-R24)	

Y-SEPARATE ILLUSTRATION

<END>

282-3876 WHEEL & TIRE GP—REAR, RH

S/N: SJL1-UP
(15X24)
PART OF 282-3874 WHEEL & TIRE AR
AN ATTACHMENT

SMCS-4201, 4202, 4203, 4208, 4209 **i02478574**

NOTE	PART NUMBER	QTY	PART NAME 1 2 3 4 5 6 (PRODUCT LEVEL)	SEE PAGE
Y	*201-1920*	1	VALVE GP-TIRE	273
	195-6343	1	WHEEL AS	
	282-3877	1	TIRE (440/80-R24)	

Y-SEPARATE ILLUSTRATION

<END>

303-0426 WHEEL & TIRE GP—LH

S/N: SJL1-UP
(15X24)
PART OF 303-0417 WHEEL & TIRE AR
AN ATTACHMENT

SMCS-4201, 4202, 4203, 4208, 4209 **i03712403**

NOTE	PART NUMBER	QTY	PART NAME 1 2 3 4 5 6 (PRODUCT LEVEL)	SEE PAGE
Y	*201-1920*	1	VALVE GP-TIRE	273
	195-6343	1	WHEEL AS (REAR)	
	303-0444	1	TIRE (15-R24)	

Y-SEPARATE ILLUSTRATION

<END>

303-0427 WHEEL & TIRE GP—RH

S/N: SJL1-UP
(15X24)
PART OF 303-0417 WHEEL & TIRE AR
AN ATTACHMENT

SMCS-4201, 4202, 4203, 4208, 4209 **i02688501**

NOTE	PART NUMBER	QTY	PART NAME 1 2 3 4 5 6 (PRODUCT LEVEL)	SEE PAGE
Y	*201-1920*	1	VALVE GP-TIRE	273
	195-6343	1	WHEEL AS (REAR)(15X24)	
	303-0444	1	TIRE (15-R24)	

Y-SEPARATE ILLUSTRATION

<END>

303-0430 WHEEL & TIRE GP—REAR, LH

S/N: SJL1-UP
(15X28)
PART OF 303-0416 WHEEL & TIRE AR
AN ATTACHMENT

SMCS-4201, 4202, 4203, 4208, 4209 **i03592821**

NOTE	PART NUMBER	QTY	PART NAME 1 2 3 4 5 6 (PRODUCT LEVEL)	SEE PAGE
Y	*201-1920*	1	VALVE GP-TIRE	273
	195-6348	1	WHEEL AS (REAR)	
	303-0441	1	TIRE (16.9-R28)	

Y-SEPARATE ILLUSTRATION

<END>

303-0431 WHEEL & TIRE GP–REAR, RH

S/N: SJL1-UP
(15X28)
PART OF 303-0416 WHEEL & TIRE AR
AN ATTACHMENT

SMCS-4201, 4202, 4203, 4208, 4209 **i03592825**

NOTE	PART NUMBER	QTY	PART NAME 1 2 3 4 5 6 (PRODUCT LEVEL)	SEE PAGE
Y	*201-1920*	1	VALVE GP-TIRE	273
	195-6348	1	WHEEL AS (REAR)	
	303-0441	1	TIRE (16.9-R28)	

Y-SEPARATE ILLUSTRATION

<END>

206-1642 CONTROL GP-PARKING BRAKE

S/N: SJL1-UP
PART OF 329-0311 POWER TRAIN AR
AN ATTACHMENT

SMCS-4282, 4284 **i03577384**

NOTE	REF NO	GRAPHIC REF	PART NUMBER	QTY	PART NAME 1 2 3 4 5 6 (PRODUCT LEVEL)	SEE PAGE
	1	1	**7K-1181**	1	STRAP-CABLE	
	2	1	**9R-2806**	1	PIN	
	3	1	**9R-2807**	1	CLIP	
J	4	1	**154-5416**	1	SWITCH AS (PARKING BRAKE)	
Y	5	1	**261-5517**	1	CONTROL GP-PARKING BRAKE	282
	6	1	**261-9635**	1	BOOT (PARKING BRAKE)	
	7	1	**8T-4224**	2	WASHER-HARD (8.8X16X2-MM THK)	
M	8	1	**8T-6912**	2	BOLT (M8X1.25X50-MM)	
	9	1	**164-1368**	2	FASTENER-PANEL	
					AVAILABLE REPAIR KIT(S):	
J			**155-2270**	1	KIT-CONNECTING PLUG (2-PIN)	
					(INCLUDES PLUG AS, WEDGE & INTERFACE SEAL)	

J-KIT MARKED J SERVICES PARTS MARKED J
M-METRIC PART
Y-SEPARATE ILLUSTRATION

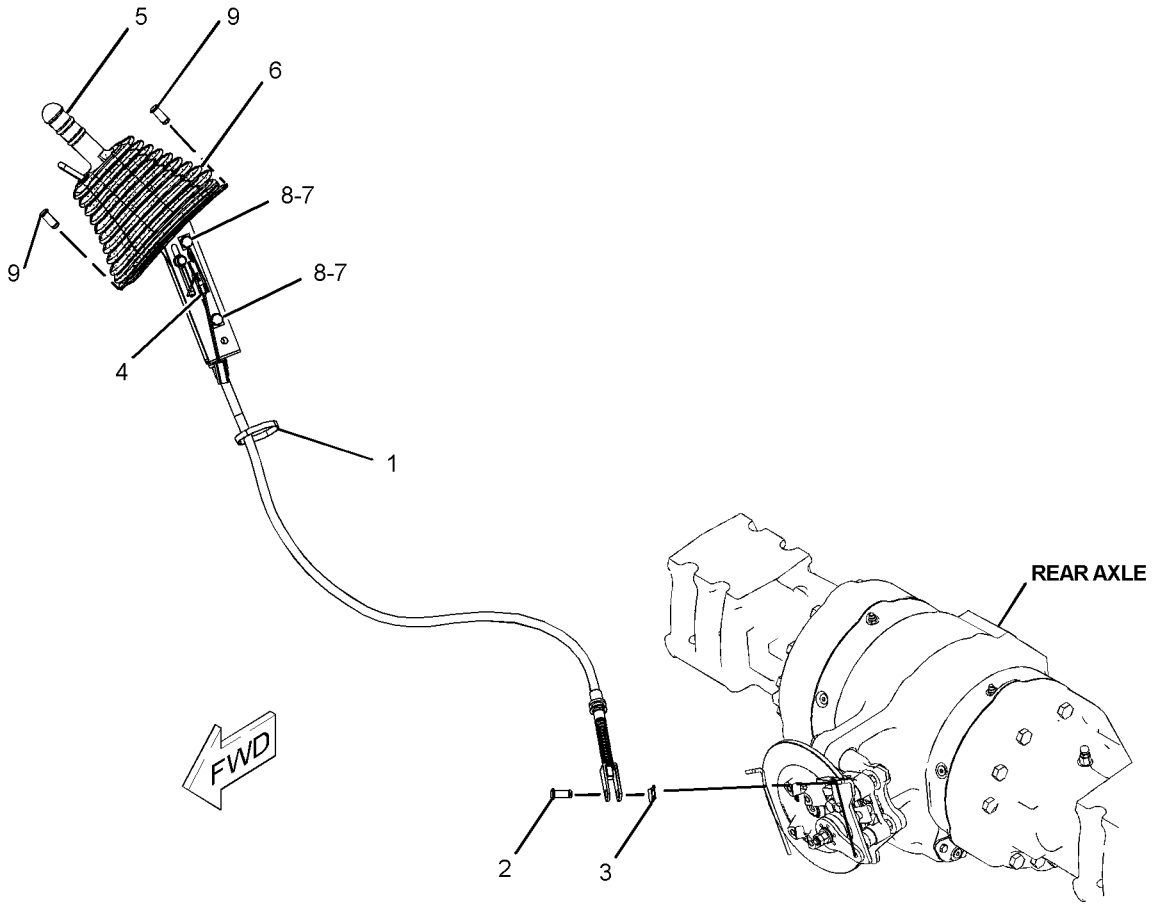

GRAPHIC #1 **<END>** g01228986

BRAKING SYSTEM

261-5517 CONTROL GP-PARKING BRAKE

S/N: SJL1-UP

PART OF 206-1642 CONTROL GP-PARKING BRAKE

AN ATTACHMENT

SMCS-4282, 4284 **i03712421**

NOTE	REF NO	GRAPHIC REF	PART NUMBER	QTY	PART NAME 1 2 3 4 5 6 (PRODUCT LEVEL)	SEE PAGE
Y	1	1	**163-0753**	1	LEVER GP-HAND CONTROL (PARKING BRAKE)	288
	2	1	**261-5519**	1	CABLE AS	
		1	**6V-8759**	1	RING-RETAINING	

Y-SEPARATE ILLUSTRATION

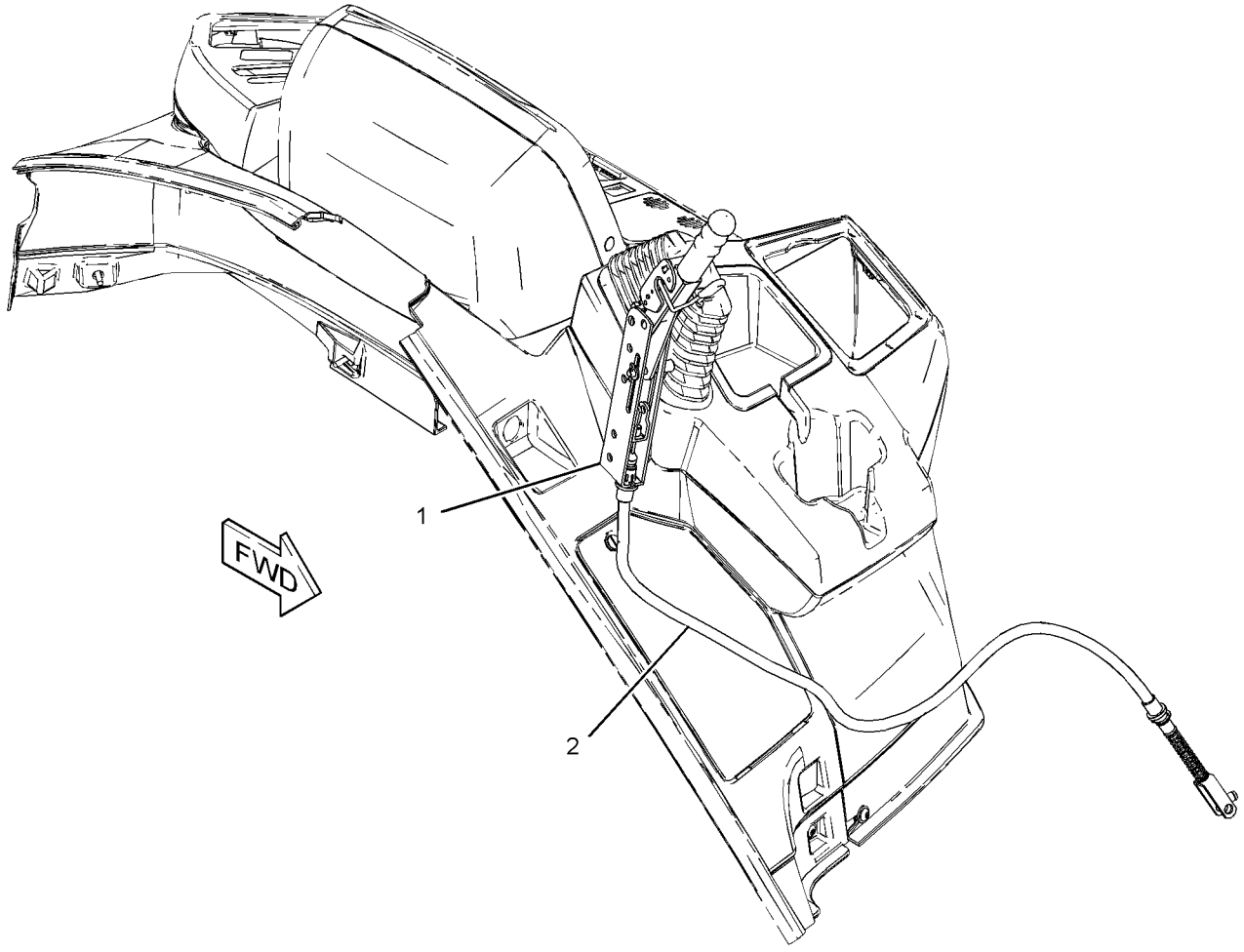

GRAPHIC #1 **<END>** g01210353

206-1639 CONTROL GP-SERVICE BRAKE–STANDARD SHIFT

S/N: SJL1-UP
PART OF 329-0311 POWER TRAIN AR
AN ATTACHMENT

SMCS-4269 **i03712420**

NOTE	REF NO	GRAPHIC REF	PART NUMBER	QTY	PART NAME 1 2 3 4 5 6 (PRODUCT LEVEL)	SEE PAGE
	1	1	**1H-1200**	1	PIN-SPRING	
	2	1	**3E-7675**	1	SWITCH GP-PRESSURE (BRAKE)	
		1	**102-8803**	1	KIT-RECEPTACLE (3-PIN)	
					(INCLUDES RECEPTACLE AS & WEDGE)	
		1	**8T-8729**	3	PIN-CONNECTOR (16-GA TO 18-GA)	
	3	1	**7K-1181**	1	STRAP-CABLE	
	4	1	**8T-0131**	1	ELBOW	
	5	1	**8T-1889**	2	CLIP (SLOT)	
	6	1	**8T-1890**	2	CLIP (TAB)	
	7	1	**105-8034**	2	SWITCH AS-LIMIT (BRAKE PEDAL)	
	8	1	**151-4841**	1	BLOCK	
	9	1	**156-3600**	1	FITTING	
	10	1	**156-3631**	1	FITTING	
	11	1	**165-6595**	1	PIN AS	
	12	1	*194-2903*	1	ELBOW AS	
		1	**3K-0360**	1	SEAL-O-RING	
		1	**8T-0119**	1	ELBOW	
	13	1	**201-3652**	1	PLATE AS	
	14	1	**202-5993**	1	PLATE	
	15	1	**206-1634**	1	PLATE AS	
	16	1	**206-1650**	1	GROMMET	
	17	1	**291-8379**	1	COVER-BRAKE	
	18	1	**206-1752**	1	PLATE AS	
	19	1	**206-1758**	1	PEDAL AS (LH)	
		1	**202-6029**	2	BEARING-SLEEVE	
	20	1	**206-1759**	1	PEDAL AS (RH)	
		1	**202-6029**	2	BEARING-SLEEVE	
	21	1	**206-1766**	2	PIN	
	22	1	**206-1767**	1	SPRING (LH)	
	23	1	**206-1768**	1	SPRING (RH)	
	24	1	**220-8226**	1	VALVE AS-BRAKE	
		1	**262-4084**	1	BOOT	
	25	1	**251-5579**	1	PLATE AS	
	26	1	**253-1549**	2	HOSE AS	
I	27	1	**255-5461**	1	HOSE AS	
I	28	1	**255-8280**	1	HOSE AS	
	29	1	**262-4081**	2	END-YOKE ROD	
M	30	1	**142-0485**	2	NUT (M10X1.5-THD)	
	31	1	*148-8318*	1	CONNECTOR AS	
		1	**3K-0360**	1	SEAL-O-RING	
		1	**6V-8397**	1	SEAL-O-RING	
		1	**6V-8634**	1	CONNECTOR	
	32	1	*148-8325*	4	CONNECTOR AS	
					(EACH INCLUDES)	
		1	**3J-1907**	1	SEAL-O-RING	
		1	**4J-5477**	1	SEAL-O-RING	
		1	**6V-8641**	1	CONNECTOR	
	33	1	*148-8364*	1	ELBOW AS	
		1	**3K-0360**	1	SEAL-O-RING	
		1	**6V-8398**	1	SEAL-O-RING	
		1	**6V-8625**	1	ELBOW	
	34	1	*148-8378*	1	ELBOW AS	
		1	**3J-1907**	1	SEAL-O-RING	
		1	**6V-8397**	1	SEAL-O-RING	
		1	**6V-8724**	1	ELBOW	

206-1639 **CONTROL GP-SERVICE BRAKE** *(contd.)* **i03712420**

NOTE	REF NO	GRAPHIC REF	PART NUMBER	QTY	PART NAME 1 2 3 4 5 6 (PRODUCT LEVEL)	SEE PAGE
M	35	1	**9X-2045**	4	SCREW-TRUSS HEAD (M6X1X20-MM)	
	36	1	**3J-1907**	1	SEAL-O-RING	
	37	1	**3K-0360**	2	SEAL-O-RING	
M	38	1	**5C-7261**	6	NUT (M8X1.25-THD)	
	39	1	**5P-4116**	4	WASHER-HARD (8.8X20.5X2-MM THK)	
	40	1	**6V-0826**	2	GROMMET	
	41	1	**7J-9108**	1	SEAL-O-RING	
	42	1	**7X-7729**	6	WASHER (11X25X3-MM THK)	
	43	1	**8T-4121**	2	WASHER-HARD (11X21X2.5-MM THK)	
M	44	1	**8T-4133**	2	NUT (M10X1.5-THD)	
M	45	1	**8T-4136**	6	BOLT (M10X1.5X25-MM)	
M	46	1	**8T-4138**	1	BOLT (M6X1X20-MM)	
	47	1	**8T-4205**	1	WASHER-HARD (7.2X14.5X2-MM THK)	
	48	1	**8T-4224**	4	WASHER-HARD (8.8X16X2-MM THK)	
M	49	1	**8T-4908**	2	BOLT (M8X1.25X25-MM)	
	50	1	**9D-3767**	2	PLUG-BUTTON	
	51	1	**9R-2807**	2	CLIP	
M	52	1	**9X-2044**	2	SCREW-TRUSS HEAD (M6X1X16-MM)	
	53	1	**286-1930**	2	RING-RETAINING	

I-REFER TO HYDRAULIC INFORMATION SYSTEM
M-METRIC PART

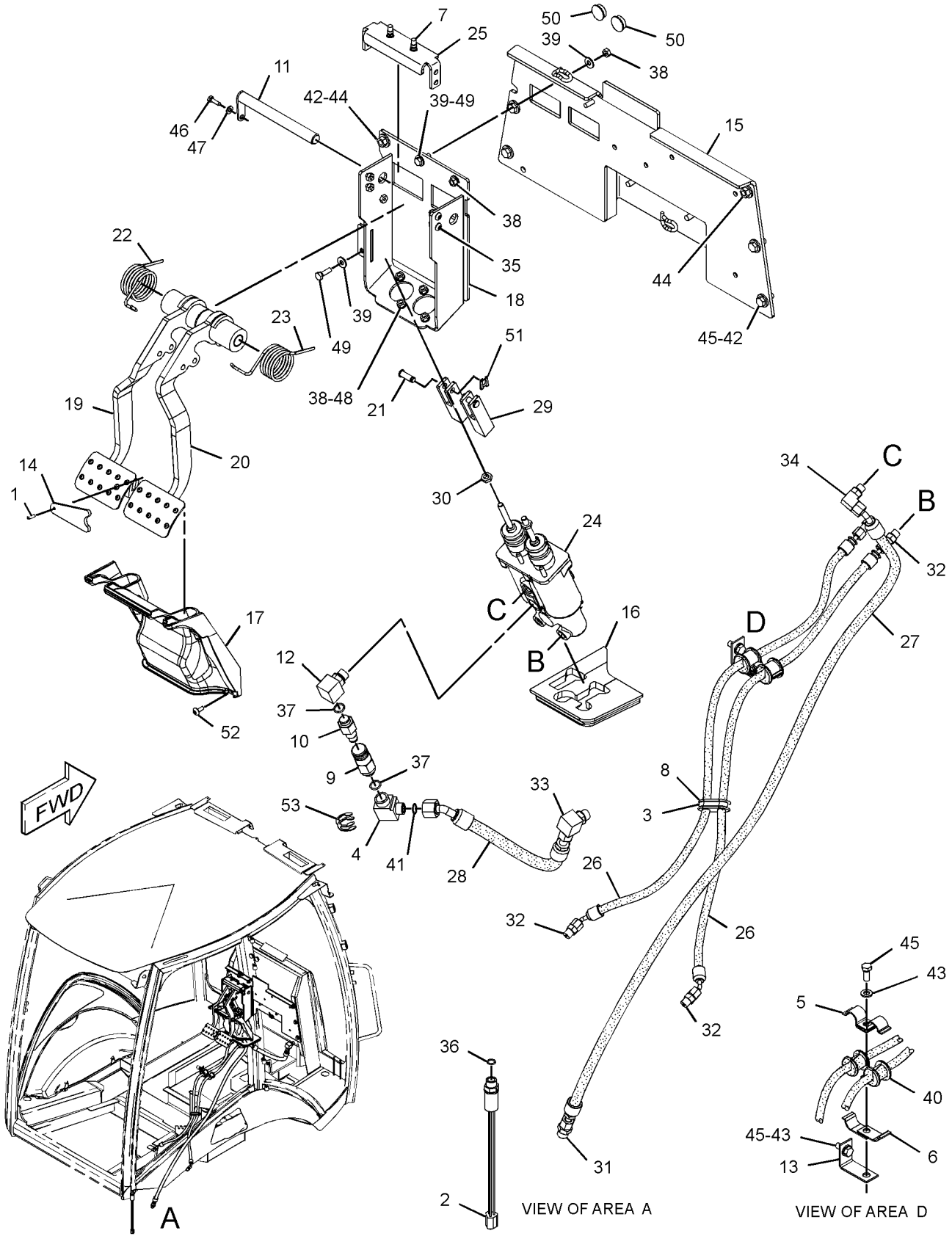

GRAPHIC #1

<END>

g01233551

BRAKING SYSTEM

216-1612 CYLINDER GP-BRAKE–RH

S/N: SJL1-UP
PART OF 316-1925 HOUSING GP-AXLE
AN ATTACHMENT

SMCS-4262 **i03563407**

NOTE	REF NO	GRAPHIC REF	PART NUMBER	QTY	PART NAME 1 2 3 4 5 6 (PRODUCT LEVEL)	SEE PAGE
M	1	1	**6V-2315**	3	BOLT (M6X1X35-MM)	
JLM	2	1	**1R-5396**	3	BOLT (M6X1X35-MM)	
J	3	1	**199-0672**	3	SPACER-SPECIAL	
J	4	1	**199-0681**	3	WASHER (6.2X16.5X2-MM THK)	
L	5	1	**199-0701**	3	BRAKE-COVER	
L	6	1	**199-0702**	3	SPRING (INNER)	
L	7	1	**199-0703**	3	SPRING (OUTER)	
	8	1	**199-0752**	1	PISTON-BRAKE	
	9	1	**199-0759**	1	O-RING-INNER	
JL	10	1	**212-5712**	6	BUSHING	
	11	1	**219-8834**	1	CYLINDER-BRAKE	
	12	1	**199-0700**	1	O-RING-OUTER	
					AVAILABLE REPAIR KIT(S):	
J			**217-2347**	3	KIT-BRAKE CYLINDER (ADJUSTER)	
L			**217-2349**	3	KIT-BRAKE CYLINDER (SPRING RETENTION)	

J-KIT MARKED J SERVICES PARTS MARKED J
L-KIT MARKED L SERVICES PARTS MARKED L
M-METRIC PART

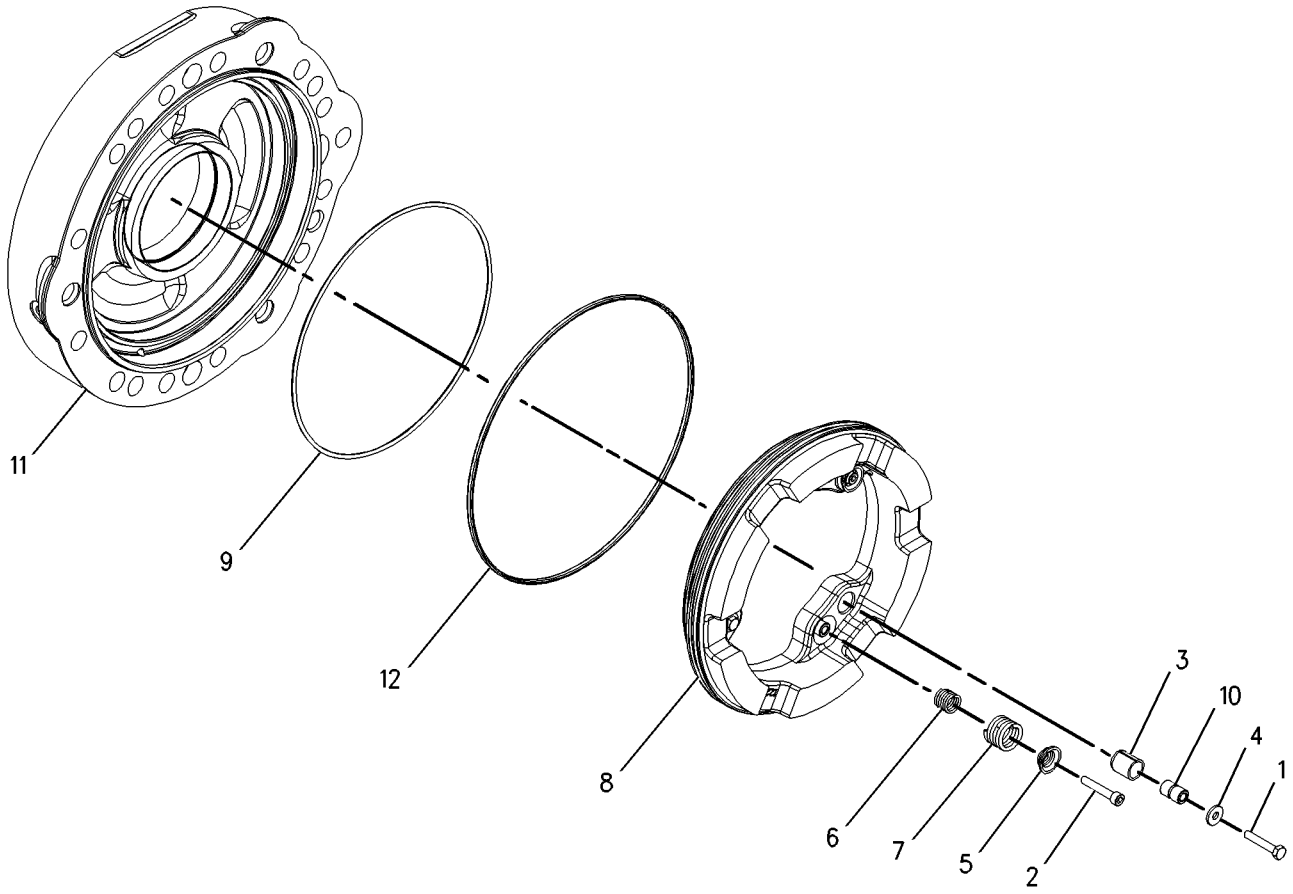

GRAPHIC #1 **<END>** g00953880

216-1613 CYLINDER GP-BRAKE–LH

S/N: SJL1-UP
PART OF 316-1925 HOUSING GP-AXLE
AN ATTACHMENT

SMCS-4262 **i03627160**

NOTE	REF NO	GRAPHIC REF	PART NUMBER	QTY	PART NAME 1 2 3 4 5 6 (PRODUCT LEVEL)	SEE PAGE
M	1	1	**6V-2315**	3	BOLT (M6X1X35-MM)	
JLM	2	1	**1R-5396**	3	BOLT (M6X1X35-MM)	
J	3	1	**199-0672**	3	SPACER-SPECIAL	
J	4	1	**199-0681**	3	WASHER (6.2X16.5X2-MM THK)	
L	5	1	**199-0701**	3	BRAKE-COVER	
L	6	1	**199-0702**	3	SPRING (INNER)	
L	7	1	**199-0703**	3	SPRING (OUTER)	
	8	1	**199-0752**	1	PISTON-BRAKE	
	9	1	**199-0759**	1	O-RING-INNER	
JL	10	1	**212-5712**	6	BUSHING	
	11	1	**219-8835**	1	CYLINDER-BRAKE	
	12	1	**199-0700**	1	O-RING-OUTER	
					AVAILABLE REPAIR KIT(S):	
J			**217-2347**	3	KIT-BRAKE CYLINDER (ADJUSTER)	
L			**217-2349**	3	KIT-BRAKE CYLINDER (SPRING RETENTION)	

J-KIT MARKED J SERVICES PARTS MARKED J
L-KIT MARKED L SERVICES PARTS MARKED L
M-METRIC PART

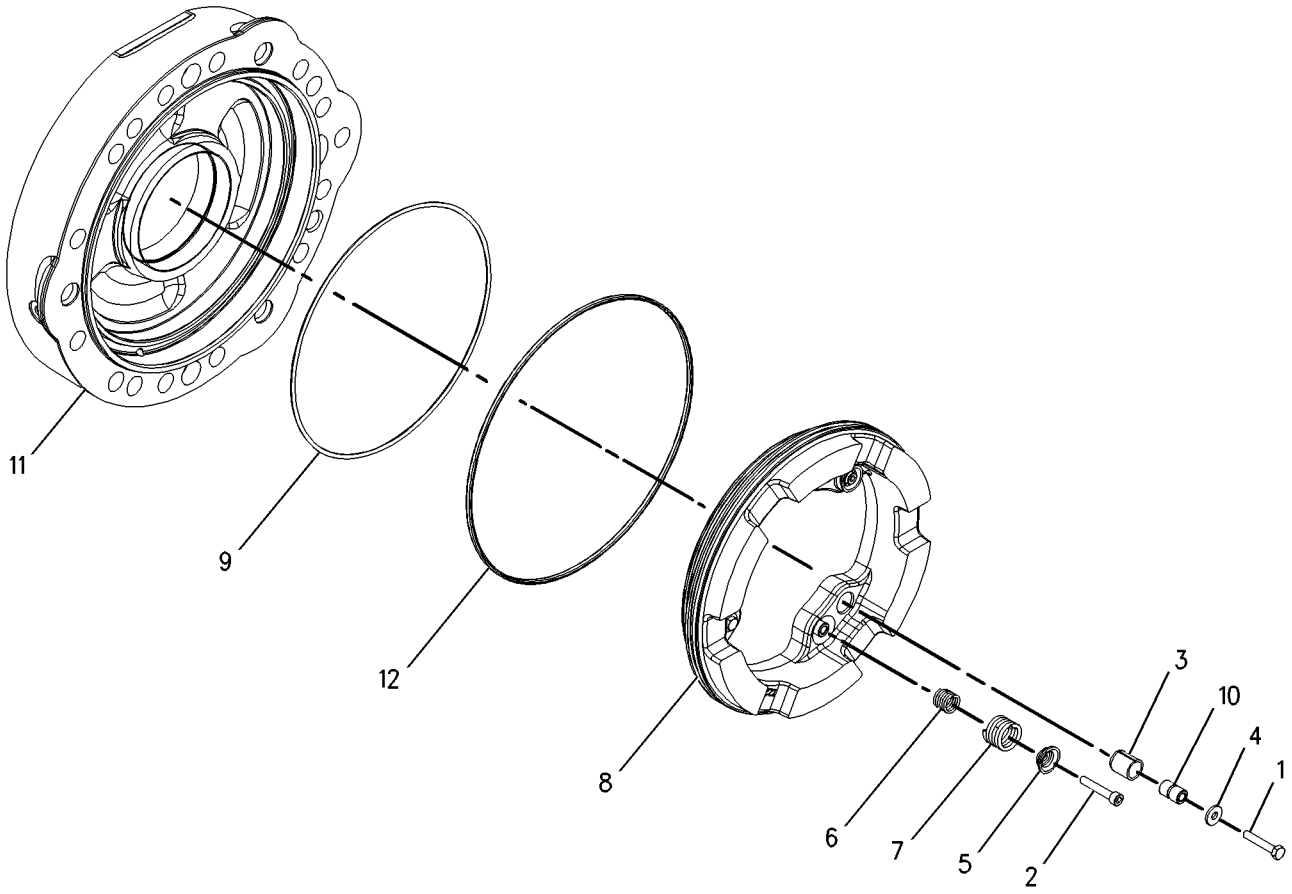

GRAPHIC #1 **<END>** g00995396

163-0753 LEVER GP-HAND CONTROL–PARKING BRAKE

S/N: SJL1-UP
PART OF 261-5517 CONTROL GP-PARKING BRAKE
AN ATTACHMENT

SMCS-4284 **i02156244**

NOTE	REF NO	GRAPHIC REF	PART NUMBER	QTY	PART NAME 1 2 3 4 5 6 (PRODUCT LEVEL)	SEE PAGE
	1	1	**7R-8239**	2	SPACER	
	2	1	**039-9133**	1	PIN	
	3	1	**164-9598**	1	GRIP	
	4	1	**164-9599**	1	COVER	
	5	1	**3B-4610**	1	PIN-COTTER	
	6	1	**8T-4224**	2	WASHER-HARD (8.8X16X2-MM THK)	

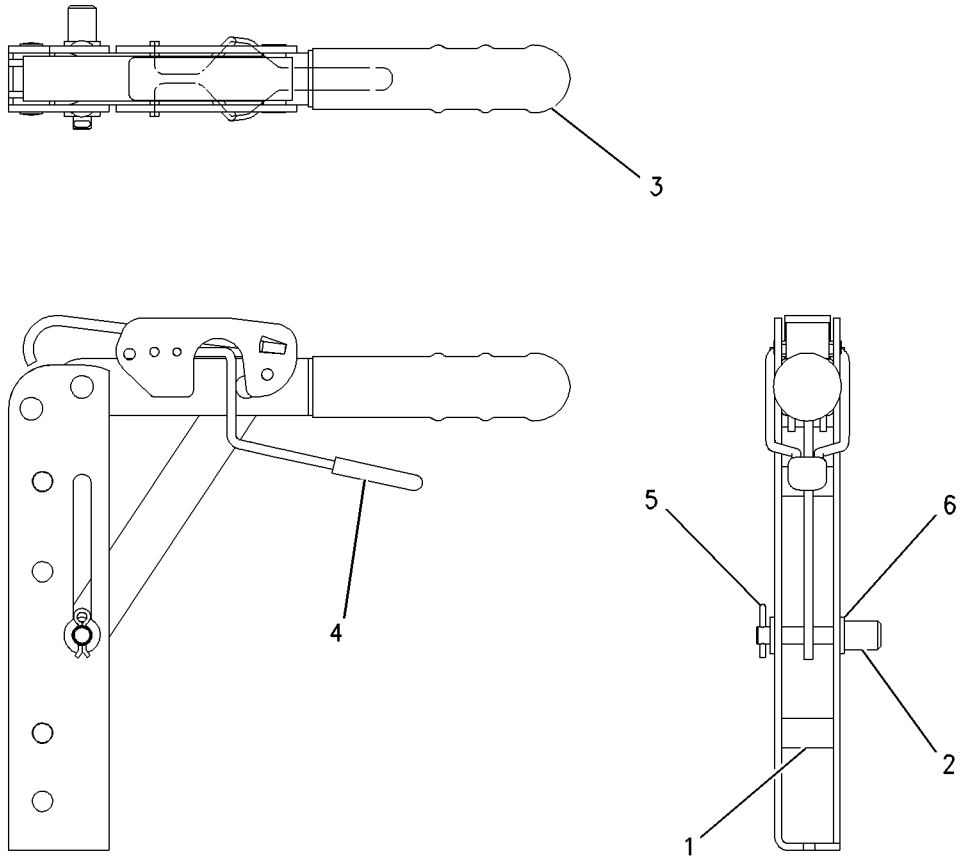

GRAPHIC #1 **<END>** g00729504

238-5238 CYLINDER GP-STEERING

S/N: SJL1-UP
PART OF 315-2318 AXLE GP-DRIVE & STEERING
AN ATTACHMENT

SMCS-4303 **i02808818**

NOTE	REF NO	GRAPHIC REF	PART NUMBER	QTY	PART NAME 1 2 3 4 5 6 (PRODUCT LEVEL)	SEE PAGE
	1	1	*3K-0360*	2	SEAL-O-RING	
	2	1	**9S-8005**	2	PLUG-O-RING	
	3	1	**304-3272**	1	ROD	
	4	1	**304-3271**	1	CYLINDER HEAD	
	5	1	**292-5424**	1	KIT-SEAL	
					(INCLUDES RINGS,SEALS,BACP-UP WASHER & ROD WIPER)	
	6	1	**311-2539**	1	FLANGE	
	7	1	**315-6224**	1	RING-RETAINING	
	8	1	**315-6222**	1	RING-RETAINING	
	9	1	**315-6223**	1	RING-RETAINING	

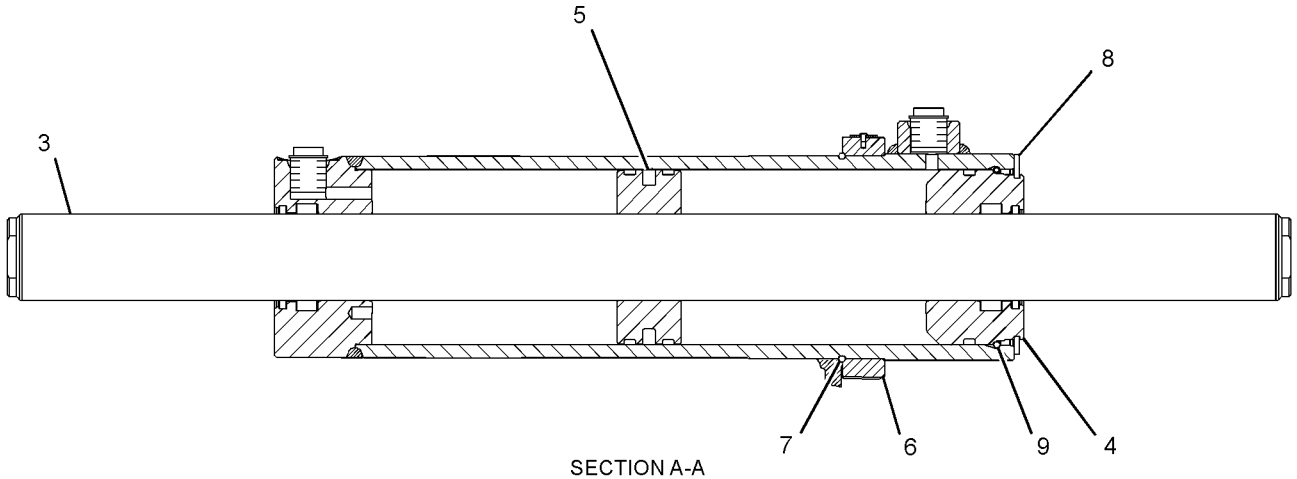

SECTION A-A

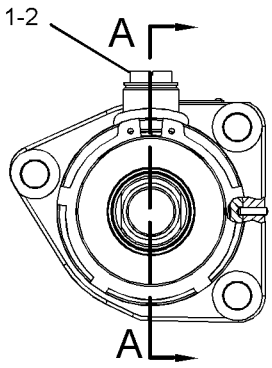

GRAPHIC #1 **<END>** g01407476

STEERING SYSTEM

338-0434 LINES GP-STEERING–
ALL WHEEL DRIVE, ALL WHEEL STEER
S/N: SJL1-UP
PART OF 329-0320 DRIVE AR-BACKHOE LOADER
AN ATTACHMENT

SMCS-4304 **i03694086**

NOTE	REF NO	GRAPHIC REF	PART NUMBER	QTY	PART NAME 1 2 3 4 5 6 (PRODUCT LEVEL)	SEE PAGE
	1	1	**5D-1026**	2	CLAMP-BAND	
I	2	1	**338-0437**	2	HOSE AS	
I	3	1	**338-0438**	1	HOSE AS	
I	4	1	**340-7024**	1	HOSE AS	
I	5	1	**340-7026**	1	HOSE AS	
I	6	1	**340-7027**	1	HOSE AS	
	7	1	**340-7028**	1	MANIFOLD GP-STEERING (ALL WHEEL STEER)	
	8	1	**340-7128**	1	BRACKET AS	
M	9	1	**096-0001**	2	BOLT-SOCKET HEAD (M8X1.25X40-MM)	
	10	1	**100-4336**	4	CLIP	
	11	1	*148-8318*	6	CONNECTOR AS	
					(EACH INCLUDES)	
		1	**3K-0360**	1	SEAL-O-RING	
		1	**6V-8397**	1	SEAL-O-RING	
		1	**6V-8634**	1	CONNECTOR	
	12	1	*148-8325*	1	CONNECTOR AS	
		1	**3J-1907**	1	SEAL-O-RING	
		1	**4J-5477**	1	SEAL-O-RING	
		1	**6V-8641**	1	CONNECTOR	
	13	1	*148-8367*	3	ELBOW AS	
					(EACH INCLUDES)	
		1	**6V-8397**	1	SEAL-O-RING	
		1	**6V-9850**	1	ELBOW	
	14	1	*148-8369*	1	ELBOW AS	
		1	**3J-7354**	1	SEAL-O-RING	
		1	**4J-5477**	1	SEAL-O-RING	
		1	**6V-8628**	1	ELBOW	
	15	1	*148-8374*	4	ELBOW AS	
					(EACH INCLUDES)	
		1	**3K-0360**	1	SEAL-O-RING	
		1	**6V-8397**	1	SEAL-O-RING	
		1	**6V-8723**	1	ELBOW	
	16	1	*150-3026*	1	ELBOW AS	
		1	**3K-0360**	1	SEAL-O-RING	
		1	**6V-4292**	1	ELBOW	
	17	1	*164-5605*	1	CONNECTOR AS	
		1	**3K-0360**	1	SEAL-O-RING	
		1	**6V-8397**	1	SEAL-O-RING	
		1	**8T-0076**	1	CONNECTOR	
	18	1	*204-0317*	1	CONNECTOR AS	
		1	**3K-0360**	1	SEAL-O-RING	
		1	**6V-8397**	1	SEAL-O-RING	
		1	**092-3635**	1	CONNECTOR	
	19	1	**206-1652**	1	SEAL	
	20	1	**325-2011**	1	PUMP GP-METERING (STEERING LINES)	
I	21	1	**340-7025**	1	HOSE AS	
	22	1	**7K-1181**	5	STRAP-CABLE	
	23	1	**8T-4121**	6	WASHER-HARD (11X21X2.5-MM THK)	
M	24	1	**8T-4137**	3	BOLT (M10X1.5X20-MM)	
M	25	1	**8T-4172**	1	BOLT (M10X1.5X80-MM)	
M	26	1	**8T-5005**	2	BOLT (M10X1.5X70-MM)	
	27	1	**9R-2216**	2	BOSS	
	28	1	**9R-3884**	1	SPACER (13X20X45-MM THK)	
E	29	1	**5P-1505**		HOSE (72-CM)	

338-0434 **LINES GP-STEERING** *(contd.)* **i03694086**

E-ORDER BY THE CENTIMETER
I-REFER TO HYDRAULIC INFORMATION SYSTEM
M-METRIC PART

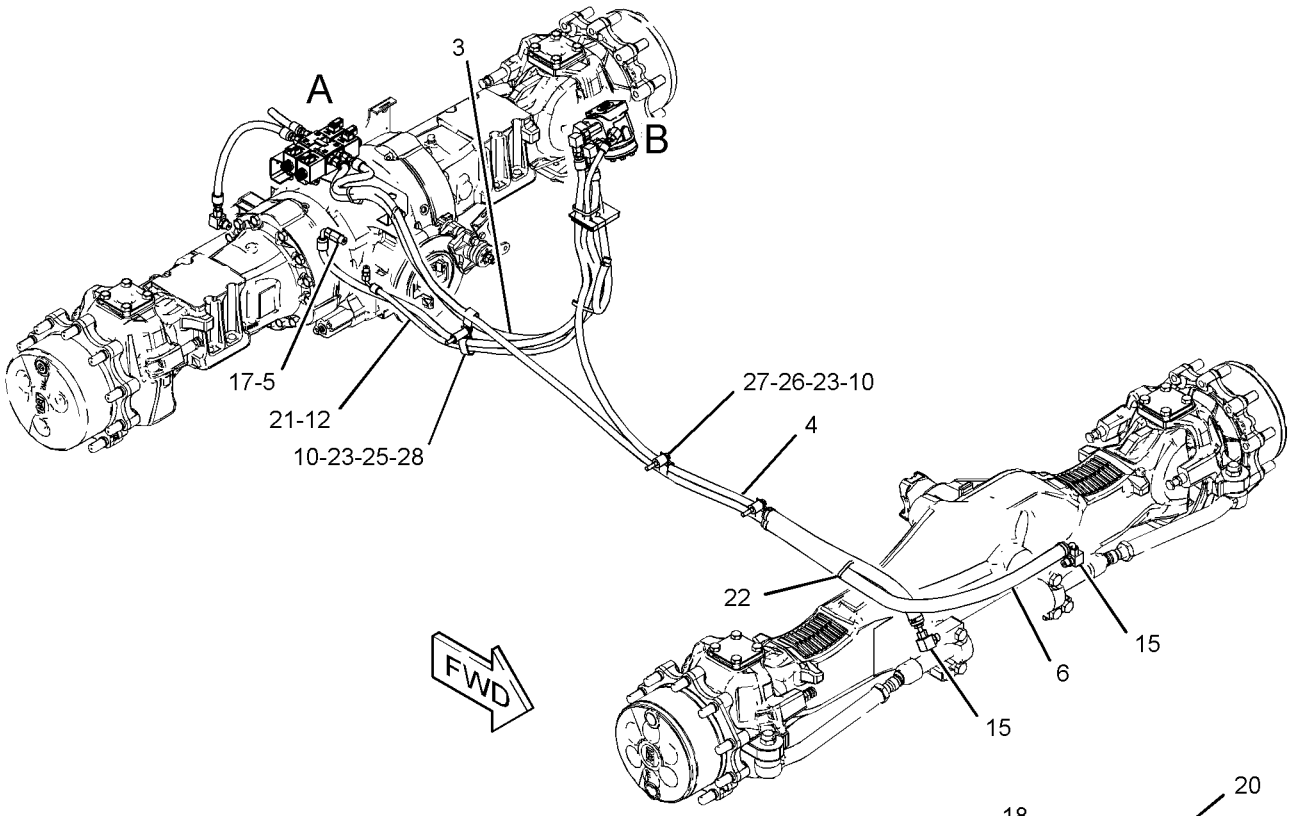

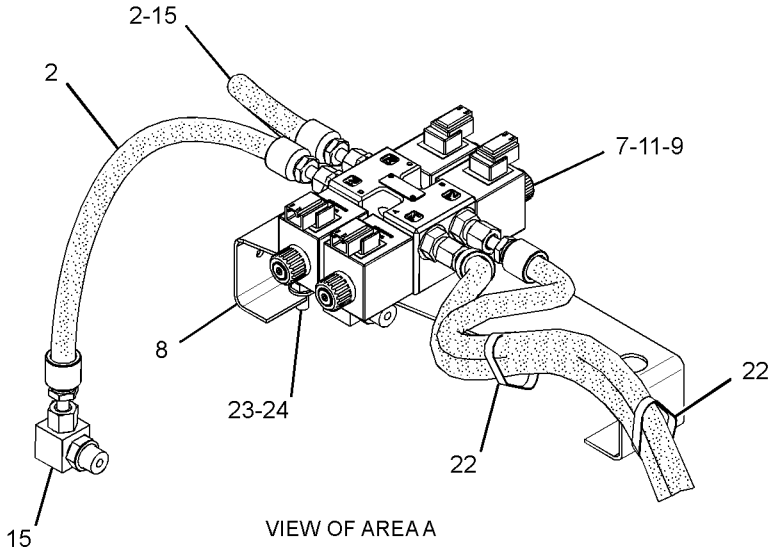

VIEW OF AREA A

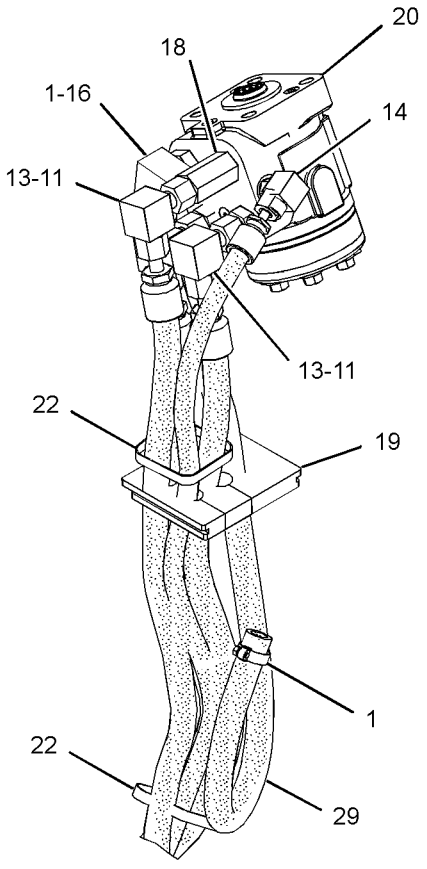

VIEW OF AREA B

GRAPHIC #1 **<END>** g01991694

310-6216 STEERING COLUMN GP–TILT

S/N: SJL1-UP
PART OF 317-5538 CONTROL GP-STEERING
AN ATTACHMENT

SMCS-4310, 4338 **i03642520**

NOTE	REF NO	GRAPHIC REF	PART NUMBER	QTY	PART NAME 1 2 3 4 5 6 (PRODUCT LEVEL)	SEE PAGE
M	1	1	**169-3261**	1	NUT (M18X1.5-THD)	
	2	1	**338-1508**	1	SPRING GP-GAS (STEERING COLUMN)	
		1	**146-6347**	2	RING-RETAINING	
	3	1	**254-9926**	1	KIT-TILT PEDAL	
					(INCLUDES BOLT, RING, NUT, SPRING & TILT LEVER)	
M	4	1	**5C-8312**	1	NUT (M4X0.7-THD)	
	5	1	**317-5544**	1	CAM	
M	6	1	**123-0708**	1	SCREW-HEX SOCKET (M4X0.7X30-MM)	

M-METRIC PART

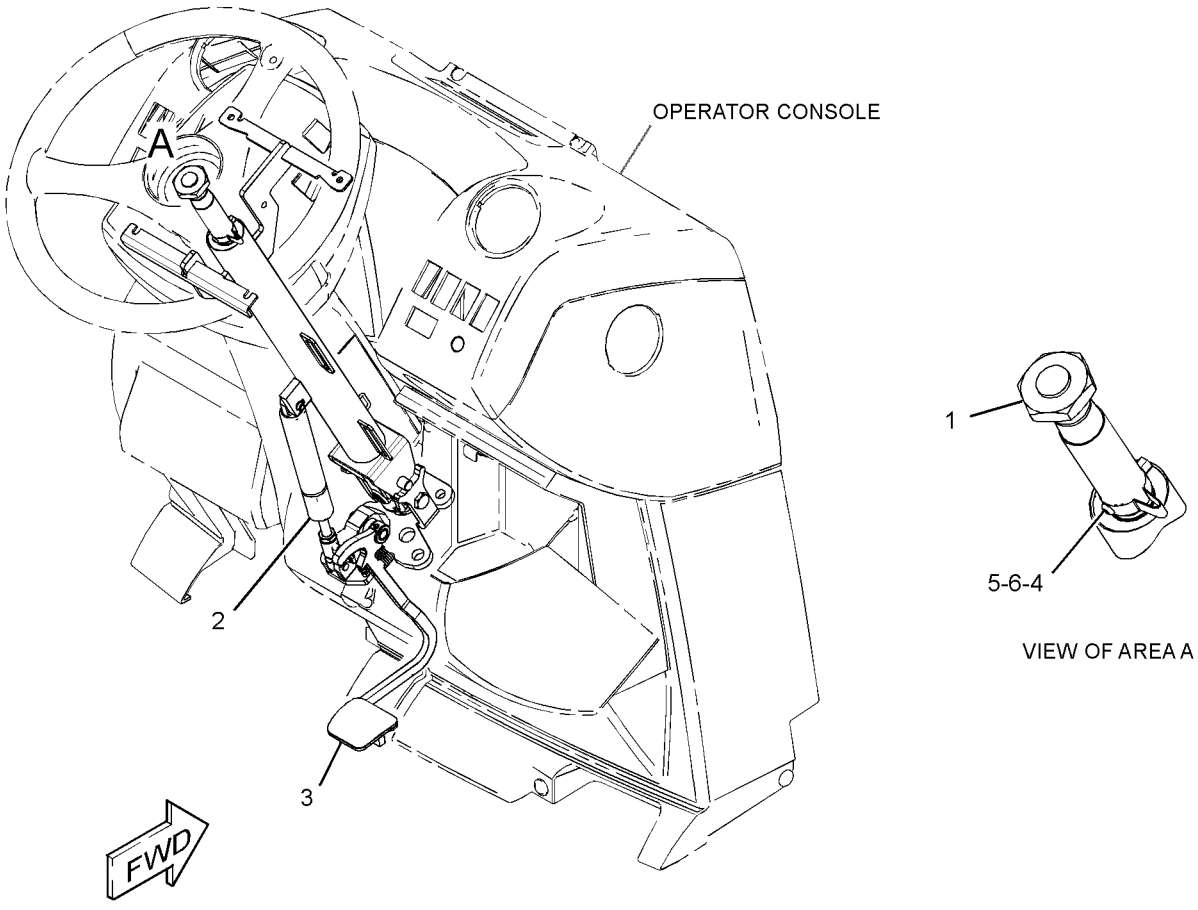

GRAPHIC #1 **<END>** g01960591

341-0694 BOX GP-BATTERY

S/N: SJL1-UP

PART OF 329-0296 CHASSIS AR

SMCS-7257 **i03642583**

NOTE	REF NO	GRAPHIC REF	PART NUMBER	QTY	PART NAME 1 2 3 4 5 6 (PRODUCT LEVEL)	SEE PAGE
	1	1	**8C-8522**	1	PAWL-LATCH	
	2	1	**124-2456**	1	FILM-INSTRUCTION (NO STEP)	
	3	1	**129-4741**	1	LATCH AS-T-BAR	
	4	1	**159-8033**	1	FILM-IDENTIFICATION (12-VOLT)	
	5	1	**223-7538**	1	STEP AS	
	6	1	**225-0312**	1	FILM-WARNING (JUMP START, READ OMM)	
	7	1	**289-3412**	1	FILM-COVER (PROTECT)	
	8	1	**321-2556**	1	COVER AS	
	9	1	**321-8253**	1	TREAD	
	10	1	**336-7612**	1	FILM-NOTICE (BATTERY CABLES DISCONNECT)	
	11	1	**338-9361**	1	BOX AS-BATTERY	
M	12	1	**5C-7261**	2	NUT (M8X1.25-THD)	
	13	1	**5P-4116**	10	WASHER-HARD (8.8X20.5X2-MM THK)	
M	14	1	**6V-7743**	2	LOCKNUT (M6X1-THD)	
M	15	1	**8T-4133**	2	NUT (M10X1.5-THD)	
M	16	1	**8T-4183**	4	BOLT (M12X1.75X40-MM)	
M	17	1	**8T-4189**	8	BOLT (M8X1.25X20-MM)	
	18	1	**8T-4205**	2	WASHER-HARD (7.2X14.5X2-MM THK)	
	19	1	**8T-4223**	5	WASHER-HARD (13.5X25.5X3-MM THK)	

M-METRIC PART

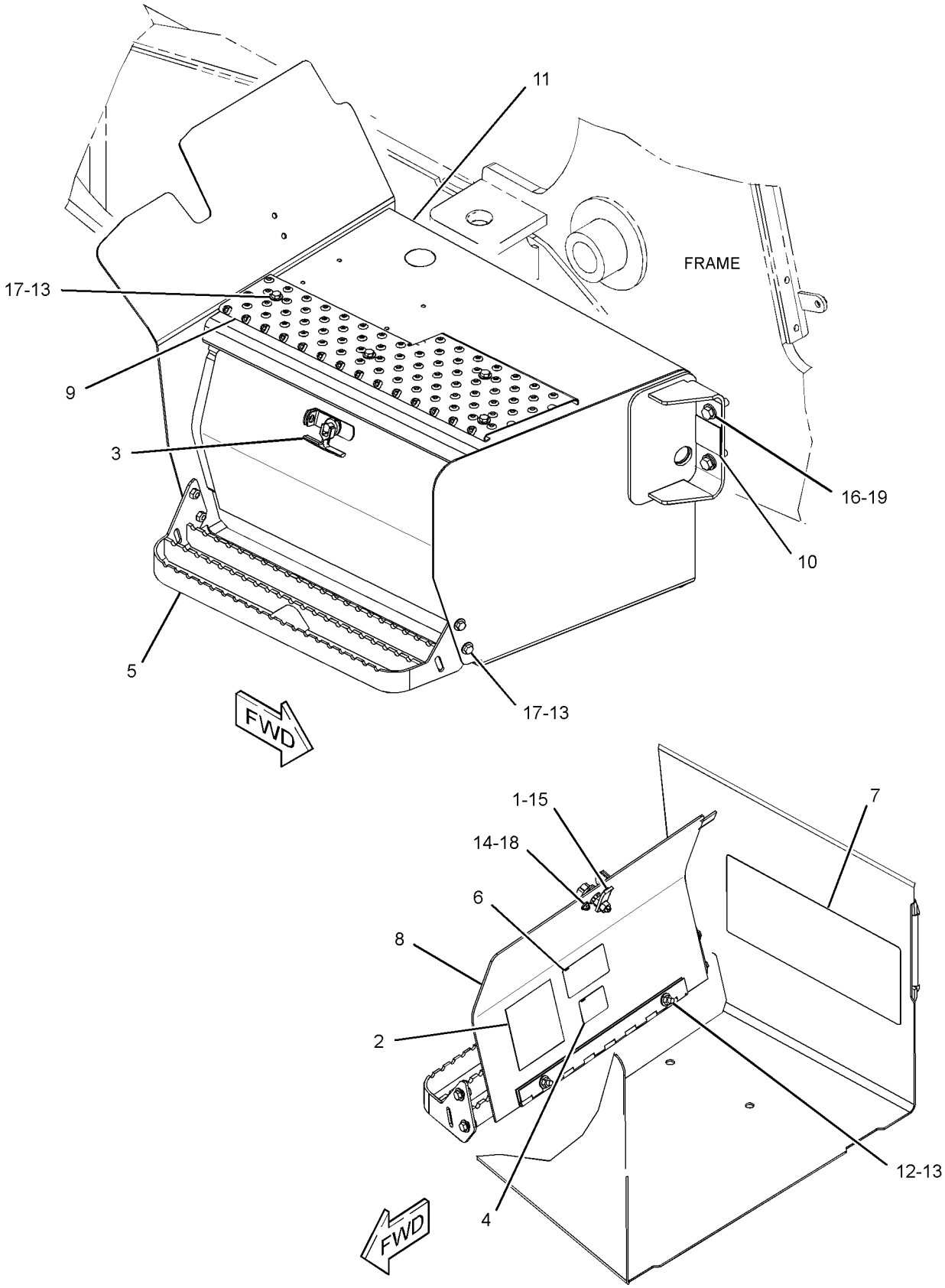

GRAPHIC #1

<END>

g01989393

211-3649 COUNTERWEIGHT GP

S/N: SJL1-UP
115-KG (250-LB)
AN ATTACHMENT

SMCS-7056 **i03709642**

NOTE	REF NO	GRAPHIC REF	PART NUMBER	QTY	PART NAME 1 2 3 4 5 6 (PRODUCT LEVEL)	SEE PAGE
	1	1	**214-3254**	1	COUNTERWEIGHT (115-KG (250-LB))	
M	2	1	**8C-3290**	2	BOLT (M24X3X150-MM)	
	3	1	**8T-4167**	2	WASHER-HARD (26X44X4-MM THK)	

M-METRIC PART

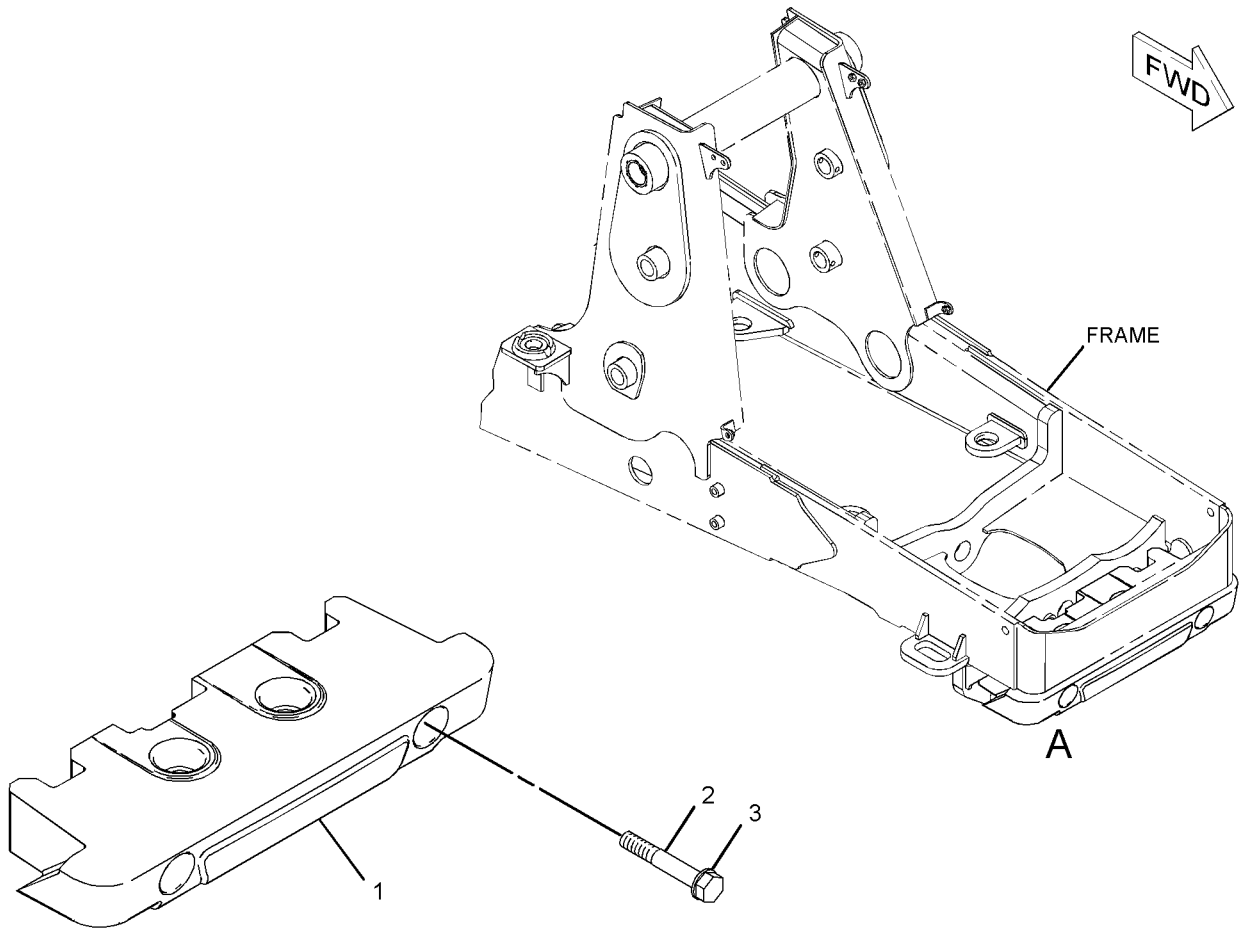

VIEW OF AREA A

GRAPHIC #1 **<END>** g01996882

249-9325 EXTENSION GP-FENDER

S/N: SJL1-UP

AN ATTACHMENT

SMCS-7252 **i02523405**

NOTE	REF NO	GRAPHIC REF	PART NUMBER	QTY	PART NAME 1 2 3 4 5 6 (PRODUCT LEVEL)	SEE PAGE
	1	1	**249-9326**	1	EXTENSION-FENDER (LH)	
	2	1	**249-9327**	1	EXTENSION-FENDER (RH)	
	3	1	**251-4889**	20	WASHER-HARD (7.2X14.5X2-MM THK)	
	4	1	**251-4890**	10	SCREW-MACHINE (M6X1X25-MM)	
	5	1	**251-4891**	10	LOCKNUT (M6X1-THD)	
	6	1	**261-9639**	2	SCREW-PAN HEAD (NO 12X0.5-IN)	
	7	1	**8T-4205**	2	WASHER-HARD (7.2X14.5X2-MM THK)	

249-9325 **EXTENSION GP-FENDER** *(contd.)* **i02523405**

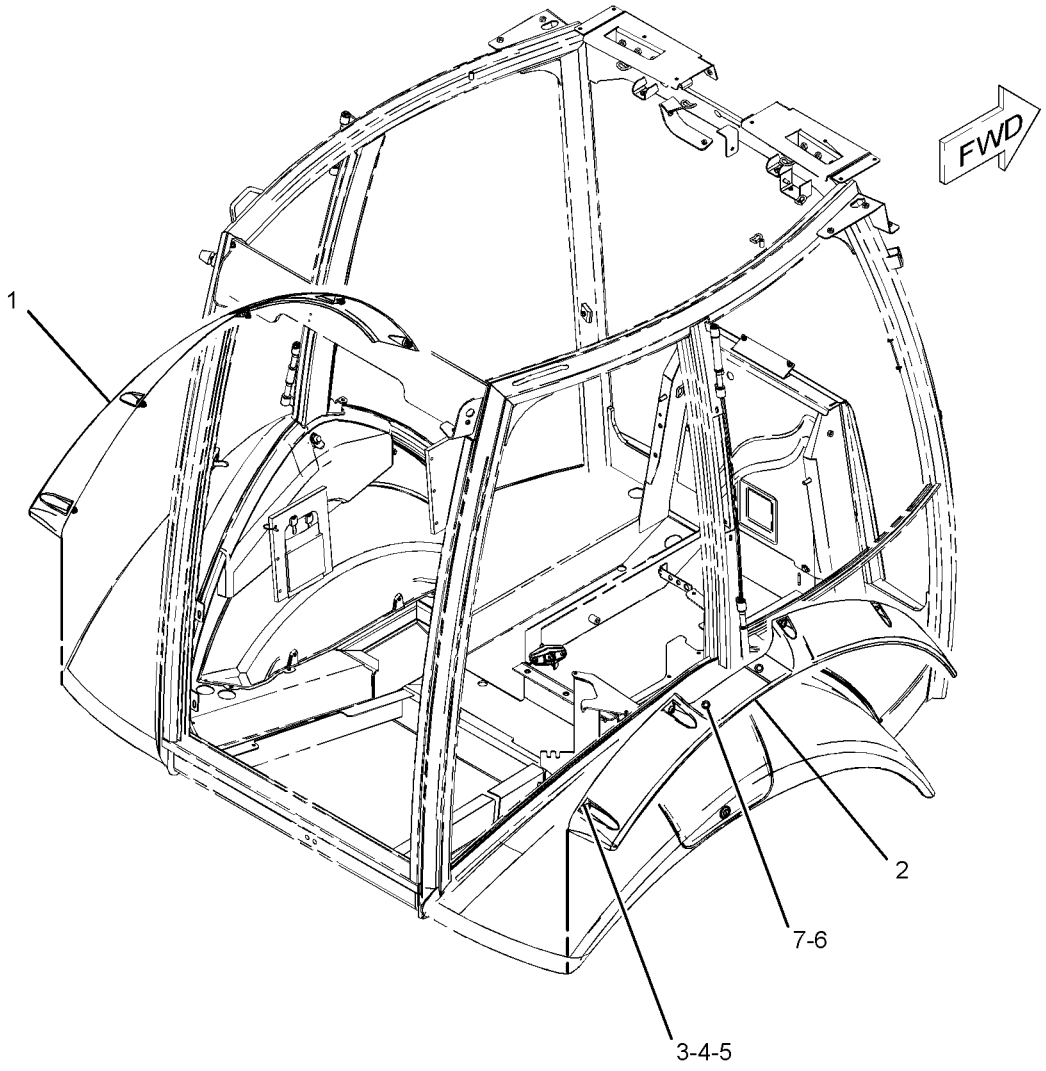

GRAPHIC #1 **<END>** g01283960

FRAME AND BODY

249-3837 FENDER GP-FRONT

S/N: SJL1-UP

AN ATTACHMENT

SMCS-7252 **i02419701**

NOTE	REF NO	GRAPHIC REF	PART NUMBER	QTY	PART NAME 1 2 3 4 5 6 (PRODUCT LEVEL)	SEE PAGE
	1	1	**249-3839**	1	BRACKET AS (LH)	
	2	1	**249-3843**	1	FENDER (LH)	
	3	1	**249-3844**	1	FENDER (RH)	
	4	1	**252-6791**	1	BRACKET AS (RH)	
M	5	1	**6V-7744**	8	LOCKNUT (M10X1.5-THD)	
	6	1	**8T-4121**	8	WASHER-HARD (11X21X2.5-MM THK)	
M	7	1	**8T-4132**	8	NUT (M16X2-THD)	
M	8	1	**8T-4136**	8	BOLT (M10X1.5X25-MM)	
	9	1	**8T-4222**	8	WASHER-PLATED (11X32X2.5-MM THK)	
	10	1	**9X-8257**	16	WASHER (17.5X30X3.5-MM THK)	

M-METRIC PART

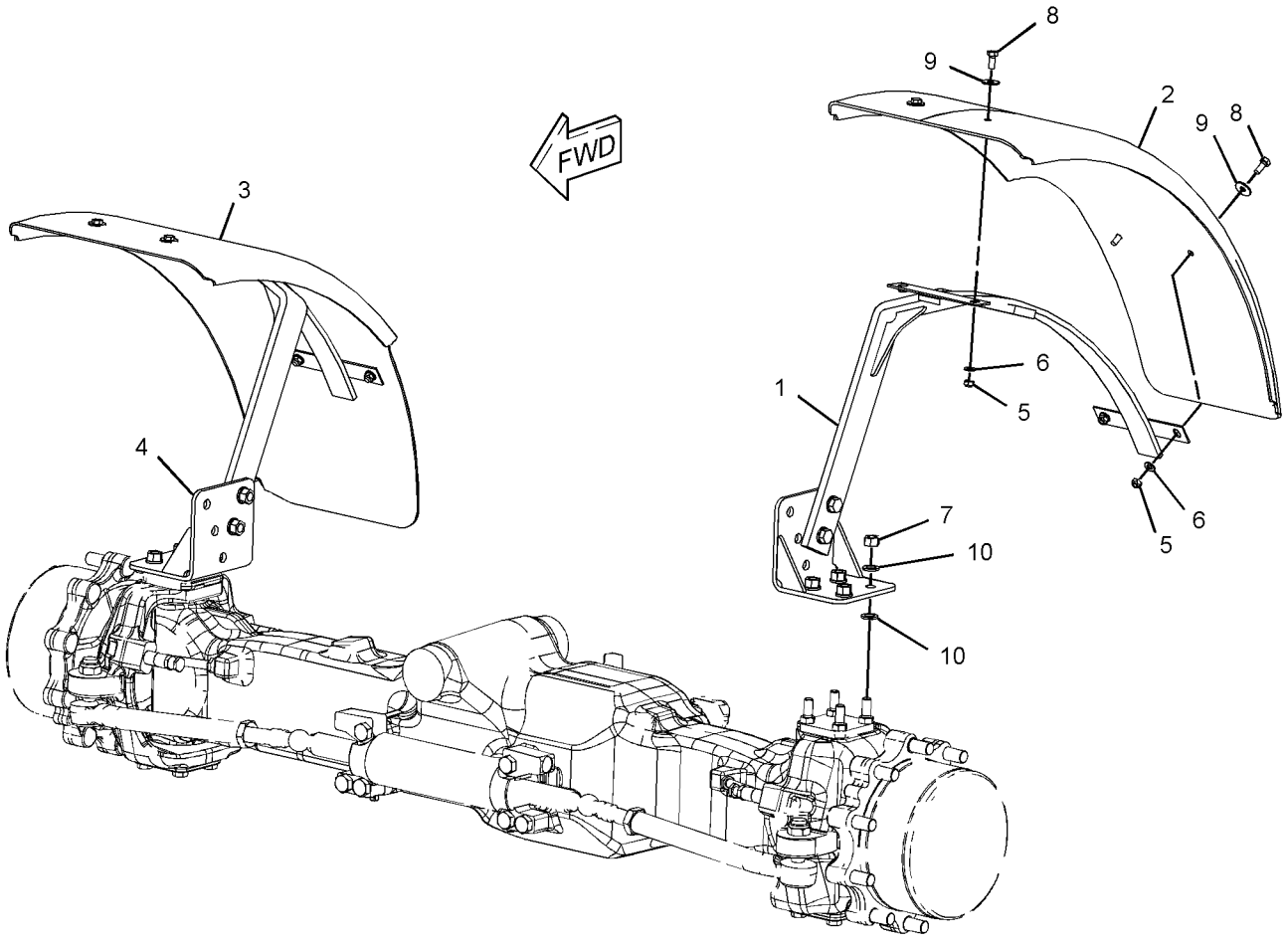

GRAPHIC #1 **<END>** g01211122

FRAME AND BODY

301-0989 FENDER GP-FRONT

S/N: SJL1-UP

AN ATTACHMENT

SMCS-7252 **i03710422**

NOTE	REF NO	GRAPHIC REF	PART NUMBER	QTY	PART NAME 1 2 3 4 5 6 (PRODUCT LEVEL)	SEE PAGE
	1	1	*249-3839*	1	BRACKET AS (LH)	
M		1	**8T-4132**	2	NUT (M16X2-THD)	
M		1	**8T-7338**	2	BOLT (M16X2X45-MM)	
		1	**9X-8257**	4	WASHER (17.5X30X3.5-MM THK)	
		1	**264-8136**	1	BRACKET AS	
		1	**264-8138**	1	BRACKET AS	
	2	1	**249-3843**	1	FENDER (LH)	
	3	1	**249-3844**	1	FENDER (RH)	
	4	1	*252-6791*	1	BRACKET AS (RH)	
M		1	**8T-4132**	2	NUT (M16X2-THD)	
M		1	**8T-7338**	2	BOLT (M16X2X45-MM)	
		1	**9X-8257**	4	WASHER (17.5X30X3.5-MM THK)	
		1	**264-8136**	1	BRACKET AS	
		1	**264-8137**	1	BRACKET AS	
M	5	1	**6V-7744**	8	LOCKNUT (M10X1.5-THD)	
	6	1	**8T-4121**	8	WASHER-HARD (11X21X2.5-MM THK)	
M	7	1	**8T-4132**	8	NUT (M16X2-THD)	
M	8	1	**8T-4136**	8	BOLT (M10X1.5X25-MM)	
	9	1	**8T-4222**	8	WASHER-PLATED (11X32X2.5-MM THK)	
	10	1	**9X-8257**	16	WASHER (17.5X30X3.5-MM THK)	

M-METRIC PART

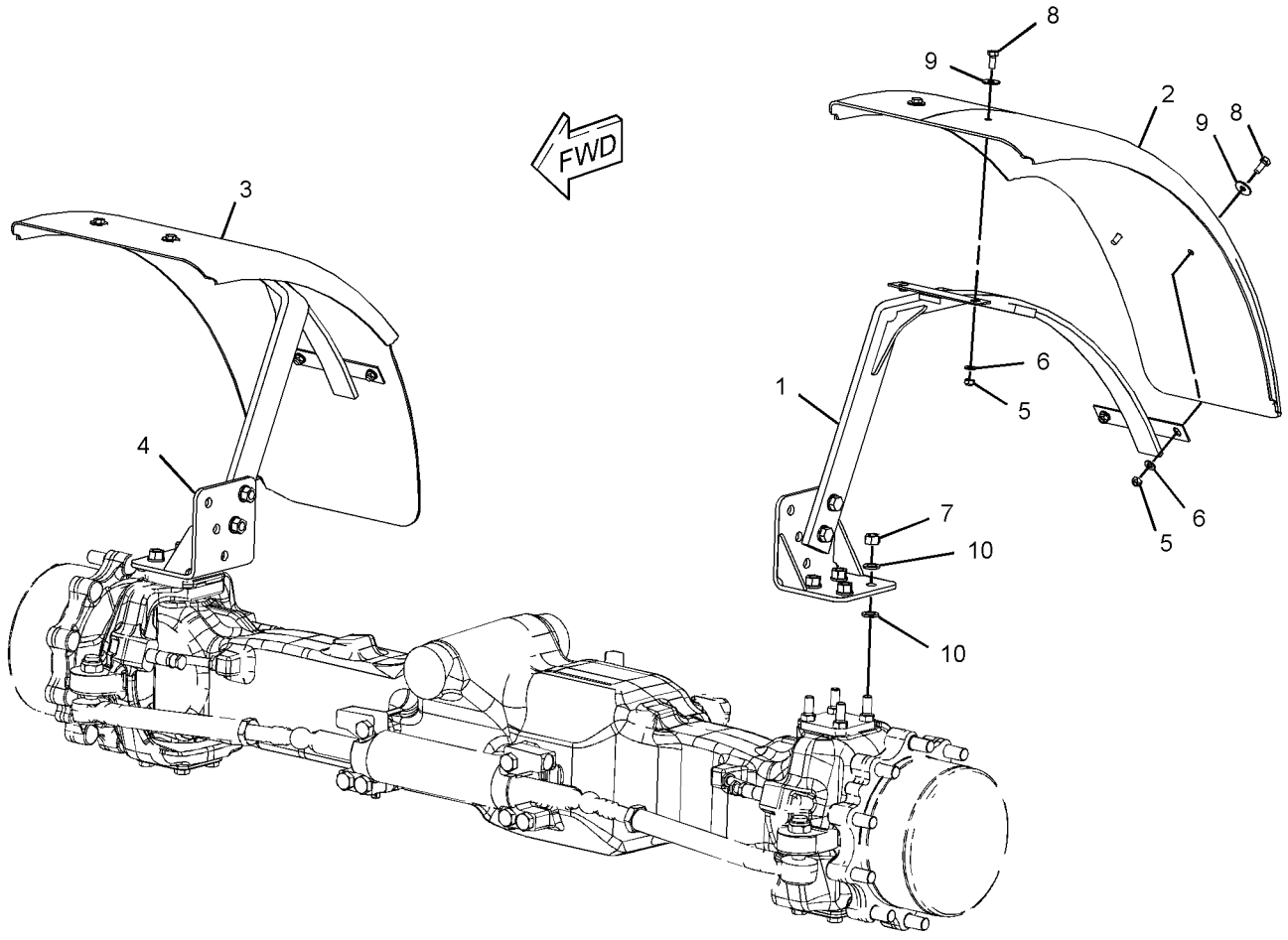

GRAPHIC #1 **<END>** g01211122

FRAME AND BODY

211-3782 FENDER GP-REAR

S/N: SJL1-UP

PART OF 335-3052, 335-3053, 335-3055 CAB AR, 335-3054 CAB AR-ENCLOSED ROPS

AN ATTACHMENT

SMCS-7252 **i03530382**

NOTE	REF NO	GRAPHIC REF	PART NUMBER	QTY	PART NAME 1 2 3 4 5 6 (PRODUCT LEVEL)	SEE PAGE
M	1	1	**8T-4908**	4	BOLT (M8X1.25X25-MM)	
E	2	1	**244-3113**		SEAL (211-CM EACH)	
	3	1	**116-5763**	1	CLIP-SPRING	
M	4	1	**193-9055**	2	SCREW-HEX FLANGE (M4X1.79X17-MM)	
	6	1	**213-1889**	1	PLATE	
J	7	1	**226-0291**	1	LOCK AS	
	8	1	**227-5556**	1	PLATE	
	9	1	**244-3111**	1	FENDER-REAR (LH)	
	11	1	**247-5557**	1	GUARD	
M	12	1	**127-2170**	1	SCREW-TRUSS HEAD (M8X1.25X20-MM)	
	13	1	**156-0283**	22	WASHER-HARD (8.4X35X2.5-MM THK)	
M	14	1	**6V-9189**	4	LOCKNUT (M8X1.25-THD)	
M	15	1	**8T-5093**	14	BOLT-LOCKING (M8X1.25X25-MM)	
E	16	1	**220-0738**		SEAL (118-CM)	
	18	1	*289-6410*	1	FENDER GP (RH)	
		1	**213-1887**	1	COVER-FENDER	
		1	**244-3112**	1	FENDER-REAR (RH)	
D	19	1	**5P-5927**		SEAL (0.8-M)	

D-ORDER BY THE METER
E-ORDER BY THE CENTIMETER
J-REQUIRES CORPORATE KEY
M-METRIC PART

211-3782 **FENDER GP-REAR** *(contd.)* **i03530382**

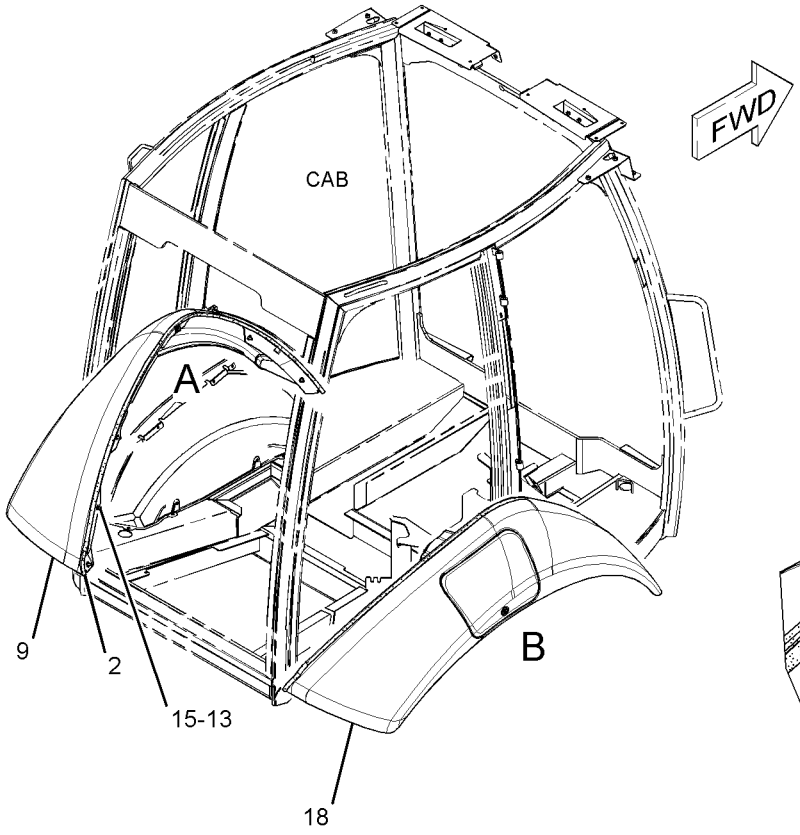

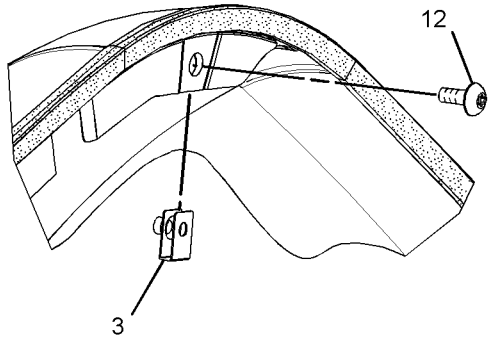

VIEW OF AREA A
(EXPLODED)

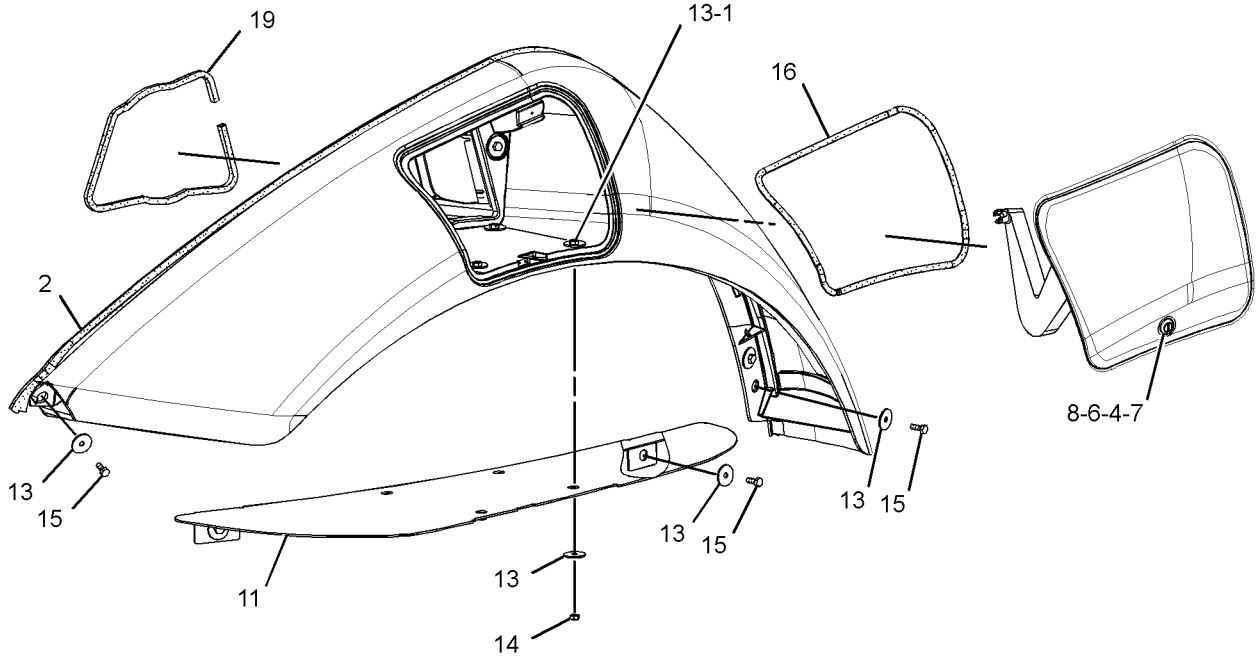

VIEW OF AREA B
(EXPLODED)

GRAPHIC #1 **<END>** g01367108

FRAME AND BODY

206-1831 FLOORPLATE GP

S/N: SJL1-UP

PART OF 335-3052, 335-3053, 335-3055 CAB AR, 335-3054 CAB AR-ENCLOSED ROPS AN ATTACHMENT

SMCS-7265 **i02752079**

NOTE	REF NO	GRAPHIC REF	PART NUMBER	QTY	PART NAME 1 2 3 4 5 6 (PRODUCT LEVEL)	SEE PAGE
	1	1	**289-9871**	1	PLATE AS	
	2	1	**269-3269**	1	PLATE AS	
M	3	1	**9X-2043**	42	SCREW-TRUSS HEAD (M6X1X14-MM)	
	4	1	**289-9874**	1	PLATE AS	
	5	1	**206-1850**	1	PLATE AS	
	6	1	**232-2865**	1	PLATE AS	
	7	1	**289-9873**	1	PLATE AS	
	8	1	**232-2869**	1	PLATE AS	
	9	1	**283-8563**	1	PLATE AS	
	10	1	**9X-2038**	38	WASHER (7X19X2-MM THK)	
	11	1	**232-2870**	1	PLATE AS	
	12	1	**206-1838**	1	PLATE	

M-METRIC PART

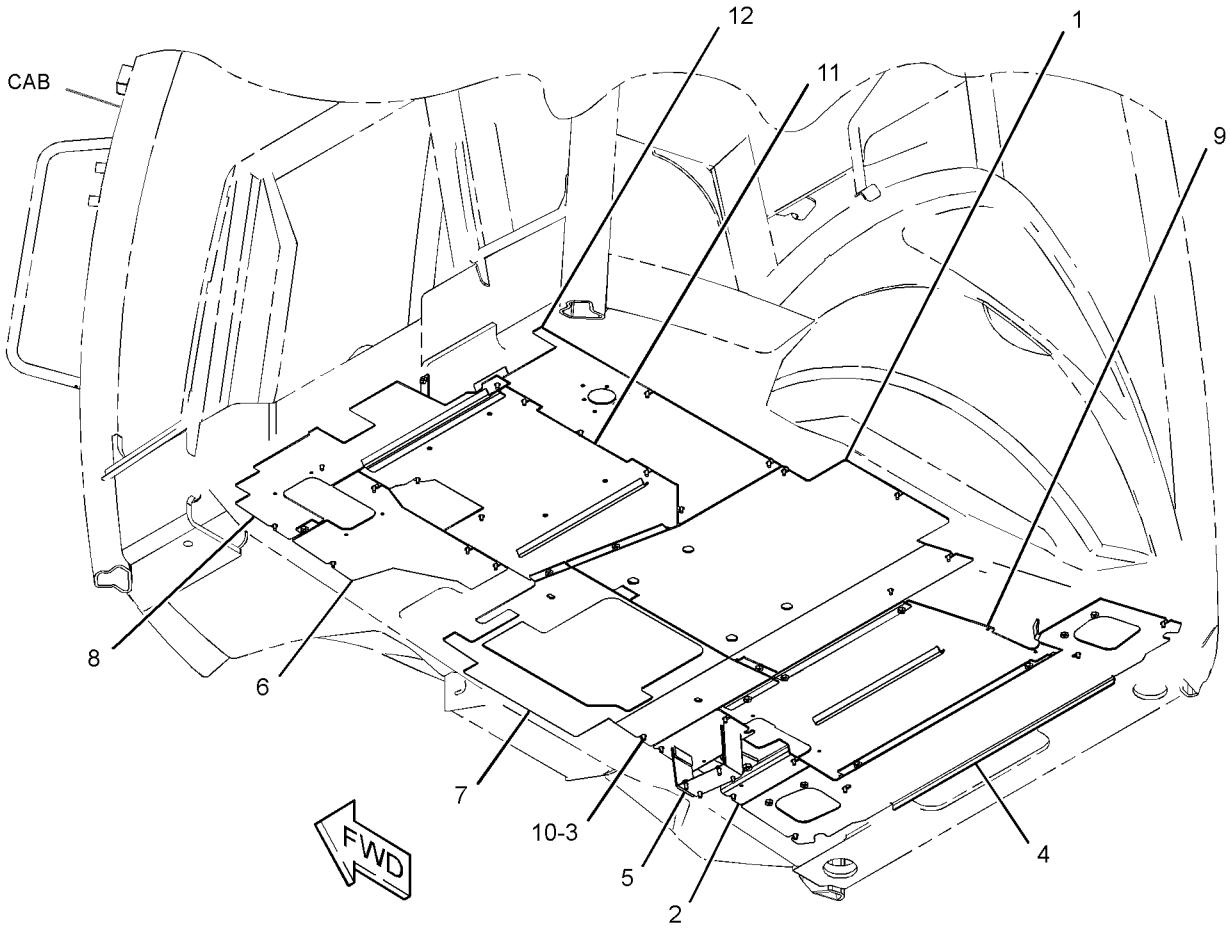

GRAPHIC #1 **<END>** g01380541

FRAME AND BODY

327-0114 FRAME AR-LOADER

S/N: SJL1-UP

AN ATTACHMENT

SMCS-7054 **i03694521**

NOTE	PART NUMBER	QTY	PART NAME 1 2 3 4 5 6 (PRODUCT LEVEL)	SEE PAGE
Y	**320-5938**	2	CYLINDER GP-STABILIZER	334
Y	*326-0044*	1	FRAME GP-LOADER	304
Y	*326-1801*	1	LINES GP-STABILIZER	398
Y	*328-5964*	1	STABILIZER GP-BACKHOE	460

Y-SEPARATE ILLUSTRATION

<END>

FRAME AND BODY

326-0044 FRAME GP-LOADER

S/N: SJL1-UP
PART OF 327-0114 FRAME AR-LOADER
AN ATTACHMENT

SMCS-7054 **i03694524**

NOTE	REF NO	GRAPHIC REF	PART NUMBER	QTY	PART NAME 1 2 3 4 5 6 (PRODUCT LEVEL)	SEE PAGE
	1	1	**159-3590**	1	FILM-IDENTIFICATION (WATER SEPARATOR)	
B	2	1	**193-1681**	8	PAD	
B	3	1	**193-1683**	2	PAD	
B	4	1	**193-1684**	2	PAD	
M	5	1	**246-7854**	22	NUT-SPECIAL (M10X1.5-THD)	
	6	1	**248-5245**	2	FILM-INFORMATION (LIFT EYE, TIE-DOWN LOCATION)	
	7	1	**317-7120**	2	COVER	
	8	1	**326-0043**	1	FRAME AS	
	9	1	**330-0798**	2	TUBE AS	
	10	1	**331-2489**	4	WEAR PAD	
	11	1	**331-4365**	2	COVER	
	12	1	**333-7265**	2	GUARD AS	
	13	1	**340-9290**	4	PLATE GP-COVER	
	14	1	**5P-4116**	6	WASHER-HARD (8.8X20.5X2-MM THK)	
M	15	1	**8T-4196**	4	BOLT (M10X1.5X35-MM)	
M	16	1	**8T-4197**	2	BOLT (M8X1.25X40-MM)	
	17	1	**8T-4222**	4	WASHER-PLATED (11X32X2.5-MM THK)	
M	18	1	**8T-7338**	8	BOLT (M16X2X45-MM)	
M	19	1	**8T-7547**	4	BOLT (M8X1.25X30-MM)	
	20	1	**9X-8257**	8	WASHER (17.5X30X3.5-MM THK)	

B-USE AS REQUIRED
M-METRIC PART

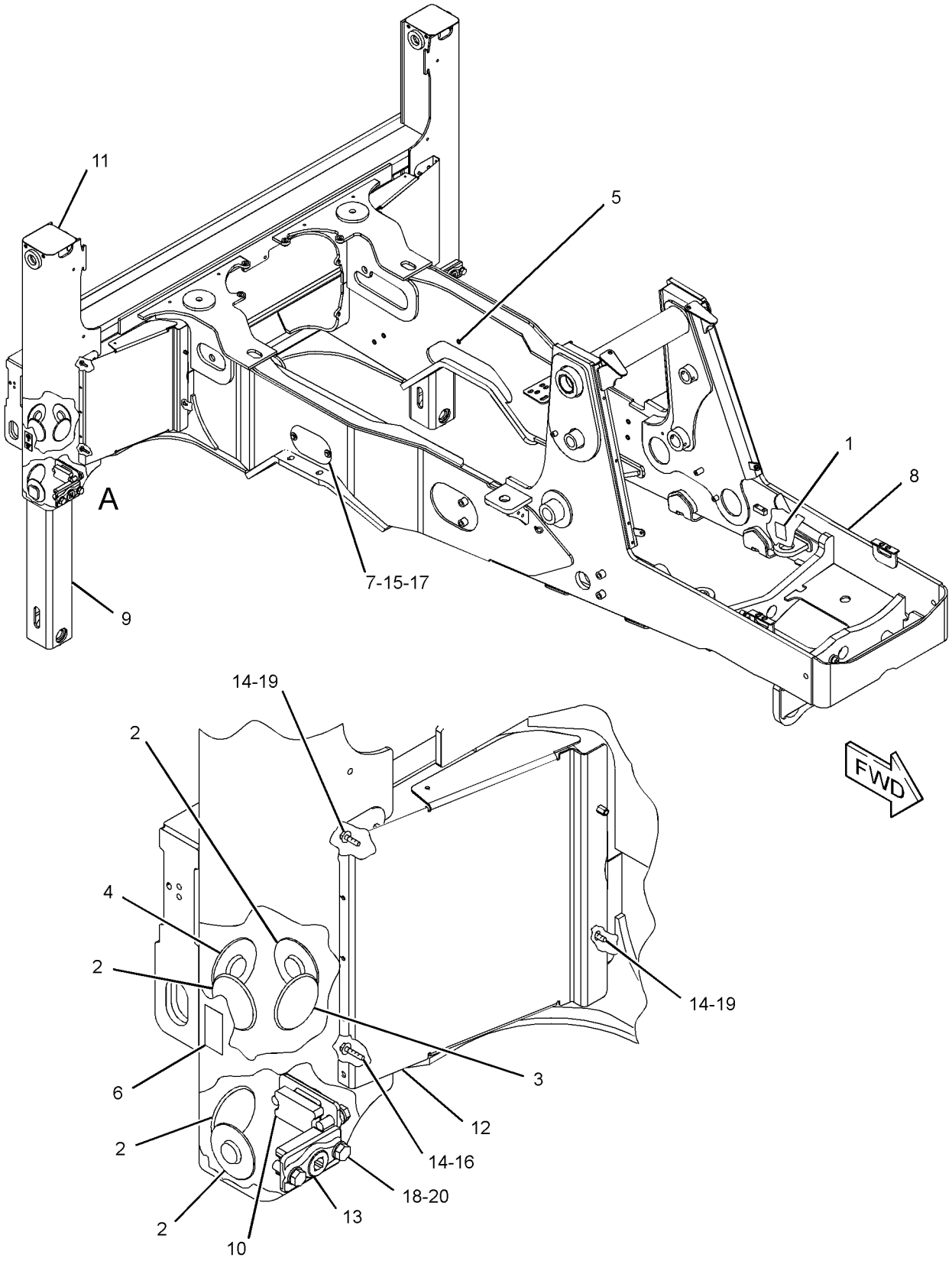

VIEW OF AREA A

GRAPHIC #1 **<END>** g01994453

FRAME AND BODY

320-5933 FRAME GP-SLIDING

S/N: SJL1-UP

PART OF 329-0296 CHASSIS AR

SMCS-5804, 6508 **i03656613**

NOTE	REF NO	GRAPHIC REF	PART NUMBER	QTY	PART NAME 1 2 3 4 5 6 (PRODUCT LEVEL)	SEE PAGE
	1	1	**9R-0481**	2	WASHER (71X110X4-MM THK)	
	2	1	**161-7145**	4	SEAL-PISTON	
Y	3	1	**269-0381**	1	CYLINDER GP-HYDRAULIC (RH)	329
Y	4	1	**279-5556**	1	CYLINDER GP-HYDRAULIC (LH)	330
	5	1	**316-4811**	1	WASHER (66.5X120X8-MM THK)	
	6	1	**320-2948**	4	CAP-CYLINDER END	
	7	1	**320-2949**	2	BAR	
	8	1	**320-3619**	4	PISTON	
	9	1	**320-3620**	2	PAD	
	10	1	**322-3768**	1	CAP & BEARING AS	
	10A	1	**9R-4110**	2	BEARING-SLEEVE	
	11	1	**322-3770**	1	FRAME AS-SLIDING	
	11A	1	**331-1521**	1	BEARING	
	11B	1	**331-1522**	1	BEARING	
	11C	1	**9R-4110**	2	BEARING-SLEEVE	
	12	1	**340-6272**	8	RING-WEAR	
	13	1	**341-4712**	2	BAR	
M	14	1	**112-1533**	12	BOLT (M24X3X160-MM)	
	15	1	**3B-8488**	2	FITTING-GREASE	
	16	1	**3B-8489**	2	FITTING-GREASE	
	17	1	**3P-0439**	4	SEAL-O-RING	
	18	1	**7K-9208**	4	SEAL-LIP TYPE	
	19	1	**8C-3347**	2	PIN-ROLL	
	20	1	**8T-1482**	6	WASHER-HARD (26X50X8-MM THK)	
	21	1	**8T-4121**	4	WASHER-HARD (11X21X2.5-MM THK)	
	22	1	**8T-4167**	6	WASHER-HARD (26X44X4-MM THK)	
M	23	1	**8T-4187**	4	BOLT (M20X2.5X80-MM)	
M	24	1	**8T-4648**	16	BOLT (M12X1.75X70-MM)	
M	25	1	**8T-5035**	4	BOLT (M10X1.5X65-MM)	
	26	1	**8T-5439**	4	WASHER-HARD (21.5X45X6-MM THK)	
	27	1	**8T-7971**	16	WASHER-HARD (13.5X25.5X5-MM THK)	
	28	1	**9M-4335**	2	DOWEL-REACTION	

M-METRIC PART
Y-SEPARATE ILLUSTRATION

320-5933 **FRAME GP-SLIDING** *(contd.)* **i03656613**

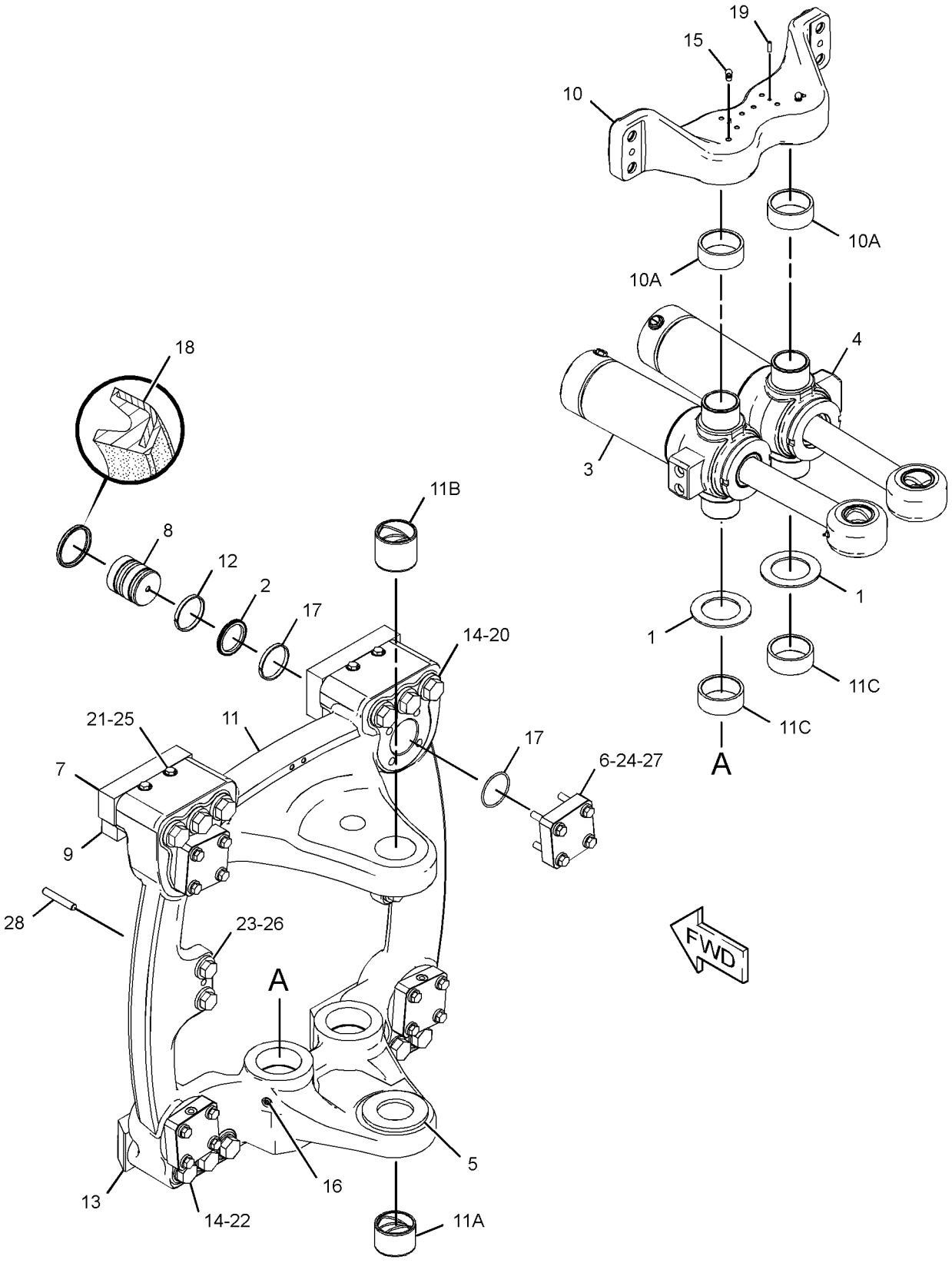

GRAPHIC #1 **<END>** g01988755

322-3764 FRAME GP-SWING

S/N: SJL1-UP

PART OF 329-0296 CHASSIS AR

SMCS-6506 **i03642530**

NOTE	REF NO	GRAPHIC REF	PART NUMBER	QTY	PART NAME 1 2 3 4 5 6 (PRODUCT LEVEL)	SEE PAGE
	1	1	**2U-9234**	1	BUSHING	
	2	1	**176-0626**	2	WASHER (67.5X120X3-MM THK)	
	3	1	**9R-8291**	2	SPACER (66X125X1-MM THK)	
	4	1	**310-0851**	2	PIN	
	5	1	**315-5384**	1	FRAME AS-SWING	
	5A	1	**213-6702**	4	BEARING-SLEEVE	
	5B	1	**331-1521**	2	BEARING	
	6	1	**316-6951**	1	PIN AS	
	7	1	**316-6952**	1	PIN AS	
	8	1	**326-0089**	1	PIN AS	
	9	1	**095-0929**	1	RING-RETAINING	
	10	1	**270-5290**	1	BOLT-SOCKET HEAD (M12X1.75X300-MM)	
	11	1	**3B-8489**	2	FITTING-GREASE	
	12	1	**5P-1076**	2	WASHER-HARD (13.5X30X4-MM THK)	
M	13	1	**6V-7687**	1	LOCKNUT (M12X1.75-THD)	
	14	1	**7X-0632**	2	WASHER-HARD (11X36X6-MM THK)	
M	15	1	**8T-4136**	1	BOLT (M10X1.5X25-MM)	
M	16	1	**8T-4196**	1	BOLT (M10X1.5X35-MM)	

M-METRIC PART

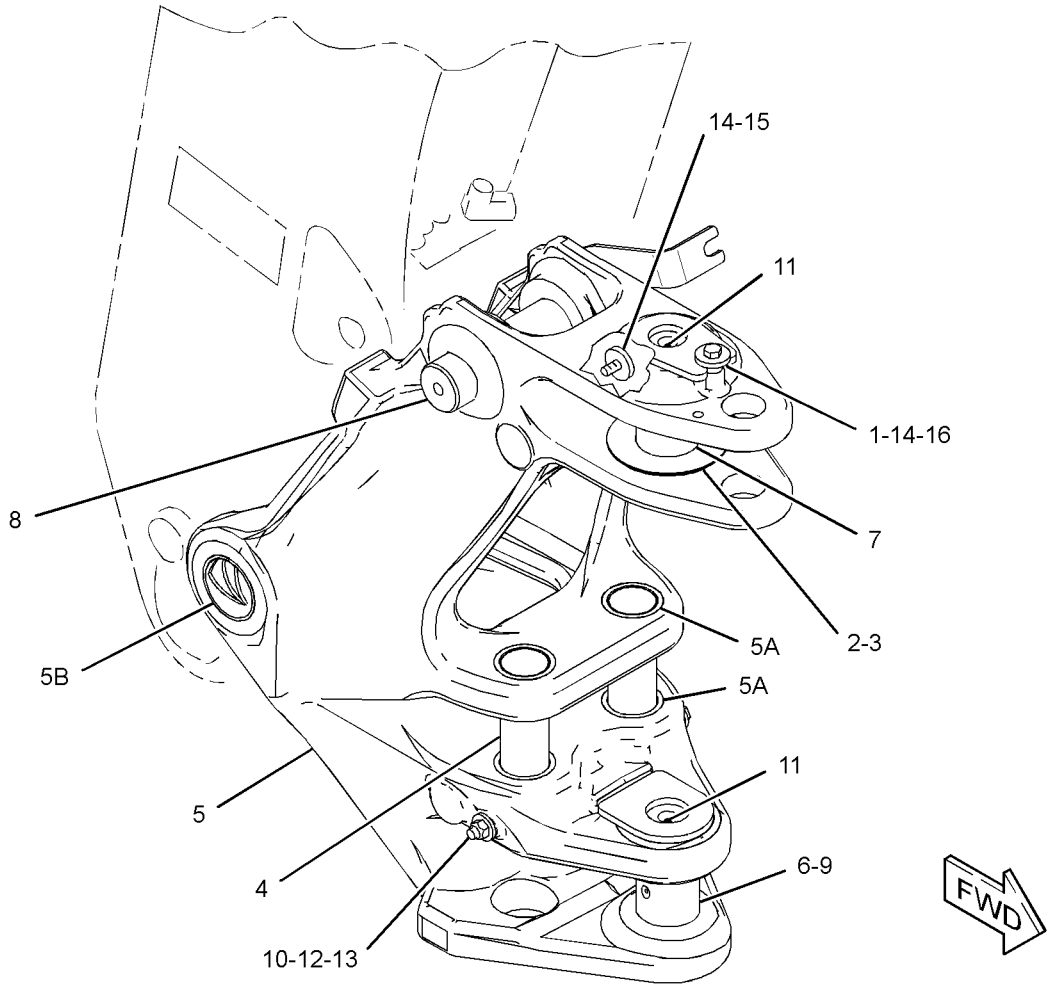

GRAPHIC #1 **<END>** g01996130

231-8945 GUARD GP-DRIVE SHAFT

S/N: SJL1-UP

AN ATTACHMENT

SMCS-7153 **i02532635**

NOTE	REF NO	GRAPHIC REF	PART NUMBER	QTY	PART NAME 1 2 3 4 5 6 (PRODUCT LEVEL)	SEE PAGE
	1	1	**231-8946**	1	GUARD AS	
M	2	1	**290-3347**	4	BOLT-CARRIAGE (M16X2X40-MM)	
	3	1	**8T-4122**	4	WASHER-HARD (17X32X3.5-MM THK)	
M	4	1	**8T-4132**	4	NUT (M16X2-THD)	

M-METRIC PART

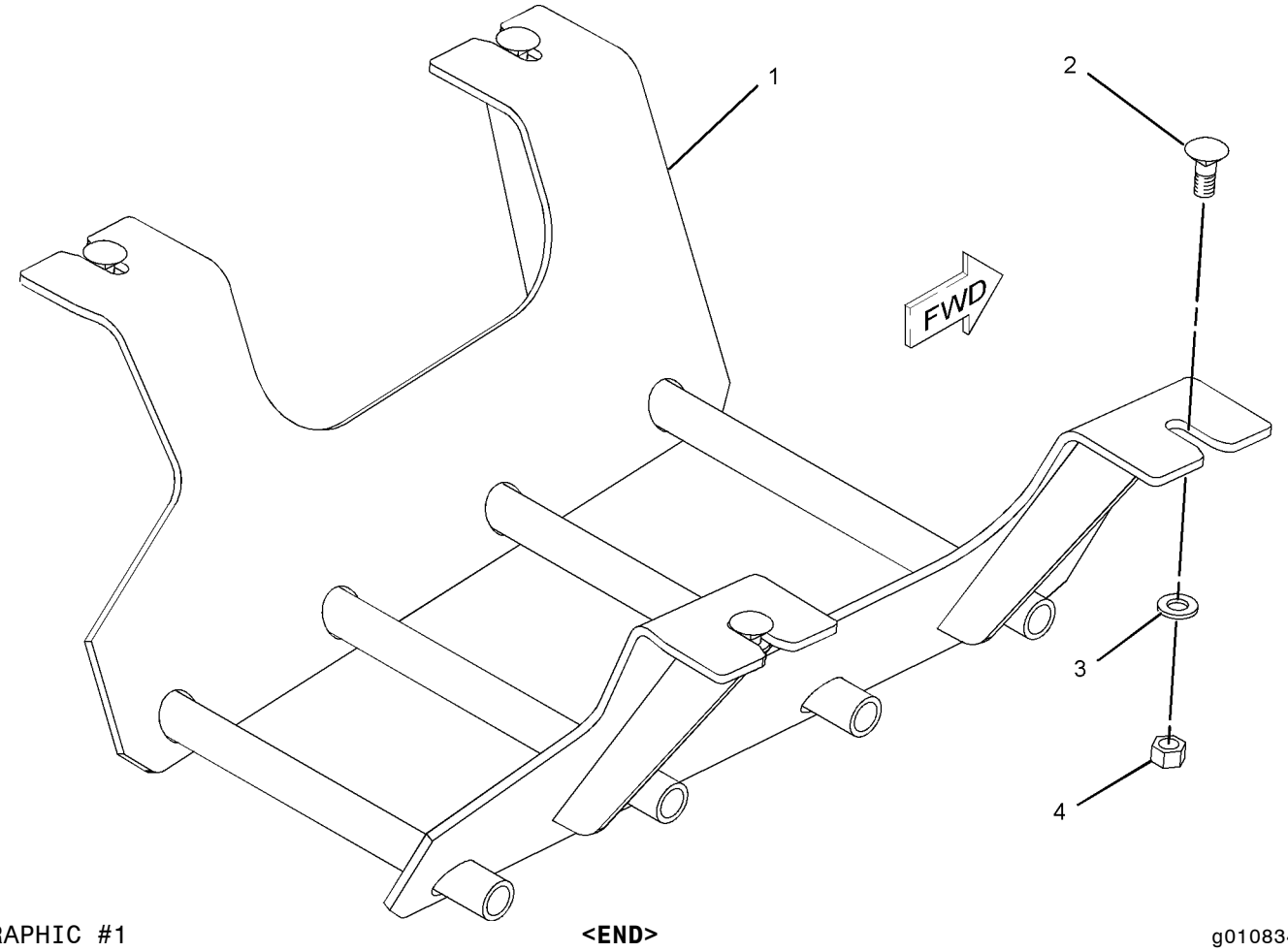

GRAPHIC #1 **<END>** g01083443

FRAME AND BODY

338-1421 GUARD GP-LIGHTING

S/N: SJL1-UP

AN ATTACHMENT

SMCS-715L **i03620562**

NOTE	REF NO	GRAPHIC REF	PART NUMBER	QTY	PART NAME 1 2 3 4 5 6 (PRODUCT LEVEL)	SEE PAGE
	1	1	**337-8655**	2	GUARD	
M	2	1	**8T-4200**	2	BOLT (M8X1.25X16-MM)	
	3	1	**8T-4224**	4	WASHER-HARD (8.8X16X2-MM THK)	
M	4	1	**8T-4908**	2	BOLT (M8X1.25X25-MM)	

M-METRIC PART

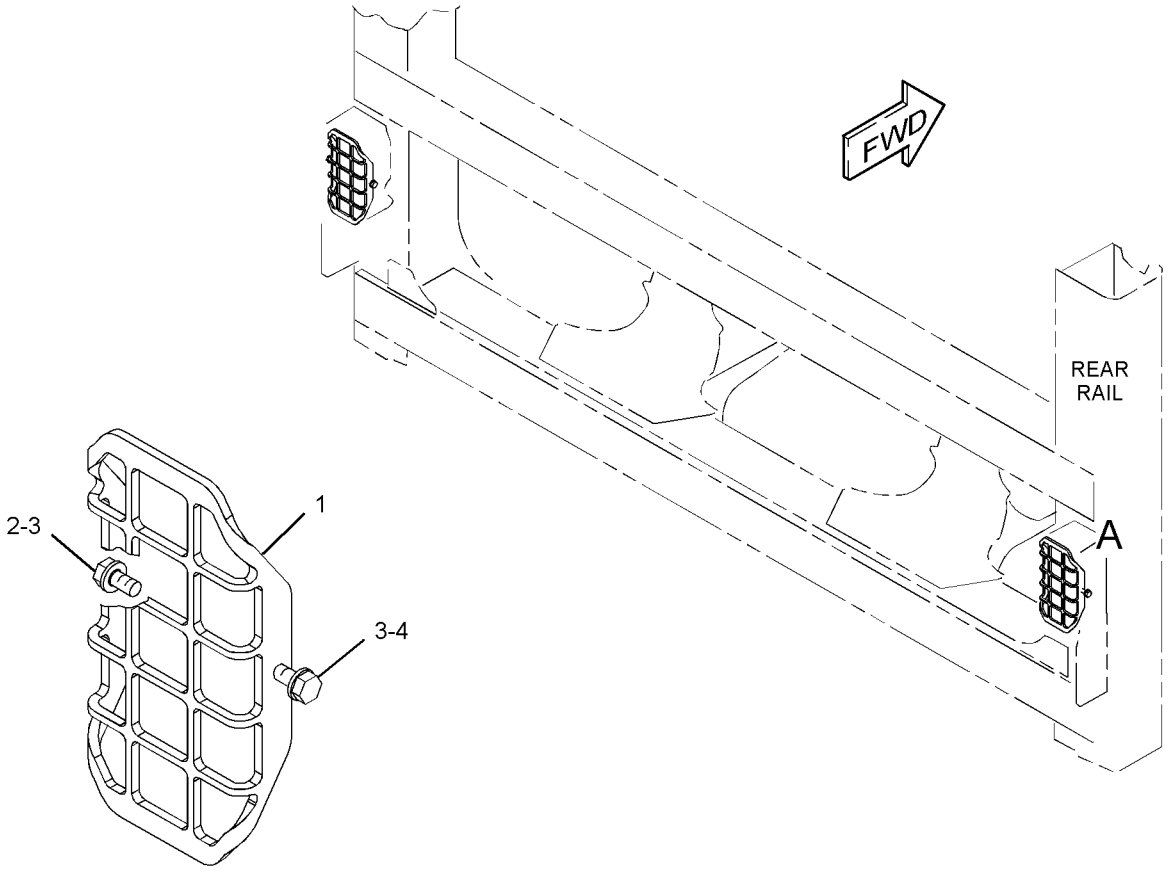

VIEW OF AREA A

GRAPHIC #1 **<END>** g01994458

FRAME AND BODY

256-0324 GUARD GP-RADIATOR

S/N: SJL1-UP
AN ATTACHMENT

SMCS-7155 **i02162026**

NOTE	REF NO	GRAPHIC REF	PART NUMBER	QTY	PART NAME 1 2 3 4 5 6 (PRODUCT LEVEL)	SEE PAGE
	1	1	**256-0323**	1	COVER	
M	2	1	**7X-2572**	2	BOLT (M24X3X35-MM)	
	3	1	**8T-4167**	2	WASHER-HARD (26X44X4-MM THK)	

M-METRIC PART

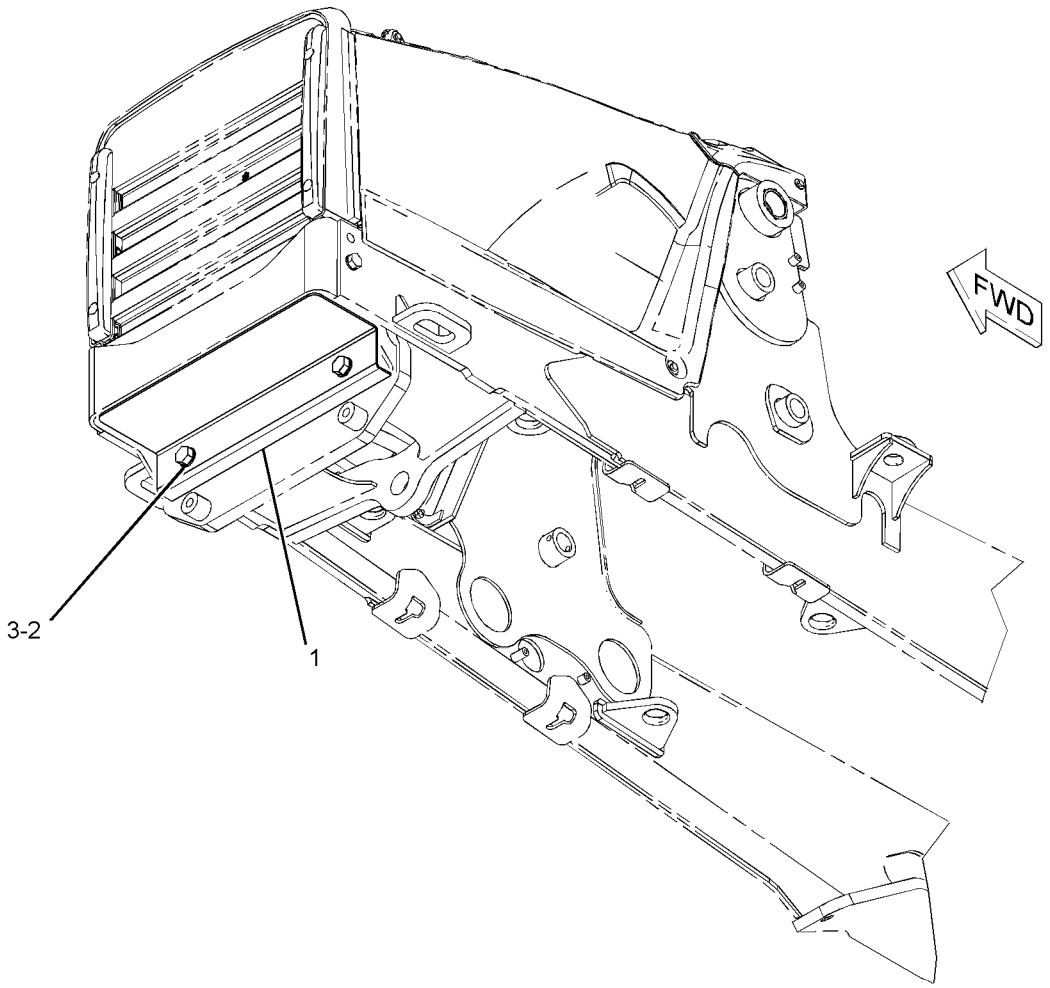

GRAPHIC #1 **<END>** g01096781

FRAME AND BODY

311-8061 HOOD & GUARD GP

S/N: SJL1-UP

PART OF 329-0296 CHASSIS AR

SMCS-7150, 7170, 7251, 7263 **i03035281**

NOTE	REF NO	GRAPHIC REF	PART NUMBER	QTY	PART NAME 1 2 3 4 5 6 (PRODUCT LEVEL)	SEE PAGE
	1	1	**9X-7114**	4	SPACER (8.5X10.15X5.6-MM THK)	
	2	1	**231-9364**	1	ENCLOSURE AS (RH)	
		1	**251-6435**	1	ENCLOSURE (RH)	
		1	**275-0002**	1	INSULATION	
	3	1	*251-6432*	1	COWLING AS	
		1	**251-6433**	1	COWLING	
		1	**267-1273**	1	FILM-STRIPE (YELLOW)	
	4	1	**251-6434**	1	ENCLOSURE (LH)	
	5	1	**256-9689**	2	BUMPER AS	
	6	1	**256-9692**	2	BAR	
	7	1	**277-9998**	2	BRACKET AS	
Y	8	1	*311-8055*	1	HOOD GP-ENGINE	316
	9	1	**325-1969**	1	BRACE	
	10	1	**325-4994**	1	GUARD AS	
	11	1	**325-5482**	1	GRILL	
	12	1	**7X-0579**	10	WASHER-HARD (8.8X25.5X2-MM THK)	
	13	1	**8T-4121**	8	WASHER-HARD (11X21X2.5-MM THK)	
	14	1	**8T-4123**	2	WASHER (22X35X3.5-MM THK)	
M	15	1	**8T-4136**	2	BOLT (M10X1.5X25-MM)	
M	16	1	**8T-4137**	6	BOLT (M10X1.5X20-MM)	
M	17	1	**8T-4139**	2	BOLT (M12X1.75X30-MM)	
M	18	1	**8T-4141**	2	BOLT (M20X2.5X70-MM)	
M	19	1	**8T-4189**	14	BOLT (M8X1.25X20-MM)	
	20	1	**8T-4223**	2	WASHER-HARD (13.5X25.5X3-MM THK)	
	21	1	**8T-4224**	8	WASHER-HARD (8.8X16X2-MM THK)	
M	22	1	**8T-7547**	4	BOLT (M8X1.25X30-MM)	

M-METRIC PART
Y-SEPARATE ILLUSTRATION

311-8061 **HOOD & GUARD GP** *(contd.)* **i03035281**

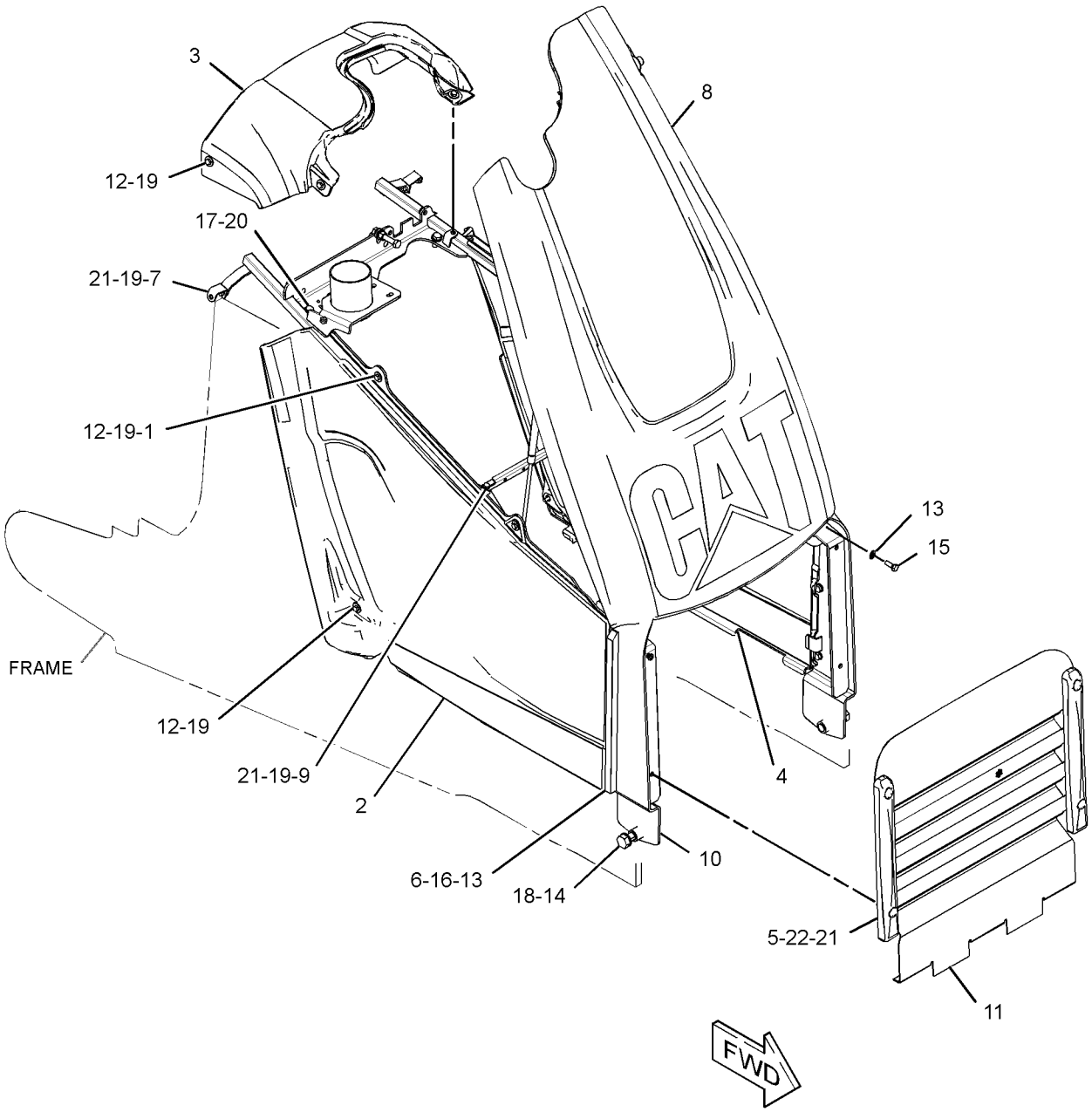

GRAPHIC #1 **<END>** g01596226

FRAME AND BODY

299-3141 HOOD GP-ENGINE

S/N: SJL1-UP

PART OF 311-8055 HOOD GP-ENGINE

SMCS-7251 **i03532120**

NOTE	REF NO	GRAPHIC REF	PART NUMBER	QTY	PART NAME 1 2 3 4 5 6 (PRODUCT LEVEL)	SEE PAGE
	1	1	**5E-8557**	1	CLIP	
E	2	1	**9X-8699**		SEAL (70-CM)	
	3	1	**316-1194**	1	HOOD AS	
	4	1	**341-9304**	1	BRACKET AS	
	5	1	**250-1878**	1	FILM-IDENTIFICATION (CAT)	
	6	1	**250-3330**	1	FILM-STRIPE (YELLOW)	
	7	1	**250-6850**	2	BRACKET AS	
	8	1	**250-6858**	1	LATCH AS (HOOD)	
	9	1	**313-7109**	1	LOCK AS	
	10	1	**251-4375**	1	ROD	
	11	1	**292-3995**	1	HINGE AS	
	12	1	**292-3996**	1	HINGE AS	
M	13	1	**7X-2537**	2	BOLT (M8X1.25X35-MM)	
M	14	1	**8T-4189**	10	BOLT (M8X1.25X20-MM)	
	15	1	**8T-4224**	12	WASHER-HARD (8.8X16X2-MM THK)	

E-ORDER BY THE CENTIMETER
M-METRIC PART

299-3141 **HOOD GP-ENGINE** *(contd.)* **i03532120**

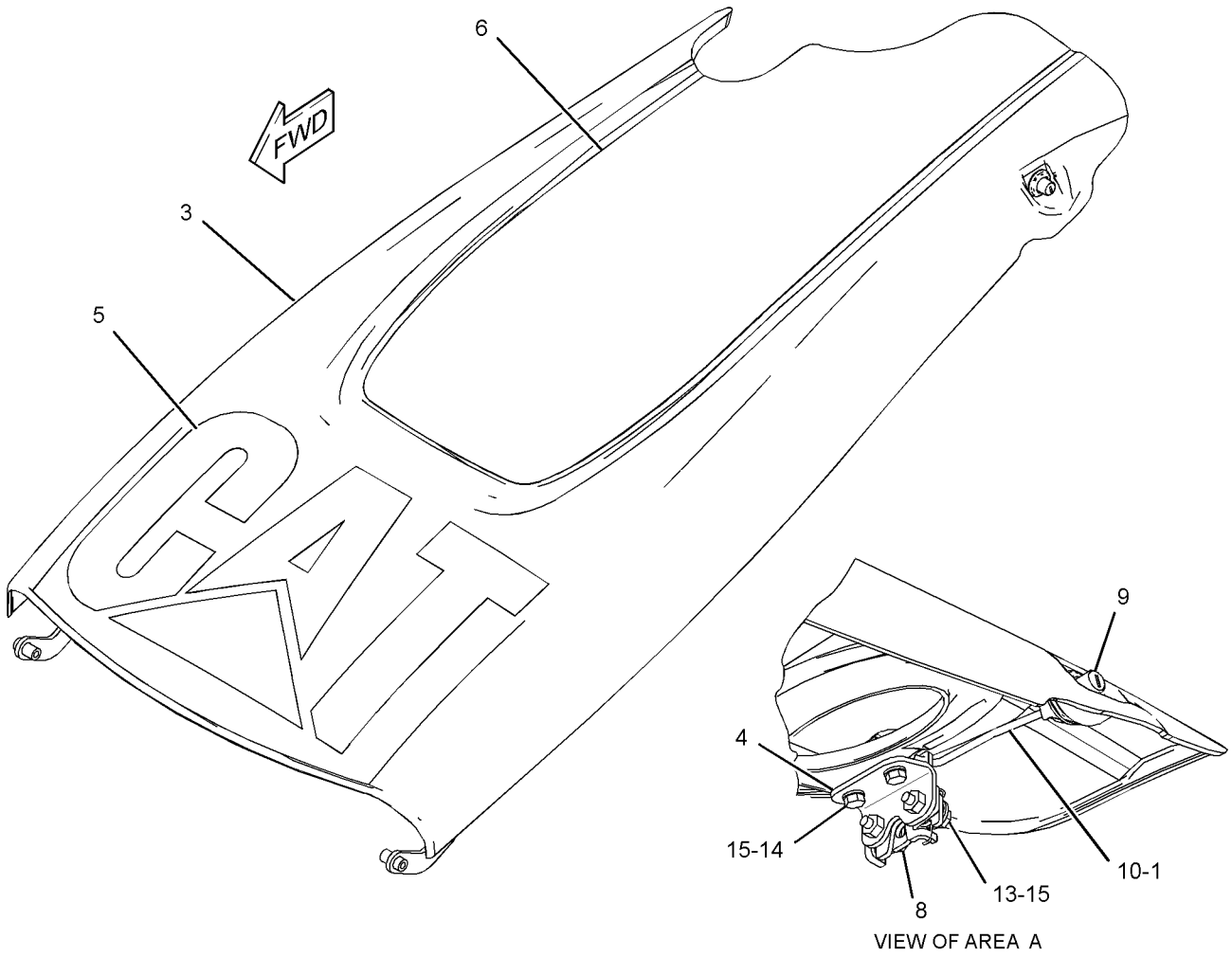

GRAPHIC #1 **<END>** g01355907

FRAME AND BODY

311-8055 HOOD GP-ENGINE

S/N: SJL1-UP

PART OF 311-8061 HOOD & GUARD GP

SMCS-7251 **i03018394**

NOTE	REF NO	GRAPHIC REF	PART NUMBER	QTY	PART NAME 1 2 3 4 5 6 (PRODUCT LEVEL)	SEE PAGE
J	1	1	**250-5881**	1	SPRING AS-GAS	
J	2	1	**254-9301**	1	SPRING AS-GAS (LOCKABLE)	
	3	1	**288-1157**	1	FILM-INSTRUCTION (UNLOCK)	
Y	4	1	*299-3141*	1	HOOD GP-ENGINE	314
	5	1	**311-8060**	1	FRAME AS-HOOD	
M		1	**8T-3490**	2	NUT-WELD (M10X1.5-THD)	
M		1	**8T-3612**	6	NUT-WELD (M8X1.25-THD)	
	6	1	**3B-4506**	2	LOCKWASHER	
	7	1	**8T-4223**	2	WASHER-HARD (13.5X25.5X3-MM THK)	
	8	1	**8T-4224**	4	WASHER-HARD (8.8X16X2-MM THK)	
M	9	1	**8T-4244**	2	NUT (M12X1.75-THD)	
M	10	1	**8T-4648**	1	BOLT (M12X1.75X70-MM)	
M	11	1	**8T-6869**	2	BOLT (M8X1.25X60-MM)	
					AVAILABLE REPAIR KIT(S):	
J			**275-0001**	1	KIT-GAS SPRING	
					(INCLUDES BALL STUDS AND CLIPS)	

J-KIT MARKED J SERVICES PART(S) MARKED J
M-METRIC PART
Y-SEPARATE ILLUSTRATION

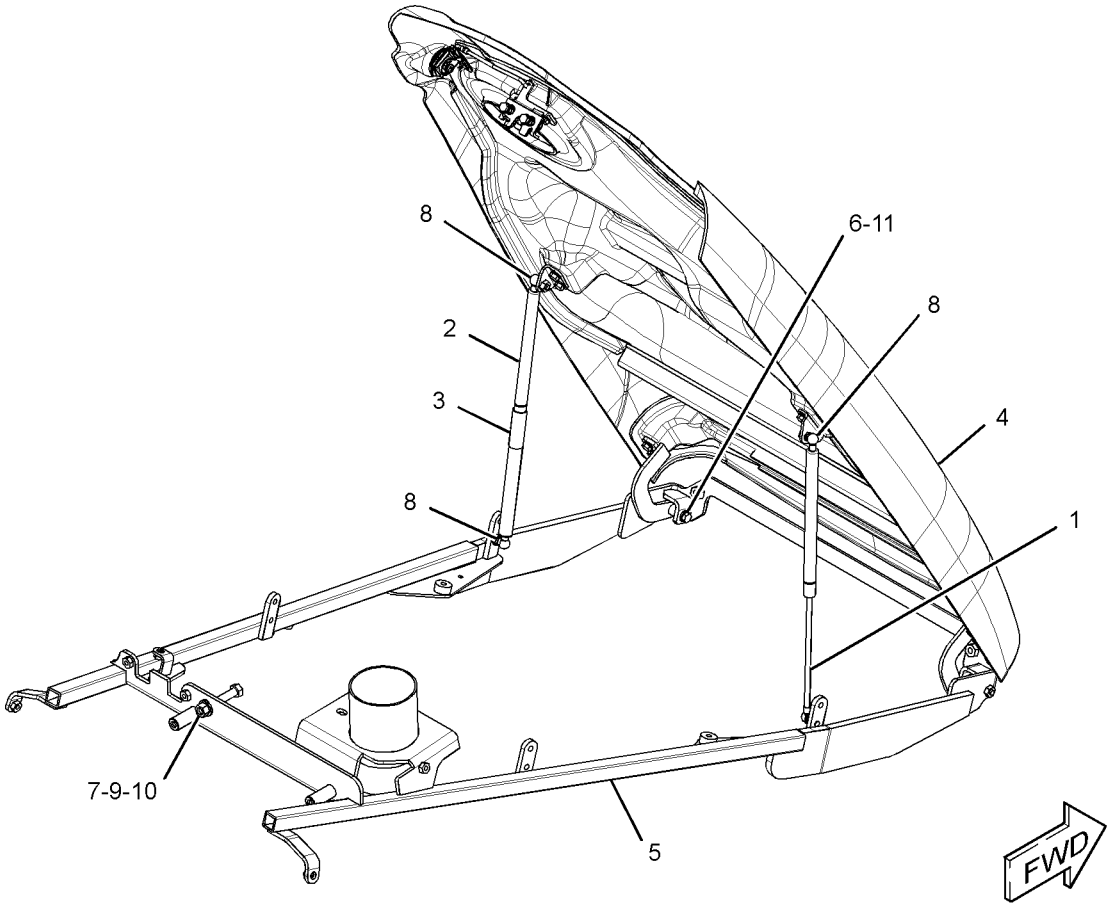

GRAPHIC #1 **<END>** g01601035

320-8640 LINER GP-SOUND SUPPRESSION

S/N: SJL1-UP
PART OF 323-0976 SUPPRESSION AR-SOUND
FOR USE WITH 339-4987—PAGE 7, 339-4991—PAGE 9. CANNOT BE USED WITH 339-4989—PAGE 8, 339-4993—PAGE 10
AN ATTACHMENT

SMCS-1801 **i03090842**

NOTE	REF NO	GRAPHIC REF	PART NUMBER	QTY	PART NAME 1 2 3 4 5 6 (PRODUCT LEVEL)	SEE PAGE
	1	1	**320-8643**	1	INSULATION (LH)	
	2	1	**320-8644**	1	INSULATION (RH)	

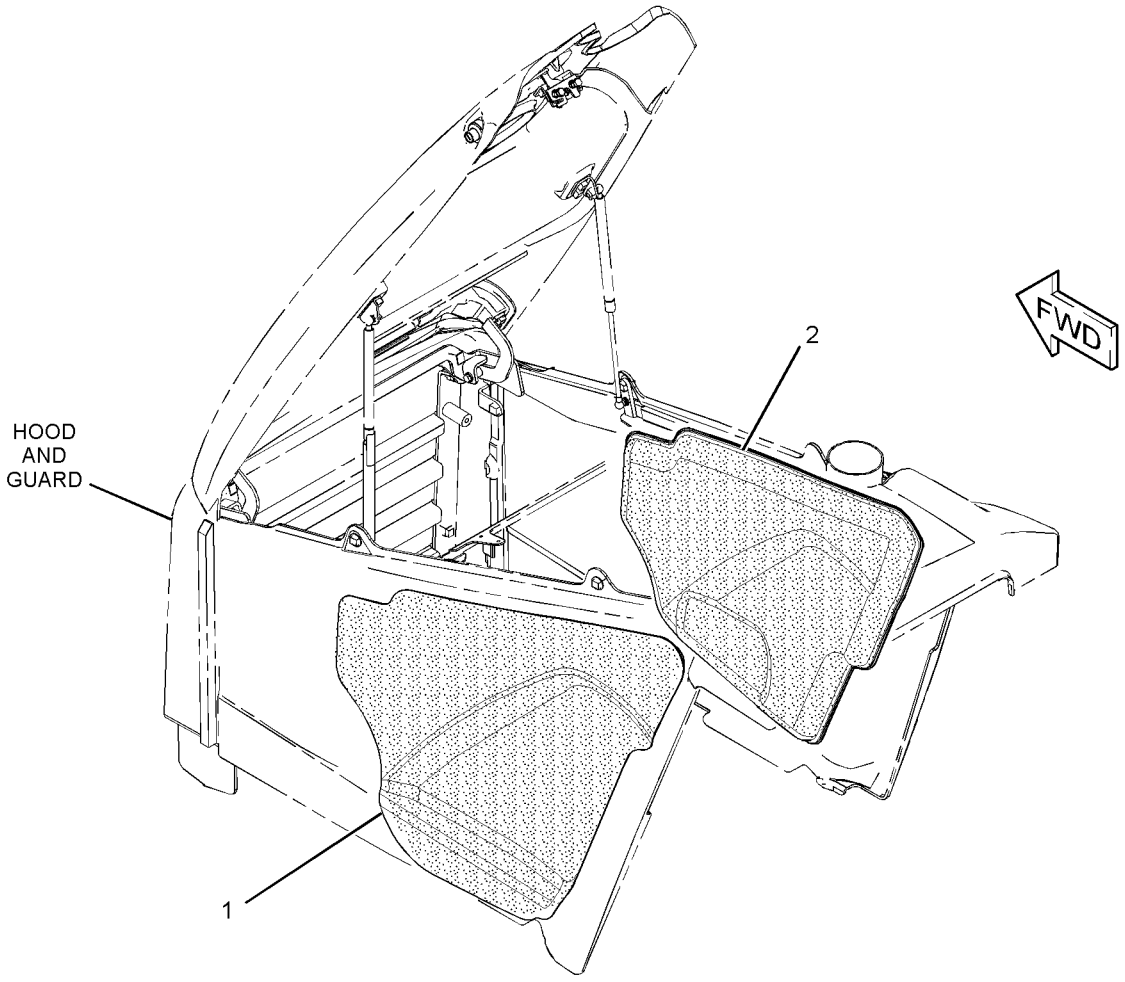

GRAPHIC #1 **<END>** g01592316

269-8456 STEP GP

S/N: SJL1-UP

PART OF 329-0092 LOADER AR

SMCS-7254 **i03090100**

NOTE	REF NO	GRAPHIC REF	PART NUMBER	QTY	PART NAME 1 2 3 4 5 6 (PRODUCT LEVEL)	SEE PAGE
	1	1	**8T-6726**	2	CLAMP-HOSE	
	2	1	**269-8023**	1	STEP	

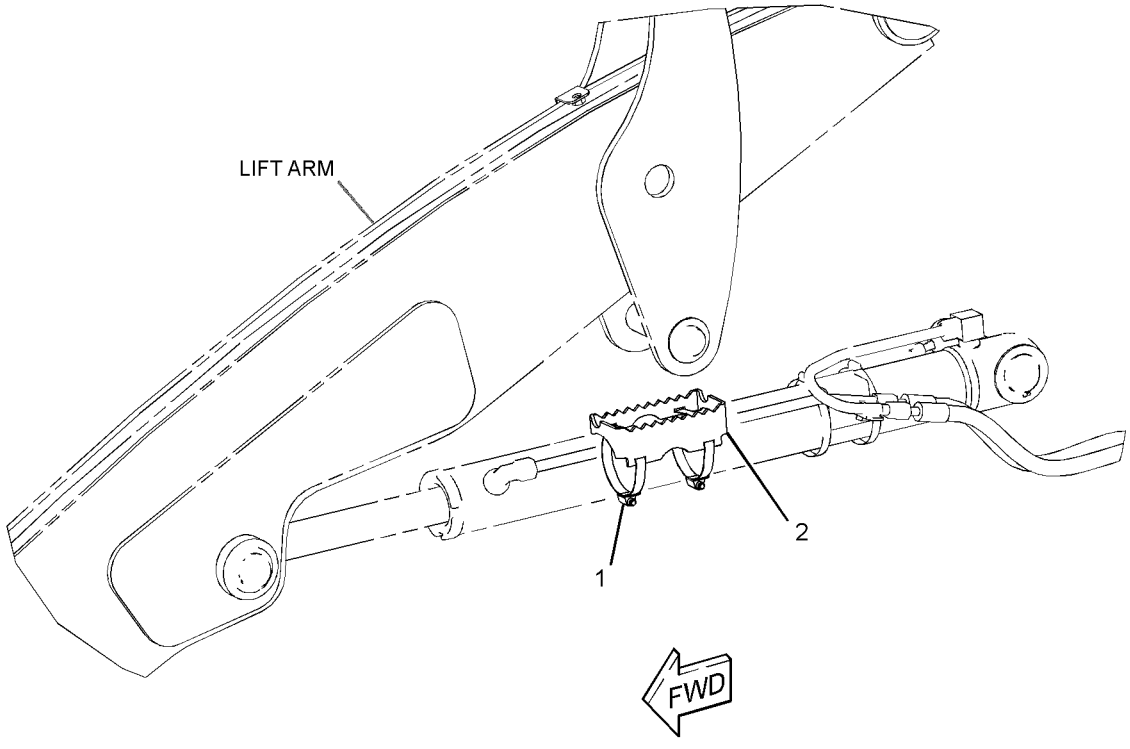

GRAPHIC #1 **<END>** g01575873

FRAME AND BODY

323-0976 SUPPRESSION AR-SOUND

S/N: SJL1-UP

FOR USE WITH 339-4993—PAGE 10, 339-4989—PAGE 8. CANNOT BE USED WITH 339-4987—PAGE 7, 339-4991—PAGE 9

AN ATTACHMENT

SMCS-7076, 7261 **i03090841**

NOTE	PART NUMBER	QTY	PART NAME 1 2 3 4 5 6 (PRODUCT LEVEL)	SEE PAGE
Y	*320-8640*	1	LINER GP-SOUND SUPPRESSION	317
Y-SEPARATE ILLUSTRATION				

<END>

149-0686 ACCUMULATOR GP-HYDRAULIC—CHARGED

S/N: SJL1-UP

PART OF 338-0433 LINES GP-PILOT

FIELD REPLACEMENT ORDER 227-8807—PAGE 320

SMCS-5077 **i02858450**

NOTE	PART NUMBER	QTY	PART NAME 1 2 3 4 5 6 (PRODUCT LEVEL)	SEE PAGE
Y	**227-8807**	1	ACCUMULATOR GP-HYDRAULIC (UNCHARGED) (PILOT)	320

Y-SEPARATE ILLUSTRATION

<END>

227-8807 ACCUMULATOR GP-HYDRAULIC—UNCHARGED

S/N: SJL1-UP

PART OF 149-0686 ACCUMULATOR GP-HYDRAULIC

FIELD REPLACEMENT FOR 149-0686—PAGE 320

SMCS-5077 **i02858449**

NOTE	PART NUMBER	QTY	PART NAME 1 2 3 4 5 6 (PRODUCT LEVEL)	SEE PAGE
			(NO SERVICED PARTS)	

<END>

345-3672 ACCUMULATOR GP-RIDE CONTROL–CHARGED

S/N: SJL1-UP
PART OF 331-8676 LINES GP-RIDE CONTROL
FIELD REPLACEMENT ORDER 345-3674–PAGE 322
AN ATTACHMENT

SMCS-5077 **i03662271**

NOTE	REF NO	GRAPHIC REF	PART NUMBER	QTY	PART NAME 1 2 3 4 5 6 (PRODUCT LEVEL)	SEE PAGE
	1	1	**224-5132**	1	CAP (GAS VALVE)	
	2	1	**224-5152**	1	VALVE-GAS	
	3	1	**3J-7354**	1	SEAL-O-RING	
	4	1	**1J-9671**	1	SEAL-O-RING	
	5	1	**241-0037**	1	FILM-WARNING (HIGH PRESSURE, READ OMM)	

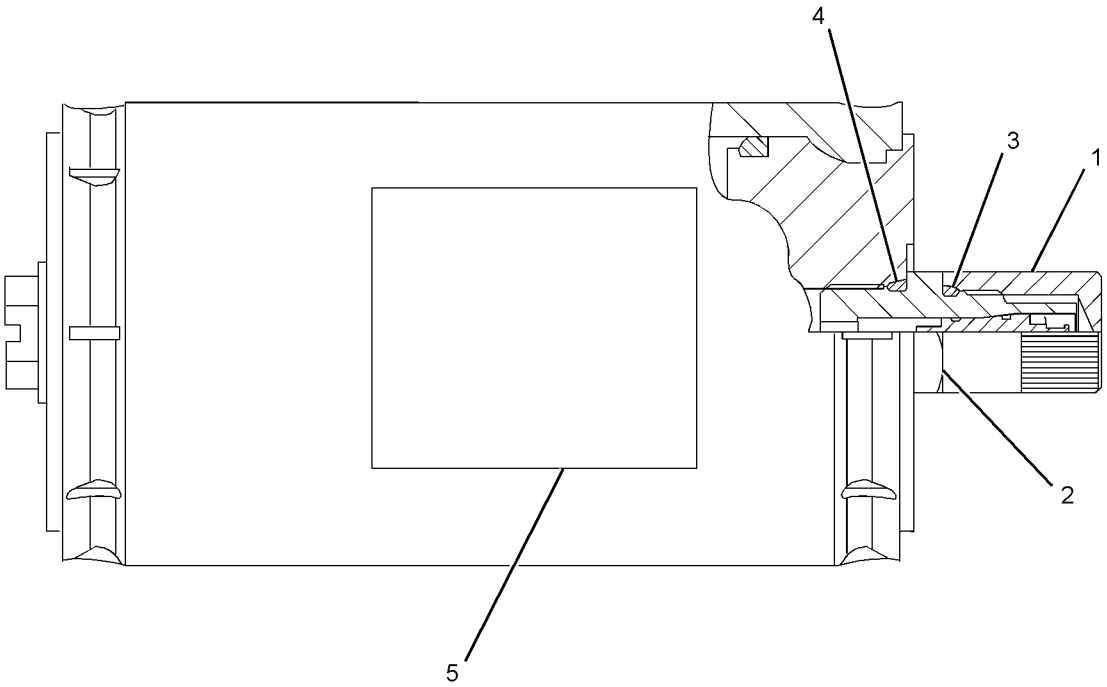

GRAPHIC #1 **<END>** g01965975

HYDRAULIC SYSTEM

345-3674 ACCUMULATOR GP-RIDE CONTROL—UNCHARGED

S/N: SJL1-UP

FIELD REPLACEMENT FOR 345-3672—PAGE 321

SMCS-5077 **i03662277**

NOTE	REF NO	GRAPHIC REF	PART NUMBER	QTY	PART NAME 1 2 3 4 5 6 (PRODUCT LEVEL)	SEE PAGE
	1	1	**224-5132**	1	CAP (GAS VALVE)	
	2	1	**224-5152**	1	VALVE-GAS	
	3	1	**3J-7354**	1	SEAL-O-RING	
	4	1	**1J-9671**	1	SEAL-O-RING	
	5	1	**241-0037**	1	FILM-WARNING (HIGH PRESSURE, READ OMM)	

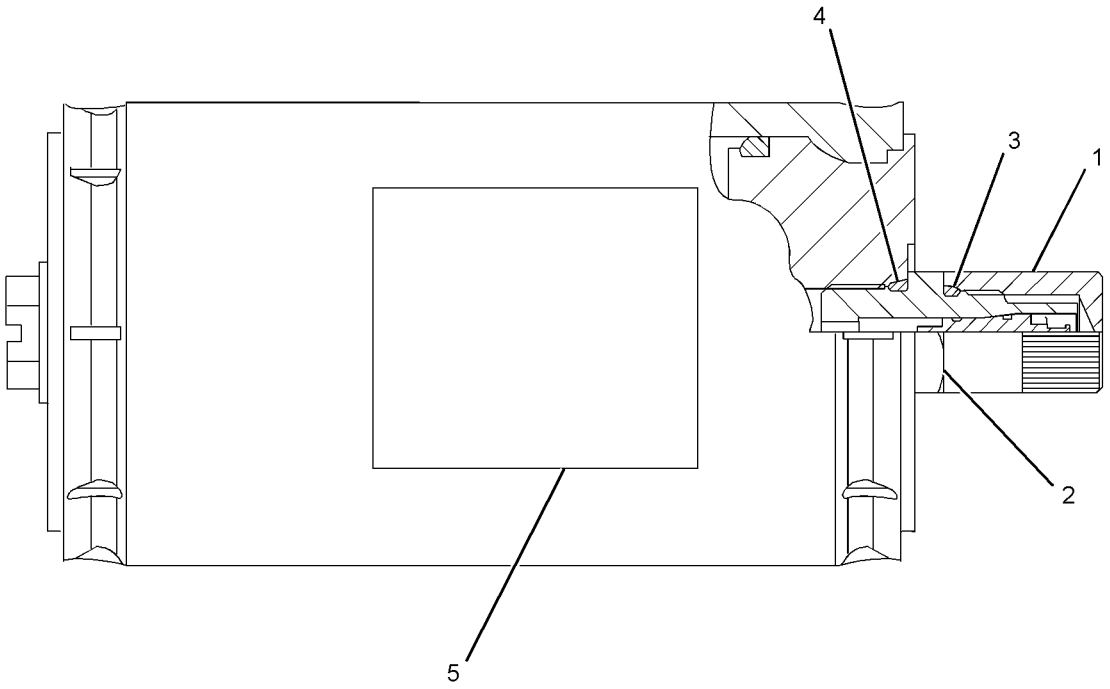

GRAPHIC #1 **<END>** g01966053

HYDRAULIC SYSTEM

344-5290 CONTROL AR-RIDE—PILOT

S/N: SJL1-UP

CANNOT BE USED WITH 344-6354—PAGE 6

AN ATTACHMENT

SMCS-5004 **i03662248**

NOTE	PART NUMBER	QTY	PART NAME 1 2 3 4 5 6 (PRODUCT LEVEL)	SEE PAGE
Y	*331-8676*	1	LINES GP-RIDE CONTROL	394
Y	*323-0991*	1	WIRING GP-RIDE CONTROL	206

Y-SEPARATE ILLUSTRATION

<END>

HYDRAULIC SYSTEM

299-4246 COOLER GP-HYD & XMSN OIL

S/N: SJL1-UP
PART OF 297-3233 RADIATOR & HYD OIL COOLER GP
AN ATTACHMENT

SMCS-1374, 1375 **i03035121**

NOTE	REF NO	GRAPHIC REF	PART NUMBER	QTY	PART NAME 1 2 3 4 5 6 (PRODUCT LEVEL)	SEE PAGE
	1	1	**9M-5733**	24	RIVET-POP	
	2	1	**299-4247**	1	CORE AS-OIL COOLER (19 PLATE)	
	3	1	**299-4248**	1	CORE AS-OIL COOLER (12 PLATE)	
M	4	1	**5C-7261**	2	NUT (M8X1.25-THD)	
M	5	1	**8T-7547**	2	BOLT (M8X1.25X30-MM)	
	6	1	**9N-0869**	6	WASHER-HARD (8.8X25.5X2-MM THK)	
	7	1	**9W-4216**	2	SPACER (9X18X7-MM THK)	

M-METRIC PART

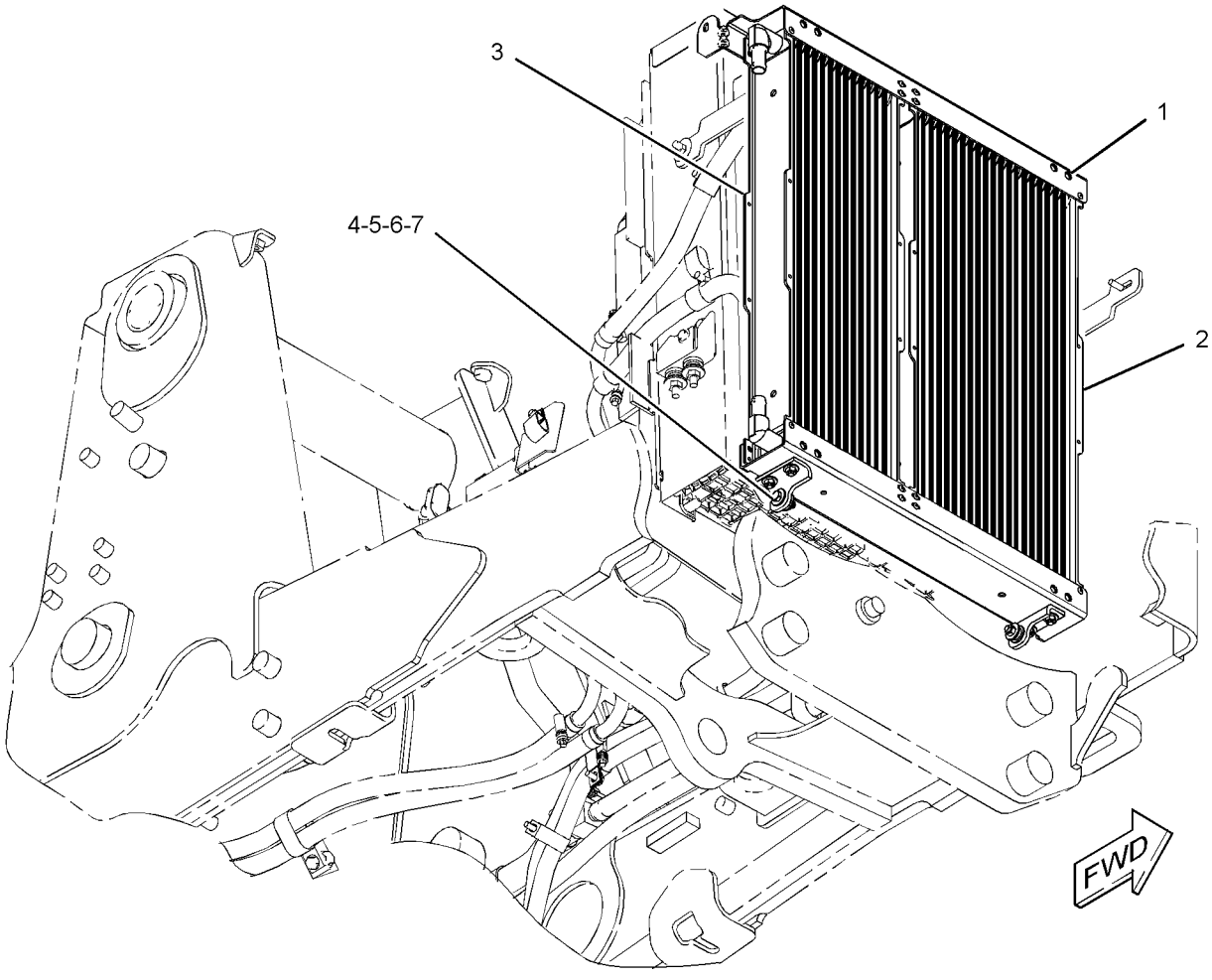

GRAPHIC #1 **<END>** g01522307

304-7847 COOLER GP-HYD & XMSN OIL

S/N: SJL1-UP

PART OF 304-4023 RADIATOR & HYD OIL COOLER GP

AN ATTACHMENT

SMCS-1374, 1375 **i03325889**

NOTE	REF NO	GRAPHIC REF	PART NUMBER	QTY	PART NAME 1 2 3 4 5 6 (PRODUCT LEVEL)	SEE PAGE
M	1	1	**8T-7547**	2	BOLT (M8X1.25X30-MM)	
	2	1	**9M-5733**	32	RIVET-POP	
	3	1	**214-4746**	1	CORE AS-OIL COOLER (HYDRAULIC) (18 PLATE)	
	4	1	**304-7849**	1	CORE AS-OIL COOLER (11 PLATE)	
M	5	1	**5C-7261**	2	NUT (M8X1.25-THD)	
	6	1	**9N-0869**	6	WASHER-HARD (8.8X25.5X2-MM THK)	
	7	1	**9W-4216**	2	SPACER (9X18X7-MM THK)	

M-METRIC PART

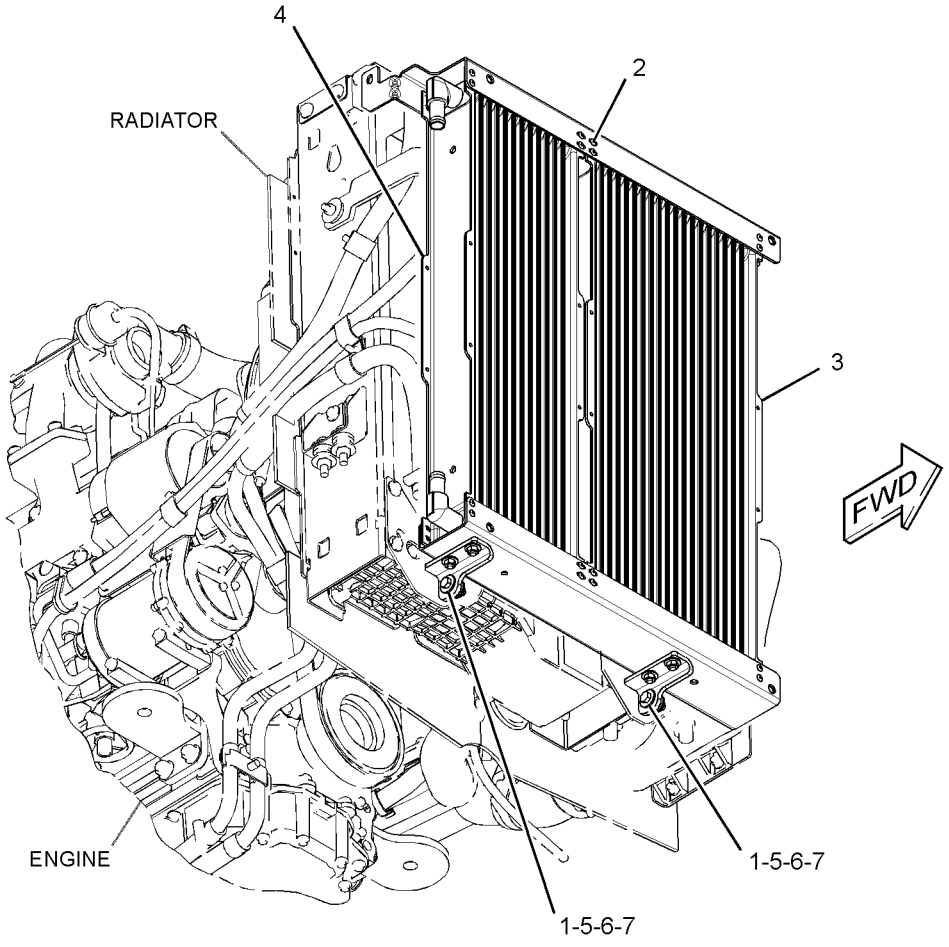

GRAPHIC #1 **<END>** g01597733

HYDRAULIC SYSTEM

320-5937 CYLINDER GP-BACKHOE BUCKET

S/N: SJL1-UP
90-MM (3.54-IN) BORE X 852-MM (33.54-IN) STROKE
PART OF 334-0686, 334-0691, 350-6934, 350-6935, 350-6944, 350-6945 BACKHOE AR-EXTENDABLE STICK, 334-0694, 350-6933 BACKHOE AR-STANDARD STICK AN ATTACHMENT

SMCS-5457 **i03693864**

NOTE	REF NO	GRAPHIC REF	PART NUMBER	QTY	PART NAME 1 2 3 4 5 6 (PRODUCT LEVEL)	SEE PAGE
	1	1	**323-2424**	1	ROD AS	
	1A	1	**9R-3092**	2	BEARING-SLEEVE	
	2	1	**323-2431**	1	CYLINDER HEAD AS	
	2A	1	**323-2470**	1	BEARING	
		1	**338-2415**	1	SEAL-WIPER	
		1	**338-2445**	1	SEAL-U-CUP	
		1	**340-9325**	1	SEAL-O-RING	
	3	1	**323-2433**	1	PISTON AS	
		1	**144-5287**	1	SEAL-PISTON	
		1	**340-9308**	1	SEAL-O-RING	
		1	**343-8051**	2	RING-WEAR	
	4	1	**323-2435**	1	CYLINDER AS-HYDRAULIC	
	4A	1	**9R-3092**	2	BEARING-SLEEVE	
	5	1	**350-3842**	2	SET SCREW (M8X1.25X10-MM)	
	6	1	**7J-9108**	2	SEAL-O-RING	
					AVAILABLE REPAIR KIT(S):	
			324-0386	1	KIT-SEAL (BUCKET CYLINDER)	

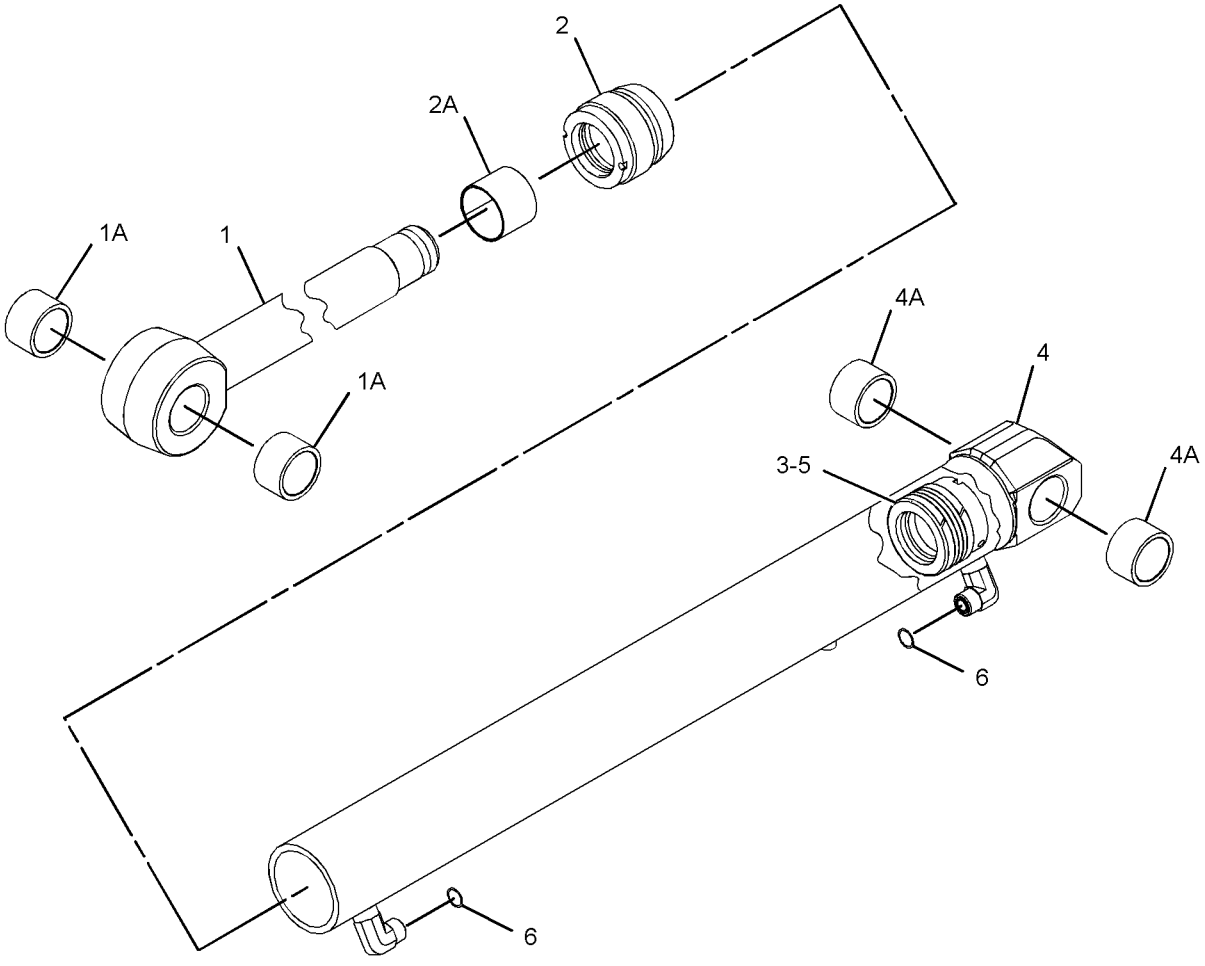

GRAPHIC #1 **<END>** g01993461

320-6520 CYLINDER GP-BOOM

S/N: SJL1-UP
120-MM (4.7-IN) BORE X 942-MM (37.1-IN) STROKE
PART OF 334-0686, 334-0691, 350-6934, 350-6935, 350-6944, 350-6945 BACKHOE AR-EXTENDABLE STICK, 334-0694, 350-6933 BACKHOE AR-STANDARD STICK AN ATTACHMENT

SMCS-5456 **i03695644**

NOTE	REF NO	GRAPHIC REF	PART NUMBER	QTY	PART NAME 1 2 3 4 5 6 (PRODUCT LEVEL)	SEE PAGE
	1	1	**324-0361**	1	ROD AS-HYDRAULIC CYLINDER	
	1A	1	**331-1520**	1	BEARING	
	2	1	**324-0367**	1	CYLINDER HEAD AS	
	2A	1	**323-2474**	1	BEARING-SLEEVE	
		1	**338-2416**	1	SEAL-WIPER	
		1	**338-2446**	1	SEAL-U-CUP	
		1	**340-9322**	1	SEAL-O-RING	
	3	1	**324-0369**	1	PISTON AS	
		1	**340-6339**	1	SEAL-PISTON	
		1	**340-9314**	1	SEAL-O-RING	
		1	**343-8053**	2	RING-WEAR	
	4	1	**324-0372**	1	CYLINDER AS	
	4A	1	**212-8960**	2	BEARING	
	5	1	**350-3842**	2	SET SCREW (M8X1.25X10-MM)	
	6	1	**7J-9108**	1	SEAL-O-RING	
					AVAILABLE REPAIR KIT(S):	
			324-0398	1	KIT-SEAL (BOOM CYLINDER)	

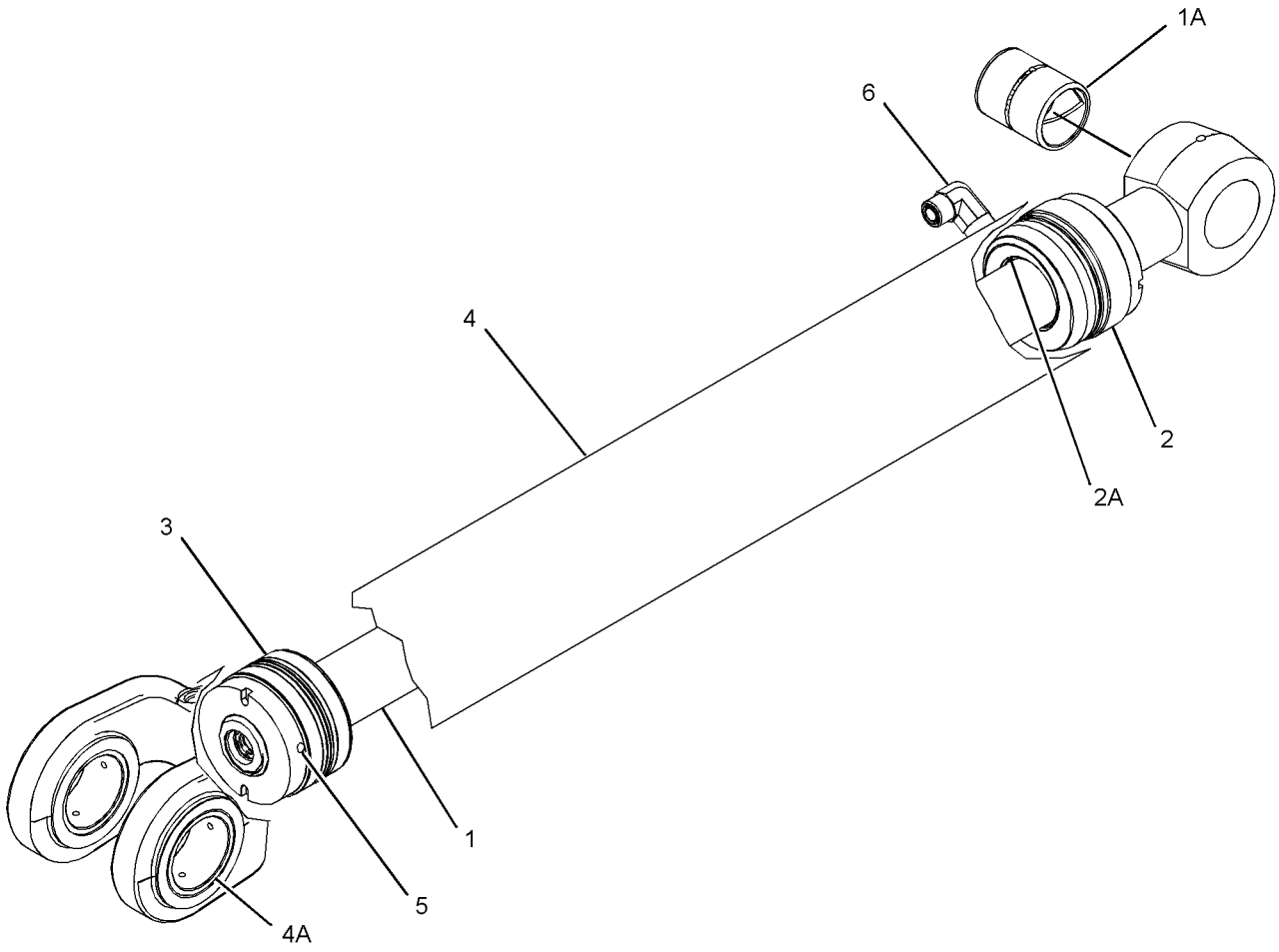

GRAPHIC #1 **<END>** g01991413

HYDRAULIC SYSTEM

190-3085 CYLINDER GP-COUPLER

S/N: SJL1-UP
PART OF 331-7411 LINES GP-HYDRAULIC
AN ATTACHMENT

SMCS-5133 **i03577420**

NOTE	REF NO	GRAPHIC REF	PART NUMBER	QTY	PART NAME 1 2 3 4 5 6 (PRODUCT LEVEL)	SEE PAGE
	1	1	**178-3893**	2	ROD	
	2	1	**190-3611**	1	VALVE GP-CHECK	
					AVAILABLE REPAIR KIT(S):	
			180-9872	1	KIT-SEAL (COUPLER CYLINDER)	
					(INCLUDES LOCKNUT, SEALS, RINGS & RETAINER)	

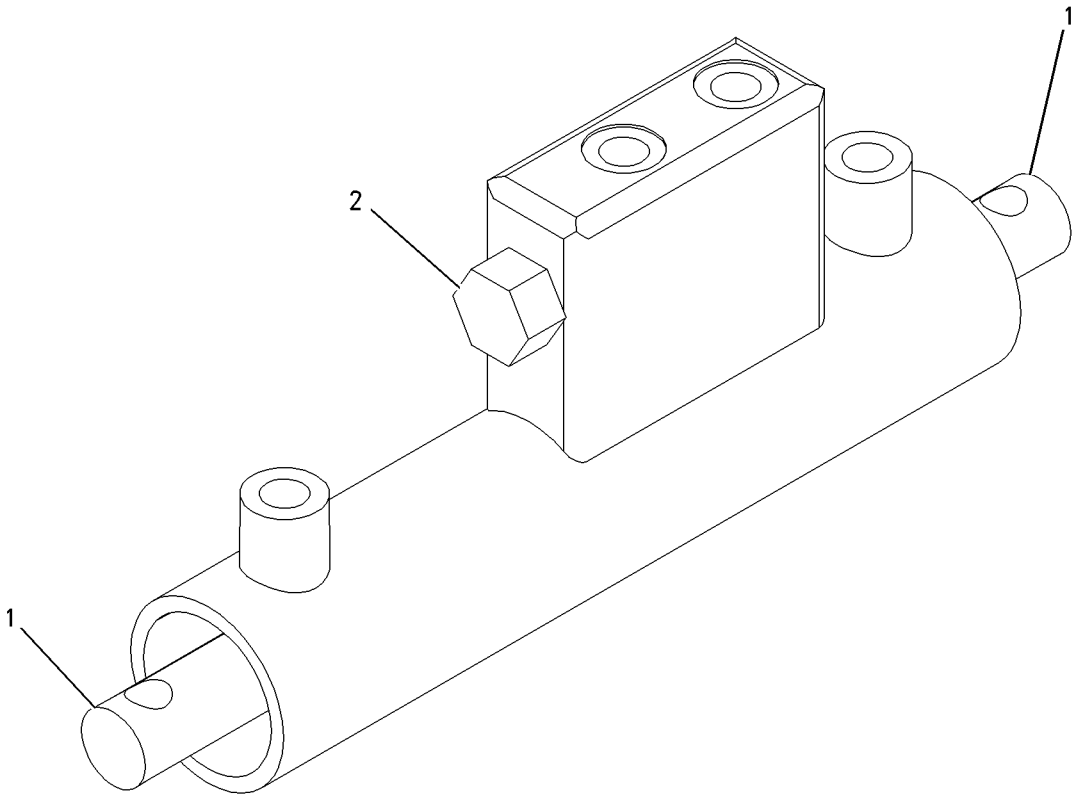

GRAPHIC #1 **<END>** g00944484

269-0381 CYLINDER GP-HYDRAULIC

S/N: SJL1-UP
100-MM (3.9-IN) BORE X 254-MM (10-IN) STROKE
PART OF 320-5933 FRAME GP-SLIDING

SMCS-7562 **i03656615**

NOTE	REF NO	GRAPHIC REF	PART NUMBER	QTY	PART NAME 1 2 3 4 5 6 (PRODUCT LEVEL)	SEE PAGE
	1	1	**3B-8489**	1	FITTING-GREASE	
	2	1	**3N-5739**	1	SPRING	
	3	1	**6E-1478**	1	PLUNGER	
	4	1	**102-3582**	1	WASHER (11X19.5X2.5-MM THK)	
	5	1	**233-0619**	1	SEAL-WIPER	
	6	1	**233-2589**	1	RING-WEAR	
	7	1	**233-2613**	1	BEARING	
	8	1	*269-0382*	1	CYLINDER AS-HYDRAULIC	
	8A	1	**9T-2883**	2	BEARING	
	9	1	*269-0386*	1	ROD AS	
	9A	1	**274-4274**	1	BEARING-SLEEVE	
	10	1	**9X-4611**	1	SEAL-O-RING	
M	11	1	**9X-6611**	1	SETSCREW-SOCKET (M10X1.5X16-MM)	
	12	1	**140-7649**	1	SEAL-PISTON	
	13	1	**167-2183**	1	SEAL AS-BUFFER	
	14	1	**167-2303**	1	SEAL-U-CUP	
	15	1	**2K-6830**	1	RING-BACKUP	
	16	1	**2Y-5821**	1	RING	
	17	1	**3E-6735**	1	SEAL-O-RING	

M-METRIC PART

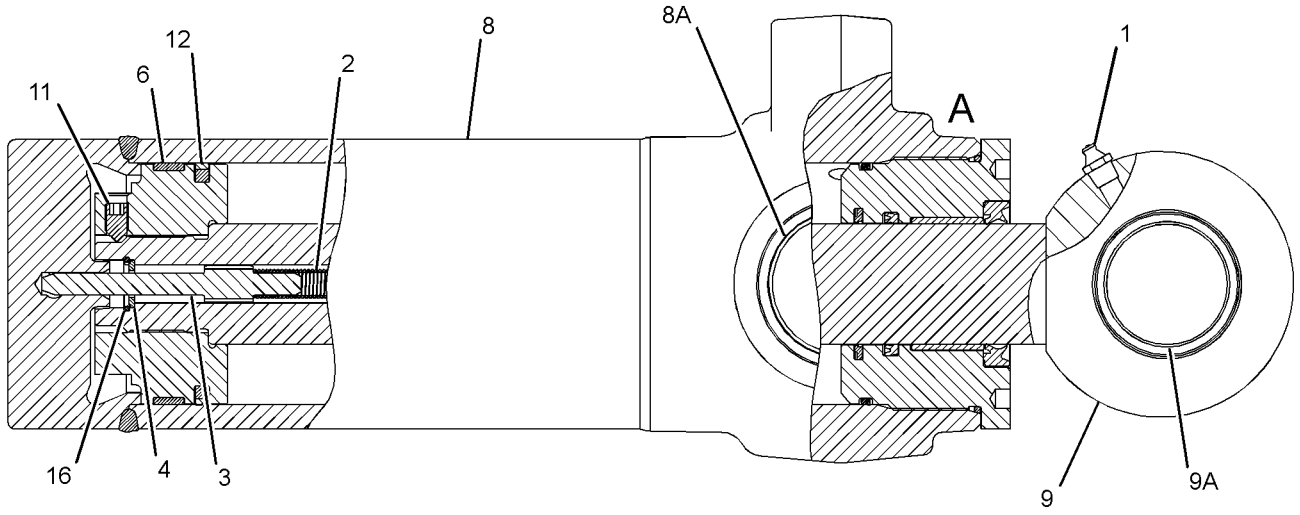

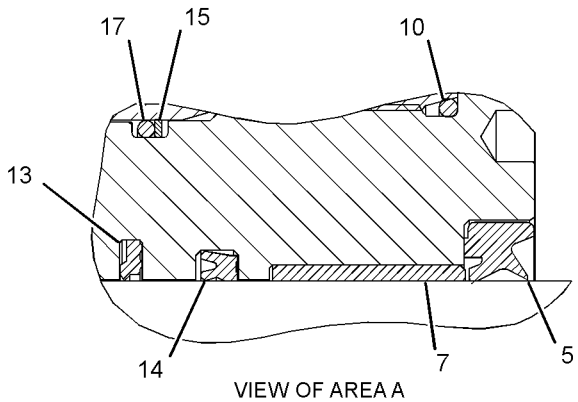

VIEW OF AREA A

GRAPHIC #1 **<END>** g01987994

HYDRAULIC SYSTEM

279-5556 CYLINDER GP-HYDRAULIC

S/N: SJL1-UP
100-MM (3.9-IN) BORE X 254-MM (10-IN) STROKE
PART OF 320-5933 FRAME GP-SLIDING

SMCS-7562 **i03656618**

NOTE	REF NO	GRAPHIC REF	PART NUMBER	QTY	PART NAME 1 2 3 4 5 6 (PRODUCT LEVEL)	SEE PAGE
	1	1	**3B-8489**	1	FITTING-GREASE	
	2	1	**3N-5739**	1	SPRING	
	3	1	**6E-1478**	1	PLUNGER	
	4	1	**102-3582**	1	WASHER (11X19.5X2.5-MM THK)	
	5	1	**233-0619**	1	SEAL-WIPER	
	6	1	**233-2589**	1	RING-WEAR	
	7	1	**233-2613**	1	BEARING	
	8	1	*269-0386*	1	ROD AS	
	8A	1	**274-4274**	1	BEARING-SLEEVE	
	9	1	**9X-4611**	1	SEAL-O-RING	
M	10	1	**9X-6611**	1	SETSCREW-SOCKET (M10X1.5X16-MM)	
	11	1	*279-5557*	1	CYLINDER AS-HYDRAULIC	
	11A	1	**9T-2883**	2	BEARING	
	12	1	**140-7649**	1	SEAL-PISTON	
	13	1	**167-2183**	1	SEAL AS-BUFFER	
	14	1	**167-2303**	1	SEAL-U-CUP	
	15	1	**2K-6830**	1	RING-BACKUP	
	16	1	**2Y-5821**	1	RING	
	17	1	**3E-6735**	1	SEAL-O-RING	

M-METRIC PART

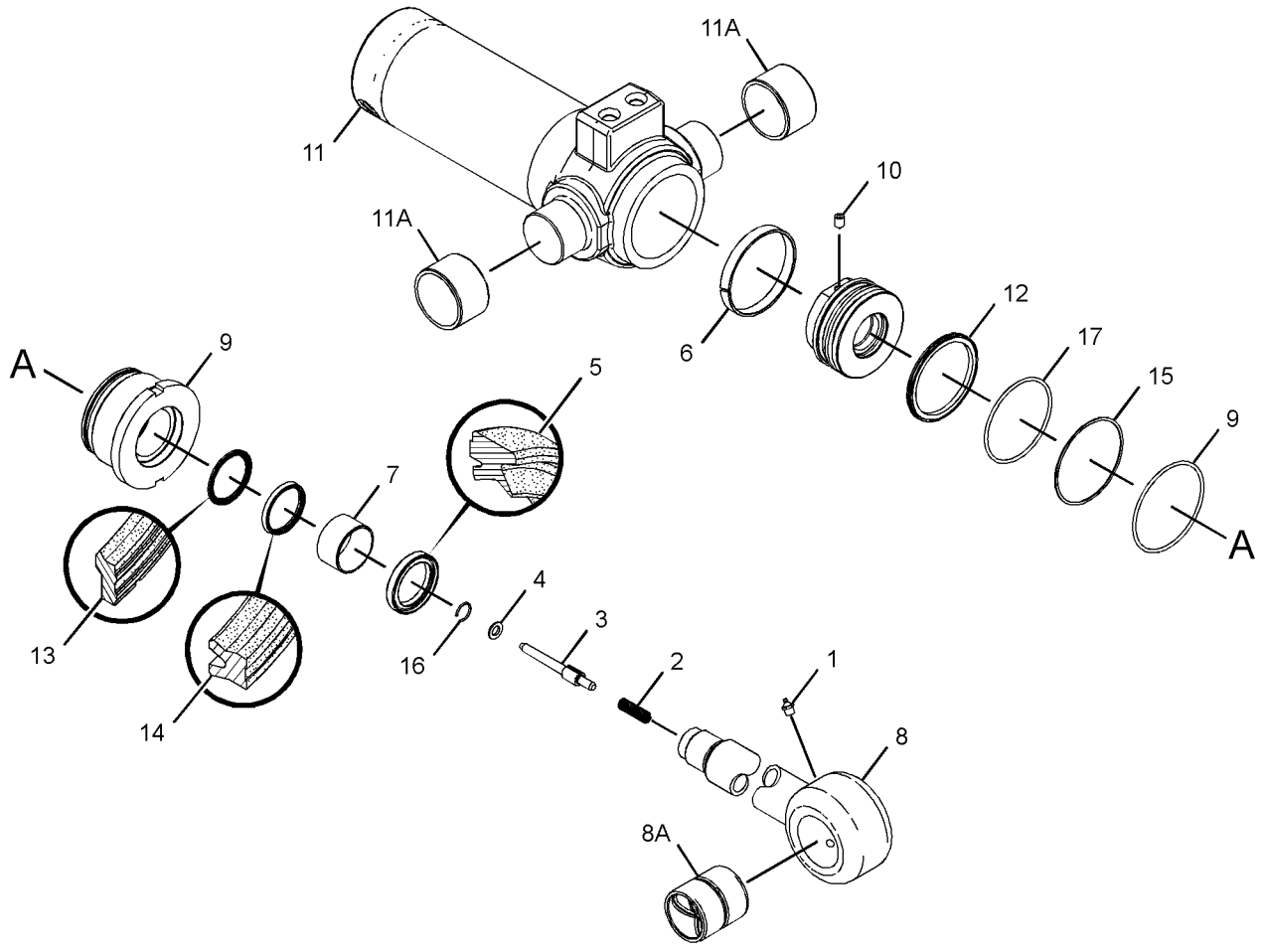

GRAPHIC #1 **<END>** g01987955

249-6710 CYLINDER GP-LIFT

S/N: SJL1-UP
85-MM (3.4-IN)BORE X 740-MM (29.1-IN)STROKE
PART OF 329-0092 LOADER AR

SMCS-5102 **i02171525**

NOTE	REF NO	GRAPHIC REF	PART NUMBER	QTY	PART NAME 1 2 3 4 5 6 (PRODUCT LEVEL)	SEE PAGE
	1	1	**223-0166**	1	HEAD	
	2	1	**223-0167**	1	PISTON	
	3	1	**223-0170**	1	ROD AS	
	3A	1	**9R-3700**	2	BEARING-SLEEVE	
	4	1	**253-1139**	1	CYLINDER AS	
	4A	1	**7J-9108**	1	SEAL-O-RING	
	4B	1	**223-0198**	2	BEARING-SLEEVE	
	5	1	**141-0711**	1	RING-WEAR	
	6	1	**167-2198**	1	SEAL AS-BUFFER	
	7	1	**167-2305**	1	SEAL-U-CUP	
M	8	1	**173-9779**	1	BOLT (M24X3X80-MM)	
	9	1	**184-1687**	1	SEAL AS	
	10	1	**1H-7339**	1	SEAL-O-RING	
	11	1	**227-1145**	1	SEAL-WIPER	
	12	1	**2H-6338**	1	SEAL-O-RING	
	13	1	**4T-6128**	1	RING	
	14	1	**6V-8237**	1	WASHER (26X44X4-MM THK)	
	15	1	**8J-2574**	1	RING-BACKUP	

M-METRIC PART

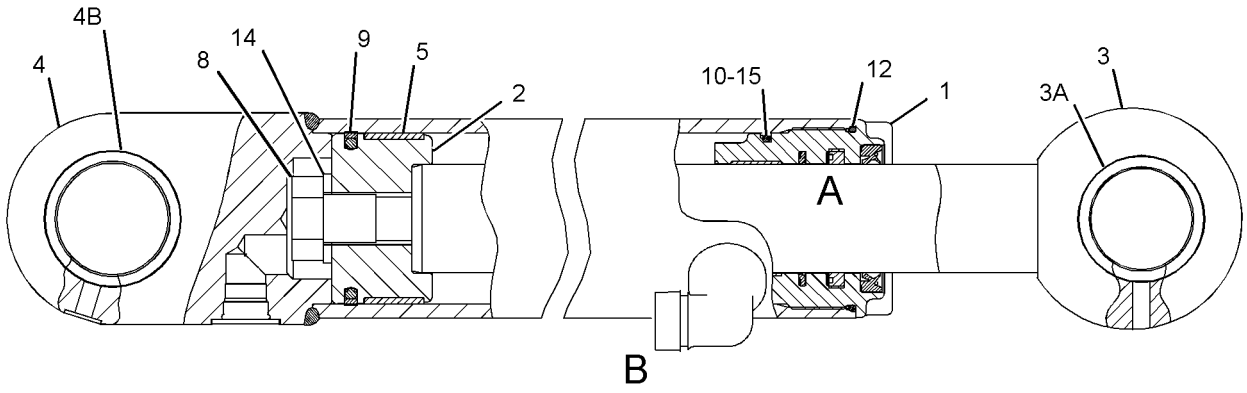

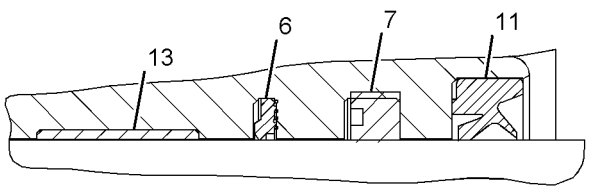

VIEW OF AREA A

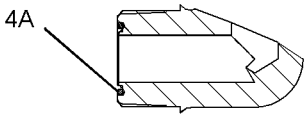

VIEW OF AREA B

GRAPHIC #1 **<END>** g01104387

249-6711 CYLINDER GP-LIFT

S/N: SJL1-UP
85-MM (3.4-IN) BORE X 740-MM (29.1-IN) STROKE
PART OF 329-0092 LOADER AR

SMCS-5102 **i02171519**

NOTE	REF NO	GRAPHIC REF	PART NUMBER	QTY	PART NAME 1 2 3 4 5 6 (PRODUCT LEVEL)	SEE PAGE
	1	1	**223-0166**	1	HEAD	
	2	1	**223-0167**	1	PISTON	
	3	1	**223-0170**	1	ROD AS	
	3A	1	**9R-3700**	2	BEARING-SLEEVE	
	4	1	**223-0174**	1	CYLINDER AS	
	4A	1	**7J-9108**	1	SEAL-O-RING	
	4B	1	**223-0198**	2	BEARING-SLEEVE	
	5	1	**141-0711**	1	RING-WEAR	
	6	1	**167-2198**	1	SEAL AS-BUFFER	
	7	1	**167-2305**	1	SEAL-U-CUP	
M	8	1	**173-9779**	1	BOLT (M24X3X80-MM)	
	9	1	**184-1687**	1	SEAL AS	
	10	1	**1H-7339**	1	SEAL-O-RING	
	11	1	**227-1145**	1	SEAL-WIPER	
	12	1	**2H-6338**	1	SEAL-O-RING	
	13	1	**4T-6128**	1	RING	
	14	1	**6V-8237**	1	WASHER (26X44X4-MM THK)	
	15	1	**8J-2574**	1	RING-BACKUP	

M-METRIC PART

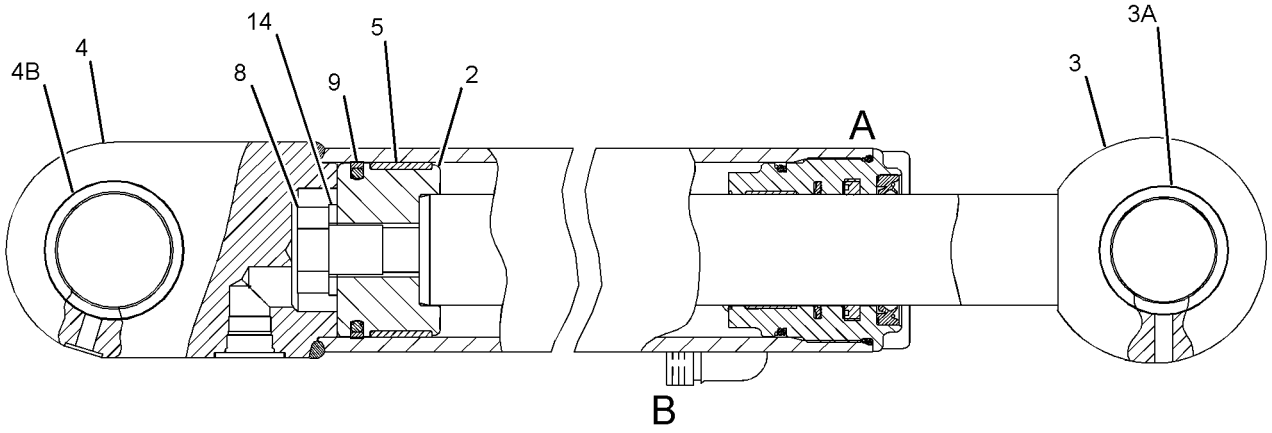

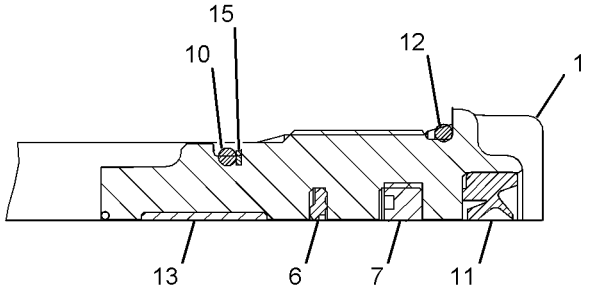

VIEW OF AREA A

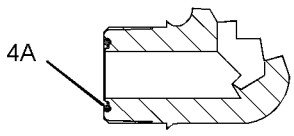

VIEW OF AREA B
(SECTIONED)

GRAPHIC #1 **<END>** g01104624

226-5540 CYLINDER GP-MULTIPURPOSE BUKT

S/N: SJL1-UP
76-MM (2.99-IN) BORE X 262-MM (10.31-IN) STROKE
PART OF 318-7257, 318-7259, 318-7261, 320-9941 BUCKET AR-MULTIPURPOSE AN ATTACHMENT

SMCS-5457 **i02983289**

NOTE	REF NO	GRAPHIC REF	PART NUMBER	QTY	PART NAME 1 2 3 4 5 6 (PRODUCT LEVEL)	SEE PAGE
	1	1	**3B-8489**	2	FITTING-GREASE	
	2	1	**9S-8004**	2	PLUG	
	3	1	**3J-1907**	2	SEAL-O-RING	
	4	1	**9T-4007**	2	BEARING	
					AVAILABLE REPAIR KIT(S):	
			230-9357	1	KIT-SEAL (BUCKET CYLINDER)	
					(INCLUDES WIPER SEAL, O-RINGS, MOISTURE EXCLUDER & POLYPAK)	

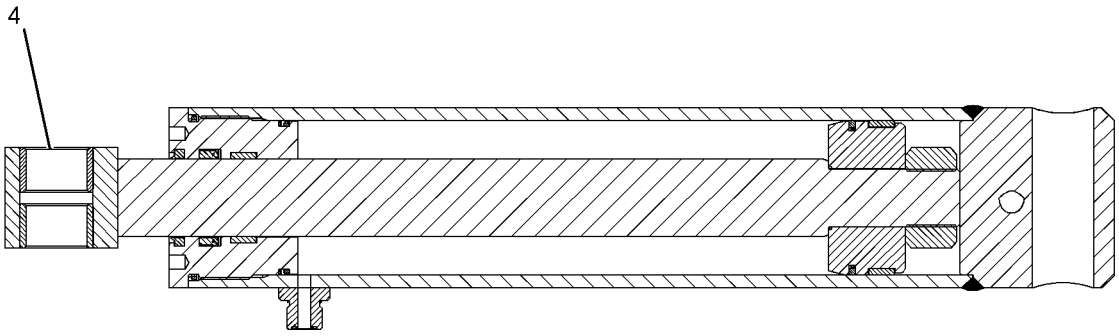

SECTION A-A



GRAPHIC #1 **<END>** g01086486

HYDRAULIC SYSTEM

320-5938 CYLINDER GP-STABILIZER

S/N: SJL1-UP
70-MM (2.75-IN) BORE X 700-MM (27.55-IN) STROKE
PART OF 327-0114 FRAME AR-LOADER
AN ATTACHMENT

SMCS-5468 **i03693801**

NOTE	REF NO	GRAPHIC REF	PART NUMBER	QTY	PART NAME 1 2 3 4 5 6 (PRODUCT LEVEL)	SEE PAGE
	1	1	**324-0496**	1	CYLINDER HEAD AS	
	1A	1	**323-2465**	1	BEARING-SLEEVE	
		1	**338-2412**	1	SEAL-WIPER	
		1	**338-2442**	1	SEAL-U-CUP	
		1	**340-9308**	1	SEAL-O-RING	
	2	1	**324-0498**	1	PISTON AS	
		1	**161-7145**	1	SEAL-PISTON	
		1	**340-6272**	2	RING-WEAR	
		1	**340-9311**	1	SEAL-O-RING	
	3	1	**324-0505**	1	ROD AS-HYDRAULIC CYLINDER	
	4	1	**324-0516**	1	CYLINDER AS-HYDRAULIC	
	5	1	**350-3842**	2	SET SCREW (M8X1.25X10-MM)	
	6	1	**6V-8397**	2	SEAL-O-RING	
					AVAILABLE REPAIR KIT(S):	
			324-0355	1	KIT-SEAL (STABILIZER CYLINDER)	

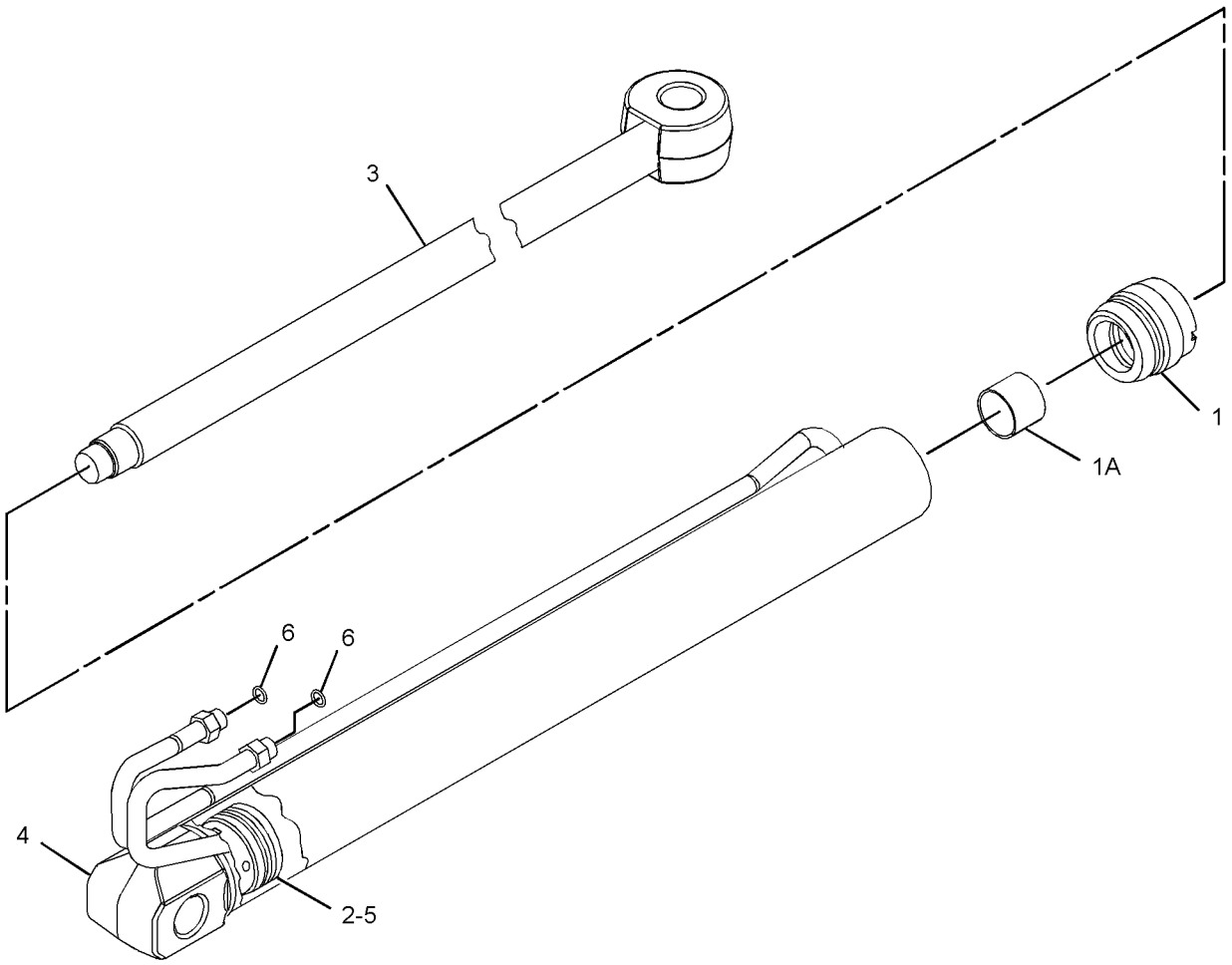

GRAPHIC #1 **<END>** g01993459

320-5935 CYLINDER GP-STICK

S/N: SJL1-UP
70-MM (2.75-IN) BORE X 1050-MM (41.35-IN) STROKE
PART OF 324-0550, 329-9749 STICK GP-EXTENDABLE
AN ATTACHMENT

SMCS-5458 **i03693945**

NOTE	REF NO	GRAPHIC REF	PART NUMBER	QTY	PART NAME 1 2 3 4 5 6 (PRODUCT LEVEL)	SEE PAGE
	1	1	**6V-8398**	1	SEAL-O-RING	
	2	1	**324-0436**	1	ROD AS	
	3	1	**324-0496**	1	CYLINDER HEAD AS	
	3A	1	**323-2465**	1	BEARING-SLEEVE	
		1	**338-2412**	1	SEAL-WIPER	
		1	**338-2442**	1	SEAL-U-CUP	
		1	**340-9308**	1	SEAL-O-RING	
	4	1	**324-0498**	1	PISTON AS	
		1	**161-7145**	1	SEAL-PISTON	
		1	**340-6272**	2	RING-WEAR	
		1	**340-9311**	1	SEAL-O-RING	
	5	1	**324-0501**	1	CYLINDER AS	
	6	1	**350-3842**	2	SET SCREW (M8X1.25X10-MM)	
					AVAILABLE REPAIR KIT(S):	
			324-0355	1	KIT-SEAL (EXTENDABLE STICK)	

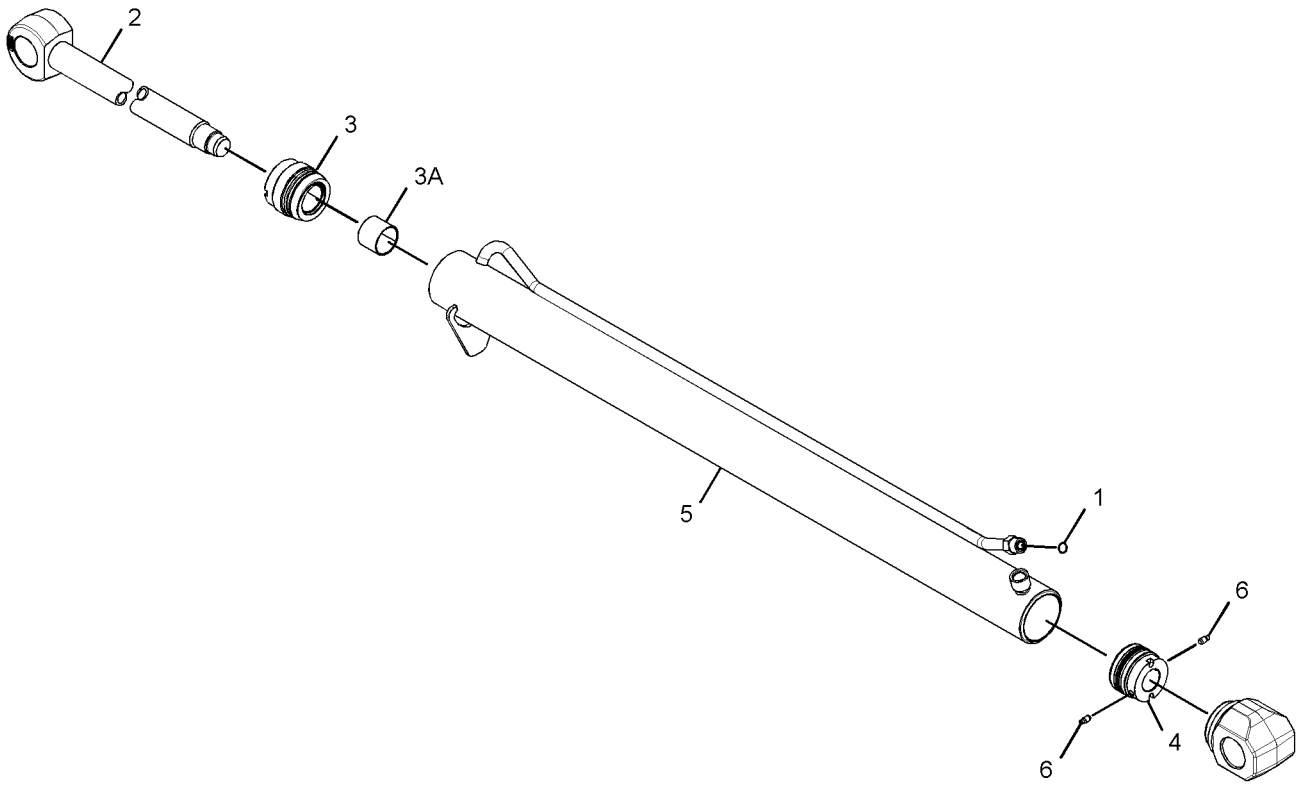

GRAPHIC #1 **<END>** g01991690

HYDRAULIC SYSTEM

320-6521 CYLINDER GP-STICK

S/N: SJL1-UP
120-MM (4.7-IN) BORE X 677-MM (26.7-IN) STROKE
PART OF 334-0686, 334-0691, 350-6934, 350-6935, 350-6944, 350-6945 BACKHOE AR-EXTENDABLE STICK, 334-0694, 350-6933 BACKHOE AR-STANDARD STICK AN ATTACHMENT

SMCS-5458 **i03695660**

NOTE	REF NO	GRAPHIC REF	PART NUMBER	QTY	PART NAME 1 2 3 4 5 6 (PRODUCT LEVEL)	SEE PAGE
	1	1	**6V-8398**	1	SEAL-O-RING	
	2	1	**324-0367**	1	CYLINDER HEAD AS	
	2A	1	**323-2474**	1	BEARING-SLEEVE	
		1	**338-2416**	1	SEAL-WIPER	
		1	**338-2446**	1	SEAL-U-CUP	
		1	**340-9322**	1	SEAL-O-RING	
	3	1	**324-0369**	1	PISTON AS	
		1	**340-6339**	1	SEAL-PISTON	
		1	**340-9314**	1	SEAL-O-RING	
		1	**343-8053**	2	RING-WEAR	
	4	1	**324-0406**	1	ROD AS	
	4A	1	**331-1520**	1	BEARING	
	5	1	**324-0417**	1	CYLINDER AS	
	5A	1	**215-1906**	2	BEARING-SLEEVE	
	6	1	**350-3842**	2	SET SCREW (M8X1.25X10-MM)	
	7	1	**7J-9108**	1	SEAL-O-RING	
					AVAILABLE REPAIR KIT(S):	
			324-0398	1	KIT-SEAL (STICK CYLINDER)	

320-6521 **CYLINDER GP-STICK** *(contd.)* **i03695660**

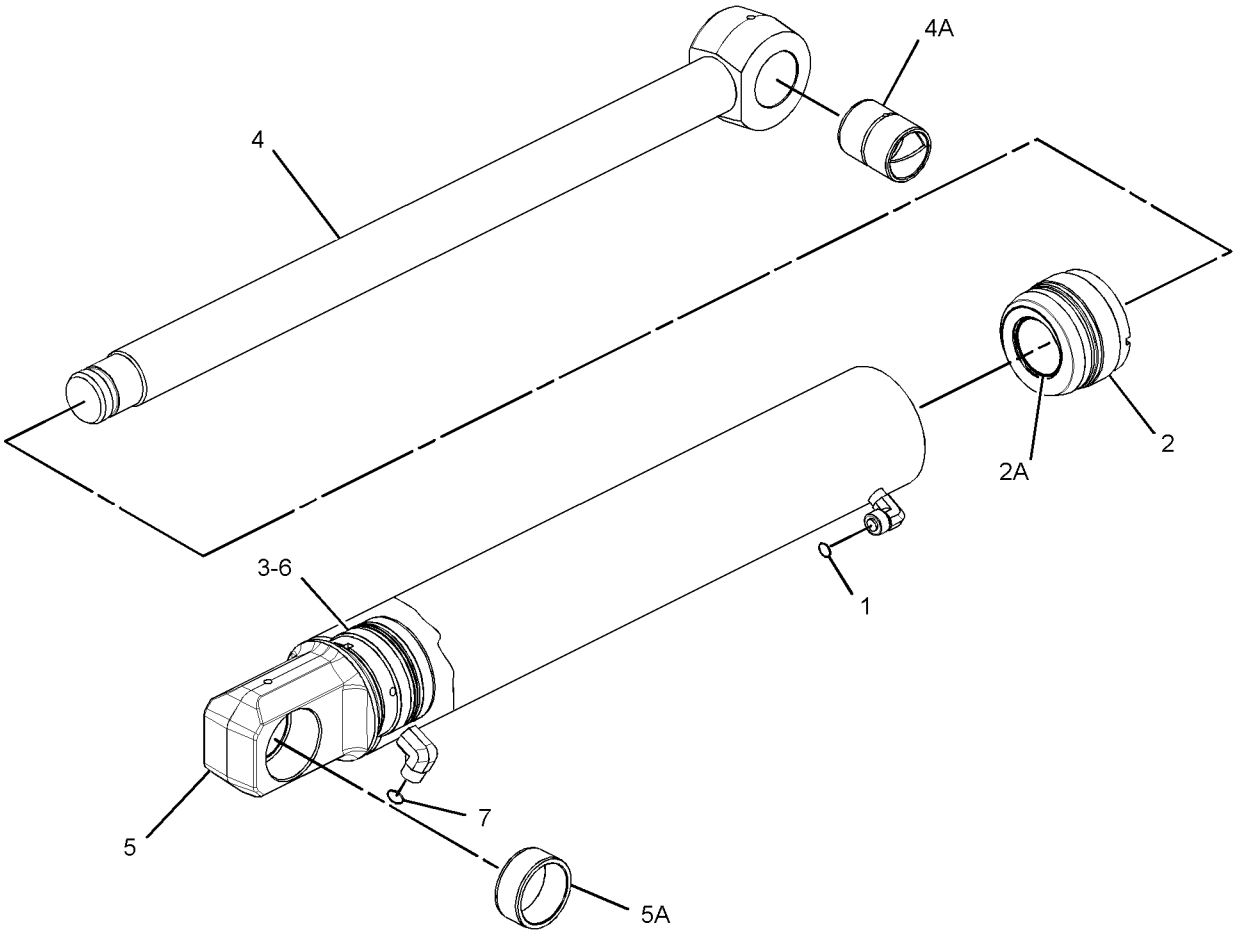

GRAPHIC #1 **<END>** g01993595

HYDRAULIC SYSTEM

210-7101 CYLINDER GP-TILT

S/N: SJL1-UP
76.2-MM (3-IN) BORE X 915-MM (10.2-IN) STROKE
PART OF 329-0092 LOADER AR

SMCS-5104 **i02171526**

NOTE	REF NO	GRAPHIC REF	PART NUMBER	QTY	PART NAME 1 2 3 4 5 6 (PRODUCT LEVEL)	SEE PAGE
	1	1	**223-0182**	1	HEAD	
	2	1	**223-0184**	1	ROD AS	
	2A	1	**9R-0321**	2	BEARING-SLEEVE	
	3	1	**223-0188**	1	CYLINDER AS	
	3A	1	**6V-8398**	1	SEAL-O-RING	
	3B	1	**9R-0153**	2	BEARING-SLEEVE	
	4	1	**230-4019**	1	PISTON	
	5	1	**167-2195**	1	SEAL AS-BUFFER	
	6	1	**167-2304**	1	SEAL-U-CUP	
M	7	1	**173-9779**	1	BOLT (M24X3X80-MM)	
	8	1	**1H-7339**	1	SEAL-O-RING	
	9	1	**223-3353**	1	RING-WEAR	
	10	1	**229-9382**	1	SEAL-WIPER	
	11	1	**4T-5613**	1	RING-WEAR	
	12	1	**5H-8848**	1	SEAL-O-RING	
	13	1	**6J-1972**	1	SEAL AS	
	14	1	**6J-5731**	1	RING-BACKUP	
	15	1	**6V-8237**	1	WASHER (26X44X4-MM THK)	

M-METRIC PART

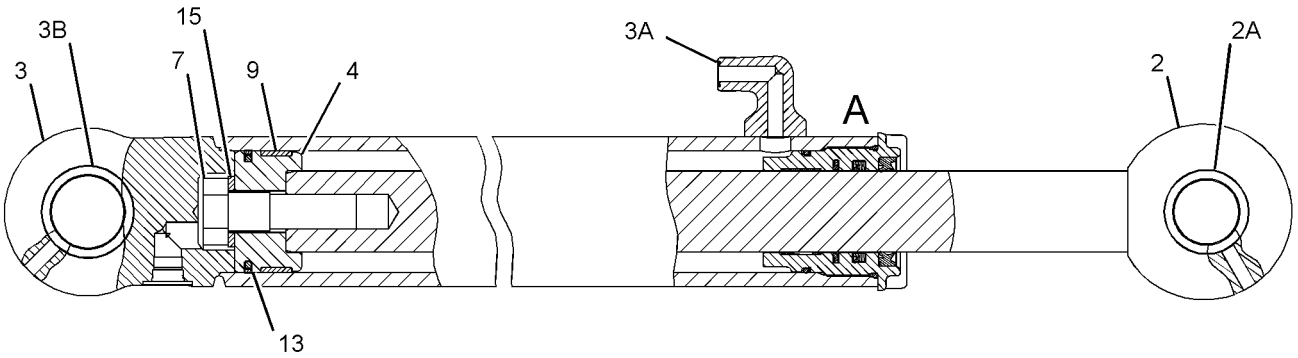

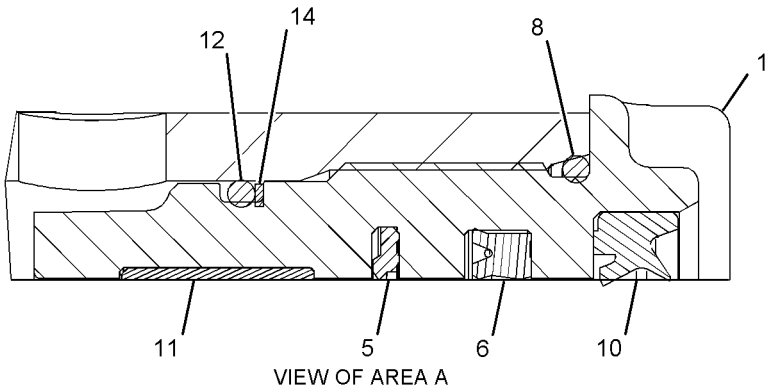

VIEW OF AREA A

GRAPHIC #1 **<END>** g01104642

112-1826 DRIVE & MTG GP-PUMP

S/N: SJL1-UP
PART OF 329-0311 POWER TRAIN AR
AN ATTACHMENT

SMCS-3108, 5070 **i03458260**

NOTE	REF NO	GRAPHIC REF	PART NUMBER	QTY	PART NAME 1 2 3 4 5 6 (PRODUCT LEVEL)	SEE PAGE
M	1	1	**8T-9405**	4	BOLT-SOCKET HEAD (M4X0.7X16-MM)	
	2	1	**9U-8886**	1	RING-SEAL	
	3	1	**115-1918**	1	PLATE	
	4	1	**117-3534**	1	ADAPTER	
	5	1	**274-4555**	1	HUB	
Y	6	1	**128-5596**	1	SHAFT GP-PUMP DRIVE	414
	7	1	**175-7904**	1	SEAL-O-RING	
	8	1	**8T-4122**	2	WASHER-HARD (17X32X3.5-MM THK)	
M	9	1	**8T-7338**	2	BOLT (M16X2X45-MM)	

M-METRIC PART
Y-SEPARATE ILLUSTRATION

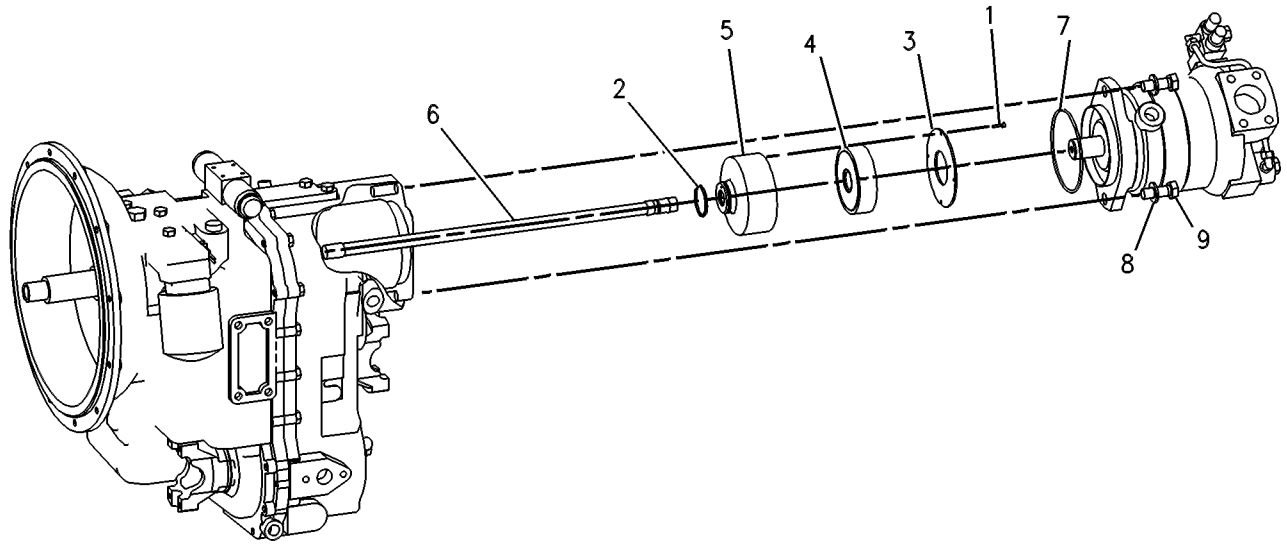

GRAPHIC #1 **<END>** g00131524

HYDRAULIC SYSTEM

325-6257 FILTER GP-OIL

S/N: SJL1-UP

PART OF 334-8021 LINES GP-RETURN

SMCS-5068 **i03038500**

NOTE	REF NO	GRAPHIC REF	PART NUMBER	QTY	PART NAME 1 2 3 4 5 6 (PRODUCT LEVEL)	SEE PAGE
	1	1	**308-3025**	1	BASE AS-FILTER	
	2	1	*148-8335*	1	CONNECTOR AS	
		1	**5K-9090**	1	SEAL-O-RING	
		1	**6V-8635**	1	CONNECTOR (SEAL)	
		1	**7M-8485**	1	SEAL-O-RING	
	3	1	*148-8407*	1	PLUG AS (STORAGE)	
		1	**3J-1907**	1	SEAL-O-RING	
		1	**9S-4191**	1	PLUG-O-RING	
	4	1	**6V-9830**	2	CAP AS	
	5	1	**6V-9833**	1	CAP AS (HYDRAULIC RETURN)	
	6	1	**8C-3451**	1	CAP-DUST	
	7	1	**126-1817**	1	FILTER-OIL (ULTRA HIGH EFFICIENCY)	
	8	1	**8C-3446**	1	VALVE-FLUID SAMPLING	

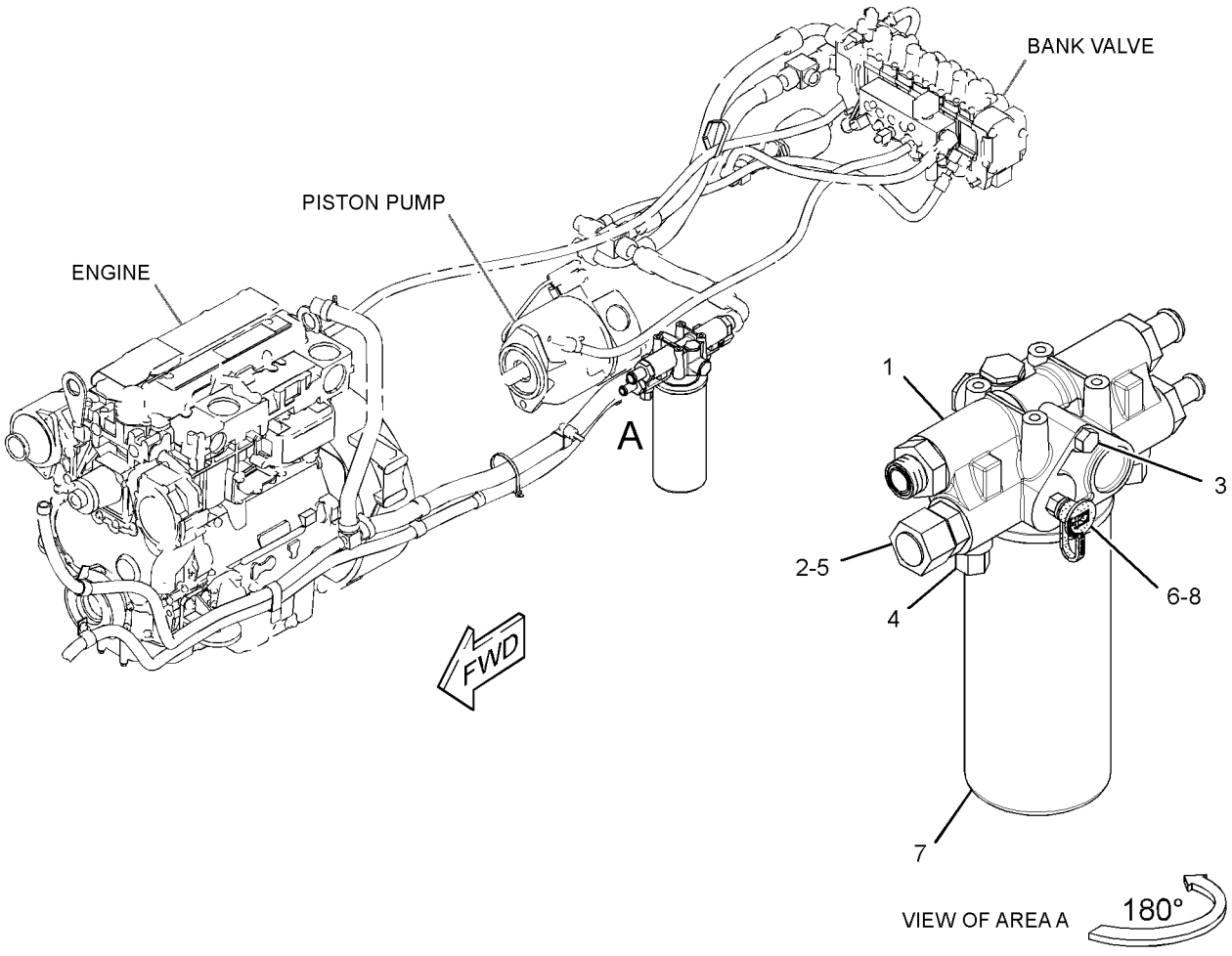

GRAPHIC #1 **<END>** g01573096

132-8769 FITTING GP-HYDRAULIC–QUICK DISCONNECT

S/N: SJL1-UP
AN ATTACHMENT

SMCS-5057 **i01499420**

NOTE	REF NO	GRAPHIC REF	PART NUMBER	QTY	PART NAME 1 2 3 4 5 6 (PRODUCT LEVEL)	SEE PAGE
	1	1	**106-0406**	1	FITTING (QUICK DISCONNECT, MALE)	
	2	1	**106-0401**	1	FITTING (QUICK DISCONNECT, FEMALE)	

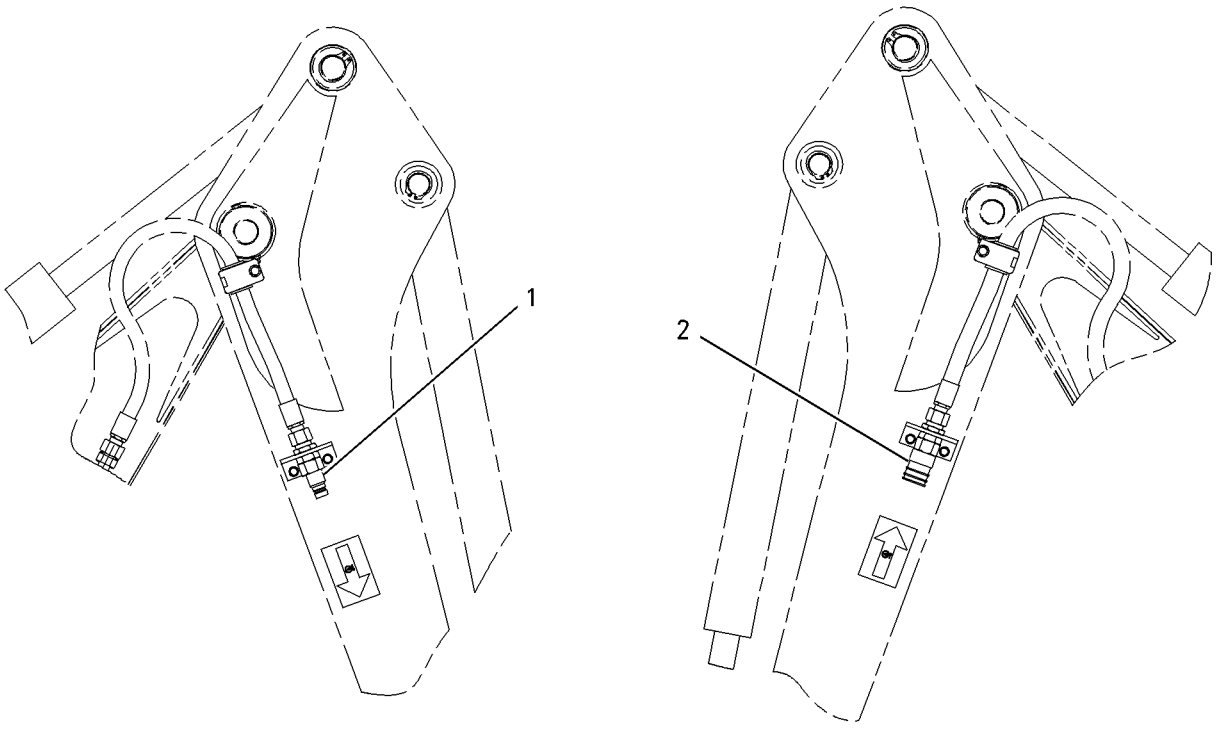

GRAPHIC #1 **<END>** g00778121

HYDRAULIC SYSTEM

329-0124 HYDRAULIC AR

S/N: SJL1-UP

PART OF 329-0080 COMMON AR

SMCS-5050 **i03665582**

NOTE	PART NUMBER	QTY	PART NAME 1 2 3 4 5 6 (PRODUCT LEVEL)	SEE PAGE
Y	**272-9700**	1	CONTROL GP-HANDLE (RH, JOYSTICK)	574
Y	*321-7231*	1	LINES GP-BACKHOE	350
Y	*299-6859*	1	LINES GP-PILOT (AUXILIARY)	380
Y	*333-0699*	1	LINES GP-PILOT (LOADER)	381
Y	*338-0432*	1	LINES GP-PILOT (BACKHOE)	383
Y	*338-0433*	1	LINES GP-PILOT (SUPPLY)	385
Y	*339-4981*	1	LINES GP-PILOT (SIGNAL)	388
Y	*335-1692*	1	LINES GP-PUMP	390
Y	*334-8021*	1	LINES GP-RETURN	392
Y	*321-7205*	1	LINES GP-SIDESHIFT LOCK	396
Y	*299-6857*	1	LINES GP-STABILIZER	397
Y	*326-1803*	1	LINES GP-SWING	401
Y	**289-6370**	1	PUMP GP-PISTON	411
Y	*324-5929*	1	TANK & MTG GP-HYDRAULIC	415
Y	*332-9781*	1	VALVE & MTG GP-BANK	419
Y	*267-5635*	1	WIRING GP-CONTROL (JOYSTICK, LH)	187
	272-5420	1	FILM-CONTROL (LOADER, JOYSTICK)	
			(ON THE SIDE CONSOLE NEXT TO THE SWITCHES & NEXT TO THE LOADER CONTROL JOYSTICK)	

Y-SEPARATE ILLUSTRATION

<END>

321-7246 LINES GP-AUXILIARY HYDRAULIC–SIDESHIFT

S/N: SJL1-UP

PART OF 344-1302, 344-1303 LINES GP-BACKHOE AUXILIARY AN ATTACHMENT

SMCS-5057 **i03664543**

NOTE	REF NO	GRAPHIC REF	PART NUMBER	QTY	PART NAME 1 2 3 4 5 6 (PRODUCT LEVEL)	SEE PAGE
	1	1	*313-3477*	2	TEE AS	
					(EACH INCLUDES)	
		1	**5K-9090**	1	SEAL-O-RING	
		1	**7J-9108**	2	SEAL-O-RING	
		1	**313-3476**	1	TEE	
	2	1	**321-3096**	1	TUBE AS	
M	3	1	**8T-4908**	2	BOLT (M8X1.25X25-MM)	
I	4	1	**321-7303**	2	HOSE AS	
I	5	1	**334-4943**	1	HOSE AS	
	6	1	**2P-1293**	1	LOCKNUT (1-3/16-12-THD)	
	7	1	**6V-1249**	2	GROMMET	
	8	1	**8T-4224**	2	WASHER-HARD (8.8X16X2-MM THK)	

I-REFER TO HYDRAULIC INFORMATION SYSTEM
M-METRIC PART

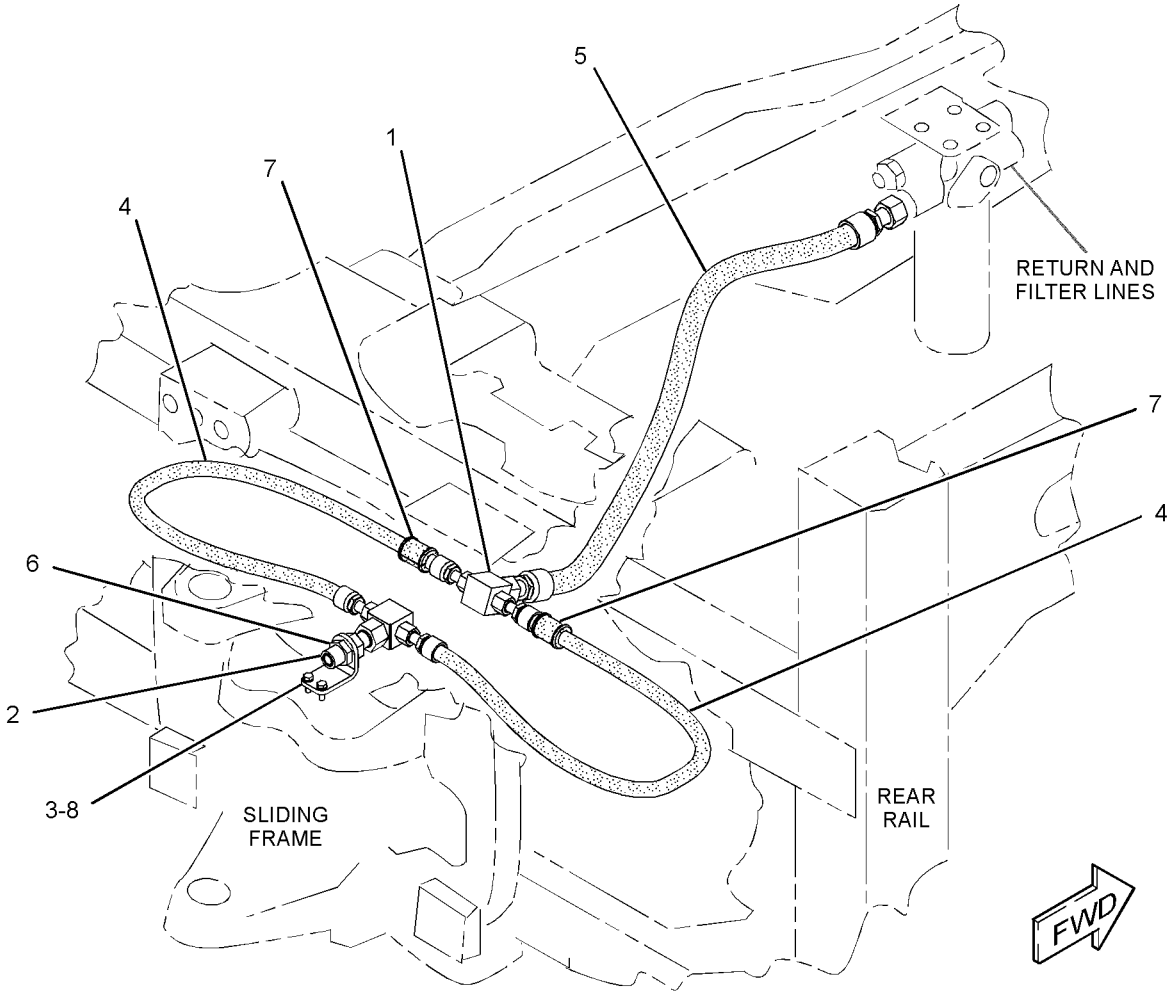

GRAPHIC #1 **<END>** g01970434

HYDRAULIC SYSTEM

327-6983 LINES GP-AUXILIARY HYDRAULIC–EXTENDABLE STICK

S/N: SJL1-UP

PART OF 344-1303 LINES GP-BACKHOE AUXILIARY AN ATTACHMENT

SMCS-5057 **i03664550**

NOTE	REF NO	GRAPHIC REF	PART NUMBER	QTY	PART NAME 1 2 3 4 5 6 (PRODUCT LEVEL)	SEE PAGE
	1	1	**123-7637**	2	CAP	
	2	1	**225-7733**	2	PLATE	
	3	1	*241-6226*	1	TEE AS	
		1	**6V-8398**	1	SEAL-O-RING	
		1	**6V-9746**	1	SEAL-O-RING	
		1	**7J-9108**	1	SEAL-O-RING	
		1	**241-6225**	1	TEE	
	4	1	**241-8450**	2	FILM-WARNING (HYD PRESS, READ OMM, INTL)	
	5	1	**281-4726**	2	FILM-INSTRUCTION (OIL FLOW DIRECTION)	
	6	1	**321-6387**	1	TUBE AS	
I	7	1	**324-7611**	1	HOSE AS	
	8	1	**327-8298**	1	TUBE AS	
	9	1	**329-0143**	1	TUBE AS	
	10	1	**331-3779**	1	PLATE	
I	11	1	**331-6299**	1	HOSE AS	
I	12	1	**331-7306**	1	HOSE AS	
	13	1	**332-1829**	1	PLATE	
	14	1	*150-3052*	1	CONNECTOR AS	
		1	**5K-9090**	1	SEAL-O-RING	
		1	**7M-8485**	1	SEAL-O-RING	
		1	**107-6709**	1	CONNECTOR	
	15	1	*150-3053*	1	CONNECTOR AS	
		1	**6V-9746**	1	SEAL-O-RING	
		1	**7M-8485**	1	SEAL-O-RING	
		1	**108-3872**	1	CONNECTOR	
	16	1	**2P-1293**	1	LOCKNUT (1-3/16-12-THD)	
	17	1	**6V-8398**	2	SEAL-O-RING	
	18	1	**6V-9170**	1	NUT-BULKHEAD (1-14-THD)	
	19	1	**6V-9172**	1	NUT (1-7/16-12-THD)	
	20	1	**6V-9746**	3	SEAL-O-RING	
	21	1	**8K-1117**	1	CLAMP	
	22	1	**8T-4121**	8	WASHER-HARD (11X21X2.5-MM THK)	
M	23	1	**8T-4133**	4	NUT (M10X1.5-THD)	
M	24	1	**8T-4136**	2	BOLT (M10X1.5X25-MM)	
M	25	1	**8T-4195**	2	BOLT (M10X1.5X30-MM)	

I-REFER TO HYDRAULIC INFORMATION SYSTEM
M-METRIC PART

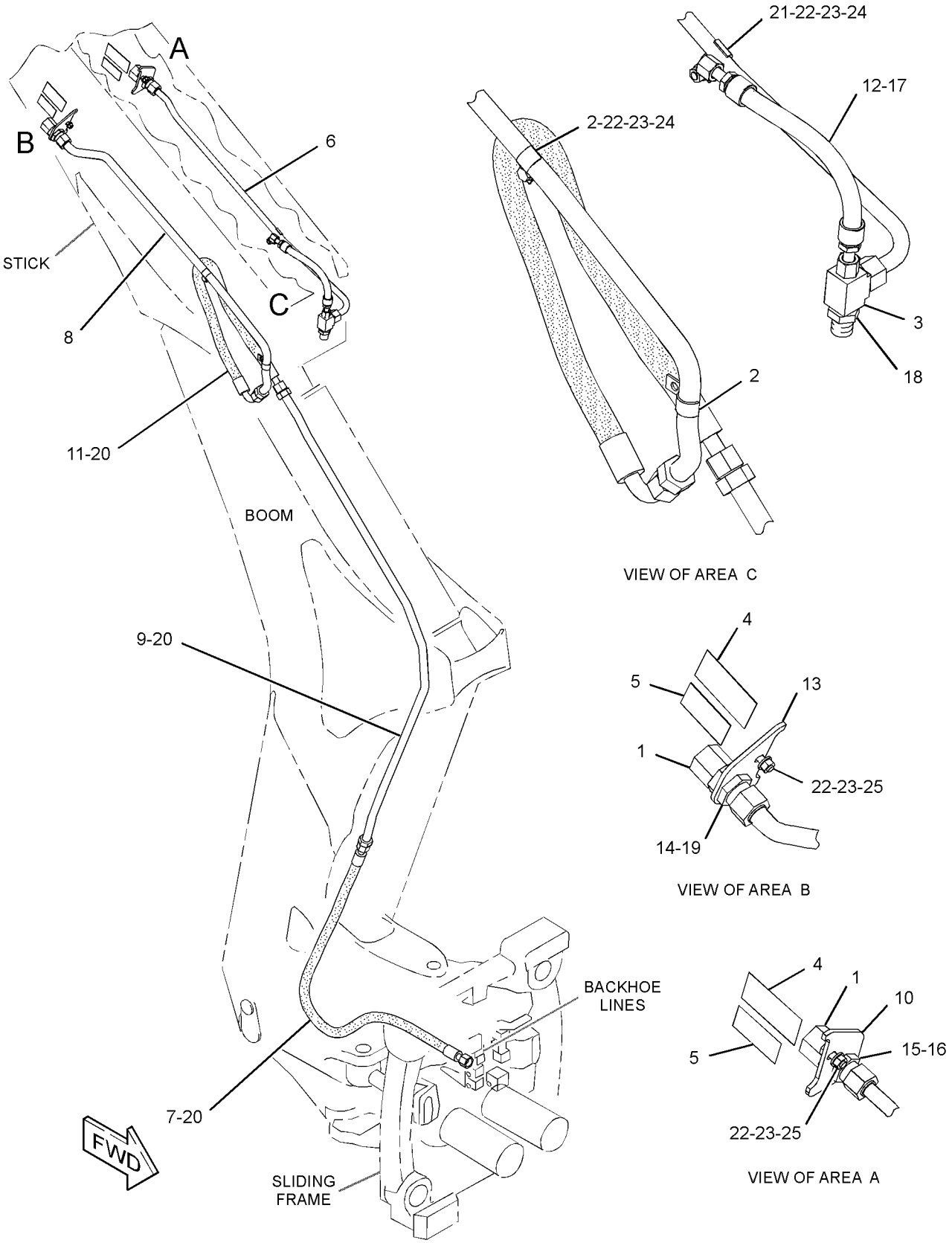

GRAPHIC #1

<END>

g01972359

HYDRAULIC SYSTEM

329-3559 LINES GP-AUXILIARY HYDRAULIC

S/N: SJL1-UP
PART OF 332-7952 CONVERSION AR-QUICK COUPLER, 332-7951, 332-7962, 332-7963
VALVE AR-BANK 3
AN ATTACHMENT

SMCS-5057 **i03654230**

NOTE	REF NO	GRAPHIC REF	PART NUMBER	QTY	PART NAME 1 2 3 4 5 6 (PRODUCT LEVEL)	SEE PAGE
	1	1	**257-9886**	1	TUBE AS	
	2	1	**257-9887**	1	TUBE AS	
	3	1	**329-3491**	1	TUBE AS	
	4	1	**329-3492**	1	TUBE AS	
I	5	1	**329-3494**	2	HOSE AS	
	6	1	*148-8341*	1	CONNECTOR AS	
		1	**3D-2824**	1	SEAL-O-RING	
		1	**6V-8713**	1	CONNECTOR	
		1	**7J-9108**	1	SEAL-O-RING	
	7	1	*148-8382*	1	ELBOW AS	
		1	**3D-2824**	1	SEAL-O-RING	
		1	**7J-9108**	1	SEAL-O-RING	
		1	**8T-0404**	1	ELBOW	
	8	1	**6V-8398**	6	SEAL-O-RING	
	9	1	**6V-9830**	2	CAP AS	
	10	1	**8T-4121**	6	WASHER-HARD (11X21X2.5-MM THK)	
M	11	1	**8T-4137**	6	BOLT (M10X1.5X20-MM)	
	12	1	**9R-1004**	6	CLIP (TAB)	
	13	1	**9R-1005**	6	CLIP (SLOT)	

I-REFER TO HYDRAULIC INFORMATION SYSTEM
M-METRIC PART

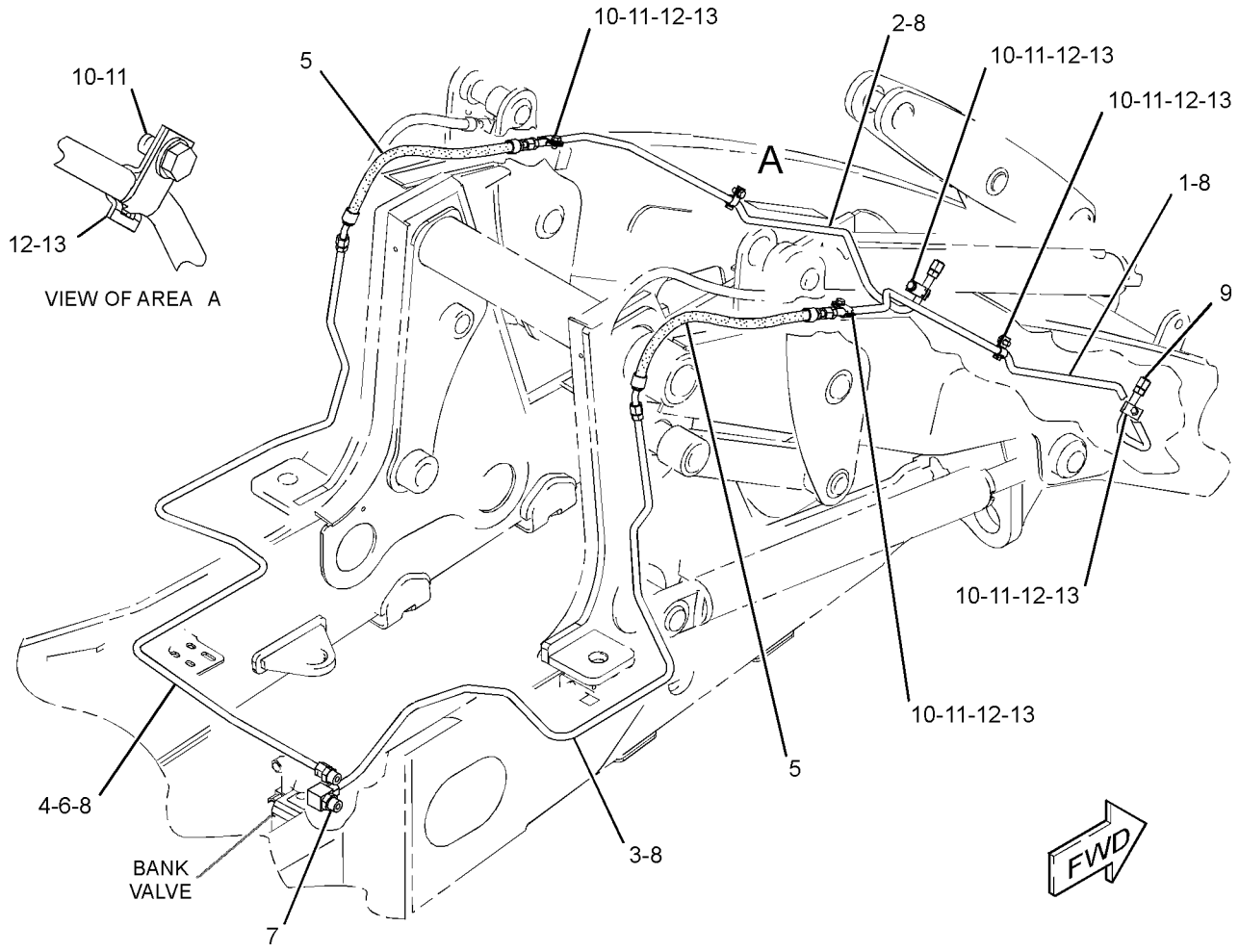

GRAPHIC #1 **<END>** g01962629

HYDRAULIC SYSTEM

332-2691 LINES GP-AUXILIARY HYDRAULIC–

STANDARD STICK, 1-WAY

S/N: SJL1-UP

PART OF 344-1302 LINES GP-BACKHOE AUXILIARY

AN ATTACHMENT

SMCS-5057 **i03705788**

NOTE	REF NO	GRAPHIC REF	PART NUMBER	QTY	PART NAME 1 2 3 4 5 6 (PRODUCT LEVEL)	SEE PAGE
	1	1	**123-7637**	2	CAP	
	2	1	**225-7733**	2	PLATE	
	3	1	*241-6226*	1	TEE AS	
		1	**6V-8398**	1	SEAL-O-RING	
		1	**6V-9746**	1	SEAL-O-RING	
		1	**7J-9108**	1	SEAL-O-RING	
		1	**241-6225**	1	TEE	
	4	1	**241-8450**	2	FILM-WARNING (HYD PRESS, READ OMM, INTL)	
	5	1	**281-4726**	2	FILM-INSTRUCTION (OIL FLOW DIRECTION)	
	6	1	**321-6387**	1	TUBE AS	
I	7	1	**324-7599**	1	HOSE AS	
I	8	1	**324-7611**	1	HOSE AS	
	9	1	**327-8298**	1	TUBE AS	
	10	1	**329-0143**	1	TUBE AS	
I	11	1	**331-6299**	1	HOSE AS	
	12	1	**336-8184**	1	PLATE	
	13	1	**336-8185**	1	PLATE	
	14	1	*150-3052*	1	CONNECTOR AS	
		1	**5K-9090**	1	SEAL-O-RING	
		1	**7M-8485**	1	SEAL-O-RING	
		1	**107-6709**	1	CONNECTOR	
	15	1	*150-3053*	1	CONNECTOR AS	
		1	**6V-9746**	1	SEAL-O-RING	
		1	**7M-8485**	1	SEAL-O-RING	
		1	**108-3872**	1	CONNECTOR	
	16	1	**2P-1293**	1	LOCKNUT (1-3/16-12-THD)	
	17	1	**6V-8398**	1	SEAL-O-RING	
	18	1	**6V-9170**	1	NUT-BULKHEAD (1-14-THD)	
	19	1	**6V-9172**	1	NUT (1-7/16-12-THD)	
	20	1	**6V-9746**	3	SEAL-O-RING	
	21	1	**6V-9830**	1	CAP AS	
	22	1	**8K-1117**	1	CLAMP	
	23	1	**8T-4121**	8	WASHER-HARD (11X21X2.5-MM THK)	
M	24	1	**8T-4133**	4	NUT (M10X1.5-THD)	
M	25	1	**8T-4136**	2	BOLT (M10X1.5X25-MM)	
M	26	1	**8T-4195**	2	BOLT (M10X1.5X30-MM)	

I-REFER TO HYDRAULIC INFORMATION SYSTEM
M-METRIC PART

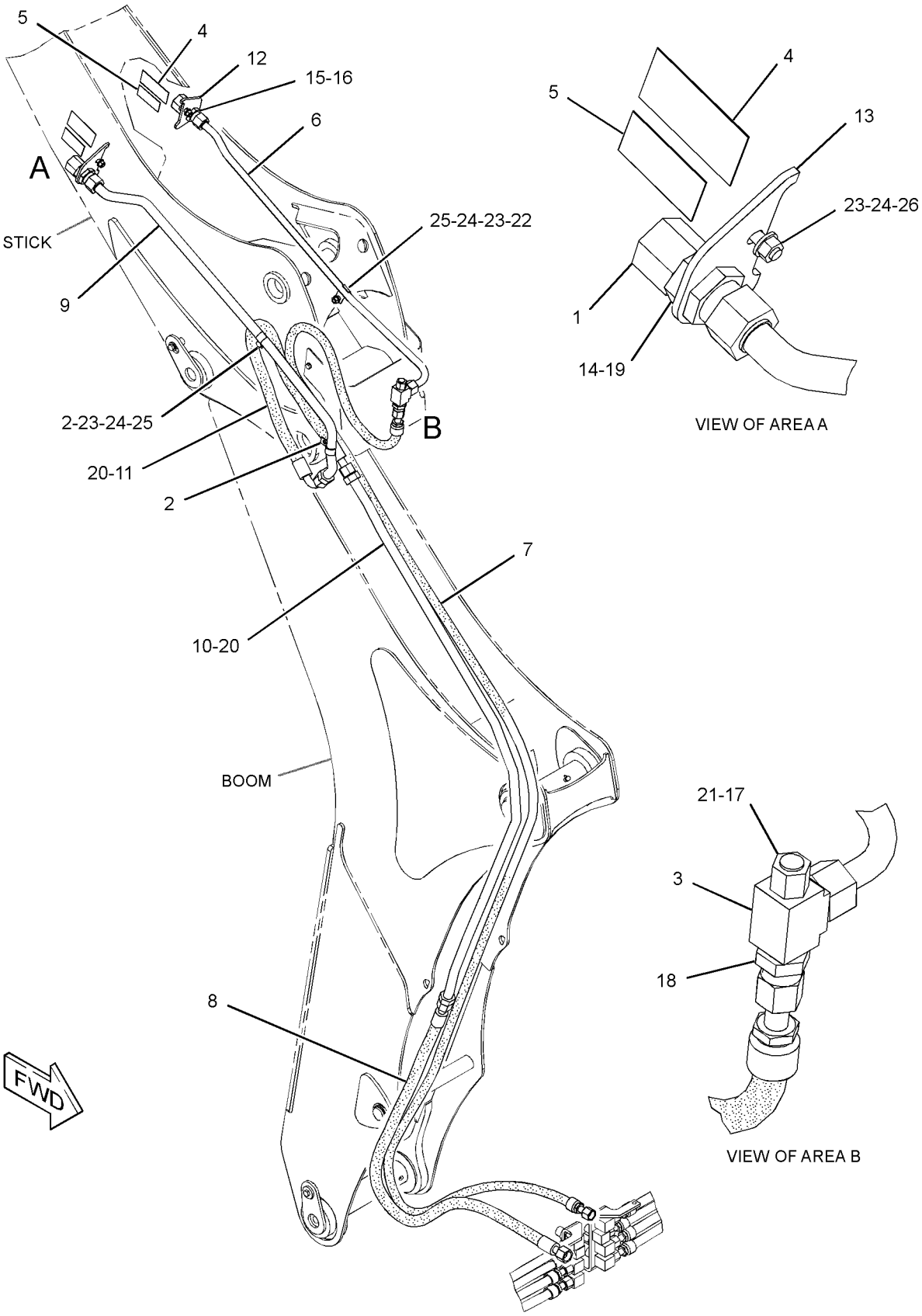

GRAPHIC #1 **<END>** g01969935

HYDRAULIC SYSTEM

321-7231 LINES GP-BACKHOE

S/N: SJL1-UP

PART OF 329-0124 HYDRAULIC AR

SMCS-5057 **i03658106**

NOTE	REF NO	GRAPHIC REF	PART NUMBER	QTY	PART NAME 1 2 3 4 5 6 (PRODUCT LEVEL)	SEE PAGE
	1	1	**5P-5148**	12	STRAP-TIE	
	2	1	*260-9214*	5	CONNECTOR AS	
					(EACH INCLUDES)	
		1	**3D-2824**	1	SEAL-O-RING	
		1	**7J-9108**	1	SEAL-O-RING	
		1	**260-9213**	1	CONNECTOR	
	3	1	**319-6906**	4	HOSE AS	
I	4	1	**319-6907**	2	HOSE AS	
	5	1	**319-6908**	2	HOSE AS	
	6	1	**320-8438**	4	CLAMP	
	7	1	**323-9083**	1	TUBE AS	
	8	1	**323-9084**	1	TUBE AS	
	9	1	**323-9085**	1	TUBE AS	
	10	1	**323-9086**	1	TUBE AS	
	11	1	**333-0739**	4	PLATE	
	12	1	*344-2170*	1	FITTING & MTG GP-HYDRAULIC	
		1	**6V-8398**	2	SEAL-O-RING	
		1	**7J-9108**	6	SEAL-O-RING	
		1	**327-0223**	1	FITTING & MTG GP-HYDRAULIC	
	13	1	*344-2171*	1	FITTING & MTG GP-HYDRAULIC	
		1	**6V-8398**	2	SEAL-O-RING	
		1	**7J-9108**	6	SEAL-O-RING	
		1	**327-0222**	1	FITTING & MTG GP-HYDRAULIC	
	14	1	*148-8328*	2	CONNECTOR AS	
					(EACH INCLUDES)	
		1	**3D-2824**	1	SEAL-O-RING	
		1	**6V-8398**	1	SEAL-O-RING	
		1	**6V-8633**	1	CONNECTOR	
	15	1	*148-8341*	1	CONNECTOR AS	
		1	**3D-2824**	1	SEAL-O-RING	
		1	**6V-8713**	1	CONNECTOR	
		1	**7J-9108**	1	SEAL-O-RING	
M	16	1	**5C-2890**	5	NUT (M6X1-THD)	
	17	1	**6V-8398**	2	SEAL-O-RING	
B	18	1	**6V-9831**	2	CAP AS	
	19	1	**7J-9108**	2	SEAL-O-RING	
M	20	1	**8T-3844**	6	BOLT (M6X1X70-MM)	
	21	1	**8T-4205**	12	WASHER-HARD (7.2X14.5X2-MM THK)	
	22	1	**8T-4224**	4	WASHER-HARD (8.8X16X2-MM THK)	
M	23	1	**8T-4908**	4	BOLT (M8X1.25X25-MM)	

B-USE AS REQUIRED
I-REFER TO HYDRAULIC INFORMATION SYSTEM
M-METRIC PART

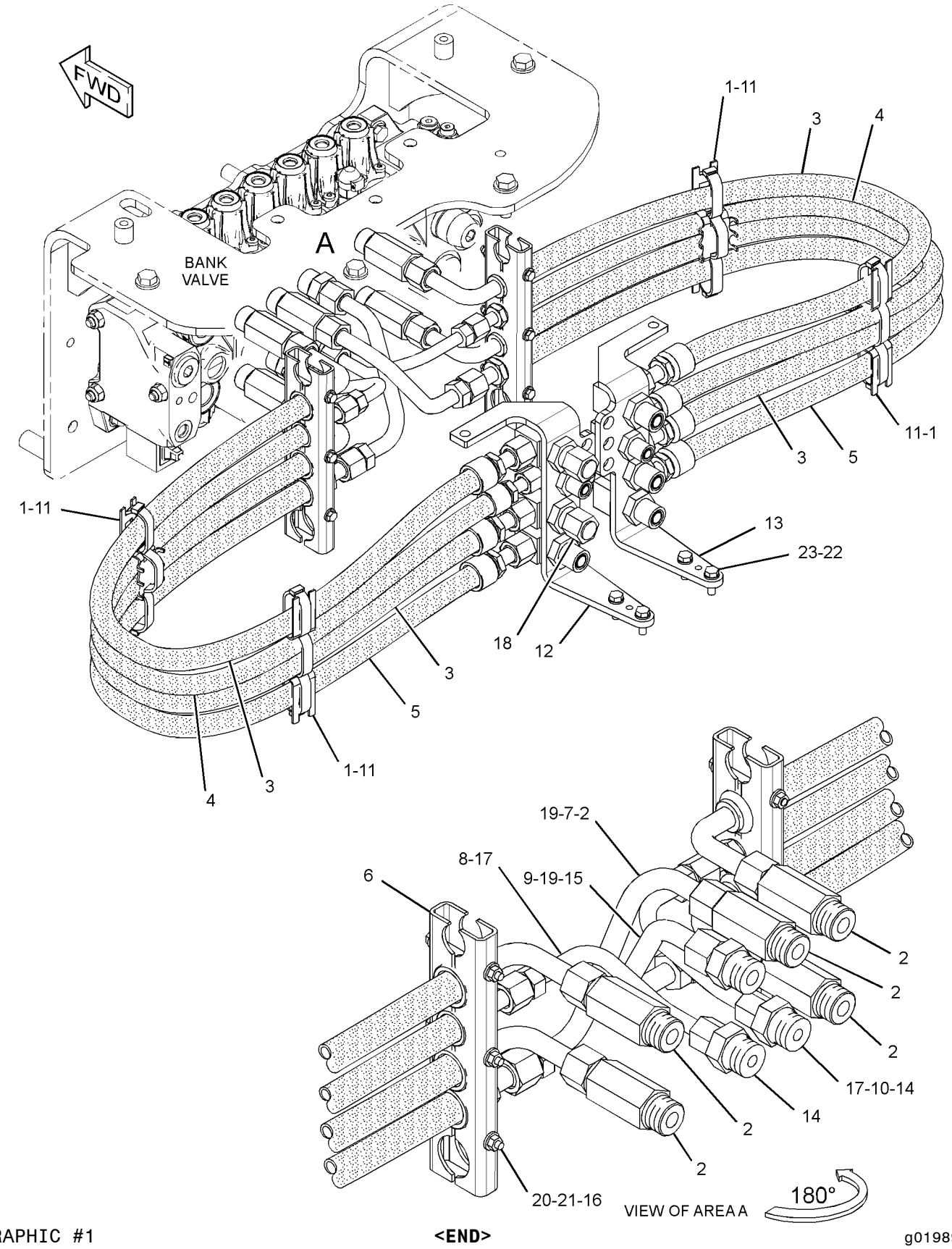

GRAPHIC #1

<END>

g01989253

HYDRAULIC SYSTEM

321-7183 LINES GP-BACKHOE AUXILIARY–EXTENDABLE STICK, 2-WAY

S/N: SJL1-UP

FOR USE WITH 327-6983–PAGE 344. CANNOT BE USED WITH 332-2691–PAGE 348, 132-8769–PAGE 341

AN ATTACHMENT

SMCS-5057 **i03648251**

NOTE	REF NO	GRAPHIC REF	PART NUMBER	QTY	PART NAME 1 2 3 4 5 6 (PRODUCT LEVEL)	SEE PAGE
	1	1	**123-7637**	1	CAP	
	2	1	**171-1357**	1	CONNECTOR AS	
		1	**3K-0360**	1	SEAL-O-RING	
		1	**7J-9108**	1	SEAL-O-RING	
		1	**160-5083**	1	CONNECTOR	
M	3	1	**8T-4195**	2	BOLT (M10X1.5X30-MM)	
	4	1	**321-6383**	1	TUBE AS	
I	5	1	**324-7612**	1	HOSE AS	
	6	1	**331-3770**	1	PLATE	
	7	1	**333-1320**	1	VALVE-MANUAL	
	8	1	*148-8311*	1	ADAPTER AS	
		1	**3K-0360**	1	SEAL-O-RING	
		1	**8T-1715**	1	ADAPTER	
	9	1	*148-8340*	1	CONNECTOR AS	
		1	**3K-0360**	1	SEAL-O-RING	
		1	**6V-8398**	1	SEAL-O-RING	
		1	**6V-8639**	1	CONNECTOR	
	10	1	*148-8359*	1	ELBOW AS	
		1	**3K-0360**	1	SEAL-O-RING	
		1	**6V-9746**	1	SEAL-O-RING	
		1	**6V-9877**	1	ELBOW	
	11	1	*150-3053*	1	CONNECTOR AS	
		1	**6V-9746**	1	SEAL-O-RING	
		1	**7M-8485**	1	SEAL-O-RING	
		1	**108-3872**	1	CONNECTOR	
	12	1	**2P-1293**	1	LOCKNUT (1-3/16-12-THD)	
	13	1	**6V-9170**	1	NUT-BULKHEAD (1-14-THD)	
	14	1	**8K-1117**	1	CLAMP	
	15	1	**8T-4121**	4	WASHER-HARD (11X21X2.5-MM THK)	
M	16	1	**8T-4133**	2	NUT (M10X1.5-THD)	

I-REFER TO HYDRAULIC INFORMATION SYSTEM
M-METRIC PART

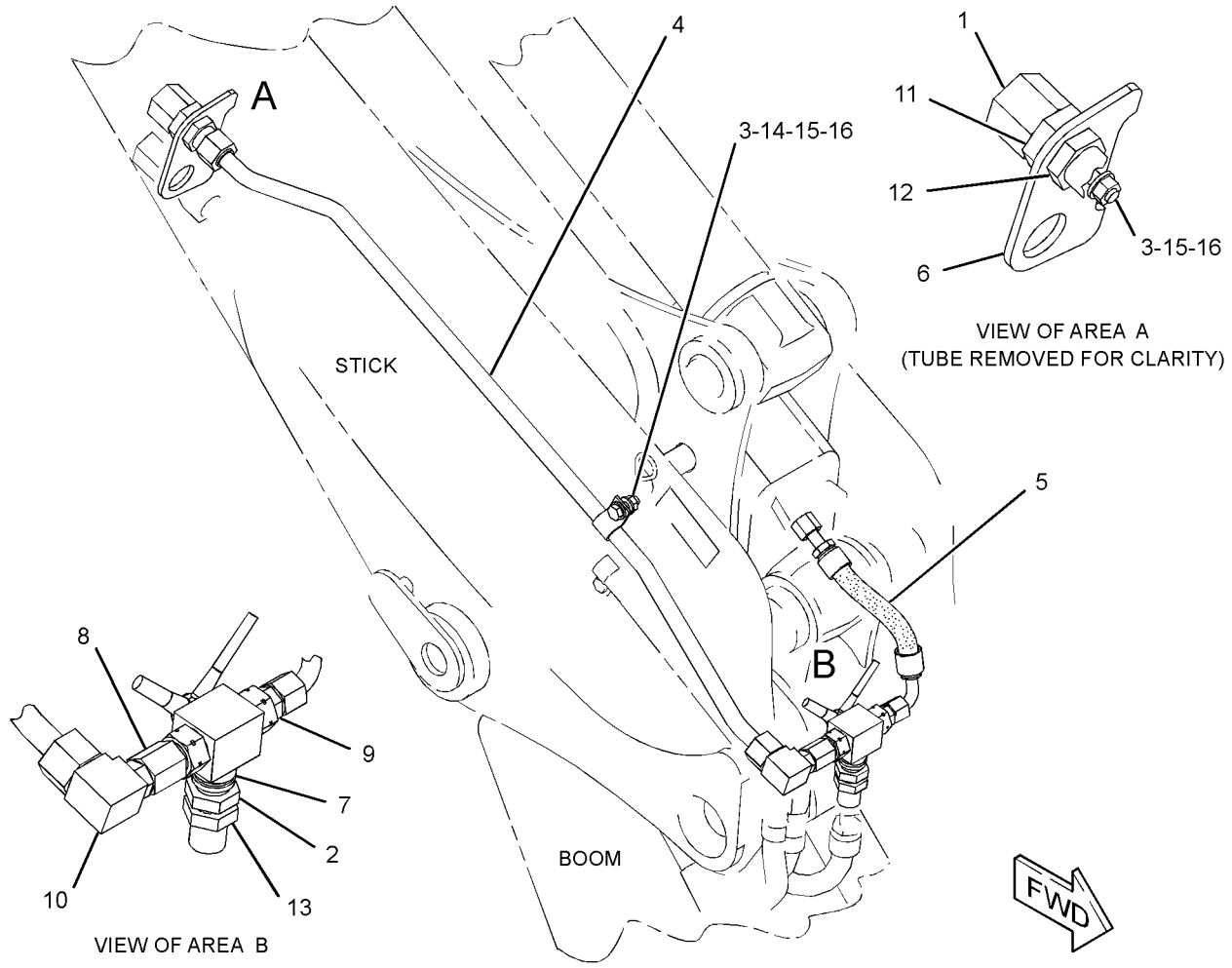

GRAPHIC #1

<END>

g01968173

HYDRAULIC SYSTEM

327-8972 LINES GP-BACKHOE AUXILIARY–EXTENDABLE STICK, 2-WAY

S/N: SJL1-UP

CANNOT BE USED WITH 132-8769–PAGE 341

AN ATTACHMENT

SMCS-5057 **i03651197**

NOTE	REF NO	GRAPHIC REF	PART NUMBER	QTY	PART NAME 1 2 3 4 5 6 (PRODUCT LEVEL)	SEE PAGE
	1	1	**123-7637**	1	CAP	
	2	1	*171-1357*	1	CONNECTOR AS	
		1	**3K-0360**	1	SEAL-O-RING	
		1	**7J-9108**	1	SEAL-O-RING	
		1	**160-5083**	1	CONNECTOR	
M	3	1	**8T-4195**	1	BOLT (M10X1.5X30-MM)	
	4	1	**331-3770**	1	PLATE	
I	5	1	**332-3871**	1	HOSE AS	
	6	1	**333-1320**	1	VALVE-MANUAL	
	7	1	**334-4436**	1	TUBE AS	
	8	1	*148-8311*	1	ADAPTER AS	
		1	**3K-0360**	1	SEAL-O-RING	
		1	**8T-1715**	1	ADAPTER	
	9	1	*148-8340*	1	CONNECTOR AS	
		1	**3K-0360**	1	SEAL-O-RING	
		1	**6V-8398**	1	SEAL-O-RING	
		1	**6V-8639**	1	CONNECTOR	
	10	1	*148-8359*	1	ELBOW AS	
		1	**3K-0360**	1	SEAL-O-RING	
		1	**6V-9746**	1	SEAL-O-RING	
		1	**6V-9877**	1	ELBOW	
	11	1	*150-3053*	1	CONNECTOR AS	
		1	**6V-9746**	1	SEAL-O-RING	
		1	**7M-8485**	1	SEAL-O-RING	
		1	**108-3872**	1	CONNECTOR	
	12	1	**2P-1293**	1	LOCKNUT (1-3/16-12-THD)	
	13	1	**6V-9170**	1	NUT-BULKHEAD (1-14-THD)	
	14	1	**8K-1117**	1	CLAMP	
	15	1	**8T-4121**	4	WASHER-HARD (11X21X2.5-MM THK)	
M	16	1	**8T-4133**	2	NUT (M10X1.5-THD)	
M	17	1	**8T-4136**	1	BOLT (M10X1.5X25-MM)	

I-REFER TO HYDRAULIC INFORMATION SYSTEM
M-METRIC PART

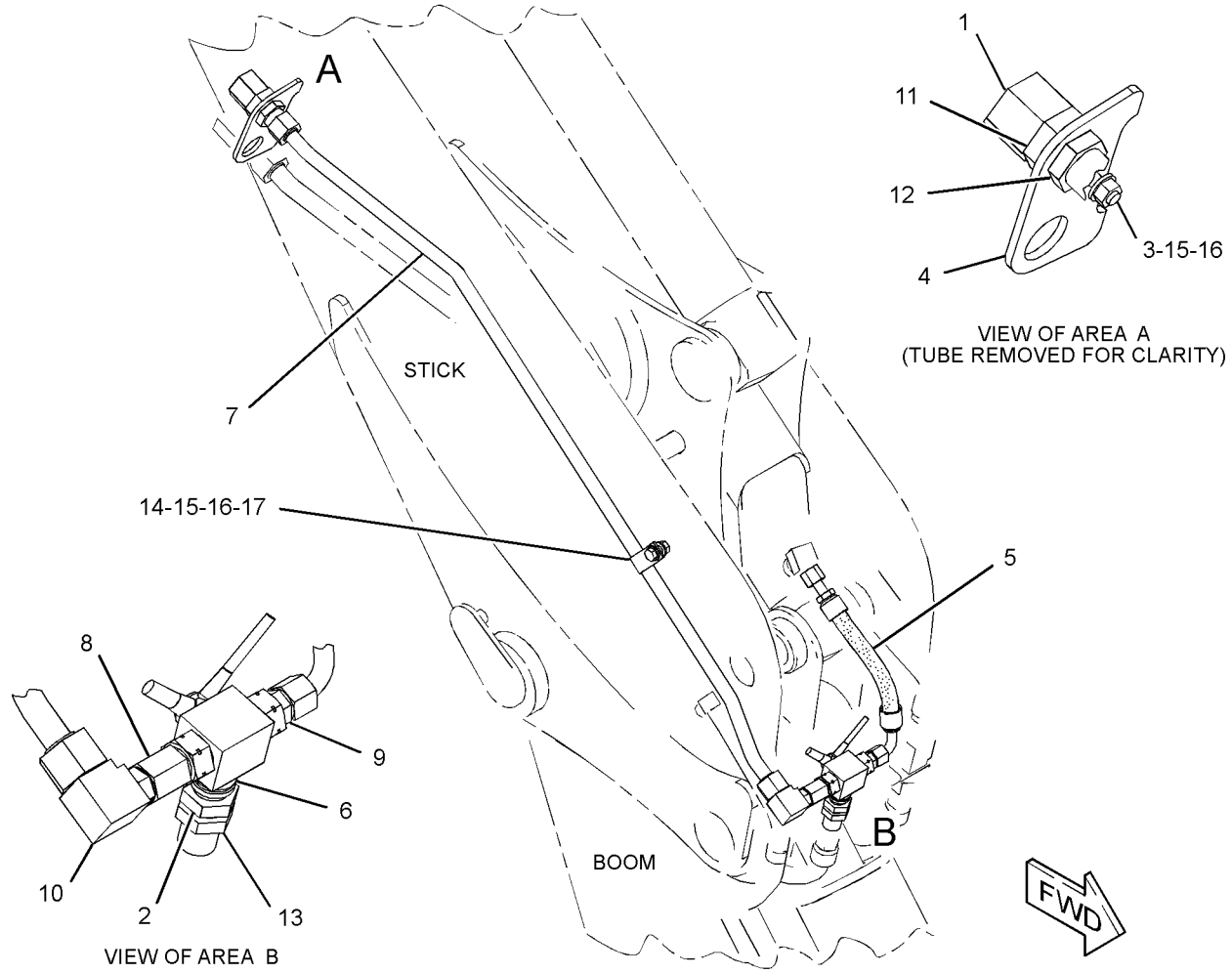

GRAPHIC #1

<END>

g01971256

344-1302 LINES GP-BACKHOE AUXILIARY–
STANDARD STICK, 1-WAY
S/N: SJL1-UP
FOR USE WITH 334-0694–PAGE 4. CANNOT BE USED WITH 334-0686–PAGE 1, 334-0691–PAGE 1, 321-7183–PAGE 352, 132-8769–PAGE 341
AN ATTACHMENT

SMCS-5057 **i03664560**

NOTE	PART NUMBER	QTY	PART NAME 1 2 3 4 5 6 (PRODUCT LEVEL)	SEE PAGE
Y	*321-7246*	1	LINES GP-AUXILIARY HYDRAULIC (SIDESHIFT)	343
Y	*332-2691*	1	LINES GP-AUXILIARY HYDRAULIC (STANDARD STICK, 1-WAY)	348

Y-SEPARATE ILLUSTRATION

<END>

344-1303 LINES GP-BACKHOE AUXILIARY–
EXTENDABLE STICK, 1-WAY
S/N: SJL1-UP
FOR USE WITH 334-0686–PAGE 1, 334-0691–PAGE 1. CANNOT BE USED WITH 334-0694–PAGE 4, 132-8769–PAGE 341
AN ATTACHMENT

SMCS-5057 **i03664542**

NOTE	PART NUMBER	QTY	PART NAME 1 2 3 4 5 6 (PRODUCT LEVEL)	SEE PAGE
Y	*321-7246*	1	LINES GP-AUXILIARY HYDRAULIC (SIDESHIFT)	343
Y	*327-6983*	1	LINES GP-AUXILIARY HYDRAULIC (EXTENDABLE STICK)	344

Y-SEPARATE ILLUSTRATION

<END>

321-7178 LINES GP-BOOM

S/N: SJL1-UP

PART OF 334-0686, 334-0691, 350-6934, 350-6935, 350-6944, 350-6945 BACKHOE AR-EXTENDABLE STICK, 334-0694, 350-6933 BACKHOE AR-STANDARD STICK AN ATTACHMENT

SMCS-5057, 5456 **i03642521**

NOTE	REF NO	GRAPHIC REF	PART NUMBER	QTY	PART NAME 1 2 3 4 5 6 (PRODUCT LEVEL)	SEE PAGE
I	1	1	**324-7594**	1	HOSE AS	
I	2	1	**324-7597**	1	HOSE AS	
	3	1	*148-8390*	1	ELBOW AS	
		1	**2M-9780**	1	SEAL-O-RING	
		1	**6V-8626**	1	ELBOW	
		1	**7J-9108**	1	SEAL-O-RING	

I-REFER TO HYDRAULIC INFORMATION SYSTEM

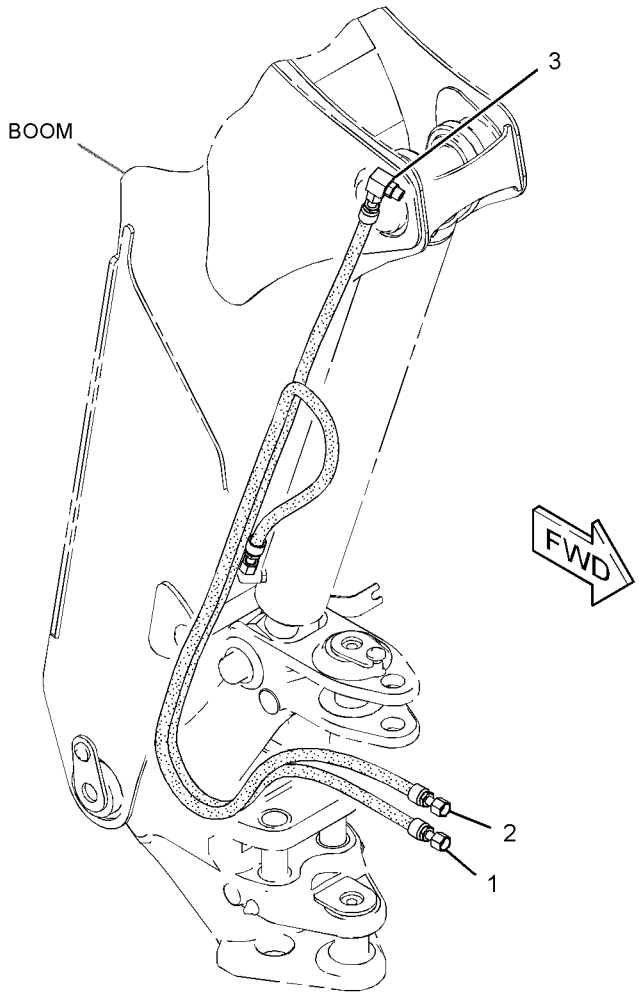

GRAPHIC #1 **<END>** g01990053

HYDRAULIC SYSTEM

320-9942 LINES GP-BUCKET

S/N: SJL1-UP

PART OF 320-9941 BUCKET AR-MULTIPURPOSE

AN ATTACHMENT

SMCS-5057, 5457 **i03479185**

NOTE	REF NO	GRAPHIC REF	PART NUMBER	QTY	PART NAME 1 2 3 4 5 6 (PRODUCT LEVEL)	SEE PAGE
	1	1	**8T-6726**	2	CLAMP-HOSE	
	2	1	**9R-8870**	2	BLOCK	
	3	1	**152-5717**	1	CAP-DUST	
	4	1	**195-6525**	1	FITTING AS (QUICK DISCONNECT, FEMALE)	
	5	1	**195-6527**	1	FITTING AS (QUICK DISCONNECT, MALE)	
I	6	1	**196-0039**	1	HOSE AS	
I	7	1	**196-0040**	1	HOSE AS	
I	8	1	**292-8339**	1	HOSE AS	
I	9	1	**317-4359**	1	HOSE AS	
I	10	1	**317-4360**	1	HOSE AS	
I	11	1	**317-4361**	1	HOSE AS	
	12	1	*148-8378*	2	ELBOW AS	
					(EACH INCLUDES)	
		1	**3J-1907**	1	SEAL-O-RING	
		1	**6V-8397**	1	SEAL-O-RING	
		1	**6V-8724**	1	ELBOW	
	13	1	*150-3060*	2	TEE AS	
					(EACH INCLUDES)	
		1	**6V-8397**	2	SEAL-O-RING	
		1	**6V-8398**	1	SEAL-O-RING	
		1	**8T-3444**	1	TEE-UNION	
	14	1	**152-5718**	1	CAP-DUST	
	15	1	**3D-2824**	2	SEAL-O-RING	
	16	1	**6V-8397**	2	SEAL-O-RING	
	17	1	**8T-1893**	4	CLIP (SLOT)	
	18	1	**8T-1894**	4	CLIP (TAB)	
	19	1	**8T-4121**	2	WASHER-HARD (11X21X2.5-MM THK)	
M	20	1	**8T-4136**	2	BOLT (M10X1.5X25-MM)	

I-REFER TO HYDRAULIC INFORMATION SYSTEM
M-METRIC PART

320-9942 **LINES GP-BUCKET** *(contd.)* **i03479185**

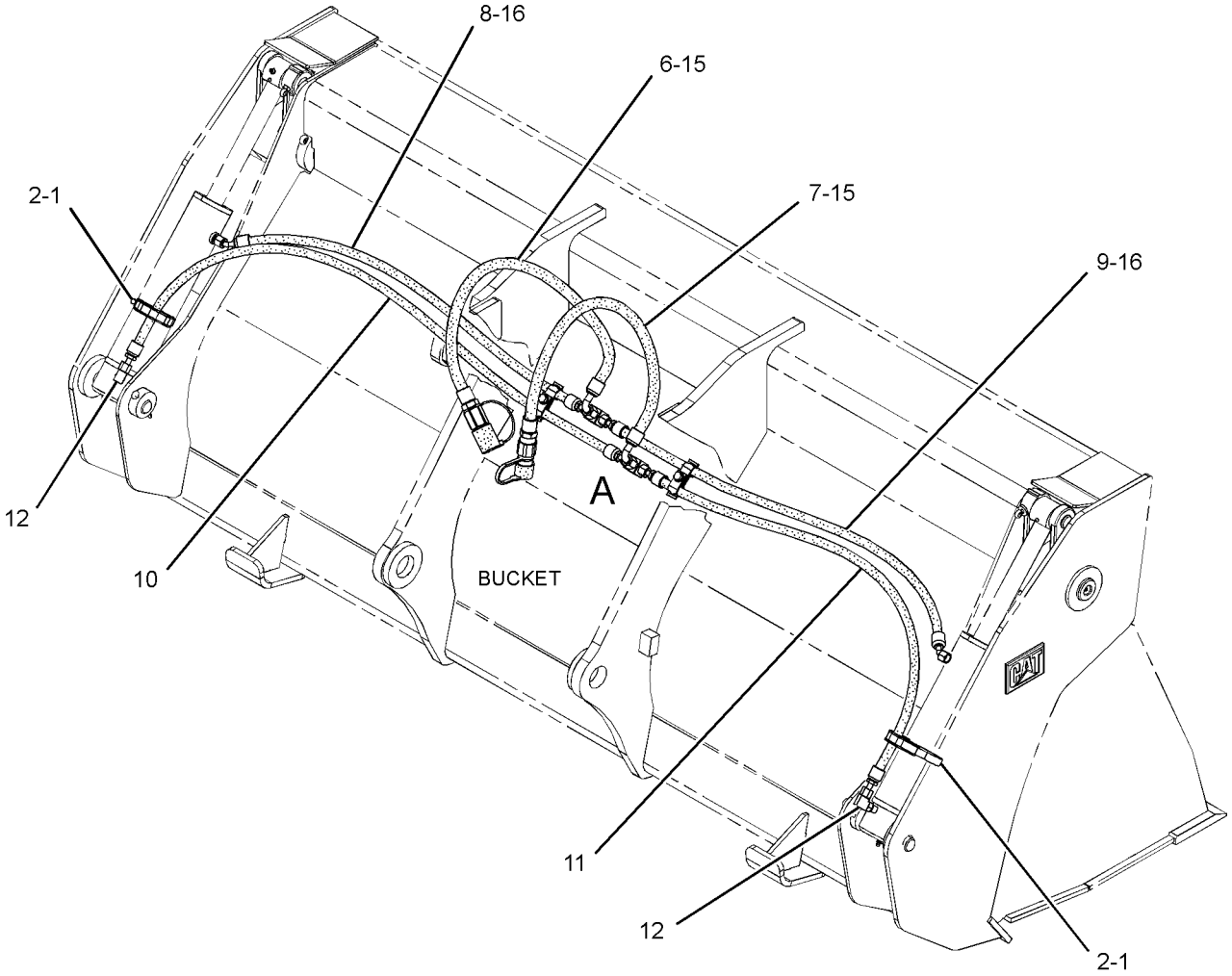

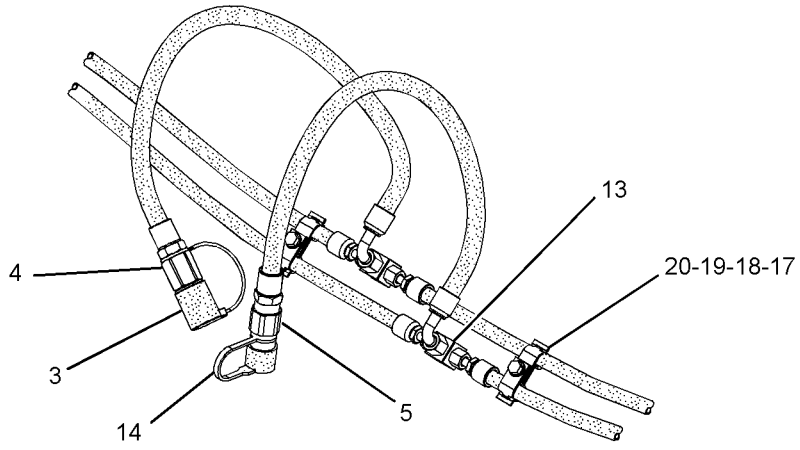

VIEW OF AREA A

GRAPHIC #1 **<END>** g01853696

HYDRAULIC SYSTEM

321-7179 LINES GP-BUCKET—EXTENDABLE STICK

S/N: SJL1-UP

PART OF 334-0686, 334-0691, 350-6934, 350-6935, 350-6944, 350-6945 BACKHOE

AR-EXTENDABLE STICK

AN ATTACHMENT

SMCS-5057, 5457 **i03693921**

NOTE	REF NO	GRAPHIC REF	PART NUMBER	QTY	PART NAME 1 2 3 4 5 6 (PRODUCT LEVEL)	SEE PAGE
	1	1	**091-0081**	1	SPACER (10.5X20X10-MM THK)	
	2	1	*268-1548*	2	CONNECTOR AS	
					(EACH INCLUDES)	
		1	**6V-8398**	1	SEAL-O-RING	
		1	**7J-9108**	1	SEAL-O-RING	
		1	**268-1547**	1	CONNECTOR	
	3	1	**321-6111**	1	TUBE AS	
	4	1	**321-6341**	1	TUBE AS	
I	6	1	**324-7598**	1	HOSE AS	
I	7	1	**324-7599**	3	HOSE AS	
I	8	1	**324-7602**	1	HOSE AS	
I	9	1	**324-7603**	1	HOSE AS	
I	10	1	**324-7604**	1	HOSE AS	
I	11	1	**334-7931**	1	HOSE AS	
	12	1	**341-5752**	1	TUBE AS	
	13	1	*148-8364*	1	ELBOW AS	
		1	**3K-0360**	1	SEAL-O-RING	
		1	**6V-8398**	1	SEAL-O-RING	
		1	**6V-8625**	1	ELBOW	
M	14	1	**5C-7261**	2	NUT (M8X1.25-THD)	
	15	1	**5P-7464**	1	CLIP (SLOT)	
	16	1	**5P-7465**	1	CLIP (TAB)	
	17	1	**6V-7359**	1	GROMMET	
	18	1	**6V-8398**	1	SEAL-O-RING	
	19	1	**6V-9170**	4	NUT-BULKHEAD (1-14-THD)	
	20	1	**7J-9108**	7	SEAL-O-RING	
	21	1	**8K-1117**	2	CLAMP	
	22	1	**8T-4121**	6	WASHER-HARD (11X21X2.5-MM THK)	
M	23	1	**8T-4133**	3	NUT (M10X1.5-THD)	
M	24	1	**8T-4136**	2	BOLT (M10X1.5X25-MM)	
M	25	1	**8T-4191**	1	BOLT (M10X1.5X16-MM)	
	26	1	**8T-4224**	4	WASHER-HARD (8.8X16X2-MM THK)	
M	27	1	**8T-4908**	2	BOLT (M8X1.25X25-MM)	
	28	1	**9M-8406**	1	CLIP	
M	29	1	**9X-6418**	1	BOLT (M10X1.5X45-MM)	

I-REFER TO HYDRAULIC INFORMATION SYSTEM
M-METRIC PART

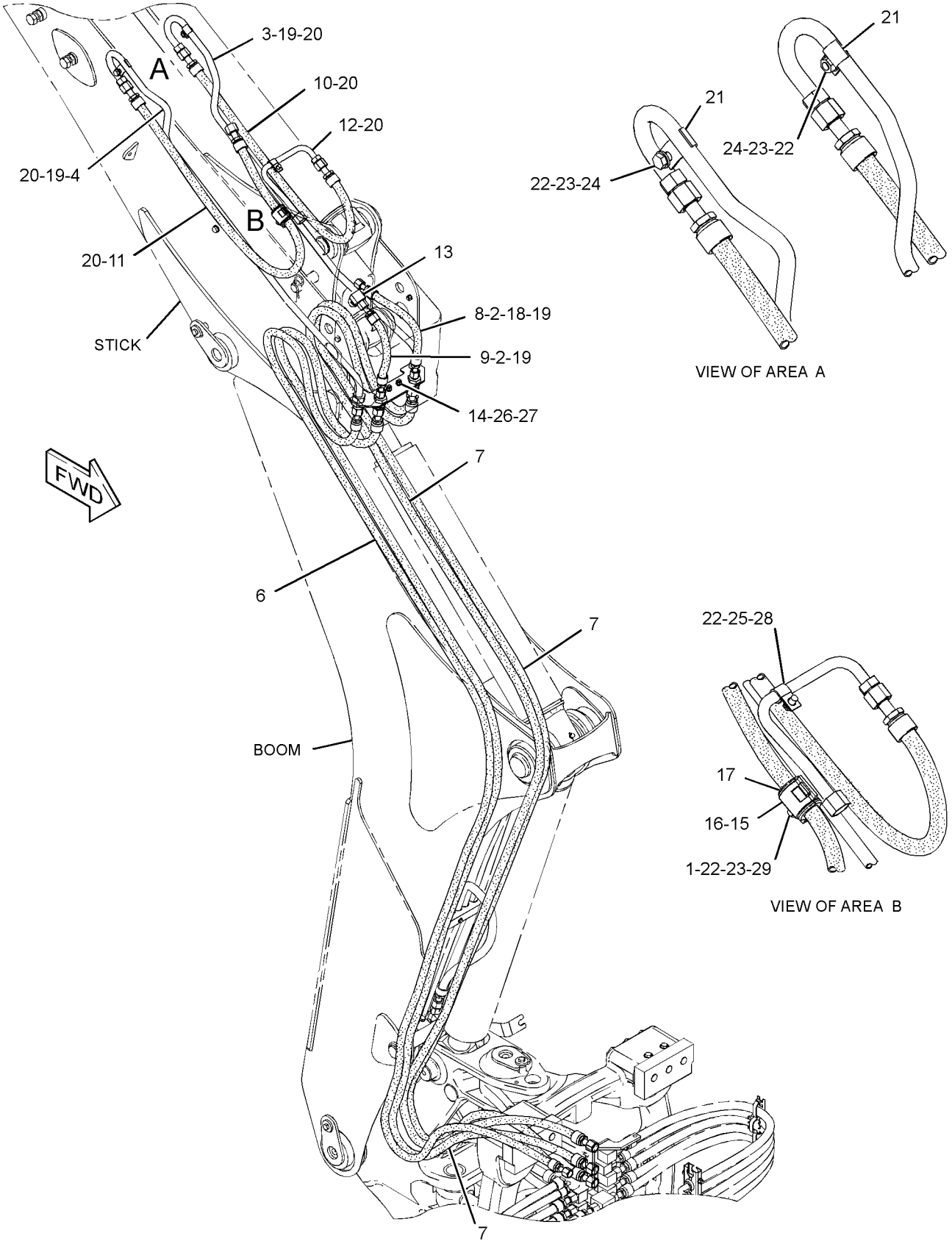

GRAPHIC #1

<END>

g01989636

HYDRAULIC SYSTEM

323-2023 LINES GP-BUCKET CYLINDER–STANDARD STICK

S/N: SJL1-UP

PART OF 334-0694, 350-6933 BACKHOE AR-STANDARD STICK

AN ATTACHMENT

SMCS-5057, 5457 **i03690285**

NOTE	REF NO	GRAPHIC REF	PART NUMBER	QTY	PART NAME 1 2 3 4 5 6 (PRODUCT LEVEL)	SEE PAGE
	1	1	*281-5983*	1	ELBOW AS	
		1	**6V-8989**	1	ELBOW	
		1	**228-7091**	2	SEAL-O-RING	
	2	1	**323-2045**	1	PLATE	
I	3	1	**324-7598**	1	HOSE AS	
I	4	1	**324-7599**	1	HOSE AS	
I	5	1	**332-1025**	1	HOSE AS	
I	6	1	**334-7947**	1	HOSE AS	
	7	1	*148-8393*	1	ELBOW AS	
		1	**6V-9852**	1	ELBOW	
		1	**7J-9108**	1	SEAL-O-RING	
	8	1	*169-7409*	1	UNION AS	
		1	**6V-8996**	1	UNION	
		1	**7J-9108**	2	SEAL-O-RING	
M	9	1	**5C-7261**	2	NUT (M8X1.25-THD)	
	10	1	**6V-9170**	2	NUT-BULKHEAD (1-14-THD)	
	11	1	**7J-9108**	2	SEAL-O-RING	
	12	1	**8T-4224**	4	WASHER-HARD (8.8X16X2-MM THK)	
M	13	1	**8T-4908**	2	BOLT (M8X1.25X25-MM)	

I-REFER TO HYDRAULIC INFORMATION SYSTEM
M-METRIC PART

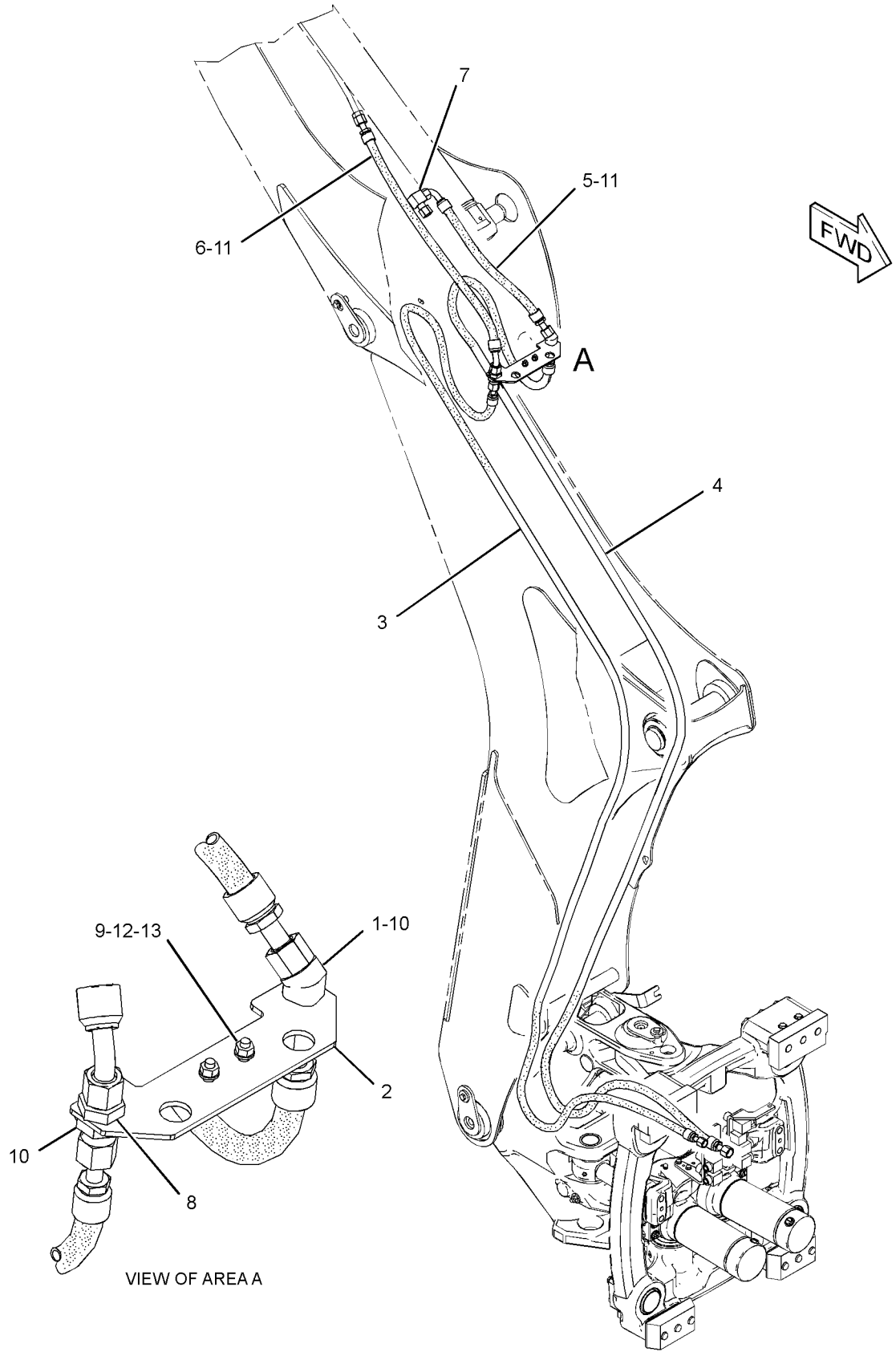

GRAPHIC #1 **<END>** g01989194

HYDRAULIC SYSTEM

216-5332 LINES GP-DRAIN

S/N: SJL1-UP
AN ATTACHMENT

SMCS-5057 **i03500100**

NOTE	REF NO	GRAPHIC REF	PART NUMBER	QTY	PART NAME 1 2 3 4 5 6 (PRODUCT LEVEL)	SEE PAGE
	1	1	**8T-0154**	1	CLAMP-HOSE	
	2	1	*165-2273*	1	VALVE GP-SHUTOFF	
		1	**3K-0360**	1	SEAL-O-RING	
		1	**6V-7238**	1	VALVE-SHUTOFF	
E	3	1	**5P-0743**		HOSE (35-CM)	

E-ORDER BY THE CENTIMETER

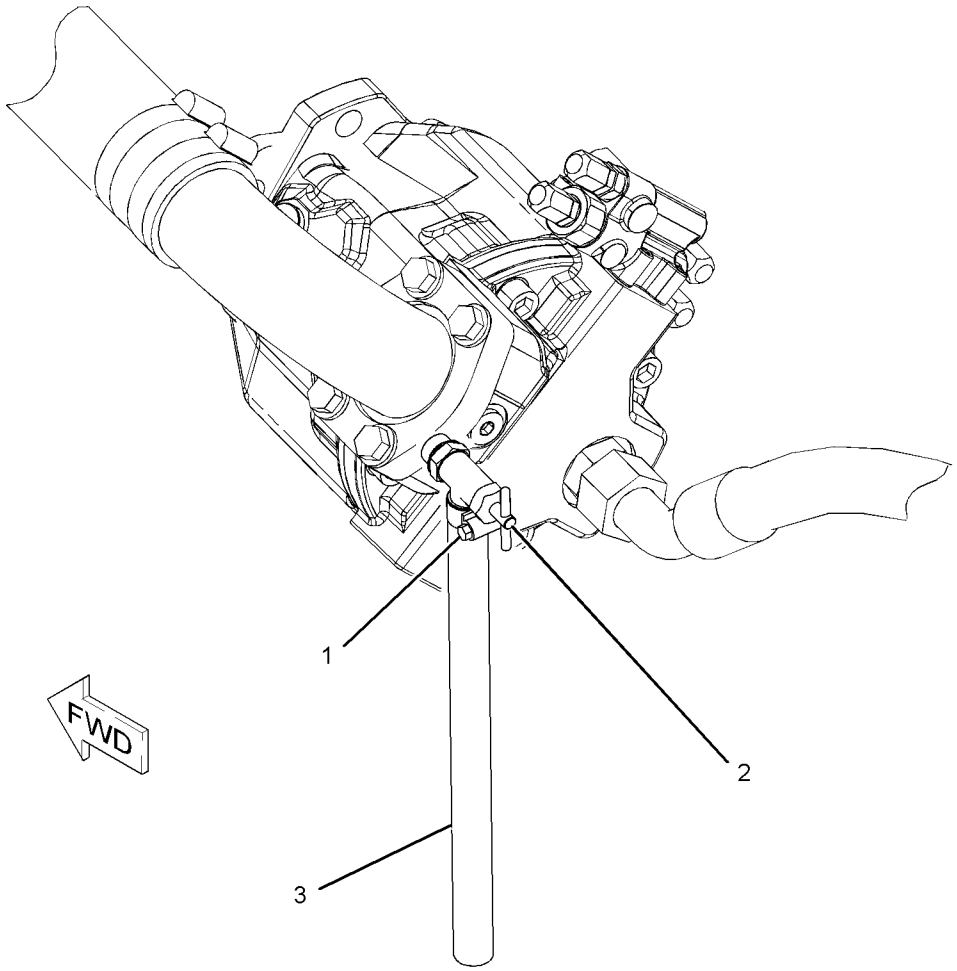

GRAPHIC #1 **<END>** g01087946

HYDRAULIC SYSTEM

331-7411 LINES GP-HYDRAULIC

S/N: SJL1-UP

PART OF 332-7952 CONVERSION AR-QUICK COUPLER, 332-7963 VALVE AR-BANK 3 AN ATTACHMENT

SMCS-5057 **i03712423**

NOTE	REF NO	GRAPHIC REF	PART NUMBER	QTY	PART NAME 1 2 3 4 5 6 (PRODUCT LEVEL)	SEE PAGE
	1	1	**6W-5760**	2	DOWEL	
	2	1	**6W-5761**	2	PIN	
	3	1	**148-5367**	2	PLATE AS	
					(EACH INCLUDES)	
M		1	**111-0483**	1	BOSS (M10X1.5-THD)	
	4	1	**152-5717**	1	CAP-DUST	
I	5	1	**188-9838**	1	HOSE AS	
Y	6	1	**190-3085**	1	CYLINDER GP-COUPLER	328
	7	1	**195-6525**	1	FITTING AS (QUICK DISCONNECT, FEMALE)	
	8	1	**195-6526**	1	FITTING AS (QUICK DISCONNECT, MALE)	
	9	1	*208-5149*	2	ELBOW AS	
					(EACH INCLUDES)	
		1	**3D-2824**	1	SEAL-O-RING	
		1	**208-5148**	1	ELBOW	
	10	1	**211-6796**	1	COVER AS	
I	11	1	**211-6799**	1	HOSE AS	
I	12	1	**211-6800**	1	HOSE AS	
I	13	1	**211-6801**	1	HOSE AS	
	14	1	**211-8319**	1	COVER	
	15	1	**211-9032**	2	WASHER-HARD (8.8X13X2-MM THK)	
Y	16	1	**231-2615**	1	VALVE GP-SOLENOID (REMOTE CONTROL)	440
I	17	1	**231-2806**	1	HOSE AS	
I	18	1	**231-2807**	1	HOSE AS	
I	19	1	**244-6864**	1	HOSE AS	
	20	1	**285-3048**	1	VALVE GP-CHECK (PILOT OPERATED HYDRAULIC)	
I	21	1	**285-3243**	1	HOSE AS	
	22	1	*148-8315*	2	CONNECTOR AS	
					(EACH INCLUDES)	
		1	**2M-9780**	1	SEAL-O-RING	
		1	**6V-8642**	1	CONNECTOR	
		1	**7J-9108**	1	SEAL-O-RING	
	23	1	*148-8319*	2	CONNECTOR AS	
					(EACH INCLUDES)	
		1	**2M-9780**	1	SEAL-O-RING	
		1	**6V-8397**	1	SEAL-O-RING	
		1	**6V-8715**	1	CONNECTOR	
	24	1	*148-8336*	2	CONNECTOR AS	
					(EACH INCLUDES)	
		1	**3J-1907**	1	SEAL-O-RING	
		1	**6V-8397**	1	SEAL-O-RING	
		1	**6V-8636**	1	CONNECTOR	
	25	1	*148-8345*	2	CONNECTOR AS	
					(EACH INCLUDES)	
		1	**2M-9780**	1	SEAL-O-RING	
		1	**6V-8398**	1	SEAL-O-RING	
		1	**6V-8638**	1	CONNECTOR	
	26	1	*148-8361*	1	ELBOW AS	
		1	**3J-7354**	1	SEAL-O-RING	
		1	**6V-8397**	1	SEAL-O-RING	
		1	**6V-9200**	1	ELBOW	
	27	1	*148-8367*	3	ELBOW AS	
					(EACH INCLUDES)	
		1	**6V-8397**	1	SEAL-O-RING	
		1	**6V-9850**	1	ELBOW	

331-7411 **LINES GP-HYDRAULIC** *(contd.)* **i03712423**

NOTE	REF NO	GRAPHIC REF	PART NUMBER	QTY	PART NAME 1 2 3 4 5 6 (PRODUCT LEVEL)	SEE PAGE
	28	1	*148-8370*	2	ELBOW AS	
					(EACH INCLUDES)	
		1	**6V-8398**	1	SEAL-O-RING	
		1	**6V-9851**	1	ELBOW	
	29	1	*148-8378*	3	ELBOW AS	
					(EACH INCLUDES)	
		1	**3J-1907**	1	SEAL-O-RING	
		1	**6V-8397**	1	SEAL-O-RING	
		1	**6V-8724**	1	ELBOW	
	30	1	*148-8433*	2	TEE AS	
					(EACH INCLUDES)	
		1	**6V-8397**	2	SEAL-O-RING	
		1	**6V-9836**	1	TEE-SWIVEL	
	31	1	*148-8435*	1	TEE AS	
		1	**3J-1907**	1	SEAL-O-RING	
		1	**6V-8397**	2	SEAL-O-RING	
		1	**6V-8781**	1	TEE-FACE SEAL	
	32	1	**152-5718**	1	CAP-DUST	
M	33	1	**5C-7261**	2	NUT (M8X1.25-THD)	
	34	1	**5P-7465**	4	CLIP (TAB)	
	35	1	**6V-1249**	4	GROMMET	
M	36	1	**6V-8213**	2	BOLT-SOCKET HEAD (M8X1.25X70-MM)	
	37	1	**8T-4121**	8	WASHER-HARD (11X21X2.5-MM THK)	
M	38	1	**8T-4136**	6	BOLT (M10X1.5X25-MM)	
M	39	1	**8T-4189**	4	BOLT (M8X1.25X20-MM)	
M	40	1	**8T-4195**	2	BOLT (M10X1.5X30-MM)	
	41	1	**8T-4224**	8	WASHER-HARD (8.8X16X2-MM THK)	
	42	1	**8T-4646**	4	CLIP (SLOT)	
M	43	1	**8T-6912**	2	BOLT (M8X1.25X50-MM)	

I-REFER TO HYDRAULIC INFORMATION SYSTEM
M-METRIC PART
Y-SEPARATE ILLUSTRATION

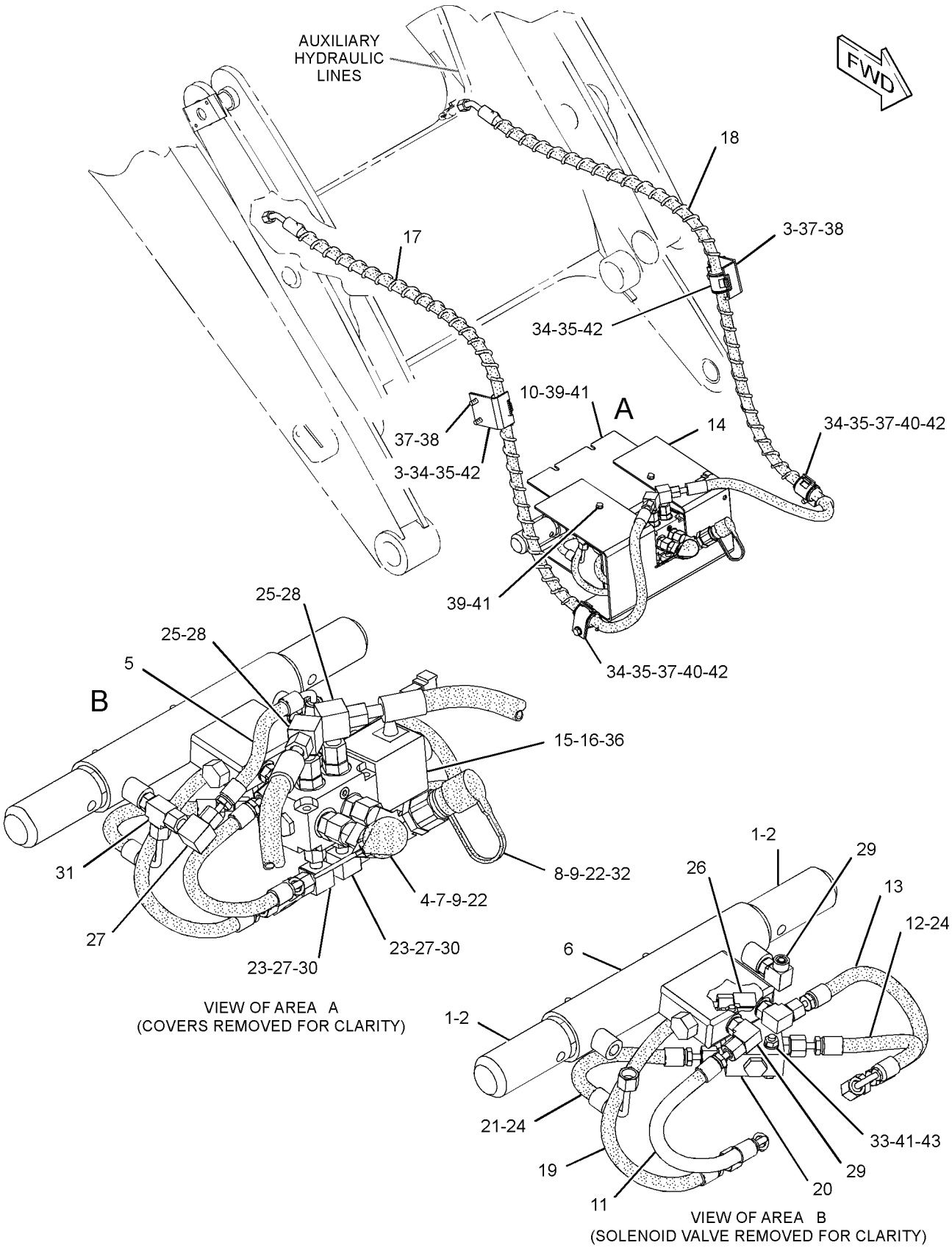

GRAPHIC #1 **<END>** g01962929

HYDRAULIC SYSTEM

329-3600 LINES GP-LIFT & TILT

S/N: SJL1-UP

PART OF 332-7952 CONVERSION AR-QUICK COUPLER, 332-7950 VALVE AR-BANK 2, 332-7951, 332-7962, 332-7963 VALVE AR-BANK 3

AN ATTACHMENT

SMCS-5057 **i03651182**

NOTE	REF NO	GRAPHIC REF	PART NUMBER	QTY	PART NAME 1 2 3 4 5 6 (PRODUCT LEVEL)	SEE PAGE
	1	1	*260-9137*	2	UNION AS-CROSS	
					(EACH INCLUDES)	
		1	**7J-9108**	4	SEAL-O-RING	
		1	**260-9136**	1	CROSS-UNION	
	2	1	*287-7269*	1	CONNECTOR AS	
		1	**3D-2824**	1	SEAL-O-RING	
		1	**7J-9108**	1	SEAL-O-RING	
		1	**287-7268**	1	CONNECTOR	
	3	1	**329-3483**	1	TUBE AS	
	4	1	**329-3484**	1	TUBE AS	
	5	1	**329-3485**	1	TUBE AS	
	6	1	**329-3486**	1	TUBE AS	
	7	1	**329-3487**	1	TUBE AS	
	8	1	**329-3488**	1	TUBE AS	
	9	1	**329-3489**	1	TUBE AS	
	10	1	**329-3490**	1	TUBE AS	
	11	1	**329-3548**	1	PLATE AS	
	12	1	**329-3819**	2	PLATE	
	13	1	**329-3820**	4	CLAMP	
	14	1	**329-3821**	4	CLAMP	
	15	1	**329-5390**	4	CLAMP	
	16	1	*330-9752*	2	ELBOW AS	
					(EACH INCLUDES)	
		1	**3D-2824**	1	SEAL-O-RING	
		1	**330-9591**	1	ELBOW	
	17	1	**334-9386**	1	PLATE AS	
	18	1	*148-8341*	1	CONNECTOR AS	
		1	**3D-2824**	1	SEAL-O-RING	
		1	**6V-8713**	1	CONNECTOR	
		1	**7J-9108**	1	SEAL-O-RING	
	19	1	*148-8446*	1	TEE AS-SWIVEL	
		1	**6V-9838**	1	TEE-SWIVEL	
		1	**7J-9108**	2	SEAL-O-RING	
	20	1	*150-4031*	1	TEE AS	
		1	**6V-9845**	1	TEE-SWIVEL	
		1	**7J-9108**	2	SEAL-O-RING	
	21	1	**6V-8398**	8	SEAL-O-RING	
	22	1	**6V-9831**	2	CAP AS	
M	23	1	**7X-2543**	2	BOLT (M10X1.5X120-MM)	
	24	1	**8T-4121**	14	WASHER-HARD (11X21X2.5-MM THK)	
M	25	1	**8T-4133**	6	NUT (M10X1.5-THD)	
M	26	1	**8T-4137**	2	BOLT (M10X1.5X20-MM)	
M	27	1	**8T-4185**	4	BOLT (M10X1.5X50-MM)	
M	28	1	**8T-4195**	4	BOLT (M10X1.5X30-MM)	

M-METRIC PART

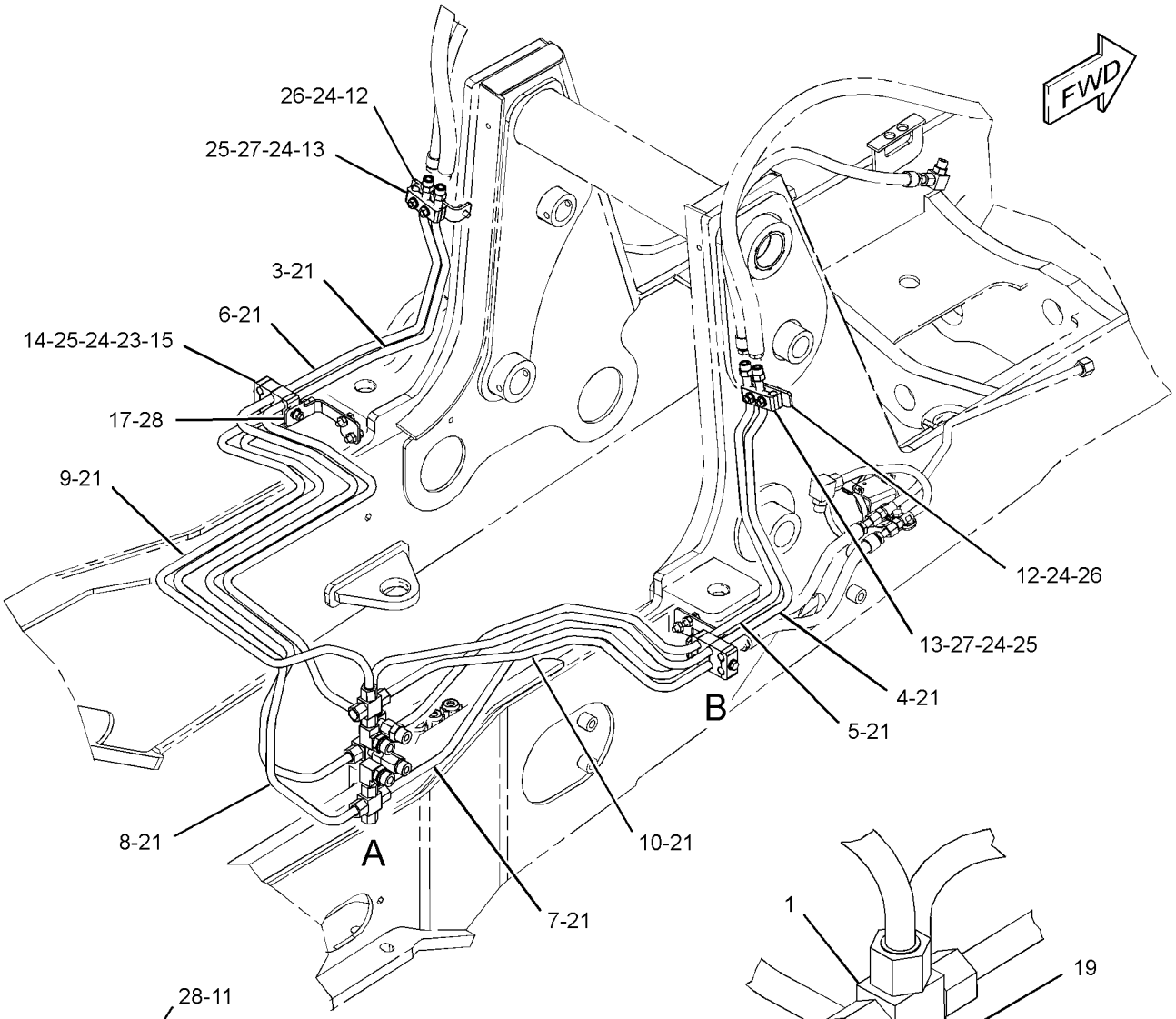

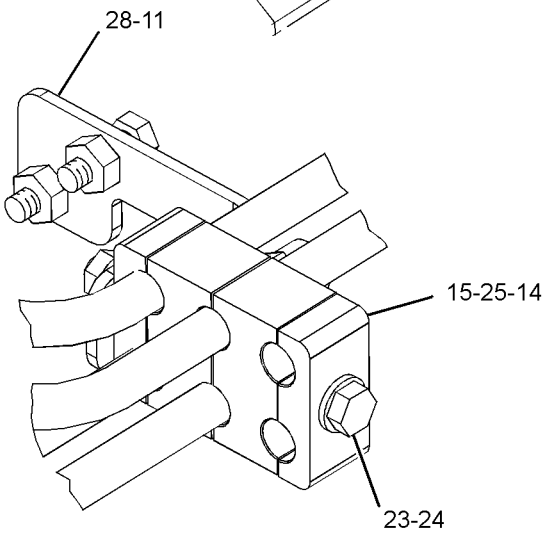

VIEW OF AREA B

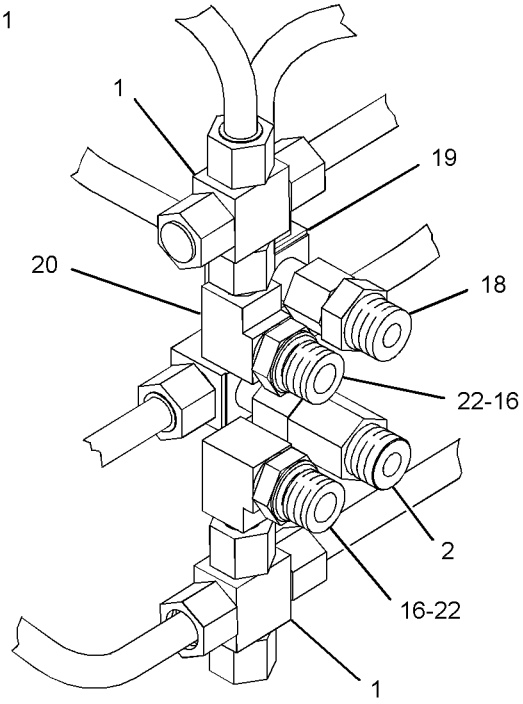

VIEW OF AREA A

GRAPHIC #1 **<END>** g01963119

HYDRAULIC SYSTEM

329-3505 LINES GP-LIFT & TILT CYLINDER

S/N: SJL1-UP
PART OF 332-7952 CONVERSION AR-QUICK COUPLER, 332-7950 VALVE AR-BANK 2, 332-7951 VALVE AR-BANK 3
AN ATTACHMENT

SMCS-5057 **i03654222**

NOTE	REF NO	GRAPHIC REF	PART NUMBER	QTY	PART NAME 1 2 3 4 5 6 (PRODUCT LEVEL)	SEE PAGE
	1	1	**5P-1717**	4	CLAMP-HOSE	
	2	1	**8L-8413**	2	STRAP-CABLE	
	3	1	**8T-6726**	4	CLAMP-HOSE	
	4	1	**9R-5948**	4	BLOCK	
	5	1	**143-0777**	1	PLATE AS	
	6	1	**143-0779**	1	PLATE AS	
					(EACH PLATE AS INCLUDES)	
M		1	**8T-3490**	1	NUT-WELD (M10X1.5-THD)	
	7	1	**158-3412**	4	CLIP (SLOT)	
	8	1	**279-2080**	1	TUBE AS	
	9	1	**279-2087**	1	TUBE AS	
	10	1	**279-2091**	1	TUBE AS	
	11	1	**279-2094**	1	TUBE AS	
I	12	1	**329-3546**	2	HOSE AS	
I	13	1	**329-3550**	2	HOSE AS	
I	14	1	**329-3551**	2	HOSE AS	
I	15	1	**334-0786**	2	HOSE AS	
	16	1	*148-8364*	2	ELBOW AS	
					(EACH INCLUDES)	
		1	**3K-0360**	1	SEAL-O-RING	
		1	**6V-8398**	1	SEAL-O-RING	
		1	**6V-8625**	1	ELBOW	
	17	1	*148-8390*	2	ELBOW AS	
					(EACH INCLUDES)	
		1	**2M-9780**	1	SEAL-O-RING	
		1	**6V-8626**	1	ELBOW	
		1	**7J-9108**	1	SEAL-O-RING	
	18	1	**6V-8398**	4	SEAL-O-RING	
	19	1	**8T-4121**	2	WASHER-HARD (11X21X2.5-MM THK)	
M	20	1	**8T-4137**	2	BOLT (M10X1.5X20-MM)	
	21	1	**9R-7803**	2	CLIP (TAB)	

I-REFER TO HYDRAULIC INFORMATION SYSTEM
M-METRIC PART

329-3505 **LINES GP-LIFT & TILT CYLINDER** *(contd.)* **i03654222**

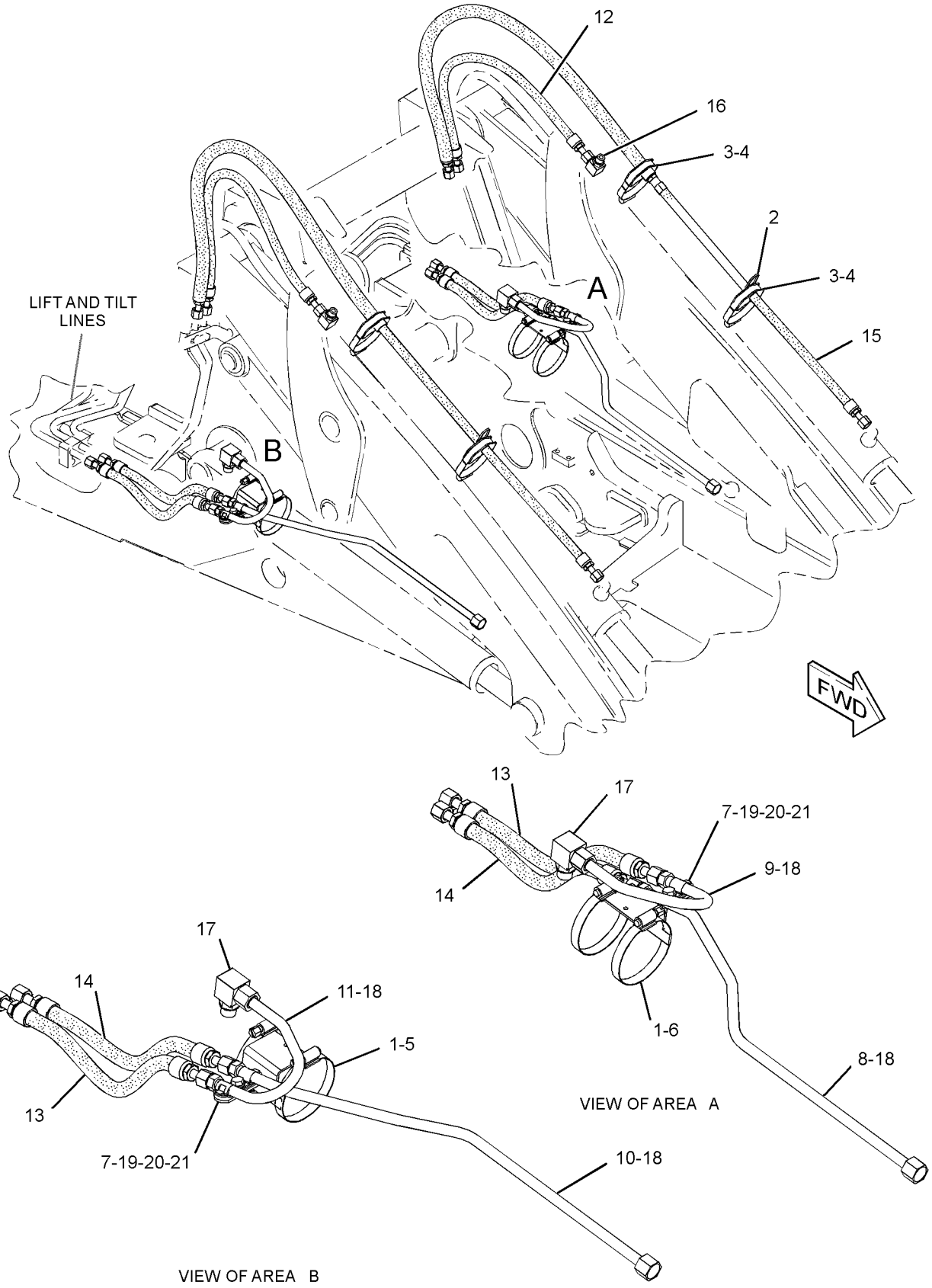

GRAPHIC #1 **<END>** g01963998

HYDRAULIC SYSTEM

329-3507 LINES GP-LIFT & TILT CYLINDER

S/N: SJL1-UP

PART OF 332-7962, 332-7963 VALVE AR-BANK 3

AN ATTACHMENT

SMCS-5057 **i03654241**

NOTE	REF NO	GRAPHIC REF	PART NUMBER	QTY	PART NAME 1 2 3 4 5 6 (PRODUCT LEVEL)	SEE PAGE
	1	1	**8L-8413**	2	STRAP-CABLE	
	2	1	**8T-6726**	4	CLAMP-HOSE	
	3	1	**9M-6738**	4	CLAMP-HOSE	
	4	1	**9R-5948**	4	BLOCK	
	5	1	*161-9916*	2	ADAPTER AS	
					(EACH INCLUDES)	
		1	**2M-9780**	1	SEAL-O-RING	
		1	**6V-7420**	1	ADAPTER	
	6	1	**179-7135**	1	BRACKET (RH)	
	7	1	**179-7136**	1	BRACKET (LH)	
	8	1	*250-1440*	2	ADAPTER AS	
					(EACH INCLUDES)	
		1	**3K-0360**	1	SEAL-O-RING	
		1	**7X-3164**	1	ADAPTER-SWIVEL	
	9	1	*250-1471*	2	TEE AS	
					(EACH INCLUDES)	
		1	**3J-1907**	1	SEAL-O-RING	
		1	**6V-8398**	1	SEAL-O-RING	
		1	**7J-9108**	1	SEAL-O-RING	
		1	**250-1470**	1	TEE	
	10	1	**262-7079**	2	VALVE GP-CHECK	
	11	1	**262-7081**	2	VALVE GP-LOAD CONTROL (LIFT & TILT)	
	12	1	**279-4967**	1	TUBE AS	
	13	1	**279-4969**	2	BRACKET	
	14	1	**279-4970**	1	TUBE AS	
I	15	1	**307-8148**	2	HOSE AS	
I	16	1	**329-3546**	2	HOSE AS	
I	17	1	**329-3549**	2	HOSE AS	
I	18	1	**331-3334**	2	HOSE AS	
I	19	1	**331-3335**	2	HOSE AS	
	20	1	*148-8345*	4	CONNECTOR AS	
					(EACH INCLUDES)	
		1	**2M-9780**	1	SEAL-O-RING	
		1	**6V-8398**	1	SEAL-O-RING	
		1	**6V-8638**	1	CONNECTOR	
	21	1	*148-8370*	2	ELBOW AS	
					(EACH INCLUDES)	
		1	**6V-8398**	1	SEAL-O-RING	
		1	**6V-9851**	1	ELBOW	
	22	1	*148-8378*	2	ELBOW AS	
					(EACH INCLUDES)	
		1	**3J-1907**	1	SEAL-O-RING	
		1	**6V-8397**	1	SEAL-O-RING	
		1	**6V-8724**	1	ELBOW	
	23	1	*148-8390*	2	ELBOW AS	
					(EACH INCLUDES)	
		1	**2M-9780**	1	SEAL-O-RING	
		1	**6V-8626**	1	ELBOW	
		1	**7J-9108**	1	SEAL-O-RING	
	24	1	*148-8426*	2	TEE AS	
					(EACH INCLUDES)	
		1	**3K-0360**	1	SEAL-O-RING	
		1	**6V-8397**	1	SEAL-O-RING	
		1	**6V-8398**	1	SEAL-O-RING	
		1	**8T-6696**	1	TEE-O-RING	

329-3507 LINES GP-LIFT & TILT CYLINDER *(contd.)* i03654241

NOTE	REF NO	GRAPHIC REF	PART NUMBER	QTY	PART NAME 1 2 3 4 5 6 (PRODUCT LEVEL)	SEE PAGE
	25	1	**2M-9780**	2	SEAL-O-RING	
	26	1	**5P-1717**	4	CLAMP-HOSE	
	27	1	**7X-3165**	2	ADAPTER AS-SWIVEL	
	28	1	**8T-4121**	4	WASHER-HARD (11X21X2.5-MM THK)	
	29	1	**8T-4224**	4	WASHER-HARD (8.8X16X2-MM THK)	
M	30	1	**8T-6912**	8	BOLT (M8X1.25X50-MM)	
M	31	1	**8T-7963**	8	LOCKNUT (M8X1.25-THD)	

I-REFER TO HYDRAULIC INFORMATION SYSTEM
M-METRIC PART

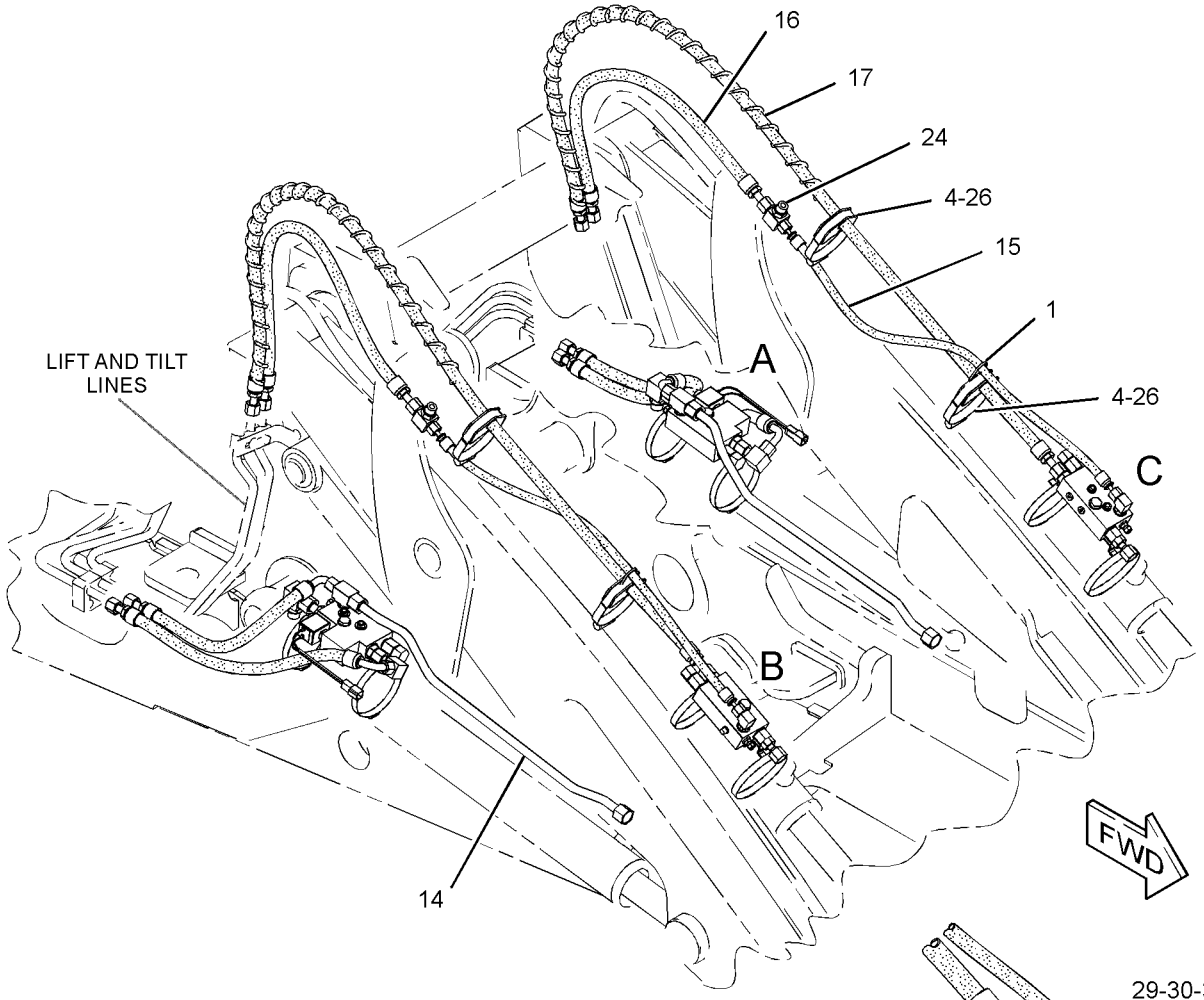

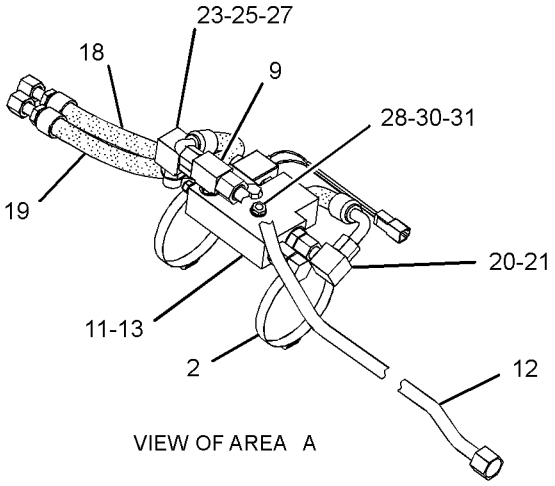

VIEW OF AREA A

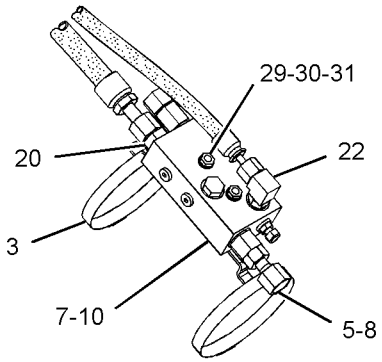

VIEW OF AREA C

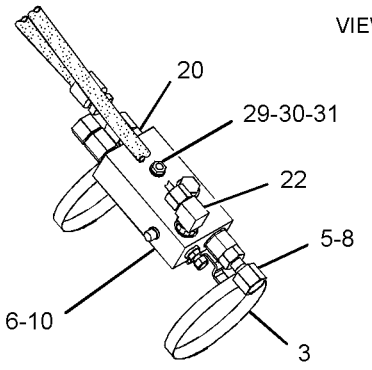

VIEW OF AREA B

GRAPHIC #1 **<END>** g01965103

HYDRAULIC SYSTEM

338-0837 LINES GP-LOAD CONTROL VALVE—PILOT

S/N: SJL1-UP

PART OF 350-6944, 350-6945 BACKHOE AR-EXTENDABLE STICK AN ATTACHMENT

SMCS-5057, 5811 **i03712425**

NOTE	REF NO	GRAPHIC REF	PART NUMBER	QTY	PART NAME 1 2 3 4 5 6 (PRODUCT LEVEL)	SEE PAGE
	1	1	*161-9916*	1	ADAPTER AS	
		1	**2M-9780**	1	SEAL-O-RING	
		1	**6V-7420**	1	ADAPTER	
	2	1	*166-2033*	1	TEE AS	
		1	**4J-5477**	1	SEAL-O-RING	
		1	**7X-2444**	1	TEE-SWIVEL	
	3	1	*205-7198*	2	TEE AS	
					(EACH INCLUDES)	
		1	**3J-1907**	1	SEAL-O-RING	
		1	**4J-5477**	2	SEAL-O-RING	
	4	1	*250-1440*	1	ADAPTER AS	
		1	**3K-0360**	1	SEAL-O-RING	
		1	**7X-3164**	1	ADAPTER-SWIVEL	
	5	1	**347-1128**	1	VALVE GP-LOAD CONTROL (BOOM)	
	6	1	**328-2477**	1	PLATE	
I	7	1	**329-4508**	1	HOSE AS	
I	8	1	**330-6124**	1	HOSE AS	
I	9	1	**330-6125**	1	HOSE AS	
I	10	1	**330-6126**	1	HOSE AS	
I	11	1	**339-0007**	1	HOSE AS	
I	12	1	**339-0010**	1	HOSE AS	
I	13	1	**339-2886**	1	HOSE AS	
I	14	1	**339-2935**	1	HOSE AS	
	15	1	**339-4287**	2	BRACKET	
	16	1	**347-1129**	1	VALVE GP-LOAD CONTROL (STICK)	
	17	1	*148-8315*	1	CONNECTOR AS	
		1	**2M-9780**	1	SEAL-O-RING	
		1	**6V-8642**	1	CONNECTOR	
		1	**7J-9108**	1	SEAL-O-RING	
	18	1	*148-8325*	3	CONNECTOR AS	
					(EACH INCLUDES)	
		1	**3J-1907**	1	SEAL-O-RING	
		1	**4J-5477**	1	SEAL-O-RING	
		1	**6V-8641**	1	CONNECTOR	
	19	1	*148-8345*	1	CONNECTOR AS	
		1	**2M-9780**	1	SEAL-O-RING	
		1	**6V-8398**	1	SEAL-O-RING	
		1	**6V-8638**	1	CONNECTOR	
	20	1	*148-8368*	2	ELBOW AS	
					(EACH INCLUDES)	
		1	**3J-1907**	1	SEAL-O-RING	
		1	**4J-5477**	1	SEAL-O-RING	
		1	**6V-8627**	1	ELBOW	
	21	1	*150-4052*	3	UNION AS	
					(EACH INCLUDES)	
		1	**4J-5477**	2	SEAL-O-RING	
		1	**6V-8993**	1	UNION	
	22	1	*150-5968*	1	TEE AS	
		1	**4J-5477**	2	SEAL-O-RING	
		1	**6V-9835**	1	TEE-SWIVEL	
	23	1	**2M-9780**	1	SEAL-O-RING	
	24	1	**2P-1279**	3	LOCKNUT (9/16-18-THD)	
	25	1	**3S-2093**	1	STRAP-CABLE	
	26	1	**5P-0599**	4	CLAMP-BAND	
M	27	1	**6V-7744**	4	LOCKNUT (M10X1.5-THD)	

338-0837 LINES GP-LOAD CONTROL VALVE *(contd.)* i03712425

NOTE	REF NO	GRAPHIC REF	PART NUMBER	QTY	PART NAME 1 2 3 4 5 6 (PRODUCT LEVEL)	SEE PAGE
	28	1	**6V-9169**	1	NUT-BULKHEAD (13/16-16-THD)	
	29	1	**6V-9170**	1	NUT-BULKHEAD (1-14-THD)	
	30	1	**7X-3165**	1	ADAPTER AS-SWIVEL	
	31	1	**8T-4121**	4	WASHER-HARD (11X21X2.5-MM THK)	
M	32	1	**8T-6466**	4	BOLT (M10X1.5X60-MM)	

I-REFER TO HYDRAULIC INFORMATION SYSTEM
M-METRIC PART

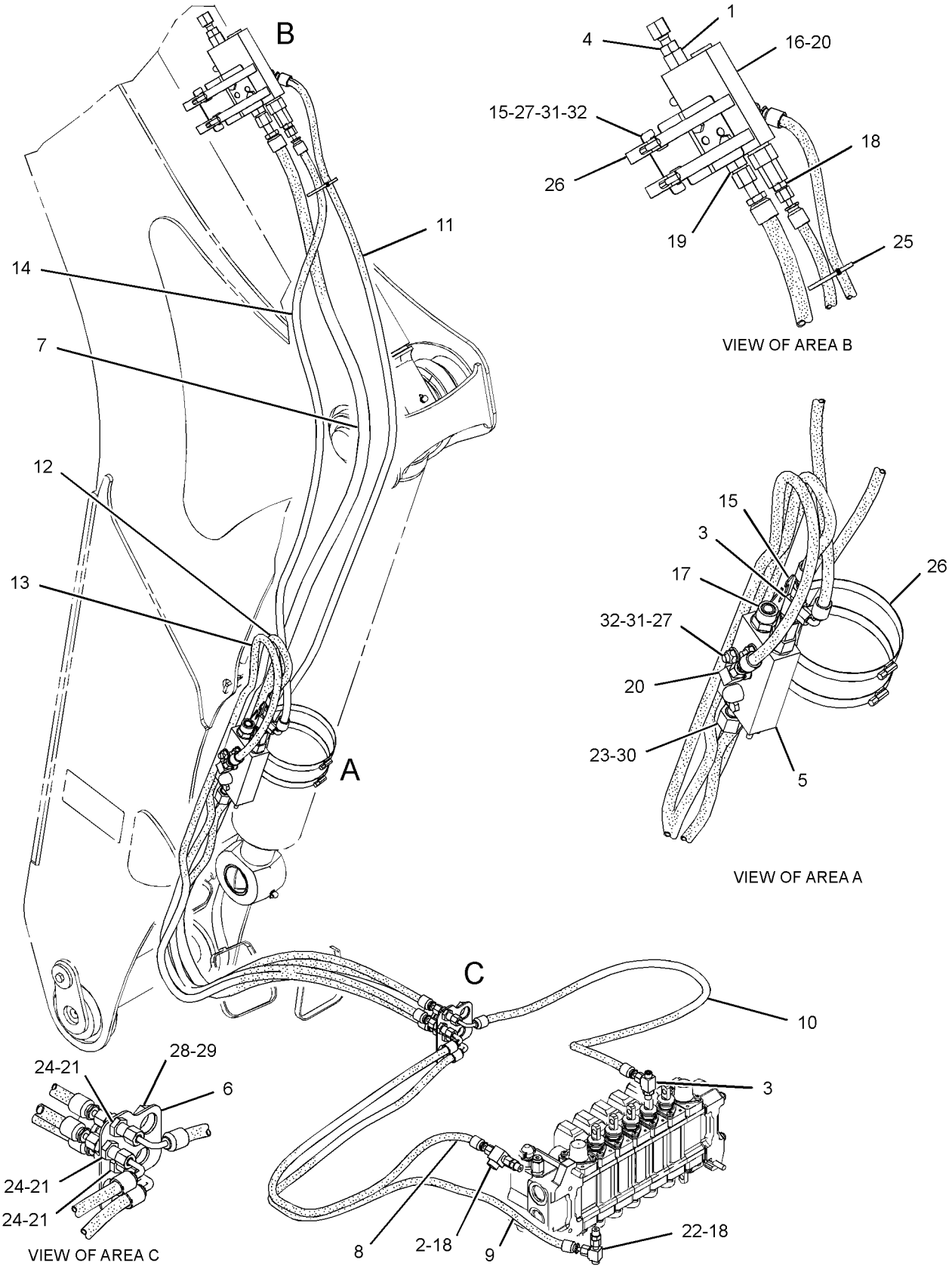

GRAPHIC #1

<END>

g01991430

HYDRAULIC SYSTEM

317-6280 LINES GP-MULTIPURPOSE BUCKET

S/N: SJL1-UP

PART OF 318-7257, 318-7259, 318-7261 BUCKET AR-MULTIPURPOSE AN ATTACHMENT

SMCS-5057 **i03479160**

NOTE	REF NO	GRAPHIC REF	PART NUMBER	QTY	PART NAME 1 2 3 4 5 6 (PRODUCT LEVEL)	SEE PAGE
	1	1	**8T-6726**	2	CLAMP-HOSE	
	2	1	**9R-8870**	2	BLOCK	
	3	1	**148-5367**	2	PLATE AS	
					(EACH INCLUDES)	
M		1	**111-0483**	1	BOSS (M10X1.5-THD)	
I	4	1	**253-8448**	2	HOSE AS	
I	5	1	**291-3654**	1	HOSE AS	
I	6	1	**317-2242**	1	HOSE AS	
I	7	1	**317-2243**	1	HOSE AS	
I	8	1	**317-2244**	1	HOSE AS	
	9	1	*148-8378*	2	ELBOW AS	
					(EACH INCLUDES)	
		1	**3J-1907**	1	SEAL-O-RING	
		1	**6V-8397**	1	SEAL-O-RING	
		1	**6V-8724**	1	ELBOW	
	10	1	*150-3060*	2	TEE AS	
					(EACH INCLUDES)	
		1	**6V-8397**	2	SEAL-O-RING	
		1	**6V-8398**	1	SEAL-O-RING	
		1	**8T-3444**	1	TEE-UNION	
	11	1	**5P-7465**	2	CLIP (TAB)	
	12	1	**6V-1249**	2	GROMMET	
	13	1	**6V-8397**	2	SEAL-O-RING	
	14	1	**8T-1893**	4	CLIP (SLOT)	
	15	1	**8T-1894**	4	CLIP (TAB)	
	16	1	**8T-4121**	8	WASHER-HARD (11X21X2.5-MM THK)	
M	17	1	**8T-4136**	8	BOLT (M10X1.5X25-MM)	
	18	1	**8T-4646**	2	CLIP (SLOT)	

I-REFER TO HYDRAULIC INFORMATION SYSTEM
M-METRIC PART

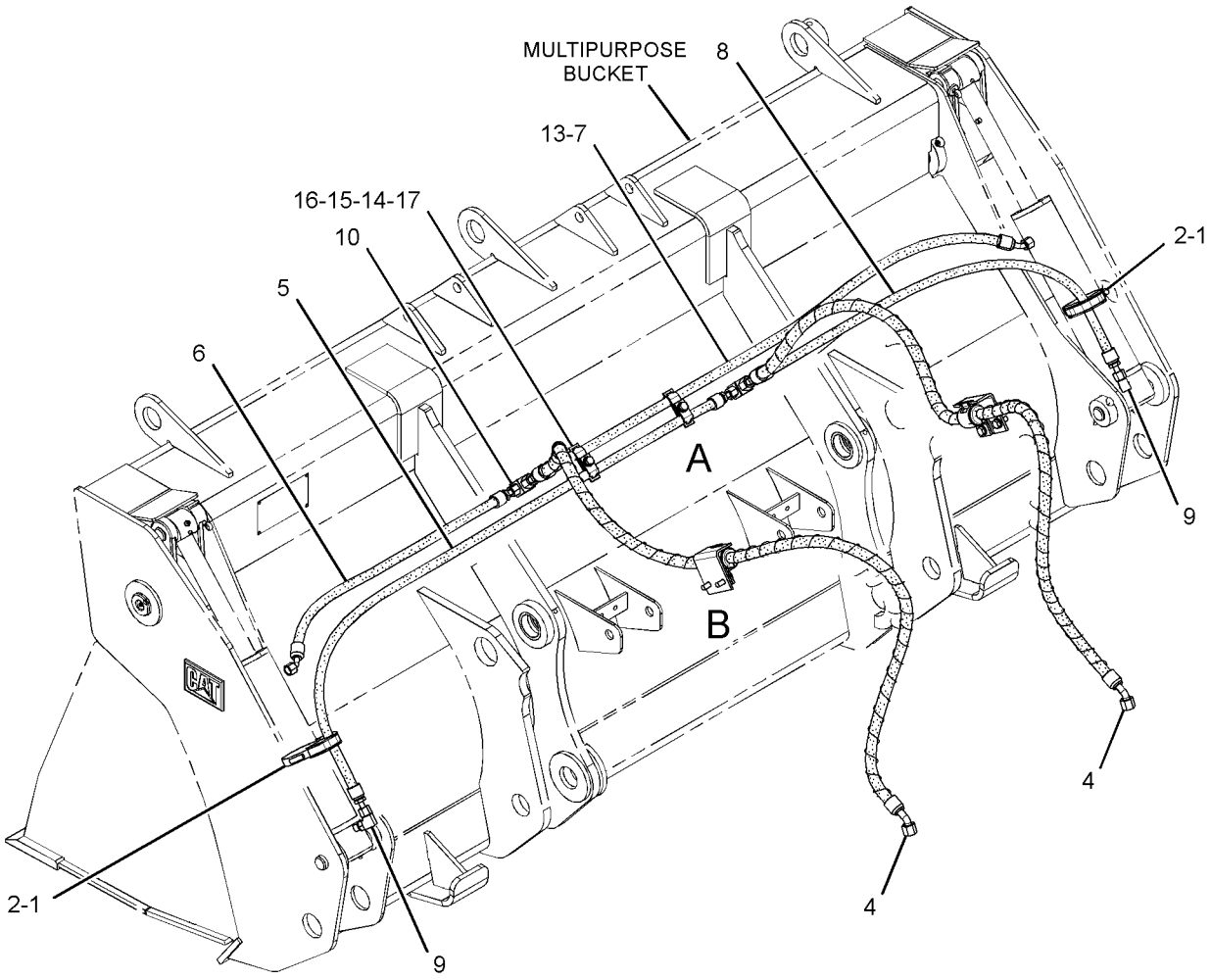

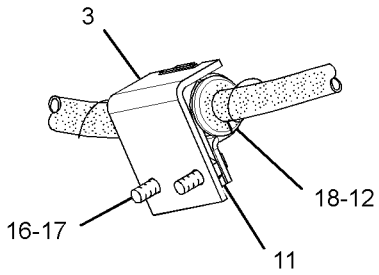

VIEW OF AREA B

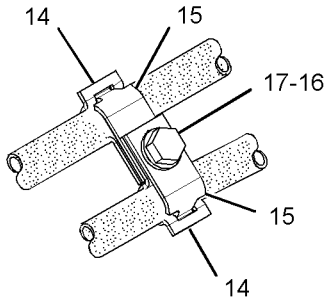

VIEW OF AREA A

GRAPHIC #1 **<END>** g01886696

HYDRAULIC SYSTEM

299-6859 LINES GP-PILOT

S/N: SJL1-UP

PART OF 329-0124 HYDRAULIC AR

SMCS-5057, 5059 **i03653635**

NOTE	REF NO	GRAPHIC REF	PART NUMBER	QTY	PART NAME 1 2 3 4 5 6 (PRODUCT LEVEL)	SEE PAGE
	1	1	**299-6940**	1	HOSE AS	
	2	1	**299-5159**	1	HOSE AS	
	3	1	**307-5354**	1	HOSE AS	
	4	1	*148-8325*	6	CONNECTOR AS	
					(EACH INCLUDES)	
		1	**3J-1907**	1	SEAL-O-RING	
		1	**4J-5477**	1	SEAL-O-RING	
		1	**6V-8641**	1	CONNECTOR	
	5	1	*148-8368*	1	ELBOW AS	
		1	**3J-1907**	1	SEAL-O-RING	
		1	**4J-5477**	1	SEAL-O-RING	
		1	**6V-8627**	1	ELBOW	
	6	1	*150-3033*	1	ELBOW AS	
		1	**3J-1907**	1	SEAL-O-RING	
		1	**4J-5477**	1	SEAL-O-RING	
		1	**8T-0164**	1	ELBOW	
	7	1	**299-7887**	1	HOSE AS	

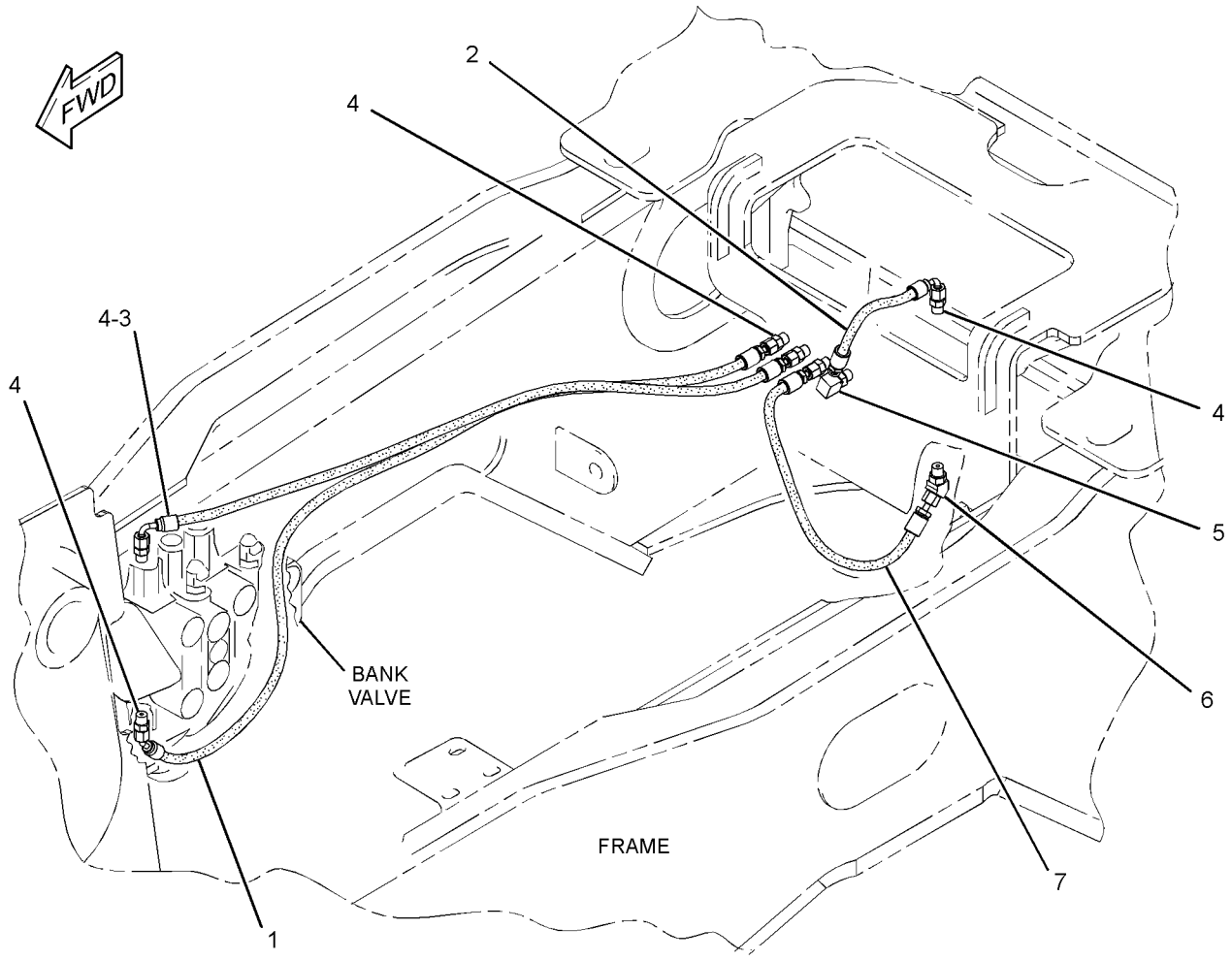

GRAPHIC #1 **<END>** g01963594

333-0699 LINES GP-PILOT–LOADER

S/N: SJL1-UP

PART OF 329-0124 HYDRAULIC AR

SMCS-5057, 5059 **i03642931**

NOTE	REF NO	GRAPHIC REF	PART NUMBER	QTY	PART NAME 1 2 3 4 5 6 (PRODUCT LEVEL)	SEE PAGE
	1	1	**7K-1181**	4	STRAP-CABLE	
	2	1	**133-5813**	2	BAND-MARKER (GRAY, P)	
	3	1	*164-9639*	4	CONNECTOR AS	
					(EACH INCLUDES)	
		1	**3J-1907**	1	SEAL-O-RING	
		1	**4J-5477**	1	SEAL-O-RING	
		1	**148-7925**	1	CONNECTOR	
	4	1	**195-0256**	2	BAND-MARKER (PINK)	
	5	1	**195-0257**	2	BAND-MARKER (BLUE)	
	6	1	**195-0258**	2	BAND-MARKER (MARINE BLUE)	
	7	1	**195-0259**	2	BAND-MARKER (GREEN)	
	8	1	**267-2760**	1	VALVE GP-PILOT (LOADER)	
		1	**260-3020**	1	KIT-SEAL	
					(INCLUDES SEAL-O-RINGS & RETAINING RINGS)	
		1	**260-3021**	2	KIT-DETENT	
					(EACH INCLUDES RETAINING RING, PLUNGER & COIL AS)	
		1	**102-8805**	1	KIT-RECEPTACLE (6-PIN)	
					(INCLUDES RECPETACLE AS & WEDGE)	
		1	**316-7091**	1	KIT-JOINT	
	9	1	**299-3270**	1	HOSE AS	
	10	1	**299-6936**	2	HOSE AS	
	11	1	**299-6938**	2	HOSE AS	
	12	1	**299-6940**	1	HOSE AS	
	13	1	*148-8325*	6	CONNECTOR AS	
					(EACH INCLUDES)	
		1	**3J-1907**	1	SEAL-O-RING	
		1	**4J-5477**	1	SEAL-O-RING	
		1	**6V-8641**	1	CONNECTOR	
G	14	1	**160-2248**		SLEEVE-ABRASION (7.9-IN)	

G-ORDER BY THE INCH

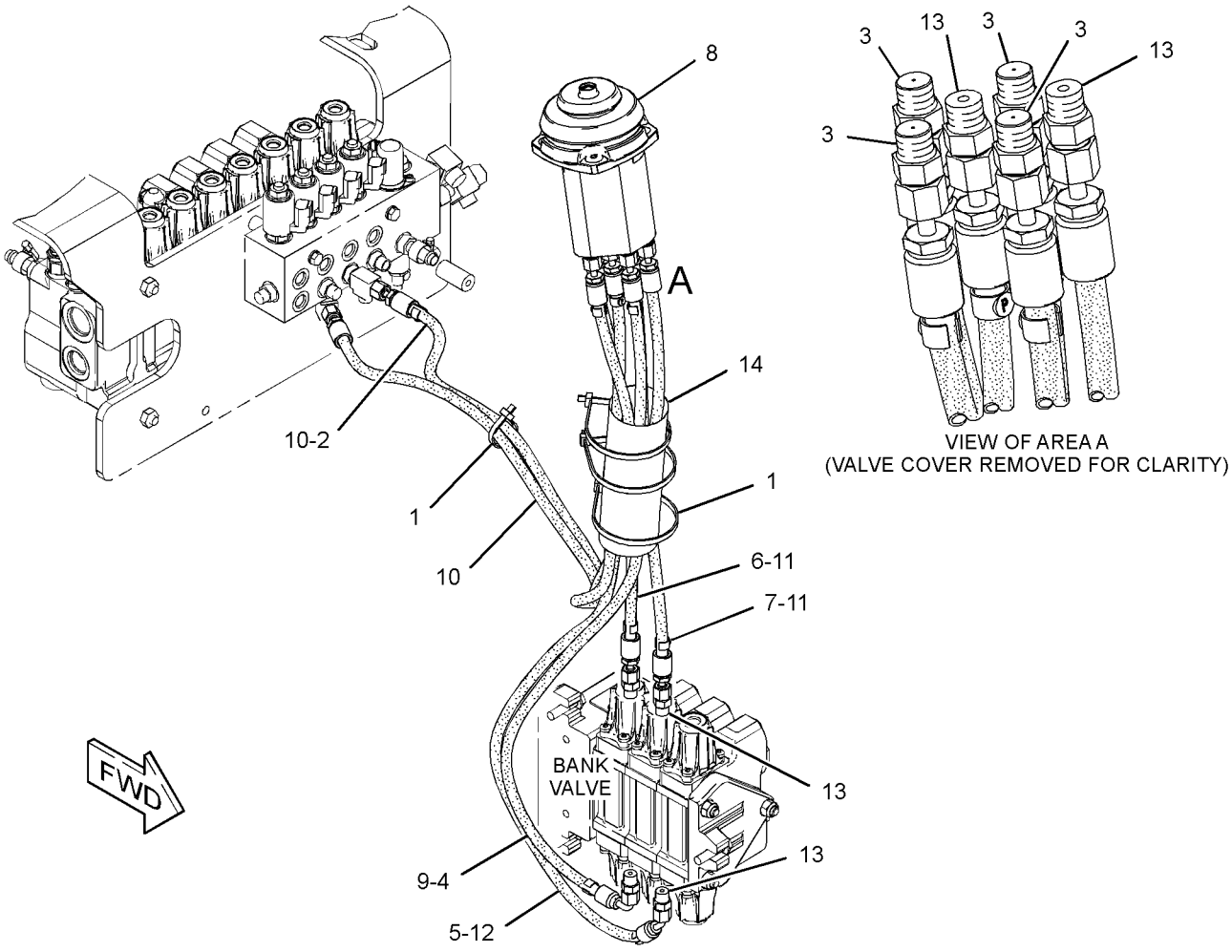

GRAPHIC #1 **<END>** g01988974

338-0432 LINES GP-PILOT—BACKHOE

S/N: SJL1-UP

PART OF 329-0124 HYDRAULIC AR

SMCS-5057, 5059 **i03665640**

NOTE	REF NO	GRAPHIC REF	PART NUMBER	QTY	PART NAME 1 2 3 4 5 6 (PRODUCT LEVEL)	SEE PAGE
	1	1	**4I-9521**	2	BAND-MARKER (RED, L1)	
	2	1	**4I-9522**	2	BAND-MARKER (YELLOW, L2)	
	3	1	**4I-9523**	2	BAND-MARKER (BLUE, L3)	
	4	1	**4I-9524**	2	BAND-MARKER (BROWN, L4)	
	5	1	**4I-9525**	2	BAND-MARKER (ORANGE, R1)	
	6	1	**4I-9526**	2	BAND-MARKER (WHITE, R2)	
	7	1	**4I-9527**	2	BAND-MARKER (GREEN, R3)	
	8	1	**4I-9528**	2	BAND-MARKER (PURPLE, R4)	
	9	1	**7K-1181**	6	STRAP-CABLE	
Y	10	1	**271-3096**	1	CONTROL GP-JOYSTICK (RH)	575
Y	11	1	**271-3097**	1	CONTROL GP-JOYSTICK (LH)	576
	12	1	**299-5152**	2	HOSE AS	
	13	1	**299-5155**	1	HOSE AS	
	14	1	**299-5156**	1	HOSE AS	
	15	1	**299-5157**	1	HOSE AS	
	16	1	**299-5158**	1	HOSE AS	
	17	1	**299-5159**	1	HOSE AS	
Y	18	1	**300-4491**	1	MANIFOLD GP-CONTROL	404
	19	1	**307-6461**	2	HOSE AS	
	20	1	**307-6462**	2	HOSE AS	
	21	1	**309-5684**	1	HOSE AS	
	22	1	**347-2208**	2	VALVE GP-PILOT (BACKHOE)	
	23	1	*148-8325*	19	CONNECTOR AS	
					(EACH INCLUDES)	
		1	**3J-1907**	1	SEAL-O-RING	
		1	**4J-5477**	1	SEAL-O-RING	
		1	**6V-8641**	1	CONNECTOR	
	24	1	*148-8368*	2	ELBOW AS	
					(EACH INCLUDES)	
		1	**3J-1907**	1	SEAL-O-RING	
		1	**4J-5477**	1	SEAL-O-RING	
		1	**6V-8627**	1	ELBOW	
	25	1	*150-3033*	1	ELBOW AS	
		1	**3J-1907**	1	SEAL-O-RING	
		1	**4J-5477**	1	SEAL-O-RING	
		1	**8T-0164**	1	ELBOW	
	26	1	**156-6175**	1	CLIP	
	27	1	**342-7196**	1	VALVE GP-CHECK (300-BAR)	
	28	1	**8T-4224**	2	WASHER-HARD (8.8X16X2-MM THK)	
M	29	1	**8T-6869**	2	BOLT (M8X1.25X60-MM)	
	30	1	**9X-2038**	1	WASHER (7X19X2-MM THK)	
M	31	1	**9X-2043**	1	SCREW-TRUSS HEAD (M6X1X14-MM)	
G	32	1	**160-2248**		SLEEVE-ABRASION (17.7-IN EACH)	

G-ORDER BY THE INCH
M-METRIC PART
Y-SEPARATE ILLUSTRATION

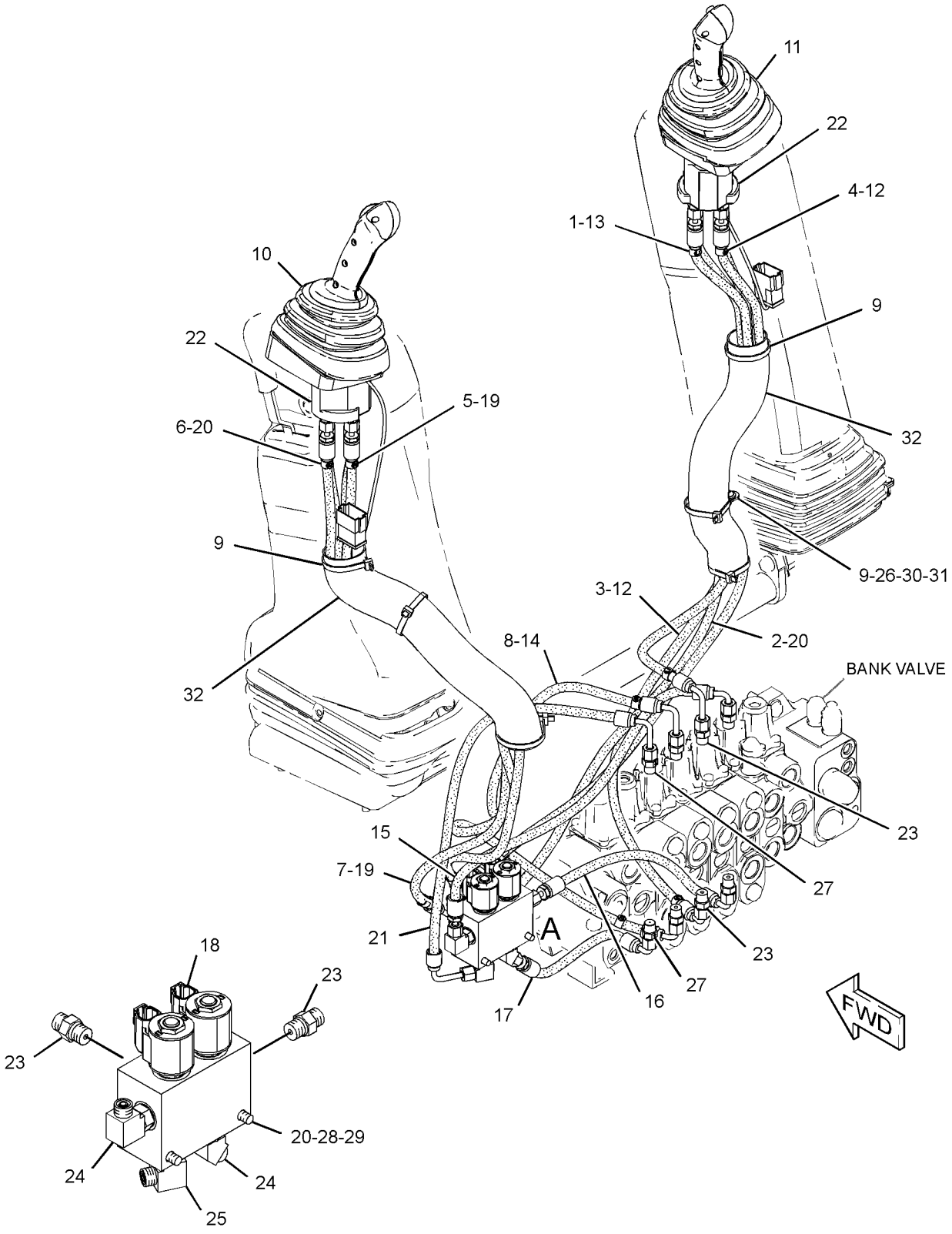

VIEW OF AREA A
(PARTS REMOVED FOR CLARITY AND EXPLODED)

GRAPHIC #1 **<END>** g01989495

HYDRAULIC SYSTEM

338-0433 LINES GP-PILOT–SUPPLY

S/N: SJL1-UP

PART OF 329-0124 HYDRAULIC AR

SMCS-5057, 5059 **i03642559**

NOTE	REF NO	GRAPHIC REF	PART NUMBER	QTY	PART NAME 1 2 3 4 5 6 (PRODUCT LEVEL)	SEE PAGE
	1	1	**133-5813**	6	BAND-MARKER (GRAY, P)	
Y	2	1	*149-0686*	1	ACCUMULATOR GP-HYDRAULIC (CHARGED)	320
	3	1	*164-5586*	1	TEE AS	
		1	**6V-8398**	1	SEAL-O-RING	
		1	**7X-0871**	1	TEE	
	4	1	*174-6740*	1	TEE AS	
		1	**2M-9780**	1	SEAL-O-RING	
		1	**122-1113**	1	TEE-O-RING	
	5	1	*205-7198*	2	TEE AS	
					(EACH INCLUDES)	
		1	**3J-1907**	1	SEAL-O-RING	
		1	**4J-5477**	2	SEAL-O-RING	
	6	1	*229-5336*	1	TEE AS	
		1	**3J-1907**	1	SEAL-O-RING	
		1	**4J-5477**	1	SEAL-O-RING	
		1	**081-5648**	1	TEE	
	7	1	*273-4211*	1	TEE AS	
		1	**6V-8398**	1	SEAL-O-RING	
		1	**273-4210**	1	TEE	
	8	1	**276-2334**	1	FILM-WARNING (HIGH PRESS CYLINDER, READ OMM)	
	9	1	**297-7964**	2	CONNECTOR	
	10	1	**299-3270**	1	HOSE AS	
	11	1	**299-5155**	1	HOSE AS	
Y	12	1	**300-4493**	1	MANIFOLD & SOLENOID GP-CONTROL	403
I	13	1	**307-1432**	1	HOSE AS	
	14	1	**307-6461**	3	HOSE AS	
I	15	1	**344-7777**	1	HOSE AS	
	16	1	**6V-0852**	1	CAP-DUST	
	17	1	*148-8318*	1	CONNECTOR AS	
		1	**3K-0360**	1	SEAL-O-RING	
		1	**6V-8397**	1	SEAL-O-RING	
		1	**6V-8634**	1	CONNECTOR	
	18	1	*148-8325*	9	CONNECTOR AS	
					(EACH INCLUDES)	
		1	**3J-1907**	1	SEAL-O-RING	
		1	**4J-5477**	1	SEAL-O-RING	
		1	**6V-8641**	1	CONNECTOR	
	19	1	*148-8336*	1	CONNECTOR AS	
		1	**3J-1907**	1	SEAL-O-RING	
		1	**6V-8397**	1	SEAL-O-RING	
		1	**6V-8636**	1	CONNECTOR	
	20	1	*148-8365*	1	ELBOW AS	
		1	**3J-1907**	1	SEAL-O-RING	
		1	**6V-8398**	1	SEAL-O-RING	
		1	**8T-6876**	1	ELBOW	
	21	1	*148-8433*	1	TEE AS	
		1	**6V-8397**	2	SEAL-O-RING	
		1	**6V-9836**	1	TEE-SWIVEL	
	22	1	*150-3027*	1	ELBOW AS	
		1	**2M-9780**	1	SEAL-O-RING	
		1	**6V-5653**	1	ELBOW	
	23	1	*164-5567*	1	COUPLER AS-QUICK DISCONNECT	
		1	**6V-3965**	1	FITTING (QUICK DISCONNECT)	
		1	**214-7568**	1	SEAL-O-RING	
	24	1	**178-3620**	1	STRAP-DUAL CLAMP	
I	25	1	**214-9468**	1	HOSE AS	

338-0433 **LINES GP-PILOT** *(contd.)* **i03642559**

NOTE	REF NO	GRAPHIC REF	PART NUMBER	QTY	PART NAME 1 2 3 4 5 6 (PRODUCT LEVEL)	SEE PAGE
	26	1	**3J-1907**	2	SEAL-O-RING	
	27	1	**3K-0360**	1	SEAL-O-RING	
	28	1	**5D-1026**	4	CLAMP-BAND	
	29	1	**6V-9169**	1	NUT-BULKHEAD (13/16-16-THD)	
	30	1	**6V-9829**	1	CAP AS	
M	31	1	**8T-3647**	2	BOLT (M8X1.25X80-MM)	
	32	1	**8T-4224**	2	WASHER-HARD (8.8X16X2-MM THK)	
E	33	1	**5P-1505**		HOSE (111-CM)	
E	33A	1	**5P-1505**		HOSE (226-CM)	

E-ORDER BY THE CENTIMETER
I-REFER TO HYDRAULIC INFORMATION SYSTEM
M-METRIC PART
Y-SEPARATE ILLUSTRATION

338-0433 **LINES GP-PILOT** *(contd.)* **i03642559**

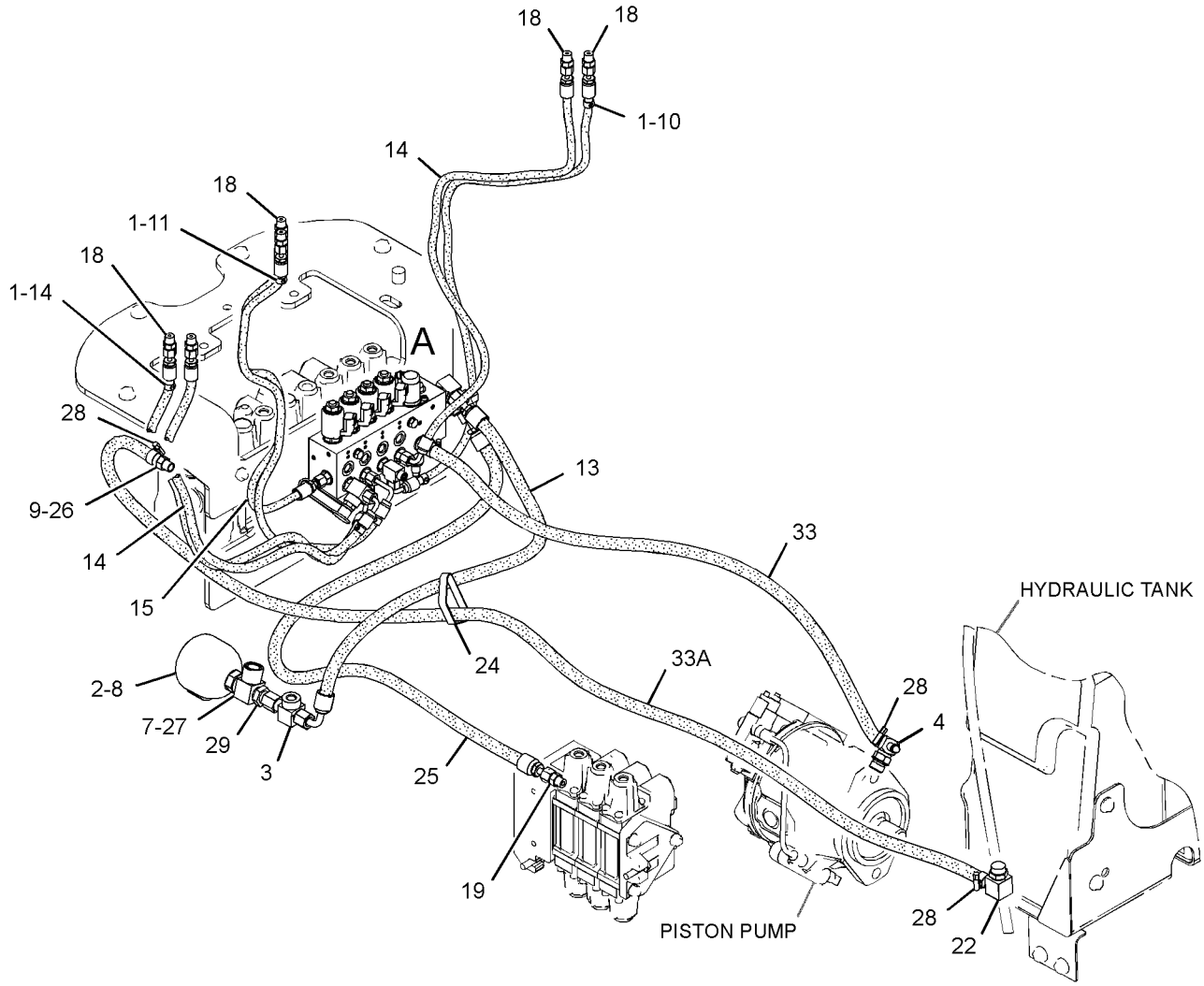

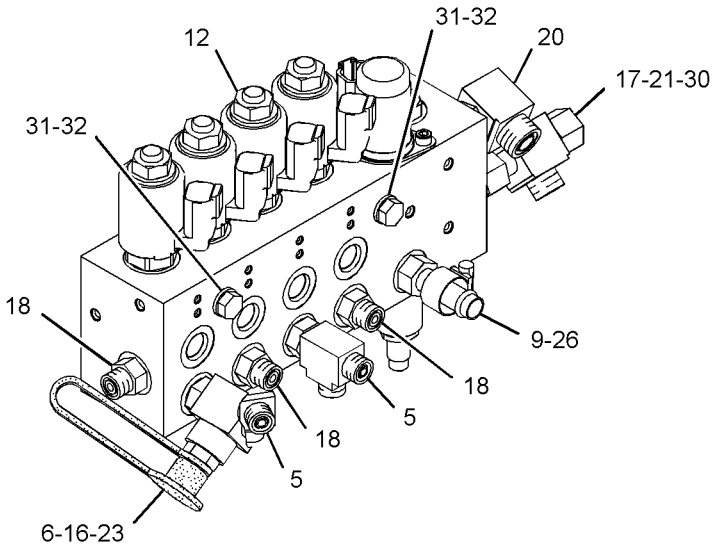



VIEW OF AREA A
(PARTS REMOVED FOR CLARITY)

GRAPHIC #1 **<END>** g01989255

HYDRAULIC SYSTEM

339-4981 LINES GP-PILOT–SIGNAL

S/N: SJL1-UP

PART OF 329-0124 HYDRAULIC AR

SMCS-5057, 5059 **i03665702**

NOTE	REF NO	GRAPHIC REF	PART NUMBER	QTY	PART NAME 1 2 3 4 5 6 (PRODUCT LEVEL)	SEE PAGE
	1	1	**5D-1026**	2	CLAMP-BAND	
	2	1	**7K-1181**	1	STRAP-CABLE	
	3	1	*174-6740*	1	TEE AS	
		1	**2M-9780**	1	SEAL-O-RING	
		1	**122-1113**	1	TEE-O-RING	
I	4	1	**208-3600**	1	HOSE AS	
I	5	1	**308-5496**	1	HOSE AS	
	6	1	**6V-0852**	2	CAP-DUST	
	7	1	*148-8325*	2	CONNECTOR AS	
					(EACH INCLUDES)	
		1	**3J-1907**	1	SEAL-O-RING	
		1	**4J-5477**	1	SEAL-O-RING	
		1	**6V-8641**	1	CONNECTOR	
	8	1	*150-3062*	1	TEE AS	
		1	**3J-7354**	1	SEAL-O-RING	
		1	**4J-5477**	1	SEAL-O-RING	
		1	**101-1787**	1	TEE AS	
	9	1	*150-5968*	2	TEE AS	
					(EACH INCLUDES)	
		1	**4J-5477**	2	SEAL-O-RING	
		1	**6V-9835**	1	TEE-SWIVEL	
	10	1	*164-5567*	2	COUPLER AS-QUICK DISCONNECT	
					(EACH INCLUDES)	
		1	**6V-3965**	1	FITTING (QUICK DISCONNECT)	
		1	**214-7568**	1	SEAL-O-RING	
	11	1	*165-4931*	1	ELBOW AS	
		1	**3J-1907**	1	SEAL-O-RING	
		1	**6V-8077**	1	ELBOW	
	12	1	**6V-9828**	1	CAP AS	
E	13	1	**5P-1505**		HOSE (91-CM)	

E-ORDER BY THE CENTIMETER
I-REFER TO HYDRAULIC INFORMATION SYSTEM

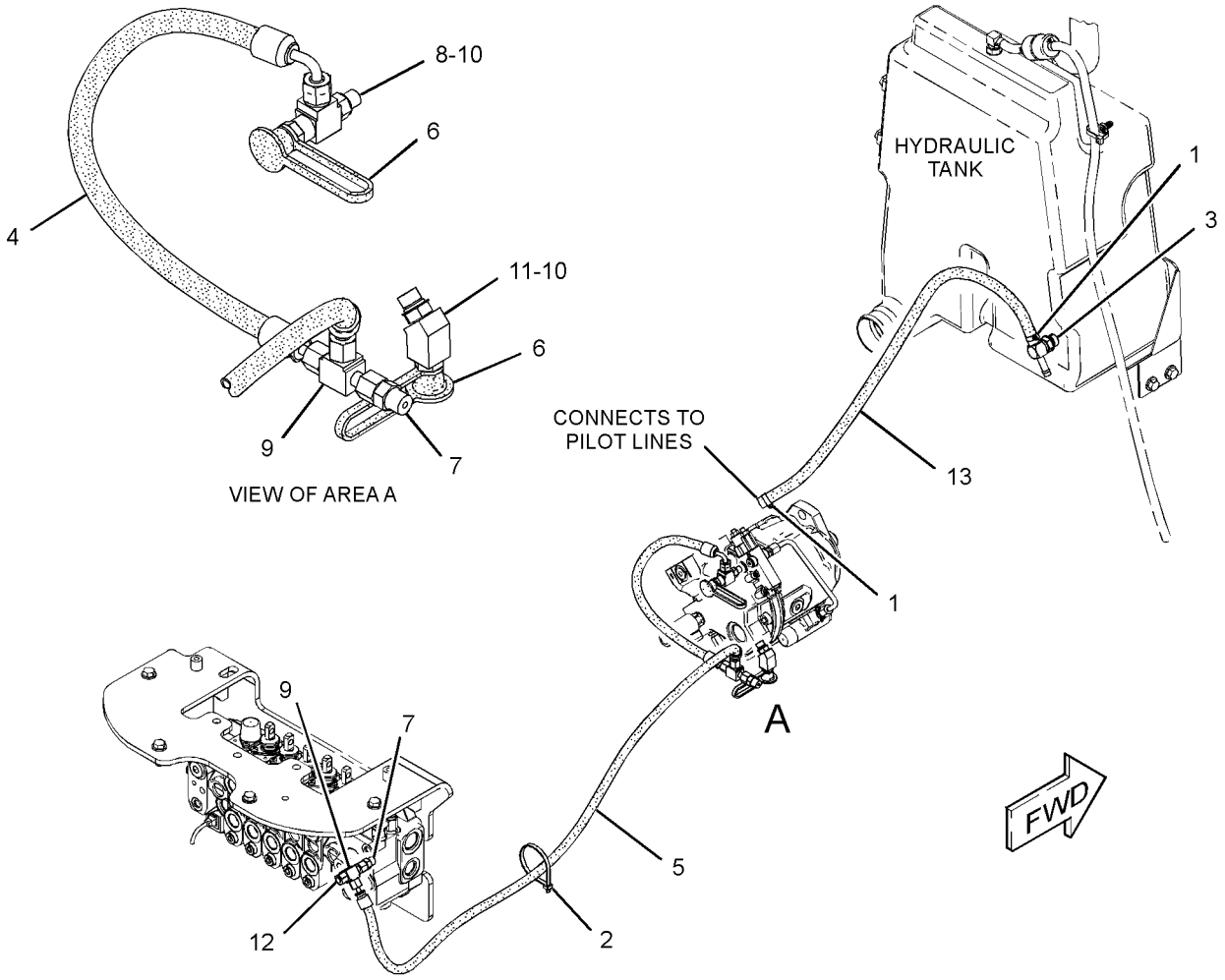

GRAPHIC #1 **<END>** g01986813

HYDRAULIC SYSTEM

335-1692 LINES GP-PUMP

S/N: SJL1-UP

PART OF 329-0124 HYDRAULIC AR

SMCS-5057 **i03663042**

NOTE	REF NO	GRAPHIC REF	PART NUMBER	QTY	PART NAME 1 2 3 4 5 6 (PRODUCT LEVEL)	SEE PAGE
	1	1	**144-0367**	1	CLAMP-HOSE	
	2	1	**211-4348**	1	ELBOW AS	
	3	1	**235-8528**	1	HOSE	
I	4	1	**298-5398**	1	HOSE AS	
I	5	1	**307-3488**	1	HOSE AS	
I	6	1	**338-0426**	1	HOSE AS	
I	7	1	**338-0427**	1	HOSE AS	
	8	1	*148-8317*	1	CONNECTOR AS	
		1	**3D-2824**	1	SEAL-O-RING	
		1	**5K-9090**	1	SEAL-O-RING	
		1	**6V-8714**	1	CONNECTOR	
	9	1	*148-8335*	2	CONNECTOR AS	
					(EACH INCLUDES)	
		1	**5K-9090**	1	SEAL-O-RING	
		1	**6V-8635**	1	CONNECTOR	
		1	**7M-8485**	1	SEAL-O-RING	
	10	1	*148-8352*	1	ELBOW AS	
		1	**5K-9090**	1	SEAL-O-RING	
		1	**6V-9854**	1	ELBOW	
	11	1	*148-8362*	1	ELBOW AS	
		1	**3D-2824**	1	SEAL-O-RING	
		1	**5K-9090**	1	SEAL-O-RING	
		1	**8T-6684**	1	ELBOW	
	12	1	*148-8429*	2	TEE AS	
					(EACH INCLUDES)	
		1	**5K-9090**	2	SEAL-O-RING	
		1	**6V-9840**	1	TEE-SWIVEL	
	13	1	**1P-4584**	2	FLANGE-HALF	
	14	1	*313-3490*	1	CONNECTOR AS	
		1	**5K-9090**	1	SEAL-O-RING	
		1	**7M-8485**	1	SEAL-O-RING	
		1	**313-3486**	1	CONNECTOR	
	15	1	**5P-4868**	2	CLAMP-HOSE	
	16	1	**6J-2680**	1	SEAL-O-RING	
M	17	1	**8T-4183**	4	BOLT (M12X1.75X40-MM)	
	18	1	**8T-4223**	4	WASHER-HARD (13.5X25.5X3-MM THK)	

I-REFER TO HYDRAULIC INFORMATION SYSTEM
M-METRIC PART

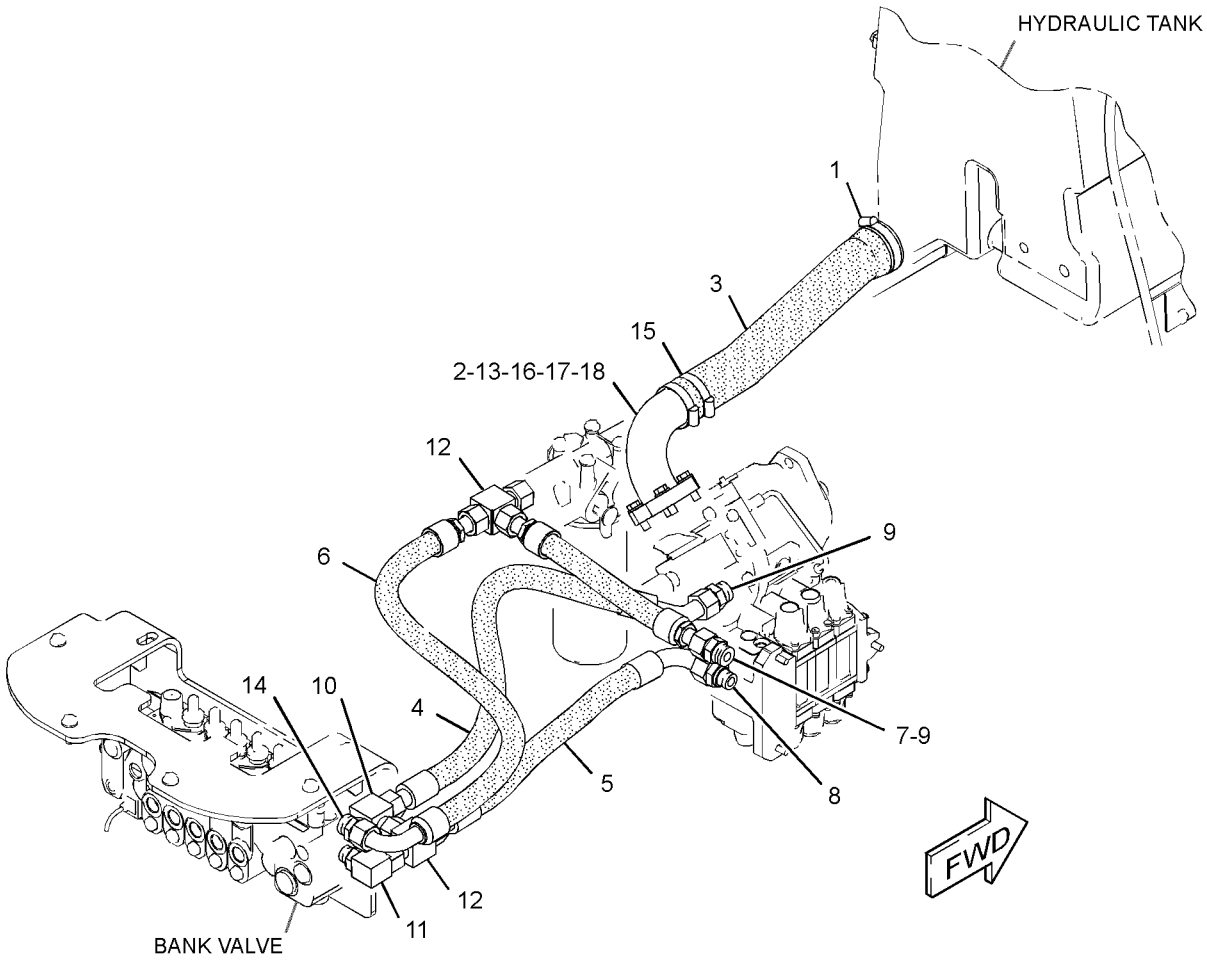

GRAPHIC #1 **<END>** g01988937

HYDRAULIC SYSTEM

334-8021 LINES GP-RETURN

S/N: SJL1-UP

PART OF 329-0124 HYDRAULIC AR

SMCS-5057 **i03642932**

NOTE	REF NO	GRAPHIC REF	PART NUMBER	QTY	PART NAME 1 2 3 4 5 6 (PRODUCT LEVEL)	SEE PAGE
	1	1	**7K-1181**	3	STRAP-CABLE	
	2	1	**130-9984**	1	CLIP	
	3	1	**159-1503**	4	CLAMP-HOSE	
	4	1	**232-0252**	1	TEE	
	5	1	**235-7091**	1	HOSE	
Y	6	1	*325-6257*	1	FILTER GP-OIL (HYDRAULIC)	340
	7	1	**091-9035**	2	SPACER (11X25X20-MM THK)	
M	8	1	**5C-7261**	2	NUT (M8X1.25-THD)	
	9	1	**5P-4116**	2	WASHER-HARD (8.8X20.5X2-MM THK)	
	10	1	**7D-7233**	2	CLIP	
	11	1	**7X-7729**	4	WASHER (11X25X3-MM THK)	
	12	1	**7X-7958**	4	CLAMP-HOSE	
	13	1	**8T-4121**	3	WASHER-HARD (11X21X2.5-MM THK)	
M	14	1	**8T-4136**	5	BOLT (M10X1.5X25-MM)	
M	15	1	**8T-5005**	2	BOLT (M10X1.5X70-MM)	
	16	1	**8T-7529**	3	CLIP	
E	17	1	**5P-1506**		HOSE (90-CM)	
E	18	1	**262-8088**		HOSE (130-CM)	
E	18A	1	**262-8088**		HOSE (222-CM)	
G	19	1	**160-2246**		SLEEVE-ABRASION (21-IN)	

E-ORDER BY THE CENTIMETER
G-ORDER BY THE INCH
M-METRIC PART
Y-SEPARATE ILLUSTRATION

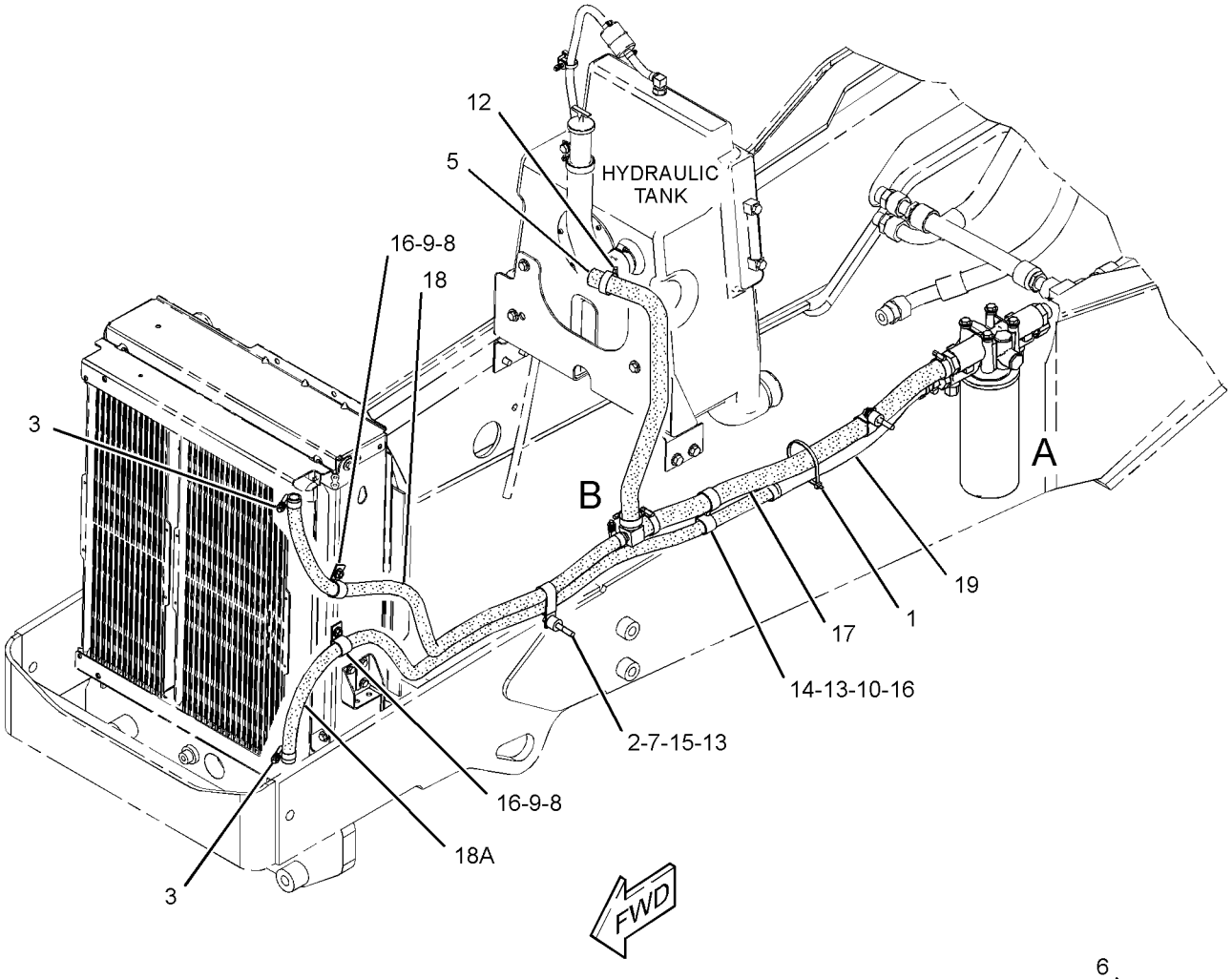

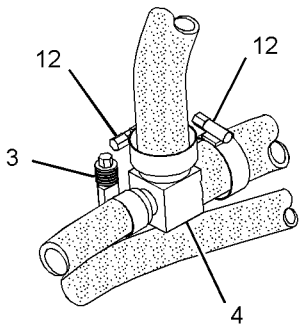

VIEW OF AREA B

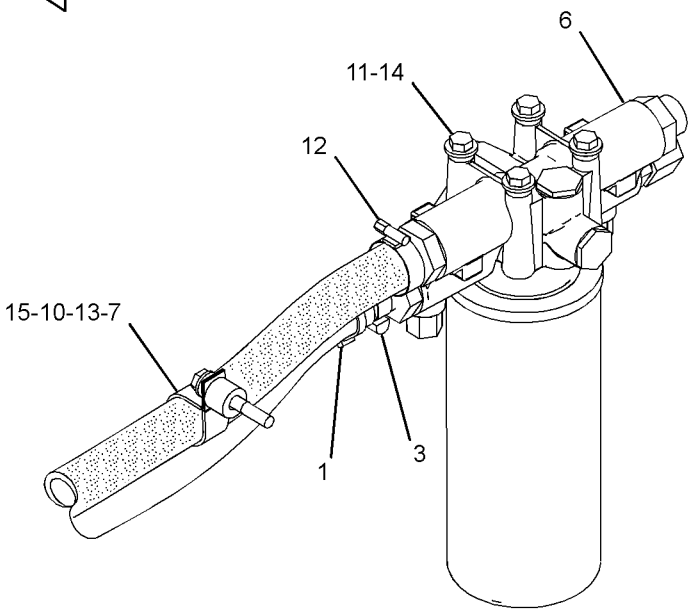

VIEW OF AREA A

GRAPHIC #1 **<END>** g01988835

HYDRAULIC SYSTEM

331-8676 LINES GP-RIDE CONTROL

S/N: SJL1-UP

PART OF 344-5290 CONTROL AR-RIDE, 344-6354 PREMIER AR AN ATTACHMENT

SMCS-5057, 5077, 5264 **i03662267**

NOTE	REF NO	GRAPHIC REF	PART NUMBER	QTY	PART NAME 1 2 3 4 5 6 (PRODUCT LEVEL)	SEE PAGE
	1	1	**7K-1181**	1	STRAP-CABLE	
Y	2	1	**245-8780**	1	MANIFOLD GP-RIDE CONTROL	408
	3	1	**276-2334**	1	FILM-WARNING (HIGH PRESS CYLINDER, READ OMM)	
I	4	1	**307-3529**	1	HOSE AS	
I	5	1	**329-7293**	1	HOSE AS	
	6	1	**331-8675**	1	BRACKET AS	
I	7	1	**337-8684**	1	HOSE AS	
Y	8	1	*345-3672*	1	ACCUMULATOR GP-RIDE CONTROL	321
	9	1	*148-8318*	1	CONNECTOR AS	
		1	**3K-0360**	1	SEAL-O-RING	
		1	**6V-8397**	1	SEAL-O-RING	
		1	**6V-8634**	1	CONNECTOR	
	10	1	*148-8340*	1	CONNECTOR AS	
		1	**3K-0360**	1	SEAL-O-RING	
		1	**6V-8398**	1	SEAL-O-RING	
		1	**6V-8639**	1	CONNECTOR	
	11	1	*148-8345*	1	CONNECTOR AS	
		1	**2M-9780**	1	SEAL-O-RING	
		1	**6V-8398**	1	SEAL-O-RING	
		1	**6V-8638**	1	CONNECTOR	
	12	1	*148-8370*	1	ELBOW AS	
		1	**6V-8398**	1	SEAL-O-RING	
		1	**6V-9851**	1	ELBOW	
	13	1	*148-8372*	1	ELBOW AS	
		1	**2M-9780**	1	SEAL-O-RING	
		1	**6V-8398**	1	SEAL-O-RING	
		1	**6V-8721**	1	ELBOW	
	14	1	*153-6241*	1	ELBOW AS	
		1	**6V-8398**	1	SEAL-O-RING	
		1	**8C-8989**	1	ELBOW	
	15	1	*164-5549*	1	COUPLING AS	
		1	**3J-1907**	1	SEAL-O-RING	
		1	**4I-6287**	1	COUPLING	
	16	1	**286-3018**	2	CLIP (SLOT)	
	17	1	**286-3019**	2	CLIP (TAB)	
	18	1	**7X-0605**	2	WASHER-HARD (13X28X1.6-MM THK)	
	19	1	**8A-8563**	2	SPACER (8.6X20X10-MM THK)	
	20	1	**8T-4121**	3	WASHER-HARD (11X21X2.5-MM THK)	
M	21	1	**8T-4137**	3	BOLT (M10X1.5X20-MM)	
M	22	1	**8T-4177**	2	BOLT (M8X1.25X90-MM)	
	23	1	**8T-4223**	2	WASHER-HARD (13.5X25.5X3-MM THK)	
	24	1	**8T-4224**	2	WASHER-HARD (8.8X16X2-MM THK)	
M	25	1	**8T-4956**	2	BOLT (M12X1.75X35-MM)	

I-REFER TO HYDRAULIC INFORMATION SYSTEM
M-METRIC PART
Y-SEPARATE ILLUSTRATION

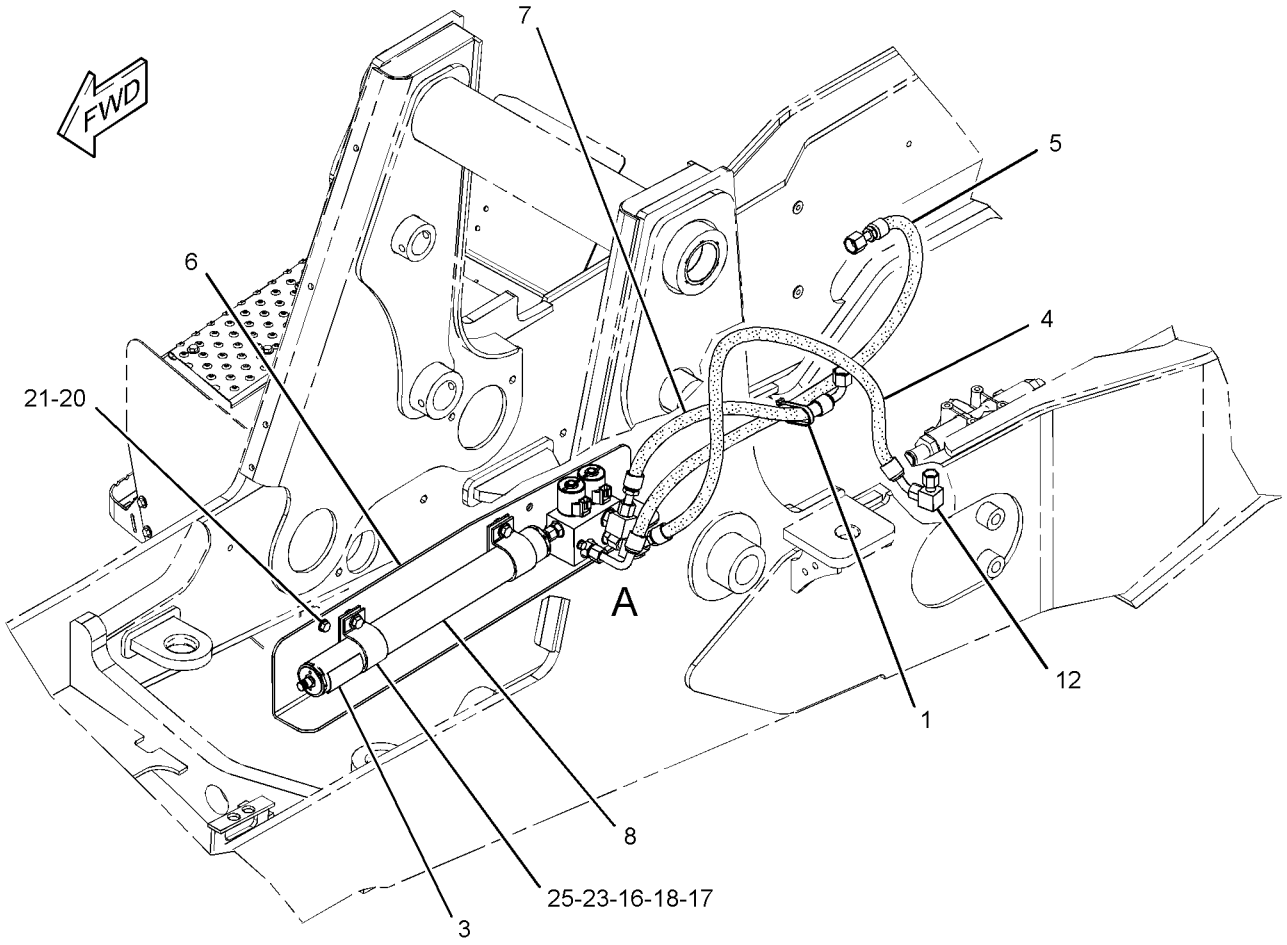

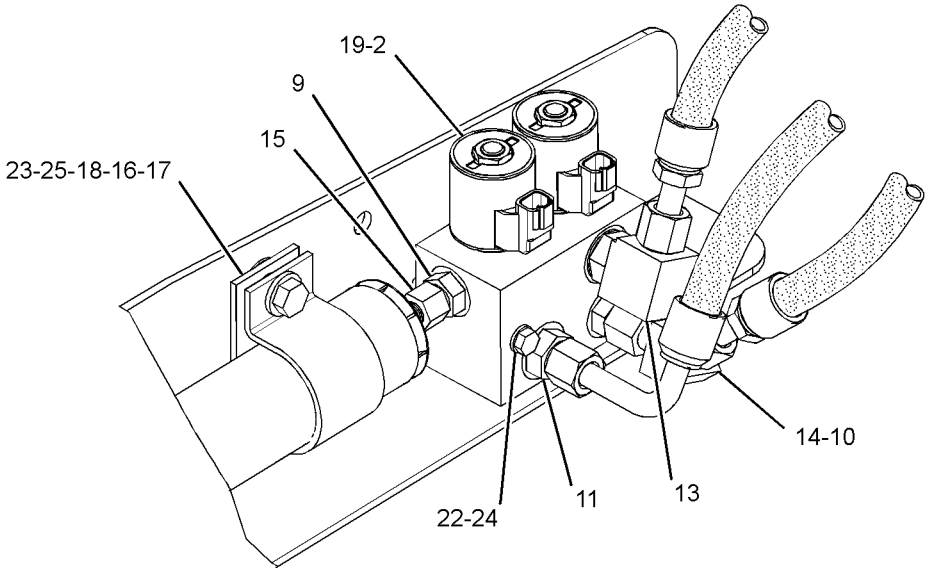

VIEW OF AREA A

GRAPHIC #1 **<END>** g01970213

HYDRAULIC SYSTEM

321-7205 LINES GP-SIDESHIFT LOCK

S/N: SJL1-UP

PART OF 329-0124 HYDRAULIC AR

SMCS-5057, 5484 **i03642525**

NOTE	REF NO	GRAPHIC REF	PART NUMBER	QTY	PART NAME 1 2 3 4 5 6 (PRODUCT LEVEL)	SEE PAGE
I	1	1	**324-7815**	1	HOSE AS	
I	2	1	**324-7816**	2	HOSE AS	
I	3	1	**324-7817**	1	HOSE AS	
	4	1	*148-8316*	2	CONNECTOR AS	
					(EACH INCLUDES)	
		1	**3J-7354**	1	SEAL-O-RING	
		1	**4J-5477**	1	SEAL-O-RING	
		1	**6V-8647**	1	CONNECTOR	
	5	1	*148-8325*	1	CONNECTOR AS	
		1	**3J-1907**	1	SEAL-O-RING	
		1	**4J-5477**	1	SEAL-O-RING	
		1	**6V-8641**	1	CONNECTOR	
	6	1	*150-4029*	2	TEE AS	
					(EACH INCLUDES)	
		1	**3J-7354**	1	SEAL-O-RING	
		1	**4J-5477**	2	SEAL-O-RING	
		1	**6V-8780**	1	TEE-FACE SEAL	
	7	1	*150-5968*	1	TEE AS	
		1	**4J-5477**	2	SEAL-O-RING	
		1	**6V-9835**	1	TEE-SWIVEL	

I-REFER TO HYDRAULIC INFORMATION SYSTEM

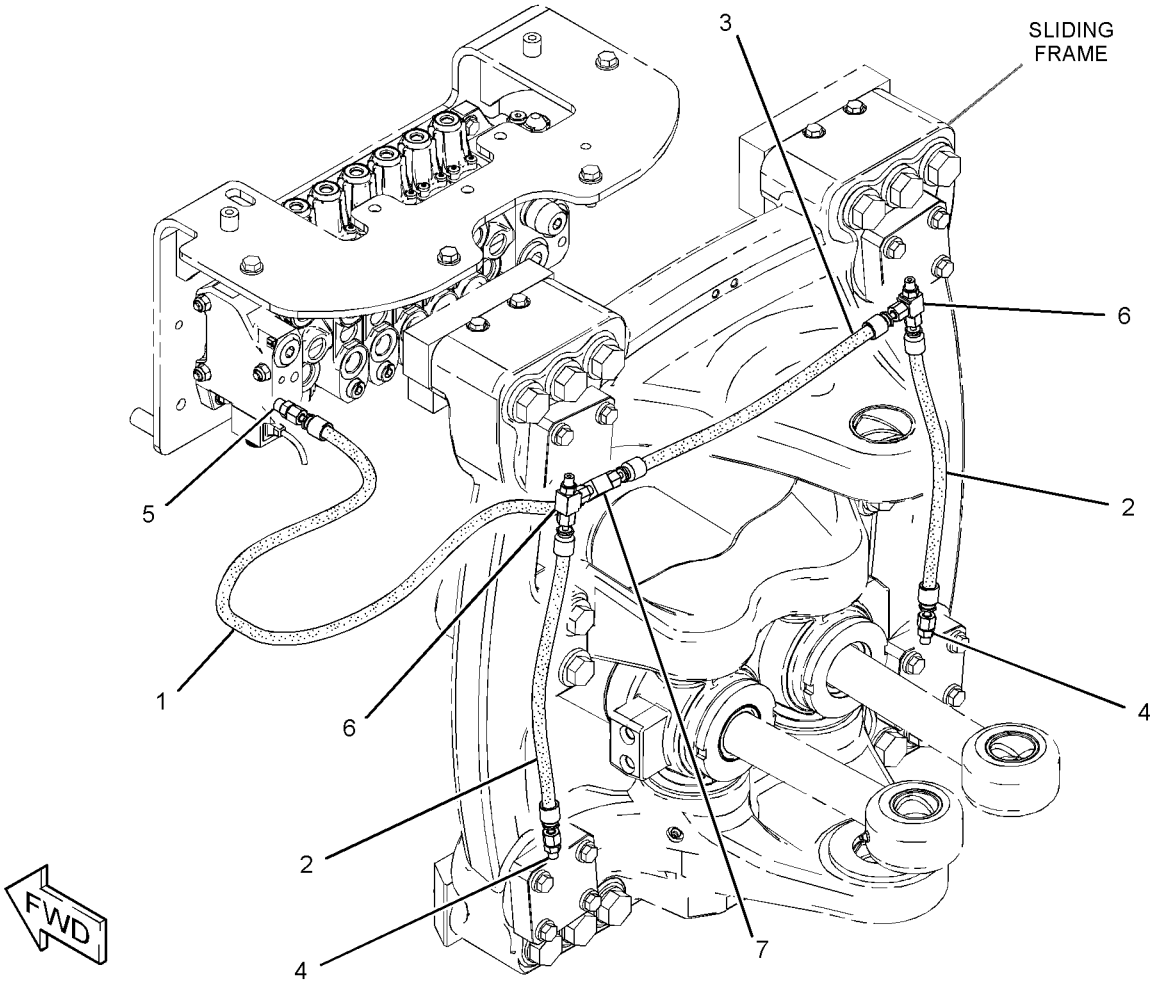

GRAPHIC #1 **<END>** g01985493

HYDRAULIC SYSTEM

299-6857 LINES GP-STABILIZER

S/N: SJL1-UP

PART OF 329-0124 HYDRAULIC AR

SMCS-5057, 5468 **i02774661**

NOTE	REF NO	GRAPHIC REF	PART NUMBER	QTY	PART NAME 1 2 3 4 5 6 (PRODUCT LEVEL)	SEE PAGE
	1	1	**7K-1181**	2	STRAP-CABLE	
	2	1	**195-0260**	2	MARKER (BEIGE, L1)	
	3	1	**195-0261**	2	BAND-MARKER (BLACK, L2)	
	4	1	**195-0262**	2	BAND-MARKER (GREEN, R1)	
	5	1	**195-0263**	2	BAND-MARKER (PINK, R2)	
	6	1	**206-1851**	1	SEAL	
	7	1	**299-3270**	1	HOSE AS	
	8	1	**299-5152**	1	HOSE AS	
	9	1	**299-6934**	1	HOSE AS	
	10	1	**302-7768**	1	HOSE AS	
	11	1	*148-8325*	8	CONNECTOR AS	
					(EACH INCLUDES)	
		1	**3J-1907**	1	SEAL-O-RING	
		1	**4J-5477**	1	SEAL-O-RING	
		1	**6V-8641**	1	CONNECTOR	
G	12	1	**160-2248**		SLEEVE-ABRASION (21.7-IN)	

G-ORDER BY THE INCH

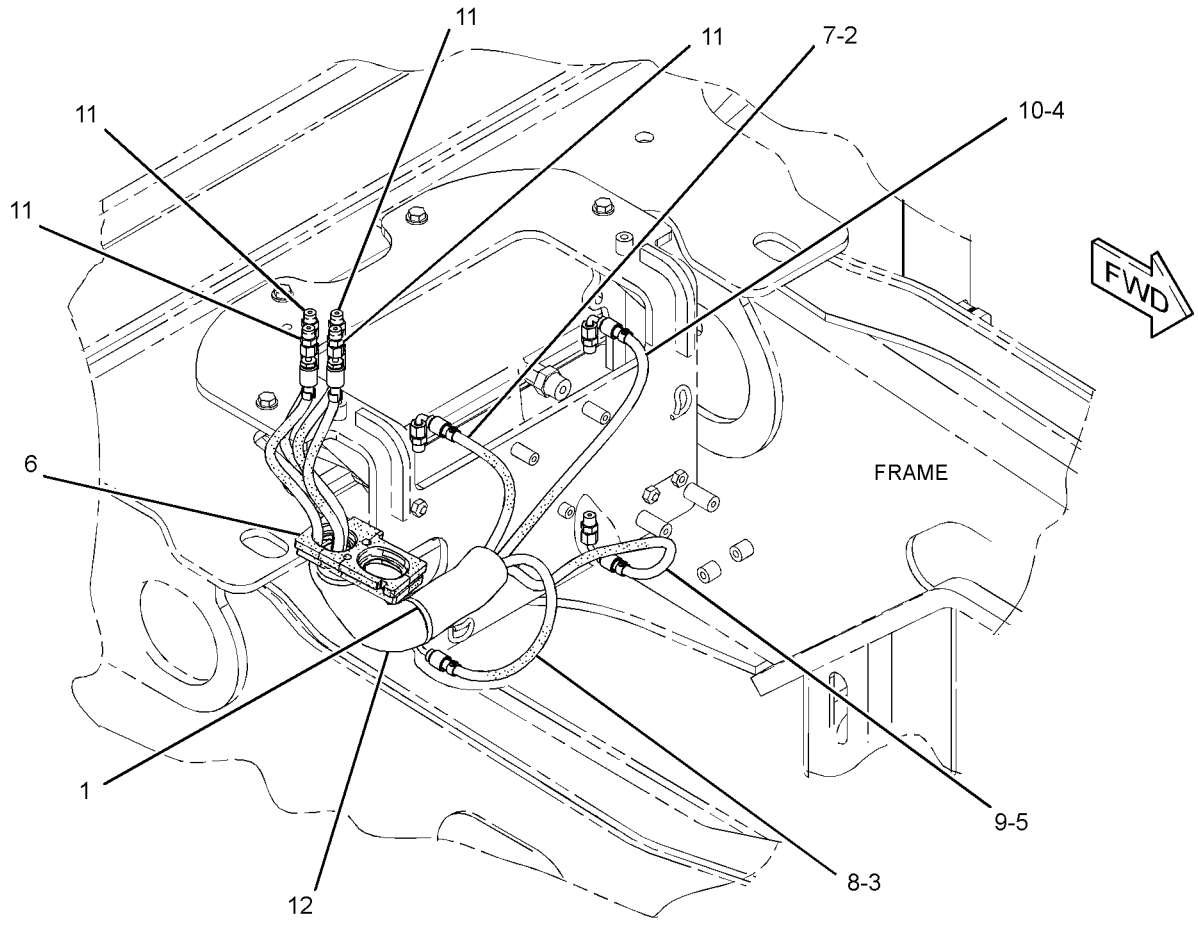

GRAPHIC #1 **<END>** g01391165

HYDRAULIC SYSTEM

326-1801 LINES GP-STABILIZER

S/N: SJL1-UP
PART OF 327-0114 FRAME AR-LOADER
AN ATTACHMENT

SMCS-5057, 5468 **i03642967**

NOTE	REF NO	GRAPHIC REF	PART NUMBER	QTY	PART NAME 1 2 3 4 5 6 (PRODUCT LEVEL)	SEE PAGE
	1	1	**3S-2093**	4	STRAP-CABLE	
	2	1	**154-2302**	2	SPACER (11X20X15-MM THK)	
	3	1	*205-2357*	4	CONNECTOR AS	
					(EACH INCLUDES)	
		1	**3D-2824**	1	SEAL-O-RING	
		1	**6V-8398**	1	SEAL-O-RING	
		1	**8T-7968**	1	CONNECTOR	
Y	4	1	**308-3437**	2	VALVE GP-LOAD CONTROL (STABILIZER)	433
I	5	1	**331-0797**	1	HOSE AS	
I	6	1	**331-0798**	3	HOSE AS	
	7	1	*148-8336*	4	CONNECTOR AS	
					(EACH INCLUDES)	
		1	**3J-1907**	1	SEAL-O-RING	
		1	**6V-8397**	1	SEAL-O-RING	
		1	**6V-8636**	1	CONNECTOR	
	8	1	*164-5549*	2	COUPLING AS	
					(EACH INCLUDES)	
		1	**3J-1907**	1	SEAL-O-RING	
		1	**4I-6287**	1	COUPLING	
	9	1	*340-1650*	2	ADAPTER AS	
					(EACH INCLUDES)	
		1	**3J-1907**	1	SEAL-O-RING	
		1	**341-0076**	1	ADAPTER	
	10	1	**5I-3978**	2	CLIP	
	11	1	**8T-4224**	2	WASHER-HARD (8.8X16X2-MM THK)	
M	12	1	**8T-6912**	2	BOLT (M8X1.25X50-MM)	

I-REFER TO HYDRAULIC INFORMATION SYSTEM
M-METRIC PART
Y-SEPARATE ILLUSTRATION

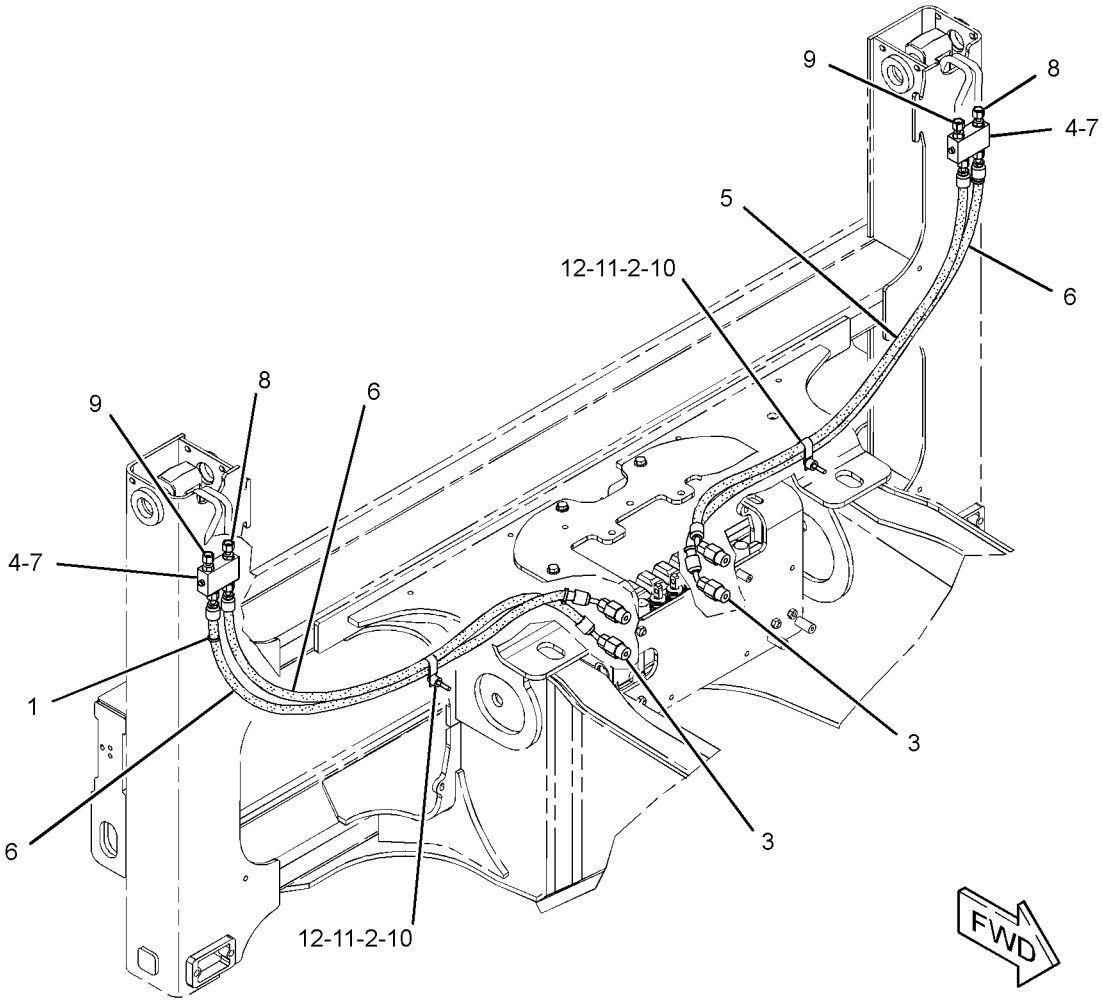

GRAPHIC #1 **<END>** g01986358

HYDRAULIC SYSTEM

321-7192 LINES GP-STICK

S/N: SJL1-UP

PART OF 334-0686, 334-0691, 350-6934, 350-6935, 350-6944, 350-6945 BACKHOE AR-EXTENDABLE STICK, 334-0694, 350-6933 BACKHOE AR-STANDARD STICK AN ATTACHMENT

SMCS-5057 **i03690282**

NOTE	REF NO	GRAPHIC REF	PART NUMBER	QTY	PART NAME 1 2 3 4 5 6 (PRODUCT LEVEL)	SEE PAGE
I	1	1	**324-7596**	1	HOSE AS	
	2	1	**343-4301**	1	HOSE AS	

I-REFER TO HYDRAULIC INFORMATION SYSTEM

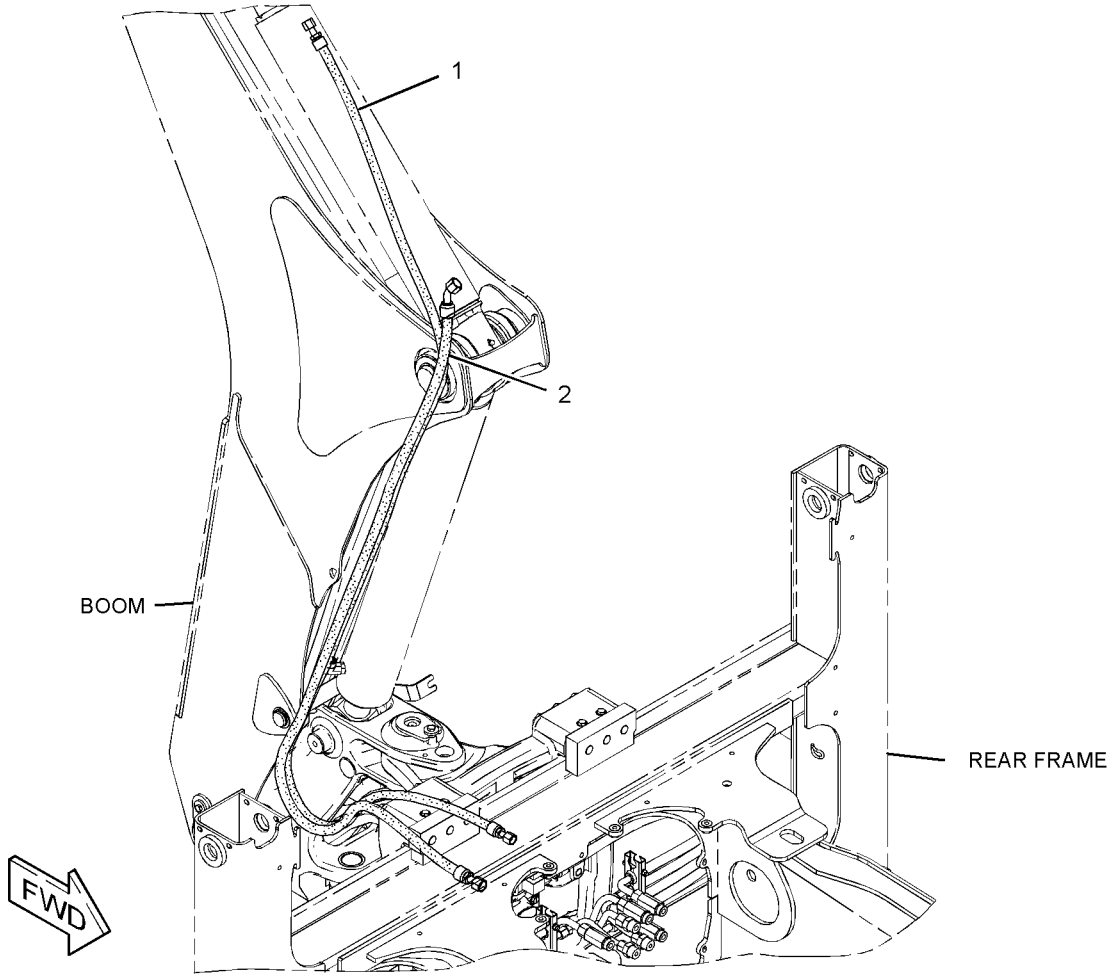

GRAPHIC #1 **<END>** g01989920

HYDRAULIC SYSTEM

326-1803 LINES GP-SWING

S/N: SJL1-UP

PART OF 329-0124 HYDRAULIC AR

SMCS-5057, 5105 **i03642535**

NOTE	REF NO	GRAPHIC REF	PART NUMBER	QTY	PART NAME 1 2 3 4 5 6 (PRODUCT LEVEL)	SEE PAGE
	1	1	**204-2281**	2	STRAP-TIE	
	2	1	*287-7252*	1	TEE AS	
		1	**3J-1907**	1	SEAL-O-RING	
		1	**6V-8398**	2	SEAL-O-RING	
		1	**287-7251**	1	TEE	
	3	1	**320-7812**	1	VALVE GP-PRESSURE CONTROL (290-BAR)	
I	4	1	**328-5333**	2	HOSE AS	
I	5	1	**328-5358**	2	HOSE AS	
	6	1	*341-0121*	1	TEE AS	
		1	**3D-2824**	1	SEAL-O-RING	
		1	**4J-5477**	1	SEAL-O-RING	
		1	**6V-8398**	1	SEAL-O-RING	
		1	**119-6346**	1	TEE-FACE SEAL	
	7	1	**344-8098**	1	TUBE AS	
I	8	1	**344-8154**	1	HOSE AS	
	9	1	**344-8163**	1	TUBE AS	
	10	1	*148-8325*	1	CONNECTOR AS	
		1	**3J-1907**	1	SEAL-O-RING	
		1	**4J-5477**	1	SEAL-O-RING	
		1	**6V-8641**	1	CONNECTOR	
	11	1	*148-8328*	1	CONNECTOR AS	
		1	**3D-2824**	1	SEAL-O-RING	
		1	**6V-8398**	1	SEAL-O-RING	
		1	**6V-8633**	1	CONNECTOR	
	12	1	*148-8340*	4	CONNECTOR AS	
					(EACH INCLUDES)	
		1	**3K-0360**	1	SEAL-O-RING	
		1	**6V-8398**	1	SEAL-O-RING	
		1	**6V-8639**	1	CONNECTOR	
	13	1	*148-8364*	2	ELBOW AS	
					(EACH INCLUDES)	
		1	**3K-0360**	1	SEAL-O-RING	
		1	**6V-8398**	1	SEAL-O-RING	
		1	**6V-8625**	1	ELBOW	
	14	1	**6V-1249**	2	GROMMET	
	15	1	**6V-8398**	1	SEAL-O-RING	
	16	1	**8T-1899**	2	CLIP (SLOT)	
	17	1	**8T-1900**	2	CLIP (TAB)	
	18	1	**8T-4121**	4	WASHER-HARD (11X21X2.5-MM THK)	
M	19	1	**8T-4133**	2	NUT (M10X1.5-THD)	
M	20	1	**8T-4195**	2	BOLT (M10X1.5X30-MM)	

I-REFER TO HYDRAULIC INFORMATION SYSTEM
M-METRIC PART

326-1803 **LINES GP-SWING** *(contd.)* **i03642535**

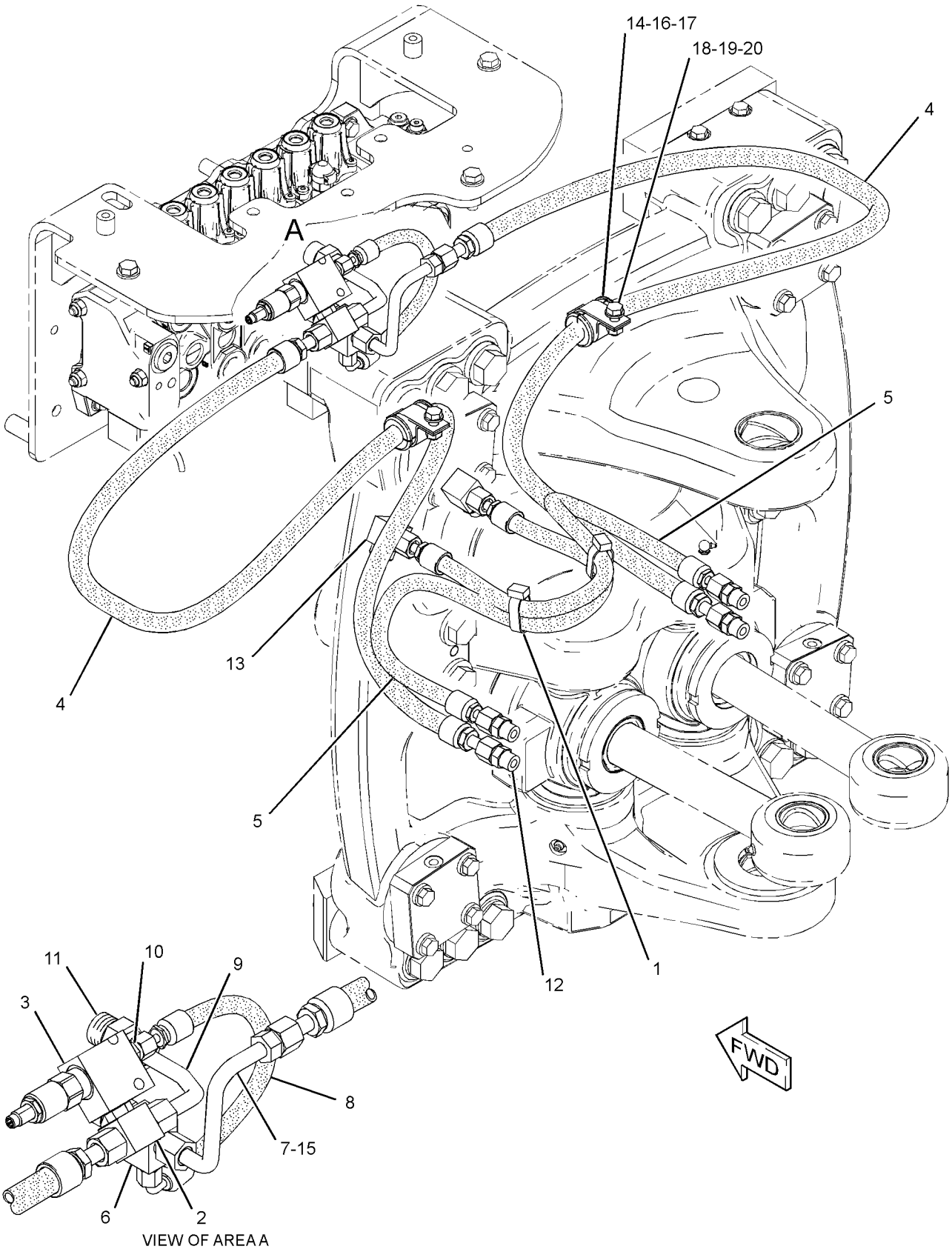

VIEW OF AREA A

GRAPHIC #1 **<END>** g01986077

HYDRAULIC SYSTEM

300-4493 MANIFOLD & SOLENOID GP-CONTROL

S/N: SJL1-UP

PART OF 338-0433 LINES GP-PILOT

SMCS-5264, 5479 **i03577539**

NOTE	REF NO	GRAPHIC REF	PART NUMBER	QTY	PART NAME 1 2 3 4 5 6 (PRODUCT LEVEL)	SEE PAGE
J	1	1	**177-3868**	1	VALVE GP-CHECK (REVERSING FAN)	
Y	2	1	**185-4254**	4	VALVE GP-SOLENOID (12-VOLT) (AUXILIARY)	439
H	3	1	**220-3398**	1	VALVE GP-SOLENOID (DIFFERENTIAL LOCK)	
	4	1	**307-0768**	1	VALVE GP-PRESSURE REDUCING	
					AVAILABLE REPAIR KIT(S):	
J			**120-9051**	1	KIT-SEAL (FAN MOTOR)	
					(INCLUDES SEALS & RINGS)	
H			**250-8330**	1	KIT-SEAL	
					(INCLUDES RINGS)	

H-KIT MARKED H SERVICES PARTS MARKED H
J-KIT MARKED J SERVICES PARTS MARKED J
Y-SEPARATE ILLUSTRATION

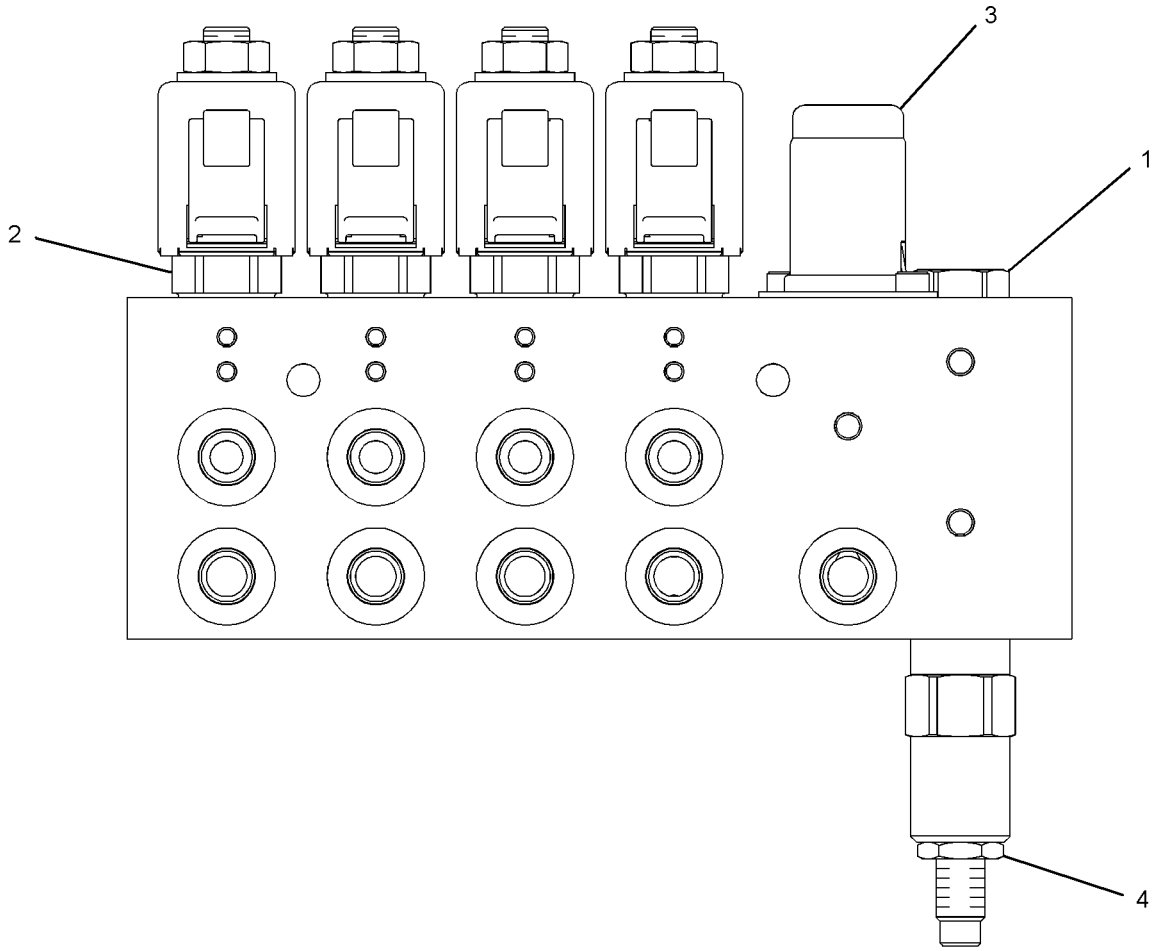

GRAPHIC #1 **<END>** g01388550

HYDRAULIC SYSTEM

300-4491 MANIFOLD GP-CONTROL

S/N: SJL1-UP

PART OF 338-0432 LINES GP-PILOT

SMCS-5264 **i03712428**

NOTE	REF NO	GRAPHIC REF	PART NUMBER	QTY	PART NAME 1 2 3 4 5 6 (PRODUCT LEVEL)	SEE PAGE
J	1	1	**240-6866**	2	VALVE GP-SOLENOID (FLOW CONTROL)	
					(EACH INCLUDES)	
		1	**250-6148**	1	COIL AS (24-VOLT)	
					AVAILABLE REPAIR KIT(S):	
J			**106-3108**	1	KIT-SEAL	
J-KIT MARKED J SERVICES PART MARKED J						

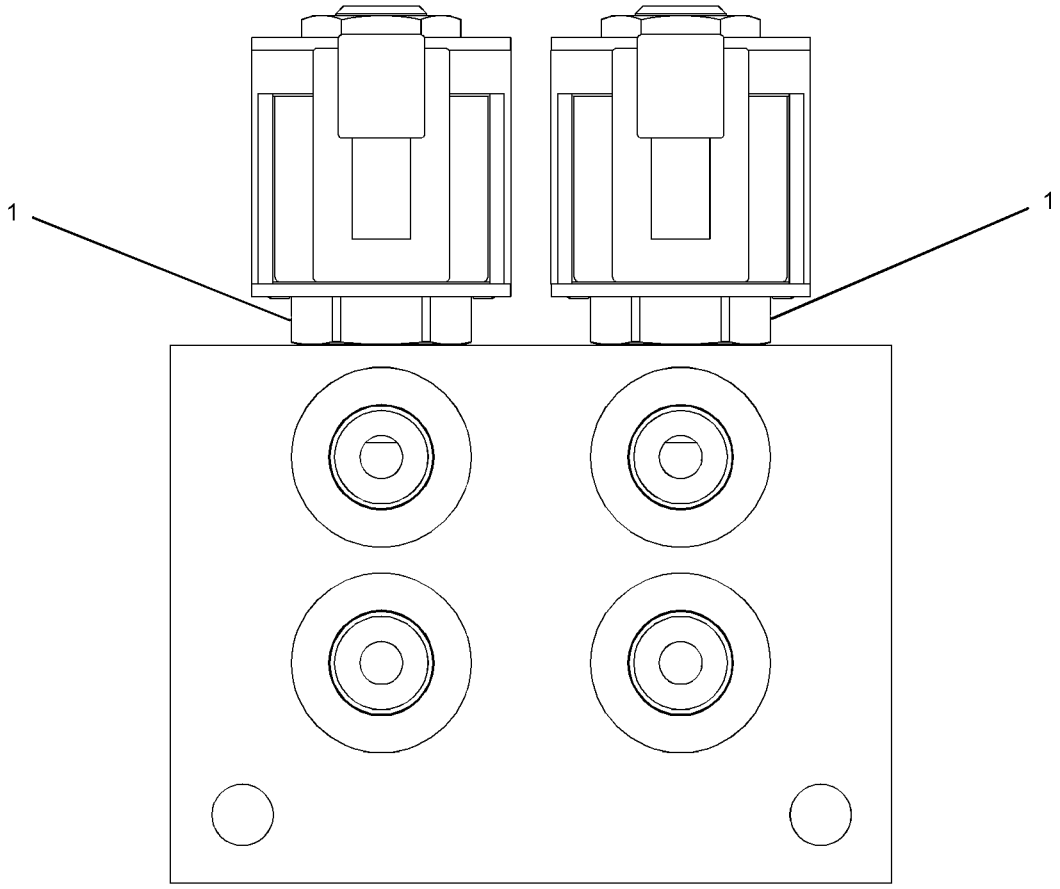

GRAPHIC #1 **<END>** g01388429

308-2154 MANIFOLD GP-CONTROL–OUTLET

S/N: SJL1-UP

PART OF 321-9975 VALVE GP-BANK 7

SMCS-5264 **i02766813**

NOTE	REF NO	GRAPHIC REF	PART NUMBER	QTY	PART NAME 1 2 3 4 5 6 (PRODUCT LEVEL)	SEE PAGE
	1	1	**9S-8004**	2	PLUG	
	2	1	**3J-1907**	2	SEAL-O-RING	
	3	1	**257-0477**	1	KIT-CARTRIDGE	
	4	1	**257-0478**	1	COIL AS	
	5	1	**9S-8008**	1	PLUG-O-RING	
	6	1	**308-2886**	1	KIT-VALVE (SHUTTLE)	
	7	1	**3D-2824**	1	SEAL-O-RING	

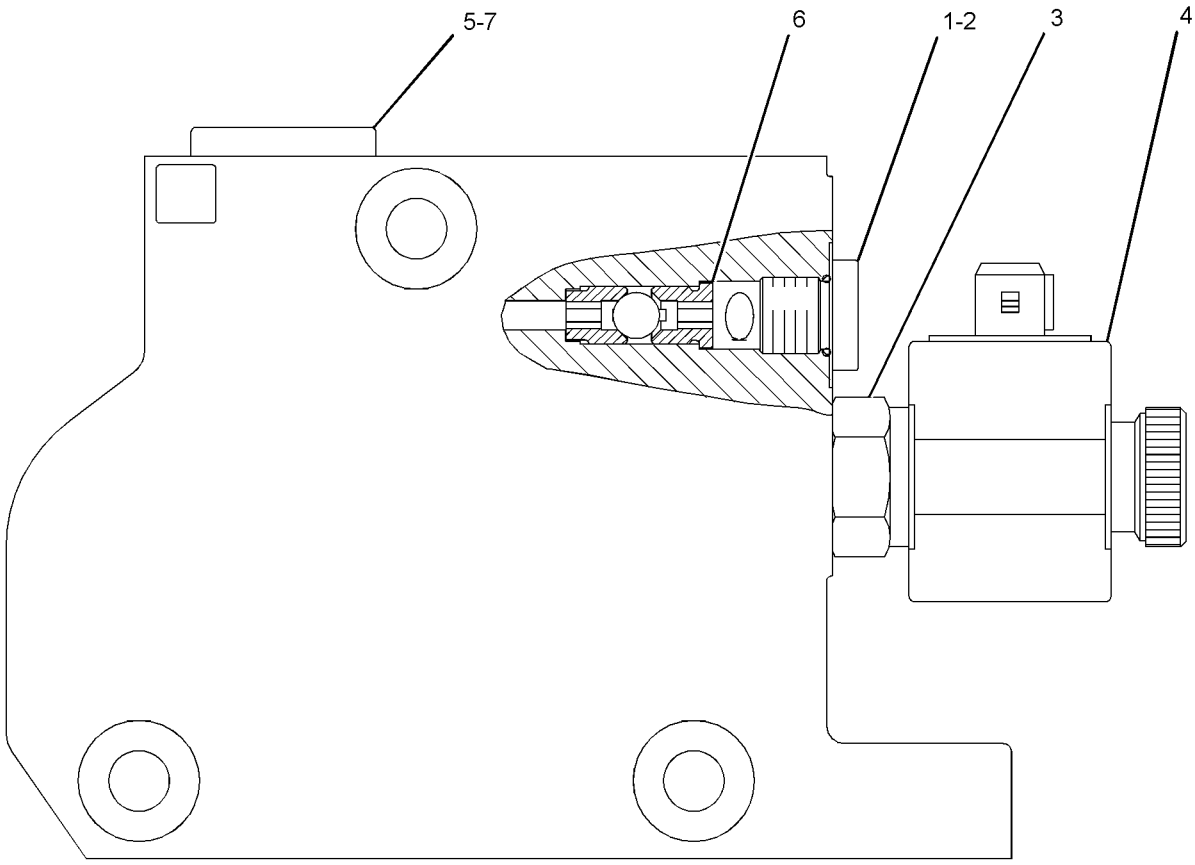

GRAPHIC #1 **<END>** g01388401

HYDRAULIC SYSTEM

308-2156 MANIFOLD GP-CONTROL

S/N: SJL1-UP
PART OF 321-9976 VALVE GP-BANK 3
AN ATTACHMENT

SMCS-5264 **i02767699**

NOTE	REF NO	GRAPHIC REF	PART NUMBER	QTY	PART NAME 1 2 3 4 5 6 (PRODUCT LEVEL)	SEE PAGE
	1	1	**308-2890**	1	KIT-VALVE (REGULATOR)	
					(INCLUDES SEAL-O-RING,CAP,SPACER & SPRINGS)	
	2	1	**308-2889**	1	KIT-VALVE (PRIORITY)	
					(INCLUDES RETAINERS,BALL,SPRING,SPOOL & FILTER)	
	3	1	**308-2888**	1	KIT-VALVE (SHUTTLE)	
	4	1	**308-2878**	1	PLUG GP-CONTROL MANIFOLD	
		1	**3K-0360**	1	SEAL-O-RING	
		1	**161-6149**	1	SEAL-O-RING	
	5	1	**308-2877**	1	PLUG GP-CONTROL MANIFOLD	
		1	**114-1042**	1	SEAL-O-RING	
		1	**122-9250**	1	SEAL-O-RING	
	6	1	**227-1199**	1	KIT-SEAL	
					(INCLUDES SEAL-O-RINGS & RING-BACKUP)	
	7	1	**227-1198**	1	KIT-SEAL (FLOW CONTROL VALVE)	
					(INCLUDES SEAL-O-RINGS & RING-BACKUP)	

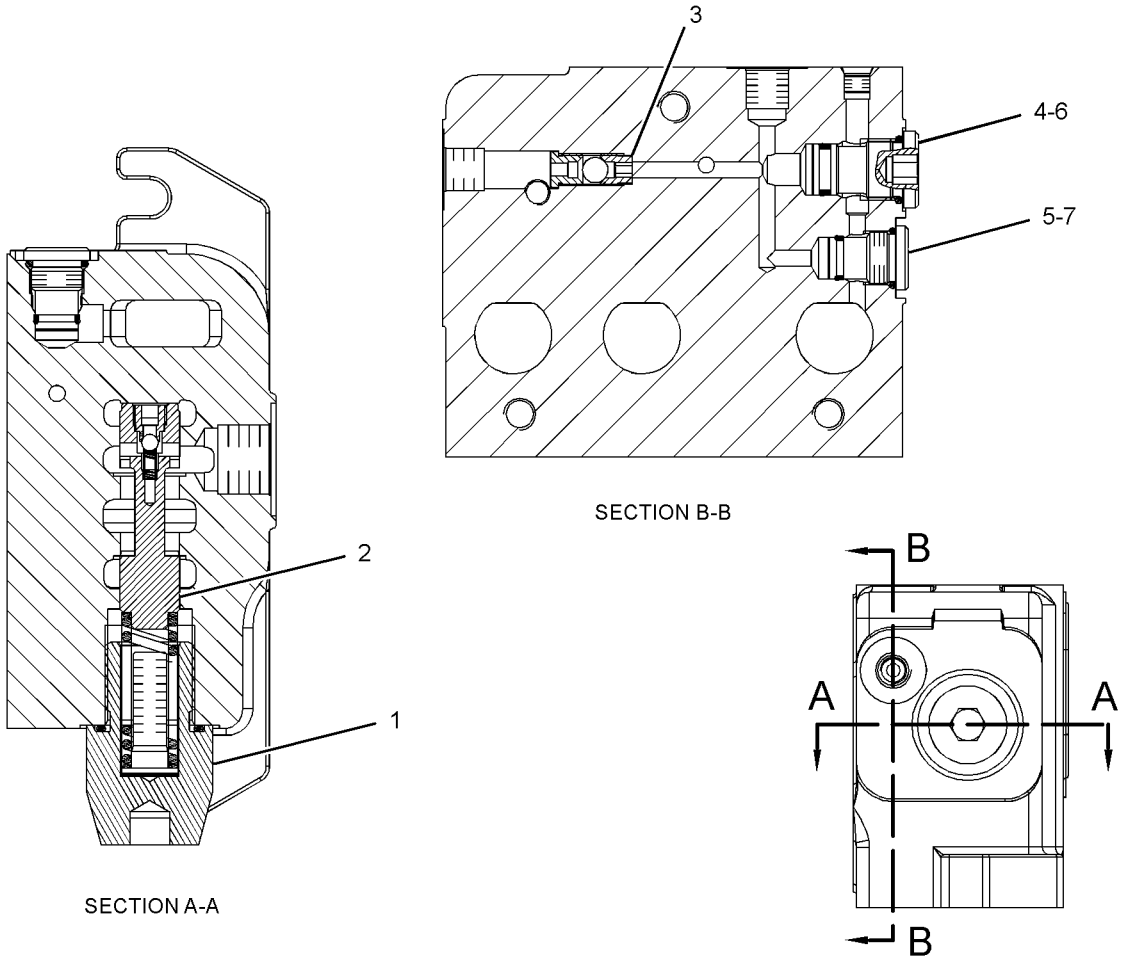

SECTION B-B

SECTION A-A

GRAPHIC #1 **<END>** g01391896

344-6126 MANIFOLD GP-CONTROL–INLET

S/N: SJL1-UP

PART OF 321-9975 VALVE GP-BANK 7

SMCS-5264 **i03665624**

NOTE	REF NO	GRAPHIC REF	PART NUMBER	QTY	PART NAME 1 2 3 4 5 6 (PRODUCT LEVEL)	SEE PAGE
	1	1	**227-1184**	1	VALVE GP-RELIEF (LOAD SENSING SIGNAL)	
	2	1	**227-1185**	1	VALVE GP-FLOW CONTROL (AUXILIARY, INLET)	
		1	**227-1198**	1	KIT-SEAL (FLOW CONTROL VALVE)	
					(INCLUDES SEAL-O-RINGS & BACKUP RINGS)	
	3	1	**3J-1907**	1	SEAL-O-RING	
	4	1	**9S-8004**	1	PLUG	
	5	1	**9S-9334**	1	PLUG-O-RING	
	6	1	**9S-8008**	1	PLUG-O-RING	
	7	1	**3D-2824**	1	SEAL-O-RING	
	8	1	**316-0675**	1	KIT-REGULATOR (CONTROL MANIFOLD)	
					(INCLUDES SEAL-O-RING, CAP, SPRING, SHIMS & SPOOL)	
	9	1	**227-1199**	1	KIT-SEAL (CONTROL MANIFOLD)	
					(INCLUDES SEAL-O-RINGS & BACKUP RINGS)	
	10	1	**227-1197**	1	FILTER-OIL (FLOW REGULATOR)	
	11	1	**7M-8485**	1	SEAL-O-RING	
	12	1	**257-0468**	1	CAP-PROTECTION	

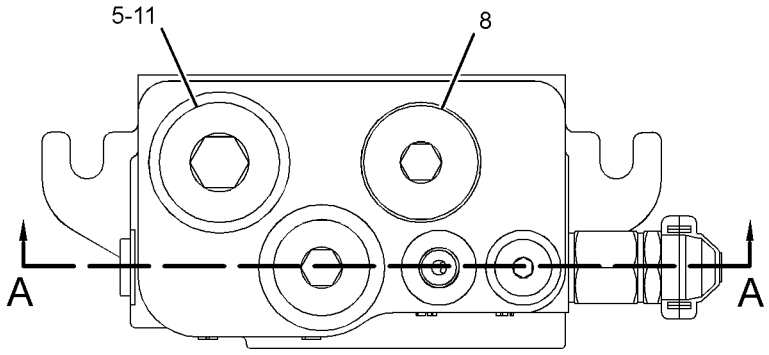

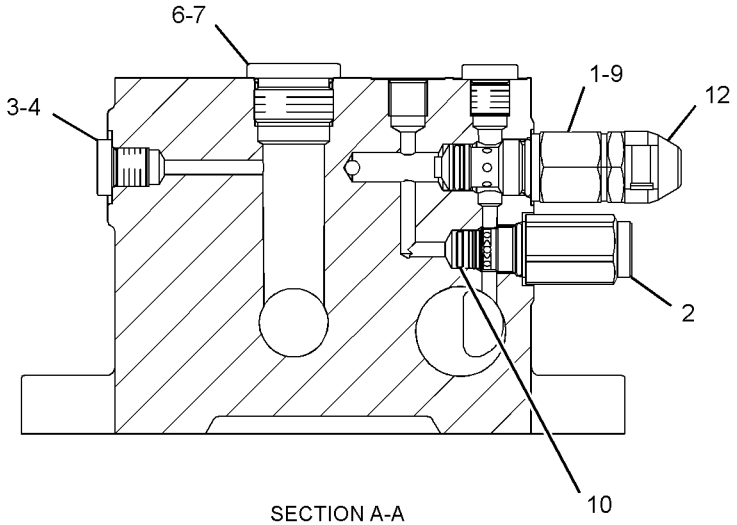

SECTION A-A

GRAPHIC #1 **<END>** g01988433

HYDRAULIC SYSTEM

245-8780 MANIFOLD GP-RIDE CONTROL

S/N: SJL1-UP
PART OF 331-8676 LINES GP-RIDE CONTROL
AN ATTACHMENT

SMCS-5264 **i03628662**

NOTE	REF NO	GRAPHIC REF	PART NUMBER	QTY	PART NAME 1 2 3 4 5 6 (PRODUCT LEVEL)	SEE PAGE
J	1	1	**249-3124**	1	VALVE GP-SOLENOID (RIDE CONTROL, SWITCH)	
L	2	1	**249-3125**	1	VALVE GP-SOLENOID (ACCUMULATOR)	
	3	1	**238-4628**	1	COIL AS	
					AVAILABLE REPAIR KIT(S):	
J			**141-0888**	1	KIT-SEAL (RIDE CONTROL, SWITCH)	
L			**227-5509**	1	KIT-SEAL (ACCUMULATOR)	
					(EACH KIT-SEAL INCLUDES RING & SEALS)	

J-KIT MARKED J SERVICES PART MARKED J
L-KIT MARKED L SERVICES PART MARKED L

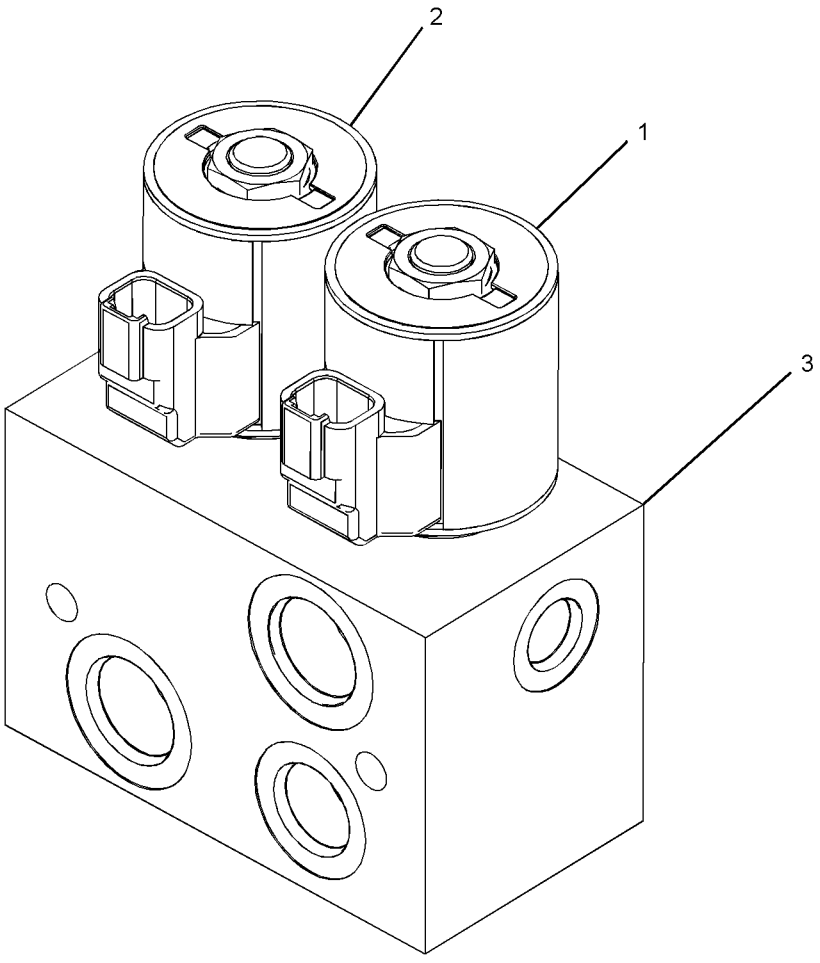

GRAPHIC #1 **<END>** g01646794

9R-4668 MOUNTING GP-CYLINDER—MULTIPURPOSE BUCKET

S/N: SJL1-UP

PART OF 318-7257, 318-7259, 318-7261, 320-9941 BUCKET AR-MULTIPURPOSE AN ATTACHMENT

SMCS-5102, 6068, 7562 **i00528574**

NOTE	REF NO	GRAPHIC REF	PART NUMBER	QTY	PART NAME 1 2 3 4 5 6 (PRODUCT LEVEL)	SEE PAGE
	1	1	**9R-4677**	2	PIN	
	2	1	**3B-5317**	4	PIN-COTTER	
	3	1	**9R-4678**	2	PIN	
	4	1	**3B-8489**	4	FITTING-GREASE	

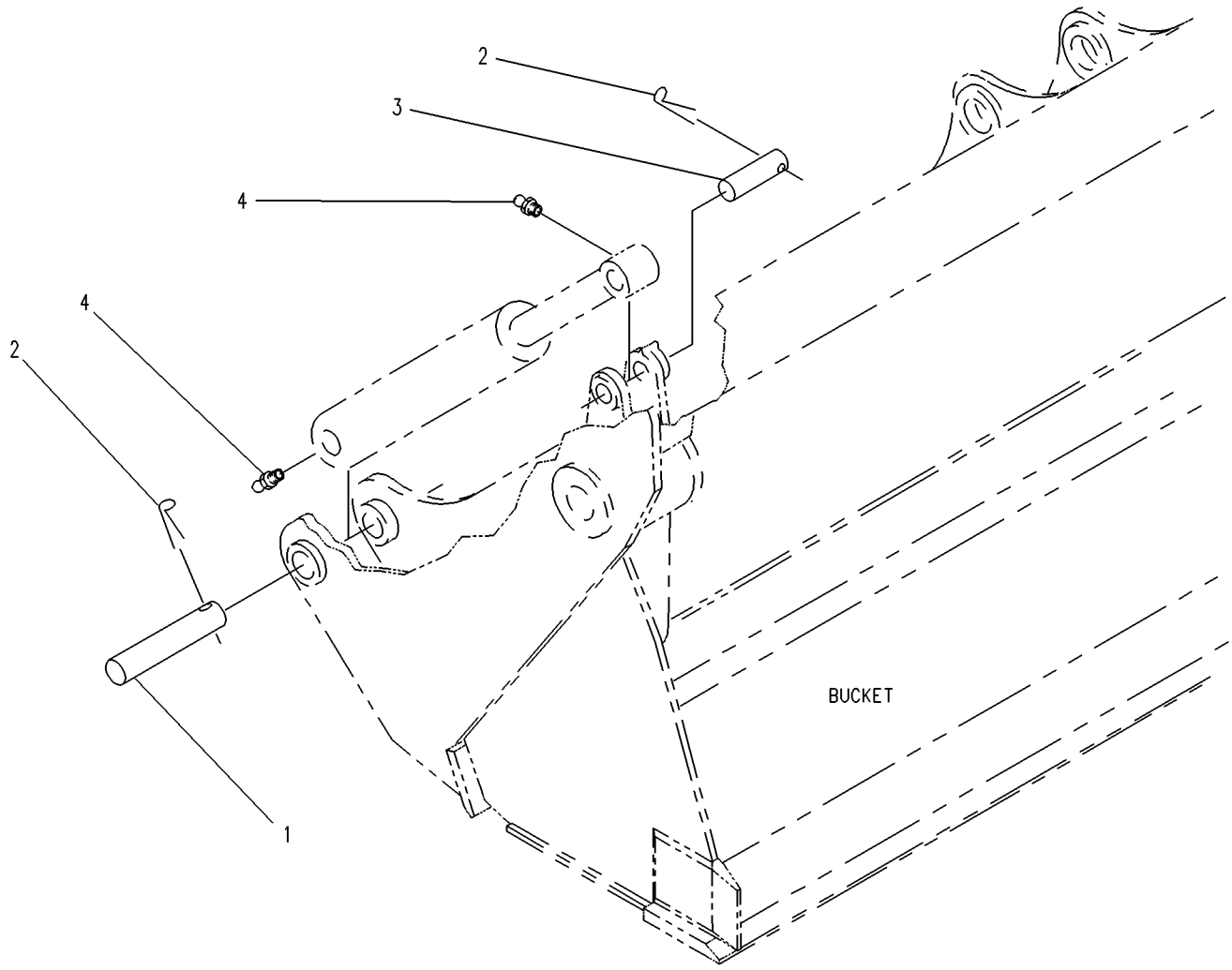

GRAPHIC #1 **<END>** g00219196

323-2096 MOUNTING GP-LINES

S/N: SJL1-UP

PART OF 334-0686, 334-0691, 350-6934, 350-6935, 350-6944, 350-6945 BACKHOE AR-EXTENDABLE STICK, 334-0694, 350-6933 BACKHOE AR-STANDARD STICK AN ATTACHMENT

SMCS-5057 **i03690287**

NOTE	REF NO	GRAPHIC REF	PART NUMBER	QTY	PART NAME 1 2 3 4 5 6 (PRODUCT LEVEL)	SEE PAGE
	1	1	**5P-5148**	3	STRAP-TIE	
	2	1	**315-7645**	1	CLAMP	
	3	1	**315-7646**	1	CLAMP	
	4	1	**315-7647**	1	CLAMP	
	5	1	**327-3753**	1	PLATE	
	6	1	**332-0092**	2	BLOCK	
	7	1	**343-7400**	1	CLAMP	
M	8	1	**5C-9553**	2	BOLT (M6X1X16-MM)	
	9	1	**8T-4205**	2	WASHER-HARD (7.2X14.5X2-MM THK)	
	10	1	**8T-4224**	4	WASHER-HARD (8.8X16X2-MM THK)	
M	11	1	**8T-6869**	2	BOLT (M8X1.25X60-MM)	
M	12	1	**8T-6912**	2	BOLT (M8X1.25X50-MM)	

M-METRIC PART

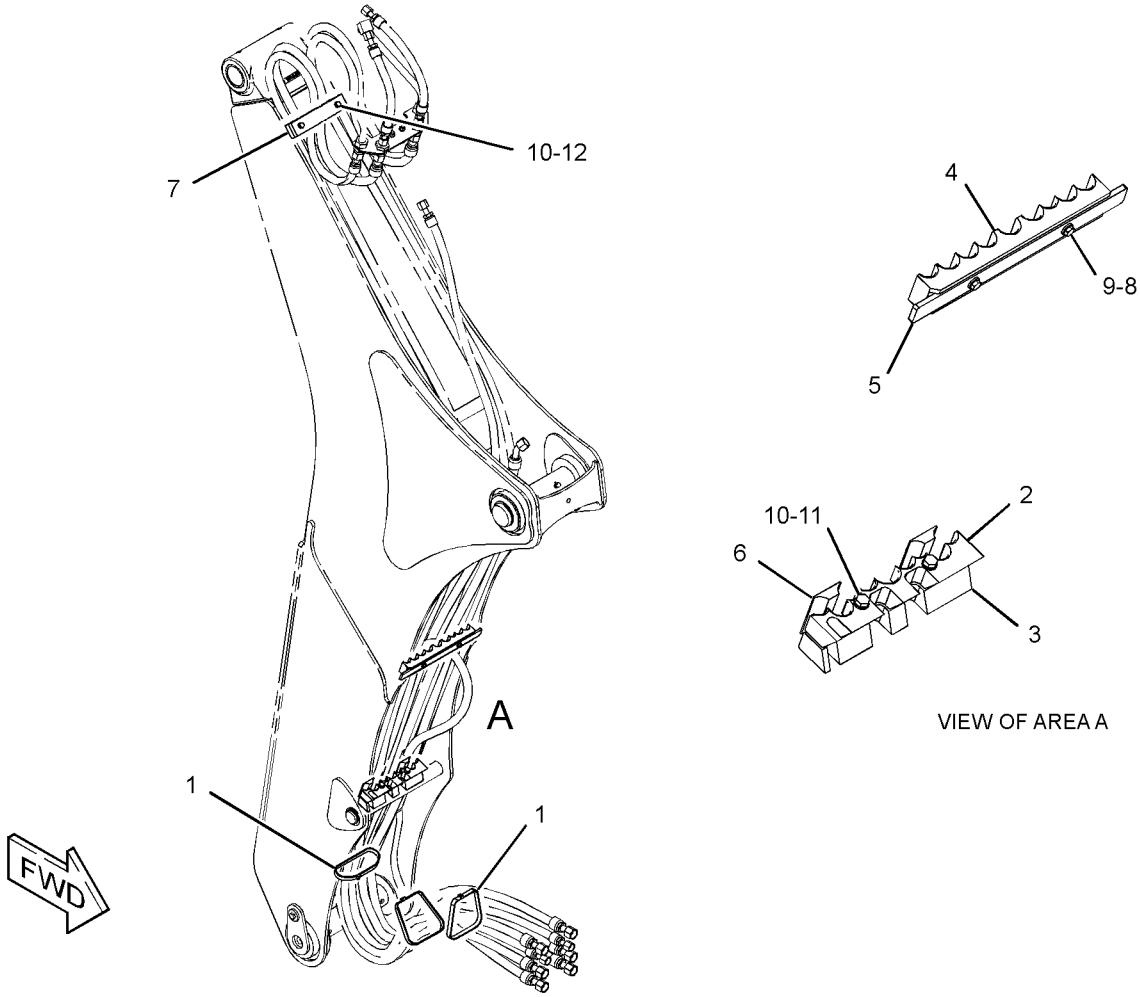

GRAPHIC #1 **<END>** g01989478

HYDRAULIC SYSTEM

289-6370 PUMP GP-PISTON

S/N: SJL1-UP

PART OF 329-0124 HYDRAULIC AR

SMCS-5070 **i03712431**

NOTE	REF NO	GRAPHIC REF	PART NUMBER	QTY	PART NAME 1 2 3 4 5 6 (PRODUCT LEVEL)	SEE PAGE
	1	1	**280-7869**	1	VALVE GP-PUMP CONTROL (PRESSURE, FLOW COMPENSATOR)	
		1	**6E-6528**	2	SEAL	
M		1	**8T-8442**	4	BOLT-SOCKET HEAD (M6X1X30-MM)	
		1	**033-6043**	2	SEAL-O-RING	
		1	**280-7870**	1	GASKET	
Y	2	1	**6E-4006**	1	ROTATING GP-PUMP	413
	3	1	**6E-4004**	2	SEAL-SHAFT	
	4	1	**180-6213**	1	RING-RETAINING	
	5	1	**162-1604**	1	SHAFT-DRIVE	
	6	1	**3B-5790**	1	CUP-BEARING	
	7	1	**6V-2323**	1	CONE-BEARING	
	8	1	**1P-6872**	1	CUP-BEARING	
	9	1	**8C-7110**	1	CONE-BEARING	
	10	1	**6E-4003**	2	BEARING	
	12	1	**173-0639**	1	SWASHPLATE AS	
	13	1	**033-6028**	1	SEAL-O-RING	
	14	1	**153-4906**	1	SEAL-O-RING	
	15	1	**9S-8004**	1	PLUG	
	16	1	**2M-9780**	1	SEAL-O-RING	
	17	1	**3E-6770**	1	SEAL-O-RING	
	18	1	**3E-6769**	4	SEAL-O-RING	
	19	1	**263-5516**	1	VALVE GP-SOLENOID (LOAD SENSING PRESSURE)	
		1	**217-3875**	1	SEAL-O-RING	
		1	**247-7054**	1	COLLAR-LOCKING	
		1	**251-2429**	1	KIT-SEAL (SOLENOID VALVE) (INCLUDES SEAL-O-RINGS)	
		1	**282-6944**	1	COIL AS	
Y	20	1	**280-7871**	1	VALVE GP-PUMP CONTROL	438
	21	1	**280-7868**	1	TUBE AS	
	22	1	**280-7872**	1	TUBE AS	
	23	1	**173-0641**	1	PLUG-FILTER	

M-METRIC PART
Y-SEPARATE ILLUSTRATION

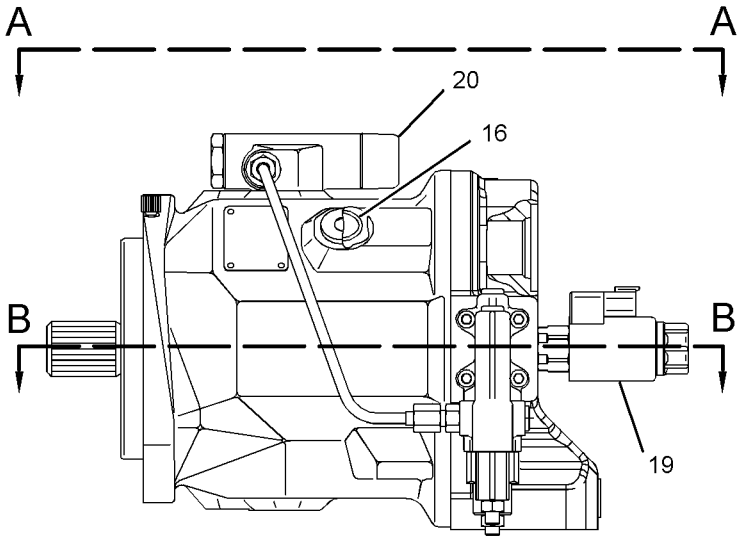

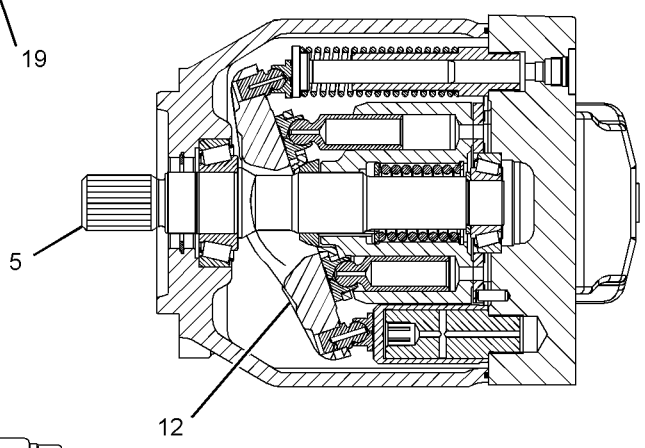

SECTION B-B

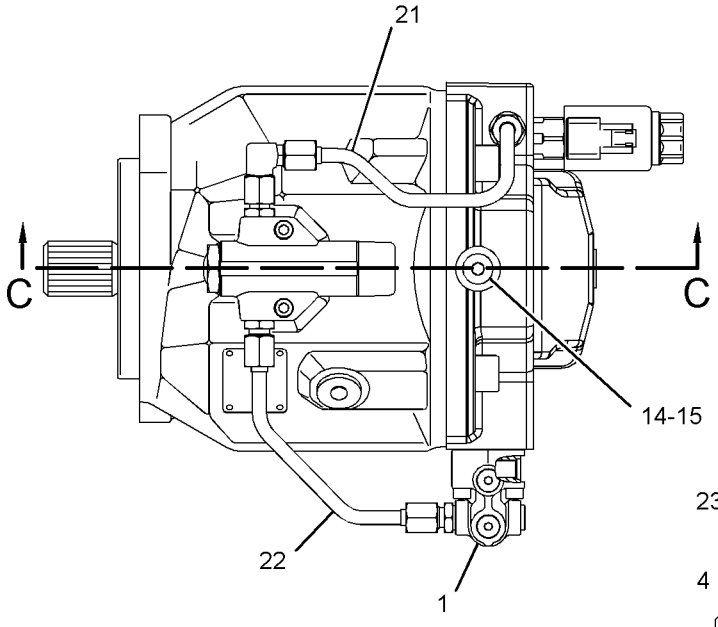

VIEW A-A

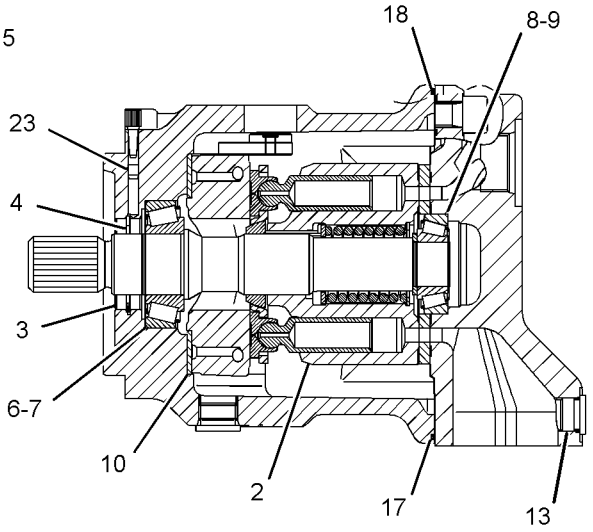

SECTION C-C

GRAPHIC #1 **<END>** g01389931

6E-4006 ROTATING GP-PUMP

S/N: SJL1-UP

PART OF 289-6370 PUMP GP-PISTON

SMCS-5070 **i02780608**

NOTE	REF NO	GRAPHIC REF	PART NUMBER	QTY	PART NAME 1 2 3 4 5 6 (PRODUCT LEVEL)	SEE PAGE
	1	1	**6E-6154**	1	PLATE-RETRACTION	
	2	1	**6E-6155**	1	BEARING	
	3	1	**6E-6157**	3	PIN	
	4	1	**6E-6151**	9	PISTON AS	
	5	1	**196-0226**	1	BARREL	
	6	1	**120-5724**	1	PLATE-VALVE	
	7	1	**7X-2908**	1	RING-RETAINING	
	8	1	**6E-4009**	1	SPRING	
	9	1	**6E-3341**	2	SEAT-SPRING	

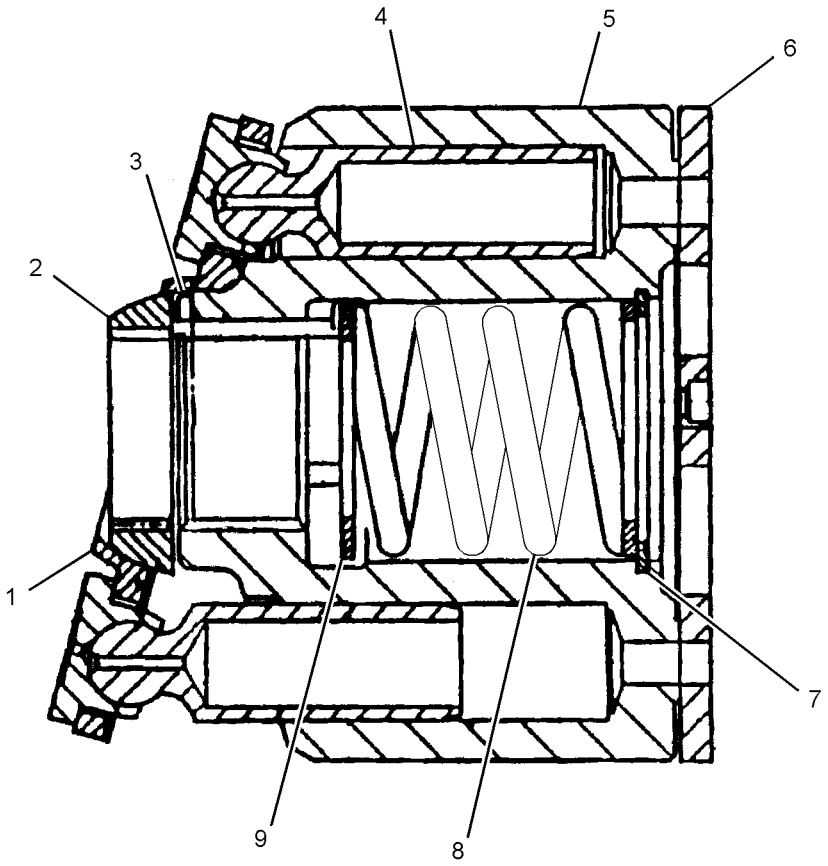

GRAPHIC #1 **<END>** g01389663

128-5596 SHAFT GP-PUMP DRIVE

S/N: SJL1-UP
PART OF 112-1826 DRIVE & MTG GP-PUMP
AN ATTACHMENT

SMCS-3108 **i00535584**

NOTE	REF NO	GRAPHIC REF	PART NUMBER	QTY	PART NAME 1 2 3 4 5 6 (PRODUCT LEVEL)	SEE PAGE
	1	1	**130-8150**	1	RING-RETAINING	

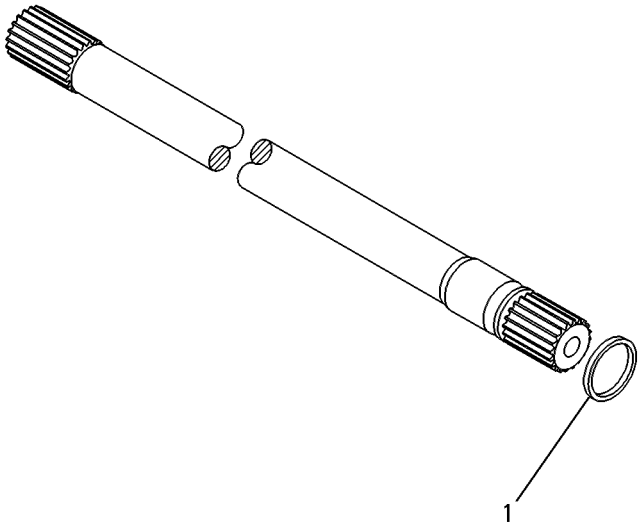

GRAPHIC #1 **<END>** g00131851

HYDRAULIC SYSTEM

324-5929 TANK & MTG GP-HYDRAULIC

S/N: SJL1-UP

PART OF 329-0124 HYDRAULIC AR

SMCS-5056 **i03628706**

NOTE	REF NO	GRAPHIC REF	PART NUMBER	QTY	PART NAME 1 2 3 4 5 6 (PRODUCT LEVEL)	SEE PAGE
	1	1	**1P-4278**	3	CLAMP-HOSE	
	2	1	**9M-0164**	1	CLAMP-HOSE	
	3	1	**9R-9925**	1	FILTER ELEMENT-BREATHER (HYDRAULIC TANK)	
	4	1	**127-4471**	1	CLAMP-HOSE	
	5	1	**132-3056**	1	SEAL-O-RING	
	6	1	**205-9920**	1	STRAP-CABLE	
	7	1	**210-7773**	1	BRACKET AS	
	8	1	*217-8185*	1	ELBOW AS	
		1	**3K-0360**	1	SEAL-O-RING	
		1	**9X-3982**	1	ELBOW	
	9	1	**222-4067**	6	BOLT-SOCKET HEAD (M5X0.8X14-MM)	
	10	1	**234-6927**	1	HOSE	
	11	1	**235-5843**	1	DIFFUSER AS	
	12	1	**237-3797**	1	CAP-FILL (HYDRAULIC OIL)	
Y	13	1	*245-8778*	1	TANK GP-HYDRAULIC	417
	14	1	**293-4671**	1	TUBE AS	
	15	1	**7X-7729**	4	WASHER (11X25X3-MM THK)	
	16	1	**8T-4121**	1	WASHER-HARD (11X21X2.5-MM THK)	
M	17	1	**8T-4137**	1	BOLT (M10X1.5X20-MM)	
M	19	1	**8T-4179**	4	BOLT (M12X1.75X20-MM)	
M	20	1	**8T-4191**	4	BOLT (M10X1.5X16-MM)	
	21	1	**8T-4223**	4	WASHER-HARD (13.5X25.5X3-MM THK)	
E	22	1	**5P-1442**		HOSE (124-CM)	
E	22A	1	**5P-1442**		HOSE (8-CM)	
	23	1	**334-4603**	1	FILM-INFORMATION (HYDO ADVANCED 10)	

E-ORDER BY THE CENTIMETER
M-METRIC PART
Y-SEPARATE ILLUSTRATION

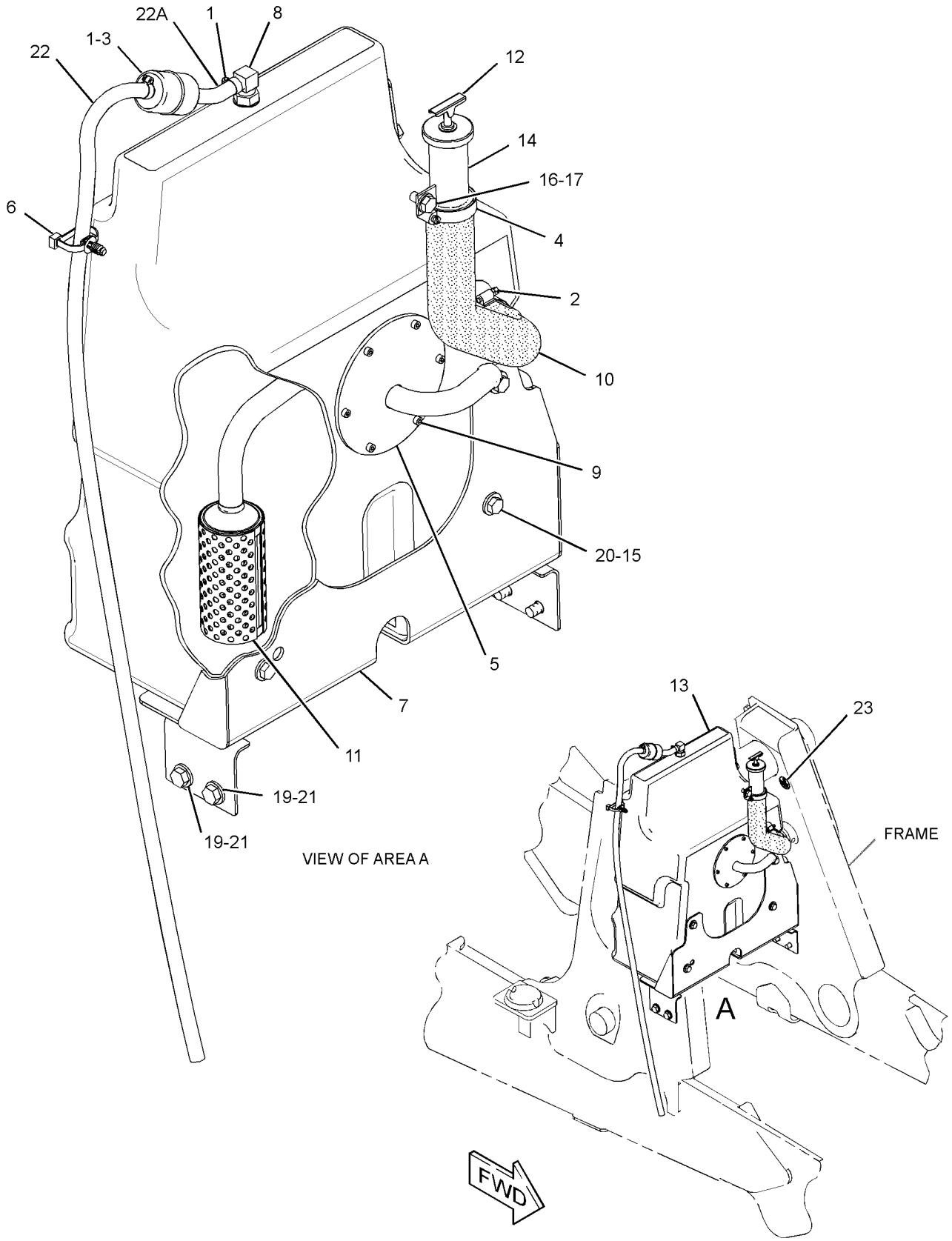

GRAPHIC #1 **<END>** g01818493

HYDRAULIC SYSTEM

245-8778 TANK GP-HYDRAULIC

S/N: SJL1-UP

PART OF 324-5929 TANK & MTG GP-HYDRAULIC

SMCS-5056 **i03712442**

NOTE	REF NO	GRAPHIC REF	PART NUMBER	QTY	PART NAME 1 2 3 4 5 6 (PRODUCT LEVEL)	SEE PAGE
	1	1	**253-8295**	1	GAUGE-SIGHT (HYDRAULIC OIL LEVEL)	

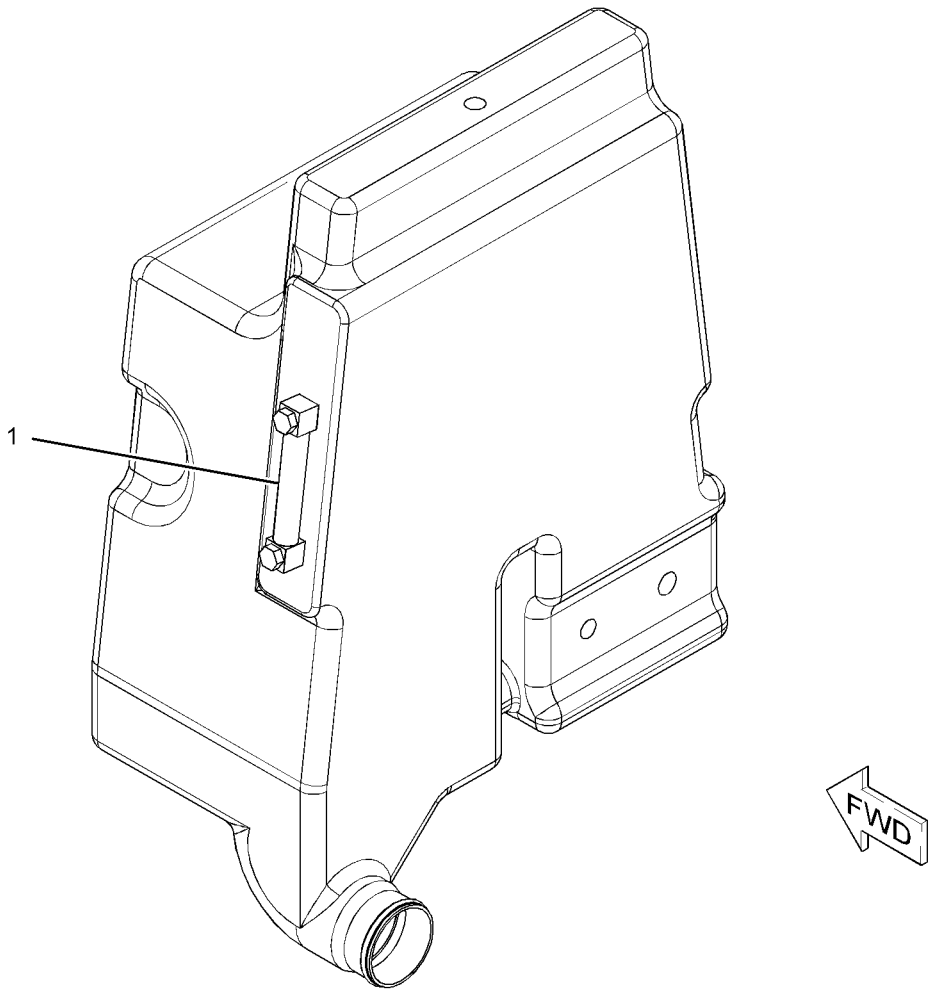

GRAPHIC #1 **<END>** g01087032

332-9195 VALVE & MTG GP-BANK—PILOT CONTROL

S/N: SJL1-UP

PART OF 332-7952 CONVERSION AR-QUICK COUPLER, 332-7950 VALVE AR-BANK 2, 332-7951, 332-7962, 332-7963 VALVE AR-BANK 3 AN ATTACHMENT

SMCS-5051, 5057, 7265 **i03642527**

NOTE	REF NO	GRAPHIC REF	PART NUMBER	QTY	PART NAME 1 2 3 4 5 6 (PRODUCT LEVEL)	SEE PAGE
Y	1	1	*321-9976*	1	VALVE GP-BANK 3 (PILOT CONTROL)	422
B	2	1	*148-8408*	2	PLUG AS	
					(EACH INCLUDES)	
		1	**3D-2824**	1	SEAL-O-RING	
		1	**9S-4183**	1	PLUG-O-RING	
	3	1	**8T-4121**	3	WASHER-HARD (11X21X2.5-MM THK)	
M	4	1	**8T-4186**	3	BOLT (M10X1.5X40-MM)	

B-USE AS REQUIRED
M-METRIC PART
Y-SEPARATE ILLUSTRATION

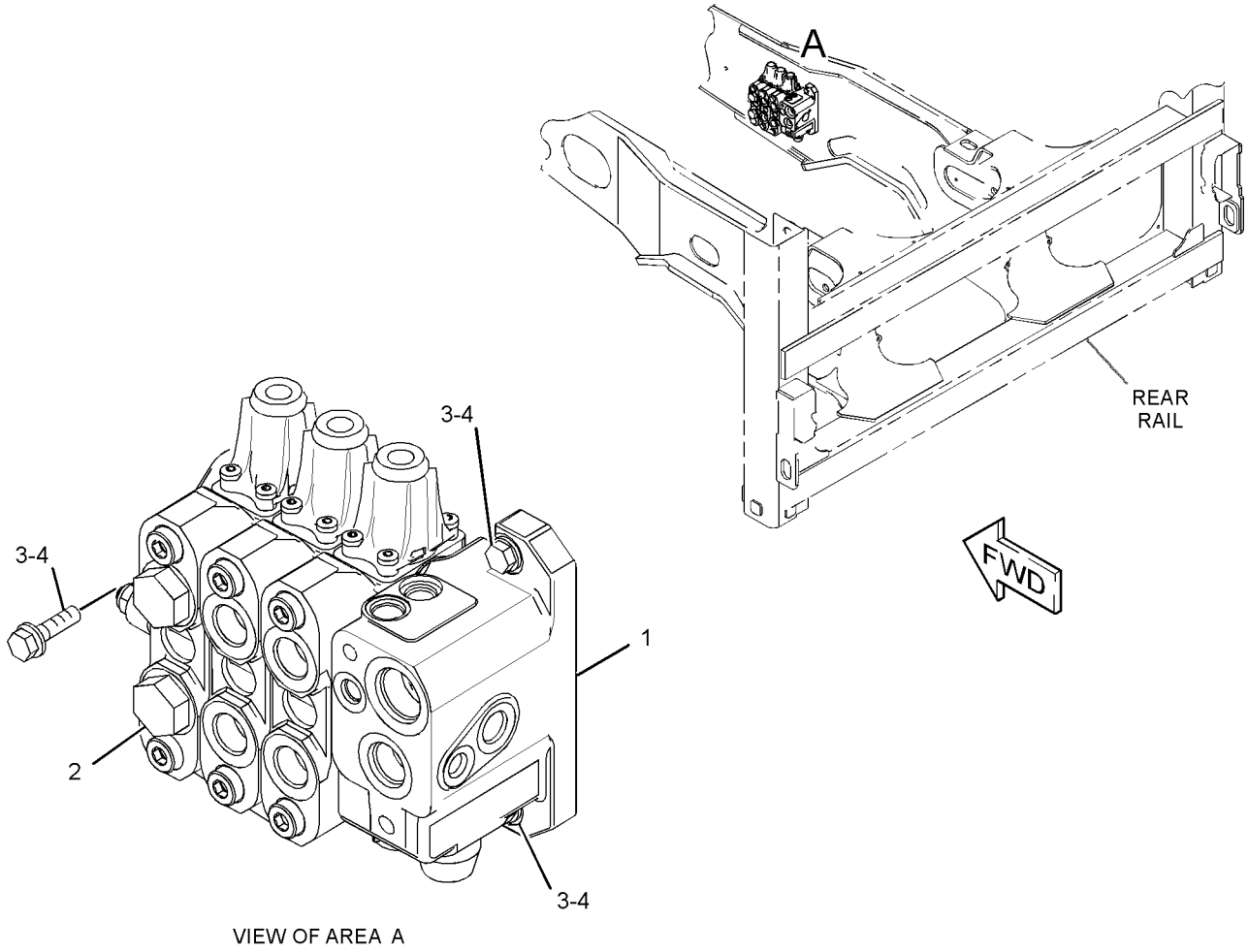

VIEW OF AREA A

GRAPHIC #1 **<END>** g01962630

HYDRAULIC SYSTEM

332-9781 VALVE & MTG GP-BANK–PILOT

S/N: SJL1-UP

PART OF 329-0124 HYDRAULIC AR

SMCS-5051, 5057, 7265 **i03665601**

NOTE	REF NO	GRAPHIC REF	PART NUMBER	QTY	PART NAME 1 2 3 4 5 6 (PRODUCT LEVEL)	SEE PAGE
Y	1	1	*321-9975*	1	VALVE GP-BANK 7	423
	2	1	**331-4340**	1	BRACKET AS	
	3	1	**8T-4121**	3	WASHER-HARD (11X21X2.5-MM THK)	
M	4	1	**8T-4182**	3	BOLT (M10X1.5X45-MM)	
M	5	1	**8T-4183**	4	BOLT (M12X1.75X40-MM)	
	6	1	**8T-4223**	4	WASHER-HARD (13.5X25.5X3-MM THK)	

M-METRIC PART
Y-SEPARATE ILLUSTRATION

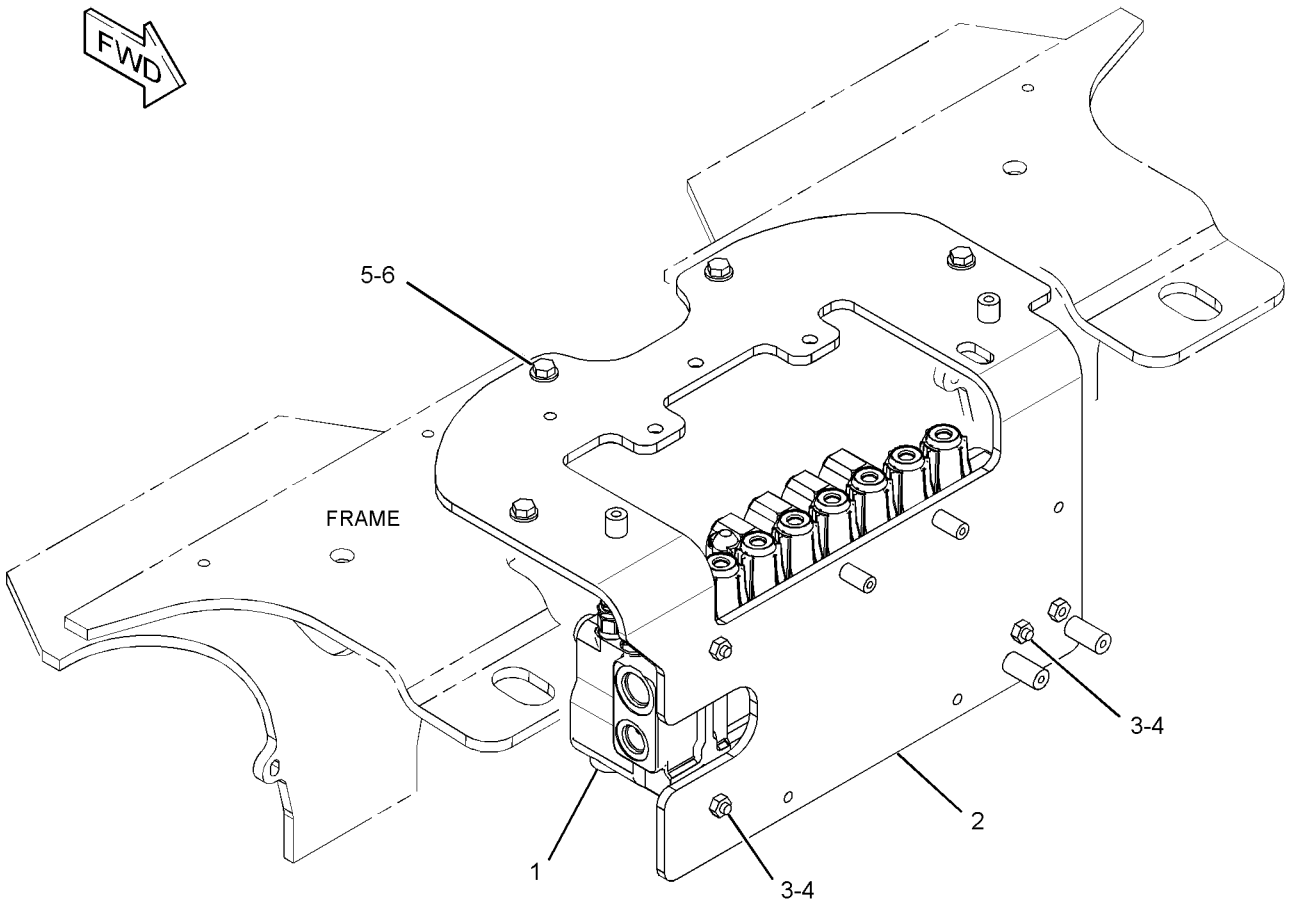

GRAPHIC #1 **<END>** g01987840

HYDRAULIC SYSTEM

332-7950 VALVE AR-BANK 2

S/N: SJL1-UP
AN ATTACHMENT

SMCS-5051 **i03654227**

NOTE	PART NUMBER	QTY	PART NAME 1 2 3 4 5 6 (PRODUCT LEVEL)	SEE PAGE
Y	*329-3600*	1	LINES GP-LIFT & TILT	368
Y	*329-3505*	1	LINES GP-LIFT & TILT CYLINDER	370
Y	*344-5323*	1	MOUNTING GP-BUCKET	552
Y	*332-9195*	1	VALVE & MTG GP-BANK	418

Y-SEPARATE ILLUSTRATION

<END>

332-7951 VALVE AR-BANK 3

S/N: SJL1-UP
AN ATTACHMENT

SMCS-5051 **i03654228**

NOTE	PART NUMBER	QTY	PART NAME 1 2 3 4 5 6 (PRODUCT LEVEL)	SEE PAGE
Y	*329-3559*	1	LINES GP-AUXILIARY HYDRAULIC	346
Y	*329-3600*	1	LINES GP-LIFT & TILT	368
Y	*329-3505*	1	LINES GP-LIFT & TILT CYLINDER	370
Y	*344-5323*	1	MOUNTING GP-BUCKET	552
Y	*332-9195*	1	VALVE & MTG GP-BANK	418

Y-SEPARATE ILLUSTRATION

<END>

332-7962 VALVE AR-BANK 3

S/N: SJL1-UP
AN ATTACHMENT

SMCS-5051 **i03654254**

NOTE	PART NUMBER	QTY	PART NAME 1 2 3 4 5 6 (PRODUCT LEVEL)	SEE PAGE
Y	*329-3559*	1	LINES GP-AUXILIARY HYDRAULIC	346
Y	*329-3600*	1	LINES GP-LIFT & TILT	368
Y	*329-3507*	1	LINES GP-LIFT & TILT CYLINDER	372
Y	*344-5323*	1	MOUNTING GP-BUCKET	552
Y	*332-9195*	1	VALVE & MTG GP-BANK (PILOT CONTROL)	418
Y	*323-0992*	1	WIRING GP-LOAD CONTROL	194
Y	*323-0991*	1	WIRING GP-RIDE CONTROL	206

Y-SEPARATE ILLUSTRATION

<END>

HYDRAULIC SYSTEM

332-7963 VALVE AR-BANK 3—QUICK COUPLER

S/N: SJL1-UP

AN ATTACHMENT

SMCS-5051 **i03654986**

NOTE	PART NUMBER	QTY	PART NAME 1 2 3 4 5 6 (PRODUCT LEVEL)	SEE PAGE
Y	*344-5326*	1	COUPLER GP-QUICK	541
Y	*329-3559*	1	LINES GP-AUXILIARY HYDRAULIC	346
Y	*331-7411*	1	LINES GP-HYDRAULIC (QUICK COUPLER)	365
Y	*329-3600*	1	LINES GP-LIFT & TILT	368
Y	*329-3507*	1	LINES GP-LIFT & TILT CYLINDER	372
Y	*332-9195*	1	VALVE & MTG GP-BANK (PILOT CONTROL)	418
Y	*323-0992*	1	WIRING GP-LOAD CONTROL	194
Y	*323-0991*	1	WIRING GP-RIDE CONTROL	206
Y	*296-0376*	1	WIRING GP-WORK TOOL	221
	282-9043	1	FILM-WARNING (QUICK COUPLER)	
			(ON RH SIDE OF A POST, CENTRED HORIZONTALLY & VERTICALLY BELOW THE DOOR LATCH)	

Y-SEPARATE ILLUSTRATION

<END>

HYDRAULIC SYSTEM

321-9976 VALVE GP-BANK 3—PILOT CONTROL

S/N: SJL1-UP
PART OF 332-9195 VALVE & MTG GP-BANK
AN ATTACHMENT

SMCS-5051 **i03654255**

NOTE	REF NO	GRAPHIC REF	PART NUMBER	QTY	PART NAME 1 2 3 4 5 6 (PRODUCT LEVEL)	SEE PAGE
Y	1	1	**308-2156**	1	MANIFOLD GP-CONTROL (INLET)	406
Y	2	1	**344-6133**	1	VALVE GP-CONTROL (LIFT)	430
Y	3	1	**344-6134**	1	VALVE GP-CONTROL (TILT)	431
Y	4	1	**344-6135**	1	VALVE GP-CONTROL (AUXILIARY)	432
	5	1	**308-2160**	1	COVER GP	
	6	1	**308-2161**	1	KIT-FASTENER (BANK VALVE)	
					(INCLUDES LOCKNUTS & TIE RODS)	
	7	1	**4J-9535**	4	SEAL-O-RING	
	8	1	**6V-8978**	12	SEAL-O-RING	

Y-SEPARATE ILLUSTRATION

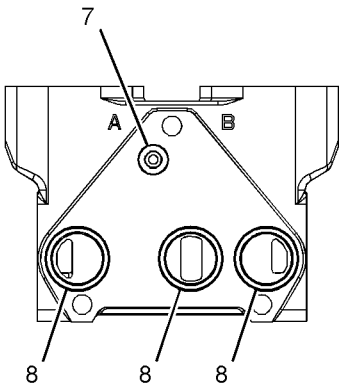

SECTION A-A

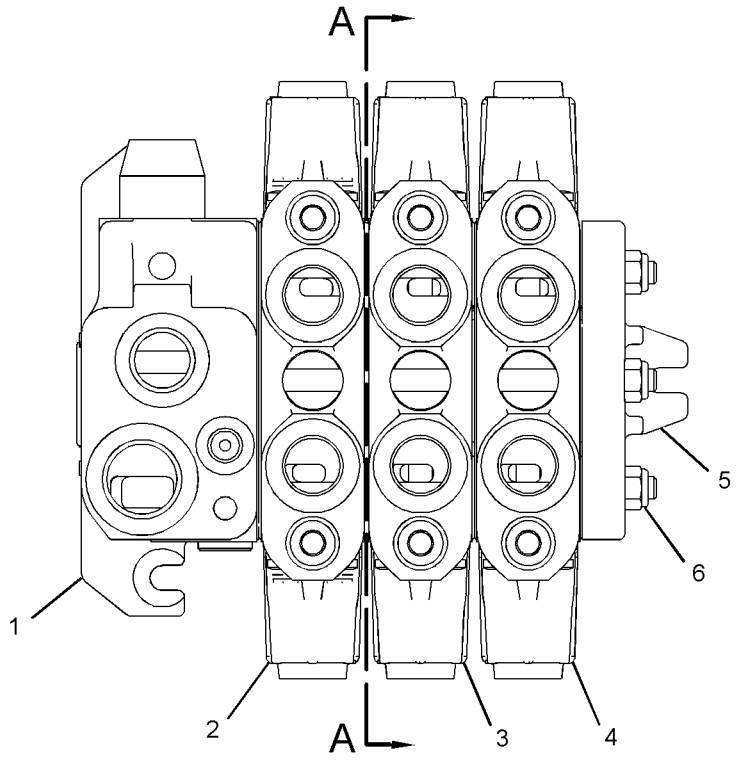

GRAPHIC #1 **<END>** g01964974

321-9975 VALVE GP-BANK 7–PILOT CONTROL

S/N: SJL1-UP

PART OF 332-9781 VALVE & MTG GP-BANK

SMCS-5051 **i03665620**

NOTE	REF NO	GRAPHIC REF	PART NUMBER	QTY	PART NAME 1 2 3 4 5 6 (PRODUCT LEVEL)	SEE PAGE
Y	1	1	**344-6126**	1	MANIFOLD GP-CONTROL (INLET)	407
Y	2	1	**344-6127**	2	VALVE GP-CONTROL (STABILIZER)	424
Y	3	1	**344-6128**	1	VALVE GP-CONTROL (BOOM)	425
Y	4	1	**344-6129**	1	VALVE GP-CONTROL (SWING)	426
Y	5	1	**344-6130**	1	VALVE GP-CONTROL (BUCKET)	427
Y	6	1	**344-6131**	1	VALVE GP-CONTROL (STICK)	428
Y	7	1	**344-6132**	1	VALVE GP-CONTROL (EXTENDABLE STICK)	429
Y	8	1	**308-2154**	1	MANIFOLD GP-CONTROL (OUTLET)	405
	9	1	**308-2155**	1	KIT-FASTENER	
					(INCLUDES LOCKNUTS & TIE RODS)	
	10	1	**4J-9535**	8	SEAL-O-RING	
	11	1	**6V-8978**	24	SEAL-O-RING	

Y-SEPARATE ILLUSTRATION

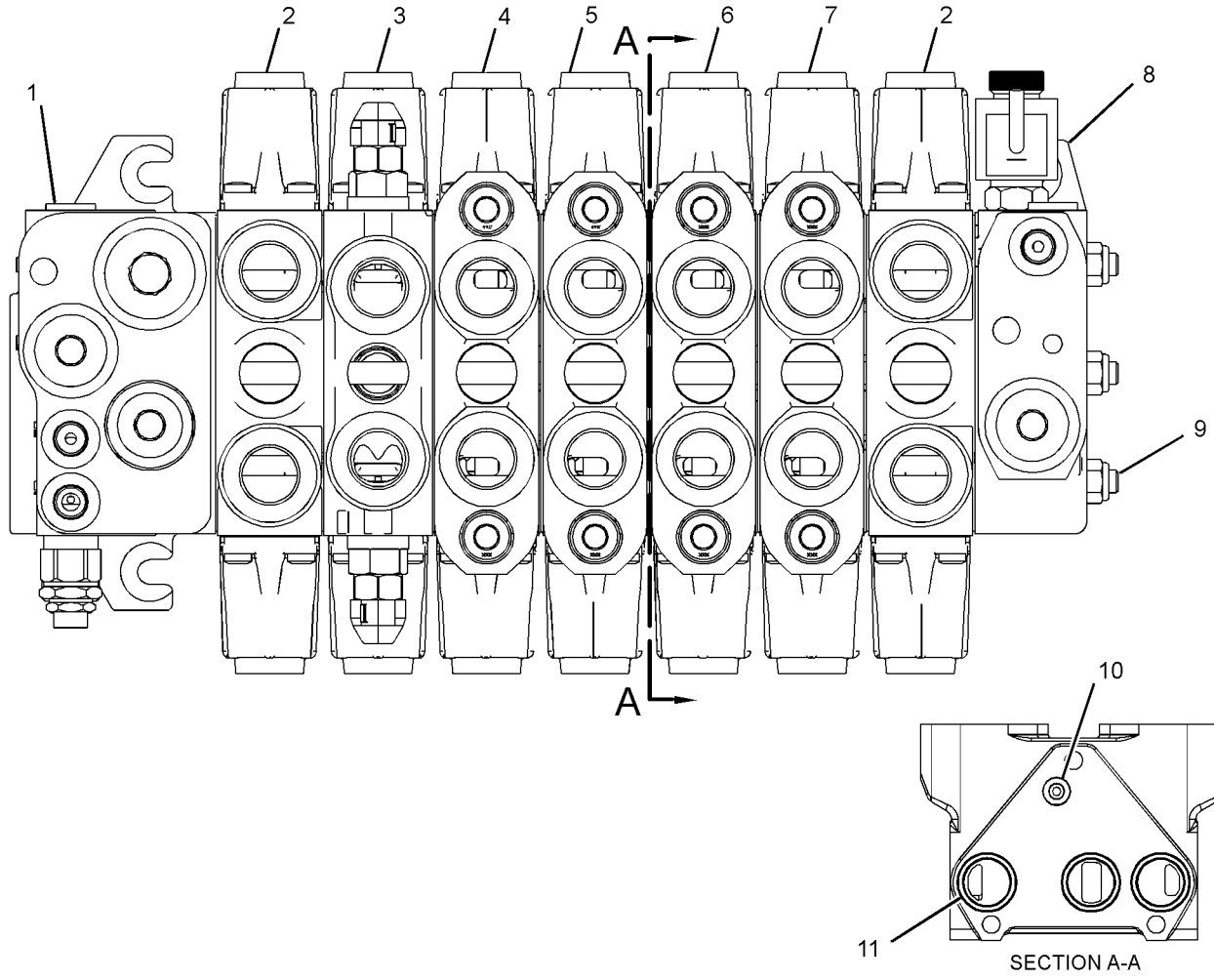

GRAPHIC #1 **<END>** g01987873

344-6127 VALVE GP-CONTROL–STABILIZER

S/N: SJL1-UP

PART OF 321-9975 VALVE GP-BANK 7

SMCS-5051 **i03688420**

NOTE	REF NO	GRAPHIC REF	PART NUMBER	QTY	PART NAME 1 2 3 4 5 6 (PRODUCT LEVEL)	SEE PAGE
	1	1	**308-2872**	1	VALVE GP-CHECK (STABILIZER CONTROL)	
		1	**6V-7970**	1	SEAL-O-RING	
		1	**095-1751**	1	SEAL-O-RING	
	2	1	**308-2873**	1	KIT-COVER	
					(INCLUDES SEAL-O-RINGS, BOLTS, SPRINGS, RETAINERS & COVERS)	

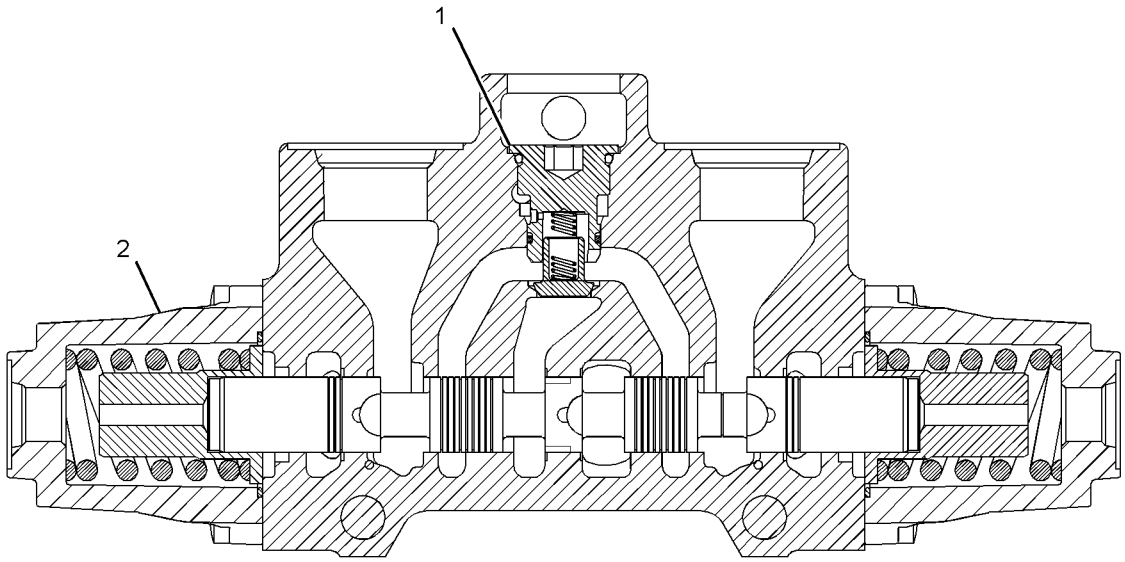

GRAPHIC #1 **<END>** g01987513

344-6128 VALVE GP-CONTROL–BOOM

S/N: SJL1-UP

PART OF 321-9975 VALVE GP-BANK 7

SMCS-5051 **i03688421**

NOTE	REF NO	GRAPHIC REF	PART NUMBER	QTY	PART NAME 1 2 3 4 5 6 (PRODUCT LEVEL)	SEE PAGE
	1	1	**257-7733**	2	VALVE GP-CHECK (BOOM CONTROL VALVE)	
					(EACH INCLUDES)	
		1	**122-9250**	1	SEAL-O-RING	
	2	1	**308-2873**	1	KIT-COVER (CONTROL VALVE)	
					(INCLUDES SEAL-O-RINGS, BOLTS, SPRINGS, REAINERS & COVERS)	
	3	1	**266-2585**	1	VALVE GP-RELIEF (165-BAR)	
		1	**8J-2413**	1	SEAL-O-RING	
		1	**095-1751**	1	SEAL-O-RING	
		1	**169-1616**	1	RING-BACKUP	
	4	1	**308-2879**	1	VALVE GP-RELIEF (300-BAR)	
		1	**8J-2413**	1	SEAL-O-RING	
		1	**095-1751**	1	SEAL-O-RING	
		1	**169-1616**	1	RING-BACKUP	
	5	1	**6V-7970**	1	SEAL-O-RING	
	6	1	**257-0468**	2	CAP-PROTECTION	

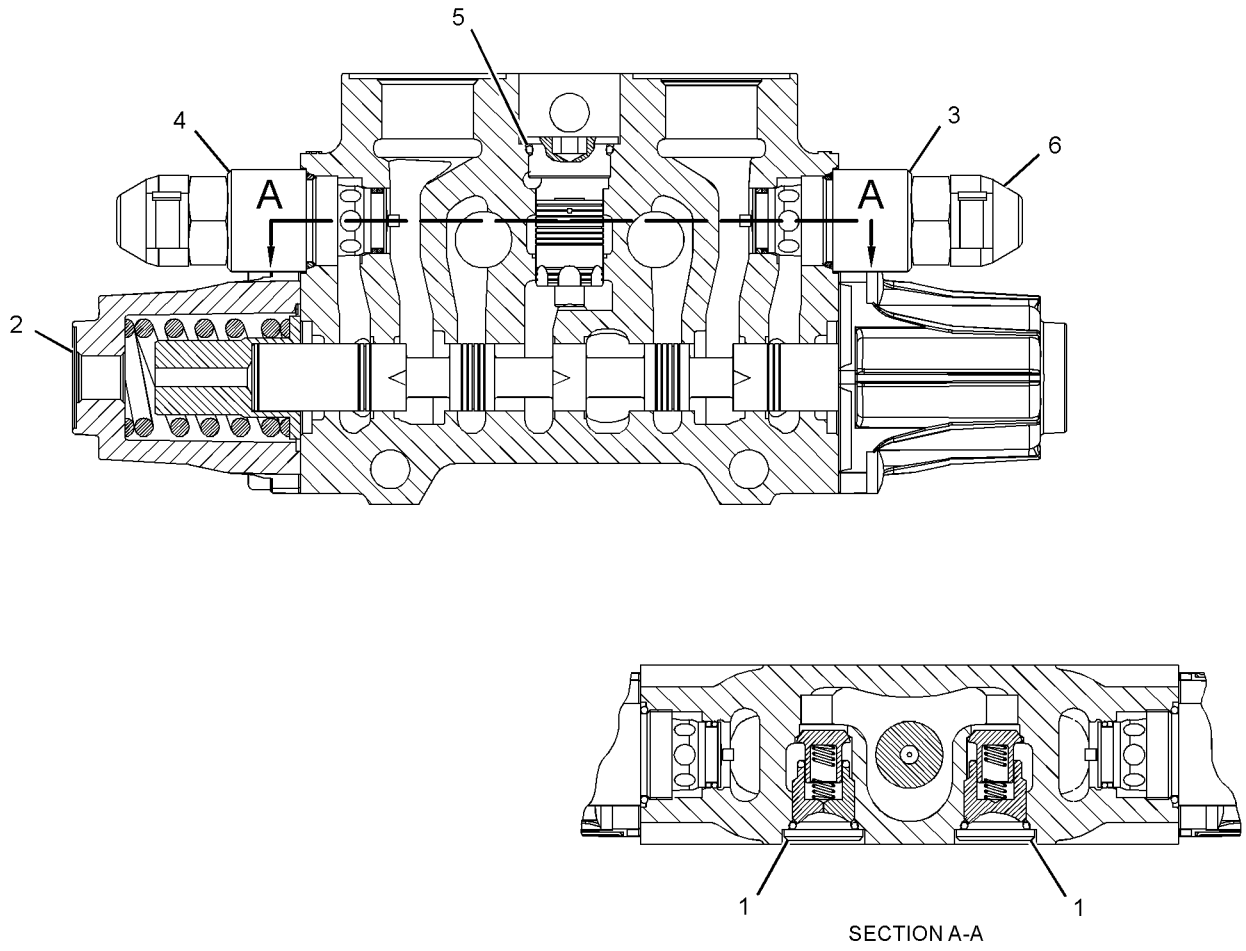

GRAPHIC #1 **<END>** g01987836

HYDRAULIC SYSTEM

344-6129 VALVE GP-CONTROL–SWING

S/N: SJL1-UP

PART OF 321-9975 VALVE GP-BANK 7

SMCS-5051 **i03688422**

NOTE	REF NO	GRAPHIC REF	PART NUMBER	QTY	PART NAME 1 2 3 4 5 6 (PRODUCT LEVEL)	SEE PAGE
	1	1	**350-8841**	1	KIT-COMPENSATOR (CONTROL VALVE)	
					(INCLUDES SEAL-O-RINGS)	
	2	1	**308-2873**	1	KIT-COVER (CONTROL VALVE)	
					(INCLUDES SEAL-O-RINGS, BOLTS, SPRINGS, RETAINERS & COVERS)	
	3	1	**308-2882**	2	VALVE GP-RELIEF (270-BAR)	
					(EACH INCLUDES)	
		1	**4D-2297**	1	SEAL-O-RING	

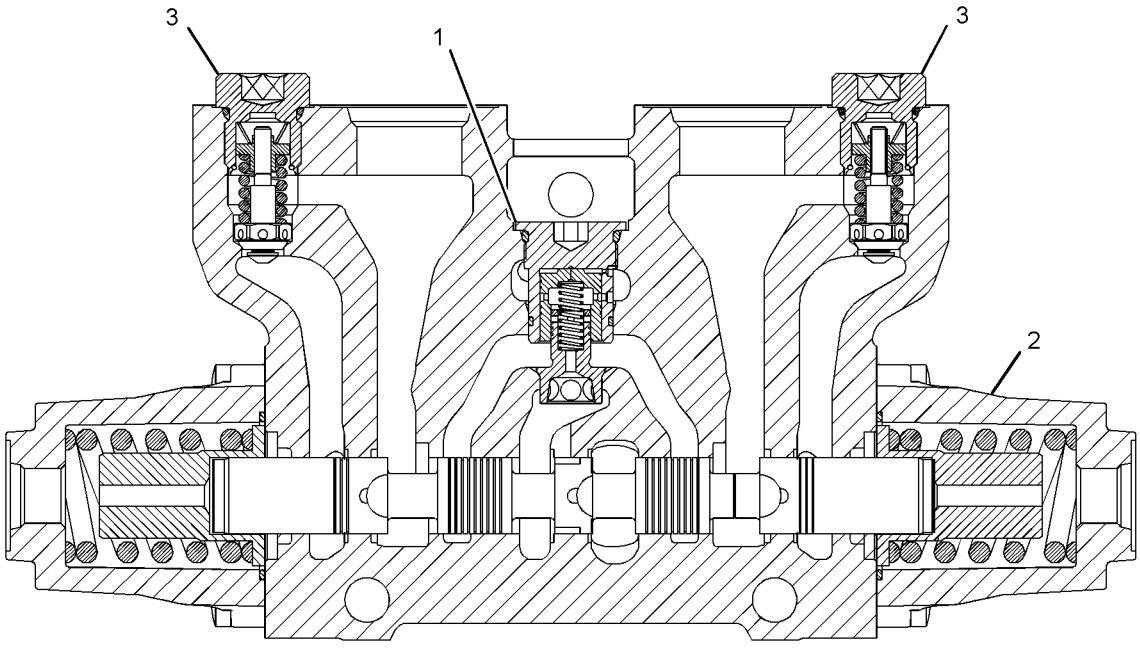

GRAPHIC #1 **<END>** g01987620

344-6130 VALVE GP-CONTROL–BUCKET

S/N: SJL1-UP

PART OF 321-9975 VALVE GP-BANK 7

SMCS-5051 **i03688440**

NOTE	REF NO	GRAPHIC REF	PART NUMBER	QTY	PART NAME 1 2 3 4 5 6 (PRODUCT LEVEL)	SEE PAGE
	1	1	**350-8841**	1	KIT-COMPENSATOR	
					(INCLUDES SEAL-O-RINGS)	
	2	1	**308-2873**	1	KIT-COVER	
					(INCLUDES SEAL-O-RINGS, BOLTS, SPRINGS, RETAINERS & COVERS)	
	3	1	**308-2884**	2	VALVE GP-RELIEF (300-BAR)	
					(EACH INCLUDES)	
		1	**4D-2297**	1	SEAL-O-RING	

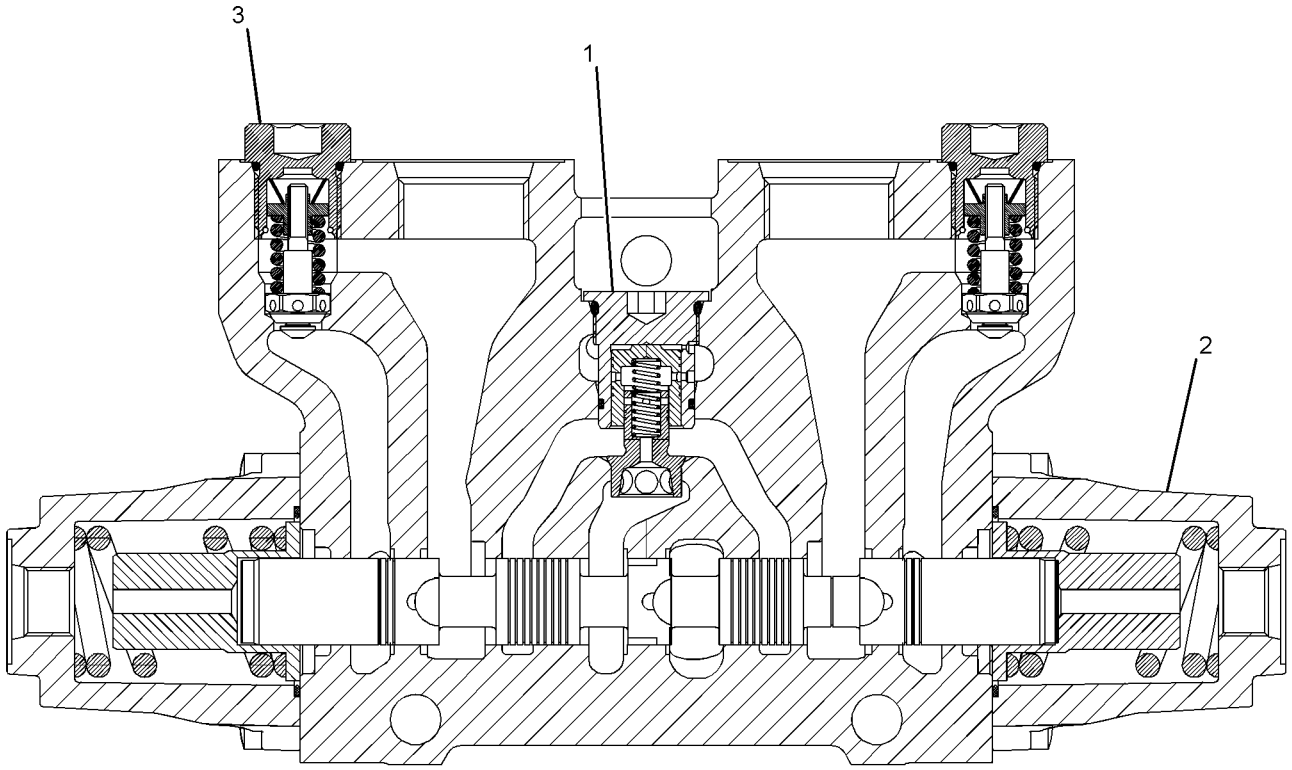

GRAPHIC #1 **<END>** g01987634

HYDRAULIC SYSTEM

344-6131 VALVE GP-CONTROL–STICK

S/N: SJL1-UP

PART OF 321-9975 VALVE GP-BANK 7

SMCS-5051 **i03688441**

NOTE	REF NO	GRAPHIC REF	PART NUMBER	QTY	PART NAME 1 2 3 4 5 6 (PRODUCT LEVEL)	SEE PAGE
	1	1	**350-8841**	1	KIT-COMPENSATOR (CONTROL VALVE)	
					(INCLUDES SEAL-O-RINGS)	
	2	1	**308-2873**	1	KIT-COVER (CONTROL VALVE)	
					(INCLUDES SEAL-O-RINGS, BOLTS, SPRINGS, RETAINERS & COVERS)	
	3	1	**308-2882**	1	VALVE GP-RELIEF (270-BAR)	
	4	1	**308-2883**	1	VALVE GP-RELIEF (290-BAR)	
					(EACH VALVE GP-RELIEF INCLUDES)	
		1	**4D-2297**	1	SEAL-O-RING	

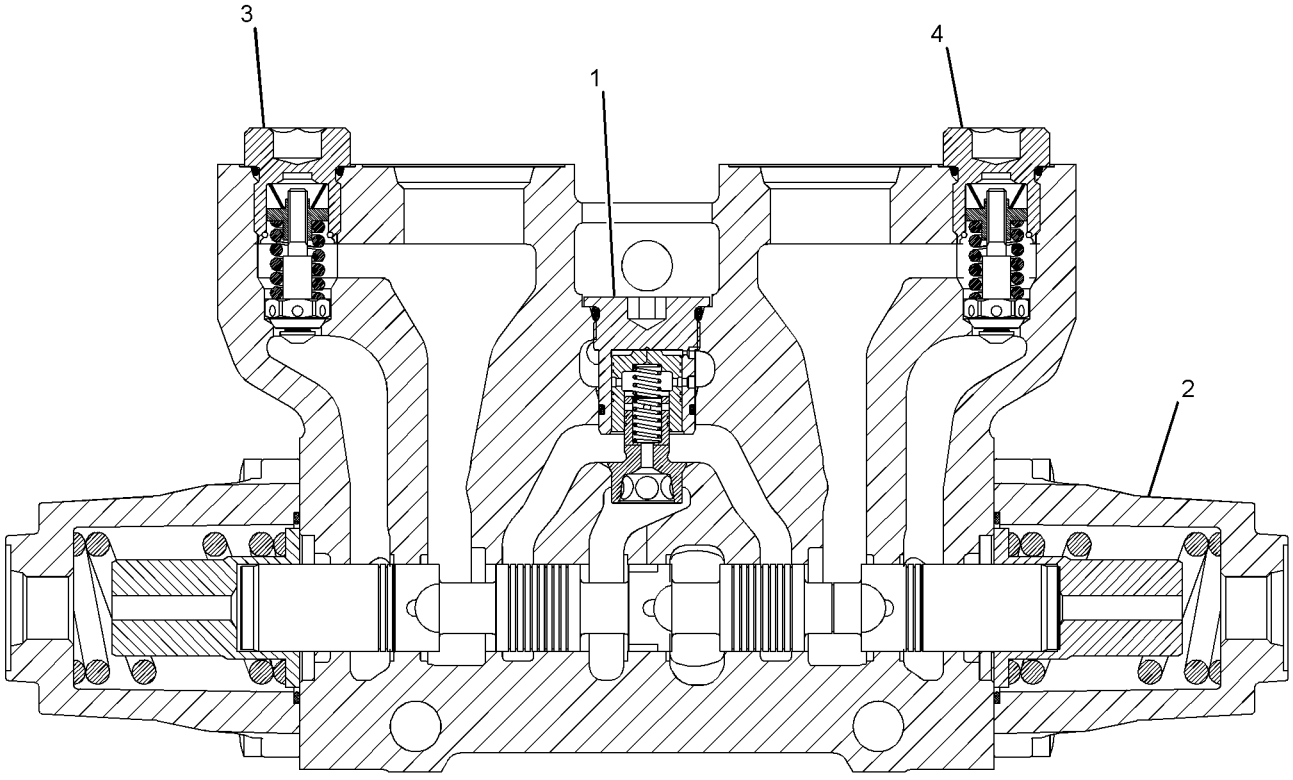

GRAPHIC #1 **<END>** g01987676

344-6132 VALVE GP-CONTROL–EXTENDABLE STICK

S/N: SJL1-UP

PART OF 321-9975 VALVE GP-BANK 7

SMCS-5051 **i03688442**

NOTE	REF NO	GRAPHIC REF	PART NUMBER	QTY	PART NAME 1 2 3 4 5 6 (PRODUCT LEVEL)	SEE PAGE
	1	1	**350-8841**	1	KIT-COMPENSATOR (CONTROL VALVE)	
					(INCLUDES SEAL-O-RINGS)	
	2	1	**308-2873**	1	KIT-COVER (CONTROL VALVE)	
					(INCLUDES SEAL-O-RINGS, BOLTS, SPRINGS, RETAINERS & COVERS)	
	3	1	**308-2882**	2	VALVE GP-RELIEF (270-BAR)	
					(EACH INCLUDES)	
		1	**4D-2297**	1	SEAL-O-RING	

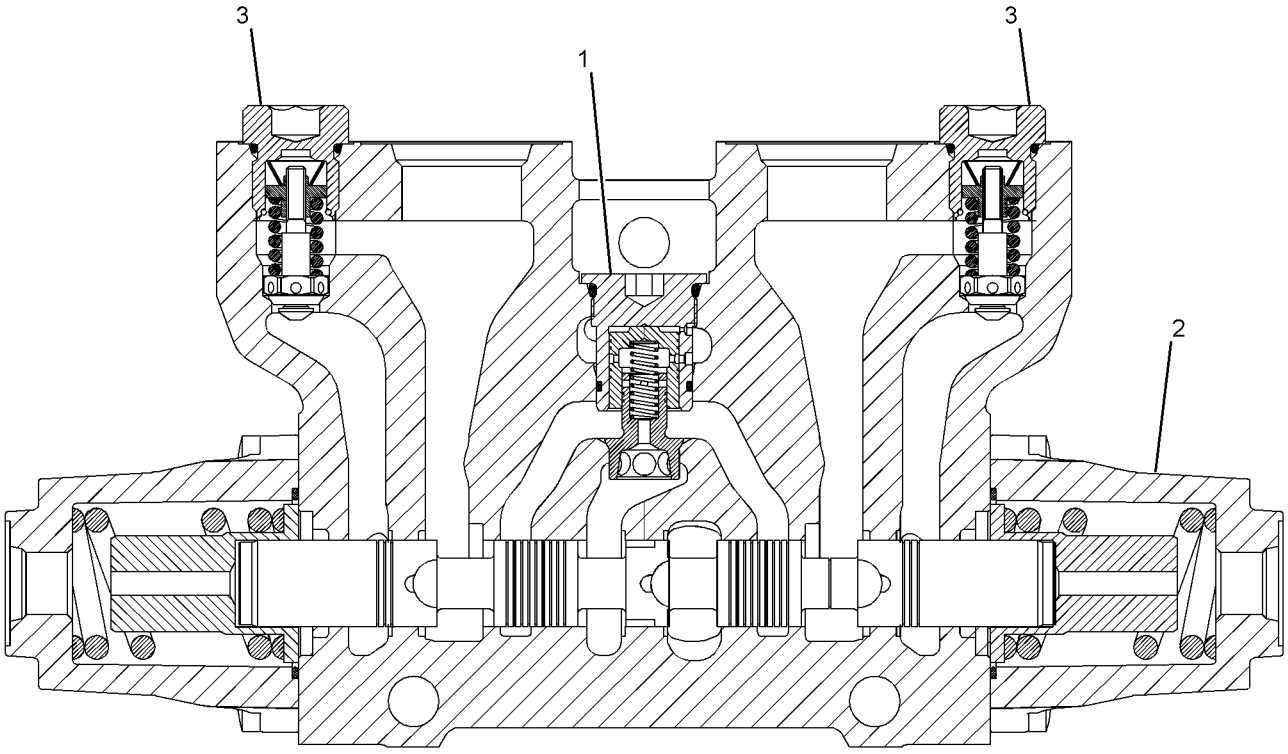

GRAPHIC #1 **<END>** g01987814

HYDRAULIC SYSTEM

344-6133 VALVE GP-CONTROL–LIFT

S/N: SJL1-UP
PART OF 321-9976 VALVE GP-BANK 3
AN ATTACHMENT

SMCS-5051 **i03664300**

NOTE	REF NO	GRAPHIC REF	PART NUMBER	QTY	PART NAME 1 2 3 4 5 6 (PRODUCT LEVEL)	SEE PAGE
	1	1	**350-8841**	1	KIT-COMPENSATOR (CONTROL VALVE)	
					(INCLUDES SEAL-O-RINGS)	
	2	1	**308-2874**	1	KIT-COVER (CONTROL VALVE)	
					(INCLUDES SEAL-O-RINGS, BOLTS, SPRINGS, SPRING RETAINERS, SCREW & COVERS)	
	3	1	**308-2885**	2	PLUG GP-CONTROL VALVE	
					(EACH INCLUDES)	
		1	**4D-2297**	1	SEAL-O-RING	

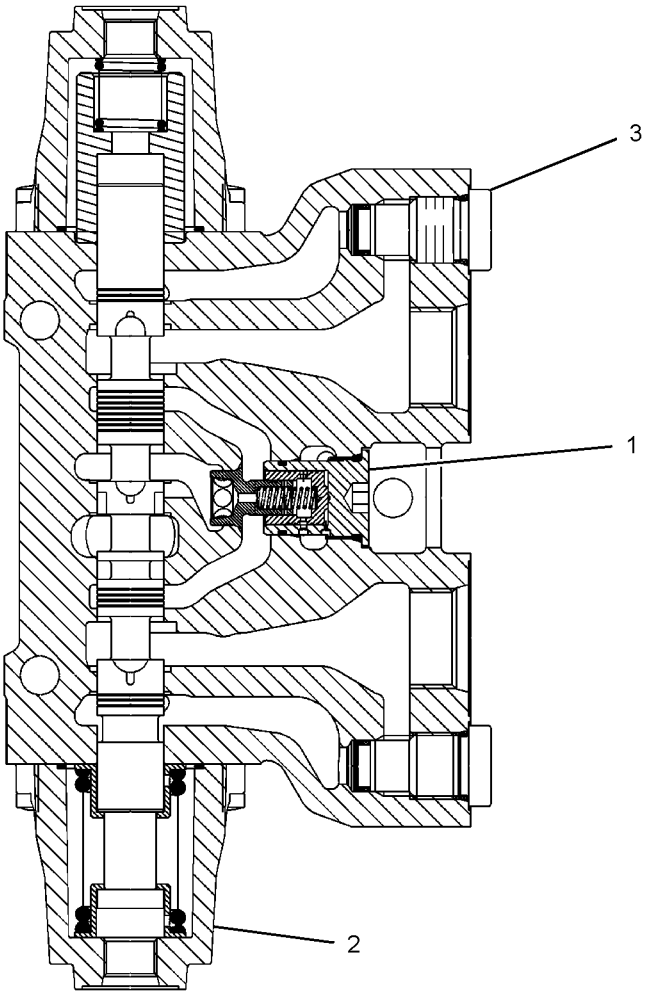

GRAPHIC #1 **<END>** g01967584

344-6134 VALVE GP-CONTROL–TILT

S/N: SJL1-UP
PART OF 321-9976 VALVE GP-BANK 3
AN ATTACHMENT

SMCS-5051 **i03664301**

NOTE	REF NO	GRAPHIC REF	PART NUMBER	QTY	PART NAME 1 2 3 4 5 6 (PRODUCT LEVEL)	SEE PAGE
	1	1	**350-8841**	1	KIT-COMPENSATOR (CONTROL VALVE)	
					(INCLUDES SEAL-O-RINGS)	
	2	1	**308-2873**	1	KIT-COVER (CONTROL VALVE)	
					(INCLUDES SEAL-O-RINGS, BOLTS, SPRINGS, SPRING RETAINERS & COVERS)	
	3	1	**308-2884**	1	VALVE GP-RELIEF (300-BAR)	
	4	1	**350-8888**	1	VALVE GP-RELIEF (160-BAR)	
					(EACH VALVE GP-RELIEF INCLUDES)	
		1	**4D-2297**	1	SEAL-O-RING	

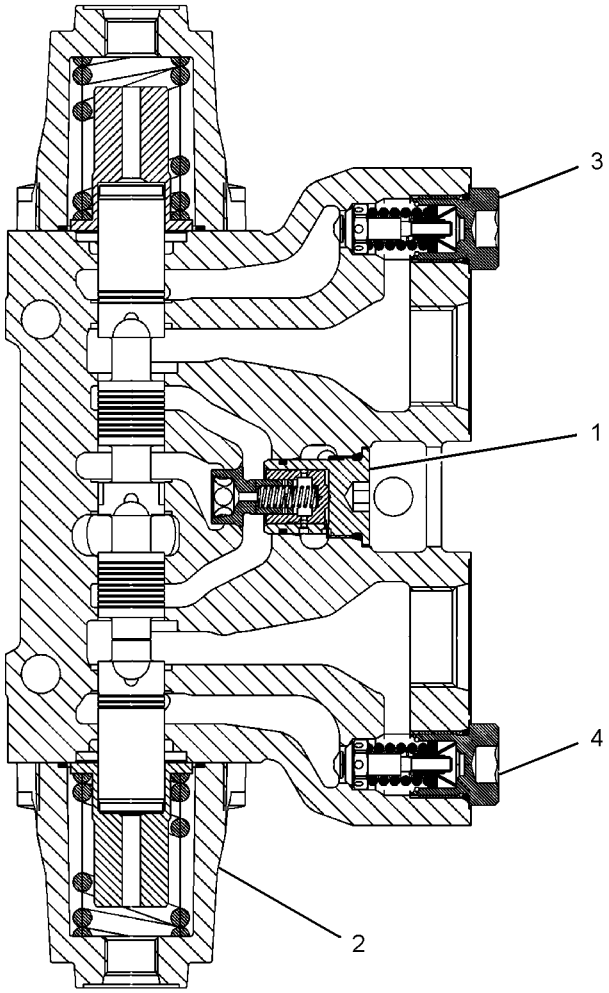

GRAPHIC #1 **<END>** g01967793

HYDRAULIC SYSTEM

344-6135 VALVE GP-CONTROL–AUXILIARY

S/N: SJL1-UP
PART OF 321-9976 VALVE GP-BANK 3
AN ATTACHMENT

SMCS-5051 **i03664302**

NOTE	REF NO	GRAPHIC REF	PART NUMBER	QTY	PART NAME 1 2 3 4 5 6 (PRODUCT LEVEL)	SEE PAGE
	1	1	**350-8841**	1	KIT-COMPENSATOR (CONTROL VALVE)	
					(INCLUDES SEAL-O-RINGS)	
	2	1	**308-2873**	1	KIT-COVER (CONTROL VALVE)	
					(INCLUDES SEAL-O-RINGS, BOLTS, SPRINGS, SPRING RETAINERS & COVERS)	
	3	1	**350-8898**	1	VALVE GP-RELIEF (240-BAR)	
		1	**4D-2297**	1	SEAL-O-RING	
	4	1	**308-2885**	1	PLUG GP-CONTROL VALVE	
		1	**4D-2297**	1	SEAL-O-RING	

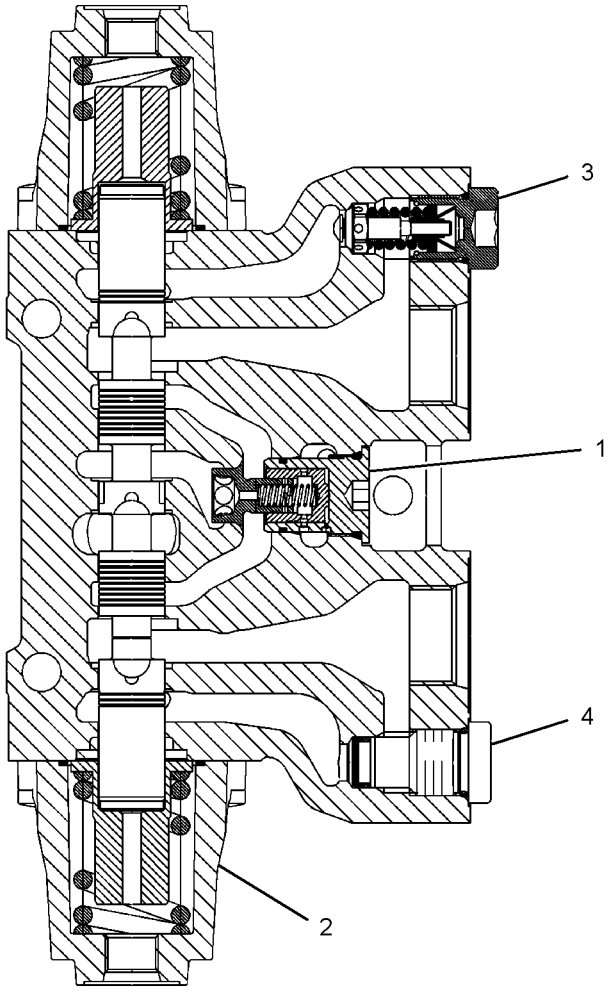

GRAPHIC #1 **<END>** g01967834

HYDRAULIC SYSTEM

308-3437 VALVE GP-LOAD CONTROL–STABILIZER

S/N: SJL1-UP

PART OF 326-1801 LINES GP-STABILIZER

AN ATTACHMENT

SMCS-5811 **i02843462**

NOTE	REF NO	GRAPHIC REF	PART NUMBER	QTY	PART NAME 1 2 3 4 5 6 (PRODUCT LEVEL)	SEE PAGE
					(NO SERVICED PARTS)	

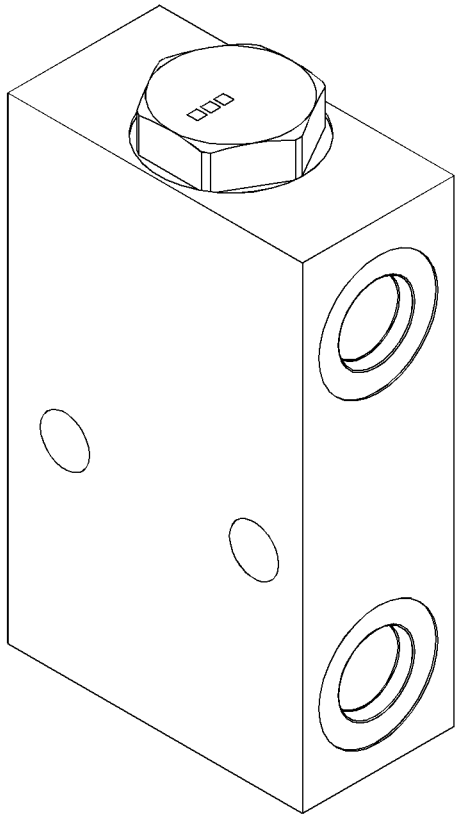

GRAPHIC #1 **<END>** g01444975

253-1054 VALVE GP-PILOT–STABILIZER

S/N: SJL1-UP

AN ATTACHMENT

SMCS-5059 **i02767788**

NOTE	PART NUMBER	QTY	PART NAME 1 2 3 4 5 6 (PRODUCT LEVEL)	SEE PAGE
Y	**297-4394**	1	VALVE GP-PILOT (STABILIZER)	435
	251-5627	1	FILM-INSTRUCTION (STABILIZER, SIDESHIFT)	

Y-SEPARATE ILLUSTRATION

<END>

253-1055 VALVE GP-PILOT–STABILIZER, SIDESHIFT, AUTO UP

S/N: SJL1-UP

AN ATTACHMENT

SMCS-5059 **i02767803**

NOTE	PART NUMBER	QTY	PART NAME 1 2 3 4 5 6 (PRODUCT LEVEL)	SEE PAGE
Y	**297-4395**	1	VALVE GP-PILOT (STABILIZER)	436
Y	*295-5903*	1	RELAY GP	169
	251-5629	1	FILM-IDENTIFICATION (STABILIZER, AUTO UP)	
			(ON RH CONSOLE NEXT TO STABILIZER CONTROLS)	

Y-SEPARATE ILLUSTRATION

<END>

297-4394 VALVE GP-PILOT–STABILIZER

S/N: SJL1-UP
PART OF 253-1054 VALVE GP-PILOT
AN ATTACHMENT

SMCS-5059 **i03713900**

NOTE	REF NO	GRAPHIC REF	PART NUMBER	QTY	PART NAME 1 2 3 4 5 6 (PRODUCT LEVEL)	SEE PAGE
	1	1	**198-6498**	2	BOOT	
	2	1	**305-2139**	1	KIT-LEVER	
					(INCLUDES LEVER, CAM, COVER FOR MICROSWITCH, PIN & SCREWS)	
	3	1	**305-2140**	1	KIT-LEVER	
					(INCLUDES LEVER, CAM, COVER FOR MICROSWITCH, PIN & SCREWS)	
	4	1	**198-6516**	2	KIT-SWITCH (PILOT VALVE)	
					(INCLUDES SWITCH PLATES, SCREWS, WASHERS, MICROSWITCH, CONNECTOR & SOCKETS)	
	5	1	**305-2136**	1	KIT-SPRING	
					(INCLUDES SPRINGS)	
	6	1	**305-2137**	1	PLATE	
	7	1	**305-2141**	2	KIT-PLUNGER	
					(INCLUDES PLUNGER GUIDE, PLUNGER & SNAP RING)	
	8	1	**305-2142**	2	KIT-PLUNGER	
					(INCLUDES PLUNGER GUIDE, PLUNGER, SNAP RING & RELEASE SWITCH)	

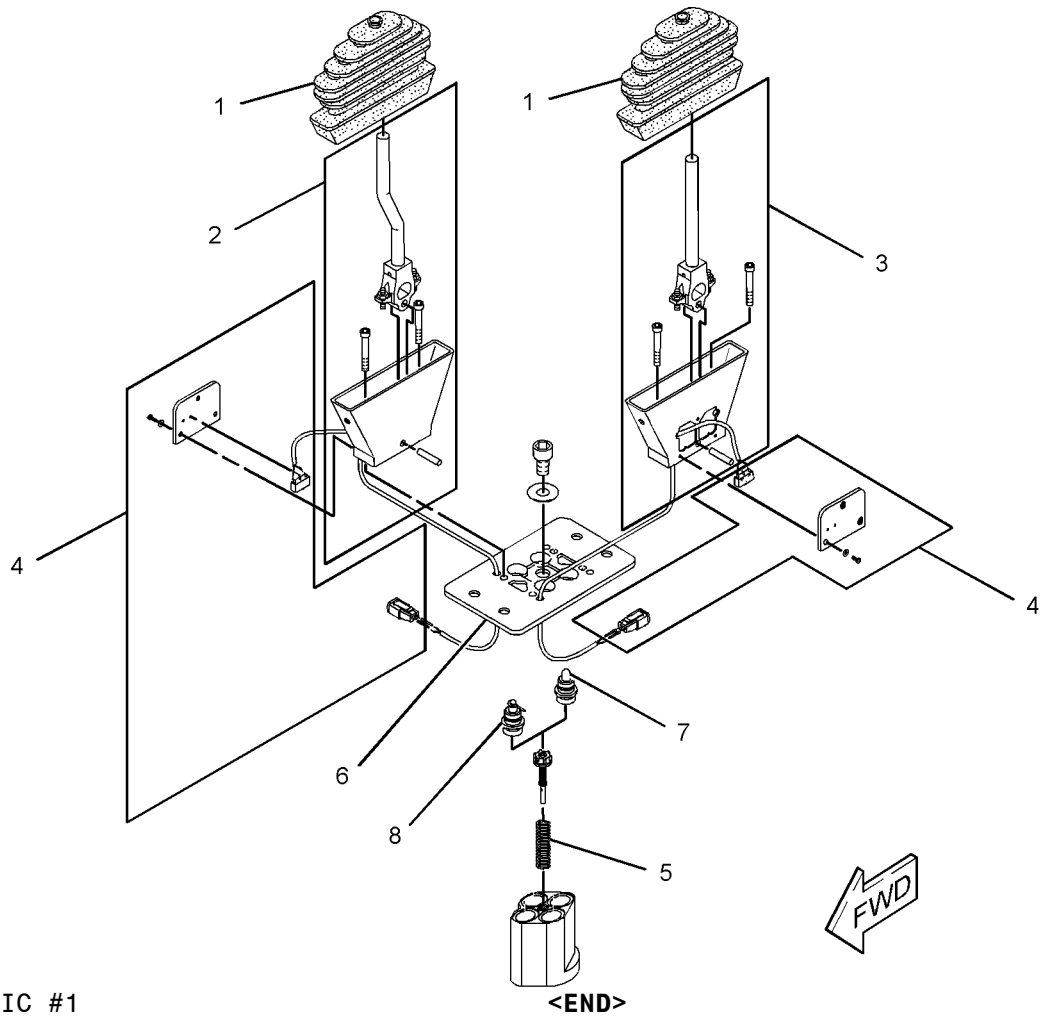

GRAPHIC #1 **<END>** g01394985

HYDRAULIC SYSTEM

297-4395 VALVE GP-PILOT—STABILIZER

S/N: SJL1-UP

PART OF 253-1055 VALVE GP-PILOT

AN ATTACHMENT

SMCS-5059 **i03713901**

NOTE	REF NO	GRAPHIC REF	PART NUMBER	QTY	PART NAME 1 2 3 4 5 6 (PRODUCT LEVEL)	SEE PAGE
	1	1	**198-6498**	2	BOOT	
	2	1	**305-2143**	1	KIT-LEVER	
	3	1	**305-2144**	1	KIT-LEVER	
					(EACH KIT LEVER INCLUDES LEVER, CAM, COVER, PIN, SCREWS, ARMATURE & SNAP RING)	
	4	1	**198-6516**	2	KIT-SWITCH (PILOT VALVE)	
					(EACH KIT SWITCH INCLUDES MICROSWITCH, PLATE, SCREWS, WASHERS, CONNECTOR & SOCKET)	
	5	1	**198-6505**	2	KIT-COIL	
					(EACH KIT COIL INCLUDES SOLENOID, BOLT & CONNECTOR KIT)	
	6	1	**305-2137**	1	PLATE	
	7	1	**305-2141**	2	KIT-PLUNGER	
					(EACH KIT PLUNGER INCLUDES PLUNGER GUIDE, PLUNGER & SNAP RING)	
	8	1	**305-2142**	2	KIT-PLUNGER	
					(EACH KIT PLUNGER INCLUDES PLUNGER GUIDE, PLUNGER, RELEASE SWITCH & SNAP RING)	
	9	1	**305-2136**	1	KIT-SPRING	
					(INCLUDES SPRING)	
	10	1	**305-2145**	1	KIT-SENSOR	
					(INCLUDES SOCKET & SPRING)	

297-4395 VALVE GP-PILOT *(contd.)* **i03713901**

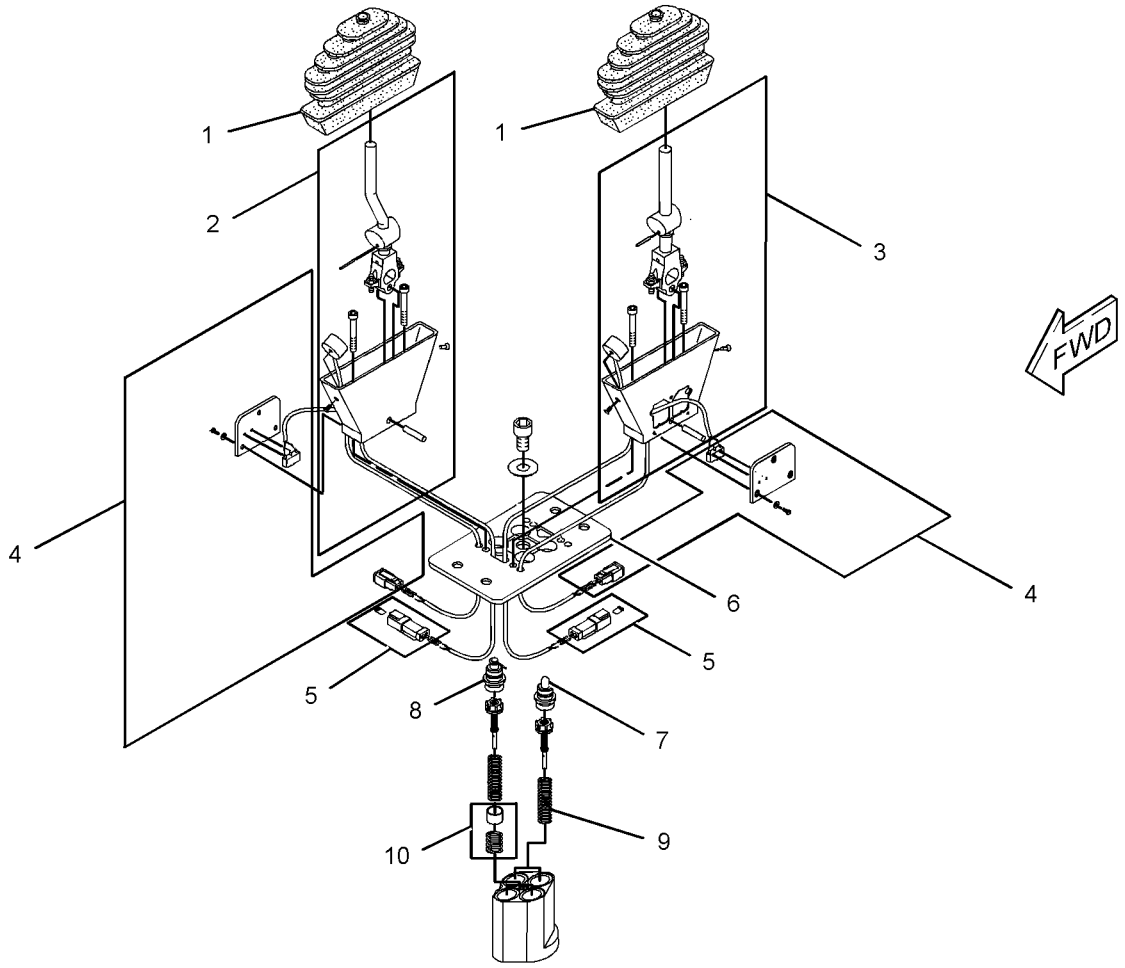

GRAPHIC #1 **<END>** g01397048

HYDRAULIC SYSTEM

280-7871 VALVE GP-PUMP CONTROL–POWER COMPENSATOR

S/N: SJL1-UP

PART OF 289-6370 PUMP GP-PISTON

SMCS-5086, 5455 **i02760902**

NOTE	REF NO	GRAPHIC REF	PART NUMBER	QTY	PART NAME 1 2 3 4 5 6 (PRODUCT LEVEL)	SEE PAGE
	1	1	**103-5520**	1	CARRIER-PIN	
	2	1	**214-0592**	1	GASKET	
M	3	1	**6V-5683**	1	BOLT (M6X1X16-MM)	
M	4	1	**3T-0849**	2	BOLT-SOCKET HEAD (M6X1X25-MM)	
	5	1	**3C-8388**	1	PIN-ROLL	
	6	1	**6V-8236**	1	PIN-SPRING	
	7	1	**105-1440**	1	CAP	
	8	1	**6V-4589**	1	SEAL-O-RING	
	9	1	**033-6044**	1	SEAL-O-RING	

M-METRIC PART

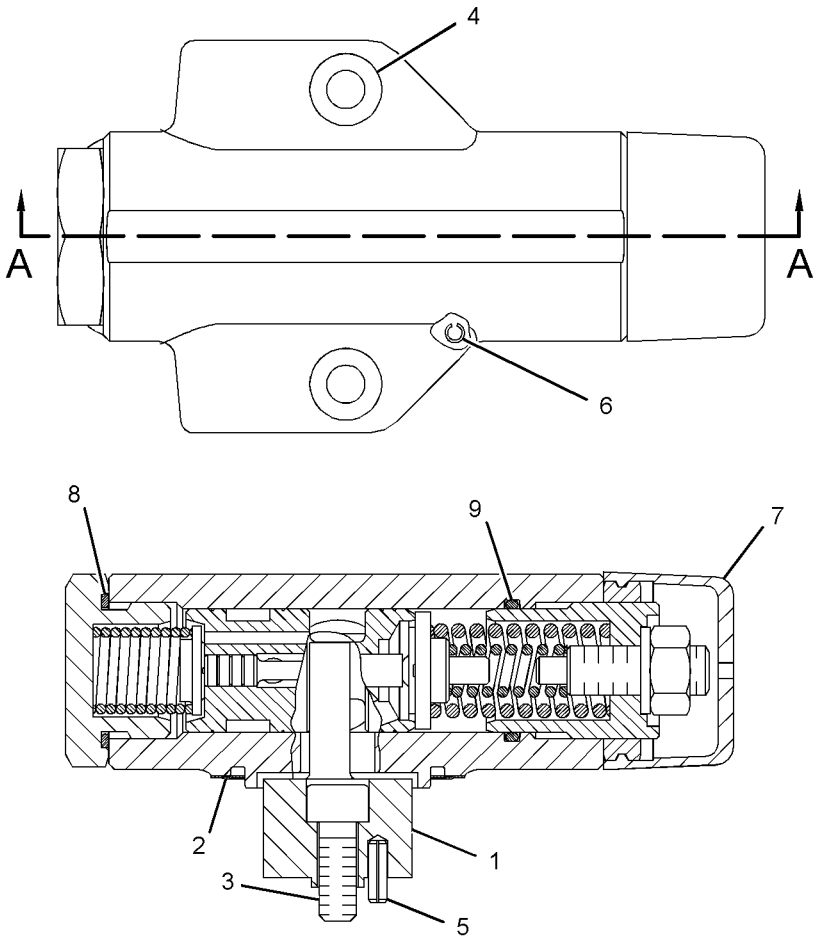

SECTION A-A

GRAPHIC #1 **<END>** g01386050

185-4254 VALVE GP-SOLENOID–12-VOLT

S/N: SJL1-UP

PART OF 300-4493 MANIFOLD & SOLENOID GP-CONTROL

SMCS-5132, 5479 **i03370641**

NOTE	REF NO	GRAPHIC REF	PART NUMBER	QTY	PART NAME 1 2 3 4 5 6 (PRODUCT LEVEL)	SEE PAGE
	1	1	**226-9629**	1	COIL AS-SOLENOID (12-VOLT)	
	2	1	**164-2108**	1	WASHER (13.03X25.4X2.38-MM THK)	
	3	1	**218-2373**	1	NUT (1/2-28-THD)	

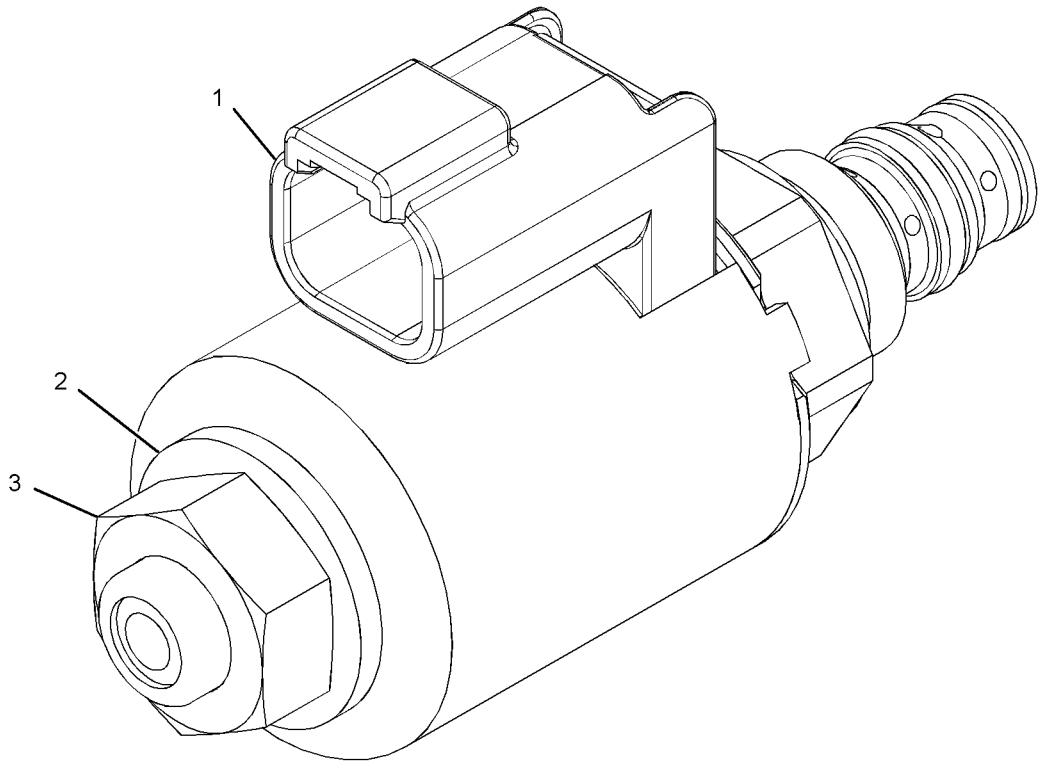

GRAPHIC #1 **<END>** g01716997

231-2615 VALVE GP-SOLENOID—REMOTE CONTROL

S/N: SJL1-UP
PART OF 331-7411 LINES GP-HYDRAULIC
AN ATTACHMENT

SMCS-5132, 5479 **i03712464**

NOTE	REF NO	GRAPHIC REF	PART NUMBER	QTY	PART NAME 1 2 3 4 5 6 (PRODUCT LEVEL)	SEE PAGE
	1	1	**212-3350**	1	SOLENOID AS (REMOTE CONTROL)	
		1	**102-8802**	1	KIT-RECEPTACLE (2-PIN)	
					(INCLUDES RECEPTACLE AS & WEDGE)	
		1	**186-3735**	2	PIN-CONNECTOR (16-GA TO 18-GA)	
	2	1	**224-6562**	1	CARTRIDGE AS	
		1	**6V-8399**	1	SEAL-O-RING	
	3	1	**224-6563**	1	FASTENER GP-VALVE	
		1	**3D-4245**	1	SEAL-O-RING	
		1	**4J-5267**	1	SEAL-O-RING	

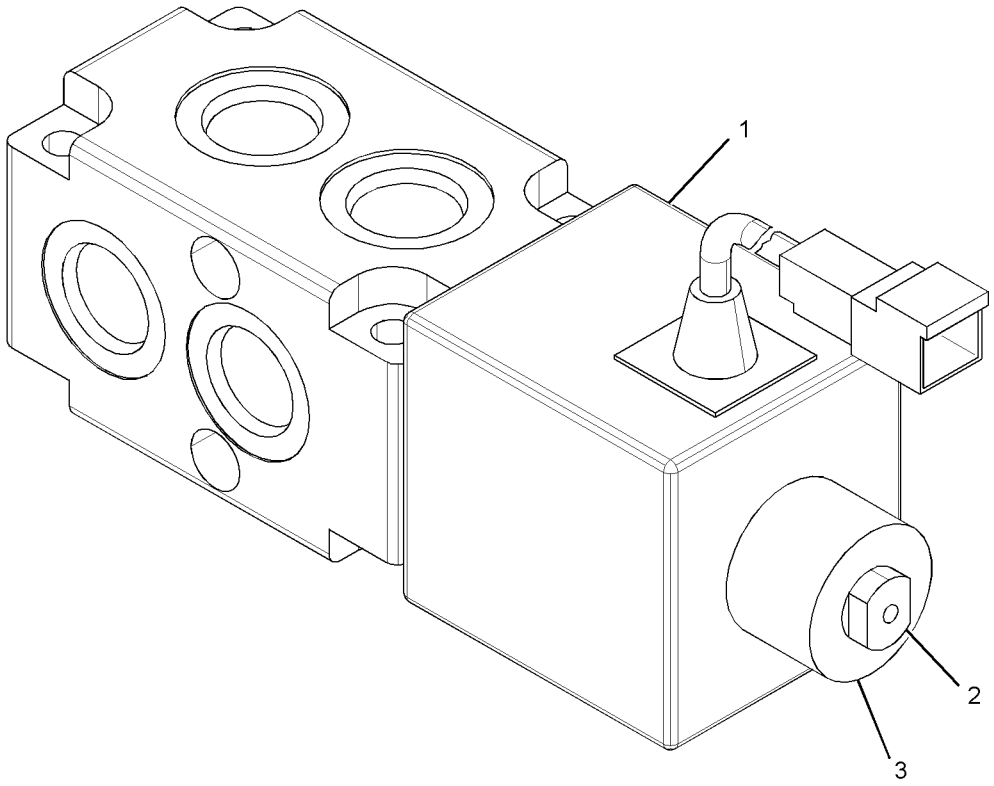

GRAPHIC #1 **<END>** g01335212

343-7355 ARM GP-LIFT

S/N: SJL1-UP

PART OF 329-0092 LOADER AR

SMCS-6118, 6119 **i03654983**

NOTE	REF NO	GRAPHIC REF	PART NUMBER	QTY	PART NAME 1 2 3 4 5 6 (PRODUCT LEVEL)	SEE PAGE
	1	1	**9R-0481**	2	WASHER (71X110X4-MM THK)	
	2	1,2	**9R-1510**	12	WASHER (51X82X4-MM THK)	
B	3	2	**9R-7273**	2	SPACER (51X90X1-MM THK)	
B	4	1,2	**111-4337**	12	WASHER (46X70X1-MM THK)	
B	5	2	**119-4594**	10	WASHER (41X64X1-MM THK)	
	6	1	**216-6359**	4	PLATE	
	7	1	**216-6361**	4	PLATE	
	8	1	**216-6362**	2	LINK AS	
					(EACH INCLUDES)	
	8A	1	**116-4825**	4	BEARING-SLEEVE	
	9	1	**216-6366**	1	LINK AS	
	9A	2	**9R-1496**	2	BEARING-SLEEVE	
	9B	2	**116-4825**	2	BEARING-SLEEVE	
	10	1	**216-6370**	1	LINK AS	
	10A	2	**9R-1496**	2	BEARING-SLEEVE	
	10B	2	**116-4825**	2	BEARING-SLEEVE	
	11	1	**216-8490**	2	SPACER (46X63.5X57.1-MM THK)	
	12	1	**216-8491**	2	SPACER (46X63.5X22-MM THK)	
B	13	1,2	**220-7108**	4	WASHER (51X85X1-MM THK)	
B	14	1	**222-7100**	2	WASHER (71X130X1-MM THK)	
B	15	1	**222-7101**	2	WASHER (71X130X3-MM THK)	
B	16	1	**222-7102**	2	WASHER (71X108X1-MM THK)	
	17	2	**228-1789**	2	SPACER (41X53.5X17.5-MM THK)	
	18	1	**247-7690**	1	ARM & BEARING AS-LIFT	
	18A	1,2	**213-6687**	8	BEARING-SLEEVE	
	18B	1	**213-6719**	4	BEARING-SLEEVE	
	19	1	**330-9673**	1	PIN	
	20	2	**330-9676**	2	PIN	
	21	2	**330-9677**	2	PIN	
	22	2	**330-9678**	1	PIN	
	23	2	**330-9679**	2	PIN AS	
	24	1	**330-9680**	4	PIN	
	25	2	**330-9681**	2	PIN	
	26	1	**330-9682**	2	PIN	
	27	1	**330-9683**	2	PIN	
	28	1	**330-9684**	2	PIN	
	29	2	**344-2567**	1	PIN AS	
	30	1	**095-7950**	2	RING-RETAINING	
	31	1,2	**3B-8488**	8	FITTING-GREASE	
	32	1,2	**3B-8489**	14	FITTING-GREASE	
	33	1,2	**6V-3213**	12	RING-RETAINING	
	34	1,2	**6V-4364**	12	RING-RETAINING	
M	35	1	**6V-7687**	4	LOCKNUT (M12X1.75-THD)	
	36	2	**6V-8144**	7	RING-RETAINING	
	37	1	**6V-8344**	2	RING-RETAINING	
M	38	1	**7X-2550**	2	BOLT (M12X1.75X110-MM)	
M	39	1	**8T-4176**	2	BOLT (M12X1.75X90-MM)	
	40	2	**9R-0109**	8	WASHER (41X64X3-MM THK)	
	41	1,2	**9R-0158**	12	WASHER (46X69X3-MM THK)	
	42	1	**9R-1502**	2	WASHER (56X90X4-MM THK)	

B-USE AS REQUIRED
M-METRIC PART

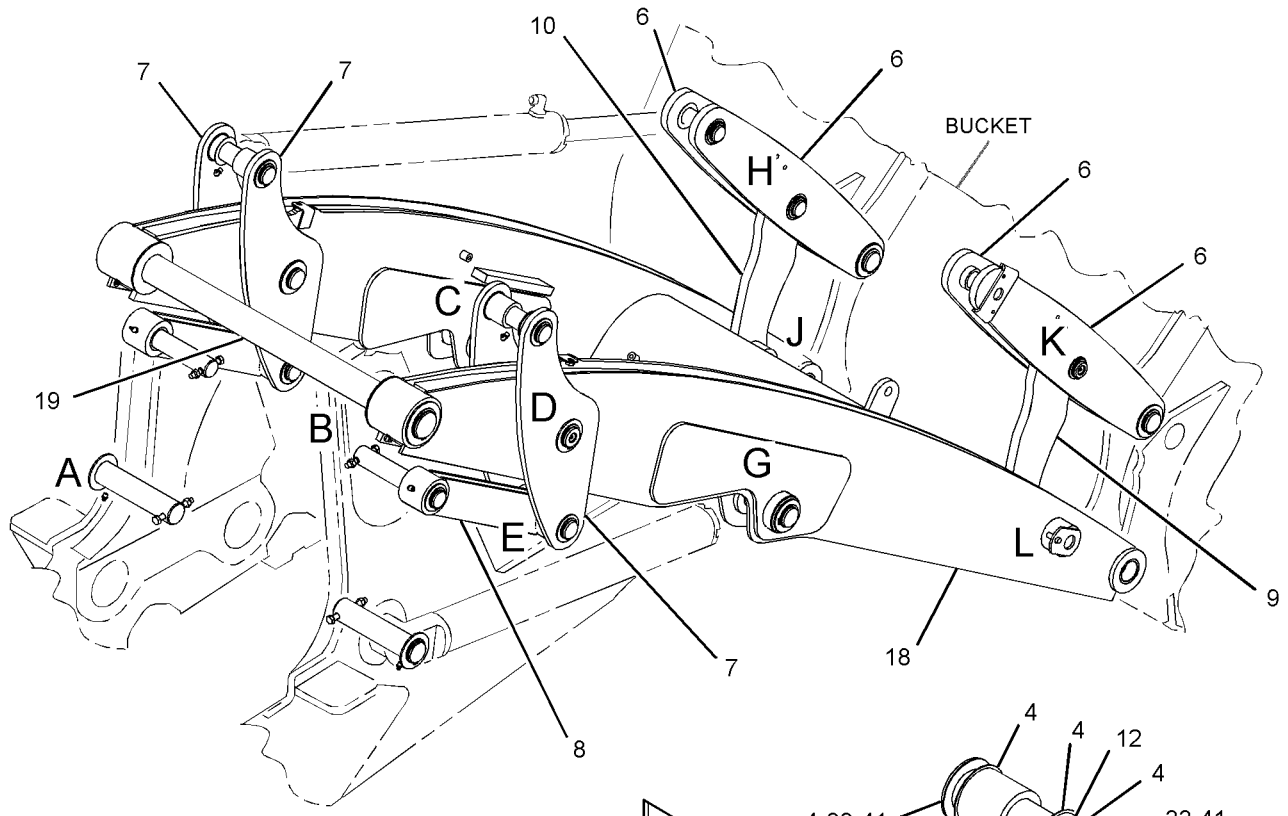

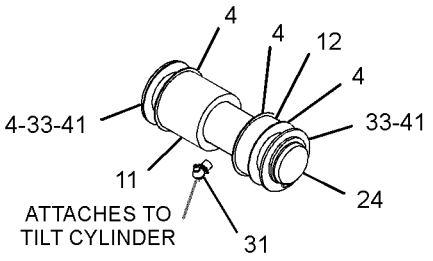

VIEW OF AREA C

FWD

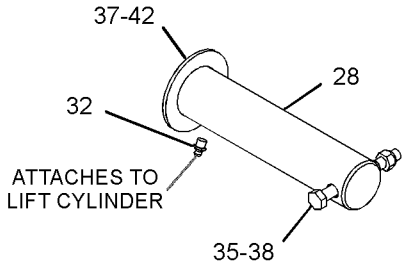

VIEW OF AREA A

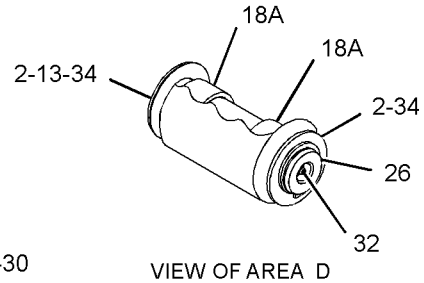

VIEW OF AREA D

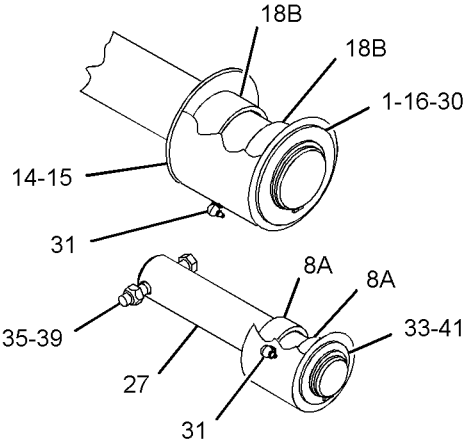

VIEW OF AREA B

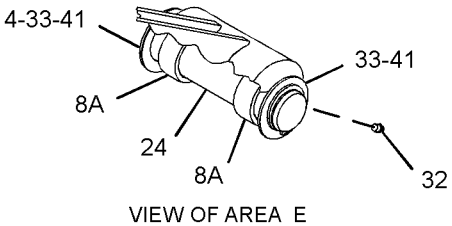

VIEW OF AREA E

REFER TO ALL ILLUSTRATIONS OF
THIS GROUP FOR AUXILIARY VIEWS

GRAPHIC #1

g01993054

343-7355 **ARM GP-LIFT** *(contd.)* **i03654983**

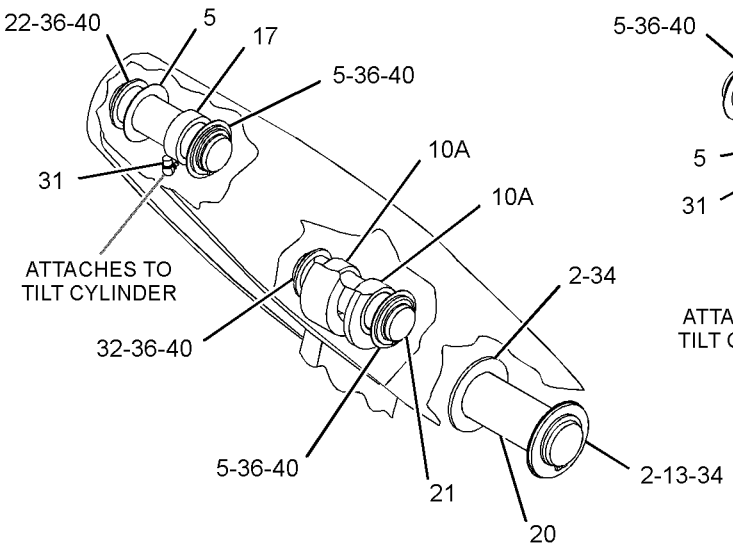

VIEW OF AREA H

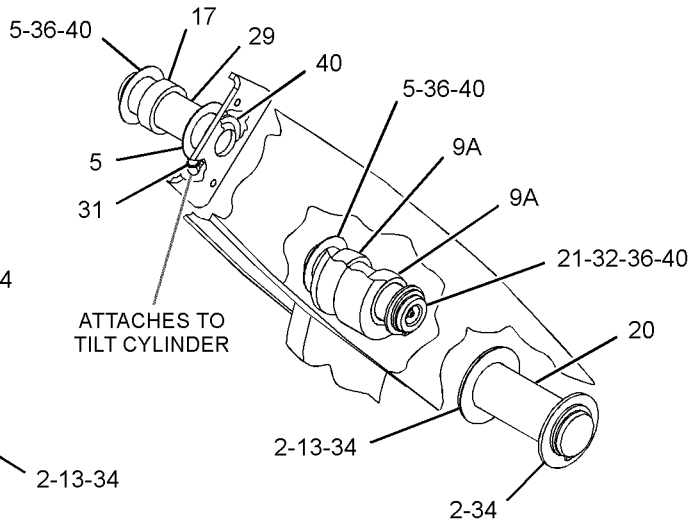

VIEW OF AREA K

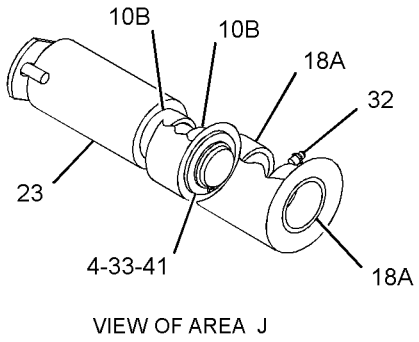

VIEW OF AREA J

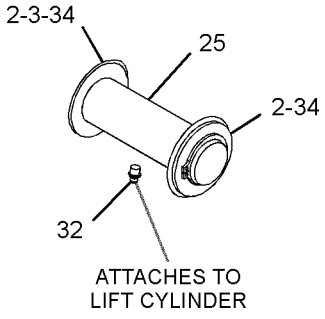

VIEW OF AREA G

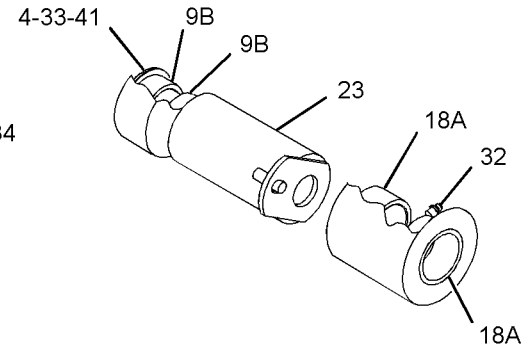

VIEW OF AREA L

GRAPHIC #2

<END>

g01993055

324-0548 BOOM GP

S/N: SJL1-UP

PART OF 334-0686, 334-0691, 350-6934, 350-6935, 350-6944, 350-6945 BACKHOE AR-EXTENDABLE STICK, 334-0694, 350-6933 BACKHOE AR-STANDARD STICK AN ATTACHMENT

SMCS-6501 **i03690289**

NOTE	REF NO	GRAPHIC REF	PART NUMBER	QTY	PART NAME 1 2 3 4 5 6 (PRODUCT LEVEL)	SEE PAGE
B	1	1	**9R-0481**	2	WASHER (71X110X4-MM THK)	
B	2	1	**9R-8291**	2	SPACER (66X125X1-MM THK)	
	3	1	**226-1240**	2	FILM-WARNING (CRUSH HAZARD, STAY BACK, INTL)	
M	4	1	**246-7853**	4	NUT-SPECIAL (M8X1.25-THD)	
	5	1	**316-4741**	1	BOOM AS	
	5A	1	**213-6683**	2	BEARING-SLEEVE	
	6	1	**316-6945**	1	PIN	
	7	1	**320-4725**	1	PIN AS	
	8	1	**322-3736**	1	PIN-BOOM LOCK	
	9	1	**095-7950**	2	RING-RETAINING	
	10	1	**115-6433**	1	WASHER (11X50X6-MM THK)	
	11	1	**3B-8488**	4	FITTING-GREASE	
	12	1	**3B-8489**	2	FITTING-GREASE	
	13	1	**6V-5201**	2	RING-RETAINING	
M	14	1	**8T-4136**	1	BOLT (M10X1.5X25-MM)	
	15	1	**9R-0109**	2	WASHER (41X64X3-MM THK)	

B-USE AS REQUIRED
M-METRIC PART

324-0548 **BOOM GP** *(contd.)* **i03690289**

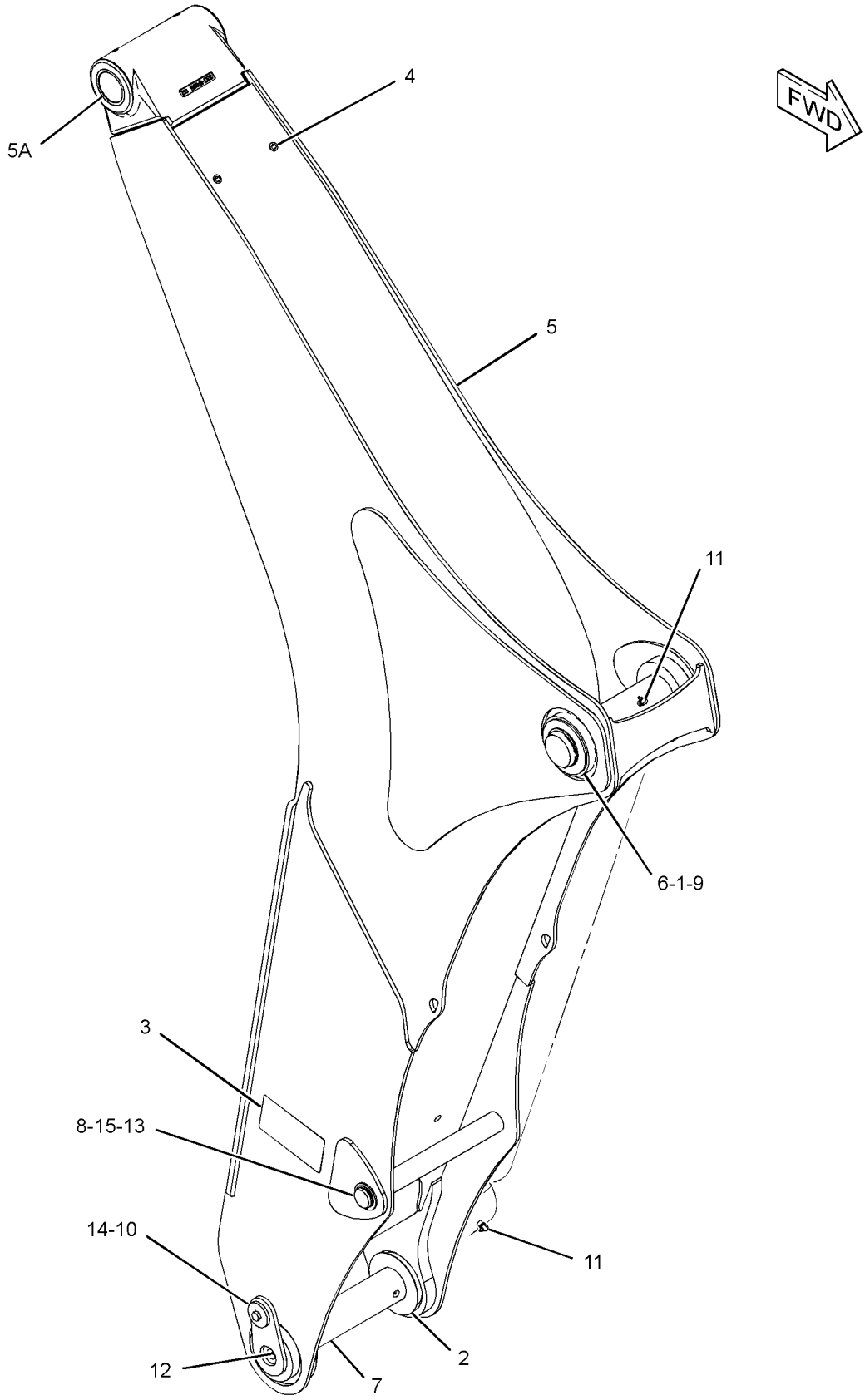

GRAPHIC #1 **<END>** g01990094

268-9910 BRACE GP-LIFT CYLINDER

S/N: SJL1-UP

PART OF 329-0092 LOADER AR

SMCS-7507 **i03126376**

NOTE	REF NO	GRAPHIC REF	PART NUMBER	QTY	PART NAME 1 2 3 4 5 6 (PRODUCT LEVEL)	SEE PAGE
C	1	1	**8T-6726**	4	CLAMP-HOSE	
C	2	1	**232-7612**	1	PIN	
C	3	1	**321-2380**	1	BRACE AS.	
C	4	1	**323-4253**	1	BRACKET AS	
C	5	1	**323-4255**	1	BRACKET AS	
C	6	1	**9R-5301**	1	PIN-COTTER	

C-CHANGE FROM PREVIOUS TYPE

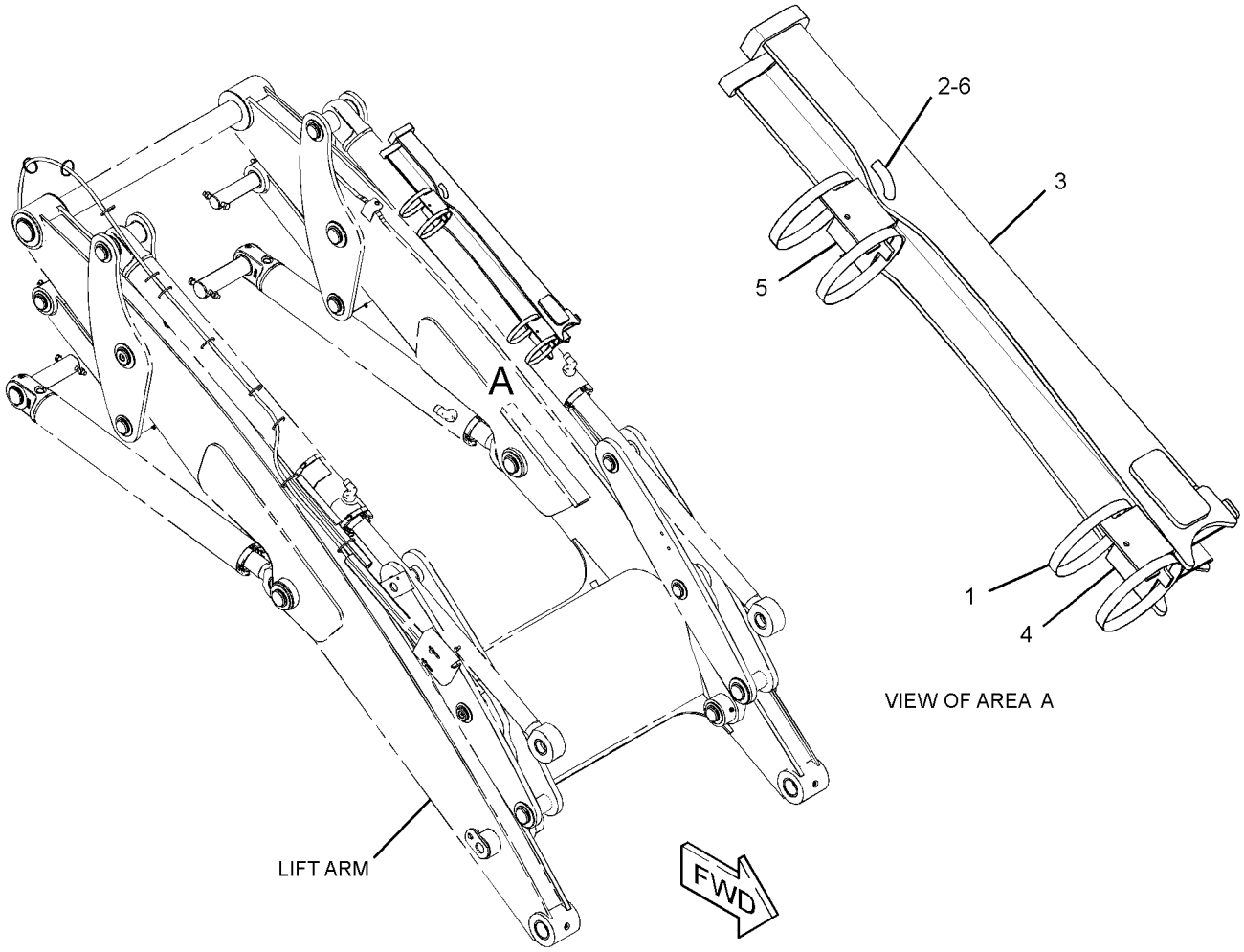

GRAPHIC #1 **<END>** g01609245

334-0751 LINKAGE GP-BACKHOE BUCKET—LIFTING

S/N: SJL1-UP

PART OF 334-0686, 350-6944 BACKHOE AR-EXTENDABLE STICK, 334-0694 BACKHOE AR-STANDARD STICK

AN ATTACHMENT

SMCS-6513 **i03694722**

NOTE	REF NO	GRAPHIC REF	PART NUMBER	QTY	PART NAME 1 2 3 4 5 6 (PRODUCT LEVEL)	SEE PAGE
	1	1	**9R-0158**	2	WASHER (46X69X3-MM THK)	
	2	1	**9R-1510**	2	WASHER (51X82X4-MM THK)	
B	3	1	**111-4337**	2	WASHER (46X70X1-MM THK)	
	4	1	**154-5280**	1	PIN	
B	5	1	**210-1707**	2	SHIM (1-MM THK)	
B	6	1	**220-7108**	6	WASHER (51X85X1-MM THK)	
	7	1	**320-9164**	1	PIN	
	8	1	**320-9241**	1	PIN	
	9	1	**328-5234**	1	PIN	
	10	1	**330-4926**	1	LINK AS	
	10A	1	**9R-0139**	2	BEARING-SLEEVE	
	10B	1	**213-6703**	2	BEARING	
	11	1	**330-5738**	1	LINK	
	12	1	**330-5739**	1	LINK	
	13	1	**096-5516**	2	RING-RETAINING	
	14	1	**154-5279**	1	PIN	
	15	1	**3B-5319**	4	PIN-COTTER	
	16	1	**3B-8489**	4	FITTING-GREASE	
	17	1	**8T-4241**	4	RING-RETAINING	

B-USE AS REQUIRED

334-0751 **LINKAGE GP-BACKHOE BUCKET** *(contd.)* **i03694722**

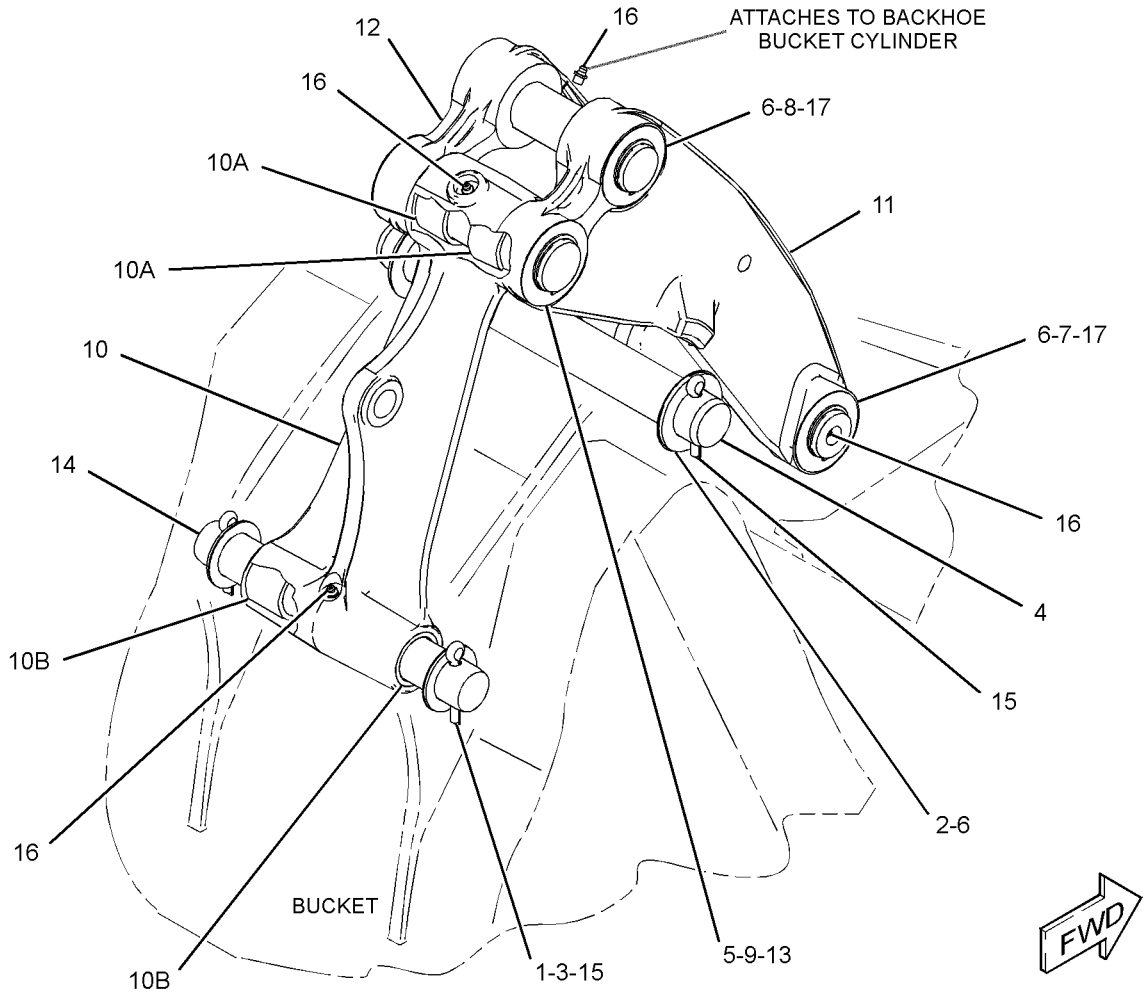

GRAPHIC #1 **<END>** g01994426

334-0752 LINKAGE GP-BACKHOE BUCKET

S/N: SJL1-UP

PART OF 334-0691, 350-6945 BACKHOE AR-EXTENDABLE STICK

AN ATTACHMENT

SMCS-6513 **i03695663**

NOTE	REF NO	GRAPHIC REF	PART NUMBER	QTY	PART NAME 1 2 3 4 5 6 (PRODUCT LEVEL)	SEE PAGE
	1	1	**9R-0158**	2	WASHER (46X69X3-MM THK)	
	2	1	**9R-9105**	2	PIN AS	
B	3	1	**111-4337**	4	WASHER (46X70X1-MM THK)	
B	4	1	**210-1707**	2	SHIM (1-MM THK)	
B	5	1	**220-7108**	4	WASHER (51X85X1-MM THK)	
	6	1	**308-4315**	2	SPACER (51X115X51-MM THK)	
	7	1	**331-8037**	1	LINKAGE GP-BUCKET	
	7A	1	**9R-0147**	2	BEARING-SLEEVE	
	7B	1	**9R-0170**	2	BEARING-SLEEVE	
	8	1	**332-2578**	1	PLATE AS (LH)	
	9	1	**332-2579**	1	PLATE AS (RH)	
	10	1	**333-0790**	1	PIN	
	11	1	**333-0791**	1	PIN	
	12	1	**333-0792**	1	PIN	
	13	1	**096-5516**	2	RING-RETAINING	
	14	1	**3B-5319**	2	PIN-COTTER	
	15	1	**3B-8489**	4	FITTING-GREASE	
	16	1	**8T-4241**	4	RING-RETAINING	

B-USE AS REQUIRED

334-0752 LINKAGE GP-BACKHOE BUCKET *(contd.)* i03695663

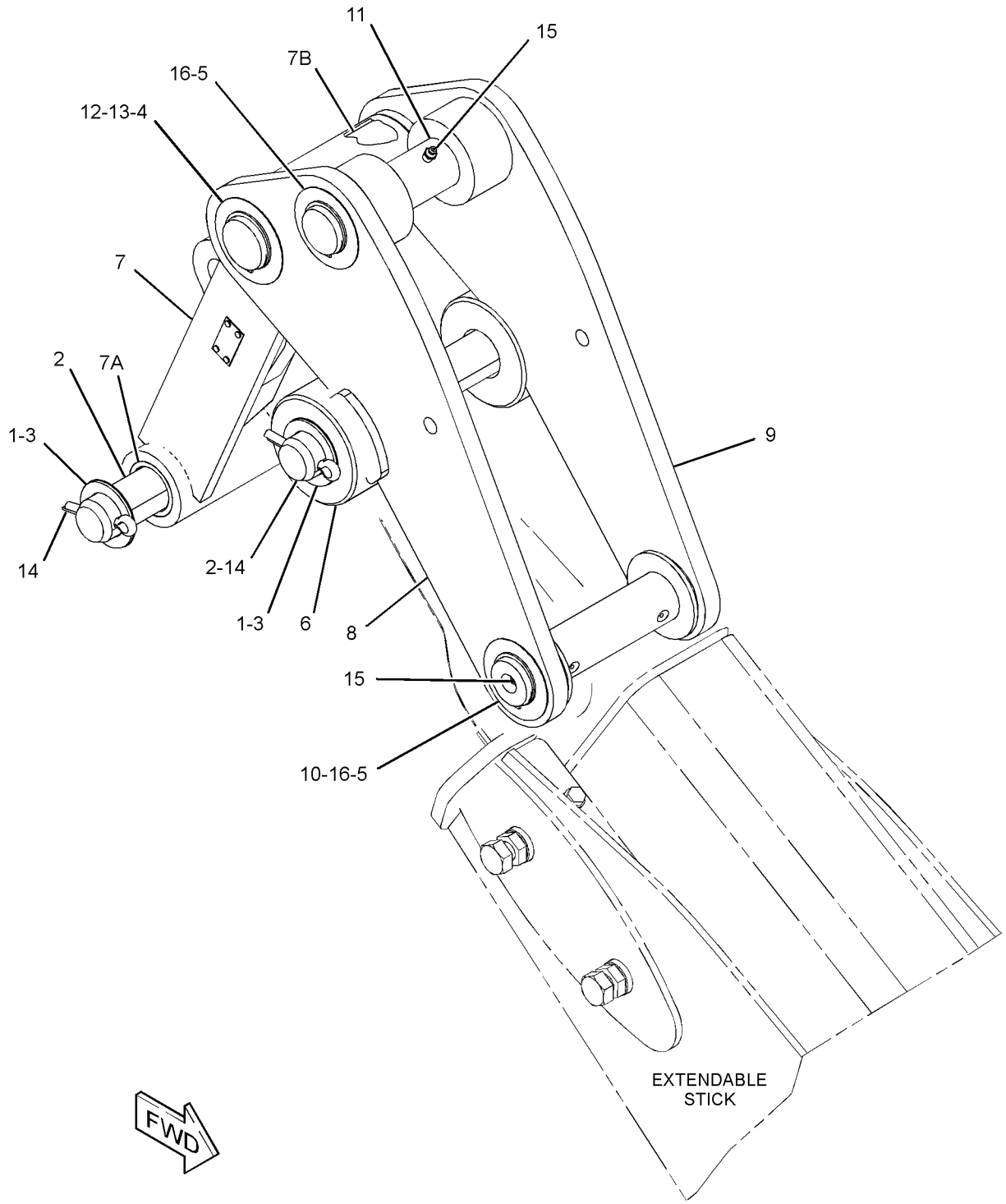

GRAPHIC #1 **<END>** g01993633

348-5464 LINKAGE GP-BACKHOE BUCKET–

WITHOUT LIFTING EYE

S/N: SJL1-UP

PART OF 350-6935 BACKHOE AR-EXTENDABLE STICK

AN ATTACHMENT

SMCS-6513 **i03693943**

NOTE	REF NO	GRAPHIC REF	PART NUMBER	QTY	PART NAME 1 2 3 4 5 6 (PRODUCT LEVEL)	SEE PAGE
	1	1	**9R-0158**	2	WASHER (46X69X3-MM THK)	
	2	1	**9R-9105**	2	PIN AS	
B	3	1	**111-4337**	4	WASHER (46X70X1-MM THK)	
B	4	1	**210-1707**	2	SHIM (1-MM THK)	
B	5	1	**220-7108**	4	WASHER (51X85X1-MM THK)	
	6	1	**308-4315**	2	SPACER (51X115X51-MM THK)	
	7	1	**332-2578**	1	PLATE AS (LH)	
	8	1	**332-2579**	1	PLATE AS (RH)	
	9	1	**333-0790**	1	PIN	
	10	1	**333-0791**	1	PIN	
	11	1	**333-0792**	1	PIN	
	12	1	**348-5460**	1	LINKAGE GP-BUCKET	
	12A	1	**9R-0147**	2	BEARING-SLEEVE	
	12B	1	**9R-0170**	2	BEARING-SLEEVE	
	13	1	**096-5516**	2	RING-RETAINING	
	14	1	**3B-5319**	2	PIN-COTTER	
	15	1	**3B-8489**	4	FITTING-GREASE	
	16	1	**8T-4241**	4	RING-RETAINING	

B-USE AS REQUIRED

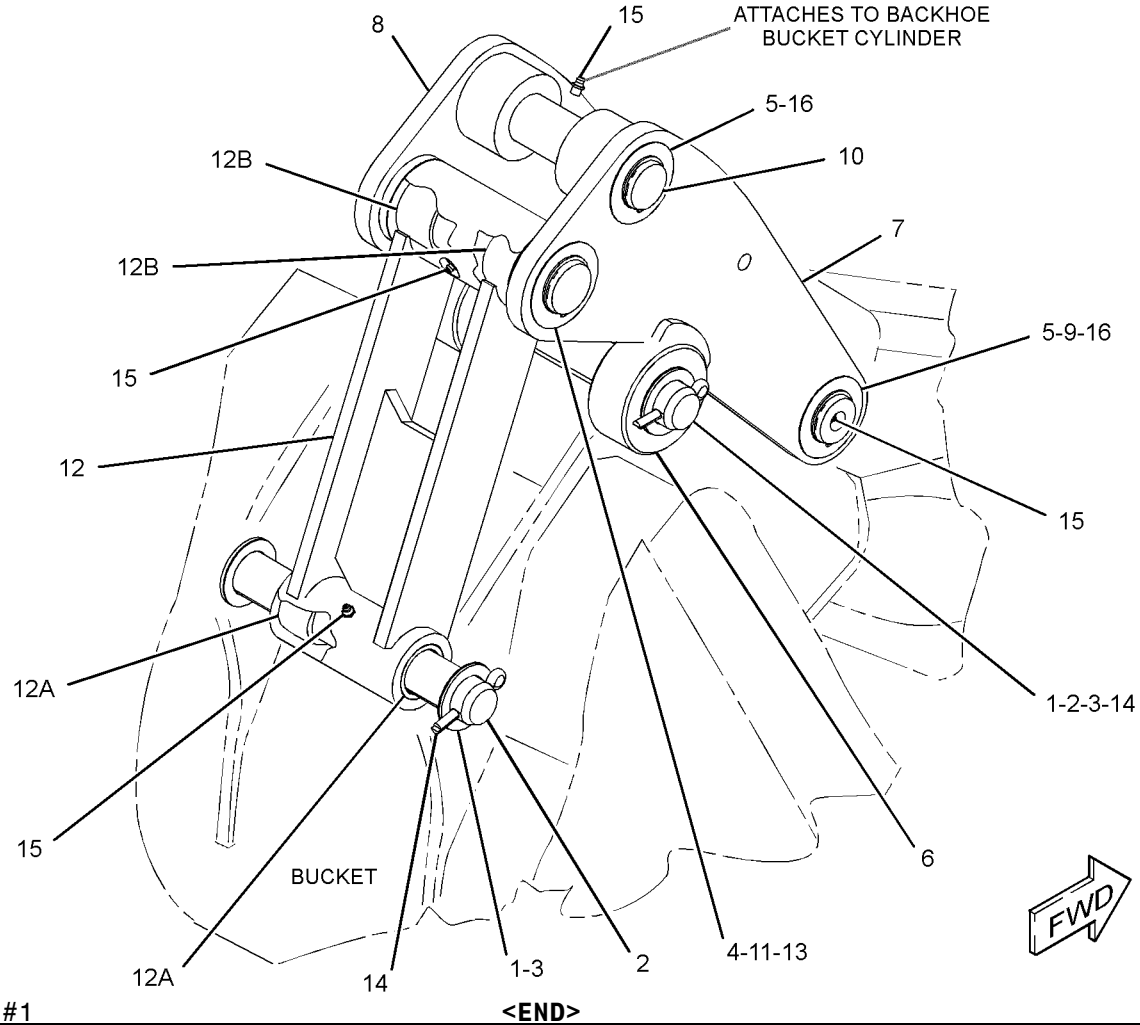

GRAPHIC #1 **<END>** g01994435

348-5465 LINKAGE GP-BACKHOE BUCKET

S/N: SJL1-UP

PART OF 350-6934 BACKHOE AR-EXTENDABLE STICK, 350-6933 BACKHOE AR-STANDARD STICK

AN ATTACHMENT

SMCS-6513 **i03690291**

NOTE	REF NO	GRAPHIC REF	PART NUMBER	QTY	PART NAME 1 2 3 4 5 6 (PRODUCT LEVEL)	SEE PAGE
	1	1	**9R-0158**	2	WASHER (46X69X3-MM THK)	
	2	1	**9R-1510**	2	WASHER (51X82X4-MM THK)	
B	3	1	**111-4337**	2	WASHER (46X70X1-MM THK)	
	4	1	**154-5280**	1	PIN	
B	5	1	**210-1707**	2	SHIM (1-MM THK)	
B	6	1	**220-7108**	6	WASHER (51X85X1-MM THK)	
	7	1	**320-9164**	1	PIN	
	8	1	**320-9241**	1	PIN	
	9	1	**328-5234**	1	PIN	
	10	1	**330-5738**	1	LINK	
	11	1	**330-5739**	1	LINK	
	12	1	**348-5463**	1	LINKAGE GP-BUCKET	
	12A	1	**9R-0139**	2	BEARING-SLEEVE	
	12B	1	**213-6703**	2	BEARING	
	13	1	**096-5516**	2	RING-RETAINING	
	14	1	**154-5279**	1	PIN	
	15	1	**3B-5319**	4	PIN-COTTER	
	16	1	**3B-8489**	4	FITTING-GREASE	
	17	1	**8T-4241**	4	RING-RETAINING	

B-USE AS REQUIRED

348-5465 **LINKAGE GP-BACKHOE BUCKET** *(contd.)* **i03690291**

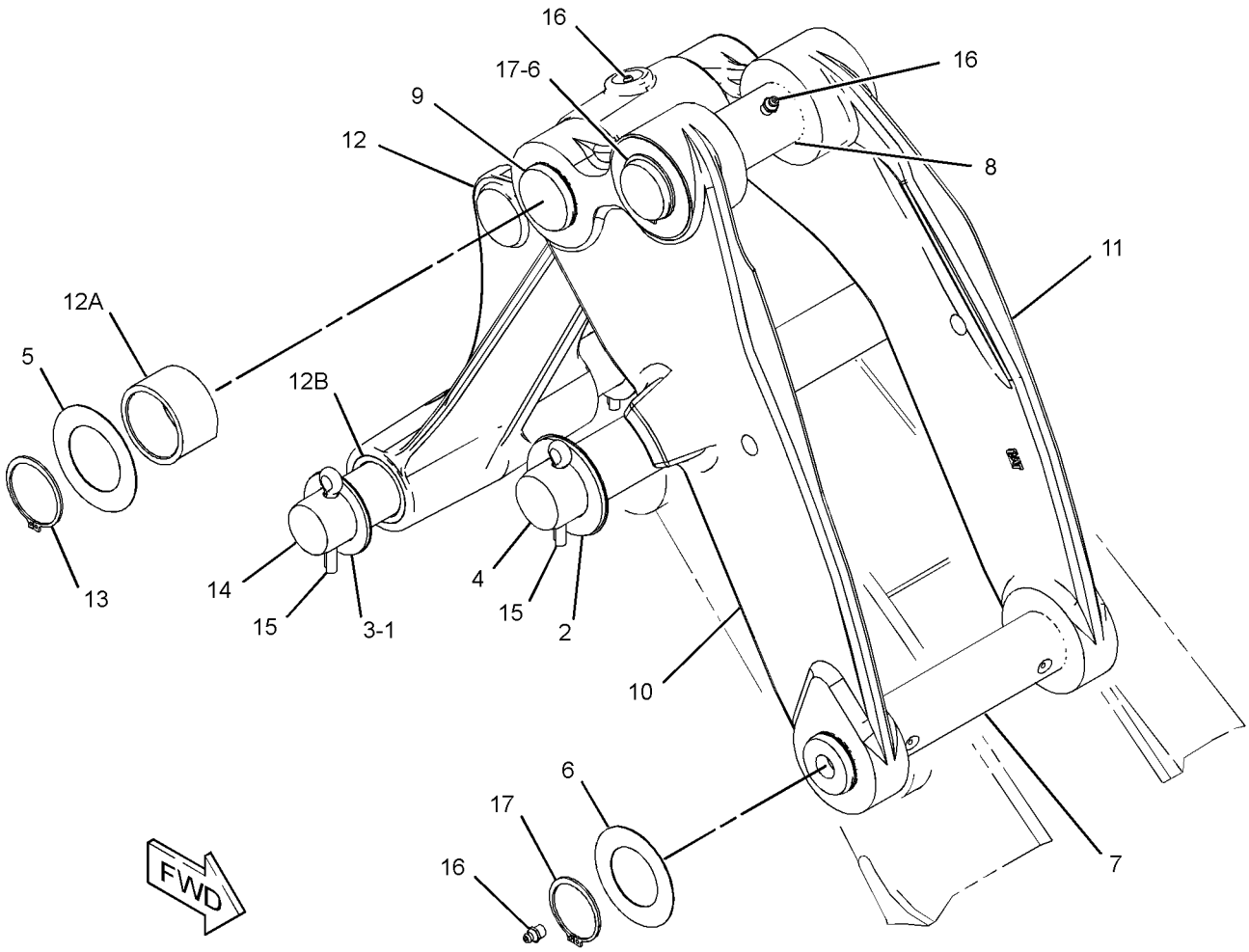

GRAPHIC #1 **<END>** g01986853

206-1641 LOCK GP-TRANSPORT–STABILIZER

S/N: SJL1-UP

PART OF 329-0296 CHASSIS AR

SMCS-7505 **i03577612**

NOTE	REF NO	GRAPHIC REF	PART NUMBER	QTY	PART NAME 1 2 3 4 5 6 (PRODUCT LEVEL)	SEE PAGE
	1	1	**9R-8165**	1	BEARING	
	2	1	**164-1398**	2	KNOB	
	3	1	**183-6084**	1	BEARING	
	4	1	**206-1871**	1	BRACKET AS	
M		1	**6V-9632**	3	NUT-WELD (M6X1-THD)	
M		1	**8T-3612**	9	NUT-WELD (M8X1.25-THD)	
	5	1	**206-1874**	1	LEVER AS	
	6	1	**229-5745**	1	SPACER (8X15.875X11.6-MM THK)	
	7	1	**248-2710**	1	GROMMET	
	8	1	**164-1395**	1	KNOB	
	9	1	**5P-4116**	6	WASHER-HARD (8.8X20.5X2-MM THK)	
B	10	1	**6E-5431**	1	SHIM (0.5-MM THK)	
M	11	1	**8T-4138**	1	BOLT (M6X1X20-MM)	
M	12	1	**8T-4189**	8	BOLT (M8X1.25X20-MM)	
	13	1	**8T-4224**	4	WASHER-HARD (8.8X16X2-MM THK)	
	14	1	**8T-6902**	1	CLIP	
M	15	1	**8T-7547**	1	BOLT (M8X1.25X30-MM)	
	16	1	**9X-8256**	1	WASHER (6.6X12X2-MM THK)	

B-USE AS REQUIRED
M-METRIC PART

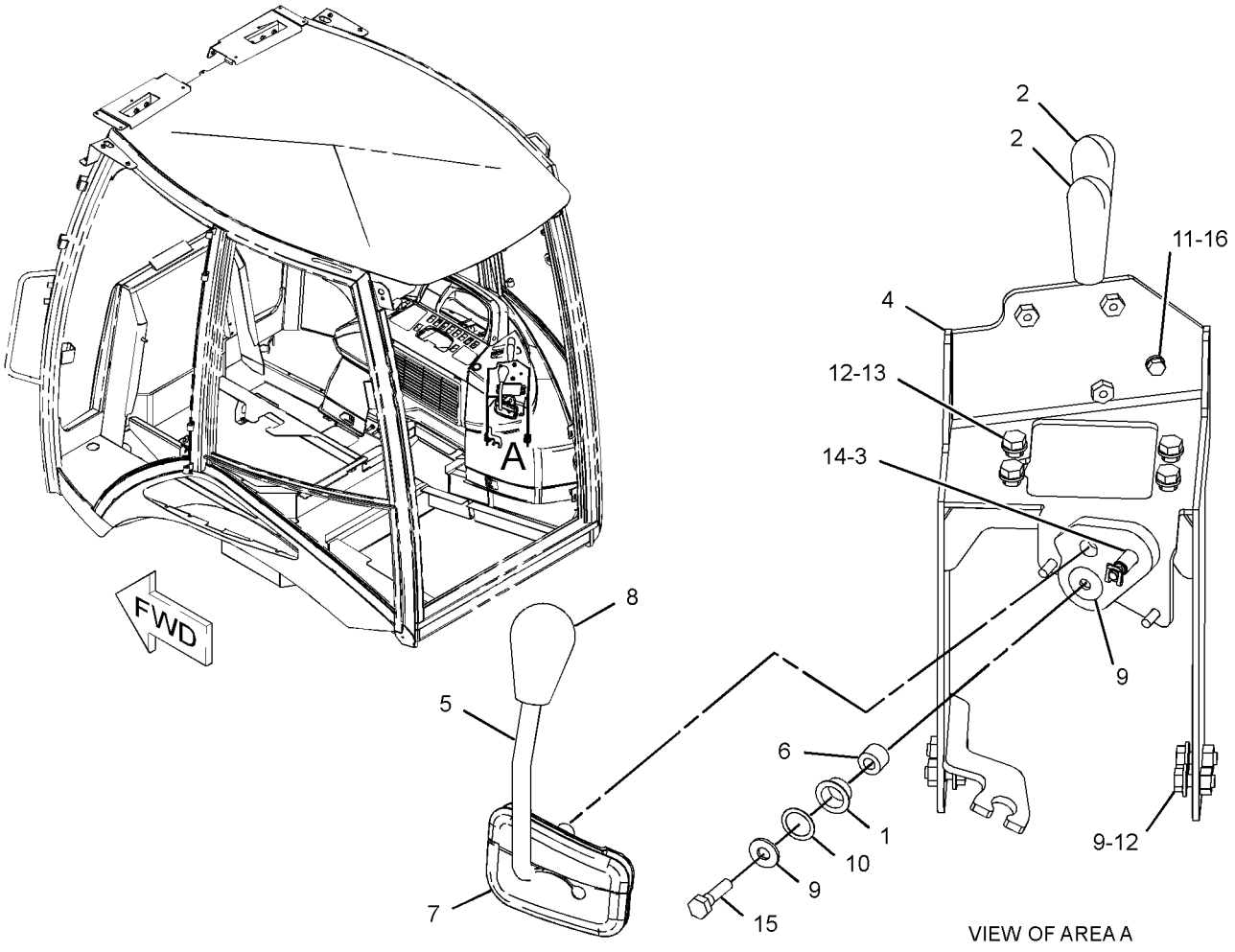

GRAPHIC #1 **<END>** g01207186

252-4660 LOCK GP-TRANSPORT—BACKHOE BUCKET

S/N: SJL1-UP

AN ATTACHMENT

SMCS-7505 **i02210128**

NOTE	REF NO	GRAPHIC REF	PART NUMBER	QTY	PART NAME 1 2 3 4 5 6 (PRODUCT LEVEL)	SEE PAGE
	1	1	**9R-9028**	1	PIN	
	2	1	**252-4659**	1	CABLE AS	
	3	1	**9R-5301**	2	PIN-COTTER	

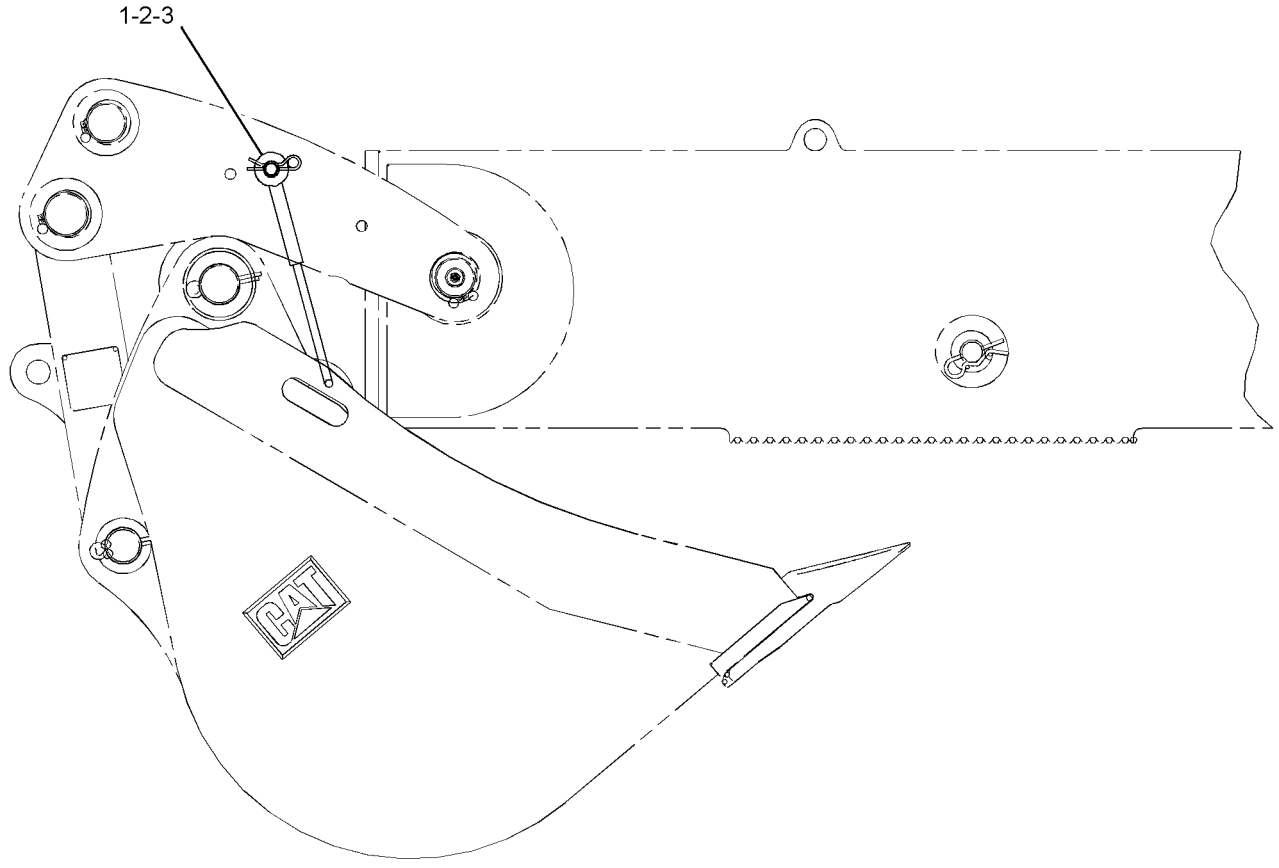

RIGHT SIDE VIEW

GRAPHIC #1 **<END>** g01116719

329-1322 LOCK GP-TRANSPORT–BOOM

S/N: SJL1-UP

PART OF 329-0296 CHASSIS AR

SMCS-7505 **i03642929**

NOTE	REF NO	GRAPHIC REF	PART NUMBER	QTY	PART NAME 1 2 3 4 5 6 (PRODUCT LEVEL)	SEE PAGE
	1	1	**5P-7958**	1	SLEEVE-CABLE SPLICE	
	2	1	**134-0143**	1	CABLE	
	3	1	**214-4285**	2	PAD AS	
	4	1	**214-7043**	1	SPACER (6.15X7.94X10-MM THK)	
	5	1	**310-3933**	1	CABLE AS	
		1	**2R-0364**	1	RING-RETAINING	
		1	**4D-9517**	1	CLIP	
		1	**5D-6523**	2	CLIP	
	6	1	**313-6572**	1	PLATE	
	7	1	**315-4533**	1	BRACKET AS	
	8	1	**317-4928**	1	PIN AS	
	9	1	**329-1329**	1	HOOK	
	10	1	**329-1330**	1	HOOK	
	11	1	**329-1331**	1	PIN	
M	12	1	**238-0251**	3	SCREW-BUTTON HEAD (M10X1.5X25-MM)	
	13	1	**3B-8489**	2	FITTING-GREASE	
M	14	1	**5A-3604**	2	BOLT-SOCKET HEAD (M8X1.25X25-MM)	
M	15	1	**5C-9553**	1	BOLT (M6X1X16-MM)	
	16	1	**6E-1135**	2	PIN	
	17	1	**7X-3383**	2	WASHER (22X50X3-MM THK)	
	18	1	**8T-4121**	7	WASHER-HARD (11X21X2.5-MM THK)	
M	19	1	**8T-4133**	1	NUT (M10X1.5-THD)	
M	20	1	**8T-4137**	1	BOLT (M10X1.5X20-MM)	
M	21	1	**8T-4195**	2	BOLT (M10X1.5X30-MM)	
	22	1	**8T-4224**	1	WASHER-HARD (8.8X16X2-MM THK)	
M	23	1	**8T-4908**	1	BOLT (M8X1.25X25-MM)	

M-METRIC PART

329-1322 **LOCK GP-TRANSPORT** *(contd.)* **i03642929**

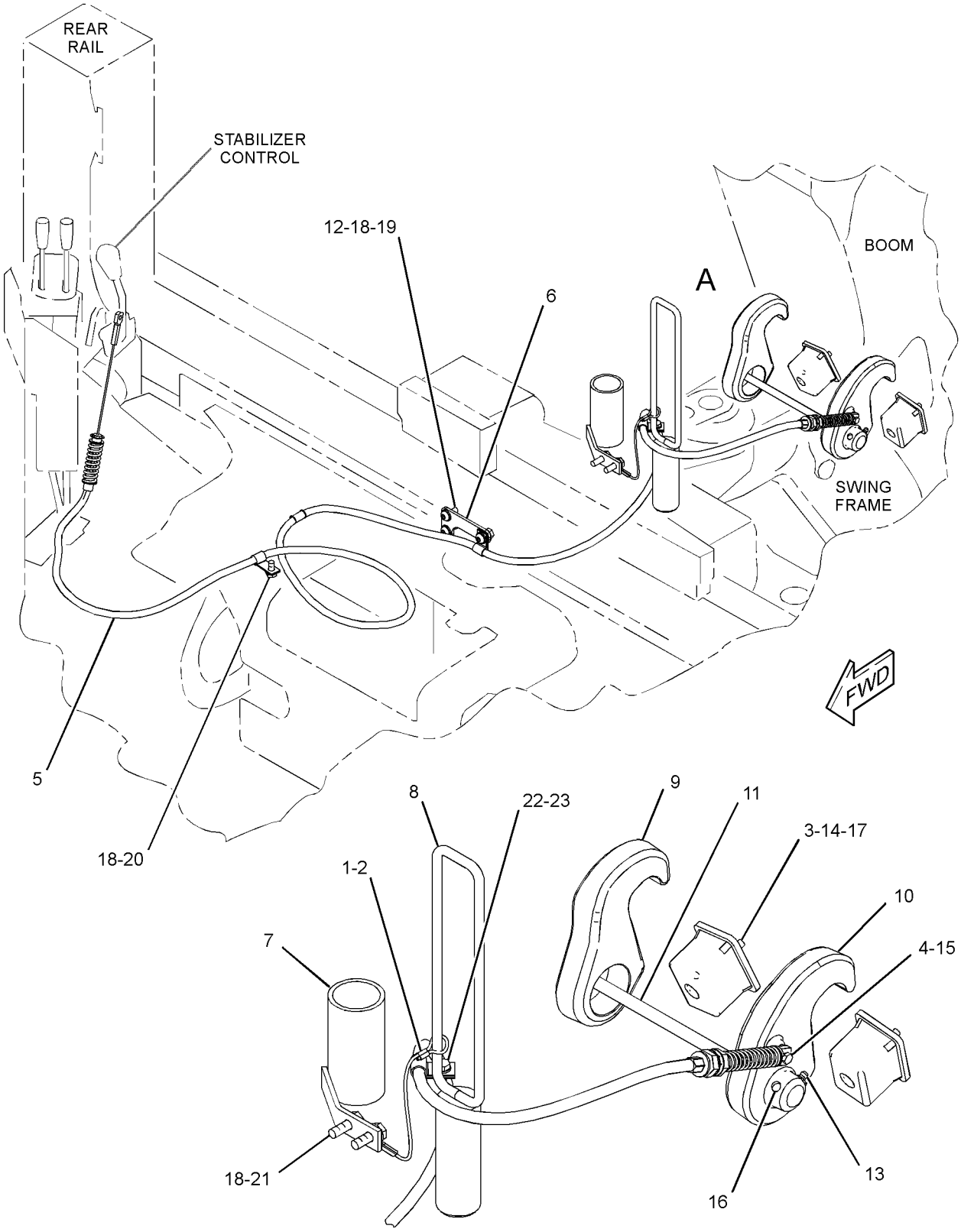

VIEW OF AREA A

GRAPHIC #1 **<END>** g01995013

343-3429 LOCK GP-TRANSPORT

S/N: SJL1-UP

AN ATTACHMENT

SMCS-7505 **i03705791**

NOTE	REF NO	GRAPHIC REF	PART NUMBER	QTY	PART NAME 1 2 3 4 5 6 (PRODUCT LEVEL)	SEE PAGE
	1	1	**160-7599**	1	RESTRAINER-BUCKET	
	2	1	**232-7612**	1	PIN	
	3	1	**252-4654**	1	PLATE AS	
	4	1	**9R-5301**	1	PIN-COTTER	

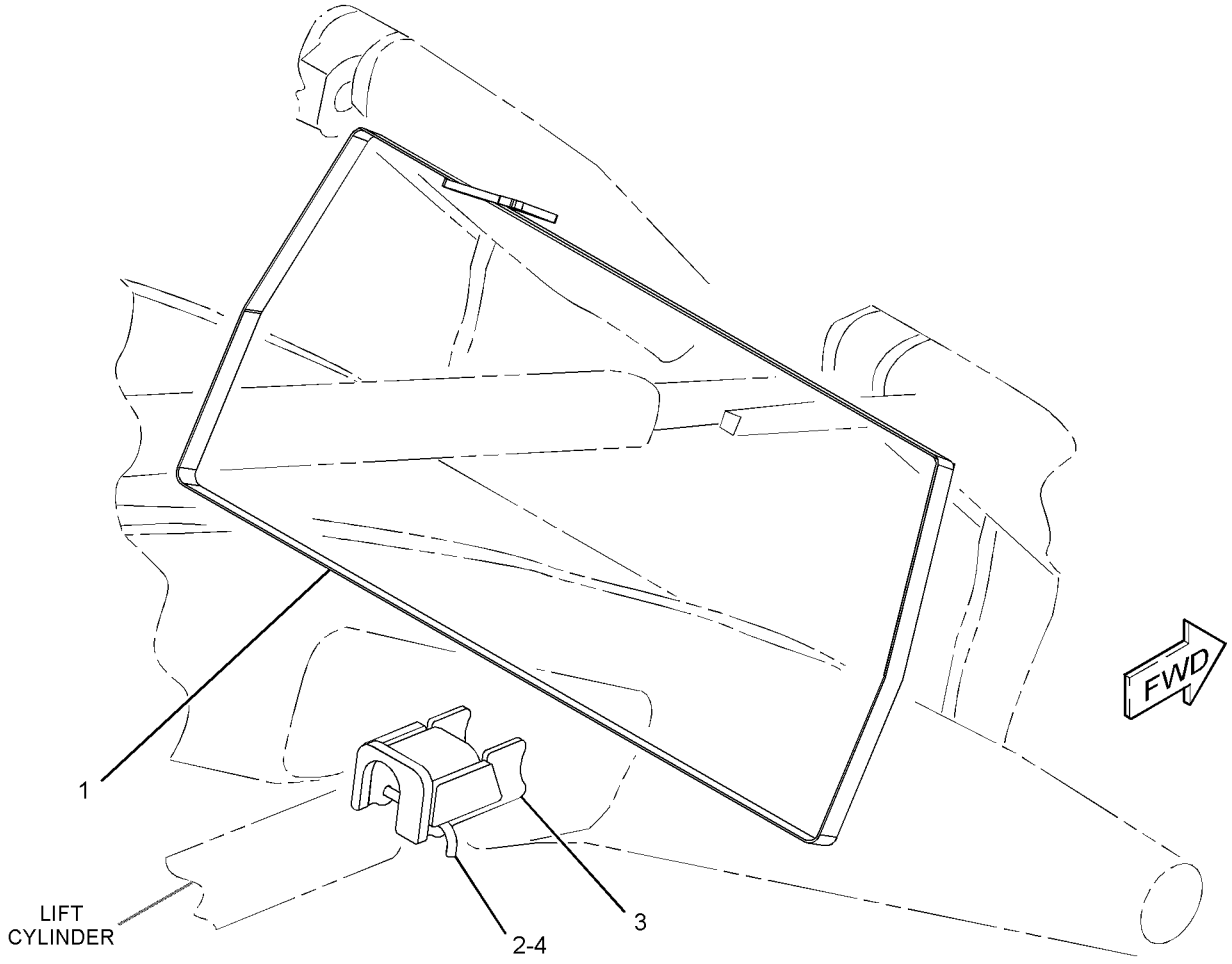

GRAPHIC #1 **<END>** g02001060

9R-0868 PAD GP-STABILIZER–STREET

S/N: SJL1-UP

FOR USE WITH 9R-1259 STABILIZER GP-SIDESHIFT

AN ATTACHMENT

SMCS-7222 **i01238045**

NOTE	REF NO	GRAPHIC REF	PART NUMBER	QTY	PART NAME 1 2 3 4 5 6 (PRODUCT LEVEL)	SEE PAGE
	1	1	**166-7870**	4	PAD AS-STABILIZER (STREET)	
M	2	1	**8T-4193**	12	BOLT (M16X2X50-MM)	
	3	1	**9X-8257**	12	WASHER (17.5X30X3.5-MM THK)	

M-METRIC PART

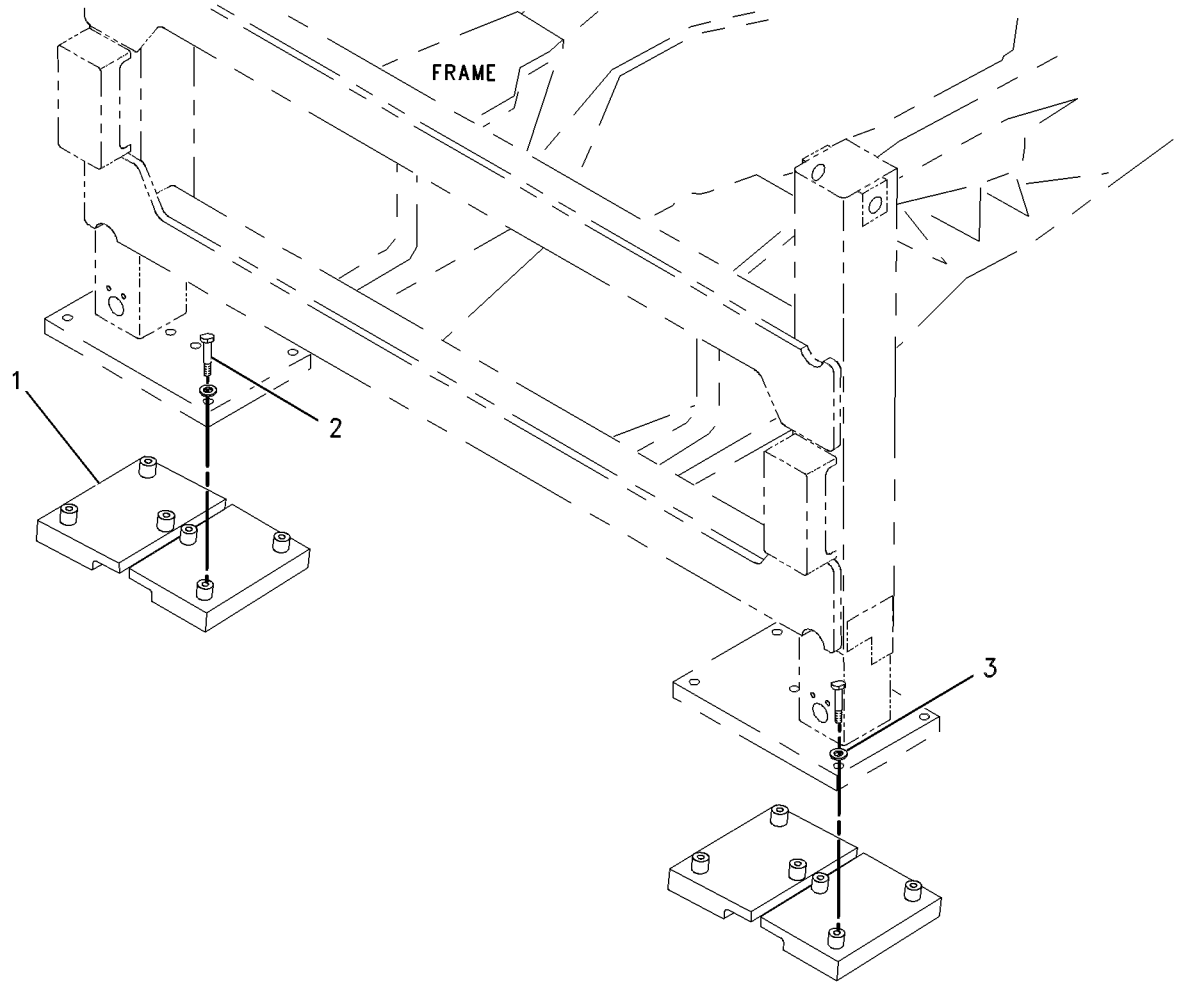

GRAPHIC #1 **<END>** g00661392

328-5964 STABILIZER GP-BACKHOE

S/N: SJL1-UP
PART OF 327-0114 FRAME AR-LOADER
AN ATTACHMENT

SMCS-7222 **i03642982**

NOTE	REF NO	GRAPHIC REF	PART NUMBER	QTY	PART NAME 1 2 3 4 5 6 (PRODUCT LEVEL)	SEE PAGE
	1	1	**325-7563**	4	SPACER (45.5X75X35-MM THK)	
	2	1	**328-5196**	2	PAD-STABILIZER	
	3	1	**330-9669**	2	PIN	
	4	1	**330-9670**	2	PIN AS	
	5	1	**6V-5204**	6	RING-RETAINING	

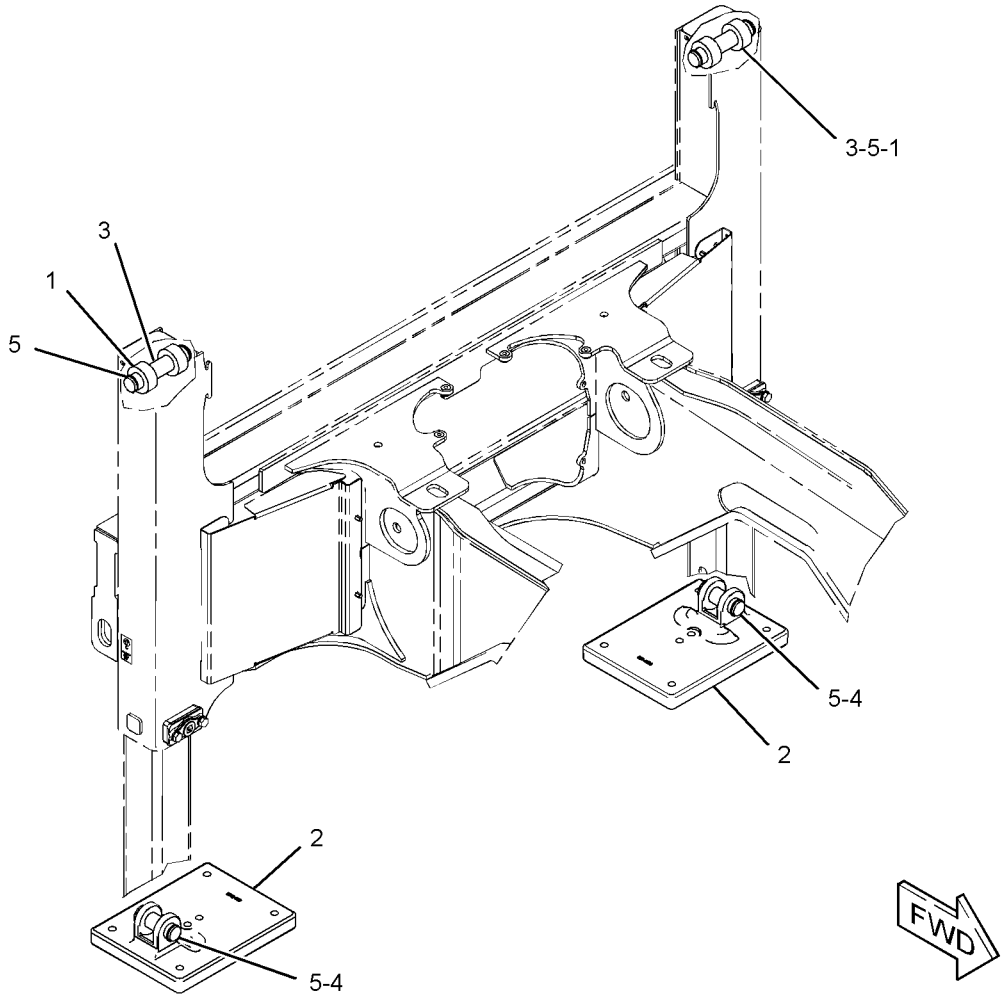

GRAPHIC #1 **<END>** g01986675

324-0552 STICK GP

S/N: SJL1-UP

PART OF 334-0694, 350-6933 BACKHOE AR-STANDARD STICK

AN ATTACHMENT

SMCS-6502 **i03642965**

NOTE	REF NO	GRAPHIC REF	PART NUMBER	QTY	PART NAME 1 2 3 4 5 6 (PRODUCT LEVEL)	SEE PAGE
B	1	1	**9R-8292**	2	SPACER (61X135X1-MM THK)	
	2	1	**316-6946**	1	PIN AS	
	3	1	**316-6947**	1	PIN	
	4	1	**319-4504**	1	STICK AS	
	4A	1	**9R-0162**	2	BEARING-SLEEVE	
	4B	1	**9R-3092**	2	BEARING-SLEEVE	
	5	1	**328-9650**	1	PIN	
	6	1	**344-2543**	1	PLATE	
	7	1	**3B-8488**	1	FITTING-GREASE	
	8	1	**3B-8489**	2	FITTING-GREASE	
	9	1	**7X-0632**	1	WASHER-HARD (11X36X6-MM THK)	
M	10	1	**7X-2543**	1	BOLT (M10X1.5X120-MM)	
	11	1	**7X-7729**	4	WASHER (11X25X3-MM THK)	
M	12	1	**8T-0389**	2	LOCKNUT (M10X1.5-THD)	
	13	1	**8T-4121**	3	WASHER-HARD (11X21X2.5-MM THK)	
M	14	1	**8T-4133**	4	NUT (M10X1.5-THD)	
M	15	1	**8T-4195**	1	BOLT (M10X1.5X30-MM)	
M	16	1	**8T-6685**	1	BOLT (M10X1.5X110-MM)	
M	17	1	**9X-2060**	4	BOLT (M10X1.5X30-MM)	

B-USE AS REQUIRED
M-METRIC PART

324-0552 **STICK GP** *(contd.)* **i03642965**

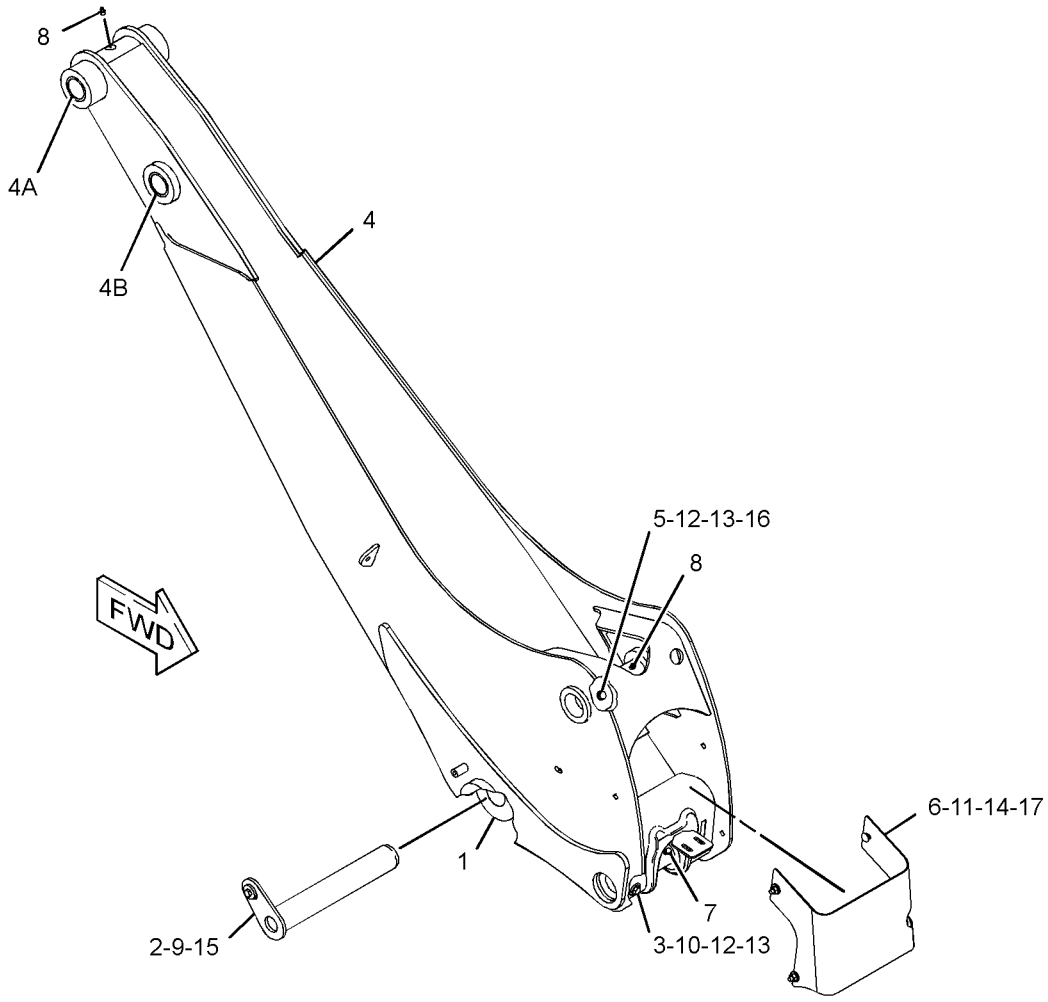

GRAPHIC #1 **<END>** g01992913

324-0550 STICK GP-EXTENDABLE

S/N: SJL1-UP

PART OF 334-0686, 350-6934, 350-6944 BACKHOE AR-EXTENDABLE STICK

AN ATTACHMENT

SMCS-6533 **i03693940**

NOTE	REF NO	GRAPHIC REF	PART NUMBER	QTY	PART NAME 1 2 3 4 5 6 (PRODUCT LEVEL)	SEE PAGE
	1	1	**9R-0158**	2	WASHER (46X69X3-MM THK)	
	2	1	**9R-2959**	2	CLIP	
B	3	1	**9R-8292**	2	SPACER (61X135X1-MM THK)	
	4	1	**316-4742**	1	STICK AS	
	4A	1	**9R-0162**	2	BEARING-SLEEVE	
	4B	1	**9R-3092**	2	BEARING-SLEEVE	
	5	1	**316-4743**	1	STICK AS	
	6	1	**316-6946**	1	PIN AS	
	7	1	**316-6947**	1	PIN	
	8	1	**316-6948**	1	PIN	
	9	1	**316-6949**	2	PIN	
	10	1	**319-9667**	4	PAD AS	
	11	1	**319-9668**	4	PAD AS	
Y	12	1	**320-5935**	1	CYLINDER GP-STICK	335
	13	1	**334-4169**	1	LOCKPIN	
	14	1	**336-6396**	1	PLATE	
	15	1	**346-5631**	2	SPACER	
	16	1	**346-6559**	4	ADJUSTER	
	17	1	**346-6560**	4	ADJUSTER	
	18	1	**350-3733**	1	FILM-INSTRUCTION (EXTENDABLE STICK PIN, READ OMM)	
M	19	1	**098-6004**	8	LOCKNUT (M20X2.5-THD)	
	20	1	**3B-8488**	1	FITTING-GREASE	
	21	1	**3B-8489**	2	FITTING-GREASE	
	22	1	**6V-5204**	4	RING-RETAINING	
	23	1	**7X-0632**	1	WASHER-HARD (11X36X6-MM THK)	
M	24	1	**7X-2543**	1	BOLT (M10X1.5X120-MM)	
	25	1	**7X-7729**	5	WASHER (11X25X3-MM THK)	
M	26	1	**8T-0271**	2	BOLT-SOCKET HEAD (M10X1.5X35-MM)	
M	27	1	**8T-0389**	1	LOCKNUT (M10X1.5-THD)	
	28	1	**8T-4121**	10	WASHER-HARD (11X21X2.5-MM THK)	
M	29	1	**8T-4133**	6	NUT (M10X1.5-THD)	
M	30	1	**8T-4195**	1	BOLT (M10X1.5X30-MM)	
M	31	1	**8T-4196**	8	BOLT (M10X1.5X35-MM)	
	32	1	**8T-4241**	2	RING-RETAINING	
M	33	1	**9X-2060**	4	BOLT (M10X1.5X30-MM)	

B-USE AS REQUIRED
M-METRIC PART
Y-SEPARATE ILLUSTRATION

324-0550 **STICK GP-EXTENDABLE** *(contd.)* **i03693940**

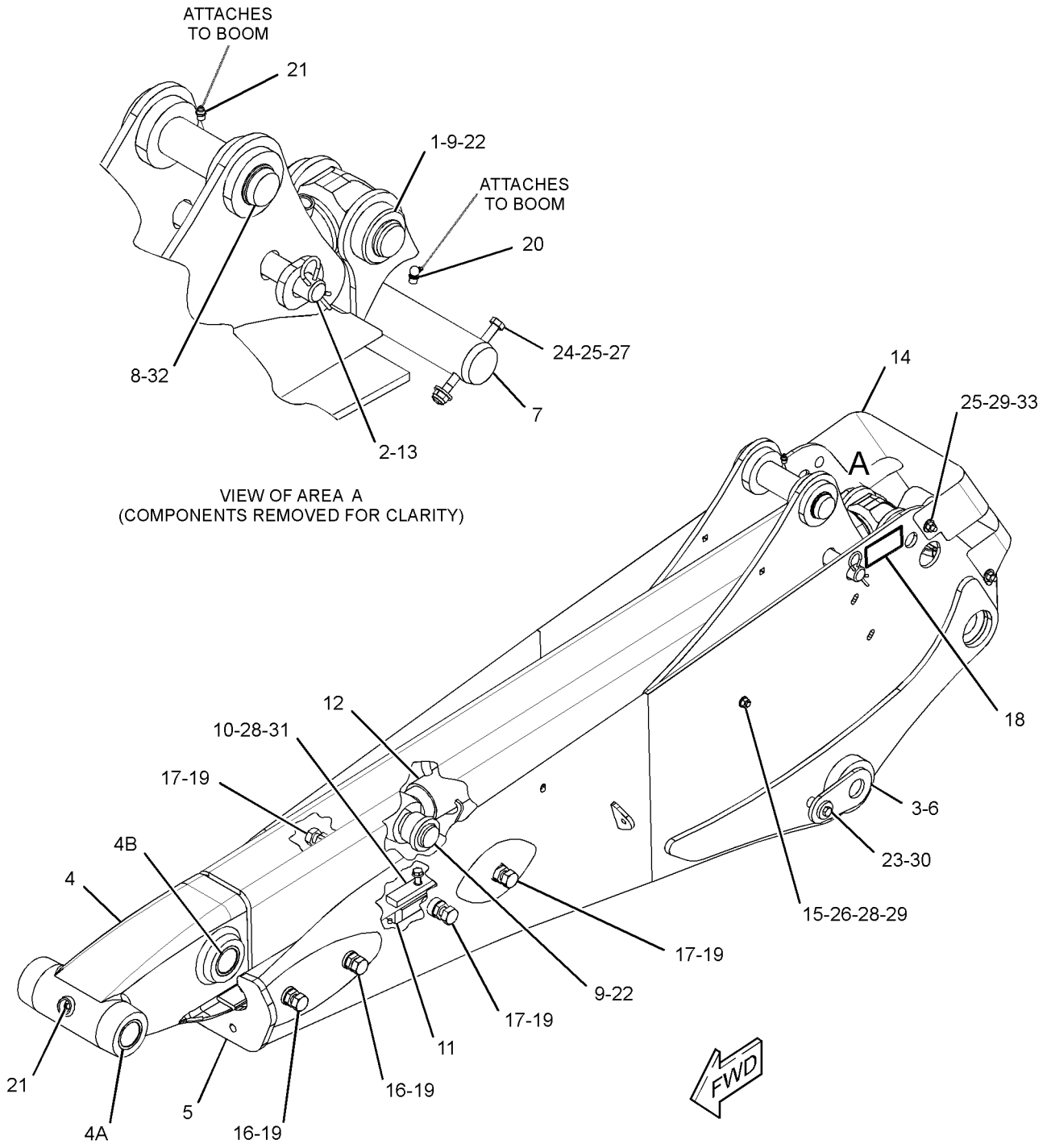

GRAPHIC #1 **<END>** g01994514

329-9749 STICK GP-EXTENDABLE

S/N: SJL1-UP

PART OF 334-0691, 350-6935, 350-6945 BACKHOE AR-EXTENDABLE STICK

AN ATTACHMENT

SMCS-6533 **i03693944**

NOTE	REF NO	GRAPHIC REF	PART NUMBER	QTY	PART NAME 1 2 3 4 5 6 (PRODUCT LEVEL)	SEE PAGE
	1	1	**9R-0158**	2	WASHER (46X69X3-MM THK)	
	2	1	**9R-2959**	2	CLIP	
B	3	1	**9R-8292**	2	SPACER (61X135X1-MM THK)	
	4	1	**316-4743**	1	STICK AS	
	5	1	**316-6946**	1	PIN AS	
	6	1	**316-6947**	1	PIN	
	7	1	**316-6948**	1	PIN	
	8	1	**316-6949**	2	PIN	
	9	1	**319-9667**	4	PAD AS	
	10	1	**319-9668**	4	PAD AS	
Y	11	1	**320-5935**	1	CYLINDER GP-STICK	335
	12	1	**329-9748**	1	STICK AS	
	12A	1	**9R-3092**	2	BEARING-SLEEVE	
	12B	1	**9R-7891**	2	BEARING-SLEEVE	
	13	1	**334-4169**	1	LOCKPIN	
	14	1	**336-6396**	1	PLATE	
	15	1	**346-5631**	2	SPACER	
	16	1	**346-6559**	4	ADJUSTER	
	17	1	**346-6560**	4	ADJUSTER	
	18	1	**350-3733**	1	FILM-INSTRUCTION (EXTENDABLE STICK PIN, READ OMM)	
M	19	1	**098-6004**	8	LOCKNUT (M20X2.5-THD)	
	20	1	**3B-8488**	1	FITTING-GREASE	
	21	1	**3B-8489**	2	FITTING-GREASE	
	22	1	**6V-5204**	4	RING-RETAINING	
	23	1	**7X-0632**	1	WASHER-HARD (11X36X6-MM THK)	
M	24	1	**7X-2543**	1	BOLT (M10X1.5X120-MM)	
	25	1	**7X-7729**	5	WASHER (11X25X3-MM THK)	
M	26	1	**8T-0271**	2	BOLT-SOCKET HEAD (M10X1.5X35-MM)	
M	27	1	**8T-0389**	1	LOCKNUT (M10X1.5-THD)	
	28	1	**8T-4121**	10	WASHER-HARD (11X21X2.5-MM THK)	
M	29	1	**8T-4133**	6	NUT (M10X1.5-THD)	
M	30	1	**8T-4195**	1	BOLT (M10X1.5X30-MM)	
M	31	1	**8T-4196**	8	BOLT (M10X1.5X35-MM)	
	32	1	**8T-4241**	2	RING-RETAINING	
M	33	1	**9X-2060**	4	BOLT (M10X1.5X30-MM)	

B-USE AS REQUIRED
M-METRIC PART
Y-SEPARATE ILLUSTRATION

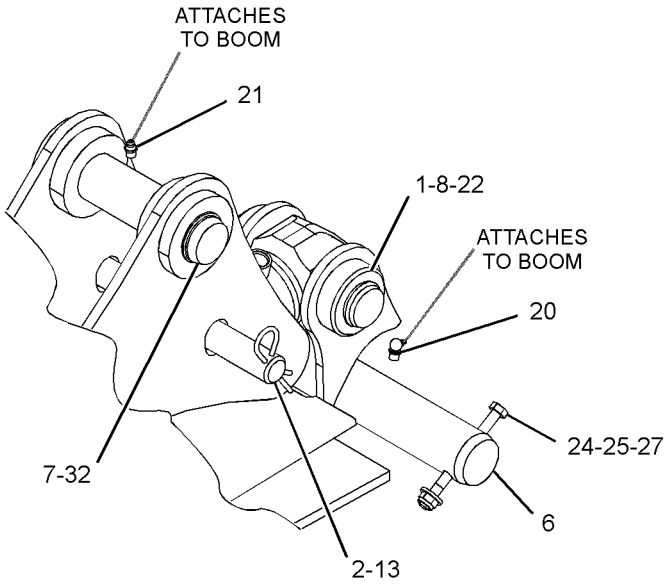

VIEW OF AREA A
(COMPONENTS REMOVED FOR CLARITY)

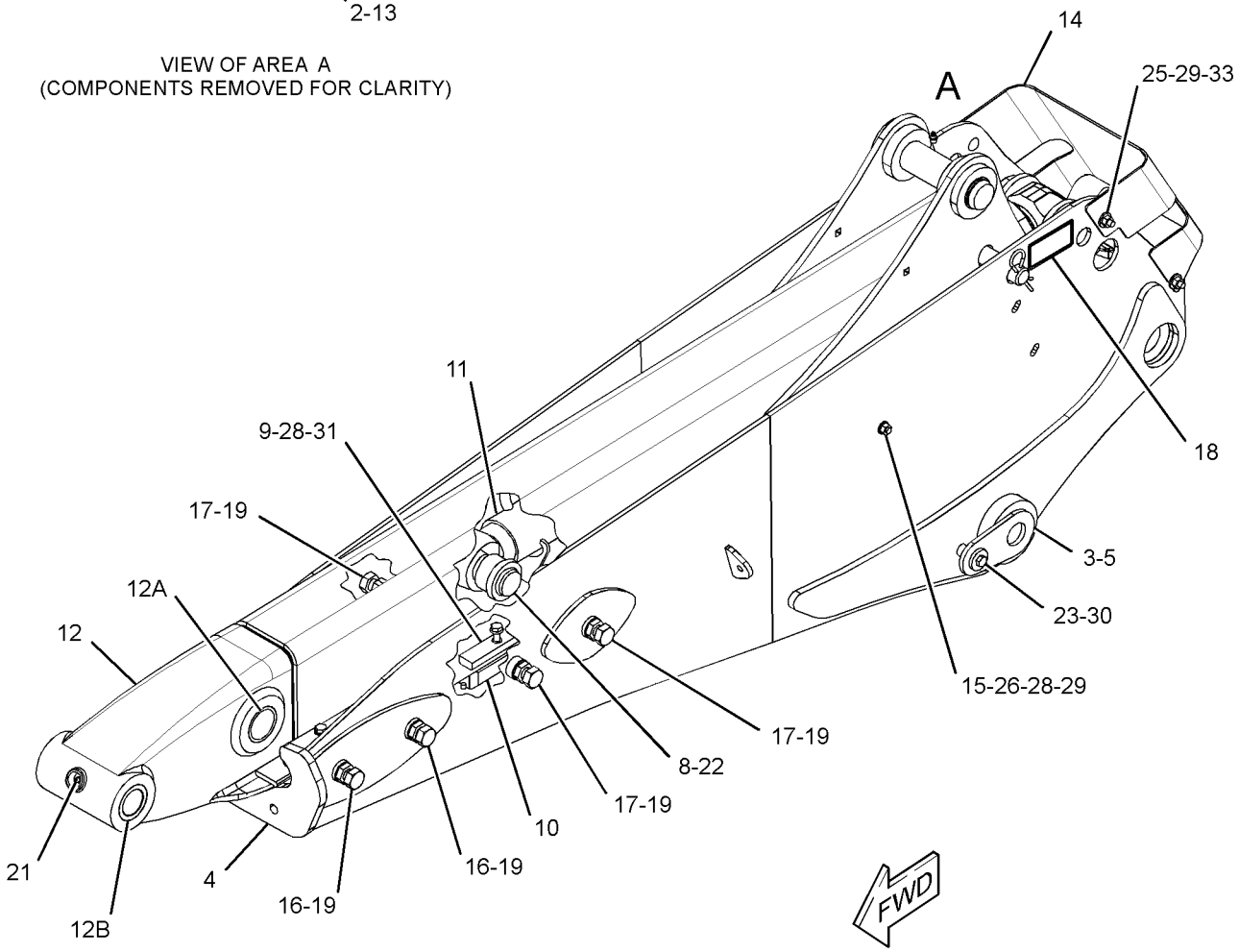

GRAPHIC #1 **<END>** g01993494

318-7257 BUCKET AR-MULTIPURPOSE

S/N: SJL1-UP
PART OF 318-7258 BUCKET AR-MULTIPURPOSE
AN ATTACHMENT

SMCS-6104 **i02989118**

NOTE	REF NO	GRAPHIC REF	PART NUMBER	QTY	PART NAME 1 2 3 4 5 6 (PRODUCT LEVEL)	SEE PAGE
	1	1	**5D-8159**	2	PIN AS	
Y	2	1	*9R-4668*	1	MOUNTING GP-CYLINDER (MULTIPURPOSE BUCKET)	409
	3	1	**178-2593**	4	BUMPER	
Y	4	1	*220-4644*	1	BUCKET GP-MULTIPURPOSE	527
Y	5	1	**226-5540**	2	CYLINDER GP-MULTIPURPOSE BUKT	333
	6	1	**250-1057**	2	PIN	
Y	7	1	*252-6005*	1	MOUNTING GP-FORK	553
Y	8	1	*317-6280*	1	LINES GP-MULTIPURPOSE BUCKET	378
M	9	1	**5C-7261**	4	NUT (M8X1.25-THD)	
	10	1	**8T-4224**	4	WASHER-HARD (8.8X16X2-MM THK)	

M-METRIC PART
Y-SEPARATE ILLUSTRATION

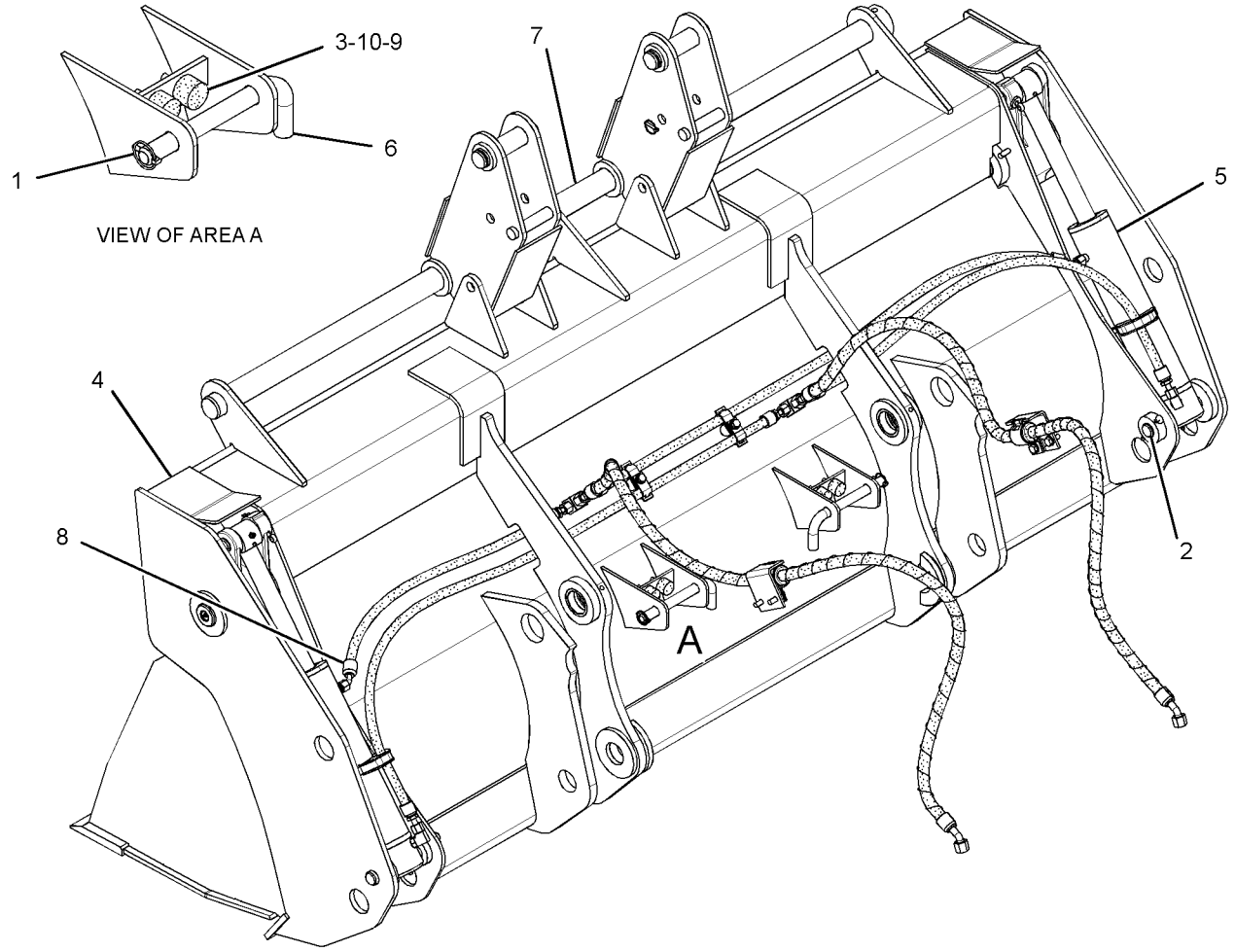

GRAPHIC #1 **<END>** g01568278

WORK TOOLS

318-7258 BUCKET AR-MULTIPURPOSE

S/N: SJL1-UP

AN ATTACHMENT

SMCS-6104 **i02989116**

NOTE	REF NO	GRAPHIC REF	PART NUMBER	QTY	PART NAME 1 2 3 4 5 6 (PRODUCT LEVEL)	SEE PAGE
	1	1	**104-6312**	2	FORK AS	
	2	1	**137-4234**	1	PLATE-IDENTIFICATION (WORK TOOL)	
	3	1	**168-8389**	4	TACK-FASTENER	
Y	4	1	*318-7257*	1	BUCKET AR-MULTIPURPOSE	467

Y-SEPARATE ILLUSTRATION

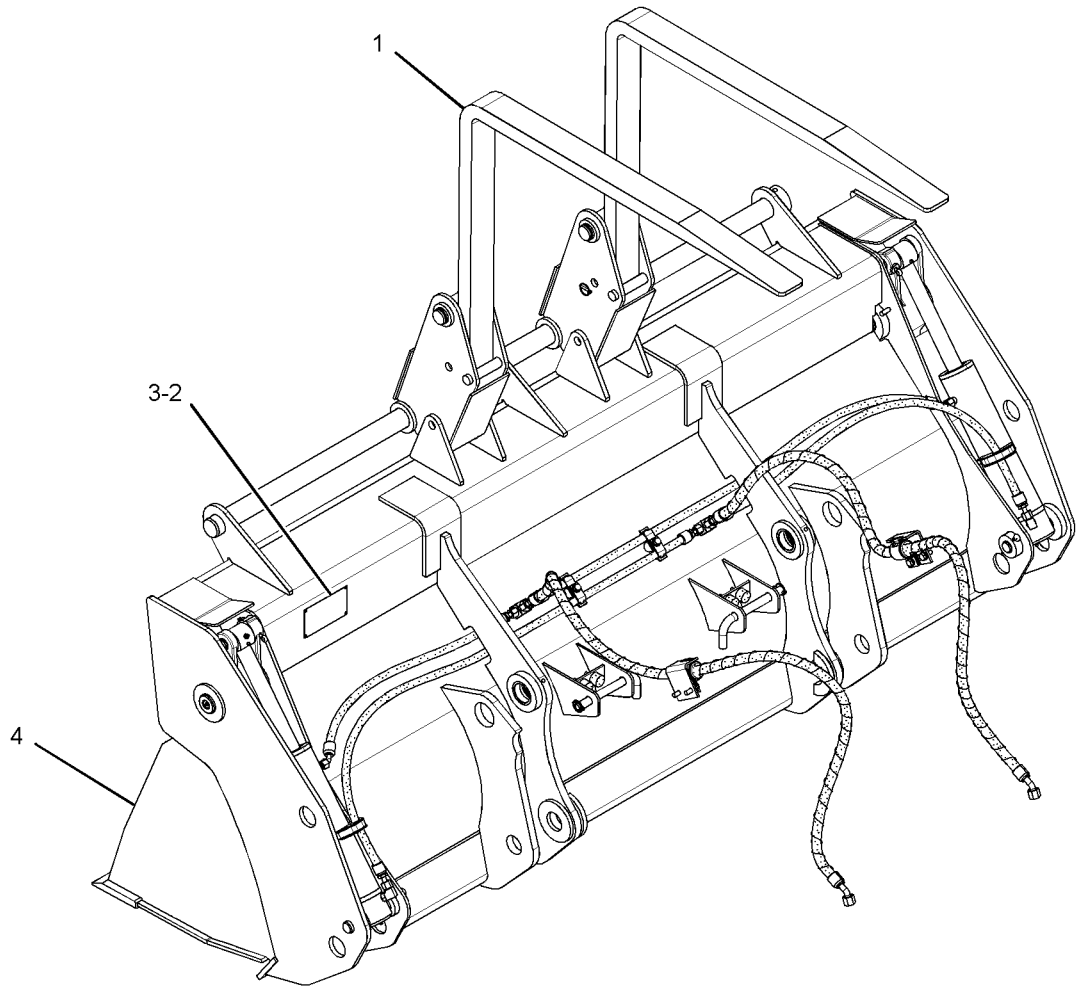

GRAPHIC #1 **<END>** g01516395

WORK TOOLS

318-7259 BUCKET AR-MULTIPURPOSE

S/N: SJL1-UP

PART OF 318-7260 BUCKET AR-MULTIPURPOSE

AN ATTACHMENT

SMCS-6104 **i02989123**

NOTE	REF NO	GRAPHIC REF	PART NUMBER	QTY	PART NAME 1 2 3 4 5 6 (PRODUCT LEVEL)	SEE PAGE
Y	1	1	*9R-4668*	1	MOUNTING GP-CYLINDER (MULTIPURPOSE BUCKET)	409
Y	2	1	*220-4654*	1	BUCKET GP-MULTIPURPOSE	528
Y	3	1	**226-5540**	2	CYLINDER GP-MULTIPURPOSE BUKT	333
Y	4	1	*317-6280*	1	LINES GP-MULTIPURPOSE BUCKET	378
Y-SEPARATE ILLUSTRATION						

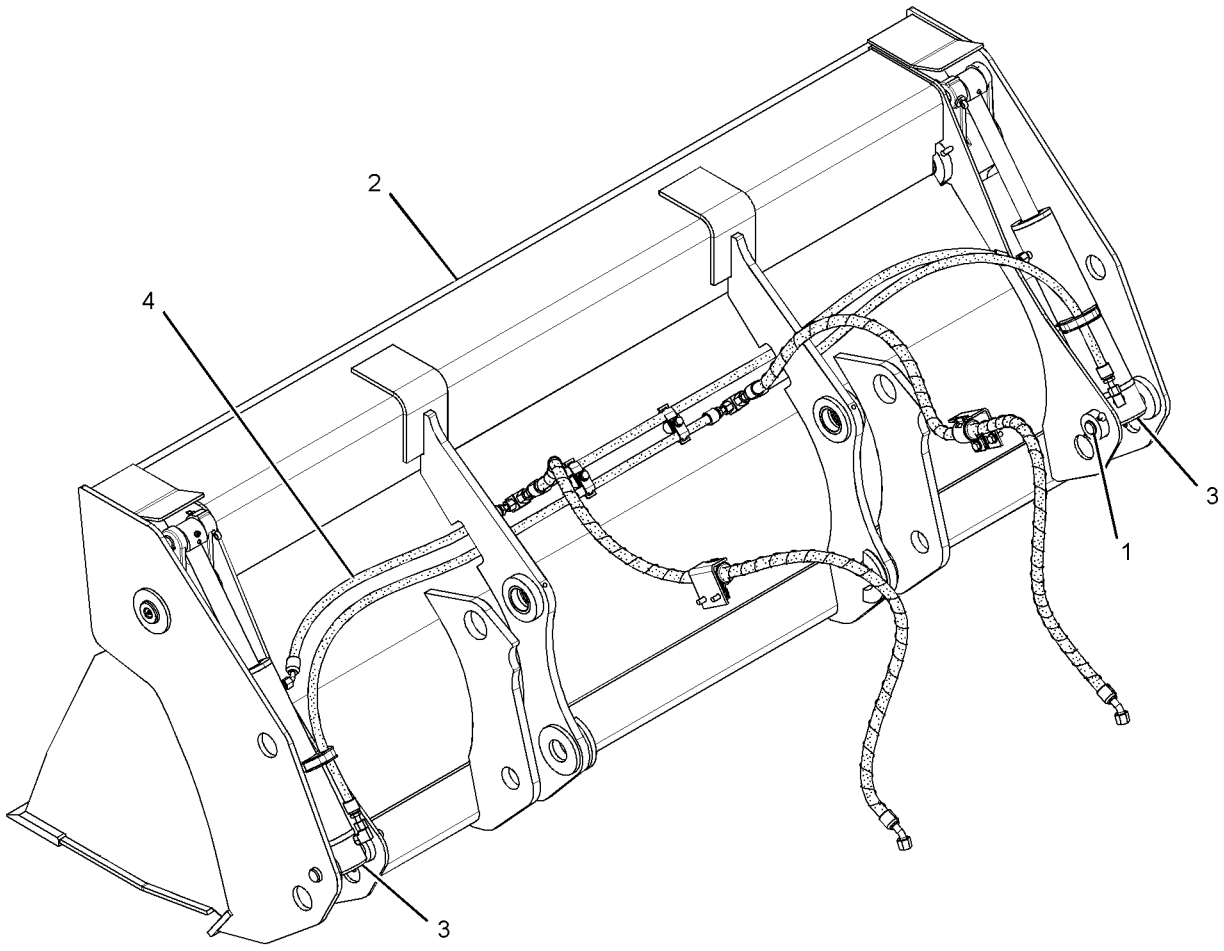

GRAPHIC #1 **<END>** g01516413

WORK TOOLS

318-7260 BUCKET AR-MULTIPURPOSE

S/N: SJL1-UP

AN ATTACHMENT

SMCS-6104 **i02989121**

NOTE	REF NO	GRAPHIC REF	PART NUMBER	QTY	PART NAME 1 2 3 4 5 6 (PRODUCT LEVEL)	SEE PAGE
	1	1	**137-4234**	1	PLATE-IDENTIFICATION (WORK TOOL)	
	2	1	**168-8389**	4	TACK-FASTENER	
Y	3	1	*318-7259*	1	BUCKET AR-MULTIPURPOSE	469

Y-SEPARATE ILLUSTRATION

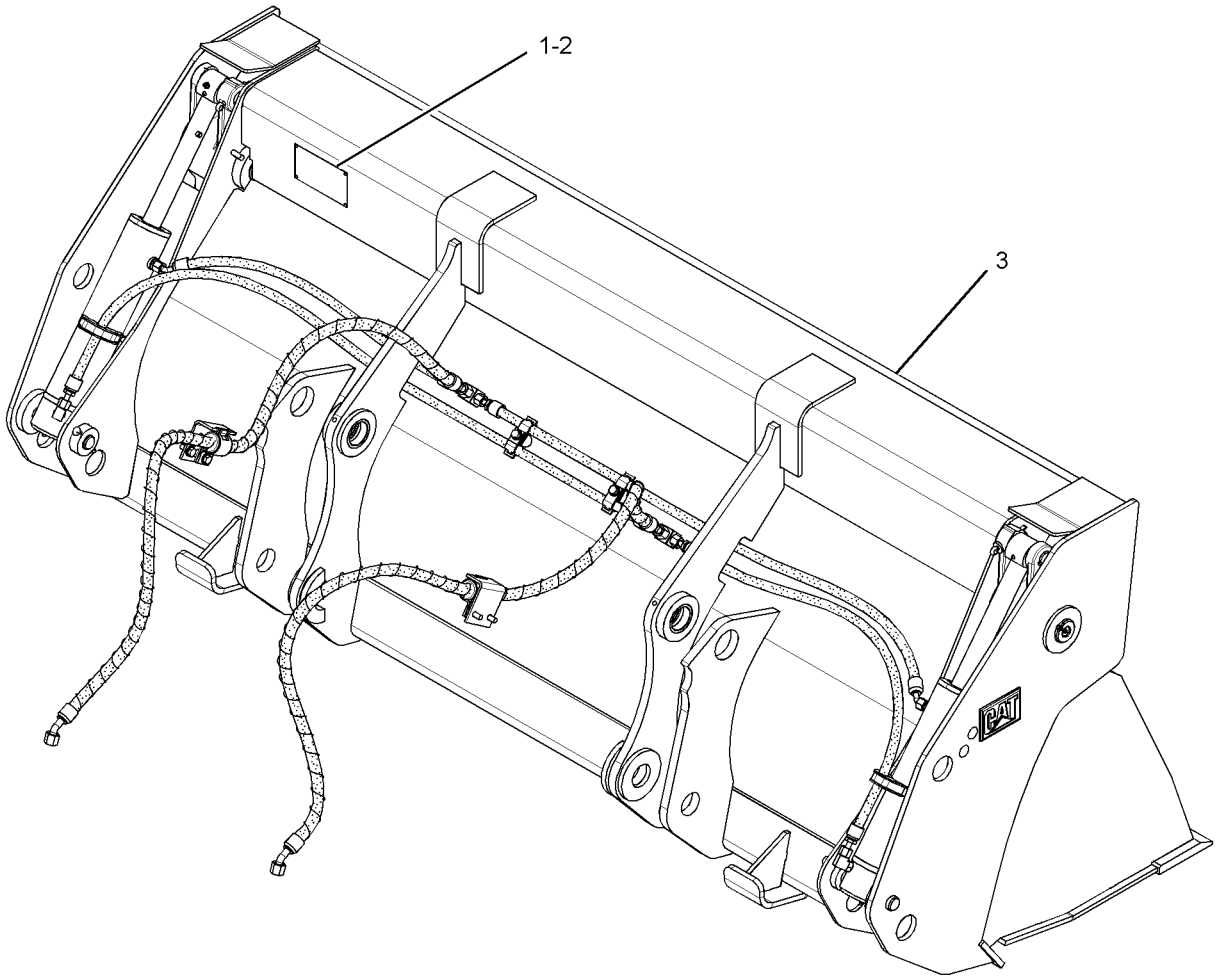

GRAPHIC #1 **<END>** g01515756

WORK TOOLS

318-7261 BUCKET AR-MULTIPURPOSE

S/N: SJL1-UP

AN ATTACHMENT

SMCS-6104 **i02989124**

NOTE	REF NO	GRAPHIC REF	PART NUMBER	QTY	PART NAME 1 2 3 4 5 6 (PRODUCT LEVEL)	SEE PAGE
Y	1	1	*9R-4668*	1	MOUNTING GP-CYLINDER (MULTIPURPOSE BUCKET)	409
	2	1	**137-4234**	1	PLATE-IDENTIFICATION (WORK TOOL)	
	3	1	**168-8389**	4	TACK-FASTENER	
Y	4	1	*220-4644*	1	BUCKET GP-MULTIPURPOSE	527
Y	5	1	**226-5540**	2	CYLINDER GP-MULTIPURPOSE BUKT	333
Y	6	1	*317-6280*	1	LINES GP-MULTIPURPOSE BUCKET	378

Y-SEPARATE ILLUSTRATION

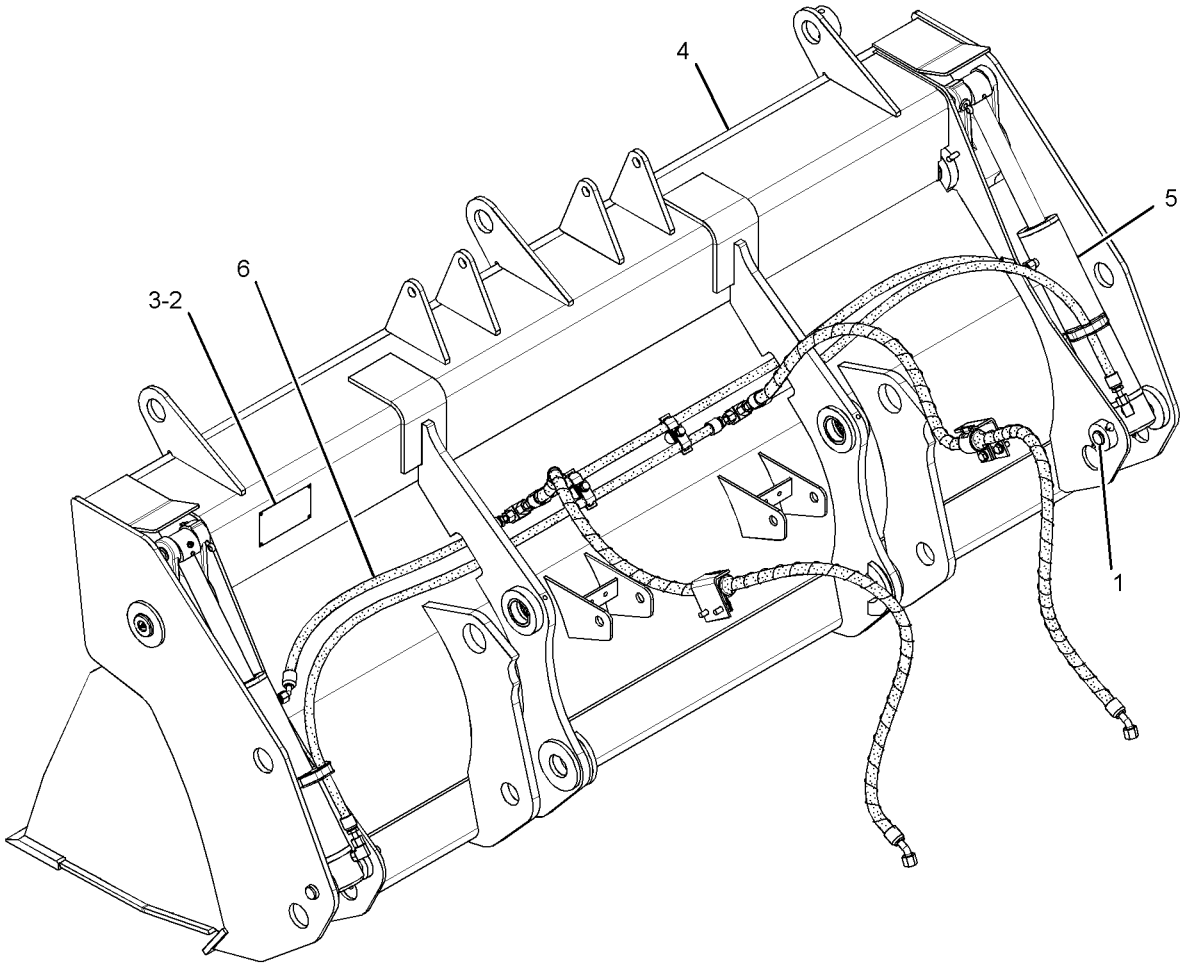

GRAPHIC #1 **<END>** g01566673

WORK TOOLS

320-9940 BUCKET AR-MULTIPURPOSE—QUICK COUPLER

S/N: SJL1-UP

AN ATTACHMENT

SMCS-6104 **i02980234**

NOTE	REF NO	GRAPHIC REF	PART NUMBER	QTY	PART NAME 1 2 3 4 5 6 (PRODUCT LEVEL)	SEE PAGE
	1	1	**137-4234**	1	PLATE-IDENTIFICATION (WORK TOOL)	
	2	1	**168-8389**	4	TACK-FASTENER	
Y	3	1	*320-9941*	1	BUCKET AR-MULTIPURPOSE	473

Y-SEPARATE ILLUSTRATION

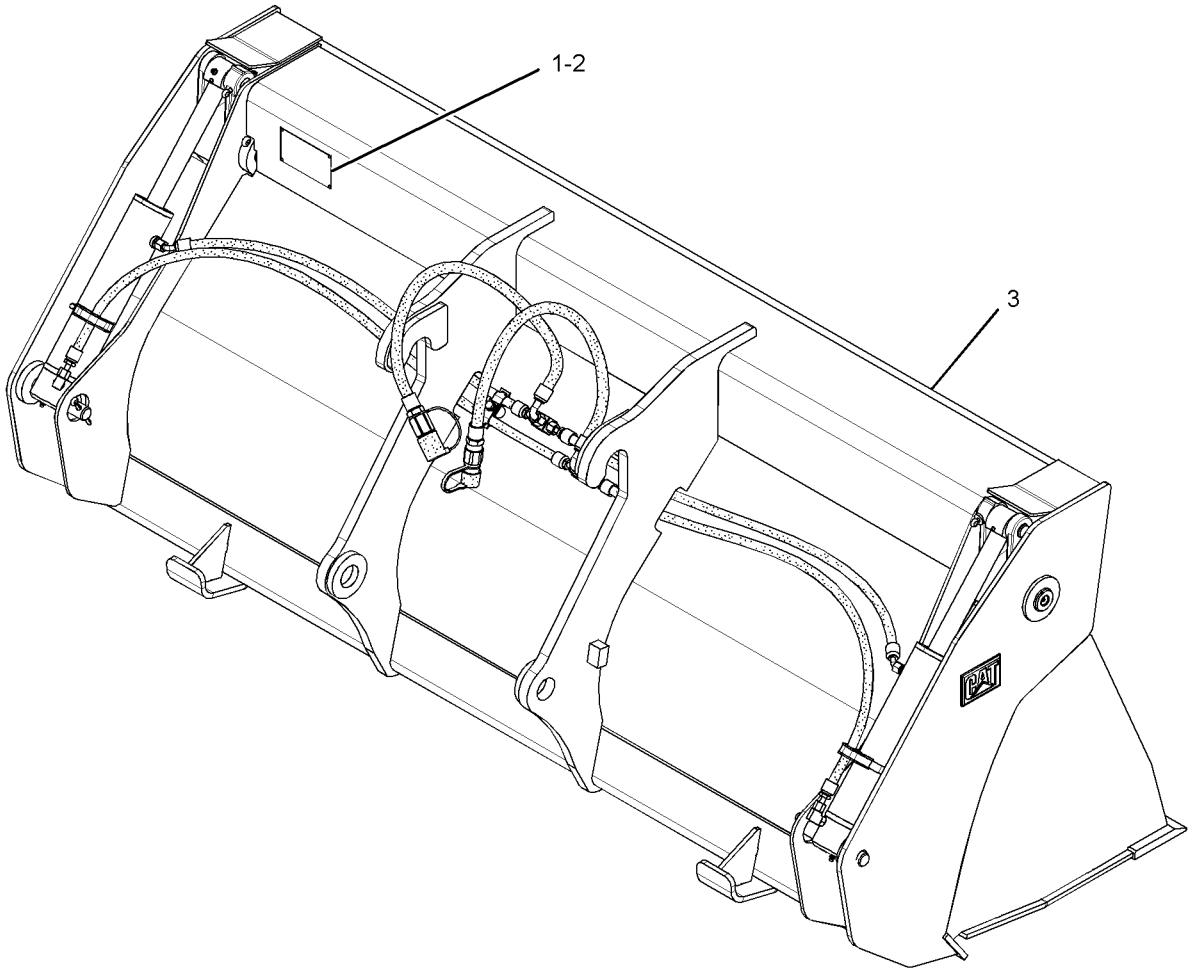

GRAPHIC #1 **<END>** g01513788

320-9941 BUCKET AR-MULTIPURPOSE—QUICK COUPLER

S/N: SJL1-UP

PART OF 320-9940 BUCKET AR-MULTIPURPOSE

AN ATTACHMENT

SMCS-6104 **i02980248**

NOTE	REF NO	GRAPHIC REF	PART NUMBER	QTY	PART NAME 1 2 3 4 5 6 (PRODUCT LEVEL)	SEE PAGE
Y	1	1	*9R-4668*	1	MOUNTING GP-CYLINDER (MULTIPURPOSE BUCKET)	409
Y	2	1	*220-4634*	1	BUCKET GP-MULTIPURPOSE	526
Y	3	1	**226-5540**	2	CYLINDER GP-MULTIPURPOSE BUKT	333
Y	4	1	*320-9942*	1	LINES GP-BUCKET	358
Y-SEPARATE ILLUSTRATION						

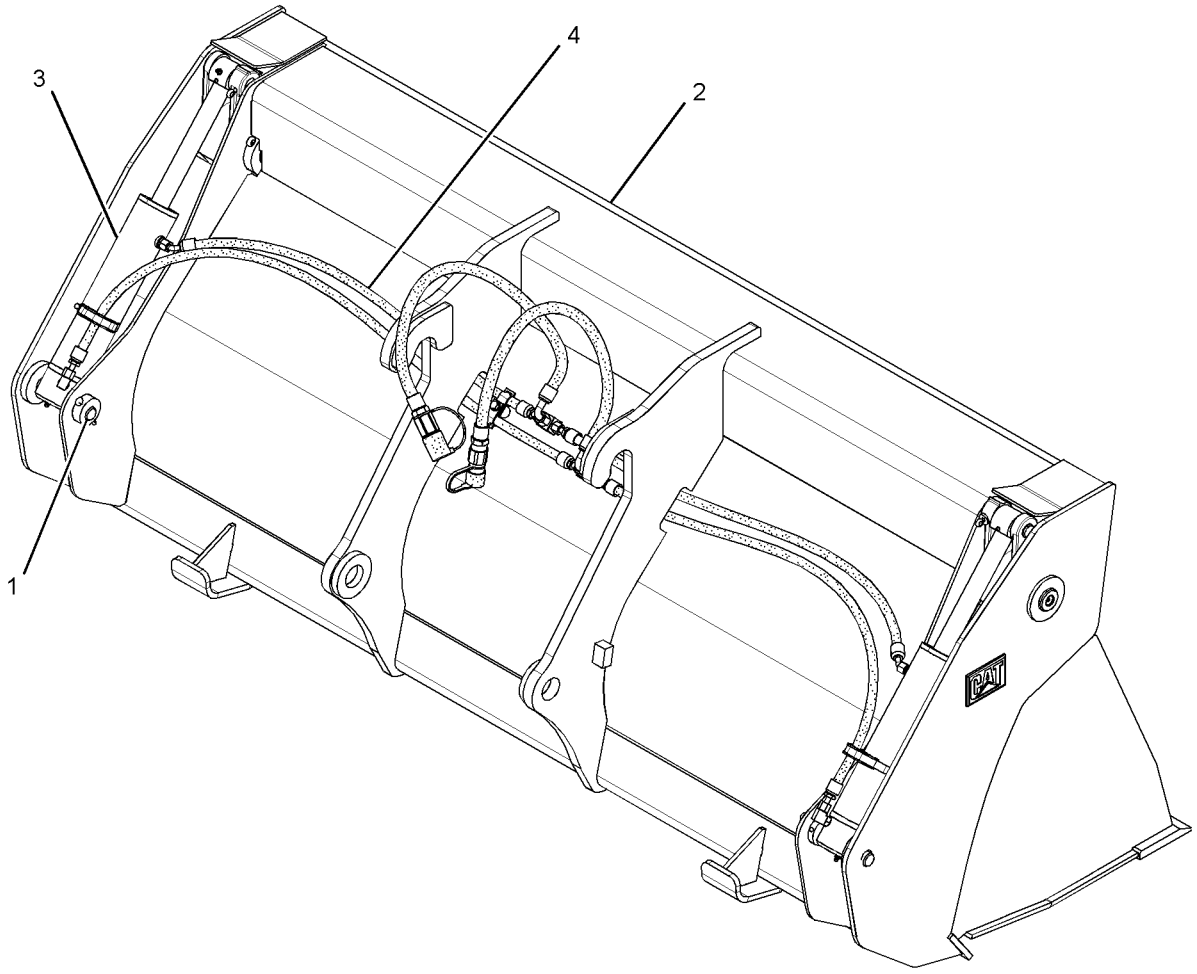

GRAPHIC #1 **<END>** g01514207

WORK TOOLS

245-3650 BUCKET AS-GENERAL PURPOSE

S/N: SJL1-UP
1.3-CU M (1.7-CU YD) CAPACITY
PART OF 248-0962 BUCKET GP-GENERAL PURPOSE
AN ATTACHMENT

SMCS-6101 **i02417393**

NOTE	REF NO	GRAPHIC REF	PART NUMBER	QTY	PART NAME 1 2 3 4 5 6 (PRODUCT LEVEL)	SEE PAGE
	1	1	**220-4671**	1	EDGE	
	2	1	**245-3647**	1	PLATE	
	3	1	**245-3648**	2	EDGE	

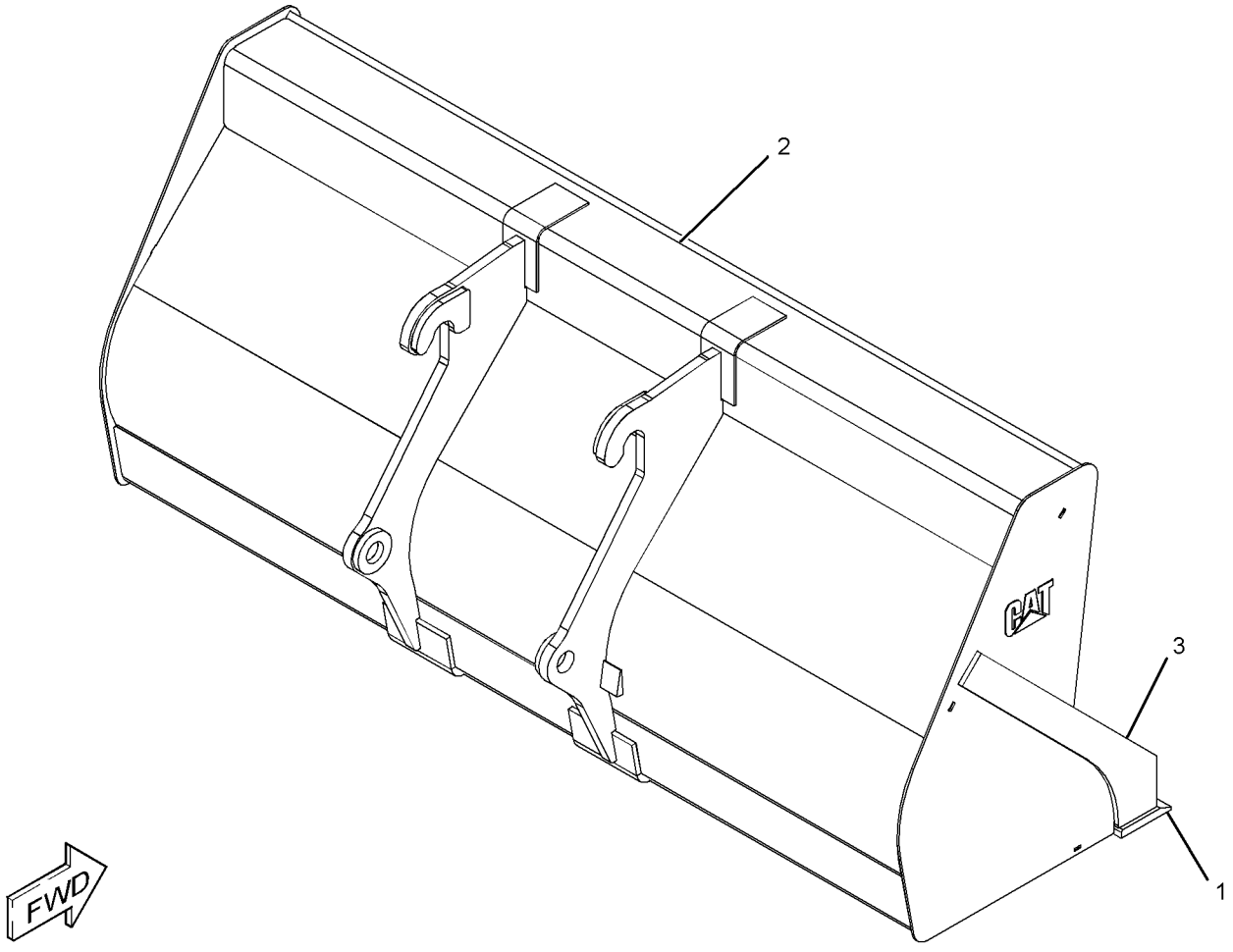

GRAPHIC #1 **<END>** g01211988

WORK TOOLS

246-9230 BUCKET AS-GENERAL PURPOSE

S/N: SJL1-UP
1.5-CU M (1.96-CU YD) CAPACITY
PART OF 248-0960 BUCKET AS-GENERAL PURPOSE
AN ATTACHMENT

SMCS-6101 **i02417341**

NOTE	REF NO	GRAPHIC REF	PART NUMBER	QTY	PART NAME 1 2 3 4 5 6 (PRODUCT LEVEL)	SEE PAGE
	1	1	**220-4671**	1	EDGE	
	2	1	**245-3641**	2	BRACKET	
	3	1	**245-3647**	1	PLATE	
	4	1	**245-3648**	2	EDGE	
	5	1	*246-9228*	1	BRACKET AS (RH)	
		1	**3T-4307**	2	BEARING-SLEEVE	
	6	1	*246-9229*	1	BRACKET AS (LH)	
		1	**3T-4307**	2	BEARING-SLEEVE	

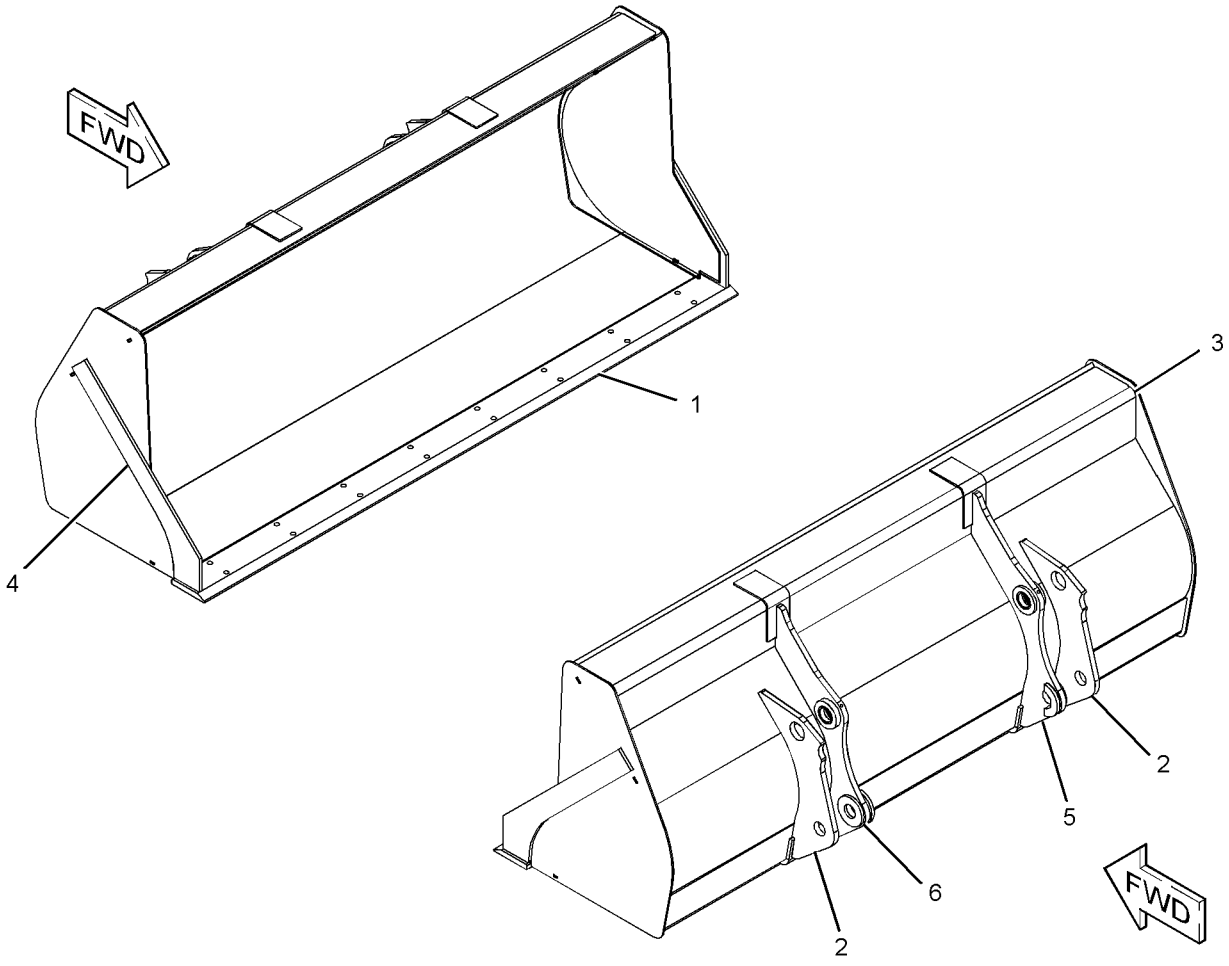

GRAPHIC #1 **<END>** g01208826

WORK TOOLS

248-0960 BUCKET AS-GENERAL PURPOSE

S/N: SJL1-UP

AN ATTACHMENT

SMCS-6101 **i02417279**

NOTE	REF NO	GRAPHIC REF	PART NUMBER	QTY	PART NAME 1 2 3 4 5 6 (PRODUCT LEVEL)	SEE PAGE
	1	1	**137-4234**	1	PLATE-IDENTIFICATION (WORK TOOL)	
	2	1	**168-8389**	4	TACK-FASTENER	
Y	3	1	*246-9230*	1	BUCKET AS-GENERAL PURPOSE	475

Y-SEPARATE ILLUSTRATION

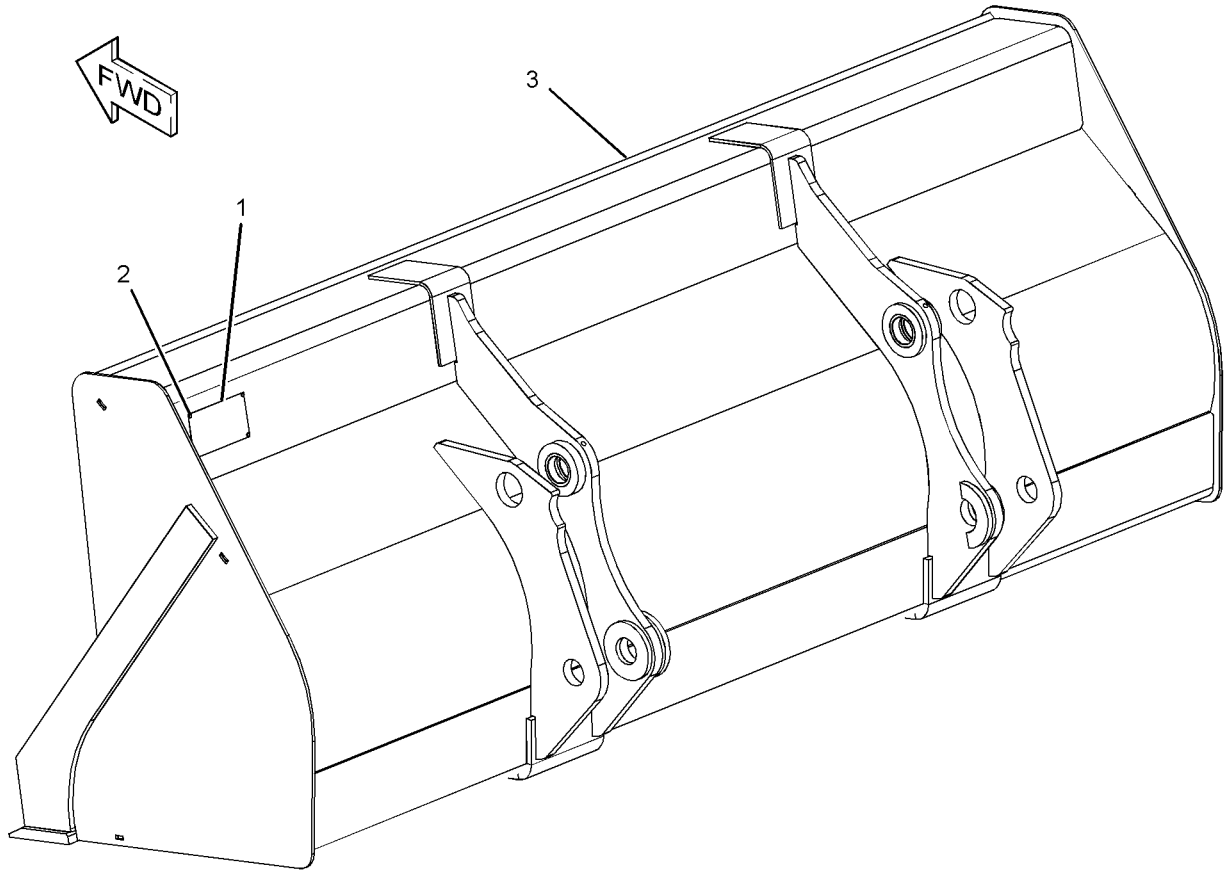

GRAPHIC #1 **<END>** g01208797

151-7829 BUCKET AS-HOE—HIGH CAPACITY

S/N: SJL1-UP
458-MM (18-IN)
PART OF 151-7887 BUCKET GP-HOE
AN ATTACHMENT

SMCS-6503 **i02686003**

NOTE	REF NO	GRAPHIC REF	PART NUMBER	QTY	PART NAME 1 2 3 4 5 6 (PRODUCT LEVEL)	SEE PAGE
	1	1	**128-3778**	1	EDGE	
	2	1	*151-7902*	1	BRACKET AS (LH)	
	2A	1	**9R-0162**	1	BEARING-SLEEVE	
	2B	1	**168-0480**	1	BEARING-SLEEVE	
	3	1	**9R-8987**	1	EDGE (LH)	
	4	1	**9R-8988**	1	EDGE (RH)	
	5	1	*151-7903*	1	BRACKET AS (RH)	
	5A	1	**9R-0162**	1	BEARING-SLEEVE	
	5B	1	**168-0480**	1	BEARING-SLEEVE	

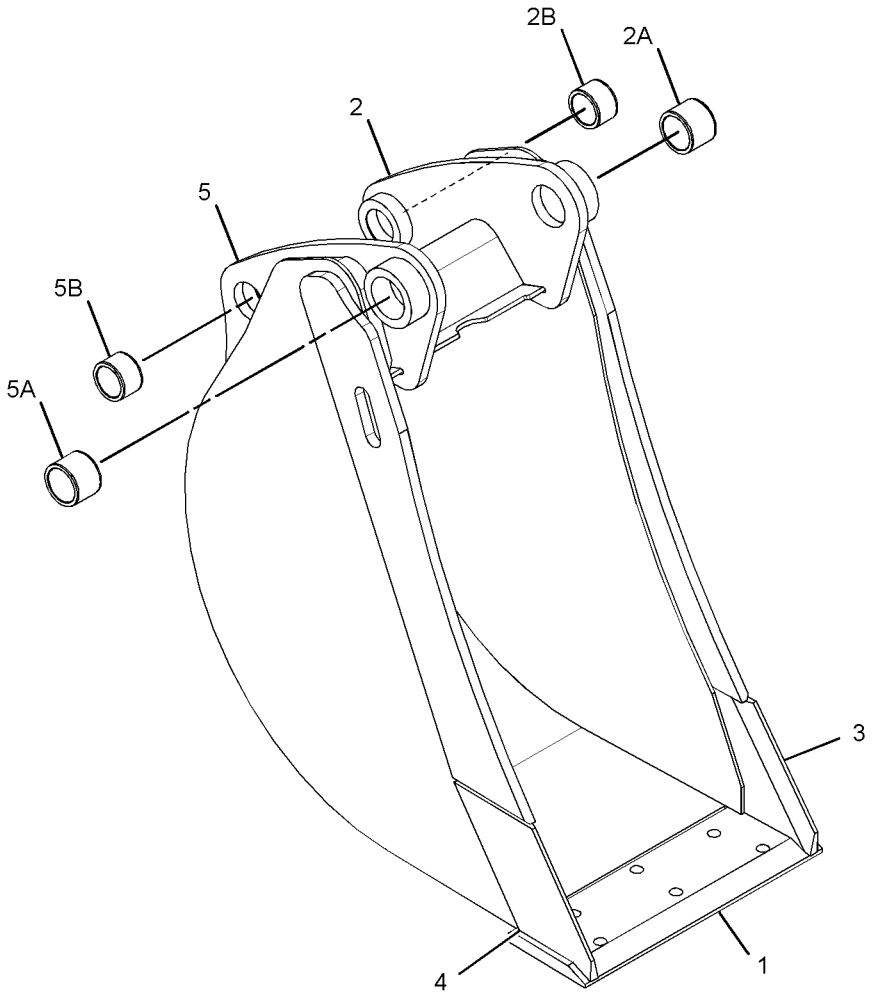

GRAPHIC #1 **<END>** g01424314

WORK TOOLS

151-7830 BUCKET AS-HOE—HIGH CAPACITY

S/N: SJL1-UP
610-MM (24-IN)
PART OF 151-7888 BUCKET GP-HOE
AN ATTACHMENT

SMCS-6503 **i02685979**

NOTE	REF NO	GRAPHIC REF	PART NUMBER	QTY	PART NAME 1 2 3 4 5 6 (PRODUCT LEVEL)	SEE PAGE
	1	1	**9R-8987**	1	EDGE (LH)	
	2	1	**9R-8988**	1	EDGE (RH)	
	3	1	**128-3094**	1	EDGE	
	4	1	*151-7902*	1	BRACKET AS (LH)	
	4A	1	**168-0480**	1	BEARING-SLEEVE	
	4B	1	**9R-0162**	1	BEARING-SLEEVE	
	5	1	*151-7903*	1	BRACKET AS (RH)	
	5A	1	**168-0480**	1	BEARING-SLEEVE	
	5B	1	**9R-0162**	1	BEARING-SLEEVE	

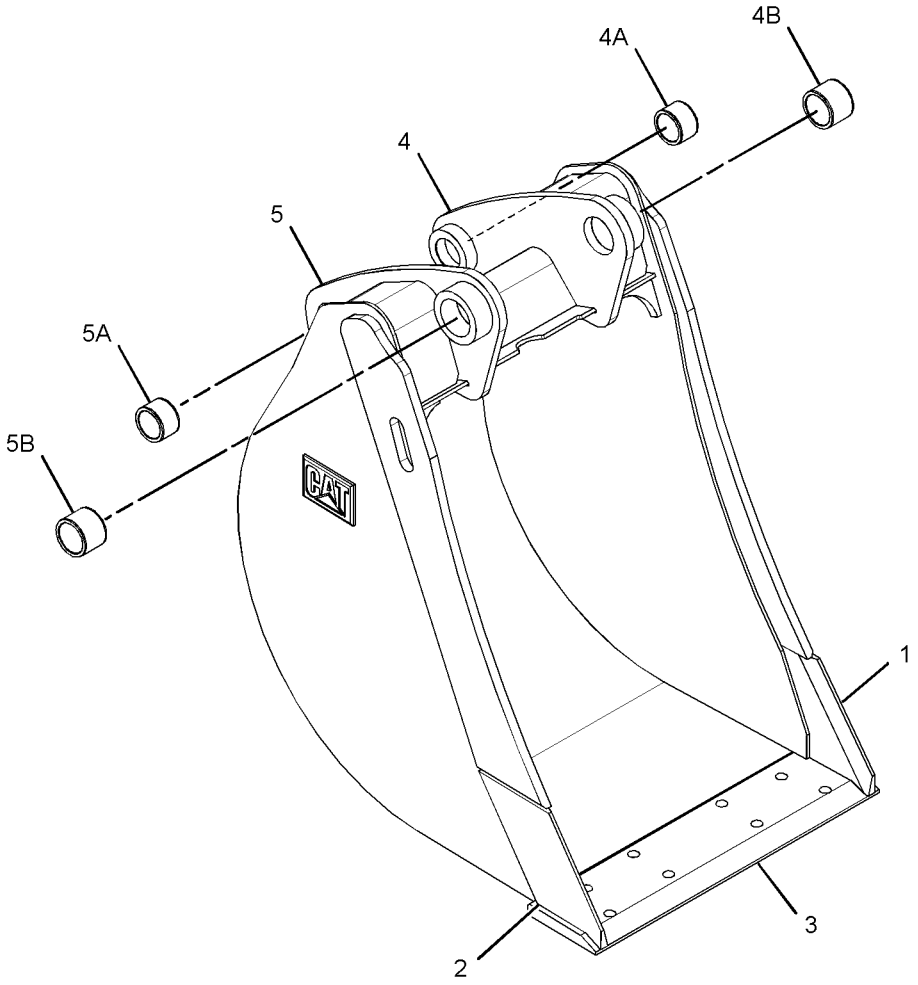

GRAPHIC #1 **<END>** g01398979

151-7831 BUCKET AS-HOE—HIGH CAPACITY

S/N: SJL1-UP
762-MM (30-IN)
PART OF 151-7889 BUCKET GP-HOE
AN ATTACHMENT

SMCS-6503 **i02686105**

NOTE	REF NO	GRAPHIC REF	PART NUMBER	QTY	PART NAME 1 2 3 4 5 6 (PRODUCT LEVEL)	SEE PAGE
	1	1	*151-7902*	1	BRACKET AS (LH)	
	1A	1	**9R-0162**	1	BEARING-SLEEVE	
	1B	1	**168-0480**	1	BEARING-SLEEVE	
	2	1	**9R-8987**	1	EDGE (LH)	
	3	1	**9R-8988**	1	EDGE (RH)	
	4	1	**131-2117**	1	EDGE	
	5	1	*151-7903*	1	BRACKET AS (RH)	
	5A	1	**9R-0162**	1	BEARING-SLEEVE	
	5B	1	**168-0480**	1	BEARING-SLEEVE	

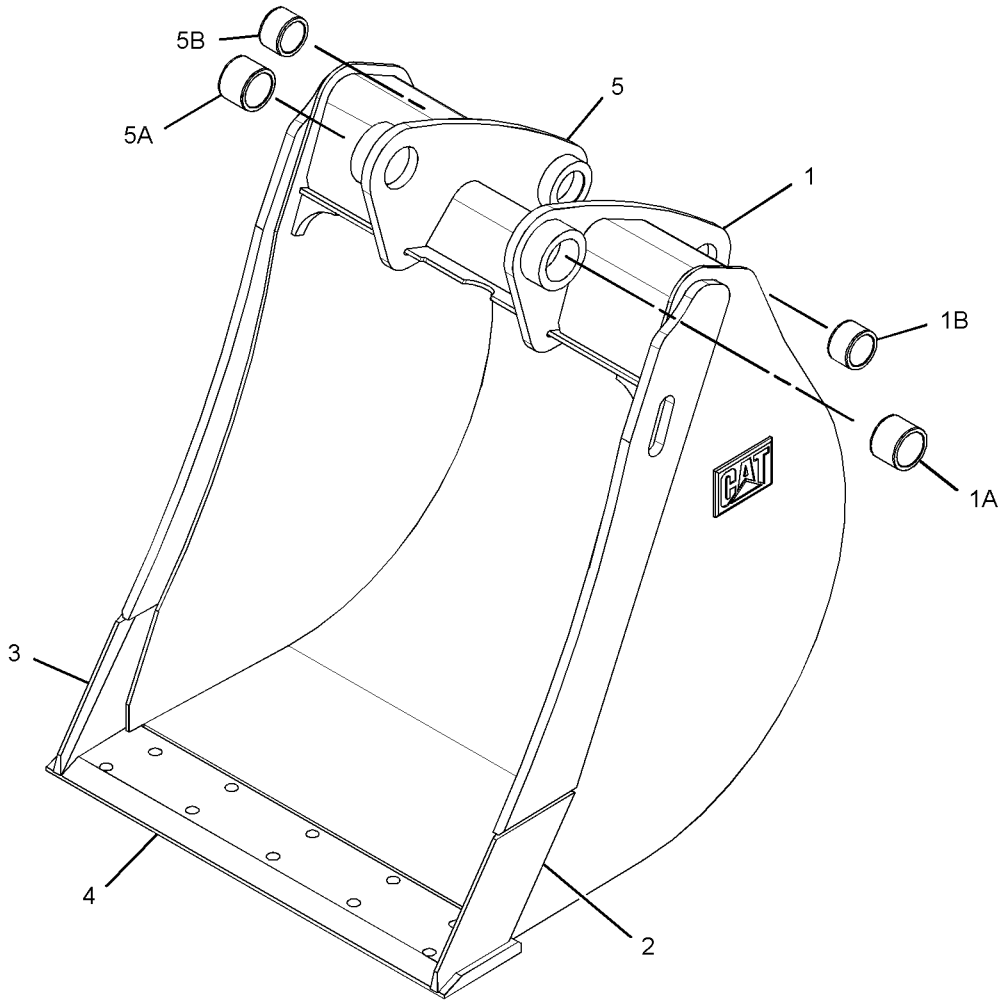

GRAPHIC #1 **<END>** g01359127

151-7832 BUCKET AS-HOE—HIGH CAPACITY

S/N: SJL1-UP
914-MM (36-IN)
PART OF 151-7890 BUCKET GP-HOE
AN ATTACHMENT

SMCS-6503 **i02686157**

NOTE	REF NO	GRAPHIC REF	PART NUMBER	QTY	PART NAME 1 2 3 4 5 6 (PRODUCT LEVEL)	SEE PAGE
	1	1	**9R-8987**	1	EDGE (LH)	
	2	1	**9R-8988**	1	EDGE (RH)	
	3	1	**130-2057**	1	EDGE	
	4	1	*151-7902*	1	BRACKET AS (LH)	
	4A	1	**9R-0162**	1	BEARING-SLEEVE	
	4B	1	**168-0480**	1	BEARING-SLEEVE	
	5	1	*151-7903*	1	BRACKET AS (RH)	
	5A	1	**9R-0162**	1	BEARING-SLEEVE	
	5B	1	**168-0480**	1	BEARING-SLEEVE	

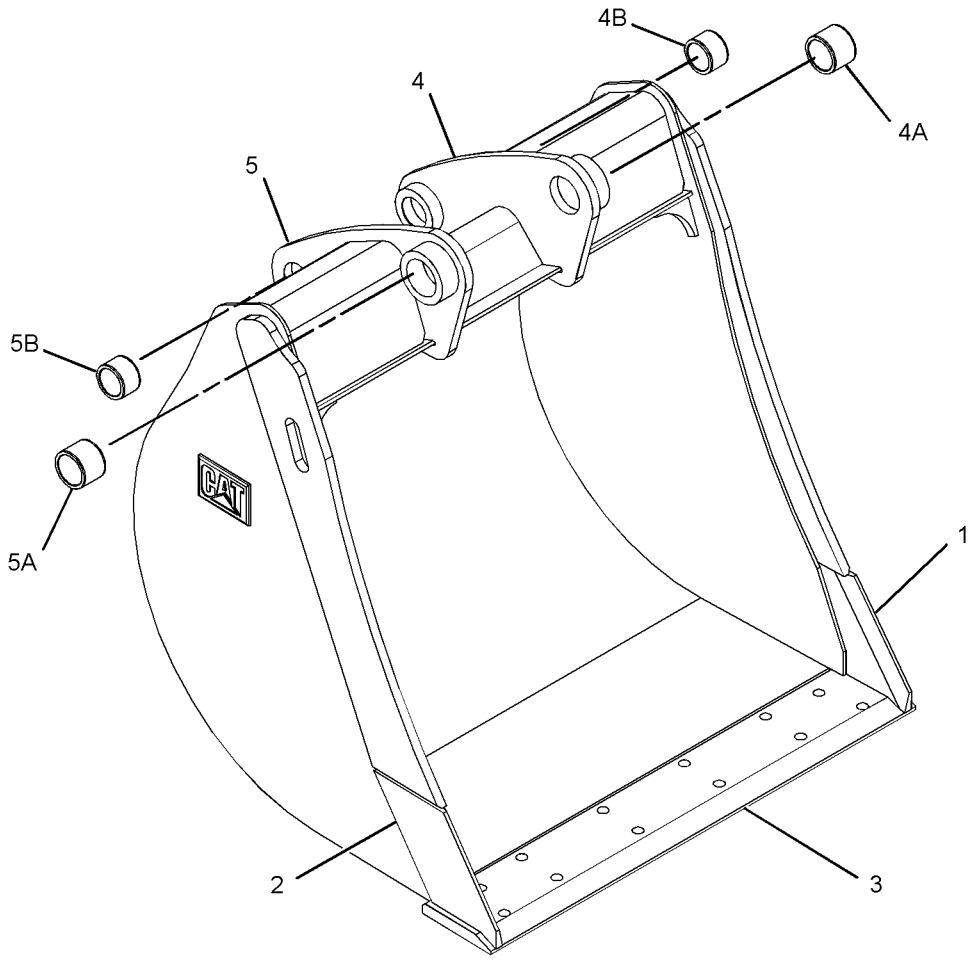

GRAPHIC #1 **<END>** g01356395

219-3366 BUCKET AS-HOE—HIGH CAPACITY

S/N: SJL1-UP
458-MM (18-IN)
PART OF 219-3390 BUCKET GP-HOE
AN ATTACHMENT

SMCS-6503 **i02651484**

NOTE	REF NO	GRAPHIC REF	PART NUMBER	QTY	PART NAME 1 2 3 4 5 6 (PRODUCT LEVEL)	SEE PAGE
	1	1	**134-5884**	1	EDGE (LH)	
	2	1	**134-5885**	1	EDGE (RH)	
	3	1	*151-7902*	1	BRACKET AS (LH)	
	3A	1	**9R-0162**	1	BEARING-SLEEVE	
	3B	1	**168-0480**	1	BEARING-SLEEVE	
	4	1	*151-7903*	1	BRACKET AS (RH)	
	4A	1	**9R-0162**	1	BEARING-SLEEVE	
	4B	1	**168-0480**	1	BEARING-SLEEVE	
	5	1	**161-4130**	2	PLATE-IDENTIFICATION (CAT)	
	6	1	**201-1234**	4	ADAPTER (2-STRAP)	
	7	1	**219-9483**	1	EDGE	

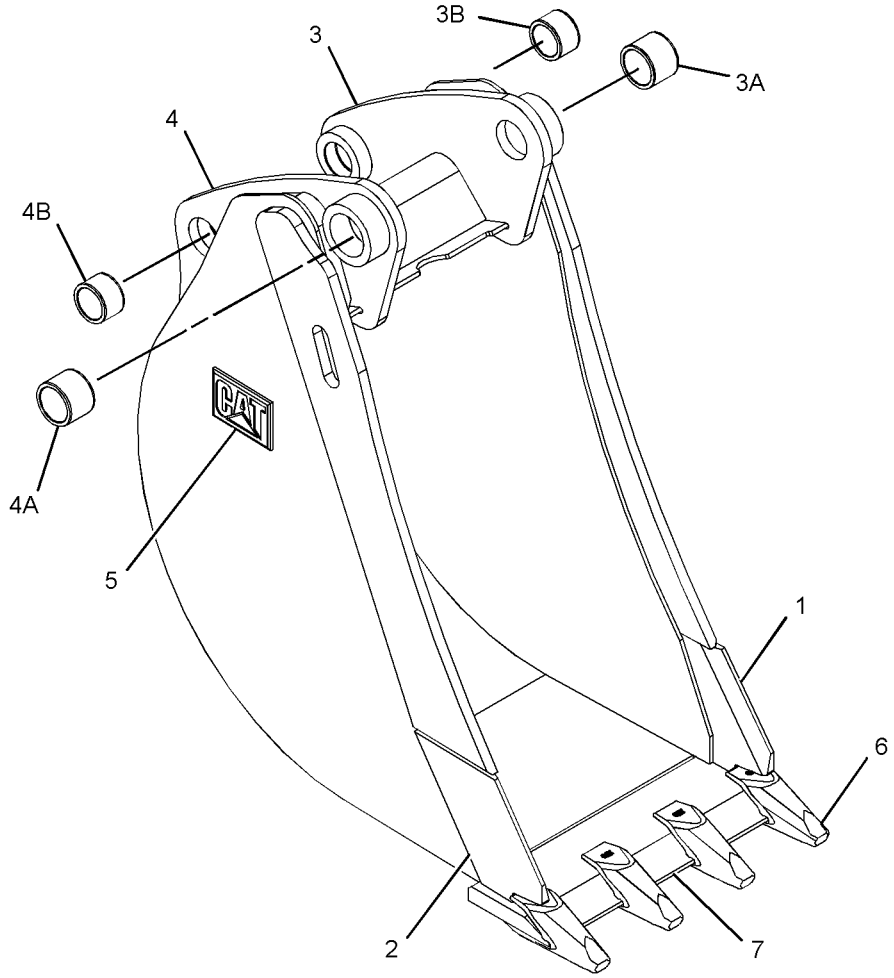

GRAPHIC #1 **<END>** g01334080

219-3367 BUCKET AS-HOE—HIGH CAPACITY

S/N: SJL1-UP
610-MM (24-IN)
PART OF 219-3391 BUCKET GP-HOE
AN ATTACHMENT

SMCS-6503 **i02651946**

NOTE	REF NO	GRAPHIC REF	PART NUMBER	QTY	PART NAME 1 2 3 4 5 6 (PRODUCT LEVEL)	SEE PAGE
	1	1	**134-5884**	1	EDGE (LH)	
	2	1	**134-5885**	1	EDGE (RH)	
	3	1	*151-7902*	1	BRACKET AS (LH)	
	3A	1	**9R-0162**	1	BEARING-SLEEVE	
	3B	1	**168-0480**	1	BEARING-SLEEVE	
	4	1	*151-7903*	1	BRACKET AS (RH)	
	4A	1	**9R-0162**	1	BEARING-SLEEVE	
	4B	1	**168-0480**	1	BEARING-SLEEVE	
	5	1	**151-7926**	2	PLATE	
	6	1	**161-4130**	2	PLATE-IDENTIFICATION (CAT)	
	7	1	**201-1234**	5	ADAPTER (2-STRAP)	
	8	1	**219-9486**	1	EDGE	

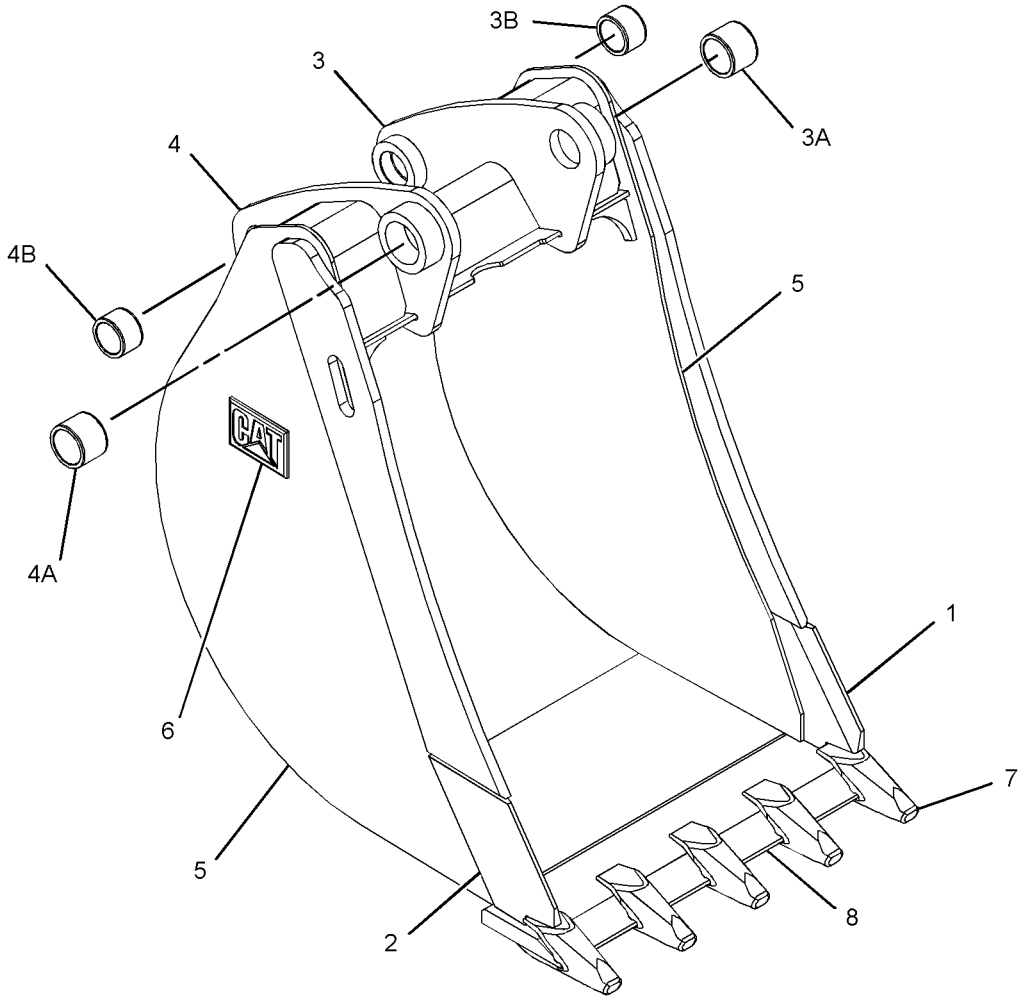

GRAPHIC #1 **<END>** g01342073

219-3368 BUCKET AS-HOE—HIGH CAPACITY

S/N: SJL1-UP
762-MM (30-IN)
PART OF 219-3392 BUCKET GP-HOE
AN ATTACHMENT

SMCS-6503 **i02651971**

NOTE	REF NO	GRAPHIC REF	PART NUMBER	QTY	PART NAME 1 2 3 4 5 6 (PRODUCT LEVEL)	SEE PAGE
	1	1	**134-5884**	1	EDGE (LH)	
	2	1	**134-5885**	1	EDGE (RH)	
	3	1	*151-7902*	1	BRACKET AS (LH)	
	3A	1	**9R-0162**	1	BEARING-SLEEVE	
	3B	1	**168-0480**	1	BEARING-SLEEVE	
	4	1	*151-7903*	1	BRACKET AS (RH)	
	4A	1	**9R-0162**	1	BEARING-SLEEVE	
	4B	1	**168-0480**	1	BEARING-SLEEVE	
	5	1	**161-4130**	2	PLATE-IDENTIFICATION (CAT)	
	6	1	**201-1234**	5	ADAPTER (2-STRAP)	
	7	1	**219-9485**	1	EDGE	

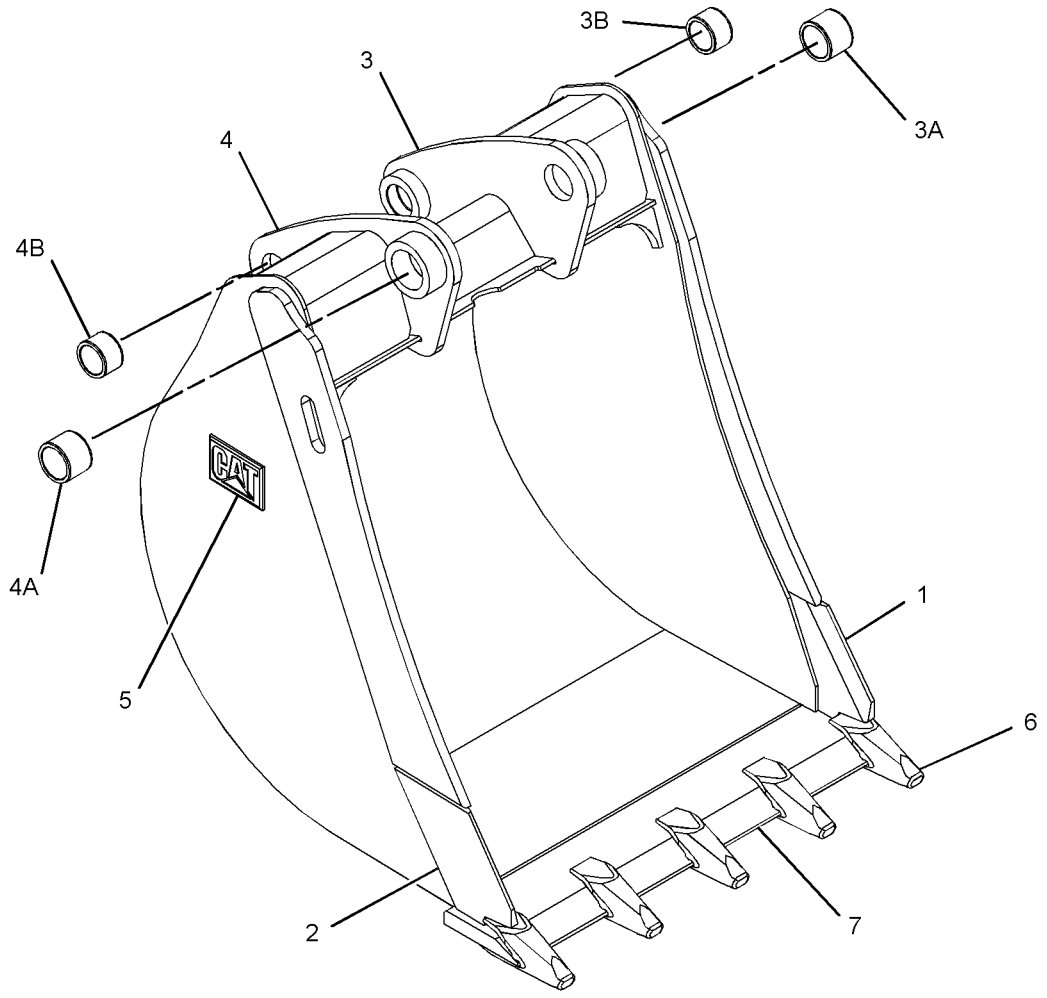

GRAPHIC #1 **<END>** g01341935

WORK TOOLS

219-3369 BUCKET AS-HOE—HIGH CAPACITY

S/N: SJL1-UP
914-MM (36-IN)
PART OF 219-3393 BUCKET GP-HOE
AN ATTACHMENT

SMCS-6503 **i02651981**

NOTE	REF NO	GRAPHIC REF	PART NUMBER	QTY	PART NAME 1 2 3 4 5 6 (PRODUCT LEVEL)	SEE PAGE
	1	1	**134-5884**	1	EDGE (LH)	
	2	1	**134-5885**	1	EDGE (RH)	
	3	1	*151-7902*	1	BRACKET AS (LH)	
	3A	1	**9R-0162**	1	BEARING-SLEEVE	
	3B	1	**168-0480**	1	BEARING-SLEEVE	
	4	1	*151-7903*	1	BRACKET AS (RH)	
	4A	1	**9R-0162**	1	BEARING-SLEEVE	
	4B	1	**168-0480**	1	BEARING-SLEEVE	
	5	1	**161-4130**	2	PLATE-IDENTIFICATION (CAT)	
	6	1	**201-1234**	6	ADAPTER (2-STRAP)	
	7	1	**219-9486**	1	EDGE	

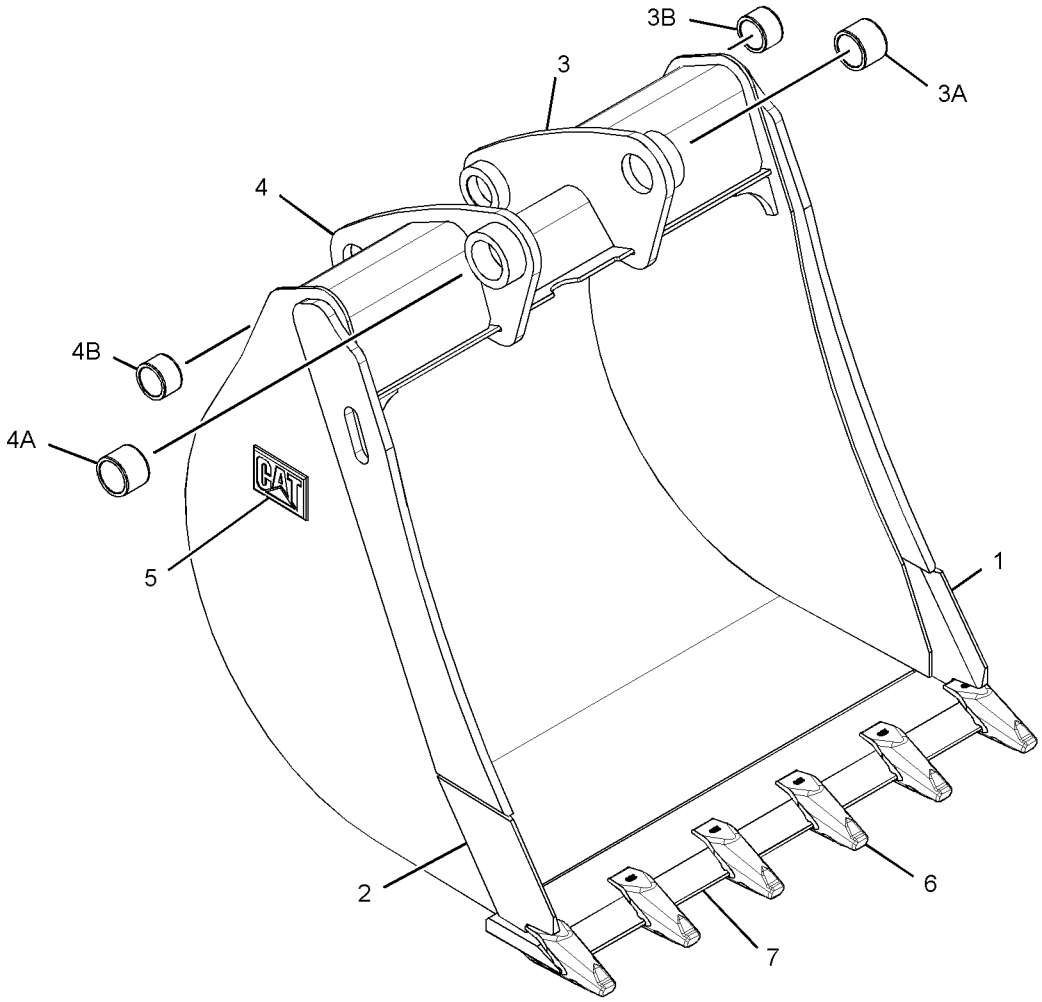

GRAPHIC #1 **<END>** g01335133

WORK TOOLS

249-4220 BUCKET AS-HOE—HEAVY-DUTY

S/N: SJL1-UP
610-MM (24-IN)
PART OF 249-4221 BUCKET GP-HOE
AN ATTACHMENT

SMCS-6503 **i03592849**

NOTE	REF NO	GRAPHIC REF	PART NUMBER	QTY	PART NAME 1 2 3 4 5 6 (PRODUCT LEVEL)	SEE PAGE
	1	1	**201-1235**	5	ADAPTER	
	2	1	**219-9488**	1	EDGE	
	3	1	*249-4209*	1	PLATE AS (RH)	
		1	**249-4207**	1	EDGE (RH)	
	4	1	*249-4210*	1	PLATE AS (LH)	
		1	**273-3622**	1	EDGE (LH)	

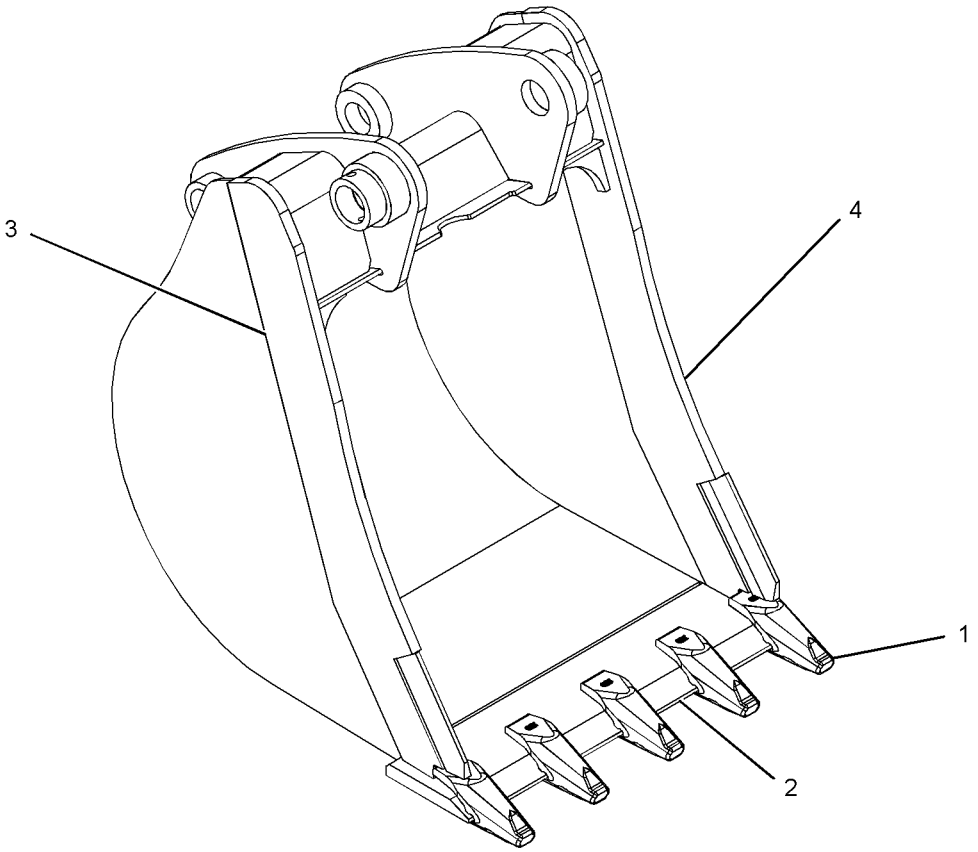

GRAPHIC #1 **<END>** g01226709

272-6411 BUCKET AS-HOE—HEAVY-DUTY

S/N: SJL1-UP
458-MM (18-IN)
PART OF 272-6410 BUCKET GP-HOE
AN ATTACHMENT

SMCS-6503 **i03592947**

NOTE	REF NO	GRAPHIC REF	PART NUMBER	QTY	PART NAME 1 2 3 4 5 6 (PRODUCT LEVEL)	SEE PAGE
	1	1	**136-6887**	1	EDGE	
	2	1	**201-1235**	4	ADAPTER	
	3	1	*249-4209*	1	PLATE AS (RH)	
		1	**249-4207**	1	EDGE (RH)	
	4	1	*249-4210*	1	PLATE AS (LH)	
		1	**273-3622**	1	EDGE (LH)	
	5	1	**272-6369**	4	PLATE	

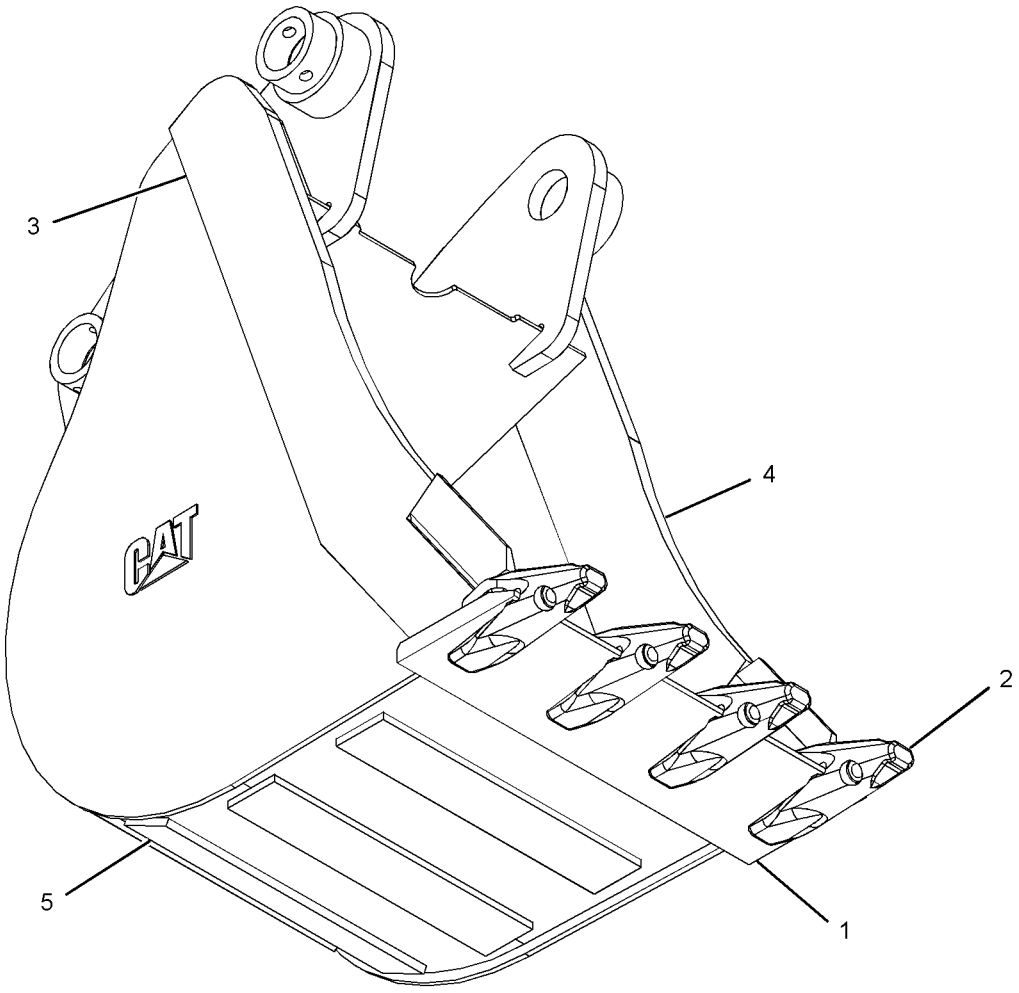

GRAPHIC #1 **<END>** g01214815

272-7873 BUCKET AS-HOE—HEAVY-DUTY

S/N: SJL1-UP
762-MM (30-IN)
PART OF 272-7872 BUCKET GP-HOE
AN ATTACHMENT

SMCS-6503 **i03592953**

NOTE	REF NO	GRAPHIC REF	PART NUMBER	QTY	PART NAME 1 2 3 4 5 6 (PRODUCT LEVEL)	SEE PAGE
	1	1	**136-6889**	1	EDGE	
	2	1	**201-1235**	5	ADAPTER	
	3	1	*249-4209*	1	PLATE AS (RH)	
		1	**249-4207**	1	EDGE (RH)	
	4	1	*249-4210*	1	PLATE AS (LH)	
		1	**273-3622**	1	EDGE (LH)	
	5	1	**272-7914**	4	PLATE	

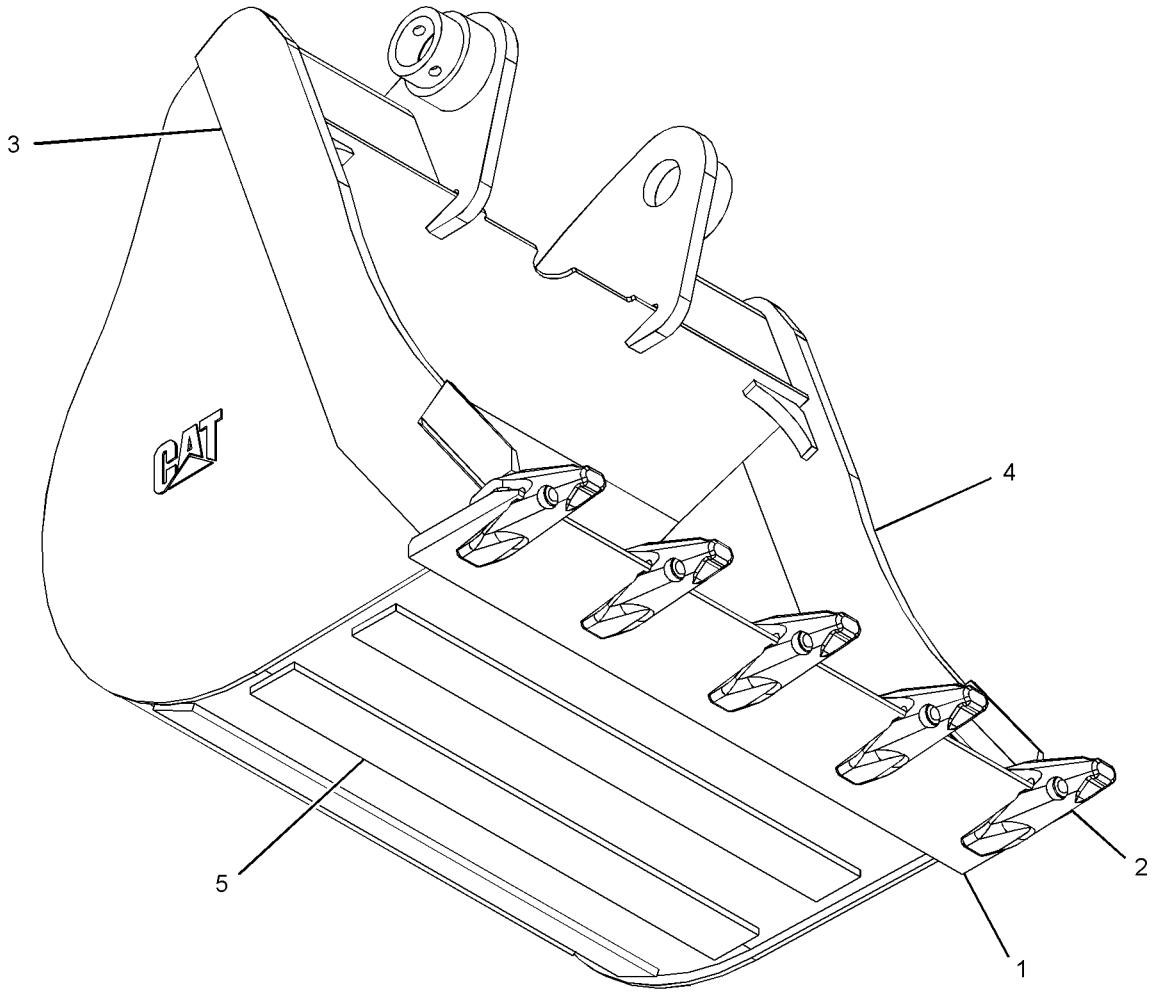

GRAPHIC #1 **<END>** g01215272

272-9235 BUCKET AS-HOE—HEAVY-DUTY

S/N: SJL1-UP
914-MM (36-IN)
PART OF 272-9234 BUCKET GP-HOE
AN ATTACHMENT

SMCS-6503 **i03592954**

NOTE	REF NO	GRAPHIC REF	PART NUMBER	QTY	PART NAME 1 2 3 4 5 6 (PRODUCT LEVEL)	SEE PAGE
	1	1	**201-1235**	6	ADAPTER	
	2	1	*249-4209*	1	PLATE AS (RH)	
		1	**249-4207**	1	EDGE (RH)	
	3	1	*249-4210*	1	PLATE AS (LH)	
		1	**273-3622**	1	EDGE (LH)	
	4	1	**272-7916**	4	PLATE	

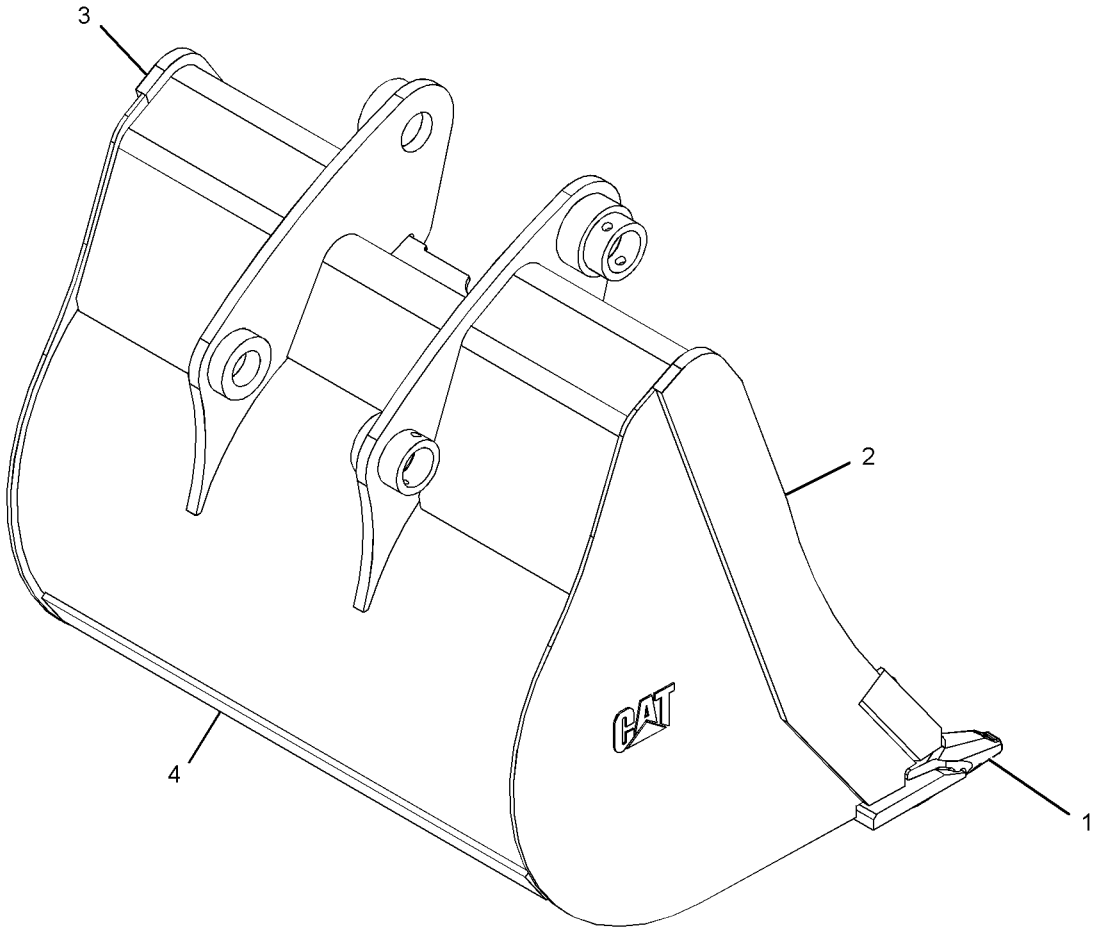

GRAPHIC #1 **<END>** g01214318

WORK TOOLS

272-9609 BUCKET AS-HOE—HEAVY-DUTY

S/N: SJL1-UP
914-MM (36-IN)
PART OF 272-9608 BUCKET GP-HOE
AN ATTACHMENT

SMCS-6503 **i02425901**

NOTE	REF NO	GRAPHIC REF	PART NUMBER	QTY	PART NAME 1 2 3 4 5 6 (PRODUCT LEVEL)	SEE PAGE
	1	1	**272-7916**	4	PLATE	
	2	1	*272-7920*	1	PLATE AS (RH)	
		1	**272-7918**	1	EDGE (RH)	
	3	1	*272-7921*	1	PLATE AS (LH)	
		1	**272-7919**	1	EDGE (LH)	
	4	1	**273-1466**	1	EDGE	

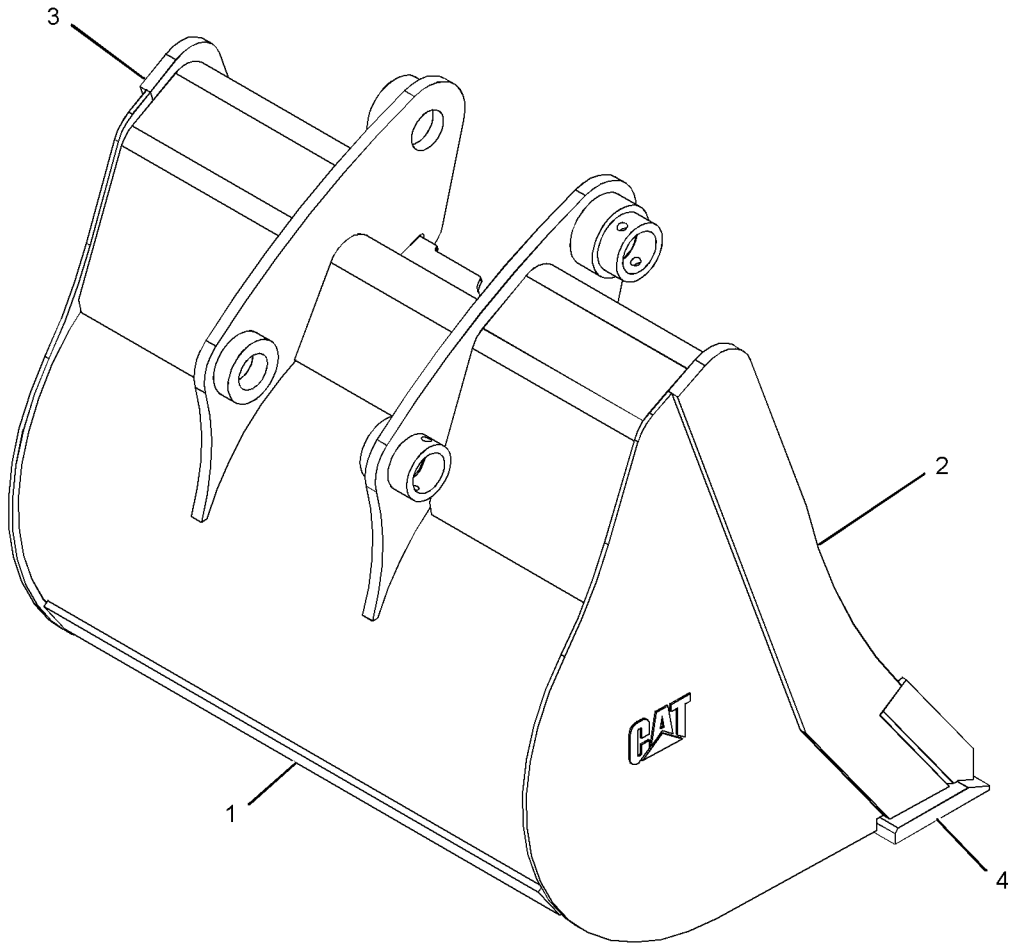

GRAPHIC #1 **<END>** g01226278

273-0043 BUCKET AS-HOE–HEAVY-DUTY

S/N: SJL1-UP
762-MM (30-IN)
PART OF 273-0042 BUCKET GP-HOE
AN ATTACHMENT

SMCS-6503 **i02427539**

NOTE	REF NO	GRAPHIC REF	PART NUMBER	QTY	PART NAME 1 2 3 4 5 6 (PRODUCT LEVEL)	SEE PAGE
	1	1	**272-7914**	4	PLATE	
	2	1	*272-7920*	1	PLATE AS (RH)	
		1	**272-7918**	1	EDGE (RH)	
	3	1	*272-7921*	1	PLATE AS (LH)	
		1	**272-7919**	1	EDGE (LH)	
	4	1	**273-1465**	1	EDGE	

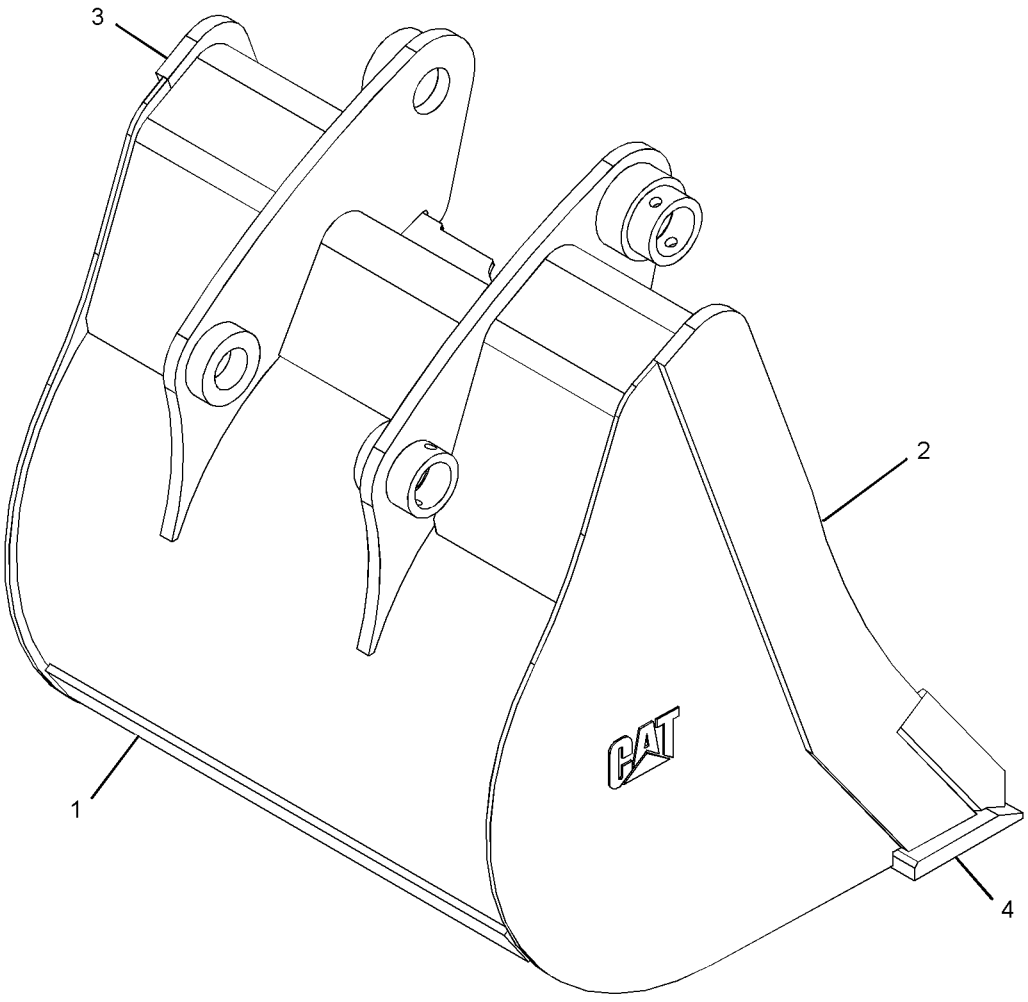

GRAPHIC #1 **<END>** g01214211

273-0094 BUCKET AS-HOE—HEAVY-DUTY

S/N: SJL1-UP
408-MM (16-IN)
PART OF 273-0093 BUCKET GP-HOE
AN ATTACHMENT

SMCS-6503 **i03592955**

NOTE	REF NO	GRAPHIC REF	PART NUMBER	QTY	PART NAME 1 2 3 4 5 6 (PRODUCT LEVEL)	SEE PAGE
	1	1	**201-1235**	3	ADAPTER	
	2	1	*249-4209*	1	PLATE AS (RH)	
		1	**249-4207**	1	EDGE (RH)	
	3	1	*249-4210*	1	PLATE AS (LH)	
		1	**273-3622**	1	EDGE (LH)	
	4	1	**272-7922**	1	EDGE	
	5	1	**273-5532**	4	PLATE	

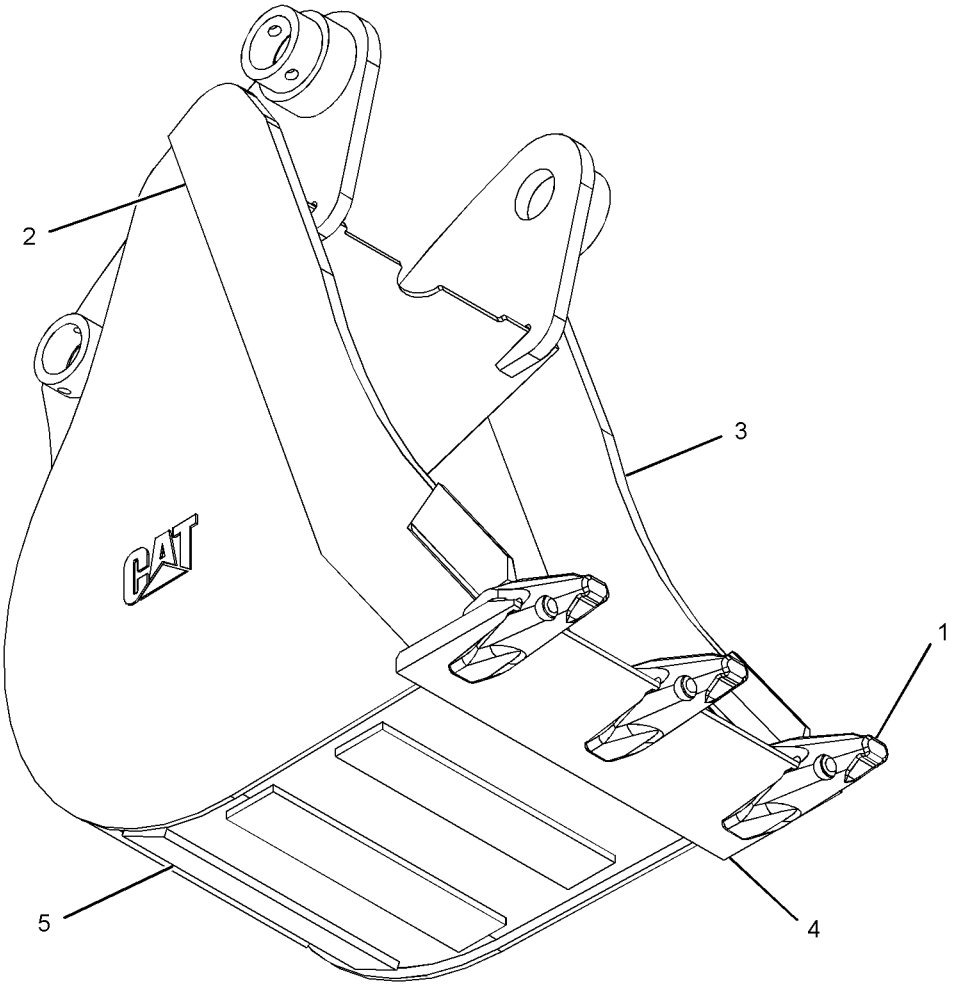

GRAPHIC #1 **<END>** g01214848

273-0800 BUCKET AS-HOE—HEAVY-DUTY

S/N: SJL1-UP
610-MM (24-IN)
PART OF 273-0799 BUCKET GP-HOE
AN ATTACHMENT

SMCS-6503 **i02427585**

NOTE	REF NO	GRAPHIC REF	PART NUMBER	QTY	PART NAME 1 2 3 4 5 6 (PRODUCT LEVEL)	SEE PAGE
	1	1	**249-4211**	4	PLATE	
	2	1	*272-7920*	1	PLATE AS (RH)	
		1	**272-7918**	1	EDGE (RH)	
	3	1	*272-7921*	1	PLATE AS (LH)	
		1	**272-7919**	1	EDGE (LH)	
	4	1	**273-1463**	1	EDGE	

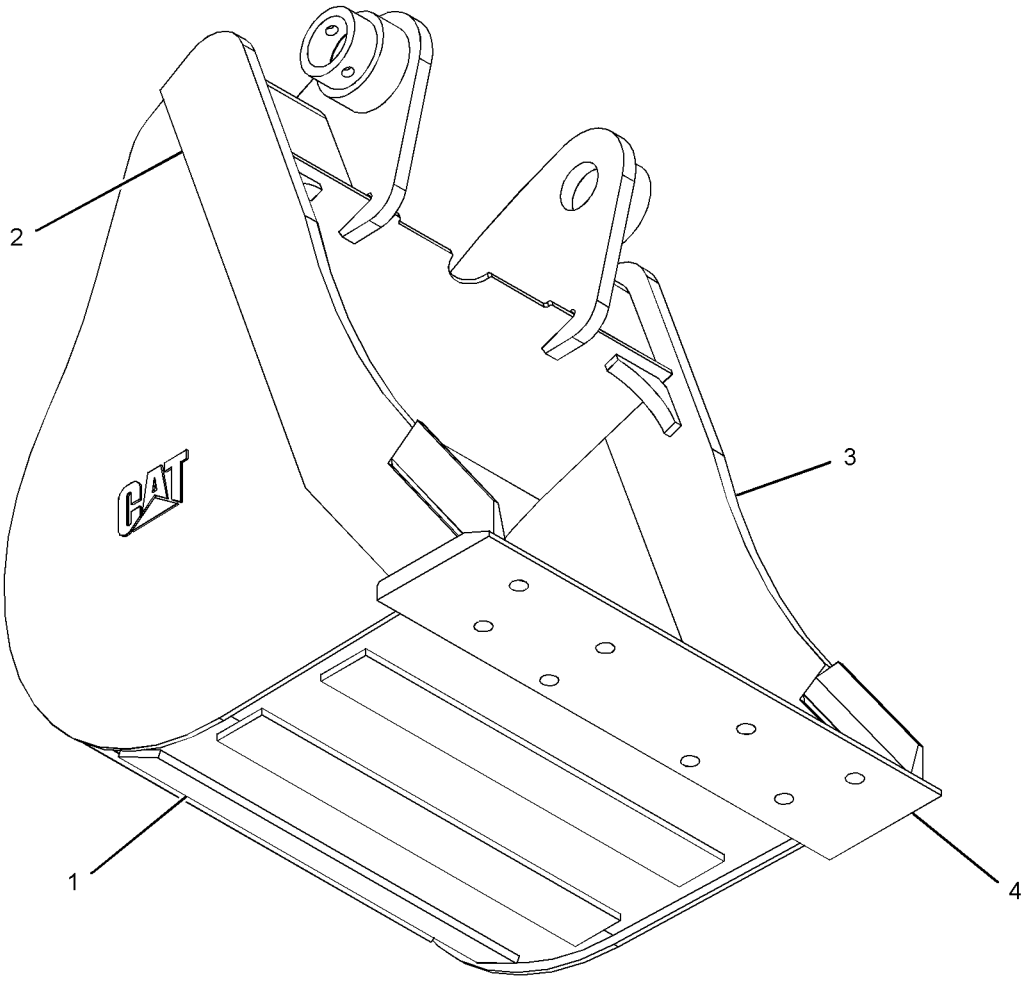

GRAPHIC #1 **<END>** g01214857

WORK TOOLS

273-0863 BUCKET AS-HOE—HEAVY-DUTY

S/N: SJL1-UP
458-MM (18-IN)
PART OF 273-0862 BUCKET GP-HOE
AN ATTACHMENT

SMCS-6503 **i02427594**

NOTE	REF NO	GRAPHIC REF	PART NUMBER	QTY	PART NAME 1 2 3 4 5 6 (PRODUCT LEVEL)	SEE PAGE
	1	1	**272-6369**	4	PLATE	
	2	1	*272-7920*	1	PLATE AS (RH)	
		1	**272-7918**	1	EDGE (RH)	
	3	1	*272-7921*	1	PLATE AS (LH)	
		1	**272-7919**	1	EDGE (LH)	
	4	1	**273-1462**	1	EDGE	

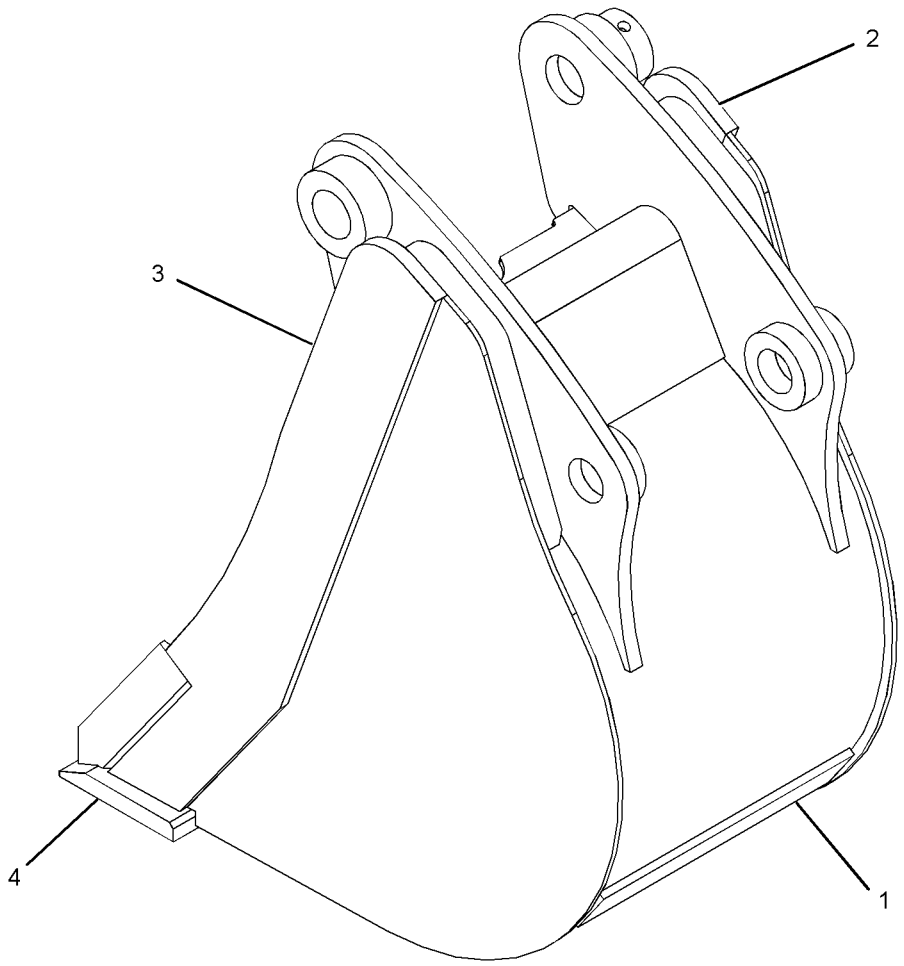

GRAPHIC #1 **<END>** g01215030

WORK TOOLS

273-1375 BUCKET AS-HOE

S/N: SJL1-UP
458-MM (18-IN)
PART OF 273-1374 BUCKET GP-HOE
AN ATTACHMENT

SMCS-6503 **i02427596**

NOTE	REF NO	GRAPHIC REF	PART NUMBER	QTY	PART NAME 1 2 3 4 5 6 (PRODUCT LEVEL)	SEE PAGE
	1	1	**273-1462**	1	EDGE	

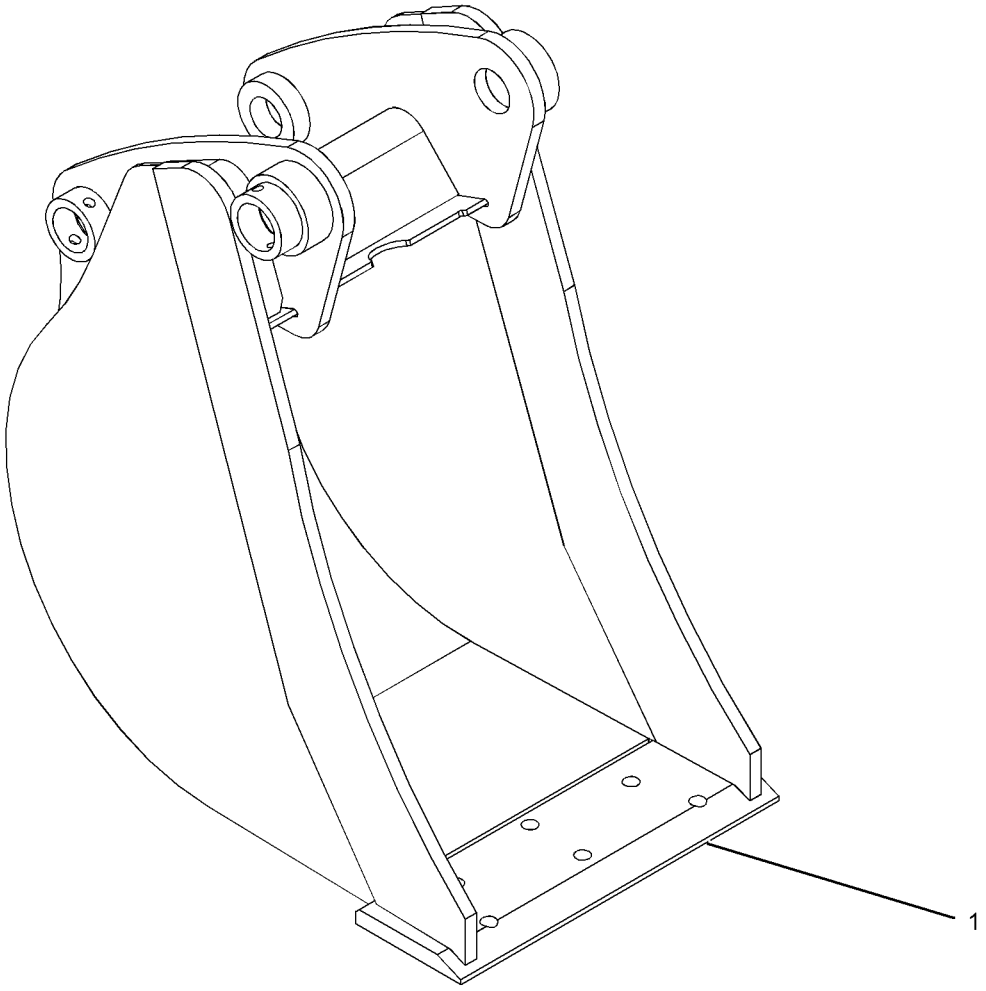

GRAPHIC #1 **<END>** g01215118

WORK TOOLS

273-1949 BUCKET AS-HOE

S/N: SJL1-UP
610-MM (24-IN)
PART OF 273-1948 BUCKET GP-HOE
AN ATTACHMENT

SMCS-6503 **i02427601**

NOTE	REF NO	GRAPHIC REF	PART NUMBER	QTY	PART NAME 1 2 3 4 5 6 (PRODUCT LEVEL)	SEE PAGE
	1	1	**273-1463**	1	EDGE	

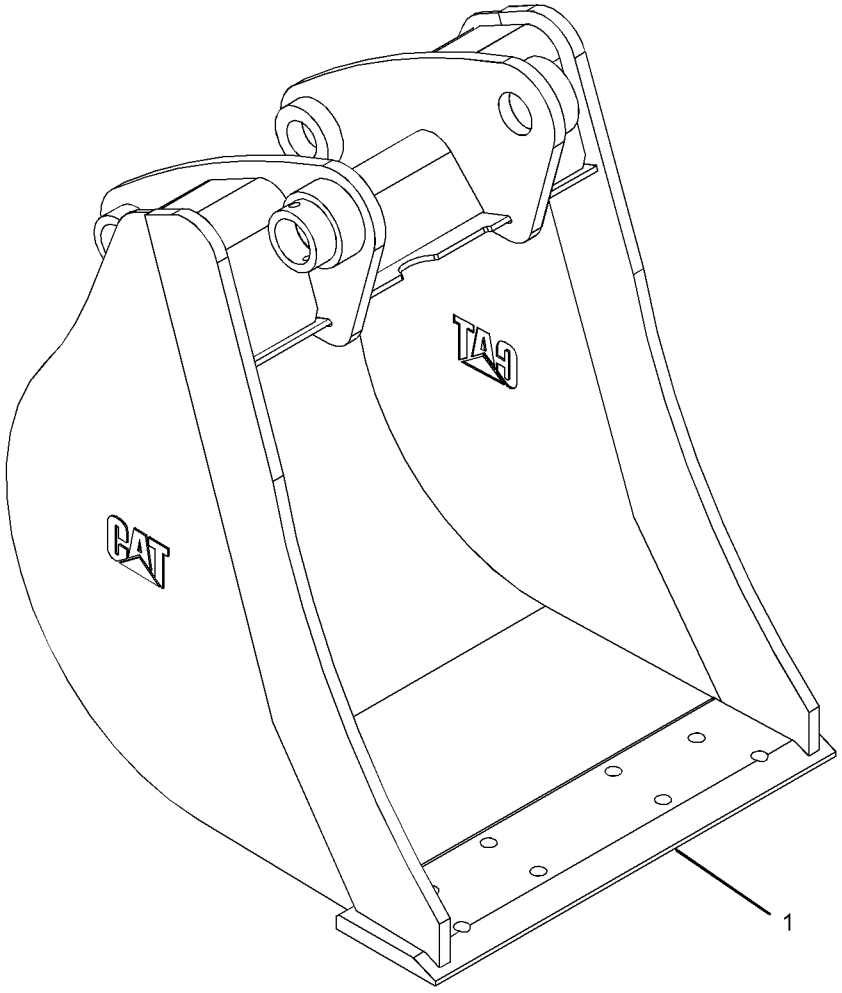

GRAPHIC #1 **<END>** g01215716

WORK TOOLS

273-1951 BUCKET AS-HOE

S/N: SJL1-UP
762-MM (30-IN)
PART OF 273-1950 BUCKET GP-HOE
AN ATTACHMENT

SMCS-6503 **i02427603**

NOTE	REF NO	GRAPHIC REF	PART NUMBER	QTY	PART NAME 1 2 3 4 5 6 (PRODUCT LEVEL)	SEE PAGE
	1	1	**273-1465**	1	EDGE	

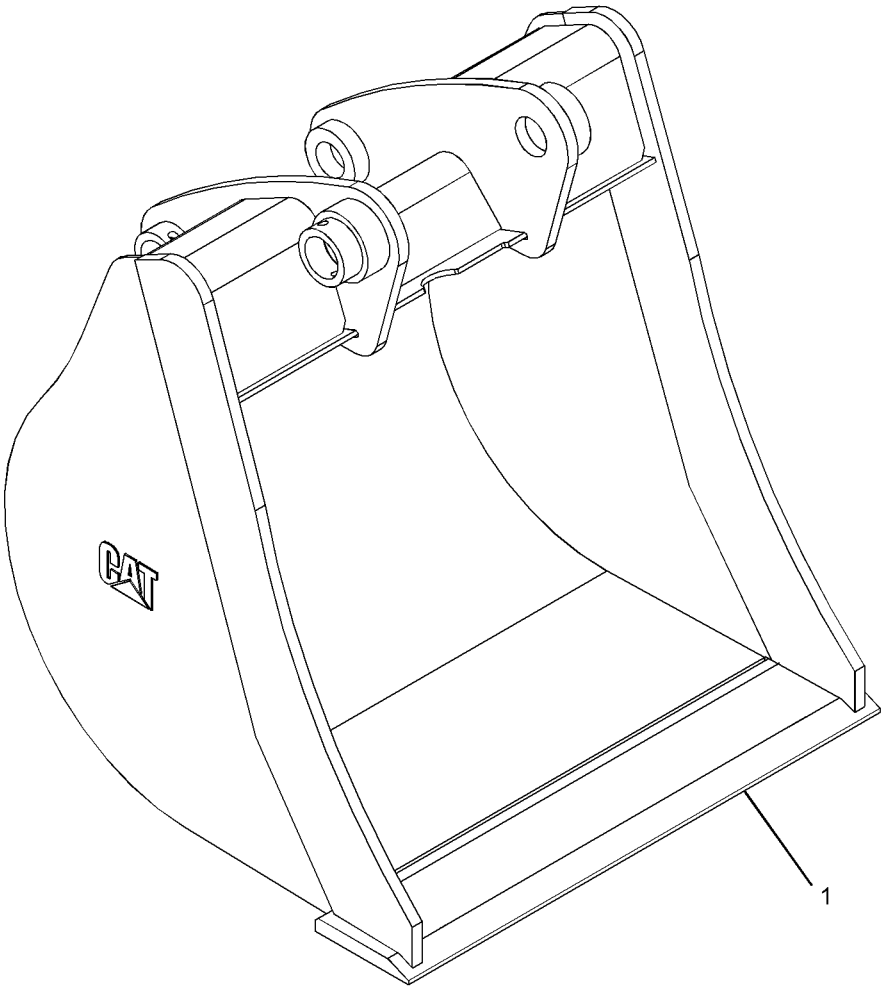

GRAPHIC #1 **<END>** g01215693

WORK TOOLS

273-1958 BUCKET AS-HOE

S/N: SJL1-UP
914-MM (36-IN)
PART OF 273-1957 BUCKET GP-HOE
AN ATTACHMENT

SMCS-6503 **i02427609**

NOTE	REF NO	GRAPHIC REF	PART NUMBER	QTY	PART NAME 1 2 3 4 5 6 (PRODUCT LEVEL)	SEE PAGE
	1	1	**273-1466**	1	EDGE	

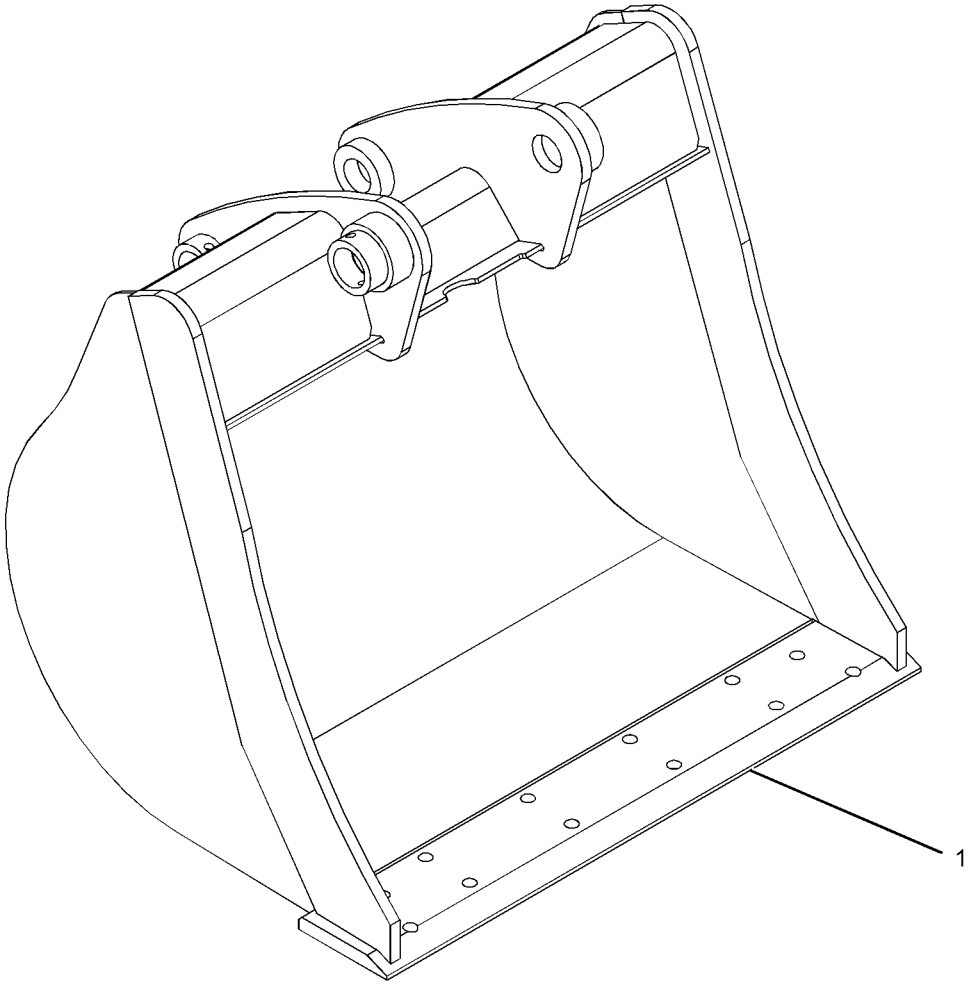

GRAPHIC #1 **<END>** g01215767

WORK TOOLS

273-3733 BUCKET AS-HOE—HEAVY-DUTY

S/N: SJL1-UP
305-MM (12-IN)
PART OF 273-3732 BUCKET GP-HOE
AN ATTACHMENT

SMCS-6503 **i02560416**

NOTE	REF NO	GRAPHIC REF	PART NUMBER	QTY	PART NAME 1 2 3 4 5 6 (PRODUCT LEVEL)	SEE PAGE
	1	1	*286-9340*	1	BRACKET AS (LH)	
		1	**9R-0320**	1	BEARING-SLEEVE	
		1	**154-5257**	1	BEARING-SLEEVE	
	2	1	*286-9338*	1	BRACKET AS (RH)	
		1	**9R-0320**	1	BEARING-SLEEVE	
		1	**154-5257**	1	BEARING-SLEEVE	
	3	1	**273-3599**	4	PLATE	
	4	1	**273-3730**	1	EDGE	
	5	1	*273-3755*	1	PLATE AS (RH)	
		1	**272-7918**	1	EDGE (RH)	
	6	1	*273-3756*	1	PLATE AS (LH)	
		1	**272-7919**	1	EDGE (LH)	

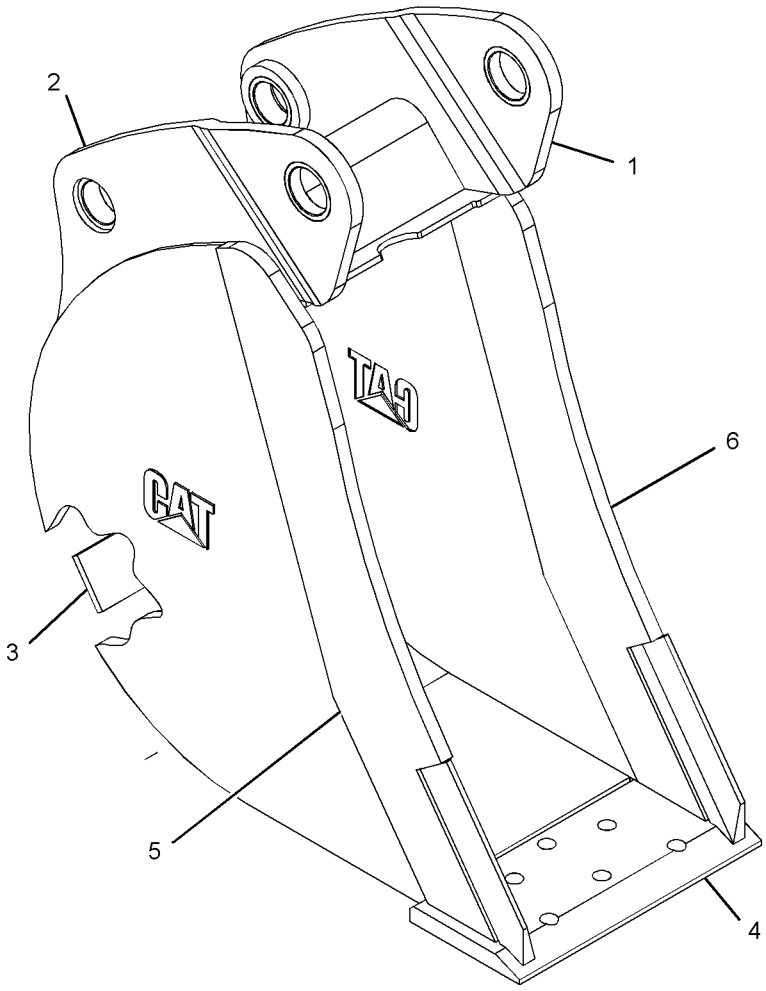

GRAPHIC #1 **<END>** g01215630

WORK TOOLS

273-3793 BUCKET AS-HOE

S/N: SJL1-UP
305-MM (12-IN)
PART OF 273-3792 BUCKET GP-HOE
AN ATTACHMENT

SMCS-6503 **i02523409**

NOTE	REF NO	GRAPHIC REF	PART NUMBER	QTY	PART NAME 1 2 3 4 5 6 (PRODUCT LEVEL)	SEE PAGE
	1	1	*286-9340*	1	BRACKET AS (LH)	
		1	**9R-0320**	1	BEARING-SLEEVE	
		1	**154-5257**	1	BEARING-SLEEVE	
	2	1	*286-9338*	1	BRACKET AS (RH)	
		1	**9R-0320**	1	BEARING-SLEEVE	
		1	**154-5257**	1	BEARING-SLEEVE	
	3	1	**273-3730**	1	EDGE	

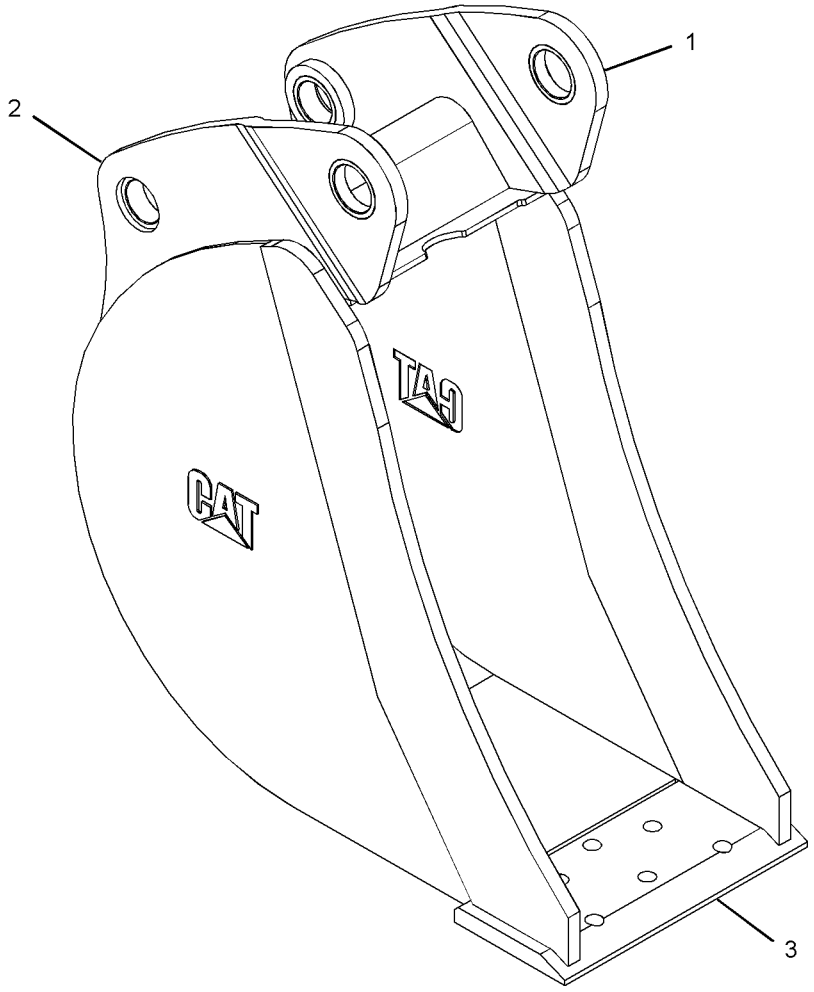

GRAPHIC #1 **<END>** g01215699

WORK TOOLS

248-0962 BUCKET GP-GENERAL PURPOSE

S/N: SJL1-UP

AN ATTACHMENT

SMCS-6101 **i02417396**

NOTE	REF NO	GRAPHIC REF	PART NUMBER	QTY	PART NAME 1 2 3 4 5 6 (PRODUCT LEVEL)	SEE PAGE
	1	1	**137-4234**	1	PLATE-IDENTIFICATION (WORK TOOL)	
	2	1	**168-8389**	4	TACK-FASTENER	
Y	3	1	*245-3650*	1	BUCKET AS-GENERAL PURPOSE	474

Y-SEPARATE ILLUSTRATION

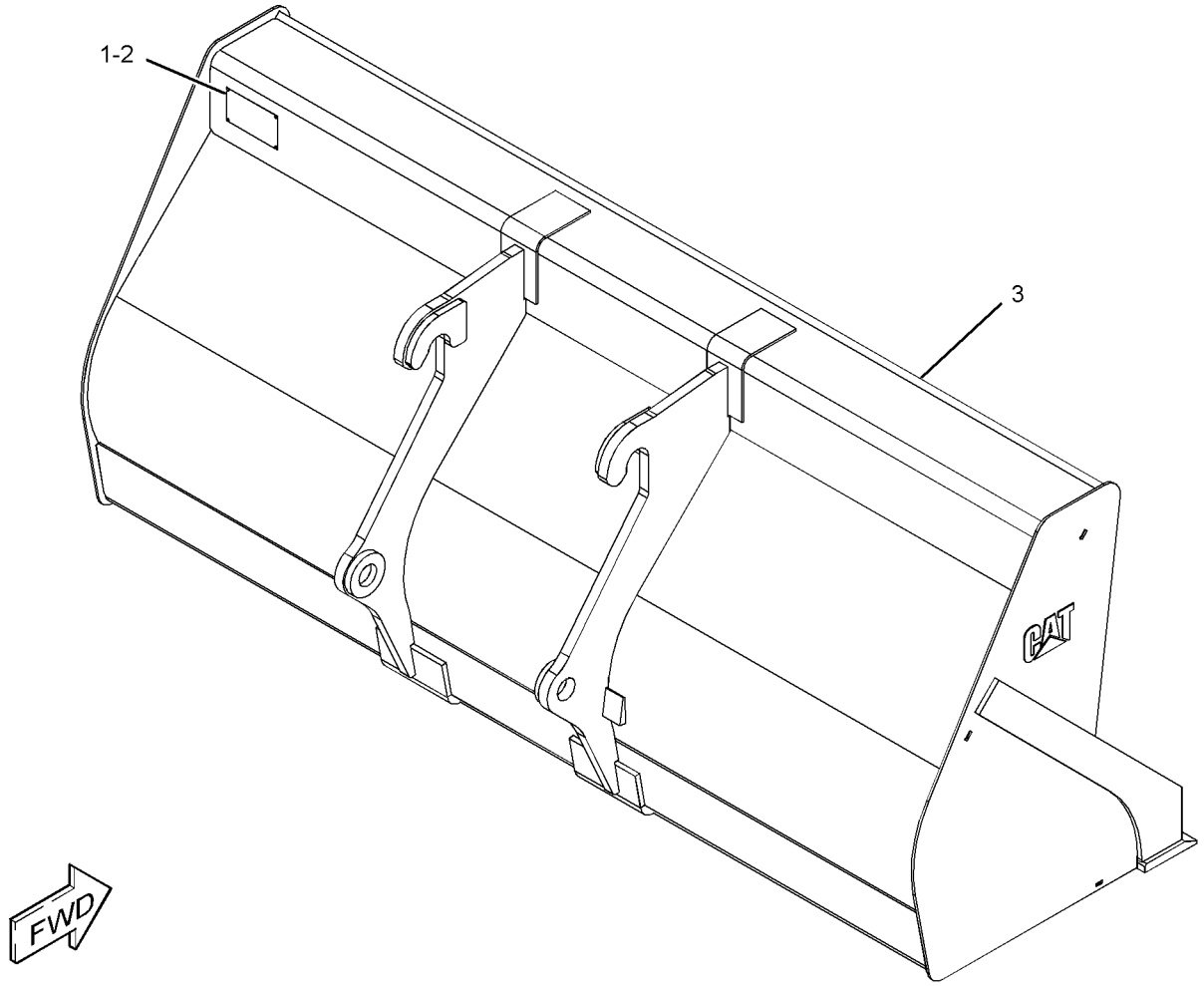

GRAPHIC #1 **<END>** g01211998

WORK TOOLS

151-7887 BUCKET GP-HOE—HIGH CAPACITY

S/N: SJL1-UP
AN ATTACHMENT

SMCS-6503 **i03595462**

NOTE	REF NO	GRAPHIC REF	PART NUMBER	QTY	PART NAME 1 2 3 4 5 6 (PRODUCT LEVEL)	SEE PAGE
C	1	1	*135-8206*	3	TOOTH GP-UNI	
					(EACH INCLUDES)	
		1	**4F-3657**	2	BOLT-PLOW (5/8-11X2.75-IN)	
		1	**4K-0367**	2	NUT-FULL (5/8-11-THD)	
		1	**135-8203**	1	TOOTH-UNI	
	2	1	**137-4234**	1	PLATE-IDENTIFICATION (WORK TOOL)	
Y	3	1	*151-7829*	1	BUCKET AS-HOE	477
C	4	1	**168-8389**	4	TACK-FASTENER	

C-CHANGE FROM PREVIOUS TYPE
Y-SEPARATE ILLUSTRATION

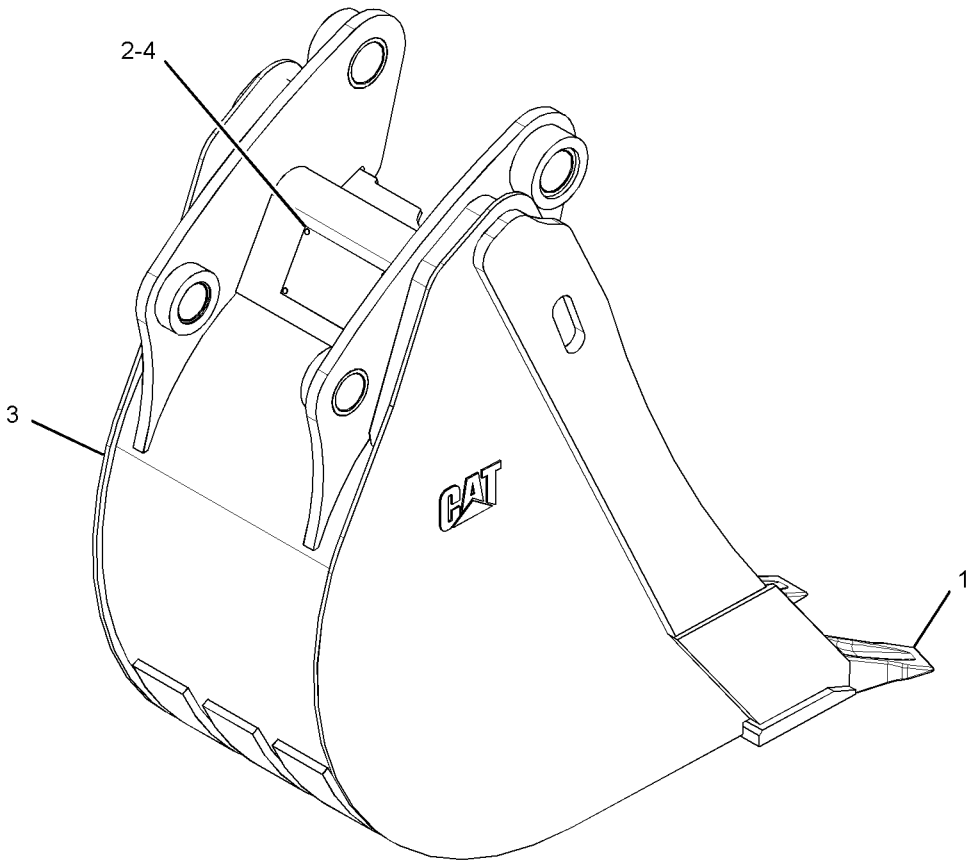

GRAPHIC #1 **<END>** g01398326

WORK TOOLS

151-7888 BUCKET GP-HOE—HIGH CAPACITY

S/N: SJL1-UP

AN ATTACHMENT

SMCS-6503 **i03595481**

NOTE	REF NO	GRAPHIC REF	PART NUMBER	QTY	PART NAME 1 2 3 4 5 6 (PRODUCT LEVEL)	SEE PAGE
C	1	1	*135-8206*	4	TOOTH GP-UNI	
					(EACH INCLUDES)	
		1	**4F-3657**	2	BOLT-PLOW (5/8-11X2.75-IN)	
		1	**4K-0367**	2	NUT-FULL (5/8-11-THD)	
		1	**135-8203**	1	TOOTH-UNI	
	2	1	**137-4234**	1	PLATE-IDENTIFICATION (WORK TOOL)	
Y	3	1	*151-7830*	1	BUCKET AS-HOE	478
C	4	1	**168-8389**	4	TACK-FASTENER	

C-CHANGE FROM PREVIOUS TYPE
Y-SEPARATE ILLUSTRATION

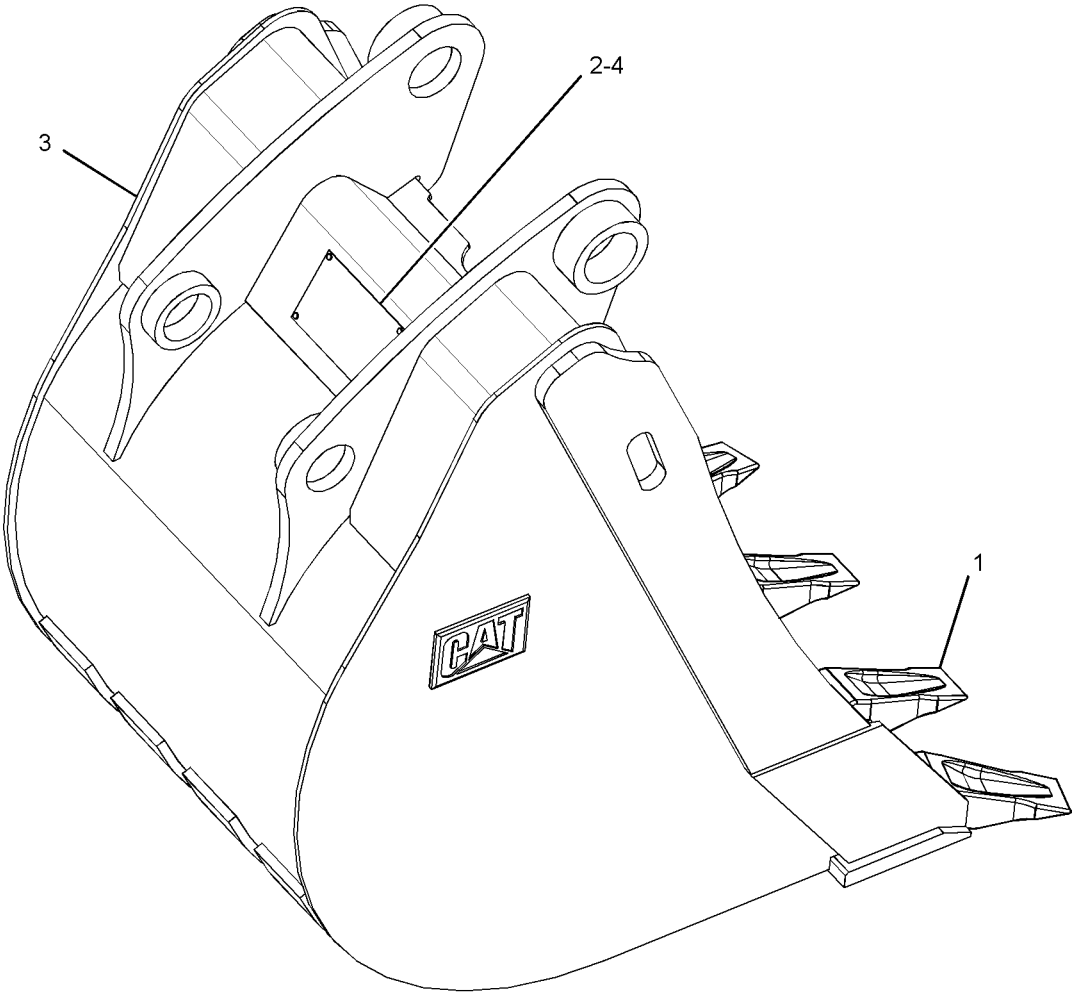

GRAPHIC #1 **<END>** g01398597

WORK TOOLS

151-7889 BUCKET GP-HOE—HIGH CAPACITY

S/N: SJL1-UP

AN ATTACHMENT

SMCS-6503 **i03595500**

NOTE	REF NO	GRAPHIC REF	PART NUMBER	QTY	PART NAME 1 2 3 4 5 6 (PRODUCT LEVEL)	SEE PAGE
C	1	1	*135-8206*	5	TOOTH GP-UNI	
					(EACH INCLUDES)	
		1	**4F-3657**	2	BOLT-PLOW (5/8-11X2.75-IN)	
		1	**4K-0367**	2	NUT-FULL (5/8-11-THD)	
		1	**135-8203**	1	TOOTH-UNI	
	2	1	**137-4234**	1	PLATE-IDENTIFICATION (WORK TOOL)	
Y	3	1	*151-7831*	1	BUCKET AS-HOE	479
C	4	1	**168-8389**	4	TACK-FASTENER	

C-CHANGE FROM PREVIOUS TYPE
Y-SEPARATE ILLUSTRATION

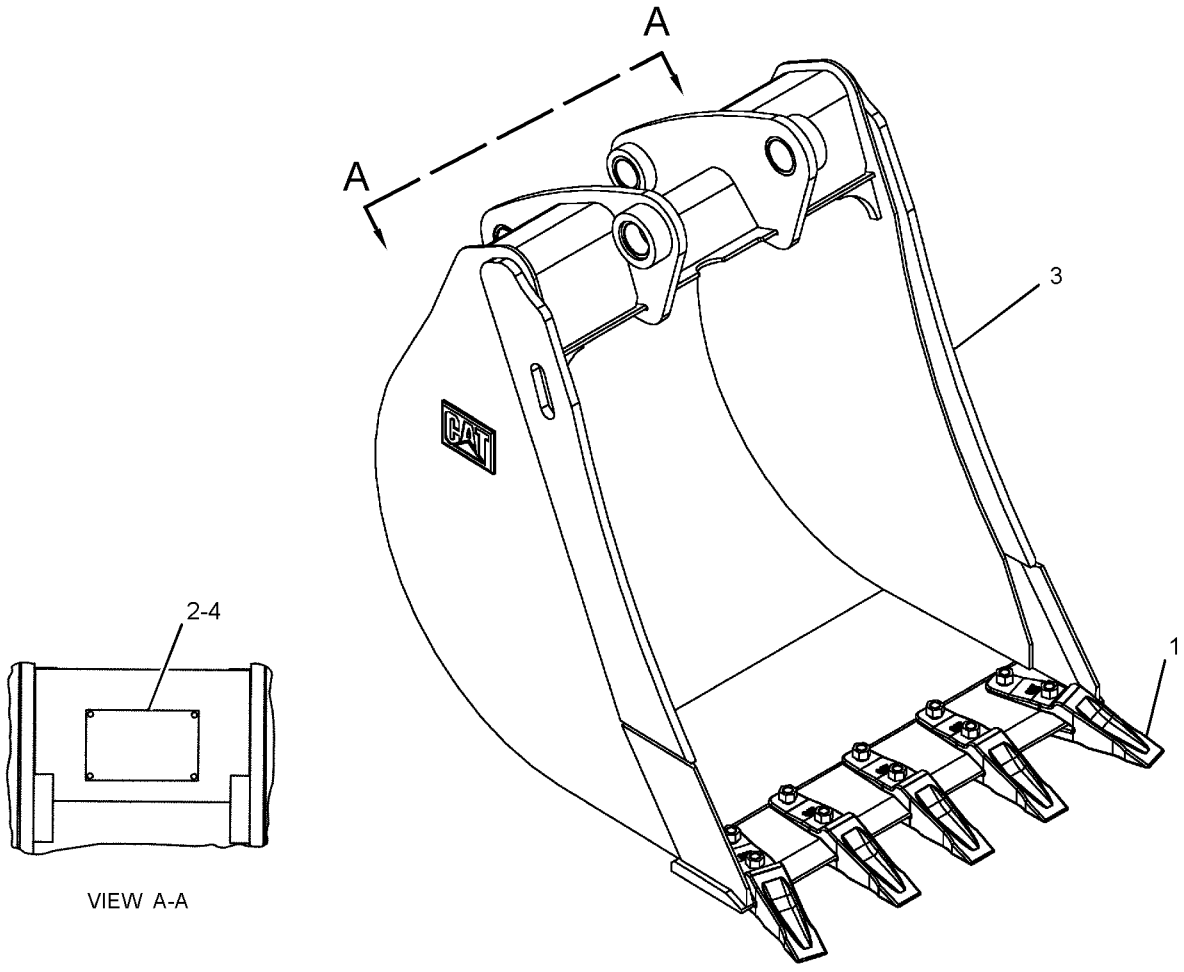

GRAPHIC #1 **<END>** g01356630

151-7890 BUCKET GP-HOE—HIGH CAPACITY

S/N: SJL1-UP
AN ATTACHMENT

SMCS-6503 **i03595501**

NOTE	REF NO	GRAPHIC REF	PART NUMBER	QTY	PART NAME 1 2 3 4 5 6 (PRODUCT LEVEL)	SEE PAGE
C	1	1	*135-8206*	6	TOOTH GP-UNI	
					(EACH INCLUDES)	
		1	**4F-3657**	2	BOLT-PLOW (5/8-11X2.75-IN)	
		1	**4K-0367**	2	NUT-FULL (5/8-11-THD)	
		1	**135-8203**	1	TOOTH-UNI	
Y	2	1	*151-7832*	1	BUCKET AS-HOE	480
	3	1	**137-4234**	1	PLATE-IDENTIFICATION (WORK TOOL)	
	4	1	**168-8389**	4	TACK-FASTENER	

C-CHANGE FROM PREVIOUS TYPE
Y-SEPARATE ILLUSTRATION

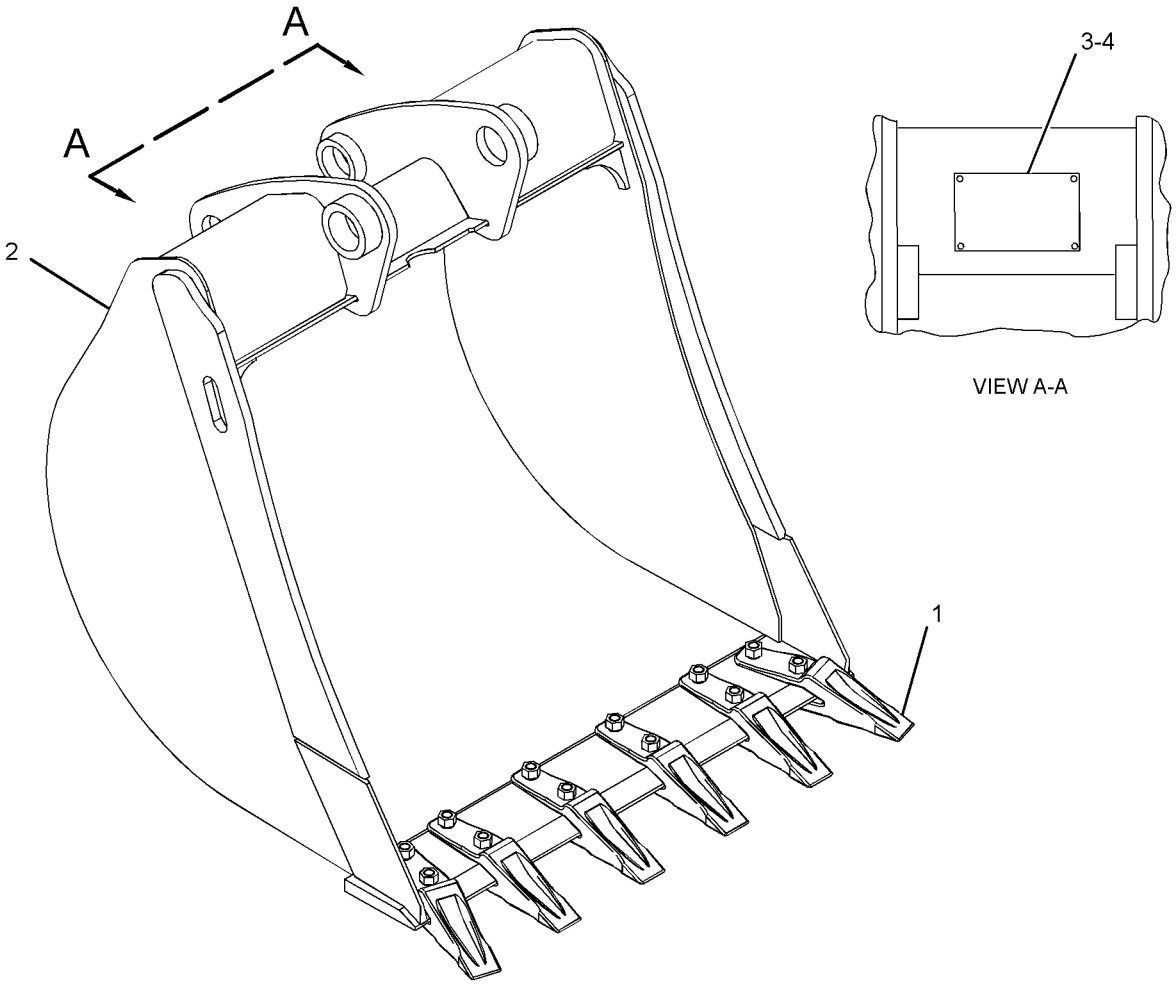

GRAPHIC #1 **<END>** g01925157

219-3390 BUCKET GP-HOE—HIGH CAPACITY

S/N: SJL1-UP

AN ATTACHMENT

SMCS-6503 **i02651418**

NOTE	REF NO	GRAPHIC REF	PART NUMBER	QTY	PART NAME 1 2 3 4 5 6 (PRODUCT LEVEL)	SEE PAGE
	1	1	**137-4234**	1	PLATE-IDENTIFICATION (WORK TOOL)	
	2	1	**168-8389**	4	TACK-FASTENER	
	3		*208-5245*	4	TIP GP-PENETRATION	
					(EACH INCLUDES)	
		1	**201-1238**	1	PIN	
		1	**201-1239**	1	RETAINER AS	
		1	**208-5235**	1	TIP-PENETRATION	
Y	4	1	*219-3366*	1	BUCKET AS-HOE	481

Y-SEPARATE ILLUSTRATION

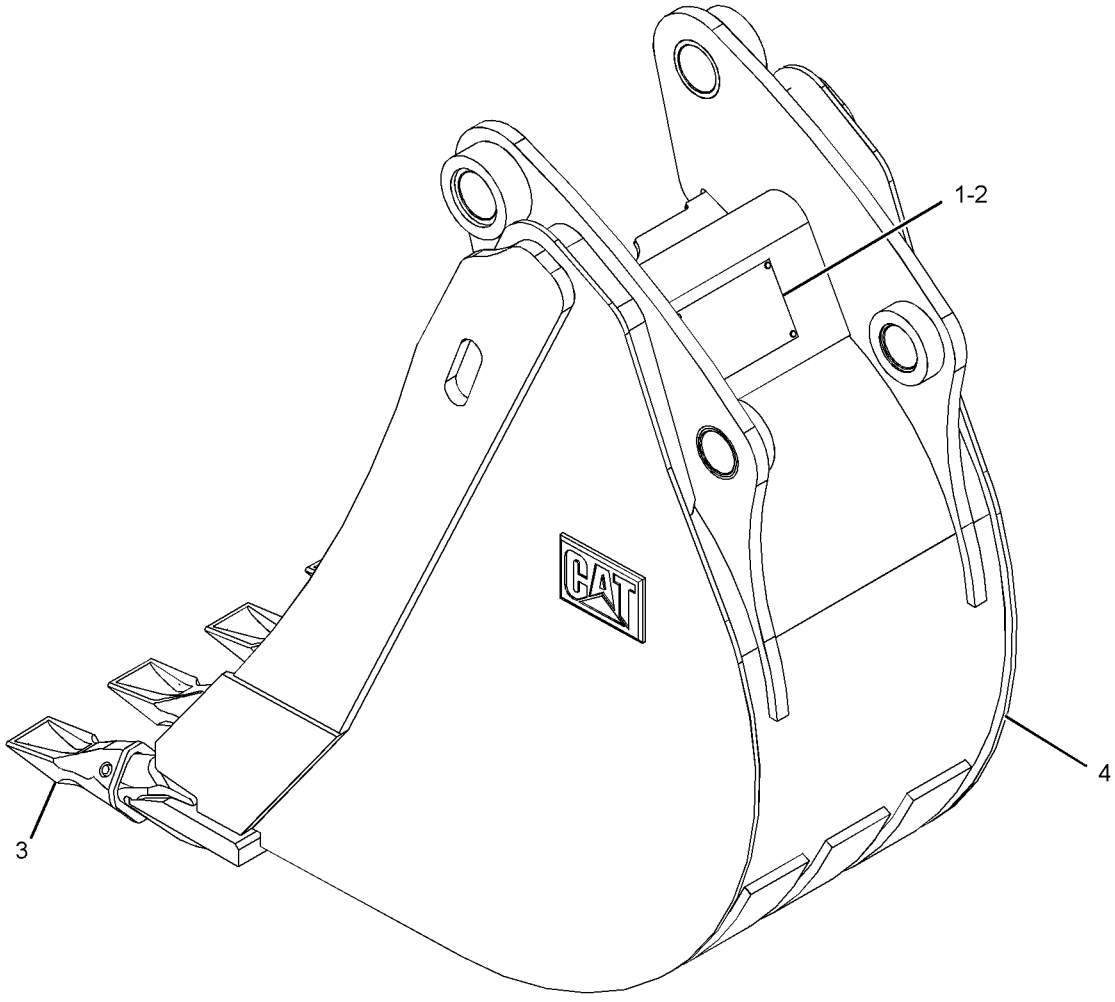

GRAPHIC #1 **<END>** g01337541

WORK TOOLS

219-3391 BUCKET GP-HOE—HIGH CAPACITY

S/N: SJL1-UP

AN ATTACHMENT

SMCS-6503 **i02651581**

NOTE	REF NO	GRAPHIC REF	PART NUMBER	QTY	PART NAME 1 2 3 4 5 6 (PRODUCT LEVEL)	SEE PAGE
	1	1	**137-4234**	1	PLATE-IDENTIFICATION (WORK TOOL)	
	2	1	**168-8389**	4	TACK-FASTENER	
	3	1	*208-5245*	5	TIP GP-PENETRATION	
					(EACH INCLUDES)	
		1	**201-1238**	1	PIN	
		1	**201-1239**	1	RETAINER AS	
		1	**208-5235**	1	TIP-PENETRATION	
Y	4	1	*219-3367*	1	BUCKET AS-HOE	482

Y-SEPARATE ILLUSTRATION

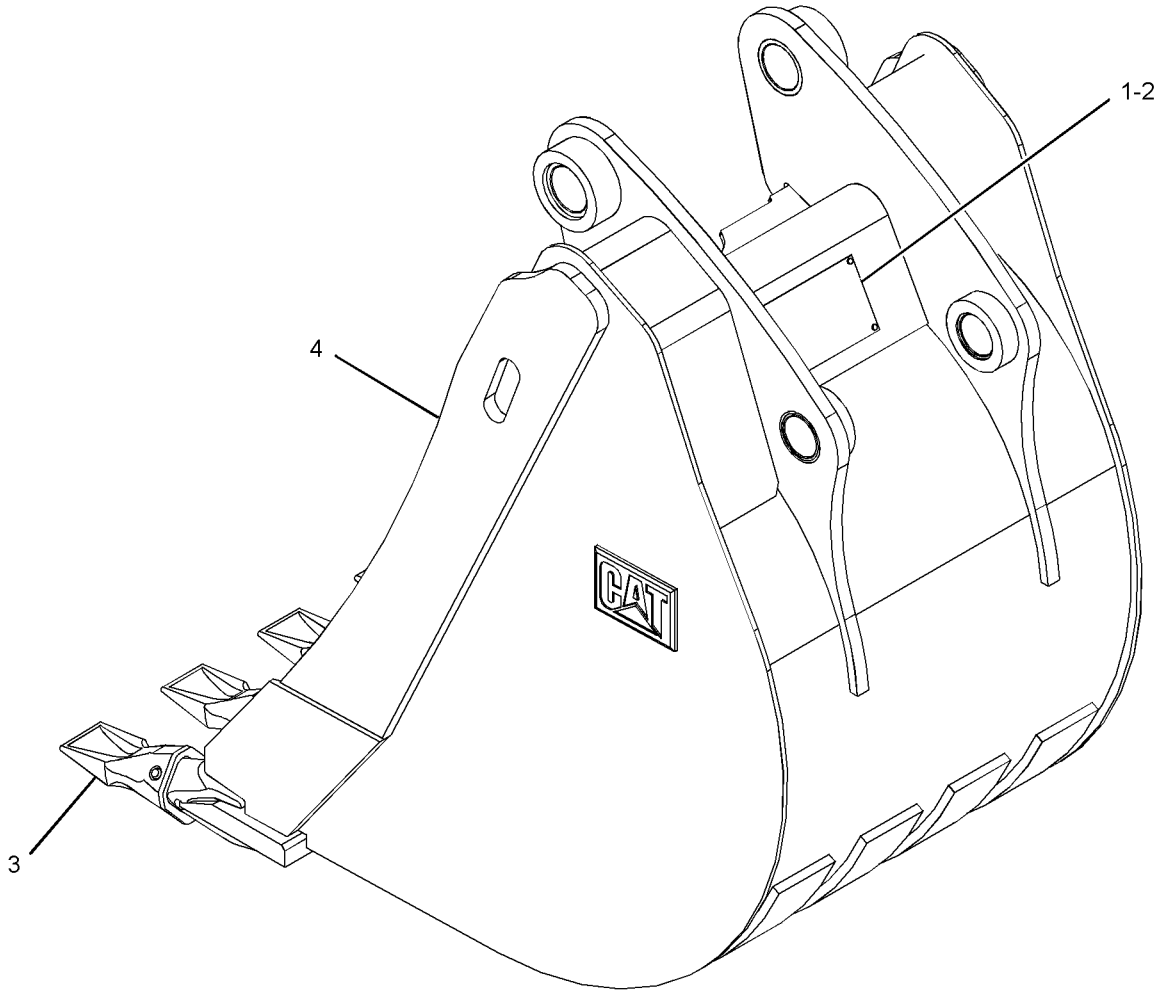

GRAPHIC #1 **<END>** g01341952

WORK TOOLS

219-3392 BUCKET GP-HOE—HIGH CAPACITY

S/N: SJL1-UP

AN ATTACHMENT

SMCS-6503 **i02651585**

NOTE	REF NO	GRAPHIC REF	PART NUMBER	QTY	PART NAME 1 2 3 4 5 6 (PRODUCT LEVEL)	SEE PAGE
	1	1	**137-4234**	1	PLATE-IDENTIFICATION (WORK TOOL)	
	2	1	**168-8389**	4	TACK-FASTENER	
	3	1	*208-5245*	5	TIP GP-PENETRATION	
					(EACH INCLUDES)	
		1	**201-1238**	1	PIN	
		1	**201-1239**	1	RETAINER AS	
		1	**208-5235**	1	TIP-PENETRATION	
Y	4	1	*219-3368*	1	BUCKET AS-HOE	483

Y-SEPARATE ILLUSTRATION

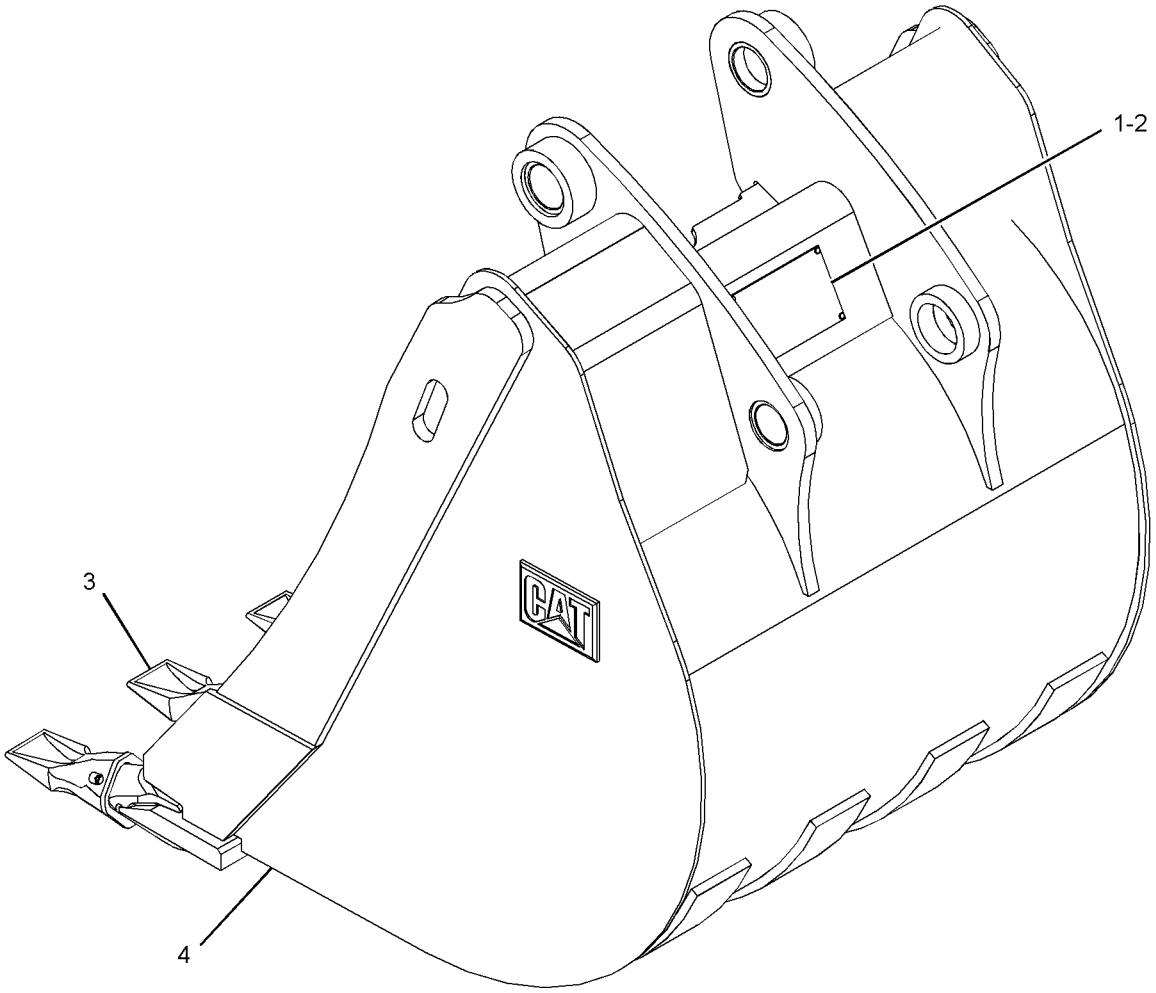

GRAPHIC #1 **<END>** g01341920

WORK TOOLS

219-3393 BUCKET GP-HOE—HIGH CAPACITY

S/N: SJL1-UP

AN ATTACHMENT

SMCS-6503 **i02651587**

NOTE	REF NO	GRAPHIC REF	PART NUMBER	QTY	PART NAME 1 2 3 4 5 6 (PRODUCT LEVEL)	SEE PAGE
	1	1	**137-4234**	1	PLATE-IDENTIFICATION (WORK TOOL)	
	2	1	**168-8389**	4	TACK-FASTENER	
	3		*208-5245*	6	TIP GP-PENETRATION	
					(EACH INCLUDES)	
		1	**201-1238**	1	PIN	
		1	**201-1239**	1	RETAINER AS	
		1	**208-5235**	1	TIP-PENETRATION	
Y	4	1	*219-3369*	1	BUCKET AS-HOE	484

Y-SEPARATE ILLUSTRATION

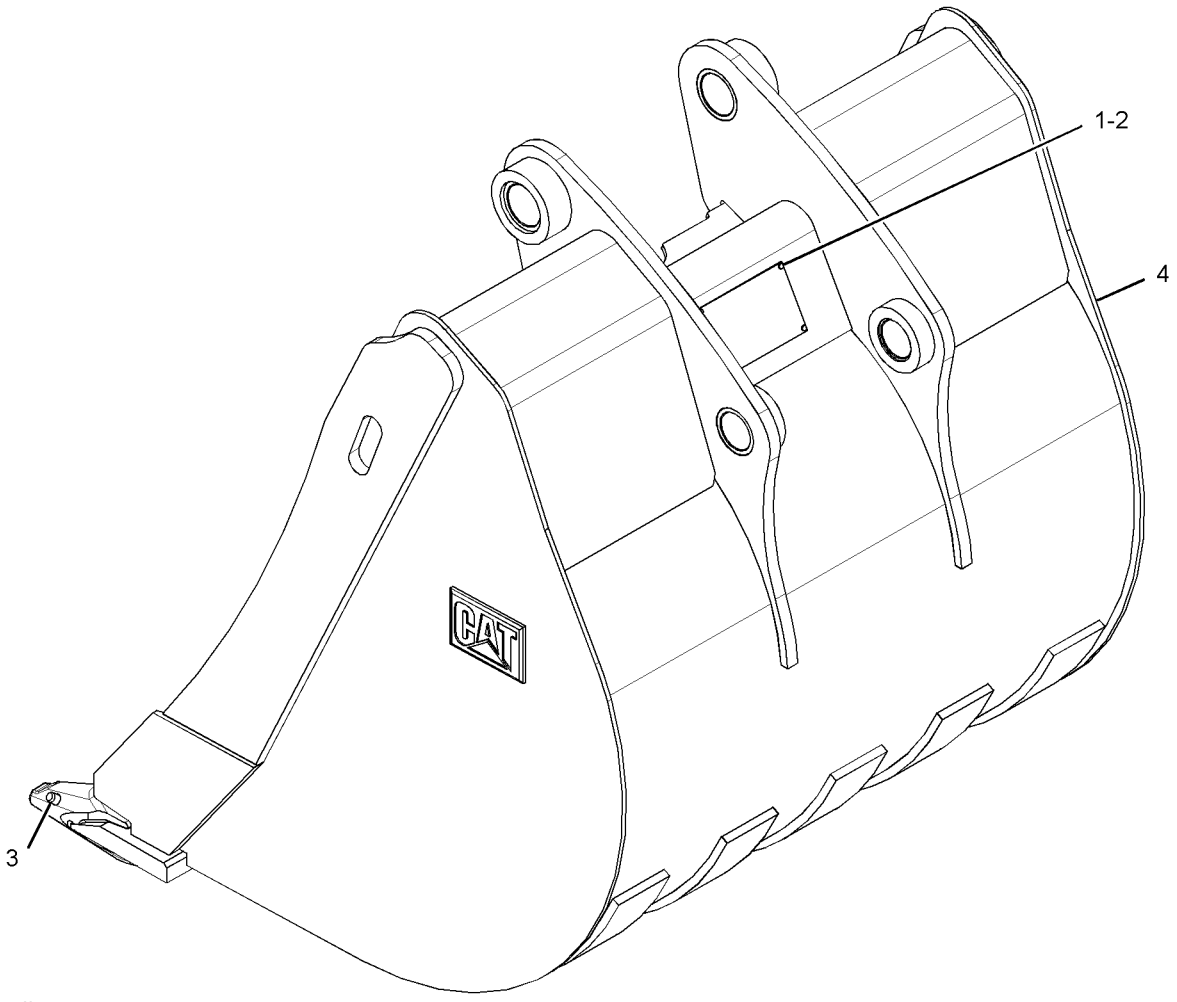

GRAPHIC #1 **<END>** g01336804

WORK TOOLS

249-4221 BUCKET GP-HOE—HEAVY-DUTY

S/N: SJL1-UP

AN ATTACHMENT

SMCS-6503 **i02399270**

NOTE	REF NO	GRAPHIC REF	PART NUMBER	QTY	PART NAME 1 2 3 4 5 6 (PRODUCT LEVEL)	SEE PAGE
	1	1	**137-4234**	1	PLATE-IDENTIFICATION (WORK TOOL)	
	2	1	**168-8389**	4	TACK-FASTENER	
	3	1	*208-5245*	5	TIP GP-PENETRATION	
					(EACH INCLUDES)	
		1	**201-1238**	1	PIN	
		1	**201-1239**	1	RETAINER AS	
		1	**208-5235**	1	TIP-PENETRATION	
Y	4	1	*249-4220*	1	BUCKET AS-HOE	485
M	5	1	**8T-4133**	4	NUT (M10X1.5-THD)	
M	6	1	**8T-4178**	2	BOLT (M10X1.5X90-MM)	

M-METRIC PART
Y-SEPARATE ILLUSTRATION

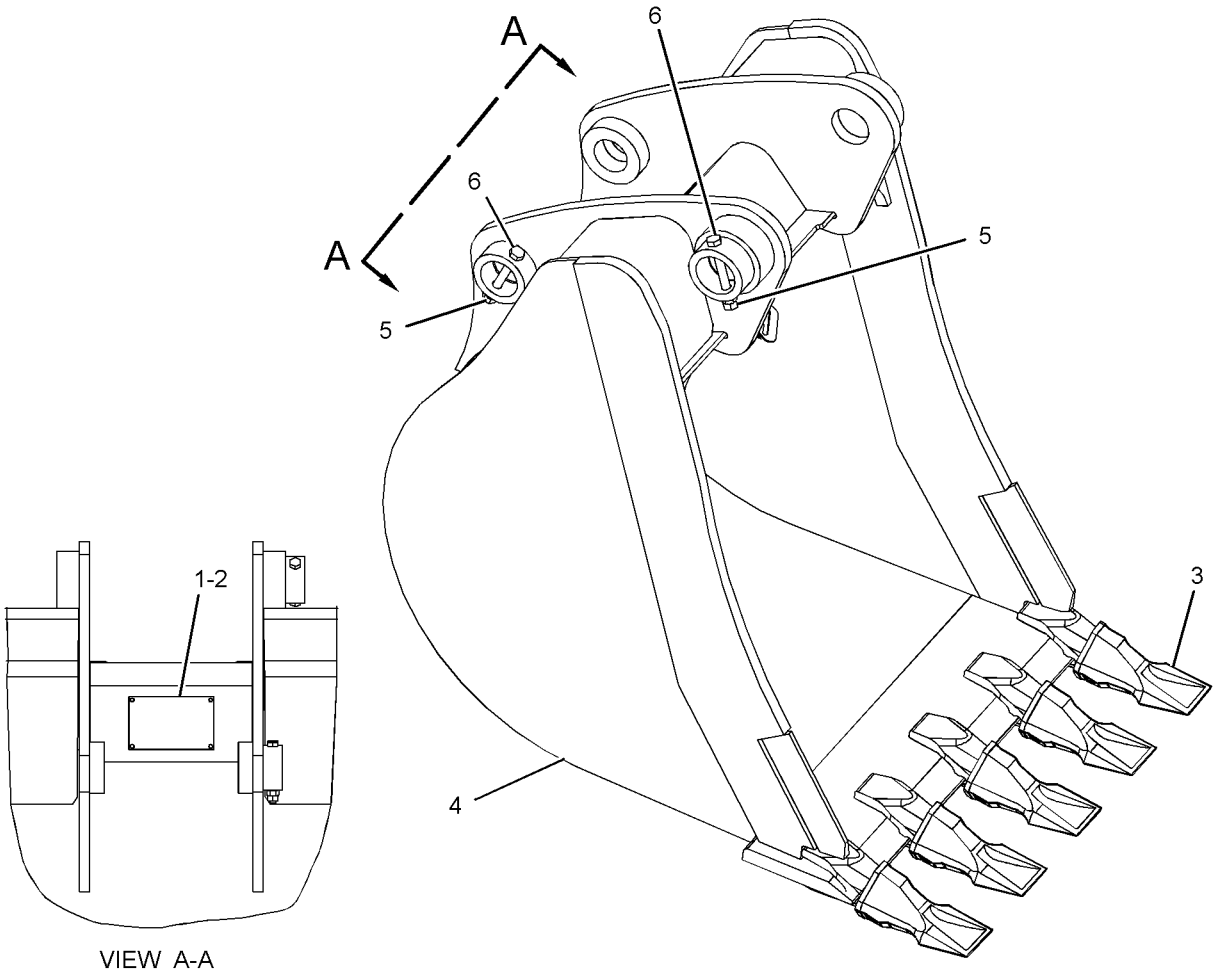

VIEW A-A

GRAPHIC #1 **<END>** g01200276

WORK TOOLS

272-6410 BUCKET GP-HOE—HEAVY-DUTY

S/N: SJL1-UP

AN ATTACHMENT

SMCS-6503 **i02425851**

NOTE	REF NO	GRAPHIC REF	PART NUMBER	QTY	PART NAME 1 2 3 4 5 6 (PRODUCT LEVEL)	SEE PAGE
	1	1	**137-4234**	1	PLATE-IDENTIFICATION (WORK TOOL)	
	2	1	**168-8389**	4	TACK-FASTENER	
	3	1	*208-5245*	4	TIP GP-PENETRATION	
					(EACH INCLUDES)	
		1	**201-1238**	1	PIN	
		1	**201-1239**	1	RETAINER AS	
		1	**208-5235**	1	TIP-PENETRATION	
Y	4	1	*272-6411*	1	BUCKET AS-HOE	486
M	5	1	**8T-4133**	4	NUT (M10X1.5-THD)	
M	6	1	**8T-4178**	2	BOLT (M10X1.5X90-MM)	

M-METRIC PART
Y-SEPARATE ILLUSTRATION

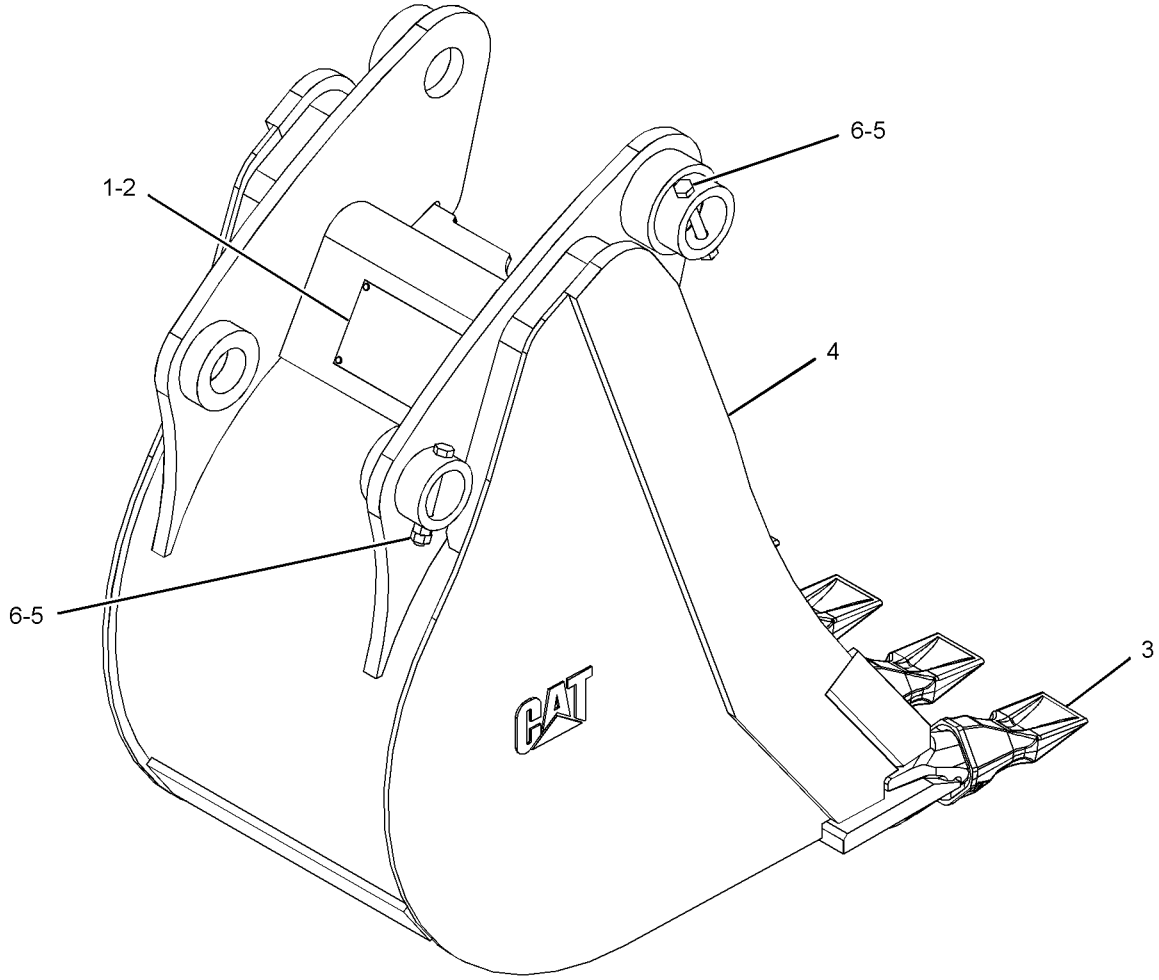

GRAPHIC #1 **<END>** g01214807

WORK TOOLS

272-7872 BUCKET GP-HOE—HEAVY-DUTY

S/N: SJL1-UP

AN ATTACHMENT

SMCS-6503 **i02425880**

NOTE	REF NO	GRAPHIC REF	PART NUMBER	QTY	PART NAME 1 2 3 4 5 6 (PRODUCT LEVEL)	SEE PAGE
	1	1	**137-4234**	1	PLATE-IDENTIFICATION (WORK TOOL)	
	2	1	**168-8389**	4	TACK-FASTENER	
	3	1	*208-5245*	5	TIP GP-PENETRATION	
					(EACH INCLUDES)	
		1	**201-1238**	1	PIN	
		1	**201-1239**	1	RETAINER AS	
		1	**208-5235**	1	TIP-PENETRATION	
Y	4	1	*272-7873*	1	BUCKET AS-HOE	487
M	5	1	**8T-4133**	4	NUT (M10X1.5-THD)	
M	6	1	**8T-4178**	2	BOLT (M10X1.5X90-MM)	

M-METRIC PART
Y-SEPARATE ILLUSTRATION

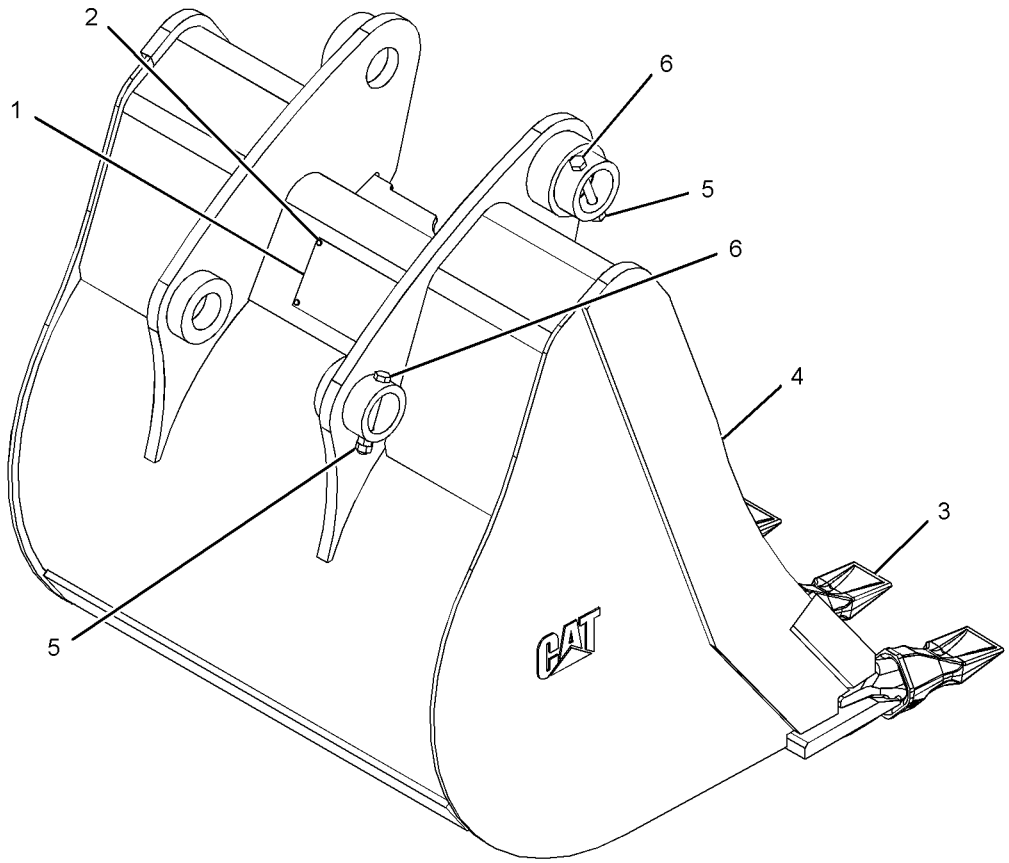

GRAPHIC #1 **<END>** g01215020

WORK TOOLS

272-9234 BUCKET GP-HOE—HEAVY-DUTY

S/N: SJL1-UP
AN ATTACHMENT

SMCS-6503 **i02427535**

NOTE	REF NO	GRAPHIC REF	PART NUMBER	QTY	PART NAME 1 2 3 4 5 6 (PRODUCT LEVEL)	SEE PAGE
	1	1	**137-4234**	1	PLATE-IDENTIFICATION (WORK TOOL)	
	2	1	**168-8389**	4	TACK-FASTENER	
	3	1	*208-5245*	6	TIP GP-PENETRATION	
					(EACH INCLUDES)	
		1	**201-1238**	1	PIN	
		1	**201-1239**	1	RETAINER AS	
		1	**208-5235**	1	TIP-PENETRATION	
Y	4	1	*272-9235*	1	BUCKET AS-HOE	488
M	5	1	**8T-4133**	4	NUT (M10X1.5-THD)	
M	6	1	**8T-4178**	2	BOLT (M10X1.5X90-MM)	

M-METRIC PART
Y-SEPARATE ILLUSTRATION

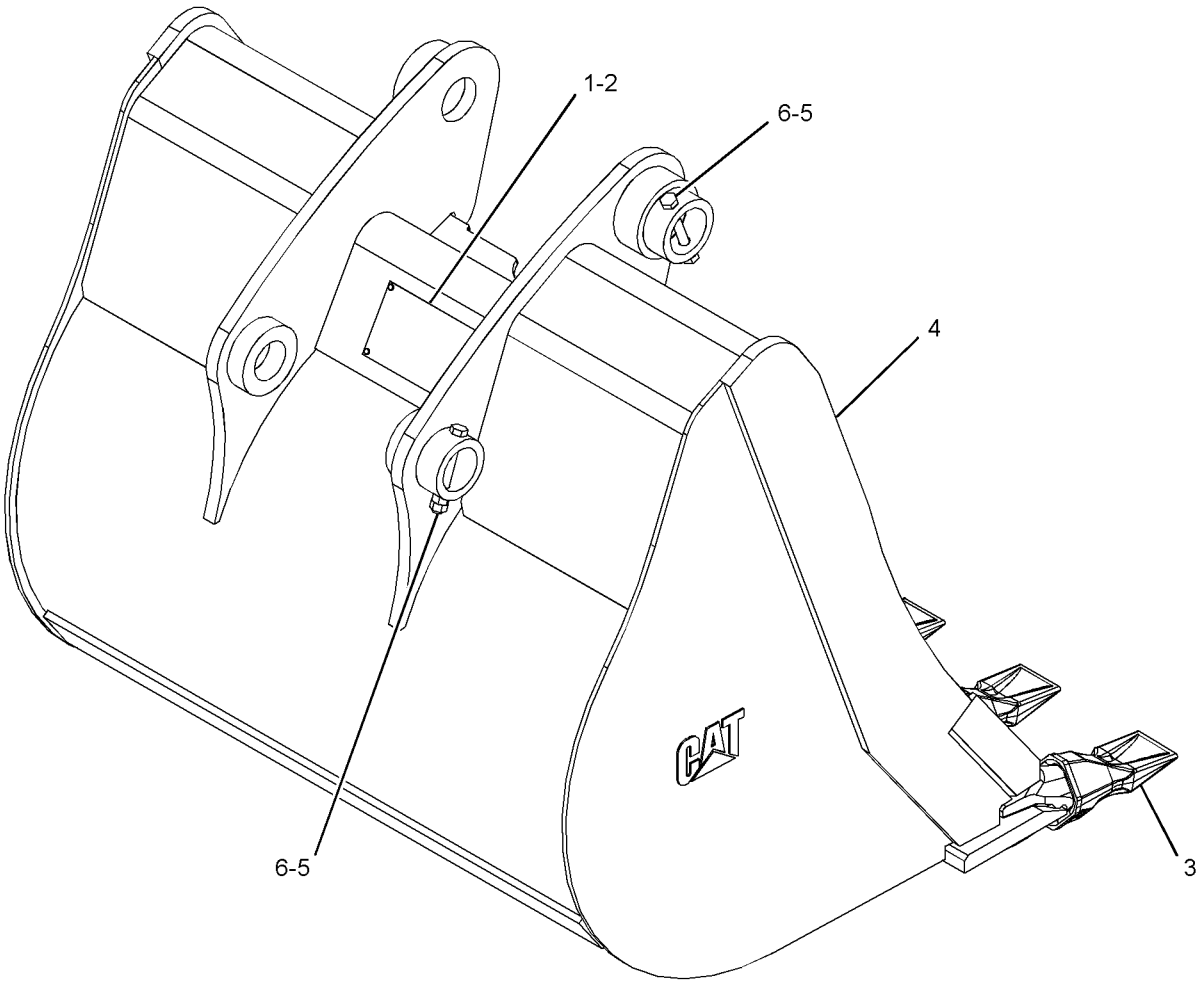

GRAPHIC #1 **<END>** g01214243

WORK TOOLS

272-9608 BUCKET GP-HOE—HEAVY-DUTY

S/N: SJL1-UP

AN ATTACHMENT

SMCS-6503 **i03599041**

NOTE	REF NO	GRAPHIC REF	PART NUMBER	QTY	PART NAME 1 2 3 4 5 6 (PRODUCT LEVEL)	SEE PAGE
	1	1	*135-8206*	6	TOOTH GP-UNI	
					(EACH INCLUDES)	
		1	**4F-3657**	2	BOLT-PLOW (5/8-11X2.75-IN)	
		1	**4K-0367**	2	NUT-FULL (5/8-11-THD)	
		1	**135-8203**	1	TOOTH-UNI	
	2	1	**137-4234**	1	PLATE-IDENTIFICATION (WORK TOOL)	
	3	1	**168-8389**	4	TACK-FASTENER	
Y	4	1	*272-9609*	1	BUCKET AS-HOE	489
M	5	1	**8T-4133**	4	NUT (M10X1.5-THD)	
M	6	1	**8T-4178**	2	BOLT (M10X1.5X90-MM)	

M-METRIC PART
Y-SEPARATE ILLUSTRATION

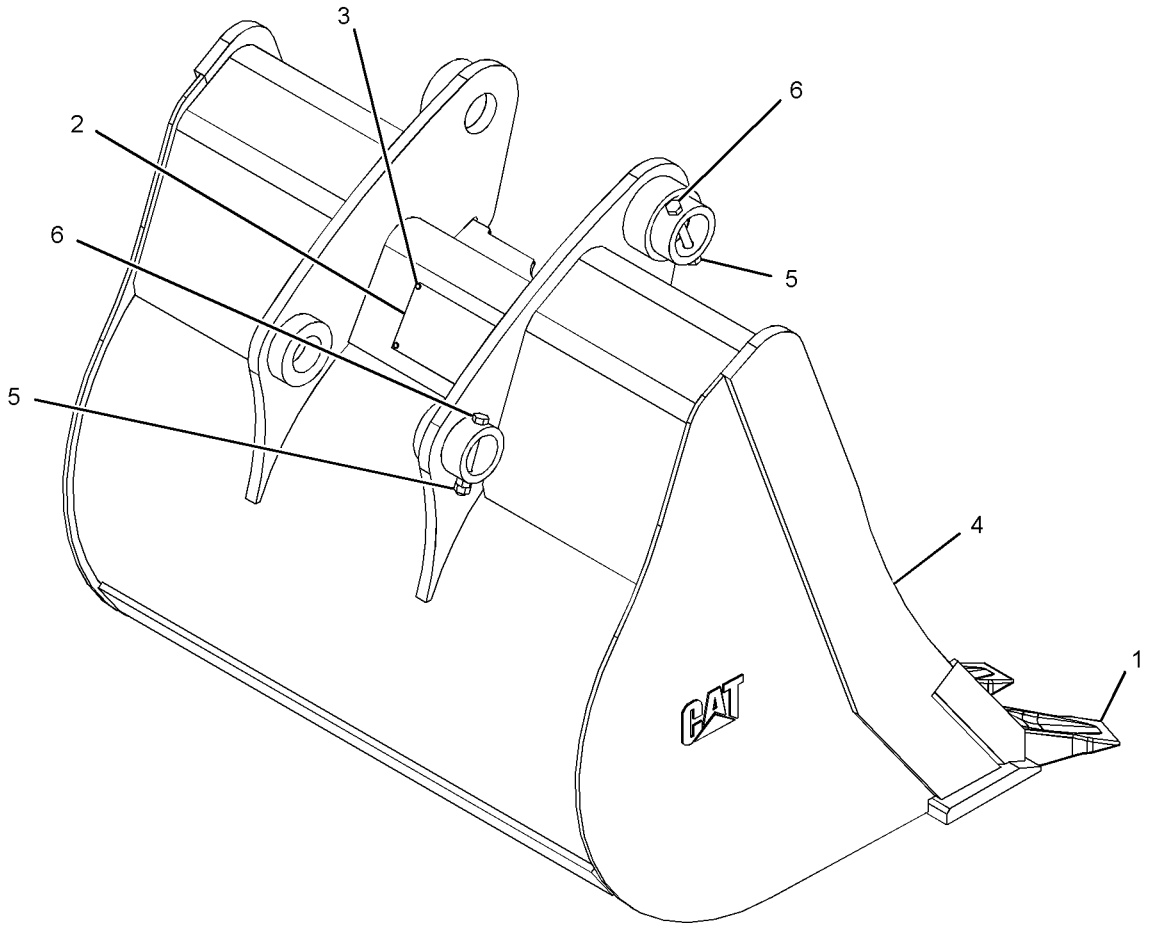

GRAPHIC #1 **<END>** g01215725

WORK TOOLS

273-0042 BUCKET GP-HOE—HEAVY-DUTY

S/N: SJL1-UP

AN ATTACHMENT

SMCS-6503 **i03599042**

NOTE	REF NO	GRAPHIC REF	PART NUMBER	QTY	PART NAME 1 2 3 4 5 6 (PRODUCT LEVEL)	SEE PAGE
	1	1	*135-8206*	5	TOOTH GP-UNI	
					(EACH INCLUDES)	
		1	**4F-3657**	2	BOLT-PLOW (5/8-11X2.75-IN)	
		1	**4K-0367**	2	NUT-FULL (5/8-11-THD)	
		1	**135-8203**	1	TOOTH-UNI	
	2	1	**137-4234**	1	PLATE-IDENTIFICATION (WORK TOOL)	
	3	1	**168-8389**	4	TACK-FASTENER	
Y	4	1	*273-0043*	1	BUCKET AS-HOE	490
M	5	1	**8T-4133**	4	NUT (M10X1.5-THD)	
M	6	1	**8T-4178**	2	BOLT (M10X1.5X90-MM)	

M-METRIC PART
Y-SEPARATE ILLUSTRATION

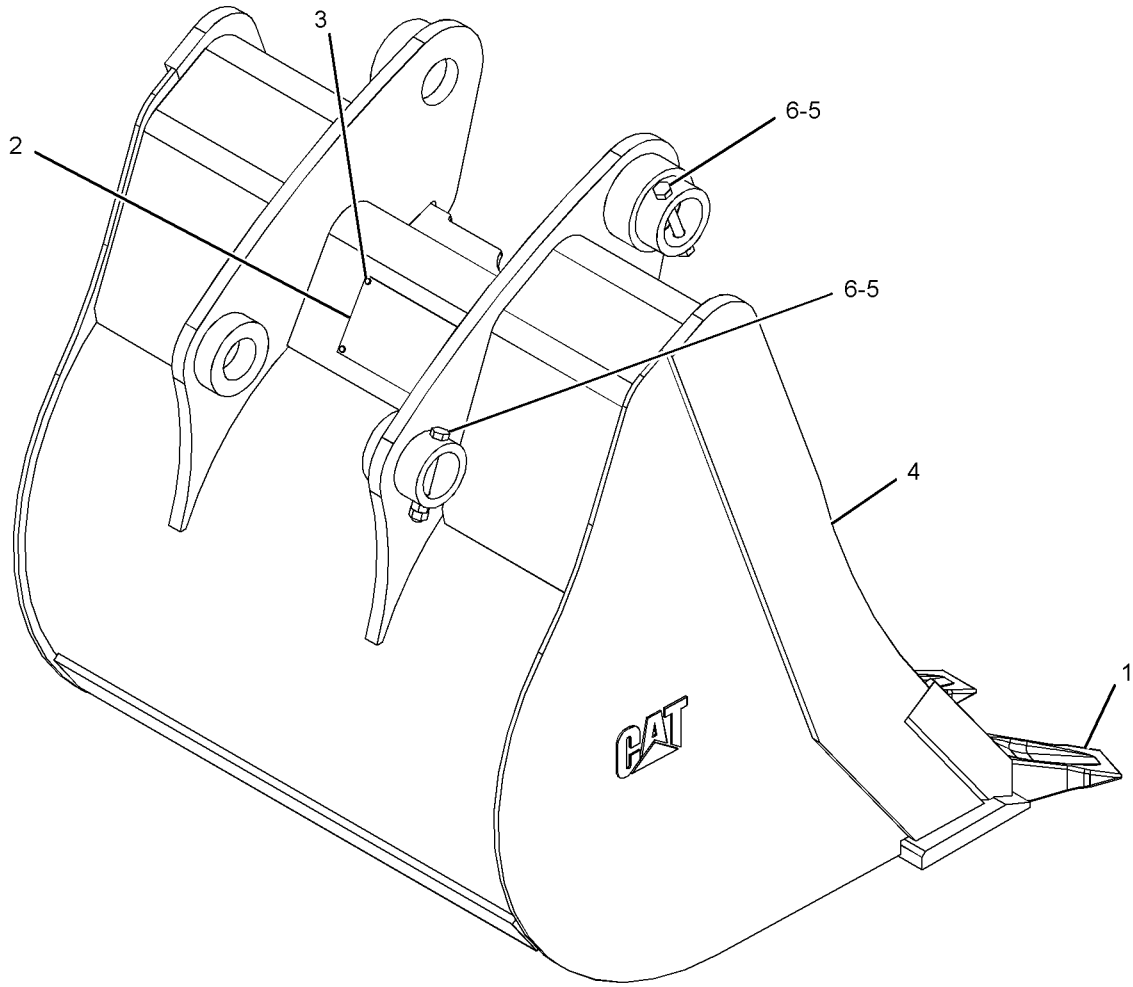

GRAPHIC #1 **<END>** g01214208

WORK TOOLS

273-0093 BUCKET GP-HOE—HEAVY-DUTY

S/N: SJL1-UP

AN ATTACHMENT

SMCS-6503 **i02427582**

NOTE	REF NO	GRAPHIC REF	PART NUMBER	QTY	PART NAME 1 2 3 4 5 6 (PRODUCT LEVEL)	SEE PAGE
	1	1	**137-4234**	1	PLATE-IDENTIFICATION (WORK TOOL)	
	2	1	**168-8389**	4	TACK-FASTENER	
	3	1	*208-5245*	3	TIP GP-PENETRATION	
					(EACH INCLUDES)	
		1	**201-1238**	1	PIN	
		1	**201-1239**	1	RETAINER AS	
		1	**208-5235**	1	TIP-PENETRATION	
Y	4	1	*273-0094*	1	BUCKET AS-HOE	491
M	5	1	**8T-4133**	4	NUT (M10X1.5-THD)	
M	6	1	**8T-4178**	2	BOLT (M10X1.5X90-MM)	

M-METRIC PART
Y-SEPARATE ILLUSTRATION

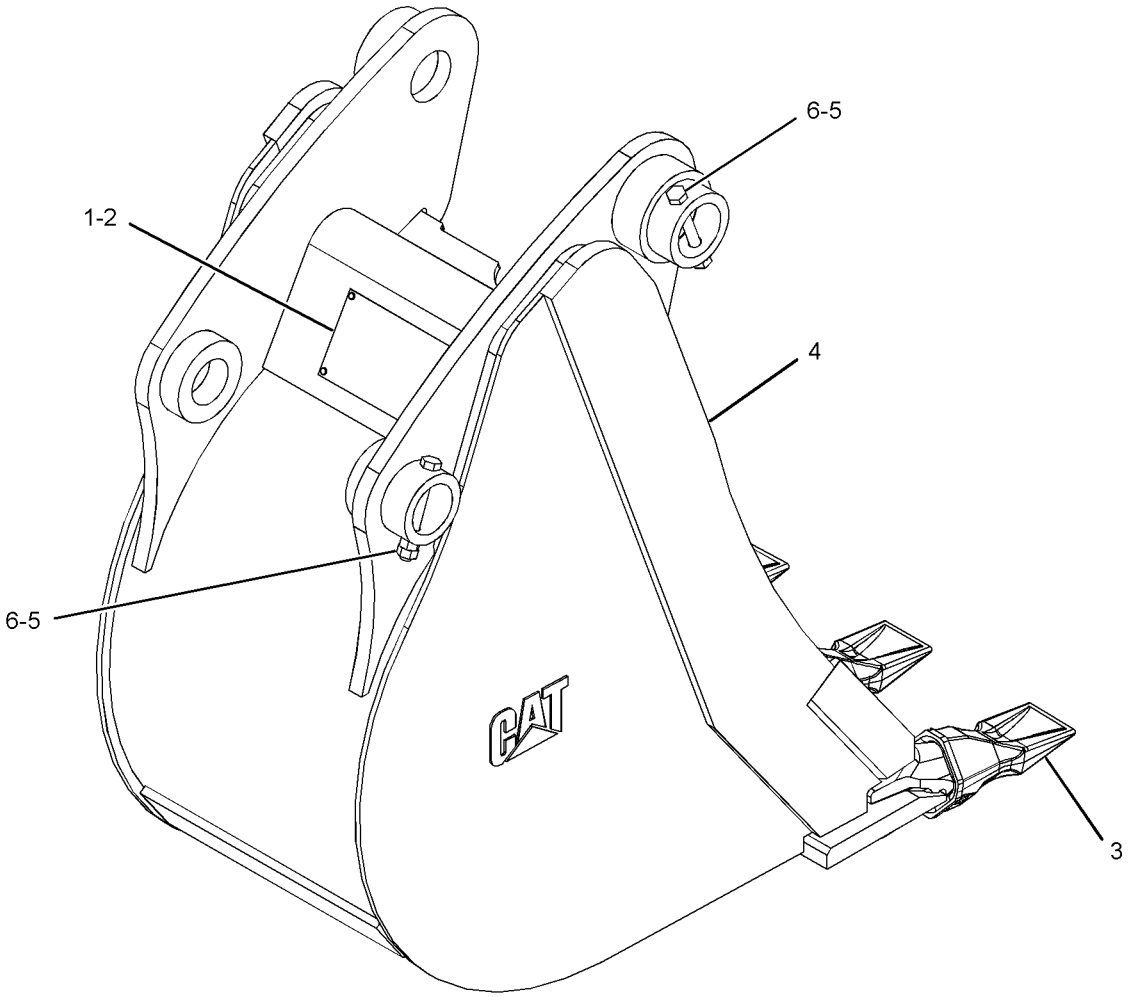

GRAPHIC #1 **<END>** g01214837

273-0799 BUCKET GP-HOE—HEAVY-DUTY

S/N: SJL1-UP
AN ATTACHMENT

SMCS-6503 **i03599045**

NOTE	REF NO	GRAPHIC REF	PART NUMBER	QTY	PART NAME 1 2 3 4 5 6 (PRODUCT LEVEL)	SEE PAGE
	1	1	*135-8206*	4	TOOTH GP-UNI	
					(EACH INCLUDES)	
		1	**4F-3657**	2	BOLT-PLOW (5/8-11X2.75-IN)	
		1	**4K-0367**	2	NUT-FULL (5/8-11-THD)	
		1	**135-8203**	1	TOOTH-UNI	
	2	1	**137-4234**	1	PLATE-IDENTIFICATION (WORK TOOL)	
	3	1	**168-8389**	4	TACK-FASTENER	
Y	4	1	*273-0800*	1	BUCKET AS-HOE	492
M	5	1	**8T-4133**	4	NUT (M10X1.5-THD)	
M	6	1	**8T-4178**	2	BOLT (M10X1.5X90-MM)	

M-METRIC PART
Y-SEPARATE ILLUSTRATION

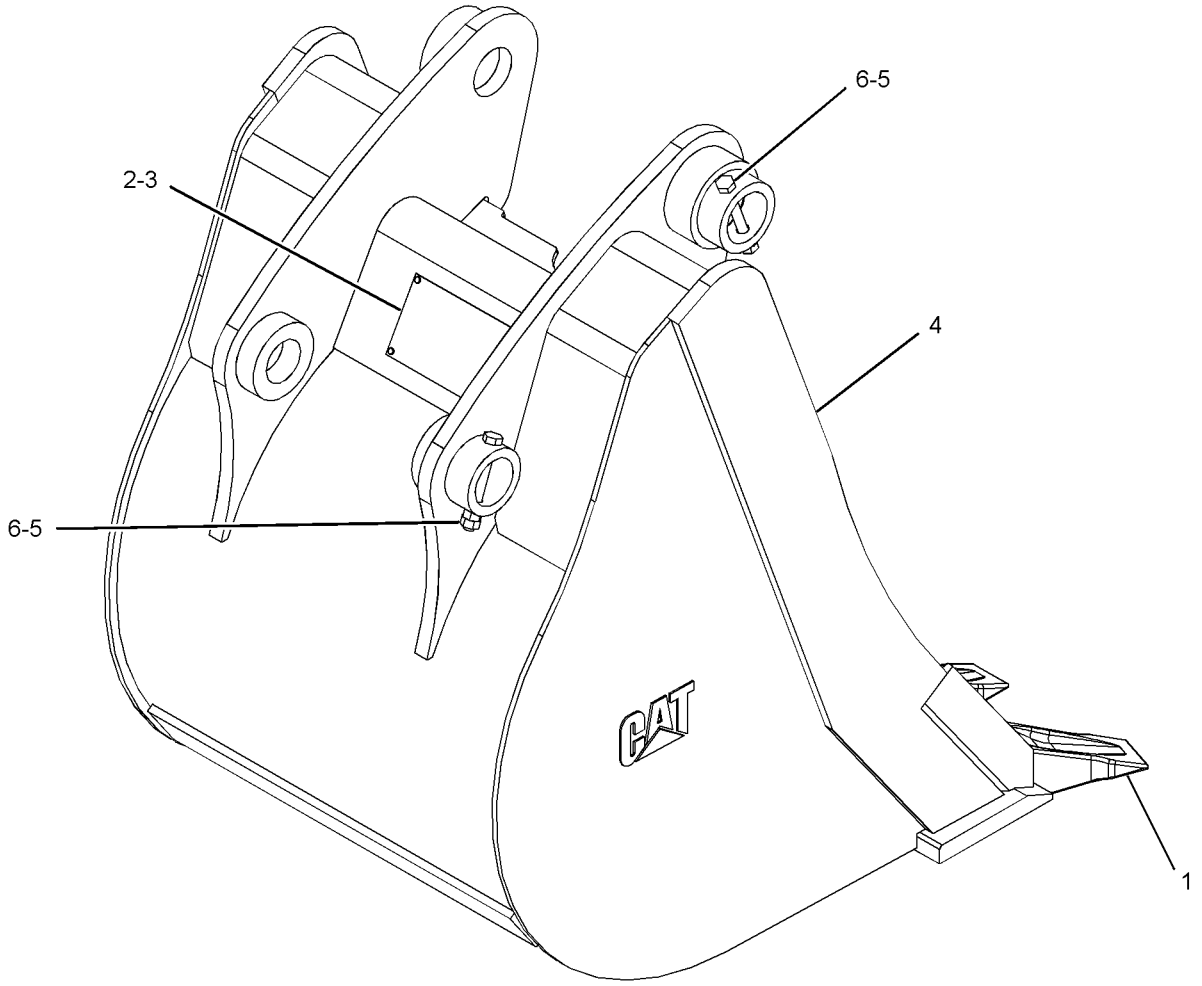

GRAPHIC #1 **<END>** g01214824

WORK TOOLS

273-0862 BUCKET GP-HOE—HEAVY-DUTY

S/N: SJL1-UP

AN ATTACHMENT

SMCS-6503 **i03599047**

NOTE	REF NO	GRAPHIC REF	PART NUMBER	QTY	PART NAME 1 2 3 4 5 6 (PRODUCT LEVEL)	SEE PAGE
	1	1	*135-8206*	3	TOOTH GP-UNI	
					(EACH INCLUDES)	
		1	**4F-3657**	2	BOLT-PLOW (5/8-11X2.75-IN)	
		1	**4K-0367**	2	NUT-FULL (5/8-11-THD)	
		1	**135-8203**	1	TOOTH-UNI	
	2	1	**137-4234**	1	PLATE-IDENTIFICATION (WORK TOOL)	
	3	1	**168-8389**	4	TACK-FASTENER	
Y	4	1	*273-0863*	1	BUCKET AS-HOE	493
M	5	1	**8T-4133**	4	NUT (M10X1.5-THD)	
M	6	1	**8T-4178**	2	BOLT (M10X1.5X90-MM)	

M-METRIC PART
Y-SEPARATE ILLUSTRATION

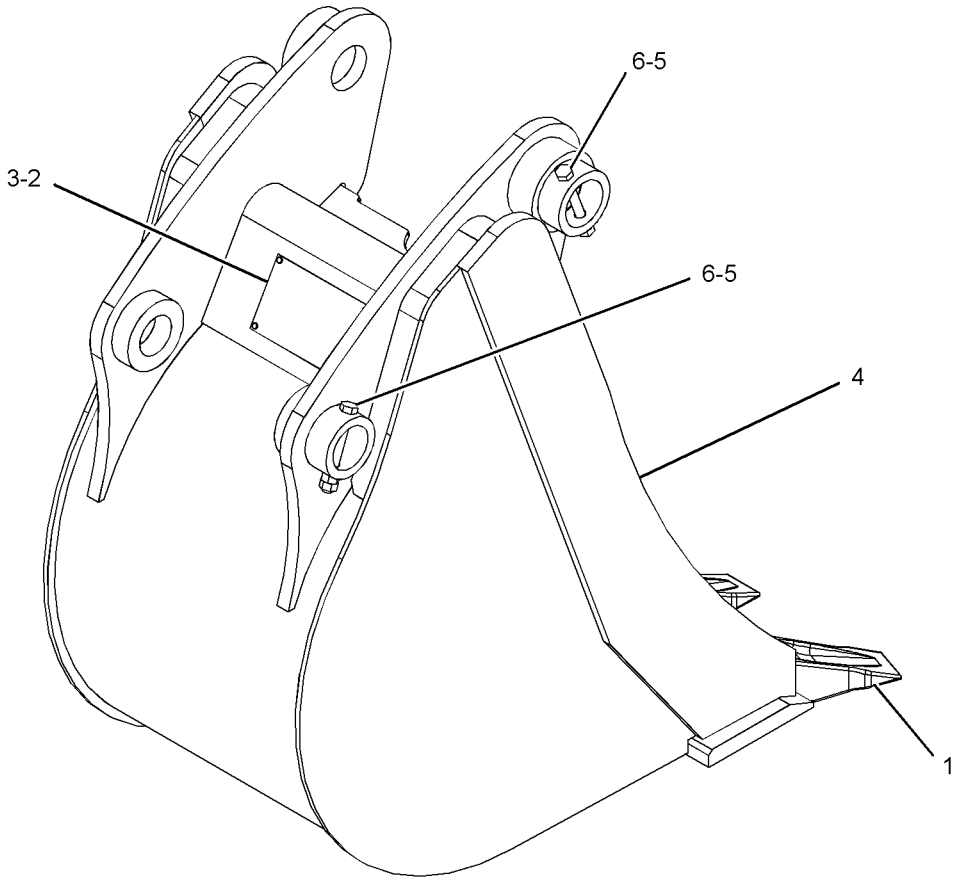

GRAPHIC #1 **<END>** g01220738

WORK TOOLS

273-1374 BUCKET GP-HOE

S/N: SJL1-UP

AN ATTACHMENT

SMCS-6503 **i03599056**

NOTE	REF NO	GRAPHIC REF	PART NUMBER	QTY	PART NAME 1 2 3 4 5 6 (PRODUCT LEVEL)	SEE PAGE
	1	1	*135-8206*	3	TOOTH GP-UNI	
					(EACH INCLUDES)	
		1	**4F-3657**	2	BOLT-PLOW (5/8-11X2.75-IN)	
		1	**4K-0367**	2	NUT-FULL (5/8-11-THD)	
		1	**135-8203**	1	TOOTH-UNI	
	2	1	**137-4234**	1	PLATE-IDENTIFICATION (WORK TOOL)	
	3	1	**168-8389**	4	TACK-FASTENER	
Y	4	1	*273-1375*	1	BUCKET AS-HOE	494
M	5	1	**8T-4133**	4	NUT (M10X1.5-THD)	
M	6	1	**8T-4178**	2	BOLT (M10X1.5X90-MM)	

M-METRIC PART
Y-SEPARATE ILLUSTRATION

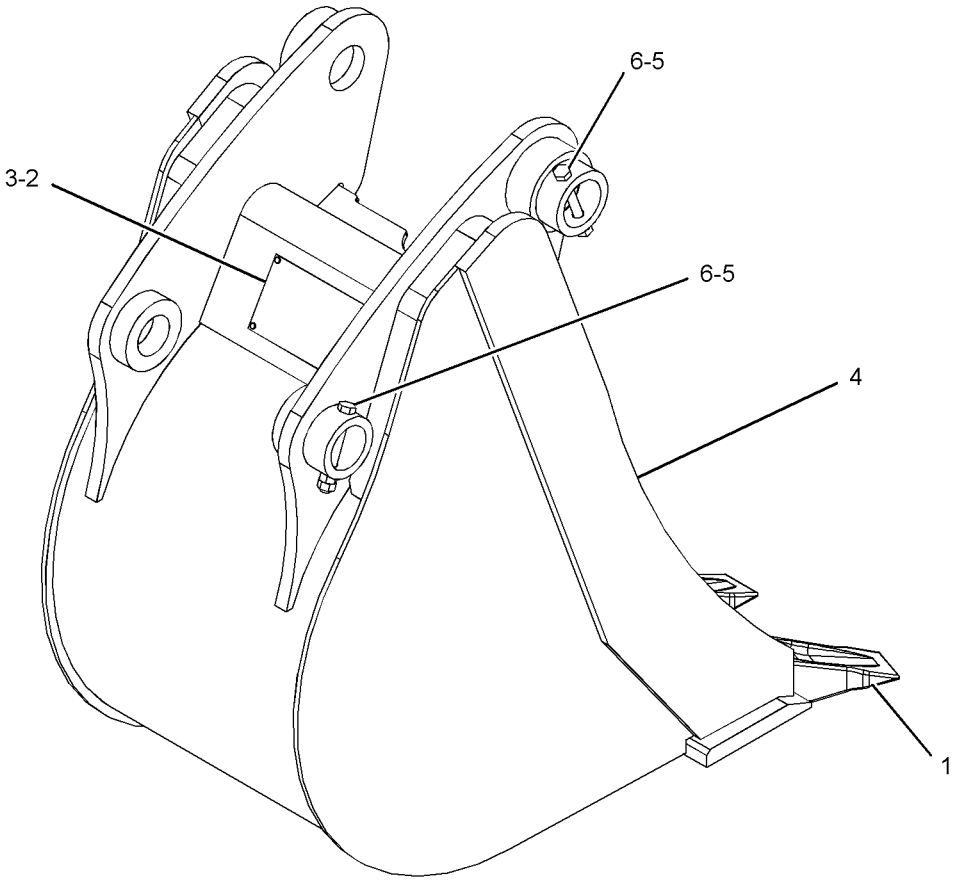

GRAPHIC #1 **<END>** g01220738

WORK TOOLS

273-1948 BUCKET GP-HOE

S/N: SJL1-UP
610-MM(24-IN)
AN ATTACHMENT

SMCS-6503 **i03599057**

NOTE	REF NO	GRAPHIC REF	PART NUMBER	QTY	PART NAME 1 2 3 4 5 6 (PRODUCT LEVEL)	SEE PAGE
	1	1	*135-8206*	4	TOOTH GP-UNI	
					(EACH INCLUDES)	
		1	**4F-3657**	2	BOLT-PLOW (5/8-11X2.75-IN)	
		1	**4K-0367**	2	NUT-FULL (5/8-11-THD)	
		1	**135-8203**	1	TOOTH-UNI	
	2	1	**137-4234**	1	PLATE-IDENTIFICATION (WORK TOOL)	
	3	1	**168-8389**	4	TACK-FASTENER	
Y	4	1	*273-1949*	1	BUCKET AS-HOE	495
M	5	1	**8T-4133**	4	NUT (M10X1.5-THD)	
M	6	1	**8T-4178**	2	BOLT (M10X1.5X90-MM)	

M-METRIC PART
Y-SEPARATE ILLUSTRATION

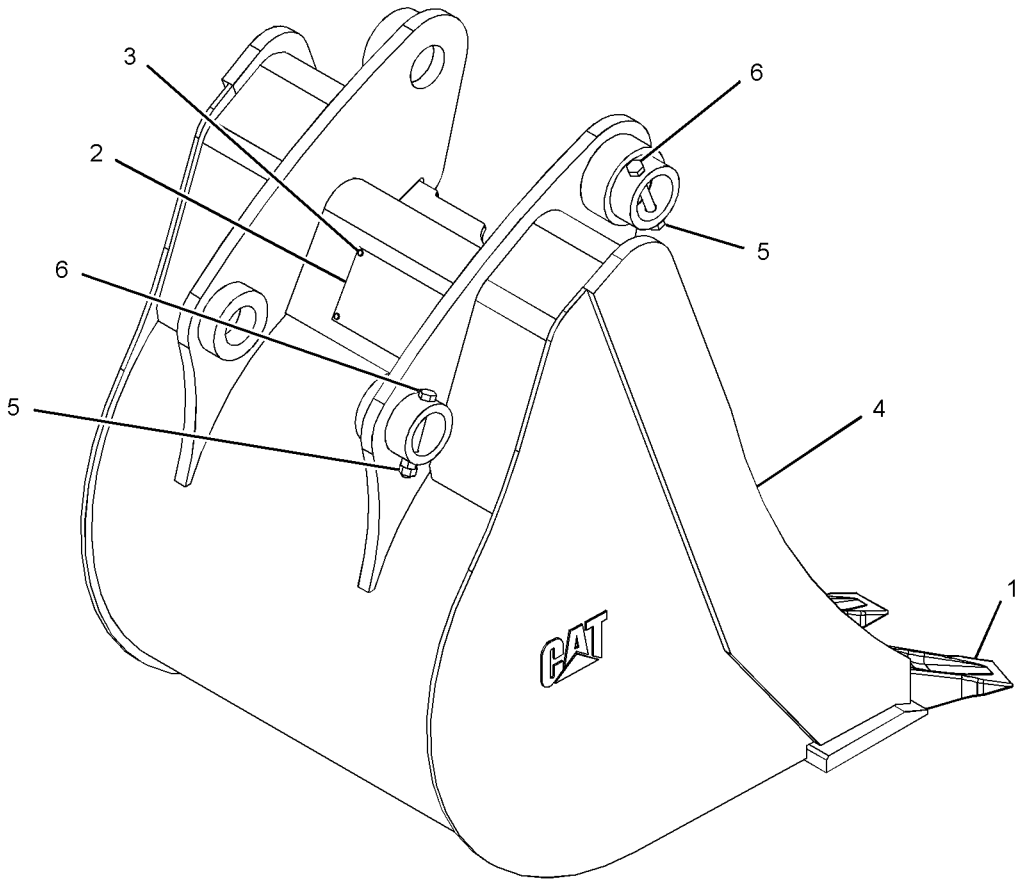

GRAPHIC #1 **<END>** g01215663

WORK TOOLS

273-1950 BUCKET GP-HOE

S/N: SJL1-UP
AN ATTACHMENT

SMCS-6503 **i03599058**

NOTE	REF NO	GRAPHIC REF	PART NUMBER	QTY	PART NAME 1 2 3 4 5 6 (PRODUCT LEVEL)	SEE PAGE
	1	1	*135-8206*	5	TOOTH GP-UNI	
					(EACH INCLUDES)	
		1	**4F-3657**	2	BOLT-PLOW (5/8-11X2.75-IN)	
		1	**4K-0367**	2	NUT-FULL (5/8-11-THD)	
		1	**135-8203**	1	TOOTH-UNI	
	2	1	**137-4234**	1	PLATE-IDENTIFICATION (WORK TOOL)	
	3	1	**168-8389**	4	TACK-FASTENER	
Y	4	1	*273-1951*	1	BUCKET AS-HOE	496
M	5	1	**8T-4133**	4	NUT (M10X1.5-THD)	
M	6	1	**8T-4178**	2	BOLT (M10X1.5X90-MM)	

M-METRIC PART
Y-SEPARATE ILLUSTRATION

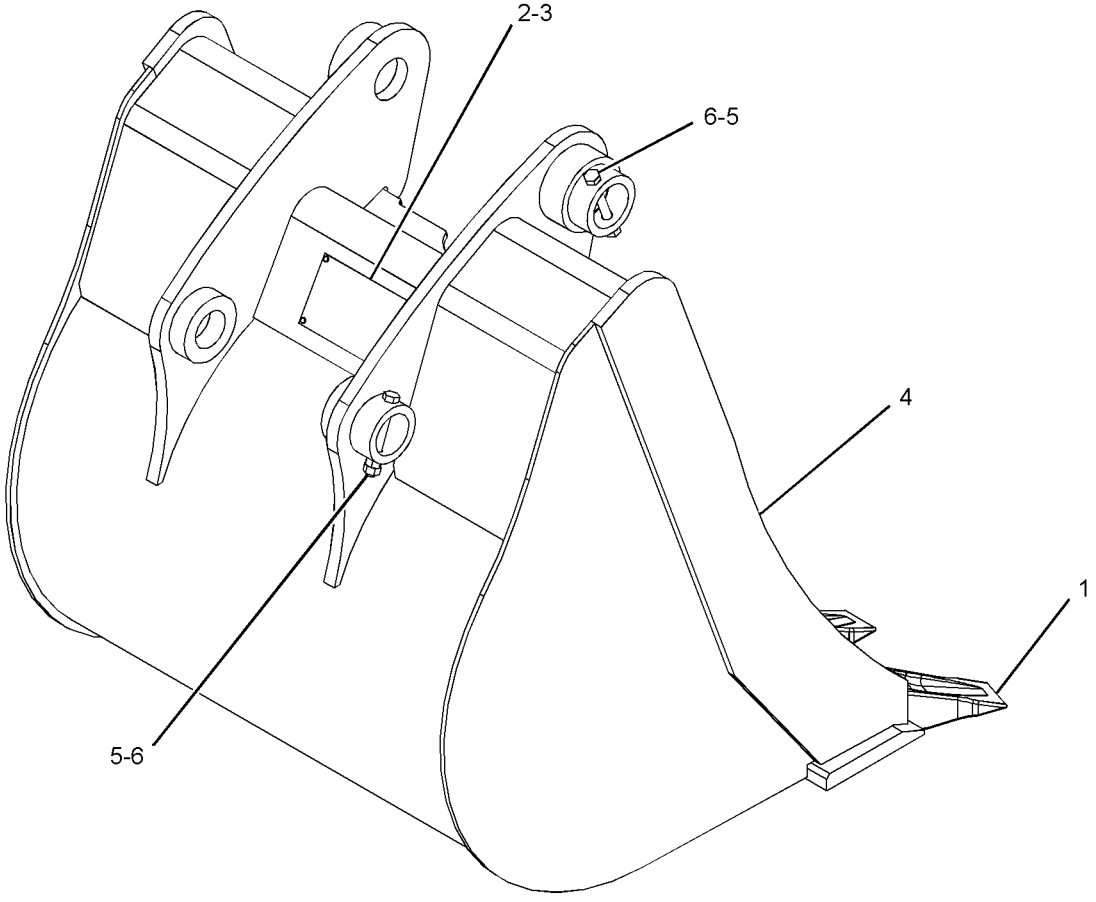

GRAPHIC #1 **<END>** g01215674

WORK TOOLS

273-1957 BUCKET GP-HOE

S/N: SJL1-UP
AN ATTACHMENT

SMCS-6503 **i03599053**

NOTE	REF NO	GRAPHIC REF	PART NUMBER	QTY	PART NAME 1 2 3 4 5 6 (PRODUCT LEVEL)	SEE PAGE
	1	1	*135-8206*	6	TOOTH GP-UNI	
					(EACH INCLUDES)	
		1	**4F-3657**	2	BOLT-PLOW (5/8-11X2.75-IN)	
		1	**4K-0367**	2	NUT-FULL (5/8-11-THD)	
		1	**135-8203**	1	TOOTH-UNI	
	2	1	**137-4234**	1	PLATE-IDENTIFICATION (WORK TOOL)	
	3	1	**168-8389**	4	TACK-FASTENER	
Y	4	1	*273-1958*	1	BUCKET AS-HOE	497
M	5	1	**8T-4133**	4	NUT (M10X1.5-THD)	
M	6	1	**8T-4178**	2	BOLT (M10X1.5X90-MM)	

M-METRIC PART
Y-SEPARATE ILLUSTRATION

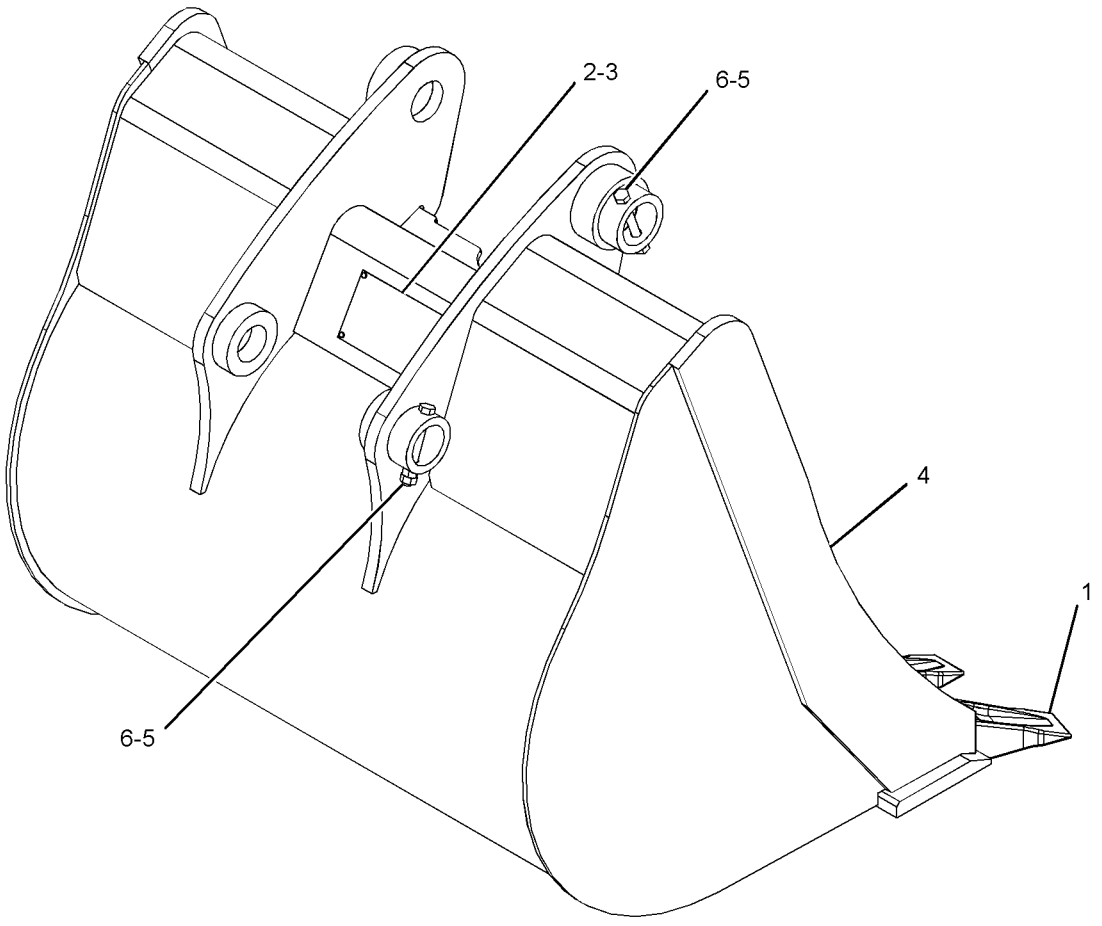

GRAPHIC #1 **<END>** g01215755

WORK TOOLS

273-3731 BUCKET GP-HOE—HEAVY-DUTY

S/N: SJL1-UP

AN ATTACHMENT

SMCS-6503 **i02427621**

NOTE	REF NO	GRAPHIC REF	PART NUMBER	QTY	PART NAME 1 2 3 4 5 6 (PRODUCT LEVEL)	SEE PAGE
	1	1	**9R-0158**	5	WASHER (46X69X3-MM THK)	
	2	1	**9R-1510**	3	WASHER (51X82X4-MM THK)	
	3	1	**168-0443**	1	PIN	
	4	1	**168-0444**	1	PIN	
Y	5	1	**273-3732**	1	BUCKET GP-HOE (HEAVY-DUTY)	523
	6	1	**6V-3213**	2	RING-RETAINING	
	7	1	**6V-4364**	2	RING-RETAINING	

Y-SEPARATE ILLUSTRATION

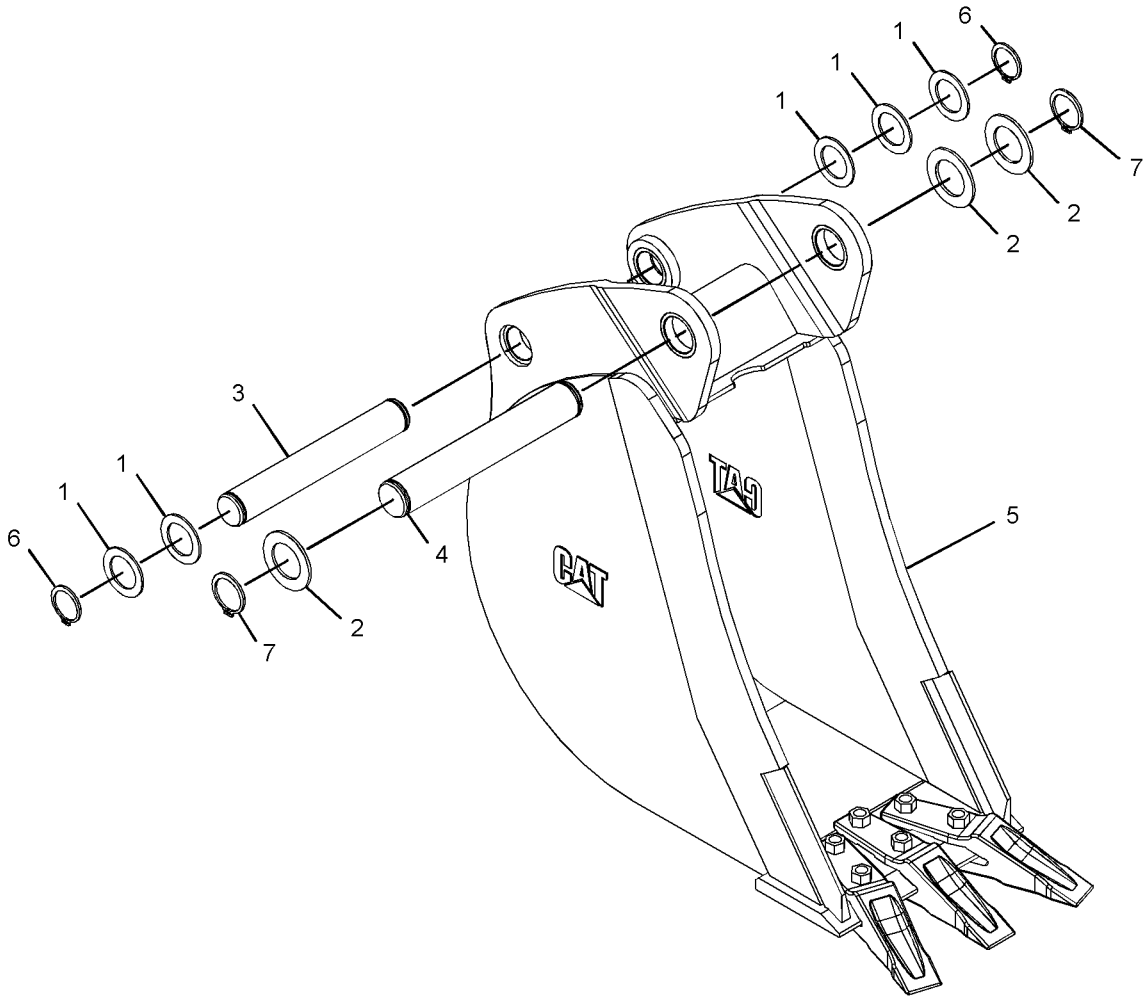

GRAPHIC #1 **<END>** g01215645

WORK TOOLS

273-3732 BUCKET GP-HOE—HEAVY-DUTY

S/N: SJL1-UP

PART OF 273-3731 BUCKET GP-HOE

AN ATTACHMENT

SMCS-6503 **i03599052**

NOTE	REF NO	GRAPHIC REF	PART NUMBER	QTY	PART NAME 1 2 3 4 5 6 (PRODUCT LEVEL)	SEE PAGE
	1	1	*135-8206*	3	TOOTH GP-UNI	
					(EACH INCLUDES)	
		1	**4F-3657**	2	BOLT-PLOW (5/8-11X2.75-IN)	
		1	**4K-0367**	2	NUT-FULL (5/8-11-THD)	
		1	**135-8203**	1	TOOTH-UNI	
	2	1	**137-4234**	1	PLATE-IDENTIFICATION (WORK TOOL)	
	3	1	**168-8389**	4	TACK-FASTENER	
Y	4	1	*273-3733*	1	BUCKET AS-HOE	498

Y-SEPARATE ILLUSTRATION

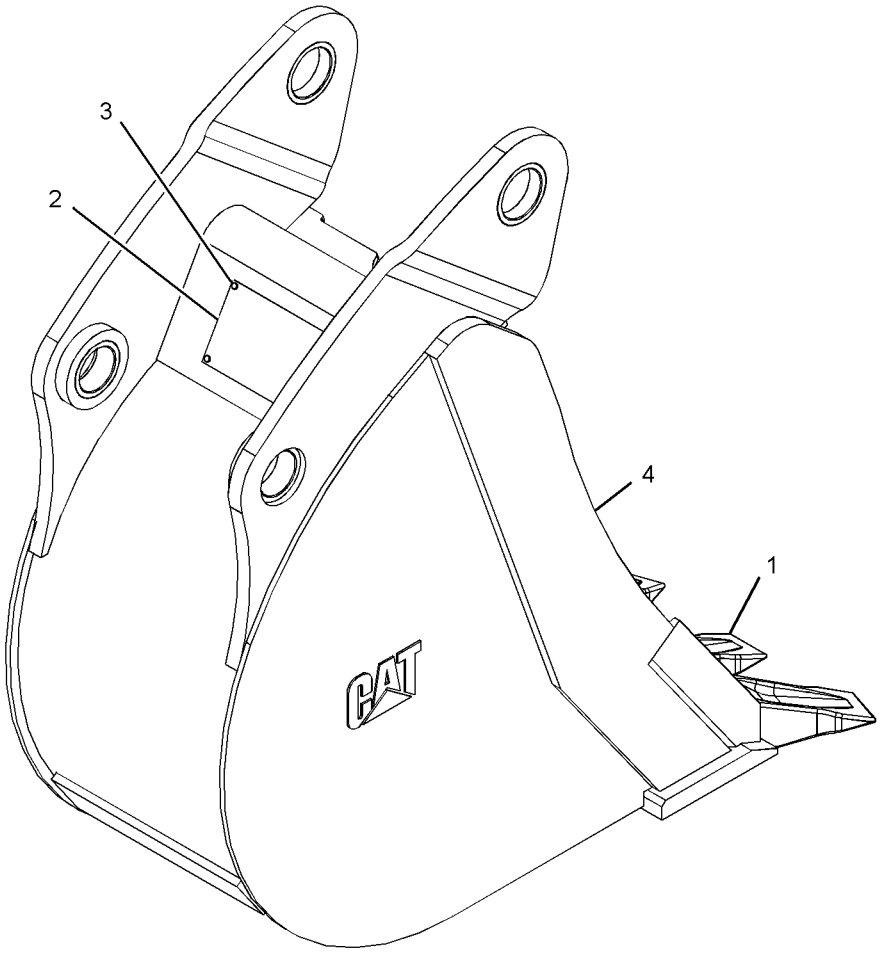

GRAPHIC #1 **<END>** g01228335

WORK TOOLS

273-3791 BUCKET GP-HOE

S/N: SJL1-UP

AN ATTACHMENT

SMCS-6503 **i02428435**

NOTE	REF NO	GRAPHIC REF	PART NUMBER	QTY	PART NAME 1 2 3 4 5 6 (PRODUCT LEVEL)	SEE PAGE
	1	1	**9R-0158**	5	WASHER (46X69X3-MM THK)	
	2	1	**9R-1510**	3	WASHER (51X82X4-MM THK)	
	3	1	**168-0443**	1	PIN	
	4	1	**168-0444**	1	PIN	
Y	5	1	**273-3792**	1	BUCKET GP-HOE	525
	6	1	**6V-3213**	2	RING-RETAINING	
	7	1	**6V-4364**	2	RING-RETAINING	

Y-SEPARATE ILLUSTRATION

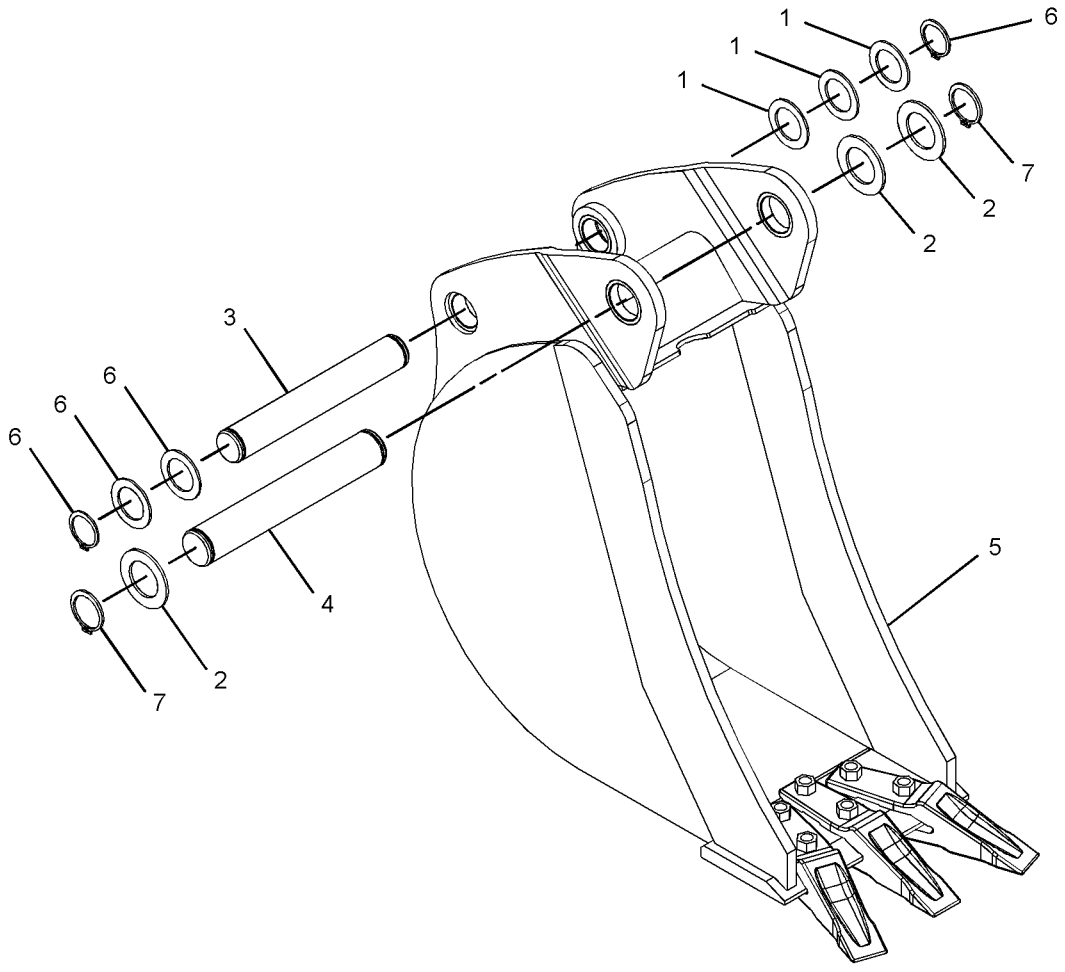

GRAPHIC #1 **<END>** g01215655

WORK TOOLS

273-3792 BUCKET GP-HOE

S/N: SJL1-UP
PART OF 273-3791 BUCKET GP-HOE
AN ATTACHMENT

SMCS-6503 **i03599051**

NOTE	REF NO	GRAPHIC REF	PART NUMBER	QTY	PART NAME 1 2 3 4 5 6 (PRODUCT LEVEL)	SEE PAGE
	1	1	*135-8206*	3	TOOTH GP-UNI	
					(EACH INCLUDES)	
		1	**4F-3657**	2	BOLT-PLOW (5/8-11X2.75-IN)	
		1	**4K-0367**	2	NUT-FULL (5/8-11-THD)	
		1	**135-8203**	1	TOOTH-UNI	
	2	1	**137-4234**	1	PLATE-IDENTIFICATION (WORK TOOL)	
	3	1	**168-8389**	4	TACK-FASTENER	
Y	4	1	*273-3793*	1	BUCKET AS-HOE	499

Y-SEPARATE ILLUSTRATION

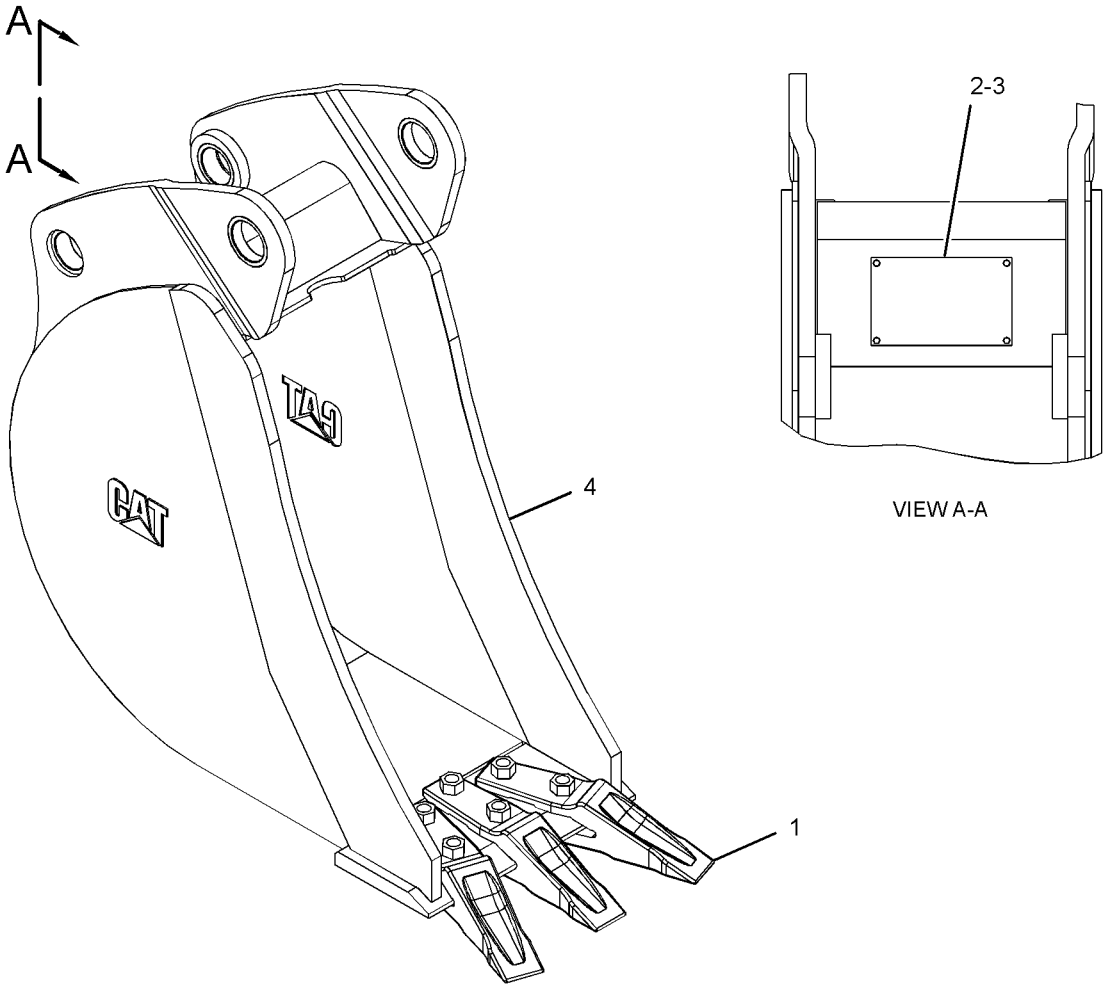

GRAPHIC #1 **<END>** g01226143

WORK TOOLS

220-4634 BUCKET GP-MULTIPURPOSE

S/N: SJL1-UP
PART OF 320-9941 BUCKET AR-MULTIPURPOSE
AN ATTACHMENT

SMCS-6104 **i02217403**

NOTE	REF NO	GRAPHIC REF	PART NUMBER	QTY	PART NAME 1 2 3 4 5 6 (PRODUCT LEVEL)	SEE PAGE
	1	1	**9R-4676**	2	PIN	
Y	2	1	**220-4616**	1	CLAM AS-MULTIPURPOSE BUCKET	533
Y	3	1	**220-4635**	1	BULLDOZER AS (MULTIPURPOSE BUCKET)	529
	4	1	**096-1820**	2	PIN-COTTER	
	5	1	**3B-8489**	2	FITTING-GREASE	

Y-SEPARATE ILLUSTRATION

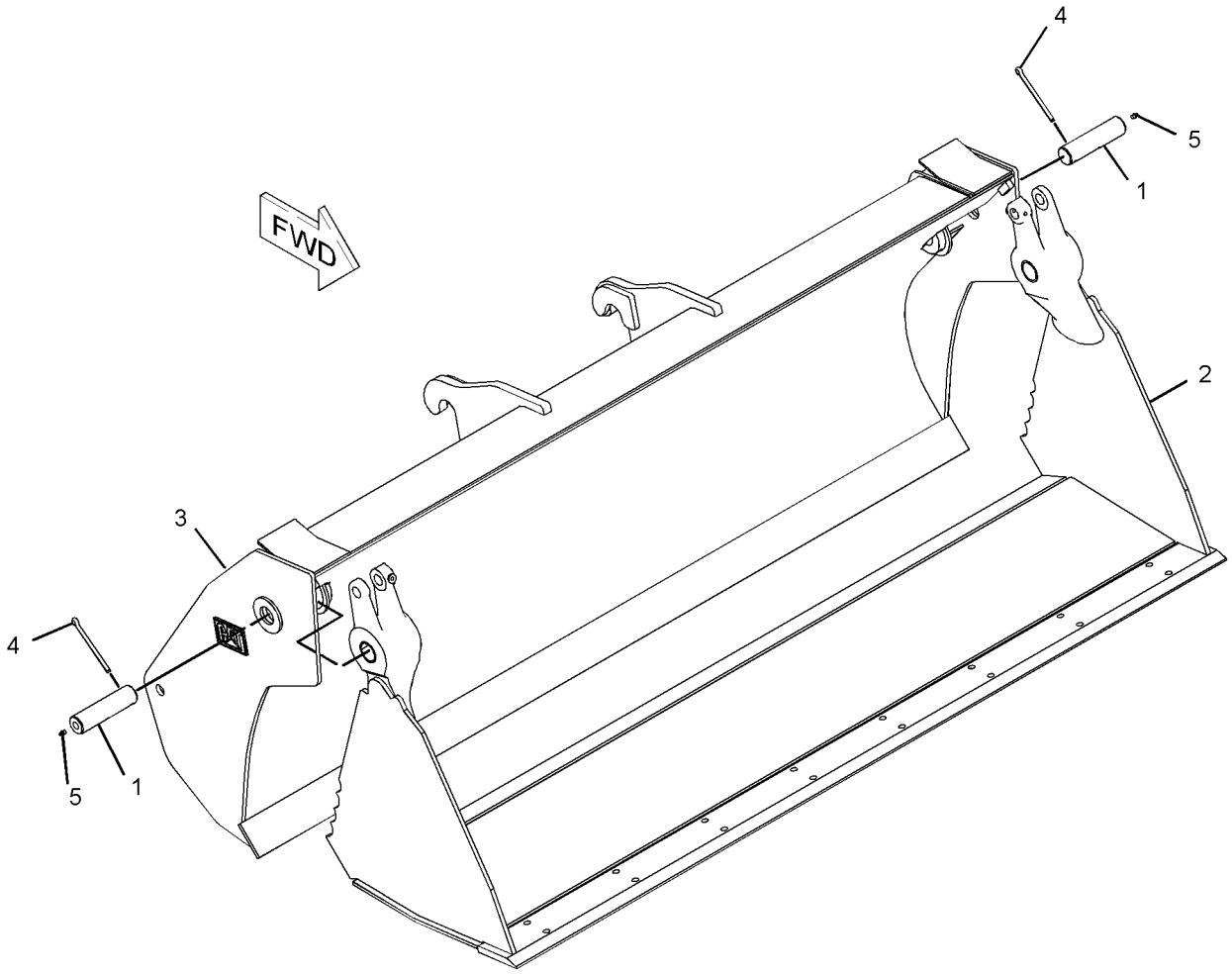

GRAPHIC #1 **<END>** g01120278

WORK TOOLS

220-4644 BUCKET GP-MULTIPURPOSE

S/N: SJL1-UP
PART OF 318-7257, 318-7261 BUCKET AR-MULTIPURPOSE
AN ATTACHMENT

SMCS-6104 **i02223532**

NOTE	REF NO	GRAPHIC REF	PART NUMBER	QTY	PART NAME 1 2 3 4 5 6 (PRODUCT LEVEL)	SEE PAGE
	1	1	**9R-4676**	2	PIN	
Y	2	1	**220-4645**	1	BULLDOZER AS (MULTIPURPOSE BUCKET)	530
Y	3	1	**220-4646**	1	CLAM AS-MULTIPURPOSE BUCKET	534
	4	1	**096-1820**	2	PIN-COTTER	
	5	1	**3B-8489**	2	FITTING-GREASE	

Y-SEPARATE ILLUSTRATION

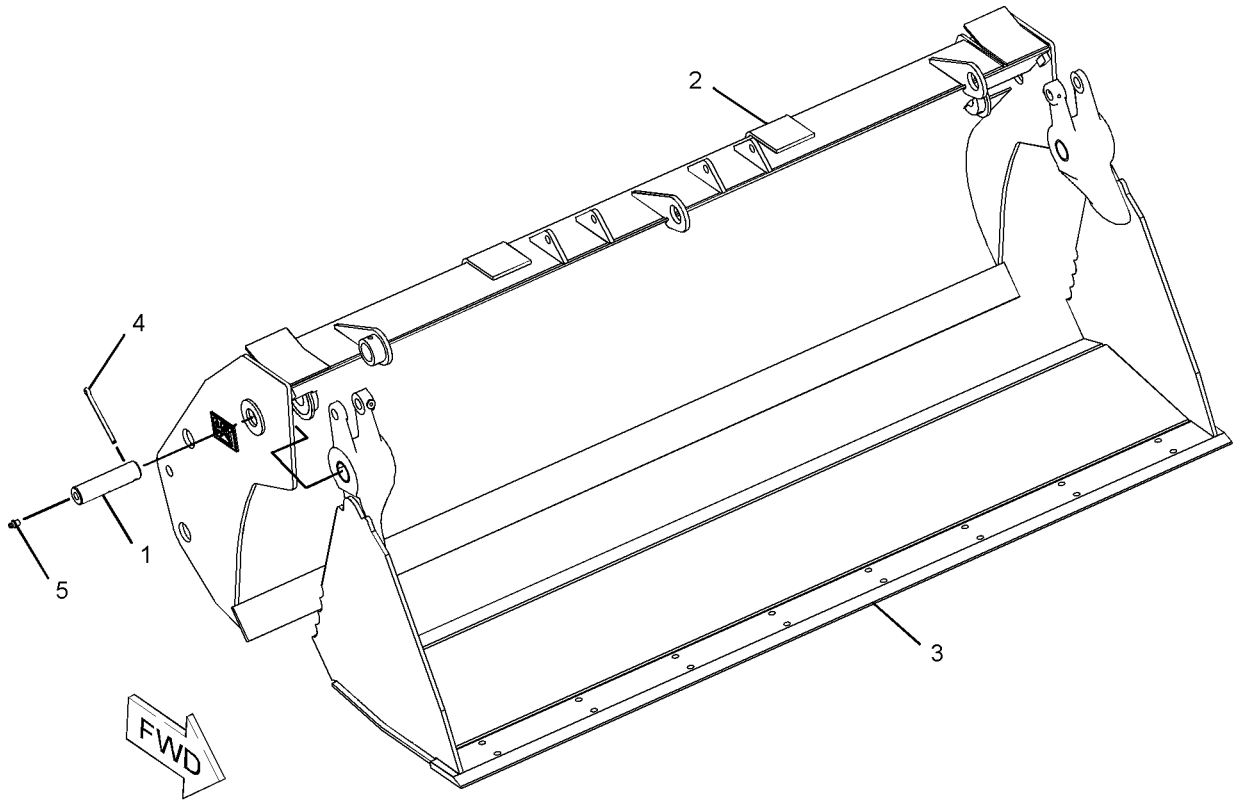

GRAPHIC #1 **<END>** g01101939

WORK TOOLS

220-4654 BUCKET GP-MULTIPURPOSE

S/N: SJL1-UP
PART OF 318-7259 BUCKET AR-MULTIPURPOSE
AN ATTACHMENT

SMCS-6104 **i02217406**

NOTE	REF NO	GRAPHIC REF	PART NUMBER	QTY	PART NAME 1 2 3 4 5 6 (PRODUCT LEVEL)	SEE PAGE
	1	1	**9R-4676**	2	PIN	
Y	2	1	**220-4646**	1	CLAM AS-MULTIPURPOSE BUCKET	534
Y	3	1	**220-4655**	1	BULLDOZER AS (MULTIPURPOSE BUCKET)	531
	4	1	**096-1820**	2	PIN-COTTER	
	5	1	**3B-8489**	2	FITTING-GREASE	

Y-SEPARATE ILLUSTRATION

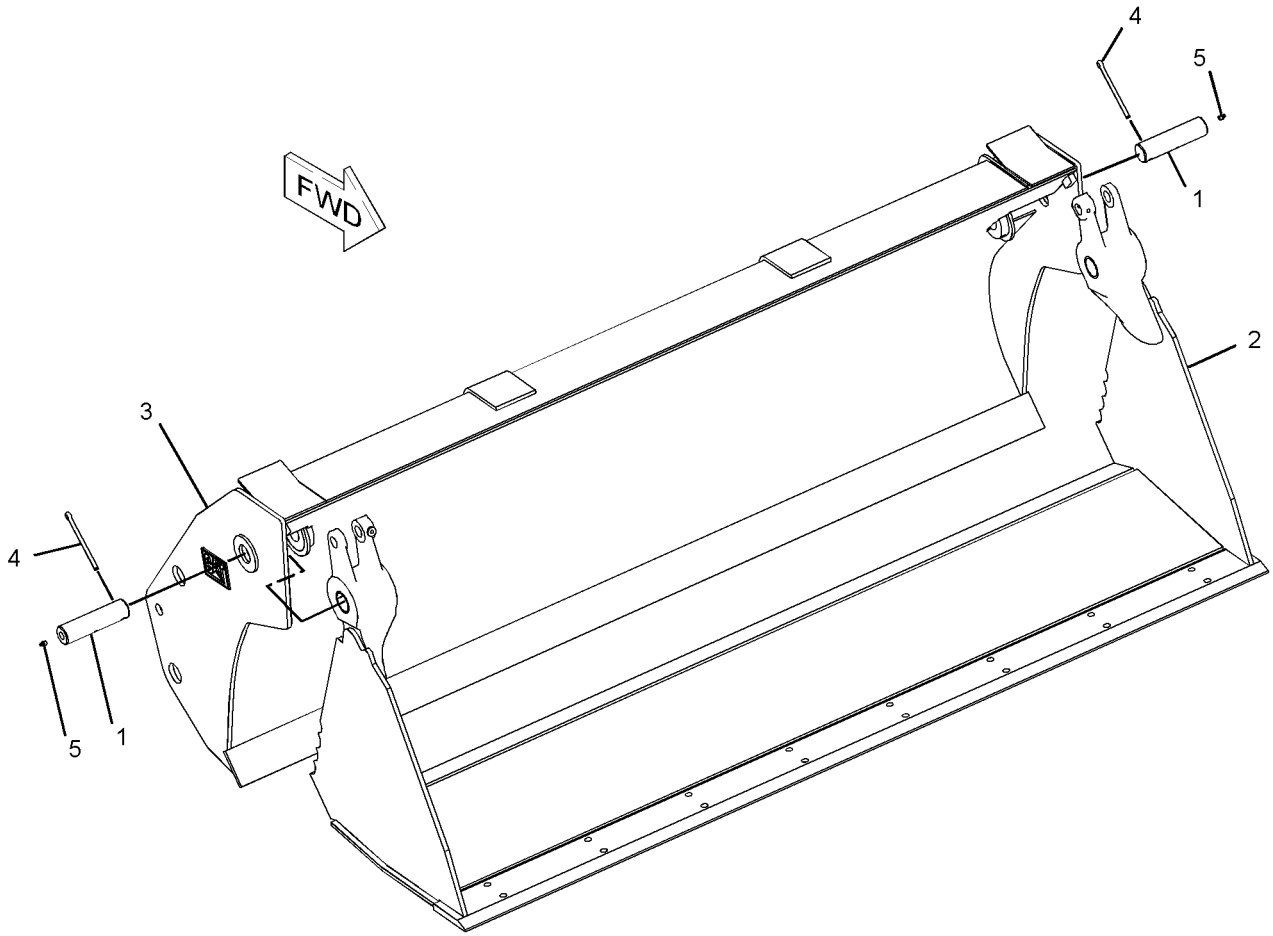

GRAPHIC #1 **<END>** g01120152

WORK TOOLS

220-4635 BULLDOZER AS

S/N: SJL1-UP
PART OF 220-4634 BUCKET GP-MULTIPURPOSE
AN ATTACHMENT

SMCS-6050 **i03028240**

NOTE	REF NO	GRAPHIC REF	PART NUMBER	QTY	PART NAME 1 2 3 4 5 6 (PRODUCT LEVEL)	SEE PAGE
	1	1	**220-4688**	1	BRACKET AS (RH)	
	2	1	**220-4690**	1	BRACKET AS (LH)	
	3	1	*220-4694*	1	BRACKET AS	
		1	**9R-5264**	1	BOSS	
	4	1	*220-4695*	1	BRACKET AS	
		1	**9R-5264**	1	BOSS	
	5	1	**220-4702**	1	EDGE	
M	6	1	**9R-5271**	2	BOSS (M10X1.5X25-MM)	

M-METRIC PART

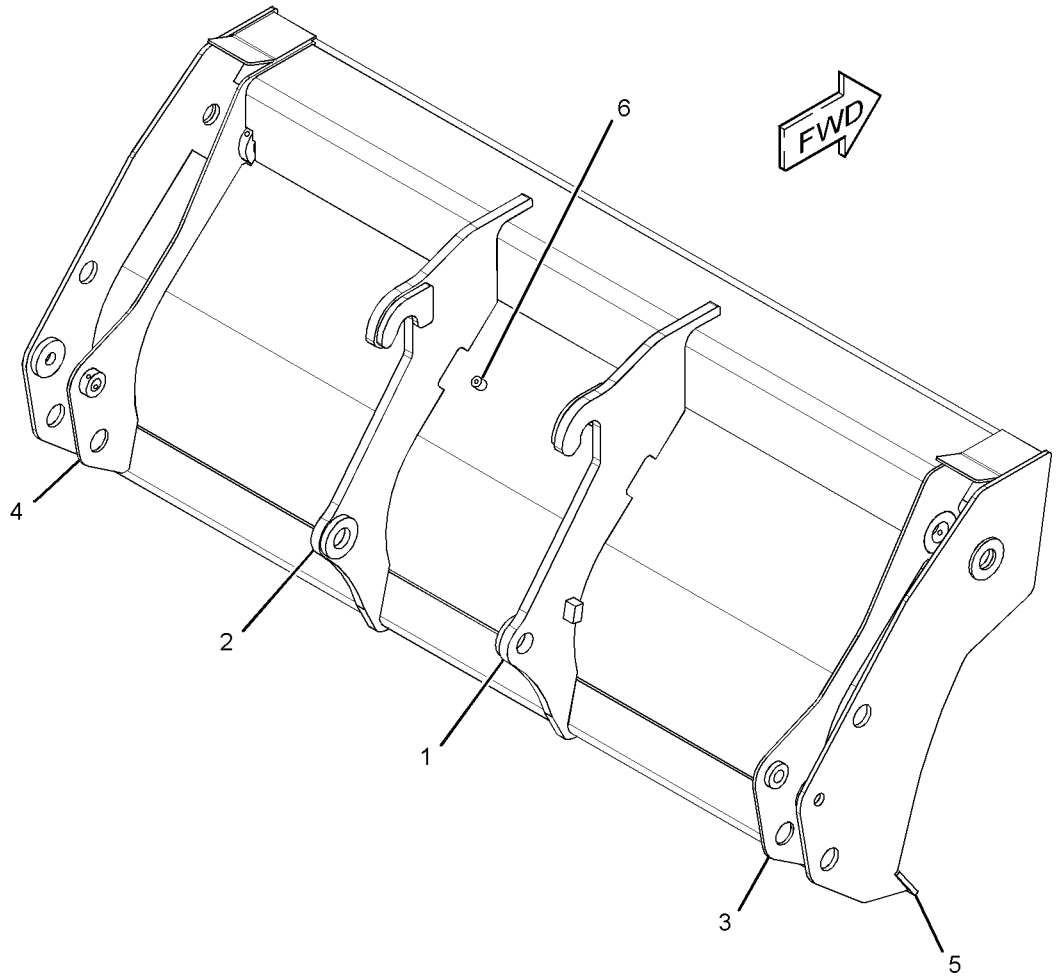

GRAPHIC #1 **<END>** g01576753

WORK TOOLS

220-4645 BULLDOZER AS

S/N: SJL1-UP
PART OF 220-4644 BUCKET GP-MULTIPURPOSE
AN ATTACHMENT

SMCS-6050 **i02912293**

NOTE	REF NO	GRAPHIC REF	PART NUMBER	QTY	PART NAME 1 2 3 4 5 6 (PRODUCT LEVEL)	SEE PAGE
Y	1	1	**220-4655**	1	BULLDOZER AS (MULTIPURPOSE BUCKET)	531
	2	1	**220-4734**	2	PLATE	
	3	1	**220-4735**	1	BRACKET AS	
	4	1	**250-6586**	4	PLATE	
	5	1	**250-6587**	2	PLATE	
	6	1	**317-2249**	4	PLATE	

Y-SEPARATE ILLUSTRATION

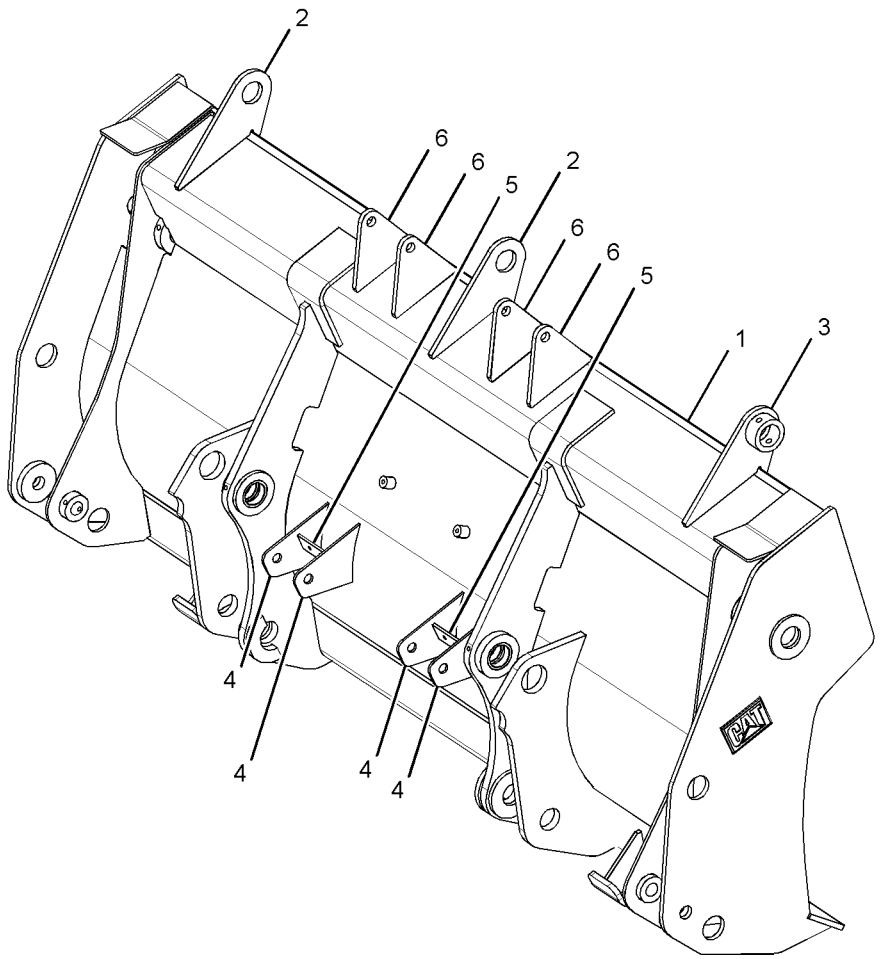

GRAPHIC #1 **<END>** g01456132

220-4655 BULLDOZER AS

S/N: SJL1-UP

PART OF 220-4654 BUCKET GP-MULTIPURPOSE, 220-4645 BULLDOZER AS

AN ATTACHMENT

SMCS-6050 **i03028300**

NOTE	REF NO	GRAPHIC REF	PART NUMBER	QTY	PART NAME 1 2 3 4 5 6 (PRODUCT LEVEL)	SEE PAGE
	1	1	**220-4702**	1	EDGE	
	2	1	*220-4728*	1	BRACKET AS	
		1	**9R-5264**	1	BOSS	
	3	1	*220-4729*	1	BRACKET AS	
		1	**9R-5264**	1	BOSS	
	4	1	*220-4739*	1	BRACKET AS	
		1	**3T-4307**	2	BEARING-SLEEVE	
	5	1	*220-4740*	1	BRACKET AS	
		1	**3T-4307**	2	BEARING-SLEEVE	
M	6	1	**9R-5271**	2	BOSS (M10X1.5X25-MM)	

M-METRIC PART

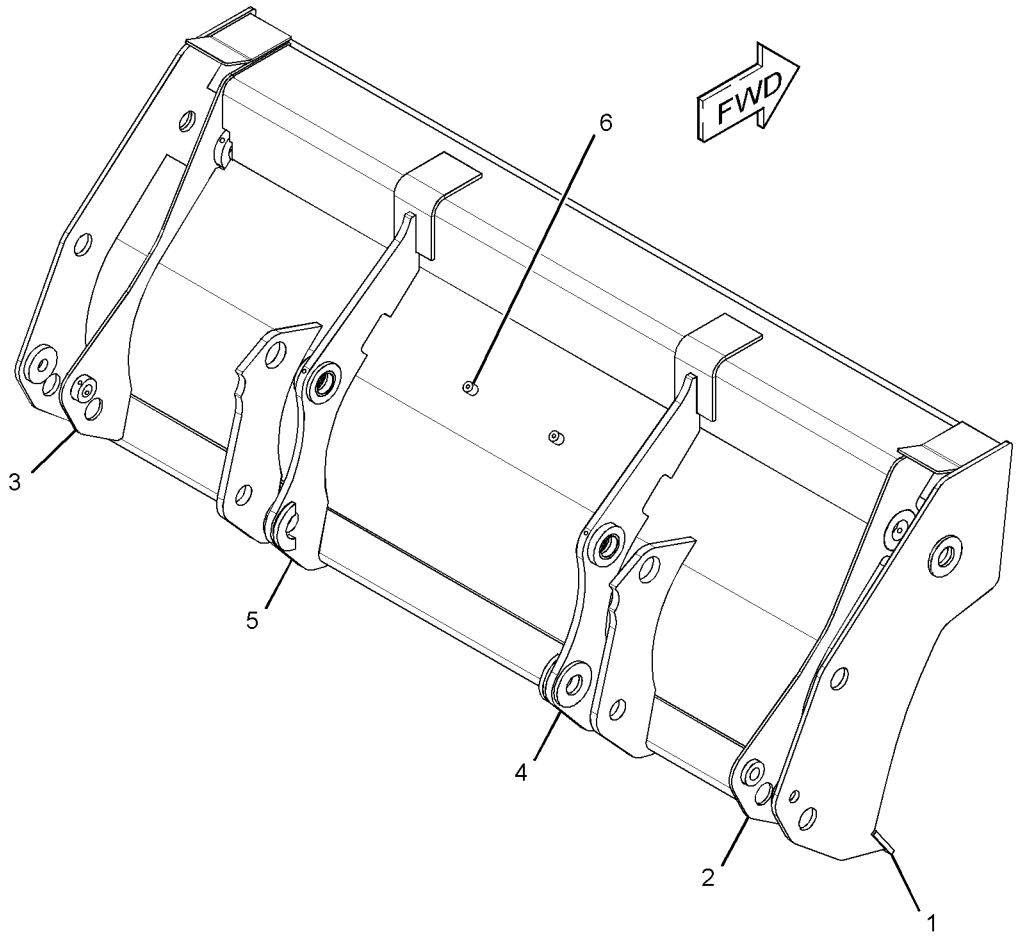

GRAPHIC #1 **<END>** g01576813

6W-8832 CARRIAGE AS-FORK—QUICK COUPLER

S/N: SJL1-UP

AN ATTACHMENT

SMCS-6402 **i03516388**

NOTE	REF NO	GRAPHIC REF	PART NUMBER	QTY	PART NAME 1 2 3 4 5 6 (PRODUCT LEVEL)	SEE PAGE
	1	1	**9V-9077**	1	PLATE	
	2	1	**251-4309**	1	PLATE-INSTRUCTION	
	3	1	**168-8389**	4	TACK-FASTENER	

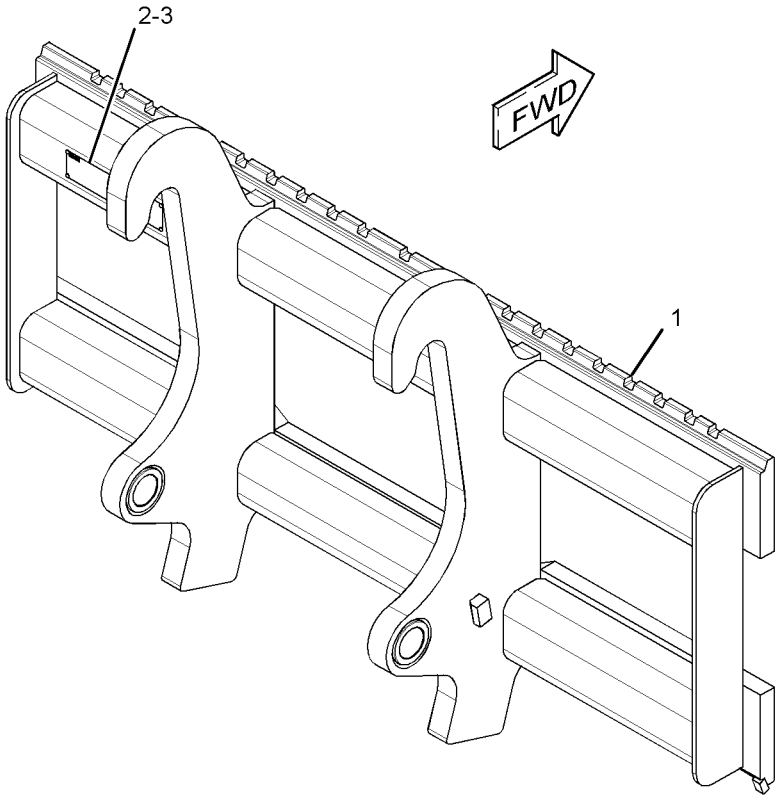

GRAPHIC #1 **<END>** g01861836

WORK TOOLS

220-4616 CLAM AS-MULTIPURPOSE BUCKET

S/N: SJL1-UP

PART OF 220-4634 BUCKET GP-MULTIPURPOSE

AN ATTACHMENT

SMCS-6104 **i02223489**

NOTE	REF NO	GRAPHIC REF	PART NUMBER	QTY	PART NAME 1 2 3 4 5 6 (PRODUCT LEVEL)	SEE PAGE
	1	1	*220-4670*	1	PLATE AS	
	1A	1	**220-4671**	1	EDGE	
	1B	1	**220-4674**	1	EDGE	
	2	1	*220-4675*	1	PLATE AS (RH)	
	2A	1	**9R-4675**	1	BUSHING-TERMINAL	
	2B	1	**9R-5294**	1	HINGE	
	3	1	*220-4677*	1	PLATE AS (LH)	
	3A	1	**9R-4675**	1	BUSHING-TERMINAL	
	3B	1	**9R-5294**	1	HINGE	
	4	1	**220-4678**	3	PLATE	

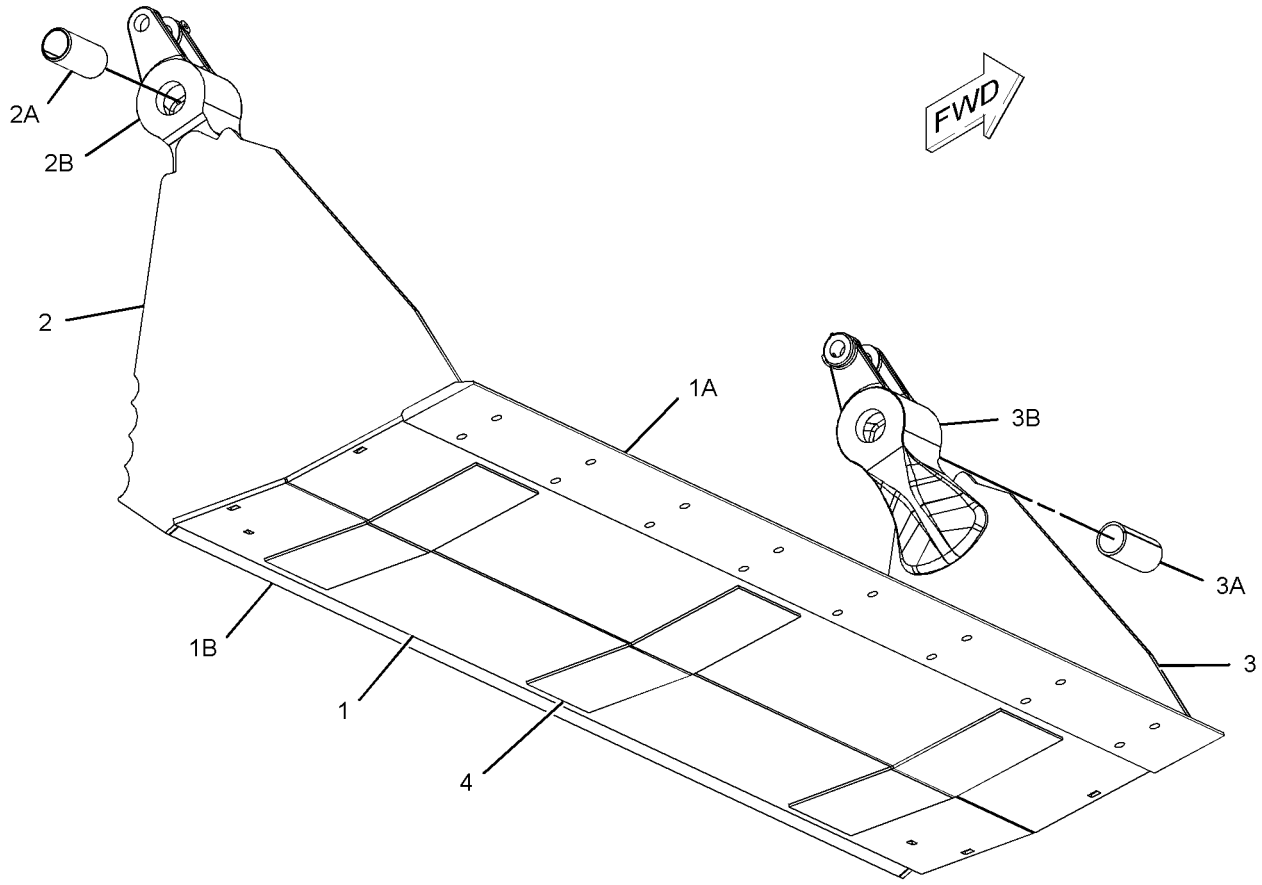

GRAPHIC #1 **<END>** g01121617

220-4646 CLAM AS-MULTIPURPOSE BUCKET

S/N: SJL1-UP

PART OF 220-4644, 220-4654 BUCKET GP-MULTIPURPOSE

AN ATTACHMENT

SMCS-6104 **i02223528**

NOTE	REF NO	GRAPHIC REF	PART NUMBER	QTY	PART NAME 1 2 3 4 5 6 (PRODUCT LEVEL)	SEE PAGE
	1	1	*220-4717*	1	PLATE AS (RH)	
	1A	1	**9R-4675**	1	BUSHING-TERMINAL	
	1B	1	**9R-5294**	1	HINGE	
	2	1	*220-4718*	1	PLATE AS (LH)	
	2A	1	**9R-4675**	1	BUSHING-TERMINAL	
	2B	1	**9R-5294**	1	HINGE	
	3	1	*220-4721*	1	PLATE AS	
	3A	1	**220-4671**	1	EDGE	
	3B	1	**220-4674**	1	EDGE	
	4	1	**220-4722**	3	PLATE	

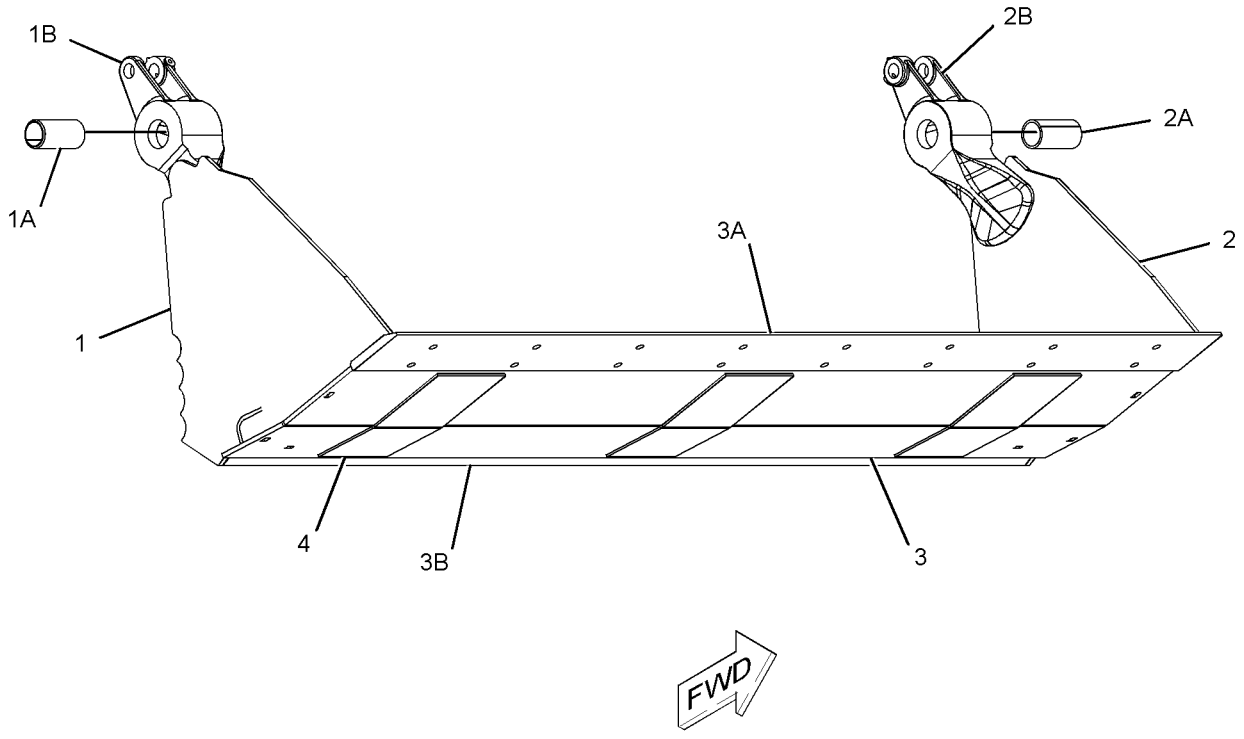

GRAPHIC #1 **<END>** g01121796

WORK TOOLS

332-7952 CONVERSION AR-QUICK COUPLER

S/N: SJL1-UP

AN ATTACHMENT

SMCS-6129 **i03654229**

NOTE	PART NUMBER	QTY	PART NAME 1 2 3 4 5 6 (PRODUCT LEVEL)	SEE PAGE
Y	*344-5326*	1	COUPLER GP-QUICK	541
Y	*329-3559*	1	LINES GP-AUXILIARY HYDRAULIC	346
Y	*331-7411*	1	LINES GP-HYDRAULIC	365
Y	*329-3600*	1	LINES GP-LIFT & TILT	368
Y	*329-3505*	1	LINES GP-LIFT & TILT CYLINDER	370
Y	*332-9195*	1	VALVE & MTG GP-BANK	418
Y	*296-0376*	1	WIRING GP-WORK TOOL	221
	282-9043	1	FILM-WARNING (QUICK COUPLER)	
			(ON RIGHT HAND SIDE OF A POST, CENTERED HORIZONTALLY & VERTICALLY BELOW THE DOOR LATCH)	

Y-SEPARATE ILLUSTRATION

<END>

WORK TOOLS

176-6251 COUPLER GP-QUICK–BACKHOE

S/N: SJL1-UP
PART OF 178-8850, 318-9901 COUPLER GP-QUICK
AN ATTACHMENT

SMCS-6129 **i03505443**

NOTE	REF NO	GRAPHIC REF	PART NUMBER	QTY	PART NAME 1 2 3 4 5 6 (PRODUCT LEVEL)	SEE PAGE
	1	1	**176-6252**	1	COUPLER	
	2	1	**200-5921**	1	HOOK	
	3	1	**216-7377**	1	SPRING	
	4	1	**132-3721**	1	PIN AS (HOOK)	
	5	1	**132-3723**	1	LOCK PIN	
C	6	1	**091-5928**	1	FITTING-GREASE	
	7	1	**8T-0144**	1	PIN-SPRING	
F			**132-3821**	1	LEVER-ACTUATING	

C-CHANGE FROM PREVIOUS TYPE
F-NOT SHOWN

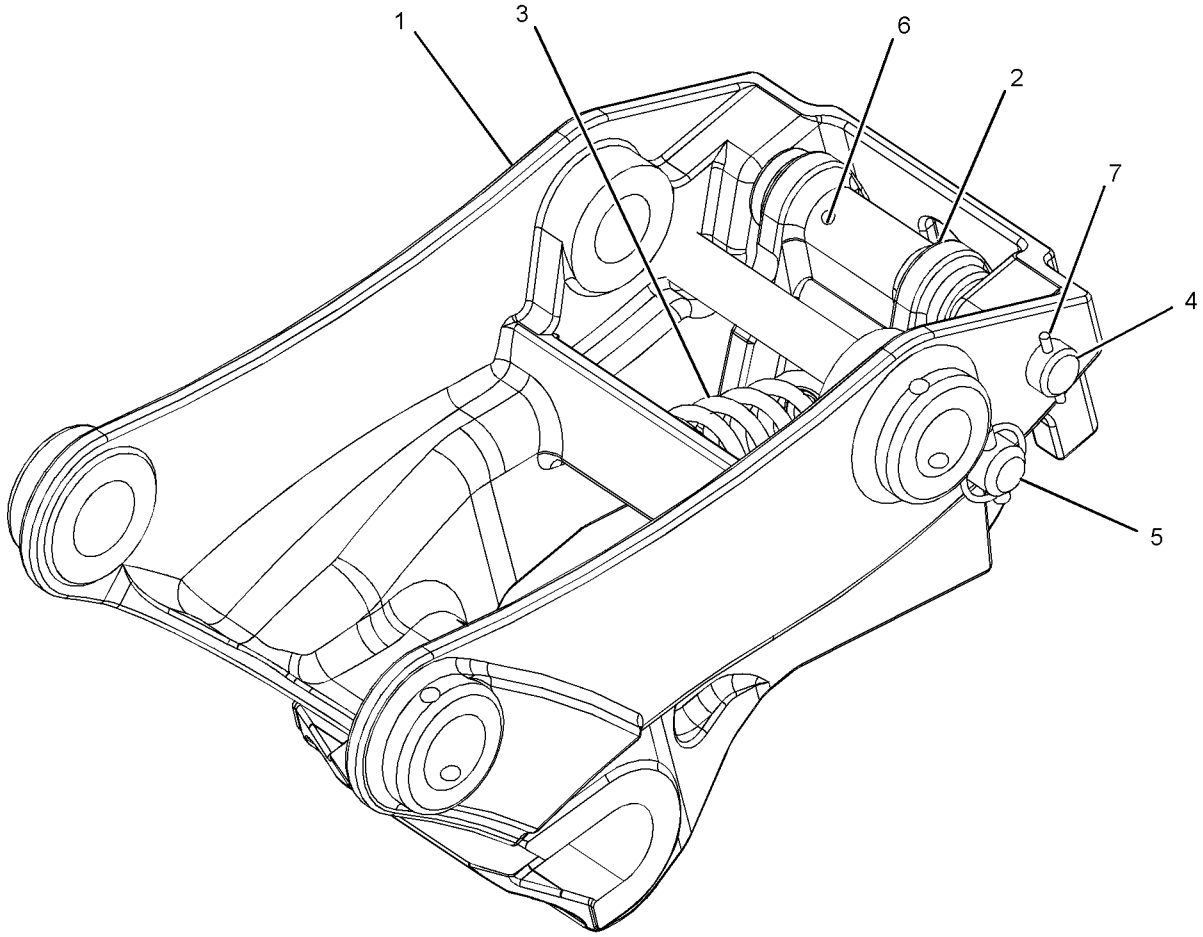

GRAPHIC #1 **<END>** g01017414

178-8850 COUPLER GP-QUICK–BACKHOE

S/N: SJL1-UP

FOR USE WITH 178-3593–PAGE 548

AN ATTACHMENT

SMCS-6129 **i03332282**

NOTE	REF NO	GRAPHIC REF	PART NUMBER	QTY	PART NAME 1 2 3 4 5 6 (PRODUCT LEVEL)	SEE PAGE
	1	1	**4J-1888**	2	PIN-COTTER	
	2	1	**132-3777**	1	PIN	
	3	1	**132-3778**	1	PIN	
Y	4	1	**176-6251**	1	COUPLER GP-QUICK (BACKHOE)	536

Y-SEPARATE ILLUSTRATION

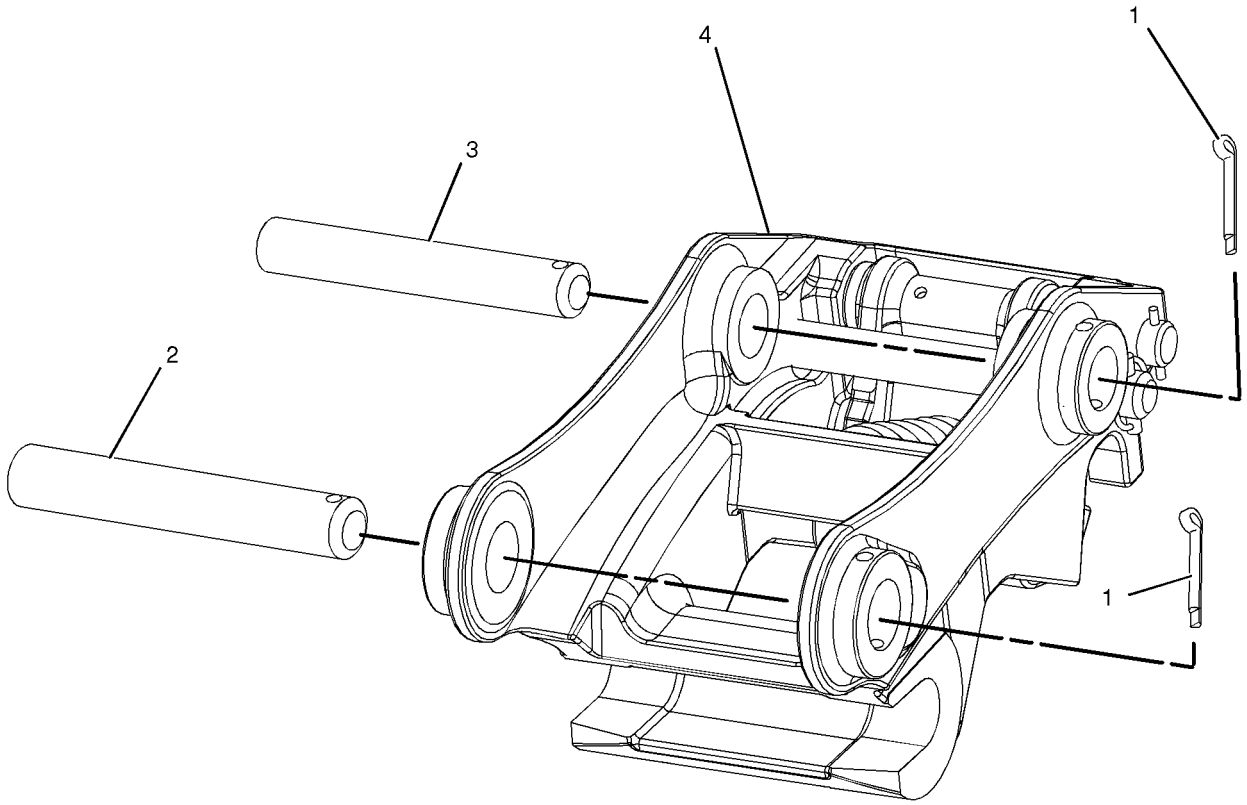

GRAPHIC #1 **<END>** g01036330

WORK TOOLS

213-8000 COUPLER GP-QUICK–JCB

S/N: SJL1-UP
FOR USE WITH 223-1882–PAGE 549, JCB STYLE BUCKETS
AN ATTACHMENT

SMCS-6129 **i01670207**

NOTE	REF NO	GRAPHIC REF	PART NUMBER	QTY	PART NAME 1 2 3 4 5 6 (PRODUCT LEVEL)	SEE PAGE
Y	1	1	**213-8008**	1	COUPLER GP-QUICK	539
	2	1	**216-7374**	2	PIN	
	3	1	**4J-1888**	2	PIN-COTTER	

Y-SEPARATE ILLUSTRATION

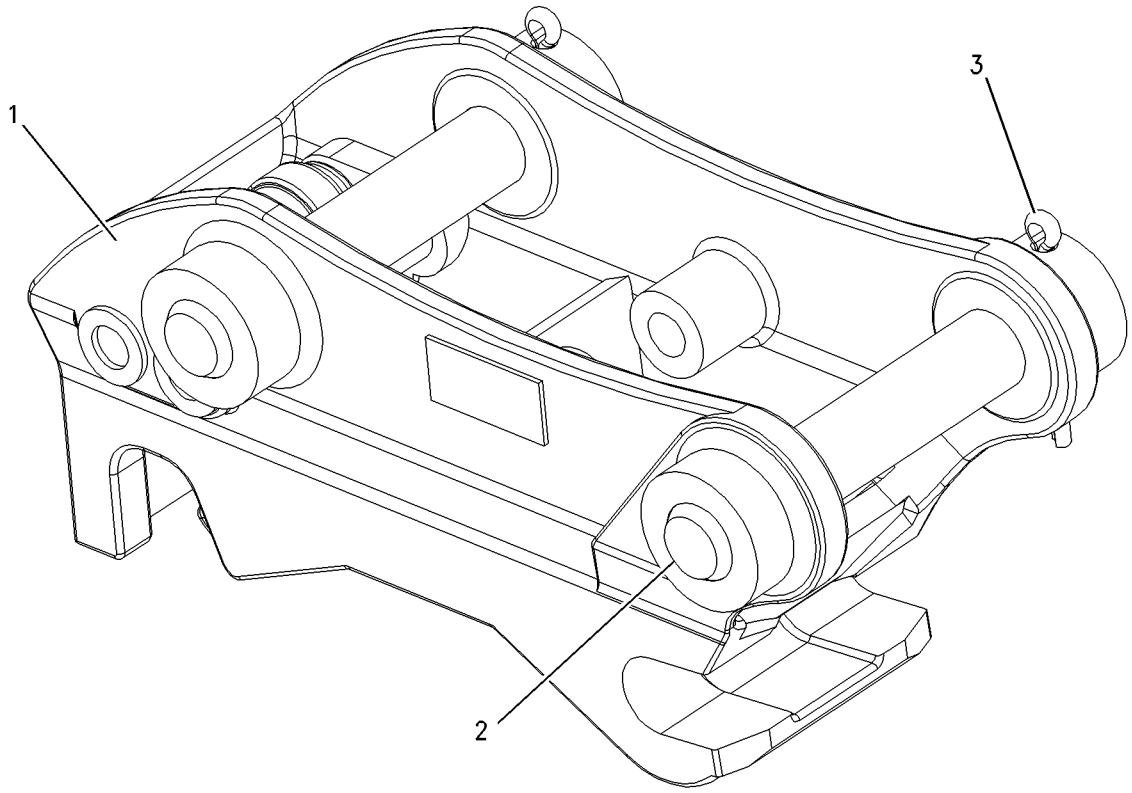

GRAPHIC #1 **<END>** g00863381

WORK TOOLS

213-8008 COUPLER GP-QUICK

S/N: SJL1-UP

PART OF 213-8000, 318-9903 COUPLER GP-QUICK

AN ATTACHMENT

SMCS-6129 **i01739273**

NOTE	REF NO	GRAPHIC REF	PART NUMBER	QTY	PART NAME 1 2 3 4 5 6 (PRODUCT LEVEL)	SEE PAGE
	1	1	**091-5928**	1	FITTING-GREASE	
	2	1	**216-7377**	1	SPRING	
	3	1	**215-1216**	1	COUPLER	
	4	1	**215-1217**	1	HOOK	
	5	1	**216-7375**	1	PIN AS	
	6	1	**216-7376**	1	PIN AS	
F		1	**132-3821**	1	LEVER-ACTUATING	

F-NOT SHOWN

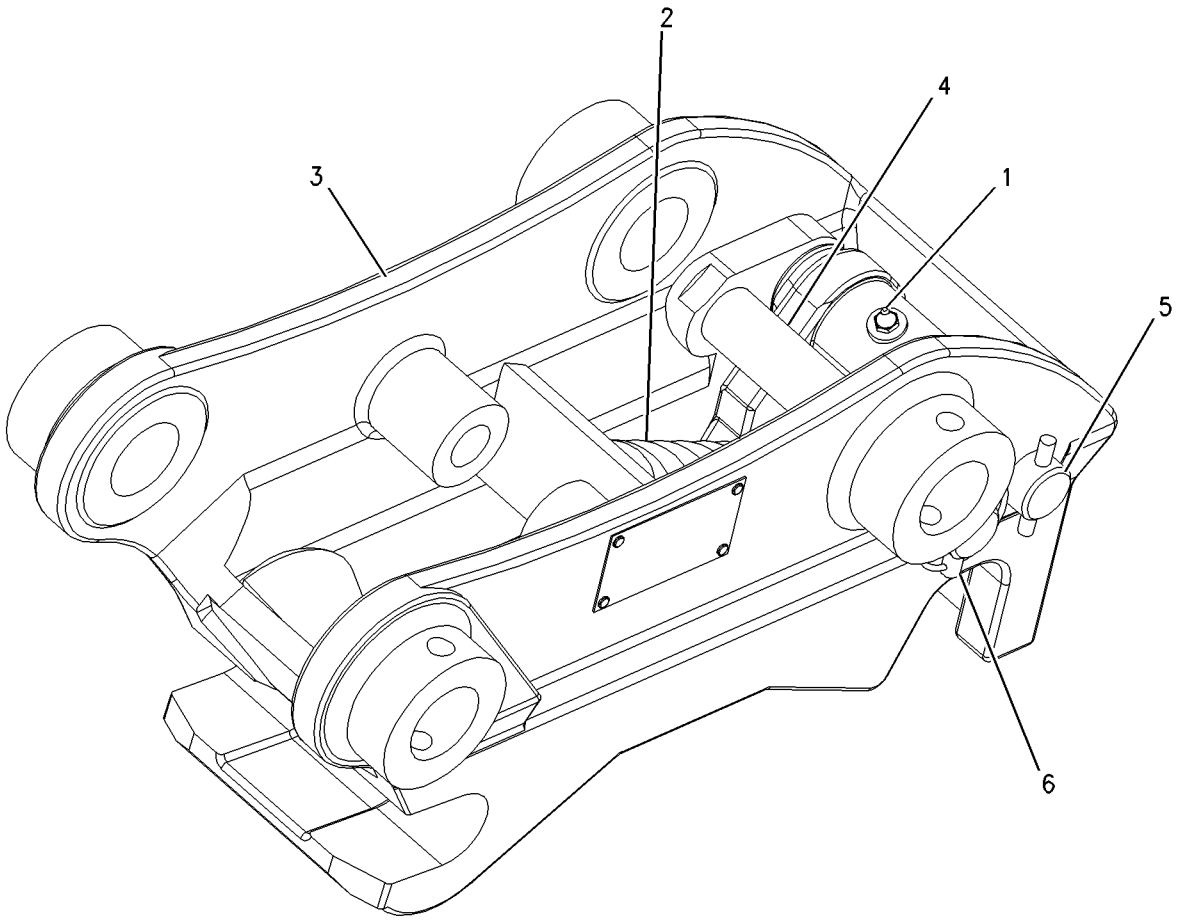

GRAPHIC #1 **<END>** g00890825

WORK TOOLS

318-9901 COUPLER GP-QUICK—BACKHOE

S/N: SJL1-UP
FOR USE WITH 318-9902—PAGE 551
AN ATTACHMENT

SMCS-6129 **i02990480**

NOTE	PART NUMBER	QTY	PART NAME 1 2 3 4 5 6 (PRODUCT LEVEL)	SEE PAGE
Y	**176-6251**	1	COUPLER GP-QUICK (BACKHOE)	536
	132-3777	1	PIN	
	132-3778	1	PIN	
	4J-1888	2	PIN-COTTER	

Y-SEPARATE ILLUSTRATION

<END>

318-9903 COUPLER GP-QUICK

S/N: SJL1-UP
FOR USE WITH 318-9904—PAGE 551
AN ATTACHMENT

SMCS-6129 **i02977716**

NOTE	PART NUMBER	QTY	PART NAME 1 2 3 4 5 6 (PRODUCT LEVEL)	SEE PAGE
Y	**213-8008**	1	COUPLER GP-QUICK (JCB)	539
	216-7374	2	PIN	
	4J-1888	2	PIN-COTTER	

Y-SEPARATE ILLUSTRATION

<END>

WORK TOOLS

344-5326 COUPLER GP-QUICK

S/N: SJL1-UP

PART OF 332-7952 CONVERSION AR-QUICK COUPLER, 332-7963 VALVE AR-BANK 3

AN ATTACHMENT

SMCS-6129 **i03654232**

NOTE	REF NO	GRAPHIC REF	PART NUMBER	QTY	PART NAME 1 2 3 4 5 6 (PRODUCT LEVEL)	SEE PAGE
	1	1	**178-0469**	1	COVER	
	2	1	**216-8500**	1	COUPLER AS	
B	3	1	**220-7108**	5	WASHER (51X85X1-MM THK)	
B	4	1	**220-7109**	5	WASHER (51X85X3-MM THK)	
	5	1	**330-9674**	2	PIN AS	
	6	1	**3B-8489**	2	FITTING-GREASE	
	7	1	**7X-0590**	2	WASHER-HARD (13.5X44.5X6-MM THK)	
M	8	1	**8T-4179**	2	BOLT (M12X1.75X20-MM)	
	9	1	**8T-4224**	4	WASHER-HARD (8.8X16X2-MM THK)	
M	10	1	**8T-4908**	4	BOLT (M8X1.25X25-MM)	

B-USE AS REQUIRED
M-METRIC PART

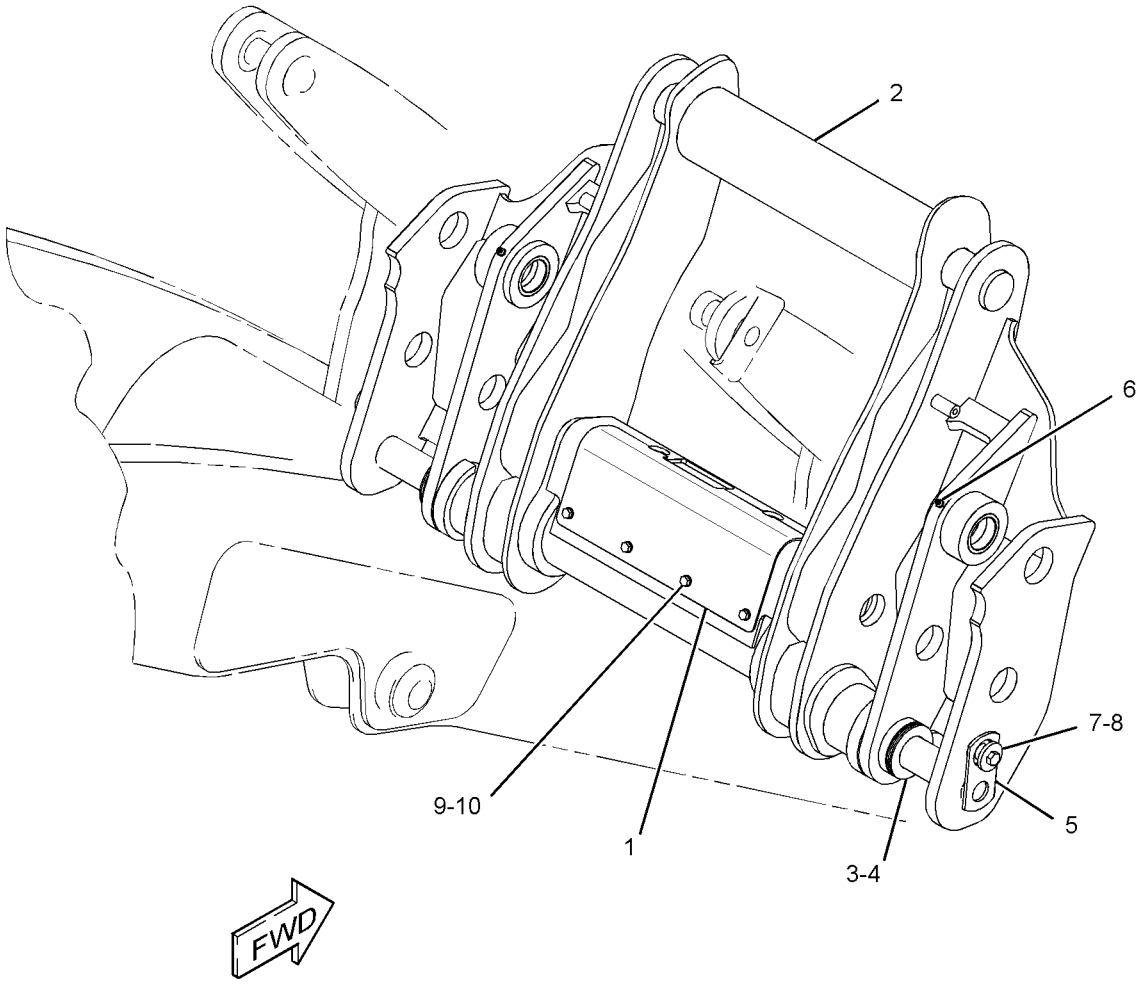

GRAPHIC #1 **<END>** g01962965

WORK TOOLS

220-4758 EDGE GP-CUTTING

S/N: SJL1-UP

AN ATTACHMENT

SMCS-6801 **i02174451**

NOTE	REF NO	GRAPHIC REF	PART NUMBER	QTY	PART NAME 1 2 3 4 5 6 (PRODUCT LEVEL)	SEE PAGE
	1	1	**220-4691**	2	EDGE	
	2	1	**3F-5108**	8	BOLT-PLOW (5/8-11X2.25-IN)	
	3	1	**4K-0367**	8	NUT-FULL (5/8-11-THD)	
	4	1	**8T-4122**	8	WASHER-HARD (17X32X3.5-MM THK)	

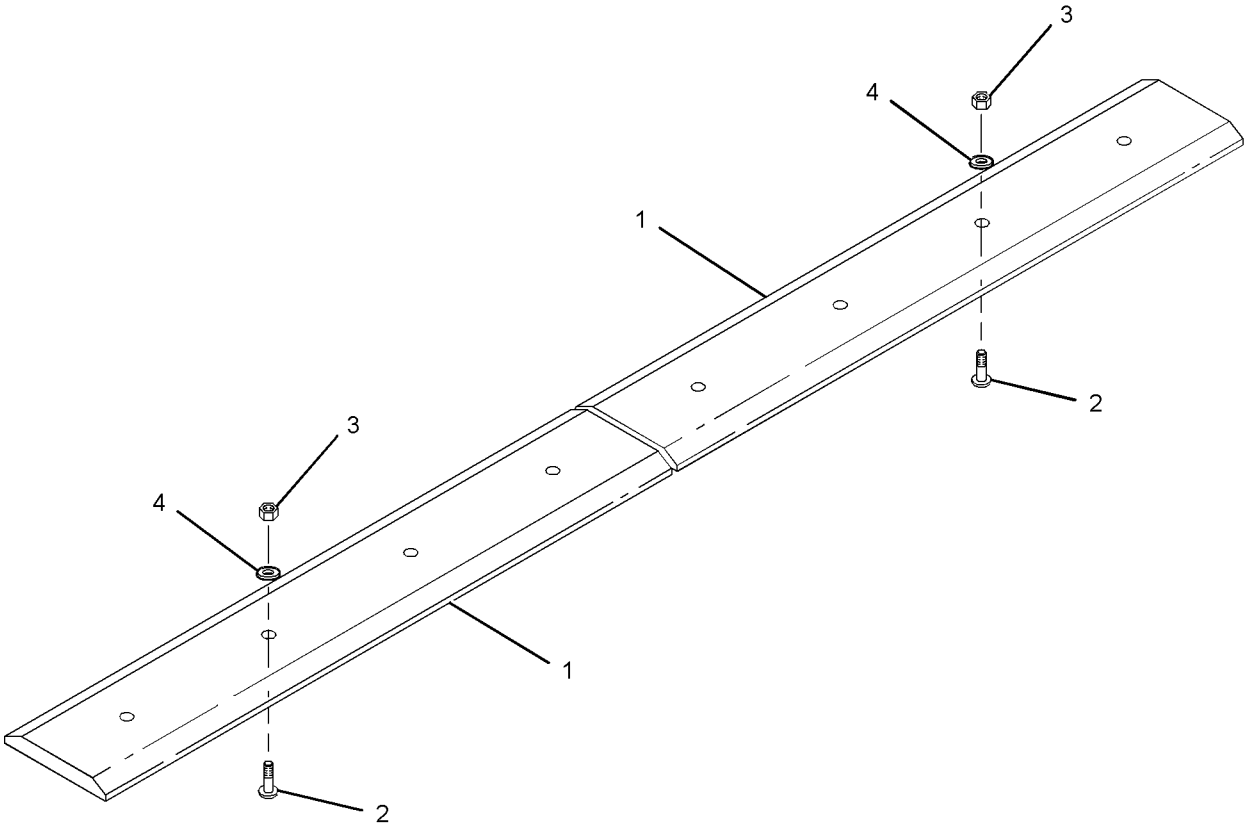

GRAPHIC #1 **<END>** g01102258

WORK TOOLS

104-6310 FORK GP

S/N: SJL1-UP
PART OF 255-9084 FORK GP
AN ATTACHMENT

SMCS-6405 **i01114480**

NOTE	REF NO	GRAPHIC REF	PART NUMBER	QTY	PART NAME 1 2 3 4 5 6 (PRODUCT LEVEL)	SEE PAGE
	1	1	**104-6311**	2	BRACKET AS	
	2	1	**104-6312**	2	FORK AS	
	3	1	**104-6316**	1	PIN	
	4	1	**104-6317**	2	PIN	
	5	1	**4J-1888**	1	PIN-COTTER	
	6	1	**9R-0109**	4	WASHER (41X64X3-MM THK)	
	7	1	**112-1776**	2	PIN AS	
	8	1	**6V-8144**	4	RING-RETAINING	
	9	1	**5D-8159**	2	PIN AS	

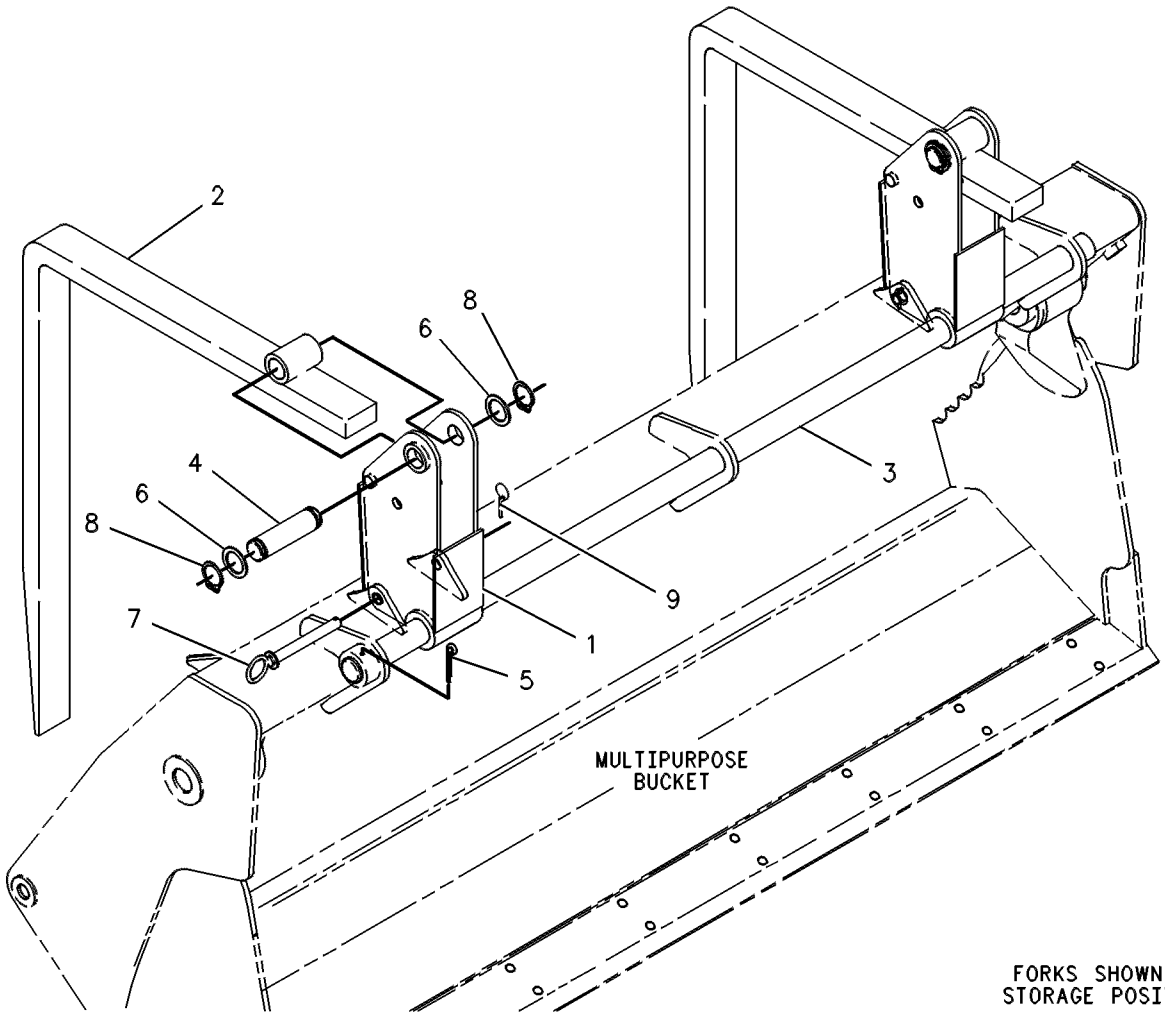

GRAPHIC #1 **<END>** g00131084

WORK TOOLS

255-9084 FORK GP–KIT

S/N: SJL1-UP
FOR USE WITH 318-7260–PAGE 470, 318-7261–PAGE 471
AN ATTACHMENT

SMCS-6405 **i02420164**

NOTE	REF NO	GRAPHIC REF	PART NUMBER	QTY	PART NAME 1 2 3 4 5 6 (PRODUCT LEVEL)	SEE PAGE
	1	1	**5D-8159**	2	PIN AS	
Y	2	1	**104-6310**	1	FORK GP	543
	3	1	**178-2593**	4	BUMPER	
	4	1	**250-1057**	2	PIN	
Y	5	1	*255-9081*	1	MOUNTING GP-FORK	554
M	6	1	**5C-7261**	4	NUT (M8X1.25-THD)	
	7	1	**8T-4224**	4	WASHER-HARD (8.8X16X2-MM THK)	

M-METRIC PART
Y-SEPARATE ILLUSTRATION

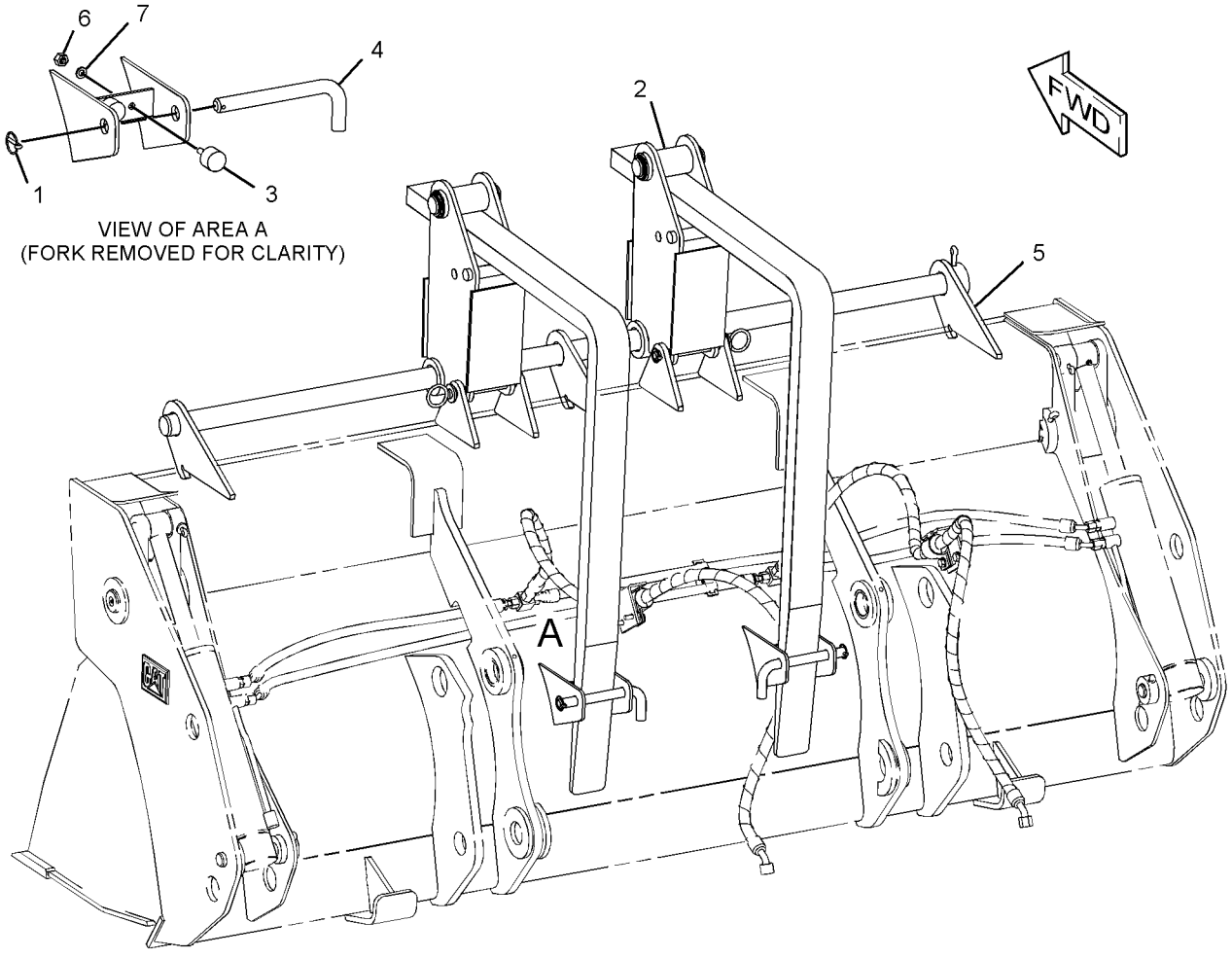

GRAPHIC #1 **<END>** g01215003

6W-8900 FORK GP-PALLET

S/N: SJL1-UP
1200-MM (47-IN)
AN ATTACHMENT

SMCS-6136 **i02595638**

NOTE	PART NUMBER	QTY	PART NAME 1 2 3 4 5 6 (PRODUCT LEVEL)	SEE PAGE
	091-1637	1	SERVICE GP-FORK POSITIONER	
	091-1665	1	LEVER	
	091-1664	1	PIN	
	8T-0255	1	PIN-SPRING	
	091-1667	1	SPRING	
	091-1745	1	WASHER (16.6X24X1.2-MM THK)	

<END>

6W-8933 FORK GP-PALLET

S/N: SJL1-UP
1050-MM (41-IN)
AN ATTACHMENT

SMCS-6136 **i02595640**

NOTE	PART NUMBER	QTY	PART NAME 1 2 3 4 5 6 (PRODUCT LEVEL)	SEE PAGE
	091-1637	1	SERVICE GP-FORK POSITIONER	
	091-1665	1	LEVER	
	091-1664	1	PIN	
	8T-0255	1	PIN-SPRING	
	091-1667	1	SPRING	
	091-1745	1	WASHER (16.6X24X1.2-MM THK)	

<END>

6W-9739 FORK GP-PALLET

S/N: SJL1-UP
1350-MM (53-IN)
AN ATTACHMENT

SMCS-6136 **i03500263**

NOTE	PART NUMBER	QTY	PART NAME 1 2 3 4 5 6 (PRODUCT LEVEL)	SEE PAGE
	091-1637	1	SERVICE GP-FORK POSITIONER	
	091-1665	1	LEVER	
	091-1664	1	PIN	
	8T-0255	1	PIN-SPRING	
	091-1667	1	SPRING	
	091-1745	1	WASHER (16.6X24X1.2-MM THK)	

<END>

WORK TOOLS

214-7024 GUARD GP-BUCKET

S/N: SJL1-UP

AN ATTACHMENT

SMCS-6001, 6800, 6805 **i03310000**

NOTE	REF NO	GRAPHIC REF	PART NUMBER	QTY	PART NAME 1 2 3 4 5 6 (PRODUCT LEVEL)	SEE PAGE
	1	1	**101-4415**	1	FILM (REFLECTOR)	
Y	2	1	*214-7025*	1	GUARD GP-BUCKET	547

Y-SEPARATE ILLUSTRATION

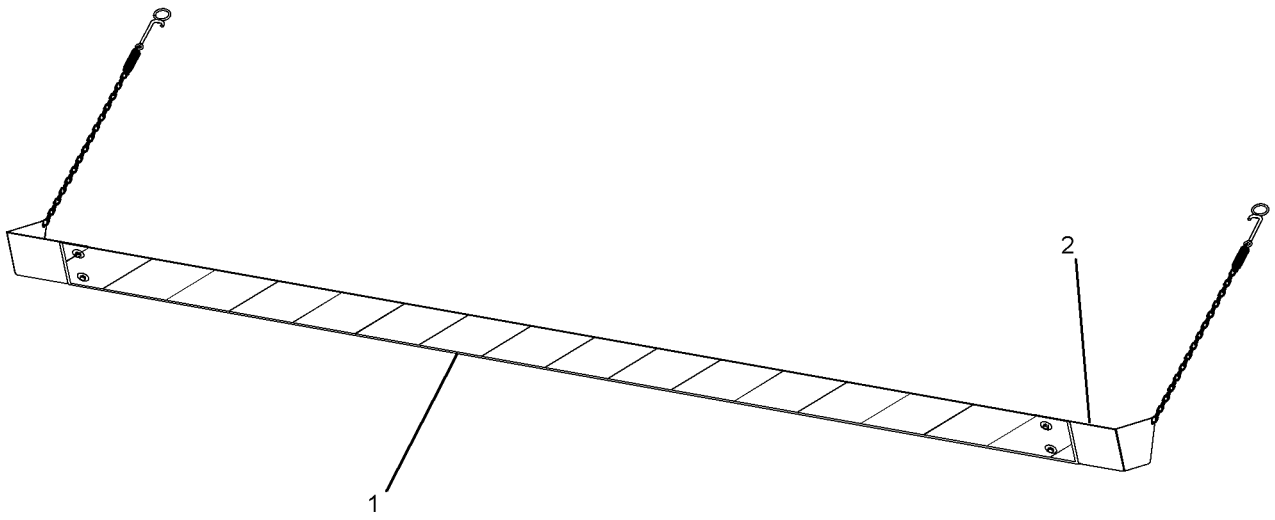

GRAPHIC #1 **<END>** g01120346

214-7025 GUARD GP-BUCKET

S/N: SJL1-UP
PART OF 214-7024 GUARD GP-BUCKET
AN ATTACHMENT

SMCS-6001, 6800, 6805 **i02224089**

NOTE	REF NO	GRAPHIC REF	PART NUMBER	QTY	PART NAME 1 2 3 4 5 6 (PRODUCT LEVEL)	SEE PAGE
	1	1	**214-7026**	1	PLATE	
	2	1	**101-4411**	2	RETAINER AS	
					(EACH INCLUDES)	
	2A	1	**101-4412**	1	CHAIN	
	2B	1	**101-4413**	1	SPRING	
	2C	1	**101-4414**	1	HOOK AS	
	3	1	**204-5258**	1	PLATE AS	
M		1	**6V-9632**	2	NUT-WELD (M6X1-THD)	
	4	1	**204-5259**	1	PLATE AS	
M		1	**6V-9632**	2	NUT-WELD (M6X1-THD)	
	5	1	**6V-7646**	4	WASHER-HARD (7.2X25X2-MM THK)	
M	6	1	**8T-4171**	4	BOLT (M6X1X12-MM)	
	7	1	**034-1432**	9	STRAP-CABLE	

M-METRIC PART

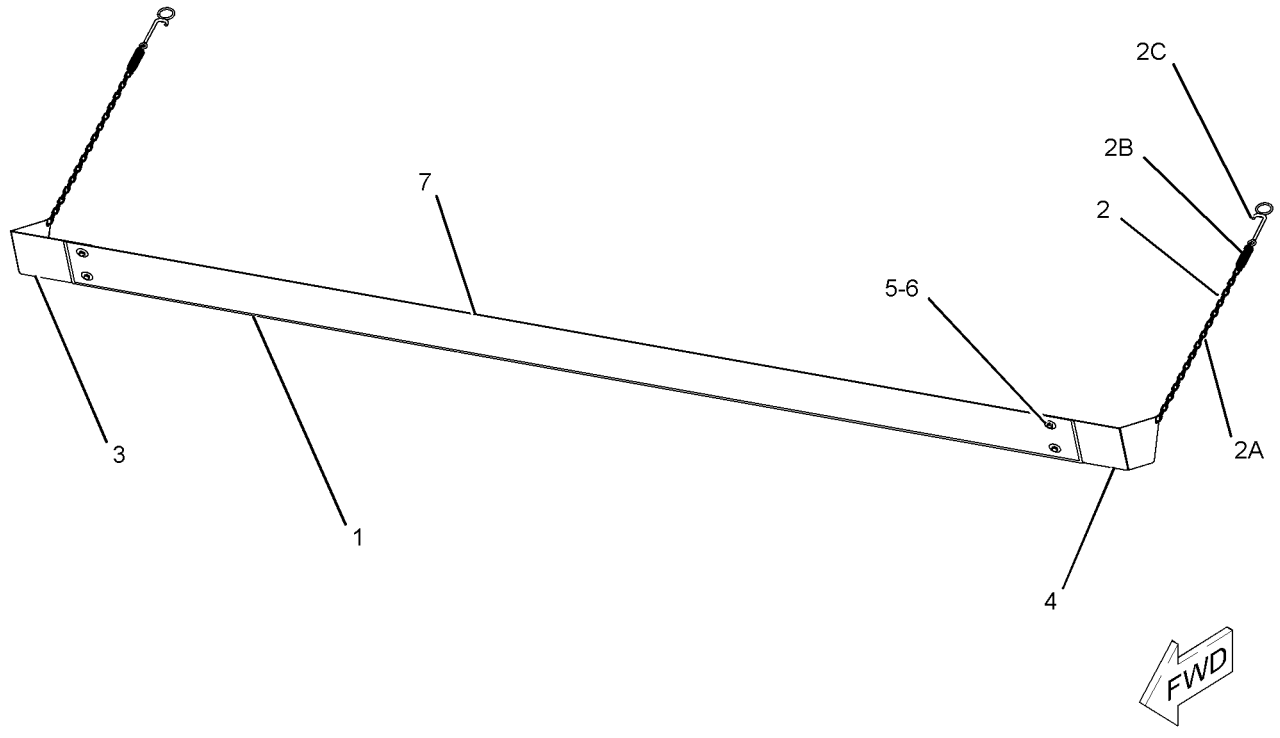

GRAPHIC #1 **<END>** g01121793

WORK TOOLS

178-3593 MOUNTING GP-BUCKET—BACKHOE, QUICK COUPLER

S/N: SJL1-UP

FOR USE WITH 178-8850—PAGE 537

AN ATTACHMENT

SMCS-6101 **i01179790**

NOTE	PART NUMBER	QTY	PART NAME 1 2 3 4 5 6 (PRODUCT LEVEL)	SEE PAGE
	3B-5319	4	PIN-COTTER	
	154-5279	1	PIN	
	154-5280	1	PIN	
	9R-0158	5	WASHER (46X69X3-MM THK)	
	9R-1510	5	WASHER (51X82X4-MM THK)	

<END>

223-1882 MOUNTING GP-BUCKET—BACKHOE

S/N: SJL1-UP
FOR USE WITH 213-8000—PAGE 538
AN ATTACHMENT

SMCS-6101 **i01801870**

NOTE	REF NO	GRAPHIC REF	PART NUMBER	QTY	PART NAME 1 2 3 4 5 6 (PRODUCT LEVEL)	SEE PAGE
	1	1	**9R-0158**	2	WASHER (46X69X3MM THK)	
	2	1	**9R-9105**	2	PIN AS	
	3	1	**3B-5319**	2	PIN-COTTER	

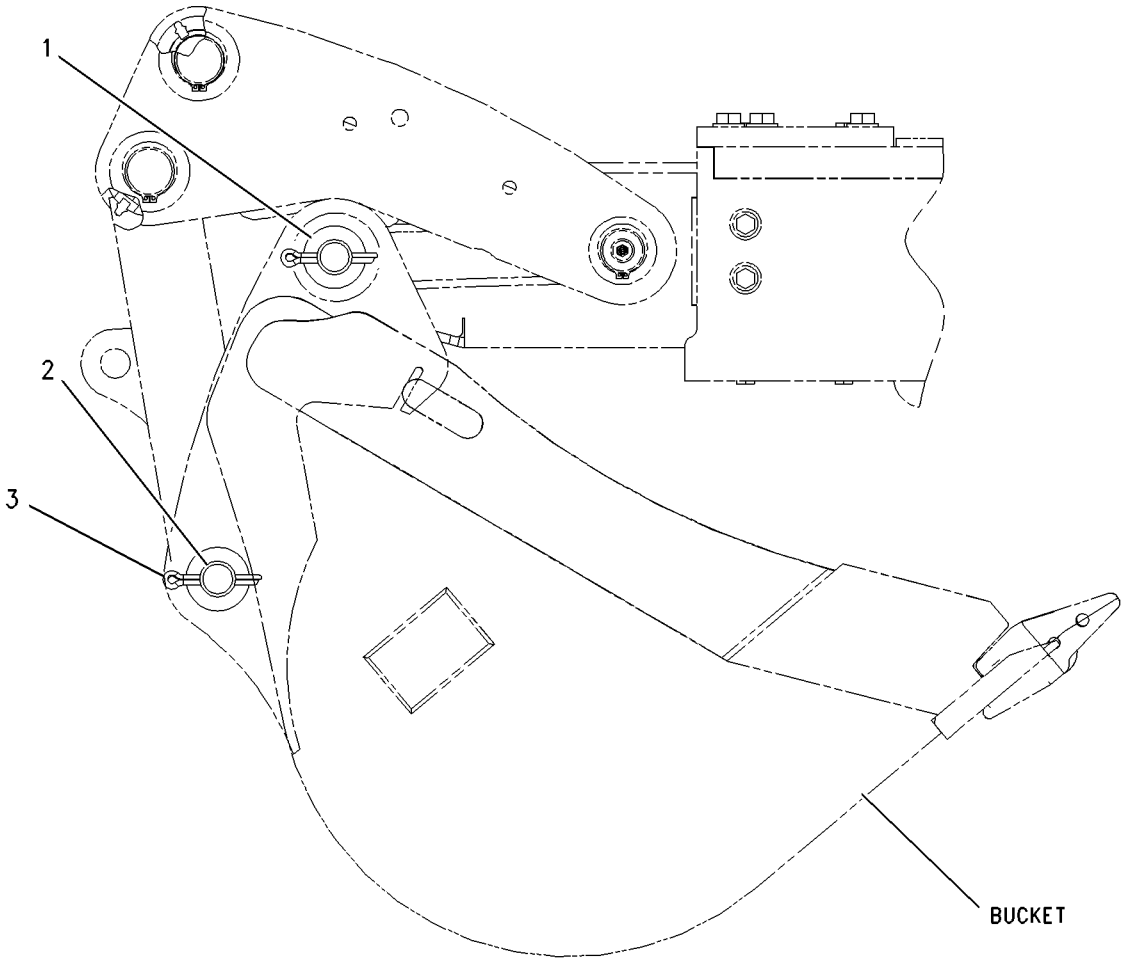

GRAPHIC #1 **<END>** g00925340

WORK TOOLS

287-8209 MOUNTING GP-BUCKET—ROADING

S/N: SJL1-UP

AN ATTACHMENT

SMCS-6101 **i03710420**

NOTE	REF NO	GRAPHIC REF	PART NUMBER	QTY	PART NAME 1 2 3 4 5 6 (PRODUCT LEVEL)	SEE PAGE
	1	1	**287-8204**	1	BRACKET AS	
	2	1	**287-8208**	1	BRACKET AS	
M	3	1	**8T-4132**	4	NUT (M16X2-THD)	
M	4	1	**8T-4193**	4	BOLT (M16X2X50-MM)	
	5	1	**9X-8257**	8	WASHER (17.5X30X3.5-MM THK)	

M-METRIC PART

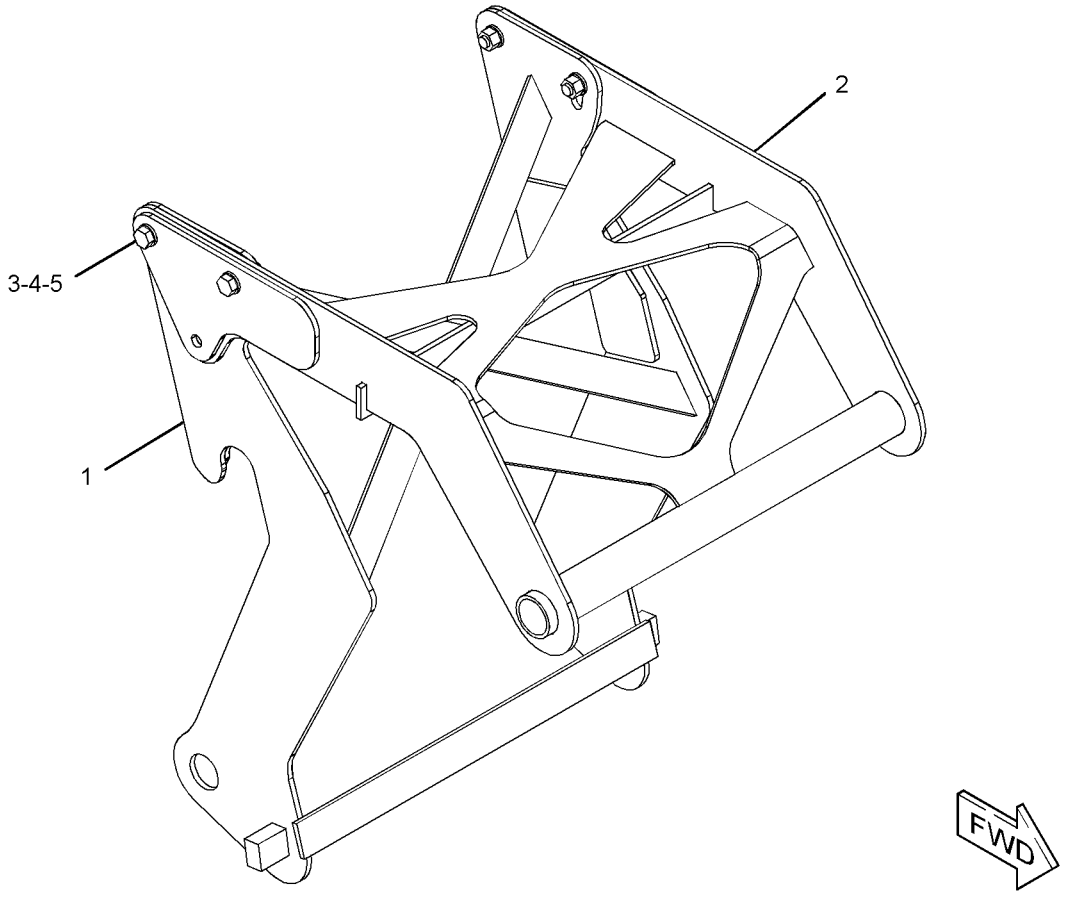

GRAPHIC #1 **<END>** g02001255

318-9902 MOUNTING GP-BUCKET—BACKHOE, QUICK COUPLER

S/N: SJL1-UP
FOR USE WITH 318-9901—PAGE 540
AN ATTACHMENT

SMCS-6101 **i02990524**

NOTE	PART NUMBER	QTY	PART NAME 1 2 3 4 5 6 (PRODUCT LEVEL)	SEE PAGE
	154-5279	1	PIN	
	154-5280	1	PIN	
	3B-5319	4	PIN-COTTER	
B	**9R-0158**	5	WASHER (46X69X3-MM THK)	
B	**9R-1510**	5	WASHER (51X82X4-MM THK)	

B-USE AS REQUIRED

<END>

318-9904 MOUNTING GP-BUCKET—BACKHOE, QUICK COUPLER

S/N: SJL1-UP
FOR USE WITH 318-9903—PAGE 540
AN ATTACHMENT

SMCS-6101 **i02977715**

NOTE	PART NUMBER	QTY	PART NAME 1 2 3 4 5 6 (PRODUCT LEVEL)	SEE PAGE
	9R-9105	2	PIN AS	
	3B-5319	2	PIN-COTTER	
	9R-0158	2	WASHER (46X69X3-MM THK)	

<END>

WORK TOOLS

344-5323 MOUNTING GP-BUCKET

S/N: SJL1-UP

PART OF 332-7950 VALVE AR-BANK 2, 332-7951, 332-7962 VALVE AR-BANK 3

AN ATTACHMENT

SMCS-6101 **i03654223**

NOTE	REF NO	GRAPHIC REF	PART NUMBER	QTY	PART NAME 1 2 3 4 5 6 (PRODUCT LEVEL)	SEE PAGE
	1	1	**9R-1510**	2	WASHER (51X82X4-MM THK)	
B	2	1	**220-7108**	4	WASHER (51X85X1-MM THK)	
B	3	1	**220-7109**	6	WASHER (51X85X3-MM THK)	
	4	1	**330-9675**	2	PIN AS	
	5	1	**3B-8489**	2	FITTING-GREASE	
	6	1	**6V-4364**	2	RING-RETAINING	

B-USE AS REQUIRED

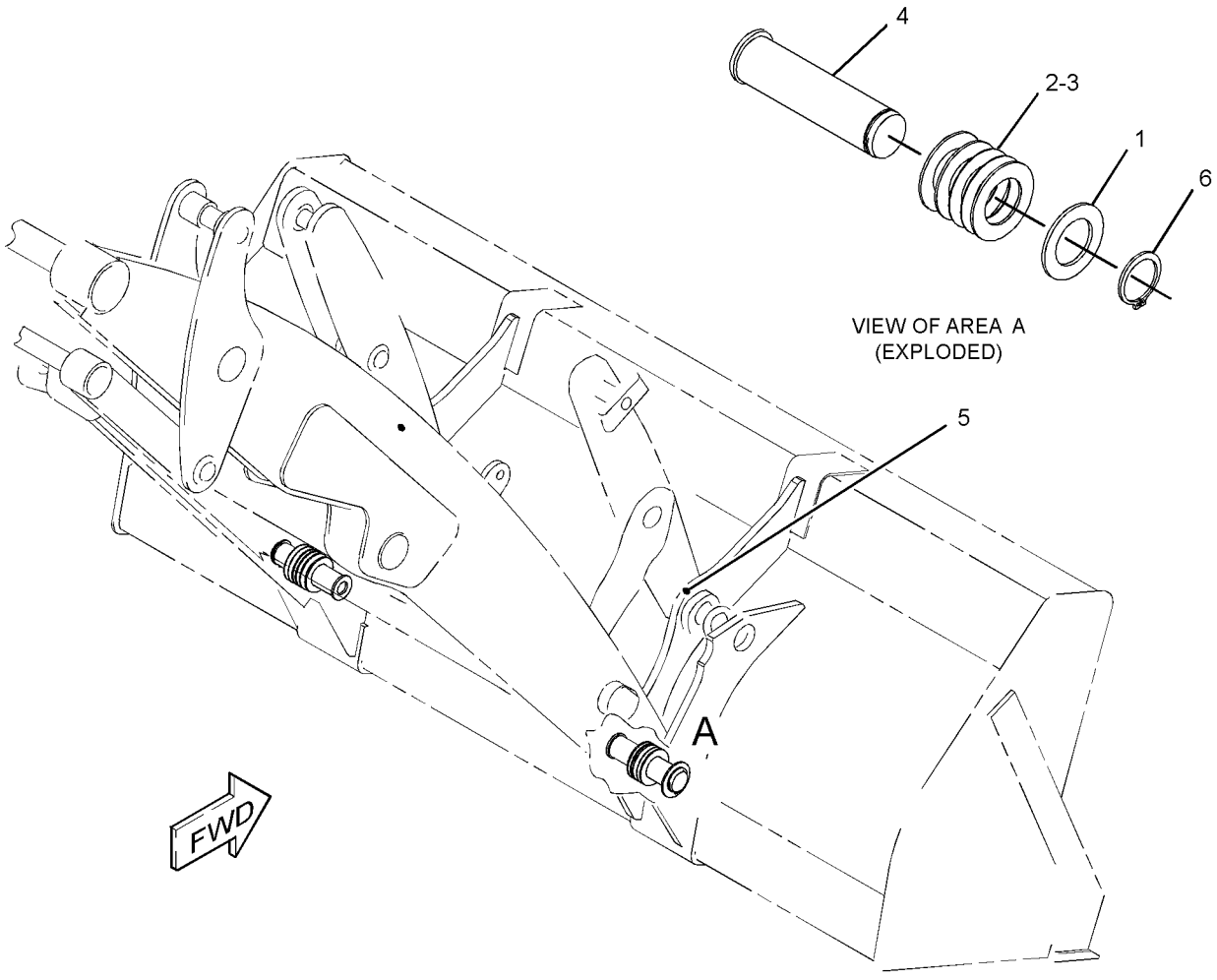

GRAPHIC #1 **<END>** g01964913

252-6005 MOUNTING GP-FORK—MULTIPURPOSE BUCKET

S/N: SJL1-UP

PART OF 318-7257 BUCKET AR-MULTIPURPOSE

AN ATTACHMENT

SMCS-6405 **i02164351**

NOTE	REF NO	GRAPHIC REF	PART NUMBER	QTY	PART NAME 1 2 3 4 5 6 (PRODUCT LEVEL)	SEE PAGE
	1	1	**5D-8159**	2	PIN AS	
	2	1	**104-6311**	2	BRACKET AS	
	3	1	**104-6316**	1	PIN	
	4	1	**104-6317**	2	PIN	
	5	1	**112-1776**	2	PIN AS	
	6	1	**4J-1888**	1	PIN-COTTER	
	7	1	**6V-8144**	4	RING-RETAINING	
	8	1	**9R-0109**	4	WASHER (41X64X3-MM THK)	

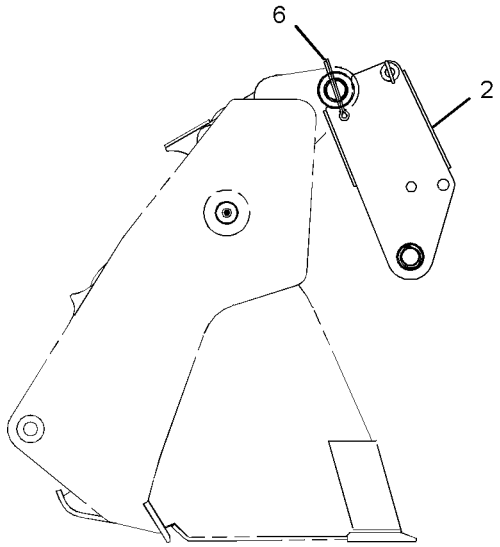

RIGHT SIDE VIEW

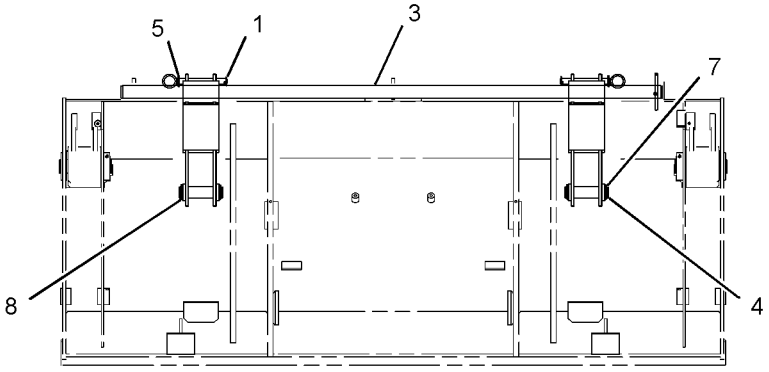

REAR VIEW

GRAPHIC #1 **<END>** g01097992

WORK TOOLS

255-9081 MOUNTING GP-FORK

S/N: SJL1-UP
PART OF 255-9084 FORK GP
AN ATTACHMENT

SMCS-6405 **i02922444**

NOTE	REF NO	GRAPHIC REF	PART NUMBER	QTY	PART NAME 1 2 3 4 5 6 (PRODUCT LEVEL)	SEE PAGE
	1	1	**220-4734**	2	PLATE	
	2	1	**220-4735**	1	BRACKET AS	
	3	1	**317-2249**	4	PLATE	
	4	1	**250-6586**	4	PLATE	
	5	1	**250-6587**	2	PLATE	

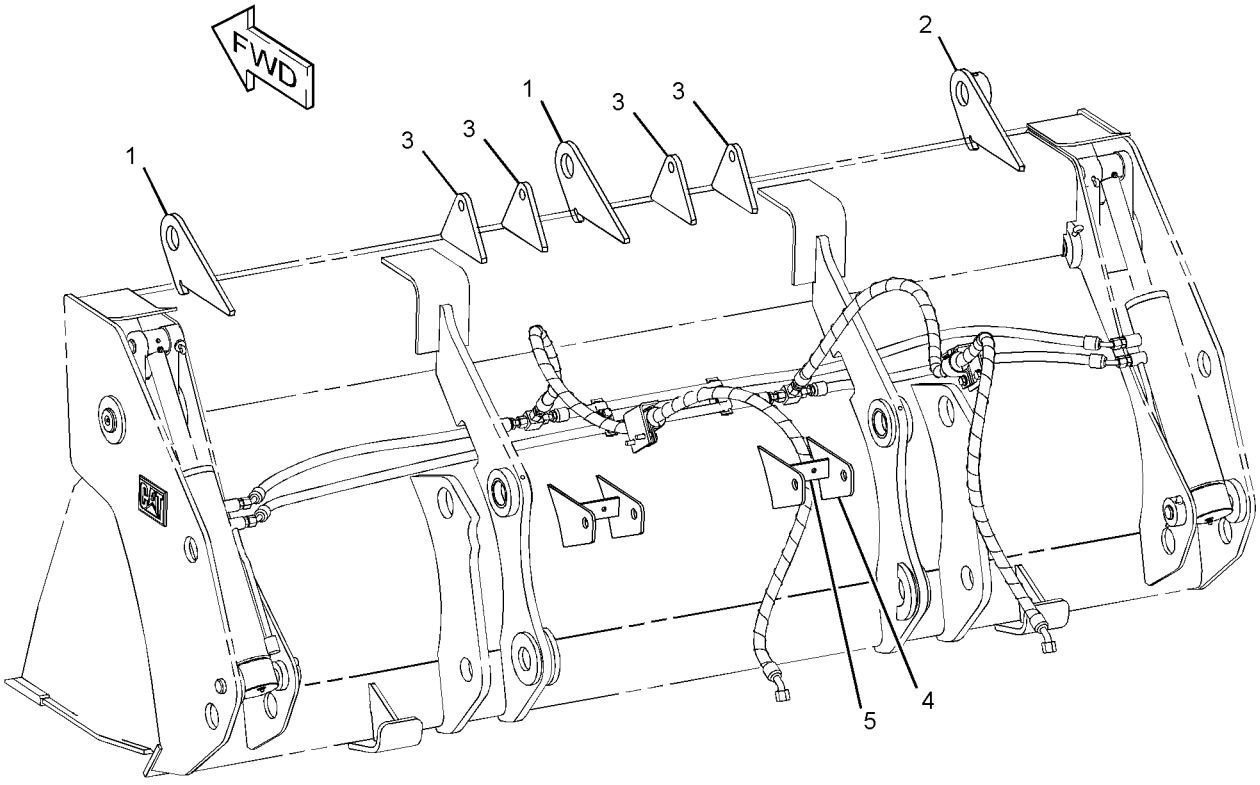

GRAPHIC #1 **<END>** g01215002

WORK TOOLS

9R-5866 TOOTH GP-UNI

S/N: SJL1-UP
FOR USE WITH LOADER BUCKETS
AN ATTACHMENT

SMCS-6822 **i01789850**

NOTE	REF NO	GRAPHIC REF	PART NUMBER	QTY	PART NAME 1 2 3 4 5 6 (PRODUCT LEVEL)	SEE PAGE
	1	1	**135-8203**	8	TOOTH-UNI	
	2	1	**4F-3657**	16	BOLT-PLOW (5/8-11X2.75 IN)	
	3	1	**4K-0367**	16	NUT-FULL (5/8-11 THD)	

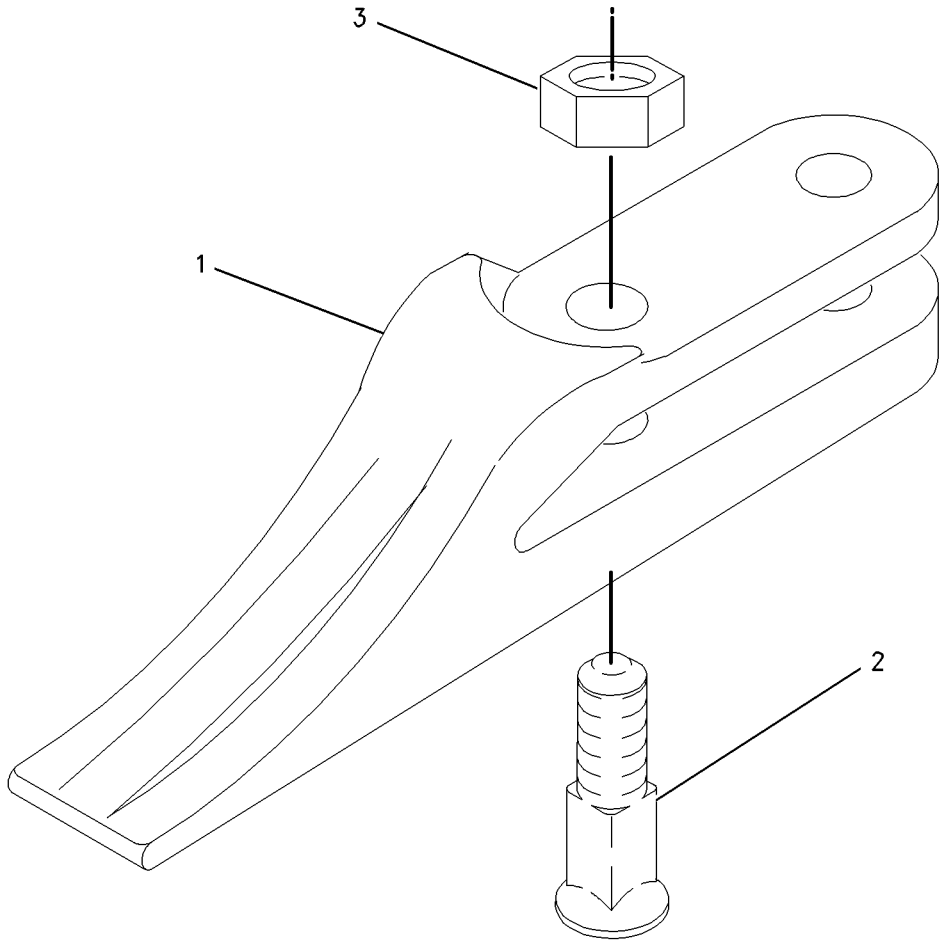

GRAPHIC #1 **<END>** g00915931

OPERATOR STATION

335-3052 CAB AR—PILOT, NON-A/C

S/N: SJL1-UP

CANNOT BE USED WITH 339-4991—PAGE 9, 339-4993—PAGE 10 AN ATTACHMENT

SMCS-7301, 7325 **i03664426**

NOTE	PART NUMBER	QTY	PART NAME 1 2 3 4 5 6 (PRODUCT LEVEL)	SEE PAGE
Y	**342-7147**	1	CAB GP	560
Y	*206-1702*	1	CONSOLE GP-OPERATOR (LH)	567
Y	*317-5539*	1	CONSOLE GP-OPERATOR (FRONT)	569
Y	*336-7545*	1	CONSOLE GP-OPERATOR (RH)	571
Y	*269-3201*	1	CONTROL & MTG GP-JOYSTICK	573
Y	*317-5538*	1	CONTROL GP-STEERING	577
Y	*211-3782*	1	FENDER GP-REAR	300
Y	*206-1618*	1	FLOOR MAT GP	583
Y	*206-1831*	1	FLOORPLATE GP	302
Y	*316-7290*	1	HEATER & MTG GP-CAB	584
Y	*340-6918*	1	LIGHTING GP-FLOOD	159
Y	*317-5543*	1	LINER GP-CAB	604
Y	*315-2940*	1	LINES GP-HEATER	606
Y	*259-6276*	1	MIRROR GP-REAR VIEW (INTERIOR)	609
Y	*336-9168*	1	MIRROR GP-REAR VIEW (EXTERIOR)	610
Y	*269-3247*	1	MOUNTING GP-BACKHOE CONTROL (PILOT)	613
Y	*206-1701*	1	PROTECTION GP-VANDALISM (ROTATING GUARD)	648
Y	*334-7225*	1	ROOF GP-CAB	618
Y	*315-9890*	1	SEAT GP-SUSPENSION (CLOTH)	627
Y	*206-1857*	1	VISOR GP-CAB	632
Y	*340-8276*	1	WASHER GP-WINDOW	633
Y	*340-3552*	1	WIRING GP-CAB	183
Y	*338-5740*	1	WIRING GP-CONSOLE (SIDE, PILOT)	185
Y	*310-5613*	1	WIRING GP-HEATER	191
Y	*338-5738*	1	WIRING GP-PLATFORM	198
Y	*211-4271*	1	WIRING GP-POWER RECEPTACLE	203
	272-5421	1	FILM-CONTROL (BACKHOE, JOYSTICK)	
			(ON THE MACHINE LH REAR SIDE CONSOLE)	
	256-5299	1	FILM-IDENTIFICATION (CATERPILLAR)	
			(ON THE FRONT OF THE ROOF CAP CENTERED HORIZONTALLY & VERTICALLY)	
	285-1207	1	MAT-PROTECTIVE	

Y-SEPARATE ILLUSTRATION

<END>

OPERATOR STATION

335-3053 CAB AR—PILOT, AIR CONDITIONER

S/N: SJL1-UP

CANNOT BE USED WITH 339-4987—PAGE 7, 339-4989—PAGE 8

AN ATTACHMENT

SMCS-7301, 7325 **i03664448**

NOTE	PART NUMBER	QTY	PART NAME 1 2 3 4 5 6 (PRODUCT LEVEL)	SEE PAGE
Y	**342-7147**	1	CAB GP	560
Y	*321-7038*	1	COMPRESSOR GP-REFRIGERANT	565
Y	*301-9725*	1	CONDENSER & MTG GP-REFRIGERANT	566
Y	*336-7545*	1	CONSOLE GP-OPERATOR (RH)	571
Y	*206-1702*	1	CONSOLE GP-OPERATOR (LH)	567
Y	*317-5539*	1	CONSOLE GP-OPERATOR (FRONT)	569
Y	*269-3201*	1	CONTROL & MTG GP-JOYSTICK	573
Y	*317-5538*	1	CONTROL GP-STEERING	577
Y	*211-3782*	1	FENDER GP-REAR	300
Y	*206-1618*	1	FLOOR MAT GP	583
Y	*206-1831*	1	FLOORPLATE GP	302
Y	*316-7291*	1	HEATER & MTG GP-CAB	586
Y	*340-6918*	1	LIGHTING GP-FLOOD	159
Y	*317-5543*	1	LINER GP-CAB	604
Y	*315-2939*	1	LINES GP-HEATER & AIR COND	607
Y	*259-6276*	1	MIRROR GP-REAR VIEW (INTERIOR)	609
Y	*336-9168*	1	MIRROR GP-REAR VIEW (EXTERIOR)	610
Y	*269-3247*	1	MOUNTING GP-BACKHOE CONTROL (PILOT)	613
Y	*206-1701*	1	PROTECTION GP-VANDALISM (ROTATING GUARD)	648
Y	*334-7225*	1	ROOF GP-CAB	618
Y	*315-9890*	1	SEAT GP-SUSPENSION (CLOTH)	627
Y	*206-1857*	1	VISOR GP-CAB	632
Y	*340-8276*	1	WASHER GP-WINDOW	633
Y	*338-5733*	1	WIRING GP-AIR CONDITIONER	180
Y	*340-3552*	1	WIRING GP-CAB	183
Y	*338-5740*	1	WIRING GP-CONSOLE (SIDE, PILOT)	185
Y	*338-5738*	1	WIRING GP-PLATFORM	198
Y	*211-4271*	1	WIRING GP-POWER RECEPTACLE	203
	272-5421	1	FILM-CONTROL (BACKHOE, JOYSTICK)	
			(ON THE MACHINE LH REAR SIDE CONSOLE)	
	256-5299	1	FILM-IDENTIFICATION (CATERPILLAR)	
			(ON THE FRONT OF THE ROOF CAP CENTERED HORIZONTALLY & VERTICALLY)	
	285-1207	1	MAT-PROTECTIVE	

Y-SEPARATE ILLUSTRATION

<END>

OPERATOR STATION

335-3055 CAB AR—DELUXE, WITH A/C

S/N: SJL1-UP

CANNOT BE USED WITH 339-4987—PAGE 7, 339-4989—PAGE 8

AN ATTACHMENT

SMCS-7301, 7325 **i03668040**

NOTE	PART NUMBER	QTY	PART NAME 1 2 3 4 5 6 (PRODUCT LEVEL)	SEE PAGE
Y	**342-7149**	1	CAB GP (DELUXE)	562
Y	*321-7038*	1	COMPRESSOR GP-REFRIGERANT	565
Y	*301-9725*	1	CONDENSER & MTG GP-REFRIGERANT	566
Y	*206-1702*	1	CONSOLE GP-OPERATOR (LH)	567
Y	*317-5539*	1	CONSOLE GP-OPERATOR (FRONT)	569
Y	*336-7545*	1	CONSOLE GP-OPERATOR (RH)	571
Y	*269-3201*	1	CONTROL & MTG GP-JOYSTICK	573
Y	*317-5538*	1	CONTROL GP-STEERING	577
Y	*211-3782*	1	FENDER GP-REAR	300
Y	*206-1618*	1	FLOOR MAT GP	583
Y	*206-1831*	1	FLOORPLATE GP	302
Y	*316-7291*	1	HEATER & MTG GP-CAB	586
Y	*340-6918*	1	LIGHTING GP-FLOOD	159
Y	*317-5543*	1	LINER GP-CAB	604
Y	*315-2939*	1	LINES GP-HEATER & AIR COND	607
Y	*259-6276*	1	MIRROR GP-REAR VIEW (INTERIOR)	609
Y	*336-9168*	1	MIRROR GP-REAR VIEW (EXTERIOR)	610
Y	*269-3247*	1	MOUNTING GP-BACKHOE CONTROL (PILOT)	613
Y	*206-1701*	1	PROTECTION GP-VANDALISM (ROTATING GUARD)	648
Y	*334-7225*	1	ROOF GP-CAB	618
Y	*315-9891*	1	SEAT GP-SUSPENSION (DELUXE, CLOTH)	627
Y	*206-1857*	1	VISOR GP-CAB	632
Y	*340-8276*	1	WASHER GP-WINDOW	633
Y	*338-5733*	1	WIRING GP-AIR CONDITIONER	180
Y	*340-3552*	1	WIRING GP-CAB	183
Y	*338-5740*	1	WIRING GP-CONSOLE (SIDE, PILOT)	185
Y	*338-5738*	1	WIRING GP-PLATFORM	198
Y	*211-4271*	1	WIRING GP-POWER RECEPTACLE	203
Y	*338-5732*	1	WIRING GP-SENSOR	208
	272-5421	1	FILM-CONTROL (BACKHOE, JOYSTICK)	
			(ON THE MACHINE LH REAR SIDE CONSOLE)	
	250-7912	1	FILM-IDENTIFICATION (CATERPILLAR, FRONT)	
			(ON THE FRONT WINDOW AT THE TOP ON THE DELUXE CABS)	
	285-1207	1	MAT-PROTECTIVE	

Y-SEPARATE ILLUSTRATION

<END>

OPERATOR STATION

335-3054 CAB AR-ENCLOSED ROPS—PILOT, NON-A/C

S/N: SJL1-UP

CANNOT BE USED WITH 339-4991—PAGE 9, 339-4993—PAGE 10

AN ATTACHMENT

SMCS-7301, 7325 **i03665881**

NOTE	PART NUMBER	QTY	PART NAME 1 2 3 4 5 6 (PRODUCT LEVEL)	SEE PAGE
Y	**342-7149**	1	CAB GP (DELUXE)	562
Y	*206-1702*	1	CONSOLE GP-OPERATOR (LH)	567
Y	*317-5539*	1	CONSOLE GP-OPERATOR (FRONT)	569
Y	*336-7545*	1	CONSOLE GP-OPERATOR (RH)	571
Y	*269-3201*	1	CONTROL & MTG GP-JOYSTICK	573
Y	*317-5538*	1	CONTROL GP-STEERING	577
Y	*211-3782*	1	FENDER GP-REAR	300
Y	*206-1618*	1	FLOOR MAT GP	583
Y	*206-1831*	1	FLOORPLATE GP	302
Y	*316-7290*	1	HEATER & MTG GP-CAB	584
Y	*340-6918*	1	LIGHTING GP-FLOOD	159
Y	*317-5543*	1	LINER GP-CAB	604
Y	*315-2940*	1	LINES GP-HEATER	606
Y	*259-6276*	1	MIRROR GP-REAR VIEW (INTERIOR)	609
Y	*336-9168*	1	MIRROR GP-REAR VIEW (EXTERIOR)	610
Y	*269-3247*	1	MOUNTING GP-BACKHOE CONTROL (PILOT)	613
Y	*206-1701*	1	PROTECTION GP-VANDALISM (ROTATING GUARD)	648
Y	*334-7225*	1	ROOF GP-CAB	618
Y	*315-9891*	1	SEAT GP-SUSPENSION (DELUXE, CLOTH)	627
Y	*206-1857*	1	VISOR GP-CAB	632
Y	*340-8276*	1	WASHER GP-WINDOW	633
Y	*340-3552*	1	WIRING GP-CAB	183
Y	*338-5740*	1	WIRING GP-CONSOLE (SIDE, PILOT)	185
Y	*310-5613*	1	WIRING GP-HEATER	191
Y	*338-5738*	1	WIRING GP-PLATFORM	198
Y	*211-4271*	1	WIRING GP-POWER RECEPTACLE	203
Y	*338-5732*	1	WIRING GP-SENSOR	208
	272-5421	1	FILM-CONTROL (BACKHOE, JOYSTICK)	
			(ON THE MACHINE LH REAR SIDE CONSOLE)	
	250-7912	1	FILM-IDENTIFICATION (CATERPILLAR, FRONT)	
			(ON THE FRONT WINDOW AT THE TOP ON THE DELUXE CABS)	
	285-1207	1	MAT-PROTECTIVE	

Y-SEPARATE ILLUSTRATION

<END>

OPERATOR STATION

342-7147 CAB GP–STANDARD

S/N: SJL1-UP
EAME MARKET
PART OF 335-3052, 335-3053 CAB AR
AN ATTACHMENT

SMCS-7301 **i03713880**

NOTE	REF NO	GRAPHIC REF	PART NUMBER	QTY	PART NAME 1 2 3 4 5 6 (PRODUCT LEVEL)	SEE PAGE
	1	1	**3S-2093**	6	STRAP-CABLE	
	2	1	**8Y-7309**	2	RETAINER	
	3	1	**129-3738**	2	GUARD-STRIKER	
	4	1	**129-5256**	12	BUSHING	
	5	1	**129-5257**	8	BUSHING	
	6	1	**205-9605**	1	GLASS (FRONT, LH)	
	7	1	**205-9606**	1	GLASS (FRONT, RH)	
	8	1	**205-9607**	1	GLASS (FRONT WINDOW)	
	9	1	**205-9608**	1	GLASS (REAR, RH)	
	10	1	**205-9609**	1	GLASS (REAR, LH)	
	11	1	**205-9629**	4	SPACER (15.9X21.4X50-MM THK)	
	12	1	**206-1590**	4	PIN	
	13	1	**206-1647**	1	PLATE	
	14	1	**210-6475**	2	PLATE	
	15	1	**213-6057**	1	HARNESS AS-LIGHTING (ROADING)	
		1	**115-1052**	2	PIN-CONNECTOR	
		1	**9X-3401**	1	PIN-CONNECTOR (16-GA TO 18-GA)	
		1	**155-2274**	2	KIT-CONNECTING PLUG (6-PIN)	
					(EACH PLUG KIT INCLUDES PLUG AS, WEDGE & INTERFACE SEAL)	
		1	**8T-8737**	3	PLUG-SEAL	
		1	**102-8806**	1	KIT-RECEPTACLE (8-PIN)	
					(INLUDES RECEPTACLE AS & WEDGE)	
		1	**9W-0844**	4	SOCKET-CONNECTOR (14-GA)	
		1	**180-9340**	6	SOCKET-CONNECTOR (14-GA TO 18-GA)	
E		1	**119-3662**		TUBE-HEAT SHRINK (10.85-MM DIA) (13-CM)	
E		1	**125-7875**		TUBE-HEAT SHRINK (7.44-MM DIA) (5-CM)	
	16	1	**215-2913**	1	GROMMET	
	17	1	**219-0302**	1	FILM-WARNING (NO WELD, NO DRILL, READ OMM)	
	18	1	**223-2030**	2	LATCH AS (HOLD OPEN)	
					(EACH INCLUDES)	
M		1	**6V-7743**	2	LOCKNUT (M6X1-THD)	
M		1	**9X-2045**	2	SCREW-TRUSS HEAD (M6X1X20-MM)	
		1	**143-2827**	2	SPRING	
Y	19	1	*315-1270*	1	WINDOW GP-CAB (REAR)	635
	20	1	**325-9310**	1	FILM-CERTIFICATION (OPS, READ OMM)	
Y	21	1	**329-1167**	1	DOOR GP-CAB (RH)	579
Y	22	1	**329-1168**	1	DOOR GP-CAB (LH)	581
	23	1	**338-3328**	2	BOLT-STRIKER	
	24	1	**342-7146**	1	CAB AS	
M	25	1	**5C-7261**	2	NUT (M8X1.25-THD)	
	26	1	**5P-4116**	11	WASHER-HARD (8.8X20.5X2-MM THK)	
	27	1	**5P-7648**	2	GROMMET	
	28	1	**7X-0618**	2	WASHER-HARD (13.5X40X5-MM THK)	
	29	1	**7X-2393**	2	BUMPER-CONICAL	
	30	1	**8S-7803**	8	RING-RETAINING	
M	31	1	**8T-4200**	11	BOLT (M8X1.25X16-MM)	
E	32	1	**322-8414**		SEAL-CAB (339-CM EACH)	

E-ORDER BY THE CENTIMETER
M-METRIC PART
Y-SEPARATE ILLUSTRATION

342-7147 CAB GP *(contd.)* **i03713880**

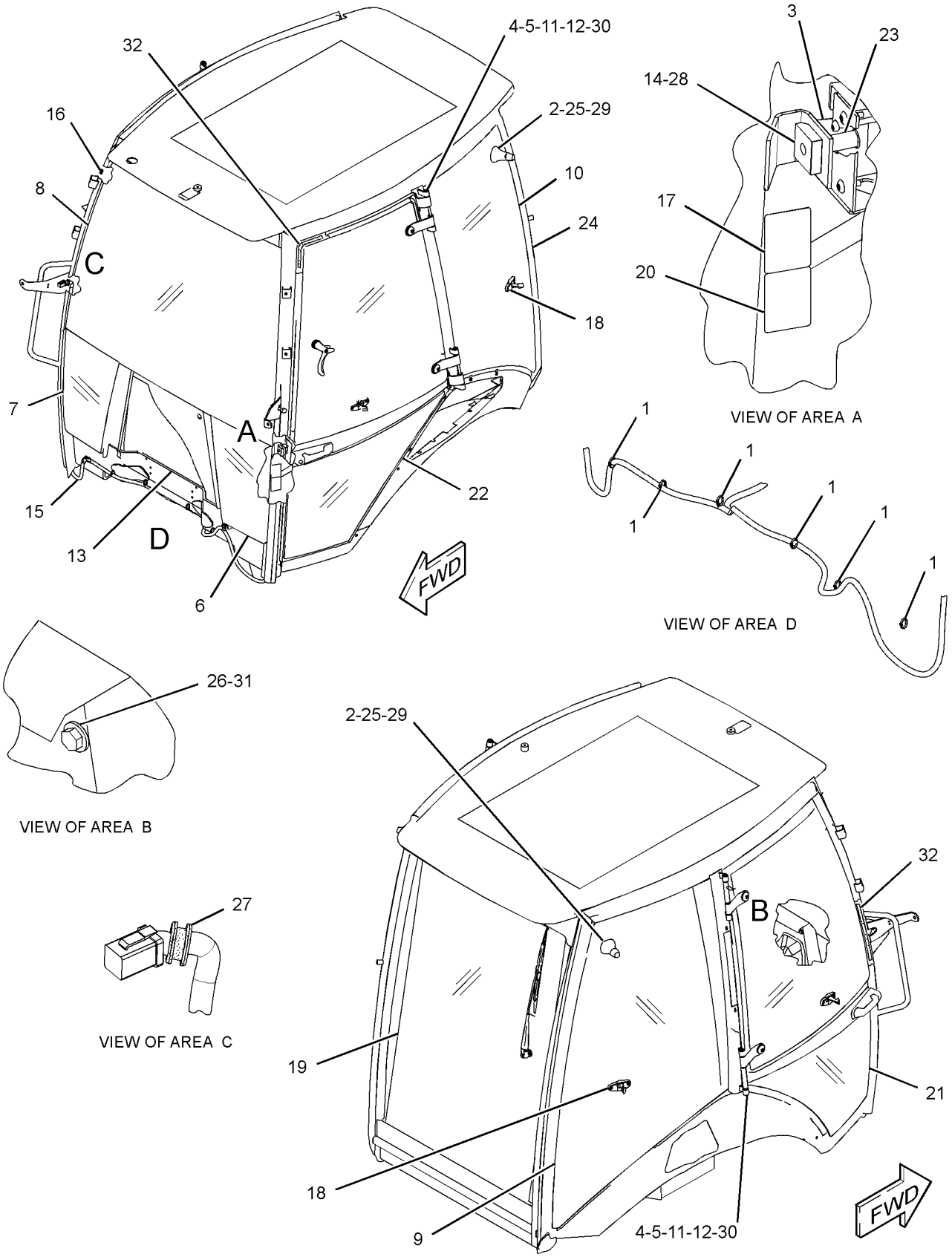

GRAPHIC #1

<END>

g01970834

OPERATOR STATION

342-7149 CAB GP–DELUXE

S/N: SJL1-UP
EUROPEAN MARKET
PART OF 335-3055 CAB AR, 335-3054 CAB AR-ENCLOSED ROPS
AN ATTACHMENT

SMCS-7301 **i03712377**

NOTE	REF NO	GRAPHIC REF	PART NUMBER	QTY	PART NAME 1 2 3 4 5 6 (PRODUCT LEVEL)	SEE PAGE
	1	1	**3S-2093**	6	STRAP-CABLE	
	2	1	**129-3738**	2	GUARD-STRIKER	
	3	1	**129-5256**	12	BUSHING	
	4	1	**129-5257**	8	BUSHING	
	5	1	**159-4945**	2	KEEPER	
B	6	1	**177-4877**	4	SHIM (1-MM THK)	
	7	1	**205-9605**	1	GLASS (FRONT, LH)	
	8	1	**205-9606**	1	GLASS (FRONT, RH)	
	9	1	**205-9607**	1	GLASS (FRONT WINDOW)	
	10	1	**205-9622**	1	GLASS (LOWER, LH)	
	11	1	**205-9631**	1	GLASS (LOWER, RH)	
	12	1	**206-1590**	4	PIN	
	13	1	**206-1647**	1	PLATE	
	14	1	**210-6475**	2	PLATE	
	15	1	**213-6057**	1	HARNESS AS-LIGHTING (ROADING)	
		1	**9W-0852**	2	PIN-CONNECTOR (14-GA)	
		1	**9X-3401**	5	PIN-CONNECTOR (16-GA TO 18-GA)	
		1	**155-2274**	2	KIT-CONNECTING PLUG (6-PIN)	
					(INCLUDES PLUG AS, WEDGE & INTERFACE SEAL)	
		1	**8T-8737**	3	PLUG-SEAL	
		1	**102-8806**	1	KIT-RECEPTACLE (8-PIN)	
					(INCLUDES RECEPTACLE AS & WEDGE)	
		1	**9W-0844**	4	SOCKET-CONNECTOR (14-GA)	
		1	**180-9340**	6	SOCKET-CONNECTOR (14-GA TO 18-GA)	
E		1	**119-3662**		TUBE-HEAT SHRINK (10.85-MM DIA) (13-CM)	
E		1	**125-7875**		TUBE-HEAT SHRINK (7.44-MM DIA) (5-CM)	
	16	1	**215-2913**	1	GROMMET	
	17	1	**219-0302**	1	FILM-WARNING (NO WELD, NO DRILL, READ OMM)	
Y	18	1	*315-1270*	1	WINDOW GP-CAB (REAR)	635
	19	1	**325-9310**	1	FILM-CERTIFICATION (OPS, READ OMM)	
Y	20	1	**327-7601**	1	WINDOW GP-CAB (LH)	637
Y	21	1	**327-7637**	1	WINDOW GP-CAB (RH)	639
Y	22	1	**329-1167**	1	DOOR GP-CAB (RH)	579
Y	23	1	**329-1168**	1	DOOR GP-CAB (LH)	581
	24	1	**338-3328**	2	BOLT-STRIKER	
	25	1	**342-7148**	1	CAB AS (DELUXE)	
M	26	1	**131-3987**	8	SCREW (M4X0.7X12-MM)	
	27	1	**159-4946**	2	KEEPER	
	28	1	**5P-4116**	11	WASHER-HARD (8.8X20.5X2-MM THK)	
	29	1	**5P-7648**	2	GROMMET	
	30	1	**7X-0618**	2	WASHER-HARD (13.5X40X5-MM THK)	
	31	1	**8S-7803**	8	RING-RETAINING	
M	32	1	**8T-4200**	11	BOLT (M8X1.25X16-MM)	
E	33	1	**322-8414**		SEAL-CAB (258-CM EACH)	
E	33A	1	**322-8414**		SEAL-CAB (339-CM EACH)	

B-USE AS REQUIRED
E-ORDER BY THE CENTIMETER
M-METRIC PART
Y-SEPARATE ILLUSTRATION

342-7149 CAB GP *(contd.)* **i03712377**

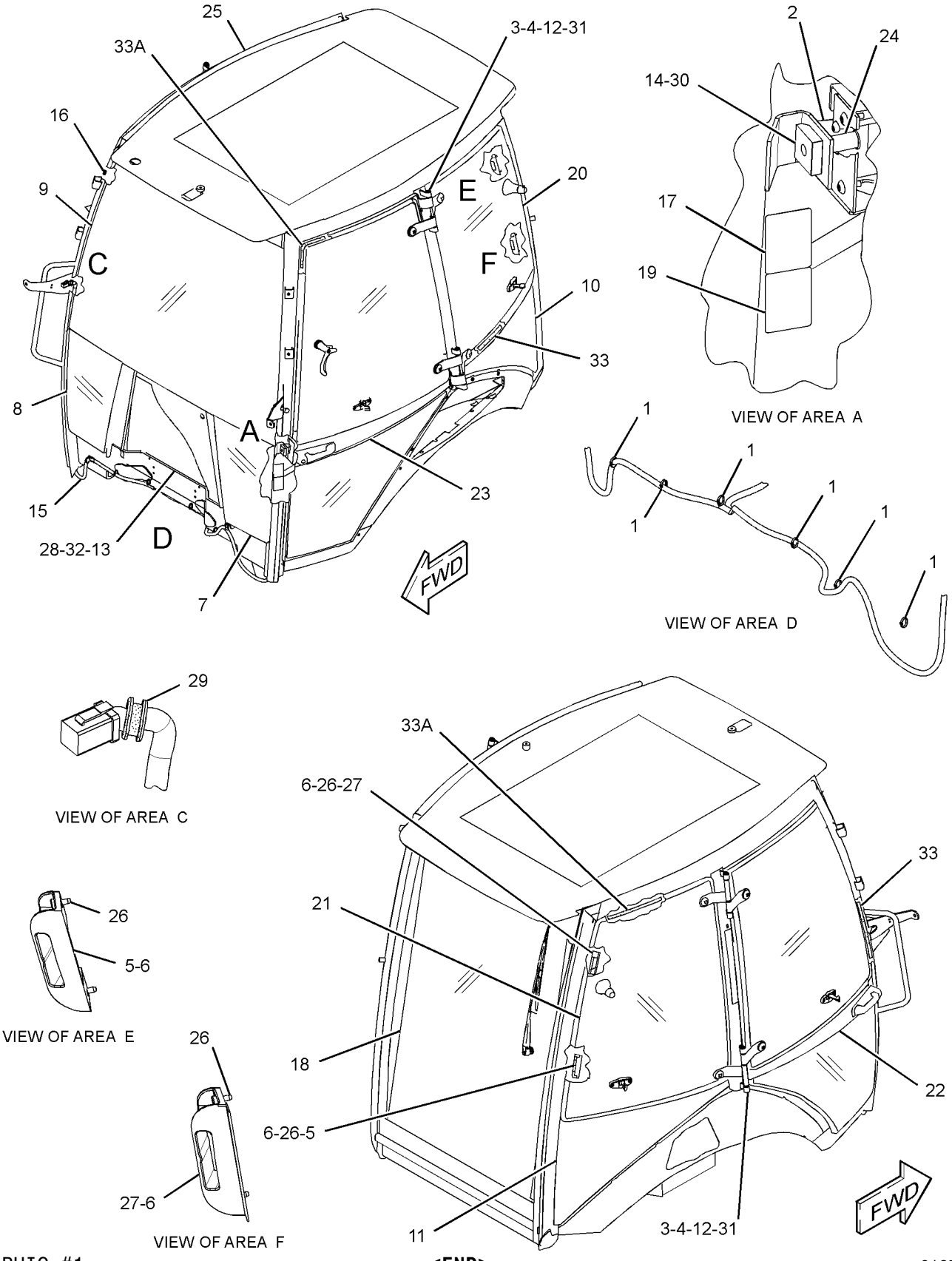

GRAPHIC #1

<END>

g01978468

OPERATOR STATION

299-2212 COMPRESSOR GP-REFRIGERANT

S/N: SJL1-UP

PART OF 321-7038 COMPRESSOR GP-REFRIGERANT

AN ATTACHMENT

SMCS-1802 **i03028620**

NOTE	REF NO	GRAPHIC REF	PART NUMBER	QTY	PART NAME 1 2 3 4 5 6 (PRODUCT LEVEL)	SEE PAGE
	1	1	**126-1767**	2	PIN-CONNECTOR (14-GA)	
	2	1	**102-8802**	1	KIT-RECEPTACLE (2-PIN)	
					(INCLUDES RECEPTACLE AS & WEDGE)	
	3	1	**314-4018**	1	VALVE AS-PRESSURE RELIEF	
	4	1	**7T-4532**	1	PLUG AS	
	5	1	**9X-7385**	2	SEAL-O-RING	

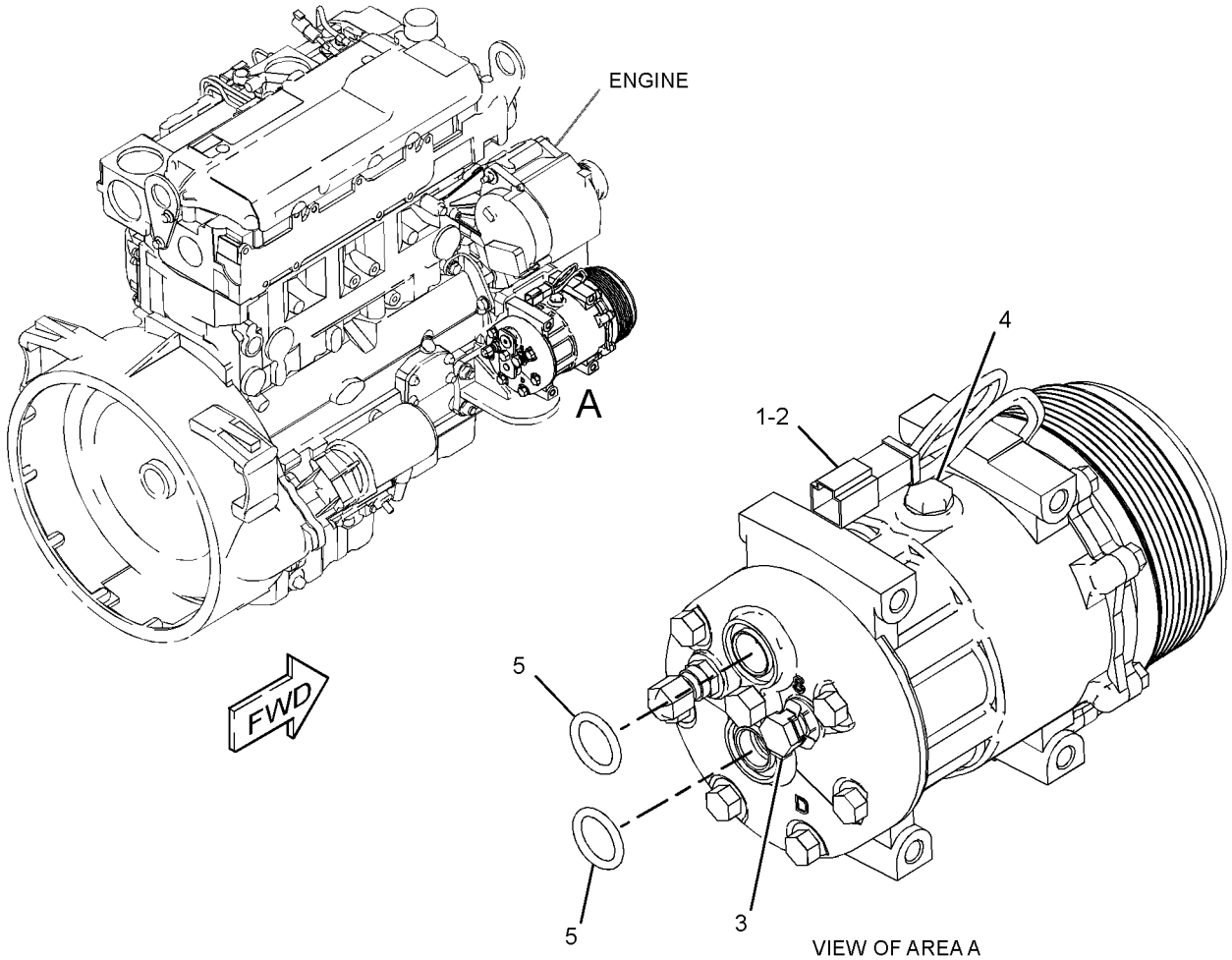

GRAPHIC #1 **<END>** g01513535

321-7038 COMPRESSOR GP-REFRIGERANT

S/N: SJL1-UP
PART OF 335-3053, 335-3055 CAB AR
AN ATTACHMENT

SMCS-1802 **i03035509**

NOTE	REF NO	GRAPHIC REF	PART NUMBER	QTY	PART NAME 1 2 3 4 5 6 (PRODUCT LEVEL)	SEE PAGE
	1	1	**288-9734**	1	BRACKET	
	2	1	**290-7831**	1	BRACKET	
Y	3	1	**299-2212**	1	COMPRESSOR GP-REFRIGERANT	564
M	4	1	**7X-2538**	4	BOLT (M8X1.25X100-MM)	
M	5	1	**7X-2553**	2	BOLT (M16X2X40-MM)	
	6	1	**8T-4121**	2	WASHER-HARD (11X21X2.5-MM THK)	
M	7	1	**8T-4136**	2	BOLT (M10X1.5X25-MM)	
	8	1	**8T-4224**	4	WASHER-HARD (8.8X16X2-MM THK)	
	9	1	**9X-8257**	2	WASHER (17.5X30X3.5-MM THK)	

M-METRIC PART
Y-SEPARATE ILLUSTRATION

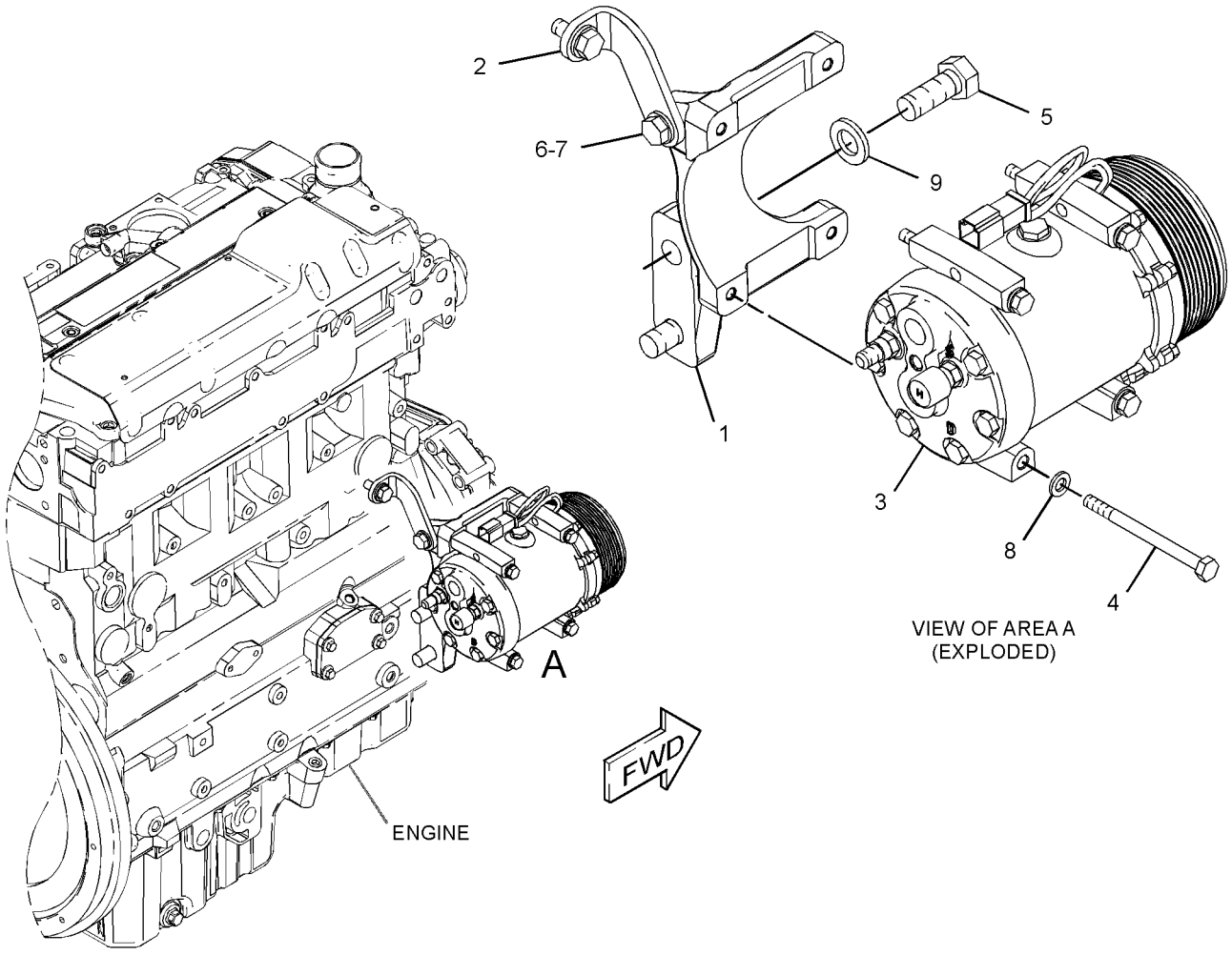

GRAPHIC #1 **<END>** g01570153

OPERATOR STATION

301-9725 CONDENSER & MTG GP-REFRIGERANT

S/N: SJL1-UP
PART OF 335-3053, 335-3055 CAB AR
AN ATTACHMENT

SMCS-1805 **i03028622**

NOTE	REF NO	GRAPHIC REF	PART NUMBER	QTY	PART NAME 1 2 3 4 5 6 (PRODUCT LEVEL)	SEE PAGE
	1	1	**8C-9987**	4	WASHER (8.3X28X2.5-MM THK)	
	2	1	**300-6792**	1	CORE AS-CONDENSER	
		1	**317-8141**	4	MOUNT	
M	3	1	**8T-4908**	4	BOLT (M8X1.25X25-MM)	

M-METRIC PART

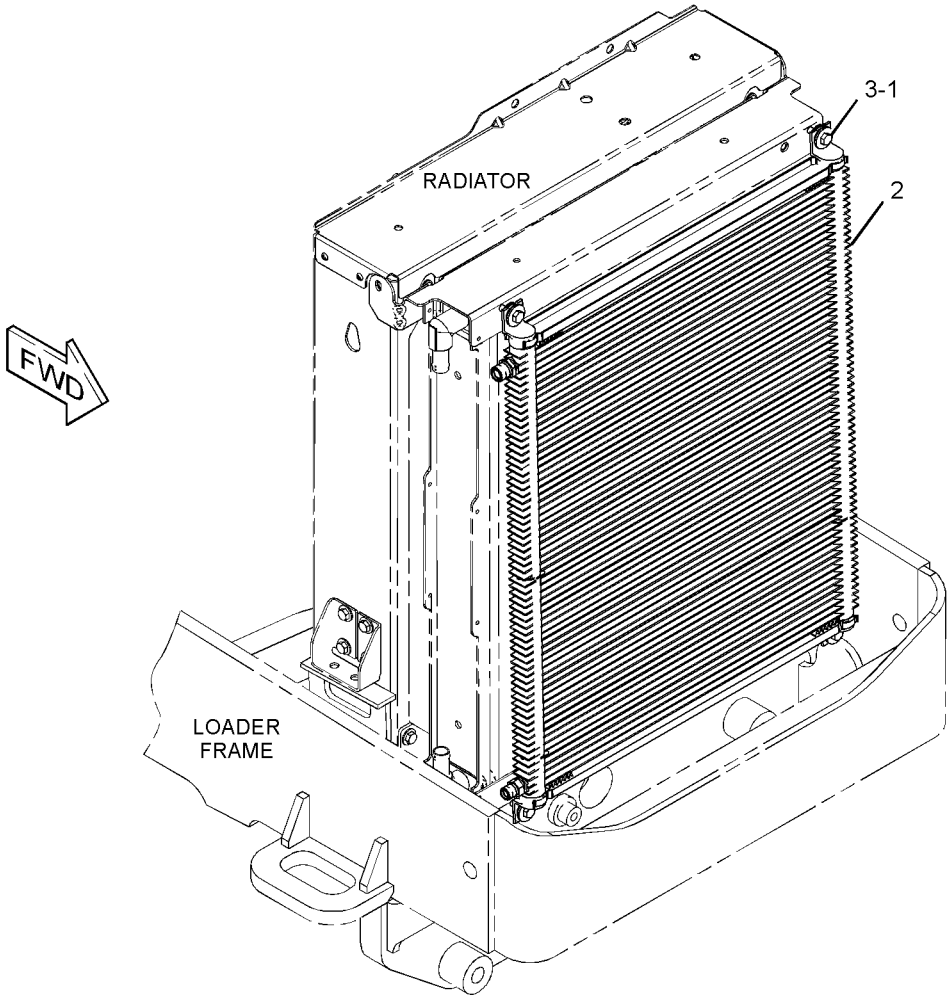

GRAPHIC #1 **<END>** g01410038

OPERATOR STATION

206-1702 CONSOLE GP-OPERATOR—LH

S/N: SJL1-UP

PART OF 335-3052, 335-3053, 335-3055 CAB AR, 335-3054 CAB AR-ENCLOSED ROPS AN ATTACHMENT

SMCS-5258, 7451 **i03126124**

NOTE	REF NO	GRAPHIC REF	PART NUMBER	QTY	PART NAME 1 2 3 4 5 6 (PRODUCT LEVEL)	SEE PAGE
E	1	1	**3E-6600**		SEAL (34-CM)	
D	2	1	**5P-5927**		SEAL (1.7-M)	
	3	1	**206-1696**	1	CONSOLE AS (LH)	
	4	1	**206-1698**	1	DOOR-STORAGE	
	5	1	**206-1699**	1	CUP HOLDER (FRONT)	
	6	1	**206-1706**	1	BOX AS-STORAGE	
J	7	1	**206-1708**	1	LOCK AS	
	8	1	**206-1712**	1	HINGE-DOOR	
	9	1	**210-6491**	1	CUP HOLDER (REAR)	
	10	1	**249-2482**	1	PLATE	
	11	1	**261-9636**	1	BRACKET-SUPPORT	
	12	1	**261-9637**	2	BRACKET AS	
	13	1	**261-9639**	3	SCREW-PAN HEAD (NO 12X0.5-IN)	
E	14	1	**293-1980**		SEAL (71-CM)	
E	14A	1	**293-1980**		SEAL (77-CM)	
M	15	1	**5C-2890**	3	NUT (M6X1-THD)	
	16	1	**8T-4205**	3	WASHER-HARD (7.2X14.5X2-MM THK)	
	17	1	**9X-2038**	6	WASHER (7X19X2-MM THK)	
M	18	1	**9X-2044**	19	SCREW-TRUSS HEAD (M6X1X16-MM)	

D-ORDER BY THE METER
E-ORDER BY THE CENTIMETER
J-REQUIRES CORPORATE KEY
M-METRIC PART

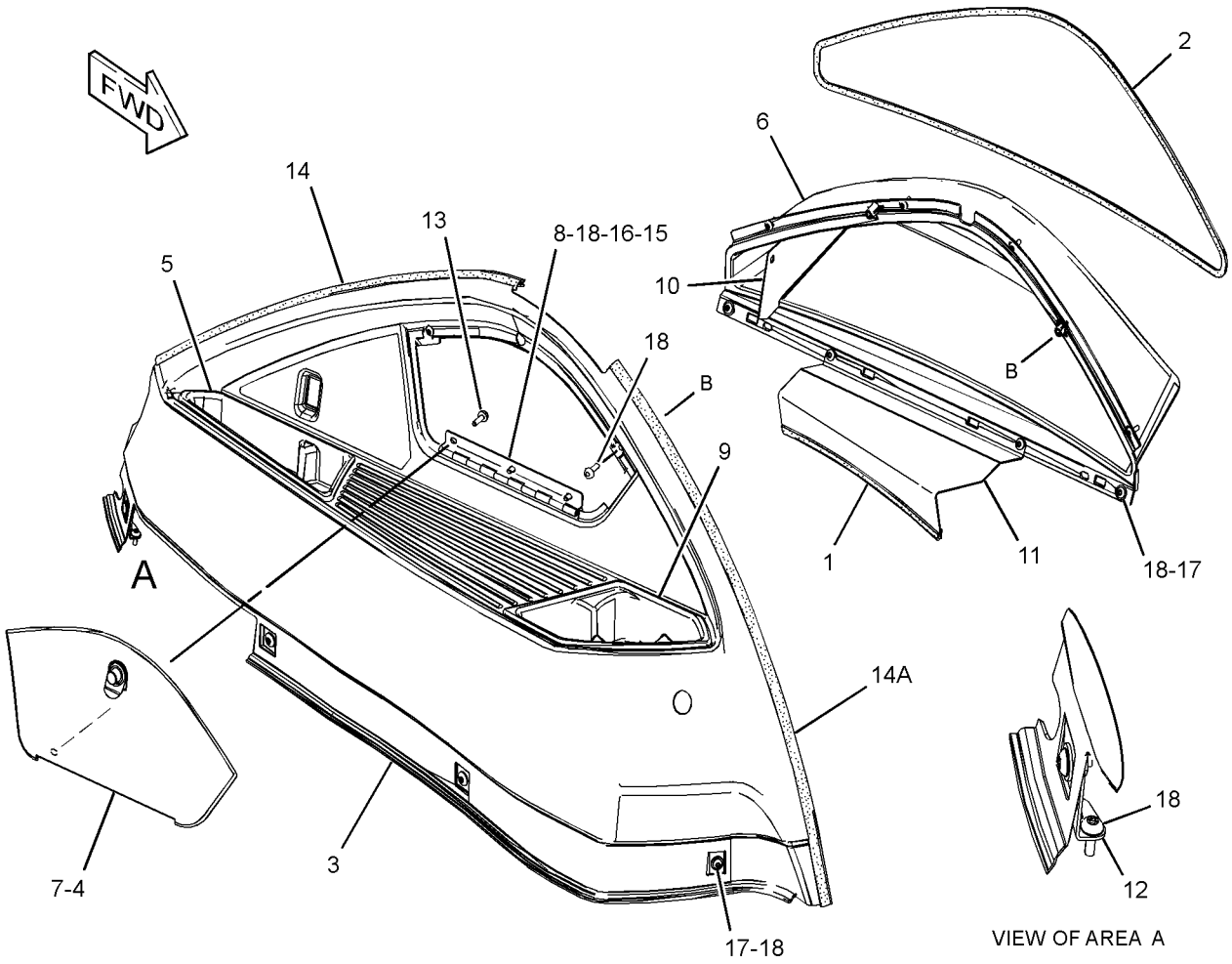

GRAPHIC #1 **<END>** g01520782

OPERATOR STATION

317-5539 CONSOLE GP-OPERATOR–FRONT

S/N: SJL1-UP

PART OF 335-3052, 335-3053, 335-3055 CAB AR, 335-3054 CAB AR-ENCLOSED ROPS AN ATTACHMENT

SMCS-5258, 7451 **i03504003**

NOTE	REF NO	GRAPHIC REF	PART NUMBER	QTY	PART NAME 1 2 3 4 5 6 (PRODUCT LEVEL)	SEE PAGE
	1	1	**4I-3038**	2	WASHER (3.3X8X0.5-MM THK)	
B	2	1	**184-5293**	1	PLUG	
	3	1	**206-1659**	1	DOOR-STORAGE	
	4	1	**206-1662**	1	CONSOLE AS-FRONT (UPPER)	
		1	**206-1667**	8	CLIP	
	5	1	**206-1663**	1	CONSOLE-FRONT (MIDDLE)	
J	6	1	**206-1708**	1	LOCK AS	
	7	1	**224-2147**	1	CONSOLE AS-FRONT (LOWER, LH)	
	8	1	**224-2149**	1	CONSOLE AS-FRONT (LOWER, RH)	
	9	1	**233-5260**	2	LANYARD	
	10	1	**258-2354**	1	BRACKET-LATCH	
	11	1	**261-9639**	10	SCREW-PAN HEAD (NO 12X0.5-IN)	
	12	1	**313-6711**	1	COVER AS-STEERING COLUMN (UPPER)	
		1	**206-1667**	2	CLIP	
	13	1	**313-6712**	1	COVER AS-STEERING COLUMN (FRONT)	
	14	1	**313-6713**	1	COVER AS-STEERING COLUMN (REAR)	
					(EACH COVER AS-STEERING COLUMN INCLUDES)	
		1	**206-1667**	4	CLIP	
	15	1	**320-9835**	1	FILM-INSTRUCTION (FORWARD, NEUTRAL, REVERSE)	
M	16	1	**120-9027**	2	SCREW-PAN HEAD (M3X0.5X16-MM)	
	17	1	**206-1854**	1	HINGE	
M	18	1	**8T-2658**	2	LOCKNUT (M3X0.5-THD)	
	19	1	**9X-2038**	3	WASHER (7X19X2-MM THK)	
M	20	1	**9X-2044**	2	SCREW-TRUSS HEAD (M6X1X16-MM)	
M	21	1	**9X-2045**	16	SCREW-TRUSS HEAD (M6X1X20-MM)	
E	22	1	**220-0738**		SEAL (22-CM)	
D	23	1	**5P-7070**		INSULATION-STRIP (0.03-M EACH)	

B-USE AS REQUIRED
D-ORDER BY THE METER
E-ORDER BY THE CENTIMETER
J-REQUIRES CORPORATE KEY
M-METRIC PART

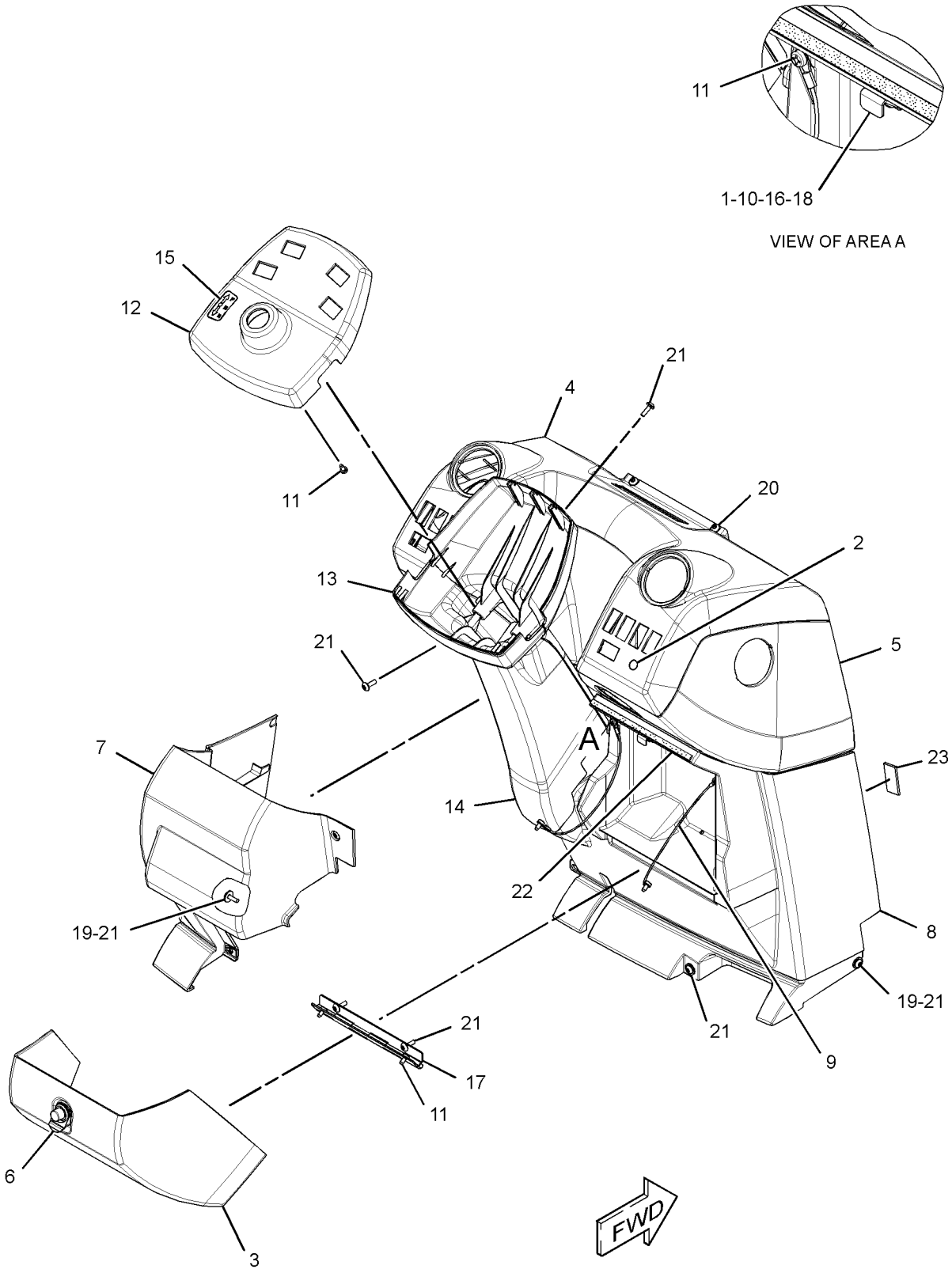

GRAPHIC #1 **<END>** g01841134

OPERATOR STATION

336-7545 CONSOLE GP-OPERATOR—RH

S/N: SJL1-UP

PART OF 335-3052, 335-3053, 335-3055 CAB AR, 335-3054 CAB AR-ENCLOSED ROPS AN ATTACHMENT

SMCS-5258, 7451 **i03663181**

NOTE	REF NO	GRAPHIC REF	PART NUMBER	QTY	PART NAME 1 2 3 4 5 6 (PRODUCT LEVEL)	SEE PAGE
B	1	1	**2S-3163**	1	PLUG	
	2	1	**164-1178**	1	CLIP	
	3	1	**167-8251**	1	FASTENER	
	4	1	**206-1678**	1	HOUSING AS (UPPER)	
	5	1	**206-1681**	1	PANEL AS (LOWER)	
		1	**172-8591**	5	NUT-SPRING	
	6	1	**206-1687**	1	COVER-FUSE	
	7	1	**206-1690**	1	COVER (FENDER, REAR)	
	8	1	**206-1692**	1	COVER AS (CONTROLS, REAR)	
		1	**206-1667**	3	CLIP	
	9	1	**231-9361**	1	FILM-IDENTIFICATION (FUSE, RELAY)	
B	10	1	**248-2709**	2	PLUG	
	11	1	**250-7910**	1	FILM-INSTRUCTION (BOOM LOCK)	
	12	1	**250-7911**	1	FILM-INSTRUCTION (VARIABLE SPEED)	
	13	1	**255-0793**	1	FILM-WARNING (READ OMM)	
	14	1	**255-0794**	1	FILM-WARNING (SEAT BELT)	
	15	1	**261-9644**	1	COVER AS (CONTROLS, FRONT, LOWER)	
		1	**206-1667**	1	CLIP	
	16	1	**261-9645**	1	COVER AS (CONTROLS, FRONT, UPPER)	
		1	**206-1667**	4	CLIP	
	17	1	**269-9115**	1	COVER AS (FENDER, FRONT)	
		1	**172-8591**	1	NUT-SPRING	
E	18	1	**293-1980**		SEAL (73-CM)	
E	18A	1	**293-1980**		SEAL (77.5-CM)	
	19	1	**323-3324**	1	FILM-IDENTIFICATION (FUSE PANEL)	
	20	1	**336-7533**	1	PANEL AS-GAUGE	
		1	**206-1667**	2	CLIP	
	21	1	**337-5351**	1	FILM-INSTRUCTION (START SWITCH)	
	22	1	**9X-2038**	5	WASHER (7X19X2-MM THK)	
M	23	1	**9X-2045**	16	SCREW-TRUSS HEAD (M6X1X20-MM)	

B-USE AS REQUIRED
E-ORDER BY THE CENTIMETER
M-METRIC PART

336-7545 **CONSOLE GP-OPERATOR** *(contd.)* **i03663181**

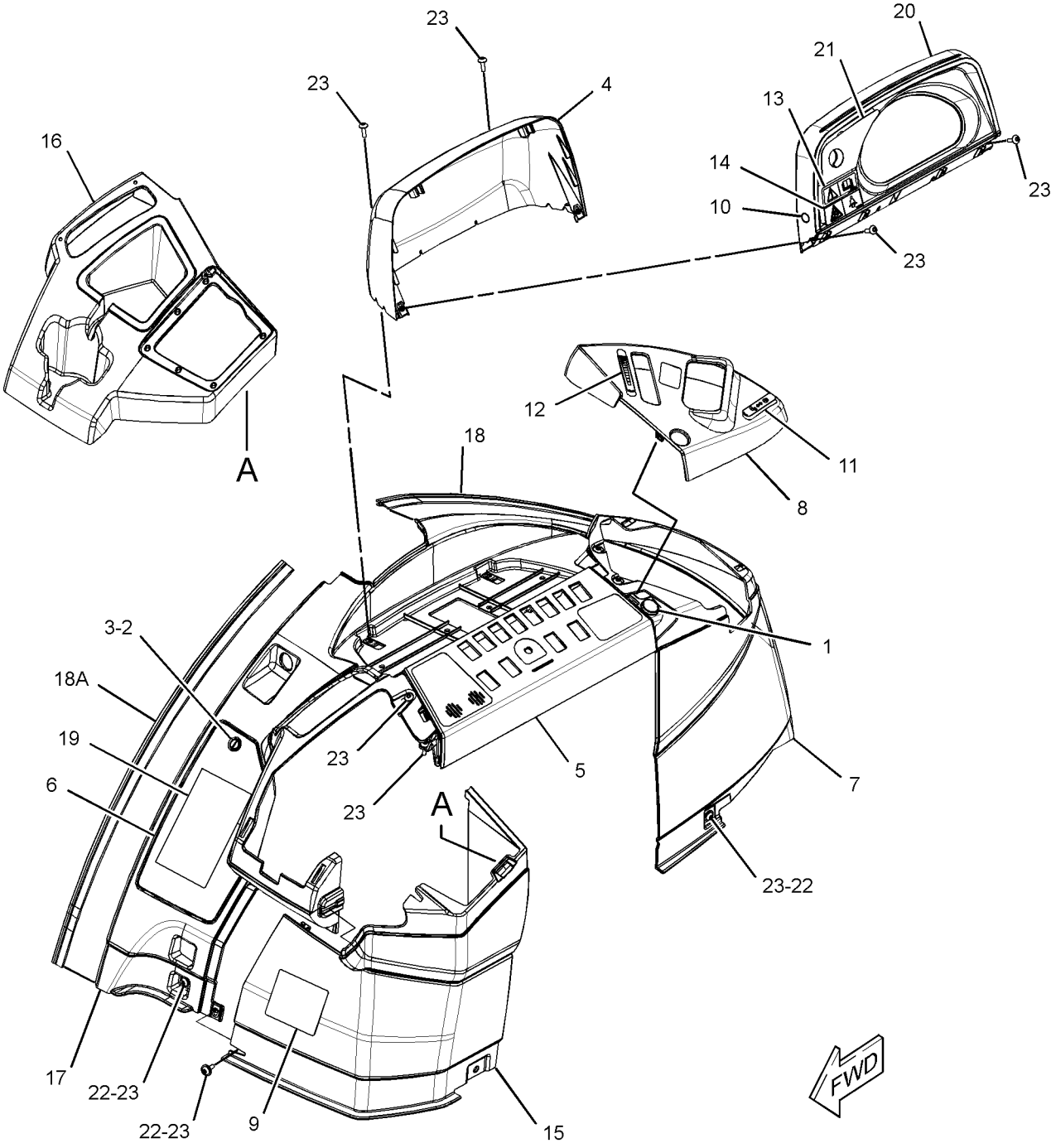

GRAPHIC #1 **<END>** g01983418

OPERATOR STATION

269-3201 CONTROL & MTG GP-JOYSTICK

S/N: SJL1-UP

PART OF 335-3052, 335-3053, 335-3055 CAB AR, 335-3054 CAB AR-ENCLOSED ROPS AN ATTACHMENT

SMCS-5059, 5705 **i03126127**

NOTE	REF NO	GRAPHIC REF	PART NUMBER	QTY	PART NAME 1 2 3 4 5 6 (PRODUCT LEVEL)	SEE PAGE
	1	1	**164-1368**	12	FASTENER-PANEL	
	2	1	**269-4159**	1	BRACKET AS	
	3	1	**269-4161**	1	BRACKET AS	
	4	1	**270-0149**	1	BOOT	
	5	1	**270-2795**	1	PLATE	
	6	1	**275-8869**	1	BRACKET AS	
	7	1	**291-5108**	1	GASKET	
M	8	1	**3T-0849**	4	BOLT-SOCKET HEAD (M6X1X25-MM)	
M	9	1	**6V-7744**	2	LOCKNUT (M10X1.5-THD)	
	10	1	**7X-7729**	4	WASHER (11X25X3-MM THK)	
M	11	1	**8T-4189**	8	BOLT (M8X1.25X20-MM)	
	12	1	**8T-4224**	4	WASHER-HARD (8.8X16X2-MM THK)	
M	13	1	**9X-2040**	2	SCREW-TRUSS HEAD (M10X1.5X25-MM)	
	14	1	**9X-8256**	4	WASHER (6.6X12X2-MM THK)	
	15	1	**5P-4116**	4	WASHER-HARD (8.8X20.5X2-MM THK)	
E	16	1	**3E-6600**		SEAL (7-CM)	
M	17	1	**8T-4244**	1	NUT (M12X1.75-THD)	

E-ORDER BY THE CENTIMETER
M-METRIC PART

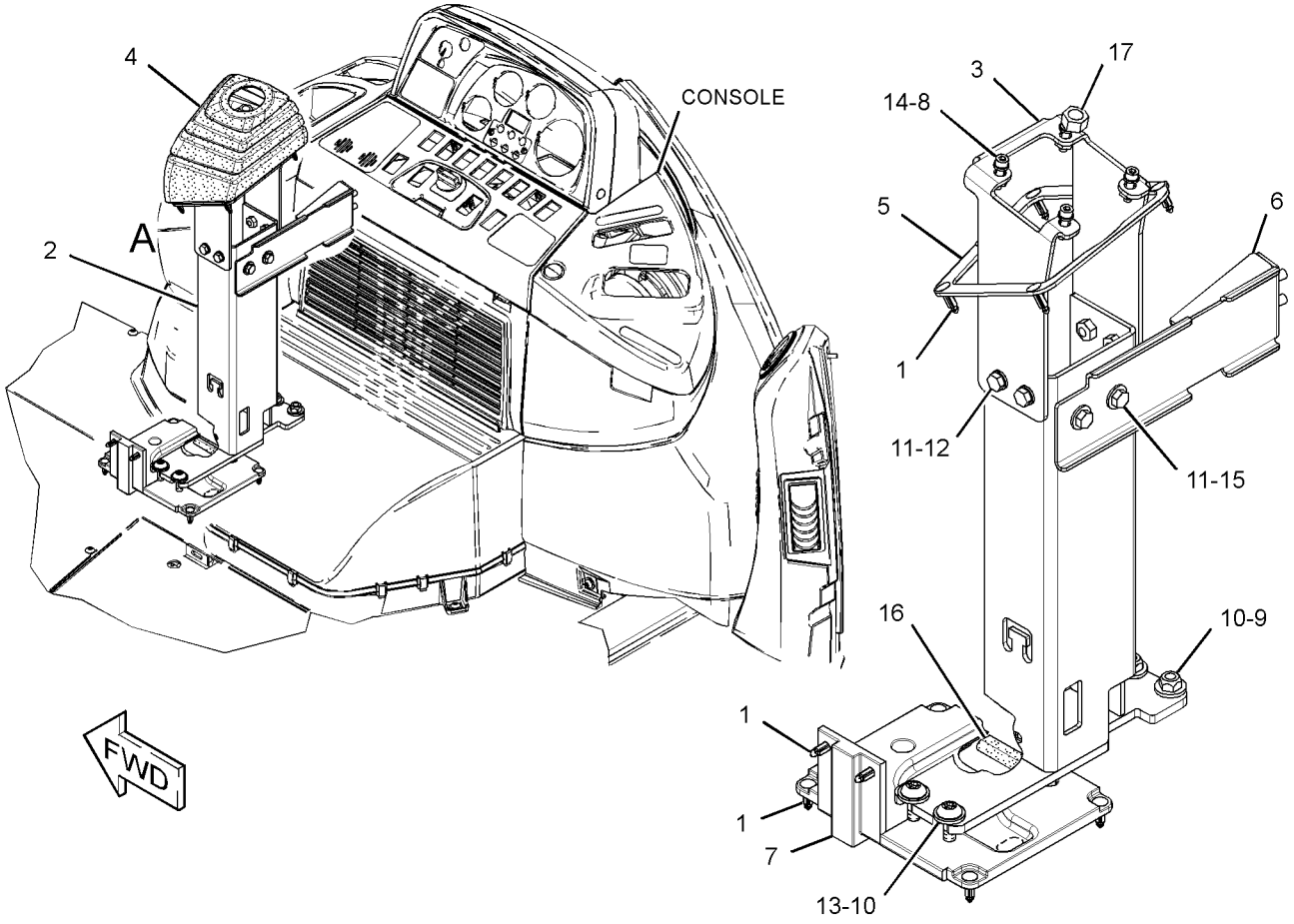

VIEW OF AREA A
(BOOT REMOVED FOR CLARITY)

GRAPHIC #1 **<END>** g01385649

OPERATOR STATION

272-9700 CONTROL GP-HANDLE–RH, JOYSTICK

S/N: SJL1-UP

PART OF 329-0124 HYDRAULIC AR

SMCS-5063, 5705 **i03712373**

NOTE	REF NO	GRAPHIC REF	PART NUMBER	QTY	PART NAME 1 2 3 4 5 6 (PRODUCT LEVEL)	SEE PAGE
	1	1	**263-2901**	1	HANDLE GP-MODULAR (RH)	
		1	**8T-8737**	5	PLUG-SEAL	
		1	**174-3091**	1	KIT-RECEPTACLE (12-PIN)	
					(INCLUDES RECEPTACLE AS & WEDGE)	
		1	**186-3735**	7	PIN-CONNECTOR (16-GA TO 18-GA)	
	2	1	**272-9701**	1	ADAPTER (RH)	

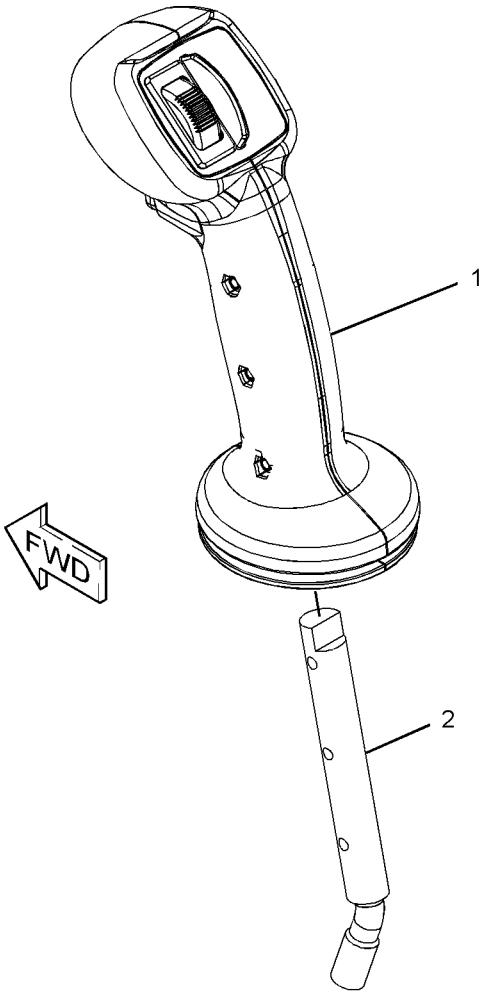

GRAPHIC #1 **<END>** g01214739

OPERATOR STATION

271-3096 CONTROL GP-JOYSTICK–RH

S/N: SJL1-UP

PART OF 338-0432 LINES GP-PILOT

SMCS-5705 **i03321223**

NOTE	REF NO	GRAPHIC REF	PART NUMBER	QTY	PART NAME 1 2 3 4 5 6 (PRODUCT LEVEL)	SEE PAGE
	1	1	**271-3101**	1	HANDLE GP-MODULAR (RH)	
		1	**8T-8737**	8	PLUG-SEAL	
		1	**174-3091**	1	KIT-RECEPTACLE (12-PIN)	
					(INCLUDES RECEPTACLE AS & WEDGE)	
		1	**186-3735**	4	PIN-CONNECTOR (16-GA TO 18-GA)	
	2	1	**272-9701**	1	ADAPTER (RH)	
	3	1	**254-3437**	1	BOOT	

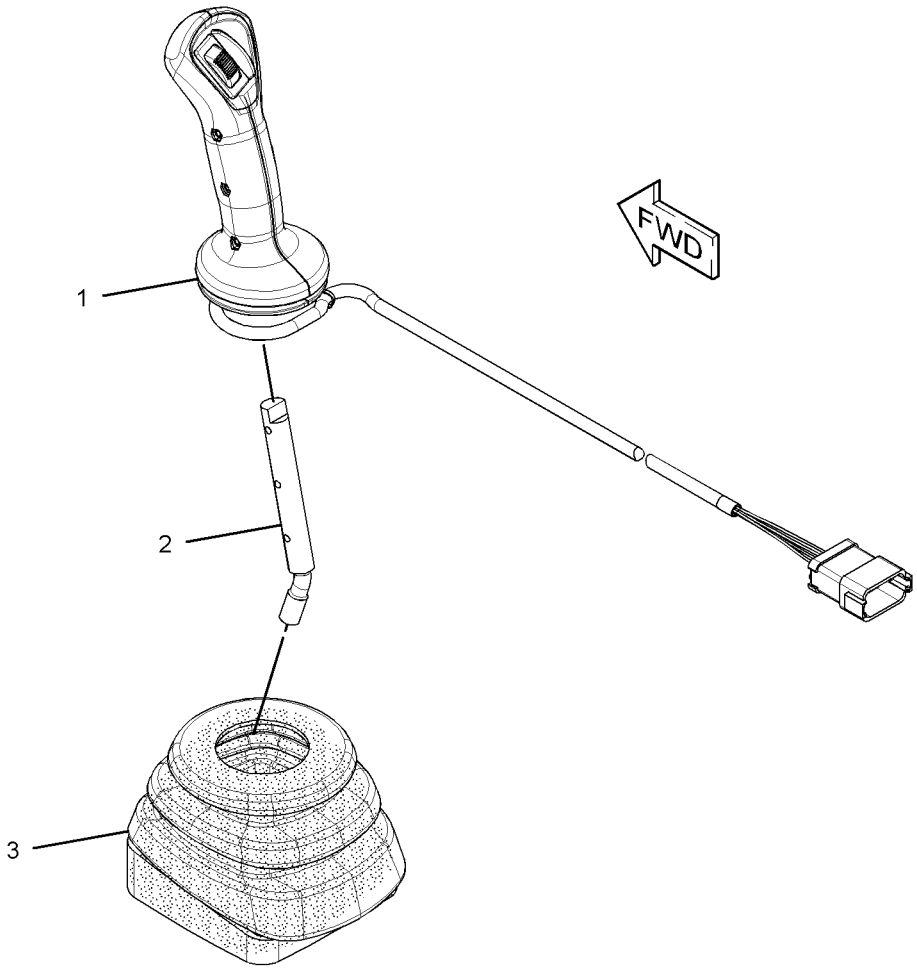

GRAPHIC #1 **<END>** g01478115

OPERATOR STATION

271-3097 CONTROL GP-JOYSTICK–LH

S/N: SJL1-UP

PART OF 338-0432 LINES GP-PILOT

SMCS-5705 **i03321224**

NOTE	REF NO	GRAPHIC REF	PART NUMBER	QTY	PART NAME 1 2 3 4 5 6 (PRODUCT LEVEL)	SEE PAGE
	1	1	**271-3103**	1	HANDLE GP-MODULAR (LH)	
		1	**8T-8737**	10	PLUG-SEAL	
		1	**174-3091**	1	KIT-RECEPTACLE (12-PIN)	
					(INCLUDES RECEPTACLE AS & WEDGE)	
		1	**186-3735**	2	PIN-CONNECTOR (16-GA TO 18-GA)	
	2	1	**278-7469**	1	ADAPTER (LH)	
	3	1	**254-3437**	1	BOOT	

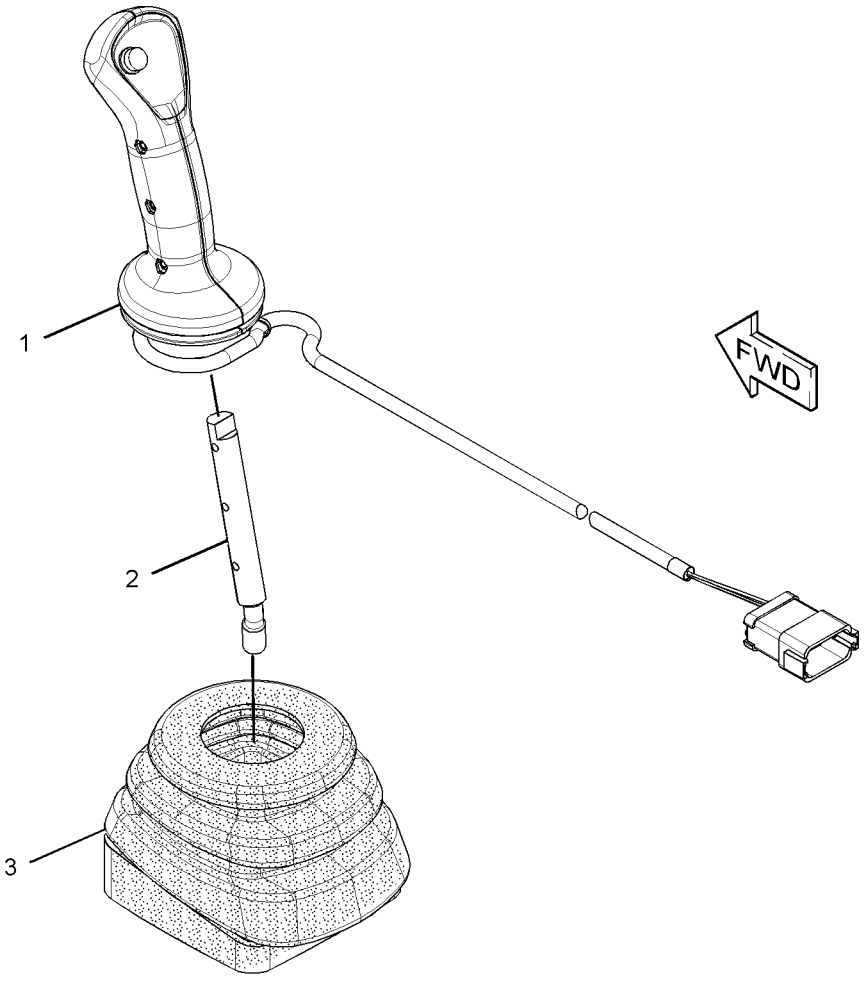

GRAPHIC #1 **<END>** g01473695

317-5538 CONTROL GP-STEERING–TILT

S/N: SJL1-UP

PART OF 335-3052, 335-3053, 335-3055 CAB AR, 335-3054 CAB AR-ENCLOSED ROPS AN ATTACHMENT

SMCS-4309, 4310, 4338 **i03332302**

NOTE	REF NO	GRAPHIC REF	PART NUMBER	QTY	PART NAME 1 2 3 4 5 6 (PRODUCT LEVEL)	SEE PAGE
	1	1	**206-1632**	1	PLATE AS	
	2	1	**255-2749**	1	PLUG	
Y	3	1	**310-6216**	1	STEERING COLUMN GP (TILT)	292
	4	1	**317-5541**	1	STEERING WHEEL	
	5	1	**325-9308**	1	KNOB AS	
	6	1	**7X-7729**	6	WASHER (11X25X3-MM THK)	
	7	1	**8R-2916**	1	COVER AS (CAT STEERING WHEEL)	
	8	1	**8T-4121**	4	WASHER-HARD (11X21X2.5-MM THK)	
M	9	1	**8T-4133**	2	NUT (M10X1.5-THD)	
M	10	1	**8T-4136**	4	BOLT (M10X1.5X25-MM)	
M	11	1	**8T-4195**	4	BOLT (M10X1.5X30-MM)	
M	12	1	**8T-8894**	1	BOLT-SOCKET HEAD (M10X1.5X20-MM)	

M-METRIC PART
Y-SEPARATE ILLUSTRATION

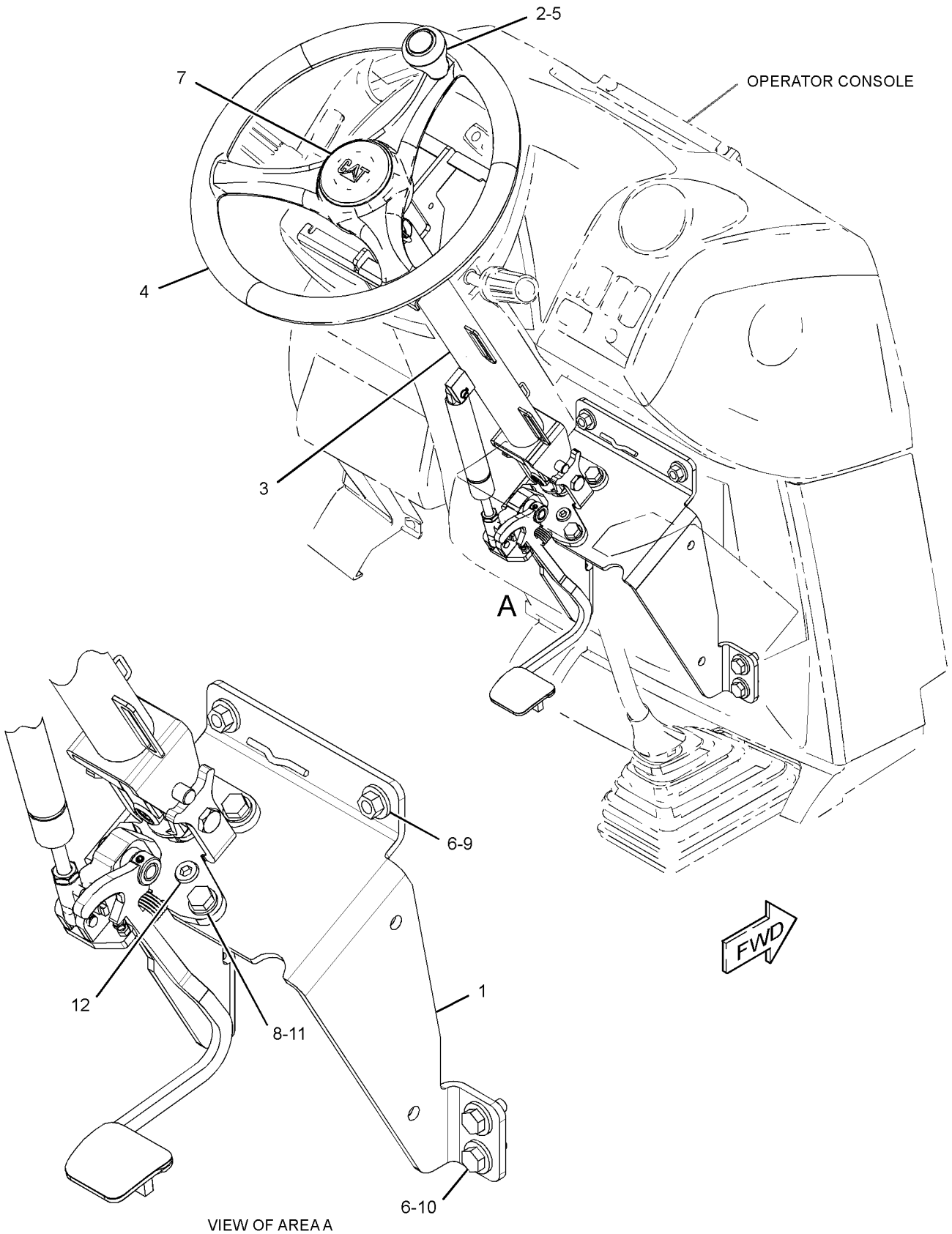

GRAPHIC #1 **<END>** g01576454

OPERATOR STATION

329-1167 DOOR GP-CAB–RH

S/N: SJL1-UP
PART OF 342-7147, 342-7149 CAB GP
AN ATTACHMENT

SMCS-7308 **i03628846**

NOTE	REF NO	GRAPHIC REF	PART NUMBER	QTY	PART NAME 1 2 3 4 5 6 (PRODUCT LEVEL)	SEE PAGE
	1	1	**132-2249**	2	SPACER (7.4X12.7X24-MM THK)	
J	2	1	**159-4269**	1	SPRING GP-GAS (CAB DOOR)	
	3	1	**159-4945**	1	KEEPER	
B	4	1	**177-4877**	1	SHIM (1-MM THK)	
	5	1	**205-9598**	1	GLASS (RH)	
	6	1	**248-2714**	2	NUT-ACORN	
N	7	1	**252-1862**	1	HANDLE AS (PULL)	
	8	1	**252-1863**	1	GASKET	
	9	1	**252-1865**	1	LATCH AS (RH)	
	10	1	**253-1817**	1	SPACER (6.5X14.5X12-MM THK)	
	11	1	**253-1857**	1	PLATE	
	12	1	**253-1858**	1	COVER (LATCH)	
	13	1	**254-1126**	1	PLATE	
	14	1	**254-1127**	1	PLATE	
	15	1	**258-3697**	2	WASHER-NYLON (7X20X2-MM THK)	
	16	1	**329-1169**	1	DOOR AS (RH)	
Y	17	1	*333-9902*	1	WINDOW GP-DOOR (RH)	642
	18	1	**223-2029**	1	SEAL AS (RH)	
M	19	1	**131-3987**	2	SCREW (M4X0.7X12-MM)	
	20	1	**197-5107**	2	SCREW-TRUSS HEAD (M6X1X60-MM)	
	21	1	**205-7048**	2	INSERT-THREADED (M6X1-THD)	
M	22	1	**5C-9553**	3	BOLT (M6X1X16-MM)	
M	23	1	**8T-6974**	1	BOLT (M6X1X80-MM)	
	24	1	**9X-2038**	4	WASHER (7X19X2-MM THK)	
M	25	1	**9X-2045**	4	SCREW-TRUSS HEAD (M6X1X20-MM)	
E	26	1	**322-8414**		SEAL-CAB (347-CM)	
					PARTS SHOWN IN GRAPHIC(S) WITHOUT A REFERENCE NUMBER ARE NOT SERVICED SEPARATELY	
					AVAILABLE REPAIR KIT(S):	
J			**161-9044**	1	KIT-FITTING	
					(INCLUDES FITTING AS & NUT)	

B-USE AS REQUIRED
E-ORDER BY THE CENTIMETER
J-KIT MARKED J SERVICES PART MARKED J
M-METRIC PART
N-REQUIRES CORPORATE KEY
Y-SEPARATE ILLUSTRATION

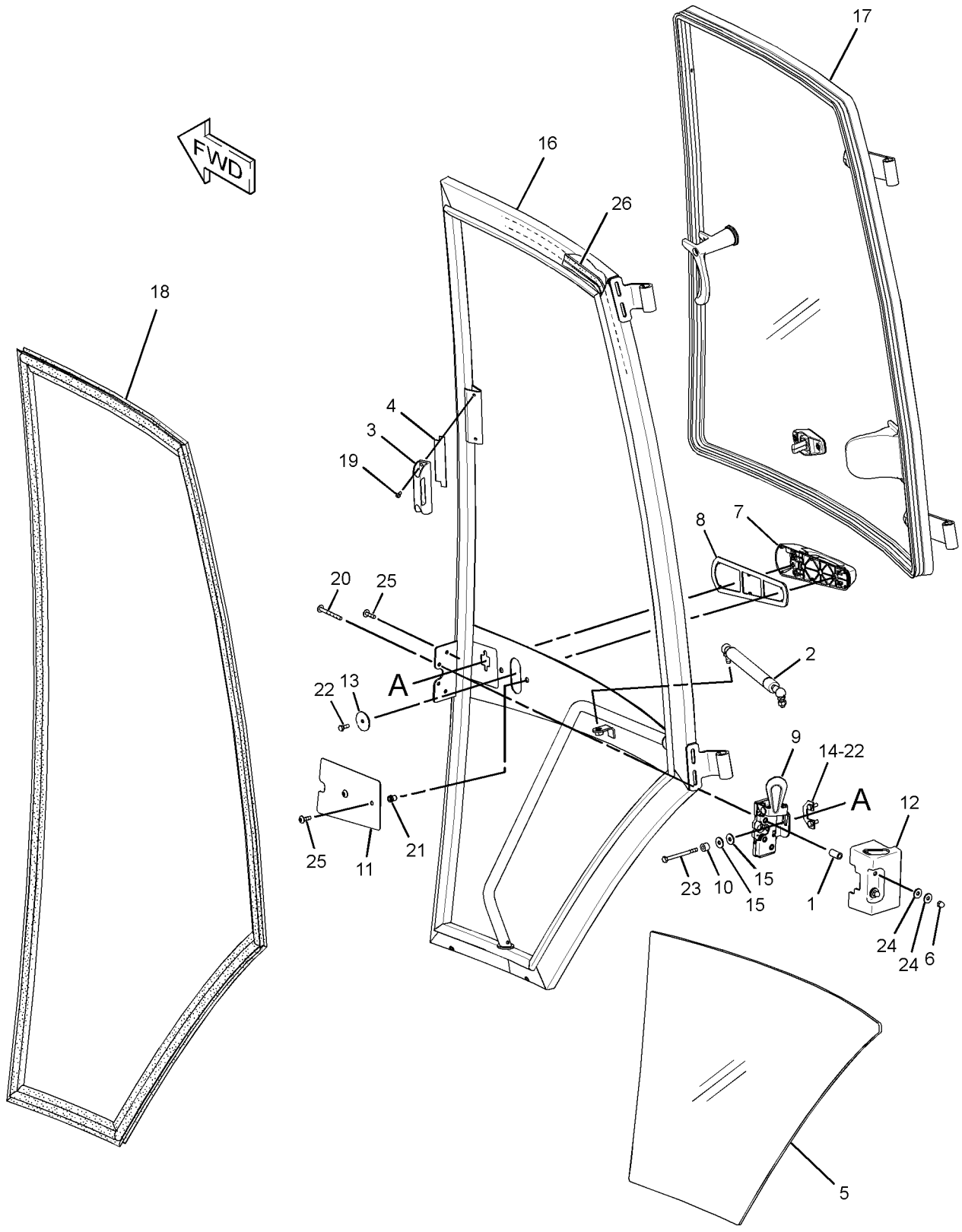

GRAPHIC #1 **<END>** g01819794

OPERATOR STATION

329-1168 DOOR GP-CAB—LH

S/N: SJL1-UP
PART OF 342-7147, 342-7149 CAB GP
AN ATTACHMENT

SMCS-7308 **i03628663**

NOTE	REF NO	GRAPHIC REF	PART NUMBER	QTY	PART NAME 1 2 3 4 5 6 (PRODUCT LEVEL)	SEE PAGE
	1	1	**132-2249**	2	SPACER (7.4X12.7X24-MM THK)	
J	2	1	**159-4269**	1	SPRING GP-GAS (CAB DOOR)	
B	3	1	**177-4877**	1	SHIM (1-MM THK)	
	4	1	**205-9588**	1	GLASS (LH)	
	5	1	**248-2714**	2	NUT-ACORN	
N	6	1	**252-1862**	1	HANDLE AS (PULL)	
	7	1	**252-1863**	1	GASKET	
	8	1	**252-1864**	1	LATCH AS (LH)	
	9	1	**253-1817**	1	SPACER (6.5X14.5X12-MM THK)	
	10	1	**253-1857**	1	PLATE	
	11	1	**253-1858**	1	COVER (LATCH)	
	12	1	**254-1126**	1	PLATE	
	13	1	**254-1127**	1	PLATE	
	14	1	**258-3697**	2	WASHER-NYLON (7X20X2-MM THK)	
	15	1	**329-1170**	1	DOOR AS (LH)	
Y	16	1	*333-9901*	1	WINDOW GP-DOOR (LH)	641
	17	1	**223-2028**	1	SEAL AS (LH)	
M	18	1	**131-3987**	2	SCREW (M4X0.7X12-MM)	
	19	1	**159-4946**	1	KEEPER	
	20	1	**197-5107**	2	SCREW-TRUSS HEAD (M6X1X60-MM)	
	21	1	**205-7048**	2	INSERT-THREADED (M6X1-THD)	
M	22	1	**5C-9553**	3	BOLT (M6X1X16-MM)	
M	23	1	**8T-6974**	1	BOLT (M6X1X80-MM)	
	24	1	**9X-2038**	4	WASHER (7X19X2-MM THK)	
M	25	1	**9X-2045**	4	SCREW-TRUSS HEAD (M6X1X20-MM)	
E	26	1	**322-8414**		SEAL-CAB (347-CM)	
					PARTS SHOWN IN GRAPHIC(S) WITHOUT A REFERENCE NUMBER ARE NOT SERVICED SEPARATELY	
					AVAILABLE REPAIR KIT(S):	
J			**161-9044**	1	KIT-FITTING	
					(INCLUDES NUT & FITTING AS)	

B-USE AS REQUIRED
E-ORDER BY THE CENTIMETER
J-KIT MARKED J SERVICES PART MARKED J
M-METRIC PART
N-REQUIRES CORPORATE KEY
Y-SEPARATE ILLUSTRATION

329-1168 DOOR GP-CAB *(contd.)* i03628663

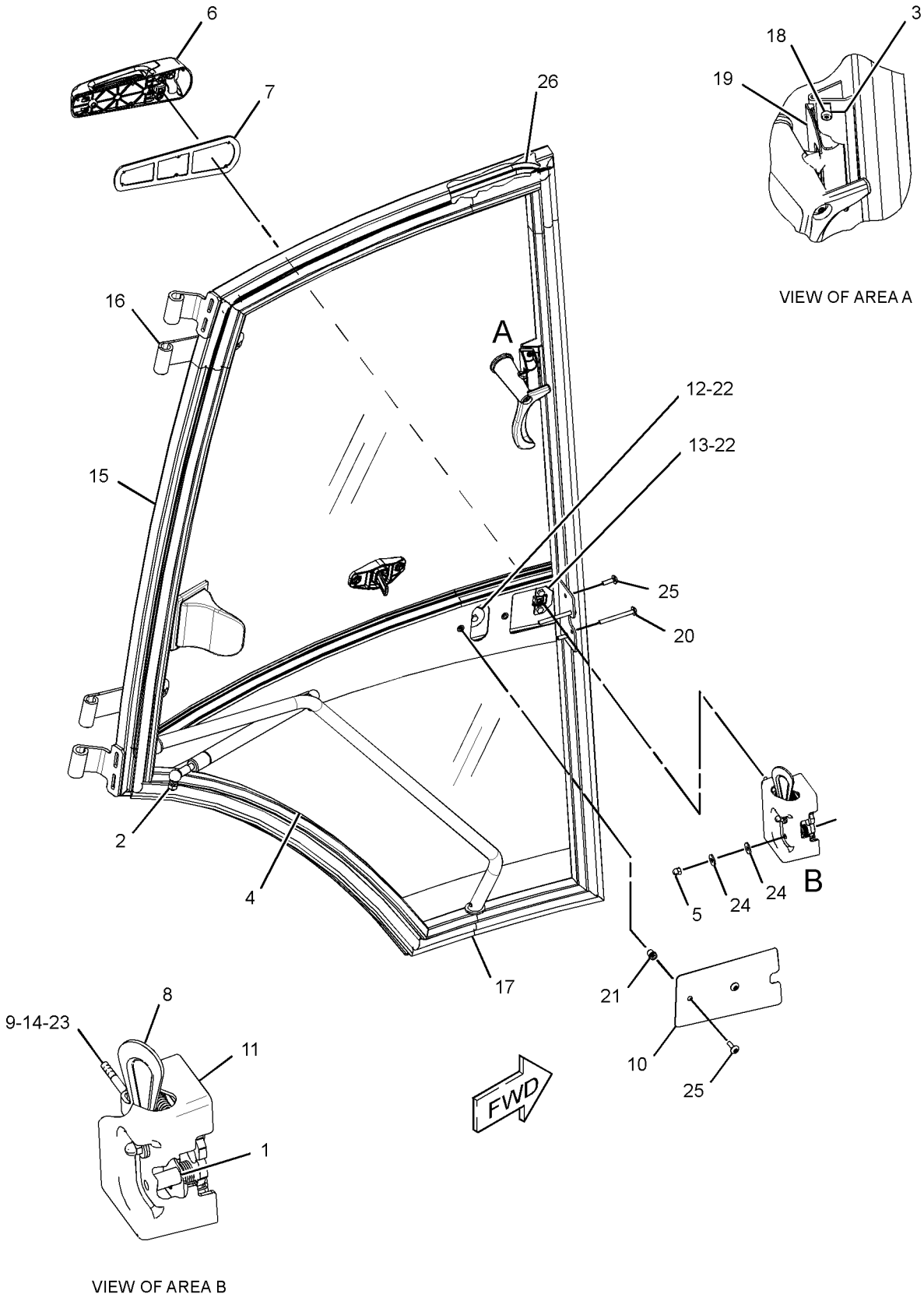

GRAPHIC #1 **<END>** g01811576

206-1618 FLOOR MAT GP

S/N: SJL1-UP

PART OF 335-3052, 335-3053, 335-3055 CAB AR, 335-3054 CAB AR-ENCLOSED ROPS AN ATTACHMENT

SMCS-7265 **i02454744**

NOTE	REF NO	GRAPHIC REF	PART NUMBER	QTY	PART NAME 1 2 3 4 5 6 (PRODUCT LEVEL)	SEE PAGE
	1	1	**247-8179**	2	PLATE	
	2	1	**284-1602**	1	FLOOR MAT	
	3	1	**1H-3244**	4	LOCKWASHER	
M	4	1	**9X-2045**	4	SCREW-TRUSS HEAD (M6X1X20-MM)	

M-METRIC PART

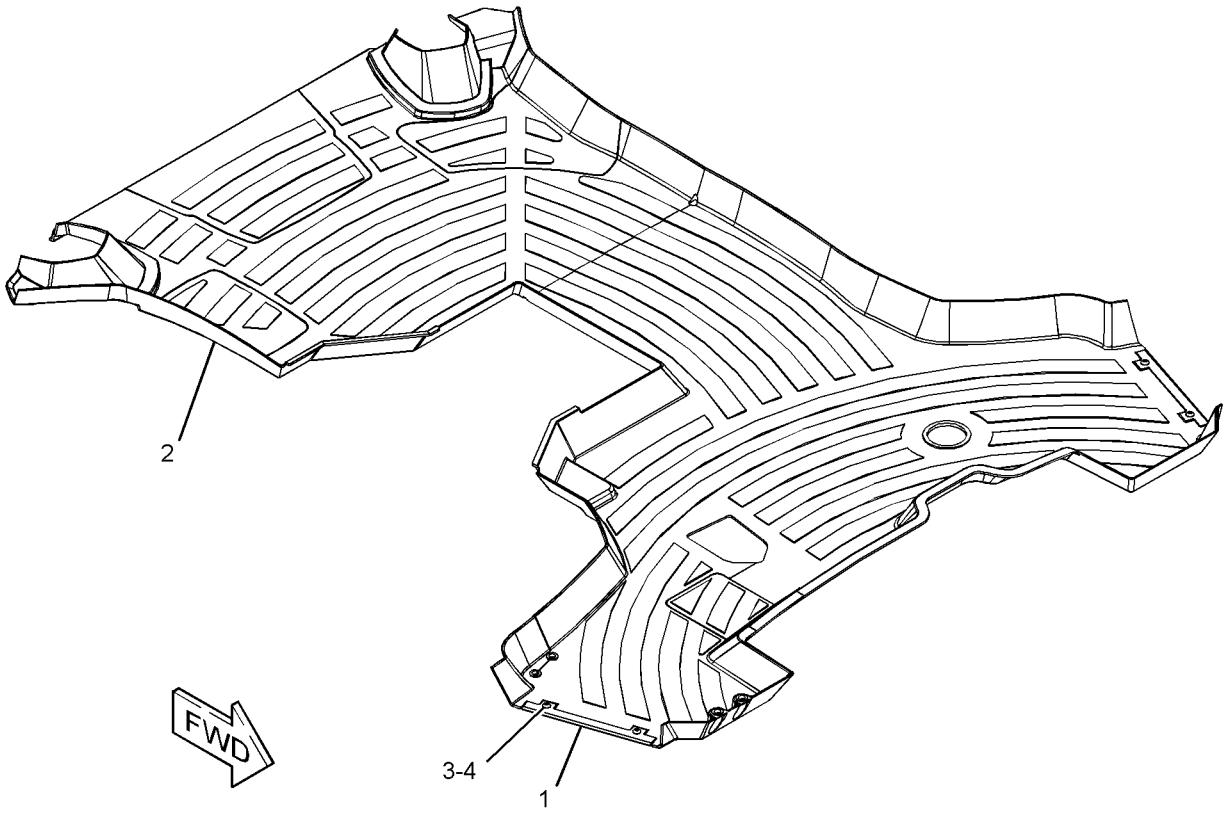

GRAPHIC #1 **<END>** g01228081

OPERATOR STATION

316-7290 HEATER & MTG GP-CAB

S/N: SJL1-UP

PART OF 335-3052 CAB AR, 335-3054 CAB AR-ENCLOSED ROPS AN ATTACHMENT

SMCS-7304 **i03713801**

NOTE	REF NO	GRAPHIC REF	PART NUMBER	QTY	PART NAME 1 2 3 4 5 6 (PRODUCT LEVEL)	SEE PAGE
	1	1	**319-8524**	1	HOSE-AIR	
	2	1	**6L-4725**	2	CLAMP-HOSE	
	3	1	**8Y-5737**	1	CLAMP (COMPRESSION)	
	4	1	**8Y-6352**	1	LOUVER AS	
	5	1	**8Y-6967**	6	LOUVER AS-VENT	
	6	1	**9M-7959**	4	CLAMP-HOSE	
	7	1	**9N-2231**	1	GROMMET AS	
	8	1	**110-6109**	1	KNOB-CONTROL (HEATER)	
	9	1	**130-4832**	2	SCREW (8-18X10-MM)	
	10	1	**164-1368**	4	FASTENER-PANEL	
	11	1	**164-8474**	2	LOUVER AS-VENT	
	12	1	**189-0881**	1	CONTROL AS (PANEL)	
	13	1	**193-3356**	1	CABLE AS	
	14	1	**194-5622**	1	VALVE AS-WATER (AIR CONDITIONER)	
		1	**6V-6717**	1	SCREW-WASHER HEAD (8-32X9.52-MM)	
		1	**124-0312**	2	SCREW-PAN HEAD (8-16X0.32-IN)	
	15	1	**206-1648**	1	LOUVER	
	16	1	**206-1653**	4	GASKET	
	17	1	**206-1682**	1	PANEL-CONTROL	
	18	1	**206-1684**	1	COVER (CAB FILTER)	
	19	1	**206-1803**	2	GASKET	
	20	1	**206-1804**	1	GASKET	
	21	1	**206-1805**	1	GASKET	
	22	1	**206-1807**	1	GASKET	
	23	1	**206-1808**	1	PLATE	
	24	1	**206-1809**	1	ROD AS	
	25	1	**206-1810**	1	DUCT-AIR	
	26	1	**206-1815**	1	DUCT-AIR	
	27	1	**206-1816**	1	DUCT-AIR	
	28	1	**206-1817**	2	DUCT-AIR	
	29	1	**206-1818**	1	DUCT AS-AIR	
		1	**172-8591**	2	NUT-SPRING	
E		1	**144-0195**		HOSE (1110-CM)	
Y	30	1	**210-8364**	1	HEATER GP-CAB	591
	31	1	**211-2661**	1	FILTER ELEMENT AS-AIR (CAB HEATER)	
	32	1	**218-0666**	6	LOUVER AS	
	33	1	**221-2420**	2	HOSE-AIR	
	34	1	**255-0795**	1	FILM (TEMPERATURE CONTROL)	
	35	1	**313-6709**	1	DUCT-AIR	
	36	1	**313-6710**	1	DUCT-AIR	
M	37	1	**111-4627**	3	SCREW-MACHINE (M6X1X30-MM)	
	38	1	**5P-4116**	1	WASHER-HARD (8.8X20.5X2-MM THK)	
	39	1	**7X-0579**	1	WASHER-HARD (8.8X25.5X2-MM THK)	
M	40	1	**8T-4200**	1	BOLT (M8X1.25X16-MM)	
	41	1	**8T-4205**	4	WASHER-HARD (7.2X14.5X2-MM THK)	
	42	1	**9X-2038**	4	WASHER (7X19X2-MM THK)	
M	43	1	**9X-2045**	8	SCREW-TRUSS HEAD (M6X1X20-MM)	
E	44	1	**220-0738**		SEAL (87-CM)	

E-ORDER BY THE CENTIMETER
M-METRIC PART
Y-SEPARATE ILLUSTRATION

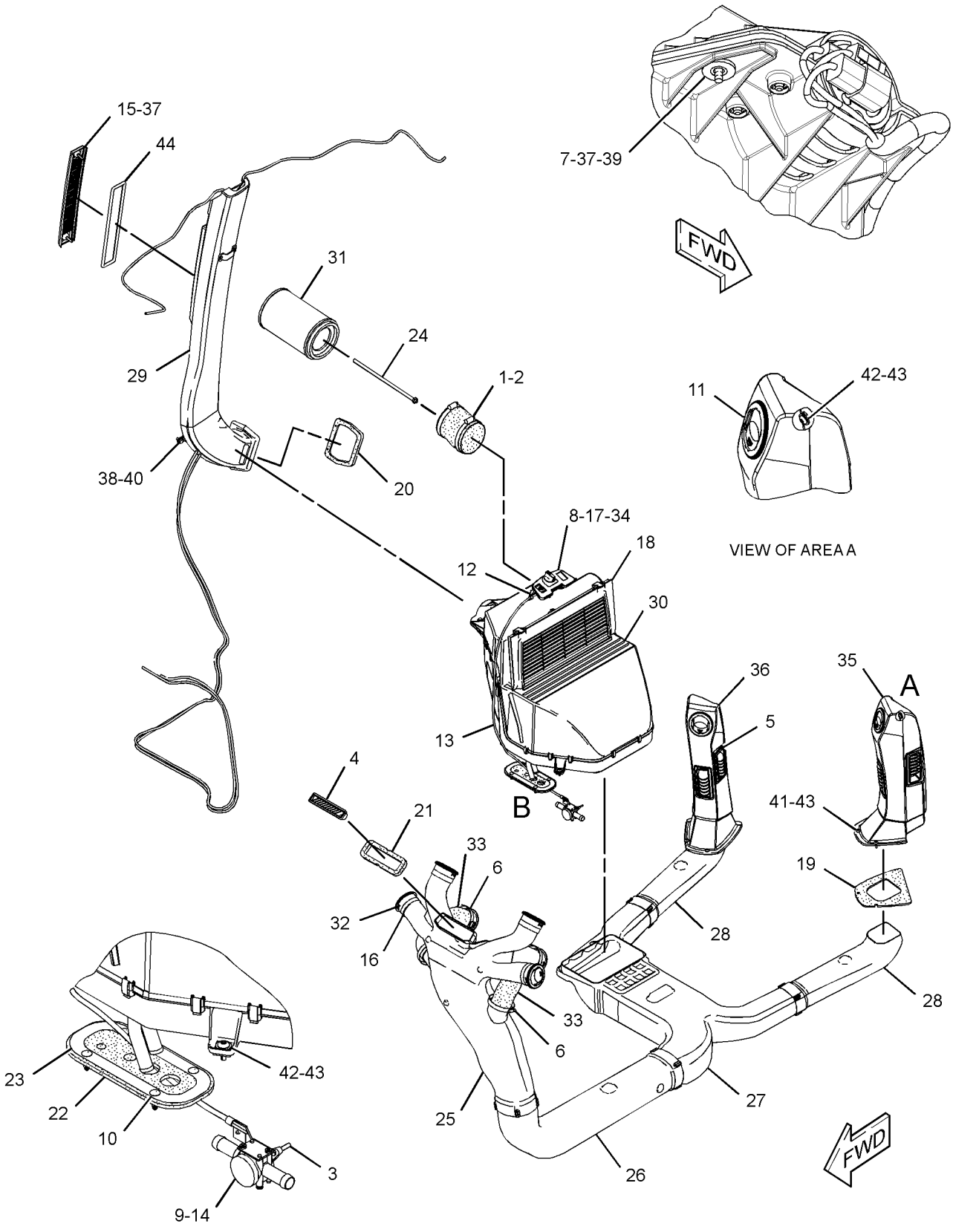

GRAPHIC #1 **<END>** g01578345

OPERATOR STATION

316-7291 HEATER & MTG GP-CAB

S/N: SJL1-UP
PART OF 335-3053, 335-3055 CAB AR
AN ATTACHMENT

SMCS-7304 **i03712361**

NOTE	REF NO	GRAPHIC REF	PART NUMBER	QTY	PART NAME 1 2 3 4 5 6 (PRODUCT LEVEL)	SEE PAGE
	1	1	**6L-4725**	2	CLAMP-HOSE	
	2	1	**8Y-5737**	1	CLAMP (COMPRESSION)	
	3	1	**8Y-6352**	1	LOUVER AS	
	4	1	**8Y-6967**	6	LOUVER AS-VENT	
	5	1	**9N-2231**	1	GROMMET AS	
	6	1	**110-6109**	1	KNOB-CONTROL (HEATER)	
	7	1	**130-4832**	2	SCREW (8-18X10-MM)	
	8	1	**164-1368**	4	FASTENER-PANEL	
	9	1	**164-8474**	2	LOUVER AS-VENT	
	10	1	**189-0881**	1	CONTROL AS (PANEL)	
	11	1	**193-3356**	1	CABLE AS	
	12	1	**194-5622**	1	VALVE AS-WATER (AIR CONDITIONER)	
		1	**6V-6717**	1	SCREW-WASHER HEAD (8-32X9.52-MM)	
		1	**124-0312**	2	SCREW-PAN HEAD (8-16X0.32-IN)	
	13	1	**206-1648**	1	LOUVER	
	14	1	**206-1653**	4	GASKET	
	15	1	**206-1682**	1	PANEL-CONTROL	
	16	1	**206-1684**	1	COVER (CAB FILTER)	
	17	1	**206-1803**	2	GASKET	
	18	1	**206-1804**	1	GASKET	
	19	1	**206-1805**	1	GASKET	
	20	1	**206-1807**	1	GASKET	
	21	1	**206-1808**	1	PLATE	
	22	1	**206-1809**	1	ROD AS	
	23	1	**206-1810**	1	DUCT-AIR	
	24	1	**206-1815**	1	DUCT-AIR	
	25	1	**206-1816**	1	DUCT-AIR	
	26	1	**206-1817**	2	DUCT-AIR	
	27	1	**206-1818**	1	DUCT AS-AIR	
		1	**172-8591**	2	NUT-SPRING	
E		1	**144-0195**		HOSE (1110-CM)	
	28	1	**206-1846**	1	INSULATION	
	29	1	**206-1847**	1	INSULATION	
Y	30	1	*210-8363*	1	HEATER GP-CAB	589
	31	1	**211-2661**	1	FILTER ELEMENT AS-AIR (CAB HEATER)	
	32	1	**218-0666**	6	LOUVER AS	
	33	1	**221-2420**	2	HOSE-AIR	
	34	1	**255-0795**	1	FILM (TEMPERATURE CONTROL)	
	35	1	**313-6709**	1	DUCT-AIR	
	36	1	**313-6710**	1	DUCT-AIR	
	37	1	**319-8524**	1	HOSE-AIR	
M	38	1	**111-4627**	3	SCREW-MACHINE (M6X1X30-MM)	
	39	1	**4H-2558**	2	GROMMET	
	40	1	**5P-4116**	1	WASHER-HARD (8.8X20.5X2-MM THK)	
	41	1	**7X-0579**	1	WASHER-HARD (8.8X25.5X2-MM THK)	
M	42	1	**8T-4200**	1	BOLT (M8X1.25X16-MM)	
	43	1	**8T-4205**	4	WASHER-HARD (7.2X14.5X2-MM THK)	
	44	1	**9M-7959**	4	CLAMP-HOSE	
	45	1	**9X-2038**	4	WASHER (7X19X2-MM THK)	
M	46	1	**9X-2045**	8	SCREW-TRUSS HEAD (M6X1X20-MM)	
E	47	1	**220-0738**		SEAL (87-CM)	
D	48	1	**5P-6129**		TUBE (0.4-M)	
D	48A	1	**5P-6129**		TUBE (0.4-M)	

D-ORDER BY THE METER
E-ORDER BY THE CENTIMETER
M-METRIC PART
Y-SEPARATE ILLUSTRATION

316-7291 **HEATER & MTG GP-CAB** *(contd.)* **i03712361**

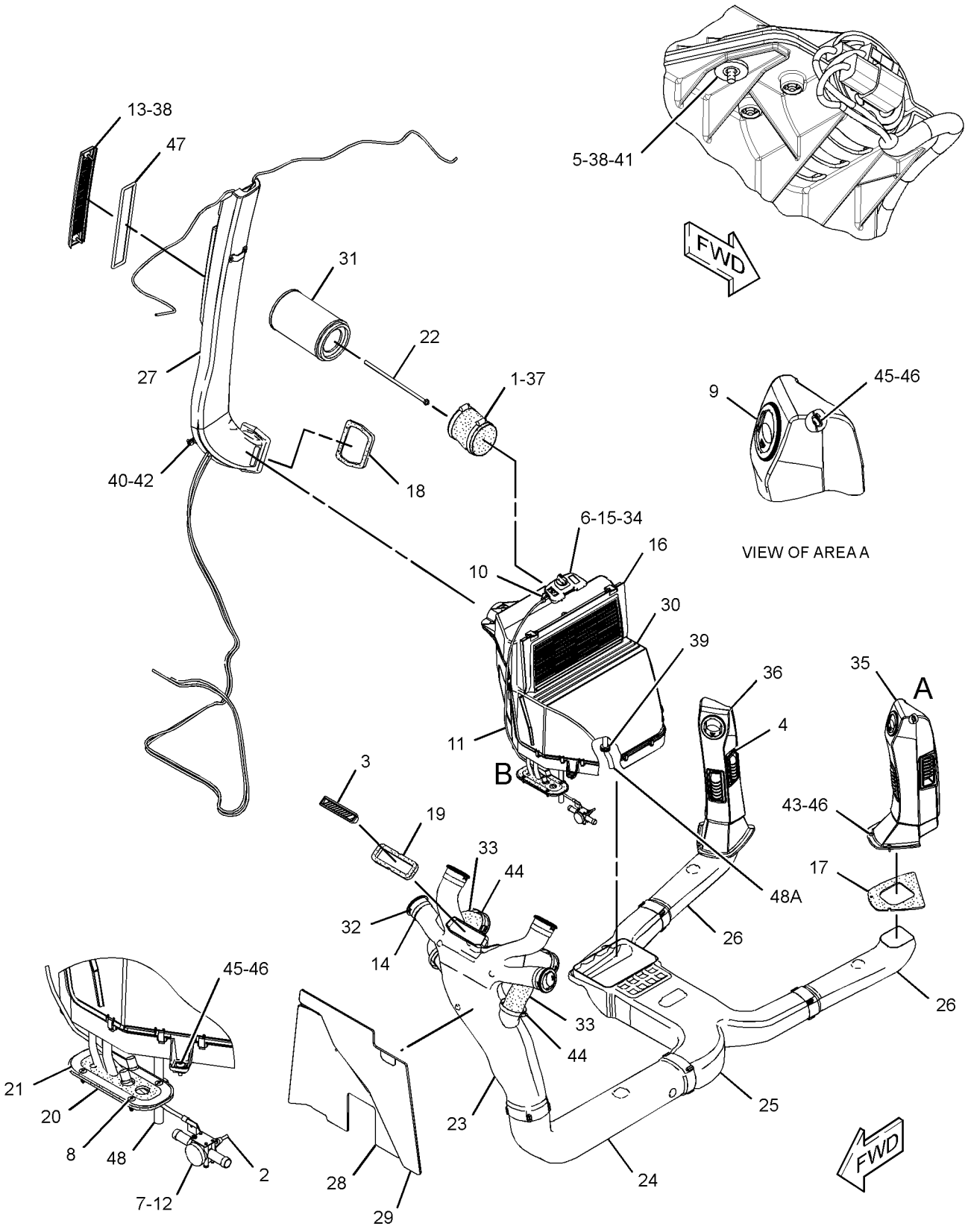

VIEW OF AREA B

GRAPHIC #1 **<END>** g01578133

OPERATOR STATION

210-8363 HEATER GP-CAB

S/N: SJL1-UP
PART OF 316-7291 HEATER & MTG GP-CAB
AN ATTACHMENT

SMCS-7304 **i03712345**

NOTE	REF NO	GRAPHIC REF	PART NUMBER	QTY	PART NAME 1 2 3 4 5 6 (PRODUCT LEVEL)	SEE PAGE
	1	1	**8C-3756**	1	FILM-IDENTIFICATION (GROUP NO., SEQUENCE NO.)	
	2	1	**119-9631**	1	SWITCH-TEMPERATURE (AIR CONDITIONER)	
	3	1	**304-8965**	1	BLOWER GP-CAB (HEATER)	
		1	**177-9645**	1	KIT-RECEPTACLE (2-PIN)	
					(INCLUDES RECEPTACLE AS & WEDGE)	
		1	**7T-0093**	2	PIN-CONNECTOR (12-GA TO 14-GA)	
	4	1	**185-4015**	11	CLIP	
	5	1	**204-9921**	1	RESISTOR AS	
	6	1	**210-7665**	1	HOUSING-TOP	
	7	1	**210-7666**	1	BAFFLE	
	8	1	**210-8401**	1	COIL AS-EVAPORATOR	
J		1	**219-6288**	1	GASKET	
DJ		1	**5P-5688**		SEAL (1-M)	
	9	1	**211-2660**	1	FILTER ELEMENT-AIR (RECIRCULATION)	
	10	1	**212-3416**	3	SCREW-PAN HEAD (8-16X0.5-IN)	
	11	1	**219-6281**	1	COVER AS	
		1	**219-6283**	1	LATCH	
		1	**6C-3680**	1	RIVET-POP	
J	12	1	**219-6284**	2	GASKET	
J	13	1	**219-6285**	1	GASKET	
J	14	1	**219-6286**	1	GASKET	
J	15	1	**219-6287**	2	GASKET	
	16	1	**219-6292**	1	HOUSING AS	
		1	**7H-3937**	4	LOCKWASHER	
M		1	**129-3178**	4	LOCKNUT (M6X1-THD)	
	18	1	**220-3762**	1	HARNESS AS-HEATER & AIR COND	
		1	**192-2112**	5	SOCKET-TERMINAL	
		1	**128-7716**	1	CONNECTOR	
		1	**7T-6739**	1	HOUSING-PLUG	
		1	**7T-0093**	3	PIN-CONNECTOR (12-GA TO 14-GA)	
		1	**155-2270**	1	KIT-CONNECTING PLUG (2-PIN)	
					(INCLUDES PLUG AS, WEDGE & INTERFACE SEAL)	
		1	**8T-8737**	1	PLUG-SEAL	
		1	**177-9653**	1	KIT-RECEPTACLE (4-PIN)	
					(INCLUDES RECEPTACLE AS & WEDGE)	
		1	**186-3736**	2	SOCKET-CONNECTOR (16-GA TO 18-GA)	
	19	1	**253-9510**	1	GUARD	
	20	1	**2S-3745**	4	SCREW-TAPPING (10-16X0.5-IN)	
M	21	1	**6V-7357**	4	BOLT (M6X1X25-MM)	
	22	1	**8T-4205**	5	WASHER-HARD (7.2X14.5X2-MM THK)	
D	23	1	**5P-5655**		SEAL (0.5-M)	
DJ	24	1	**5P-5637**		SEAL (0.8-M)	
EJ	25	1	**8C-7524**		SEAL (35-CM)	
					AVAILABLE REPAIR KIT(S):	
J			**285-9109**	1	KIT-SEAL (HVAC)	

D-ORDER BY THE METER
E-ORDER BY THE CENTIMETER
J-KIT MARKED J SERVICES PARTS MARKED J
M-METRIC PART

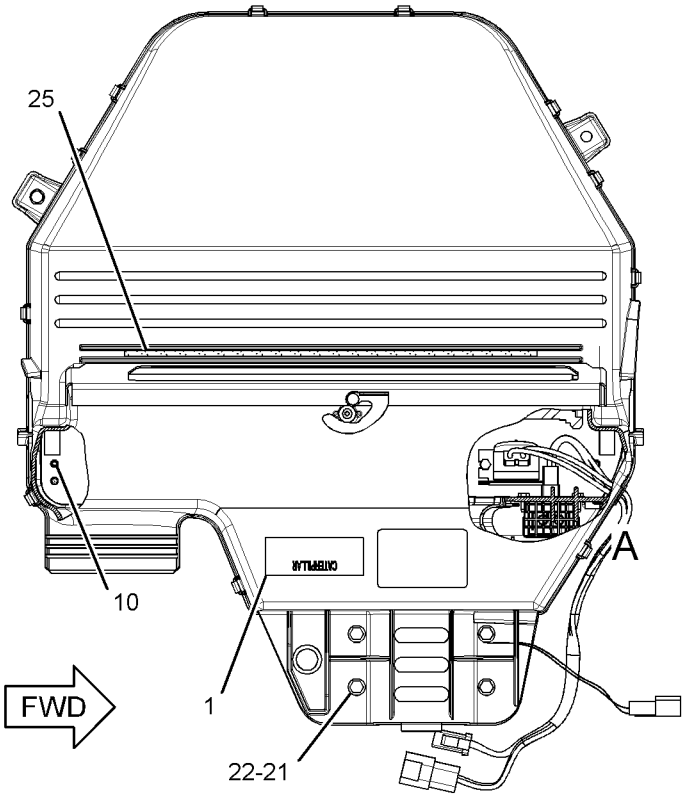

TOP VIEW

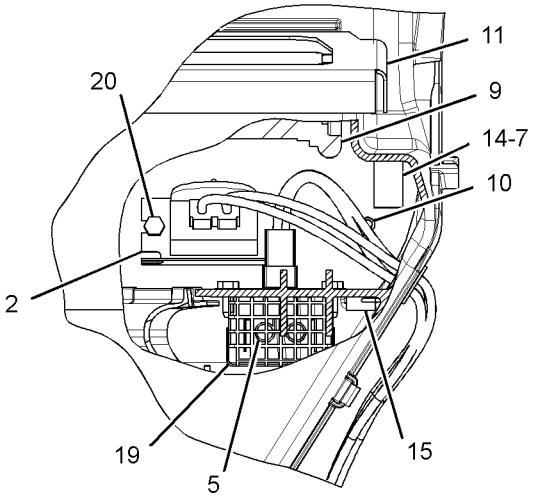

VIEW OF AREA A

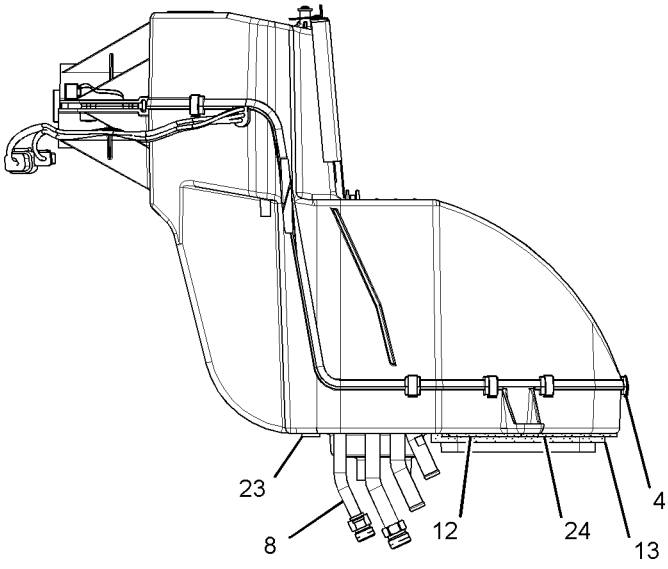

FRONT VIEW

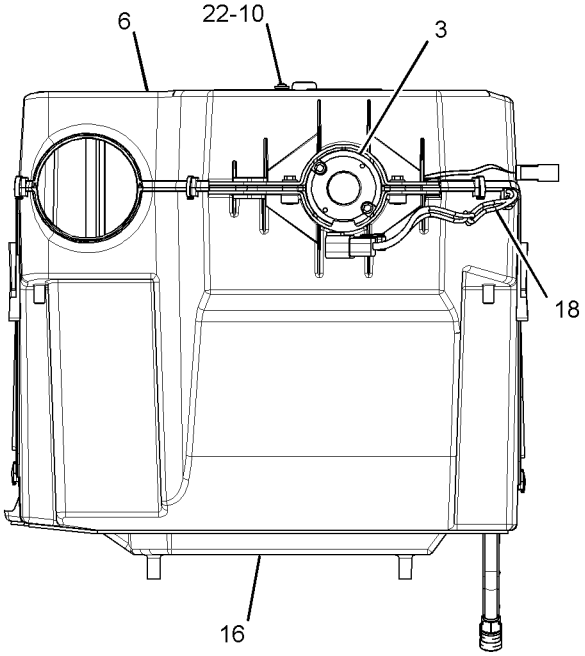

RIGHT SIDE VIEW

GRAPHIC #1 **<END>** g01460871

OPERATOR STATION

210-8364 HEATER GP-CAB

S/N: SJL1-UP
PART OF 316-7290 HEATER & MTG GP-CAB
AN ATTACHMENT

SMCS-7304 **i03712342**

NOTE	REF NO	GRAPHIC REF	PART NUMBER	QTY	PART NAME 1 2 3 4 5 6 (PRODUCT LEVEL)	SEE PAGE
	1	1	**8C-3756**	1	FILM-IDENTIFICATION (GROUP NO., SEQUENCE NO.)	
	2	1	**304-8965**	1	BLOWER GP-CAB (HEATER)	
		1	**177-9645**	1	KIT-RECEPTACLE (2-PIN)	
					(INCLUDES RECEPTACLE AS & WEDGE)	
		1	**7T-0093**	2	PIN-CONNECTOR (12-GA TO 14-GA)	
	3	1	**185-4015**	11	CLIP	
	4	1	**204-9921**	1	RESISTOR AS	
	5	1	**210-7665**	1	HOUSING-TOP	
	6	1	**210-7666**	1	BAFFLE	
	7	1	**210-8402**	1	COIL AS-HEATER	
DJ		1	**5P-5688**		SEAL (1-M)	
J		1	**219-6288**	1	GASKET	
	8	1	**211-2660**	1	FILTER ELEMENT-AIR (CAB HEATER, AIR CONDITIONER)	
	9	1	**212-3416**	3	SCREW-PAN HEAD (8-16XO.5-IN)	
	10	1	**219-6281**	1	COVER AS	
		1	**219-6283**	1	LATCH	
		1	**6C-3680**	1	RIVET-POP	
J	11	1	**219-6284**	2	GASKET	
J	12	1	**219-6285**	1	GASKET	
J	13	1	**219-6286**	1	GASKET	
J	14	1	**219-6287**	2	GASKET	
	15	1	**219-6292**	1	HOUSING AS	
		1	**7H-3937**	4	LOCKWASHER	
M		1	**129-3178**	4	LOCKNUT (M6X1-THD)	
	17	1	**253-2470**	1	HARNESS AS-HEATER	
		1	**192-2112**	3	SOCKET-TERMINAL	
		1	**128-7716**	1	CONNECTOR	
		1	**220-5725**	1	GROMMET	
		1	**7T-0093**	3	PIN-CONNECTOR (12-GA TO 14-GA)	
		1	**8T-8737**	1	PLUG-SEAL	
		1	**177-9653**	1	KIT-RECEPTACLE (4-PIN)	
					(INCLUDES RECEPTACLE AS & WEDGE)	
	18	1	**253-9510**	1	GUARD	
	19	1	**2S-3745**	2	SCREW-TAPPING (10-16XO.5-IN)	
M	20	1	**6V-7357**	4	BOLT (M6X1X25-MM)	
	21	1	**8T-4205**	5	WASHER-HARD (7.2X14.5X2-MM THK)	
D	22	1	**5P-5655**		SEAL (O.5-M)	
DJ	23	1	**5P-5637**		SEAL (O.8-M)	
EJ	24	1	**8C-7524**		SEAL (35-CM)	
					AVAILABLE REPAIR KIT(S):	
J			**285-9109**	1	KIT-SEAL (HVAC)	

D-ORDER BY THE METER
E-ORDER BY THE CENTIMETER
J-KIT MARKED J SERVICES PARTS MARKED J
M-METRIC PART

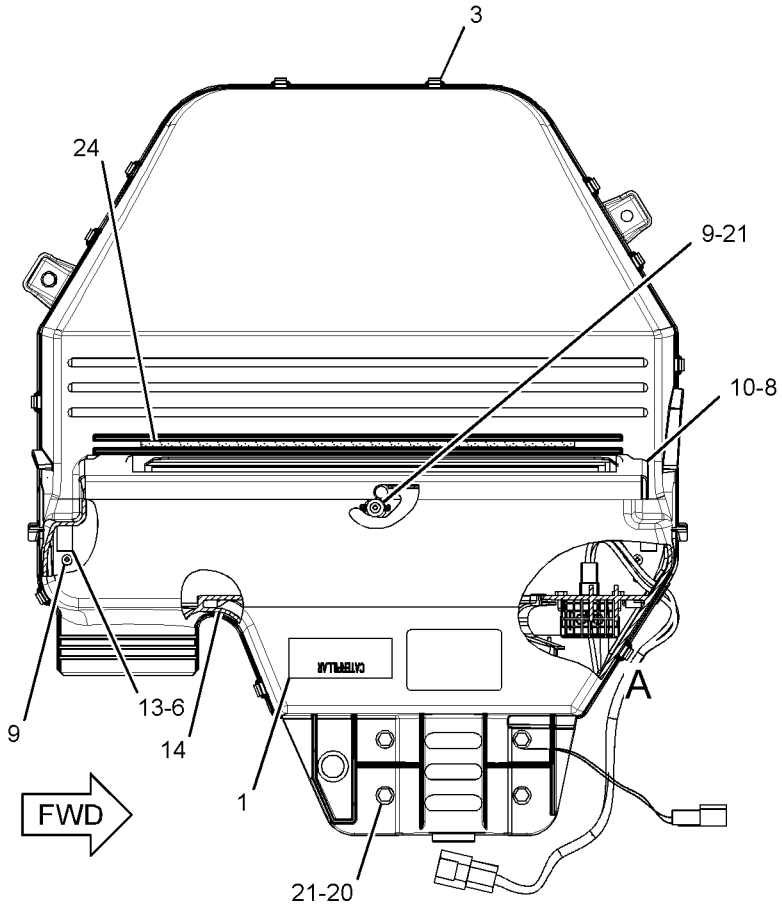

TOP VIEW

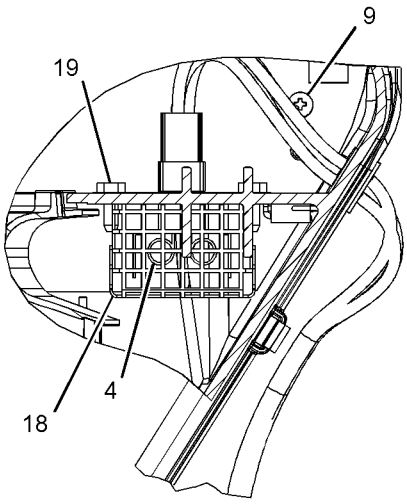

VIEW OF AREA A

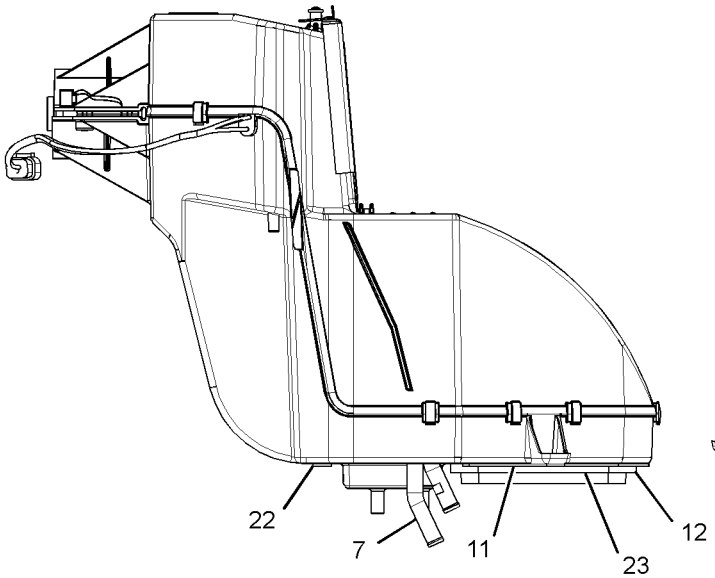

FRONT VIEW

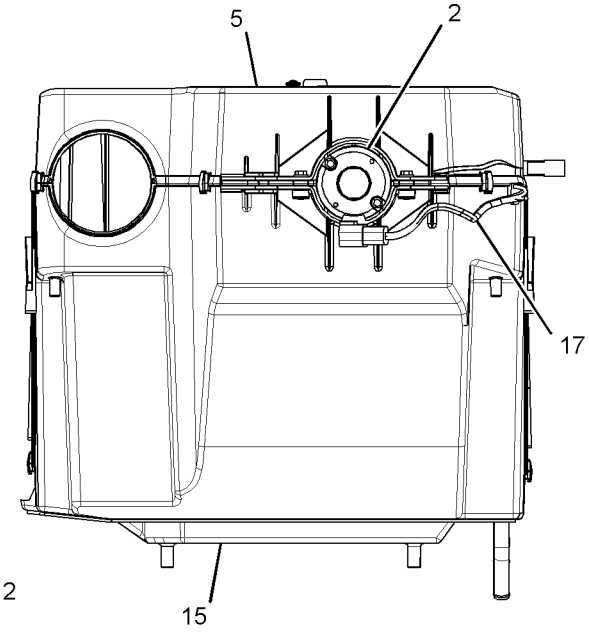

RIGHT SIDE VIEW

GRAPHIC #1 **<END>** g01460989

OPERATOR STATION

328-1956 HORN GP-ELECTRIC—REAR

S/N: SJL1-UP

AN ATTACHMENT

SMCS-7402 **i03620563**

NOTE	REF NO	GRAPHIC REF	PART NUMBER	QTY	PART NAME 1 2 3 4 5 6 (PRODUCT LEVEL)	SEE PAGE
	1	1	**3S-2093**	1	STRAP-CABLE	
	2	1	**164-9425**	1	HORN AS (24-VOLT, LOW TONE)	
B	3	1	**8T-4121**	2	WASHER-HARD (11X21X2.5-MM THK)	
BM	4	1	**8T-4133**	1	NUT (M10X1.5-THD)	
BM	5	1	**8T-4196**	1	BOLT (M10X1.5X35-MM)	

B-USE AS REQUIRED
M-METRIC PART

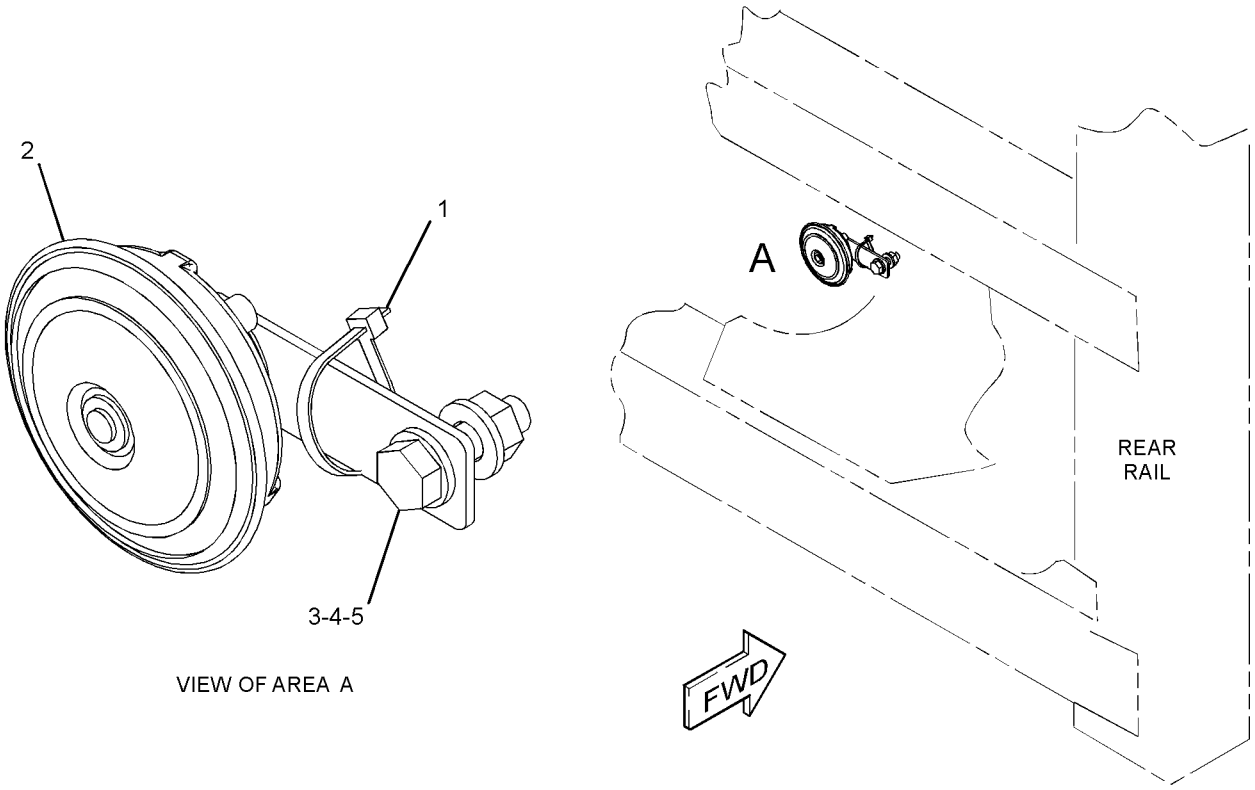

VIEW OF AREA A

GRAPHIC #1 **<END>** g01994394

OPERATOR STATION

270-3217 INSTALLATION GP-RADIO

S/N: SJL1-UP

AN ATTACHMENT

SMCS-1408, 7338 **i03592841**

NOTE	PART NUMBER	QTY	PART NAME 1 2 3 4 5 6 (PRODUCT LEVEL)	SEE PAGE
	200-5728	1	HARNESS AS-RADIO	
	172-8039	11	TERMINAL (RADIO)	
	8T-8737	1	PLUG-SEAL	
	160-3518	1	KIT-RECEPTACLE (8-PIN)	
			(INCLUDES RECEPTACLE AS & WEDGE)	
	172-8037	1	CONNECTOR (RADIO)	
	186-3735	7	PIN-CONNECTOR (16-GA TO 18-GA)	
	262-2781	1	RADIO	
	6K-0806	1	STRAP-CABLE	

<END>

OPERATOR STATION

324-2897 KIT-SEAT FRAME

S/N: SJL1-UP
PART OF 324-2896 SEAT GP
AN ATTACHMENT

SMCS-7321 **i03121860**

NOTE	REF NO	GRAPHIC REF	PART NUMBER	QTY	PART NAME 1 2 3 4 5 6 (PRODUCT LEVEL)	SEE PAGE
	1	1	**164-1255**	1	SECTOR	
	2	1	**164-1256**	2	SPACER (19X25.4X12.5-MM THK)	
	3	1	**161-9283**	1	WASHER (19.8X31.8X1.6-MM THK)	
	4	1	**164-1249**	1	LEVER AS (RECLINER CONTROL)	
	5	1	**164-1251**	1	SPRING (RECLINER)	
	6	1	**164-1252**	1	SPRING (SEAT RECLINER)	
	7	1	**164-1253**	1	PLATE	
	8	1	**164-1254**	1	SECTOR	
					PARTS SHOWN IN GRAPHIC(S) WITHOUT A REFERENCE NUMBER ARE NOT SERVICED SEPARATELY	

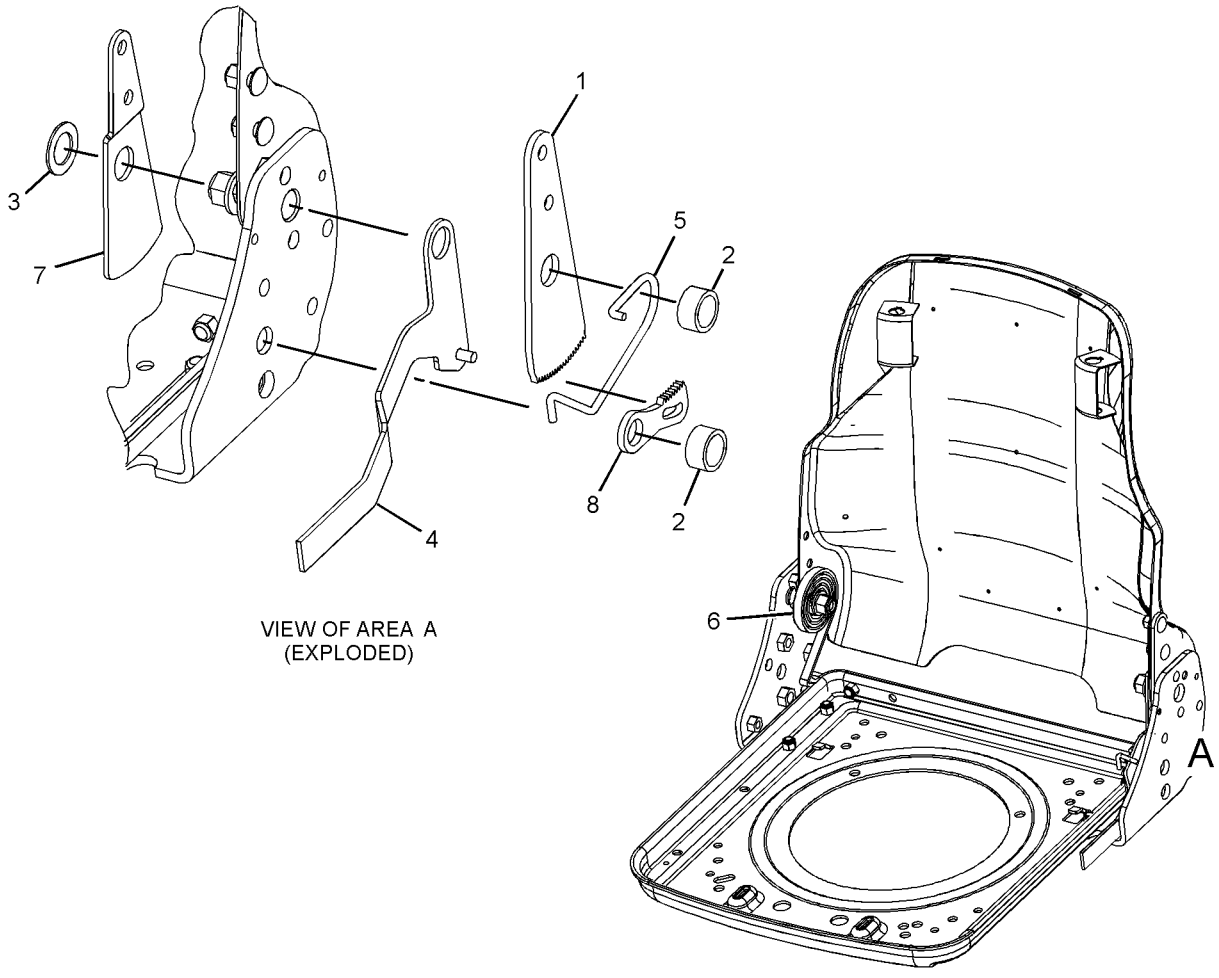

VIEW OF AREA A
(EXPLODED)

GRAPHIC #1 **<END>** g01626962

OPERATOR STATION

324-2906 KIT-SEAT PAN

S/N: SJL1-UP
PART OF 324-2903 SEAT GP
AN ATTACHMENT

SMCS-7321 **i03121864**

NOTE	REF NO	GRAPHIC REF	PART NUMBER	QTY	PART NAME 1 2 3 4 5 6 (PRODUCT LEVEL)	SEE PAGE
	1	1	**5P-1076**	2	WASHER-HARD (13.5X30X4-MM THK)	
M	2	1	**6V-5217**	2	BOLT (M8X1.25X20-MM)	
M	3	1	**105-3481**	2	BOLT-SOCKET HEAD (M8X1.25X20-MM)	
	4	1	**161-9283**	1	WASHER (19.8X31.8X1.6-MM THK)	
	5	1	**164-1249**	1	LEVER AS (RECLINER CONTROL)	
	6	1	**164-1251**	1	SPRING (RECLINER)	
	7	1	**164-1252**	1	SPRING (SEAT RECLINER)	
	8	1	**164-1253**	1	PLATE	
	9	1	**164-1254**	1	SECTOR	
	10	1	**164-1255**	1	SECTOR	
	11	1	**164-1256**	2	SPACER (19X25.4X12.5-MM THK)	
	12	1	**164-1274**	1	BLOCK	
	13	1	**180-5785**	1	SPRING	
	14	1	**180-5786**	4	PUCK	
	15	1	**180-5789**	1	NUT	
	16	1	**324-9976**	1	LATCH (SLIDE)	
	17	1	**324-9977**	1	LINK	
	18	1	**2P-7864**	1	SCREW-TAPPING	
M	19	1	**3T-0852**	12	LOCKNUT (M8X1.25-THD)	
	20	1	**4H-1641**	1	PIN-SPRING	
	21	1	**4K-9890**	4	WASHER (8.6X17.3X1.6-MM THK)	

M-METRIC PART

324-2906 KIT-SEAT PAN *(contd.)* **i03121864**

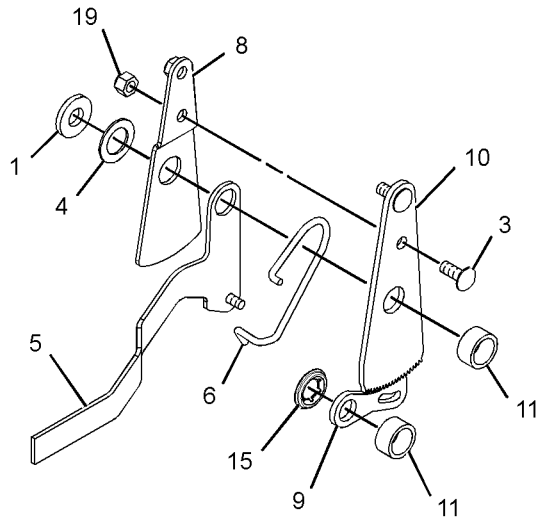

VIEW OF AREA A
(EXPLODED)

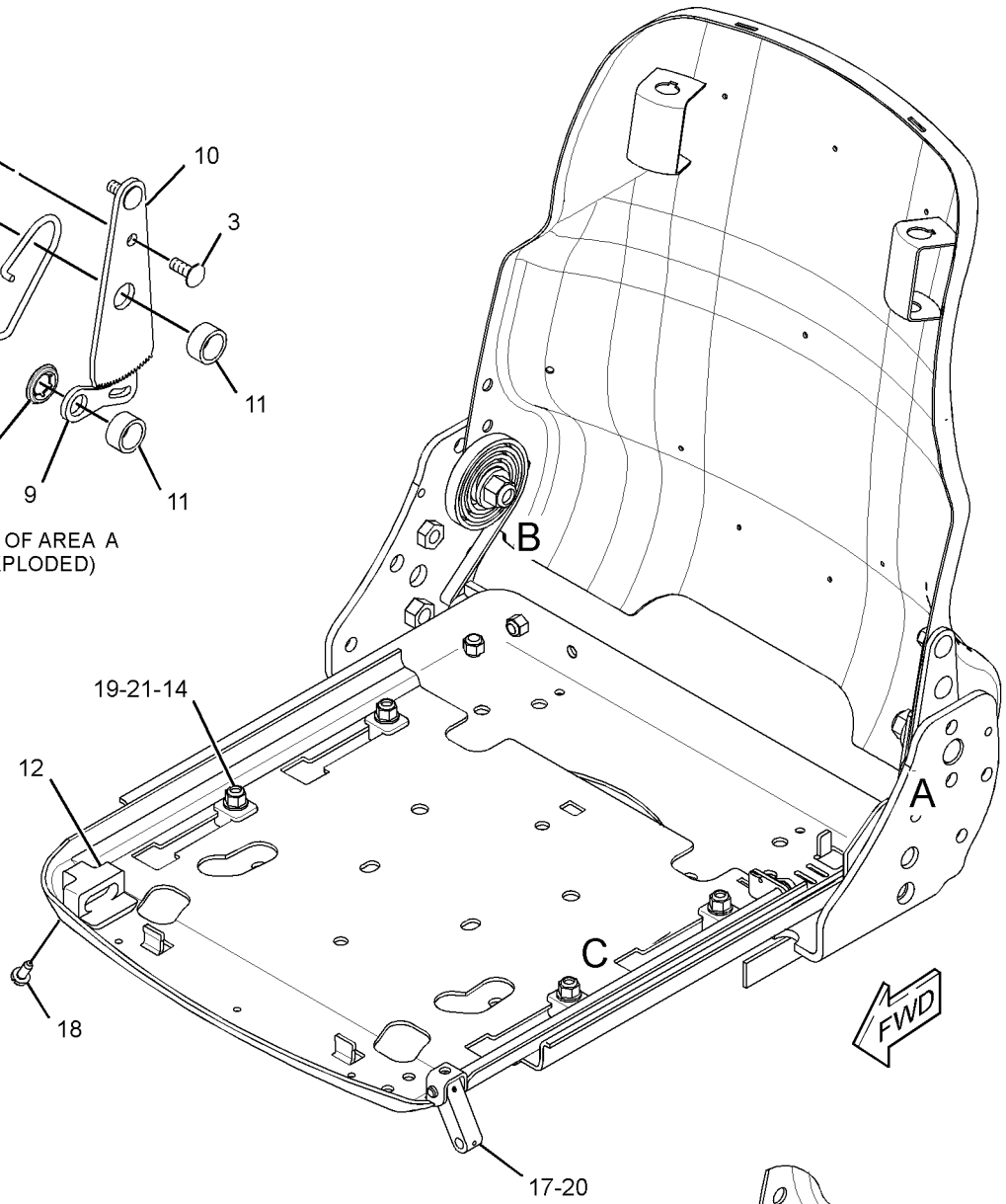

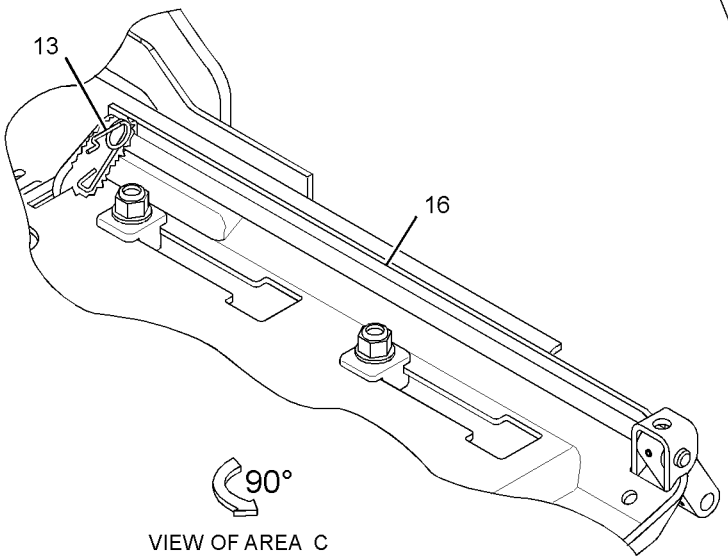

VIEW OF AREA C

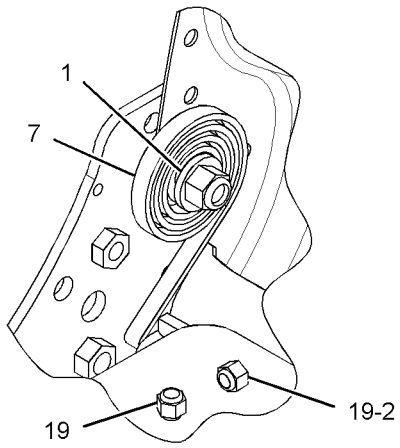

VIEW OF AREA B

GRAPHIC #1 **<END>** g01624350

OPERATOR STATION

324-2894 KIT-SEAT SUSPENSION–AIR

S/N: SJL1-UP
PART OF 324-2890 SUSPENSION GP-SEAT
AN ATTACHMENT

SMCS-7312, 7324 **i03592838**

NOTE	REF NO	GRAPHIC REF	PART NUMBER	QTY	PART NAME 1 2 3 4 5 6 (PRODUCT LEVEL)	SEE PAGE
	1	1	**163-1135**	1	SPRING	
	2	1	**186-5110**	2	BOLT-SHOULDER	
	3	1	**192-7805**	1	HARNESS AS-VALVE (SEAT AIR COMPRESSOR)	
		1	**5P-4571**	2	TERMINAL-BLADE (14-GA TO 16-GA)	
		1	**102-8802**	1	KIT-RECEPTACLE (2-PIN)	
					(KIT INCLUDES RECEPTACLE AS & WEDGE)	
		1	**186-3735**	2	PIN-CONNECTOR (16-GA TO 18-GA)	
E		1	**211-5358**		CONDUIT-FLEXIBLE (64-CM)	
	4	1	**237-3943**	1	BRACKET	
	5	1	**4F-4879**	1	BOLT (3/8-16X0.5-IN)	
	6	1	**328-7749**	1	HARNESS AS-WIRING (SEAT AIR COMPRESSOR)	
	7	1	**328-7750**	1	TEE	
	8	1	**328-7751**	1	ELBOW	
	9	1	**328-7752**	1	ELBOW	
	10	1	**330-9687**	1	TUBE	
	11	1	**331-7798**	1	TUBE	
	12	1	**331-7799**	1	TUBE	
	13	1	**108-4311**	1	SCREW-MACHINE (3/8-16X0.75-IN)	
	14	1	**3E-4337**	1	RIVET-POP	
	15	1	**4V-2264**	1	NUT-PUSH	
	16	1	**216-4554**	2	SHIM (1.4-MM THK)	
	17	1	**338-9831**	1	CLIP	

E-ORDER BY THE CENTIMETER

324-2894 KIT-SEAT SUSPENSION *(contd.)* **i03592838**

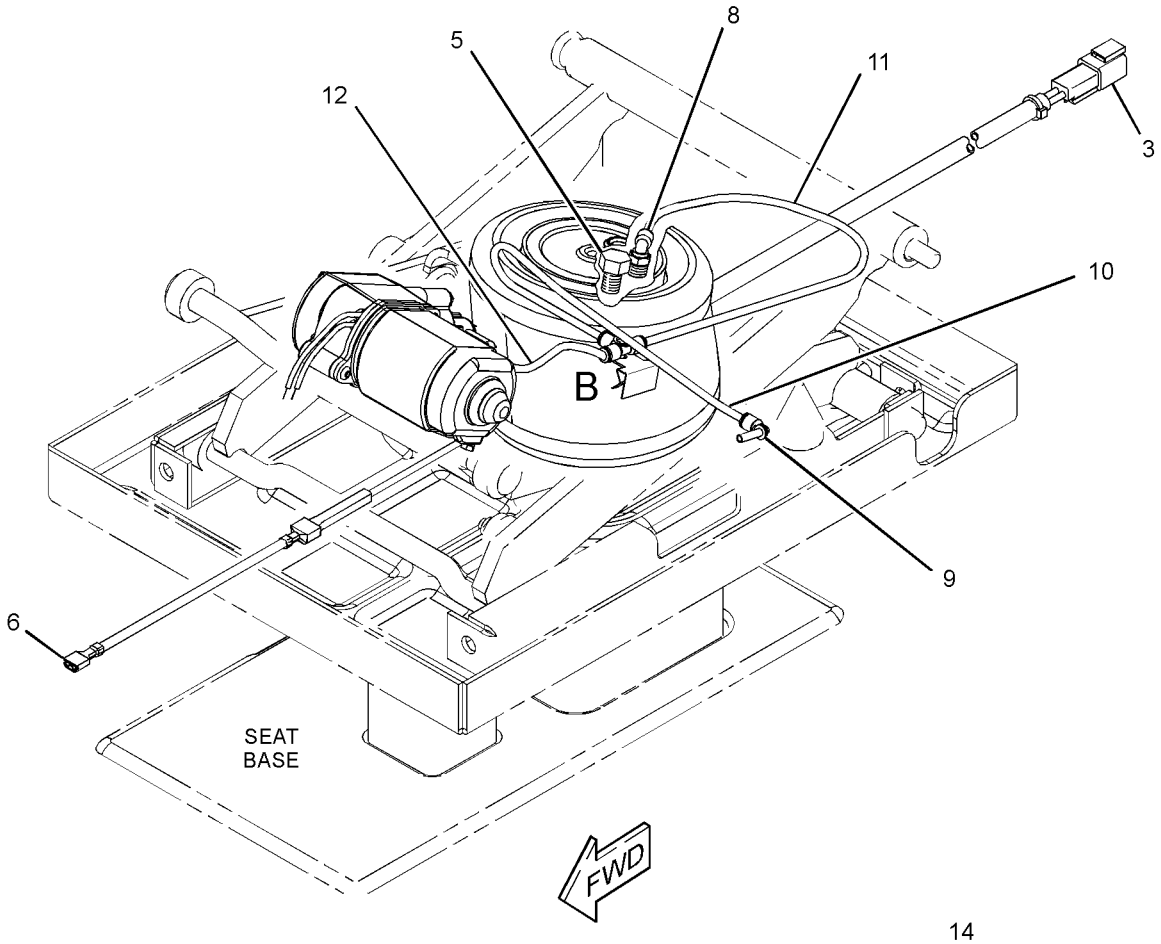

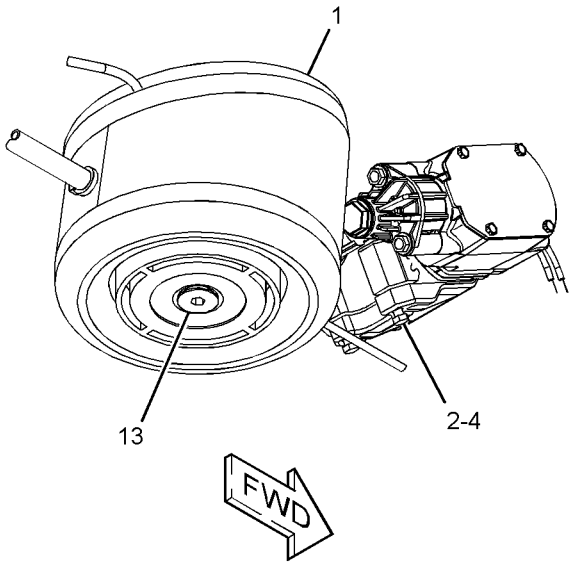

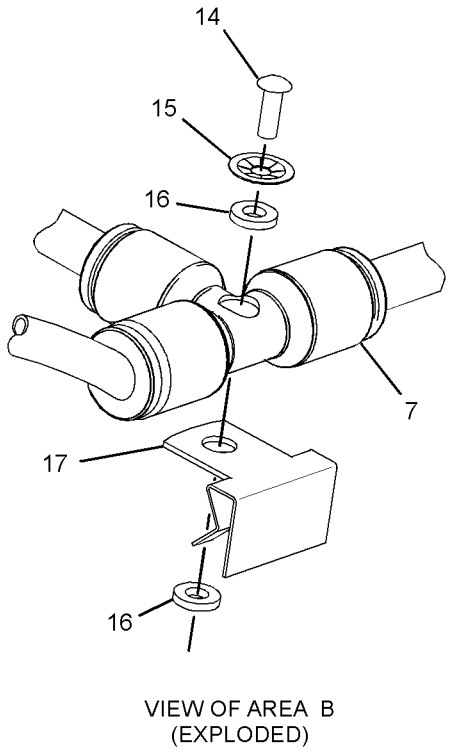

VIEW OF AREA B
(EXPLODED)

GRAPHIC #1 **<END>** g01783376

OPERATOR STATION

299-6985 LATCH GP-CAB DOOR & WINDOW

S/N: SJL1-UP

PART OF 327-7601, 327-7637 WINDOW GP-CAB, 333-9902 WINDOW GP-DOOR

AN ATTACHMENT

SMCS-7308, 7310 **i02693060**

NOTE	REF NO	GRAPHIC REF	PART NUMBER	QTY	PART NAME 1 2 3 4 5 6 (PRODUCT LEVEL)	SEE PAGE
M	1	1	**161-6984**	1	SCREW-TRUSS HEAD (M5X0.8X20-MM)	
	2	1	**161-6987**	1	WASHER-HARD (5.2X16X1.5-MM THK)	
	3	1	**161-9294**	1	SPRING-FLAT WIRE	
M	4	1	**162-6556**	1	LOCKNUT (M6X1-THD)	
M	5	1	**5C-2874**	1	NUT (M5X0.8-THD)	

M-METRIC PART

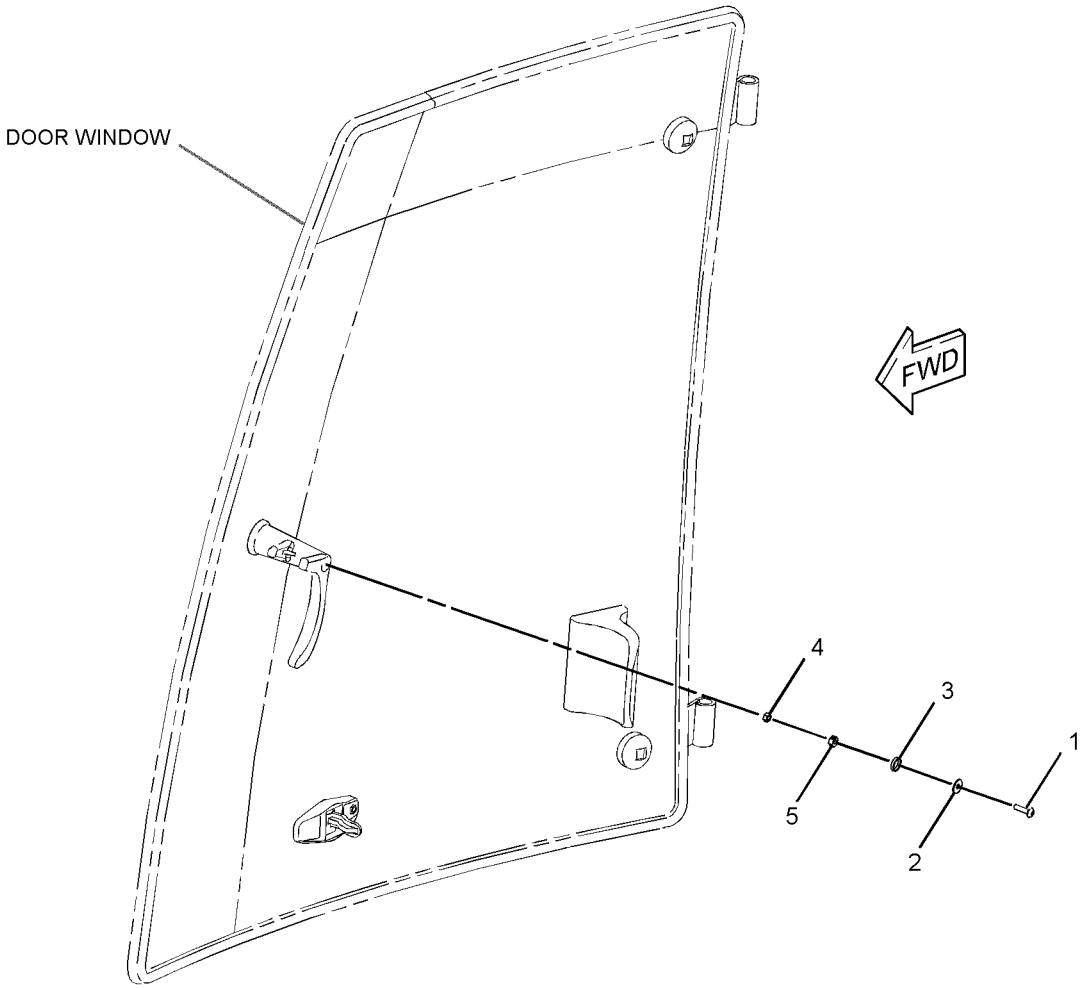

GRAPHIC #1 **<END>** g01353996

OPERATOR STATION

299-6986 LATCH GP-CAB DOOR & WINDOW

S/N: SJL1-UP

PART OF 327-7601, 327-7637 WINDOW GP-CAB, 333-9901 WINDOW GP-DOOR

AN ATTACHMENT

SMCS-7308, 7310 **i02693061**

NOTE	REF NO	GRAPHIC REF	PART NUMBER	QTY	PART NAME 1 2 3 4 5 6 (PRODUCT LEVEL)	SEE PAGE
M	1	1	**161-6984**	1	SCREW-TRUSS HEAD (M5X0.8X20-MM)	
	2	1	**161-6987**	1	WASHER-HARD (5.2X16X1.5-MM THK)	
	3	1	**161-9294**	1	SPRING-FLAT WIRE	
M	4	1	**162-6556**	1	LOCKNUT (M6X1-THD)	
M	5	1	**5C-2874**	1	NUT (M5X0.8-THD)	

M-METRIC PART

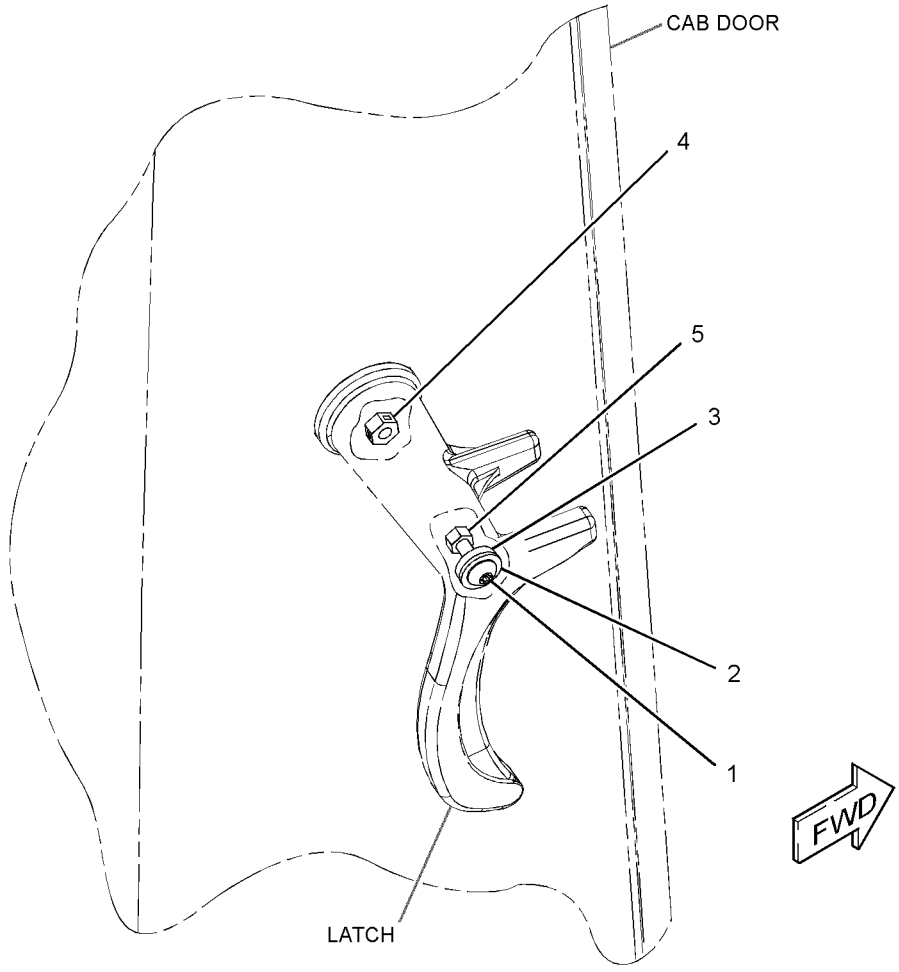

GRAPHIC #1 **<END>** g01354326

OPERATOR STATION

269-3248 LATCH GP-CONSOLE

S/N: SJL1-UP
PART OF 269-3247 MOUNTING GP-BACKHOE CONTROL
AN ATTACHMENT

SMCS-5258 **i02410119**

NOTE	REF NO	GRAPHIC REF	PART NUMBER	QTY	PART NAME 1 2 3 4 5 6 (PRODUCT LEVEL)	SEE PAGE
	1	1	**8T-4742**	2	END-YOKE ROD	
	2	1	**8T-4744**	2	PIN AS-SPRING	
	3	1	**110-5602**	1	KNOB	
	4	1	**180-9160**	1	LATCH AS	
	5	1	**183-4911**	2	PLATE	
	6	1	**183-5443**	1	LATCH AS	
	7	1	**183-6085**	2	BEARING	
	8	1	**268-5902**	1	LEVER AS	
	9	1	**268-5903**	2	ROD	
M	10	1	**099-3649**	1	BOLT (M8X1.25X40-MM)	
	11	1	**156-0283**	3	WASHER-HARD (8.4X35X2.5-MM THK)	
	12	1	**183-4912**	1	SLEEVE	
M	13	1	**5C-2890**	2	NUT (M6X1-THD)	

M-METRIC PART

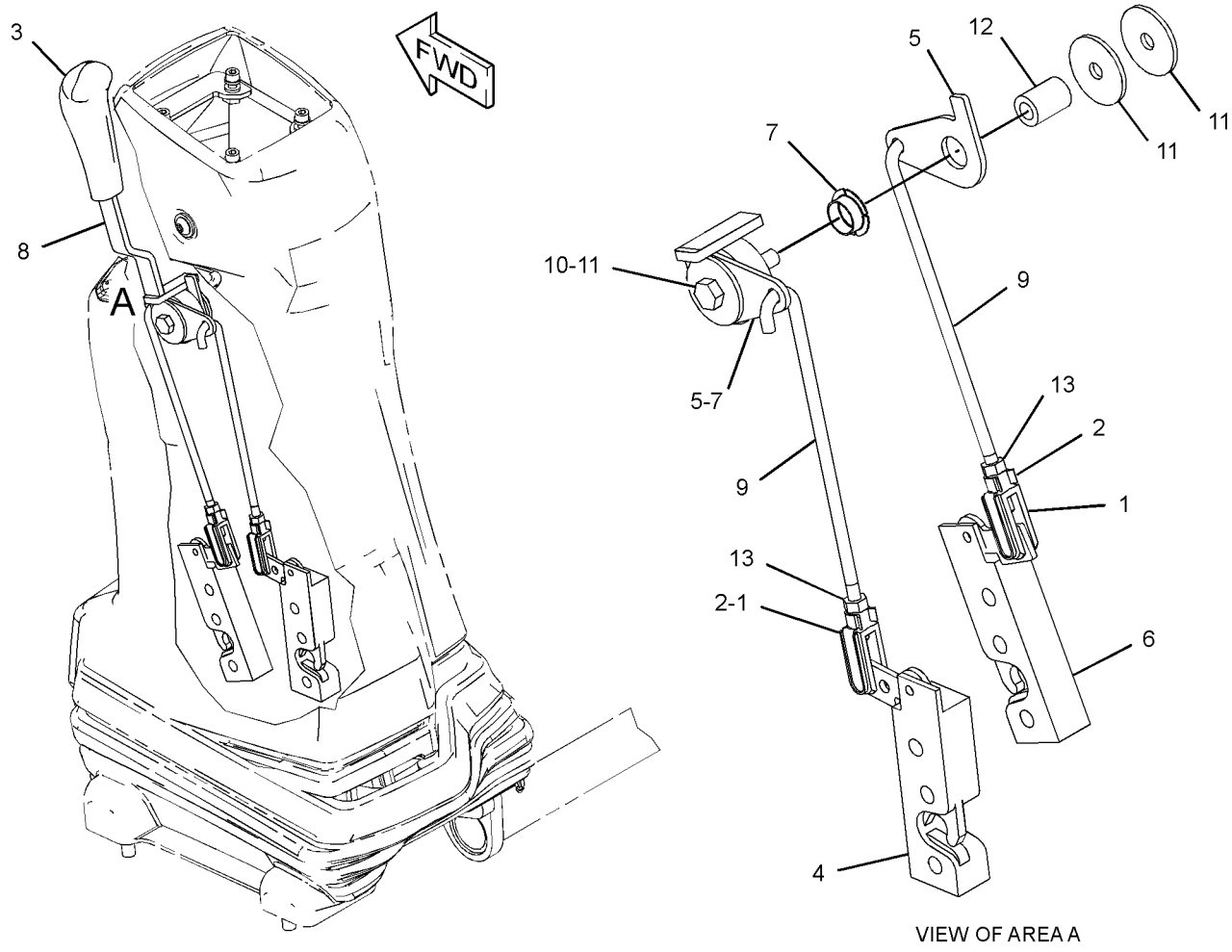

GRAPHIC #1 **<END>** g01211340

209-3367 LEVER GP-GOVERNOR–HANDHELD

S/N: SJL1-UP
PART OF 206-1640 CONTROL GP-GOVERNOR
AN ATTACHMENT

SMCS-1265 **i02159826**

NOTE	REF NO	GRAPHIC REF	PART NUMBER	QTY	PART NAME 1 2 3 4 5 6 (PRODUCT LEVEL)	SEE PAGE
	1	1	**209-3366**	1	CABLE AS	
	2	1	**219-0343**	1	LEVER AS	
	3	1	**8T-4742**	1	END-YOKE ROD	
	4	1	**8T-4744**	1	PIN AS-SPRING	
M	5	1	**8T-4971**	1	BOLT (M6X1X30-MM)	
M	6	1	**129-3178**	1	LOCKNUT (M6X1-THD)	

M-METRIC PART

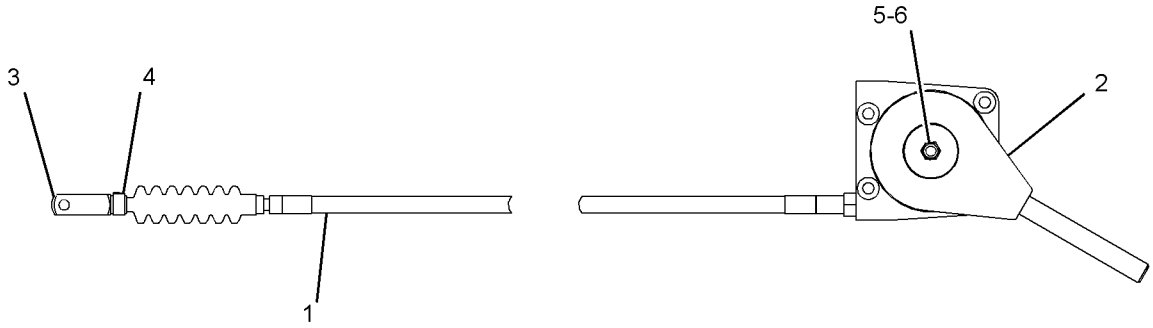

GRAPHIC #1 **<END>** g01096744

OPERATOR STATION

317-5543 LINER GP-CAB

S/N: SJL1-UP

PART OF 335-3052, 335-3053, 335-3055 CAB AR, 335-3054 CAB AR-ENCLOSED ROPS AN ATTACHMENT

SMCS-7329 **i03417781**

NOTE	REF NO	GRAPHIC REF	PART NUMBER	QTY	PART NAME 1 2 3 4 5 6 (PRODUCT LEVEL)	SEE PAGE
	1	1	**325-9311**	3	FASTENER	
	2	1	**5G-2003**	2	SPACER (6.8X13X10-MM THK)	
	3	1	**8E-1118**	1	ANTENNA AS	
	4	1	**8R-6111**	1	CABLE AS-COAXIAL	
	5	1	**9U-8263**	1	COVER	
	6	1	**084-4277**	1	LAMP GP-DOME (12-VOLT)	
		1	**210-8754**	1	LAMP (12-VOLT)	
	7	1	**132-2249**	1	SPACER (7.4X12.7X24-MM THK)	
	8	1	**145-0981**	2	SPACER (8.5X12.7X18-MM)	
	9	1	**169-7291**	2	COVER-SPEAKER	
	10	1	**209-4716**	2	PLATE	
	11	1	**262-9567**	2	SPEAKER	
	12	1	**282-7832**	1	GROMMET	
	13	1	**282-7835**	1	PLATE	
	14	1	**292-5773**	1	COVER	
	15	1	**317-5542**	1	LINER AS-CAB	
		1	**263-5781**	2	PLATE AS	
					(EACH INCLUDES)	
		1	**205-7047**	8	INSERT-THREADED (M4X0.7-THD)	
M	16	1	**113-0920**	8	BOLT-SOCKET HEAD (M4X0.7X35-MM)	
M	17	1	**121-9870**	5	SCREW-MACHINE (M6X1X40-MM)	
M	18	1	**8C-4982**	8	BOLT-SOCKET HEAD (M4X0.7X20-MM)	
M	19	1	**8C-3798**	2	BOLT-LOCKING (M6X1X30-MM)	
	20	1	**9X-2038**	3	WASHER (7X19X2-MM THK)	
	21	1	**9X-8256**	2	WASHER (6.6X12X2-MM THK)	

M-METRIC PART

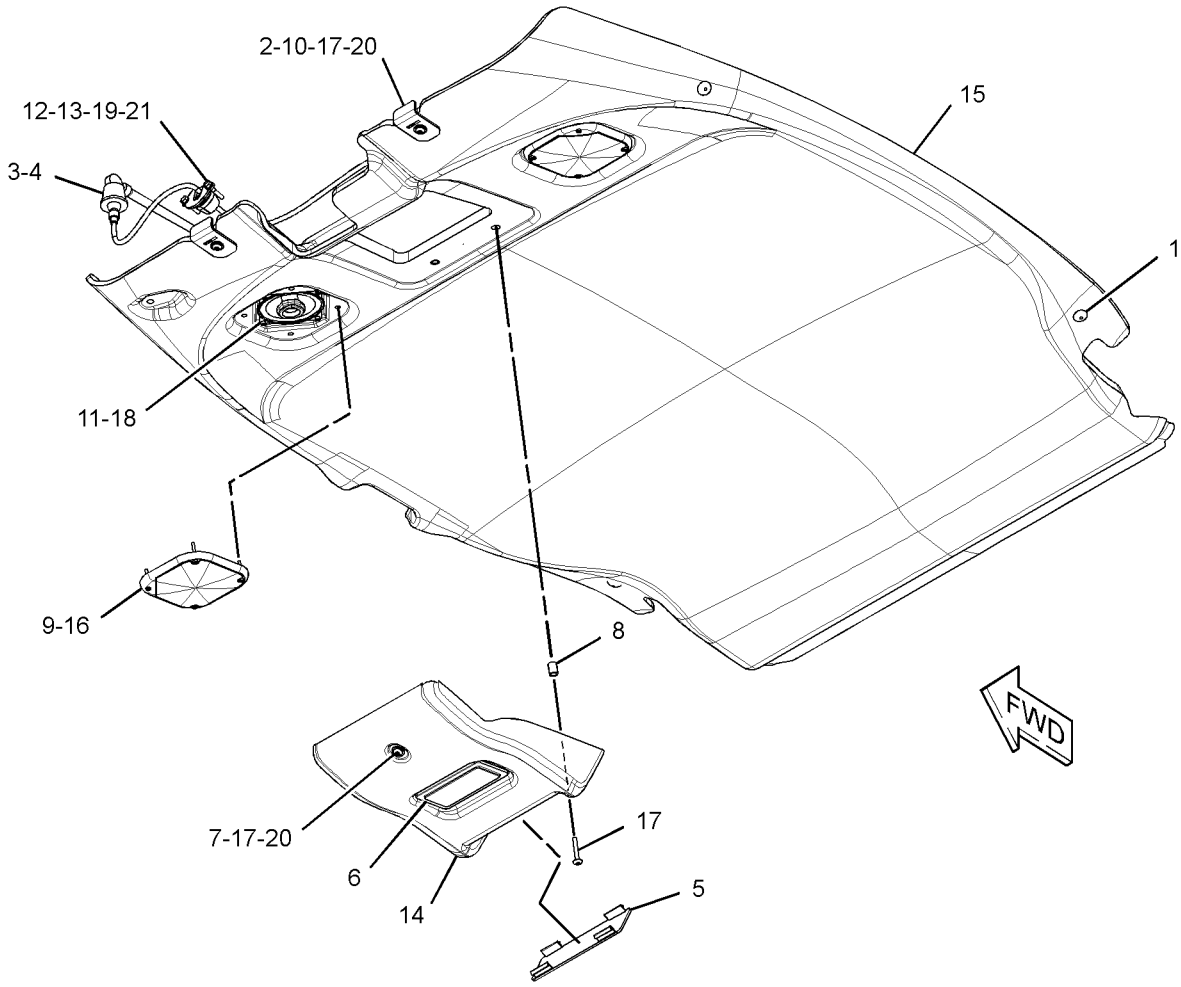

GRAPHIC #1 **<END>** g01625714

OPERATOR STATION

315-2940 LINES GP-HEATER

S/N: SJL1-UP
PART OF 335-3052 CAB AR, 335-3054 CAB AR-ENCLOSED ROPS
AN ATTACHMENT

SMCS-1812 **i03462303**

NOTE	REF NO	GRAPHIC REF	PART NUMBER	QTY	PART NAME 1 2 3 4 5 6 (PRODUCT LEVEL)	SEE PAGE
	1	1	**6P-8855**	1	TUBE	
	2	1	**7K-1181**	3	STRAP-CABLE	
	3	1	**9M-4814**	1	CONNECTOR-HOSE	
	4	1	**6V-0675**	1	ELBOW	
E	5	1	**5P-0767**		HOSE (260-CM)	
E	5A	1	**5P-0767**		HOSE (205-CM)	
E	5B	1	**5P-0767**		HOSE (22-CM)	
E	5C	1	**5P-0767**		HOSE (65-CM)	
	6	1	**3E-4321**	4	CLIP	
	7	1	**5D-1026**	8	CLAMP-BAND	
	8	1	**8T-4121**	2	WASHER-HARD (11X21X2.5-MM THK)	
M	9	1	**8T-4137**	2	BOLT (M10X1.5X20-MM)	

E-ORDER BY THE CENTIMETER
M-METRIC PART

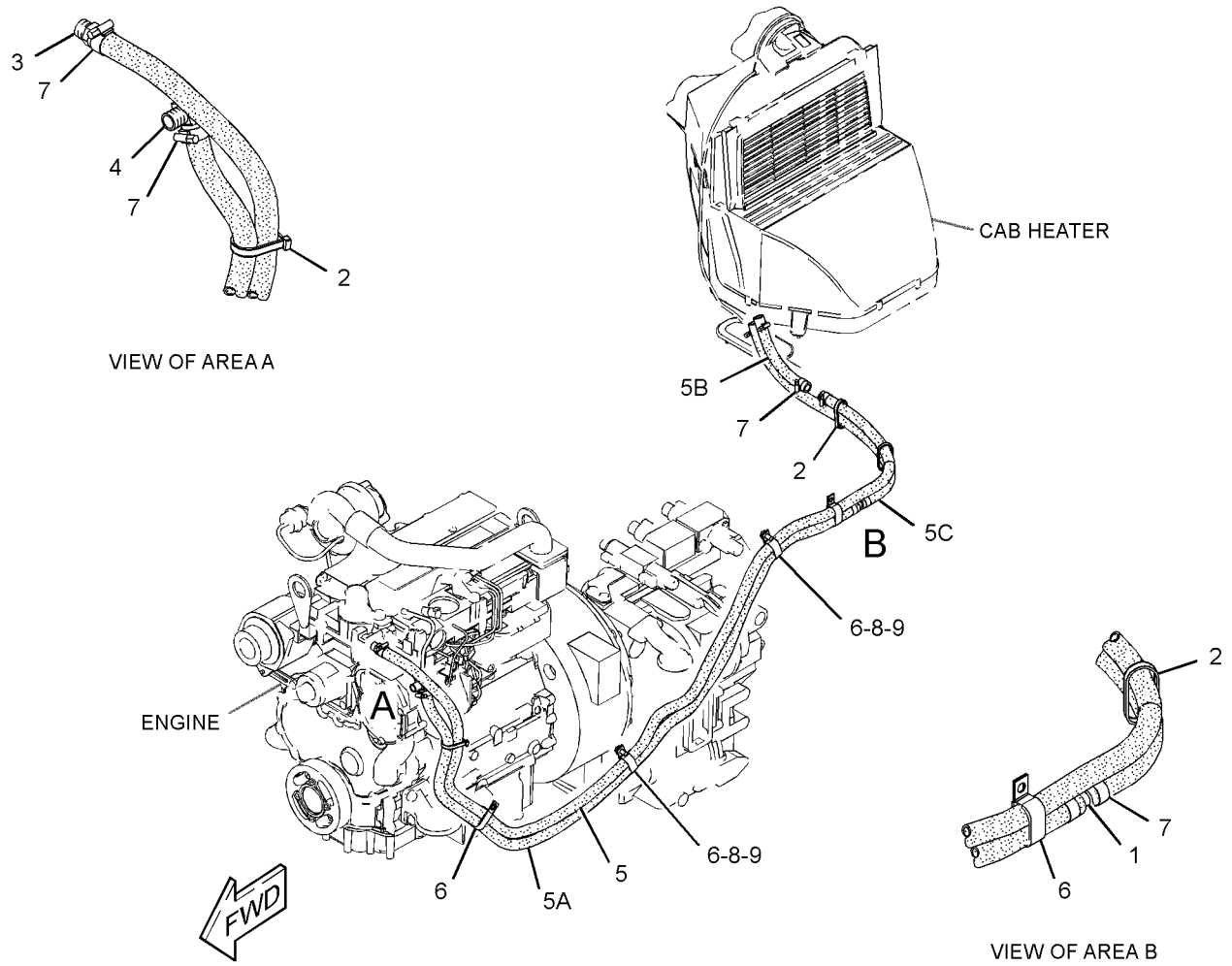

GRAPHIC #1 **<END>** g01808733

OPERATOR STATION

315-2939 LINES GP-HEATER & AIR COND

S/N: SJL1-UP

PART OF 335-3053, 335-3055 CAB AR

AN ATTACHMENT

SMCS-1380, 1808, 1812 **i03500281**

NOTE	REF NO	GRAPHIC REF	PART NUMBER	QTY	PART NAME 1 2 3 4 5 6 (PRODUCT LEVEL)	SEE PAGE
	1	1	**3S-2093**	2	STRAP-CABLE	
	2	1	**6P-8855**	1	TUBE	
	3	1	**7K-1181**	4	STRAP-CABLE	
	4	1	**9M-4814**	1	CONNECTOR-HOSE	
	5	1	**105-9411**	1	SUPPORT	
	6	1	**114-0063**	1	PLATE-INSTRUCTION	
	7	1	**130-9984**	3	CLIP	
	8	1	**6V-0675**	1	ELBOW	
	9	1	**170-0235**	1	ACCUMULATOR-REFRIGERANT (AIR CONDITIONER)	
I	10	1	**214-3736**	1	HOSE AS	
	11	1	**283-4237**	1	RECEIVER-REFRIGERANT DRYER (AIR CONDITIONER)	
		1	**3E-0068**	1	TUBE AS-REFRIGERANT ORIFICE	
	12	1	**289-6018**	2	U-BOLT	
	13	1	**289-6021**	1	PLATE	
	14	1	**297-5252**	1	HOSE AS	
I	15	1	**166-7208**	1	HOSE AS	
	16	1	**297-5254**	1	HOSE AS	
I	17	1	**319-5639**	1	HOSE AS	
	19	1	**109-1633**	1	CLIP (SLOT)	
	20	1	**109-1634**	1	CLIP (TAB)	
M	21	1	**208-9293**	2	BOLT-FLANGE HEAD (M10X1.5X30-MM)	
	22	1	**2K-4973**	4	LOCKNUT (3/8-16-THD)	
	23	1	**3E-4321**	4	CLIP	
	24	1	**5D-1026**	8	CLAMP-BAND	
	25	1	**5K-5338**	1	CLIP	
	26	1	**8T-4121**	10	WASHER-HARD (11X21X2.5-MM THK)	
M	27	1	**8T-4136**	1	BOLT (M10X1.5X25-MM)	
M	28	1	**8T-4137**	2	BOLT (M10X1.5X20-MM)	
M	29	1	**8T-4139**	1	BOLT (M12X1.75X30-MM)	
M	30	1	**8T-4196**	1	BOLT (M10X1.5X35-MM)	
	31	1	**8T-4223**	1	WASHER-HARD (13.5X25.5X3-MM THK)	
	33	1	**9X-7380**	2	SEAL-O-RING	
	34	1	**9X-7381**	3	SEAL-O-RING	
	35	1	**9X-7382**	1	SEAL-O-RING	
	36	1	**9X-7383**	2	SEAL-O-RING	
E	37	1	**5P-0767**		HOSE (260-CM)	
E	37A	1	**5P-0767**		HOSE (65-CM)	
E	37B	1	**5P-0767**		HOSE (22-CM)	
E	37C	1	**5P-0767**		HOSE (205-CM)	
M	38	1	**8T-4185**	2	BOLT (M10X1.5X50-MM)	
	39	1	**194-8648**	2	BOSS	

E-ORDER BY THE CENTIMETER
I-REFER TO HYDRAULIC INFORMATION SYSTEM
M-METRIC PART

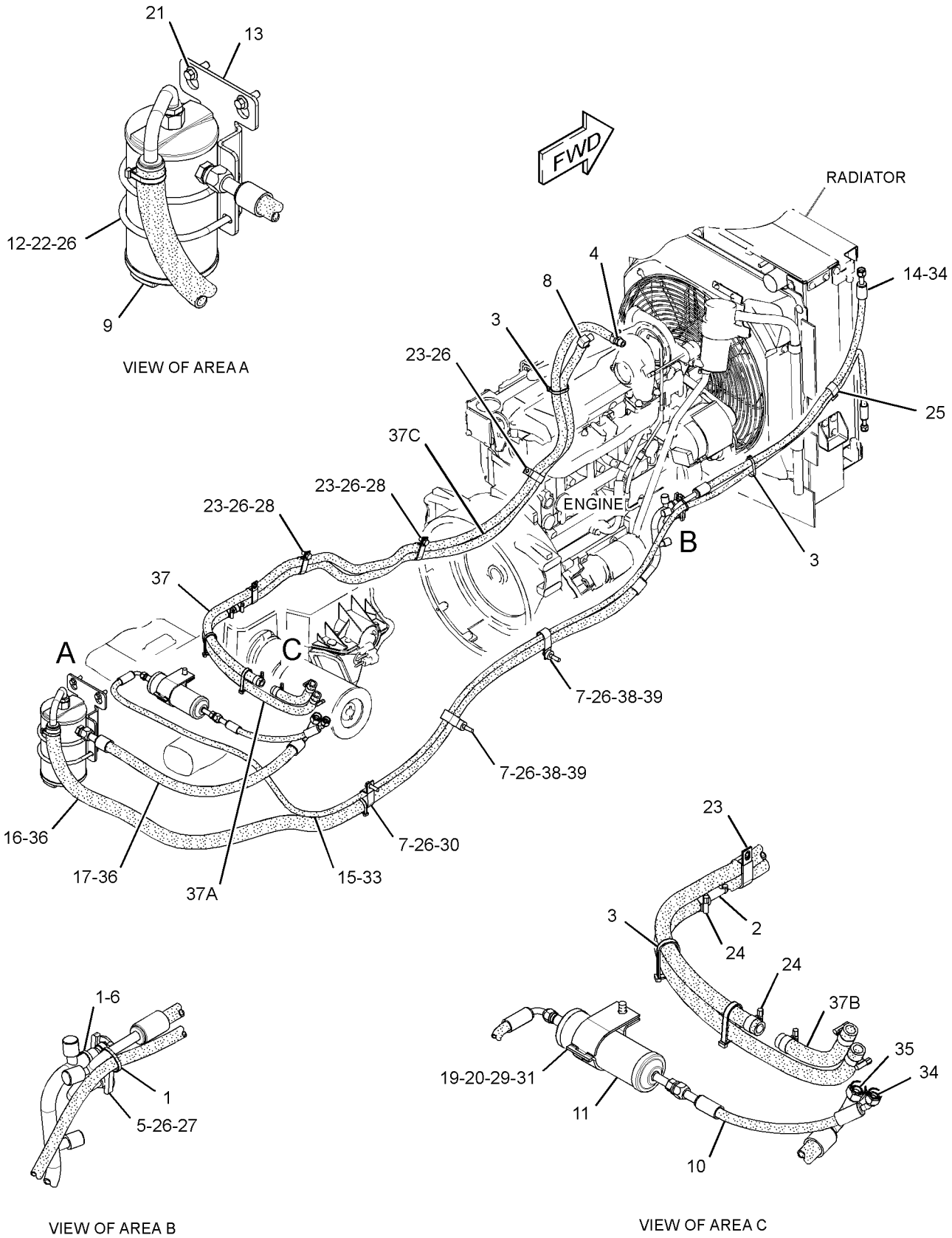

GRAPHIC #1 **<END>** g01805933

OPERATOR STATION

259-6276 MIRROR GP-REAR VIEW–INTERIOR

S/N: SJL1-UP

PART OF 335-3052, 335-3053, 335-3055 CAB AR, 335-3054 CAB AR-ENCLOSED ROPS AN ATTACHMENT

SMCS-7319 **i02403099**

NOTE	REF NO	GRAPHIC REF	PART NUMBER	QTY	PART NAME 1 2 3 4 5 6 (PRODUCT LEVEL)	SEE PAGE
M	1	1	**8C-4982**	2	BOLT-SOCKET HEAD (M4X0.7X20-MM)	
	2	1	**199-0929**	1	MIRROR AS	
	3	1	**096-6166**	2	WASHER-HARD (4.5X9X1-MM THK)	

M-METRIC PART

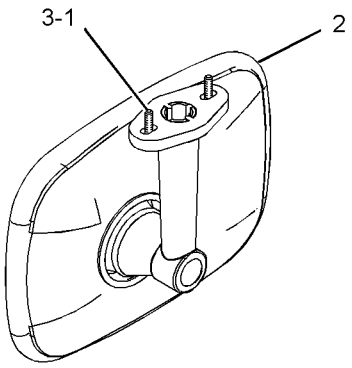

VIEW OF AREA A

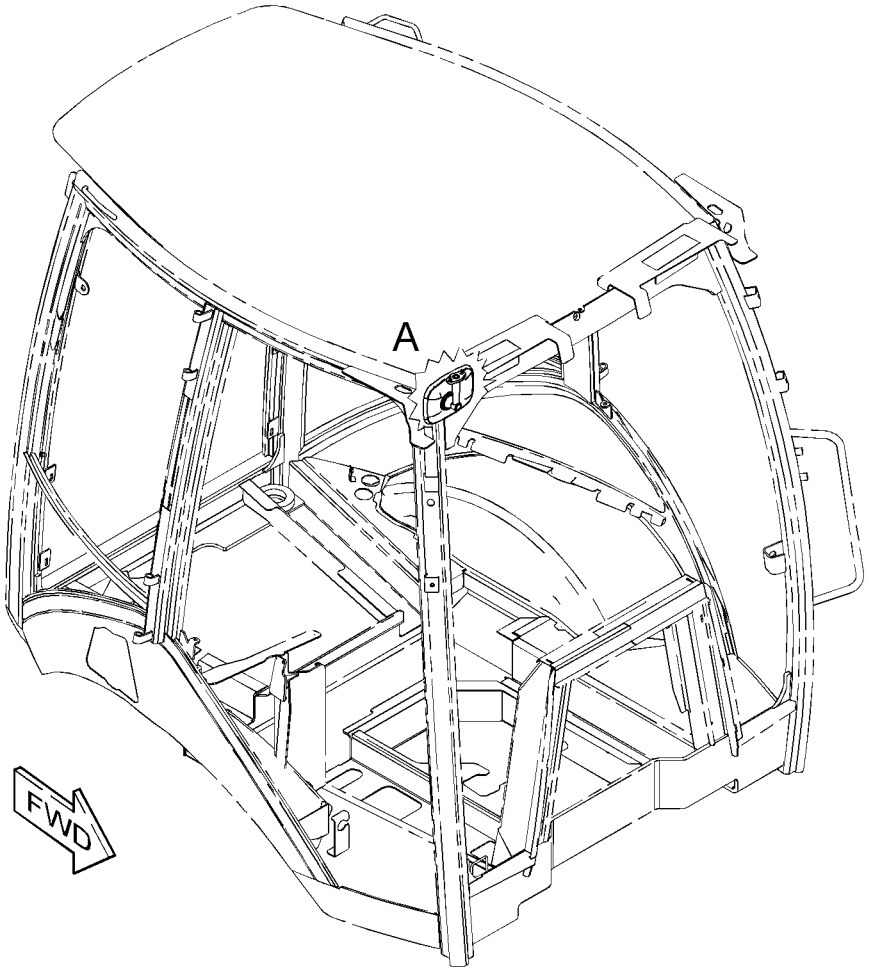

GRAPHIC #1 **<END>** g01214241

OPERATOR STATION

336-9168 MIRROR GP-REAR VIEW—EXTERIOR

S/N: SJL1-UP

PART OF 335-3052, 335-3053, 335-3055 CAB AR, 335-3054 CAB AR-ENCLOSED ROPS AN ATTACHMENT

SMCS-7319 **i03338640**

NOTE	REF NO	GRAPHIC REF	PART NUMBER	QTY	PART NAME 1 2 3 4 5 6 (PRODUCT LEVEL)	SEE PAGE
	1	1	**180-0448**	2	MIRROR AS	
	2	1	**159-7105**	1	BRACKET & MOUNTING AS (LH)	
	3	1	**159-7106**	1	BRACKET & MOUNTING AS (RH)	
	4	1	**8T-4224**	4	WASHER-HARD (8.8X16X2-MM THK)	
M	5	1	**8T-4908**	4	BOLT (M8X1.25X25-MM)	

M-METRIC PART

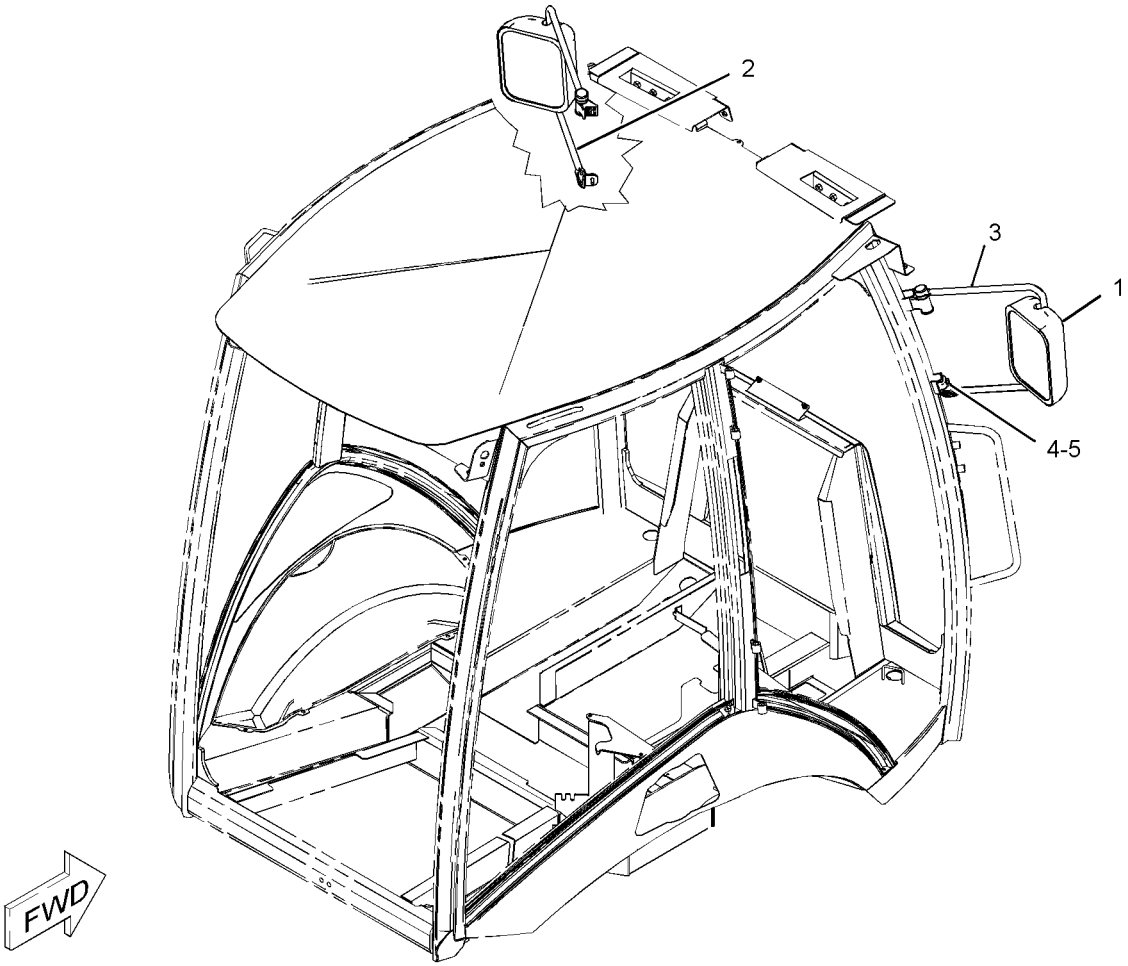

GRAPHIC #1 **<END>** g01090966

OPERATOR STATION

313-3752 MOTOR GP-WINDOW WIPER–12-VOLT

S/N: SJL1-UP

PART OF 340-8276 WASHER GP-WINDOW

AN ATTACHMENT

SMCS-7305 **i03500282**

NOTE	REF NO	GRAPHIC REF	PART NUMBER	QTY	PART NAME 1 2 3 4 5 6 (PRODUCT LEVEL)	SEE PAGE
	1	1	**102-8806**	1	KIT-RECEPTACLE (8-PIN)	
					(INCLUDES RECEPTACLE AS & WEDGE)	
	2	1	**8T-8737**	1	PLUG-SEAL	
	3	1	**186-3735**	7	PIN-CONNECTOR (16-GA TO 18-GA)	
	4	1	**206-5823**	1	CAP (MOTOR)	
	5	1	**3F-9556**	1	LOCKWASHER	
M	6	1	**5C-7261**	1	NUT (M8X1.25-THD)	

M-METRIC PART

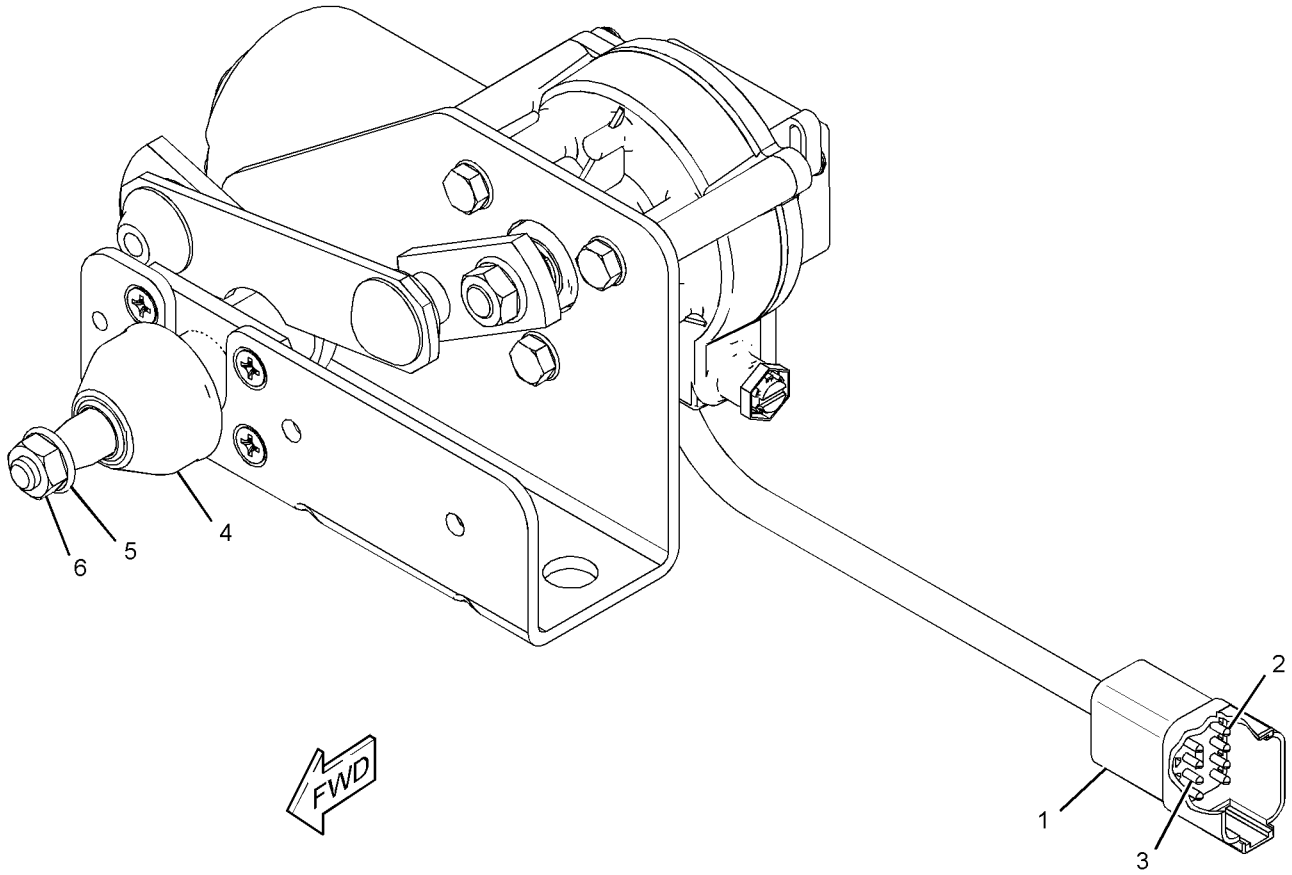

GRAPHIC #1 **<END>** g01570360

OPERATOR STATION

315-1318 MOTOR GP-WINDOW WIPER–REAR

S/N: SJL1-UP
PART OF 315-1272 WIPER GP-WINDOW
AN ATTACHMENT

SMCS-7305 **i03214029**

NOTE	REF NO	GRAPHIC REF	PART NUMBER	QTY	PART NAME 1 2 3 4 5 6 (PRODUCT LEVEL)	SEE PAGE
	1	1	**102-8804**	1	KIT-RECEPTACLE (4-PIN)	
					(INCLUDES RECEPTACLE AS & WEDGE)	
	2	1	**186-3735**	4	PIN-CONNECTOR (16-GA TO 18-GA)	
M	3	1	**5C-7261**	1	NUT (M8X1.25-THD)	
M	4	1	**8C-6437**	1	NUT (M16X1-THD)	
	5	1	**263-3823**	1	CAP-WIPER	

M-METRIC PART

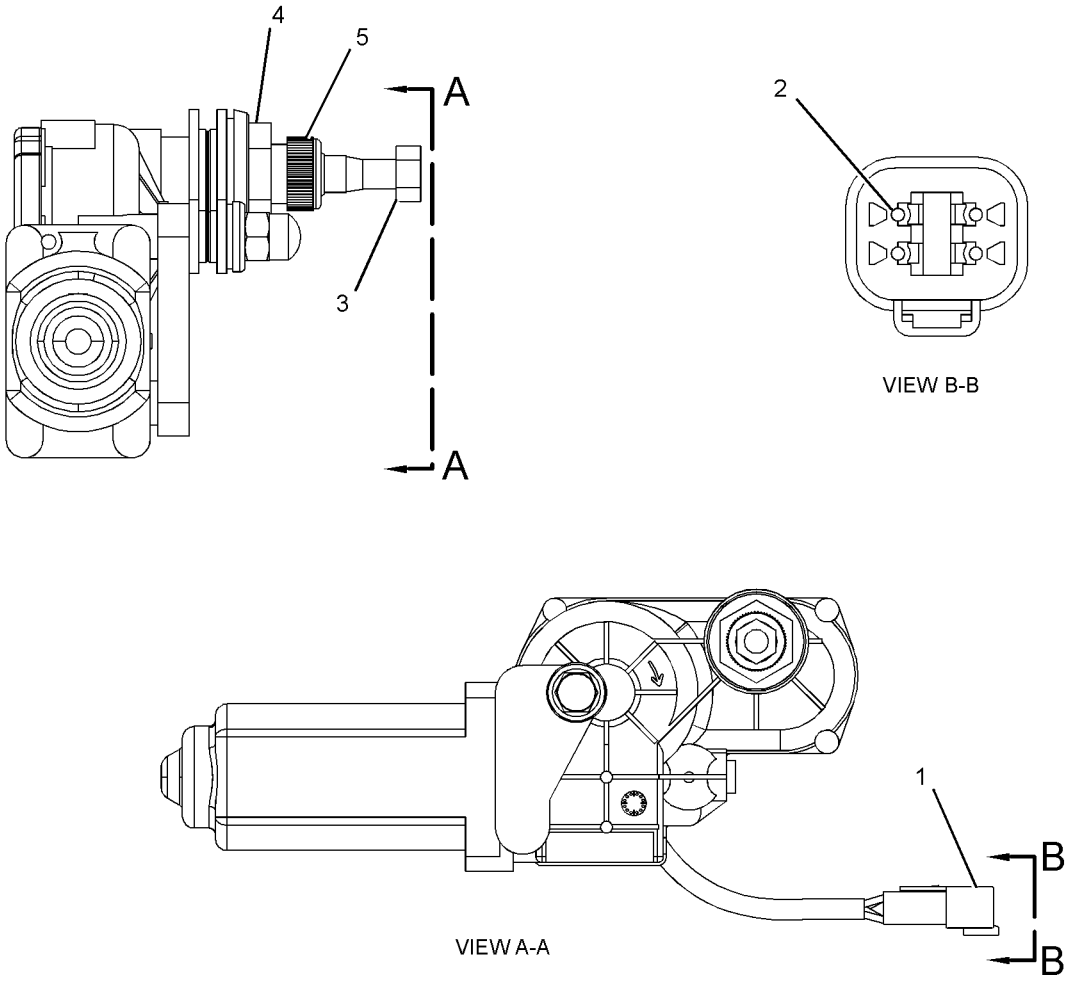

GRAPHIC #1 **<END>** g01654033

OPERATOR STATION

269-3247 MOUNTING GP-BACKHOE CONTROL—PILOT

S/N: SJL1-UP

PART OF 335-3052, 335-3053, 335-3055 CAB AR, 335-3054 CAB AR-ENCLOSED ROPS AN ATTACHMENT

SMCS-5063, 5258, 5705 **i02502859**

NOTE	REF NO	GRAPHIC REF	PART NUMBER	QTY	PART NAME 1 2 3 4 5 6 (PRODUCT LEVEL)	SEE PAGE
	1	1,2	**7K-1181**	2	STRAP-CABLE	
	2	1,2	**164-1368**	15	FASTENER-PANEL	
	3	1,2	**183-4934**	2	BEARING-SELF-ALIGNING	
B	4	1,2	**195-7602**	3	SHIM (1.6-MM THK)	
E	5	1	**261-9634**		SEAL-BULK (8.5-CM EACH)	
	6	2	**261-9642**	1	COVER-CONSOLE (LH)	
	7	2	**267-5225**	1	BOOT	
Y	8	1	*269-3248*	1	LATCH GP-CONSOLE	602
	9	2	**269-3254**	1	SUPPORT AS (LH)	
B	10	2	**269-3262**	4	SHIM (1-MM THK)	
	11	1,2	**270-2794**	2	INSULATION	
	12	2	**270-5161**	1	GASKET	
	13	2	**272-7079**	1	PLATE	
	14	1	**273-1473**	1	GROMMET	
	15	1	**273-1475**	1	COVER-CONSOLE (RH)	
	16	1	**273-1476**	1	BOOT	
	17	1	**273-1477**	1	PLATE	
	18	1	**273-1478**	1	BUMPER AS	
	19	1	**283-3467**	1	PLATE AS	
M		1	**6V-9632**	7	NUT-WELD (M6X1-THD)	
M		1	**8T-3490**	3	NUT-WELD (M10X1.5-THD)	
M		1	**8T-3612**	1	NUT-WELD (M8X1.25-THD)	
	20	2	**283-3477**	1	TUBE AS	
	21	1	**283-7981**	1	PLATE AS	
	22	1	**283-8053**	2	STRIKER	
	23	1	**039-8557**	2	WASHER (13X26X6-MM THK)	
M	24	1,2	**3T-0849**	8	BOLT-SOCKET HEAD (M6X1X25-MM)	
M	25	1	**7X-2533**	6	BOLT (M6X1X35-MM)	
	26	1,2	**8T-4121**	9	WASHER-HARD (11X21X2.5-MM THK)	
M	27	1	**8T-4134**	6	NUT (M6X1-THD)	
M	28	1,2	**8T-4138**	2	BOLT (M6X1X20-MM)	
M	29	2	**8T-4186**	5	BOLT (M10X1.5X40-MM)	
M	30	1	**8T-4189**	2	BOLT (M8X1.25X20-MM)	
M	31	1	**8T-4195**	4	BOLT (M10X1.5X30-MM)	
	32	1,2	**8T-4224**	4	WASHER-HARD (8.8X16X2-MM THK)	
M	33	1,2	**8T-4244**	2	NUT (M12X1.75-THD)	
M	34	1	**8T-4956**	2	BOLT (M12X1.75X35-MM)	
M	35	1	**8T-4971**	2	BOLT (M6X1X30-MM)	
M	36	2	**8T-7547**	2	BOLT (M8X1.25X30-MM)	
	37	1,2	**9X-2038**	14	WASHER (7X19X2-MM THK)	
M	38	1,2	**9X-2045**	8	SCREW-TRUSS HEAD (M6X1X20-MM)	
	39	1,2	**9X-8256**	26	WASHER (6.6X12X2-MM THK)	

B-USE AS REQUIRED
E-ORDER BY THE CENTIMETER
M-METRIC PART
Y-SEPARATE ILLUSTRATION

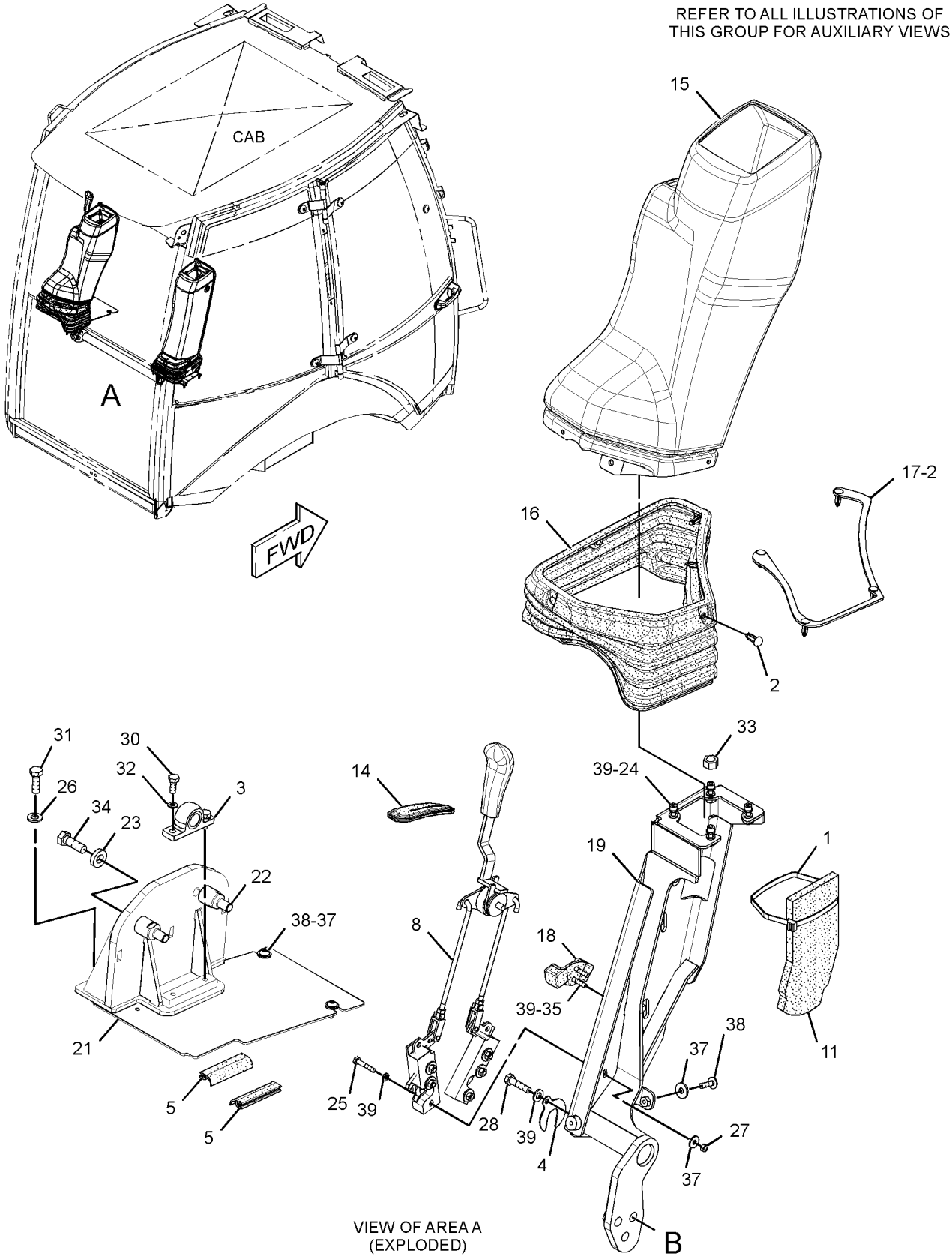

GRAPHIC #1

g01316012

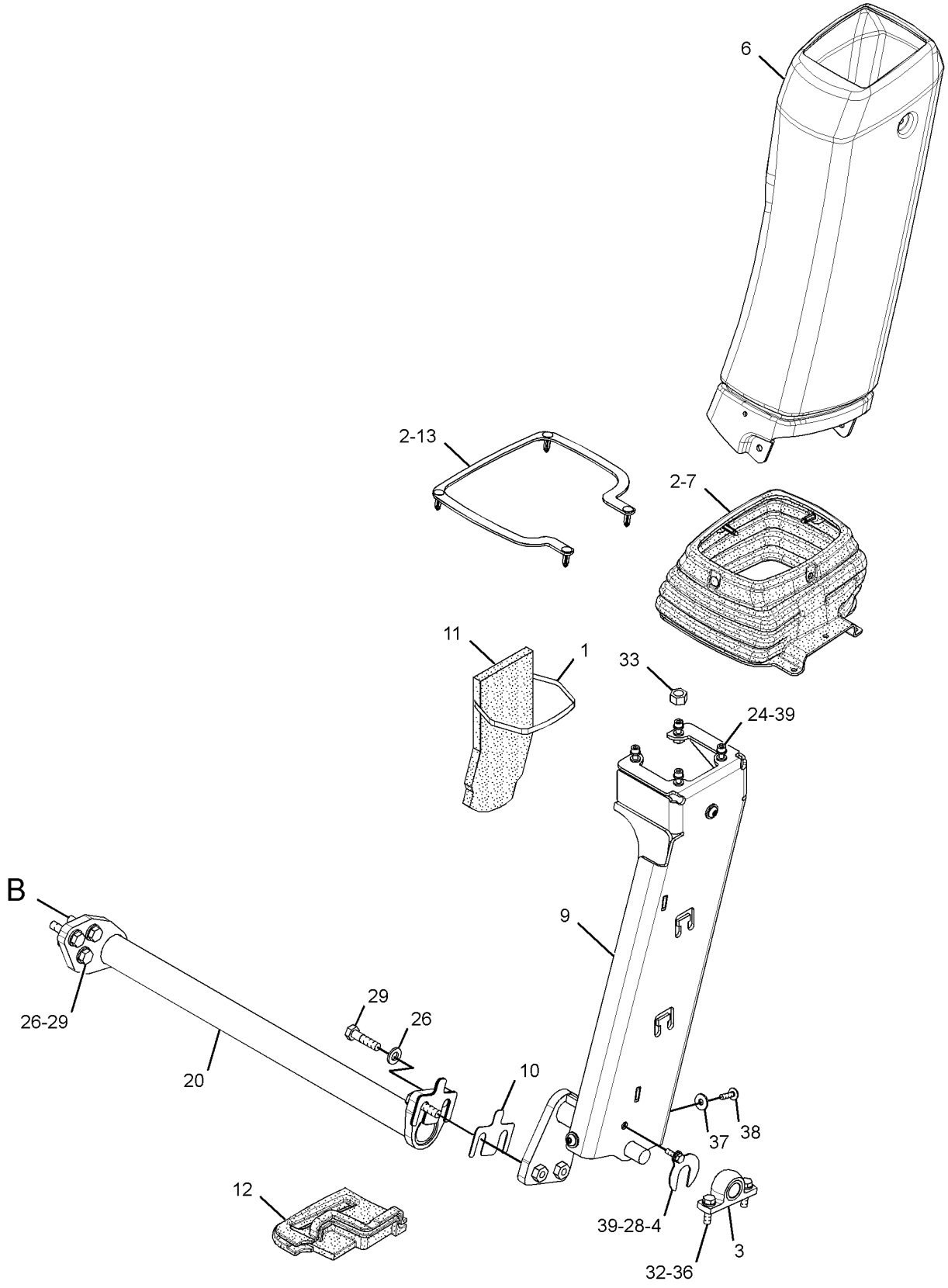

GRAPHIC #2 **<END>** g01316018

OPERATOR STATION

204-4249 MOUNTING GP-CAB

S/N: SJL1-UP

PART OF 329-0296 CHASSIS AR

SMCS-7301 **i02509402**

NOTE	REF NO	GRAPHIC REF	PART NUMBER	QTY	PART NAME 1 2 3 4 5 6 (PRODUCT LEVEL)	SEE PAGE
	1	1	**6Y-9930**	2	MOUNT AS	
	2	1	**118-2990**	2	MOUNT AS	
	3	1	**9W-6582**	2	SLEEVE	
	4	1	**8C-3291**	2	WASHER (17X90X10-MM THK)	
M	5	1	**8C-8478**	2	BOLT (M20X2.5X140-MM)	
	6	1	**8T-4123**	4	WASHER (22X35X3.5-MM THK)	
M	7	1	**8T-4131**	2	NUT (M20X2.5-THD)	
M	8	1	**8T-4132**	2	NUT (M16X2-THD)	
M	9	1	**8T-4173**	2	BOLT (M16X2X110-MM)	
	10	1	**9W-6584**	2	WASHER (20.5X114X10-MM THK)	
	11	1	**9X-8257**	4	WASHER (17.5X30X3.5-MM THK)	
	12	1	**1L-6377**	2	BUTTON-PLUG	

M-METRIC PART

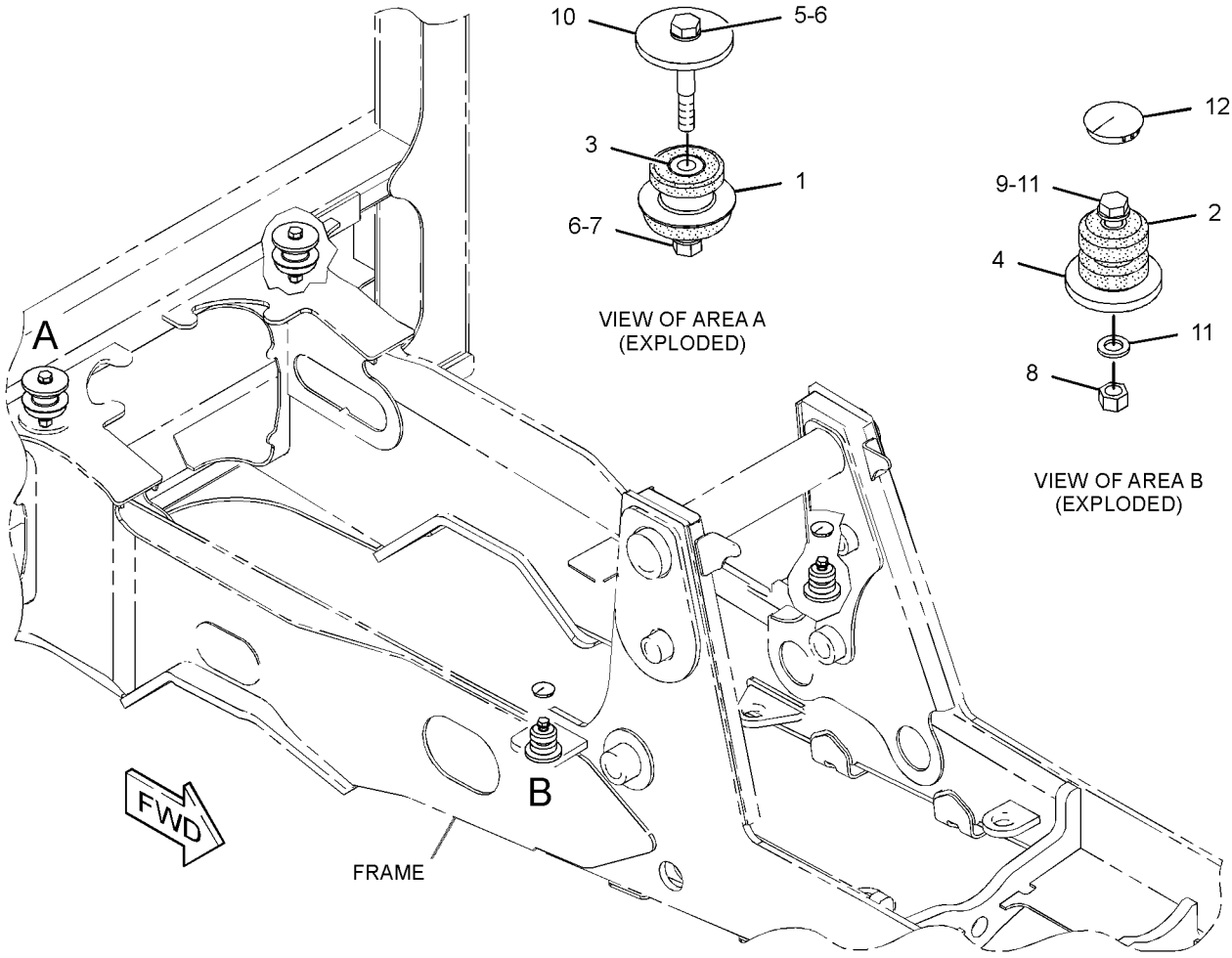

GRAPHIC #1 **<END>** g01271386

OPERATOR STATION

209-3378 PEDAL GP-GOVERNOR

S/N: SJL1-UP
PART OF 206-1640 CONTROL GP-GOVERNOR
AN ATTACHMENT

SMCS-1265 **i03592816**

NOTE	REF NO	GRAPHIC REF	PART NUMBER	QTY	PART NAME 1 2 3 4 5 6 (PRODUCT LEVEL)	SEE PAGE
M	1	1	**129-3178**	1	LOCKNUT (M6X1-THD)	
M	2	1	**5C-7261**	1	NUT (M8X1.25-THD)	
M	3	1	**5C-9553**	1	BOLT (M6X1X16-MM)	
	4	1	**8T-4205**	1	WASHER-HARD (7.2X14.5X2-MM THK)	
M	5	1	**095-0641**	4	BOLT-SOCKET HEAD (M4X0.7X10-MM)	
	6	1	**243-0063**	1	BOOT	
	7	1	**3F-9556**	2	LOCKWASHER	
	8	1	**6V-8186**	2	NUT-FULL (5/16-24-THD)	
	9	1	**8T-6902**	3	CLIP	
M	10	1	**9X-2842**	1	BOLT (M8X1.25X45-MM)	
					AVAILABLE REPAIR KIT(S):	
			164-1154	1	KIT-SERVICE	
					(INCLUDES CLAMP & SCREWS)	
			243-0062	1	KIT-REPAIR (GOVERNOR PEDAL)	
					(INCLUDES SHAFT, CLIPS & BEARINGS)	

M-METRIC PART

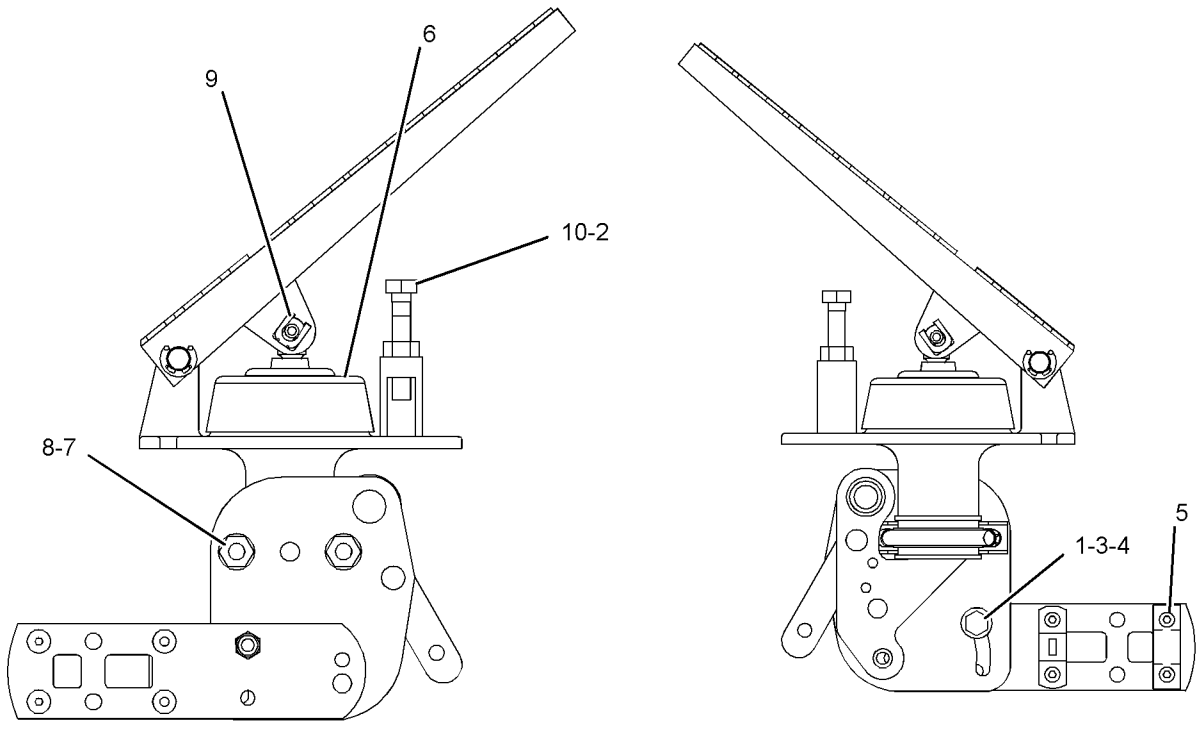

RIGHT SIDE VIEW **LEFT SIDE VIEW**

GRAPHIC #1 **<END>** g01081364

OPERATOR STATION

334-7225 ROOF GP-CAB

S/N: SJL1-UP

PART OF 335-3052, 335-3053, 335-3055 CAB AR, 335-3054 CAB AR-ENCLOSED ROPS AN ATTACHMENT

SMCS-7301 **i03686780**

NOTE	REF NO	GRAPHIC REF	PART NUMBER	QTY	PART NAME 1 2 3 4 5 6 (PRODUCT LEVEL)	SEE PAGE
	1	1	**193-5915**	2	PLUG	
	2	1	**334-7227**	1	CAP AS	
	3	1	**341-5749**	5	SPACER (8.5X12.7X4.3-MM THK)	
	4	1	**341-5750**	5	PLATE	
	5	1	**8C-9987**	3	WASHER (8.3X28X2.5-MM THK)	
M	6	1	**8T-4189**	8	BOLT (M8X1.25X20-MM)	
B	7	1	**193-5914**	2	PLUG	
	8	1	**8T-4224**	5	WASHER-HARD (8.8X16X2-MM THK)	

B-USE AS REQUIRED
M-METRIC PART

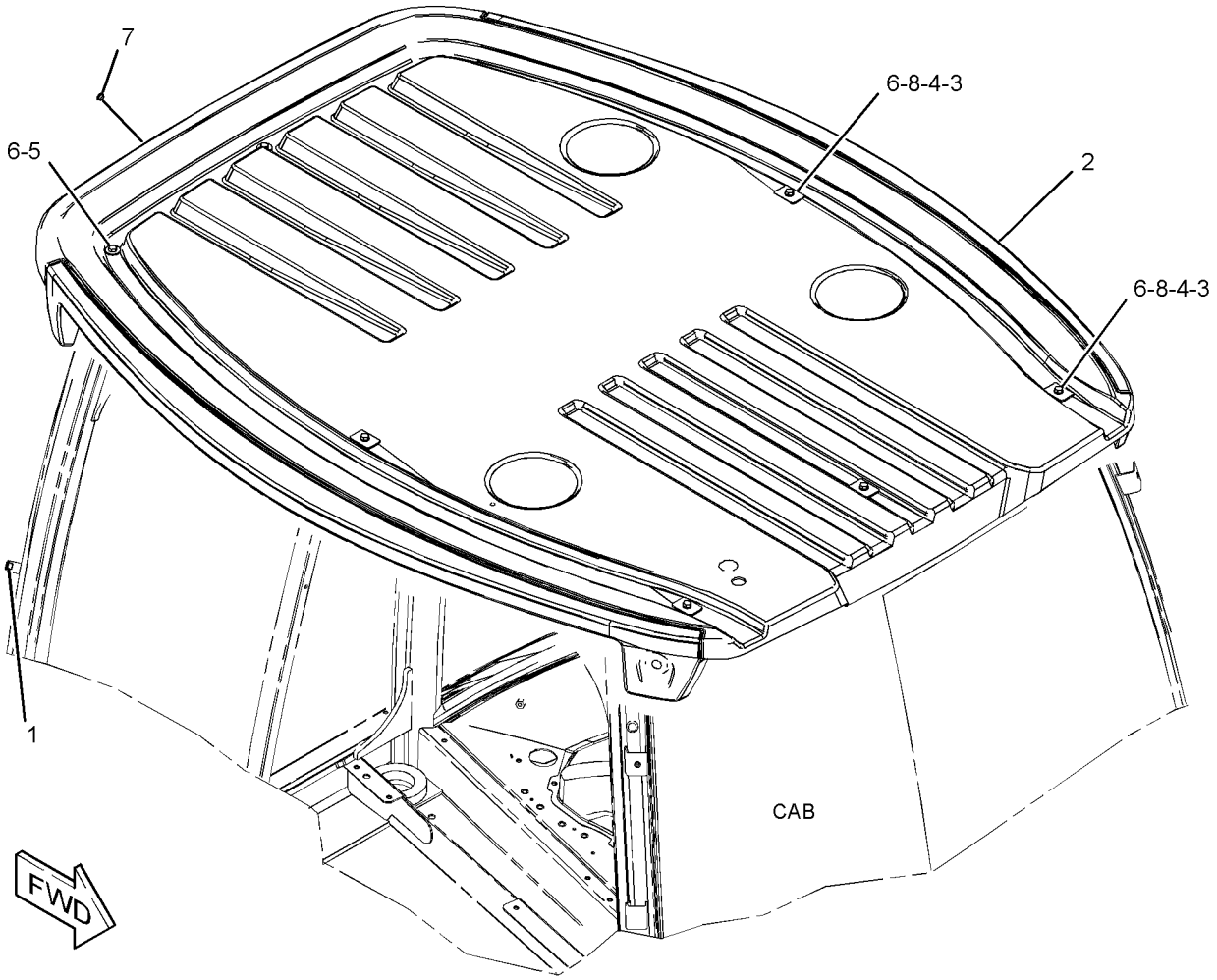

GRAPHIC #1 **<END>** g01983395

OPERATOR STATION

324-2896 SEAT GP

S/N: SJL1-UP

PART OF 314-4290 SEAT GP-SUSPENSION

AN ATTACHMENT

SMCS-7312, 7321, 7324, 7336 **i03502361**

NOTE	REF NO	GRAPHIC REF	PART NUMBER	QTY	PART NAME 1 2 3 4 5 6 (PRODUCT LEVEL)	SEE PAGE
	1	1	**1V-0358**	4	WASHER (8.6X33.3X1.2-MM THK)	
	2	1	**164-1244**	1	CUSHION AS-BACK	
	3	1	**180-5796**	1	CUSHION AS-SEAT	
	4	1	**197-4521**	1	KIT-KNOB	
	5	1	**203-9858**	1	SPACER (8.5X20X12-MM THK)	
	6	1	**220-3790**	1	ARMREST AS (RH)	
M		1	**6A-9083**	1	SCREW-MACHINE (M6X1X15-MM)	
	7	1	**220-3791**	1	ARMREST AS (LH)	
M		1	**6A-9083**	1	SCREW-MACHINE (M6X1X15-MM)	
	8	1	**119-3859**	2	SCREW-PAN HEAD (10-16X0.75-IN)	
Y	9	1	**324-2897**	1	KIT-SEAT FRAME	595
	10	1	**324-2900**	1	BRACKET	
	11	1	**324-2901**	1	BRACKET	
	12	1	**0S-1595**	2	BOLT (1/2-13X1.25-IN)	
	13	1	**1K-6872**	2	LOCKNUT (1/2-13-THD)	
	14	1	**5P-8245**	2	WASHER-HARD (13.5X25.5X3-MM THK)	
M	15	1	**6V-9189**	1	LOCKNUT (M8X1.25-THD)	
M	16	1	**8C-6431**	1	SCREW-FLAT HEAD	
M	17	1	**8T-4908**	4	BOLT (M8X1.25X25-MM)	
	18	1	**8T-9501**	2	SCREW (10-16X0.75-IN)	

M-METRIC PART
Y-SEPARATE ILLUSTRATION

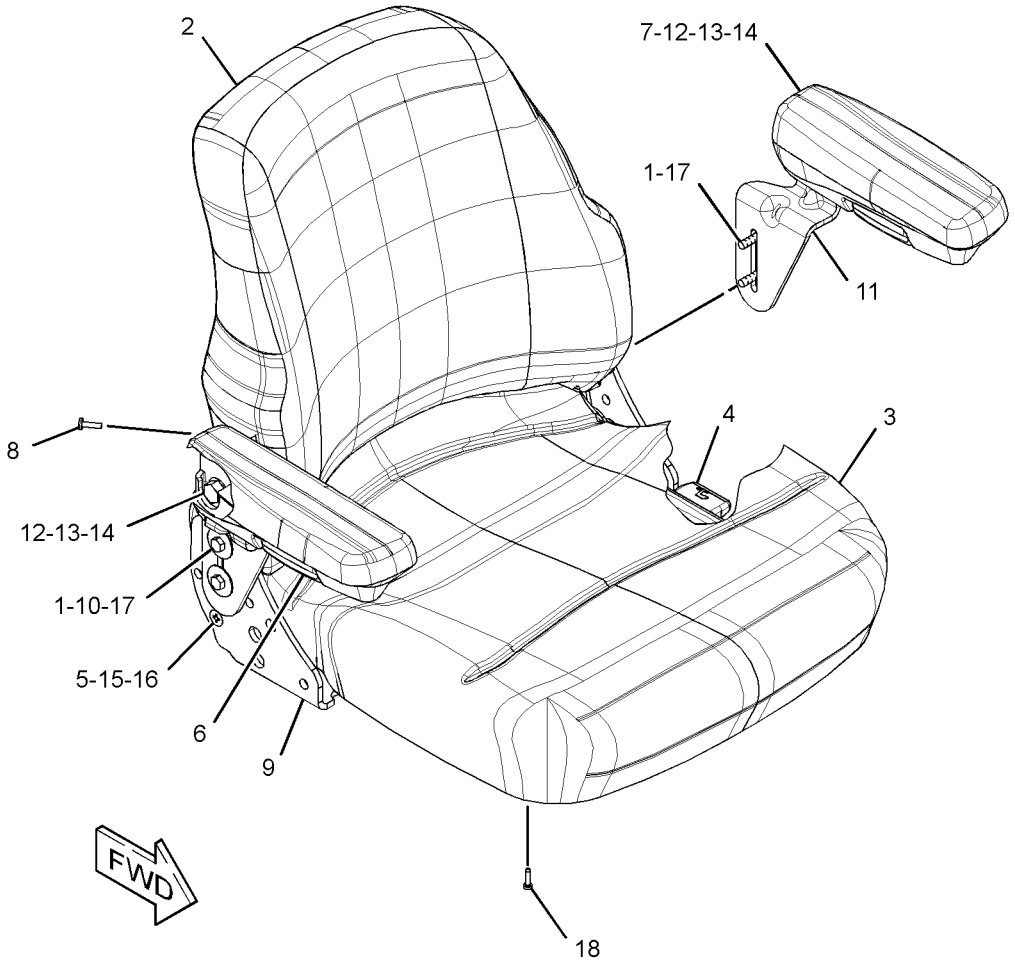

GRAPHIC #1 **<END>** g01625312

OPERATOR STATION

324-2903 SEAT GP–DELUXE

S/N: SJL1-UP

PART OF 314-4291 SEAT GP-SUSPENSION

AN ATTACHMENT

SMCS-7312, 7321, 7324, 7336 **i03164620**

NOTE	REF NO	GRAPHIC REF	PART NUMBER	QTY	PART NAME 1 2 3 4 5 6 (PRODUCT LEVEL)	SEE PAGE
	1	1	**1V-0358**	4	WASHER (8.6X33.3X1.2-MM THK)	
	2	1	**121-3040**	6	FASTENER-PANEL	
	3	1	**164-1246**	1	CUSHION AS (BACK)	
	4	1	**164-1269**	1	BOOT	
	5	1	**164-1271**	2	SPRING	
	6	1	**164-1272**	1	ROD AS	
	7	1	**164-1273**	2	SPRING-EXTENSION (TILT)	
	8	1	**164-1274**	1	BLOCK	
	9	1	**164-1276**	2	TUBE	
	10	1	**164-1277**	2	CLIP-SPRING	
	11	1	**180-5787**	1	KNOB	
	12	1	**180-5788**	1	BLOCK	
	13	1	**180-5791**	1	SUPPORT AS-SEAT (LUMBAR)	
	14	1	**186-5113**	2	SCREW	
	15	1	**197-4521**	1	KIT-KNOB	
	16	1	**203-9858**	1	SPACER (8.5X20X12-MM THK)	
	17	1	**220-3790**	1	ARMREST AS (RH)	
M		1	**6A-9083**	1	SCREW-MACHINE (M6X1X15-MM)	
	18	1	**220-3791**	1	ARMREST AS (LH)	
M		1	**6A-9083**	1	SCREW-MACHINE (M6X1X15-MM)	
	19	1	**119-3859**	2	SCREW-PAN HEAD (10-16X0.75-IN)	
	20	1	**324-2900**	1	BRACKET	
	21	1	**324-2901**	1	BRACKET	
	22	1	**324-2905**	1	KNOB	
Y	23	1	**324-2906**	1	KIT-SEAT FRAME	596
	24	1	**324-2907**	1	CUSHION AS-SEAT	
	25	1	**324-2909**	1	HEADREST	
	26	1	**324-2910**	1	HANDLE	
	27	1	**324-9978**	1	PIN	
	28	1	**0S-1595**	2	BOLT (1/2-13X1.25-IN)	
	29	1	**1K-6872**	2	LOCKNUT (1/2-13-THD)	
	30	1	**2P-7864**	1	SCREW-TAPPING	
	31	1	**4H-1641**	3	PIN-SPRING	
	32	1	**5P-8245**	2	WASHER-HARD (13.5X25.5X3-MM THK)	
M	33	1	**6V-9189**	1	LOCKNUT (M8X1.25-THD)	
M	34	1	**8C-6431**	1	SCREW-FLAT HEAD	
M	35	1	**8T-4908**	4	BOLT (M8X1.25X25-MM)	

M-METRIC PART
Y-SEPARATE ILLUSTRATION

324-2903 SEAT GP *(contd.)* i03164620

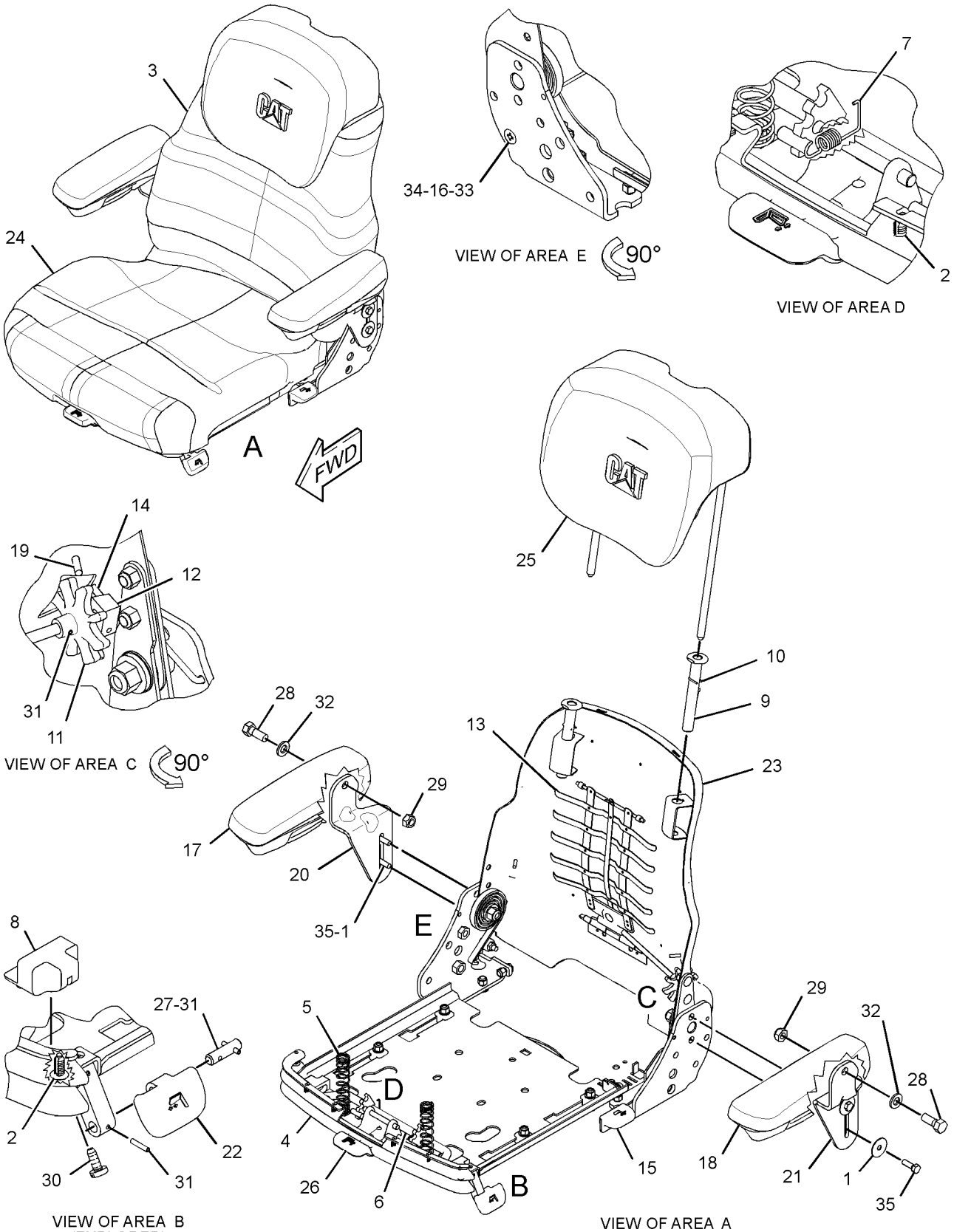

GRAPHIC #1 **<END>** g01624167

OPERATOR STATION

314-4290 SEAT GP-SUSPENSION—CLOTH

S/N: SJL1-UP

PART OF 315-9890 SEAT GP-SUSPENSION

AN ATTACHMENT

SMCS-7324, 7336 **i03164080**

NOTE	REF NO	GRAPHIC REF	PART NUMBER	QTY	PART NAME 1 2 3 4 5 6 (PRODUCT LEVEL)	SEE PAGE
	1	1	**0S-1594**	4	BOLT (3/8-16X1-IN)	
	2	1	**2K-4973**	4	LOCKNUT (3/8-16-THD)	
	3	1	**308-3554**	8	SPACER (9.9X28.4X3.2-MM THK)	
	4	1	**322-9480**	1	KIT-SEAT BELT	
					(INCLUDES SPACER, WASHERS & BOLTS)	
	5	1	**322-9481**	1	BASE-SEAT	
Y	6	1	**322-9486**	1	SWIVEL GP-SEAT	630
Y	7	1	**324-2890**	1	SUSPENSION GP-SEAT	628
Y	8	1	**324-2896**	1	SEAT GP	619

Y-SEPARATE ILLUSTRATION

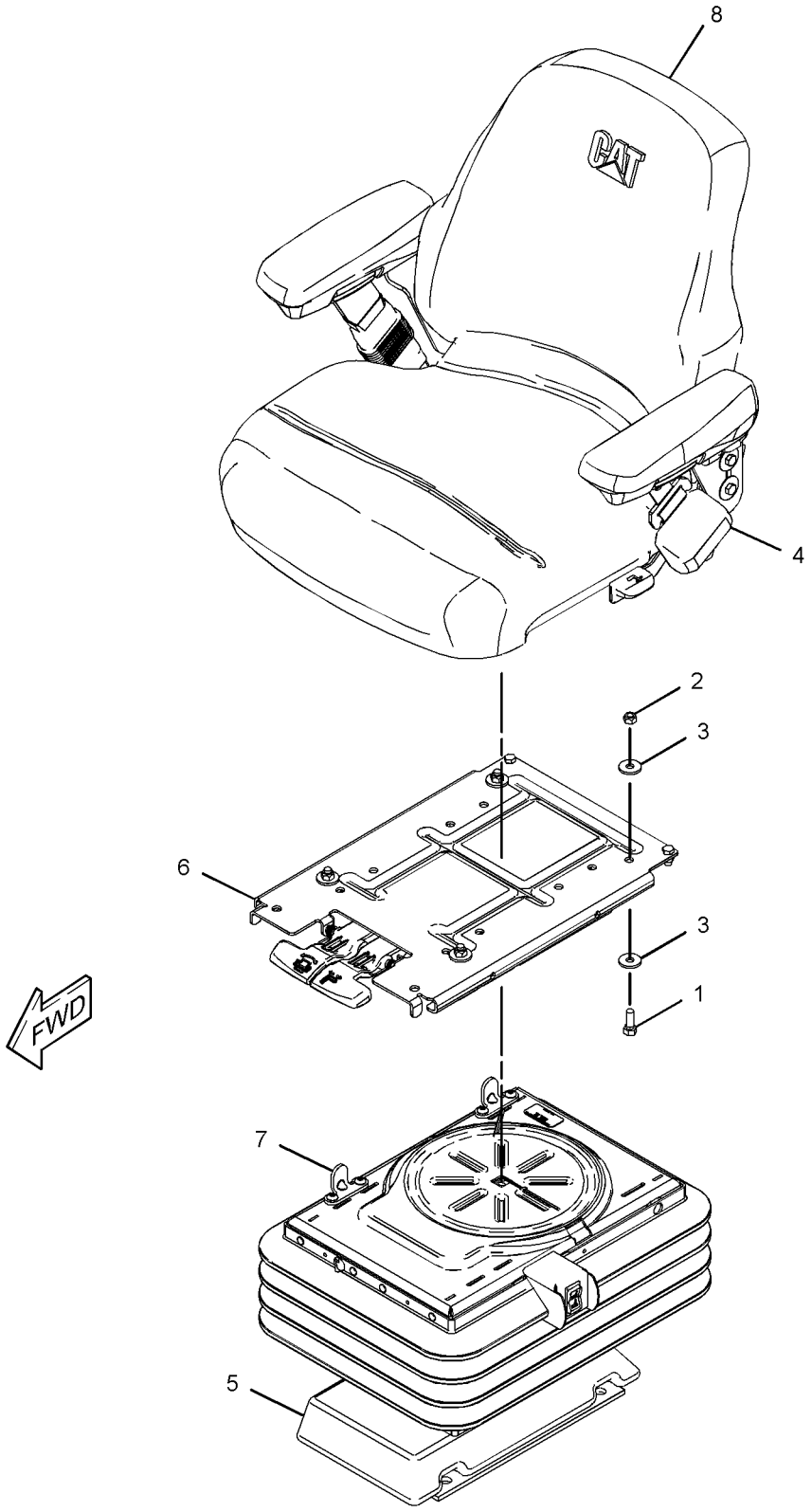

GRAPHIC #1 **<END>** g01625141

OPERATOR STATION

314-4291 SEAT GP-SUSPENSION—DELUXE, CLOTH

S/N: SJL1-UP

PART OF 315-9891 SEAT GP-SUSPENSION

AN ATTACHMENT

SMCS-7324, 7336 **i03332381**

NOTE	REF NO	GRAPHIC REF	PART NUMBER	QTY	PART NAME 1 2 3 4 5 6 (PRODUCT LEVEL)	SEE PAGE
	1	1	**0S-1594**	2	BOLT (3/8-16X1-IN)	
	2	1	**2K-4973**	4	LOCKNUT (3/8-16-THD)	
	3	1	**234-3017**	2	BOLT (3/8-16X0.875-IN)	
	4	1	**7X-7729**	8	WASHER (11X25X3-MM THK)	
	5	1	**308-3554**	8	SPACER (9.9X28.4X3.2-MM THK)	
	6	1	**322-9480**	1	KIT-SEAT BELT	
					(INCLUDES SPACER, WASHERS & BOLTS)	
	7	1	**322-9481**	1	BASE-SEAT	
Y	8	1	**322-9486**	1	SWIVEL GP-SEAT	630
Y	9	1	**324-2890**	1	SUSPENSION GP-SEAT	628
Y	10	1	**324-2903**	1	SEAT GP (DELUXE)	621

Y-SEPARATE ILLUSTRATION

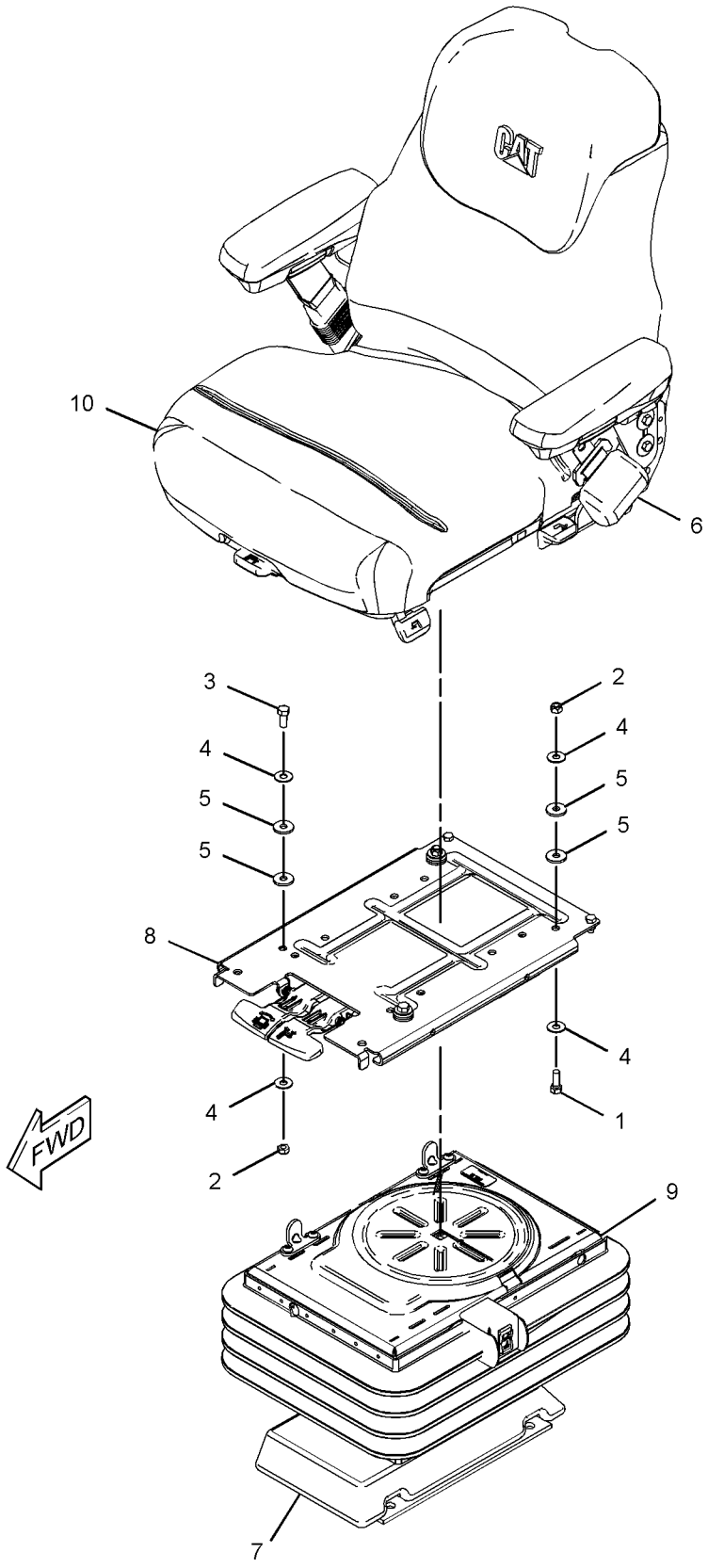

GRAPHIC #1 **<END>** g01625673

315-9890 SEAT GP-SUSPENSION—CLOTH

S/N: SJL1-UP
PART OF 335-3052, 335-3053 CAB AR
AN ATTACHMENT

SMCS-7324, 7336 **i03164824**

NOTE	PART NUMBER	QTY	PART NAME 1 2 3 4 5 6 (PRODUCT LEVEL)	SEE PAGE
Y	**314-4290**	1	SEAT GP-SUSPENSION (CLOTH)	623
M	**8T-4139**	4	BOLT (M12X1.75X30-MM)	
	3S-2093	1	STRAP-CABLE	
	8T-4223	4	WASHER-HARD (13.5X25.5X3-MM THK)	

M-METRIC PART
Y-SEPARATE ILLUSTRATION

<END>

315-9891 SEAT GP-SUSPENSION—DELUXE, CLOTH

S/N: SJL1-UP
PART OF 335-3055 CAB AR, 335-3054 CAB AR-ENCLOSED ROPS
AN ATTACHMENT

SMCS-7324, 7336 **i03164361**

NOTE	PART NUMBER	QTY	PART NAME 1 2 3 4 5 6 (PRODUCT LEVEL)	SEE PAGE
Y	**314-4291**	1	SEAT GP-SUSPENSION (DELUXE, CLOTH)	625
M	**8T-4139**	4	BOLT (M12X1.75X30-MM)	
	3S-2093	1	STRAP-CABLE	
	8T-4223	4	WASHER-HARD (13.5X25.5X3-MM THK)	

M-METRIC PART
Y-SEPARATE ILLUSTRATION

<END>

OPERATOR STATION

324-2890 SUSPENSION GP-SEAT

S/N: SJL1-UP
PART OF 314-4290, 314-4291 SEAT GP-SUSPENSION
AN ATTACHMENT

SMCS-7312, 7324 **i03500320**

NOTE	REF NO	GRAPHIC REF	PART NUMBER	QTY	PART NAME 1 2 3 4 5 6 (PRODUCT LEVEL)	SEE PAGE
	1	1	**164-1230**	4	BEARING	
	2	1	**204-1682**	4	STRAP-CABLE	
	3	1	**304-1021**	4	ROLLER	
	4	1	**304-1023**	2	BUMPER	
	7	1	**305-4353**	2	SPACER (6.4X24X6-MM THK)	
	8	1	**313-3280**	2	NUT	
	9	1	**321-5776**	1	RING-RETAINING	
	10	1	**322-9507**	2	SHAFT	
	11	1	**322-9509**	2	BRACKET-STOP	
	12	1	**322-9520**	1	BASE-SEAT	
	13	1	**324-2889**	1	HOUSING-UPPER	
	14	1	**324-2891**	1	ARM AS-SCISSORS	
	15	1	**324-2892**	2	PLATE	
	16	1	**324-2893**	2	STOP	
Y	17	1	**324-2894**	1	KIT-SEAT SUSPENSION (AIR)	598
	18	1	**324-2895**	1	SWITCH-TOGGLE (SUSPENSION SEAT)	
	19	1	**328-7742**	1	SHOCK ABSORBER	
	20	1	**031-4155**	2	LOCKNUT (5/16-18-THD)	
M	21	1	**129-3178**	1	LOCKNUT (M6X1-THD)	
	22	1	**1B-2705**	2	BOLT-CARRIAGE (5/16-18X0.75-IN)	
	23	1	**2K-4973**	2	LOCKNUT (3/8-16-THD)	
	24	1	**4K-9890**	2	WASHER (8.6X17.3X1.6-MM THK)	
M	25	1	**6V-7743**	4	LOCKNUT (M6X1-THD)	
M	26	1	**9X-2044**	4	SCREW-TRUSS HEAD (M6X1X16-MM)	
					PARTS SHOWN IN GRAPHIC(S) WITHOUT A REFERENCE NUMBER ARE NOT SERVICED SEPARATELY	

M-METRIC PART
Y-SEPARATE ILLUSTRATION

324-2890 SUSPENSION GP-SEAT *(contd.)* i03500320

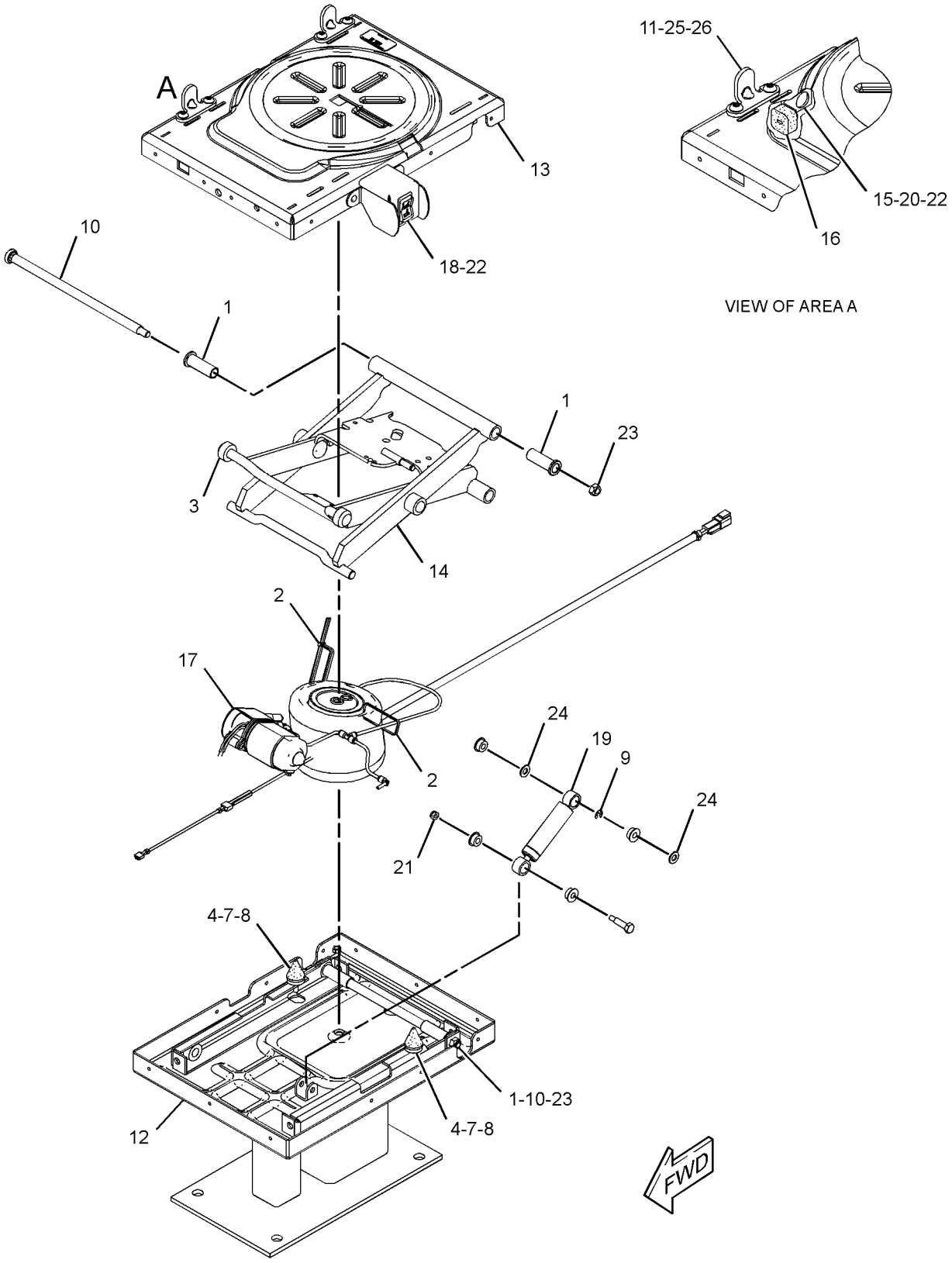

GRAPHIC #1 **<END>** g01623750

OPERATOR STATION

322-9486 SWIVEL GP-SEAT

S/N: SJL1-UP
PART OF 314-4290, 314-4291 SEAT GP-SUSPENSION
AN ATTACHMENT

SMCS-7312, 7321 **i03579014**

NOTE	REF NO	GRAPHIC REF	PART NUMBER	QTY	PART NAME 1 2 3 4 5 6 (PRODUCT LEVEL)	SEE PAGE
	1	1	**161-9283**	1	WASHER (19.8X31.8X1.6-MM THK)	
	2	1	**161-9285**	1	NUT (3/4-10-THD)	
	3	1	**161-9288**	1	SHAFT-PIVOT	
	5	1	**215-1242**	1	RING	
	6	1	**260-0030**	1	SHAFT-PIVOT	
	7	1	**260-0033**	1	SPRING-TORSION	
	8	1	**260-0034**	1	SPRING-RETURN	
	9	1	**260-0035**	1	SPRING-RETURN	
	10	1	**260-0041**	1	BOLT (3/4-1-X1.42-IN)	
	11	1	**260-0057**	1	LATCH AS-SLIDE	
	12	1	**313-5637**	2	BOLT	
	13	1	**322-9490**	1	HANDLE (SWIVEL)	
	14	1	**322-9491**	1	HANDLE (SLIDE)	
	15	1	**322-9492**	1	SPRING	
	16	1	**322-9493**	1	PLATE AS-SLIDE	
	17	1	**322-9494**	1	KIT-BLOCK	
					(INCLUDES BLOCK-SLIDERS & SETSCREWS)	
	18	1	**322-9495**	1	PLATE AS-UPPER	
	19	1	**322-9496**	1	LATCH (SWIVEL)	
	20	1	**031-4155**	2	LOCKNUT (5/16-18-THD)	
	21	1	**2L-5893**	1	PIN-SPRING	
	22	1	**3B-4631**	1	PIN-COTTER	
	23	1	**4B-9784**	8	BALL	
	24	1	**4B-4283**	1	WASHER (20.6X37.5X3.5-MM THK)	
	25	1	**8S-7803**	3	RING-RETAINING	
	26	1	**9R-5708**	2	LOCKWASHER	

322-9486 SWIVEL GP-SEAT *(contd.)* i03579014

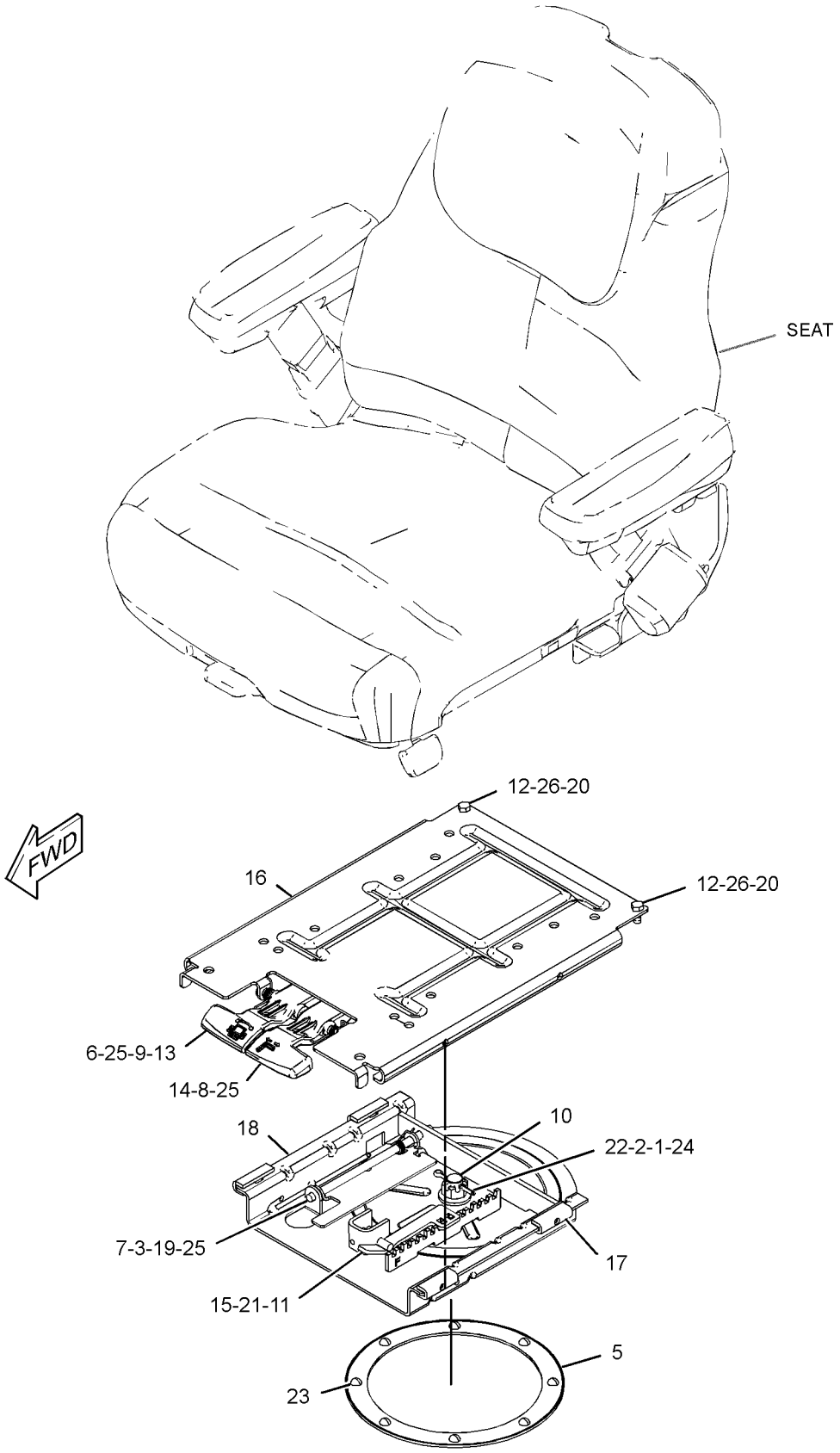

GRAPHIC #1

<END>

g01623695

OPERATOR STATION

206-1857 VISOR GP-CAB

S/N: SJL1-UP

PART OF 335-3052, 335-3053, 335-3055 CAB AR, 335-3054 CAB AR-ENCLOSED ROPS AN ATTACHMENT

SMCS-7301 **i02704721**

NOTE	REF NO	GRAPHIC REF	PART NUMBER	QTY	PART NAME 1 2 3 4 5 6 (PRODUCT LEVEL)	SEE PAGE
CE	1	1	**8C-3681**		HOSE (2.5-CM EACH)	
	2	1	**9R-3205**	1	VISOR AS	
C	3	1	**5P-9297**	2	CLIP	

C-CHANGE FROM PREVIOUS TYPE
E-ORDER BY THE CENTIMETER

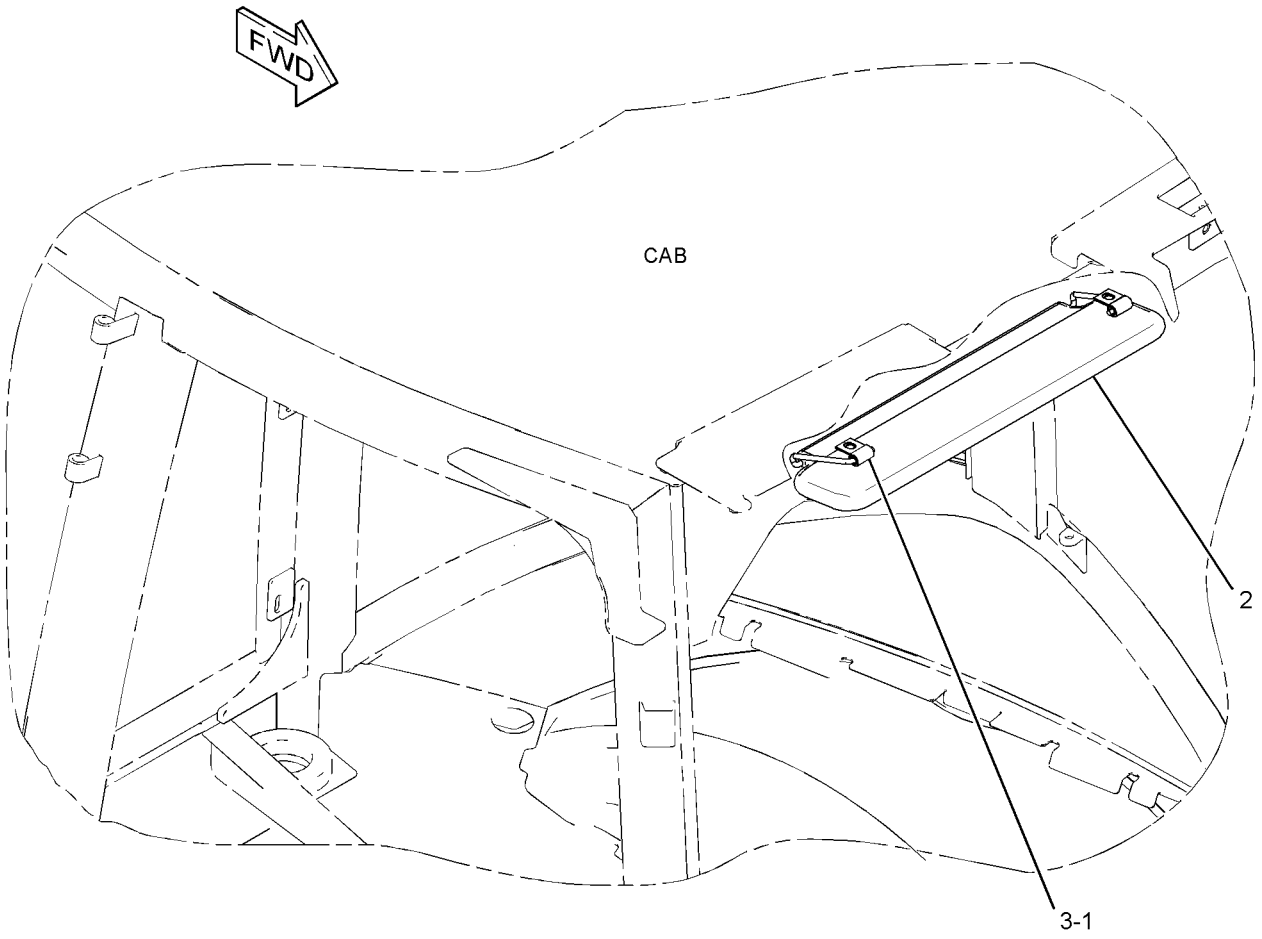

GRAPHIC #1 **<END>** g01384970

OPERATOR STATION

340-8276 WASHER GP-WINDOW

S/N: SJL1-UP

PART OF 335-3052, 335-3053, 335-3055 CAB AR, 335-3054 CAB AR-ENCLOSED ROPS AN ATTACHMENT

SMCS-7306 **i03712386**

NOTE	REF NO	GRAPHIC REF	PART NUMBER	QTY	PART NAME 1 2 3 4 5 6 (PRODUCT LEVEL)	SEE PAGE
	1	1	**3S-2093**	12	STRAP-CABLE	
	2	1	**8T-1118**	1	NOZZLE AS-WASHER	
	3	1	**9R-3469**	2	DIAPHRAGM	
	4	1	**9X-8372**	1	FILM-INSTRUCTION (WASHER FILL)	
	5	1	**101-0745**	1	BLADE AS-WIPER (600-MM) (FRONT)	
	6	1	**121-6936**	1	CONNECTOR	
	7	1	**154-5410**	1	ARM-WINDOW WIPER (FRONT)	
	8	1	**214-3763**	1	TANK GP-WINDOW WASHER	
		1	**6T-1375**	2	PUMP AS-WASHER	
		1	**8E-8293**	2	GROMMET	
		1	**214-3742**	1	TANK-WASHER	
		1	**254-5683**	1	CAP	
	9	1	**214-4709**	1	SWITCH AS-ROCKER (WIPER, WASHER, REAR)	
		1	**111-7899**	1	GASKET	
	10	1	**276-8791**	1	CLIP	
	11	1	**283-3451**	2	CONNECTOR AS	
Y	12	1	**313-3752**	1	MOTOR GP-WINDOW WIPER (12-VOLT)	611
	13	1	**315-1284**	1	NOZZLE	
	14	1	**156-0283**	2	WASHER-HARD (8.4X35X2.5-MM THK)	
M	15	1	**6V-7357**	1	BOLT (M6X1X25-MM)	
	16	1	**8T-4205**	1	WASHER-HARD (7.2X14.5X2-MM THK)	
M	17	1	**8T-5093**	2	BOLT-LOCKING (M8X1.25X25-MM)	
E	18	1	**144-0195**		HOSE (52-CM)	
E	18A	1	**144-0195**		HOSE (72-CM)	
E	18B	1	**144-0195**		HOSE (21-CM EACH)	

E-ORDER BY THE CENTIMETER
M-METRIC PART
Y-SEPARATE ILLUSTRATION

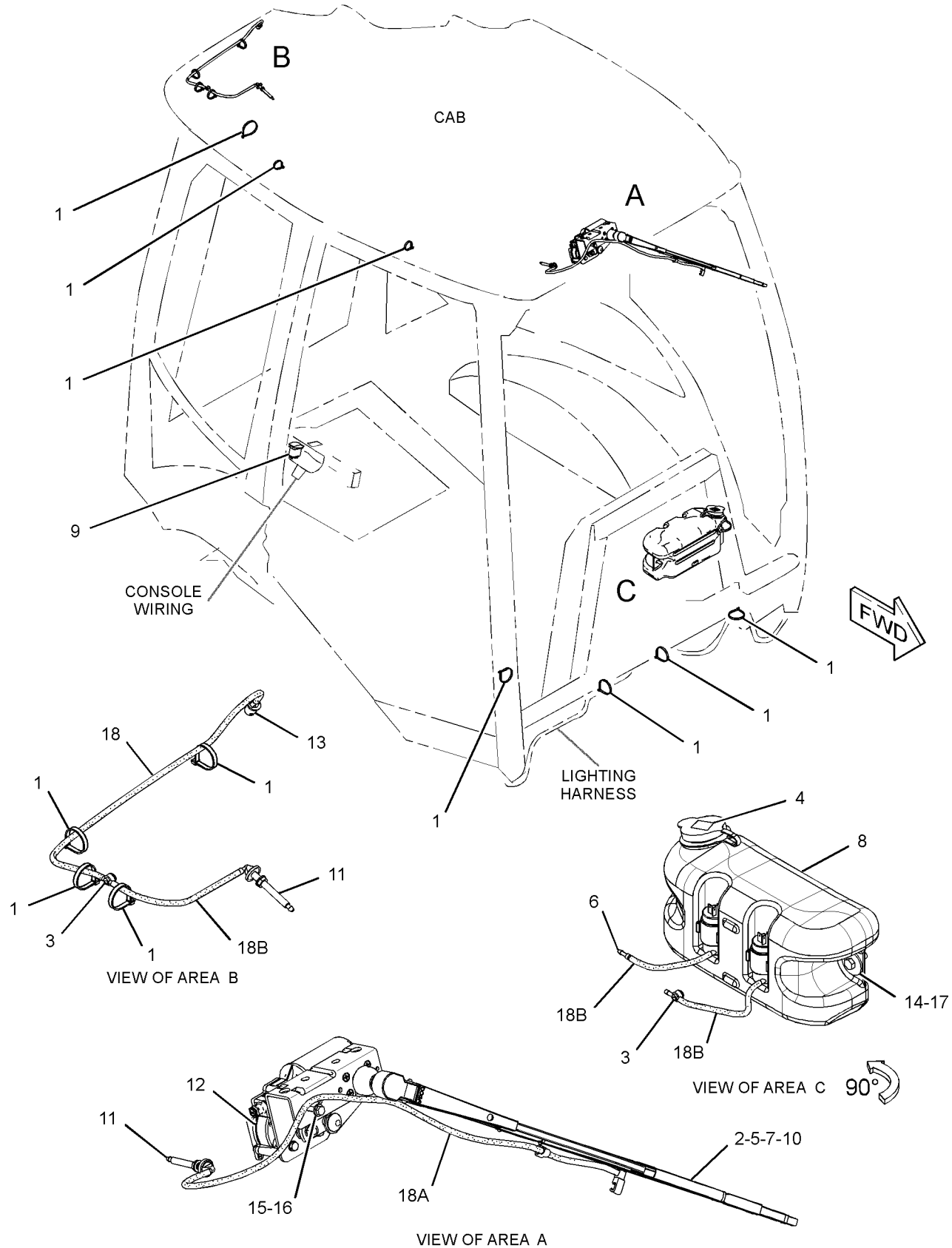

GRAPHIC #1

<END>

g01972114

OPERATOR STATION

315-1270 WINDOW GP-CAB—REAR

S/N: SJL1-UP
PART OF 342-7147, 342-7149 CAB GP
AN ATTACHMENT

SMCS-7310 **i03651202**

NOTE	REF NO	GRAPHIC REF	PART NUMBER	QTY	PART NAME 1 2 3 4 5 6 (PRODUCT LEVEL)	SEE PAGE
	1	1	**5C-6588**	2	WASHER (13X22X2-MM THK)	
	2	1	**7H-3937**	4	LOCKWASHER	
	3	1	**146-4023**	2	PLUG	
	4	1	**167-8182**	2	BUMPER	
	5	1	**180-3748**	8	INSERT-THREADED (M8X1.25-THD)	
Y	6	1	*311-3639*	1	WIRING GP-WIPER (REAR)	217
Y	7	1	*315-1272*	1	WIPER GP-WINDOW (REAR)	643
	8	1	**315-1277**	1	FRAME AS	
	9	1	**315-1282**	1	PLATE AS	
	10	1	**315-1299**	1	GLASS (REAR)	
	11	1	**315-1300**	2	ROLLER	
	12	1	**315-1301**	2	ROLLER	
	13	1	**315-1302**	1	HANDLE GP-DOOR (LH)	
	14	1	**315-1303**	1	HANDLE GP-DOOR (RH)	
					(EACH HANDLE GP INCLUDES)	
		1	**317-4261**	1	AXLE	
		1	**317-4262**	1	SPRING	
		1	**317-4263**	1	PIN	
	15	1	**315-1304**	2	PIVOT	
	16	1	**315-1306**	1	BRACKET	
	17	1	**315-1311**	2	SPRING-GAS	
	18	1	**315-1312**	2	CAP	
	19	1	**315-1313**	1	SEAL	
	20	1	**315-1314**	1	SEAL	
	21	1	**344-1004**	1	SEAL	
	22	1	**316-8228**	2	SCREW-BUTTON HEAD (M8X1.25X45-MM)	
	23	1	**323-6066**	1	SEAL	
	24	1	**325-1968**	2	PLATE	
	25	1	**325-9315**	2	CORNER	
	26	1	**326-6389**	1	BRACKET AS	
	27	1	**335-2224**	2	FOAM	
M	28	1	**131-3540**	2	LOCKNUT (M8X1.25-THD)	
M	29	1	**172-4018**	8	BOLT-SOCKET HEAD (M8X1.25X35-MM)	
	30	1	**3F-9556**	4	LOCKWASHER	
	31	1	**4D-6433**	2	WASHER-HARD (12X25.5X2-MM THK)	
M	32	1	**5C-7261**	8	NUT (M8X1.25-THD)	
	33	1	**5P-4116**	2	WASHER-HARD (8.8X20.5X2-MM THK)	
M	34	1	**8T-0389**	2	LOCKNUT (M10X1.5-THD)	
M	35	1	**8T-4133**	2	NUT (M10X1.5-THD)	
	36	1	**9P-2553**	2	SPACER (6.83X10.28X11-MM THK)	
M	37	1	**9X-2045**	2	SCREW-TRUSS HEAD (M6X1X20-MM)	
E	38	1	**9X-2092**		TRIM-EDGE (88-CM)	
	39	1	**6C-9089**	2	NUT-CAP	

E-ORDER BY THE CENTIMETER
M-METRIC PART
Y-SEPARATE ILLUSTRATION

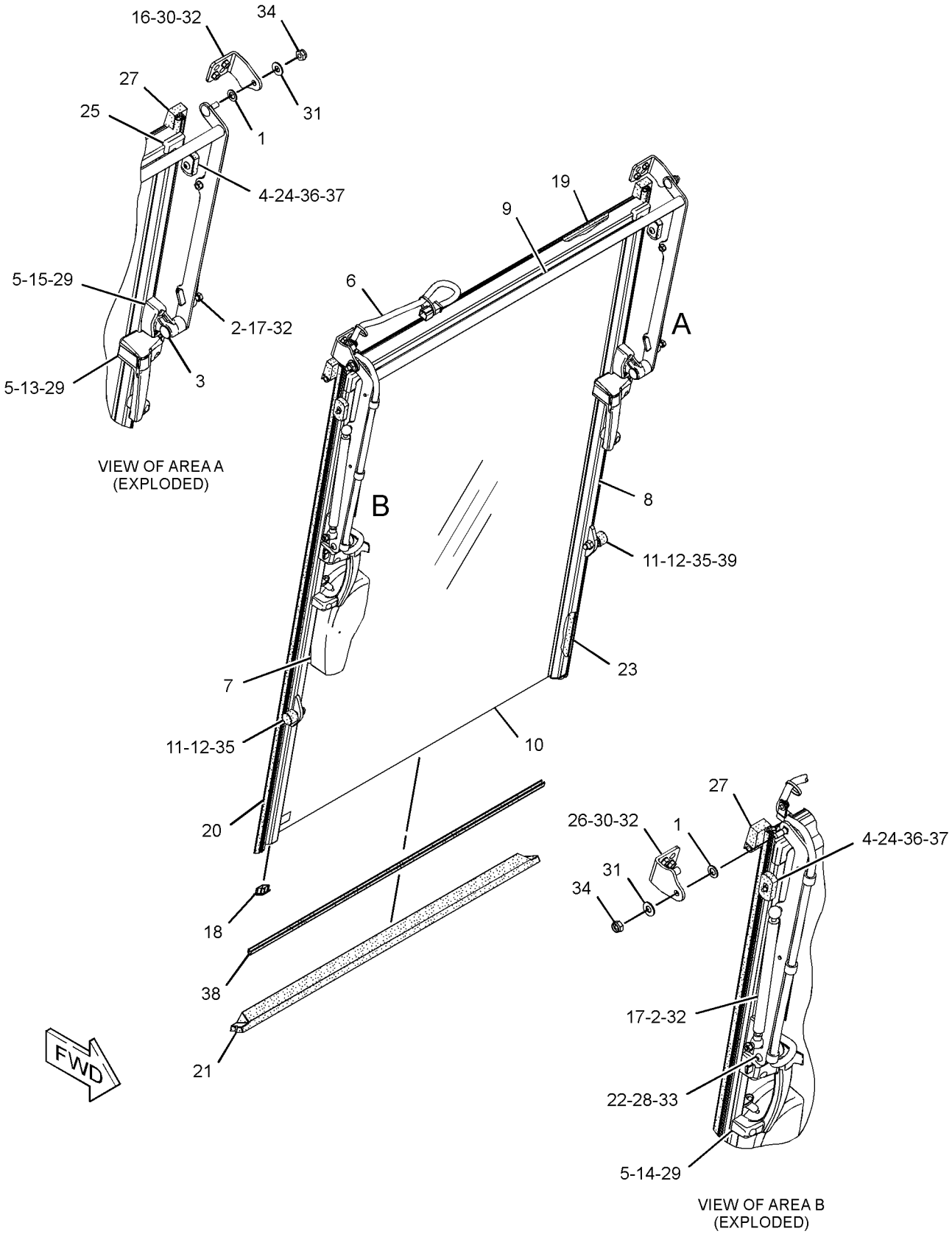

GRAPHIC #1 **<END>** g01960733

OPERATOR STATION

327-7601 WINDOW GP-CAB—LH

S/N: SJL1-UP
PART OF 342-7149 CAB GP
AN ATTACHMENT

SMCS-7310 **i03712338**

NOTE	REF NO	GRAPHIC REF	PART NUMBER	QTY	PART NAME 1 2 3 4 5 6 (PRODUCT LEVEL)	SEE PAGE
	1	1	**8Y-7309**	1	RETAINER	
	2	1	**100-7608**	1	HANDLE (LH)	
	3	1	**129-8542**	6	RETAINER	
	4	1	**129-8545**	8	WASHER (13X40X3-MM THK)	
M	5	1	**136-4192**	4	BOLT (M6X1X35-MM)	
	6	1	**154-5423**	2	SPACER (6.6X12.7X17-MM THK)	
	7	1	**205-9623**	1	HINGE (LOWER, LH)	
	8	1	**205-9624**	1	HINGE (UPPER, LH)	
Y	9	1	**299-6985**	1	LATCH GP-CAB DOOR & WINDOW (LOWER)	600
Y	10	1	**299-6986**	1	LATCH GP-CAB DOOR & WINDOW (UPPER)	601
	11	1	**325-9300**	1	GLASS (REAR, LH)	
	12	1	**223-2030**	1	LATCH AS (HOLD OPEN)	
M		1	**6V-7743**	2	LOCKNUT (M6X1-THD)	
M		1	**9X-2045**	2	SCREW-TRUSS HEAD (M6X1X20-MM)	
		1	**143-2827**	1	SPRING	
M	13	1	**5C-7261**	1	NUT (M8X1.25-THD)	
M	14	1	**6V-7743**	2	LOCKNUT (M6X1-THD)	
	15	1	**7X-2393**	1	BUMPER-CONICAL	
E	16	1	**148-5353**		SEAL (342-CM)	

E-ORDER BY THE CENTIMETER
M-METRIC PART
Y-SEPARATE ILLUSTRATION

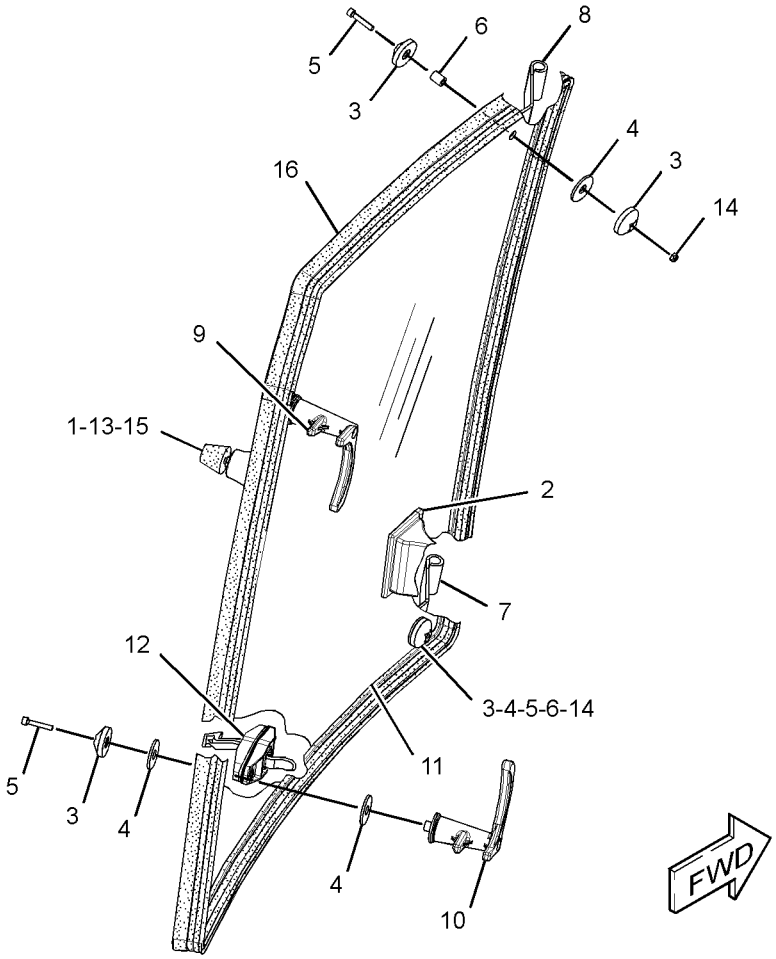

GRAPHIC #1 **<END>** g01971456

OPERATOR STATION

327-7637 WINDOW GP-CAB—RH

S/N: SJL1-UP
PART OF 342-7149 CAB GP
AN ATTACHMENT

SMCS-7310 **i03712339**

NOTE	REF NO	GRAPHIC REF	PART NUMBER	QTY	PART NAME 1 2 3 4 5 6 (PRODUCT LEVEL)	SEE PAGE
	1	1	**8Y-7309**	1	RETAINER	
	2	1	**100-7608**	1	HANDLE (RH)	
	3	1	**129-8542**	6	RETAINER	
	4	1	**129-8545**	8	WASHER (13X40X3-MM THK)	
M	5	1	**136-4192**	4	BOLT (M6X1X35-MM)	
	6	1	**154-5423**	2	SPACER (6.6X12.7X17-MM THK)	
	7	1	**205-9633**	1	HINGE (LOWER, RH)	
	8	1	**205-9634**	1	HINGE (UPPER, RH)	
Y	9	1	**299-6985**	1	LATCH GP-CAB DOOR & WINDOW (LOWER)	600
Y	10	1	**299-6986**	1	LATCH GP-CAB DOOR & WINDOW (UPPER)	601
	11	1	**325-9301**	1	GLASS (REAR, RH)	
	12	1	**223-2030**	1	LATCH AS (HOLD OPEN)	
M		1	**6V-7743**	2	LOCKNUT (M6X1-THD)	
M		1	**9X-2045**	2	SCREW-TRUSS HEAD (M6X1X20-MM)	
		1	**143-2827**	1	SPRING	
M	13	1	**5C-7261**	1	NUT (M8X1.25-THD)	
M	14	1	**6V-7743**	2	LOCKNUT (M6X1-THD)	
	15	1	**7X-2393**	1	BUMPER-CONICAL	
E	16	1	**148-5353**		SEAL (342-CM)	

E-ORDER BY THE CENTIMETER
M-METRIC PART
Y-SEPARATE ILLUSTRATION

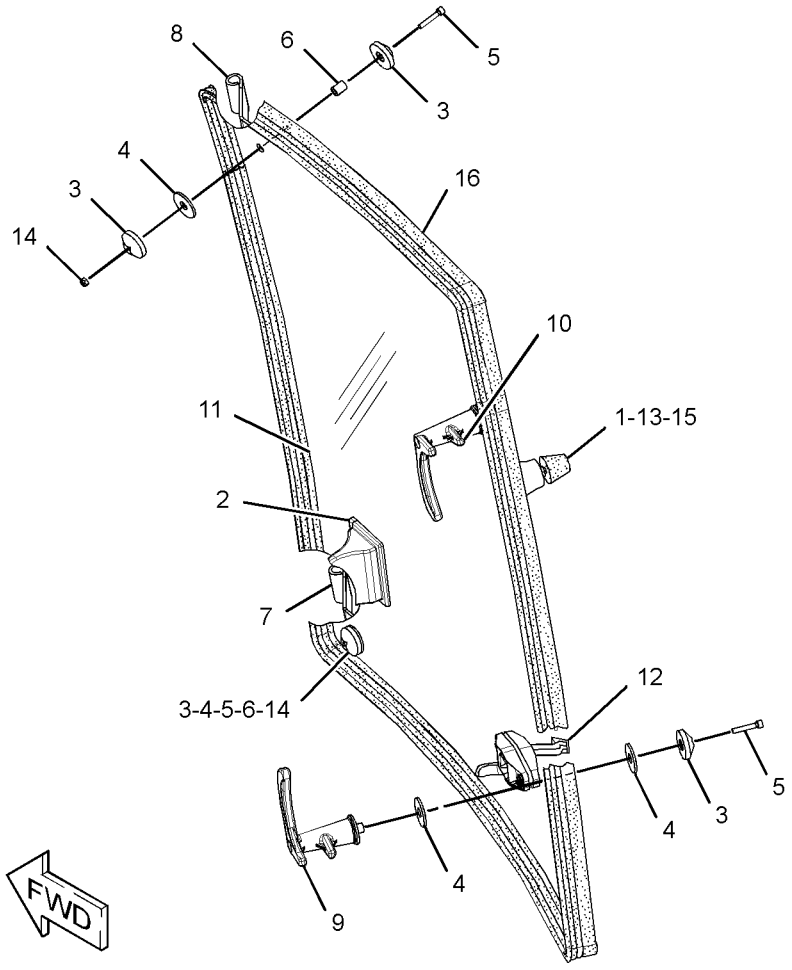

GRAPHIC #1 **<END>** g01971659

OPERATOR STATION

333-9901 WINDOW GP-DOOR–LH

S/N: SJL1-UP
PART OF 329-1168 DOOR GP-CAB
AN ATTACHMENT

SMCS-7308, 7310 **i03564760**

NOTE	REF NO	GRAPHIC REF	PART NUMBER	QTY	PART NAME 1 2 3 4 5 6 (PRODUCT LEVEL)	SEE PAGE
E	1	1	**148-5353**		SEAL (354-CM)	
	2	1	**100-7608**	1	HANDLE (LH)	
	3	1	**129-8542**	5	RETAINER	
	4	1	**129-8545**	6	WASHER (13X40X3-MM THK)	
M	5	1	**136-4192**	3	BOLT (M6X1X35-MM)	
	6	1	**154-5423**	2	SPACER (6.6X12.7X17-MM THK)	
	7	1	**205-9587**	1	GLASS (LH)	
	8	1	**205-9590**	1	HINGE (UPPER)	
	9	1	**205-9591**	1	HINGE (LOWER)	
Y	10	1	**299-6986**	1	LATCH GP-CAB DOOR & WINDOW (LH)	601
	11	1	**223-2030**	1	LATCH AS (HOLD OPEN) (LH)	
M		1	**6V-7743**	2	LOCKNUT (M6X1-THD)	
M		1	**9X-2045**	2	SCREW-TRUSS HEAD (M6X1X20-MM)	
		1	**143-2827**	1	SPRING	
M	12	1	**6V-7743**	2	LOCKNUT (M6X1-THD)	

E-ORDER BY THE CENTIMETER
M-METRIC PART
Y-SEPARATE ILLUSTRATION

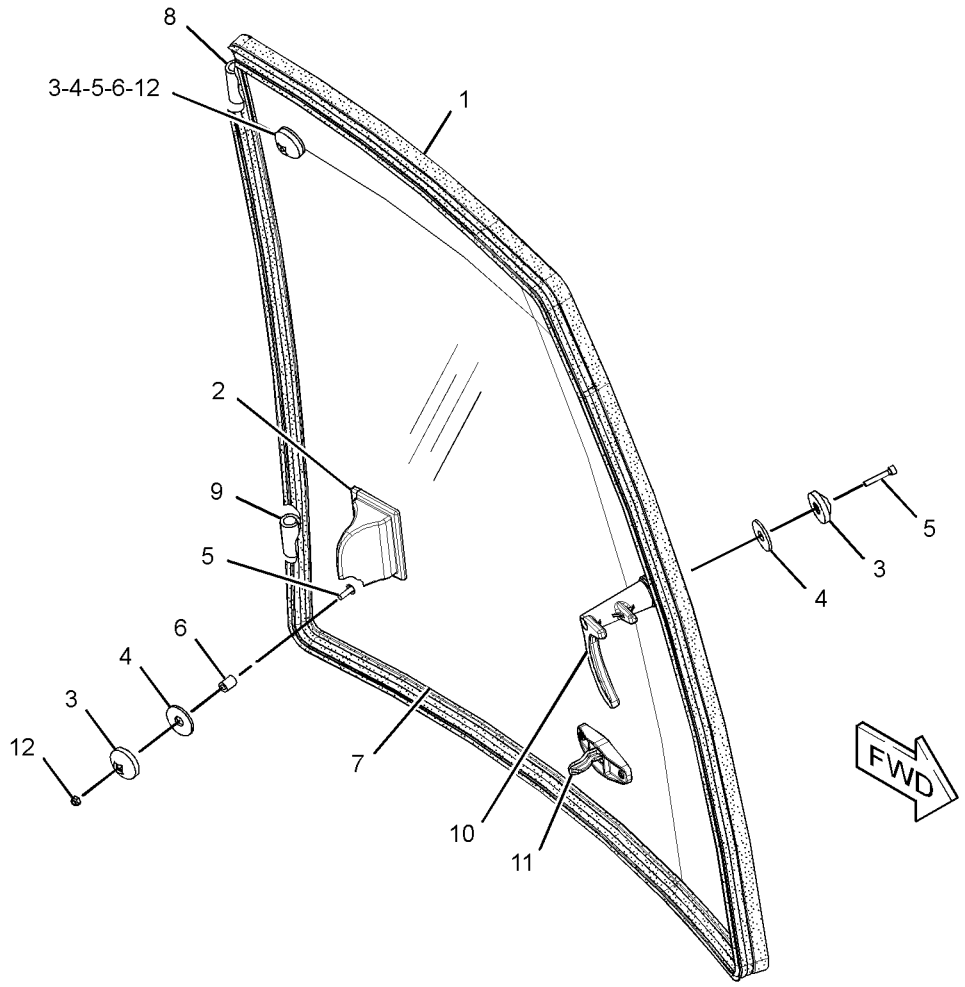

GRAPHIC #1 **<END>** g01890354

OPERATOR STATION

333-9902 WINDOW GP-DOOR–RH

S/N: SJL1-UP
PART OF 329-1167 DOOR GP-CAB
AN ATTACHMENT

SMCS-7308, 7310 **i03564761**

NOTE	REF NO	GRAPHIC REF	PART NUMBER	QTY	PART NAME 1 2 3 4 5 6 (PRODUCT LEVEL)	SEE PAGE
E	1	1	**148-5353**		SEAL (354-CM)	
	2	1	**100-7608**	1	HANDLE (RH)	
	3	1	**129-8542**	5	RETAINER	
	4	1	**129-8545**	6	WASHER (13X40X3-MM THK)	
M	5	1	**136-4192**	3	BOLT (M6X1X35-MM)	
	6	1	**154-5423**	2	SPACER (6.6X12.7X17-MM THK)	
	7	1	**205-9597**	1	GLASS (RH)	
	8	1	**205-9614**	1	HINGE (LOWER)	
	9	1	**205-9615**	1	HINGE (UPPER)	
Y	10	1	**299-6985**	1	LATCH GP-CAB DOOR & WINDOW (RH)	600
	11	1	**223-2030**	1	LATCH AS (HOLD OPEN) (RH)	
M		1	**6V-7743**	2	LOCKNUT (M6X1-THD)	
M		1	**9X-2045**	2	SCREW-TRUSS HEAD (M6X1X20-MM)	
		1	**143-2827**	1	SPRING	
M	12	1	**6V-7743**	2	LOCKNUT (M6X1-THD)	

E-ORDER BY THE CENTIMETER
M-METRIC PART
Y-SEPARATE ILLUSTRATION

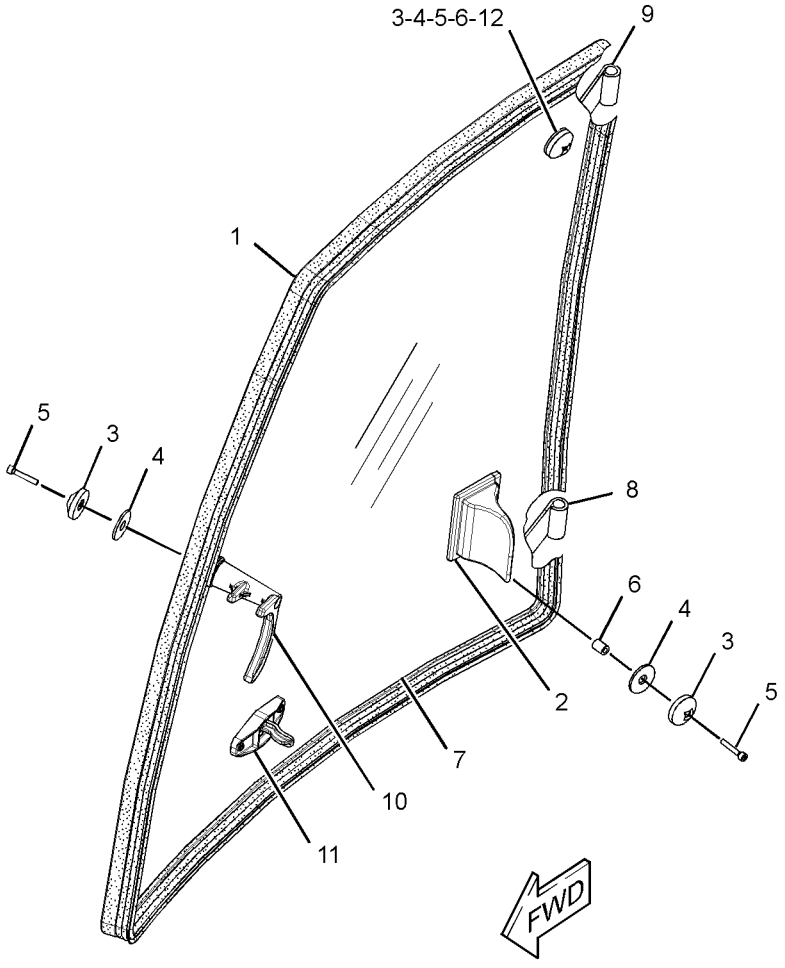

GRAPHIC #1 **<END>** g01890418

OPERATOR STATION

315-1272 WIPER GP-WINDOW–REAR

S/N: SJL1-UP
PART OF 315-1270 WINDOW GP-CAB
AN ATTACHMENT

SMCS-7305 **i03332455**

NOTE	REF NO	GRAPHIC REF	PART NUMBER	QTY	PART NAME 1 2 3 4 5 6 (PRODUCT LEVEL)	SEE PAGE
	1	1	**315-1316**	1	BLADE AS (WIPER, REAR)	
	2	1	**315-1317**	1	ARM GP-WINDOW WIPER (REAR)	
Y	3	1	**315-1318**	1	MOTOR GP-WINDOW WIPER (REAR)	612
	4	1	**315-1319**	1	COVER	

Y-SEPARATE ILLUSTRATION

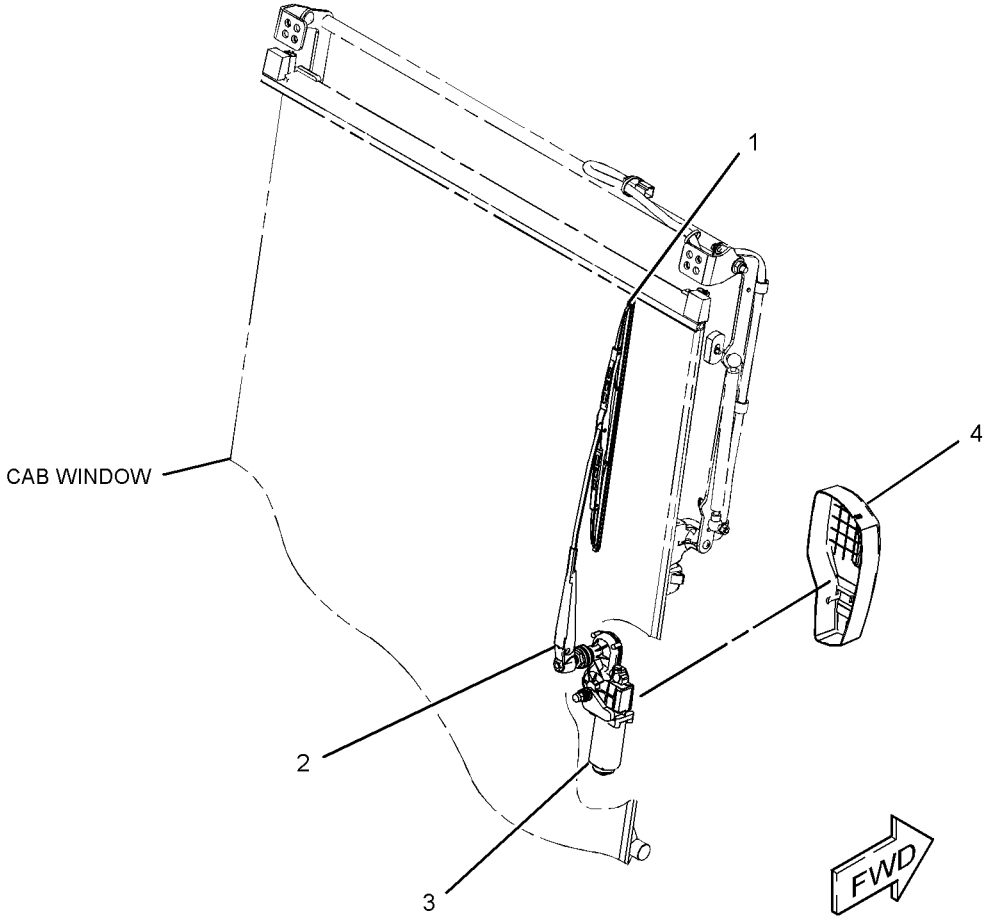

GRAPHIC #1 **<END>** g01653534

SERVICE EQUIPMENT AND SUPPLIES

343-7811 FILM GP

S/N: SJL1-UP

PART OF 329-0296 CHASSIS AR

SMCS-7405, 7557 **i03642558**

NOTE	REF NO	GRAPHIC REF	PART NUMBER	QTY	PART NAME 1 2 3 4 5 6 (PRODUCT LEVEL)	SEE PAGE
	1	1	**295-5556**	1	FILM-IDENTIFICATION (CAT 434E, LH)	
	2	1	**295-5557**	1	FILM-IDENTIFICATION (CAT 434E, RH)	

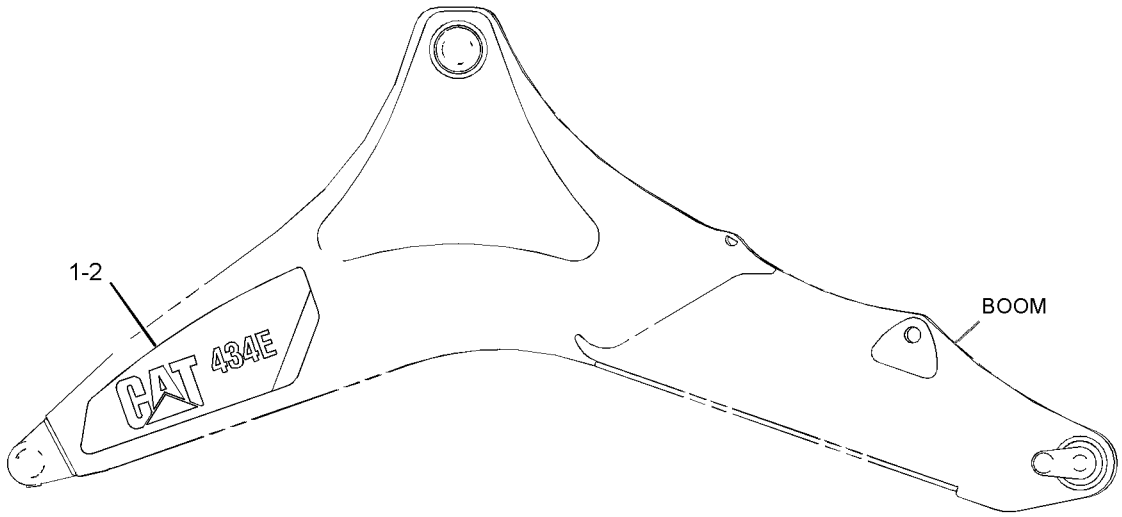

RIGHT SIDE VIEW

GRAPHIC #1 **<END>** g01989914

SERVICE EQUIPMENT AND SUPPLIES

175-7877 LINK GP-SHIPPING

S/N: SJL1-UP

PART OF 329-0296 CHASSIS AR

SMCS-6513 **i01190768**

NOTE	PART NUMBER	QTY	PART NAME 1 2 3 4 5 6 (PRODUCT LEVEL)	SEE PAGE
	120-9286	1	PLATE	

<END>

SERVICE EQUIPMENT AND SUPPLIES

216-0910 LOCK GP-VANDALISM

S/N: SJL1-UP

AN ATTACHMENT

SMCS-7315 **i03326060**

NOTE	REF NO	GRAPHIC REF	PART NUMBER	QTY	PART NAME 1 2 3 4 5 6 (PRODUCT LEVEL)	SEE PAGE
	1	1	**246-2641**	3	PADLOCK GP	
					(EACH INCLUDES)	
		1	**5P-8500**	1	KEY	

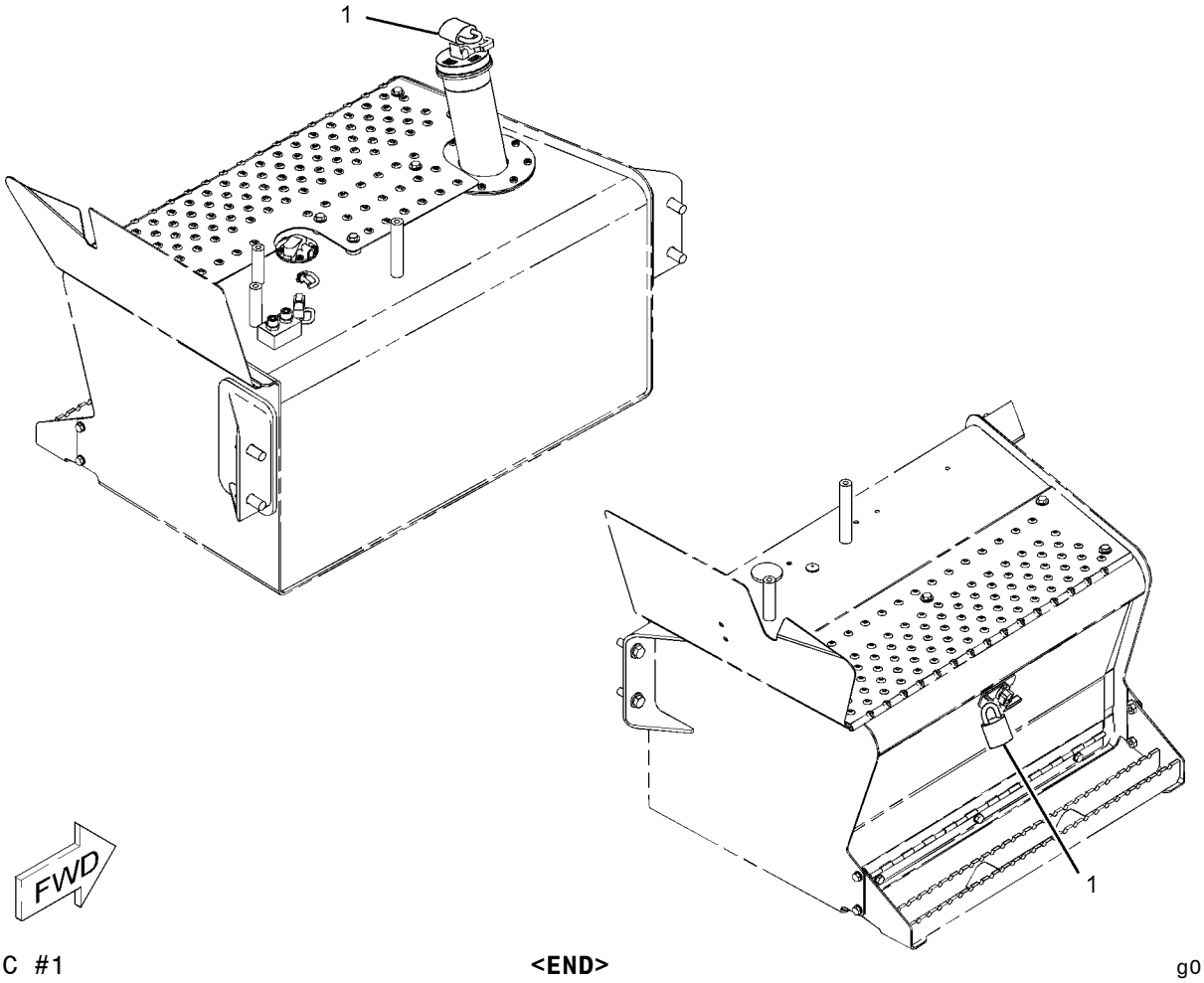

GRAPHIC #1 **<END>** g01096994

SERVICE EQUIPMENT AND SUPPLIES

342-8061 PLATE & FILM GP

S/N: SJL1-UP

PART OF 329-0296 CHASSIS AR

SMCS-7405 **i03657452**

NOTE	PART NUMBER	QTY	PART NAME 1 2 3 4 5 6 (PRODUCT LEVEL)	SEE PAGE
	239-6989	1	PLATE-SERIAL NUMBER (MACHINE)	
	225-4150	1	PLATE-SERVICE INFORMATION (MACHINE)	
	323-3308	30	CAP	
	323-3309	15	CAP	
	323-6645	10	CAP	
B	**193-5913**	2	PLUG	
B	**193-5914**	16	PLUG	
B	**193-5915**	6	PLUG	
B	**193-5916**	4	PLUG	
	258-9999	2	FILM (LIFT EYE LOCATION)	
			(ON FRONT SIDE OF THE FRONT AXLE BETWEEN THE CHASSIS & WHEEL ASSEMBLY ON THE LH & RH SIDE OF THE MACHINE)	
	255-0796	1	FILM-IDENTIFICATION (LUBRICATION POINTS)	
			(UNDER THE HOOD ON PRE-CLEANER)	
	134-7258	1	FILM-INFORMATION (EXTENDED LIFE COOLANT,READ OMM)	
			(ON SHUNT TANK NEXT TO RADIATOR CAP)	
	224-8946	1	FILM-WARNING (NO ETHER SPRAY/AIR INTK, INTL)	
			(UNDER HOOD ON PRE-CLEANER UNDER THE SERVICE FILM)	
	259-4402	1	FILM-WARNING (HOT FLUID UNDER PRESSURE)	
			(ON TOP OF THE RADIATOR SHUNT TANK CAP)	

B-USE AS REQUIRED

<END>

SERVICE EQUIPMENT AND SUPPLIES

206-1701 PROTECTION GP-VANDALISM—ROTATING GUARD

S/N: SJL1-UP

PART OF 335-3052, 335-3053, 335-3055 CAB AR, 335-3054 CAB AR-ENCLOSED ROPS AN ATTACHMENT

SMCS-7315 **i03500322**

NOTE	REF NO	GRAPHIC REF	PART NUMBER	QTY	PART NAME 1 2 3 4 5 6 (PRODUCT LEVEL)	SEE PAGE
	1	1	**206-1852**	1	COVER-VANDALISM	
	2	1	**206-1853**	2	BUSHING	
	3	1	**206-1855**	1	PLATE	
	4	1	**206-1856**	1	BRACKET	
J	5	1	**226-0291**	1	LOCK AS	
M	6	1	**129-3178**	2	LOCKNUT (M6X1-THD)	
M	7	1	**174-8131**	1	SCREW-TRUSS HEAD (M4X0.7X12-MM)	
	8	1	**232-4636**	2	BOLT-CARRIAGE (M6X1-THD)	
	9	1	**8C-9660**	1	WASHER (4.6X7.9X0.8-MM THK)	
M	10	1	**8T-2659**	1	LOCKNUT (M4X0.7-THD)	
	11	1	**9X-2038**	2	WASHER (7X19X2-MM THK)	

J-REQUIRES 5P-8500 KEY
M-METRIC PART

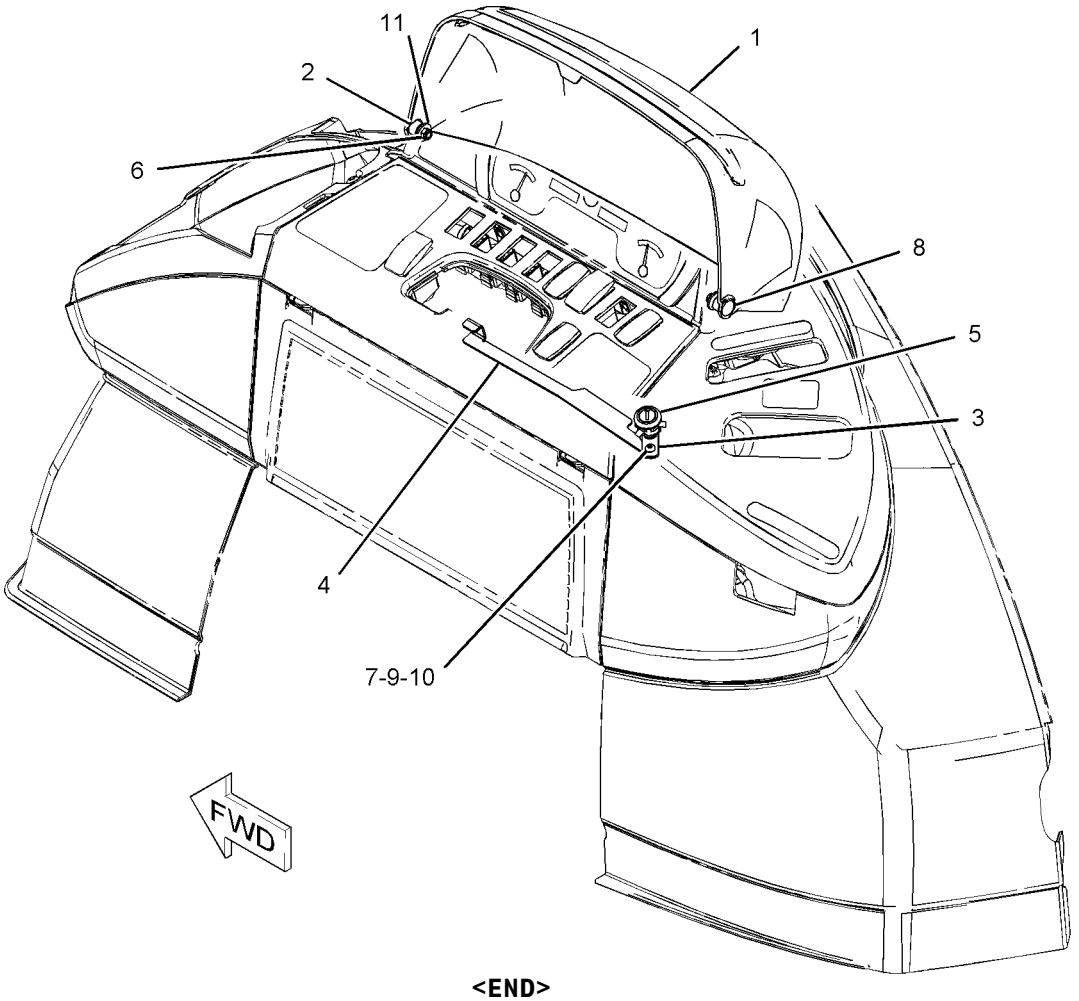

GRAPHIC #1 **<END>** g01083362

SERVICE EQUIPMENT AND SUPPLIES

243-1022 SERVICE GP-FILTER–KIT

S/N: SJL1-UP

AN ATTACHMENT

SMCS-1260, 1261, 1263, 1308, 3067, 5068 **i02474610**

NOTE	PART NUMBER	QTY	PART NAME 1 2 3 4 5 6 (PRODUCT LEVEL)	SEE PAGE
	7W-2326	1	FILTER AS-ENGINE OIL	
	119-4740	1	FILTER-OIL (STANDARD EFFICIENCY) (HYDRAULIC)	
	126-1817	1	FILTER-OIL (ULTRA HIGH EFFICIENCY)	
	228-9130	1	FILTER AS-WATER SEP & FUEL	

<END>

MEMORANDA

PART NUMBER INDEX

Part	Page
0	
0S-1594	623
	625
0S-1595	619
	621
0S-1603	37
	38
1	
1B-2705	628
1B-8736	13
	14
	19
	43
1H-1200	283
1H-3244	166
	167
	168
	170
	583
1H-7339	331
	332
	338
1J-9671	321
	322
1K-6872	619
	621
1K-7082	249
1L-6377	616
1M-6119	134
1M-6120	134
1P-4278	111
	114
	116
	145
	147
	415
1P-4584	390
1P-6872	411
1R-5396	286
	287
1S-7251	134
	136
	188
1S-7252	134
	136
1S-9593	157
	160
	198
1U-8846	223
	227
	247
1V-0358	619
	621
2	
2B-0858	29
	30
	58
	61
2B-0941	235
2D-2628	272
2D-2629	272
2D-2630	272
2D-2631	272
2D-2633	272
2H-6338	331
	332
2K-4973	607
	623
	625
	628
2K-6830	329
	330
2L-5893	630
2L-8066	188
2L-8067	180
	188
2L-8069	180
	199
2L-8075	204
	212
2L-8076	208
2L-8079	188
	199
2M-9780	357
	365
	370
	372
	373
	375
	385
	388
	394
	411
2P-1279	375
2P-1293	343
	344
	348
	352
	354
2P-7864	596
	621
2P-8104	171
2R-0364	456
2S-3163	571
2S-3745	589
	591
2U-9234	308
2W-9710	82
	92
2Y-5821	329
	330
3	
3B-4506	316
3B-4610	288
3B-4631	630
3B-5317	409
3B-5319	447
	449
	451
	452
	548
	549
	551
3B-5790	411
3B-8488	306
	441
	444
	461
	463
	465
3B-8489	306
	308
	329
	330
	333
	409
	441
	444
	447
	449
	451
	452
	456
	461
	463
	465
	526
	527
	528
	541
	552
3C-8388	438
3D-2824	346
	350
	358
	365
	368
	390
	398
	401
	405
	407
	418
3D-4245	440
3E-0068	607
3E-3371	196
3E-4321	606
	607
3E-4337	598
3E-5153	171
3E-5154	171
3E-6600	200
	567
	573
3E-6735	329
	330
3E-6769	411
3E-6770	411
3E-7675	283
3E-7689	212
3E-7843	▶137
	193
3E-8299	200
3E-9362	180
	212
3F-5108	542
3F-9556	189
	611
	617
	635
3G-6927	265
3J-1907	128
	206
	208
	209
	229
	235
	265
	266
	283
	284
	290
	333
	340
	358
	365
	366
	372
	375
	378
	380
	381
	383
	385
	386
	388
	394
	396
	397
	398
	401
	405
	407
3J-4818	189
3J-7354	290
	321
	322
	365
	388
	396
3K-0360	208
	213
	283
	284
	289
	290
	352
	354
	360
	364
	370
	372
	375
	385
	386
	394
	401
	406
	415
3K-8460	111
3N-5739	329

▶ **PRIMARY REFERENCE**

PART NUMBER INDEX

Part	Page
	330
3P-0439	306
3S-2093	128
	134
	136
	142
	148
	157
	159
	160
	162
	164
	169
	181
	183
	185
	187
	189
	191
	193
	194
	196
	199
	204
	206
	208
	209
	213
	215
	217
	219
	221
	375
	398
	560
	562
	593
	607
	627
	633
3S-8665	221
3T-0849	438
	573
	613
3T-0852	596
3T-4307	475
	531
3T-5760	134
	136

4

4B-2043	179
	212
4B-4283	630
4B-4863	95
	97
	213
4B-9784	630
4D-2297	426
	427
	428
	429
	430
	431
	432
4D-6433	635
4D-6466	134
4D-7388	82
	92
4D-9517	456
4F-3657	501
	502
	503
	504
	513
	514
	516
	517
	518
	519
	520
	521
	523
	525
	555
4F-4879	598
4F-9029	227
4H-0408	40
4H-1641	596
	621
4H-2558	586
4I-3038	569
4I-6287	394
	398
4I-9521	383
4I-9522	383
4I-9523	383
4I-9524	383
4I-9525	383
4I-9526	383
4I-9527	383
4I-9528	383
4J-0522	235
	265
4J-1888	537
	538
	540
	543
	553
4J-5267	440
4J-5477	229
	235
	283
	290
	375
	380
	381
	383
	385
	388
	396
	397
	401
4J-9535	422
	423
4K-0367	501
	502
	503
	504
	513
	514
	516
	517
	518
	519
	520
	521
	523
	525
	542
	555
4K-9890	596
	628
4L-6454	227
4P-7428	189
	204
4P-7581	189
	208
	219
4P-8134	189
	199
	213
4T-5613	338
4T-6128	331
	332
4V-2264	598
4W-9972	265

5

5A-3604	456
5B-9079	63
5C-2874	156
	189
	600
	601
5C-2890	160
	166
	167
	168
	170
	179
	181
	189
	191
	199
	350
	567
	602
5C-6588	635
5C-7261	80
	82
	89
	91
	92
	143
	148
	150
	151
	157
	160
	166
	167
	168
	170
	181
	189
	191
	199
	284
	293
	324
	325
	360
	362
	366
	392
	467
	544
	560
	611
	612
	617
	635
	637
	639
5C-8312	95
	97
	292
5C-9553	410
	456
	579
	581
	617
5D-1026	67
	82
	92
	290
	386
	388
	606
	607
5D-6523	456
5D-8159	467
	543
	544
	553
5E-8557	314
5G-2003	604
5G-7820	193
5H-4909	227
5H-8848	338
5I-3978	398
5K-5338	607
5K-9090	340
	343
	344
	348
	390
5P-0599	375
5P-0743	364
5P-0747	134
	136
	188
5P-0761	134
	136
5P-0767	221

PART NUMBER INDEX

Part	Page
	606
	607
5P-1076	308
	596
5P-1420	111
	114
	116
	145
	148
5P-1442	114
	116
	415
5P-1505	290
	386
	388
5P-1506	392
5P-1717	370
	373
5P-4115	209
5P-4116	67
	77
	78
	79
	80
	88
	89
	95
	97
	131
	157
	160
	235
	284
	293
	304
	392
	454
	560
	562
	573
	584
	586
	635
5P-4571	183
	199
	598
5P-4868	390
5P-5148	350
	410
5P-5637	589
	591
5P-5655	589
	591
5P-5688	589
	591
5P-5927	300
	567
5P-5995	209
5P-6006	188
5P-6129	586
5P-7070	569
5P-7464	360
5P-7465	360
	366
	378
5P-7648	560
	562
5P-7814	111
5P-7958	147
	196
	456
5P-8066	265
5P-8245	37
	38
	619
	621
5P-8500	646
5P-9297	632
5V-2545	256
6	
6A-9083	619
	621
6C-3680	589
	591
6C-9089	635
6D-0337	▶272
	273
6D-0443	272
6E-1135	456
6E-1478	329
	330
6E-3341	413
6E-4003	411
6E-4004	411
6E-4006	411
	▶413
6E-4009	413
6E-5431	454
6E-6151	413
6E-6154	413
6E-6155	413
6E-6157	413
6E-6528	411
6H-3587	183
6H-3616	47
	48
6I-0217	41
	43
	50
	52
	84
	86
	105
	107
	120
	124
6I-0218	74
6I-0254	84
	86
6I-0260	17
	50
	52
	68
	72
	73
	74
	120
	124
	132
	133
6I-0289	50
	52
6I-0291	120
	124
6I-0363	50
	52
6I-0364	104
	173
	174
6I-0423	39
	40
6I-0501	33
	34
6I-0563	104
	105
	107
6I-0572	23
	27
	50
	52
	75
	76
	99
	105
6I-0594	173
	174
6I-0645	41
	43
	75
	76
6I-0646	27
	62
6I-0650	41
	43
	132
	133
6I-0846	15
	17
6I-0847	39
	40
6I-0917	15
	17
6I-1418	198
6I-1497	67
	69
6I-4374	74
6J-1972	338
6J-2680	390
6J-5731	338
6K-0806	180
	191
	198
	594
6K-8178	114
	116
6L-4725	584
	586
6N-6984	82
	92
6P-8855	606
	607
6T-0465	134
6T-1375	633
6T-5017	109
6T-5598	134
6T-9163	265
6T-9164	265
6T-9165	265
6T-9166	265
6T-9196	254
	257
	259
	261
	263
6T-9202	265
6V-0675	606
	607
6V-0826	284
6V-0852	266
	385
	388
6V-1249	343
	366
	378
	401
6V-1363	95
	97
6V-2315	286
	287
6V-2317	150
	151
6V-2323	411
6V-3213	441
	522
	524
6V-3305	111
6V-3940	227
6V-3965	266
	385
	388
6V-4292	290
6V-4364	441
	522
	524
	552
6V-4589	438
6V-5100	254
	257
	259
	263
6V-5201	444
6V-5204	460
	463
	465
6V-5215	265
6V-5217	596
6V-5653	385
6V-5683	438
6V-5764	199
6V-5842	265
6V-6717	584
	586
6V-7238	364
6V-7357	589
	591
	633
6V-7359	360

▶ **PRIMARY REFERENCE**

PART NUMBER INDEX

Part	Page
6V-7420	372
	375
6V-7646	547
6V-7687	308
	441
6V-7743	293
	560
	628
	637
	639
	641
	642
6V-7744	298
	299
	375
	573
6V-7970	424
	425
6V-8076	209
6V-8077	388
6V-8097	265
6V-8144	441
	543
	553
6V-8186	617
6V-8213	366
6V-8236	438
6V-8237	331
	332
	338
6V-8344	441
6V-8378	265
6V-8397	283
	290
	334
	358
	365
	366
	372
	378
	385
	394
	398
6V-8398	283
	335
	336
	338
	344
	346
	348
	350
	352
	354
	358
	360
	365
	366
	368
	370
	372
	375
	378
	385
	394
	398
	401
6V-8399	440
6V-8455	234
6V-8523	193
6V-8625	283
	360
	370
	401
6V-8626	357
	370
	372
6V-8627	229
	235
	375
	380
	383
6V-8628	290
6V-8633	350
	401
6V-8634	283
	290
	385
	394
6V-8635	340
	390
6V-8636	365
	385
	398
6V-8638	365
	372
	375
	394
	401
6V-8641	229
	283
	290
	375
	380
	381
	383
	385
	388
	396
	397
	401
6V-8642	365
	375
6V-8647	396
6V-8713	346
	350
	368
6V-8714	390
6V-8715	365
6V-8716	80
6V-8721	394
6V-8723	290
6V-8724	283
	358
	366
	372
	378
6V-8757	254
6V-8759	282
6V-8780	396
6V-8781	366
6V-8801	134
6V-8978	422
	423
6V-8989	362
6V-8993	375
6V-8996	362
6V-9023	183
6V-9169	376
	386
6V-9170	344
	348
	352
	354
	360
	362
	376
6V-9172	344
	348
6V-9178	271
6V-9182	80
6V-9189	300
	619
	621
6V-9200	365
6V-9327	213
6V-9632	176
	198
	227
	454
	547
	613
6V-9746	80
	344
	348
	352
	354
6V-9828	388
6V-9829	386
6V-9830	340
	346
	348
6V-9831	350
	368
6V-9833	340
6V-9835	375
	388
	396
6V-9836	366
	385
6V-9838	368
6V-9840	390
6V-9845	368
6V-9850	290
	365
6V-9851	366
	372
	394
6V-9852	362
6V-9854	390
6V-9877	352
	354
6W-5760	365
6W-5761	365
6W-8832	▶532
6W-8900	▶545
6W-8933	▶545
6W-9739	▶545
6Y-1192	254
	257
	261
6Y-1896	265
6Y-7929	254
	257
	259
	261
6Y-7957	263
6Y-9930	616

7

Part	Page
7C-0351	50
	52
7C-1224	50
	52
7C-4354	114
	116
7C-4616	41
	43
7D-7233	69
	392
7E-3870	102
7H-3937	589
	591
	635
7J-9108	209
	284
	326
	327
	331
	332
	336
	343
	344
	346
	348
	350
	352
	354
	357
	360
	362
	365
	368
	370
	372
	375
7K-1181	109
	114
	116
	134
	157
	160
	188

▶ **PRIMARY REFERENCE**

PART NUMBER INDEX

Part	Page
	194
	198
	204
	209
	212
	215
	229
	281
	283
	290
	381
	383
	388
	392
	394
	397
	606
	607
	613
7K-9208	306
7M-8485	80
	340
	344
	348
	352
	354
	390
	407
7N-5274	136
7N-7221	185
	188
	198
	212
7N-7779	219
7N-7780	219
7N-7781	219
7N-7782	219
7N-9017	188
7R-2751	199
7R-8239	288
7S-1912	114
	116
7T-0093	589
	591
7T-2646	265
7T-2651	265
7T-3195	265
7T-3251	265
7T-3253	265
7T-4532	564
7T-4848	198
7T-6087	171
7T-6088	171
7T-6090	171
7T-6092	171
7T-6093	171
7T-6099	171
7T-6655	257
	259
7T-6739	589
7T-6799	185
7T-9987	136
7W-1176	39
	40
7W-2326	69
	649
7W-3556	265
7W-4634	33
	34
7W-4642	39
	40
7W-7381	209
7X-0579	82
	90
	91
	92
	199
	312
	584
	586
7X-0586	95
	97
7X-0590	541
7X-0603	82
	92
7X-0605	394
7X-0618	249
	560
	562
7X-0620	215
7X-0632	308
	461
	463
	465
7X-0818	109
	235
7X-0871	385
7X-0872	209
7X-2393	560
	637
	639
7X-2444	375
7X-2533	145
	148
	613
7X-2534	181
	191
	200
7X-2537	314
7X-2538	565
7X-2540	77
	78
	79
7X-2543	368
	461
	463
	465
7X-2550	441
7X-2553	250
	565
7X-2559	227
7X-2572	311
7X-2908	413
7X-3164	372
	375
7X-3165	209
	373
	376
7X-3383	456
7X-4741	265
7X-4744	271
7X-7729	77
	78
	79
	134
	200
	284
	392
	415
	461
	463
	465
	573
	577
	625
7X-7958	392
7X-9065	212
7Y-3883	188
8	
8A-8563	394
8C-3056	134
8C-3290	295
8C-3291	616
8C-3347	306
8C-3398	189
	200
8C-3446	340
8C-3451	340
8C-3681	82
	92
	632
8C-3756	589
	591
8C-3798	67
	183
	604
8C-4982	604
	609
8C-5457	171
8C-5748	265
8C-6354	198
8C-6431	619
	621
8C-6437	612
8C-7110	411
8C-7505	227
8C-7524	589
	591
8C-8478	616
8C-8522	293
8C-8545	265
8C-8989	394
8C-9660	648
8C-9778	171
8C-9783	171
8C-9987	566
	618
8D-2707	272
8E-1118	604
8E-5707	254
	257
	259
	261
	263
8E-8293	633
8F-1434	156
	171
	189
	265
8F-3590	183
	189
	200
8J-2413	425
8J-2574	331
	332
8J-4455	171
8K-1117	344
	348
	352
	354
	360
8L-2779	266
8L-2786	266
8L-8413	7
	8
	9
	10
	134
	147
	180
	188
	191
	194
	196
	199
	206
	215
	221
	370
	372
8M-2770	209
8M-2773	114
	116
8N-0869	134
8R-2916	577
8R-6111	604
8S-0023	235
8S-0024	235
8S-7803	560
	562
	630
8T-0076	290
8T-0119	283
8T-0131	283
8T-0144	536
8T-0154	364
8T-0164	380
	383
8T-0255	545
8T-0271	265
	463
	465
8T-0285	200
	213
8T-0292	227
8T-0328	189
	200

► **PRIMARY REFERENCE**

PART NUMBER INDEX

Part	Page
	265
8T-0337	213
8T-0389	152
	153
	154
	155
	219
	461
	463
	465
	635
8T-0404	346
8T-0643	265
8T-1118	633
8T-1482	306
8T-1580	261
8T-1581	261
8T-1715	352
	354
8T-1889	283
8T-1890	283
8T-1893	358
	378
8T-1894	358
	378
8T-1899	401
8T-1900	401
8T-2223	82
	92
8T-2658	569
8T-2659	648
8T-3444	358
	378
8T-3490	69
	80
	104
	111
	316
	370
	613
8T-3612	82
	92
	109
	316
	454
	613
8T-3647	386
8T-3844	350
8T-4121	49
	69
	77
	78
	79
	80
	104
	111
	114
	116
	128
	134
	136
	171
	179
	183
	189
	200
	204
	210
	213
	219
	229
	235
	284
	290
	298
	299
	306
	312
	344
	346
	348
	352
	354
	358
	360
	366
	368
	370
	373
	376
	378
	392
	394
	401
	415
	418
	419
	456
	461
	463
	465
	565
	577
	593
	606
	607
	613
8T-4122	49
	309
	339
	542
8T-4123	312
	616
8T-4131	616
8T-4132	49
	298
	299
	309
	550
	616
8T-4133	82
	92
	104
	114
	116
	134
	171
	183
	189
	200
	204
	213
	284
	293
	344
	348
	352
	354
	360
	368
	401
	456
	461
	463
	465
	509
	510
	511
	512
	513
	514
	515
	516
	517
	518
	519
	520
	521
	577
	593
	635
8T-4134	613
8T-4136	69
	80
	104
	114
	116
	200
	213
	219
	235
	284
	298
	299
	308
	312
	344
	348
	354
	358
	360
	366
	378
	392
	444
	565
	577
	607
8T-4137	134
	189
	200
	210
	290
	312
	346
	368
	370
	394
	415
	456
	606
	607
8T-4138	67
	109
	143
	148
	200
	213
	284
	454
	613
8T-4139	312
	607
	627
8T-4141	312
8T-4167	295
	306
	311
8T-4171	131
	181
	189
	191
	217
	547
8T-4172	77
	78
	79
	229
	290
8T-4173	616
8T-4176	235
	441
8T-4177	394
8T-4178	509
	510
	511
	512
	513
	514
	515
	516
	517
	518
	519
	520
	521
8T-4179	114
	116
	189
	415
	541
8T-4182	419
8T-4183	293
	390
	419
8T-4185	368
	607
8T-4186	418
	613
8T-4187	306

PART NUMBER INDEX

Part	Page	Part	Page	Part	Page	Part	Page
8T-4189	67		148		143		82
	82		200		148		92
	89		234		150		95
	90		310		151		97
	91		560		162		109
	92		562		164		162
	95		584		166		164
	97		586		167		193
	114	8T-4205	67		168		284
	116		109		170		300
	131		131		181		310
	143		143		189		343
	148		145		191		350
	162		148		193		360
	164		160		200		362
	189		166		234		456
	293		167		281		541
	312		168		284		566
	314		170		288		610
	366		181		310		619
	454		189		312		621
	573		191		314	8T-4956	235
	613		200		316		250
	618		213		343		394
8T-4191	360		217		350		613
	415		284		360	8T-4970	69
8T-4192	80		293		362	8T-4971	213
	249		296		366		603
8T-4193	131		350		373		613
	459		410		383	8T-4984	82
	550		567		386		92
8T-4195	104		584		394	8T-4985	193
	111		586		398	8T-5005	134
	204		589		410		290
	344		591		454		392
	348		617		456	8T-5035	306
	352		633		467	8T-5093	300
	354	8T-4222	82		541		633
	366		92		544	8T-5439	249
	368		298		565		273
	401		299		573		274
	456		304		610		275
	461	8T-4223	80		613		306
	463		114		618	8T-6466	134
	465		116	8T-4241	447		376
	577		189		449	8T-6684	390
	613		235		451	8T-6685	461
8T-4196	49		250		452	8T-6696	372
	77		293		463	8T-6703	82
	78		312		465		92
	79		316	8T-4244	316	8T-6726	95
	179		390		573		97
	304		394		613		318
	308		415	8T-4646	366		358
	463		419		378		370
	465		607	8T-4648	306		372
	593		627		316		378
	607	8T-4224	77	8T-4742	602		446
8T-4197	304		78		603	8T-6869	316
8T-4199	193		79	8T-4744	602		383
8T-4200	82		89		603		410
	88		109	8T-4753	156	8T-6876	385
	89		114	8T-4908	77	8T-6885	193
	92		116		78	8T-6902	454
	143		136		79		617

► **PRIMARY REFERENCE**

PART NUMBER INDEX

Part	Page
8T-6912	281
	366
	373
	398
	410
8T-6974	579
	581
8T-7338	299
	304
	339
8T-7529	67
	80
	392
8T-7547	82
	92
	157
	160
	304
	312
	324
	325
	454
	613
8T-7876	76
	112
8T-7963	373
8T-7968	398
8T-7971	306
8T-8442	411
8T-8729	283
8T-8730	137
8T-8737	147
	152
	153
	154
	155
	157
	180
	183
	185
	187
	188
	191
	196
	198
	199
	204
	206
	208
	209
	212
	215
	219
	221
	560
	562
	574
	575
	576
	589
	591
	594
	611
8T-8799	134
	180
	188
	191
	198
	199
8T-8894	128
	577
8T-9402	67
	95
8T-9405	95
	97
	339
8T-9501	619
8T-9655	198
8X-9618	198
8Y-5737	584
	586
8Y-6352	584
	586
8Y-6967	584
	586
8Y-7309	560
	637
	639
8Y-8080	134
8Y-8081	134

9

Part	Page
9B-7233	212
9D-3767	284
9F-5644	170
9G-2265	219
9G-3695	219
9M-0164	415
9M-2307	156
9M-4335	306
9M-4814	606
	607
9M-5733	324
	325
9M-6738	372
9M-7958	69
	82
	92
9M-7959	584
	586
9M-8406	114
	116
	143
	148
	360
9N-0869	324
	325
9N-2231	584
	586
9P-2553	635
9P-9150	265
9R-0109	441
	444
	543
	553
9R-0139	447
	452
9R-0147	449
	451
9R-0153	338
9R-0158	441
	447
	449
	451
	452
	463
	465
	522
	524
	548
	549
	551
9R-0162	461
	463
	477
	478
	479
	480
	481
	482
	483
	484
9R-0170	449
	451
9R-0320	498
	499
9R-0321	338
9R-0481	306
	441
	444
9R-0868	▶459
9R-1004	346
9R-1005	346
9R-1496	441
9R-1499	162
	164
9R-1502	441
9R-1510	441
	447
	452
	522
	524
	548
	551
	552
9R-2216	290
9R-2806	281
9R-2807	213
	281
	284
9R-2959	463
	465
9R-3092	326
	461
	463
	465
9R-3205	632
9R-3469	633
9R-3700	331
	332
9R-3884	290
9R-4110	306
9R-4668	▶409
9R-4675	533
	534
9R-4676	526
	527
	528
9R-4677	409
9R-4678	409
9R-5264	529
	531
9R-5271	529
	531
9R-5294	533
	534
9R-5301	446
	455
	458
9R-5708	630
9R-5866	▶555
9R-5948	370
	372
9R-7240	130
9R-7273	441
9R-7803	370
9R-7891	465
9R-7941	183
9R-7942	158
9R-7958	158
9R-7980	183
9R-8165	454
9R-8291	308
	444
9R-8292	461
	463
	465
9R-8870	358
	378
9R-8987	477
	478
	479
	480
9R-8988	477
	478
	479
	480
9R-9028	455
9R-9105	449
	451
	549
	551
9R-9702	249
9R-9925	415
9S-4183	418
9S-4185	266
9S-4191	128
	266
	340
9S-8004	227
	333
	405
	407
	411

▶ **PRIMARY REFERENCE**

PART NUMBER INDEX

Part	Page
9S-8005	289
9S-8008	405
	407
9S-9334	407
9T-2883	329
	330
9T-4007	333
9U-8263	604
9U-8875	257
9U-8886	259
	339
9V-9077	532
9W-0607	150
	151
9W-0844	183
	194
	199
	217
	219
	560
	562
9W-0852	183
	204
	217
	562
9W-1951	199
9W-3324	152
	153
	154
	155
9W-3326	160
9W-4216	324
	325
9W-5460	265
9W-6582	616
9W-6584	616
9W-9910	49
9W-9915	49
9W-9952	49
9W-9953	49
9X-1054	180
	188
	191
	194
	221
9X-1055	180
	188
9X-1813	212
9X-2036	171
9X-2038	302
	383
	567
	569
	571
	579
	581
	584
	586
	604
	613
	648
9X-2040	573
9X-2042	176
9X-2043	302
	383
9X-2044	284
	567
	569
	628
9X-2045	179
	284
	560
	569
	571
	579
	581
	583
	584
	586
	613
	635
	637
	639
	641
	642
9X-2060	461
	463
	465
9X-2092	635
9X-2480	189
9X-2842	617
9X-3401	7
	8
	9
	10
	147
	157
	160
	180
	183
	187
	193
	196
	204
	208
	209
	212
	560
	562
9X-3402	160
	188
	209
9X-3982	415
9X-4244	150
	151
9X-4611	329
	330
9X-5617	137
9X-6165	179
9X-6418	360
9X-6611	329
	330
9X-6615	265
9X-7114	312
9X-7378	181
9X-7380	607
9X-7381	607
9X-7382	607
9X-7383	607
9X-7385	564
9X-7684	227
9X-8118	158
9X-8139	158
9X-8256	69
	183
	454
	573
	604
	613
9X-8257	131
	250
	298
	299
	304
	459
	550
	565
	616
9X-8372	633
9X-8699	314
9Y-5015	29
	30
0	
009-2062	261
031-4155	628
	630
031-5644	82
	92
	165
032-9090	19
032-9091	19
033-6028	411
033-6043	411
033-6044	438
033-7687	37
	38
034-1432	547
035-8017	112
	120
035-8063	27
	178
035-8068	23
	27
038-9317	134
	136
039-8557	613
039-9133	288
067-6002	23
	27
067-6006	23
	27
	29
	30
067-6043	23
	27
067-6095	14
067-6179	41
	43
067-6213	50
	52
067-6264	112
	120
067-6265	112
	120
067-6873	19
067-6874	19
067-6999	112
	120
069-4080	128
081-5648	385
084-4277	604
089-7990	249
091-0081	360
091-1637	545
091-1664	545
091-1665	545
091-1667	545
091-1745	545
091-2436	180
	183
	188
	199
	209
	212
091-5928	536
	539
091-9035	134
	392
092-3635	290
093-8828	230
	247
095-0641	617
095-0674	247
095-0927	261
095-0928	261
095-0929	308
095-1041	230
	247
095-1751	424
	425
095-7950	441
	444
095-9805	227
096-0001	290
096-1820	526
	527
	528
096-5516	447
	449
	451
	452
096-5968	270
096-6166	199
	212
	609
097-7234	183
098-6004	463
	465
099-3649	602
1	
100-3253	152
	153
	154
	155

► **PRIMARY REFERENCE**

PART NUMBER INDEX

Part	Page
100-3254	152
	153
	154
	155
100-3255	152
	153
	154
	155
100-3685	171
100-3751	41
	43
	84
	86
100-4112	171
100-4113	171
100-4115	171
100-4118	171
100-4119	171
100-4336	290
100-4461	70
	71
100-4830	45
	46
	120
	124
100-4838	15
	17
100-4841	15
	17
	23
	27
100-5041	180
	188
100-6674	180
	188
	199
100-7608	637
	639
	641
	642
100-8451	132
	133
101-0745	633
101-1787	388
101-2987	47
	48
101-3617	39
101-3771	50
	52
101-3895	41
	43
	74
101-4411	547
101-4412	547
101-4413	547
101-4414	547
101-4415	546
101-7404	128
102-3582	329
	330
102-8801	183
	199
	212
	221
102-8802	7
	8
	9
	10
	130
	147
	156
	180
	181
	188
	191
	196
	199
	212
	215
	440
	564
	598
102-8803	148
	157
	160
	180
	191
	193
	196
	206
	212
	283
102-8804	185
	194
	199
	206
	208
	212
	217
	612
102-8805	147
	152
	153
	154
	155
	183
	196
	199
	215
	221
	381
102-8806	147
	187
	196
	212
	221
	560
	562
	611
102-9941	33
	34
103-2543	200
103-5520	438
104-1995	180
	199
104-2091	212
104-3288	265
104-6310	►543
	544
104-6311	543
	553
104-6312	468
	543
104-6316	543
	553
104-6317	543
	553
105-1440	438
105-3480	215
105-3481	596
105-8034	283
105-9411	607
106-0401	341
106-0406	341
106-3108	404
106-8020	130
106-8835	120
106-8916	105
	107
106-9586	271
106-9861	265
107-6709	344
	348
107-6826	256
107-9677	212
108-3872	344
	348
	352
	354
108-4311	598
109-1633	607
109-1634	607
110-0203	199
110-2445	95
	97
110-5602	602
110-6109	584
	586
110-7887	185
111-0483	365
	378
111-0859	35
	36
111-3422	120
	123
111-3423	120
	123
111-4337	441
	447
	449
	451
	452
111-4627	584
	586
111-6792	181
	199
111-6795	180
	199
111-6816	180
	199
111-7899	159
	160
	162
	164
	180
	183
	185
	188
	191
	194
	198
	204
	206
	209
	212
	215
	219
	221
	633
111-7906	234
111-7907	►234
	264
111-8222	100
112-1533	306
112-1776	543
	553
112-1826	253
	►339
113-0920	604
113-6349	132
	133
113-8129	84
	86
113-8490	199
113-8491	199
113-8492	199
114-0063	607
114-1042	406
114-2579	99
	100
114-4363	39
	40
115-1052	560
115-1162	99
115-1615	147
	181
	188
	191
	194
	196
	221
115-1918	339
115-6433	444
116-4825	441
116-5763	300
116-7471	198
117-1385	265
117-3534	339
117-9713	234
117-9887	256
118-2990	616
118-7286	80
118-8118	110
	127
118-8119	110
119-3662	180
	183
	185
	188
	191
	194

► PRIMARY REFERENCE

PART NUMBER INDEX

Part	Page
	199
	204
	219
	560
	562
119-3859	619
	621
119-4594	441
119-4740	253
	649
119-5025	109
119-5708	69
119-6346	401
119-9631	589
120-5724	413
120-9027	569
120-9051	403
120-9286	645
120-9762	265
121-0694	257
	259
121-0883	39
	40
121-0885	261
121-2059	265
121-2060	265
121-2061	265
121-2500	257
	259
121-3040	621
121-4480	110
121-6936	633
121-7385	265
121-7396	265
121-7398	265
121-7399	265
121-7400	265
121-7401	265
121-7402	265
121-9870	604
122-1113	385
	388
122-1877	254
	261
	263
122-1878	263
122-1879	265
122-1883	265
122-1884	263
122-1886	259
122-4401	180
	199
122-6787	265
122-9250	406
	425
123-0708	292
123-0714	259
123-1373	134
123-2920	259
123-4065	90
	91
123-6758	147
	196
123-7615	183
	188
123-7637	344
	348
	352
	354
123-8905	257
	259
	263
123-8906	257
	259
	263
123-8907	254
	261
123-8908	254
	261
123-8909	259
123-8910	259
123-8912	254
	261
	263
123-8913	259
124-0174	209
124-0312	584
	586
124-2456	293
124-3536	54
	55
124-3815	41
	43
	100
	124
124-5640	180
	188
124-6259	95
	97
125-7874	147
	160
	180
	183
	185
	188
	191
	194
	196
	199
	204
	206
	209
	212
	219
	221
125-7875	183
	188
	199
	215
	221
	560
	562
125-7876	134
	209
126-1766	147
	196
	199
126-1767	185
	564
126-1768	185
126-1817	340
	649
127-2170	300
127-4471	69
	415
128-3094	478
128-3778	477
128-4168	188
128-4170	183
128-4172	188
128-4190	199
128-4249	199
128-5596	339
	▶414
128-7716	589
	591
129-3178	95
	97
	589
	591
	603
	617
	628
	648
129-3738	560
	562
129-4741	293
129-5256	560
	562
129-5257	560
	562
129-8542	637
	639
	641
	642
129-8545	637
	639
	641
	642
130-2057	480
130-4832	584
	586
130-7092	▶110
	111
130-7282	227
130-7881	77
	78
	79
130-8150	414
130-9984	80
	392
	607
131-1812	110
131-2117	479
131-3540	635
131-3987	562
	579
	581
132-2249	579
	581
	604
132-3056	415
132-3721	536
132-3723	536
132-3777	537
132-3778	537
	540
132-3821	536
	539
132-5789	134
	188
132-8769	▶341
133-1011	41
	43
133-3413	141
133-5813	381
	385
133-6517	141
134-0143	456
134-0404	208
134-2305	212
134-2540	198
134-5884	481
	482
	483
	484
134-5885	481
	482
	483
	484
134-7258	647
135-8203	501
	502
	503
	504
	513
	514
	516
	517
	518
	519
	520
	521
	523
	525
	555
135-8206	501
	502
	503
	504
	513
	514
	516
	517
	518
	519
	520
	521
	523
	525
136-1955	67
136-4192	637
	639
	641
	642
136-6887	486
136-6889	487
137-4234	468
	470

▶ **PRIMARY REFERENCE**

PART NUMBER INDEX

Part	Page	Part	Page	Part	Page	Part	Page
	471		642		354	148-8378	283
	472	144-0195	584	148-8315	365		358
	476		586		375		366
	500		633	148-8316	396		372
	501	144-0367	390	148-8317	390		378
	502	144-5287	326	148-8318	283	148-8382	346
	503	145-0981	604		290	148-8390	357
	504	145-2350	89		385		370
	505	146-4023	635		394		372
	506	146-6347	292	148-8319	365	148-8393	362
	507	146-6729	171	148-8325	229	148-8407	128
	508	146-9439	175		283		266
	509		179		290		340
	510		198		375	148-8408	418
	511		206		380	148-8426	372
	512	147-0201	265		381	148-8429	390
	513	147-0202	257		383	148-8433	366
	514		259		385		385
	515	147-0203	254		388	148-8435	366
	516		261		396	148-8446	368
	517		263		397	148-8447	209
	518	147-0205	261		401	149-0686	▶320
	519	147-0207	263	148-8328	350		385
	520	147-0209	265		401	149-4236	105
	521		▶271	148-8335	340	149-7372	221
	523	147-0211	265		390	149-9954	127
	525	147-0215	254	148-8336	365	150-3026	290
138-2053	14	147-0216	254		385	150-3027	385
138-8454	145	147-0218	265		398	150-3033	380
	147	147-0224	259	148-8339	80		383
140-3640	82	147-0226	265	148-8340	352	150-3052	344
	92	147-0227	263		354		348
140-7649	329	147-0228	254		394	150-3053	344
	330		257		401		348
140-8714	120		259	148-8341	346		352
	124	147-0234	265		350		354
140-8718	120	147-0236	266		368	150-3060	358
	124	147-0238	254	148-8345	365		378
140-8783	132		257		372	150-3062	388
	133		259		375	150-3757	261
140-9378	198		263		394	150-4029	396
141-0711	331	147-0242	261	148-8352	390	150-4031	368
	332	147-0248	261	148-8359	352	150-4052	375
141-0888	408	147-0256	257		354	150-5968	375
141-1667	103	147-0257	259	148-8360	80		388
	105	147-0258	254	148-8361	365		396
141-8061	147	147-0259	257	148-8362	390	150-7732	266
	188		259	148-8364	283	151-1975	111
	196	147-0260	261		360	151-4841	109
	198	147-0261	261		370		114
	217	147-0262	266		401		116
	221	147-0266	266	148-8365	385		229
142-0485	283	147-0270	257	148-8367	290		283
142-3391	77	147-1445	199		365	151-7829	▶477
	78	147-1446	199	148-8368	229		501
	79	147-1979	29		235	151-7830	▶478
143-0539	▶171	147-5553	107		375		502
	173	148-5353	637		380	151-7831	▶479
143-0777	370		639		383		503
143-0779	370		641	148-8369	290	151-7832	▶480
143-1344	171		642	148-8370	366		504
143-2827	560	148-5367	365		372	151-7887	▶501
	637		378		394	151-7888	▶502
	639	148-7925	381	148-8372	394	151-7889	▶503
	641	148-8311	352	148-8374	290	151-7890	▶504

▶ **PRIMARY REFERENCE**

PART NUMBER INDEX

Part	Page
151-7902	477
	478
	479
	480
	481
	482
	483
	484
151-7903	477
	478
	479
	480
	481
	482
	483
	484
151-7926	482
151-9272	185
151-9275	198
152-3968	119
	123
152-5717	358
	365
152-5718	358
	366
152-6144	223
	226
	230
153-4906	411
153-6241	394
154-2302	398
154-5257	498
	499
154-5279	447
	452
	548
	551
154-5280	447
	452
	548
	551
154-5404	223
154-5410	633
154-5416	281
154-5423	637
	639
	641
	642
155-2255	187
	199
	204
	212
155-2260	137
	147
	188
	194
	196
	204
	206
155-2264	199
155-2265	147
	183
	196
	199
	221
155-2270	147
	157
	160
	180
	183
	188
	191
	194
	196
	199
	204
	206
	208
	212
	215
	221
155-2271	183
	196
	199
	204
	209
	212
	217
155-2274	199
	219
	221
156-0283	300
	602
	633
156-1458	219
156-1460	219
156-3600	283
156-3631	283
156-6175	199
	383
157-1669	128
157-2088	261
157-2090	261
158-3412	370
159-1503	80
	392
159-3590	304
159-4269	579
	581
159-4945	562
	579
159-4946	562
	581
159-7105	610
159-7106	610
159-8033	293
159-9322	199
159-9495	219
159-9496	219
160-2246	193
	392
160-2248	381
	383
	397
160-3518	147
	196
	198
	594
160-5083	352
	354
160-7599	5
	458
161-3249	263
161-4130	481
	482
	483
	484
161-6149	406
161-6984	600
	601
161-6987	600
	601
161-7145	306
	334
	335
161-9044	579
	581
161-9283	595
	596
	630
161-9285	630
161-9288	630
161-9294	600
	601
161-9820	132
	133
161-9916	372
	375
162-1604	411
162-6556	600
	601
163-0753	282
	▶288
163-1135	598
163-6290	193
163-9091	254
	257
	261
164-1154	617
164-1178	571
164-1230	628
164-1244	619
164-1246	621
164-1249	595
	596
164-1251	595
	596
164-1252	595
	596
164-1253	595
	596
164-1254	595
	596
164-1255	595
	596
164-1256	595
	596
164-1269	621
164-1271	621
164-1272	621
164-1273	621
164-1274	596
	621
164-1276	621
164-1277	621
164-1368	215
	281
	573
	584
	586
	613
164-1395	109
	454
164-1398	454
164-1404	235
164-2108	439
164-5549	394
	398
164-5567	385
	388
164-5586	385
164-5605	290
164-7556	150
	151
164-8474	584
	586
164-9425	188
	593
164-9598	288
164-9599	288
164-9639	381
165-2273	364
165-4021	67
165-4931	388
165-6365	209
165-6595	283
165-7951	128
165-8996	249
166-2033	375
166-7208	607
166-7870	459
166-9413	227
167-2183	329
	330
167-2195	338
167-2198	331
	332
167-2303	329
	330
167-2304	338
167-2305	331
	332
167-3692	199
167-3693	188
167-8182	635
167-8251	571
168-0443	522
	524
168-0444	522
	524
168-0480	477
	478
	479
	480
	481
	482

▶ **PRIMARY REFERENCE**

PART NUMBER INDEX

Part	Page	Part	Page	Part	Page	Part	Page
	483		574	179-7136	372		▶439
	484		575	180-0448	610	185-6627	100
168-8389	468		576	180-3730	130	185-6643	67
	470	174-4647	226	180-3748	635	186-3735	130
	471	174-4650	226	180-5785	596		147
	472	174-6740	385	180-5786	596		152
	476		388	180-5787	621		153
	500	174-8131	648	180-5788	621		154
	501	174-9638	105	180-5789	596		155
	502		107	180-5791	621		156
	503	175-3265	213	180-5796	619		181
	504	175-4291	150	180-6213	411		185
	505		151	180-9160	602		188
	506	175-4292	150	180-9339	147		196
	507		151		191		198
	508	175-7877	5		194		206
	509		▶645		196		212
	510	175-7904	339		206		440
	511	176-0626	308		215		574
	512	176-1477	7		217		575
	513		8		221		576
	514		9	180-9340	147		594
	515		10		157		598
	516	176-1521	7		160		611
	517		8		180		612
	518		9		183	186-3736	206
	519		10		185		219
	520	176-2947	185		187		589
	521	176-6219	119		188	186-5110	598
	523		123		191	186-5113	621
	525	176-6251	▶536		194	188-4651	209
	532		537		196	188-9838	365
169-1616	425		540		204	189-0881	584
169-3261	292	176-6252	536		208		586
169-5326	124	177-3868	403		209	189-3158	180
169-5861	111	177-4877	562		212		188
169-7291	604		579		215		194
169-7409	362		581		217		198
170-0235	607	177-9600	6		221		204
170-0950	179	177-9645	589		560		206
170-6307	212		591		562		221
170-9360	199	177-9648	180	180-9872	328	190-3085	▶328
171-1357	352		191	183-4911	602		365
	354	177-9653	589	183-4912	602	190-3611	328
172-4018	635		591	183-4934	613	190-7634	130
172-5317	257	177-9656	180	183-5443	602	191-8304	266
	259		191	183-6084	454	192-2112	589
172-6050	254	178-0469	541	183-6085	602		591
	261	178-1781	134	184-0982	130	192-7805	598
	263	178-2593	467	184-1687	331	192-7876	127
172-6743	261		544		332	193-0161	119
172-8037	594	178-3593	▶548	184-5293	569	193-0618	127
172-8039	594	178-3620	385	184-6581	128	193-1681	304
172-8591	571	178-3893	328	185-0882	29	193-1683	304
	584	178-7539	198		30	193-1684	304
	586		203	185-0884	23	193-3356	584
173-0332	254	178-8465	7		27		586
173-0639	411		8	185-1546	63	193-5913	647
173-0641	411		9	185-1861	7	193-5914	618
173-7003	169		10		8		647
173-9779	331	178-8850	▶537		9	193-5915	618
	332	178-9242	134		10		647
	338	178-9566	261	185-4015	589	193-5916	647
174-0503	199	179-6401	198		591	193-9055	300
174-3091	215	179-7135	372	185-4254	403	194-2903	283

▶ **PRIMARY REFERENCE**

PART NUMBER INDEX

Part	Page
194-5390	105
	107
194-5622	584
	586
194-8648	607
195-0189	▶152
	162
195-0190	▶153
	162
195-0191	▶154
	164
195-0192	▶155
	164
195-0256	381
195-0257	381
195-0258	381
195-0259	381
195-0260	397
195-0261	397
195-0262	397
195-0263	397
195-2132	47
	48
195-2134	47
	48
195-2136	47
	48
195-2221	47
	48
195-5830	128
195-6329	276
195-6343	277
	278
	279
195-6348	275
	276
	277
	278
	279
	280
195-6525	358
	365
195-6526	365
195-6527	358
195-7602	613
195-9712	156
196-0030	▶156
	157
	160
196-0039	358
196-0040	358
196-0226	413
196-2966	199
197-4521	619
	621
197-5107	579
	581
197-9155	226
198-6498	435
	436
198-6505	436
198-6516	435
	436
198-7811	223
	226
	247
198-7815	223
	226
198-7819	243
198-7822	223
	226
198-7823	223
	226
198-7825	223
	226
198-7826	223
	226
198-7835	223
	226
198-7838	223
	226
198-7839	223
	226
198-7841	223
198-7842	223
198-7843	223
199-0639	223
199-0648	243
	244
	245
	246
199-0652	226
199-0653	251
	252
199-0656	230
	247
199-0659	233
199-0662	223
199-0663	230
	247
199-0668	226
	230
199-0669	252
199-0672	286
	287
199-0673	232
	233
199-0675	230
	247
199-0676	226
199-0677	223
199-0678	230
	247
199-0679	226
	230
199-0680	230
	247
199-0681	286
	287
199-0683	223
	226
199-0684	230
	247
199-0685	230
	247
199-0686	230
	247
199-0687	230
	247
199-0688	230
	247
199-0689	230
	247
199-0690	230
	247
199-0691	230
	247
199-0692	230
	247
199-0693	230
	247
199-0694	232
	233
199-0695	230
	247
199-0697	230
	247
199-0700	286
	287
199-0701	286
	287
199-0702	286
	287
199-0703	286
	287
199-0705	243
	244
199-0706	226
199-0707	243
	244
	245
	246
199-0752	286
	287
199-0756	233
199-0759	286
	287
199-0760	251
	252
199-0778	238
	239
	240
	241
199-0779	243
	244
	245
	246
199-0783	223
199-0784	232
	233
199-0785	230
	247
199-0786	226
199-0787	226
199-0791	232
199-0807	233
199-0808	232
	233
199-0858	230
	247
199-0929	609
199-9267	177
	178
199-9751	29
	30
	57
	60
	189
200-1898	147
	196
200-5728	594
200-5921	536
201-1024	198
201-1234	481
	482
	483
	484
201-1235	485
	486
	487
	488
	491
201-1238	505
	506
	507
	508
	509
	510
	511
	512
	515
201-1239	505
	506
	507
	508
	509
	510
	511
	512
	515
201-1916	273
	274
	275
201-1919	273
	274
	275
201-1920	▶273
	275
	276
	277
	278
	279
	280
201-1975	275
	276
201-3652	283
201-9459	176
202-0181	244
202-5909	67
202-5993	283
202-6017	176
202-6029	283
202-6611	151
202-6614	150
203-9858	619
	621

2

▶ **PRIMARY REFERENCE**

PART NUMBER INDEX

Part	Page
204-0317	290
204-0775	176
204-1682	628
204-2281	401
204-4249	5
	▶616
204-5258	547
204-5259	547
204-9921	589
	591
205-1627	95
	97
205-2357	398
205-6298	176
205-7047	604
205-7048	579
	581
205-7198	375
	385
205-9244	266
205-9587	641
205-9588	581
205-9590	641
205-9591	641
205-9597	642
205-9598	579
205-9605	560
	562
205-9606	560
	562
205-9607	560
	562
205-9608	560
205-9609	560
205-9614	642
205-9615	642
205-9622	562
205-9623	637
205-9624	637
205-9629	560
205-9631	562
205-9633	639
205-9634	639
205-9920	157
	160
	188
	204
	212
	415
206-1345	143
	147
	179
	180
	183
	185
	188
	204
	212
	217
206-1590	560
	562
206-1618	556
	557
	558
	559
	▶583
206-1632	577
206-1634	283
206-1639	253
	▶283
206-1640	7
	8
	9
	10
	▶109
206-1641	5
	▶454
206-1642	253
	▶281
206-1647	560
	562
206-1648	584
	586
206-1650	283
206-1652	290
206-1653	584
	586
206-1659	569
206-1662	569
206-1663	569
206-1667	569
	571
206-1678	571
206-1681	571
206-1682	584
	586
206-1684	584
	586
206-1687	571
206-1690	571
206-1692	571
206-1696	567
206-1698	567
206-1699	567
206-1701	556
	557
	558
	559
	▶648
206-1702	556
	557
	558
	559
	▶567
206-1706	567
206-1708	567
	569
206-1709	212
206-1712	567
206-1752	283
206-1758	283
206-1759	283
206-1766	283
206-1767	283
206-1768	283
206-1803	584
	586
206-1804	584
	586
206-1805	584
	586
206-1807	584
	586
206-1808	584
	586
206-1809	584
	586
206-1810	584
	586
206-1815	584
	586
206-1816	584
	586
206-1817	584
	586
206-1818	584
	586
206-1831	▶302
	556
	557
	558
	559
206-1838	302
206-1846	586
206-1847	586
206-1850	302
206-1851	397
206-1852	648
206-1853	648
206-1854	569
206-1855	648
206-1856	648
206-1857	556
	557
	558
	559
	▶632
206-1871	454
206-1874	454
206-2423	134
	187
	206
	209
	215
206-5823	611
207-4257	251
	252
207-4262	245
	246
207-5962	251
	252
208-3600	388
208-5148	365
208-5149	365
208-5235	505
	506
	507
	508
	509
	510
	511
	512
	515
208-9281	103
208-9293	607
209-3366	603
209-3367	109
	▶603
209-3378	109
	▶617
209-4232	240
	241
209-4573	103
209-4716	604
209-9219	25
	26
210-1707	447
	449
	451
	452
210-3106	226
210-3108	247
210-5932	237
210-6139	92
210-6475	560
	562
210-6491	567
210-6807	7
	8
	9
	10
	▶102
210-7101	6
	▶338
210-7302	238
	239
	240
	241
210-7665	589
	591
210-7666	589
	591
210-7773	415
210-8363	586
	▶589
210-8364	584
	▶591
210-8401	589
210-8402	591
210-8754	604
211-0073	▶235
	253
211-2660	589
	591
211-2661	584
	586
211-3649	▶295
211-3782	▶300
	556
	557
	558

▶ **PRIMARY REFERENCE**

PART NUMBER INDEX

Part	Page
	559
211-4258	▶219
211-4271	▶203
	556
	557
	558
	559
211-4291	▶165
211-4348	390
211-5358	598
211-6752	254
211-6753	261
211-6796	365
211-6799	365
211-6800	365
211-6801	365
211-8319	365
211-9032	365
211-9461	219
212-0862	198
212-3350	440
212-3416	589
	591
212-4678	223
212-5702	230
	247
212-5710	230
	▶232
212-5712	286
	287
212-5713	226
212-6215	264
212-6934	103
212-7038	219
212-8960	327
212-9353	77
	79
213-0139	180
	191
213-1887	300
213-1889	300
213-4222	251
	252
213-4223	223
	226
213-4225	223
	226
213-4227	223
	226
213-6055	180
	191
213-6057	560
	562
213-6064	194
213-6077	221
213-6683	444
213-6687	441
213-6702	308
213-6703	447
	452
213-6719	441
213-8000	▶538
213-8008	538
	▶539
	540
214-0592	438
214-2968	▶150
	183
214-2969	▶151
	159
214-3203	27
	62
214-3254	295
214-3647	90
214-3736	607
214-3742	633
214-3745	235
214-3763	633
214-4285	456
214-4691	215
214-4692	175
214-4693	185
214-4694	198
214-4695	180
	191
214-4697	183
214-4698	159
214-4699	183
214-4700	159
214-4703	191
214-4705	219
214-4706	221
214-4707	221
214-4708	221
214-4709	633
214-4710	206
214-4711	162
	164
214-4713	204
214-4716	198
214-4717	198
214-4718	180
214-4721	160
214-4722	185
214-4723	198
214-4746	325
214-7024	▶546
214-7025	546
	▶547
214-7026	547
214-7043	456
214-7568	385
	388
214-9468	385
215-1216	539
215-1217	539
215-1242	630
215-1906	336
215-2913	560
	562
215-4012	103
215-9515	114
	116
216-0910	▶646
216-1600	247
216-1601	251
	252
216-1602	237
216-1606	251
	252
216-1608	238
	239
	240
	241
216-1609	▶237
	238
	239
216-1610	226
	▶251
216-1612	247
	▶286
216-1613	247
	▶287
216-3338	131
216-4475	6
	▶256
216-4554	598
216-4983	103
216-5332	▶364
216-6359	441
216-6361	441
216-6362	441
216-6366	441
216-6370	441
216-7374	538
	540
216-7375	539
216-7376	539
216-7377	536
	539
216-7473	223
	226
216-7474	223
	226
216-7476	226
	▶238
216-7477	226
	▶239
216-7479	238
	▶243
216-7481	239
	▶244
216-8314	21
	22
216-8490	441
216-8491	441
216-8500	541
216-8634	41
	43
216-9069	198
216-9083	6
	▶223
217-0049	223
	226
217-2346	230
217-2347	286
	287
217-2349	286
	287
217-2914	226
217-3875	411
217-8185	415
218-0666	584
	586
218-2373	439
218-3597	266
218-9984	235
219-0302	560
	562
219-0343	603
219-3271	141
219-3366	▶481
	505
219-3367	▶482
	506
219-3368	▶483
	507
219-3369	▶484
	508
219-3390	▶505
219-3391	▶506
219-3392	▶507
219-3393	▶508
219-6281	589
	591
219-6283	589
	591
219-6284	589
	591
219-6285	589
	591
219-6286	589
	591
219-6287	589
	591
219-6288	589
	591
219-6292	589
	591
219-6314	147
	196
219-8795	223
	226
219-8798	223
219-8828	230
219-8834	286
219-8835	287
219-8836	247
219-8838	232
219-8839	226
219-9483	481
219-9485	483
219-9486	482
	484
219-9488	485
220-0738	300
	569
	584
	586
220-3398	403
220-3762	589
220-3790	619
	621
220-3791	619
	621
220-4616	526
	▶533
220-4634	473
	▶526
220-4635	526

▶ **PRIMARY REFERENCE**

PART NUMBER INDEX

Part	Page
	▶529
220-4644	467
	471
	▶527
220-4645	527
	▶530
220-4646	527
	528
	▶534
220-4654	469
	▶528
220-4655	528
	530
	▶531
220-4670	533
220-4671	474
	475
	533
	534
220-4674	533
	534
220-4675	533
220-4677	533
220-4678	533
220-4688	529
220-4690	529
220-4691	542
220-4694	529
220-4695	529
220-4702	529
	531
220-4717	534
220-4718	534
220-4721	534
220-4722	534
220-4728	531
220-4729	531
220-4734	530
	554
220-4735	530
	554
220-4739	531
220-4740	531
220-4758	▶542
220-5725	591
220-7108	441
	447
	449
	451
	452
	541
	552
220-7109	541
	552
220-8226	283
220-8631	39
	40
221-2420	584
	586
221-9719	131
222-1529	6
	▶249
222-1530	249
222-3518	114
	116
222-4067	415
222-7100	441
222-7101	441
222-7102	441
222-7106	212
222-7108	227
223-0166	331
	332
223-0167	331
	332
223-0170	331
	332
223-0174	332
223-0182	338
223-0184	338
223-0188	338
223-0198	331
	332
223-1882	▶549
223-2028	581
223-2029	579
223-2030	560
	637
	639
	641
	642
223-3353	338
223-7538	293
223-9079	212
223-9080	212
224-2147	569
224-2149	569
224-5132	321
	322
224-5152	321
	322
224-5917	114
	116
224-6562	440
224-6563	440
224-8946	647
225-0312	293
225-3854	204
225-4150	647
225-4287	88
	89
225-4317	12
	▶58
225-5436	55
225-5437	55
225-5438	54
	55
225-5439	54
	55
225-5441	54
	55
225-5451	54
	55
225-5453	54
	55
225-5454	54
	55
225-5458	54
	55
225-5459	54
	55
225-5495	29
225-5496	29
225-5498	29
225-5499	29
225-5501	31
	32
225-5502	31
	32
225-5625	63
225-5629	63
	64
225-5634	63
	64
225-5638	63
	64
225-5640	63
225-5927	143
	147
225-5959	63
	64
225-5960	63
	64
225-5961	63
	64
225-5962	63
	64
225-5963	▶63
	66
225-6005	50
	52
225-6041	50
	52
225-6451	15
	17
225-6456	15
	17
225-6461	15
	17
225-6464	15
	17
225-6477	15
	17
225-6478	15
	17
225-6479	15
	17
225-6522	17
	68
225-6817	74
225-6818	74
225-7733	344
	348
225-7738	84
	86
225-7739	84
	86
225-7741	84
	86
225-7772	19
225-7941	76
	178
225-7944	23
	27
	75
	76
225-7988	187
225-8016	84
225-8019	84
	86
225-8287	41
	43
225-8329	70
	71
225-8524	105
	107
225-8526	105
	107
225-8533	105
	107
225-8534	105
	107
225-8536	105
	107
225-8848	45
	46
225-8858	23
	27
226-0291	300
	648
226-0449	95
226-1240	444
226-4346	237
	240
	241
226-4355	226
226-4356	226
226-4357	226
226-4364	238
	239
	240
	241
226-4365	238
	239
	240
	241
226-4366	238
	239
	240
	241
226-4367	238
	239
	240
	241
226-4370	238
	239
	240
	241
226-4372	243
226-4560	152
	153
	154
	155
226-4561	152
	153
	154
	155
226-5540	▶333
	467
	469

▶ **PRIMARY REFERENCE**

PART NUMBER INDEX

Part	Page	Part	Page	Part	Page	Part	Page
	471		188		57	233-2613	329
	473	230-4013	209		60		330
226-9629	439	230-4014	209	232-1323	120	233-3784	19
227-1057	185	230-4019	338		124	233-3785	19
	198	230-5008	147	232-1328	120	233-3786	19
227-1145	331		196		124	233-5260	569
	332	230-5009	147	232-1545	215	233-7432	12
227-1184	407		196	232-1793	124		▶45
227-1185	407		209	232-1794	120	234-1981	▶94
227-1197	407	230-7300	12		124		95
227-1198	406		▶37	232-2725	120		97
	407	230-7355	12		124	234-3017	625
227-1199	406		▶84	232-2726	120	234-3030	103
	407	230-7569	12		124		105
227-5509	408		▶59	232-2865	302	234-6927	415
227-5556	300	230-7578	12	232-2869	302	235-0128	109
227-7449	94		▶70	232-2870	302	235-1790	120
227-8807	▶320	230-7886	120	232-3126	112	235-5843	415
228-1789	441	230-8094	50		118	235-7091	392
228-4668	136		52		124	235-8528	390
228-5087	▶136	230-8989	120		139	235-8634	134
228-5088	134		124	232-3149	120	235-8747	188
228-5089	134	230-8995	120		124	236-1583	235
228-5090	134		124	232-3157	120	236-1673	120
228-5092	136	230-8996	120		124	236-1674	120
228-5093	136		124	232-3274	120	236-2144	112
228-5856	180	230-8997	120		124	236-6651	69
	185		124	232-3657	41	236-6923	180
	191	230-8998	120		43	236-8228	▶119
	209		124	232-3666	41		120
	212	230-9127	15		43	236-8229	12
	221		17	232-3751	23		▶120
228-6050	154	230-9357	333		27	236-8238	12
	155	231-0033	12		75		▶39
228-6051	152		▶72		76	237-0024	12
	153	231-0046	59	232-4636	648		▶173
228-6052	152	231-0149	12	232-6204	12	237-0769	15
	153		▶99		▶60		17
	154	231-0670	232	232-6661	12	237-0975	104
	155		233		▶139	237-3658	12
228-6053	152	231-0671	232	232-6662	139		▶47
	153		233		140	237-3786	105
	154	231-0692	▶233	232-7400	▶19	237-3794	105
	155		247		21		107
228-6054	152	231-0693	233		22	237-3797	415
	153	231-0694	233	232-7440	23	237-3921	105
	154	231-0695	232		27		107
	155		233	232-7449	25	237-3922	105
228-6056	152	231-0696	233		26	237-3924	12
	153	231-0697	233	232-7596	23		▶105
	154	231-0699	226		27	237-3943	598
	155	231-2615	365	232-7597	23	237-4157	94
228-7091	362		▶440		27	237-4894	177
228-9130	127	231-2806	365	232-7599	23		178
	649	231-2807	365		27	237-4896	12
228-9132	127	231-3057	141	232-7600	23		▶177
229-4896	17	231-3058	▶141	232-7603	23	238-0251	456
229-5091	245		142	232-7604	▶23	238-2799	12
	246	231-8945	▶309		26		▶76
229-5092	237	231-8946	309	232-7612	446	238-4628	408
229-5336	385	231-9361	571		458	238-5229	223
229-5745	454	231-9364	312	233-0619	329	238-5230	223
229-9382	338	232-0252	392		330	238-5236	223
229-9855	134	232-1322	29	233-2589	329		226
230-4011	160		30		330	238-5237	223

▶ **PRIMARY REFERENCE**

PART NUMBER INDEX

Part	Page
	226
238-5238	226
	▶289
238-5241	223
238-5259	263
238-5275	223
238-5276	223
	▶252
238-5277	223
	▶240
238-5278	223
	▶241
238-5279	240
	▶245
238-5280	241
	▶246
238-5281	240
	241
238-5282	240
	241
238-5283	245
238-5284	246
238-5285	223
238-5286	223
	▶230
238-5288	230
238-5291	226
238-5292	226
238-5296	223
238-5297	223
238-7492	180
238-8671	120
	124
239-1434	109
239-2270	102
239-6989	647
240-5571	124
240-6866	404
241-0037	321
	322
241-6215	209
241-6225	344
	348
241-6226	344
	348
241-8450	344
	348
242-3291	134
242-9751	77
	78
	79
243-0062	617
243-0063	617
243-1022	▶649
243-5027	134
244-3106	188
244-3111	300
244-3112	300
244-3113	300
244-6864	365
245-3641	475
245-3647	474
	475
245-3648	474
	475
245-3650	▶474
	500
245-4827	250
245-6789	253
	▶264
245-8026	185
245-8778	415
	▶417
245-8780	394
	▶408
245-9828	37
	38
246-1163	17
246-2641	646
246-7853	444
246-7854	304
246-8038	206
246-8047	193
246-8052	215
246-8058	134
246-9228	475
246-9229	475
246-9230	▶475
	476
247-0144	84
247-1385	82
	92
247-4001	104
247-4868	▶29
	32
247-4884	112
	118
247-4885	12
	▶118
247-5557	300
247-7054	411
247-7690	441
247-8179	583
247-9730	95
	97
248-0960	▶476
248-0962	▶500
248-2215	▶142
248-2707	109
248-2709	571
248-2710	454
248-2714	579
	581
248-3231	95
	97
248-5245	304
249-0974	75
	76
249-2482	567
249-3124	408
249-3125	408
249-3837	▶298
249-3839	298
	299
249-3843	298
	299
249-3844	298
	299
249-4207	485
	486
	487
	488
	491
249-4209	485
	486
	487
	488
	491
249-4210	485
	486
	487
	488
	491
249-4211	492
249-4220	▶485
	509
249-4221	▶509
249-5512	95
	97
249-6710	6
	▶331
249-6711	6
	▶332
249-7568	273
	▶275
249-7569	273
	▶276
249-7570	▶273
249-7571	273
	▶276
249-7572	273
	▶276
249-7573	▶273
249-7669	▶127
	128
249-9325	▶296
249-9326	296
249-9327	296
250-1057	467
	544
250-1440	372
	375
250-1448	208
250-1470	372
250-1471	372
250-1738	277
250-1878	314
250-2158	274
	▶277
250-2159	274
	▶277
250-2160	▶274
250-2314	82
	92
250-3330	314
250-5881	316
250-6148	404
250-6586	530
	554
250-6587	530
	554
250-6850	314
250-6858	314
250-7910	571
250-7911	571
250-7912	558
	559
250-8330	270
	403
251-2429	411
251-2437	35
	36
251-3227	82
	92
251-4309	532
251-4375	314
251-4889	296
251-4890	296
251-4891	296
251-5579	283
251-5627	434
251-5629	434
251-6432	312
251-6433	312
251-6434	312
251-6435	312
252-1862	579
	581
252-1863	579
	581
252-1864	581
252-1865	579
252-4654	458
252-4659	455
252-4660	▶455
252-6005	467
	▶553
252-6438	29
	30
252-6791	298
	299
253-0354	128
253-1054	▶434
253-1055	▶434
253-1139	331
253-1549	283
253-1817	579
	581
253-1857	579
	581
253-1858	579
	581
253-2470	591
253-4137	95
	97
253-4138	95
	97
253-4976	240
	241
253-4979	226
253-4980	226
253-5024	223
253-8295	417
253-8448	378
253-9396	194
253-9510	589
	591
254-1126	579
	581
254-1127	579

▶ **PRIMARY REFERENCE**

PART NUMBER INDEX

Part	Page	Part	Page	Part	Page	Part	Page
	581		559	264-4297	208	269-4159	573
254-2187	104		▶609	264-7029	160	269-4161	573
254-2267	72	259-8417	92		188	269-8023	318
	73	260-0030	630	264-7030	209	269-8456	6
254-2270	72	260-0033	630	264-7031	147		▶318
	73	260-0034	630		185	269-9115	571
254-3437	575	260-0035	630		196	270-0149	573
	576	260-0041	630	264-8136	299	270-2794	613
254-3954	29	260-0057	630	264-8137	299	270-2795	573
	30	260-0634	95	264-8138	299	270-3217	▶594
254-4418	67		97	265-5645	193	270-5161	613
254-5683	633	260-1393	95	266-2275	111	270-5290	308
254-5703	▶250		97	266-2585	425	271-3096	383
	253	260-3020	381	266-2814	217		▶575
254-9301	316	260-3021	381	266-4157	157	271-3097	383
254-9926	292	260-9136	368		160		▶576
255-0793	571	260-9137	368		217	271-3101	575
255-0794	571	260-9213	350	267-1273	312	271-3103	576
255-0795	584	260-9214	350	267-2701	167	271-7308	250
	586	261-0371	78		168	272-0537	130
255-0796	647	261-0376	77		198	272-2232	12
255-2749	577		79	267-2760	381	272-2265	74
255-3447	105	261-0406	78	267-5211	166	272-5420	342
	107	261-0423	77		167	272-5421	556
255-4692	95		79		168		557
	97	261-0428	77		170		558
255-5461	283		79	267-5213	166		559
255-8280	283	261-0524	185		167	272-6369	486
255-9081	544	261-5517	281		168		493
	▶554		▶282		170	272-6410	▶510
255-9084	▶544	261-5519	282	267-5225	613	272-6411	▶486
256-0323	311	261-7694	147	267-5635	▶187		510
256-0324	▶311	261-9634	613		342	272-7079	613
256-0548	229	261-9635	281	267-8321	86	272-7872	▶511
256-0549	229	261-9636	567	267-8363	277	272-7873	▶487
256-5299	556	261-9637	567		278		511
	557	261-9639	296	268-0867	12	272-7914	487
256-9689	312		567	268-1547	360		490
256-9692	312		569	268-1548	360	272-7916	488
257-0468	407	261-9642	613	268-5902	602		489
	425	261-9644	571	268-5903	602	272-7918	489
257-0477	405	261-9645	571	268-9910	6		490
257-0478	405	262-2781	594		▶446		492
257-7211	147	262-3705	143	269-0381	306		493
	196		147		▶329		498
257-7212	147	262-4081	283	269-0382	329	272-7919	489
	196	262-4084	283	269-0386	329		490
257-7214	147	262-4341	143		330		492
	196		147	269-0986	145		493
257-7733	425	262-4727	160		147		498
257-9886	346	262-7079	372	269-3201	556	272-7920	489
257-9887	346	262-7081	372		557		490
258-2354	569	262-8088	80		558		492
258-3697	579		392		559		493
	581	262-9567	604		▶573	272-7921	489
258-4946	31	262-9786	94	269-3247	556		490
	32	263-2901	574		557		492
258-9999	647	263-3823	612		558		493
259-0127	227	263-5376	103		559	272-7922	491
259-0128	227		105		▶613	272-9234	▶512
259-0129	227	263-5516	411	269-3248	▶602	272-9235	▶488
259-4402	647	263-5781	604		613		512
259-6276	556	263-8850	147	269-3254	613	272-9608	▶513
	557		196	269-3262	613	272-9609	▶489
	558	263-9484	208	269-3269	302		513

▶ **PRIMARY REFERENCE**

PART NUMBER INDEX

Part	Page	Part	Page	Part	Page	Part	Page
272-9700	342		▶277	277-3012	41	284-9039	130
	▶574	273-5096	274		43	285-1207	556
272-9701	574		▶278	277-5156	12		557
	575	273-5140	▶274	277-9998	312		558
272-9800	158	273-5532	491	278-0209	266		559
273-0042	▶514	273-9190	198	278-0213	266	285-3048	365
273-0043	▶490	274-3774	188	278-0461	198	285-3243	365
	514		204	278-5113	64	285-9109	589
273-0093	▶515	274-3775	204	278-5126	13		591
273-0094	▶491	274-4274	329	278-6377	166	286-0867	266
	515		330		170	286-1072	147
273-0799	▶516	274-4553	254		198		196
273-0800	▶492		257	278-7469	576	286-1930	284
	516		259	279-2080	370	286-3018	394
273-0862	▶517		261	279-2087	370	286-3019	394
273-0863	▶493		263	279-2091	370	286-3592	84
	517	274-4554	266	279-2094	370	286-4880	139
273-1374	▶518	274-4555	339	279-4967	372		140
273-1375	▶494	274-4556	266	279-4969	372	286-7848	33
	518	274-4561	▶257	279-4970	372		34
273-1462	493		266	279-5556	306	286-9338	498
	494	274-4569	266		▶330		499
273-1463	492	274-4578	▶259	279-5557	330	286-9340	498
	495		266	280-7008	▶263		499
273-1465	490	274-4580	▶254		266	287-3923	▶111
	496		266	280-7009	266	287-7251	401
273-1466	489	274-4582	▶261	280-7010	266	287-7252	401
	497		266	280-7012	266	287-7268	368
273-1473	613	274-4716	21	280-7013	223	287-7269	368
273-1475	613	274-7409	198	280-7014	223	287-8204	550
273-1476	613	274-8034	266	280-7015	223	287-8208	550
273-1477	613	274-8041	270	280-7868	411	287-8209	▶550
273-1478	613	274-8048	229	280-7869	411	287-8573	15
273-1948	▶519		▶270	280-7870	411		17
273-1949	▶495	274-8638	254	280-7871	411	287-8597	39
	519		259		▶438		40
273-1950	▶520		261	280-7872	411	288-0422	41
273-1951	▶496	274-9872	170	281-4726	344		43
	520		198		348	288-1157	316
273-1957	▶521	274-9993	215	281-5983	362	288-1394	55
273-1958	▶497	275-0001	316	282-3874	▶274	288-1395	55
	521	275-0002	312	282-3875	274	288-9734	565
273-3599	498	275-0553	198		▶278	289-3412	293
273-3622	485	275-0570	180	282-3876	274	289-6018	607
	486		191		▶278	289-6021	607
	487	275-1038	120	282-3877	278	289-6370	342
	488		124	282-6944	411		▶411
	491	275-8869	573	282-7832	604	289-6410	300
273-3730	498	275-9883	50	282-7833	183	289-9871	302
	499		52	282-7835	183	289-9873	302
273-3731	▶522	276-2334	385		604	289-9874	302
273-3732	522		394	282-9043	421	290-3347	309
	▶523	276-5450	147		535	290-4164	223
273-3733	▶498		196	283-3451	633	290-7831	565
	523	276-5605	23	283-3467	613	291-3654	378
273-3755	498		27	283-3477	613	291-5108	573
273-3756	498	276-7287	▶166	283-4237	607	291-8379	283
273-3791	▶524		181	283-7981	613	292-3995	314
273-3792	524		191	283-8053	613	292-3996	314
	▶525	276-7290	▶167	283-8563	302	292-5424	289
273-3793	▶499		198	284-1602	583	292-5773	604
	525	276-7291	▶168	284-2917	95	292-8339	358
273-4210	385		198	284-3425	132	293-1980	567
273-4211	385	276-7476	54		133		571
273-5095	274	276-8791	633	284-5165	95	293-4053	94

▶ **PRIMARY REFERENCE**

PART NUMBER INDEX

Part	Page
293-4671	69
	415
293-5352	95
	97
293-9289	249
294-0288	41
	43
294-9818	264
	▶265
295-5550	97
295-5556	644
295-5557	644
295-5893	147
	196
295-5902	6
	▶193
295-5903	▶169
	434
296-0375	221
296-0376	▶221
	421
	535
296-5616	▶74
	75
	76
297-3233	▶88
	90
297-4394	434
	▶435
297-4395	434
	▶436
297-5252	607
297-5254	607
297-7964	385
298-4524	19
298-5112	11
	▶71
298-5129	11
	▶57
298-5131	11
	▶61
298-5398	390
298-5901	95
	97
299-2212	▶564
	565
299-3141	▶314
	316
299-3270	381
	385
	397
299-4246	88
	▶324
299-4247	324
299-4248	324
299-4684	69
299-4687	69
299-4716	9
	▶77
299-4729	7
	8
	▶78
299-4732	77
	78
299-4996	198
299-5152	383
	397
299-5155	383
	385
299-5156	383
299-5157	383
299-5158	383
299-5159	380
	383
299-6857	342
	▶397
299-6859	342
	▶380
299-6934	397
299-6936	381
299-6938	381
299-6940	380
	381
299-6985	▶600
	637
	639
	642
299-6986	▶601
	637
	639
	641
299-7887	380
300-1702	109
300-4491	383
	▶404
300-4493	385
	▶403
300-4994	185
300-6792	566
301-0989	▶299
301-9672	88
301-9725	557
	558
	▶566
301-9765	103
301-9766	103
302-7768	397
302-8432	266
303-0416	▶275
303-0417	▶275
303-0426	275
	▶279
303-0427	275
	▶279
303-0430	275
	▶279
303-0431	275
	▶280
303-0441	279
	280
303-0444	279
303-5767	11
	▶40
303-5768	11
	▶38
303-5769	11
	▶174
303-5770	11
	▶35
303-5778	11
	▶48
303-5795	174
304-1021	628
304-1023	628
304-3263	256
304-3264	253
	▶256
304-3269	256
304-3271	289
304-3272	289
304-3920	8
	10
	▶103
304-3922	103
304-4022	8
	10
	▶82
304-4023	▶89
	91
304-5691	138
304-5696	206
304-6673	79
304-7847	89
	▶325
304-7848	82
304-7849	325
304-7850	89
304-7851	89
304-8760	11
	▶41
304-8761	11
	▶62
304-8764	50
	52
304-8965	589
	591
304-9457	69
305-2136	435
	436
305-2137	435
	436
305-2139	435
305-2140	435
305-2141	435
	436
305-2142	435
	436
305-2143	436
305-2144	436
305-2145	436
305-3295	6
	▶175
305-3423	266
305-4353	628
305-6917	103
305-6918	91
305-7881	132
	133
306-7346	198
306-8857	33
	34
307-0768	403
307-1432	385
307-2033	7
	8
	9
	10
	▶69
307-2242	77
	79
307-3488	390
307-3529	394
307-5354	380
307-6461	383
	385
307-6462	383
307-8148	372
308-1792	15
	17
308-2154	▶405
	423
308-2155	423
308-2156	▶406
	422
308-2160	422
308-2161	422
308-2872	424
308-2873	424
	425
	426
	427
	428
	429
	431
	432
308-2874	430
308-2877	406
308-2878	406
308-2879	425
308-2882	426
	428
	429
308-2883	428
308-2884	427
	431
308-2885	430
	432
308-2886	405
308-2888	406
308-2889	406
308-2890	406
308-3025	340
308-3074	217
308-3437	398
	▶433
308-3554	623
	625
308-4315	449
	451
308-5496	388
308-9973	▶176
	253
309-1325	▶158
	165
309-5684	383
309-7555	11

3

▶ **PRIMARY REFERENCE**

PART NUMBER INDEX

Part	Page
	▶68
309-9105	7
	9
	▶90
309-9106	8
	10
	▶91
310-0851	308
310-2330	188
310-2345	198
310-2352	▶215
	253
310-2644	7
	9
	▶95
310-3933	456
310-5613	▶191
	556
	559
310-6216	▶292
	577
310-7304	89
310-9354	215
311-1218	217
311-2539	289
311-2701	212
311-2768	103
311-3639	▶217
	635
311-6094	67
311-6886	130
311-8055	312
	▶316
311-8060	316
311-8061	5
	▶312
311-8070	199
312-3083	199
312-7617	226
312-7618	226
313-3280	628
313-3379	5
	▶134
313-3476	343
313-3477	343
313-3486	390
313-3490	390
313-3752	▶611
	633
313-5637	630
313-6572	456
313-6709	584
	586
313-6710	584
	586
313-6711	569
313-6712	569
313-6713	569
313-7109	314
314-4018	564
314-4290	▶623
	627
314-4291	▶625
	627
314-6700	7
	8
	9
	10
	▶128
315-0033	89
315-1270	560
	562
	▶635
315-1272	635
	▶643
315-1277	635
315-1282	635
315-1284	633
315-1299	635
315-1300	635
315-1301	635
315-1302	635
315-1303	635
315-1304	635
315-1306	635
315-1311	635
315-1312	635
315-1313	635
315-1314	635
315-1316	643
315-1317	643
315-1318	▶612
	643
315-1319	643
315-1369	▶80
	253
315-2318	6
	▶226
315-2939	557
	558
	▶607
315-2940	556
	559
	▶606
315-3371	188
315-3379	86
315-3381	124
315-3384	13
315-3385	▶64
	65
315-3386	64
315-3387	64
315-3388	64
315-3390	30
315-3391	30
315-3392	30
315-3393	30
315-3394	30
315-3395	54
315-3396	19
315-3397	19
315-3398	19
315-3411	11
	▶86
315-3418	11
	▶140
315-4533	456
315-5384	308
315-5401	80
315-5496	67
315-5667	88
315-6222	289
315-6223	289
315-6224	289
315-7645	410
315-7646	410
315-7647	410
315-9890	556
	557
	▶627
315-9891	558
	559
	▶627
316-0675	407
316-1194	314
316-1925	226
	▶247
316-1926	226
316-4741	444
316-4742	463
316-4743	463
	465
316-4811	306
316-6899	11
	▶75
316-6925	11
	▶178
316-6941	11
	▶73
316-6945	444
316-6946	461
	463
	465
316-6947	461
	463
	465
316-6948	463
	465
316-6949	463
	465
316-6951	308
316-6952	308
316-7091	381
316-7290	556
	559
	▶584
316-7291	557
	558
	▶586
316-7896	▶30
	31
316-8228	635
317-2242	378
317-2243	378
317-2244	378
317-2249	530
	554
317-3769	68
317-3778	68
317-4261	635
317-4262	635
317-4263	635
317-4359	358
317-4360	358
317-4361	358
317-4928	456
317-5502	103
317-5538	556
	557
	558
	559
	▶577
317-5539	556
	557
	558
	559
	▶569
317-5541	577
317-5542	604
317-5543	556
	557
	558
	559
	▶604
317-5544	292
317-6280	▶378
	467
	469
	471
317-7120	304
317-8141	566
317-9776	11
	▶132
318-2365	120
318-7257	▶467
	468
318-7258	▶468
318-7259	▶469
	470
318-7260	▶470
318-7261	▶471
318-9901	▶540
318-9902	▶551
318-9903	▶540
318-9904	▶551
319-4504	461
319-5639	607
319-6385	180
319-6906	350
319-6907	350
319-6908	350
319-8524	584
	586
319-9667	463
	465
319-9668	463
	465
320-2948	306
320-2949	306
320-3619	306
320-3620	306
320-4725	444
320-5933	5
	▶306
320-5935	▶335
	463
	465
320-5937	1
	2
	3

▶ **PRIMARY REFERENCE**

PART NUMBER INDEX

Part	Page
	4
	▶326
320-5938	303
	▶334
320-6520	1
	2
	3
	4
	▶327
320-6521	1
	2
	3
	4
	▶336
320-7233	▶229
	253
320-7812	401
320-8438	350
320-8640	▶317
	319
320-8643	317
320-8644	317
320-9164	447
	452
320-9213	112
320-9241	447
	452
320-9835	569
320-9940	▶472
320-9941	472
	▶473
320-9942	▶358
	473
321-1327	130
321-2380	446
321-2556	293
321-3096	343
321-3113	10
	▶79
321-5657	130
321-5776	628
321-6111	360
321-6341	360
321-6383	352
321-6387	344
	348
321-7031	69
321-7038	557
	558
	▶565
321-7178	1
	2
	3
	4
	▶357
321-7179	1
	2
	3
	▶360
321-7183	▶352
321-7192	1
	2
	3
	4
	▶400
321-7205	342
	▶396
321-7231	342
	▶350
321-7246	▶343
	356
321-7303	343
321-7705	8
	10
	▶11
321-7782	11
321-8253	293
321-9975	419
	▶423
321-9976	418
	▶422
322-1924	7
	9
	▶12
322-3037	▶143
322-3040	143
	147
322-3736	444
322-3764	5
	▶308
322-3768	306
322-3770	306
322-6827	▶170
	188
322-8414	560
	562
	579
	581
322-9476	11
	▶50
322-9480	623
	625
322-9481	623
	625
322-9486	623
	625
	▶630
322-9490	630
322-9491	630
322-9492	630
322-9493	630
322-9494	630
322-9495	630
322-9496	630
322-9507	628
322-9509	628
322-9520	628
322-9615	105
	107
322-9616	105
	107
322-9663	29
	30
322-9664	30
322-9761	90
	91
323-0976	▶319
323-0991	6
	▶206
	323
	420
	421
323-0992	▶194
	420
	421
323-2023	4
	▶362
323-2045	362
323-2096	1
	2
	3
	4
	▶410
323-2424	326
323-2431	326
323-2433	326
323-2435	326
323-2465	334
	335
323-2470	326
323-2474	327
	336
323-3308	647
323-3309	647
323-3324	571
323-4253	446
323-4255	446
323-6066	635
323-6645	647
323-9083	350
323-9084	350
323-9085	350
323-9086	350
323-9307	8
	10
	▶67
324-0355	334
	335
324-0361	327
324-0367	327
	336
324-0369	327
	336
324-0372	327
324-0386	326
324-0398	327
	336
324-0406	336
324-0417	336
324-0436	335
324-0444	41
	43
324-0496	334
	335
324-0498	334
	335
324-0501	335
324-0505	334
324-0516	334
324-0548	1
	2
	3
	4
	▶444
324-0550	1
	2
	3
	▶463
324-0552	4
	▶461
324-2889	628
324-2890	623
	625
	▶628
324-2891	628
324-2892	628
324-2893	628
324-2894	▶598
	628
324-2895	628
324-2896	▶619
	623
324-2897	▶595
	619
324-2900	619
	621
324-2901	619
	621
324-2903	▶621
	625
324-2905	621
324-2906	▶596
	621
324-2907	621
324-2909	621
324-2910	621
324-3408	78
324-3851	90
	91
324-5929	342
	▶415
324-6213	7
	9
	▶92
324-7594	357
324-7596	400
324-7597	357
324-7598	360
	362
324-7599	348
	360
	362
324-7602	360
324-7603	360
324-7604	360
324-7611	344
	348
324-7612	352
324-7815	396
324-7816	396
324-7817	396
324-9976	596
324-9977	596
324-9978	621
325-1968	635
325-1969	312
325-2011	290
325-3036	7
	8
	9

▶ **PRIMARY REFERENCE**

PART NUMBER INDEX

Part	Page
	10
	▶104
325-3495	104
325-4994	312
325-5482	312
325-5855	82
	92
325-5950	▶138
	199
325-6257	▶340
	392
325-7563	460
325-8341	188
325-9300	637
325-9301	639
325-9308	577
325-9310	560
	562
325-9311	604
325-9315	635
326-0043	304
326-0044	303
	▶304
326-0089	308
326-1801	303
	▶398
326-1803	342
	▶401
326-1880	35
	36
326-6389	635
326-7959	143
	▶145
326-8992	13
326-8999	11
	▶25
326-9000	11
	▶21
326-9002	11
	▶54
326-9003	11
	▶31
326-9004	11
	▶65
326-9005	11
	▶13
326-9008	11
	▶15
326-9009	11
	▶33
326-9012	11
	▶112
326-9013	11
	▶46
326-9147	▶123
	124
326-9149	11
	▶124
326-9153	107
326-9156	11
	▶107
327-0114	▶303
327-0222	350
327-0223	350
327-2269	204
327-3753	410
327-4172	160
327-6983	▶344
	356
327-7601	562
	▶637
327-7637	562
	▶639
327-8298	344
	348
327-8972	▶354
328-1485	145
	▶196
328-1907	145
	147
328-1942	5
	▶204
328-1950	▶160
328-1953	▶157
328-1954	▶179
328-1956	▶593
328-2477	375
328-2481	▶147
328-5196	460
328-5234	447
	452
328-5333	401
328-5358	401
328-5964	303
	▶460
328-7020	157
328-7742	628
328-7749	598
328-7750	598
328-7751	598
328-7752	598
328-9650	461
329-0080	▶5
329-0092	5
	▶6
329-0124	5
	▶342
329-0129	11
	▶100
329-0143	344
	348
329-0296	5
329-0311	▶253
329-0320	▶6
	253
329-1167	560
	562
	▶579
329-1168	560
	562
	▶581
329-1169	579
329-1170	581
329-1322	5
	▶456
329-1329	456
329-1330	456
329-1331	456
329-3483	368
329-3484	368
329-3485	368
329-3486	368
329-3487	368
329-3488	368
329-3489	368
329-3490	368
329-3491	346
329-3492	346
329-3494	346
329-3505	▶370
	420
	535
329-3507	▶372
	420
	421
329-3546	370
	372
329-3548	368
329-3549	372
329-3550	370
329-3551	370
329-3559	▶346
	420
	421
	535
329-3600	▶368
	420
	421
	535
329-3819	368
329-3820	368
329-3821	368
329-4508	375
329-5390	368
329-5699	92
329-5700	82
329-6655	29
329-7293	394
329-7496	▶162
329-7497	▶164
329-9748	465
329-9749	1
	2
	3
	▶465
330-0798	304
330-4926	447
330-5738	447
	452
330-5739	447
	452
330-6124	375
330-6125	375
330-6126	375
330-6734	97
330-7612	157
	160
330-7613	160
330-9591	368
330-9669	460
330-9670	460
330-9673	441
330-9674	541
330-9675	552
330-9676	441
330-9677	441
330-9678	441
330-9679	441
330-9680	441
330-9681	441
330-9682	441
330-9683	441
330-9684	441
330-9687	598
330-9752	368
331-0797	398
331-0798	398
331-1520	327
	336
331-1521	306
	308
331-1522	306
331-2489	304
331-3334	372
331-3335	372
331-3770	352
	354
331-3779	344
331-4340	419
331-4365	304
331-6299	344
	348
331-7306	344
331-7411	▶365
	421
	535
331-7798	598
331-7799	598
331-8037	449
331-8675	394
331-8676	6
	323
	▶394
332-0092	410
332-1025	362
332-1829	344
332-2577	179
332-2578	449
	451
332-2579	449
	451
332-2691	▶348
	356
332-3871	354
332-6587	8
	10
	▶97
332-7333	95
	97
332-7541	80
332-7542	80
332-7950	▶420
332-7951	▶420
332-7952	▶535
332-7962	▶420
332-7963	▶421
332-9195	▶418
	420
	421
	535

▶ **PRIMARY REFERENCE**

PART NUMBER INDEX

Part	Page	Part	Page	Part	Page	Part	Page
332-9781	342		▶618		335	340-7026	290
	▶419	334-7227	618	338-2445	326	340-7027	290
333-0699	342	334-7931	360	338-2446	327	340-7028	290
	▶381	334-7947	362		336	340-7128	290
333-0739	350	334-8021	342	338-3328	560	340-8276	556
333-0790	449		▶392		562		557
	451	334-9386	368	338-5723	185		558
333-0791	449	335-1584	25	338-5731	180		559
	451		▶27	338-5732	▶208		▶633
333-0792	449	335-1692	342		558	340-9290	304
	451		▶390		559	340-9308	326
333-1320	352	335-1836	49	338-5733	▶180		334
	354	335-2224	635		557		335
333-7265	304	335-3052	▶556		558	340-9311	334
333-9901	581	335-3053	▶557	338-5737	5		335
	▶641	335-3054	▶559		▶188	340-9314	327
333-9902	579	335-3055	▶558	338-5738	▶198		336
	▶642	335-9798	12		556	340-9322	327
334-0686	▶1		▶17		557		336
334-0691	▶1	335-9799	12		558	340-9325	326
334-0694	▶4		▶52		559	341-0076	398
334-0751	1	336-6396	463	338-5740	▶185	341-0121	401
	3		465		556	341-0694	5
	4	336-7533	571		557		▶293
	▶447	336-7545	556		558	341-0697	5
334-0752	1		557		559		▶131
	3		558	338-9360	▶130	341-4712	306
	▶449		559		131	341-5749	618
334-0786	370		▶571	338-9361	293	341-5750	618
334-2318	55	336-7612	293	338-9831	598	341-5752	360
334-2319	55	336-8184	348	339-0007	375	341-9304	314
334-3754	12	336-8185	348	339-0010	375	342-7146	560
	▶36	336-9096	162	339-2886	375	342-7147	556
334-3755	12		164	339-2935	375		557
	▶34	336-9168	556	339-3067	185		▶560
334-3756	12		557	339-4287	375	342-7148	562
	▶133		558	339-4981	342	342-7149	558
334-3757	12		559		▶388		559
	▶43		▶610	339-4987	▶7		▶562
334-4169	463	337-5351	571	339-4989	▶8	342-7196	383
	465	337-5352	143	339-4991	▶9	342-8061	5
334-4202	12	337-7029	162	339-4993	▶10		▶647
	▶26		164	340-0146	212	343-0656	▶5
334-4203	12	337-8655	310	340-0147	212	343-3429	▶458
	▶22	337-8684	394	340-0150	6	343-4301	400
334-4204	12	338-0426	390		▶212	343-4355	185
	▶55	338-0427	390	340-1650	398	343-6503	212
334-4205	12	338-0432	342	340-3551	183	343-6504	212
	▶32		▶383	340-3552	▶183	343-7355	6
334-4207	12	338-0433	342		556		▶441
	▶66		▶385		557	343-7400	410
334-4208	12	338-0434	6		558	343-7811	5
	▶14		▶290		559		▶644
334-4436	354	338-0437	290	340-6272	306	343-8051	326
334-4603	415	338-0438	290		334	343-8053	327
334-4943	343	338-0837	3		335		336
334-7152	7		▶375	340-6339	327	344-1004	635
	8	338-1421	▶310		336	344-1053	138
	9	338-1508	292	340-6918	▶159	344-1055	138
	10	338-2412	334		556	344-1302	▶356
	▶49		335		557	344-1303	▶356
334-7225	556	338-2415	326		558	344-2170	350
	557	338-2416	327		559	344-2171	350
	558		336	340-7024	290	344-2543	461
	559	338-2442	334	340-7025	290	344-2567	441

▶ **PRIMARY REFERENCE**

PART NUMBER INDEX

Part	Page	Part	Page	Part	Page	Part	Page
344-5290	▶323	349-1100	209				
344-5323	420	349-1101	3				
	▶552		▶209				
344-5326	421	349-2773	209				
	535	349-3644	5				
	▶541	350-1078	209				
344-6126	▶407	350-1101	209				
	423	350-2374	14				
344-6127	423	350-3733	463				
	▶424		465				
344-6128	423	350-3842	326				
	▶425		327				
344-6129	423		334				
	▶426		335				
344-6130	423		336				
	▶427	350-6933	▶4				
344-6131	423	350-6934	▶2				
	▶428	350-6935	▶2				
344-6132	423	350-6944	▶3				
	▶429	350-6945	▶3				
344-6133	422	350-8841	426				
	▶430		427				
344-6134	422		428				
	▶431		429				
344-6135	422		430				
	▶432		431				
344-6354	▶6		432				
344-7777	385	350-8888	431				
344-7954	160	350-8898	432				
344-8098	401	350-9471	209				
344-8154	401						
344-8163	401						
345-3672	▶321						
	394						
345-3674	▶322						
345-7477	7						
	9						
	▶114						
345-7478	8						
	10						
	▶116						
346-0407	41						
	43						
346-0408	41						
	43						
346-5631	463						
	465						
346-6559	463						
	465						
346-6560	463						
	465						
346-9825	132						
	133						
347-1128	375						
347-1129	375						
347-2208	383						
348-5460	451						
348-5463	452						
348-5464	2						
	▶451						
348-5465	2						
	4						
	▶452						
349-1098	209						
349-1099	209						

▶ **PRIMARY REFERENCE**



© 2009 CATERPILLAR
ALL RIGHTS
RESERVED

CAT, CATERPILLAR, THEIR RESPECTIVE LOGOS, “CATERPILLAR YELLOW” AND THE POWER EDGE TRADE DRESS, AS WELL AS CORPORATE AND PRODUCT IDENTITY USED HEREIN, ARE TRADEMARKS OF CATERPILLAR AND MAY NOT BE USED WITHOUT PERMISSION.

PRINTED IN
U.S.A.