https://www.pdfmanual4trucks.com/

NOVEMBRO 2004

435

Bobcat®

Parts Manual

S/N 5631 11001 & Above

AG SERIES

RUTHZIL TRATOR COMERCIAL DE PEÇAS LTDA 11 97083-6812 ROLANDO

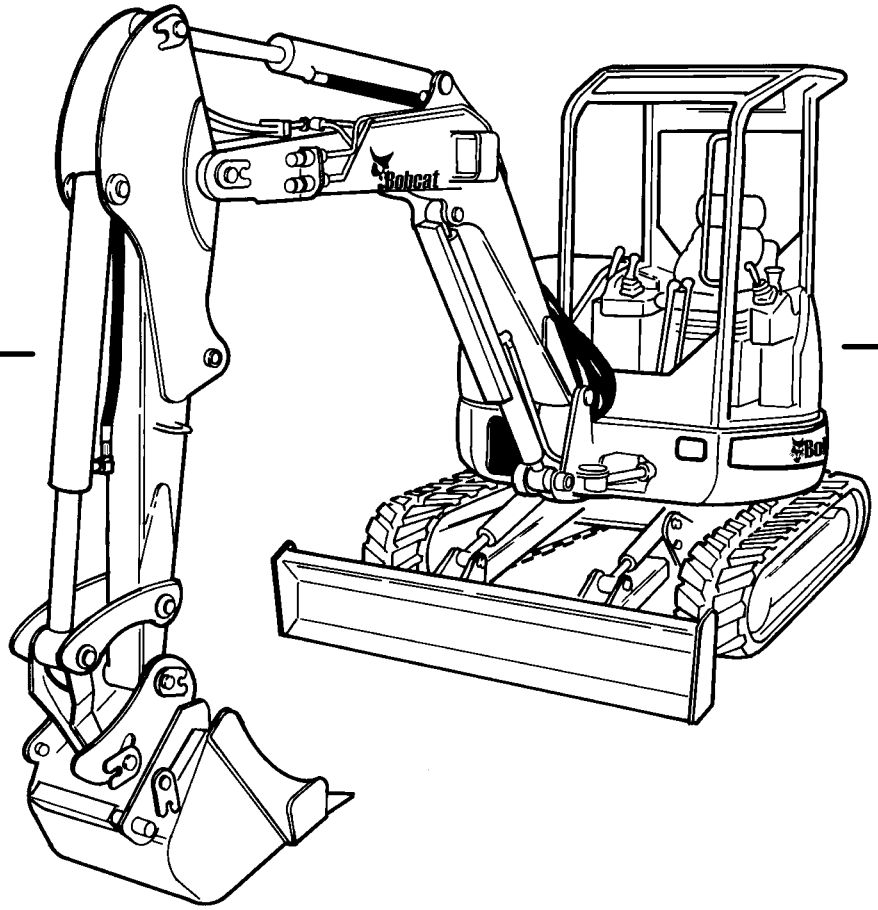

IR Bobcat®

6903361 (11-04)

Printed in U.S.A.

© Bobcat Company 2004

https://www.pdfmanual4trucks.com/

MAINTENANCE ITEMS
Model 435AG

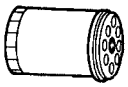
1

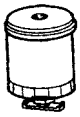
2

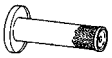
3

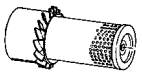
4


5


6

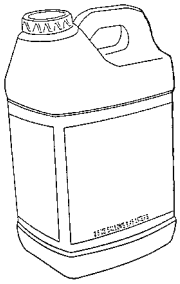
7

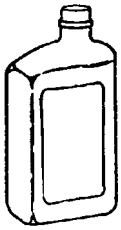
8



9



10

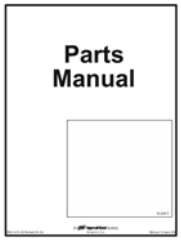

11



12

B-22668

https://www.pdfmanual4trucks.com/

MAINTENANCE ITEMS (Cont'd)
Model 435AG

Ref. No.	Part Number	Description	Remarks	Serial Number	Qty.
1	6675517	FILTER	engine oil - 6 pack -		
			see page NO TAG		x
2	6667352	ELEMENT	fuel - See Page NO TAG		x
	6633977	FILTER	fuel - inline - See Page NO TAG		x
3	6666376	FILTER	air cleaner - primary		x
	6666377	FILTER	inner		x
4	6661248	ELEMENT	hydro - See Page NO TAG		x
	6681012	FILTER	hydraulic - inline - See Page NO TAG		
			x		
5	6673865	BATTERY	See Page NO TAG		x
6	6903117	FLUID	hyd/hydro - (2) 2.5 Gallons -		
			See Page NO TAG		x
	6903118	FLUID	hyd/hydro - 5 Gal.-		
			See Page NO TAG		x
	6903119	FLUID	hyd/hydro - 55 Gal. -		
			See Page NO TAG		x
7	6903105	MOTOR OIL	15W40 CE/SG -1 Qt. -		
			See Page NO TAG		x
	6903106	MOTOR OIL	15W40 CE/SG -1 Gal. -		
			See Page NO TAG		x
	6903113	MOTOR OIL	15W40 CE/SG - 2.5 Gal. -		
			See Page NO TAG		x
	6903107	MOTOR OIL	10W30 CE/SG -1 Qt.		
			See Page NO TAG		x
	6903108	MOTOR OIL	10W30 CE/SG -1 Gal. -		
			See Page NO TAG		x
	6903112	MOTOR OIL	10W30 CE/SG - 2.5 Gal. -		
			See Page NO TAG		x
	6903109	MOTOR OIL	30 CE/SG -1 Qt. -		
			See Page NO TAG		x
	6903110	MOTOR OIL	30 CE/SG -1 Gal. -		
			See Page NO TAG		x
	6903111	MOTOR OIL	30 CE/SG -2.5 Gal. -		
			See Page NO TAG		x
	6903121	LUBRICANT	80W90 - 1Qt. -		
			See Page NO TAG		x
8	6902653	HANDBOOK	operator		x
9	6902330	MANUAL	Operation & Maintenance		x
10	6902331	MANUAL	Service		x
11	6902839	MANUAL	Parts		x

https://www.pdfmanual4trucks.com/

MAINTENANCE SCHEDULE
Model 435AG

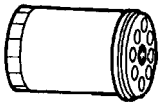



B–24306

https://www.pdfmanual4trucks.com/

MAINTENANCE SCHEDULE (Cont'd)

Model 435AG – 50 Hour Service Schedule

Ref. No.	Part Number	Description	Remarks	Serial Number	Qty.
1	6675517	FILTER	engine oil (6 pack) –		
			See page NO TAG		x
2	6903108	MOTOR OIL	10W30 CE/SG –1 Gal. –		
			See Page NO TAG		x
	6903112	MOTOR OIL	10W30 CE/SG – 2.5 Gal. –		
			See Page NO TAG		x
	6903105	MOTOR OIL	15W40 CE/SG –1 Qt. –		
			See Page NO TAG –		x
	6903106	MOTOR OIL	15W40 CE/SG –1 Gal. –		
			See Page NO TAG		x
	6903113	MOTOR OIL	15W40 CE/SG – 2.5 Gal. –		x
			See Page NO TAG		x
	6903109	MOTOR OIL	30 CE/SG –1 Qt. –		
			See Page NO TAG		x
	6903110	MOTOR OIL	30 CE/SG –1 Gal. –		
			See Page NO TAG		x
	6903111	MOTOR OIL	30 CE/SG –2.5 Gal. –		
			See Page NO TAG –		x

https://www.pdfmanual4trucks.com/

MAINTENANCE SCHEDULE
Model 435AG

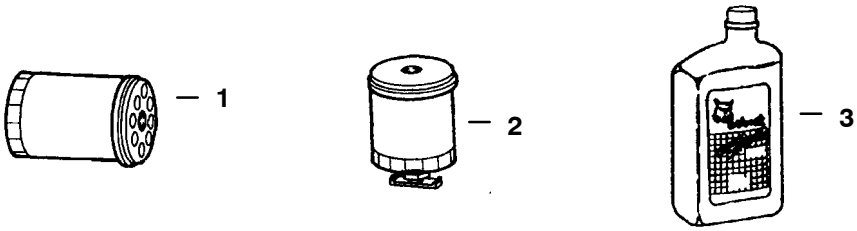

B-24307

https://www.pdfmanual4trucks.com/

MAINTENANCE SCHEDULE (Cont'd)

Model 435AG – 100 Hour Service Schedule

Ref. No.	Part Number	Description	Remarks	Serial Number	Qty.
1	6661248	ELEMENT	hydraulic		x
2	6681012	FILTER	hydraulic in line–casedrain & fan		x
3	6903105	MOTOR OIL	15W40 CE/SG –1 Qt. –		
			See Page NO TAG		x
	6903106	MOTOR OIL	15W40 CE/SG –1 Gal. –		
			See Page NO TAG		x
	6903113	MOTOR OIL	15W40 CE/SG – 2.5 Gal. –		
			See Page NO TAG		x
	6903107	MOTOR OIL	10W30 CE/SG –1 Qt.		
			See Page NO TAG		x
	6903108	MOTOR OIL	10W30 CE/SG –1 Gal. –		
			See Page NO TAG		x
	6903112	MOTOR OIL	10W30 CE/SG – 2.5 Gal. –		
			See Page NO TAG		x
	6903109	MOTOR OIL	30 CE/SG –1 Qt. –		
			See Page NO TAG		x
	6903110	MOTOR OIL	30 CE/SG –1 Gal. –		
			See Page NO TAG		x
	6903111	MOTOR OIL	30 CE/SG –2.5 Gal. –		
			See Page NO TAG		x

https://www.pdfmanual4trucks.com/

MAINTENANCE SCHEDULE
Model 435AG



B-24308

https://www.pdfmanual4trucks.com/

MAINTENANCE SCHEDULE (Cont'd)

Model 435AG – 250 Hour Service Schedule

Ref. No.	Part Number	Description	Remarks	Serial Number	Qty.
1	6633977	FILTER	fuel – inline		x
2	6667352	ELEMENT	fuel		x

https://www.pdfmanual4trucks.com/

MAINTENANCE SCHEDULE
Model 435AG

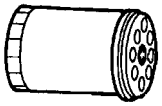

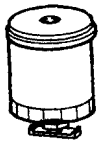





B-24309

https://www.pdfmanual4trucks.com/

MAINTENANCE SCHEDULE (Cont'd)

Model 435AG – 500 Hour Service Schedule

Ref. No.	Part Number	Description	Remarks	Serial Number	Qty.
1	6675517	FILTER	engine oil (6 pack) –		
			See page NO TAG		x
2	6661248	ELEMENT	hydraulic		x
	6681012	FILTER	hydraulic in line–casedrain & fan		x
3	6903117	FLUID	hyd/hydro – (2) 2.5 –		
			See Page NO TAG		x
	6903118	FLUID	hyd/hydro – 5 Gal.–		
			See Page NO TAG		x
	6903119	FLUID	hyd/hydro – 55 Gal. –		
			See Page NO TAG		x
4	6903108	MOTOR OIL	10W30 CE/SG –1 Gal. –		
			See Page NO TAG		x
	6903112	MOTOR OIL	10W30 CE/SG – 2.5 Gal. –		
			See Page NO TAG		x
	6903105	MOTOR OIL	15W40 CE/SG –1 Qt. –		
			See Page NO TAG		x
	6903106	MOTOR OIL	15W40 CE/SG –1 Gal. –		
			See Page NO TAG		x
	6903113	MOTOR OIL	15W40 CE/SG – 2.5 Gal. –		
			See Page NO TAG –		x
	6903107	MOTOR OIL	10W30 CE/SG –1 Qt.		
			See Page NO TAG		x
	6903109	MOTOR OIL	30 CE/SG –1 Qt. –		
			See Page NO TAG		x
	6903110	MOTOR OIL	30 CE/SG –1 Gal. –		
			See Page NO TAG		x
	6903111	MOTOR OIL	30 CE/SG –2.5 Gal. –		
			See Page NO TAG		x

https://www.pdfmanual4trucks.com/

GENERAL INFORMATION

When using the machine serial number, use the complete number.

Some Serial Number breaks are not available at time of printing. These are listed as & Below or & Above.

The number shown in the quantity column in this manual is the number of parts needed for the illustration on the page. For some parts an "x" will be shown in the quantity column. This "x" indicates that the quantity to be used is "As Needed".

When references L.H. and R.H. are used in this manual, it is done from the operator's seat in the forward operating position.

Some of the illustrations and information found in this parts manual were supplied to Bobcat by machine component companies.

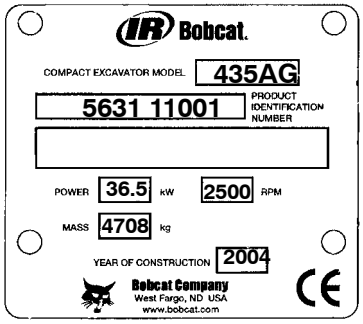

ABBREVIATIONS & SYMBOLS

SALES = Order from Gwinner Sales Department

NSS = Not Serviced Seperately

NAP = Not Available as Parts

*** = Changed or Added Sections, Pages or Part Numbers**

Disposition Code Definition (Found in the Remarks Column)

[A] = Use Up

[B] = Use Up on Other Appplication (See PNI)

[C] = File PDR Report With Bobcat Parts Sales

[D] = Part Number Error

Explications en francais	**Grid Nb**	**3**
Erklärungen auf deutsch	**Grid Nb**	**4**
Spiegazioni in italiano	**Grid Nb**	**5**
Explicaciones en espanol	**Grid Nb**	**6**
Verklaring in het Nederlands	**Grid Nb**	**7**

https://www.pdfmanual4trucks.com/

NOTE D'INFORMATION

Pour toute référence au numéro de série de l'engin, toujours donner le numéro complet.

Le chiffré apparaissant dans la colonne des quantités de ce manuel représentent le nombre de pièces nécessaires pour l'illustration reprise sur la page. Dans certains cas, on lira un "x" dans la colonne des quantités. Cet "x" indique que la quantité nécessaire est "selon besoin".

Pour toute référence vers la GAUCHE ou la DROITE dans ce manuel, considérer que la personne se trouve assise dans le siège de l'opérateur, en position de fonctionnement en marche avant.

Certaines illustrations et informations reprises dans ce manuel de pièces de rechange ont été fournies à Bobcat, par des fabricants de composants.

ABREVIATIONS & SYMBOLES

SALES	= Commander au Service Ventes à Bruxelles
NSS	= Pas vendu séparément
NAP	= Non disponible comme pièce de rechange
	= Chapitre, page ou numéro de pièce modifié ou supplémentaire
BTI	= Bobcat Technical Information Bulletin : voir à la fin de la microfiché du modèle concerné ou la microfiche générale reprenant l' ensemble des "BTI".
was 6535403	= était avant 6535403
adj. (adjustment)	= réglage
Assembly	= ensemble
available W/Ref.	= disponible avec réf.
bulk/sold per foot	= en vrac/vendu par pied
does not include	= ne comprend pas
included with	= compris dans
I.D.	= D.I. (diamètre intérieur)
O.D.	= D.E. (diamètre extérieur)
not in kit	= pas en kit
W/ – WO/	= inclus/ – non inclus/
Qty	= quantité requise
see page/ref.	= voir page/réf.
used with ref/	= utilisé avec réf.
0,05 inch thickness	= 0,05 pouce d'épaisseur (un pouce = 25.4 mm)
weld on	= à souder

https://www.pdfmanual4trucks.com/

ALLGEMEINE INFORMATIONEN

Bei Angabe der Maschinen–Seriennummer stets die komplette Nummer angeben.

Bei der in der Mengenspalte (Anzahl) in diesem Handbuch angegebenen Zahl handelt es sich um die Anzahl von Teilen, die für die Abbildung auf der betreffenden Seite benötigt werden. Bei manchen Teilen in der Mengenspalte ist ein “x” angegeben. Dieses “x” weist darauf hin, dass sich die Anzahl der verwendeten Teile auf den “Bedarf” bezieht.

Bei Verwendung der Seitenangaben links und rechts in diesem Handbuch gelten diese für die Blickrichtung vom Fahrersitz aus, und zwar in Vorwärts–Betriebsrichtung.

Einige der in diesem Ersatzteilhandbuch aufgeführten Abbildungen und Informationen wurden der Bobcat, von den Herstellern von Maschinenbauteilen zur Verfügung gestellt.

ABKÜRZUNGEN UND SYMBOLE

SALES	= Bestellung bei der Verkaufsabteilung in Brüssel
NSS	= Nicht einzeln erhältlich
NAP	= Nicht als Ersatzteil erhältlich
	= Geänderte oder hinzugefügte Abschnitte, Seiten oder Teilenummern
BTI	= Bobcat Technical Information Bulletin : Siehe am Ende der Mikrokarte des jeweiligen Modells oder der allgemeinen Mikrokarte der BTI.
was 6535403	= War 6535403
adj.	= Einstellung
Assembly	= Baugruppe
available W/Ref.	= erhältlich mit der Referenz
bulk/sold per foot	= Mengenabnahme / Verkauf pro Fuss
does not include	= beinhaltet nicht
included with	= enthalten in
I.D.	= Innendurchmesser
O.D.	= Aussendurchmesser
not in kit	= nicht in Bausatz
W/ – WO/	= mit/ – ohne/
Qty	= Anzahl
see page/ref.	= Siehe Seite / Referenz
used with ref.	= verwendet mit Referenz
0.05 inch thickness	= Dicke : 0.05 Zoll (ein Zoll = 25.4 mm)
weld on	= anschweissen

https://www.pdfmanual4trucks.com/

INFORMAZIONI GENERALI

Quando si usa il numero di serie della macchina usare il numero completo.

Il numero mostrato nella colonna della quantità di questo manuale corrisponde al numero di componenti necessari per l'illustrazione della pagina. Per alcuni componenti appare "X" nella colonna delle quantità. Questa "X" indica che la quantità da usare è "come necessario".

See in questo manuale si fa riferimento alla parte destra o sinistra, si intende dal sedile dell'operatore nella posizione in avanti di funzionamento.

Alcune delle illustrazioni e informazioni trovate in questo manuale di componenti sono state fornite alla Bobcat, da società di componenti di macchine.

SIMBOLI E ABBREVIAZIONI

SALES	= Ordinare al servizio vendite di Bruxelles
NSS	= Non vendute separatamente
NAP	= Non disponibile come componente
	= Sezioni, pagine o numeri di componente cambiati o aggiunti
BTI	= (Bobcat Technical information) Ved. al termine del microfiche del modello relativo oppure microfiche generale
was 6535403	= era 6535403
adj. (adjustment)	= regol. (regolazione)
Assembly	= Complessivo
available W/ref.	= disponibile con rif.
bulk/sold per foot	= alla rinfusa/venduto al piede
does not include	= non comprende
Included with	= compreso con
I.D.	= d. i.
O.D.	= d. e.
not in kit	= non fa parte del kit
W/ – WO/	= con – senza
Qty	= Qtà
see page/ref	= ved. pagina/rif.
used with ref.	= usato con il rif.
0,05 inch thickness	= spessore 0,05 pollici (un pollice = 25,4 mm)
weld on	= a saldare

https://www.pdfmanual4trucks.com/

INFORMACION GENERAL

Al utilizar el número de serie de la máquina, debe emplearse el número completo.

El número que figura en la columna de “Unidades” en este manual es el número de piezas que se necesitan para la ilustración que consta en la página. En algunas piezas aparece una “x” en la columna de “Unidades”. Esta “x” indica que las unidades a utilizar son “según sea necesario”.

Cuando se empleen las referencias izq. y dcha., éstas se entienden mirando desde el asiento del conductor, en posición de marcha adelante.

Algunas de las ilustraciones y la información que figuran en este manual de piezas han sido facilitadas a Bobcat, por empresas de componentes de máquinas.

ABREVIATURAS Y SIMBOLOS

VENTAS	= Pedido al Departamento de Ventas de Bruselas
NSS	= No se vende por separado
NAP	= No disponible como pieza de repuesto
	= Secciones, páginas o referencias modificadas o añadidas
BTI	= (Bobcat Tecnical Information) Ver al final de la microficha del modelo afectado o en la microficha general “Boletín de Información Técnica Bobcat”.
was 6535403	= era anteriormente el 6535403
adj. (adjustment)	= ajuste
assembly	= conjunto
available W/Ref.	= disponible con la ref.
bulk/sold per foot	= a granel/vendido por pies
does not include	= no incluye
included with	= incluido en
I.D.	= diámetro interior
O.D.	= diámetro exterior
not in kit	= no en el kit
W/ - WO/	= con/ – sin
Qty	= Unidades
see page /ref.	= ver página/ref.
used with ref.	= empleado con la ref.
0,05 inch thickness	= 0,05 pulgadas de espesor (1 pulgada = 25,4 mm)
weld on	= debe ser soldado

https://www.pdfmanual4trucks.com/

ALGEMENE INFORMATIE

Als u het serienummer van de machine gebruikt, geef dan het gehele serienummer.

Het cijfer dat voorkomt in de kolom “Aantal”, in deze handleiding, is het aantal onderdelen dat nodig is van de illustratie op de pagina. Voor sommige onderdelen staat er een “x” in de kolom “Aantal”. Deze “x” betekent dat er een aantal “zoals nodig” vereist is.

Wanneer er in deze handleiding naar “links” en naar “rechts” gerefereerd wordt, moet dit verstaan worden voor een bestuurder die in de bestuurdersstoel zit in de voorwaartse bedrijfsstand.

Sommige van de illustraties en informatie in deze onderdelen-handleiding werden door firma’s van machine-componenten geleverd aan Bobcat.

AFKORTINGEN EN SYMBOLEN

SALES	= Bestellen bij de Verkoopafdeling te Brussel
NSS	= Niet afzonderlijk te verkrijgen
NAP	= Niet beschikbaar als onderdeel
	= Gewijzigde of toegevoegde paragrafen, pagina’s of onderdeelnummers
BTI	= Bobcat Technical Information Bulletin : Zie einde van de microfiche van het desbetreffende model of einde van de algemene microfiche die het geheel van alle “BTI” herneemt.
was 6535403	= was vroeger 6535403
adj. (adjustment)	= afstelling
Assembly	= geheel
available W/Ref.	= beschikbaar met ref.
bulk/sold per foot	= bulk/aan de meter verkocht
does not include	= bevat niet
includes with	= is bevat in
I.D.	= ϕ inw. (inwendige diameter)
O.D.	= ϕ uitw. (uitwendige diameter)
not in kit	= niet in de kit
W/ - WO/	= met/ - zonder/
Qty	= vereiste aantal
see page/ref.	= zie pagina/ref.
used with ref/	= gebruikt met ref.
0,05 inch thickness	= 0.05 inch dik (een inch = 25.4 mm)
weld on	= te lassen

https://www.pdfmanual4trucks.com/

435AG ALPHABETICAL INDEX

A/C UPGRADE KIT 238
ADHESIVE 300
ALARM 176, 270
ALTERNATOR 180
ANTI-FREEZE 300
ARMREST 68, 70
BEACON 240, 286
BUCKET 244
CAB 36, 38
CANOPY 40
CONSOLE 68, 70
CYLINDER HEAD 194
CYLINDER, ARM 162
CYLINDER, BLADE 164
CYLINDER, BOOM 166
CYLINDER, BUCKET 168
CYLINDER, SWING 170
DECALS 246
DOOR 26
ENGINE 188
FAN 218
FLOORMAT 38, 40
HYD/HYDRO FLUID 300
IDLER 48, 202
INSULATION 42
KEY 174
LUBRICANT 300
MOTOR, FAN 116
MOTOR, SWING 108
OIL COOLER 234
OIL 300
OIL PAN 192
PAINT 300
PISTON 204
POLISH 300
PUMP, WATER 224
RADIO 272
ROLLER 54, 56, 58
SEALANT 300
SEAT BELT 276
SEAT 30
SENSOR 178
STARTER 182
TAILGATE 22
THERMOSTAT 222
UNDERCARRIAGE 46
WINDOW 24, 32
X-CHANGE 296

https://www.pdfmanual4trucks.com/

435AG CONTENTS

MAIN FRAME **19-44**
UPPERSTRUCTURE & TAILGATE 19–22
OPERATOR CAB 23–40
INSULATION & R.H. COVER 41–44
UNDERCARRIAGE **47-66**
FRONT IDLER 47–52
TRACK ROLLER 53–58
WORK EQUIPMENT **61-68**
SWING FRAME 59–60
ARM, BOOM & BLADE 61–66
CONTROL CONSOLE **67-78**
R.H. CONSOLE 67–70
BLADE & THROTTLE CONTROLS 71–74
TRAVEL 75–78
HYDRAULIC CIRCUITRY **79-170**
HYDRAULIC CIRCUITRY 79–98
HYDROSTATIC OIL FILTER 99–100
ISO/STD 101–101
LOCK VALVE 103–104
RELIEF/BRAKE VALVE 105–106
SWING MOTOR & FAN MOTOR 107–116
R.H. & L.H. JOYSTICK 117–120
TRAVEL CONTROLLER & TRAVEL MOTOR 121–123
ROTARY GROUP 125–128
PRESSURE VALVE & RINGS 129–131
HYDRAULIC TANK & SWIVEL ASSY 133–136
CONTROL VALVE 137–160
CYLINDERS 161–170
ELECTRICAL **171-182**
ELECTRICAL 171–178
ALTERNATOR & STARTER 179–182
POWER UNIT **183-236**
ENGINE & ATTACHING PARTS 183–188
ENGINE BREAKDOWN 189–234
FUEL SYSTEM 235–236
ACCESSORIES & OPTIONS **237-296**
AIR CONDITIONER UPGRADE KIT 237–238
BEACON KIT & BLOCK HEATER KIT 239–242
BUCKET & DECALS 243–246
DIRECT TO TANK 247–248
HEATER BOX & KIT & HVAC 249–264
KEYLESS IGNITION KIT 265–266
LONG ARM KIT & MOTION ALARM KIT 267–270
RADIO KIT & SECONDARY AUXILIARY KIT 271–274
SEAT BELT KIT & SOLAR KIT 275–278
SPECIAL APPLICATION KIT & STEEL TRACK KIT 279–284
STROBE LIGHT KIT 285–286
TOP GUARD KIT & TOP GUARD LIGHT KIT 287–290
X–CHANGE 291–296
BULK ITEMS **299–300**
NUMERICAL INDEX **301**

https://www.pdfmanual4trucks.com/

MAINTENANCE ITEMS

Ref.	Part Number	Description	Remarks
1	6675517	FILTER	ENGINE OIL - 6 PACK
2	6667352	FILTER FUEL	FUEL
2	6633977	FILTER	FUEL - INLINE
3	6666376	FILTER	air cleaner - primary
3	6666377	FILTER	inner
4	6661248	ELEMENT	HYDRO
4	6681012	FILTER	HYDRAULIC - INLINE
5	6673865	BATTERY	
6	6903117	HYD FLUID 2.5 GAL.	HYD/HYDRO - (2) 2.5 GALLONS
6	6903118	HYD. FLUID 5GAL	HYD/HYDRO - 5 GALLONS
6	6903119	HYD. FLUID 55GAL	HYD/HYDRO - 55 GALLONS
7	6903105	OIL 15W40 QT. 12	15W40 CE/SG -1 QT.
7	6903106	OIL 15W40 GAL. 6	15W40 CE/SG -1 GALLON
7	6903113	OIL 15W40 2.5 GAL. 2	15W40 CE/SG - 2.5 GALLONS
7	6903107	OIL 10W30 QT. 12	10W30 CE/SG -1 QT.
7	6903108	OIL 10W30 GAL. 6	10W30 CE/SG -1 Gallon -
7	6903112	OIL 10W30 2.5 GAL 2	10W30 CE/SG - 2.5 GALLONS
7	6903109	OIL 30W QT. 12	30 CE/SG -1 QT.
7	6903110	OIL 30W GAL. 6	30 CE/SG -1 GALLON
7	6903111	OIL 30W 2.5 GAL 2	30 CE/SG -2.5 GALLONS
7	6903121	GEAR LUBE 12	80W90 - 1QT.
8	6902653	HANDBOOK	operator
9	6902330	MANUAL	Operation & Maintenance
10	6902331	MANUAL	Service
11	6902839	MANUAL	Parts

https://www.pdfmanual4trucks.com/

https://www.pdfmanual4trucks.com/

https://www.pdfmanual4trucks.com/

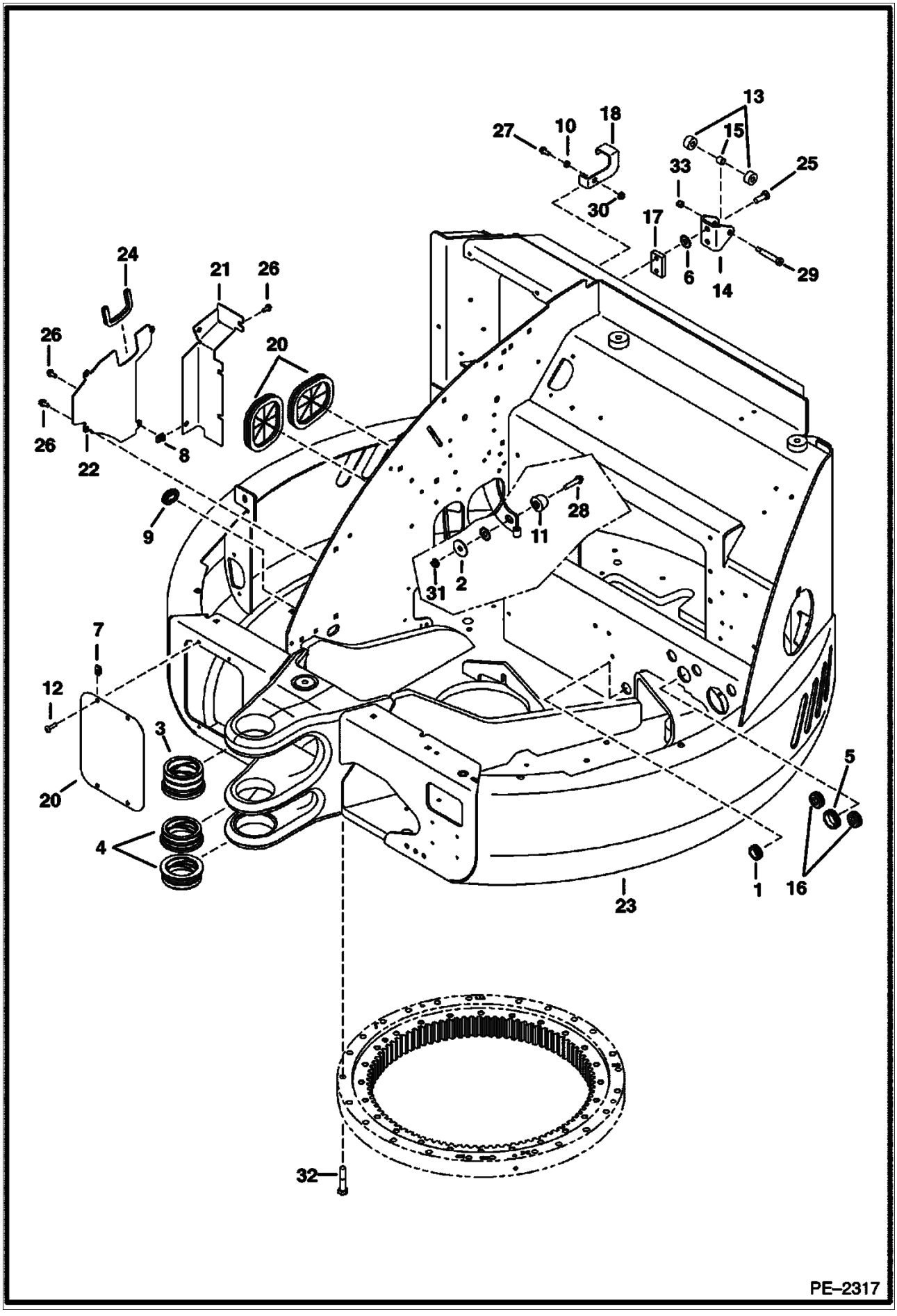

https://www.pdfmanual4trucks.com/

Ref. No.	Part Number	Description	Remarks	Serial Number	Qty.
1	6515603	GROMMET			1
2	6560899	WASHER	flat		1
3	6628101	BUSHING			1
4	6628102	BUSHING			2
5	6670119	GROMMET			1
6	6675273	WASHER			2
7	6676026	NUT			4
8	6676169	NUT	clip		2
9	6681886	GROMMET			1
10	6807220	SPACER			1
11	6808365	BUMPER			1
12	6809030	SCREW			4
13	6809726	ROLLER			2
14	6809727	STRIKER			4
15	6809734	BUSHING			1
16	6810133	GROMMET			2
17	6810802	BAR	striker		1
18	6811886	PLATE			1
19	6814926	GROMMET			2
20	6816555	SCREEN			1
21	7101106	COVER			1
22	7101107	COVER			1
23	7102847	UPPERSTRUCTURE			1
24	7104660	SEAL			1
25	17C000820B	BOLT			2
26	26GM08020B	SCREW			7
27	29CM00820B	BOLT			1
28	29CM01050B	SCREW			1
29	38C000840B	BOLT			1
30	43DM00008B	NUT			1
31	51DM00010B	NUT			1
32	55CM01470B	SCREW			24
33	59D000006B	NUT			1

https://www.pdfmanual4trucks.com/

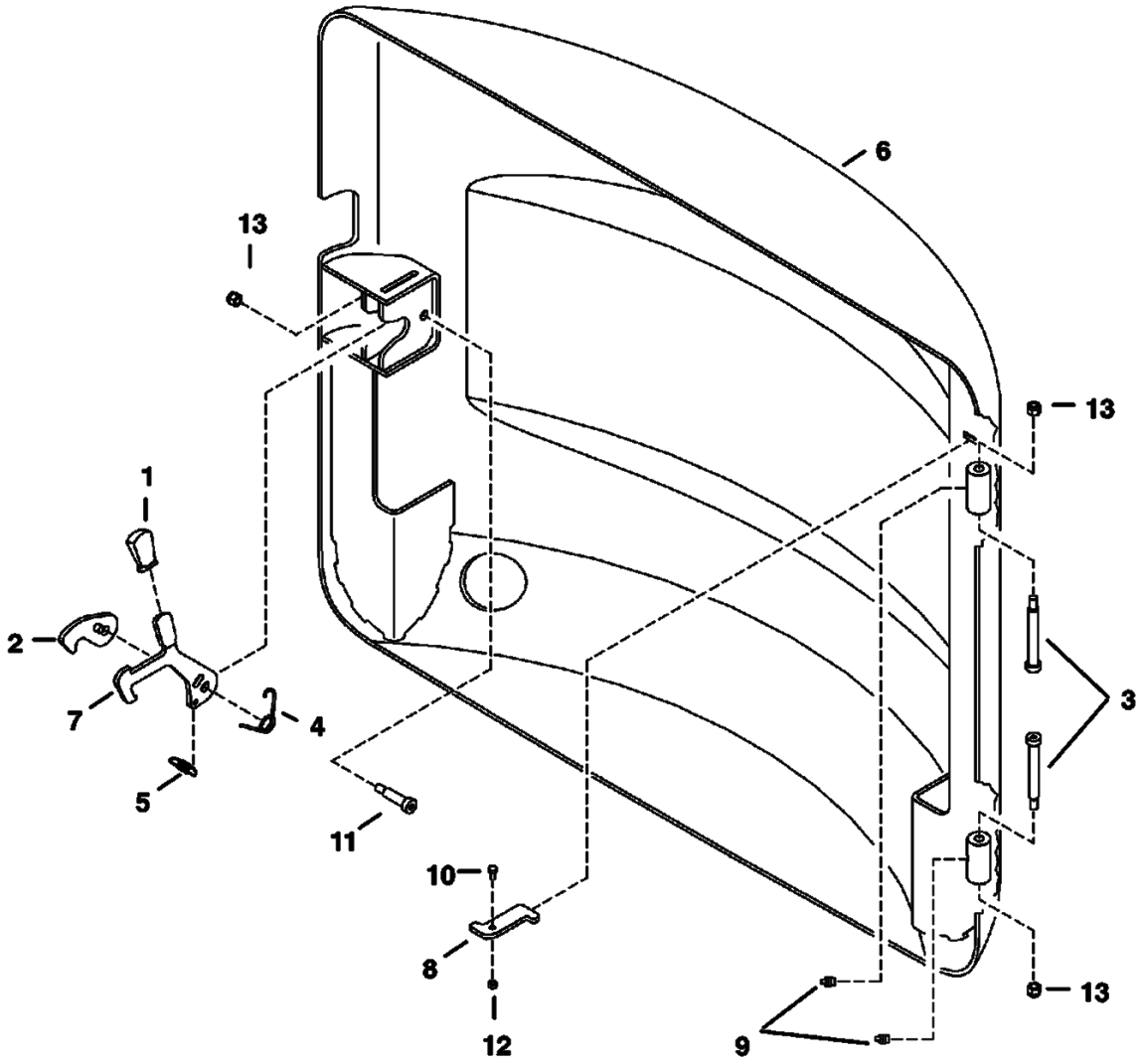

https://www.pdfmanual4trucks.com/

Ref. No.	Part Number	Description	Remarks	Serial Number	Qty.
1	6564452	GRIP			1
2	6733667	LATCH			1
3	6809845	BOLT			2
4	6810132	SPRING			1
5	6810141	SPRING	extension		1
6	6810971	TAILGATE			1
7	6812988	HANDLE	latch		1
8	6808706	STOP	tailgate		1
9	10H000025B	GREASE ZERK	grease		2
10	1CM00612B	SCREW			1
11	38C000824B	BOLT			1
12	4DM00006B	NUT			1
13	59D000006B	NUT			3

https://www.pdfmanual4trucks.com/

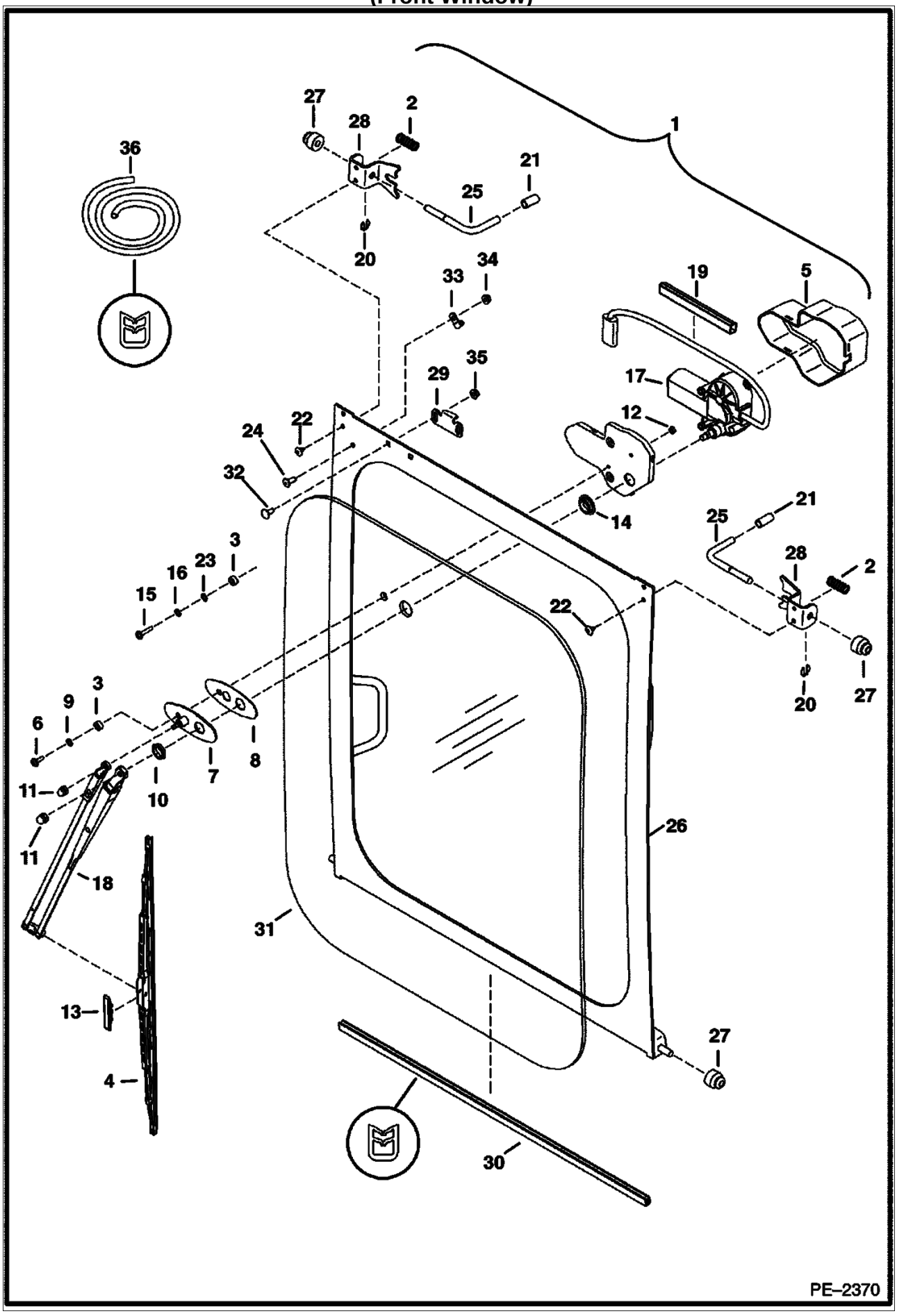

https://www.pdfmanual4trucks.com/

(Front Window)

Ref. No.	Part Number	Description	Remarks	Serial Number	Qty.
1	6812705	WINDOW	assy - W/Ref. 2-14, 17-16		1
2	6610082	SPRING			2
3	6664085	BUSHING			1
4	6677834	BLADE	wiper		1
5	6685140	COVER	motor		1
6	6677837	BOLT			1
7	6677839	GASKET			1
8	6677840	SWIVEL ASSY			1
9	6677841	WASHER			1
10	6677842	NUT			1
11	6677843	NUT			1
12	6677844	NUT			2
13	6677845	ADAPTER			1
14	6677847	GROMMET			1
15	51DM00006B	NUT			2
16	6682492	TRIM	bulk - sold per foot		3
17	6684139	MOTOR			1
18	6680180	ARM			1
19	6680971	RETAINER			1
20	6681651	RING	retaining		2
21	6681652	CAP			2
22	6808882	ADHESIVE			1
23	6589675	SCREW			4
24	6803202	SCREW			1
25	6812413	PIN			2
26		WINDOW	NAP - frame - order Ref. 1		1
27	6813028	ROLLER			4
28	6814423	BRACKET			2
29	6816437	BRACKET			1
30		SEAL	NAP - use 33" (839mm) of Ref. 16		1
31		WINDOW	NAP - front		1
32	21CM00616B	BOLT			2
33	30H000010B	CLAMP			1
34	43DM00006B	NUT			2
35	51DM00006B	NUT			2
36	6682492	TRIM	Bulk - Sold Per Foot		x

https://www.pdfmanual4trucks.com/

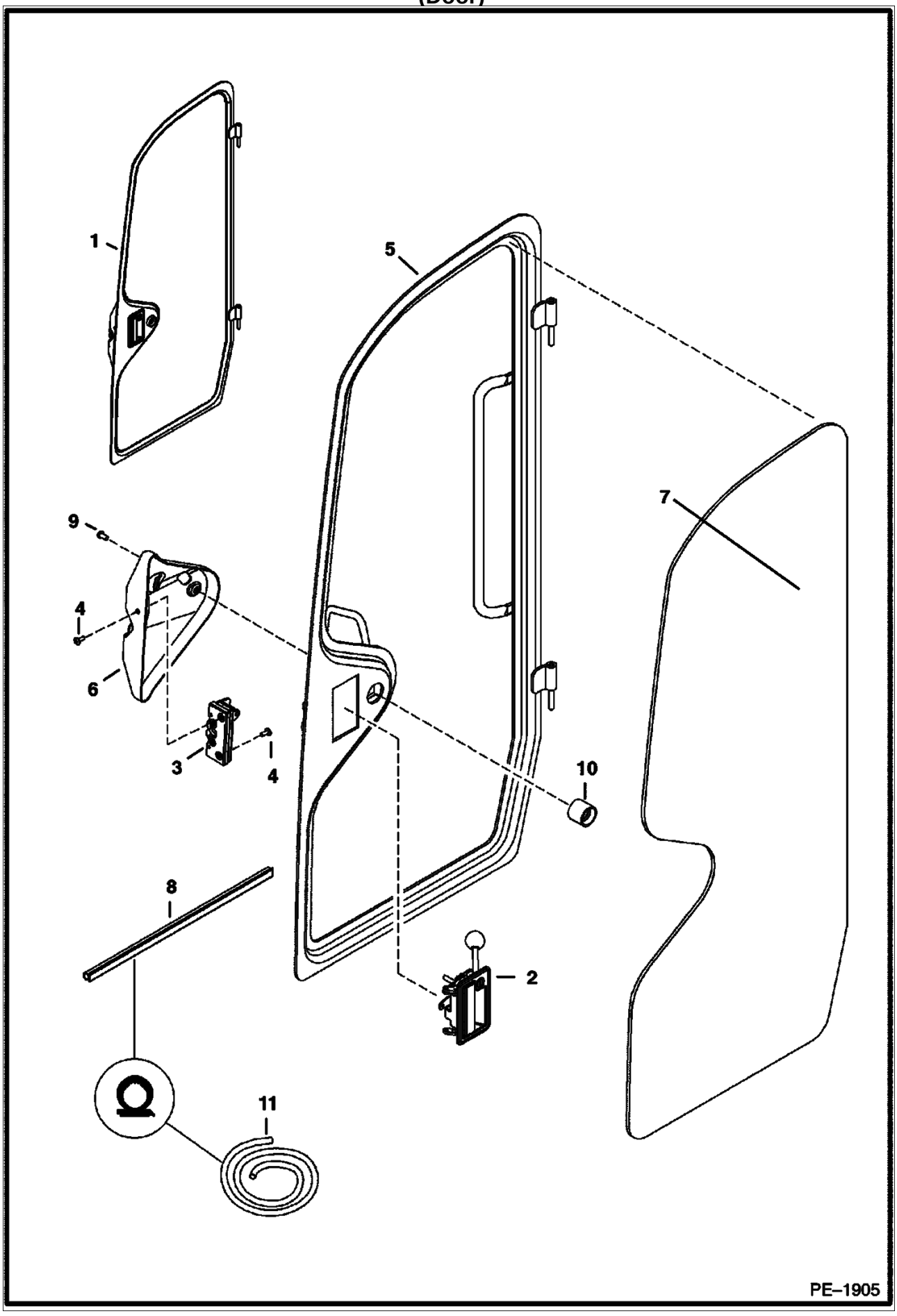

OPERATOR CAB (Cont'd)

https://www.pdfmanual4trucks.com/

(Door)

Ref. No.	Part Number	Description	Remarks	Serial Number	Qty.
1	6810944	DOOR	assy - W/Ref. 2 - 11		1
2	6679885	HANDLE	door		1
2		KEY			1
3	6679886	LATCH			1
4	6803202	SCREW			4
5		DOOR	NAP - assy - order 6810944		1
6	6813574	COVER	latch		1
7		DOOR	NAP - glass - order 6810944 assy		1
8		SEAL	NAP - door - use 22.5" (571.5mm) of Ref. 11		1
9	25G000510B	SCREW	socket		1
10	6675386	SOCKET			1
11	6684518	SEAL	bulk - sold per foot		x

https://www.pdfmanual4trucks.com/

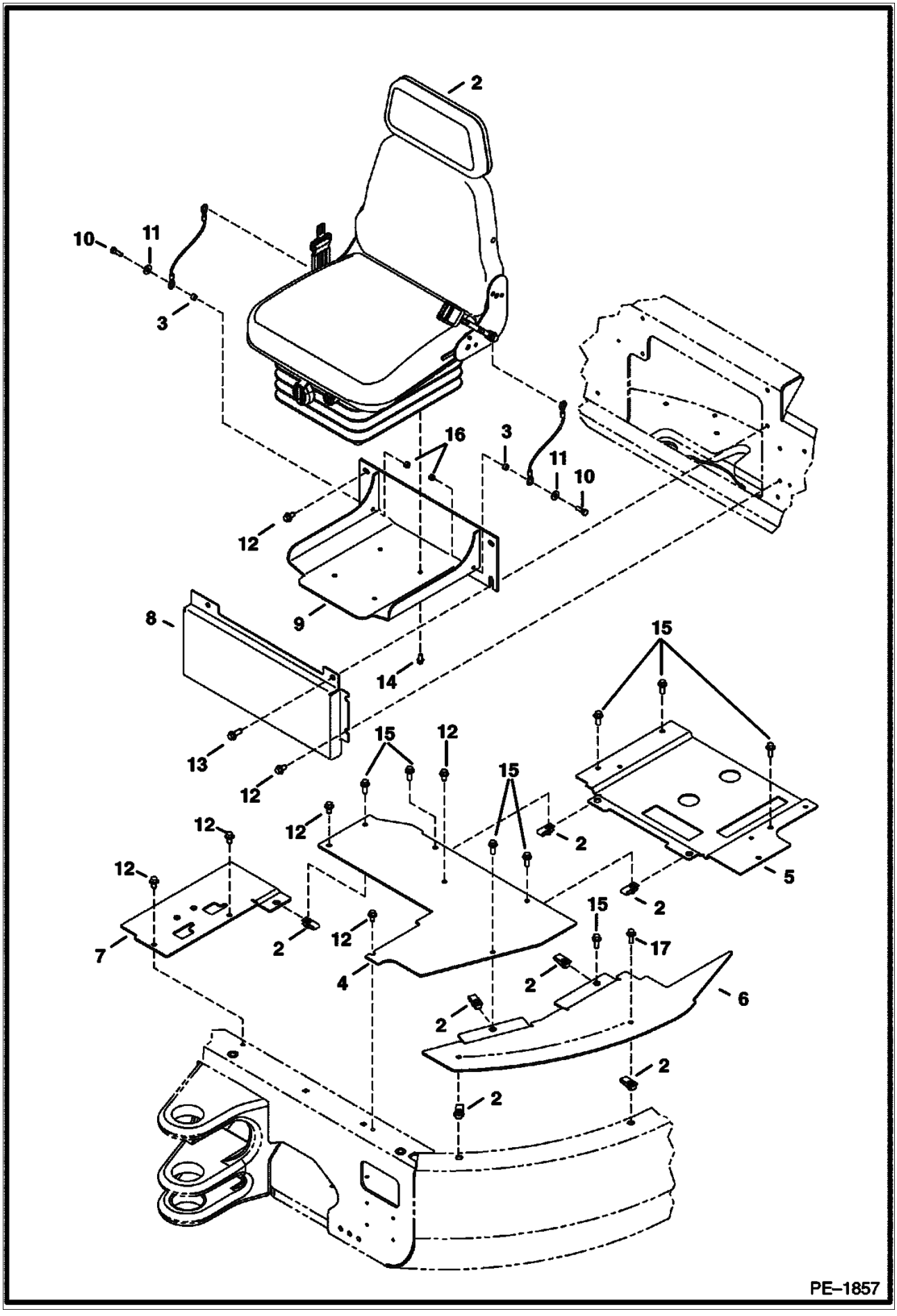

https://www.pdfmanual4trucks.com/

Ref. No.	Part Number	Description	Remarks	Serial Number	Qty.
1	6675722	NUT			7
2	6685657	SEAT	See Illustration SEAT SUSPENSION/ PE2300 NO SEAT BELT OR HARDWARE		1
3	6802539	SPACER			2
4	6812296	PLATE	front		1
5	6812297	PLATE	rear		1
6	6812298	PLATE			1
7	6812299	PLATE			1
8	6812458	PLATE			1
9	6814192	SEAT			1
10	1CM00825B	BOLT			2
11	25E000016B	WASHER			2
12	26GM10020B	SCREW			9
13	26GM10030B	SCREW			2
14	29CM00816B	SCREW			4
15	29CM01025B	SCREW			8
16	53DM00008B	NUT			7

SEAT SUSPENSION
https://www.partmanual4trucks.com/
(Vinyl)

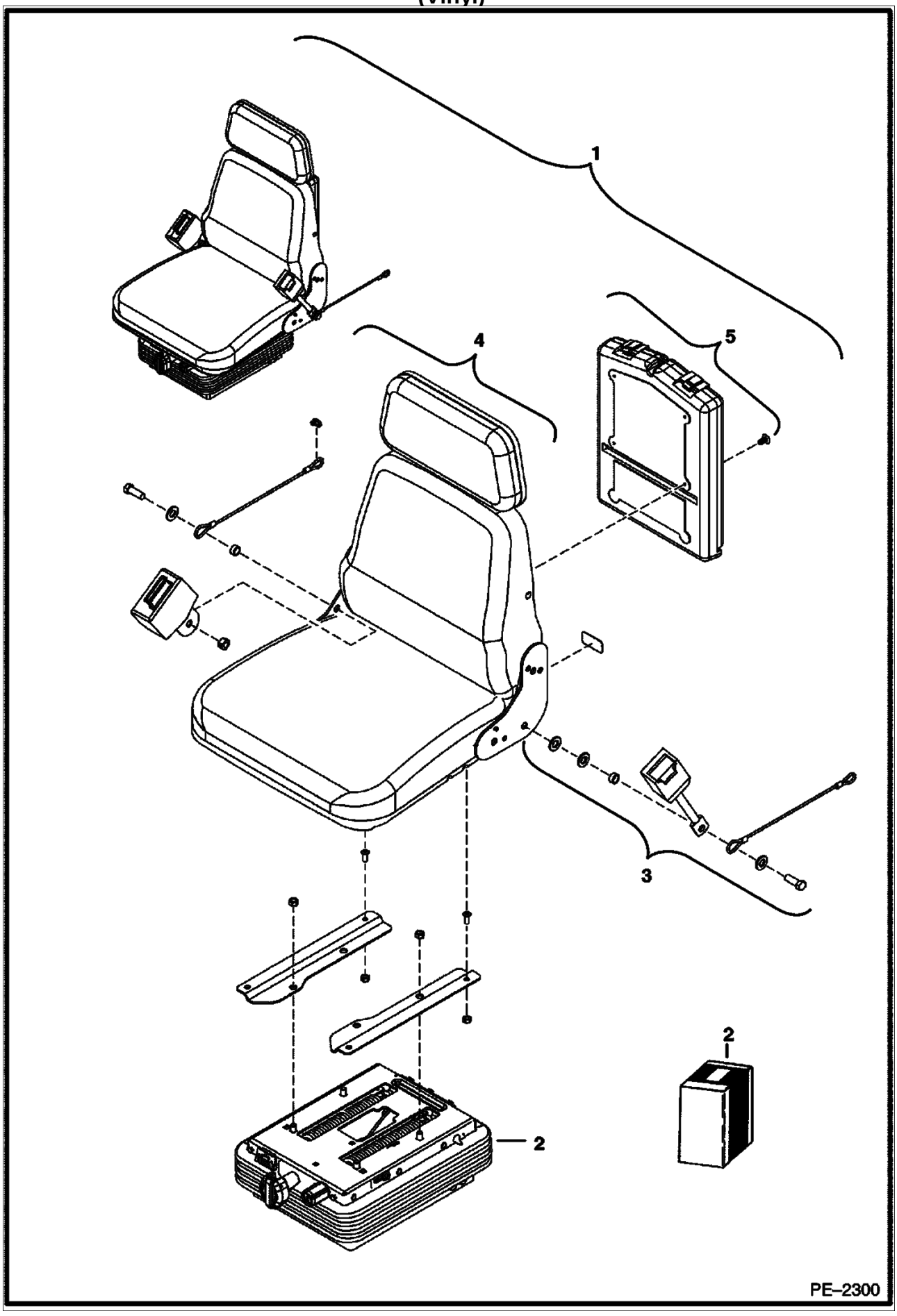

SEAT SUSPENSION (Cont'd)

https://www.pdfmanual4trucks.com/

(Vinyl)

Ref. No.	Part Number	Description	Remarks	Serial Number	Qty.
1		SEAT	NAP - assy - order 6685657		1
1	6685657	SEAT	assy		1
2	6686151	SUSPENSION	assy		1
3	6686089	KIT	seat belt		1
4	6686088	KIT	seat - top, bottom & back cushions on frame		1
5	6686150	BOX	manual w/hardware		1

RIGHT WINDOW

https://www.pdfmanual4trucks.com/

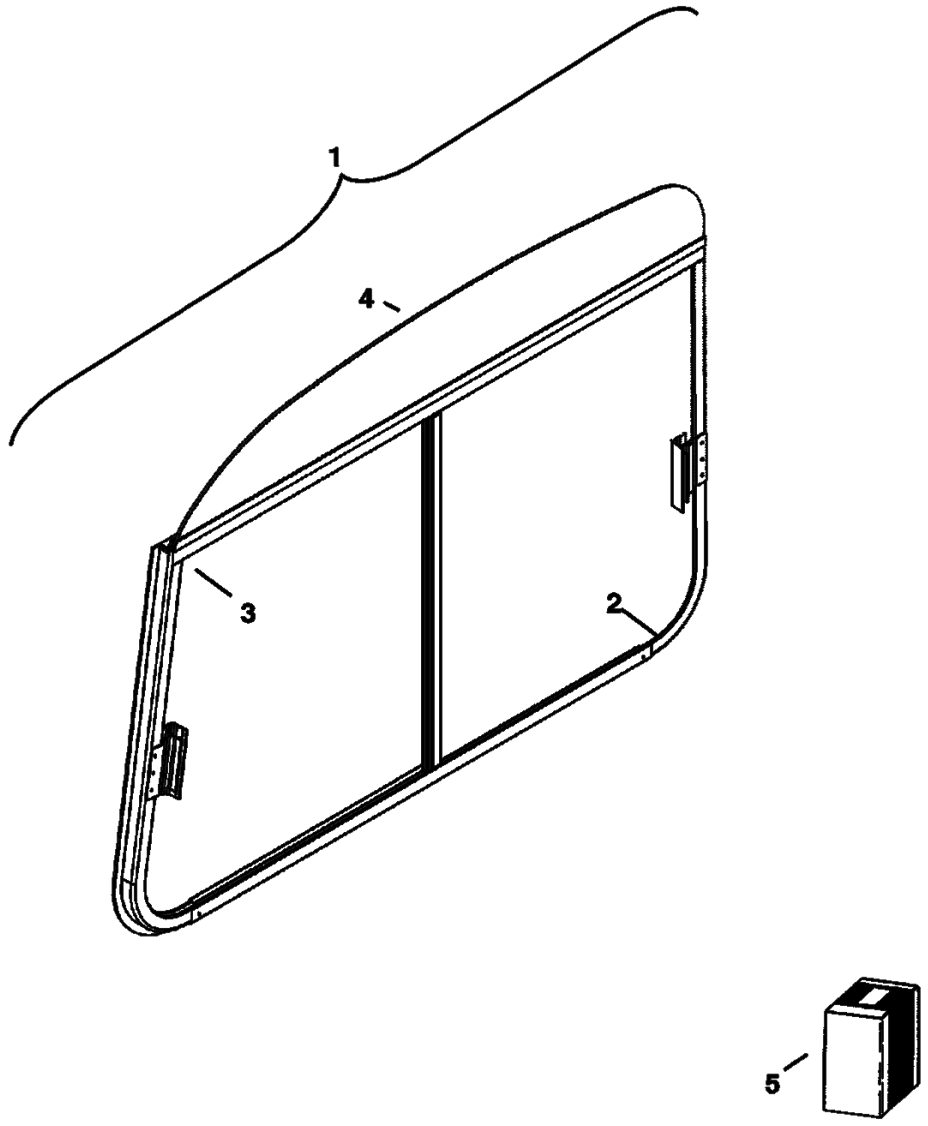

PE--2297

https://www.pdfmanual4trucks.com/

Ref. No.	Part Number	Description	Remarks	Serial Number	Qty.
1	7100571	WINDOW	assy		1
2	6685772	WINDOW	rear		1
3	6685773	WINDOW	front		1
4	6685774	FRAME			1
5	6679641	LATCH KIT			1

https://www.pdfmanual4trucks.com/

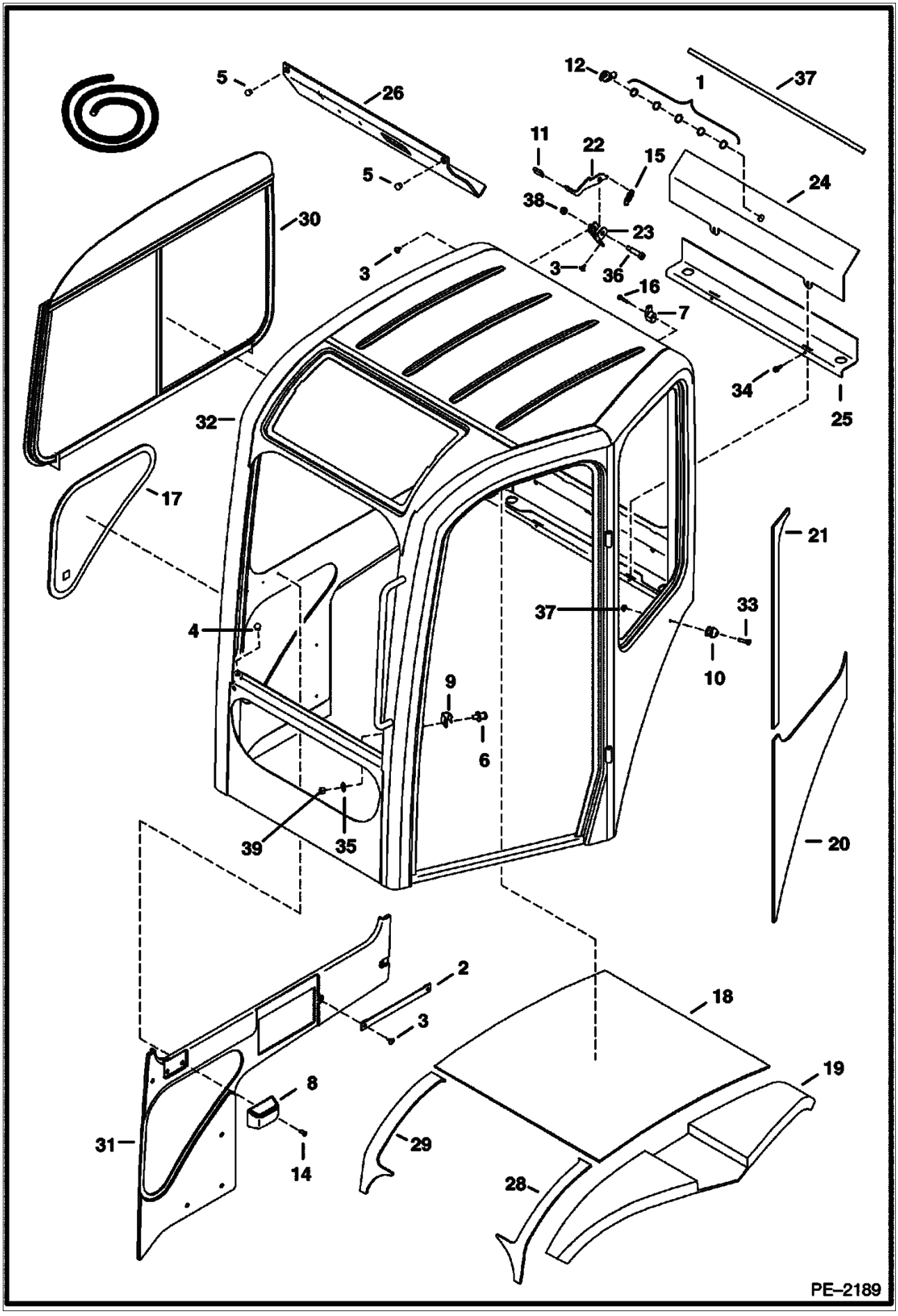

https://www.pdfmanual4trucks.com/

Ref. No.	Part Number	Description	Remarks	Serial Number	Qty.
1	6536802	WASHER			5
2	6589347	STRAP			1
3	6589675	SCREW			4
4	6597572	BUMPER			4
5	6630207	RIVET			2
6	6654170	STRIKER BOLT			1
7	6658289	HOOK			1
8	6664075	ASH TRAY			1
9	6664083	COVER			1
10	6675385	PLUG			1
11	6677500	HANDLE			1
12	6681922	LATCH			1
13	6682740	RETAINER			1
14	6706517	SCREW			2
15	6714210	SPRING			1
16	6808424	SCREW			1
17	6811792	WINDOW			1
18	6813567	INSULATION	door		1
19	6813568	INSULATION			1
20	6813569	INSULATION			1
21	6814241	INSULATION			1
22	6814721	HANDLE			1
23	6814724	CHANNEL			1
24	6814958	COVER	rear		1
25	6815542	SEAL	cover		1
26	6815626	INSULATION			1
27	6816115	PAD			1
28	6818275	INSULATION	R.H. - front		1
29	6818276	INSULATION	L.H. - front		1
30	7100571	WINDOW	See Illustration RIGHT WINDOW/ PE2297 SLIDER		1
31	7101010	INSULATION			1
32	7104082	CAB	no center post for R.H. window		1
32	7101967	CAB	complete w/door, windows, insulation & decals		1
33	1C000416B	SCREW			1
34	26GM06020B	SCREW			2
35	27E000006B	WASHER			1
36	4F006106B	PIN	Was - 38C000620B		1
37	55D000004B	NUT			1
38	1306637B	PIN	Was - 59D000005B		1
39	61D000007B	NUT			1

https://www.pdfmanual4trucks.com/

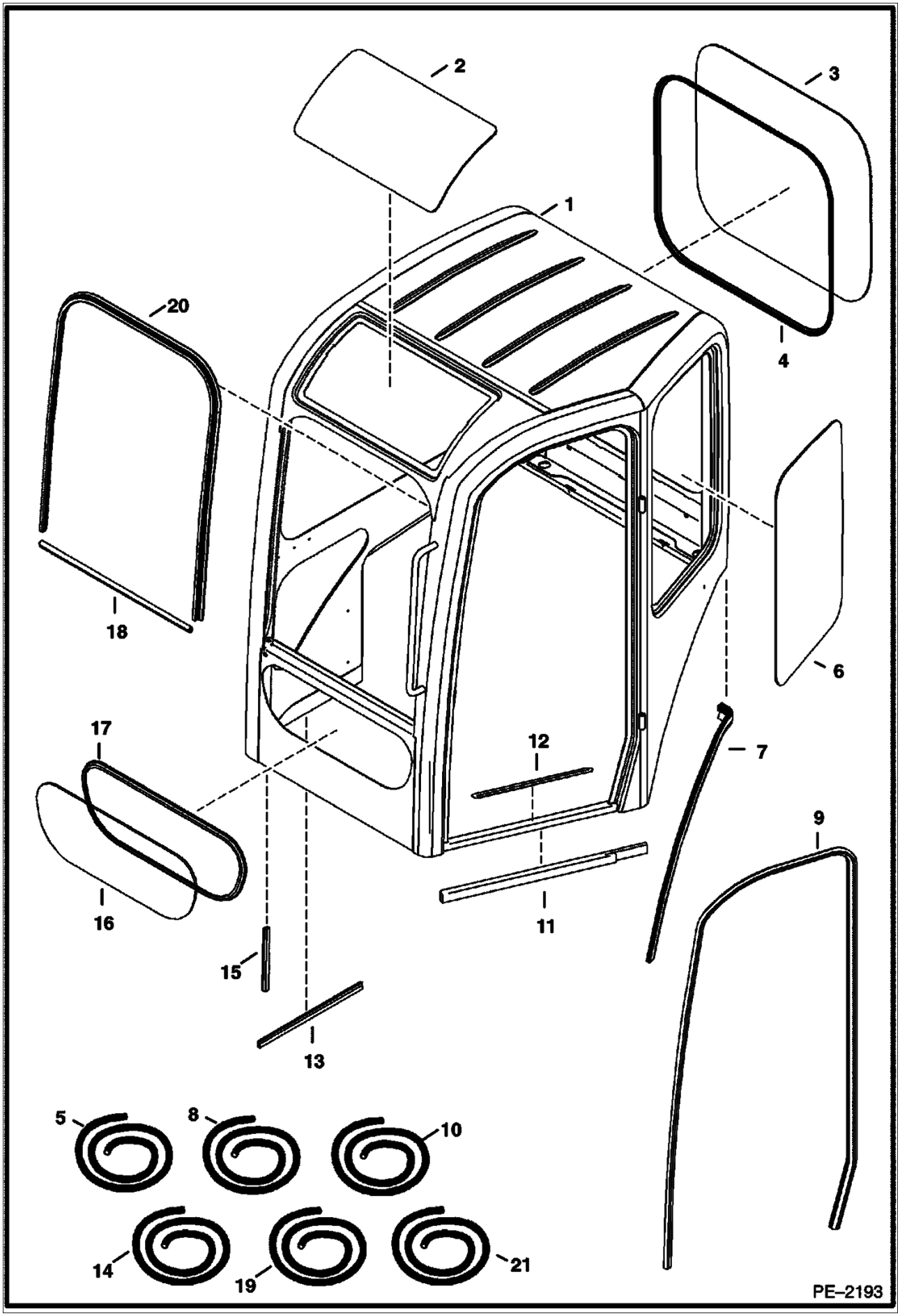

https://www.pdfmanual4trucks.com/

Ref. No.	Part Number	Description	Remarks	Serial Number	Qty.
1	7104082	CAB	W/A		1
1	7101967	CAB	complete		1
2	6817530	WINDOW	top		1
3	6816125	WINDOW	rear		1
4		SEAL	NAP - use 104" (2642mm) of Ref. 5		1
5	6815939	SEAL	bulk - sold per foot		x
6	6816126	WINDOW	side - L.H.		1
7		SEAL	NAP - 34" (864mm) of Ref. 8		1
8	6817343	SEAL	bulk - sold per foot		x
9		SEAL	NAP - use 127" (3226mm) of Ref. 10		1
10	7100721	SEAL	bulk - sold per foot		x
11	7100929	SEAL			1
12	6807327	SAFETY TREAD			1
13		SEAL	NAP - use 18" (457mm) of Ref. 14		1
14	6681883	SEAL			1
15	6682740	RETAINER			1
16	6815150	WINDOW	front - lower		1
17		SEAL	NAP - use 66" (1676mm) of Ref. 5		1
18		SEAL	NAP - use 26" (660mm) of Ref. 19		1
19	6684518	SEAL	bulk - sold per foot		x
20		SEAL	NAP - use 92" (2337mm) of Ref. 21		1
21	7100712	SEAL	bulk - sold per foot		x

https://www.pdfmanual4trucks.com/

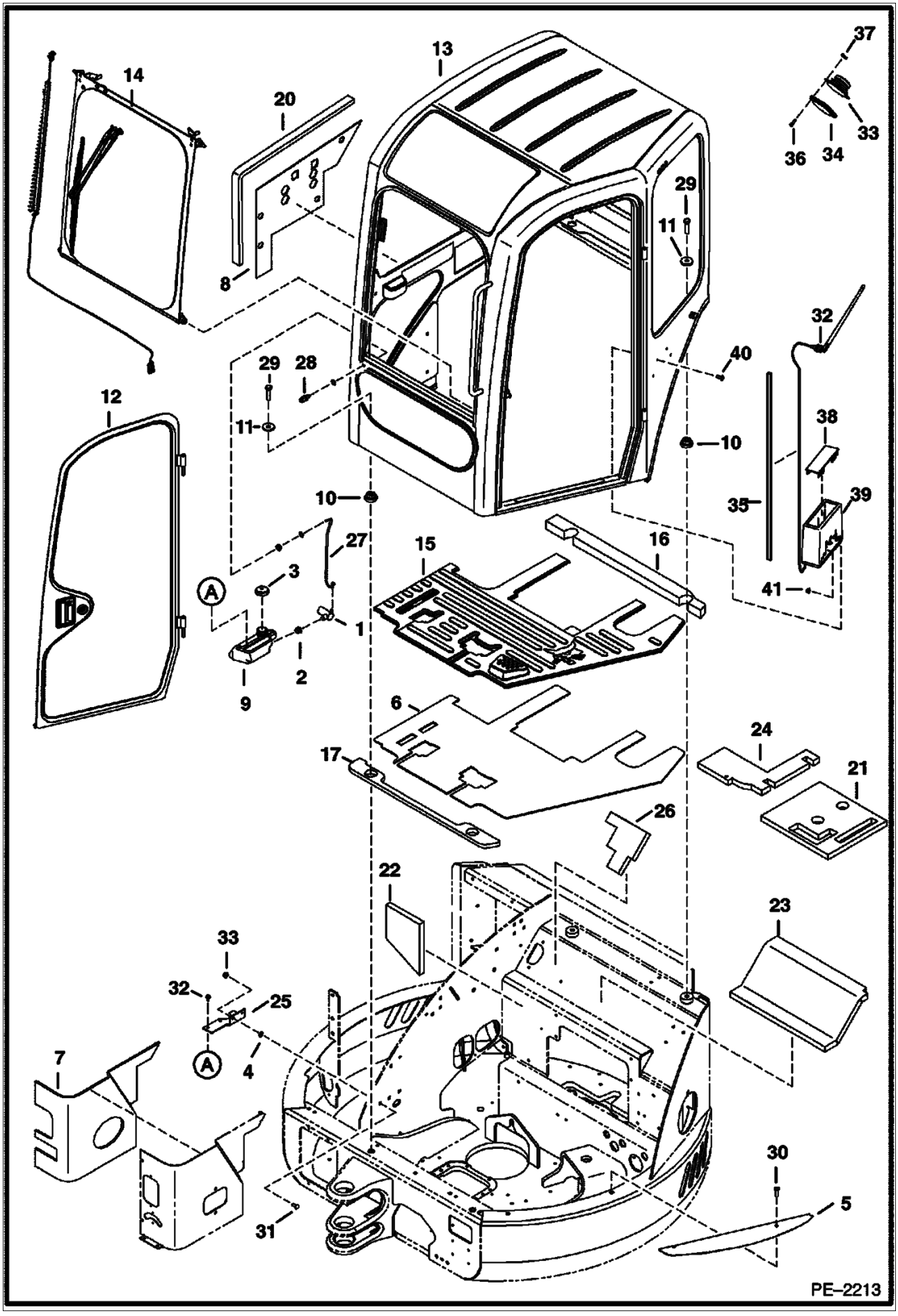

https://www.pdfmanual4trucks.com/

Ref. No.	Part Number	Description	Remarks	Serial Number	Qty.
1	6664554	PUMP			1
2	6666766	GROMMET			1
3	6674993	CAP			1
4	6675859	BOLT	retainer		2
5	6680293	TREAD	safety		1
6	6684544	FLOORMAT			1
7	6684896	INSULATION			1
8	6684897	INSULATION			1
9	6736875	TANK	washer		1
10	6804026	MOUNT			4
11	6805244	WASHER	flat		4
12	6810944	DOOR	See Illustration OPERATOR CAB/ PE1905		1
13	7101122	CAB			1
13	7101967	CAB	complete		1
14	6812705	WINDOW	See Illustration OPERATOR CAB/ PE2370 FRONT		1
15	6812712	FLOORMAT			1
16	6814325	SEAL			1
17	6814326	SEAL			1
18	43DM00008B	NUT			2
19	35D000408B	SCREW			2
20	6814908	SEAL	cab		1
21	6814922	INSULATION	floor		1
22	6816598	INSULATION	R.H. console		1
23	6816607	INSULATION	seat		1
24	6816678	INSULATION	R.H. console		1
25	6817751	BRACKET			1
26	6817902	INSULATION			1
27	7100202	HOSE	wiper		1
28	7101511	NOZZLE	washer		1
29	10CM01455B	SCREW			4
30	27CM01030B	SCREW			2
31	28CM00820B	BOLT			2
32	6676114	ANTENNA			1
33	6685606	SPEAKER	4"		2
34	6685607	GRILLE			2
35	6685654	RETAINER			1
36	6685743	SCREW			8
37	6685744	NUT			8
38	6685745	COVER	plastic		1
39	6685799	BRACKET	radio		1
40	6803202	SCREW			4
41	51DM00006B	NUT			4

https://www.pdfmanual4trucks.com/

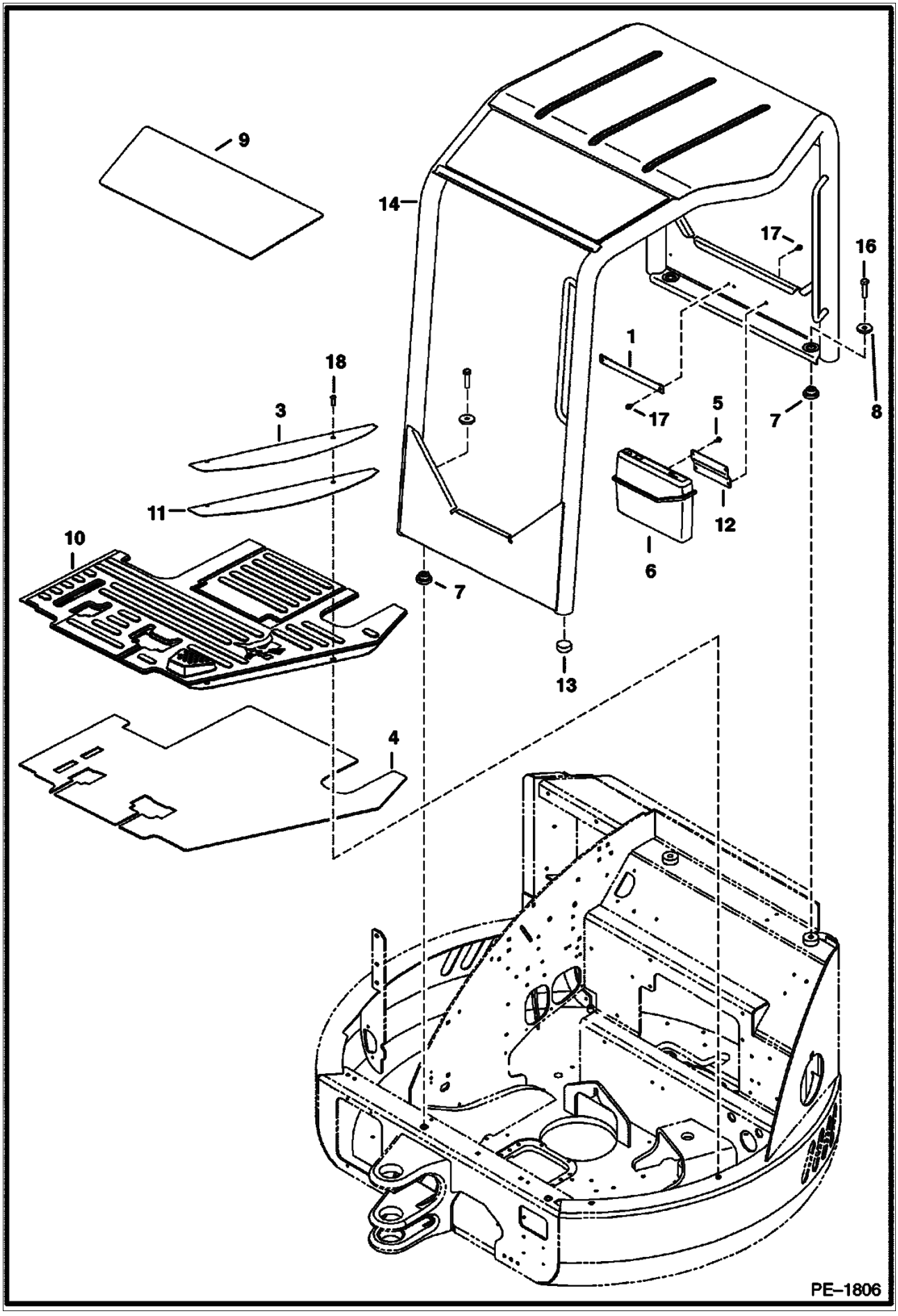

https://www.pdfmanual4trucks.com/

Ref. No.	Part Number	Description	Remarks	Serial Number	Qty.
1	6589347	STRAP			1
2	6630207	RIVET			2
3	6680293	TREAD			1
4	6684561	FLOORMAT			1
5	6702642	SCREW			1
6	6708827	CONTAINER			1
7	6804026	MOUNT			4
8	6805244	WASHER			4
9	6812030	WINDOW			1
10	6812711	FLOORMAT	canopy		1
11	6812714	PLATE			1
12	6813083	BRACKET			1
13	6816135	INSULATION			1
14	6818380	CANOPY			1
15	6818403	PLATE			1
16	10CM01455B	SCREW			4
17	26GM08016B	SCREW			4
18	27CM01030B	SCREW			2

https://www.pdfmanual4trucks.com/

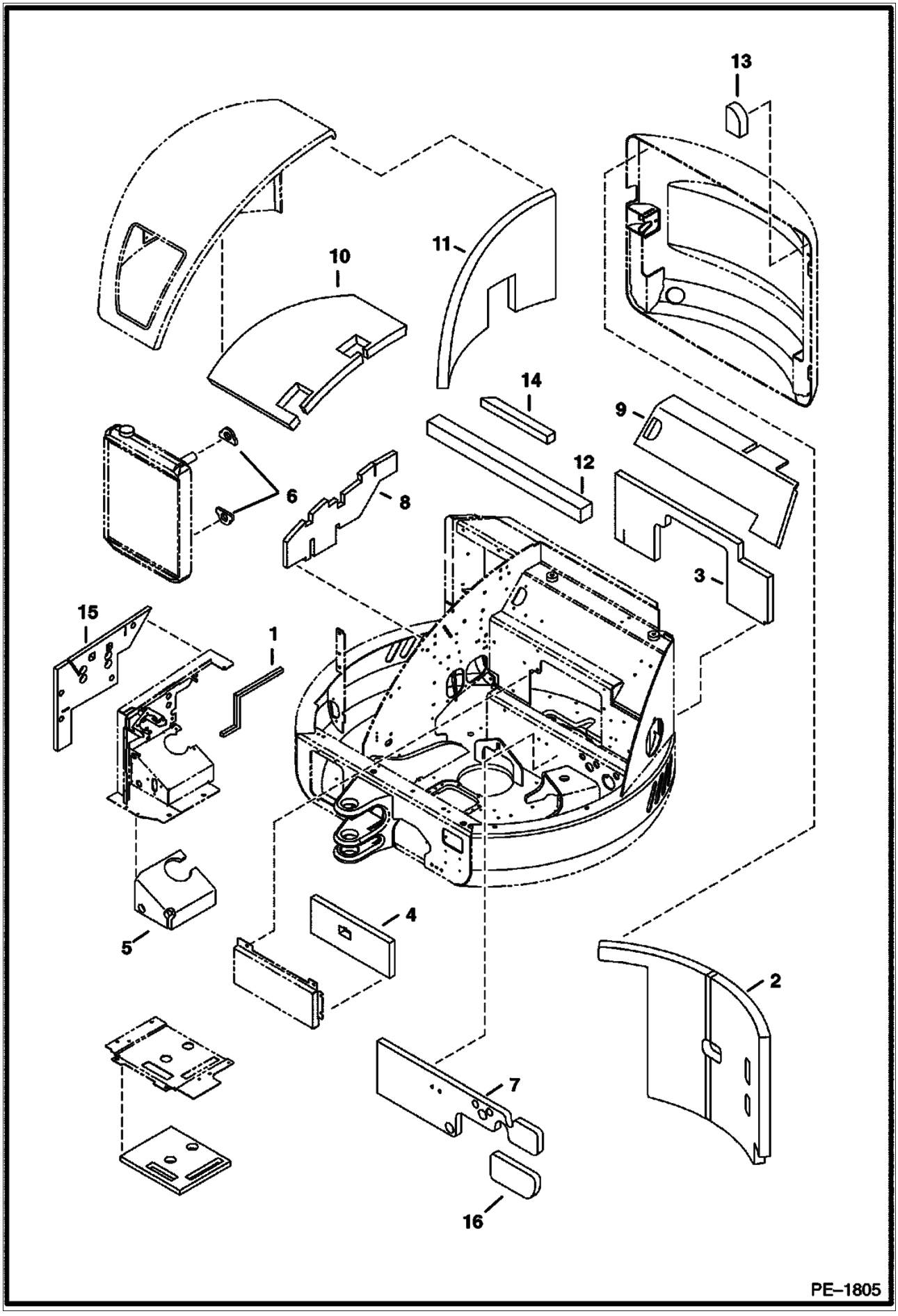

https://www.pdfmanual4trucks.com/

Ref. No.	Part Number	Description	Remarks	Serial Number	Qty.
1	6808577	SEAL	cab		1
2	6811891	INSULATION	tailgate		1
3	7103022	INSULATION	engine Was - 6811892		1
4	6812193	INSULATION	seat		1
5	6812252	INSULATION	console		1
6	6812377	INSULATION	radiator		1
7	7103023	INSULATION	engine Was - 6813527		1
8	7103019	INSULATION	valve Was - 6813529 [A]		1
9	6814355	INSULATION	engine		1
10	6814371	INSULATION	R.H. cover		1
11	6814372	INSULATION	R.H. cover		1
12	6814393	INSULATION	tailgate		1
13	6816600	INSULATION	tailgate		1
14	7103034	INSULATION	R.H. cover Was - 6817304		1
15	6817918	INSULATION			1
16	6818393	INSULATION	engine		1

https://www.pdfmanual4trucks.com/

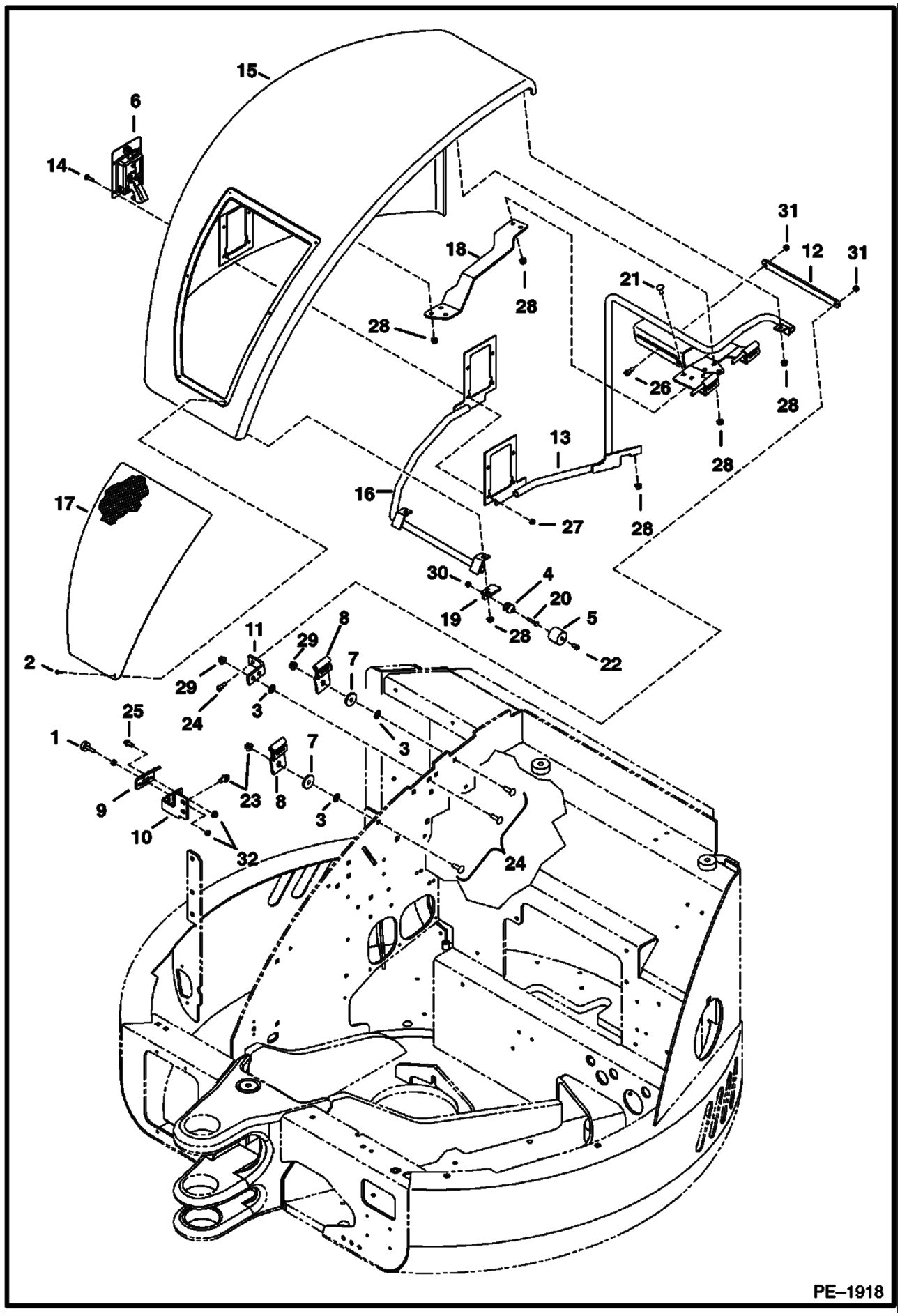

https://www.pdfmanual4trucks.com/

Ref. No.	Part Number	Description	Remarks	Serial Number	Qty.
1	6655399	BUMPER			1
2	6669224	BOLT			6
3	6674264	BOLT	retainer		4
4	6675385	PLUG			1
5	6675386	SOCKET			1
6	6684408	LATCH			1
6	6709527	KEY			1
7	6805244	WASHER			2
8	6812809	HINGE	NAP Was - 6812809 Order 7105711 (1) Also order 35.5"(902mm) of Ref. 33 [A]		1
9	6813216	BRACKET			1
10	6815412	BRACKET			1
11	6816050	BRACKET	NAP Was - 6816050 Order 7105711(1) Also Order 35.5"(902mm) of Ref. 33 [A]		1
12	6816051	BAR			1
13	6816052	COVER			1
14	6816193	SCREW			4
15	6816300	COVER	R.H.		1
16	6816465	COVER			1
17	6816568	SCREEN			1
18	6816789	BRACKET			1
19	6817750	BRACKET			1
20	1C000420B	SCREW			1
21	21CM00820B	BOLT	carriage		2
22	25G000510B	SCREW			1
23	26GM10020B	SCREW			2
24	28CM01030B	BOLT	carriage		4
25	29CM00820B	BOLT			2
26	38C000606B	SCREW			2
27	43DM00006B	NUT			4
28	43DM00008B	NUT			14
29	43DM00010B	NUT			4
30	55D000004B	NUT			1
31	59D000005B	NUT			2
32	61D000005B	NUT			2
33	6675546	SEAL- BULK/FT	BULK - Sold per foot		x

https://www.pdfmanual4trucks.com/

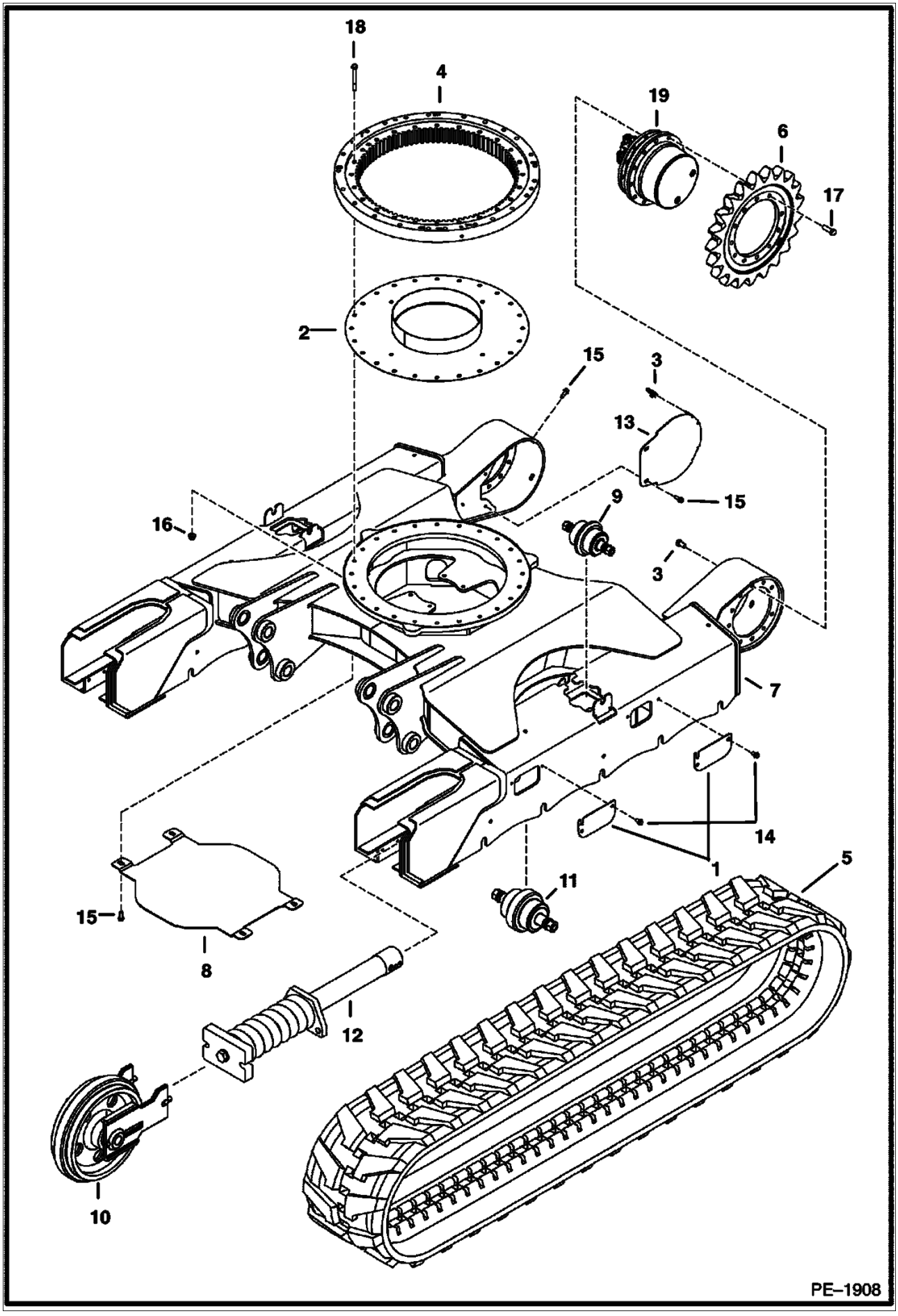

https://www.pdfmanual4trucks.com/

Ref. No.	Part Number	Description	Remarks	Serial Number	Qty.
1	6596723	COVER			4
2	6627719	FLANGE	bearing		1
3	6675722	NUT			4
4	6675777	BEARING			1
5	6678826	TRACK	rubber		2
6	6816209	SPROCKET			2
7	6812738	UNDERCARRIAGE			1
8	7102346	PLATE			1
9	6815119	ROLLER	See Illustration TRACK ROLLER/ PE1914 ASSY		2
10	6815125	IDLER	See Illustration FRONT IDLER/ PE1911 ASSY		2
11	6815127	ROLLER	See Illustration TRACK ROLLER/ PE1914 ASSY		10
12	7101491	CYLINDER	See Illustration RECOIL SPRING/ PE1912 ASSY		2
13	6816483	COVER			2
14	26GM10020B	SCREW			8
15	26GM10030B	SCREW			12
16	51DM00012B	NUT			24
17	55CM01445B	SCREW			24
18	7CM12100B	SCREW			24
19	6685455	MOTOR	See Illustration HYDRAULIC CIRCUITRY/ PE2315 DRIVE		2

FRONT IDLER
https://www.pdfmanual4trucks.com/
(Rubber)

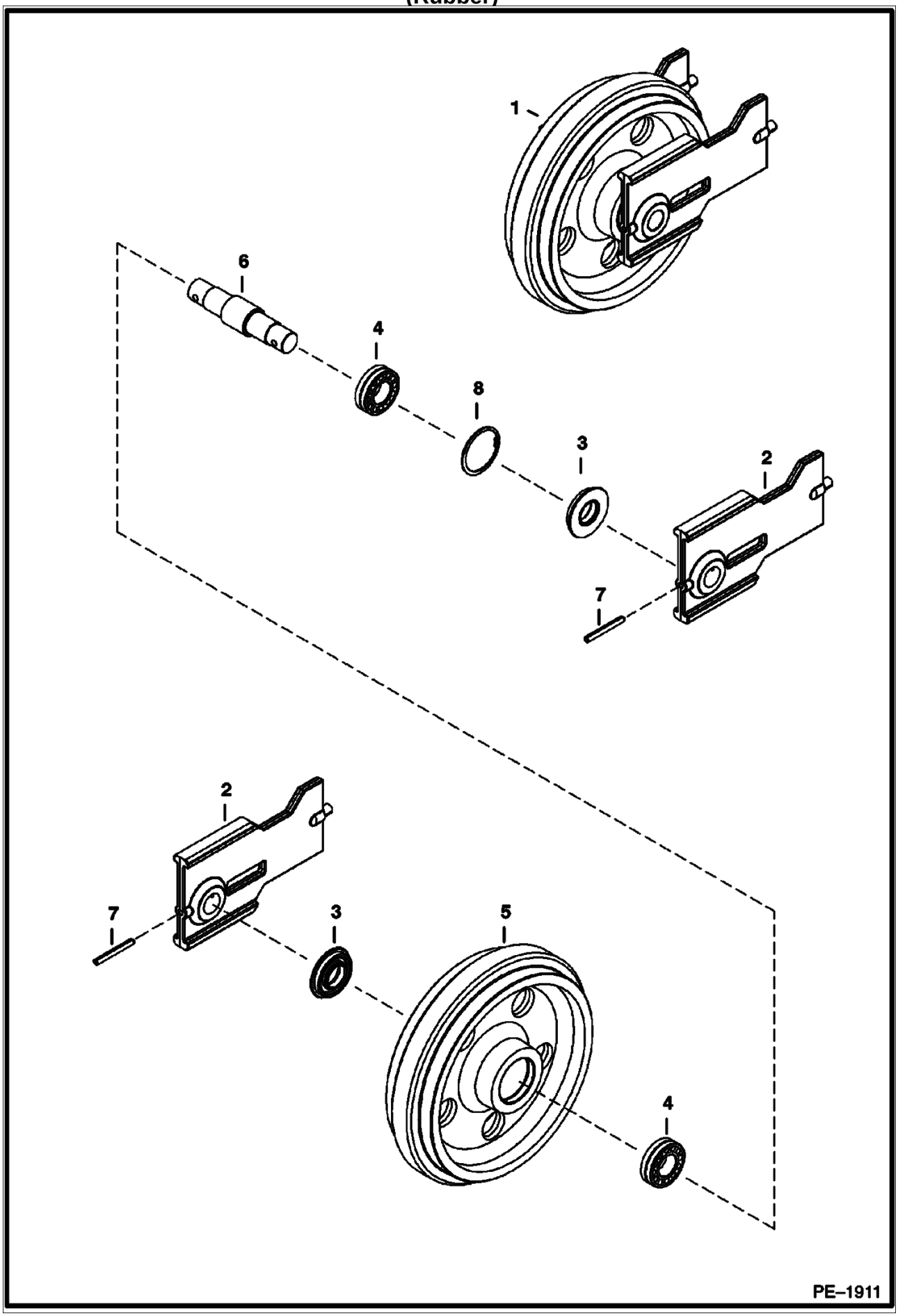

https://www.pdfmanual4trucks.com/

FRONT IDLER (Cont'd)
(Rubber)

Ref. No.	Part Number	Description	Remarks	Serial Number	Qty.
1	6815125	IDLER	assy		2
2	6627777	BLOCK			2
3	6679882	SEAL			2
4		BEARING	NAP - Order 6686728, Also Order Ref. 6 (7109138 shaft) - Was 6679884 [A]		2
4	6686728	BEARING			2
5	6815126	IDLER			1
6		SHAFT	NAP - 1.97 " dia. - Order 7109138, also Order Ref. 4 (6686728 (2) bearing) - Was 6815146 [A]		1
6	7109138	SHAFT	1.73 " dia.		1
7	2JM01085B	PIN			2
8	7JM00080B	RING			1

https://www.pdfmanual4trucks.com/

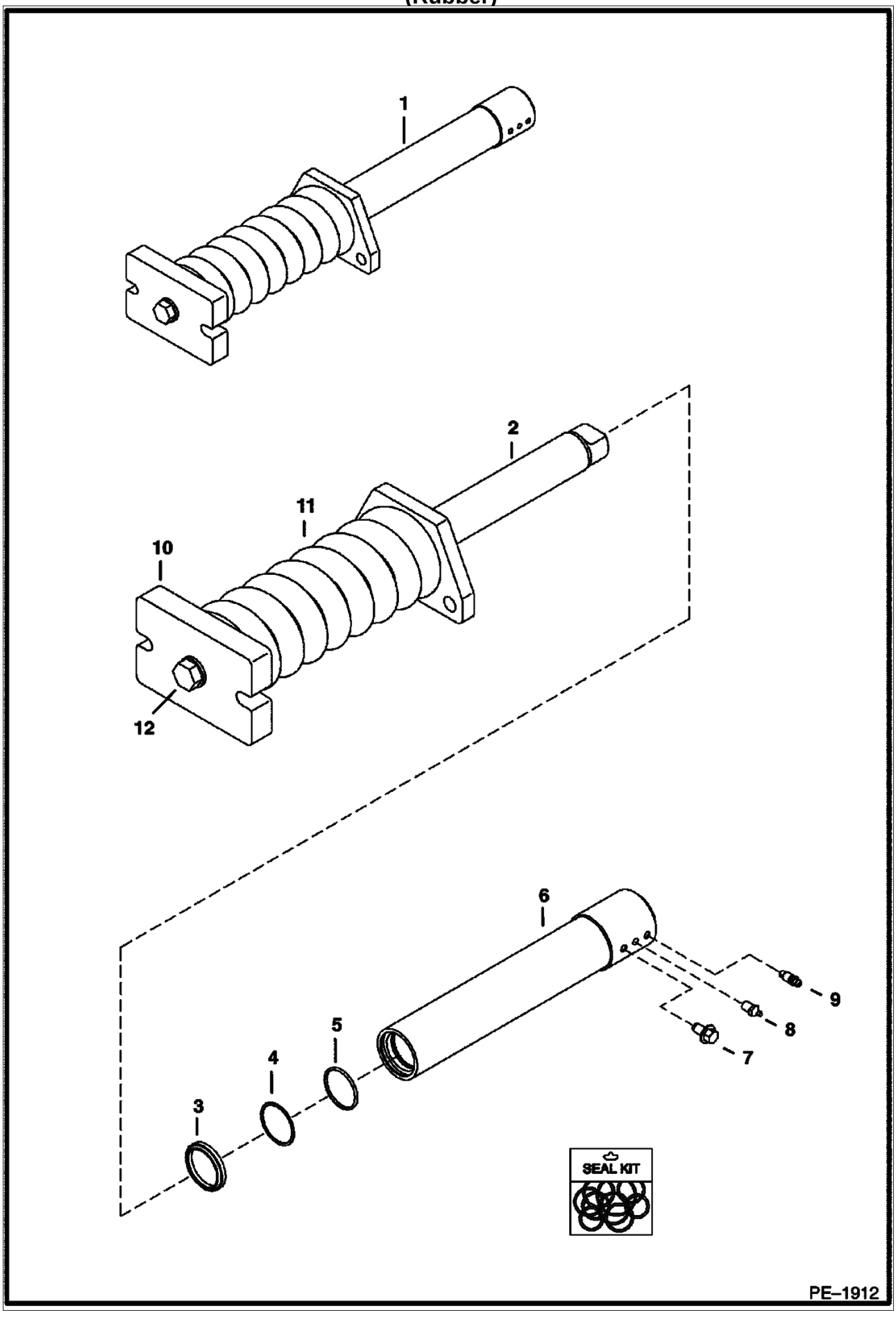

https://www.pdfmanual4trucks.com/

RECOIL SPRING (Cont'd)
(Rubber)

Ref. No.	Part Number	Description	Remarks	Serial Number	Qty.
1	7101491	CYLINDER	assy		2
2		SPRING	NSS - assy - order Ref. 1		1
3	6684410	SEAL	wiper		1
4	6685154	O-RING	back-up		1
5	6685153	O-RING			1
6	6816242	CYLINDER			1
7	26GM10020B	SCREW			1
8	6655752	FITTING	grease		1
9	6645812	SCREW	bleeder		1
10	7102860	SEAL KIT	W/Ref. 3 - 5		1

https://www.pdfmanual4trucks.com/

RECOIL SPRING
(Steel Tracks)

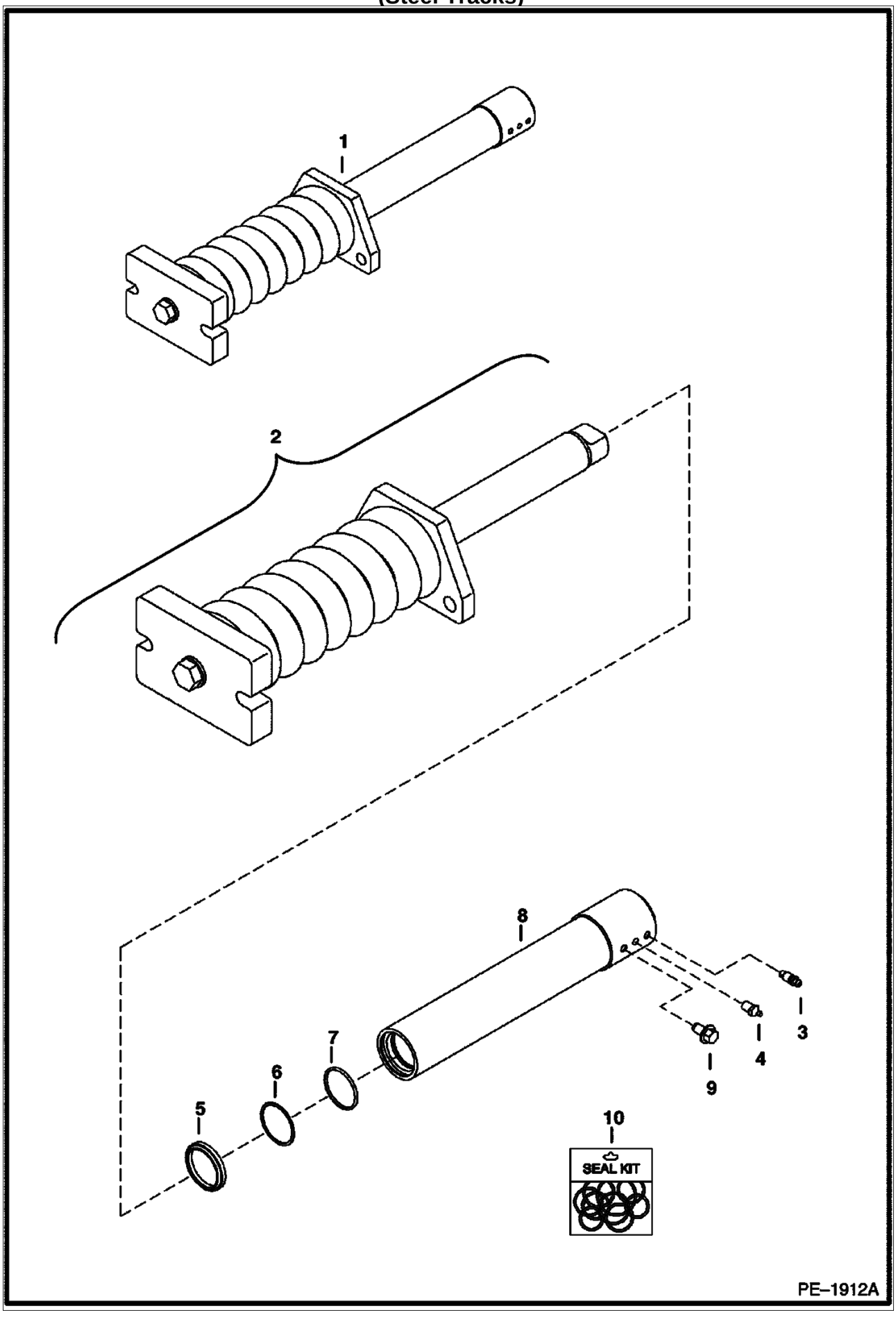

RECOIL SPRING (Cont'd)
https://www.pdfmanual4trucks.com/
(Steel Tracks)

Ref. No.	Part Number	Description	Remarks	Serial Number	Qty.
1	7101556	CYLINDER	assy - W/Refs. 9-8		1
2		SPRING	NSS - assy - order Ref. 1		1
3	6645812	SCREW	bleeder		1
4	6655752	FITTING	grease		1
5	6684410	SEAL			1
6	6685154	O-RING			1
7	6685153	O-RING			1
8	6816242	CYLINDER			1
9	26GM10020B	SCREW			1
10	7102860	SEAL KIT			1

https://www.pdfmanual4trucks.com/

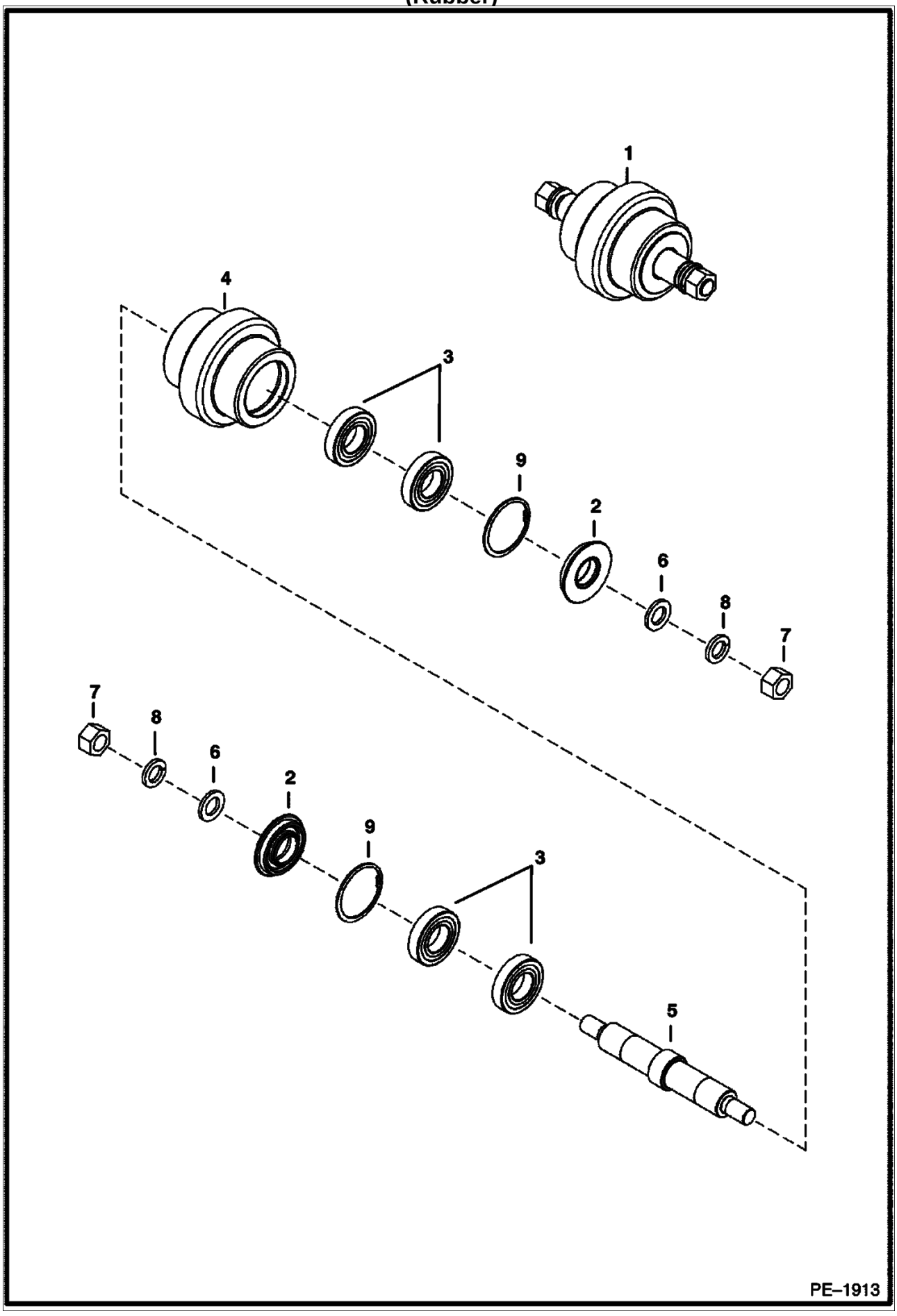

https://www.pdfmanual4trucks.com/

Ref. No.	Part Number	Description	Remarks	Serial Number	Qty.
1	6815127	ROLLER	assy		10
2	6679882	SEAL			2
3	6680292	BEARING			4
4	6815128	ROLLER			1
5	6816735	SHAFT			1
6	1EM00240B	WASHER			2
7	4DM00024B	NUT			2
8	6EM00240B	WASHER			2
9	7JM00080B	RING			4

https://www.pdfmanual4trucks.com/

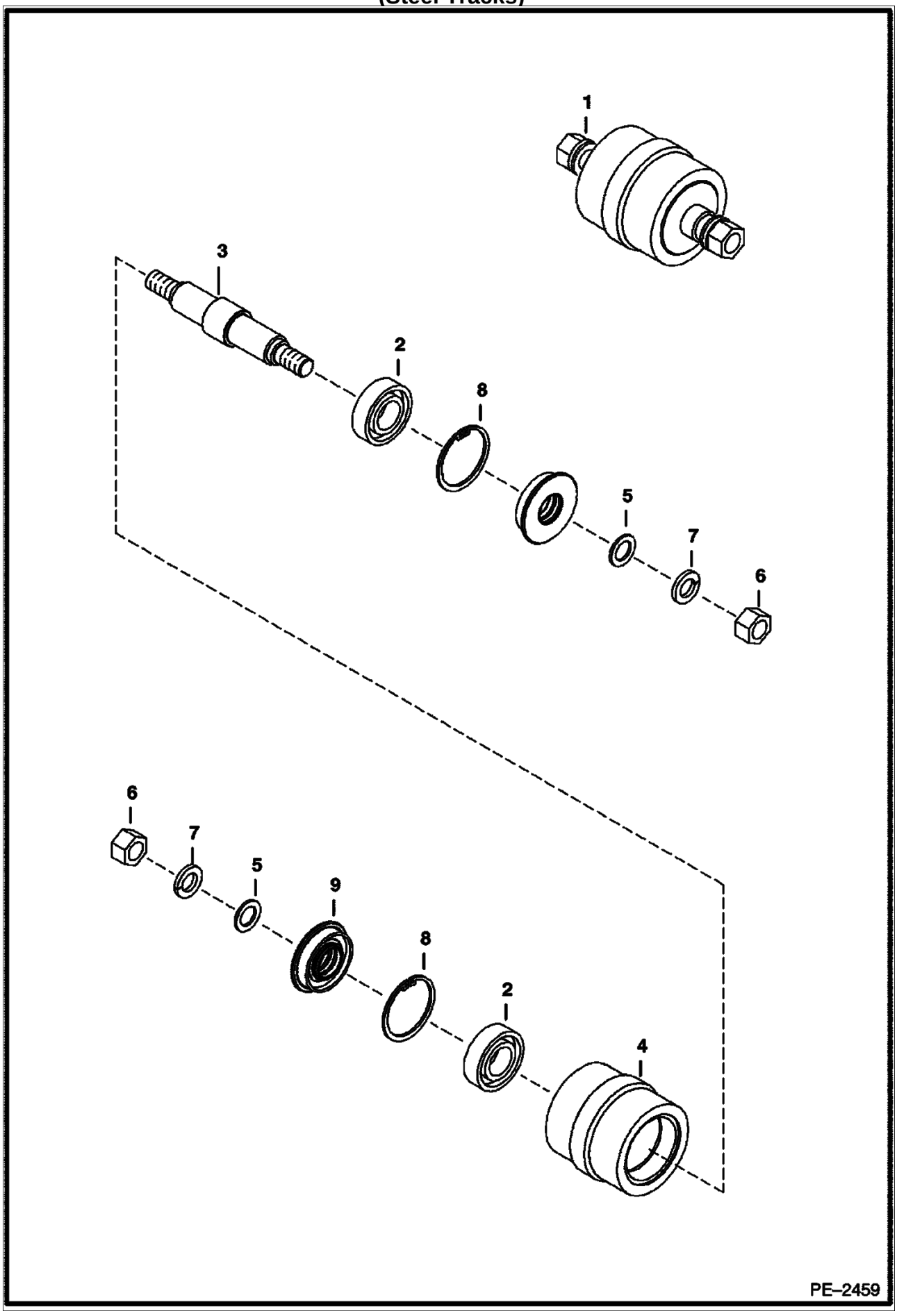

https://www.pdfmanual4trucks.com/

Ref. No.	Part Number	Description	Remarks	Serial Number	Qty.
1	6815123	ROLLER			2
2	6680291	BEARING			2
3	6810769	SHAFT			1
4	6815124	ROLLER			1
5	15EM00200B	WASHER	flat		2
6	1DM00020B	NUT			2
7	6EM00200B	WASHER			2
8	7JM00072B	RING			2
9	6679881	SEAL			2

https://www.pdfmanual4trucks.com/

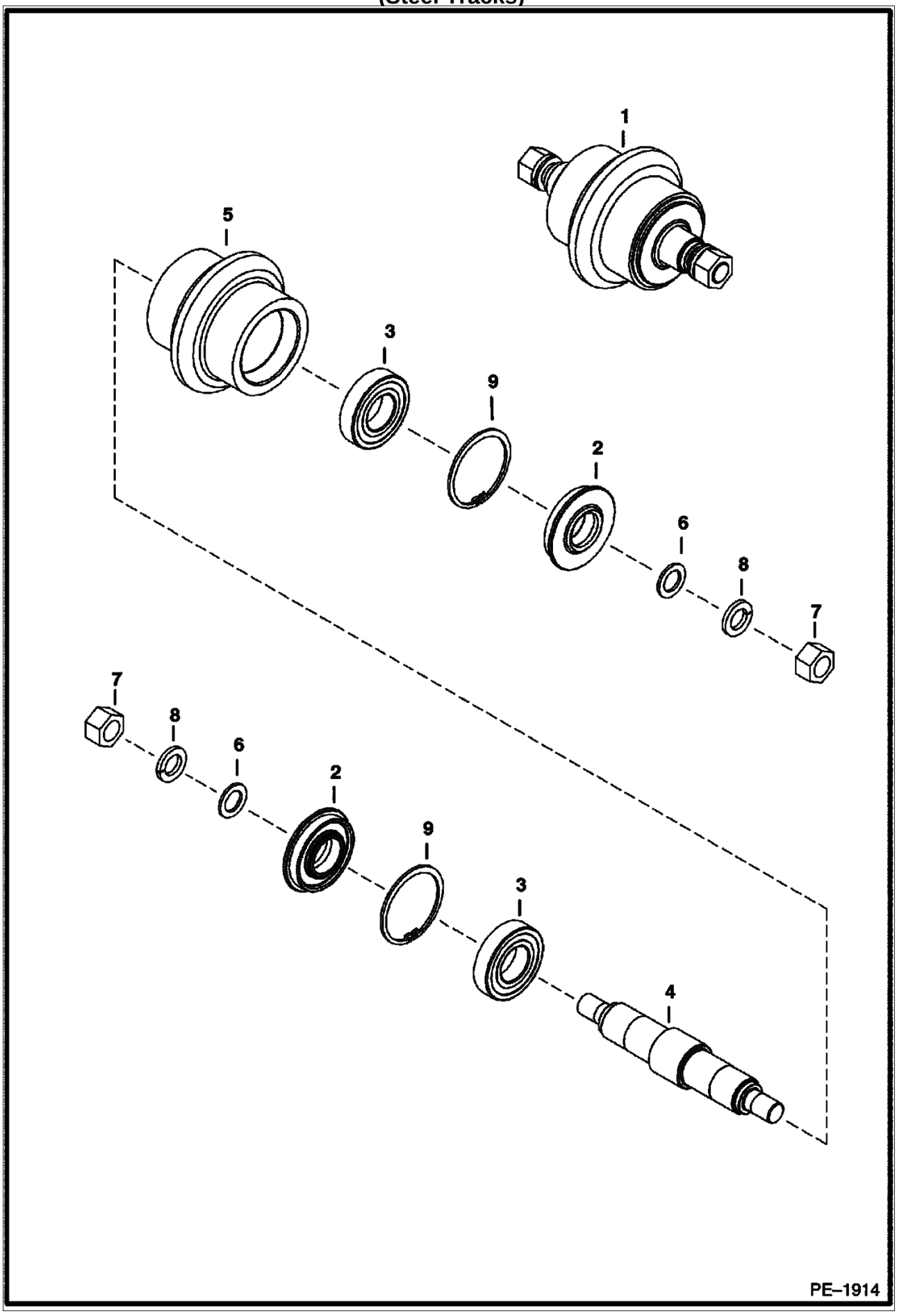

https://www.pdfmanual4trucks.com/

Ref. No.	Part Number	Description	Remarks	Serial Number	Qty.
1	6815129	ROLLER	assy		10
2	6679882	SEAL			2
3	6680292	BEARING			4
4	6816735	SHAFT			1
5	6815130	ROLLER			1
6	1EM00240B	WASHER			2
7	4DM00024B	NUT			2
8	6EM00240B	WASHER			2
9	7JM00080B	RING			1

https://www.pdfmanual4trucks.com/

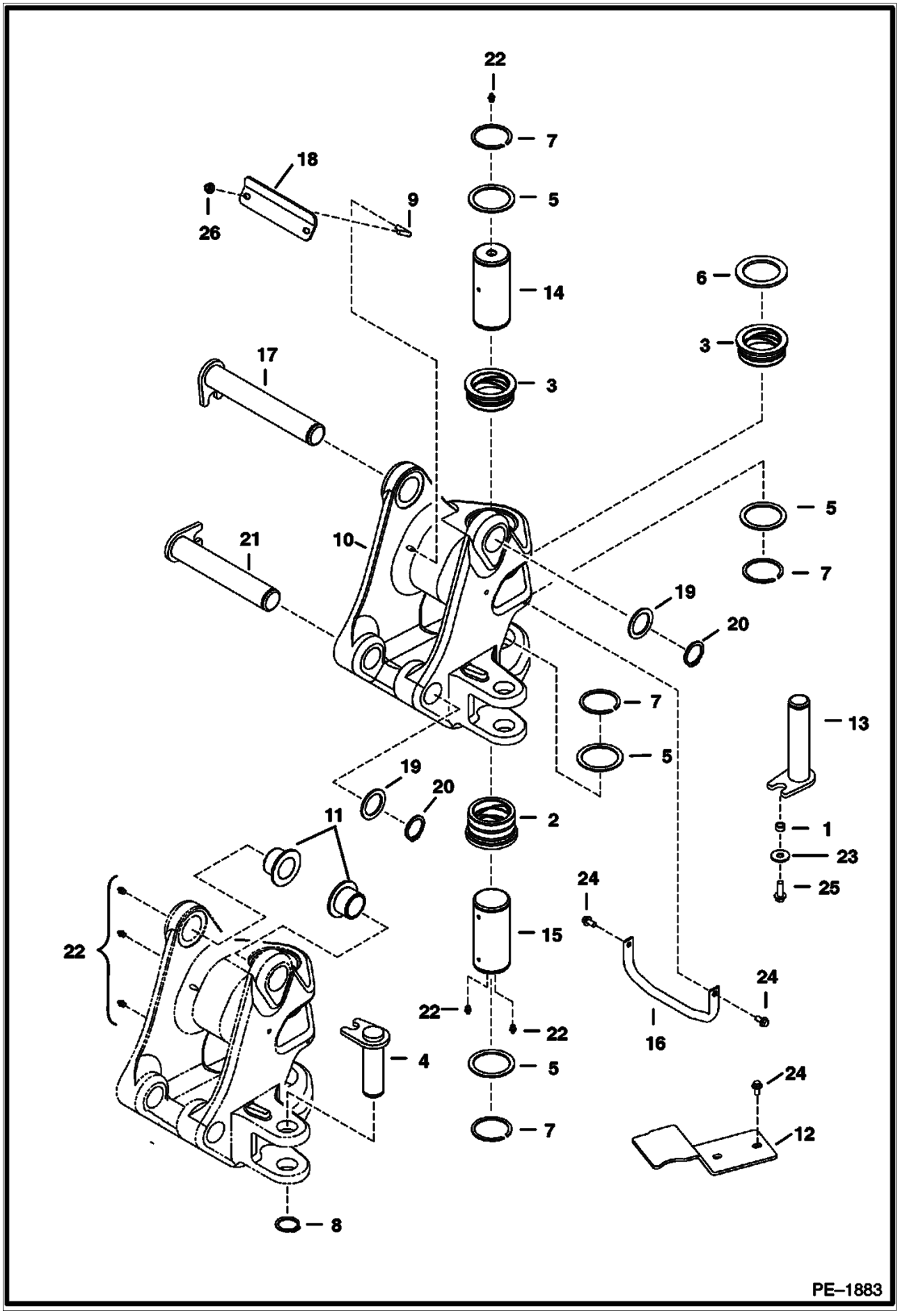

https://www.pdfmanual4trucks.com/

Ref. No.	Part Number	Description	Remarks	Serial Number	Qty.
1	6503451	SPACER			1
2	6628101	BUSHING			1
3	6628102	BUSHING			2
4	6628155	PIN			1
5	6628338	WASHER			4
6	6628339	WASHER			1
7	6668199	RING			4
8	6668787	RING			1
9	6808211	BOLT	angle		2
10	6811252	FRAME			1
11	6811457	BUSHING			2
12	6812156	BRACKET			1
13	6812235	PIN			1
14	6812575	PIN			1
15	6812631	PIN			1
16	6812656	TUBE			1
17	6812674	PIN			1
18	6812682	STRAP			1
19	6812687	WASHER			2
20	6812713	RING	retaining		2
21	6817239	PIN			1
22	10H000025B	GREASE ZERK	grease		6
23	17EM00120B	WASHER	flat		1
24	29CM01020B	SCREW			4
25	29CM01235B	BOLT			1
26	51DM00010B	NUT			2

https://www.pdfmanual4trucks.com/

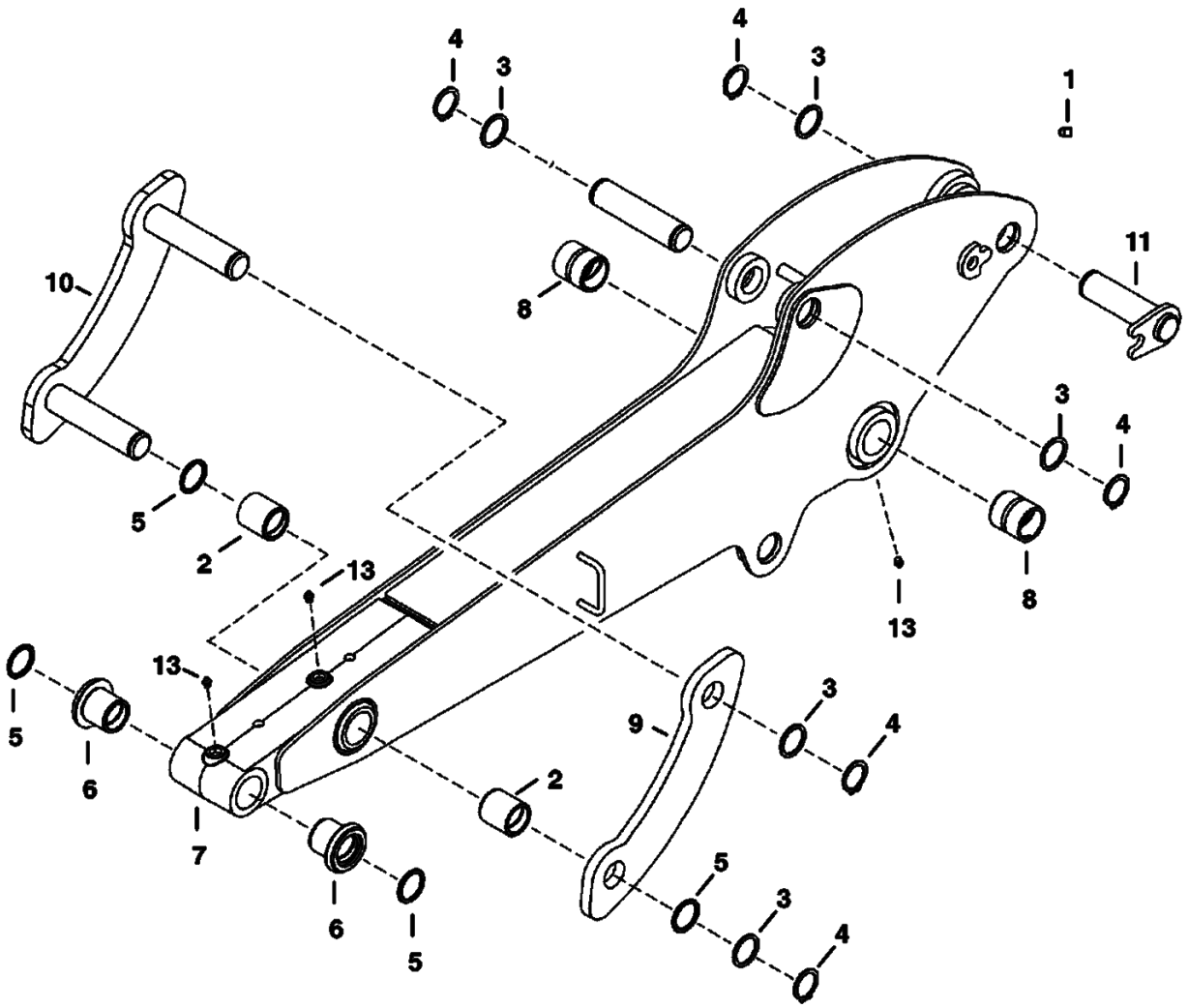

PE–1916

https://www.pdfmanual4trucks.com/

Ref. No.	Part Number	Description	Remarks	Serial Number	Qty.
1	6597572	BUMPER			1
2	6628341	BUSHING			2
3	6628547	WASHER			8
4	6668787	RING	retaining		5
5	6669287	SEAL	dust		2
6	6805601	BUSHING			4
7	6813485	ARM	std		1
7	7100135	ARM	long		1
8	6813497	BUSHING			1
9	6817169	LINK			1
10	6817170	LINK			2
11	6818028	PIN			1
12	6818030	PIN			1
13	10H000025B	GREASE ZERK	grease		3
14	6805281	LINK	bolt on		1
14	6805278	LINK	lever		1

https://www.pdfmanual4trucks.com/

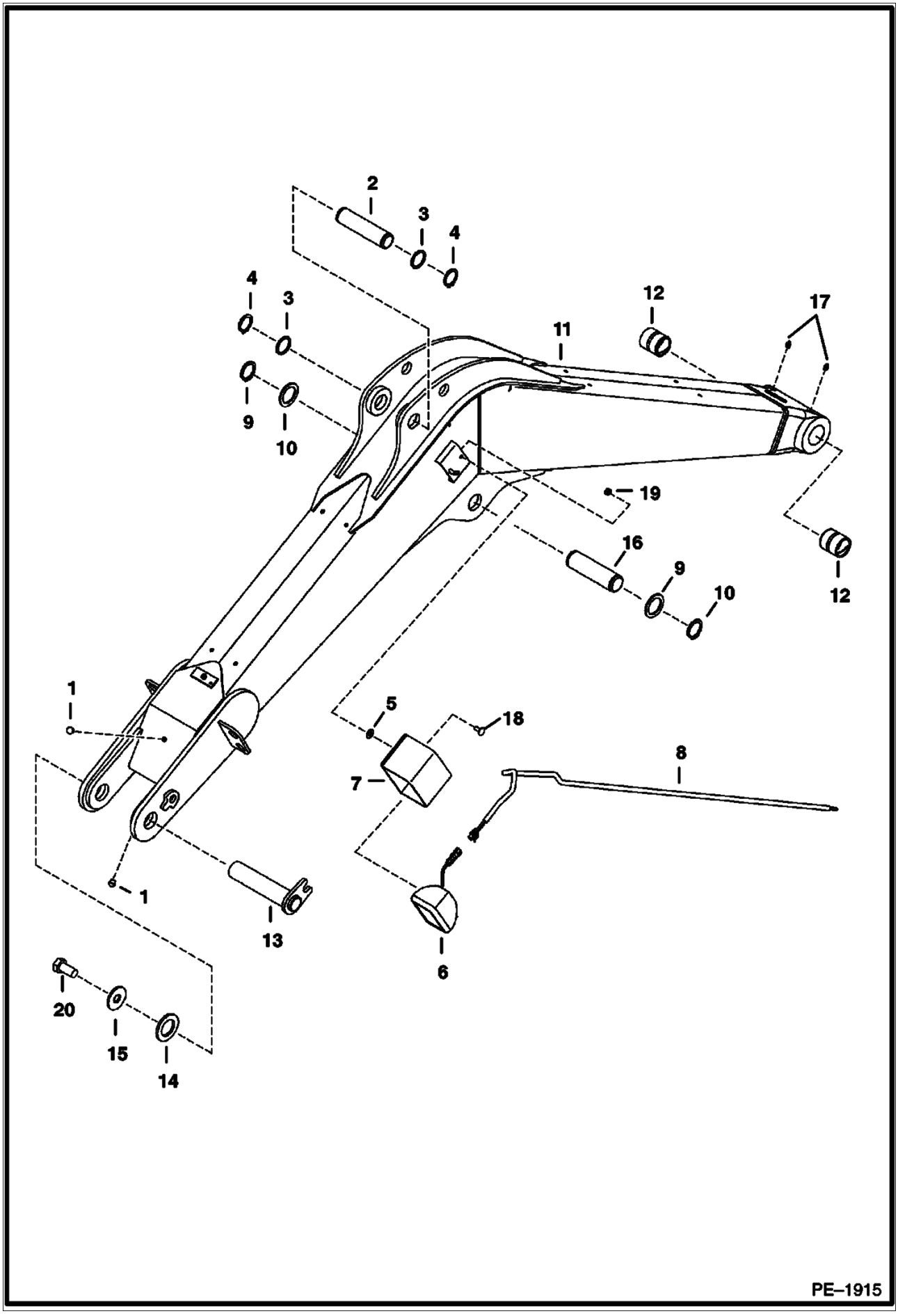

https://www.pdfmanual4trucks.com/

Ref. No.	Part Number	Description	Remarks	Serial Number	Qty.
1	6597572	BUMPER			2
2	6628002	PIN			1
3	6628547	WASHER			2
4	6668787	RING			2
5	6675859	BOLT			2
6	6675938	LIGHT			2
6	6677934	BULB			1
6	6676203	BEZEL			1
6	17C000532B	BOLT			1
6	6676204	NUT			1
6	61D000005B	NUT			1
7	6808258	HOUSING			1
8	6808415	HARNESS			1
9	6812687	WASHER			2
10	6812713	RING			2
11	7102816	BOOM	Was 6813482 [A]		1
12	6813497	BUSHING			2
13	6813863	PIN			1
14	6813932	WASHER			1
15	6813933	WASHER			1
16	6814280	PIN			1
17	10H000025B	GREASE ZERK	grease		1
18	21CM00820B	BOLT			2
19	4DM00008B	NUT			2
20	53CM02450B	SCREW			1

https://www.pdfmanual4trucks.com/

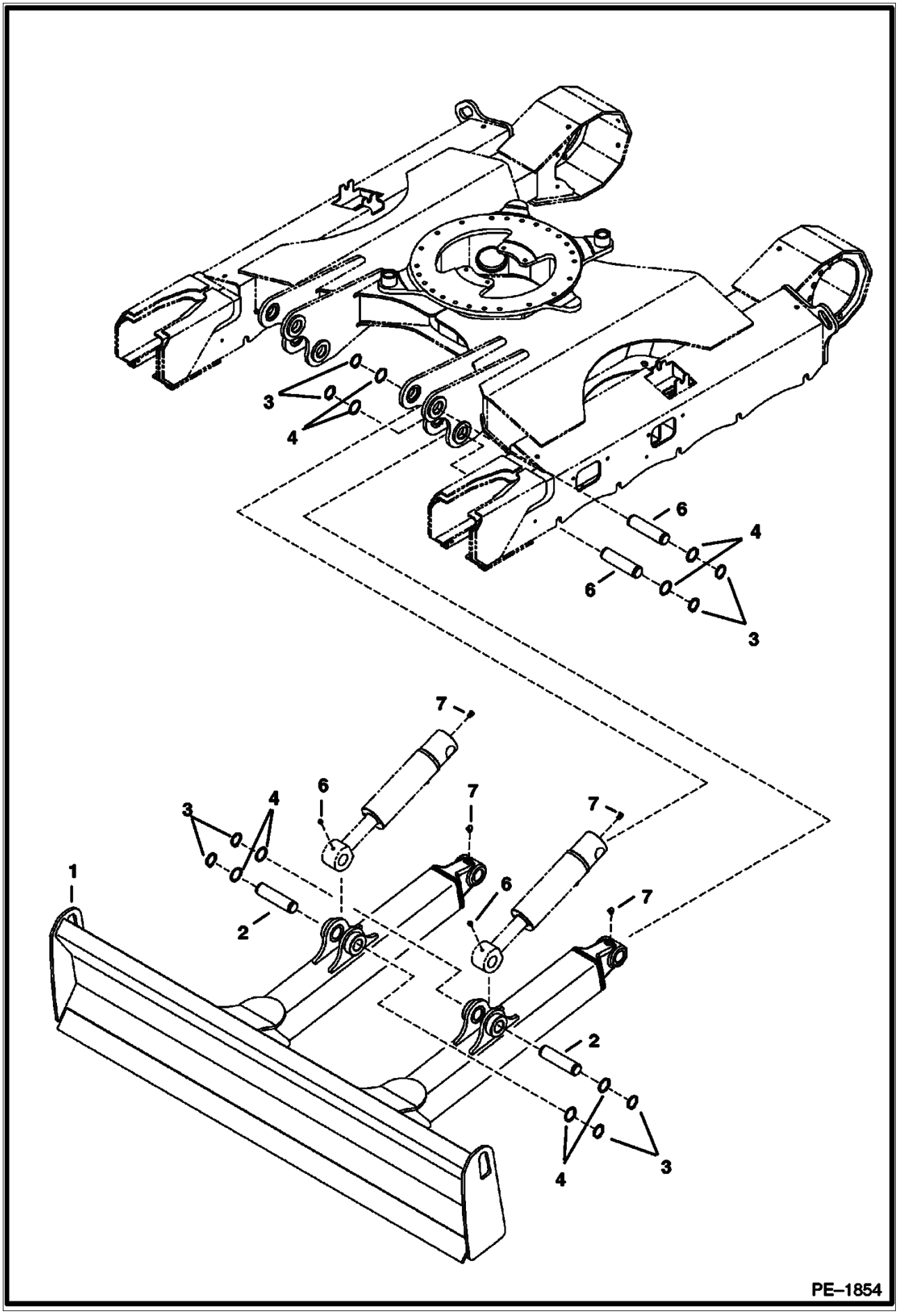

https://www.pdfmanual4trucks.com/

Ref. No.	Part Number	Description	Remarks	Serial Number	Qty.
1	6813071	BLADE			1
2	6597461	PIN			2
3	6665618	RING			12
4	6666549	WASHER			12
5	6628756	PIN			4
6	10H000025B	GREASE ZERK	grease		2
7	12H000015B	GREASE ZERK	grease		4

https://www.pdfmanual4trucks.com/

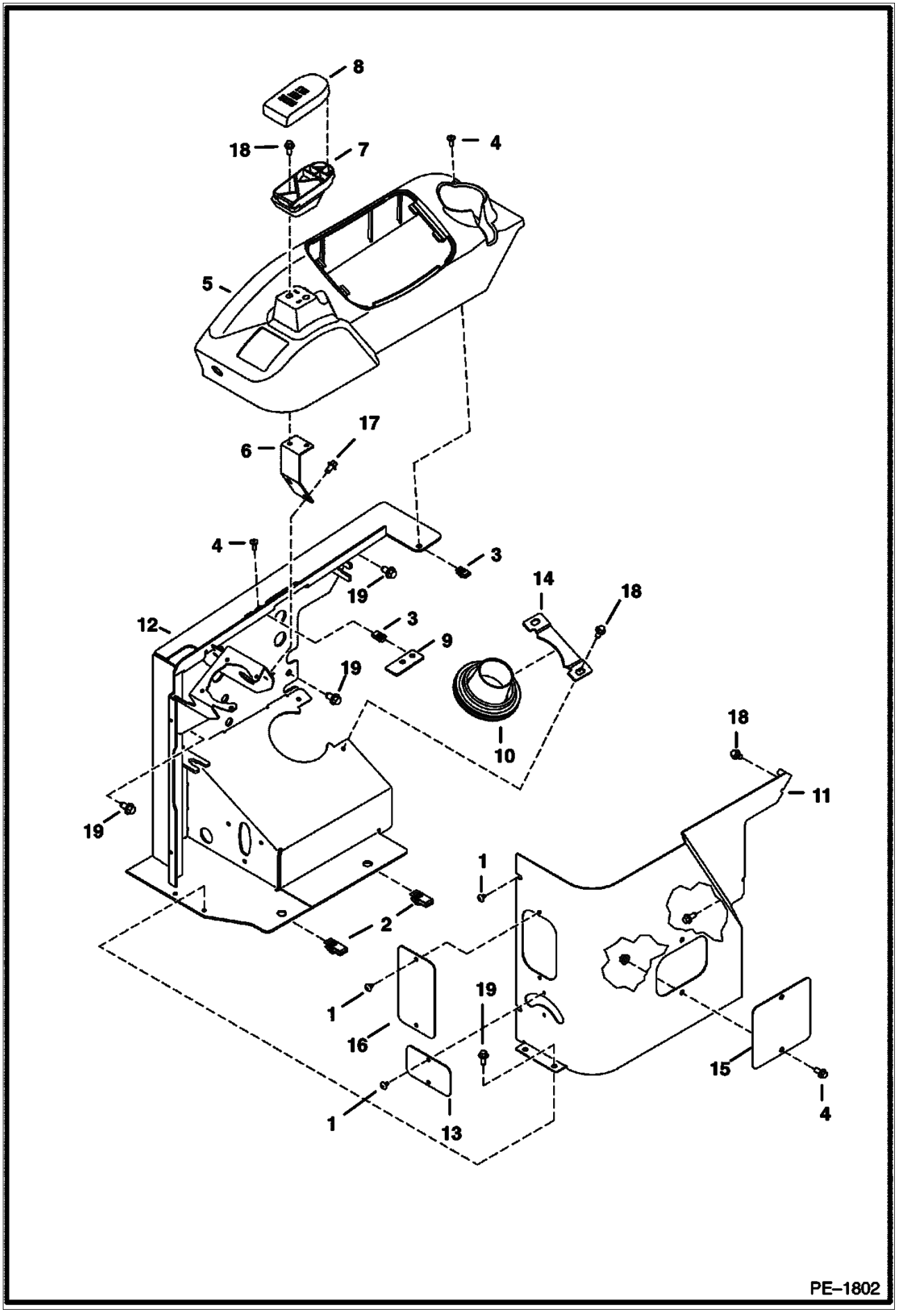

https://www.pdfmanual4trucks.com/

Ref. No.	Part Number	Description	Remarks	Serial Number	Qty.
1	6589675	SCREW			6
2	6675722	NUT			2
3	6676026	NUT			5
4	6803202	SCREW			5
5	6807033	COVER			1
6	6807362	SUPPORT			1
7	6807982	ARMREST			1
8	6807983	COVER	armrest		1
9	6810405	STOP			1
10	6810671	BOOT			1
11	6811998	PANEL			1
12	6812010	CONSOLE			1
13	6812065	COVER			1
14	6814609	PLATE			1
15	6814933	COVER			1
16	6814934	COVER			1
17	26GM08016B	SCREW			2
18	26GM08020B	SCREW			8
19	26GM10030B	SCREW			4
20	6814607	PLATE			1
21	29CM00816B	SCREW			2
22	26GM08016B	SCREW			3

https://www.pdfmanual4trucks.com/

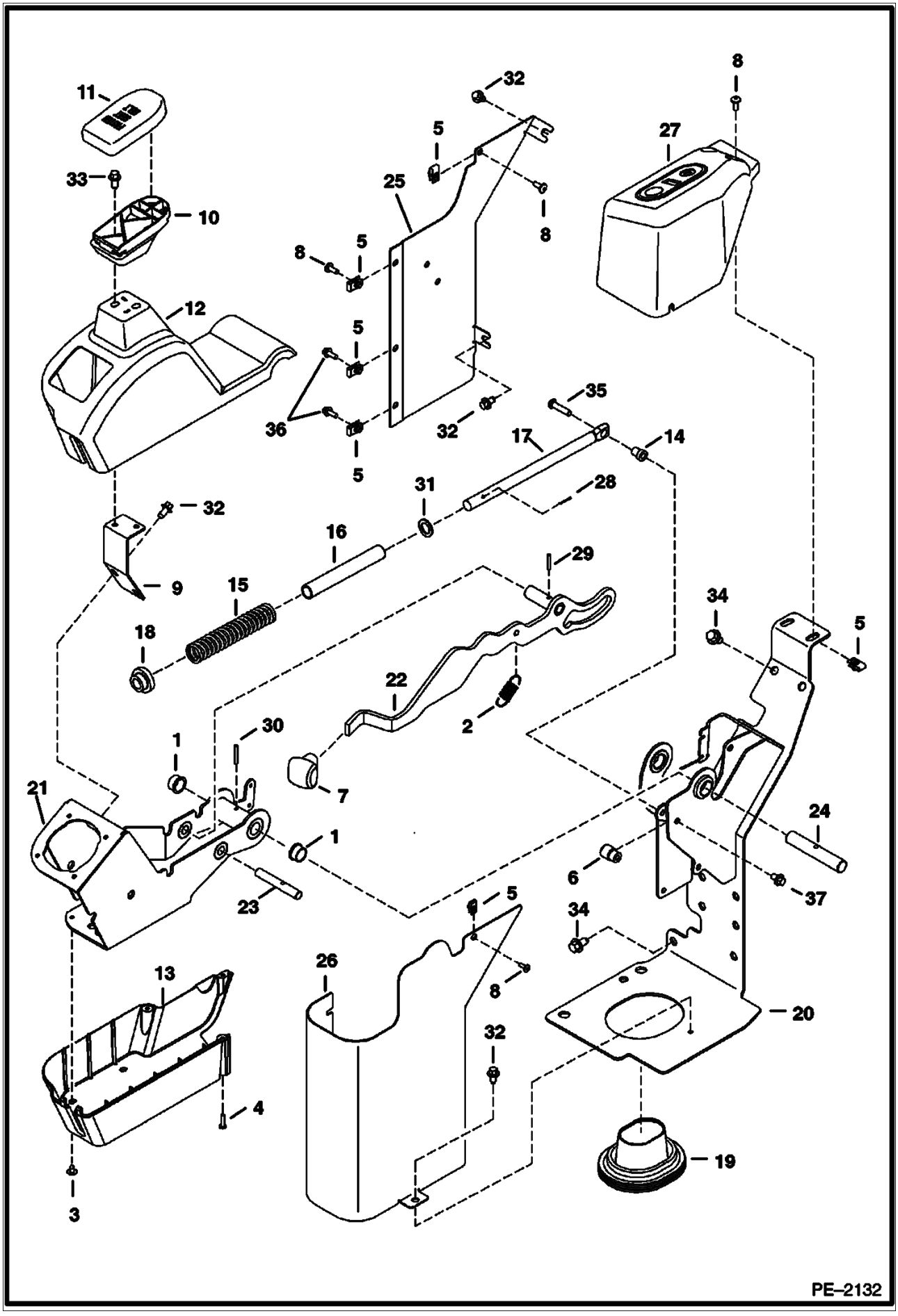

https://www.pdfmanual4trucks.com/

Ref. No.	Part Number	Description	Remarks	Serial Number	Qty.
1	6536801	BUSHING			2
2	6563128	SPRING			1
3	6589675	SCREW			4
4	6669224	BOLT			3
5	6676026	NUT			7
6	6678918	BEARING			1
7	6803199	HANDLE			1
8	6803202	SCREW			5
9	6807362	SUPPORT			1
10	6807982	ARMREST			1
11	6807983	COVER	armrest		1
12	6807984	COVER	L.H. - upper		1
13	6807985	COVER	L.H. - lower		1
14	6808749	BUSHING			1
15	6808840	SPRING			1
16	6810454	TUBE			1
17	6810455	SHAFT			1
18	6810456	BUSHING			1
19	6810671	BOOT			1
20	6811719	CONSOLE	L.H.		1
21	6811751	CONSOLE			1
22	6811760	HANDLE			1
23	6811762	PIN			1
24	6811771	PIN			1
25	6811783	COVER	L.H.		1
26	6811785	COVER	L.H. - lower		1
27	6811973	CONSOLE	L.H. - rear		1
28	13JM20025B	PIN	cotter		1
29	14J001816B	PIN	coiled		1
30	14J000820B	PIN	coiled		1
31	15EM00160B	WASHER			1
32	26GM08016B	SCREW			5
33	26GM08020B	SCREW			2
34	26GM10020B	SCREW			5
35	27CM00835B	SCREW			1
36	29CM00616B	SCREW			2
37	29CM00812B	SCREW			1

https://www.pdfmanual4trucks.com/

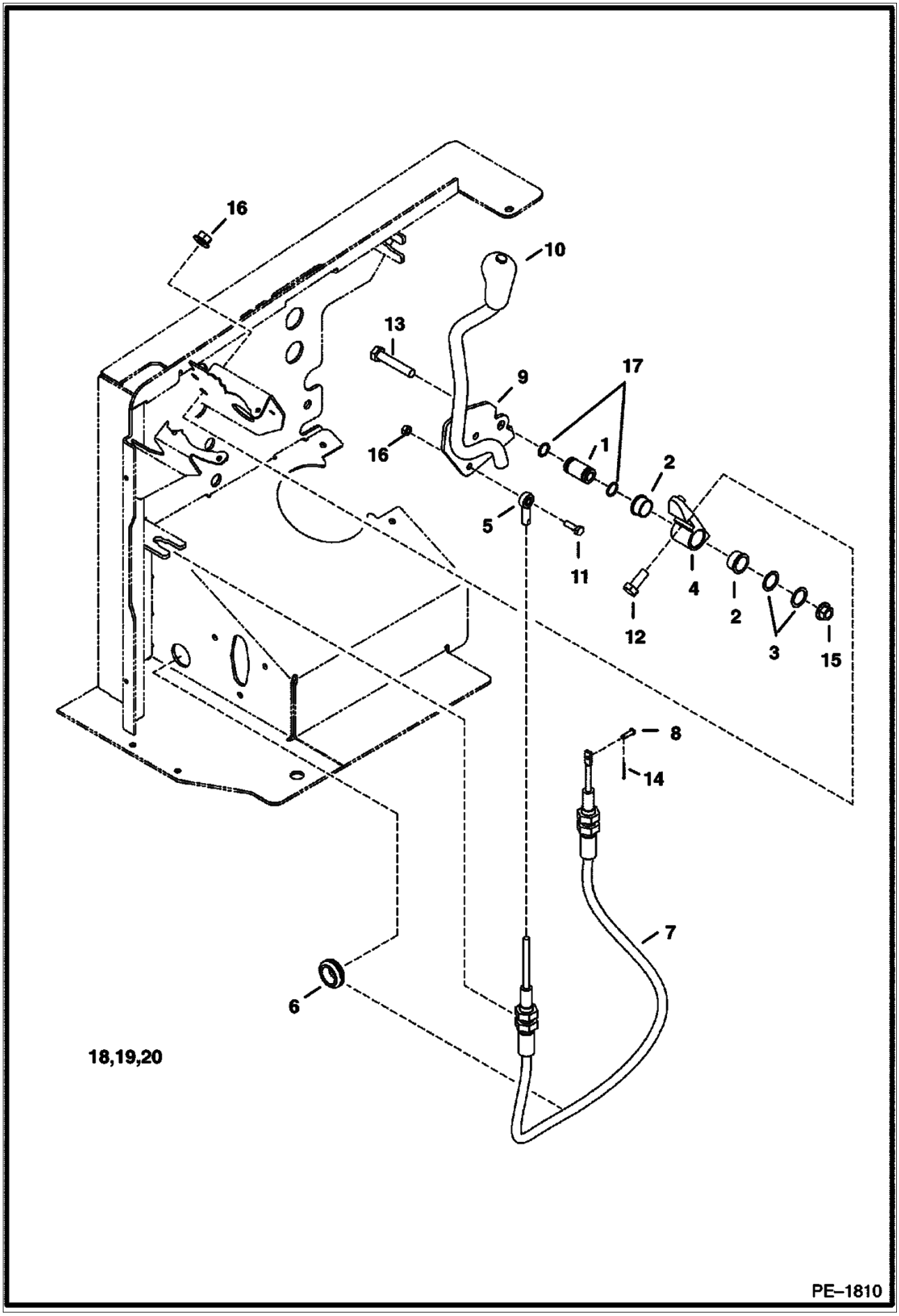

https://www.pdfmanual4trucks.com/

Ref. No.	Part Number	Description	Remarks	Serial Number	Qty.
1	6536545	SLEEVE			1
2	6536801	BUSHING			2
3	6536802	WASHER			2
4	6537481	MOUNT			1
5	6593671	CONNECTOR			1
6	6676508	GROMMET			1
7	6679038	CABLE			1
8	6801068	PIN			1
9	6807169	PLATE			1
10	6807948	LEVER			1
11	1CM00620B	BOLT			1
12	1CM01025B	SCREW			1
13	1CM01055B	SCREW			1
14	1F000212B	PIN			1
15	43DM00010B	NUT			2
16	4DM00006B	NUT			1
17	58K000015B	O-RING			2
18	84G003724B	BOLT			2
19	6815898	MOUNT			1
20	6562266	CLAMP			2

https://www.pdfmanual4trucks.com/

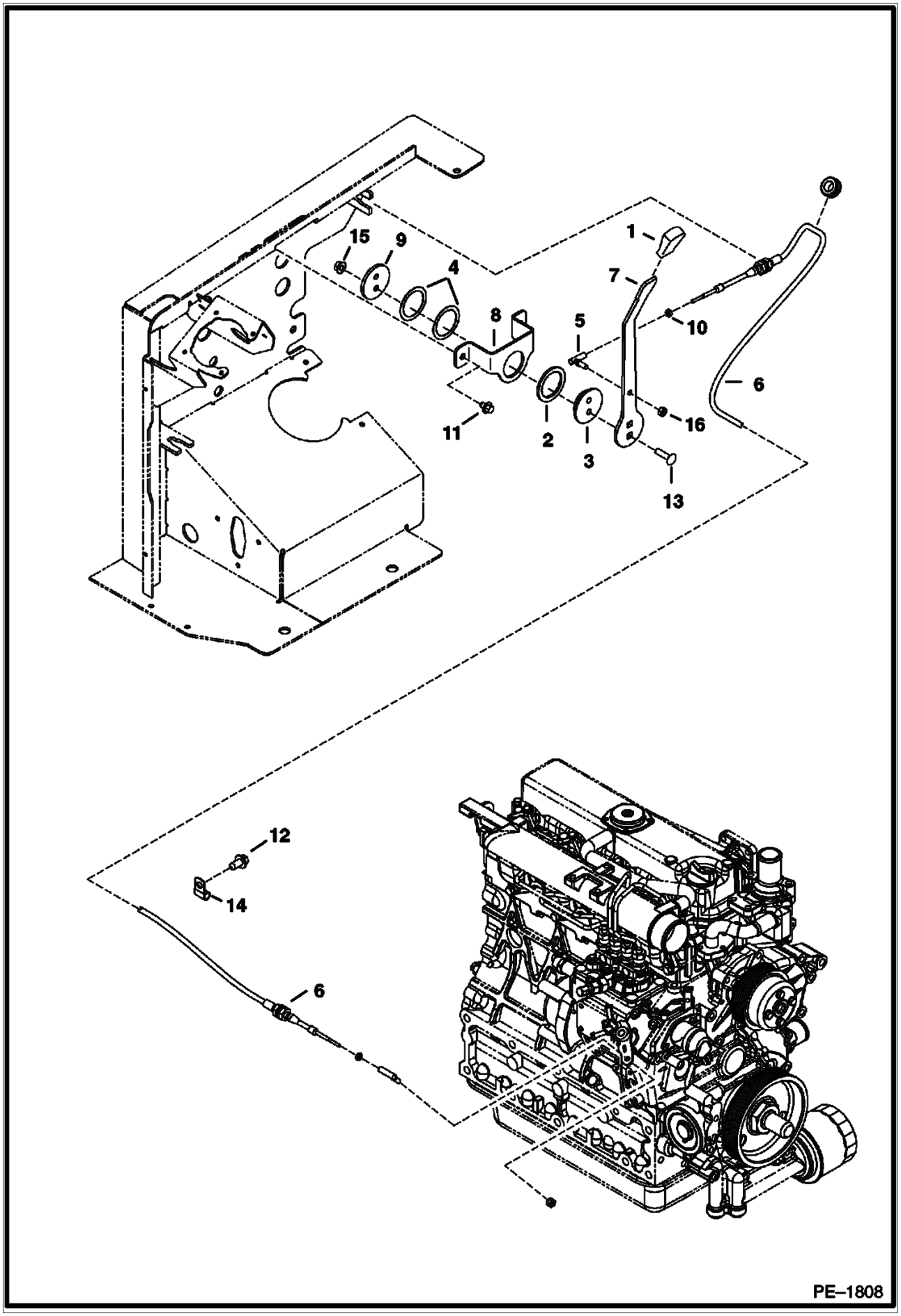

https://www.pdfmanual4trucks.com/

Ref. No.	Part Number	Description	Remarks	Serial Number	Qty.
1	6564452	GRIP			1
2	6567962	WASHER			1
3	6567963	SPACER			1
4	6630945	WASHER			2
5	6644965	BALL JOINT			2
6	6680996	CABLE			1
7	6812089	HANDLE			1
8	6812154	BRACKET			1
9	6812686	WASHER			1
10	14D000010B	NUT			2
11	26GM08013B	SCREW			2
12	26GM10020B	SCREW			1
13	28CM00830B	BOLT			2
14	30H000023B	CLAMP			1
15	43DM00008B	NUT			2
16	62D000004B	NUT			2

https://www.pdfmanual4trucks.com/

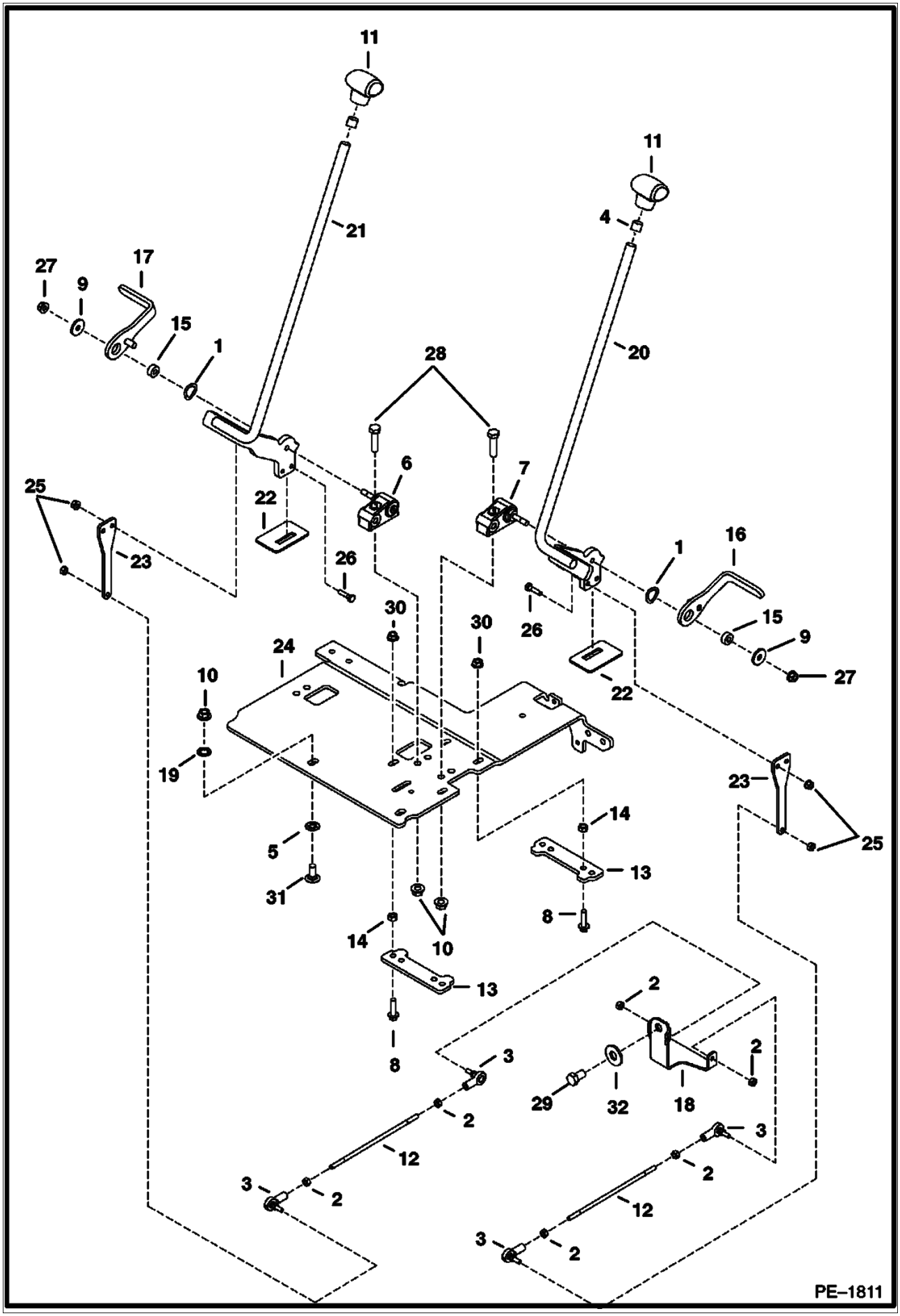

https://www.pdfmanual4trucks.com/

Ref. No.	Part Number	Description	Remarks	Serial Number	Qty.
1	6536803	WASHER			3
2	62D000004B	NUT			8
3	6631036	JOINT			4
4	6672494	RING			2
5	6674264	BOLT			2
6	6677904	BEARING			1
7	6677908	BEARING			2
8	29CM00830B	SCREW			4
9	6701174	WASHER			3
10	51DM00010B	NUT			5
11	6804068	HANDLE			2
12	6808004	ROD			2
13	6809084	STOP	pedal		2
14	4DM00008B	NUT			4
15	6810303	SPACER			3
16	6810508	PEDAL	L.H.		2
17	6810511	PEDAL	R.H.		1
18	6810515	PLATE			1
19	6E000008B	WASHER			2
20	6810532	PEDAL	L.H. - travel		1
21	6810533	PEDAL	R.H. - travel		1
22	6812070	SEAL			3
23	6812286	PLATE			2
24	6812930	MOUNT			1
25	83D000004B	NUT			4
26	1C000416B	SCREW			4
27	47DM00008B	NUT			3
28	1CM01040B	SCREW			3
29	1CM01220B	SCREW			1
30	43DM00008B	NUT			4
31	21CM01025B	BOLT	carriage		2
32	25E000022B	WASHER	flat		1

https://www.pdfmanual4trucks.com/

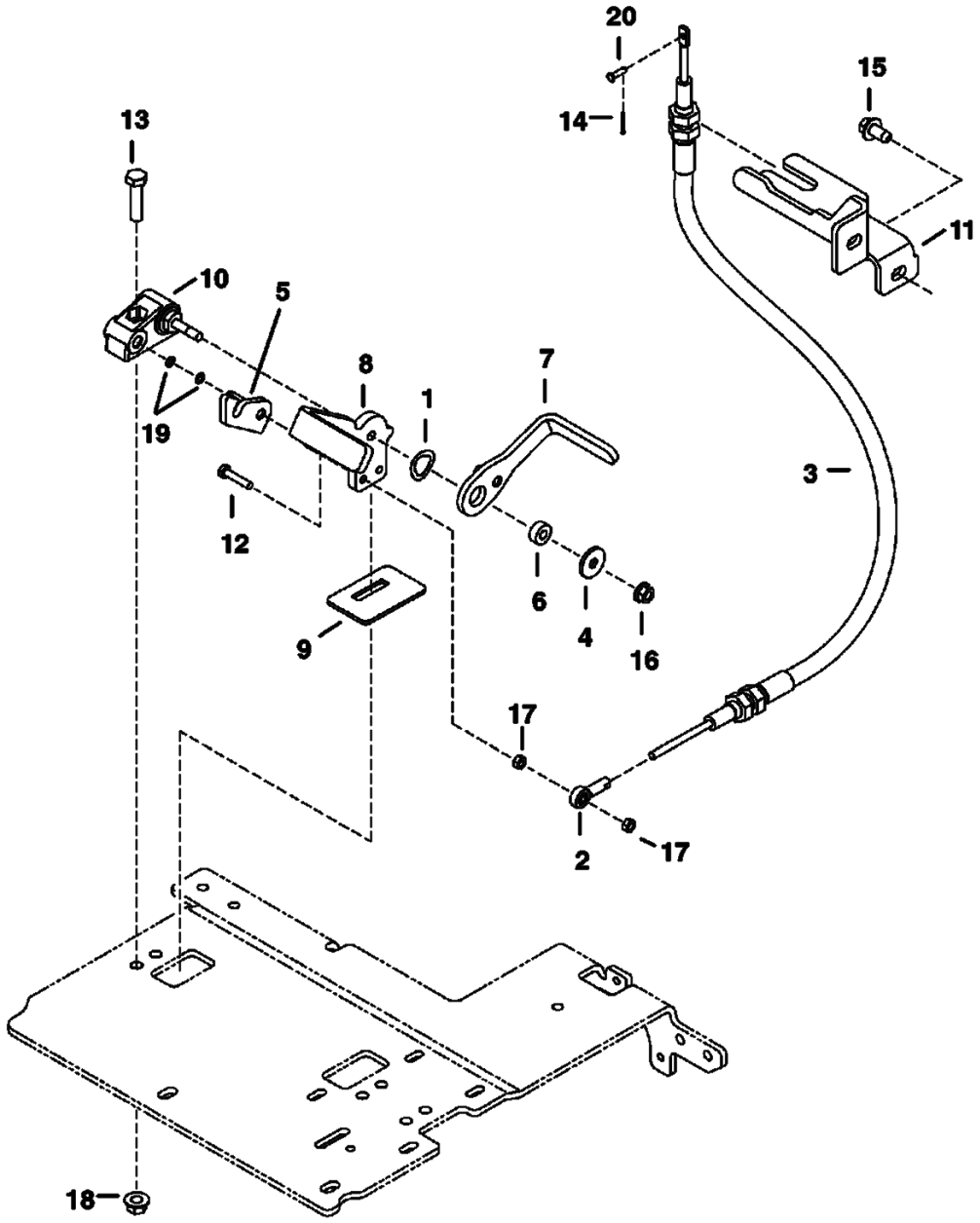

PE–1812

https://www.pdfmanual4trucks.com/

TRAVEL (Cont'd)
(Offset)

Ref. No.	Part Number	Description	Remarks	Serial Number	Qty.
1	6536803	WASHER			3
2	6593671	CONNECTOR			1
3	6679038	CABLE			1
4	6701174	WASHER			3
5	6809194	LOCK			1
6	6810303	SPACER			3
7	6810508	PEDAL	L.H.		1
8	6816109	PEDAL	L.H.		1
9	6812070	SEAL			3
10	6677908	BEARING			2
11	6815898	MOUNT			1
12	1CM00630B	BOLT			1
13	1CM01040B	SCREW			3
14	1F000212B	PIN	cotter		1
15	26GM10020B	SCREW			2
16	47DM00008B	NUT			3
17	4DM00006B	NUT			2
18	51DM00010B	NUT			5
19	54K020008B	O-RING			2
20	6801068	PIN			1

https://www.pdfmanual4trucks.com/

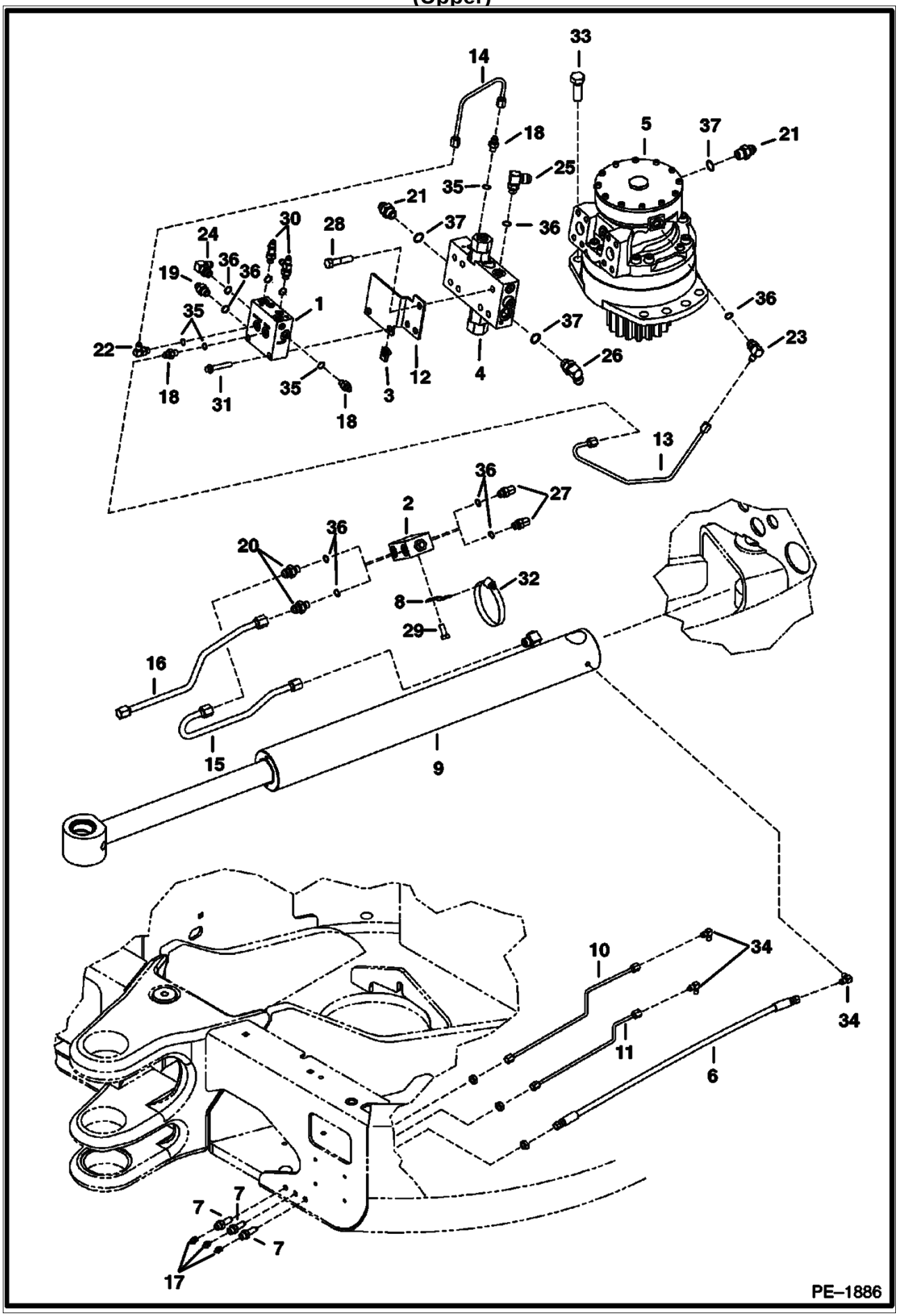

https://www.pdfmanual4trucks.com/

Ref. No.	Part Number	Description	Remarks	Serial Number	Qty.
1	6673053	VALVE			1
2	6676167	VALVE	lock		1
3	6676169	NUT			1
4	6678788	VALVE	See Illustration RELIEF/BRAKE VALVE/ B16419 ASSY		1
5	6686511	MOTOR	See Illustration SWING MOTOR/ B19907A SLEW		1
6	6802064	HOSE			1
7	6807184	FITTING			3
8	6807345	MOUNT			1
9	6812633	CYLINDER	See Illustration SWING CYLINDER/ PE2006		1
10	6813916	TUBE			1
11	6813917	TUBE			1
12	6814456	BRACKET			1
13	6815235	TUBE			1
14	6815236	TUBE			1
15	6816328	TUBE			1
16	6816329	TUBE			1
17	10H000025B	GREASE ZERK	grease		3
18	15KB00404B	ADAPTER	W/Ref. 35		3
19	15KB00606B	ADAPTER	W/Ref. 36		1
20	15KB00806B	CONNECTOR	W/Ref. 36		2
21	15KB00808B	ADAPTER	W/Ref. 37		2
22	17KB00404B	ELBOW	W/Ref. 35		1
23	17KB00406B	ELBOW	W/Ref. 36		1
24	17KB00606B	ELBOW	W/Ref. 36		1
25	17KB00806B	FITTING	W/Ref. 36		1
26	17KB00808B	ELBOW	W/Ref. 37		1
27	18KB00606B	ELBOW	W/Ref. 36		1
28	17C000732B	SCREW			7
29	1CM01025B	SCREW			1
30	21KB00404B	TEE	W/Ref. 35		2
31	29CM00850B	SCREW			2
32	42H000056B	CLAMP			1
33	7CM01645B	SCREW			8
34	83F000003B	SCREW			3
35	79K000004B	O-RING			x
36	79K000006B	O-RING			x
37	79K000008B	O-RING			x

https://www.pdfmanual4trucks.com/

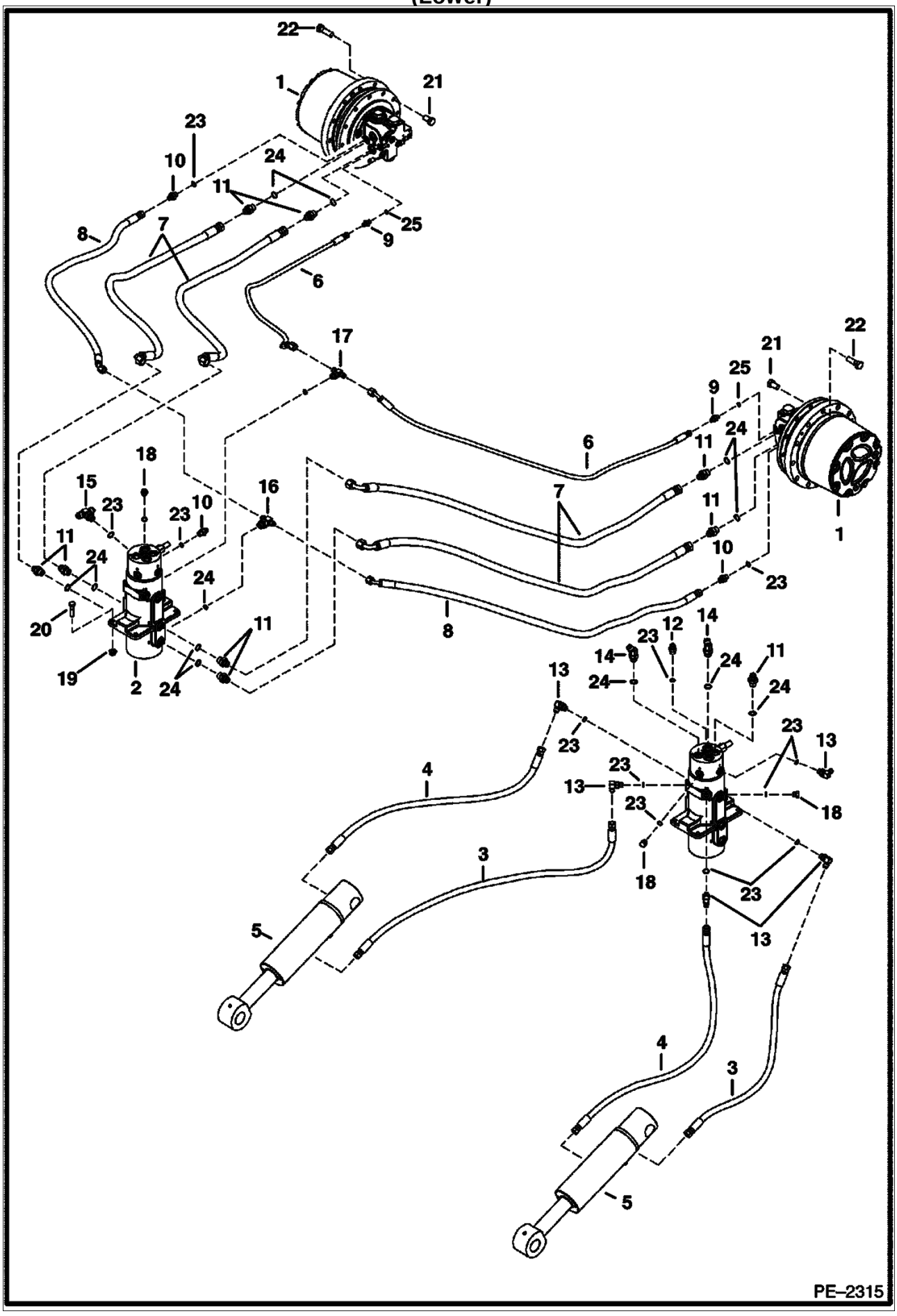

https://www.pdfmanual4trucks.com/

Ref. No.	Part Number	Description	Remarks	Serial Number	Qty.
1	6685455	MOTOR	See Illustration TRAVEL MOTOR/ B19921 TRAVEL		2
2	6811778	SWIVEL	See Illustration SWIVEL ASSY/ PE1906 ASSY		2
3	6814831	HOSE			2
4	6814832	HOSE			2
5	6815952	CYLINDER	See Illustration BLADE CYLINDER/ PE2037 BLADE		2
6	6816492	HOSE			4
7	7101091	HOSE			2
8	7103043	HOSE			2
9	15KB00404B	ADAPTER	W/Ref. 24		1
10	15KB00606B	ADAPTER	W/Ref. 25		3
11	15KB00808B	ADAPTER	W/Ref. 23		1
12	16KB00606B	ADAPTER	W/Ref. 25		1
13	17KB00606B	ELBOW	W/Ref. 25		1
14	17KB00808B	ELBOW	W/Ref. 23		2
15	19KB00606B	TEE	W/Ref. 25		1
16	19KB00808B	FITTING	W/Ref. 23		1
17	21KB00808B	TEE	W/Ref. 23		1
18	24K000005B	PLUG			1
19	42DM00010B	NUT			4
20	53CM01040B	SCREW			4
21	55CM01435B	SCREW			48
22	55CM01445B	SCREW			24
23	79K000008B	O-RING			x
24	79K000004B	O-RING			x
25	79K000006B	O-RING			x

https://www.pdfmanual4trucks.com/

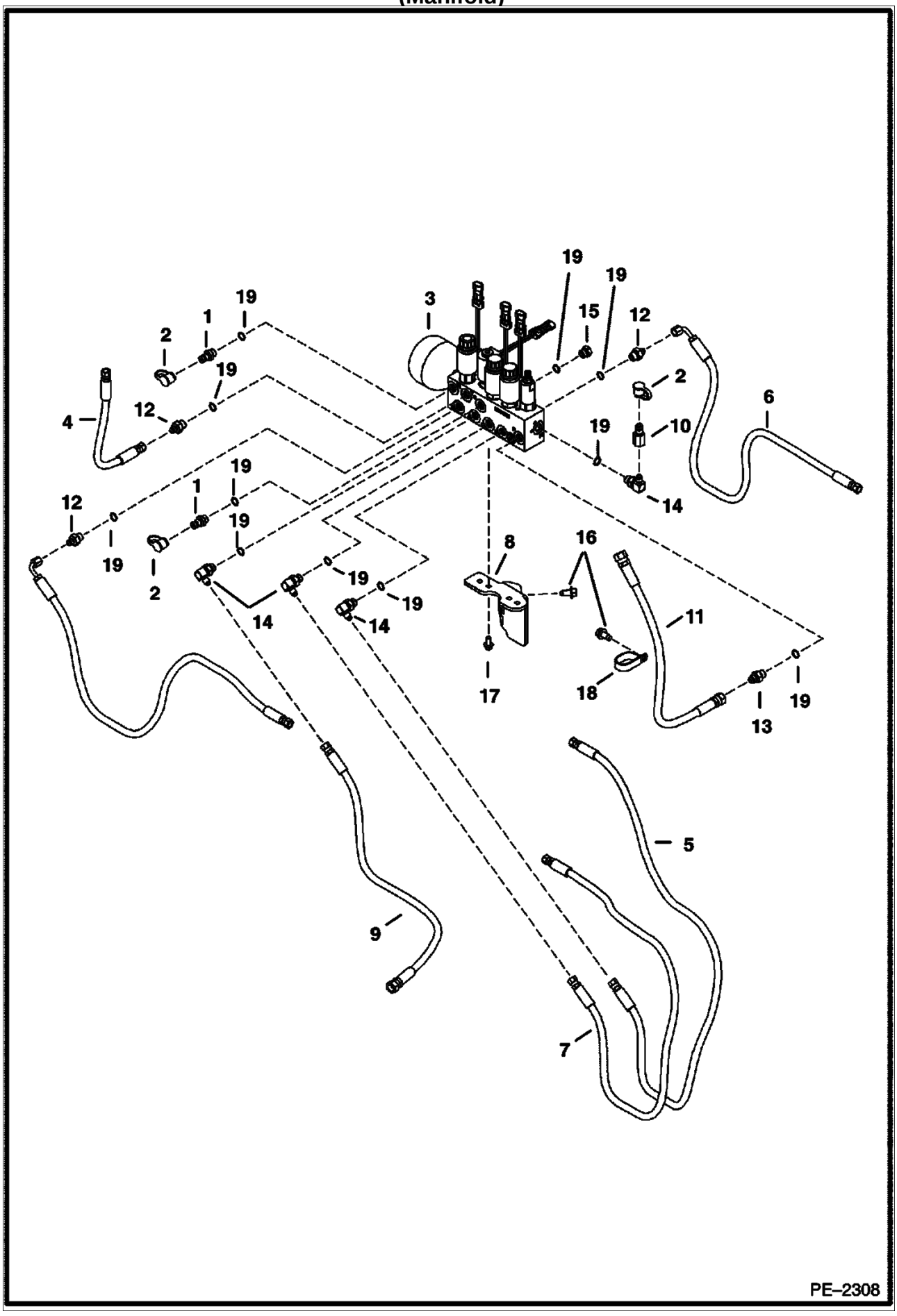

https://www.pdfmanual4trucks.com/

Ref. No.	Part Number	Description	Remarks	Serial Number	Qty.
1	6630168	COUPLER			2
2	6630367	CAP			3
3	6685162	MANIFOLD	See Illustration MANIFOLD/ MS1935 assy		1
4	6706228	HOSE			1
5	6802066	HOSE			1
6	6807945	HOSE			2
7	6812855	HOSE			1
8	6813694	BRACKET			1
9	6815221	HOSE			1
10	7000009	PLUG			1
11	7107843	HOSE			1
12	15KB00406B	ADAPTER	W/Ref. 19		3
13	15KB00606B	ADAPTER	W/Ref. 19		1
14	17KB00406B	ELBOW	W/Ref. 19		4
15	24K000005B	PLUG			1
16	26GM10020B	SCREW			3
17	29CM00816B	SCREW			2
18	31H000038B	CLAMP			1
19	79K000006B	O-RING			x

https://www.pdfmanual4trucks.com/

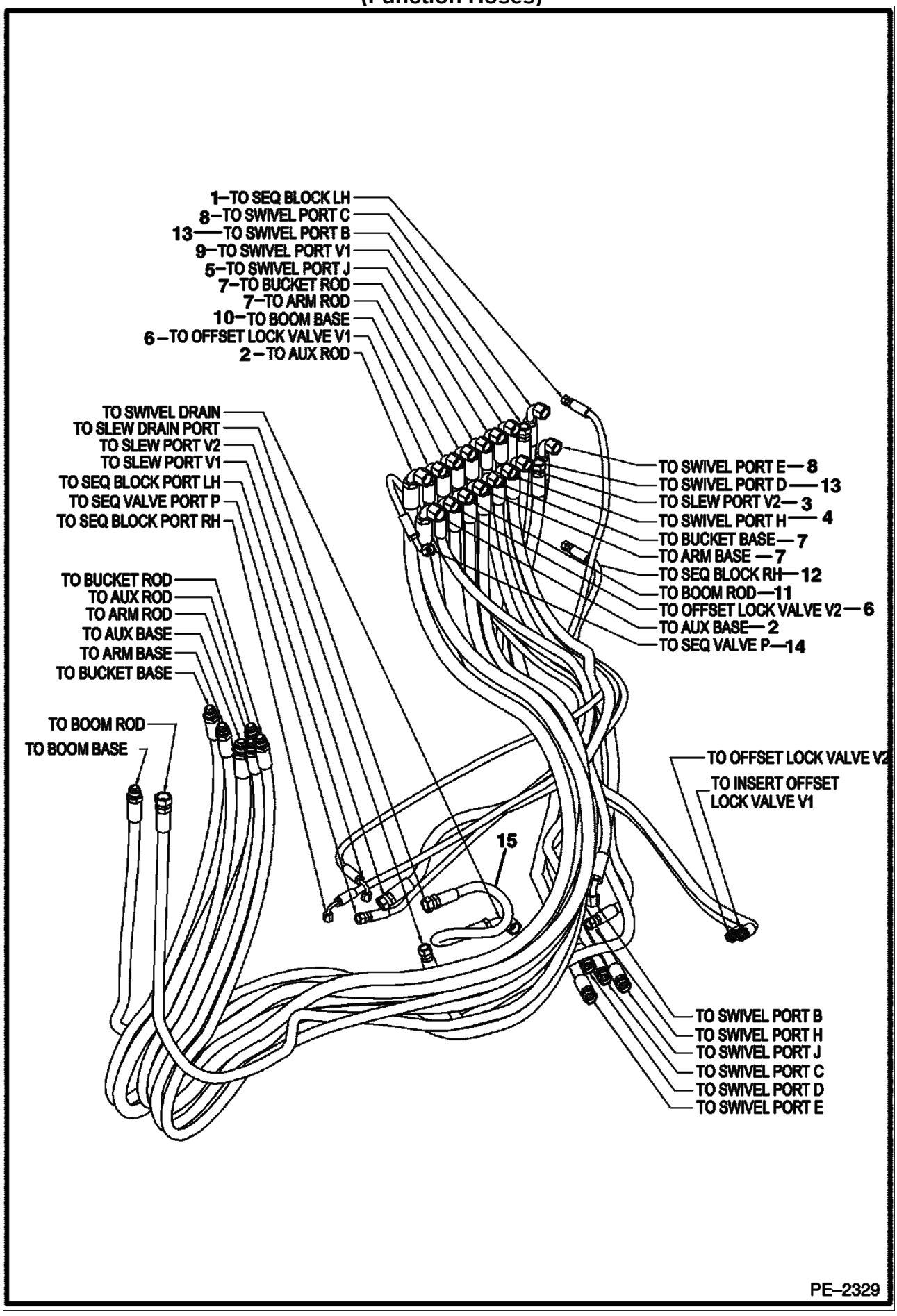

https://www.pdfmanual4trucks.com/
(Function Hoses)

Ref. No.	Part Number	Description	Remarks	Serial Number	Qty.
1	6806788	HOSE			1
2	6807460	HOSE			2
3	6813903	HOSE			1
4	6815033	HOSE			1
5	6815582	HOSE			1
6	6817060	HOSE			2
7	6818101	HOSE			4
8	6818105	HOSE			4
9	7101790	HOSE			1
10	7101791	HOSE			1
11	7101792	HOSE			1
12	7101687	HOSE			1
13	7102576	HOSE			1
14	7105261	HOSE			1
15	7106221	HOSE	Was 6615630 [A]		1

https://www.pdfmanual4trucks.com/

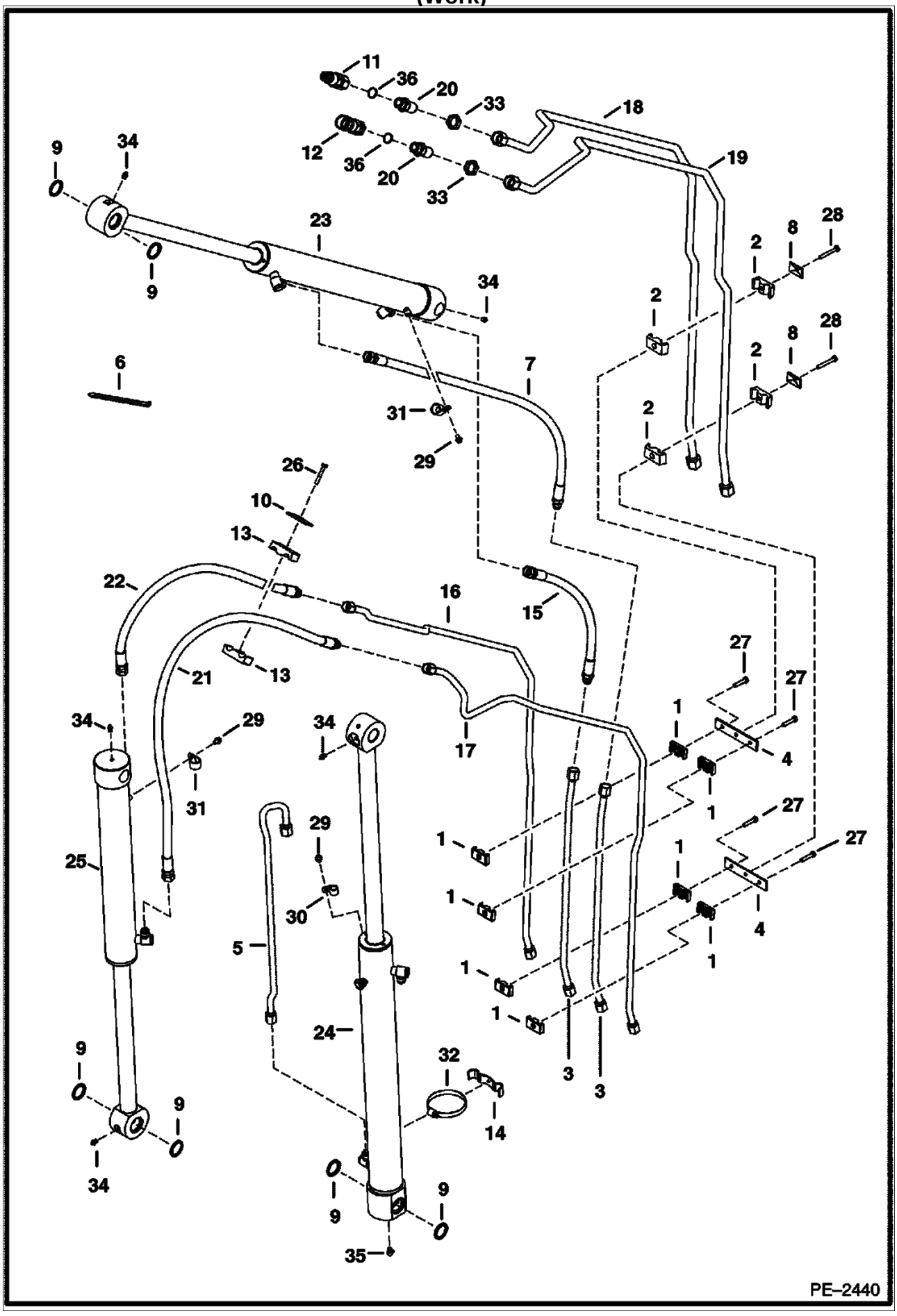

https://www.pdfmanual4trucks.com/

Ref. No.	Part Number	Description	Remarks	Serial Number	Qty.
1	6577697	CLAMP			8
2	6592506	CLAMP			4
3	6596042	TUBELINE			2
4	6596116	PLATE			2
5	6596855	TUBELINE			1
6	6624289	STA STRAP			3
7	6628360	HOSE			1
8	6652521	COVER			2
9	6652915	SEAL	dust		6
10	6653493	COVER			1
11	6667808	COUPLER	flush face - male		1
12	6672960	COUPLER	flush face - female		1
13	6683610	CLAMP			2
14	6806461	CLAMP			1
15	6810465	HOSE			1
16	6812063	TUBELINE			1
17	6812064	TUBELINE			1
18	6812099	TUBELINE			1
19	6812100	TUBELINE			1
20	6812823	ADAPTER	W/Ref. 36		1
21	6814781	HOSE	standard arm		1
21	6814784	HOSE	long arm		1
22	6814782	HOSE	standard arm		1
22	6814783	HOSE	long arm		1
23	6816744	CYLINDER	See Illustration ARM CYLINDER/ PE2003 ARM		1
24	6814385	CYLINDER	See Illustration BOOM CYLINDER/ PE2004 BOOM		1
25	6812517	CYLINDER	See Illustration BUCKET CYLINDER/ PE2005 BUCKET		2
26	1C000532B	BOLT			1
27	1CM00840B	SCREW			4
28	1CM00860B	SCREW			2
29	29CM00812B	SCREW			3
30	30H000037B	CLAMP			1
31	30H000050B	CLAMP			2
32	42H000056B	CLAMP			1
33	86F000008B	NUT			2
34	10H000025B	GREASE ZERK	grease		5
35	12H000015B	GREASE ZERK	grease		1
36	79K000012B	O-RING			x

HYDRAULIC CIRCUITRY
https://www.pdfmanual4trucks.com/
(Cooler/Filter)

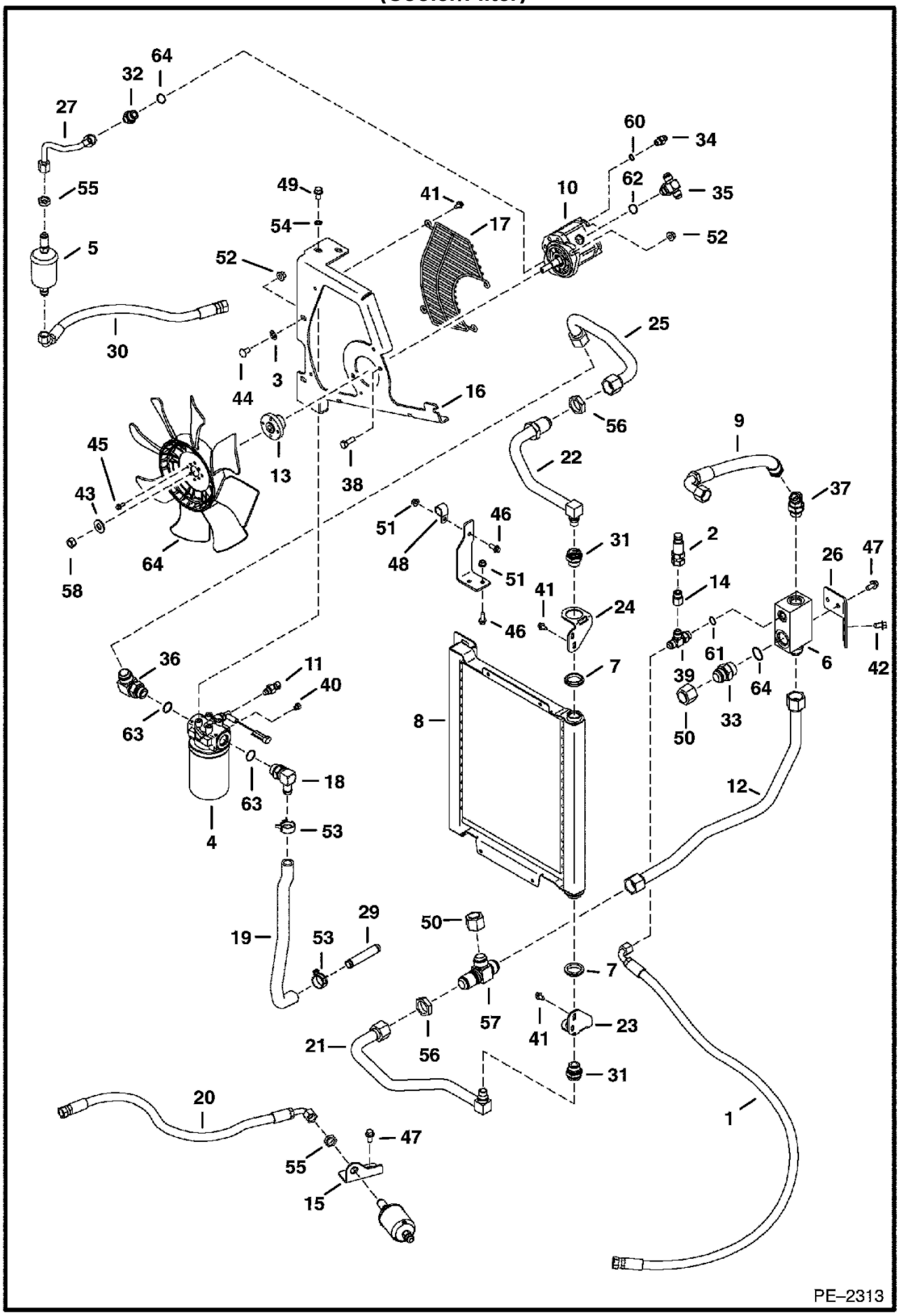

https://www.pdfmanual4trucks.com/

Ref. No.	Part Number	Description	Remarks	Serial Number	Qty.
1	6618216	HOSE			1
2	6667806	COUPLER			1
3	6674264	BOLT			1
4	6676969	FILTER	assy		1
5	6681012	FILTER	in-line		2
6	6681586	VALVE	build-up		1
7	6681623	BUSHING			2
8	6683316	EXCHANGER	heat hyd.		1
9	6684365	HOSE			1
10	6686269	MOTOR	See Illustration FAN MOTOR/ B24364		1
11	6727869	SENDER	hyd temp		1
12	6811696	TUBE			1
13	6812390	HUB	fan		1
14	6812828	ADAPTER	W/Ref. 61		1
15	6814286	BRACKET	filter		1
16	6814287	MOUNT	fan		1
17	6814288	GUARD	fan		1
18	6814419	FITTING	W/Ref. 63		1
19	6814421	HOSE			1
20	6814660	HOSE			1
21	6815879	TUBE			1
22	6815880	TUBE			1
23	6815881	BRACKET			1
24	6815882	BRACKET			1
25	6815883	TUBE			1
26	6815885	BRACKET			1
27	6815893	TUBE			1
28	7101025	BRACKET			1
29	7101113	TUBE			1
30	7102583	HOSE			1
31	10L001212B	TUBE	to std		2
32	15KB00810B	CONNECTOR	W/Ref. 62		1
33	15KB01616B	CONNECTOR	W/Ref. 59		1
34	17KB00406B	ELBOW	W/Ref. 60		1
35	17KB00810B	ELBOW	W/Ref. 62		1
36	17KB01612B	ELBOW	W/Ref. 63		1
37	18KB01212B	ELBOW	W/Ref. 63		1
38	1CM01030B	SCREW			2
39	21KB00808B	TEE	W/Ref. 61		1
40	24K000002B	PLUG			1
41	26GM08016B	SCREW			8
42	26GM10020B	SCREW			2
43	27E000008B	WASHER			1
44	28CM01020B	BOLT			3
45	29CM00616B	SCREW			4
46	29CM00820B	BOLT			4
47	29CM01020B	SCREW			4
48	30H000065B	CLIP			1
49	35C000612B	BOLT			2
50	36K000010B	CAP			2
51	43DM00008B	NUT			3
52	51DM00010B	NUT			5
53	5HM00029B	CLAMP			2
54	6E000006B	WASHER			1
55	86F000006B	NUT			2
56	86F000010B	NUT			2
57	91K000010B	ADAPTER			1

https://www.pdfmanual4trucks.com/

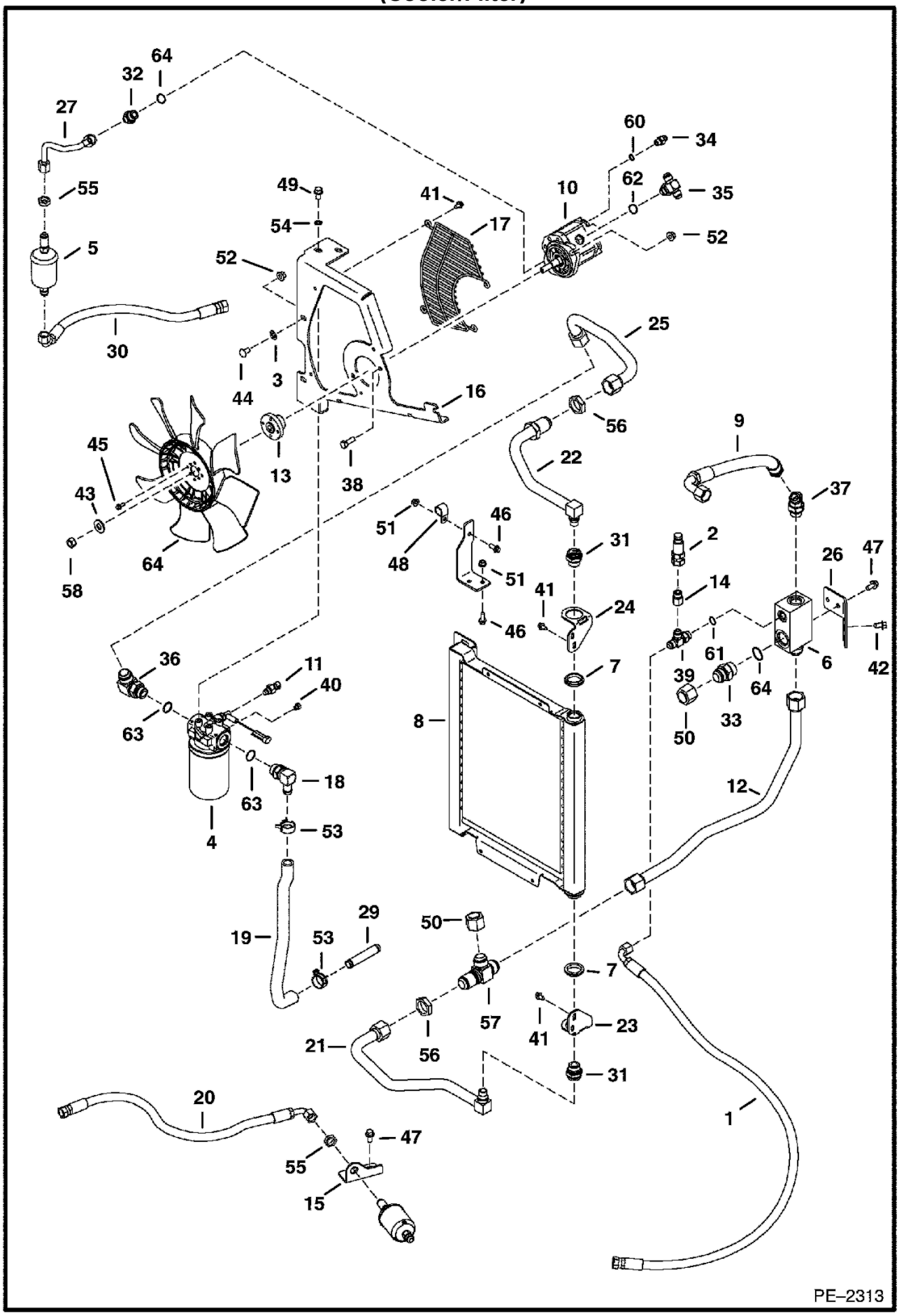

https://www.pdfmanual4trucks.com/

Ref. No.	Part Number	Description	Remarks	Serial Number	Qty.
58	96D000008B	NUT			1
59	79K000016B	O-RING			x
60	79K000006B	O-RING			x
61	79K000008B	O-RING			x
62	79K000010B	O-RING			x
63	79K000012B	O-RING			x
64	6683810	FAN			1

https://www.pdfmanual4trucks.com/

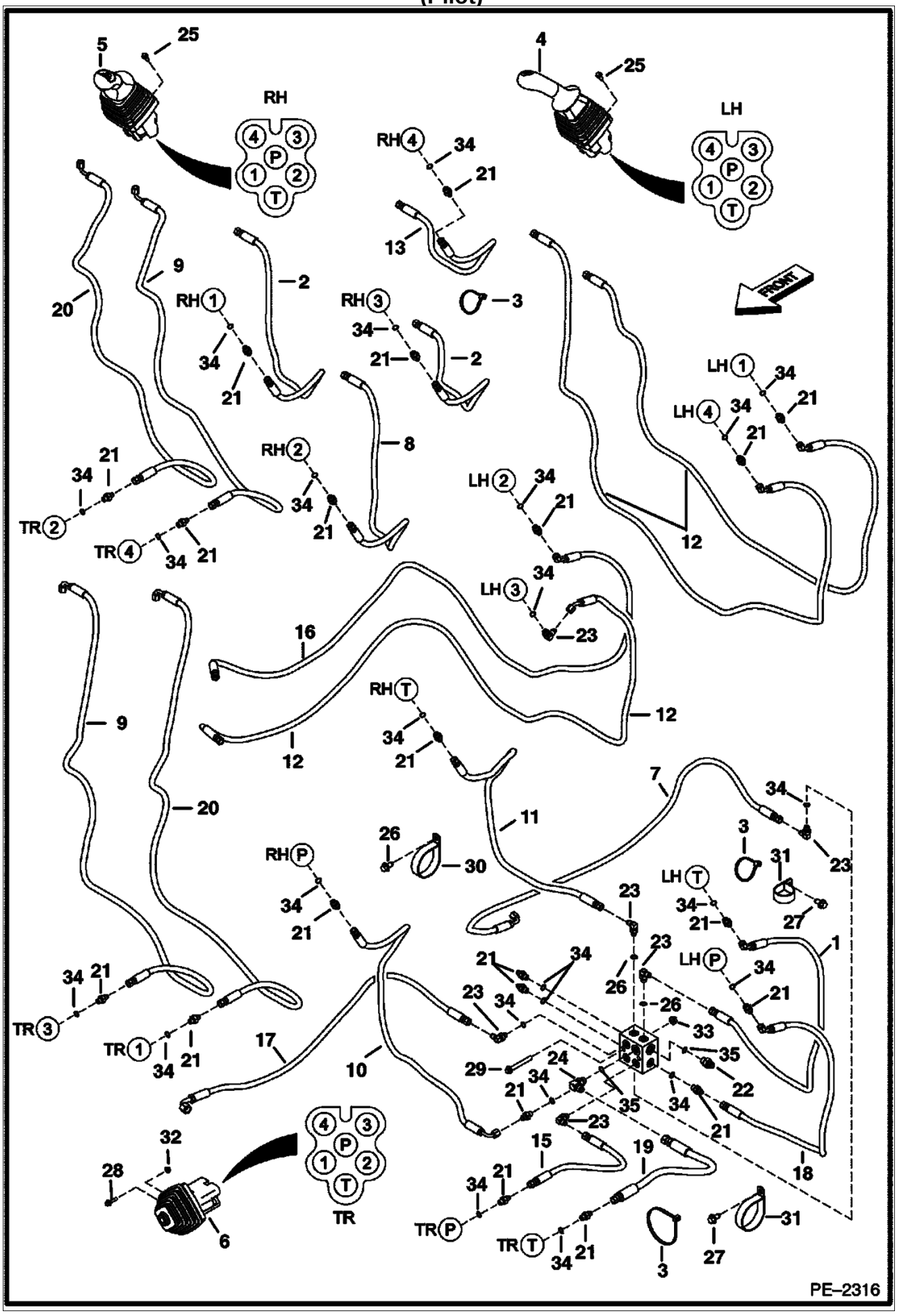

https://www.pdfmanual4trucks.com/

Ref. No.	Part Number	Description	Remarks	Serial Number	Qty.
1	6578185	HOSE	assy		1
2	6597811	HOSE	assy		2
3	6624289	STA STRAP			7
4	6677894	JOYSTICK	See Illustration L.H. JOYSTICK/ MS1354		1
5	6677895	JOYSTICK	See Illustration R.H. JOYSTICK/ MS1352		1
6	6677896	JOYSTICK	See Illustration TRAVEL CONTROLLER/ MS1351		1
7	6803091	HOSE			1
8	6806794	HOSE			1
9	6807480	HOSE			2
10	6807946	HOSE			1
11	6813790	HOSE			1
12	6813882	HOSE			3
13	6813884	HOSE			1
14	6814985	BLOCK			1
15	6815261	HOSE			1
16	6815465	HOSE			1
17	6815471	HOSE			1
18	6815897	HOSE			1
19	6817066	HOSE			1
20	7102576	HOSE			2
21	15KB00404B	ADAPTER			21
22	15KB00606B	ADAPTER			1
23	17KB00404B	ELBOW	90 degree		6
24	17KB00606B	ELBOW	90 degree		1
25	26GM06020B	SCREW			8
26	26GM10016B	SCREW			1
27	26GM10020B	SCREW			2
28	29CM00625B	SCREW			3
29	29CM00870B	SCREW			2
30	30H000085B	CLAMP			1
31	30H000100B	CLAMP			2
32	43DM00006B	NUT			3
33	51DM00008B	NUT			2
34	79K000004B	O-RING			x
35	79K000006B	O-RING			x

https://www.pdfmanual4trucks.com/

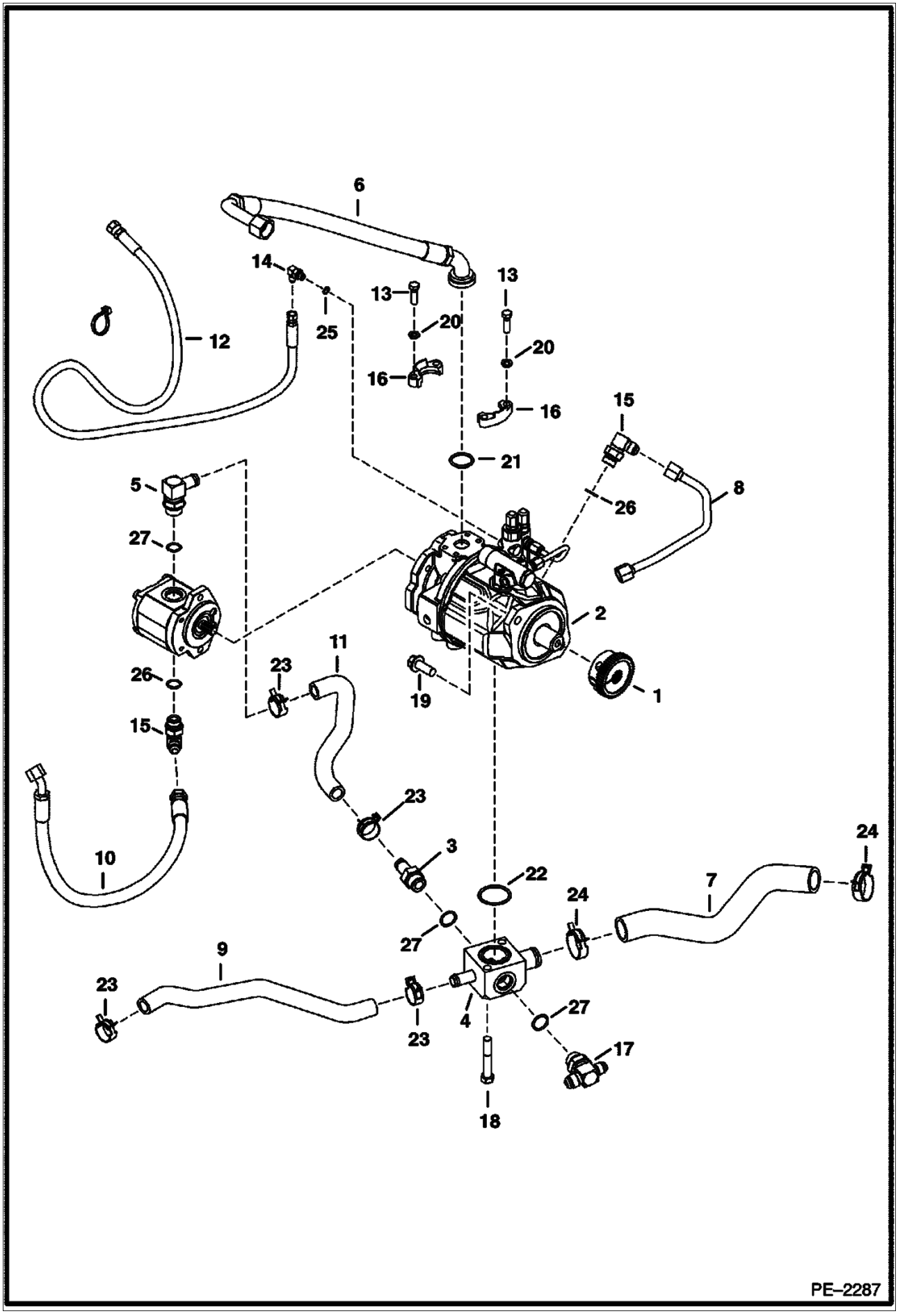

https://www.pdfmanual4trucks.com/

Ref. No.	Part Number	Description	Remarks	Serial Number	Qty.
1	6676535	COUPLER			1
2	6685694	PUMP	hydraulic		1
3	6812865	FITTING	W/Ref. 27		1
4	6814414	MANIFOLD	pump		1
5	6814419	FITTING	W/Ref. 27		1
6	6815429	HOSE			1
7	7101024	HOSE			1
8	7101026	TUBELINE			1
9	7101112	HOSE			1
10	7102579	HOSE			1
11	7102953	HOSE			1
12	7107865	HOSE			1
13	17C000620B	BOLT			4
14	17KB00404B	ELBOW	W/Ref. 25 - 90 degree		1
15	17KB00810B	ELBOW	W/Ref. 26 - 90 degree		2
16	19J000016B	CLAMP			2
17	19KB000812B	FITTING	W/Ref. 27		1
18	1C000848B	SCREW			1
19	29CM01435B	SCREW			2
20	4E000006B	WASHER			4
21	58K000219B	O-RING			1
22	58K000225B	O-RING			1
23	5HM00029B	CLAMP	hose		4
24	5HM00042B	CLAMP			2
25	79K000004B	O-RING			x
26	79K000010B	O-RING			x
27	79K000012B	O-RING			x

https://www.pdfmanual4trucks.com/

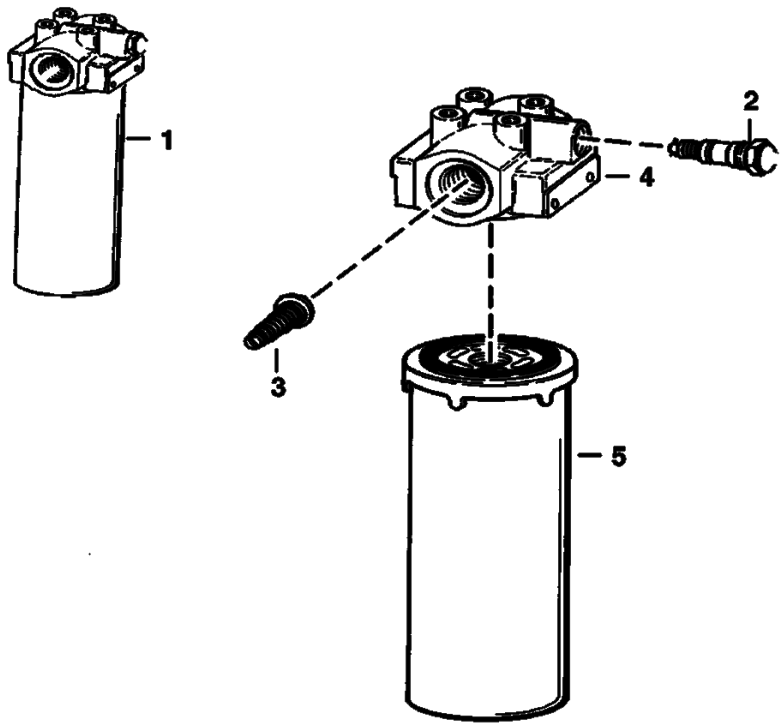

B–16487

HYDROSTATIC OIL FILTER (Cont'd)

https://www.pdfmanual4trucks.com/

Ref. No.	Part Number	Description	Remarks	Serial Number	Qty.
1	6676969	FILTER	assy - W/Ref. 2-5 (50 PSI by-pass & switch)		1
2	6660260	SWITCH	pressure - normally closed		1
2	6599365	KIT	Nut, washer & o-rings		1
3		VALVE	NAP - by-pass (50 PSI - Order Ref. 1)		1
4		HEAD	NSS - Order Ref. 1		1
5	6661248	ELEMENT			1

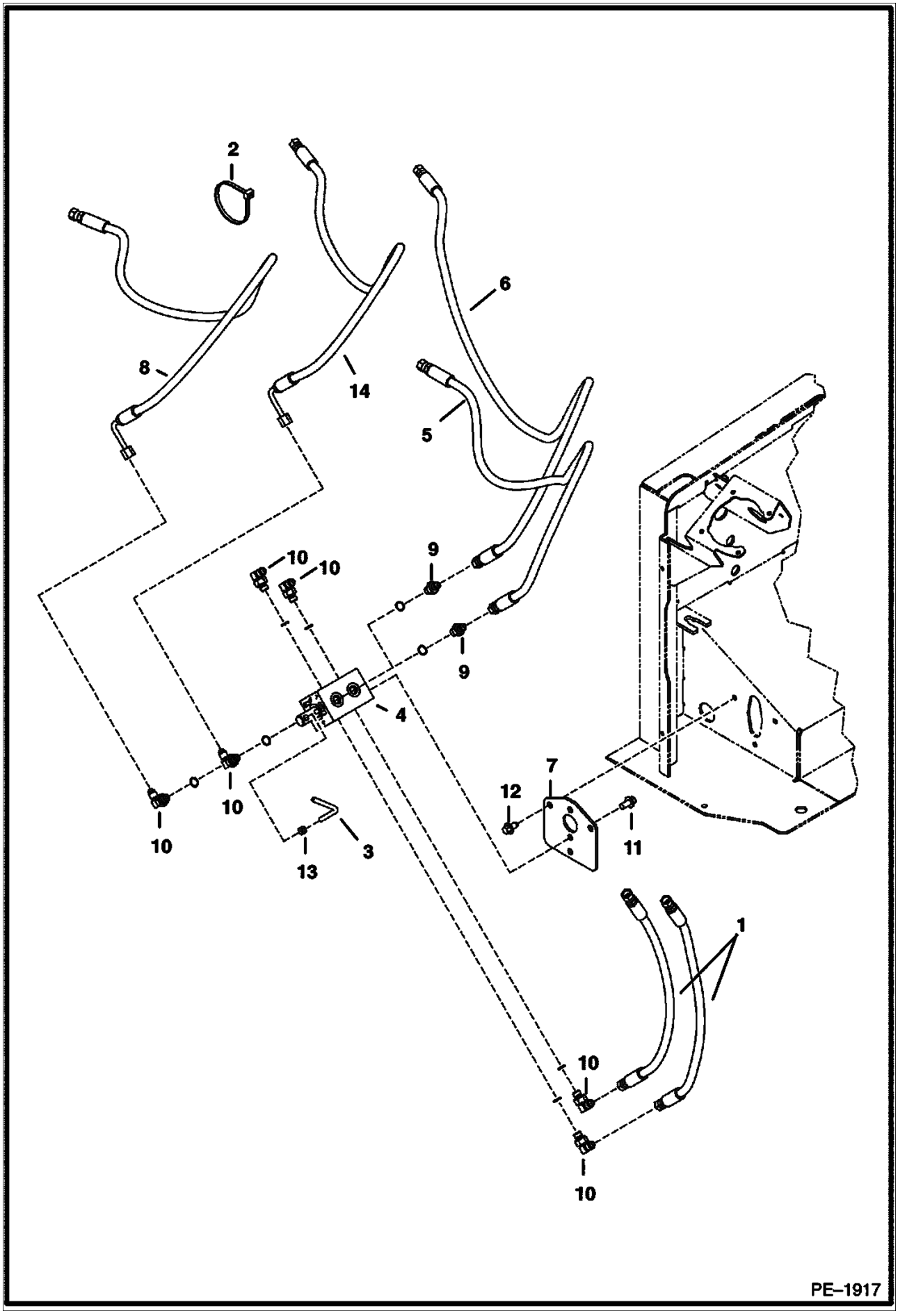
2
6
8
14
5
10
10
9
9
4
10
10
10
7
12
11
13
3
1
10
10
PE–1917

https://www.pdfmanual4trucks.com/

Ref. No.	Part Number	Description	Remarks	Serial Number	Qty.
1	6577775	HOSE			2
2	6624289	STA STRAP			2
3	6804251	HANDLE			1
4	6805768	VALVE			1
5	6812855	HOSE			1
6	6813790	HOSE			1
7	6814607	PLATE			1
8	6817266	HOSE			1
9	15KB00404B	ADAPTER			2
10	17KB00404B	ELBOW			6
11	26GM08016B	SCREW			3
12	29CM00816B	SCREW			2
13	4DM00006B	NUT			1
14	6807478	HOSE			1

https://www.pdfmanual4trucks.com/

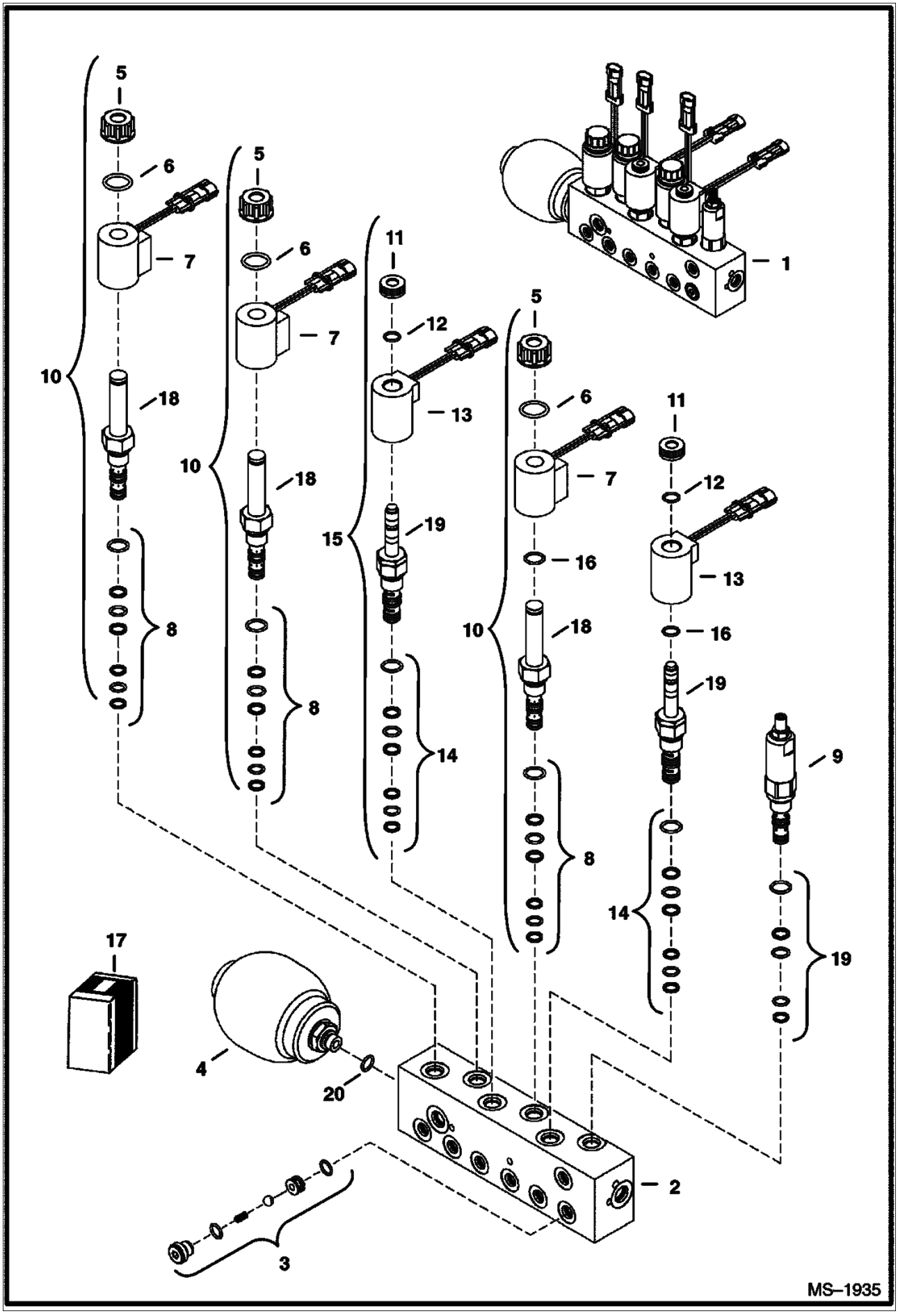

https://www.pdfmanual4trucks.com/

Ref. No.	Part Number	Description	Remarks	Serial Number	Qty.
1	6685162	MANIFOLD	assy		1
2		BODY	NSS - order Ref. 1		1
3	6678990	VALVE	assy		1
4	6685832	ACCUMULATOR			1
5	6685282	NUT			1
6	6679684	O-RING			1
7	6685283	COIL			3
8	6679078	SEAL KIT			1
9	6685284	VALVE	pressure reducing		1
10	6679032	VALVE	assy - W/Ref. 5 - 8		1
11	6679076	NUT			2
12	6679509	O-RING			4
13	6678984	COIL			2
14	6685285	SEAL KIT			2
15	6678988	VALVE	assy - W/Ref. 11 - 14		2
16		SOLENOID	NSS - order Ref. 10		3
17		SOLENOID	NSS - order Ref. 15		3

https://www.pdfmanual4trucks.com/

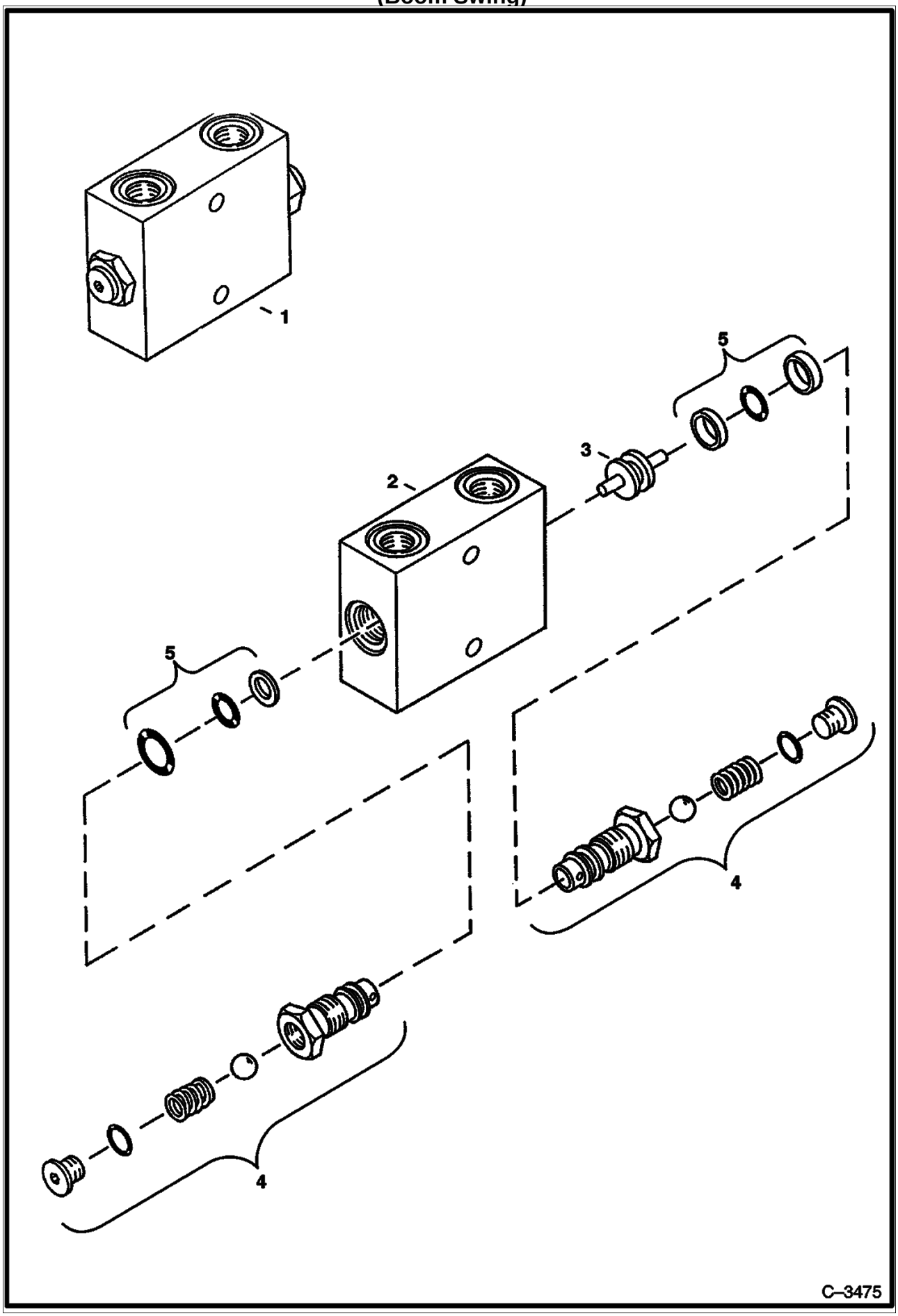

LOCK VALVE (Cont'd)
https://www.pdfmanual4trucks.com/
(Boom Swing)

Ref. No.	Part Number	Description	Remarks	Serial Number	Qty.
1	6676167	VALVE	assy. - Lock - W/Refs. 2-4		1
2		HOUSING	NSS - Order Ref. 1		1
3	6671709	SPOOL			1
4	6671708	CHECK VALVE	W/Refs. 5		2
5	6671710	SEAL KIT			2

https://www.pdfmanual4trucks.com/

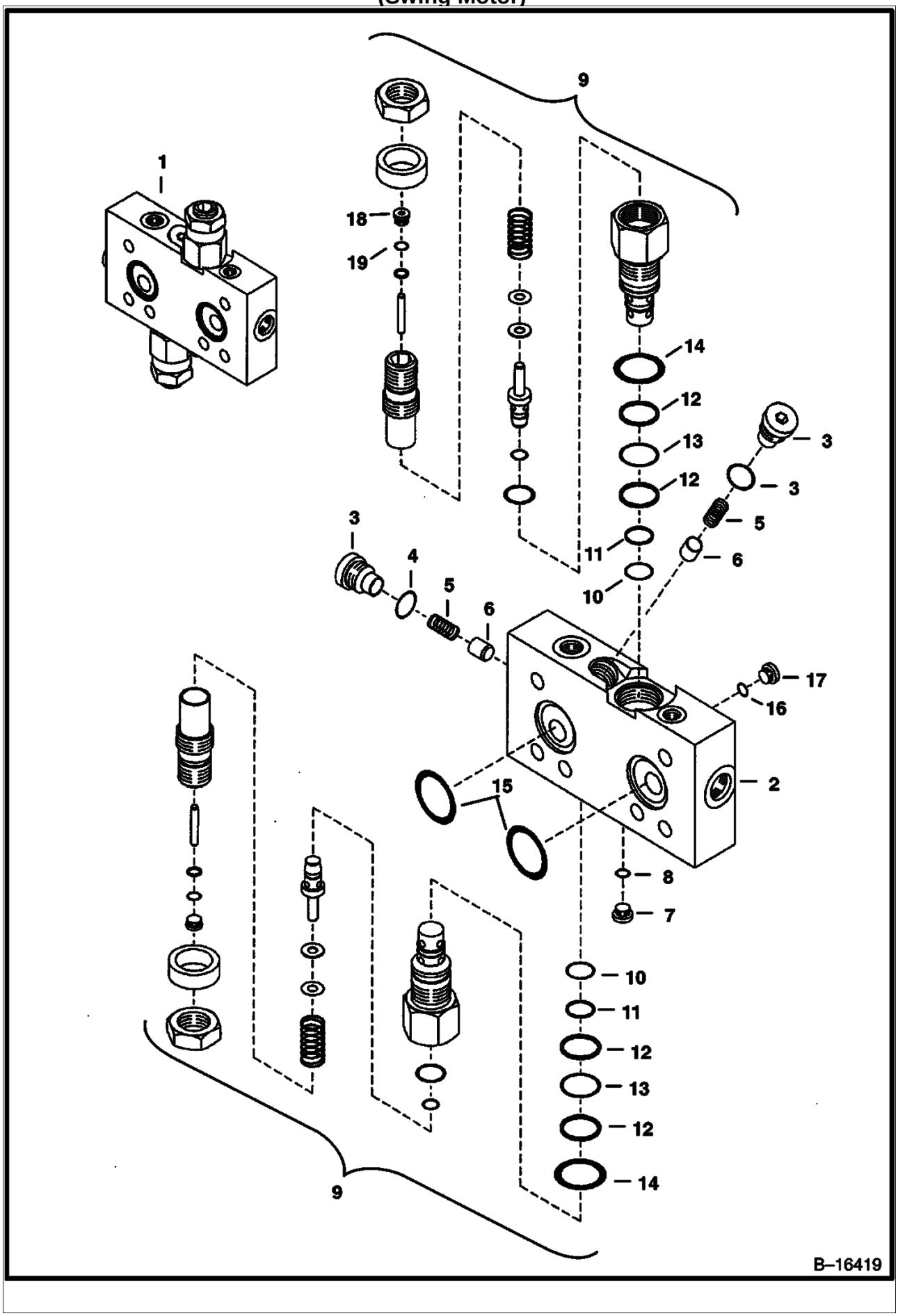

https://www.pdfmanual4trucks.com/

RELIEF/BRAKE VALVE (Cont'd)
(Swing Motor)

Ref. No.	Part Number	Description	Remarks	Serial Number	Qty.
1	6678788	VALVE	Relief/Brake - W/Refs. 2 - 17		1
2		BLOCK	NSS		1
3	6672539	PLUG			2
4	6669215	O-RING			2
5	6669210	SPRING			2
6	6669212	POPPET			2
7	6672529	PLUG			1
8	79K000004B	O-RING			1
9	6678789	RELIEF VALVE			2
10	58K000016B	O-RING			1
11	73K000016B	O-RING			1
12	6674902	O-RING			2
13	6674903	O-RING			1
14	6674901	O-RING			1
15	6674900	O-RING			2
16	79K000002B	O-RING			1
17	6672540	PLUG			1
18	90KV00001B	PLUG	W/Ref. 19		1
19	95K000002B	O-RING			1
19	79K000002B	O-RING			1

https://www.pdfmanual4trucks.com/

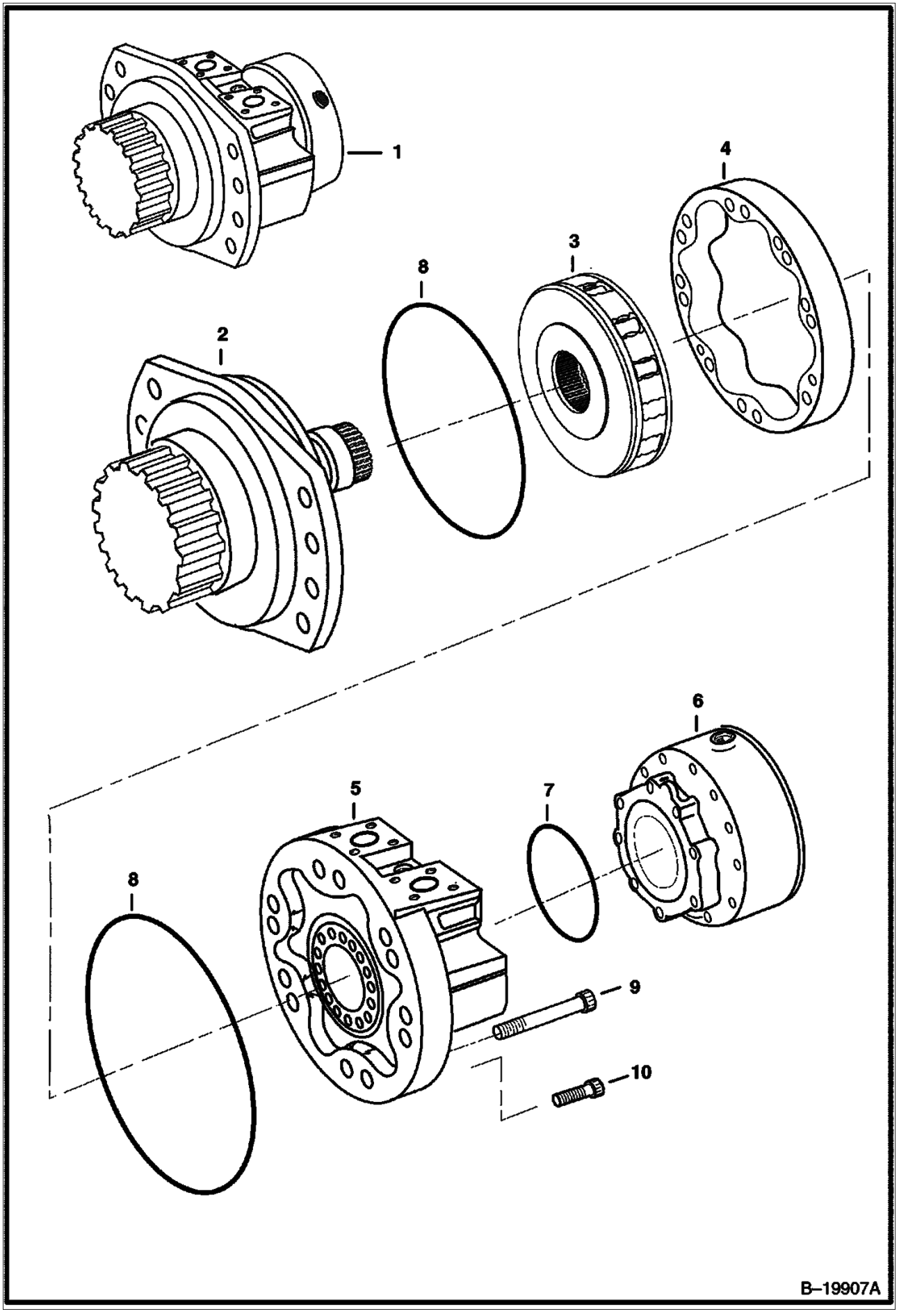

https://www.pdfmanual4trucks.com/

Ref. No.	Part Number	Description	Remarks	Serial Number	Qty.
1	6686511	MOTOR	assy		1
2	6684715	CASE	assy		1
3	6687087	ROTARY GROUP			1
4	6675024	CAM			1
5	6679775	CASE			1
6	6684717	BRAKE			1
7	6675195	SEAL			1
8	6674029	SEAL			2
9	6687080	SCREW			10
10	6687081	SCREW			2

https://www.pdfmanual4trucks.com/

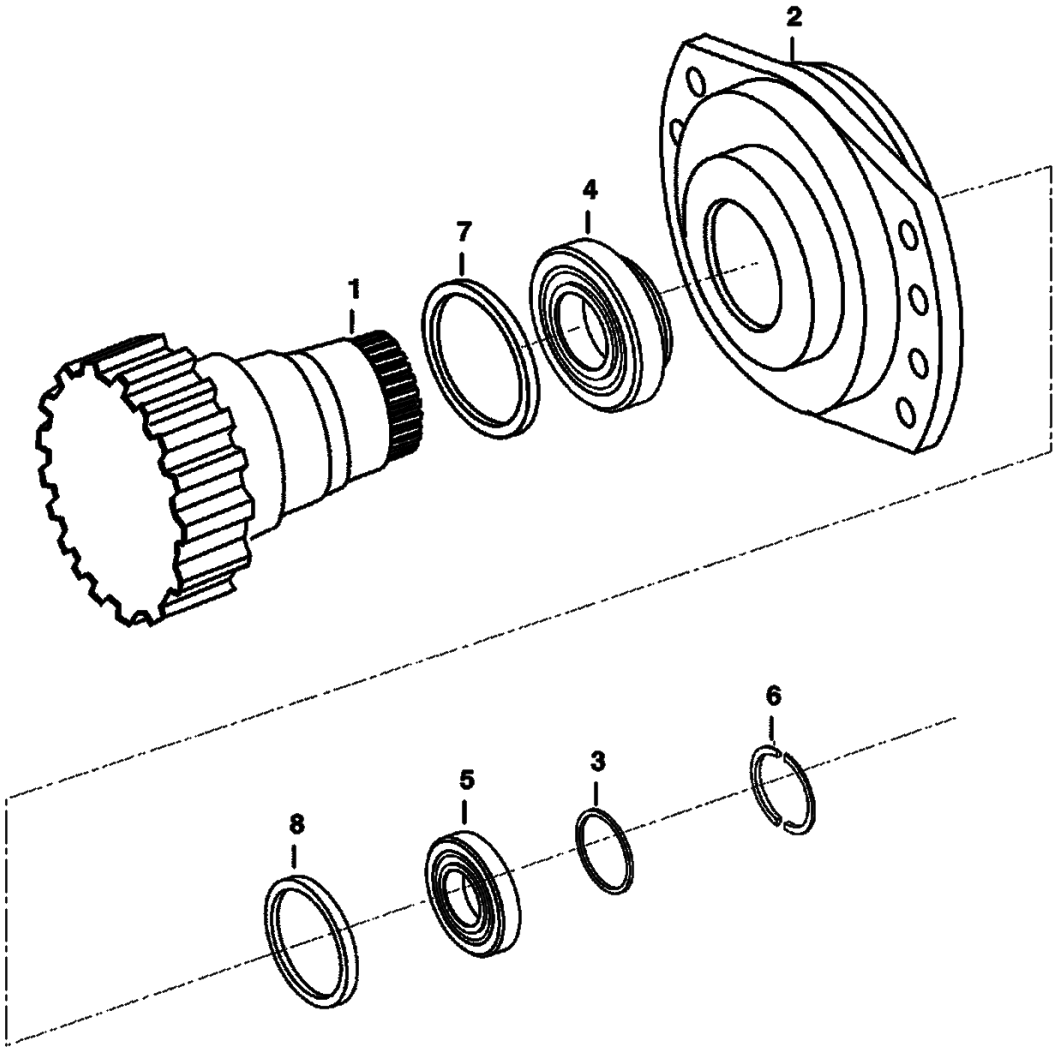

https://www.pdfmanual4trucks.com/

Ref. No.	Part Number	Description	Remarks	Serial Number	Qty.
1	6687074	SHAFT			1
2	6684719	HOUSING			1
3		WASHER	NAP		1
4	6684933	BEARING	front		1
5	6686366	SEAL	rear		1
6	6677849	RING	split		1
7	6684721	SEAL			1
8	6678135	SEAL	shaft		1

https://www.pdfmanual4trucks.com/

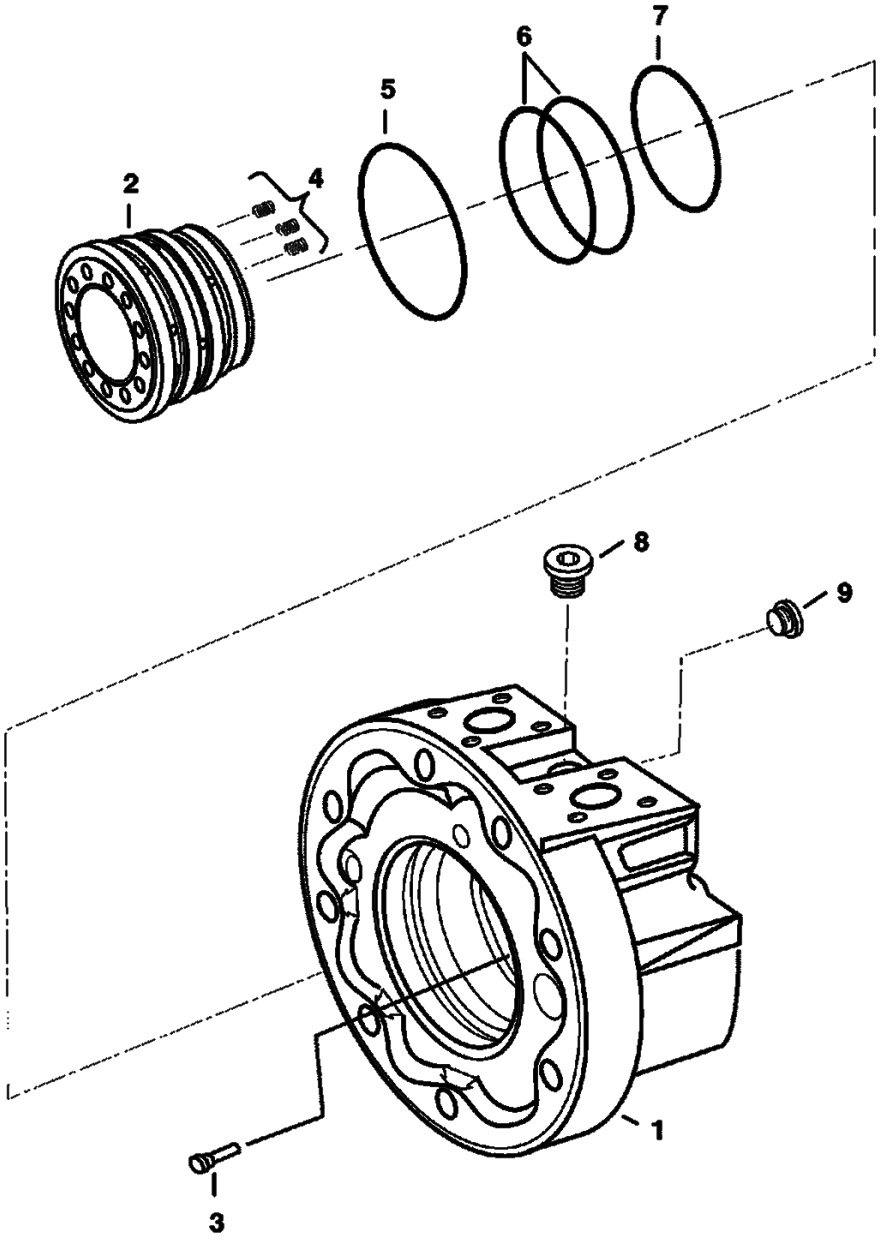

https://www.pdfmanual4trucks.com/

Ref. No.	Part Number	Description	Remarks	Serial Number	Qty.
1	6679778	HOUSING	rear		1
2	6674184	RING	distributor		1
3	6675189	PIN	stop		1
4	6674037	SPRING			9
5	6675227	SEAL			1
6	6675228	SEAL			2
7	6675229	SEAL			1
8	6687077	PLUG			1

https://www.pdfmanual4trucks.com/

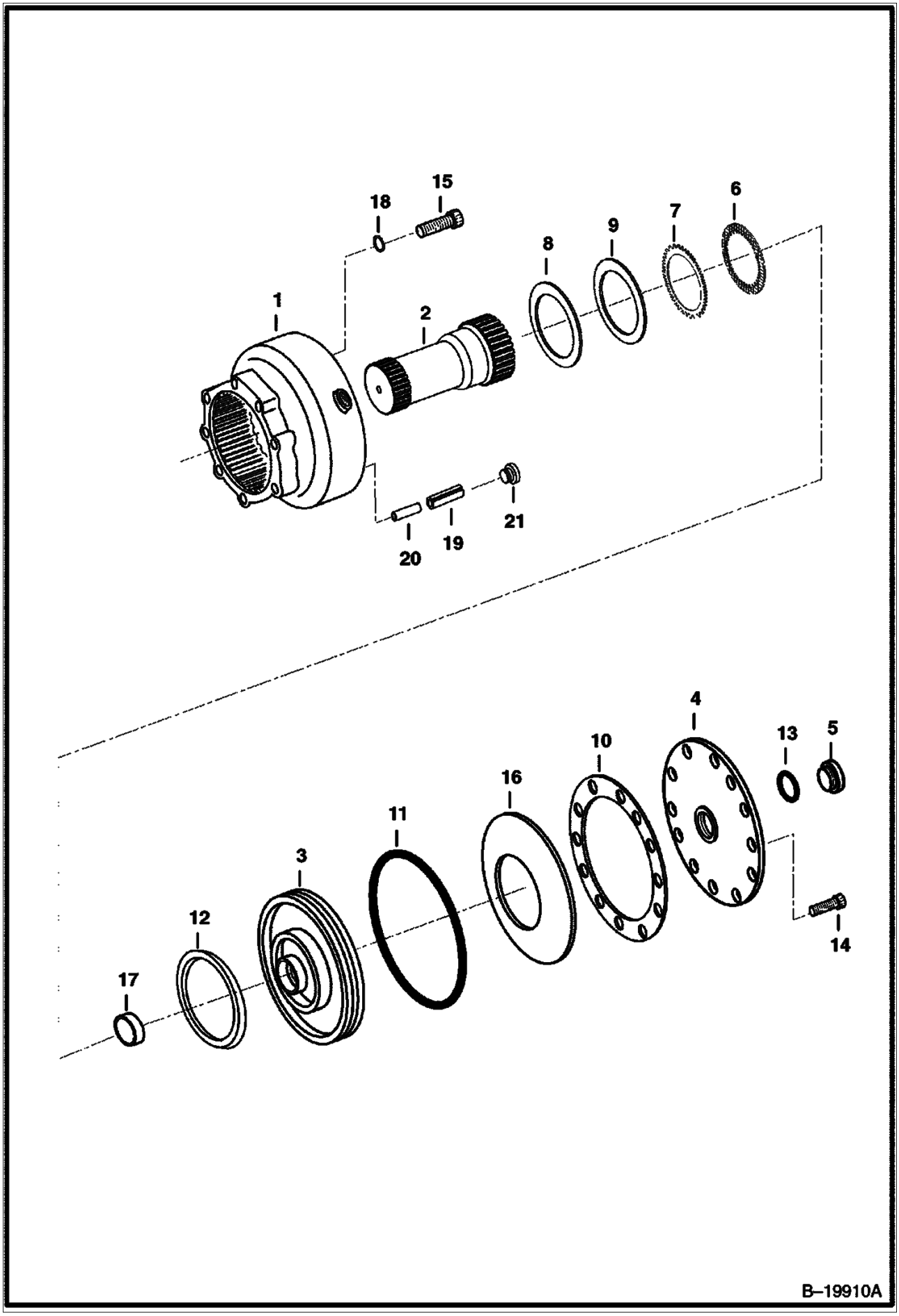

https://www.pdfmanual4trucks.com/

Ref. No.	Part Number	Description	Remarks	Serial Number	Qty.
1	6679779	HOUSING			1
2	6674189	SHAFT			1
3	6676406	PISTON			1
4	6674199	COVER			1
5	6674707	PLUG			1
6	6674192	BRAKE DISC	brake - outer		15
7	6679780	DISC	brake - inner		12
8	6674190	SHIM			1
9	6674191	SHIM			1
10	6675892	GASKET			1
11	6684722	RING	square		1
12	6675894	SEAL	outer		1
13	6687082	O-RING			1
14	6687083	SCREW			12
15	6687084	SCREW			6
16	6675897	WASHER			1
17	6674196	BUSHING			1
18	6674194	WASHER			6
19	6679781	PIN	roll		2
20	6679782	PIN	spring		2
21	6687085	PLUG			2

https://www.pdfmanual4trucks.com/

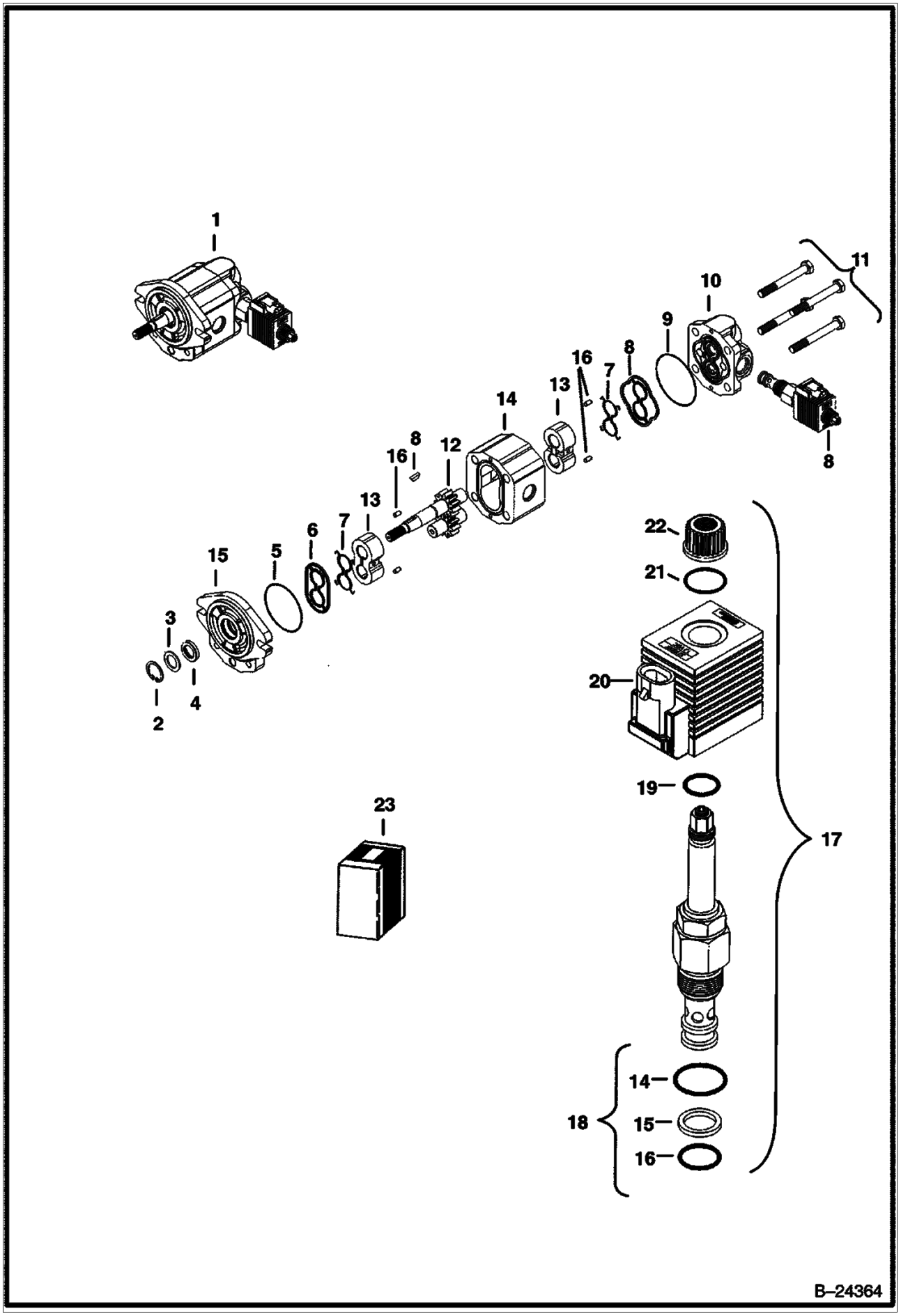

https://www.pdfmanual4trucks.com/

Ref. No.	Part Number	Description	Remarks	Serial Number	Qty.
1	6686269	MOTOR			1
2	6686648	RING			1
3	6686650	WASHER			1
4	6686649	SEAL			1
5		O-RING	NSS - order Ref. 24		1
6		SEAL	NSS - order Ref. 24		1
7		RING	NSS - order Ref. 24		1
8	6686651	KEY	order Ref. 24		1
9		O-RING	NSS - order Ref. 24		1
10		COVER	NSS - order Ref. 1		1
11		BOLT	NSS - order Ref. 1		1
12		GEAR	NSS - order Ref. 1		1
13		BEARING	NSS - order Ref. 1		1
14		CASE	NSS - order Ref. 1		1
15		COVER	NSS - order Ref. 1		1
16		PIN	NSS - order Ref. 1		1
17	6686210	VALVE	solenoid valve Was - 6686653		1
18	6683206	SEAL KIT			1
19	6686209	O-RING			1
20	6684590	COIL			1
21	6686208	O-RING			1
22	6686207	NUT			1
23		SEAL	NSS - order Ref. 24		1
24	6686654	SEAL KIT	gear pump		1

https://www.pdfmanual4trucks.com/

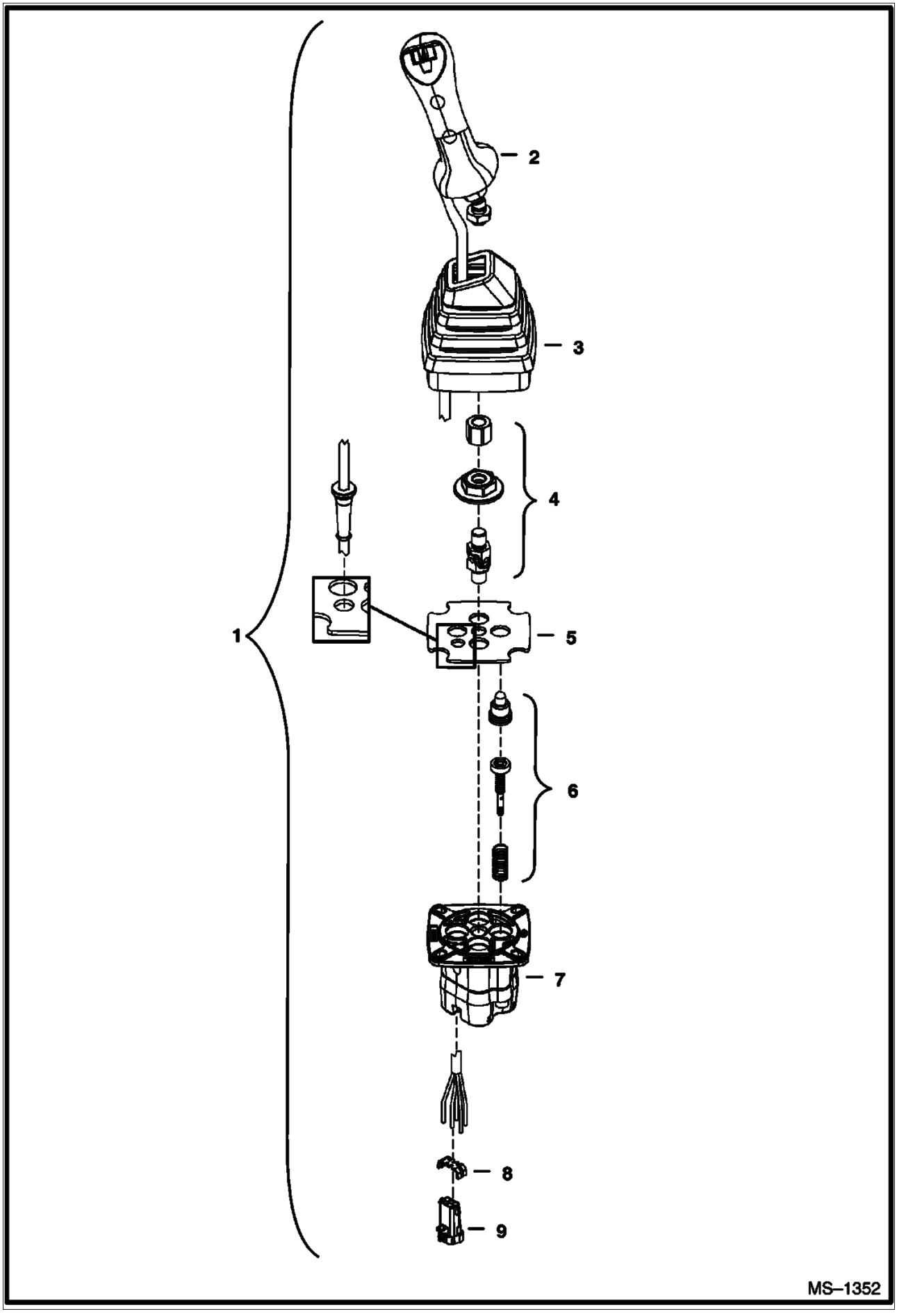

https://www.pdfmanual4trucks.com/

Ref. No.	Part Number	Description	Remarks	Serial Number	Qty.
1	6677895	JOYSTICK			1
2	6679953	HANDLE			1
3	6679955	BOOT			1
4	6679956	KIT			1
5	6679957	FLANGE			1
6	6679952	KIT	plunger		4
7		HOUSING	NSS - order Ref. 1		1
8	6679958	LOCK			1
9	6679960	CONNECTOR			1

https://www.pdfmanual4trucks.com/

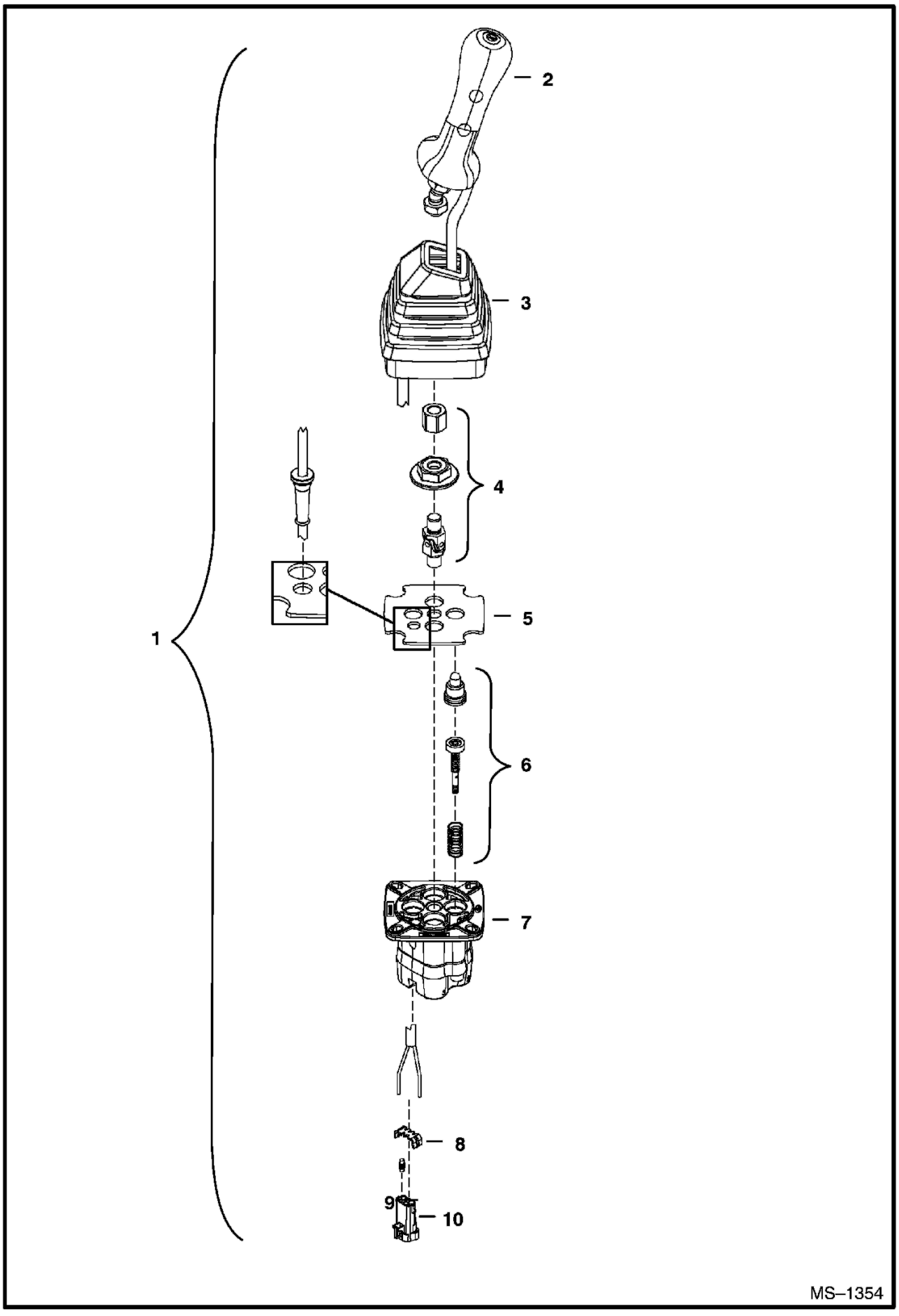

https://www.pdfmanual4trucks.com/

Ref. No.	Part Number	Description	Remarks	Serial Number	Qty.
1	6677894	JOYSTICK			1
2	6679954	HANDLE			1
3	6679955	BOOT			1
4	6679956	KIT			1
5	6679957	FLANGE			1
6	6679952	KIT	plunger		4
7		HOUSING	NSS - order Ref. 1		1
8	6679958	LOCK			1
9	6679959	PLUG			1
10	6679960	CONNECTOR			1

https://www.pdfmanua l4trucks.com/

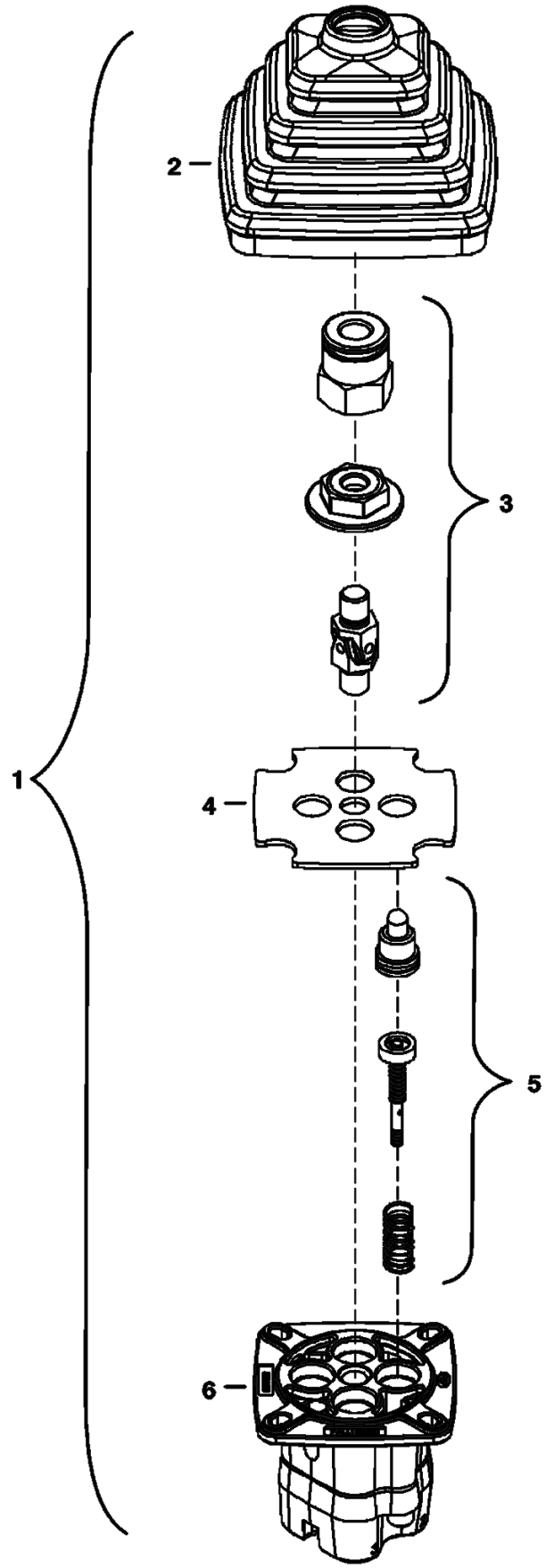

MS–1351

https://www.pdfmanual4trucks.com/

Ref. No.	Part Number	Description	Remarks	Serial Number	Qty.
1	6677896	JOYSTICK	travel assy		1

https://www.pdfmanual4trucks.com/

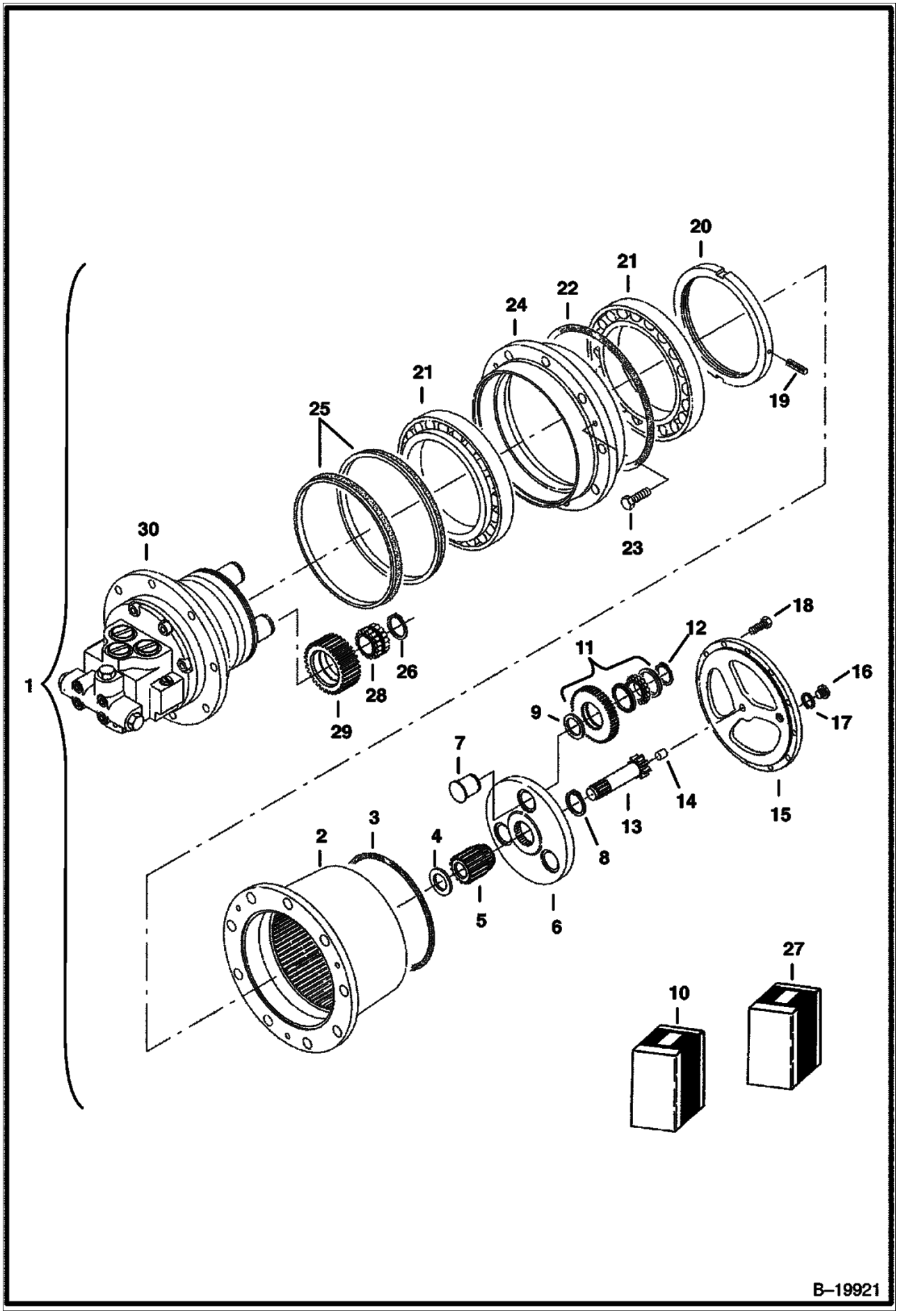

https://www.pdfmanual4trucks.com/

Ref. No.	Part Number	Description	Remarks	Serial Number	Qty.
1	6685455	MOTOR	travel w/gear drive		2
2	6687112	HOUSING			1
3	6686288	O-RING			1
4	6686286	WASHER			1
5	6686271	GEAR			1
6	6686913	CARRIER			1
7	6686273	PIN			1
8	6686280	RING	snap		3
9		RING	NSS - order Ref. 10		1
10	6687115	KIT	gear planet - Ref. 9 & 12		1
11	6686916	SPINDLE			1
12		RING	NSS - order Ref. 10		3
13	6687113	GEAR	sun		1
14	6686277	BUTTON	thrust		1
15	6686276	COVER			1
16	6686283	PLUG			2
17	6686284	SEAL			2
18	6686279	BOLT			8
19	6686291	PIN			2
20	6686272	NUT			1
21	6686278	BEARING			2
22	6686281	O-RING			1
23	6686285	BOLT			3
24	6686274	RING			1
25	6686282	SEAL			1
26		RING	NSS - order Ref. 27		4
27	6686292	KIT	gear w/Ref. 26, 28 & 29		1
28		BEARING	NSS - order Ref. 27		4
29		GEAR	NSS - order Ref. 27		4
30	6687114	MOTOR			1
31	6686915	WASHER	thrust		1

https://www.pdfmanual4trucks.com/

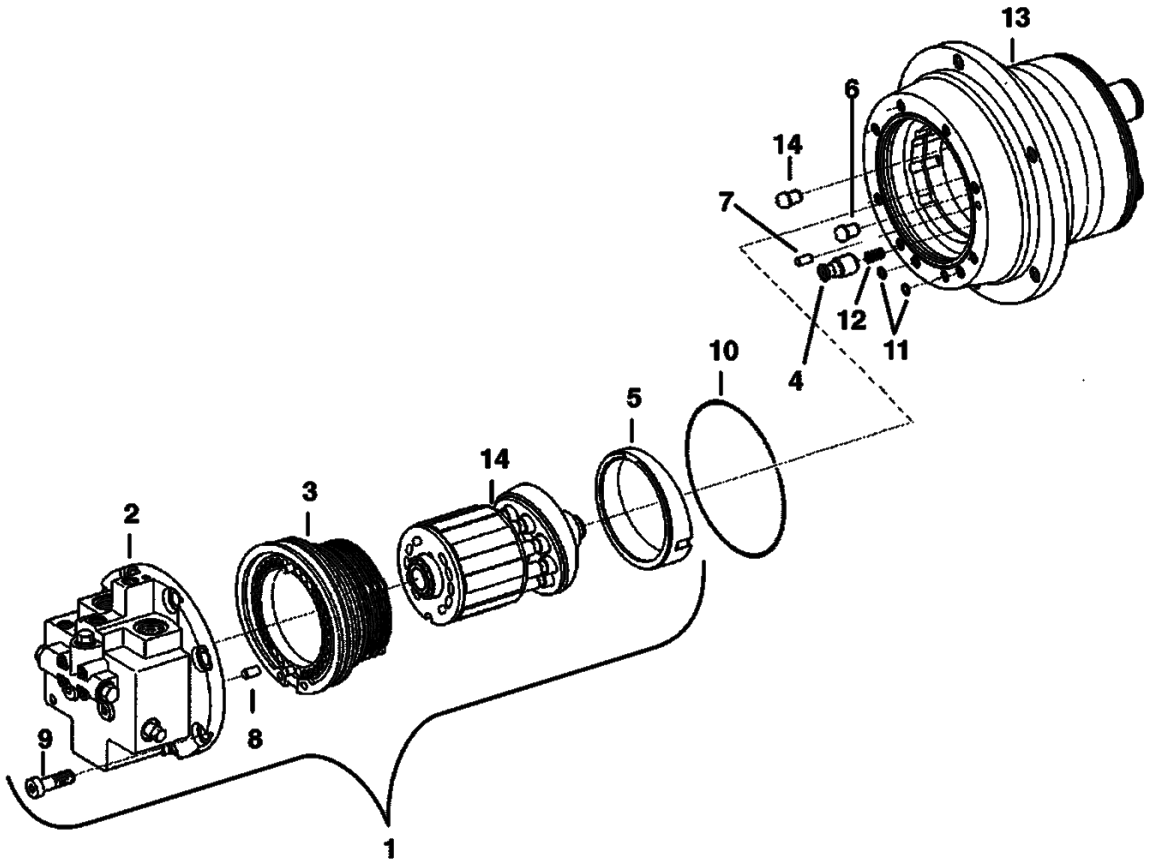

https://www.pdfmanual4trucks.com/

Ref. No.	Part Number	Description	Remarks	Serial Number	Qty.
1	6686290	MOTOR	less gear drive		1
2	6686298	PORT PLATE			1
3	6686598	RING	pressure		1
4	6686300	PISTON			1
5		RING			1
6	6686302	SWIVEL BALL			2
7	6686303	PIN	cylinder		1
8	6682919	PIN	cylinder		1
9	6686304	SCREW	socket		8
10	6686305	O-RING			1
11	6686306	RING	gasket		2
12	6686307	RING	pressure		1
13	6686308	AXLE			1
14	6686297	ROTARY GROUP			1

https://www.pdfmanual4trucks.com/

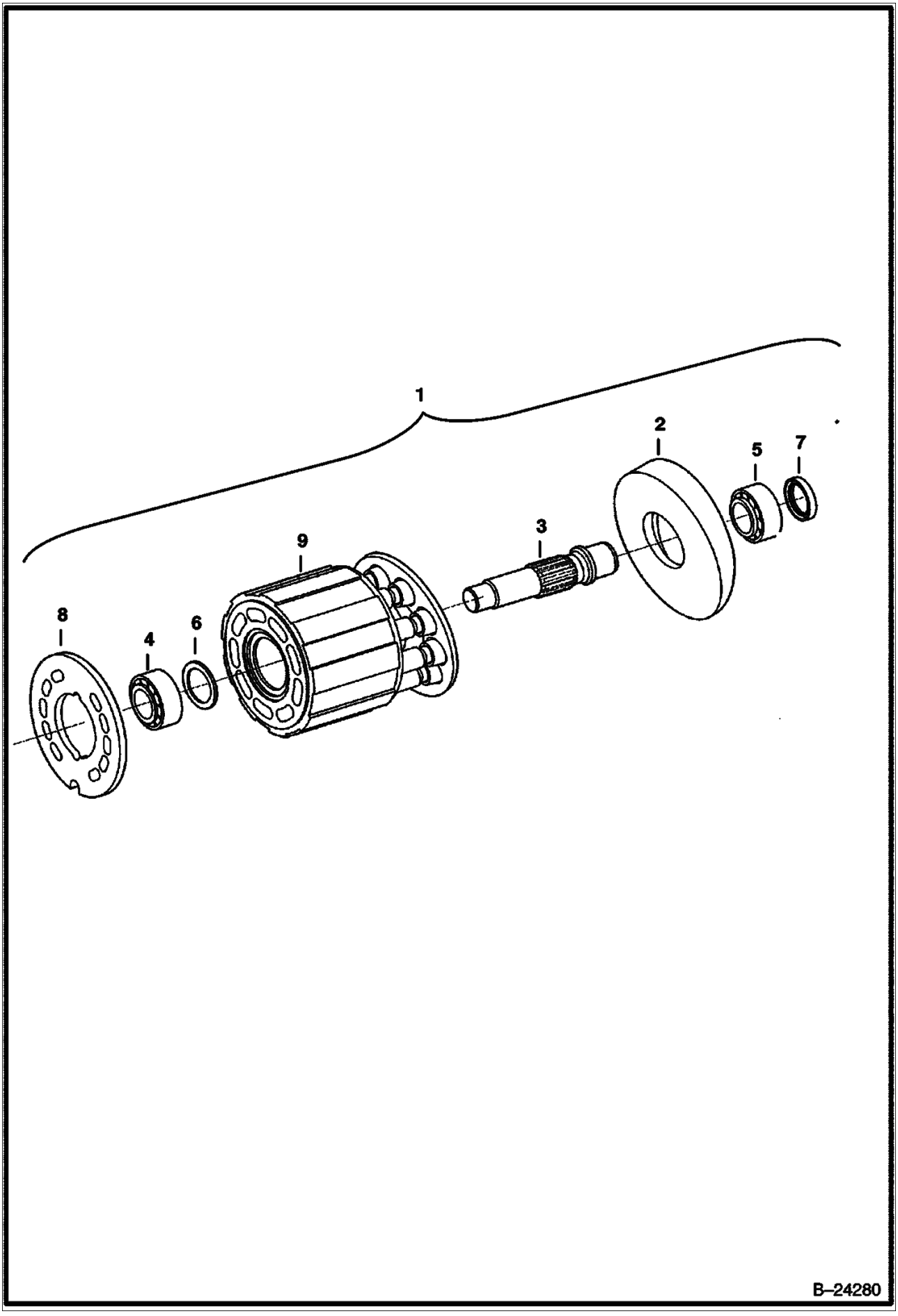

https://www.pdfmanual4trucks.com/

Ref. No.	Part Number	Description	Remarks	Serial Number	Qty.
1	6686297	ROTARY GROUP	Ref. 2-9		1
2	6686618	RING			1
3	6686309	DRIVE SHAFT			1
4	6686310	BEARING			1
5	6686311	BEARING			1
6	6686312	SHIM			1
7	6686313	RING	seal		1
8		PLATE	NSS - control - order Ref. 9		1
9		PISTON	NSS - order 6686297		1

https://www.pdfmanual4trucks.com/

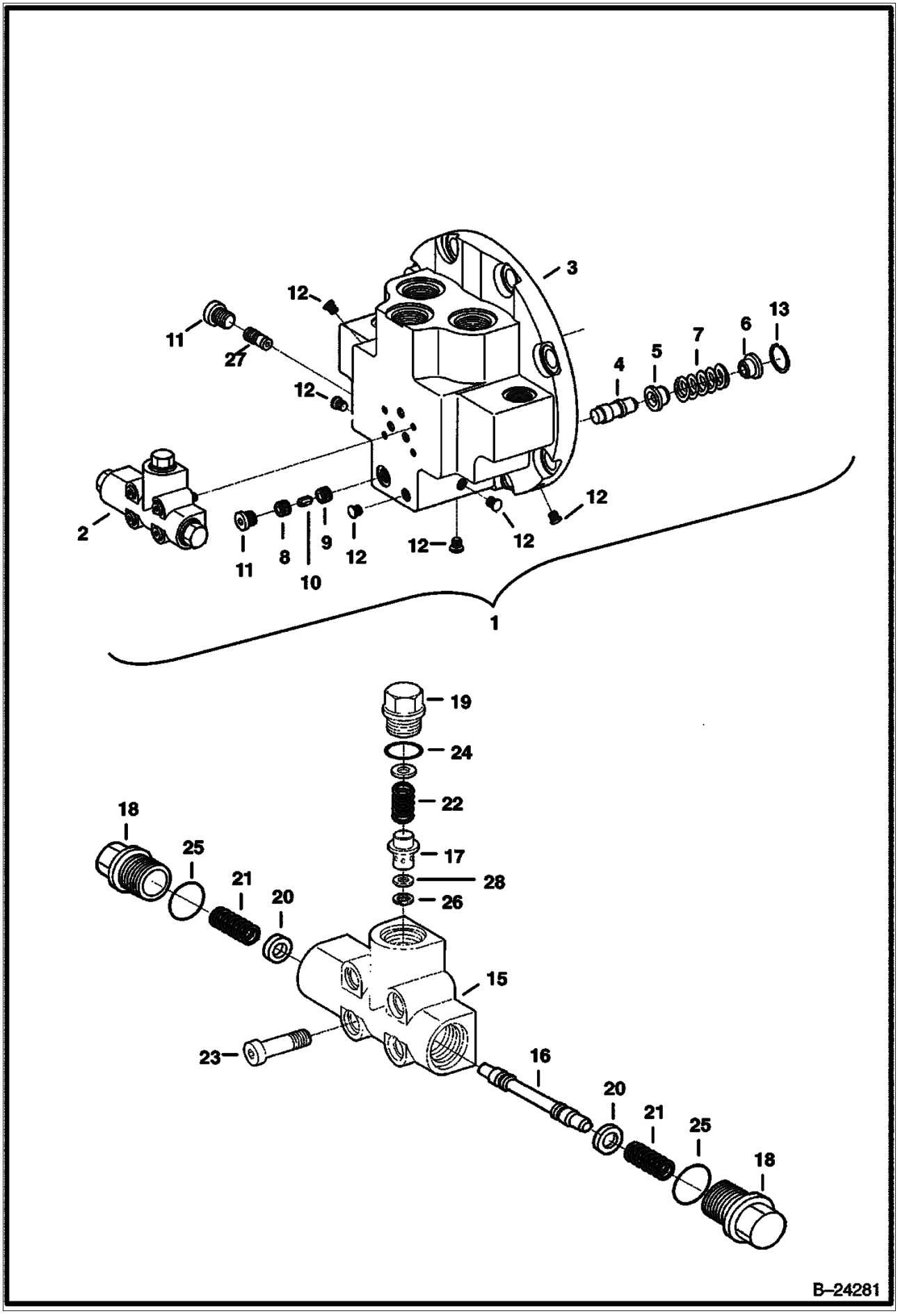

https://www.pdfmanual4trucks.com/

Ref. No.	Part Number	Description	Remarks	Serial Number	Qty.
1	6686298	PORT PLATE			1
2	6686315	VALVE	pressure		1
3		PLATE	NAP		1
4	6686316	PISTON	control		1
5	6686317	COLLAR	spring		1
6	6686318	COLLAR	spring		1
7	6686319	SPRING	pressure		1
8	6686320	SCREW	throttle		1
9	6686321	SCREW	throttle		1
10	6671834	PIN			1
11	6686322	SCREW	locking		2
12		PIN	NAP - break-off		6
13	6686323	RING	retaining		1
14	6686324	RING	gasket		3
15		HOUSING	NSS		1
16		PISTON	NSS		1
17	6671887	PISTON			1
18	6671892	SCREW			2
19	6671884	SCREW			1
20	6671890	WASHER			2
21	6686599	SPRING	pressure		1
22	6666366	SPRING			1
23	6686600	SCREW			4
24	6686001	O-RING			1
25	6686002	O-RING			2
26	6686003	RING	retaining		1
27	6686314	VALVE	shuttle		1
28		ORIFICE			1

https://www.pdfmanual4trucks.com/

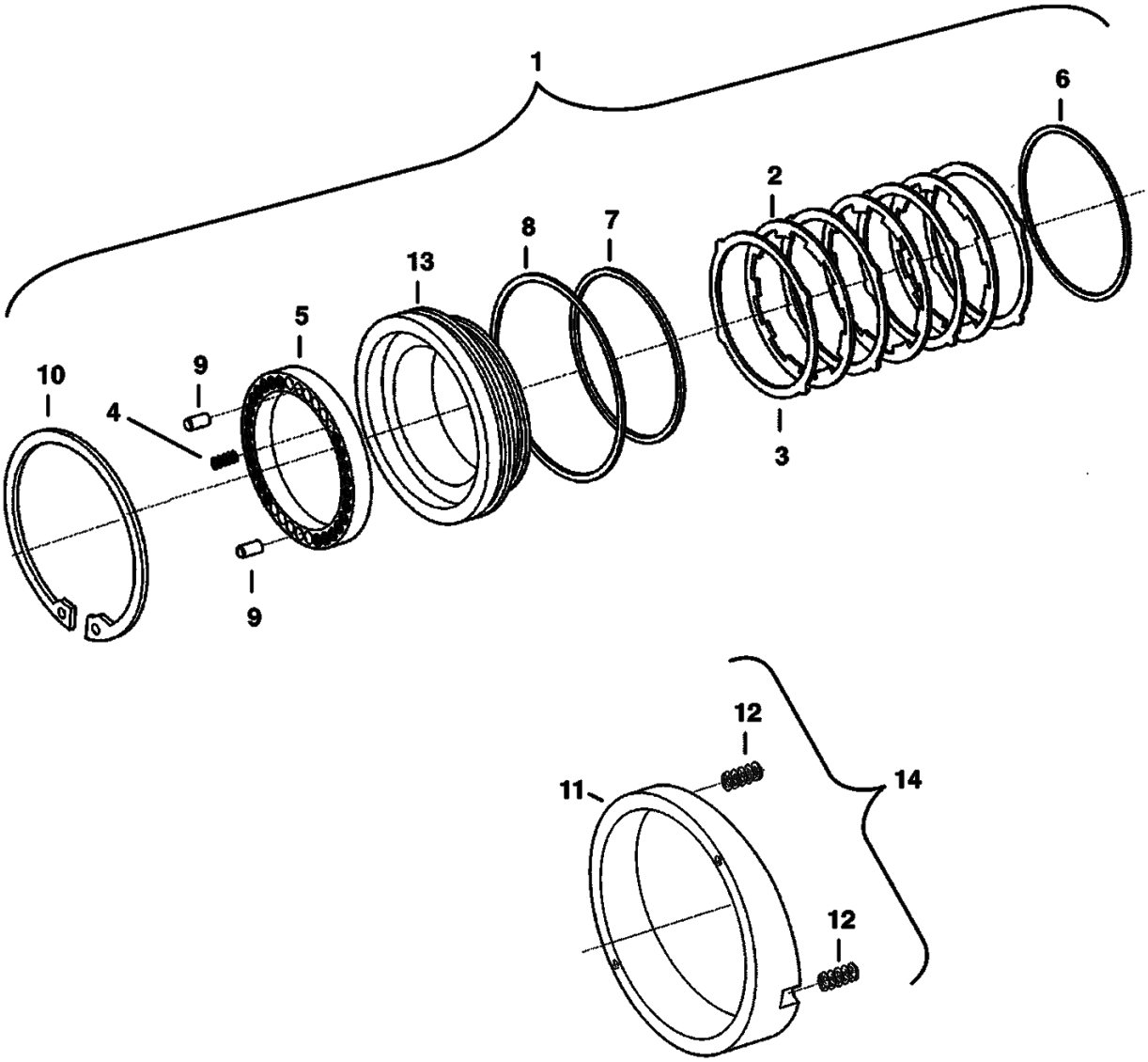

https://www.pdfmanual4trucks.com/

Ref. No.	Part Number	Description	Remarks	Serial Number	Qty.
1	6686598	RING	pressure assy		1
2	6686622	LAMINATION			3
3	6686623	COUNTER			4
4	6686624	SPRING	pressure		26
5	6686625	RING	guide		1
6	6686626	CIRCLIP			1
7	6686604	O-RING			1
8	6686605	O-RING			1
9	6686606	PIN			2
10	6686329	RING	retaining		1
11		STOP	NSS - order Ref. 14		1
12	6686607	SPRING	pressure		2
13	6686621	RING	pressure		1
14	6686617	STOP	assy - W/Ref. 12		1

https://www.pdfmanual4trucks.com/

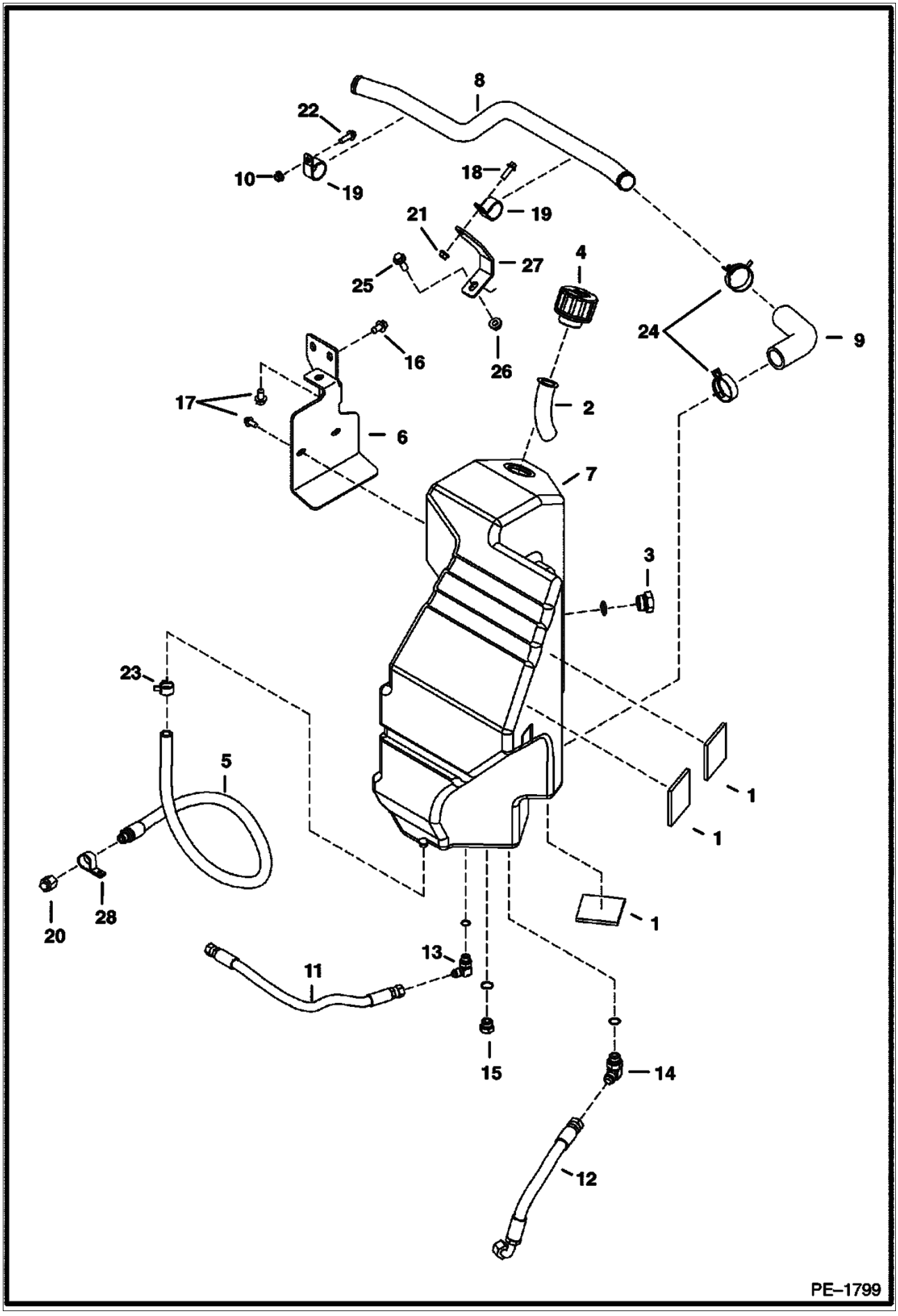

https://www.pdfmanual4trucks.com/

Ref. No.	Part Number	Description	Remarks	Serial Number	Qty.
1	6578278	PAD	square - rubber		3
2	6587168	SCREEN			1
3	6665915	GAUGE			1
4	6674690	CAP			1
5	6812176	HOSE			1
6	6814175	BRACKET			1
7	6814617	TANK	hydraulic		1
8	6816886	TUBELINE			1
9	6814655	HOSE			1
10	6814661	TUBE			1
11	6815887	HOSE			1
12	6815894	HOSE			1
13	17KB00606B	ELBOW			1
14	17KB00808B	ELBOW			1
15	24K000006B	PLUG			1
16	26GM10020B	SCREW			3
17	29CM00816B	SCREW			2
18	29CM00820B	BOLT			2
19	30H000075B	CLAMP			3
20	36K000006B	CAP			1
21	43DM00008B	NUT			2
22	59CM10110B	SCREW			1
23	5HM00020B	CLAMP			1
24	5HM00042B	CLAMP			2
25	29CM01030B	SCREW			1
26	43DM00010B	NUT			1
27	6815896	BRACKET			1
28	30HJ00616B	CLAMP			1

https://www.pdfmanual4trucks.com/

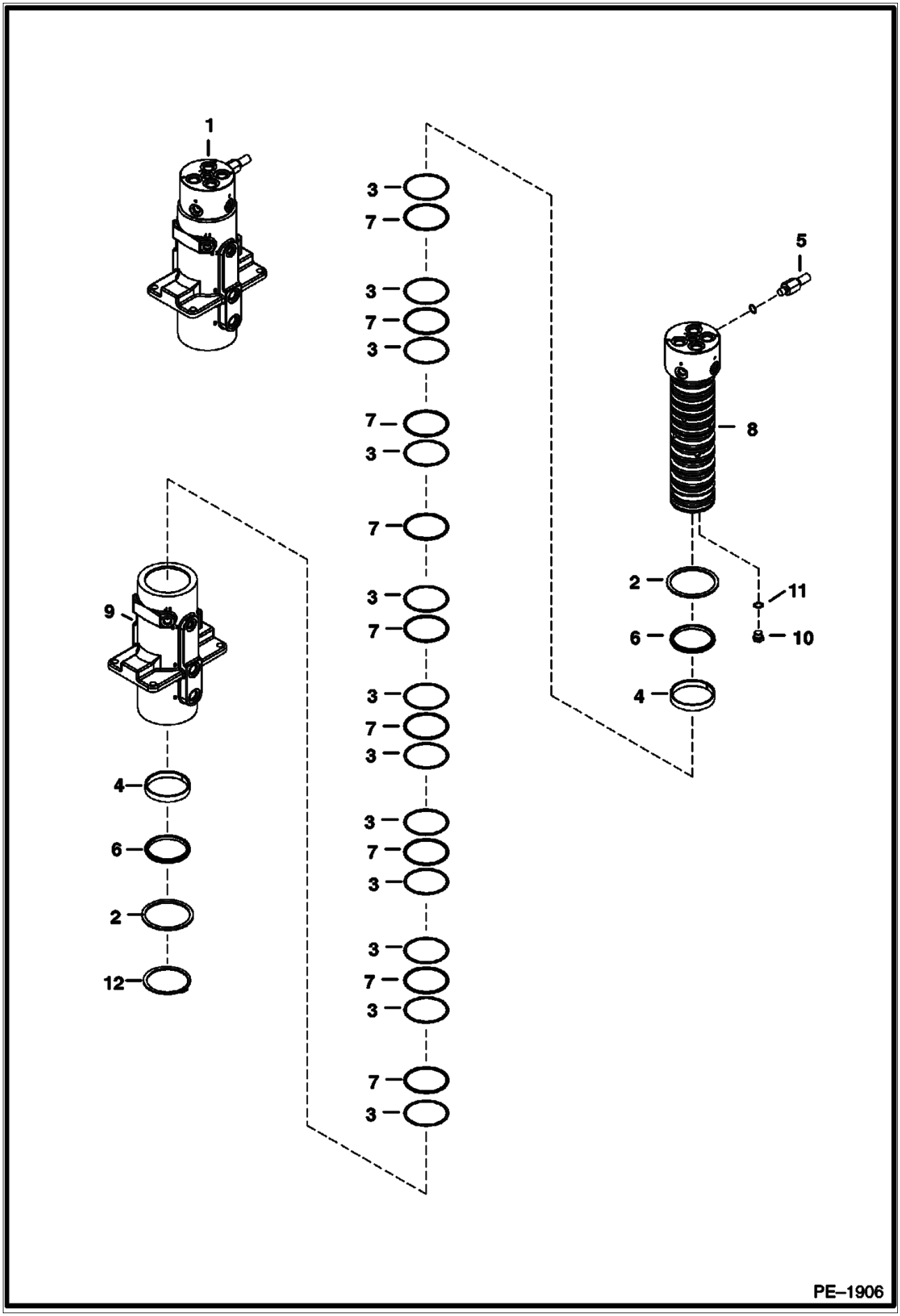

https://www.pdfmanual4trucks.com/

Ref. No.	Part Number	Description	Remarks	Serial Number	Qty.
1	6811778	SWIVEL	assy		1
2	6674221	WASHER			2
3	6679248	RING	back-up		12
4	6680323	RING	wear		2
5	6810029	STOP			1
6	6810610	SEAL			2
7	6810813	SEAL			9
8	6811775	SPOOL			1
9		BARREL	NAP - order Ref. 1		1
10	6812171	PLUG	W/Ref. 10		1
11	79K000006B	O-RING			1
12	6662076	RING	retaining		1

https://www.pdfmanual4trucks.com/

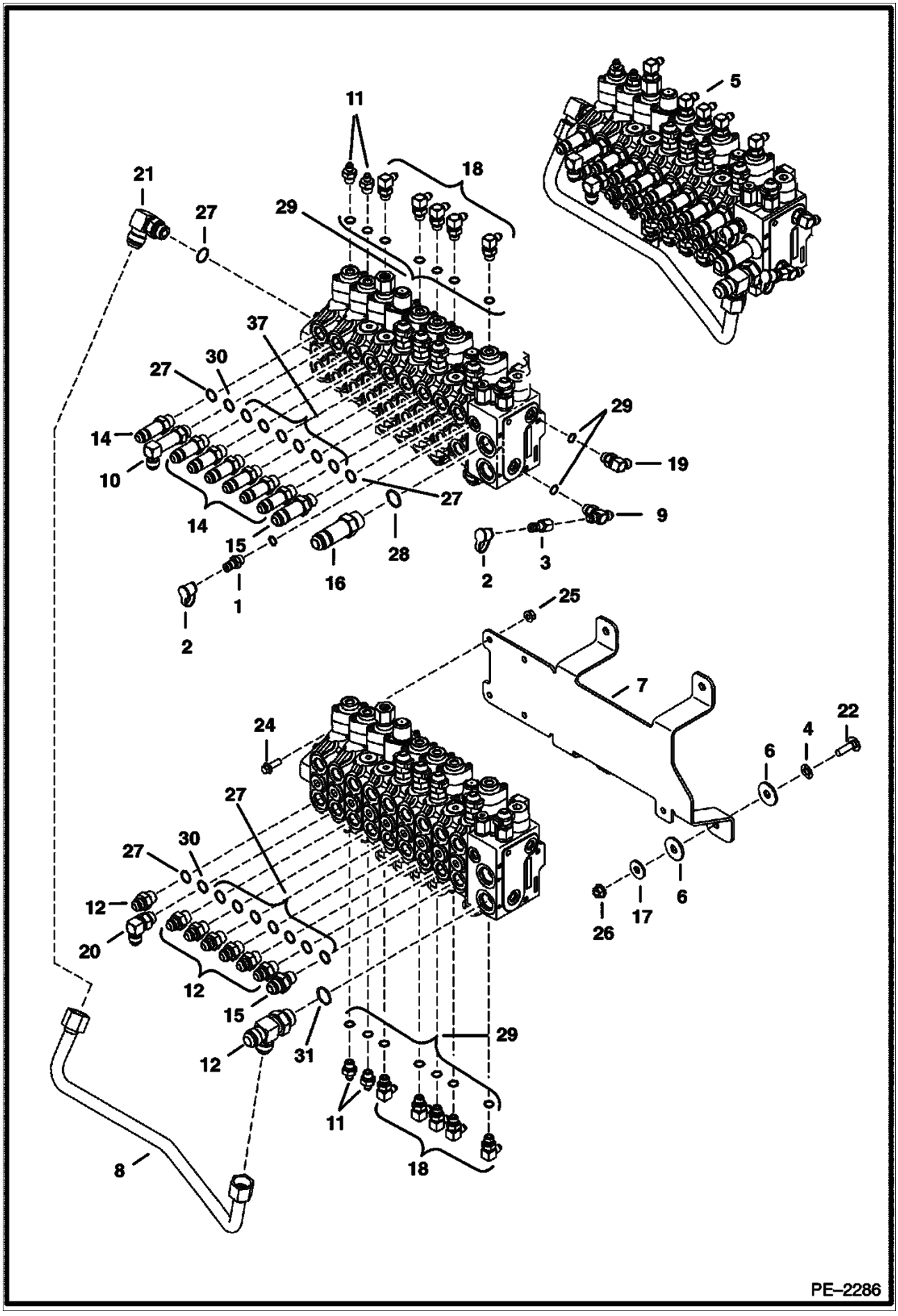

https://www.pdfmanual4trucks.com/

Ref. No.	Part Number	Description	Remarks	Serial Number	Qty.
1	6630168	COUPLER	diagnostic		1
2	6630367	CAP	dust		2
3	6661753	PLUG	diagnostic		1
4	6674264	BOLT	retainer		4
5	6685693	VALVE	control		4
6	6806720	INSULATOR			8
7	7100224	MOUNT			8
8	7101014	TUBELINE			1
9	7102019	FITTING	W/Ref. 29		1
10	7102234	FITTING	W/Ref. 30		1
11	15KB00406B	ADAPTER	W/Ref. 29		4
12	15KB00808B	ADAPTER	W/Ref. 27		6
13	15KB01008B	CONNECTOR	W/Ref. 27		1
14	16KB00808B	CONNECTOR	W/Ref. 27		2
15	16KB01008B	CONNECTOR	W/Ref. 27		5
16	16KB01212B	ADAPTER	W/Ref. 28		1
17	17EM00100B	WASHER			4
18	17KB00406B	ELBOW	W/Ref. 29		10
19	17KB00606B	ELBOW	W/Ref. 29		1
20	17KB00808B	ELBOW	W/Ref. 30		1
21	17KB01210B	ELBOW	W/Ref. 27		1
22	21CM01035B	BOLT			4
23	21KB01212B	FITTING	W/Ref. 31		1
24	29CM00825B	SCREW			3
25	43DM00008B	NUT			3
26	51DM00010B	NUT			4
27	79K000010B	O-RING			x
28	79K000012B	O-RING			x
29	79K000006B	O-RING			x
30	79K000008B	O-RING			x
31	79K000012B	O-RING			x

https://www.pdfmanual4trucks.com/

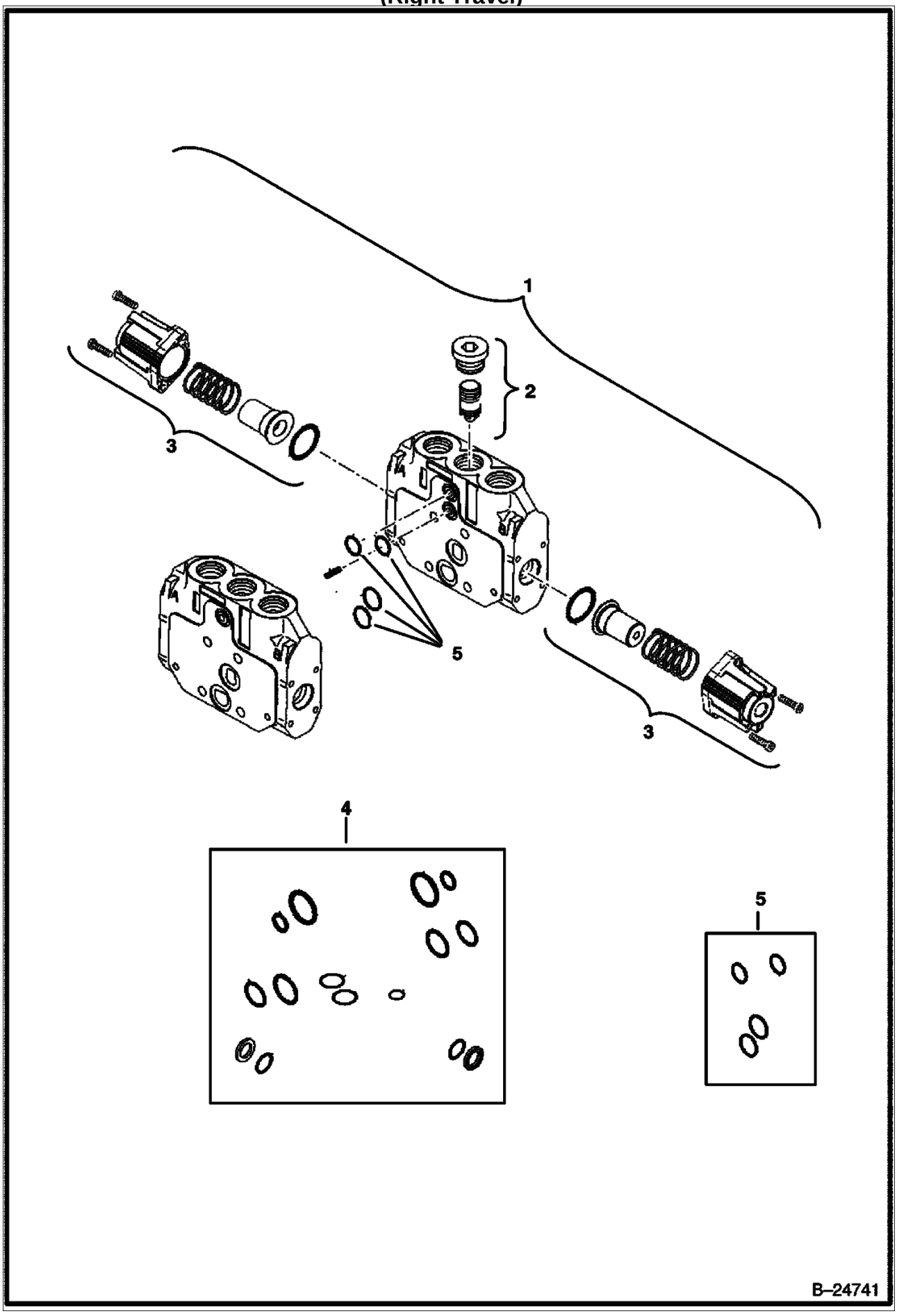

https://www.pdfmanual4trucks.com/

CONTROL VALVE (Cont'd)
(Right Travel)

Ref. No.	Part Number	Description	Remarks	Serial Number	Qty.
1	6686581	VALVE	assy - right travel		1
2	6686896	KIT	pressure valve		1
3	6685254	KIT	end caps (both ends)		1
4	6685264	KIT	seal		1
5	6686594	KIT	between elements		1

https://www.pdfmanual4trucks.com/

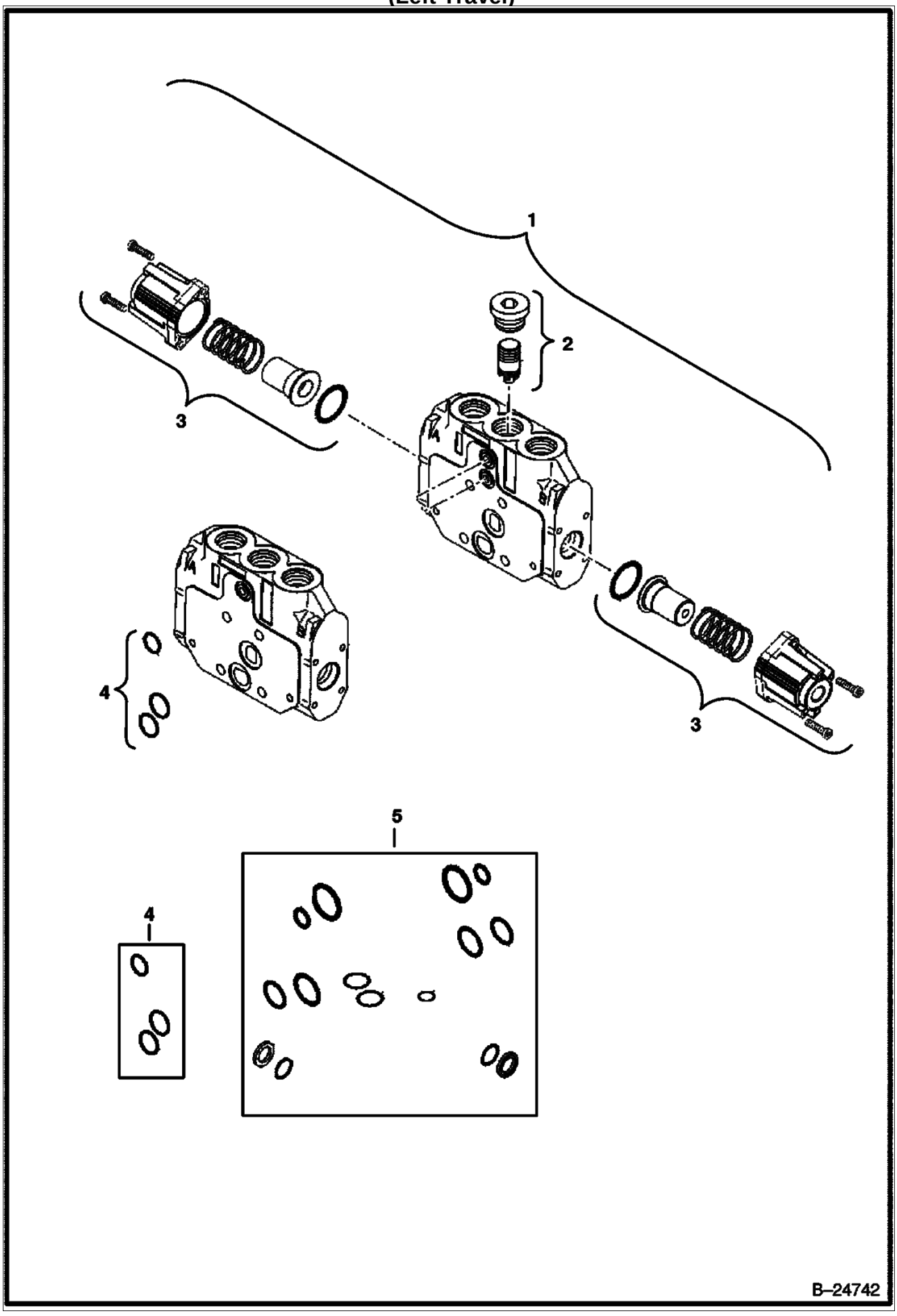

https://www.pdfmanual4trucks.com/

CONTROL VALVE (Cont'd)
(Left Travel)

Ref. No.	Part Number	Description	Remarks	Serial Number	Qty.
1	6686582	VALVE	assy - left drive		1
2	6686896	KIT	pressure valve		1
3	6685254	KIT	end cap (both ends)		1
4	6685259	KIT	between elements		1
5	6685264	KIT	seal		1

https://www.pdfmanual4trucks.com/

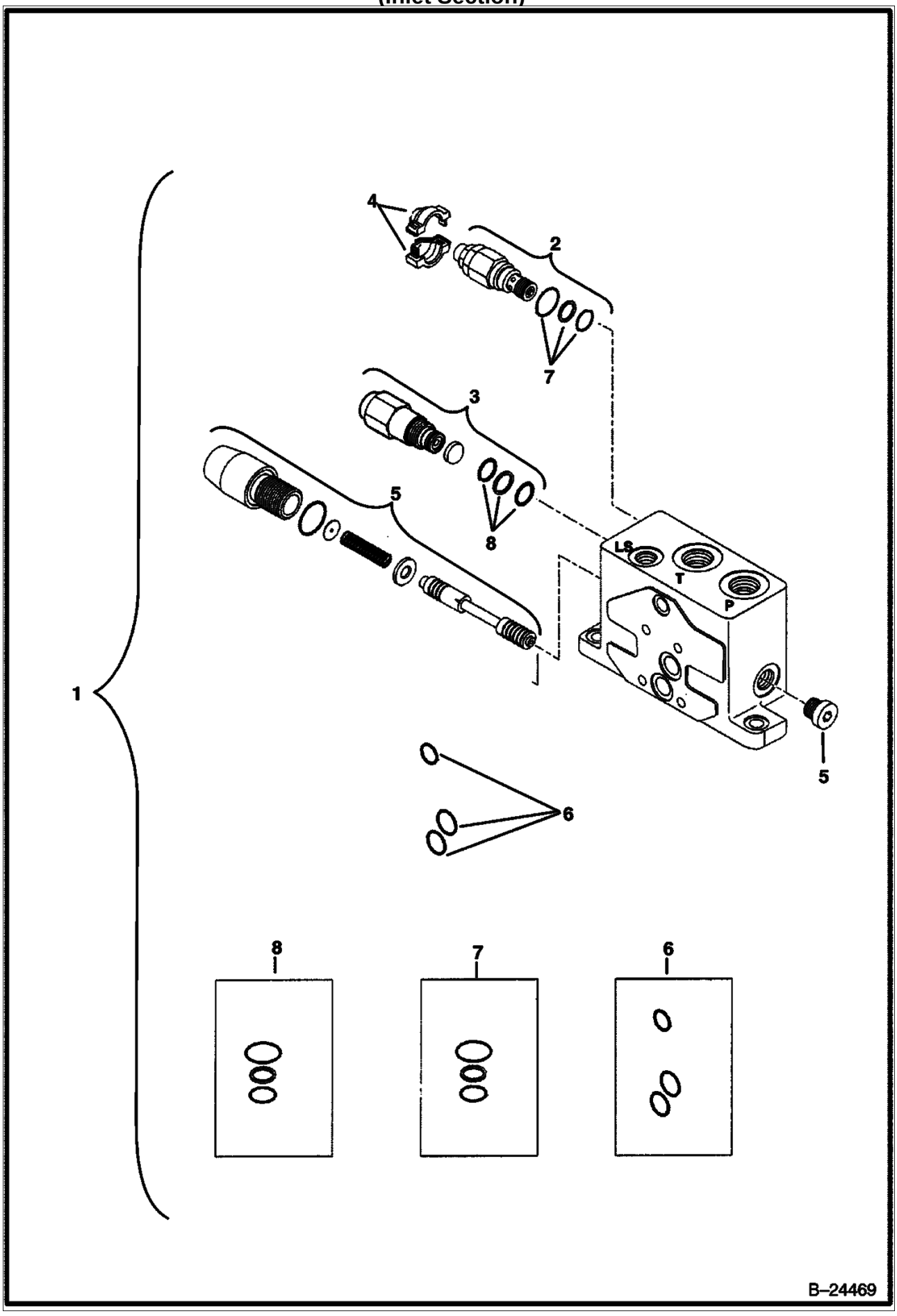

https://www.pdfmanual4trucks.com/

CONTROL VALVE (Cont'd)
(Inlet Section)

Ref. No.	Part Number	Description	Remarks	Serial Number	Qty.
1	6685238	VALVE	assy - inlet		1
2	6686592	VALVE	press relief		1
3	6686593	REGULATOR	flow		1
4	6678023	COVER	half		2
5	6686899	VALVE	regulator		1
6	6685259	KIT			1
7	6685257	SEAL KIT	relief		1
8	6685258	SEAL KIT	regulator		1

https://www.pdfmanual4trucks.com/

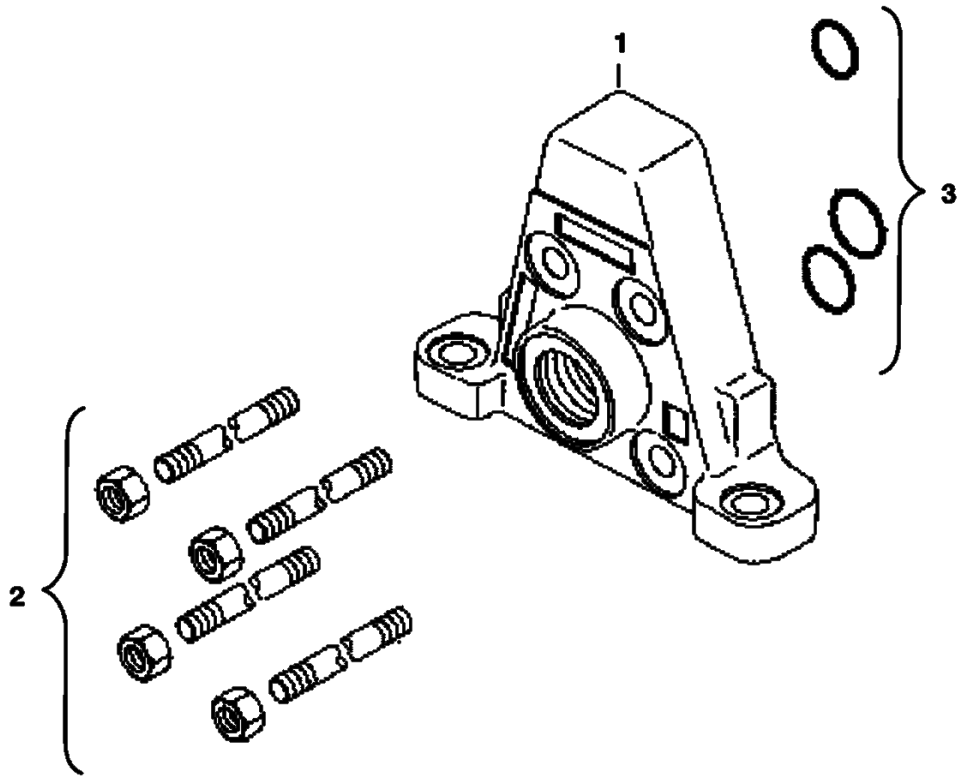

B–24743

CONTROL VALVE (Cont'd)
(Outlet Section)

https://www.pdfmanual4trucks.com/

Ref. No.	Part Number	Description	Remarks	Serial Number	Qty.
1	6685235	VALVE	assy - outlet		1
2	6685246	KIT	tie rod		1
3	6685259	KIT			1

https://www.pdfmanual4trucks.com/

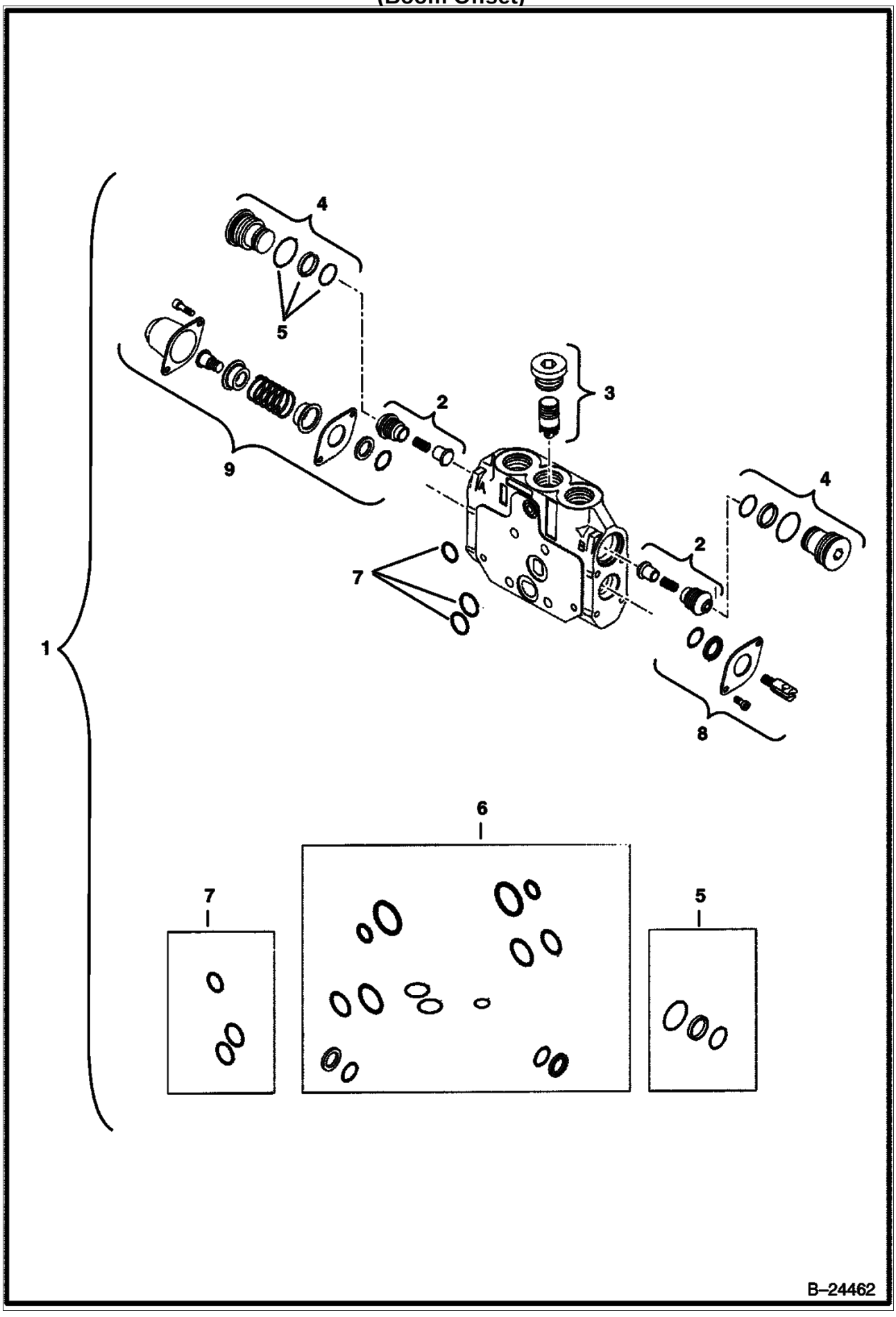

https://www.pdfmanual4trucks.com/

Ref. No.	Part Number	Description	Remarks	Serial Number	Qty.
1	6686642	VALVE			1
2	6686595	KIT	check valve		2
3	6686896	KIT	press comp		1
3	6685248	PLUG			1
4	6685250	PLUG			2
5	6685256	SEAL KIT	secondary valves		2
6	6685264	KIT	assy		1
7	6685259	KIT			1
8	6685252	END CAP			1
9	6685251	END CAP			1

https://www.pdfmanual4trucks.com/

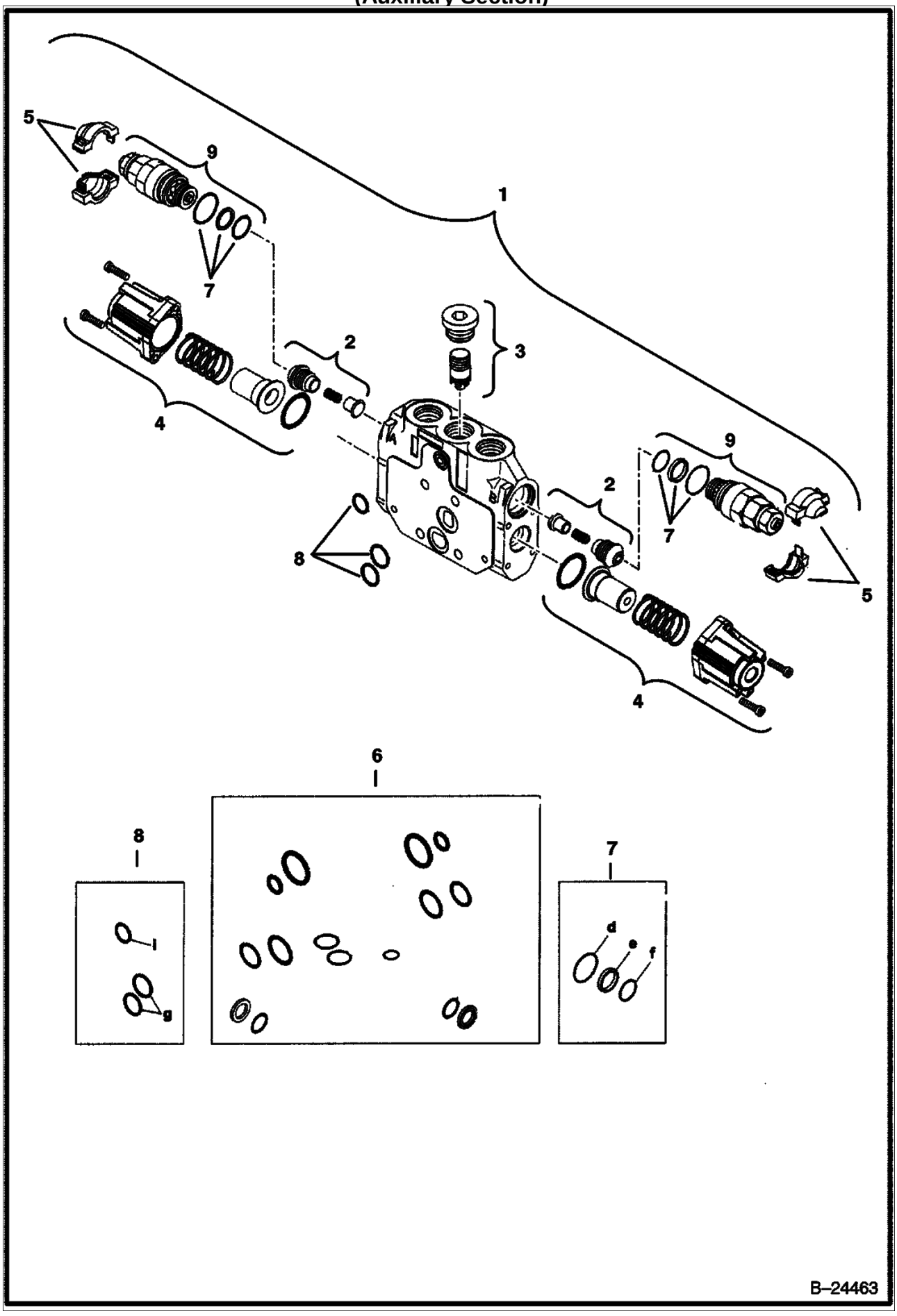

CONTROL VALVE (Cont'd)
https://www.pdfmanual4trucks.com/
(Auxiliary Section)

Ref. No.	Part Number	Description	Remarks	Serial Number	Qty.
1	6686583	VALVE			1
2	6686595	KIT	check valve		2
3	6686896	KIT	pressure comp		1
3	6685248	PLUG			1
4	6685254	KIT	end cap		1
5	6678023	COVER	half		4
6	6685264	KIT	assy		1
7	6685256	SEAL KIT	secondary valves		2
8	6685259	KIT			1
9	6686897	RELIEF VALVE	assy		1

https://www.pdfmanual4trucks.com/

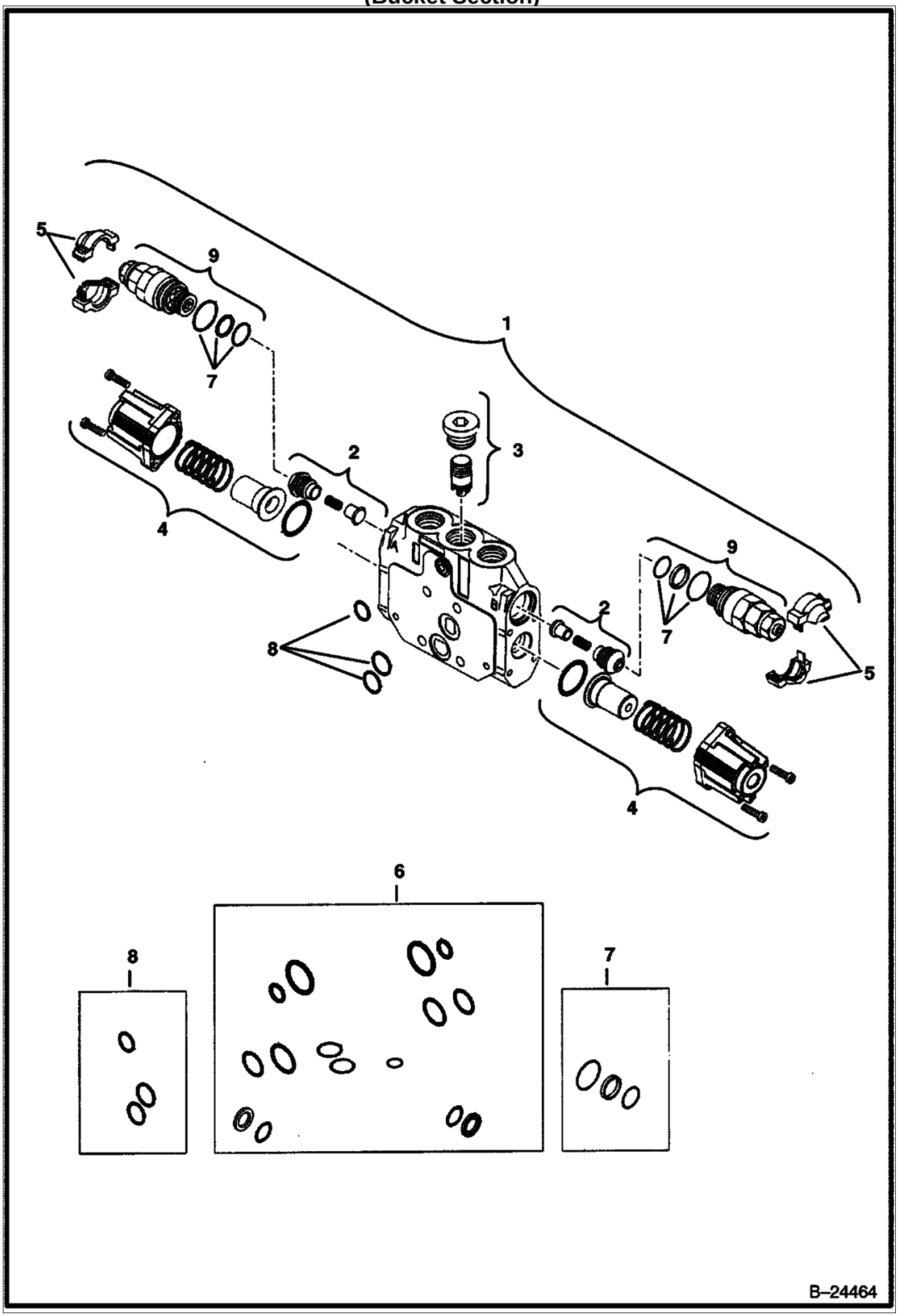

https://www.pdfmanual4trucks.com/

CONTROL VALVE (Cont'd)
(Bucket Section)

Ref. No.	Part Number	Description	Remarks	Serial Number	Qty.
1	6686638	VALVE	assy - bucket		1
2	6686595	KIT	check valve		2
3	6686896	KIT	pressure comp		1
3	6685248	PLUG			1
4	6685254	KIT	end cap		1
5	6678023	COVER	half		4
6	6685264	KIT	assy		1
7	6685256	SEAL KIT	secondary valves		2
8	6685259	KIT			1
9	6686897	RELIEF VALVE	assy		1

CONTROL VALVE
https://www.pdfmanual4trucks.com/
(Blade Section)

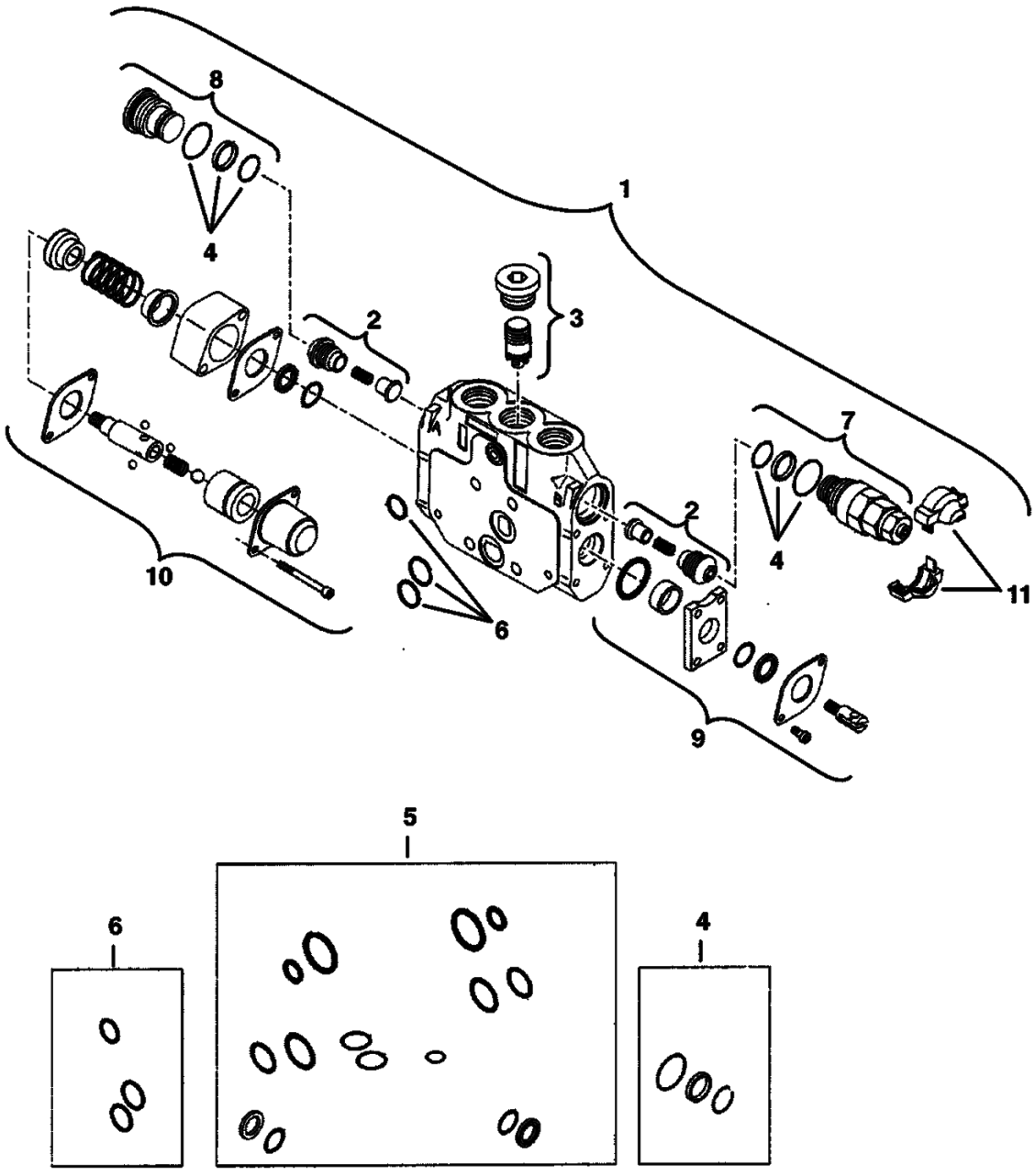

B–24465

https://www.pdfmanual4trucks.com/

CONTROL VALVE (Cont'd)
(Blade Section)

Ref. No.	Part Number	Description	Remarks	Serial Number	Qty.
1	6686640	VALVE			1
2	6686595	KIT	check valve		2
3	6686896	KIT	pressure comp		1
3	6685248	PLUG	allen		1
4	6685256	SEAL KIT	secondary valves		2
5	6685264	KIT	assy		1
6	6685259	KIT			1
7	6686897	RELIEF VALVE	assy		1
8	6685250	PLUG			1
9	6685253	END CAP	assy (B port)		1
10	6686901	END CAP	assy (A port)		1
11	6678023	COVER	half		2

https://www.pdfmanual4trucks.com/

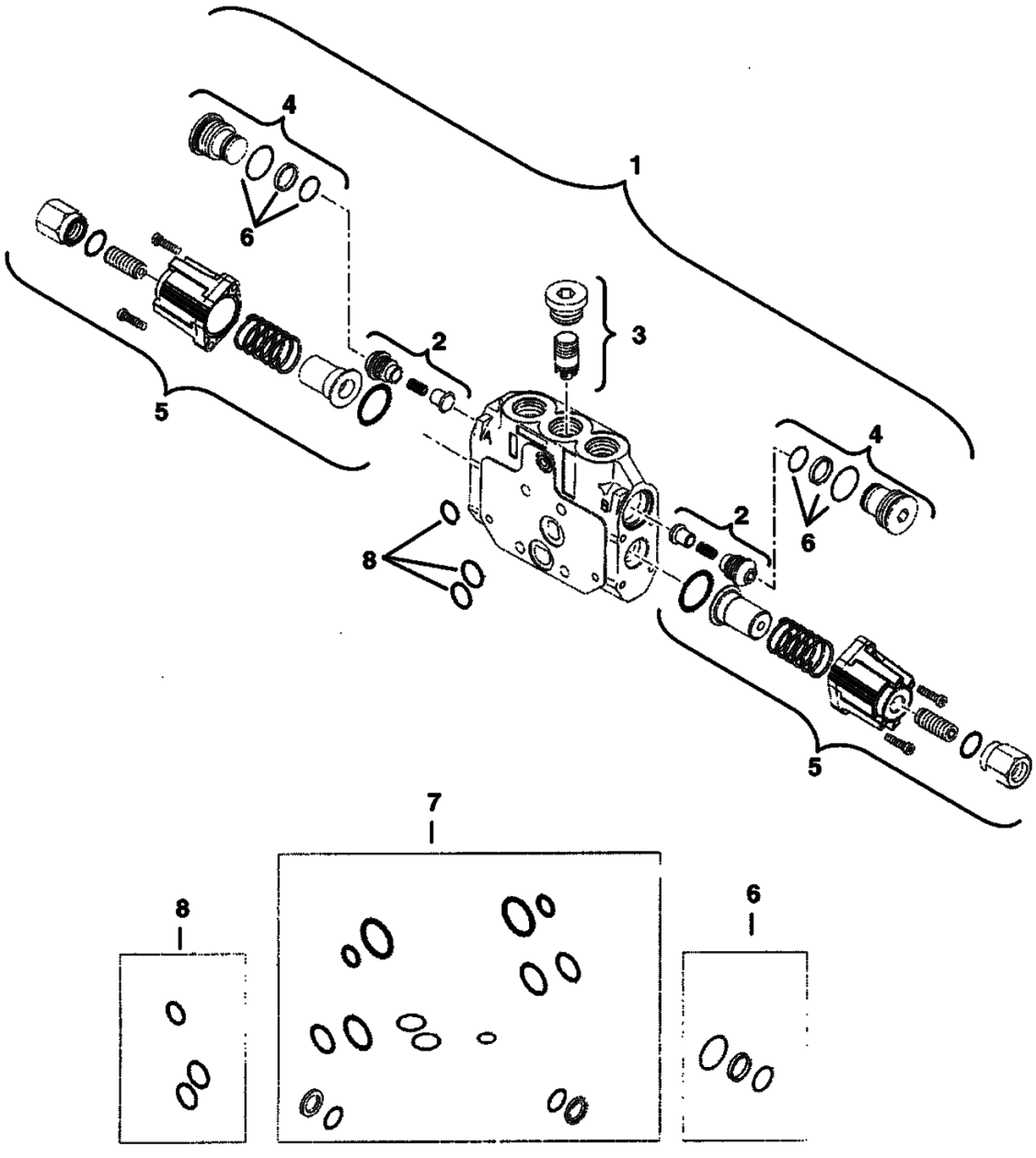

https://www.pdfmanual4trucks.com/

Ref. No.	Part Number	Description	Remarks	Serial Number	Qty.
1	6686643	VALVE			1
2	6686595	KIT	check valve		2
3	6685247	KIT	press comp		1
3	6685248	PLUG	allen		1
4	6685250	PLUG			2
5	6685255	KIT	end cap		1
6	6685256	SEAL KIT	secondary valves		2
7	6685264	KIT	assy		1
8	6685259	KIT			1

CONTROL VALVE
https://www.pdfmanual4trucks.com/
(Boom Section)

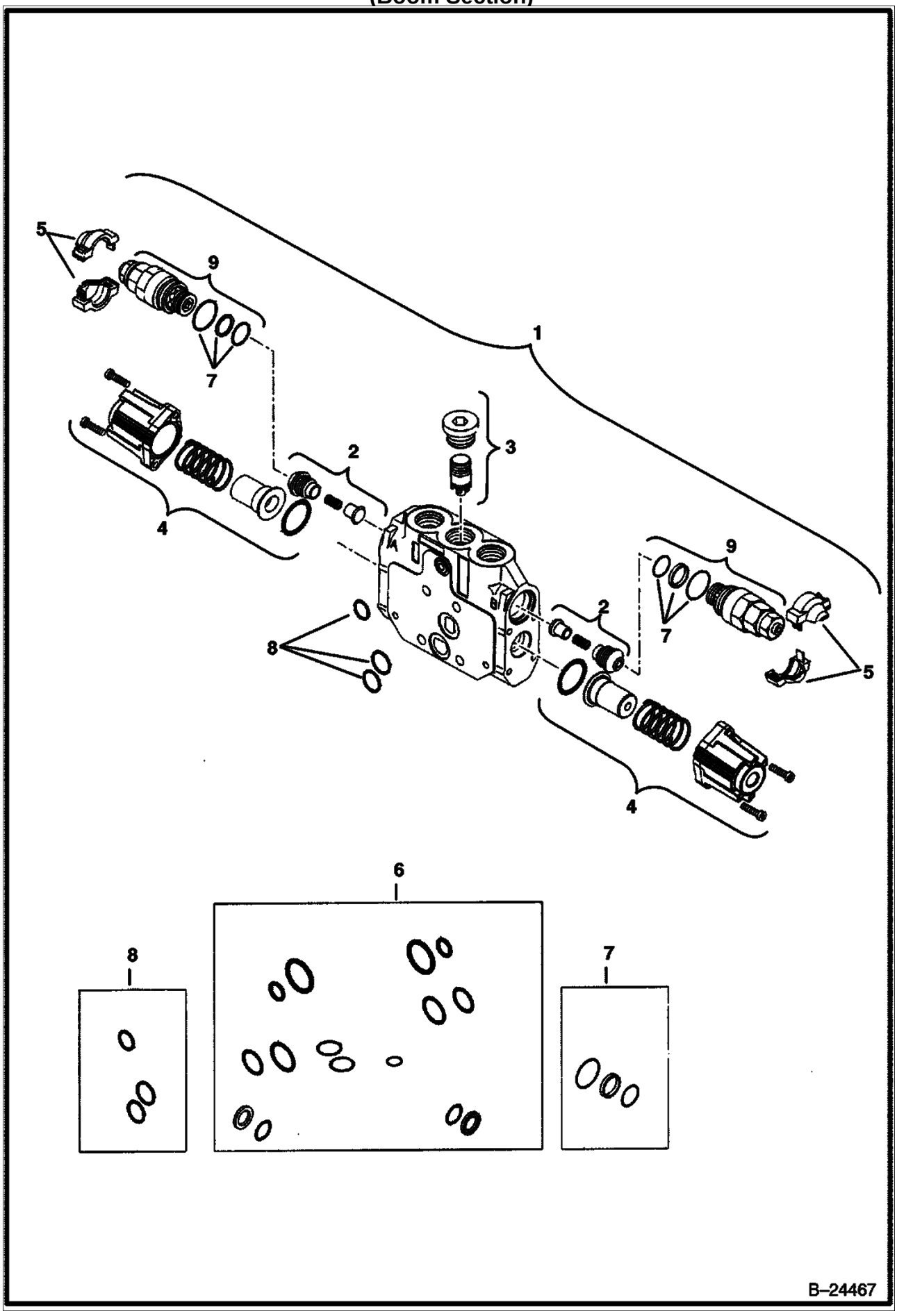

CONTROL VALVE (Cont'd)
(Boom Section)

https://www.pdfmanual4trucks.com/

Ref. No.	Part Number	Description	Remarks	Serial Number	Qty.
1	6686634	VALVE	assy - boom		1
2	6686595	KIT	check valve		2
3	6686896	KIT	pressure comp		1
3	6685248	PLUG			1
4	6685254	KIT	end cap		1
5	6678023	COVER	half		4
6	6685264	KIT	assy		1
7	6685256	SEAL KIT	secondary valves		2
8	6685259	KIT			1
9	6686897	RELIEF VALVE	assy		1

https://www.pdfmanual4trucks.com/

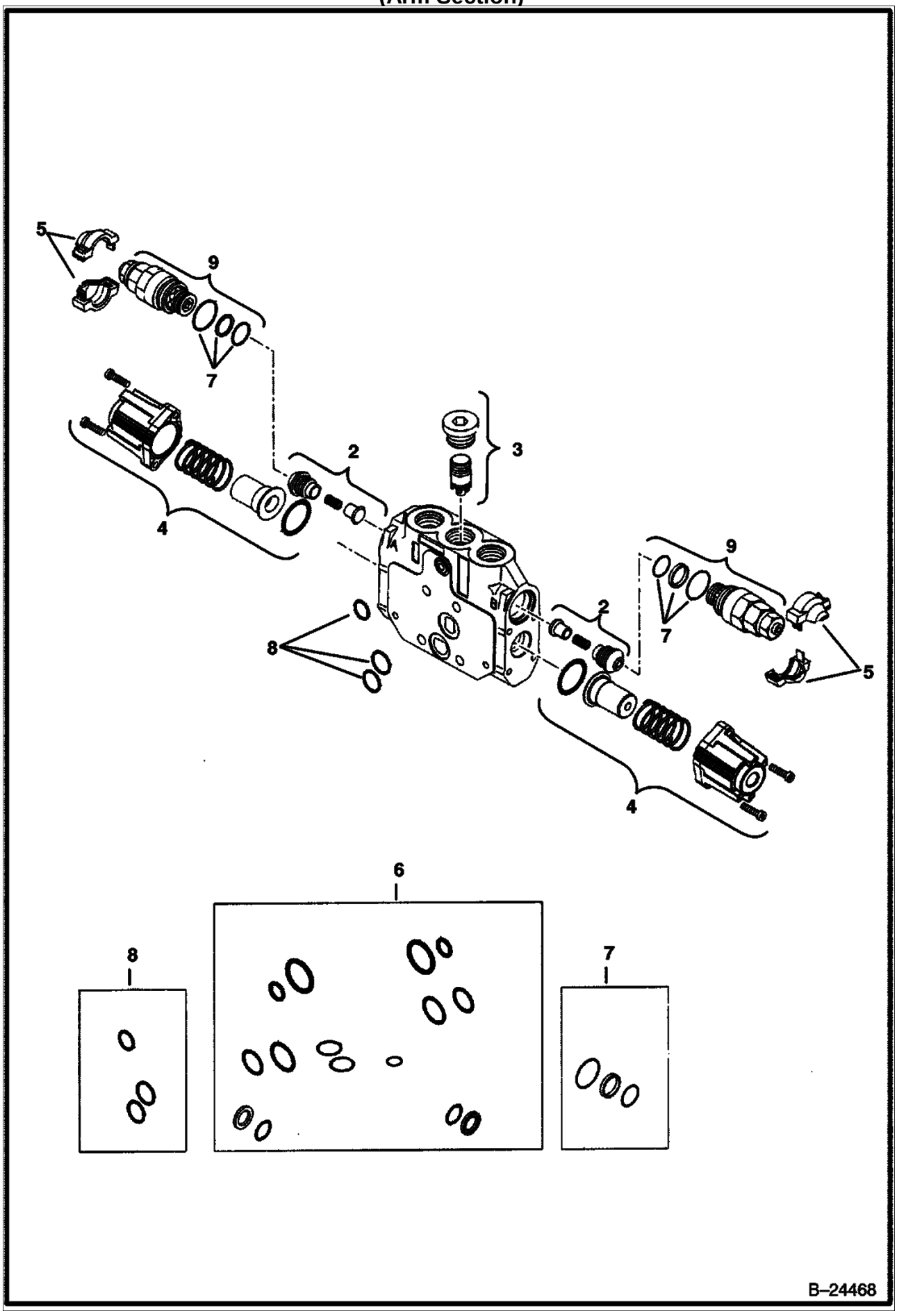

https://www.pdfmanual4trucks.com/

CONTROL VALVE (Cont'd)
(Arm Section)

Ref. No.	Part Number	Description	Remarks	Serial Number	Qty.
1	6686636	VALVE	assy - arm		1
2	6686595	KIT	check valve		2
3	6686896	KIT	pressure comp		1
3	6685248	PLUG			1
4	6685254	KIT	end cap		1
5	6678023	COVER	half		4
6	6685264	KIT	assy		1
7	6685256	SEAL KIT	secondary valves		2
8	6685259	KIT			1
9	6686897	RELIEF VALVE	assy		1

https://www.pdfmanual4trucks.com/

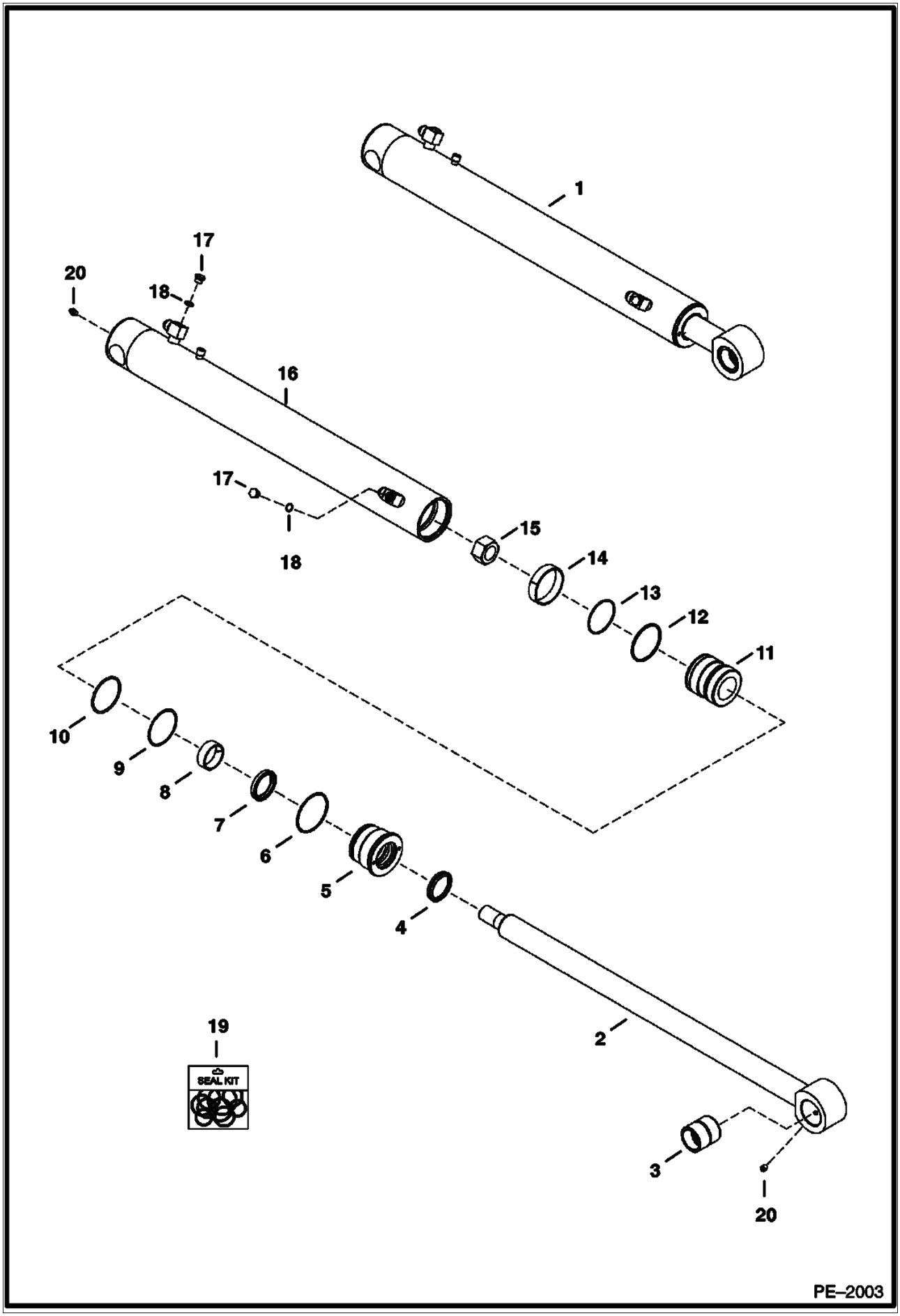

https://www.pdfmanual4trucks.com/

Ref. No.	Part Number	Description	Remarks	Serial Number	Qty.
1	6816744	CYLINDER	assy - W/Ref. 2 & 4 - 18		1
2	6816745	ROD			1
3	6816829	BUSHING			1
4	6666545	WIPER			1
5	6817122	HEAD			1
6	58K000236B	O-RING			1
7	6667328	SEAL			1
8	6655859	RING	wear		1
9	73K000234B	RING	back-up		1
10	54K040300B	O-RING			1
11	6816759	PISTON			1
12	54K030226B	O-RING			1
13	6513466	SEAL			1
14	6672149	RING	wear		1
15	6810540	NUT			1
16	6816826	HOUSING			1
17	6812171	PLUG	W/Ref. 18		2
18	75K000006B	O-RING			2
19	6817143	SEAL KIT	W/Ref. 4, 6 - 10 & 12 - 15		1
20	10H000025B	GREASE ZERK			2

https://www.pdfmanual4trucks.com/

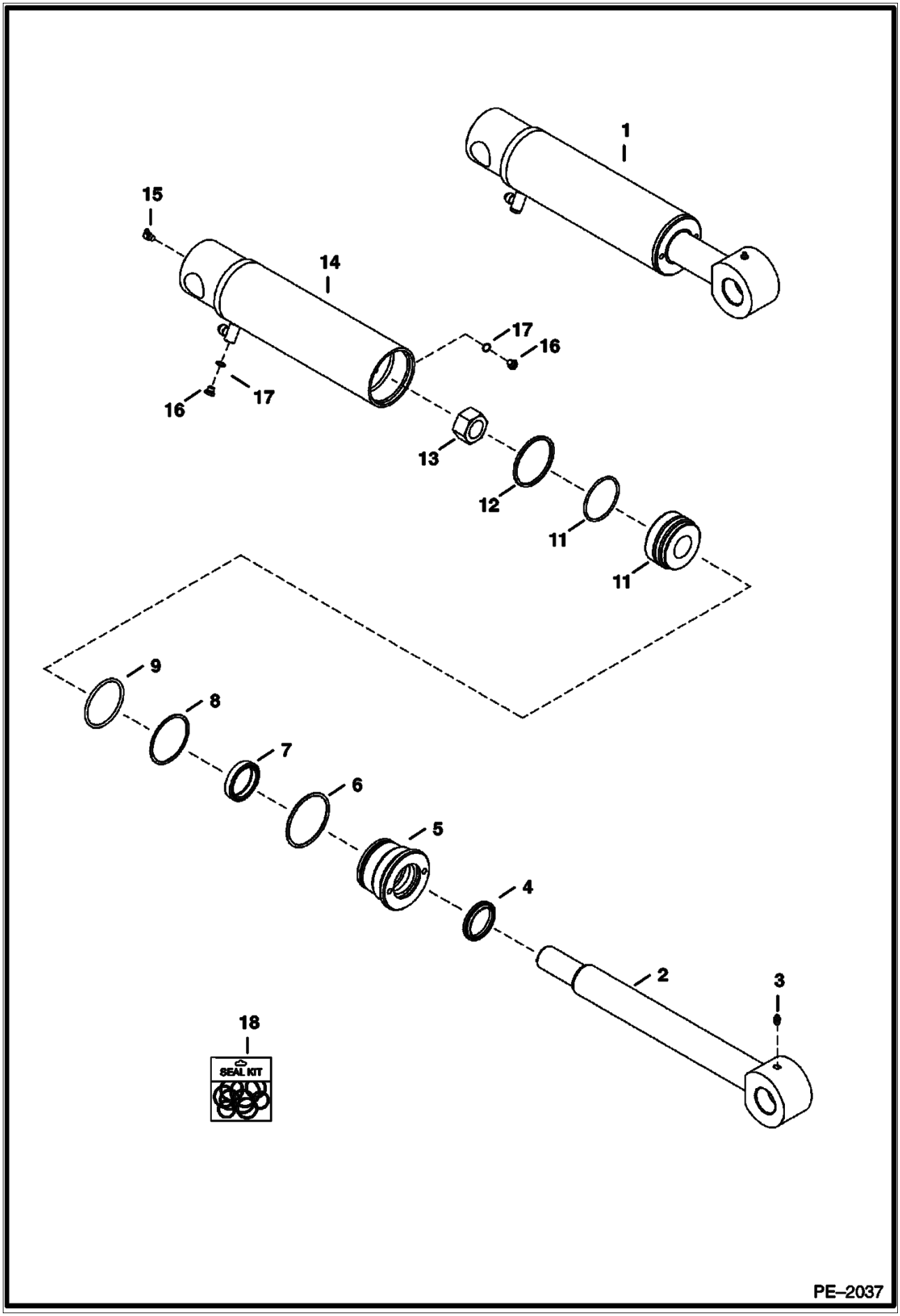

BLADE CYLINDER (Cont'd)

https://www.pdfmanual4trucks.com/

Ref. No.	Part Number	Description	Remarks	Serial Number	Qty.
1	6815952	CYLINDER	assy - W/Ref. 2 & 14 - 18		1
2	6628614	ROD			1
3	10H000025B	GREASE ZERK	grease		1
4	6666544	WIPER			1
5	6586570	HEAD			1
6	58K000236B	O-RING			1
7	6667327	SEAL			1
8	73K000234B	RING			1
9	54K040300B	O-RING			1
10	6628912	PISTON			1
11	54K030226B	O-RING			1
12	6513466	SEAL	piston		1
13	6810539	NUT			1
14	6815958	HOUSING			1
15	12H000015B	GREASE ZERK	grease		1
16	6812170	PLUG			2
17	75K000003B	O-RING			x
18	6816533	SEAL KIT	W/Ref. 4, 6 - 9 & 11 - 13		1

https://www.pdfmanual4trucks.com/

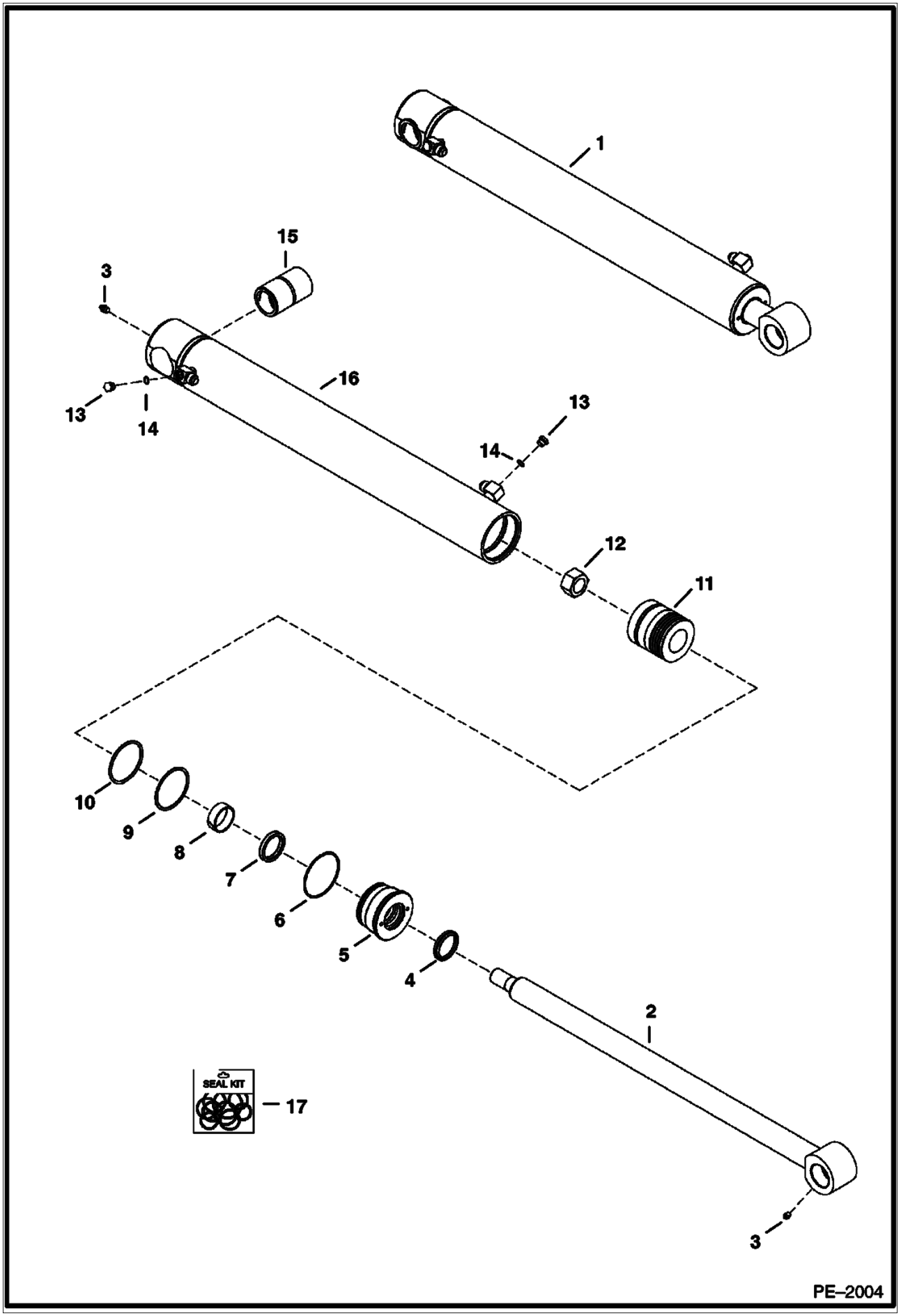

BOOM CYLINDER (Cont'd)

https://www.pdfmanual4trucks.com/

Ref. No.	Part Number	Description	Remarks	Serial Number	Qty.
1	6814385	CYLINDER	assy - W/Refs. 2 & 4 - 16		1
2	6814387	ROD			1
3	10H000025B	GREASE ZERK	grease		1
4	6666545	WIPER			1
5	6815090	HEAD			1
6	58K000240B	O-RING			1
7	6667328	SEAL			1
8	6655859	RING	wear		1
9	73K000340B	RING	back-up		1
10	82K000240B	O-RING			1
11	6684622	PISTON			1
11	6684628	SEAL	nylon		1
12	6810540	NUT			1
13	6812171	PLUG	W/Ref. 14		2
14	75K000006B	O-RING			2
15	6816676	BUSHING	wear		1
16	6814386	HOUSING			1
17	6815959	SEAL KIT	W/Ref. 4, 6, 7, 9, 10 & 12		1

https://www.pdfmanual4trucks.com/

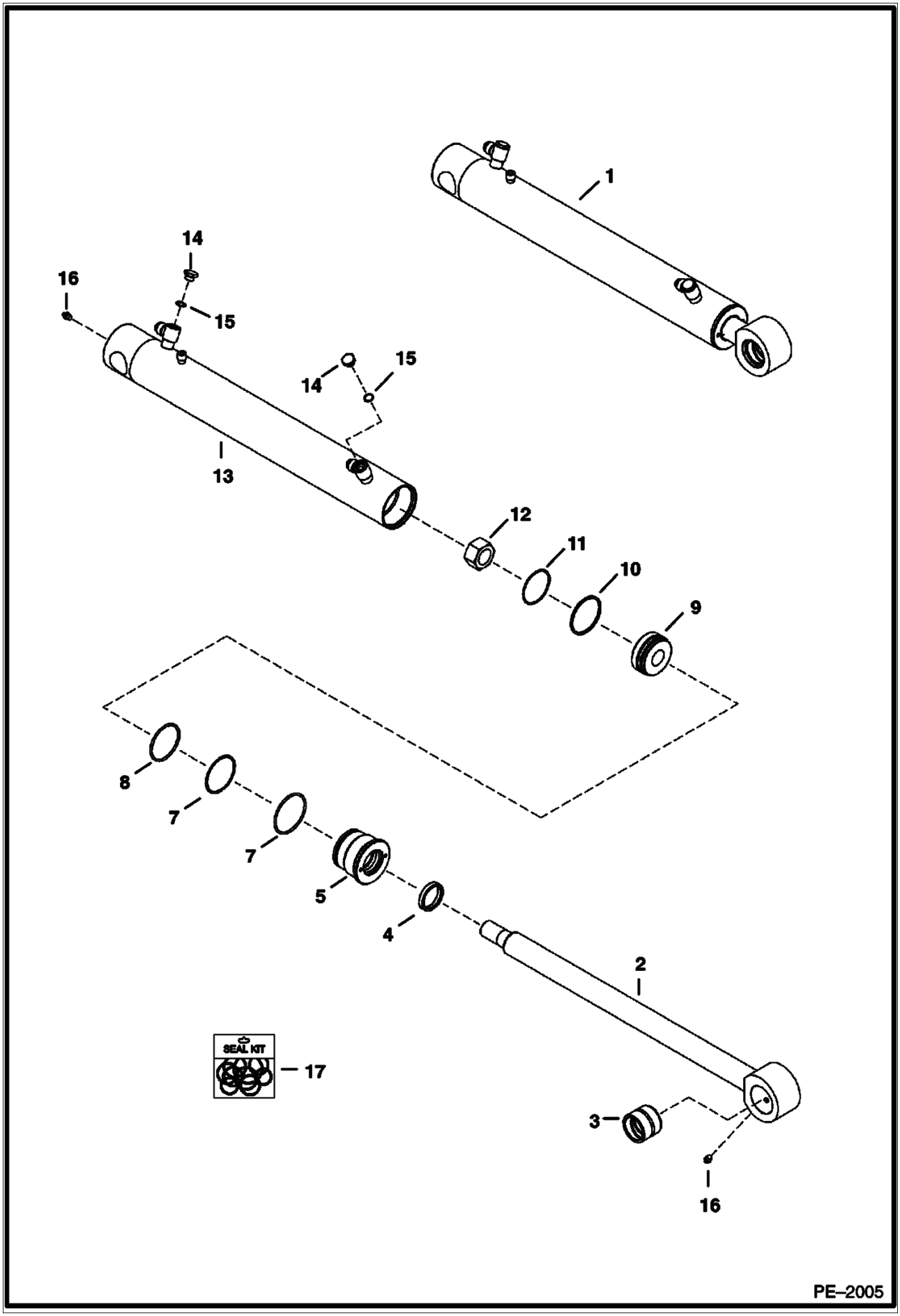

https://www.pdfmanual4trucks.com/

Ref. No.	Part Number	Description	Remarks	Serial Number	Qty.
1	6812517	CYLINDER	assy - W/Ref. 2 & 4 - 15		1
2	6812518	ROD			1
3	6802371	BUSHING	wear		1
4	6666544	WIPER			1
5	6812526	HEAD			1
6	54K040300B	O-RING			1
7	73K000232B	WASHER	back-up		1
8	54K040224B	O-RING			1
9	6812525	PISTON			1
10	54K030218B	O-RING			1
11	947088B	SEAL			1
12	6810540	NUT			1
13	6812522	HOUSING			1
14	6812171	PLUG	W/Ref. 15		2
15	75K000006B	O-RING			2
16	10H000025B	GREASE ZERK	grease		2
17	6816352	SEAL KIT	W/Ref. 4, 6 - 8, 11 & 12		1

https://www.pdfmanual4trucks.com/

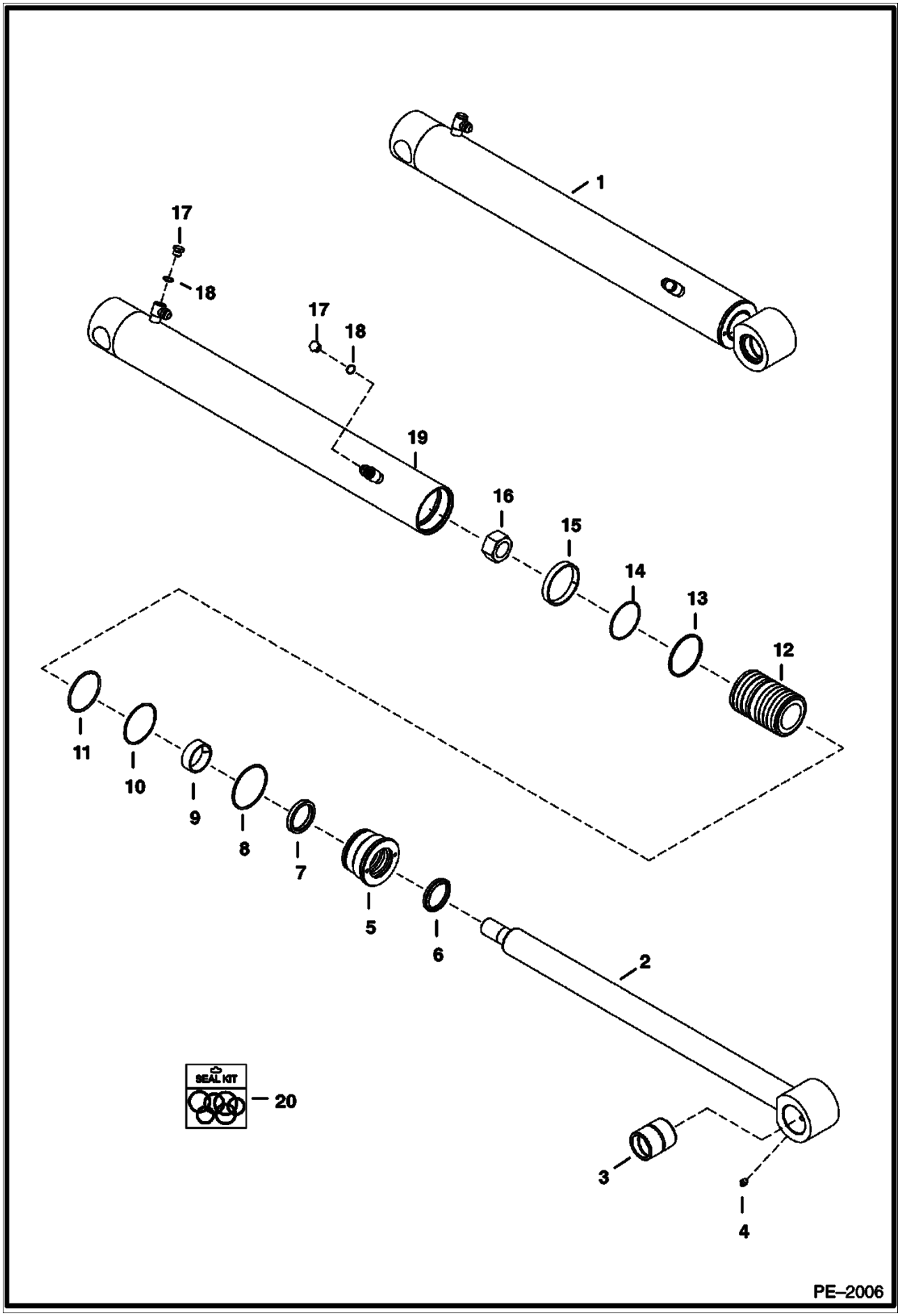

https://www.pdfmanual4trucks.com/

Ref. No.	Part Number	Description	Remarks	Serial Number	Qty.
1	6812633	CYLINDER	Ref. 2 & 5 - 19		1
2	6812634	ROD			1
3	6812645	BUSHING			1
4	10H000025B	GREASE ZERK	grease		1
5	6818158	HEAD			1
6	6666545	WIPER	rod		1
7	58K000236B	O-RING			1
8	6667328	SEAL			1
9	6655859	RING	wear		1
10	73K000234B	RING	back-up		1
11	54K040300B	O-RING			1
12	6816010	PISTON			1
13	54K030226B	O-RING			1
14	6513466	SEAL			1
15	6683392	RING	wear		1
16	6810540	NUT			1
17	6812171	PLUG	W/Ref. 19		2
18	75K000006B	O-RING			1
19	6812638	HOUSING			1
20	6818161	SEAL KIT	W/Ref. 6 - 11 & 13 - 16		1

https://www.pdfmanual4trucks.com/

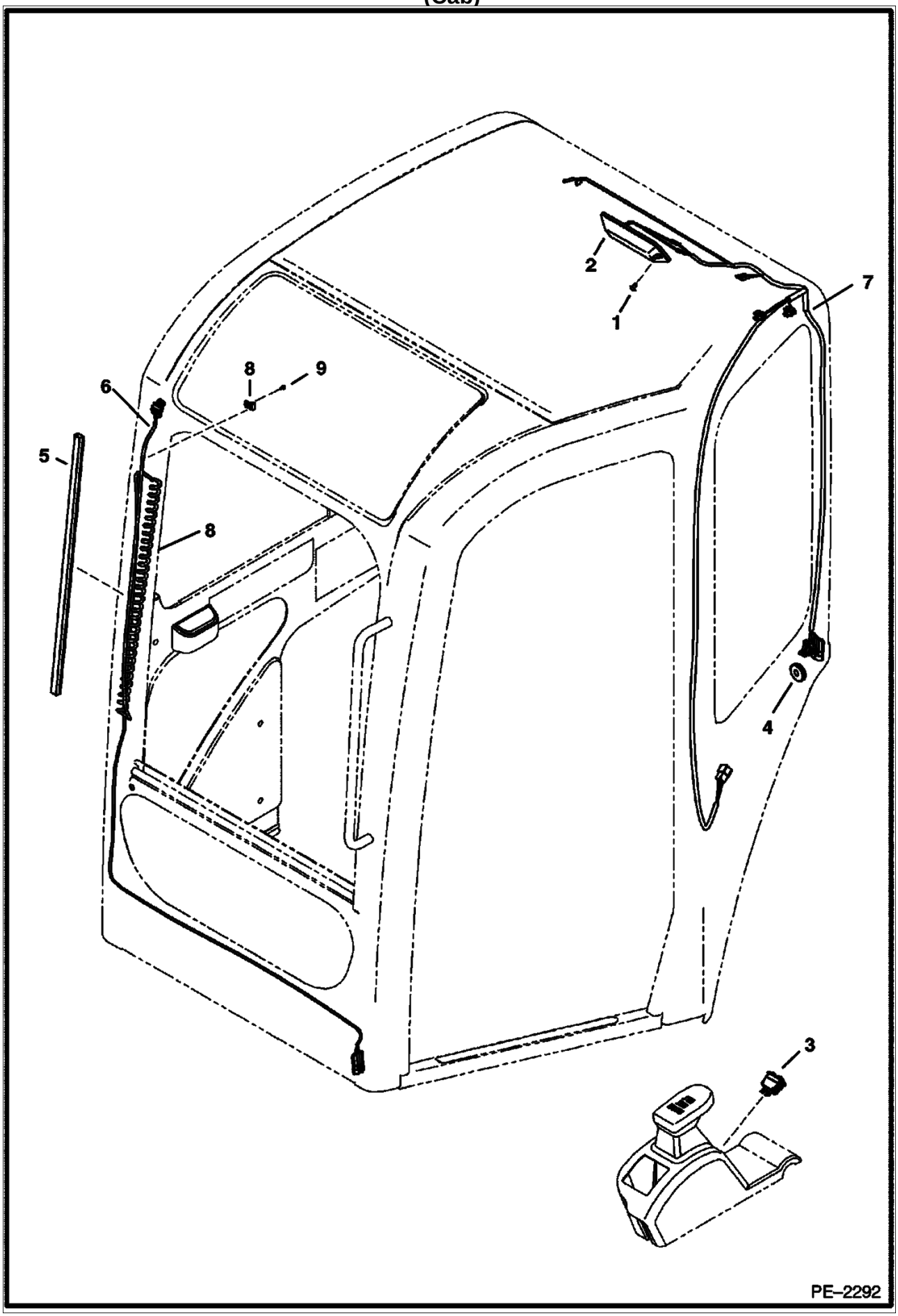

https://www.pdfmanual4trucks.com/

Ref. No.	Part Number	Description	Remarks	Serial Number	Qty.
1	6589675	SCREW			2
2	6664084	LIGHT	dome		1
2	6665367	BULB			1
3	6671113	SWITCH			1
4	6682697	GROMMET			1
5	6682741	RETAINER			1
6	7100772	CORD	wiper		1
7	7102833	HARNESS	cab		1
8	30H000010B	CLAMP			1
9	58G000806B	SCREW			1

https://www.pdfmanual4trucks.com/

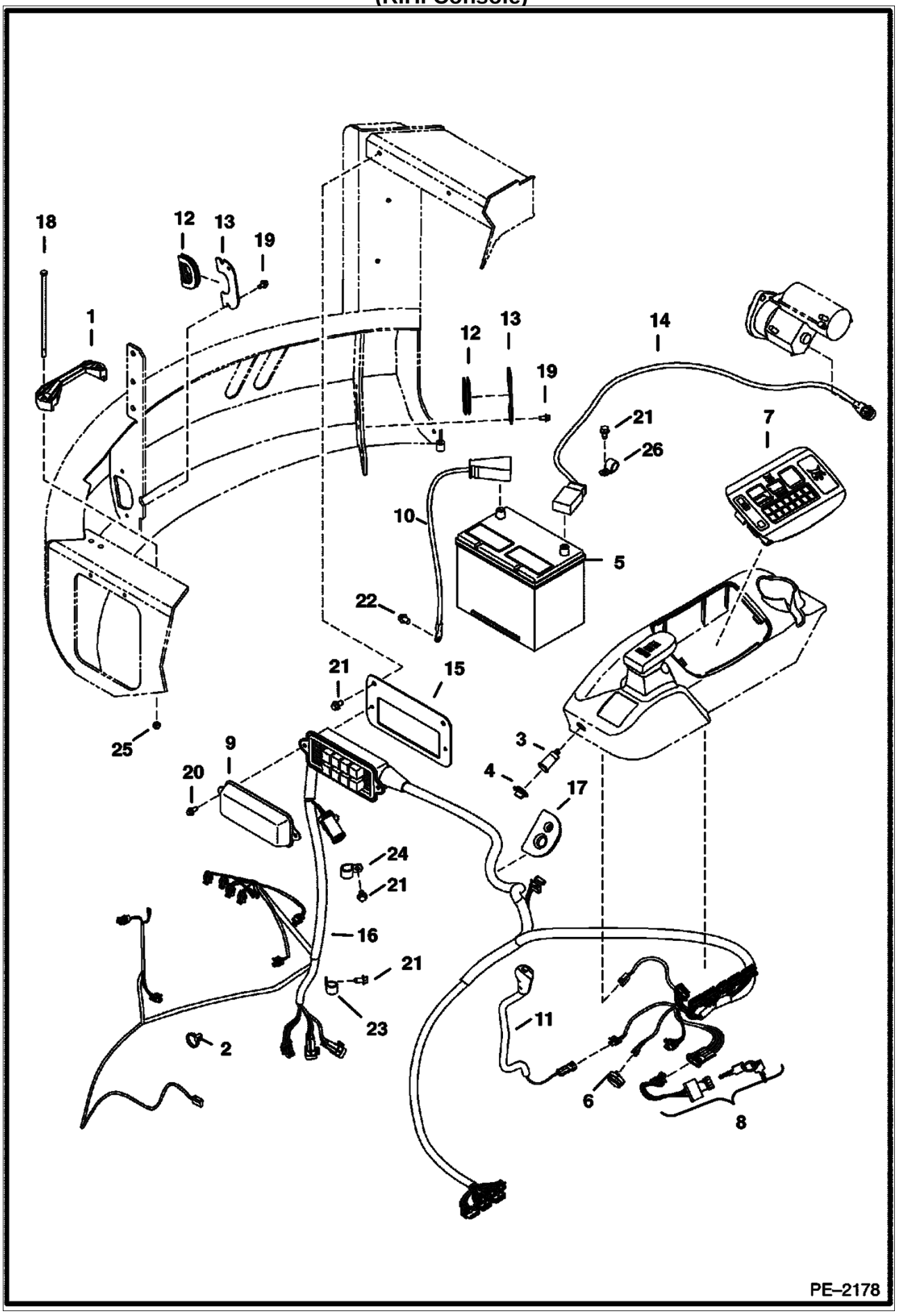

https://www.pdfmanual4trucks.com/

Ref. No.	Part Number	Description	Remarks	Serial Number	Qty.
1	6569203	CLAMP	battery		1
2	6624289	STA STRAP			3
3	6664223	OUTLET			1
4	6664224	CAP			1
5	6673865	BATTERY			1
6	6675705	ALARM			1
7	6678690	CONTROLLER			1
8	6679842	SWITCH			1
8	6709527	KEY	ignition		1
9	6716621	COVER			1
10	6807431	CABLE	negative		1
11	6807948	LEVER			1
11	6675721	SWITCH			1
12	6810364	GROMMET			1
13	6810365	GROMMET	plate		1
14	6812394	CABLE	positive		1
15	6814704	BRACKET			1
16		HARNESS	console - R.H. Was - 6814920 Order 7105174 and 7105175	& Below	1
16	7105175	HARNESS		& Above	1
17	6815653	GROMMET			1
18	17C005152B	BOLT	Was - 1C005148B		2
19	26GM08016B	SCREW			4
20	26GM08020B	SCREW			2
21	26GM10020B	SCREW			6
22	29CM01016B	SCREW			1
23	30H000046B	CLAMP			1
24	30H000050B	CLAMP			3
25	51DM00008B	NUT			2
26	59D000005B	NUT			2
27	7105174	HARNESS		& Above	1

https://www.pdfmanual4trucks.com/

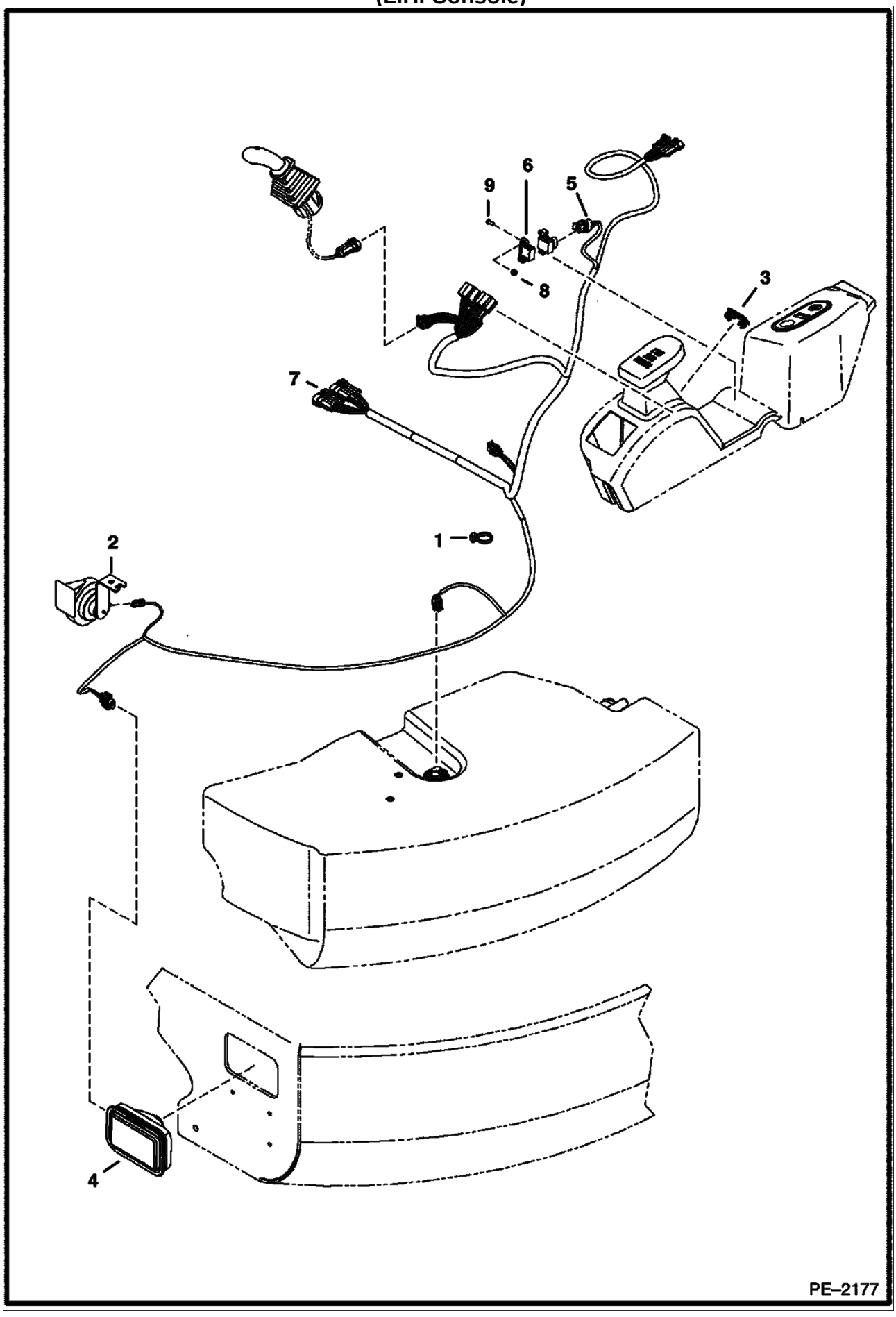

https://www.pdfmanual4trucks.com/

(L.H. Console)

Ref. No.	Part Number	Description	Remarks	Serial Number	Qty.
1	6624289	STA STRAP			3
2	6665105	ALARM			1
3	6665314	SWITCH			4
4	6676238	LIGHT			1
4	6667934	BULB			1
4	6676725	BEZEL	rubber mount		1
5	6680427	SENSOR			1
6	6680428	MAGNET			1
7	7101609	HARNESS			1
8	50D000008B	NUT			4
9	87G000808B	SCREW			4

https://www.pdfmanual4trucks.com/

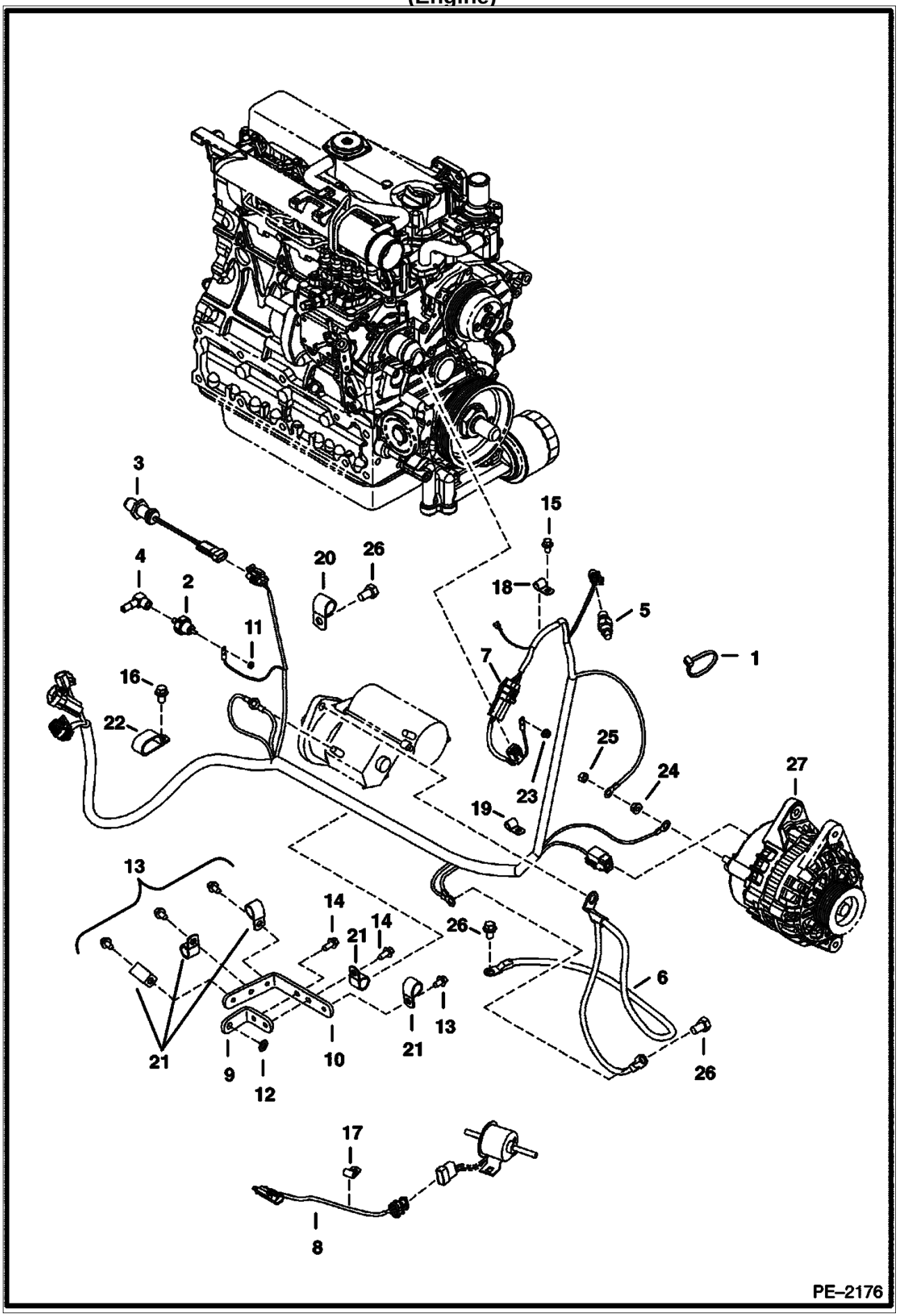

https://www.pdfmanual4trucks.com/

Ref. No.	Part Number	Description	Remarks	Serial Number	Qty.
1	6624289	STA STRAP			5
2	6631010	SWITCH	pressure		1
3	6684037	SENSOR	speed		1
4	6707040	ELBOW			1
5	6718414	SENDER	temp		1
6	6812395	CABLE	negative		1
7	6814829	HARNESS	engine - W/Ref. 28		1
8	6815091	HARNESS	fuel pump		1
9	6817371	BRACKET			1
10	6817372	BRACKET			1
11	4DM00008B	NUT			1
12	6CM01220B	BOLT			2
13	12D000008B	NUT			1
14	15EM00100B	WASHER			1
15	26GM08016B	SCREW			4
16	26GM08020B	SCREW			2
17	29CM00812B	SCREW			1
18	29CM01016B	SCREW			2
19	30H000019B	CLAMP			1
20	30H000022B	CLIP			1
21	30H000026B	CLIP			1
22	30H000048B	CLAMP			1
23	30H000065B	CLIP			5
24	31H000042B	CLIP			1
25	43DM00006B	NUT			1
26	43DM00008B	NUT			2
27	6681857	ALTERNATOR	See Illustration ALTERNATOR/ B22386		1
28	6814830	HARNESS	fuel shutoff		1

https://www.pdfmanual4trucks.com/

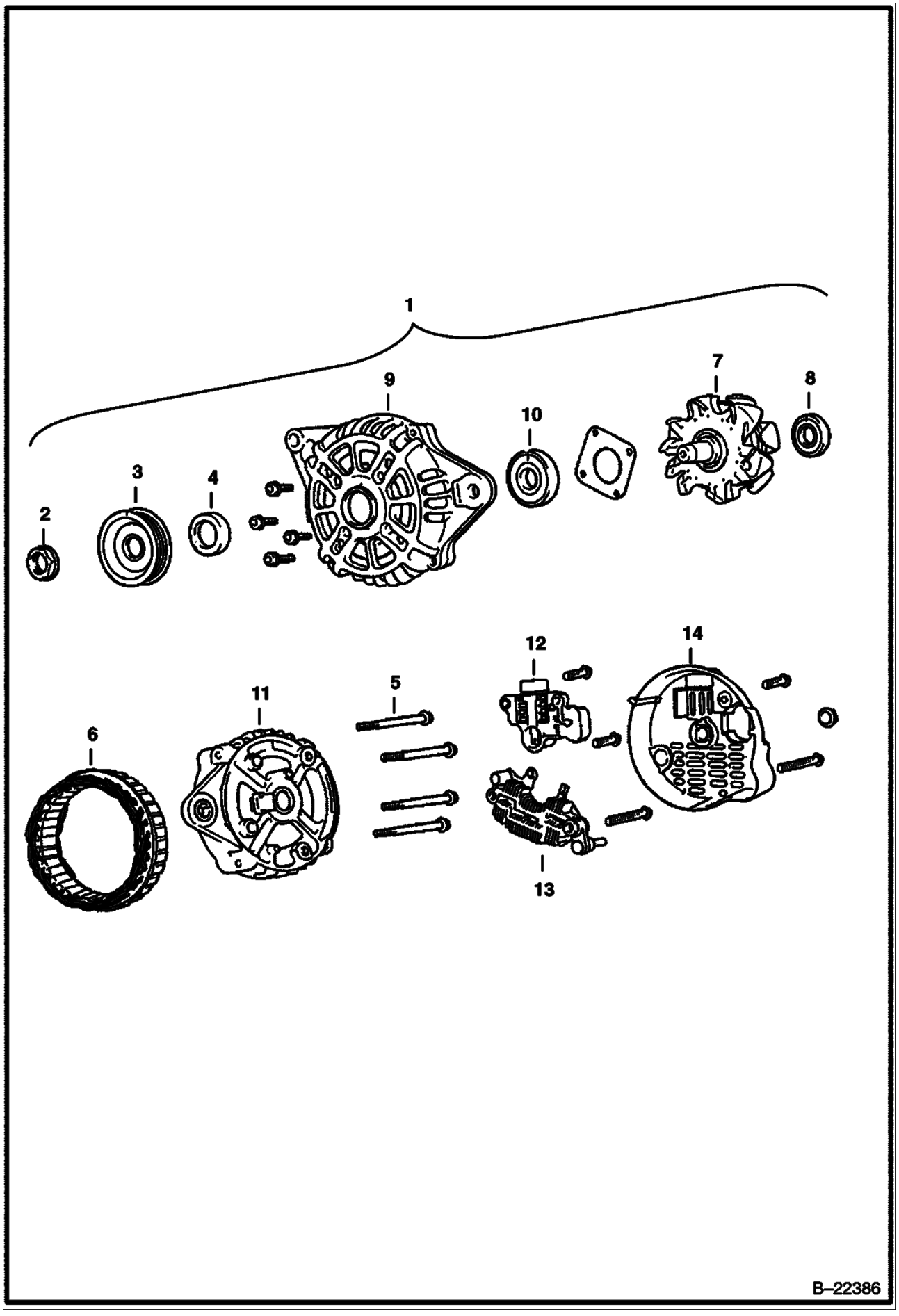

https://www.pdfmanual4trucks.com/

Ref. No.	Part Number	Description	Remarks	Serial Number	Qty.
1	6681857	ALTERNATOR			1
2	6677497	NUT			1
3	6684653	PULLEY			1
4	6677495	SPACER			1
5	6677494	BOLT			1
6	6677493	STATOR			1
7	6677492	ROTOR			1
8	6684652	BEARING	rear		1
9	6677491	BRACKET			1
10	6684651	BEARING	front		1
11	6684650	REGULATOR			1
12	6677490	BRACKET	rear		1
13	6677488	RECTIFIER			1
14	6677487	COVER			1

https://www.pdfmanual4trucks.com/

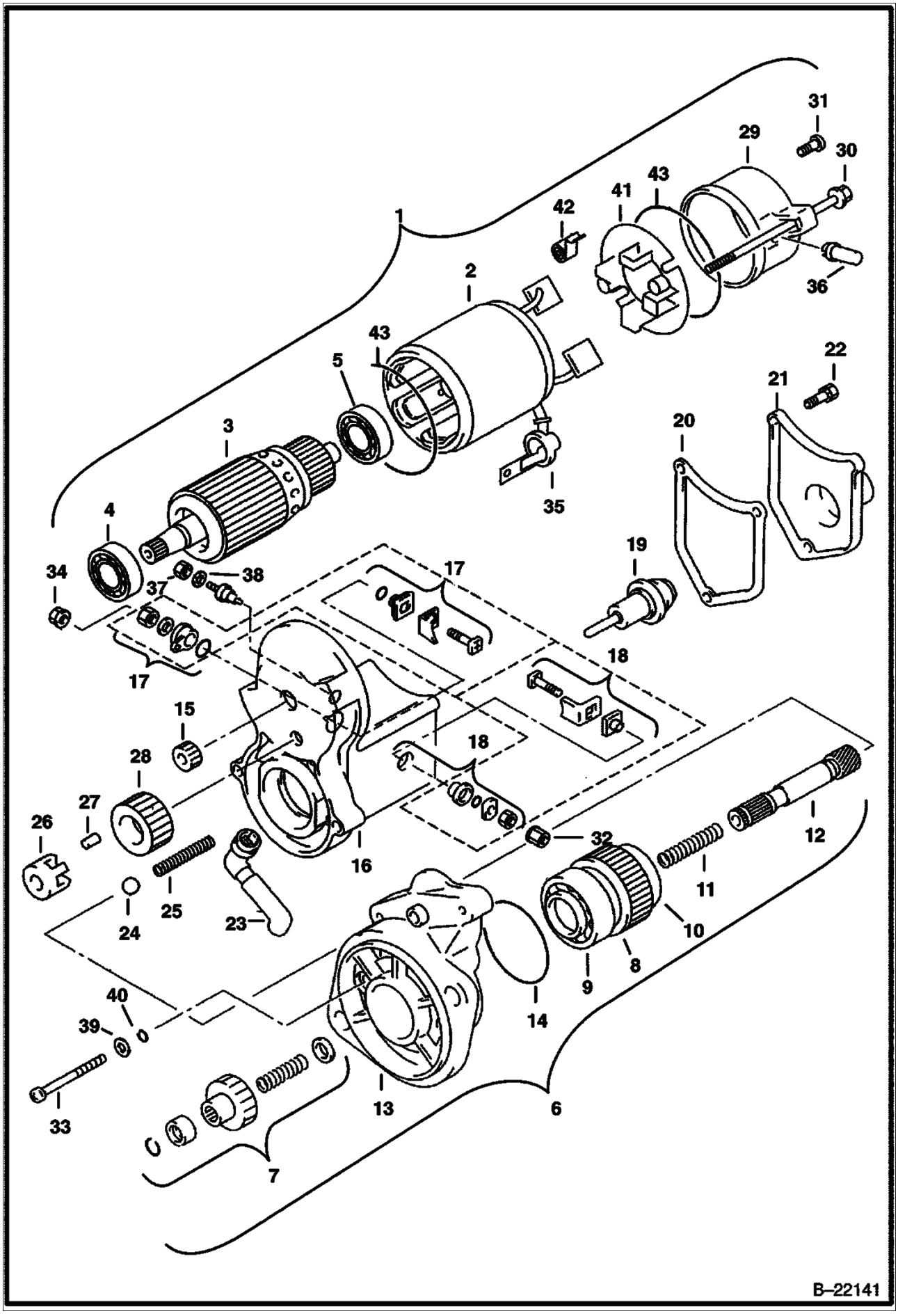

https://www.pdfmanual4trucks.com/

Ref. No.	Part Number	Description	Remarks	Serial Number	Qty.
1	6681858	STARTER	assy		1
2	6674817	YOKE	assy		1
3	6674818	ARMATURE			1
4	6671985	BEARING			1
5	6674819	BEARING			1
6	6674820	CLUTCH	assy		1
7	6672172	KIT	starter		1
8	6674821	CLUTCH	starter		1
9	6671989	BEARING			1
10	6671990	BEARING			1
11	6671991	SPRING			1
12	6671992	SHAFT			1
13	6674823	HOUSING			1
14	6672013	O-RING			1
15	6674824	PINION			1
16	6684729	SWITCH			1
17	6684730	STARTER			1
18	6674826	STARTER			1
19	6684731	STARTER			1
20	6674828	PLUNGER			1
21	6674829	COVER			1
22	6674830	BOLT			3
23	6684732	BUSHING			1
24	6671122	BALL			1
25	6674831	SPRING			1
26	6672000	RETAINER			1
27	6671999	ROLLER			5
28	6672001	PINION			1
29	6684733	FRAME			1
30	6674833	BOLT			2
31	6674834	SCREW			2
32	6672006	NUT			1
33	6674835	SCREW			2
34	6672008	NUT			1
35	6672178	COVER	solenoid		1
36	6672007	BUSHING			1
37	6672011	NUT			1
38	6672012	WASHER			1
39	6666629	WASHER	plate		2
40	6666631	WASHER			2
41	6674836	HOLDER			1
42	6684734	SPRING			4
43	6671982	O-RING			2

https://www.pdfmanual4trucks.com/

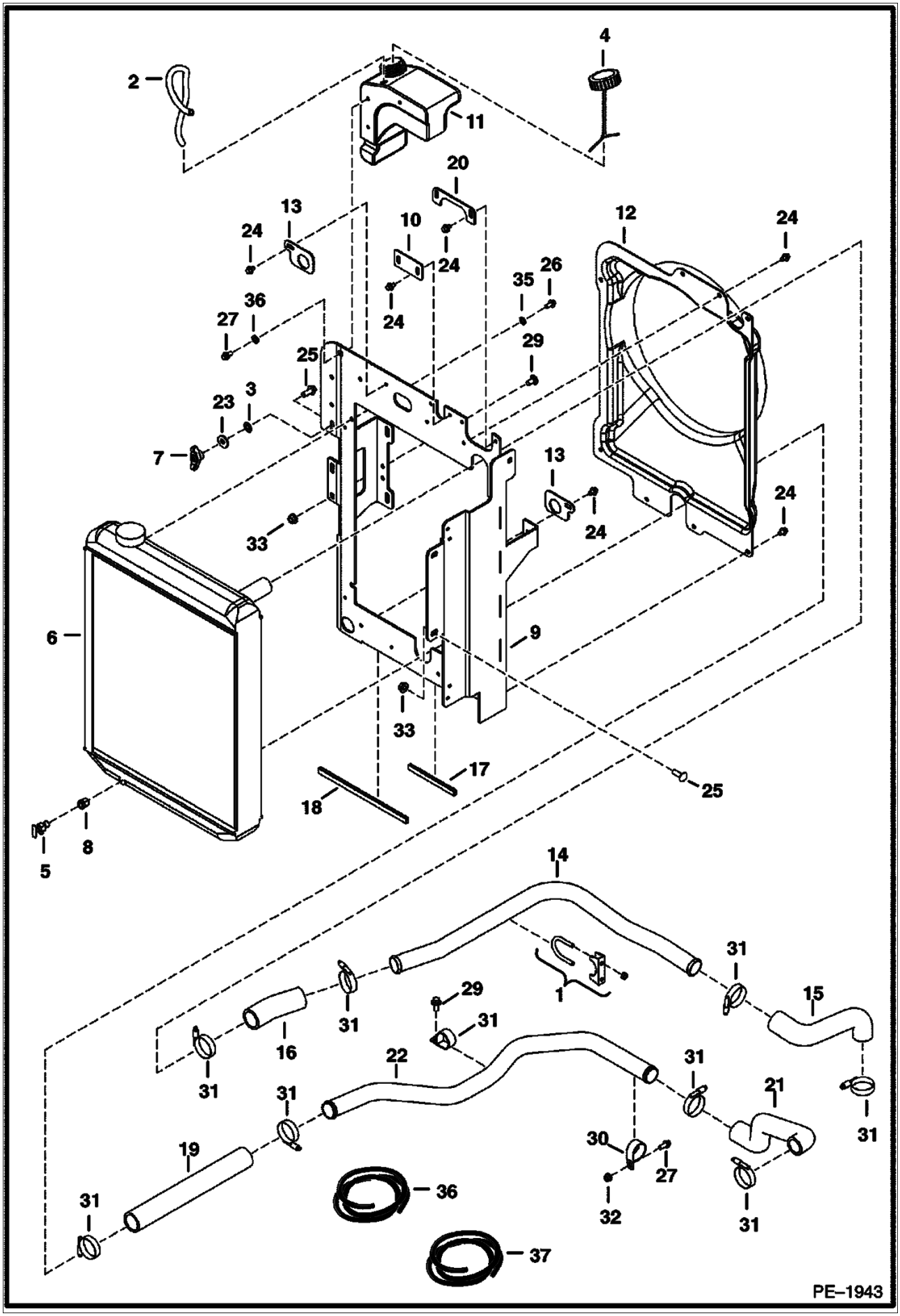

https://www.pdfmanual4trucks.com/

Ref. No.	Part Number	Description	Remarks	Serial Number	Qty.
1	710706B	CLAMP			2
2		HOSE	NAP - order 21" (534mm) of Ref. 37		1
3	6674264	BOLT	retainer		2
4	6675551	CAP			1
5	6679506	DRAIN			1
6	6679831	EXCHANGER			1
6	6682274	CAP	radiator		1
7	6685343	NUT	win		2
8	6682999	ADAPTER			1
9	6813180	PLATE	radiator		1
10	6813203	PLATE			1
11	6813898	TANK	coolant		1
12	6814173	SHROUD			1
13	6814179	PLATE			2
14	6814416	TUBELINE			14
15	6814417	HOSE			1
16	6814418	HOSE			1
17		SEAL	NAP - use 6" (153mm) of Ref. 36		x
18		SEAL	NAP - use 11" (280mm) of Ref. 36		x
19	6814733	HOSE			1
20	6816118	PLATE			1
21	6816889	HOSE			1
22	7101023	TUBE			1
23	17EM00100B	WASHER			2
24	26GM08013B	SCREW			14
25	28CM01030B	BOLT			5
26	29CM00816B	SCREW			7
27	29CM00820B	BOLT			1
28	29CM01020B	SCREW			1
29	29CM01025B	SCREW			1
30	30H000060B	CLAMP			2
31	42HC00200B	CLAMP			8
32	43DM00008B	NUT			1
33	51DM00010B	NUT			4
34	6E000006B	WASHER			1
35	6EM00080B	WASHER	spring lock		3
36	6681883	SEAL	bulk - sold per foot		x
37	6577822	HOSE	bulk - sold per foot		x

https://www.pdfmanual4trucks.com/

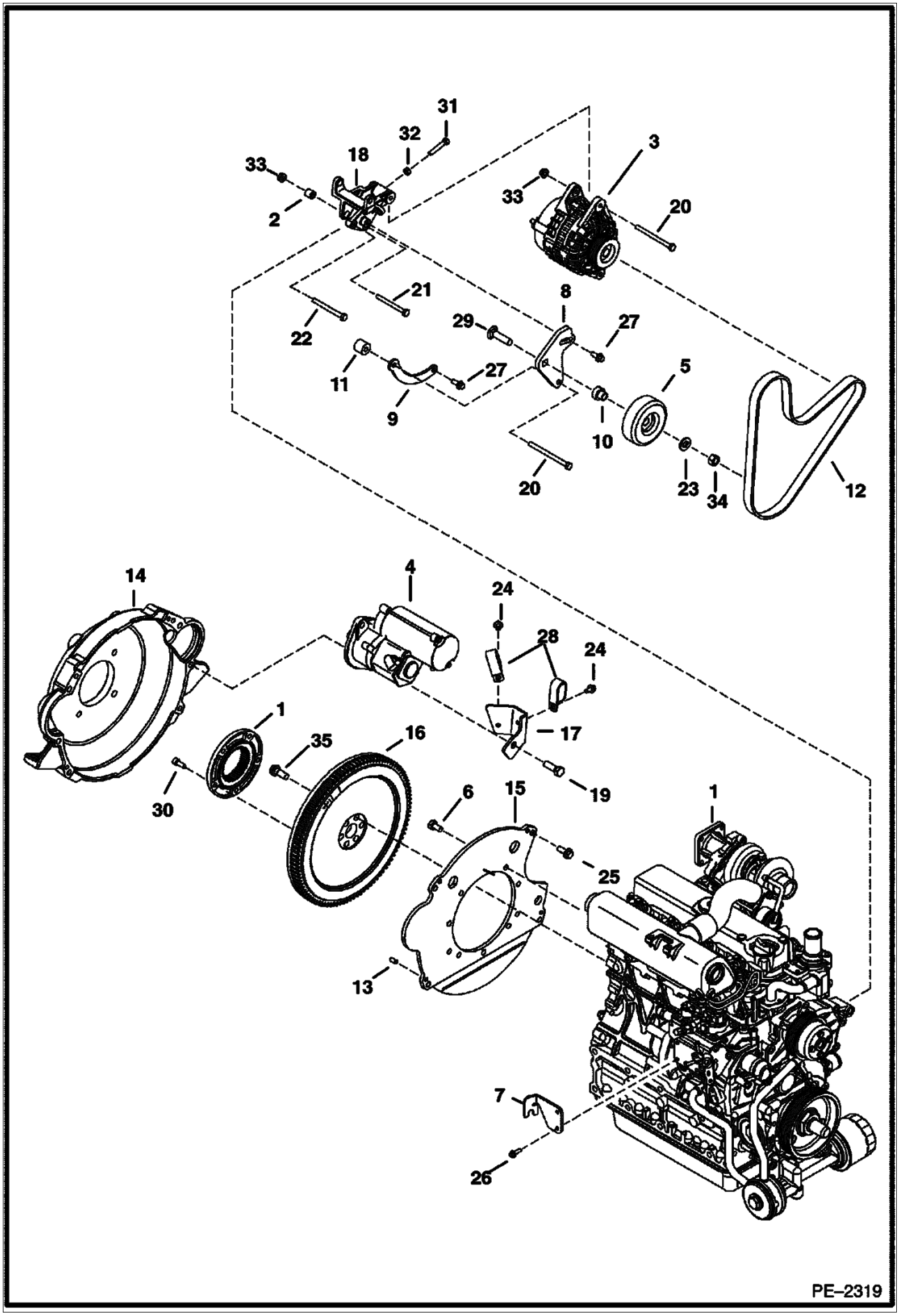

https://www.pdfmanual4trucks.com/

Ref. No.	Part Number	Description	Remarks	Serial Number	Qty.
1	6685050	ENGINE	V2003T		1
2	6675838	BUSHING			1
3	6681857	ALTERNATOR	See Illustration ALTERNATOR/ B22386		1
4	6681858	STARTER			1
5	6681942	IDLER			1
6	6681860	FILTER			1
7	6733378	SCREW			1
8	6814848	PLATE			1
9	6814859	TENSIONER			1
10	6814860	SPACER			1
11	6814861	SPACER			1
12	6815019	BELT			1
13	7101341	PIN			2
14	7101784	HOUSING			1
15	7101787	PLATE			1
16	7102172	FLYWHEEL			1
17	7102964	BUCKET			1
18	7103231	BRACKET			1
19	1CM01235B	SCREW			2
20	1CM08110B	SCREW			1
21	1CM00880B	SCREW			1
22	1CM00885B	SCREW			1
23	25E000021B	WASHER			1
24	26GM08016B	SCREW			2
25	29CM01025B	SCREW			1
26	29CM00620B	SCREW			2
27	29CM00820B	BOLT			2
28	31H000042B	CLIP			2
29	37C000832B	BOLT			1
30	3GM00820B	SCREW			5
31	4CM00845B	SCREW			1
32	4DM00008B	NUT			1
33	51DM00008B	NUT			1
34	96D000008B	NUT			1
35	6654487	BOLT			6

https://www.pdfmanual4trucks.com/

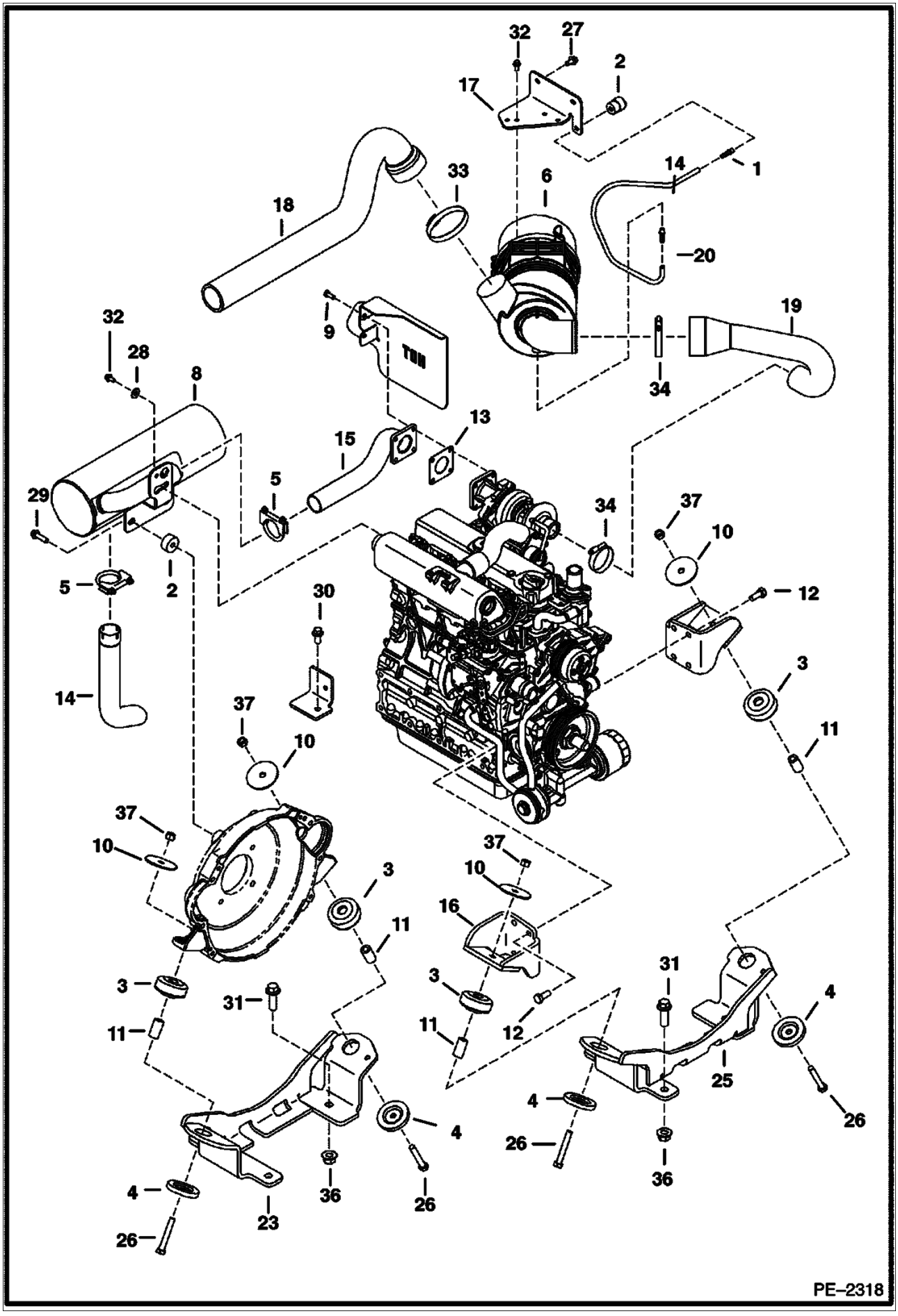

https://www.pdfmanual4trucks.com/

Ref. No.	Part Number	Description	Remarks	Serial Number	Qty.
1	6685050	ENGINE	See Illustration ENGINE & ATTACHING PARTS/ PE1943 V2003T		1
2	6515007	GAUGE			1
3	6661785	MOUNT			4
4	6661787	WASHER			4
5	6677363	CLAMP			2
6	6681860	FILTER			1
7	6505813	CONNECTOR			2
8	6685647	MUFFLER			1
9	6701123	SCREW			4
10	6705106	WASHER	mount		1
11	6706043	TUBE			1
12	6719828	BOLT			8
13	6727753	GASKET			1
14	6812917	PIPE			1
15	6814127	PIPE			1
16	6814278	MOUNT			2
17	6814640	BRACKET			1
18	6815875	HOSE			1
19	6815876	HOSE			1
20	6817554	HOSE			1
21	6817624	COVER	exhaust		1
22	7101016	SPACER			2
23	7101021	MOUNT	engine		1
24	7102959	BRACKET			1
25	7105076	MOUNT	W/A		1
26	1CM01280B	SCREW			4
27	26GM10020B	SCREW			2
28	27E000005B	WASHER	plain		1
29	29CM01035B	SCREW			4
30	29CM01225B	SCREW			1
31	29CM01650B	SCREW			4
32	29CM00816B	SCREW			5
33	42H000056B	CLAMP			1
34	42HC00250B	CLAMP			1
35	42HC00350B	CLAMP			1
36	51DM00016B	NUT			4
37	53DM00012B	NUT			4

https://www.pdfmanual4trucks.com/

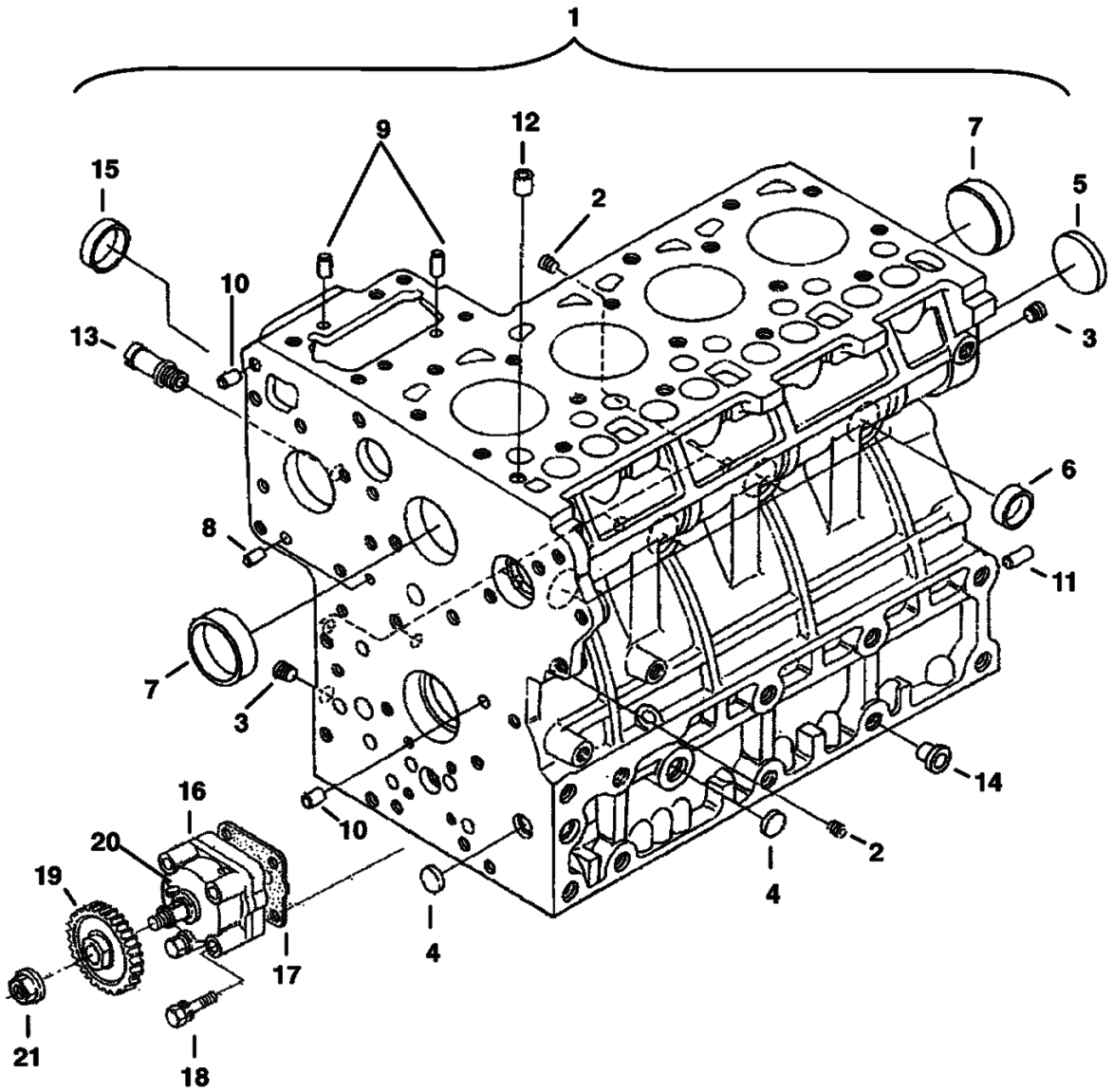

https://www.pdfmanual4trucks.com/

Ref. No.	Part Number	Description	Remarks	Serial Number	Qty.
1	6684750	CRANKCASE	W/Ref. 2-14		1
2	6598169	PLUG			6
3	6598170	PLUG			2
4	6667418	PLUG			3
5	6657663	PLUG			1
6	3974389B	GASKET			6
7	6680639	PLUG			2
8	3974393B	PIN			2
9	3974394B	PIN			3
10	3974395B	PIN			2
11	3974868B	PIN			1
12	6680643	PIN			1
13	3974447B	PIPE	water return		1
14	6598187	PLUG			2
15	3975169	CAP	Was - 3974169 [D]		1
16	6682498	PUMP	assy - oil		1
17	6684786	GASKET			1
18	6670770	BOLT			4
19	3975441B	GEAR			1
20	6652794	KEY			1
21	6685088	NUT	flange		1

https://www.pdfmanual4trucks.com/

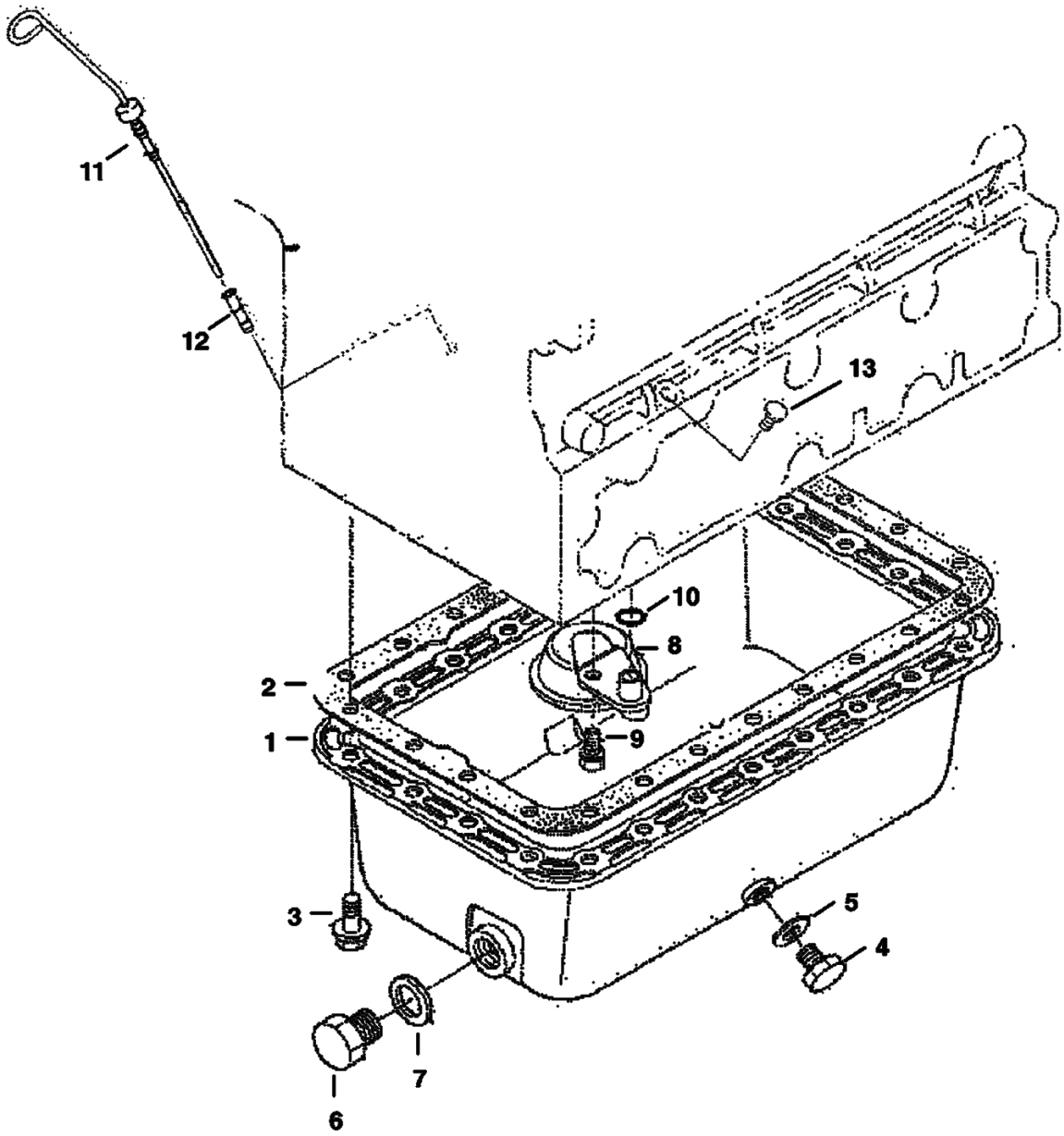

https://www.pdfmanual4trucks.com/

Ref. No.	Part Number	Description	Remarks	Serial Number	Qty.
1	6655151	OIL PAN			1
2	6684753	GASKET	oil pan		1
3	6653798	BOLT	flange		24
4	6640729	PLUG			1
5	6680484	GASKET			1
6	6680657	PLUG			1
7	6631046	SEAL			1
8	6653568	FILTER			1
9	6667420	BOLT			1
10	6684754	O-RING			1
11	6684784	GAUGE	oil		1
12	6677203	GUIDE	oil		1
13	6684785	PLUG			1

https://www.pdfmanual4trucks.com/

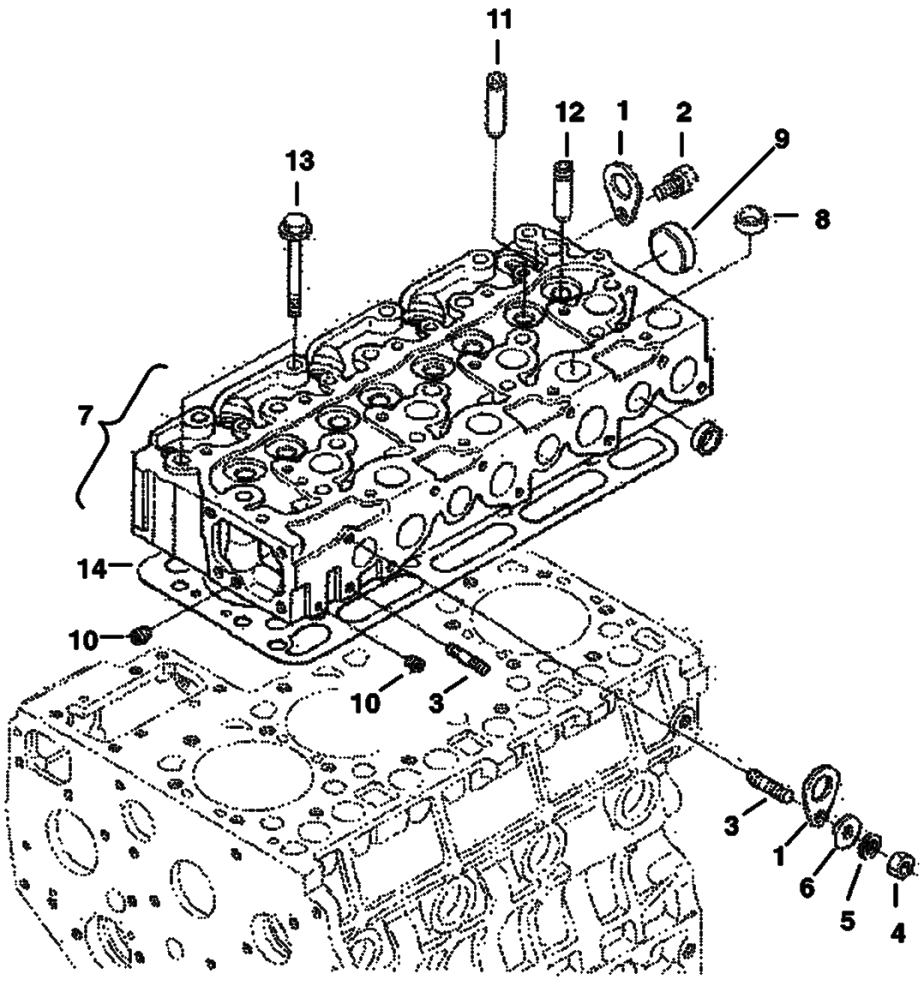

https://www.pdfmanual4trucks.com/

Ref. No.	Part Number	Description	Remarks	Serial Number	Qty.
1	3974882B	BRACKET			2
2	6667421	BOLT			1
3	6598156	STUD			2
4	6652792	NUT			1
5	6667422	WASHER	spring		1
6	2EM00008B	WASHER	plain		1
7	6684755	CYLINDER HEAD	W/Ref. 8-12		1
8	6680665	PLUG	sealing		12
9	6680666	PLUG	sealing		1
10	6598116	PLUG			2
11	6655154	GUIDE	inlet valve		4
12	6684756	GUIDE	exhaust valve		4
13	6655158	BOLT			18
14	6684758	GASKET			1
14	6684757	GASKET			1
14	6684759	GASKET			1
14	6684760	GASKET			1
14	6684761	GASKET			1

https://www.pdfmanual4trucks.com/

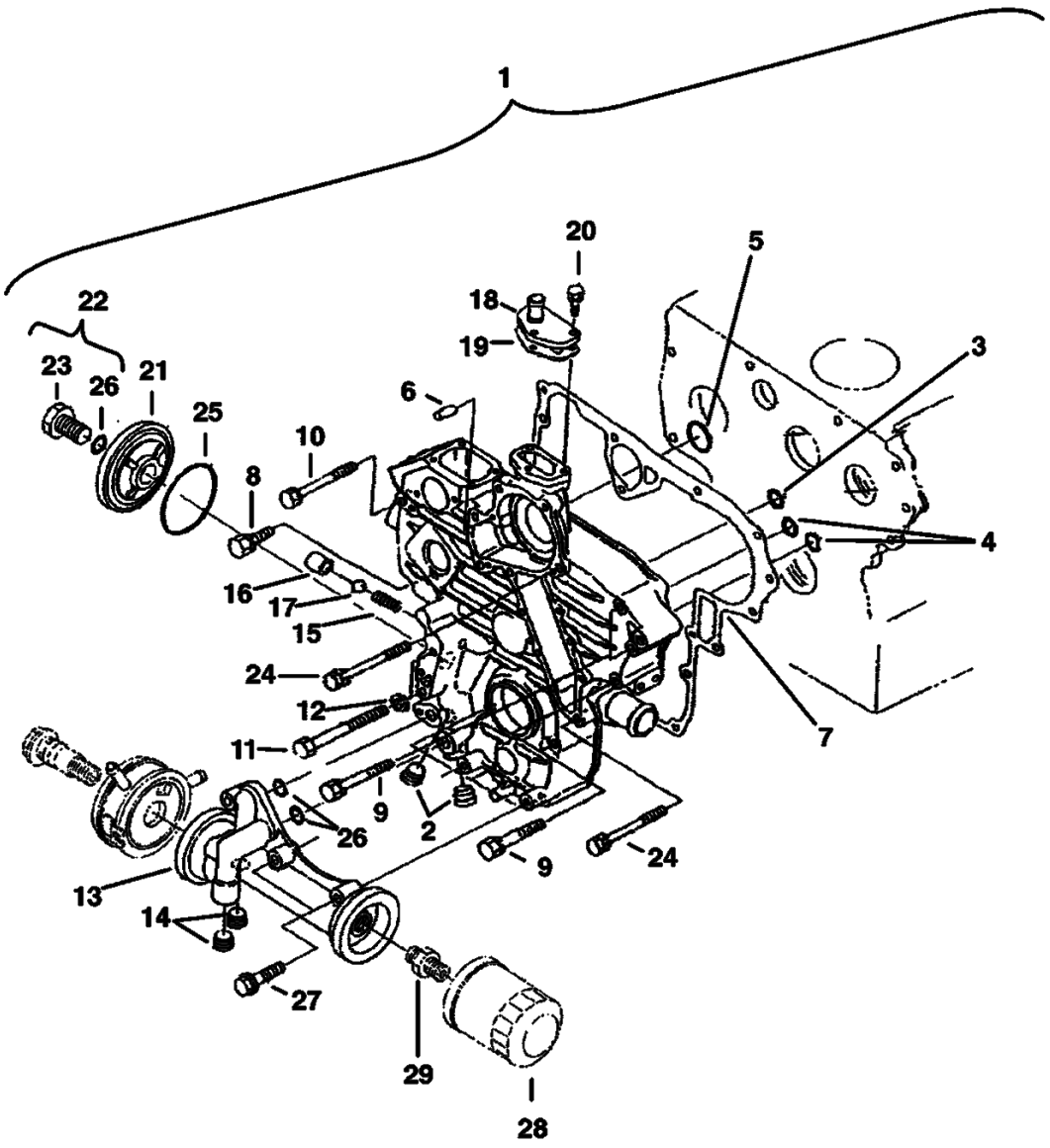

https://www.pdfmanual4trucks.com/

Ref. No.	Part Number	Description	Remarks	Serial Number	Qty.
1	6684764	HOUSING	gearcase		1
2	6672360	PLUG			2
3	6670769	O-RING			1
4	6680661	O-RING			2
5	6684765	SEAL			1
6	3974395B	PIN			2
7	6684770	GASKET			1
8	1CM00835B	BOLT			1
9	1CM00870B	BOLT			7
10	6653807	BOLT			1
11	6684772	BOLT			2
12	6667422	WASHER			2
13	6684773	FILTER	oil		1
14	6672360	PLUG			2
15	3974892B	SPRING			1
16	3974893B	SEAT			1
17	10J000013B	BALL			1
18	3974894B	FLANGE	water		1
19	6684774	GASKET			1
20	4CM00620B	BOLT			3
21	6684766	COVER			1
22	6684767	BOLT			1
23	6684768	BOLT			1
24	6653808	BOLT			4
25	6684769	O-RING			1
26	6670769	O-RING			3
27	6680593	BOLT			3
28	6675517	FILTER	engine oil		1
29	3974891B	ADAPTER			1

https://www.pdfmanual4trucks.com/

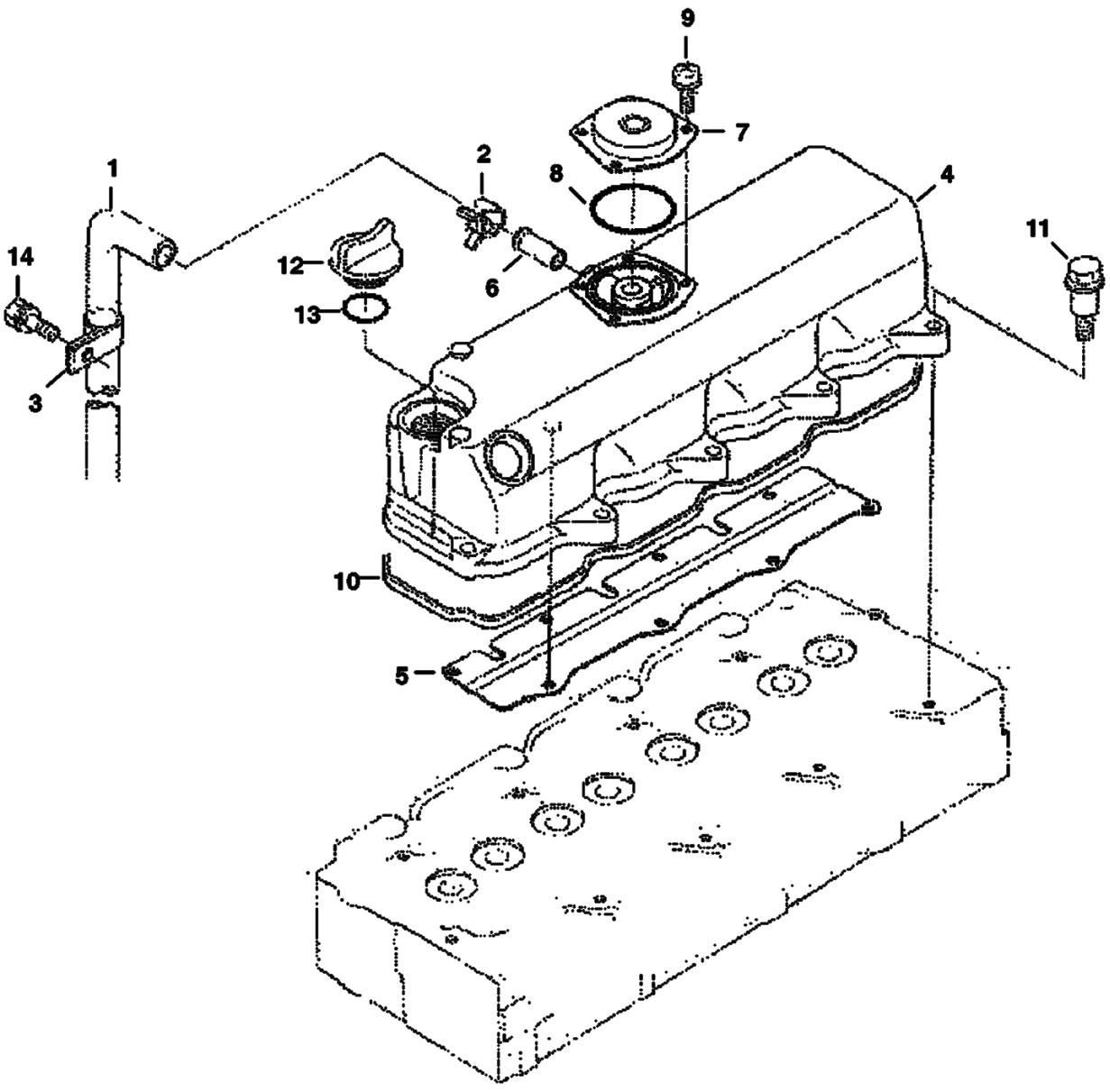

https://www.pdfmanual4trucks.com/

Ref. No.	Part Number	Description	Remarks	Serial Number	Qty.
1	6685580	TUBE	breather		1
2	6684776	CLAMP			1
3	6684777	CLAMP			1
4	6684778	COVER	cylinder head - W/Ref. 5-9		1
5	6684779	SHIELD	breather		1
6	6655880	PIPE	water return		1
7	6680692	COVER			1
8	6685581	O-RING			1
9	3974928B	SCREW			4
10	6684780	GASKET	head cover		1
11	6684781	BOLT			10
12	6680908	CAP			1
13	6684782	O-RING			1
14	4CM00822B	BOLT			1

https://www.pdfmanual4trucks.com/

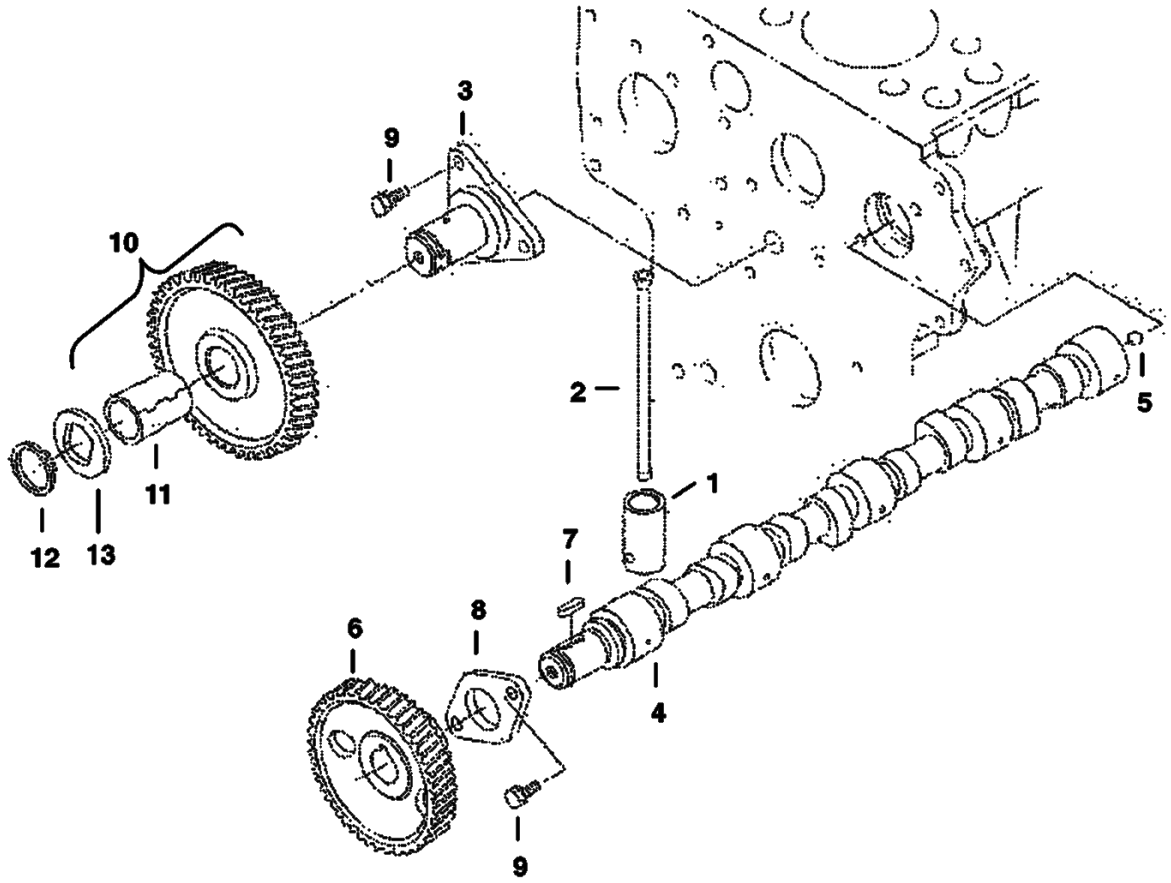

B–22705

https://www.pdfmanual4trucks.com/

Ref. No.	Part Number	Description	Remarks	Serial Number	Qty.
1	6680707	TAPPET			8
2	6655176	PUSHROD			8
3	6685519	SHAFT			1
4	6685582	CAMSHAFT			1
5	6652633	BALL			1
6	6653840	GEAR			1
7	3974546B	KEY			1
8	3974547B	STOPPER	camshaft		1
9	4CM00818B	BOLT			5
10	6684793	GEAR	W/Ref. 11		1
11	6684794	BUSHING			1
12	6667433	CIRCLIP	external		1
13	6684795	COLLAR			1

https://www.pdfmanual4trucks.com/

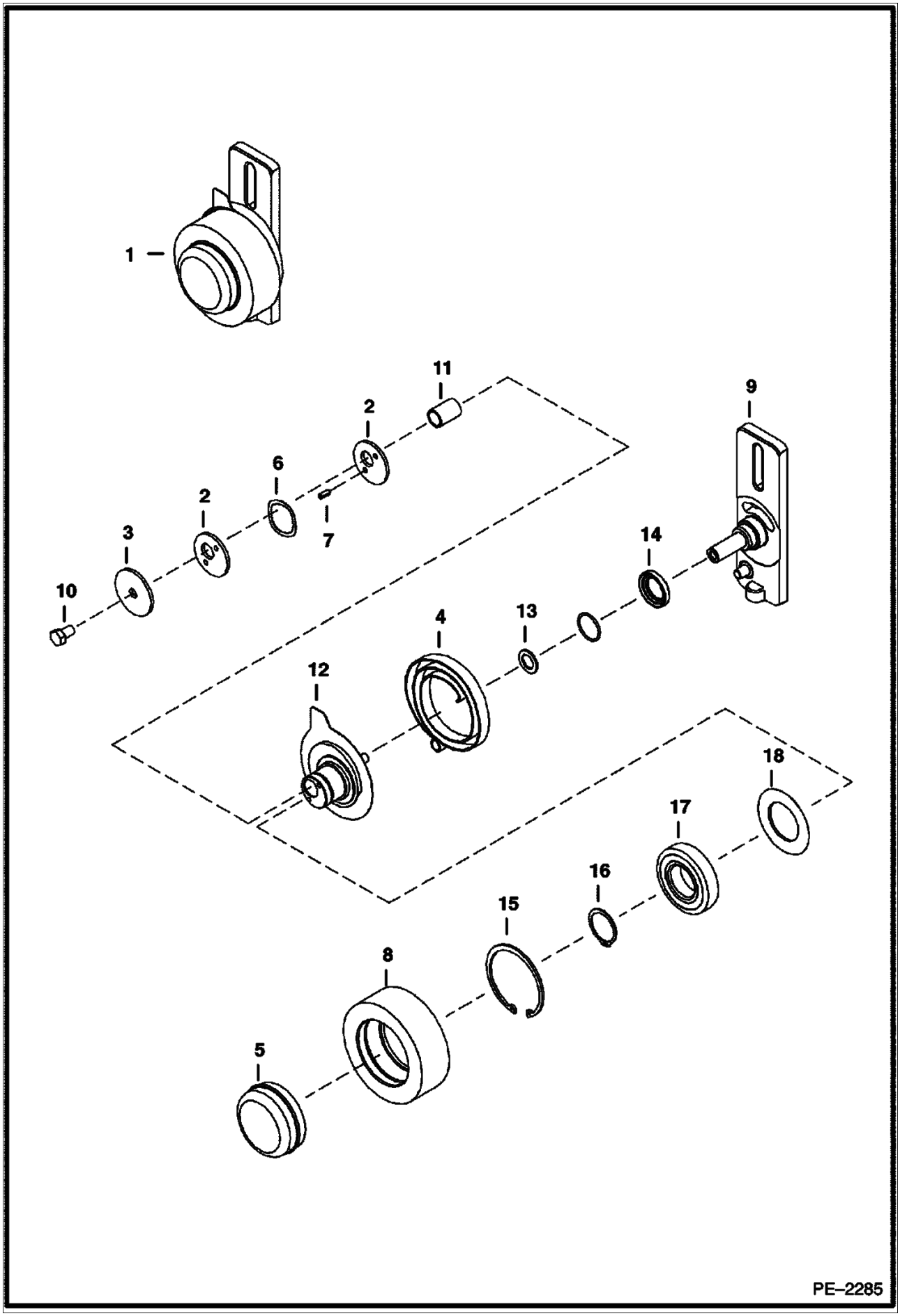

https://www.pdfmanual4trucks.com/

Ref. No.	Part Number	Description	Remarks	Serial Number	Qty.
1	7101660	IDLER	assy		1
2	6705231	WASHER			2
3	6705232	WASHER			1
4	6705491	SPRING			1
5	6708770	CAP	dust		1
6	6710585	WASHER			1
7	6713370	PIN			2
8	6814587	PULLEY			1
9	7101662	BRACKET			1
10	1C000610B	SCREW			1
11	6682442	SLEEVE			1
12	6814586	HUB	assy - W/Ref. 10 & pin		1
13	6703168	BEARING	thrust		1
14	6685735	SEAL			1
15	6658847	RING	retainer		1
16	6658536	RING	snap		1
17	6668114	BEARING			1
18	6664209	SEAL			1

https://www.pdfmanual4trucks.com/

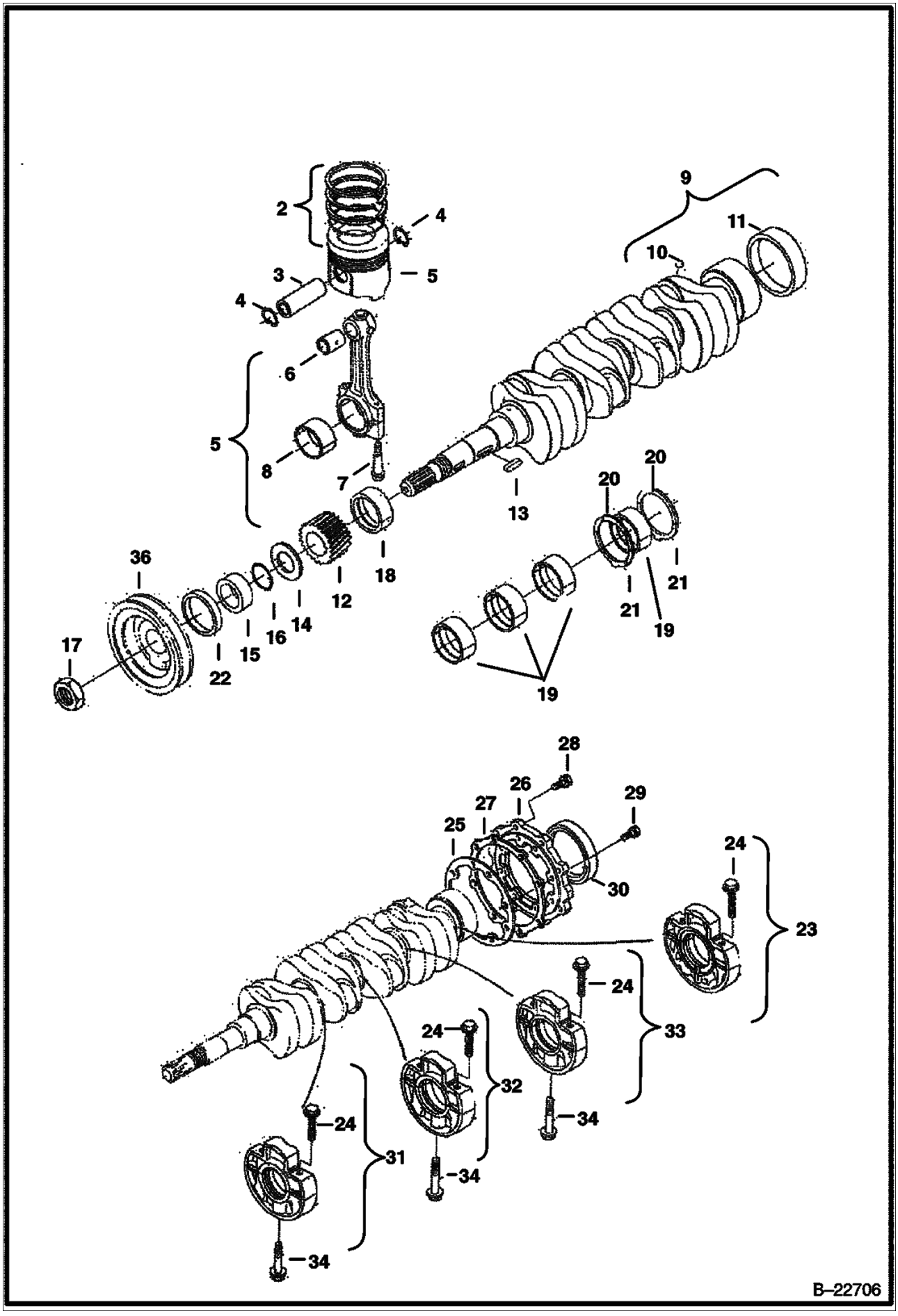

https://www.pdfmanual4trucks.com/

Ref. No.	Part Number	Description	Remarks	Serial Number	Qty.
1	6684797	PISTON	std - (05) (1G770-21110)		4
1	6684798	PISTON	0.25 mm- (05) (1G770-21900)		4
1	6684799	PISTON	std - (00) (1G770-21112)		4
1	6684880	GASKET	0.25 mm- (00) (1G770-21910)		4
1	6684801	PISTON	std - (10) (1G770-21130)		4
1	6684802	PISTON	0.25mm - (10) (1G770-21910)		4
2	6684803	RING	piston - std		4
2	6684804	RING	piston - 0.25		4
3	6655179	PIN			4
4	6684805	CIRCLIP			8
5	6655181	ROD	connecting - W/Ref. 6, 7 & 8		4
6	6655243	BUSHING			4
7	3974940B	BOLT			8
8	6655183	PIN	std		4
8	6655236	PIN	0,2mm		4
8	6655237	PIN	(0,4mm - .0157)		4
9	6684806	CRANKSHAFT	W/Ref. 10 & 11		1
10	6652633	BALL			4
11	6684807	BUSHING			1
12	6685481	GEAR			1
13	6685469	KEY			1
14	3975424B	SLINGER			1
15	3975337B	COLLAR			1
16	3974577B	O-RING			1
17	3974671B	NUT			1
18	6685486	BEARING	std		1
18	6685490	BEARING	(0,2mm - .0079)		1
18	6685491	BEARING	(0,4mm -. 0157)		1
19	6685487	BEARING	std		4
19	6685492	BEARING	(0,2mm - .0079)		4
19	6685493	BEARING	(0,4mm -. 0157)		4
20	6685488	WASHER	thrust - std		2
20	6685494	WASHER	thrust - (0,2mm - .0079)		2
20	6685495	WASHER	thrust - (0,4mm -. 0157)		2
21	6685489	WASHER	thrust - std		2
21	6685496	WASHER	thrust - (0,2mm - .0079)		2
21	6685497	WASHER	thrust - (0,4mm -. 0157)		2
22	6654710	SEAL			1
23	6685583	BEARING	assy - W/Ref. 24		1
24	6685482	BOLT			6
25	6684788	GASKET			1
26	6685515	COVER			1
27	6666814	GASKET			1
28	4CM00825B	BOLT			8
29	4CM00828B	BOLT			8
30	6684789	SEAL			1
31	6685584	BEARING	assy - W/Ref. 24		1
32	6685585	BEARING	assy - W/Ref. 24		1
33	6685586	BEARING	assy - W/Ref. 24		1
34	6683821	BOLT			3
35	6684853	PULLEY	fan drive		1

https://www.pdfmanual4trucks.com/

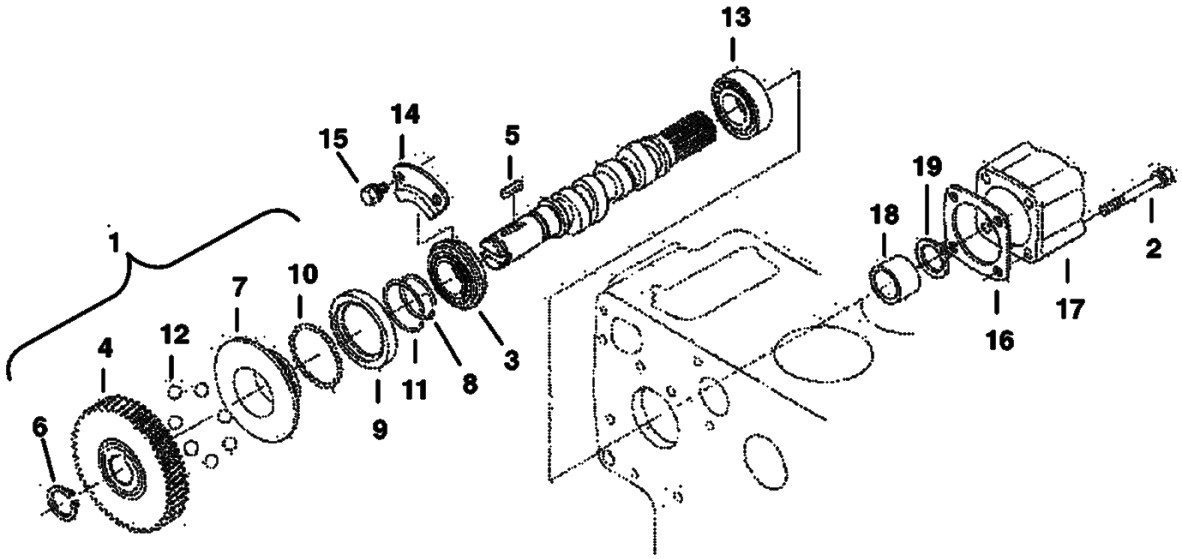

B–22707

FUEL CAMSHAFT & GOVERNOR SHAFT (Cont'd)

https://www.pdfmanual4trucks.com/

Ref. No.	Part Number	Description	Remarks	Serial Number	Qty.
1	6684810	CAMSHAFT	assy - W/Ref. 2-12		1
2		CAMSHAFT	NAP - fuel, order Ref. 1		1
3	851242B	BEARING			1
4	6684811	GEAR	injection		1
5	6598099	KEY			1
6	5JM00024B	CIRCLIP	external		1
7	6655213	SLEEVE	governor		1
8	3974618B	CIRCLIP			1
9	6655214	CASE			1
10	10J000005B	BALL			39
11	3974620B	CIRCLIP			1
12	6655215	BALL			7
13	6685479	BEARING			1
14	6685517	STOPPER			1
15	6667420	BOLT			2
16	6684813	GASKET			1
17	6667440	COVER	fuel camshaft		1
18	6685516	COLLAR			1
19	6598158	CIRCLIP			1
20	6651934	BOLT			4

https://www.pdfmanual4trucks.com/

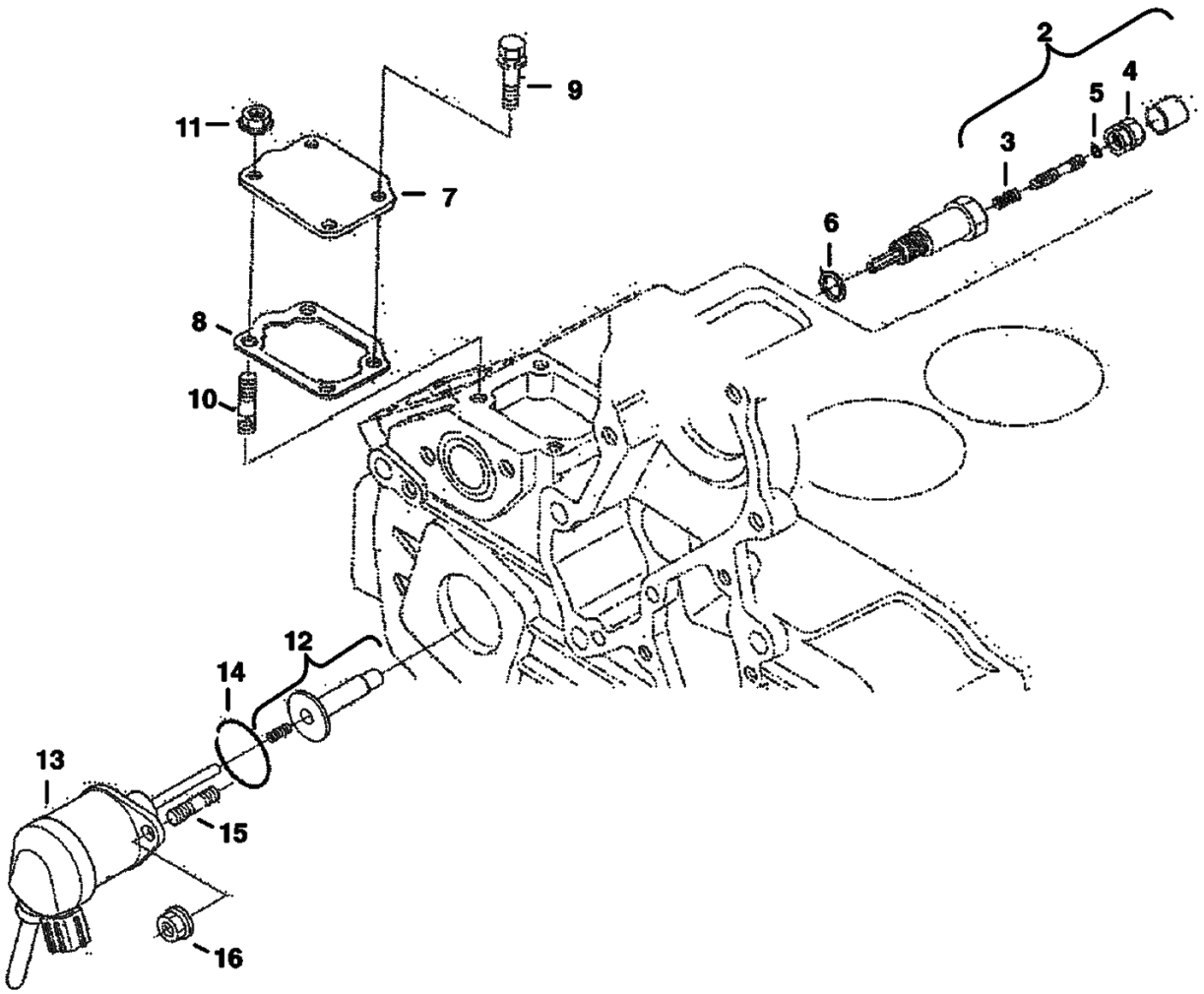

https://www.pdfmanual4trucks.com/

Ref. No.	Part Number	Description	Remarks	Serial Number	Qty.
1	6684815	IDLING ASSY	W/Ref. 2-5		1
2	6684816	BOLT	assy		1
3	3974977B	SPRING			1
4	6684817	NUT	spring		1
5	6684891	SEAL			1
6	6684818	SEAL			1
7	6685500	COVER			1
8	6684824	GASKET			1
9	4CM00616B	BOLT			2
10	6683087	STUD			2
11	6653561	NUT	flange		2
12	6684825	GUIDE			1
13	6684826	SOLENOID			1
14	6685465	O-RING			1
15	3974462B	STUD			2
16	6684827	NUT	flange		2

https://www.pdfmanual4trucks.com/

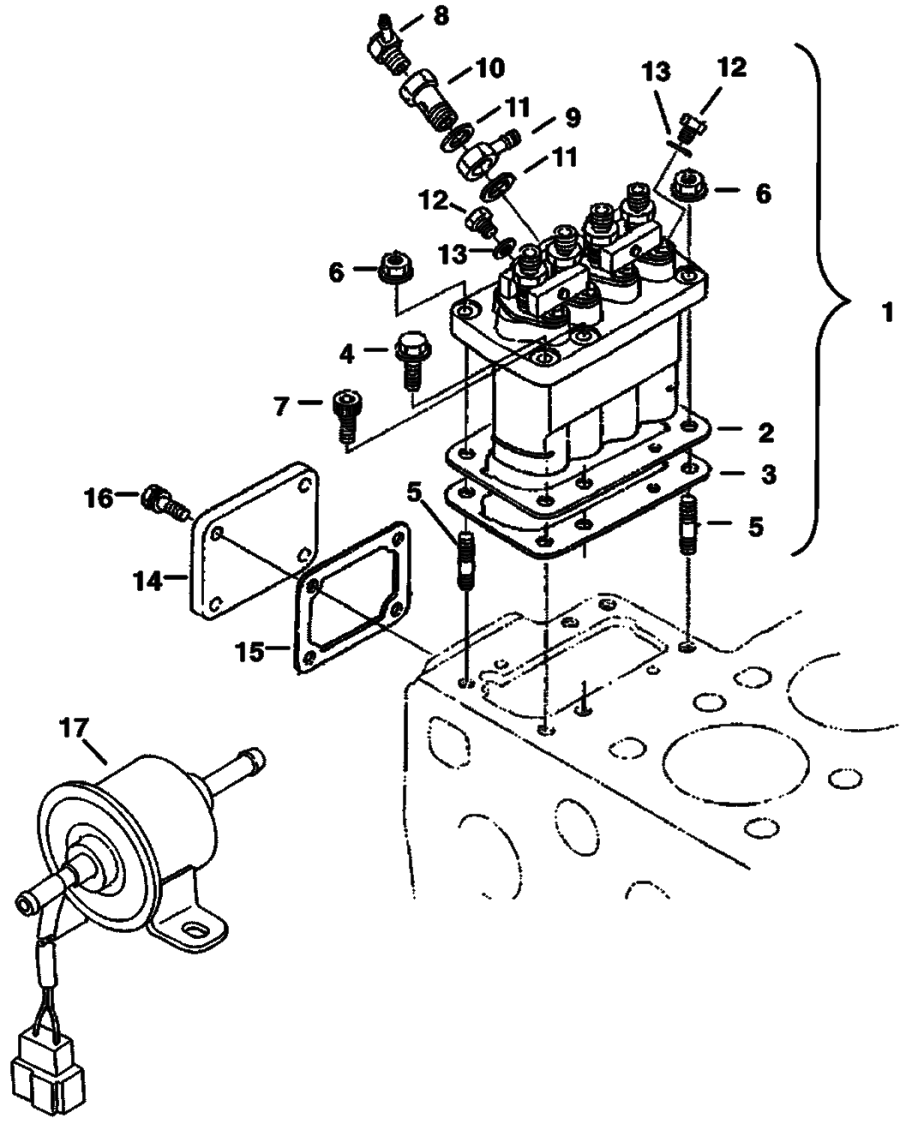

https://www.pdfmanual4trucks.com/

Ref. No.	Part Number	Description	Remarks	Serial Number	Qty.
1	6684828	PUMP	injection		1
2	6682514	SHIM	0.20mm		1
2	6682515	SHIM	0.25mm		1
3	6655210	SHIM	0.30mm		1
3	6684829	SHIM	0.35mm		1
4	6680810	CAMSHAFT	flange		3
5	3974916B	STUD			2
6	6680663	NUT	flange		2
7	6684830	BOLT	hex		1
8	6598102	BOLT			1
9	6513707	JOINT			1
10	6685473	BOLT			1
11	6599118	GASKET			2
12	6599084	SCREW	air		2
13	6599119	GASKET			2
14	6684571	COVER			1
15	6684572	GASKET			1
16	4CM00616B	BOLT			4
17	6684852	PUMP			1

https://www.pdfmanual4trucks.com/

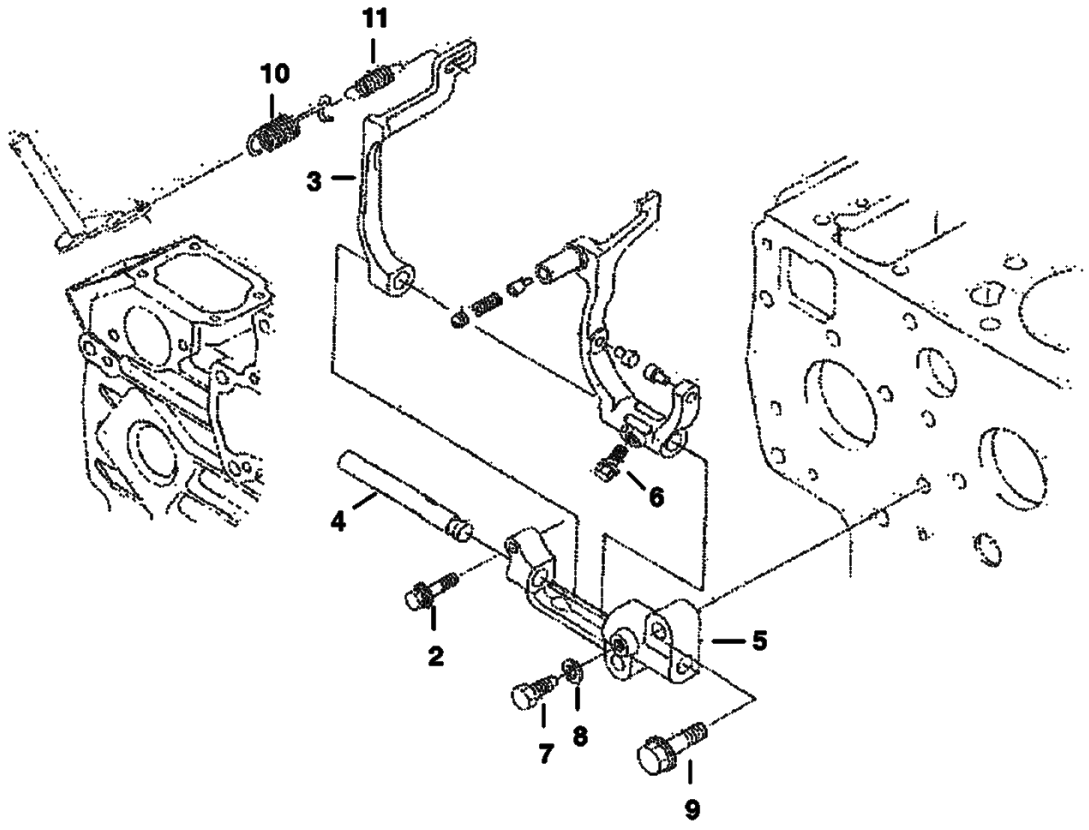

B–22718

https://www.pdfmanual4trucks.com/

Ref. No.	Part Number	Description	Remarks	Serial Number	Qty.
1	6685588	LEVER	assy		1
2	6685464	BOLT			1
3	6684832	LEVER			1
4	6684833	SHAFT	fork lever		1
5	6684834	HOLDER			1
6	6680830	BOLT			1
7	3974662B	BOLT			1
8	6667419	WASHER	spring		1
9	6680706	BOLT			2
10	6684835	SPRING	governor		1
11	6685514	SPRING	governor		1

SPEED CONTROL PLATE

https://www.pdfmanual4trucks.com/

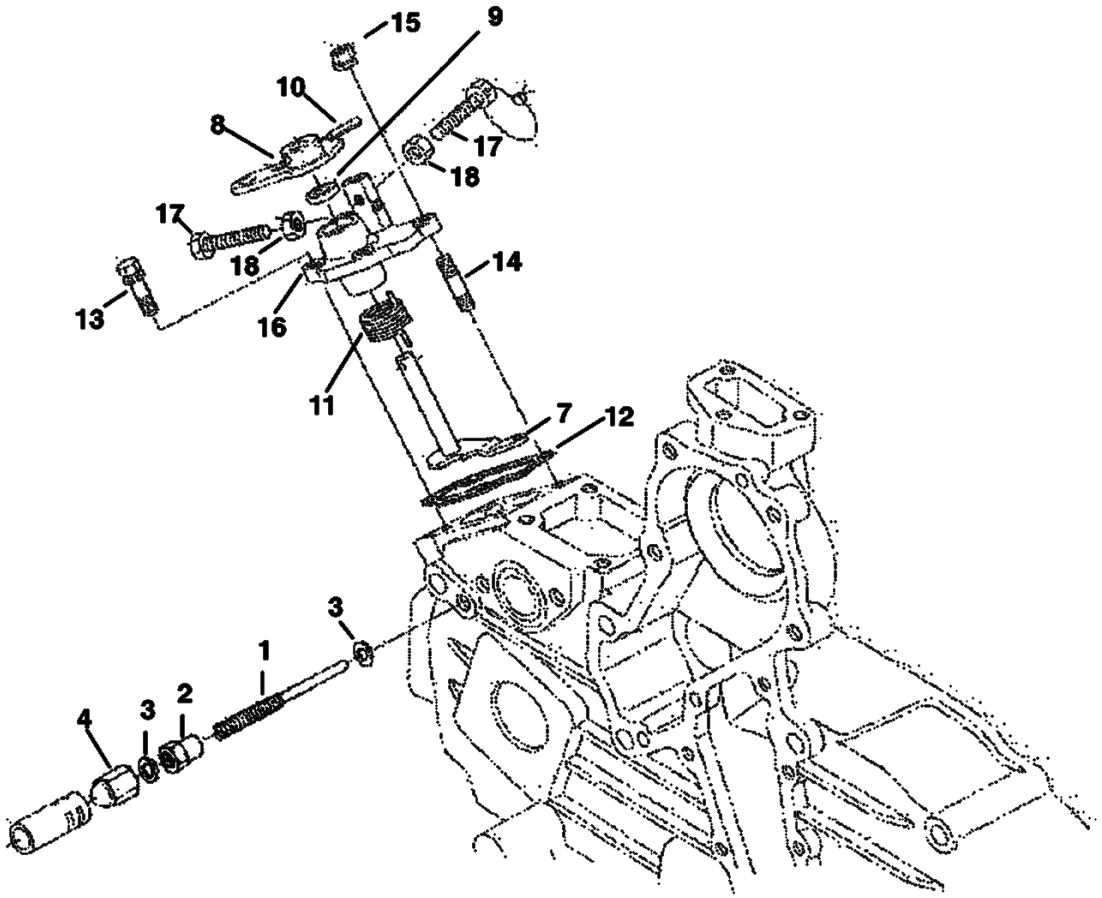

B–22711

SPEED CONTROL PLATE (Cont'd)

https://www.pdfmanual4trucks.com/

Ref. No.	Part Number	Description	Remarks	Serial Number	Qty.
1	6684836	BOLT	adjusting - W/Ref. 2		1
2	3974971B	NUT			1
3	3974972B	GASKET			2
4	6655223	NUT			2
5		PLATE	NSS		1
6	6685526	PLATE	control assy. - Ref. 7-11, 17 & 18		1
7	6684838	LEVER			1
8	6684839	LEVER			1
9	6685476	SEAL	oil		1
10	6598098	PIN	spring		1
11	6684823	SPRING			1
12	6684824	GASKET			1
13	4CM00620B	BOLT			1
14	3974462B	STUD			2
15	6670533	NUT			2
16		PLATE	NSS		1
17		SCREW	NSS		2
18		WIRE	NSS		1
19		LEAD	NSS - sealing		1

https://www.pdfmanual4trucks.com/

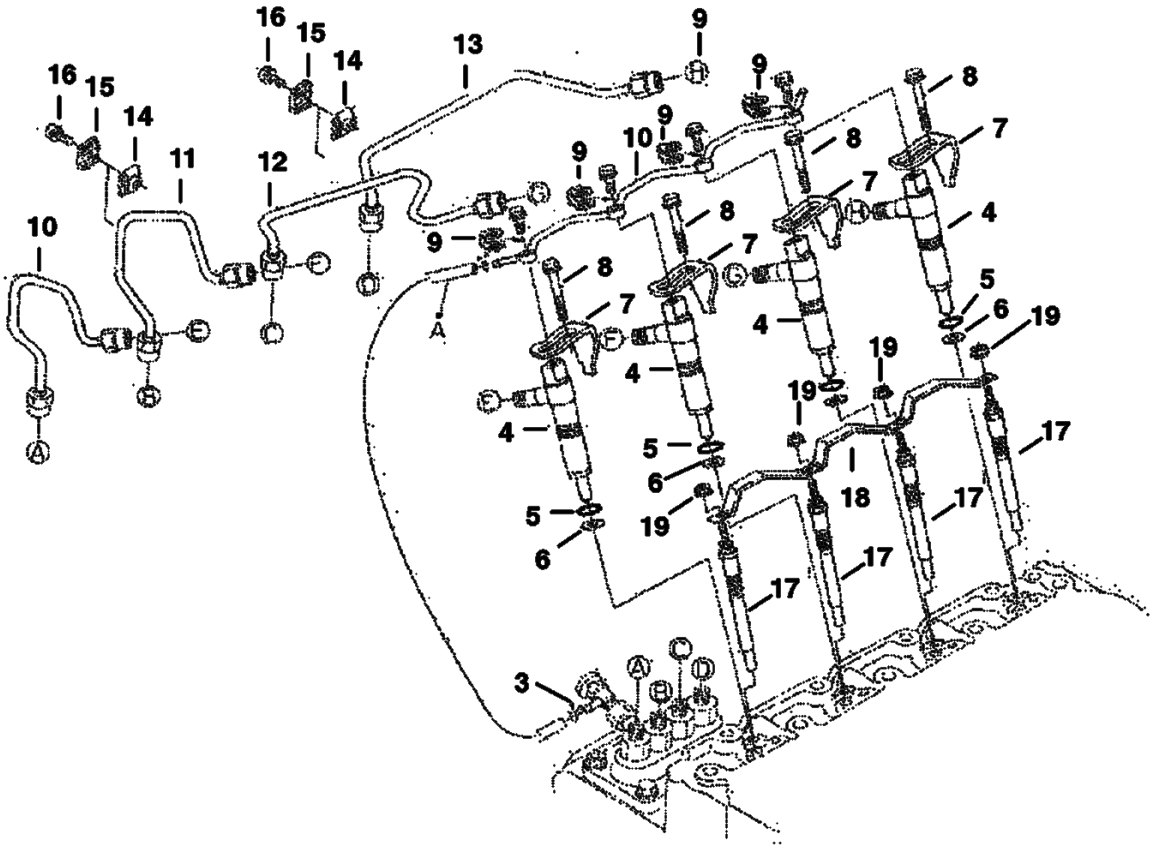

https://www.pdfmanual4trucks.com/

Ref. No.	Part Number	Description	Remarks	Serial Number	Qty.
1	6684842	PIPE			1
2	6598146	PIPE	assy - W/Ref. 3, 20		1
3	6680795	CLAMP	pipe		1
4	6684843	INJECTOR			1
5	6670769	O-RING			4
6	6680779	GASKET			4
7	6684845	CLAMP	nozzle		4
8	6684844	BOLT	clamp		4
9	6685498	GASKET			4
10	6684846	PIPE			1
11	6684847	PIPE			1
12	6684848	PIPE			1
13	6684849	PIPE			1
14	6680785	CLAMP			2
15	6680786	CLAMP			2
16	3974260B	BOLT	w/washer		2
17	6684850	GLOW PLUG			4
18	6684851	CORD			1
19	6670472	NUT	flange		4
20	6654718	CLAMP	pipe		1

https://www.pdfmanual4trucks.com/

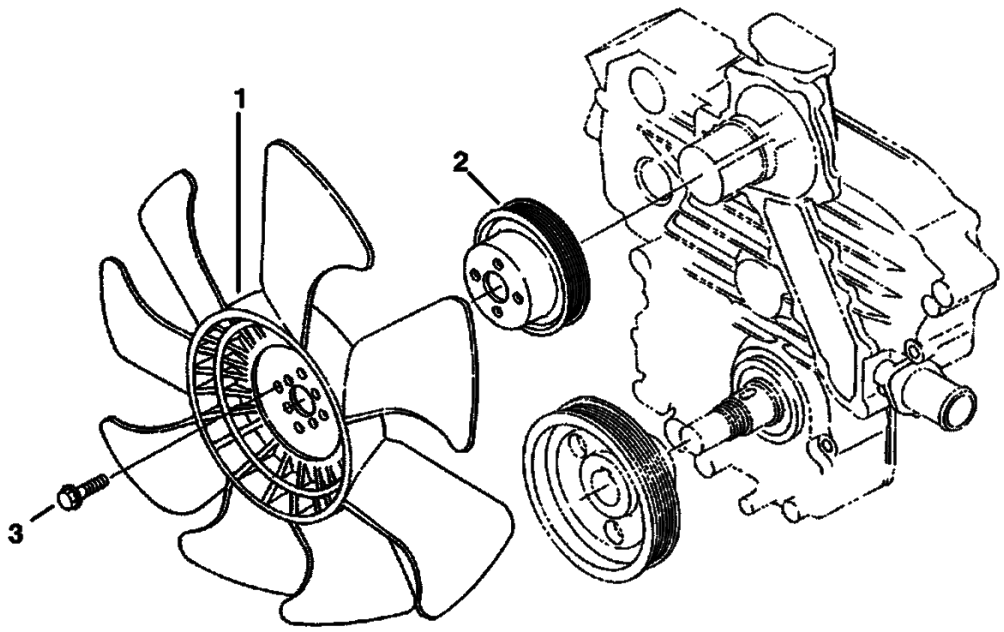

B–24356

https://www.pdfmanual4trucks.com/

Ref. No.	Part Number	Description	Remarks	Serial Number	Qty.
1	6683810	FAN			1
2	6684871	PULLEY			1
3	6652762	BOLT	flange		4

OIL SWITCH/THERMOMETER & PLUG

https://www.pdfmanual4trucks.com/

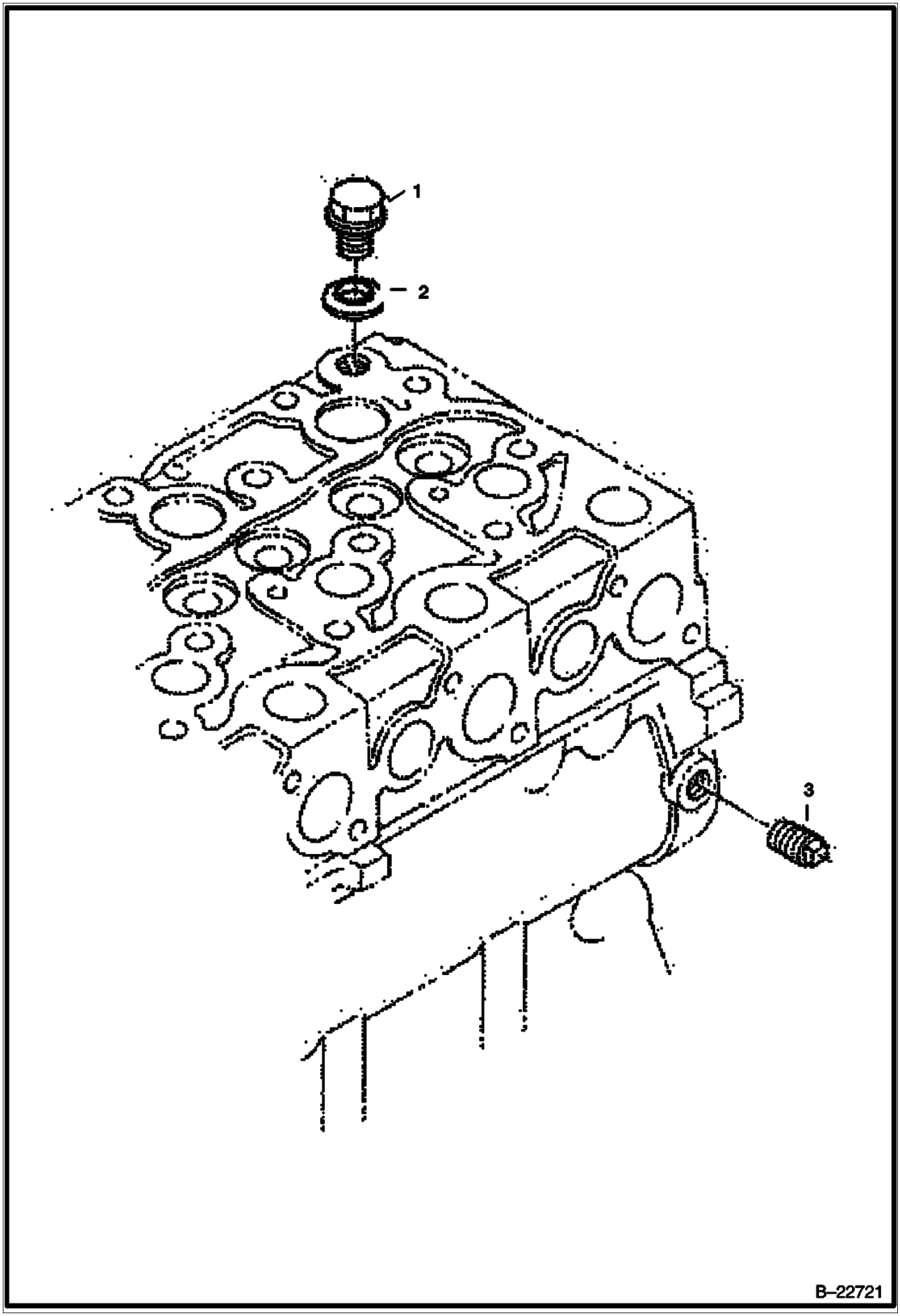

OIL SWITCH/THERMOMETER & PLUG (Cont'd)

https://www.pdfmanual4trucks.com/

Ref. No.	Part Number	Description	Remarks	Serial Number	Qty.
1	6655160	PLUG			1
2	6655161	WASHER	w/rubber		1
3	16F000002B	PLUG			1

https://www.pdfmanual4trucks.com/

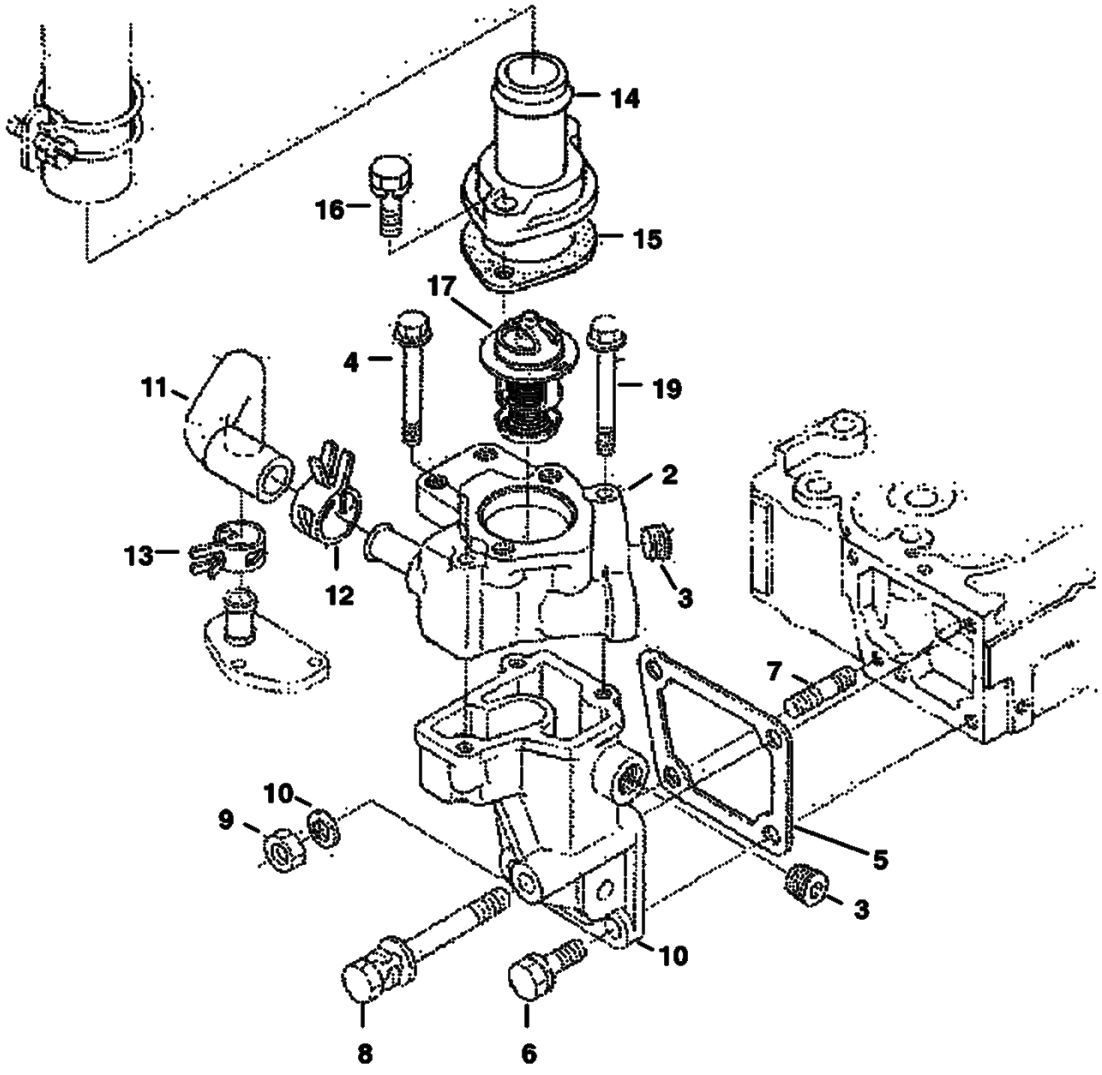

WATER FLANGE & THERMOSTAT (Cont'd)

https://www.pdfmanual4trucks.com/

Ref. No.	Part Number	Description	Remarks	Serial Number	Qty.
1	6684855	FLANGE	water		1
2	6684856	FLANGE			1
2	6684854	FLANGE			1
3	6684857	PLUG			2
4	6684858	BOLT			2
4	6685104	BOLT			1
5	6684860	GASKET			1
6	4CM00822B	BOLT	flange		2
7	3974347	STUD			1
8	6684861	BOLT			1
9	6652792	NUT			1
10	6667422	WASHER	spring		1
11	6684862	PIPE			1
12	6675618	CLAMP			1
13	6684889	CLAMP			1
14	6685591	COVER			1
15	6684863	GASKET	thermostat		1
16	1CM00835B	BOLT			2
17	6685520	THERMOSTAT			1

https://www.pdfmanual4trucks.com/

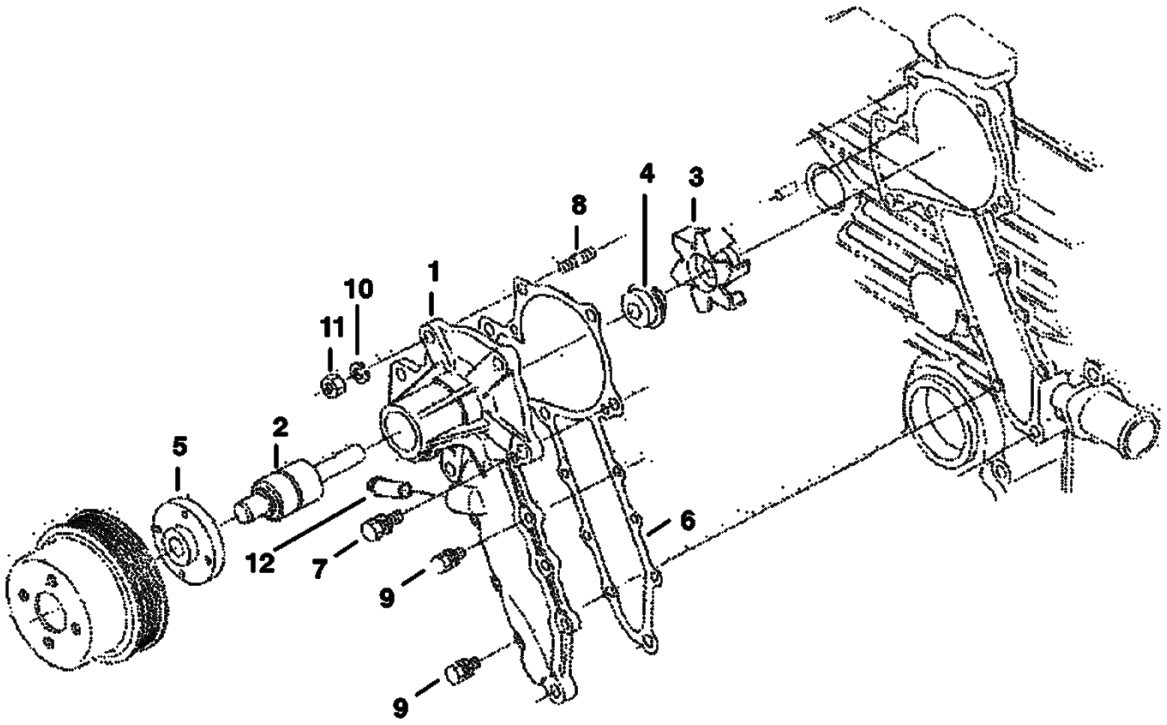

https://www.pdfmanual4trucks.com/

Ref. No.	Part Number	Description	Remarks	Serial Number	Qty.
1	6684865	PUMP	assy - W/Ref. 2-5 & 12		1
1	6684866	PUMP	assy		1
2	3974991B	BEARING			1
3	6684867	SEAL	fan		1
4	6684868	SEAL	fan		1
5	6684869	FLANGE			1
6	6684870	GASKET			1
7	4CM00828B	BOLT			2
8	6653946	STUD			1
9	1CM00616B	BOLT			6
10	6667422	WASHER	spring		1
11	6652792	NUT			1
12	6670785	PIPE			1

https://www.pdfmanual4trucks.com/

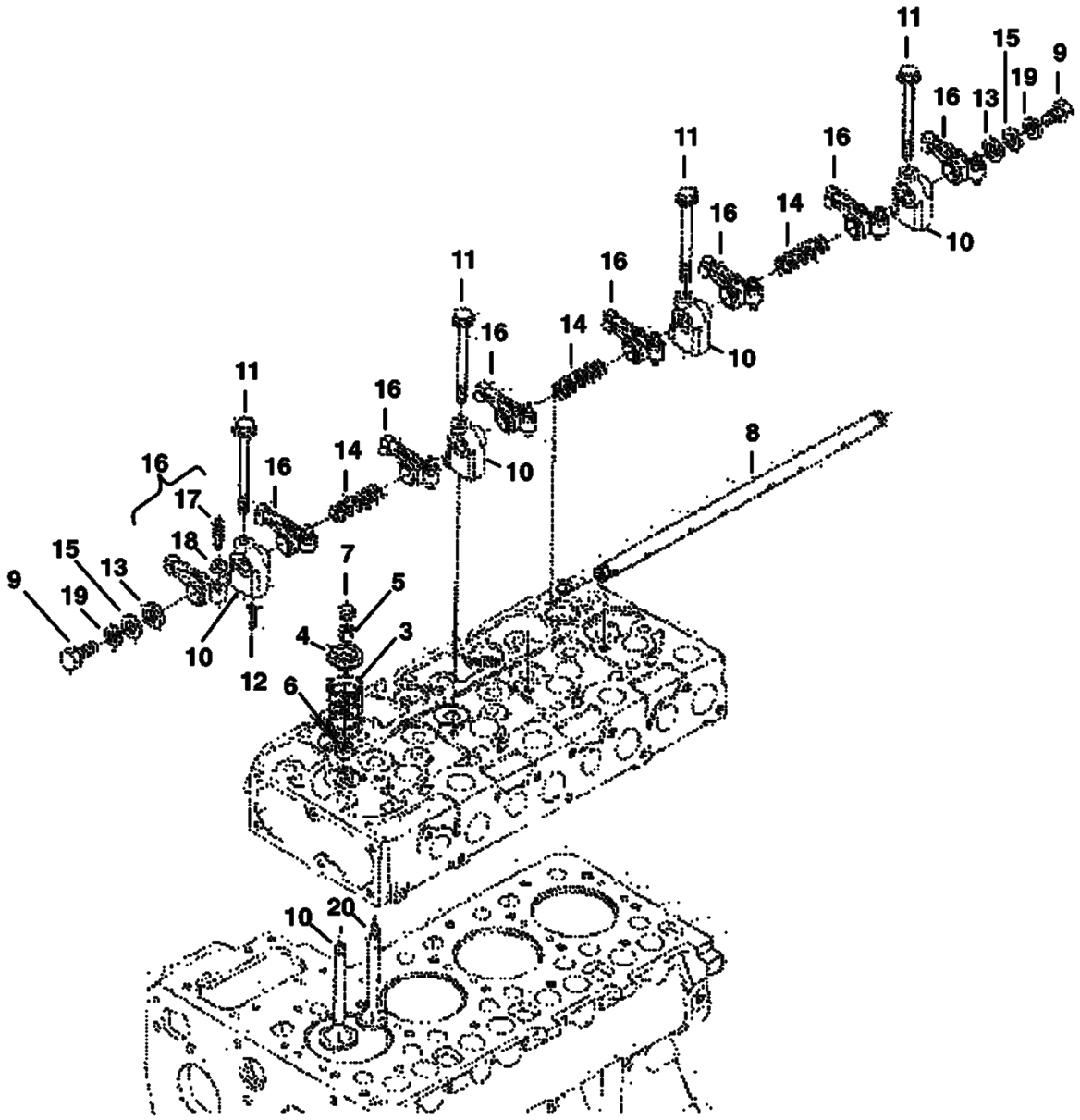

VALVE & ROCKER ARM (Cont'd)

https://www.pdfmanual4trucks.com/

Ref. No.	Part Number	Description	Remarks	Serial Number	Qty.
1	6684872	VALVE	inlet		4
2	6684873	VALVE	exhaust		4
3	3974514B	SPRING	valve		8
4	3974515B	RETAINER	valve		8
5	6684874	COLLAR			8
6	3974517B	SEAL			8
7	3974518B	CAP			8
8	6684875	SHAFT	rocker arm		1
9	5CM00812B	BOLT			2
10	3974521B	BRACKET			4
11	6680655	PIN	flange		4
12	6667461	PIN	spring		1
13	6680766	WASHER			2
14	3974525B	SPRING			3
15	6667451	WASHER			2
16	6655870	ROCKER ARM	assy - W/Ref. 17 & 18		8
17	3974920B	SCREW	adjusting		8
18	6680874	NUT			8
19	6667422	WASHER			2

https://www.pdfmanual4trucks.com/

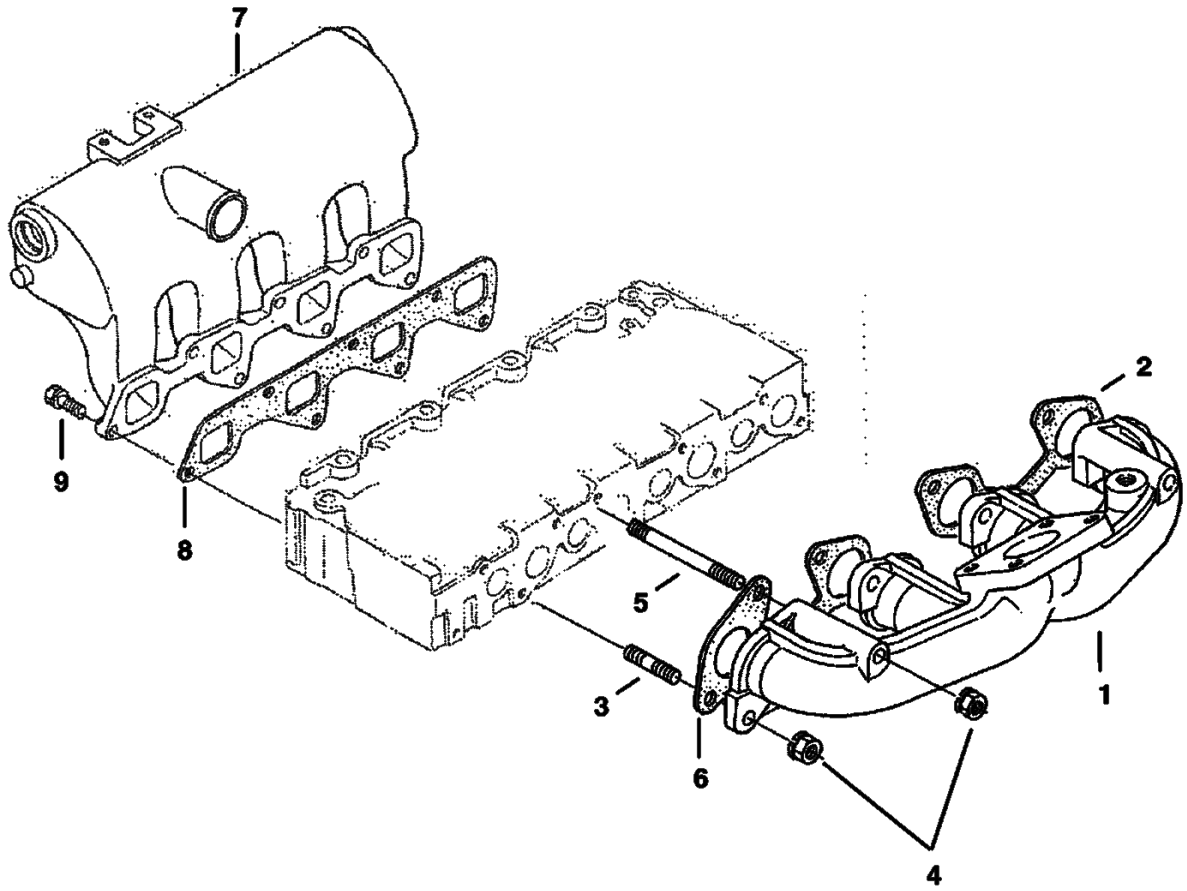

https://www.pdfmanual4trucks.com/

Ref. No.	Part Number	Description	Remarks	Serial Number	Qty.
1	6684878	MANIFOLD	exhaust		1
2	6684879	GASKET			1
3	3974916B	STUD			6
4	6682532	NUT			8
5	6682533	STUD			2
6	6684880	GASKET			1
7	6684876	MANIFOLD	inlet		1
8	6684877	GASKET			1
9	4CM00822B	BOLT			6

https://www.pdfmanual4trucks.com/

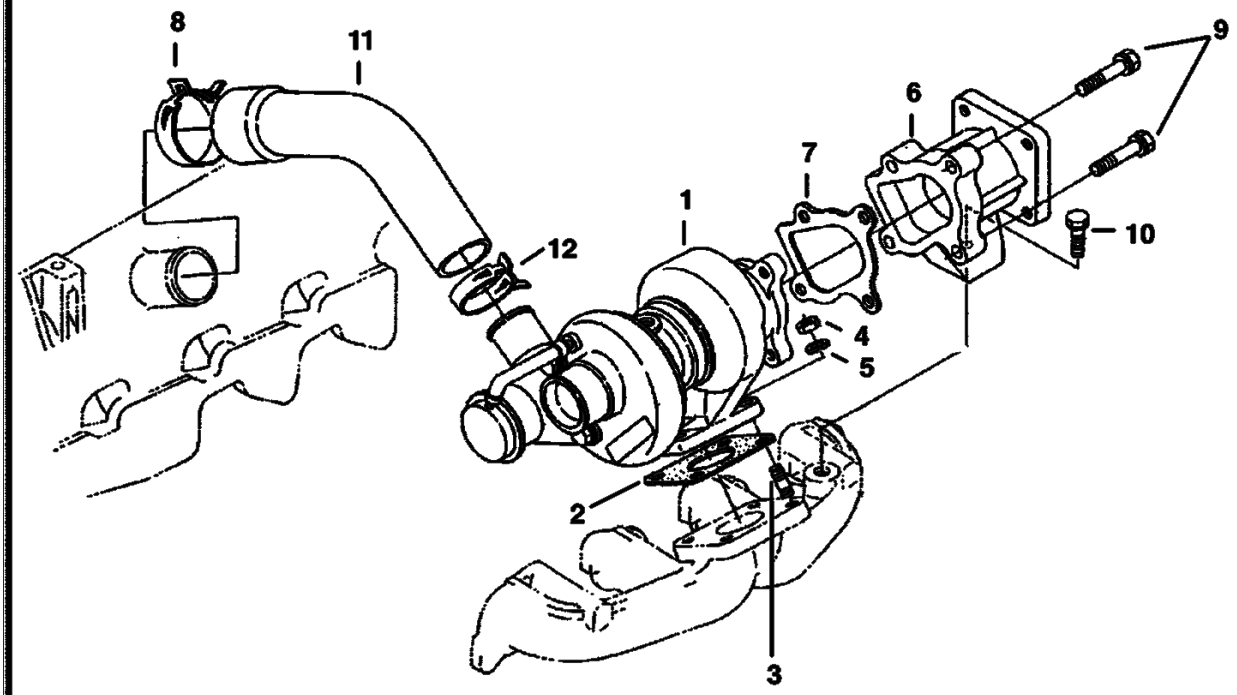

https://www.pdfmanual4trucks.com/

Ref. No.	Part Number	Description	Remarks	Serial Number	Qty.
1	6684881	TURBO CHARGER			1
2	6675636	GASKET			1
3	6680564	STUD			4
4	6652792	NUT			4
5	6667422	WASHER			4
6	6684883	FLANGE			1
7	6675637	GASKET			1
8	6680550	BAND	pipe		1
9	6657416	BOLT			4
10	6640728	BOLT			1
11	6684882	HOSE	inlet		1
12	6675635	BAND	pipe		1

https://www.pdfmanual4trucks.com/

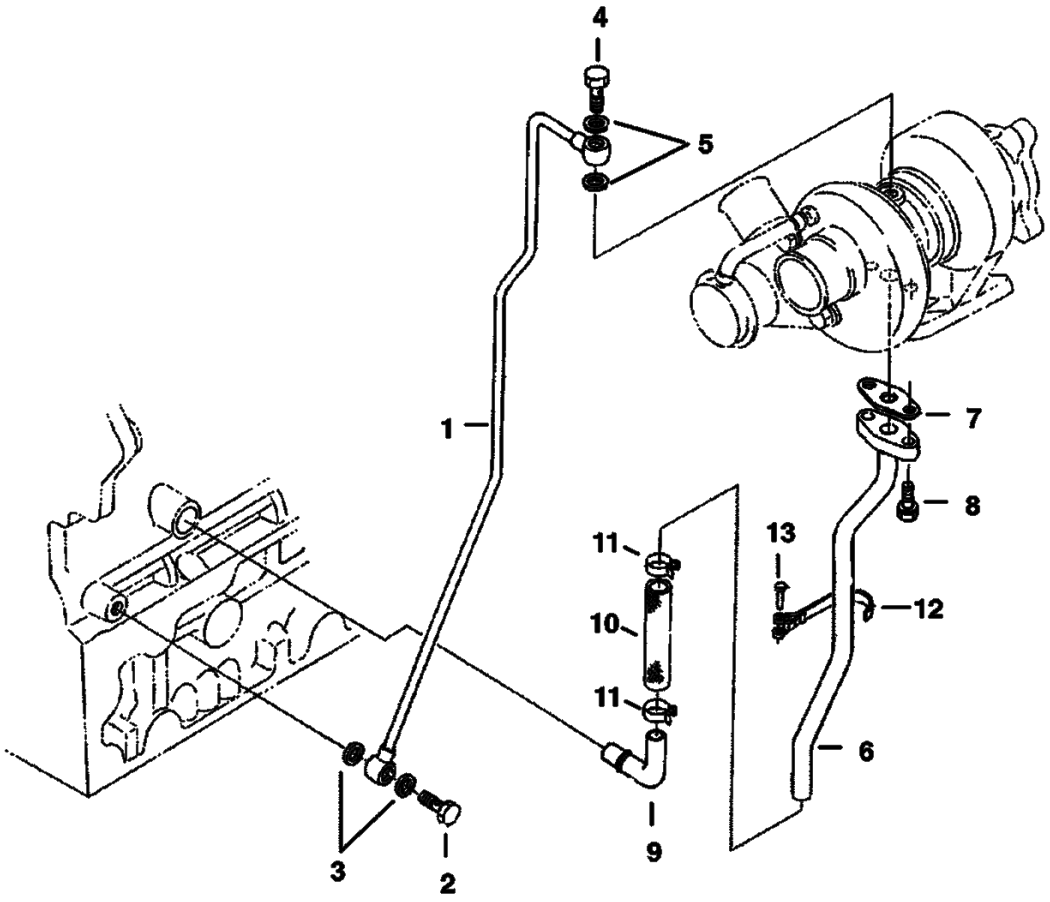

https://www.pdfmanual4trucks.com/

Ref. No.	Part Number	Description	Remarks	Serial Number	Qty.
1	6682538	PIPE			1
2	6680791	BOLT	eye joint		1
3	6680792	GASKET			2
4	6680566	BOLT	eye joint		1
5	6680567	GASKET			2
6	6682539	PIPE	oil		1
7	6680570	GASKET			1
8	6652580	BOLT			2
9	6684884	PIPE			1
10	6685600	TUBE			1
11	6675618	CLAMP	hose		2
12	6685601	CLAMP	pipe		1
13	6680576	PIN	band		1

https://www.pdfmanual4trucks.com/

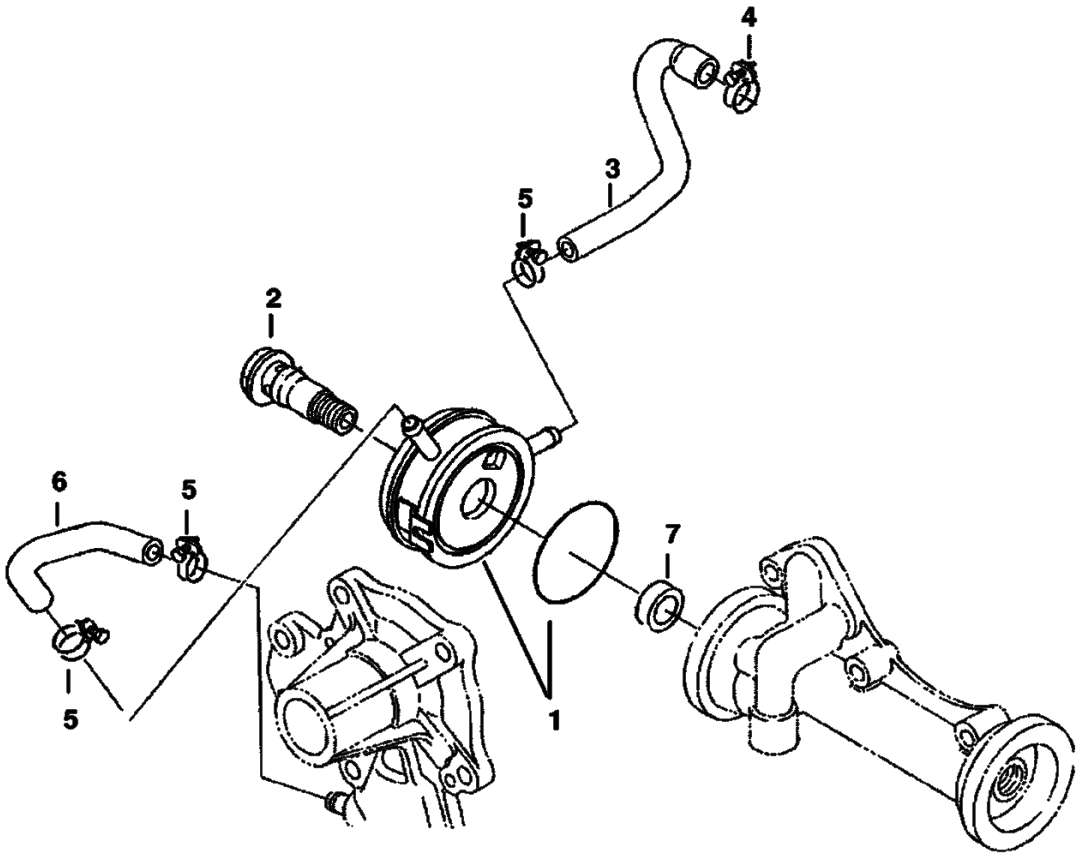

https://www.pdfmanual4trucks.com/

Ref. No.	Part Number	Description	Remarks	Serial Number	Qty.
1	6684885	OIL COOLER			1
2	6684886	CONNECTOR			1
3	6684888	HOSE			1
4	6684889	CLAMP	hose		1
5	6680580	BAND	pipe		4
6	6684890	HOSE			1
7	6685637	COLLAR			1

https://www.pdfmanual4trucks.com/

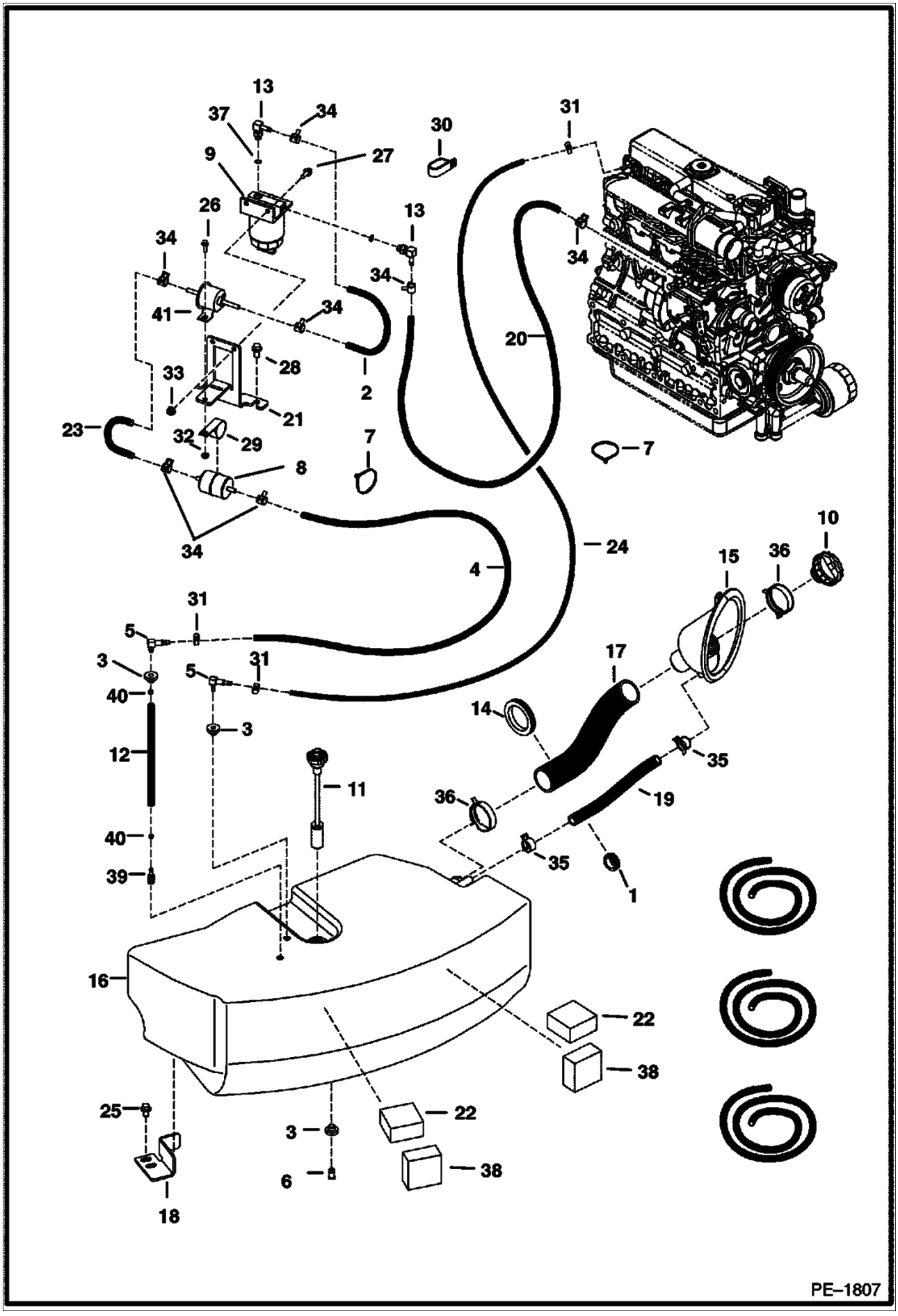

https://www.pdfmanual4trucks.com/

Ref. No.	Part Number	Description	Remarks	Serial Number	Qty.
1	6515603	GROMMET			1
2	6548761	HOSE			1
3	6553411	BUSHING			3
4	6562927	HOSE			1
5	6598908	ELBOW			1
6	6599645	PLUG			1
7	6610510	TIE	nylon		8
8	6633977	FILTER	fuel		1
9	6667353	FILTER ASSY	assy		1
9	6667352	FILTER FUEL			1
10	6680151	CAP	fuel		1
10	6709527	KEY	ignition		x
11	6680437	SENSOR	fuel		1
12	6683892	FUEL	tube		1
13	6715183	ELBOW			1
14	6807283	GROMMET			1
15	6811629	FUEL	fill		1
16	6811668	TANK	fuel		1
17	6811726	HOSE			1
18	6812104	BRACKET			1
19	6814501	HOSE	fuel		1
20	6814608	HOSE			1
21	6814817	BRACKET			1
22	6814957	BLOCK	foam		4
23	6815048	HOSE			1
24	6815049	HOSE			1
25	26GM10020B	SCREW			3
26	29CM00620B	SCREW			1
27	29CM00820B	BOLT			1
28	29CM01020B	SCREW			1
29	30HJ00624B	CLIP			1
30	31H000031B	CLAMP			2
31	42HS00004B	CLAMP			1
32	51DM00006B	NUT			1
33	51DM00008B	NUT			2
34	5HM00014B	CLAMP			7
35	5HM00023B	CLAMP			2
36	5HM00058B	CLAMP			2
37	79K000005B	O-RING			1
38	7101352	BLOCK	foam		2
39	6650239	SCREEN			1
40	6661213	RING			2
41	6684852	PUMP	fuel - electric		1

https://www.pdfmanual4trucks.com/

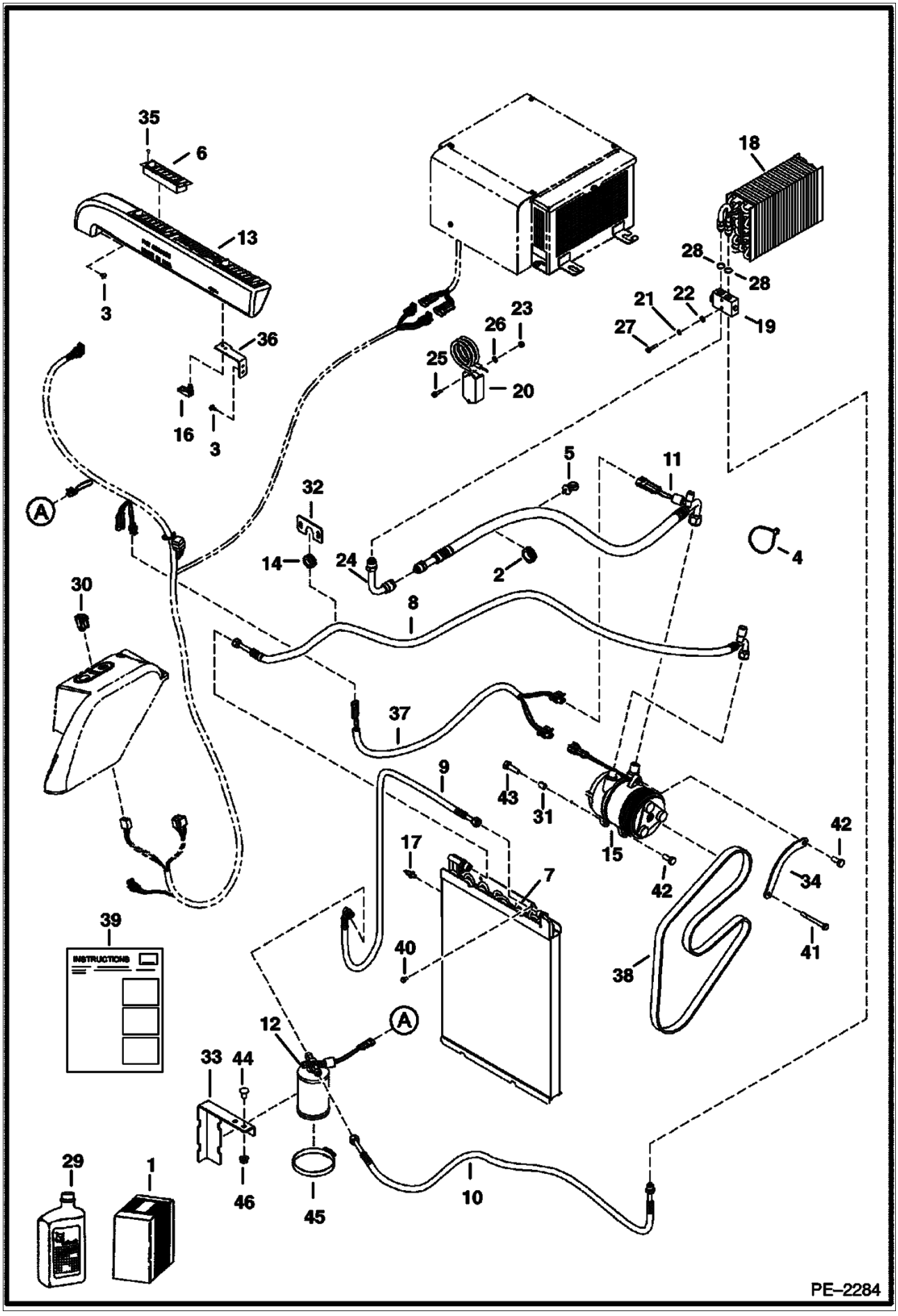

AIR CONDITIONER UPGRADE KIT (Cont'd)

https://www.pdfmanual4trucks.com/

Ref. No.	Part Number	Description	Remarks	Serial Number	Qty.
1	6817109	A/C UPGRADE KIT			1
2	6515603	GROMMET			1
3	6589675	SCREW			1
4	6624289	STA STRAP			4
5	6675734	STRAP			1
6	6676713	LOUVER			2
7	6678831	CONDENSER			1
8	6680306	HOSE			1
9	6680304	HOSE			1
10	6680305	HOSE			1
11	6680303	HOSE			1
12	6680311	RECEIVER			1
13	6680976	DUCT			1
14	6681567	GROMMET			1
15	6681716	COMPRESSOR			1
16	6681878	LATCH			1
17	6682990	CLIP			3
18	6683909	COIL			1
19	6683910	VALVE			1
20	6683911	SWITCH	thermostat		1
21	6684499	WASHER	lock		2
22	6684500	WASHER	flat		2
23	6684520	NUT			2
24	6684649	ADAPTER			1
25	6685114	SCREW			1
26	6685115	WASHER	flat		2
27	6685116	SCREW			2
28	6685117	O-RING			2
29	6685118	OIL			1
30	6719176	SWITCH			1
31	6732732	BUSHING			1
32	6813191	PLATE			1
33	6813715	BRACKET			1
34	6813975	PLATE			1
35	6814024	SCREW			4
36	6814194	BRACKET			1
37	6814228	HARNESS			1
38	6815018	BELT			1
39	6902640	INSTRUCTIONS			1
40	1CM00610B	SCREW			4
41	1CM00880B	SCREW			1
42	5CM01025B	SCREW			2
43	5CM01030B	SCREW			1
44	28CM01020B	BOLT			2
45	42H000056B	CLAMP			2
46	43DM00010B	NUT			2

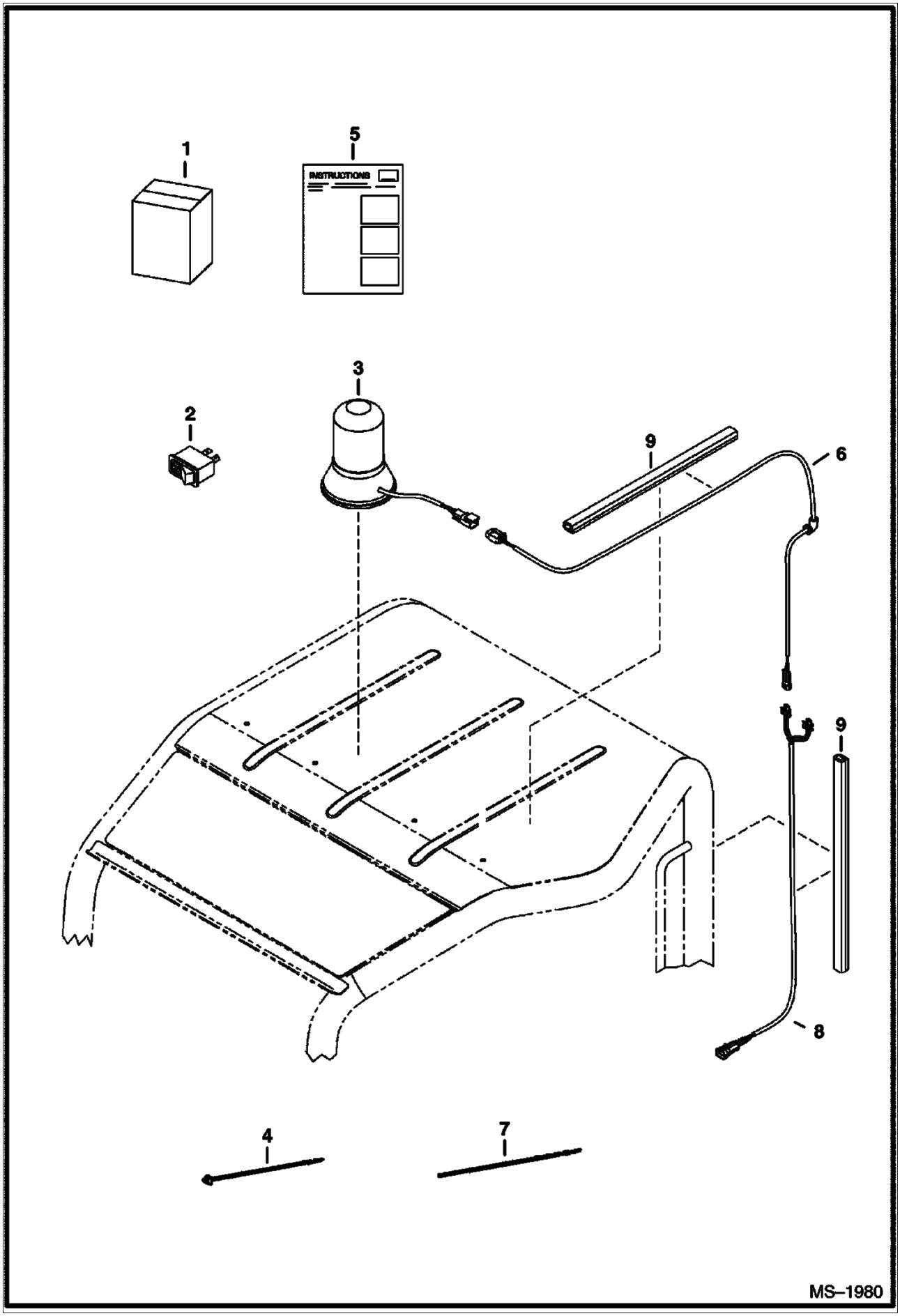
1
5
INSTRUCTIONS
3
2
9
6
9
8
4
7
MS–1980

https://www.pdfmanual4trucks.com/

Ref. No.	Part Number	Description	Remarks	Serial Number	Qty.
1	7105014	KIT	beacon - W/Ref. 2-9		1
2	6665317	SWITCH			1
3	6675523	BEACON			1
4	6624289	STA STRAP			2
5	6903147	INSTRUCTION			1
6	7104182	HARNESS			1
7	7104659	HARNESS			1
8	7104694	HARNESS			1
9	6682741	RETAINER			1

https://www.pdfmanual4trucks.com/

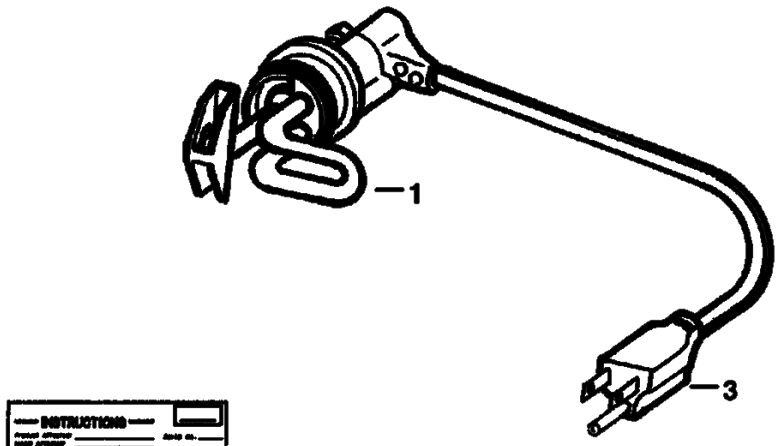

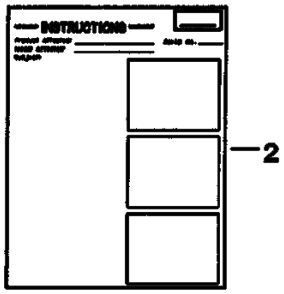

B–12299

https://www.pdfmanual4trucks.com/

Ref. No.	Part Number	Description	Remarks	Serial Number	Qty.
1	6810814	KIT			1
2	6668881	CORD			1
2	6720736	PLUG			1
3	6720038	INSTRUCTIONS			1

https://www.pdfmanual4trucks.com/

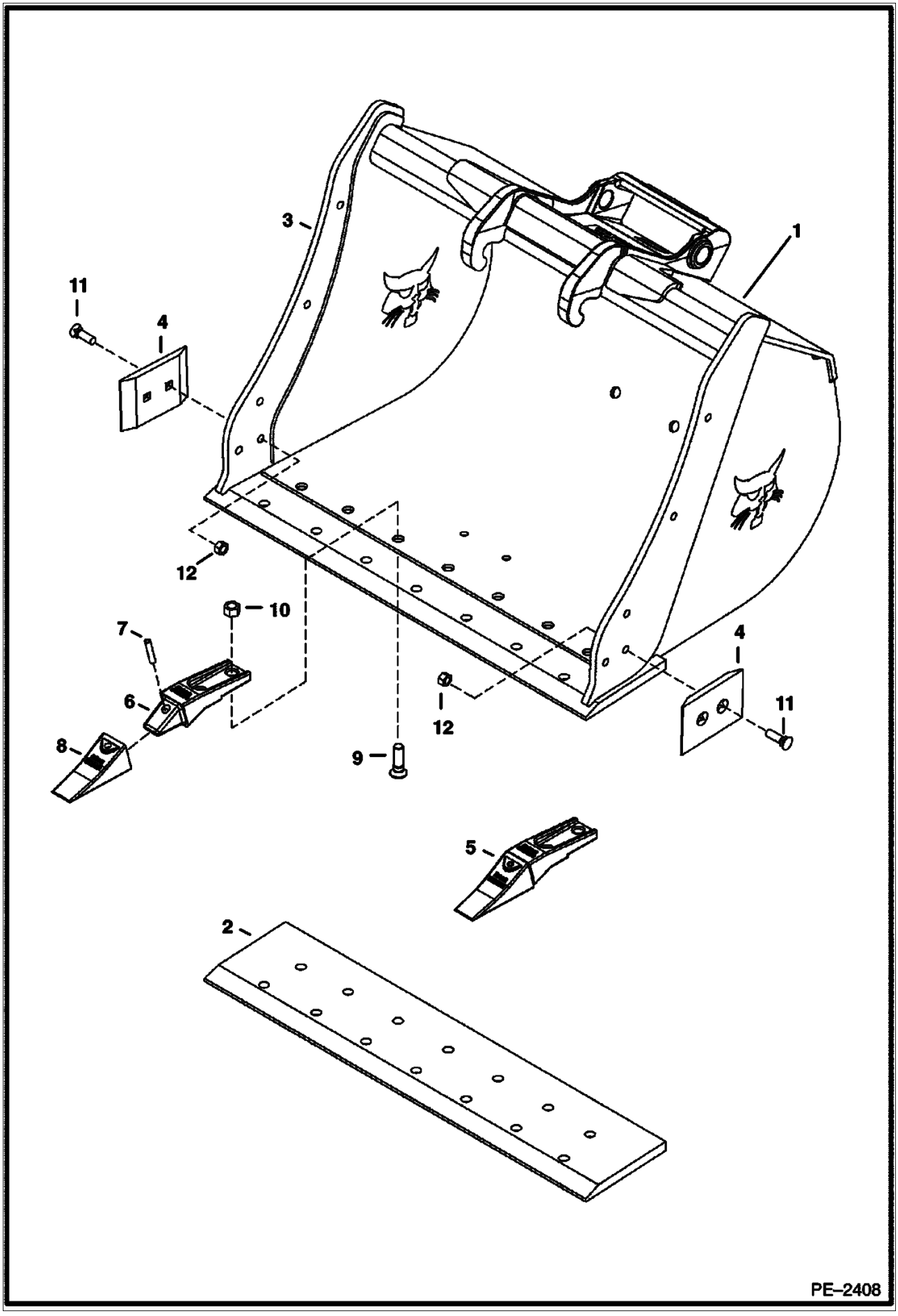

https://www.pdfmanual4trucks.com/

Ref. No.	Part Number	Description	Remarks	Serial Number	Qty.
1		BUCKET	SALES - 13" (330mm) uses 3 teeth - Sales #6735350		x
1		BUCKET	SALES - 18" (457mm) uses 4 teeth - Sales #6735354		x
1		BUCKET	SALES - 24" (609mm) uses 4 teeth - Sales #6735358		x
1		BUCKET	SALES - 30" (762mm) uses 6 teeth - Sales #6735362		x
1		BUCKET	SALES - 36" (914mm) uses 4 teeth - Sales #6735366		x
1		BUCKET	SALES - 52" (1320mm) does not use teeth - Sales #6735370		x
1		BUCKET	SALES - 39" (990mm) does not use teeth Sales #6735443		x
1		BUCKET	SALES - 24" (635mm) HD does not use teeth - Sales #6813606		x
2	6805937	CUTTING EDGE	13" (330mm)		1
2	6807357	CUTTING EDGE	18" (457mm)		1
2	6813941	CUTTING EDGE	24" (609mm) HD		1
2	6807389	CUTTING EDGE	30" (762mm)		1
2	6814676	CUTTING EDGE	36" (914mm)		1
2	6805816	CUTTING EDGE	52" (1320mm)		1
2	6805815	CUTTING EDGE	39" (990mm)		1
3	6805951	CUTTING EDGE	side - 13" (330mm), 18" (457mm), 24" (609mm), 30" (762mm), 36" (914mm)		1
3	6805771	CUTTING EDGE	39" (990mm), 52" (1320mm)		2
4	6805464	CUTTER			2
5	6731635	TOOTH ASSY	W/Ref. 6 - 8		x
6		SHANK	NAP - order Ref. 5		x
7	14J003732B	PIN			x
8	6728801	TOOTH			x
9	9G001036B	BOLT	(2) per tooth		x
10	95D000010B	NUT	(2) per tooth		x
11	39C000824B	BOLT			4
12	63D000008B	NUT			x

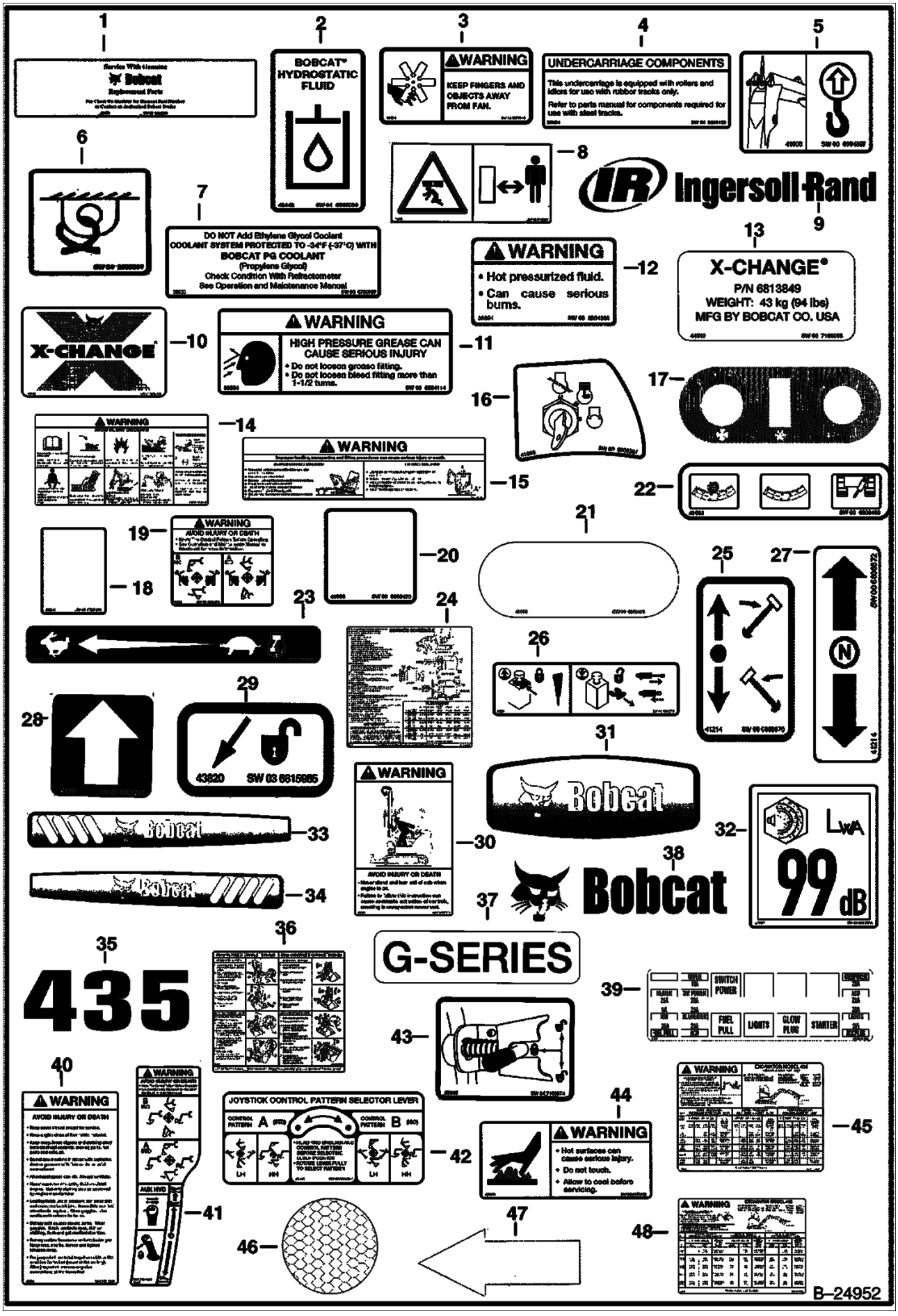
1
2
BOBCAT® HYDROSTATIC FLUID
3
WARNING
KEEP FINGERS AND OBJECTS AWAY FROM FAN.
4
UNDERCARRIAGE COMPONENTS
This undercarriage is equipped with rollers and idlers for use with rubber tracks only.
Refer to parts manual for components required for use with steel tracks.
5
6
7
DO NOT Add Ethylene Glycol Coolant
COOLANT SYSTEM PROTECTED TO -34°F (-37°C) WITH
BOBCAT PG COOLANT
(Propylene Glycol)
Check Condition With Refractometer
See Operation and Maintenance Manual
8
Ingersoll-Rand
9
WARNING
• Hot pressurized fluid.
• Can cause serious burns.
12
13
X-CHANGE®
P/N 6813849
WEIGHT: 43 kg (94 lbs)
MFG BY BOBCAT CO. USA
X-CHANGE
10
WARNING
HIGH PRESSURE GREASE CAN CAUSE SERIOUS INJURY
• Do not loosen grease fitting.
• Do not loosen bleed fitting more than 1-1/2 turns.
11
16
17
WARNING
14
WARNING
15
22
19
WARNING
AVOID INJURY OR DEATH
18
20
21
23
24
25
27
26
28
29
43820 SW 03 6815985
31
WARNING
AVOID INJURY OR DEATH
30
Bobcat
32
LWA
99 dB
33
Bobcat
34
Bobcat
37
38
Bobcat
35
435
36
G-SERIES
39
SWITCH POWER
FUEL PULL
LIGHTS
GLOW PLUG
STARTER
43
40
WARNING
AVOID INJURY OR DEATH
41
ASK HHD
JOYSTICK CONTROL PATTERN SELECTOR LEVER
CONTROL PATTERN A
CONTROL PATTERN B
LH
HH
42
44
WARNING
• Hot surfaces can cause serious injury.
• Do not touch.
• Allow to cool before servicing.
45
46
47
48
B–24952

https://www.pdfmanual4trucks.com/

Ref. No.	Part Number	Description	Remarks	Serial Number	Qty.
1	6565200	DECAL			1
2	6565990	DECAL			1
3	6576048	DECAL			1
4	6589129	DECAL			2
5	6594897	DECAL			1
6	6595014	DECAL	tie down		5
7	6708929	DECAL			1
8	6713507	DECAL			2
9	6735864	DECAL	IR logo		2
10	6803760	DECAL	x-change		1
11	6804114	DECAL			2
12	6804233	DECAL			1
13	7100058	DECAL	x-change		1
14	6807776	DECAL	warning		1
15	6808185	DECAL	warning		1
16	6808261	DECAL			1
17	6808433	DECAL			1
18	6808473	DECAL	R.H. cover		1
19	6808474	DECAL			1
20	6808475	DECAL			1
21	6808478	DECAL			1
22	6808480	DECAL			1
23	6808481	DECAL			1
24	6817082	DECAL	service schedule		1
25	6808870	DECAL			1
26	6808879	DECAL			1
27	6808872	DECAL			1
28	6809263	DECAL			2
29	6815985	DECAL			1
30	6809829	DECAL			1
31	6812258	DECAL	rear logo		1
32	6812568	DECAL			1
33	6813506	DECAL	R.H. logo		1
34	6813507	DECAL	L.H. logo		1
35	6815541	DECAL	model 435		1
36	7102651	DECAL			1
37	6817056	DECAL	G-Series		1
38	6815489	DECAL			2
39	6815625	DECAL			1
40	6815915	DECAL			1
41	6817815	DECAL			1
42	6815957	DECAL			1
43	7103874	DECAL	latch		2
44	6817225	DECAL	warning		1
45	7106219	DECAL	lift		1
46	7106627	DECAL	reflective		1
47	6533899	DECAL			1
48	7107501	DECAL	lift		2

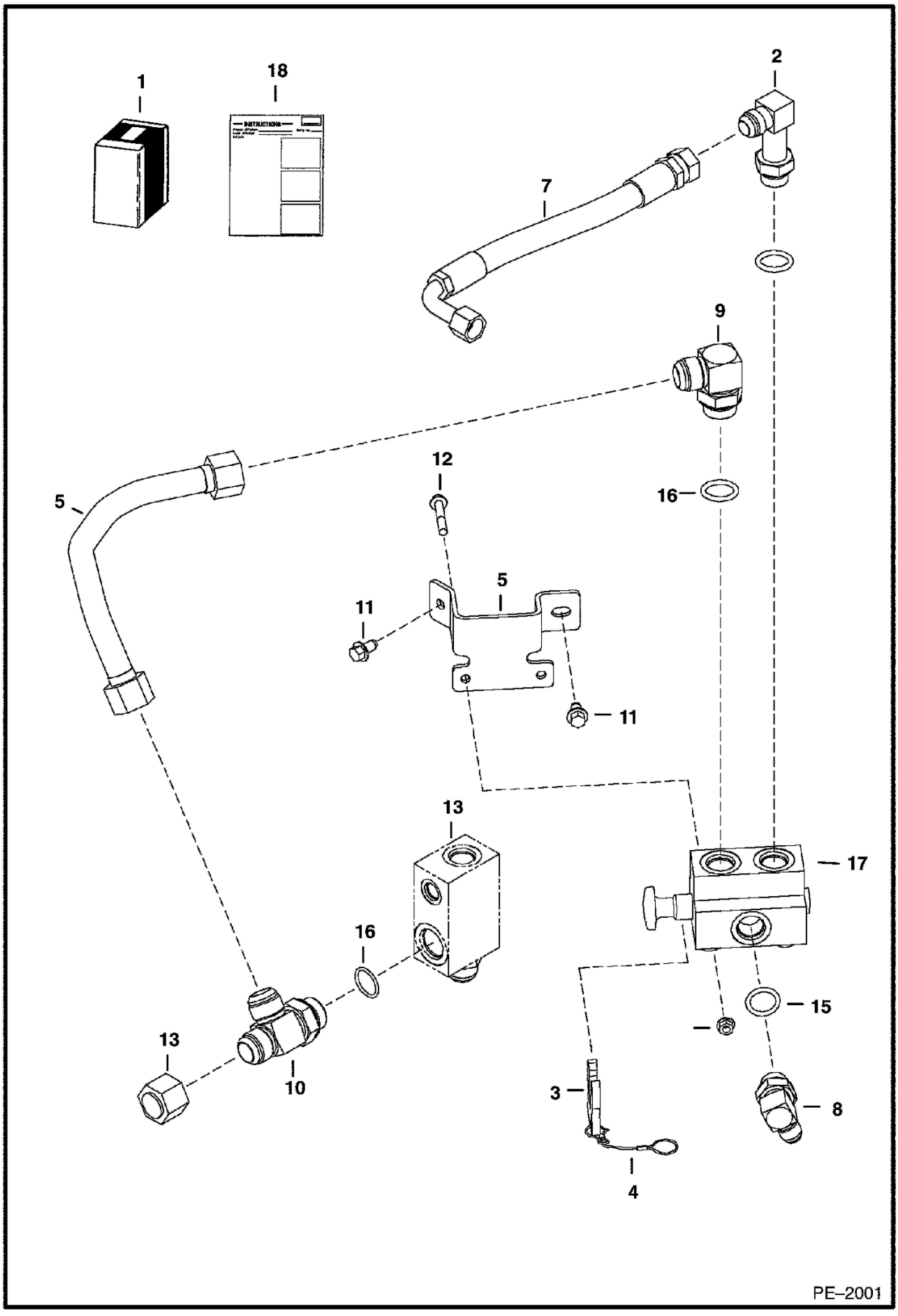
1
18
INSTRUCTIONS
2
7
9
16
12
5
11
5
11
13
17
16
15
13
10
3
8
4
PE–2001

DIRECT TO TANK (Cont'd)

https://www.pdfmanual4trucks.com/

Ref. No.	Part Number	Description	Remarks	Serial Number	Qty.
1	7102022	KIT			1
2	6716443	ELBOW	90 degree		1
3	6808717	CLIP	retaining		1
4	6808831	WIRE ROPE			1
5	6814176	TUBELINE			1
6	6814290	BRACKET			1
7	6815890	HOSE			1
8	17KB01012B	ELBOW	W/Ref. 15		1
9	17KB01616B	ELBOW	W/Ref. 16		1
10	21KB01616B	TEE	W/Ref. 16		1
11	26GM10020B	SCREW			2
12	29CM00850B	SCREW			2
13	36K000010B	CAP			1
14	43DM00008B	NUT			2
15	79K000012B	O-RING			1
16	79K000016B	O-RING			2
17	6660267	VALVE			1
18	6902810	INSTRUCTION			1

https://www.pdfmanual4trucks.com/

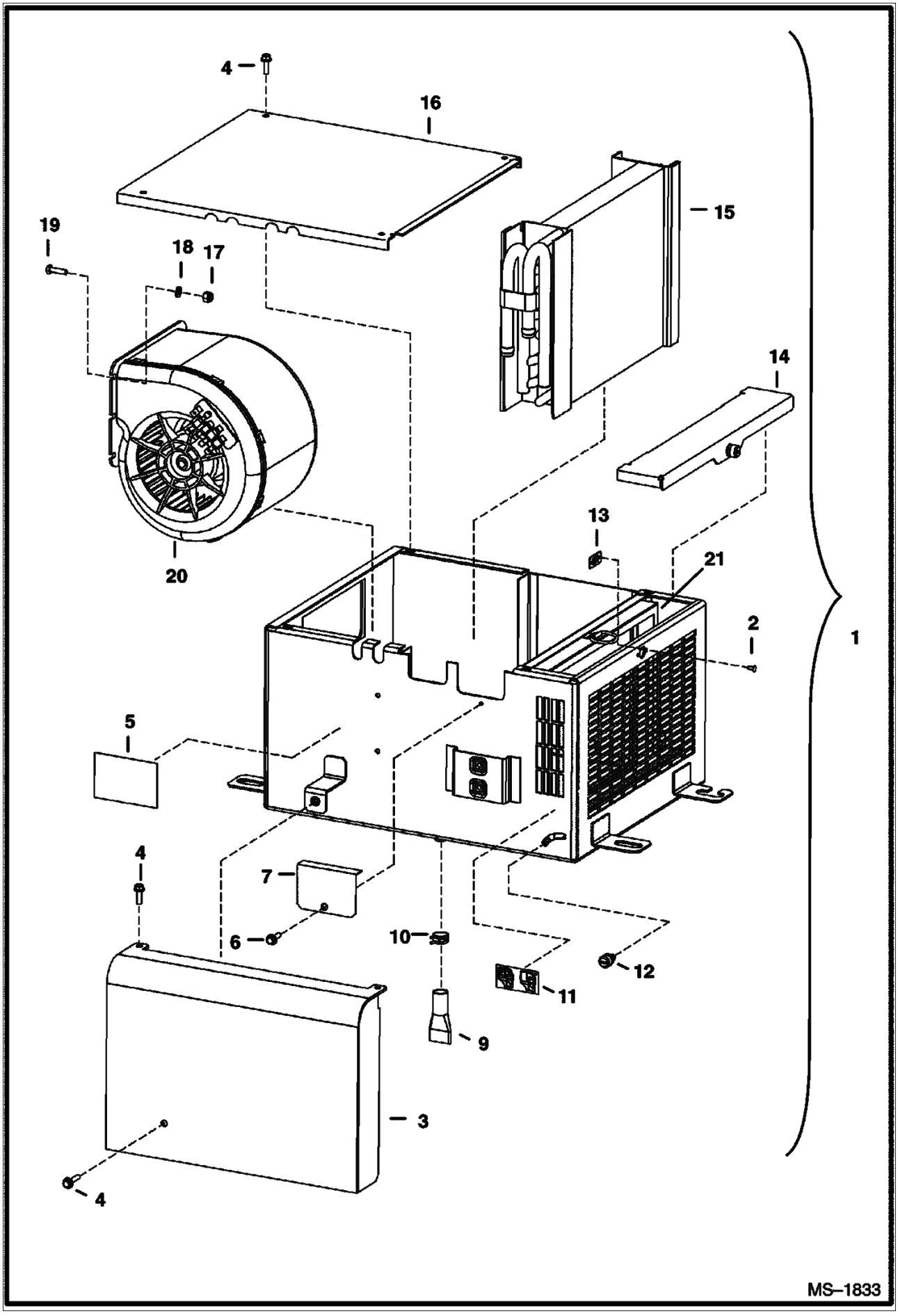

https://www.pdfmanual4trucks.com/

Ref. No.	Part Number	Description	Remarks	Serial Number	Qty.
1	6680975	BOX	heater		1
2		HOUSING	NSS - order Ref. 1		1
3	6685316	COVER			1
4	6685315	SCREW			5
5		PLATE	NAP		1
6	6684482	SCREW			7
7	6685318	COVER			1
8	6684503	NUT			7
9	6684507	TUBE			2
10	6684506	CLAMP			2
11	6685312	DECAL			1
12	6685321	SCREW			1
13	6685322	NUT			1
14	6685313	COVER			1
15	6685323	COIL	heater		1
16	6685317	COVER			1
17	6684521	NUT			4
18	6684500	WASHER			4
19	6685319	SCREW			4
20	6685320	BLOWER			1
21	6685314	FILTER			1

https://www.pdfmanual4trucks.com/

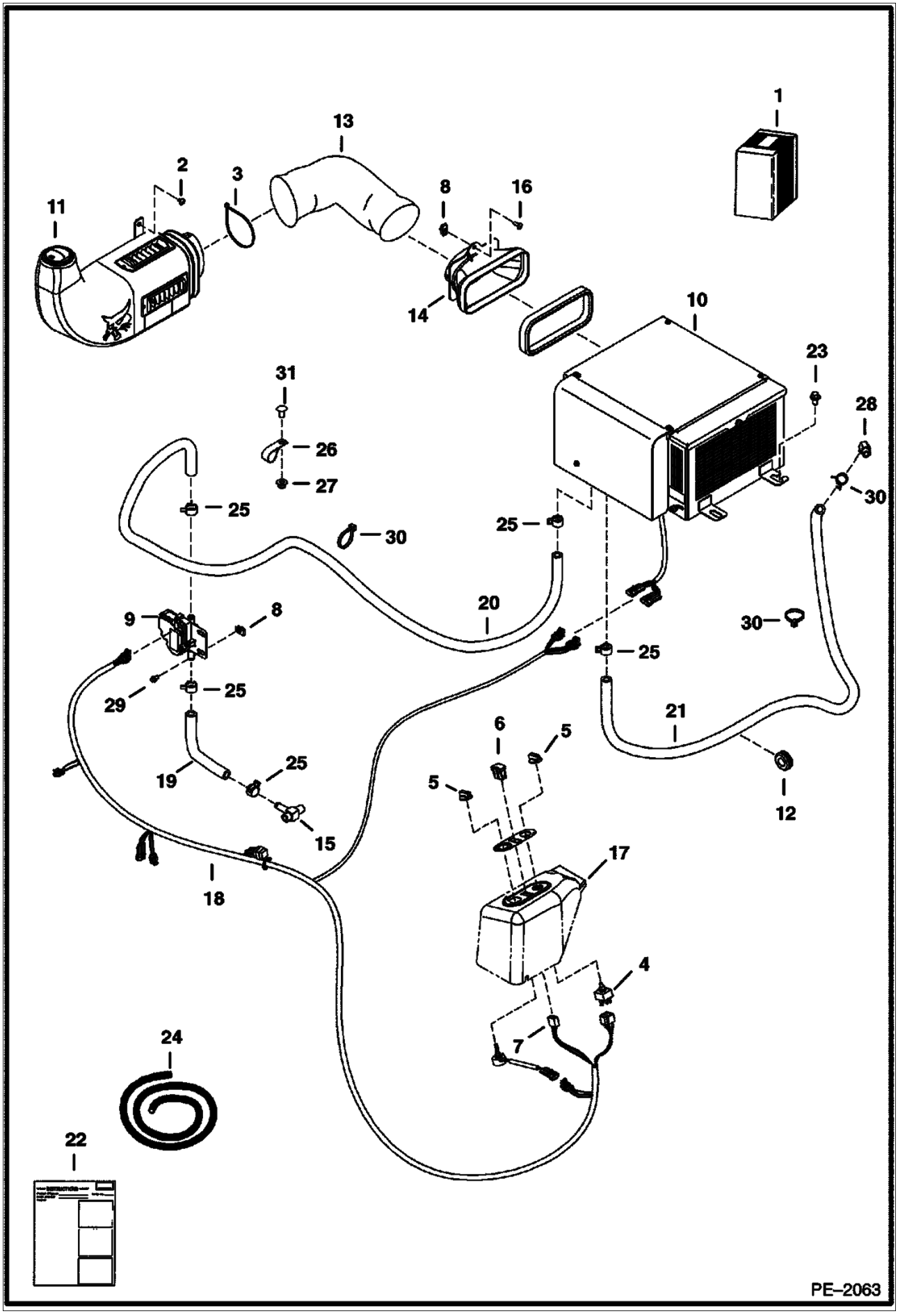

https://www.pdfmanual4trucks.com/

Ref. No.	Part Number	Description	Remarks	Serial Number	Qty.
1	6817111	KIT	W/Ref. 2-29		1
2	6589675	SCREW			3
3	6610510	TIE	nylon		4
4	6675176	SWITCH			1
5	6675177	KNOB			2
6	6675181	PLUG			1
7	6675846	POTENTIOMETER	assy		1
8	6676026	NUT	clip		4
9	6685459	VALVE	heater		1
10	6680975	BOX	heater - assy		1
11	6680977	DUCT			1
11	6676713	LOUVER			2
11	6680308	LOUVER	round		1
11	6680321	CAP			1
11	6681509	DUCT			1
11	6681576	BRACKET			1
11	6681577	BRACKET			1
11	6814024	SCREW			4
11	58G000808B	SCREW			4
12	6681528	GROMMET			1
13	6681653	HOSE			1
13	6681881	DUCT			1
13	6681884	SEAL	sold by the foot - use 21" (534mm) of Ref. 24		1
14		DUCT	NAP - assy		1
15	6682150	TEE			1
16	6803202	SCREW			4
17	6808433	DECAL	heater		1
18	6814229	HARNESS			1
19		HOSE	NAP - heater - use 9" (229mm) of Ref. 24		1
20		HOSE	NAP - heater - use 78" (1982mm)of Ref. 24		1
21		HOSE	NAP - heater - use 72" (1829mm) of Ref. 24		1
22	28CM01020B	BOLT			1
23	26GM10020B	SCREW			3
24	6565977	HOSE	bulk - sold per foot		x
25	5HM00020B	CLAMP			3
26	30GJ000616B	CLIP			2
27	43DM00010B	NUT			1
28	6731085	ELBOW			1
29	29CM00612B	SCREW			1
30	6624289	STA STRAP			4
31	6902520	INSTRUCTIONS			1

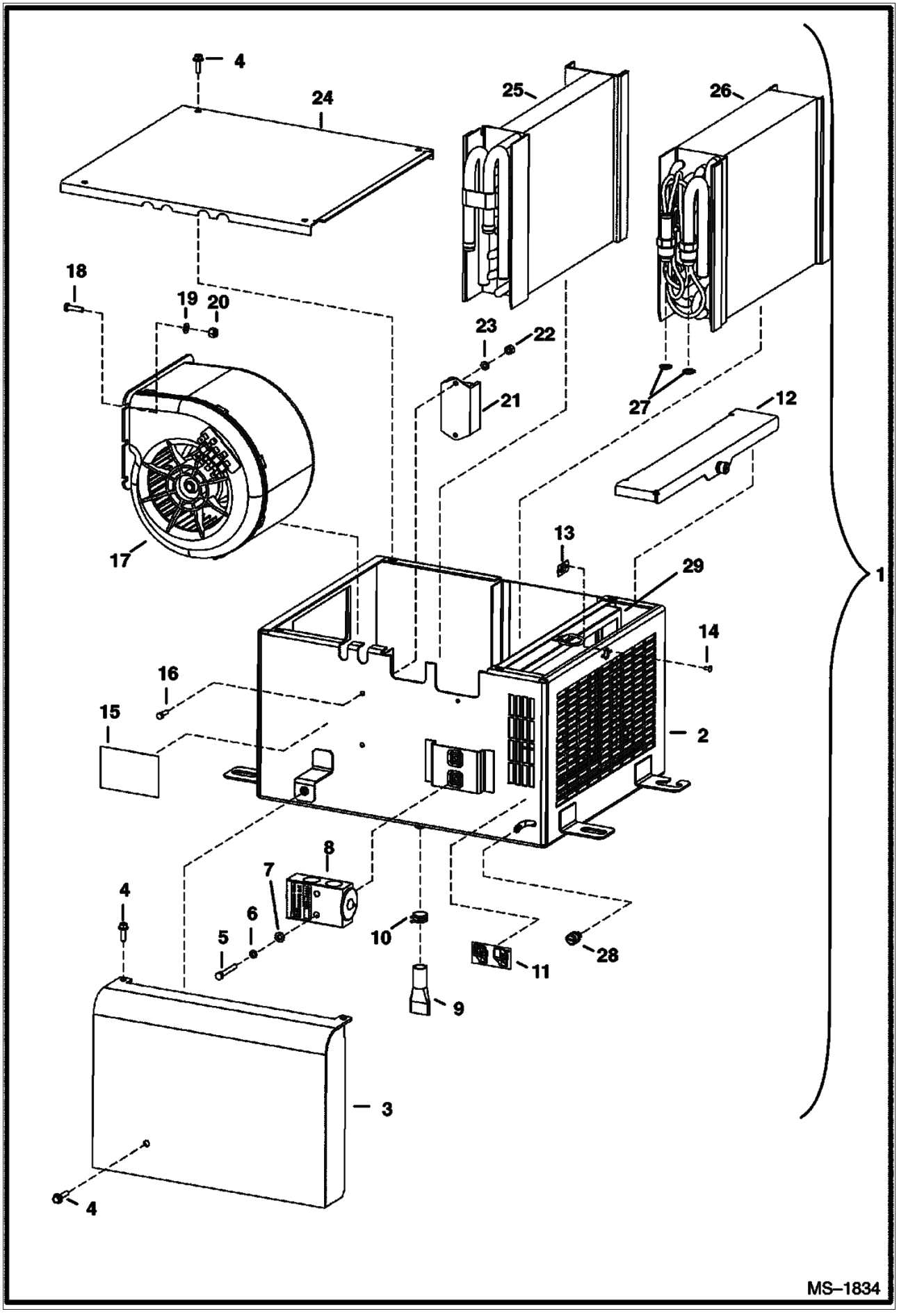
4
24
25
26
18
19
20
23
22
21
27
12
17
13
29
1
14
16
15
2
8
7
4
6
5
10
28
11
9
3
4
MS–1834

https://www.pdfmanual4trucks.com/

Ref. No.	Part Number	Description	Remarks	Serial Number	Qty.
1	6678966	BOX	HVAC		1
2		CASE	NSS - Order Ref. 1		1
3	6685316	COVER			1
4	6685315	SCREW			5
5	6685116	SCREW			2
6	6684499	WASHER			2
7	6684500	WASHER			2
8	6684539	VALVE	expansion		1
9	6684507	TUBE	drain		2
10	6684506	CLAMP			2
11	6685312	DECAL			1
12	6685313	COVER			1
13	6685322	NUT			1
14		RIVET	NAP - buy locally		1
15		PLATE	NAP - serial number		1
16	6685114	SCREW			2
17	6685320	BLOWER			1
18	6685319	SCREW			4
19	6684500	WASHER			6
20	6684521	NUT			4
21	6679082	THERMOSTAT			1
22	6684520	NUT			2
23	6685115	WASHER			2
24	6685317	COVER			1
25	6685323	COIL	heater		1
26	6685324	EVAPORATOR			1
27	6685325	O-RING			2
28	6685321	SCREW			1
29	6685314	FILTER			1

https://www.pdfmanual4trucks.com/

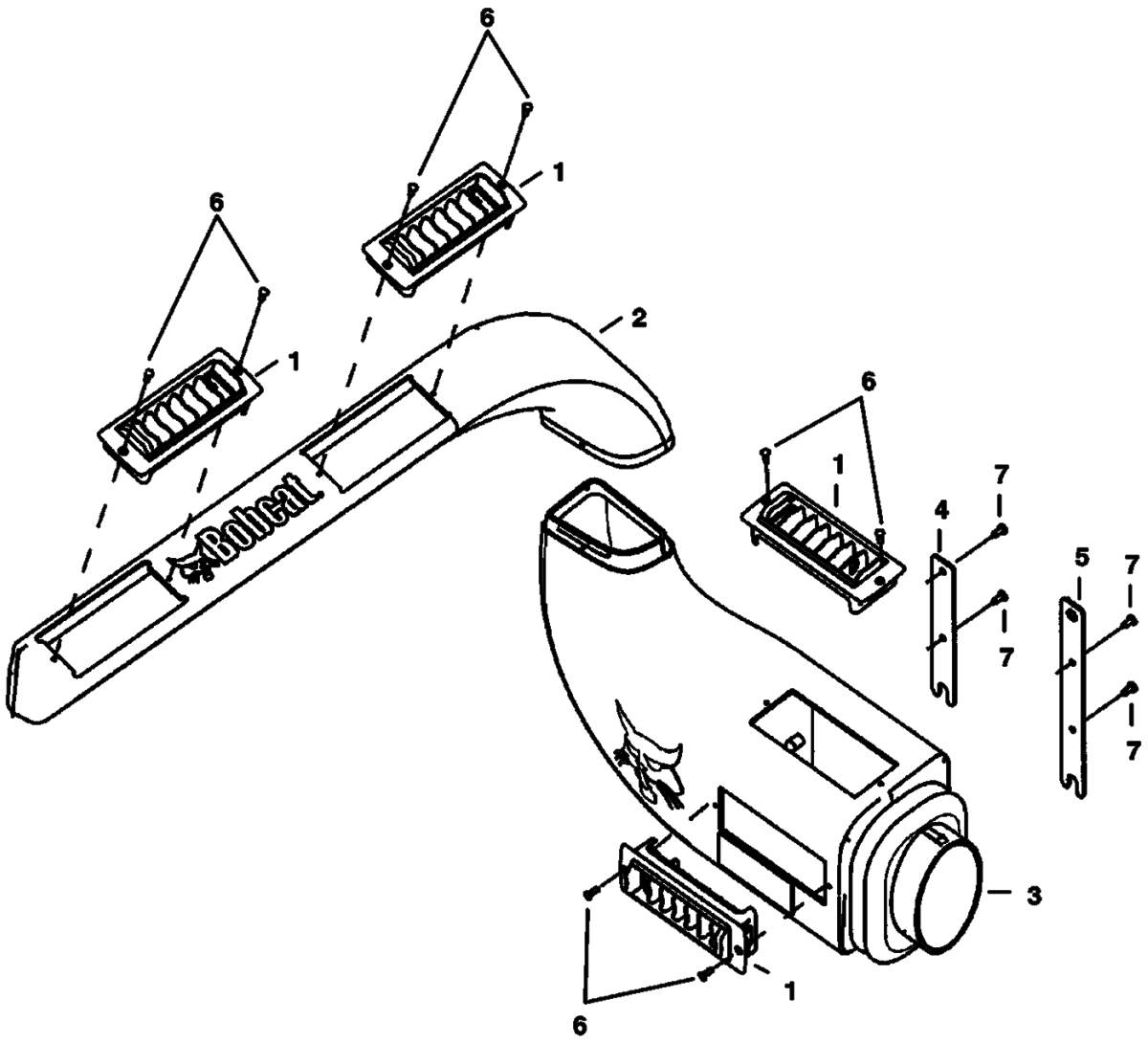

https://www.pdfmanual4trucks.com/

Ref. No.	Part Number	Description	Remarks	Serial Number	Qty.
1	6676713	LOUVER			4
2	6680976	DUCT	crossmember		1
3	6681509	DUCT			1
4	6681576	BRACKET			1
5	6681577	BRACKET			1
6	6814024	SCREW			8
7	58G000808B	SCREW			4

https://www.pdfmanual4trucks.com/

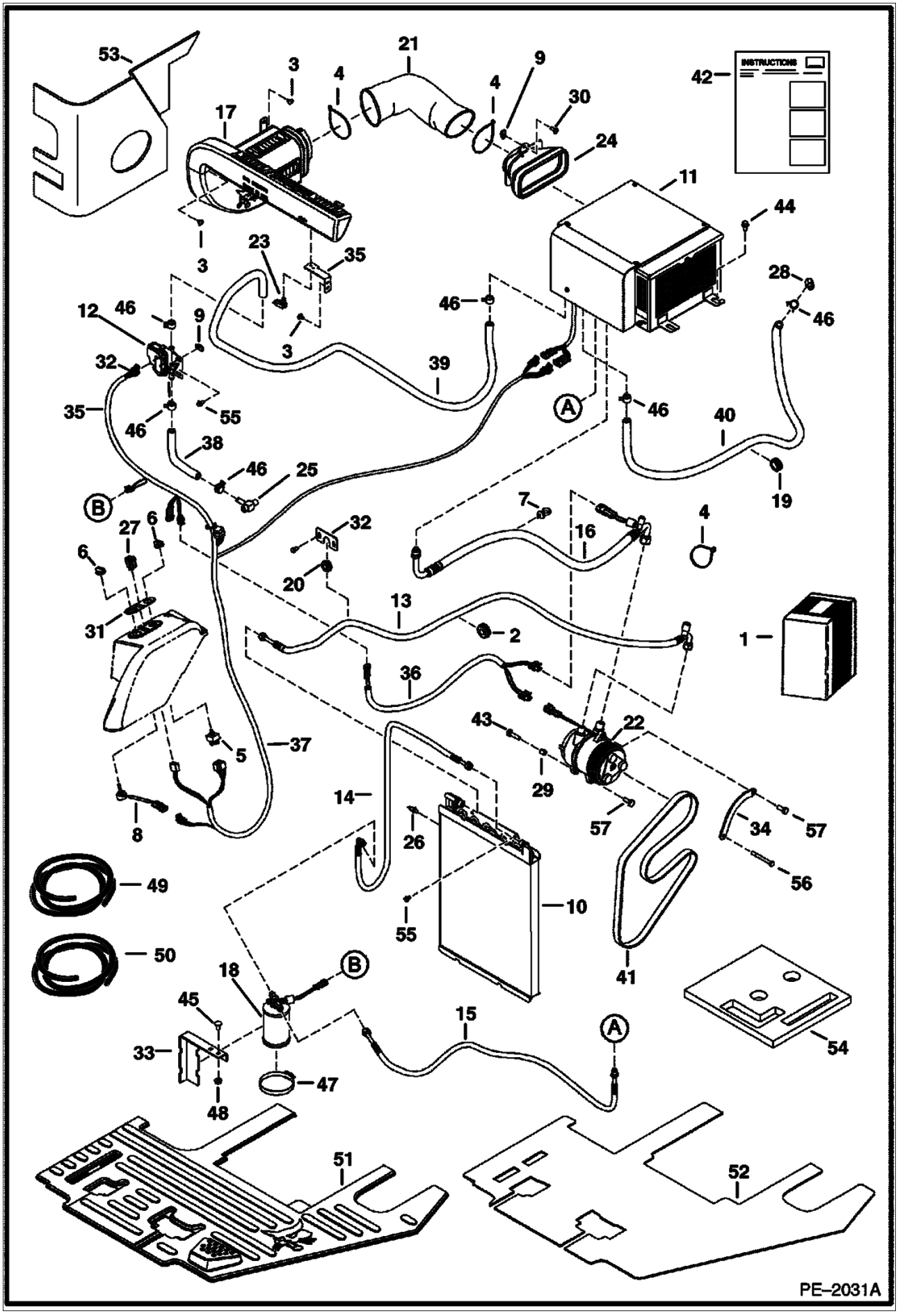

https://www.pdfmanual4trucks.com/

Ref. No.	Part Number	Description	Remarks	Serial Number	Qty.
1	6817403	KIT	HVAC		1
2	6515603	GROMMET			1
3	6589675	SCREW			5
4	6610510	TIE	nylon		6
5	6675176	SWITCH			1
6	6675177	KNOB			2
7	6675734	STRAP			1
8	6675846	POTENTIOMETER			1
9	6676026	NUT	clip		1
10	6678831	CONDENSER			1
11	6678966	BOX	HVAC		1
12	6685459	VALVE	heater		1
13	6680303	HOSE			1
14	6680304	HOSE			1
15	6680305	HOSE			1
16	6680306	HOSE			1
17		DUCT	NAP - assy		1
17	6676713	LOUVER			4
17	6680976	DUCT			1
17	6681509	DUCT	base		1
17	6681576	BRACKET			1
17	6681577	BRACKET			1
17	6814024	SCREW			1
17	58G000808B	SCREW			1
18	6680311	RECEIVER			1
19	6681528	GROMMET			1
20	6681567	GROMMET			1
21	6681653	HOSE			1
22	6681716	COMPRESSOR			1
23	6681878	LATCH			2
24	6681606	ADAPTER			1
24		SEAL	NAP - use 21.5'' (547mm) of Ref. 50		1
25	6682150	TEE			1
26	6682990	CLIP	hose		4
27	6719176	SWITCH			1
28	6731085	ELBOW			1
29	6732732	BUSHING			1
30	6803202	SCREW			4
31	6808433	DECAL	heater		1
32	6813191	PLATE			1
33	6813715	BRACKET			1
34	6813975	PLATE			1
35	6814194	BRACKET			1
36	6814228	HARNESS			1
37	6814229	HARNESS	HVAC		1
38		HOSE	NAP - heater - use 9'' (229mm) of Ref. 49		1
39		HOSE	NAP - heater- use 78'' (1982mm) of Ref. 49		1
40		HOSE	NAP - heater- use 72'' (1829mm) of Ref. 49		1
41	6815018	BELT			1
42	6902519	INSTRUCTIONS			1
43	5CM01030B	SCREW			2
44	26GM10020B	SCREW			3
45	28CM01020B	BOLT			1

https://www.pdfmanual4trucks.com/

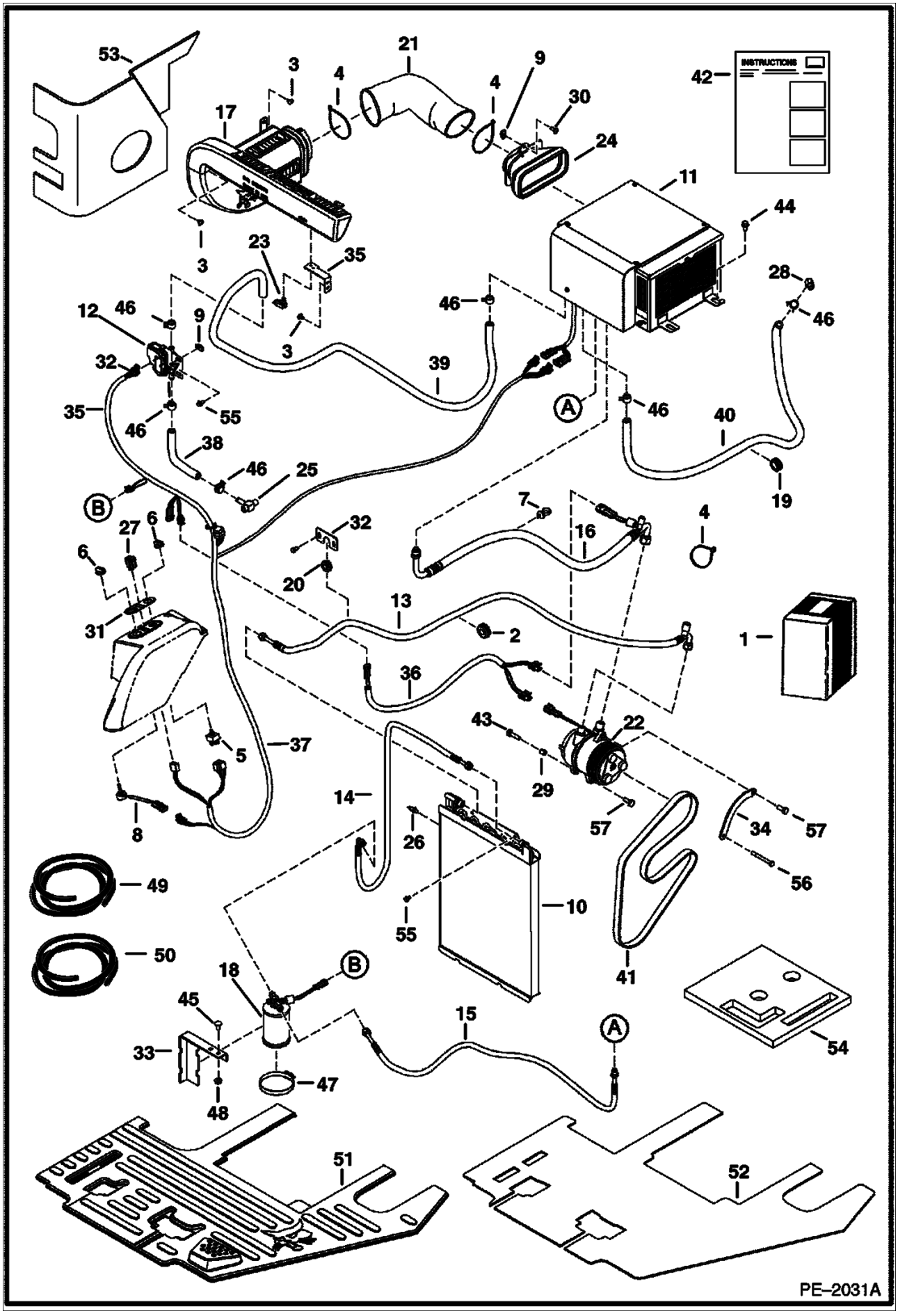

https://www.pdfmanual4trucks.com/

Ref. No.	Part Number	Description	Remarks	Serial Number	Qty.
46	5HM00020B	CLAMP			6
47	42H000056B	CLAMP			2
48	43DM00010B	NUT			2
49	6565977	HOSE	bulk - sold per foot		x
50	6681884	SEAL	bulk - sold per foot		x
51	6812712	FLOORMAT			1
52	6684544	FLOORMAT	underlayment		1
53	6684896	INSULATION			1
54	6814922	INSULATION			1
55	1CM00610B	SCREW			4
56	1CM00880B	SCREW			1
57	5CM01025B	SCREW			1

https://www.pdfmanual4trucks.com/

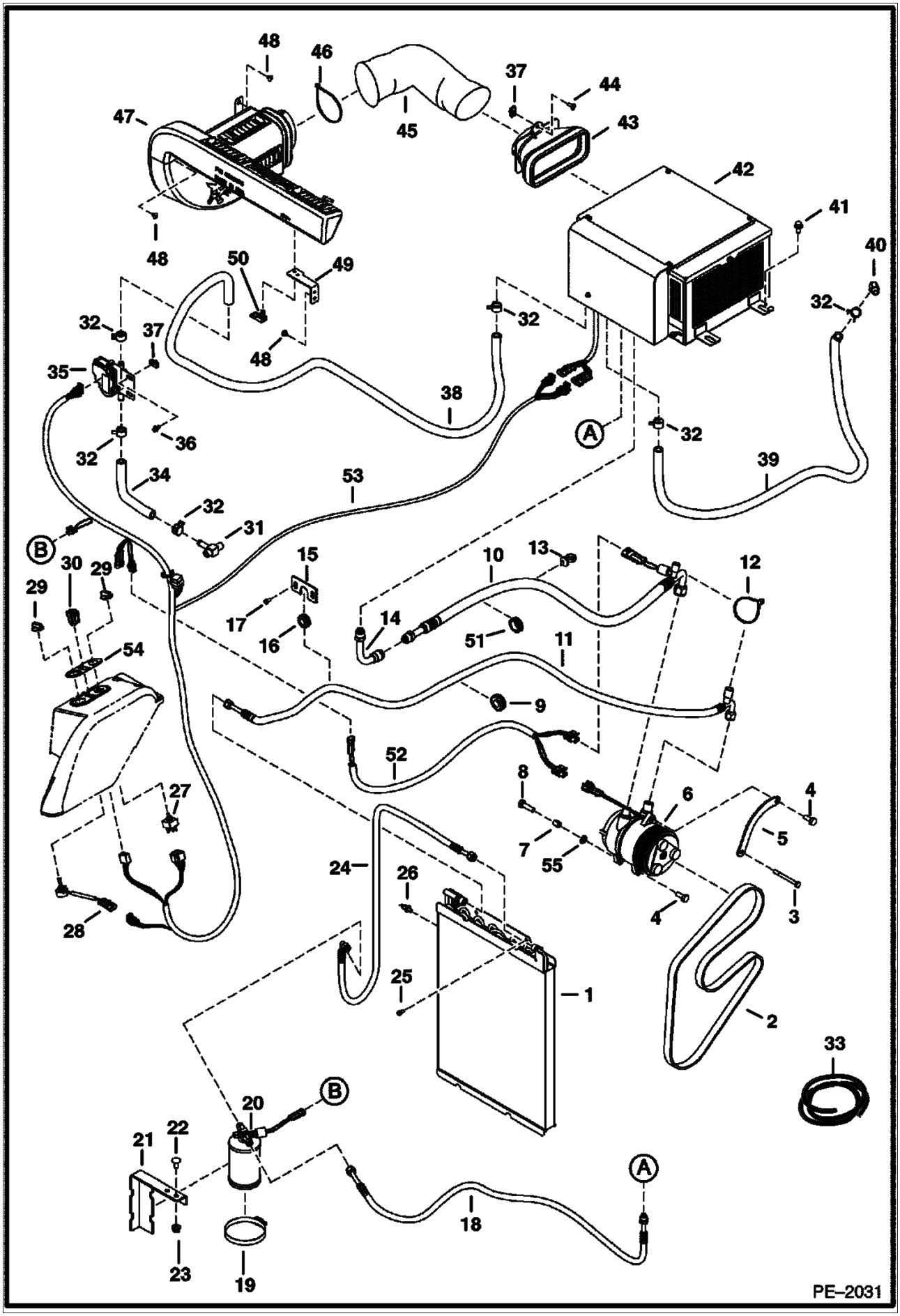

https://www.pdfmanual4trucks.com/

Ref. No.	Part Number	Description	Remarks	Serial Number	Qty.
1	6678831	CONDENSER			1
2	6815018	BELT			1
3	1CM00880B	SCREW			1
4	5CM01025B	SCREW			2
5	6813975	PLATE			1
6	6681716	COMPRESSOR			1
7	6732732	BUSHING			1
8	5CM01030B	SCREW			1
9	6515603	GROMMET			1
10	6680306	HOSE			1
11	6680303	HOSE			1
12	6624289	STA STRAP			6
13	6675734	STRAP			1
14	6684649	ADAPTER			1
15	6813191	PLATE			1
16	6681567	GROMMET			1
17		SCREW			1
18	6680305	HOSE			1
19	42H000056B	CLAMP			2
20	6680311	RECEIVER			1
21	6813715	BRACKET			1
22	28CM01020B	BOLT			2
23	43DM00010B	NUT			2
24	6680304	HOSE			1
25	1CM00612B	SCREW			4
26	6682990	CLIP			3
27	6675176	SWITCH			1
28	6675846	POTENTIOMETER			1
29	6675177	KNOB			2
30	6719176	SWITCH	rocker		1
31	6682150	TEE			1
32	5HM00020B	CLAMP			6
33	6565977	HOSE	bulk - sold per foot		x
34		HOSE	NAP - use 9" (229mm) of Ref. 33		1
35	6684909	VALVE	heater		1
36	29CM00612B	SCREW			2
37	6676026	NUT			2
38		HOSE	NAP - use 78" (1982mm) of Ref. 33		1
39		HOSE	NAP - use 72" (1829mm) of Ref. 33		1
40	6731085	ELBOW			1
41	26GM10020B	SCREW			3
42	6678966	BOX	See Illustration HVAC BOX/ MS1834 HVAC		1
43	6681881	DUCT			1
44	6803202	SCREW			2
45	6681653	HOSE			1
46	6610510	TIE			1
47		DUCT	See Illustration HVAC DUCT/ B22507 NAP - ASSY		1
48	6589675	SCREW			2
49	6814194	BRACKET			1
50	6681878	LATCH			1
51	6681528	GROMMET			1
52	6814228	HARNESS			1
53	6814229	HARNESS			1
54	6808433	DECAL	heater		1

https://www.pdfmanual4trucks.com/

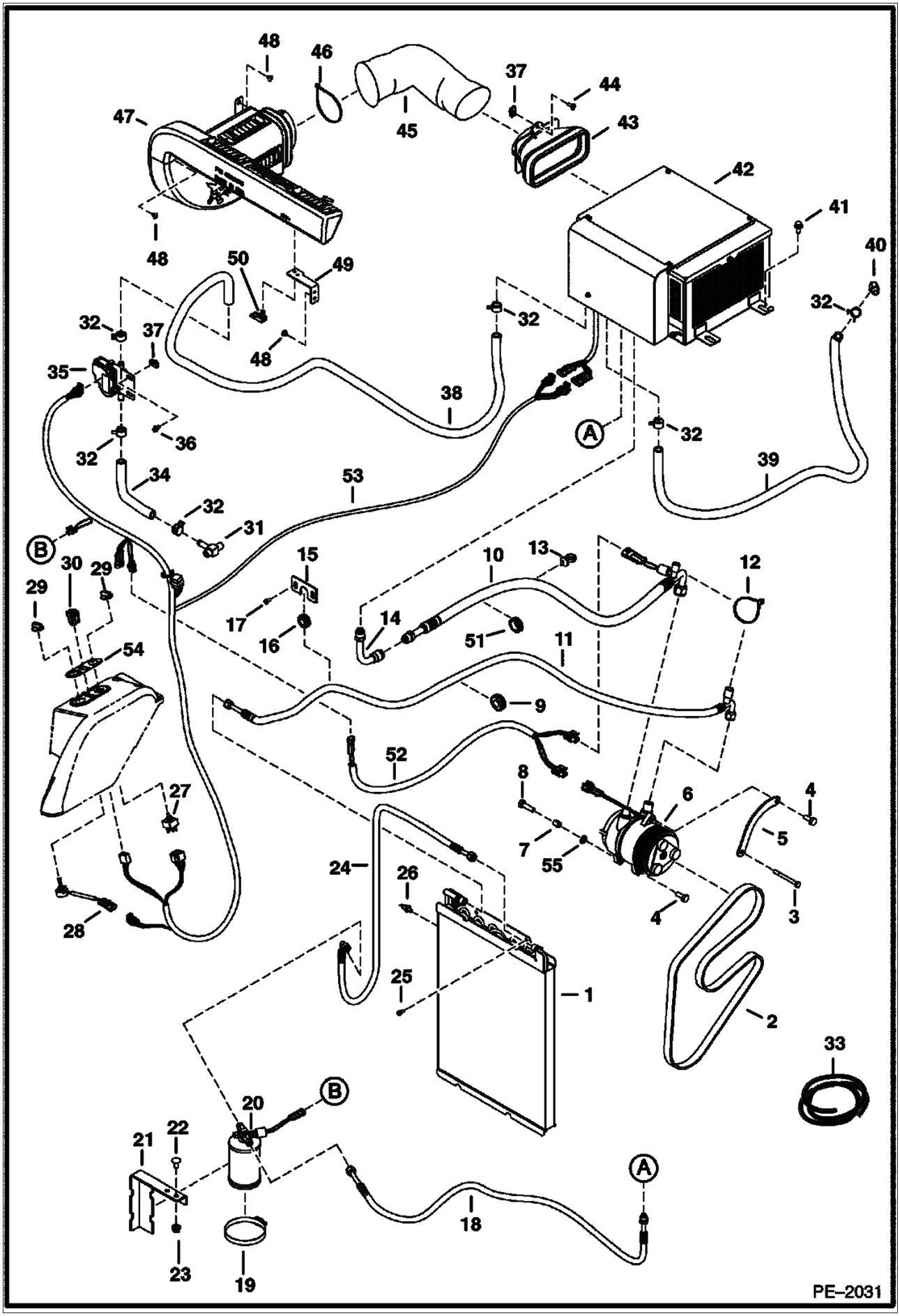

https://www.pdfmanual4trucks.com/

Ref. No.	Part Number	Description	Remarks	Serial Number	Qty.
55	28E000006B	WASHER			1

https://www.pdfmanual4trucks.com/

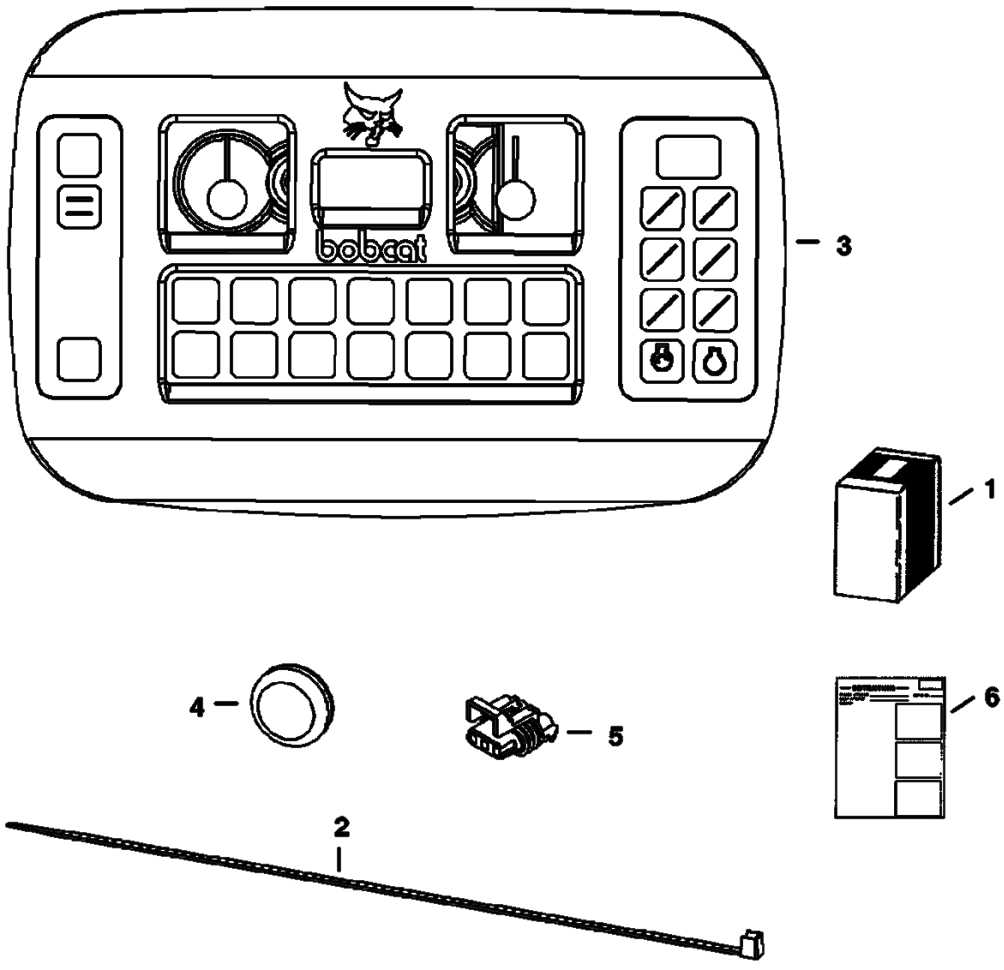

PE–1248

https://www.pdfmanual4trucks.com/

Ref. No.	Part Number	Description	Remarks	Serial Number	Qty.
1	6814715	KIT			1
2	6610510	TIE			1
3	6676922	PLUG			1
4	6678691	CONTROLLER	keyless		1
5	6809227	CONNECTOR			1
6	6902601	INSTRUCTIONS			1

https://www.pdfmanual4trucks.com/

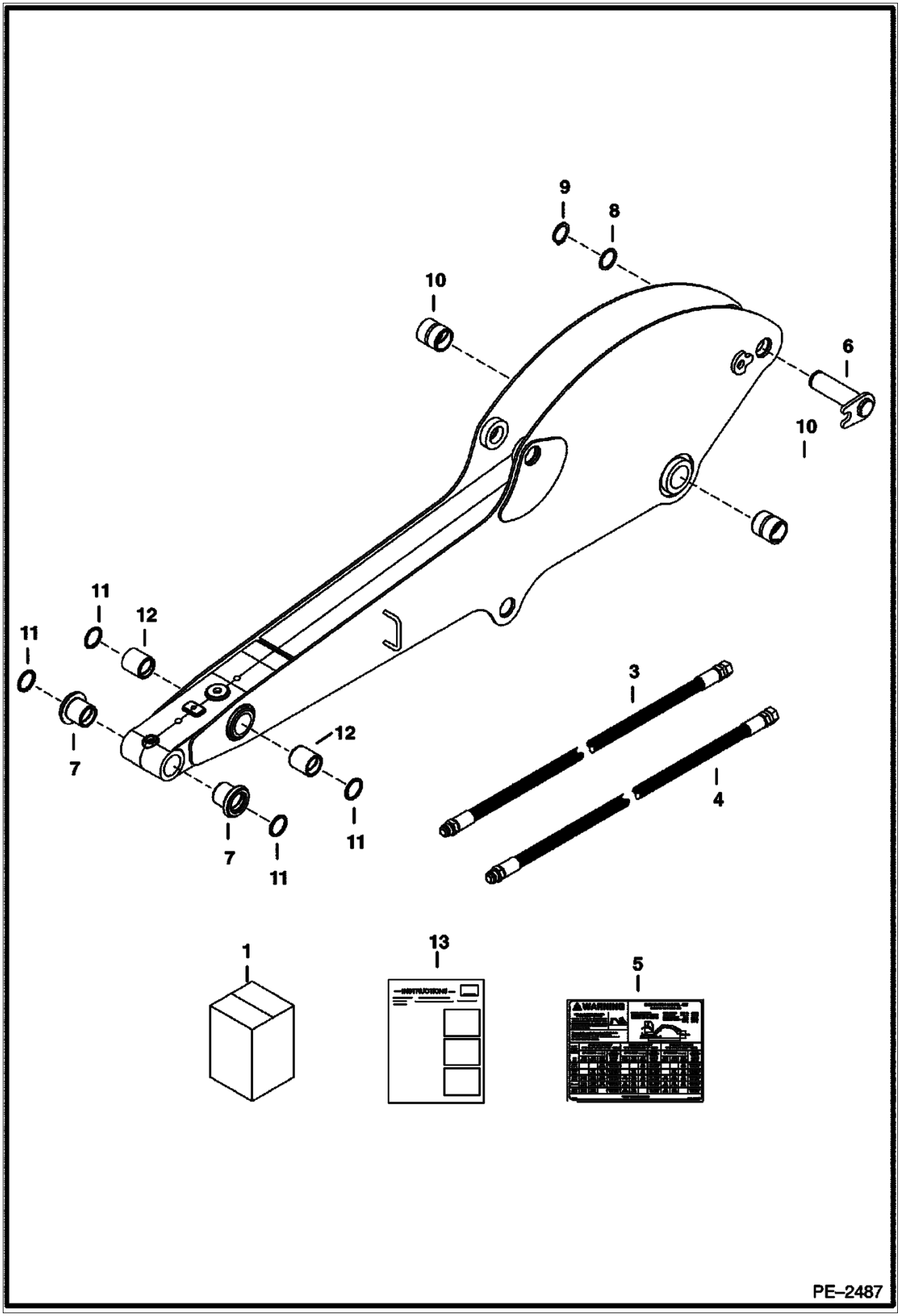

LONG ARM KIT (Cont'd)

https://www.pdfmanual4trucks.com/

Ref. No.	Part Number	Description	Remarks	Serial Number	Qty.
1		KIT	SALES - long arm - order 7100958		1
2	7100135	ARM	W/A - also order Ref. 7, 10 & 12		1
3	7100898	HOSE	51'' (1295mm) long		1
4	7100899	HOSE	73'' (1854mm) long		1
5	7107502	DECAL	lift capacity		1
6	6818028	PIN			1
7	6805601	BUSHING	press fit		2
8	6628547	WASHER			1
9	6668787	RING			1
10	6813497	BUSHING			1
11	6669287	SEAL	dust		4
12	6628341	BUSHING	press fit		2
13	6902709	INSTRUCTIONS			1

https://www.pdfmanual4trucks.com/

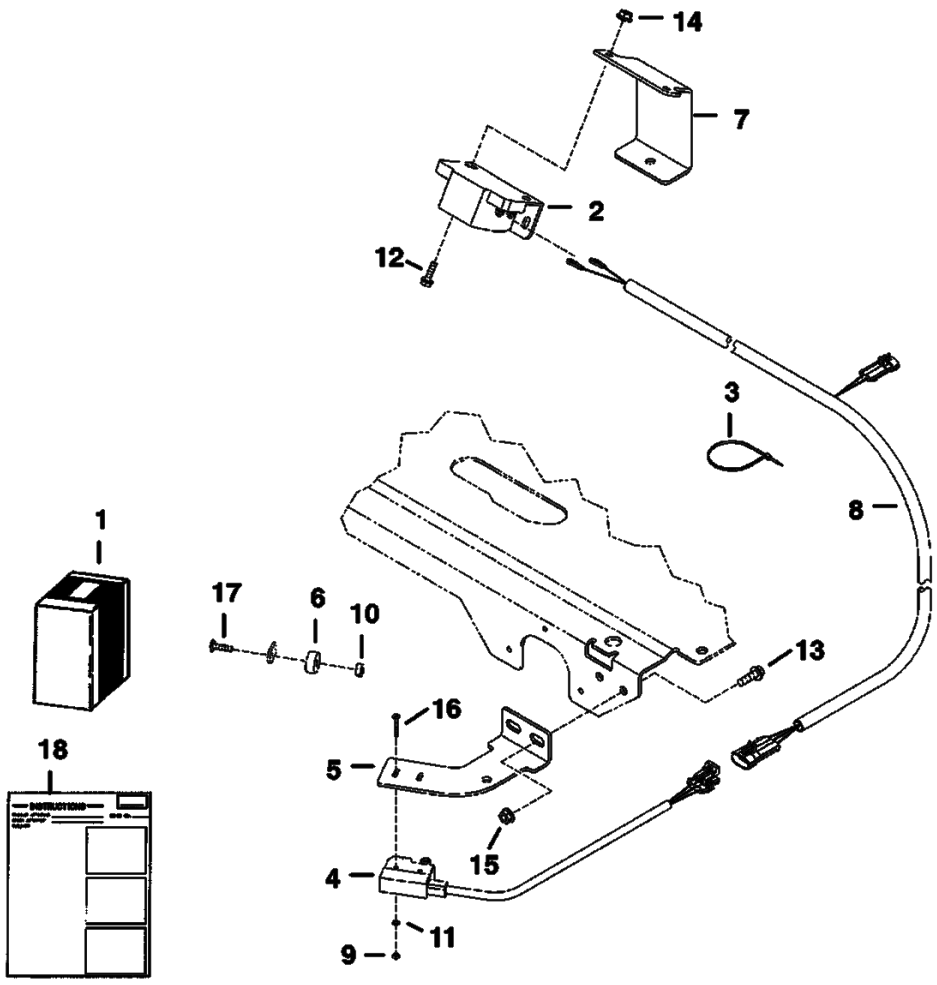

MS–1095

MOTION ALARM KIT (Cont'd)

https://www.pdfmanual4trucks.com/

Ref. No.	Part Number	Description	Remarks	Serial Number	Qty.
1	6808053	KIT	W/Ref. 2 - 18		1
2	6599931	ALARM	back-up		1
3	6610510	TIE	nylon		3
4	6661150	SWITCH			1
5	6808054	MOUNT	switch - 337/341 D-Series		1
5	6811056	MOUNT	switch - 430AG, 435Ag		1
6	6808580	BEARING			1
7	6808896	MOUNT	alarm		1
8	6809258	HARNESS			1
9	12D000006B	NUT			2
10	12D000010B	NUT			1
11	12E000006B	WASHER			2
12	29CM00616B	SCREW			2
13	29CM00816B	SCREW			2
14	43DM00006B	NUT			2
15	43DM00008B	NUT			2
16	85G000616B	SCREW			2
17	87G001010B	SCREW			2
18	6810004	DECAL			1
19	6901053	INSTRUCTION			1

https://www.pdfmanual4trucks.com/

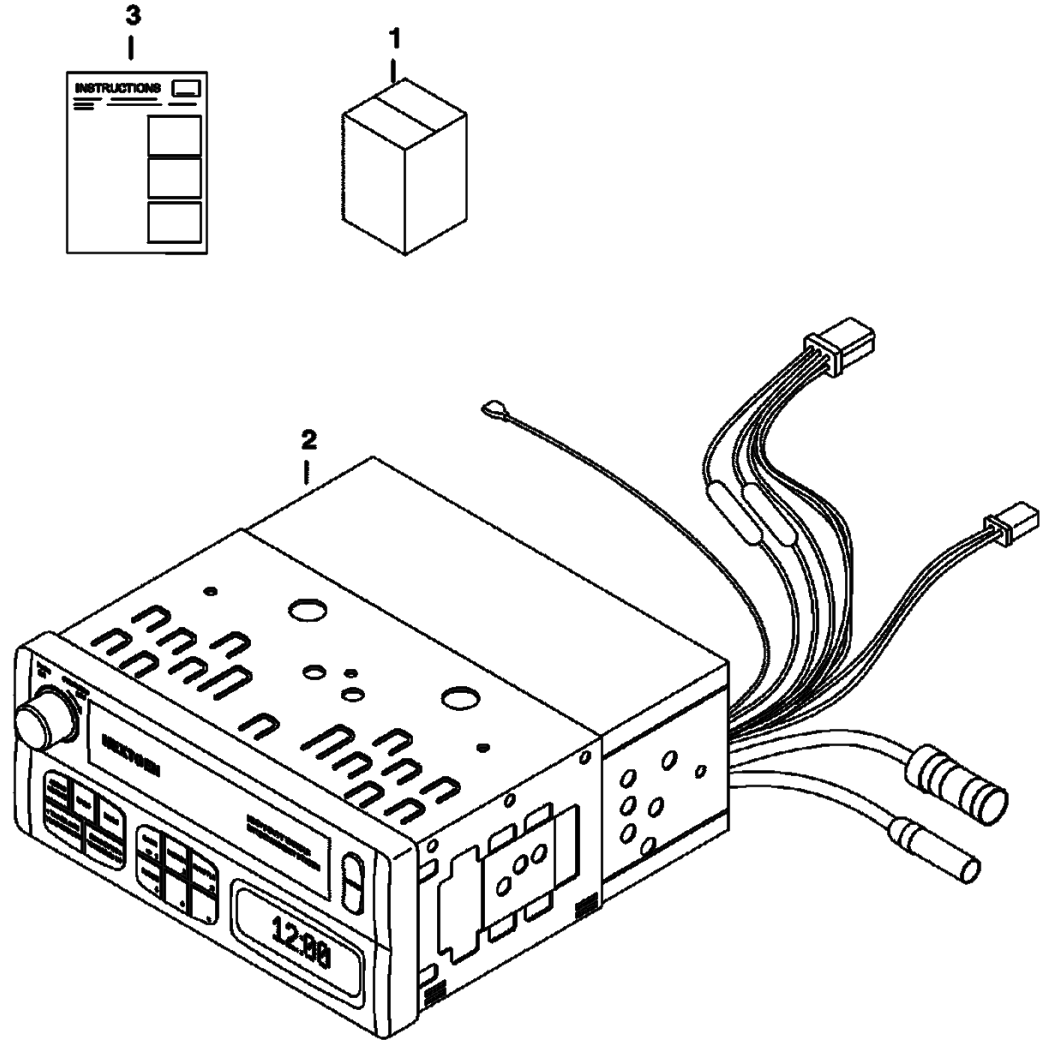

MS–1955

https://www.pdfmanual4trucks.com/

Ref. No.	Part Number	Description	Remarks	Serial Number	Qty.
1	7100662	KIT			1
2	6901445	RADIO			1
3	6902667	INSTRUCTIONS			1

https://www.pdfmanual4trucks.com/

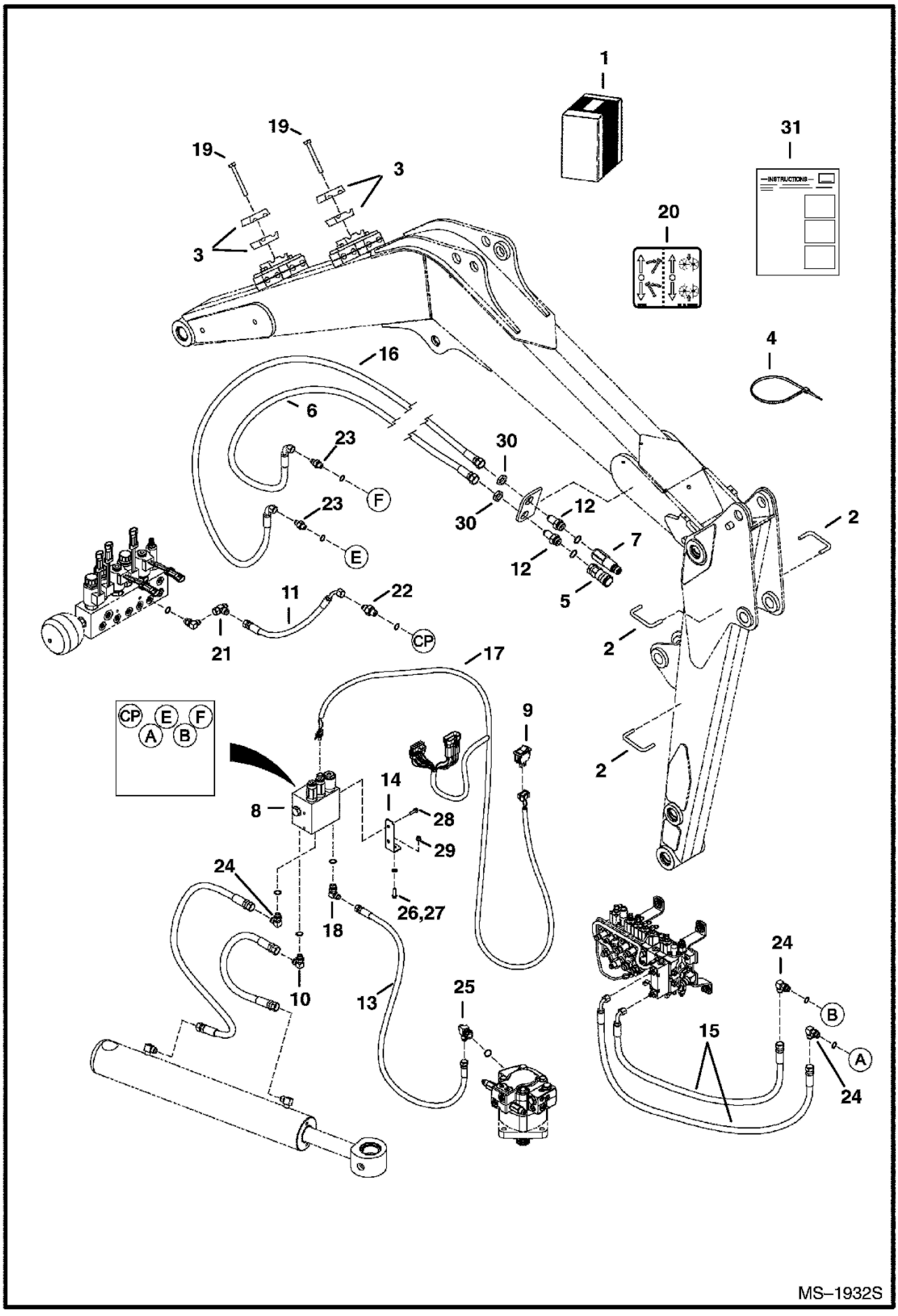

SECONDARY AUXILIARY KIT (Cont'd)

https://www.pdfmanual4trucks.com/

Ref. No.	Part Number	Description	Remarks	Serial Number	Qty.
1	6816881	KIT			1
2	6586391	GUIDE			1
3	6592506	CLAMP			4
4	6624289	STA STRAP			1
5	6672960	COUPLER	female flush face		1
6	6674264	BOLT	retainer		2
7	6674688	COUPLER	male flush face		1
8	6679888	VALVE ASSY			1
9	6679906	SWITCH			1
10	17KB00806B	FITTING	90 degree		1
11	6806995	HOSE			1
12	6812816	ADAPTER	hose		1
13	6815035	HOSE			1
14	6816892	BRACKET			2
15	7103893	HOSE			1
16	6816894	HOSE			2
17	6818394	HARNESS			1
18	7103659	FITTING			1
19	1CM08100B	BOLT			2
20	6958363	DECAL			1
21	13K000003B	TEE			1
22	15KB00406B	ADAPTER			1
23	15KB00606B	ADAPTER			2
24	17KB00606B	ELBOW			5
25	13K000006B	FITTING	90 degree		1
26	28CM01020B	BOLT			2
27	29CM01020B	SCREW			2
28	35C000516B	BOLT			4
29	51DM00010B	NUT			2
30	86F000007B	NUT			2
31	6902493	INSTRUCTIONS			1

https://www.pdfmanual4trucks.com/

SEAT BELT KIT
(Three Inch)

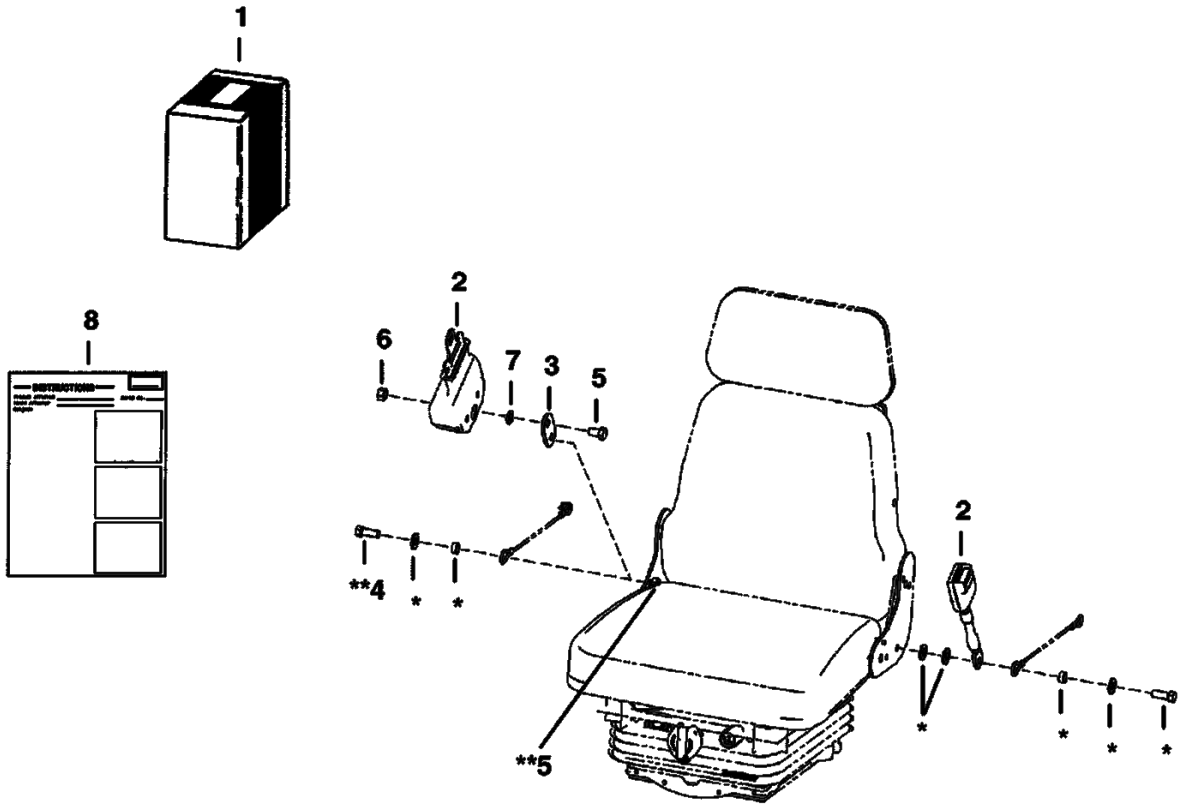

*** Existing Parts**
**** Use with flanged seat frame (otherwise use existing hardware)**

PE–2207

https://www.pdfmanual4trucks.com/

SEAT BELT KIT (Cont'd)
(Three Inch)

Ref. No.	Part Number	Description	Remarks	Serial Number	Qty.
1	7102902	KIT	3'' (76.2mm)seat belt		1
2	6685747	SEAT BELT	3'' (76.2mm)		1
3	7102065	BRACKET			1
4	1CM01250B	BOLT			1
5	1CM01220B	SCREW			1
6	53DM00012B	NUT			2
7	1EM00120B	WASHER			1
8	6902838	INSTRUCTIONS			1

https://www.pdfmanual4trucks.com/

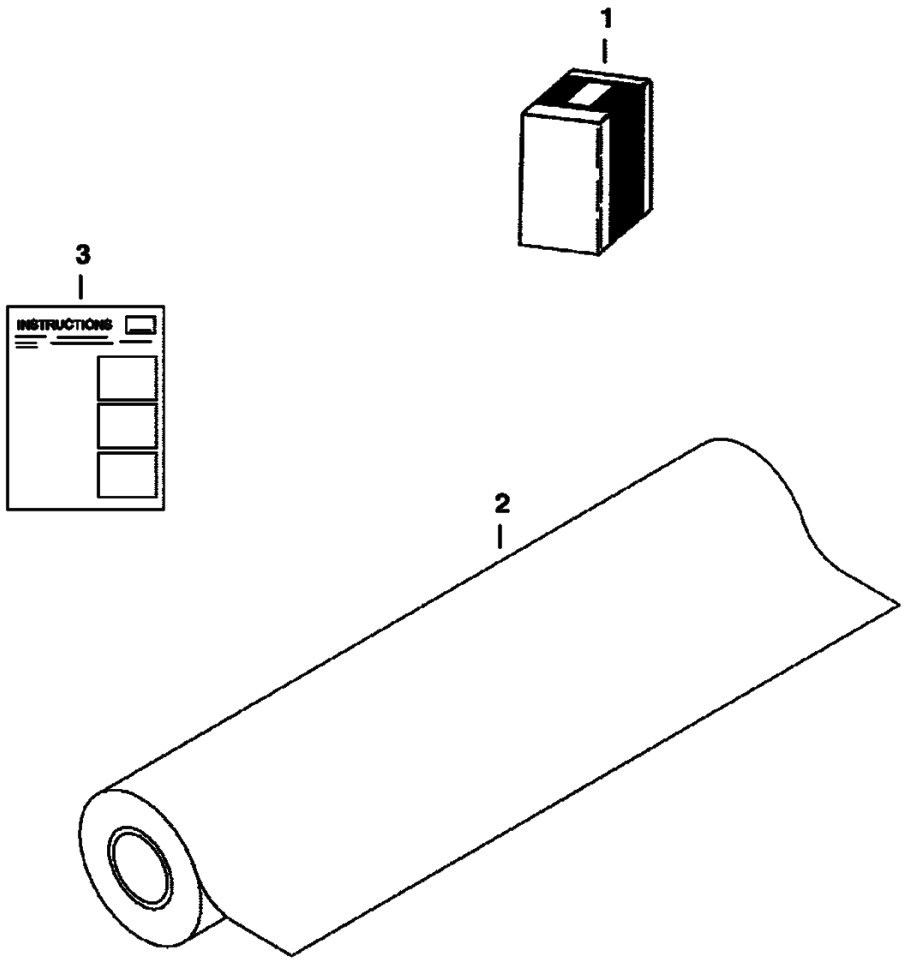

MS–1889

https://www.pdfmanual4trucks.com/

Ref. No.	Part Number	Description	Remarks	Serial Number	Qty.
1	6817568	KIT			1
2	6683889	SHIELD	solar film		1
3	6902534	INSTRUCTIONS			1

https://www.pdfmanual4trucks.com/

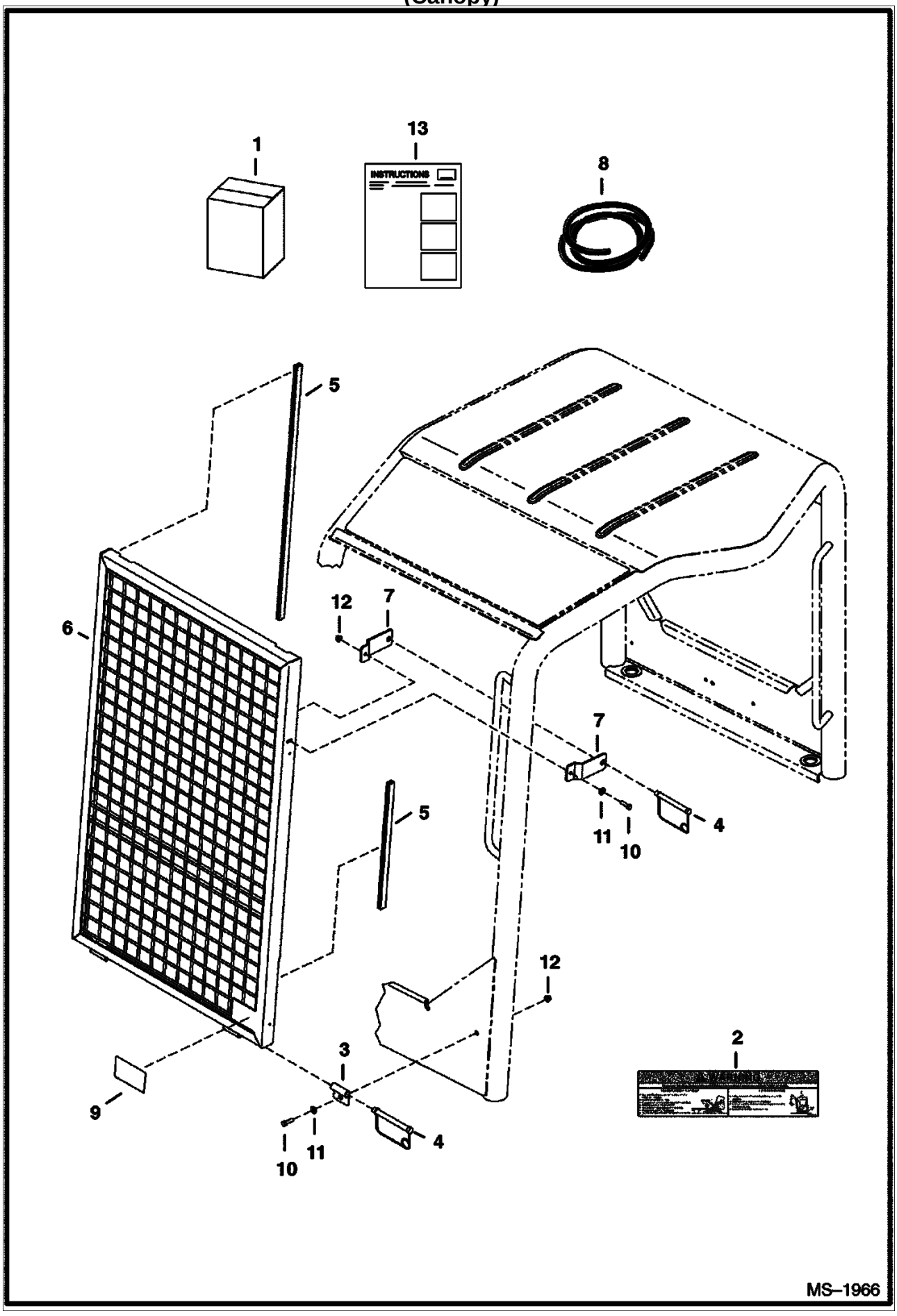

https://www.pdfmanual4trucks.com/

SPECIAL APPLICATION KIT (Cont'd)
(Canopy)

Ref. No.	Part Number	Description	Remarks	Serial Number	Qty.
1	6818012	KIT			1
2	6808924	HINGE			2
3	6808926	PIN			4
4	6818013	GUARD			1
5	6818017	BRACKET			4
6		TRIM	NAP - 70" (1778mm) long - order Ref. 4		2
7	1CM00620B	BOLT			4
8	25E000013B	WASHER			4
9	51DM00006B	NUT			4
10	7103194	DECAL			1
11	6682492	TRIM	bulk - sold per foot		x
12	6808185	DECAL			1
13	6902939	INSTRUCTION			1

https://www.pdfmanual4trucks.com/

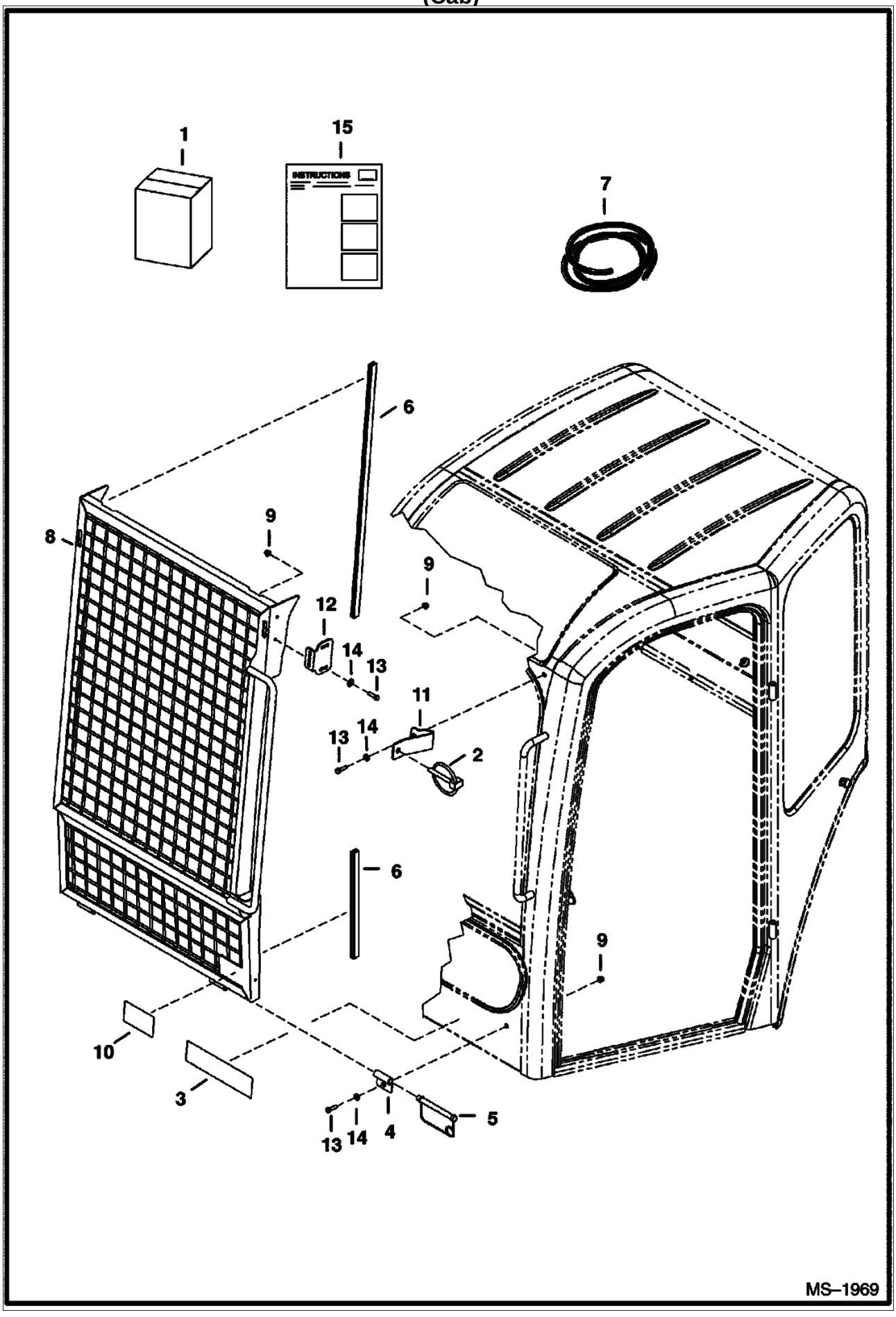

SPECIAL APPLICATION KIT (Cont'd)
https://www.pdfmanual4trucks.com/
(Cab)

Ref. No.	Part Number	Description	Remarks	Serial Number	Qty.
1	6817753	KIT			1
2	6808924	HINGE			2
3	6808926	PIN			4
4	6817754	GUARD			1
5		TRIM	NAP - 70" (1778mm) long - order Ref. 14		2
6	1CM00620B	BOLT			4
7	25E000013B	WASHER			4
8	51DM00006B	NUT			4
9	7103195	DECAL			1
10	7103753	BRACKET			2
11	7103872	BRACKET			2
12	6668928	LOCK PIN			2
13	6808185	DECAL			1
14	6682497	TRIM	bulk - sold per foot		1
15	6902939	INSTRUCTION			1

https://www.pdfmanual4trucks.com/

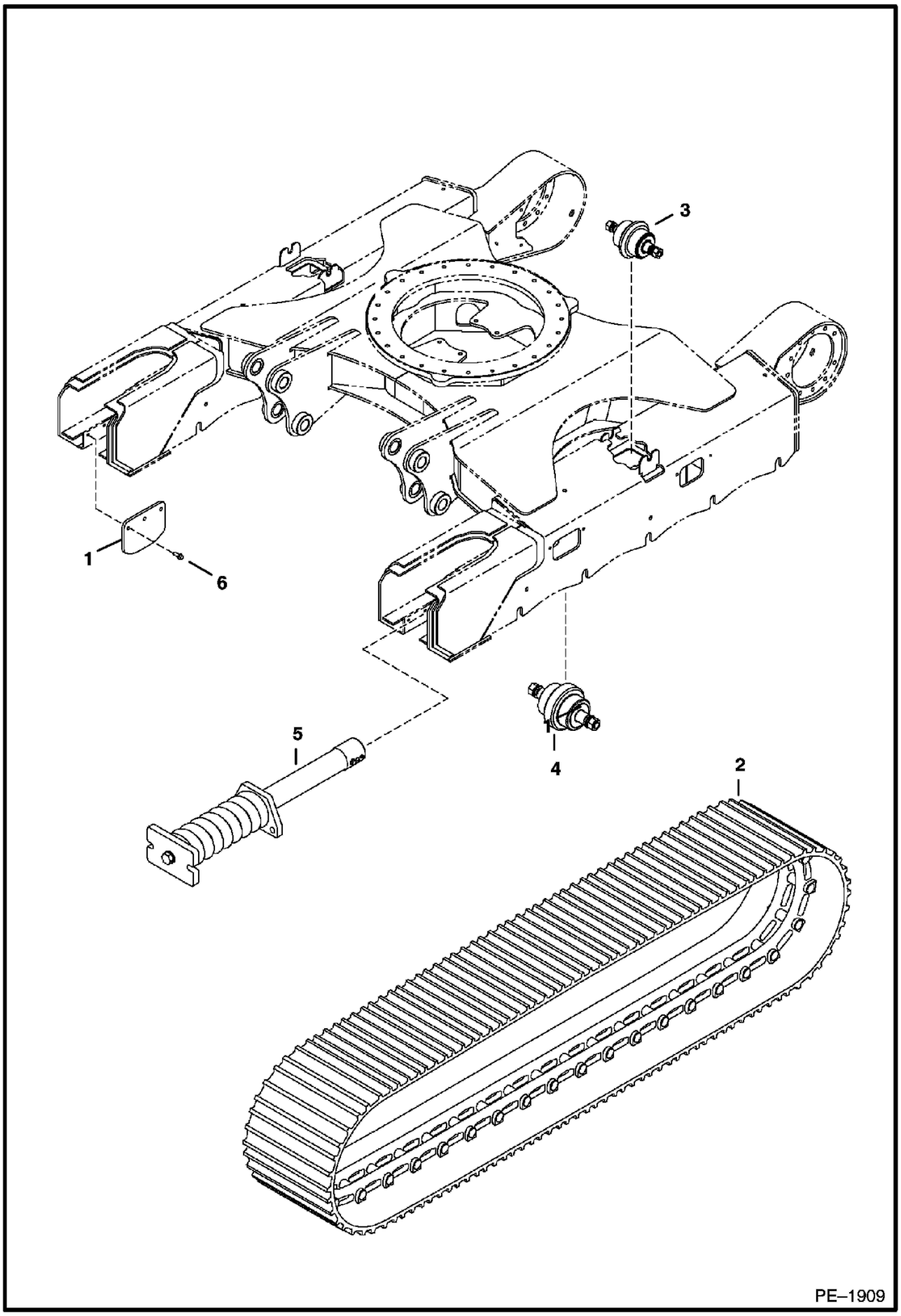

STEEL TRACK KIT (Cont'd)

https://www.pdfmanual4trucks.com/

Ref. No.	Part Number	Description	Remarks	Serial Number	Qty.
1	6817548	STEEL TRACK KIT			1
2	6810367	TRACK	steel		1
3	6815123	ROLLER	assy		2
4	6815129	ROLLER	assy		10
5	6816244	CYLINDER			2
6	26GM10030B	SCREW			12
7	6628758	GUIDE			4
8	6902532	INSTRUCTIONS			1

https://www.pdfmanual4trucks.com/

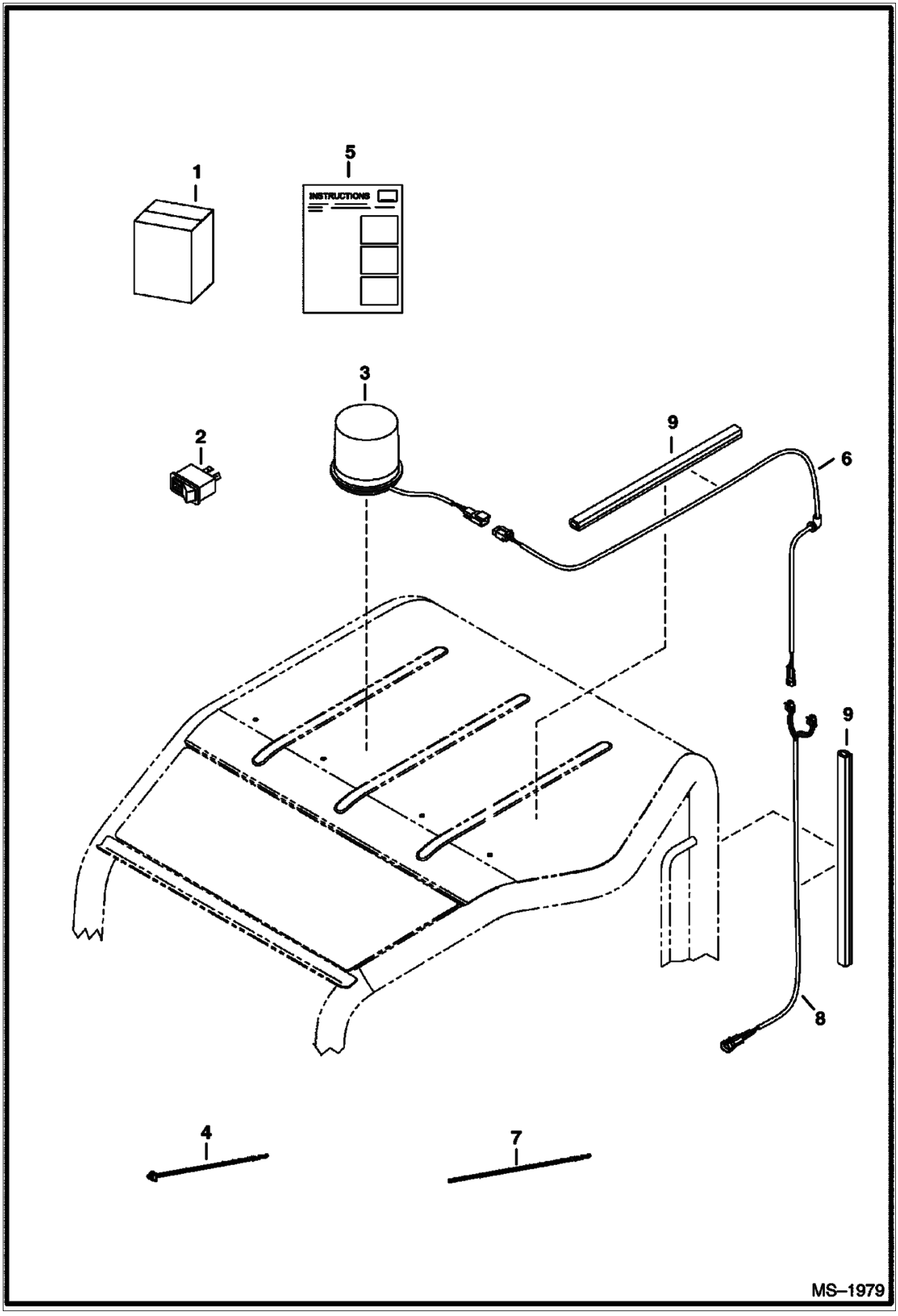

STROBE LIGHT KIT (Cont'd)

https://www.pdfmanual4trucks.com/

Ref. No.	Part Number	Description	Remarks	Serial Number	Qty.
1	7105013	KIT	W/Ref. 2-9		1
2	6665317	SWITCH			1
3	6675522	STROBE			1
4	6624289	STA STRAP			2
5	6903146	INSTRUCTION			1
6	7104182	HARNESS			1
7	7104659	HARNESS			1
8	7104694	HARNESS			1
9	6682741	RETAINER			2

https://www.pdfmanual4trucks.com/

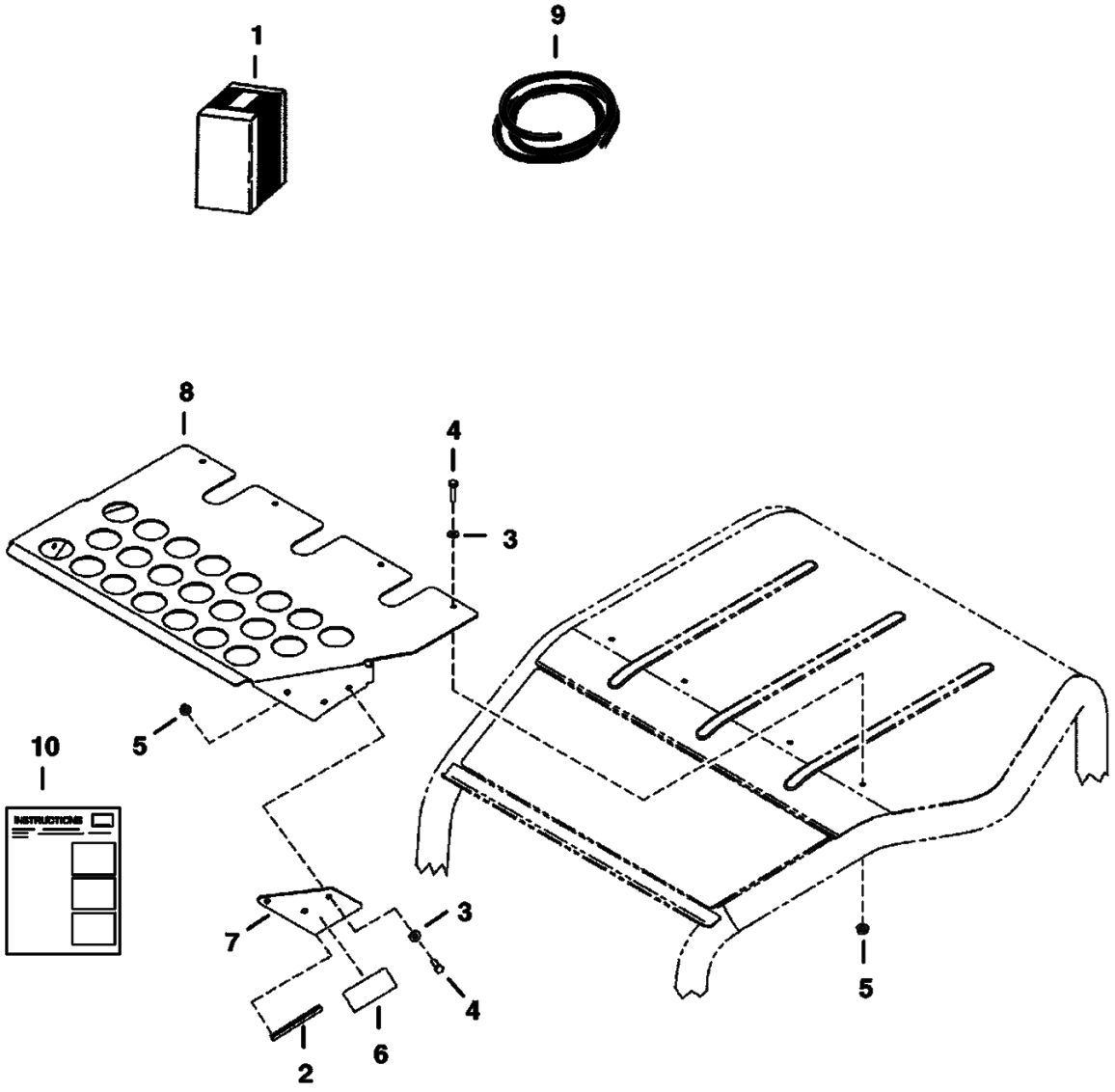

https://www.pdfmanual4trucks.com/

Ref. No.	Part Number	Description	Remarks	Serial Number	Qty.
1	6817948	KIT			1
2		TRIM	NAP - 7" (178mm) order Ref. 9		2
3	15EM00100B	WASHER			10
4	1CM01020B	BOLT			10
5	51DM00010B	NUT			10
6	7103193	DECAL			1
7	7103726	PLATE			2
8	6817661	TOP GUARD			1
9	6682492	TRIM	bulk - sold per foot		x
10	6902939	INSTRUCTION			1

TOP GUARD LIGHT KIT

https://www.pdfmanual4trucks.com/

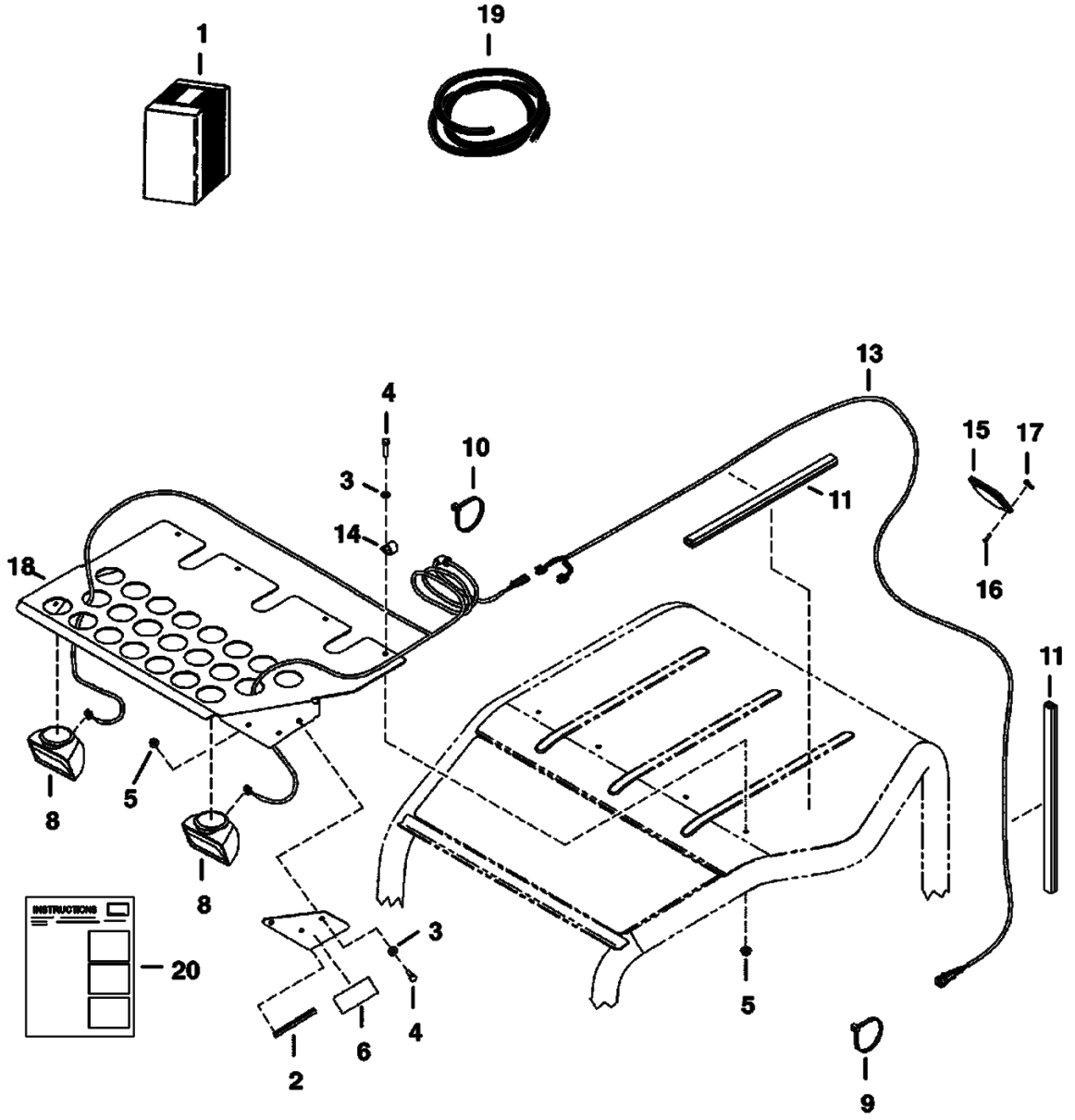

TOP GUARD LIGHT KIT (Cont'd)

https://www.pdfmanual4trucks.com/

Ref. No.	Part Number	Description	Remarks	Serial Number	Qty.
1	7104097	KIT			1
2	6816136	TRIM	63'' (1600mm) long - order Ref. 19		2
3	15EM00100B	WASHER			10
4	1CM01020B	BOLT			10
5	51DM00010B	NUT			10
6	7103193	DECAL			1
7	7103726	PLATE			2
8	6577801	LIGHT	assy		2
9	6610510	TIE	nylon		2
10	6624289	STA STRAP			2
11	6682741	RETAINER			2
12	7104183	HARNESS			1
13	7104659	HARNESS			1
14	30H000023B	CLAMP			4
15	6685607	GRILLE	speaker		2
16	6685743	SCREW			8
17	6685744	NUT			8
18	6817661	TOP GUARD			1
19	6682492	TRIM	bulk - sold per foot		x
20	6902939	INSTRUCTION			1

X-CHANGE
https://www.pdfmanual4trucks.com/

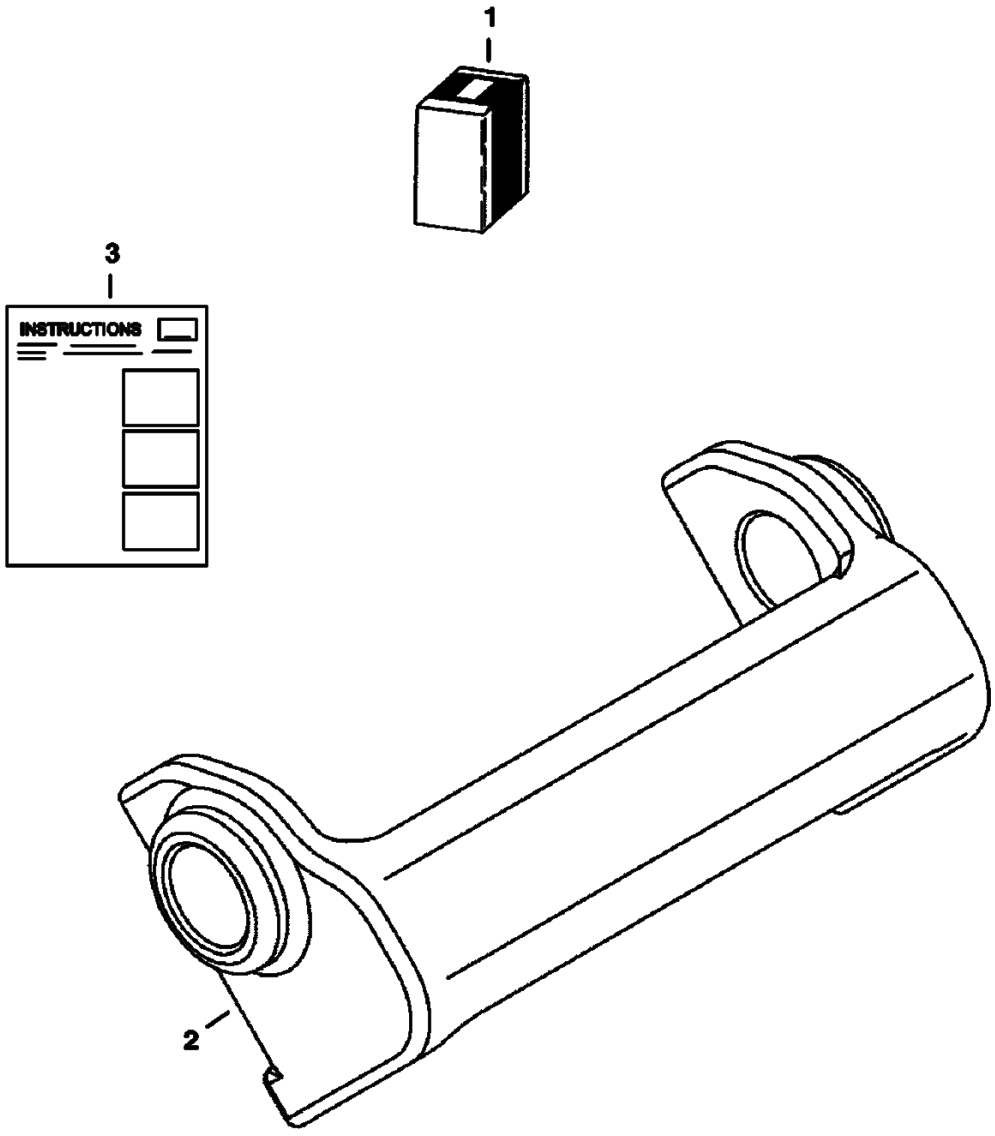

MS–1869

https://www.pdfmanual4trucks.com/

Ref. No.	Part Number	Description	Remarks	Serial Number	Qty.
1	6736191	KIT	pin on		1
2	6733852	MOUNT			1
3	6902422	INSTRUCTION			1

https://www.pdfmanual4trucks.com/

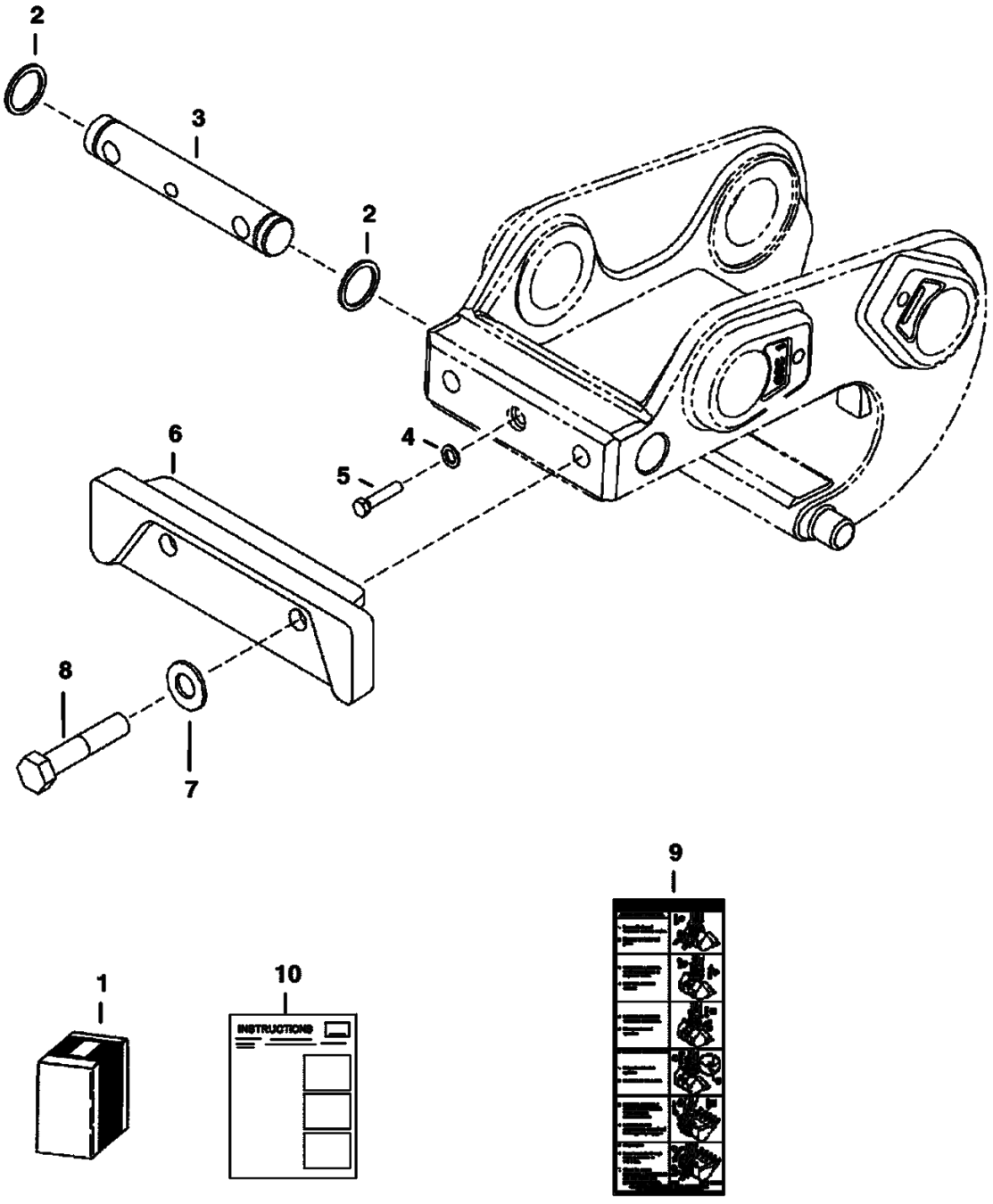

https://www.pdfmanual4trucks.com/

Ref. No.	Part Number	Description	Remarks	Serial Number	Qty.
1	6817828	KIT			1
2	58K000214B	O-RING			2
3	6733540	PIN			1
4	17EM00100B	WASHER			1
5	1CM01050B	BOLT			1
6	7103112	PLATE			1
7	6816369	GASKET			2
8	17C001056B	BOLT			2
9	6806121	DECAL			1
10	6902620	INSTRUCTION			1

https://www.pdfmanual4trucks.com/

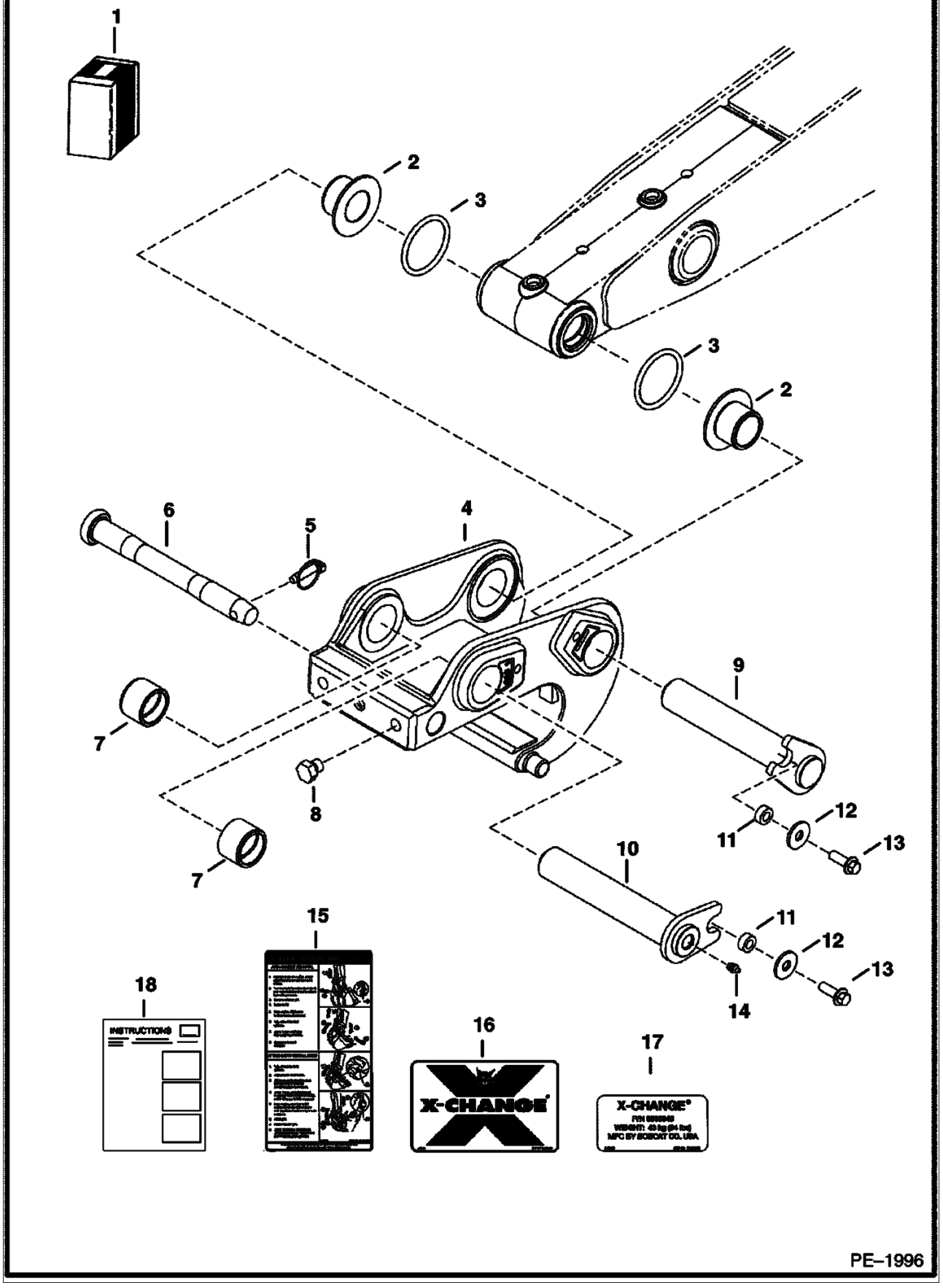

https://www.pdfmanual4trucks.com/

X-CHANGE KIT (Cont'd)
(Pin-On)

Ref. No.	Part Number	Description	Remarks	Serial Number	Qty.
1		X-CHANGE	SALES - pin-on - order 6818270		1
2	6805579	BUSHING			2
3	6674145	O-RING			2
4	6813355	X-CHANGE			1
5	6560382	RING			1
6	6734239	PIN			1
7	6802703	BUSHING			2
8	24K000006B	PLUG			3
9	6817303	PIN			1
10	6813401	PIN			1
11	6816368	SPACER			2
12	17EM00120B	WASHER			2
13	29CM01235B	BOLT			2
14	10H000025B	GREASE ZERK	grease		1
15	6818059	DECAL			1
16	7100058	DECAL			1
17	6803760	DECAL			1
18	6902634	INSTRUCTIONS			1

https://www.pdfmanual4trucks.com/

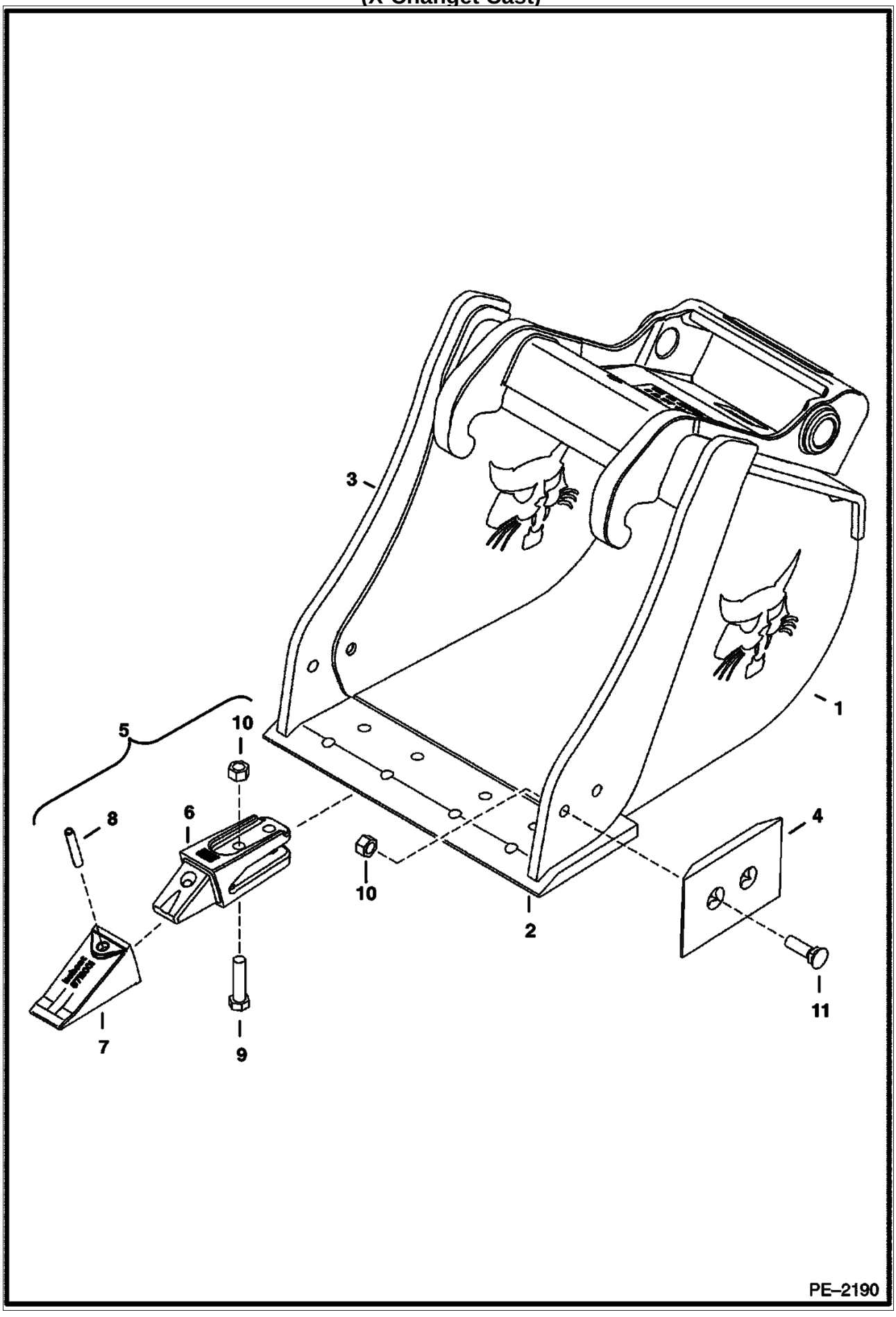

https://www.pdfmanual4trucks.com/

BUCKET (Cont'd)
(X-Changet Cast)

Ref. No.	Part Number	Description	Remarks	Serial Number	Qty.
1		BUCKET	SALES - 13'' (330mm) - uses 3 teeth - SALES #6735375		x
1		BUCKET	SALES - 16'' (406mm) - uses 4 teeth - SALES #6735380		x
1		BUCKET	SALES - 20'' (508mm) - uses 5 teeth - SALES #6735395		x
1		BUCKET	SALES - 24'' (609mm) - uses 5 teeth - SALES #6735399		x
1		BUCKET	SALES - 39'' (990mm) - does not use teeth - SALES #6735443		x
2	6805433	CUTTING EDGE	13'' (330mm)		x
2	6805434	CUTTING EDGE	16'' (406mm)		1
2	6805435	CUTTING EDGE	20'' (508mm)		1
2	6805436	CUTTING EDGE	24'' (609mm)		1
2	6805815	CUTTING EDGE	39'' (990mm)		1
3	6805771	CUTTING EDGE	for 13'' (330mm), 16'' (406mm), 20'' (508mm), 24'' (609mm), 39'' (990mm) & 52'' (1320mm)		2
4	6805464	CUTTER	side - not used on 39'' (990mm) or 52'' (1320mm) Buckets		2
5	6684448	TOOTH ASSY	W/Ref. 6 - 8		x
6		SHANK	NAP - bolt-on - order Ref. 5		x
7	6716001	TOOTH			x
8	14J003732B	PIN			x
9	47C000832B	SCREW	(1) per tooth		x
10	95D000008B	NUT	(2) per tooth		x
11	39C000828B	BOLT			4

https://www.pdfmanual4trucks.com/

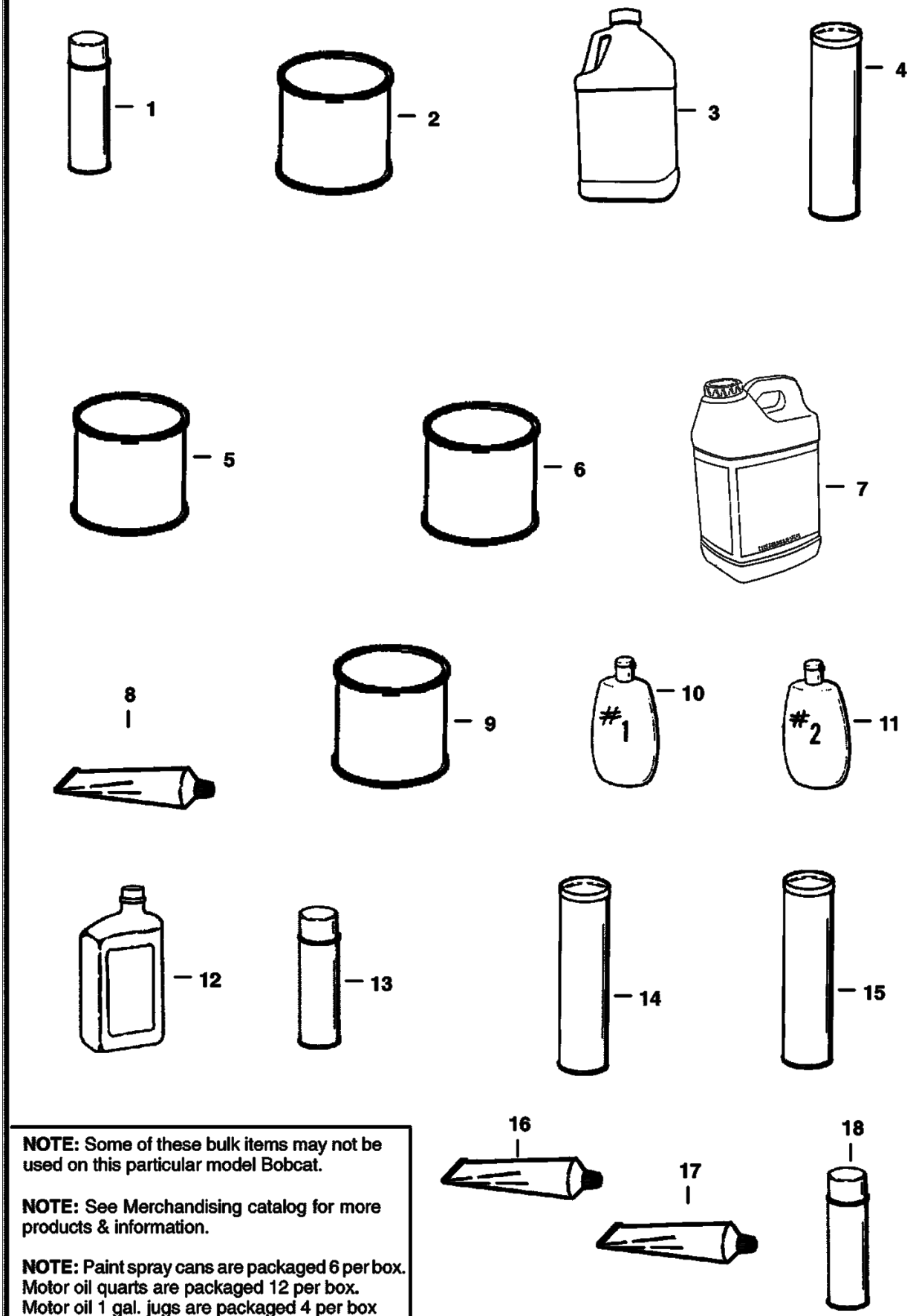

NOTE: Some of these bulk items may not be used on this particular model Bobcat.

NOTE: See Merchandising catalog for more products & information.

NOTE: Paint spray cans are packaged 6 per box.
Motor oil quarts are packaged 12 per box.
Motor oil 1 gal. jugs are packaged 4 per box
Motor oil 2.5 gal. jugs are packaged 2 per box.

https://www.pdfmanual4trucks.com/

BULK ITEMS (Cont'd)
(SEE NOTE)

Ref. No.	Part Number	Description	Remarks	Serial Number	Qty.
1	6902228	PAINT	orange - Spray Can - SEE NOTE		x
1	6902229	PAINT	charcoal -Spray Can -SEE NOTE		x
1	6902230	PAINT	white - Spray Can - SEE NOTE		x
2		PAINT	NAP - orange - Gal. - Also Order Ref. 5		x
2	6722782	PAINT	orange - Qt. - Also Order Ref. 5		x
2		PAINT	NAP - charcoal - Gal-Also Order Ref. 5		x
2	6902234	PAINT	charcoal - Qt. - Also Order Ref. 5		x
2		PAINT	NAP - white - Gallon - Also Order Ref. 5		x
2	6902235	PAINT	white - Qt. Also Order Ref. 5		x
3	6724094	ANTI-FREEEZE	gallon - PG - premixed		x
3	6724354	ANTI-FREEZE	gallon - PG - concentrate		x
4	6633583	SEALANT	chaincase covers		x
5		REDUCER	NAP - gallon		x
6		PRIMER	NAP - gallon		x
6	6653519	PRIMER	Qt.		x
7	6563328	FLUID	5 Gallons - 2-2 1/2 Gallon Containers		x
7	6722344	FLUID	5 Gallons Container		x
7		Hyd/Hydro Fluid	NAP - 30 Gallon Drum		x
7	6563330	FLUID	55 Gallon Drum		x
8	6599360	SEALANT	electrical - 3 oz. tube		x
9	6634393	LUBRICANT	90 wt. gear - pint - For use in cooling fan drive assy.		x
10	6630188	POLISH	window-1 (8 oz.)		x
10	6630190	POLISH	window-1 (64 oz.)		x
11	6630189	POLISH	window-2 (8 oz.) - scratch remover		x
11	6630191	POLISH	window-2 (64 oz.) - scratch remover		x
12	6657303	MOTOR OIL	30 CE/SG - 1 Qt. - SEE NOTE		x
12	6724559	MOTOR OIL	SAE 30 - 1 Gallon		x
12	6674206	MOTOR OIL	30 CE/SG - 2.5 Gal. - SEE NOTE		x
12	6657301	MOTOR OIL	10W30 CE/SG - 1 Qt. -SEE NOTE		x
12	6724557	MOTOR OIL	SAE 10W30 - 1 Gal. - SEE NOTE		x
12	6674205	MOTOR OIL	10W30 CE/SG-2.5 Gal.-SEE NOTE		x
12	6657299	MOTOR OIL	15W40 CE/SG - 1 Qt. -SEE NOTE		x
12	6724558	MOTOR OIL	SAE 15W40 - 1 Gal. - SEE NOTE		x
12	6674204	MOTOR OIL	15W40 CE/SG-2.5 Gal.-SEE NOTE		x
13	6652818	ADHESIVE	insulation - spray can		x
14	6658266	GREASE	general purpose		x
15	6599719	GREASE	14.5 oz. cartridge - For fan idler bearing & spring loaded drive idler		x
16	6650407	ADHESIVE	1 oz. tube		x
17	6650388	SEALANT	flange		x
18	6736644	PAINT	orange - 5 oz. spray can		x
18	6736641	PAINT	charcoal - 5 oz. spray can		x
18	6736642	PAINT	white - 5 oz. spray can		x
18	6736645	PAINT	red - 5 oz. spray can		x

https://www.pdfmanual4trucks.com/

CONTENTS

https://www.pdfmanual4trucks.com/

MAIN FRAME 1-26
UPPERSTRUCTURE 1
TAILGATE 3
OPERATOR CAB 5-8
OPERATOR SEAT 9
SEAT SUSPENSION 11
RIGHT WINDOW 13
CAB ENCLOSURE 15-20
CANOPY 21
INSULATION 23
R.H. COVER 25
UNDERCARRIAGE 27-40
TRACK ROLLER 35-40
UNDERCARRIAGE 27
FRONT IDLER 29
RECOIL SPRING 31-34
WORK EQUIPMENT 41-48
SWING FRAME 41
ARM 43
BOOM 45
BLADE 47
CONTROLS 49-60
R.H. CONSOLE 49
L.H. CONSOLE 51
BLADE CONTROL 53
THROTTLE CONTROL 55
TRAVEL 57-60
HYDRAULIC SYSTEM 61-152
PRESSURE RINGS 113
HYDRAULIC TANK 115
SWIVEL ASSY 117
CONTROL VALVE 119-142
ARM CYLINDER 143
BLADE CYLINDER 145
BOOM CYLINDER 147
BUCKET CYLINDER 149
SWING CYLINDER 151
HYDRAULIC PUMP 77
HYDROSTATIC OIL FILTER 79
ISO/STD 81
MANIFOLD 83
LOCK VALVE 85
RELIEF/BRAKE VALVE 87
SWING MOTOR 89-96
FAN MOTOR 97
R.H. JOYSTICK 99
L.H. JOYSTICK 101
TRAVEL CONTROLLER 103
TRAVEL MOTOR 105
ROTARY GROUP 107-110
PRESSURE VALVE 111
HYDRAULIC CIRCUITRY 61-76
ELECTRICAL SYSTEM 153-164
ELECTRICAL 153-160
ALTERNATOR 161
STARTER 163
POWER UNIT 165-218
PISTON & CRANKSHAFT 185

CONTENTS (Cont'd)

https://www.pdfmanual4trucks.com/

POWER UNIT
FUEL CAMSHAFT & GOVERNOR SHAFT 187
ENGINE STOP LEVER 189
INJECTION PUMP 191
GOVERNOR 193
SPEED CONTROL PLATE 195
INJECTOR HOLDER & GLOW PLUG 197
FAN 199
OIL SWITCH/THERMOMETER & PLUG 201
WATER FLANGE & THERMOSTAT 203
WATER PUMP 205
VALVE & ROCKER ARM 207
MANIFOLD 209
TURBO CHARGER 211
OIL PIPE 213
OIL COOLER 215
FUEL SYSTEM 217
ENGINE & ATTACHING PARTS 165-170
CRANKCASE 171
OIL PAN 173
CYLINDER HEAD 175
GEARCASE 177
HEAD COVER 179
CAMSHAFT & IDLE GEAR SHAFT 181
IDLER 183

ACCESSORIES & OPTIONS 219-282
SOLAR KIT 259
SPECIAL APPLICATION KIT 261-264
STEEL TRACK KIT 265
STROBE LIGHT KIT 267
TOP GUARD KIT 269
TOP GUARD LIGHT KIT 271
X-CHANGE 273-276
X-CHANGE KIT 277
BULK ITEMS 281
SEAT BELT KIT 257
BEACON KIT 221
BLOCK HEATER 223
BUCKET 225-280
DECALS 227
DIRECT TO TANK 229
HEATER BOX 231
HEATER KIT 233
HVAC BOX 235
HVAC DUCT 237
HVAC KIT 239-242
HVAC INSTALLATION 243-246
KEYLESS IGNITION KIT 247
LONG ARM KIT 249
MOTION ALARM KIT 251
RADIO KIT 253
SECONDARY AUXILIARY KIT 255
AIR CONDITIONER UPGRADE KIT 219

https://www.pdfmanual4trucks.com/

Part No.	Description	Was	Code	Page
10CM01455B	SCREW	10CM01460B	A	20, 22
10CM01455B	SCREW	10CM01460B	B	20, 22
10CM01455B	SCREW			20, 22
10H000025B	GREASE ZERK	10H000015B	A	4, 42, 44, 46, 48, 62, 70, 144, 146, 148, 150, 152, 278
10H000025B	GREASE ZERK	10H000035B	B	4, 42, 44, 46, 48, 62, 70, 144, 146, 148, 150, 152, 278
10H000025B	GREASE ZERK	NSS	D	4, 42, 44, 46, 48, 62, 70, 144, 146, 148, 150, 152, 278
10H000025B	GREASE ZERK	NSS		4, 42, 44, 46, 48, 62, 70, 144, 146, 148, 150, 152, 278
10H000025B	GREASE ZERK			4, 42, 44, 46, 48, 62, 70, 144, 146, 148, 150, 152, 278
10J000005B	BALL			188
10J000013B	BALL			178
10L001212B	TUBE			72
12D000006B	NUT	61D000004B	B	252
12D000006B	NUT			252
12D000008B	NUT	85D000004B	B	160
12D000008B	NUT			160
12D000010B	NUT	12D000008B	B	252
12D000010B	NUT	14D000010B	A	252
12D000010B	NUT	14D000010B	B	252
12D000010B	NUT	6664050	A	252
12D000010B	NUT	84G003116B	B	252
12D000010B	NUT			252
12E000006B	WASHER			252
12H000015B	GREASE ZERK	10H000015B	A	48, 70, 146
12H000015B	GREASE ZERK	12H000025B	B	48, 70, 146
12H000015B	GREASE ZERK	12H000025B	B,D	48, 70, 146
12H000015B	GREASE ZERK	743332B	B	48, 70, 146
12H000015B	GREASE ZERK	NSS	D	48, 70, 146
12H000015B	GREASE ZERK	NSS		48, 70, 146
12H000015B	GREASE ZERK			48, 70, 146
1306637B	PIN	- 59D000005B		16
1306637B	PIN	- 59D000005B Was - 59D000005B		16
1306637B	PIN	59D000005B	B	16
1306637B	PIN			16
13JM20025B	PIN			52
13K000003B	TEE			256
13K000006B	FITTING			256
14D000010B	NUT	12D000006B	A	56
14D000010B	NUT	14K000010B	A	56
14D000010B	NUT	8D000004B	B	56
14D000010B	NUT			56
14J000820B	PIN			52
14J001816B	PIN			52
14J003732B	PIN	6656387	A	226, 280
14J003732B	PIN	6671145	A	226, 280
14J003732B	PIN			226, 280
15EM00100B	WASHER	6537432	A	160, 270, 272
15EM00100B	WASHER			160, 270, 272
15EM00160B	WASHER			52
15EM00200B	WASHER			38
15KB00404B	ADAPTER			62, 64, 76, 82
15KB00406B	ADAPTER			66, 120, 256

Code for disposition of old part number

A -- Use up

B -- Use on other application (See PNI)

C -- File PDR Report with Bobcat Parts Sales

D -- Part Number Error

https://www.pdfmanual4trucks.com/

Part No.	Description	Was	Code	Page
15KB00606B	ADAPTER	15KV-5	A	62, 64, 66, 76, 256
15KB00606B	ADAPTER	15KV-5		62, 64, 66, 76, 256
15KB00606B	ADAPTER	18KB606B	B	62, 64, 66, 76, 256
~~15KB00606B~~	~~ADAPTER~~			~~62, 64, 66, 76, 256~~
15KB00806B	CONNECTOR			62
15KB00808B	ADAPTER	17KV00006B	B,D	62, 64, 120
~~15KB00808B~~	~~ADAPTER~~			~~62, 64, 120~~
15KB00810B	CONNECTOR			72
15KB01008B	CONNECTOR			120
~~15KB01616B~~	~~CONNECTOR~~			~~72~~
16F000002B	PLUG	15F-2	A	202
16F000002B	PLUG	15F-2		202
~~16F000002B~~	~~PLUG~~	~~6512916~~	~~A~~	~~202~~
16F000002B	PLUG	998050B	A	202
16F000002B	PLUG			202
~~16KB00606B~~	~~ADAPTER~~			~~64~~
16KB00808B	CONNECTOR			120
16KB01008B	CONNECTOR			120
~~16KB01212B~~	~~ADAPTER~~			~~120~~
17C000532B	BOLT	17C000544B	B	46
17C000532B	BOLT			46
17C000620B	BOLT	17C-6204	D	78
~~17C000620B~~	~~BOLT~~	~~17C-670~~	~~B~~	~~78~~
17C000620B	BOLT	17C000612B	B	78
17C000620B	BOLT	17C000616B	B	78
~~17C000620B~~	~~BOLT~~	~~35C000628B~~	~~B~~	~~78~~
17C000620B	BOLT	4F006106B	B, D	78
17C000620B	BOLT	4F006106B	B,D	78
~~17C000620B~~	~~BOLT~~	~~6717378~~	~~A~~	~~78~~
17C000620B	BOLT	6717378	B	78
17C000620B	BOLT			78
~~17C000732B~~	~~SCREW~~			~~62~~
17C000820B	BOLT	17C000816B	A	2
17C000820B	BOLT	17C000824B	B	2
~~17C000820B~~	~~BOLT~~	~~25G000820B~~	~~A~~	~~2~~
17C000820B	BOLT			2
17C001056B	BOLT			276
~~17C005152B~~	~~BOLT~~	~~- 1C005148B~~	~~B~~	~~156~~
17C005152B	BOLT	- 1C005148B		156
17C005152B	BOLT			156
17EM00100B	WASHER	15EM00080B	B	120, 166, 276
17EM00100B	WASHER			120, 166, 276
17EM00120B	WASHER	17EM00100B		42, 278
17EM00120B	WASHER			42, 278
~~17KB00404B~~	~~ELBOW~~	~~17KV-3~~	~~A~~	~~62, 76, 78, 82~~
17KB00404B	ELBOW			62, 76, 78, 82
17KB00406B	ELBOW			62, 66, 72, 120
~~17KB00606B~~	~~ELBOW~~	~~17KN00005B~~	~~B~~	~~62, 64, 76, 116, 120, 256~~
17KB00606B	ELBOW	17KV-5	A	62, 64, 76, 116, 120, 256
17KB00606B	ELBOW	17KV-5		62, 64, 76, 116, 120, 256
~~17KB00606B~~	~~ELBOW~~	~~17KV00005B~~	~~B~~	~~62, 64, 76, 116, 120, 256~~
17KB00606B	ELBOW	21KB00606	A	62, 64, 76, 116, 120, 256
17KB00606B	ELBOW	6657211	A	62, 64, 76, 116, 120, 256
~~17KB00606B~~	~~ELBOW~~		~~A~~	~~62, 64, 76, 116, 120, 256~~
17KB00606B	ELBOW			62, 64, 76, 116, 120, 256
17KB00806B	FITTING	672942	A	62, 256

Code for disposition of old part number

A -- Use up

B -- Use on other application (See PNI)

C -- File PDR Report with Bobcat Parts Sales

D -- Part Number Error

https://www.pdfmanual4trucks.com/

Part No.	Description	Was	Code	Page
17KB00806B	FITTING	672942		62, 256
17KB00806B	FITTING	672942B	A	62, 256
17KB00806B	FITTING			62, 256
17KB00808B	ELBOW			62, 64, 116, 120
17KB00810B	ELBOW	6715716	A	72, 78
17KB00810B	ELBOW			72, 78
17KB01012B	ELBOW	1302104	A	230
17KB01012B	ELBOW	1302104B	A	230
17KB01012B	ELBOW			230
17KB01210B	ELBOW	1300294	A	120
17KB01210B	ELBOW	6714901	A	120
17KB01210B	ELBOW			120
17KB01612B	ELBOW	1300309B	A	72
17KB01612B	ELBOW	6800657	A	72
17KB01612B	ELBOW			72
17KB01616B	ELBOW			230
18KB00606B	ELBOW			62
18KB01212B	ELBOW			72
19J000016B	CLAMP			78
19KB000812B	FITTING			78
19KB00606B	TEE	19K000005B	B	64
19KB00606B	TEE			64
19KB00808B	FITTING			64
1C000416B	SCREW			16, 58
1C000420B	SCREW			26
1C000532B	BOLT			70
1C000610B	SCREW	1C000612B	B	184
1C000610B	SCREW			184
1C000848B	SCREW			78
1CM00610B	SCREW			220, 242
1CM00612B	SCREW			4, 244
1CM00616B	BOLT	17C-408	B	206
1CM00616B	BOLT	17C000408B	A	206
1CM00616B	BOLT	17C000408B	B	206
1CM00616B	BOLT	17C000408B	B	206
1CM00616B	BOLT	1CM00615B	A	206
1CM00616B	BOLT	1CM00615B		206
1CM00616B	BOLT	29CM00616B	B	206
1CM00616B	BOLT			206
1CM00620B	BOLT	1CM00610B	D	54, 262, 264
1CM00620B	BOLT			54, 262, 264
1CM00630B	BOLT	1CM00625B	B	60
1CM00630B	BOLT	23GM00525B	B	60
1CM00630B	BOLT			60
1CM00825B	BOLT	1CM00820B	B	10
1CM00825B	BOLT	1CM00830B	A	10
1CM00825B	BOLT			10
1CM00835B	BOLT	1CM00825B	B	178, 204
1CM00835B	BOLT	1CM00830B	B	178, 204
1CM00835B	BOLT	1CM00830B	D	178, 204
1CM00835B	BOLT	1CM00834B	A	178, 204
1CM00835B	BOLT			178, 204
1CM00840B	SCREW	1C000532B	B	70
1CM00840B	SCREW	1CM00850B	B	70
1CM00840B	SCREW			70
1CM00860B	SCREW	17C000520B		70

Code for disposition of old part number

A -- Use up
B -- Use on other application (See PNI)
C -- File PDR Report with Bobcat Parts Sales
D -- Part Number Error

https://www.pdfmanual4trucks.com/

Part No.	Description	Was	Code	Page
1CM00860B	SCREW	1CM00850B	B	70
1CM00860B	SCREW	1CM00870B	A	70
1CM00860B	SCREW	1CM00870B	B	70
1CM00860B	SCREW	1CM01060B	D	70
1CM00860B	SCREW		B	70
1CM00860B	SCREW			70
1CM00870B	BOLT			178
1CM00880B	SCREW	17CM-880	D	168, 220, 242, 244
1CM00880B	SCREW	1CM-880	B,D	168, 220, 242, 244
1CM00880B	SCREW	1CM00890B	B	168, 220, 242, 244
1CM00880B	SCREW			168, 220, 242, 244
1CM00885B	SCREW			168
1CM01020B	BOLT			270, 272
1CM01025B	SCREW	6535080	A	54, 62
1CM01025B	SCREW	7GM01025B	D	54, 62
1CM01025B	SCREW			54, 62
1CM01030B	SCREW	17C000512B	A	72
1CM01030B	SCREW	1CM01025B	B	72
1CM01030B	SCREW	1CM01040B	B	72
1CM01030B	SCREW	3GM01025B	A	72
1CM01030B	SCREW	7CM-1030	B	72
1CM01030B	SCREW			72
1CM01040B	SCREW	6646278		58, 60
1CM01040B	SCREW			58, 60
1CM01050B	BOLT			276
1CM01055B	SCREW	1CM01065B	B	54
1CM01055B	SCREW			54
1CM01220B	SCREW	6CM01220B	B	58, 258
1CM01220B	SCREW			58, 258
1CM01235B	SCREW	1CM01035B	D	168
1CM01235B	SCREW	1CM01225B	D	168
1CM01235B	SCREW	29CM01025B	D	168
1CM01235B	SCREW			168
1CM01250B	BOLT			258
1CM01280B	SCREW			170
1CM08100B	BOLT			256
1CM08110B	SCREW			168
1DM00020B	NUT	36DM00020B	A	38
1DM00020B	NUT	36DM00020B	B	38
1DM00020B	NUT			38
1EM00120B	WASHER			258
1EM00240B	WASHER			36, 40
1F000212B	PIN			54, 60
21CM00616B	BOLT			6
21CM00820B	BOLT	29CM00820B	D	26, 46
21CM00820B	BOLT			26, 46
21CM01025B	BOLT			58
21CM01035B	BOLT			120
21KB00404B	TEE			62
21KB00808B	TEE			64, 72
21KB01212B	FITTING	21K-8	A	120
21KB01212B	FITTING	21K000008B	A	120
21KB01212B	FITTING			120
21KB01616B	TEE			230
24K000002B	PLUG			72
24K000005B	PLUG			64, 66

Code for disposition of old part number

A -- Use up

B -- Use on other application (See PNI)

C -- File PDR Report with Bobcat Parts Sales

D -- Part Number Error

https://www.pdfmanual4trucks.com/

Part No.	Description	Was	Code	Page
24K000006B	PLUG	6650157	D	116, 278
24K000006B	PLUG	6717401	B	116, 278
24K000006B	PLUG			116, 278
25E000013B	WASHER	17C000408B	B,D	262, 264
25E000013B	WASHER	25E000015B	A	262, 264
25E000013B	WASHER	25E000015B	B	262, 264
25E000013B	WASHER	664421	A	262, 264
25E000013B	WASHER	6E000004B	B	262, 264
25E000013B	WASHER	6E000004B		262, 264
25E000013B	WASHER			262, 264
25E000016B	WASHER	872229	B	10
25E000016B	WASHER			10
25E000021B	WASHER	4E000008B	B	168
25E000021B	WASHER	619027	A	168
25E000021B	WASHER	664425	A	168
25E000021B	WASHER			168
25E000022B	WASHER	17E000010B	B	58
25E000022B	WASHER			58
25G000510B	SCREW		B	8, 26
25G000510B	SCREW			8, 26
26GM06020B	SCREW			16, 76
26GM08013B	SCREW	26GM08012B	A	56, 166
26GM08013B	SCREW			56, 166
26GM08016B	SCREW	1CM00812B	A	22, 50, 52, 72, 82, 156, 160, 168
26GM08016B	SCREW	1CM00812B	B	22, 50, 52, 72, 82, 156, 160, 168
26GM08016B	SCREW	1CM00816B	A	22, 50, 52, 72, 82, 156, 160, 168
26GM08016B	SCREW	1CM00816B	B	22, 50, 52, 72, 82, 156, 160, 168
26GM08016B	SCREW	1CM00820B	B	22, 50, 52, 72, 82, 156, 160, 168
26GM08016B	SCREW	29CM00812B	B	22, 50, 52, 72, 82, 156, 160, 168
26GM08016B	SCREW	29CM00816B	B	22, 50, 52, 72, 82, 156, 160, 168
26GM08016B	SCREW	29CM00820B	B	22, 50, 52, 72, 82, 156, 160, 168
26GM08016B	SCREW			22, 50, 52, 72, 82, 156, 160, 168
26GM08020B	SCREW	26GM08016B	D	2, 50, 52, 156, 160
26GM08020B	SCREW	29CM00820B	B	2, 50, 52, 156, 160
26GM08020B	SCREW			2, 50, 52, 156, 160
26GM10016B	SCREW			76
26GM10020B	SCREW	1CM00812B	B	10, 26, 28, 32, 34, 52, 56, 60, 66, 72, 76, 116, 156, 170, 218, 230, 234, 240, 244
26GM10020B	SCREW	26GM-10002	D	10, 26, 28, 32, 34, 52, 56, 60, 66, 72, 76, 116, 156, 170, 218, 230, 234, 240, 244
26GM10020B	SCREW	26GM01020B	A	10, 26, 28, 32, 34, 52, 56, 60, 66, 72, 76, 116, 156, 170, 218, 230, 234, 240, 244
26GM10020B	SCREW	26GM10030B	B	10, 26, 28, 32, 34, 52, 56, 60, 66, 72, 76, 116, 156, 170, 218, 230, 234, 240, 244

Code for disposition of old part number

A -- Use up

B -- Use on other application (See PNI)

C -- File PDR Report with Bobcat Parts Sales

D -- Part Number Error

https://www.pdfmanual4trucks.com/

Part No.	Description	Was	Code	Page
26GM10020B	SCREW	29CM-1016	A	10, 26, 28, 32, 34, 52, 56, 60, 66, 72, 76, 116, 156, 170, 218, 230, 234, 240, 244
26GM10020B	SCREW	29CM01016B	A	10, 26, 28, 32, 34, 52, 56, 60, 66, 72, 76, 116, 156, 170, 218, 230, 234, 240, 244
26GM10020B	SCREW	29CM01016B	B	10, 26, 28, 32, 34, 52, 56, 60, 66, 72, 76, 116, 156, 170, 218, 230, 234, 240, 244
26GM10020B	SCREW	29CM01020B	A	10, 26, 28, 32, 34, 52, 56, 60, 66, 72, 76, 116, 156, 170, 218, 230, 234, 240, 244
26GM10020B	SCREW	29CM01020B	B	10, 26, 28, 32, 34, 52, 56, 60, 66, 72, 76, 116, 156, 170, 218, 230, 234, 240, 244
26GM10020B	SCREW	29CM01020B	D	10, 26, 28, 32, 34, 52, 56, 60, 66, 72, 76, 116, 156, 170, 218, 230, 234, 240, 244
26GM10020B	SCREW	29CM01060B	A	10, 26, 28, 32, 34, 52, 56, 60, 66, 72, 76, 116, 156, 170, 218, 230, 234, 240, 244
26GM10020B	SCREW	99K000008B	B	10, 26, 28, 32, 34, 52, 56, 60, 66, 72, 76, 116, 156, 170, 218, 230, 234, 240, 244
26GM10020B	SCREW			10, 26, 28, 32, 34, 52, 56, 60, 66, 72, 76, 116, 156, 170, 218, 230, 234, 240, 244
26GM10030B	SCREW	26CM-10030	D	10, 28, 50, 266
26GM10030B	SCREW	26GM-130	D	10, 28, 50, 266
26GM10030B	SCREW	26GM10025B	A	10, 28, 50, 266
26GM10030B	SCREW	29CM01030B	B	10, 28, 50, 266
26GM10030B	SCREW			10, 28, 50, 266
27CM00835B	SCREW			52
27CM01030B	SCREW			20, 22
27E000005B	WASHER	3727372B	B	170
27E000005B	WASHER			170
27E000006B	WASHER	25E000017B	D	16
27E000006B	WASHER	27E000016B	D	16
27E000006B	WASHER		B	16
27E000006B	WASHER			16
27E000008B	WASHER			72
28CM00820B	BOLT			20
28CM00830B	BOLT			56
28CM01020B	BOLT	1CM01016B	B	72, 220, 234, 240, 244, 256
28CM01020B	BOLT	28CM01030B	B	72, 220, 234, 240, 244, 256
28CM01020B	BOLT			72, 220, 234, 240, 244, 256
28CM01030B	BOLT			26, 166
28E000006B	WASHER			244, 245, 246
29CM00612B	SCREW			234, 244
29CM00616B	SCREW	1CM00610B	A	52, 72, 252
29CM00616B	SCREW	1CM00616B	A	52, 72, 252
29CM00616B	SCREW	1CM00616B	B	52, 72, 252
29CM00616B	SCREW	6652762	A	52, 72, 252
29CM00616B	SCREW			52, 72, 252
29CM00620B	SCREW	29CM00616B	B	168, 218
29CM00620B	SCREW			168, 218
29CM00625B	SCREW	17CM-625	A	76
29CM00625B	SCREW	17EM-625	D	76

Code for disposition of old part number

A -- Use up

B -- Use on other application (See PNI)

C -- File PDR Report with Bobcat Parts Sales

D -- Part Number Error

https://www.pdfmanual4trucks.com/

Part No.	Description	Was	Code	Page
29CM00625B	SCREW			76
29CM00812B	SCREW	29CM00612B	A	52, 70, 160
29CM00812B	SCREW	29CM00812B	A	52, 70, 160
29CM00812B	SCREW	29CM00820B	A	52, 70, 160
29CM00812B	SCREW	29CM00820B	B	52, 70, 160
29CM00812B	SCREW			52, 70, 160
29CM00816B	SCREW	1CM00816B	B	10, 50, 66, 82, 116, 166, 170, 252
29CM00816B	SCREW	1CM00820B	B	10, 50, 66, 82, 116, 166, 170, 252
29CM00816B	SCREW	26GM10020B	D	10, 50, 66, 82, 116, 166, 170, 252
29CM00816B	SCREW	29CM-815	B	10, 50, 66, 82, 116, 166, 170, 252
29CM00816B	SCREW	29CM00820B	B	10, 50, 66, 82, 116, 166, 170, 252
29CM00816B	SCREW	29GM-816	D	10, 50, 66, 82, 116, 166, 170, 252
29CM00816B	SCREW			10, 50, 66, 82, 116, 166, 170, 252
29CM00820B	BOLT	1CM00820B	B	2, 26, 72, 116, 166, 168, 218
29CM00820B	BOLT	29CM00816B	B	2, 26, 72, 116, 166, 168, 218
29CM00820B	BOLT	29CM00830B	B	2, 26, 72, 116, 166, 168, 218
29CM00820B	BOLT	35C000512B	B	2, 26, 72, 116, 166, 168, 218
29CM00820B	BOLT			2, 26, 72, 116, 166, 168, 218
29CM00825B	SCREW			120
29CM00830B	SCREW	29CM00825B	B	58
29CM00830B	SCREW			58
29CM00850B	SCREW			62, 230
29CM00870B	SCREW			76
29CM01016B	SCREW	29CM01030B	B	156, 160
29CM01016B	SCREW			156, 160
29CM01020B	SCREW	- 26GM10020B		42, 72, 166, 218, 256
29CM01020B	SCREW	1CM01020B	A	42, 72, 166, 218, 256
29CM01020B	SCREW	1CM01020B	B	42, 72, 166, 218, 256
29CM01020B	SCREW	1CM01025B	B	42, 72, 166, 218, 256
29CM01020B	SCREW	1CM01030B	B	42, 72, 166, 218, 256
29CM01020B	SCREW	26GM10020B	B	42, 72, 166, 218, 256
29CM01020B	SCREW	26GM10020B		42, 72, 166, 218, 256
29CM01020B	SCREW	29CM01016B	D	42, 72, 166, 218, 256
29CM01020B	SCREW	49DM00010B	D	42, 72, 166, 218, 256
29CM01020B	SCREW			42, 72, 166, 218, 256
29CM01025B	SCREW	1CM01025B	A	10, 166, 168
29CM01025B	SCREW	29CM01020B	A	10, 166, 168
29CM01025B	SCREW	29GM-1025	D	10, 166, 168
29CM01025B	SCREW	7GM01020B	A	10, 166, 168
29CM01025B	SCREW	7GM01025B	A	10, 166, 168
29CM01025B	SCREW			10, 166, 168
29CM01030B	SCREW	1CM01030B	B	116
29CM01030B	SCREW			116
29CM01035B	SCREW	30CM01035B	B	170
29CM01035B	SCREW			170
29CM01050B	SCREW	29DM-1050	D	2
29CM01050B	SCREW			2
29CM01225B	SCREW			170
29CM01235B	BOLT	59CM01235B	A	42, 278
29CM01235B	BOLT			42, 278

Code for disposition of old part number

A -- Use up

B -- Use on other application (See PNI)

C -- File PDR Report with Bobcat Parts Sales

D -- Part Number Error

https://www.pdfmanual4trucks.com/

Part No.	Description	Was	Code	Page
29CM01435B	SCREW			78
29CM01650B	SCREW			170
2EM00008B	WASHER			176
2JM01085B	PIN			30
30GJ000616B	CLIP			234
30H000010B	CLAMP			6, 154
30H000019B	CLAMP	30H000019B	B	160
30H000019B	CLAMP	30H000019B	B,D	160
30H000019B	CLAMP	30H000020B	B	160
30H000019B	CLAMP	30H000021B	B	160
30H000019B	CLAMP	30H000021B	B,D	160
30H000019B	CLAMP			160
30H000022B	CLIP	29CM00820B	A	160
30H000022B	CLIP	29CM00820B	B	160
30H000022B	CLIP			160
30H000023B	CLAMP			56, 272
30H000026B	CLIP			160
30H000037B	CLAMP	30H000007B	B	70
30H000037B	CLAMP	30H000007B	D	70
30H000037B	CLAMP	30H000031B	D	70
30H000037B	CLAMP			70
30H000046B	CLAMP	30H000041B		156
30H000046B	CLAMP	30H000042B	B	156
30H000046B	CLAMP	30H000047B	D	156
30H000046B	CLAMP	31H000038B	B	156
30H000046B	CLAMP			156
30H000048B	CLAMP			160
30H000050B	CLAMP	30H000045B	B	70, 156
30H000050B	CLAMP	30H000046B	A	70, 156
30H000050B	CLAMP	30H000046B	B	70, 156
30H000050B	CLAMP	31H000042B	B	70, 156
30H000050B	CLAMP	31H000045B	B	70, 156
30H000050B	CLAMP			70, 156
30H000060B	CLAMP	30H000050B	B	166
30H000060B	CLAMP	30H000058B	B	166
30H000060B	CLAMP	6703939	A	166
30H000060B	CLAMP			166
30H000065B	CLIP			72, 160
30H000075B	CLAMP			116
30H000085B	CLAMP	31H000042B	B	76
30H000085B	CLAMP			76
30H000100B	CLAMP			76
30HJ00616B	CLAMP	30HJ00512B	B	116
30HJ00616B	CLAMP			116
30HJ00624B	CLIP	30HJ-620	B	218
30HJ00624B	CLIP			218
31H000031B	CLAMP	31H000042B	B	218
31H000031B	CLAMP			218
31H000038B	CLAMP	30H000023B	A	66
31H000038B	CLAMP	30H000023B	B	66
31H000038B	CLAMP	30H000038B	B	66
31H000038B	CLAMP	30HJ00608B	B	66
31H000038B	CLAMP	31H000027B	B	66
31H000038B	CLAMP	31H000034B	B	66
31H000038B	CLAMP	31H000046B	B	66
31H000038B	CLAMP	31H000046B	B,D	66

Code for disposition of old part number

A -- Use up

B -- Use on other application (See PNI)

C -- File PDR Report with Bobcat Parts Sales

D -- Part Number Error

https://www.pdfmanual4trucks.com/

Part No.	Description	Was	Code	Page
31H000038B	CLAMP			66
31H000042B	CLIP	31H000046B	B	160, 168
31H000042B	CLIP			160, 168
35C000516B	BOLT	17C000516B	B	256
35C000516B	BOLT	35C000616B	B	256
35C000516B	BOLT	58G002512B	B	256
35C000516B	BOLT	6554744	A	256
35C000516B	BOLT	84G003112B	A	256
35C000516B	BOLT			256
35C000612B	BOLT	17C000612B	A	72
35C000612B	BOLT	17C000614B		72
35C000612B	BOLT	25G000612B	B	72
35C000612B	BOLT	31C-612	A	72
35C000612B	BOLT	31C000612B	A	72
35C000612B	BOLT	31C000612B	B	72
35C000612B	BOLT	31C000612B	B, D	72
35C000612B	BOLT	31C000612B	B,D	72
35C000612B	BOLT	35C000616B	B	72
35C000612B	BOLT	35C000620B	B	72
35C000612B	BOLT	45C000616B	B	72
35C000612B	BOLT			72
35D000408B	SCREW			20
36K000006B	CAP	36K000006B	B	116
36K000006B	CAP	36K000008B	B	116
36K000006B	CAP			116
36K000010B	CAP			72, 230
37C000832B	BOLT			168
38C000606B	SCREW	6534900	A	26
38C000606B	SCREW			26
38C000824B	BOLT	31C000420B	B	4
38C000824B	BOLT			4
38C000840B	BOLT	37C000644	B	2
38C000840B	BOLT			2
3974260B	BOLT			198
3974347	STUD			204
3974389B	GASKET	6680753	A	172
3974389B	GASKET			172
3974393B	PIN			172
3974394B	PIN			172
3974395B	PIN			172, 178
3974447B	PIPE			172
3974462B	STUD			190, 196
3974514B	SPRING			208
3974515B	RETAINER			208
3974517B	SEAL	6653830	A	208
3974517B	SEAL			208
3974518B	CAP			208
3974521B	BRACKET			208
3974525B	SPRING			208
3974546B	KEY			182
3974547B	STOPPER	6653843	A	182
3974547B	STOPPER			182
3974577B	O-RING			186
3974618B	CIRCLIP			188
3974620B	CIRCLIP	3974618B	A	188
3974620B	CIRCLIP			188

Code for disposition of old part number

A -- Use up

B -- Use on other application (See PNI)

C -- File PDR Report with Bobcat Parts Sales

D -- Part Number Error

https://www.pdfmanual4trucks.com/

Part No.	Description	Was	Code	Page
3974662B	BOLT			194
3974671B	NUT			186
3974868B	PIN			172
3974882B	BRACKET	6670349	A	175, 176
3974882B	BRACKET			175, 176
3974891B	ADAPTER			178
3974892B	SPRING			178
3974893B	SEAT			178
3974894B	FLANGE			178
3974916B	STUD	6652670	D	192, 210
3974916B	STUD			192, 210
3974920B	SCREW			208
3974928B	SCREW			180
3974940B	BOLT			186
3974971B	NUT	6653903	A	196
3974971B	NUT			196
3974972B	GASKET			196
3974977B	SPRING			190
3974991B	BEARING	6653943	A	206
3974991B	BEARING			206
3975169	CAP	- 3974169	D	172
3975169	CAP	3974169	D	172
3975169	CAP			172
3975337B	COLLAR	3974576B	A	186
3975337B	COLLAR	3975336B	D	186
3975337B	COLLAR			186
3975424B	SLINGER			186
3975441B	GEAR	3974869B	A	172
3975441B	GEAR			172
39C000824B	BOLT			226
39C000828B	BOLT	- 39C000824B		280
39C000828B	BOLT			280
3GM00820B	SCREW	1CM00816B	A	168
3GM00820B	SCREW	1GM-820	B	168
3GM00820B	SCREW	36M-820	D	168
3GM00820B	SCREW	6674702	A	168
3GM00820B	SCREW	6678112	A	168
3GM00820B	SCREW			168
42DM00010B	NUT			64
42H000056B	CLAMP			62, 70, 170, 220, 242, 244
42HC00200B	CLAMP	5HM00040B	B	166
42HC00200B	CLAMP	6672281	A	166
42HC00200B	CLAMP			166
42HC00250B	CLAMP	42HL00250B	B	170
42HC00250B	CLAMP			170
42HC00350B	CLAMP			170
42HS00004B	CLAMP	42HL00050B	B	218
42HS00004B	CLAMP	6515575	A	218
42HS00004B	CLAMP	6515575	B	218
42HS00004B	CLAMP			218
43DM00006B	NUT	42DM00006B	B	6, 26, 76, 160, 252
43DM00006B	NUT	55D-4	B	6, 26, 76, 160, 252
43DM00006B	NUT	55D000004B	A	6, 26, 76, 160, 252
43DM00006B	NUT	55D000004B	B	6, 26, 76, 160, 252
43DM00006B	NUT	55D000004B	B	6, 26, 76, 160, 252
43DM00006B	NUT			6, 26, 76, 160, 252

Code for disposition of old part number

A -- Use up
B -- Use on other application (See PNI)
C -- File PDR Report with Bobcat Parts Sales
D -- Part Number Error

https://www.pdfmanual4trucks.com/

Part No.	Description	Was	Code	Page
43DM00008B	NUT	42DM -8	D	2, 20, 26, 56, 58, 72, 116, 120, 160, 166, 230, 252
43DM00008B	NUT	42DM00008B	A	2, 20, 26, 56, 58, 72, 116, 120, 160, 166, 230, 252
43DM00008B	NUT	42DM00008B	B	2, 20, 26, 56, 58, 72, 116, 120, 160, 166, 230, 252
43DM00008B	NUT	43DM00008B	B	2, 20, 26, 56, 58, 72, 116, 120, 160, 166, 230, 252
43DM00008B	NUT	4DM00006B	B	2, 20, 26, 56, 58, 72, 116, 120, 160, 166, 230, 252
43DM00008B	NUT	51DM00008B	B	2, 20, 26, 56, 58, 72, 116, 120, 160, 166, 230, 252
43DM00008B	NUT	53D000006B	B	2, 20, 26, 56, 58, 72, 116, 120, 160, 166, 230, 252
43DM00008B	NUT	6677843	B	2, 20, 26, 56, 58, 72, 116, 120, 160, 166, 230, 252
43DM00008B	NUT		B	2, 20, 26, 56, 58, 72, 116, 120, 160, 166, 230, 252
43DM00008B	NUT			2, 20, 26, 56, 58, 72, 116, 120, 160, 166, 230, 252
43DM00010B	NUT	42DM00008B	B	26, 54, 116, 220, 234, 242, 244
43DM00010B	NUT	42DM00010B	A	26, 54, 116, 220, 234, 242, 244
43DM00010B	NUT	42DM00010B	B	26, 54, 116, 220, 234, 242, 244
43DM00010B	NUT	4DM00010B	B	26, 54, 116, 220, 234, 242, 244
43DM00010B	NUT	6677842	B	26, 54, 116, 220, 234, 242, 244
43DM00010B	NUT			26, 54, 116, 220, 234, 242, 244
47C000832B	SCREW	17C000828B	A	280
47C000832B	SCREW	17C000828B	B	280
47C000832B	SCREW	47C000828B	B	280
47C000832B	SCREW			280
47DM00008B	NUT	51DM00008B	A	58, 60
47DM00008B	NUT	51DM00008B	B	58, 60
47DM00008B	NUT			58, 60
4CM00616B	BOLT			190, 192
4CM00620B	BOLT	4CM00020B	D	178, 196
4CM00620B	BOLT			178, 196
4CM00818B	BOLT			182
4CM00822B	BOLT			180, 204, 210
4CM00825B	BOLT	1DM00008B	B	186
4CM00825B	BOLT			186
4CM00828B	BOLT			186, 206
4CM00845B	SCREW			168
4DM00006B	NUT	1DM00006B	B	4, 54, 60, 82
4DM00006B	NUT	4CM-6	D	4, 54, 60, 82
4DM00006B	NUT			4, 54, 60, 82
4DM00008B	NUT	1DM00008B	A	46, 58, 160, 168
4DM00008B	NUT	1DM00008B	B	46, 58, 160, 168
4DM00008B	NUT	4DM00008B	B	46, 58, 160, 168
4DM00008B	NUT			46, 58, 160, 168
4DM00024B	NUT			36, 40
4E000006B	WASHER	233128B	A	78
4E000006B	WASHER			78
4F006106B	PIN	- 38C000620B		16
4F006106B	PIN	- 38C000620B Was - 38C000620B		16
4F006106B	PIN	1311652	A	16
4F006106B	PIN	38C000620B	B	16

Code for disposition of old part number

A -- Use up
B -- Use on other application (See PNI)
C -- File PDR Report with Bobcat Parts Sales
D -- Part Number Error

https://www.pdfmanual4trucks.com/

Part No.	Description	Was	Code	Page
4F006106B	PIN			16
50D000008B	NUT	12D000006B	B	158
50D000008B	NUT			158
51DM00006B	NUT			6, 20, 218, 262, 264
51DM00008B	NUT	43DM00008B	B	76, 156, 168, 218
51DM00008B	NUT	45DM00008B	B	76, 156, 168, 218
51DM00008B	NUT	47DM00008B	D	76, 156, 168, 218
51DM00008B	NUT			76, 156, 168, 218
51DM00010B	NUT	42DM00010B	A	2, 42, 58, 60, 72, 120, 166, 256, 270, 272
51DM00010B	NUT	42DM00010B	B	2, 42, 58, 60, 72, 120, 166, 256, 270, 272
51DM00010B	NUT	43DM00010B	A	2, 42, 58, 60, 72, 120, 166, 256, 270, 272
51DM00010B	NUT	43DM00010B	B	2, 42, 58, 60, 72, 120, 166, 256, 270, 272
51DM00010B	NUT	45DM00010B	A	2, 42, 58, 60, 72, 120, 166, 256, 270, 272
51DM00010B	NUT	45DM00010B	B	2, 42, 58, 60, 72, 120, 166, 256, 270, 272
51DM00010B	NUT	47DM00012B	B	2, 42, 58, 60, 72, 120, 166, 256, 270, 272
51DM00010B	NUT	51M-10	A	2, 42, 58, 60, 72, 120, 166, 256, 270, 272
51DM00010B	NUT	6512274	B	2, 42, 58, 60, 72, 120, 166, 256, 270, 272
51DM00010B	NUT			2, 42, 58, 60, 72, 120, 166, 256, 270, 272
51DM00012B	NUT	45DM00012B	B	28
51DM00012B	NUT	47DM00012B	B	28
51DM00012B	NUT			28
51DM00016B	NUT			170
53CM01040B	SCREW	1CM01040B	B	64
53CM01040B	SCREW	3GM01025B	B	64
53CM01040B	SCREW			64
53CM02450B	SCREW			46
53DM00008B	NUT	40DM00008B	B	10
53DM00008B	NUT	49DM00008B	B	10
53DM00008B	NUT	54DM-8	B	10
53DM00008B	NUT			10
53DM00012B	NUT	1DM00012B	B, D	170, 258
53DM00012B	NUT	39DM00012B	B	170, 258
53DM00012B	NUT	49DM00012B	B	170, 258
53DM00012B	NUT			170, 258
54K020008B	O-RING			60
54K030218B	O-RING	25K-30218	B	150
54K030218B	O-RING	25K030218B	A	150
54K030218B	O-RING	25K030218B	B	150
54K030218B	O-RING	58K-30218	B	150
54K030218B	O-RING	NSS	A	150
54K030218B	O-RING	NSS	D	150
54K030218B	O-RING	NSS		150
54K030218B	O-RING		A	150
54K030218B	O-RING			150
54K030226B	O-RING	25K-30266	A	144, 146, 152
54K030226B	O-RING	25K030226B	A	144, 146, 152
54K030226B	O-RING	25K030226B	B	144, 146, 152

Code for disposition of old part number

A -- Use up

B -- Use on other application (See PNI)

C -- File PDR Report with Bobcat Parts Sales

D -- Part Number Error

https://www.pdfmanual4trucks.com/

Part No.	Description	Was	Code	Page
54K030226B	O-RING	25K030226B	D	144, 146, 152
54K030226B	O-RING	54K030226B	D	144, 146, 152
54K030226B	O-RING	54K040300B	B	144, 146, 152
54K030226B	O-RING	NSS	A	144, 146, 152
54K030226B	O-RING	NSS	D	144, 146, 152
54K030226B	O-RING			144, 146, 152
54K040224B	O-RING	25K040224B	A	150
54K040224B	O-RING	25K040224B	B	150
54K040224B	O-RING	58K-232	B	150
54K040224B	O-RING	58K000232B	A	150
54K040224B	O-RING	58K000232B	B	150
54K040224B	O-RING	NSS	A	150
54K040224B	O-RING	NSS	D	150
54K040224B	O-RING	NSS		150
54K040224B	O-RING			150
54K040300B	O-RING	25K040300B	A	144, 146, 150, 152
54K040300B	O-RING	58K-234	B	144, 146, 150, 152
54K040300B	O-RING	58K000234B	A	144, 146, 150, 152
54K040300B	O-RING	58K000234B	B	144, 146, 150, 152
54K040300B	O-RING	58K000236B	A	144, 146, 150, 152
54K040300B	O-RING	58K000236B	B	144, 146, 150, 152
54K040300B	O-RING	58K000236B	D	144, 146, 150, 152
54K040300B	O-RING	6513466	A	144, 146, 150, 152
54K040300B	O-RING	73K000234B	A	144, 146, 150, 152
54K040300B	O-RING	NSS	A	144, 146, 150, 152
54K040300B	O-RING	NSS	D	144, 146, 150, 152
54K040300B	O-RING	NSS		144, 146, 150, 152
54K040300B	O-RING		A	144, 146, 150, 152
54K040300B	O-RING			144, 146, 150, 152
55CM01435B	SCREW	55C-1435	D	64
55CM01435B	SCREW	7CM01435B	B	64
55CM01435B	SCREW	7CM01435B	D	64
55CM01435B	SCREW			64
55CM01445B	SCREW			28, 64
55CM01470B	SCREW	7CM01470B	B	2
55CM01470B	SCREW			2
55D000004B	NUT	57D000004B	B	16, 26
55D000004B	NUT			16, 26
58G000806B	SCREW			154
58G000808B	SCREW			234, 238, 240
58K000015B	O-RING	25K020016B	B,D	54
58K000015B	O-RING			54
58K000016B	O-RING	58K000014B	B	88
58K000016B	O-RING	6665473	B	88
58K000016B	O-RING	NSS		88
58K000016B	O-RING			88
58K000214B	O-RING			276
58K000219B	O-RING	58K000216B	A	78
58K000219B	O-RING	79K000016B	B	78
58K000219B	O-RING			78
58K000225B	O-RING			78
58K000236B	O-RING	NSS	A	144, 146, 152
58K000236B	O-RING	NSS		144, 146, 152
58K000236B	O-RING			144, 146, 152
58K000240B	O-RING			148
59CM10110B	SCREW			116

Code for disposition of old part number

A -- Use up

B -- Use on other application (See PNI)

C -- File PDR Report with Bobcat Parts Sales

D -- Part Number Error

https://www.pdfmanual4trucks.com/

Part No.	Description	Was	Code	Page
59D000005B	NUT	61D-5	B	26, 156
59D000005B	NUT	61D000005B	A	26, 156
59D000005B	NUT	61D000005B	B	26, 156
59D000005B	NUT	85D000005B	B	26, 156
59D000005B	NUT			26, 156
59D000006B	NUT	62D000006B	B	2, 4
59D000006B	NUT	6519662	A	2, 4
59D000006B	NUT	83D000006B	B	2, 4
59D000006B	NUT	85D000006B	B	2, 4
59D000006B	NUT	85D000008B	B	2, 4
59D000006B	NUT	85D000008B		2, 4
59D000006B	NUT	91D000006B	B	2, 4
59D000006B	NUT			2, 4
5CM00812B	BOLT			208
5CM01025B	SCREW			220, 242, 244
5CM01030B	SCREW			220, 240, 244
5HM00014B	CLAMP			218
5HM00020B	CLAMP			116, 234, 240, 241, 242, 244
5HM00023B	CLAMP	42H000008B	A	218
5HM00023B	CLAMP	52H-8	A	218
5HM00023B	CLAMP			218
5HM00029B	CLAMP	5HM00027B	C	72, 78
5HM00029B	CLAMP			72, 78
5HM00042B	CLAMP			78, 116
5HM00058B	CLAMP	42H000024B	B	218
5HM00058B	CLAMP			218
5JM00024B	CIRCLIP			188
61D000005B	NUT	57D000005B	B,D	26, 46
61D000005B	NUT	61D000006B	B	26, 46
61D000005B	NUT	61D000006B		26, 46
61D000005B	NUT	61D000008B	B	26, 46
61D000005B	NUT	62D000005B	B	26, 46
61D000005B	NUT	83D000005B	B	26, 46
61D000005B	NUT	85D000005B	B	26, 46
61D000005B	NUT			26, 46
61D000007B	NUT	61D000006B	D	16
61D000007B	NUT			16
62D000004B	NUT	86D000004B	B	56, 58
62D000004B	NUT			56, 58
63D000008B	NUT	61D000008B	B	226
63D000008B	NUT	95D000008B	B	226
63D000008B	NUT			226
6503451	SPACER			41, 42
6505813	CONNECTOR	6705813	A	170
6505813	CONNECTOR	6705813	D	170
6505813	CONNECTOR			170
6513466	SEAL	1530265B	B,D	144, 146, 152
6513466	SEAL	NSS	A	144, 146, 152
6513466	SEAL	NSS	D	144, 146, 152
6513466	SEAL	NSS		144, 146, 152
6513466	SEAL	Nss		144, 146, 152
6513466	SEAL			144, 146, 152
6513707	JOINT	6652658	A	192
6513707	JOINT			192
6515007	GAUGE			170
6515603	GROMMET			1, 2, 217, 218, 220, 240, 244

Code for disposition of old part number

A -- Use up

B -- Use on other application (See PNI)

C -- File PDR Report with Bobcat Parts Sales

D -- Part Number Error

https://www.pdfmanual4trucks.com/

Part No.	Description	Was	Code	Page
6533899	DECAL			228
6536545	SLEEVE			53, 54
6536801	BUSHING			51, 52, 54
6536802	WASHER	27E000006B	B	15, 16, 54
6536802	WASHER			15, 16, 54
6536803	WASHER			57, 58, 59, 60
6537481	MOUNT			54
6548761	HOSE			218
6553411	BUSHING			218
6560382	RING			278
6560899	WASHER			2
6562266	CLAMP	6502426	A	54
6562266	CLAMP	6502426	D	54
6562266	CLAMP			54
6562927	HOSE			218
6563128	SPRING			52
6563328	FLUID			282
6563330	FLUID			282
6564452	GRIP			3, 4, 55, 56
6565200	DECAL	6709781	A	227, 228
6565200	DECAL			227, 228
6565977	HOSE	6719144	B	234, 242, 244
6565977	HOSE			234, 242, 244
6565990	DECAL	6561378	A	228
6565990	DECAL		A	228
6565990	DECAL			228
6567962	WASHER			56
6567963	SPACER			56
6569203	CLAMP	6563462	A	155, 156
6569203	CLAMP	6563462	B	155, 156
6569203	CLAMP			155, 156
6576048	DECAL	6557927	A	228
6576048	DECAL	6557930	A	228
6576048	DECAL	6565251	A	228
6576048	DECAL			228
6577697	CLAMP	6701893	B	69, 70
6577697	CLAMP			69, 70
6577775	HOSE	6501769	A	81, 82
6577775	HOSE			81, 82
6577801	LIGHT			272
6577822	HOSE	6562515	A	166
6577822	HOSE	6562515	B	166
6577822	HOSE	6562575	A	166
6577822	HOSE	6564030	A	166
6577822	HOSE	6577821	A	166
6577822	HOSE	6577821	B	166
6577822	HOSE	6586251	A	166
6577822	HOSE	672221B	A	166
6577822	HOSE		A	166
6577822	HOSE			166
6578185	HOSE			75, 76
6578278	PAD			115, 116
6586391	GUIDE			256
6586570	HEAD	6537360		146
6586570	HEAD			146
6587168	SCREEN			116

Code for disposition of old part number
A -- Use up
B -- Use on other application (See PNI)
C -- File PDR Report with Bobcat Parts Sales
D -- Part Number Error

https://www.pdfmanual4trucks.com/

Part No.	Description	Was	Code	Page
6589129	DECAL			228
6589347	STRAP			16, 21, 22
6589675	SCREW	1CM00612B	A	6, 16, 49, 50, 52, 153, 154, 220, 234, 240, 244
6589675	SCREW	1CM00612B	B	6, 16, 49, 50, 52, 153, 154, 220, 234, 240, 244
6589675	SCREW	6587499	A	6, 16, 49, 50, 52, 153, 154, 220, 234, 240, 244
6589675	SCREW	6587499	B	6, 16, 49, 50, 52, 153, 154, 220, 234, 240, 244
6589675	SCREW	6810157	A	6, 16, 49, 50, 52, 153, 154, 220, 234, 240, 244
6589675	SCREW			6, 16, 49, 50, 52, 153, 154, 220, 234, 240, 244
6592506	CLAMP	6577697	B	70, 256
6592506	CLAMP	6659498	A	70, 256
6592506	CLAMP			70, 256
6593671	CONNECTOR	6631036	A	54, 60
6593671	CONNECTOR	774332B	A	54, 60
6593671	CONNECTOR			54, 60
6594897	DECAL	6533897	B	228
6594897	DECAL			228
6595014	DECAL	6707867	A	228
6595014	DECAL	6718401	A	228
6595014	DECAL	6718401	B	228
6595014	DECAL			228
6596042	TUBELINE			70
6596116	PLATE			70
6596723	COVER	6539292	A	27, 28
6596723	COVER			27, 28
6596855	TUBELINE			70
6597461	PIN			48
6597572	BUMPER	6597345	A	16, 43, 44, 45, 46
6597572	BUMPER			16, 43, 44, 45, 46
6597811	HOSE			76
6598098	PIN			196
6598099	KEY	3974616B	A	188
6598099	KEY			188
6598102	BOLT	6652671	A	192
6598102	BOLT			192
6598116	PLUG	6652797	A	176
6598116	PLUG		A	176
6598116	PLUG			176
6598146	PIPE			198
6598156	STUD			176
6598158	CIRCLIP	3975432B	A	188
6598158	CIRCLIP			188
6598169	PLUG			172
6598170	PLUG	6598190	D	172
6598170	PLUG			172
6598187	PLUG			172
6598908	ELBOW	6598909	D	218
6598908	ELBOW	6661382	A	218
6598908	ELBOW	6661382	B	218
6598908	ELBOW			218
6599084	SCREW			192
6599118	GASKET			192

Code for disposition of old part number

A -- Use up

B -- Use on other application (See PNI)

C -- File PDR Report with Bobcat Parts Sales

D -- Part Number Error

https://www.pdfmanual4trucks.com/

Part No.	Description	Was	Code	Page
6599119	GASKET			192
6599360	SEALANT			282
6599365	KIT			80
6599645	PLUG			218
6599719	GREASE			282
6599931	ALARM	6579858	A	252
6599931	ALARM		A	252
6599931	ALARM			252
6610082	SPRING			6
6610510	TIE	1714312	A	218, 234, 240, 244, 248, 252, 272
6610510	TIE	1715312B	A	218, 234, 240, 244, 248, 252, 272
6610510	TIE	1715312B	B	218, 234, 240, 244, 248, 252, 272
6610510	TIE	1715312B		218, 234, 240, 244, 248, 252, 272
6610510	TIE	30H-23	B	218, 234, 240, 244, 248, 252, 272
6610510	TIE	30H000023B	B	218, 234, 240, 244, 248, 252, 272
6610510	TIE	30H000031B	B	218, 234, 240, 244, 248, 252, 272
6610510	TIE	30H000031B		218, 234, 240, 244, 248, 252, 272
6610510	TIE	6578824	A	218, 234, 240, 244, 248, 252, 272
6610510	TIE	6591255	A	218, 234, 240, 244, 248, 252, 272
6610510	TIE	6627289	B,D	218, 234, 240, 244, 248, 252, 272
6610510	TIE	6633498	A	218, 234, 240, 244, 248, 252, 272
6610510	TIE	6671037	D	218, 234, 240, 244, 248, 252, 272
6610510	TIE	6705035	A	218, 234, 240, 244, 248, 252, 272
6610510	TIE			218, 234, 240, 244, 248, 252, 272
6618216	HOSE			71, 72
6624289	STA STRAP	6512052	A	70, 76, 82, 156, 157, 158, 159, 160, 220, 222, 234, 244, 256, 268, 272
6624289	STA STRAP	6583348	A	70, 76, 82, 156, 157, 158, 159, 160, 220, 222, 234, 244, 256, 268, 272
6624289	STA STRAP	6610510	A	70, 76, 82, 156, 157, 158, 159, 160, 220, 222, 234, 244, 256, 268, 272
6624289	STA STRAP	6610510	B	70, 76, 82, 156, 157, 158, 159, 160, 220, 222, 234, 244, 256, 268, 272
6624289	STA STRAP	6648361	A	70, 76, 82, 156, 157, 158, 159, 160, 220, 222, 234, 244, 256, 268, 272
6624289	STA STRAP		B	70, 76, 82, 156, 157, 158, 159, 160, 220, 222, 234, 244, 256, 268, 272

Code for disposition of old part number

A -- Use up

B -- Use on other application (See PNI)

C -- File PDR Report with Bobcat Parts Sales

D -- Part Number Error

https://www.pdfmanual4trucks.com/

Part No.	Description	Was	Code	Page
6624289	STA STRAP			70, 76, 82, 156, 157, 158, 159, 160, 220, 222, 234, 244, 256, 268, 272
6627719	FLANGE			28
6627777	BLOCK			30
6628002	PIN			46
6628101	BUSHING			2, 42
6628102	BUSHING			2, 42
6628155	PIN			42
6628338	WASHER			42
6628339	WASHER			42
6628341	BUSHING			44, 250
6628360	HOSE	6597169	A	70
6628360	HOSE			70
6628547	WASHER	6803030	D	44, 46, 250
6628547	WASHER			44, 46, 250
6628614	ROD			146
6628756	PIN			48
6628758	GUIDE			266
6628912	PISTON			146
6630168	COUPLER			65, 66, 119, 120
6630188	POLISH			282
6630189	POLISH			282
6630190	POLISH			282
6630191	POLISH			282
6630207	RIVET	1662965	A	16, 22
6630207	RIVET	6512797	A	16, 22
6630207	RIVET	6512797	B	16, 22
6630207	RIVET	6512797, 6598092, & 6513493	A	16, 22
6630207	RIVET	6513417	B	16, 22
6630207	RIVET	6513493	A	16, 22
6630207	RIVET	6598092	A	16, 22
6630207	RIVET	6598092	B	16, 22
6630207	RIVET	6630193	A	16, 22
6630207	RIVET	6630193	B	16, 22
6630207	RIVET	6630207	A	16, 22
6630207	RIVET	NAP	D	16, 22
6630207	RIVET	NAP		16, 22
6630207	RIVET			16, 22
6630367	CAP			66, 120
6630945	WASHER			56
6631010	SWITCH	6632186	B	160
6631010	SWITCH	6646596	A	160
6631010	SWITCH	6652576	A	160
6631010	SWITCH	6676053	B	160
6631010	SWITCH			160
6631036	JOINT			58
6631046	SEAL	3974403	A	174
6631046	SEAL			174
6633583	SEALANT	6555349	A	282
6633583	SEALANT	6632501	A	282
6633583	SEALANT			282
6633977	FILTER	6511393	A	218
6633977	FILTER	6511393	B	218
6633977	FILTER	6611393	B	218
6633977	FILTER			218

Code for disposition of old part number

A -- Use up
B -- Use on other application (See PNI)
C -- File PDR Report with Bobcat Parts Sales
D -- Part Number Error

https://www.pdfmanual4trucks.com/

Part No.	Description	Was	Code	Page
6634393	LUBRICANT			282
6640728	BOLT			212
6640729	PLUG			174
6644965	BALL JOINT	6631036	B	56
6644965	BALL JOINT			56
6645812	SCREW			32, 34
6650239	SCREEN	6598911	A	218
6650239	SCREEN	6598911		218
6650239	SCREEN	6659239	D	218
6650239	SCREEN			218
6650388	SEALANT	1802303B	A	282
6650388	SEALANT			282
6650407	ADHESIVE			282
6651934	BOLT			188
6652521	COVER	6647638	A	70
6652521	COVER	6806461	A	70
6652521	COVER			70
6652580	BOLT	3974038	B	214
6652580	BOLT			214
6652633	BALL	3974058B	A	182, 186
6652633	BALL			182, 186
6652762	BOLT	4CM00612B	A	200
6652762	BOLT	4CM00612B	B	200
6652762	BOLT			200
6652792	NUT			176, 204, 206, 212
6652794	KEY			172
6652818	ADHESIVE	6632469	A	282
6652818	ADHESIVE	6632469	S	282
6652818	ADHESIVE			282
6652915	SEAL	NSS		70
6652915	SEAL			70
6653493	COVER			70
6653519	PRIMER			282
6653561	NUT	6680663	D	190
6653561	NUT			190
6653568	FILTER	3974413B	A	174
6653568	FILTER			174
6653798	BOLT			174
6653807	BOLT	3974889B	A	178
6653807	BOLT			178
6653808	BOLT	3974890B	A	178
6653808	BOLT	3974890B	B	178
6653808	BOLT	6653809	B, D	178
6653808	BOLT			178
6653840	GEAR	6598159	A	182
6653840	GEAR	6598159		182
6653840	GEAR			182
6653946	STUD			206
6654170	STRIKER BOLT			16
6654487	BOLT			168
6654710	SEAL			186
6654718	CLAMP	3974252B	A	198
6654718	CLAMP			198
6655151	OIL PAN			173, 174
6655154	GUIDE	3974434B	A	176
6655154	GUIDE	6653586	A	176

Code for disposition of old part number
A -- Use up
B -- Use on other application (See PNI)
C -- File PDR Report with Bobcat Parts Sales
D -- Part Number Error

https://www.pdfmanual4trucks.com/

Part No.	Description	Was	Code	Page
6655154	GUIDE	6653802	A	176
6655154	GUIDE			176
6655158	BOLT			176
6655160	PLUG			201, 202
6655161	WASHER			202
6655176	PUSHROD			182
6655179	PIN			186
6655181	ROD			186
6655183	PIN			186
6655210	SHIM			192
6655213	SLEEVE			188
6655214	CASE	3974619B	A	188
6655214	CASE			188
6655215	BALL			188
6655223	NUT	3974972B	A	196
6655223	NUT	3974973B	A	196
6655223	NUT			196
6655236	PIN			186
6655237	PIN			186
6655243	BUSHING			186
6655399	BUMPER	6511847	A	25, 26
6655399	BUMPER	6714454	B	25, 26
6655399	BUMPER	6714454	B,D	25, 26
6655399	BUMPER	6714454	B,D	25, 26
6655399	BUMPER			25, 26
6655752	FITTING	12H000015B	A	32, 34
6655752	FITTING			32, 34
6655859	RING			144, 148, 152
6655870	ROCKER ARM	3975438B	A	208
6655870	ROCKER ARM	6598171	A	208
6655870	ROCKER ARM	6655490	D	208
6655870	ROCKER ARM			208
6655880	PIPE	6653939	A	180
6655880	PIPE			180
6657299	MOTOR OIL			282
6657301	MOTOR OIL			282
6657303	MOTOR OIL			282
6657416	BOLT			212
6657663	PLUG			172
6658266	GREASE			282
6658289	HOOK			16
6658536	RING			184
6658847	RING			184
6660260	SWITCH	6632053	B,D	80
6660260	SWITCH	6674376	A	80
6660260	SWITCH	6684826	B	80
6660260	SWITCH			80
6660267	VALVE			230
6661150	SWITCH			252
6661213	RING			218
6661248	ELEMENT	6598903	B	80
6661248	ELEMENT	6630977	A	80
6661248	ELEMENT	6630977	B	80
6661248	ELEMENT	6660728	A	80
6661248	ELEMENT			80
6661753	PLUG			120

Code for disposition of old part number

A -- Use up
B -- Use on other application (See PNI)
C -- File PDR Report with Bobcat Parts Sales
D -- Part Number Error

https://www.pdfmanual4trucks.com/

Part No.	Description	Was	Code	Page
6661785	MOUNT			170
6661787	WASHER			170
6662076	RING			118
6664075	ASH TRAY			16
6664083	COVER			16
6664084	LIGHT			154
6664085	BUSHING			6
6664209	SEAL			184
6664223	OUTLET			156
6664224	CAP			156
6664554	PUMP			19, 20
6665105	ALARM	6662635	A	158
6665105	ALARM			158
6665314	SWITCH	6668314	B,D	158
6665314	SWITCH	6719038	A	158
6665314	SWITCH	6807730	A	158
6665314	SWITCH	6807730	B	158
6665314	SWITCH			158
6665317	SWITCH			222, 268
6665367	BULB	6655055	A	154
6665367	BULB			154
6665618	RING			48
6665915	GAUGE	6656338	A	116
6665915	GAUGE	7000001	A	116
6665915	GAUGE			116
6666366	SPRING			112
6666544	WIPER	1657088B	A	146, 150
6666544	WIPER	1657088B	B	146, 150
6666544	WIPER	1657088B	D	146, 150
6666544	WIPER	6665086	A	146, 150
6666544	WIPER	NSS	A	146, 150
6666544	WIPER	NSS	D	146, 150
6666544	WIPER	NSS		146, 150
6666544	WIPER			146, 150
6666545	WIPER	1657088B	A	144, 148, 152
6666545	WIPER	1657090B	A	144, 148, 152
6666545	WIPER	NSS	A	144, 148, 152
6666545	WIPER	NSS	D	144, 148, 152
6666545	WIPER	NSS		144, 148, 152
6666545	WIPER			144, 148, 152
6666549	WASHER			48
6666629	WASHER			164
6666631	WASHER			164
6666766	GROMMET			20
6666814	GASKET	6655167	A	186
6666814	GASKET	6682505	B	186
6666814	GASKET		A	186
6666814	GASKET			186
6667327	SEAL	58K000238B	D	146
6667327	SEAL	6538140	A	146
6667327	SEAL	6538140	B	146
6667327	SEAL	6538410	A	146
6667327	SEAL	NSS	A	146
6667327	SEAL	NSS	D	146
6667327	SEAL	NSS		146
6667327	SEAL			146

Code for disposition of old part number

A -- Use up

B -- Use on other application (See PNI)

C -- File PDR Report with Bobcat Parts Sales

D -- Part Number Error

https://www.pdfmanual4trucks.com/

Part No.	Description	Was	Code	Page
6667328	SEAL	6538277	A	144, 148, 152
6667328	SEAL	NSS	A	144, 148, 152
6667328	SEAL	NSS		144, 148, 152
6667328	SEAL		A	144, 148, 152
6667328	SEAL			144, 148, 152
6667352	FILTER FUEL	6647773	A	218
6667352	FILTER FUEL			218
6667353	FILTER ASSY	6657020	A	218
6667353	FILTER ASSY			218
6667418	PLUG	3974095B	D	172
6667418	PLUG	6666782	D	172
6667418	PLUG	6675623	D	172
6667418	PLUG	6684752	D	172
6667418	PLUG			172
6667419	WASHER			194
6667420	BOLT	6667439	A	174, 188
6667420	BOLT			174, 188
6667421	BOLT			176
6667422	WASHER			176, 178, 204, 206, 208, 212
6667433	CIRCLIP			182
6667440	COVER			188
6667451	WASHER			208
6667461	PIN			208
6667806	COUPLER			72
6667808	COUPLER			70
6667934	BULB	6650111	A	158
6667934	BULB	6677934	D	158
6667934	BULB			158
6668114	BEARING	6662899	A	184
6668114	BEARING			184
6668199	RING			42
6668787	RING	51DM00016B	D	42, 44, 46, 250
6668787	RING			42, 44, 46, 250
6668881	CORD			224
6668928	LOCK PIN			264
6669210	SPRING			88
6669212	POPPET			88
6669215	O-RING			88
6669224	BOLT			26, 52
6669287	SEAL			44, 250
6670119	GROMMET			2
6670472	NUT			198
6670533	NUT	6653561	A	196
6670533	NUT			196
6670769	O-RING			178, 198
6670770	BOLT			172
6670785	PIPE			206
6671113	SWITCH			154
6671122	BALL	6632435	B,D	164
6671122	BALL			164
6671708	CHECK VALVE			86
6671709	SPOOL			86
6671710	SEAL KIT			86
6671834	PIN			112
6671884	SCREW			112
6671887	PISTON			112

Code for disposition of old part number

A -- Use up
B -- Use on other application (See PNI)
C -- File PDR Report with Bobcat Parts Sales
D -- Part Number Error

https://www.pdfmanual4trucks.com/

Part No.	Description	Was	Code	Page
6671890	WASHER			112
6671892	SCREW			112
6671982	O-RING			164
6671985	BEARING			164
6671989	BEARING			164
6671990	BEARING			164
6671991	SPRING			164
6671992	SHAFT			164
6671999	ROLLER			164
6672000	RETAINER			164
6672001	PINION			164
6672006	NUT			164
6672007	BUSHING			164
6672008	NUT			164
6672011	NUT			164
6672012	WASHER			164
6672013	O-RING			164
6672149	RING			144
6672172	KIT	6672173	D	164
6672172	KIT			164
6672178	COVER			164
6672360	PLUG			178
6672494	RING			58
6672529	PLUG			88
6672539	PLUG		B	88
6672539	PLUG			88
6672540	PLUG			88
6672960	COUPLER	6667807	A	70, 256
6672960	COUPLER	6667807	D	70, 256
6672960	COUPLER	6667808	A	70, 256
6672960	COUPLER	6672760	D	70, 256
6672960	COUPLER			70, 256
6673053	VALVE			61, 62
6673865	BATTERY			156
6674029	SEAL			90
6674037	SPRING			94
6674145	O-RING	6674415	D	278
6674145	O-RING			278
6674184	RING	6674185	A	94
6674184	RING			94
6674189	SHAFT			96
6674190	SHIM			96
6674191	SHIM			96
6674192	BRAKE DISC			96
6674194	WASHER			96
6674196	BUSHING			96
6674199	COVER			96
6674204	MOTOR OIL			282
6674205	MOTOR OIL			282
6674206	MOTOR OIL			282
6674221	WASHER			118
6674264	BOLT			26, 58, 72, 120, 166, 256
6674688	COUPLER	6667808	A	256
6674688	COUPLER	6667808	B	256
6674688	COUPLER	6672960	A	256
6674688	COUPLER	6677808	A	256

Code for disposition of old part number

A -- Use up
B -- Use on other application (See PNI)
C -- File PDR Report with Bobcat Parts Sales
D -- Part Number Error

https://www.pdfmanual4trucks.com/

Part No.	Description	Was	Code	Page
6674688	COUPLER		A	256
6674688	COUPLER			256
6674690	CAP			116
6674707	PLUG			96
6674817	YOKE			164
6674818	ARMATURE			164
6674819	BEARING			164
6674820	CLUTCH			164
6674821	CLUTCH			164
6674823	HOUSING			164
6674824	PINION			164
6674826	STARTER			164
6674828	PLUNGER			164
6674829	COVER			164
6674830	BOLT			164
6674831	SPRING			164
6674833	BOLT			164
6674834	SCREW			164
6674835	SCREW			164
6674836	HOLDER			164
6674900	O-RING			88
6674901	O-RING			88
6674902	O-RING			88
6674903	O-RING			88
6674993	CAP			20
6675024	CAM	6674182	A	90
6675024	CAM	6674182	B	90
6675024	CAM	6674182	B,D	90
6675024	CAM			90
6675176	SWITCH			234, 240, 244
6675177	KNOB			234, 240, 244
6675181	PLUG			234
6675189	PIN	6674186	A	94
6675189	PIN			94
6675195	SEAL			90
6675227	SEAL	6674038	A	94
6675227	SEAL	6674038	B	94
6675227	SEAL	6674038	D	94
6675227	SEAL			94
6675228	SEAL	6674336	A	94
6675228	SEAL	6674336	B	94
6675228	SEAL	6674336	D	94
6675228	SEAL			94
6675229	SEAL	6676022	D	94
6675229	SEAL			94
6675273	WASHER	6675263	B,D	2
6675273	WASHER	6675263	B,D	2
6675273	WASHER			2
6675385	PLUG			16, 26
6675386	SOCKET			8, 26
6675517	FILTER	3974896	A	178
6675517	FILTER	3974896B	A	178
6675517	FILTER	6684783	A	178
6675517	FILTER			178
6675522	STROBE			268
6675523	BEACON			222

Code for disposition of old part number

A -- Use up

B -- Use on other application (See PNI)

C -- File PDR Report with Bobcat Parts Sales

D -- Part Number Error

https://www.pdfmanual4trucks.com/

Part No.	Description	Was	Code	Page
6675546	SEAL- BULK/FT			26
6675551	CAP			166
6675618	CLAMP			204, 214
6675635	BAND			212
6675636	GASKET	6575580	B,D	212
6675636	GASKET	6684782	D	212
6675636	GASKET			212
6675637	GASKET			212
6675705	ALARM			156
6675721	SWITCH			156
6675722	NUT			9, 10, 28, 50
6675734	STRAP			220, 240, 244
6675777	BEARING	6668731	D	28
6675777	BEARING			28
6675838	BUSHING			168
6675846	POTENTIOMETER	6675178	A	234, 240, 244
6675846	POTENTIOMETER			234, 240, 244
6675859	BOLT			20, 46
6675892	GASKET			96
6675894	SEAL			96
6675897	WASHER			96
6675938	LIGHT			46
6676026	NUT			2, 50, 52, 234, 240, 244
6676114	ANTENNA			20
6676167	VALVE			62, 85, 86
6676169	NUT			2, 62
6676203	BEZEL			46
6676204	NUT			46
6676238	LIGHT	6675938	D	158
6676238	LIGHT			158
6676406	PISTON	6674197	A	96
6676406	PISTON			96
6676508	GROMMET			54
6676535	COUPLER			77, 78
6676713	LOUVER			220, 234, 237, 238, 240
6676725	BEZEL			158
6676922	PLUG			248
6676969	FILTER			72, 79, 80
6677203	GUIDE			174
6677363	CLAMP	657904	A	170
6677363	CLAMP	657904	B	170
6677363	CLAMP	657904(A)	A	170
6677363	CLAMP	657904B	A	170
6677363	CLAMP	657904B	B	170
6677363	CLAMP			170
6677487	COVER			162
6677488	RECTIFIER			162
6677490	BRACKET			162
6677491	BRACKET			162
6677492	ROTOR			162
6677493	STATOR			162
6677494	BOLT			162
6677495	SPACER			162
6677497	NUT			162
6677500	HANDLE			16
6677834	BLADE			6

Code for disposition of old part number

A -- Use up

B -- Use on other application (See PNI)

C -- File PDR Report with Bobcat Parts Sales

D -- Part Number Error

https://www.pdfmanual4trucks.com/

Part No.	Description	Was	Code	Page
6677837	BOLT			6
6677839	GASKET			6
6677840	SWIVEL ASSY			6
6677841	WASHER			6
6677842	NUT			6
6677843	NUT			6
6677844	NUT			6
6677845	ADAPTER			6
6677847	GROMMET			6
6677849	RING	6678449	D	92
6677849	RING			92
6677894	JOYSTICK			76, 101, 102
6677895	JOYSTICK			76, 99, 100
6677896	JOYSTICK			76, 103, 104
6677904	BEARING	6807119		58
6677904	BEARING	6807119 - Order 6677904 or Ref.65		58
6677904	BEARING			58
6677908	BEARING	6807119	A	58, 60
6677908	BEARING	6807119		58, 60
6677908	BEARING			58, 60
6677934	BULB			46
6678023	COVER			126, 132, 134, 136, 140, 142
6678135	SEAL			92
6678690	CONTROLLER			156
6678691	CONTROLLER			248
6678788	VALVE	6674784	A	62, 87, 88
6678788	VALVE			62, 87, 88
6678789	RELIEF VALVE	6675213	A	88
6678789	RELIEF VALVE			88
6678826	TRACK	- 6668734	A	28
6678826	TRACK			28
6678831	CONDENSER			220, 240, 243, 244
6678918	BEARING			52
6678966	BOX			235, 236, 240, 244
6678984	COIL			84
6678988	VALVE			84
6678990	VALVE			84
6679032	VALVE			84
6679038	CABLE			54, 60
6679076	NUT			84
6679078	SEAL KIT			84
6679082	THERMOSTAT			236
6679248	RING			118
6679506	DRAIN	6513679	A	166
6679506	DRAIN	NAP	A	166
6679506	DRAIN			166
6679509	O-RING			84
6679641	LATCH KIT			14
6679684	O-RING			84
6679775	CASE			90
6679778	HOUSING			93, 94
6679779	HOUSING			95, 96
6679780	DISC			96
6679781	PIN			96
6679782	PIN			96
6679831	EXCHANGER			166

Code for disposition of old part number

A -- Use up

B -- Use on other application (See PNI)

C -- File PDR Report with Bobcat Parts Sales

D -- Part Number Error

https://www.pdfmanual4trucks.com/

Part No.	Description	Was	Code	Page
6679842	SWITCH	6675370	A	156
6679842	SWITCH	6675470	A	156
6679842	SWITCH			156
6679881	SEAL	67117802	A	38
6679881	SEAL	6717802	A	38
6679881	SEAL	6725082	A	38
6679881	SEAL			38
6679882	SEAL	6725083	A	30, 36, 40
6679882	SEAL			30, 36, 40
6679885	HANDLE			8
6679886	LATCH			8
6679888	VALVE ASSY			256
6679906	SWITCH			256
6679952	KIT			100, 102
6679953	HANDLE			100
6679954	HANDLE			102
6679955	BOOT			100, 102
6679956	KIT			100, 102
6679957	FLANGE			100, 102
6679958	LOCK			100, 102
6679959	PLUG			102
6679960	CONNECTOR			100, 102
6680151	CAP			218
6680180	ARM			6
6680291	BEARING			38
6680292	BEARING			36, 40
6680293	TREAD			20, 22
6680303	HOSE			220, 240, 244
6680304	HOSE			220, 240, 244
6680305	HOSE			220, 240, 244
6680306	HOSE			220, 240, 244
6680308	LOUVER			234
6680311	RECEIVER			220, 240, 244
6680321	CAP			234
6680323	RING			118
6680427	SENSOR	6675665	A	158
6680427	SENSOR	6675666	A	158
6680427	SENSOR	6680427	A	158
6680427	SENSOR			158
6680428	MAGNET	6675665	A	158
6680428	MAGNET			158
6680437	SENSOR	6675662	A	218
6680437	SENSOR			218
6680484	GASKET	6680408	D	174
6680484	GASKET			174
6680550	BAND			212
6680564	STUD			212
6680566	BOLT			214
6680567	GASKET			214
6680570	GASKET			214
6680576	PIN			214
6680580	BAND			216
6680593	BOLT			178
6680639	PLUG			172
6680643	PIN			172
6680655	PIN			208

Code for disposition of old part number
A -- Use up
B -- Use on other application (See PNI)
C -- File PDR Report with Bobcat Parts Sales
D -- Part Number Error

https://www.pdfmanual4trucks.com/

Part No.	Description	Was	Code	Page
6680657	PLUG			174
6680661	O-RING			178
6680663	NUT			192
6680665	PLUG			176
6680666	PLUG			176
6680692	COVER			180
6680706	BOLT			194
6680707	TAPPET			181, 182
6680766	WASHER			208
6680779	GASKET			198
6680785	CLAMP			198
6680786	CLAMP			198
6680791	BOLT			214
6680792	GASKET			214
6680795	CLAMP			198
6680810	CAMSHAFT			192
6680830	BOLT			194
6680874	NUT			208
6680908	CAP			180
6680971	RETAINER			6
6680975	BOX			231, 232, 234
6680976	DUCT			220, 238, 240
6680977	DUCT			234
6680996	CABLE			56
6681012	FILTER			72
6681509	DUCT			234, 238, 240
6681528	GROMMET			234, 240, 244
6681567	GROMMET			220, 240, 244
6681576	BRACKET			234, 238, 240
6681577	BRACKET			234, 238, 240
6681586	VALVE			72
6681606	ADAPTER			240
6681623	BUSHING			72
6681651	RING			6
6681652	CAP			6
6681653	HOSE			234, 240, 244
6681716	COMPRESSOR			220, 240, 244
6681857	ALTERNATOR			160, 161, 162, 168
6681858	STARTER			163, 164, 168
6681860	FILTER			168, 170
6681878	LATCH			220, 240, 244
6681881	DUCT			234, 244
6681883	SEAL			18, 166
6681884	SEAL			234, 242
6681886	GROMMET			2
6681922	LATCH			16
6681942	IDLER			168
6682150	TEE			234, 240, 244
6682274	CAP	6646678	B	166
6682274	CAP			166
6682442	SLEEVE	6704393	A	184
6682442	SLEEVE	6704393		184
6682442	SLEEVE			184
6682492	TRIM			6, 262, 270, 272
6682497	TRIM			264
6682498	PUMP			172

Code for disposition of old part number

A -- Use up

B -- Use on other application (See PNI)

C -- File PDR Report with Bobcat Parts Sales

D -- Part Number Error

https://www.pdfmanual4trucks.com/

Part No.	Description	Was	Code	Page
6682514	SHIM			192
6682515	SHIM			192
6682532	NUT			210
6682533	STUD			210
6682538	PIPE			213, 214
6682539	PIPE			214
6682697	GROMMET			154
6682740	RETAINER			16, 18
6682741	RETAINER			154, 222, 268, 272
6682919	PIN			108
6682990	CLIP			220, 240, 244
6682999	ADAPTER			166
6683087	STUD			190
6683206	SEAL KIT			98
6683316	EXCHANGER			72
6683392	RING			152
6683610	CLAMP			70
6683810	FAN			74, 199, 200
6683821	BOLT			186
6683889	SHIELD			260
6683892	FUEL	6683893	D	218
6683892	FUEL			218
6683909	COIL			220
6683910	VALVE			220
6683911	SWITCH			220
6684037	SENSOR	6658260	A	160
6684037	SENSOR	6658260	B	160
6684037	SENSOR	6679853	A	160
6684037	SENSOR	6679853	B	160
6684037	SENSOR			160
6684139	MOTOR			6
6684365	HOSE			72
6684408	LATCH			26
6684410	SEAL	6668004	A	32, 34
6684410	SEAL			32, 34
6684448	TOOTH ASSY	6808523	A	280
6684448	TOOTH ASSY			280
6684482	SCREW			232
6684499	WASHER			220, 236
6684500	WASHER			220, 232, 236
6684503	NUT			232
6684506	CLAMP			232, 236
6684507	TUBE			232, 236
6684518	SEAL			8, 18
6684520	NUT			220, 236
6684521	NUT			232, 236
6684539	VALVE			236
6684544	FLOORMAT			20, 242
6684561	FLOORMAT			22
6684571	COVER			192
6684572	GASKET			192
6684590	COIL			98
6684622	PISTON			148
6684628	SEAL			148
6684649	ADAPTER			220, 244
6684650	REGULATOR			162

Code for disposition of old part number

A -- Use up

B -- Use on other application (See PNI)

C -- File PDR Report with Bobcat Parts Sales

D -- Part Number Error

https://www.pdfmanual4trucks.com/

Part No.	Description	Was	Code	Page
6684651	BEARING			162
6684652	BEARING			162
6684653	PULLEY			162
6684715	CASE			90
6684717	BRAKE			90
6684719	HOUSING			92
6684721	SEAL			92
6684722	RING			96
6684729	SWITCH			164
6684730	STARTER			164
6684731	STARTER			164
6684732	BUSHING			164
6684733	FRAME			164
6684734	SPRING			164
6684750	CRANKCASE			171, 172
6684753	GASKET			174
6684754	O-RING			174
6684755	CYLINDER HEAD			176
6684756	GUIDE			176
6684757	GASKET			176
6684758	GASKET			176
6684759	GASKET			176
6684760	GASKET			176
6684761	GASKET			176
6684764	HOUSING			177, 178
6684765	SEAL			178
6684766	COVER			178
6684767	BOLT			178
6684768	BOLT			178
6684769	O-RING			178
6684770	GASKET			178
6684772	BOLT			178
6684773	FILTER			178
6684774	GASKET			178
6684776	CLAMP			180
6684777	CLAMP			180
6684778	COVER			180
6684779	SHIELD			180
6684780	GASKET			180
6684781	BOLT			180
6684782	O-RING			180
6684784	GAUGE			174
6684785	PLUG			174
6684786	GASKET			172
6684788	GASKET			186
6684789	SEAL			186
6684793	GEAR			182
6684794	BUSHING			182
6684795	COLLAR			182
6684797	PISTON			185, 186
6684798	PISTON			186
6684799	PISTON			186
6684801	PISTON			186
6684802	PISTON			186
6684803	RING	6655178	A	186
6684803	RING			186

Code for disposition of old part number

A -- Use up

B -- Use on other application (See PNI)

C -- File PDR Report with Bobcat Parts Sales

D -- Part Number Error

https://www.pdfmanual4trucks.com/

Part No.	Description	Was	Code	Page
6684804	RING			186
6684805	CIRCLIP			186
6684806	CRANKSHAFT			186
6684807	BUSHING			186
6684810	CAMSHAFT			187, 188
6684811	GEAR			188
6684813	GASKET			188
6684815	IDLING ASSY			189, 190
6684816	BOLT			190
6684817	NUT			190
6684818	SEAL			190
6684823	SPRING			196
6684824	GASKET			190, 196
6684825	GUIDE			190
6684826	SOLENOID	6681513	A	190
6684826	SOLENOID	6681513	B	190
6684826	SOLENOID			190
6684827	NUT			190
6684828	PUMP			191, 192
6684829	SHIM			192
6684830	BOLT			192
6684832	LEVER			194
6684833	SHAFT			194
6684834	HOLDER			194
6684835	SPRING			194
6684836	BOLT			195, 196
6684838	LEVER			196
6684839	LEVER			196
6684842	PIPE			197, 198
6684843	INJECTOR			198
6684844	BOLT			198
6684845	CLAMP			198
6684846	PIPE			198
6684847	PIPE			198
6684848	PIPE			198
6684849	PIPE			198
6684850	GLOW PLUG			198
6684851	CORD			198
6684852	PUMP			192, 218
6684853	PULLEY			186
6684854	FLANGE			204
6684855	FLANGE			203, 204
6684856	FLANGE			204
6684857	PLUG			204
6684858	BOLT			204
6684860	GASKET			204
6684861	BOLT			204
6684862	PIPE			204
6684863	GASKET			204
6684865	PUMP			205, 206
6684866	PUMP			206
6684867	SEAL			206
6684868	SEAL			206
6684869	FLANGE			206
6684870	GASKET			206
6684871	PULLEY			200

Code for disposition of old part number

A -- Use up

B -- Use on other application (See PNI)

C -- File PDR Report with Bobcat Parts Sales

D -- Part Number Error

https://www.pdfmanual4trucks.com/

Part No.	Description	Was	Code	Page
6684872	VALVE			207, 208
6684873	VALVE			208
6684874	COLLAR			208
6684875	SHAFT			208
6684876	MANIFOLD			210
6684877	GASKET			210
6684878	MANIFOLD			209, 210
6684879	GASKET	6666781	D	210
6684879	GASKET	6684754	D	210
6684879	GASKET			210
6684880	GASKET	6684879	D	186, 210
6684880	GASKET			186, 210
6684881	TURBO CHARGER			211, 212
6684882	HOSE			212
6684883	FLANGE			212
6684884	PIPE			214
6684885	OIL COOLER			215, 216
6684886	CONNECTOR			216
6684888	HOSE			216
6684889	CLAMP			204, 216
6684890	HOSE			216
6684891	SEAL			190
6684896	INSULATION			20, 242
6684897	INSULATION			20
6684909	VALVE			244
6684933	BEARING			92
6685050	ENGINE			167, 168, 169, 170
6685088	NUT			172
6685104	BOLT			204
6685114	SCREW			220, 236
6685115	WASHER			220, 236
6685116	SCREW			220, 236
6685117	O-RING			220
6685118	OIL			220
6685140	COVER			6
6685153	O-RING	6672338	A	32, 34
6685153	O-RING			32, 34
6685154	O-RING	6672342	A	32, 34
6685154	O-RING			32, 34
6685162	MANIFOLD	6683161	A	66, 83, 84
6685162	MANIFOLD			66, 83, 84
6685235	VALVE			127, 128
6685238	VALVE			125, 126
6685246	KIT			128
6685247	KIT			138
6685248	PLUG			130, 132, 134, 136, 138, 140, 142
6685250	PLUG			130, 136, 138
6685251	END CAP			130
6685252	END CAP			130
6685253	END CAP			136
6685254	KIT			122, 124, 132, 134, 140, 142
6685255	KIT			138
6685256	SEAL KIT			130, 132, 134, 136, 138, 140, 142
6685257	SEAL KIT			126
6685258	SEAL KIT			126

Code for disposition of old part number
A -- Use up
B -- Use on other application (See PNI)
C -- File PDR Report with Bobcat Parts Sales
D -- Part Number Error

https://www.pdfmanual4trucks.com/

Part No.	Description	Was	Code	Page
6685259	KIT			124, 126, 128, 130, 132, 134, 136, 138, 140, 142
6685264	KIT			122, 124, 130, 132, 134, 136, 138, 140, 142
6685282	NUT			84
6685283	COIL			84
6685284	VALVE			84
6685285	SEAL KIT			84
6685312	DECAL			232, 236
6685313	COVER			232, 236
6685314	FILTER			232, 236
6685315	SCREW			232, 236
6685316	COVER			232, 236
6685317	COVER			232, 236
6685318	COVER			232
6685319	SCREW			232, 236
6685320	BLOWER			232, 236
6685321	SCREW			232, 236
6685322	NUT			232, 236
6685323	COIL			232, 236
6685324	EVAPORATOR			236
6685325	O-RING			236
6685343	NUT	6681940	A	166
6685343	NUT			166
6685455	MOTOR	6668730	A	28, 63, 64, 105, 106
6685455	MOTOR			28, 63, 64, 105, 106
6685459	VALVE	6679812	A	234, 240
6685459	VALVE			234, 240
6685464	BOLT			194
6685465	O-RING			190
6685469	KEY			186
6685473	BOLT			192
6685476	SEAL			196
6685479	BEARING			188
6685481	GEAR			186
6685482	BOLT			186
6685486	BEARING			186
6685487	BEARING			186
6685488	WASHER			186
6685489	WASHER			186
6685490	BEARING			186
6685491	BEARING			186
6685492	BEARING			186
6685493	BEARING			186
6685494	WASHER			186
6685495	WASHER			186
6685496	WASHER			186
6685497	WASHER			186
6685498	GASKET			198
6685500	COVER			190
6685514	SPRING			194
6685515	COVER			186
6685516	COLLAR			188
6685517	STOPPER			188
6685519	SHAFT			182
6685520	THERMOSTAT			204
6685526	PLATE			196

Code for disposition of old part number

A -- Use up
B -- Use on other application (See PNI)
C -- File PDR Report with Bobcat Parts Sales
D -- Part Number Error

https://www.pdfmanual4trucks.com/

Part No.	Description	Was	Code	Page
6685580	TUBE			179, 180
6685581	O-RING			180
6685582	CAMSHAFT			182
6685583	BEARING			186
6685584	BEARING			186
6685585	BEARING			186
6685586	BEARING			186
6685588	LEVER			193, 194
6685591	COVER			204
6685600	TUBE			214
6685601	CLAMP			214
6685606	SPEAKER			20
6685607	GRILLE			20, 272
6685637	COLLAR			216
6685647	MUFFLER			170
6685654	RETAINER			20
6685657	SEAT	- 6682974		10, 12
6685657	SEAT	6682964	A	10, 12
6685657	SEAT	6682974	A	10, 12
6685657	SEAT			10, 12
6685693	VALVE			120
6685694	PUMP			78
6685735	SEAL	6661112	A	184
6685735	SEAL			184
6685743	SCREW			20, 272
6685744	NUT			20, 272
6685745	COVER			20
6685747	SEAT BELT			258
6685772	WINDOW			14
6685773	WINDOW			14
6685774	FRAME			14
6685799	BRACKET			20
6685832	ACCUMULATOR	6679031	A	84
6685832	ACCUMULATOR	6679031		84
6685832	ACCUMULATOR			84
6686001	O-RING			112
6686002	O-RING			112
6686003	RING			112
6686088	KIT			12
6686089	KIT			12
6686150	BOX			12
6686151	SUSPENSION			12
6686207	NUT			98
6686208	O-RING			98
6686209	O-RING			98
6686210	VALVE	- 6686653		98
6686210	VALVE		A	98
6686210	VALVE			98
6686269	MOTOR	6678949	A	72, 97, 98
6686269	MOTOR			72, 97, 98
6686271	GEAR			106
6686272	NUT			106
6686273	PIN			106
6686274	RING			106
6686276	COVER			106
6686277	BUTTON			106

Code for disposition of old part number

A -- Use up

B -- Use on other application (See PNI)

C -- File PDR Report with Bobcat Parts Sales

D -- Part Number Error

https://www.pdfmanual4trucks.com/

Part No.	Description	Was	Code	Page
6686278	BEARING			106
6686279	BOLT			106
6686280	RING			106
~~6686281~~	~~O-RING~~			~~106~~
6686282	SEAL			106
6686283	PLUG			106
~~6686284~~	~~SEAL~~			~~106~~
6686285	BOLT			106
6686286	WASHER			106
~~6686288~~	~~O-RING~~			~~106~~
6686290	MOTOR			107, 108
6686291	PIN			106
~~6686292~~	~~KIT~~			~~106~~
6686297	ROTARY GROUP			108, 109, 110
6686298	PORT PLATE			108, 111, 112
~~6686300~~	~~PISTON~~			~~108~~
6686302	SWIVEL BALL			108
6686303	PIN			108
~~6686304~~	~~SCREW~~			~~108~~
6686305	O-RING			108
6686306	RING			108
6686307	RING			108
~~6686308~~	~~AXLE~~			~~108~~
6686309	DRIVE SHAFT			110
6686310	BEARING			110
~~6686311~~	~~BEARING~~			~~110~~
6686312	SHIM			110
6686313	RING			110
~~6686314~~	~~VALVE~~			~~112~~
6686315	VALVE			112
6686316	PISTON			112
~~6686317~~	~~COLLAR~~			~~112~~
6686318	COLLAR			112
6686319	SPRING			112
~~6686320~~	~~SCREW~~			~~112~~
6686321	SCREW			112
6686322	SCREW			112
~~6686323~~	~~RING~~			~~112~~
6686324	RING			112
6686329	RING			114
6686366	SEAL			92
6686511	MOTOR			62, 89, 90
6686581	VALVE			121, 122
6686582	VALVE			123, 124
~~6686583~~	~~VALVE~~			~~131, 132~~
6686592	VALVE			126
6686593	REGULATOR			126
~~6686594~~	~~KIT~~			~~122~~
6686595	KIT			130, 132, 134, 136, 138, 140, 142
~~6686598~~	~~RING~~			~~108, 113, 114~~
6686599	SPRING			112
6686600	SCREW			112
~~6686604~~	~~O-RING~~			~~114~~
6686605	O-RING			114
6686606	PIN			114
6686607	SPRING			114

Code for disposition of old part number

A -- Use up

B -- Use on other application (See PNI)

C -- File PDR Report with Bobcat Parts Sales

D -- Part Number Error

https://www.pdfmanual4trucks.com/

Part No.	Description	Was	Code	Page
6686617	STOP			114
6686618	RING			110
6686621	RING			114
6686622	LAMINATION			114
6686623	COUNTER			114
6686624	SPRING			114
6686625	RING			114
6686626	CIRCLIP			114
6686634	VALVE			139, 140
6686636	VALVE			141, 142
6686638	VALVE			133, 134
6686640	VALVE			135, 136
6686642	VALVE			129, 130
6686643	VALVE			137, 138
6686648	RING			98
6686649	SEAL			98
6686650	WASHER			98
6686651	KEY			98
6686654	SEAL KIT			98
6686728	BEARING			30
6686896	KIT			122, 124, 130, 132, 134, 136, 140, 142
6686897	RELIEF VALVE			132, 134, 136, 140, 142
6686899	VALVE			126
6686901	END CAP			136
6686913	CARRIER			106
6686915	WASHER			106
6686916	SPINDLE			106
6687074	SHAFT			91, 92
6687077	PLUG			94
6687080	SCREW			90
6687081	SCREW			90
6687082	O-RING	6684723	A	96
6687082	O-RING			96
6687083	SCREW	6675895	A	96
6687083	SCREW			96
6687084	SCREW	6676024	A	96
6687084	SCREW	6684724	A	96
6687084	SCREW			96
6687085	PLUG			96
6687087	ROTARY GROUP			90
6687112	HOUSING			106
6687113	GEAR			106
6687114	MOTOR			106
6687115	KIT			106
6701123	SCREW	4CM00825B	B	170
6701123	SCREW			170
6701174	WASHER			58, 60
6702642	SCREW	84G003112B	A	22
6702642	SCREW	84G003112B	B	22
6702642	SCREW			22
6703168	BEARING			184
6705106	WASHER			170
6705231	WASHER			184
6705232	WASHER			184
6705491	SPRING			184
6706043	TUBE	6705105	A	170

Code for disposition of old part number

A -- Use up
B -- Use on other application (See PNI)
C -- File PDR Report with Bobcat Parts Sales
D -- Part Number Error

https://www.pdfmanual4trucks.com/

Part No.	Description	Was	Code	Page
6706043	TUBE			170
6706228	HOSE			66
6706517	SCREW	58G000806B	A	16
6706517	SCREW	58G000806B	B	16
6706517	SCREW	6579119	A	16
6706517	SCREW	6579119	B,D	16
6706517	SCREW	6704400	A	16
6706517	SCREW	6704400	B	16
6706517	SCREW		A	16
6706517	SCREW			16
6707040	ELBOW	26F000001B	B	160
6707040	ELBOW	6658634	A	160
6707040	ELBOW	6658634	B, D	160
6707040	ELBOW			160
6708770	CAP			184
6708827	CONTAINER			22
6708929	DECAL	6708922	D	228
6708929	DECAL			228
6709527	KEY	6632560	A	26, 156, 218
6709527	KEY	6632560	B,D	26, 156, 218
6709527	KEY	6666202	A	26, 156, 218
6709527	KEY			26, 156, 218
6710585	WASHER	6709008	A	184
6710585	WASHER			184
6713370	PIN	14J-1808	B	184
6713370	PIN	14J001808B	A	184
6713370	PIN	14J001808B	B	184
6713370	PIN			184
6713507	DECAL	6813507	D	228
6713507	DECAL		A	228
6713507	DECAL			228
6714210	SPRING			16
6715183	ELBOW	6657083	A	218
6715183	ELBOW			218
6716001	TOOTH			280
6716443	ELBOW	6716443	A	230
6716443	ELBOW			230
6716621	COVER			156
6718414	SENDER	6718415	B	160
6718414	SENDER	6718415	B,D	160
6718414	SENDER	6718415	D	160
6718414	SENDER			160
6719176	SWITCH			220, 240, 244
6719828	BOLT	6719827	B	170
6719828	BOLT	6CM01230B	A	170
6719828	BOLT	6CM01230B	B	170
6719828	BOLT			170
6720038	INSTRUCTIONS			224
6720736	PLUG	6654133	A	224
6720736	PLUG			224
6722344	FLUID			282
6722782	PAINT			282
6724094	ANTI-FREEEZE	6658230	A	282
6724094	ANTI-FREEEZE	6658230		282
6724094	ANTI-FREEEZE			282
6724354	ANTI-FREEZE	6658230	A	282

Code for disposition of old part number

A -- Use up

B -- Use on other application (See PNI)

C -- File PDR Report with Bobcat Parts Sales

D -- Part Number Error

https://www.pdfmanual4trucks.com/

Part No.	Description	Was	Code	Page
6724354	ANTI-FREEZE			282
6724557	MOTOR OIL	6657302	A	282
6724557	MOTOR OIL			282
6724558	MOTOR OIL	6657300	A	282
6724558	MOTOR OIL			282
6724559	MOTOR OIL	6657304	A	282
6724559	MOTOR OIL			282
6727753	GASKET	6653956	A	170
6727753	GASKET	6666816	A	170
6727753	GASKET			170
6727869	SENDER	6718417(B)	B	72
6727869	SENDER			72
6728801	TOOTH			226
6731085	ELBOW			234, 240, 244
6731635	TOOTH ASSY			226
6732732	BUSHING			220, 240, 244
6733378	SCREW	5CM-1020	B	168
6733378	SCREW	5CM01020B	A	168
6733378	SCREW	5CM01020B	B	168
6733378	SCREW			168
6733540	PIN			276
6733667	LATCH	6811910	A	4
6733667	LATCH			4
6733852	MOUNT			274
6734239	PIN			278
6735864	DECAL	6731509	A	228
6735864	DECAL	6732424	A	228
6735864	DECAL	6732424	B	228
6735864	DECAL	6732495	B	228
6735864	DECAL			228
6736191	KIT			273, 274
6736641	PAINT		A	282
6736641	PAINT			282
6736642	PAINT			282
6736644	PAINT			282
6736645	PAINT			282
6736875	TANK		A	20
6736875	TANK			20
6801068	PIN			54, 60
6802064	HOSE	6628047	A	62
6802064	HOSE			62
6802066	HOSE			66
6802371	BUSHING			150
6802539	SPACER			10
6802703	BUSHING			278
6803091	HOSE			76
6803199	HANDLE			52
6803202	SCREW	6589675	B	6, 8, 20, 50, 52, 234, 240, 244
6803202	SCREW	6803203	D	6, 8, 20, 50, 52, 234, 240, 244
6803202	SCREW			6, 8, 20, 50, 52, 234, 240, 244
6803760	DECAL			228, 278
6804026	MOUNT			20, 22
6804068	HANDLE	6802972	A	58
6804068	HANDLE			58
6804114	DECAL	6534739	A	228
6804114	DECAL	6589742	A	228

Code for disposition of old part number

A -- Use up

B -- Use on other application (See PNI)

C -- File PDR Report with Bobcat Parts Sales

D -- Part Number Error

https://www.pdfmanual4trucks.com/

Part No.	Description	Was	Code	Page
6804114	DECAL		A	228
6804114	DECAL			228
6804233	DECAL			228
6804251	HANDLE			82
6805244	WASHER	6597241	A	20, 22, 26
6805244	WASHER	6803445	A	20, 22, 26
6805244	WASHER			20, 22, 26
6805278	LINK	6804816	A	44
6805278	LINK			44
6805281	LINK	6803410	A	44
6805281	LINK			44
6805433	CUTTING EDGE			280
6805434	CUTTING EDGE			280
6805435	CUTTING EDGE			280
6805436	CUTTING EDGE			280
6805464	CUTTER			226, 280
6805579	BUSHING			278
6805601	BUSHING			44, 250
6805768	VALVE	6805257	A	82
6805768	VALVE			82
6805771	CUTTING EDGE			226, 280
6805815	CUTTING EDGE			226, 280
6805816	CUTTING EDGE			226
6805937	CUTTING EDGE			226
6805951	CUTTING EDGE			226
6806121	DECAL			276
6806461	CLAMP	6652521	A	70
6806461	CLAMP			70
6806720	INSULATOR			120
6806788	HOSE			67, 68
6806794	HOSE			76
6806995	HOSE			256
6807033	COVER			50
6807169	PLATE			54
6807184	FITTING	6807181	D	62
6807184	FITTING			62
6807220	SPACER			2
6807283	GROMMET			218
6807327	SAFETY TREAD			18
6807345	MOUNT			62
6807357	CUTTING EDGE			226
6807362	SUPPORT			50, 52
6807389	CUTTING EDGE			226
6807431	CABLE			156
6807460	HOSE			68
6807478	HOSE	6802478	D	82
6807478	HOSE			82
6807480	HOSE			76
6807776	DECAL	6804230	A	228
6807776	DECAL	6808180	A	228
6807776	DECAL			228
6807945	HOSE			66
6807946	HOSE			76
6807948	LEVER			54, 156
6807982	ARMREST			50, 52
6807983	COVER	6808983	D	50, 52

Code for disposition of old part number

A -- Use up
B -- Use on other application (See PNI)
C -- File PDR Report with Bobcat Parts Sales
D -- Part Number Error

https://www.pdfmanual4trucks.com/

Part No.	Description	Was	Code	Page
6807983	COVER			50, 52
6807984	COVER			52
6807985	COVER			52
6808004	ROD			58
6808053	KIT			251, 252
6808054	MOUNT			252
6808185	DECAL			228, 262, 264
6808211	BOLT	29CM01050B	A	42
6808211	BOLT			42
6808258	HOUSING			46
6808261	DECAL			228
6808365	BUMPER			2
6808415	HARNESS			46
6808424	SCREW			16
6808433	DECAL			228, 234, 240, 244
6808473	DECAL			228
6808474	DECAL			228
6808475	DECAL			228
6808478	DECAL			228
6808480	DECAL			228
6808481	DECAL			228
6808577	SEAL			23, 24
6808580	BEARING			252
6808706	STOP	6714126	A	4
6808706	STOP			4
6808717	CLIP			230
6808749	BUSHING			52
6808831	WIRE ROPE	6808837	B,D	230
6808831	WIRE ROPE			230
6808840	SPRING			52
6808870	DECAL			228
6808872	DECAL			228
6808879	DECAL			228
6808882	ADHESIVE			6
6808896	MOUNT			252
6808924	HINGE			262, 264
6808926	PIN			262, 264
6809030	SCREW			2
6809084	STOP			58
6809194	LOCK	6807227	A	60
6809194	LOCK			60
6809227	CONNECTOR			248
6809258	HARNESS			252
6809263	DECAL			228
6809726	ROLLER	61D000006	B	2
6809726	ROLLER			2
6809727	STRIKER	6719524	B	2
6809727	STRIKER			2
6809734	BUSHING	6719550	B	2
6809734	BUSHING			2
6809829	DECAL			228
6809845	BOLT	38C-856	A	4
6809845	BOLT	38C-856	B	4
6809845	BOLT	38C000856B	A	4
6809845	BOLT	38C000856B	B	4
6809845	BOLT			4

Code for disposition of old part number
A -- Use up
B -- Use on other application (See PNI)
C -- File PDR Report with Bobcat Parts Sales
D -- Part Number Error

https://www.pdfmanual4trucks.com/

Part No.	Description	Was	Code	Page
6810004	DECAL			252
6810029	STOP			118
6810132	SPRING	6801032	D	4
6810132	SPRING			4
6810133	GROMMET			2
6810141	SPRING	6714210	B	4
6810141	SPRING			4
6810303	SPACER			58, 60
6810364	GROMMET			156
6810365	GROMMET			156
6810367	TRACK			266
6810405	STOP			50
6810454	TUBE			52
6810455	SHAFT			52
6810456	BUSHING	6814056	D	52
6810456	BUSHING			52
6810465	HOSE			70
6810508	PEDAL	6808974	A	58, 60
6810508	PEDAL	6808974		58, 60
6810508	PEDAL			58, 60
6810511	PEDAL			58
6810515	PLATE			58
6810532	PEDAL	6806929	A	58
6810532	PEDAL			58
6810533	PEDAL	6806927	A	58
6810533	PEDAL	6806927		58
6810533	PEDAL			58
6810539	NUT	6804592	A	146
6810539	NUT	6804592	B	146
6810539	NUT			146
6810540	NUT	92D000020B	A	144, 148, 150, 152
6810540	NUT	92D000020B	B	144, 148, 150, 152
6810540	NUT			144, 148, 150, 152
6810610	SEAL	6669252	A	118
6810610	SEAL			118
6810671	BOOT			50, 52
6810769	SHAFT	6589003	A	38
6810769	SHAFT	6807918	A	38
6810769	SHAFT	6810769	A	38
6810769	SHAFT			38
6810802	BAR	6719525	B	2
6810802	BAR			2
6810813	SEAL	6669254	A	118
6810813	SEAL			118
6810814	KIT			223, 224
6810944	DOOR			7, 8, 20
6810971	TAILGATE			4
6811056	MOUNT			252
6811252	FRAME			42
6811457	BUSHING			42
6811629	FUEL			218
6811668	TANK			218
6811696	TUBE			72
6811719	CONSOLE			52
6811726	HOSE			218
6811751	CONSOLE			52

Code for disposition of old part number

A -- Use up
B -- Use on other application (See PNI)
C -- File PDR Report with Bobcat Parts Sales
D -- Part Number Error

https://www.pdfmanual4trucks.com/

Part No.	Description	Was	Code	Page
6811760	HANDLE			52
6811762	PIN			52
6811771	PIN			52
6811775	SPOOL			118
6811778	SWIVEL			64, 117, 118
6811783	COVER			52
6811785	COVER			52
6811792	WINDOW			16
6811886	PLATE			2
6811891	INSULATION			24
6811973	CONSOLE			52
6811998	PANEL			50
6812010	CONSOLE			50
6812030	WINDOW			22
6812063	TUBELINE			70
6812064	TUBELINE			70
6812065	COVER			50
6812070	SEAL	6808430	A	58, 60
6812070	SEAL			58, 60
6812089	HANDLE			56
6812099	TUBELINE	6628643	D	70
6812099	TUBELINE			70
6812100	TUBELINE	6596042	D	70
6812100	TUBELINE			70
6812104	BRACKET			218
6812154	BRACKET			56
6812156	BRACKET			42
6812170	PLUG	90KV00002B	A	146
6812170	PLUG			146
6812171	PLUG	90KV-5	B	118, 144, 148, 150, 152
6812171	PLUG	90KV00005B	A	118, 144, 148, 150, 152
6812171	PLUG	90KV00005B	B	118, 144, 148, 150, 152
6812171	PLUG			118, 144, 148, 150, 152
6812176	HOSE			116
6812193	INSULATION			24
6812235	PIN			42
6812252	INSULATION			24
6812258	DECAL			228
6812286	PLATE			58
6812296	PLATE			10
6812297	PLATE			10
6812298	PLATE			10
6812299	PLATE			10
6812377	INSULATION			24
6812390	HUB			72
6812394	CABLE			156
6812395	CABLE			160
6812413	PIN			6
6812458	PLATE			10
6812517	CYLINDER			70, 149, 150
6812518	ROD			150
6812522	HOUSING			150
6812525	PISTON			150
6812526	HEAD			150
6812568	DECAL			228
6812575	PIN			42

Code for disposition of old part number

A -- Use up

B -- Use on other application (See PNI)

C -- File PDR Report with Bobcat Parts Sales

D -- Part Number Error

https://www.pdfmanual4trucks.com/

Part No.	Description	Was	Code	Page
6812631	PIN			42
6812633	CYLINDER			62, 151, 152
6812634	ROD			152
6812638	HOUSING			152
6812645	BUSHING			152
6812656	TUBE			42
6812674	PIN			42
6812682	STRAP			42
6812686	WASHER	6813373	A	56
6812686	WASHER			56
6812687	WASHER			42, 46
6812705	WINDOW			5, 6, 20
6812711	FLOORMAT			22
6812712	FLOORMAT			20, 242
6812713	RING			42, 46
6812714	PLATE			22
6812738	UNDERCARRIAGE			28
6812809	HINGE	- 6812809 Order 7105711 (1) Also order 35.5"(902mm) of Ref. 33	A	26
6812816	ADAPTER	6715185	A	256
6812816	ADAPTER			256
6812823	ADAPTER			70
6812828	ADAPTER	6812828	A	72
6812828	ADAPTER			72
6812855	HOSE			66, 82
6812865	FITTING			78
6812917	PIPE			170
6812930	MOUNT			58
6812988	HANDLE			4
6813028	ROLLER			6
6813071	BLADE			47, 48
6813083	BRACKET			22
6813180	PLATE			166
6813191	PLATE			220, 240, 244
6813203	PLATE			166
6813216	BRACKET			26
6813355	X-CHANGE			278
6813401	PIN			278
6813485	ARM			44
6813497	BUSHING			44, 46, 250
6813506	DECAL			228
6813507	DECAL			228
6813567	INSULATION			16
6813568	INSULATION			16
6813569	INSULATION			16
6813574	COVER			8
6813694	BRACKET			66
6813715	BRACKET			220, 240, 244
6813790	HOSE			76, 82
6813863	PIN			46
6813882	HOSE			76
6813884	HOSE			76
6813898	TANK			166
6813903	HOSE			68

Code for disposition of old part number

A -- Use up
B -- Use on other application (See PNI)
C -- File PDR Report with Bobcat Parts Sales
D -- Part Number Error

https://www.pdfmanual4trucks.com/

Part No.	Description	Was	Code	Page
6813916	TUBE			62
6813917	TUBE			62
6813932	WASHER			46
6813933	WASHER			46
6813941	CUTTING EDGE			226
6813975	PLATE			220, 240, 244
6814024	SCREW			220, 234, 238, 240
6814127	PIPE			170
6814173	SHROUD			166
6814175	BRACKET			116
6814176	TUBELINE			230
6814179	PLATE			166
6814192	SEAT			10
6814194	BRACKET			220, 240, 244
6814228	HARNESS			220, 240, 244
6814229	HARNESS			234, 240, 244
6814241	INSULATION			16
6814278	MOUNT			170
6814280	PIN			46
6814286	BRACKET			72
6814287	MOUNT			72
6814288	GUARD			72
6814290	BRACKET			230
6814325	SEAL			20
6814326	SEAL			20
6814355	INSULATION			24
6814371	INSULATION			24
6814372	INSULATION			24
6814385	CYLINDER			70, 147, 148
6814386	HOUSING			148
6814387	ROD			148
6814393	INSULATION			24
6814414	MANIFOLD			78
6814416	TUBELINE			166
6814417	HOSE			166
6814418	HOSE			166
6814419	FITTING			72, 78
6814421	HOSE			72
6814423	BRACKET			6
6814456	BRACKET			62
6814501	HOSE			218
6814586	HUB			184
6814587	PULLEY			184
6814607	PLATE			50, 82
6814608	HOSE			218
6814609	PLATE			50
6814617	TANK			116
6814640	BRACKET			170
6814655	HOSE			116
6814660	HOSE			72
6814661	TUBE			116
6814676	CUTTING EDGE			226
6814704	BRACKET			156
6814715	KIT			247, 248
6814721	HANDLE			16
6814724	CHANNEL			16

Code for disposition of old part number
A -- Use up
B -- Use on other application (See PNI)
C -- File PDR Report with Bobcat Parts Sales
D -- Part Number Error

https://www.pdfmanual4trucks.com/

Part No.	Description	Was	Code	Page
6814733	HOSE			166
6814781	HOSE			70
6814782	HOSE			70
6814783	HOSE			70
6814784	HOSE			70
6814817	BRACKET			218
6814829	HARNESS			160
6814830	HARNESS			160
6814831	HOSE			64
6814832	HOSE			64
6814848	PLATE			168
6814859	TENSIONER			168
6814860	SPACER			168
6814861	SPACER			168
6814908	SEAL			20
6814922	INSULATION			20, 242
6814926	GROMMET			2
6814933	COVER			50
6814934	COVER			50
6814957	BLOCK			218
6814958	COVER			16
6814985	BLOCK			76
6815018	BELT			220, 240, 244
6815019	BELT			168
6815033	HOSE			68
6815035	HOSE			256
6815048	HOSE			218
6815049	HOSE			218
6815090	HEAD			148
6815091	HARNESS			160
6815119	ROLLER			28
6815123	ROLLER			37, 38, 266
6815124	ROLLER			38
6815125	IDLER			28, 29, 30
6815126	IDLER			30
6815127	ROLLER			28, 35, 36
6815128	ROLLER			36
6815129	ROLLER			39, 40, 266
6815130	ROLLER			40
6815150	WINDOW			18
6815221	HOSE			66
6815235	TUBE			62
6815236	TUBE			62
6815261	HOSE			76
6815412	BRACKET			26
6815429	HOSE			78
6815465	HOSE			76
6815471	HOSE			76
6815489	DECAL			228
6815541	DECAL			228
6815542	SEAL			16
6815582	HOSE			68
6815625	DECAL			228
6815626	INSULATION			16
6815653	GROMMET			156
6815875	HOSE			170

Code for disposition of old part number
A -- Use up
B -- Use on other application (See PNI)
C -- File PDR Report with Bobcat Parts Sales
D -- Part Number Error

https://www.pdfmanual4trucks.com/

Part No.	Description	Was	Code	Page
6815876	HOSE			170
6815879	TUBE			72
6815880	TUBE			72
6815881	BRACKET			72
6815882	BRACKET			72
6815883	TUBE			72
6815885	BRACKET			72
6815887	HOSE			116
6815890	HOSE			230
6815893	TUBE			72
6815894	HOSE			116
6815896	BRACKET			116
6815897	HOSE			76
6815898	MOUNT			54, 60
6815915	DECAL	6809612		228
6815915	DECAL			228
6815939	SEAL			18
6815952	CYLINDER			64, 145, 146
6815957	DECAL	6804276	A	228
6815957	DECAL		A	228
6815957	DECAL			228
6815958	HOUSING			146
6815959	SEAL KIT			148
6815985	DECAL			228
6816010	PISTON			152
6816050	BRACKET	- 6816050 Order 7105711(1) Also Order 35.5"(902mm) of Ref. 33	A	26
6816050	BRACKET			26
6816051	BAR			26
6816052	COVER			26
6816109	PEDAL			60
6816115	PAD			16
6816118	PLATE			166
6816125	WINDOW			18
6816126	WINDOW			18
6816135	INSULATION			22
6816136	TRIM			272
6816193	SCREW			26
6816209	SPROCKET	6812134	A	28
6816209	SPROCKET			28
6816242	CYLINDER			32, 34
6816244	CYLINDER	6804152	A	266
6816244	CYLINDER			266
6816300	COVER			26
6816328	TUBE			62
6816329	TUBE			62
6816352	SEAL KIT			150
6816368	SPACER			278
6816369	GASKET			276
6816437	BRACKET			6
6816465	COVER			26
6816483	COVER			28
6816492	HOSE			64
6816533	SEAL KIT	6804613	A	146

Code for disposition of old part number
A -- Use up
B -- Use on other application (See PNI)
C -- File PDR Report with Bobcat Parts Sales
D -- Part Number Error

https://www.pdfmanual4trucks.com/

Part No.	Description	Was	Code	Page
6816533	SEAL KIT			146
6816555	SCREEN			2
6816568	SCREEN			26
6816598	INSULATION			20
6816600	INSULATION			24
6816607	INSULATION			20
6816676	BUSHING			148
6816678	INSULATION			20
6816735	SHAFT			36, 40
6816744	CYLINDER			70, 143, 144
6816745	ROD			144
6816759	PISTON			144
6816789	BRACKET			26
6816826	HOUSING			144
6816829	BUSHING			144
6816881	KIT			255, 256
6816886	TUBELINE			116
6816889	HOSE			166
6816892	BRACKET			256
6816894	HOSE			256
6817056	DECAL			228
6817060	HOSE			68
6817066	HOSE			76
6817082	DECAL			228
6817109	A/C UPGRADE KIT			219, 220
6817111	KIT			233, 234
6817122	HEAD			144
6817143	SEAL KIT			144
6817169	LINK			44
6817170	LINK			44
6817225	DECAL			228
6817239	PIN			42
6817266	HOSE			82
6817303	PIN			278
6817343	SEAL			18
6817371	BRACKET			160
6817372	BRACKET			160
6817403	KIT			239, 240
6817530	WINDOW			18
6817548	STEEL TRACK KIT			265, 266
6817554	HOSE			170
6817568	KIT			259, 260
6817624	COVER			170
6817661	TOP GUARD			270, 272
6817750	BRACKET			26
6817751	BRACKET			20
6817753	KIT			263, 264
6817754	GUARD			264
6817815	DECAL			228
6817828	KIT			275, 276
6817902	INSULATION			20
6817918	INSULATION			24
6817948	KIT			269, 270
6818012	KIT			261, 262
6818013	GUARD			262

Code for disposition of old part number
A -- Use up
B -- Use on other application (See PNI)
C -- File PDR Report with Bobcat Parts Sales
D -- Part Number Error

https://www.pdfmanual4trucks.com/

Part No.	Description	Was	Code	Page
6818017	BRACKET			262
6818028	PIN			44, 250
6818030	PIN			44
6818059	DECAL			278
6818101	HOSE			68
6818105	HOSE			68
6818158	HEAD			152
6818161	SEAL KIT	6818160	D	152
6818161	SEAL KIT			152
6818275	INSULATION			16
6818276	INSULATION			16
6818380	CANOPY			22
6818393	INSULATION			24
6818394	HARNESS			256
6818403	PLATE			22
6901053	INSTRUCTION			252
6901445	RADIO			254
6902228	PAINT	6722783	A	281, 282
6902228	PAINT	6722783 - SEE NOTE	A	281, 282
6902228	PAINT			281, 282
6902229	PAINT	6722786	A	282
6902229	PAINT	6722786 - SEE NOTE	A	282
6902229	PAINT			282
6902230	PAINT	6722789	A	282
6902230	PAINT	6722789 - SEE NOTE	A	282
6902230	PAINT		A	282
6902230	PAINT			282
6902234	PAINT	6722785	A	282
6902234	PAINT	6722785		282
6902234	PAINT			282
6902235	PAINT	6722788	A	282
6902235	PAINT	6722788		282
6902235	PAINT			282
6902422	INSTRUCTION			274
6902493	INSTRUCTIONS			256
6902519	INSTRUCTIONS			240
6902520	INSTRUCTIONS			234
6902532	INSTRUCTIONS			266
6902534	INSTRUCTIONS			260
6902601	INSTRUCTIONS			248
6902620	INSTRUCTION			276
6902634	INSTRUCTIONS			278
6902640	INSTRUCTIONS			220
6902667	INSTRUCTIONS			254
6902709	INSTRUCTIONS			250
6902810	INSTRUCTION			230
6902838	INSTRUCTIONS			258
6902939	INSTRUCTION			262, 264, 270, 272
6903146	INSTRUCTION			268
6903147	INSTRUCTION			222
6958363	DECAL			256
6CM01220B	BOLT	1CM01220B	B	160
6CM01220B	BOLT	5CM01220B	D	160
6CM01220B	BOLT			160

Code for disposition of old part number

A -- Use up
B -- Use on other application (See PNI)
C -- File PDR Report with Bobcat Parts Sales
D -- Part Number Error

https://www.pdfmanual4trucks.com/

Part No.	Description	Was	Code	Page
6E000006B	WASHER	6E000005B	B	72, 166
6E000006B	WASHER			72, 166
6E000008B	WASHER	9E000008B	B	58
6E000008B	WASHER			58
6EM00080B	WASHER	25E000016B	B	166
6EM00080B	WASHER	63EM00080B	B	166
6EM00080B	WASHER	6535023	A	166
6EM00080B	WASHER	6535049	A	166
6EM00080B	WASHER	6535074	A	166
6EM00080B	WASHER	6535148	A	166
6EM00080B	WASHER	6EM00100B	B	166
6EM00080B	WASHER	6EM00100B	D	166
6EM00080B	WASHER			166
6EM00200B	WASHER			38
6EM00240B	WASHER			36, 40
7000009	PLUG			66
7100058	DECAL			228, 278
7100135	ARM			44, 250
7100202	HOSE			20
7100224	MOUNT			120
7100571	WINDOW			13, 14, 16
7100662	KIT			253, 254
7100712	SEAL			18
7100721	SEAL			18
7100772	CORD			154
7100898	HOSE			250
7100899	HOSE			250
7100929	SEAL			18
7101010	INSULATION			16
7101014	TUBELINE			120
7101016	SPACER			170
7101021	MOUNT			170
7101023	TUBE	6816890	A	166
7101023	TUBE			166
7101024	HOSE			78
7101025	BRACKET			72
7101026	TUBELINE			78
7101091	HOSE			64
7101106	COVER			2
7101107	COVER			2
7101112	HOSE			78
7101113	TUBE			72
7101122	CAB			20
7101341	PIN	21JM00816B	A	168
7101341	PIN	21JM00816B	B	168
7101341	PIN			168
7101352	BLOCK			218
7101491	CYLINDER	6816241	A	28, 31, 32
7101491	CYLINDER			28, 31, 32
7101511	NOZZLE			20
7101556	CYLINDER			33, 34
7101609	HARNESS			158
7101660	IDLER			183, 184
7101662	BRACKET			184
7101687	HOSE	6815580	A	68
7101687	HOSE			68

Code for disposition of old part number

A -- Use up

B -- Use on other application (See PNI)

C -- File PDR Report with Bobcat Parts Sales

D -- Part Number Error

https://www.pdfmanual4trucks.com/

Part No.	Description	Was	Code	Page
7101784	HOUSING			168
7101787	PLATE			168
7101790	HOSE			68
7101791	HOSE			68
7101792	HOSE			68
7101967	CAB			16, 18, 20
7102019	FITTING			120
7102022	KIT			229, 230
7102065	BRACKET			258
7102172	FLYWHEEL	6801358	A	168
7102172	FLYWHEEL	6801358		168
7102172	FLYWHEEL			168
7102234	FITTING			120
7102346	PLATE			28
7102576	HOSE			68, 76
7102579	HOSE			78
7102583	HOSE			72
7102651	DECAL			228
7102816	BOOM	6813482	A	46
7102816	BOOM			46
7102833	HARNESS			154
7102847	UPPERSTRUCTURE	6811212	A	2
7102847	UPPERSTRUCTURE			2
7102860	SEAL KIT			32, 34
7102902	KIT			257, 258
7102953	HOSE			78
7102959	BRACKET			170
7102964	BUCKET			168
7103019	INSULATION	- 6813529	A	24
7103019	INSULATION			24
7103022	INSULATION	- 6811892		24
7103022	INSULATION			24
7103023	INSULATION	- 6813527		24
7103023	INSULATION			24
7103034	INSULATION	- 6817304		24
7103034	INSULATION			24
7103043	HOSE			64
7103112	PLATE			276
7103193	DECAL			270, 272
7103194	DECAL			262
7103195	DECAL			264
7103231	BRACKET	6816547	A	168
7103231	BRACKET			168
7103659	FITTING			256
7103726	PLATE			270, 272
7103753	BRACKET			264
7103872	BRACKET			264
7103874	DECAL			228
7103893	HOSE			256
7104082	CAB	- 7101122		16, 17, 18
7104082	CAB	7101122	A	16, 17, 18
7104082	CAB	7101122		16, 17, 18
7104082	CAB			16, 17, 18
7104097	KIT			271, 272
7104182	HARNESS			222, 268
7104183	HARNESS			272

Code for disposition of old part number
A -- Use up
B -- Use on other application (See PNI)
C -- File PDR Report with Bobcat Parts Sales
D -- Part Number Error

https://www.pdfmanual4trucks.com/

Part No.	Description	Was	Code	Page
7104659	HARNESS			222, 268, 272
7104660	SEAL			2
7104694	HARNESS			222, 268
7105013	KIT			267, 268
7105014	KIT			221, 222
7105076	MOUNT			170
7105174	HARNESS			156
7105175	HARNESS			156
7105261	HOSE			68
7106219	DECAL			228
7106221	HOSE	6615630	A	68
7106627	DECAL			228
710706B	CLAMP	6634608	A	165, 166
710706B	CLAMP			165, 166
7107501	DECAL			228
7107502	DECAL			250
7107843	HOSE			66
7107865	HOSE			78
7109138	SHAFT			30
73K000016B	O-RING	80K-16	A	88
73K000016B	O-RING	80K-16	B	88
73K000016B	O-RING	NSS		88
73K000016B	O-RING			88
73K000232B	WASHER	80K000232B	A	150
73K000232B	WASHER	80K000232B	B	150
73K000232B	WASHER	80K000232B		150
73K000232B	WASHER	NSS	A	150
73K000232B	WASHER	NSS		150
73K000232B	WASHER			150
73K000234B	RING	80K000234B	A	144, 146, 152
73K000234B	RING	NSS		144, 146, 152
73K000234B	RING			144, 146, 152
73K000340B	RING	NSS		148
73K000340B	RING			148
75K000003B	O-RING	95K000003B	B,D	146
75K000003B	O-RING			146
75K000006B	O-RING	75K000008B	B	144, 148, 150, 152
75K000006B	O-RING	79K-6	B	144, 148, 150, 152
75K000006B	O-RING	79K000006B	B	144, 148, 150, 152
75K000006B	O-RING			144, 148, 150, 152
79K000002B	O-RING			88
79K000004B	O-RING	6535102	A	62, 64, 76, 78, 88
79K000004B	O-RING	6668957	A	62, 64, 76, 78, 88
79K000004B	O-RING	79K000007B	B	62, 64, 76, 78, 88
79K000004B	O-RING	91F000003B	A	62, 64, 76, 78, 88
79K000004B	O-RING			62, 64, 76, 78, 88
79K000005B	O-RING	79K000008B	B	218
79K000005B	O-RING	91F000004B	A	218
79K000005B	O-RING	91F000004B	B	218
79K000005B	O-RING			218
79K000006B	O-RING	6535047	A	62, 64, 66, 74, 76, 118, 120
79K000006B	O-RING	6634874	A	62, 64, 66, 74, 76, 118, 120
79K000006B	O-RING	6634874	B	62, 64, 66, 74, 76, 118, 120
79K000006B	O-RING	6634874	B,D	62, 64, 66, 74, 76, 118, 120
79K000006B	O-RING	6648281	A	62, 64, 66, 74, 76, 118, 120
79K000006B	O-RING	6655250	A	62, 64, 66, 74, 76, 118, 120

Code for disposition of old part number

A -- Use up

B -- Use on other application (See PNI)

C -- File PDR Report with Bobcat Parts Sales

D -- Part Number Error

https://www.pdfmanual4trucks.com/

Part No.	Description	Was	Code	Page
79K000006B	O-RING	6665471	A	62, 64, 66, 74, 76, 118, 120
79K000006B	O-RING	6665471	B	62, 64, 66, 74, 76, 118, 120
79K000006B	O-RING	75K000006B	B	62, 64, 66, 74, 76, 118, 120
79K000006B	O-RING	79K000010B	D	62, 64, 66, 74, 76, 118, 120
79K000006B	O-RING	91F-5	A	62, 64, 66, 74, 76, 118, 120
79K000006B	O-RING	91F000005B	A	62, 64, 66, 74, 76, 118, 120
79K000006B	O-RING	91F000005B	B	62, 64, 66, 74, 76, 118, 120
79K000006B	O-RING	91F000005B	D	62, 64, 66, 74, 76, 118, 120
79K000006B	O-RING	91F000005B		62, 64, 66, 74, 76, 118, 120
79K000006B	O-RING	99K000006B	A	62, 64, 66, 74, 76, 118, 120
79K000006B	O-RING	99K000006B	B	62, 64, 66, 74, 76, 118, 120
79K000006B	O-RING	99K000006B	B,D	62, 64, 66, 74, 76, 118, 120
79K000006B	O-RING		A	62, 64, 66, 74, 76, 118, 120
79K000006B	O-RING		B,D	62, 64, 66, 74, 76, 118, 120
79K000006B	O-RING			62, 64, 66, 74, 76, 118, 120
79K000008B	O-RING	6535126	A	62, 64, 74, 120
79K000008B	O-RING	6656437	A	62, 64, 74, 120
79K000008B	O-RING	79K000012B	A	62, 64, 74, 120
79K000008B	O-RING	79K000012B	D	62, 64, 74, 120
79K000008B	O-RING	91F-6	A	62, 64, 74, 120
79K000008B	O-RING	91F000006B	A	62, 64, 74, 120
79K000008B	O-RING	91F000006B	B	62, 64, 74, 120
79K000008B	O-RING	91F000006B	D	62, 64, 74, 120
79K000008B	O-RING	NSS	D	62, 64, 74, 120
79K000008B	O-RING	NSS		62, 64, 74, 120
79K000008B	O-RING			62, 64, 74, 120
79K000010B	O-RING	6515237	A	74, 78, 120
79K000010B	O-RING	6535113	A	74, 78, 120
79K000010B	O-RING	6665432	A	74, 78, 120
79K000010B	O-RING	69K000010B	B	74, 78, 120
79K000010B	O-RING	79000014B	B	74, 78, 120
79K000010B	O-RING	79K-8	B	74, 78, 120
79K000010B	O-RING	79K000007B	D	74, 78, 120
79K000010B	O-RING	79K000008B	B	74, 78, 120
79K000010B	O-RING	79K000012B	B	74, 78, 120
79K000010B	O-RING	79K000012B	D	74, 78, 120
79K000010B	O-RING	79K000014B	B	74, 78, 120
79K000010B	O-RING	91F-7	A	74, 78, 120
79K000010B	O-RING	91F000007B	A	74, 78, 120
79K000010B	O-RING	91F000007B	B	74, 78, 120
79K000010B	O-RING	91F000007B		74, 78, 120
79K000010B	O-RING	97K000010B	A	74, 78, 120
79K000010B	O-RING	99K000010B	B	74, 78, 120
79K000010B	O-RING			74, 78, 120
79K000012B	O-RING	17K-16	B	70, 74, 78, 120, 230
79K000012B	O-RING	58K000018B	B	70, 74, 78, 120, 230
79K000012B	O-RING	58K000018B	B,D	70, 74, 78, 120, 230
79K000012B	O-RING	6535115	A	70, 74, 78, 120, 230
79K000012B	O-RING	75K-12	B	70, 74, 78, 120, 230
79K000012B	O-RING	75K000012B	A	70, 74, 78, 120, 230
79K000012B	O-RING	79K-10	B,D	70, 74, 78, 120, 230
79K000012B	O-RING	79K-16	D	70, 74, 78, 120, 230
79K000012B	O-RING	79K-18	A	70, 74, 78, 120, 230
79K000012B	O-RING	79K-18	B	70, 74, 78, 120, 230
79K000012B	O-RING	79K000005B	B, D	70, 74, 78, 120, 230
79K000012B	O-RING	79K000010B	B	70, 74, 78, 120, 230

Code for disposition of old part number

A -- Use up

B -- Use on other application (See PNI)

C -- File PDR Report with Bobcat Parts Sales

D -- Part Number Error

https://www.pdfmanual4trucks.com/

Part No.	Description	Was	Code	Page
79K000012B	O-RING	79K000010B	D	70, 74, 78, 120, 230
79K000012B	O-RING	79K000016B	B	70, 74, 78, 120, 230
79K000012B	O-RING	79K000016B	D	70, 74, 78, 120, 230
79K000012B	O-RING	91F-8	A	70, 74, 78, 120, 230
79K000012B	O-RING	91F000008B	A	70, 74, 78, 120, 230
79K000012B	O-RING	91F000008B	B	70, 74, 78, 120, 230
79K000012B	O-RING	91F000008B		70, 74, 78, 120, 230
79K000012B	O-RING	97K000016B	B	70, 74, 78, 120, 230
79K000012B	O-RING	98K000012B	B	70, 74, 78, 120, 230
79K000012B	O-RING	99K-12	B	70, 74, 78, 120, 230
79K000012B	O-RING	99K000010B	B	70, 74, 78, 120, 230
79K000012B	O-RING	99K000012B	B	70, 74, 78, 120, 230
79K000012B	O-RING			70, 74, 78, 120, 230
79K000016B	O-RING	58K000021B	B	74, 230
79K000016B	O-RING	58K000127B	B	74, 230
79K000016B	O-RING	79K000008B	B	74, 230
79K000016B	O-RING	91F-10	A	74, 230
79K000016B	O-RING	91F000010B	A	74, 230
79K000016B	O-RING	91F000010B		74, 230
79K000016B	O-RING	99K000016B	A	74, 230
79K000016B	O-RING	99K000016B	B	74, 230
79K000016B	O-RING			74, 230
7CM01645B	SCREW			62
7CM12100B	SCREW			28
7JM00072B	RING	6535561	A	38
7JM00072B	RING	6655060	A	38
7JM00072B	RING			38
7JM00080B	RING			30, 36, 40
82K000240B	O-RING		b	148
82K000240B	O-RING			148
83D000004B	NUT	57D000004B	B	58
83D000004B	NUT	61D000004B	B	58
83D000004B	NUT	61D000005B	B	58
83D000004B	NUT	83D000005B	B	58
83D000004B	NUT	83D000005B	B,D	58
83D000004B	NUT			58
83F000003B	SCREW	83FN-3	A	62
83F000003B	SCREW	83FN00003B	B	62
83F000003B	SCREW			62
84G003724B	BOLT	17C000624B	B	54
84G003724B	BOLT	17C000626B	B	54
84G003724B	BOLT	84G003220B	D	54
84G003724B	BOLT	84G003720B	A	54
84G003724B	BOLT	84G003720B	B	54
84G003724B	BOLT	84G003720B		54
84G003724B	BOLT	84G003728B	B	54
84G003724B	BOLT	84G003728B		54
84G003724B	BOLT			54
851242B	BEARING			188
85G000616B	SCREW			252
86F000006B	NUT	7D000012B	B	72
86F000006B	NUT			72
86F000007B	NUT	86F000006B	B	256
86F000007B	NUT			256
86F000008B	NUT	86F000006B	B	70
86F000008B	NUT			70

Code for disposition of old part number

A -- Use up
B -- Use on other application (See PNI)
C -- File PDR Report with Bobcat Parts Sales
D -- Part Number Error

https://www.pdfmanual4trucks.com/

Part No.	Description	Was	Code	Page
86F000010B	NUT	61E000016B	D	72
86F000010B	NUT			72
87G000808B	SCREW			158
87G001010B	SCREW	85G001010B	B	252
87G001010B	SCREW			252
90KV00001B	PLUG			88
91K000010B	ADAPTER			72
947088B	SEAL	947098	D	150
947088B	SEAL	NSS	A	150
947088B	SEAL	NSS	D	150
947088B	SEAL	NSS		150
947088B	SEAL			150
95D000008B	NUT	83D000008B	B	280
95D000008B	NUT			280
95D000010B	NUT			226
95K000002B	O-RING			88
96D000008B	NUT	86D000008B	B	72, 73, 74, 168
96D000008B	NUT	92D-8	B	72, 73, 74, 168
96D000008B	NUT			72, 73, 74, 168
9G001036B	BOLT			226

Code for disposition of old part number

A -- Use up

B -- Use on other application (See PNI)

C -- File PDR Report with Bobcat Parts Sales

D -- Part Number Error