RUTHZIL TRATOR COMERCIAL DE PEÇAS LTDA 11 97083-6812 ROLANDO

PARTS CATALOG

SKID STEER
COMPACT TRACK LOADER

440
440CT
SERIES 3

APPLICABLE
ASN - N8M474469



BD07N496

TABLE OF CONTENTS

General Information
Section 2 – Engine
Section 3 – Fuel System
Section 4 – Electrical System
Section 6 – Power train
Section 7 – Brakes
Section 8 – Hydraulics
Section 9 – Chassis/Attachments
Index

Bur • Issued 01Jan08
Printed in U.S.A. • Book/Form Number 87632291 NA
Copyright © 2007. CNH America, LLC. All Rights Reserved.

CNH America, LLC reserves the right to make improvements in design or changes in specifications at any time without incurring any obligation to install them on units previously sold.

All data given in this publication is subject to production variations. Dimensions and weights are only approximate. Illustrations do not necessarily show products in standard condition. For exact information about any particular product, please consult your Dealer

This unit first became available 01-2008			
REVISION HISTORY			
Issue	Issue Date	Applicable Machines	Remarks
First Edition	01Jan 08	440, 440CT Series 3 Skid Steer/Compact Track Loader	87632291 NA

Any use of editorial or pictorial content is strictly prohibited without express written permission from
CNH America, LLC. Racine, WI 53403 U.S.A..

TABLE OF CONTENTS

02-01	FAN, RADIATOR/OIL COOLER - COOLANT RECOVERY SYSTEM
02-02	RADIATOR/OIL COOLER
02-03	EXHAUST SYSTEM
02-04	EXHAUST SYSTEM, ASPIRATOR
02-05	AIR CLEANER - ENGINE
02-06	ENGINE - MOUNTING
02-07	ENGINE - MOUNTING (EUROPE)
02-08	ENGINE - BLOCK HEATER
02-09	CYLINDER BLOCK
02-10	CYLINDER BLOCK - COVERS, REAR GEAR
02-11	CYLINDER BLOCK - COVERS, FLYWHEEL
02-12	CYLINDER BLOCK - COVERS, FRONT
02-13	GEAR COVER - PLATE
02-14	CYLINDER HEAD COVERS
02-15	CYLINDER BLOCK STIFFENER PLATE
02-16	CYLINDER HEAD
02-17	OIL PUMP, PAN
02-18	ENGINE, OIL
02-19	OIL FILTER AND COOLER
02-20	OIL FILTERS - ENGINE
02-21	OIL PUMP - ENGINE
02-22	OIL FILL - ENGINE
02-23	REMOTE OIL DRAIN
02-24	MOTOR SENSORS - ENGINE OIL
02-25	BREATHER - ENGINE
02-26	MANIFOLD - INTAKE
02-27	MANIFOLD - EXHAUST
02-28	PISTONS - CONNECTING ROD
02-29	CONNECTING ROD
02-30	ROCKER SHAFT
02-31	FLYWHEEL - ENGINE
02-32	PULLEY - CRANKSHAFT
02-33	CAMSHAFT
02-34	CRANKSHAFT
02-35	COOLING SYSTEM - ENGINE
02-36	WATER PUMP
02-37	WATER PUMP - CONTROL
02-38	THERMOSTAT - ENGINE COOLING SYSTEM
02-39	FAN DRIVE
02-40	ENGINE - LIFT HOOK
02-41	TURBOCHARGER
03-01	FUEL LINES AND FUEL FILTER
03-02	CONTROLS - FOOT AND HAND THROTTLE
03-03	FUEL FILTER
03-04	FUEL INJECTION PUMP
03-05	FUEL PUMP
03-06	INJECTION PUMP - CONTROL
03-07	FUEL INJECTION SYSTEM - FUEL, SUPPLY
03-08	FUEL INJECTION SYSTEM - SUPPLY
03-09	FUEL INJECTION SYSTEM - DRAIN LINE
03-10	INJECTION EQUIPMENT - INJECTOR

TABLE OF CONTENTS

04-01	STARTER AND ALTERNATOR
04-02	ALTERNATOR MOUNTING
04-03	BATTERY - CABLES
04-04	HARNESS, ENGINE
04-05	CHASSIS, ELECTRICAL
04-06	ELECTRIC - CAB
04-07	CONSOLE - RH
04-08	CONSOLE - LH
04-09	CONTROL HANDLE, RH - BASIC
04-10	CONTROL HANDLE, LH - BASIC
04-11	CONTROL HANDLE, RH - DELUXE W/O AUX ELECTRIC
04-12	CONTROL HANDLE, LH - DELUXE W/O AUX ELECTRIC
04-13	CONTROL HANDLE, RH - DELUXE
04-14	CONTROL HANDLE, LH - DELUXE
04-15	DISCONNECT SWITCH - REMOTE JUMP START
04-16	WORK LIGHTS - LH
04-17	WORK LIGHTS - RH
04-18	ELECTRICAL - ROAD LIGHTS (NA)
04-19	ELECTRICAL - ROAD LIGHTS (EUROPE)
04-20	HEADLAMP - RH
04-21	HEADLAMP - LH
04-22	REAR LIGHT AND MOUNTING
04-23	BACKUP ALARM
04-24	ELECTRICAL ACCESSORY SOCKET
04-25	ELECTRICAL ACCESSORY SOCKET (EUROPE)
04-26	HORN - MOUNTING
04-27	ELECTRIC, FRONT AUXILIARY
04-28	ROTATING BEACON
04-29	SPECIAL PARTS FOR ITALY - LICENSE PLATE LIGHT
04-32	STROBE LIGHT
06-01	JOYSTICK CONTROL PLUMBING - H PATTERN
06-02	JOYSTICK CONTROL PLUMBING - ISO PATTERN (440)
06-03	JOYSTICK CONTROL PLUMBING - ISO PATTERN (440CT)
06-04	JOYSTICK VALVE KITS - H PATTERN, LH
06-05	JOYSTICK VALVE KITS - H PATTERN, RH
06-06	JOYSTICK VALVE KITS - ISO PATTERN, LH
06-07	JOYSTICK VALVE KITS - ISO PATTERN, RH
06-08	JOYSTICK VALVE KITS - ISO PATTERN, LH
06-09	HYDROSTATICS - PUMP, SUPPLY AND RETURN (440)
06-10	HYDROSTATICS - PUMP MOUNTING (440)
06-11	HYDROSTATICS - DRIVE MOTORS, CASE DRAIN (440)
06-12	HYDROSTATICS - PUMP, SUPPLY AND RETURN (440CT)
06-13	HYDROSTATICS - DRIVE MOTORS (440CT)
06-14	HYDROSTATICS - MULTI VALVE (440CT)
06-15	HYDROSTATICS - PUMP FITTINGS (440CT)
06-16	HYDROSTATICS - HOSES, PUMP AND DRIVE MOTORS
06-17	HYDROSTATICS - PUMP TO COOLER (440 WITH PILOT CONTROL)
06-18	HYDROSTATICS - MANIFOLD/CONTROL VALVE (440 WITH PILOT CONTROL)
06-19	HYDROSTATICS - PUMP FITTINGS (440 WITH PILOT CONTROL)
06-20	HYDROSTATICS - SINGLE SPEED, DRIVE MOTORS (440)
06-21	HYDROSTATICS - HOSES (440 WITH PILOT CONTROL)

TABLE OF CONTENTS

06-22	HYDROSTATICS - MULTI VALVE (440 WITH PILOT CONTROL)
06-23	HYDROSTATICS - TWO SPEED, DRIVE MOTORS (MECHANICAL CONTROL)
06-24	HYDROSTATICS - TWO SPEED, DRIVE MOTORS (PILOT CONTROL)
06-25	HYDROSTATICS - MULTI VALVE ASSEMBLY
06-26	HYDROSTATICS - TWO SPEED, VALVE ASSY
06-27	HYDROSTATICS - TWO SPEED, VALVE ASSY (440CT)
06-28	HYDROSTATICS - TWO SPEED, VALVE ASSY (WITH PILOT CONTROL)
06-29	HYDROSTATICS - RESONATOR (440CT EUROPE)
06-30	HYDROSTATICS - RESONATOR, WITH PILOT CONTROL (440 EUROPE)
06-31	HYDROSTATICS - RESONATOR, MECHANICAL CONTROL (440 EUROPE)
06-32	FILTER ASSY - MOUNTING
06-33	PUMP, TANDEM (440)
06-34	PUMP, TANDEM (440)
06-35	PUMP, TANDEM (440)
06-36	PUMP, TANDEM (440)
06-37	PUMP, TANDEM (440)
06-38	PUMP, TANDEM (440)
06-39	PUMP, TANDEM - REXROTH (87546976)
06-40	PUMP, TANDEM - PRESSURE RELIEF VALVE (87546976)
06-41	PUMP, TANDEM - PRESSURE RELIEF VALVE (87546976)
06-42	PUMP, TANDEM - INTERNAL GEAR PUMP (87546976)
06-43	PUMP, TANDEM - ROTARY GROUP, RIGHT HAND ROTATION (87546976)
06-44	PUMP, TANDEM - ROTARY GROUP, LEFT HAND ROTATION (87546976)
06-45	PUMP, TANDEM - CONTROL, HYDRAULIC (87546976)
06-46	PUMP, TANDEM - CONTROL CARTRIDGE WITH ORIFICE (87546976)
06-47	PUMP, TANDEM - REXROTH (87546977)
06-48	PUMP, TANDEM - PRESSURE RELIEF VALVE (87546977)
06-49	PUMP, TANDEM - INTERNAL GEAR PUMP (87546977)
06-50	PUMP, TANDEM - ROTARY GROUP, RIGHT HAND ROTATION (87546977)
06-51	PUMP, TANDEM - ROTARY GROUP, LEFT HAND ROTATION (87546977)
06-52	PUMP, TANDEM - CONTROL, HYDRAULIC (87546977)
06-53	PUMP, TANDEM - CONTROL CARTRIDGE WITH ORIFICE (87546977)
06-54	PUMP, GEAR (WITHOUT HIGH FLOW)
06-55	PUMP, GEAR (HIGH FLOW)
06-56	MOTOR ASSY - SINGLE SPEED
06-57	MOTOR ASSY - SINGLE SPEED
06-58	MOTOR ASSY - SINGLE SPEED
06-59	MOTOR ASSY - TWO SPEED
06-60	MOTOR ASSY - TWO SPEED
06-61	MOTOR ASSY - TWO SPEED
06-62	MOTOR ASSY - HYDROSTATIC DRIVE (440CT)
06-63	DRIVE LINE
06-64	AXLE ASSY
06-65	WHEELS - SOLID FLEX
06-66	WHEELS
06-67	TRACK (440CT)
06-68	FINAL DRIVE (440CT)
07-01	BRAKE SYSTEM - HYDRAULIC
08-01	HYDRAULICS - TILT
08-02	HYDRAULICS - LIFT
08-03	HYDRAULICS - CASE DRAIN

TABLE OF CONTENTS

08-04	HYDRAULICS - RIDE CONTROL
08-05	HYDRAULICS - SELF LEVELING
08-06	HYDRAULICS - SECONDARY FRONT AUXILIARY
08-07	HYDRAULICS - ATTACHMENT, IMPLEMENT (PILOT CONTROL)
08-08	HYDRAULICS - ATTACHMENT, PROPORTIONAL (PILOT CONTROL)
08-09	HYDRAULICS - ATTACHMENT (MECHANICAL CONTROL)
08-10	HYDRAULICS - COUPLER SYSTEM
08-11	HYDRAULICS - COUPLER SYSTEM
08-12	HYDRAULICS - COUPLER SYSTEM (ITALIAN)
08-13	HYDRAULICS - COUPLER SYSTEM (ITALIAN)
08-14	CYLINDER - TILT
08-15	CYLINDER - LIFT
08-16	HIGH FLOW - SUPPLY AND RETURN
08-17	HIGH FLOW - AUXILIARY SYSTEM
08-18	HIGH FLOW - CONTROL VALVE
08-19	CONTROL VALVE ASSEMBLY - HIGH FLOW
08-20	CONTROL VALVE - 87583286 VALVE ASSY
08-21	CONTROL VALVE - 87583285 VALVE ASSY
08-22	CONTROL VALVE - 87546974 VALVE ASSY
08-23	CONTROL VALVE - 87546975 VALVE ASSY
08-24	CONTROL VALVE - SEAL REPLACEMENT KITS
08-25	CONTROL VALVE - MAIN RELIEF VALVE
08-26	CONTROL VALVE - RELIEF VALVES
08-27	CONTROL VALVE - SPOOL END GROUP
08-28	CONTROL VALVE - SPOOL END GROUP
08-29	CONTROL VALVE - SPOOL END GROUP
08-30	CONTROL VALVE - CHECK VALVE GROUP
08-31	CONTROL VALVE - SPOOL END GROUP, DETENT
08-32	CONTROL VALVE - SPOOL END GROUP
08-33	CONTROL VALVE - SPOOL END GROUP
08-34	CONTROL VALVE - SEAL REPLACEMENT KITS
08-35	CONTROL VALVE - SPOOL END GROUP
08-36	CONTROL VALVE - SPOOL END GROUP
08-37	CONTROL VALVE - SPOOL END GROUP
08-38	CONTROL VALVE - SPOOL END GROUP, EHPV
08-39	CONTROL VALVE - SPOOL END GROUP, EHPV
08-40	SECONDARY FRONT AUXILIARY - VALVE ASSY
09-01	LOADER LIFT
09-02	LIFT CYLINDER - COVERS
09-03	COUPLER, MECHANICAL
09-04	COUPLER, MECHANICAL (ITALIAN)
09-05	COUPLER, HYDRAULIC
09-06	BUCKETS - LOADER, DIRT / FOUNDRY
09-07	BUCKETS - LOADER (LOW PROFILE/ EXTENDED LOW PROFILE)
09-08	BUCKETS - LOADER (UTILITY/LIGHT MATERIAL)
09-09	BUCKETS - LOADER (HEAVY DUTY)
09-10	BUCKET, CUTTING EDGE (BOLT-ON CUTTING EDGE)
09-11	SPECIAL PARTS FOR ITALY - GUARD, BUCKET
09-12	PALLET FORK
09-13	CONTROLLER - MOUNTING (PILOT CONTROL)
09-14	CONSOLE - RH

TABLE OF CONTENTS

09-15	CONSOLE - LH
09-16	CHASSIS (440)
09-17	CHASSIS (440)
09-18	CHASSIS (440CT)
09-19	CHASSIS (440CT)
09-20	LOADER & GROUND DRIVE CONTROL - RH
09-21	LOADER & GROUND DRIVE CONTROL - LH
09-22	LOADER & GROUND DRIVE CONTROL - LINKAGE
09-23	CONTROLS - AUXILIARY HYDRAULICS
09-24	HOOD
09-25	HOOD - AIR CONDITIONING
09-26	REAR DOOR
09-27	REAR DOOR - LOUVERED (EUROPE)
09-28	LOCK - REAR DOOR
09-29	CAB DOOR - MOUNTING
09-30	CAB DOOR - WASHER SYSTEM
09-31	CAB DOOR
09-32	CAB DOOR - VISOR
09-33	CAB DOOR - WIPER MOUNTING
09-34	CAB DOOR - HANDLE
09-35	DEMOLITION DOOR - MOUNTING
09-36	DEMOLITION DOOR
09-37	FLOOR MAT
09-38	CAB - FRAME AND SEAT BAR
09-39	SEAT BAR
09-40	SEAT BELT, LAP BELT (2 IN)
09-41	SEAT BELT, LAP BELT (3 IN)
09-42	SHOULDER BELT
09-43	REAR VIEW MIRROR
09-44	SPECIAL PARTS FOR ITALY - MIRROR, REAR VIEW
09-45	SEAT MOUNTING - STANDARD SEAT
09-46	SEAT MOUNTING - SUSPENSION SEAT
09-47	SEAT MOUNTING - DELUXE SUSPENSION SEAT
09-48	REAR WINDOW
09-49	REAR WINDOW - HEAT AND AIR CONDITIONING
09-50	TOP WINDOW
09-51	SIDE WINDOWS
09-52	HEADLINER - STANDARD
09-53	HEADLINER - HEATER AND AIR CONDITIONING
09-54	INTERIOR TRIM
09-55	RADIO - SPEAKERS AND ANTENNA
09-56	RADIO - SPEAKERS AND HOUSING
09-57	HEATER SYSTEM
09-58	HEATER SYSTEM
09-59	AIR CONDITIONING SYSTEM
09-60	HEATER ASSEMBLY
09-61	HEATER AND AIR CONDITIONING ASSEMBLY
09-62	HEAT SHIELD
09-63	SOUNDPROOFING - SEAL
09-64	NOISE CONTROL - REAR DOOR (EUROPE)
09-65	LIFT HOOK - SINGLE POINT

TABLE OF CONTENTS

09-66	LIFT HOOK
09-67	DECALS - ENGLISH
09-68	DECAL (440CT)
09-69	DECALS
09-70	DECALS
09-71	DECALS - DANISH, DUTCH, FINNISH
09-72	DECALS - FRENCH, GERMAN, GREEK
09-73	DECALS - ITALIAN, NORWEGIAN, POLISH
09-74	DECALS - PORTGUESE, SPANISH, SWEDISH
09-75	DECALS - BRAZILIAN PORTUGUESE, CANADIAN FRENCH, LATIN AMERICAN SPANISH

GENERAL INFORMATION

PROPRIETARY NOTICE

The contents of this manual are proprietary data of this company. Reproduction or use of any part for other than the operation and maintenance of our equipment is permissible only if expressly authorized in writing.

Additional copies may be obtained from your dealer. Address requests for copies to your Dealer and refer to the publication part number appearing on the bottom of the rear catalog cover or on the title page.

COMPANY POLICY

Company policy, which is one of continuous improvement, reserves the right to change prices and to make changes in design and specification at any time without notice and without obligation to modify units previously built.

All data given in this book is subject to production variations. Dimensions and weights are approximate only and the illustrations do not necessarily show machines in standard condition. For exact information about any particular machine please consult your dealer.

PARTS AND ACCESSORIES

Genuine parts and accessories have been specifically designed for these machines.

We would like to point out that “non-genuine” parts and accessories have NOT been examined and released by the Company. The installation and or use of such products could have negative effects upon the design characteristics of your machine and thereby affect its safety. The company is not liable for any damage caused by the use of “non-genuine” parts and accessories.

IMPROVEMENTS

We are continually striving to improve our products. We reserve the right to make improvements or changes when it becomes practical and possible to do so, without incurring any obligation to make changes or additions to the equipment sold previously.

MODEL CODES

The range of machines listed may not be available in all countries or markets therefore, for the latest information consult your local dealer.

OWNER ASSISTANCE

We want you to be completely satisfied with your investment. Normally any problems with your equipment will be handled by your dealer's Service Department; however, misunderstandings can occur. If your problem has not been handled to your satisfaction, we suggest the following:

1. Contact the owner or General Manager of the dealership, explain the problem, and request assistance. When additional assistance is needed, your dealer has direct access to our office.
2. Provide your dealer with:
   - Your Name, Address, and Telephone number
   - Machine Model and Serial Number
   - Dealership Name and Address
   - Machine purchase date and amount of use
   - Nature of problem

Be aware that your problem will likely be resolved in the dealership using the dealer's facilities, equipment, and personnel. So it is important that your initial contact be with the dealer.

SPARE PARTS

To maintain operating efficiency, use original spare parts.

When ordering parts, give the following information:

- Machine Model
- Machine and Engine Serial Numbers
- Part Number from the Parts Catalog

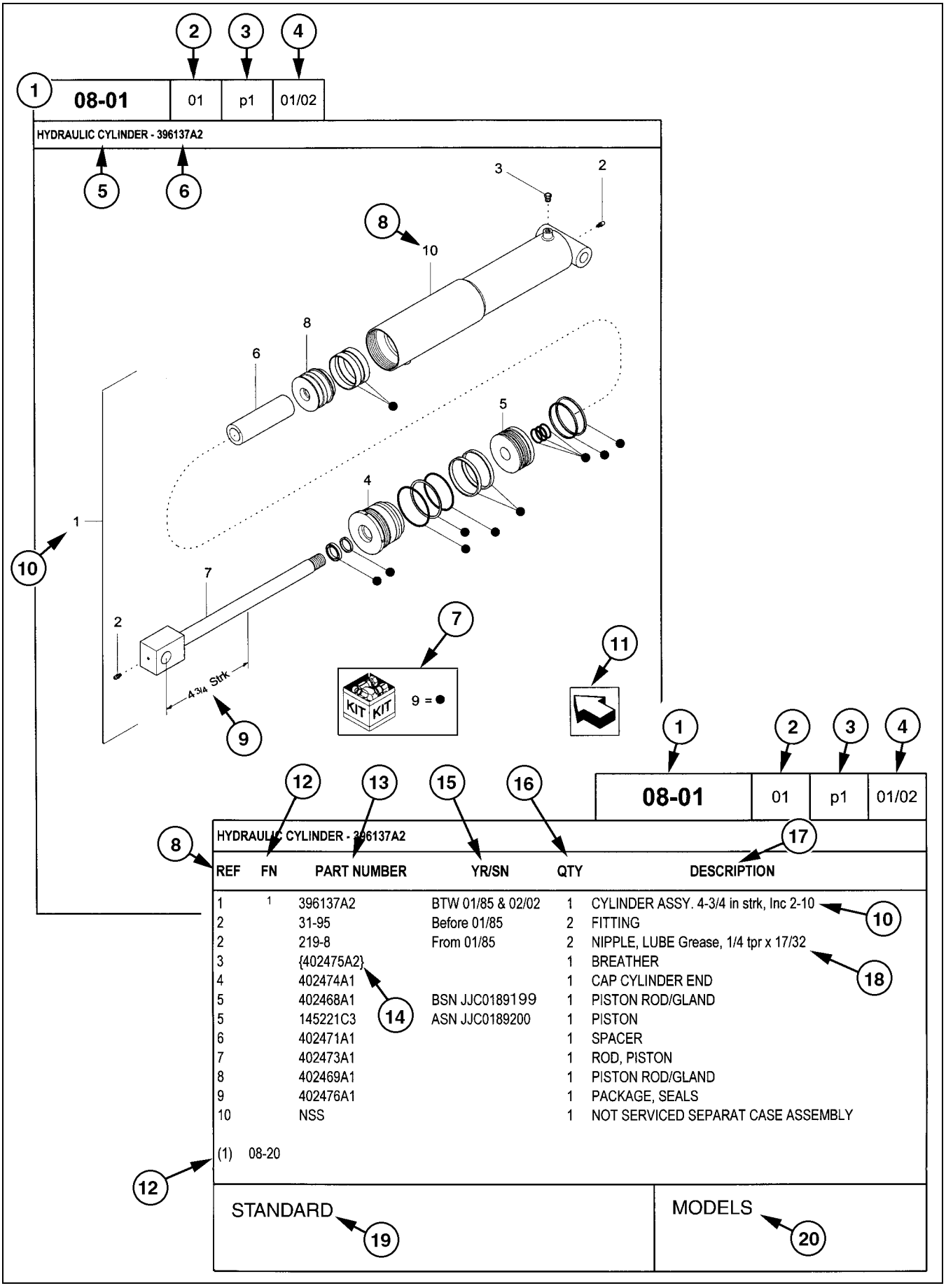

REF	FN	PART NUMBER	YR/SN	QTY	DESCRIPTION
1	1	396137A2	BTW 01/85 & 02/02	1	CYLINDER ASSY. 4-3/4 in strk, Inc 2-10
2		31-95	Before 01/85	2	FITTING
2		219-8	From 01/85	2	NIPPLE, LUBE Grease, 1/4 tpr x 17/32
3		{402475A2}		1	BREATHER
4		402474A1		1	CAP CYLINDER END
5		402468A1	BSN JJC0189199	1	PISTON ROD/GLAND
5		145221C3	ASN JJC0189200	1	PISTON
6		402471A1		1	SPACER
7		402473A1		1	ROD, PISTON
8		402469A1		1	PISTON ROD/GLAND
9		402476A1		1	PACKAGE, SEALS
10		NSS		1	NOT SERVICED SEPARAT CASE ASSEMBLY

(1) 08-20

STANDARD

MODELS

HOW TO USE YOUR PARTS CATALOG

1. Figure Number
2. Sequence Code within the Figure Number
3. Page Number within the Sequence Code
4. Date of Printing (month / year)
5. Figure Description
6. General information regarding the figure
7. Parts supplied in repair kits per symbol reference
8. Figure call-out of the part number (REF)
9. Technical specifications relating to the part indicated
10. Figure call-out includes bracketed items, the included items may also be listed in the additional description area
11. Orientation - Arrow indicates front of the machine
12. Footnote - Additional information relating to the part number. In this example, 08-20 equals another figure that this part is shown on
13. Part Number
    NSS = Not Serviced Separately (Non-serviced parts)
    Bracketed numbers = not available as service parts in this market
14. Not Available as service part in this market
15. YR/SN
    Year
    Before 01/85 = Part valid for production January 1985 and before
    From 01/85 = Part valid for production from January 1985 and after
    BTW 01/85 & 02/02 = Part valid for machines produced between January 1985 and February 2002.
    Serial Number (P.I.N.)
    BSN JJC0268800 = Part valid for serial number JJC0268800 and below
    ASN JJC0268800 = Part valid for serial number JJC0268800 and above
    BTW JJC0178000 & JJC0179000 = Part valid for serial numbers between JJC0178000 & JJC0179000
16. Total Quantity of the Part referred to in the page. The quantity can be replaced by the following indications:
    AR = As Required
    X = As required
17. Part Description
18. Additional description of the part to help confirm identification
19. Figure Notes
20. Model Number(s)

RIGHT-HAND AND LEFT-HAND

The reference to right-hand and left-hand in this catalog is identified by the operator standing at the rear of the basic unit (without rear attachment), looking toward the front of the machine (in normal forward travel).

For pages covering any machine attachments, right-hand and left-hand are defined by the operator sitting in the position for proper operation of the attachment.

DIMENSIONS

Metric and U.S. hardware dimensions do not show the numeric designations of standard coarse threads. A number following a semi colon (;) is the class or grade of hardware. A comma (,) represents the decimal point (.) used in U.S. dimensions.

EXPLANATION OF ABBREVIATIONS

AC	Alternating Current
adj	adjustable
amp	ampere
AR	As required
ASN	Serial number and after P.I.N. and after
blkhd	bulkhead
br	branch
BSN	before Serial number before P.I.N.
BTW	between
cc	cubic centimetre
cl	class
cmprsn	compression
cn pt	cone point
cp pt	cup point
CRS	Chrome Alloy Steel
CST	Carbon Steel
cu yd	cubic yard
DC	Direct Current
deg	degree
dg pt	dog point
dia	diameter
dr type	drive type
fc	face
fc sl	face seal
fem	female
fem PT	female pipe thread
fl	flare
flat pt	flat point
ft	feet or foot
ga	gauge
gal	gallon or gallons
gpm	gallons per minute
gr	grade
hd	head
hdg pt	half dog point
hp	horsepower
ID	inside diameter
in	inch or inches
Incl.	Includes
inv fl	inverted flare
K	kilo
kg	kilogram
km/h	kilometers per hour
L	litre
lb	pounds
lb-ft	pound-foot
lg	long
LH	left-hand
LH thd	left-hand thread
M	(prefix) metric thread size
m	metre
ml	milliliter
mm	millimetre
NF	National Fine
No.	number
NPT	National Pipe Thread
NS	National Super Fine
OD	outside diameter
ohm	electrical unit of resistance
Or	O-ring
ORB	O-ring boss
ORFS	O-ring face seal
ov cntr	over center
ov pt	oval point
oz	ounce
P	pitch
psi	pounds per square inch
pt	pint
PT	pipe thread
rd	round
rd holes	round holes
RH	right-hand
RH thd	right-hand thread
rpm	revolutions per minute
sl	self-locking
sq	square
SST	Stainless Steel
st	self-tapping
strk	stroke
sw	swivel
T	teeth
thk	thick
tpr	taper
tube OD	tube outside diameter
V	volt or volts
W	watt or watts
X	as required
yd	yard

SECTION INDEX
Engine

02-01	FAN, RADIATOR/OIL COOLER - COOLANT RECOVERY SYSTEM
02-02	RADIATOR/OIL COOLER
02-03	EXHAUST SYSTEM
02-04	EXHAUST SYSTEM, ASPIRATOR
02-05	AIR CLEANER - ENGINE
02-06	ENGINE - MOUNTING
02-07	ENGINE - MOUNTING (EUROPE)
02-08	ENGINE - BLOCK HEATER
02-09	CYLINDER BLOCK
02-10	CYLINDER BLOCK - COVERS, REAR GEAR
02-11	CYLINDER BLOCK - COVERS, FLYWHEEL
02-12	CYLINDER BLOCK - COVERS, FRONT
02-13	GEAR COVER - PLATE
02-14	CYLINDER HEAD COVERS
02-15	CYLINDER BLOCK STIFFENER PLATE
02-16	CYLINDER HEAD
02-17	OIL PUMP, PAN
02-18	ENGINE, OIL
02-19	OIL FILTER AND COOLER
02-20	OIL FILTERS - ENGINE
02-21	OIL PUMP - ENGINE
02-22	OIL FILL - ENGINE
02-23	REMOTE OIL DRAIN
02-24	MOTOR SENSORS - ENGINE OIL
02-25	BREATHER - ENGINE
02-26	MANIFOLD - INTAKE
02-27	MANIFOLD - EXHAUST
02-28	PISTONS - CONNECTING ROD
02-29	CONNECTING ROD
02-30	ROCKER SHAFT
02-31	FLYWHEEL - ENGINE
02-32	PULLEY - CRANKSHAFT
02-33	CAMSHAFT
02-34	CRANKSHAFT
02-35	COOLING SYSTEM - ENGINE
02-36	WATER PUMP
02-37	WATER PUMP - CONTROL
02-38	THERMOSTAT - ENGINE COOLING SYSTEM
02-39	FAN DRIVE
02-40	ENGINE - LIFT HOOK
02-41	TURBOCHARGER

FAN, RADIATOR/OIL COOLER - COOLANT RECOVERY SYSTEM

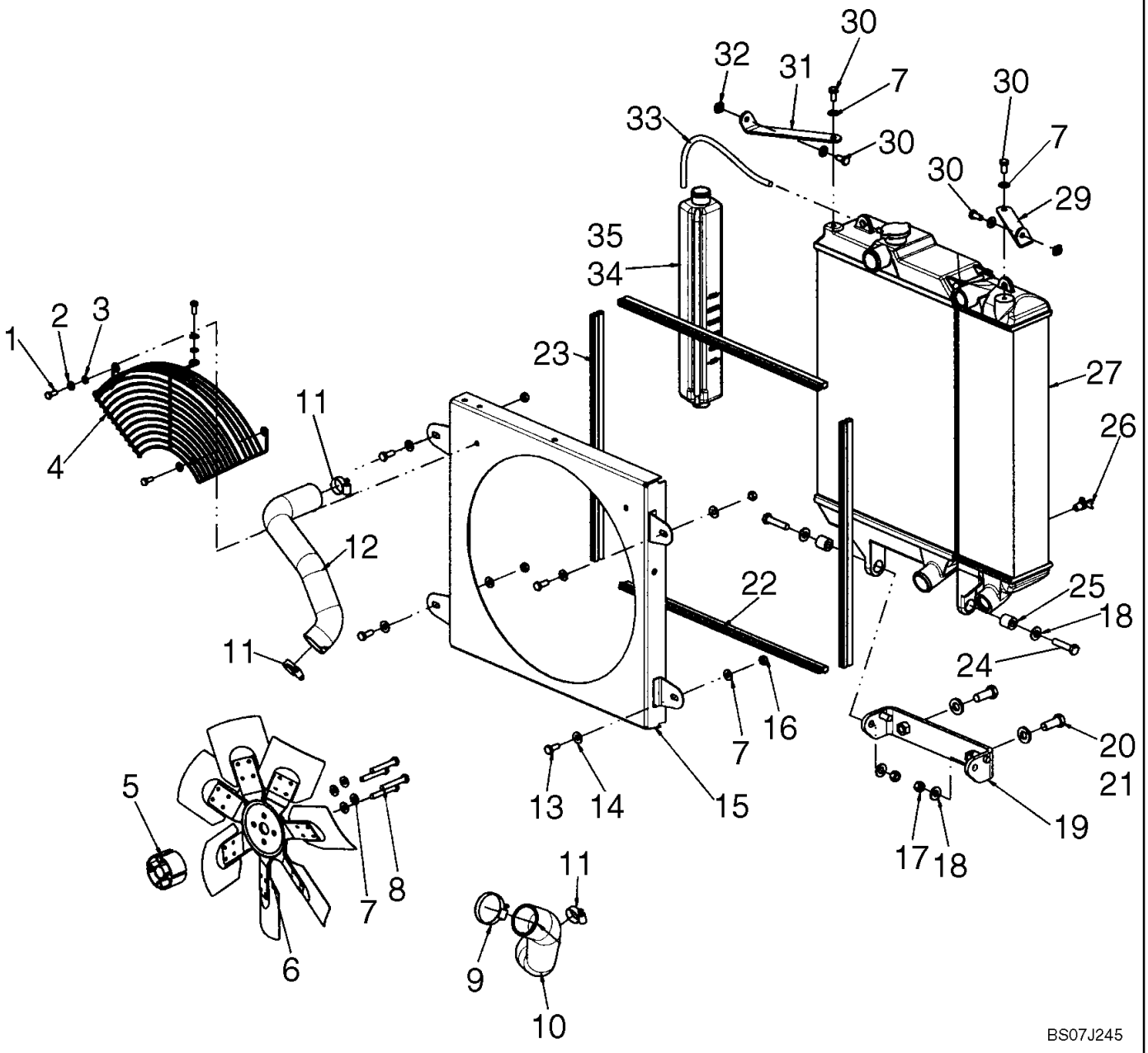

FAN, RADIATOR/OIL COOLER - COOLANT RECOVERY SYSTEM

REF	FN	PART NUMBER	YR/SN	QTY	DESCRIPTION
1		120104		3	BOLT, Hex, M8 x 20, 8.8
2		322358		3	WASHER, SPRING, Belleville, M8
3		86624184		3	WASHER, M8 x 16 x 1.6
4		{87594970}		1	Fan Guard
5		87565745		1	SPACER, Fan Spacer, 43mm
5		87565746		1	SPACER, Fan Spacer, 60mm (Europe)
6		87025470		1	FAN, 480 Dia Pusher
7		140045		12	WASHER, SPRING, Belleville, M10
8		120071		4	BOLT, Hex, M10 x 65, 8.8
8		120073		4	BOLT, Hex, M10 x 80, 8.8, Used With 87565746 Fan Spacer
9		86625032		1	CLAMP, HOSE, #48, 2.56/3.50 Type F Worm
10		87661380		1	HOSE, Formed Hose, Lower Radiator
11		84674		3	CLAMP, HOSE, #28, 1.31/2.25 Type F Worm
12		87661378		1	HOSE, Formed Hose, Upper Radiator
13		43139		4	SCREW, M10 X 25 Full 8.8 ZND
14		86625253		4	WASHER, M11 x 24 x 2
15		87660828		1	SHROUD, Fan Shroud
16		86500689		4	NUT, M10, Cl 10
17		{87533547}		2	Nut, M12 x 1.75 10 ZND
18		86625254		4	WASHER, M12 x 28 x 2.5
19		87676100		1	BRACKET, Bracket, Lower Hinge Mount
20		43168		2	BOLT, Hex, M16 x 40, 8.8
21		86639326		2	WASHER, M17.5 x 34 x 5, HT
22		{87578980}		2	Bulb Seal, 590mm (23 1/4 in.)
23		{87648128}		2	Bulb Seal, 562mm (22 1/8 in.)
24		87021825		2	BOLT, Hex, M12 x 55, 10.9
25		87626729		2	SPACER
26		86625234		1	COCK, DRAIN
27		87660842		1	RADIATOR, Radiator And Oil Cooler; See Fig 02-02
28		87687375		1	RADIATOR, Radiator Cap
29		87651800		1	BRACKET, Upper Radiator Mount, LH
30		43138		4	SCREW, Hex, M10 x 20, 8.8, Full Thd
31		87651799		1	BRACKET, Upper Radiator Mount, RH
32		230427A1		2	NUT

FAN, RADIATOR/OIL COOLER - COOLANT RECOVERY SYSTEM

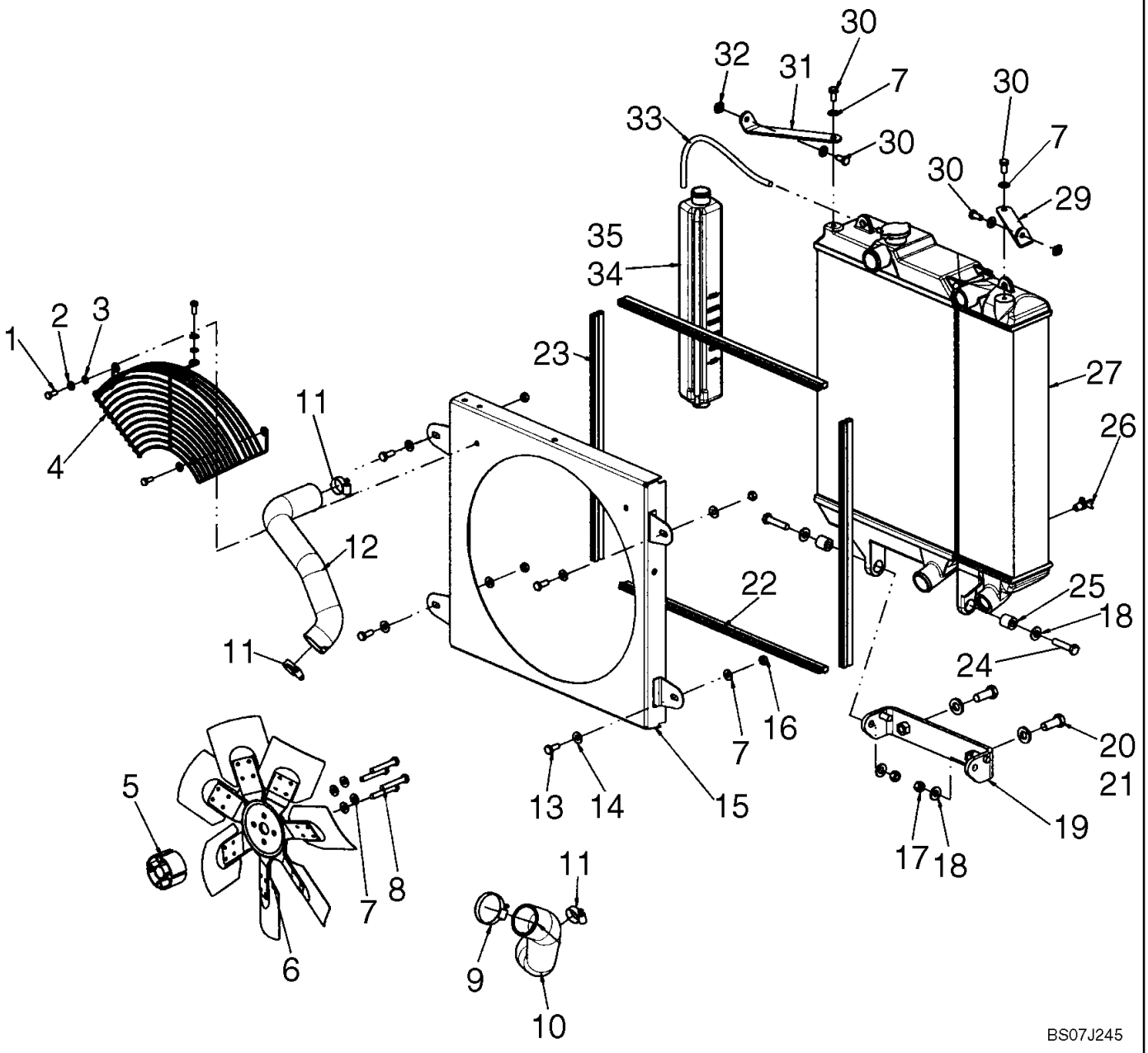

FAN, RADIATOR/OIL COOLER - COOLANT RECOVERY SYSTEM

REF	FN	PART NUMBER	YR/SN	QTY	DESCRIPTION
33		{87534725}		1	Coolant Recovery Hose, 400mm (15 3/4 in.)
34		87020980		1	RESERVOIR, COOLANT EXPNSN, Coolant Recovery Bottle; Incl. 35
35		257884A1		1	PLUG, Cap

RADIATOR/OIL COOLER

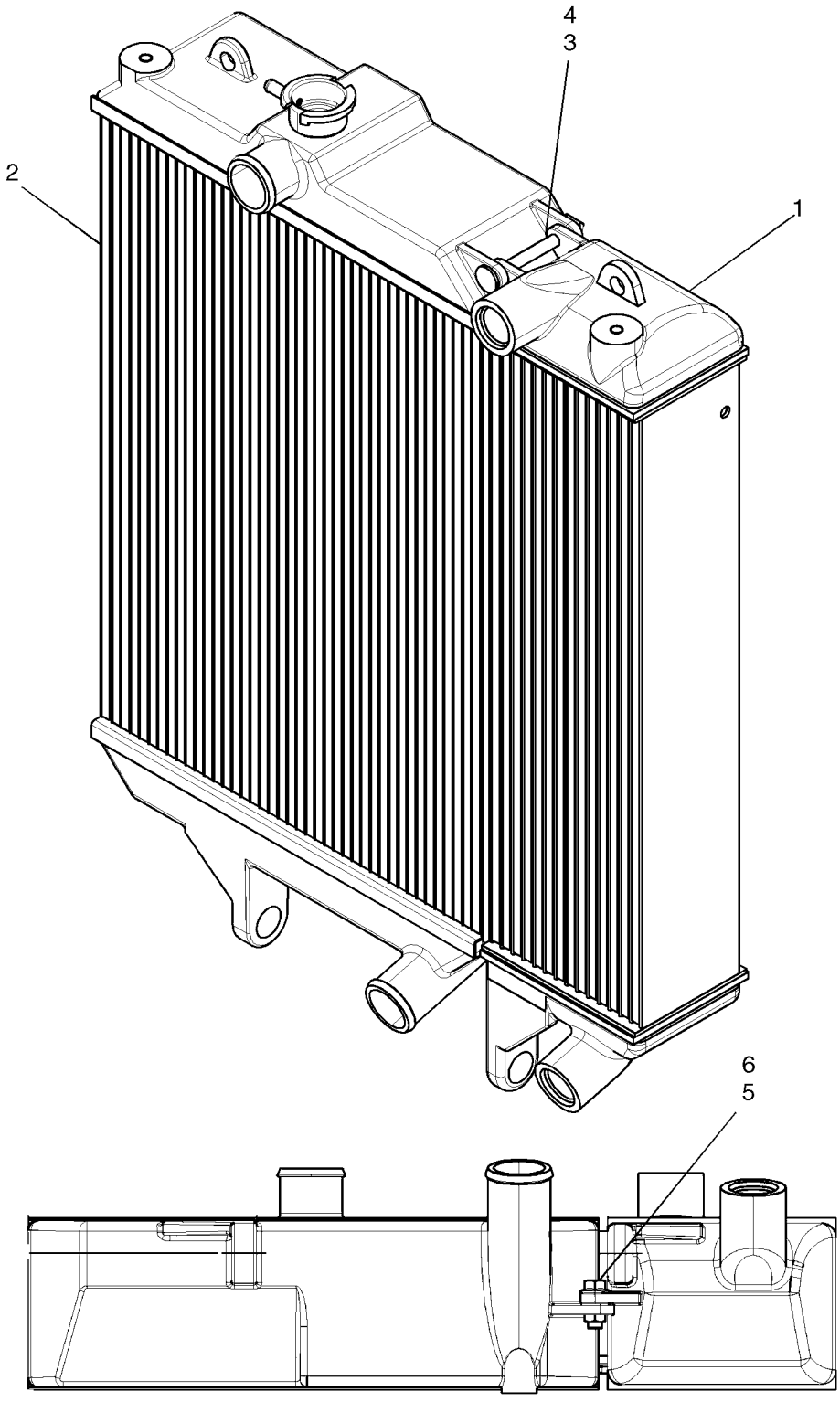

BS07K378

RADIATOR/OIL COOLER

REF	FN	PART NUMBER	YR/SN	QTY	DESCRIPTION
		87660842		1	RADIATOR, Incl 1 - 8
1		87687372		1	RADIATOR, Oil Cooler
1		87688650		1	COOLER, OIL, Low Fin Density Oil Cooler
2		87688523		1	RADIATOR, Standard Radiator And Decal
2		87688649		1	RADIATOR, Low Fin Density Radiator And Decal
3		87687373		1	RADIATOR, Pin
4		87687374		1	RADIATOR, Clip
5		9804262		1	BOLT, Hex Flg, M10 x 30, 8.8
6		9804278		1	NUT, M10 x 1.5, Flg, Cl 8
7		87687376		1	RADIATOR, Seal
8		87687375		1	RADIATOR, Radiator Cap; Not Illustrated

EXHAUST SYSTEM

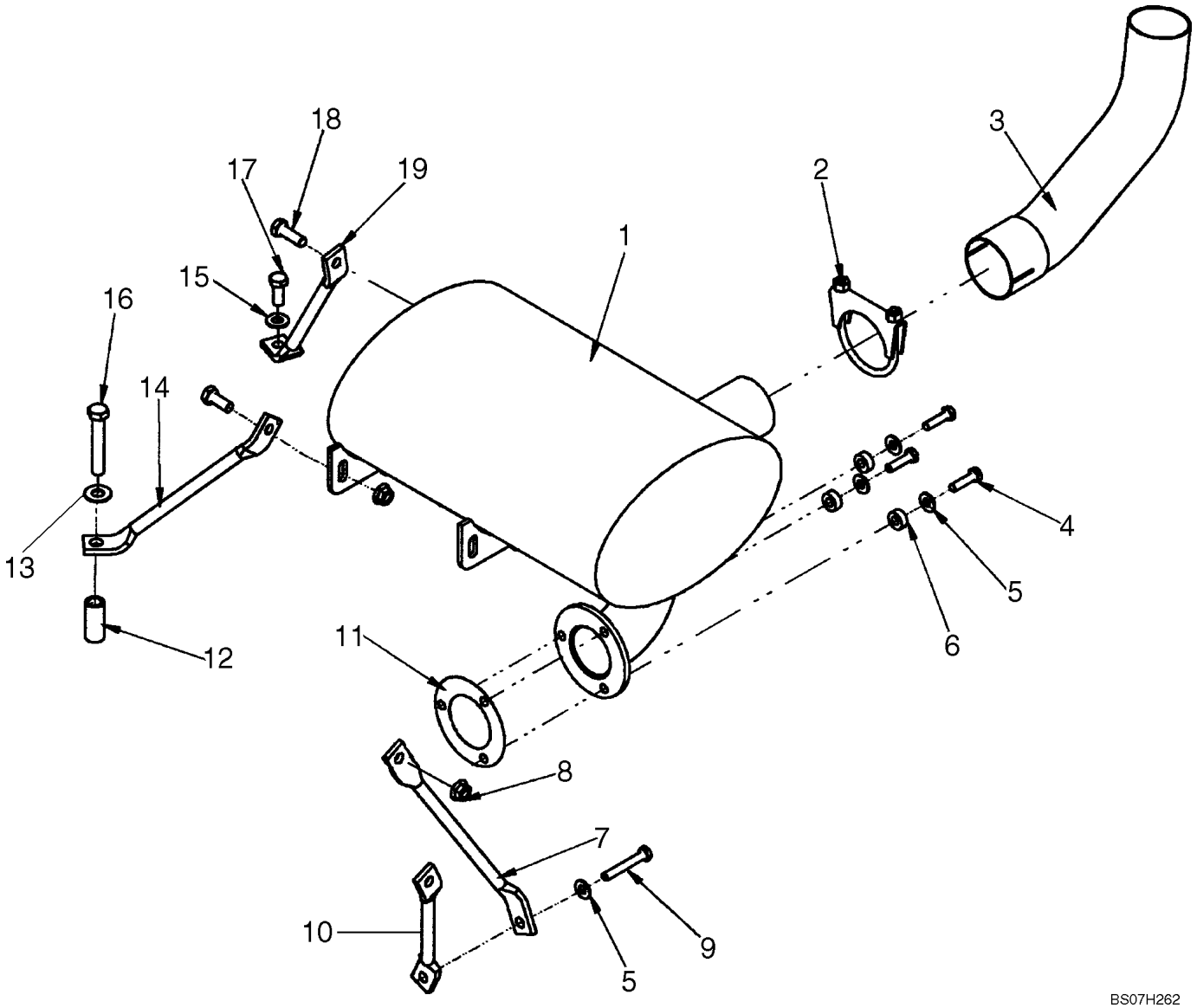

EXHAUST SYSTEM

REF	FN	PART NUMBER	YR/SN	QTY	DESCRIPTION
1		{87572831}		1	Muffler, Insulated
2		87461995		1	CLAMP
3		87654919		1	PIPE, EXHAUST SYSTEM, Tube, Exhaust
4		43138		3	SCREW, Hex, M10 x 20, 8.8, Full Thd
5		86625263		4	WASHER, M8 x 20 x 1.6
6		86633393		3	SPACER, 11/32 ID X 3/4 OD X 5/16 Thk; If Used
7		87033361		1	ROD, Muffler Support
8		411345A1		3	NUT, M10
9		16044321		1	BOLT, Hex, M8 x 55, 8.8
10		87029961		1	ROD, Muffler Support
11		86606073		1	GASKET, Muffler
12		86608204		1	SPACER
13		140046		1	WASHER, SPRING, Belleville, M12
14		87034631		1	ROD, Muffler Support
15		140045		1	WASHER, SPRING, Belleville, M10
16		9706717		1	BOLT, Hex, M12 x 70, 8.8, Full Thd
17		43139		3	SCREW
18		87034630		1	ROD, Muffler Support
19		43140		1	BOLT, Hex, M10 x 30, 8.8, Full Thd
20		87584781		1	MUFFLER, Muffler Wrap, Europe; Not Illustrated
21		87393399		9	SPRING, Stainless Steel Tie; Not Illustrated

EXHAUST SYSTEM, ASPIRATOR

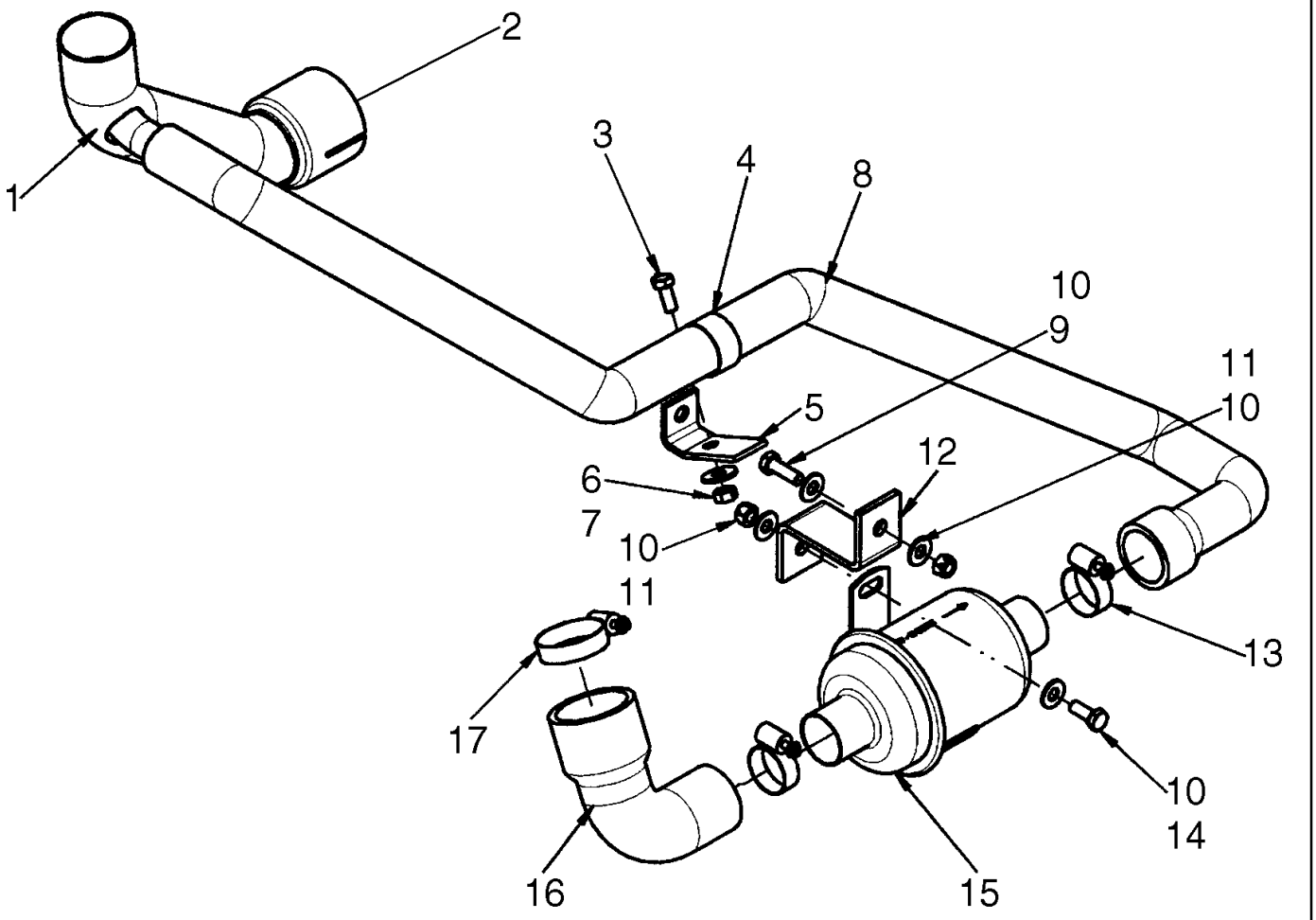

BS07K720

EXHAUST SYSTEM, ASPIRATOR

REF	FN	PART NUMBER	YR/SN	QTY	DESCRIPTION
		87638327		1	KIT, SERVICE, Kit, Aspirator; Incl 1 - 17
1		507586		1	CLAMP, HOSE, #20, 0.81/1.75 Type F Worm
2		87654923		1	PIPE, EXHAUST SYSTEM, Aspirator
3		86625000		1	BOLT, Hex, M8 x 18, 8.8, Full Thd
4		{87648719}		1	CLAMP 36.5 mm P Insul 3/8 Bolt
5		87615745		1	BRACKET, Aspirator Hose Support
6		9706690		1	NUT, M8, Cl 8
7		86639313		1	WASHER, M8 x 20 x 1.6
8		87615743		1	HOSE, Tail Pipe To Aspirator
9		43127		1	BOLT, Hex, M8 x 25, 8.8
10		86625263		4	WASHER, M8 x 20 x 1.6
11		9628098		2	NUT, LOCK, M8 x 1.25, Cl 10
12		87615741		1	BRACKET, Aspirator Mounting
13		84674		2	CLAMP, HOSE, #28, 1.31/2.25 Type F Worm
14		120104		1	BOLT, Hex, M8 x 20, 8.8
15		406089A2		1	VALVE, Aspirator Check
16		87615742		1	HOSE, Air Cleaner To Aspirator
17		86624194		1	CLAMP, HOSE, #36, 1.81/2.75 Type F Worm

AIR CLEANER - ENGINE

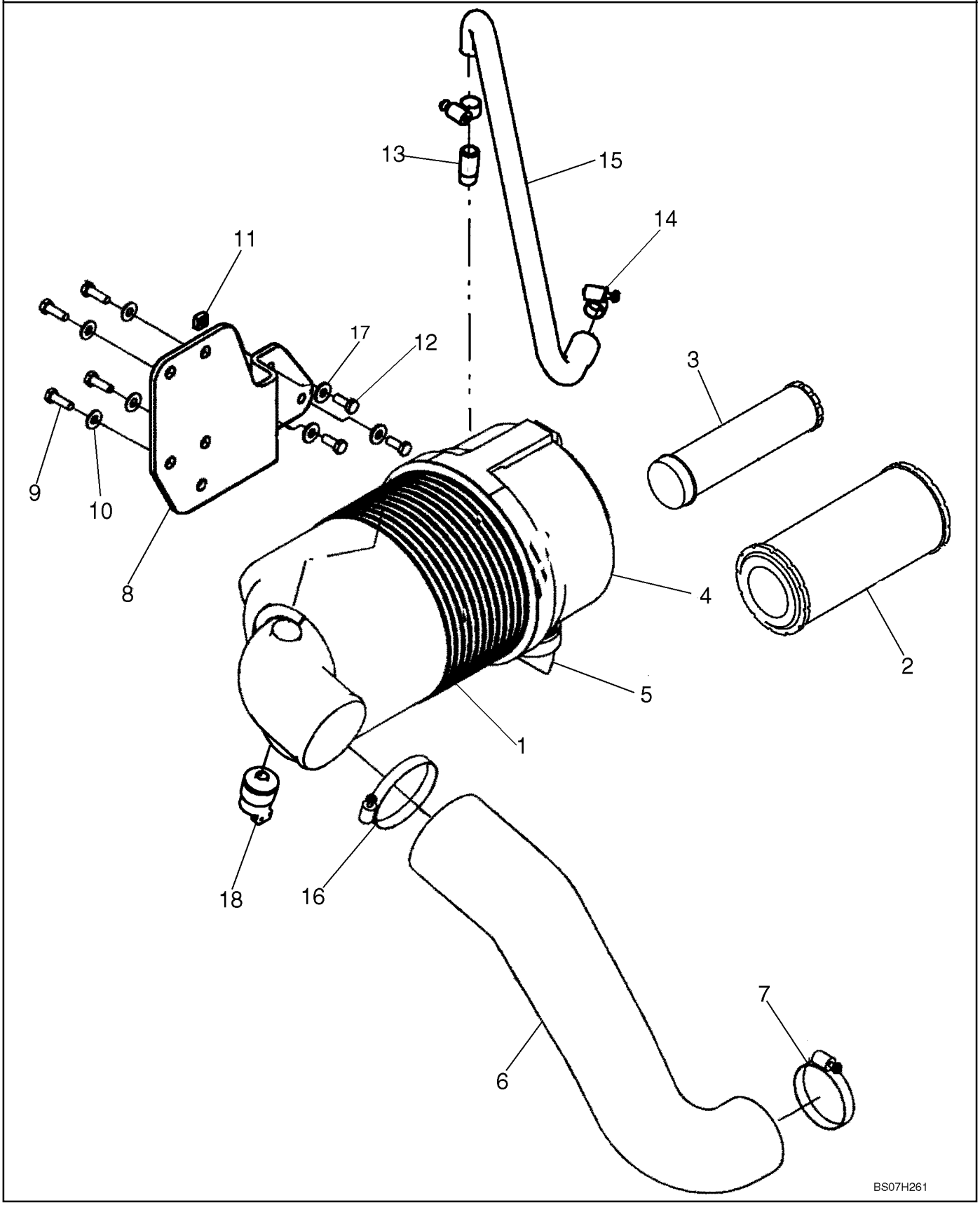

AIR CLEANER - ENGINE

REF	FN	PART NUMBER	YR/SN	QTY	DESCRIPTION
		87032107		1	CLEANER, Incl. 1 - 5
1		87041842		1	AIR CLEANER, Body
2		222421A1		1	FILTER, AIR, Primary
3		222422A1		1	FILTER, ELEMENT, Secondary
4		395792A1		1	COVER ASSY, Incl. 4A
4A		86990981		1	TAB, LOCKING, Not Illustrated Separately
5		A184597		1	POPPET, VALVE
6		87351957		1	HOSE, Air Cleaner Outlet
7		87040758		1	CLAMP, HOSE
8		87620930		1	BRACKET
9		43127		4	BOLT, Hex, M8 x 25, 8.8
10		86625263		4	WASHER, M8 x 20 x 1.6
11		87030567		3	NUT
12		120104		3	BOLT, Hex, M8 x 20, 8.8
13		L17985		1	FITTING
14		86625021		2	CLAMP, HOSE, #12, 0.69/1.25 Type F Worm
15		87352014		1	HOSE
16		381144		1	CLAMP, HOSE, #60, 3.31/4.25 Type F Worm
17		896-15008		3	WASHER, M8 x 21.5 x 2.5, HT
18		87013666		1	SWITCH, Air Restriction

ENGINE - MOUNTING

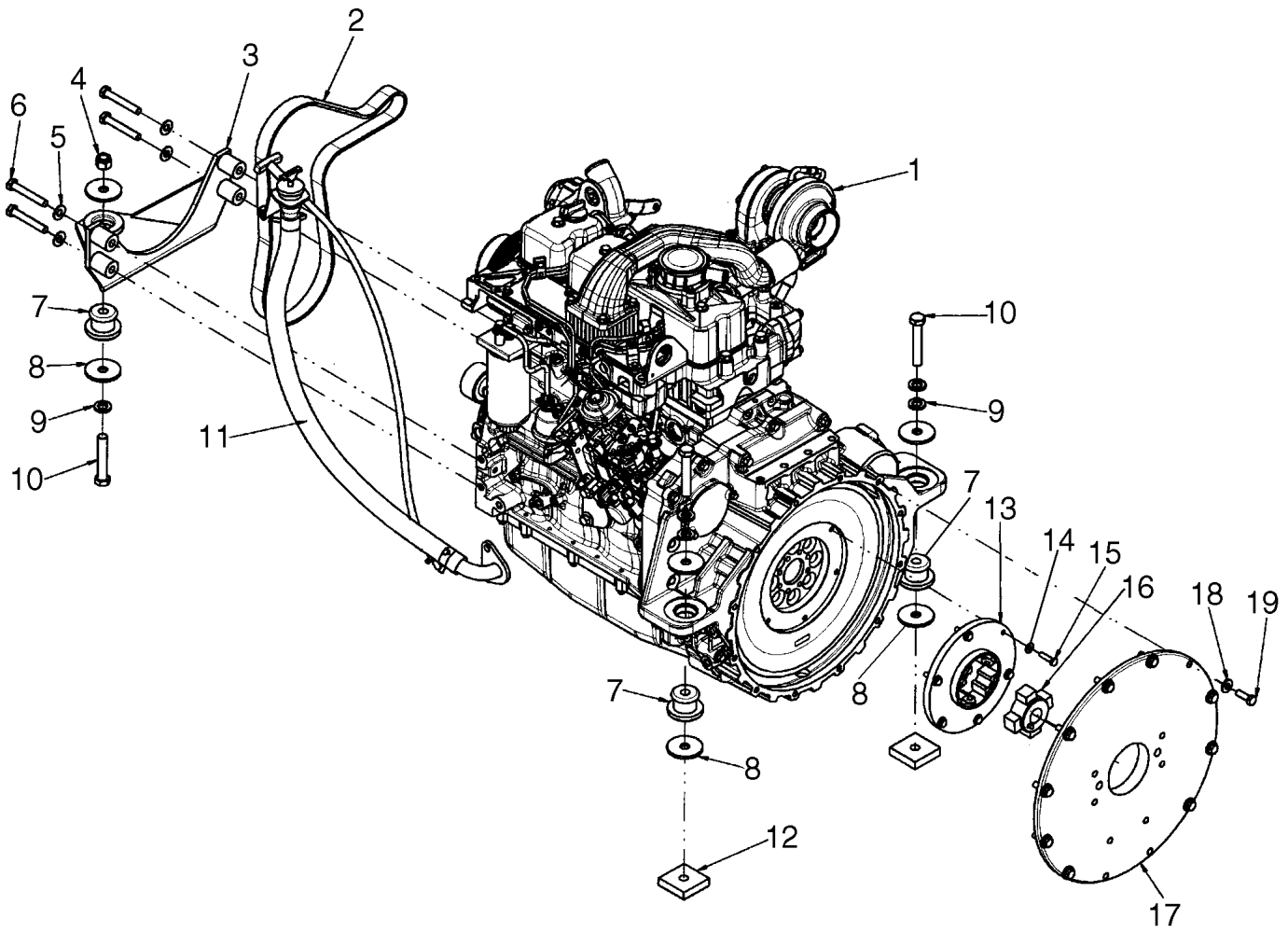

ENGINE - MOUNTING

REF	FN	PART NUMBER	YR/SN	QTY	DESCRIPTION
1		87384641		1	ENGINE, NEF, 67 KW 296 Fan; Incl Parts on Figures 02-09 - 02-41, 03-03 - 03-10, 04-02
2		85826230		1	BELT
3		87041763		1	MOUNT, ENGINE, Rear
4		412066		1	NUT, LOCK, M16 x 2, Cl 8
5		140046		4	WASHER, SPRING, Belleville, M12
6		412085		4	BOLT, Hex, M12 x 80, 10.9
7		A140221		3	MOUNTING PARTS
8		87032338		6	WASHER, 21/32" x 2 1/2" x .188", HDN
9		86625266		5	WASHER, M17.5 x 30 x 4, HT
10		350616		3	BOLT, Hex, M16 x 90, 8.8
11		REF			INSTRUCTION, Dipstick Assy; See Figure 02-22
12		390350A1		2	PLATE
13		87024539		1	ELEMENT, Pump Drive, 6.5 in
14		322358		6	WASHER, SPRING, Belleville, M8
15		43235		6	BOLT, Hex, M8 x 30, 10.9
16		87024588		1	HUB, Pump Drive Star
17		87547003		1	PLATE, Pump Mounting
18		86639325		10	WASHER, M10 x 24.5 x 3, HT
19		43140		10	BOLT, Hex, M10 x 30, 8.8, Full Thd

ENGINE - MOUNTING (EUROPE)

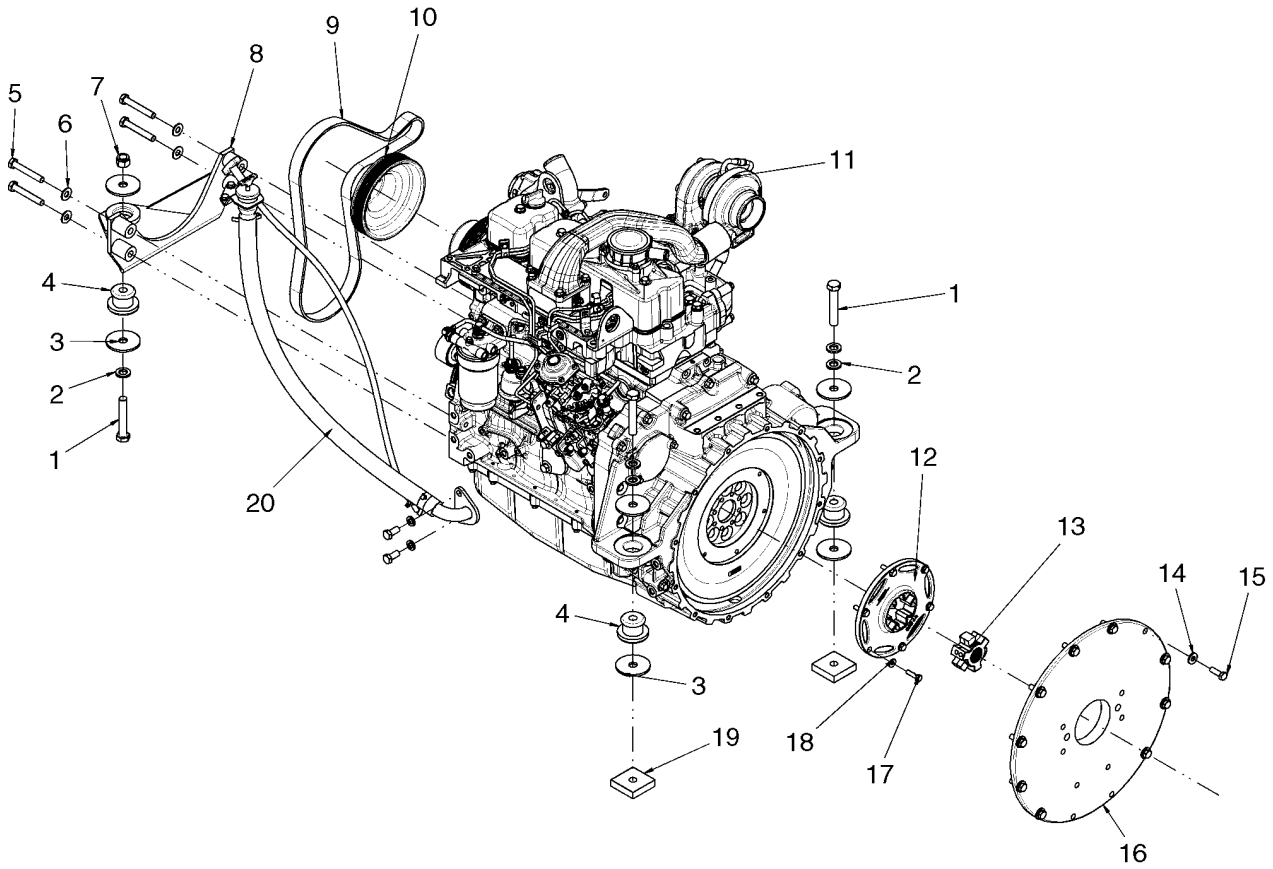

BS07N459

ENGINE - MOUNTING (EUROPE)

REF	FN	PART NUMBER	YR/SN	QTY	DESCRIPTION
1		350616		3	BOLT, Hex, M16 x 90, 8.8
2		86625266		5	WASHER, M17.5 x 30 x 4, HT
3		87687021		6	FASTENER
4		A140221		3	MOUNTING PARTS, Engine Mount
5		412085		4	BOLT, Hex, M12 x 80, 10.9
6		140046		4	WASHER, SPRING, Belleville, M12
7		412066		1	NUT, LOCK, M16 x 2, Cl 8
8		87041763		1	MOUNT, ENGINE, Rear Engine Mount
9		87713059		1	BELT, Belt, V Ribbed (Europe)
10		87712652		1	PULLEY, Pulley (Europe)
11		87384641		1	ENGINE, Engine, NEF
12		87692685		1	COUPLING, Coupling, Flexible
13		87711337		1	COUPLING, Coupling, Drive Star
14		86639325		10	WASHER, M10 x 24.5 x 3, HT
15		43140		10	BOLT, Hex, M10 x 30, 8.8, Full Thd
16		87547003		1	PLATE, Pump Mounting Plate
17		43235		6	BOLT, Hex, M8 x 30, 10.9
18		322358		6	WASHER, SPRING, Belleville, M8
19		390350A1		2	PLATE
20		REF		1	INSTRUCTION, Oil Fill; See Fig 02-22

ENGINE - BLOCK HEATER

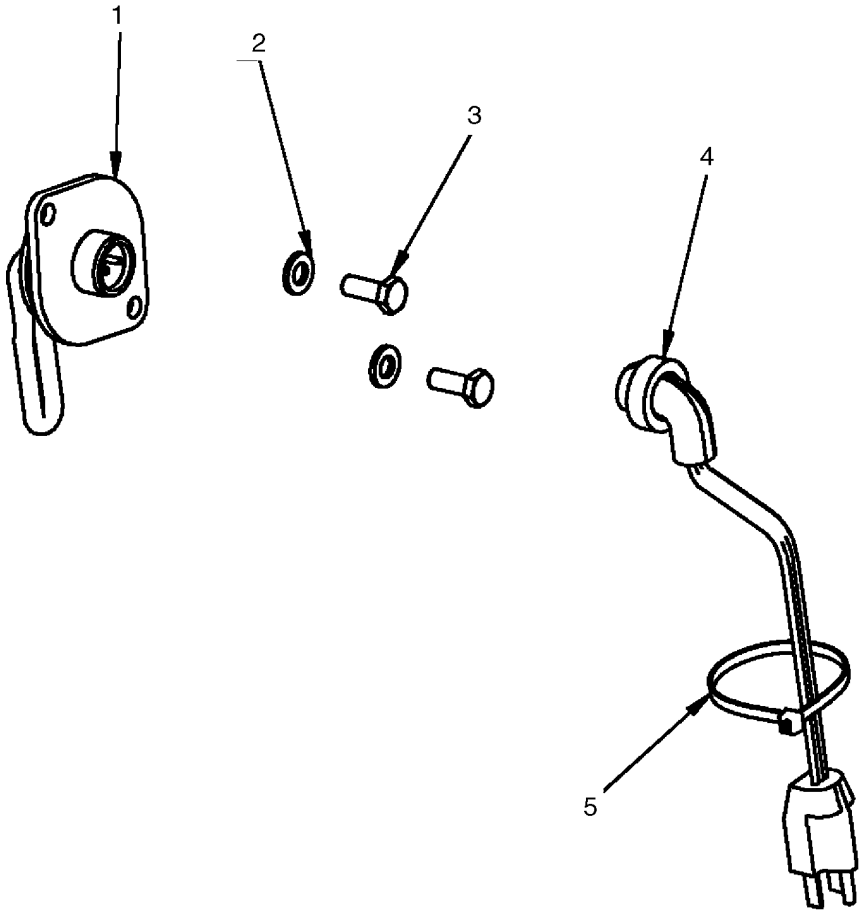

BS07K096

ENGINE - BLOCK HEATER

REF	FN	PART NUMBER	YR/SN	QTY	DESCRIPTION
		87017686		1	DIA, Construction, Kit, Block Heater; Incl 1 - 5
1		8602005		1	HEATER, Block Heater, 750W 120V
2		86624185		2	WASHER, M8 x 17.5 x 2, HT
3		120104		2	BOLT, Hex, M8 x 20, 8.8
4		87105748		1	CABLE, ELECTRIC
5		L11541		1	STRAP, CABLE, Cable Tie

CYLINDER BLOCK

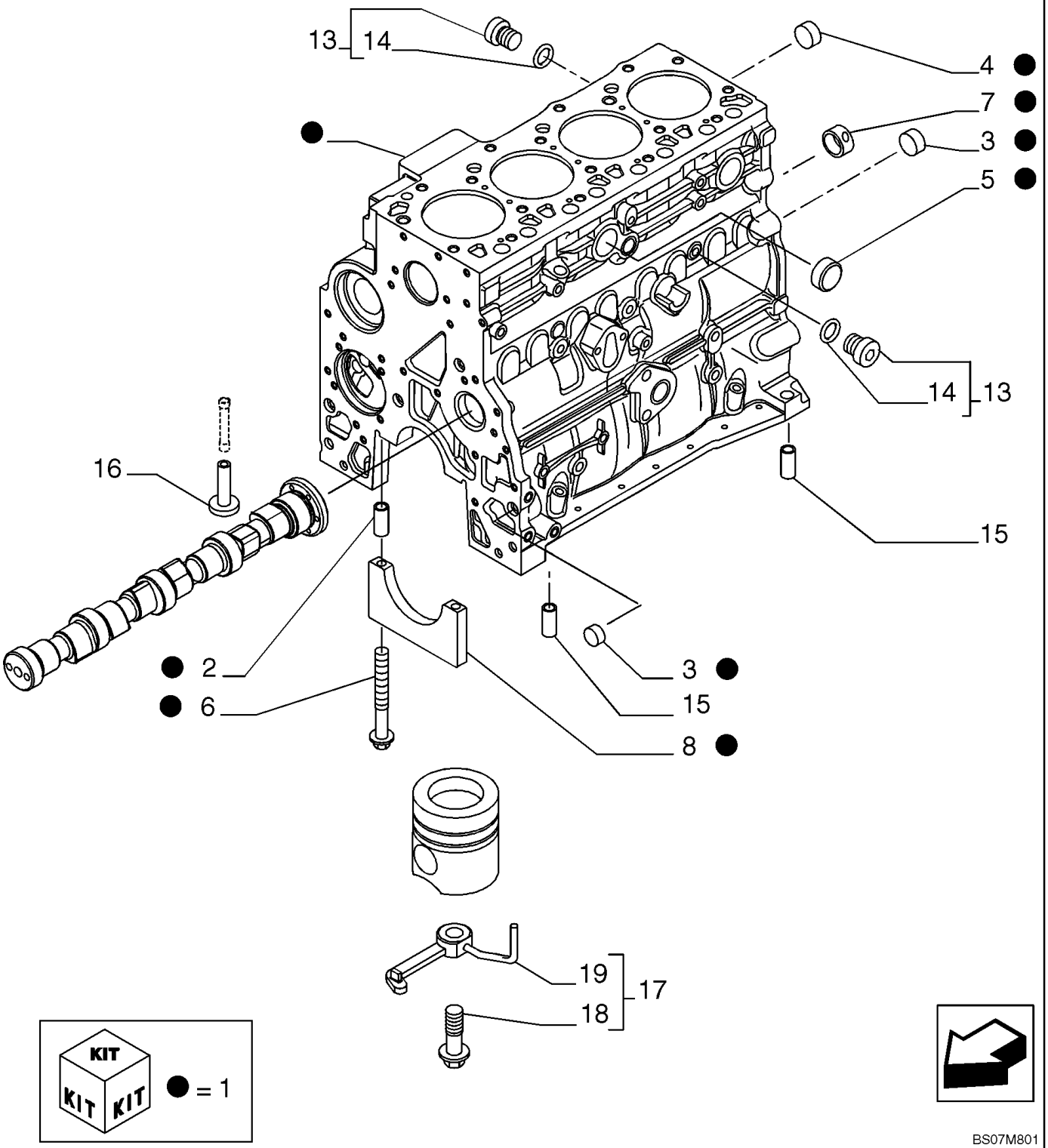

CYLINDER BLOCK

REF	FN	PART NUMBER	YR/SN	QTY	DESCRIPTION
1		2830083		1	CYLINDER BLOCK, - ASSY
2		4899026		10	DOWEL
3		4895039		3	PLUG
4		4895038		4	PLUG
5		4895228		2	PLUG
6		4891353		10	SCREW, Flg Hd, M12 x 1.5 x 120
7		4895040		1	BUSHING
8		4895919		4	BEARING, CRANKSHAFT
8		4895921		1	BEARING, CRANKSHAFT
13		4895392		2	PLUG, - ASSY
14		4895393		2	O-RING
15		4895049		2	DOWEL
16		4895180		8	TAPPET
17		4896865		4	NOZZLE, LUB. OIL JET, - ASSY
18		4894218		1	SCREW
19		2852203		1	NOZZLE, LUB. OIL JET

CYLINDER BLOCK - COVERS, REAR GEAR

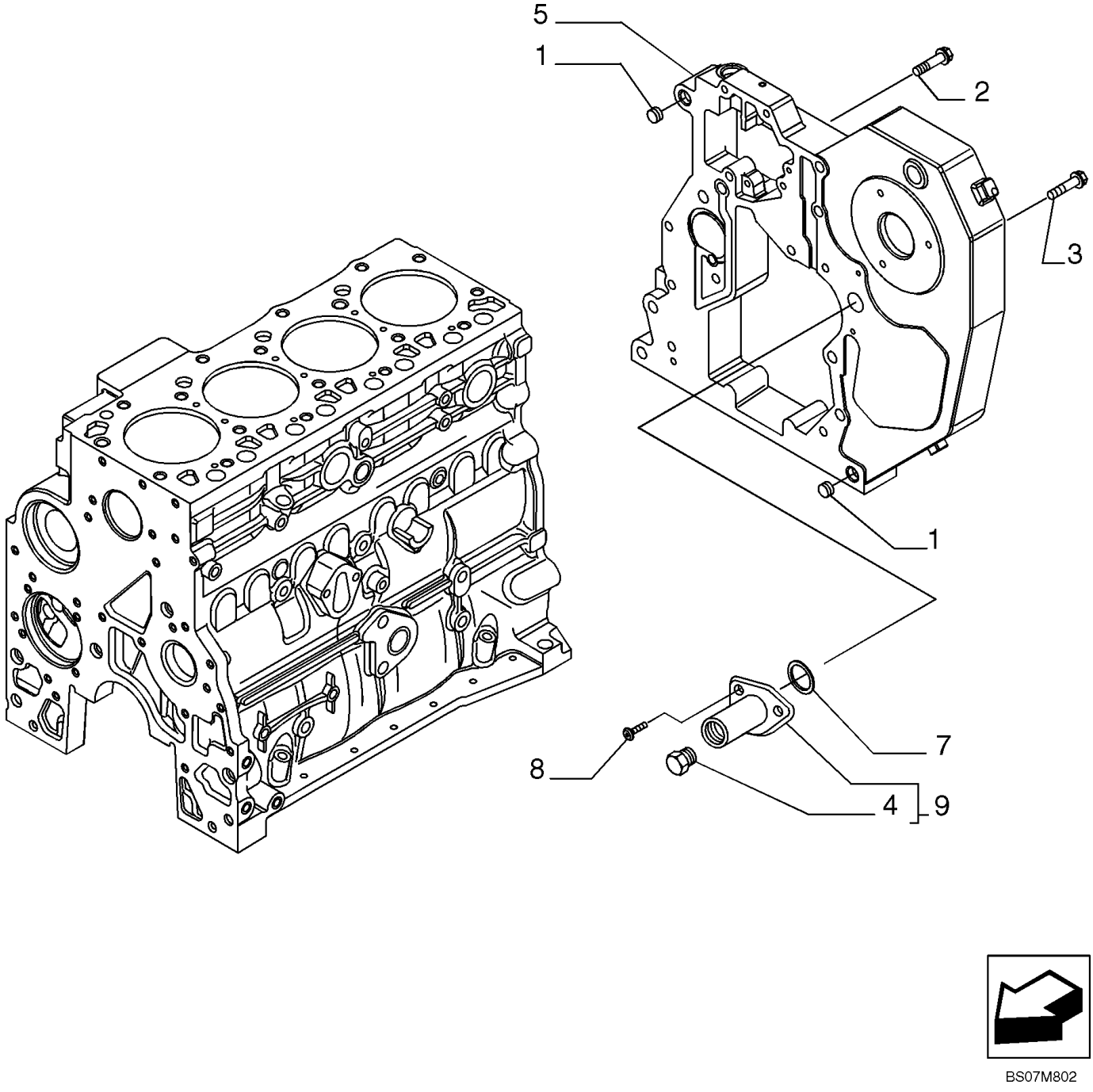

BS07M802

CYLINDER BLOCK - COVERS, REAR GEAR

REF	FN	PART NUMBER	YR/SN	QTY	DESCRIPTION
1		4899026		2	DOWEL
2		4899091		4	SCREW, Hex Flg, M8 x 1.25 x 40
3		4899093		5	SCREW, Hex Flg, M10 x 1.5 x 30
3		4899073		1	SCREW, Hex Flg, M12 x 1.75 x 30
4		{2855289}		1	Plug
5		2852619		1	HOUSING
7		2852519		1	O-RING
8		4895355		2	SCREW, Torx Rd Hd, M5 x .8 x 17
9		2855287		1	HOUSING, - ASSY

CYLINDER BLOCK - COVERS, FLYWHEEL

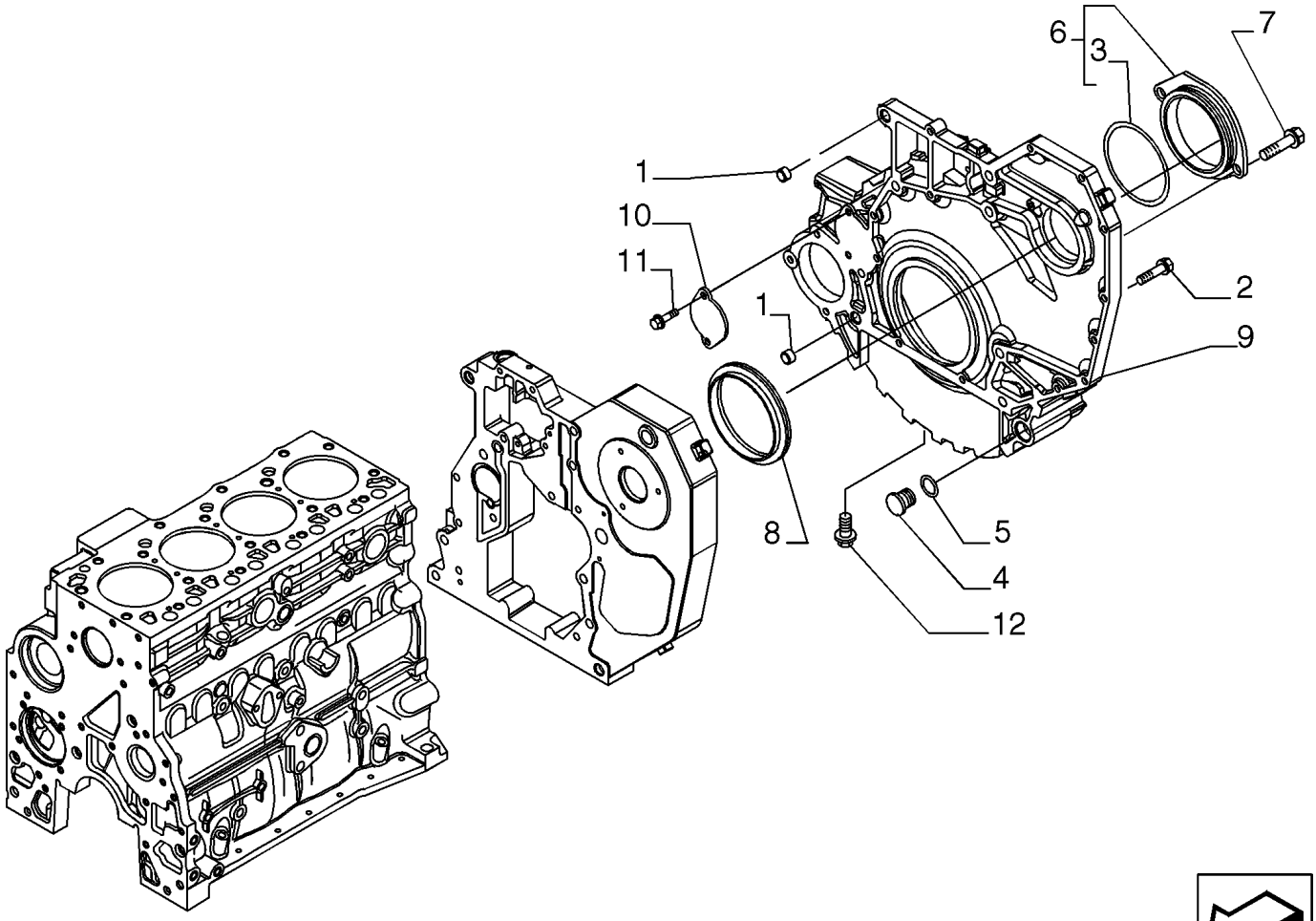

BS07M803

CYLINDER BLOCK - COVERS, FLYWHEEL

REF	FN	PART NUMBER	YR/SN	QTY	DESCRIPTION
1		4899026		2	DOWEL
2		4892915		7	SCREW
2		4899076		5	SCREW, Hex Flg, M12 x 1.75 x 80
2		4899074		3	SCREW, Hex Flg, M12 x 1.75 x 120
2		4899109		3	SCREW, Hex, M10 x 1.5 x 80
2		4899143		1	SCREW, Hex Flg, M10 x 1.5 x 140, IN ALTERNATIVE WITH 2854866
2		2852865		2	SCREW
2		2854866		1	PLUG, IN ALTERNATIVE WITH 4899143
3		2854075		1	O-RING
4		4895378		2	PLUG
5		4895379		2	O-RING, M21.82 ID x 3.53 Thk
6		2854073		1	COVER, - ASSY
7		4899020		2	SCREW
8		4890833		1	SEAL
9		2855180		1	HOUSING, Flywheel
10		4895155		1	COVER
11		4899068		1	SCREW, Hex Flg, M8 x 1.25 x 16
12		4893036		1	PLUG, - ASSY

CYLINDER BLOCK - COVERS, FRONT

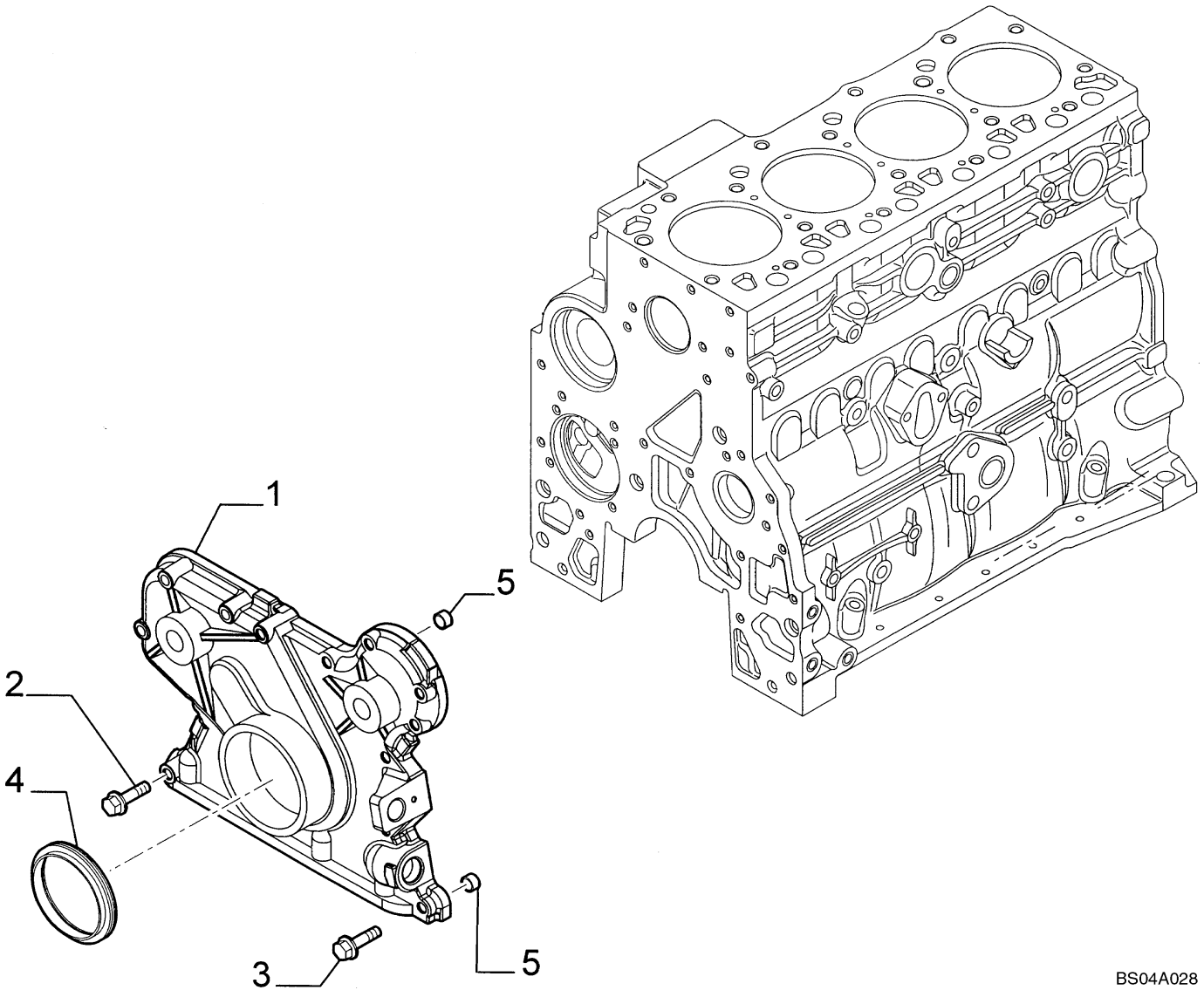

CYLINDER BLOCK - COVERS, FRONT

REF	FN	PART NUMBER	YR/SN	QTY	DESCRIPTION
1		4897026		1	COVER, Front
2		4899078		5	SCREW, Hex Flg, M8 x 1.25 x 45
3		4899063		8	SCREW, Hex Flg, M8 x 1.25 x 30
4		4890832		1	SEAL
5		4891209		2	DOWEL

GEAR COVER - PLATE

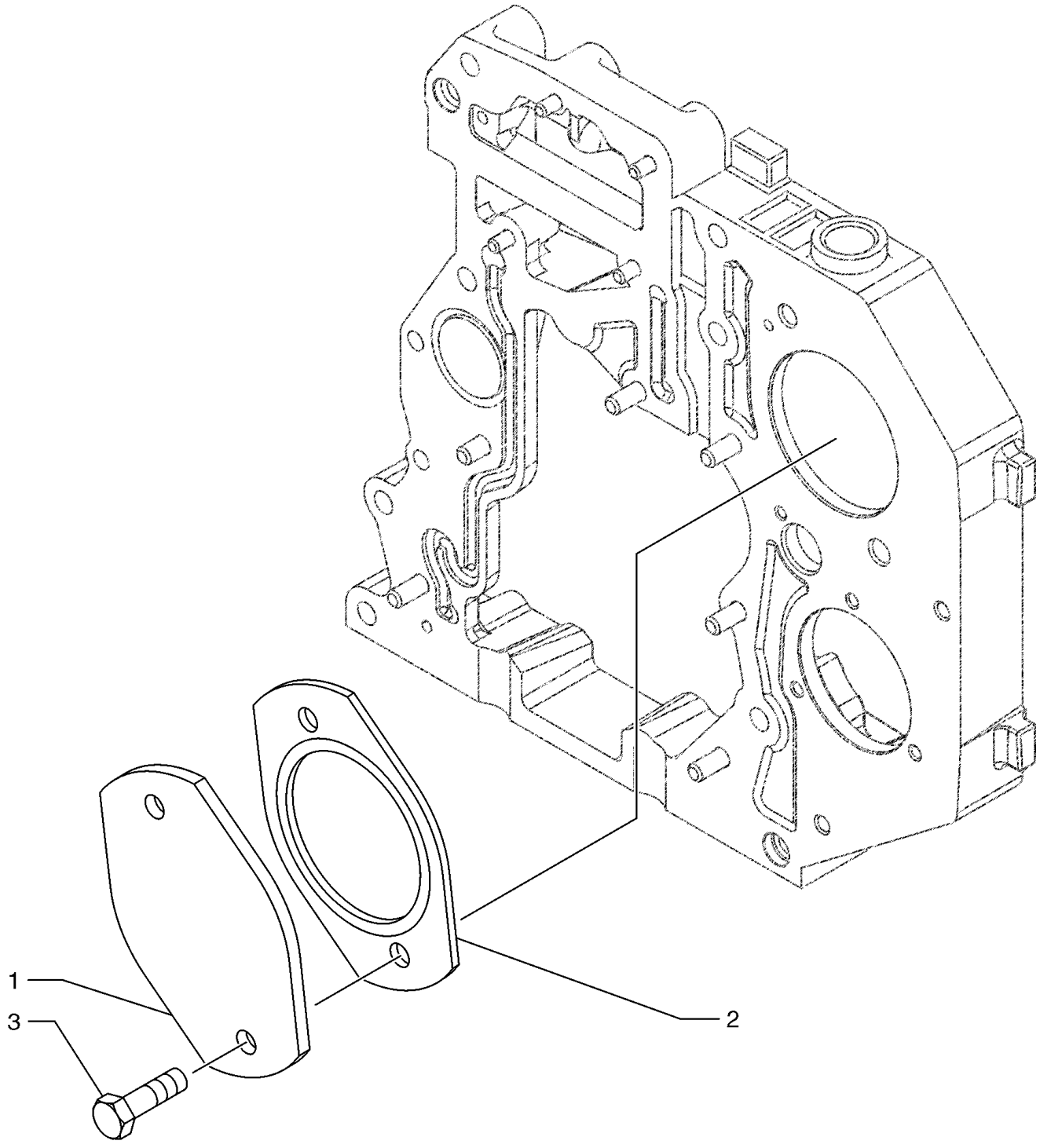

BS04A022

GEAR COVER - PLATE

REF	FN	PART NUMBER	YR/SN	QTY	DESCRIPTION
1		2852175		1	COVER
2		4896897		1	GASKET
3		16677734		2	SCREW, Hex Flg, M12 x 1.75 x 25

CYLINDER HEAD COVERS

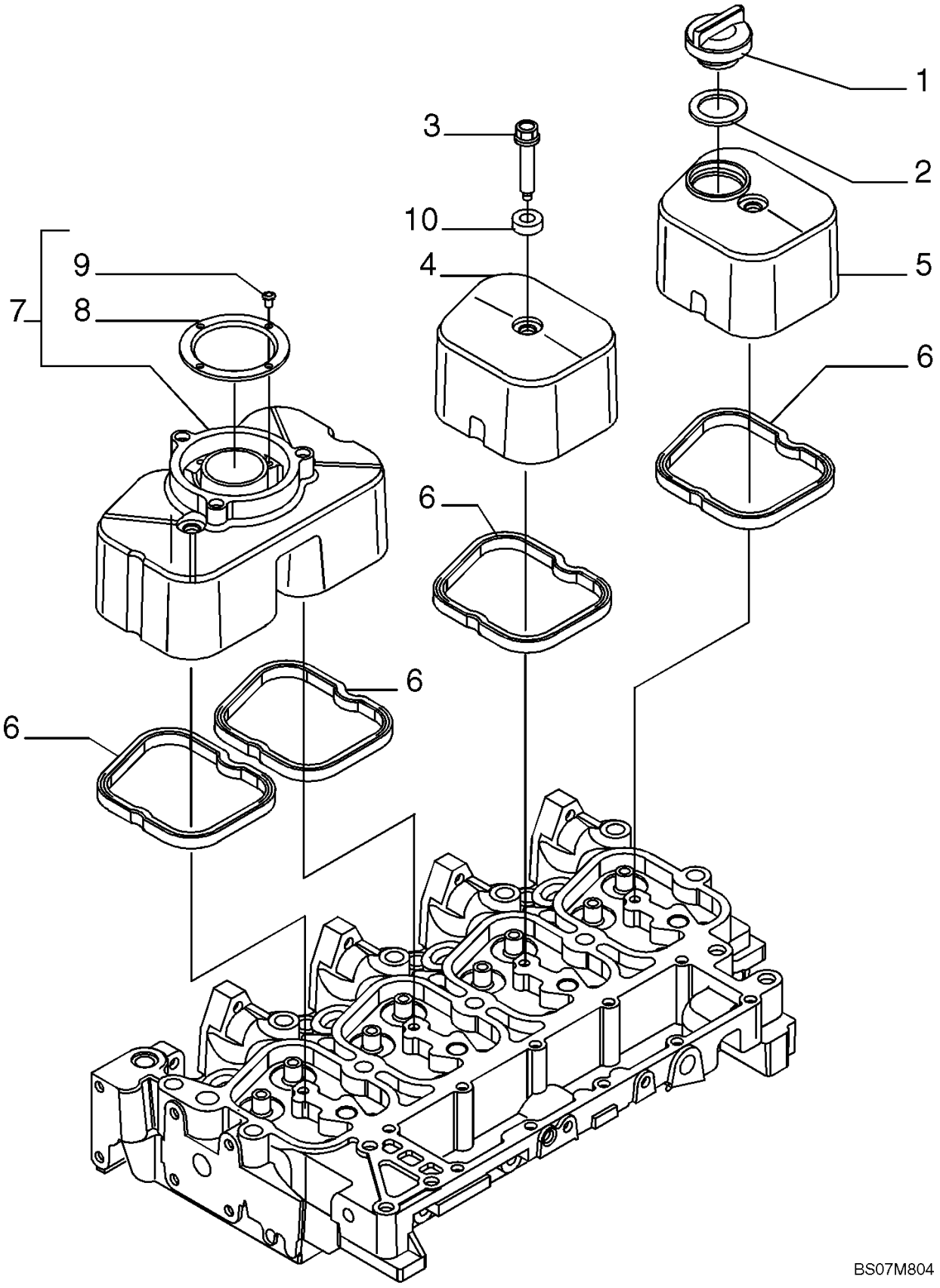

CYLINDER HEAD COVERS

REF	FN	PART NUMBER	YR/SN	QTY	DESCRIPTION
1		4895202		1	CAP, FILLER
2		4895296		1	SEAL, IN ALTERNATIVE
2		4892808		1	SEAL, IN ALTERNATIVE
3		4895214		4	SCREW
4		2852032		1	COVER
5		2852894		1	COVER
6		2852033		4	GASKET
7		2830784		1	COVER, VALVE, - ASSY
8		2830775		1	SLINGER
9		2830281		4	SCREW, SELF TAP
10		4895360		4	ISOLATOR

CYLINDER BLOCK STIFFENER PLATE

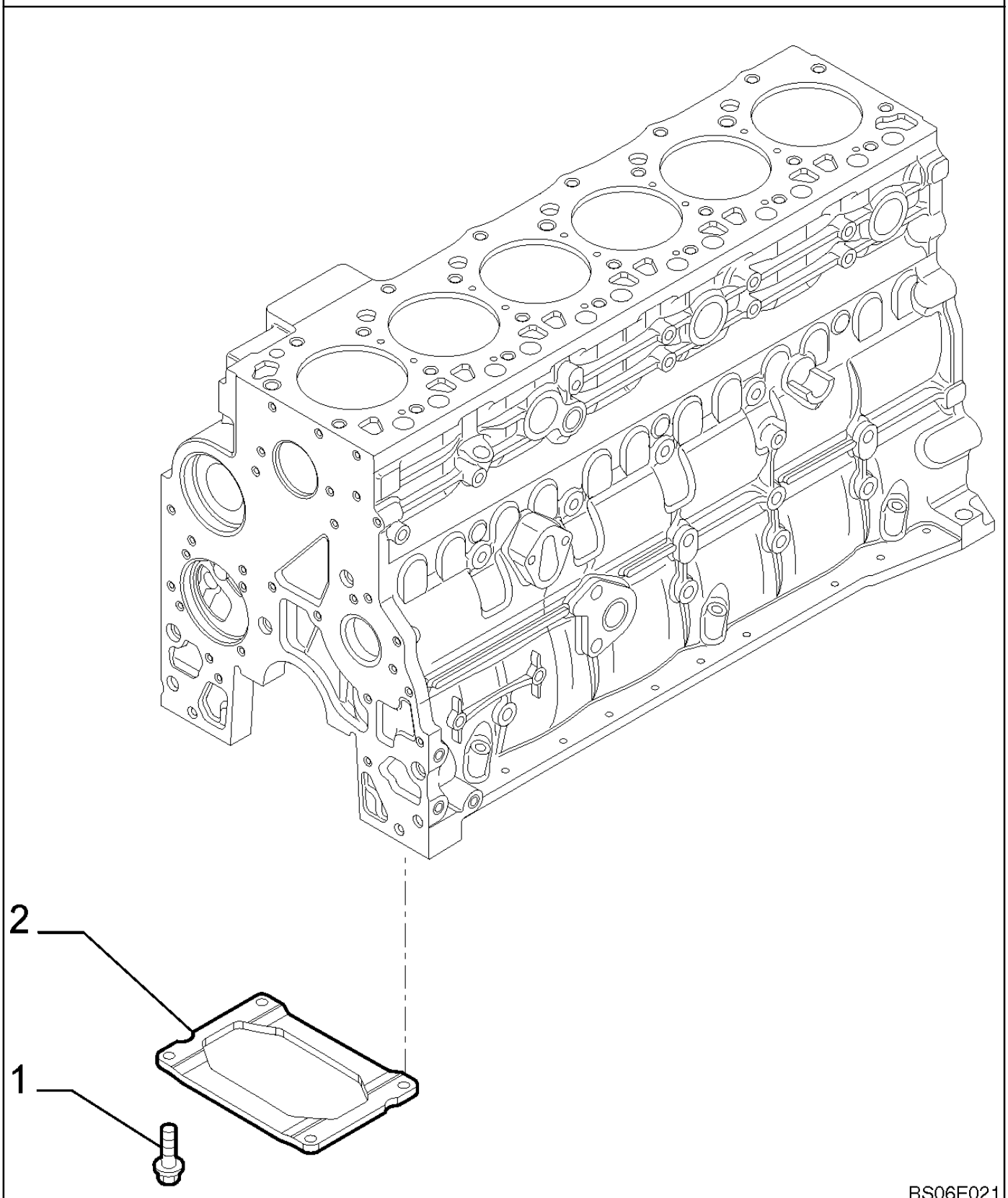

CYLINDER BLOCK STIFFENER PLATE

REF	FN	PART NUMBER	YR/SN	QTY	DESCRIPTION
1		4899032		4	SCREW, Hex Flg, M10 x 1.5 x 25
2		2852729		1	STIFFENER, Noise Reduction

CYLINDER HEAD

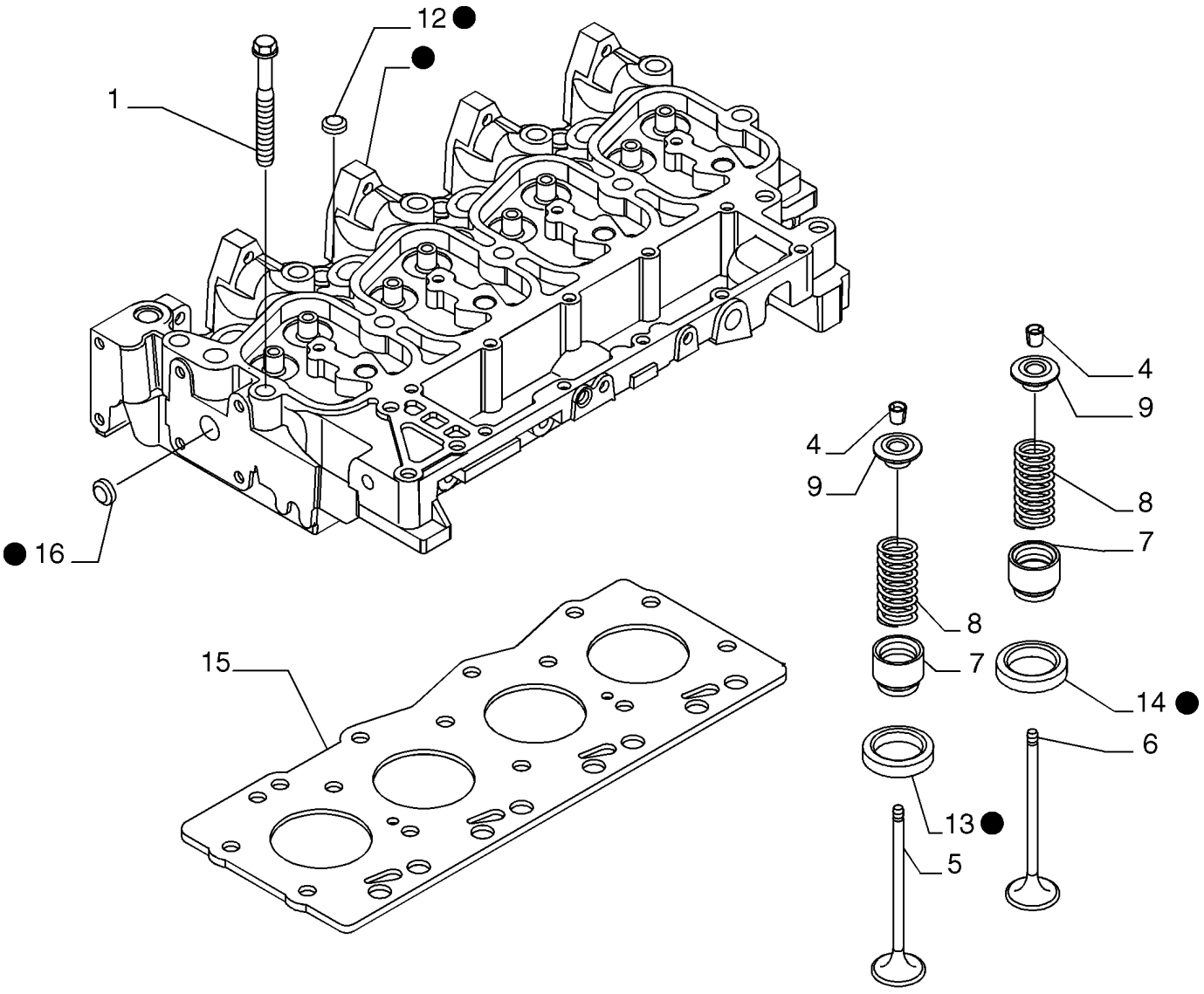

CYLINDER HEAD

REF	FN	PART NUMBER	YR/SN	QTY	DESCRIPTION
1		4892861		4	SCREW, Wash Hd, M12 x 1.25 x 73
1		4892859		10	SCREW, Wash Hd, M12 x 1.25 x 143
3		2856017		1	CYLINDER HEAD, Incl 12, 13, 14,16
4		4895183		16	COLLET
5		4895188		4	VALVE, ENG EXHAUST, STD
6		4895187		4	VALVE, ENGINE, INLET, STD
7		4895347		8	SEAL
8		4895215		8	SPRING, VALVE
8		{2831472}		8	Alternate To 4895215
9		4895184		8	RETAINER
12		4895179		3	PLUG
13		4897178		4	VALVE SEAT, - INTAKE
14		4897179		4	VALVE SEAT, - EXHAUST
15		2830919		1	GASKET, CYLINDER HEAD, SP=1.25
15		2830920		1	GASKET, CYLINDER HEAD, SP=1.15
16		4895085		1	PLUG

OIL PUMP, PAN

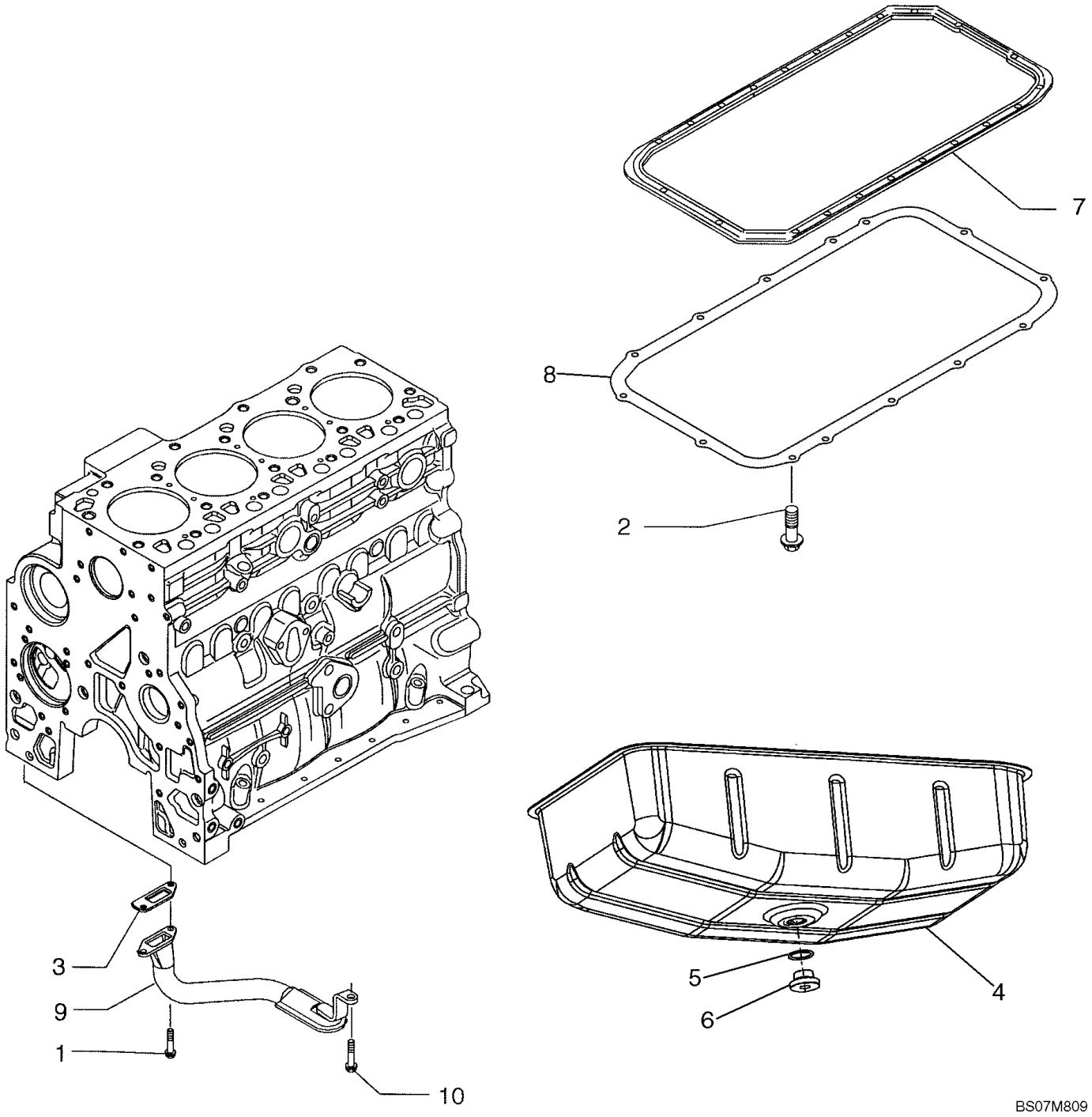

OIL PUMP, PAN

REF	FN	PART NUMBER	YR/SN	QTY	DESCRIPTION
1		16673635		2	SCREW
2		4899091		14	SCREW, Hex Flg, M8 x 1.25 x 40
3		4898301		1	GASKET
4		2853047		1	PAN, ENGINE OIL, Oil Pan
5		2852978		1	O-RING
6		4894139		1	PLUG, 22 x 1.5; Does Not Include Seal, Purchase Seal Separately
7		4897877		1	GASKET
8		4897876		1	SPACER
9		2853050		1	PIPE, Oil Suction; Includes Screen Which Is Not Serviced Separately
10		4895291		1	SCREW, Hex Flg, M10 x 1.5 x 20

ENGINE, OIL

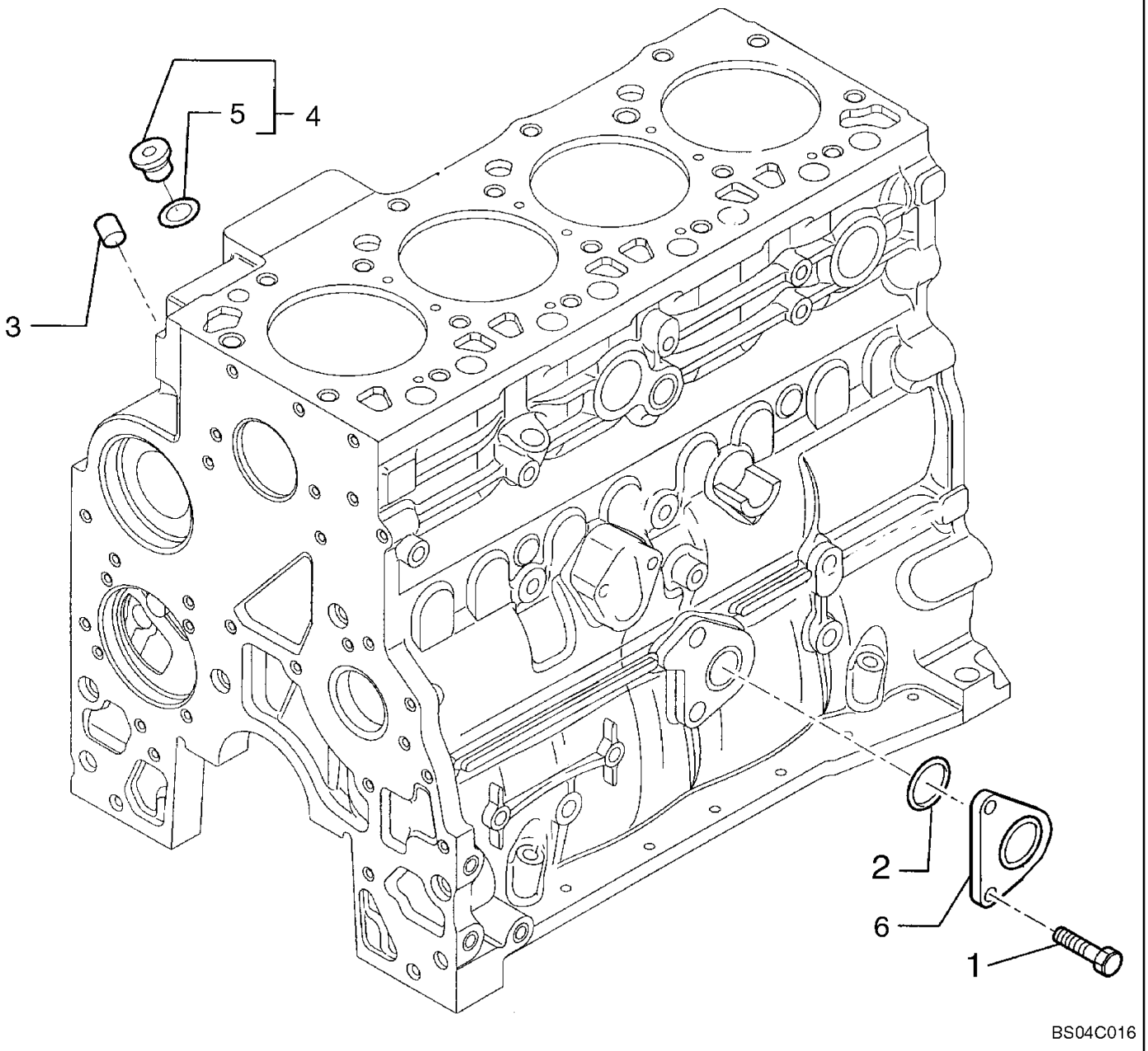

ENGINE, OIL

REF	FN	PART NUMBER	YR/SN	QTY	DESCRIPTION
1		2852134		2	SCREW, Flange
2		14458681		1	O-RING, -128, Cl 7, 1.487" ID x .103" Thk
3		4895406		1	PLUG
4		4897330		2	PLUG, Assy; Incl. Ref 5
5		4895610		1	O-RING
6		2852995		1	FLANGE

OIL FILTER AND COOLER

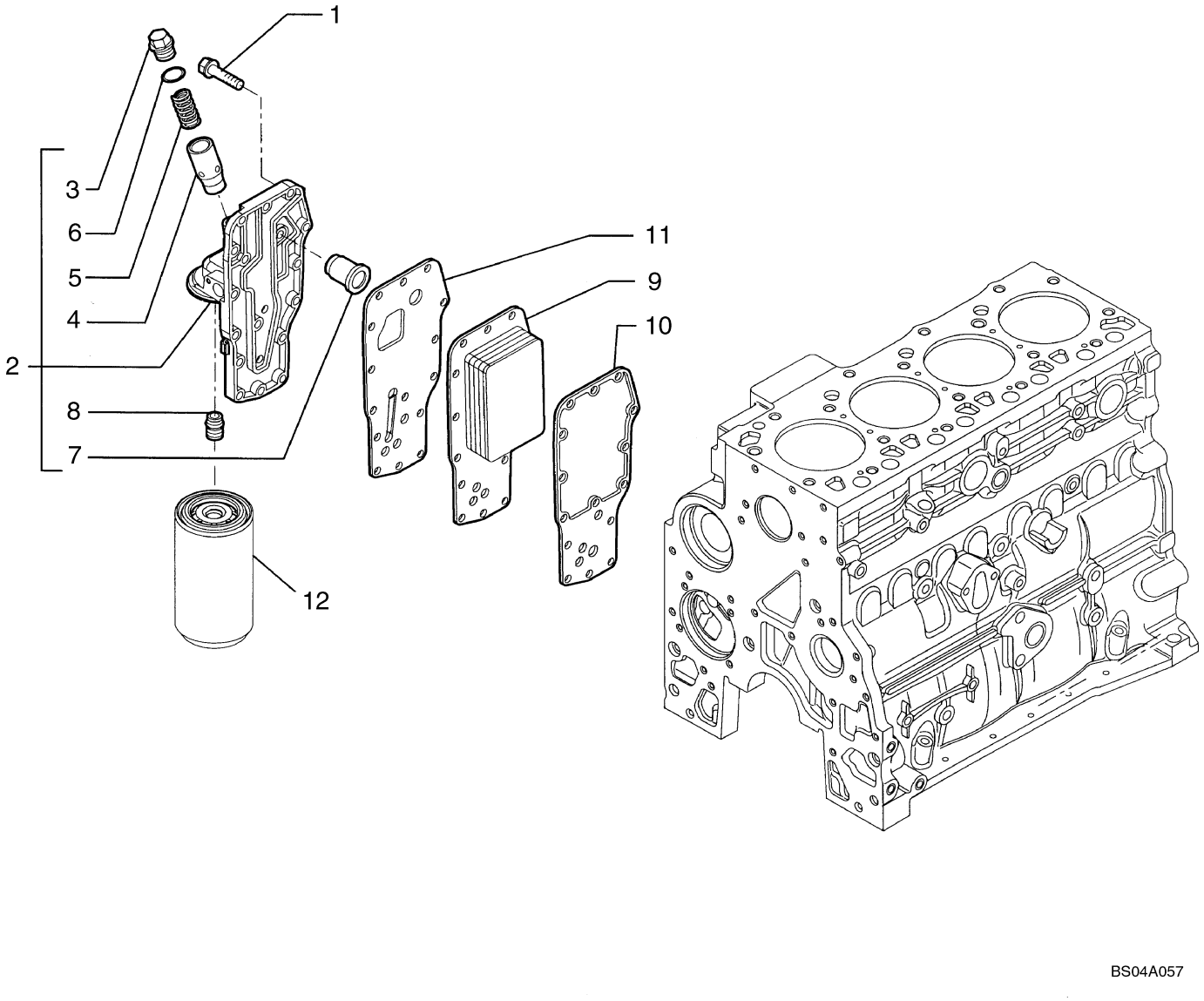

OIL FILTER AND COOLER

REF	FN	PART NUMBER	YR/SN	QTY	DESCRIPTION
1		4899019		15	SCREW, Hex Flg, M8 x 1.25 x 35
		2856343		1	HEAD, FILTER, Incl. Ref 3 - 8
3		2853781		1	PLUG
4		4896404		1	PLUNGER, Plunger, Pressure Regulator
5		4895045		1	SPRING
6		4899035		1	O-RING
7		4896410		1	VALVE, PRESSURE RELIEF, Pressure Relief
8		{2856344}		1	Head, Filter; Incl 8A
8A		4893391		1	ADAPTER
9		4896406		1	COOLER, OIL, Cooler Core
9		2853722		1	COOLER, OIL, Alternate Part to 4896406
10		2830559		1	GASKET, Core
11		4896409		1	GASKET, Head
12		REF		1	INSTRUCTION, FILTER, ENGINE OIL; See Figure 02-20

OIL FILTERS - ENGINE

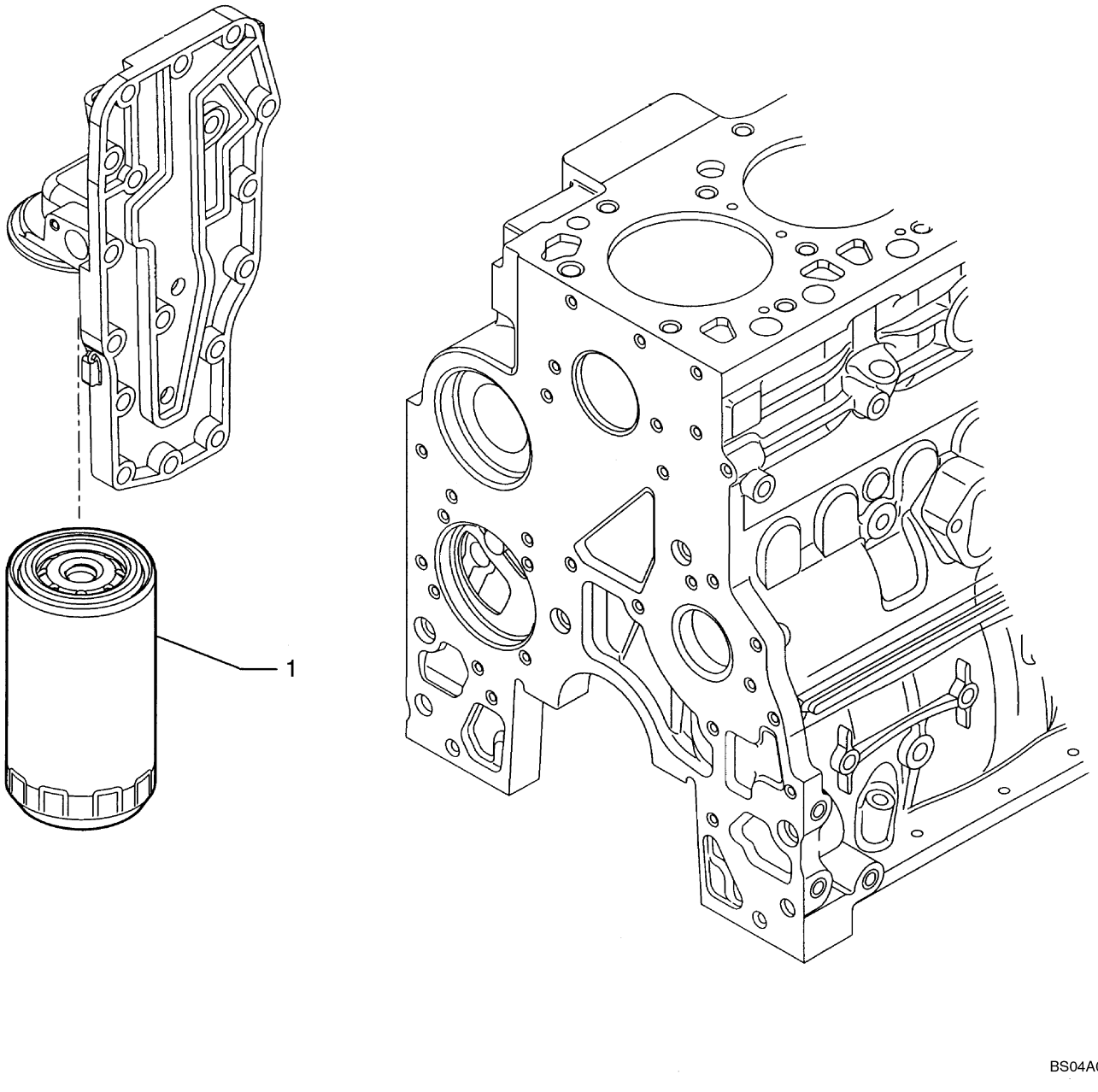

OIL FILTERS - ENGINE

REF	FN	PART NUMBER	YR/SN	QTY	DESCRIPTION
1		2856715		1	FILTER, ENGINE OIL

OIL PUMP - ENGINE

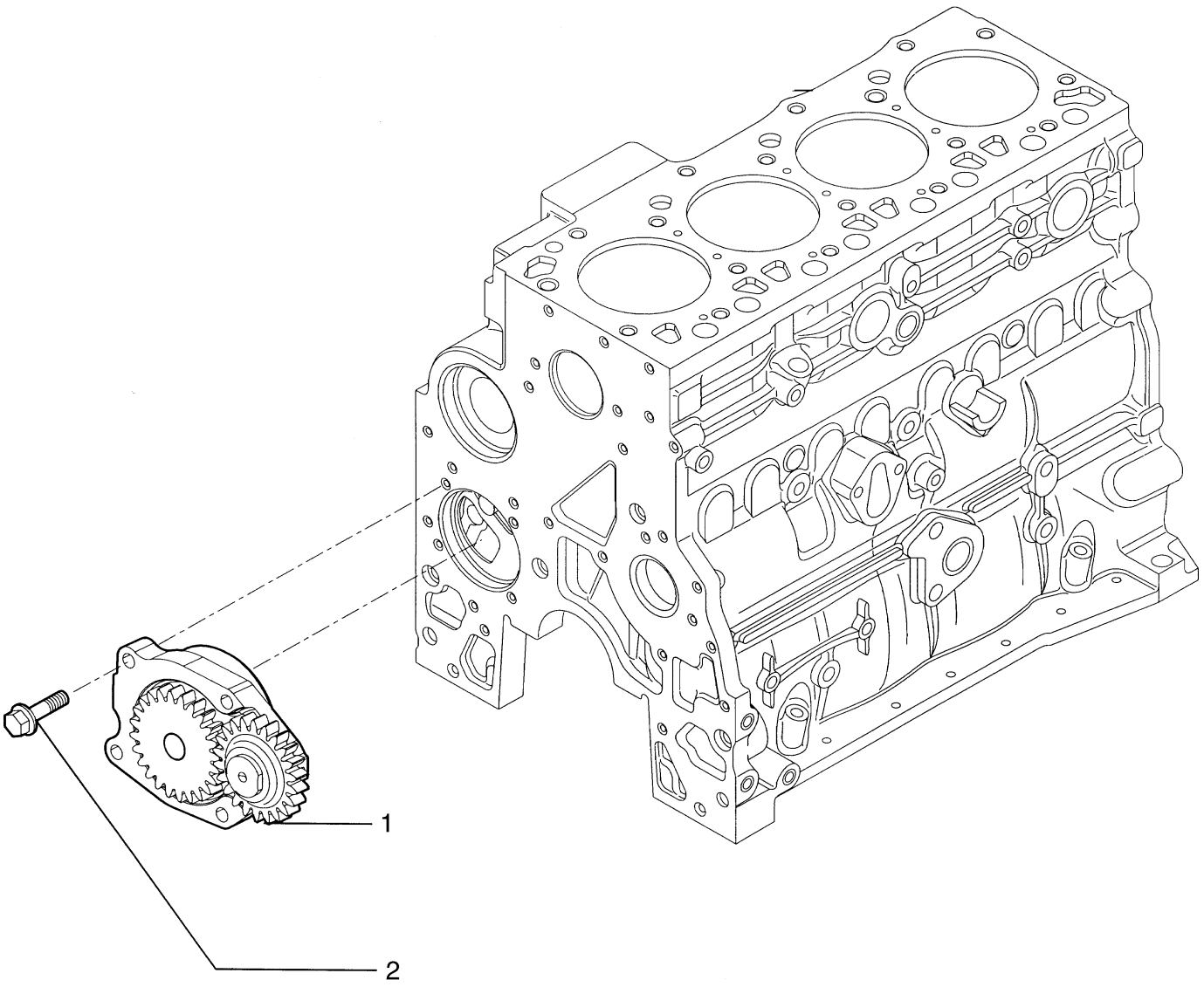

BS04A054

OIL PUMP - ENGINE

REF	FN	PART NUMBER	YR/SN	QTY	DESCRIPTION
1		4897480		1	PUMP, ENGINE OIL
2		4899090		4	SCREW, Hex Flg, M8 x 1.25 x 30

OIL FILL - ENGINE

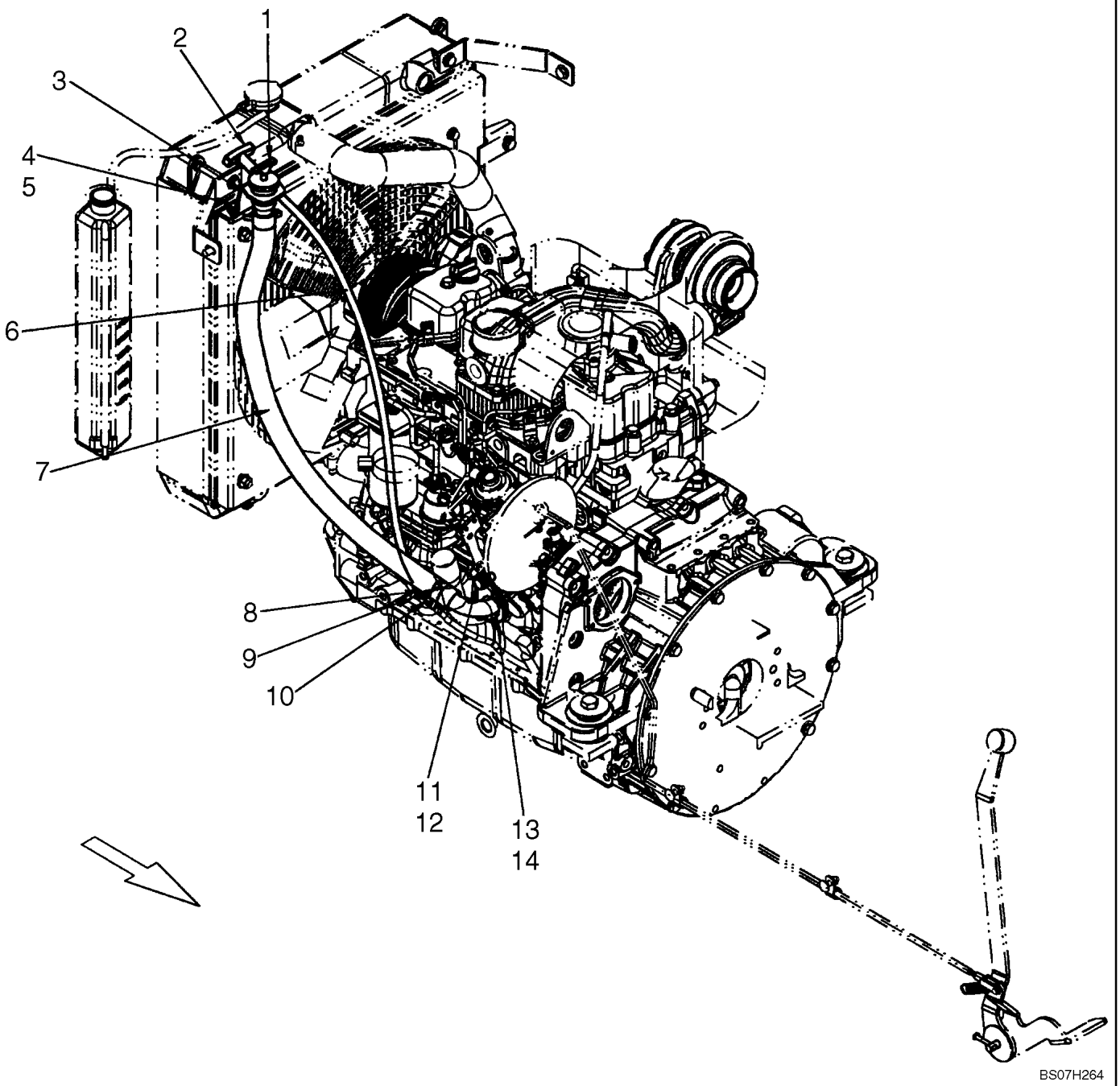

OIL FILL - ENGINE

REF	FN	PART NUMBER	YR/SN	QTY	DESCRIPTION
1		87445427		1	CAP, FILLER, Oil Fill
1		87722140		1	CAP, Oil Fill Cap, Europe
2		{87566701}		1	Dipstick
3		{87574281}		1	Bracket, Dipstick, Oil Fill Mounting
3		87735275		1	BRACKET, Bracket, Oil Fill Mounting, Europe
4		120103		2	BOLT, Hex, M8 x 16, 8.8
5		322358		2	WASHER, SPRING, Belleville, M8
6		{87612761}		1	Tube; Dipstick
7		{87560205}		1	Tube; Remote Oil Fill
8		574518		1	CLAMP, HOSE, #4, 0.25/0.62 Type M Worm
9		87432275		2	SPRING, Clamp, 35 mm
10		87438418		1	TUBE, Oil Guage
11		300388		2	SCREW, Hex, M12 x 25, 8.8
12		412123		2	WASHER, LOCK, M12
13		14458781		1	O-RING, -129, CI 7, 1.549" ID x .103" Thk
14		87432267		1	TUBE, Oil Fill

REMOTE OIL DRAIN

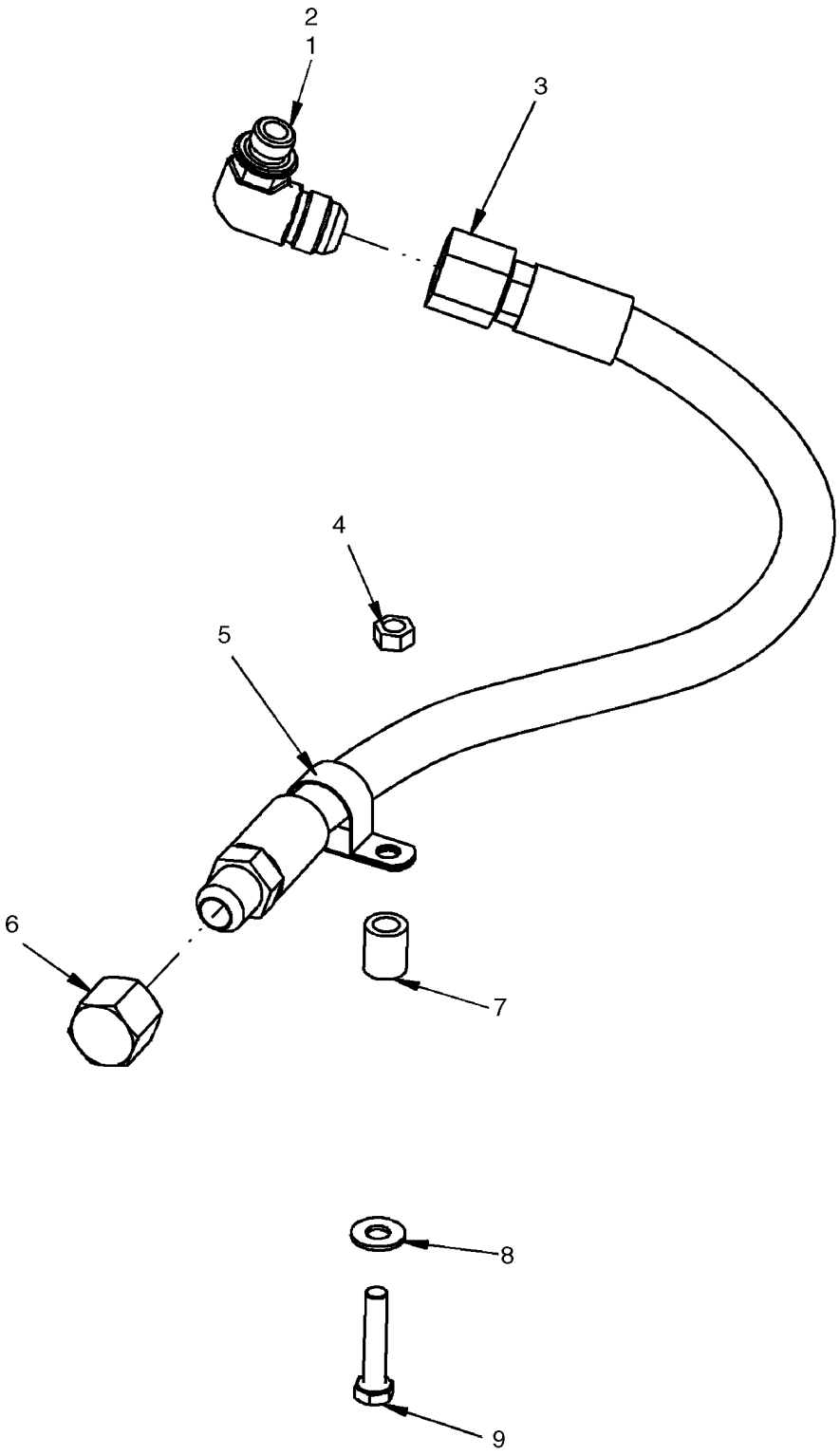

REMOTE OIL DRAIN

REF	FN	PART NUMBER	YR/SN	QTY	DESCRIPTION
1		87688478		1	FITTING, Oil Pan Fitting; Incl 2
2		86598102		1	O-RING, Cl 6, 19.3MM ID x 2.2 Thk
3		87694058		1	HOSE, Hose, Remote Oil Drain, 730mm (28 3/4 in.)
4		9706690		1	NUT, M8, Cl 8
5		87307884		1	CLAMP
6		129200		1	CAP, 37º, 7/8"-14
7		229398		1	SPACER
8		86625263		1	WASHER, M8 x 20 x 1.6
9		43129		1	BOLT, Hex, M8 x 40, 8.8

MOTOR SENSORS - ENGINE OIL

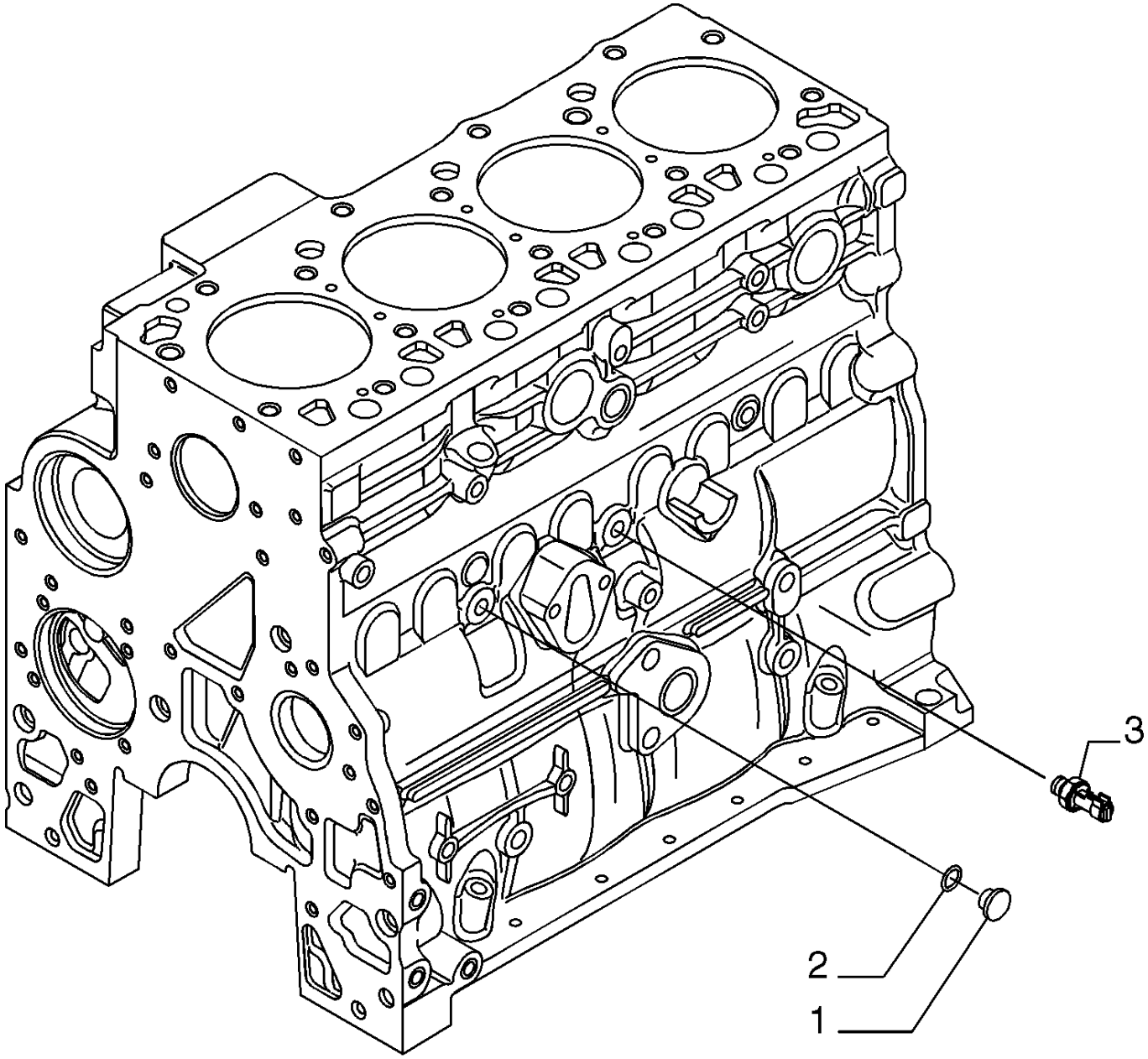

BS07M810

MOTOR SENSORS - ENGINE OIL

REF	FN	PART NUMBER	YR/SN	QTY	DESCRIPTION
1		4899009		1	PLUG, M10 x 1
2		4899072		1	O-RING
3		2852889		1	SWITCH, PRESSURE, Engine Oil

BREATHER - ENGINE

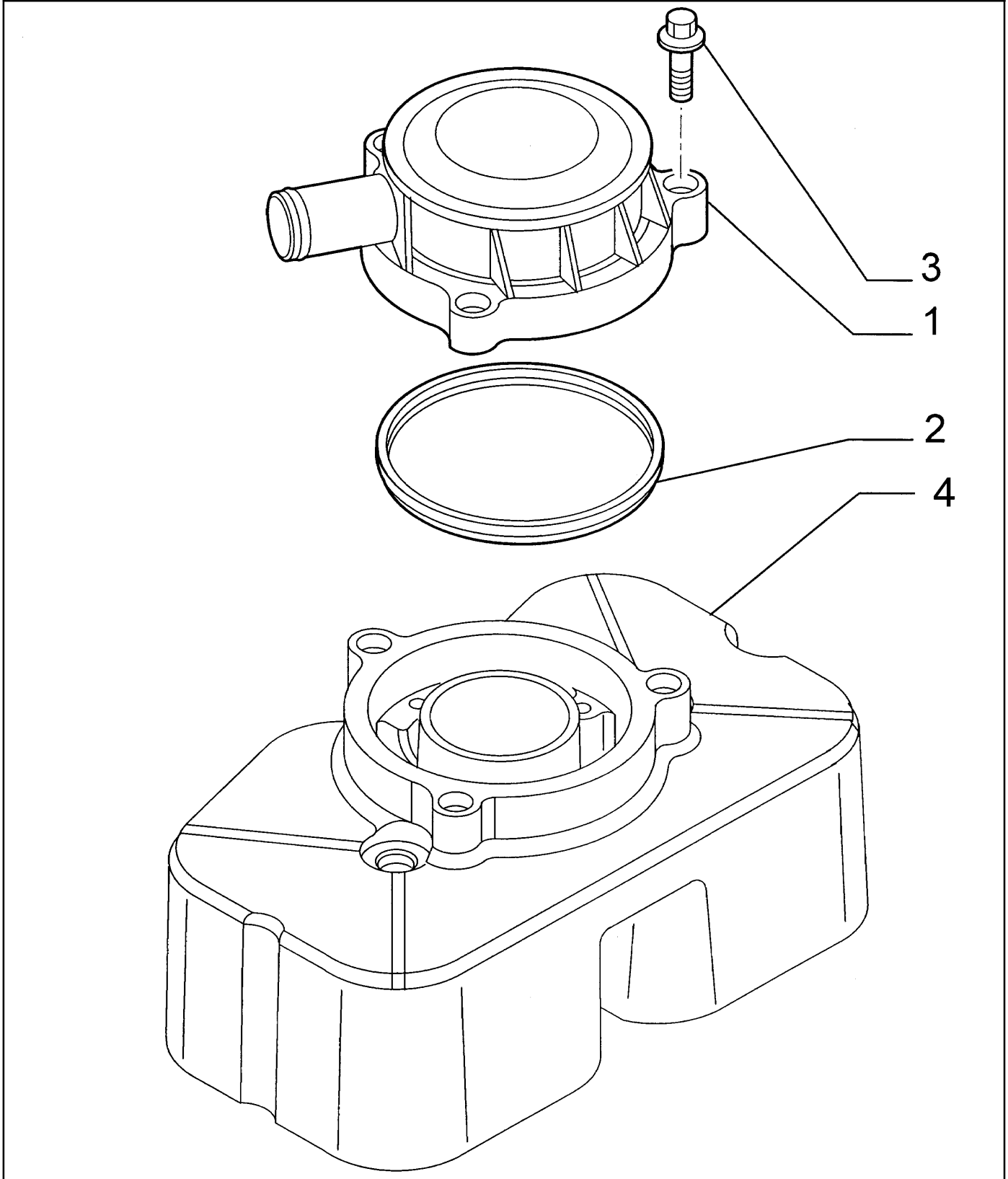

BREATHER - ENGINE

REF	FN	PART NUMBER	YR/SN	QTY	DESCRIPTION
1		2852531		1	BREATHER
2		2852028		1	GASKET
3		4899110		3	SCREW, Hex Flg, M6 x 1 x 20, In Alternative
3		4899092		3	SCREW, Hex Flg, M6 x 1 x 25, In Alternative

MANIFOLD - INTAKE

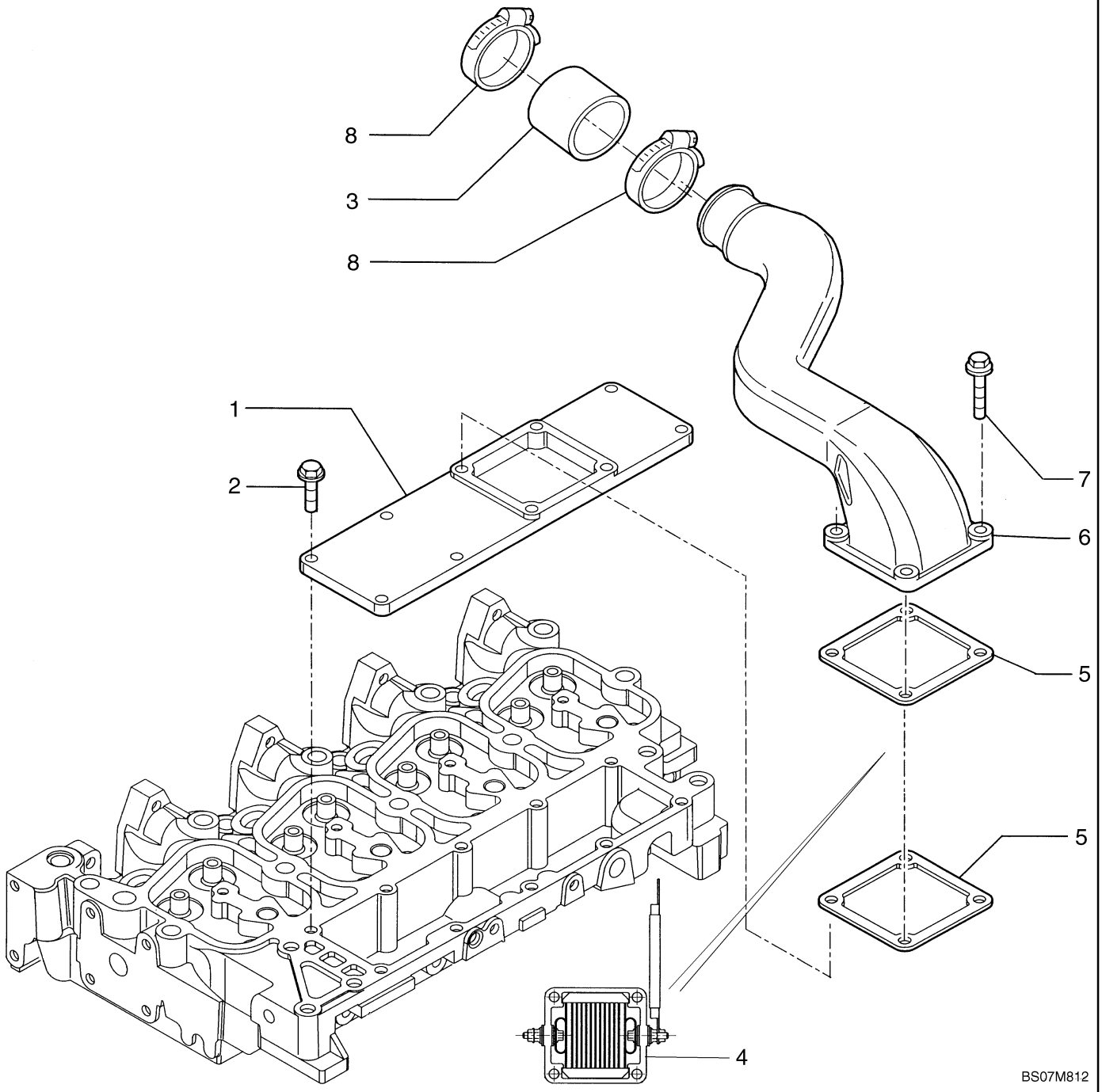

MANIFOLD - INTAKE

REF	FN	PART NUMBER	YR/SN	QTY	DESCRIPTION
1		2856462		1	MANIFOLD, INLET
2		4899039		6	SCREW, Hex Flg, M8 x 1.25 x 25
3		2852029		1	SLEEVE
4		4895316		1	HEATER
5		4899921		2	GASKET
6		2853075		1	ELBOW, Hose Assy
7		2852155		4	SCREW, Flange, M8 x 80
8		2853076		2	CLAMP, HOSE
		4895325		1	DECAL, Warning, Do Not Use Ether

MANIFOLD - EXHAUST

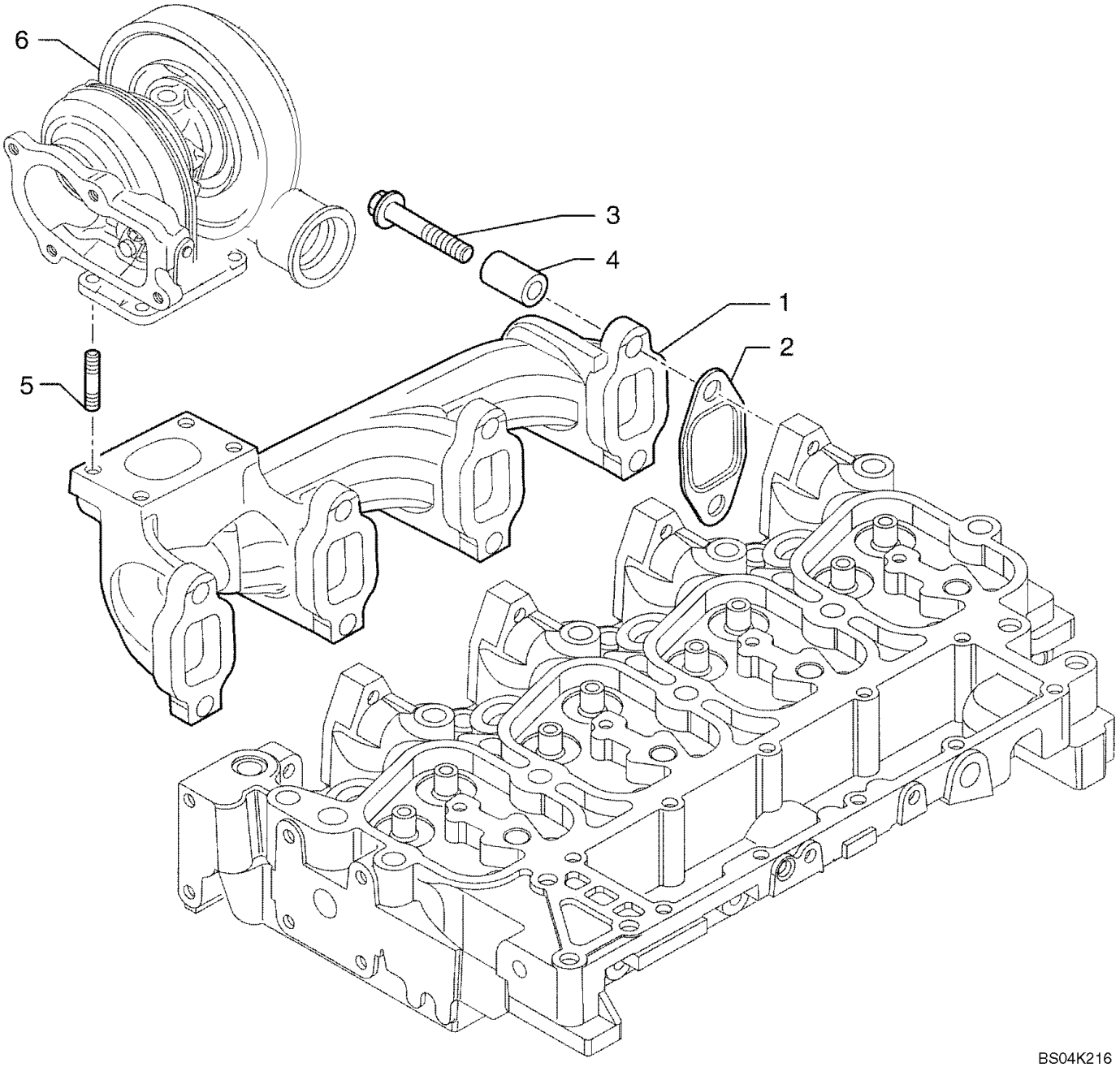

MANIFOLD - EXHAUST

REF	FN	PART NUMBER	YR/SN	QTY	DESCRIPTION
1		{2855983}		1	Exhaust Manifold
2		2830445		4	GASKET
3		2852834		8	SCREW, Flange, M10 x 40; Models Without Turbocharged Engine
3		2852744		8	SCREW, Flange, M10 x 65; Models With Turbocharged Engine
4		4895336		8	SPACER, Spacer; Models With Turbocharged Engine
5		4899859		4	STUD
6		REF		1	INSTRUCTION, TURBOCHARGER; See Figure 02-41

PISTONS - CONNECTING ROD

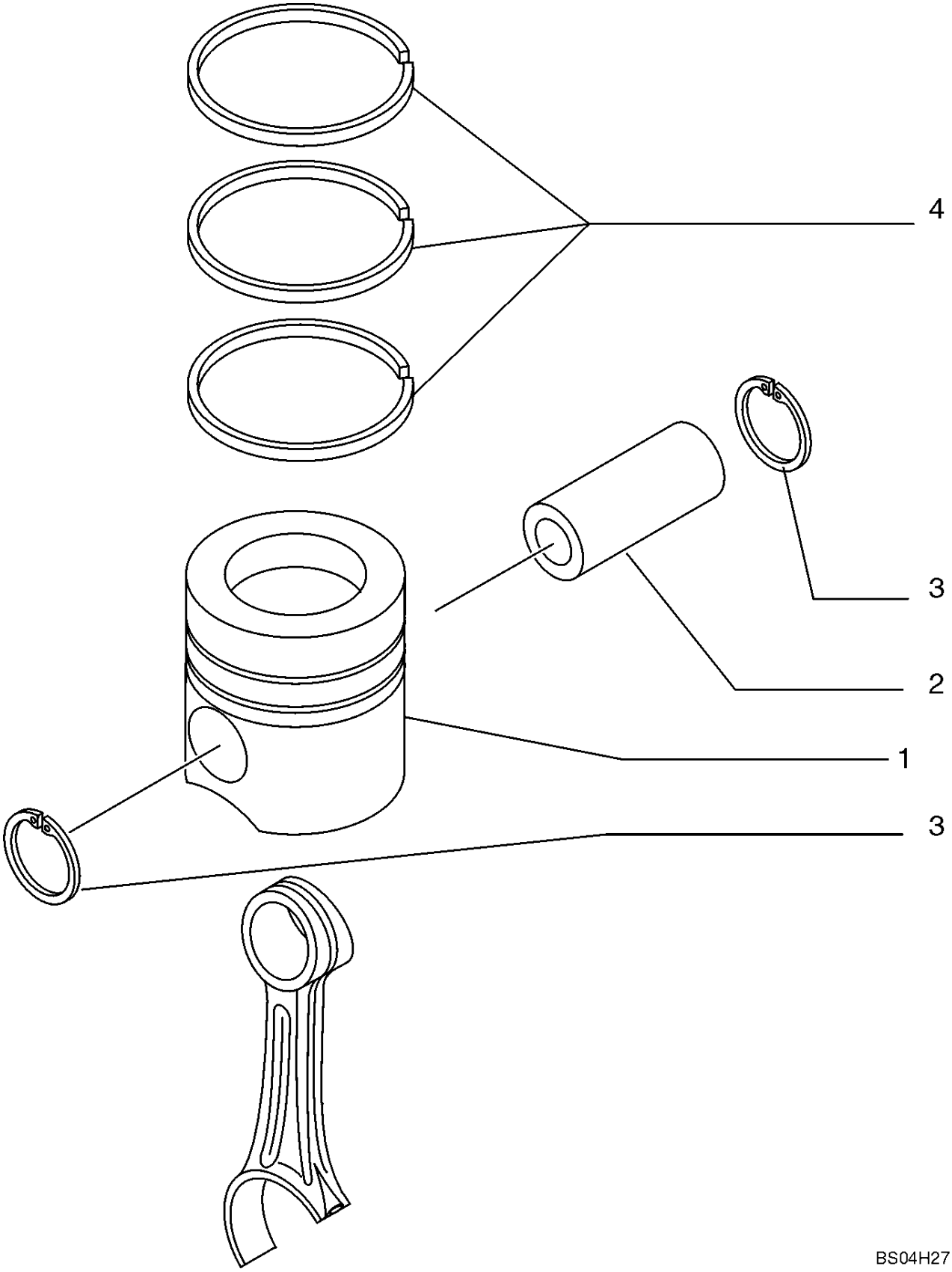

PISTONS - CONNECTING ROD

REF	FN	PART NUMBER	YR/SN	QTY	DESCRIPTION
		87647549		1	KIT, PISTON & RINGS, STD, Incl Piston 2855531, Top Compression Ring 2853805, Second Compression Ring 2830158, Oil Control Ring 2852037, Piston Pin 4892712, And Retainer 2854030
		87647550		1	KIT, PISTON & RINGS, 0.4 mm Oversize, Incl Piston 2856484, Top Compression Ring 2854141, Second Compression Ring 2830159, Oil Control Ring 2853875, Piston Pin 4892712, And Retainer 2854030
		87647551		1	KIT, PISTON & RINGS, 0.8 mm Oversize, Incl Piston 2856485, Top Compression Ring 2854142, Second Compression Ring 2830160, Oil Control Ring 2853876, Piston Pin 4892712, And Retainer 2854030
		{87582179}		1	Ring Kit; STD; Incl. Top Cmpression Ring 2854603, Second Compression Ring 2830158, Oil Control Ring 2852037
		{87582180}		1	Ring Kit; 0.4 mm Oversize; Incl. Top Cmpression Ring 2856713, Second Compression Ring 2830159, Oil Control Ring 2853875
		{87582181}		1	Ring Kit; 0.8 mm Oversize; Incl. Top Cmpression Ring 2856714, Second Compression Ring 2830160, Oil Control Ring 2853876
1		2855531		4	PISTON ASSY, STD; Does Not Include Rings
1		{2856484}		4	0.4 Oversize; Does Not Include Rings
1		{2856485}		4	0.8 Oversize; Does Not Include Rings
2		4892712		4	PIN, PISTON
3		2854030		8	RING, SNAP
3		4892713		8	RING, SNAP, Alternative To 2854030
4		{2853805}		4	Top Compression Ring; STD
4		{2854141}		4	Top Compression Ring; 0.4 Oversize
4		{2856713}		4	Top Compression Ring; 0.4 Oversize
4		{2856714}		4	Top Compression Ring; 0.4 Oversize
4		{2854142}		4	Top Compression Ring; 0.8 Oversize
4		2852037		4	RING, OIL SCRAPER, Oil Control; STD; Red Identification Mark
4		{2853875}		4	Oil Control Ring; 0.4 Oversize

PISTONS - CONNECTING ROD

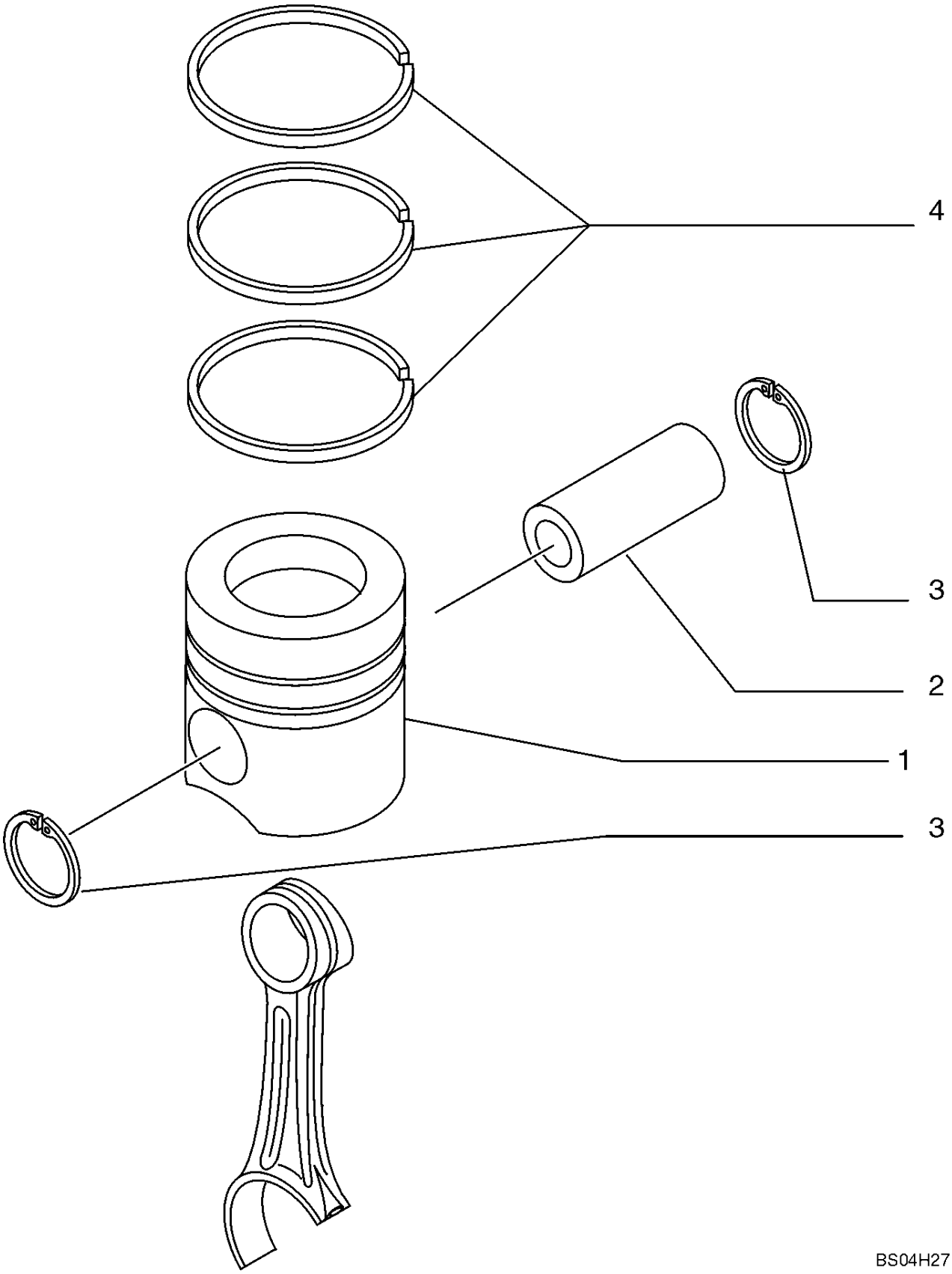

PISTONS - CONNECTING ROD

REF	FN	PART NUMBER	YR/SN	QTY	DESCRIPTION
4		{2853876}		4	Oil Control Ring; 0.8 Oversize
4		2830158		4	RING, PISTON, Second Compression; STD; Yellow Identification Mark
4		{2830159}		4	Second Compression Ring; 0.4 mm Oversize
4		{2830160}		4	Second Compression Ring; 0.8 mm Oversize
4		2854603		4	KIT, Ring, Wear

CONNECTING ROD

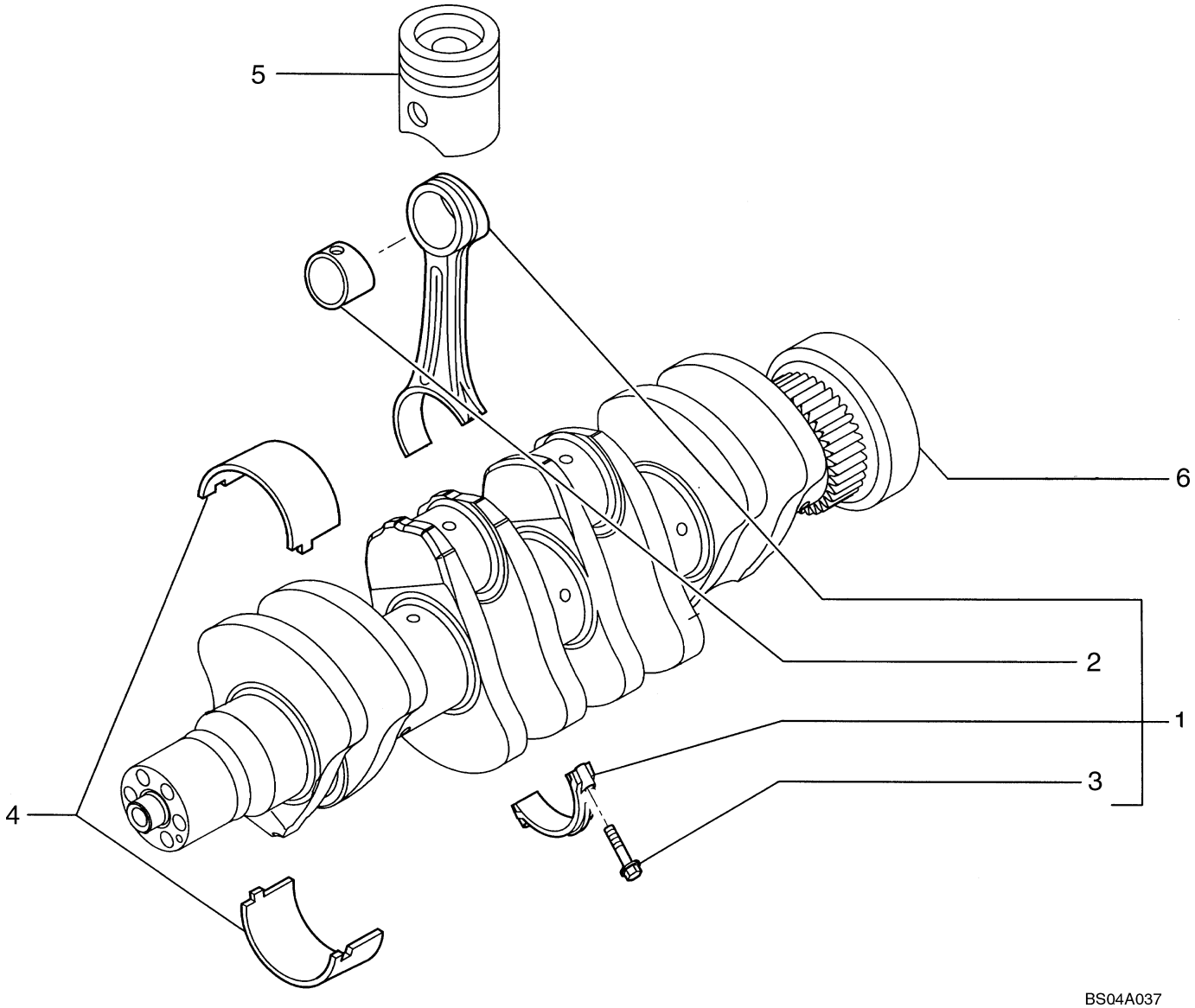

CONNECTING ROD

REF	FN	PART NUMBER	YR/SN	QTY	DESCRIPTION
1		2831298		4	ROD, CONNECTING, Incl. Ref 2, 3
1		{4895747}		4	Connecting Rod; Alternate To 2831298; Incl. Ref 2, 3
2		4892708		1	BUSHING
3		2831297		2	SCREW
4		4892714		4	BEARING, CRANKSHAFT
4		4892715		4	BEARING, CRANKSHAFT
5		REF		1	INSTRUCTION, PISTON; See Figure 02-28
6		REF		1	INSTRUCTION, CRANKSHAFT; See Figure 02-34

ROCKER SHAFT

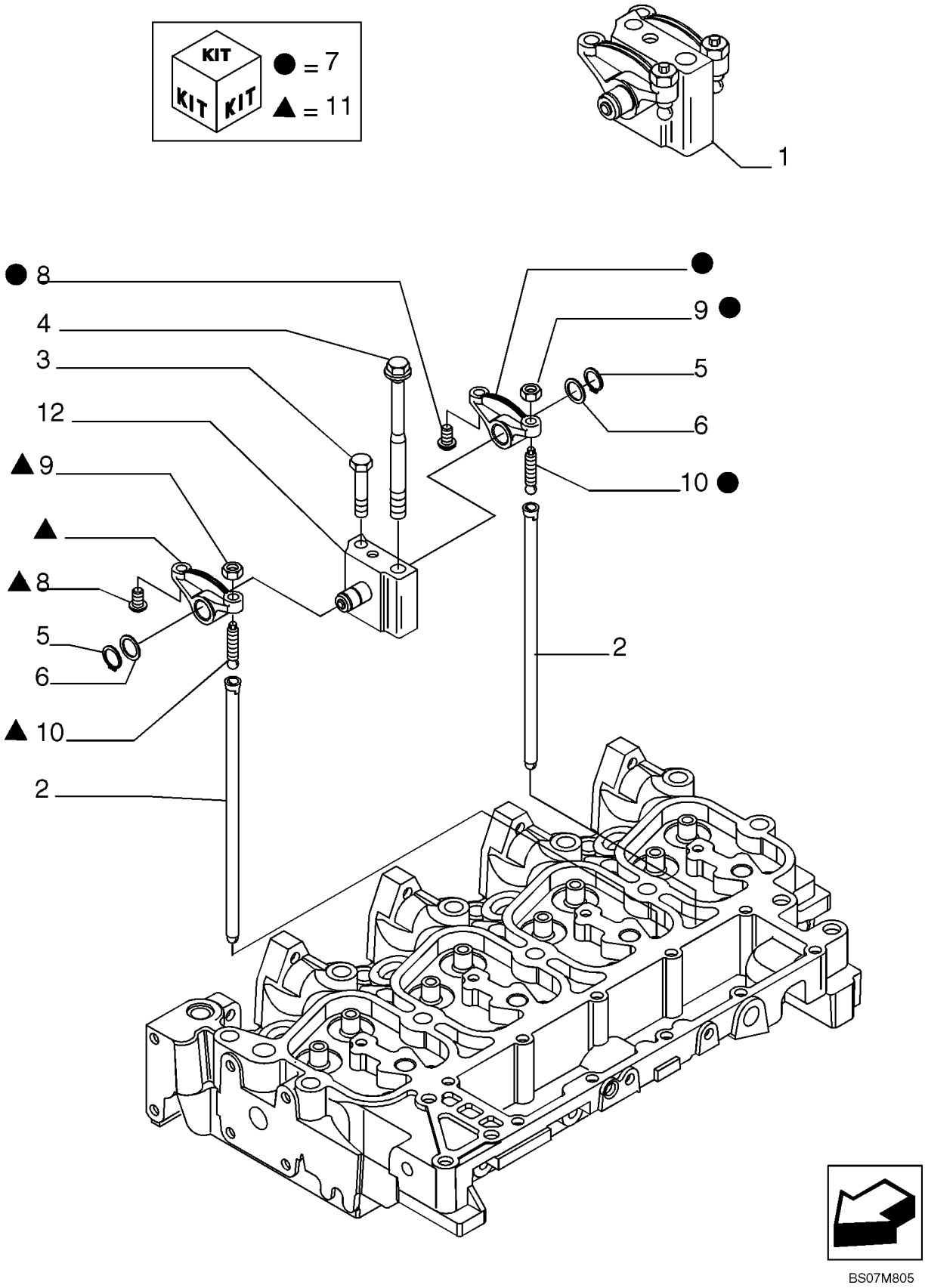

ROCKER SHAFT

REF	FN	PART NUMBER	YR/SN	QTY	DESCRIPTION
1		4895195		4	ROCKER ARM, - ASSY
2		4895361		8	ROD, PUSH
3		2852866		4	SCREW
4		4892860		4	SCREW, Wash Hd, M12 x 1.25 x 183
5		4895363		2	RING, SNAP
6		4895364		2	WASHER
7		4895196		1	ROCKER ARM, - ASSY
8		4895365		2	INSERT
9		4895198		2	NUT
10		4895199		2	SCREW
11		4895200		1	ROCKER ARM, - ASSY
12		4895204		1	SUPPORT

FLYWHEEL - ENGINE

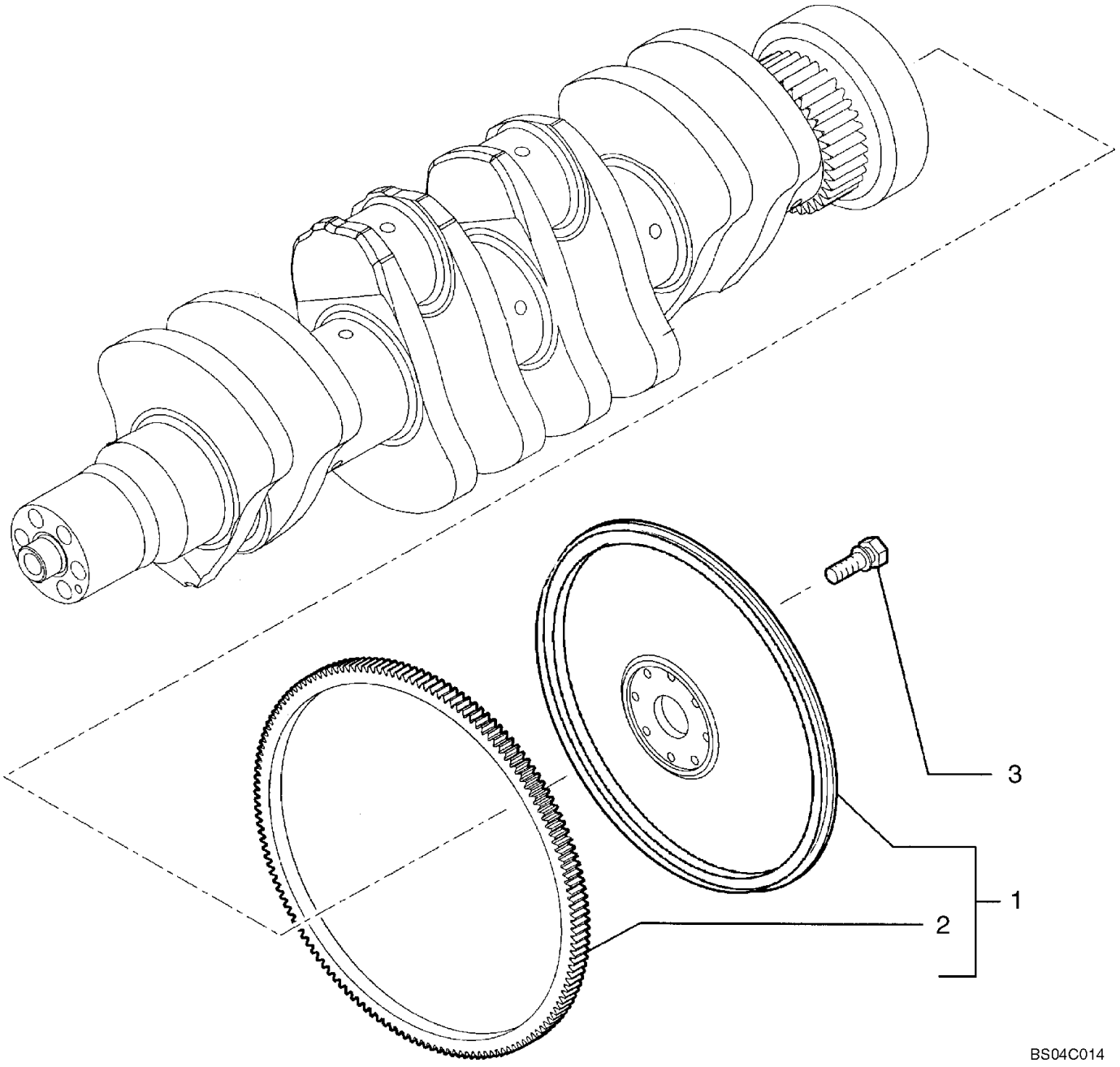

FLYWHEEL - ENGINE

REF	FN	PART NUMBER	YR/SN	QTY	DESCRIPTION
1		2853991		1	FLYWHEEL, ENGINE, Incl. Ref 2
2		2852221		1	GEAR, RING
3		2852364		8	SCREW, With Washer, M12 x 40

PULLEY - CRANKSHAFT

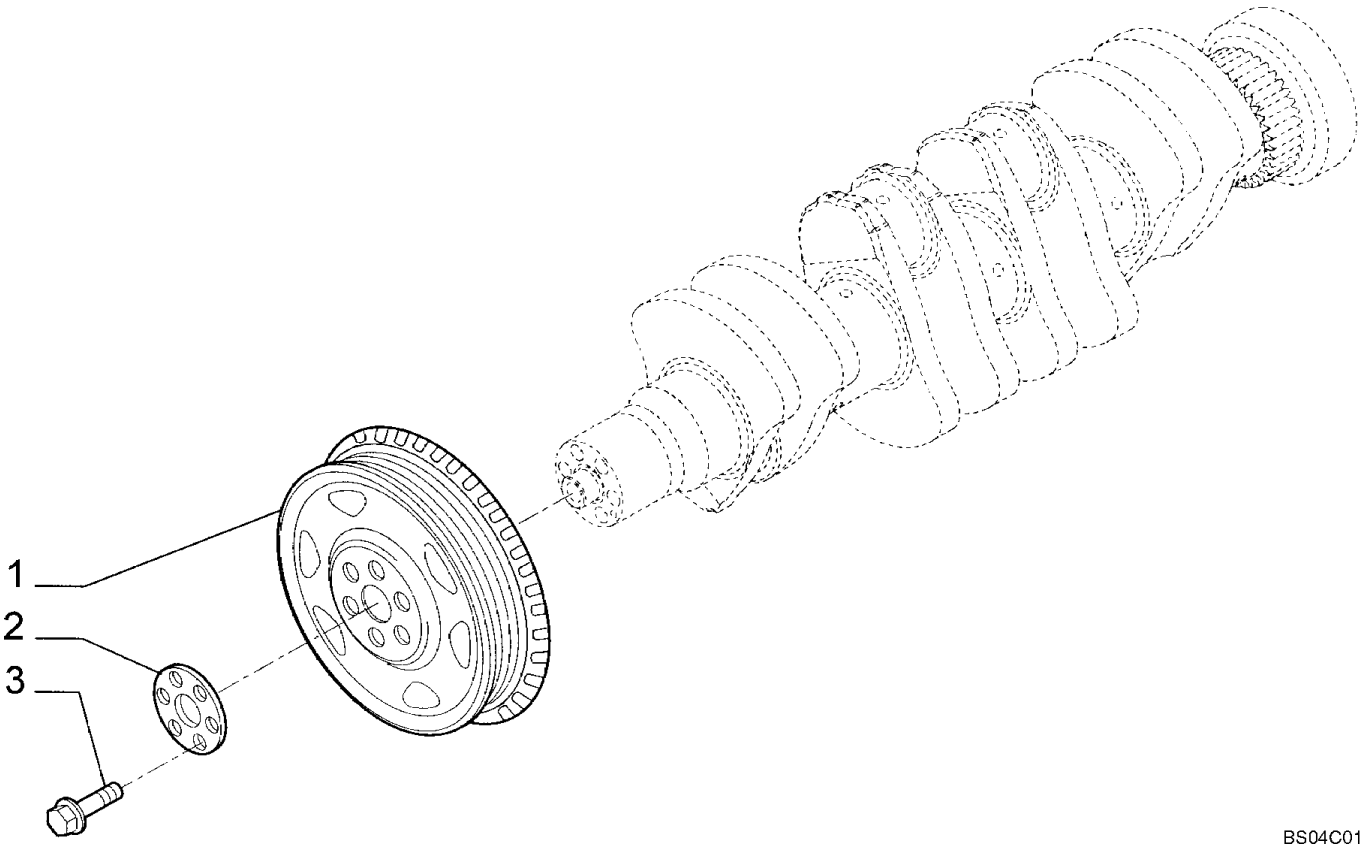

PULLEY - CRANKSHAFT

REF	FN	PART NUMBER	YR/SN	QTY	DESCRIPTION
1		4896773		1	PULLEY
2		2852533		1	WASHER, Clamping Plate
3		4892867		6	SCREW, Torx Wash Hd, M12 x 1.25 x 78.5
3		2853960		6	SCREW, Alternative To 4892867

CAMSHAFT

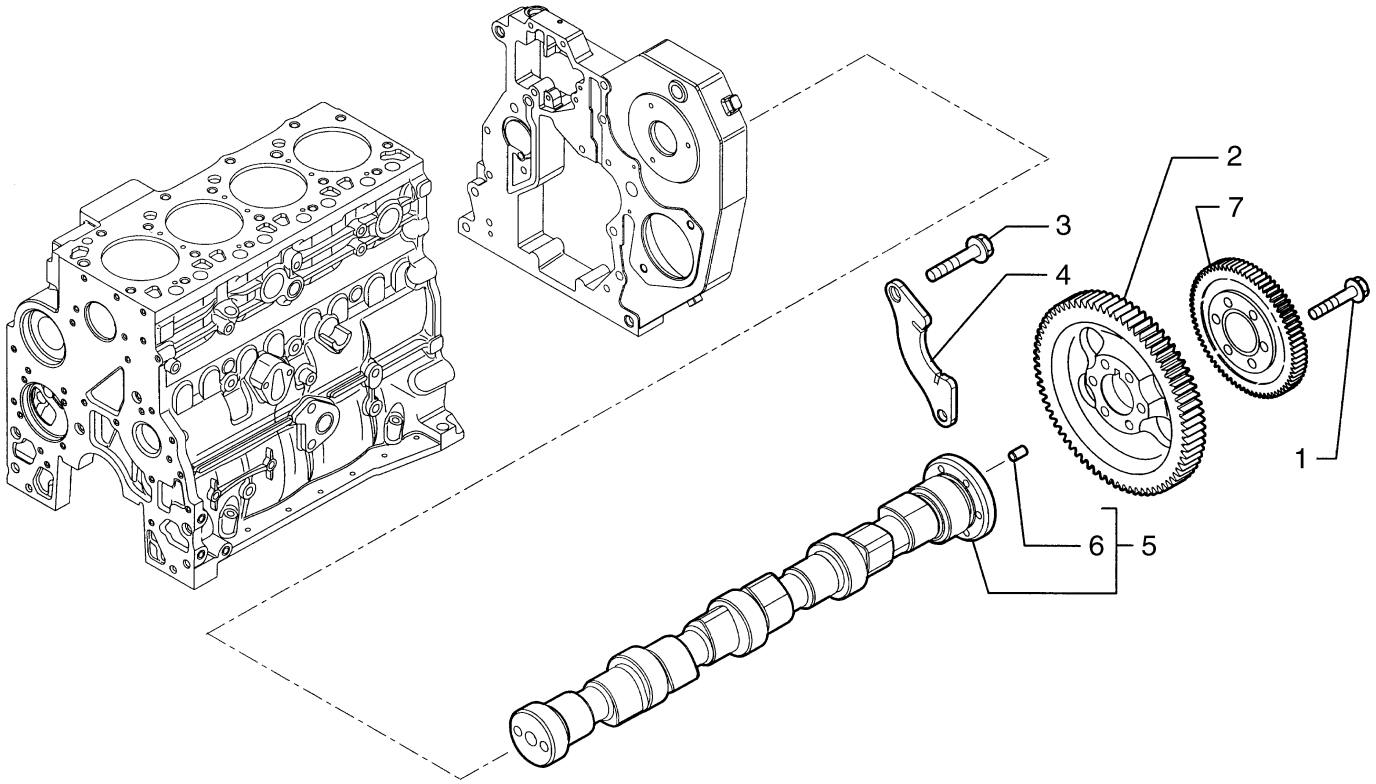

BS04A043

CAMSHAFT

REF	FN	PART NUMBER	YR/SN	QTY	DESCRIPTION
1		4895323		6	SCREW, Flange, M8 x 40
2		2852062		1	GEAR
3		4899068		2	SCREW, Hex Flg, M8 x 1.25 x 16
4		4897457		1	FLANGE
5		{2856170}		1	Camshaft; Incl. Ref 6
6		4899080		1	DOWEL
7		{2855183}		1	Gear, Driven

CRANKSHAFT

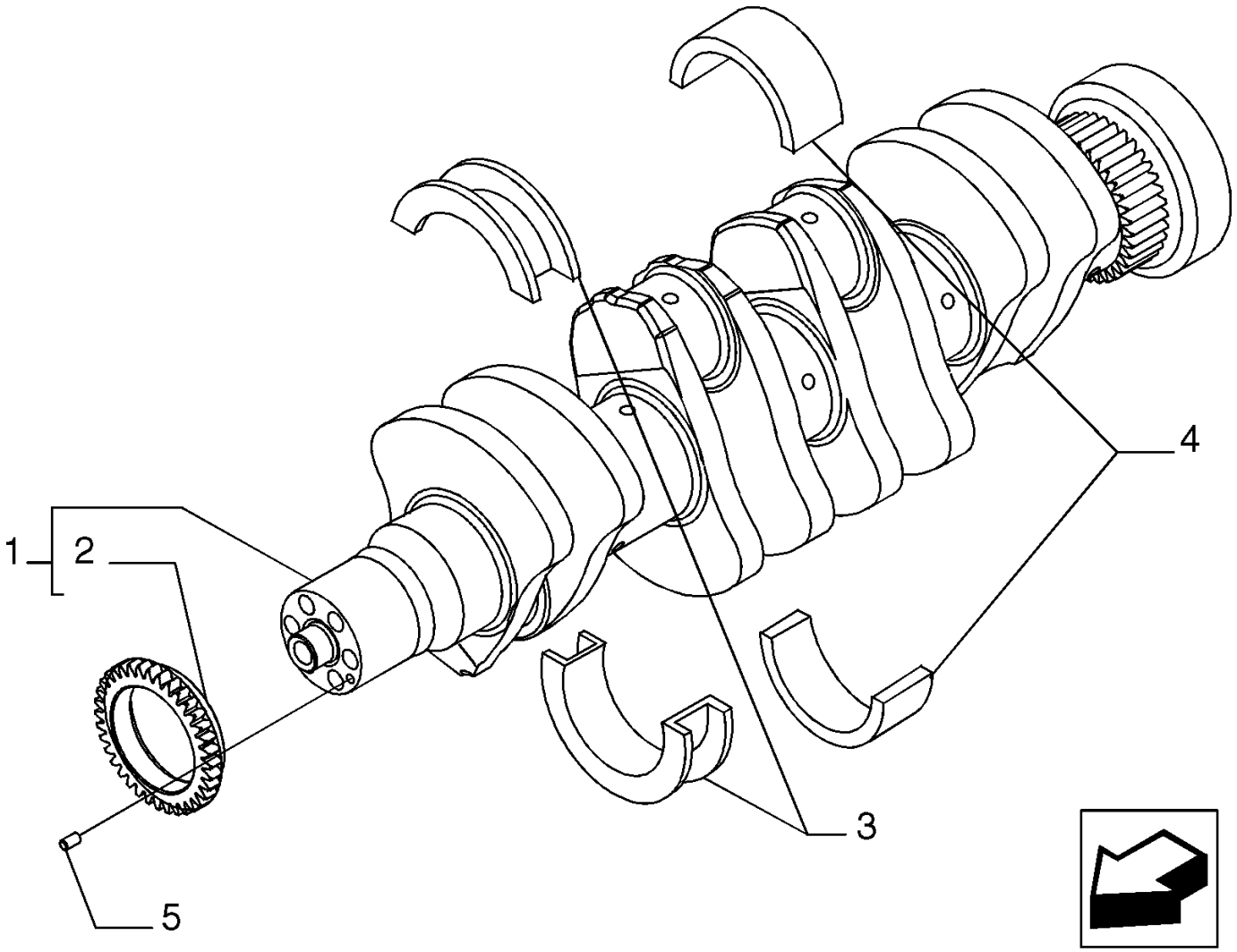

BS07M806

CRANKSHAFT

REF	FN	PART NUMBER	YR/SN	QTY	DESCRIPTION
1		2853822		1	CRANKSHAFT, - ASSY
2		4893386		1	GEAR
3		{2853816}		1	Thrust Bearing Kit; STD.
3		{2855020}		1	Thrust Bearing Kit; -0.25
3		{2855021}		1	Thrust Bearing Kit; -0.5
3		{2855022}		1	Thrust Bearing Kit; -0.75
3		{2855023}		1	Thrust Bearing Kit; -1
3		4895414		1	BEARING, CRANKSHAFT
4		{2853815}		4	Main Bearing Kit; STD.
4		{2853816}		4	Main Bearing Kit; -0.25
4		{2853817}		4	Main Bearing Kit; -0.5
4		{2853818}		4	Main Bearing Kit; -0.75
4		{2853819}		4	Main Bearing Kit; -1
4		4895017		4	BEARING, CRANKSHAFT
5		4899046		1	DOWEL

COOLING SYSTEM - ENGINE

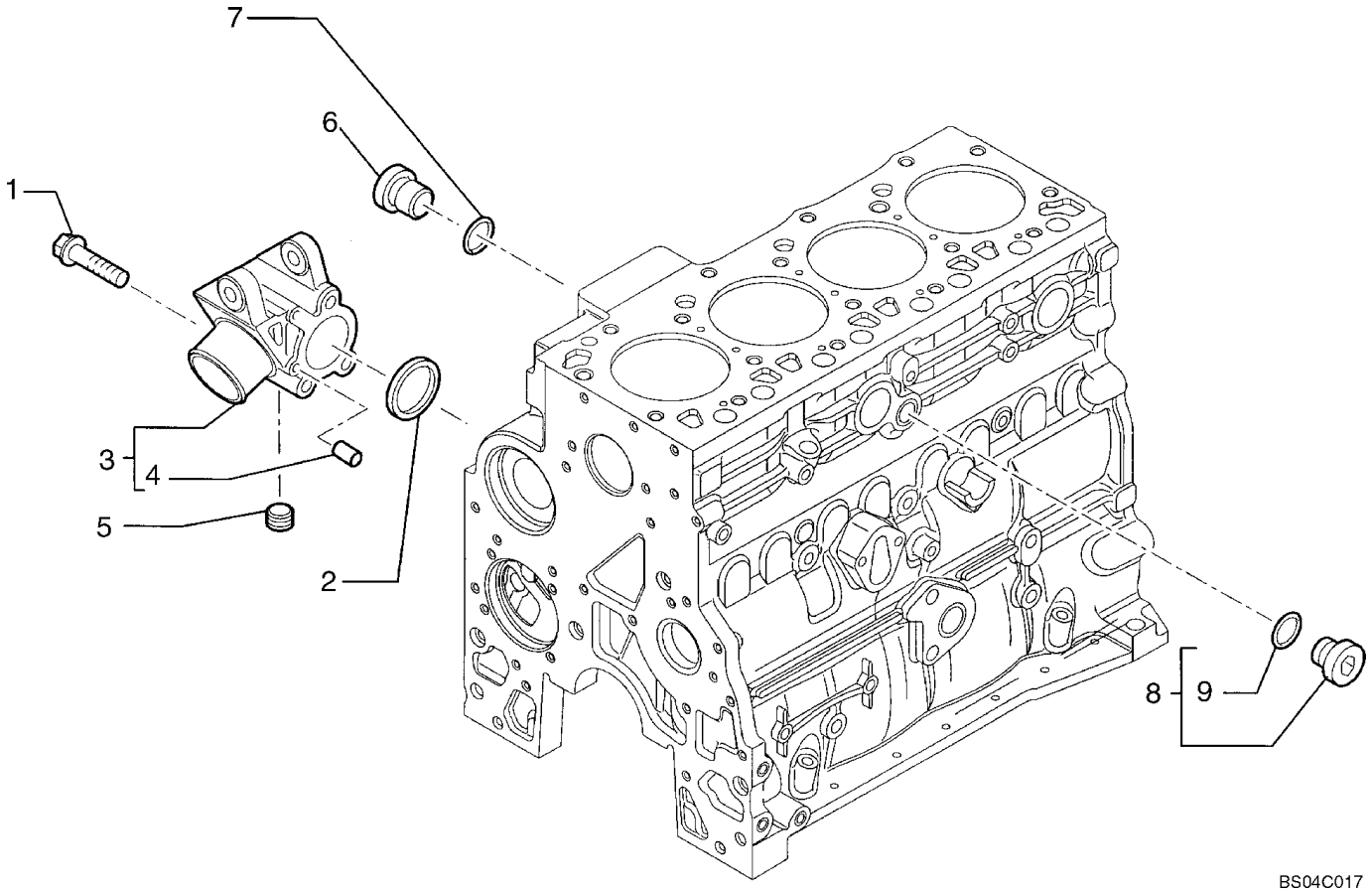

COOLING SYSTEM - ENGINE

REF	FN	PART NUMBER	YR/SN	QTY	DESCRIPTION
1		4899109		3	SCREW, Hex, M10 x 1.5 x 80
2		2854072		1	O-RING
3		2852145		1	SUPPORT, Incl. Ref 4
4		NSS		2	NOT SERVICED SEPARATELY, Dowel
5		2852511		1	PLUG
		4895392		1	PLUG, M18; Torque Converter Oil; Incl. Ref 6, 7
6		4895394		1	PLUG
7		4895393		1	O-RING
8		4895623		1	PLUG, Compressor Plumbing; Incl. Ref 9
9		4895625		1	O-RING

WATER PUMP

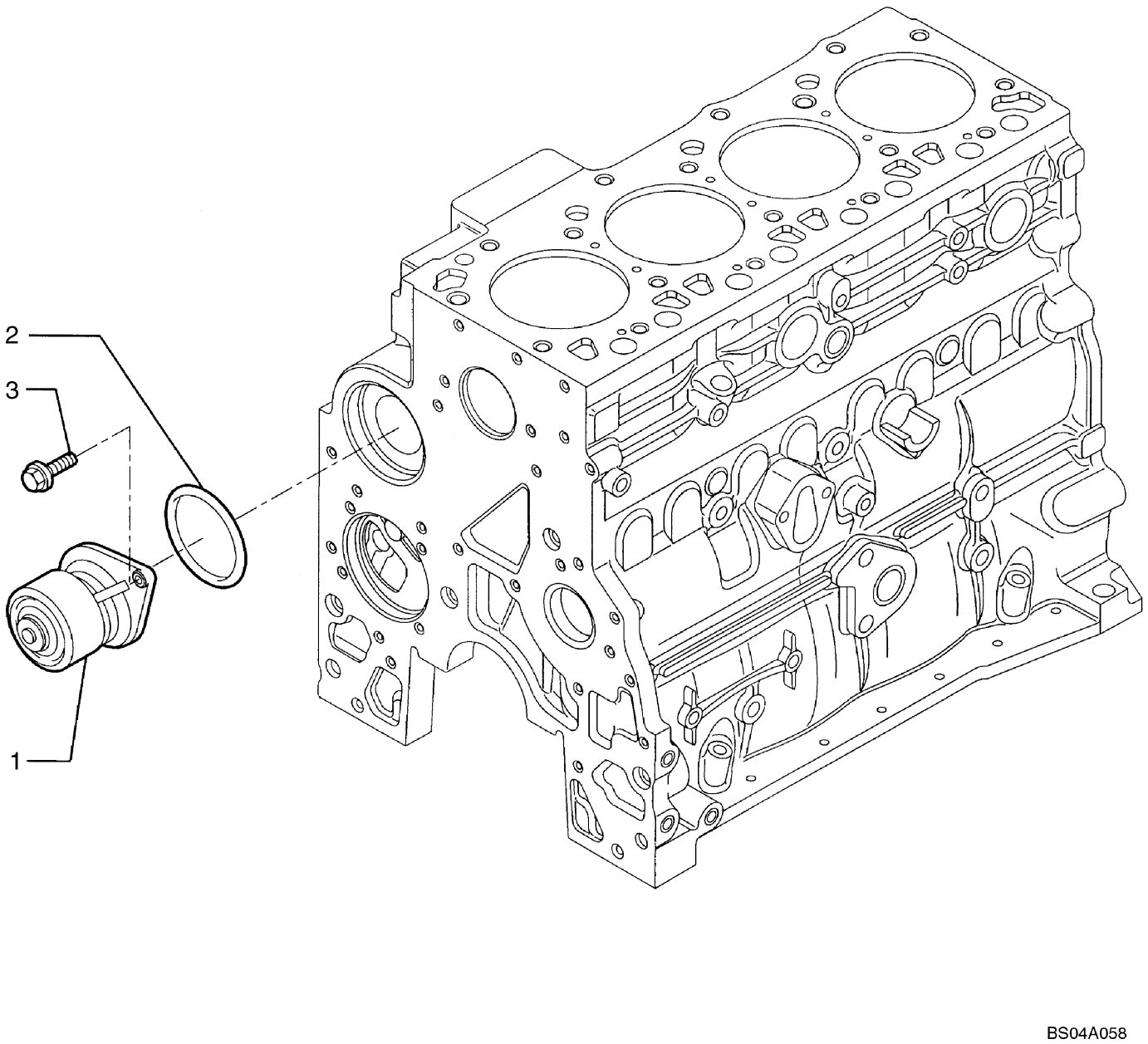

WATER PUMP

REF	FN	PART NUMBER	YR/SN	QTY	DESCRIPTION
1		4891252		1	PUMP, WATER
2		2852047		1	GASKET, Gasket
3		4899079		2	SCREW, Hex Flg, M8 x 1.25 x 25

WATER PUMP - CONTROL

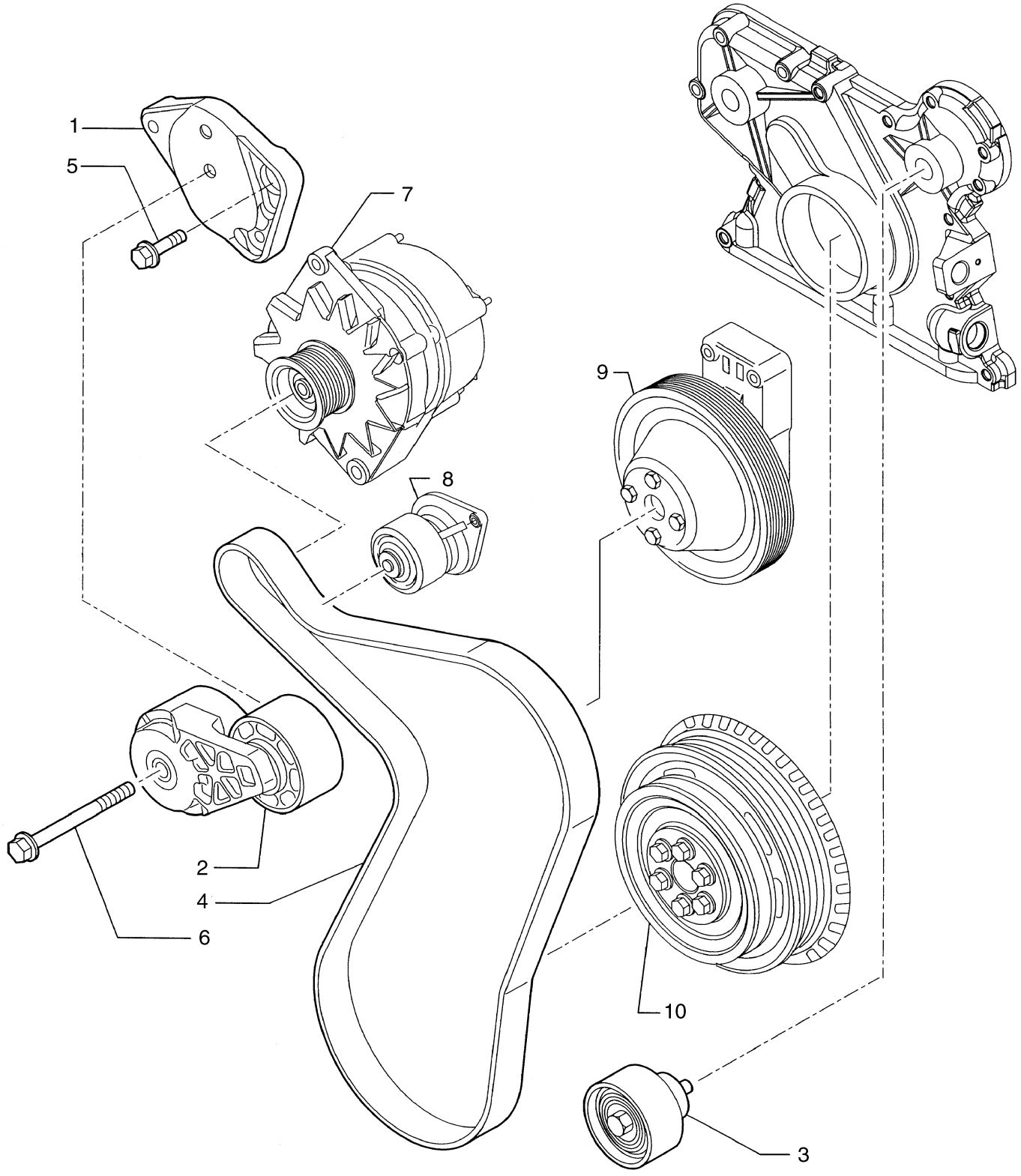

WATER PUMP - CONTROL

REF	FN	PART NUMBER	YR/SN	QTY	DESCRIPTION
1		2852163		1	BRACKET
		2854611		1	PULLEY, Incls. 1,2,3,5 & 6
2		2852161		1	TENSIONER, BELT
3		2852162		1	PULLEY
4		85826230		1	BELT, See Figure 02-06
5		4899079		2	SCREW, Hex Flg, M8 x 1.25 x 25
6		4899109		1	SCREW, Hex, M10 x 1.5 x 80
7		REF		1	INSTRUCTION, ALTERNATOR; See Figure 04-02
8		REF		1	INSTRUCTION, WATER PUMP; See Figure 02-36
9		REF		1	INSTRUCTION, FAN DRIVE; See Figure 02-39
10		REF		1	INSTRUCTION, CRANKSHAFT PULLEY; See Figure 02-32

THERMOSTAT - ENGINE COOLING SYSTEM

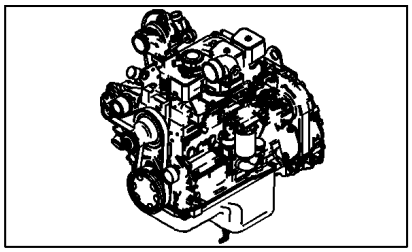

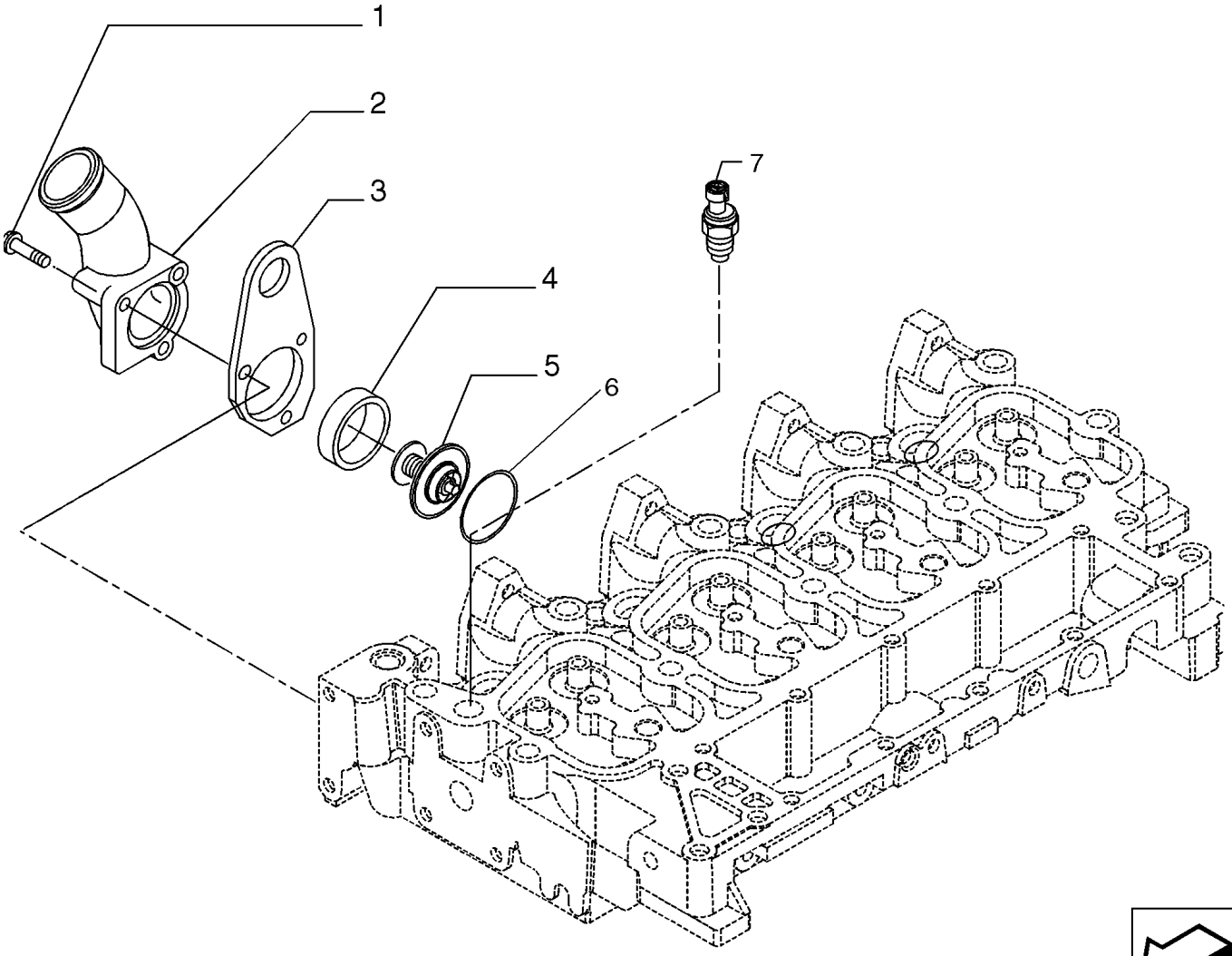

BS07M808

THERMOSTAT - ENGINE COOLING SYSTEM

REF	FN	PART NUMBER	YR/SN	QTY	DESCRIPTION
1		2852155		3	SCREW
2		2856455		1	MANIFOLD
3		{2853132}		1	Bracket; Engine Lifting
4		2853133		1	SEAL
5		2856541		1	THERMOSTAT, Incl 6
6		2852473		1	GASKET
7		{2854867}		1	SENSOR; Water Temp
8		4895078		1	PLUG, Not Illustrated

FAN DRIVE

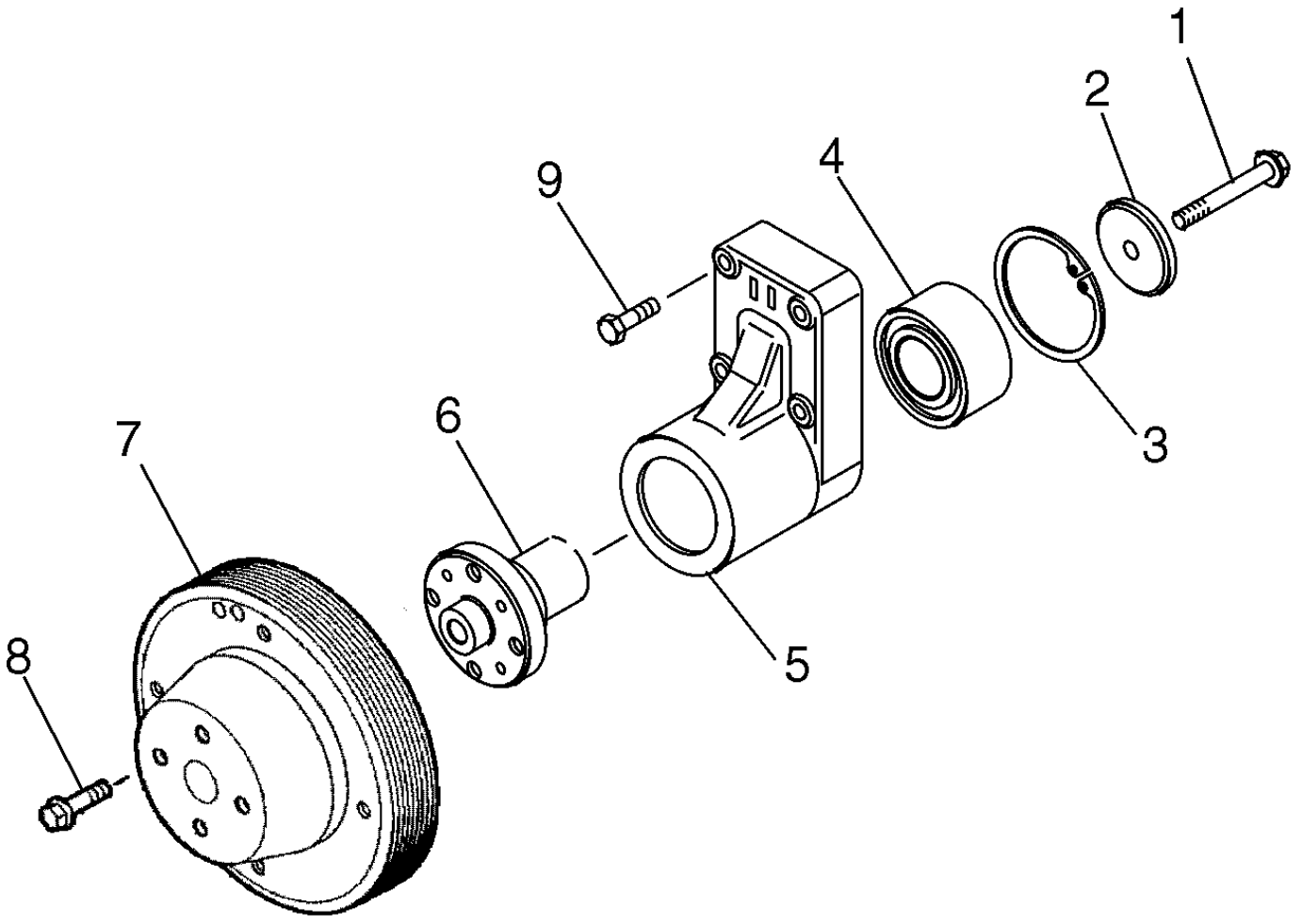

BS04K142

FAN DRIVE

REF	FN	PART NUMBER	YR/SN	QTY	DESCRIPTION
		2852170		1	SUPPORT, Incl. 1 - 6
1		2852172		1	SCREW
2		4892732		1	BEARING, BALL
3		2852171		1	CIRCLIP
4		4890732		1	RETAINER
5		NSS		1	NOT SERVICED SEPARATELY, Support
6		4892426		1	HUB
7		2853010		1	PULLEY
8		4899032		4	SCREW, Hex Flg, M10 x 1.5 x 25
9		4899053		4	SCREW, Hex Flg, M8 x 45

ENGINE - LIFT HOOK

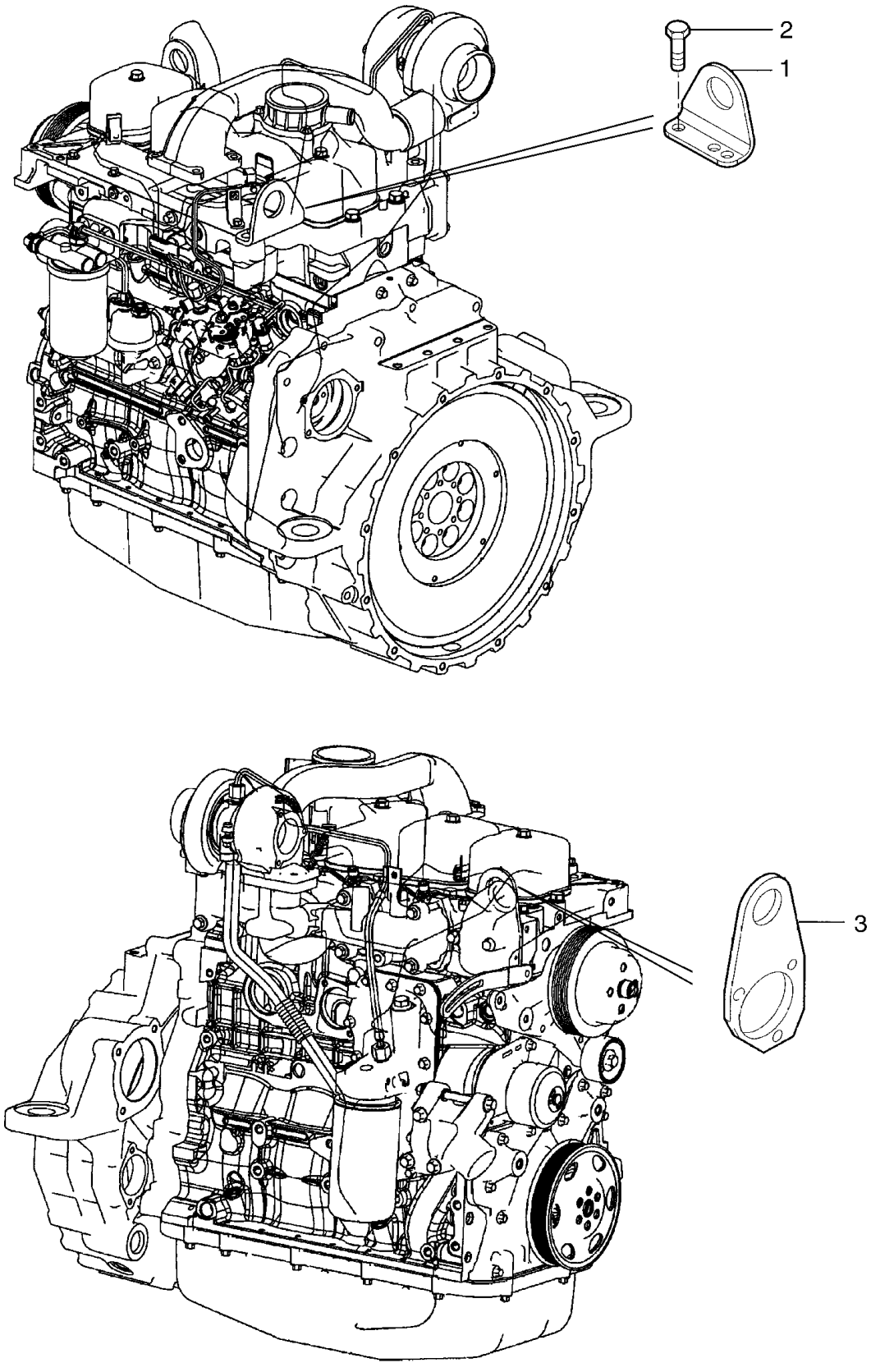

ENGINE - LIFT HOOK

REF	FN	PART NUMBER	YR/SN	QTY	DESCRIPTION
1		2852183		1	RING, LIFTING
2		4899073		2	SCREW, Hex Flg, M12 x 1.75 x 30
3		REF		1	INSTRUCTION, LIFT RING 2853132; See Figure 02-38

TURBOCHARGER

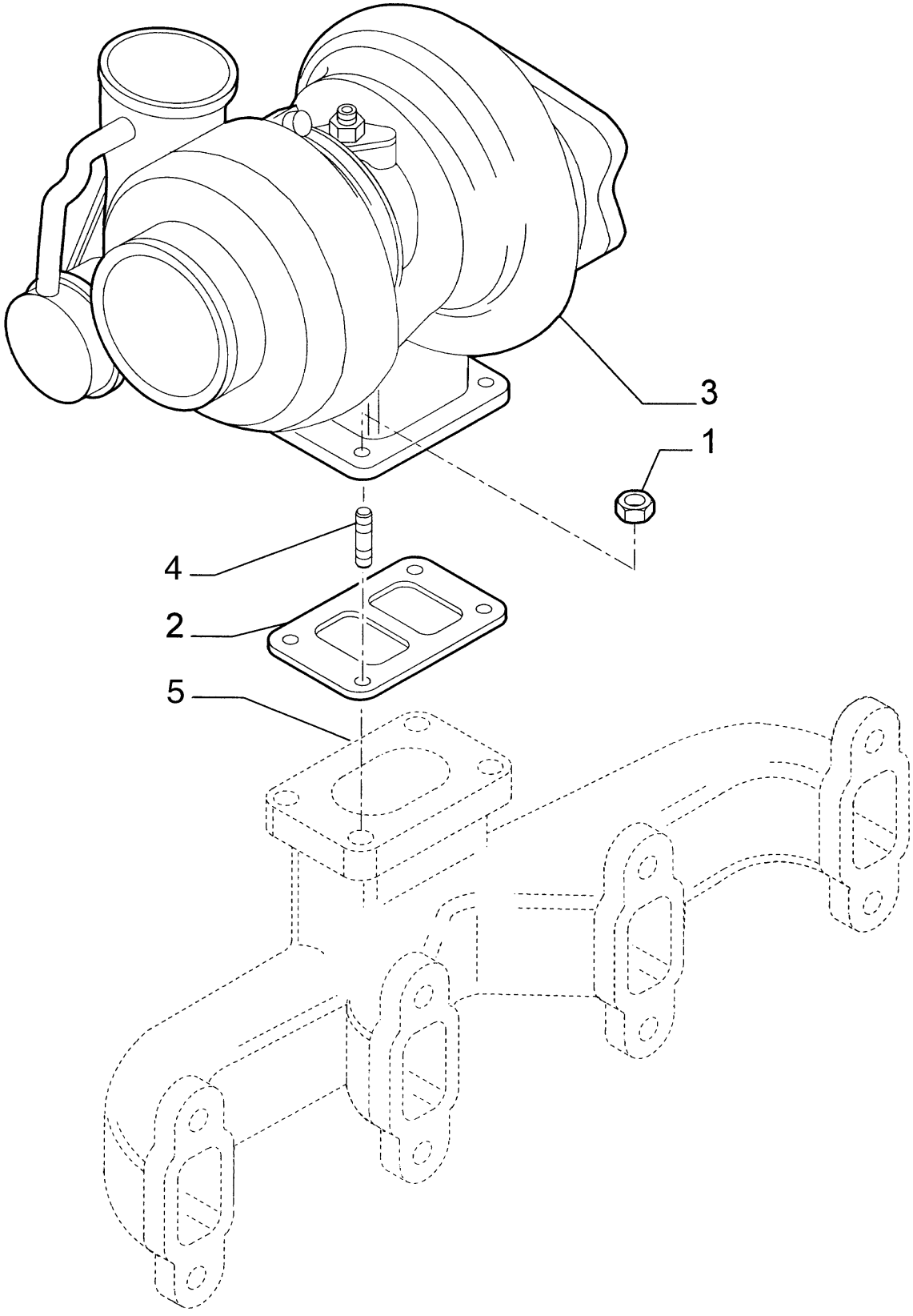

TURBOCHARGER

REF	FN	PART NUMBER	YR/SN	QTY	DESCRIPTION
1		500322677		4	NUT
2		4895133		1	GASKET
3		2852507		1	TURBOCHARGER
4		4899859		4	STUD
5		REF			INSTRUCTION, Exhaust Manifold; See Figure 02-27

NOTES

SECTION INDEX
Fuel System

03-01	FUEL LINES AND FUEL FILTER
03-02	CONTROLS - FOOT AND HAND THROTTLE
03-03	FUEL FILTER
03-04	FUEL INJECTION PUMP
03-05	FUEL PUMP
03-06	INJECTION PUMP - CONTROL
03-07	FUEL INJECTION SYSTEM - FUEL, SUPPLY
03-08	FUEL INJECTION SYSTEM - SUPPLY
03-09	FUEL INJECTION SYSTEM - DRAIN LINE
03-10	INJECTION EQUIPMENT - INJECTOR

FUEL LINES AND FUEL FILTER

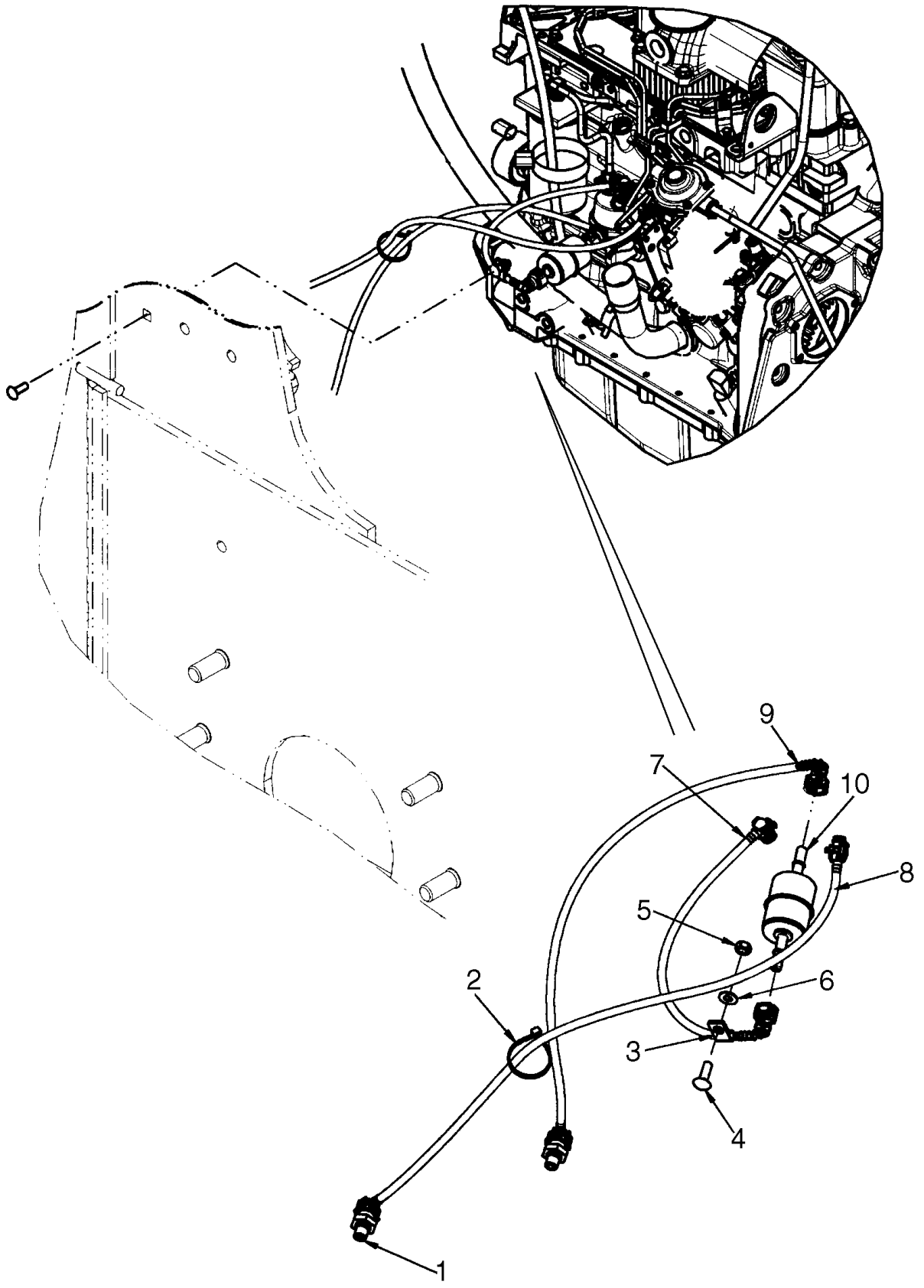

FUEL LINES AND FUEL FILTER

REF	FN	PART NUMBER	YR/SN	QTY	DESCRIPTION
1		87431323		1	ADAPTER, Fuel Line Adapter
2		529070		1	STRAP, CABLE, .30" x 14.5"
3		853764		1	CLAMP, 5/16", Insul, 5/16" Bolt
4		308761		1	BOLT, CARRIAGE, Short NK, M8 x 25, Cl8.8, Full Thd
5		43362		1	NUT, M8, Cl 10
6		322358		1	WASHER, SPRING, Belleville, M8
7		87584554		1	HOSE, Fuel Line 355 mm (13.97 in)
8		87598810		1	HOSE, Return Fuel Line, 805 mm (31.7 in)
9		87584639		1	HOSE, Fuel Line, 650 mm (25.6 in)
10		87548612		1	FILTER, FUEL, Inline

CONTROLS - FOOT AND HAND THROTTLE

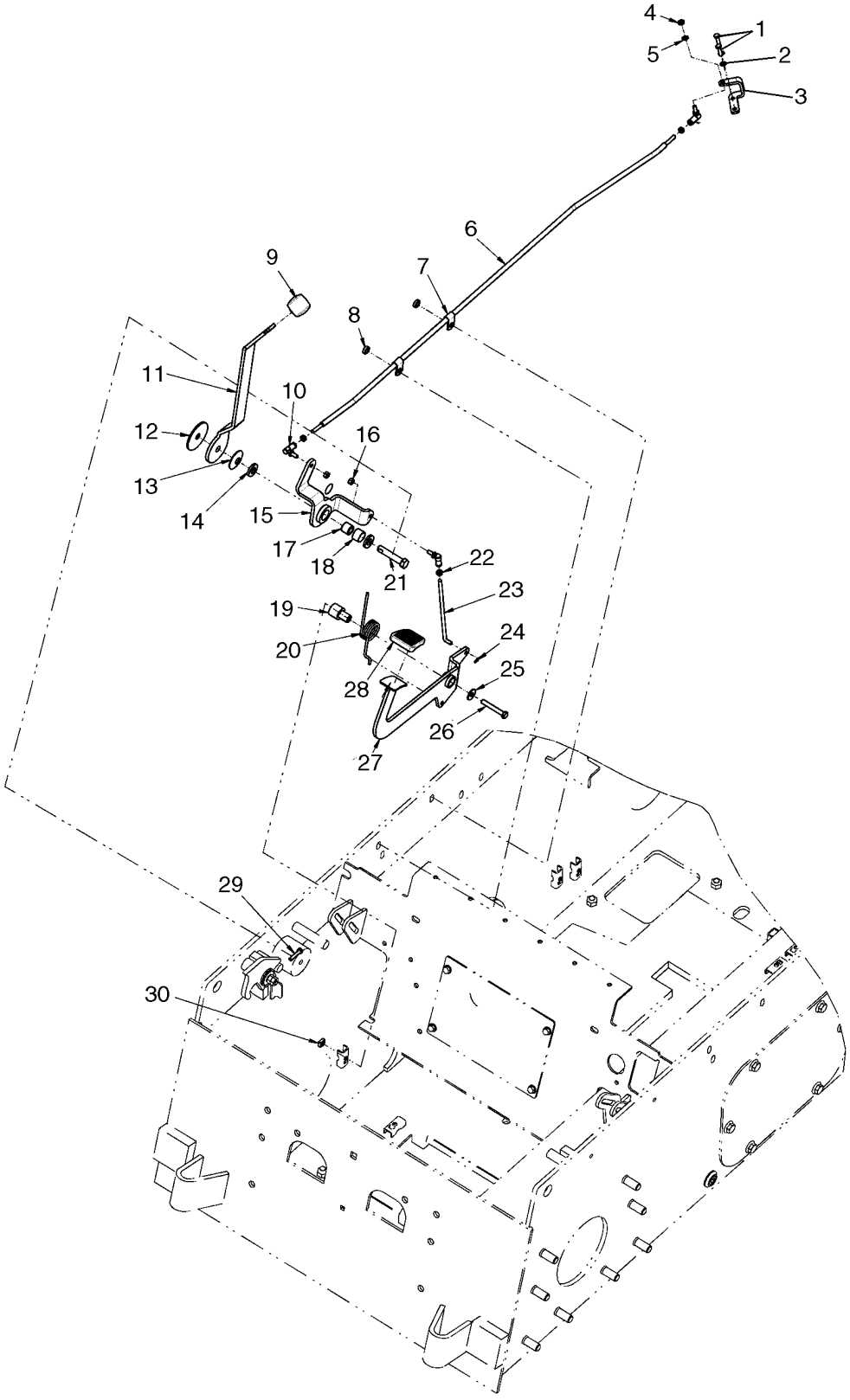

CONTROLS - FOOT AND HAND THROTTLE

REF	FN	PART NUMBER	YR/SN	QTY	DESCRIPTION
1		120100		2	BOLT, Hex, M6 x 20, 8.8
2		86517328		2	WASHER, LOCK, M6
3		{87643562}		1	Throttle Rod Bracket
4		88098		1	NUT, Jam, 1/4"-28, G2
5		80682		1	WASHER, LOCK, 1/4"
6		{87688638}		1	Throttle Rod
7		87028524		2	CLAMP
8		694371		2	SPACER
9		A177436		1	KNOB
10		H169920		3	BALL JOINT
11		87712373		1	THROTTLE CONTROL, Hand Throttle
12		1342374C1		1	DISC
13		R14771		1	WASHER
14		86625256		2	WASHER, M12 x 28.5 x 4, HT
15		87712376		1	THROTTLE CONTROL, Throttle Control
16		86509309		2	NUT, 1/4"-28, G5
17		187035A2		1	BUSHING, LARGE
18		186905A1		1	BUSHING, Throttle Bushing
19		87424095		1	SLEEVE, Throttle Pivot
20		87416539		1	TORSION SPRING
21		87612749		1	FASTENER, Bolt, M12 X 60 10.9
22		86976064		3	NUT, Jam, 1/4"-28, G5
23		87650094		1	ROD, Throttle Rod, Foot
24		D131983		1	PIN
25		86639313		1	WASHER, M8 x 20 x 1.6
26		16044321		1	BOLT, Hex, M8 x 55, 8.8
27		{87650090}		1	Foot Pedal
28		323657A1		1	PAD, Foot Pedal Pad
29		43117		1	BOLT, Hex, M6 x 30, 8.8, `
30		229197A1		1	NUT

FUEL FILTER

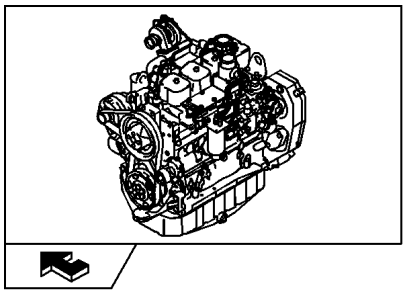

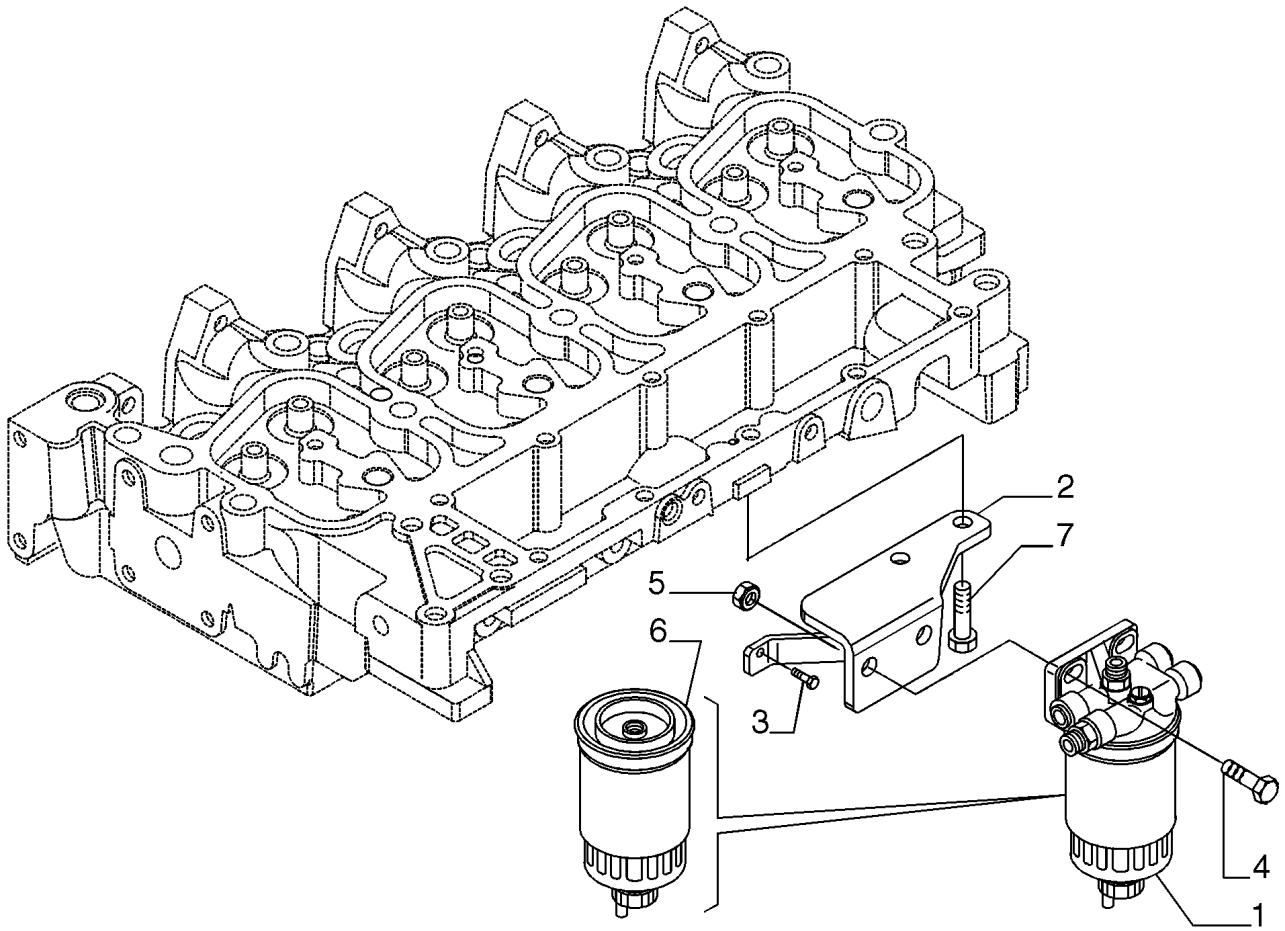

BS07M807

FUEL FILTER

REF	FN	PART NUMBER	YR/SN	QTY	DESCRIPTION
1		2852547		1	FILTER ASSY., Fuel
2		2855103		1	SUPPORT
3		4899068		1	SCREW, Hex Flg, M8 x 1.25 x 16
4		{4899849}		2	Screw
5		4895166		2	NUT, M10X1.5 mm
6		87803194		1	FILTER, FUEL
7		2830411		2	SCREW

FUEL INJECTION PUMP

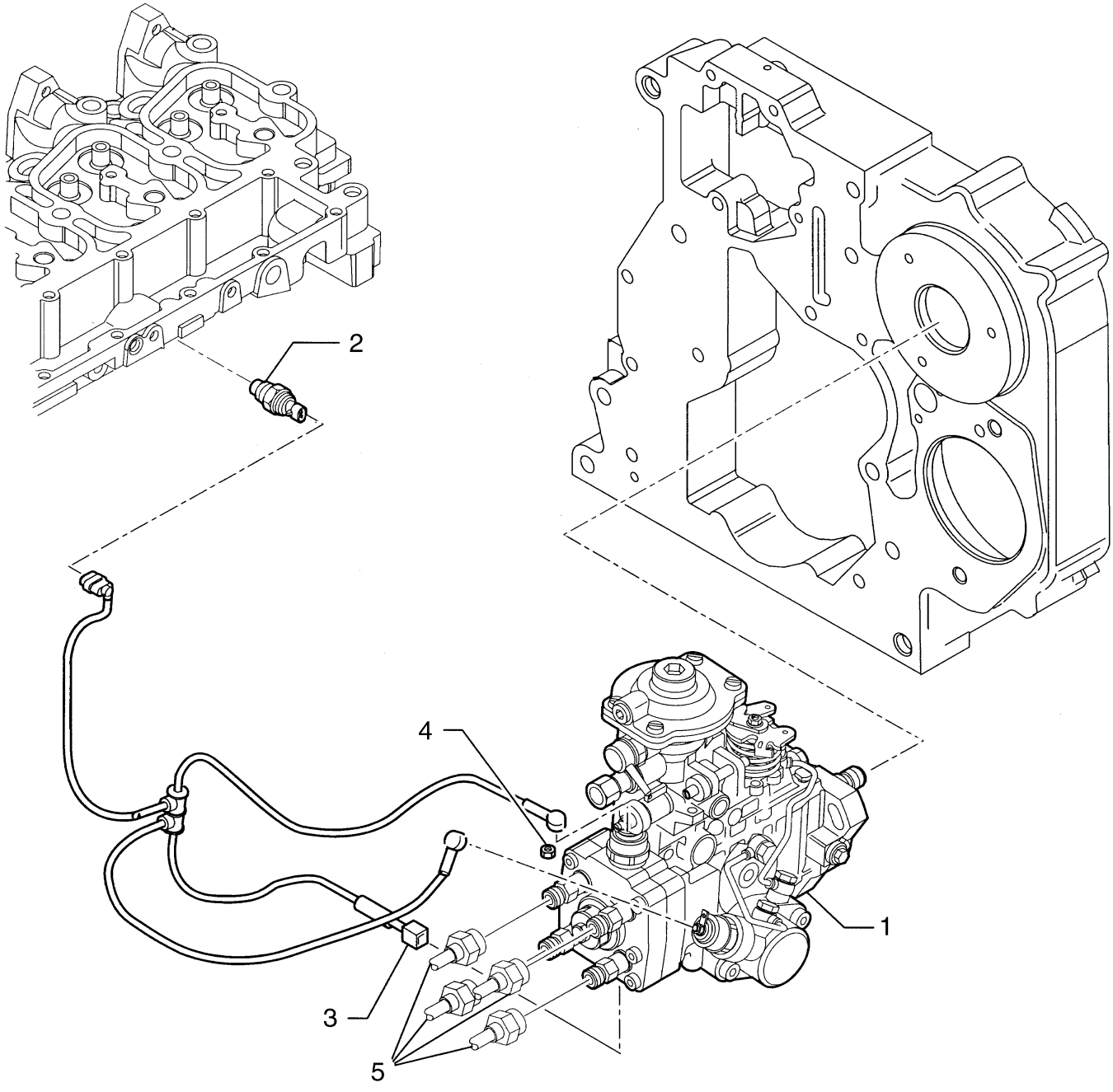

BS04A044

FUEL INJECTION PUMP

REF	FN	PART NUMBER	YR/SN	QTY	DESCRIPTION
1		2856334		1	PUMP, FUEL INJECTION, Incl 2852741
		2852741		1	SOLENOID, Fuel Shut Off
2		2856350		1	SENSOR, Water Temperature
3		2852088		1	CONNECTOR, WIRE
4		2852089		2	NUT, Lock
5		REF		1	INSTRUCTION, TUBE; See Figure 03-07 for Tube Kit

FUEL PUMP

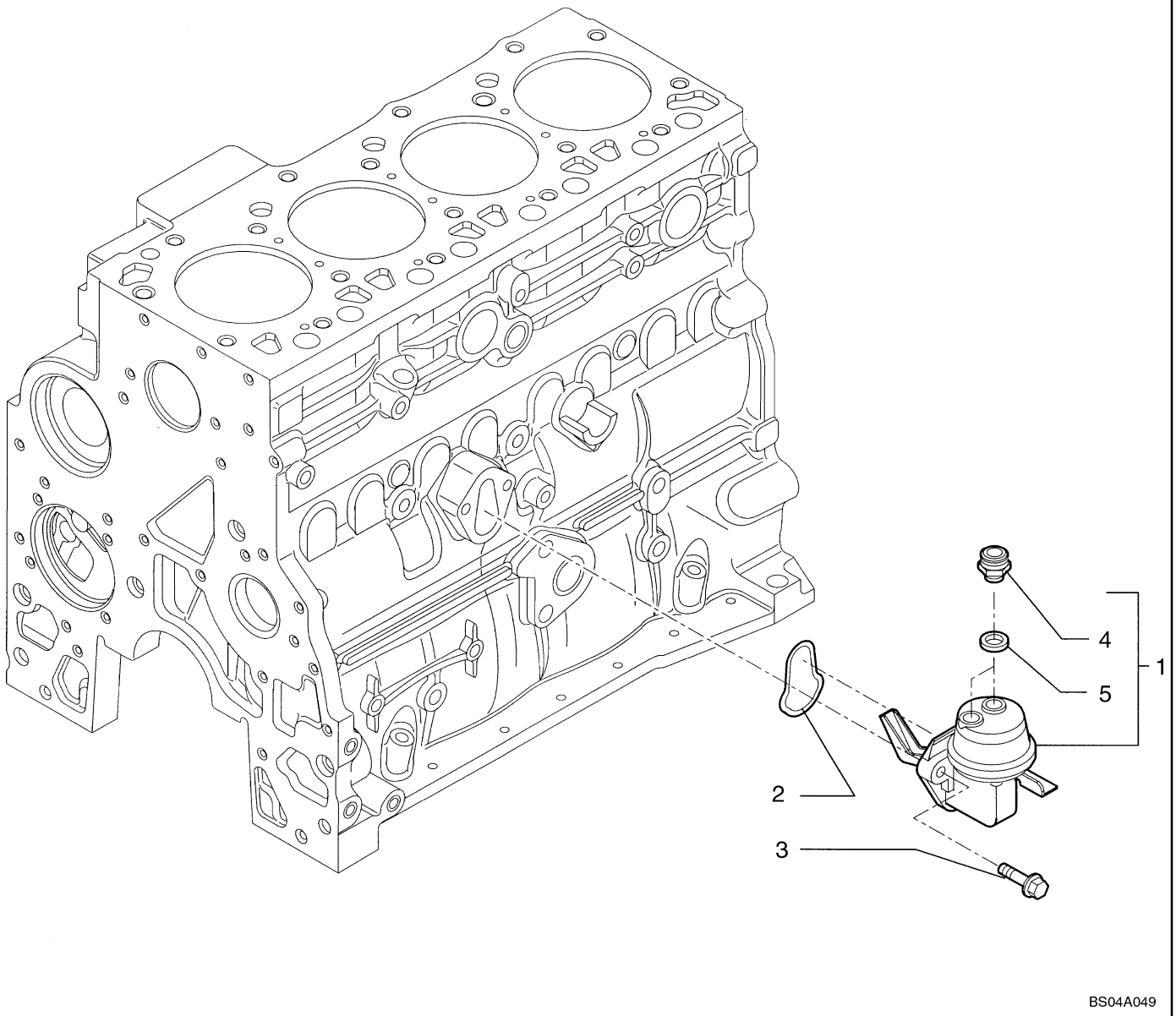

FUEL PUMP

REF	FN	PART NUMBER	YR/SN	QTY	DESCRIPTION
1		2830266		1	PUMP, FUEL, Incl. Ref 4, 5
2		2830156		1	GASKET
3		4899031		2	SCREW, Hex Flg, M8 x 1.25 x 25
4		4890964		2	FITTING
5		4894721		2	WASHER, SEALING

INJECTION PUMP - CONTROL

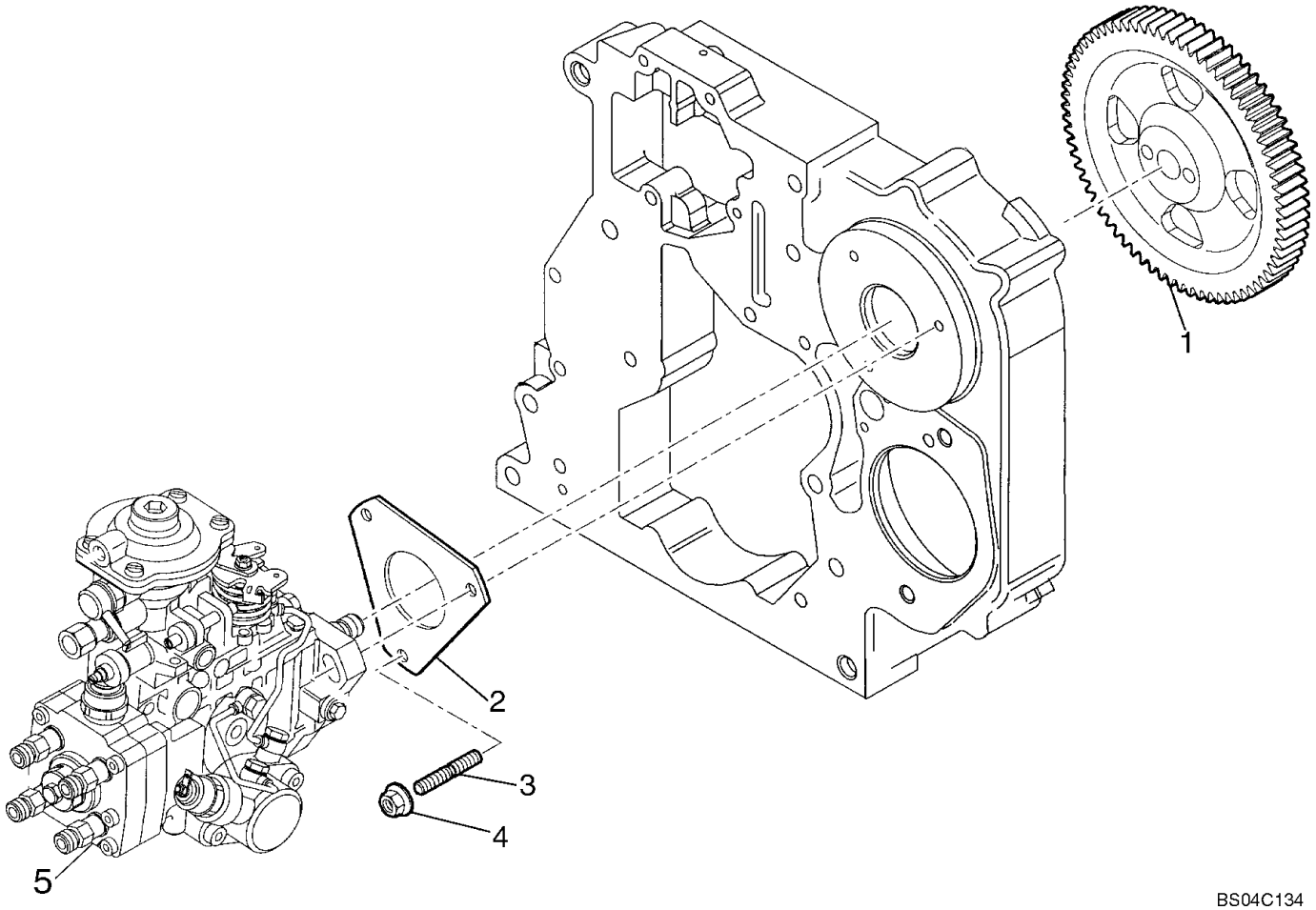

BS04C134

INJECTION PUMP - CONTROL

REF	FN	PART NUMBER	YR/SN	QTY	DESCRIPTION
1		2854340		1	GEAR, Injection Pump Control
2		2852885		1	GASKET
3		2852294		3	STUD
4		17044731		3	NUT, Flg, M8 x 1.25
5		REF		1	INSTRUCTION, INJECTION PUMP; See Figure 03-04

FUEL INJECTION SYSTEM - FUEL, SUPPLY

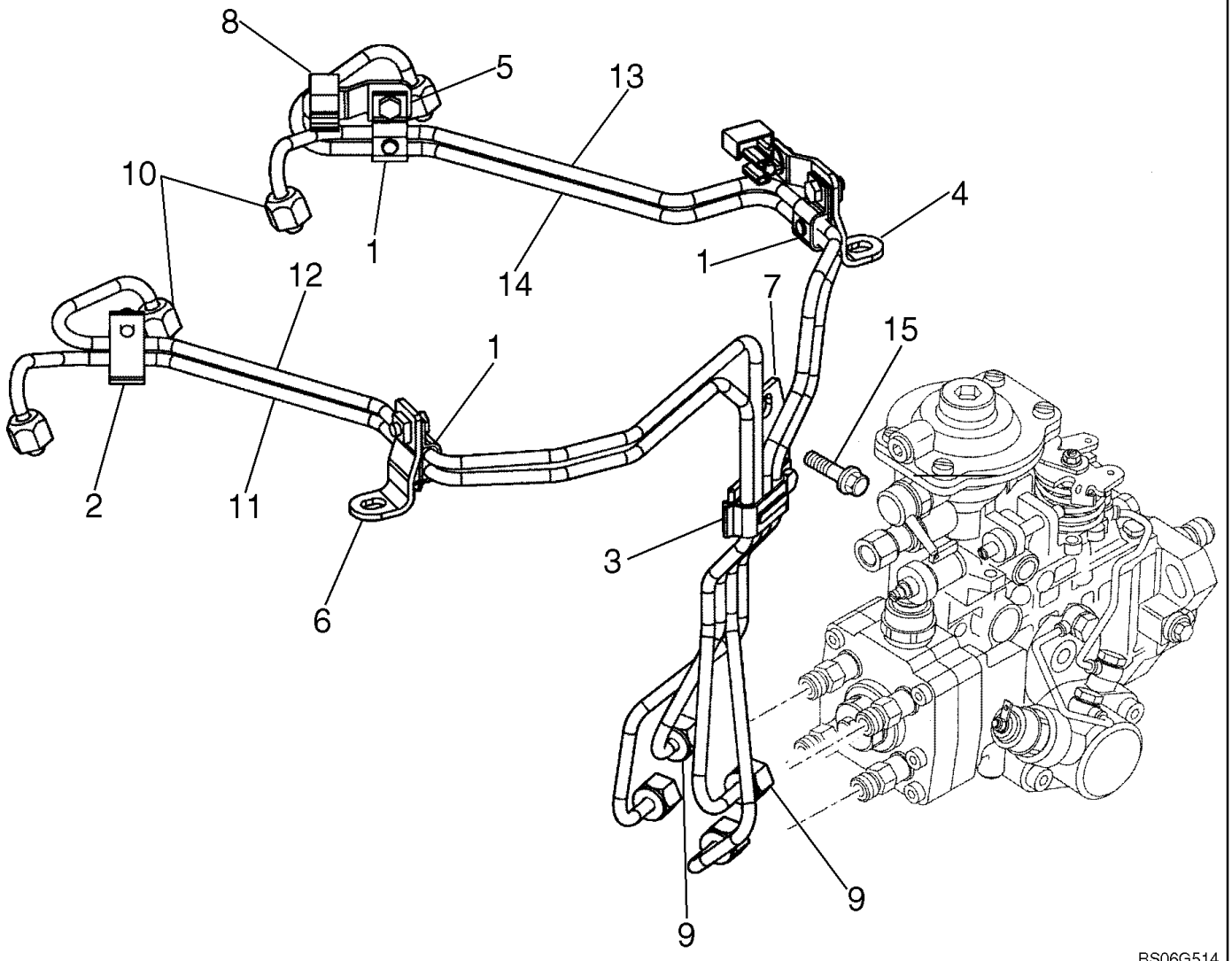

FUEL INJECTION SYSTEM - FUEL, SUPPLY

REF	FN	PART NUMBER	YR/SN	QTY	DESCRIPTION
		2852075		1	KIT, Fuel Injection Supply Pipe Assembly; Includes Ref 1-14
1		2852871		3	BRACKET, Fuel Injection Pipe Bracket
2		2852872		1	BRACKET, Fuel Injection Pipe Bracket
3		2852873		1	BRACKET, Fuel Injection Pipe Bracket
4		2852874		1	BRACKET, Fuel Injection Pipe Bracket
5		2852875		1	BRACKET, Fuel Injection Pipe Bracket
6		2852876		1	BRACKET, Fuel Injection Pipe Bracket
7		2852877		1	BRACKET, Fuel Injection Pipe Bracket
8		2852878		2	CLAMP BRACKET, Fuel Injection Pipe Bracket
9		2852879		4	NUT, Hex Nut
10		2852880		4	NUT, Hex Nut
11		2852881		1	PIPE INJECTION, Fuel Injector Supply Pipe
12		2852882		1	PIPE INJECTION, Fuel Injector Supply Pipe
13		2852883		1	PIPE INJECTION, Fuel Injector Supply Pipe
14		2852884		1	PIPE INJECTION, Fuel Injector Supply Pipe
15		4896884		1	SCREW, M8x1.25x16

FUEL INJECTION SYSTEM - SUPPLY

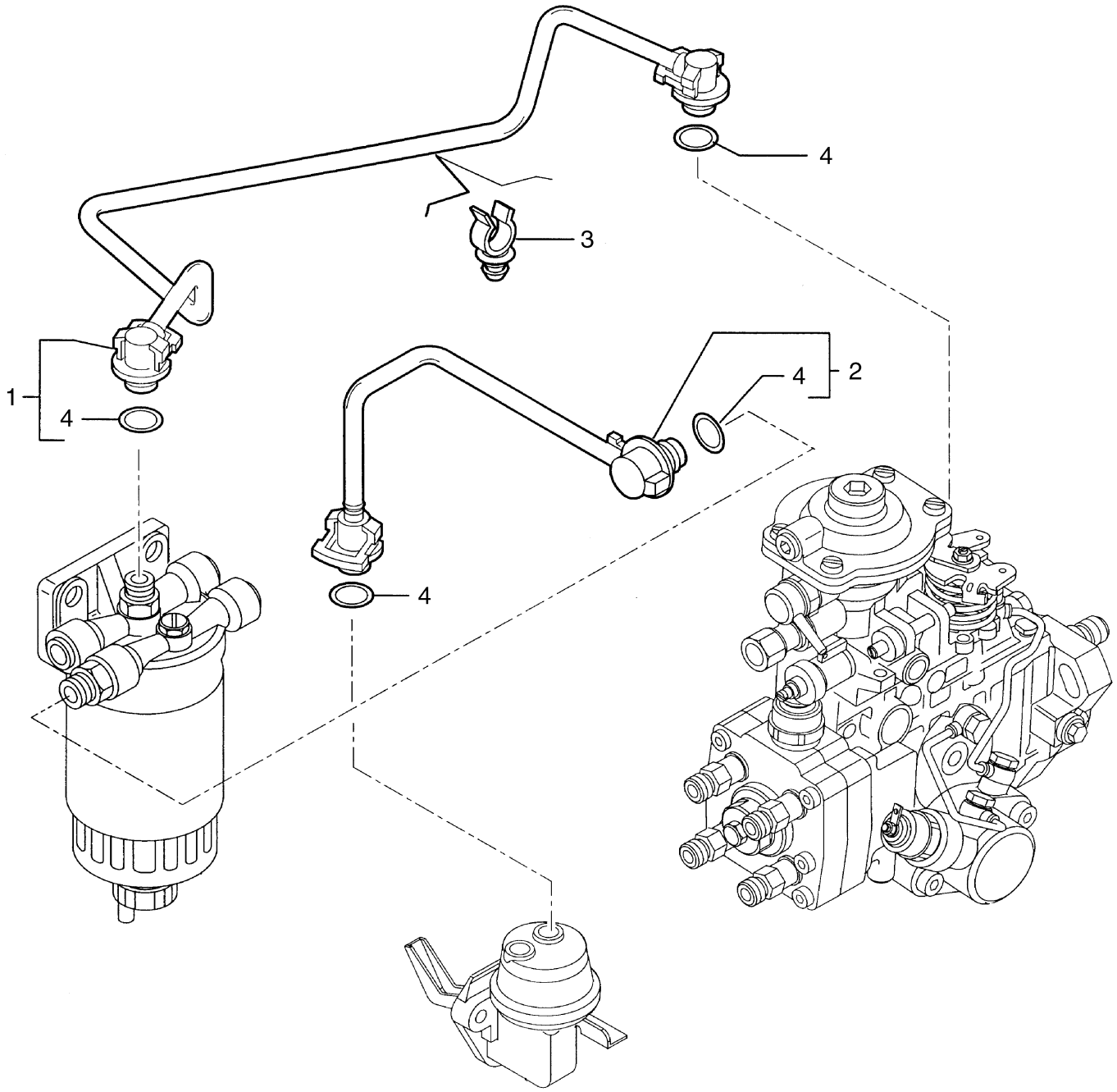

FUEL INJECTION SYSTEM - SUPPLY

REF	FN	PART NUMBER	YR/SN	QTY	DESCRIPTION
1		2852105		1	TUBE, Fuel Pump Supply; Incl. Ref 4
2		2852108		1	TUBE, RIGID, Fuel Filter Supply; Incl. Ref 4
3		2852111		1	CLAMP
4		4894095		2	O-RING

FUEL INJECTION SYSTEM - DRAIN LINE

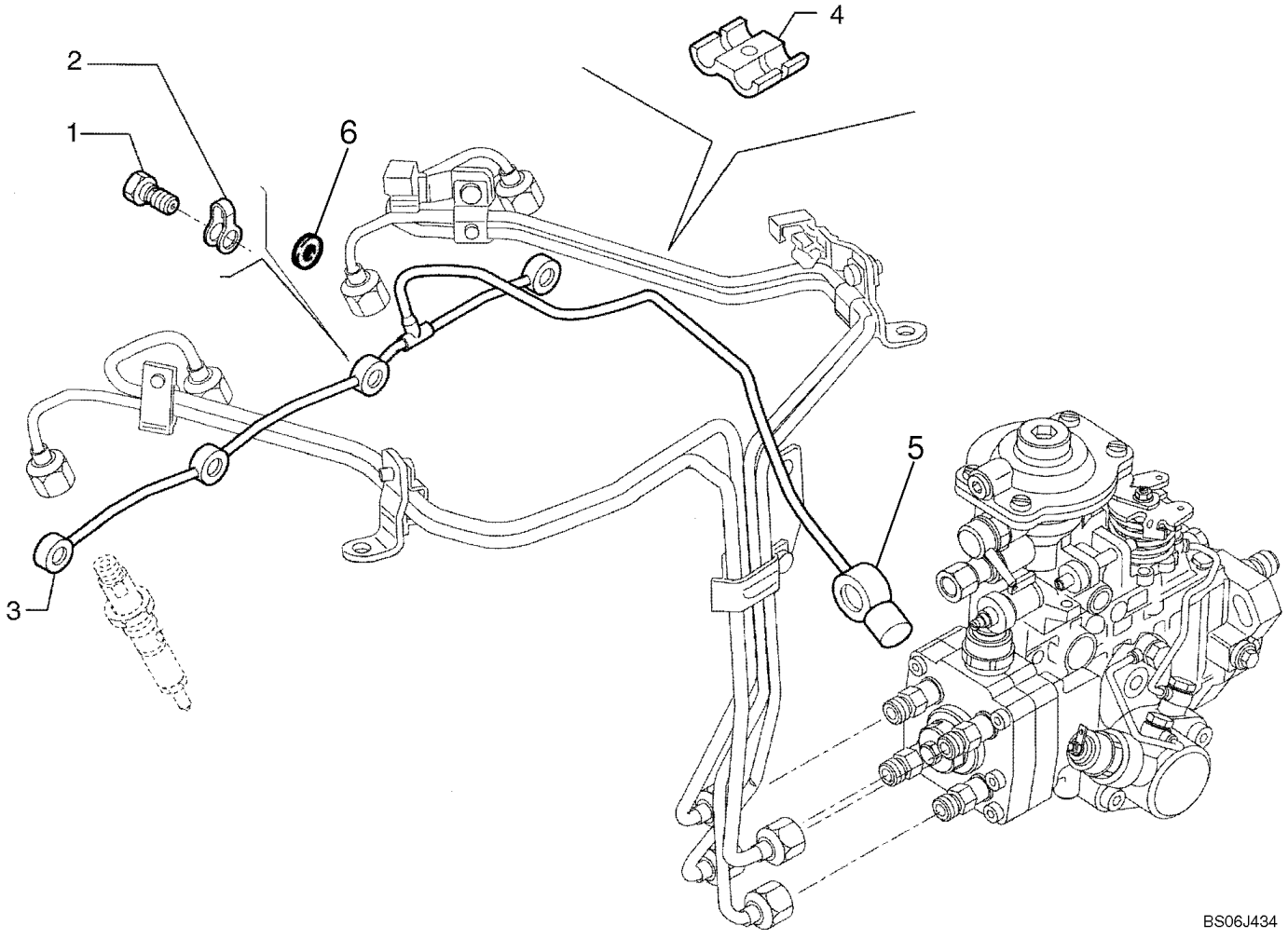

FUEL INJECTION SYSTEM - DRAIN LINE

REF	FN	PART NUMBER	YR/SN	QTY	DESCRIPTION
1		4895244		4	BOLT, BANJO
2		4895305		4	SEAL
3		2852065		1	TUBE, RIGID, Fuel Drain
4		2852521		1	CLIP, SPRING
5		NSS		1	NOT SERVICED SEPARATELY, Banjo Connector Assy; Order 2852065 Tube
6		2855903		8	WASHER, SEALING, If Used
		2852093		1	PLUG, Incl. Plug And O-Ring; Not Illustrated
		2852094		1	PLUG
		4899055		1	O-RING

INJECTION EQUIPMENT - INJECTOR

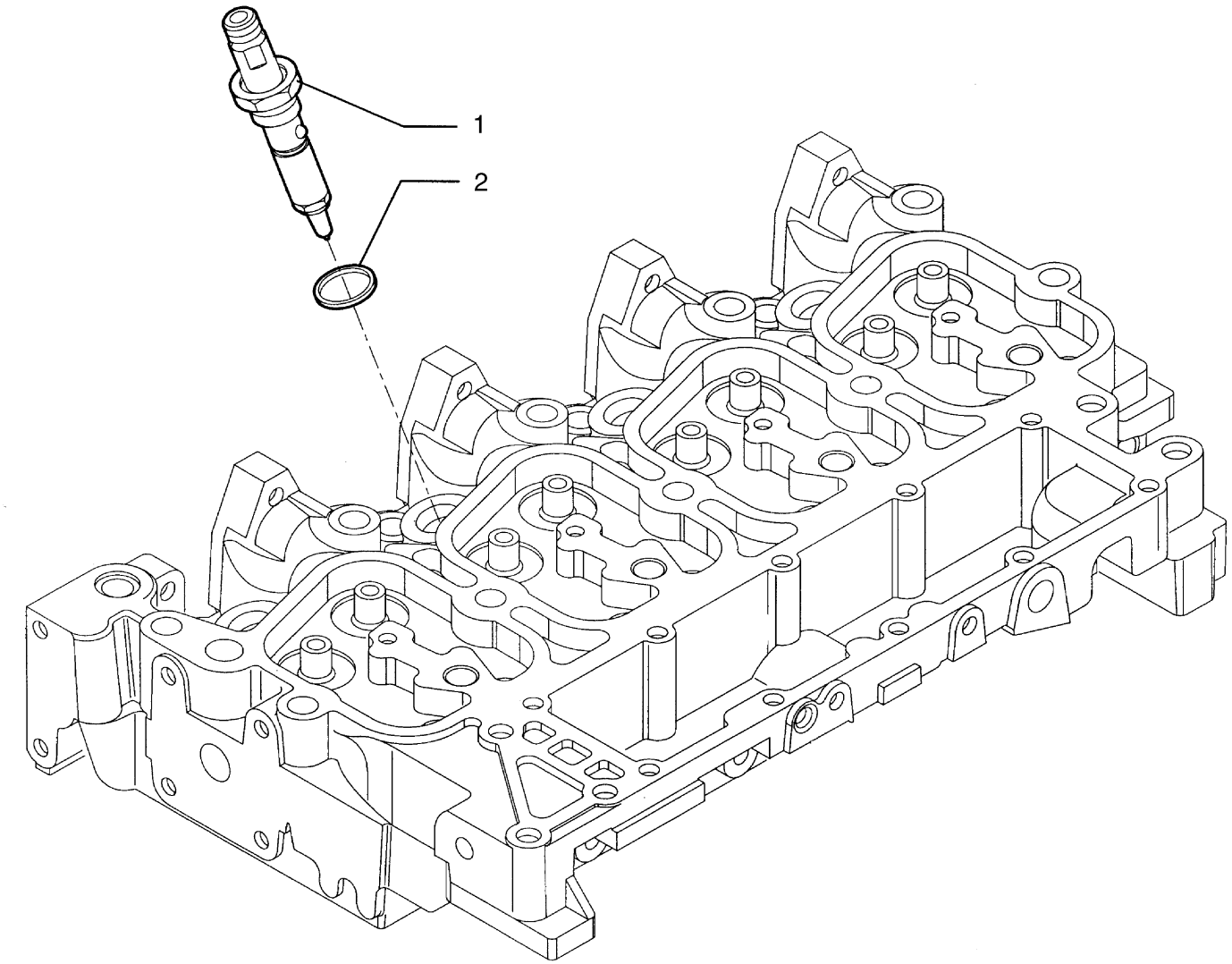

BS04A045

INJECTION EQUIPMENT - INJECTOR

REF	FN	PART NUMBER	YR/SN	QTY	DESCRIPTION
1		{2856255}		4	Fuel Injector; Incl. Seal 2856436
		{2856436}		1	
2		4895297		4	SEALRING

NOTES

SECTION INDEX
Electrical System

04-01	STARTER AND ALTERNATOR
04-02	ALTERNATOR MOUNTING
04-03	BATTERY - CABLES
04-04	HARNESS, ENGINE
04-05	CHASSIS, ELECTRICAL
04-06	ELECTRIC - CAB
04-07	CONSOLE - RH
04-08	CONSOLE - LH
04-09	CONTROL HANDLE, RH - BASIC
04-10	CONTROL HANDLE, LH - BASIC
04-11	CONTROL HANDLE, RH - DELUXE W/O AUX ELECTRIC
04-12	CONTROL HANDLE, LH - DELUXE W/O AUX ELECTRIC
04-13	CONTROL HANDLE, RH - DELUXE
04-14	CONTROL HANDLE, LH - DELUXE
04-15	DISCONNECT SWITCH - REMOTE JUMP START
04-16	WORK LIGHTS - LH
04-17	WORK LIGHTS - RH
04-18	ELECTRICAL - ROAD LIGHTS (NA)
04-19	ELECTRICAL - ROAD LIGHTS (EUROPE)
04-20	HEADLAMP - RH
04-21	HEADLAMP - LH
04-22	REAR LIGHT AND MOUNTING
04-23	BACKUP ALARM
04-24	ELECTRICAL ACCESSORY SOCKET
04-25	ELECTRICAL ACCESSORY SOCKET (EUROPE)
04-26	HORN - MOUNTING
04-27	ELECTRIC, FRONT AUXILIARY
04-28	ROTATING BEACON
04-29	SPECIAL PARTS FOR ITALY - LICENSE PLATE LIGHT
04-32	STROBE LIGHT

STARTER AND ALTERNATOR

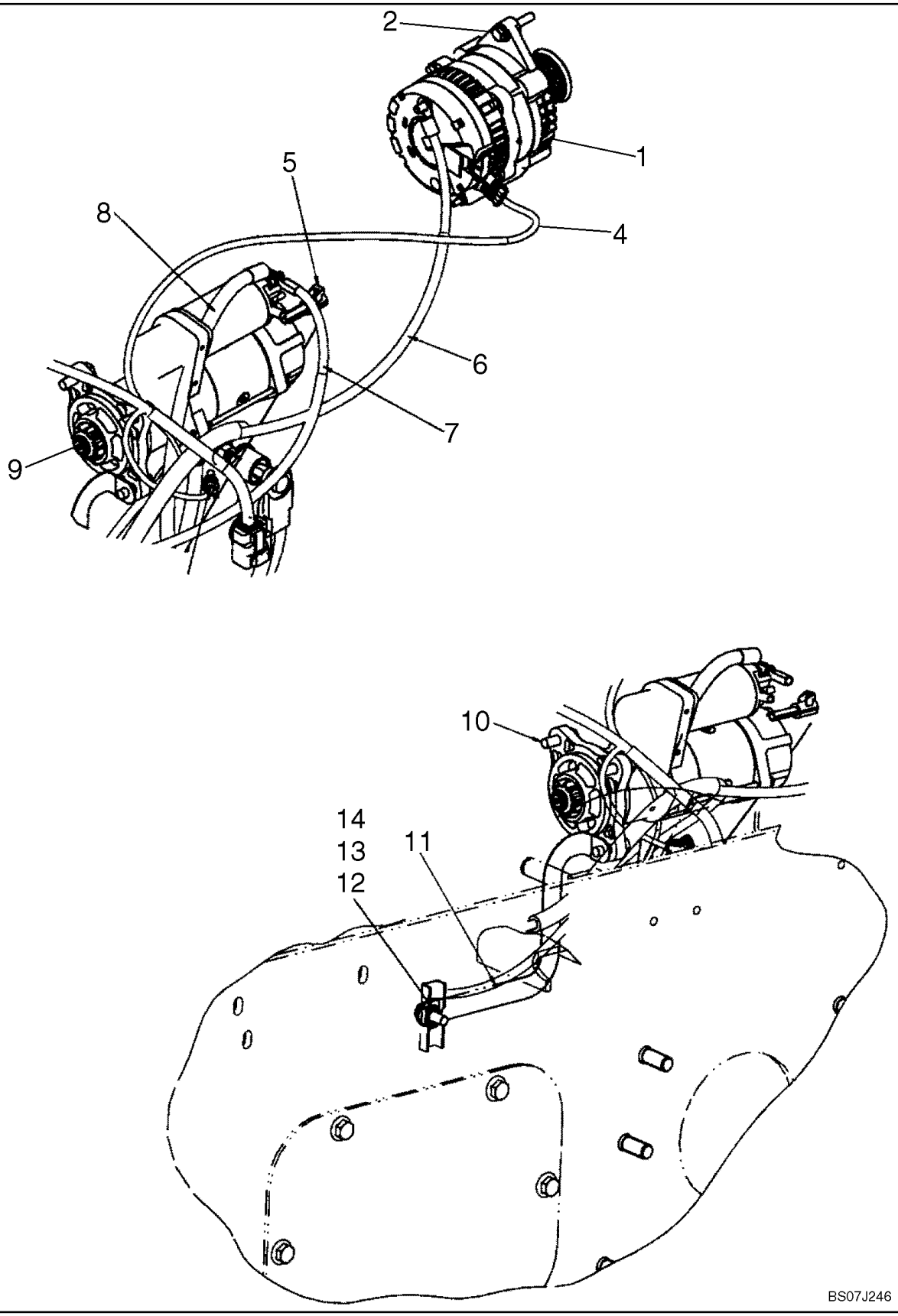

STARTER AND ALTERNATOR

REF	FN	PART NUMBER	YR/SN	QTY	DESCRIPTION
1		87042118		1	ALTERNATOR, Delco
2		322358		1	WASHER, SPRING, Belleville, M8
3		386045		1	BOLT, Hex, M8 x 45, 8.8
4		{87623352}		1	Harness; NEF Engine
5		87053083		1	HARNESS, Starter Jumper
6		87620458		1	CABLE, Harness, Starter To Alternator And Start Relay
7		87652238		1	CABLE, Starter To Power Distribution Block
8		87052670		1	CABLE ASSY., Battery Cable; Positive; See Figure 04-03
9		87366159		1	MOTOR, STARTER
10		9804262		3	BOLT, Hex Flg, M10 x 30, 8.8
11		87648689		1	STRAP, GROUND, Starter
12		43140		1	BOLT, Hex, M10 x 30, 8.8, Full Thd
13		86625253		1	WASHER, M11 x 24 x 2
14		309096A1		1	NUT, Square M10-1.5 W/Retaining Cls 8 Znd

ALTERNATOR MOUNTING

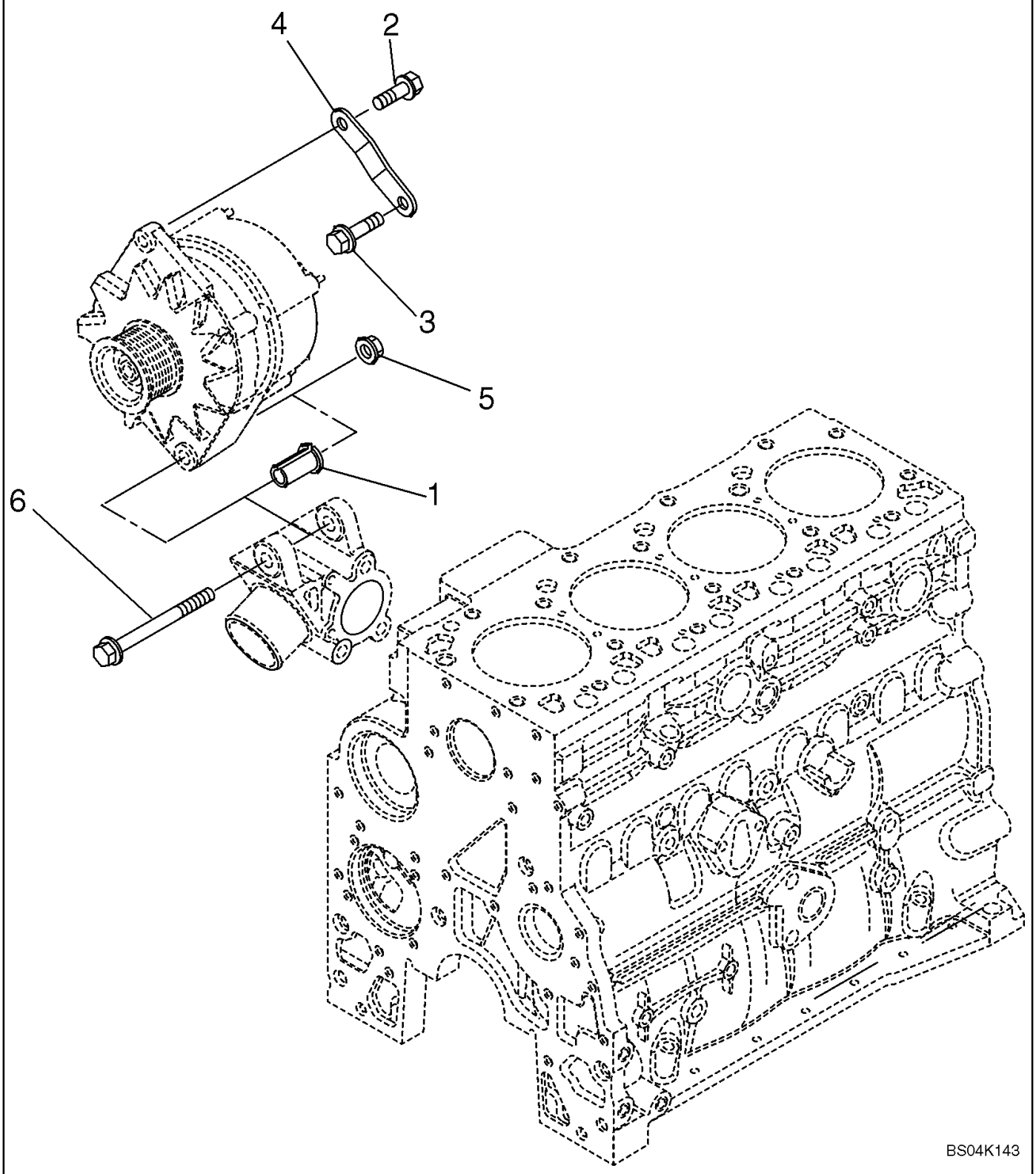

ALTERNATOR MOUNTING

REF	FN	PART NUMBER	YR/SN	QTY	DESCRIPTION
1		2852181		1	SPACER
2		4899031		1	SCREW, Hex Flg, M8 x 1.25 x 25
3		4895291		1	SCREW, Hex Flg, M10 x 1.5 x 20
4		2852180		1	BRACKET
5		4895166		1	NUT, M10 x 1.5
6		4895538		1	SCREW

BATTERY - CABLES

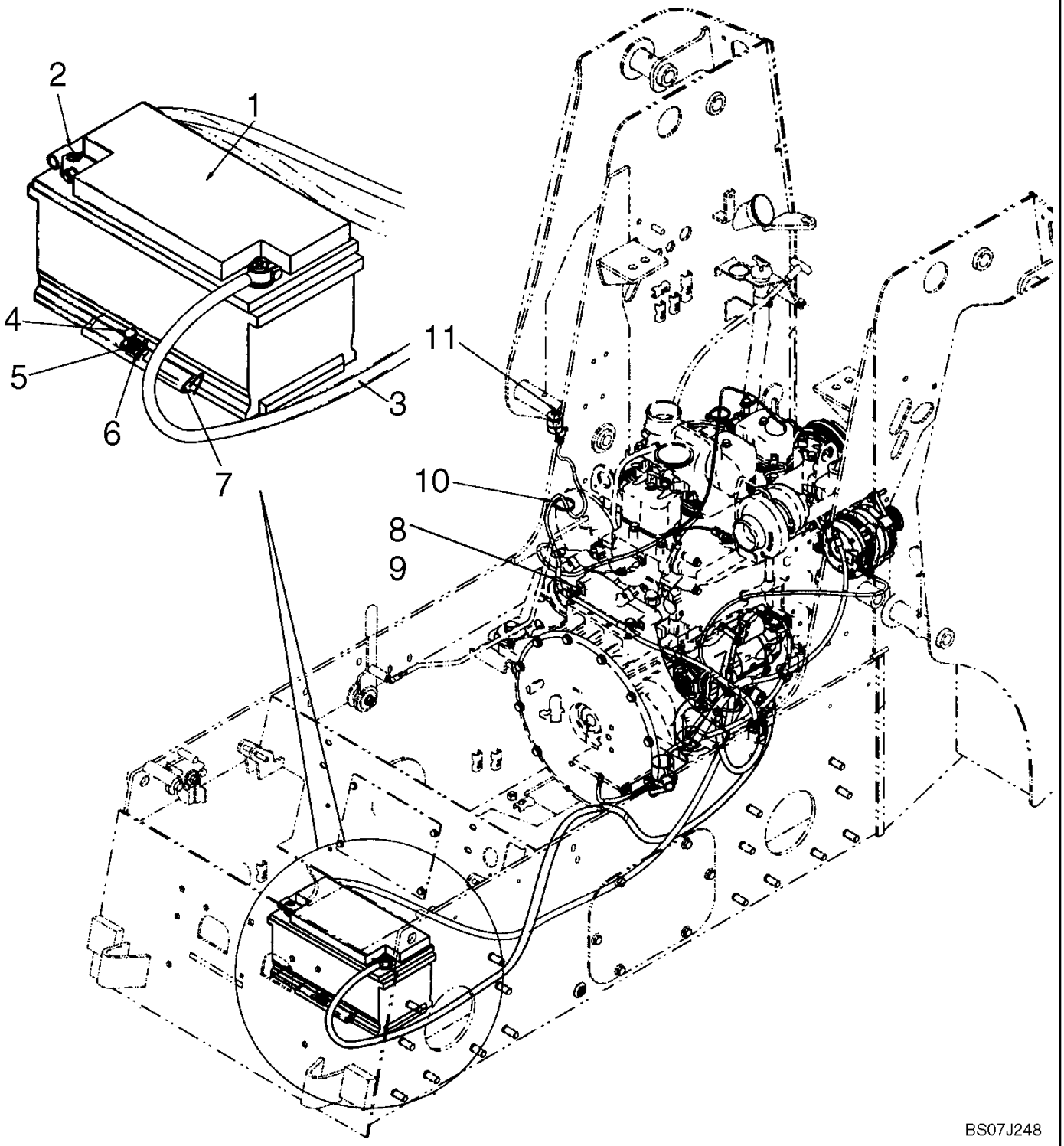

BATTERY - CABLES

REF	FN	PART NUMBER	YR/SN	QTY	DESCRIPTION
1		87403835		1	BATTERY, WET, 850 CCA
2		338030A1		1	CABLE ASSY., Battery; Negative
3		87052670		1	CABLE ASSY., Battery; Positive
4		120106		1	BOLT, Hex, M8 x 40, 8.8, Full Thd
5		43362		1	NUT, M8, Cl 10
6		86625074		1	NUT
7		87450956		1	ANGLE, Battery Hold Down
8		87301588		2	CLAMP, Clamp; 11.1 mm M12 Bolt
9		300388		3	SCREW, Hex, M12 x 25, 8.8
10		529070		2	STRAP, CABLE, .30" x 14.5"
11		87013666		1	SWITCH, Air Cleaner Restriction

HARNESS, ENGINE

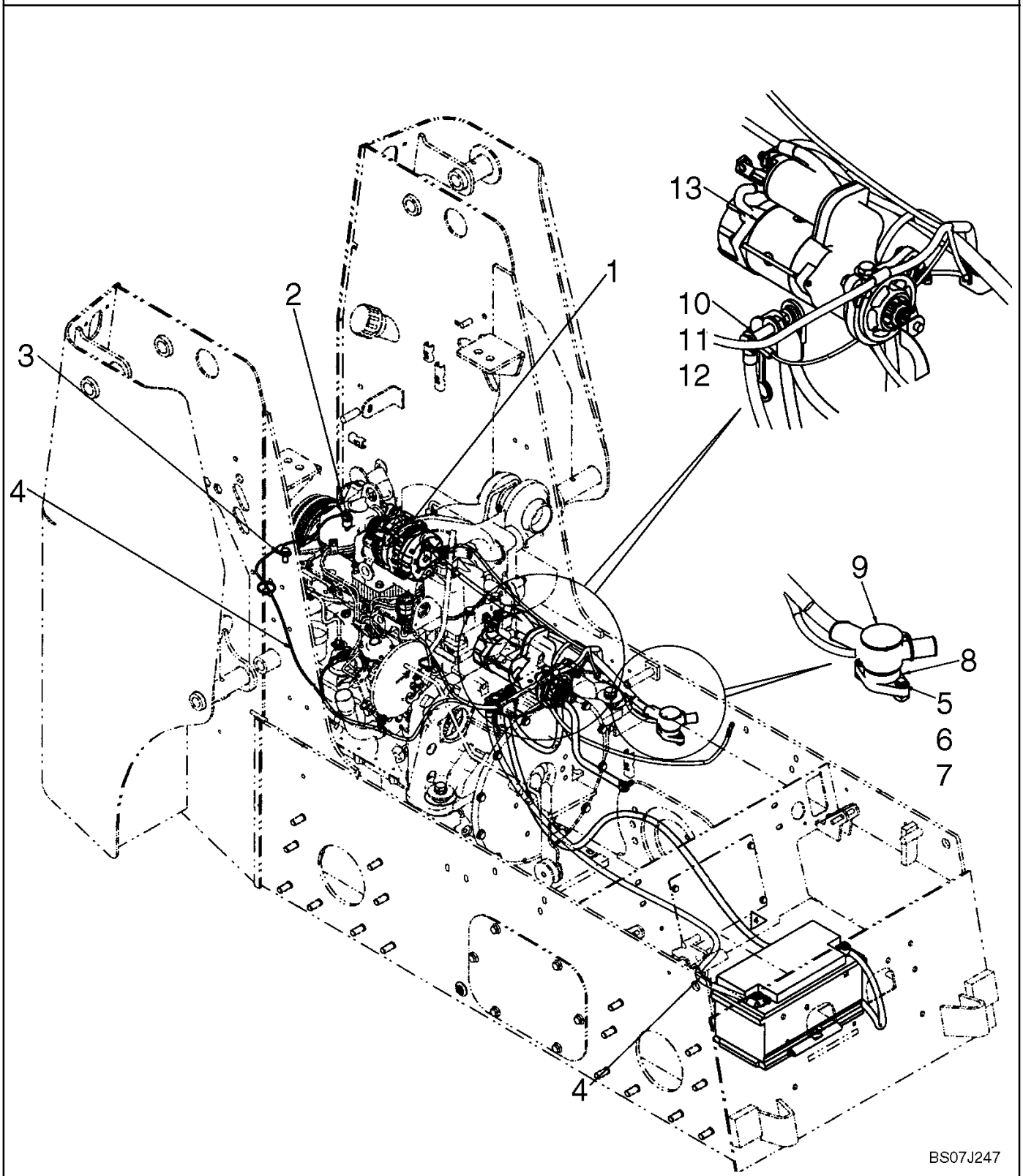

HARNESS, ENGINE

REF	FN	PART NUMBER	YR/SN	QTY	DESCRIPTION
1		87042118			ALTERNATOR, Alternator; See Figure 04-01
2		A166057		1	SENDER, TEMPERATURE, Transmission Oil Temperature Sender
3		86639003		1	CLAMP, 3/8", Insul, 7/16" Bolt
4		{87623352}		1	Harness; NEF Engine
5		322357		2	WASHER, SPRING, Belleville, M6
6		86977786		2	BOLT, Hex, M6 x 25, 8.8
7		87404992		2	NUT, Square M6-1.0 Class 8 Znd
8		87630124		1	POST, Power Distribution Post, 3/8 Stud
9		87630125		1	BOOT, Boot For Power Distribution Post
10		9706685		1	NUT, M12, Cl 8
11		86625256		1	WASHER, M12 x 28.5 x 4, HT
12		87458961		1	STUD, 12mm x 80mm

04-05		p1	12/07

CHASSIS, ELECTRICAL

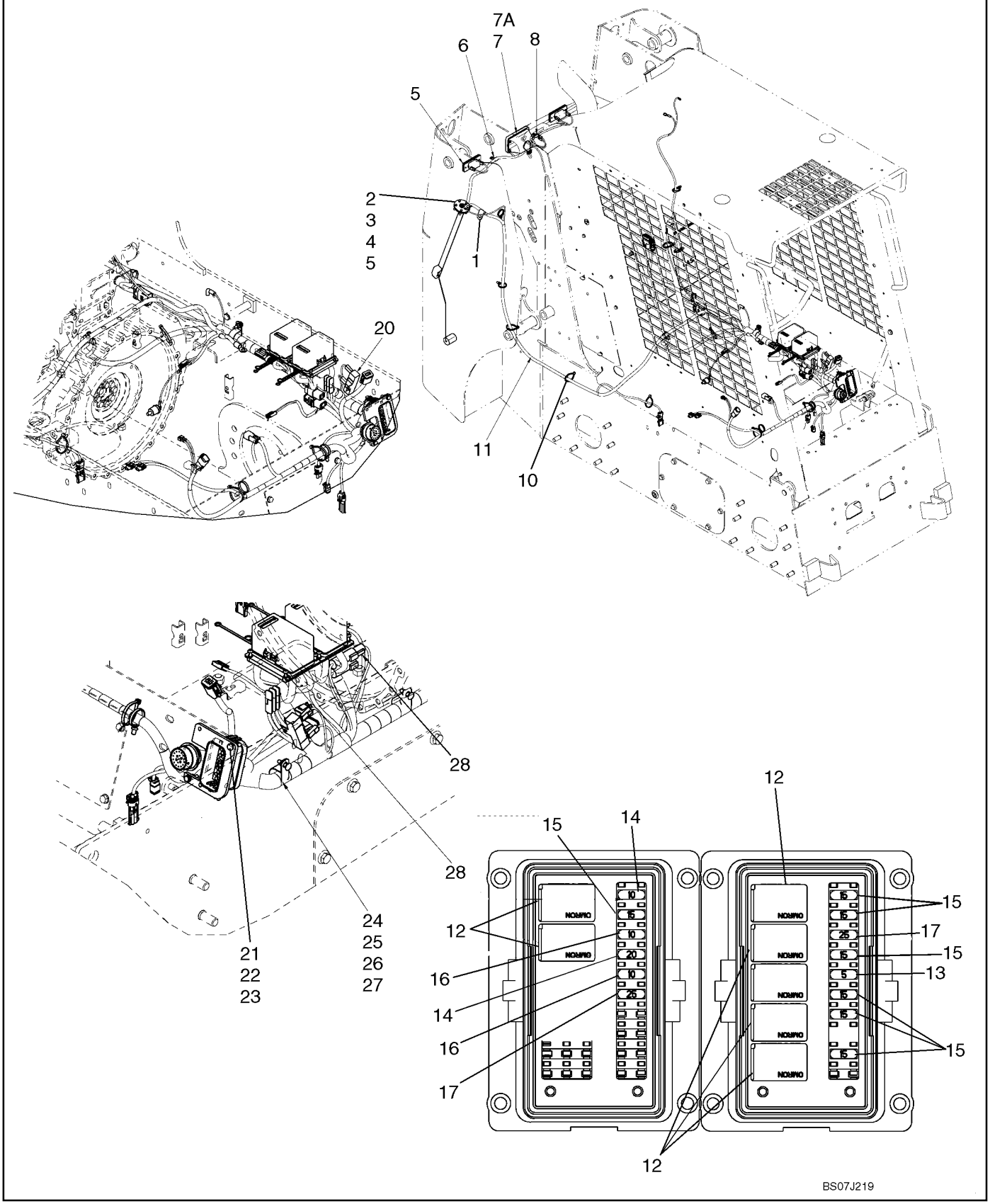

CHASSIS, ELECTRICAL

REF	FN	PART NUMBER	YR/SN	QTY	DESCRIPTION
1		87301588		1	CLAMP, Clamp,Closed 11.1mm Insulated 1/2 Bolt
2		376843A4		1	SENDER UNIT, Fuel Level Sender Unit
3		528359R4		1	GASKET, Sender Unit Gasket
4		87308282		5	SCREW, Hex Hd, #10-32 x 3/4"
5		196985A1		5	THREADED ROD
6		87016870		1	CLAMP, J, 7/16" Insul, 5/16" Bolt
7		222004A2		1	HEADLIGHT, Low Profile Halogen Lamp; Incl 7A
7A		259702A1		1	BULB, Light Bulb, 50W 12.8V Halogen
8		86637978		1	CLAMP, 3/8", Insul, 5/16" Bolt
9		87668737		6	STRAP, Strap, Fir Tree
10		87000312		8	STRAP, CABLE, Cable Tie
11		87661493		1	HARNESS, Chassis Harness; Incl 12 - 18
12		{87655334}		7	Relay,35A N.O.
13		121410A1		1	FUSE, Fuse, 5A
14		121412A1		3	FUSE, Fuse, 10A
15		121413A1		7	FUSE, Fuse, 15A
16		121414A1		1	FUSE, Fuse, 20A
17		121415A1		2	FUSE, Fuse, 25A
18		L71879		3	DIODE-ELEMENT, 3A Diode Connector
19		A166057		1	SENDER, TEMPERATURE, Oil Temperature Sending Unit
20		86705351		1	RESISTOR
21		86977786		2	BOLT, Hex, M6 x 25, 8.8
22		86588450		4	WASHER, M6
23		87030561		2	NUT, LOCK, M6 x 1, Cl 8
24		87035382		3	CLAMP, 1 3/16", Insul, 3/8" Bolt
25		374891		3	BOLT, CARRIAGE, Short NK, M6 x 25, Cl8.8, Full Thd
26		86500688		3	NUT, M6, Cl 10
27		322357		3	WASHER, SPRING, Belleville, M6
28		87020181		8	SCREW

ELECTRIC - CAB

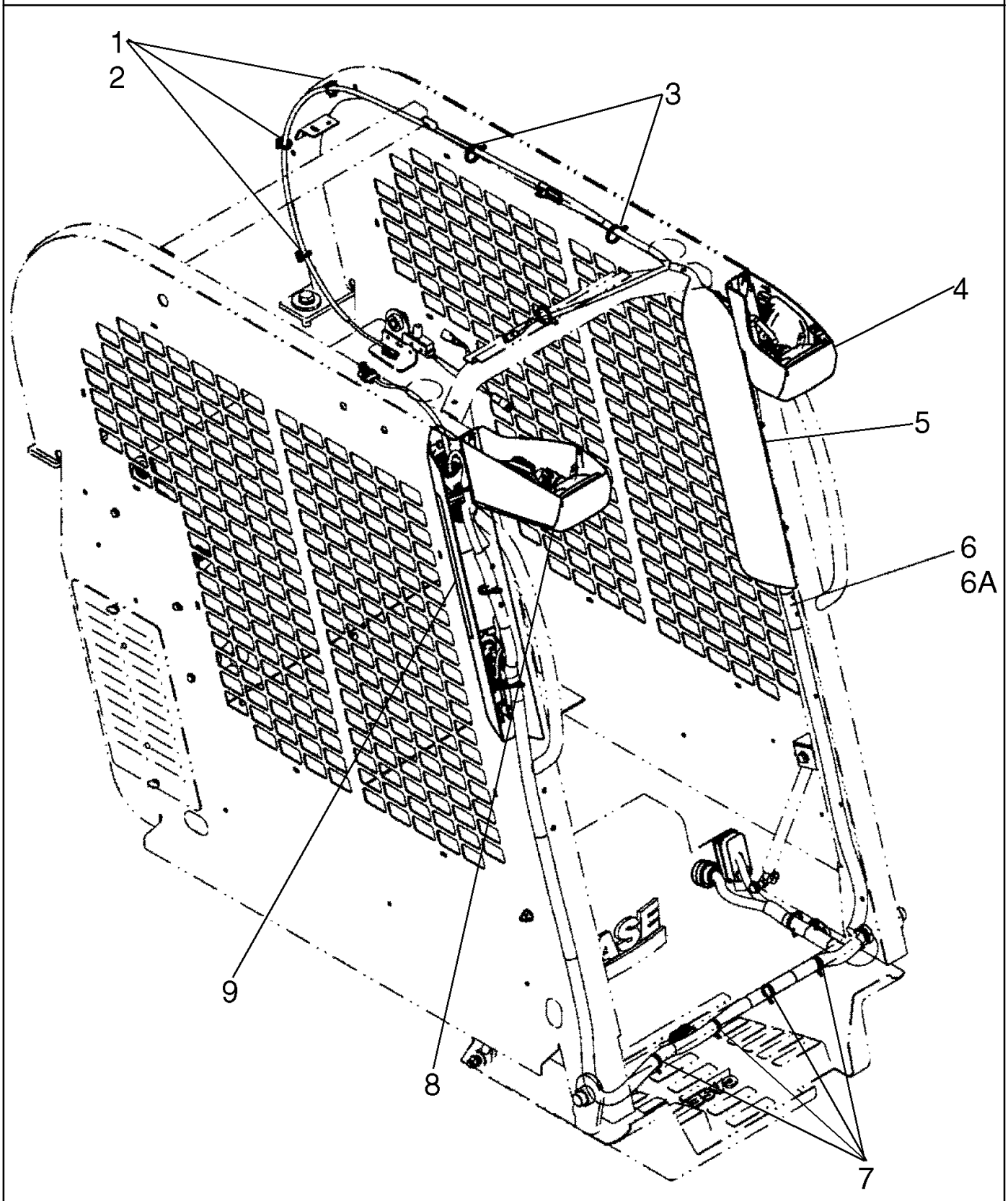

ELECTRIC - CAB

REF	FN	PART NUMBER	YR/SN	QTY	DESCRIPTION
1		87642914		3	BASE, Strap Mount
2		87642915		3	STRAP, CABLE
3		87668737		10	STRAP, Strap With Mount
4		87650097		1	LIGHT, Work Light, LH; See Fig. 04-16
5		87627050		1	CONSOLE, Console, LH; See Fig. 04-08
6		87668728		1	HARNESS, Harness, Cab; Incl 6A
6A		{87618013}		1	6A Diode
7		263117		4	STRAP, CABLE, .14" x 11 1/2"
8		87650098		1	LIGHT, Work Light, RH; See Fig. 04-17
9		{87665327}		1	Console, RH; See Fig. 04-07

CONSOLE - RH

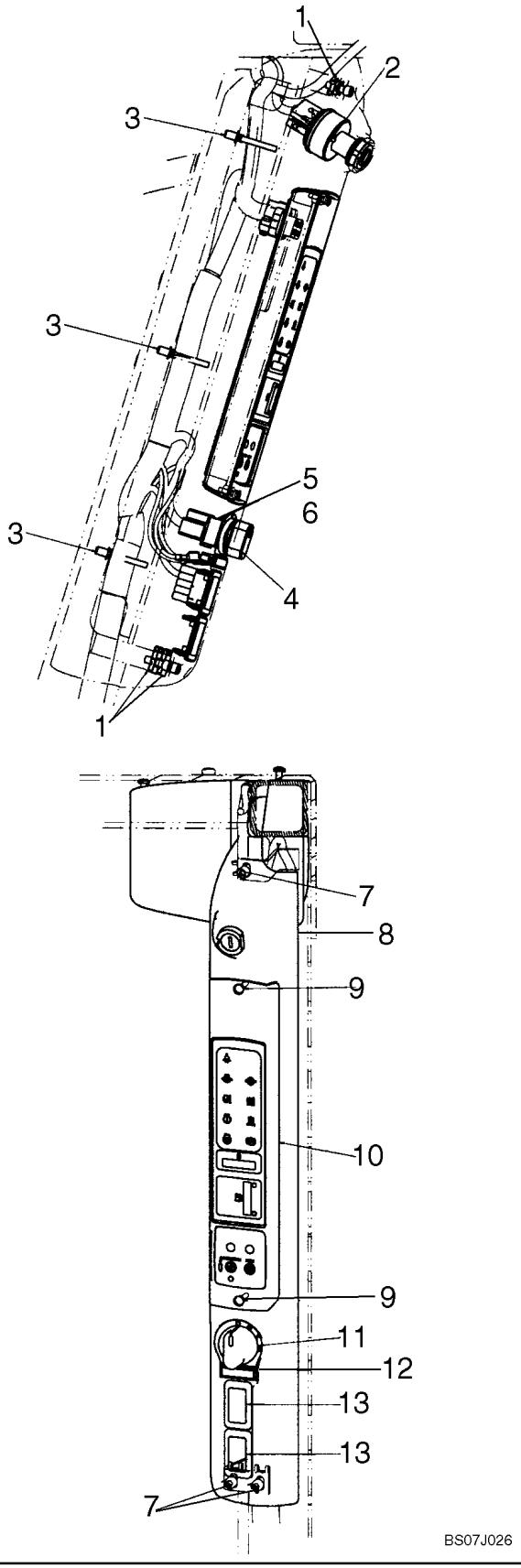

CONSOLE - RH

REF	FN	PART NUMBER	YR/SN	QTY	DESCRIPTION
1		86521425		3	NUT, Tinn, U, 1/4"-20
2		282775A1		1	SWITCH, IGNITION, Ignition Switch And 2 Keys
3		87668737		10	STRAP, Strap With Fastener
4		86729670		1	KNOB
5		86729669		1	SWITCH, FAN, Fan Speed Switch
6		87310592		1	NUT, Jam, 7/16"-28, G5
7		280272		3	SCREW, Hex Soc Hd, 1/4"-20 x 3/4"
8		{87665327}		1	Console, RH
9		86511042		2	SCREW, Cross Pan Hd, M4 x 16
10		87638864		1	PANEL, INSTRUMENTS, Instrument Panel, Standard (Shown In Illustration)
10		87638865		1	PANEL, INSTRUMENTS, Instrument Panel, Deluxe
11		{87677739}		1	Decal, Light Switch
12		86627432		1	PLASTIC PLUG
13		126844A1		2	PLUG, Switch Hole Cover

CONSOLE - LH

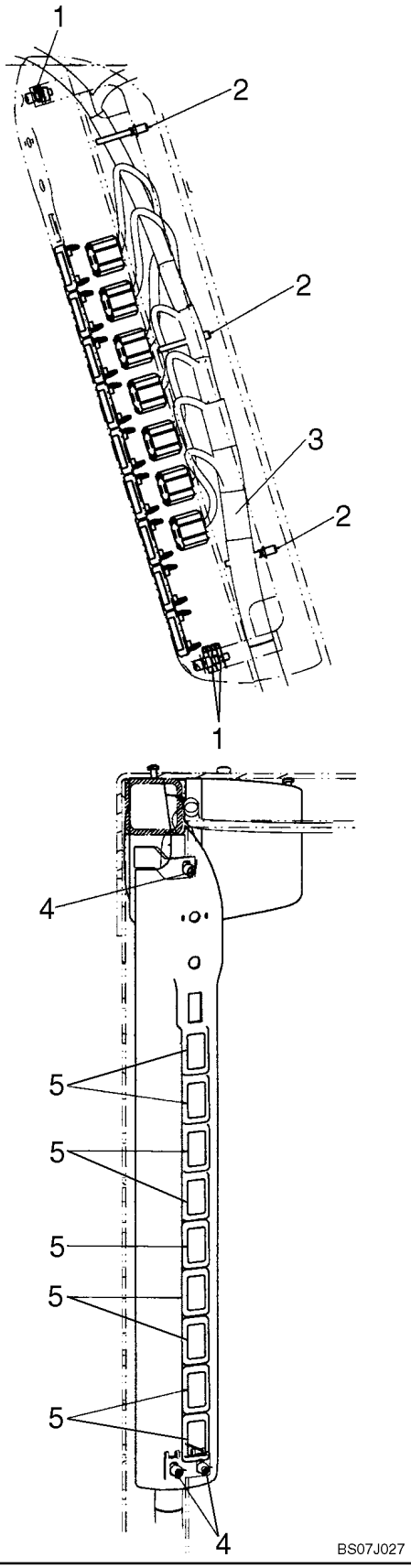

CONSOLE - LH

REF	FN	PART NUMBER	YR/SN	QTY	DESCRIPTION
		87627050		1	CONSOLE, Console, LH
1		86521425		3	NUT, Tinn, U, 1/4"-20
2		87668737		3	STRAP, Strap With Mount
3		87668728		1	HARNESS, Cab Harness
4		280272		3	SCREW, Hex Soc Hd, 1/4"-20 x 3/4"
5		126844A1		11	PLUG, Switch Hole Cover

04-09		p1	11/07

CONTROL HANDLE, RH - BASIC

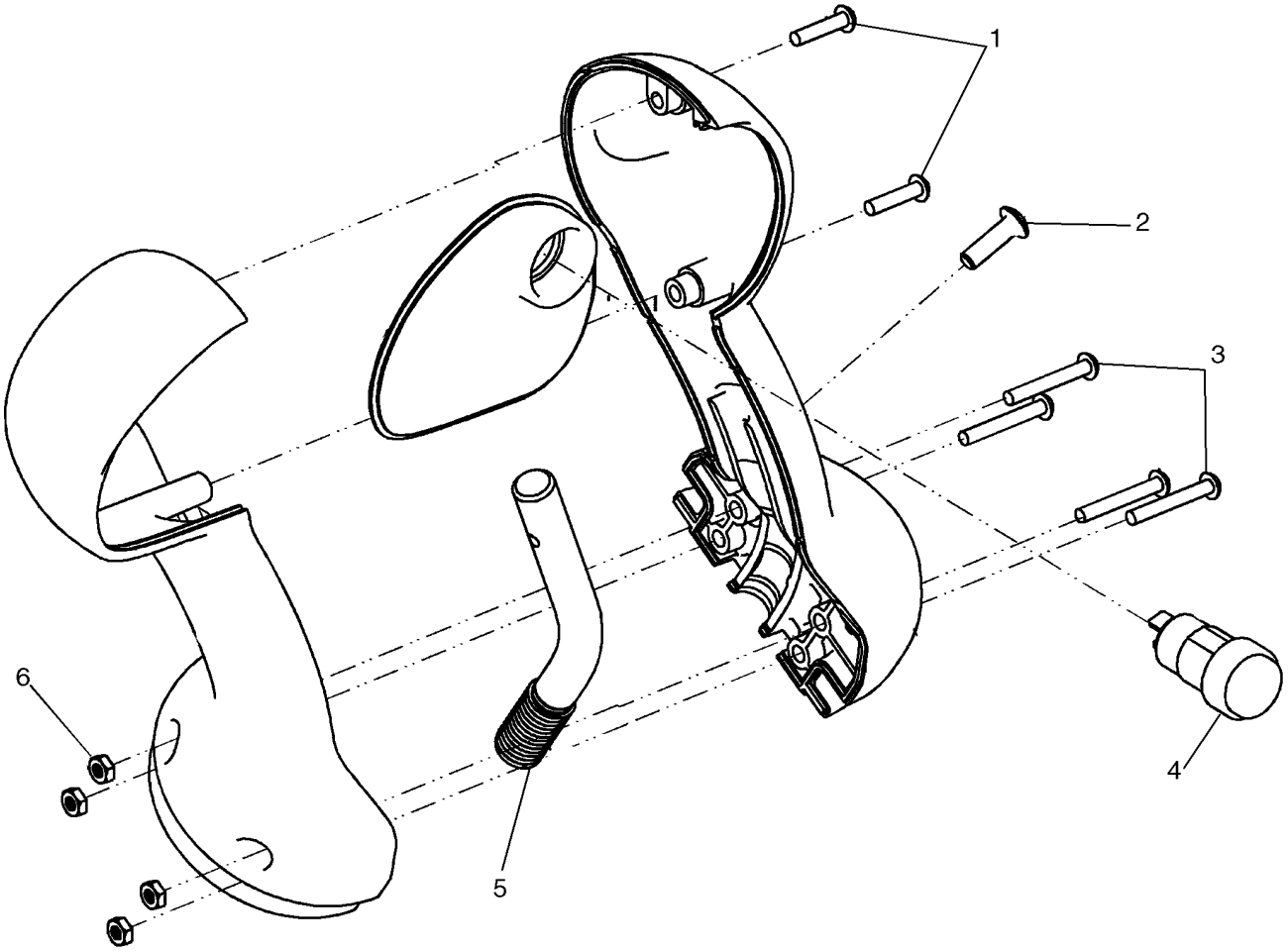

CONTROL HANDLE, RH - BASIC

REF	FN	PART NUMBER	YR/SN	QTY	DESCRIPTION
		87656868		1	HANDLE GRIP, Handle, RH - Basic; Incl 1 - 6
1		86637783		2	SCREW, SELF TAP, Cross Pan Hd, #6 x 5/8"
2		87534744		1	FASTENER
3		281045		4	SCREW, Cross Pan Hd, #6-32 x 1"
4		87630127		1	SWITCH, Parking Brake
5		{87652816}		1	Handle Mounting Rod
6		{87667726}		4	Nut, #6 - 32

CONTROL HANDLE, LH - BASIC

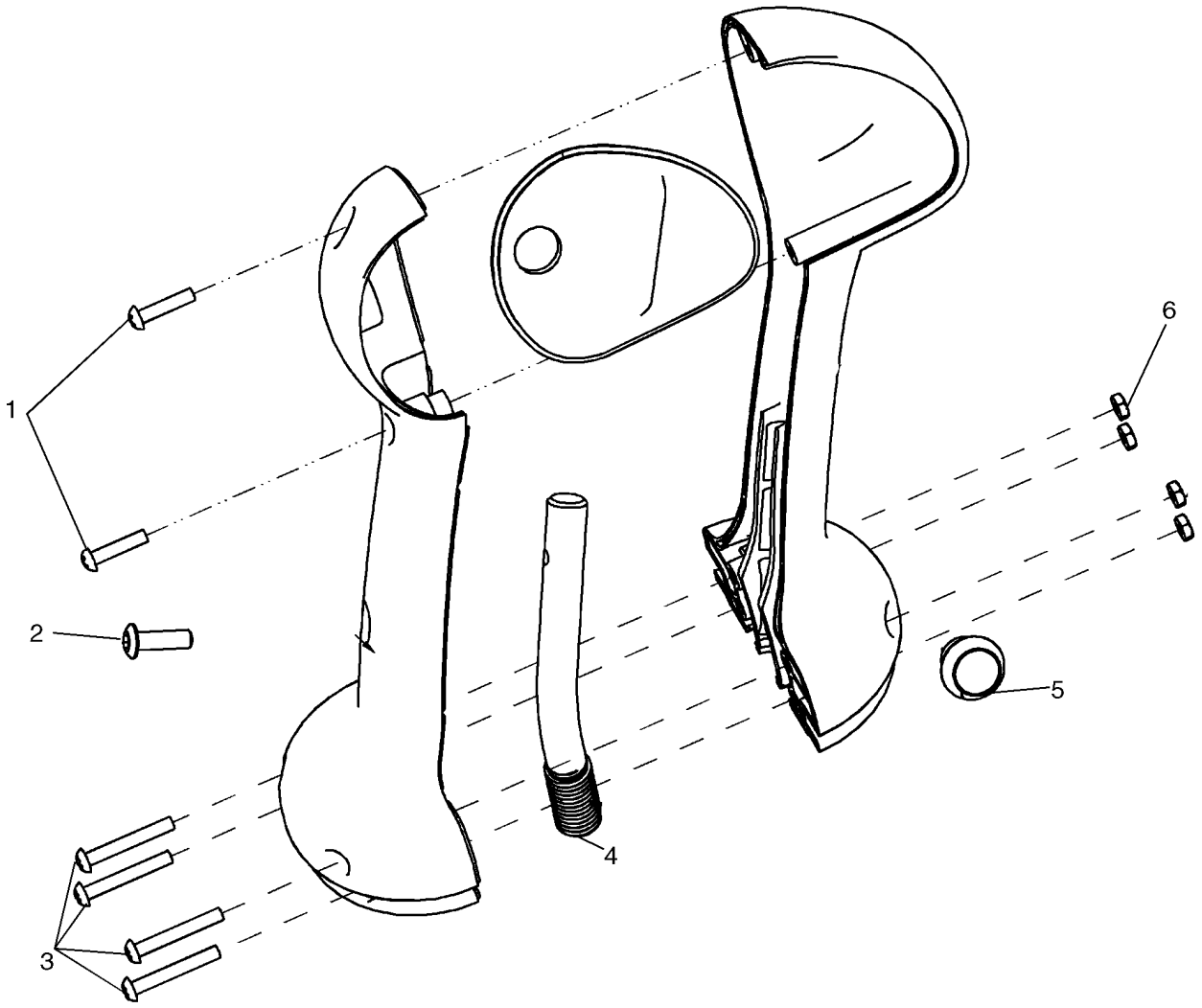

BS07J364

CONTROL HANDLE, LH - BASIC

REF	FN	PART NUMBER	YR/SN	QTY	DESCRIPTION
		87656866		1	HANDLE GRIP, Handle, LH - Basic; Incl 1 - 6
1		86637783		2	SCREW, SELF TAP, Cross Pan Hd, #6 x 5/8"
2		87534744		1	FASTENER
3		281045		4	SCREW, Cross Pan Hd, #6-32 x 1"
4		{87652818}		1	Handle Mounting Rod
5		87630126		1	SWITCH, Horn
6		{87667726}		4	Nut, #6 - 32

CONTROL HANDLE, RH - DELUXE W/O AUX ELECTRIC

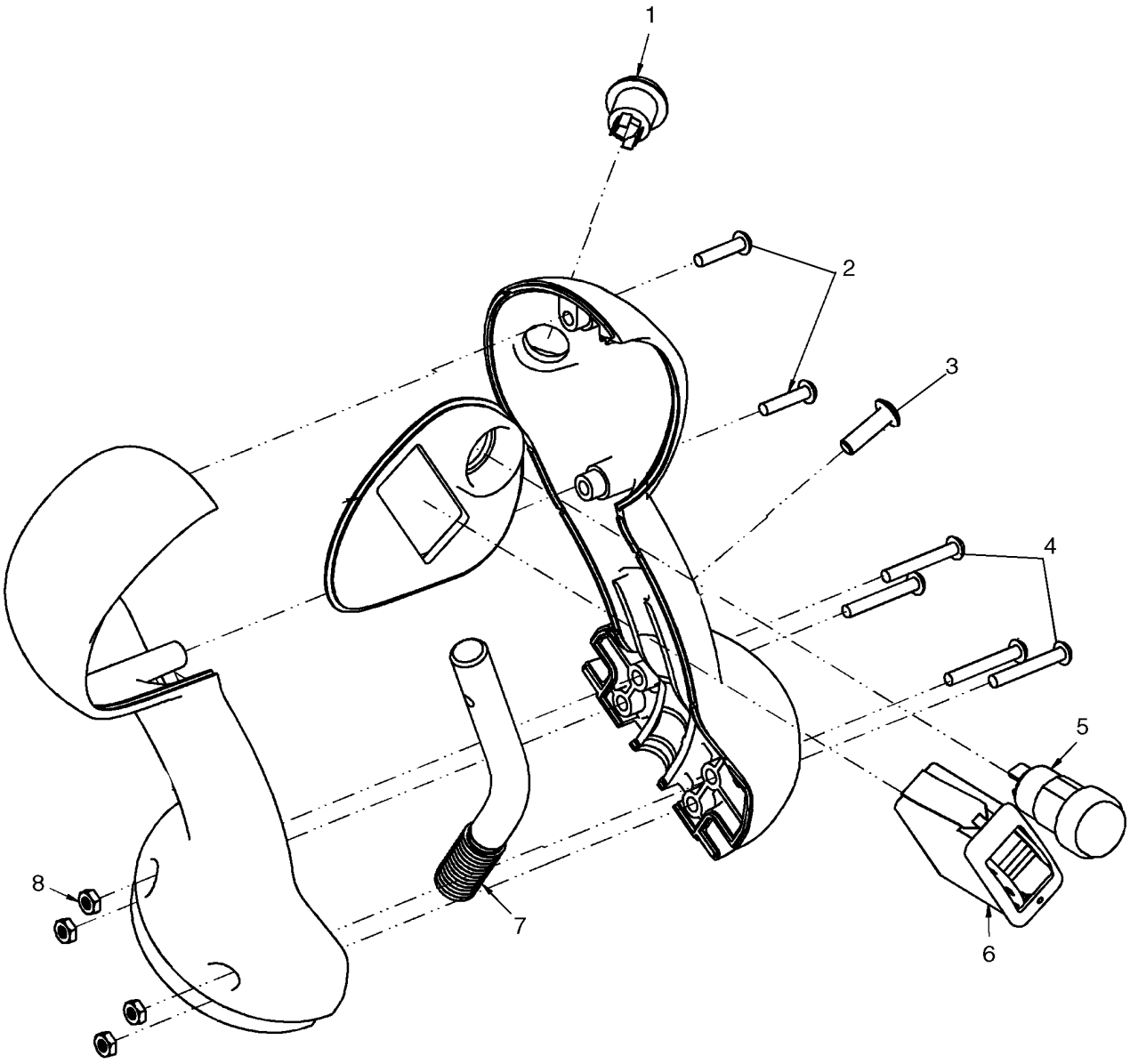

CONTROL HANDLE, RH - DELUXE W/O AUX ELECTRIC

REF	FN	PART NUMBER	YR/SN	QTY	DESCRIPTION
		87656872		1	HANDLE GRIP, Handle, RH - Deluxe Without Aux Electric; Incl 1 - 8
1		87630129		1	SWITCH, Ride Control
2		86637783		2	SCREW, SELF TAP, Cross Pan Hd, #6 x 5/8"
3		87534744		1	FASTENER
4		281045		4	SCREW, Cross Pan Hd, #6-32 x 1"
5		87630127		1	SWITCH, Parking Brake
6		87642913		1	SWITCH, Auxiliary Hydraulic
7		{87652816}		1	Handle Mounting Rod
8		{87667726}		4	Nut, #6 - 32

CONTROL HANDLE, LH - DELUXE W/O AUX ELECTRIC

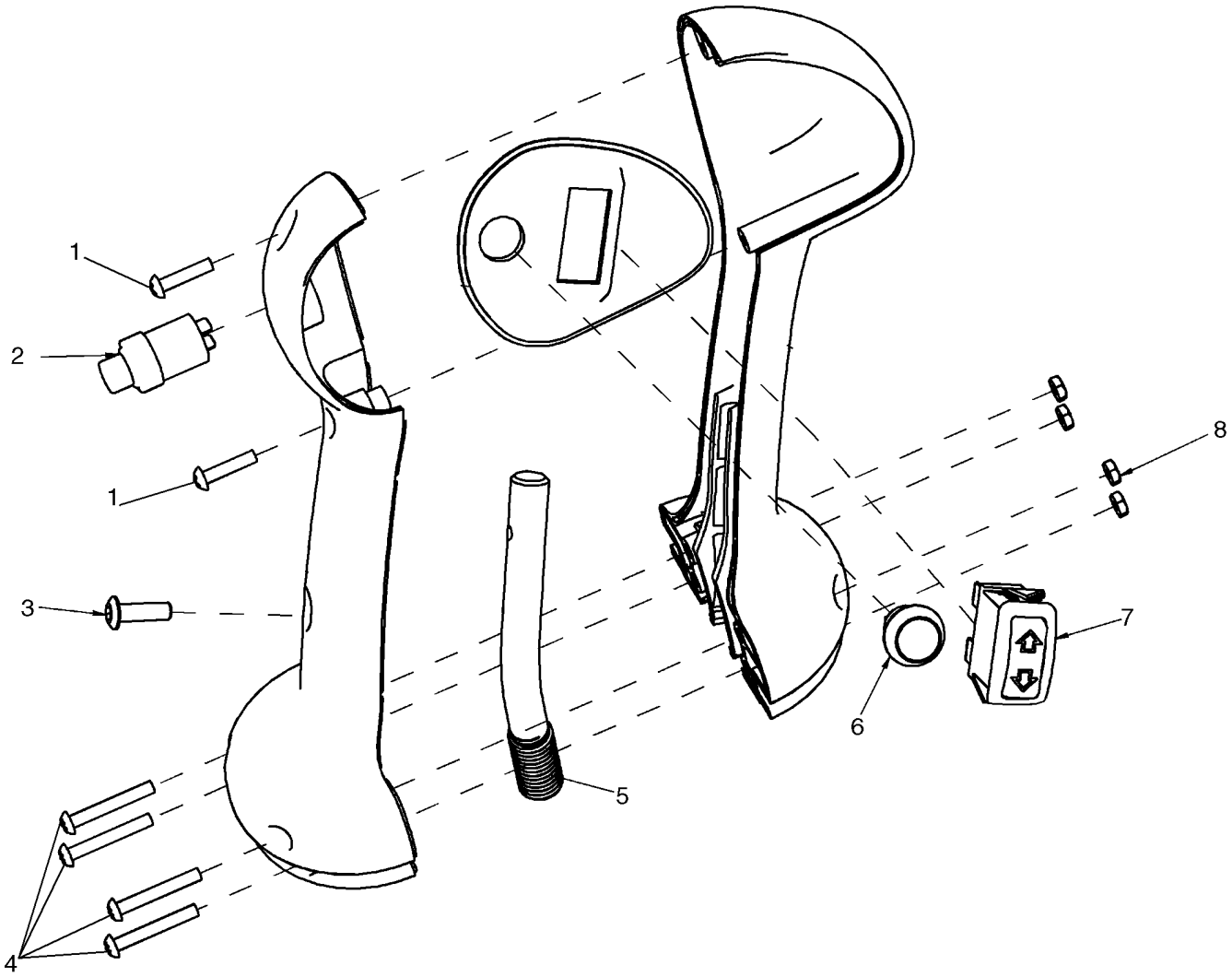

CONTROL HANDLE, LH - DELUXE W/O AUX ELECTRIC

REF	FN	PART NUMBER	YR/SN	QTY	DESCRIPTION
		87656870		1	HANDLE GRIP, Handle, LH - Deluxe Without Aux Electric
1		86637783		2	SCREW, SELF TAP, Cross Pan Hd, #6 x 5/8"
2		87630130		1	SWITCH, Two Speed
3		87534744		1	FASTENER
4		281045		4	SCREW, Cross Pan Hd, #6-32 x 1"
5		{87652818}		1	Handle Mounting Rod
6		87630126		1	SWITCH, Horn
7		87630128		1	SWITCH, Turn Signal
8		{87667726}		4	Nut, #6 - 32

CONTROL HANDLE, RH - DELUXE

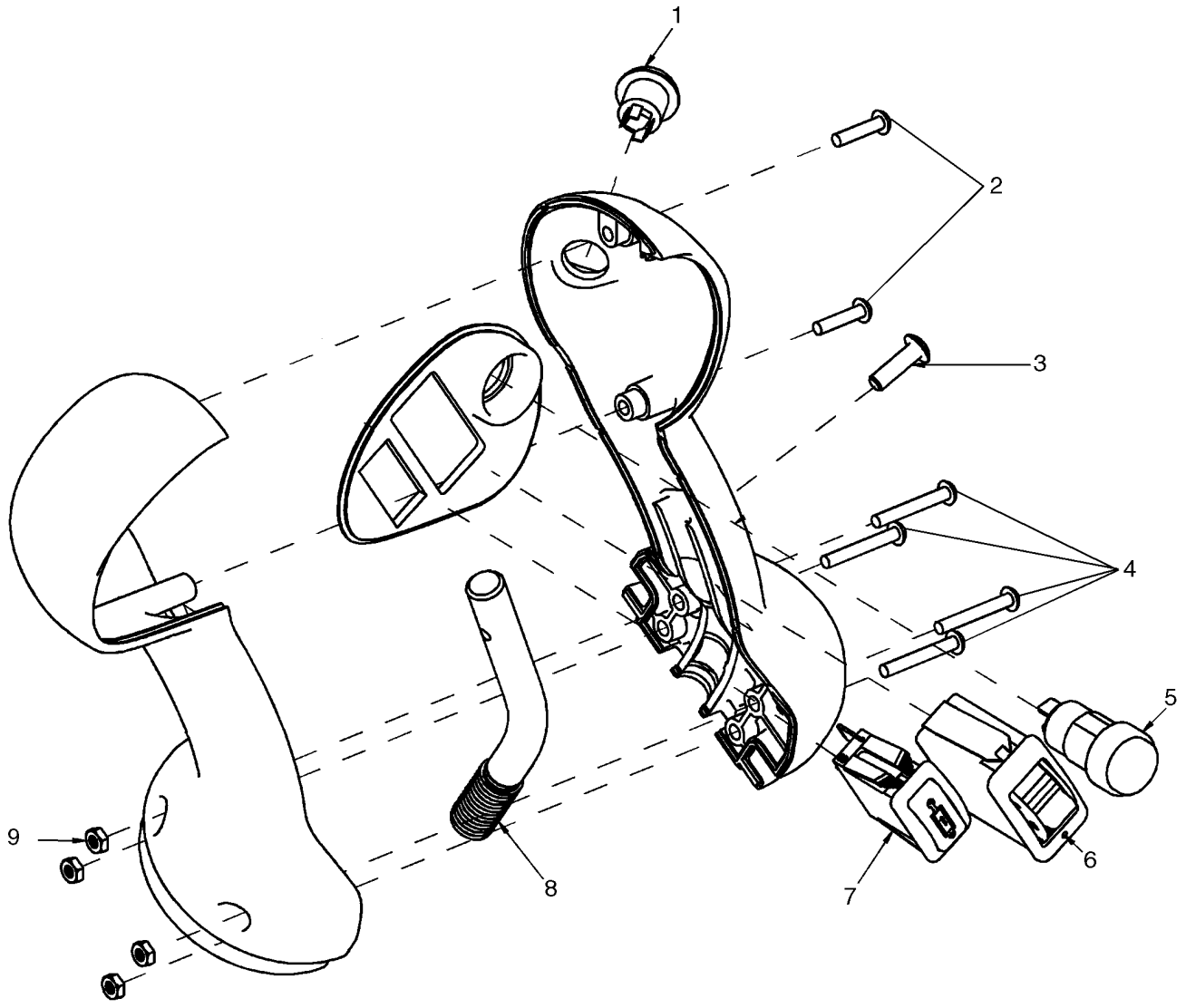

BS07J269

CONTROL HANDLE, RH - DELUXE

REF	FN	PART NUMBER	YR/SN	QTY	DESCRIPTION
		87641948		1	HANDLE GRIP, Handle, RH - Deluxe
1		87630129		1	SWITCH, Ride Control
2		86637783		2	SCREW, SELF TAP, Cross Pan Hd, #6 x 5/8"
3		87534744		1	FASTENER
4		281045		4	SCREW, Cross Pan Hd, #6-32 x 1"
5		87630127		1	SWITCH, Parking Brake
6		87642913		1	SWITCH, Auxiliary Hydraulic
7		87427685		1	SWITCH, Switch Hyd M-O-M
8		{87652816}		1	Handle Mounting Rod
9		{87667726}		4	Nut, #6 - 32

04-14		p1	11/07

CONTROL HANDLE, LH - DELUXE

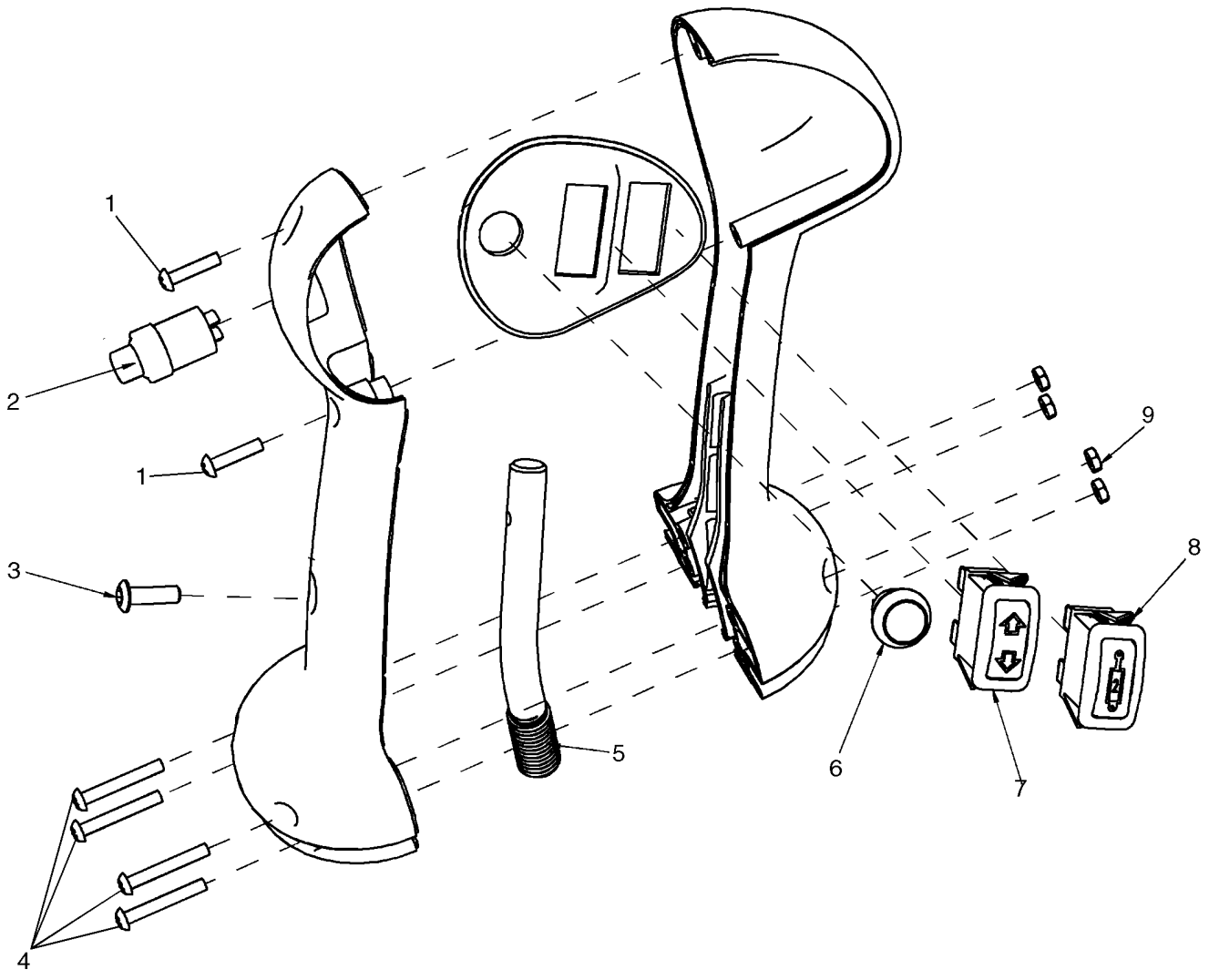

CONTROL HANDLE, LH - DELUXE

REF	FN	PART NUMBER	YR/SN	QTY	DESCRIPTION
		87641947		1	HANDLE GRIP, Handle, LH - Deluxe
1		86637783		2	SCREW, SELF TAP, Cross Pan Hd, #6 x 5/8"
2		87630130		1	SWITCH, Two Speed
3		87534744		1	FASTENER
4		281045		4	SCREW, Cross Pan Hd, #6-32 x 1"
5		{87652818}		1	Handle Mounting Rod
6		87630126		1	SWITCH, Horn
7		87630128		1	SWITCH, Turn Signal
8		87427686		1	SWITCH, Hyd M-O-M
9		{87667726}		4	Nut, #6 - 32

DISCONNECT SWITCH - REMOTE JUMP START

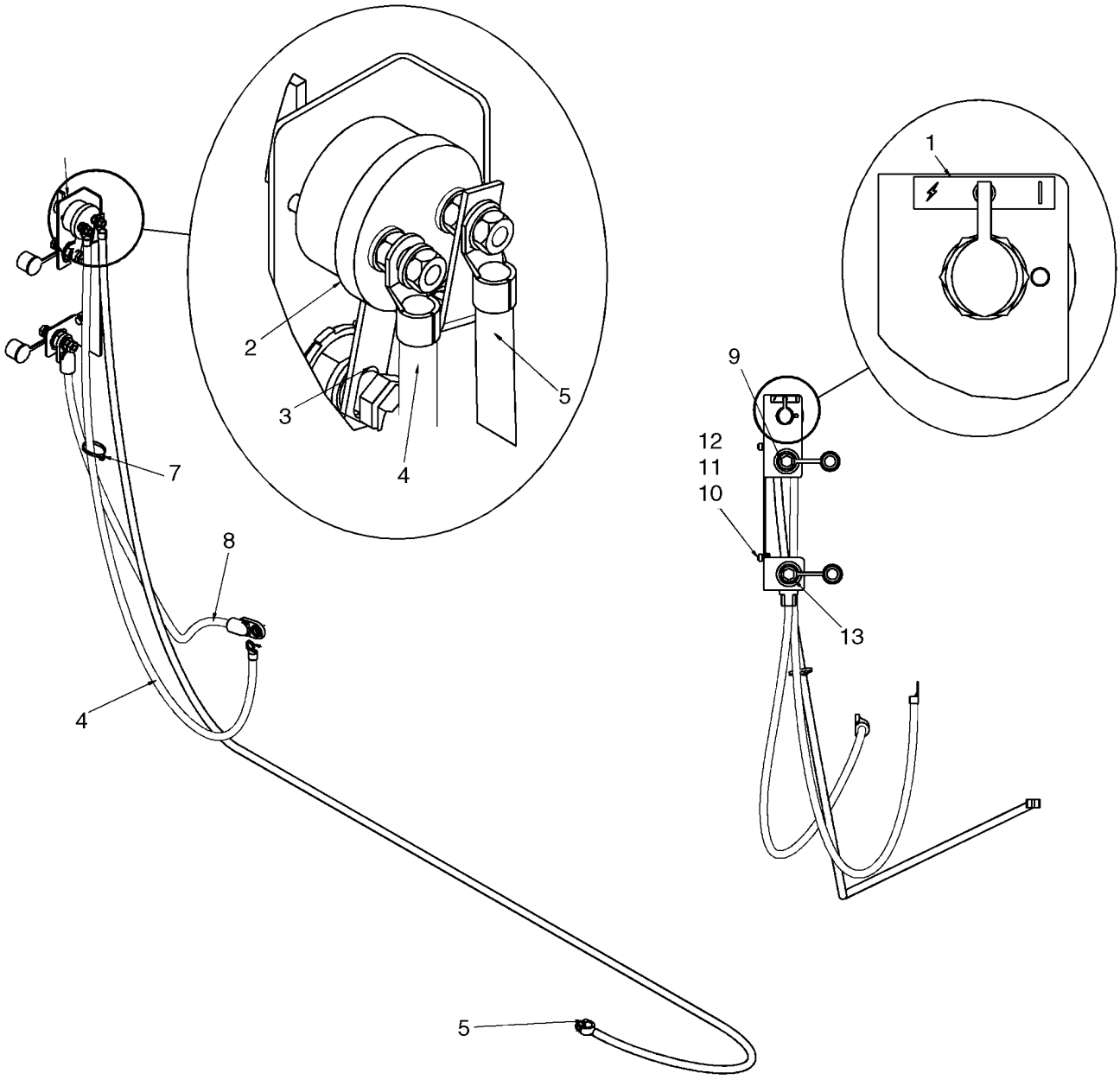

DISCONNECT SWITCH - REMOTE JUMP START

REF	FN	PART NUMBER	YR/SN	QTY	DESCRIPTION
1		176332A1		1	DECAL, Battery Disconnect
2		87458467		1	SWITCH, Master Disconnect Switch
3		399665A2		1	ANCHOR, Strip, Battery Jump Start
4		{87622960}		1	Battery Cable, Negative, 1200mm (47 1/4 in.)
5		87444992		1	CABLE ASSY., Battery Cable, Negative, 2900mm (114 3/16 in.)
6		87624401		1	BRACKET, Remote Jump Start Bracket
7		L11541		1	STRAP, CABLE
8		87052671		1	CABLE ASSY., Battery Cable, Positive
9		399384A1		1	TERMINAL CONNECTOR, Terminal, Negative Remote Jump Start
10		120103		2	BOLT, Hex, M8 x 16, 8.8
11		86624185		2	WASHER, M8 x 17.5 x 2, HT
12		229197A1		2	NUT
13		399383A1		1	TERMINAL CONNECTOR, Terminal, Positive Remote Jump Start

WORK LIGHTS - LH

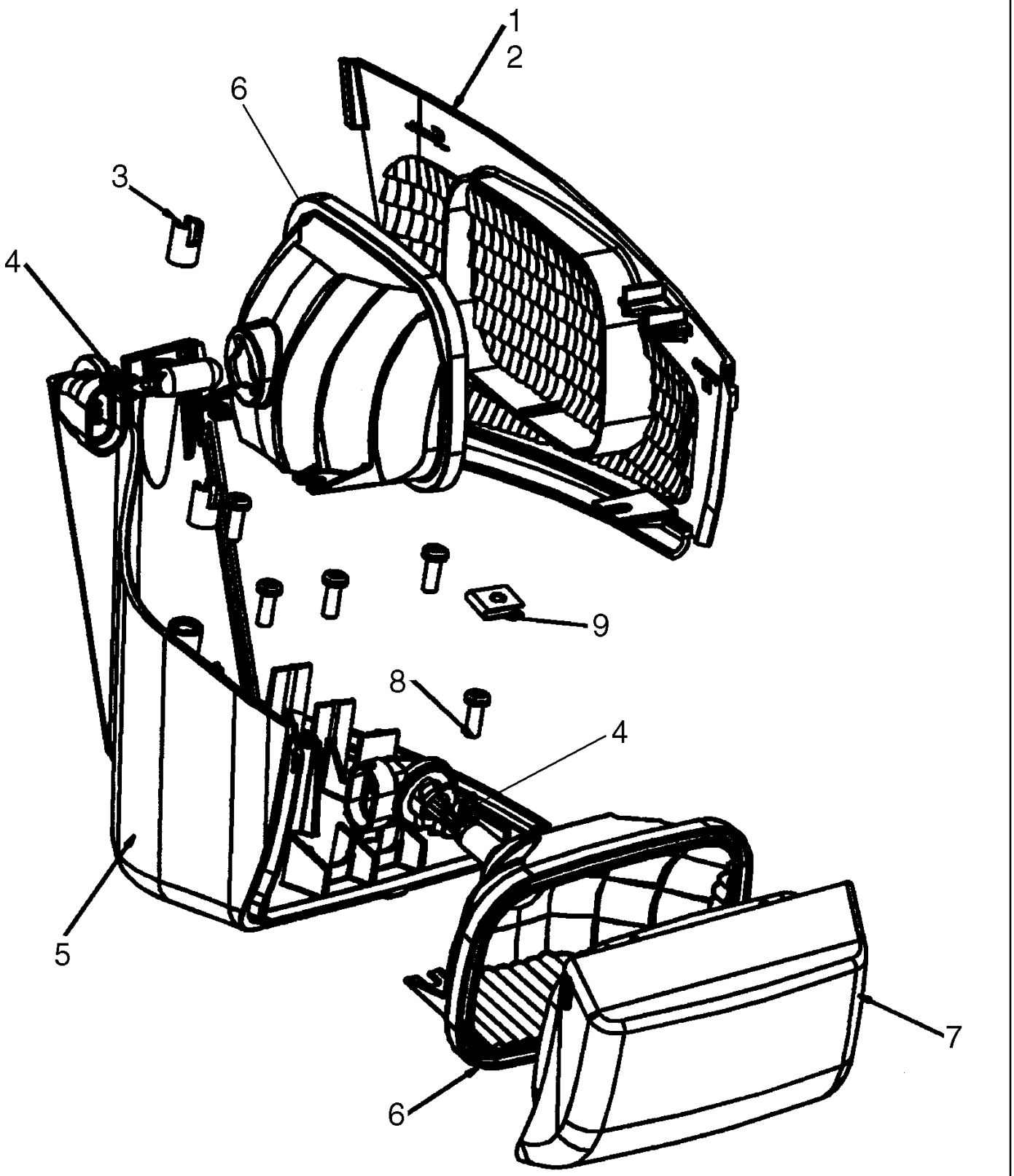

WORK LIGHTS - LH

REF	FN	PART NUMBER	YR/SN	QTY	DESCRIPTION
		87650097		1	LIGHT, Work Light, LH; Incl 1 - 9
1		NSS		AR	NOT SERVICED SEPARATELY, Adhesive Sealant
2		NSS		1	NOT SERVICED SEPARATELY, Side Lens, Clear
3		NSS		2	NOT SERVICED SEPARATELY, Threaded Brass Insert, M5 X 10
4		NSS		2	NOT SERVICED SEPARATELY, Bulb, 12.8V 50W Halogen
5		NSS		2	NOT SERVICED SEPARATELY, Housing
6		NSS		2	NOT SERVICED SEPARATELY, Reflector
7		NSS		1	NOT SERVICED SEPARATELY, Front Lens, Clear
8		NSS		5	NOT SERVICED SEPARATELY, Screw
9		NSS		1	NOT SERVICED SEPARATELY, Nut

WORK LIGHTS - RH

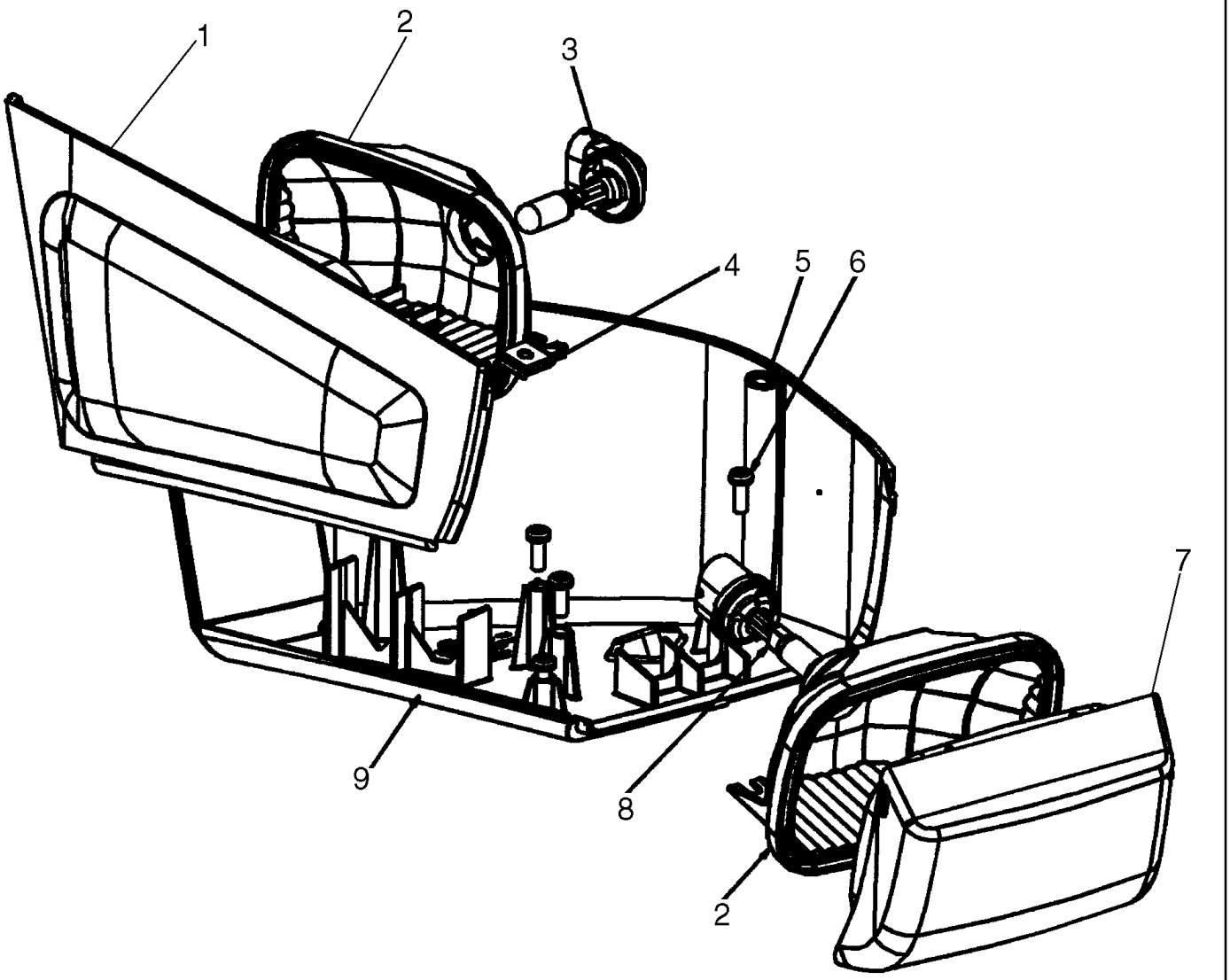

BS07J029

WORK LIGHTS - RH

REF	FN	PART NUMBER	YR/SN	QTY	DESCRIPTION
		87650098		1	LIGHT, Work Light, RH; Incl 1 - 9
1		NSS		1	NOT SERVICED SEPARATELY, Side Lens, Clear
2		NSS		2	NOT SERVICED SEPARATELY, Reflector
3		NSS		1	NOT SERVICED SEPARATELY, Bulb, 12.8V 50W Halogen
4		NSS		1	NOT SERVICED SEPARATELY, Nut
5		NSS		2	NOT SERVICED SEPARATELY, Threaded Brass Insert, M5 X 10
6		NSS		5	NOT SERVICED SEPARATELY, Screw
7		NSS		1	NOT SERVICED SEPARATELY, Front Lens, Clear
8		NSS		1	NOT SERVICED SEPARATELY, Bulb, 12V 50W
9		NSS		1	NOT SERVICED SEPARATELY, Housing

ELECTRICAL - ROAD LIGHTS (NA)

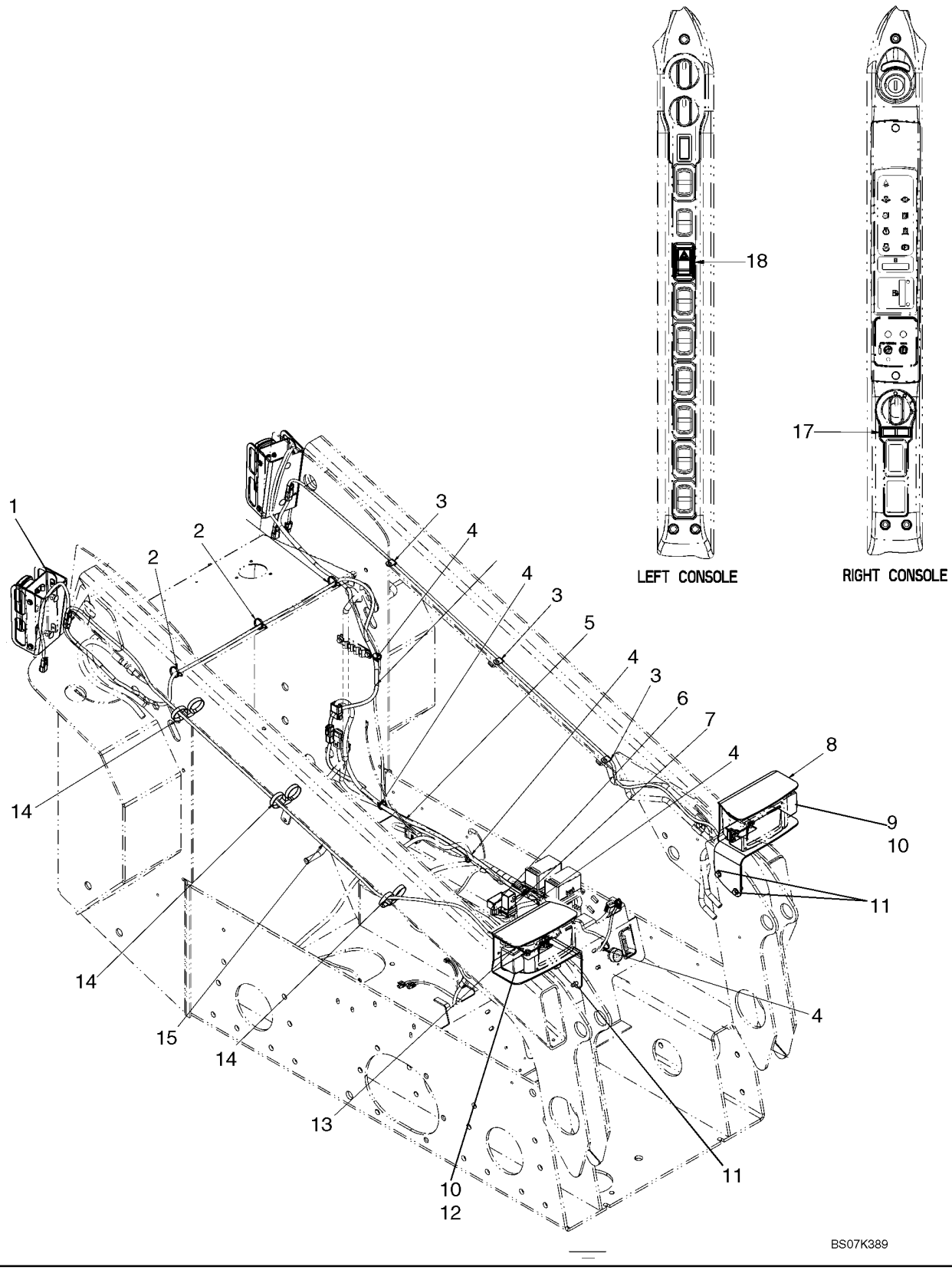

ELECTRICAL - ROAD LIGHTS (NA)

REF	FN	PART NUMBER	YR/SN	QTY	DESCRIPTION
		87676259		1	KIT, SERVICE, Kit, Road Lights (NA); Incl 1 - 18
1		REF		2	INSTRUCTION, Rear Lights; See Fig 04-22
2		87668737		3	STRAP
3		853765		3	CLAMP, 5/16", Insul, 3/8" Bolt
4		263117		5	STRAP, CABLE, .14" x 11 1/2"
5		87673072		1	HARNESS, Harness, Road Lights
6		83982664		1	RELAY, Turn Signal Relay
7		9821783		1	FLASHER UNIT
8		87720246		1	BRACKET, Bracket, LH
9		85821385		1	HEADLAMP, LH, See Fig 04-21
10		43435		4	NUT, M10, Flg Ser
11		280476		4	SCREW, SELF TAP, Hex Wash Hd, 3/8" x 1"
12		85821384		1	HEADLAMP, RH, See Fig 04-20
13		87720245		1	BRACKET, Bracket, RH
14		87659208		3	CIRCLIP, Strap, Dual Tie Releasable
15		87673079		2	HARNESS, Harness, Turn Signal
16		{87655334}		2	Relay
17		86604657		1	INDICATOR, TURN SIGNAL
18		87634133		1	SWITCH, Rocker Switch, Hazard Lights

ELECTRICAL - ROAD LIGHTS (EUROPE)

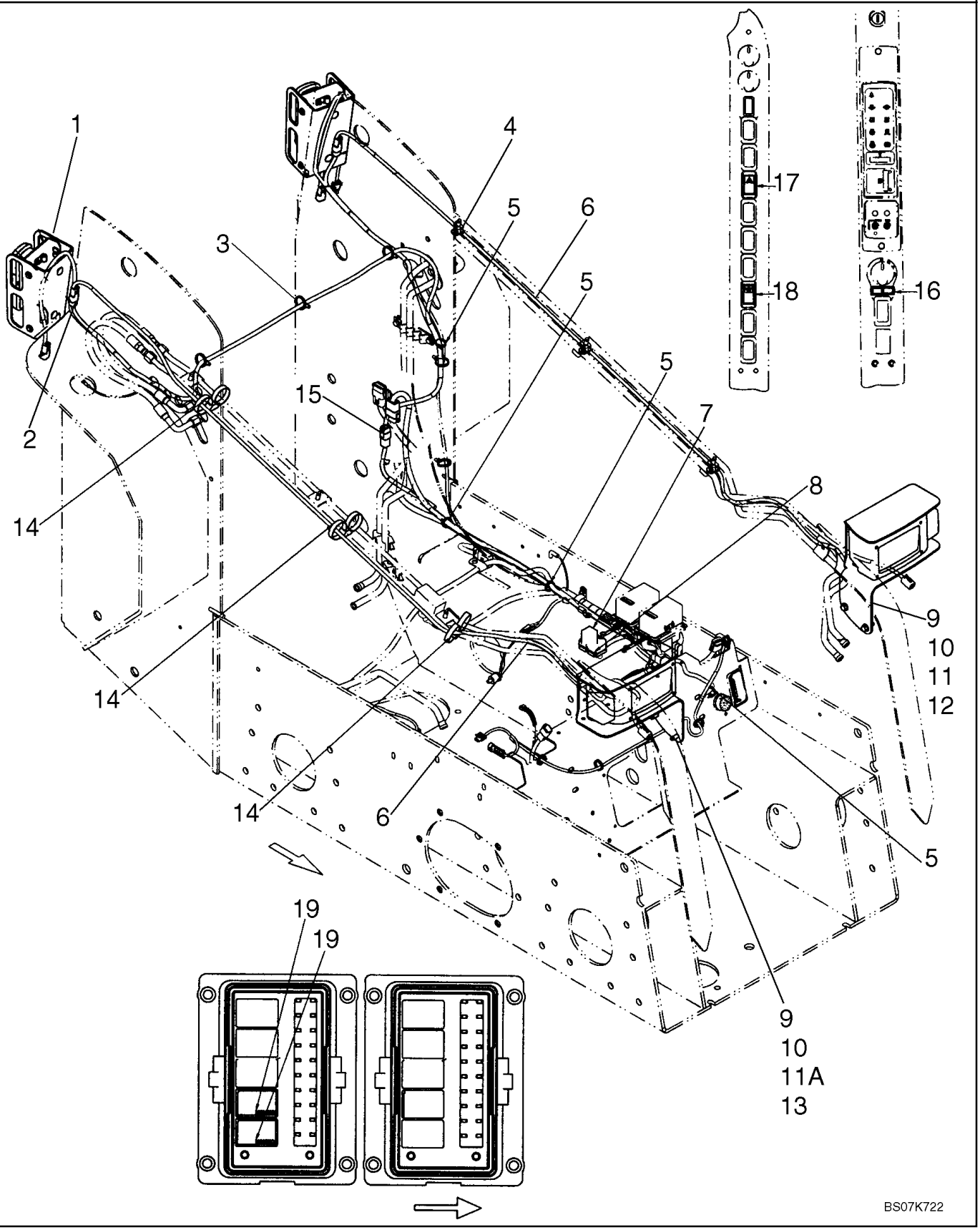

ELECTRICAL - ROAD LIGHTS (EUROPE)

REF	FN	PART NUMBER	YR/SN	QTY	DESCRIPTION
		87676260		1	KIT, SERVICE, Kit, Road Lights (EU); Incl 1 - 19
1		REF		2	INSTRUCTION, Rear Lights; See Fig 04-22
2		87673077		1	HARNESS, Harness, Turn Signal
3		87668737		3	STRAP
4		853765		3	CLAMP, 5/16", Insul, 3/8" Bolt
5		263117		4	STRAP, CABLE, .14" x 11 1/2"
6		87673079		2	HARNESS, Harness, Turn Signal Loader Arm
7		388457A1		1	RELAY, Time Delay, Road Lights, Europe
8		9821783		1	FLASHER UNIT
9		43435		4	NUT, M10, Flg Ser
10		280476		4	SCREW, SELF TAP, Hex Wash Hd, 3/8" x 1"
11		85821385		1	HEADLAMP, LH, See Fig 04-21
11A		85821384		1	HEADLAMP, RH, See Fig 04-20
12		87720246		1	BRACKET, Bracket, LH
13		87720245		1	BRACKET, Bracket, RH
14		87659208		3	CIRCLIP, Strap, Dual Tie Releasable
15		87673070		1	HARNESS, Harness, EU Adapter
16		86604657		1	INDICATOR, TURN SIGNAL
17		87634133		1	SWITCH, Rocker Switch, Hazard Lights
18		87642912		1	SWITCH, Rocker Switch, Loader Lock
19		{87655334}		2	Relay, 35A, Road Lights

HEADLAMP - RH

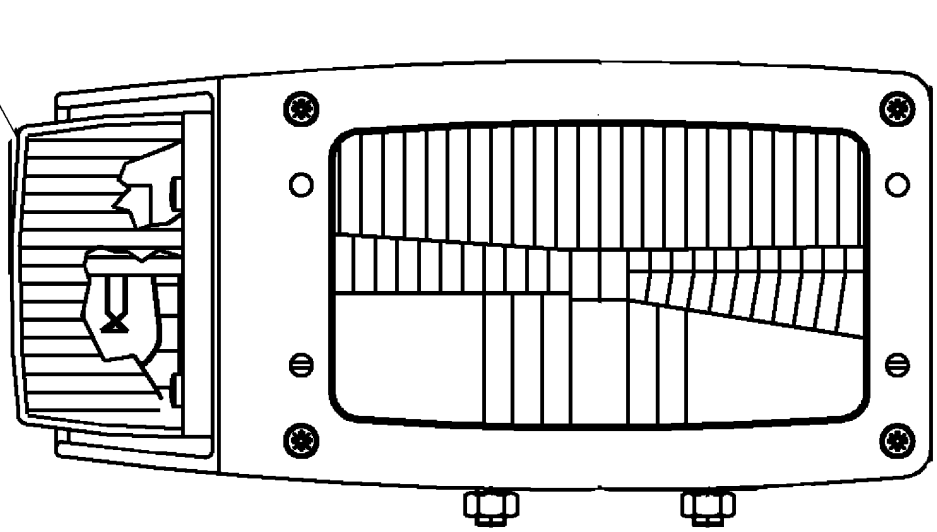

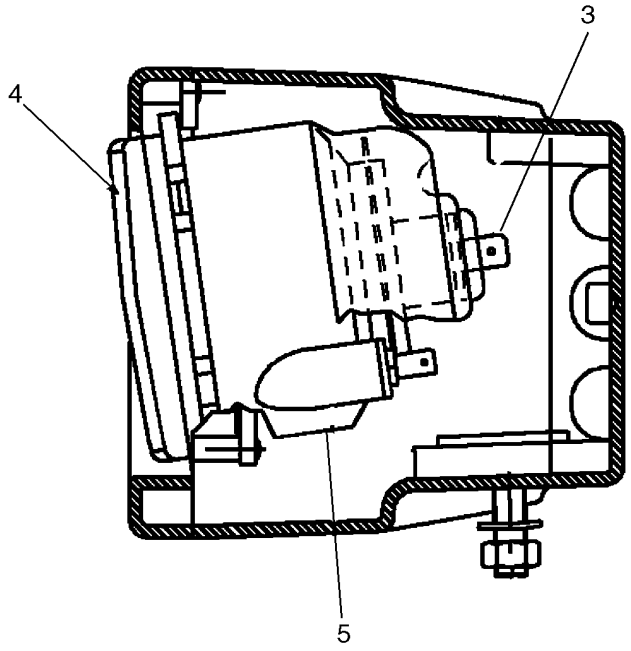

BS07K390

HEADLAMP - RH

REF	FN	PART NUMBER	YR/SN	QTY	DESCRIPTION
		85821384		1	HEADLAMP, RH, Incl. 1 - 5
1		9969431		1	LENS
2		14148190		1	BULB, Bulb, 12V 21W
3		14152090		1	BULB, Bulb, 12V 60/55 W
4		NSS		1	NOT SERVICED SEPARATELY, Lamp
5		14142390		1	BULB, Bulb, 12V-4W

HEADLAMP - LH

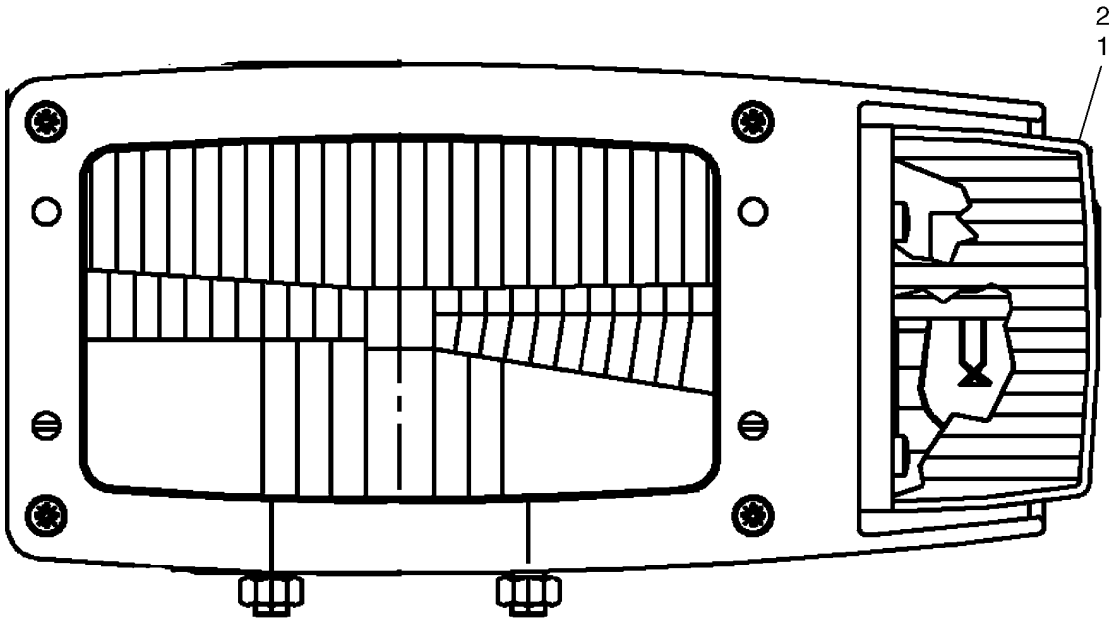

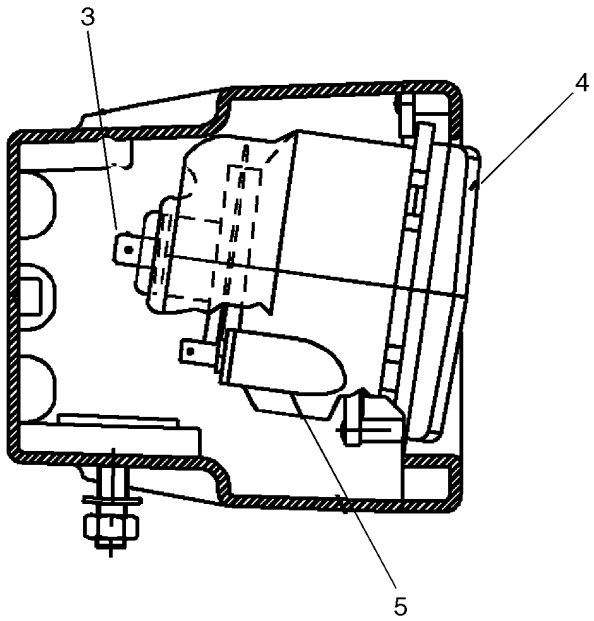

BS07K391

HEADLAMP - LH

REF	FN	PART NUMBER	YR/SN	QTY	DESCRIPTION
		85821385		1	HEADLAMP, LH, Incl 1 - 5
1		9969430		1	LENS
2		14148190		1	BULB, Bulb, 12V 21W
3		14152090		1	BULB, Bulb, 12V 60/55 W
4		NSS		1	NOT SERVICED SEPARATELY, Lamp
5		14142390		1	BULB, Bulb, 12V 4W

REAR LIGHT AND MOUNTING

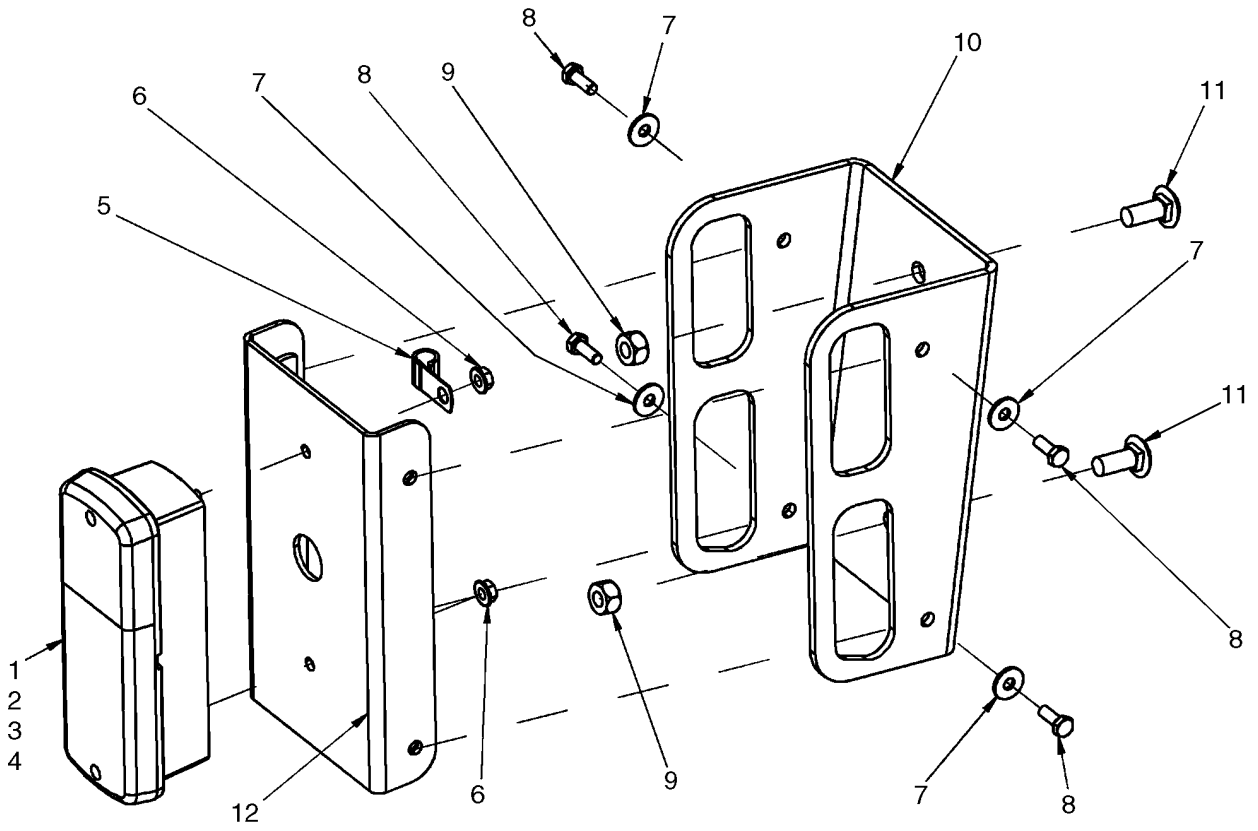

BS07K392

REAR LIGHT AND MOUNTING

REF	FN	PART NUMBER	YR/SN	QTY	DESCRIPTION
1		177239A2		2	LIGHT, TAIL, Incl 2 - 4
2		187140A1		2	LENS
3		3131227R1		2	BULB, P25-1, 12V, 25W
4		3131234R1		2	BULB, P25-2, 12V, 5W
5		87016870		2	CLAMP, J, 7/16" Insul, 5/16" Bolt
6		86511444		4	NUT, M6, Flg Ser
7		86624182		8	WASHER, M6 x 18 x 1.6
8		86508568		8	BOLT, Hex, M6 x 16, 8.8
9		87030549		4	NUT, LOCK, M10 x 1.5, Cl 10
10		419431A1		2	BRACKET, Rear Turn Signal Bracket
11		86633356		4	BOLT, CARRIAGE, Short NK, M10 x 25, Cl8.8, Full Thd
12		427180A1		2	BRACKET

BACKUP ALARM

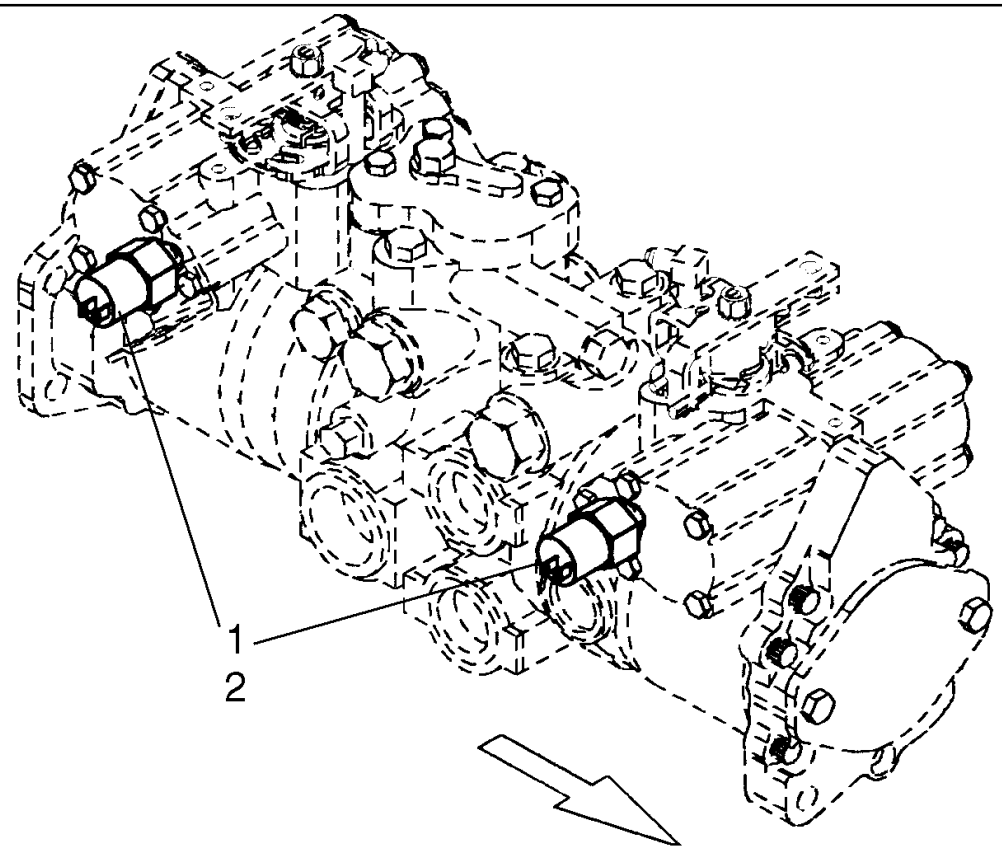

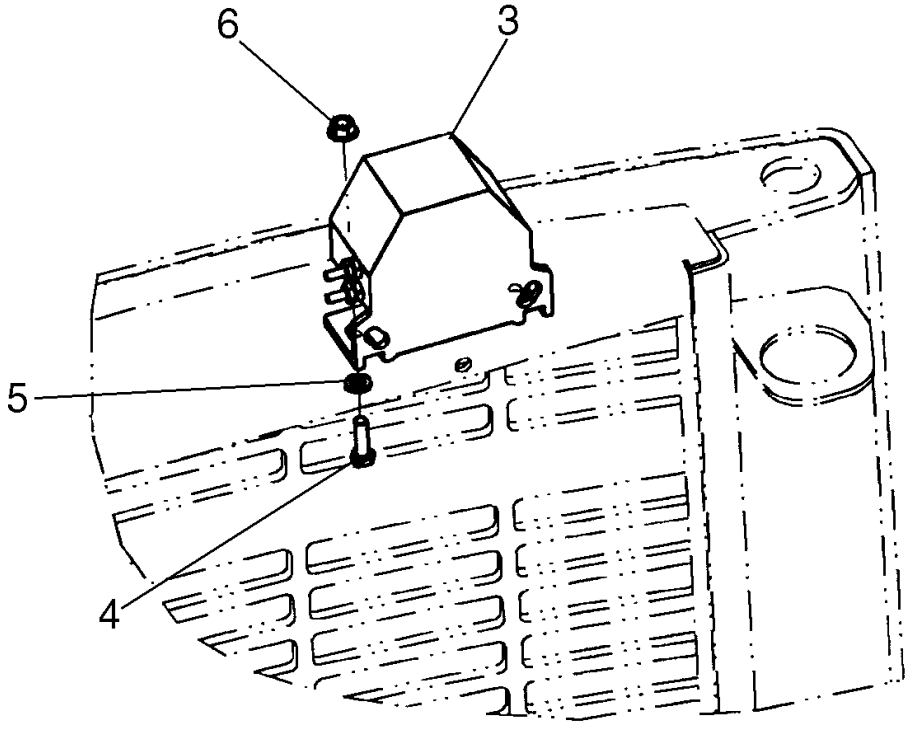

BS04K096

BACKUP ALARM

REF	FN	PART NUMBER	YR/SN	QTY	DESCRIPTION
1		87029843		2	SWITCH, PRESSURE, 600 PSI; Backup Alarm Control; Incl. 2; If Used
1		87370805		2	SWITCH, PRESSURE, 2000 PSI; Backup Alarm Control; Incl. O-Ring 9617873; Replaces 87461545; If Used
2		9617873		1	O-RING, 6-1, 90 Duro, .468" ID x .078" Thk
3		324299A1		1	ALARM, For Service Order 325258A1
3		325258A1		1	KIT, SERVICE, Backup Alarm
4		120100		2	BOLT, Hex, M6 x 20, 8.8
5		86624182		2	WASHER, M6 x 18 x 1.6
6		86511444		2	NUT, M6, Flg Ser

ELECTRICAL ACCESSORY SOCKET

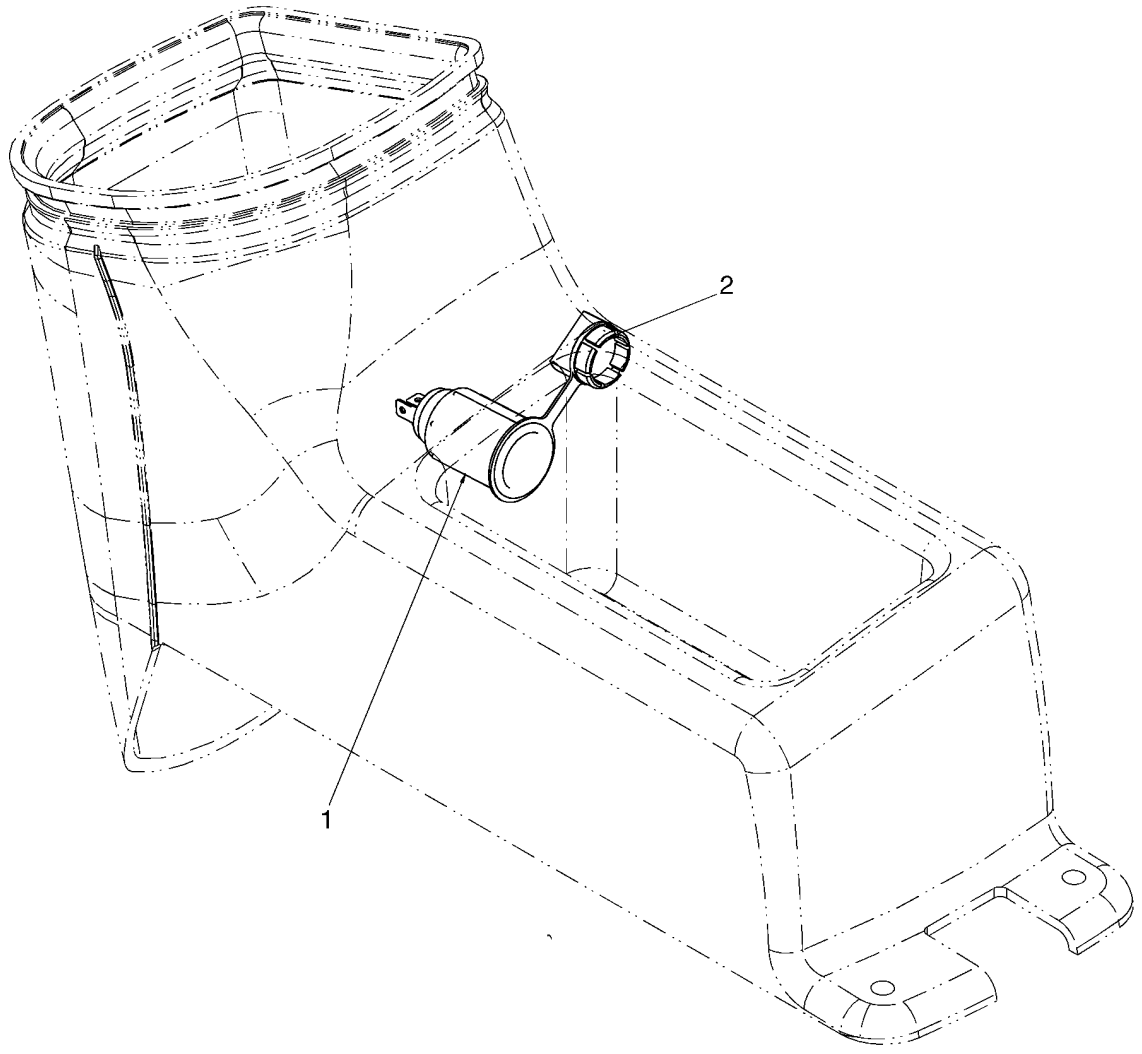

BS07K960

ELECTRICAL ACCESSORY SOCKET

REF	FN	PART NUMBER	YR/SN	QTY	DESCRIPTION
1		283779A1		1	OUTLET, Power Outlet
2		283781A1		1	CAP

ELECTRICAL ACCESSORY SOCKET (EUROPE)

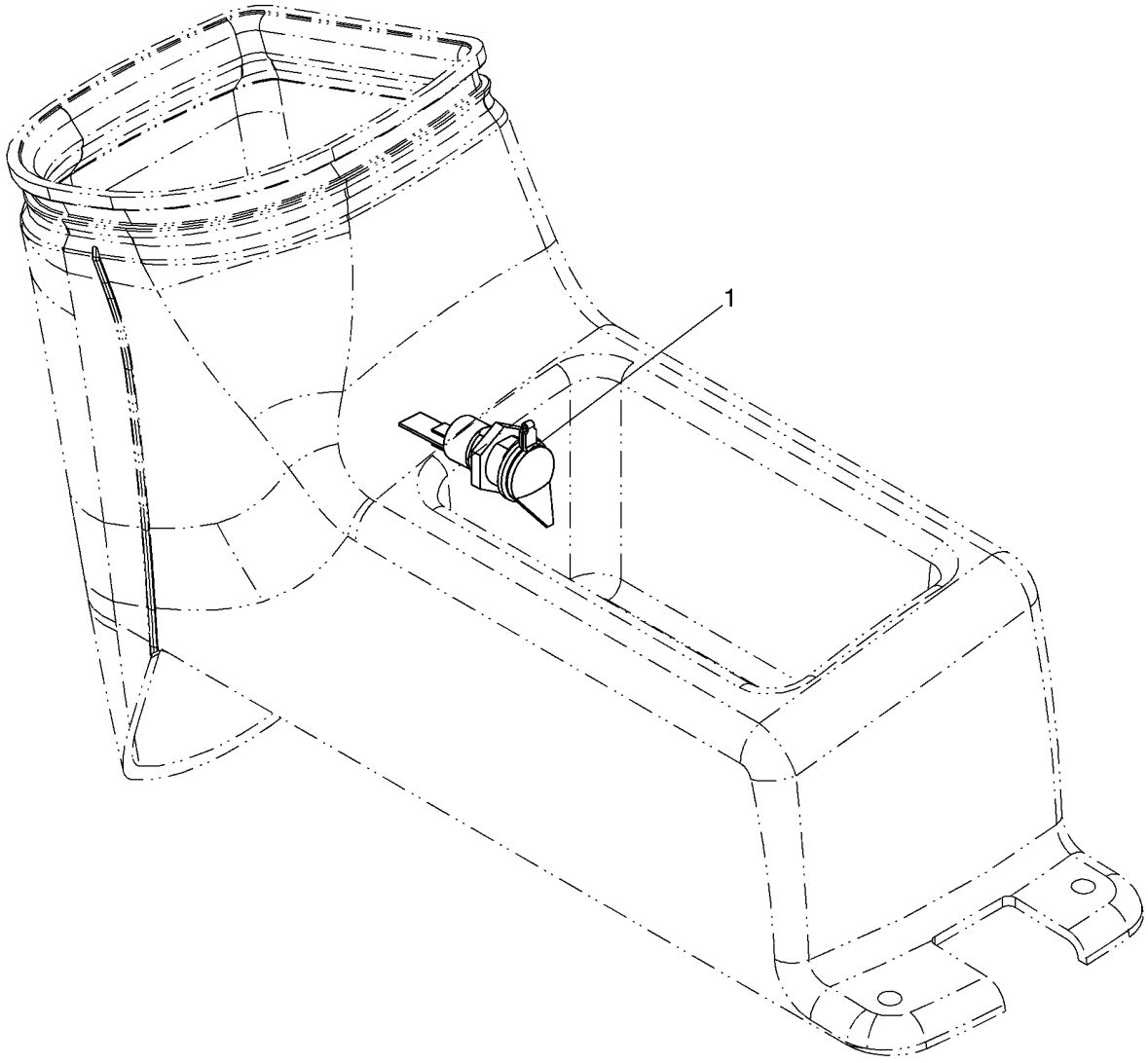

BS07K962

ELECTRICAL ACCESSORY SOCKET (EUROPE)

REF	FN	PART NUMBER	YR/SN	QTY	DESCRIPTION
1		142211A1		1	SOCKET

HORN - MOUNTING

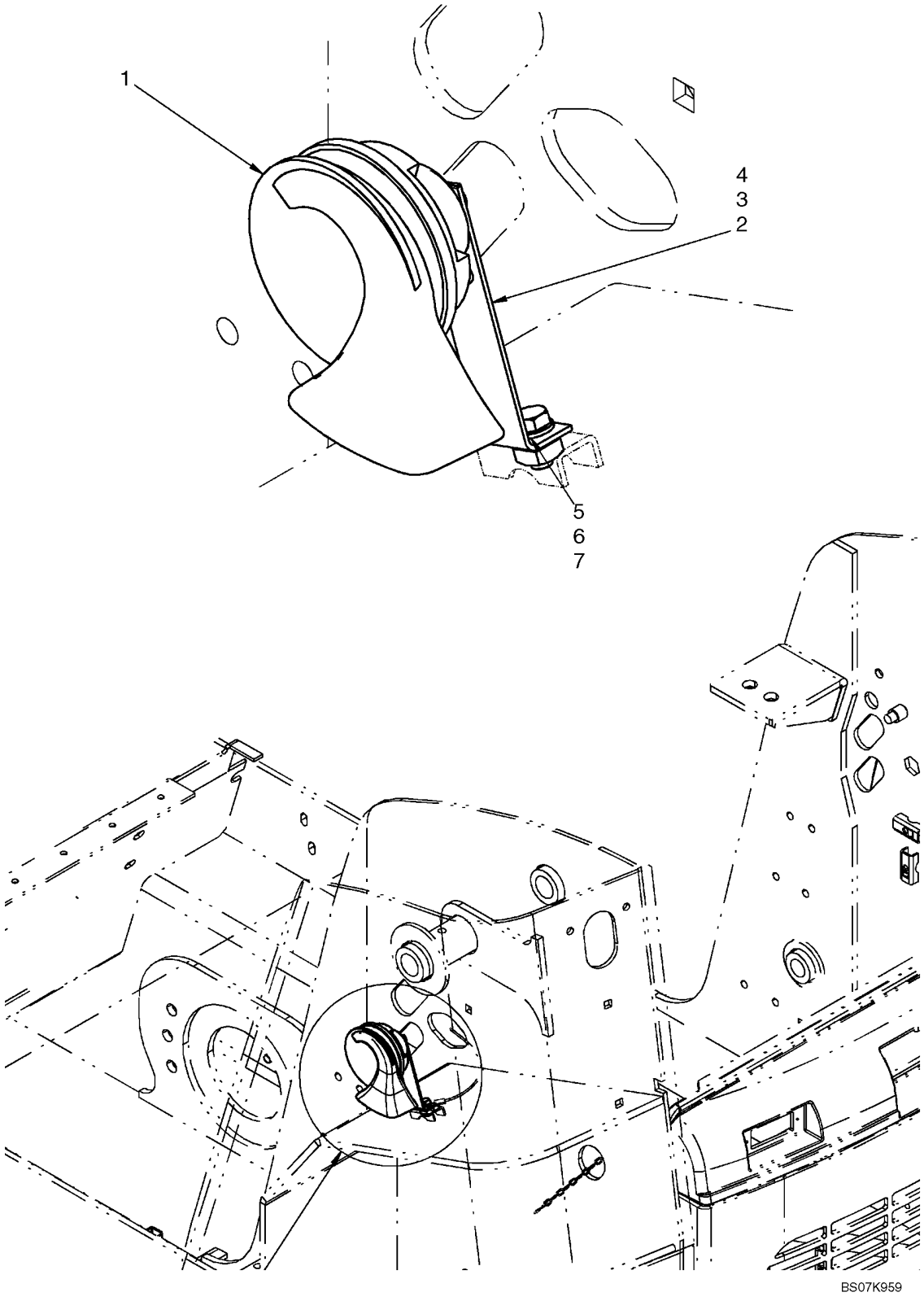

HORN - MOUNTING

REF	FN	PART NUMBER	YR/SN	QTY	DESCRIPTION
1		254130A1		1	HORN
2		406938A2		1	ANGLE, Horn Mounting Bracket
3		87030561		1	NUT, LOCK, M6 x 1, Cl 8
4		86632601		2	WASHER, LOCK, Ext Tooth, M8
5		86624184		1	WASHER, M8 x 16 x 1.6
6		120103		1	BOLT, Hex, M8 x 16, 8.8
7		229197A1		1	NUT

ELECTRIC, FRONT AUXILIARY

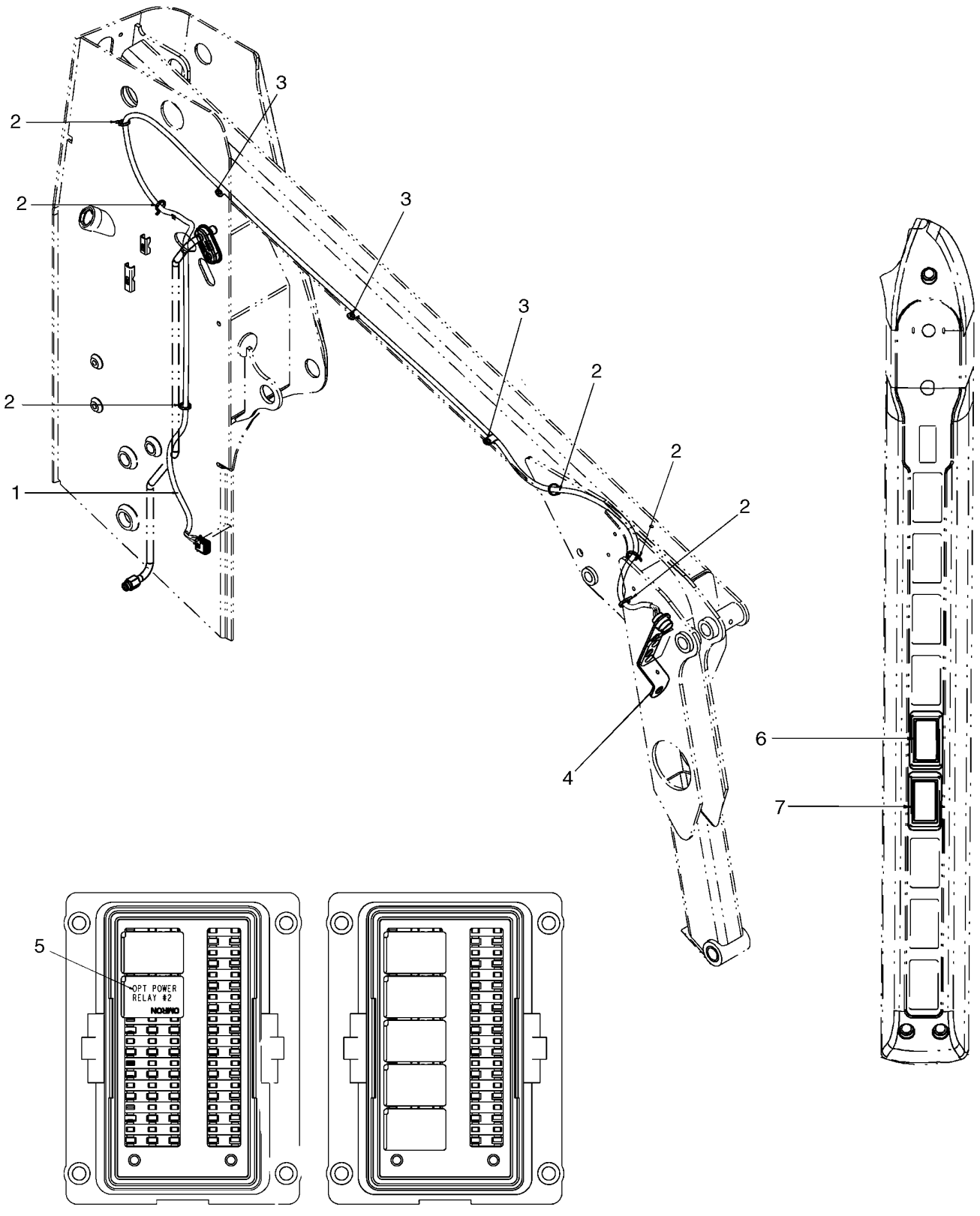

ELECTRIC, FRONT AUXILIARY

REF	FN	PART NUMBER	YR/SN	QTY	DESCRIPTION
		87640048		1	KIT, SERVICE, Kit, Front Auxiliary Electric; Incl 1 - 11
1		87441574		1	HARNESS, WIRE, Front Auxiliary Harness
2		263117		6	STRAP, CABLE, .14" x 11 1/2"
3		87028524		3	CLAMP
4		87023530		1	BRACKET
5		{87655334}		1	Relay
6		87634134		1	SWITCH, Rocker Switch, Auxiliary Electric I/O
7		87634135		1	SWITCH, Rocker Switch, Auxiliary Electric F/R
8		9706704		1	BOLT, Hex, M10 x 35, 8.8, Full Thd, Not Illustrated
9		87449992		1	BRACKET, Bracket, Auxiliary Electric; Not Illustrated
10		87453780		1	BRACKET, Bracket, Auxiliary Electric With Case Drain; Not Illustrated
11		87458118		1	BRACKET, Bracket, Auxiliary Electric Mount; Not Illustrated

ROTATING BEACON

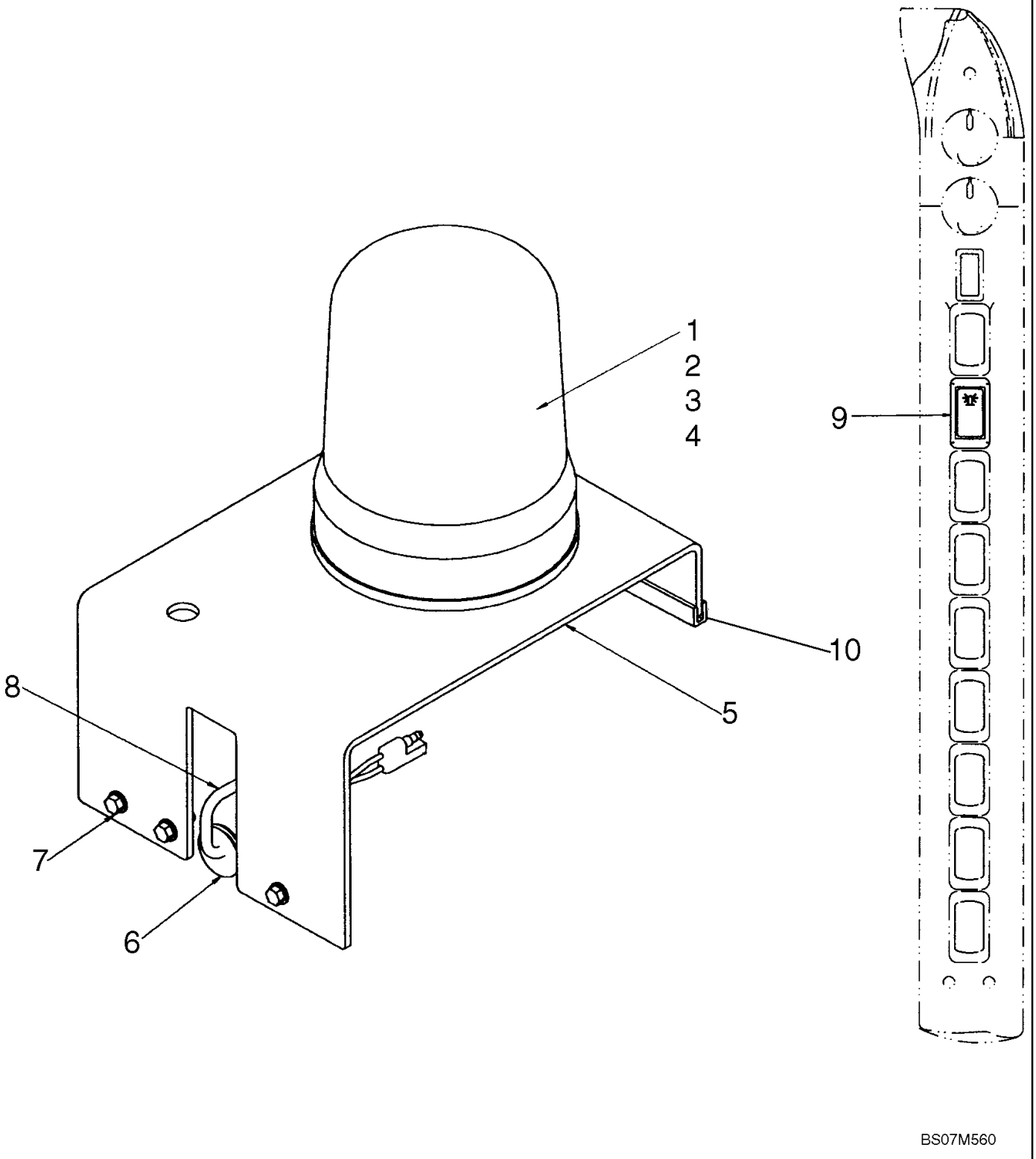

ROTATING BEACON

REF	FN	PART NUMBER	YR/SN	QTY	DESCRIPTION
		87638500		1	KIT, SERVICE, Kit, Rotating Beacon; Incl 1 - 10
1		E99128		1	BEACON, Rotating Beacon; Incl 2 - 4
2		E99208		1	LENS
3		3125705R1		1	BULB
4		E38908		1	SEAL
5		87682712		1	BRACKET, Beacon Support
6		87530614		1	GROMMET, Grommet
7		86625224		3	SCREW, Screw, Hex Head #1/4-20 X 3/4
8		293828A1		1	HARNESS, Harness, Rotating Beacon
9		133714A1		1	SWITCH, Rocker Switch, Rotating Beacon
10		293470A1		1	STRIP, ORNAMENTAL, Edge Trim

SPECIAL PARTS FOR ITALY - LICENSE PLATE LIGHT

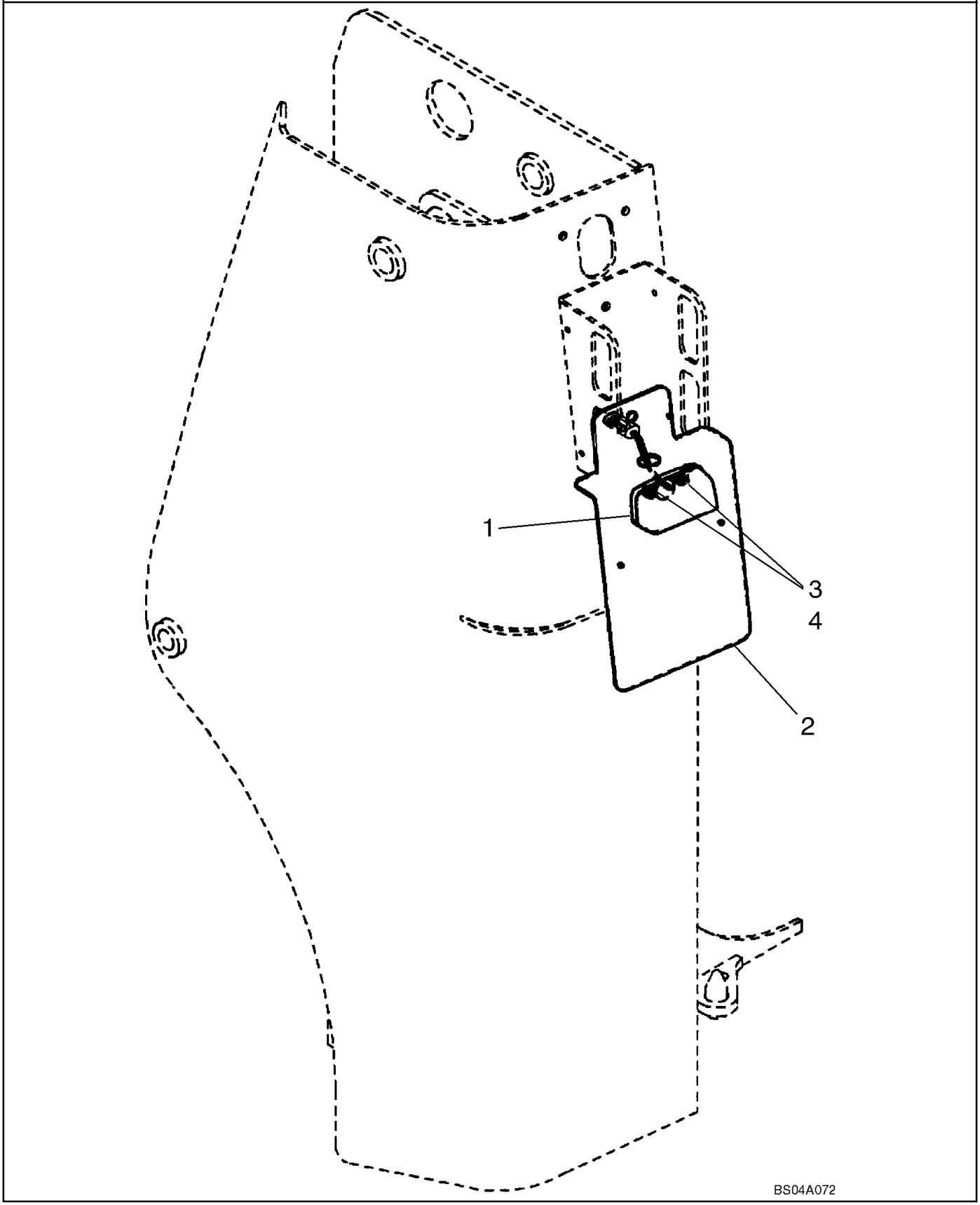

SPECIAL PARTS FOR ITALY - LICENSE PLATE LIGHT

REF	FN	PART NUMBER	YR/SN	QTY	DESCRIPTION
1		120229A1		1	LIGHT
2		428239A2		1	PLATE ASSY., License Plate Mounting
3		825-5146		2	NUT, M6, Flg Ser
4		840-1616		2	SCREW, Cross Pan Hd, M6 x 16

STROBE LIGHT

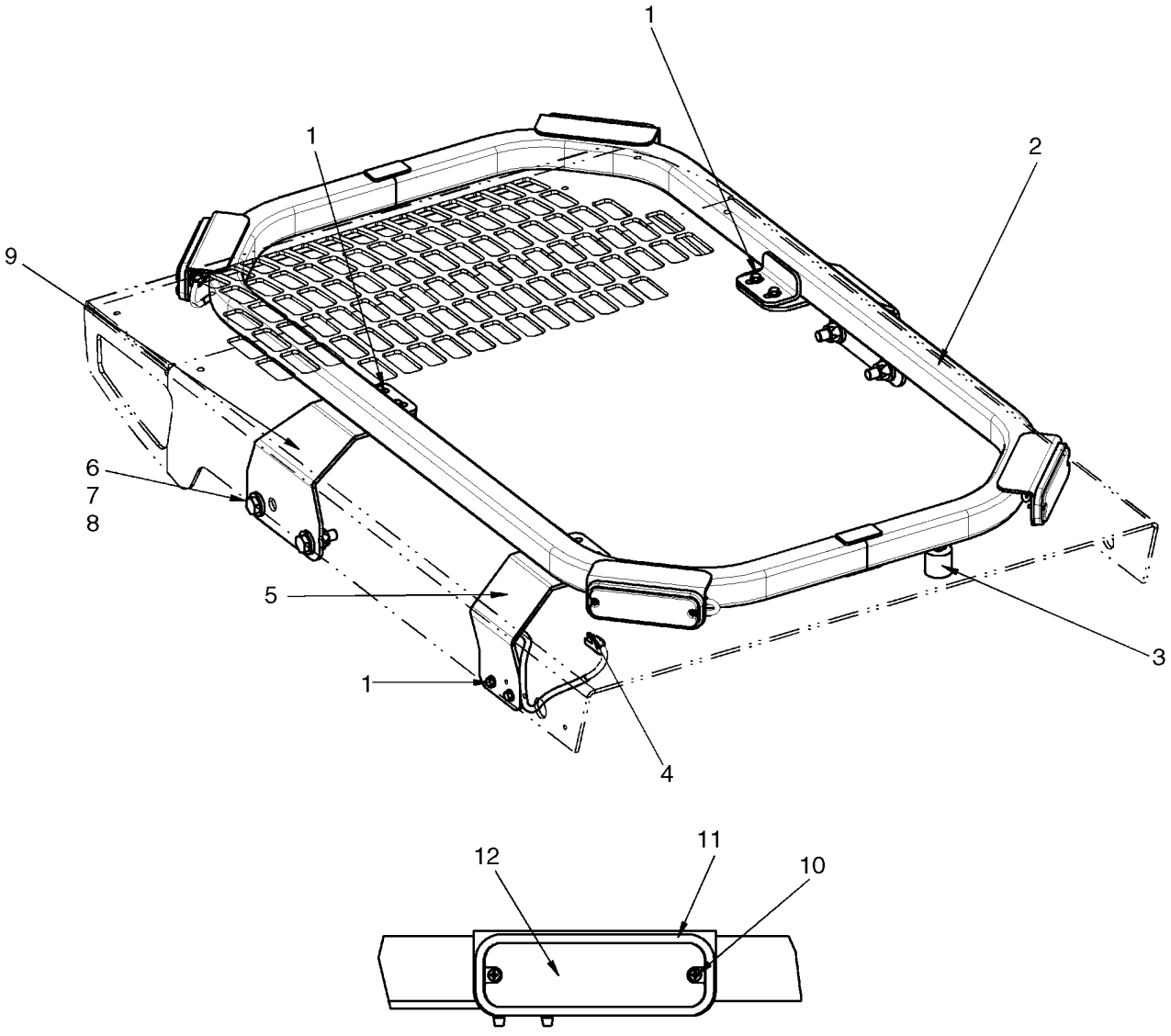

STROBE LIGHT

REF	FN	PART NUMBER	YR/SN	QTY	DESCRIPTION
		87652336		1	KIT, SERVICE, Kit, Strobe Light; Incl 1 - 12
1		86625224		6	SCREW
2		87727417		1	FRAME
3		87727414		1	BUMPER, Rubber Feet
4		87723831		1	HARNESS, Harness, Strobe
5		NSS		1	NOT SERVICED SEPARATELY, Wire Guard
6		337563		4	BOLT, Hex, M12 x 40, 10.9, Full Thd
7		412672		4	NUT, LOCK, M12 x 1.75, Cl 10
8		86625256		8	WASHER, M12 x 28.5 x 4, HT
9		87727413		2	BRACKET, Strobe Mounting Bracket
10		86637783		8	SCREW, SELF TAP, Cross Pan Hd, #6 x 5/8"
11		87728345		4	BEZEL, Strobe Light
12		87634137		4	HARNESS, Amber Strobe, LED

NOTES

SECTION INDEX
Power Train

06-01	JOYSTICK CONTROL PLUMBING - H PATTERN
06-02	JOYSTICK CONTROL PLUMBING - ISO PATTERN (440)
06-03	JOYSTICK CONTROL PLUMBING - ISO PATTERN (440CT)
06-04	JOYSTICK VALVE KITS - H PATTERN, LH
06-05	JOYSTICK VALVE KITS - H PATTERN, RH
06-06	JOYSTICK VALVE KITS - ISO PATTERN, LH
06-07	JOYSTICK VALVE KITS - ISO PATTERN, RH
06-08	JOYSTICK VALVE KITS - ISO PATTERN, LH
06-09	HYDROSTATICS - PUMP, SUPPLY AND RETURN (440)
06-10	HYDROSTATICS - PUMP MOUNTING (440)
06-11	HYDROSTATICS - DRIVE MOTORS, CASE DRAIN (440)
06-12	HYDROSTATICS - PUMP, SUPPLY AND RETURN (440CT)
06-13	HYDROSTATICS - DRIVE MOTORS (440CT)
06-14	HYDROSTATICS - MULTI VALVE (440CT)
06-15	HYDROSTATICS - PUMP FITTINGS (440CT)
06-16	HYDROSTATICS - HOSES, PUMP AND DRIVE MOTORS
06-17	HYDROSTATICS - PUMP TO COOLER (440 WITH PILOT CONTROL)
06-18	HYDROSTATICS - MANIFOLD/CONTROL VALVE (440 WITH PILOT CONTROL)
06-19	HYDROSTATICS - PUMP FITTINGS (440 WITH PILOT CONTROL)
06-20	HYDROSTATICS - SINGLE SPEED, DRIVE MOTORS (440)
06-21	HYDROSTATICS - HOSES (440 WITH PILOT CONTROL)
06-22	HYDROSTATICS - MULTI VALVE (440 WITH PILOT CONTROL)
06-23	HYDROSTATICS - TWO SPEED, DRIVE MOTORS (MECHANICAL CONTROL)
06-24	HYDROSTATICS - TWO SPEED, DRIVE MOTORS (PILOT CONTROL)
06-25	HYDROSTATICS - MULTI VALVE ASSEMBLY
06-26	HYDROSTATICS - TWO SPEED, VALVE ASSY
06-27	HYDROSTATICS - TWO SPEED, VALVE ASSY (440CT)
06-28	HYDROSTATICS - TWO SPEED, VALVE ASSY (WITH PILOT CONTROL)
06-29	HYDROSTATICS - RESONATOR (440CT EUROPE)
06-30	HYDROSTATICS - RESONATOR, WITH PILOT CONTROL (440 EUROPE)
06-31	HYDROSTATICS - RESONATOR, MECHANICAL CONTROL (440 EUROPE)
06-32	FILTER ASSY - MOUNTING
06-33	PUMP, TANDEM (440)
06-34	PUMP, TANDEM (440)
06-35	PUMP, TANDEM (440)
06-36	PUMP, TANDEM (440)
06-37	PUMP, TANDEM (440)
06-38	PUMP, TANDEM (440)
06-39	PUMP, TANDEM - REXROTH (87546976)
06-40	PUMP, TANDEM - PRESSURE RELIEF VALVE (87546976)
06-41	PUMP, TANDEM - PRESSURE RELIEF VALVE (87546976)
06-42	PUMP, TANDEM - INTERNAL GEAR PUMP (87546976)
06-43	PUMP, TANDEM - ROTARY GROUP, RIGHT HAND ROTATION (87546976)
06-44	PUMP, TANDEM - ROTARY GROUP, LEFT HAND ROTATION (87546976)
06-45	PUMP, TANDEM - CONTROL, HYDRAULIC (87546976)
06-46	PUMP, TANDEM - CONTROL CARTRIDGE WITH ORIFICE (87546976)
06-47	PUMP, TANDEM - REXROTH (87546977)
06-48	PUMP, TANDEM - PRESSURE RELIEF VALVE (87546977)
06-49	PUMP, TANDEM - INTERNAL GEAR PUMP (87546977)
06-50	PUMP, TANDEM - ROTARY GROUP, RIGHT HAND ROTATION (87546977)
06-51	PUMP, TANDEM - ROTARY GROUP, LEFT HAND ROTATION (87546977)

SECTION INDEX
Power Train

06-52	PUMP, TANDEM - CONTROL, HYDRAULIC (87546977)
06-53	PUMP, TANDEM - CONTROL CARTRIDGE WITH ORIFICE (87546977)
06-54	PUMP, GEAR (WITHOUT HIGH FLOW)
06-55	PUMP, GEAR (HIGH FLOW)
06-56	MOTOR ASSY - SINGLE SPEED
06-57	MOTOR ASSY - SINGLE SPEED
06-58	MOTOR ASSY - SINGLE SPEED
06-59	MOTOR ASSY - TWO SPEED
06-60	MOTOR ASSY - TWO SPEED
06-61	MOTOR ASSY - TWO SPEED
06-62	MOTOR ASSY - HYDROSTATIC DRIVE (440CT)
06-63	DRIVE LINE
06-64	AXLE ASSY
06-65	WHEELS - SOLID FLEX
06-66	WHEELS
06-67	TRACK (440CT)
06-68	FINAL DRIVE (440CT)

NOTES

JOYSTICK CONTROL PLUMBING - H PATTERN

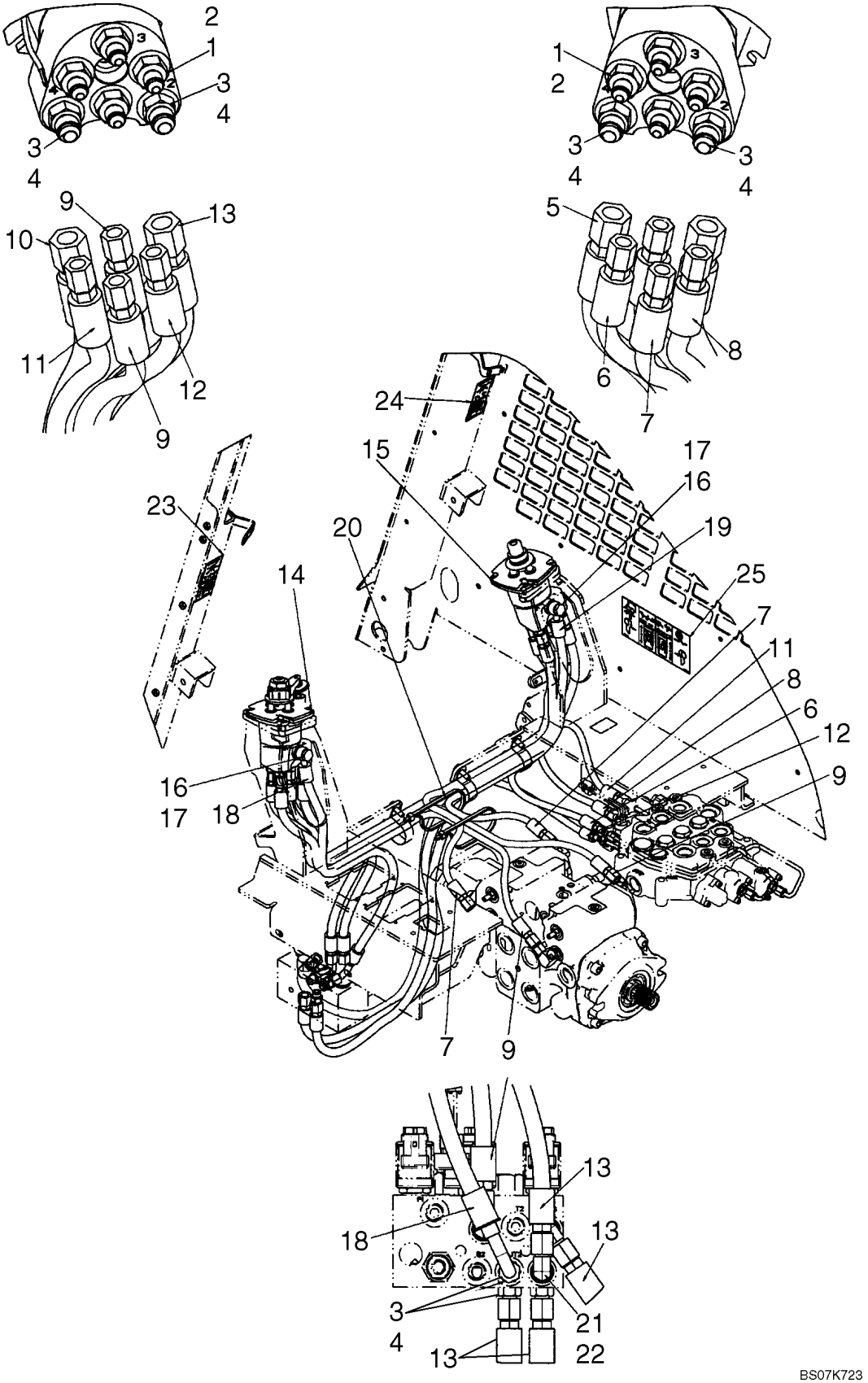

JOYSTICK CONTROL PLUMBING - H PATTERN

REF	FN	PART NUMBER	YR/SN	QTY	DESCRIPTION
		{87704477}		1	Kit; H Pattern Controls; Incl. 1 - 21 And Instructions
1		139398		8	CONNECTOR, HYD., 7/16"-20, 37° x 9/16"-18, O-Ring, Incl 2
2		9617873		8	O-RING, 6-1, 90 Duro, .468" ID x .078" Thk
3		76350		6	CONNECTOR, HYD., 9/16"-18, 37° x 9/16"-18, O-Ring, Incl 4
4		9617873		6	O-RING, 6-1, 90 Duro, .468" ID x .078" Thk
5		87684218		2	HOSE, 1300 mm (51.18 in) Joystick Supply Or Drain
6		87604062		1	HOSE, 590 mm (23.23 in) Pilot
7		87604064		2	HOSE, 850 mm (33.46 in) Pilot
8		87604069		1	HOSE, 490 mm (19.29 in) Pilot
9		{87684229}		2	915 mm (36.02 in) Pilot
10		87684180		1	HOSE, 620 mm (24.40 in) Joystick Drain
11		87604061		1	HOSE, 1055 mm (41.54 in) Pilot
12		87604063		1	HOSE, 930 mm (36.61 in) Pilot
13		87684217		1	HOSE, 690 mm (27.16 in) Joystick Supply
14		87357240		1	VALVE, HYDRAULIC, H Pattern Joystick Valve, Left Hand, See Figure 06-04
15		87357241		1	VALVE, HYDRAULIC, H Pattern Joystick Valve, Right Hand, See Figure 06-05
16		87622364		2	BOLT, Banjo Bolt, 10 Banjo 3/4 Hole
17		933610R1		4	WASHER, SEALING, M14 x 18 x 1.8
18		87575290		1	HOSE, 776 mm (30.55 in) Joystick Supply
19		87575289		1	HOSE, 1260 mm (49.61 in) Joystick Supply
20		529070		2	STRAP, CABLE, .30" x 14.5"
21		86526		1	ELBOW, 90°, 9/16"-18, 37° x 9/16"-18, LG, Incl. 22
22		9617873		1	O-RING, 6-1, 90 Duro, .468" ID x .078" Thk
23		87715689		1	DECAL, Decal, H Pattern LH
24		87715690		1	DECAL, Decal, H Pattern RH
25		87715687		1	DECAL, Decal, H Pattern Control ID

JOYSTICK CONTROL PLUMBING - ISO PATTERN (440)

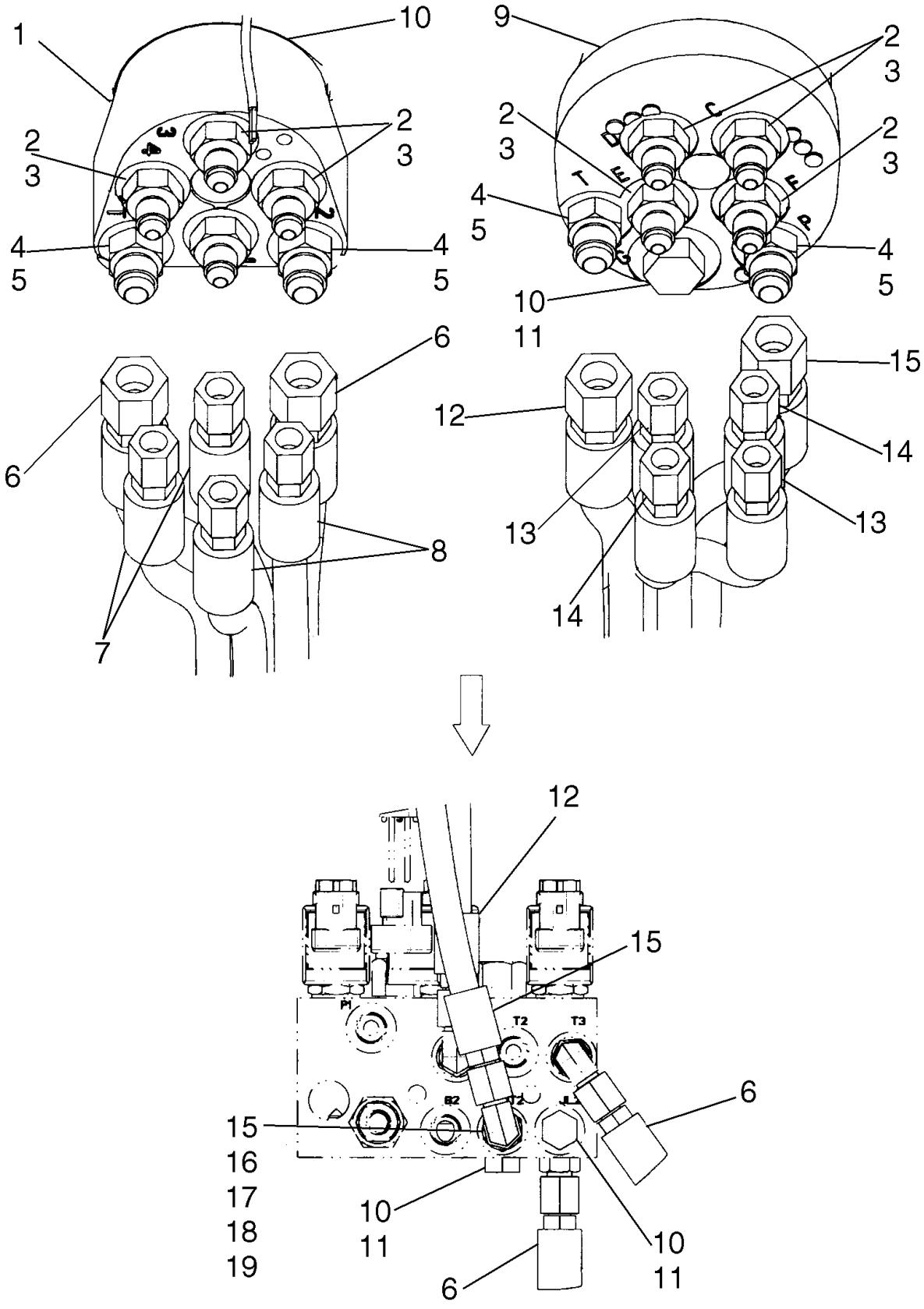

JOYSTICK CONTROL PLUMBING - ISO PATTERN (440)

REF	FN	PART NUMBER	YR/SN	QTY	DESCRIPTION
		{87703830}		1	Kit, ISO Pattern Control; Incl 1 - 21; 440
1		139398		8	CONNECTOR, HYD., 7/16"-20, 37º x 9/16"-18, O-Ring, Incl 3
2		9617873		8	O-RING, 6-1, 90 Duro, .468" ID x .078" Thk
3		76350		4	CONNECTOR, HYD., 9/16"-18, 37º x 9/16"-18, O-Ring, Incl 4
4		9617873		4	O-RING, 6-1, 90 Duro, .468" ID x .078" Thk
5		87684218		2	HOSE, 1300 mm (51.18 in) Joystick Drain Or Supply
6		87604062		2	HOSE, 590 mm (23.23 in) Pilot
7		87604069		2	HOSE, 490 mm (19.29 in) Pilot
8		76349		3	PLUG, Hex Hd, 9/16"-18 ORB, Incl 9
9		9617873		3	O-RING, 6-1, 90 Duro, .468" ID x .078" Thk
10		87684180		1	HOSE, 620 mm (24.40 in) Joystick Drain
11		87604072		2	HOSE, 800 mm (31.50 in) Pilot
12		87604070		2	HOSE, 920 mm (36.22 in) Pilot
13		87604071		1	HOSE, 680 mm (26.77 in) Joystick Supply
14		87600622		1	VALVE, Joystick Valve, ISO Pattern LH; See Figure 06-08
15		87600623		1	VALVE, Joystick Valve, ISO Pattern RH; See Figure 06-07
16		529070		2	STRAP, CABLE, .30" x 14.5"
17		87573371		1	ADAPTER, .38 OD Male x .38 OD Female; Incl 18, 19
18		9617873		1	O-RING, 6-1, 90 Duro, .468" ID x .078" Thk
19		9993141		1	O-RING, -012, 90 Duro, .364" ID x .070" Thk
20		86526		1	ELBOW, 90º, 9/16"-18, 37º x 9/16"-18, LG, Incl 21
21		9617873		1	O-RING, 6-1, 90 Duro, .468" ID x .078" Thk

JOYSTICK CONTROL PLUMBING - ISO PATTERN (440CT)

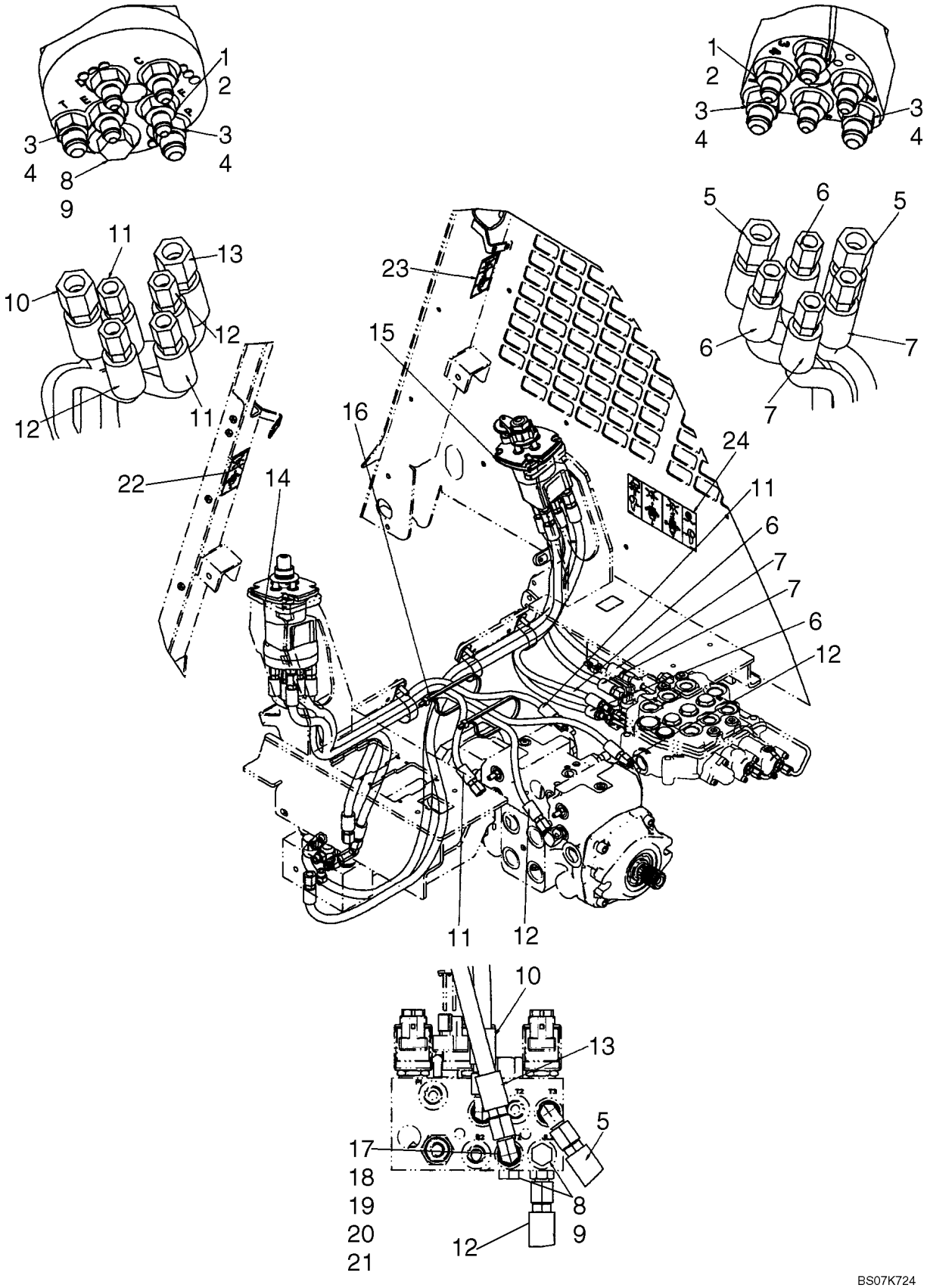

JOYSTICK CONTROL PLUMBING - ISO PATTERN (440CT)

REF	FN	PART NUMBER	YR/SN	QTY	DESCRIPTION
		{87703828}		1	Kit, ISO Pattern Control; Incl 1 - 21
1		139398		8	CONNECTOR, HYD., 7/16"-20, 37º x 9/16"-18, O-Ring, Incl 3
2		9617873		8	O-RING, 6-1, 90 Duro, .468" ID x .078" Thk
3		76350		4	CONNECTOR, HYD., 9/16"-18, 37º x 9/16"-18, O-Ring, Incl 4
4		9617873		4	O-RING, 6-1, 90 Duro, .468" ID x .078" Thk
5		87684218		2	HOSE, 1300 mm (51.18 in) Joystick Drain Or Supply
6		87604062		2	HOSE, 590 mm (23.23 in) Pilot
7		87604069		2	HOSE, 490 mm (19.29 in) Pilot
8		76349		3	PLUG, Hex Hd, 9/16"-18 ORB, Incl 9
9		9617873		3	O-RING, 6-1, 90 Duro, .468" ID x .078" Thk
10		87684180		1	HOSE, 620 mm (24.40 in) Joystick Drain
11		87604072		2	HOSE, 800 mm (31.50 in) Pilot
12		87604070		2	HOSE, 920 mm (36.22 in) Pilot
13		87604071		1	HOSE, 680 mm (26.77 in) Joystick Supply
14		87611854		1	VALVE, Joystick Valve, ISO Pattern LH; See Figure 06-06
15		87600623		1	VALVE, Joystick Valve, ISO Pattern RH; See Figure 06-07
16		529070		2	STRAP, CABLE, .30" x 14.5"
17		87573371		1	ADAPTER, .38 OD Male x .38 OD Female; Incl 18, 19
18		9617873		1	O-RING, 6-1, 90 Duro, .468" ID x .078" Thk
19		9993141		1	O-RING, -012, 90 Duro, .364" ID x .070" Thk
20		86526		1	ELBOW, 90º, 9/16"-18, 37º x 9/16"-18, LG, Incl 21
21		9617873		1	O-RING, 6-1, 90 Duro, .468" ID x .078" Thk
22		87715691		1	DECAL, Decal, ISO Pattern RH
23		87715692		1	DECAL, Decal, ISO Pattern LH
24		87715688		1	DECAL, Decal, Control ID ISO Pattern

JOYSTICK VALVE KITS - H PATTERN, LH

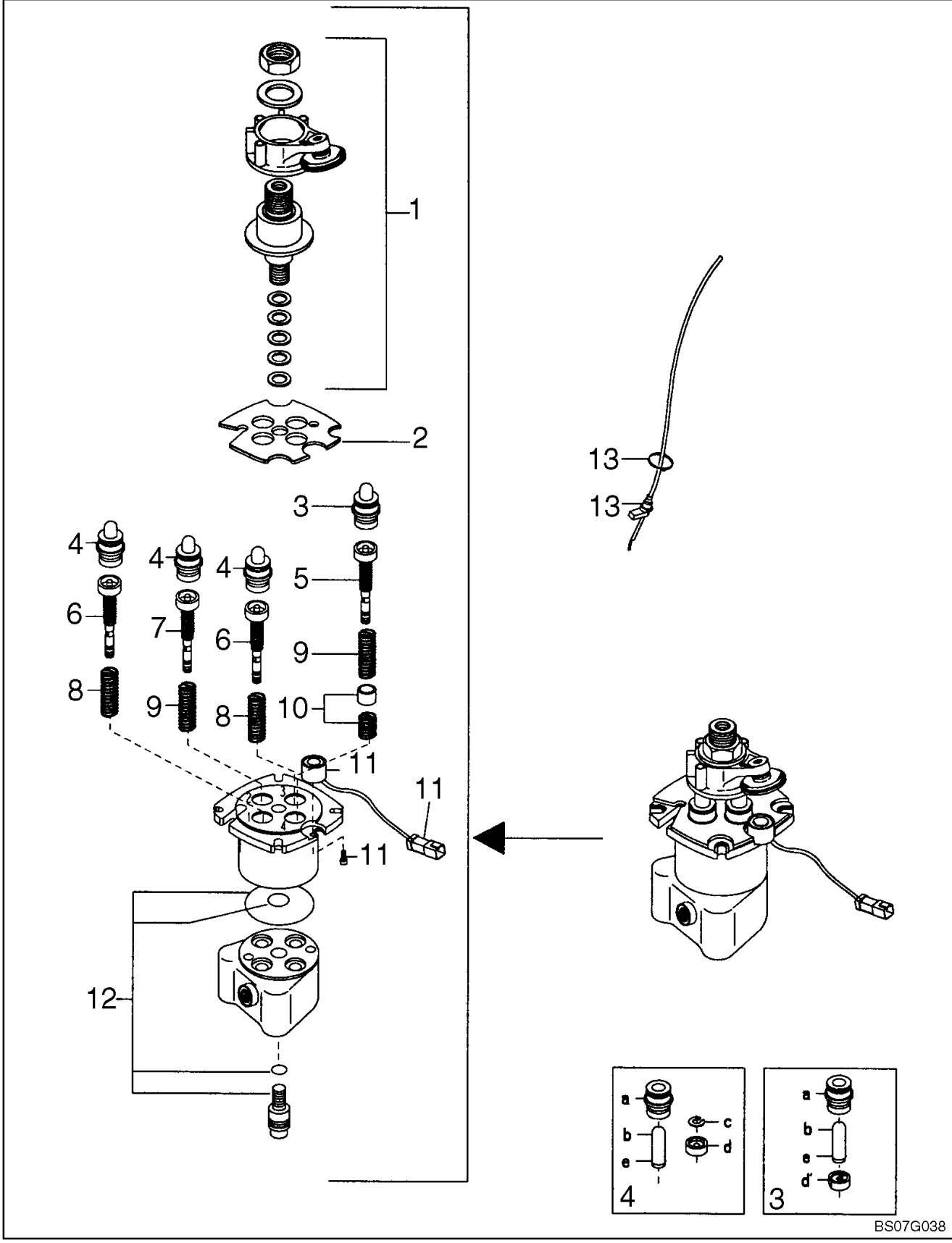

JOYSTICK VALVE KITS - H PATTERN, LH

REF	FN	PART NUMBER	YR/SN	QTY	DESCRIPTION
		REF			INSTRUCTION, MODELS WITH PILOT CONTROL
		87357240		1	VALVE, HYDRAULIC, Joystick Control; H Pattern Left Hand; Incl. 1 - 13
1		87548834		1	KIT, SERVICE, Cardan With Detent
2		87548836		1	KIT, SERVICE, Retaining Plate, Detent
3		87548839		1	KIT, SERVICE, Full Plunger Prefeeling
4		{87548828}		3	Hollow Plunger
5		87614018		1	REGULATOR
6		87614017		2	REGULATOR, With Plunger
7		87614016		1	REGULATOR
8		87614020		1	SPRING, Medium
9		87614019		1	SPRING, Heavy
10		87548846		1	KIT, SERVICE, Prefeeling Point
11		87548847		1	KIT, SERVICE, Solenoid
12		87548848		1	KIT, SERVICE, Standard Seal
13		87548874		1	KIT, SERVICE, Cable

JOYSTICK VALVE KITS - H PATTERN, RH

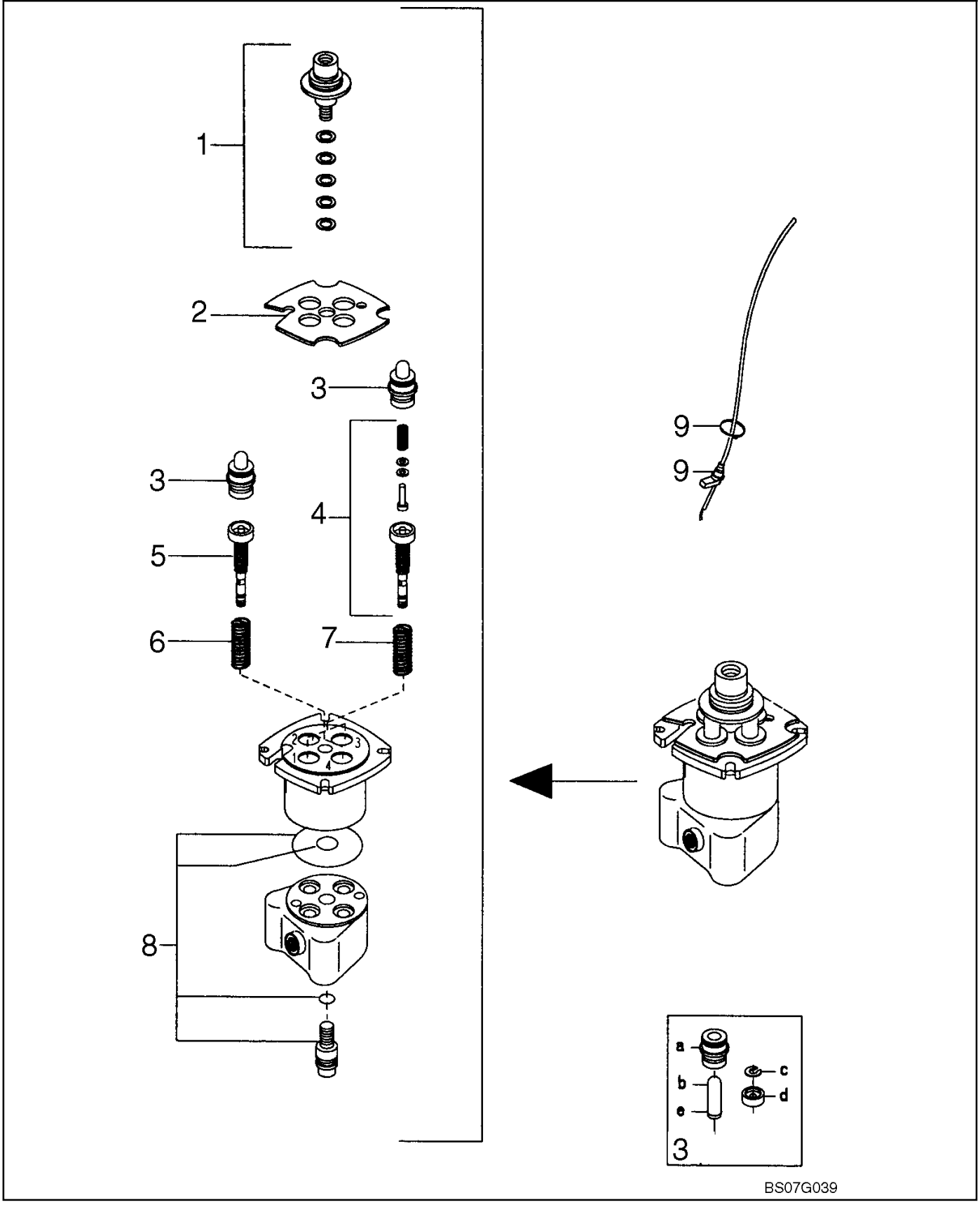

JOYSTICK VALVE KITS - H PATTERN, RH

REF	FN	PART NUMBER	YR/SN	QTY	DESCRIPTION
		REF			INSTRUCTION, MODELS WITH PILOT CONTROL
		87357241		1	VALVE, HYDRAULIC, Joystick Control; H Pattern Right Hand; Incl. 1 - 9
1		87548833		1	KIT, SERVICE, Bent Lever Cardan
2		87548835		1	PLATE, Retaining Plate, Standard
3		87614023		2	PLUNGER, Hollow Plunger
4		87614017		2	REGULATOR, With Plunger
5		87614024		1	REGULATOR
6		87614019		1	SPRING, Heavy
7		87614020		1	SPRING, Medium
8		87548848		1	KIT, SERVICE, Standard Seal
9		87548874		1	KIT, SERVICE, Cable

JOYSTICK VALVE KITS - ISO PATTERN, LH

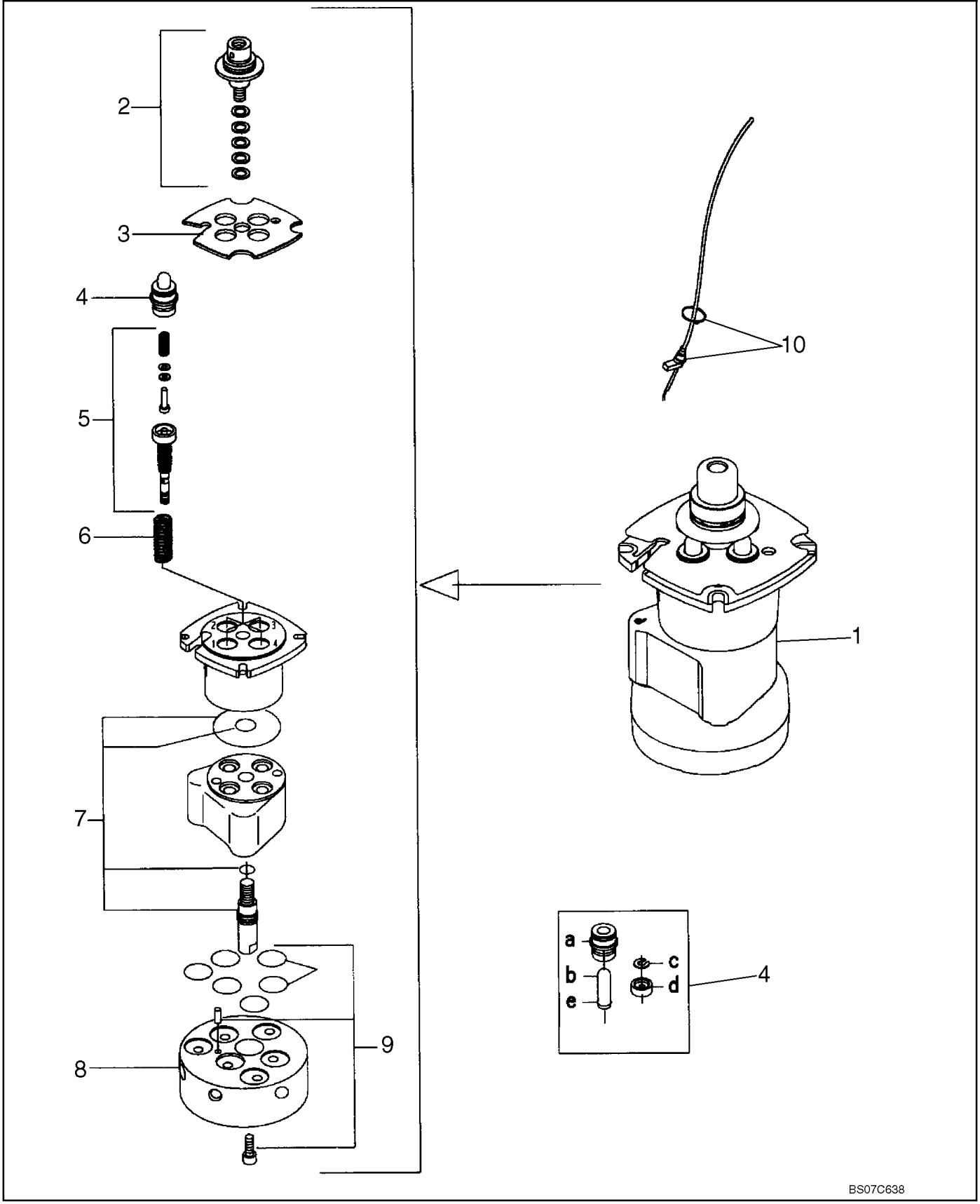

JOYSTICK VALVE KITS - ISO PATTERN, LH

REF	FN	PART NUMBER	YR/SN	QTY	DESCRIPTION
1		87611854		1	VALVE, Joystick Valve, ISO Pattern LH
2		87548833		1	KIT, SERVICE, Bent Lever Cardan
3		87548835		1	PLATE, Retaining Plate, Standard
4		87614023		2	PLUNGER, Kit, Hollow Plunger
5		87614017		4	REGULATOR, Kit, Reg. Unit With Plunger C227
6		87614020		2	SPRING, Kit, Medium Spring
7		{87548871}		1	Seal With Screw
8		{87548872}		1	
9		{87548873}		1	Flange Seal
10		87548874		1	KIT, SERVICE, Cable

JOYSTICK VALVE KITS - ISO PATTERN, RH

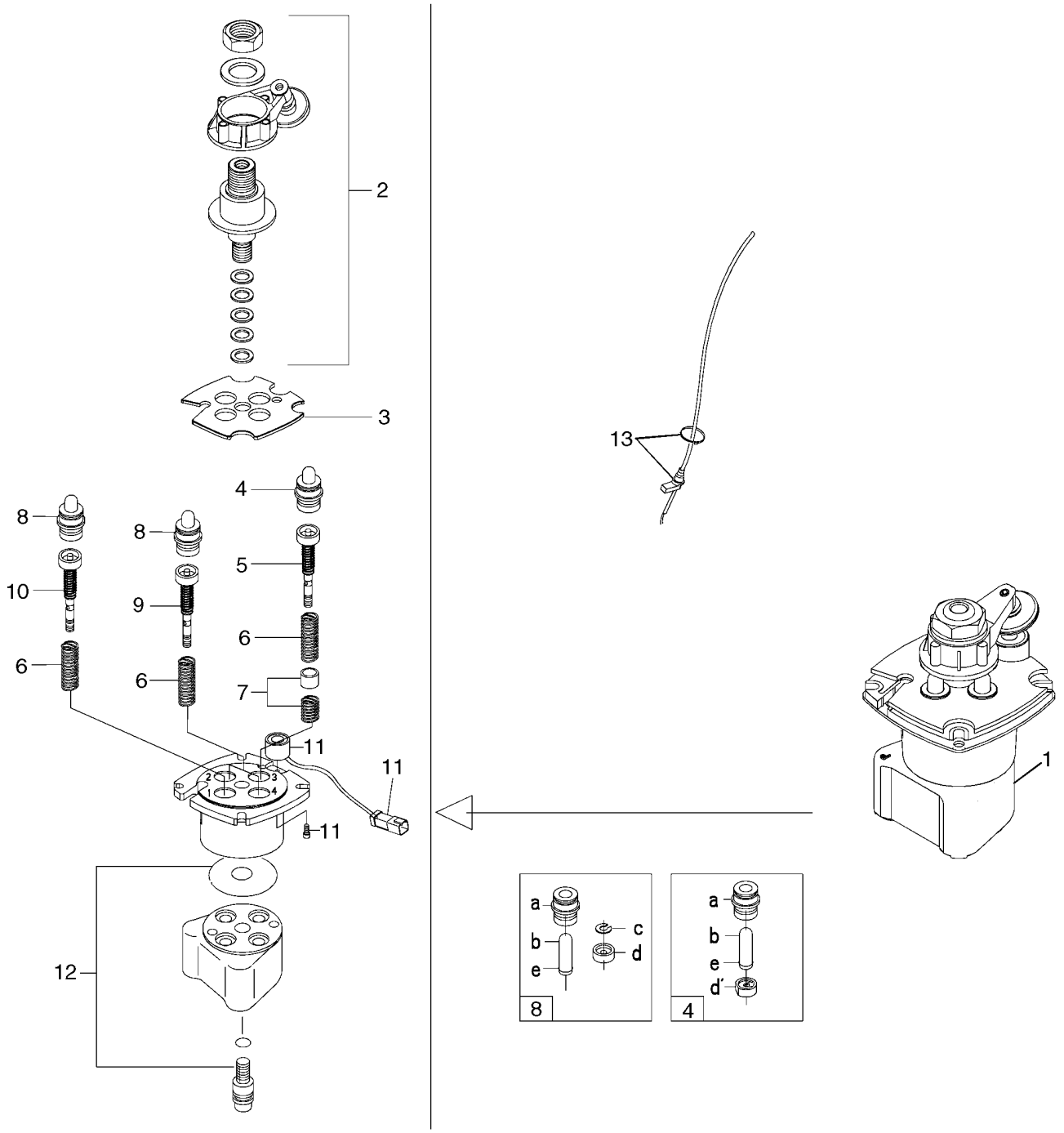

JOYSTICK VALVE KITS - ISO PATTERN, RH

REF	FN	PART NUMBER	YR/SN	QTY	DESCRIPTION
1		87600623		1	VALVE, Joystick Valve, ISO Pattern, RH; Incl. 2 - 13
2		87548834		1	KIT, SERVICE, Kit, Cardan With Detent
3		87548836		1	KIT, SERVICE, Retaining Plate, Detent
4		87548839		1	KIT, SERVICE, Kit, Full Plunger Prefeeling
5		{87548843}		1	Kit, Regulation Unit Prefeeling Point
6		87614020		2	SPRING, Kit, Medium Spring
7		87548846		1	KIT, SERVICE, Kit, Prefeeling Point
8		{87548838}		3	Kit, Hollow Plunger
9		{87594866}		2	Kit, Regulation Unit
10		{87548840}		1	Kit, Regulation Unit
11		87548847		1	KIT, SERVICE, Kit, Solenoid
12		87548848		1	KIT, SERVICE, Kit, Standard Seal
13		87548874		1	KIT, SERVICE, Kit, Cable

06-08		p1	11/07

JOYSTICK VALVE KITS - ISO PATTERN, LH

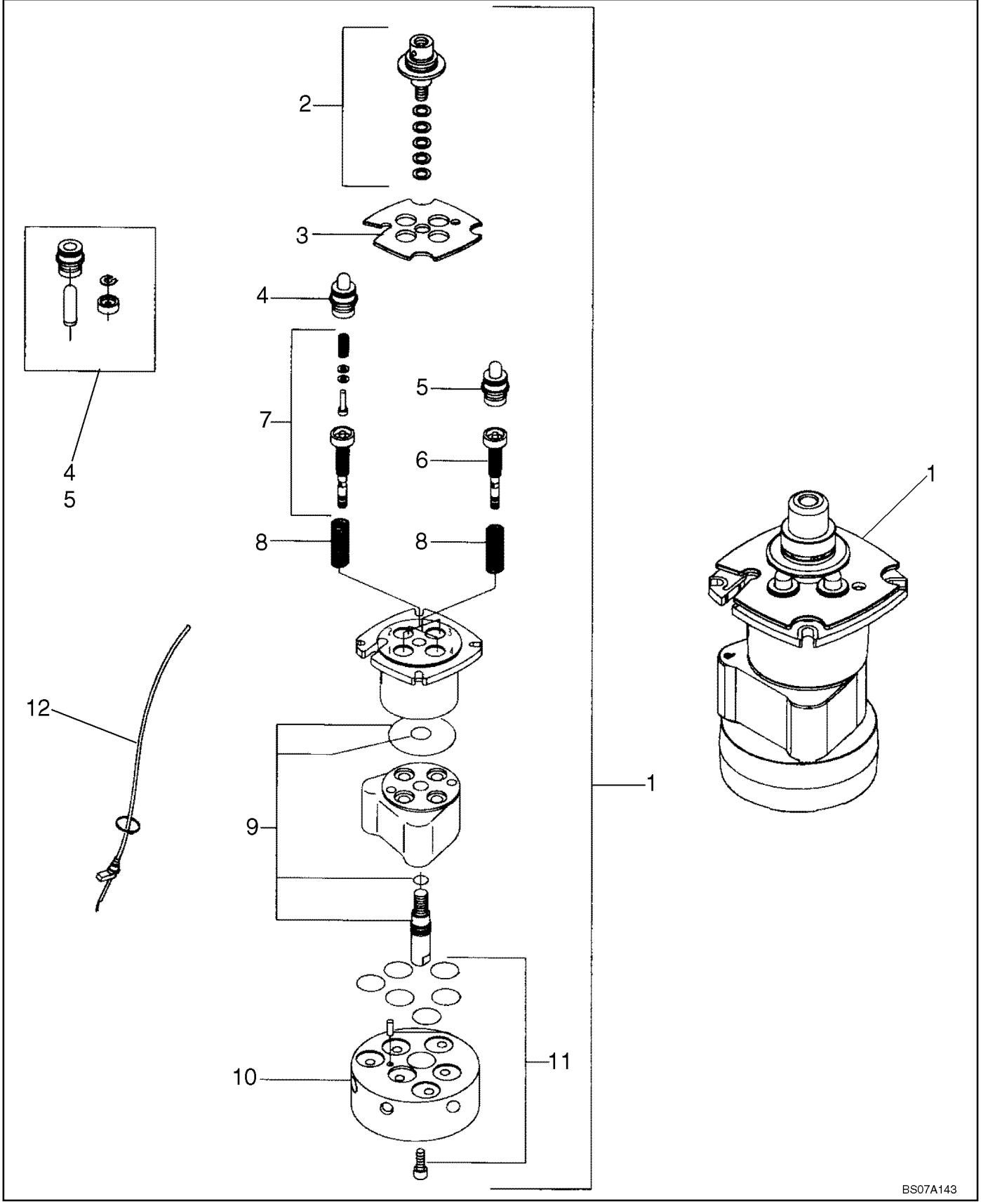

JOYSTICK VALVE KITS - ISO PATTERN, LH

REF	FN	PART NUMBER	YR/SN	QTY	DESCRIPTION
1		87600622		1	VALVE, Joystick Valve, ISO Pattern
2		87548833		1	KIT, SERVICE, Kit, Bent Lever Cardan
3		87548835		1	PLATE, Retaining Plate, Standard
4		87614023		2	PLUNGER, Kit, Hollow Plunger, Use On Ports 1, 3
5		87614023		2	PLUNGER, Kit, Hollow Plunger, Use On Ports 2, 4
6		87627518		2	REGULATOR, Kit, Reg Unit PP C229, Use On Ports 2, 4
7		87614017		2	REGULATOR, Kit, Reg Unit With Plunger, Use On Ports 1, 3
8		87614020		1	SPRING, Kit, Medium Spring
9		{87548871}		1	Kit, Seal
10		{87548872}		1	
11		{87548873}		1	Kit, Flange Seal
12		87548874		1	KIT, SERVICE, Kit, Cable

HYDROSTATICS - PUMP, SUPPLY AND RETURN (440)

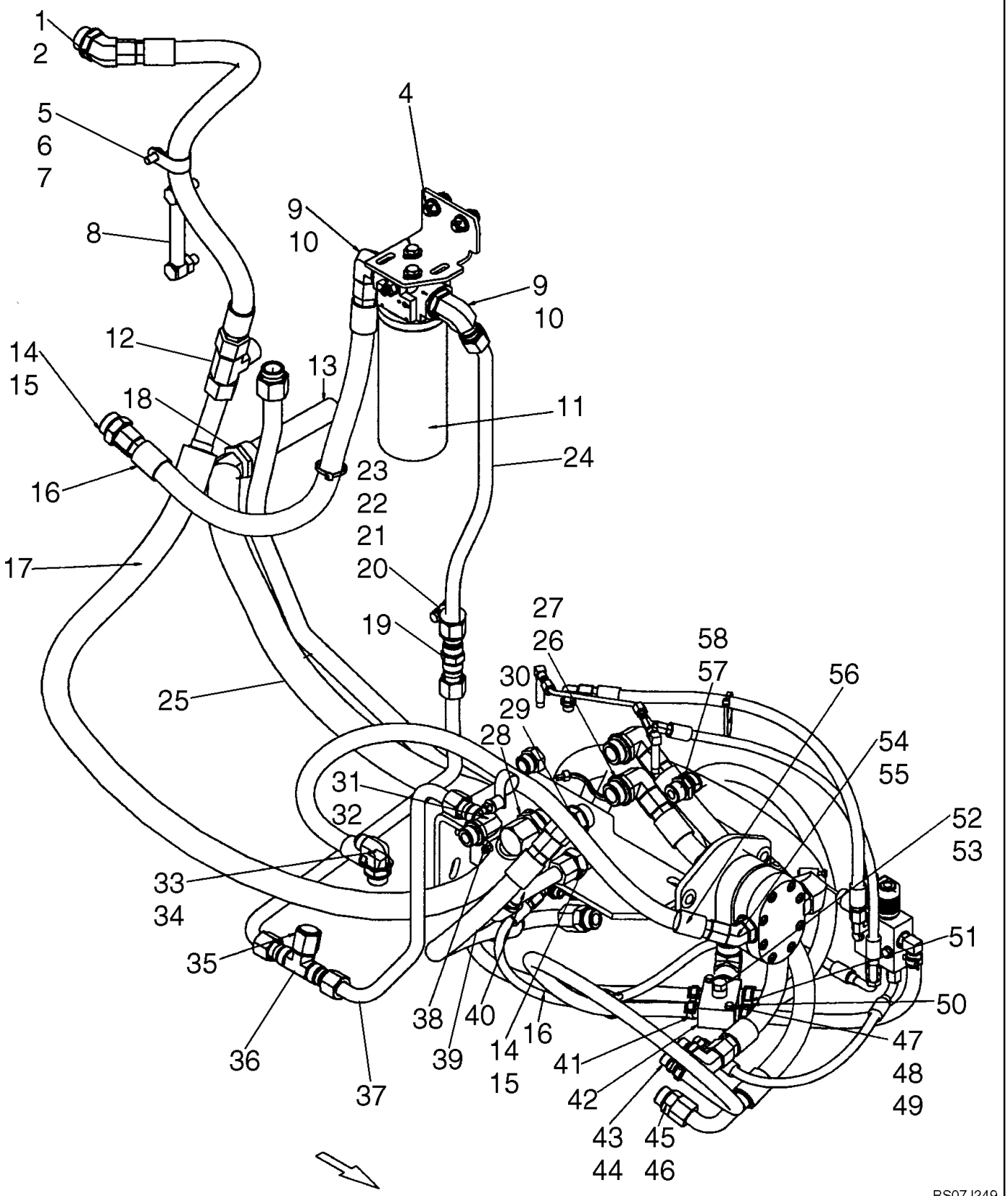

HYDROSTATICS - PUMP, SUPPLY AND RETURN (440)

REF	FN	PART NUMBER	YR/SN	QTY	DESCRIPTION
1		{87657980}		1	Elbow; 37FL 45 ADJ 3/4 x 1.0 Tube; Incl 2; To Top Of Oil Cooler, See Figure 02-01
2		167268		1	O-RING, 16-1, 90 Duro, 1.171" ID x .116" Thk
3		87653980		1	HOSE, Upper Cooler
4		REF			INSTRUCTION, For Filter Mounting, See Figure 06-32
5		86639001		1	CLAMP, 1 3/16", Insul, 7/16" Bolt
6		140045		1	WASHER, SPRING, Belleville, M10
7		43138		1	SCREW, Hex, M10 x 20, 8.8, Full Thd
8		87374752		1	GAUGE, Liquid Level
9		87021824		1	ELBOW, 90º, 1 1/16"-12, 37º x 1 5/16"-12, O-Ring, Incl 10
10		167268		1	O-RING, 16-1, 90 Duro, 1.171" ID x .116" Thk
11		87430661		1	FILTER, Hydrostatic Filter; For Breakdown And Mounting, See Figure 06-32, See Figure 02-01
12		9790547		1	TEE, 1 5/16"-12, 37º x 1"-11 1/2, NPTF Br
13		H151399		1	FILTER CARTRIDGE, Suction Line
14		233705		1	CONNECTOR, HYD., 1 1/16"-12, 37º x 1 5/16"-12, O-Ring, Incl 15; To Bottom Of Oil Cooler
15		167266		1	O-RING, 12-1, 90 Duro, .924 ID x .116" Thk
16		87022175		1	HOSE ASSY., 600 mm (23.62 in); Case Drain
17		87458996		1	HOSE ASSY., 1680 mm (66.14 in); Suction
18		87033823		1	FITTING, 1/4" Hose x 1/8" NPTF, Fem, Barbed
19		144121		1	UNION, 1 1/16"-12, 37º x 1 1/16"-12, 37º
20		87445136		1	ISOLATOR, 3/4
21		87042897		1	SPACER
22		86624184		2	WASHER, M8 x 16 x 1.6
23		87301359		1	CLAMP, 1 1/8", 3/8" Bolt
24		87660856		1	TUBE, RIGID, Formed Tube; Valve To Filter, LH Wall
25		87022438		1	HOSE ASSY., 1610 mm (63.38 in); Suction
26		87021824		3	ELBOW, 90º, 1 1/16"-12, 37º x 1 5/16"-12, O-Ring, Incl 27
27		167268		1	O-RING, 16-1, 90 Duro, 1.171" ID x .116" Thk
28		87418259		1	FITTING, 90 Deg 20ORB x 16 Bead
29		22907		1	ELBOW, 45º, 1 1/16"-12 x 1 5/16"-12, O-Ring, Incl 30
30		167268		1	O-RING, 16-1, 90 Duro, 1.171" ID x .116" Thk

HYDROSTATICS - PUMP, SUPPLY AND RETURN (440)

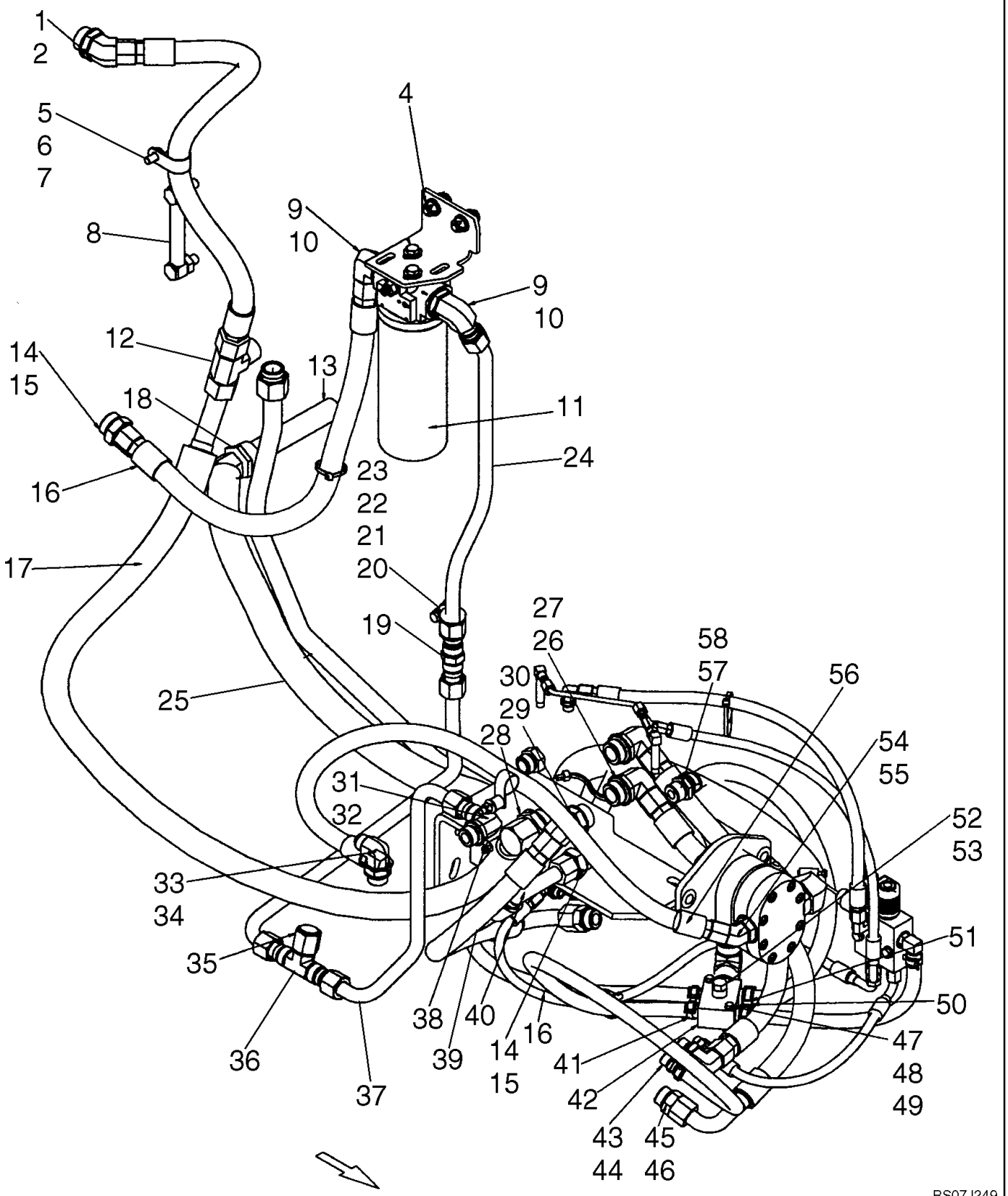

HYDROSTATICS - PUMP, SUPPLY AND RETURN (440)

REF	FN	PART NUMBER	YR/SN	QTY	DESCRIPTION
31		322894		1	ELBOW, 90º, 1 1/16"-12, 37º x 1 1/16"-12, O-Ring, Incl 32
32		167266		1	O-RING, 12-1, 90 Duro, .924 ID x .116" Thk
33		84570		1	ELBOW, 90º, 7/8"-14, 37º x 1 1/16"-12, O-Ring, Incl 34
34		167266		1	O-RING, 12-1, 90 Duro, .924 ID x .116" Thk
35		219606		1	CAP, 37º, 1 1/16"-12
36		15694		1	TEE, 1 1/16"-12 37º
37		87446248		1	TUBE ASSY., Valve Out To Filter
38		86536660		1	CLAMP, HOSE, #16, 0.81/1.50 Type F Worm, 1.75 in
39		87022172		1	HOSE ASSY., 650 mm (25.59 in); Loop
40		87417085		1	HOSE ASSY., 445 mm (17.52in); Loop
41		87443510		4	CLAMP, HOSE, 20 mm
42		87437351		1	MANIFOLD, Return, Oil
43		87010108		2	FITTING, 1/2" Hose x 3/4"-16 ORB, Beaded, Incl 44
44		128825		1	O-RING, 8-1, 90 Duro, .644" ID x .087" Thk
45		322896		2	CONNECTOR, HYD., 1 1/16"-12, 37º x 1 1/16"-12, O-Ring, Incl 46
46		167266		1	O-RING, 12-1, 90 Duro, .924 ID x .116" Thk
47		86977790		2	BOLT, Hex, M6 x 45, 8.8
48		87404992		2	NUT
49		86588450		2	WASHER, M6
50		REF			INSTRUCTION, Brake; See Figure 07-01
51		87443511		2	CLAMP, 24 mm
52		76349		1	PLUG, Hex Hd, 9/16"-18 ORB, Incl 53
53		9617873		1	O-RING, 6-1, 90 Duro, .468" ID x .078" Thk
54		100197		1	ELBOW, 45º, 7/8"-14 x 1 1/16"-12, O-Ring, Incl 55
55		167266		1	O-RING, 12-1, 90 Duro, .924 ID x .116" Thk
56		87547070		1	HOSE, 1000 mm (39.37 in); Valve Supply
57		87311640		1	CONNECTOR, HYD., 5/8 HOSE x 1-1/16-12 ORB STR Barb; Incl 58
58		167266		1	O-RING, 12-1, 90 Duro, .924 ID x .116" Thk

HYDROSTATICS - PUMP MOUNTING (440)

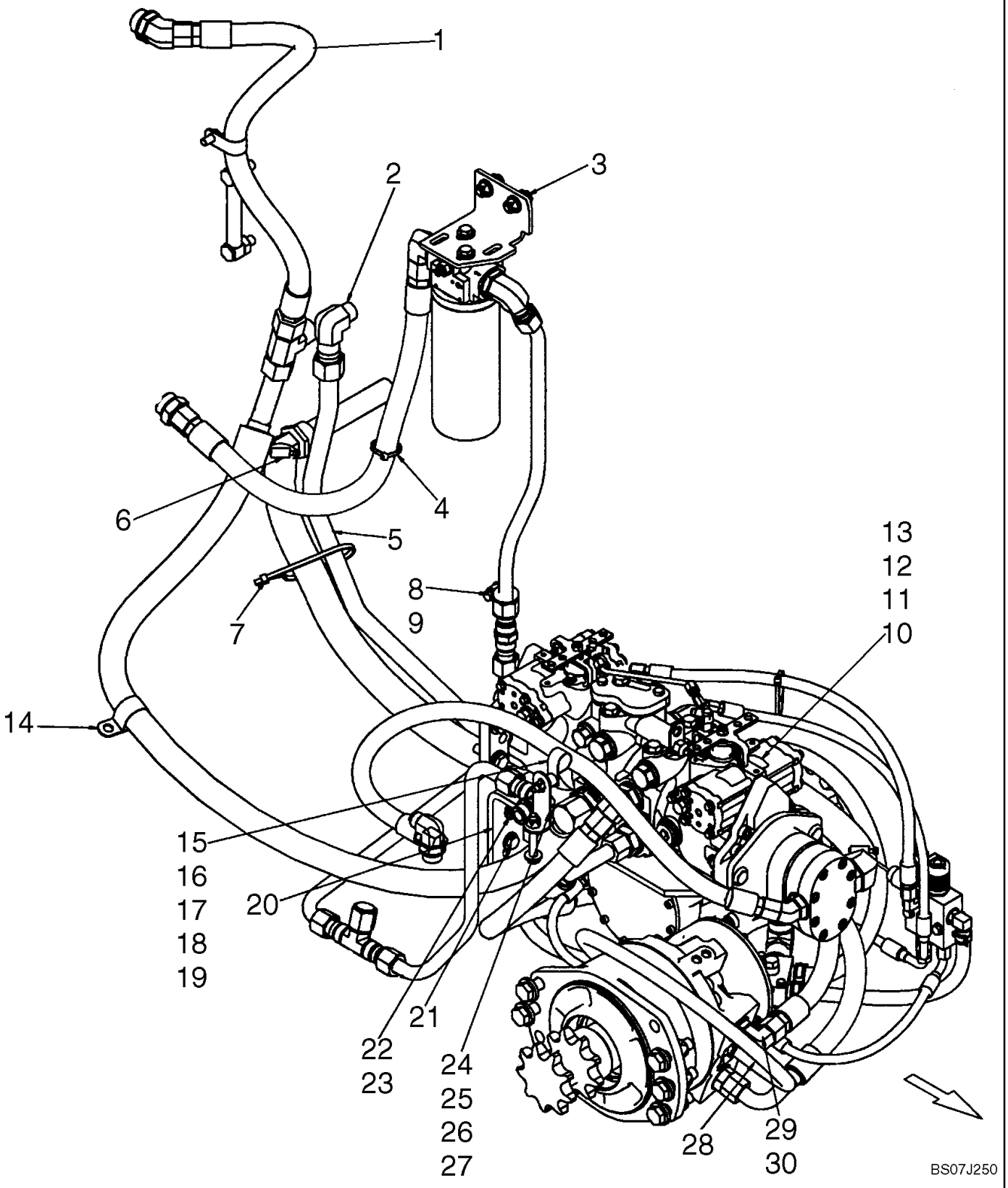

HYDROSTATICS - PUMP MOUNTING (440)

REF	FN	PART NUMBER	YR/SN	QTY	DESCRIPTION
1		87653980			HOSE, Upper Cooler Hose; See Figure 06-10, Supply And Return
2		9615396		1	ELBOW, 90º, 1 5/16"-12, 37º x 3/4"-14, NPTF
3		REF			INSTRUCTION, Filter Assy And Mounting, See Figure 06-32
4		529070		1	STRAP, CABLE, .30" x 14.5"
5		87584058		1	TUBE, RIGID, Case Drain
6		87039085		2	CLAMP, HOSE, 1.25/2.125 HD Worm
7		529070		2	STRAP, CABLE, .30" x 14.5"
8		43128		1	BOLT, Hex, M8 x 30, 8.8
9		87030567		2	NUT
10		87043498		1	PUMP, Tandem Pump; Incl 11, 12, 13
11		87043500		1	PUMP, Tandem Pump; See Figure 06-33 - 06-38
12		87024695		1	PUMP, Gear Pump; See Figure 06-54
13		87013729		1	O-RING, -044, 70 Duro, 3.739" ID x .070" Thk
14		86639006		1	CLAMP, 1 1/2", Insul, 1/2" Bolt
15		9628098		1	NUT, LOCK, M8 x 1.25, Cl 10
16		P24576		1	SPACER, 3/8" Pipe x 11/16", If Used Behind Bracket 87458997, Not Illustrated
17		86625263		1	WASHER, M8 x 20 x 1.6
18		120104		1	BOLT, Hex, M8 x 20, 8.8
19		9827902		1	CLAMP, 1", Insul, 3/8" Bolt
20		87627383		1	SUPPORT, Pump
21		43248		2	BOLT, Hex, M10 x 40, 10.9, Full Thd
22		86625256		4	WASHER, M12 x 28.5 x 4, HT
23		43260		4	BOLT, Hex, M12 x 30, 10.9
24		86512554		3	NUT, LOCK, M10 x 1.5, Cl 10
25		86639325		1	WASHER, M10 x 24.5 x 3, HT
26		43144		1	SCREW, Hex, M10 x 70, 8.8
27		87458997		1	BRACKET, Valve
28		87022174		1	HOSE ASSY., 950 mm (37.4 in); Case Drain
29		322894		1	ELBOW, 90º, 1 1/16"-12, 37º x 1 1/16"-12, O-Ring, Incl 30
30		167266		1	O-RING, 12-1, 90 Duro, .924 ID x .116" Thk

HYDROSTATICS - DRIVE MOTORS, CASE DRAIN (440)

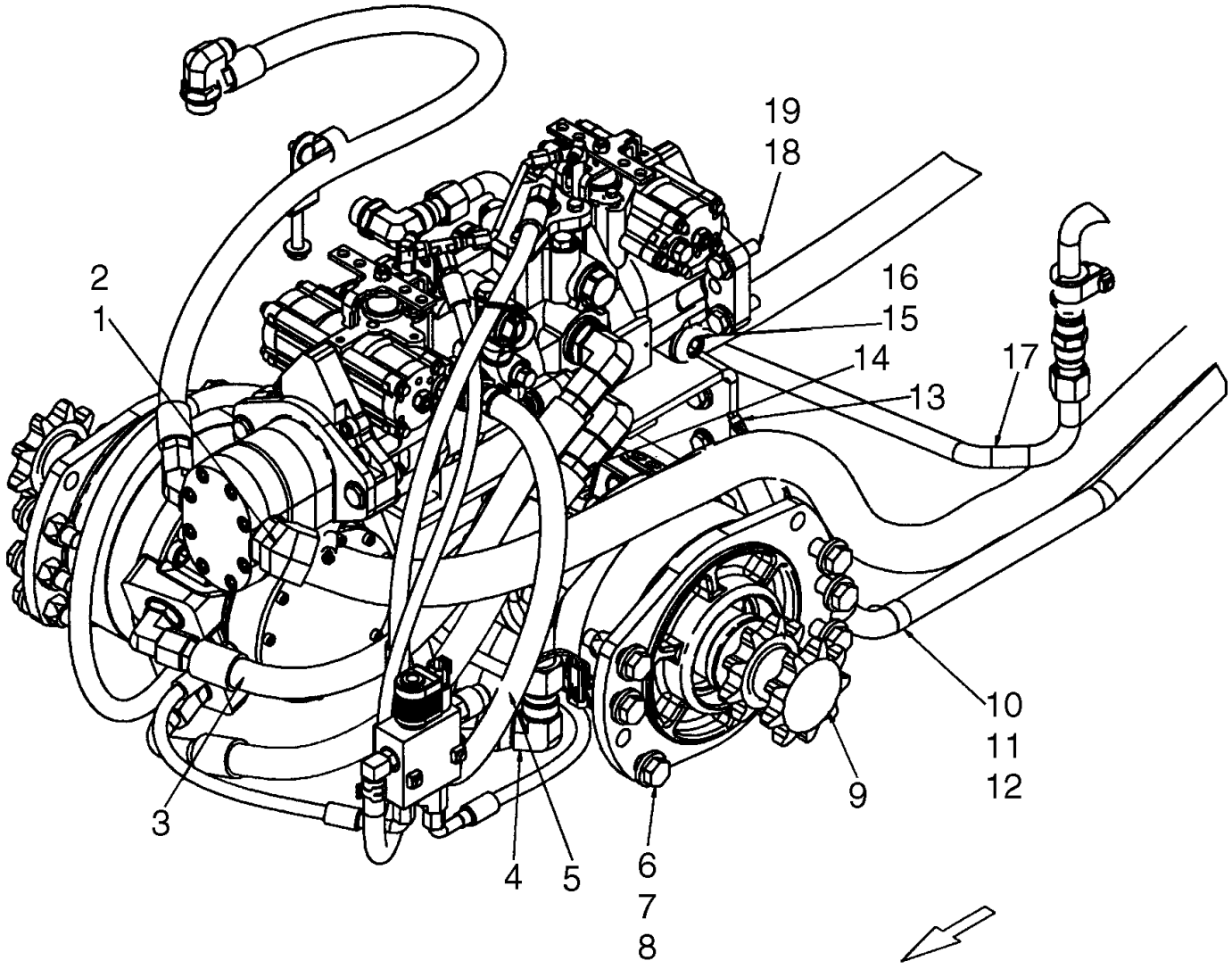

HYDROSTATICS - DRIVE MOTORS, CASE DRAIN (440)

REF	FN	PART NUMBER	YR/SN	QTY	DESCRIPTION
1		87033824		1	FITTING, 45º, 1 1/4" Hose x 1 5/16"-12 ORB Beaded, Incl 2
2		167268		1	O-RING, 16-1, 90 Duro, 1.171" ID x .116" Thk
3		87021266		1	HOSE ASSY., 560 mm (22 in); Loop
4		86050288		1	ELBOW, 90º, 1 5/16"-12, 37º x 1 5/16"-12, 37º Fem Sw
5		87016334		1	HOSE ASSY., 535 mm (21.06 in); Case Drain
6		9828248		12	BOLT, Hex, M16 x 60, 10.9
7		86512555		12	NUT, LOCK, M16 x 2, Cl 10
8		86625258		12	WASHER, M16 x 34.5 x 5, HT
9		87035341		2	MOTOR, HYDRAULIC, See Figure 06-56 - 06-58
10		86637977		1	CLAMP, 1", Insul, 5/16" Bolt
11		87030567		2	NUT, Square, M8
12		120103		1	BOLT, Hex, M8 x 16, 8.8
13		529070		2	STRAP, CABLE, .30" x 14.5"
14		87417084		1	HOSE ASSY., 625 mm (24.6 in); Loop
15		87033027		1	ADAPTER, ADAPTER; -12 SAE To 1/2 NPTF; Incl 16
16		167266		1	O-RING, 12-1, 90 Duro, .924 ID x .116" Thk
17		87445138		1	TUBE ASSY., Valve Out To Filter
18		412087		4	BOLT, Hex, M12 x 45, 10.9, Full Thd
19		86625256		8	WASHER, M12 x 28.5 x 4, HT

HYDROSTATICS - PUMP, SUPPLY AND RETURN (440CT)

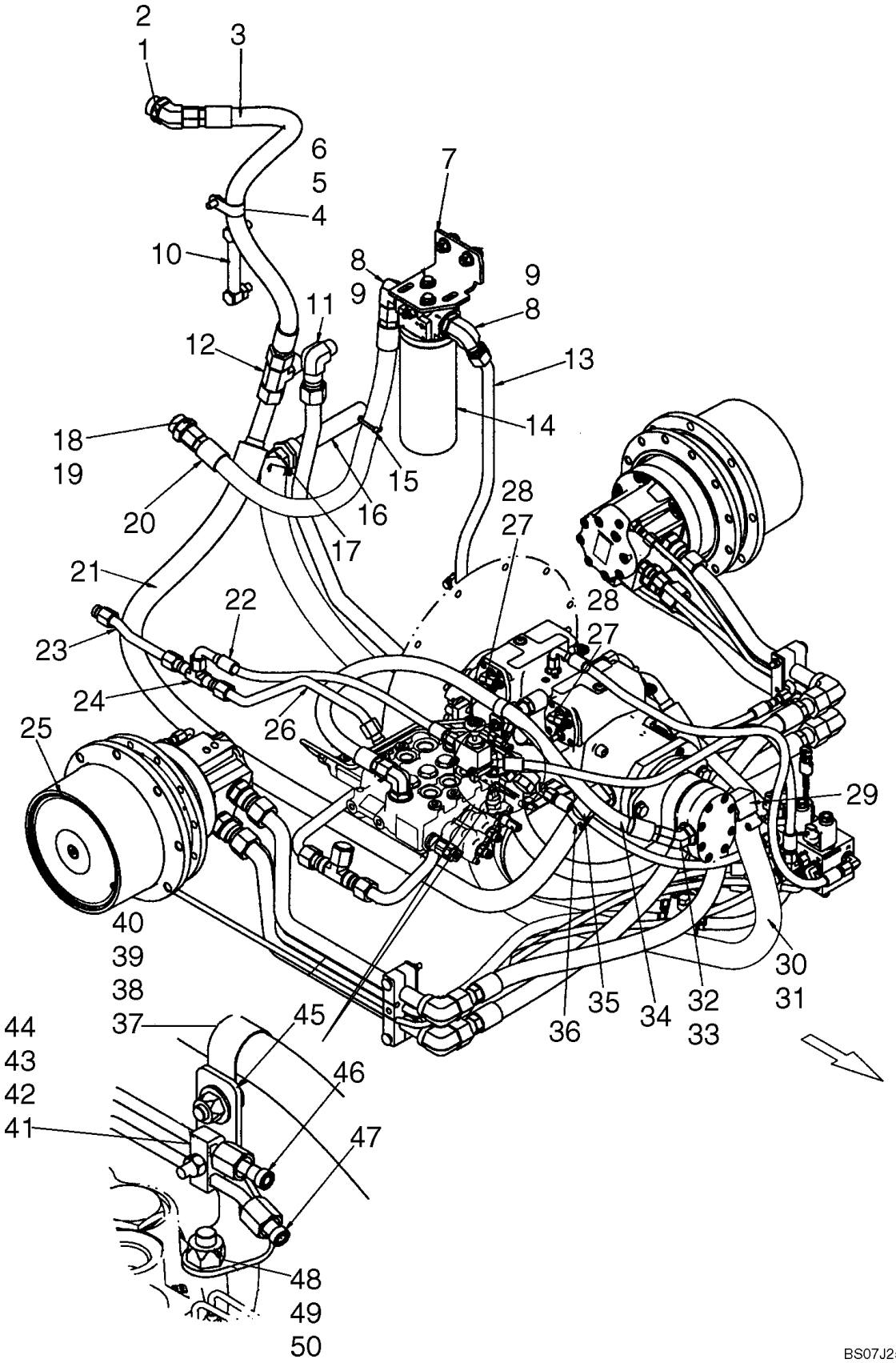

HYDROSTATICS - PUMP, SUPPLY AND RETURN (440CT)

REF	FN	PART NUMBER	YR/SN	QTY	DESCRIPTION
1		{87657980}		1	Elbow; 37FL 45 ADJ 3/4 X 1.0 Tube; Incl 2
2		167268		1	O-RING, 16-1, 90 Duro, 1.171" ID x .116" Thk
3		87653980		1	HOSE, 810 mm (31.88 in); Upper Cooler
4		86639001		1	CLAMP, 1 3/16", Insul, 7/16" Bolt
5		140045		1	WASHER, SPRING, Belleville, M10
6		43138		1	SCREW, Hex, M10 x 20, 8.8, Full Thd
7		REF		1	INSTRUCTION, Hydrostatic Filter; For Mounting, See Figure 06-32
8		570024		2	ELBOW, 90º, 1 1/16"-12, 37º x 1 5/16"-12, O-Ring, Incl. 9
9		305412		2	O-RING
10		87374752		1	GAUGE, Liquid Level
11		9615396		1	ELBOW, 90º, 1 5/16"-12, 37º x 3/4"-14, NPTF
12		9790547		1	TEE, 1 5/16"-12, 37º x 1"-11 1/2, NPTF Br
13		87660856		1	TUBE, RIGID, Tube, Valve To Filter, LH Wall
14		87430661		1	FILTER, Hydrostatic Filter; See Figure 06-32
15		529070		1	STRAP, CABLE, .30" x 14.5"
16		H151399		1	FILTER CARTRIDGE, Suction Line
17		87033823		1	FITTING, 1/4" Hose x 1/8" NPTF, Fem, Barbed
18		233705		1	CONNECTOR, HYD., 1 1/16"-12, 37º x 1 5/16"-12, O-Ring, Incl. 19
19		167266		1	O-RING, 12-1, 90 Duro, .924 ID x .116" Thk
20		87653981		1	HOSE, 750mm (29.52 in); Lower Cooler
21		87563971		1	HOSE, 1859 mm (73.18 in); Charge Pump Supply
22		87625890		1	HOSE, 559 mm (22 in); Dump Valve Supply
23		87564000		1	TUBE, HYD, Dump Valve Drain
24		87644290		1	CONNECTOR, HYD., Tee, 5/8 x 5/8 x 1/2 37 FL
25		REF			INSTRUCTION, Undercarriage Plumbing; See Figure 06-13
26		87563998		1	TUBE, HYD, Dump Valve Drain
27		86512936		2	ELBOW, 90º, 9/16"-18, 37º x 7/16"-20, O-Ring
28		87604074		1	ADAPTER, 6FJ x 6MJ W/ 1.2 Orifice
29		86729372		1	FITTING, 90º, 1 1/4" Hose x 1 5/16"-12 ORB Beaded
30		87376457		1	HOSE, 1915 mm (75.39 in); Suction
31		87039085		2	CLAMP, HOSE, 1.25/2.125 HD Worm

HYDROSTATICS - PUMP, SUPPLY AND RETURN (440CT)

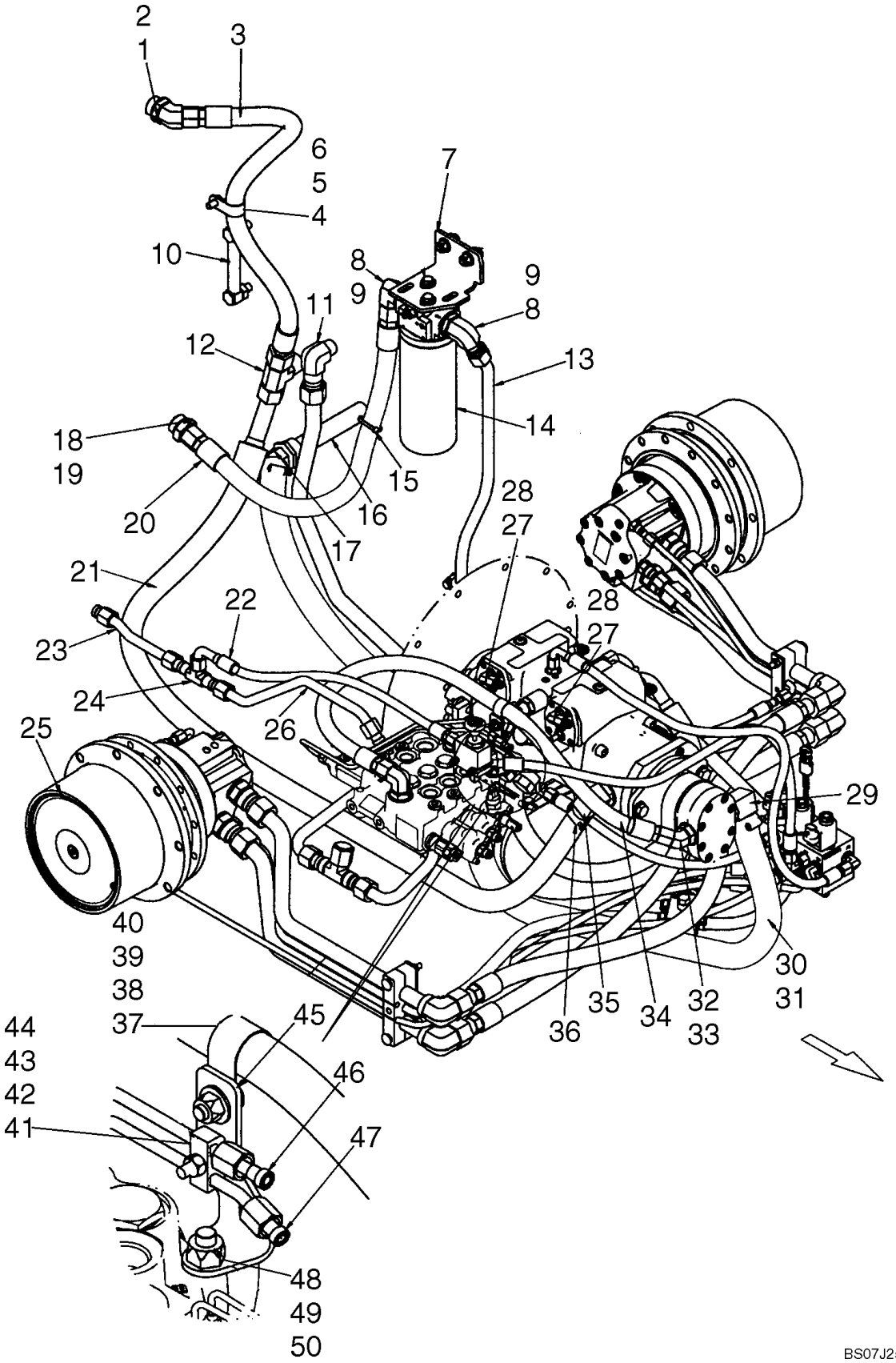

HYDROSTATICS - PUMP, SUPPLY AND RETURN (440CT)

REF	FN	PART NUMBER	YR/SN	QTY	DESCRIPTION
32		100197		1	ELBOW, 45º, 7/8"-14 x 1 1/16"-12, O-Ring, Incl.33
33		167266		1	O-RING, 12-1, 90 Duro, .924 ID x .116" Thk
34		87547070		1	HOSE, 1000 mm (39.37 in); Valve Supply
35		87393628		1	ADAPTER, 90 Barb 1 Hose x 1-5/16-12 OR
36		86536660		1	CLAMP, HOSE, #16, 0.81/1.50 Type F Worm
37		9827902		1	CLAMP, 1", Insul, 3/8" Bolt
38		120104		1	BOLT, Hex, M8 x 20, 8.8
39		9628098		1	NUT, LOCK, M8 x 1.25, Cl 10
40		86625263		2	WASHER, M8 x 20 x 1.6
41		608089		1	CLAMP, Double
42		87030561		1	NUT, LOCK, M6 x 1, Cl 8
43		86588450		1	WASHER, M6
44		627-6030		1	BOLT, Hex, M6 x 30, 10.9, Full Thd
45		87564009		1	BRACKET, Hose Support
46		87563969		1	TUBE, HYD, Pilot
47		87563968		1	TUBE, HYD, Pilot
48		43144		1	SCREW, Hex, M10 x 70, 8.8
49		86512554		1	NUT, LOCK, M10 x 1.5, Cl 10
50		86639325		1	WASHER, M10 x 24.5 x 3, HT

HYDROSTATICS - DRIVE MOTORS (440CT)

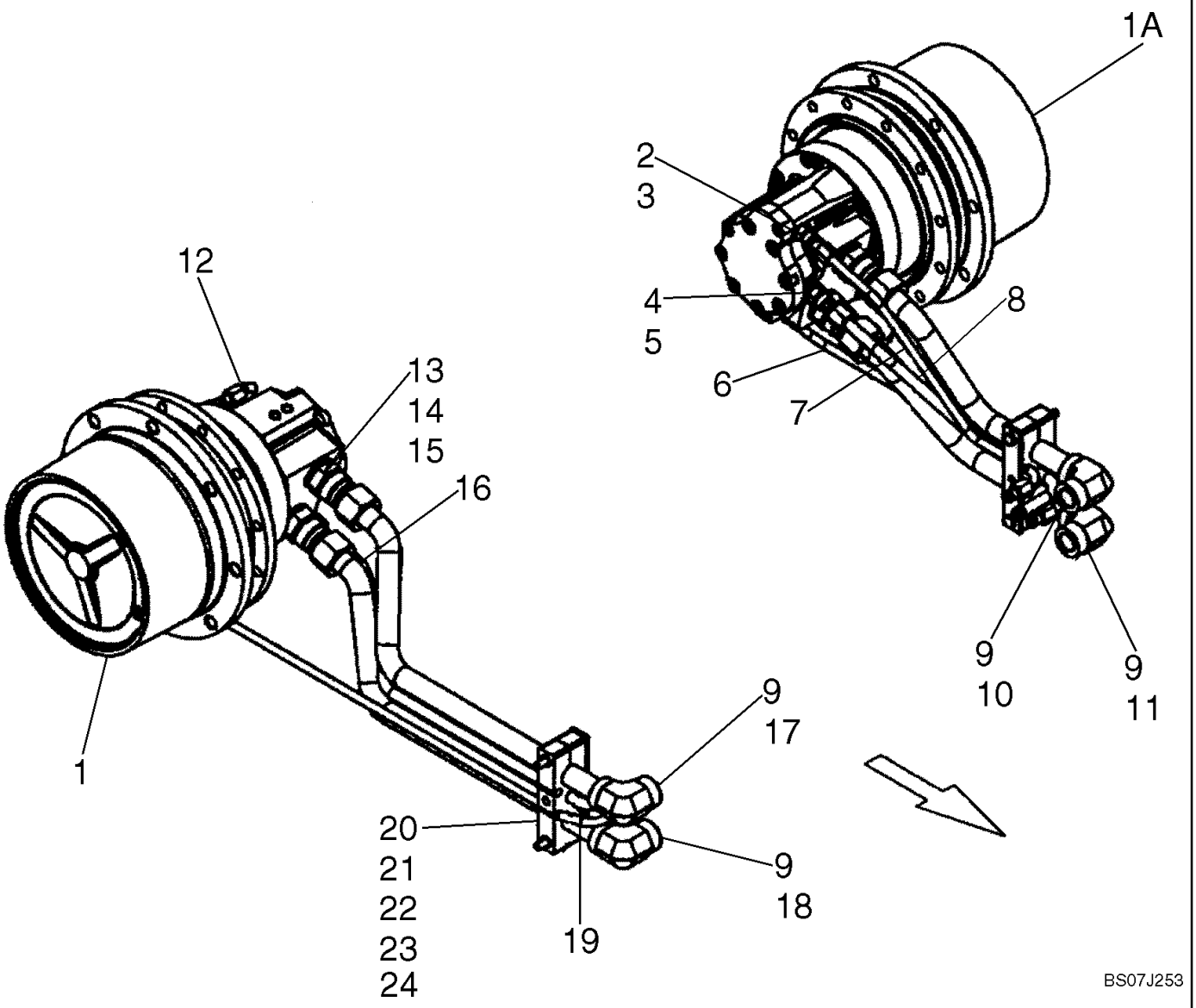

HYDROSTATICS - DRIVE MOTORS (440CT)

REF	FN	PART NUMBER	YR/SN	QTY	DESCRIPTION
1		87600263		1	MOTOR, Drive Motor, RH; See Fig. 06-62
		87600263C		1	CORE-MOTOR HYDRAULIC, Core - Motor Return Number, Use To Return Core For Credit When Using A Remanufactured Assy
		87600263R		1	REMAN-MOTOR HYDRAUL, Remanufactured Drive Motor
1A		87600262		1	MOTOR, Drive Motor, LH; See Fig. 06-62
		87600262C		1	CORE-MOTOR HYDRAULIC, Core - Motor Return Number, Use To Return Core For Credit When Using A Remanufactured Assy
		87600262R		1	REMAN-MOTOR HYDRAUL, Remanufactured Drive Motor
2		76350		4	CONNECTOR, HYD., 9/16"-18, 37° x 9/16"-18, O-Ring, Incl. 3
3		9617873		1	O-RING, 6-1, 90 Duro, .468" ID x .078" Thk
4		86509028		2	CONNECTOR, HYD., 3/4"-16, 37° x 9/16"-18, O-Ring, Incl. 5
5		9617873		1	O-RING, 6-1, 90 Duro, .468" ID x .078" Thk
6		87364807		1	TUBE, Brake Left Hand
7		87364627		1	TUBE, Two Speed Left Hand
8		87364808		1	TUBE, Case Drain Left Hand
9		9824050		4	O-RING, -021, 90 Duro, .926" ID x .070" Thk
10		87364801		1	TUBE, Left Hand Loop Top
11		87364802		1	TUBE, Left Hand Loop Bottom
12		87364804		1	TUBE, Brake Right Hand
13		87303844		4	CONNECTOR, HYD., 1 7/16"-12 ORFS x 1 1/16"-12 ORB, Incl. 14, 15
14		167266		1	O-RING, 12-1, 90 Duro, .924 ID x .116" Thk
15		9824050		1	O-RING, -021, 90 Duro, .926" ID x .070" Thk
16		87364628		1	TUBE, Two Speed Right Hand
17		87364799		1	TUBE, Right Hand Loop Top
18		87364800		1	TUBE, Right Hand Loop Bottom
19		87364805		1	TUBE, Case Drain Right Hand
20		87452108		4	CLAMP
21		87302564		4	SPACER, 1/4 x 2.000 STD Pipe ZND

HYDROSTATICS - DRIVE MOTORS (440CT)

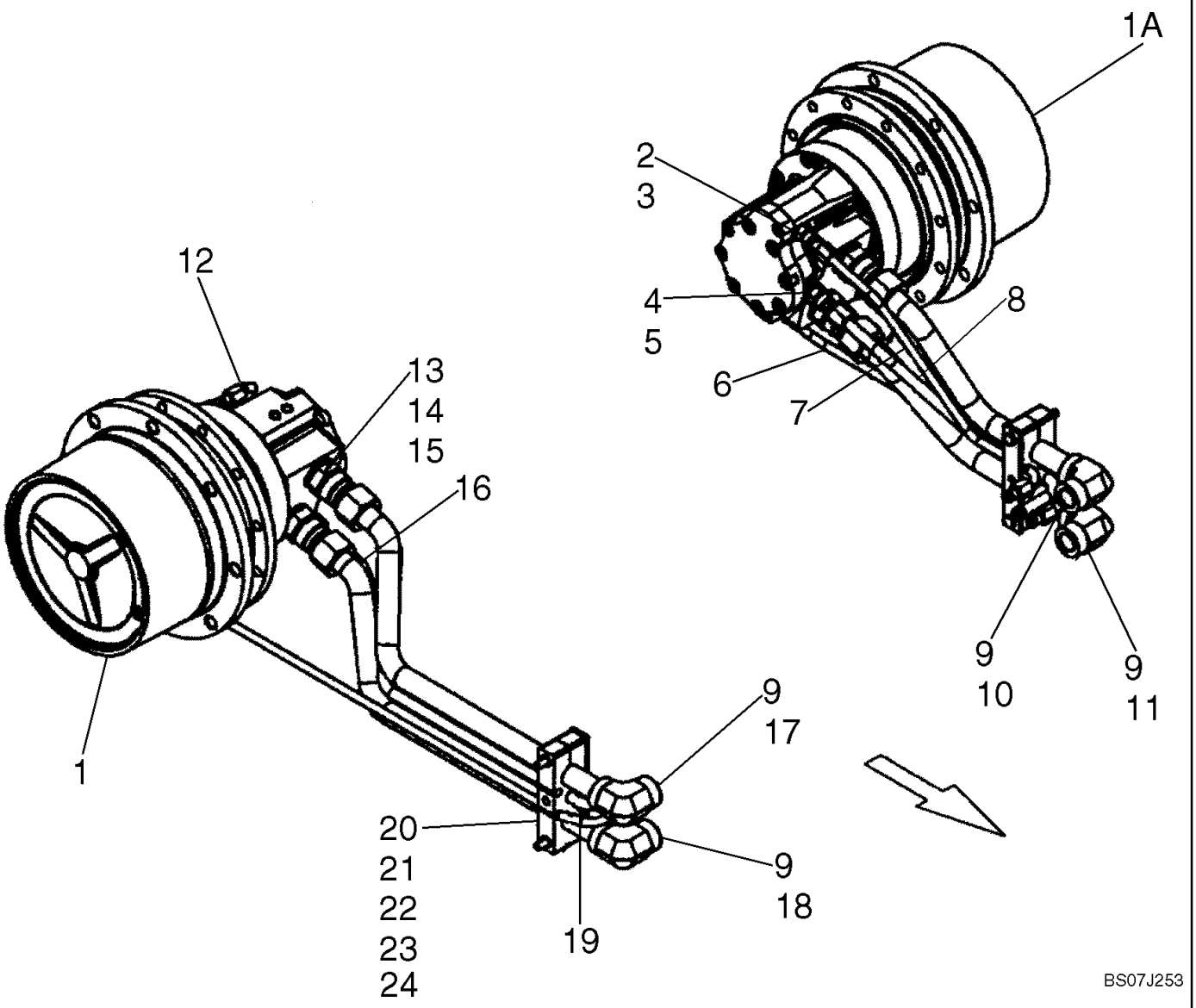

HYDROSTATICS - DRIVE MOTORS (440CT)

REF	FN	PART NUMBER	YR/SN	QTY	DESCRIPTION
22		87452146		2	BAR, Clamp Top
23		120040		4	BOLT, CARRIAGE, Short NK, M8 x 80, Cl8.8, Replaces 120062
24		9628098		4	NUT, LOCK, M8 x 1.25, Cl 10

HYDROSTATICS - MULTI VALVE (440CT)

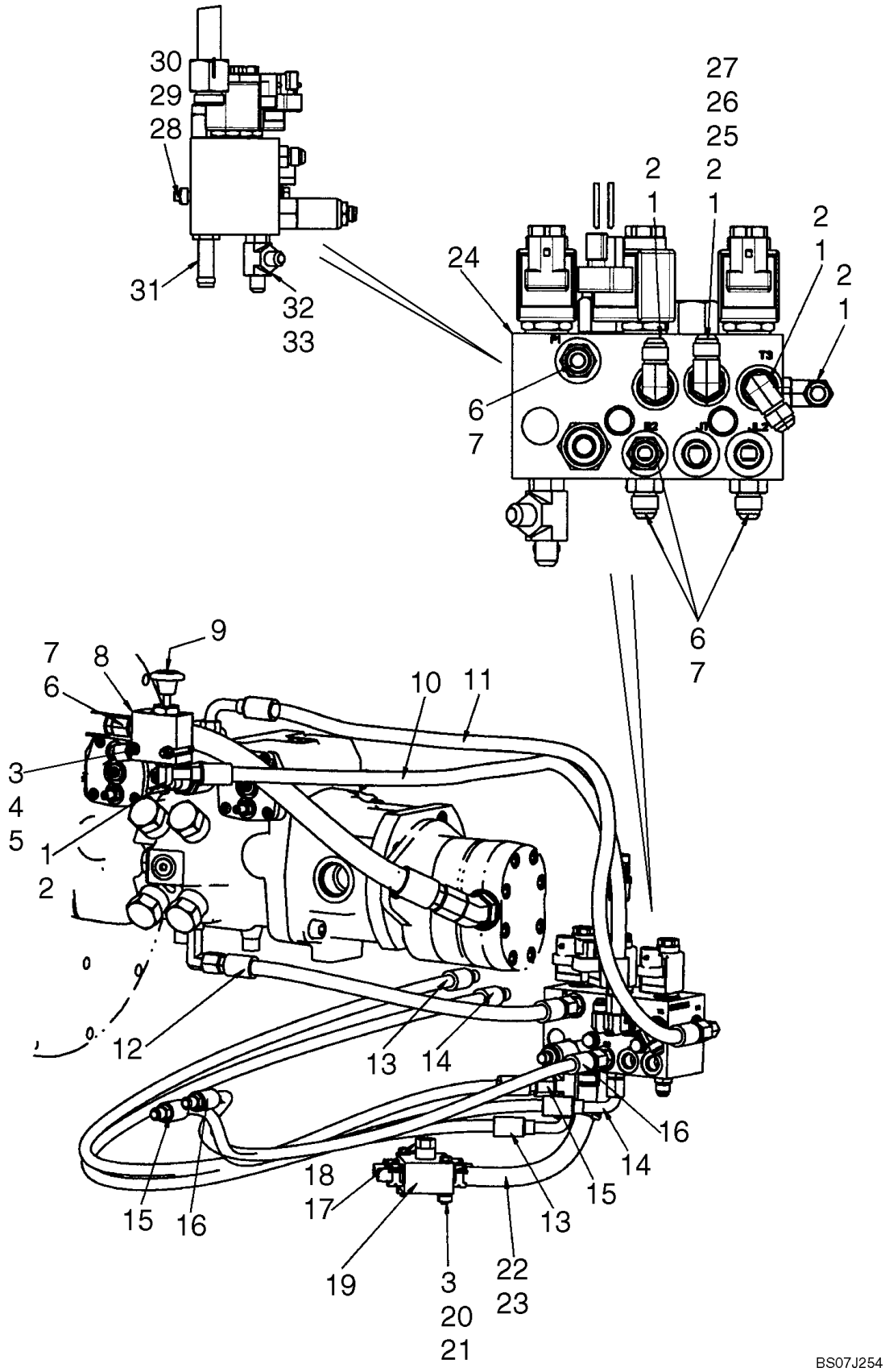

HYDROSTATICS - MULTI VALVE (440CT)

REF	FN	PART NUMBER	YR/SN	QTY	DESCRIPTION
1		76344		4	ELBOW, 90º, 9/16"-18, 37º x 9/16"-18, O-Ring, Incl 2
2		9617873		1	O-RING, 6-1, 90 Duro, .468" ID x .078" Thk
3		86588450		4	WASHER, M6
4		87030561		2	NUT, LOCK, M6 x 1, Cl 8
5		120056		2	BOLT, Hex, M6 x 50, 8.8
6		76350		5	CONNECTOR, HYD., 9/16"-18, 37º x 9/16"-18, O-Ring, Incl 7
7		9617873		1	O-RING, 6-1, 90 Duro, .468" ID x .078" Thk
8		87604076		1	VALVE, EXHAUST, OVERSIZE, Boom Override
9		87568435		1	DECAL, Boom Override
10		87563992		1	HOSE, 820 mm (32.28 in); Dump Valve Drain
11		87563991		1	HOSE, 884 mm (34.8 in); DA pressure
12		87547032		1	HOSE, 467 mm (18.38 in); Charge pressure
13		87364806		1	HOSE, 1200 mm (47.24 in); 2 Speed LH
14		87364631		1	HOSE, 1250 mm (49.21 in); Brake LH
15		87364803		1	TUBE, 825 mm (32.48 in); 2 Speed RH
16		87364629		1	HOSE, 850 mm (33.46 in); Brake RH
17		76349		1	PLUG, Hex Hd, 9/16"-18 ORB, Incl 18
18		9617873		1	O-RING, 6-1, 90 Duro, .468" ID x .078" Thk
19		87437351		1	MANIFOLD, Return oil
20		86977790		2	BOLT, Hex, M6 x 45, 8.8
21		87404992		2	NUT, Square M6-1.0 Class 8 ZND
22		87563996		1	HOSE, 244 mm (9.6 in); Multi-Valve Drain
23		87443510		2	CLAMP, HOSE, 20 mm
24		87577076		1	VALVE, PILOT, Two Speed Track Models; See Figure 06-27
25		87573371		1	ADAPTER, Incl 26, 27
26		9617873		1	O-RING, 6-1, 90 Duro, .468" ID x .078" Thk
27		9993141		1	O-RING, -012, 90 Duro, .364" ID x .070" Thk
28		87030567		2	NUT, Square M8 1.25 Class 8 ZND
29		86624184		4	WASHER, M8 x 16 x 1.6
30		86508571		2	BOLT, Hex, M8 x 90, 8.8
31		86705988		1	FITTING, 1/2" Hose x 9/16"-18 ORB, Beaded
32		86513020		1	TEE, 9/16"-18, 37º x 9/16"-18, O-Ring Run, Incl 33
33		9617873		1	O-RING, 6-1, 90 Duro, .468" ID x .078" Thk

HYDROSTATICS - PUMP FITTINGS (440CT)

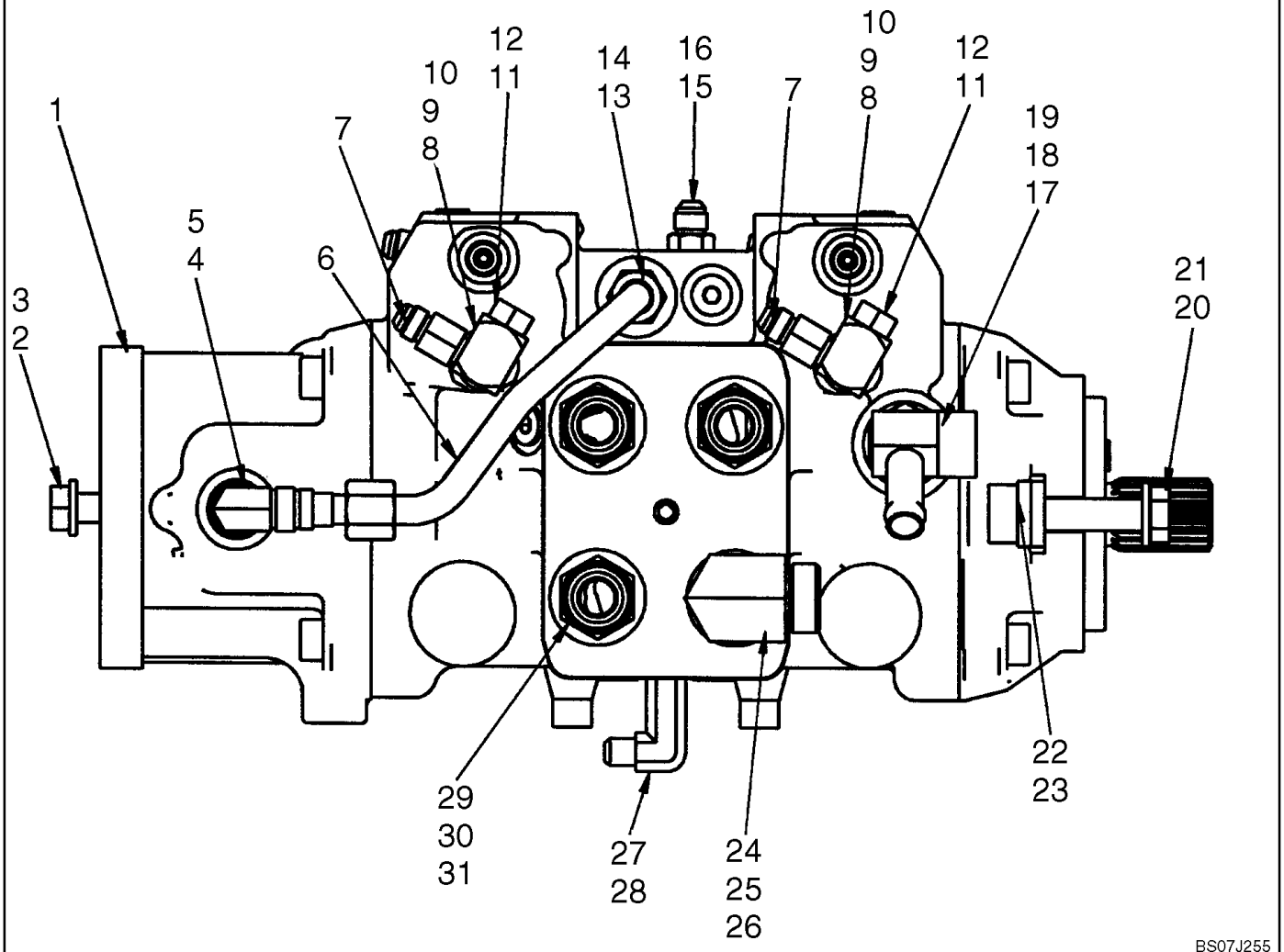

HYDROSTATICS - PUMP FITTINGS (440CT)

REF	FN	PART NUMBER	YR/SN	QTY	DESCRIPTION
1		87546977		1	PUMP, A22; See Figure 06-47 - 06-53
2		86625255		2	WASHER, M13.5 x 24.5 x 3, HT
3		87670		2	BOLT, Hex, 1/2"-13 x 1 1/4", G5, Full Thd
4		128830		1	ELBOW, 90º, 3/4"-16, 37º x 3/4"-16, O-Ring, Incl 5
5		128825		1	O-RING, 8-1, 90 Duro, .644" ID x .087" Thk
6		87554297		1	TUBE, HYD, Tube, Tandem Pump Supply
7		87604074		2	ADAPTER, 6FJ x 6MJ W/ 1.2 Orifice
8		87546979		2	ADAPTER, Incl 9, 10
9		9617873		1	O-RING, 6-1, 90 Duro, .468" ID x .078" Thk
10		165202		1	O-RING, 4-1, 90 Duro, .351" ID x .072" Thk
11		76349		2	PLUG, Hex Hd, 9/16"-18 ORB, Incl 12
12		9617873		1	O-RING, 6-1, 90 Duro, .468" ID x .078" Thk
13		128818		1	CONNECTOR, HYD., 3/4"-16, 37º x 3/4"-16, O-Ring, Incl 14
14		128825		1	O-RING, 8-1, 90 Duro, .644" ID x .087" Thk
15		76350		6	CONNECTOR, HYD., 9/16"-18, 37º x 9/16"-18, O-Ring, Incl 16
16		9617873		6	O-RING, 6-1, 90 Duro, .468" ID x .078" Thk
17		87571937		1	ADAPTER, Incl 18, 19
18		167266		1	O-RING, 12-1, 90 Duro, .924 ID x .116" Thk
19		167269		1	O-RING, 10-1, 90 Duro, .755" ID x .097" Thk
20		{87556906}		2	Bolt, Hex Head M14 x 70 ZND
21		87016615		2	WASHER, M12 x 28.5 x 3, HT
22		87637186		2	NUT, M14 Class 10 ZND
23		{87564723}		4	Washer, 15.3 x 28.5 x 6 HTS ZND
24		9846848		1	ELBOW, Incl. 25, 26
25		9991976		1	O-RING, -018, 90 Duro, .739" ID x .070" Thk
26		167266		1	O-RING, 12-1, 90 Duro, .924 ID x .116" Thk
27		86526		1	ELBOW, 90º, 9/16"-18, 37º x 9/16"-18, LG, Incl 28
28		9617873		1	O-RING, 6-1, 90 Duro, .468" ID x .078" Thk
29		9840535		3	CONNECTOR, HYD., Incl 30, 31
30		9991976		1	O-RING, -018, 90 Duro, .739" ID x .070" Thk
31		167266		1	O-RING, 12-1, 90 Duro, .924 ID x .116" Thk

HYDROSTATICS - HOSES, PUMP AND DRIVE MOTORS

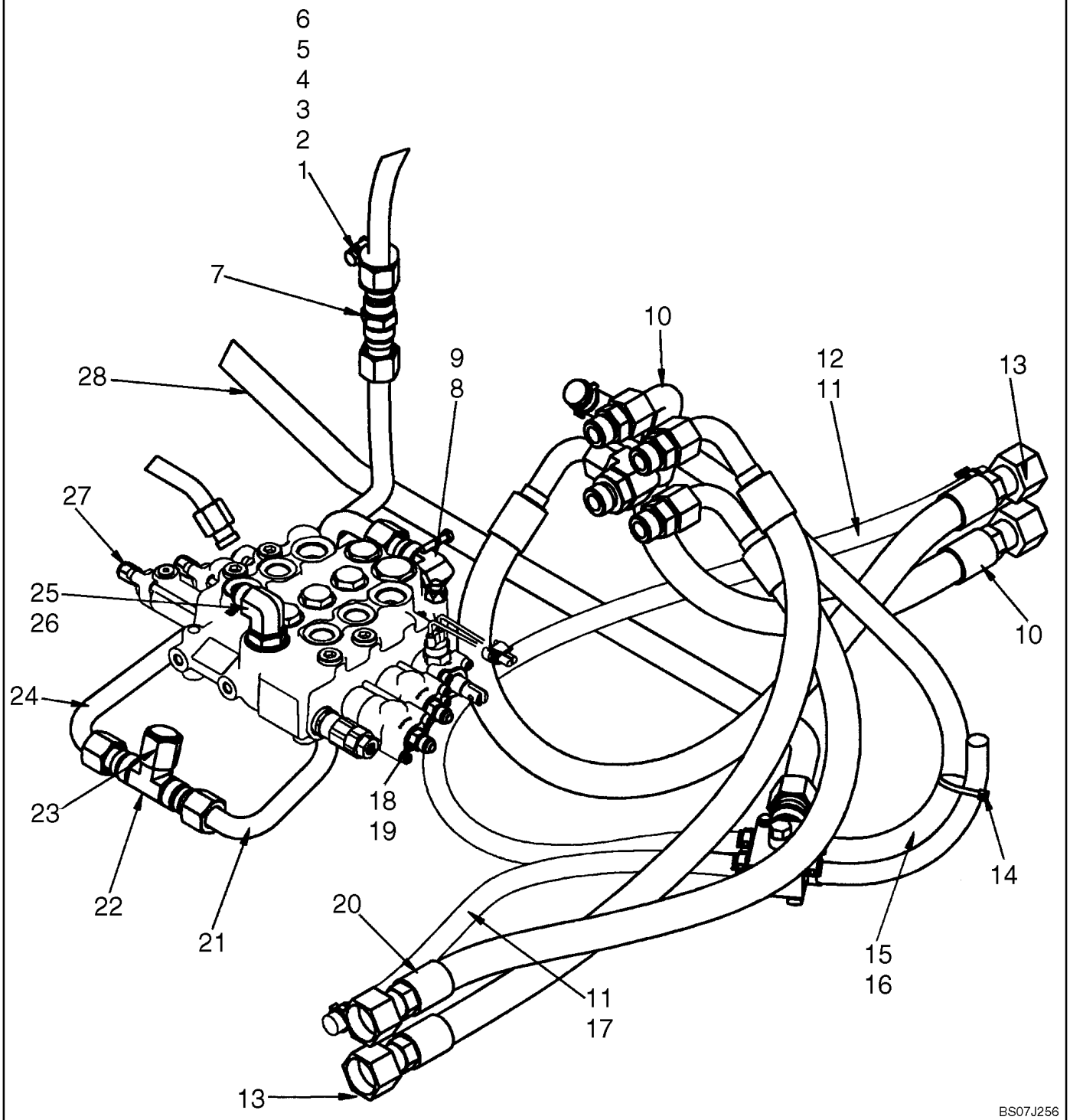

HYDROSTATICS - HOSES, PUMP AND DRIVE MOTORS

REF	FN	PART NUMBER	YR/SN	QTY	DESCRIPTION
1		86624184		1	WASHER, M8 x 16 x 1.6
2		87030567		1	NUT, Square M8
3		87042897		1	SPACER
4		87301359		1	CLAMP, 1 1/8", 3/8" Bolt
5		87445136		1	ISOLATOR, 3/4
6		43128		1	BOLT, Hex, M8 x 30, 8.8
7		144121		1	UNION, 1 1/16"-12, 37º x 1 1/16"-12, 37º
8		322894		1	ELBOW, 90º, 1 1/16"-12, 37º x 1 1/16"-12, O-Ring, Incl. 9
9		167266		1	O-RING, 12-1, 90 Duro, .924 ID x .116" Thk
10		87547065		1	HOSE, 609 mm (24.00 in); Motor Pump Loop
11		87443510		4	CLAMP, HOSE
12		87364625		1	HOSE, 1000 mm (39.37 in); Case Drain,
13		87547067		1	HOSE, 930 mm (36.61 in); Motor To Pump Loop
14		529070		1	STRAP, CABLE, .30" x 14.5"
15		87563997		1	HOSE, 765 mm (30.12 in); Pump Drain
16		87443511		2	CLAMP
17		87364622		1	HOSE, 715 mm (28.15 in); Case Drain
18		84570		2	ELBOW, 90º, 7/8"-14, 37º x 1 1/16"-12, O-Ring, Incl 19
19		165202		1	O-RING, 4-1, 90 Duro, .351" ID x .072" Thk
20		87547066		1	HOSE, 970 mm (38.20 in); Motor To Pump Loop
21		87446248		1	TUBE ASSY., Valve To Filter
22		15694		1	TEE, 1 1/16"-12 37º
23		219606		1	CAP, 37º, 1 1/16"-12
24		87445138		1	TUBE ASSY., Valve To Filter
25		84570		1	ELBOW, 90º, 7/8"-14, 37º x 1 1/16"-12, O-Ring, Incl. 26
26		167266		1	O-RING, 12-1, 90 Duro, .924 ID x .116" Thk
27		87575684		2	CONNECTOR, HYD., Flareless
28		87364616		1	TUBE, Case Drain

HYDROSTATICS - PUMP TO COOLER (440 WITH PILOT CONTROL)

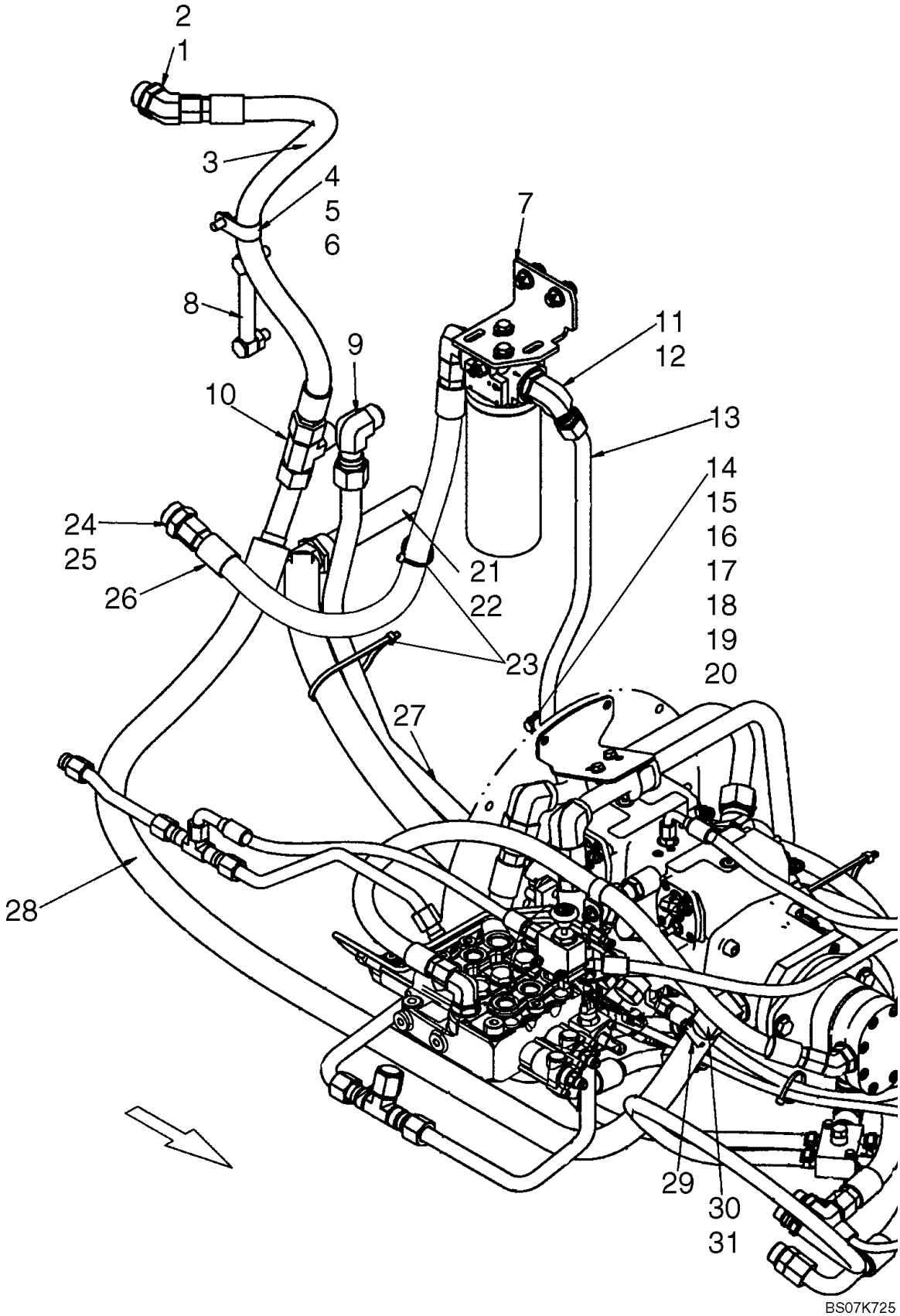

HYDROSTATICS - PUMP TO COOLER (440 WITH PILOT CONTROL)

REF	FN	PART NUMBER	YR/SN	QTY	DESCRIPTION
1		{87657980}		2	Elbow, 37FL 45 ADJ 3/4 x 1.0 Tube; To Oil Cooler; Incl 2
2		167268		1	O-RING, 16-1, 90 Duro, 1.171" ID x .116" Thk
3		87653980		1	HOSE, 810 mm (31.88 in) To Upper Oil Cooler
4		86639001		1	CLAMP, 1 3/16", Insul, 7/16" Bolt
5		140045		1	WASHER, SPRING, Belleville, M10
6		43138		1	SCREW, Hex, M10 x 20, 8.8, Full Thd
7		REF			INSTRUCTION, For Filter Assy And Mounting See Fig 06-32
8		87374752		1	GAUGE, Liquid Level
9		9615396		1	ELBOW, 90º, 1 5/16"-12, 37º x 3/4"-14, NPTF
10		9790547		1	TEE, 1 5/16"-12, 37º x 1"-11 1/2, NPTF Br
11		87021824		2	ELBOW, 90º, 1 1/16"-12, 37º x 1 5/16"-12, O-Ring, Incl 12
12		167268		1	O-RING, 16-1, 90 Duro, 1.171" ID x .116" Thk
13		87660856		1	TUBE, RIGID, Tube, Valve To Filter (LH Wall)
14		43128		1	BOLT, Hex, M8 x 30, 8.8
15		86624184		4	WASHER, M8 x 16 x 1.6
16		87042897		1	SPACER
17		87301359		1	CLAMP, 1 1/8", 3/8" Bolt
18		87445136		1	ISOLATOR
19		229197A1		2	NUT
20		144121		1	UNION, 1 1/16"-12, 37º x 1 1/16"-12, 37º
21		H151399		1	FILTER CARTRIDGE
22		87033823		1	FITTING, 1/4" Hose x 1/8" NPTF, Fem, Barbed
23		L18331		2	STRAP, CABLE
24		233705		1	CONNECTOR, HYD., 1 1/16"-12, 37º x 1 5/16"-12, O-Ring, Incl 25
25		167266		2	O-RING, 12-1, 90 Duro, .924 ID x .116" Thk
26		87653981		1	HOSE, 750 mm (29.52 in) To Lower Oil Cooler
27		87584058		1	TUBE, RIGID, Case Drain
28		87563971		1	HOSE, 1859 mm (73.19 in) Charge Pump Suppply
29		86536660		1	CLAMP, HOSE, #16, 0.81/1.50 Type F Worm
30		87393628		1	ADAPTER, Incl 31
31		167268		1	O-RING, 16-1, 90 Duro, 1.171" ID x .116" Thk

HYDROSTATICS - MANIFOLD/CONTROL VALVE (440 WITH PILOT CONTROL)

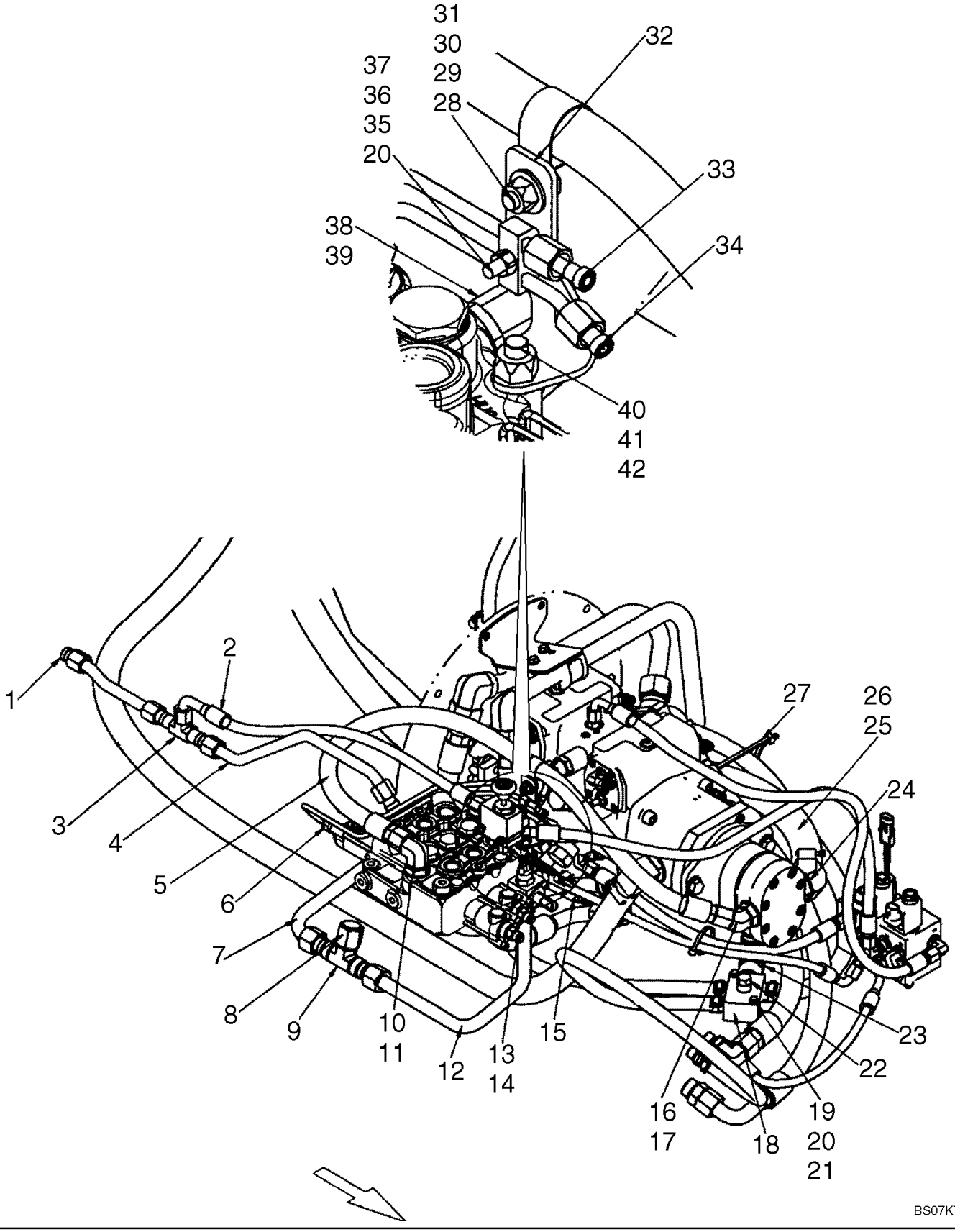

HYDROSTATICS - MANIFOLD/CONTROL VALVE (440 WITH PILOT CONTROL)

REF	FN	PART NUMBER	YR/SN	QTY	DESCRIPTION
1		87564000		1	TUBE, HYD, Dump Valve Drain
2		87625890		1	HOSE, (559 mm, 22.00 in) Dump Valve Supply
3		87644290		1	CONNECTOR, HYD.
4		87563998		1	TUBE, HYD, Dump Valve Drain
5		87547070		1	HOSE, 1000 mm (39.37 in) Valve Supply
6		87575684		2	CONNECTOR, HYD., Connector, Flareless
7		87445138		1	TUBE ASSY., Valve Out To Filter
8		219606		1	CAP, 37º, 1 1/16"-12
9		15694		1	TEE, 1 1/16"-12 37º
10		84570		1	ELBOW, 90º, 7/8"-14, 37º x 1 1/16"-12, O-Ring, Incl 11
11		167266		1	O-RING, 12-1, 90 Duro, .924 ID x .116" Thk
12		87445137		1	TUBE ASSY., Valve To Filter
13		84384		2	CONNECTOR, HYD., 9/16"-18, 37º x 7/16"-20, O-Ring, Incl 14
14		165202		2	O-RING, 4-1, 90 Duro, .351" ID x .072" Thk
15		{87563975}		1	Hose, 800 mm (31.49 in) LH Brake
16		100197		1	ELBOW, 45º, 7/8"-14 x 1 1/16"-12, O-Ring, Incl 17
17		167266		1	O-RING, 12-1, 90 Duro, .924 ID x .116" Thk
18		87437351		1	MANIFOLD
19		86977790		2	BOLT, Hex, M6 x 45, 8.8
20		86588450		3	WASHER, M6
21		87404992		2	NUT
22		76349		1	PLUG, Hex Hd, 9/16"-18 ORB, Incl 19
23		86050288		1	ELBOW, 90º, 1 5/16"-12, 37º x 1 5/16"-12, 37º Fem Sw
24		87033824		1	FITTING, 45º, 1 1/4" Hose x 1 5/16"-12 ORB Beaded, Incl 21
25		87563972		1	HOSE, 553 mm (61.14 in) Loader Pump Supply
26		87039085		2	CLAMP, HOSE, 1.25/2.125 HD Worm
27		529070		2	STRAP, CABLE, .30" x 14.5"
28		120104		1	BOLT, Hex, M8 x 20, 8.8
29		86625263		2	WASHER, M8 x 20 x 1.6
30		9628098		1	NUT, LOCK, M8 x 1.25, Cl 10
31		9827902		1	CLAMP, 1", Insul, 3/8" Bolt

HYDROSTATICS - MANIFOLD/CONTROL VALVE (440 WITH PILOT CONTROL)

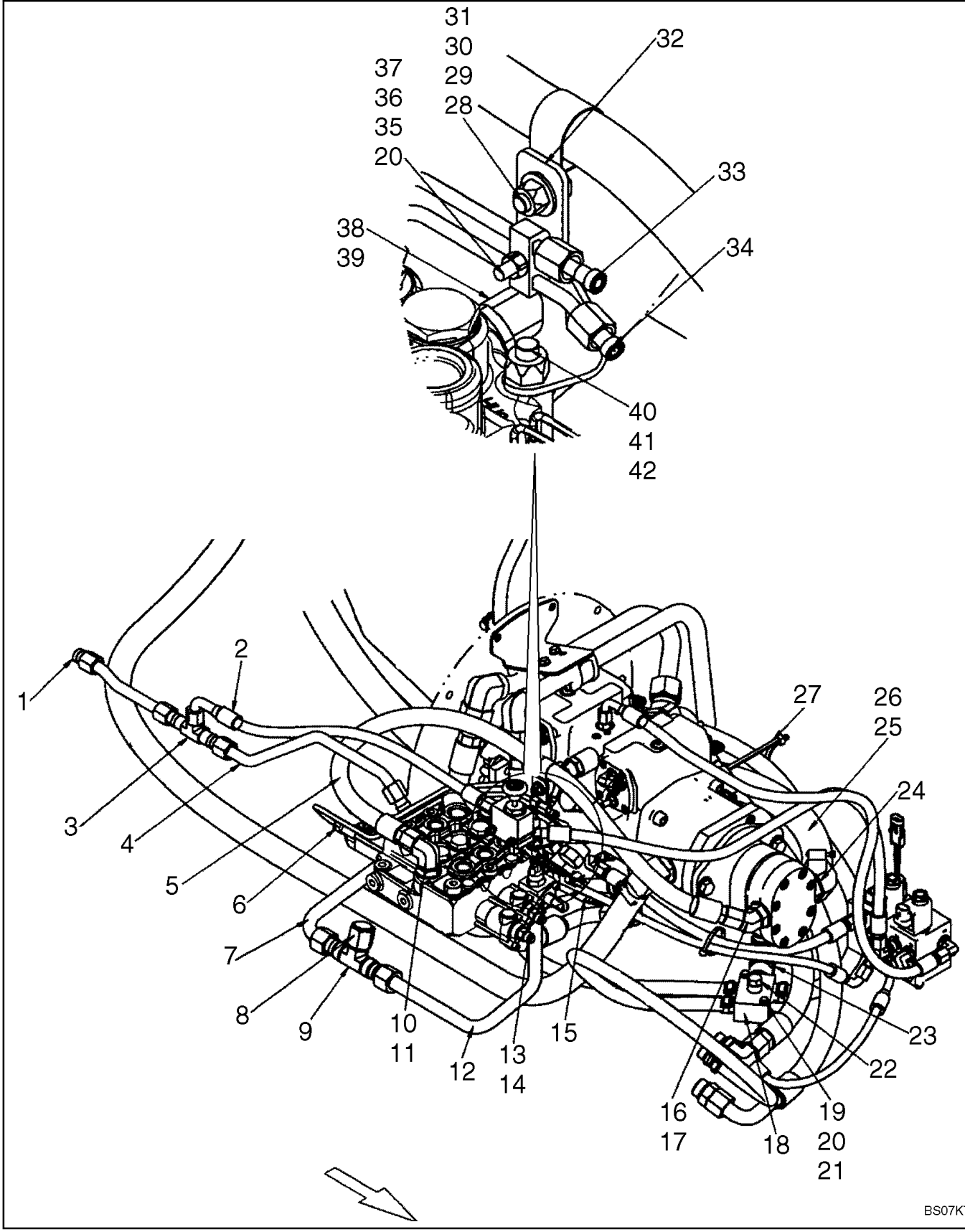

HYDROSTATICS - MANIFOLD/CONTROL VALVE (440 WITH PILOT CONTROL)

REF	FN	PART NUMBER	YR/SN	QTY	DESCRIPTION
32		87678506		1	BRACKET, Bracket, Hose Support
33		87563969		1	TUBE, HYD
34		87563968		1	TUBE, HYD
35		80120101		1	SCREW
36		87030561		1	NUT, LOCK, M6 x 1, Cl 8
37		608089		1	CLAMP
38		322894		4	ELBOW, 90º, 1 1/16"-12, 37º x 1 1/16"-12, O-Ring, Incl 39
39		167266		1	O-RING, 12-1, 90 Duro, .924 ID x .116" Thk
40		43144		1	SCREW, Hex, M10 x 70, 8.8
41		86512554		1	NUT, LOCK, M10 x 1.5, Cl 10
42		86639325		1	WASHER, M10 x 24.5 x 3, HT

HYDROSTATICS - PUMP FITTINGS (440 WITH PILOT CONTROL)

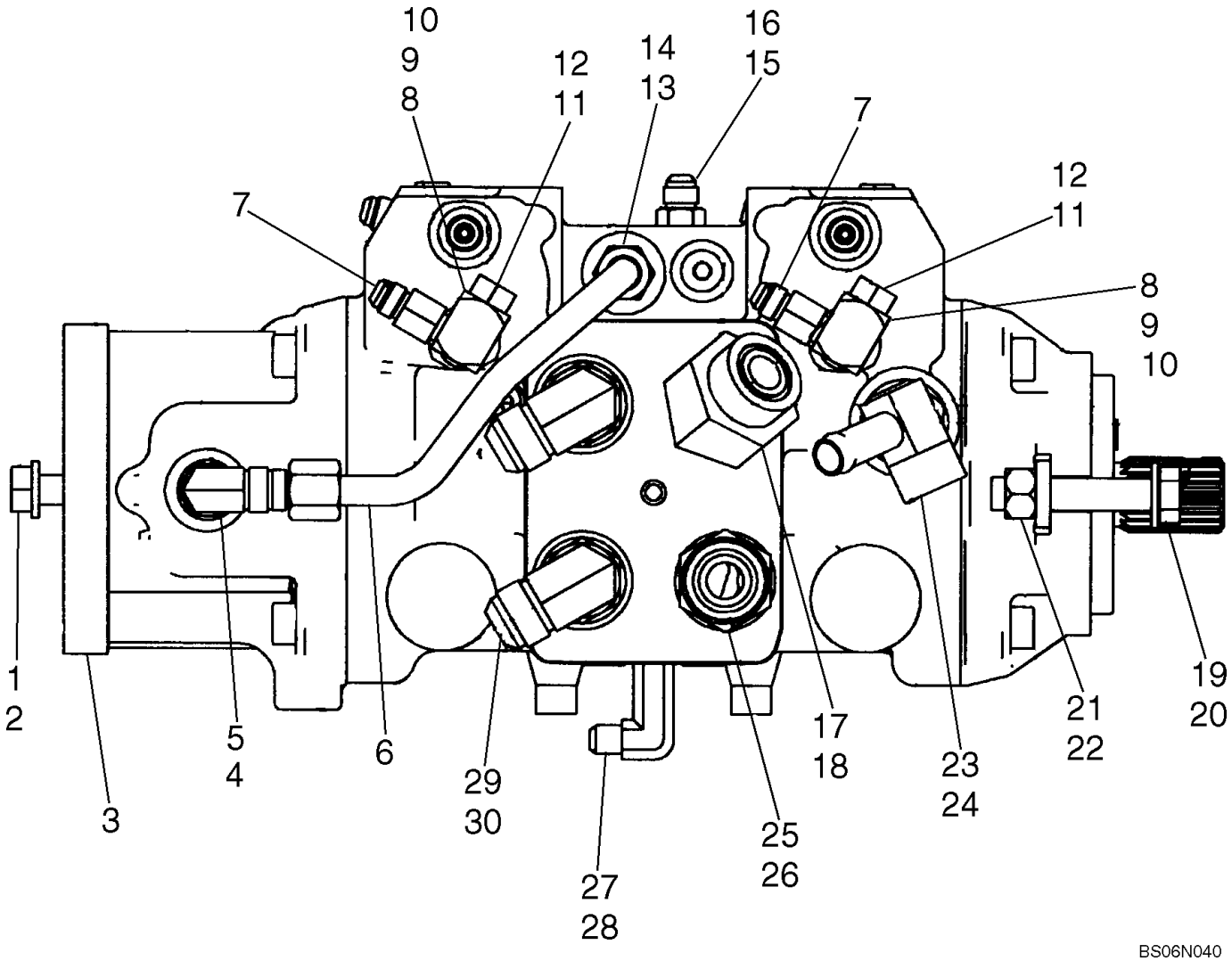

HYDROSTATICS - PUMP FITTINGS (440 WITH PILOT CONTROL)

REF	FN	PART NUMBER	YR/SN	QTY	DESCRIPTION
1		86625255		2	WASHER, M13.5 x 24.5 x 3, HT
2		87670		2	BOLT, Hex, 1/2"-13 x 1 1/4", G5, Full Thd
3		87546976		1	PUMP, A22 Double Piston Pilot Control; See Figure 06-39
4		128830		1	ELBOW, 90º, 3/4"-16, 37º x 3/4"-16, O-Ring, Incl. 5
5		128825		1	O-RING, 8-1, 90 Duro, .644" ID x .087" Thk
6		87554297		1	TUBE, HYD, Tube, Tandem Pump Supply
7		87604075		4	ADAPTER, Connector With 1.0 mm Orifice
8		87546979		2	ADAPTER, Incl 9, 10
9		165202		1	O-RING, 4-1, 90 Duro, .351" ID x .072" Thk
10		9617873		1	O-RING, 6-1, 90 Duro, .468" ID x .078" Thk
11		76349		3	PLUG, Hex Hd, 9/16"-18 ORB, Incl 12
12		9617873		1	O-RING, 6-1, 90 Duro, .468" ID x .078" Thk
13		128818		1	CONNECTOR, HYD., 3/4"-16, 37º x 3/4"-16, O-Ring, Incl 14
14		128825		1	O-RING, 8-1, 90 Duro, .644" ID x .087" Thk
15		76350		6	CONNECTOR, HYD., 9/16"-18, 37º x 9/16"-18, O-Ring, Incl 16
16		9617873		1	O-RING, 6-1, 90 Duro, .468" ID x .078" Thk
17		{87302733}		1	Elbow 45 Adj. 1.0 ORFS-ORB 3/4; Incl 18
18		167266		1	O-RING, 12-1, 90 Duro, .924 ID x .116" Thk
19		{87556906}		2	Bolt, Hex Head M14 X 70 ZND
20		87016615		2	WASHER, M12 x 28.5 x 3, HT
21		87637186		2	NUT
22		{87564723}		2	Washer
23		87571937		1	ADAPTER, Incl 24
24		167266		1	O-RING, 12-1, 90 Duro, .924 ID x .116" Thk
25		87303844		1	CONNECTOR, HYD., 1 7/16"-12 ORFS x 1 1/16"-12 ORB, Incl 26
26		167266		1	O-RING, 12-1, 90 Duro, .924 ID x .116" Thk
27		86526		1	ELBOW, 90º, 9/16"-18, 37º x 9/16"-18, LG
28		9617873		1	O-RING, 6-1, 90 Duro, .468" ID x .078" Thk
29		322894		4	ELBOW, 90º, 1 1/16"-12, 37º x 1 1/16"-12, O-Ring, Incl 30
30		167266		1	O-RING, 12-1, 90 Duro, .924 ID x .116" Thk

HYDROSTATICS - SINGLE SPEED, DRIVE MOTORS (440)

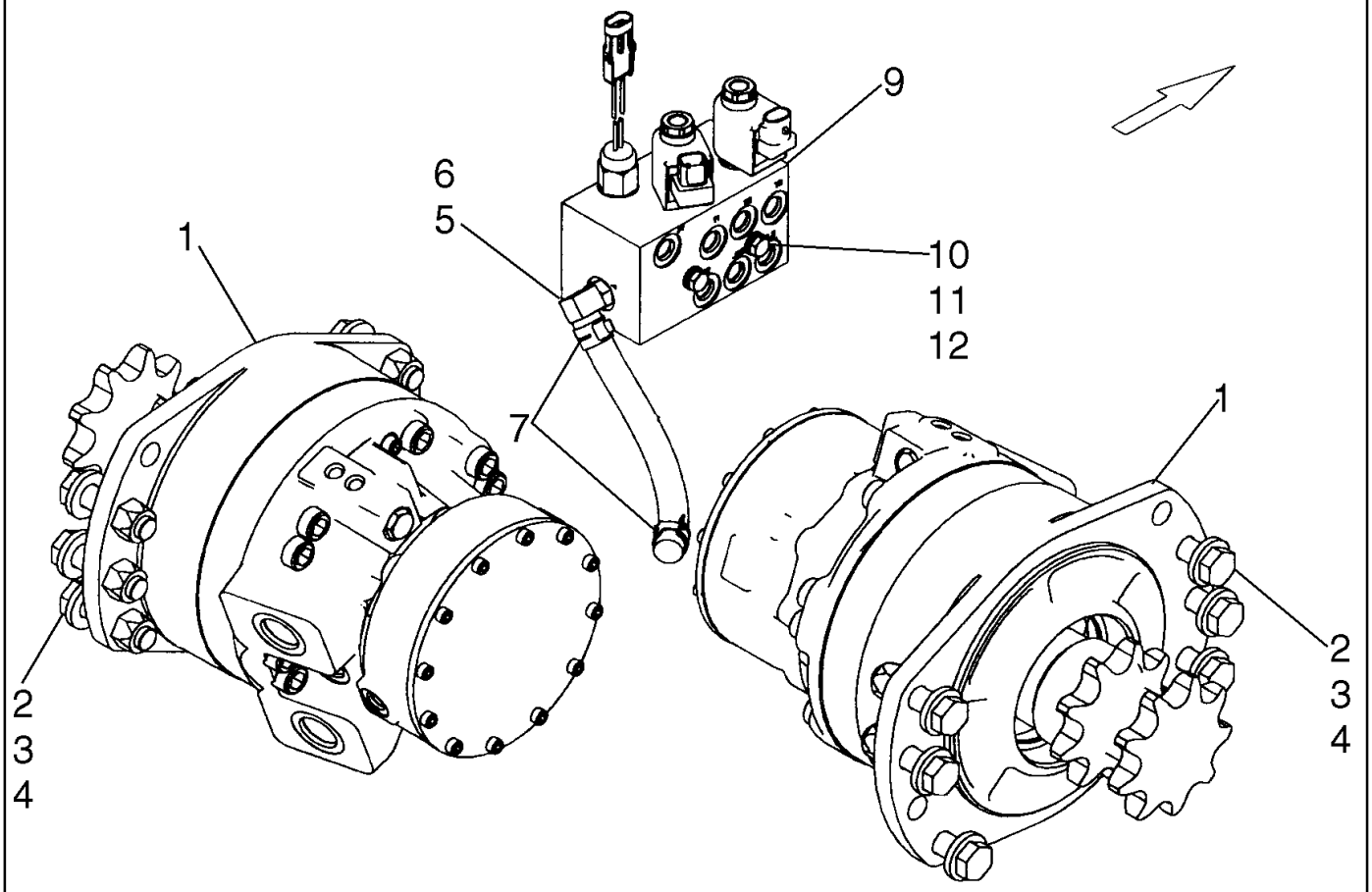

HYDROSTATICS - SINGLE SPEED, DRIVE MOTORS (440)

REF	FN	PART NUMBER	YR/SN	QTY	DESCRIPTION
1		87035341		2	MOTOR, HYDRAULIC, See Figure 06-56 - 06-58
2		86625258		12	WASHER, M16 x 34.5 x 5, HT
3		9828248		12	BOLT, Hex, M16 x 60, 10.9
4		86512555		12	NUT, LOCK, M16 x 2, Cl 10
5		86705580		1	FITTING, 90º, 1/2" Hose x 9/16"-18 ORB Beaded, Incl. 6
6		9617873		1	O-RING, 6-1, 90 Duro, .468" ID x .078" Thk
7		87443510		2	CLAMP, HOSE, 20 mm
8		87563994		1	HOSE, 190 mm (7.48 in) Multi-Valve Drain
9		87546971		1	VALVE, HYDRAULIC, See Figure 06-25
10		86508571		2	BOLT, Hex, M8 x 90, 8.8
11		86624184		4	WASHER, M8 x 16 x 1.6
12		229197A1		2	NUT

HYDROSTATICS - HOSES (440 WITH PILOT CONTROL)

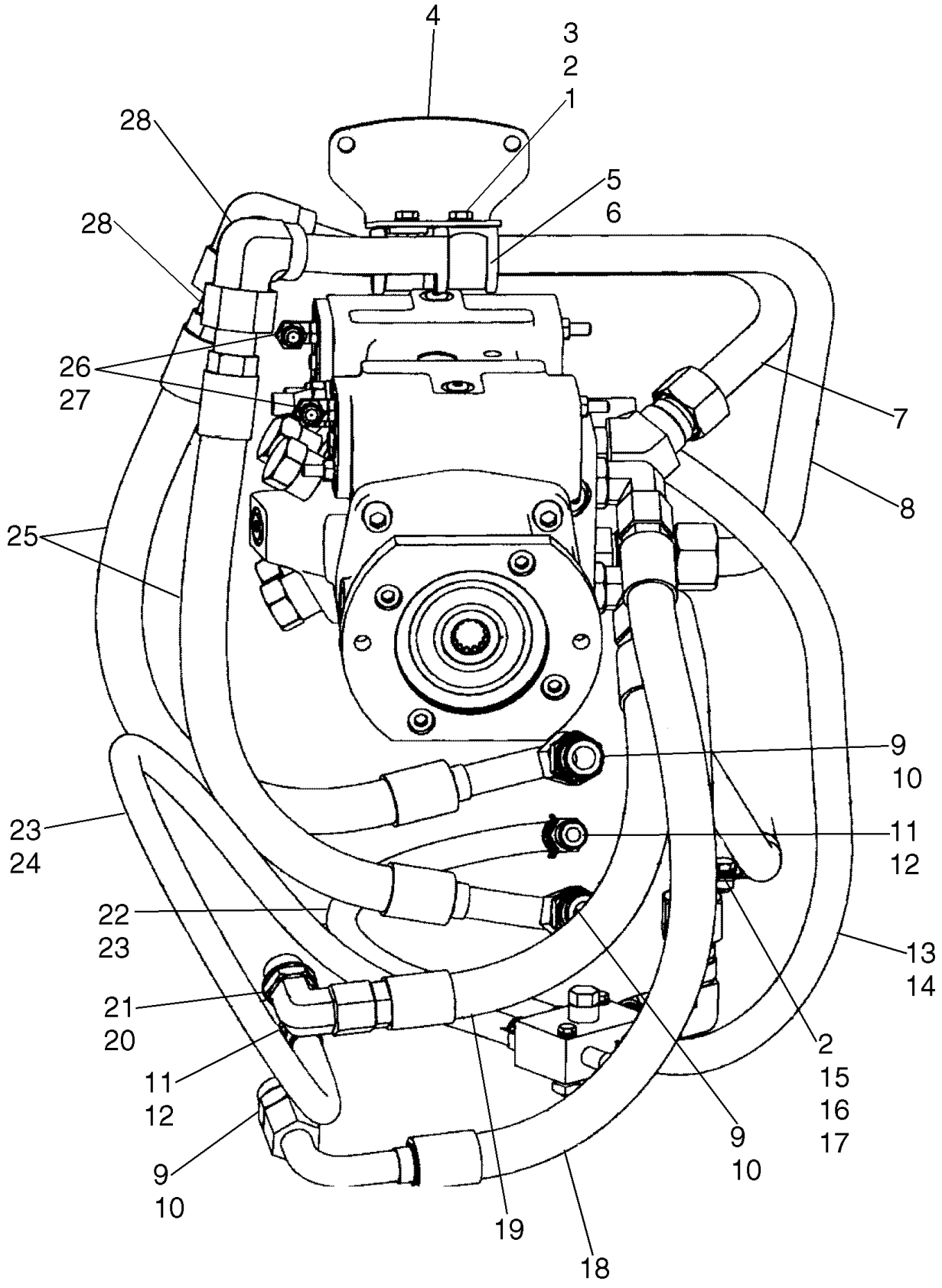

HYDROSTATICS - HOSES (440 WITH PILOT CONTROL)

REF	FN	PART NUMBER	YR/SN	QTY	DESCRIPTION
1		9628098		3	NUT, LOCK, M8 x 1.25, Cl 10
2		86624184		2	WASHER, M8 x 16 x 1.6
3		43127		2	BOLT, Hex, M8 x 25, 8.8
4		87564008		1	CLAMP BRACKET
5		D67297		2	BLOCK, Isolation
6		D68846		2	CLAMP
7		87547068		1	TUBE, HYD, Motor To Pump Loop
8		87600630		1	TUBE, HYD, Motor To Pump Loop
9		322896		3	CONNECTOR, HYD., 1 1/16"-12, 37° x 1 1/16"-12, O-Ring, Incl 10
10		167266		3	O-RING, 12-1, 90 Duro, .924 ID x .116" Thk
11		87010108		2	FITTING, 1/2" Hose x 3/4"-16 ORB, Beaded, Incl 12
12		128825		2	O-RING, 8-1, 90 Duro, .644" ID x .087" Thk
13		87563995		1	HOSE, (657 mm, 25.87 in)Pump Drain
14		87443511		2	CLAMP
15		120103		1	BOLT, Hex, M8 x 16, 8.8
16		86637977		1	CLAMP, 1", Insul, 5/16" Bolt
17		229197A1		2	NUT
18		87547060		1	HOSE, 675 mm (26.57 in) Motor To Pump Loop
19		87547061		1	HOSE, 505 mm (19.88 in)Motor To Pump Loop
20		322894		4	ELBOW, 90°, 1 1/16"-12, 37° x 1 1/16"-12, O-Ring, Incl 21
21		167266		4	O-RING, 12-1, 90 Duro, .924 ID x .116" Thk
22		87022175		1	HOSE ASSY., 600 mm (23.62 in)Case Drain
23		87443510		4	CLAMP, HOSE
24		87022174		1	HOSE ASSY., 950 mm (37.40 in) Case Drain
25		87547062		2	HOSE, (646 mm, 25.43 in) Motor To Pump Loop
26		87604075		2	ADAPTER, Connector With 1.0 mm Orifice
27		86512936		2	ELBOW, 90°, 9/16"-18, 37° x 7/16"-20, O-Ring, Incl 28
28		9824050		2	O-RING, -021, 90 Duro, .926" ID x .070" Thk

HYDROSTATICS - MULTI VALVE (440 WITH PILOT CONTROL)

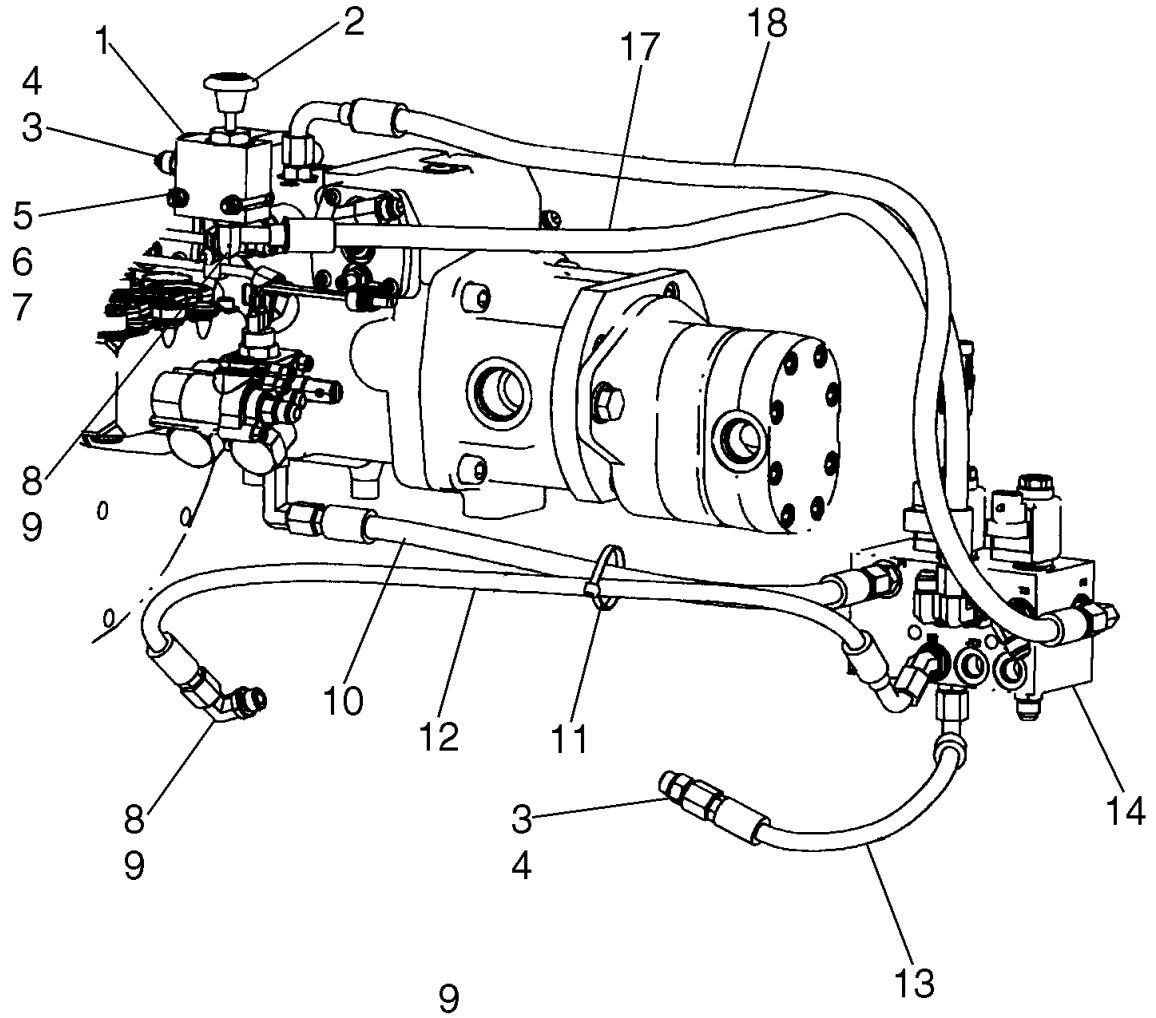

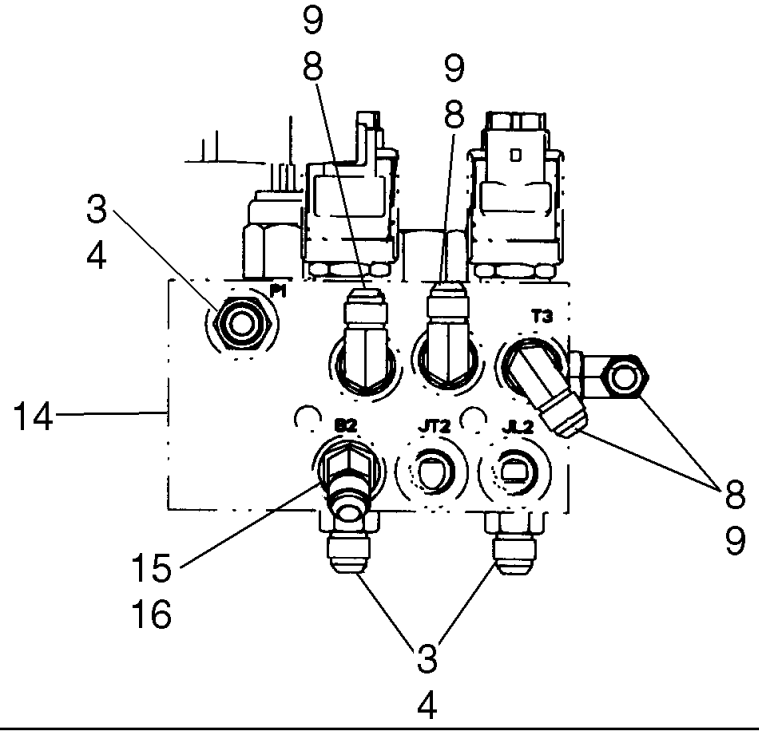

BS07K727

HYDROSTATICS - MULTI VALVE (440 WITH PILOT CONTROL)

REF	FN	PART NUMBER	YR/SN	QTY	DESCRIPTION
1		87546973		1	VALVE, Boom Override; Incl. Knob; If Used
1		87604076		1	VALVE, EXHAUST, OVERSIZE, Boom Overide; If Used
2		87568435		1	DECAL, Boom Override
3		76350		6	CONNECTOR, HYD., 9/16"-18, 37° x 9/16"-18, O-Ring, Incl. 4
4		9617873		6	O-RING, 6-1, 90 Duro, .468" ID x .078" Thk
5		86588450		7	WASHER, M6
6		86512440		2	NUT, LOCK
7		120056		2	BOLT, Hex, M6 x 50, 8.8
8		76344		6	ELBOW, 90º, 9/16"-18, 37º x 9/16"-18, O-Ring, Incl. 9
9		9617873		6	O-RING, 6-1, 90 Duro, .468" ID x .078" Thk
10		87547032		1	HOSE
11		529070		1	STRAP, CABLE, .30" x 14.5"
12		{87563975}		1	Hose, 800 mm (31.50 in) Left Hand Brake
13		87563977		1	HOSE, 371 mm (14.61 in) Right Hand Brake
14		87546971		1	VALVE, HYDRAULIC, See Figure 06-25
15		330346		1	ELBOW, 45º, 9/16"-18, 37º x 9/16"-18, O-Ring, Incl. 16
16		9617873		1	O-RING, 6-1, 90 Duro, .468" ID x .078" Thk
17		87563992		1	HOSE, 820 mm (32.28 in) Dump Valve Drain
18		87563991		1	HOSE, 884 mm (34.80 in) DA Pressure

HYDROSTATICS - TWO SPEED, DRIVE MOTORS (MECHANICAL CONTROL)

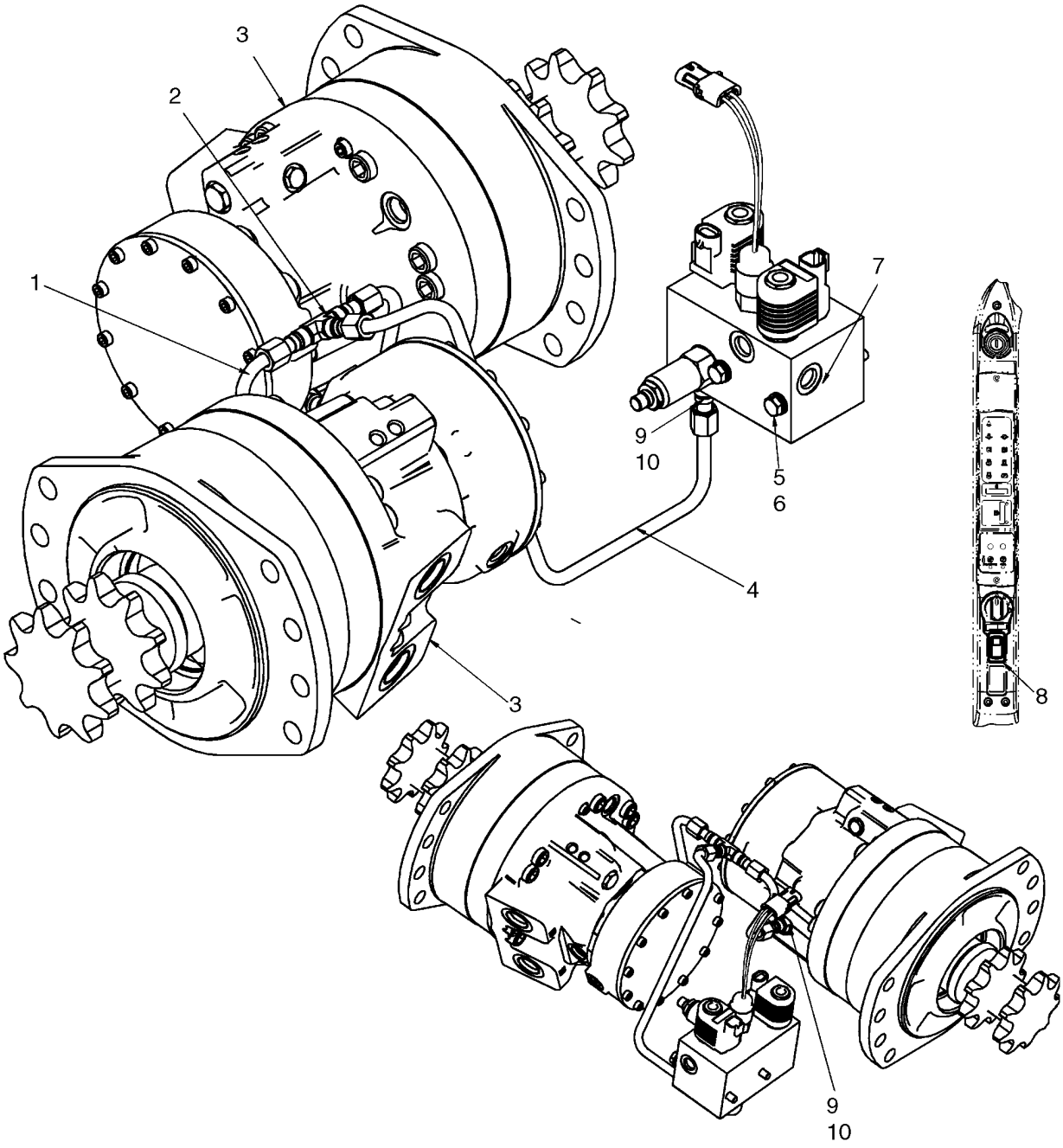

HYDROSTATICS - TWO SPEED, DRIVE MOTORS (MECHANICAL CONTROL)

REF	FN	PART NUMBER	YR/SN	QTY	DESCRIPTION
1		87430855		2	TUBE ASSY.
2		76355		1	TEE, 9/16"-18, 37º
3		87035342		2	MOTOR, HYDRAULIC, See Fig 06-59 - 06-61
4		87455412		1	TUBE ASSY.
5		140016		4	WASHER, M8 x 16 x 1.6
6		86508571		2	BOLT, Hex, M8 x 90, 8.8
7		87429625		1	VALVE, HYDRAULIC, See Fig 06-26
8		87634136		1	SWITCH, Indicator, High Speed
9		76350		3	CONNECTOR, HYD., 9/16"-18, 37º x 9/16"-18, O-Ring, Incl 10
10		9617873		3	O-RING, 6-1, 90 Duro, .468" ID x .078" Thk

HYDROSTATICS - TWO SPEED, DRIVE MOTORS (PILOT CONTROL)

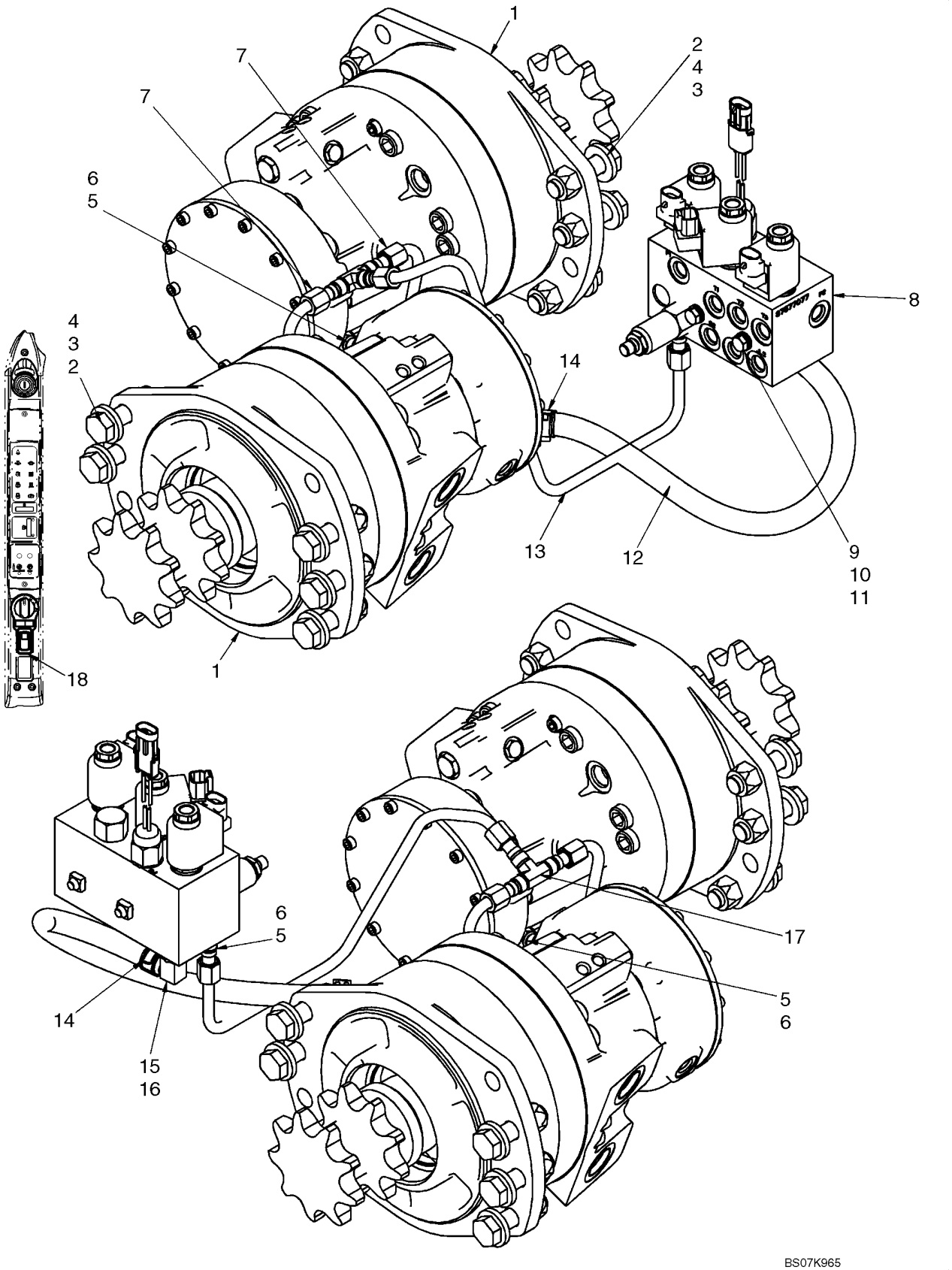

HYDROSTATICS - TWO SPEED, DRIVE MOTORS (PILOT CONTROL)

REF	FN	PART NUMBER	YR/SN	QTY	DESCRIPTION
1		87035342		2	MOTOR, HYDRAULIC, See Fig 06-59 - 06-61
2		86512555		12	NUT, LOCK, M16 x 2, Cl 10
3		86625258		12	WASHER, M16 x 34.5 x 5, HT
4		9828248		12	BOLT, Hex, M16 x 60, 10.9
5		76350		3	CONNECTOR, HYD., 9/16"-18, 37° x 9/16"-18, O-Ring, Incl 6
6		9617873		3	O-RING, 6-1, 90 Duro, .468" ID x .078" Thk
7		87430855		2	TUBE ASSY.
8		87577077		1	VALVE, PILOT, Pilot, Brake/Two Speed; See Fig 06-28
9		86508571		2	BOLT, Hex, M8 x 90, 8.8
10		86624184		4	WASHER, M8 x 16 x 1.6
11		229197A1		2	NUT
12		87547047		1	HOSE, Hose, Multi Valve Drain, 520mm (20 1/2 in.)
13		87455412		1	TUBE ASSY.
14		87443510		2	CLAMP, HOSE
15		86705580		1	FITTING, 90°, 1/2" Hose x 9/16"-18 ORB Beaded, Incl 16
16		9617873		1	O-RING, 6-1, 90 Duro, .468" ID x .078" Thk
17		76355		1	TEE, 9/16"-18, 37°
18		87634136		1	SWITCH, Indicator High Speed

HYDROSTATICS - MULTI VALVE ASSEMBLY

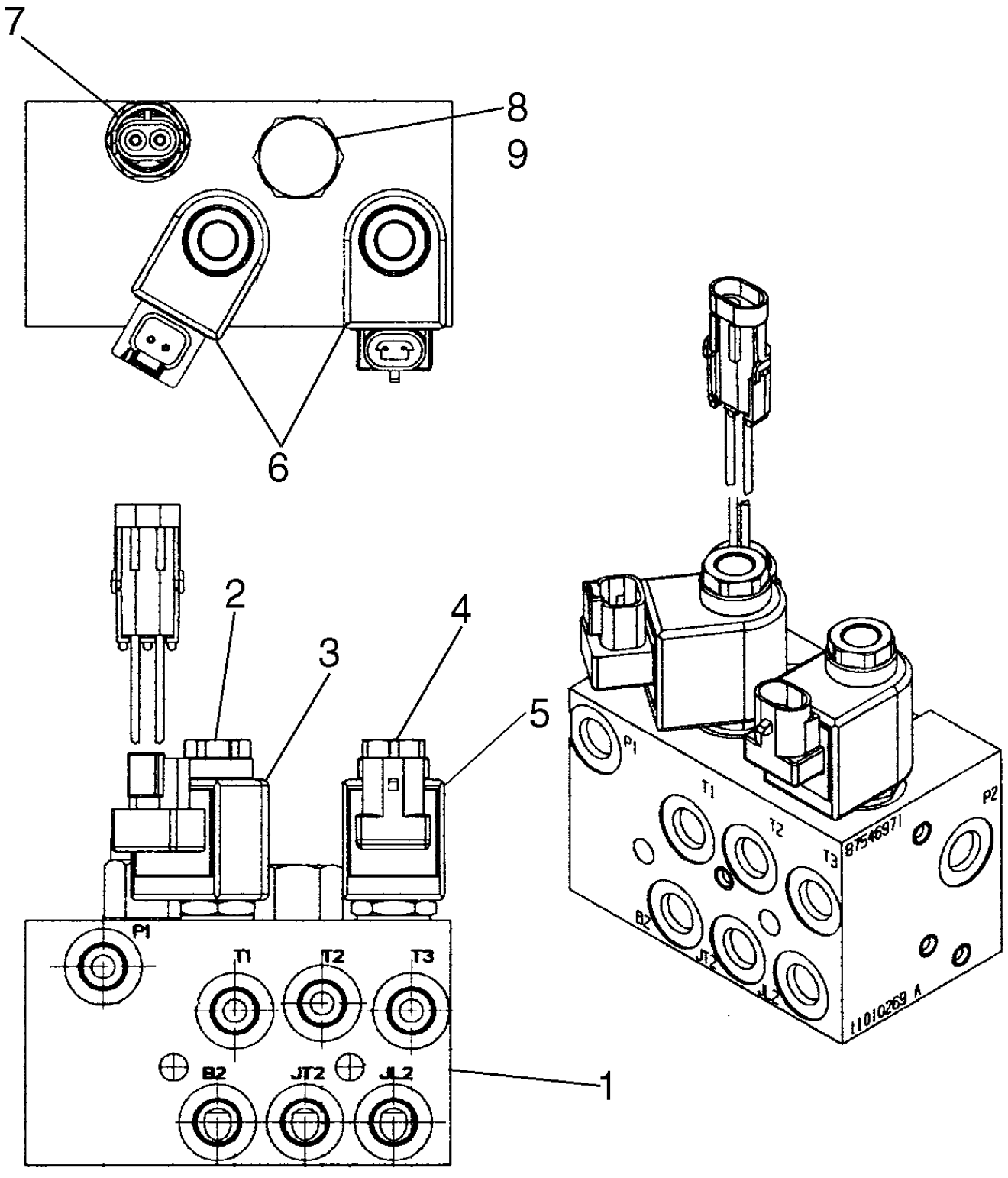

BS07G071

HYDROSTATICS - MULTI VALVE ASSEMBLY

REF	FN	PART NUMBER	YR/SN	QTY	DESCRIPTION
1		87546971		1	VALVE, HYDRAULIC, Pilot Control, Brake; Incl. 2 - 9
2		87588579		1	VALVE, SOLENOID
3		87588596		1	SOLENOID, Coil
4		87614011		1	VALVE, SOLENOID
5		87614012		1	COIL
6		87614013		1	KIT, SEALS, Solenoid Valve
7		87458061		1	SWITCH, PRESSURE, Charge Pressure
8		87614009		1	VALVE, Cartridge Valve
9		87614015		1	KIT, SEALS, Cartridge Valve

HYDROSTATICS - TWO SPEED, VALVE ASSY

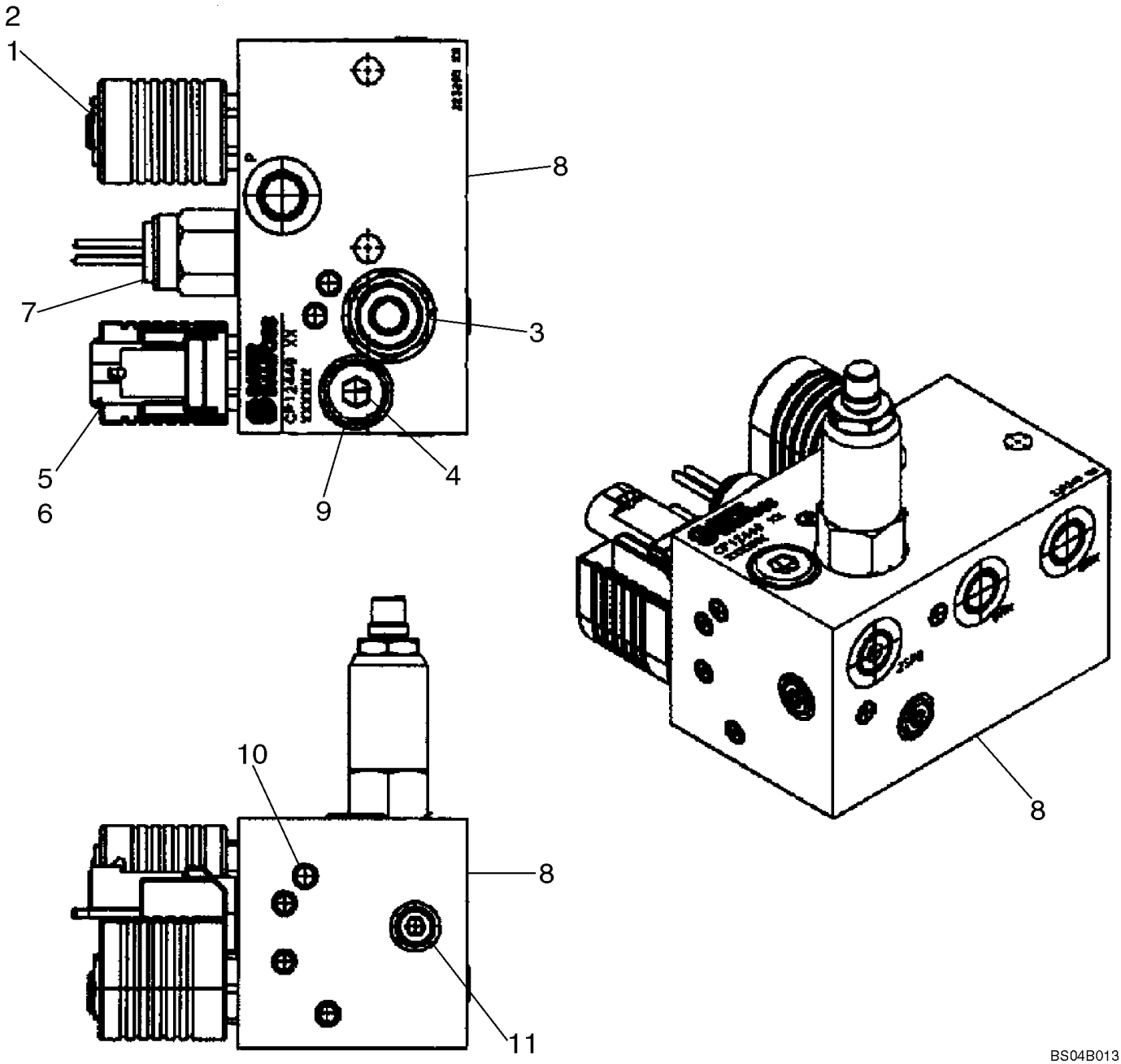

HYDROSTATICS - TWO SPEED, VALVE ASSY

REF	FN	PART NUMBER	YR/SN	QTY	DESCRIPTION
		87429625		1	VALVE, HYDRAULIC, Two Speed; Incl. 1 - 11
		87352524		1	VALVE, BRAKE, Two Speed; Incl. 1 - 11
1		87424182		1	VALVE, BRAKE
2		87433496		X	COIL, Not Illustrated Separately
3		87433497		1	VALVE, Sequence; Part of 87429625
3		87352527		1	VALVE, Sequence; Part of 87352524
4		87426545		1	ORIFICE, M12
5		87433495		1	VALVE, SOLENOID, Hydraulic Valve
6		87433499		X	COIL, Not Illustrated Separately
7		87019943		1	SWITCH, PRESSURE, Hydraulic Valve
8		NSS		1	NOT SERVICED SEPARATELY, Body
9		NSS		1	NOT SERVICED SEPARATELY, Plug
10		NSS		11	NOT SERVICED SEPARATELY, Expansion Plug
11		NSS		3	NOT SERVICED SEPARATELY, Plug

HYDROSTATICS - TWO SPEED, VALVE ASSY (440CT)

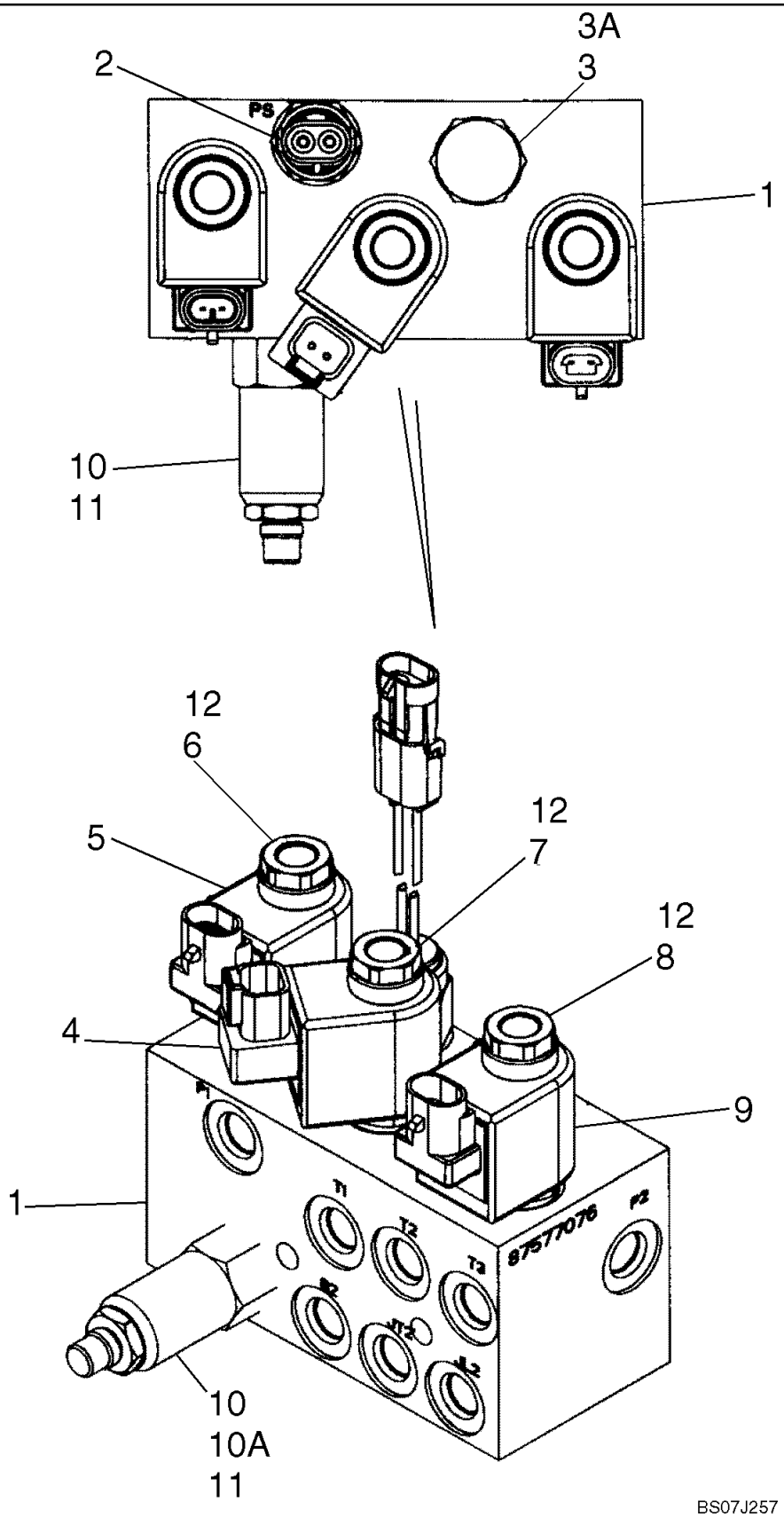

HYDROSTATICS - TWO SPEED, VALVE ASSY (440CT)

REF	FN	PART NUMBER	YR/SN	QTY	DESCRIPTION
1		87577076		1	VALVE, PILOT, Brake Valve; Two Speed; Incl. 1 - 12
2		87458061		1	SWITCH, PRESSURE, Brake Valve
3		87614009		1	VALVE, Cartridge Valve
3A		87614015		1	KIT, SEALS, Cartridge Valve
4		87588596		1	SOLENOID, Coil
5		87588597		1	SOLENOID, Coil
6		87588585		1	VALVE, SOLENOID, Sol Valve
7		87588579		1	VALVE, SOLENOID, Sol Valve
8		87614011		1	VALVE, SOLENOID, Sol Valve
9		87614012		1	COIL, Coil
10		87352527		1	VALVE, Sequence
10A		87614014		1	KIT, SEALS, Solenoid Valve
11		87426545		1	ORIFICE, .017 Sauer
12		87614013		1	KIT, SEALS, Solenoid Valve

HYDROSTATICS - TWO SPEED, VALVE ASSY (WITH PILOT CONTROL)

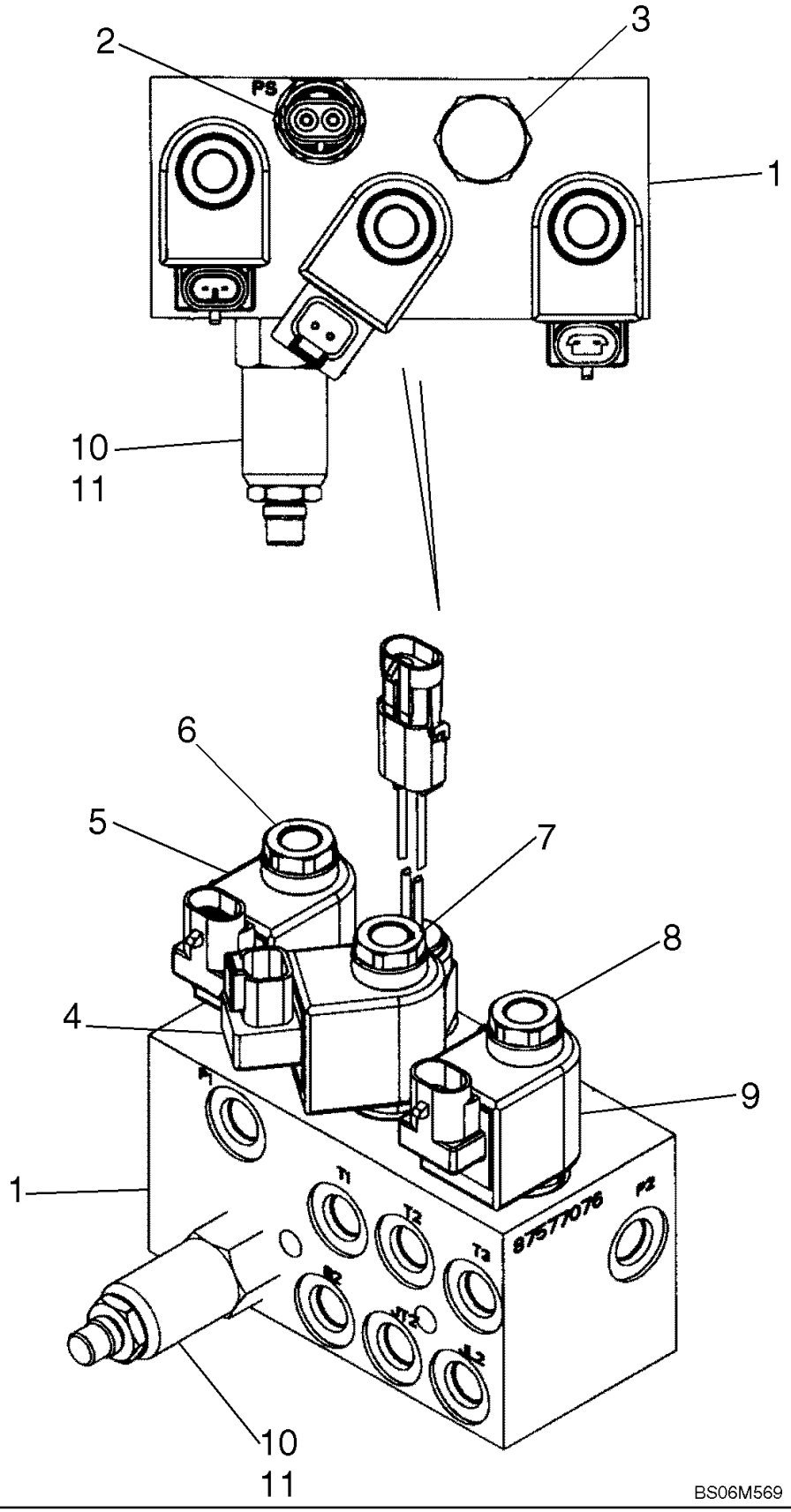

HYDROSTATICS - TWO SPEED, VALVE ASSY (WITH PILOT CONTROL)

REF	FN	PART NUMBER	YR/SN	QTY	DESCRIPTION
1		87577077		1	VALVE, PILOT, Brake Valve; Two Speed; Incl. 1 - 11
2		87458061		1	SWITCH, PRESSURE, Brake Valve
3		NSS		1	NOT SERVICED SEPARATELY, Cartridge Valve
4		NSS		1	NOT SERVICED SEPARATELY, Coil
5		NSS		1	NOT SERVICED SEPARATELY, Coil
6		NSS		1	NOT SERVICED SEPARATELY, Sol Valve
7		NSS		1	NOT SERVICED SEPARATELY, Sol Valve
8		NSS		1	NOT SERVICED SEPARATELY, Sol Valve
9		NSS		1	NOT SERVICED SEPARATELY, Coil
10		87433497		1	VALVE, Sequence
11		87426545		1	ORIFICE, .017 Sauer

HYDROSTATICS - RESONATOR (440CT EUROPE)

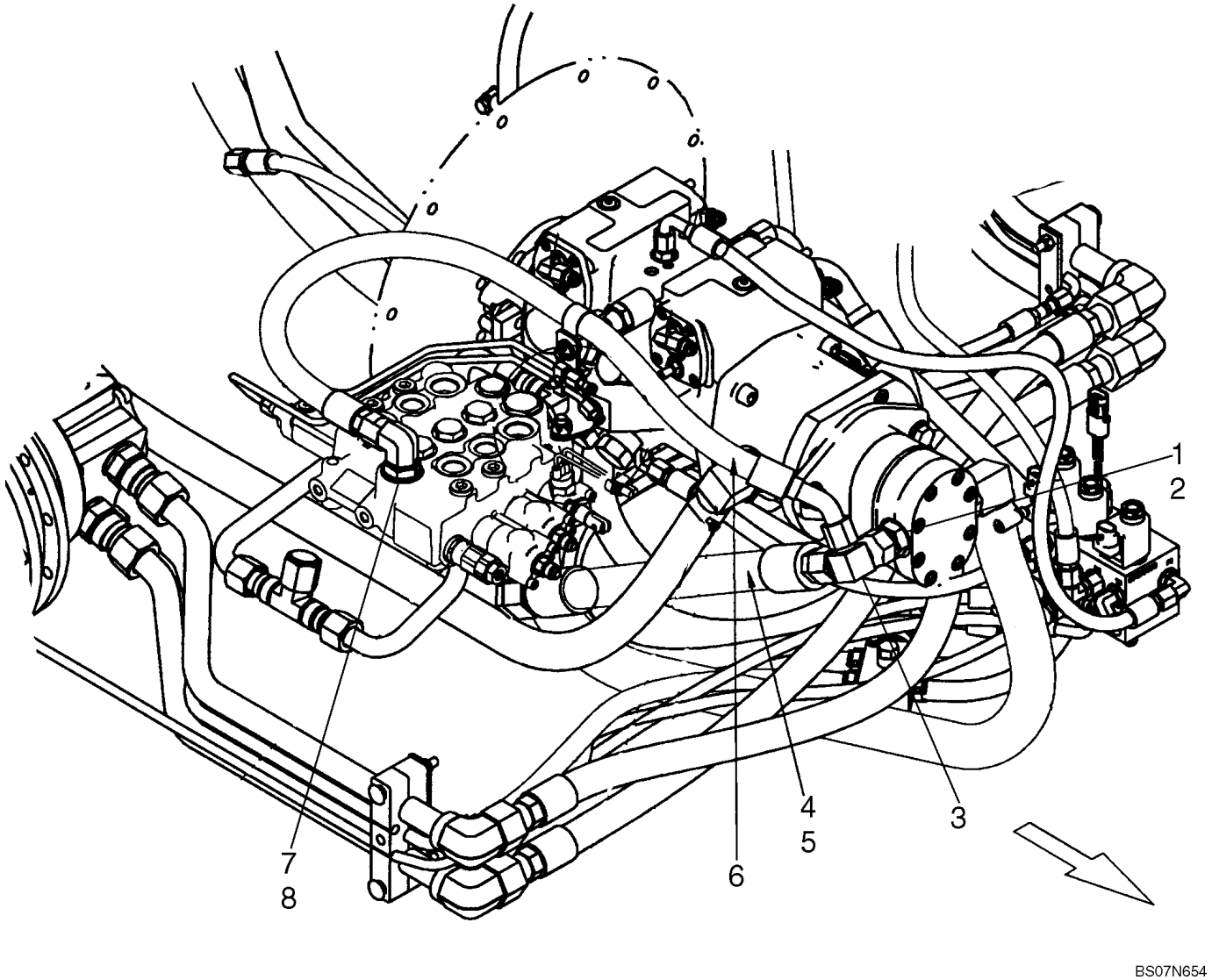

HYDROSTATICS - RESONATOR (440CT EUROPE)

REF	FN	PART NUMBER	YR/SN	QTY	DESCRIPTION
1		322896		1	CONNECTOR, HYD., 1 1/16"-12, 37° x 1 1/16"-12, O-Ring, Incl 2
2		167266		1	O-RING, 12-1, 90 Duro, .924 ID x .116" Thk
3		87441649		1	ADAPTER
4		9790527		1	PLUG, 1 5/16"-12, 37°
5		87462103		1	HOSE ASSY., Hose, Resonator
6		87720912		1	HOSE, Hose, Valve Supply 950mm (37 13/32 in.)
7		84570		1	ELBOW, 90°, 7/8"-14, 37° x 1 1/16"-12, O-Ring, Incl 8
8		167266		1	O-RING, 12-1, 90 Duro, .924 ID x .116" Thk

HYDROSTATICS - RESONATOR, WITH PILOT CONTROL (440 EUROPE)

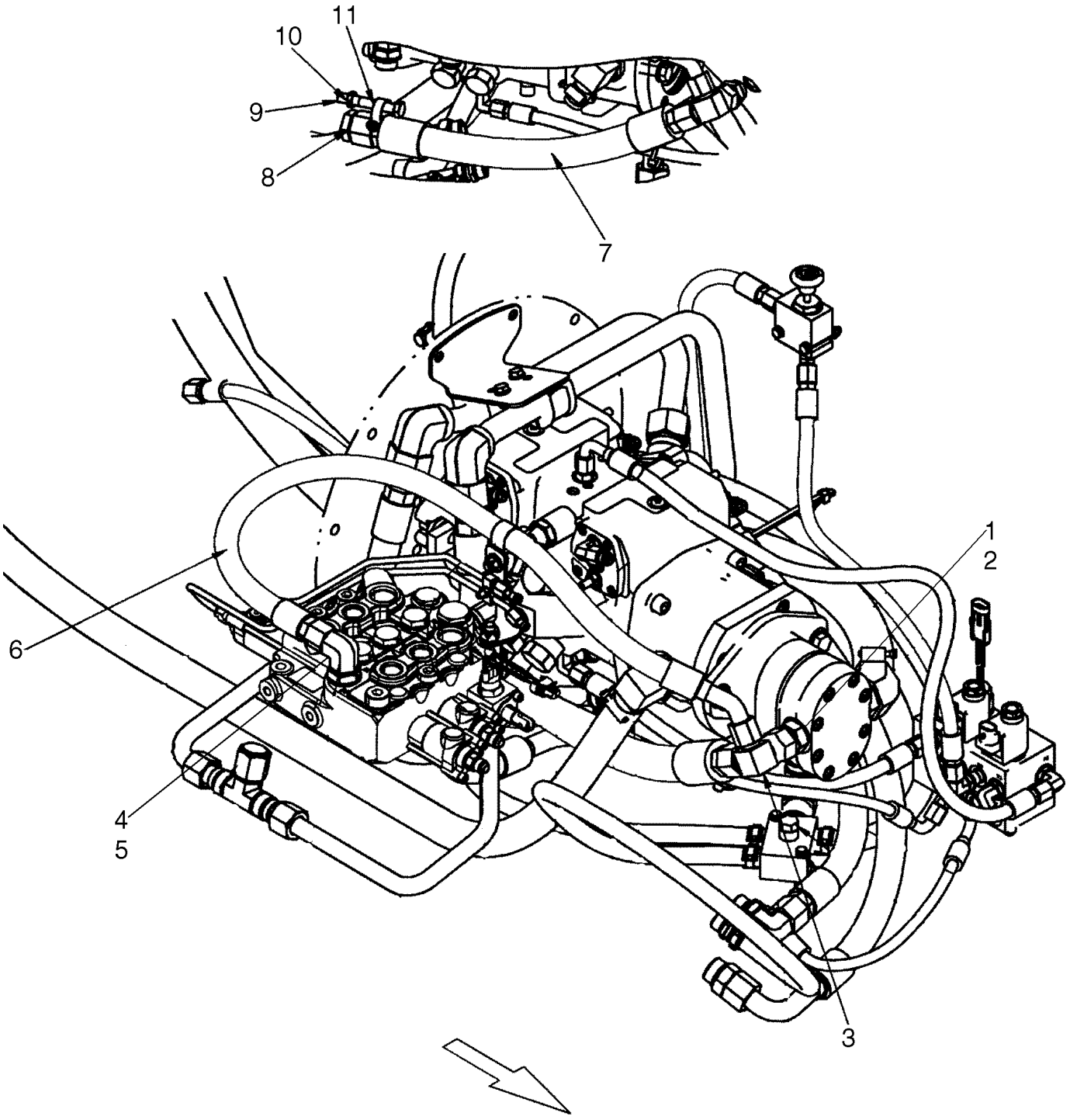

HYDROSTATICS - RESONATOR, WITH PILOT CONTROL (440 EUROPE)

REF	FN	PART NUMBER	YR/SN	QTY	DESCRIPTION
1		322896		1	CONNECTOR, HYD., 1 1/16"-12, 37° x 1 1/16"-12, O-Ring, Incl 2
2		167266		1	O-RING, 12-1, 90 Duro, .924 ID x .116" Thk
3		87441649		1	ADAPTER
4		84570		1	ELBOW, 90°, 7/8"-14, 37° x 1 1/16"-12, O-Ring, Incl 5
5		167266		1	O-RING, 12-1, 90 Duro, .924 ID x .116" Thk
6		87720912		1	HOSE, Hose, Valve Supply 950mm (37 13/32 in.)
7		87462103		1	HOSE ASSY., Hose, Resonator
8		9790527		1	PLUG, 1 5/16"-12, 37°
9		43158		1	BOLT, Hex, M12 x 80, 8.8
10		323238		1	NUT, Thin, M12 x 1.75, Cl 05
11		87039085		1	CLAMP, HOSE, 1.25/2.125 HD Worm

HYDROSTATICS - RESONATOR, MECHANICAL CONTROL (440 EUROPE)

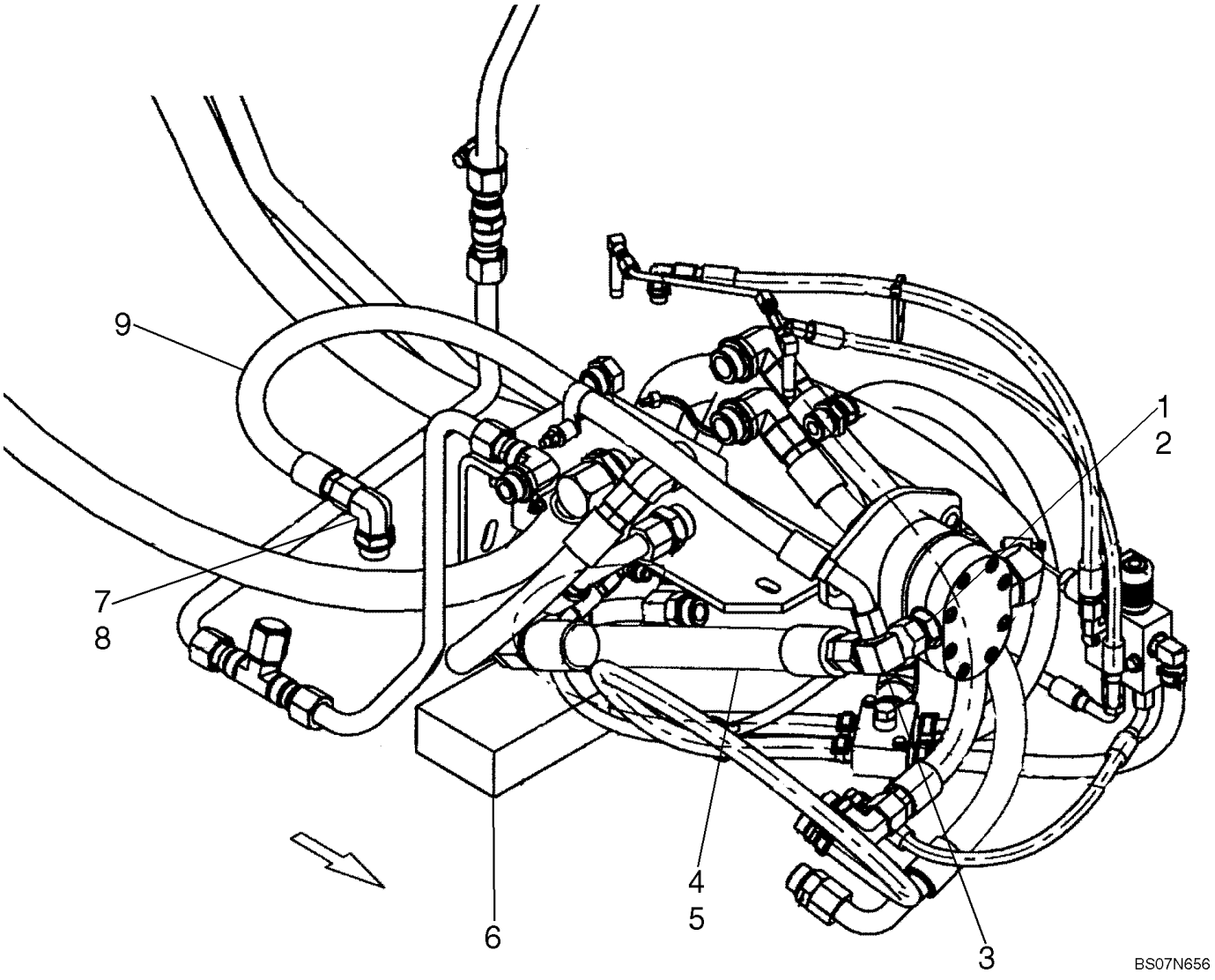

HYDROSTATICS - RESONATOR, MECHANICAL CONTROL (440 EUROPE)

REF	FN	PART NUMBER	YR/SN	QTY	DESCRIPTION
1		322896		1	CONNECTOR, HYD., 1 1/16"-12, 37° x 1 1/16"-12, O-Ring, Incl 2
2		167266		1	O-RING, 12-1, 90 Duro, .924 ID x .116" Thk
3		87441649		1	ADAPTER
4		87462103		1	HOSE ASSY., Hose, Resonator
5		9790527		1	PLUG, 1 5/16"-12, 37°
6		87353205		1	PAD
7		84570		1	ELBOW, 90°, 7/8"-14, 37° x 1 1/16"-12, O-Ring, Incl 8
8		167266		1	O-RING, 12-1, 90 Duro, .924 ID x .116" Thk
9		87720912		1	HOSE, Hose, Valve Supply 950mm (37 13/32 in.)

FILTER ASSY - MOUNTING

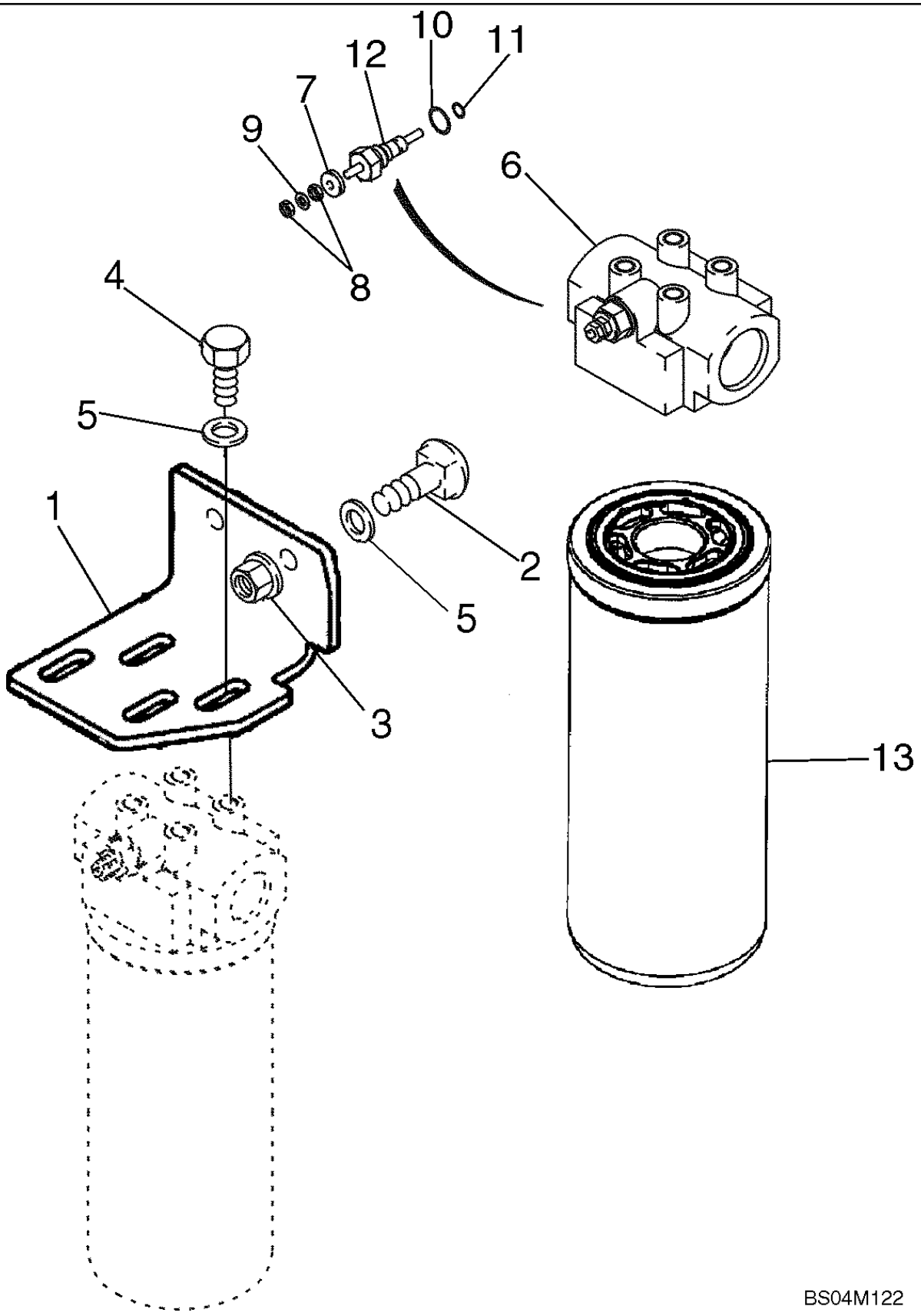

FILTER ASSY - MOUNTING

REF	FN	PART NUMBER	YR/SN	QTY	DESCRIPTION
1		87020901		1	BRACKET, SUPPORTING, Hydrostatic Filter
2		9706704		2	BOLT, Hex, M10 x 35, 8.8, Full Thd
3		86512554		2	NUT, LOCK, M10 x 1.5, Cl 10
4		43139		2	SCREW, Hex, M10 x 25, 8.8, Full Thd
5		86639325		2	WASHER, M10 x 24.5 x 3, HT
		87430661		1	FILTER, Hydrostatic Filter; Return; Incl. 6 - 13
6		87439984		1	HEAD, FILTER, Hydrostatic Filter; Incl. N13268
		N13268		1	SWITCH, PRESSURE, Hydrostatic Filter; Incl. 7 - 12
7		NSS		1	NOT SERVICED SEPARATELY, Washer; Red, White
8		129-667		2	NUT, #10-32, LH
9		493-21020		1	WASHER, LOCK, Int Tooth, #10
10		9617873		1	O-RING, 6-1, 90 Duro, .468" ID x .078" Thk
11		9672548		1	O-RING, -011, 70 Duro, .301" ID x .070" Thk
12		NSS		1	NOT SERVICED SEPARATELY, Body
13		87010593		1	ELEMENT, Hydrostatic Filter

PUMP, TANDEM (440)

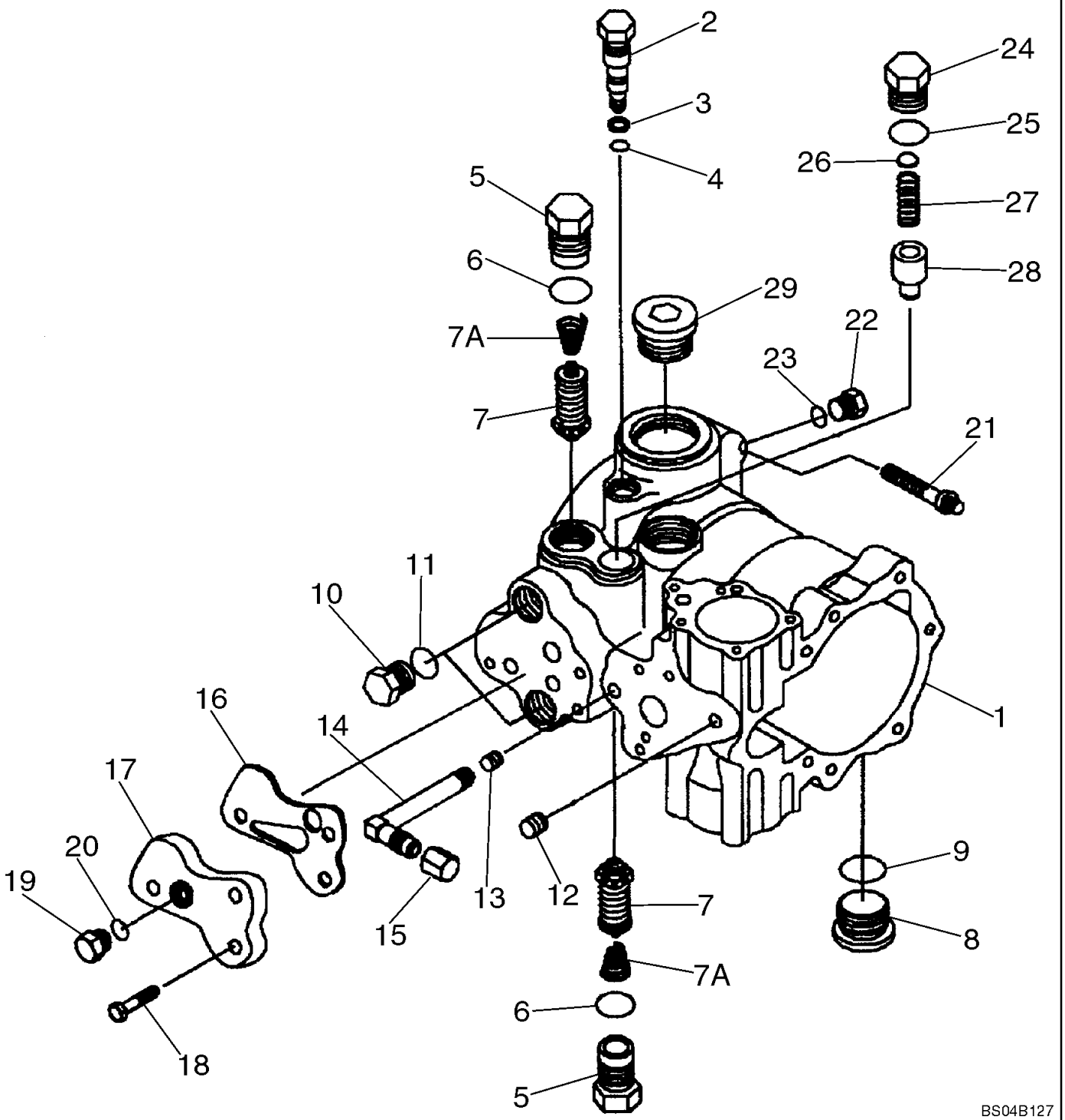

PUMP, TANDEM (440)

REF	FN	PART NUMBER	YR/SN	QTY	DESCRIPTION
					Front Pump
		87043500		1	PUMP, Incl. 1 - 29
1		402364A1		1	HOUSING
2		87039612		1	VALVE, BY-PASS, Incl. Ref 3, 4
3		S99877		1	RING
4		86993475		1	O-RING, 3/8 ID x 1/16; Included in 140008A1 Seal Kit
		N14848		2	VALVE, PRESSURE RELIEF, Incl. 5 - 7A
5		NSS		1	NOT SERVICED SEPARATELY, Plug
6		237-6012		1	O-RING, 12-1, 90 Duro, .924 ID x .118" Thk, Included in 140008A1 Seal Kit
7		NSS		1	NOT SERVICED SEPARATELY, Valve, Relief
7A		86993468		1	SPRING
8		9841223		2	PLUG, Hex Soc, 1 1/16"-12 ORB, Incl. 9
9		237-6012		1	O-RING, 12-1, 90 Duro, .924 ID x .118" Thk
10		76349		2	PLUG, Hex Hd, 9/16"-18 ORB, Incl. 11
11		237-6006		1	O-RING, 6-1, 90 Duro, .468" ID x .078" Thk
12		F23137		1	PLUG
13		86993479		1	PLUG
14		86993480		1	ELBOW
15		86993467		1	CAP
16		303709A1		1	SEAL, Filter Adapter; Included in 140008A1 Seal Kit
17		101462A1		1	ADAPTER, Suction Line Filter
18		26-516		3	BOLT, Hex, 5/16"-18 x 1", G8, Full Thd
19		76349		1	PLUG, Hex Hd, 9/16"-18 ORB, Incl. Ref 20
		140008A1		1	KIT, GASKET, Overhaul Seal And Gasket Kit; Incl. (10) Rings, (4) Bearings, (20) O-Rings, (6) Gaskets, (2) Seals; Incl. Ref 3, 4, 6, 16, 25
20		237-6006		1	O-RING, 6-1, 90 Duro, .468" ID x .078" Thk
21		166-89		2	SCREW, 12 Pt Flg, 1/2"-13 x 2", G8
22		9672438		1	PLUG, Hex Hd, 7/16"-20 ORB, Incl. 23
23		237-6006		1	O-RING, 6-1, 90 Duro, .468" ID x .078" Thk
24		87039611		1	PLUG, Charge Relief; Incl. 25
25		237-6010		1	O-RING, 10-1, 90 Duro, .755" ID x .097" Thk, Included in 140008A1 Seal Kit
26		H407767		1	KIT, Shim

PUMP, TANDEM (440)

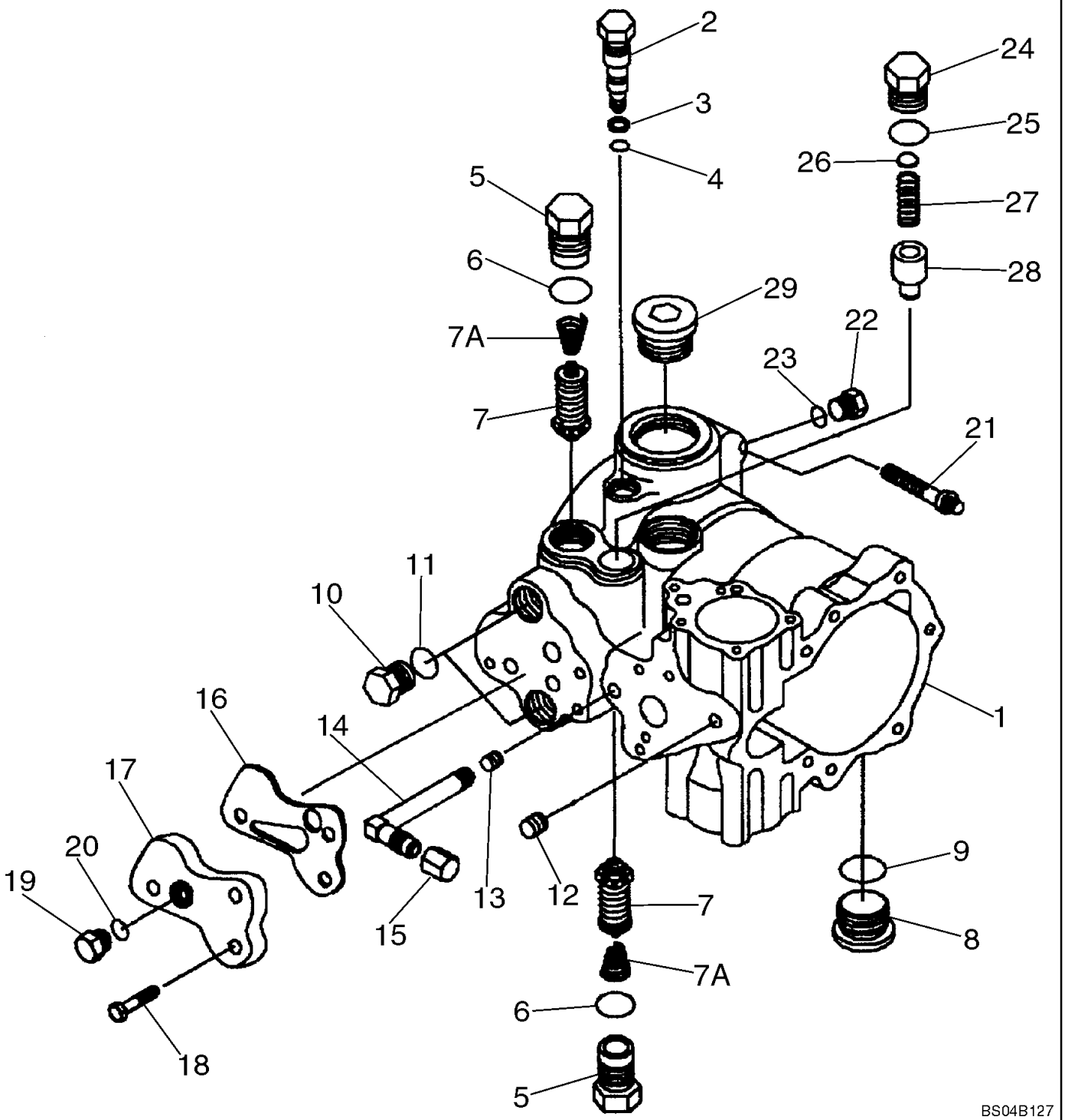

PUMP, TANDEM (440)

REF	FN	PART NUMBER	YR/SN	QTY	DESCRIPTION
27		244898A1		1	SPRING
28		V38371		1	VALVE, Charge Relief
29		NSS		1	NOT SERVICED SEPARATELY, Plug

PUMP, TANDEM (440)

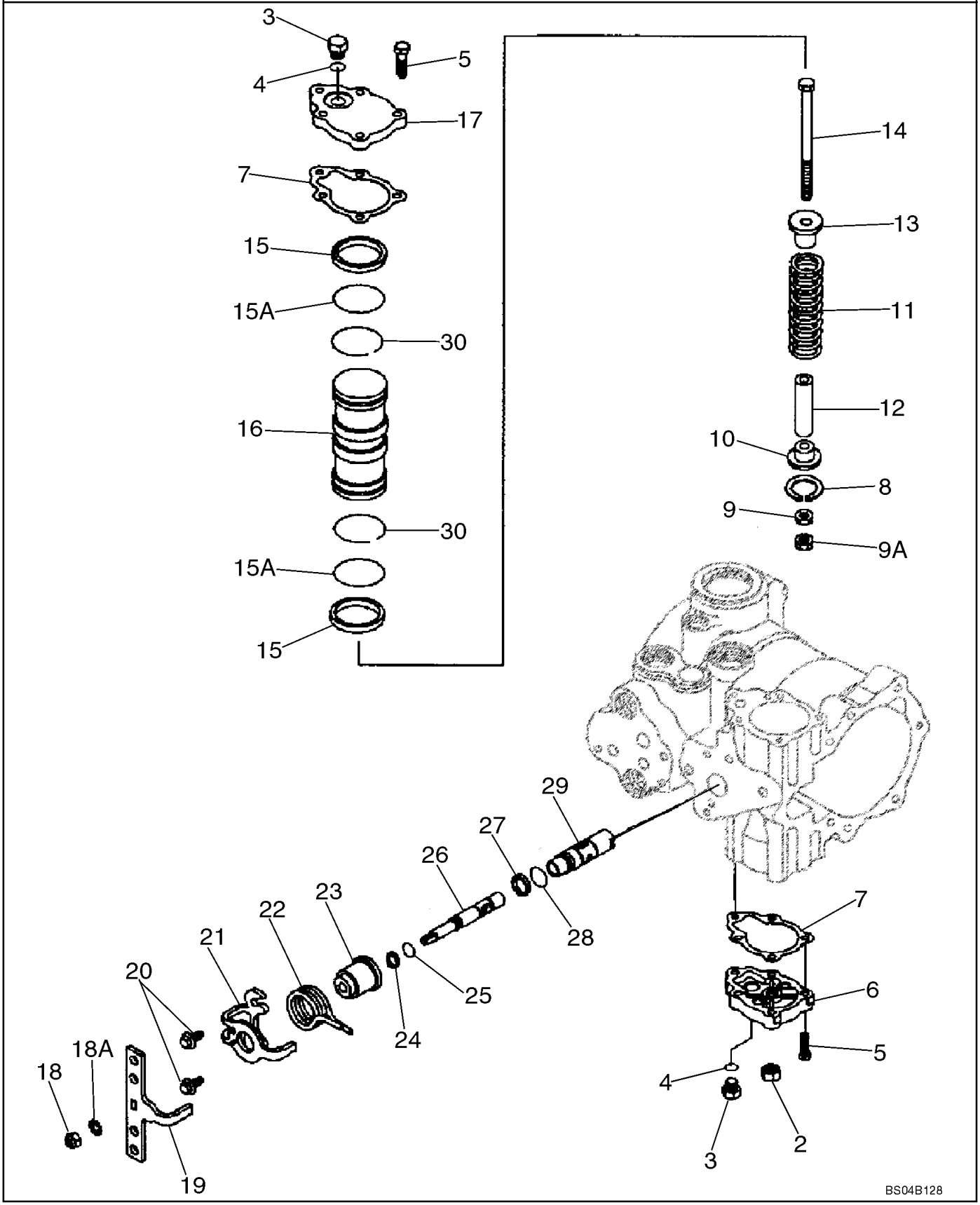

PUMP, TANDEM (440)

REF	FN	PART NUMBER	YR/SN	QTY	DESCRIPTION
					Front Pump
		87043500		1	PUMP, Incl. 2 - 30
2		N13260		1	NUT, 5/8 NF
3		76349		2	PLUG, Hex Hd, 9/16"-18 ORB, Incl. 4
4		237-6006		1	O-RING, 6-1, 90 Duro, .468" ID x .078" Thk
5		H438321		10	BOLT, 1/4 x 1-1/4; 8
6		H436065		1	COVER, Included in 140008A1 Seal Kit
7		N14063		2	GASKET
8		N13255		1	RING
9		425-116		1	NUT, 3/8"-24, G5
9B		324604A1		1	NUT, 3/8 in
10		N13241		1	GUIDE
11		N13226		1	SPRING
12		N13242		1	SLEEVE
13		N14666		1	GUIDE
14		370531A1		1	SCREW
		H673773		1	KIT, Incl. 15, 15A; Incl. Rings For Rear Pump Pistons
15		N14668		4	RING, PISTON, Included in 140008A1 Seal Kit
15A		238-5131		2	O-RING, -131, 70 Duro, 1.674" ID x .103" Thk, Included in 140008A1 Seal Kit
		140008A1		1	KIT, GASKET, Overhaul Seal And Gasket Kit; Incl. (10) Rings, (4) Bearings, (20) O-Rings, (6) Gaskets, (2) Seals; Incl. Ref 7, 15, 15A, 24, 25, 27, 28, 30
16		87039622		1	PISTON ASSY, Incl. 15, 15A, 30
17		H436053		1	COVER
18		H436054		1	NUT
18A		493-41033		1	WASHER, LOCK, Ext Tooth, 5/16"
19		436415A1		1	HANDLE
20		H435770		2	SCREW
21		436416A1		1	BRACKET
22		407060A1		1	SPRING
23		87039613		1	GUIDE
24		86993484		1	RING, Included in 140008A1 Seal Kit
25		86993475		1	O-RING, Included in 140008A1 Seal Kit
26		87039614		1	SPOOL, Incl. 24, 25

PUMP, TANDEM (440)

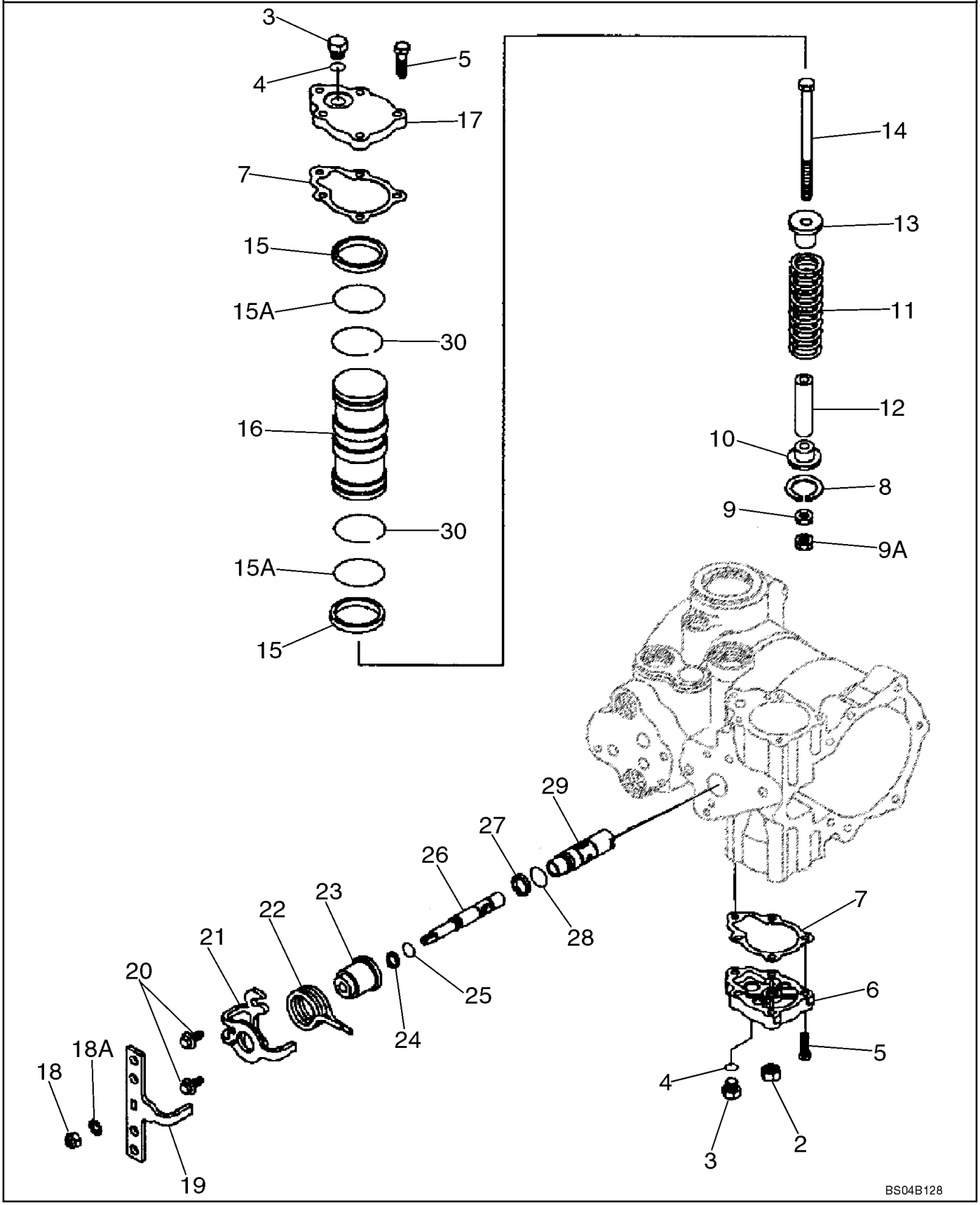

PUMP, TANDEM (440)

REF	FN	PART NUMBER	YR/SN	QTY	DESCRIPTION
27		86993483		1	RING, Included in 140008A1 Seal Kit
28		NSS		1	NOT SERVICED SEPARATELY, O-Ring; Included in 140008A1 Seal Kit
29		87039615		1	SLEEVE, Incl. 27, 28
30		100536A1		2	RING, Included in 140008A1 Seal Kit

PUMP, TANDEM (440)

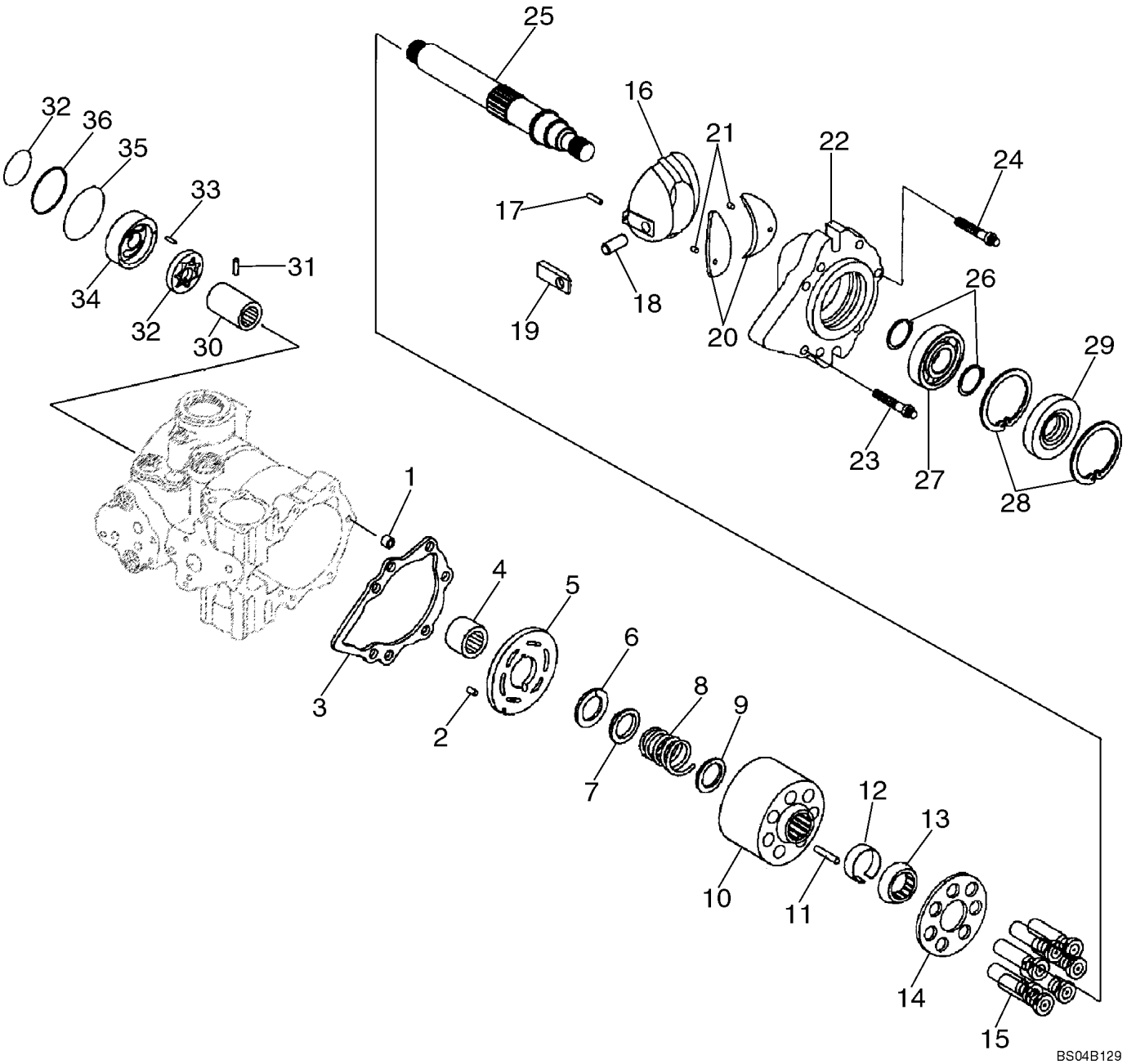

PUMP, TANDEM (440)

REF	FN	PART NUMBER	YR/SN	QTY	DESCRIPTION
					Front Pump
		87043500		1	PUMP, Incl. 1 - 37
1		N13994		1	SPACER
2		38-11207		1	PIN, LOCK, 3/16" x 7/16", Slotted
3		H436704		1	GASKET, Included in 140008A1 Seal Kit
4		1277297C1		1	BEARING
5		128928A1		1	PLATE, LARGE
		87039625		1	KIT, Cylinder Block; Kit Includes Cylinder Block Parts For Rear Pump; Incl. 6 - 15
6		NSS		2	NOT SERVICED SEPARATELY, Ring, Retaining
7		115950A1		2	DISC
8		115948A1		2	SPRING
9		115946A1		2	DISC
10		NSS		2	NOT SERVICED SEPARATELY, Block, Cylinder
11		110873A1		6	PIN, LARGE
12		115943A1		2	SLEEVE, Ring, Retaining
13		115942A1		2	GUIDE
14		NSS		2	NOT SERVICED SEPARATELY, Retainer
15		NSS		14	NOT SERVICED SEPARATELY, Piston
16		87050523		1	PLATE ASSY., Variable Swash Plate
17		324610A1		1	PIN, LARGE
18		N13254		1	PIN
19		N13224		1	SLEEVE
		87050525		1	COVER ASSY, Incl. 20 - 22
20		87050524		2	BEARING ASSY
21		193494A1		2	PIN, ROLL
22		NSS		1	NOT SERVICED SEPARATELY
23		223677A1		6	SCREW, 7/16 in
24		223680A1		1	BOLT, SPECIAL, 3/8 in
25		N13244		1	SHAFT
26		100-11137		2	RING, SNAP, #137, Ext
27		A29183		2	BEARING, BALL
28		103-21281		1	RING, SNAP, 2.812", Int, #281
29		N14103		1	SEAL, Lip; Included in 140008A1 Seal Kit
30		N13234		1	COUPLING, BREAK AWAY

PUMP, TANDEM (440)

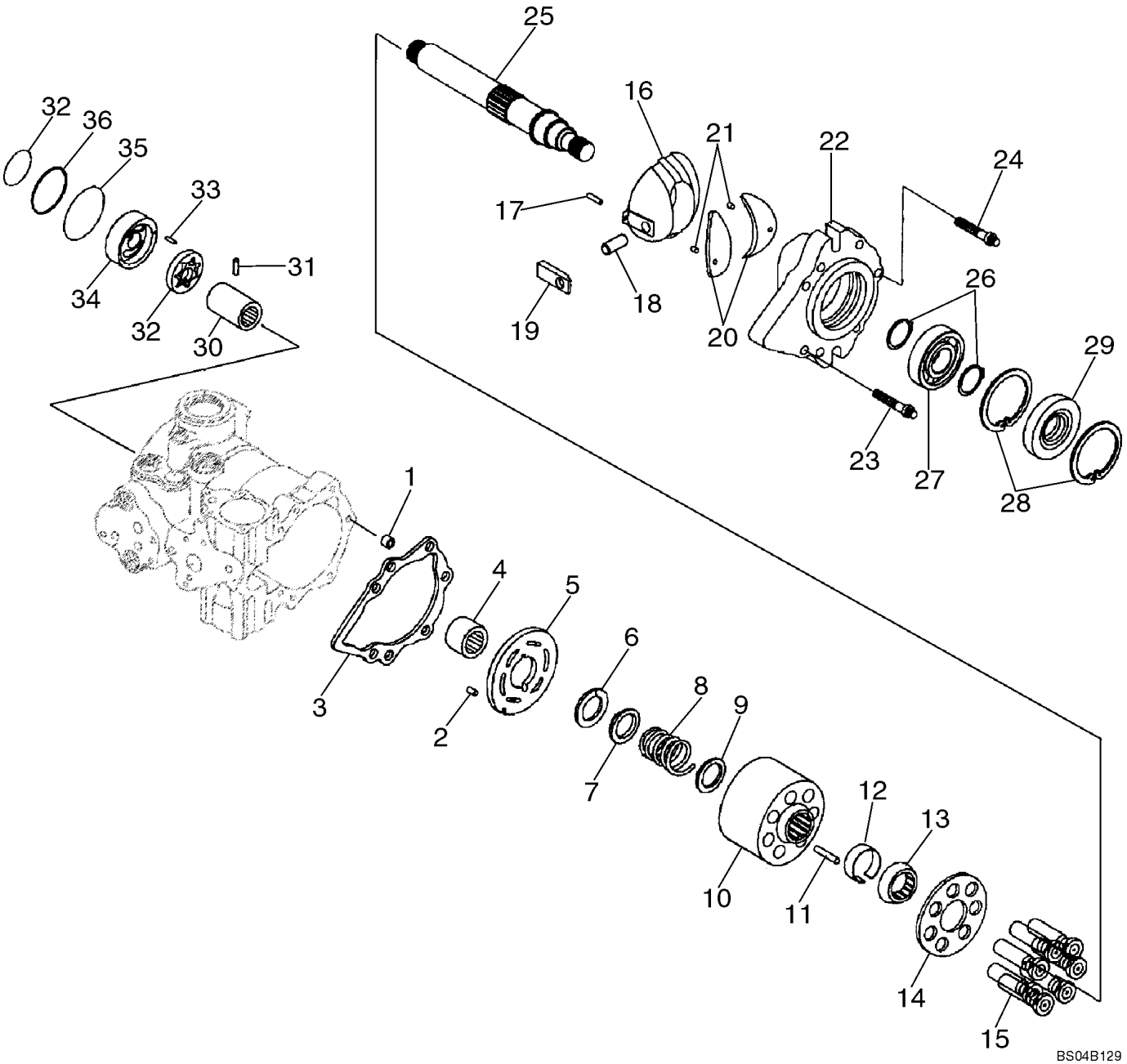

PUMP, TANDEM (440)

REF	FN	PART NUMBER	YR/SN	QTY	DESCRIPTION
31		N13262		2	PIN
32		N13247		1	GEAR-SET
33		181680A1		1	PIN
34		N13999		1	PLATE
35		H437190		1	O-RING, Included in 140008A1 Seal Kit
36		238-6238		1	O-RING, -238, 90 Duro, 3.484" ID x .139" Thk, Included in 140008A1 Seal Kit
37		H435776		1	O-RING, Included in 140008A1 Seal Kit

PUMP, TANDEM (440)

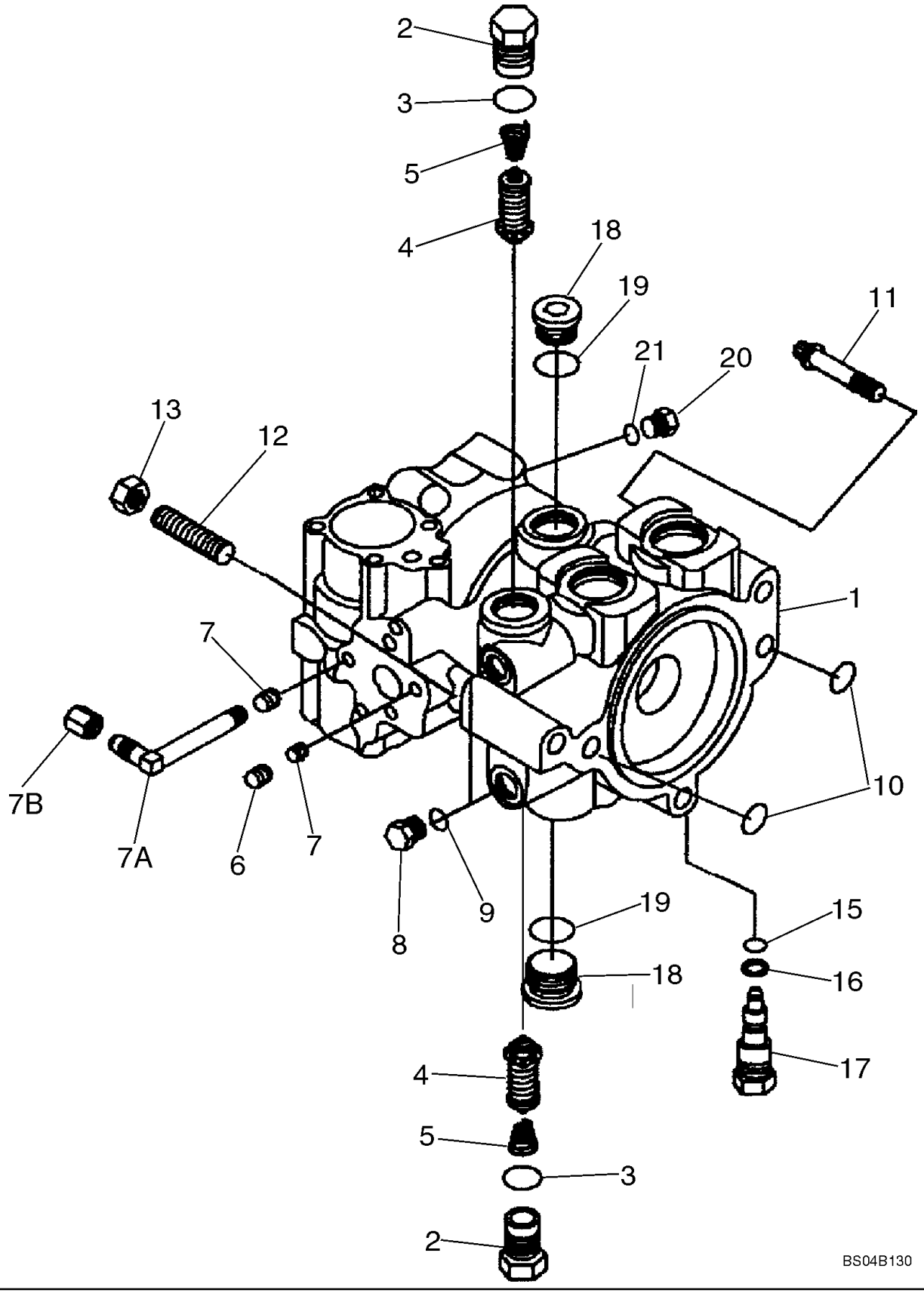

PUMP, TANDEM (440)

REF	FN	PART NUMBER	YR/SN	QTY	DESCRIPTION
					Rear Pump
		87043500		1	PUMP, Incl. 1 - 21
1		402365A1		1	HOUSING, Incl. 1277297C1, 138-217, 9672438
		1277297C1		1	BEARING
		138-217		1	PIN, LOCK, 3/16" x 7/16", Slotted
		9672438		1	PLUG, Hex Hd, 7/16"-20 ORB
		N14848		2	VALVE, PRESSURE RELIEF, Incl. 2 - 5
2		NSS		1	NOT SERVICED SEPARATELY, Plug
3		237-6012		1	O-RING, 12-1, 90 Duro, .924 ID x .118" Thk, Included in 140008A1 Seal Kit
4		NSS		1	NOT SERVICED SEPARATELY, Valve, Relief
5		86993468		1	SPRING
6		F23137		1	PLUG
7		86993479		2	PLUG
7A		86993480		1	ELBOW, 90 deg
7B		86993467		1	CAP
		140008A1		1	KIT, GASKET, Overhaul Seal And Gasket Kit; Incl. (10) Rings, (4) Bearings, (20) O-Rings, (6) Gaskets, (2) Seals; Incl. Ref 3, 10, 15, 16
8		76349		2	PLUG, Hex Hd, 9/16"-18 ORB, Incl. 9
9		237-6006		1	O-RING, 6-1, 90 Duro, .468" ID x .078" Thk
10		238-6116		2	O-RING, -116, 90 Duro, .737" ID x .103" Thk, Included in 140008A1 Seal Kit
11		166-89		1	SCREW, 12 Pt Flg, 1/2"-13 x 2", G8
12		K608432		1	STUD, Hex, M10 x 70, 8.8
13		425-108		1	NUT, 1/2"-13, G5
15		86993475		1	O-RING, Included in 140008A1 Seal Kit
16		S99877		1	RING, Included in 140008A1 Seal Kit
17		87039612		1	VALVE, BY-PASS, Incl. Ref 15, 16
18		9841223		2	PLUG, Hex Soc, 1 1/16"-12 ORB, Incl. 19
19		237-6012		1	O-RING, 12-1, 90 Duro, .924 ID x .118" Thk
20		9672438		1	PLUG, Hex Hd, 7/16"-20 ORB, Incl. 21
21		237-6004		1	O-RING, 4-1, 90 Duro, .351" ID x .072" Thk

PUMP, TANDEM (440)

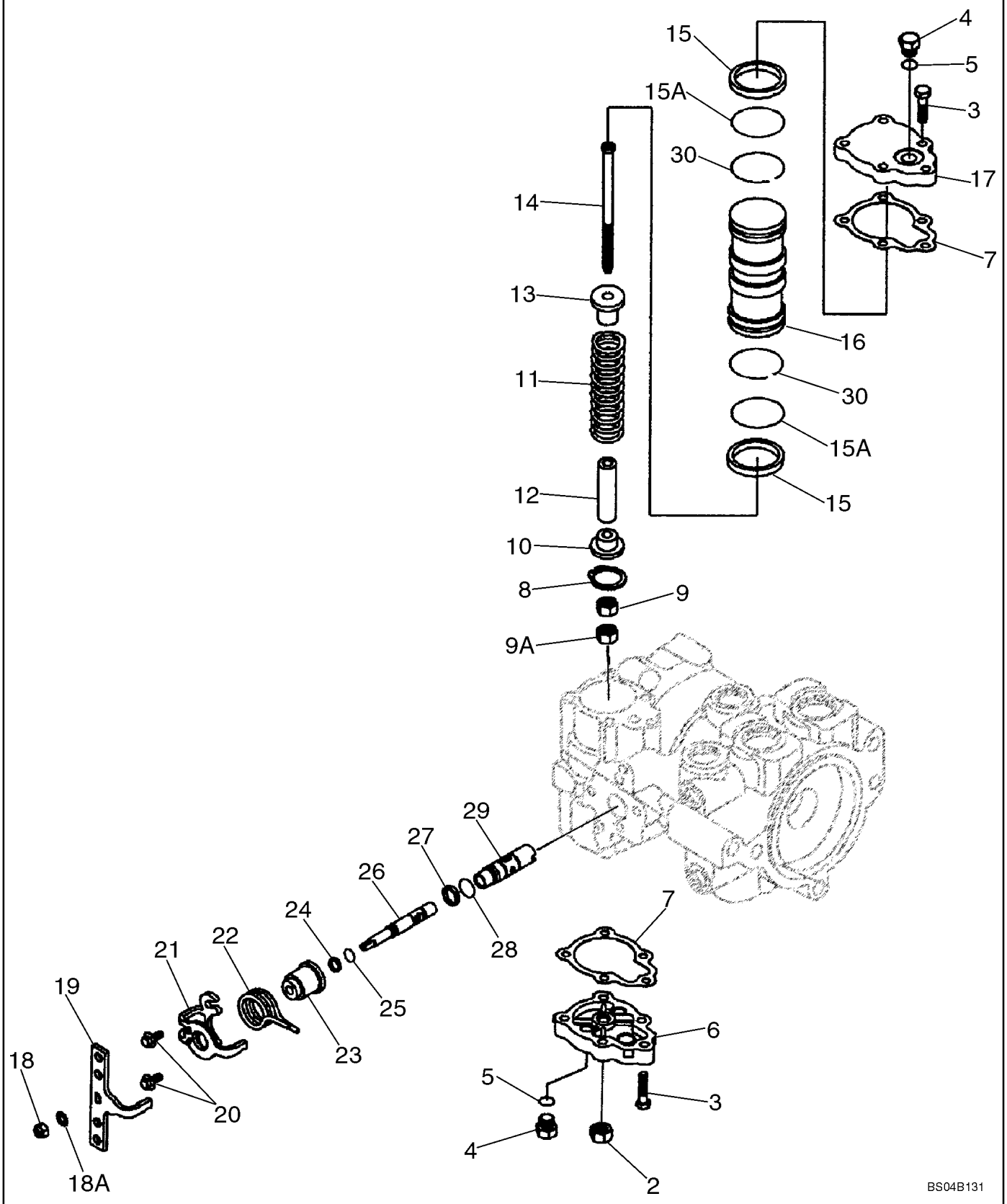

PUMP, TANDEM (440)

REF	FN	PART NUMBER	YR/SN	QTY	DESCRIPTION
					Rear Pump
		87043500		1	PUMP, Incl. 2 - 30
2		N13260		1	NUT, 5/8 NF
3		H438321		10	BOLT, 1/4 x 1-1/4; 8
4		76349		2	PLUG, Hex Hd, 9/16"-18 ORB, Incl. 5
5		237-6006		1	O-RING, 6-1, 90 Duro, .468" ID x .078" Thk
6		H436065		1	COVER
7		N14063		2	GASKET, Included in 140008A1 Seal Kit
8		N13255		1	RING
9		425-116		1	NUT, 3/8"-24, G5
9B		324604A1		1	NUT, 3/8 in
10		N13241		1	GUIDE
11		N13226		1	SPRING
12		N13242		1	SLEEVE
13		N14666		1	GUIDE
14		370531A1		1	SCREW
		H673773		1	KIT, Piston Rings; Incl. Rings For Front Pump Piston; Incl. 15, 15A
15		N14668		4	RING, PISTON, Included in 140008A1 Seal Kit
15A		238-5131		2	O-RING, -131, 70 Duro, 1.674" ID x .103" Thk, Included in 140008A1 Seal Kit
		140008A1		1	KIT, GASKET, Overhaul Seal And Gasket Kit; Incl. (10) Rings, (4) Bearings, (20) O-Rings, (6) Gaskets, (2) Seals; Incl. Ref 7, 15, 15A, 24, 25, 27, 28, 30
16		87039622		1	PISTON ASSY, Incl. 15, 15A, 30
17		H436053		1	COVER
18		H436054		1	NUT
18A		493-41033		1	WASHER, LOCK, Ext Tooth, 5/16"
19		436415A1		1	HANDLE
20		H435770		2	SCREW
21		436416A1		1	BRACKET
22		407060A1		1	SPRING
23		87039613		1	GUIDE
24		86993484		1	RING, Included in 140008A1 Seal Kit
25		86993475		1	O-RING, Included in 140008A1 Seal Kit

PUMP, TANDEM (440)

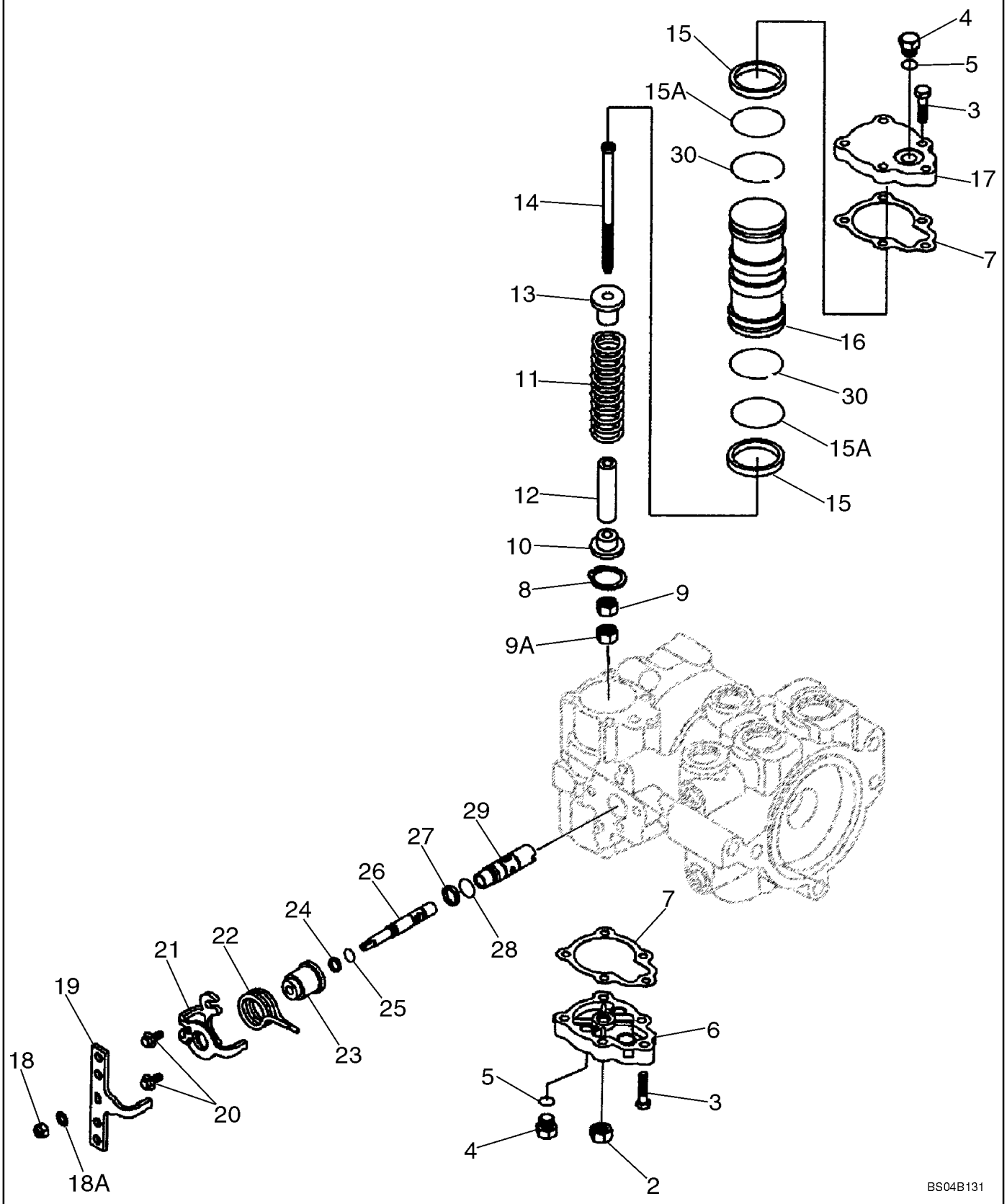

PUMP, TANDEM (440)

REF	FN	PART NUMBER	YR/SN	QTY	DESCRIPTION
26		87039614		1	SPOOL, Incl. 24, 25
27		86993483		1	RING, Included in 140008A1 Seal Kit
28		NSS		1	NOT SERVICED SEPARATELY, Included in 140008A1 Seal Kit
29		87039615		1	SLEEVE, Incl. 27, 28
30		100536A1		2	RING, Included in 140008A1 Seal Kit

PUMP, TANDEM (440)

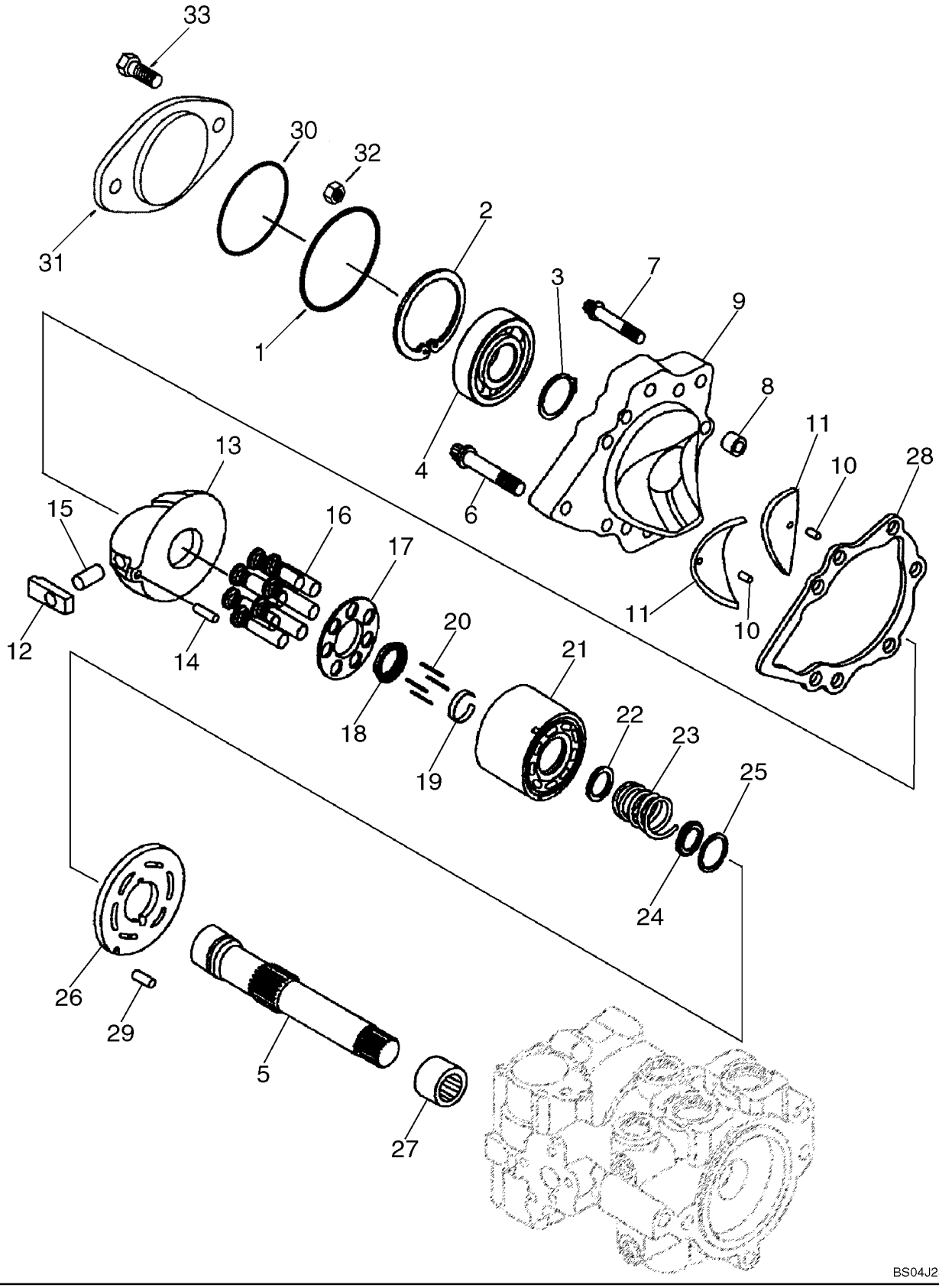

PUMP, TANDEM (440)

REF	FN	PART NUMBER	YR/SN	QTY	DESCRIPTION
					Rear Pump
		87043500		1	PUMP, Incl. 2 - 32
2		103-21281		1	RING, SNAP, 2.812", Int, #281
3		100-11137		1	RING, SNAP, #137, Ext
4		A29183		1	BEARING, BALL
5		87039623		1	SHAFT
6		223677A1		6	SCREW, 7/16 in
7		223680A1		1	BOLT, SPECIAL, 3/8 in
8		N13994		1	SPACER
		87050526		1	COVER ASSY, Incl. Ref 9 - 11
9		NSS		1	NOT SERVICED SEPARATELY, Cover; Incl. 10, 11
10		193494A1		2	PIN, ROLL
11		87050524		2	BEARING ASSY
12		N13224		1	SLEEVE
13		87050523		1	PLATE ASSY.
14		324610A1		1	PIN, LARGE
15		N13254		1	PIN
		402366A1		1	KIT, Cylinder Block; Components Not Serviced Separately; Incl. 16 - 25
16		NSS		14	NOT SERVICED SEPARATELY, Piston
17		NSS		2	NOT SERVICED SEPARATELY, Retainer
18		115942A1		2	GUIDE, Guide
19		115943A1		2	SLEEVE, Ring, Retaining
20		110873A1		6	PIN, LARGE, Pin
21		NSS		2	NOT SERVICED SEPARATELY, Block, Cylinder
22		115946A1		2	DISC
23		115948A1		2	SPRING
24		115950A1		2	DISC
25		NSS		2	NOT SERVICED SEPARATELY, Ring, Retaining
26		128929A1		1	PLATE, LARGE
27		NSS		1	NOT SERVICED SEPARATELY, Bearing, Needle
28		H436704		1	GASKET
29		38-11207		1	PIN, LOCK, 3/16" x 7/16", Slotted
30		87013729		1	O-RING, -044, 70 Duro, 3.739" ID x .070" Thk, Included in 140008A1 Seal Kit

PUMP, TANDEM (440)

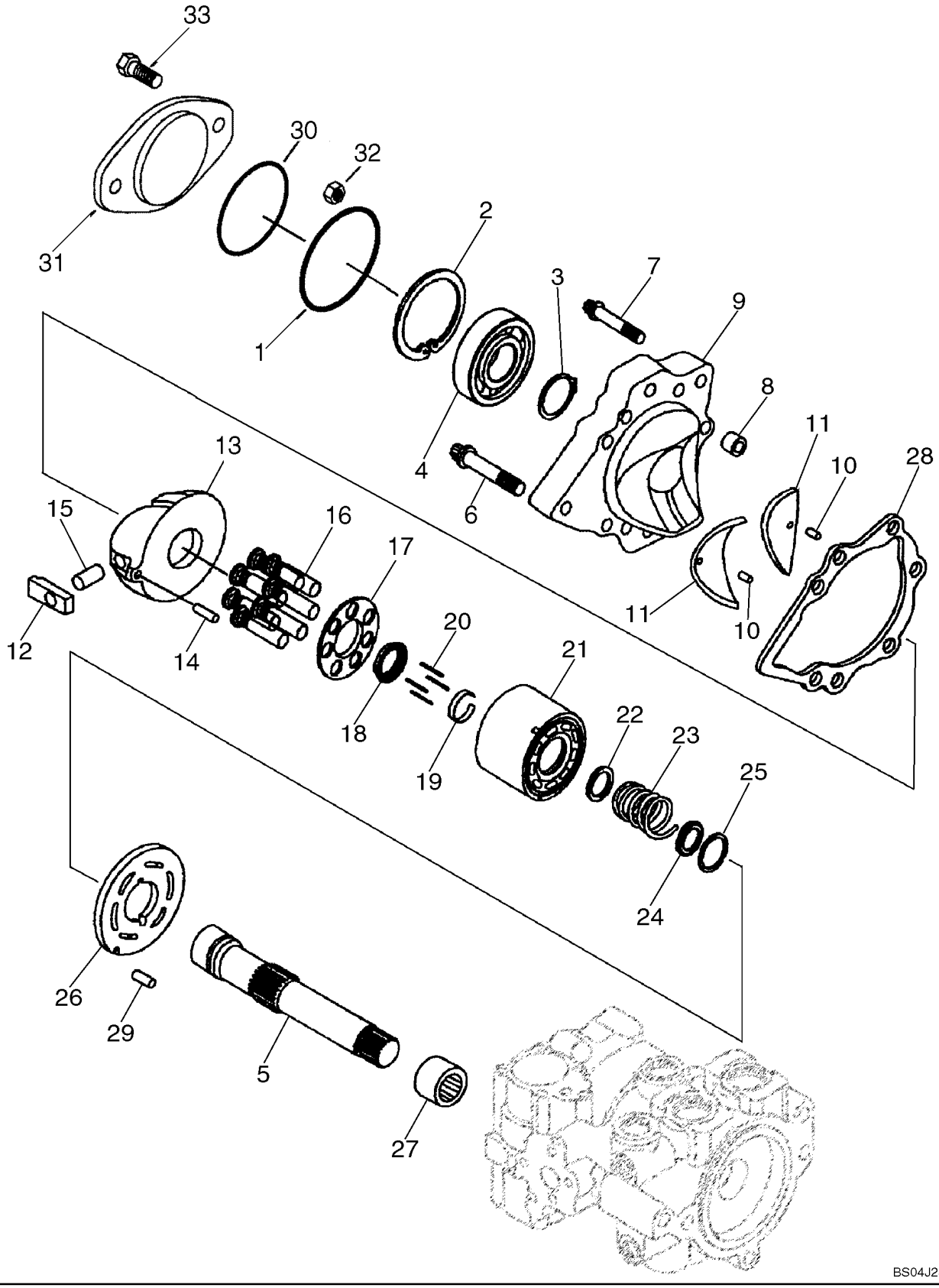

PUMP, TANDEM (440)

REF	FN	PART NUMBER	YR/SN	QTY	DESCRIPTION
31		100703A1		2	PLATE, SPACER
32		425-108		2	NUT, 1/2"-13, G5
33		13-836		2	BOLT, Hex, 1/2"-13 x 2 1/4", G5
		140008A1		1	KIT, GASKET, Overhaul Seal And Gasket Kit; Incl. (10) Rings, (4) Bearings, (20) O-Rings, (6) Gaskets, (2) Seals; Incl. Ref 34

PUMP, TANDEM - REXROTH (87546976)

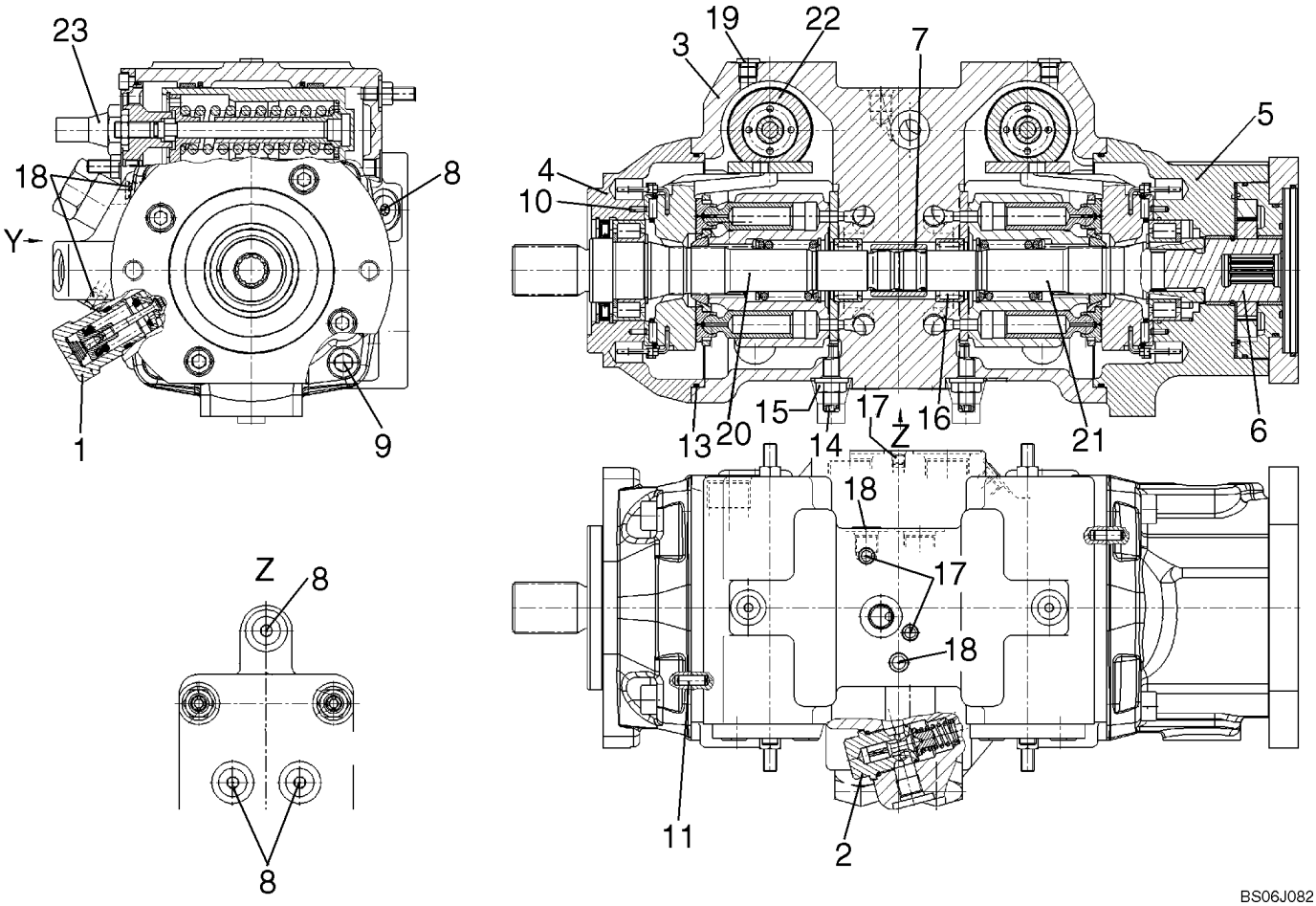

PUMP, TANDEM - REXROTH (87546976)

REF	FN	PART NUMBER	YR/SN	QTY	DESCRIPTION
1		87614028		4	VALVE, PRESSURE RELIEF, HD 300 Bar; See Fig. 06-40
2		87553604		1	VALVE, PRESSURE RELIEF, 15 - 30 Bar R-Ring Viton; See Fig. 06-41
3		87553605		1	HOUSING, Pump
4		87553606		1	FLANGE, Bearing
5		87614029		1	BEARING, With Bushing
6		87553608		1	PUMP, Internal Gear Pump; See Fig. 06-42
7		87553609		1	COUPLING, Through Drive
8		87553611		5	SCREW, LOCK, 9/16 - 18UNF
9		87553613		8	SCREW, Socket Head
10		87553614		4	PIN, Clamping
11		87553615		2	PIN, Cylinder
12		87553616		1	O-RING, Not Illustrated
13		87553617		2	O-RING
14		87553618		2	SCREW, Eccentric Screw
15		87553619		2	NUT, LOCK, Seal
16		87553620		2	BEARING, ROLLER, Plain
17		87553621		2	PIN, Double Break Off
18		87553622		2	PIN, Double Break Off
19		87553612		2	SCREW, LOCK, 7/16 - 20UNF
20		87553599		1	KIT, SERVICE, Rotary Group, RH Rotation; See Fig. 06-43
21		87553600		1	KIT, SERVICE, Rotary Group, LH Rotation; See Fig. 06-44
22		87553601		2	CONTROL, Hydraulic; See Fig. 06-45
23		87614027		1	CARTRIDGE, With Orifice; See Fig. 06-46
		87553610		1	BEARING, Bushing
		87627399		3	CAP

PUMP, TANDEM - PRESSURE RELIEF VALVE (87546976)

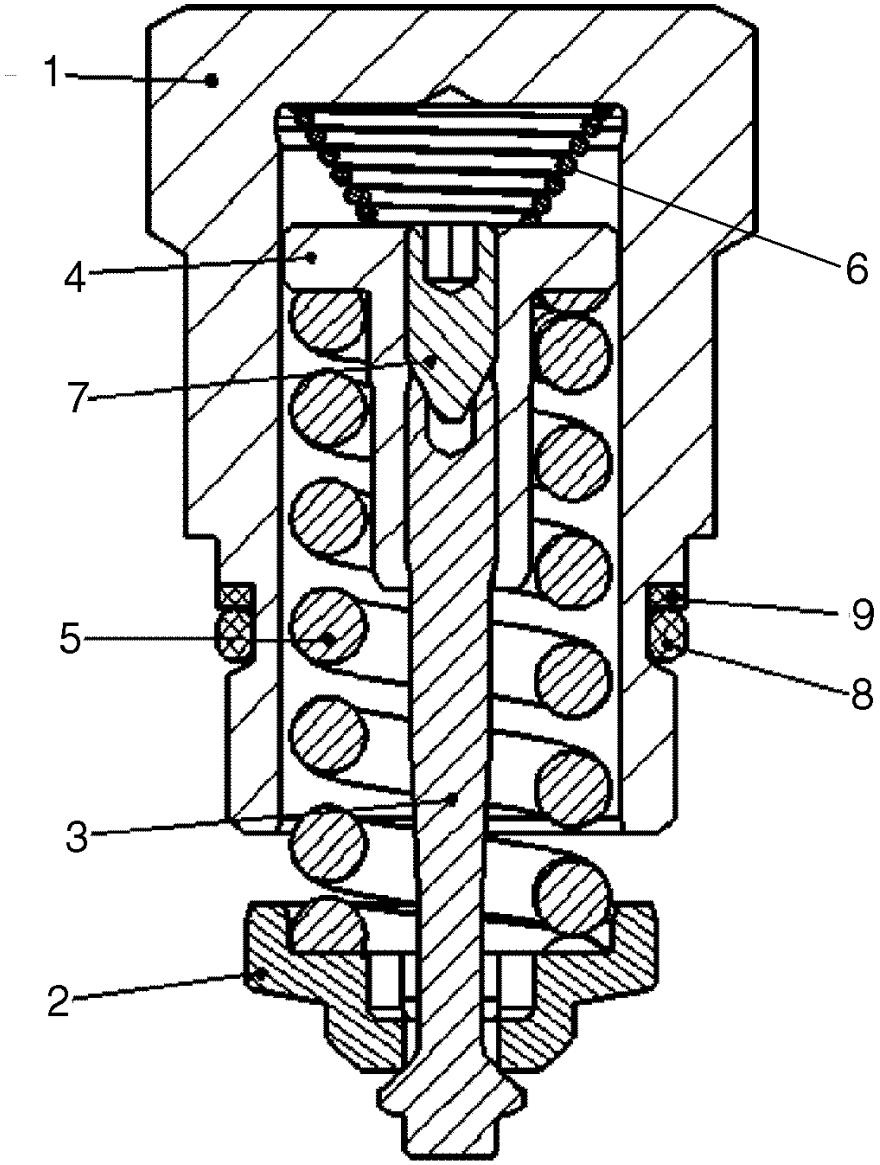

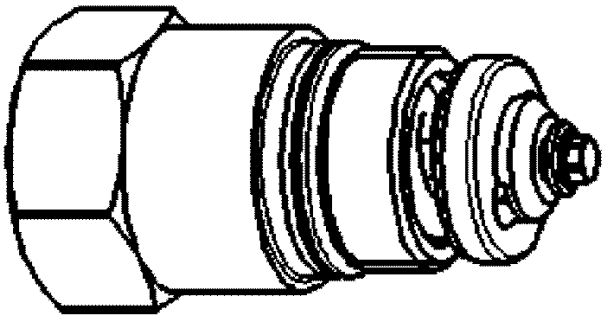

BS06J085

PUMP, TANDEM - PRESSURE RELIEF VALVE (87546976)

REF	FN	PART NUMBER	YR/SN	QTY	DESCRIPTION
		87614028		1	VALVE, PRESSURE RELIEF, Incl. 1 - 9
1		NSS		1	NOT SERVICED SEPARATELY, Locking Screw
2		NSS		1	NOT SERVICED SEPARATELY, Valve Collar
3		NSS		1	NOT SERVICED SEPARATELY, Valve Spindle
4		NSS		1	NOT SERVICED SEPARATELY, Spring Loading Nut
5		NSS		1	NOT SERVICED SEPARATELY, Pressure Spring
6		NSS		1	NOT SERVICED SEPARATELY, Spring, Cone Shaped
7		NSS		1	NOT SERVICED SEPARATELY, Threaded Pin
8		87597284		1	O-RING
9		87597285		1	RING, Back Up

PUMP, TANDEM - PRESSURE RELIEF VALVE (87546976)

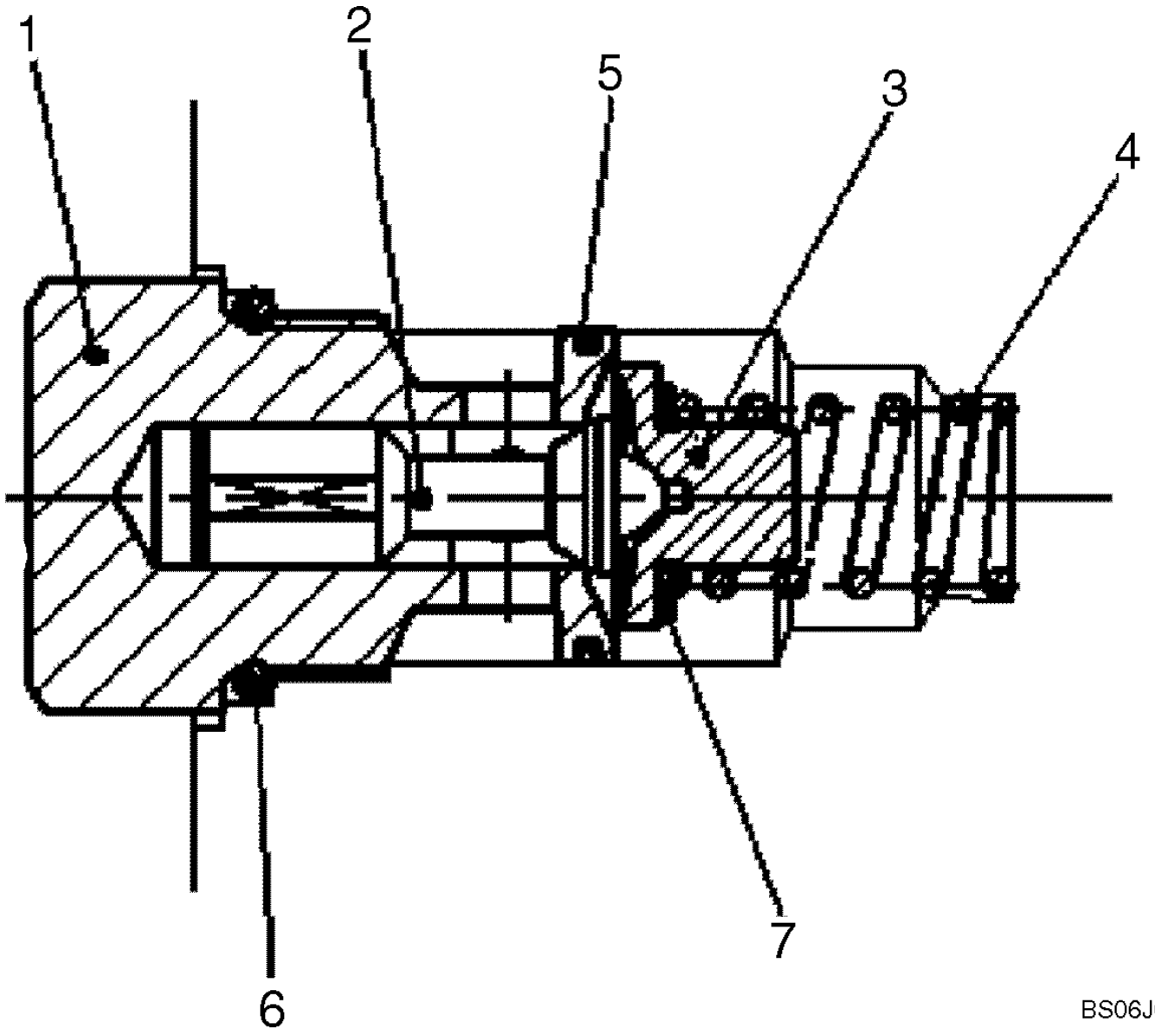

PUMP, TANDEM - PRESSURE RELIEF VALVE (87546976)

REF	FN	PART NUMBER	YR/SN	QTY	DESCRIPTION
		87553604		1	VALVE, PRESSURE RELIEF, Pressure Relief Valve; Incl. 1 - 7
1		NSS		1	NOT SERVICED SEPARATELY, Locking Screw
2		NSS		1	NOT SERVICED SEPARATELY, Valve Piston
3		NSS		1	NOT SERVICED SEPARATELY, Spring Collar
4		NSS		1	NOT SERVICED SEPARATELY, Pressure Spring
5		NSS		1	NOT SERVICED SEPARATELY, Steel Sealing Spring
6		87597286		1	O-RING, O-ring
7		NSS		1	NOT SERVICED SEPARATELY, Shim

PUMP, TANDEM - INTERNAL GEAR PUMP (87546976)

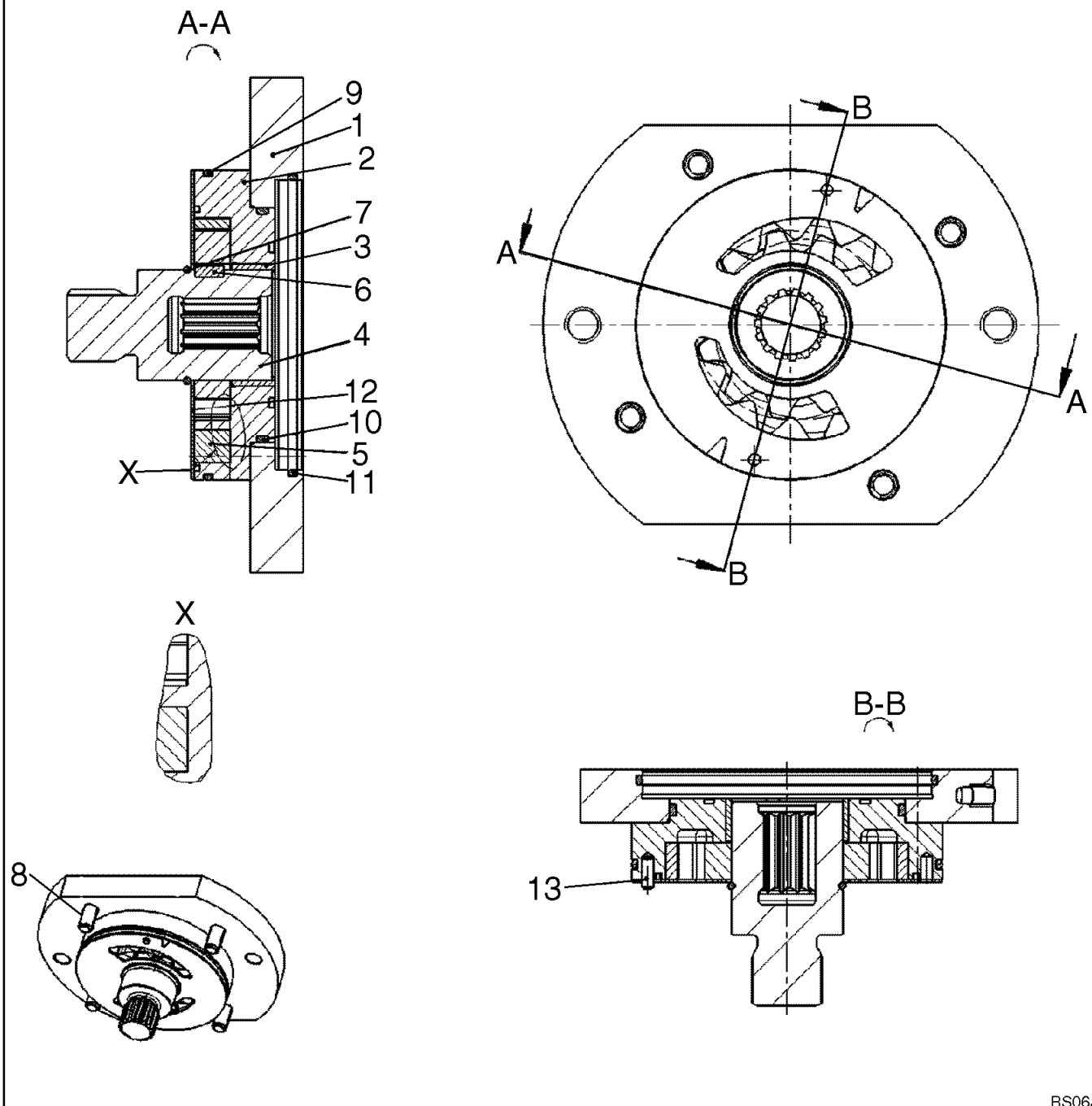

BS06J087

PUMP, TANDEM - INTERNAL GEAR PUMP (87546976)

REF	FN	PART NUMBER	YR/SN	QTY	DESCRIPTION
		87553608		1	PUMP, Internal Gear Pump; Incl. 1 - 13
1		87597287		1	FLANGE, Intermediate Flange
2		87597288		1	HOUSING, IZP Housing
3		87553610		1	BEARING, Bearing Bushing
4		87597289		1	COUPLING, Through Drive Coupling
5		87597290		1	WHEEL SET, Wheel Set
6		87597291		1	KEY, Shaft Key
7		87597292		1	RING, SNAP, Snap Ring
8		87597293		4	SCREW, Socket Head Screw
9		87597294		1	O-RING, O-ring
10		87597295		1	O-RING, O-ring
11		87553616		1	O-RING, O-ring
12		87597296		1	PLATE, Wear Plate
13		87597297		1	PIN, Cylinder Pin

PUMP, TANDEM - ROTARY GROUP, RIGHT HAND ROTATION (87546976)

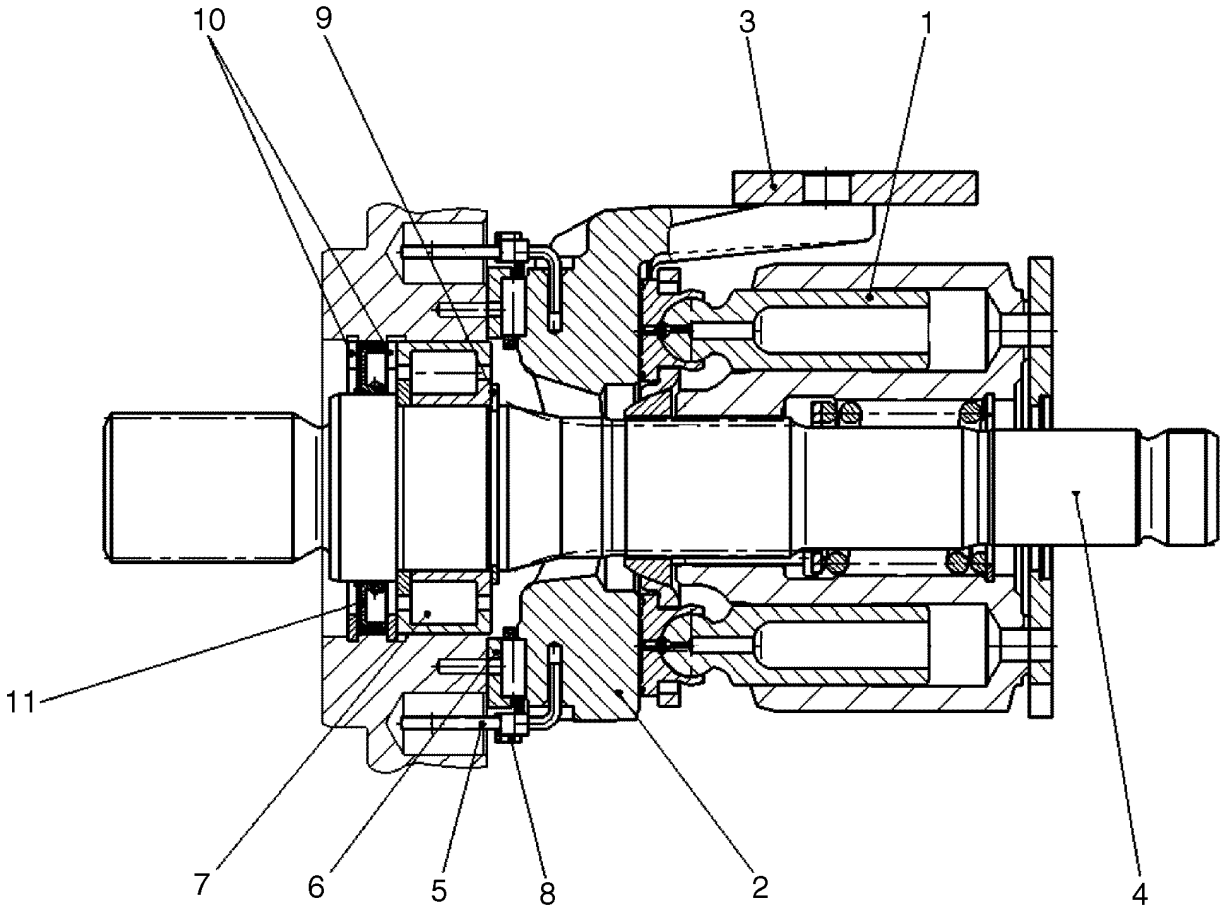

BS06J126

PUMP, TANDEM - ROTARY GROUP, RIGHT HAND ROTATION (87546976)

REF	FN	PART NUMBER	YR/SN	QTY	DESCRIPTION
		87553599		1	KIT, SERVICE, Rotary Group, Right Hand Rotation; Incl. 1 - 11
1		87553623		1	VALVE SECTION, Rotary Group, Hydraulic Section
2		87597259		1	CRADLE
3		87597260		1	SLIDE, Ring
4		87597261		1	SHAFT, DRIVE
5		87597262		2	WIRE, With Coil
6		87597263		1	BEARING LINER, Pair
7		87597264		1	BEARING, Plain Roller Bearing
8		87597265		1	CRADLE, Bearing Assembly (set)
9		87597266		1	RING, Retaining Ring
10		87597267		2	RING, Seeger V-ring
11		87597268		1	RING, Shaft Seal Ring

PUMP, TANDEM - ROTARY GROUP, LEFT HAND ROTATION (87546976)

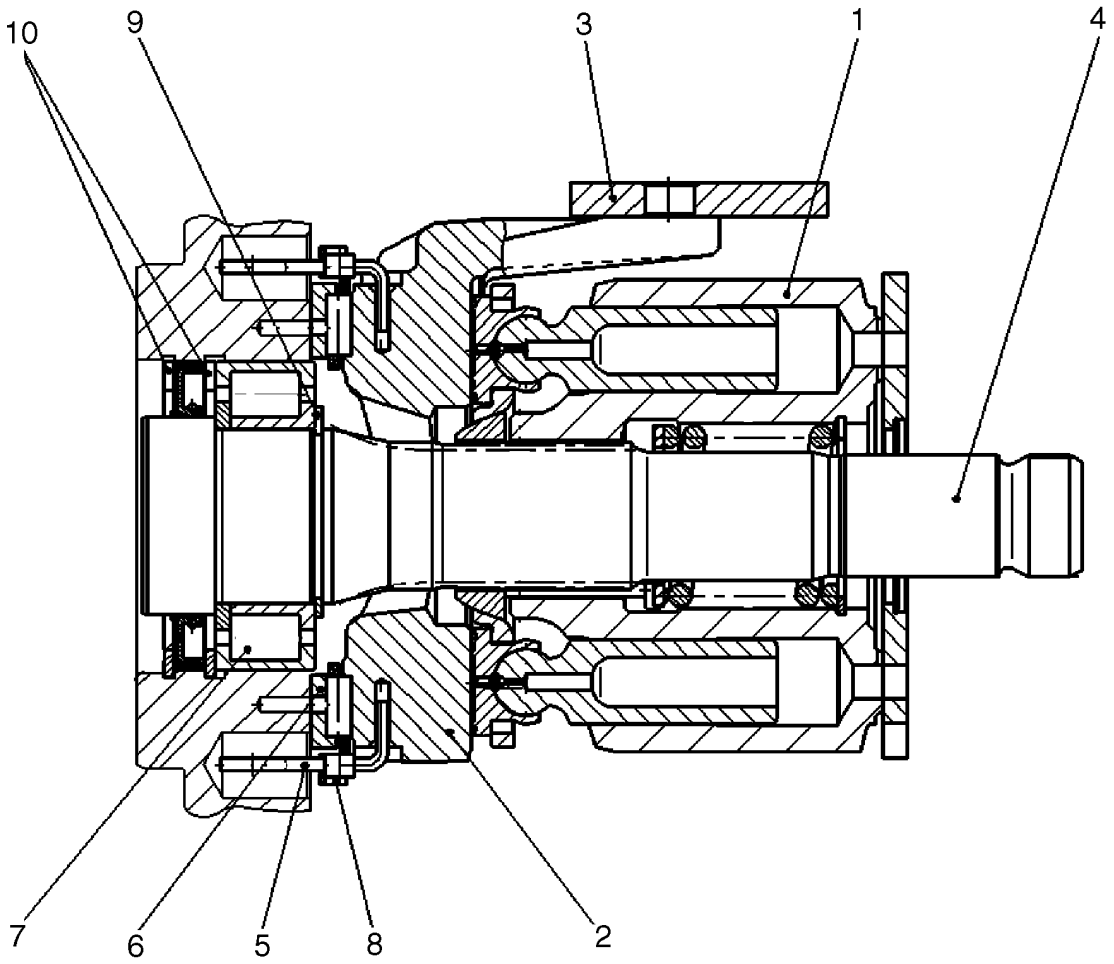

BS06J127

PUMP, TANDEM - ROTARY GROUP, LEFT HAND ROTATION (87546976)

REF	FN	PART NUMBER	YR/SN	QTY	DESCRIPTION
		87553600		1	KIT, SERVICE, Rotary Group, Left Hand Rotation; Incl. 1 - 10
1		87597269		1	VALVE SECTION, HYD, Rotary Group, Hydraulic Section
2		87597259		1	CRADLE, Cradle
3		87597260		1	SLIDE, Ring
4		87597271		1	SHAFT, DRIVE
5		87597262		2	WIRE, With Coil
6		87597263		1	BEARING LINER, Pair
7		87597264		1	BEARING, Plain Roller Bearing
8		87597265		1	CRADLE, Bearing Assembly (set)
9		87597266		1	RING, Retaining Ring
10		87597267		2	RING, Seeger V-ring

PUMP, TANDEM - CONTROL, HYDRAULIC (87546976)

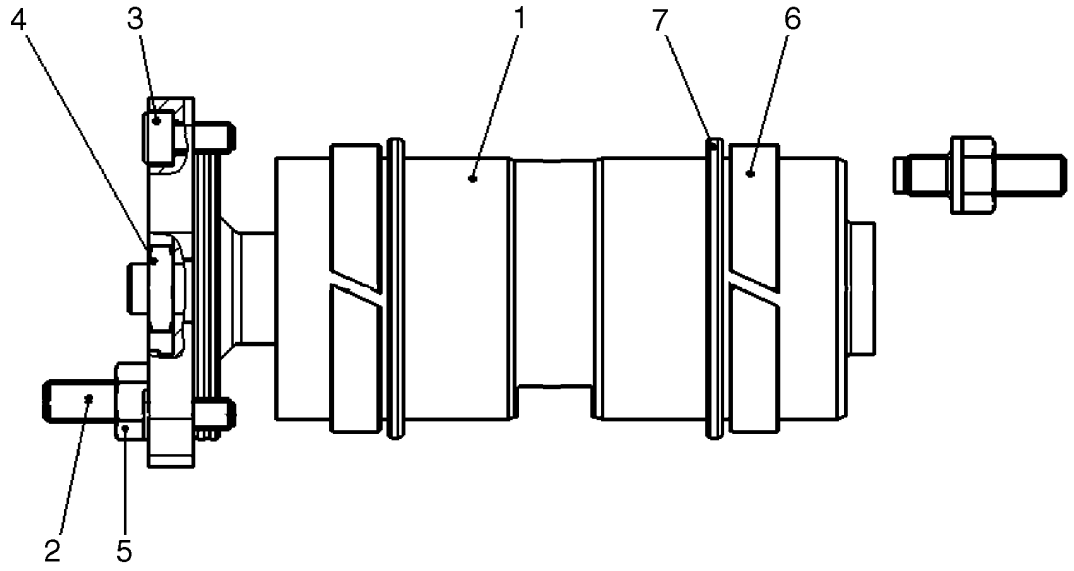

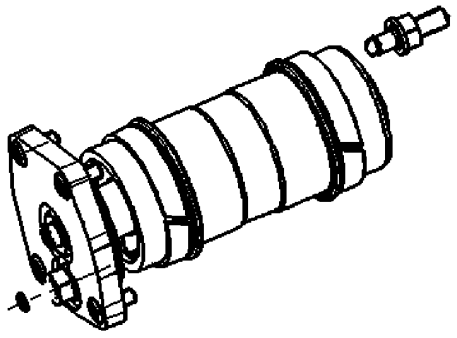

BS06J128

PUMP, TANDEM - CONTROL, HYDRAULIC (87546976)

REF	FN	PART NUMBER	YR/SN	QTY	DESCRIPTION
		87553601		1	CONTROL, Control, Hydraulic; Incl. 1 - 7
1		87597272		1	PISTON, Positioning Piston, Complete
2		87597274		2	PIN, Threaded Pin
3		87597275		4	SCREW, Socket Head Screw
4		87597276		1	NUT, Hexagon Nut
5		87597277		2	NUT, Seal, Lock Nut
6		87597281		2	RING, GUIDE, Guide Ring
7		87597282		2	KIT, SERVICE, Rod Seal Kit

PUMP, TANDEM - CONTROL CARTRIDGE WITH ORIFICE (87546976)

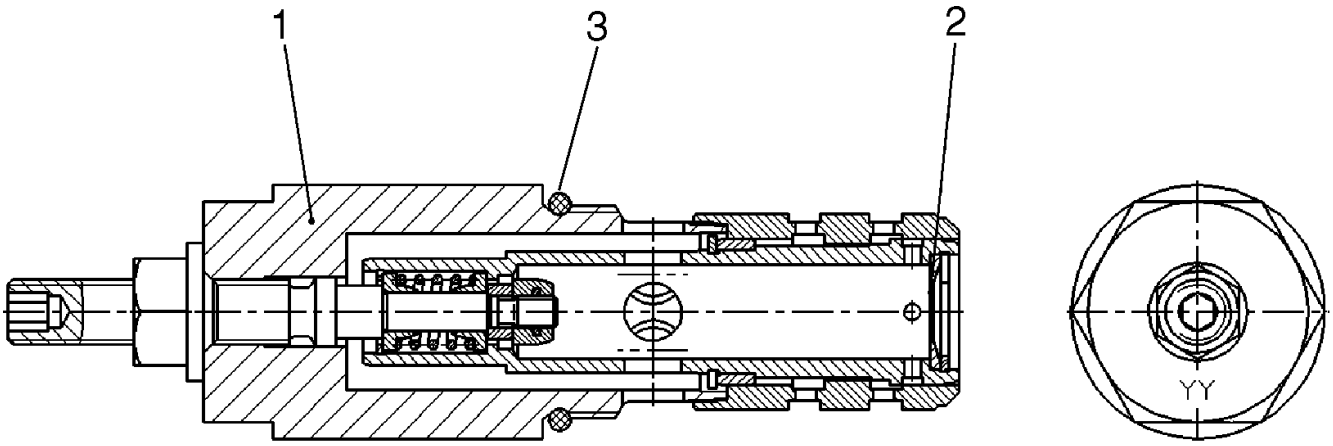

BS07A093

PUMP, TANDEM - CONTROL CARTRIDGE WITH ORIFICE (87546976)

REF	FN	PART NUMBER	YR/SN	QTY	DESCRIPTION
		87614027		1	CARTRIDGE, Control Cartridge With Orifice; Incl. 1 - 3
1		87597283		1	CARTRIDGE, Control Cartridge Without Orifice
2		87614030		1	ORIFICE
3		87597284		1	O-RING, O-Ring

PUMP, TANDEM - REXROTH (87546977)

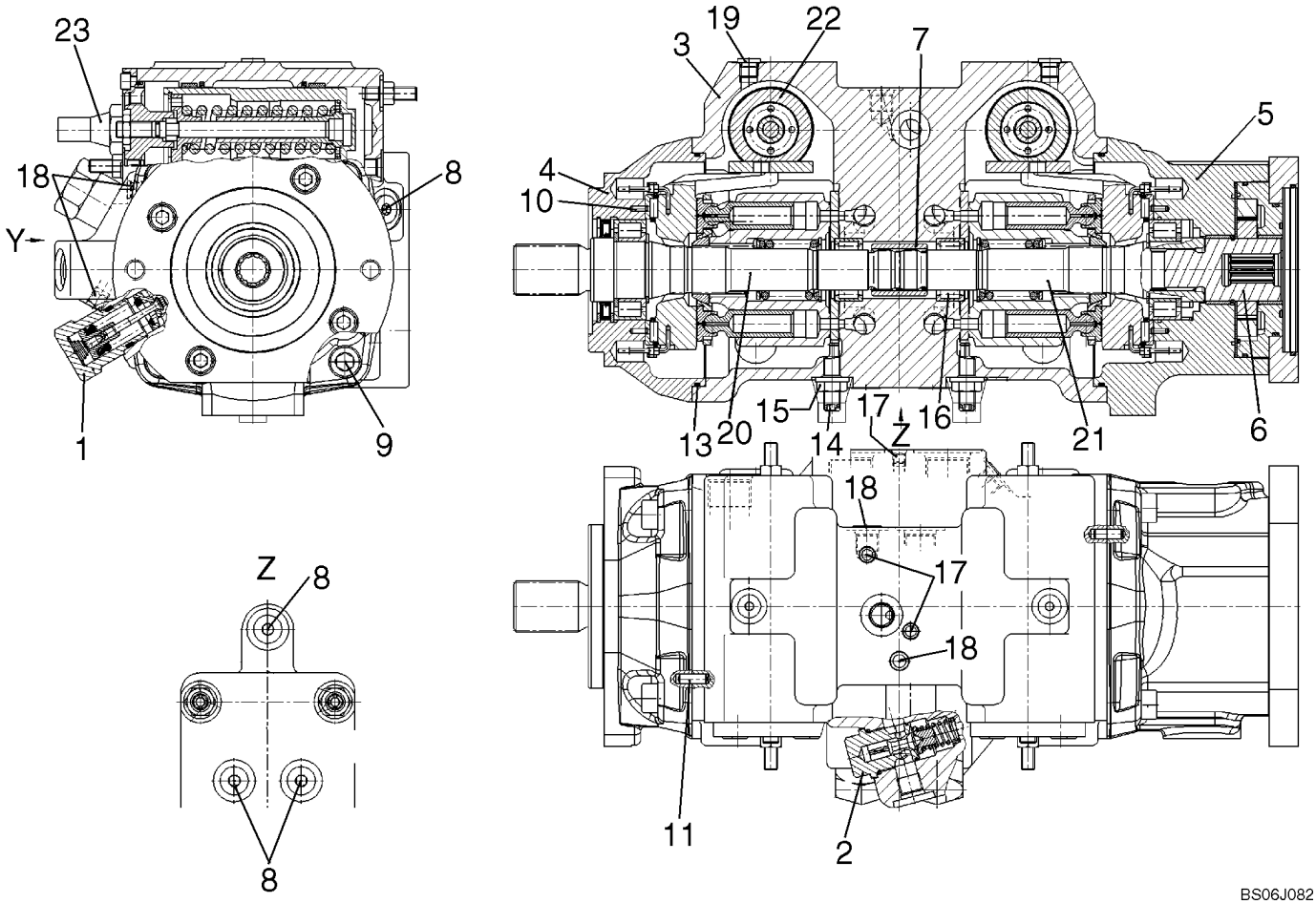

BS06J082

PUMP, TANDEM - REXROTH (87546977)

REF	FN	PART NUMBER	YR/SN	QTY	DESCRIPTION
1		87614031		4	VALVE, PRESSURE RELIEF, HD 360 Bar; See Fig. 06-53
2		87553604		1	VALVE, PRESSURE RELIEF, 15 - 30 Bar R-Ring Viton; See Fig. 06-48
3		87553605		1	HOUSING, Pump
4		87553606		1	FLANGE, Bearing
5		87553607		1	FLANGE, Bearing With Bushing
6		87553608		1	PUMP, Internal Gear Pump; See Fig. 06-49
7		87553609		1	COUPLING, Through Drive
8		87553611		5	SCREW, LOCK, 9/16 - 18UNF
9		87553613		8	SCREW, Socket Head
10		87553614		4	PIN, Clamping
11		87553615		2	PIN, Cylinder
12		87553616		1	O-RING, Not Illustrated
13		87553617		2	O-RING, O-Ring
14		87553618		2	SCREW, Eccentric Screw
15		87553619		2	NUT, LOCK, Seal
16		87553620		2	BEARING, ROLLER, Plain
17		87553621		2	PIN, Double Break Off
18		87553622		2	PIN, Double Break Off
19		87553612		2	SCREW, LOCK, 7/16 - 20UNF
20		87553599		1	KIT, SERVICE, Rotary Group, RH Rotation; See Fig. 06-50
21		87553600		1	KIT, SERVICE, Rotary Group, LH Rotation; See Fig. 06-51
22		87553601		2	CONTROL, Hydraulic; See Fig. 06-52
23		87614027		1	CARTRIDGE, With Orifice; See Fig. 06-46
		87553610		1	BEARING, Bushing
		87627399		3	CAP

PUMP, TANDEM - PRESSURE RELIEF VALVE (87546977)

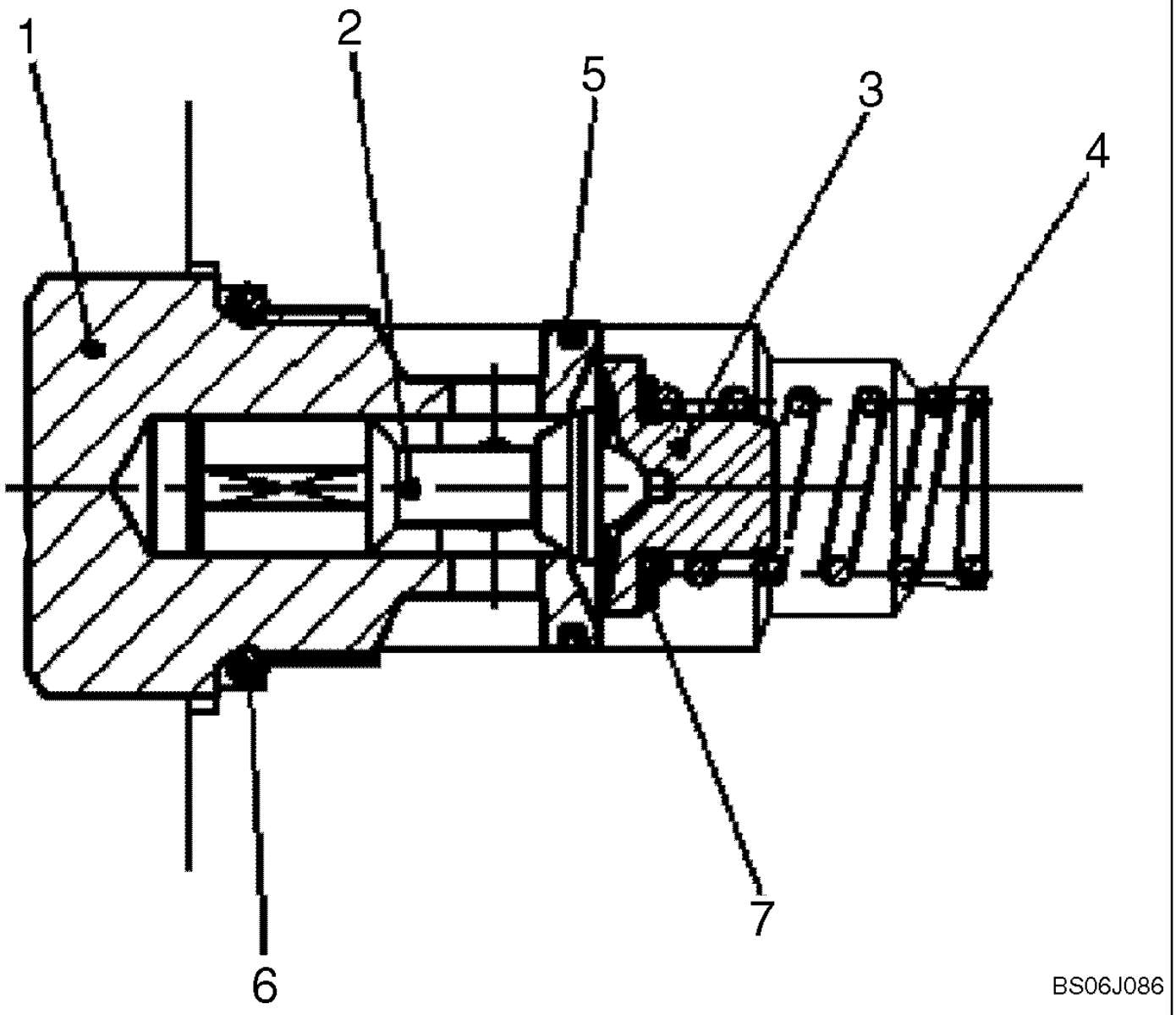

PUMP, TANDEM - PRESSURE RELIEF VALVE (87546977)

REF	FN	PART NUMBER	YR/SN	QTY	DESCRIPTION
		87553604		1	VALVE, PRESSURE RELIEF, Pressure Relief Valve; Incl. 1 - 7
1		NSS		1	NOT SERVICED SEPARATELY, Locking Screw
2		NSS		1	NOT SERVICED SEPARATELY, Valve Piston
3		NSS		1	NOT SERVICED SEPARATELY, Spring Collar
4		NSS		1	NOT SERVICED SEPARATELY, Pressure Spring
5		NSS		1	NOT SERVICED SEPARATELY, Steel Sealing Spring
6		87597286		1	O-RING, O-ring
7		NSS		1	NOT SERVICED SEPARATELY, Shim

PUMP, TANDEM - INTERNAL GEAR PUMP (87546977)

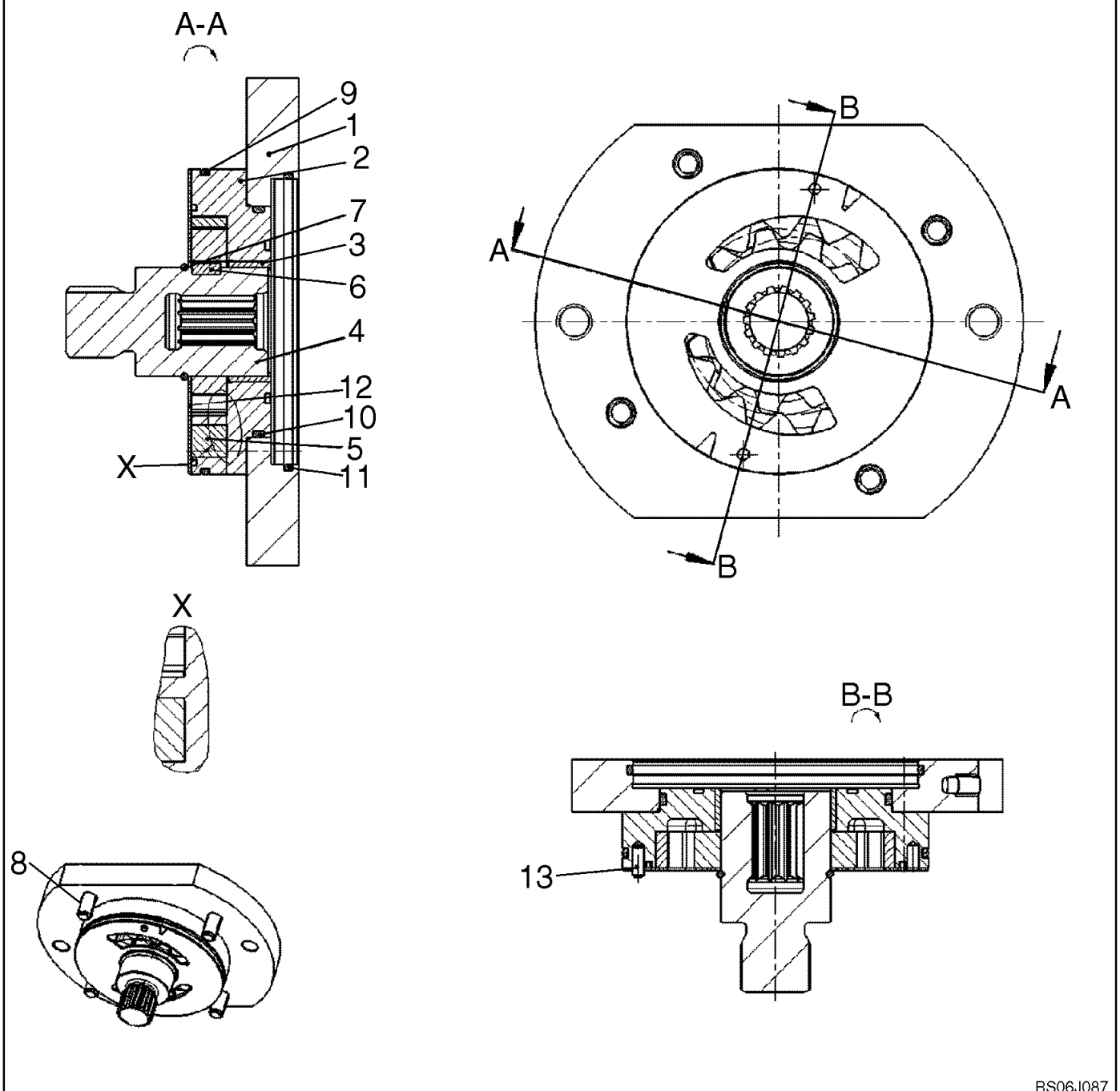

BS06J087

PUMP, TANDEM - INTERNAL GEAR PUMP (87546977)

REF	FN	PART NUMBER	YR/SN	QTY	DESCRIPTION
		87553608		1	PUMP, Internal Gear Pump; Incl. 1 - 13
1		87597287		1	FLANGE, Intermediate Flange
2		87597288		1	HOUSING, IZP Housing
3		87553610		1	BEARING, Bearing Bushing
4		87597289		1	COUPLING, Through Drive Coupling
5		87597290		1	WHEEL SET, Wheel Set
6		87597291		1	KEY, Shaft Key
7		87597292		1	RING, SNAP, Snap Ring
8		87597293		4	SCREW, Socket Head Screw
9		87597294		1	O-RING, O-ring
10		87597295		1	O-RING, O-ring
11		87553616		1	O-RING, O-ring
12		87597296		1	PLATE, Wear Plate
13		87597297		1	PIN, Cylinder Pin

PUMP, TANDEM - ROTARY GROUP, RIGHT HAND ROTATION (87546977)

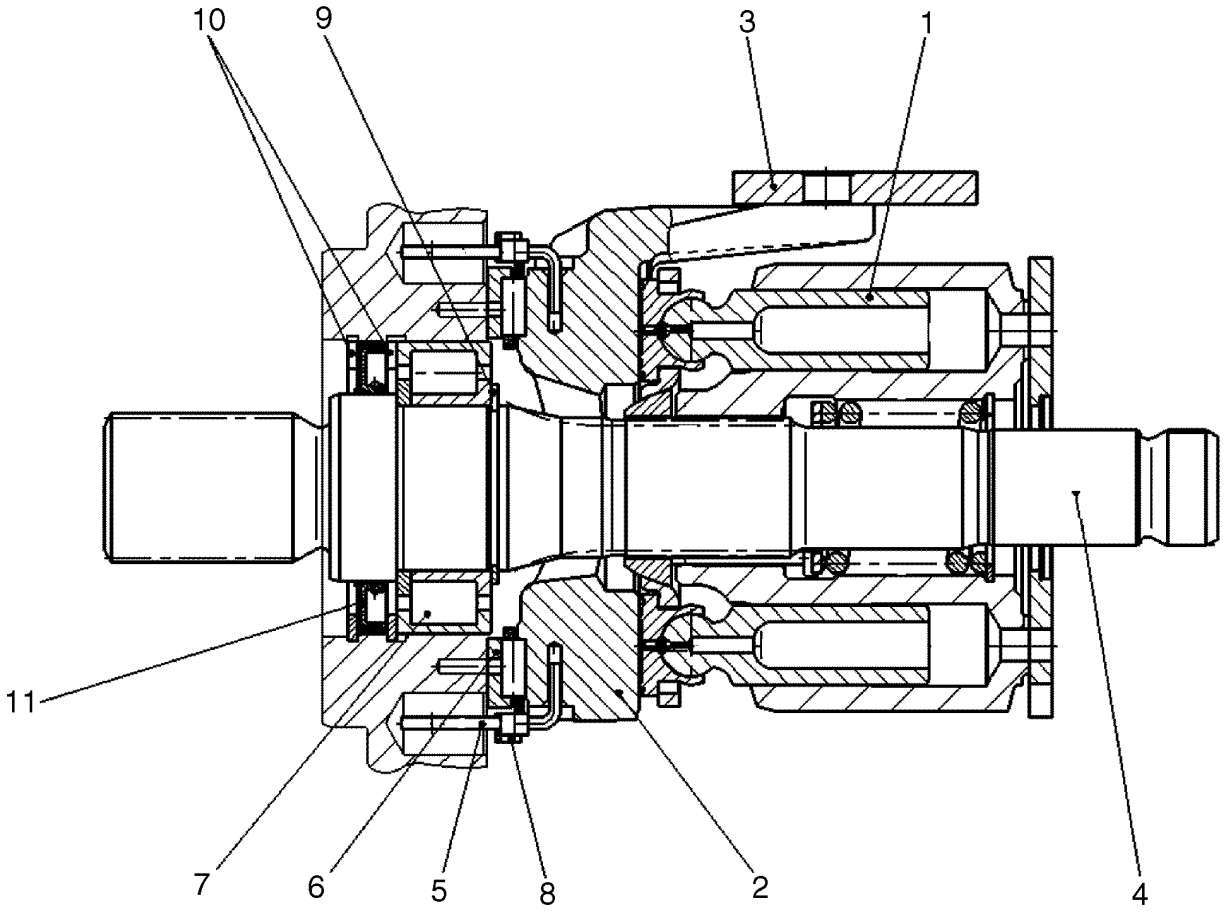

BS06J126

PUMP, TANDEM - ROTARY GROUP, RIGHT HAND ROTATION (87546977)

REF	FN	PART NUMBER	YR/SN	QTY	DESCRIPTION
		87553599		1	KIT, SERVICE, Rotary Group, Right Hand Rotation; Incl. 1 - 11
1		87553623		1	VALVE SECTION, Rotary Group, Hydraulic Section
2		87597259		1	CRADLE, Cradle
3		87597260		1	SLIDE, Ring
4		87597261		1	SHAFT, DRIVE, Drive Shaft
5		87597262		2	WIRE, With Coil
6		87597263		1	BEARING LINER, Pair
7		87597264		1	BEARING, Plain Roller Bearing
8		87597265		1	CRADLE, Bearing Assembly (set)
9		87597266		1	RING, Retaining Ring
10		87597267		2	RING, Seeger V-ring
11		87597268		1	RING, Shaft Seal Ring

PUMP, TANDEM - ROTARY GROUP, LEFT HAND ROTATION (87546977)

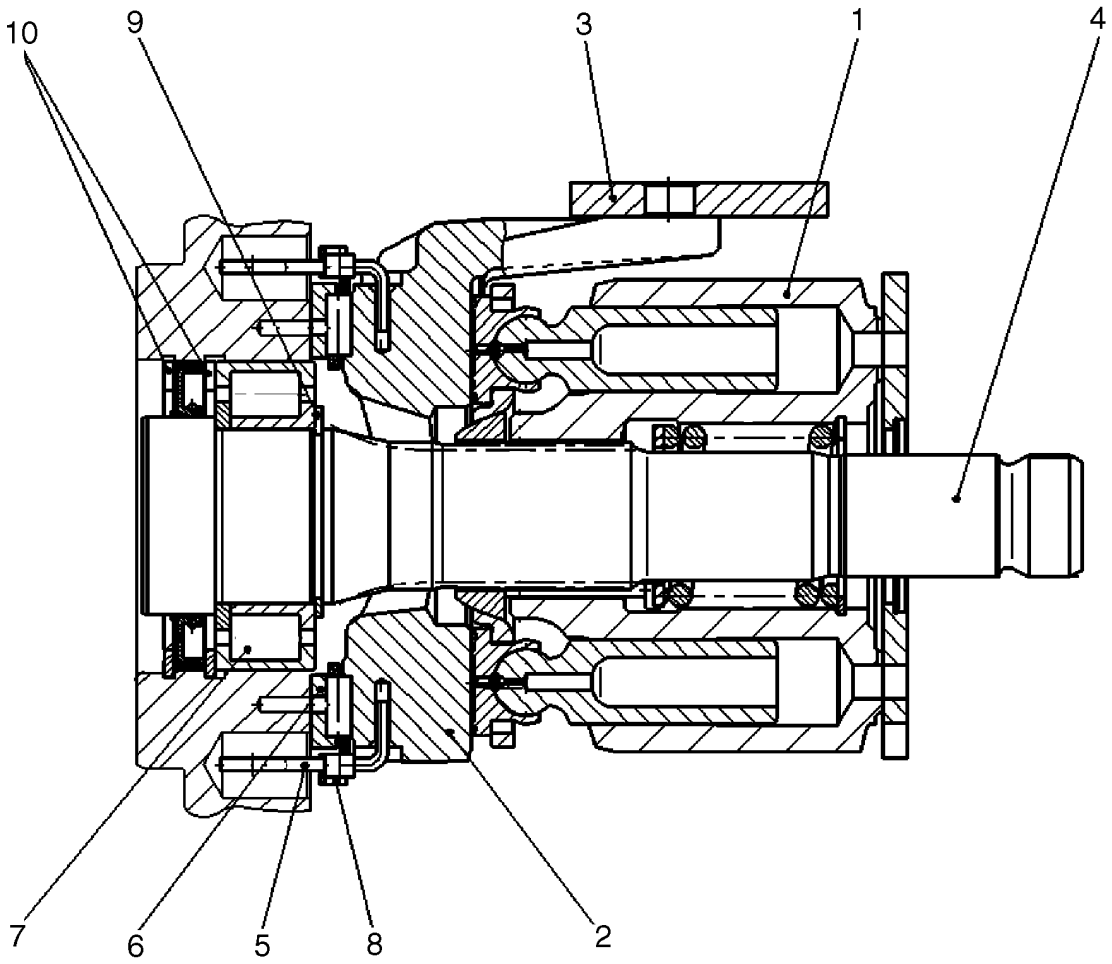

BS06J127

PUMP, TANDEM - ROTARY GROUP, LEFT HAND ROTATION (87546977)

REF	FN	PART NUMBER	YR/SN	QTY	DESCRIPTION
		87553600		1	KIT, SERVICE, Rotary Group, Left Hand Rotation; Incl. 1 - 10
1		87597269		1	VALVE SECTION, HYD, Rotary Group, Hydraulic Section
2		87597259		1	CRADLE, Cradle
3		87597260		1	SLIDE, Ring
4		87597271		1	SHAFT, DRIVE
5		87597262		2	WIRE, With Coil
6		87597263		1	BEARING LINER, Pair
7		87597264		1	BEARING, Plain Roller Bearing
8		87597265		1	CRADLE, Bearing Assembly (set)
9		87597266		1	RING, Retaining Ring
10		87597267		2	RING, Seeger V-ring

PUMP, TANDEM - CONTROL, HYDRAULIC (87546977)

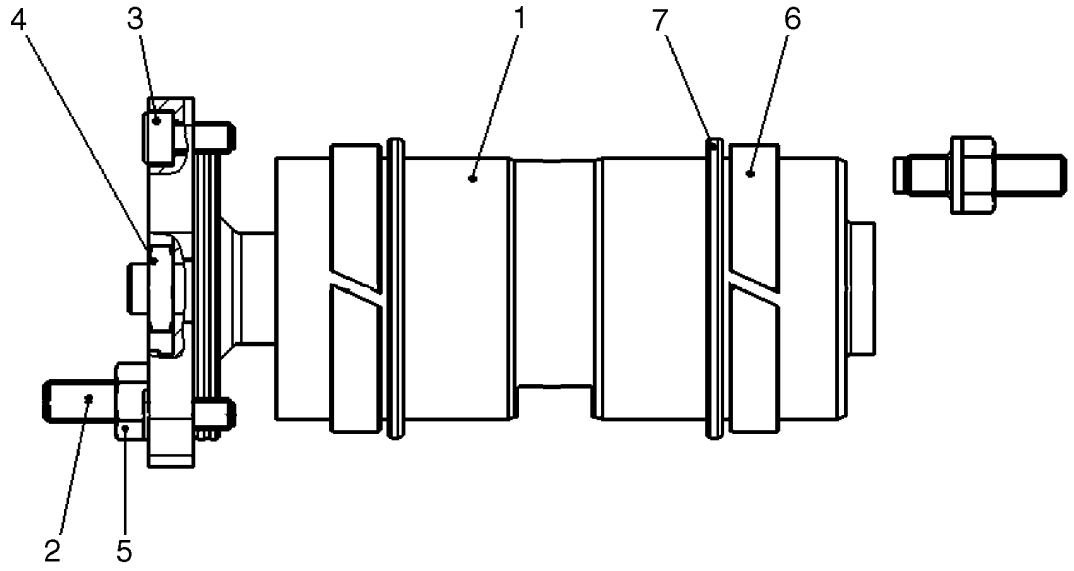

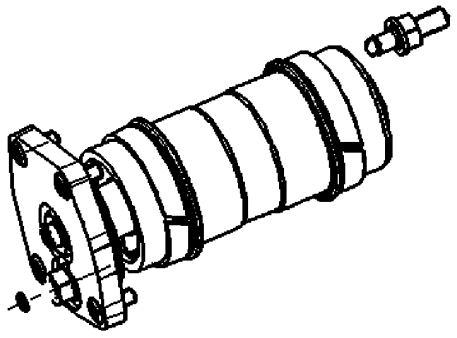

BS06J128

PUMP, TANDEM - CONTROL, HYDRAULIC (87546977)

REF	FN	PART NUMBER	YR/SN	QTY	DESCRIPTION
		87553601		1	CONTROL, Control, Hydraulic; Incl. 1 - 7
1		87597272		1	PISTON, Positioning Piston, Complete
2		87597274		2	PIN, Threaded Pin
3		87597275		4	SCREW, Socket Head Screw
4		87597276		1	NUT, Hexagon Nut
5		87597277		2	NUT, Seal, Lock Nut
6		87597281		2	RING, GUIDE, Guide Ring
7		87597282		2	KIT, SERVICE, Rod Seal Kit

PUMP, TANDEM - CONTROL CARTRIDGE WITH ORIFICE (87546977)

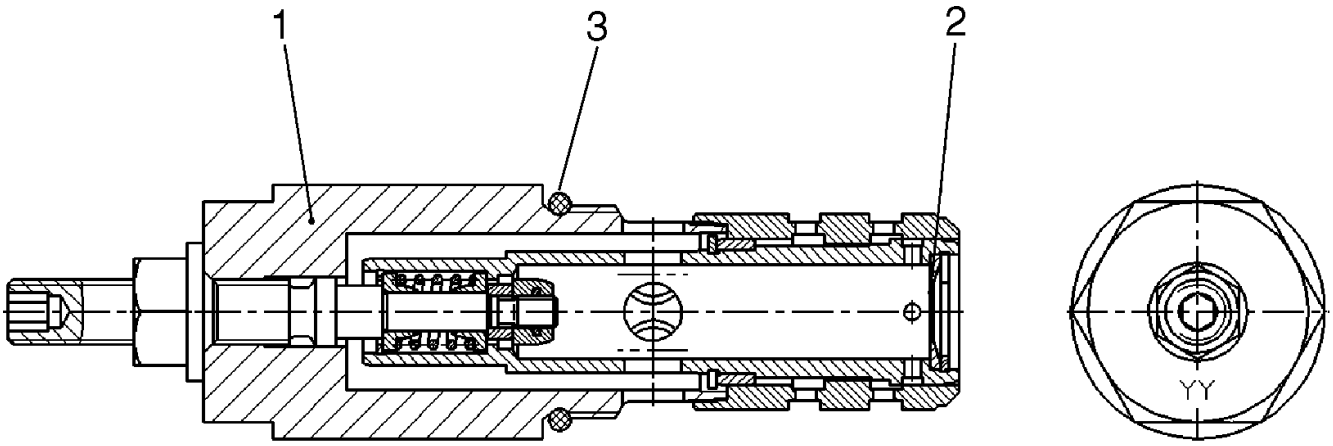

BS07A093

PUMP, TANDEM - CONTROL CARTRIDGE WITH ORIFICE (87546977)

REF	FN	PART NUMBER	YR/SN	QTY	DESCRIPTION
		87614031		1	VALVE, PRESSURE RELIEF, Control Cartridge With Orifice; Incl. 1 - 3
1		NSS		1	NOT SERVICED SEPARATELY, Control Cartridge Without Orifice
2		87597285		1	RING, Back Up Ring
3		87597284		1	O-RING, O-Ring

PUMP, GEAR (WITHOUT HIGH FLOW)

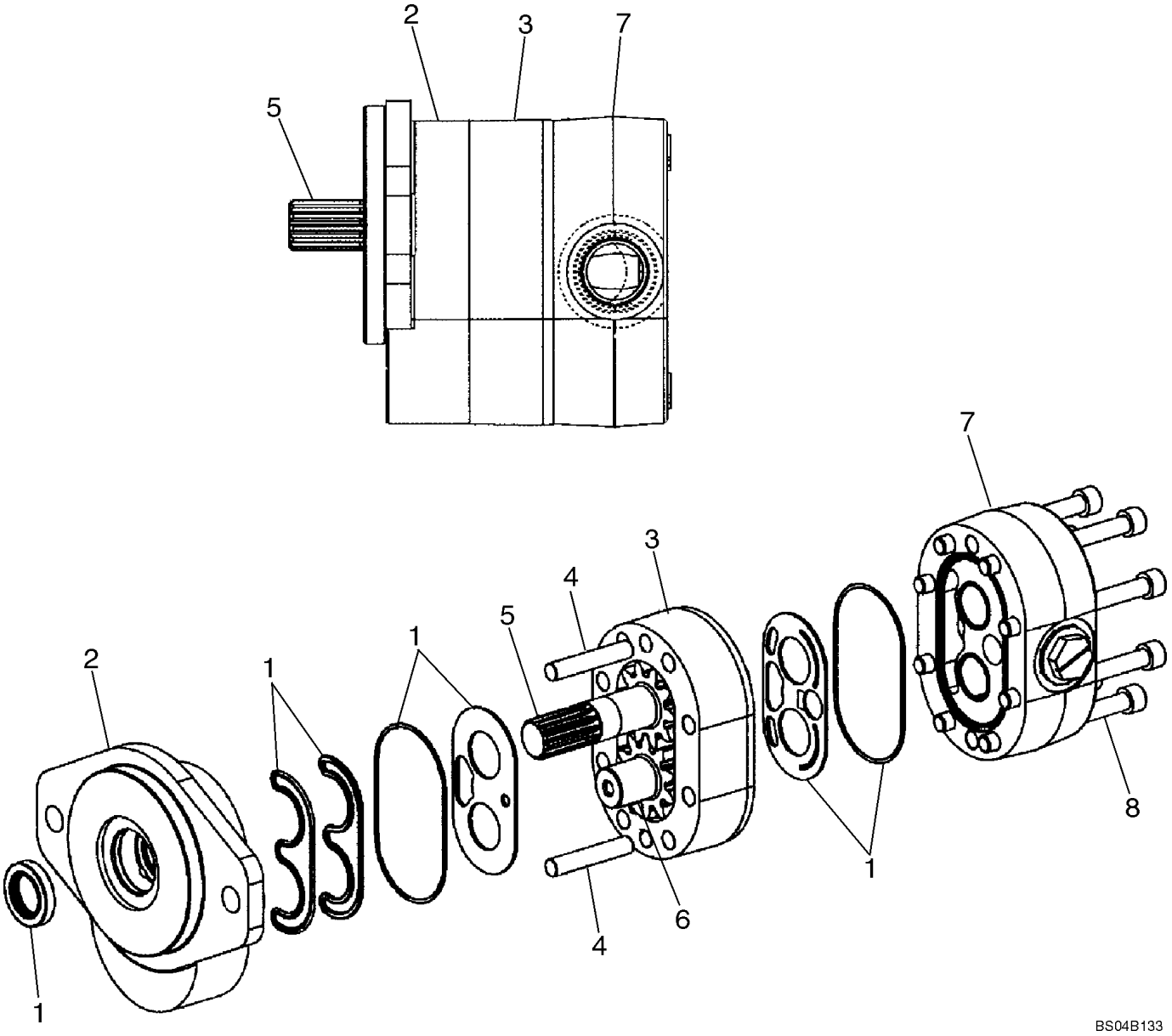

PUMP, GEAR (WITHOUT HIGH FLOW)

REF	FN	PART NUMBER	YR/SN	QTY	DESCRIPTION
		87024695		1	PUMP, Incl. 1 - 8; Models Without High Flow
1		87042214		1	KIT, SEALS, Seal; Component Parts Not Serviced Separately
2		NSS		1	NOT SERVICED SEPARATELY, Cover
3		NSS		1	NOT SERVICED SEPARATELY, Plate, Gear
4		NSS		2	NOT SERVICED SEPARATELY, Pin, Dowel
5		NSS		1	NOT SERVICED SEPARATELY, Shaft, Drive
6		NSS		1	NOT SERVICED SEPARATELY, Shaft, Idler
7		NSS		1	NOT SERVICED SEPARATELY, Cover
8		NSS		8	NOT SERVICED SEPARATELY, Screw

PUMP, GEAR (HIGH FLOW)

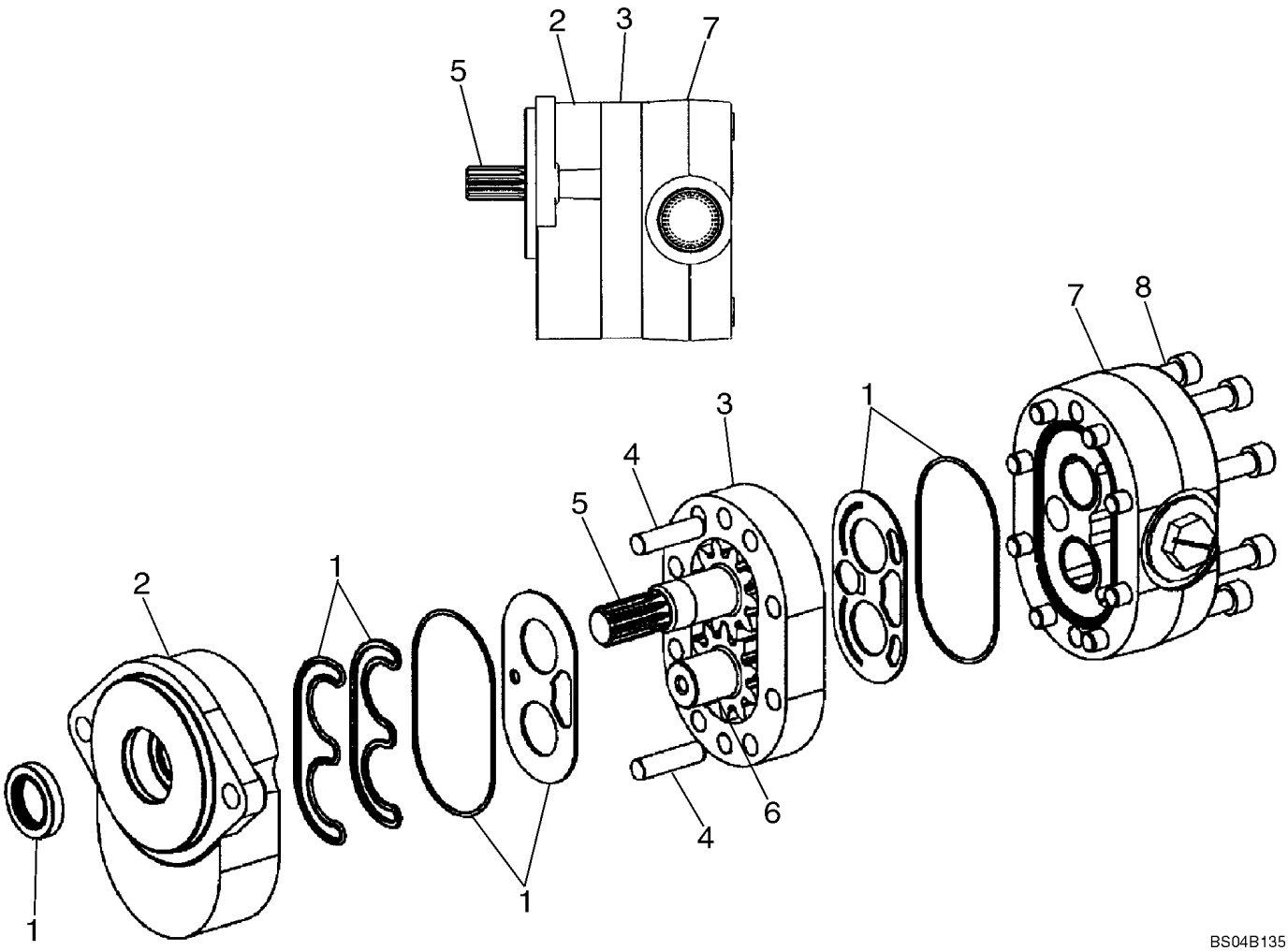

PUMP, GEAR (HIGH FLOW)

REF	FN	PART NUMBER	YR/SN	QTY	DESCRIPTION
		87020733		1	PUMP, Incl. 1 - 8; Models With High Flow
1		87042214		1	KIT, SEALS, Seal; Component Parts Not Serviced Separately
2		NSS		1	NOT SERVICED SEPARATELY, Cover
3		NSS		1	NOT SERVICED SEPARATELY, Plate, Gear
4		NSS		2	NOT SERVICED SEPARATELY, Pin, Dowel
5		NSS		1	NOT SERVICED SEPARATELY, Shaft, Drive
6		NSS		1	NOT SERVICED SEPARATELY, Shaft, Idler
7		NSS		1	NOT SERVICED SEPARATELY, Cover
8		NSS		8	NOT SERVICED SEPARATELY, Screw

MOTOR ASSY - SINGLE SPEED

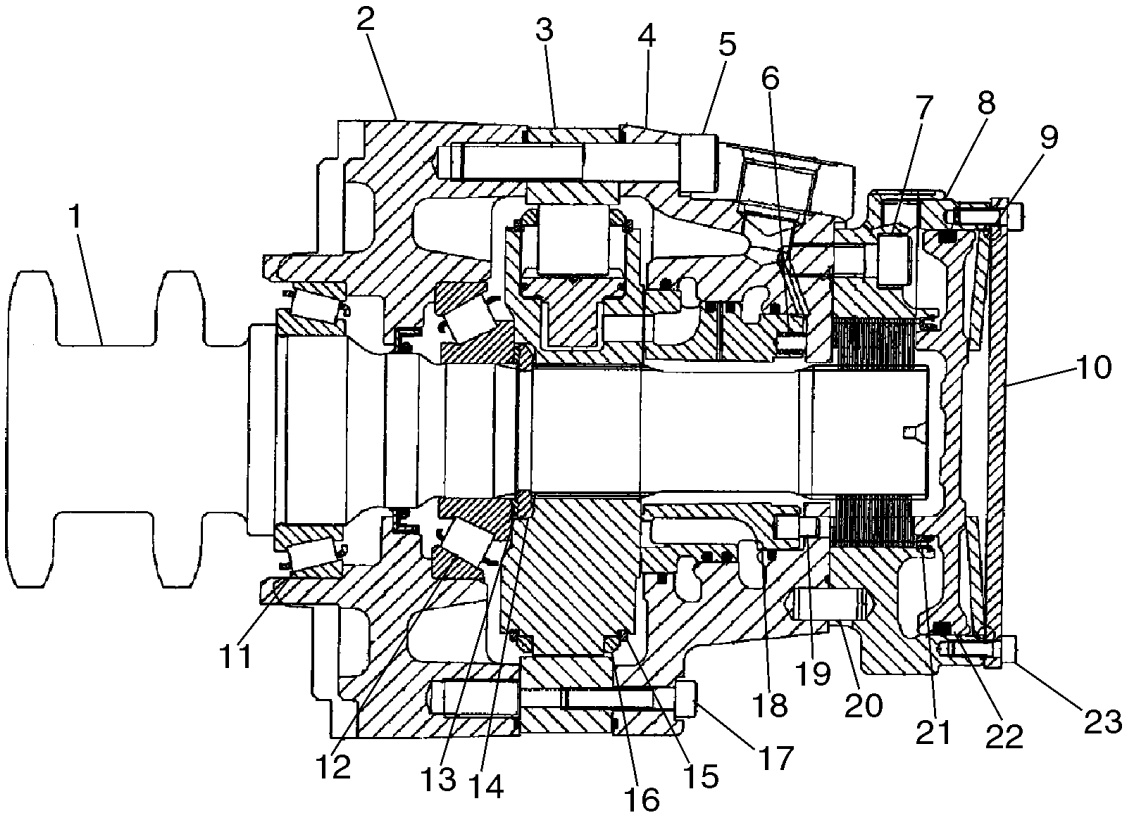

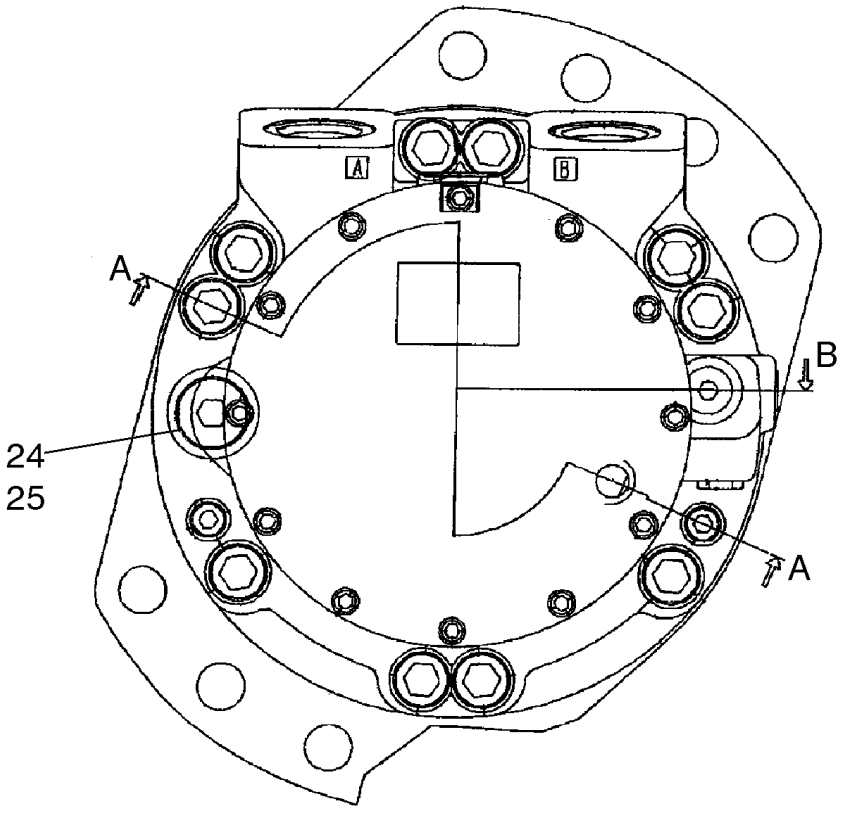

BS04B175

MOTOR ASSY - SINGLE SPEED

REF	FN	PART NUMBER	YR/SN	QTY	DESCRIPTION
		87035341		2	MOTOR, HYDRAULIC, One Speed
1		87039359		1	KIT, Shaft And Bearing
2		87042941		1	CASE, Front
3		87042908		1	CAM, 680/470
4		87042953		1	CASE, Rear
5		861-14080		10	SCREW, Hex Soc Hd, M14 x 80, 12.9
6		87042912		9	SPRING
7		86512142		5	SCREW, Hex Soc Hd, M12 x 30, 12.9
8		87042921		1	HOUSING, Brake
9		87042926		1	SPRING, Disc
10		87042923		1	COVER, End
11		87042904		1	BEARING, 70 x 110 x 25
12		87042905		1	BEARING, 50 x 110 x 29.25
13		87042903		1	KIT, Washer
14		87042906		1	RING, Split Ring
15		NSS			NOT SERVICED SEPARATELY
16		NSS			NOT SERVICED SEPARATELY
17		861-8040		2	SCREW, Hex Soc Hd, M8 x 40, 12.9
18		87042954		1	RING, Distributor
19		87042911		1	PIN, Stop
20		87042927		3	PIN, 12 x 25
21		87042925		1	CLIP, 87 ID
22		87042922		1	PISTON, Brake Piston
23		86512134		12	SCREW, Hex Soc Hd, M6 x 16, 12.9
24		214389		1	PLUG, Hex Hd, 3/4"-16 ORB, Incl. Ref. 25
25		237-6008		1	O-RING, 8-1, 90 Duro, .644" ID x .087" Thk

MOTOR ASSY - SINGLE SPEED

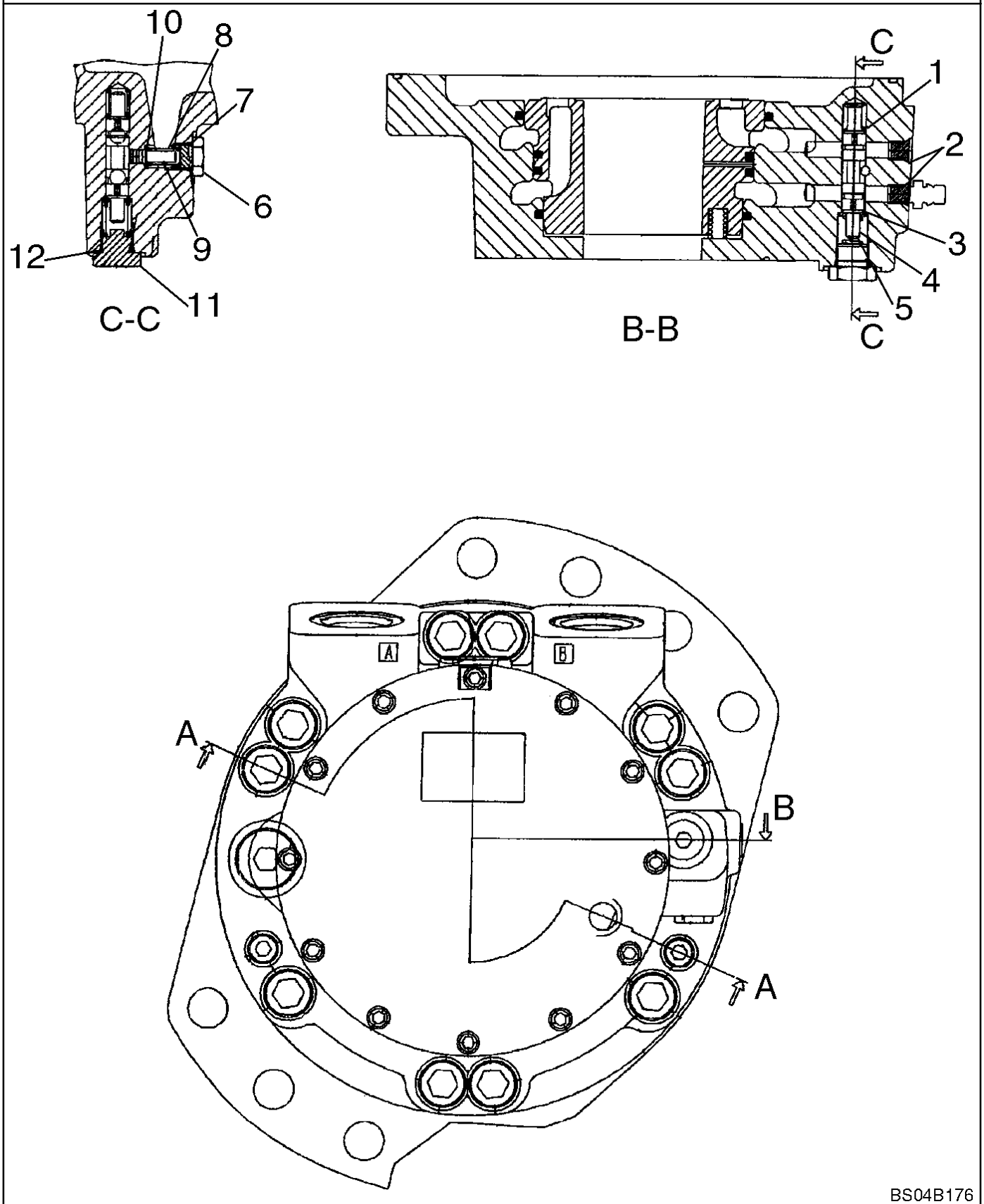

MOTOR ASSY - SINGLE SPEED

REF	FN	PART NUMBER	YR/SN	QTY	DESCRIPTION
		87035341		2	MOTOR, HYDRAULIC, One Speed
1		87042934		1	SPRING, Flushing Side A
2		NSS		2	NOT SERVICED SEPARATELY, Shear Plug; M8
3		87042929		1	WASHER, 1.5 Thick
4		87042935		1	SPRING, Flushing Side B
5		87042928		1	SPOOL, Flushing
6		87042933		1	POPPET, Plug; 7/16
7		NSS		1	NOT SERVICED SEPARATELY, O-Ring; 8.92 x 1.83; Included In 87039370, Seal Kit, See Figure 06-58
8		87042931		1	POPPET, 1.7 Orifice
9		87042932		1	SPRING, Flushing
10		87042930		1	SHIM, 0.6
11		214389		1	PLUG, Hex Hd, 3/4"-16 ORB
12		NSS		1	NOT SERVICED SEPARATELY, O-Ring; 11.90 x 1.98; Incl. In 87039370, Seal Kit, See Figure 06-58

MOTOR ASSY - SINGLE SPEED

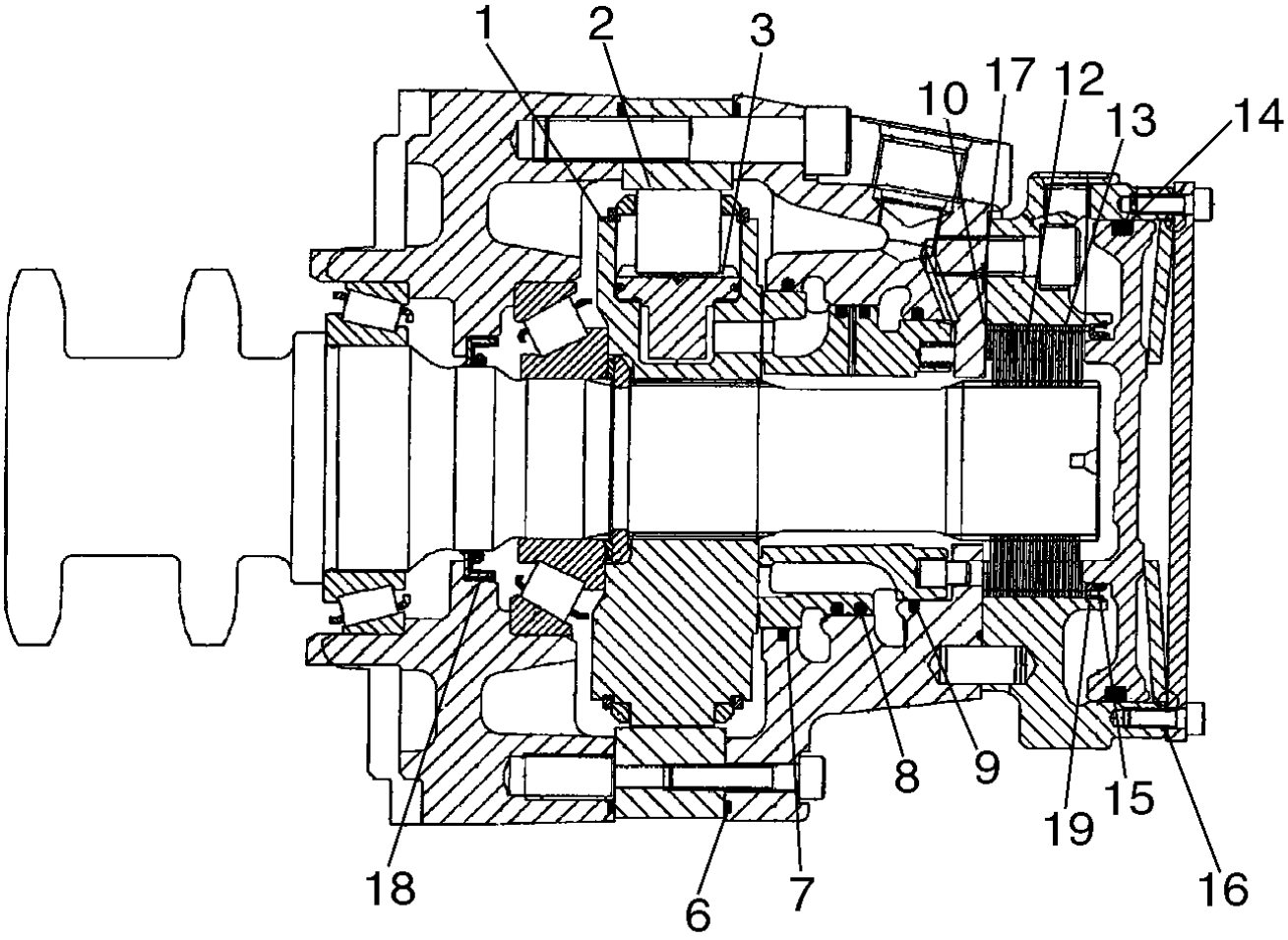

BS04B177

MOTOR ASSY - SINGLE SPEED

REF	FN	PART NUMBER	YR/SN	QTY	DESCRIPTION
		87035341		2	MOTOR, HYDRAULIC, One Speed
		87039368		1	KIT, Brake; Incl. 1 - 3
1		NSS		1	NOT SERVICED SEPARATELY, Cylinder Block
2		NSS		8	NOT SERVICED SEPARATELY, Roll
3		NSS		8	NOT SERVICED SEPARATELY, Piston S/A
		87039370		1	KIT, Seal; Incl. 4 - 9
4		NSS		1	NOT SERVICED SEPARATELY, O-Ring; 11.90 x 1.98; For Illustration, See Figure 06-57, Ref 12
5		NSS		1	NOT SERVICED SEPARATELY, O-Ring; 8.92 x 1.83; For Illustration, See Figure 06-57, Ref 7
6		NSS		2	NOT SERVICED SEPARATELY, Square Ring; 213 x 2.51
7		NSS		1	NOT SERVICED SEPARATELY, Rod Seal; 105
8		NSS		1	NOT SERVICED SEPARATELY, Piston Seal; 96.5
9		NSS		1	NOT SERVICED SEPARATELY, Rod Seal; 87.15
		87039372		1	KIT, Rotating; Incl. 10 - 16
10		NSS		1	NOT SERVICED SEPARATELY, Shim; 80 x 63 x 0.1
11		NSS		1	NOT SERVICED SEPARATELY, Shim; 80 x 63 x 0.3
12		NSS		14	NOT SERVICED SEPARATELY, Inner Plate
13		NSS		16	NOT SERVICED SEPARATELY, Outer Plate
14		NSS		1	NOT SERVICED SEPARATELY, Square Ring; 139.07 x 5.16
15		NSS		1	NOT SERVICED SEPARATELY, O-ring; 75.92 x 1.78
16		NSS		1	NOT SERVICED SEPARATELY, Gasket; 0.5
17		87042919		1	O-RING, 107.67 x 1.78
18		87042907		1	SEAL, SHAFT, 57.15
19		87042924		1	RING, Brake Seal

MOTOR ASSY - TWO SPEED

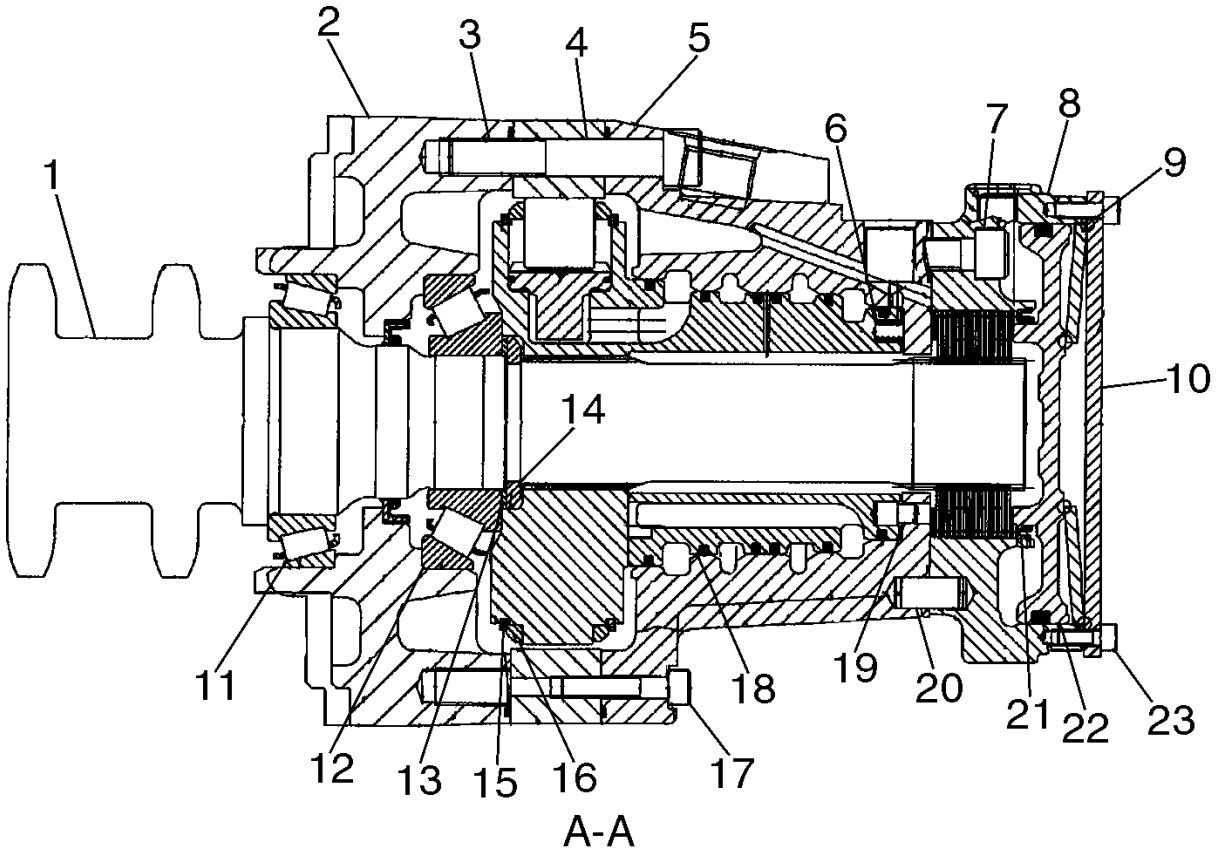

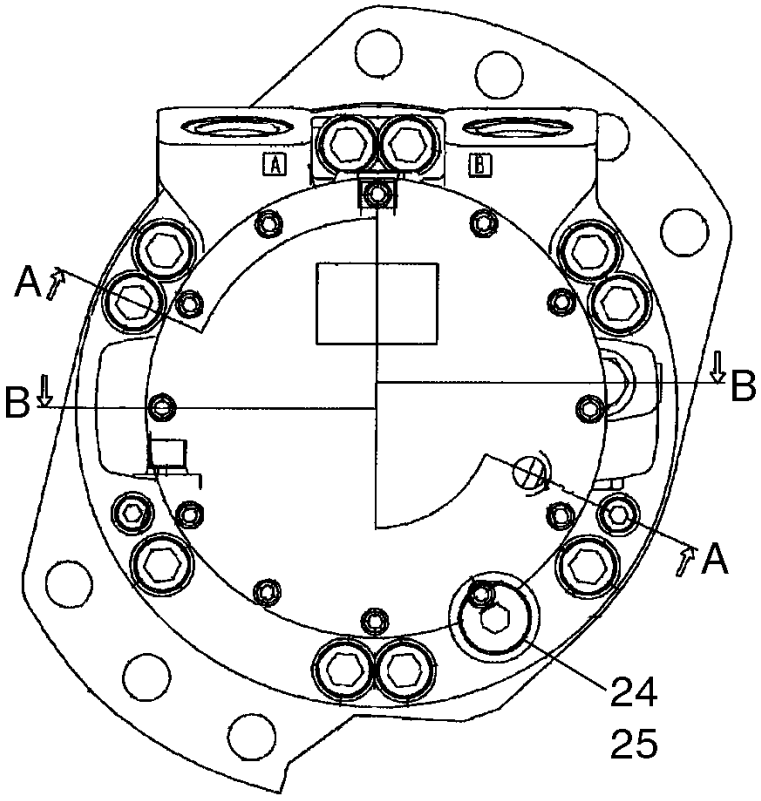

BS04B178

MOTOR ASSY - TWO SPEED

REF	FN	PART NUMBER	YR/SN	QTY	DESCRIPTION
		87035342		2	MOTOR, HYDRAULIC, Two Speed
1		87039360		1	KIT, Shaft And Bearing
2		87042941		1	CASE, Front
3		861-14080		10	SCREW, Hex Soc Hd, M14 x 80, 12.9
4		87042908		1	CAM, MCR3/5
5		87042909		1	CASE
6		87042912		16	SPRING
7		86512142		5	SCREW, Hex Soc Hd, M12 x 30, 12.9
8		87042921		1	HOUSING, Brake Housing
9		87042926		1	SPRING, Disc
10		87042923		1	COVER, End
11		87042904		1	BEARING, 70 x 110 x 25
12		87042905		1	BEARING, 50 x 110 x 29.25
13		87042903		1	KIT, Washer
14		87042906		1	RING, Split
15		NSS			NOT SERVICED SEPARATELY
16		NSS			NOT SERVICED SEPARATELY
17		861-8040		2	SCREW, Hex Soc Hd, M8 x 40, 12.9
18		87042910		1	DISTRIBUTOR
19		87042911		1	PIN, Stop
20		87042927		3	PIN, 12 x 25
21		87042925		1	CLIP, 87 ID
22		87042922		1	PISTON, Brake
23		86512134		12	SCREW, Hex Soc Hd, M6 x 16, 12.9
24		214389		1	PLUG, Hex Hd, 3/4"-16 ORB, Incl. 25
25		128825		1	O-RING, 8-1, 90 Duro, .644" ID x .087" Thk

MOTOR ASSY - TWO SPEED

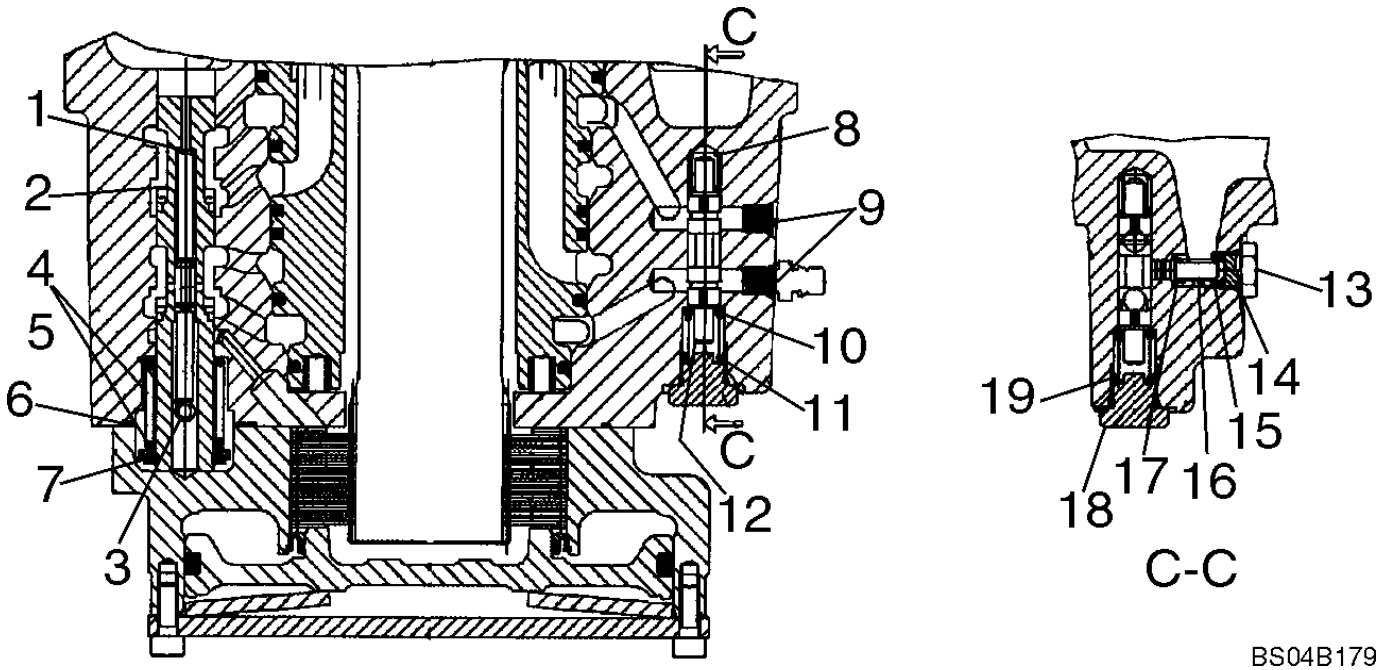

MOTOR ASSY - TWO SPEED

REF	FN	PART NUMBER	YR/SN	QTY	DESCRIPTION
		87035342		2	MOTOR, HYDRAULIC, Two Speed
1		87042918		1	SPRING, Shut Off
2		87042913		1	SPOOL
3		87042917		1	SPRING, 6 x 16
4		87042914		1	KIT, Washer And Spring Kit; Incl. 5
5		NSS		1	NOT SERVICED SEPARATELY, Washer
6		87042916		1	O-RING, 34.65 x 1.78
7		87042915		1	CLIP, 18 dia
8		87042934		1	SPRING, Flushing Side A
9		NSS		2	NOT SERVICED SEPARATELY, Shear Plug; M8
10		87042929		1	WASHER, 1.5 Thick
11		87042935		1	SPRING, Flushing Side B
12		87042928		1	SPOOL, Flushing
13		87042933		1	POPPET, 7/16
14		NSS		1	NOT SERVICED SEPARATELY, O-Ring; 8.92 x 1.83; Included In 87039371, Seal Kit, See Figure 06-61
15		87042931		1	POPPET, 1.7 Orifice
16		87042932		1	SPRING, Flushing
17		87042930		1	SHIM, 0.6
18		214389		1	PLUG, Hex Hd, 3/4"-16 ORB
19		NSS		1	NOT SERVICED SEPARATELY, O-Ring 11.90 x 1.98; Included In 87039371 Seal Kit; See Figure 06-61

MOTOR ASSY - TWO SPEED

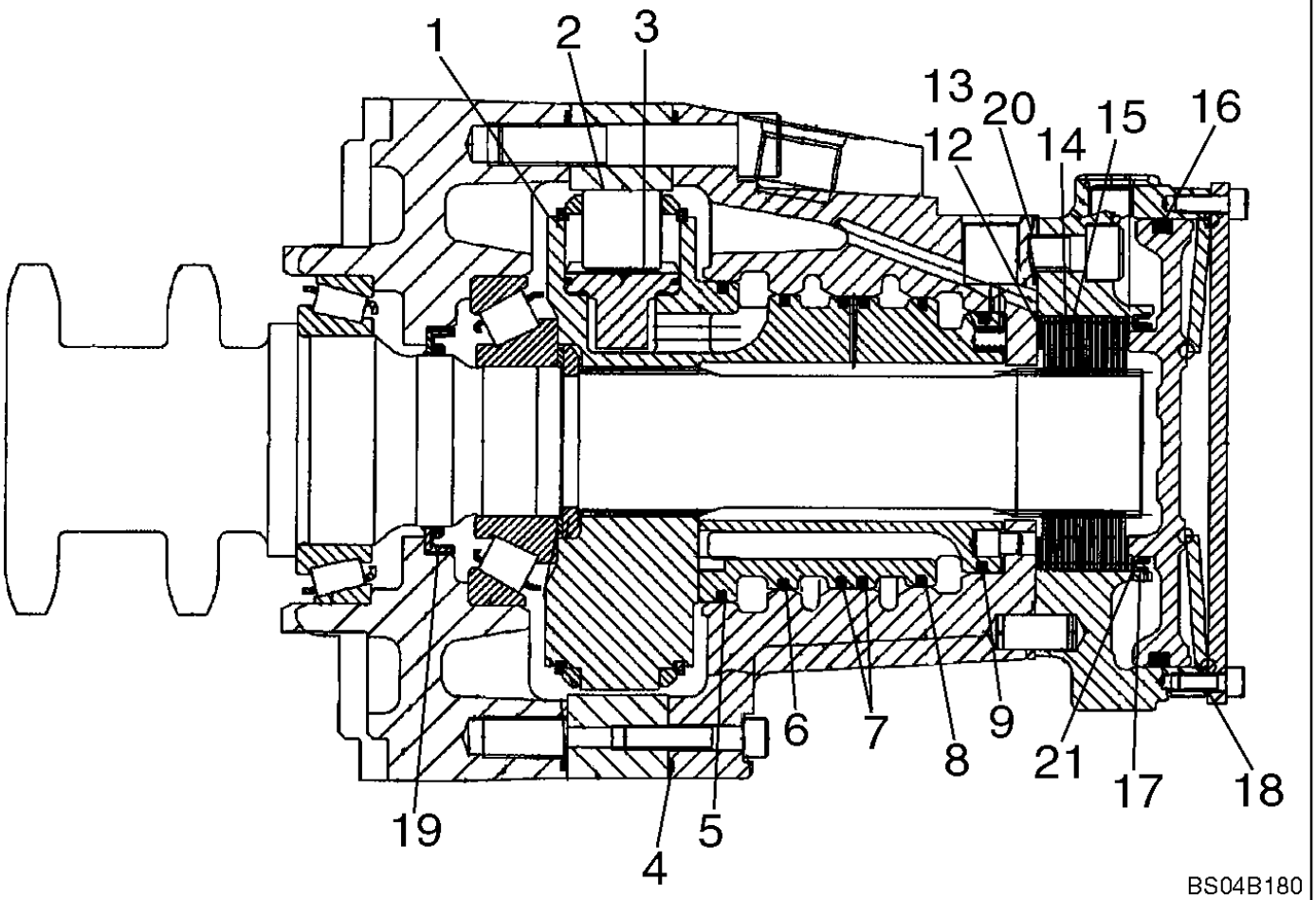

MOTOR ASSY - TWO SPEED

REF	FN	PART NUMBER	YR/SN	QTY	DESCRIPTION
		87035342		2	MOTOR, HYDRAULIC, Two Speed
		87039369		1	KIT, Rotating; Incl. 1 - 3
1		NSS		1	NOT SERVICED SEPARATELY, Cylinder Block
2		NSS		8	NOT SERVICED SEPARATELY, Roll
3		NSS		8	NOT SERVICED SEPARATELY, Piston S/A
		87039371		1	KIT, SEALS, Incl. 4 - 11, 19
4		NSS		2	NOT SERVICED SEPARATELY, Square Ring; 213 x 2.51
5		NSS		1	NOT SERVICED SEPARATELY, Piston Seal; 107.25
6		NSS		1	NOT SERVICED SEPARATELY, Piston Seal; 98.725
7		NSS		2	NOT SERVICED SEPARATELY, Piston Seal; 97.725
8		NSS		1	NOT SERVICED SEPARATELY, Piston Seal; 96.725
9		NSS		1	NOT SERVICED SEPARATELY, Piston Seal; 87.25
10		NSS		1	NOT SERVICED SEPARATELY, O-Ring; 11.90 x 1.98; For Illustration, See Figure 06-60, Ref 19
11		NSS		1	NOT SERVICED SEPARATELY, O-Ring; 8.92 x 1.83; For Illustration, See Figure 06-60, Ref 14
		87039372		1	KIT, Brake; Incl. 12 - 18
12		NSS		1	NOT SERVICED SEPARATELY, Shim; 80 x 63 x 0.1
13		NSS		1	NOT SERVICED SEPARATELY, Shim; 80 x 63 x 0.3
14		NSS		14	NOT SERVICED SEPARATELY, Inner Plate
15		NSS		16	NOT SERVICED SEPARATELY, Outer Plate
16		NSS		1	NOT SERVICED SEPARATELY, Square Ring; 139.07 x 5.16
17		NSS		1	NOT SERVICED SEPARATELY, O-ring; 75.92 x 1.78
18		NSS		1	NOT SERVICED SEPARATELY, Gasket; 0.5
19		87042907		1	SEAL, SHAFT, 57.15
20		87042919		1	O-RING, 107.67 x 1.78
21		87042924		1	RING, Brake Seal Ring

MOTOR ASSY - HYDROSTATIC DRIVE (440CT)

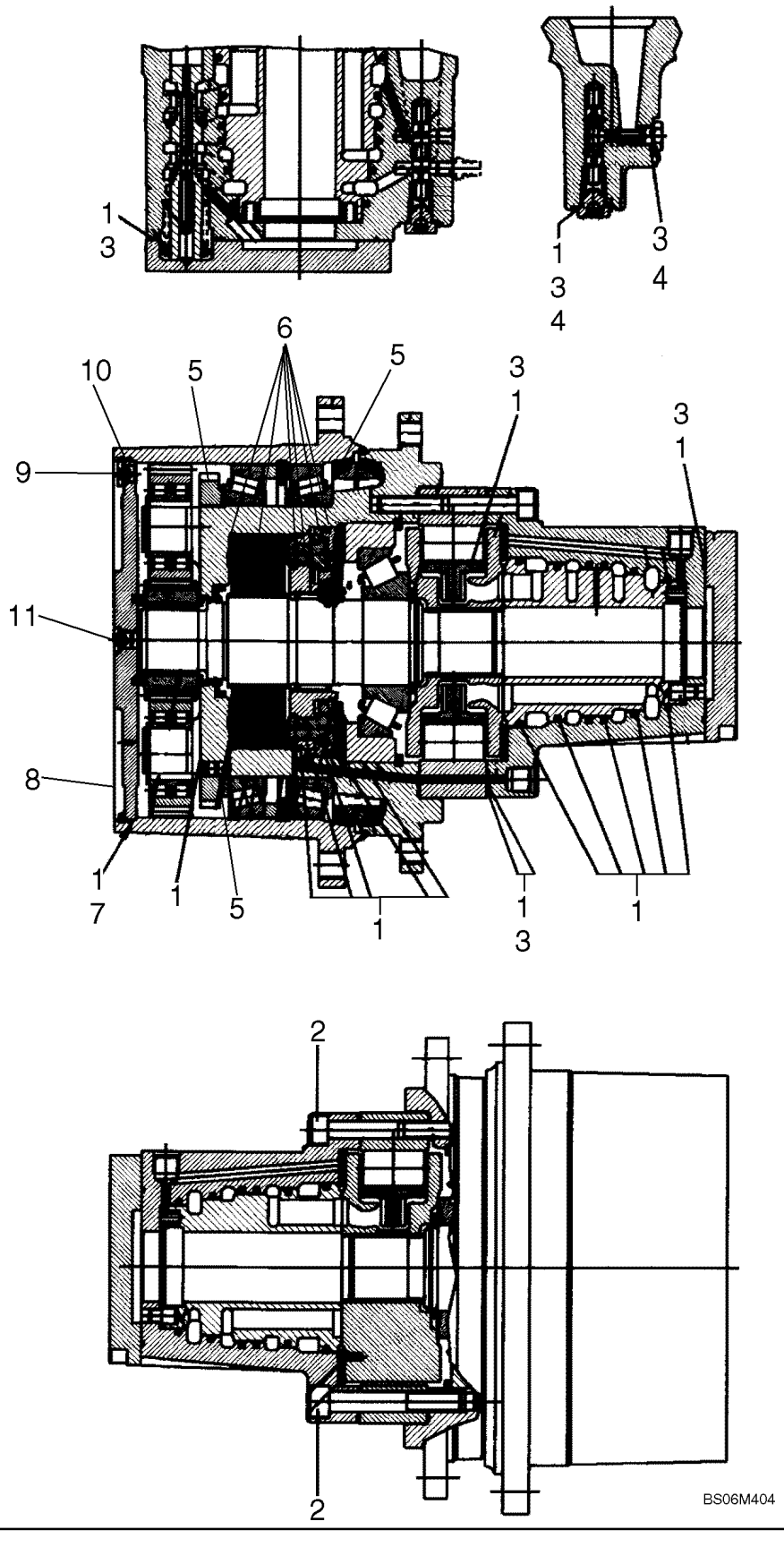

MOTOR ASSY - HYDROSTATIC DRIVE (440CT)

REF	FN	PART NUMBER	YR/SN	QTY	DESCRIPTION
		87600262		1	MOTOR, Drive Motor, LH; Incl. 1 - 11
		87600262C		1	CORE-MOTOR HYDRAULIC, Drive Motor, LH Core - Motor Return Number, Use To Return Core For Credit When Using A Remanufactured Assy
		87600262R		1	REMAN-MOTOR HYDRAUL, Reman - Motor, LH, Remanufactured
		87600263		1	MOTOR, Drive Motor, RH; Incl. 1 - 11
		87600263C		1	CORE-MOTOR HYDRAULIC, Drive Motor, RH Core - Motor Return Number, Use To Return Core For Credit When Using A Remanufactured Assy
		87600263R		1	REMAN-MOTOR HYDRAUL, Reman - Motor, RH, Remanufactured
1		87461859		1	KIT, SEALS, Motor Seals; Includes (27) 0-Rings, (4) Quad Rings, (4) Rod Seals, (2) Piston Seals, (1) Shaft Seal, (8) Piston Rings
2		87612449		1	KIT, SERVICE, Cam Bolt; Includes (2) M12 x 75 Screws, (8) M10 x 80 Screws
3		87571969		1	KIT, External Seals; Includes (13) O-Rings, (3) Quad Rings, (8) Piston Rings
4		87601409		1	KIT, SEALS, Flushing Seals; Includes (2) O-Rings
5		87571954		1	KIT, Face Seal; Includes (2) M6 x 16 Dowell Pins, (1) Shaft Nut, (1) Face Seal
6		87571958		1	KIT, Brake; Includes (14) O-Rings, (1) Quad Ring, (6) Shims, (37) Brake Plates
7		87612446		1	O-RING, 210 x 2.00
8		87612445		1	COVER
9		87575213		3	PLUG, Drain, M10 x 1
10		87575214		1	RING, SNAP, Cover
11		87579238		1	PLUG, M16 x 1.5

DRIVE LINE

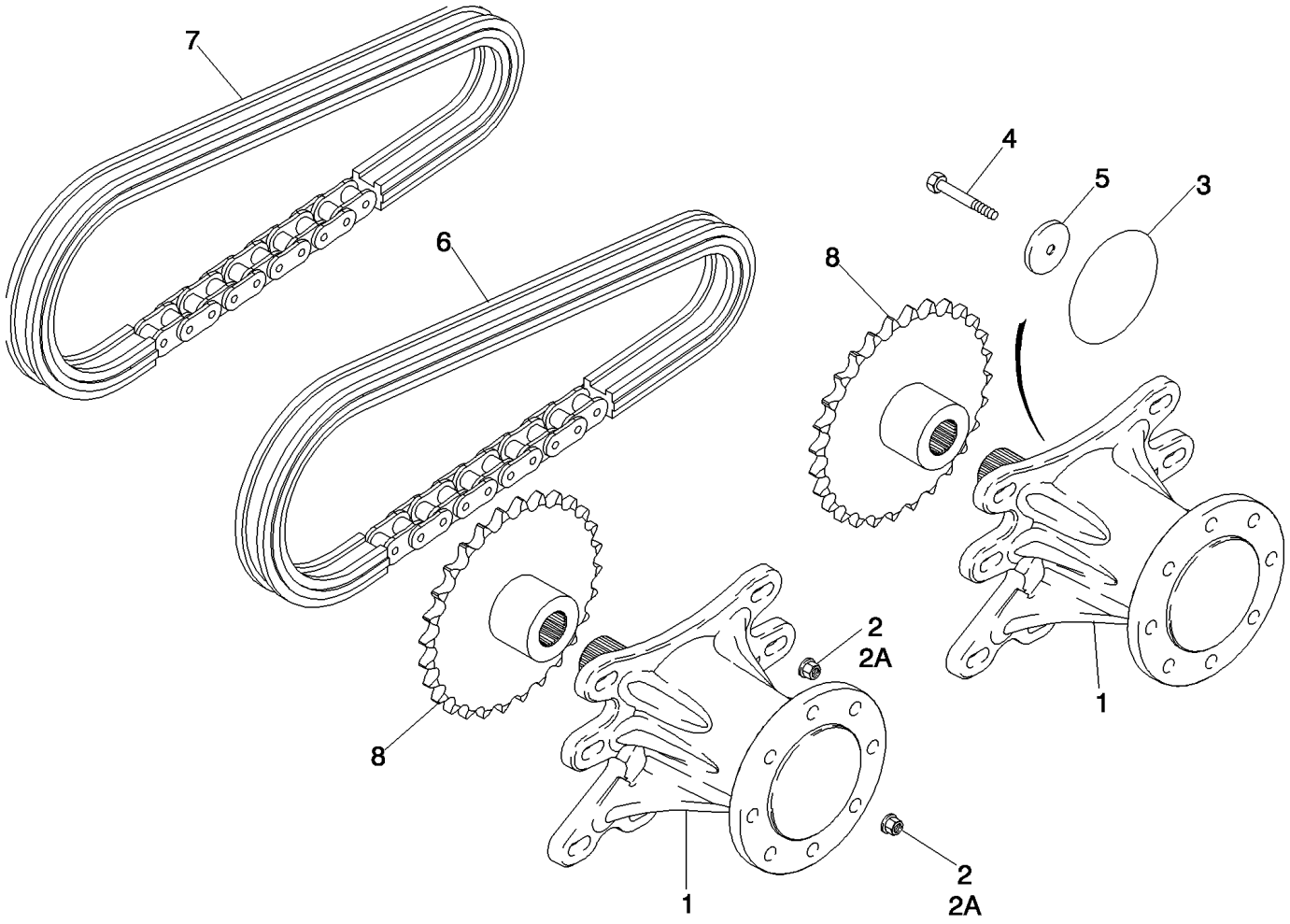

BS04B017

DRIVE LINE

REF	FN	PART NUMBER	YR/SN	QTY	DESCRIPTION
1		NSS		4	NOT SERVICED SEPARATELY, 338552A3 AXLE ASSY; Used In Production; See Figure 06-64
2		86512498		32	NUT, M16 x 2, Flg, Cl 10
3		238-5443		4	O-RING, -443, 70 Duro, 7.500" ID x .275" Thk
4		86577946		4	BOLT, Hex, M16 x 80, 10.9, Use Permatex ZPX24210
		ZPX24210		X	SEALANT, THREAD, 10 ml
5		429233A1		4	WASHER
6		364181A1		2	CHAIN ASSY.(CE), 100/60P; Rear Chain
7		87428143		2	CHAIN ASSY.(CE), 100/46P; Front Chain
8		228141A2		4	SPROCKET ASSY., 28T

AXLE ASSY

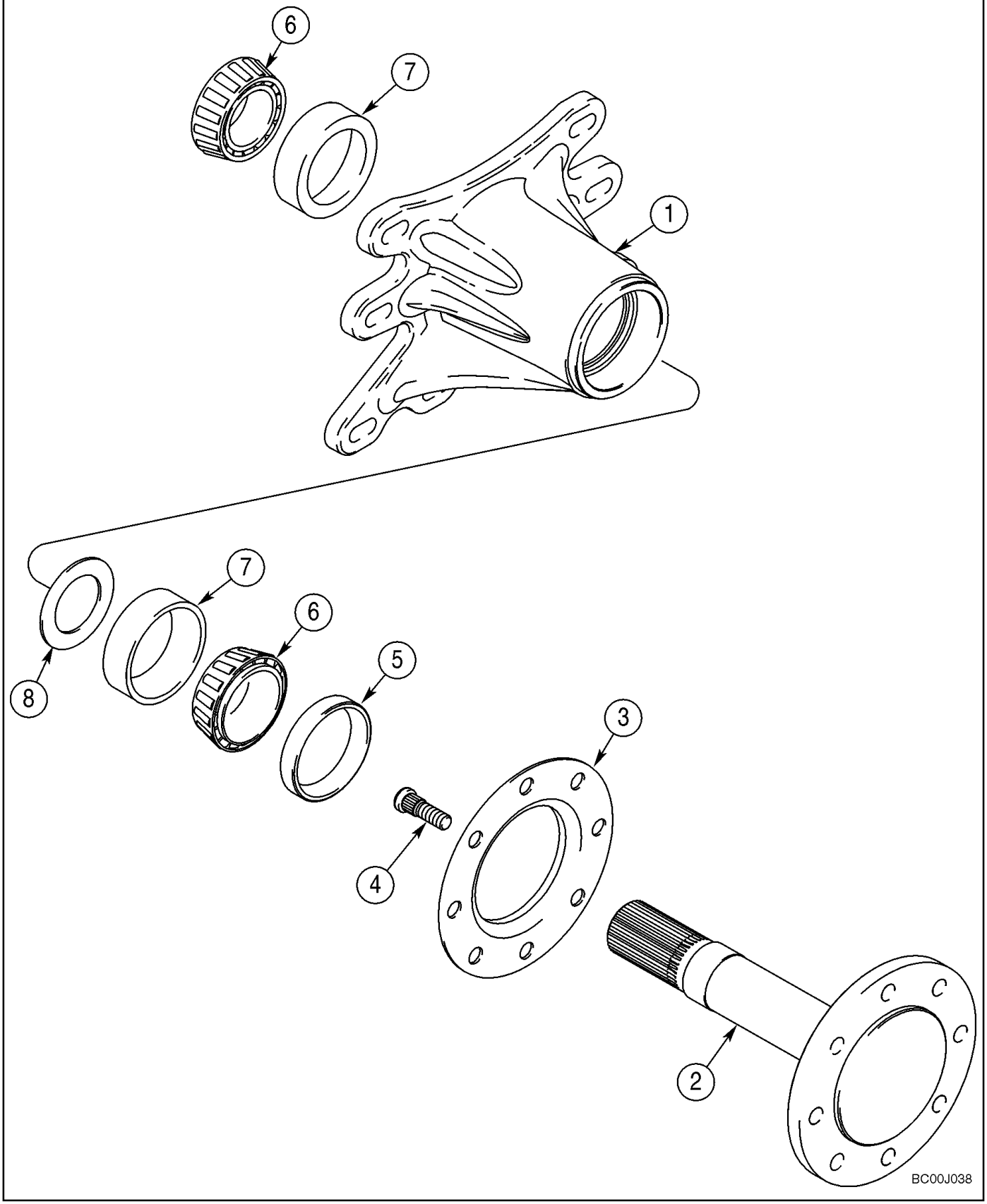

AXLE ASSY

REF	FN	PART NUMBER	YR/SN	QTY	DESCRIPTION
1		338551A2		1	HUB
		338550A4		1	WHEEL SHAFT, Incl. 2 - 4
2		NSS		1	NOT SERVICED SEPARATELY, Shaft, Axle
3		189995A1		1	FLANGE
4		191048A2		8	STUD, M16; Plain; Grade 9.8; If Used
4		{87618650}		8	M16; Phosphate Coated; Grade 9.8; If Used
5		341837A2		1	SEAL
6		D63653		2	BEARING
7		R32216		2	CUP, 3-1/4 OD
8		197805A1		1	WASHER

WHEELS - SOLID FLEX

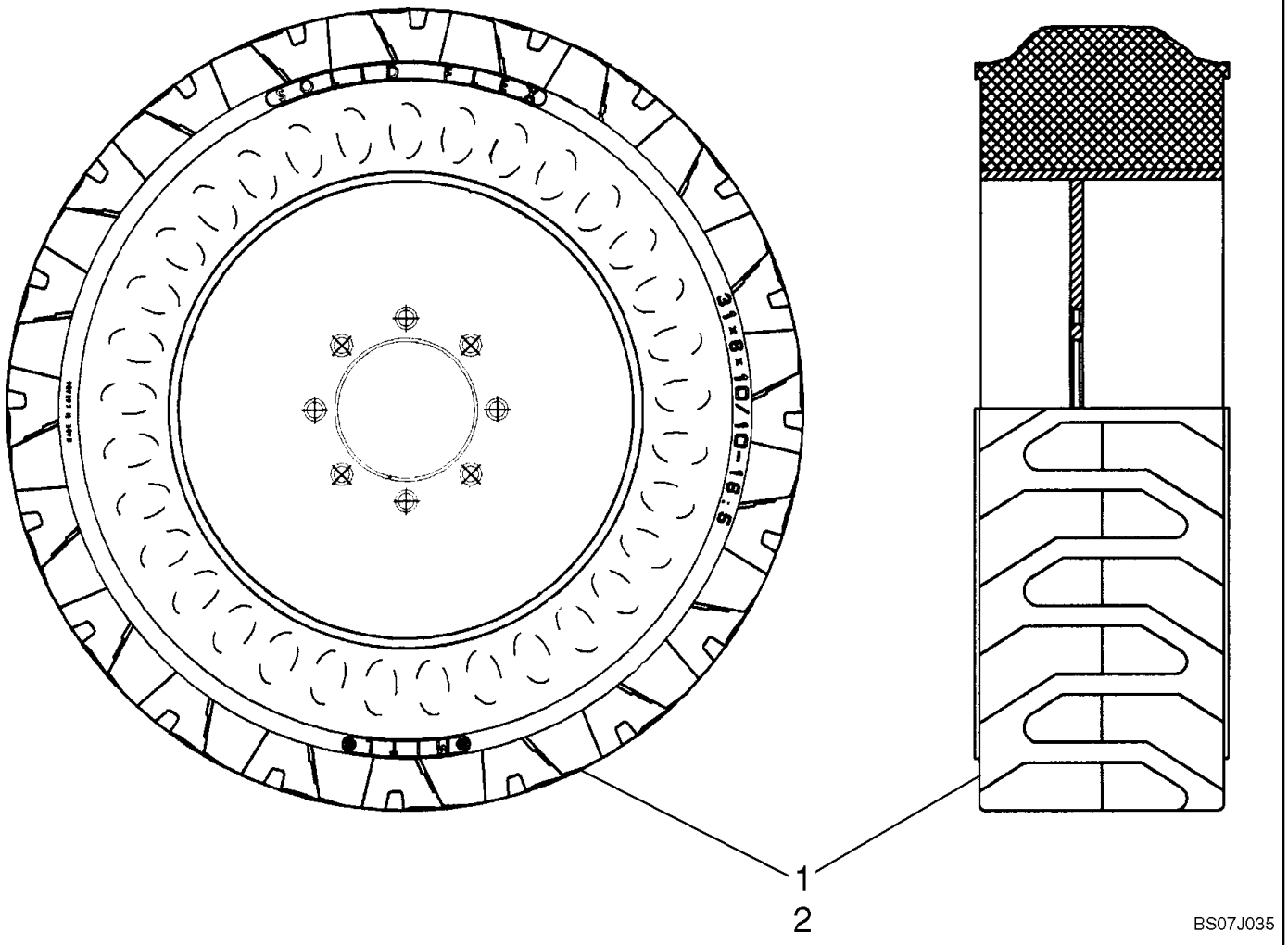

WHEELS - SOLID FLEX

REF	FN	PART NUMBER	YR/SN	QTY	DESCRIPTION
1		{87686722}		2	Tire, LH - 10 X 16.5 Galaxy Solid Flex
2		{87686721}		2	Tire, RH - 10 X 16.5 Galaxy Solid Flex
		408127A1		32	NUT, Nut, M16, 90 Deg Taper

WHEELS

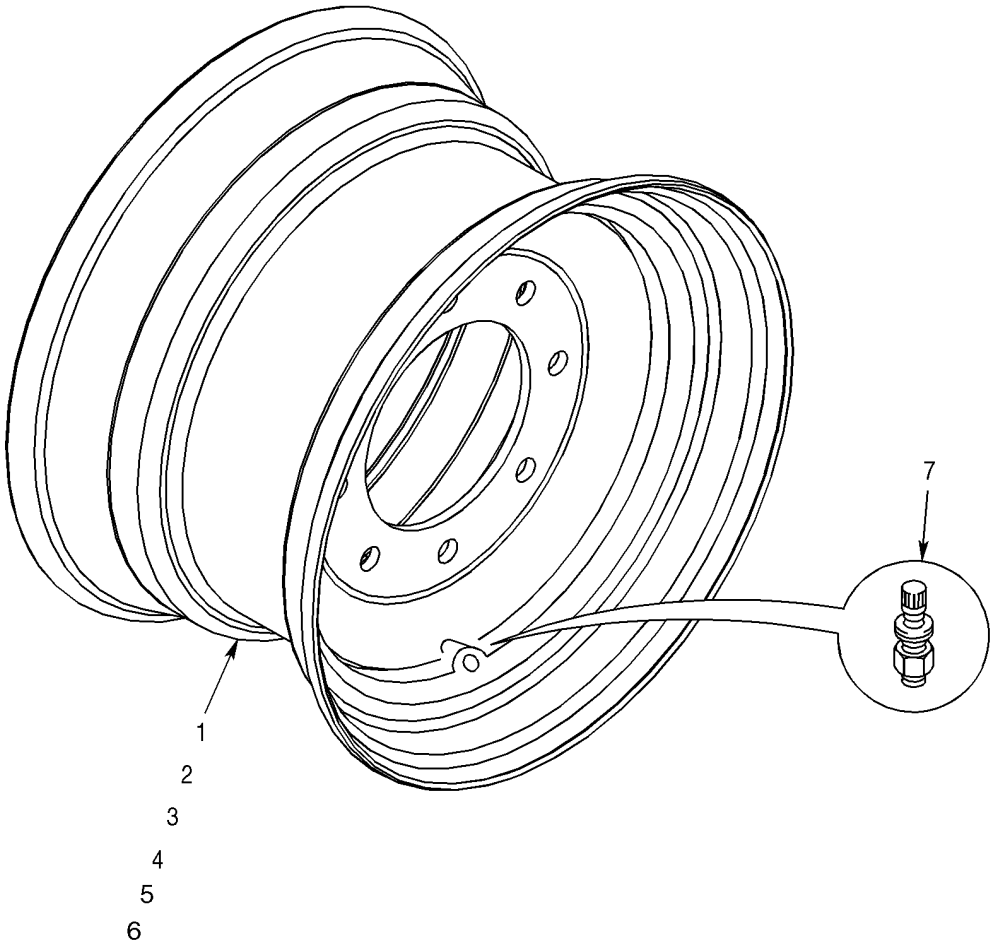

BS07K100

WHEELS

REF	FN	PART NUMBER	YR/SN	QTY	DESCRIPTION
1		408856A3		4	RIM, 16,5 x 8,25, Stamped Center; Used With 33/10 x 16.5 Tire; Uses Ref 7 Valve Stem And Ref 10 Nut
2		408450A1		4	RIM, 16,5 x 9,75, Stamped Center; Used With 12 x 16.5 Inch Tire; Models With 64 in Over Tire Width; Uses Ref 7 Valve Stem And Ref 10 Nut
3		409574A1		4	RIM, 16.5 x 9.75, Stamped Center; Used With 12 x 16.5 Inch Tire; Models With 71 in Over Tire Width; Uses Ref 7 Valve Stem And Ref 10 Nut
4		409174A2		4	RIM, 16.5 x 12, Stamped Center; Used With 33/15.5 x 16.5 Tire; Models With 71 in Over Tire Width; Uses Ref 7 Valve Stem And Ref 10 Nut
5		87534387		4	RIM, Rim, 16.5 X 9.75 Full Center, 13.84mm Offset; Uses Ref 7 Valve Stem And Ref 9 Nut
6		87578653		4	RIM, Rim, 16.5 X 9.75 Full Center; Uses Ref 7 Valve Stem And Ref 9 Nut
7		294579A1		4	VALVE STEM
9		86512498		32	NUT, M16 x 2, Flg, Cl 10, Nut, Hex Flange M16 10 ZND
10		408127A1		32	NUT, Nut, M16 X 2, 90 Deg Taper

TRACK (440CT)

ART

NOT

AVAILABLE

TRACK (440CT)

REF	FN	PART NUMBER	YR/SN	QTY	DESCRIPTION
		87541112		2	RUBBER TRACK, 50 x 86P x 400W

FINAL DRIVE (440CT)

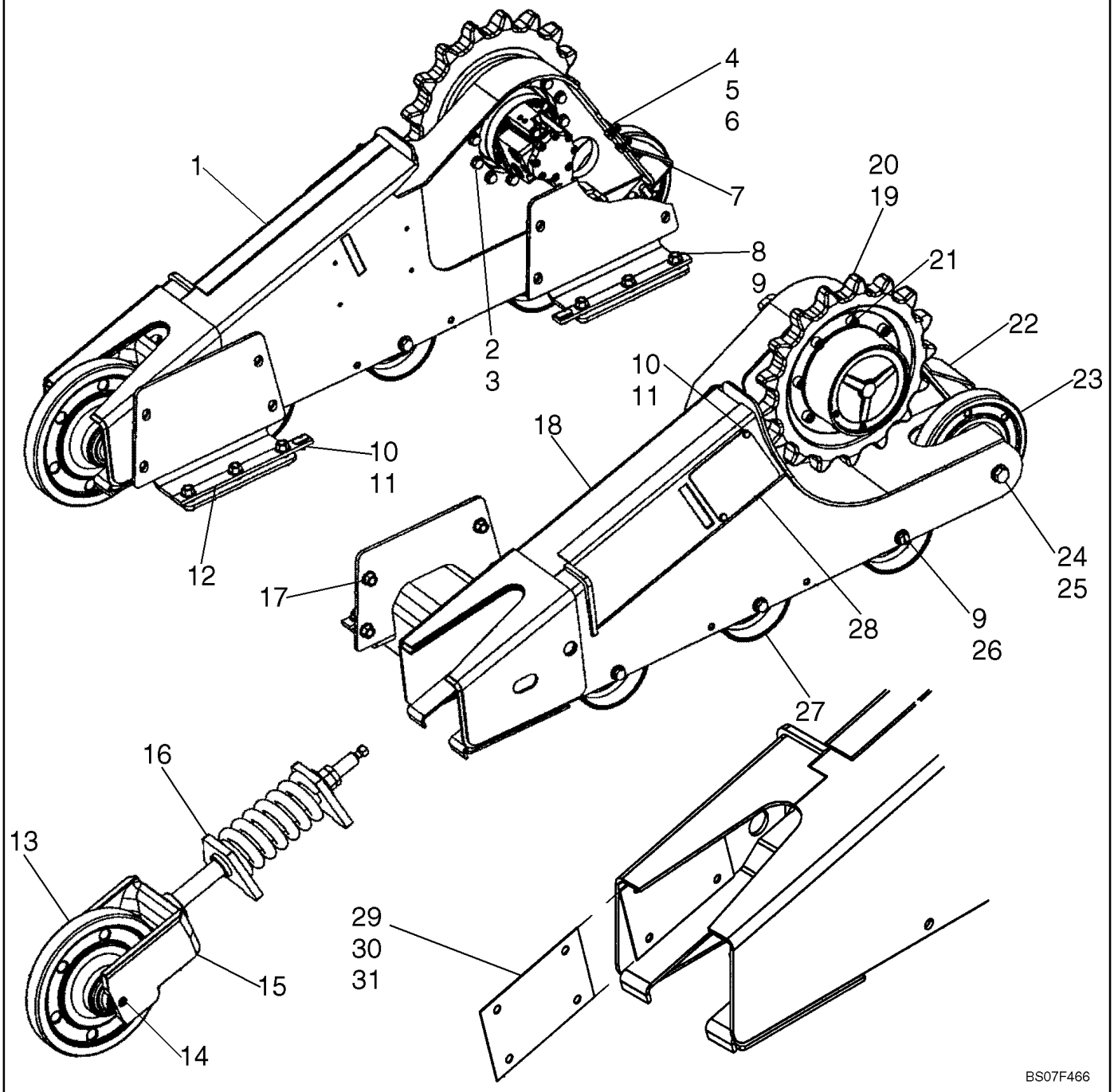

FINAL DRIVE (440CT)

REF	FN	PART NUMBER	YR/SN	QTY	DESCRIPTION
		87563155		1	KIT, Roller And Idler; Includes Ref. 9, 13, 14, 23 - 26, 27 And Instructions
1		87582846		1	FRAME, RH; Replaces 87525673, 87459512; If Used
1		87669349		1	FRAME, RH; If Used
2		87316174		24	BOLT, Hex, M14 x 50
3		87016615		24	WASHER, M12 x 28.5 x 3, HT
4		43260		8	BOLT, Hex, M12 x 30, 10.9
5		337475		8	NUT, M12, Cl 10
6		86625255		8	WASHER, M13.5 x 24.5 x 3, HT
7		87459518		1	SCRAPER, Scraper Plate, Right Hand
8		86508624		12	BOLT, Hex, M16 x 45, 10.9
9		86639326		24	WASHER, M17.5 x 34 x 5, HT
10		43127		4	BOLT, Hex, M8 x 25, 8.8
11		86511315		8	WASHER, M8 x 16 x 1.6
12		87364613		4	BAR, Bar W/Undercarriage Mount
13		87535298		2	IDLER, FRONT, 350 mm, Front; Replaces 87462176
14		14301821		4	SCREW, Hex Soc Hd, M10 x 16, 8.8
15		87462287		2	YOKE, Front Idler
16		87602985		2	TENSIONER, Spring, Tension; Replaces 87458724
		87602988		1	ROD, Piston Rod For Track Tensioner, Ref. 16
		87602987		1	KIT, SERVICE, Seal Kit For Track Tensioner, Ref. 16; Incl. Scraper, Spacer, And O-Ring
		87356572		1	VALVE, Grease Valve For Tension Spring Ref 16
17		86512498		16	NUT, M16 x 2, Flg, Cl 10
18		87582844		1	FRAME, LH; Replaces 87525672, 87459511; If Used
18		87669347		1	FRAME, LH; If Used
19		87363008		2	SPACER, Motor Spacer
20		87460888		2	SPROCKET, 17 Tooth - 86 Pitch
21		87303345		16	SCREW, Hex Soc Hd, M16 x 40, 10.9
22		87459517		1	SCRAPER, Scraper Plate, Left Hand
23		87535299		2	IDLER, 290 mm, Rear; Replaces 87447230
24		9512573		4	BOLT, Hex, M20 x 40, 10.9
25		86629891		4	WASHER, M18 x 41.5 x 5, HT
26		374835		12	BOLT, Hex, M16 x 40, 10.9
27		87535297		6	TRACK ROLLER, Replaces 87447228

FINAL DRIVE (440CT)

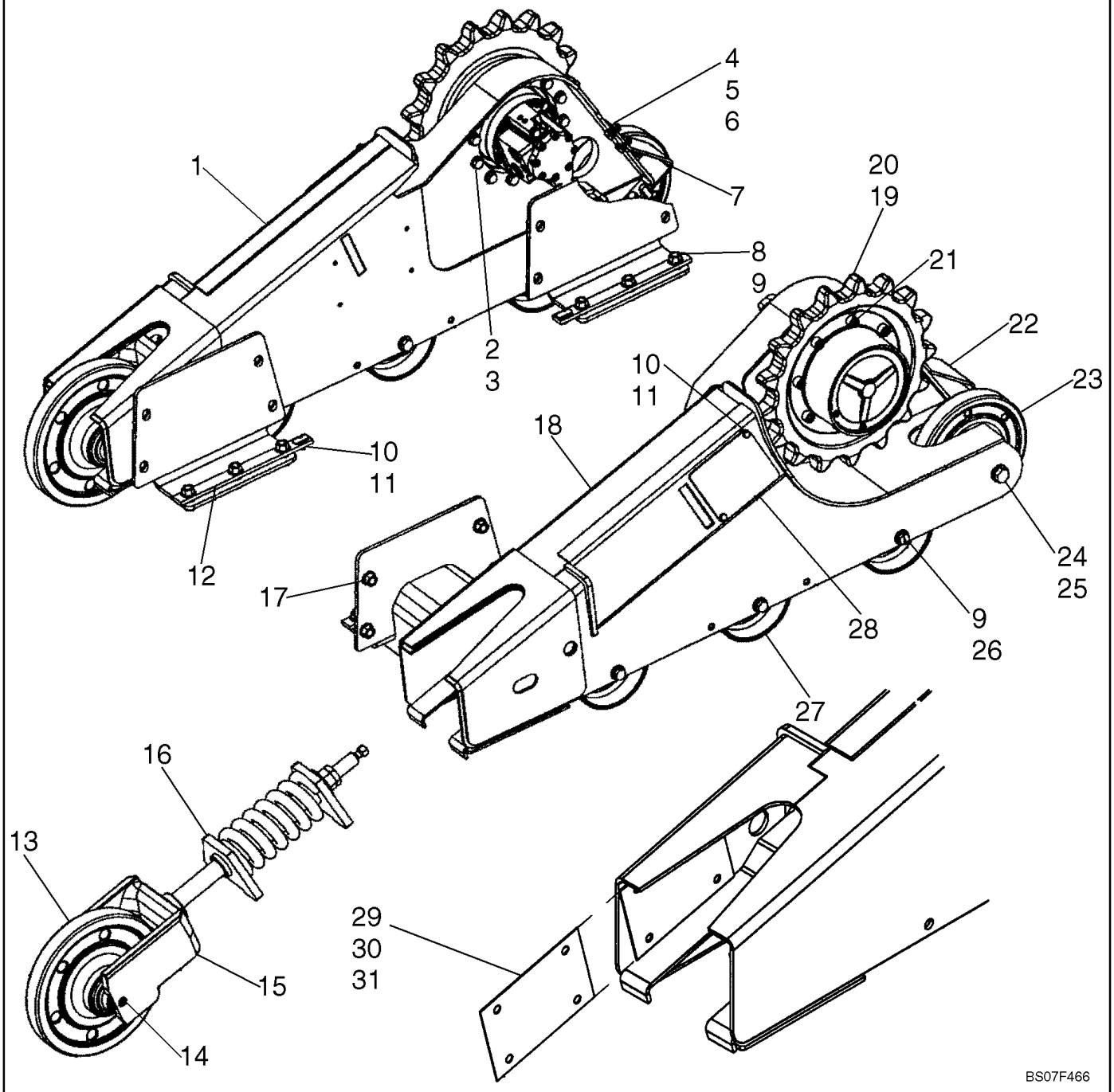

FINAL DRIVE (440CT)

REF	FN	PART NUMBER	YR/SN	QTY	DESCRIPTION
28		87354210		2	COVER, Plate, Zerk Cover
29		87650011		1	KIT, SERVICE, Yoke Shim Kit; Incl. 30, 31 And Instructions
30		87650010		2	PLATE, 16 Gage Shim
31		87650009		2	PLATE, 12 Gage Shim

NOTES

SECTION INDEX
Brakes

07-01 BRAKE SYSTEM - HYDRAULIC

BRAKE SYSTEM - HYDRAULIC

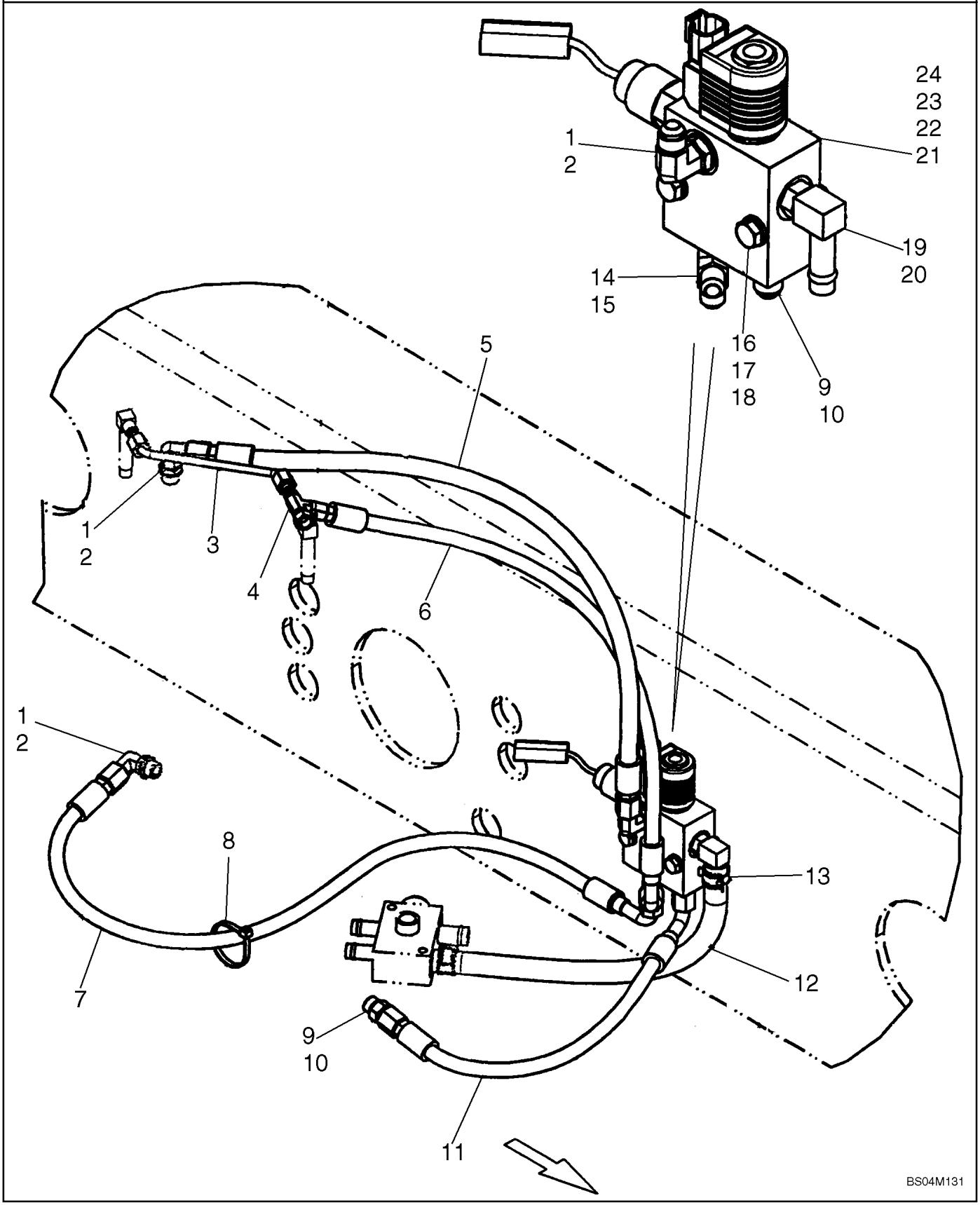

BRAKE SYSTEM - HYDRAULIC

REF	FN	PART NUMBER	YR/SN	QTY	DESCRIPTION
1		76344		4	ELBOW, 90º, 9/16"-18, 37º x 9/16"-18, O-Ring, Incl 2
2		9617873		1	O-RING, 6-1, 90 Duro, .468" ID x .078" Thk
3		87021277		1	TUBE ASSY.
4		86513653		1	TEE, 37º, 7/16"-20 x 7/16"-20, Fem Sw Run
5		87459910		1	HOSE ASSY., 635 mm (25 in); Charge
6		87441276		1	HOSE ASSY., 580 mm (22.83 in); NOR
7		87022436		1	HOSE ASSY., 815 mm (32 in); Brake
8		L18331		1	STRAP, CABLE
9		76350		1	CONNECTOR, HYD., 9/16"-18, 37º x 9/16"-18, O-Ring, Incl 10
10		9617873		1	O-RING, 6-1, 90 Duro, .468" ID x .078" Thk
11		87022437		1	HOSE ASSY., 420 mm (16.53 in); Brake
12		87022177		1	HOSE ASSY., 340 mm (13.38 in); Drain
13		87443510		2	CLAMP, HOSE, 20 mm
14		86513020		1	TEE, 9/16"-18, 37º x 9/16"-18, O-Ring Run, Incl. 15
15		9617873		1	O-RING, 6-1, 90 Duro, .468" ID x .078" Thk
16		43130		2	BOLT, Hex, M8 x 50, 8.8
17		86624185		2	WASHER, M8 x 17.5 x 2, HT
18		229197A1		2	NUT, M8
19		217-374		1	FITTING, 90º, 1/2" Hose x 9/16"-18 ORB Beaded, Incl 20
20		237-6006		1	O-RING, 6-1, 90 Duro, .468" ID x .078" Thk
21		87021047		1	VALVE, BRAKE, Incl 22 - 24
22		87424182		1	VALVE, BRAKE, Solenoid
23		87433496		X	COIL
24		87458061		1	SWITCH, PRESSURE, Brake Valve

NOTES

SECTION INDEX
Hydraulics

08-01	HYDRAULICS - TILT
08-02	HYDRAULICS - LIFT
08-03	HYDRAULICS - CASE DRAIN
08-04	HYDRAULICS - RIDE CONTROL
08-05	HYDRAULICS - SELF LEVELING
08-06	HYDRAULICS - SECONDARY FRONT AUXILIARY
08-07	HYDRAULICS - ATTACHMENT, IMPLEMENT (PILOT CONTROL)
08-08	HYDRAULICS - ATTACHMENT, PROPORTIONAL (PILOT CONTROL)
08-09	HYDRAULICS - ATTACHMENT (MECHANICAL CONTROL)
08-10	HYDRAULICS - COUPLER SYSTEM
08-11	HYDRAULICS - COUPLER SYSTEM
08-12	HYDRAULICS - COUPLER SYSTEM (ITALIAN)
08-13	HYDRAULICS - COUPLER SYSTEM (ITALIAN)
08-14	CYLINDER - TILT
08-15	CYLINDER - LIFT
08-16	HIGH FLOW - SUPPLY AND RETURN
08-17	HIGH FLOW - AUXILIARY SYSTEM
08-18	HIGH FLOW - CONTROL VALVE
08-19	CONTROL VALVE ASSEMBLY - HIGH FLOW
08-20	CONTROL VALVE - 87583286 VALVE ASSY
08-21	CONTROL VALVE - 87583285 VALVE ASSY
08-22	CONTROL VALVE - 87546974 VALVE ASSY
08-23	CONTROL VALVE - 87546975 VALVE ASSY
08-24	CONTROL VALVE - SEAL REPLACEMENT KITS
08-25	CONTROL VALVE - MAIN RELIEF VALVE
08-26	CONTROL VALVE - RELIEF VALVES
08-27	CONTROL VALVE - SPOOL END GROUP
08-28	CONTROL VALVE - SPOOL END GROUP
08-29	CONTROL VALVE - SPOOL END GROUP
08-30	CONTROL VALVE - CHECK VALVE GROUP
08-31	CONTROL VALVE - SPOOL END GROUP, DETENT
08-32	CONTROL VALVE - SPOOL END GROUP
08-33	CONTROL VALVE - SPOOL END GROUP
08-34	CONTROL VALVE - SEAL REPLACEMENT KITS
08-35	CONTROL VALVE - SPOOL END GROUP
08-36	CONTROL VALVE - SPOOL END GROUP
08-37	CONTROL VALVE - SPOOL END GROUP
08-38	CONTROL VALVE - SPOOL END GROUP, EHPV
08-39	CONTROL VALVE - SPOOL END GROUP, EHPV
08-40	SECONDARY FRONT AUXILIARY - VALVE ASSY

HYDRAULICS - TILT

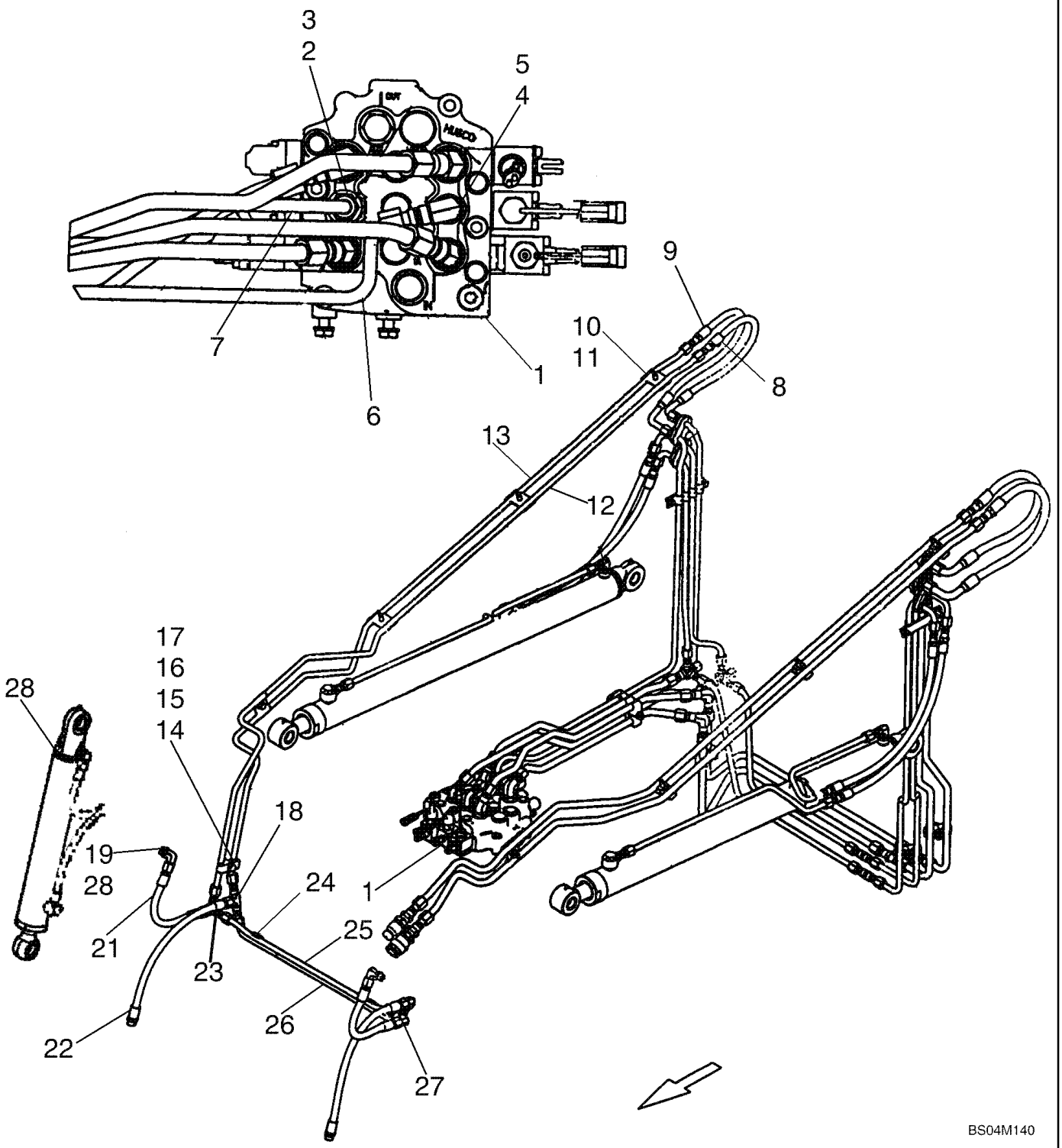

HYDRAULICS - TILT

REF	FN	PART NUMBER	YR/SN	QTY	DESCRIPTION
1		87583285		1	VALVE, Control Valve; 440: See Figure 08-21
1		87546974		1	VALVE, HYDRAULIC, Control Valve; 440CT; See Figures 08-22
2		128819		1	CONNECTOR, HYD., 3/4"-16, 37º x 7/8"-14, O-Ring, Incl. 3
3		128825		1	O-RING, 8-1, 90 Duro, .644" ID x .087" Thk
4		9617891		1	ELBOW, 90º, 3/4"-16, 37º x 7/8"-14, O-Ring, Incl. 5
5		167269		1	O-RING, 10-1, 90 Duro, .755" ID x .097" Thk
6		87423368		1	TUBE ASSY., 1/2 Tube, Curl
7		87445747		1	TUBE ASSY., 1/2 Tube, Dump
8		406242A1		1	HOSE ASSY., 580 mm (22.83 in)
9		406088A1		1	HOSE ASSY., 600 mm (23.62 in)
10		86501706		4	CLAMP, Double
11		280476		4	SCREW, SELF TAP, Hex Wash Hd, 3/8" x 1"
12		87531091		1	TUBE, HYD, 1/2 Tube, Dump
13		406336A1		1	TUBE ASSY., 1/2 Tube, Curl
14		9706704		1	BOLT, Hex, M10 x 35, 8.8, Full Thd
15		230427A1		1	NUT, M10 -1.5
16		140017		1	WASHER, M10 x 20 x 2
17		D120679		1	CLAMP, 1/2 in
18		128996		1	TEE, 3/4"-16, 37º
19		128830		2	ELBOW, 90º, 3/4"-16, 37º x 3/4"-16, O-Ring, Incl. 20
20		128825		1	O-RING, 8-1, 90 Duro, .644" ID x .087" Thk
21		87387193		2	HOSE ASSY., 355 mm, 14 in; Dump
22		373241A3		2	HOSE ASSY., Curl
23		D124661		1	ELBOW, Side Outlet
24		H434900		2	CLAMP
25		373223A3		1	TUBE ASSY., Dump
26		373225A3		1	TUBE ASSY., Curl
27		216791		1	ELBOW, 90º, 3/4"-16, 37º x 3/4"-16, 37º
28		87438193		2	CYLINDER ASSY., Tilt; See Figure 08-14

HYDRAULICS - LIFT

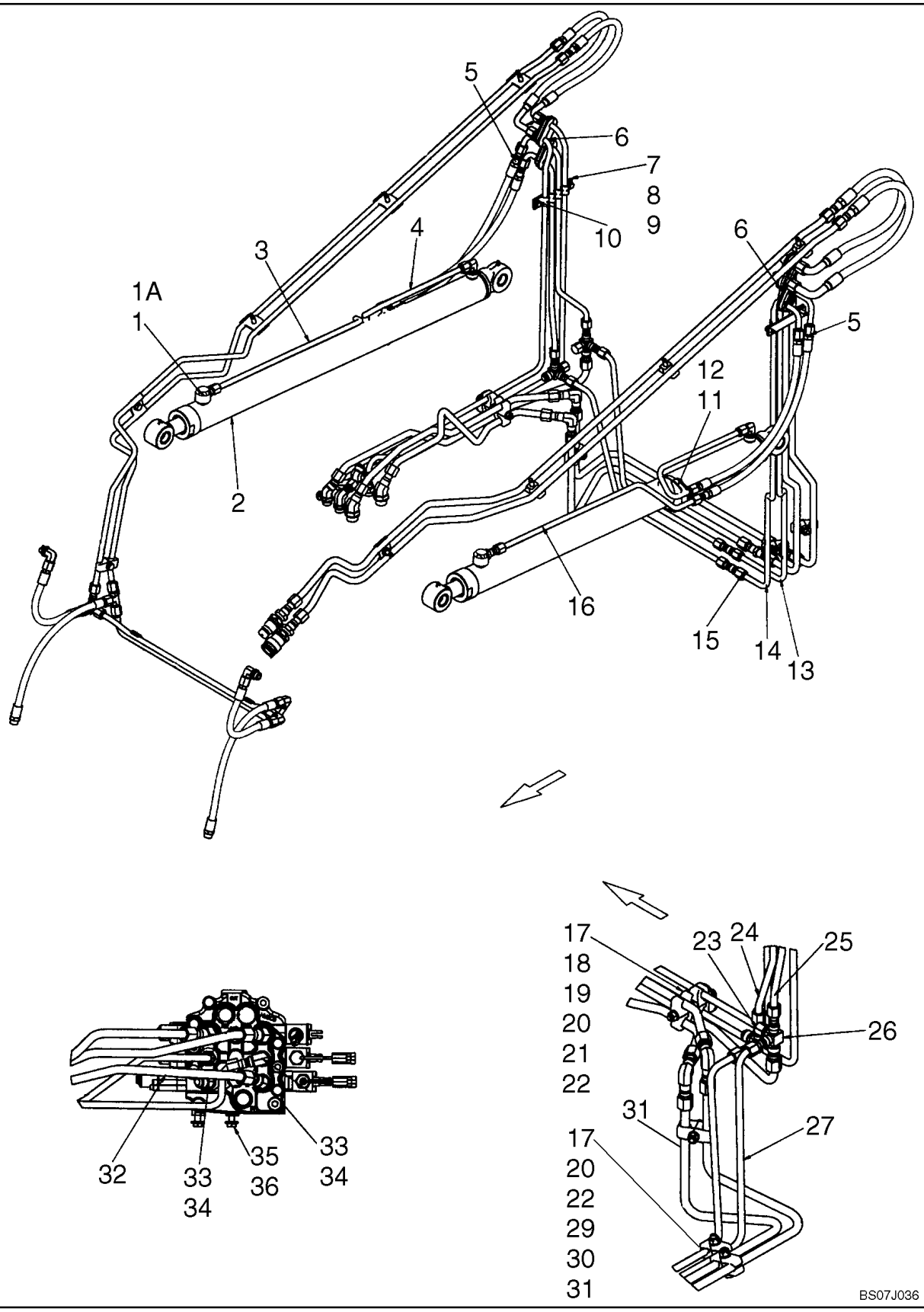

HYDRAULICS - LIFT

REF	FN	PART NUMBER	YR/SN	QTY	DESCRIPTION
1		81827427		2	CONNECTOR, HYD., Incl 1A
1A		128825		2	O-RING, 8-1, 90 Duro, .644" ID x .087" Thk
2		87438190		2	CYLINDER ASSY., Lift Cylinder; See Figure 08-15
3		406342A1		1	TUBE ASSY., Lift Cylinder, RH (Lower)
4		396243A2		2	TUBE ASSY., Lift Cylinder (Raise)
5		390211A1		4	HOSE ASSY., 575mm (22 5/8 in.) (Raise)
6		376523A2		6	SUPPORT, Hydraulic Tube Support
7		406940A1		1	BAR, Bar Clamp, Back
8		87029930		1	SCREW
9		406941A1		1	BAR, Bar Clamp, Face
10		87385021		1	FASTENER, Screw, Hex Washer Head 5/16 x 1/2
11		R24703		2	SUPPORT
12		86625033		2	CLAMP, HOSE, #56, 3.06/4.00 Type F Worm
13		87405135		1	TUBE ASSY., Lift LH (Lower)
14		87405137		1	TUBE ASSY., Lift LH (Raise)
15		128822		2	UNION, 3/4"-16, 37º x 3/4"-16, 37º
16		406344A1		1	TUBE ASSY., Lift Cylinder LH (Lower)
17		D120614		2	CLAMP
18		87040707		1	FASTENER, Washer, .531 X 2.25 X .179 in.
19		D120613		1	CLAMP
20		D120679		2	CLAMP
21		86500689		1	NUT, M10, Cl 10
22		86624176		4	WASHER, M10 x 20 x 2
23		262159		2	CAP, 37º, 3/4"-16
24		87405141		1	TUBE ASSY., Lift RH (Raise)
25		87593416		1	TUBE, HYD, Lift RH (Raise)
26		87404825		1	TEE
27		87593417		1	TUBE, HYD, Lift LH (Lower)
29		86512554		1	NUT, LOCK, M10 x 1.5, Cl 10
30		120069		1	BOLT, Hex, M10 x 50, 8.8
31		87624736		1	TUBE, HYD, Lift LH (Raise)
32		87593415		1	TUBE, HYD, Lift (Lower)
33		330345		2	ELBOW, 45º, 7/8"-14 x 7/8"-14, O-Ring, Incl 34
34		167269		2	O-RING, 10-1, 90 Duro, .755" ID x .097" Thk
35		43138		2	SCREW, Hex, M10 x 20, 8.8, Full Thd

HYDRAULICS - LIFT

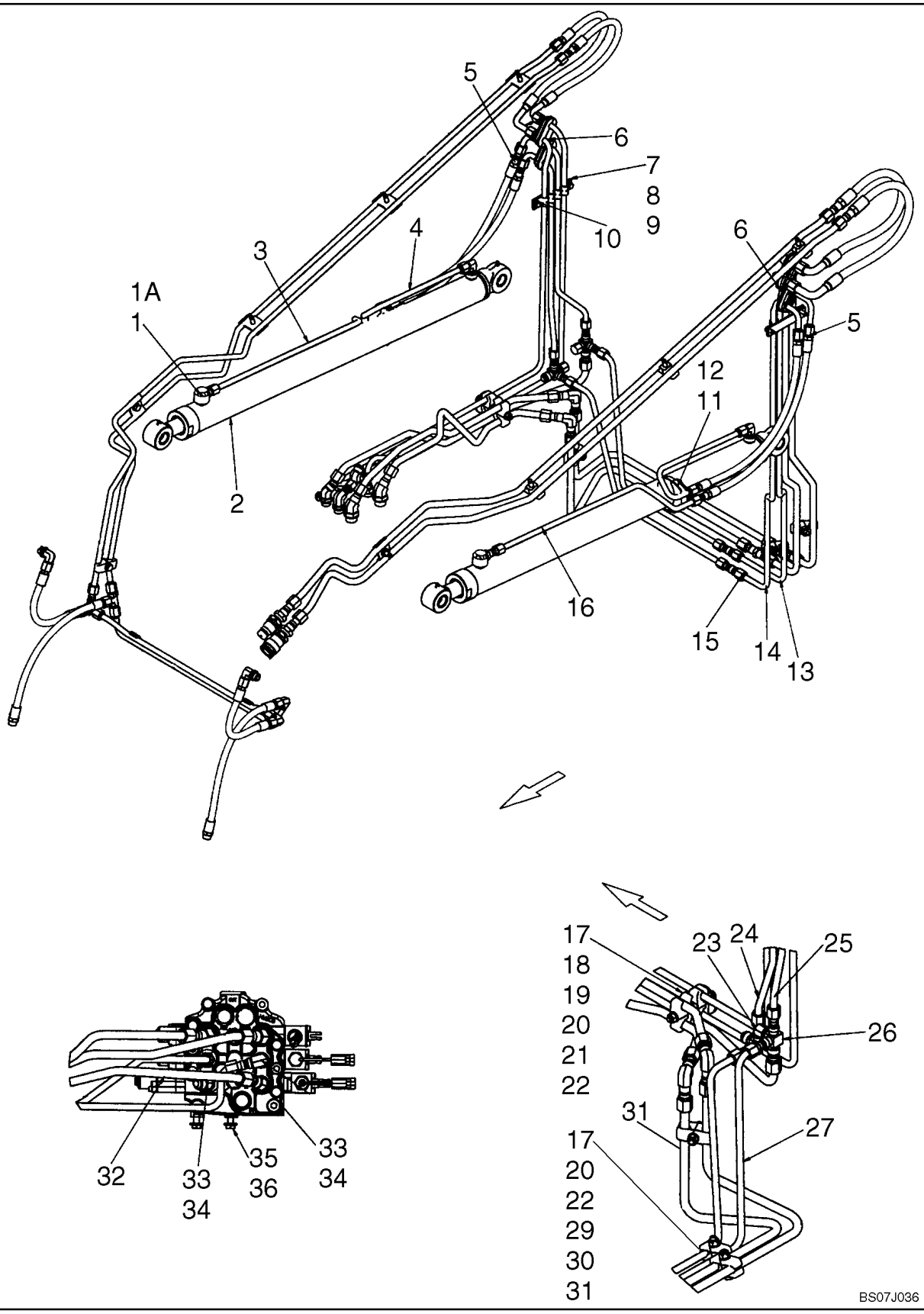

HYDRAULICS - LIFT

REF	FN	PART NUMBER	YR/SN	QTY	DESCRIPTION
36		86639325		2	WASHER, M10 x 24.5 x 3, HT
37		{87659996}		1	Tube; High Flow

HYDRAULICS - CASE DRAIN

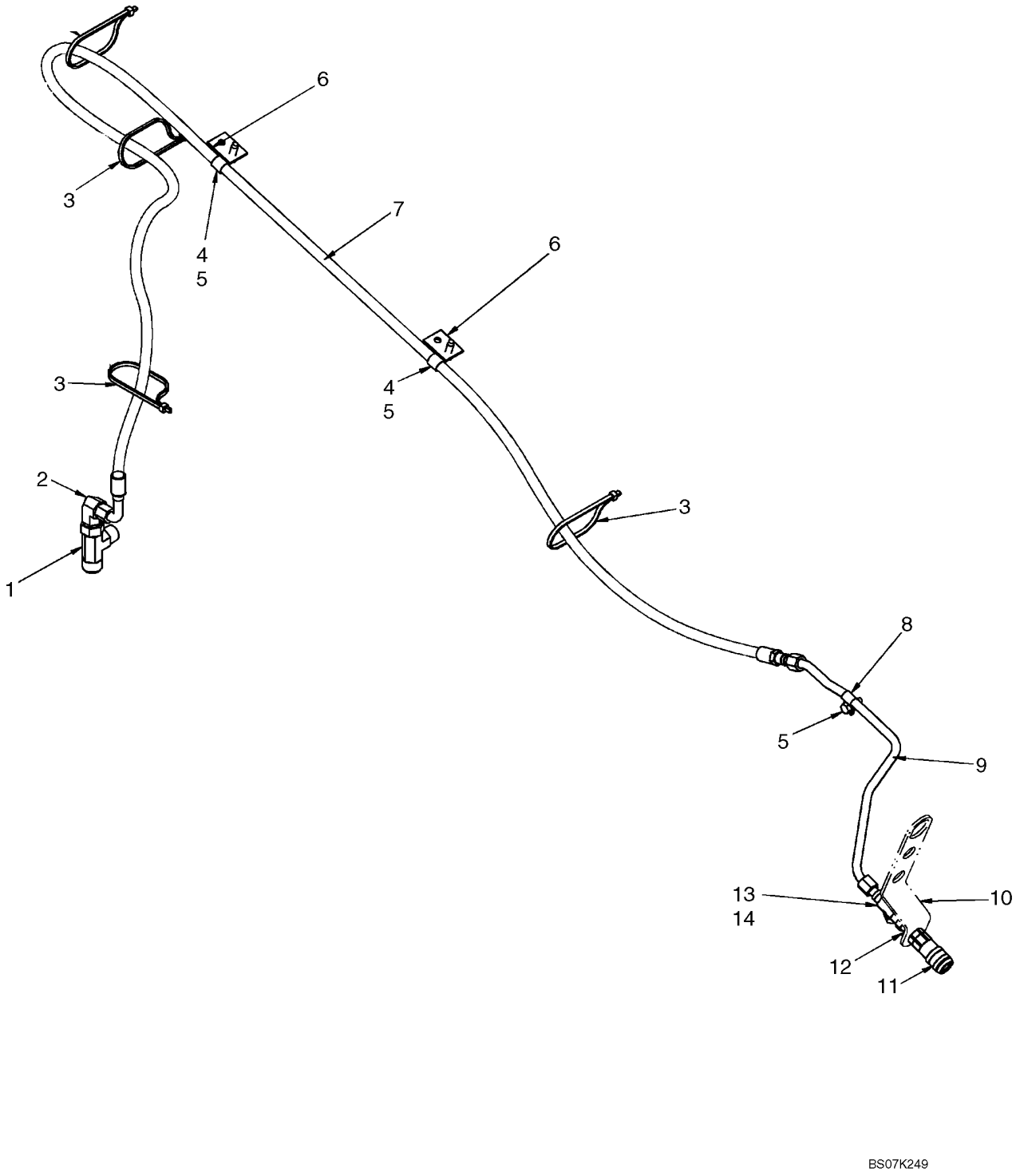

HYDRAULICS - CASE DRAIN

REF	FN	PART NUMBER	YR/SN	QTY	DESCRIPTION
		87685962		1	KIT, SERVICE, Kit, Loader Arm Case Drain; Incl 1 - 14
1		{87690479}		1	Tee, Male Branch 1.0 X 3/4 X 3/4 NP
2		86624011		1	ELBOW, 90º, 3/4"-16, 37º x 1 1/16"-12, 37º Fem Sw
3		L18331		4	STRAP, CABLE
4		86624005		2	CLAMP, 3/4", Insul, 3/8" Bolt
5		280476		3	SCREW, SELF TAP, Hex Wash Hd, 3/8" x 1"
6		87447813		2	BRACKET
7		87659253		1	HOSE, Hose, Loader Arm Case Drain, 2880mm (113 13/32 in.)
8		86010402		1	CLAMP, 1/2", Insul, 3/8" Bolt
9		87024208		1	TUBE ASSY.
10		87023530		1	BRACKET
11		87019286		1	COUPLING, FF Coupler .38 Female 8MFB
12		524036		1	NUT, LOCK, Blkhd, 3/4"-16
13		87426293		1	TEE, Tee, Swivel 37Fl 1/2 X 1/2 X 1/2
14		262159		1	CAP, 37º, 3/4"-16

HYDRAULICS - RIDE CONTROL

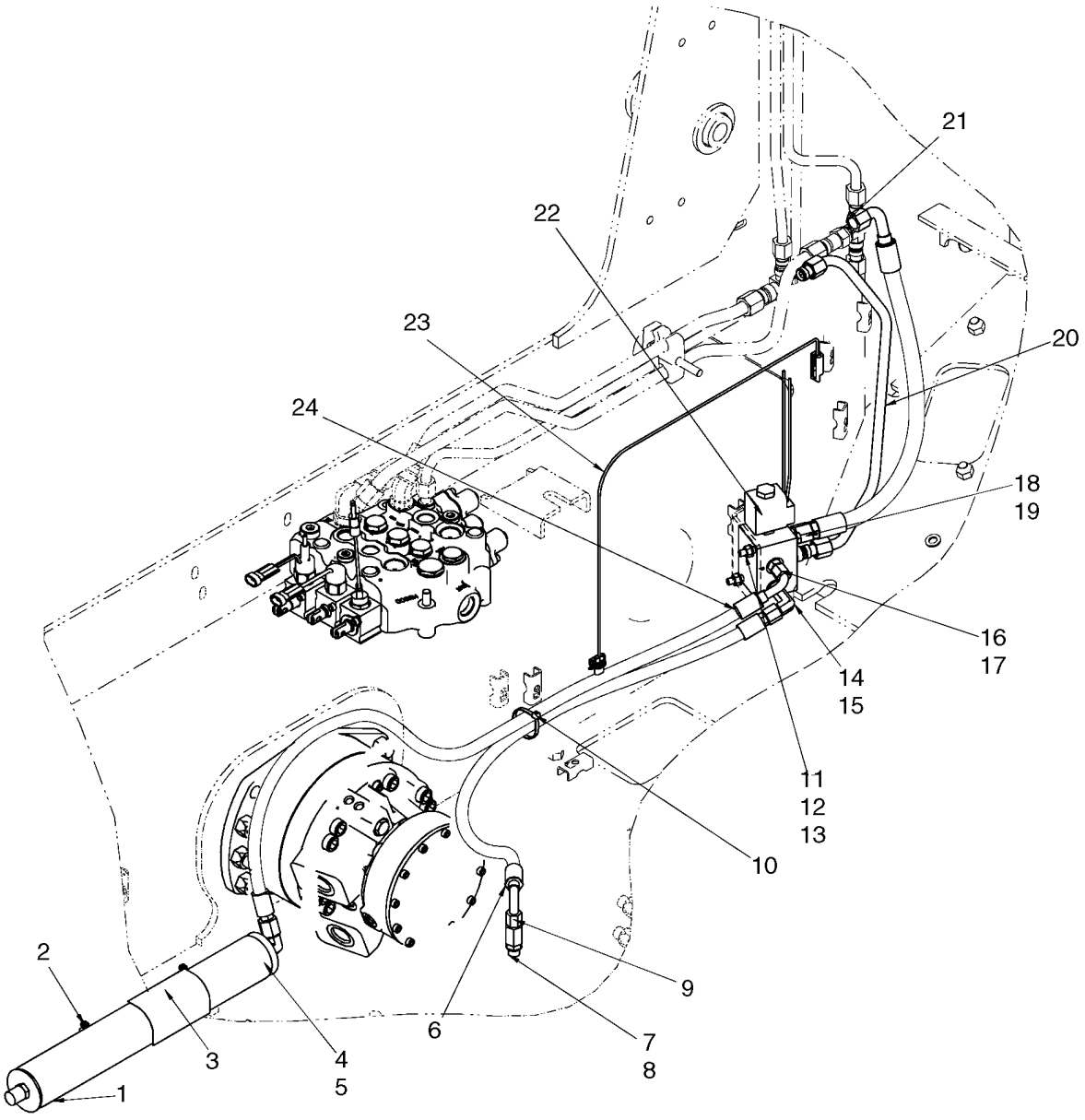

HYDRAULICS - RIDE CONTROL

REF	FN	PART NUMBER	YR/SN	QTY	DESCRIPTION
		87638304		1	KIT, SERVICE, Kit, Ride Control; Incl 1 - 26
1		87403797		1	ACCUMULATOR, Hydraulic Accumulator
2		86624194		2	CLAMP, HOSE, #36, 1.81/2.75 Type F Worm
3		384260A1		1	DECAL, Warning, Pressurized System
4		128830		1	ELBOW, 90º, 3/4"-16, 37º x 3/4"-16, O-Ring, Incl 5
5		128825		1	O-RING, 8-1, 90 Duro, .644" ID x .087" Thk
6		87456974		1	HOSE ASSY., 970mm (38 3/16 in.)
7		86513020		1	TEE, 9/16"-18, 37º x 9/16"-18, O-Ring Run, Incl 8
8		9617873		1	O-RING, 6-1, 90 Duro, .468" ID x .078" Thk
9		574342		1	CAP, 37º, 9/16"-18
10		529070		1	STRAP, CABLE, .30" x 14.5"
11		9706690		2	NUT, M8, Cl 8
12		140016		4	WASHER, M8 x 16 x 1.6
13		43133		2	BOLT, Hex, M8 x 80, 8.8
14		86526		1	ELBOW, 90º, 9/16"-18, 37º x 9/16"-18, LG, Incl 15
15		9617873		1	O-RING, 6-1, 90 Duro, .468" ID x .078" Thk
16		76350		1	CONNECTOR, HYD., 9/16"-18, 37º x 9/16"-18, O-Ring, Incl 17
17		9617873		1	O-RING, 6-1, 90 Duro, .468" ID x .078" Thk
18		86509028		2	CONNECTOR, HYD., 3/4"-16, 37º x 9/16"-18, O-Ring, Incl 19
19		9617873		2	O-RING, 6-1, 90 Duro, .468" ID x .078" Thk
20		87588929		1	TUBE, HYD, Valve To Cylinder Base
21		87588930		1	HOSE, 550mm (21 5/8 in.)
22		87428444		1	VALVE, Solenoid Valve, Ride Control
23		310838A1		1	HARNESS, Ride Control Harness
24		87588928		1	HOSE, Valve To Accumulator, 1200mm (47 1/4 in.)
25		304083A1		2	DECAL, Ride Control; Not Illustrated
26		255927A1		1	DECAL, Warning, Ride Control; Not Illustrated

HYDRAULICS - SELF LEVELING

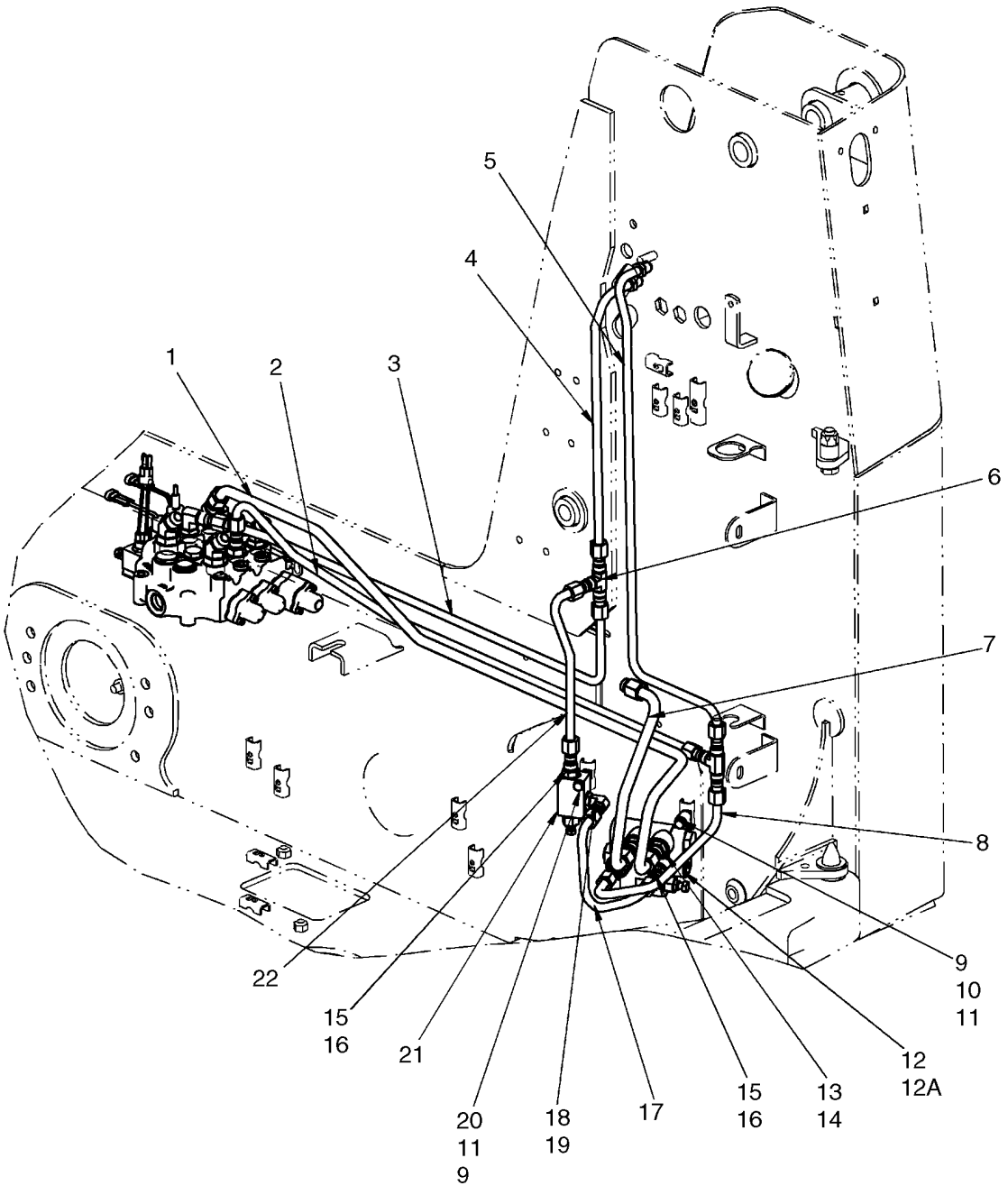

HYDRAULICS - SELF LEVELING

REF	FN	PART NUMBER	YR/SN	QTY	DESCRIPTION
		87638293		1	KIT, SERVICE, Kit, Single Hydraulic Self Level; Incl 1 - 22
1		87446001		1	TUBE ASSY., Tube, Lift (Lower)
2		87593420		1	TUBE, HYD, Tube, Tip (Dump)
3		87436668		1	TUBE ASSY., Tube, Tip (Curl)
4		87436539		1	TUBE ASSY., Tube, Tip (Curl)
5		87593421		1	TUBE, HYD, Tube, Tip (Dump)
6		128996		2	TEE, 3/4"-16, 37º
7		87593425		1	TUBE, HYD, Valve Out
8		87593422		1	TUBE, HYD, Tube, Valve To Bucket Base
9		86624184		3	WASHER, M8 x 16 x 1.6
10		412479		2	BOLT, Hex, M8 x 35, 8.8
11		229197A1		3	NUT
12		87447793		1	VALVE, Self Level; Incl 12A
12A		87535230		1	VALVE KIT, Kit, Seal
13		86071		2	CONNECTOR, HYD., 7/8"-14, 37º x 3/4"-16, O-Ring, Incl 14
14		128825		2	O-RING, 8-1, 90 Duro, .644" ID x .087" Thk
15		128818		3	CONNECTOR, HYD., 3/4"-16, 37º x 3/4"-16, O-Ring, Incl 16
16		128825		3	O-RING, 8-1, 90 Duro, .644" ID x .087" Thk
17		87421454		1	TUBE ASSY., Self Level To Relief
18		128830		1	ELBOW, 90º, 3/4"-16, 37º x 3/4"-16, O-Ring, Incl 19
19		128825		1	O-RING, 8-1, 90 Duro, .644" ID x .087" Thk
20		386045		1	BOLT, Hex, M8 x 45, 8.8
21		294650A1		1	VALVE, Relief Valve
22		87445306		1	TUBE ASSY.

HYDRAULICS - SECONDARY FRONT AUXILIARY

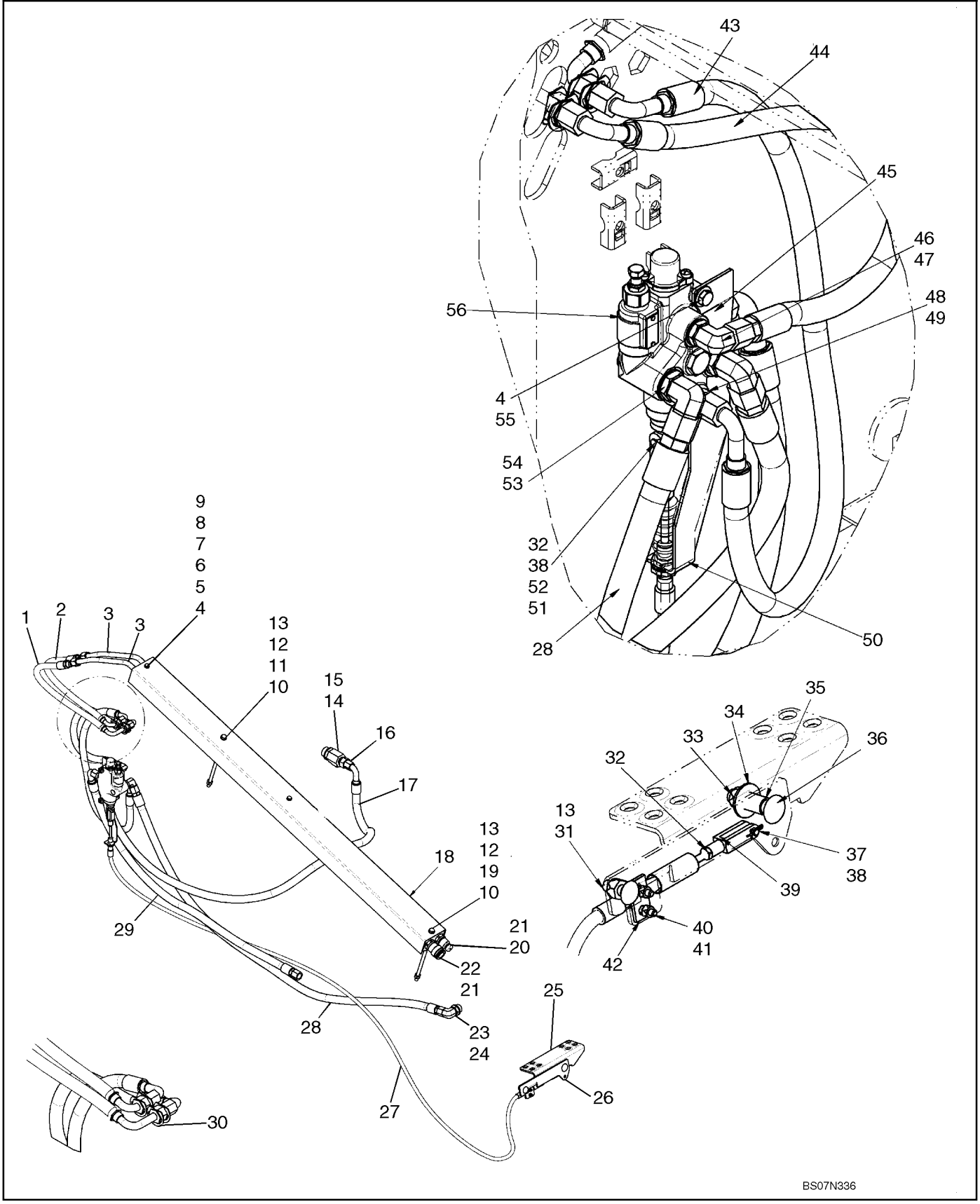

HYDRAULICS - SECONDARY FRONT AUXILIARY

REF	FN	PART NUMBER	YR/SN	QTY	DESCRIPTION
		87730804		1	KIT, SERVICE, Kit, Secondary Front Auxiliary; Incl 1 - 56
1		87462215		1	HOSE ASSY., Hose, Secondary Auxiliary, 633mm (24 15/16 in.)
2		87444373		1	HOSE ASSY., Hose Secondary Auxiliary, 583mm (23 in.)
3		87444371		2	TUBE ASSY., Tube, Secondary Auxiliary
4		16044321		4	BOLT, Hex, M8 x 55, 8.8
5		257857A1		2	CLAMP
6		259905A1		2	SPACER, Spacer, 1/4 Sch 40 Pipe X 31 1/4 in. Lg
7		257859A1		2	PLATE, SPACER
8		194739A1		2	PLATE, LEDGER
9		86624184		2	WASHER, M8 x 16 x 1.6
10		86624977		2	BOLT, Hex, M10 x 245, 8.8
11		87447010		1	SPACER
12		86624176		2	WASHER, M10 x 20 x 2
13		86512554		3	NUT, LOCK, M10 x 1.5, Cl 10
14		86624131		1	TEE, 37º, 1 1/16"-12, 1 5/16"-12 O-Ring Run, 1 1/16"-12, Incl 15
15		167268		1	O-RING, 16-1, 90 Duro, 1.171" ID x .116" Thk
16		87301344		1	REDUCER, 37º, 1 1/16"-12, Fem x 7/8"-14 Male
17		87728982		1	HOSE, Hose, Tank Return, 1773mm (69 13/16 in.)
18		87447965		1	COVER, Cover, Secondary Auxilary Tube
19		87447009		1	BRACKET
20		87417308		1	COUPLING, BREAK AWAY, Coupler, 1/2 Male Quick Disconnect
21		595460		2	NUT, LOCK, Blkhd, 7/8"-14
22		393394A1		1	COUPLING, BREAK AWAY, Coupler, 1/2 Female Quick Disconnect
23		84570		1	ELBOW, 90º, 7/8"-14, 37º x 1 1/16"-12, O-Ring, Incl 24
24		167266		1	O-RING, 12-1, 90 Duro, .924 ID x .116" Thk
25		87423833		1	PEDAL ASSY., Pedal, Auxiliary Hydraulic
26		87715341		1	PLATE, Mounting Plate
27		87739945		1	CABLE, Cable, Secondary Auxiliary

HYDRAULICS - SECONDARY FRONT AUXILIARY

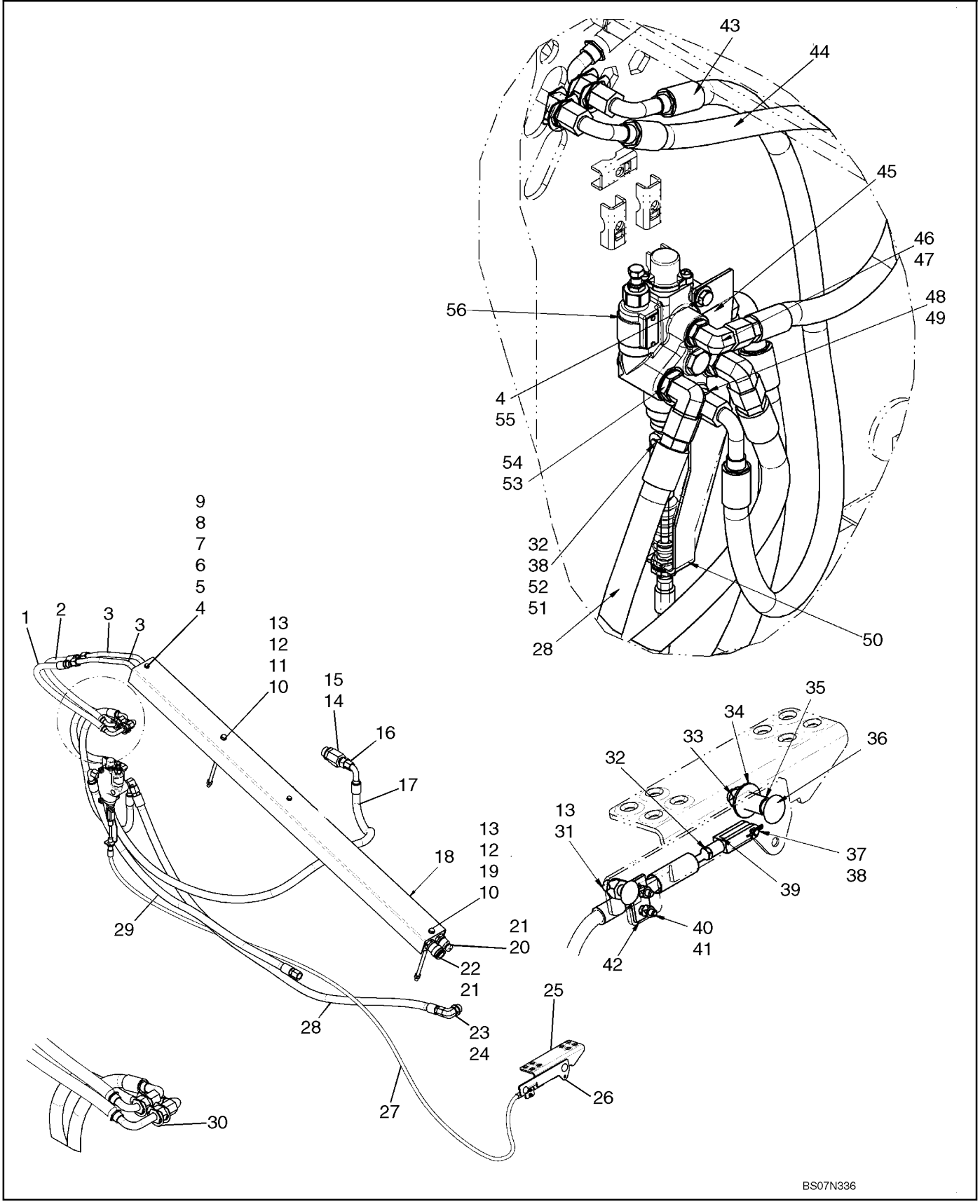

HYDRAULICS - SECONDARY FRONT AUXILIARY

REF	FN	PART NUMBER	YR/SN	QTY	DESCRIPTION
28		87729000		1	HOSE, Hose, Secondary Auxiliary Inlet, 1530mm (60 1/4 in.)
29		87728990		1	HOSE, Hose, Secondary Auxiliary Outlet, 1279mm (50 11/32 in.)
30		87301328		4	RING, LOCKING, Retaining Ring, External "E" Style #98 Plated
31		86512446		1	BOLT, CARRIAGE, Short NK, M10 x 30, Cl8.8, Full Thd
32		86976064		2	NUT, Jam, 1/4"-28, G5
33		412672		1	NUT, LOCK, M12 x 1.75, Cl 10
34		81541		1	WASHER, 7/16"
35		L14781		1	BUSHING, Bronze Bushing
36		87033290		1	BOLT, CARRIAGE, Short NK, M12 x 55, Cl8.8
37		87597960		1	PIN, CLEVIS
38		D131983		2	PIN
39		86520436		1	CLEVIS, ADJUSTABLE, 1/4"-28
40		87442439		1	ROD
41		86512440		2	NUT, LOCK
42		H373779		1	PLATE, LARGE
43		87729005		1	HOSE, Hose, Secondary Auxiliary, 983mm (38 11/16 in.)
44		87729004		1	HOSE, Hose, Secondary Auxiliary, 589mm (23 3/16 in.)
45		129878A1		1	FITTING
46		128830		1	ELBOW, 90º, 3/4"-16, 37º x 3/4"-16, O-Ring, Incl 47
47		128825		1	O-RING, 8-1, 90 Duro, .644" ID x .087" Thk
48		81827427		1	CONNECTOR, HYD., Incl 49
49		128825		1	O-RING, 8-1, 90 Duro, .644" ID x .087" Thk
50		87739947		1	BRACKET, Cable Bracket
51		H32961		1	CLEVIS COUPLING
52		87444160		1	CLEVIS
53		9617891		2	ELBOW, 90º, 3/4"-16, 37º x 7/8"-14, O-Ring, Incl 54
54		167269		2	O-RING, 10-1, 90 Duro, .755" ID x .097" Thk
55		86625263		2	WASHER, M8 x 20 x 1.6
56		87017348		1	VALVE, Secondary Auxiliary Valve; See Fig 08-40

HYDRAULICS - ATTACHMENT, IMPLEMENT (PILOT CONTROL)

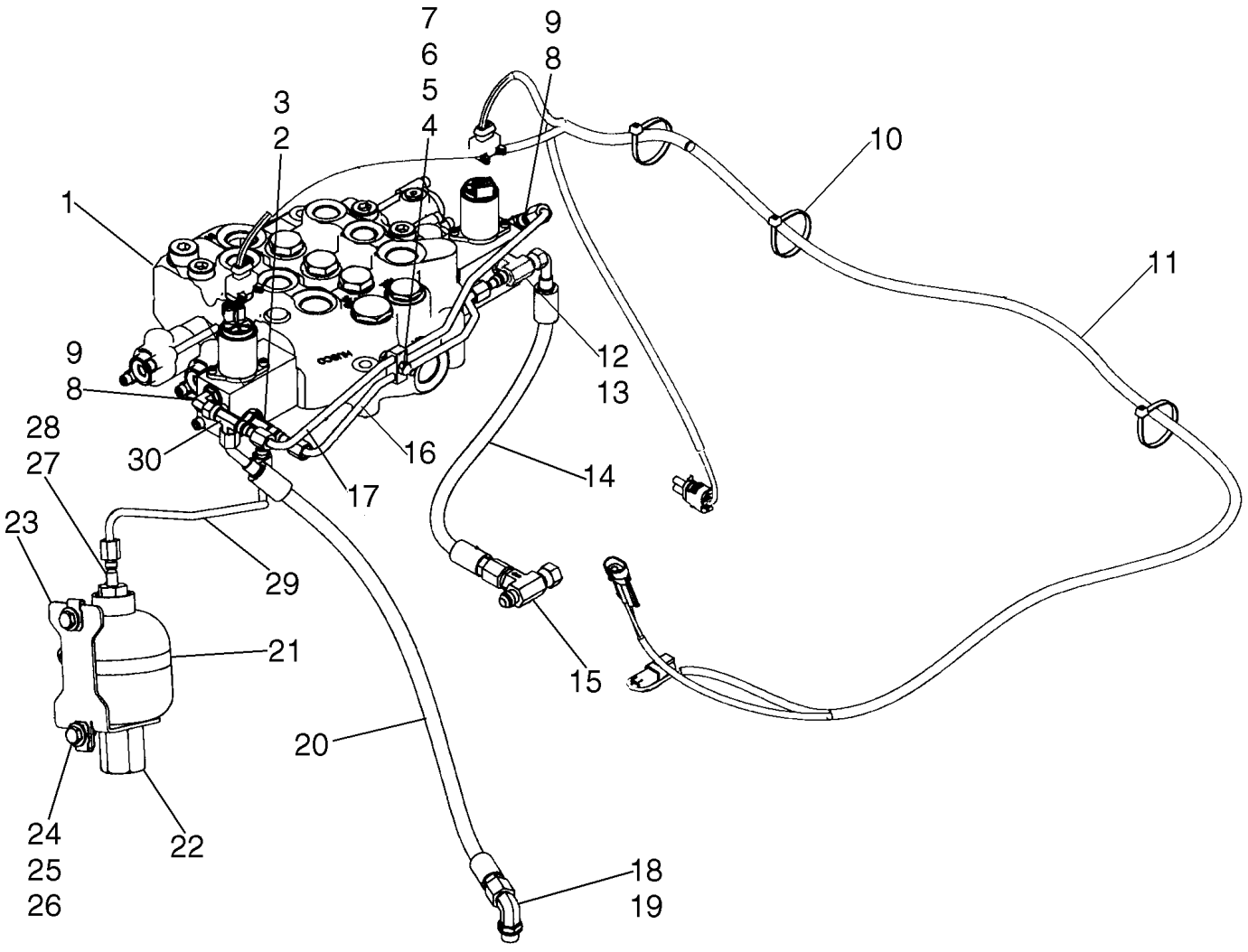

HYDRAULICS - ATTACHMENT, IMPLEMENT (PILOT CONTROL)

REF	FN	PART NUMBER	YR/SN	QTY	DESCRIPTION
		87575606		1	KIT, SERVICE, Electro-Hydraulic Valve Kit; Incl 1 - 30
1		87546975		1	VALVE, HYDRAULIC, Pilot Control Models With Hydraulic Attachment; See Fig. 08-23
2		86513019		1	TEE, 7/16"-20, 37º x 7/16"-20, O-Ring Run, Incl. 3
3		165202		1	O-RING, 4-1, 90 Duro, .351" ID x .072" Thk
4		608089		1	CLAMP
5		86624181		1	WASHER, M6
6		80120101		1	SCREW, M6 x 30
7		87030561		1	NUT, LOCK, M6 x 1, Cl 8
8		216773		2	ELBOW, 90º, 7/16"-20, 37º x 7/16"-20, O-Ring, Incl. 9
9		165202		2	O-RING, 4-1, 90 Duro, .351" ID x .072" Thk
10		529070		3	STRAP, CABLE, .30" x 14.5"
11		87447970		1	HARNESS, Electro-Hydraulic Harness
12		16989		1	TEE, 7/16"-20, 37º x 7/8"-14, O-Ring Br, Incl. 13
13		165202		1	O-RING, 4-1, 90 Duro, .351" ID x .072" Thk
14		87563974		1	HOSE, 424 mm (16.69 in) EH Supply
15		87438766		1	TEE, Tee With Check Valve
16		87563970		1	TUBE, HYD, Pilot Pressure
17		87564001		1	TUBE, HYD, Drain
18		76344		1	ELBOW, 90º, 9/16"-18, 37º x 9/16"-18, O-Ring, Incl 19
19		9617873		1	O-RING, 6-1, 90 Duro, .468" ID x .078" Thk
20		87460042		1	HOSE, Case Drain
21		86625032		1	CLAMP, HOSE, #48, 2.56/3.50 Type F Worm
22		87376969		1	ACCUMULATOR
23		87621245		1	ANGLE, Mounting Bracket
24		120104		2	BOLT, Hex, M8 x 20, 8.8
25		122158A1		2	NUT, M8, U
26		86625263		2	WASHER, M8 x 20 x 1.6
27		139398		1	CONNECTOR, HYD., 7/16"-20, 37º x 9/16"-18, O-Ring, Incl. 28
28		9617873		1	O-RING, 6-1, 90 Duro, .468" ID x .078" Thk
29		87447764		1	TUBE ASSY., Pilot Pressure
30		86513653		1	TEE, 37º, 7/16"-20 x 7/16"-20, Fem Sw Run

HYDRAULICS - ATTACHMENT, PROPORTIONAL (PILOT CONTROL)

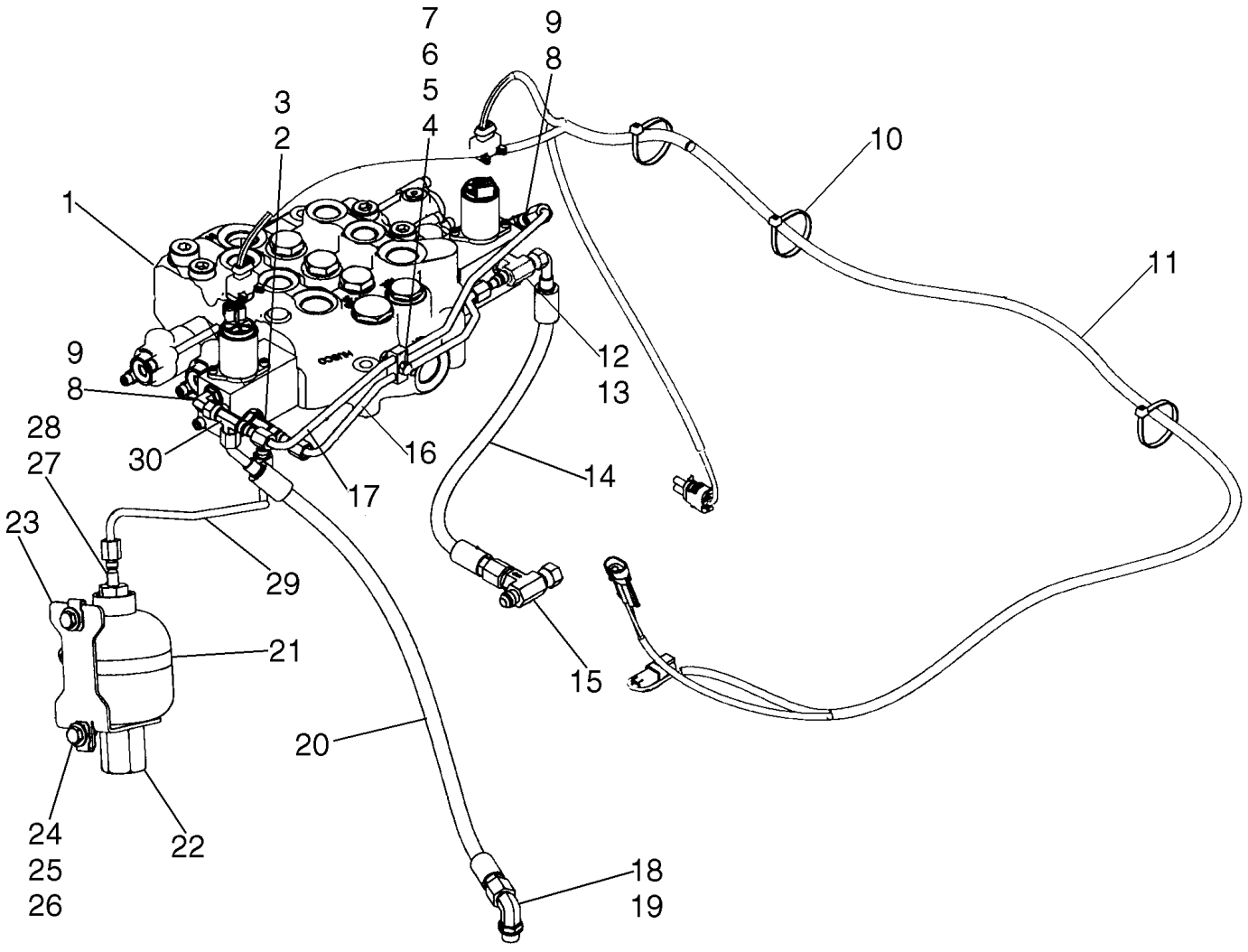

HYDRAULICS - ATTACHMENT, PROPORTIONAL (PILOT CONTROL)

REF	FN	PART NUMBER	YR/SN	QTY	DESCRIPTION
		87638361		1	KIT, SERVICE, Kit, EH Proportional Auxiliary Pilot Control; Incl. 1 - 30
1		87546975		1	VALVE, HYDRAULIC, Pilot Control Models With Hydraulic Attachment; See Fig. 08-23
2		86513019		1	TEE, 7/16"-20, 37º x 7/16"-20, O-Ring Run, Incl. 3
3		165202		1	O-RING, 4-1, 90 Duro, .351" ID x .072" Thk
4		608089		1	CLAMP
5		86624181		1	WASHER, M6
6		120101		1	BOLT, Hex, M6 x 30, 8.8, Full Thd, If Used
7		87030561		1	NUT, LOCK, M6 x 1, Cl 8
6		80120101		1	SCREW, If Used
8		216773		2	ELBOW, 90º, 7/16"-20, 37º x 7/16"-20, O-Ring, Incl. 9
9		165202		2	O-RING, 4-1, 90 Duro, .351" ID x .072" Thk
10		L11541		3	STRAP, CABLE
11		87447970		1	HARNESS
12		16989		1	TEE, 7/16"-20, 37º x 7/8"-14, O-Ring Br, Incl. 13
13		165202		1	O-RING, 4-1, 90 Duro, .351" ID x .072" Thk
14		87612875		1	HOSE, 350mm (22 13/16 in.)
15		87438766		1	TEE, Tee With Check Valve
16		87563970		1	TUBE, HYD, Pilot Pressure
17		87564001		1	TUBE, HYD, Drain
18		76344		1	ELBOW, 90º, 9/16"-18, 37º x 9/16"-18, O-Ring, Includes 19
19		9617873		1	O-RING, 6-1, 90 Duro, .468" ID x .078" Thk
20		87460042		1	HOSE, Case Drain
21		86625034		1	CLAMP, HOSE, #64, 3.56/4.50 Type F Worm
22		86624732		1	ACCUMULATOR
23		87440253		1	ANGLE, Mounting Bracket
24		120104		2	BOLT, Hex, M8 x 20, 8.8
25		122158A1		2	NUT, M8, U
26		86625263		2	WASHER, M8 x 20 x 1.6
27		87010110		1	CONNECTOR, HYD., Straight; Incl. 28
28		128825		1	O-RING, 8-1, 90 Duro, .644" ID x .087" Thk
29		87447764		1	TUBE ASSY., Pilot Pressure
30		86513653		1	TEE, 37º, 7/16"-20 x 7/16"-20, Fem Sw Run

HYDRAULICS - ATTACHMENT (MECHANICAL CONTROL)

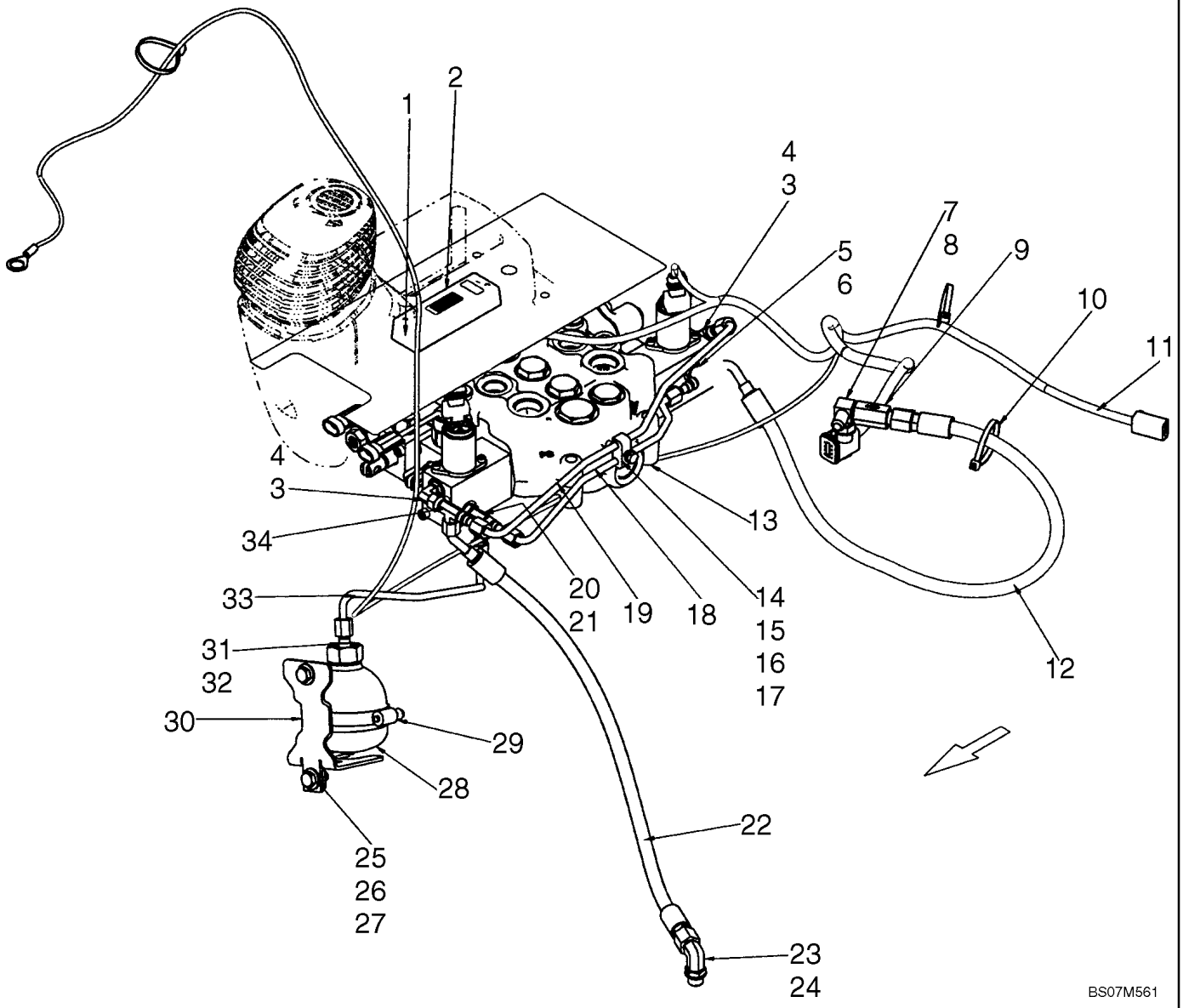

HYDRAULICS - ATTACHMENT (MECHANICAL CONTROL)

REF	FN	PART NUMBER	YR/SN	QTY	DESCRIPTION
1		100012		2	NUT, M4, Cl 8
		87617017		1	KIT, SERVICE, Kit, EH Proportional Auxiliary, Mechanical Controls; Incl 1 - 34
2		87657080		1	VALVE, PWM Driver
3		216773		2	ELBOW, 90º, 7/16"-20, 37º x 7/16"-20, O-Ring, Incl 4
4		165202		2	O-RING, 4-1, 90 Duro, .351" ID x .072" Thk
5		16989		1	TEE, 7/16"-20, 37º x 7/8"-14, O-Ring Br, Incl 6
6		165202		1	O-RING, 4-1, 90 Duro, .351" ID x .072" Thk
7		L104616		1	TEE, Incl 8
8		9617873		1	O-RING, 6-1, 90 Duro, .468" ID x .078" Thk
9		87441786		1	VALVE, In Line Check Valve
10		L11541		3	STRAP, CABLE
11		87668739		1	HARNESS, Harness, Electro-Hydraulic Auxiliary
12		87516044		1	HOSE, Hose, 750mm (29 1/2 in.)
13		87583286		1	VALVE, Control Valve, Manual Control; See Fig 08-20
14		608089		1	CLAMP
15		80120101		1	SCREW
16		86624181		1	WASHER, M6
17		87030561		1	NUT, LOCK, M6 x 1, Cl 8
18		87563970		1	TUBE, HYD, Tube, Pilot Pressure
19		87564001		1	TUBE, HYD, Tube, Drain
20		86513019		1	TEE, 7/16"-20, 37º x 7/16"-20, O-Ring Run, Incl 21
21		165202		1	O-RING, 4-1, 90 Duro, .351" ID x .072" Thk
22		87460042		1	HOSE, Hose, Case Drain 580mm (22 13/16 in.)
23		76344		1	ELBOW, 90º, 9/16"-18, 37º x 9/16"-18, O-Ring, Incl 24
24		9617873		1	O-RING, 6-1, 90 Duro, .468" ID x .078" Thk
25		120104		2	BOLT, Hex, M8 x 20, 8.8
26		86625263		2	WASHER, M8 x 20 x 1.6
27		122158A1		2	NUT, M8, U
28		87376969		1	ACCUMULATOR
29		86625032		1	CLAMP, HOSE, #48, 2.56/3.50 Type F Worm
30		87621245		1	ANGLE
31		139398		1	CONNECTOR, HYD., 7/16"-20, 37º x 9/16"-18, O-Ring, Incl 32
32		9617873		1	O-RING, 6-1, 90 Duro, .468" ID x .078" Thk

HYDRAULICS - ATTACHMENT (MECHANICAL CONTROL)

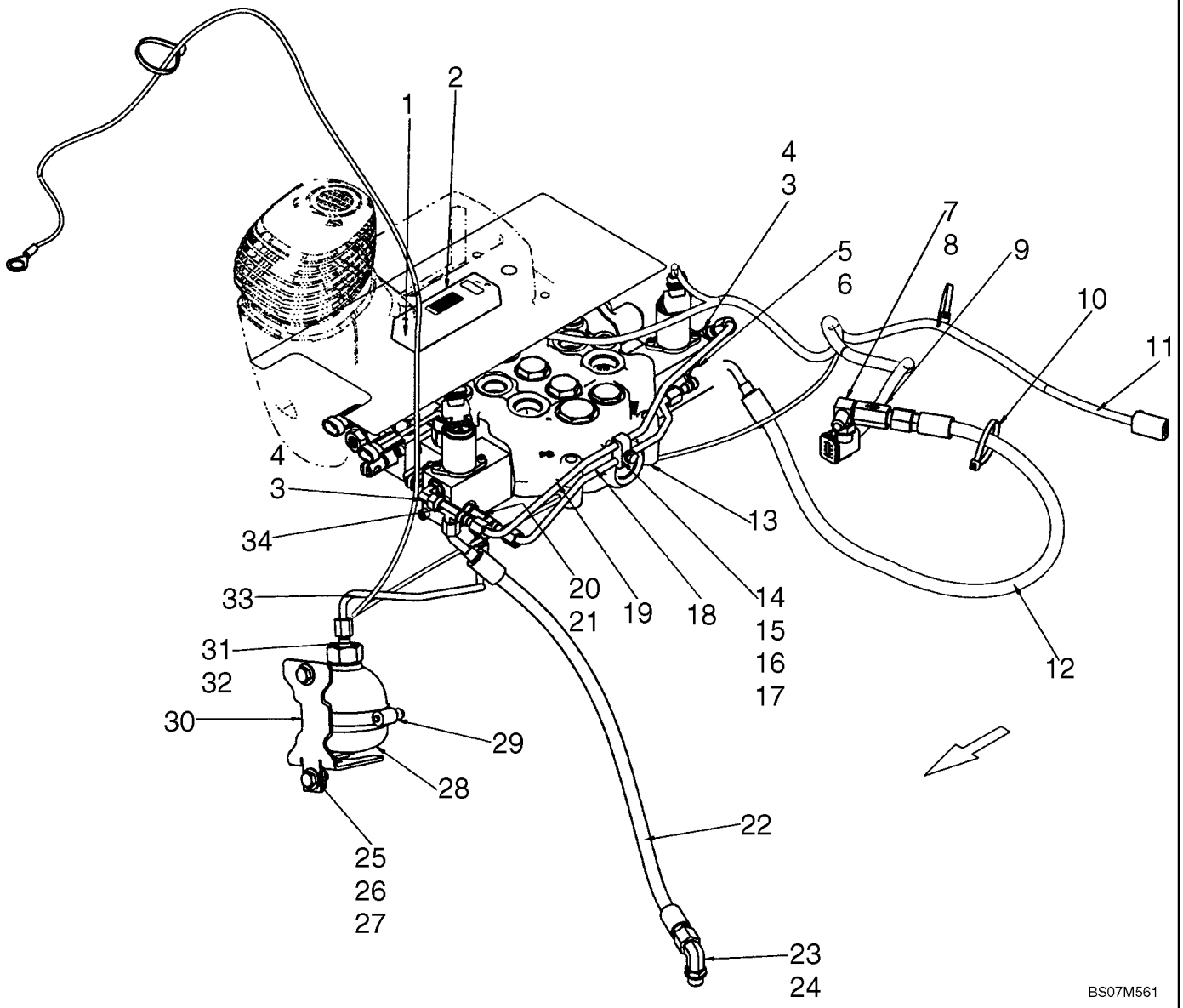

HYDRAULICS - ATTACHMENT (MECHANICAL CONTROL)

REF	FN	PART NUMBER	YR/SN	QTY	DESCRIPTION
33		87447764		1	TUBE ASSY., Tube, Pilot Pressure
34		86513653		1	TEE, 37º, 7/16"-20 x 7/16"-20, Fem Sw Run

HYDRAULICS - COUPLER SYSTEM

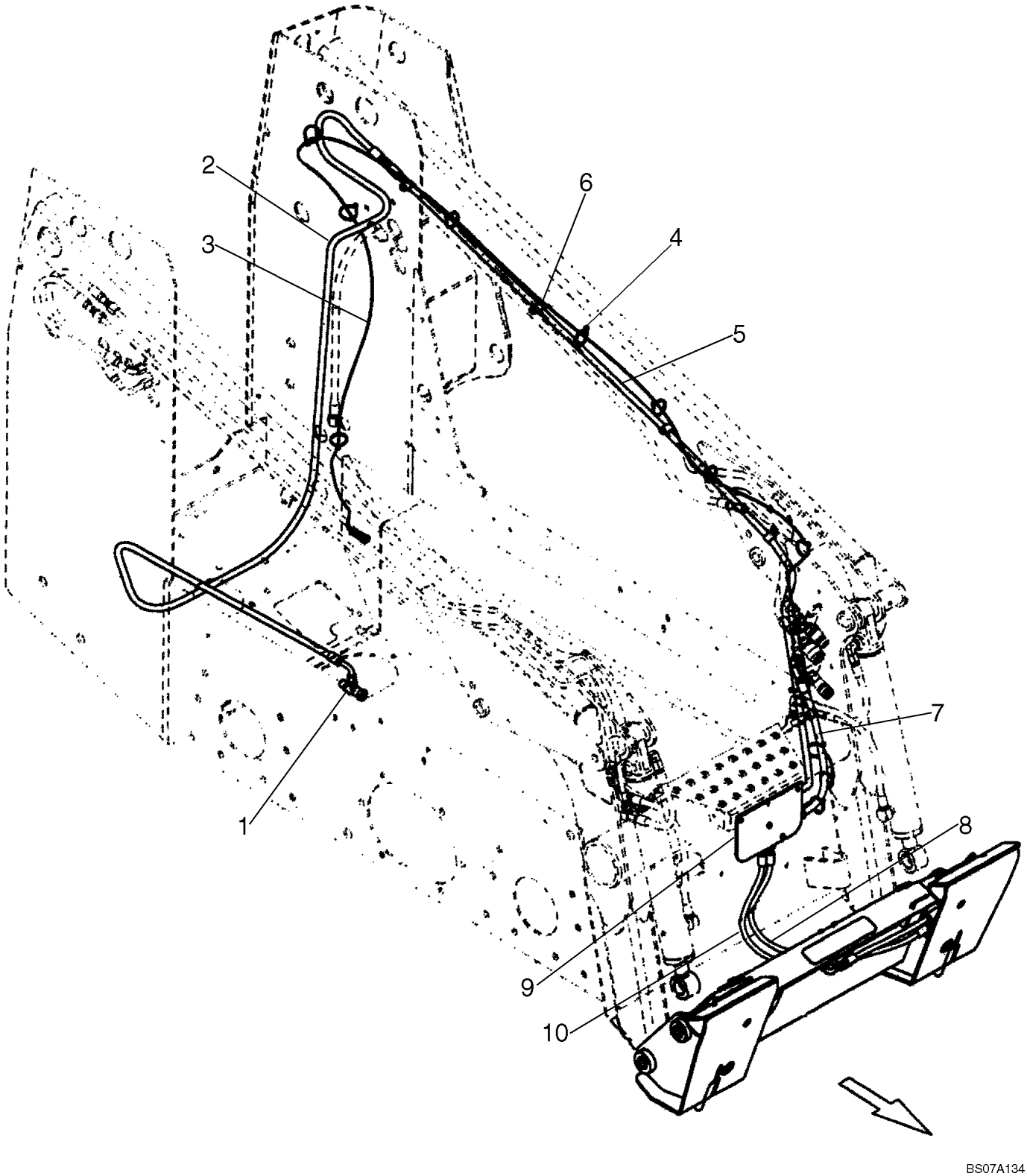

HYDRAULICS - COUPLER SYSTEM

REF	FN	PART NUMBER	YR/SN	QTY	DESCRIPTION
		REF			INSTRUCTION, See Figure 08-11
		87638893		1	KIT, SERVICE, Kit, Hydraulic Coupler; Incl 1 - 10 And Fig 08-11
		87388074		1	KIT, CONVERSION, Kit To Convert From Connection Into Bucket Circuit To Connection Between Gear Pump And Loader Valve; Incl. Ref 1, 2, 4, 5, 6
1		87446825		1	TEE
2		87367444		1	HOSE
3		87446983		1	HARNESS, WIRE
4		L11541		8	STRAP, CABLE
5		87367445		1	HOSE
6		86624005		4	CLAMP, 3/4", Insul, 3/8" Bolt
7		87413436		1	HOSE ASSY., Case Drain
8		87440565		1	HOSE ASSY., Step To Coupler
9		87423807		1	PLATE
10		87440564		1	HOSE ASSY., Step To Coupler

HYDRAULICS - COUPLER SYSTEM

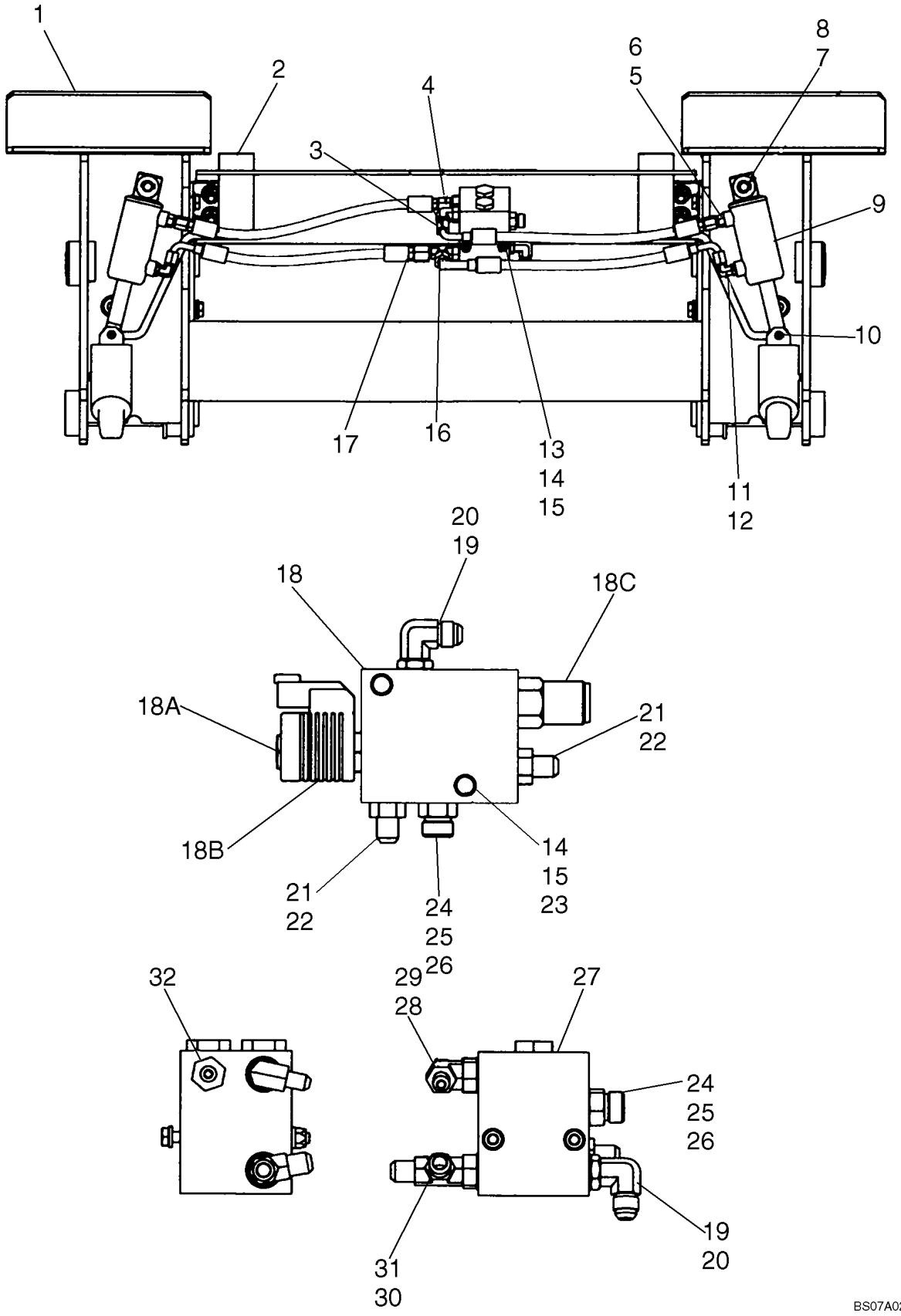

HYDRAULICS - COUPLER SYSTEM

REF	FN	PART NUMBER	YR/SN	QTY	DESCRIPTION
1		REF		1	INSTRUCTION, Coupler Frame; See Figure 09-05; See Figure 08-10
2		396052A2		2	FLAG
3		87440569		1	HOSE ASSY., Left Hand; Base End
4		87440566		1	HOSE ASSY., Right Hand; Base End
5		265235		2	CONNECTOR, HYD., 7/16"-20, 37º x 7/16"-20, O-Ring, Incl. 6
6		165202		1	O-RING, 4-1, 90 Duro, .351" ID x .072" Thk
7		100-1650		2	RING, SNAP, #50, Ext
8		87387540		2	RETAINER, Handle Pivot
9		87442337		2	CYLINDER, Component Parts Not Serviced Separately
10		87610718		2	PIN
11		216773		2	ELBOW, 90º, 7/16"-20, 37º x 7/16"-20, O-Ring, Incl. 12
12		165202		1	O-RING, 4-1, 90 Duro, .351" ID x .072" Thk
13		86508570		2	BOLT, Hex, M6 x 80, 8.8
14		86512440		4	NUT, LOCK
15		86588450		8	WASHER, M6
16		87440570		1	HOSE ASSY., Left Hand; Rod End
17		87440568		1	HOSE ASSY., Right Hand; Rod End
18		87421480		1	VALVE, HYDRAULIC, Hydraulic Coupler; Incl.18A - 18C
18A		87562926		1	VALVE, Sequence Valve Sauer No. CP538-1-U-0-12D-DE
18B		87433496		1	COIL, Sauer No. 322113
18C		87562923		1	VALVE, Sequence Valve Sauer No. CP240-21-B-0-A-C-270
19		76344		2	ELBOW, 90º, 9/16"-18, 37º x 9/16"-18, O-Ring, Includes 20
20		9617873		1	O-RING, 6-1, 90 Duro, .468" ID x .078" Thk
21		76350		2	CONNECTOR, HYD., 9/16"-18, 37º x 9/16"-18, O-Ring, Incl. 22
22		9617873		1	O-RING, 6-1, 90 Duro, .468" ID x .078" Thk
23		338413		2	BOLT, Hex, M6 x 60, 8.8

HYDRAULICS - COUPLER SYSTEM

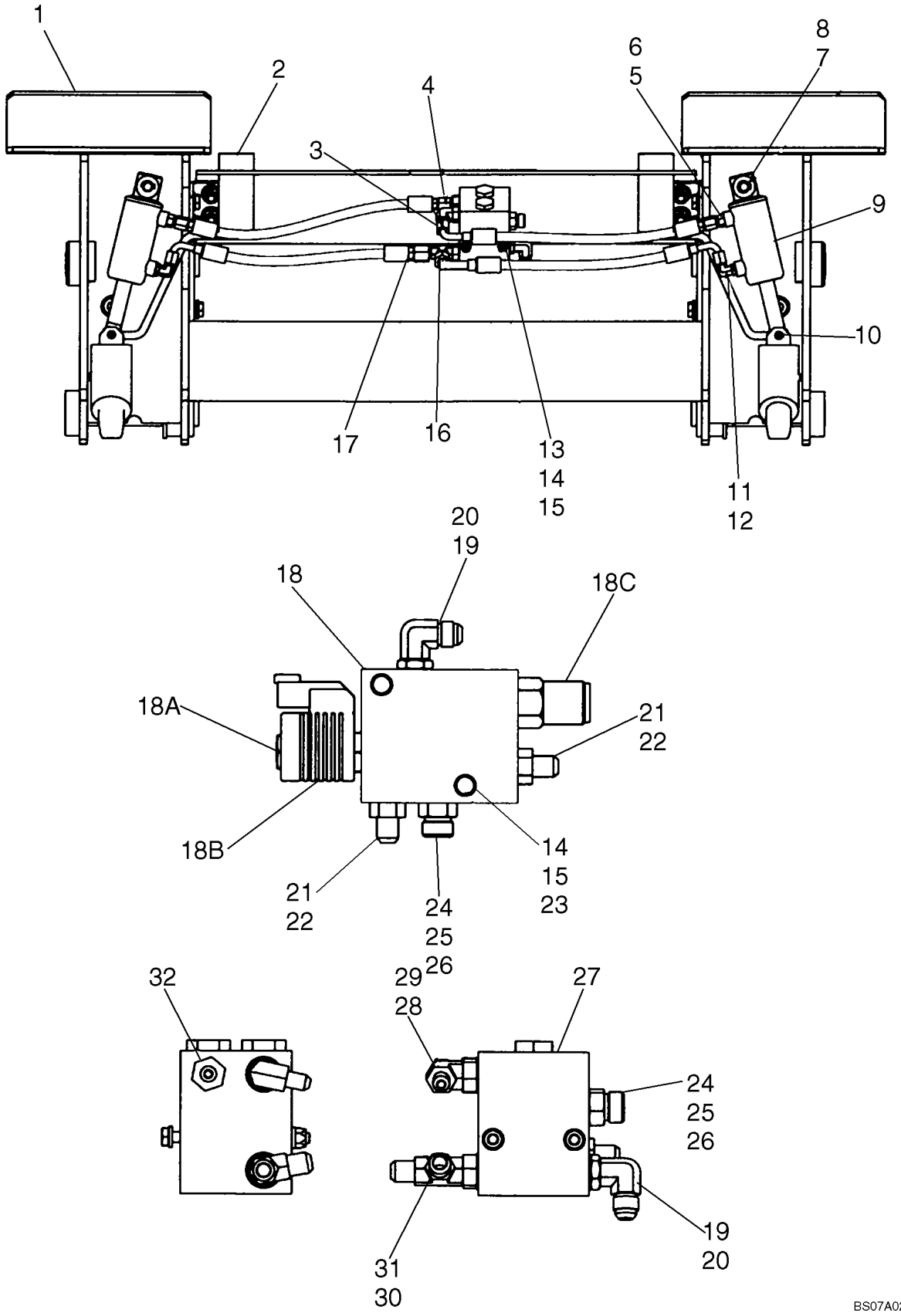

HYDRAULICS - COUPLER SYSTEM

REF	FN	PART NUMBER	YR/SN	QTY	DESCRIPTION
24		9993143		2	CONNECTOR, HYD., 11/16"-16 ORFS x 9/16"-18 ORB, Incl. 25, 26
25		9993141		1	O-RING, -012, 90 Duro, .364" ID x .070" Thk
26		9617873		1	O-RING, 6-1, 90 Duro, .468" ID x .078" Thk
27		294741A1		1	VALVE, CHECK, Component Parts Not Serviced Separately
28		86512934		1	ELBOW, 90º, 7/16"-20, 37º x 9/16"-18, O-Ring, Incl. 29
29		9617873		1	O-RING, 6-1, 90 Duro, .468" ID x .078" Thk
30		86513020		1	TEE, 9/16"-18, 37º x 9/16"-18, O-Ring Run, Incl. 31
31		9617873		1	O-RING, 6-1, 90 Duro, .468" ID x .078" Thk
32		139398		1	CONNECTOR, HYD., 7/16"-20, 37º x 9/16"-18, O-Ring, Incl. 9617873
		9617873		1	O-RING, 6-1, 90 Duro, .468" ID x .078" Thk

HYDRAULICS - COUPLER SYSTEM (ITALIAN)

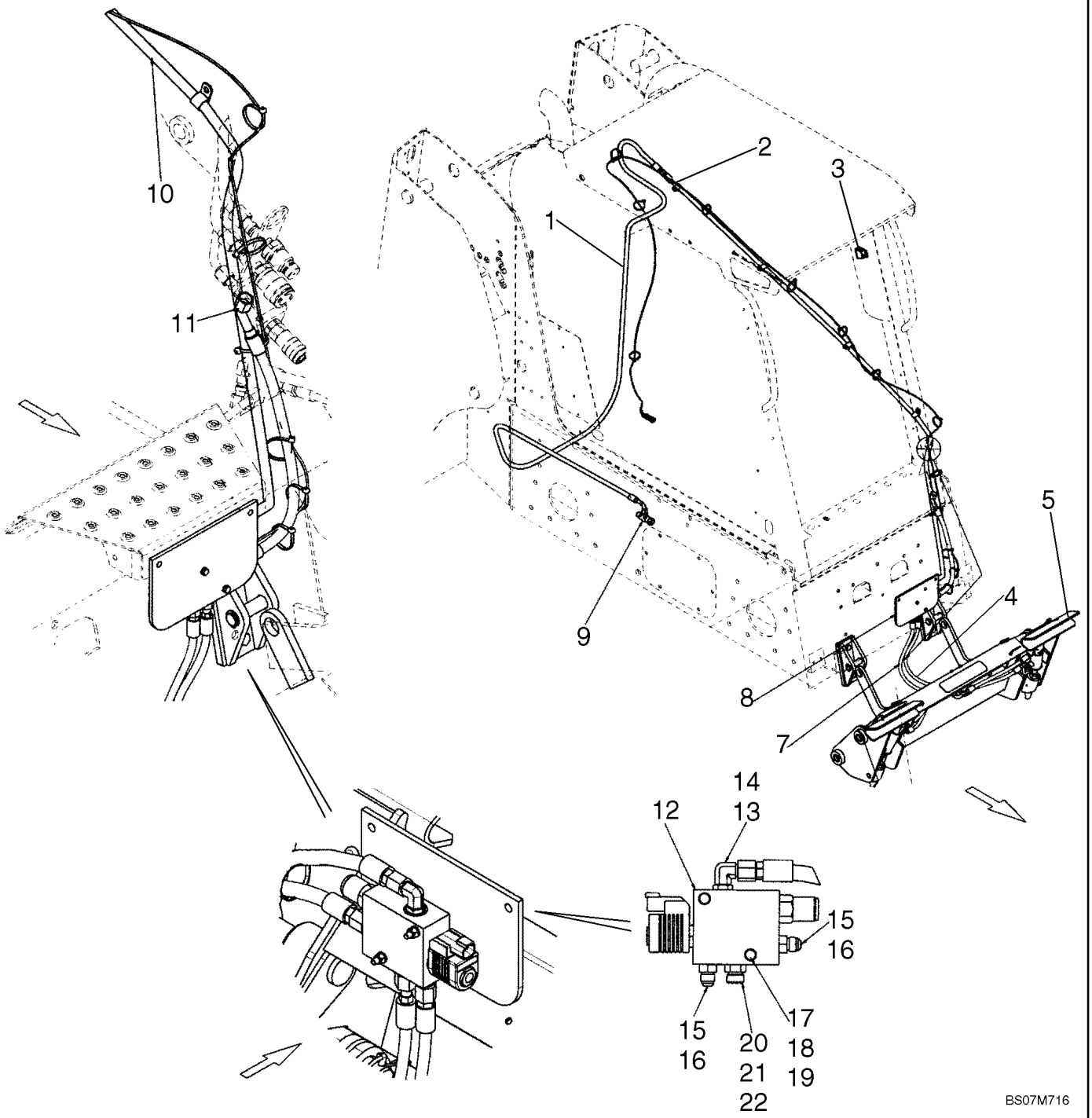

HYDRAULICS - COUPLER SYSTEM (ITALIAN)

REF	FN	PART NUMBER	YR/SN	QTY	DESCRIPTION
1		87367444		1	HOSE, Hose, Hydraulic Coupler, 3305mm (130 1/8 in.)
2		86624005		4	CLAMP, 3/4", Insul, 3/8" Bolt
3		87642911		1	SWITCH, Rocker Switch, Hydraulic Coupler
4		87440565		1	HOSE ASSY., Hose, Step To Coupler, 720mm (28 11/32 in.)
5		REF		1	INSTRUCTION, Coupler; See Fig 08-12
6		80710		4	NIPPLE, LUBE, 1/8"-27 x .66 lg
7		87440564		1	HOSE ASSY., Hose, Step To Coupler, 690mm (27 3/16 in.)
8		87423807		1	PLATE
9		87446825		1	TEE
10		87367445		1	HOSE, Hose, Hydraulic Coupler, 2482mm (97 11/16 in.)
11		87413436		1	HOSE ASSY., Hose, Case Drain, 655mm (25 13/16 in.)
12		87421480		1	VALVE, HYDRAULIC
13		76344		2	ELBOW, 90º, 9/16"-18, 37º x 9/16"-18, O-Ring, Incl 14
14		9617873		2	O-RING, 6-1, 90 Duro, .468" ID x .078" Thk
15		76350		2	CONNECTOR, HYD., 9/16"-18, 37º x 9/16"-18, O-Ring, Incl 16
16		9617873		2	O-RING, 6-1, 90 Duro, .468" ID x .078" Thk
17		338413		2	BOLT, Hex, M6 x 60, 8.8
18		86512440		4	NUT, LOCK
19		86588450		8	WASHER, M6
20		9993143		1	CONNECTOR, HYD., 11/16"-16 ORFS x 9/16"-18 ORB, Incl 21, 22
21		9617873		1	O-RING, 6-1, 90 Duro, .468" ID x .078" Thk
22		9993141		1	O-RING, -012, 90 Duro, .364" ID x .070" Thk

HYDRAULICS - COUPLER SYSTEM (ITALIAN)

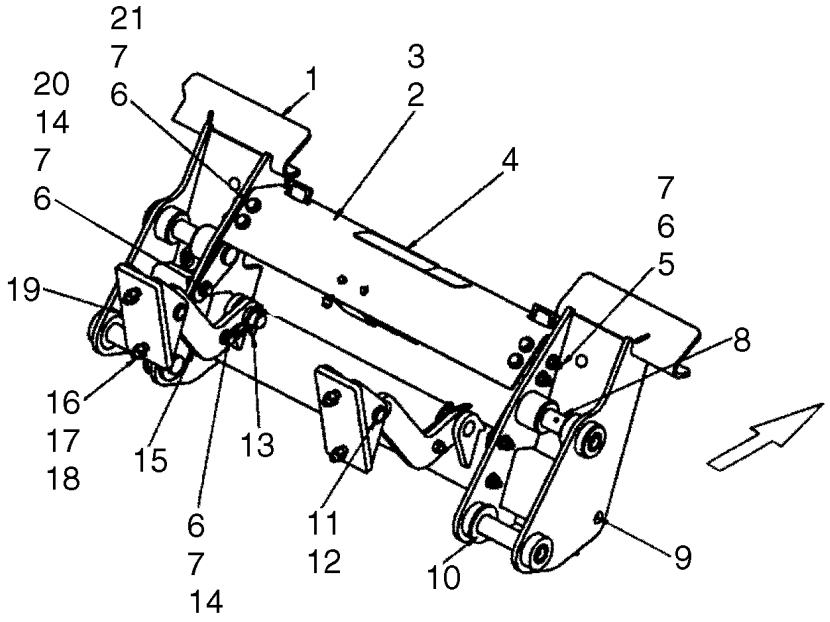

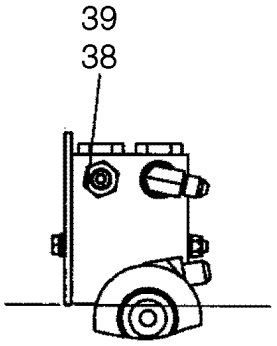

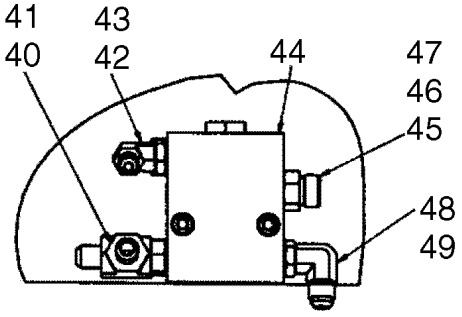

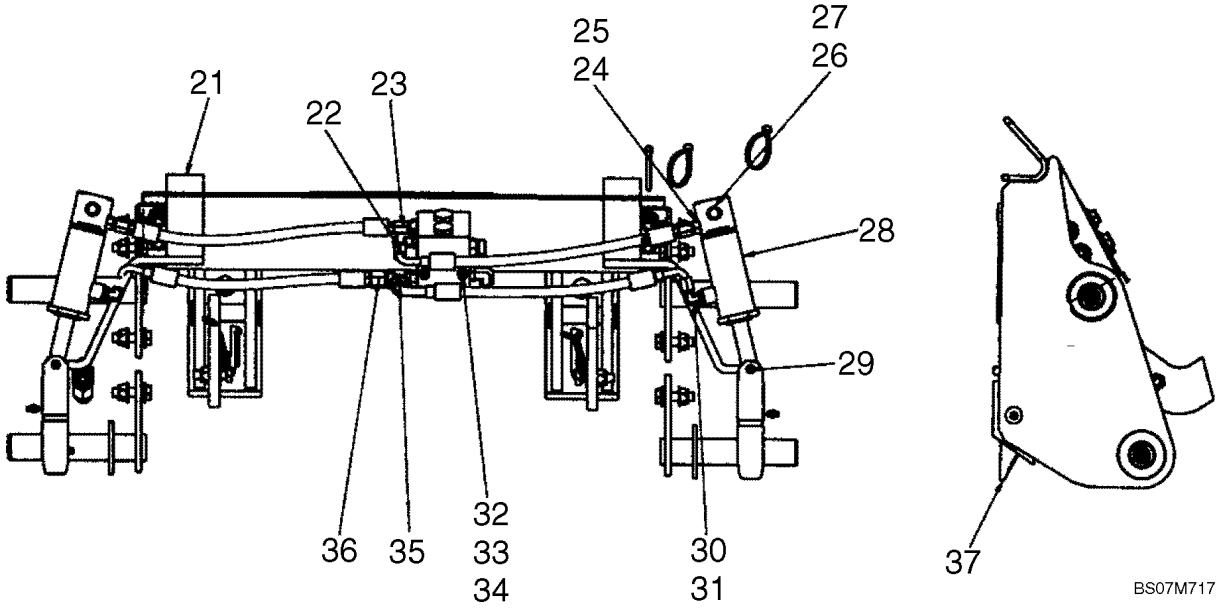

BS07M717

HYDRAULICS - COUPLER SYSTEM (ITALIAN)

REF	FN	PART NUMBER	YR/SN	QTY	DESCRIPTION
1		417779A3		1	FRAME ASSY, Coupler Frame, Italian
2		87620412		1	PLATE, Cover
3		409783A1		2	BRACKET
4		D55216		1	STRIP, ANTI-SKID
5		9706704		4	BOLT, Hex, M10 x 35, 8.8, Full Thd
6		86512554		14	NUT, LOCK, M10 x 1.5, Cl 10
7		86625253		26	WASHER, M11 x 24 x 2
8		87659406		4	PIN
9		87414		2	NIPPLE, LUBE, 1/4"-28 x .56" lg, Drive
10		86512837		2	WASHER, 1 1/4", SAE
11		D138889		2	PIN
12		{86625151}		4	Retaining Ring, External #87
13		A30338		2	PIN, Klik Pin
14		120112		6	BOLT, Hex, M10 x 40, 8.8, Full Thd
15		398194A1		2	LINK, Bucket Lock
16		120080		4	BOLT, Hex Head, M12 X 45 Cl 8.8
17		86625255		4	WASHER, M13.5 x 24.5 x 3, HT
18		412672		4	NUT, LOCK, M12 x 1.75, Cl 10
19		398196A1		2	BRACKET
20		906091R1		4	SPACER
21		43139		4	SCREW
22		87440569		1	HOSE ASSY., Hose, Base End LH, 365mm (14 3/8 in.)
23		87440566		1	HOSE ASSY., Hose, Base End RH, 372mm (14 21/32 in.)
24		265235		2	CONNECTOR, HYD., 7/16"-20, 37º x 7/16"-20, O-Ring, Incl 25
25		165202		2	O-RING, 4-1, 90 Duro, .351" ID x .072" Thk
26		87387540		2	RETAINER
27		{87612753}		2	Retaining Ring, External #50
28		87442337		2	CYLINDER
29		87610718		2	PIN
30		216773		2	ELBOW, 90º, 7/16"-20, 37º x 7/16"-20, O-Ring, Incl 31
31		165202		2	O-RING, 4-1, 90 Duro, .351" ID x .072" Thk
32		86508570		2	BOLT, Hex, M6 x 80, 8.8

HYDRAULICS - COUPLER SYSTEM (ITALIAN)

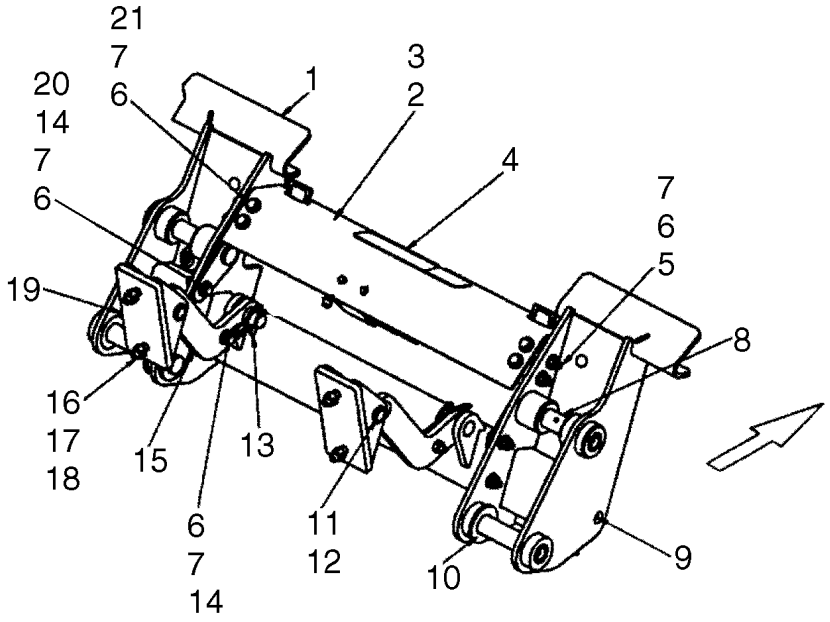

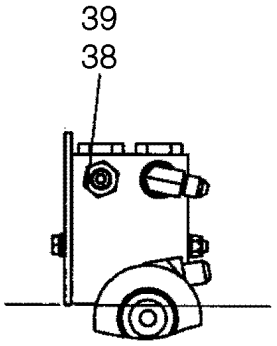

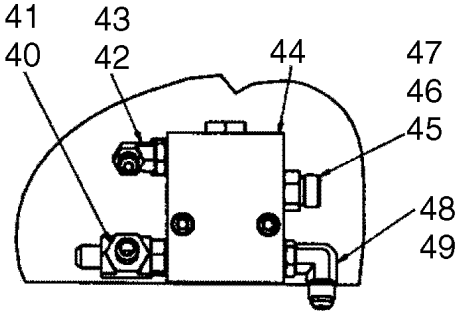

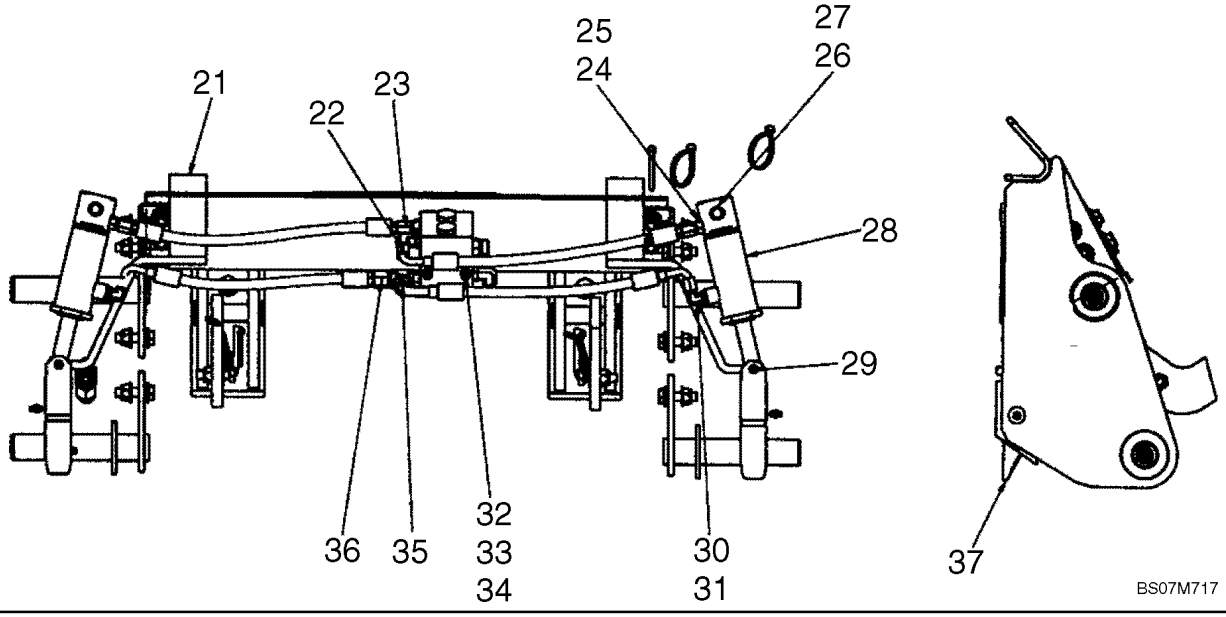

BS07M717

HYDRAULICS - COUPLER SYSTEM (ITALIAN)

REF	FN	PART NUMBER	YR/SN	QTY	DESCRIPTION
33		86512440		4	NUT, LOCK
34		86588450		8	WASHER, M6
35		87440570		1	HOSE ASSY., Hose, Rod End LH, 363mm (14 9/32 in.)
36		87440568		1	HOSE ASSY., Hose, Rode End RH, 337mm (13 1/4 in.)
37		87413030		2	PIN
38		139398		1	CONNECTOR, HYD., 7/16"-20, 37° x 9/16"-18, O-Ring, Incl 39
39		9617873		1	O-RING, 6-1, 90 Duro, .468" ID x .078" Thk
40		86513020		1	TEE, 9/16"-18, 37° x 9/16"-18, O-Ring Run, Incl 41
41		9617873		1	O-RING, 6-1, 90 Duro, .468" ID x .078" Thk
42		86512934		1	ELBOW, 90°, 7/16"-20, 37° x 9/16"-18, O-Ring, Incl 43
43		9617873		1	O-RING, 6-1, 90 Duro, .468" ID x .078" Thk
44		294741A1		1	VALVE, CHECK
45		9993143		1	CONNECTOR, HYD., 11/16"-16 ORFS x 9/16"-18 ORB, Incl 46,47
46		9617873		1	O-RING, 6-1, 90 Duro, .468" ID x .078" Thk
47		9993141		1	O-RING, -012, 90 Duro, .364" ID x .070" Thk
48		76344		2	ELBOW, 90°, 9/16"-18, 37° x 9/16"-18, O-Ring, Incl 49
49		9617873		2	O-RING, 6-1, 90 Duro, .468" ID x .078" Thk

CYLINDER - TILT

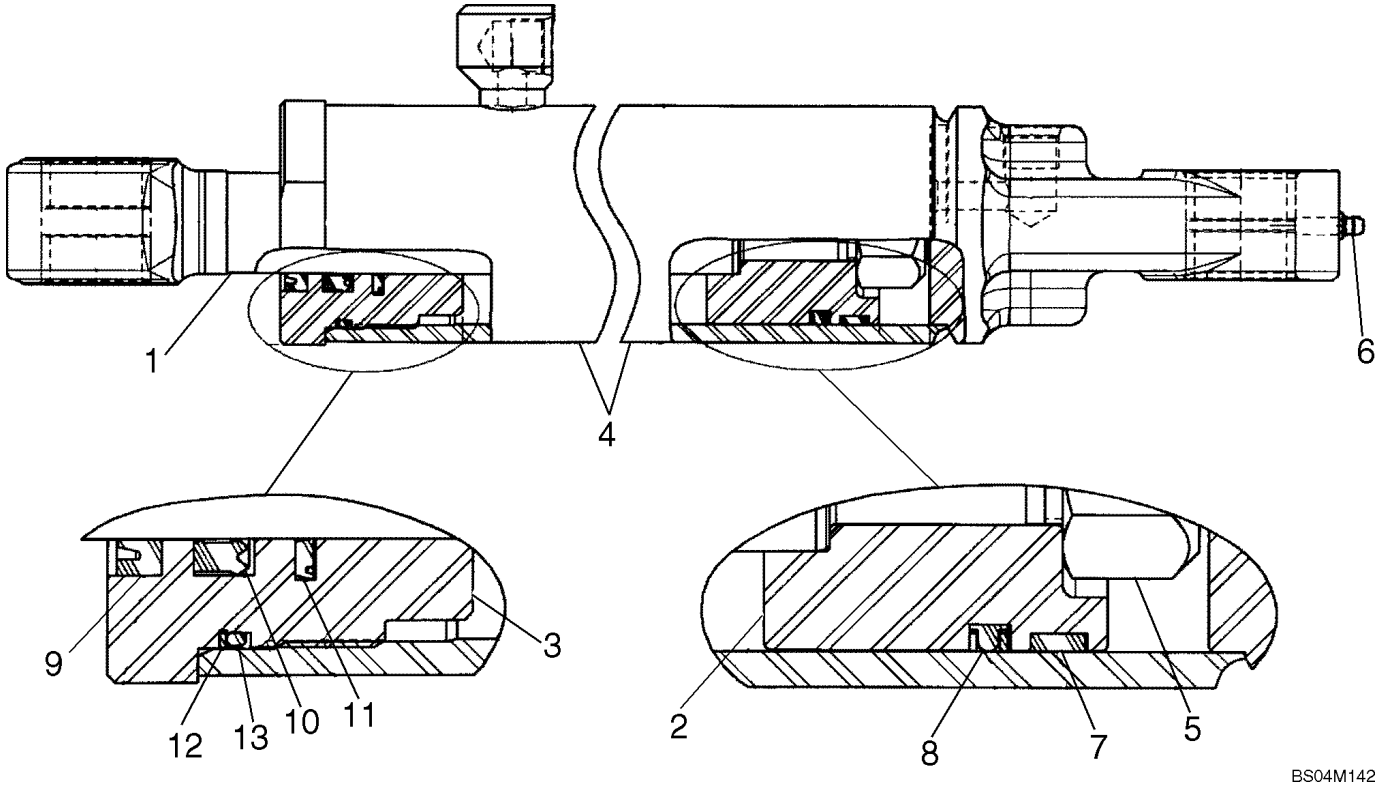

CYLINDER - TILT

REF	FN	PART NUMBER	YR/SN	QTY	DESCRIPTION
		87438193		2	CYLINDER ASSY., Tilt; 3.0 Bore, 14.56 Stroke; Incl. 1 - 6 and Seal Kit 86614269 Ref 7 - 13
1		87442326		1	ROD ASSY., 38.1 Dia, 31.8 Pin
2		87442334		1	PISTON
3		86614267		1	CYLINDER HEAD, 2.5 x 1.38
4		87442335		1	CYLINDER, Incl. Bushings, 86624450
		86624450		2	BUSHING
5		87027430		1	NUT, LOCK, 1 1/8"-12, GC
6		87414		1	NIPPLE, LUBE, 1/4"-28 x .56" lg, Drive
		86614269		1	KIT, Seal, 3.0 x 1.50; Incl. 7 - 13
7		771714		1	RING
8		86595542		1	SEAL, Seal, 3.0 Piston
9		86631610		1	SEAL, 1.50 Wiper
10		86631607		1	SEAL, 1.50 Rod
11		86631616		1	SEAL, 1.38 Buffer
12		86609324		1	SEAL WASHER
13		270192		1	O-RING, -335", 70 Duro, 2.725" ID x .210" Thk

CYLINDER - LIFT

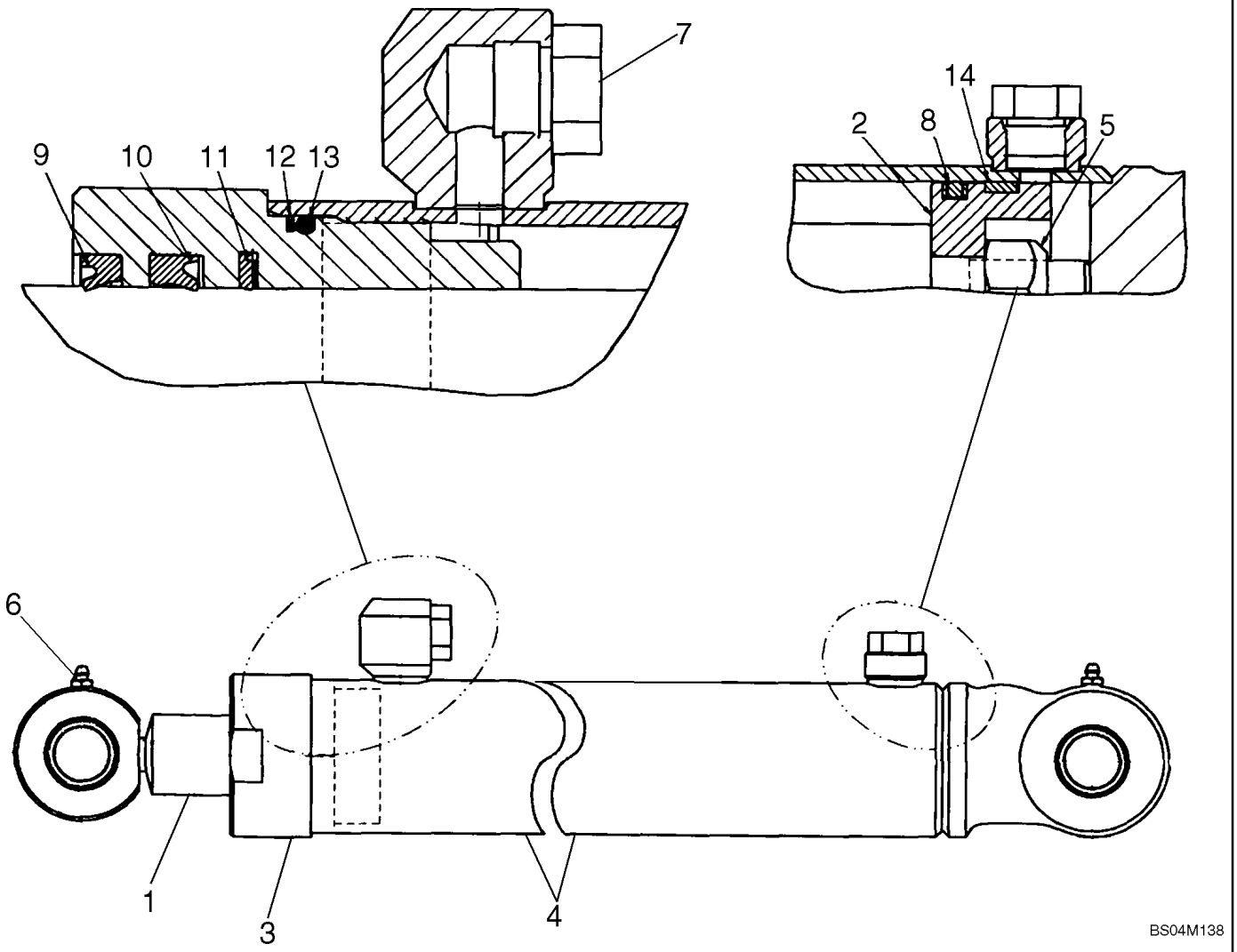

CYLINDER - LIFT

REF	FN	PART NUMBER	YR/SN	QTY	DESCRIPTION
		87438190		2	CYLINDER ASSY., 2.50 Bore, 35.83 Stroke; Incl. 1 - 7 And Seal Kit 86631598 Ref 8 - 14
1		86611742		1	ROD, Piston, Incl. Bushings 86624451
		86624451		2	BUSHING
2		848220		1	PISTON
3		86631597		1	CYLINDER HEAD, 2.5 x 1.25
4		86611740		1	CYLINDER, Incl. Bushings 86624450
		86624450		2	BUSHING
5		280724		1	NUT, LOCK, 3/4"-16, GC
6		87414		2	NIPPLE, LUBE, 1/4"-28 x .56" lg, Drive
7		214389		2	PLUG, Hex Hd, 3/4"-16 ORB, 1/2" OD Tube
		86631598		1	KIT, Seal, Incl. 8 - 14
8		86563839		1	SEAL, 2.5
9		86631610		1	SEAL, 1.5 Wiper
10		86631607		1	SEAL, 1.5 Rod
11		86631616		1	SEAL, 1.5 Buffer
12		86512008		1	BACK-UP RING
13		52419		1	O-RING, -229, 70 Duro, 2.359" ID x .139" Thk
14		783874		1	RING, WEAR

HIGH FLOW - SUPPLY AND RETURN

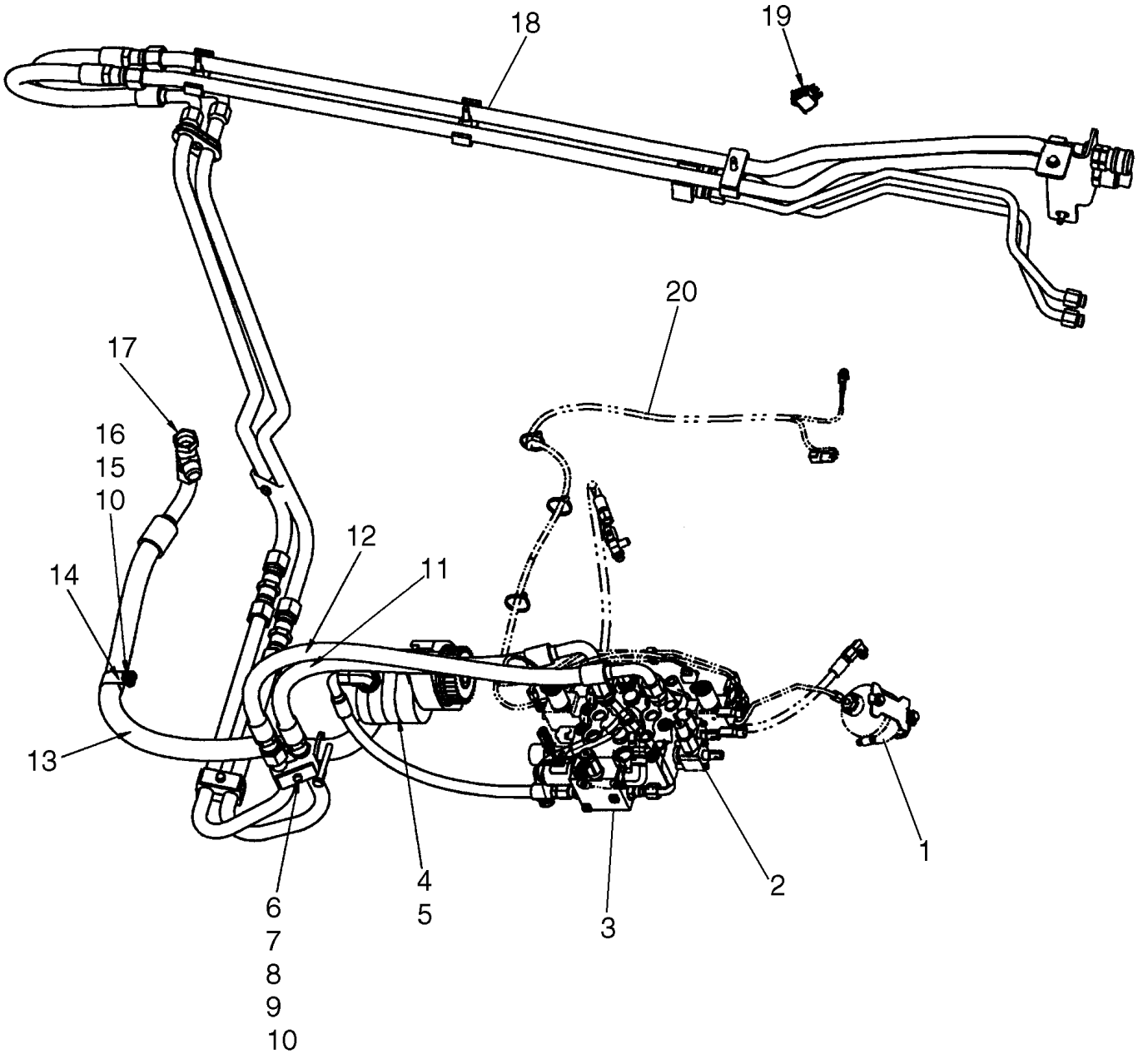

HIGH FLOW - SUPPLY AND RETURN

REF	FN	PART NUMBER	YR/SN	QTY	DESCRIPTION
		87617100		1	KIT, SERVICE, Kit, High Flow Bi-Directional Gear; Incl 1- 20
1		REF		1	INSTRUCTION, Accumulator, See Fig 08-07
2		87546975			VALVE, HYDRAULIC, Control Valve, See Fig 08-23
3		87012669		1	VALVE, See Fig 08-19
4		87020733		1	PUMP, See Fig 06-55
5		272310		1	O-RING, -042, 70 Duro, 3.239" ID x .070" Thk
6		120061		1	BOLT, Hex, M8 x 60, 8.8
7		80681		2	WASHER, LOCK, 5/16"
8		257859A1		3	PLATE, SPACER
9		1546028C1		2	CLAMP, 25.4 x 25.4
10		9628098		2	NUT, LOCK, M8 x 1.25, Cl 10
11		87454000		1	HOSE ASSY., 860 mm (38.85 in) High Flow
12		87453999		1	HOSE ASSY., 1020 mm (40.15 in) High Flow
13		87602204		1	HOSE, 1200 mm (47.24 in) High Flow Suction
14		86639006		1	CLAMP, 1 1/2", Insul, 1/2" Bolt
15		43127		1	BOLT, Hex, M8 x 25, 8.8
16		86625263		1	WASHER, M8 x 20 x 1.6
17		9618946		1	TEE, 37º, 1 5/16"-12 x 1 5/16"-12, Fem Sw Run
18		REF			INSTRUCTION, Auxiliary Hydraulics, See Fig 08-17
19		87414769		1	SWITCH, Rocker, High Flow
20		87447970		1	HARNESS, Electro-Hydraulic Auxiliary

HIGH FLOW - AUXILIARY SYSTEM

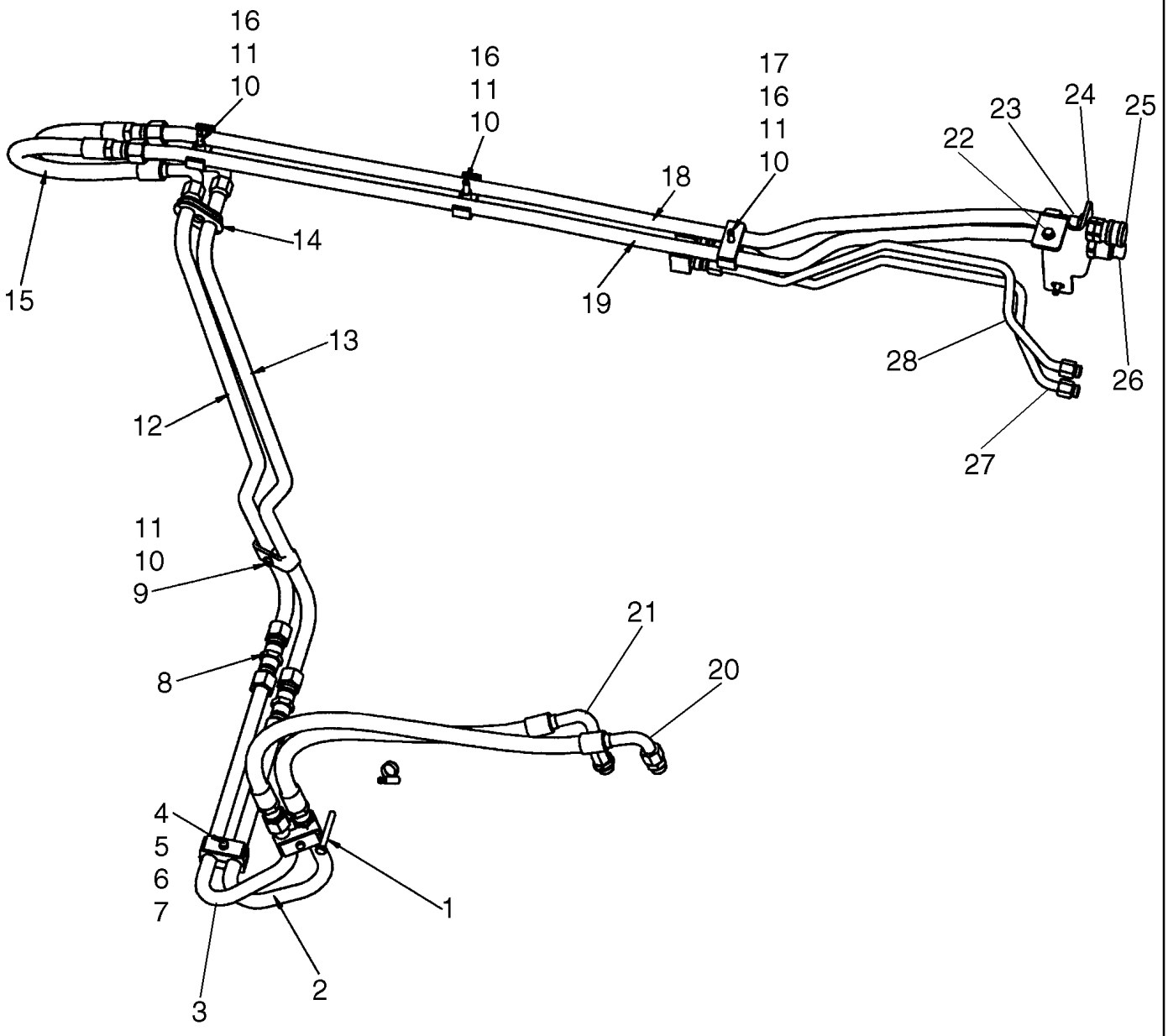

HIGH FLOW - AUXILIARY SYSTEM

REF	FN	PART NUMBER	YR/SN	QTY	DESCRIPTION
		87617100		1	KIT, SERVICE, Kit, High Flow Bi-Directional Gear; Incl 1 - 28 And Fig 08-16
1		120073		1	BOLT, Hex, M10 x 80, 8.8
2		87026696		1	TUBE ASSY.
3		87026695		1	TUBE ASSY.
4		43130		1	BOLT, Hex, M8 x 50, 8.8
5		80681		2	WASHER, LOCK, 5/16"
6		257859A1		1	PLATE, SPACER
7		1546028C1		1	CLAMP
8		9790526		1	UNION
9		325829		1	BOLT, Hex, M10 x 45, 8.8
10		87022737		4	SPACER
11		87020743		4	BRACKET
12		87554226		1	TUBE, HYD, High Flow Aux
13		87554200		1	TUBE, HYD, High Flow Aux
14		87017999		2	SUPPORT
15		87020048		2	HOSE, 675 mm (26.57 in)
16		87025275		3	SCREW, 3/8 x 2.5
17		87023483		1	PLATE
18		87023470		1	TUBE ASSY.
19		87023469		1	TUBE ASSY.
20		87453999		1	HOSE ASSY., 1020 mm (40.15 in) High Flow
21		87454000		1	HOSE ASSY., 860 mm (33.85 in) High Flow
22		280476		2	SCREW, SELF TAP, Hex Wash Hd, 3/8" x 1"
23		86513144		2	NUT, LOCK, Blkhd, 1 5/16"-12
24		87023398		1	BRACKET
25		87022671		1	COUPLING, 5/8, Female; Mating Conector For 87022671 (Female) Is 395268A1 (Male)
26		87022672		1	COUPLING, 5/8, Male; Mating Connector For 87022672 (Male) Is 395267A1 (Female)
27		87023472		1	TUBE ASSY.
28		87023471		1	TUBE ASSY.

HIGH FLOW - CONTROL VALVE

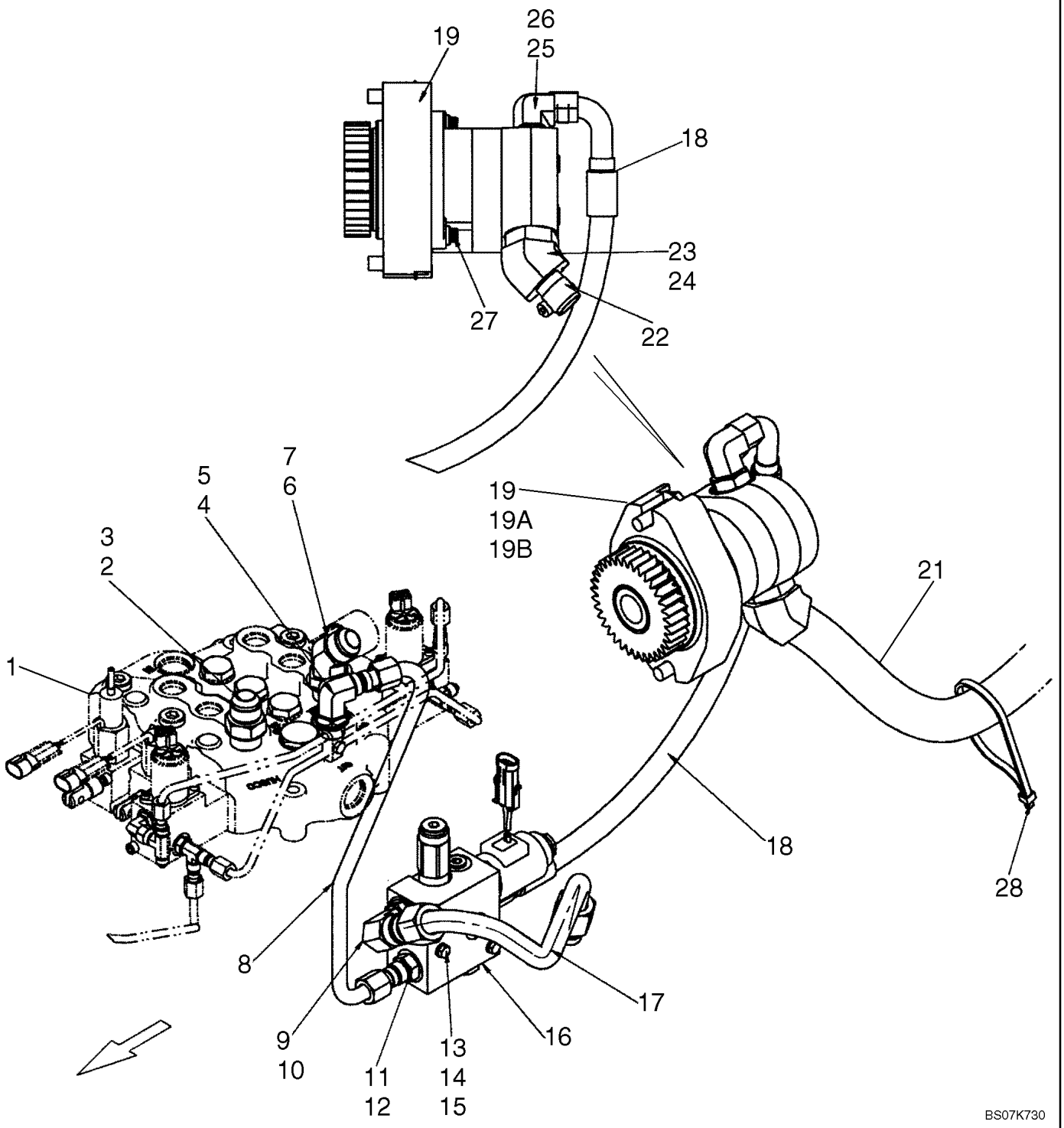

HIGH FLOW - CONTROL VALVE

REF	FN	PART NUMBER	YR/SN	QTY	DESCRIPTION
1		87546975			VALVE, HYDRAULIC, Control Valve See Fig 08-23
2		322896		1	CONNECTOR, HYD., 1 1/16"-12, 37º x 1 1/16"-12, O-Ring, Incl 3
3		167266		1	O-RING, 12-1, 90 Duro, .924 ID x .116" Thk
4		9617891		1	ELBOW, 90º, 3/4"-16, 37º x 7/8"-14, O-Ring, Incl 5
5		167269		1	O-RING, 10-1, 90 Duro, .755" ID x .097" Thk
6		330344		1	ELBOW, 45º, 1 1/16"-12 x 1 1/16"-12, O-Ring, Incl 7
7		167266		1	O-RING, 12-1, 90 Duro, .924 ID x .116" Thk
8		87549658		1	TUBE, RIGID, Tube; High Flow Supply
9		322894		1	ELBOW, 90º, 1 1/16"-12, 37º x 1 1/16"-12, O-Ring, Incl 10
10		167266		1	O-RING, 12-1, 90 Duro, .924 ID x .116" Thk
11		128818		2	CONNECTOR, HYD., 3/4"-16, 37º x 3/4"-16, O-Ring, Incl 12
12		128825		2	O-RING, 8-1, 90 Duro, .644" ID x .087" Thk
13		86588450		2	WASHER, M6
14		338413		2	BOLT, Hex, M6 x 60, 8.8
15		87404992		2	NUT
16		87012669		1	VALVE, Combination Valve; See Fig 08-19
17		87549660		1	TUBE, HYD, Valve To Filter
18		87458725		1	HOSE, 565 mm (22.24 in) Supply
19		2853146		1	PTO
19A		16588324		2	SCREW
19B		4896897		1	GASKET
20		87020733		1	PUMP, Incl. Seal Kit 87042214, See Figure 06-55
21		87602204		1	HOSE, 1200 mm (47.24 in) High Flow Suction
22		86536660		1	CLAMP, HOSE, #16, 0.81/1.50 Type F Worm
23		{87029968}		1	STEM; 45 Bead Hose 1.0 ID x 1-5-16-12 THD; Incl 24
24		167268		1	O-RING, 16-1, 90 Duro, 1.171" ID x .116" Thk
25		84570		1	ELBOW, 90º, 7/8"-14, 37º x 1 1/16"-12, O-Ring, Incl 26
26		167266		1	O-RING, 12-1, 90 Duro, .924 ID x .116" Thk
27		87016486		2	SCREW, 12 Pt Hd, M10 x 30, 12.9
28		529070		1	STRAP, CABLE, .30" x 14.5"

CONTROL VALVE ASSEMBLY - HIGH FLOW

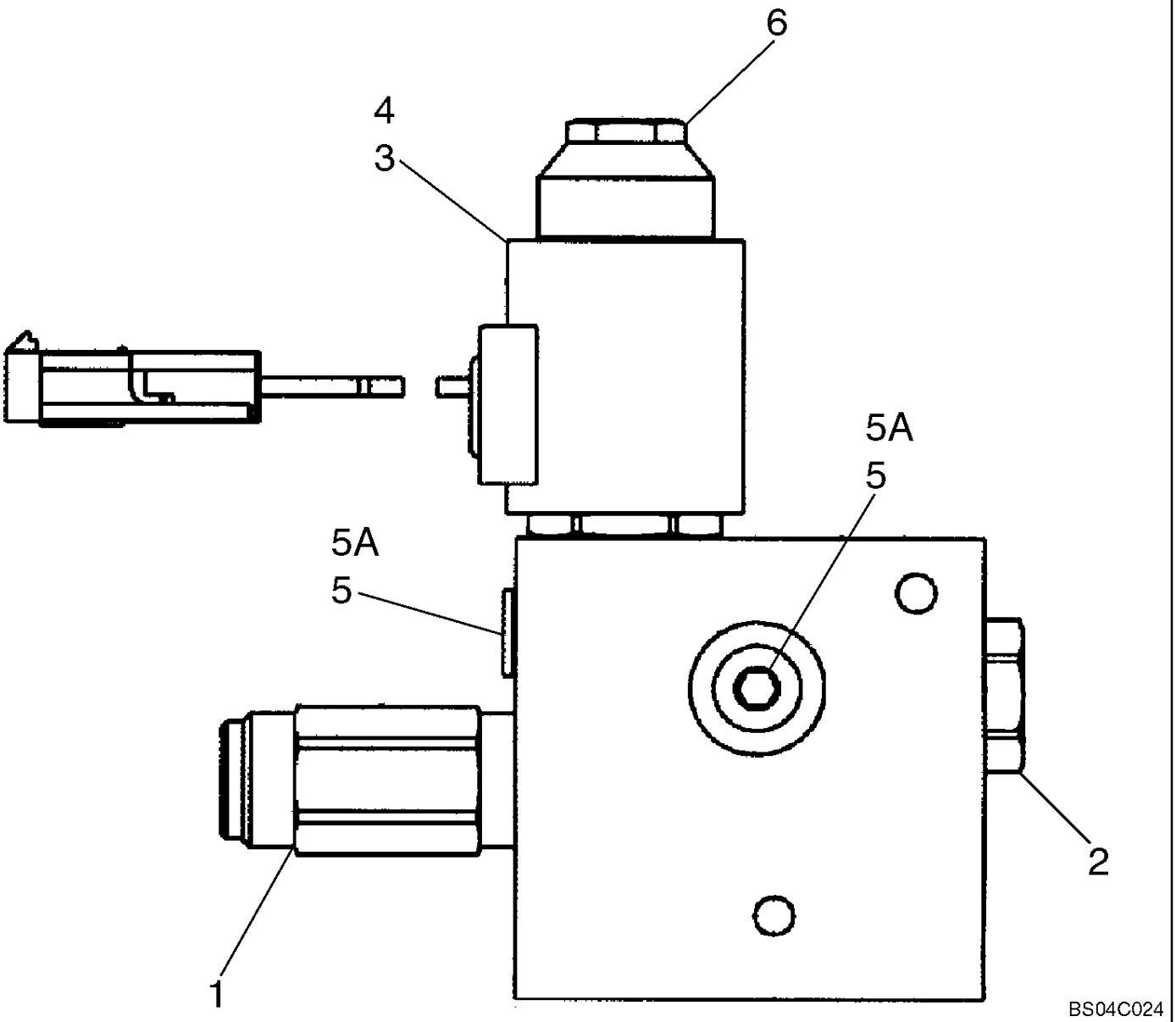

CONTROL VALVE ASSEMBLY - HIGH FLOW

REF	FN	PART NUMBER	YR/SN	QTY	DESCRIPTION
		87012669		1	VALVE, Combination Valve; High Flow; Incl. 1 - 6 And Seal Kit 86527863
1		87447123		1	VALVE, Relief Valve; Component Parts Not Serviced Separately
2		86527866		1	VALVE, HYDRAULIC, Check Valve; Component Parts Not Serviced Separately
3		86527861		1	VALVE, HYDRAULIC, Cartridge, Valve; Component Parts Not Serviced Separately
4		87447124		1	SOLENOID, Coil
5		76349		2	PLUG, Hex Hd, 9/16"-18 ORB, Incl. 5A
5A		9617873		1	O-RING, 6-1, 90 Duro, .468" ID x .078" Thk
6		86527865		1	NUT
		86527863		1	KIT, SEALS, Not Illustrated

CONTROL VALVE - 87583286 VALVE ASSY

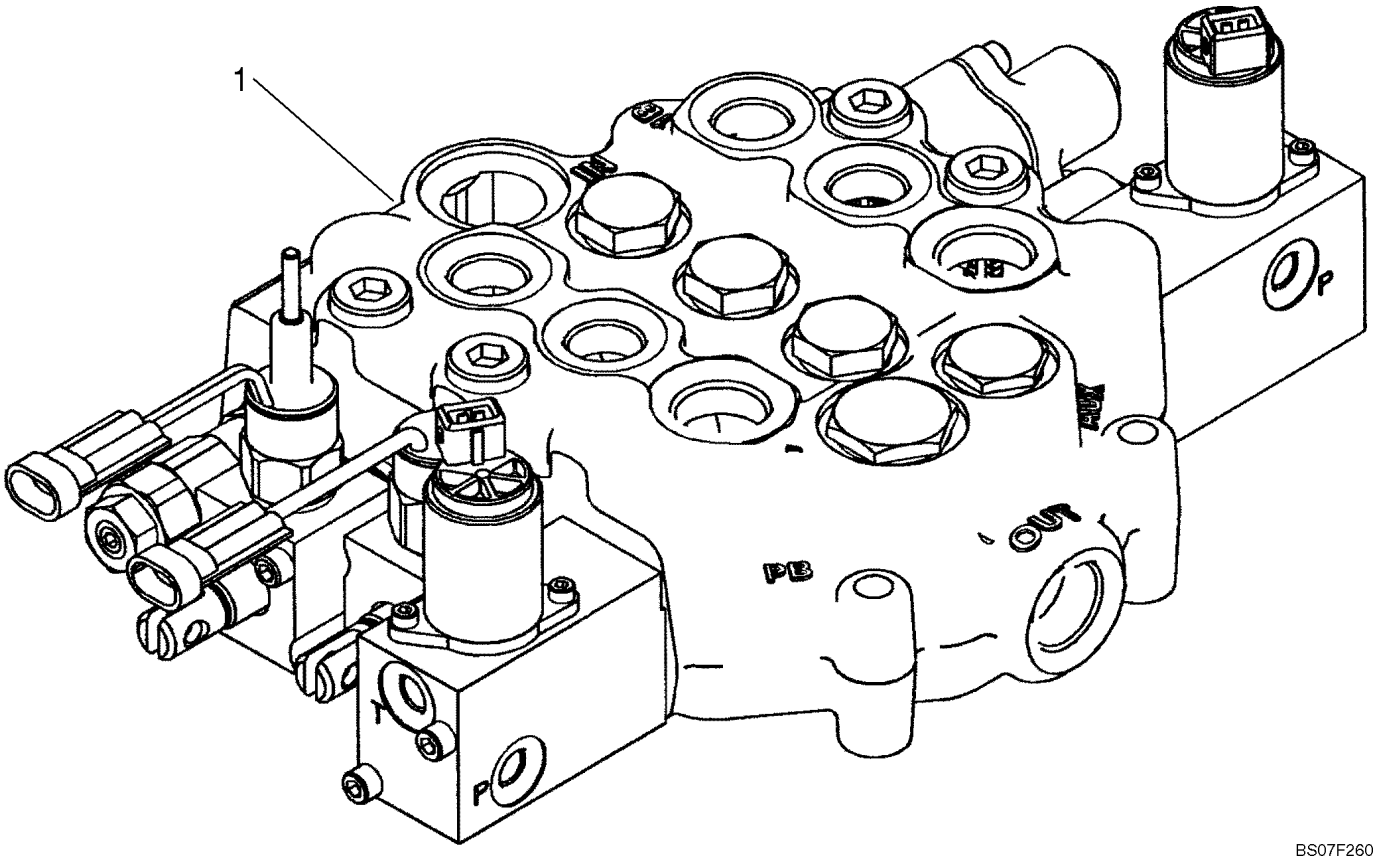

BS07F260

CONTROL VALVE - 87583286 VALVE ASSY

REF	FN	PART NUMBER	YR/SN	QTY	DESCRIPTION
1		87583286		1	VALVE, Incl. 2 - 23
2		87610349		1	KIT, SEALS, Seal Replacement Kit; See Fig 08-24
3		87610350		1	VALVE, Main Relief Valve; See Fig 08-25
4		87576153		1	VALVE, Workport Relief Valve; See Fig 08-26
5		87445935		1	VALVE, Workport Relief Valve; See Fig 08-26
6		87445943		1	VALVE, Workport Relief Valve; See Fig 08-26
7		87445932		1	VALVE, Workport Anti-Cavitation; See Fig 08-26
8		87445988		1	SOLENOID, Spool Lock Out Solenoid Manual; See Fig 08-27
9		87445987		1	SOLENOID, Spool Lock Out Solenoid Non-Manual; See Fig 08-28
10		87576154		2	VALVE, SOLENOID, Hi-Flow Solenoids For EH Auxiliary; See Fig 08-38
11		87576157		3	VALVE, DAMPING, Check Valve Group; See Fig 08-30
12		87610351		1	VALVE, Check Valve Group; See Fig 08-30
13		87576158		1	PLUG, See Fig 08-30
14		87576160		1	PLUG, See Fig 08-30
15		87576161		1	PLUG
16		87610352		3	PLUG, Plug
17		87576162		1	PLUG, See Fig 08-30
18		87576163		1	SPOOL, Detent
19		87576169		1	SPOOL
20		87611845		1	SPOOL, EHPV; See Fig 08-38
21		87611846		1	SPOOL, EHPV; See Fig 08-39
22		87611848		1	SPOOL, Spool; See Fig 08-28
23		87611849		1	SPOOL, See Fig 08-27

CONTROL VALVE - 87583285 VALVE ASSY

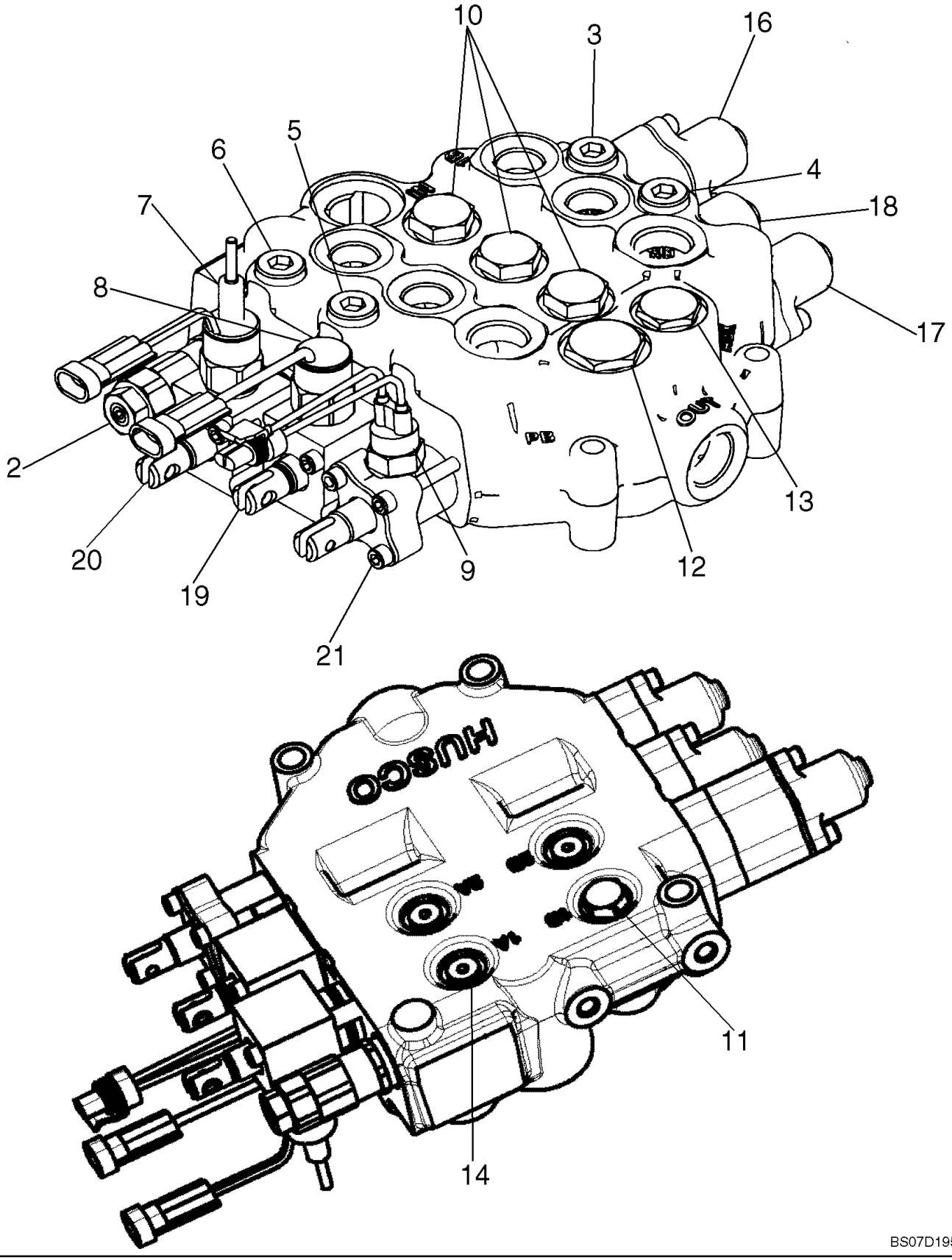

CONTROL VALVE - 87583285 VALVE ASSY

REF	FN	PART NUMBER	YR/SN	QTY	DESCRIPTION
		87583285		1	VALVE, Manual Control Valve
1		87610349		1	KIT, SEALS, Seal Replacement Kit; See Fig. 08-24
2		87610350		1	VALVE, Main Relief Valve, 210 Bar (3050 psi); See Fig. 08-25
3		87576153		1	VALVE, Workport Relief Valve, 215 Bar; See Fig. 08-26
4		87445935		1	VALVE, Workport Relief Valve, 230 Bar; See Fig. 08-26
5		87445943		1	VALVE, Workport Relief Valve, 260 Bar; See Fig. 08-26
6		87445932		1	VALVE, Workport Anti-Cavitation; See Fig. 08-26
7		87445988		1	SOLENOID, Spool Lock Out Solenoid, Manual; See Fig. 08-27
8		87445987		1	SOLENOID, Spool Lock Out Solenoid, Non-Manual; See Fig. 08-26
9		87446617		1	SWITCH, Auxiliary Spool Interlock Switch; See Fig. 08-29
10		87576157		3	VALVE, DAMPING, Check Valve Group; See Fig. 08-30
11		87610351		1	VALVE, Check Valve Group; See Fig. 08-30
12		87576158		1	PLUG, Plug Assembly; See Fig. 08-30
13		87576160		1	PLUG, Plug Assembly; See Fig. 08-30
14		87610352		3	PLUG, Plug Assembly
15		87576162		1	PLUG, Plug Assembly, Metric; Not Illustrated; See Fig. 08-30
16		87576163		1	SPOOL, Spool End Group, Detent; See Fig. 08-31
17		87576168		1	SPOOL, Spool End Group; See Fig. 08-32
18		87576169		1	SPOOL, Spool End Group; See Fig. 08-33
19		87611848		1	SPOOL, Spool End Group; See Fig. 08-28
20		87611849		1	SPOOL, Spool End Group; See Fig. 08-27
21		87611850		1	SPOOL, Spool End Group; See Fig. 08-29

CONTROL VALVE - 87546974 VALVE ASSY

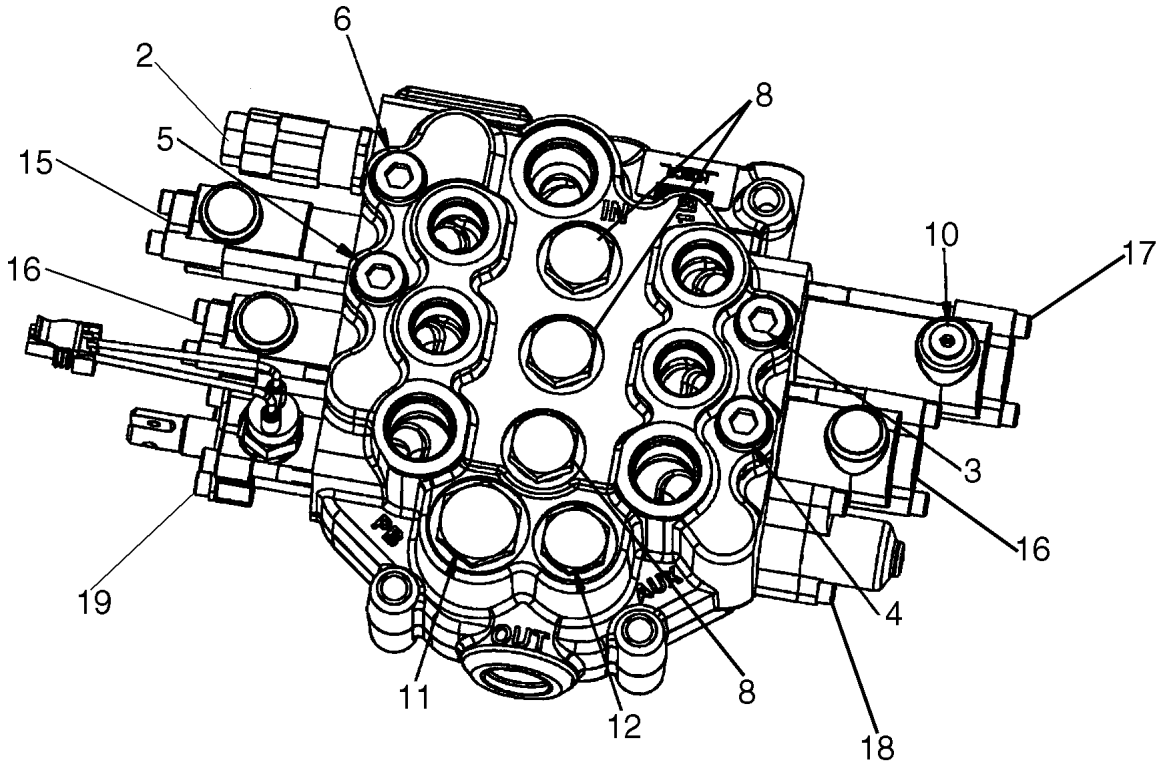

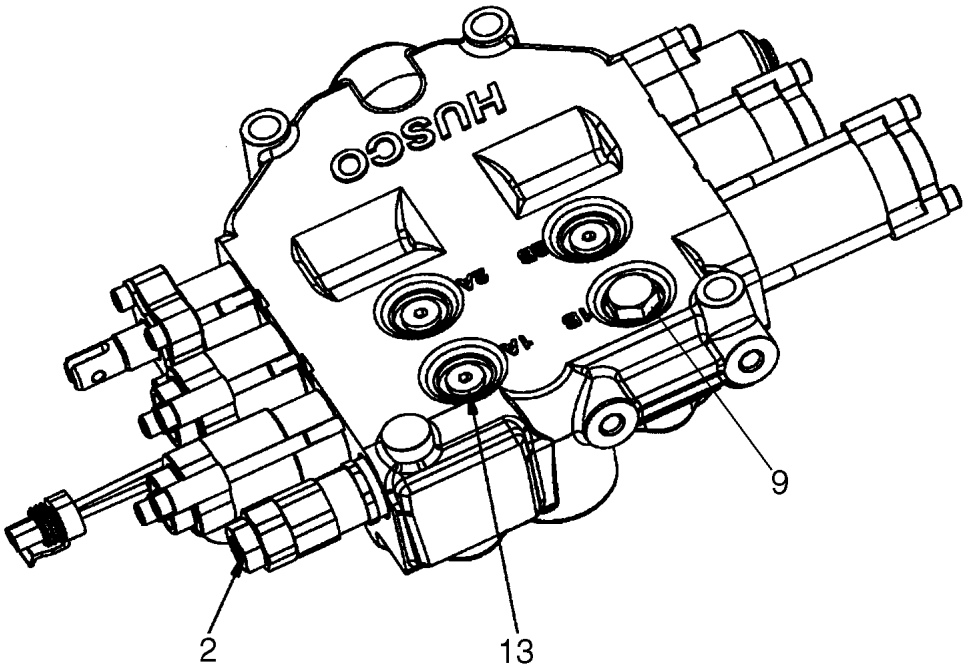

BS07H033

CONTROL VALVE - 87546974 VALVE ASSY

REF	FN	PART NUMBER	YR/SN	QTY	DESCRIPTION
		87546974		1	VALVE, HYDRAULIC, Manual Control Valve; Models With Pilot Control
1		87610517		1	KIT, SEALS, Seal Replacement Kit; See Fig. 08-34
2		87610350		1	VALVE, Main Relief Valve, 210 Bar (3050 psi); See Fig. 08-25
3		87576153		1	VALVE, Workport Relief Valve, 215 Bar; See Fig. 08-26
4		87445935		1	VALVE, Workport Relief Valve, 230 Bar; See Fig. 08-26
5		87445943		1	VALVE, Workport Relief Valve, 260 Bar; See Fig. 08-26
6		87445932		1	VALVE, Workport Anti-Cavitation; See Fig. 08-26
7		87446617		1	SWITCH, Auxiliary Spool Interlock Switch; See Fig. 08-29
8		87576157		3	VALVE, DAMPING, Check Valve Group; See Fig. 08-30
9		87610351		1	VALVE, Check Valve Group; See Fig. 08-30
10		87610530		1	PLUG, Plug Assy
11		87576158		1	PLUG, Plug Assembly; See Fig. 08-30
12		87576160		1	PLUG, Plug Assembly; See Fig. 08-30
13		87610352		3	PLUG, Plug Assembly
14		87576162		1	PLUG, Plug Assembly, Metric; Not Illustrated; See Fig. 08-30
15		87610531		1	SPOOL, Spool End Group; See Fig. 08-37
16		87610532		1	SPOOL, Spool End Group; See Fig. 08-36
17		87610533		1	SPOOL, Spool End Group; See Fig. 08-35
18		87576168		1	SPOOL, Spool End Group; See Fig. 08-32
19		87611850		1	SPOOL, Spool End Group; See Fig. 08-29

CONTROL VALVE - 87546975 VALVE ASSY

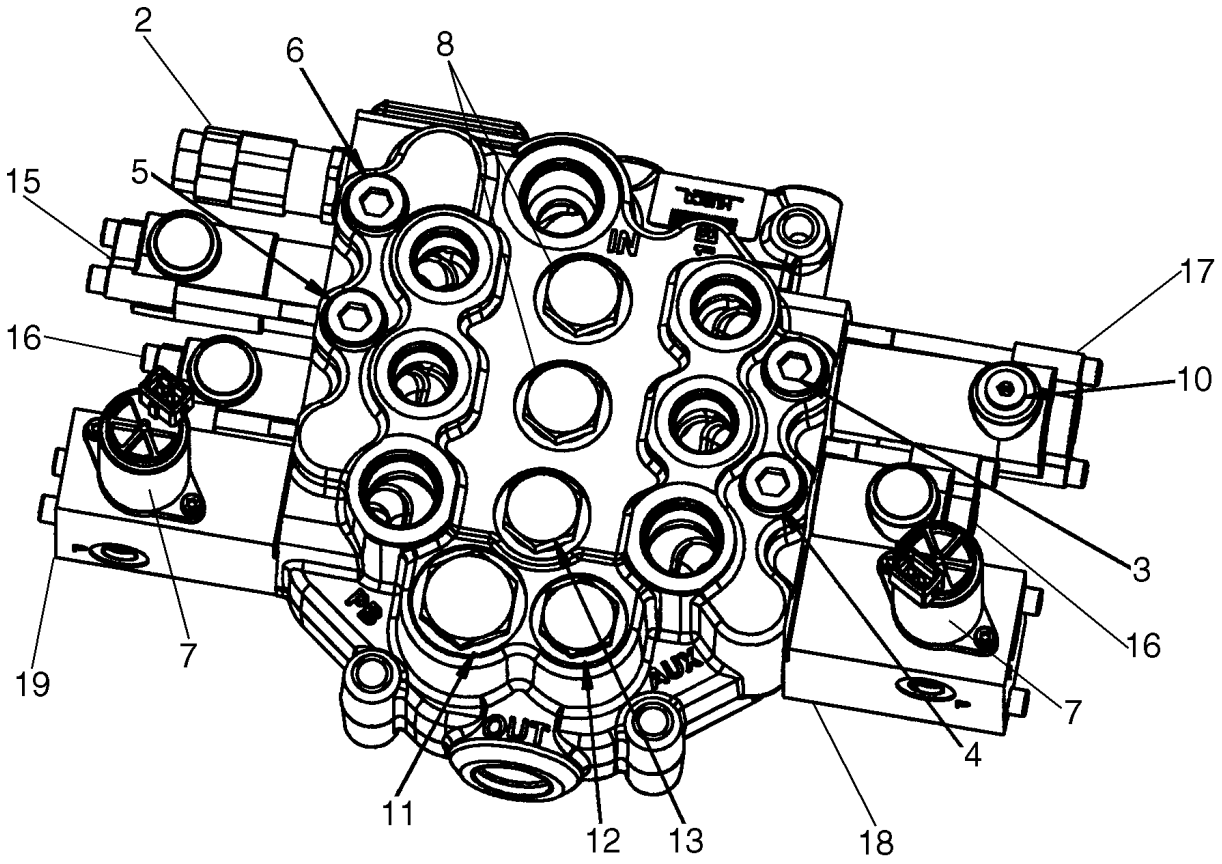

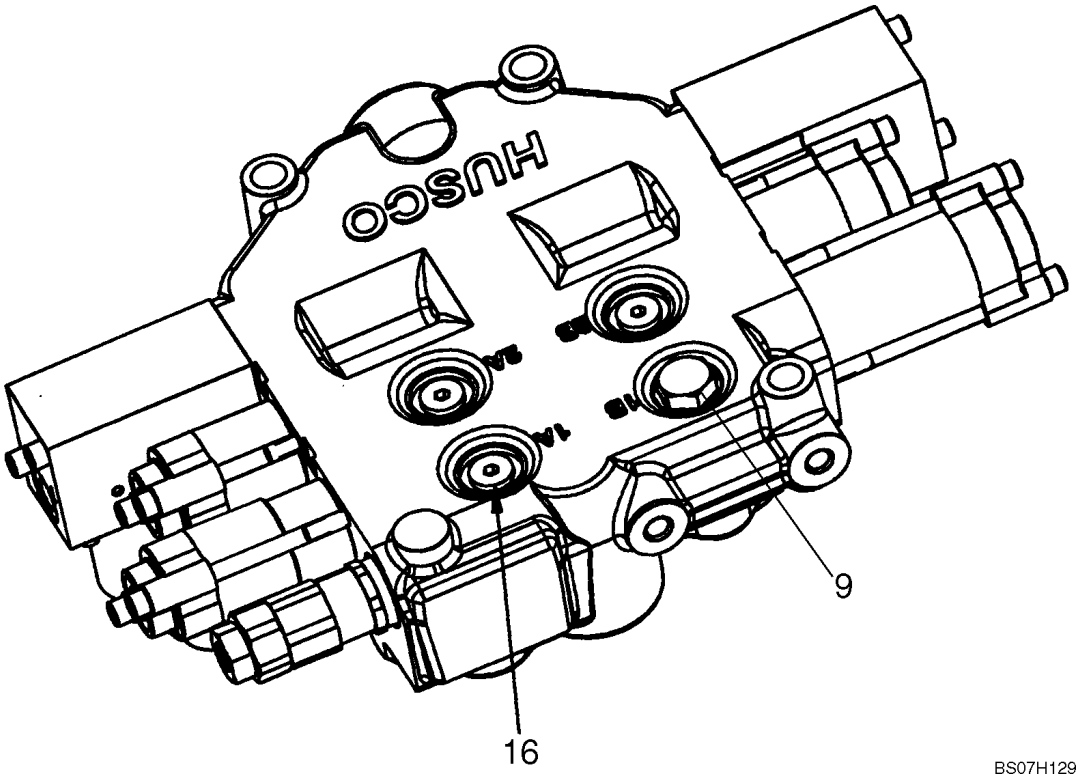

BS07H129

CONTROL VALVE - 87546975 VALVE ASSY

REF	FN	PART NUMBER	YR/SN	QTY	DESCRIPTION
		87546975		1	VALVE, HYDRAULIC, Manual Control Valve; Pilot Control Models With Hydraulic Attachment
1		87610517		1	KIT, SEALS, Seal Replacement Kit; See Fig. 08-34
2		87610350		1	VALVE, Main Relief Valve, 210 Bar (3050 psi); See Fig. 08-25
3		87576153		1	VALVE, Workport Relief Valve, 215 Bar; See Fig. 08-26
4		87445935		1	VALVE, Workport Relief Valve, 230 Bar; See Fig. 08-26
5		87445943		1	VALVE, Workport Relief Valve, 260 Bar; See Fig. 08-26
6		87445932		1	VALVE, Workport Anti-Cavitation; See Fig. 08-26
7		87576154		2	VALVE, SOLENOID, High Flow Solenoids For EH Auxiliary; See Fig. 08-38, 08-39
8		87576157		2	VALVE, DAMPING, Check Valve Group; See Fig. 08-30
9		87610351		1	VALVE, Check Valve Group; See Fig. 08-30
10		87610530		1	PLUG, Plug Assy
11		87576158		1	PLUG, Assembly; See Fig. 08-30
12		87576160		1	PLUG, Assembly; See Fig. 08-30
13		87576161		1	PLUG, Assembly
14		87576162		1	PLUG, Assembly, Metric; Not Illustrated; See Fig. 08-30
15		87610531		1	SPOOL, Spool End Group; See Fig. 08-37
16		87610532		1	SPOOL, Spool End Group; See Fig. 08-36
17		87610533		1	SPOOL, Spool End Group; See Fig. 08-35
18		87611845		1	SPOOL, Spool End Group; EHPV; Incl. Ref 7; See Fig. 08-38
19		87611846		1	SPOOL, Spool End Group; EHPV; Incl. Ref 7; See Fig. 08-39

CONTROL VALVE - SEAL REPLACEMENT KITS

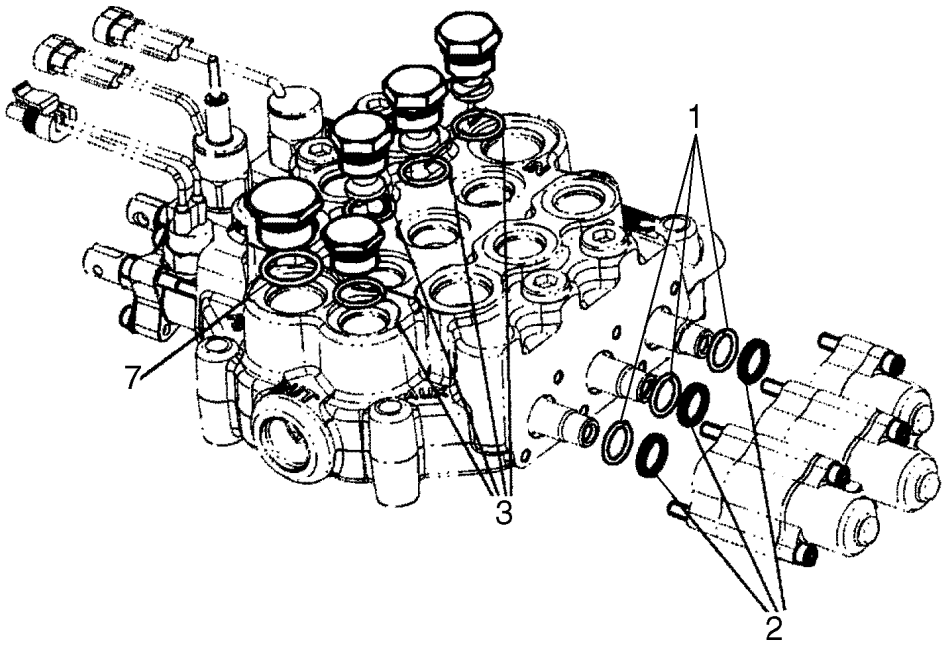

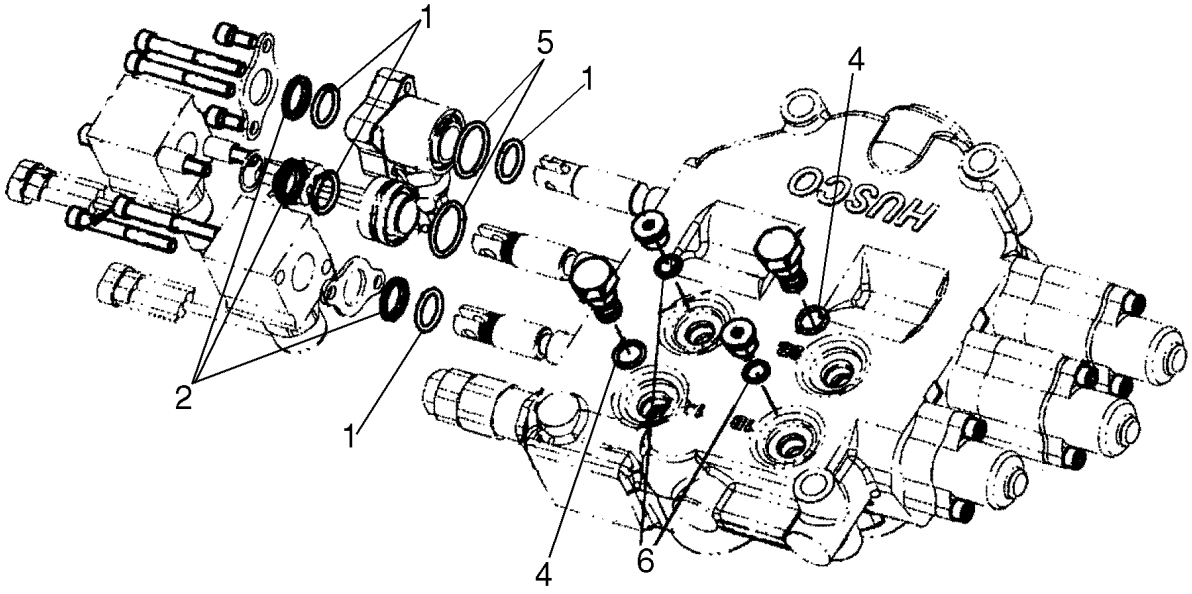

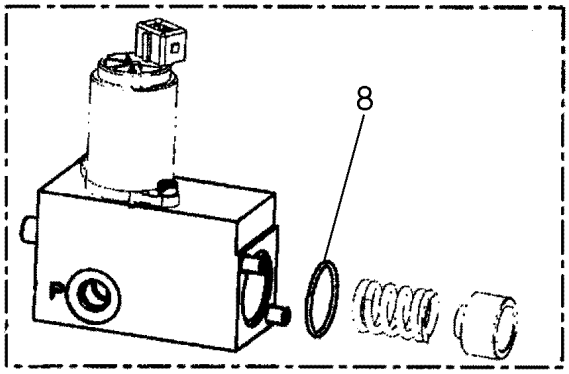

BS07D196

CONTROL VALVE - SEAL REPLACEMENT KITS

REF	FN	PART NUMBER	YR/SN	QTY	DESCRIPTION
		87610349		1	KIT, SEALS, Kit, Seal Replacement; Incl. 1 - 8
1		NSS		7	NOT SERVICED SEPARATELY, O-ring, .818 OD
2		NSS		6	NOT SERVICED SEPARATELY, Wiper, .796 OD
3		NSS		4	NOT SERVICED SEPARATELY, O-ring, .949 OD
4		NSS		2	NOT SERVICED SEPARATELY, O-ring, .614 OD
5		NSS		2	NOT SERVICED SEPARATELY, O-ring, 1.063 OD
6		NSS		3	NOT SERVICED SEPARATELY, O-ring, .498 OD
7		NSS		1	NOT SERVICED SEPARATELY, O-ring, 1.156 OD
8		NSS		2	NOT SERVICED SEPARATELY, O-ring, 1.129 OD

CONTROL VALVE - MAIN RELIEF VALVE

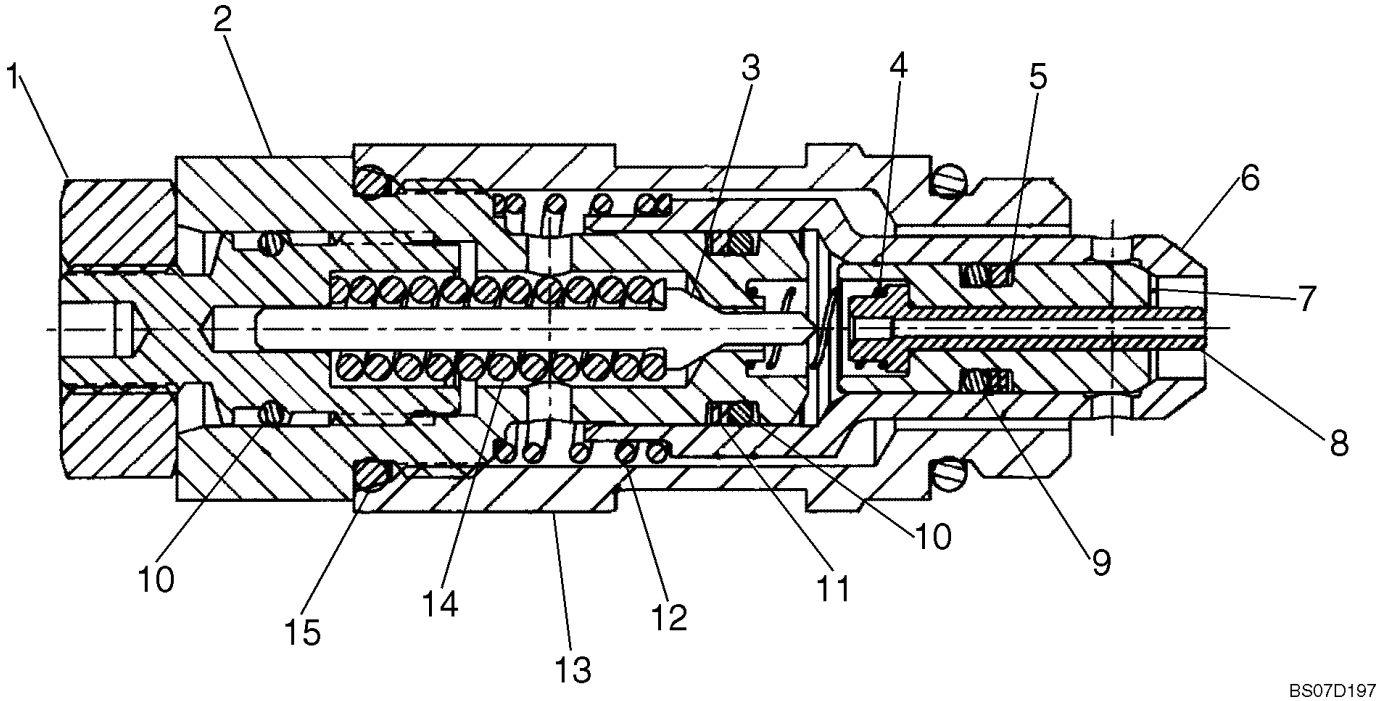

CONTROL VALVE - MAIN RELIEF VALVE

REF	FN	PART NUMBER	YR/SN	QTY	DESCRIPTION
		87610350		1	VALVE, Main Relief Valve, 3050 PSI; Incl. 1 - 16
1		NSS		1	NOT SERVICED SEPARATELY, Nut
2		NSS		1	NOT SERVICED SEPARATELY, Plug
3		NSS		1	NOT SERVICED SEPARATELY, Poppet
4		NSS		1	NOT SERVICED SEPARATELY, Spring
5		NSS		1	NOT SERVICED SEPARATELY, Back-Up Ring
6		NSS		1	NOT SERVICED SEPARATELY, Poppet
7		NSS		1	NOT SERVICED SEPARATELY, Poppet
8		NSS		1	NOT SERVICED SEPARATELY, Piston
9		NSS		1	NOT SERVICED SEPARATELY, O-Ring
10		NSS		2	NOT SERVICED SEPARATELY, O-Ring
11		NSS		1	NOT SERVICED SEPARATELY, Back-Up Ring
12		NSS		1	NOT SERVICED SEPARATELY, Spring
13		NSS		1	NOT SERVICED SEPARATELY, Body
14		NSS		1	NOT SERVICED SEPARATELY, Spring
15		NSS		2	NOT SERVICED SEPARATELY, O-Ring
16		NSS		1	NOT SERVICED SEPARATELY, Adjust Screw

CONTROL VALVE - RELIEF VALVES

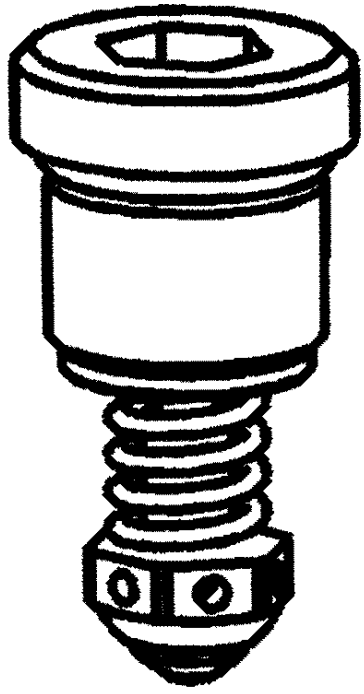

1

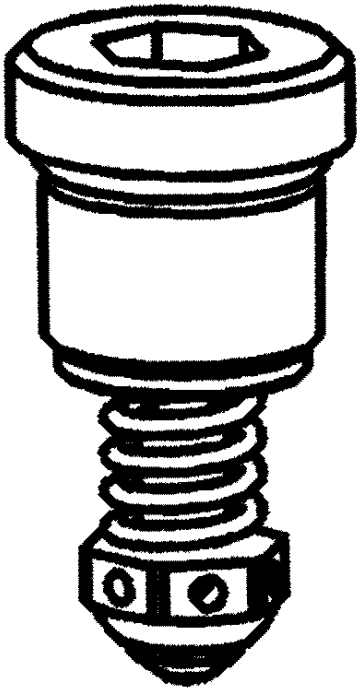

2

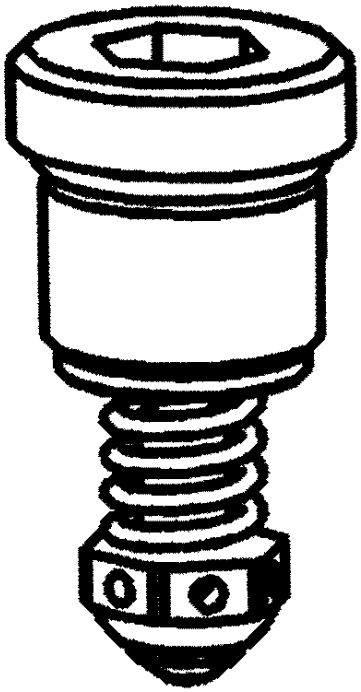

3

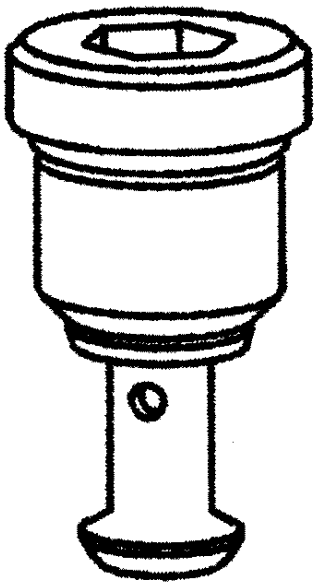

4

BS07D198

CONTROL VALVE - RELIEF VALVES

REF	FN	PART NUMBER	YR/SN	QTY	DESCRIPTION
1		87576153		1	VALVE, Workport Relief Valve, Non-Adjustable 215 Bar
2		{87448935}		1	Workport Relief Valve, Non-Adjustable 230 Bar
3		87445943		1	VALVE, Workport Relief Valve, Non-Adjustable 260 Bar
4		87445932		1	VALVE, Workport Anti-Cavitation Valve

CONTROL VALVE - SPOOL END GROUP

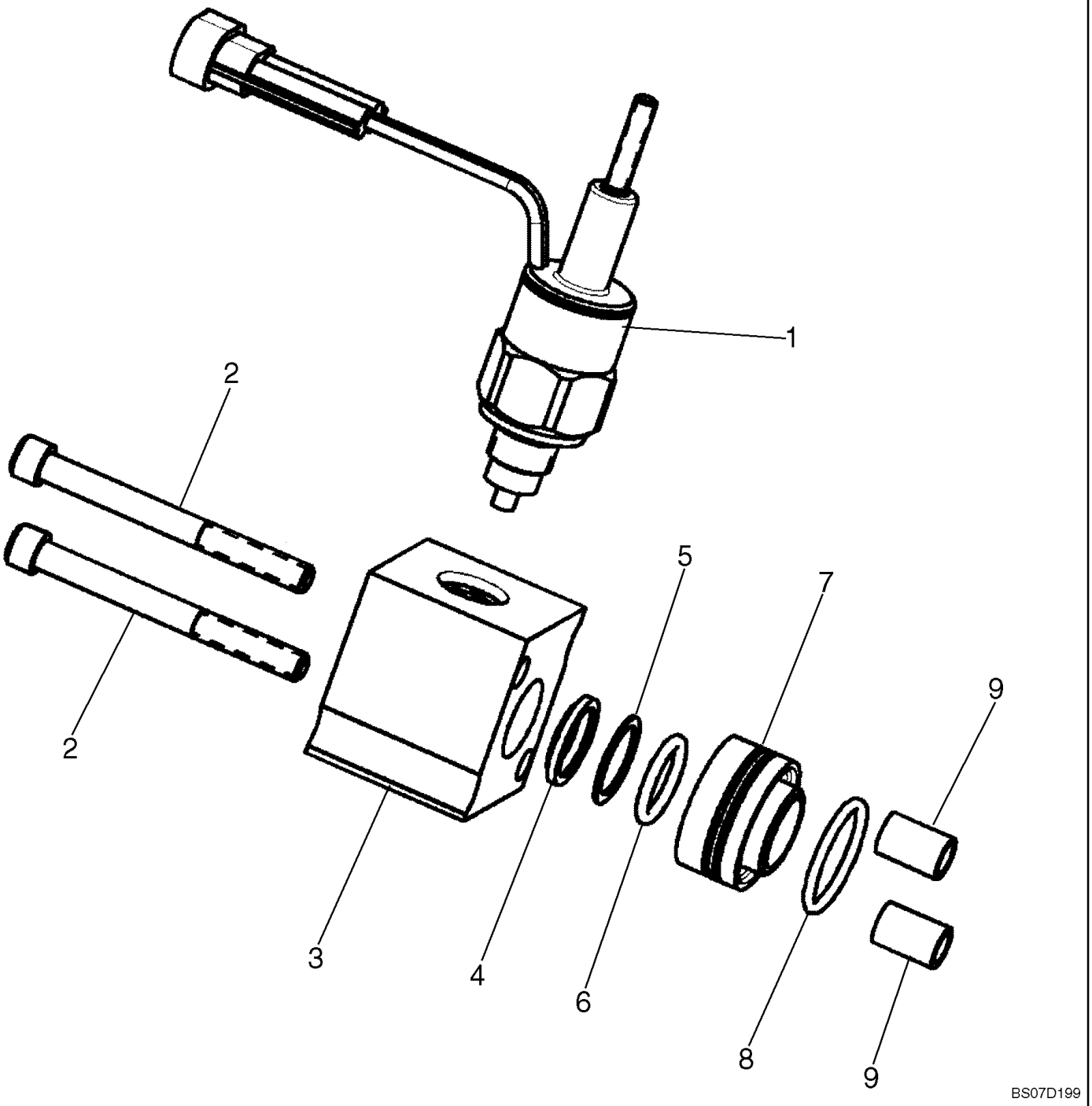

CONTROL VALVE - SPOOL END GROUP

REF	FN	PART NUMBER	YR/SN	QTY	DESCRIPTION
		87611849		1	SPOOL, Spool End Group; Incl. 1 - 9
1		87445988		1	SOLENOID, Spool Lockout Solenoid With Manual Overide
2		NSS		2	NOT SERVICED SEPARATELY, Cap Screw
3		NSS		1	NOT SERVICED SEPARATELY, Spool Cap
4		NSS		1	NOT SERVICED SEPARATELY, Wiper
5		NSS		1	NOT SERVICED SEPARATELY, Washer
6		NSS		1	NOT SERVICED SEPARATELY, O-Ring
7		NSS		1	NOT SERVICED SEPARATELY, Spool Spacer
8		NSS		1	NOT SERVICED SEPARATELY, O-Ring
9		NSS		2	NOT SERVICED SEPARATELY, Spacer

CONTROL VALVE - SPOOL END GROUP

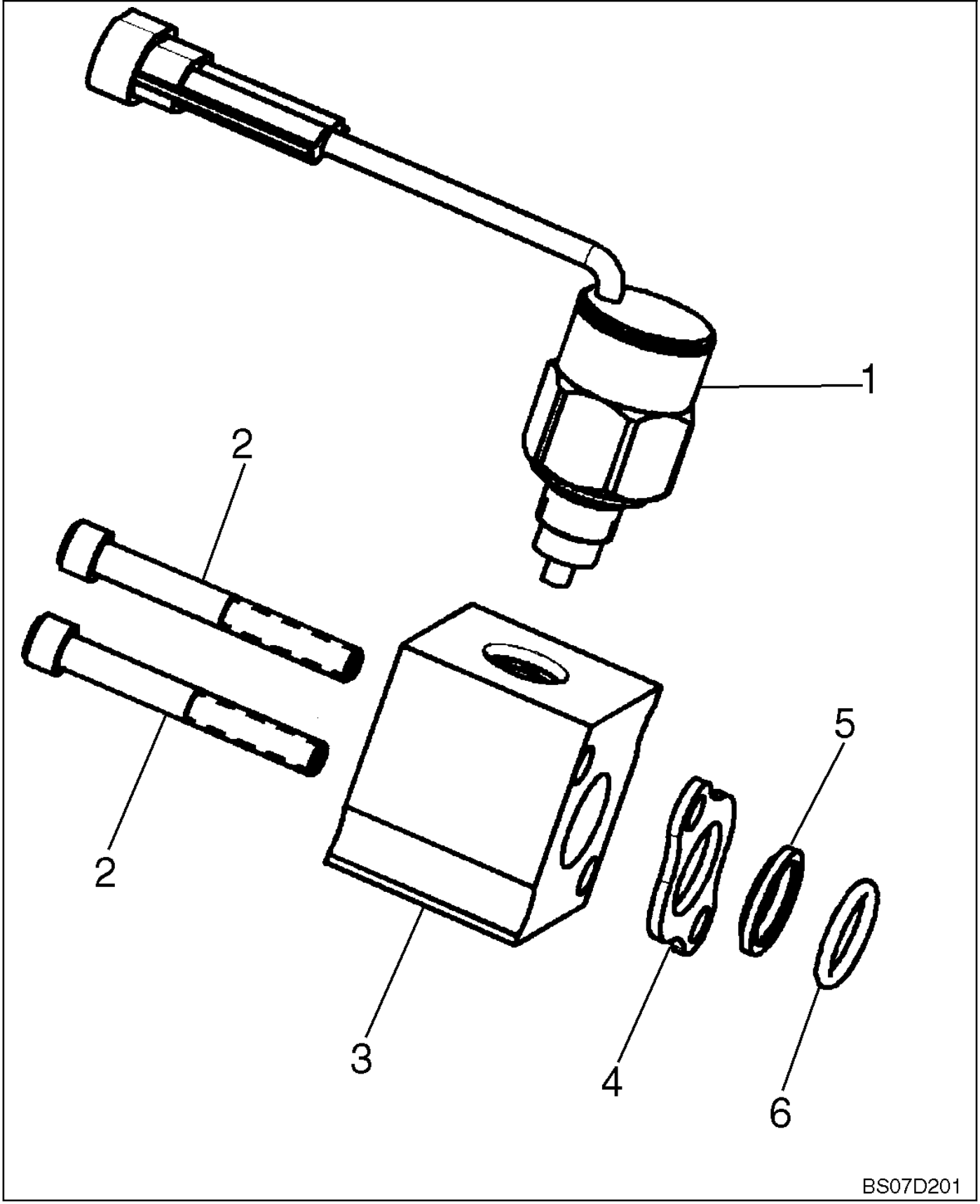

CONTROL VALVE - SPOOL END GROUP

REF	FN	PART NUMBER	YR/SN	QTY	DESCRIPTION
		87611848		1	SPOOL, Spool End Group With Solenoid; Incl. 1 - 6
1		87445987		1	SOLENOID, Spool Lockout Solenoid, Non-Manual Overide
2		NSS		2	NOT SERVICED SEPARATELY, Cap Screw
3		NSS		1	NOT SERVICED SEPARATELY, Spool Cap
4		NSS		1	NOT SERVICED SEPARATELY, Seal Plate
5		NSS		1	NOT SERVICED SEPARATELY, Wiper
6		NSS		1	NOT SERVICED SEPARATELY, O-Ring

CONTROL VALVE - SPOOL END GROUP

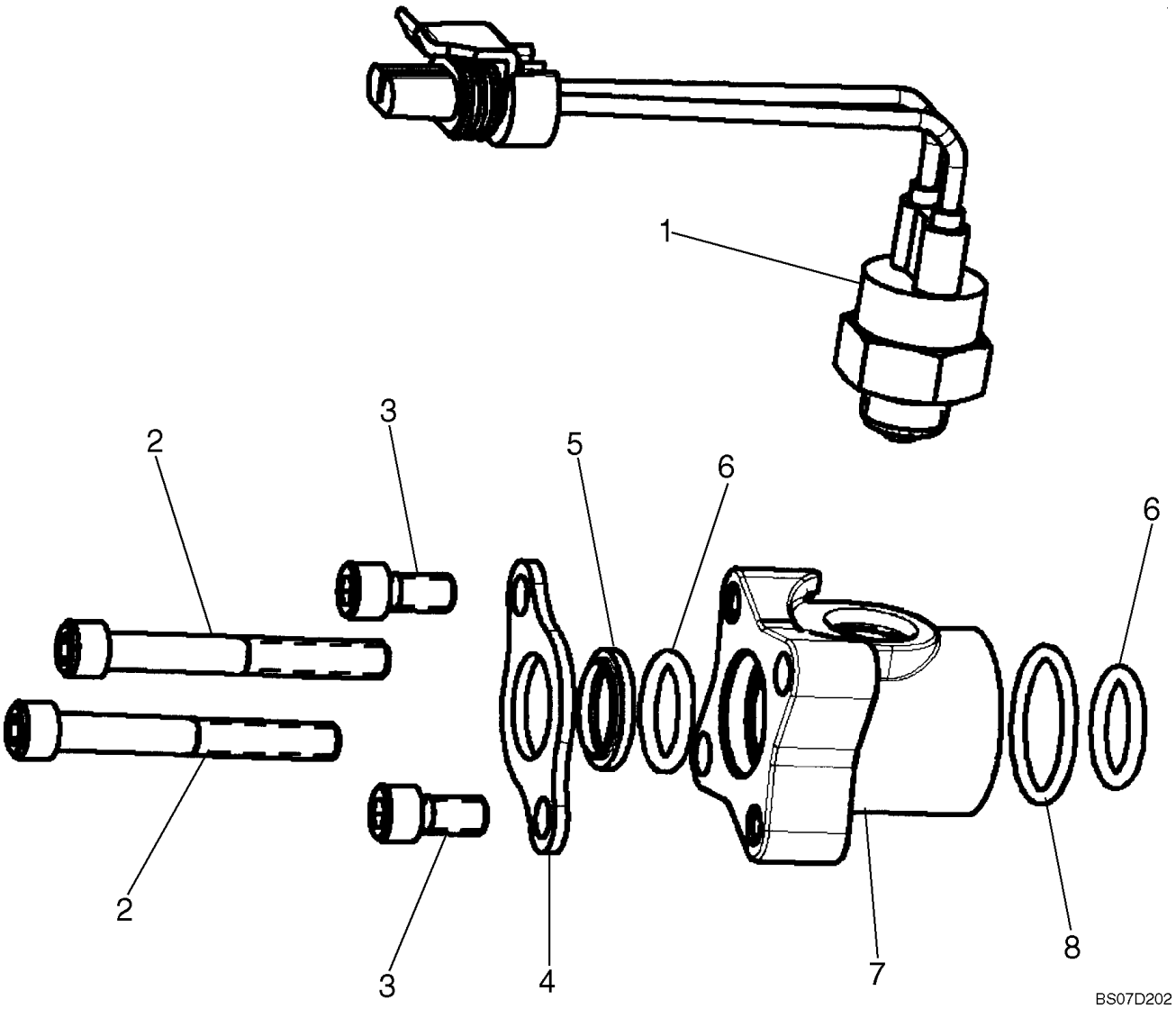

CONTROL VALVE - SPOOL END GROUP

REF	FN	PART NUMBER	YR/SN	QTY	DESCRIPTION
		87611850		1	SPOOL, Spool End Group With Switch; Incl. 1 - 8
1		87446617		1	SWITCH, Auxiliary Spool Ball Switch
2		NSS		2	NOT SERVICED SEPARATELY, Cap Screw
3		NSS		2	NOT SERVICED SEPARATELY, Cap Screw
4		NSS		1	NOT SERVICED SEPARATELY, Seal Plate
5		NSS		1	NOT SERVICED SEPARATELY, Wiper
6		NSS		2	NOT SERVICED SEPARATELY, O-Ring
7		NSS		1	NOT SERVICED SEPARATELY, Spool Cap
8		NSS		1	NOT SERVICED SEPARATELY, O-Ring

CONTROL VALVE - CHECK VALVE GROUP

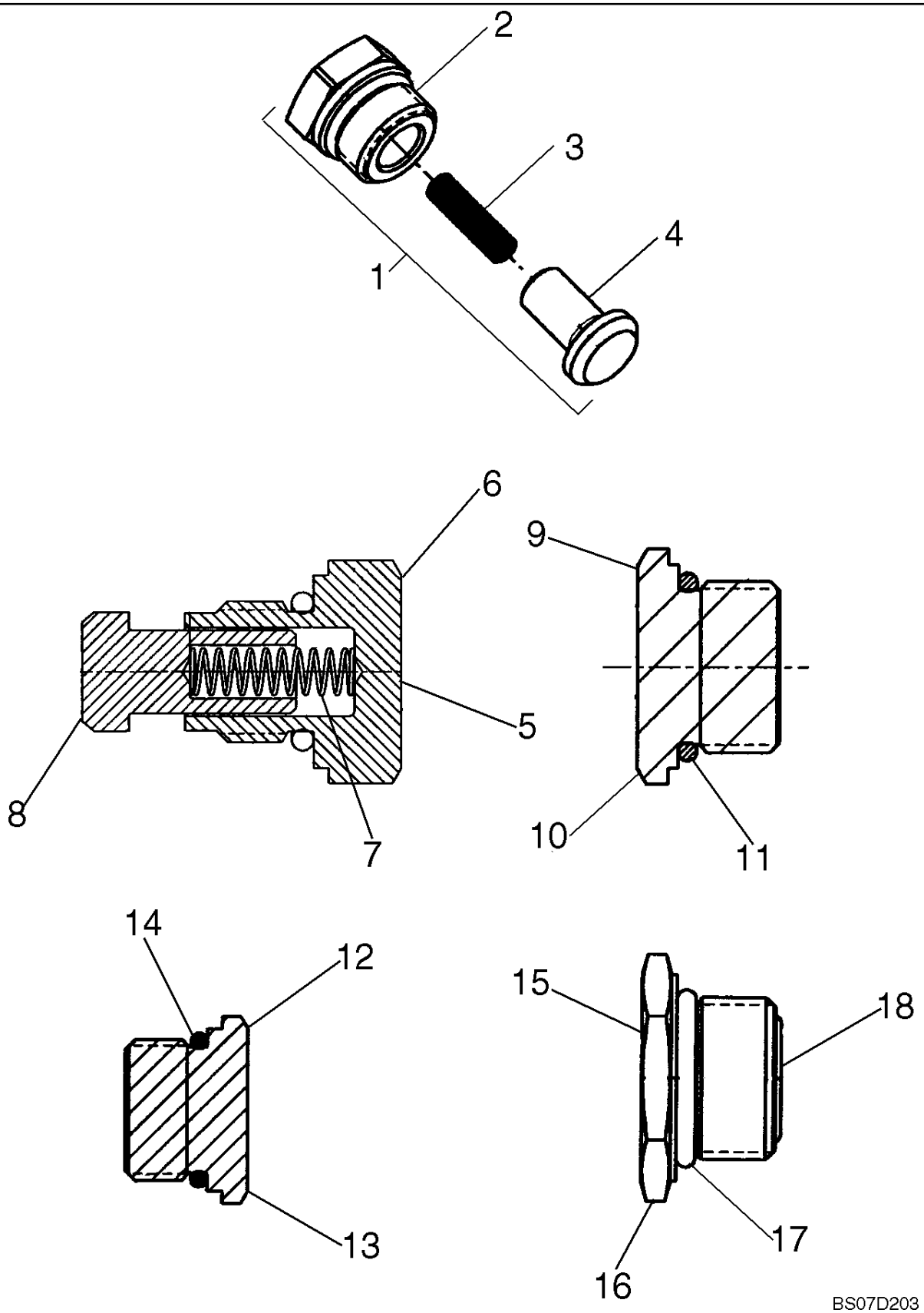

CONTROL VALVE - CHECK VALVE GROUP

REF	FN	PART NUMBER	YR/SN	QTY	DESCRIPTION
1		87576157		1	VALVE, DAMPING, Check Valve; Incl. 2 - 4
2		NSS		1	NOT SERVICED SEPARATELY, Plug
3		NSS		1	NOT SERVICED SEPARATELY, Spring
4		NSS		1	NOT SERVICED SEPARATELY, Poppet
5		87610351		1	VALVE, Check Valve; Incl. 6 - 8
6		NSS		1	NOT SERVICED SEPARATELY, Plug, M14 X 1.5-6G Thd.
7		NSS		1	NOT SERVICED SEPARATELY, Spring
8		NSS		1	NOT SERVICED SEPARATELY, Poppet
9		87576158		1	PLUG, Plug Assembly, 1-1/16 - 12UN-2A Thd.; Incl. 10, 11
10		NSS		1	NOT SERVICED SEPARATELY, Plug, 1-1/16 - 12UN-2A Thd.
11		NSS		1	NOT SERVICED SEPARATELY, O-Ring
12		87576160		1	PLUG, Plug Assembly, 7/8 - 14UNF - 2A Thd.; Incl. 13, 14
13		NSS		1	NOT SERVICED SEPARATELY, Plug, 7/8 - 14UNF - 2A Thd.
14		NSS		1	NOT SERVICED SEPARATELY, O-Ring
15		87576162		1	PLUG, Plug Assembly, M18 X 1.5-6H Thd.; Incl. 16 - 18
16		NSS		1	NOT SERVICED SEPARATELY, Plug, M18 X 1.5-6H Thd.
17		NSS		1	NOT SERVICED SEPARATELY, O-Ring
18		NSS		1	NOT SERVICED SEPARATELY, O-Ring

CONTROL VALVE - SPOOL END GROUP, DETENT

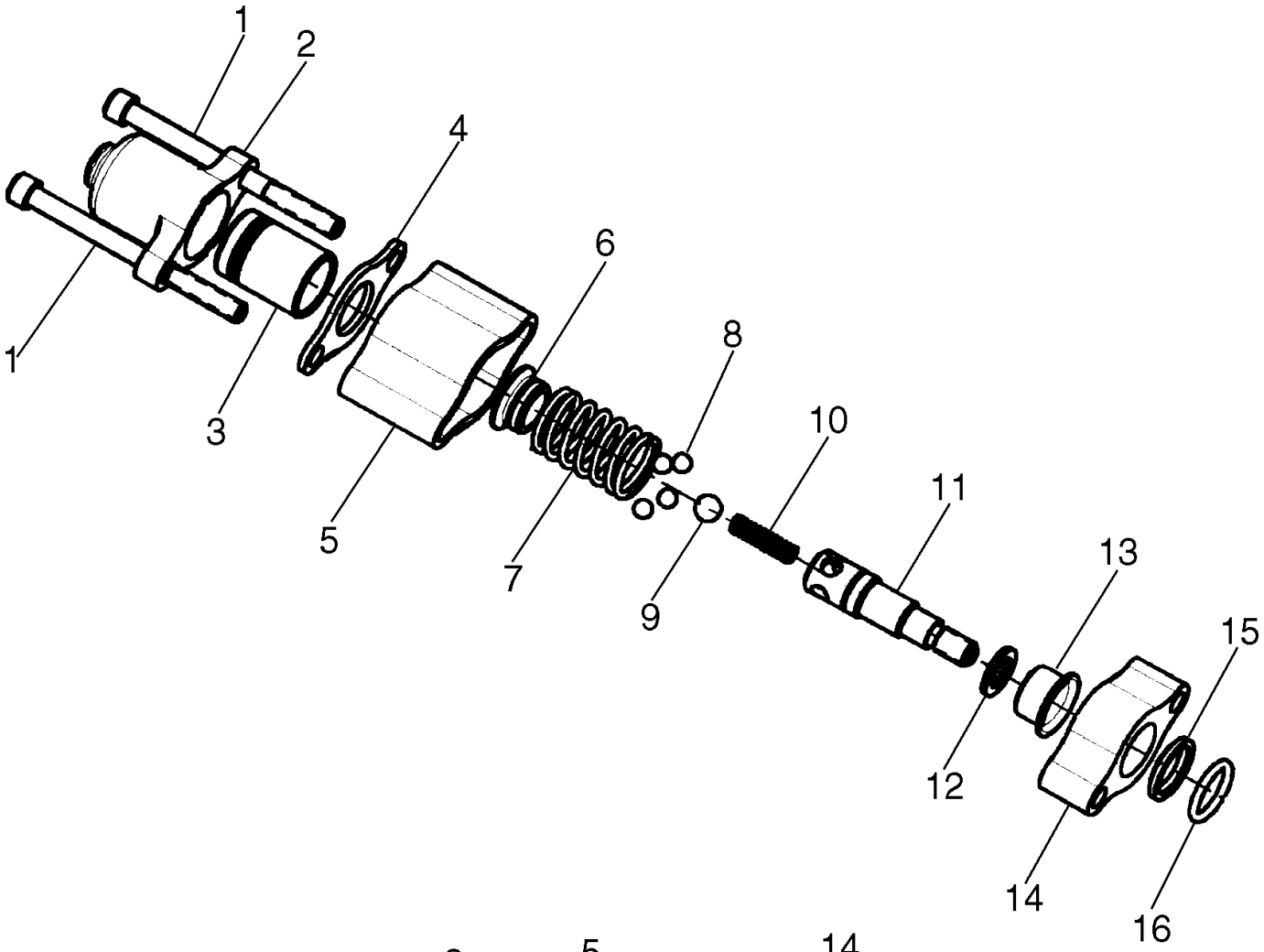

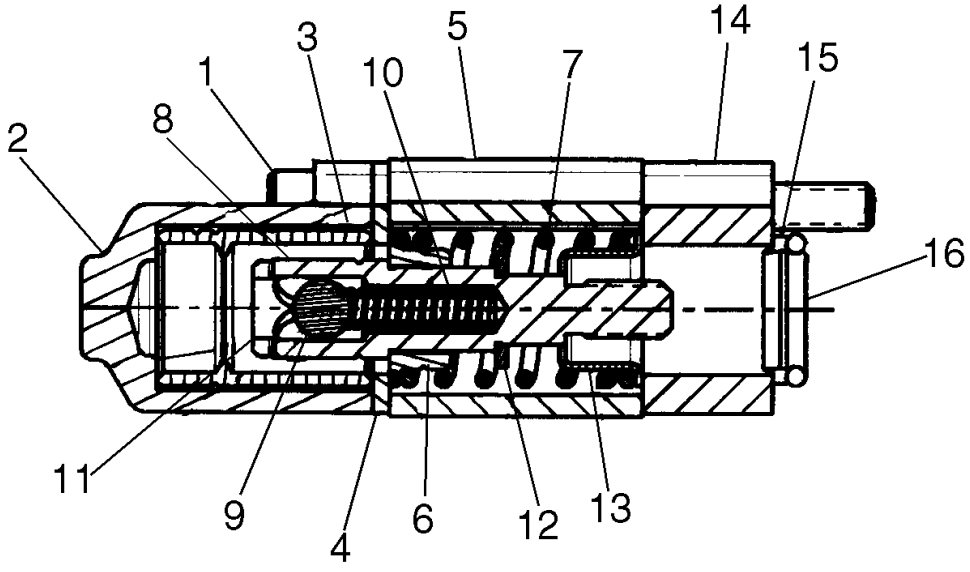

BS07D204

CONTROL VALVE - SPOOL END GROUP, DETENT

REF	FN	PART NUMBER	YR/SN	QTY	DESCRIPTION
		87576163		1	SPOOL, Spool End Group - Detent; Incl. 1 - 16
1		NSS		2	NOT SERVICED SEPARATELY, Cap Screw
2		NSS		1	NOT SERVICED SEPARATELY, Spool Cap
3		NSS		1	NOT SERVICED SEPARATELY, Sleeve - Detent
4		NSS		1	NOT SERVICED SEPARATELY, Seal Plate
5		NSS		1	NOT SERVICED SEPARATELY, Spacer
6		NSS		1	NOT SERVICED SEPARATELY, Spring Seat
7		NSS		1	NOT SERVICED SEPARATELY, Spring
8		NSS		4	NOT SERVICED SEPARATELY, Ball
9		NSS		1	NOT SERVICED SEPARATELY, Ball
10		NSS		1	NOT SERVICED SEPARATELY, Spring
11		NSS		1	NOT SERVICED SEPARATELY, Spool End, Detent Pin
12		NSS		1	NOT SERVICED SEPARATELY, Washer
13		NSS		1	NOT SERVICED SEPARATELY, Spring Seat
14		NSS		1	NOT SERVICED SEPARATELY, Plate Seal
15		NSS		1	NOT SERVICED SEPARATELY, Wiper
16		NSS		1	NOT SERVICED SEPARATELY, O-Ring

CONTROL VALVE - SPOOL END GROUP

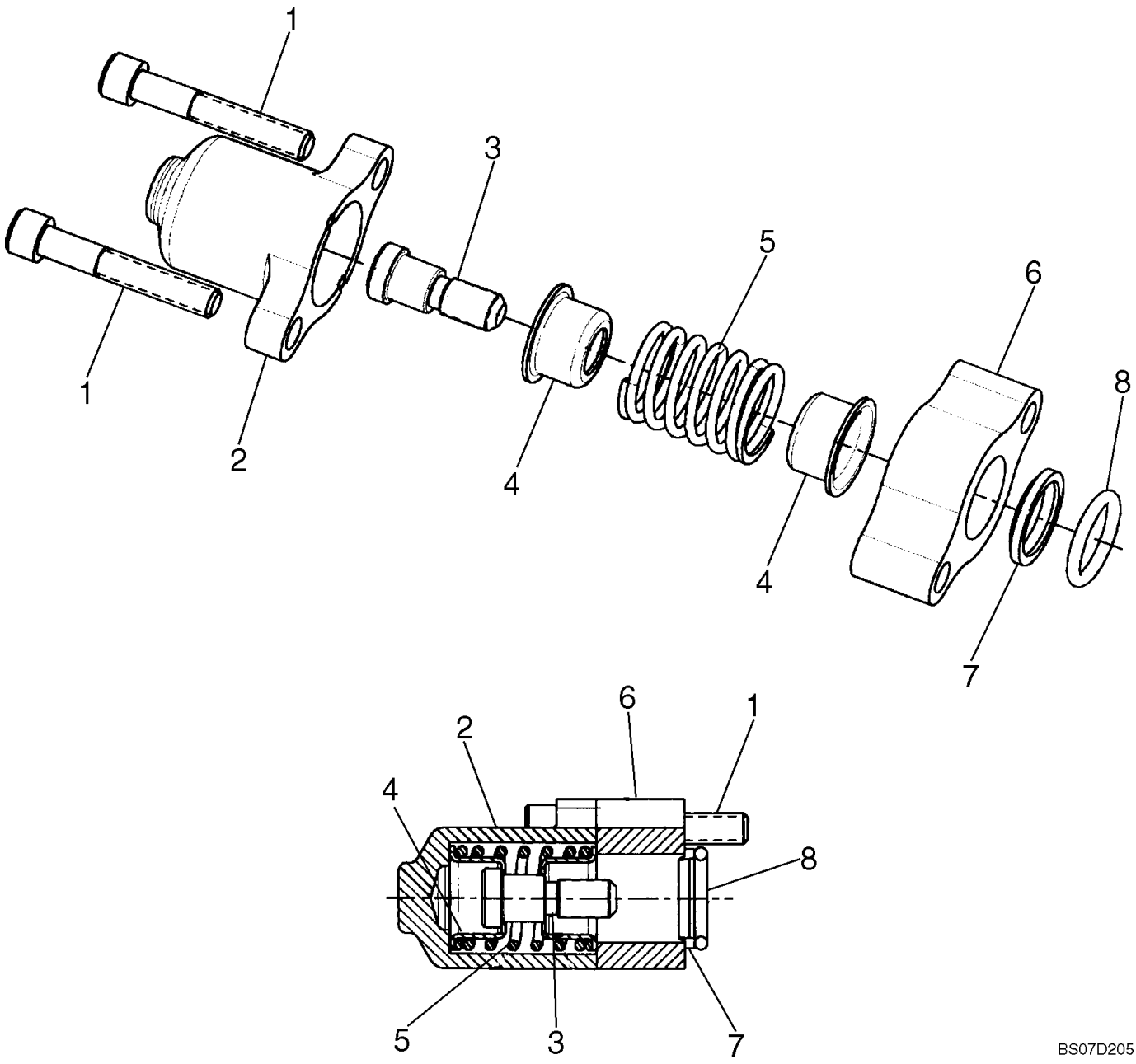

CONTROL VALVE - SPOOL END GROUP

REF	FN	PART NUMBER	YR/SN	QTY	DESCRIPTION
		87576168		1	SPOOL, Spool End Group; Incl. 1 - 8
1		NSS		2	NOT SERVICED SEPARATELY, Cap Screw
2		NSS		1	NOT SERVICED SEPARATELY, Spool Cap
3		NSS		1	NOT SERVICED SEPARATELY, Spool End
4		NSS		2	NOT SERVICED SEPARATELY, Spring Seat
5		NSS		1	NOT SERVICED SEPARATELY, Spring
6		NSS		1	NOT SERVICED SEPARATELY, Plate - Seal
7		NSS		1	NOT SERVICED SEPARATELY, Wiper
8		NSS		1	NOT SERVICED SEPARATELY, O-Ring

CONTROL VALVE - SPOOL END GROUP

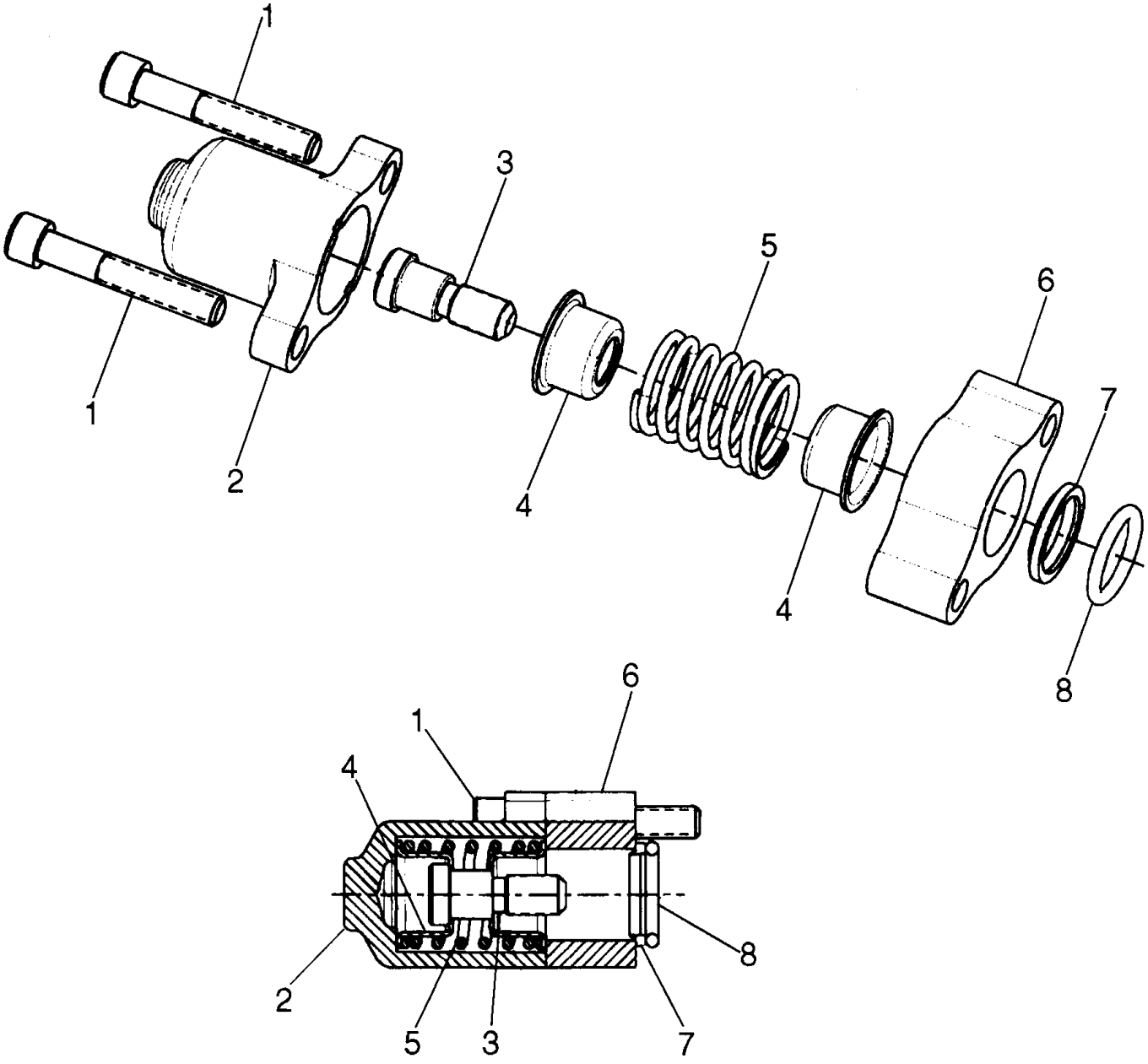

BS07D206

CONTROL VALVE - SPOOL END GROUP

REF	FN	PART NUMBER	YR/SN	QTY	DESCRIPTION
		87576169		1	SPOOL, Spool End Group; Incl. 1 - 8
1		NSS		2	NOT SERVICED SEPARATELY, Cap Screw
2		NSS		1	NOT SERVICED SEPARATELY, Spool Cap
3		NSS		1	NOT SERVICED SEPARATELY, Spool End
4		NSS		2	NOT SERVICED SEPARATELY, Spring Seat
5		NSS		1	NOT SERVICED SEPARATELY, Spring
6		NSS		1	NOT SERVICED SEPARATELY, Plate, Seal
7		NSS		1	NOT SERVICED SEPARATELY, Wiper
8		NSS		1	NOT SERVICED SEPARATELY, O-Ring

CONTROL VALVE - SEAL REPLACEMENT KITS

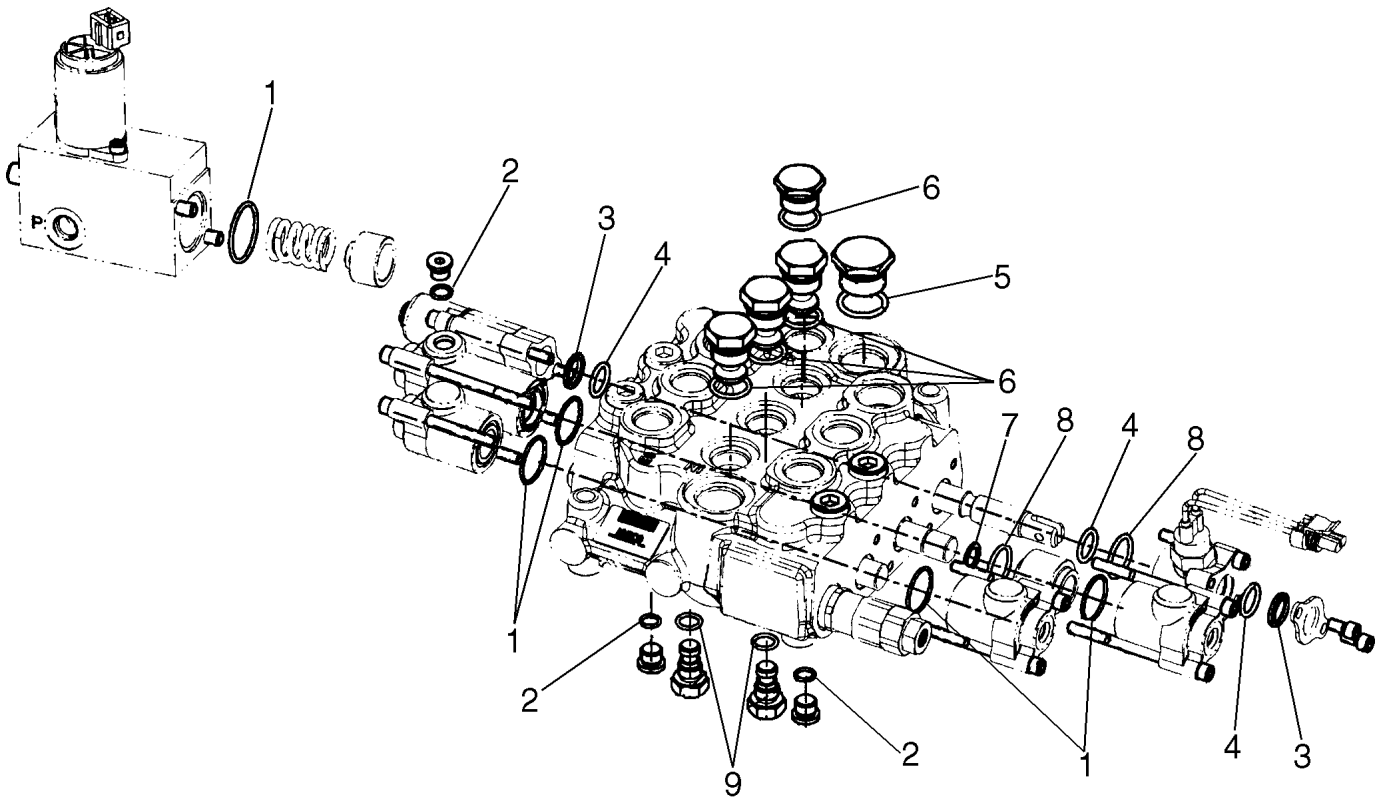

CONTROL VALVE - SEAL REPLACEMENT KITS

REF	FN	PART NUMBER	YR/SN	QTY	DESCRIPTION
		87610517		1	KIT, SEALS, Kit, Seal Replacement; Incl. 1 - 8
1		NSS		6	NOT SERVICED SEPARATELY, O-ring, 1.129 OD
2		NSS		3	NOT SERVICED SEPARATELY, O-ring, .498 OD
3		NSS		2	NOT SERVICED SEPARATELY, Wiper, .796 OD
4		NSS		3	NOT SERVICED SEPARATELY, O-ring, .818 OD
5		NSS		1	NOT SERVICED SEPARATELY, O-ring, 1.156 OD
6		NSS		4	NOT SERVICED SEPARATELY, O-ring, .949 OD
7		NSS		1	NOT SERVICED SEPARATELY, Back Up Ring, .673 OD
8		NSS		2	NOT SERVICED SEPARATELY, O-ring, 1.063 OD
9		NSS		2	NOT SERVICED SEPARATELY, O-ring, .614 OD

CONTROL VALVE - SPOOL END GROUP

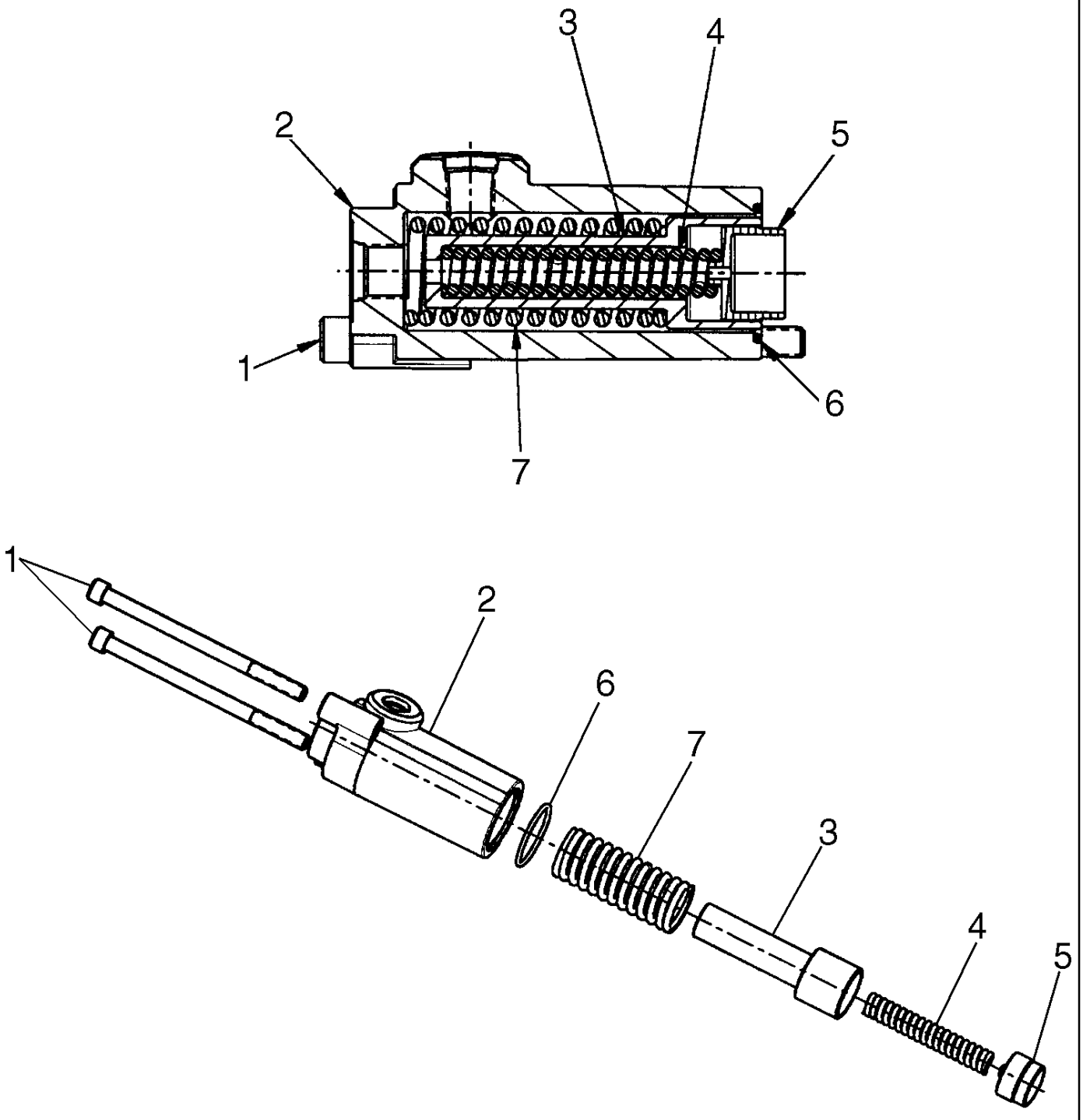

CONTROL VALVE - SPOOL END GROUP

REF	FN	PART NUMBER	YR/SN	QTY	DESCRIPTION
		87610533		1	SPOOL, Spool End Group; Incl. 1 - 7
1		NSS		2	NOT SERVICED SEPARATELY, Cap Screw
2		NSS		1	NOT SERVICED SEPARATELY, Spool Cap
3		NSS		2	NOT SERVICED SEPARATELY, Spring Seat
4		NSS		1	NOT SERVICED SEPARATELY, Spring
5		NSS		2	NOT SERVICED SEPARATELY, Spring Seat
6		NSS		1	NOT SERVICED SEPARATELY, O-Ring
7		NSS		1	NOT SERVICED SEPARATELY, Spring

CONTROL VALVE - SPOOL END GROUP

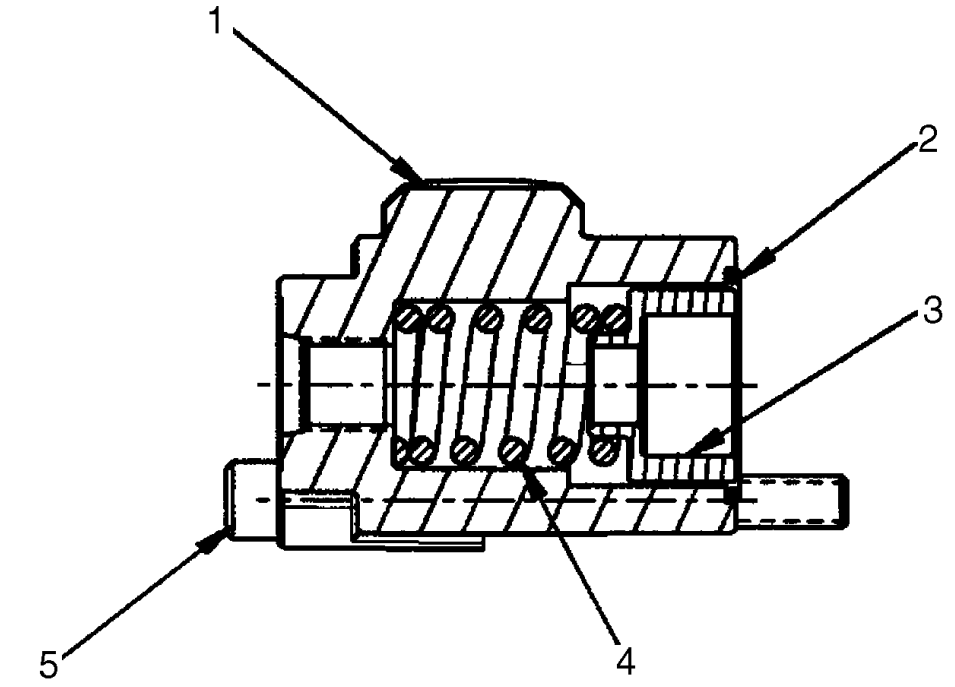

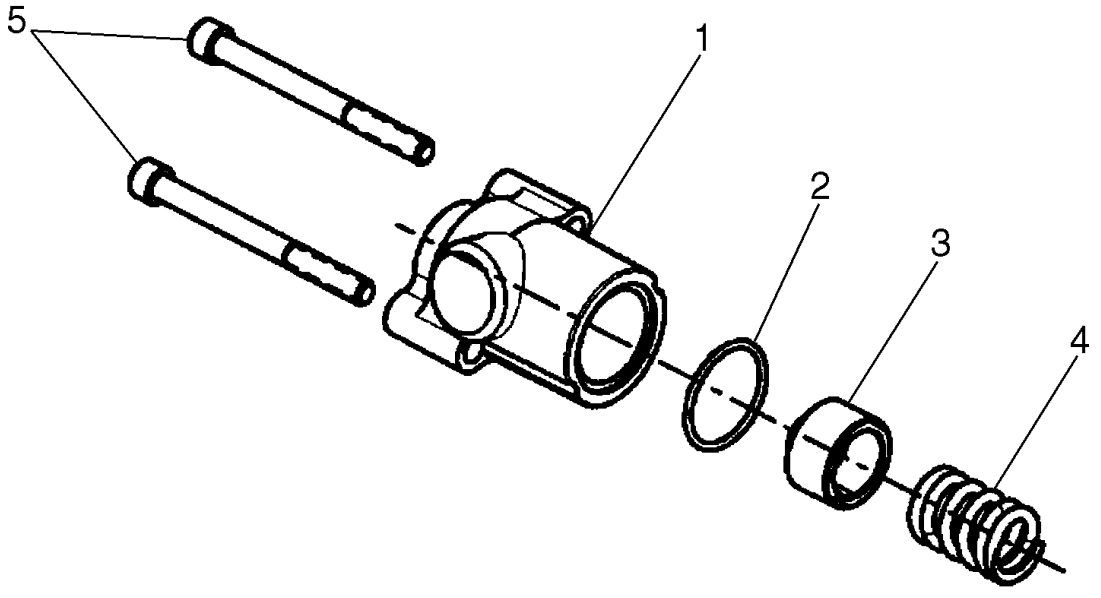

BS07H036

CONTROL VALVE - SPOOL END GROUP

REF	FN	PART NUMBER	YR/SN	QTY	DESCRIPTION
		87610532		1	SPOOL, Spool End Group; Incl. 1 - 5
1		NSS		1	NOT SERVICED SEPARATELY, Spool Cap
2		NSS		1	NOT SERVICED SEPARATELY, O-Ring
3		NSS		1	NOT SERVICED SEPARATELY, Spring Seat
4		NSS		1	NOT SERVICED SEPARATELY, Spring
5		NSS		2	NOT SERVICED SEPARATELY, Cap Screw

CONTROL VALVE - SPOOL END GROUP

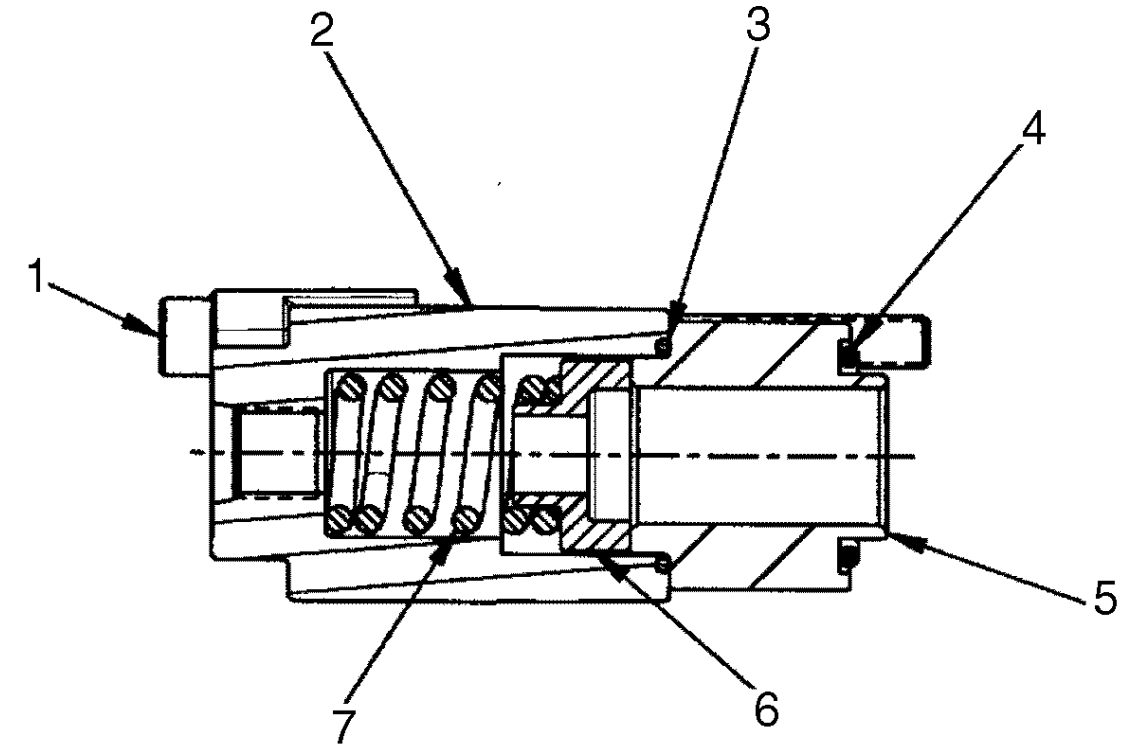

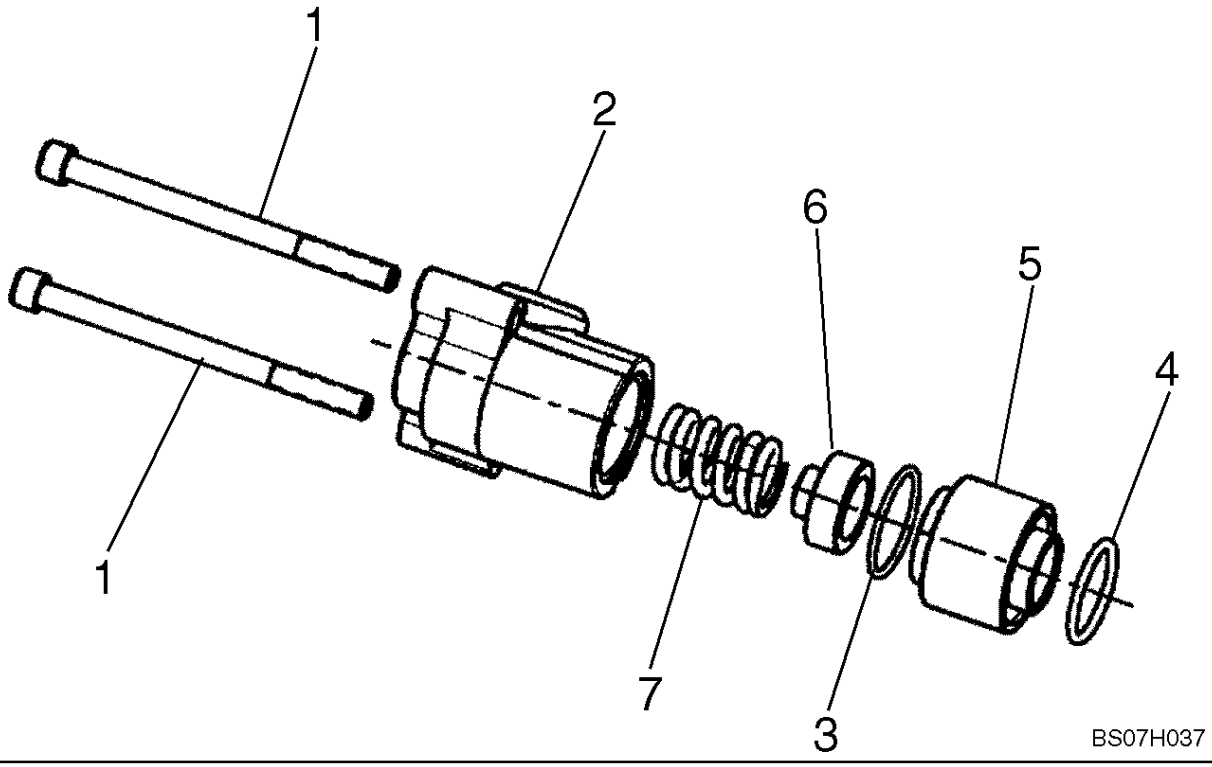

CONTROL VALVE - SPOOL END GROUP

REF	FN	PART NUMBER	YR/SN	QTY	DESCRIPTION
		87610531		1	SPOOL, Spool End Group; Incl. 1 - 7
1		NSS		2	NOT SERVICED SEPARATELY, Cap Screw
2		NSS		1	NOT SERVICED SEPARATELY, Spool Cap
3		NSS		1	NOT SERVICED SEPARATELY, O-Ring
4		NSS		1	NOT SERVICED SEPARATELY, O-Ring
5		NSS		1	NOT SERVICED SEPARATELY, Retainer
6		NSS		1	NOT SERVICED SEPARATELY, Spring Seat
7		NSS		1	NOT SERVICED SEPARATELY, Spring

CONTROL VALVE - SPOOL END GROUP, EHPV

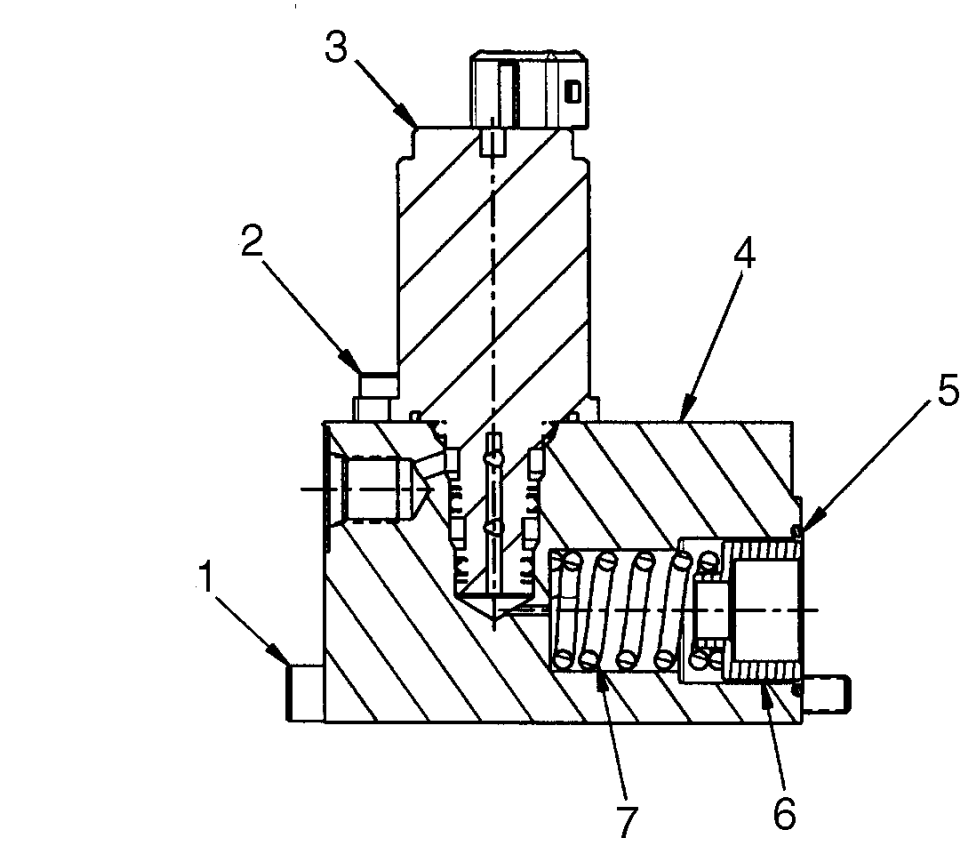

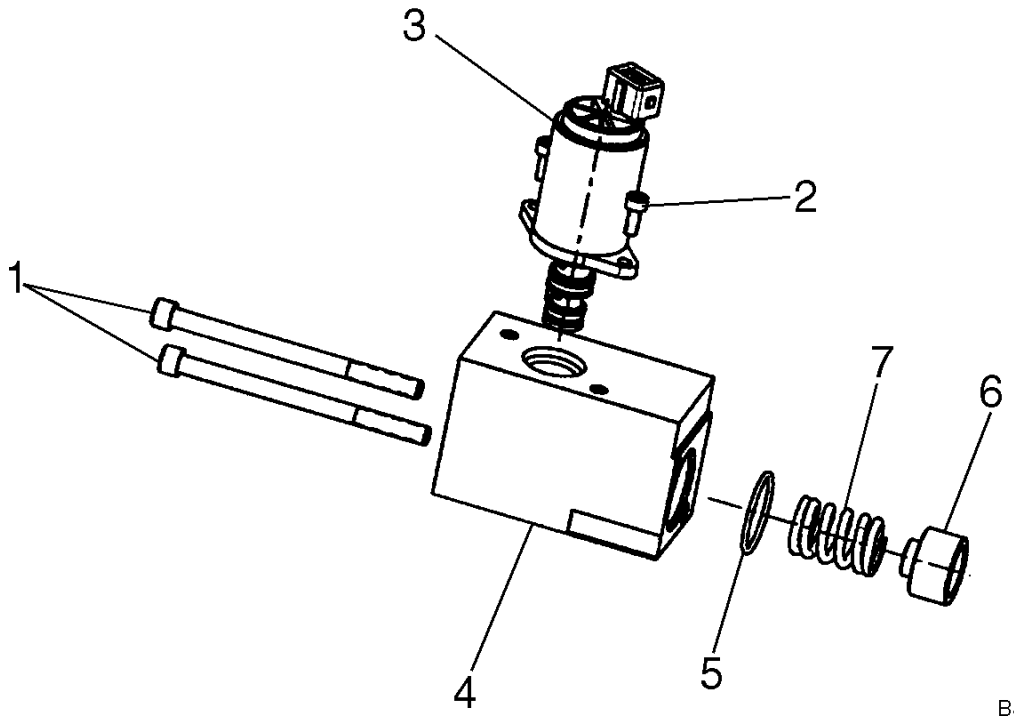

BS07H130

CONTROL VALVE - SPOOL END GROUP, EHPV

REF	FN	PART NUMBER	YR/SN	QTY	DESCRIPTION
		87611845		1	SPOOL, Spool End Group, EHPV; Incl. 1 - 7
1		NSS		2	NOT SERVICED SEPARATELY, Cap Screw
2		NSS		2	NOT SERVICED SEPARATELY, Cap Screw
3		87576154		1	VALVE, SOLENOID, Proportional Pressure Reducing
4		NSS		1	NOT SERVICED SEPARATELY, End Cap
5		NSS		1	NOT SERVICED SEPARATELY, O-Ring
6		NSS		1	NOT SERVICED SEPARATELY, Spring Seat
7		NSS		1	NOT SERVICED SEPARATELY, Spring

CONTROL VALVE - SPOOL END GROUP, EHPV

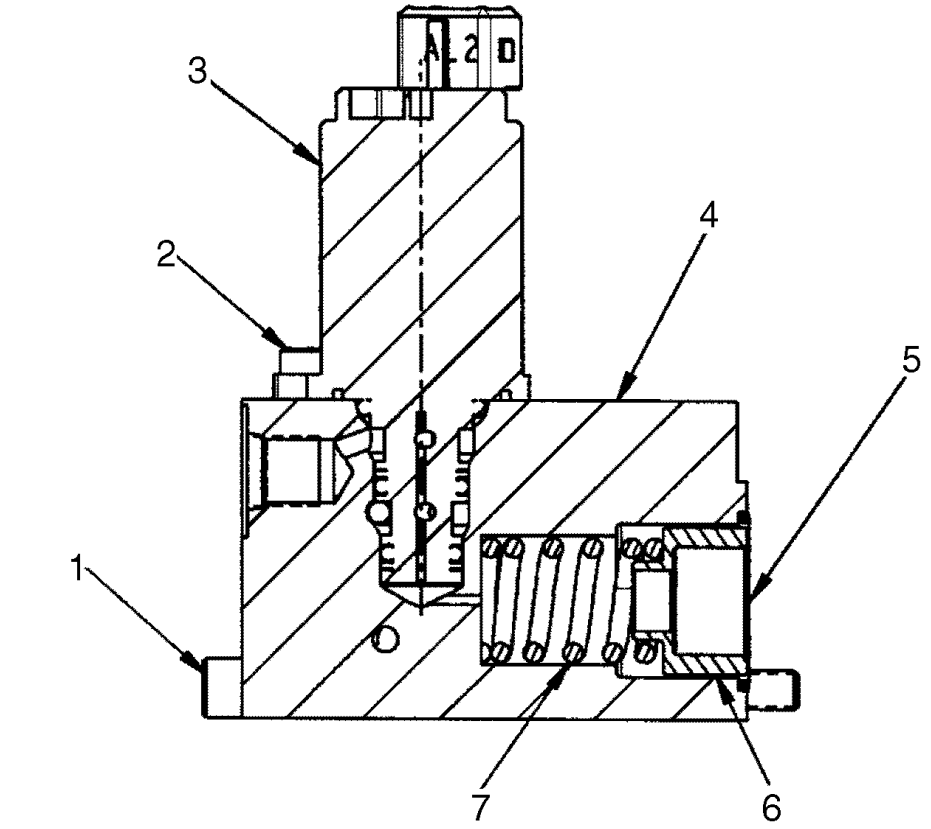

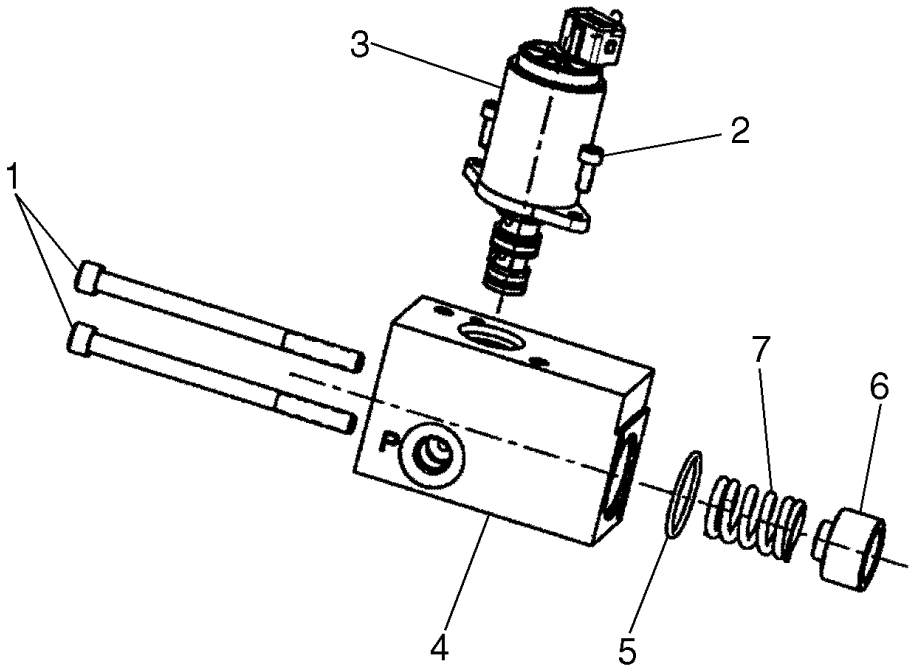

BS07H131

CONTROL VALVE - SPOOL END GROUP, EHPV

REF	FN	PART NUMBER	YR/SN	QTY	DESCRIPTION
		87611846		1	SPOOL, Spool End Group, EHPV; Incl. 1 - 7
1		NSS		2	NOT SERVICED SEPARATELY, Cap Screw
2		NSS		2	NOT SERVICED SEPARATELY, Cap Screw
3		87576154		1	VALVE, SOLENOID, Proportional Pressure Reducing
4		NSS		1	NOT SERVICED SEPARATELY, End Cap
5		NSS		1	NOT SERVICED SEPARATELY, O-Ring
6		NSS		1	NOT SERVICED SEPARATELY, Spring Seat
7		NSS		1	NOT SERVICED SEPARATELY, Spring

SECONDARY FRONT AUXILIARY - VALVE ASSY

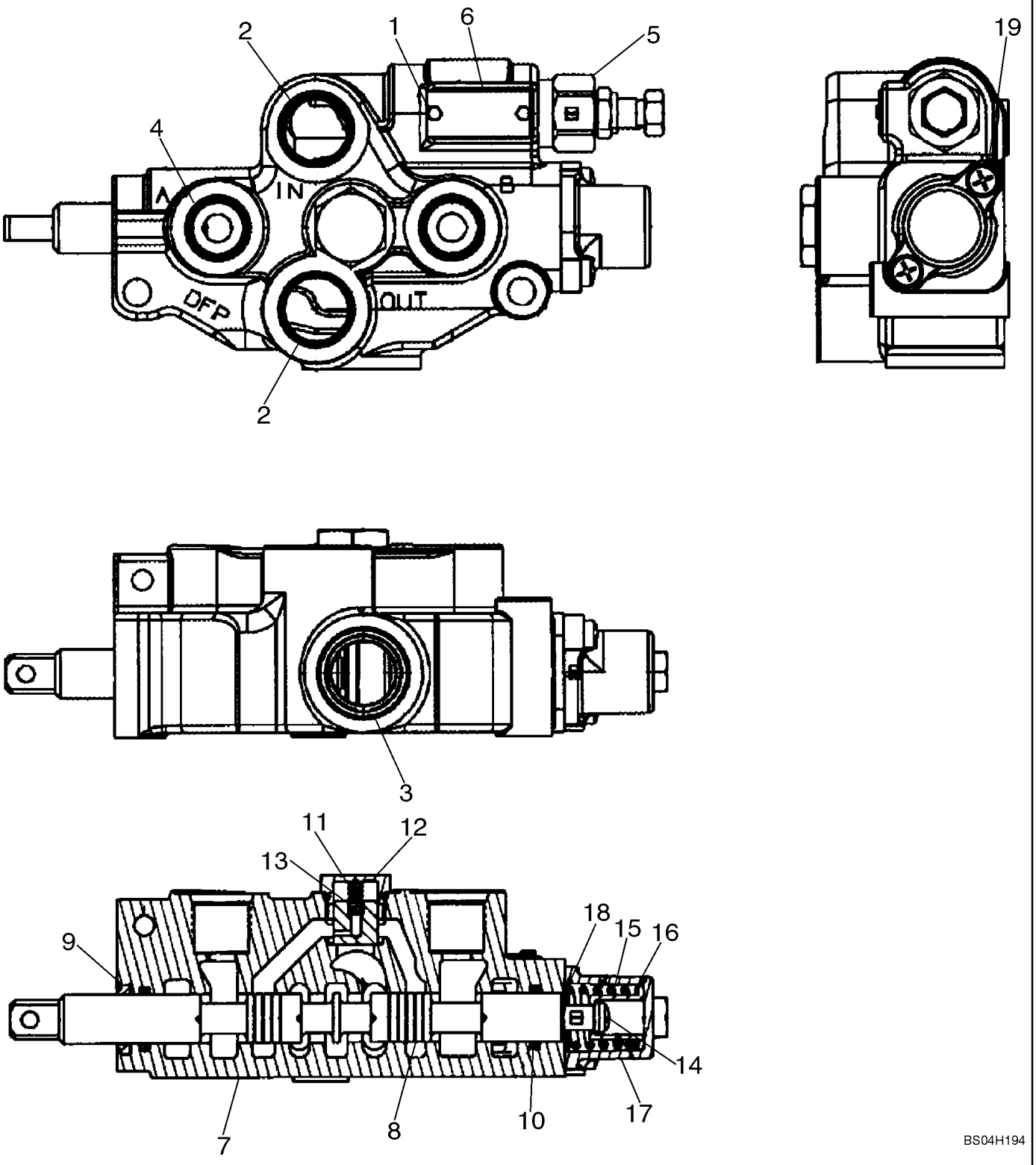

SECONDARY FRONT AUXILIARY - VALVE ASSY

REF	FN	PART NUMBER	YR/SN	QTY	DESCRIPTION
		87017348		1	VALVE, Secondary Auxiliary Valve; Incl. 1 - 19
1		NSS		2	NOT SERVICED SEPARATELY, Screw, Drive
2		NSS		2	NOT SERVICED SEPARATELY, Shipping Plug
3		NSS		1	NOT SERVICED SEPARATELY, Shipping Plug
4		NSS		2	NOT SERVICED SEPARATELY, Shipping Plug
5		NSS		1	NOT SERVICED SEPARATELY, Relief Valve Assy
6		NSS		1	NOT SERVICED SEPARATELY, Name Plate
7		NSS		1	NOT SERVICED SEPARATELY, Body
8		NSS		1	NOT SERVICED SEPARATELY, Spool
		87455258		1	KIT, SEALS, Incl. 9, 10
9		NSS		1	NOT SERVICED SEPARATELY, Ring, Wiper
10		NSS		2	NOT SERVICED SEPARATELY, O-Ring
		87455257		1	KIT, Load Check Kit; Incl. 11 - 13
11		NSS		1	NOT SERVICED SEPARATELY, Spring
12		NSS		1	NOT SERVICED SEPARATELY, Load Check Plug Assy
13		NSS		1	NOT SERVICED SEPARATELY, Poppet, Load Check
		87455274		1	KIT, SPRING, Spring Center Kit; Incl. 14 - 19
14		NSS			NOT SERVICED SEPARATELY, Screw With Lock Washer
15		NSS			NOT SERVICED SEPARATELY, Spring
16		NSS			NOT SERVICED SEPARATELY, Spacer
17		NSS			NOT SERVICED SEPARATELY, End Cap
18		NSS			NOT SERVICED SEPARATELY, Washer
19		NSS			NOT SERVICED SEPARATELY, Screw With Lock Washer

NOTES

SECTION INDEX
Chassis

09-01	LOADER LIFT
09-02	LIFT CYLINDER - COVERS
09-03	COUPLER, MECHANICAL
09-04	COUPLER, MECHANICAL (ITALIAN)
09-05	COUPLER, HYDRAULIC
09-06	BUCKETS - LOADER, DIRT / FOUNDRY
09-07	BUCKETS - LOADER (LOW PROFILE/ EXTENDED LOW PROFILE)
09-08	BUCKETS - LOADER (UTILITY/LIGHT MATERIAL)
09-09	BUCKETS - LOADER (HEAVY DUTY)
09-10	BUCKET, CUTTING EDGE (BOLT-ON CUTTING EDGE)
09-11	SPECIAL PARTS FOR ITALY - GUARD, BUCKET
09-12	PALLET FORK
09-13	CONTROLLER - MOUNTING (PILOT CONTROL)
09-14	CONSOLE - RH
09-15	CONSOLE - LH
09-16	CHASSIS (440)
09-17	CHASSIS (440)
09-18	CHASSIS (440CT)
09-19	CHASSIS (440CT)
09-20	LOADER & GROUND DRIVE CONTROL - RH
09-21	LOADER & GROUND DRIVE CONTROL - LH
09-22	LOADER & GROUND DRIVE CONTROL - LINKAGE
09-23	CONTROLS - AUXILIARY HYDRAULICS
09-24	HOOD
09-25	HOOD - AIR CONDITIONING
09-26	REAR DOOR
09-27	REAR DOOR - LOUVERED (EUROPE)
09-28	LOCK - REAR DOOR
09-29	CAB DOOR - MOUNTING
09-30	CAB DOOR - WASHER SYSTEM
09-31	CAB DOOR
09-32	CAB DOOR - VISOR
09-33	CAB DOOR - WIPER MOUNTING
09-34	CAB DOOR - HANDLE
09-35	DEMOLITION DOOR - MOUNTING
09-36	DEMOLITION DOOR
09-37	FLOOR MAT
09-38	CAB - FRAME AND SEAT BAR
09-39	SEAT BAR
09-40	SEAT BELT, LAP BELT (2 IN)
09-41	SEAT BELT, LAP BELT (3 IN)
09-42	SHOULDER BELT
09-43	REAR VIEW MIRROR
09-44	SPECIAL PARTS FOR ITALY - MIRROR, REAR VIEW
09-45	SEAT MOUNTING - STANDARD SEAT
09-46	SEAT MOUNTING - SUSPENSION SEAT
09-47	SEAT MOUNTING - DELUXE SUSPENSION SEAT
09-48	REAR WINDOW
09-49	REAR WINDOW - HEAT AND AIR CONDITIONING
09-50	TOP WINDOW
09-51	SIDE WINDOWS

SECTION INDEX
Chassis

09-52	HEADLINER - STANDARD
09-53	HEADLINER - HEATER AND AIR CONDITIONING
09-54	INTERIOR TRIM
09-55	RADIO - SPEAKERS AND ANTENNA
09-56	RADIO - SPEAKERS AND HOUSING
09-57	HEATER SYSTEM
09-58	HEATER SYSTEM
09-59	AIR CONDITIONING SYSTEM
09-60	HEATER ASSEMBLY
09-61	HEATER AND AIR CONDITIONING ASSEMBLY
09-62	HEAT SHIELD
09-63	SOUNDPROOFING - SEAL
09-64	NOISE CONTROL - REAR DOOR (EUROPE)
09-65	LIFT HOOK - SINGLE POINT
09-66	LIFT HOOK
09-67	DECALS - ENGLISH
09-68	DECAL (440CT)
09-69	DECALS
09-70	DECALS
09-71	DECALS - DANISH, DUTCH, FINNISH
09-72	DECALS - FRENCH, GERMAN, GREEK
09-73	DECALS - ITALIAN, NORWEGIAN, POLISH
09-74	DECALS - PORTGUESE, SPANISH, SWEDISH
09-75	DECALS - BRAZILIAN PORTUGUESE, CANADIAN FRENCH, LATIN AMERICAN SPANISH

NOTES

09-01		p1	10/07

LOADER LIFT

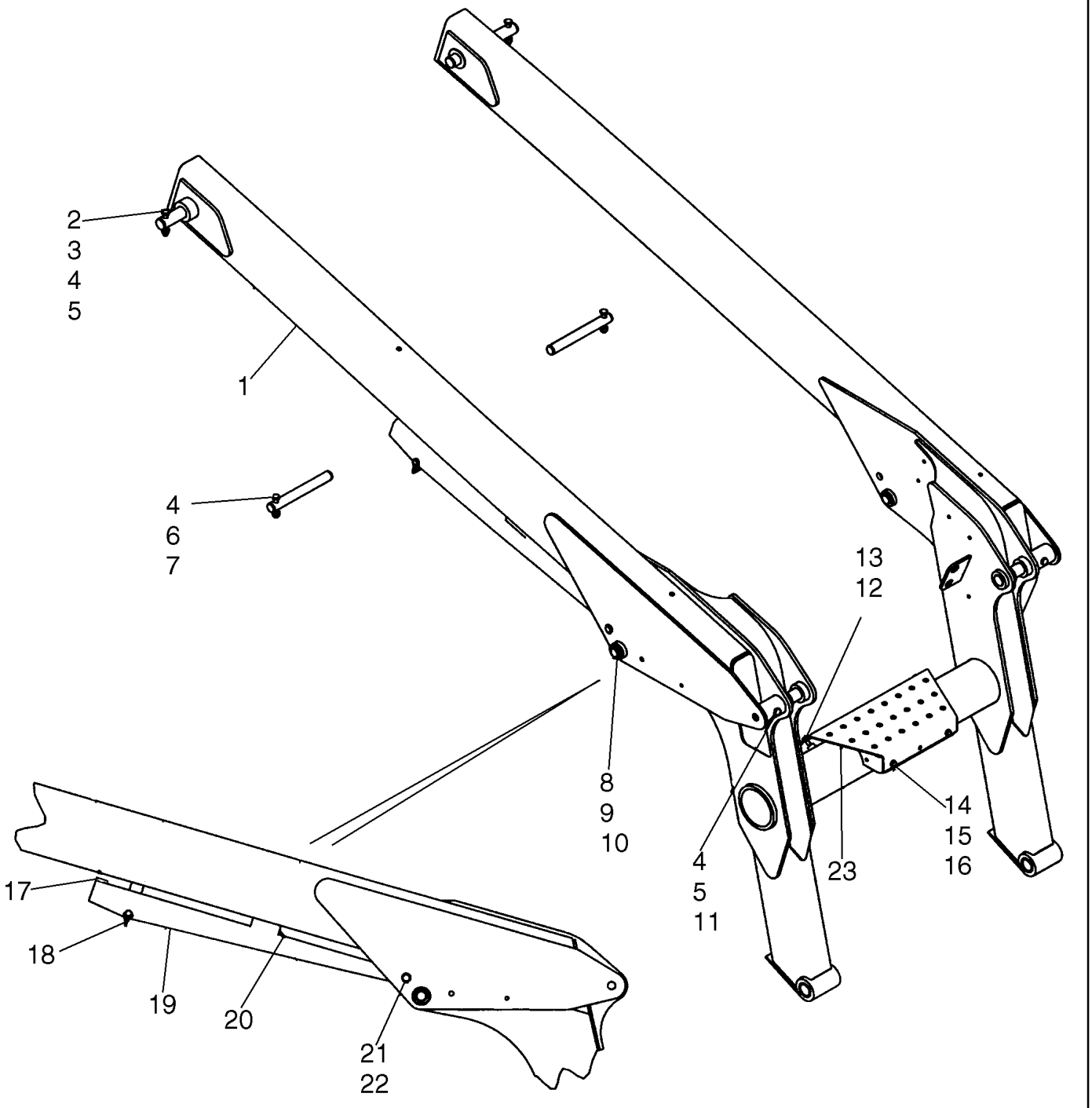

LOADER LIFT

REF	FN	PART NUMBER	YR/SN	QTY	DESCRIPTION
		87448095		1	FRAME ASSY, Loader Arm Kit; Order From Machinery Price List; Incl. Ref 1 Loader Frame, Plus The Following Decals The Following Decals, 321-7029, 411515A1, 411516A1, (2) 87389371; See Decal Pages For Illustration
1		NSS		1	NOT SERVICED SEPARATELY, 87417491 Loader; Incl. (4) D33827 Bushings; Used In Production
2		382837A1		2	PIN, Lift Arm
4		86512554		6	NUT, LOCK, M10 x 1.5, Cl 10
5		43144		4	SCREW, Hex, M10 x 70, 8.8
6		382838A1		2	PIN, Lift Cylinder
6		87458990		1	PIN, Lift Cylinder, Left Hand
7		120070		2	BOLT, Hex, M10 x 60, 8.8
8		{87602935}		10	WASHER, 1.0625 x 1.625 x 0.065
9		405853A1		2	PIN
10		87019495		4	RING, SNAP, #98, Ext
11		393742A1		2	PIN, Cylinder
12		120104		2	BOLT, Hex, M8 x 20, 8.8
13		87015284		2	WASHER, M8 x 21.5 x 2.5, HT
14		86624184		2	WASHER, M8 x 16 x 1.6
15		43127		2	BOLT, Hex, M8 x 25, 8.8
16		9628098		2	NUT, LOCK, M8 x 1.25, Cl 10
17		{87599604}		1	Grommet
18		87711364		1	PIN, Pin
19		87711366		1	STRUT, Strut, Loader Support
20		87599718		1	INSULATION, FOAM, Loader Strut; One Piece
21		405854A1		1	PIN, Cylinder
22		{87599605}		2	Ring
23		409422A1		1	STEP

LIFT CYLINDER - COVERS

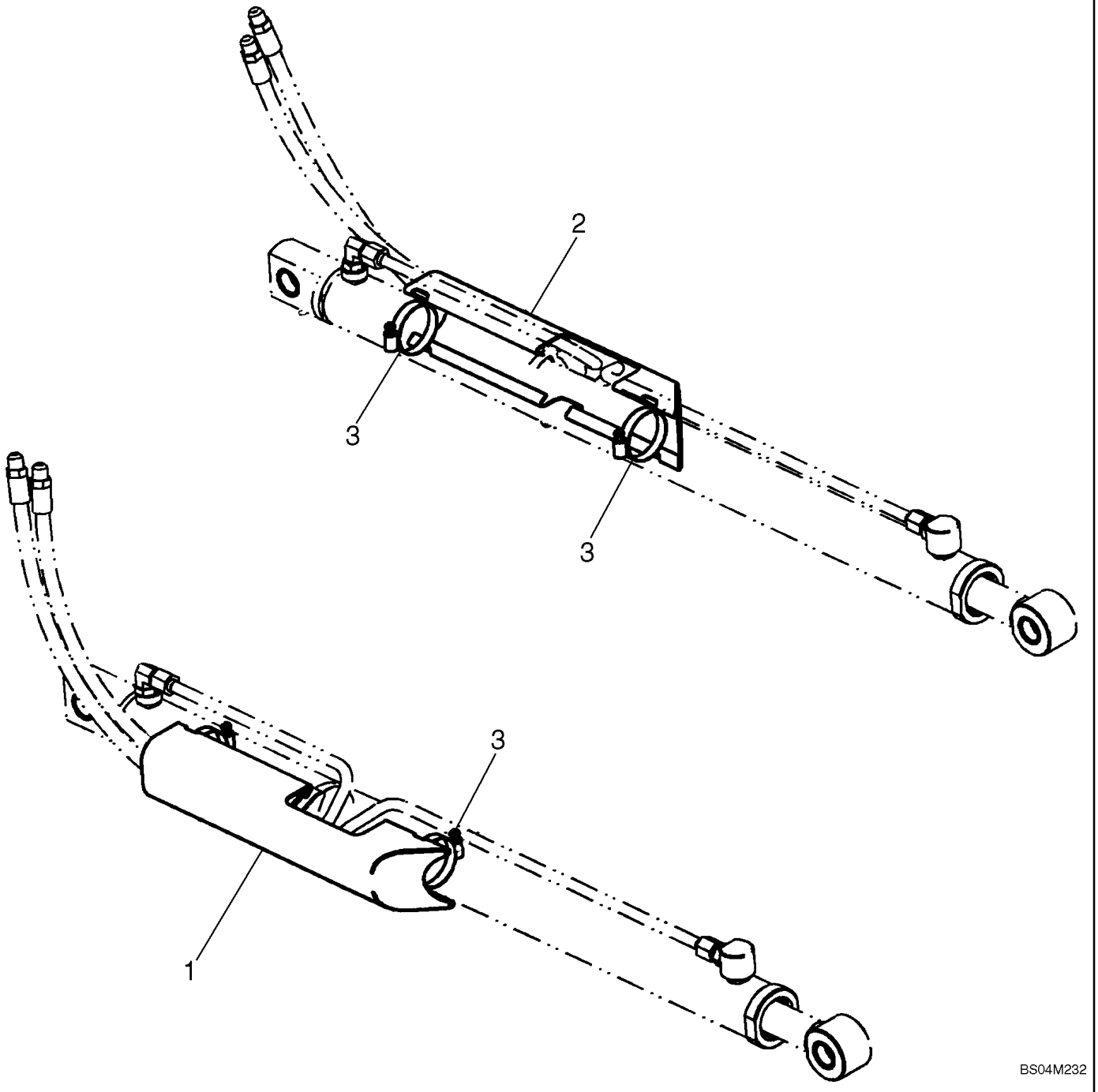

LIFT CYLINDER - COVERS

REF	FN	PART NUMBER	YR/SN	QTY	DESCRIPTION
		450051A1		1	DIA KIT, ADDITIONAL PROD., Kit, Lift Cylinder Cover; Incl 1 - 3
1		429619A1		1	COVER, Right Hand
2		429620A1		1	COVER, Left Hand
3		214-1444		4	CLAMP, HOSE, #44, 2.31/3.25 Type F Worm

COUPLER, MECHANICAL

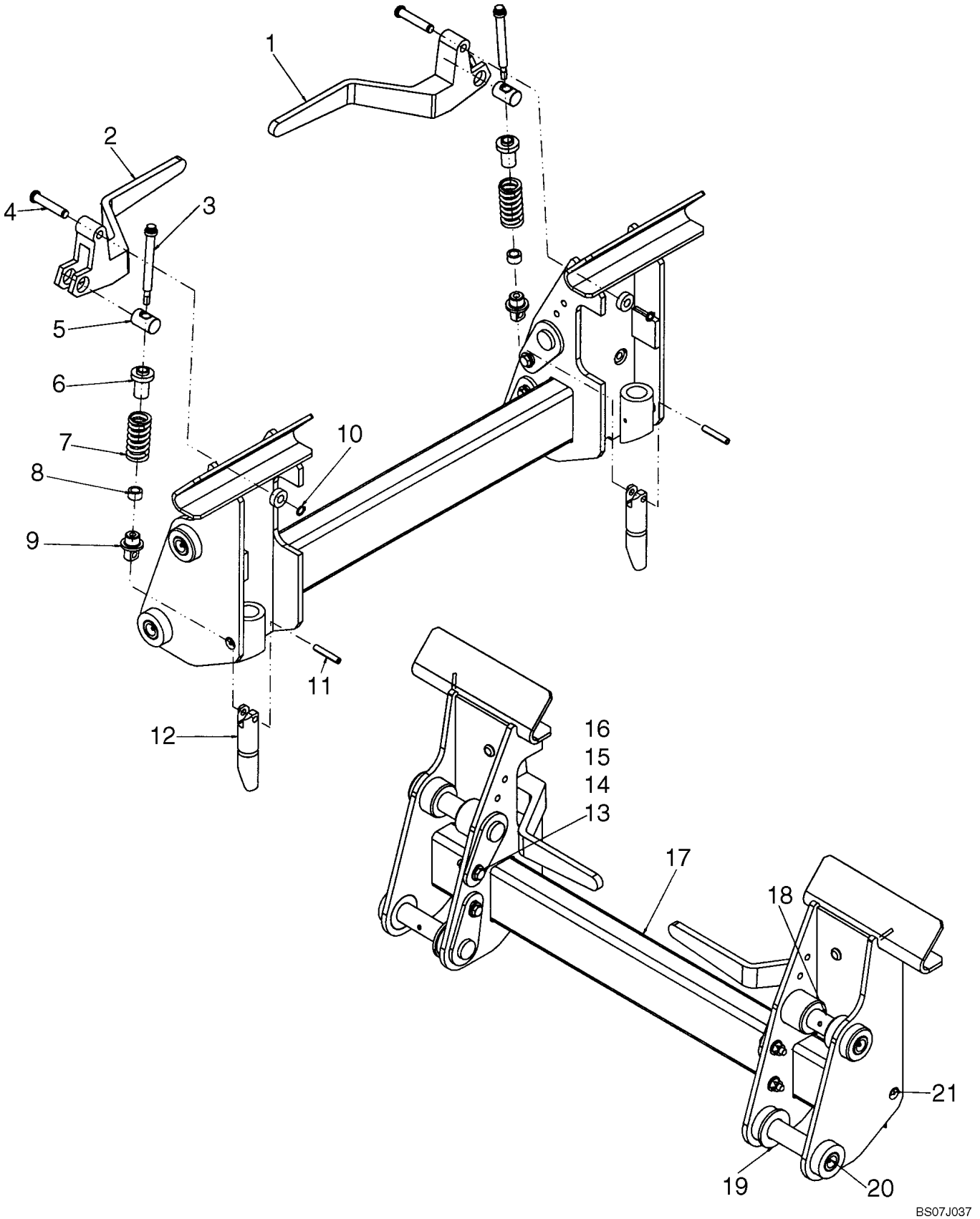

COUPLER, MECHANICAL

REF	FN	PART NUMBER	YR/SN	QTY	DESCRIPTION
1		86633195		1	HANDLE, LH
2		86633196		1	HANDLE, RH
3		87533223		2	PIN, CS12PT Shoulder Bolt, 1/2 X 4.0
4		87387540		2	RETAINER
5		9829733		2	PIN
6		86610166		2	GUIDE, Spring Guide
7		86610167		2	SPRING
8		87412041		2	SPACER, Bushing Spacer
9		{87579303}		2	Pin
10		{87612753}		2	Retaining Ring, External #50 PLN
11		86624092		2	PIN, 3/8" x 2", Coiled
12		87413030		2	PIN, Latch Pin
13		120112		4	BOLT, Hex, M10 x 40, 8.8, Full Thd
14		86625253		8	WASHER, M11 x 24 x 2
15		86512554		4	NUT, LOCK, M10 x 1.5, Cl 10
16		906091R1		4	SPACER, 3/8" Pipe X 3/8" Length
17		404599A5		1	FRAME ASSY
18		87659406		4	PIN
19		86512837		2	WASHER, 1 1/4", SAE
20		80710		4	NIPPLE, LUBE, 1/8"-27 x .66 lg
21		87414		2	NIPPLE, LUBE, 1/4"-28 x .56" lg, Drive

COUPLER, MECHANICAL (ITALIAN)

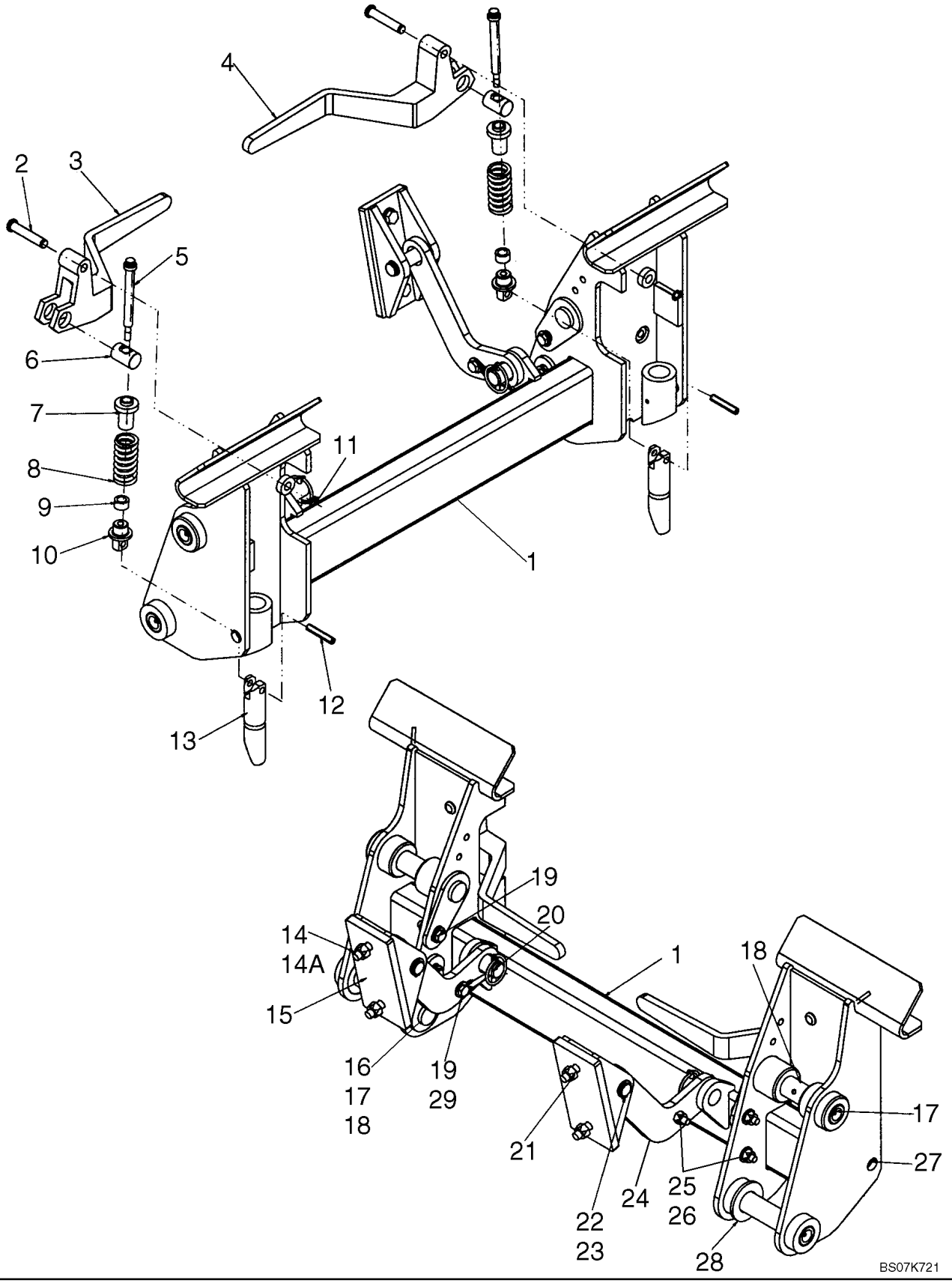

COUPLER, MECHANICAL (ITALIAN)

REF	FN	PART NUMBER	YR/SN	QTY	DESCRIPTION
1		417779A3		1	FRAME ASSY, Coupler, Italian On Road
2		87387540		2	RETAINER, Handle Pivot
3		86633196		1	HANDLE, Right Hand
4		86633195		1	HANDLE, Left Hand
5		87533223		2	PIN, CS12PT SHO PH .5 x 4.0
6		9829733		2	PIN
7		86610166		2	GUIDE
8		86610167		2	SPRING, Compression
9		87412041		2	SPACER, Bushing
10		{87579303}		2	Pin
11		{87612753}		2	Retaining Ring # 50
12		86624092		2	PIN, 3/8" x 2", Coiled, Coiled Spring
13		87413030		2	PIN, Latch
14		412672		4	NUT, LOCK, M12 x 1.75, Cl 10
14A		86625255		4	WASHER, M13.5 x 24.5 x 3, HT
15		398196A1		2	BRACKET, Bucket Lock
16		906091R1		4	SPACER, 3/8 x 0.375 x Strg Pipe
17		80710		4	NIPPLE, LUBE, 1/8"-27 x .66 lg
18		87659406		4	PIN
19		120112		4	BOLT, Hex, M10 x 40, 8.8, Full Thd
20		A30338		2	PIN
21		120080		4	BOLT
22		D138889		2	PIN, Lift Cylinder Pivot
23		{86625151}		4	Retaining Ring EXT HD #87
24		398194A1		2	LINK, Bucket Lock
25		86625253		10	WASHER, M11 x 24 x 2
26		86512554		6	NUT, LOCK, M10 x 1.5, Cl 10
27		87414		2	NIPPLE, LUBE, 1/4"-28 x .56" lg, Drive
28		86512837		2	WASHER, 1 1/4", SAE
29		L78786		2	RETAINER, CABLE

COUPLER, HYDRAULIC

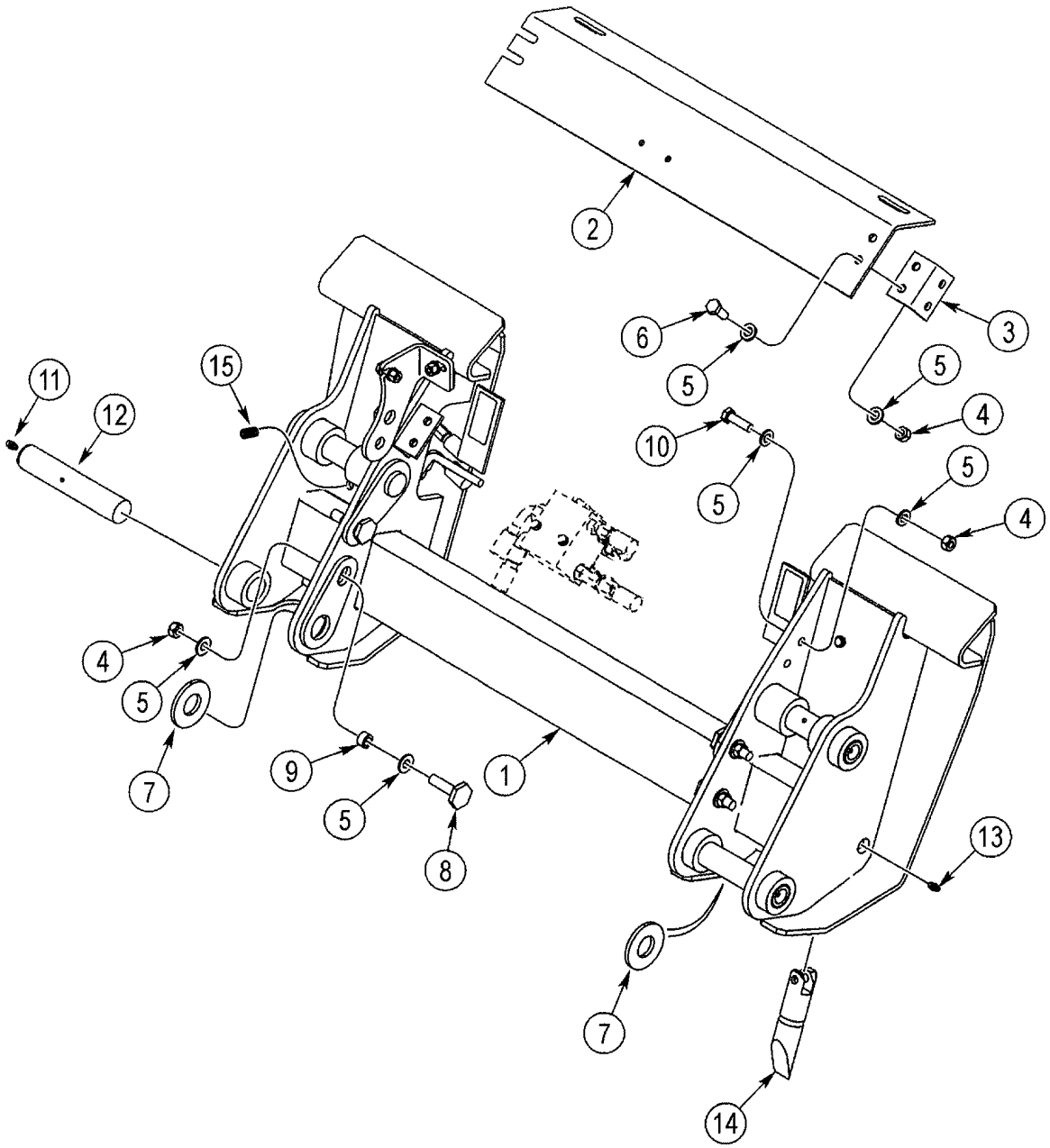

COUPLER, HYDRAULIC

REF	FN	PART NUMBER	YR/SN	QTY	DESCRIPTION
1		404599A5		1	FRAME ASSY
2		87620412		1	PLATE, Protective Cover
3		409783A1		2	BRACKET, Coupler Cover
4		86512554		12	NUT, LOCK, M10 x 1.5, Cl 10
5		86625253		24	WASHER, M11 x 24 x 2
6		43139		4	SCREW, Hex, M10 x 25, 8.8, Full Thd
7		86512837		2	WASHER, 1 1/4", SAE
8		120112		4	BOLT, Hex, M10 x 40, 8.8, Full Thd
9		906091R1		4	SPACER, Spacer; 3/8 x 0.375 x Strg Pipe
10		9706704		4	BOLT, Hex, M10 x 35, 8.8, Full Thd
11		80710		4	NIPPLE, LUBE, 1/8"-27 x .66 lg
12		394582A2		4	PIN
13		87414		2	NIPPLE, LUBE, 1/4"-28 x .56" lg, Drive
14		87413030		2	PIN, Latch
15		9617020		2	PLUG, Hex Soc, 1/4"-18, If Used
		D55216		1	STRIP, ANTI-SKID, Non-Slip

BUCKETS - LOADER, DIRT / FOUNDRY

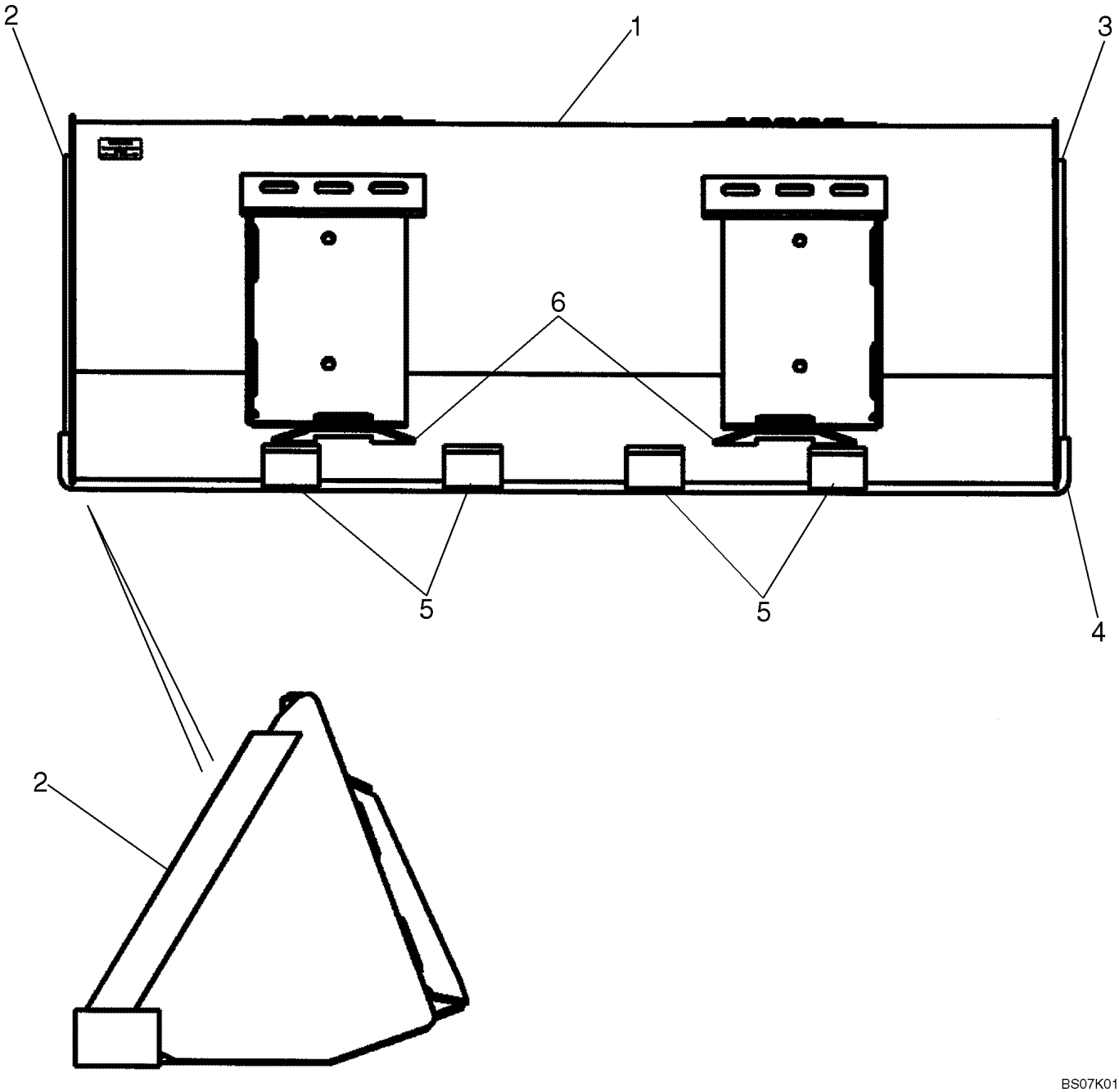

BUCKETS - LOADER, DIRT / FOUNDRY

REF	FN	PART NUMBER	YR/SN	QTY	DESCRIPTION
		REF			INSTRUCTION, DIRT / FOUNDRY
1		{86618350}		1	BUCKET, 1676 mm (66 Inch); Order From Machinery Price List; Incl 2 - 6
2		87014505		1	CUTTING BLADE, LH Cutter
3		87014504		1	CUTTING BLADE, RH Cutter
4		86577166		1	EDGE, CUTTING, Weld On Blade 66 in
5		87016983		3	BAR, Skid Bar
6		9822175		2	PLATE
1		86618351		1	BUCKET, 1829 mm (72 Inch); Order From Machinery Price List; Incl 2 - 6
2		87014505		1	CUTTING BLADE, LH Cutter
3		87014504		1	CUTTING BLADE, RH Cutter
4		86577168		1	EDGE, CUTTING, Weld On Blade 72 in
5		87016983		4	BAR, Skid Bar
6		9822175		2	PLATE
1		{86633060}		1	BUCKET, 1981mm (78 Inch); Order From Machinery Price List; Incl 2 - 6
2		87014505		1	CUTTING BLADE, LH Cutter
3		87014504		1	CUTTING BLADE, RH Cutter
4		86577170		1	EDGE, CUTTING, Weld On Blade 78 in
5		87016983		4	BAR, Skid Bar
6		9822175		2	PLATE

BUCKETS - LOADER (LOW PROFILE/ EXTENDED LOW PROFILE)

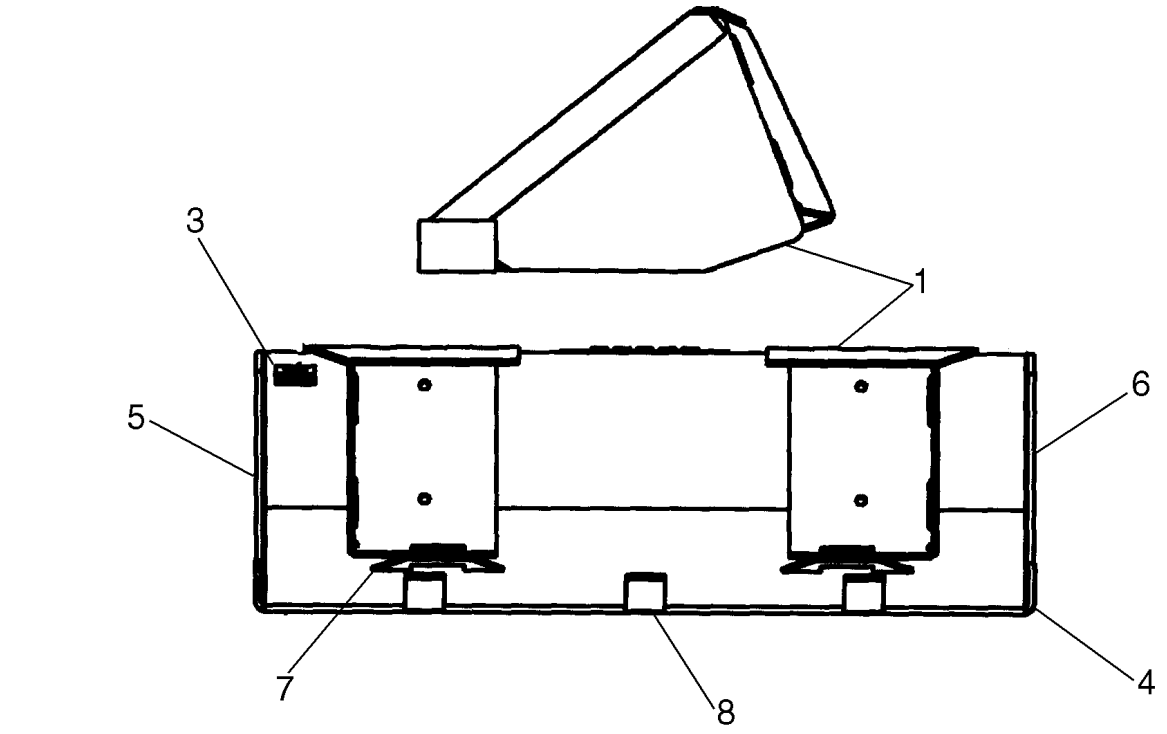

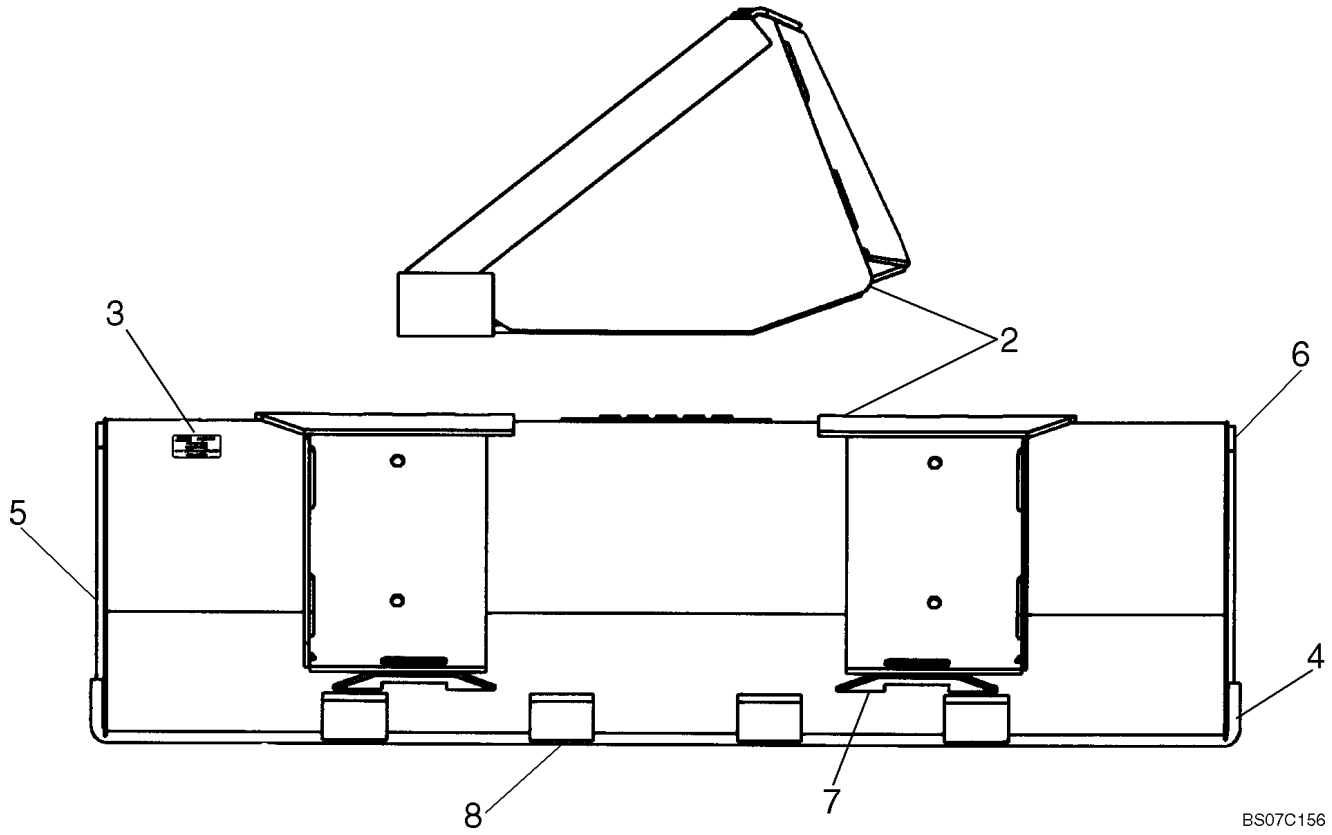

BUCKETS - LOADER (LOW PROFILE/ EXTENDED LOW PROFILE)

REF	FN	PART NUMBER	YR/SN	QTY	DESCRIPTION
		REF			INSTRUCTION, LOW PROFILE
1		86618363		1	BUCKET, 1676 mm (66 Inch); Order From Machinery Price List; Incl. 3 - 8
3		NSS		1	NOT SERVICED SEPARATELY, Decal
4		87015514		1	EDGE, CUTTING, Weld On Blade
5		87014503		1	EDGE, CUTTING, Cutter Left Hand
6		87014502		1	EDGE, CUTTING, Cutter Right Hand
7		87015460		2	PLATE
8		9829786		3	BAR, Skid Bar
1		86618364		1	BUCKET, 1820 mm (72 Inch); Order From Machinery Price List; Incl. 3 - 8
3		NSS		1	NOT SERVICED SEPARATELY, Decal
4		86577168		1	EDGE, CUTTING, Weld On Blade
5		87014503		1	EDGE, CUTTING, Cutter Left Hand
6		87014502		1	EDGE, CUTTING, Cutter Right Hand
7		87015460		2	PLATE
8		9829786		4	BAR, Skid Bar
		REF			INSTRUCTION, EXTENDED LOW PROFILE
2		86618354		1	BUCKET, 1676 mm (66 Inch); Order From Machinery Price List; Incl. 3 - 8
3		NSS		1	NOT SERVICED SEPARATELY, Decal
4		87015514		1	EDGE, CUTTING, Weld On Blade
5		87014503		1	EDGE, CUTTING, Cutter Left Hand
6		87014502		1	EDGE, CUTTING, Cutter Right Hand
7		9822175		2	PLATE
8		9829786		3	BAR, Skid Bar
2		86618355		1	BUCKET, 1829 mm (72 Inch); Order From Machinery Price List; Incl. 3 - 8
3		NSS		1	NOT SERVICED SEPARATELY, Decal
4		86577168		1	EDGE, CUTTING, Weld On Blade
5		86510316		1	EDGE, CUTTING, Cutter Left Hand
6		86510315		1	EDGE, CUTTING, Cutter Right Hand
7		87015460		2	PLATE
8		86510314		3	BAR, Skid Bar

BUCKETS - LOADER (LOW PROFILE/ EXTENDED LOW PROFILE)

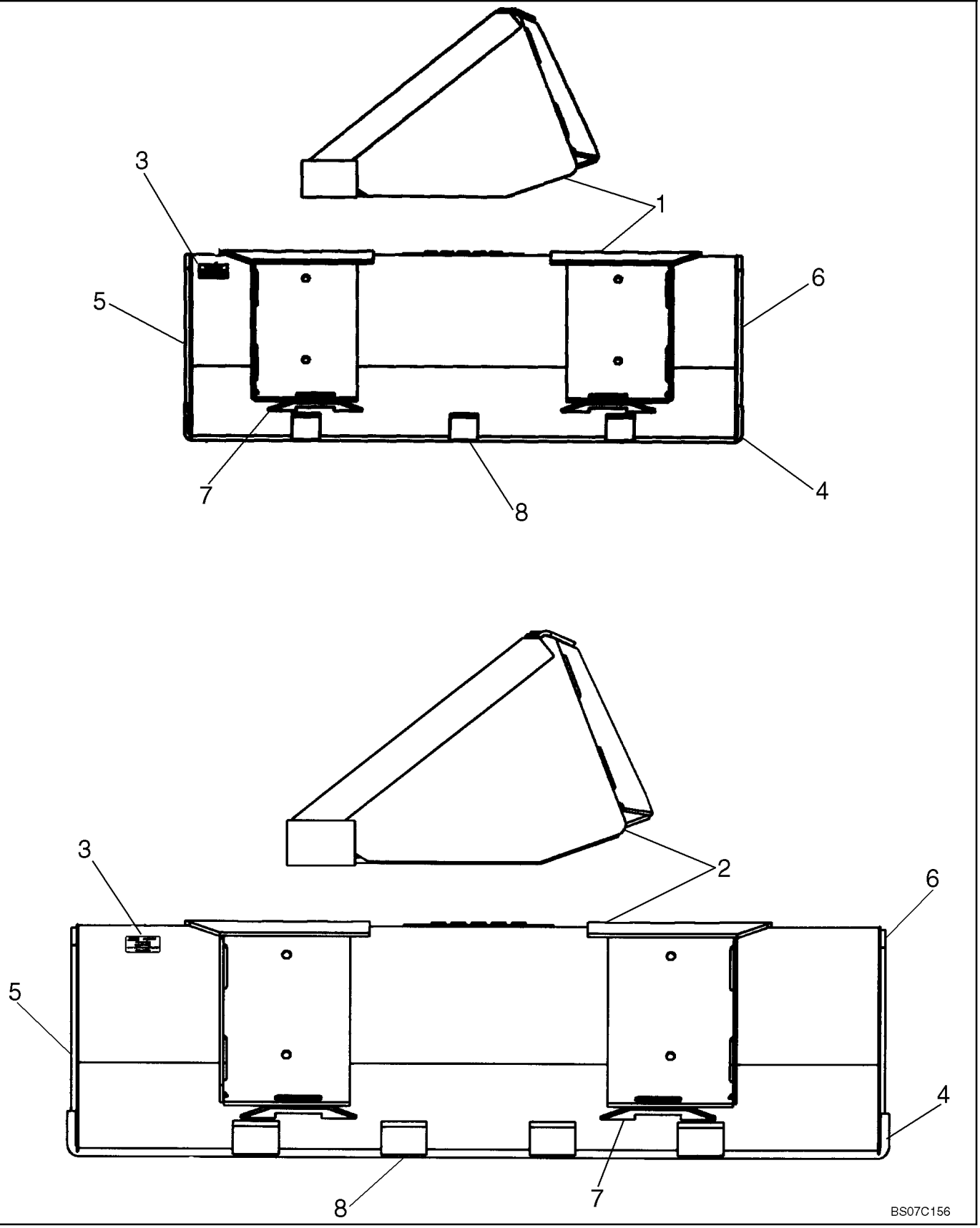

BUCKETS - LOADER (LOW PROFILE/ EXTENDED LOW PROFILE)

REF	FN	PART NUMBER	YR/SN	QTY	DESCRIPTION
2		{86633059}		1	BUCKET, 1981 mm (78 Inch); Order From Machinery Price List; Incl. 3 - 8
3		NSS		1	NOT SERVICED SEPARATELY, Decal
4		87015514		1	EDGE, CUTTING, Weld On Blade
5		87014503		1	EDGE, CUTTING, Cutter Left Hand
6		87014502		1	EDGE, CUTTING, Cutter Right Hand
7		87015460		2	PLATE
8		9829786		3	BAR, Skid Bar

BUCKETS - LOADER (UTILITY/LIGHT MATERIAL)

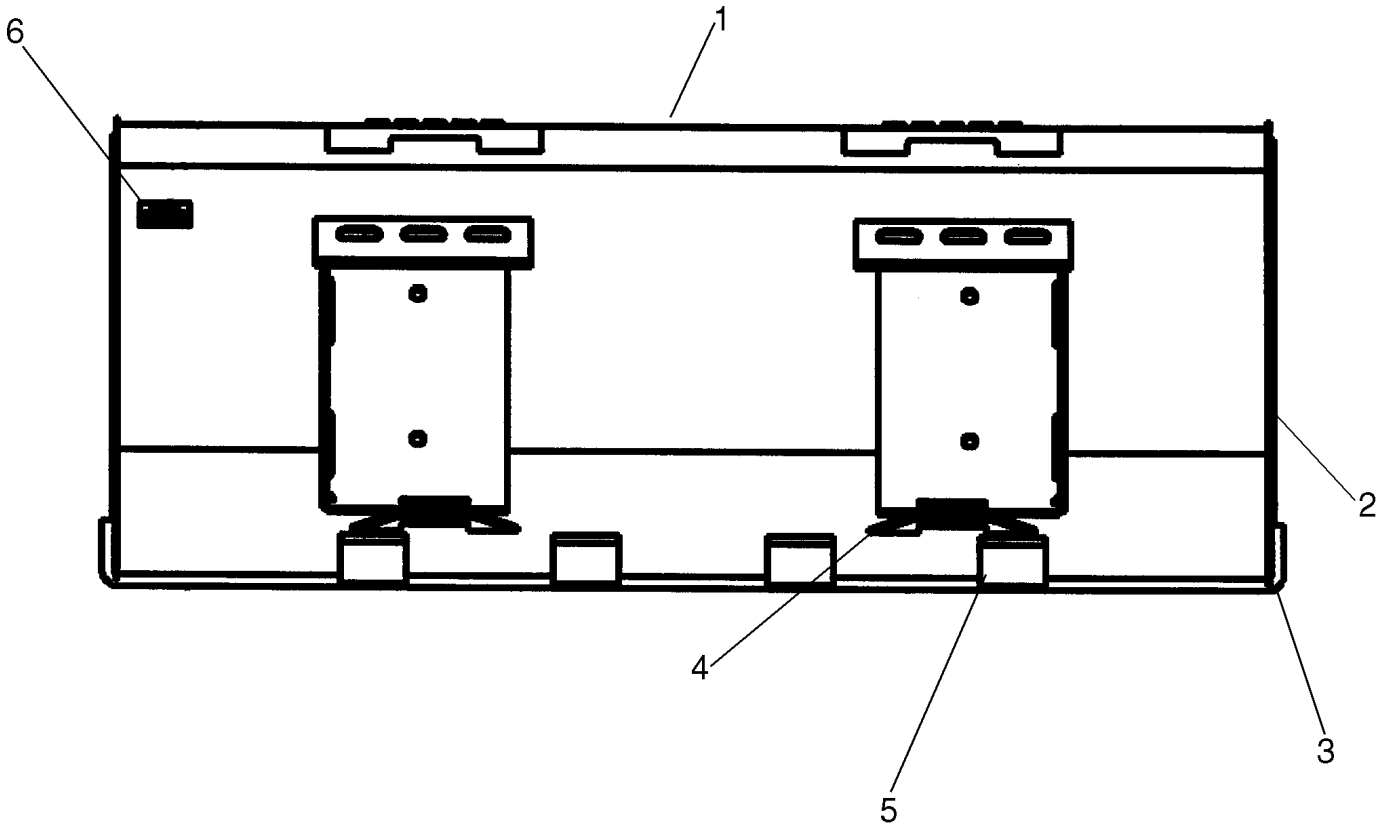

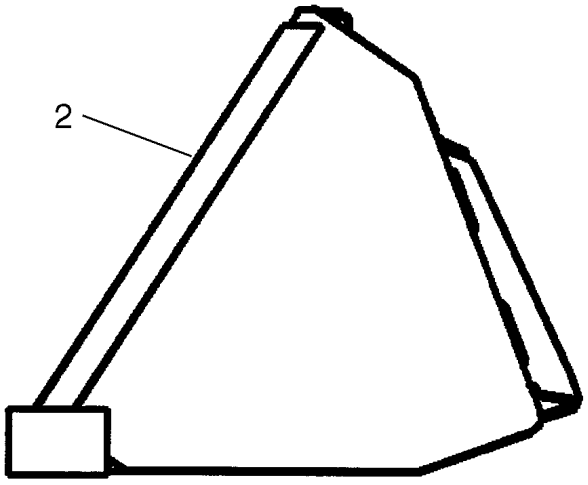

BS07K013

BUCKETS - LOADER (UTILITY/LIGHT MATERIAL)

REF	FN	PART NUMBER	YR/SN	QTY	DESCRIPTION
		REF			INSTRUCTION, UTILITY/LIGHT MATERIAL
1		{87010188}		1	BUCKET, 1829 mm (72 Inch), Order From Machinery Price List; Incl 2- 6
2		86501801		2	EDGE, CUTTING
3		86577168		1	EDGE, CUTTING, 72 in
4		9822175		2	PLATE
5		86501815		4	BAR, Skid Bar
6		NSS		1	NOT SERVICED SEPARATELY, Decal
1		{87010189}		1	BUCKET, 2134 mm (84 Inch), Order From Machinery Price List; Incl 2- 6
2		86501801		2	EDGE, CUTTING
3		86900574		1	EDGE, CUTTING, 84 in
4		9822175		2	PLATE
5		86501815		5	BAR, Skid Bar
6		NSS		1	NOT SERVICED SEPARATELY, Decal

BUCKETS - LOADER (HEAVY DUTY)

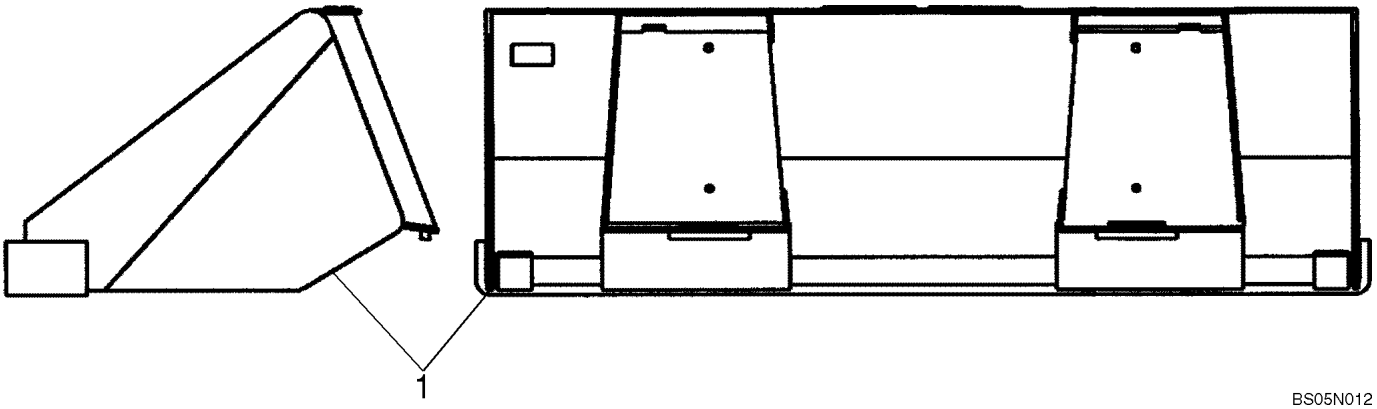

BUCKETS - LOADER (HEAVY DUTY)

REF	FN	PART NUMBER	YR/SN	QTY	DESCRIPTION
1		87438564		1	BUCKET, 66" Heavy Duty Dirt: Incl 87015514
		87015514		1	EDGE, CUTTING, 66" Blade
1		87438566		1	BUCKET, 72" Heavy Duty Dirt; Incl 86577168
		86577168		1	EDGE, CUTTING, 72" Blade
1		87430292		1	BUCKET, 78" Heavy Duty Dirt; Incl 86577170
		86577170		1	EDGE, CUTTING, 78" Blade

BUCKET, CUTTING EDGE (BOLT-ON CUTTING EDGE)

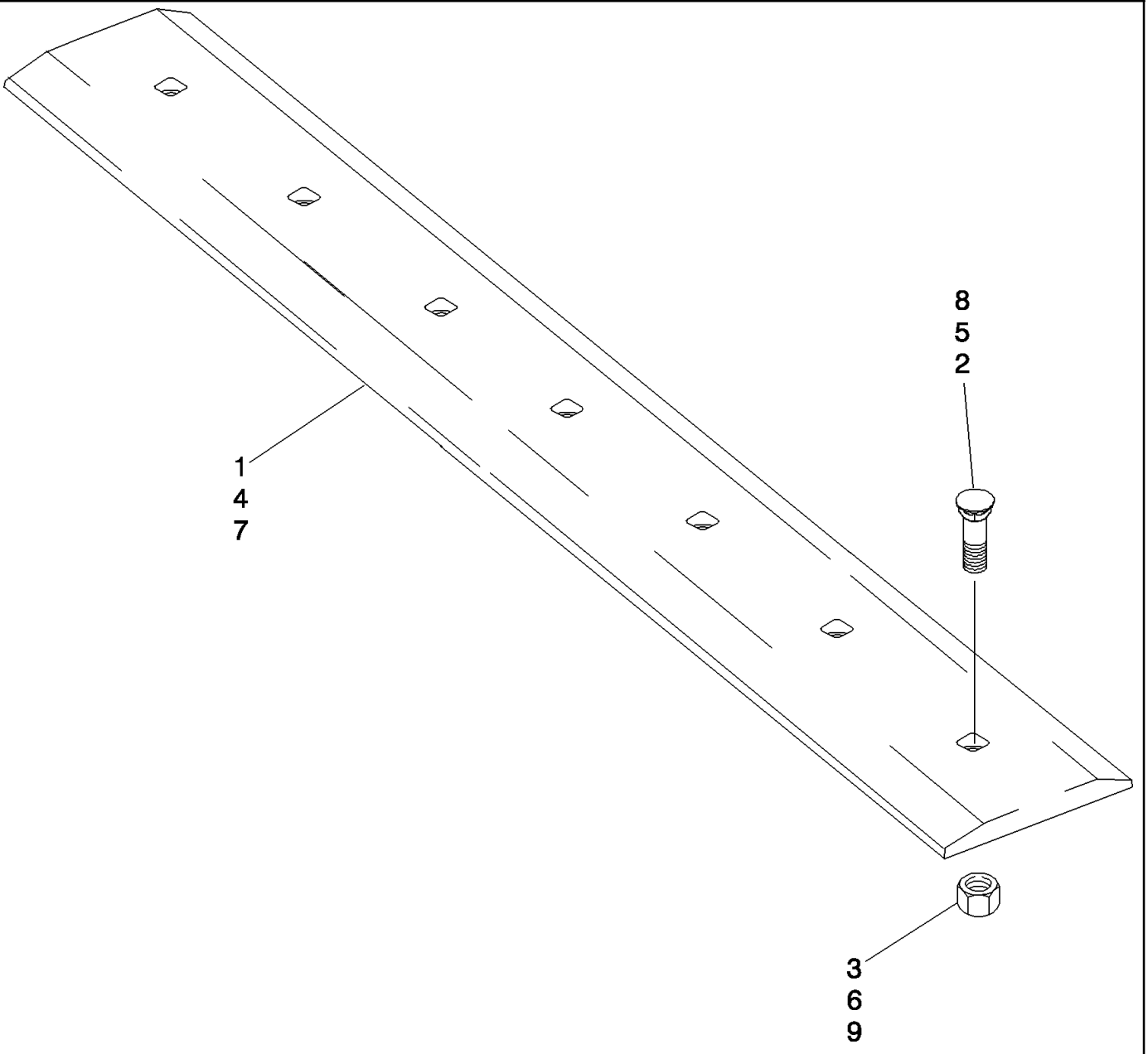

BS04A101

BUCKET, CUTTING EDGE (BOLT-ON CUTTING EDGE)

REF	FN	PART NUMBER	YR/SN	QTY	DESCRIPTION
		430498A1		1	EDGE, CUTTING, Kit; 66 Inch; Incl. Ref 4 - 6
4		87454483		1	EDGE, CUTTING, 1676 mm (66 inch)
5		86548338		7	BOLT, PLOW, 5/8"-11 x 2", G5
6		425-1010		7	NUT, 5/8"-11, G5
		430499A1		1	EDGE, CUTTING, Kit; 72 Inch; Incl. Ref 7 - 9
7		87454488		1	EDGE, CUTTING, 1829 mm (72 inch)
8		86548338		7	BOLT, PLOW, 5/8"-11 x 2", G5
9		425-1010		7	NUT, 5/8"-11, G5
		434817A1		1	EDGE, CUTTING, Kit; 78 Inch; Incl. Ref 7 - 9
7		87454489		1	EDGE, CUTTING
8		86548338		7	BOLT, PLOW, 5/8"-11 x 2", G5
9		280374		7	NUT, 5/8"-11, G5
		430500A1		1	EDGE, CUTTING, Kit; 84 Inch; Incl. Ref 7 - 9
7		86577173		1	EDGE, CUTTING, 2134 mm (84 inch)
8		420-21032		9	BOLT, CARRIAGE, 5/8"-11 x 2", G8, Full Thd
9		329-1010		9	NUT, 5/8"-11, G8

SPECIAL PARTS FOR ITALY - GUARD, BUCKET

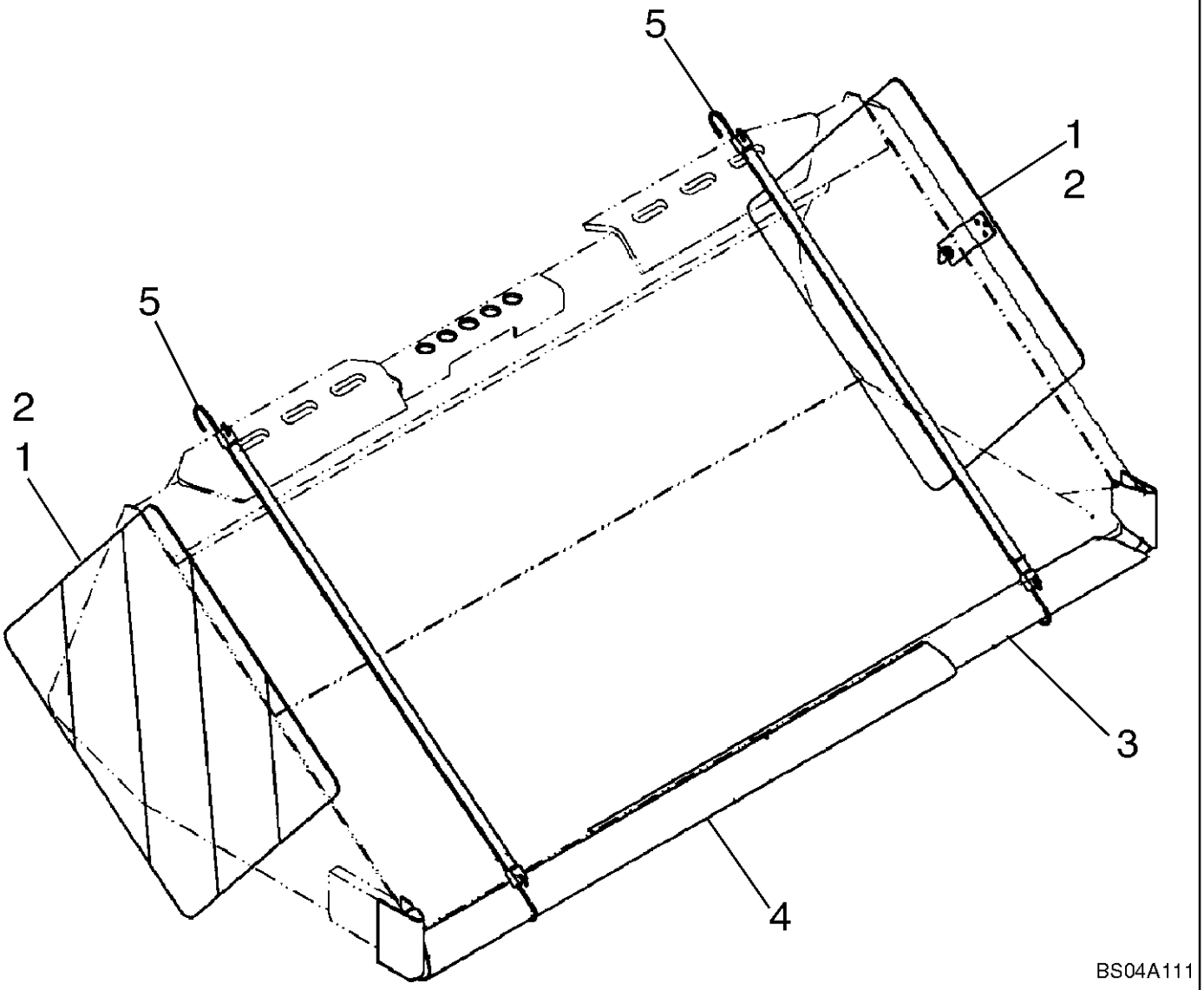

SPECIAL PARTS FOR ITALY - GUARD, BUCKET

REF	FN	PART NUMBER	YR/SN	QTY	DESCRIPTION
1		631816		2	SCREW
2		86530079		2	GUARD, Bucket
3		86565640		1	GUARD, Right Hand
4		86565641		1	GUARD, Left Hand
5		434346A1		2	ELASTIC STRAP

PALLET FORK

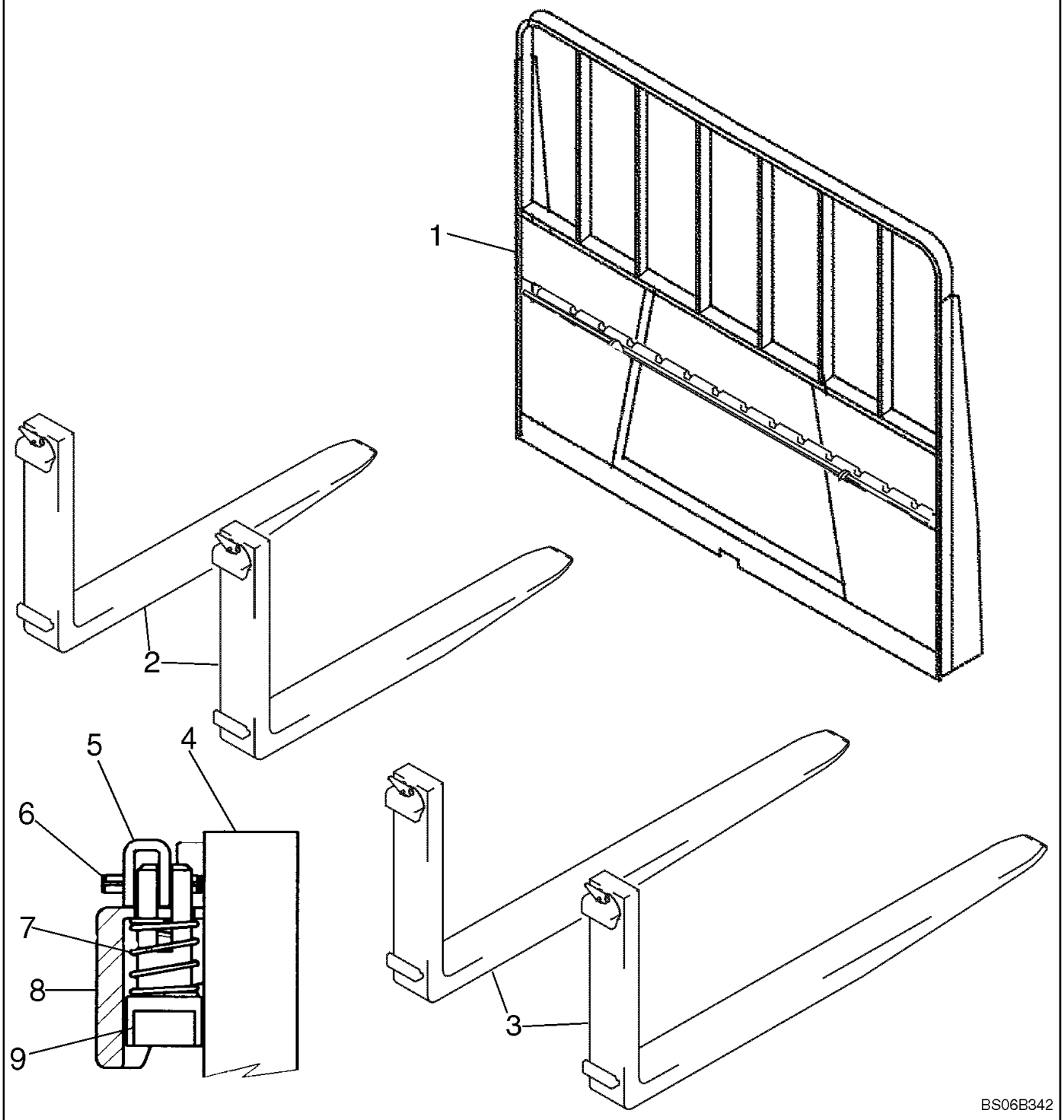

PALLET FORK

REF	FN	PART NUMBER	YR/SN	QTY	DESCRIPTION
1		86639773		1	MOUNTING PARTS, Pallet Fork
2		86589764		1	FORK, 42 in. Pallet Fork Set; Incl. 86574054
		86574054		2	FORK, BUCKET, Fork Assy; 42 in.; Incl. 4 - 9
3		86589765		1	DIA, Construction, 48 in. Pallet Fork Set; Incl. 86574055
		86574055		2	FORK, BUCKET, Fork Assy; 48 in.; Incl. 4 - 9
4		NSS		1	NOT SERVICED SEPARATELY, Fork Arm
5		226129		1	HANDLE
6		118827		1	PIN, 3/16" x 1", Slotted
7		9800081		1	SPRING
8		NSS		1	NOT SERVICED SEPARATELY, Top Hook
9		226130		1	PIN

CONTROLLER - MOUNTING (PILOT CONTROL)

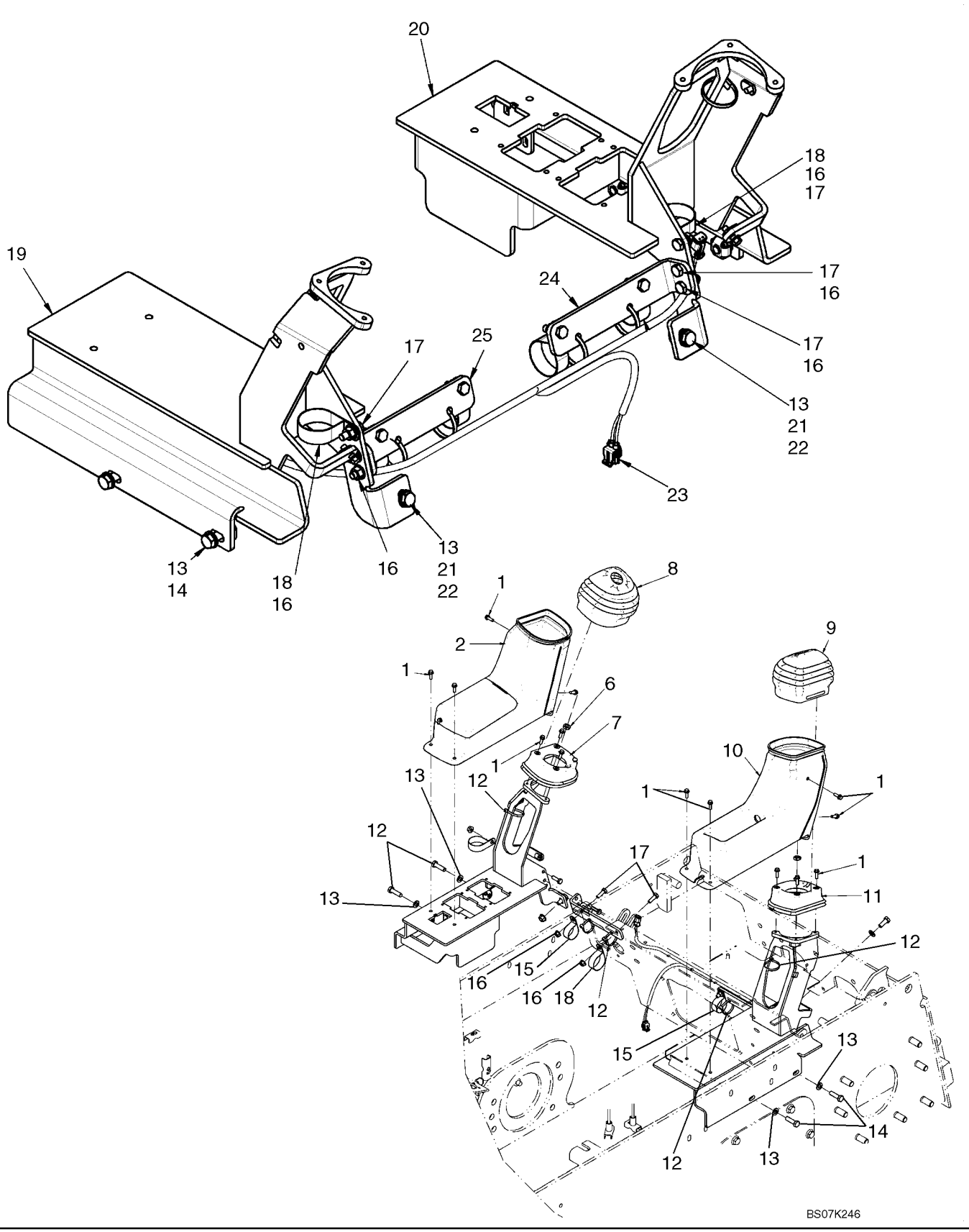

CONTROLLER - MOUNTING (PILOT CONTROL)

REF	FN	PART NUMBER	YR/SN	QTY	DESCRIPTION
1		87556251		14	SCREW, Screw, 1/4-20 X 3/4
2		87665545		1	CONSOLE, Console, LH
3		87647723		1	COVER, Fuse Cover
4		87568437		1	NUT, WING, Knob, Latch
5		236535A1		1	CLIP, ELECTRICAL, Clip, Latch
6		323238		2	NUT, Thin, M12 x 1.75, Cl 05
7		87646402		1	SEAL, RUBBER, Seal, LH
8		87568426		1	RUBBER SLEEVE, Boot, LH
9		87568427		1	RUBBER SLEEVE, Boot, RH
10		87665543		1	CONSOLE, Console, RH
11		87646401		1	SEAL, RUBBER, Seal, RH
12		L11541		6	STRAP, CABLE
13		86624176		6	WASHER, M10 x 20 x 2
14		9706704		4	BOLT, Hex, M10 x 35, 8.8, Full Thd
15		86637998		3	CLAMP, 1 1/2", Insul, 3/8" Bolt
16		86505868		10	NUT, M8, Flg Ser
17		43127		6	BOLT, Hex, M8 x 25, 8.8
18		603022		3	CLAMP, 1 3/4", Insul, 3/8" Bolt
19		NSS		1	NOT SERVICED SEPARATELY, Console, RH
20		NSS		1	NOT SERVICED SEPARATELY, Console, LH
21		43139		2	SCREW
22		43435		2	NUT, M10, Flg Ser
23		87568434		1	HARNESS, Pilot Harness
24		NSS		1	NOT SERVICED SEPARATELY, Hose Support, LH
25		NSS		1	NOT SERVICED SEPARATELY, Hose Support, RH

CONSOLE - RH

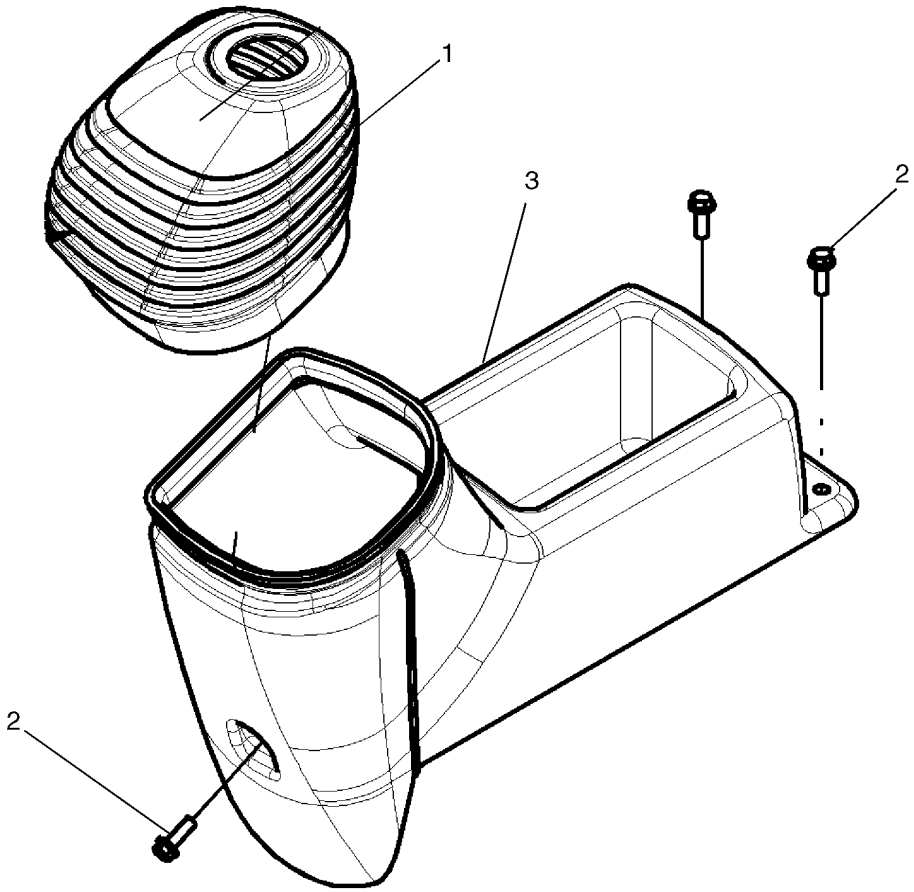

BS07J262

CONSOLE - RH

REF	FN	PART NUMBER	YR/SN	QTY	DESCRIPTION
1		{87679715}		1	Boot, RH Pilot
2		87556251		6	SCREW
3		87665549		1	CONSOLE, Console, RH

09-15		p1	12/07

CONSOLE - LH

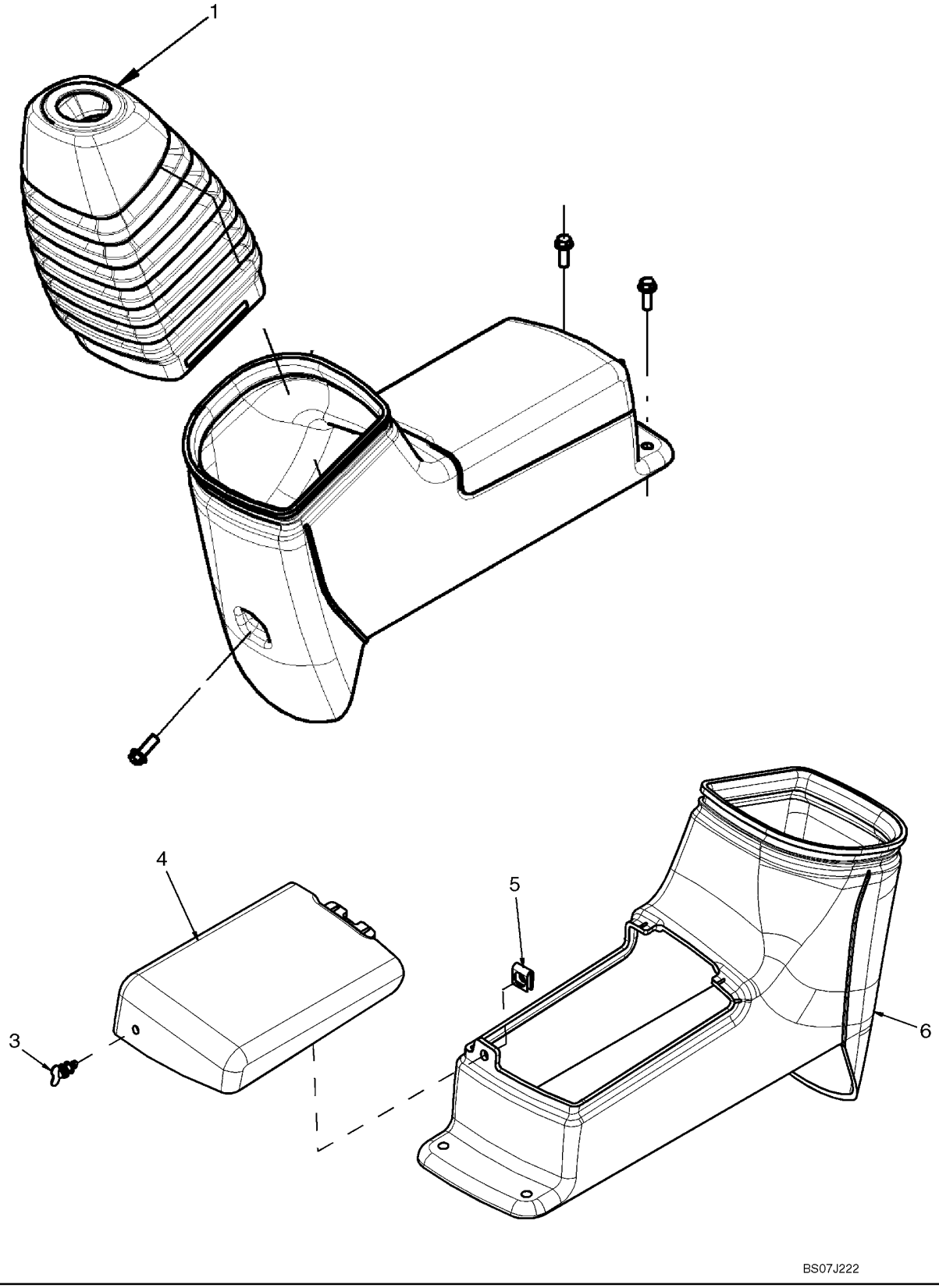

CONSOLE - LH

REF	FN	PART NUMBER	YR/SN	QTY	DESCRIPTION
1		{87679718}		1	Boot, LH Pilot
3		87568437		1	NUT, WING
4		87647723		1	COVER
5		236535A1		1	CLIP, ELECTRICAL
6		87665550		1	CONSOLE, Console, LH

09-16		p1	12/07

CHASSIS (440)

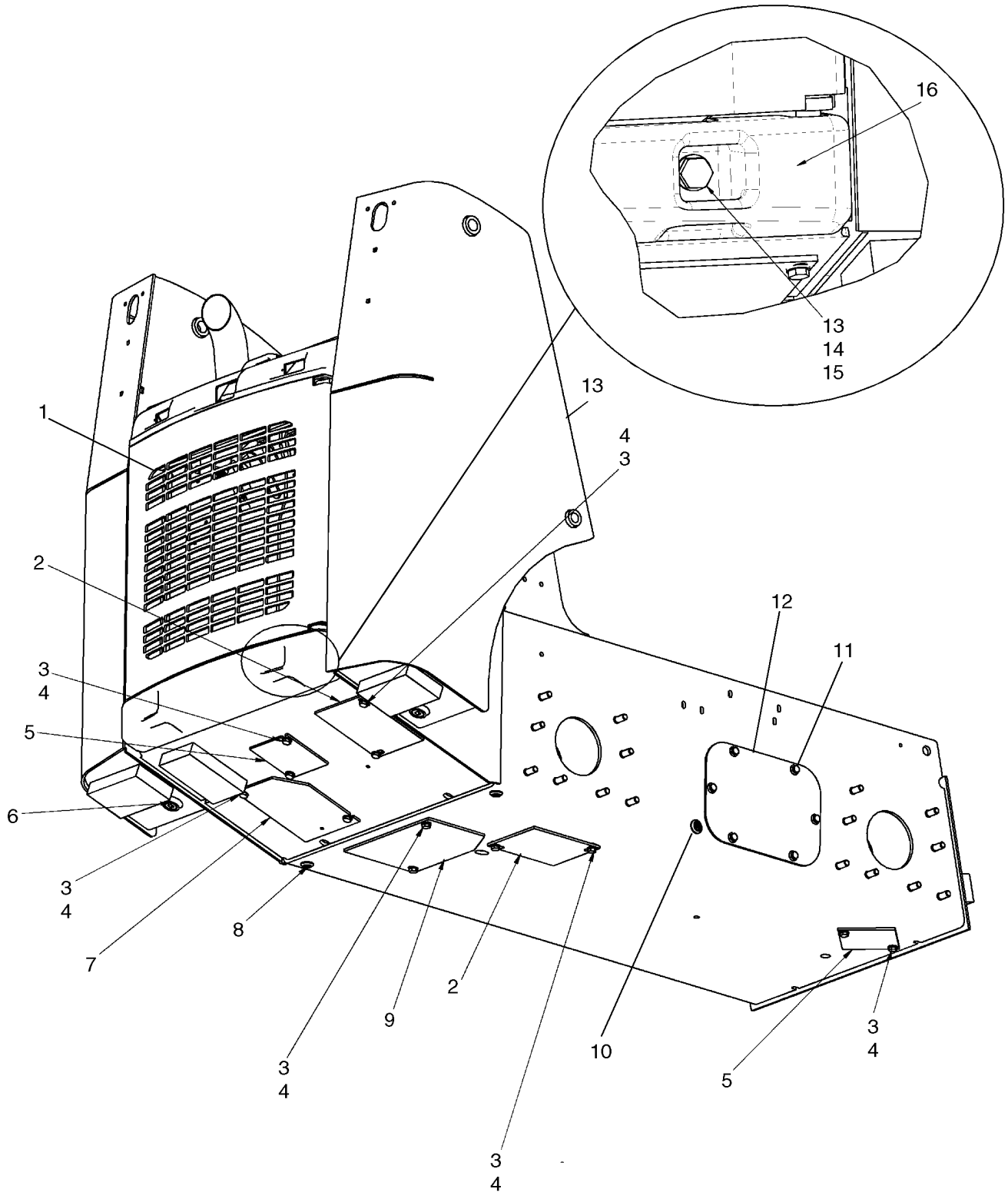

CHASSIS (440)

REF	FN	PART NUMBER	YR/SN	QTY	DESCRIPTION
1		REF		1	INSTRUCTION, Rear Door; See Fig. 09-26
1		REF		1	INSTRUCTION, Rear Door, Louvered, Europe; See Fig 09-27
2		87458642		2	PLATE, Plumbing Access Plate
3		86625255		16	WASHER, M13.5 x 24.5 x 3, HT
4		9824642		12	BOLT, Hex, M12 x 35, 10.9
5		H436914		2	PLATE, LARGE
6		87432221		2	PLUG, Magnetic Plug
7		87666074		1	PLATE, COVER, Plumbing Access Plate
8		236622		2	PLUG, 3/8 - 18 NPTF
9		87648094		1	PLATE, Oil Drain Cover
10		{647429}		2	Plug, 1/2 - 14 NPTF
11		87030508		12	BOLT, Hex Flg, M12 x 30, 10.9, Full Thd
12		87411208		2	PLATE, COVER
13		87617091		1	KIT, SERVICE, Frame; Incl Ref 6, 8, 10 And Fig 09-16 Ref 17 (Non Locking Cap) 18, Fuel Sender And Gasket
14		86625260		2	WASHER, M20 x 37.5 x 4, HT
15		86536985		2	NUT, LOCK, M20 x 2.5, Cl 10
16		87626717		1	WEIGHT, COUNTER, Bumper, Counterweight

CHASSIS (440)

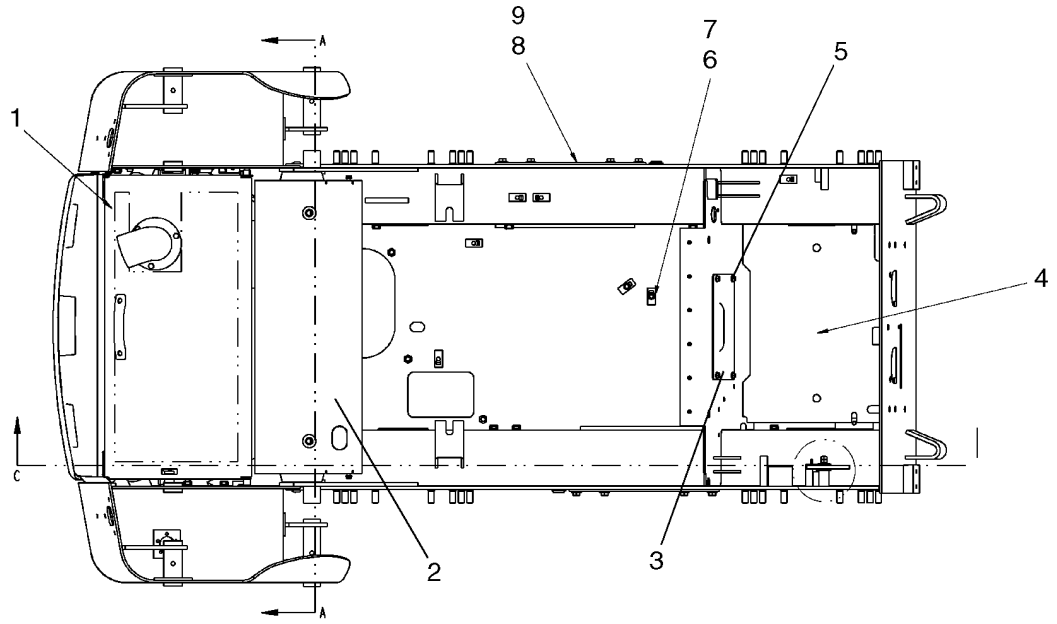

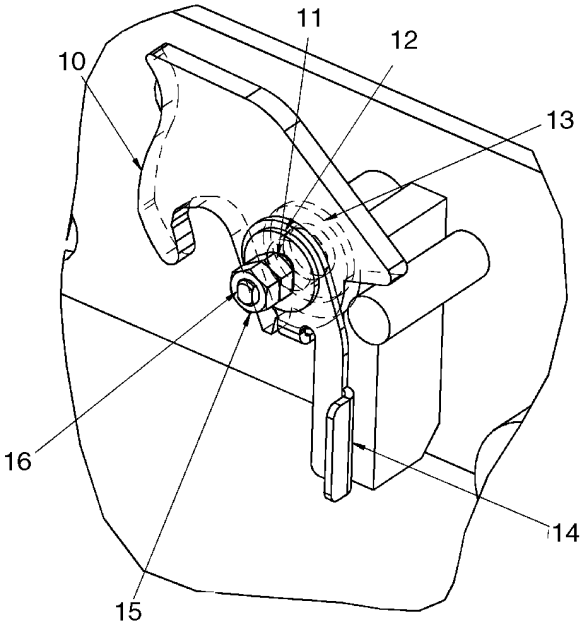

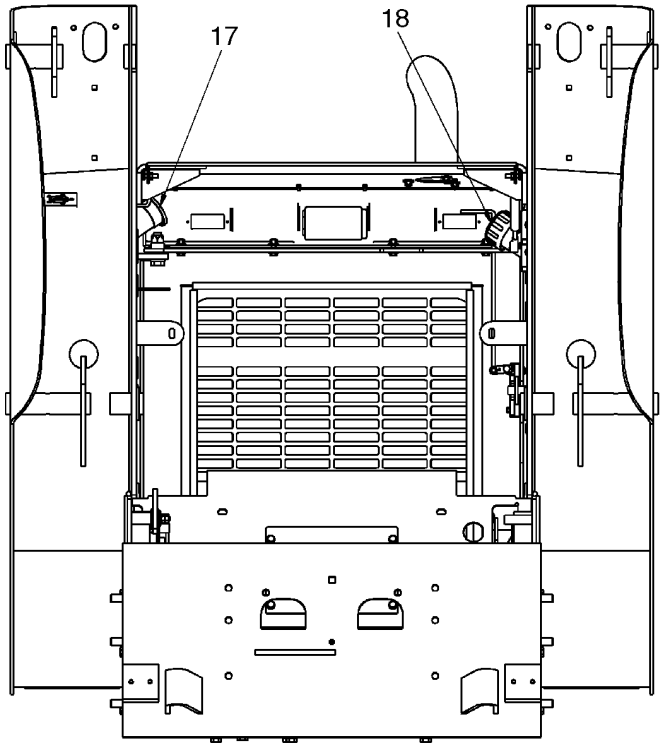

BS07K252

CHASSIS (440)

REF	FN	PART NUMBER	YR/SN	QTY	DESCRIPTION
1		REF		1	INSTRUCTION, Rear Hood; See Fig. 09-24
2		{87661301}		1	Panel, Heat Shield Extension
3		87430679		1	PLATE, Cover Plate
4		{87705430}		1	Floor Plate - Tan
5		86545825		4	SCREW, SELF TAP, Hex Wash Hd, 5/16" x 5/8"
6		86508569		2	BOLT, Hex, M6 x 70, 8.8
7		87022737		2	SPACER
8		87030508		12	BOLT, Hex Flg, M12 x 30, 10.9, Full Thd
9		87411208		2	PLATE, COVER
10		390516A3		1	LATCH, ROPS Latch Plate
11		278332A1		1	WASHER
12		294967A1		1	WASHER
13		87381		1	WASHER, 3/4", SAE
14		294911A2		1	HOOK, Latch Return Plate
15		86500689		2	NUT, M10, Cl 10
16		294943A1		1	STUD, Latch Mounting Stud
17		H436887		1	CAP, FILLER, Fuel Cap, Non Locking
17		108925A1		1	CAP, FILLER, Fuel Cap, Locking; Incl 2 Keys
18		257448A1		1	CAP, Hydraulic Fill Cap

CHASSIS (440CT)

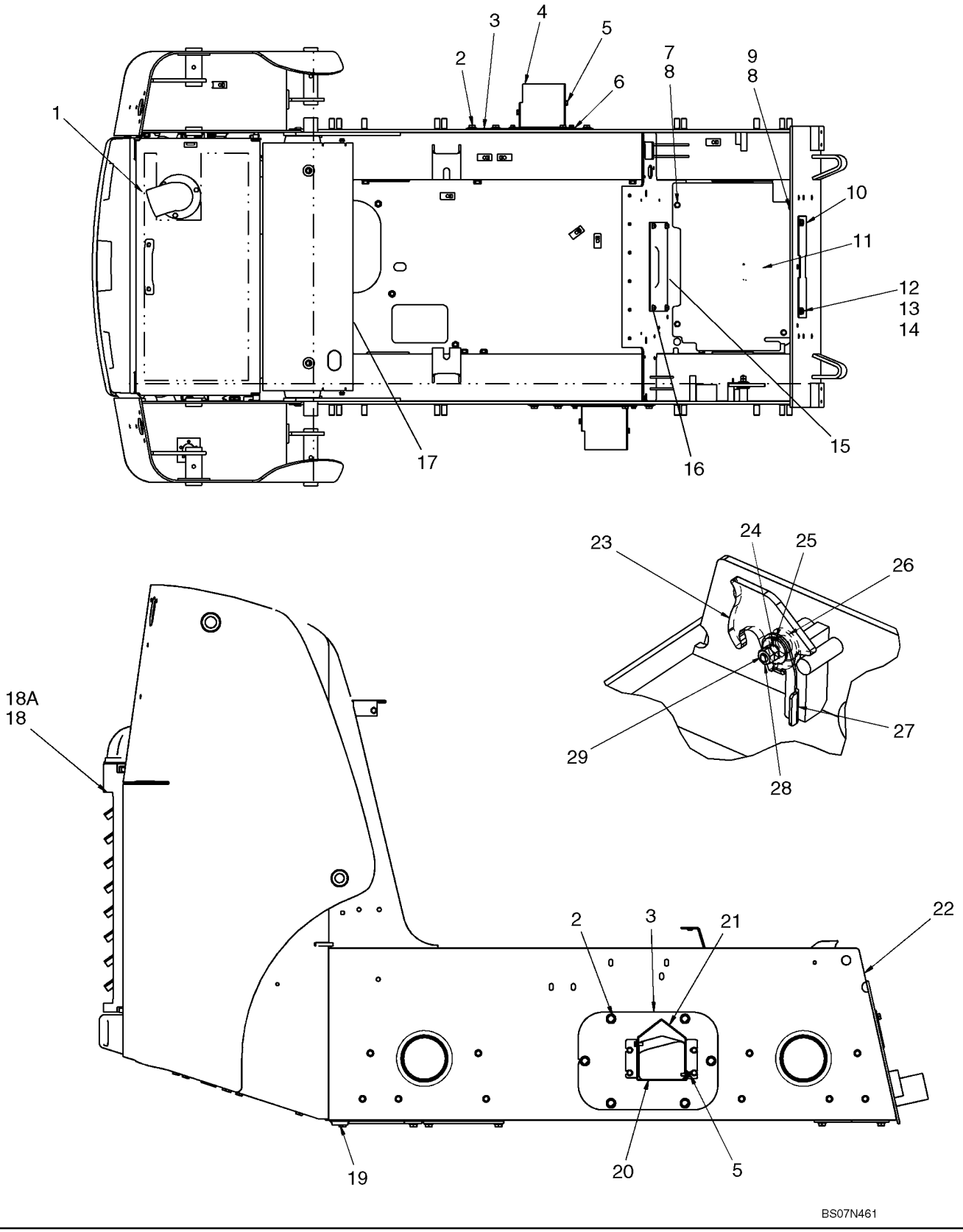

CHASSIS (440CT)

REF	FN	PART NUMBER	YR/SN	QTY	DESCRIPTION
1		REF		1	INSTRUCTION, Rear Hood; See Fig 09-24
2		87030508		12	BOLT, Hex Flg, M12 x 30, 10.9, Full Thd
3		87368774		2	COVER
4		87368777		1	GUARD, Hose Guard, Lower Left
5		9840344		12	SCREW
6		87368778		1	GUARD, Hose Guard, Upper Left
7		9635884		3	BOLT, Hex, 5/16"-18 x 1", G5, Full Thd
8		83918746		4	WASHER
9		9707515		1	BOLT, Hex, 5/16"-18 x 1 3/4", G5
10		87461248		1	PLATE, Cover Plate, Front Plate
11		{87705430}		1	Composite Floor Plate
12		43139		2	SCREW
13		140017		4	WASHER, M10 x 20 x 2
14		86512554		2	NUT, LOCK, M10 x 1.5, Cl 10
15		87430679		1	PLATE
16		86545825		4	SCREW, SELF TAP, Hex Wash Hd, 5/16" x 5/8"
17		{87661301}		1	Heat Shield Extension
18		REF		1	INSTRUCTION, Rear Door, Louvered, Europe; See Fig 09-27
18A		REF		1	INSTRUCTION, Rear Door, Standard; See Fig 09-26
19		86625135		2	PLUG, Hex Soc, 1"-11 1/2 NPTF
20		87368775		1	GUARD, Hose Guard, Lower Right
21		87368776		1	GUARD, Hose Guard, Upper Right
22		87617092		1	KIT, SERVICE, Kit, Chassis; Incl Fuel Cap, Hydraulic Cap And Fuel Sender With Gasket
23		390516A3		1	LATCH, ROPS Latch
24		278332A1		1	WASHER
25		294967A1		1	WASHER
26		87381		1	WASHER, 3/4", SAE
27		294911A2		1	HOOK, Latch Return
28		86500689		2	NUT, M10, Cl 10
29		294943A1		1	STUD

09-19		p1	12/07

CHASSIS (440CT)

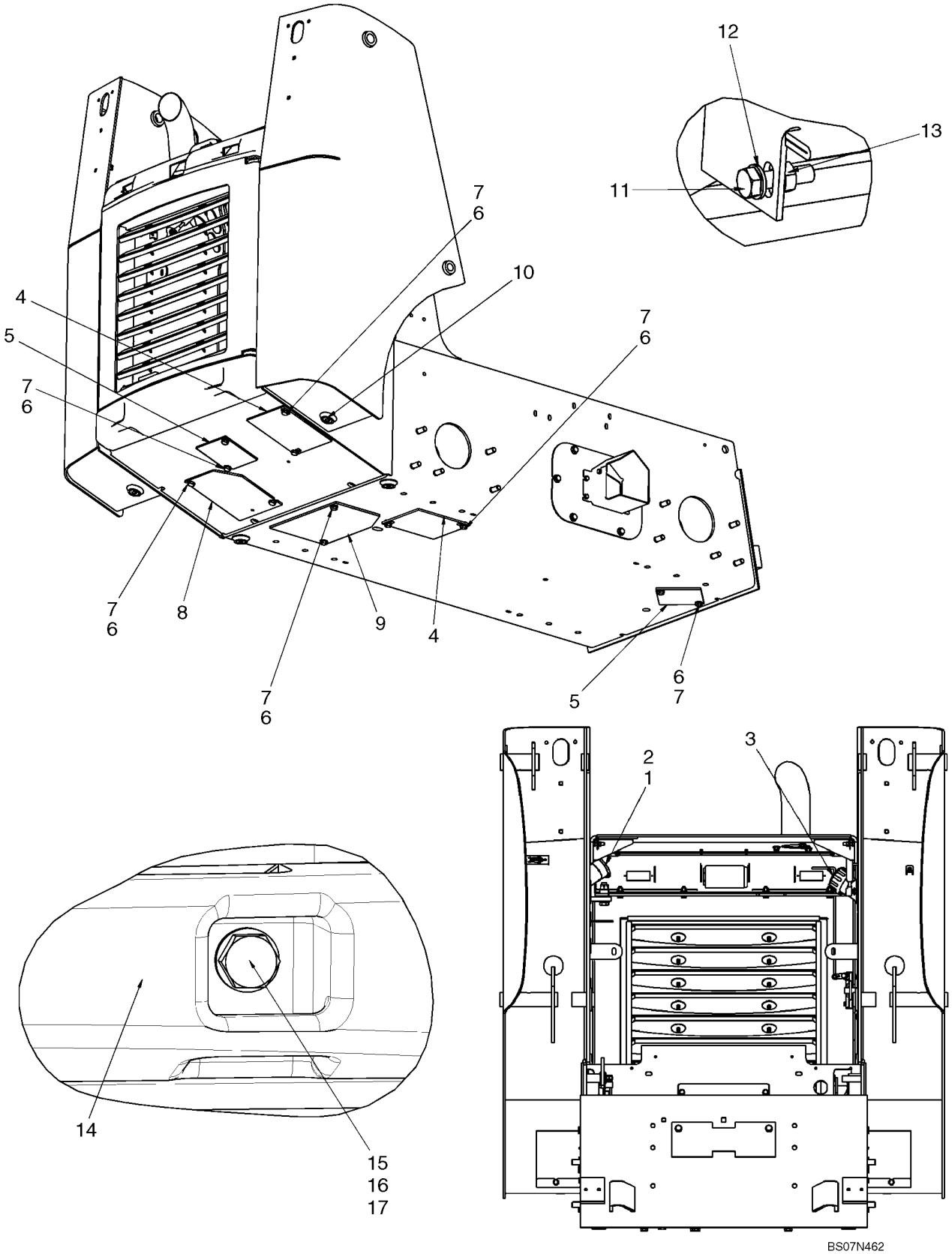

CHASSIS (440CT)

REF	FN	PART NUMBER	YR/SN	QTY	DESCRIPTION
1		H436887		1	CAP, FILLER, Non Locking
2		108925A1		1	CAP, FILLER, Locking
3		257448A1		1	CAP, Hydraulic Fill Cap
4		87458642		2	PLATE
5		H436914		2	PLATE, LARGE
6		86625255		16	WASHER, M13.5 x 24.5 x 3, HT
7		9824642		12	BOLT, Hex, M12 x 35, 10.9
8		87666074		1	PLATE, COVER
9		87648094		1	PLATE, Oil Drain Cover
10		87432221		2	PLUG, Magnetic Plug
11		43128		2	BOLT, Hex, M8 x 30, 8.8
12		140016		4	WASHER, M8 x 16 x 1.6
13		43362		2	NUT, M8, Cl 10
14		87626717		1	WEIGHT, COUNTER
15		412641		2	BOLT, Hex, M20 x 70, 10.9
16		86625260		2	WASHER, M20 x 37.5 x 4, HT
17		86536985		2	NUT, LOCK, M20 x 2.5, Cl 10
18		REF		1	INSTRUCTION, Rear Door, Louvered, Europe; See Fig 09-27
18A		REF		1	INSTRUCTION, Rear Door, Standard; See Fig 09-26

LOADER & GROUND DRIVE CONTROL - RH

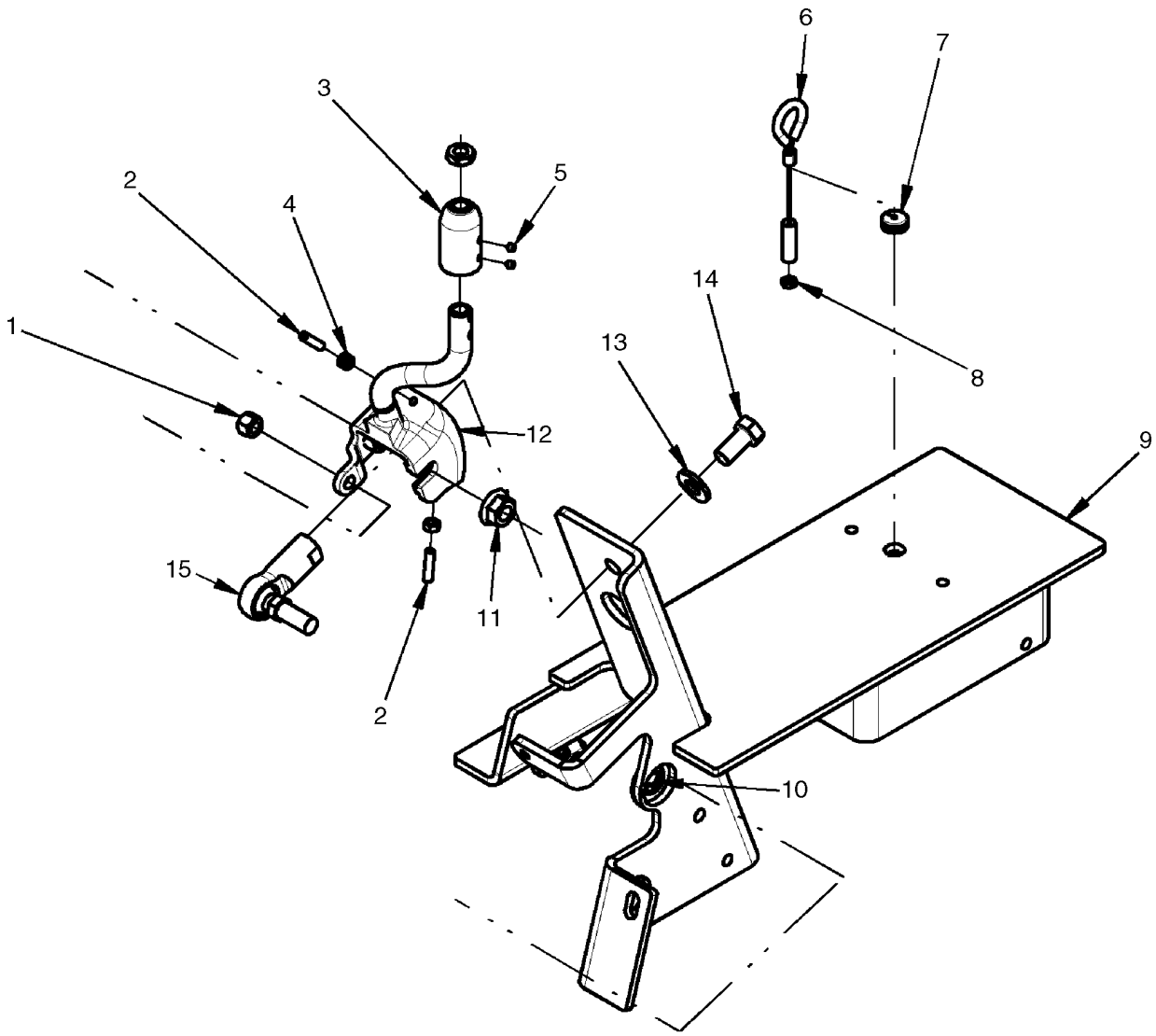

LOADER & GROUND DRIVE CONTROL - RH

REF	FN	PART NUMBER	YR/SN	QTY	DESCRIPTION
1		80855		4	NUT, LOCK, 3/8"-24, GC
2		405103A1		2	SCREW
3		{87662429}		1	Handle Mounting Adapter
4		86500688		5	NUT, M6, Cl 10
5		87564724		2	SCREW, Set Screw, #10-32 X 1/4
6		87462741		1	CABLE, Cable, Override
7		87036285		1	GROMMET, 1/8" ID x 9/16" Groove Dia, Str Cut
8		87825		1	NUT, #10-32
9		{87684388}		1	Frame, Control RH
10		87309725		4	RING, SNAP, Retaining Ring, External "E" Style #62
11		87033645		2	NUT, LOCK, Flg, 1/2"-20
12		{87662357}		1	Control Lever, RH
13		87364		2	WASHER, 1/2", SAE
14		87848		2	BOLT, Hex, 1/2"-20 x 1", G5, Full Thd
15		87458667		1	JOINT

LOADER & GROUND DRIVE CONTROL - LH

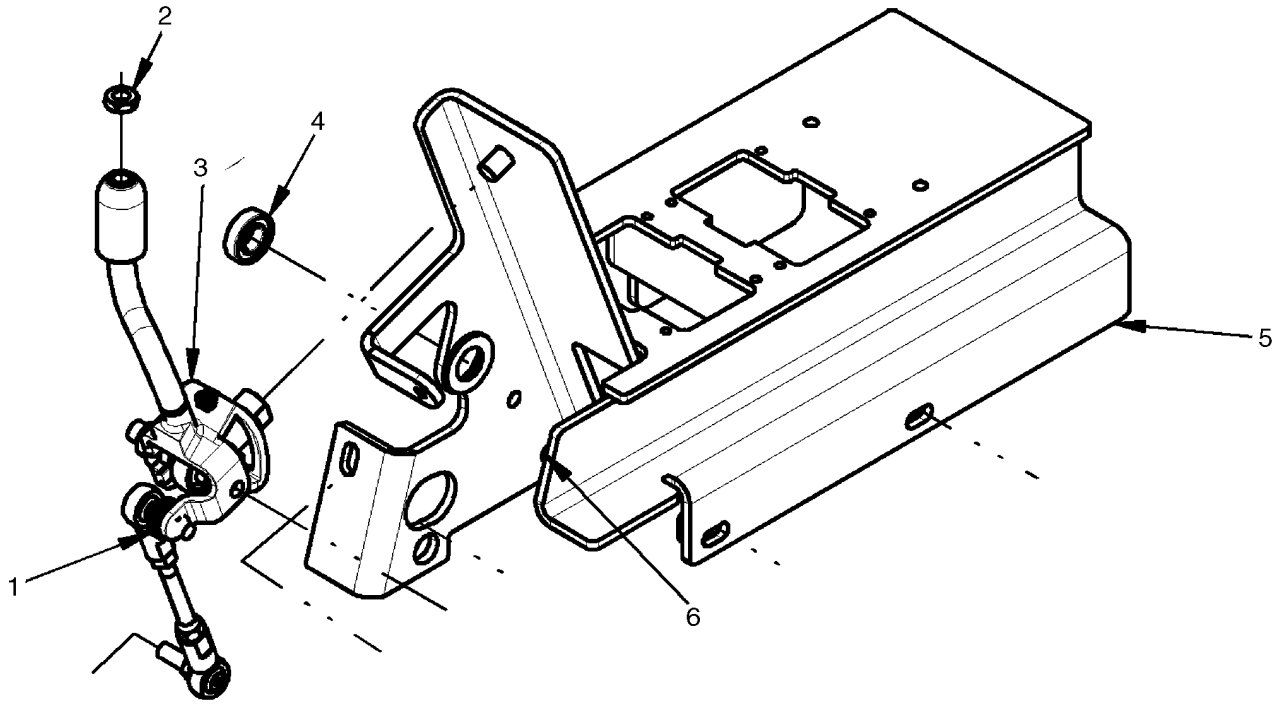

BS07J220

LOADER & GROUND DRIVE CONTROL - LH

REF	FN	PART NUMBER	YR/SN	QTY	DESCRIPTION
1		86639325		3	WASHER, M10 x 24.5 x 3, HT
2		323238		2	NUT, Thin, M12 x 1.75, Cl 05
3		{87662349}		1	Control Lever, LH
4		87458664		2	BEARING, BALL
5		{87684387}		1	Frame, Control LH
6		87030561		1	NUT, LOCK, M6 x 1, Cl 8

LOADER & GROUND DRIVE CONTROL - LINKAGE

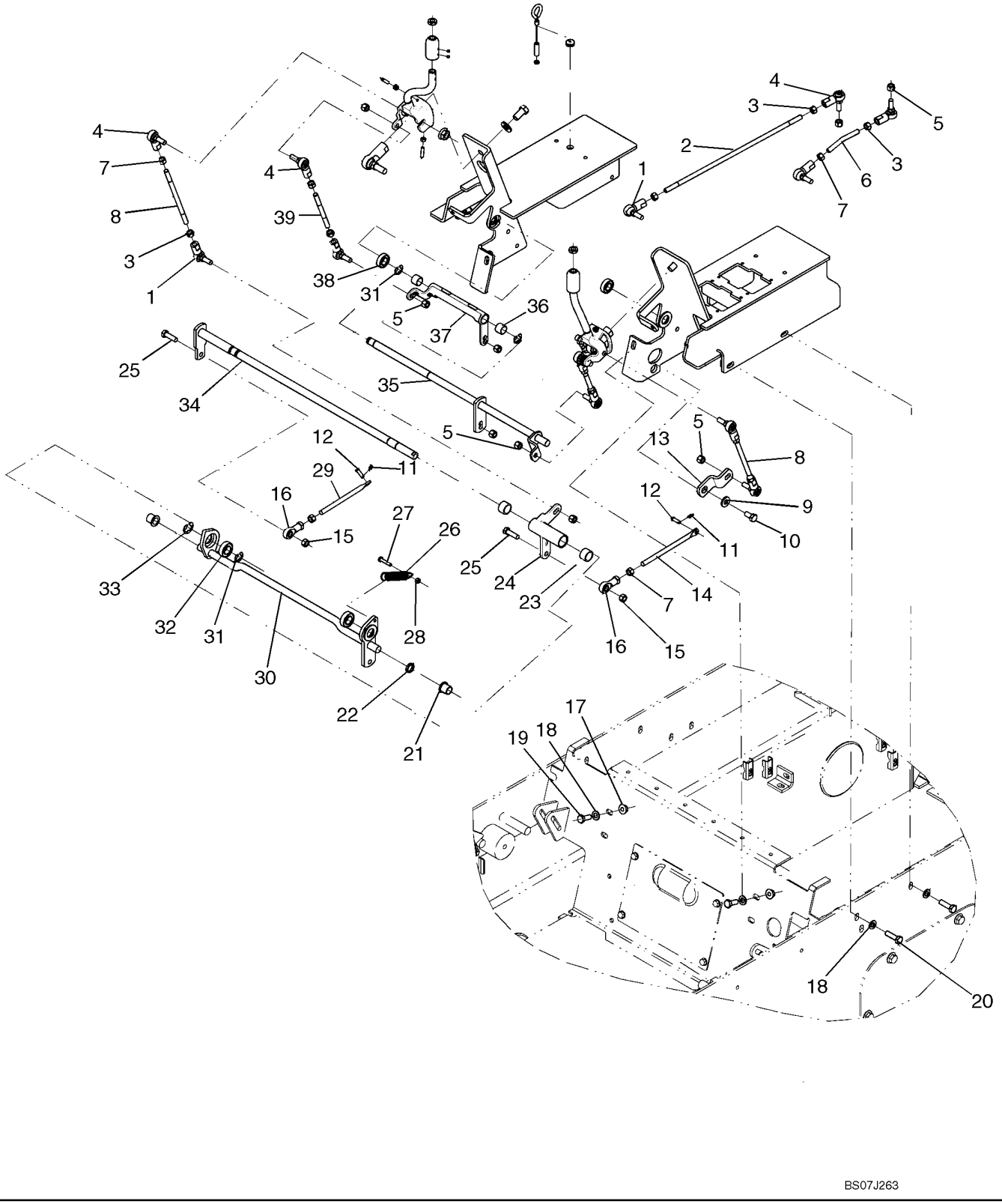

LOADER & GROUND DRIVE CONTROL - LINKAGE

REF	FN	PART NUMBER	YR/SN	QTY	DESCRIPTION
1		230426A1		6	BALL JOINT
2		435565A1		1	ROD
3		87030547		6	NUT, 3/8"-24, G5, LH
4		230425A1		6	BALL JOINT
5		80855		12	NUT, LOCK, 3/8"-24, GC
6		87460100		1	ROD
7		86509310		8	NUT, 3/8"-24, G5
8		180682A1		2	STEM
9		86639325		3	WASHER, M10 x 24.5 x 3, HT
10		43138		1	SCREW, Hex, M10 x 20, 8.8, Full Thd
11		D131983		2	PIN
12		234726		2	PIN, CLEVIS, 1/4" x .770"
13		87458510		1	ARM
14		87458662		1	ROD
15		9628503		2	NUT, 3/8"-16, G5
16		86500348		2	BALL JOINT
17		411345A1		2	NUT
18		86624176		6	WASHER, M10 x 20 x 2
19		43139		2	SCREW
20		9706704		4	BOLT, Hex, M10 x 35, 8.8, Full Thd
21		367582A1		2	BEARING, NYLON
22		409856A1		1	SPACER
23		409845A1		2	BEARING, NEEDLE
24		385783A3		1	CRANK
25		88011		2	BOLT, Hex, 3/8"-16 x 1 1/4", G5, Full Thd
26		120952A1		1	SPRING
27		43117		1	BOLT, Hex, M6 x 30, 8.8
28		86500688		5	NUT, M6, Cl 10
29		87458660		1	ROD
30		87458511		1	SHAFT
31		87309725		4	RING, SNAP, External "E" Style, #62
32		87458665		2	BEARING, BALL
33		87309726		1	RING, SNAP, External "E" Style, #75
34		87613733		4	ROD
35		87458514		1	ROD ASSY.

LOADER & GROUND DRIVE CONTROL - LINKAGE

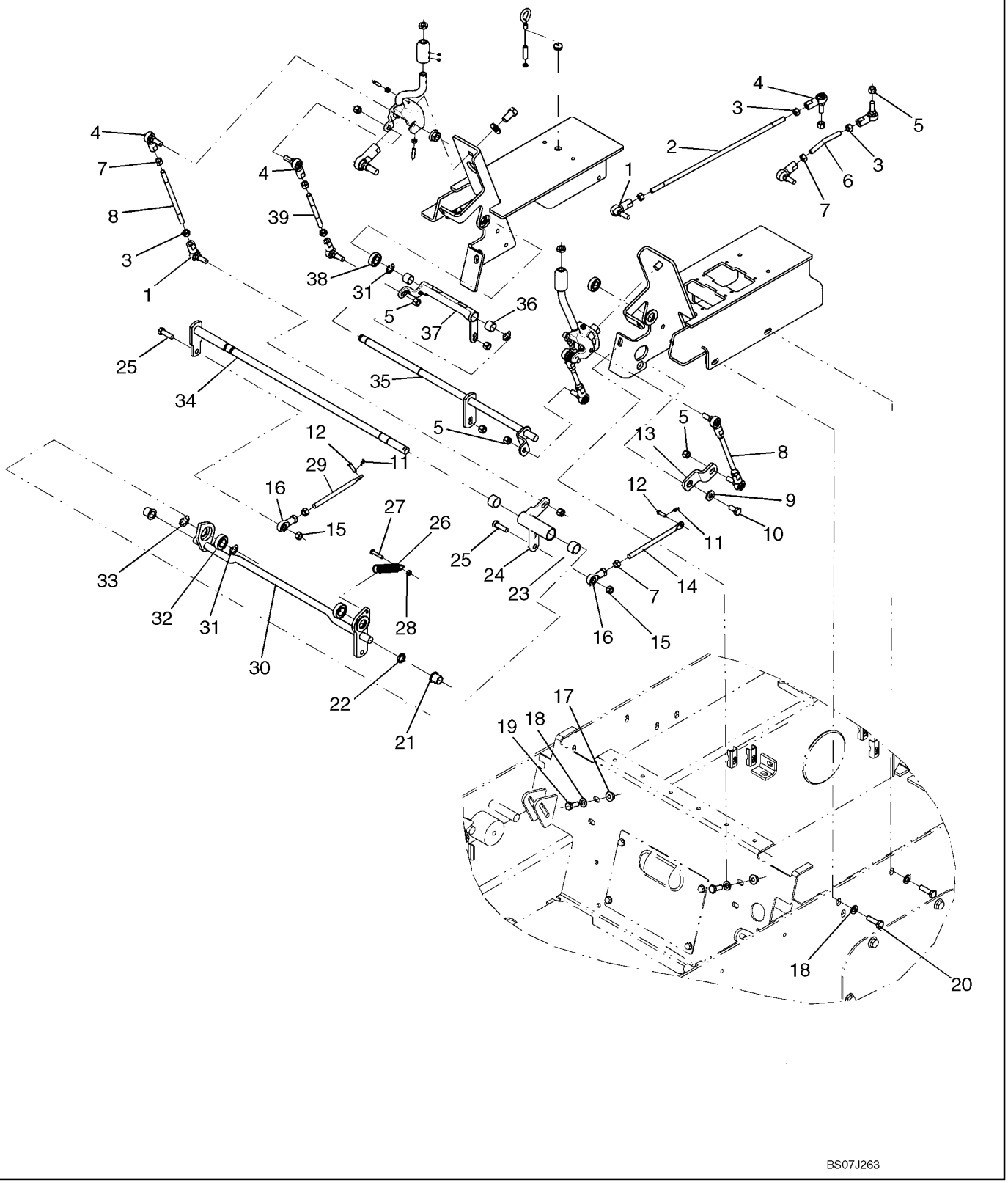

LOADER & GROUND DRIVE CONTROL - LINKAGE

REF	FN	PART NUMBER	YR/SN	QTY	DESCRIPTION
36		409844A1		2	BEARING, NEEDLE
37		367585A2		1	CRANK
38		87458664		2	BEARING, BALL
39		249367A2		2	PIN, LARGE

CONTROLS - AUXILIARY HYDRAULICS

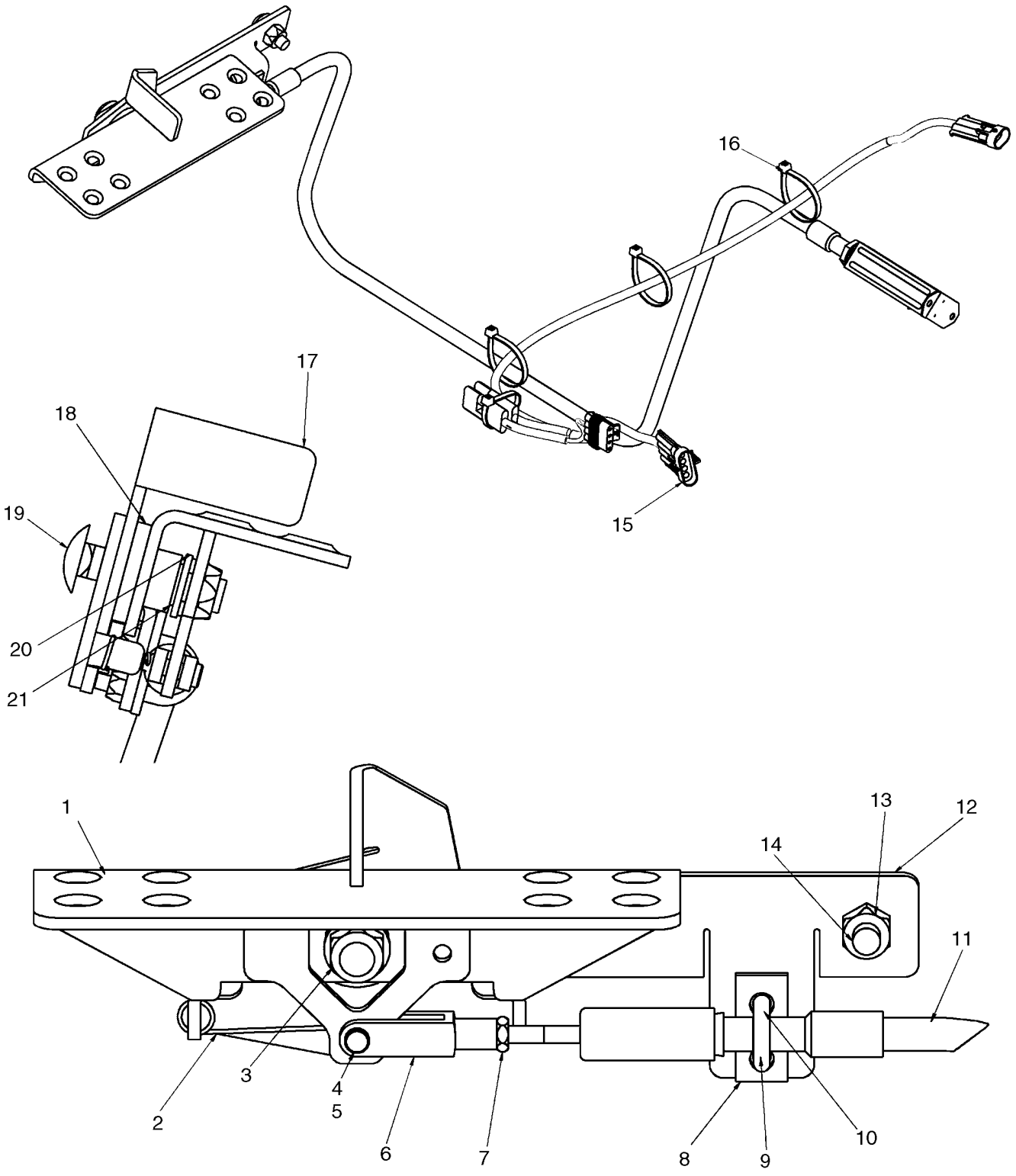

CONTROLS - AUXILIARY HYDRAULICS

REF	FN	PART NUMBER	YR/SN	QTY	DESCRIPTION
1		87423833		1	PEDAL ASSY.
2		302960A2		1	SPRING
3		412672		1	NUT, LOCK, M12 x 1.75, Cl 10
4		D131983		1	PIN
5		234726		1	PIN, CLEVIS, 1/4" x .770"
6		86520436		1	CLEVIS, ADJUSTABLE, 1/4"-28
7		86976064		1	NUT, Jam, 1/4"-28, G5
8		H373779		1	PLATE, LARGE, Spacer
9		87442439		1	ROD
10		86512440		2	NUT, LOCK
11		87423856		1	CABLE ASSY.
12		NSS		1	NOT SERVICED SEPARATELY, Mounting Plate
13		86512554		1	NUT, LOCK, M10 x 1.5, Cl 10
14		86512446		1	BOLT, CARRIAGE, Short NK, M10 x 30, Cl8.8, Full Thd
15		87715731		1	HARNESS, Auxiliary Interlock Harness; Incl 15A
15A		774735		1	DIODE
16		L11541		3	STRAP, CABLE
17		87446614		1	LEVER, Pedal Lock Lever
18		283839A1		1	SPACER, Rubber Spacer
19		87033290		1	BOLT, CARRIAGE, Short NK, M12 x 55, Cl8.8
20		140018		1	WASHER, M12 x 24 x 2.5
21		L14781		1	BUSHING

09-24		p1	12/07

HOOD

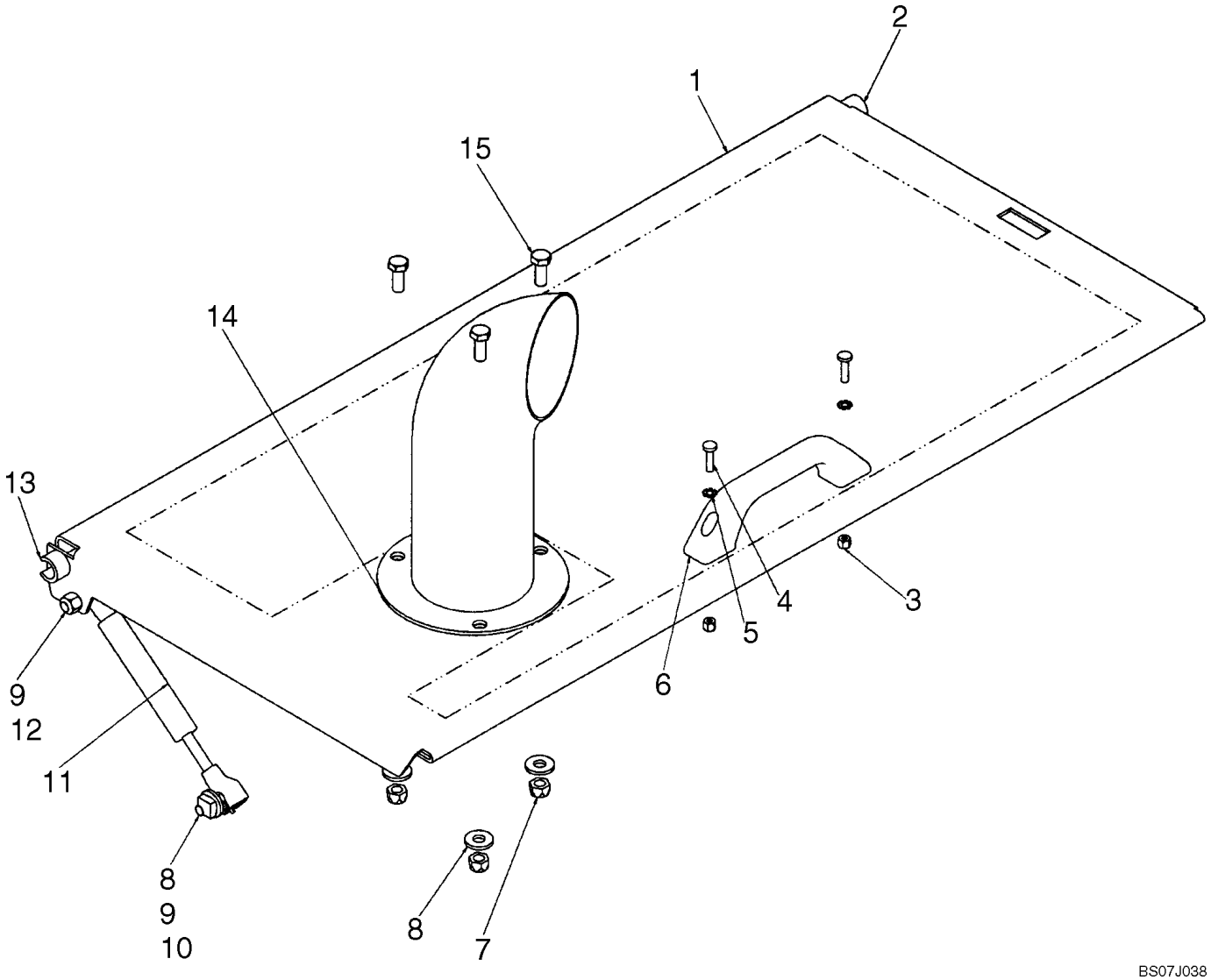

HOOD

REF	FN	PART NUMBER	YR/SN	QTY	DESCRIPTION
1		87707134		1	FRAME, Frame, Rear Hood
2		435396A1		1	SPACER
3		86639241		2	NUT, LOCK, M5 x .8, Cl 8
4		86511827		2	SCREW, Cross Pan Hd, M5 x 20
5		86625264		2	WASHER, LOCK, Ext Tooth, M5
6		406256A1		1	HANDLE
7		9628098		3	NUT, LOCK, M8 x 1.25, Cl 10
8		87015284		4	WASHER, M8 x 21.5 x 2.5, HT
9		189609A1		2	STUD
10		229197A1		1	NUT
11		400473A1		1	CYLINDER ASSY.
12		412250		1	NUT, LOCK, M8 x 1.25, Cl 8
13		87429698		1	SPACER
14		87381264		1	PIPE
15		120104		3	BOLT, Hex, M8 x 20, 8.8

09-25		p1	12/07

HOOD - AIR CONDITIONING

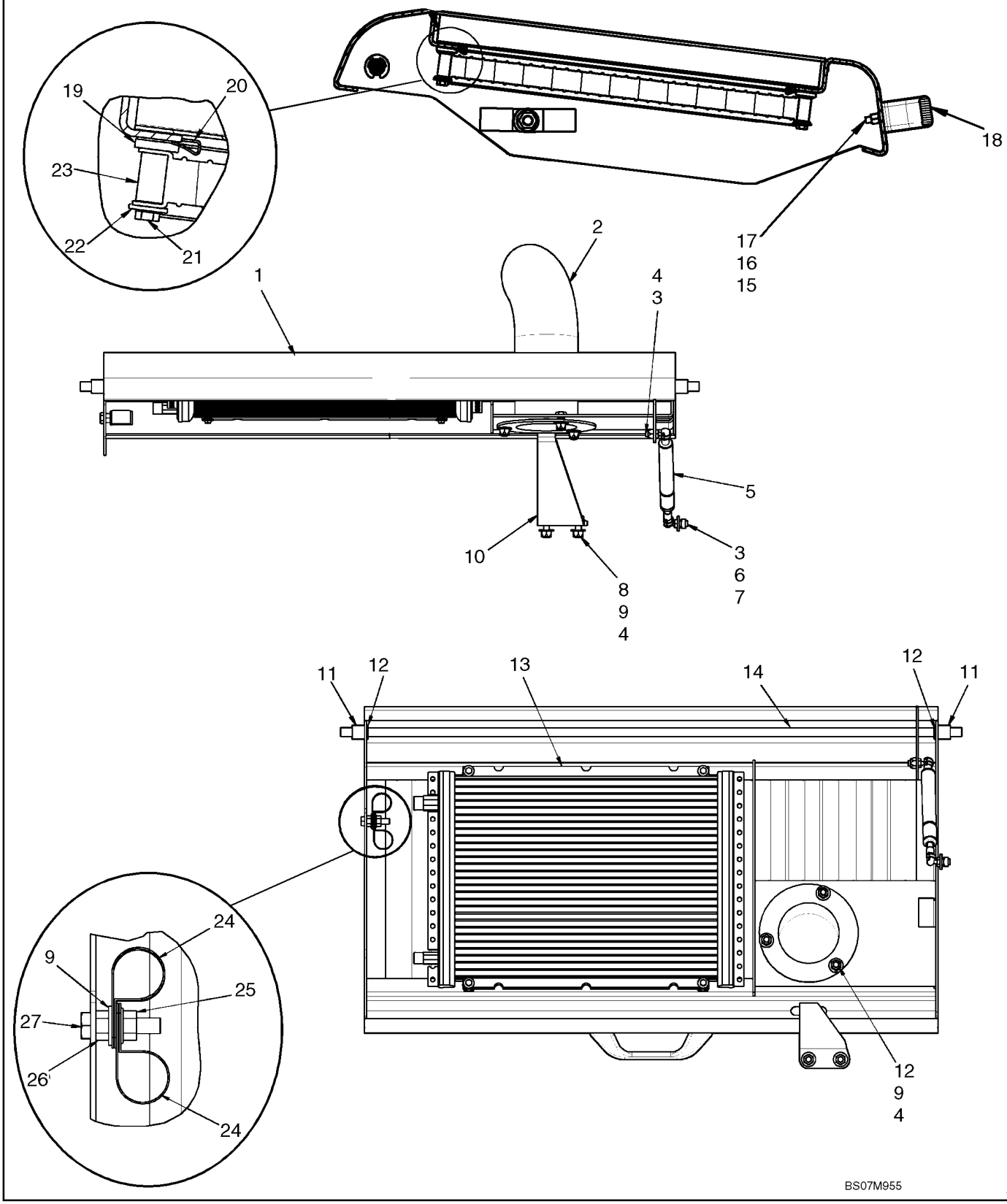

HOOD - AIR CONDITIONING

REF	FN	PART NUMBER	YR/SN	QTY	DESCRIPTION
1		87707135		1	DOOR, Rear Hood, Air Conditioning
2		87381264		1	PIPE, Exhaust Extension
3		189609A1		2	STUD, Ball Stud
4		9628098		6	NUT, LOCK, M8 x 1.25, Cl 10
5		87449854		1	SUPPORT
6		87015284		1	WASHER, M8 x 21.5 x 2.5, HT
7		229197A1		1	NUT
8		43127		2	BOLT, Hex, M8 x 25, 8.8
9		86625263		8	WASHER, M8 x 20 x 1.6
10		87459076		1	BAR, LOCKING
11		87305403		2	SPACER
12		9635806		2	CIRCLIP, #50, .392" Dia, E-Type
13		87563692		1	CONDENSER, Air Conditioning Condensor
14		87459075		1	ROD
15		86639241		2	NUT, LOCK, M5 x .8, Cl 8
16		86625264		2	WASHER, LOCK, Ext Tooth, M5
17		86511827		2	SCREW, Cross Pan Hd, M5 x 20
18		406256A1		1	HANDLE
19		86592710		4	WASHER, M6 x 17 x 3
20		87301324		4	NUT, M5, U
21		86025725		4	BOLT, Hex, M5 x 40, 8.8
22		87013357		4	WASHER, M5 x 15 x 1.6
23		87574372		4	SPACER
24		9827902		2	CLAMP, 1", Insul, 3/8" Bolt
25		9804277		1	NUT, M8 x 1.25, Flg, Cl 8
26		9706690		1	NUT, M8, Cl 8
27		300381		1	BOLT, Hex, M8 x 35, 8.8

REAR DOOR

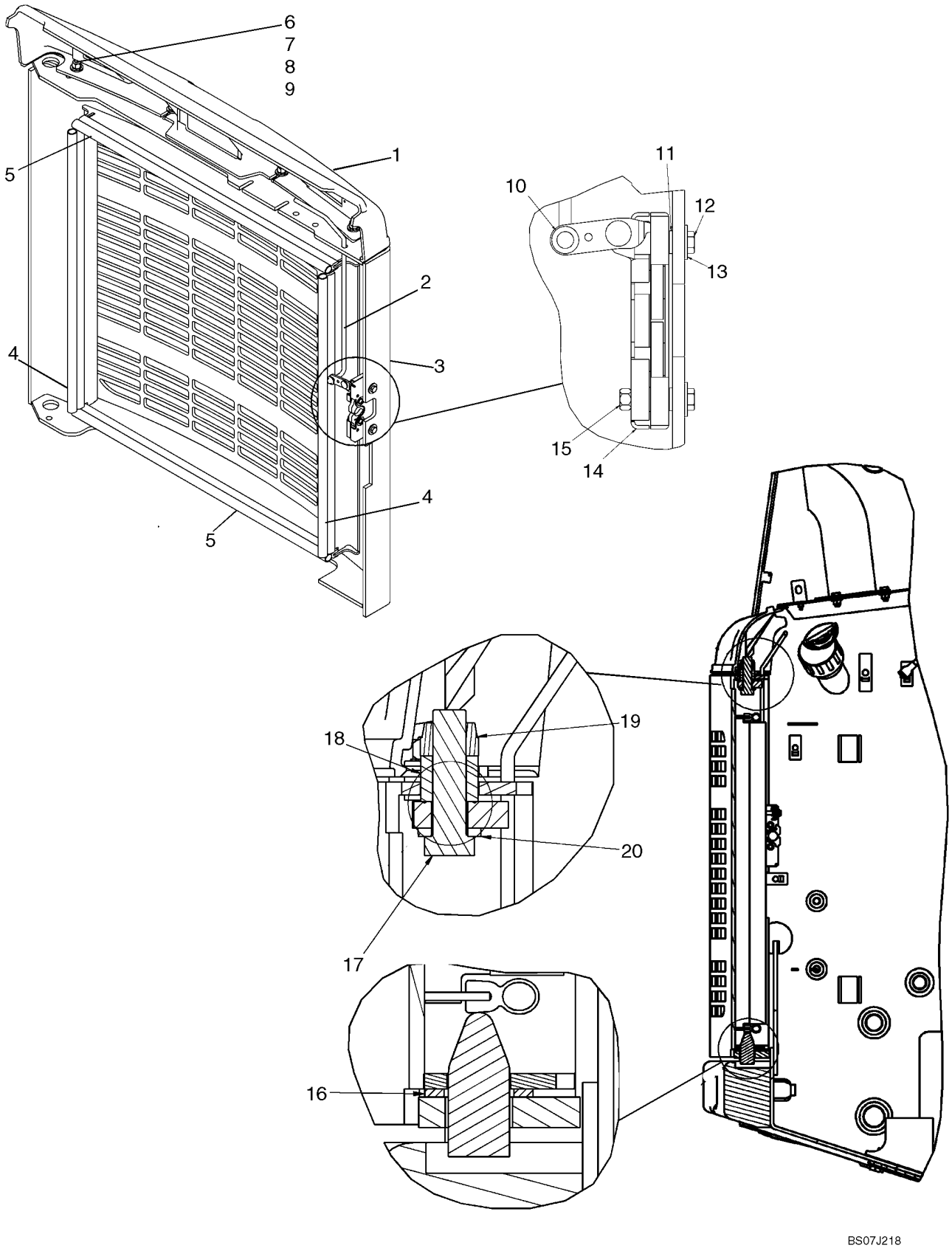

REAR DOOR

REF	FN	PART NUMBER	YR/SN	QTY	DESCRIPTION
1		87461604		1	FAIRING, LIGHT, Fairing, Rear Door Top
2		87440124		1	ROD, Latch Pull Rod
3		87660800		1	DOOR, Rear Door
4		{87648128}		2	Bulb Seal, 562mm (22 1/8 in.)
5		{87578980}		2	Bulb Seal, 590mm (23 7/32 in.)
6		43128		4	BOLT, Hex, M8 x 30, 8.8
7		86632601		4	WASHER, LOCK, Ext Tooth, M8
8		412250		4	NUT, LOCK, M8 x 1.25, Cl 8
9		87015284		12	WASHER, M8 x 21.5 x 2.5, HT
10		380751A1		1	NUT
11		86588450		2	WASHER, M6
12		86977789		2	BOLT, Hex, M6 x 35, 8.8
13		86624182		2	WASHER, M6 x 18 x 1.6
14		87437076		1	LATCH
15		87030561		2	NUT, LOCK, M6 x 1, Cl 8
16		248988A1		1	WASHER, Rear Door Thrust Washer
17		9828248		1	BOLT, Hex, M16 x 60, 10.9
18		248461A1		1	BUSHING, LARGE, Door Hinge Bushing
19		86512555		1	NUT, LOCK, M16 x 2, Cl 10
20		86625266		1	WASHER, M17.5 x 30 x 4, HT

REAR DOOR - LOUVERED (EUROPE)

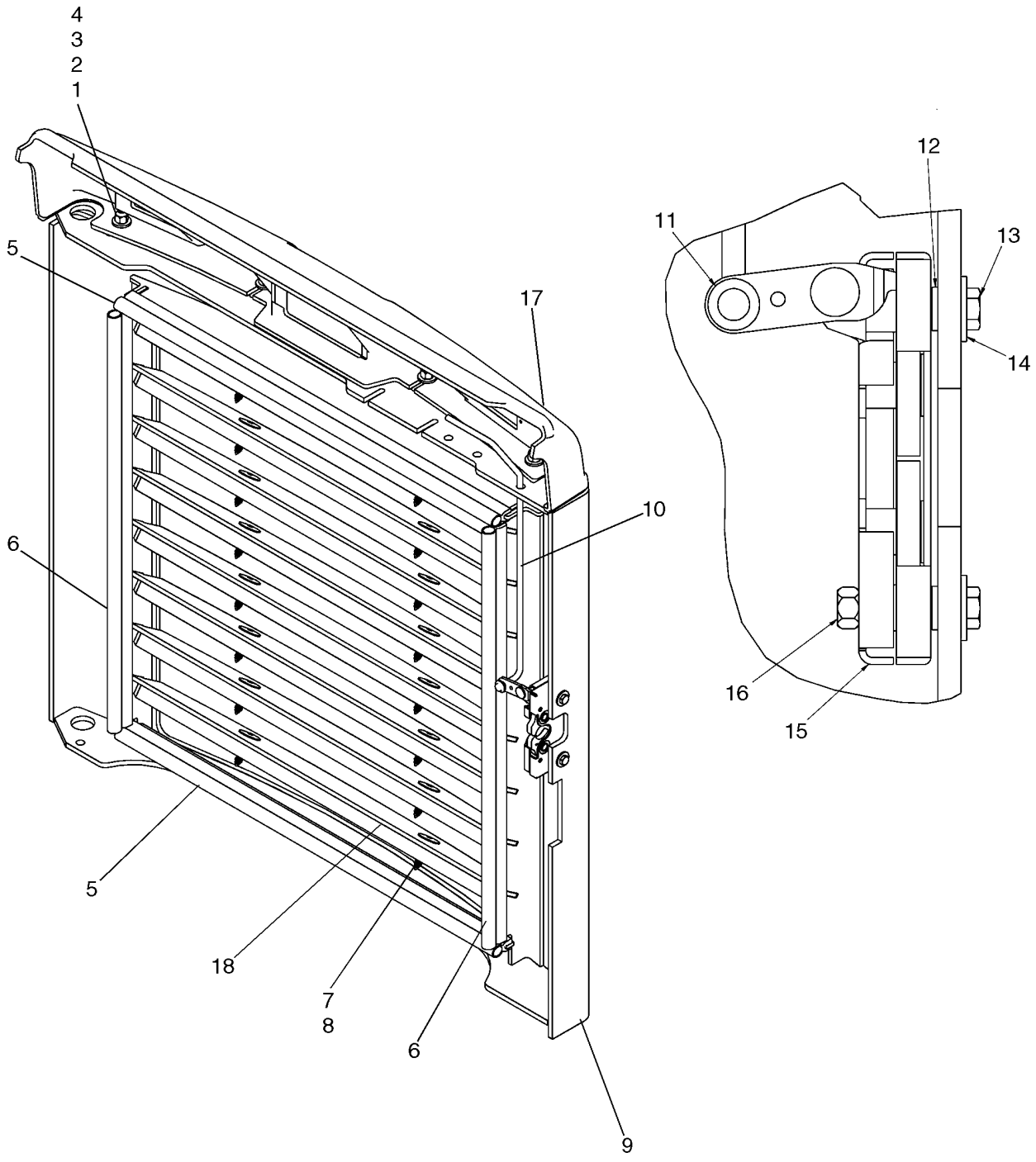

REAR DOOR - LOUVERED (EUROPE)

REF	FN	PART NUMBER	YR/SN	QTY	DESCRIPTION
1		43128		4	BOLT, Hex, M8 x 30, 8.8
2		86632601		4	WASHER, LOCK, Ext Tooth, M8
3		412250		4	NUT, LOCK, M8 x 1.25, Cl 8
4		87015284		8	WASHER, M8 x 21.5 x 2.5, HT
5		{87578980}		2	Bulb Seal, Top And Bottom
6		{87648128}		2	Bulb Seal, Side
7		348452A1		16	SCREW
8		348434A1		16	WASHER
9		87671495		1	DOOR, Euro Louvered Door
10		87440124		1	ROD, Latch Pull Rod
11		380751A1		1	NUT
12		86588450		2	WASHER, M6
13		86977789		2	BOLT, Hex, M6 x 35, 8.8
14		86624182		2	WASHER, M6 x 18 x 1.6
15		87437076		1	LATCH
16		87030561		2	NUT, LOCK, M6 x 1, Cl 8
17		87461604		1	FAIRING, LIGHT
18		{87671496}		8	Sound Pad

LOCK - REAR DOOR

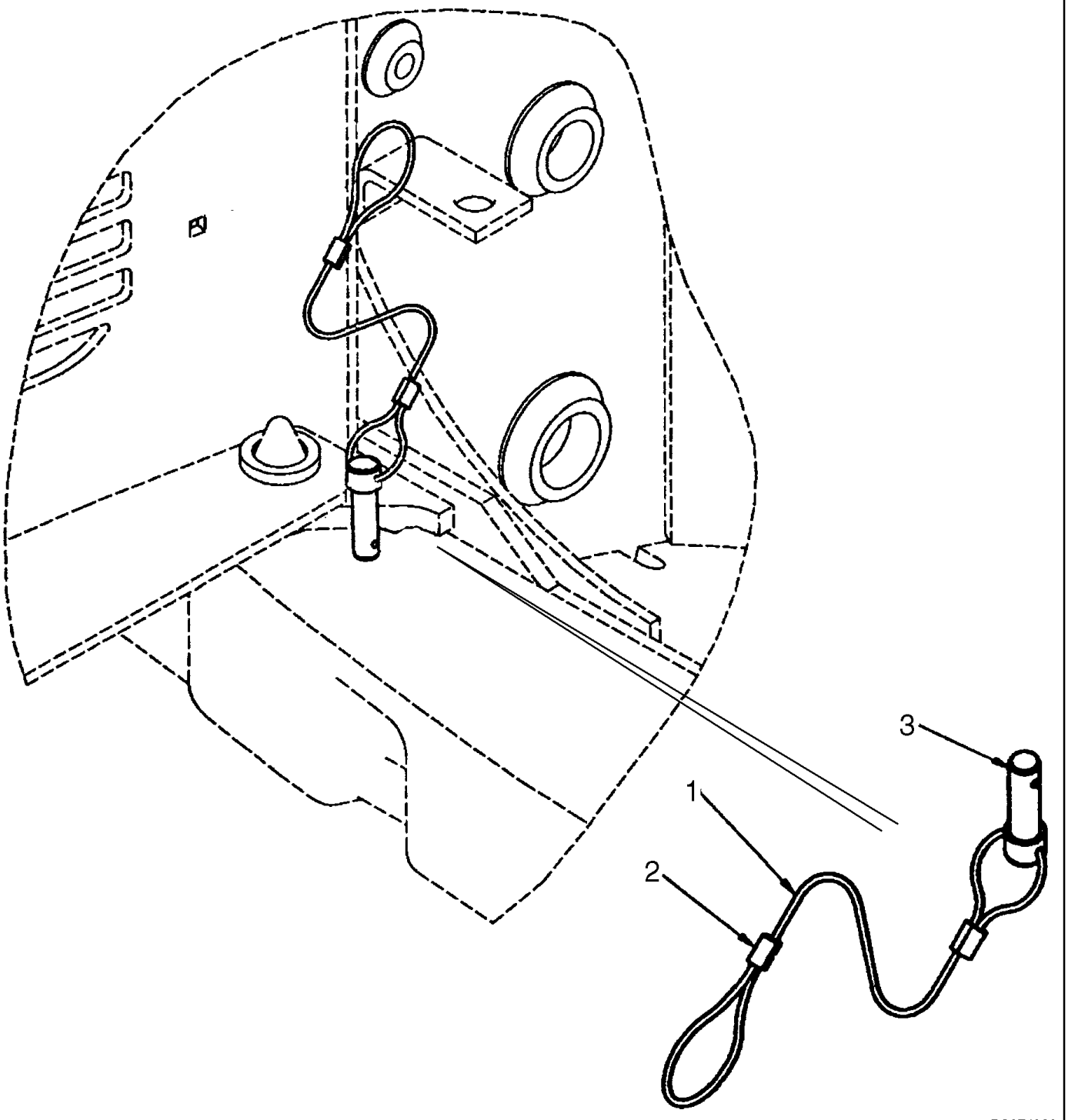

LOCK - REAR DOOR

REF	FN	PART NUMBER	YR/SN	QTY	DESCRIPTION
1		297245A1		1	CABLE, Rear Door Lock; Incl. 2 - 4
2		297244A1		1	CABLE
3		297246A1		2	SLEEVE
4		H439276		1	PIN, LARGE

CAB DOOR - MOUNTING

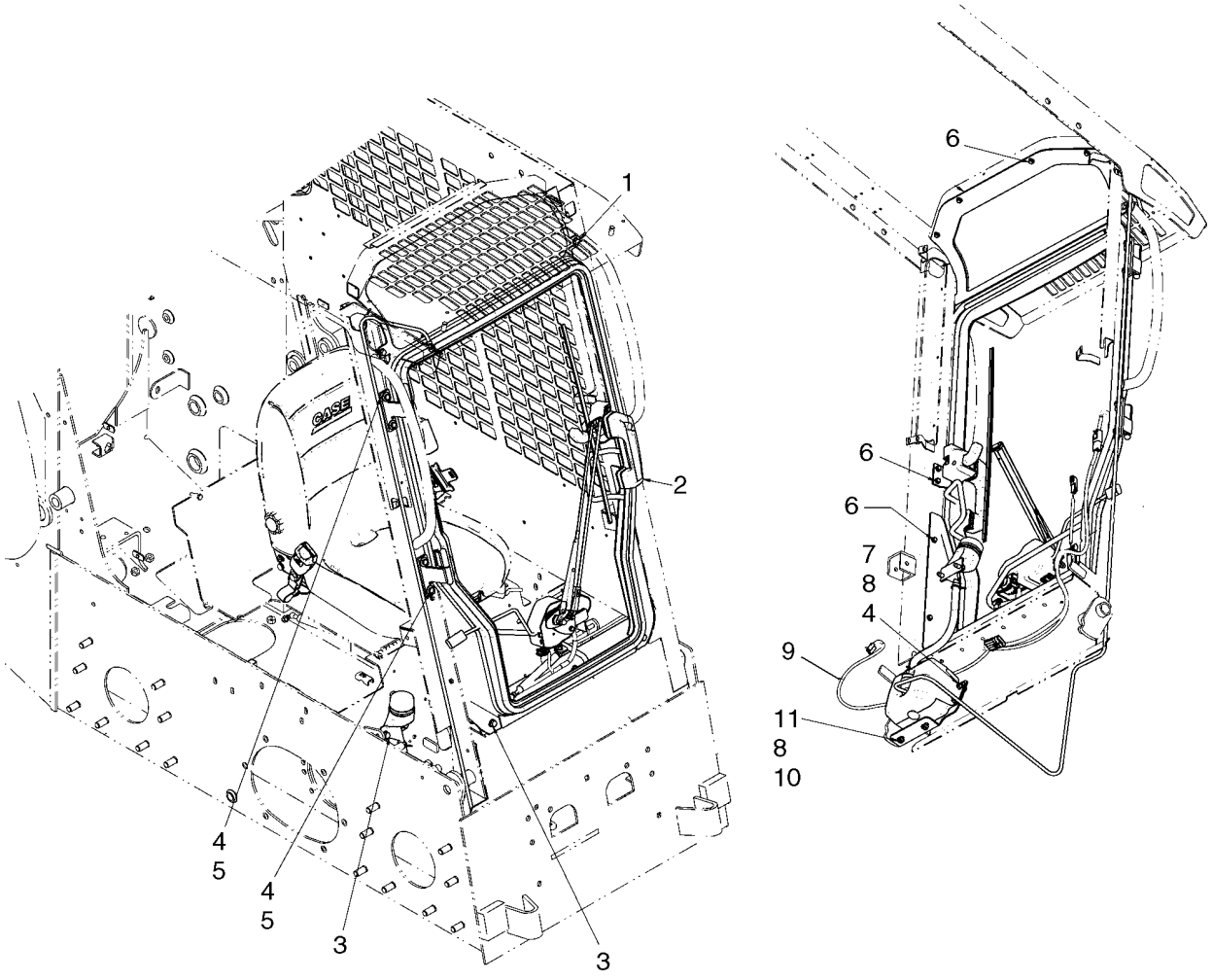

CAB DOOR - MOUNTING

REF	FN	PART NUMBER	YR/SN	QTY	DESCRIPTION
1		9804258		2	BOLT, Hex Flg, M8 x 20, 8.8
		87635322		1	KIT, SERVICE, Kit, Front Door; Incl 1 - 11
2		87627051		1	DOOR, See Fig. 09-30
3		637964		4	SCREW, SELF TAP
4		120104		8	BOLT, Hex, M8 x 20, 8.8
5		86639313		4	WASHER, M8 x 20 x 1.6
6		87015862		10	BOLT, Hex Flg, M6 x 20, 8.8, Full Thd
7		43362		4	NUT, M8, Cl 10
8		86624184		10	WASHER, M8 x 16 x 1.6
9		87659212		1	HARNESS, Door Jumper Harness
10		229197A1		2	NUT
11		120103		2	BOLT, Hex, M8 x 16, 8.8

CAB DOOR - WASHER SYSTEM

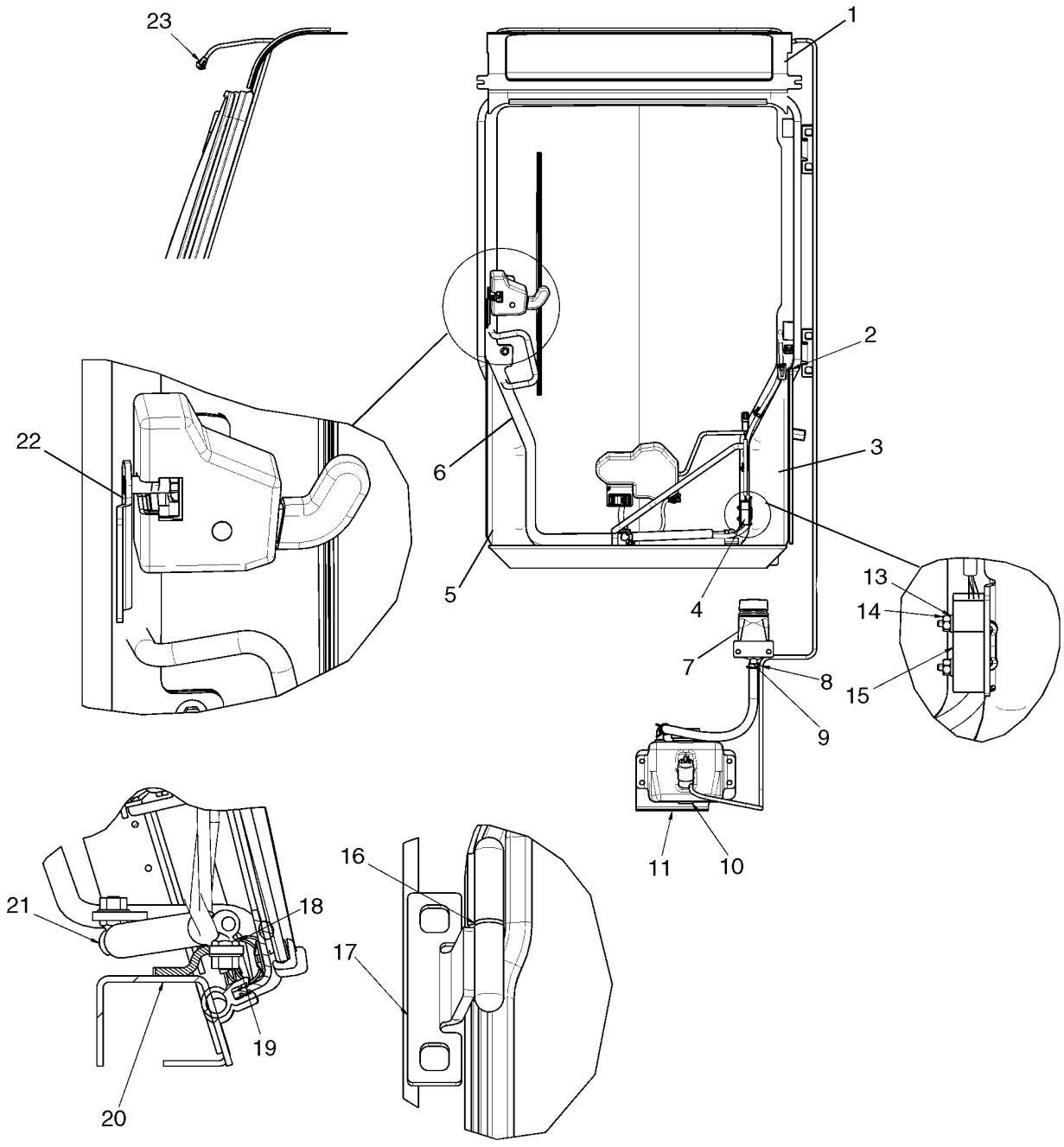

CAB DOOR - WASHER SYSTEM

REF	FN	PART NUMBER	YR/SN	QTY	DESCRIPTION
1		REF		1	INSTRUCTION, Visor; See Fig 09-32
2		{87669915}		1	Spacer Plate, Black
3		{87717215}		1	Door Bracket, Lower RH
4		{87680073}		1	U-Bolt, Switch Mount
5		{87717210}		1	Door Bracket, Lower LH
6		87627706		1	DOOR, See Fig 09-30
7		87655055		1	FILLER, Remote Washer Fill
8		{87712606}		1	Windshield Washer Tubing
9		{87712605}		1	Hose, Remote Fill
10		{87714131}		1	Washer Bottle
11		{87672011}		1	Washer Bracket
12		516742		2	CLAMP
13		87529123		2	WASHER, WASHER, 0.156 X 0.375 X 0.049 in.
14		{87622767}		2	Nut
15		87051110		1	SWITCH, DOOR, Switch, Door Open
16		{87599753}		2	Bushing
17		{87717283}		2	Door Hinge
18		{87581669}		1	Ball Stud
19		9804277		1	NUT, M8 x 1.25, Flg, Cl 8
20		{87722347}		1	Threshold, Black
21		{87642437}		1	Gas Spring
22		{87642394}		1	Striker Latch

CAB DOOR

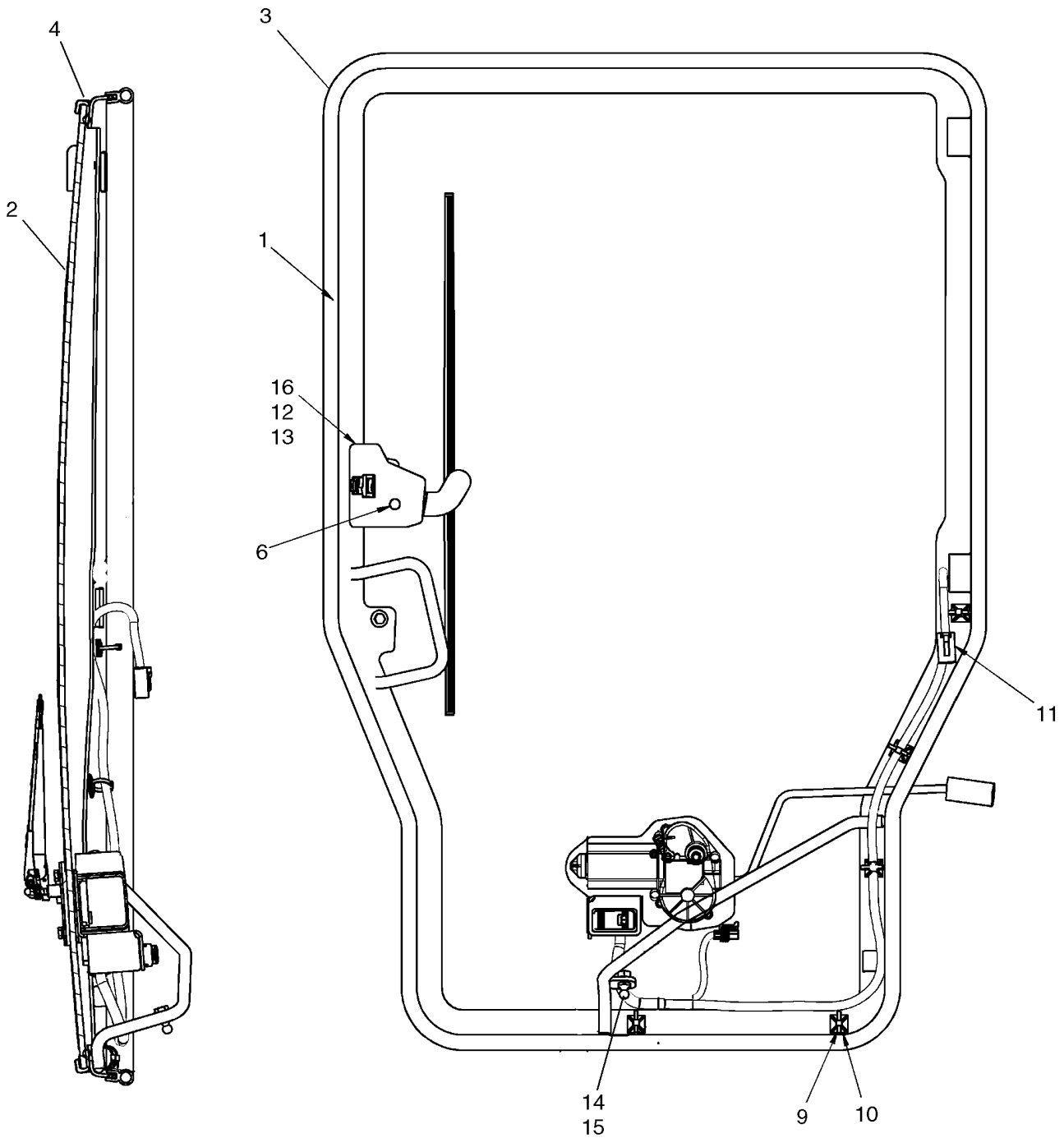

CAB DOOR

REF	FN	PART NUMBER	YR/SN	QTY	DESCRIPTION
1		87627520		1	DOOR, Door With Glass; Incl. 2 - 8
2		87717689		1	KIT, SERVICE, Kit, Front Door Glass; Incl 2, 4
2		87624640		1	GLASS, Front Door Glass
3		NSS		1	NOT SERVICED SEPARATELY, Door, Black
4		NSS		1	NOT SERVICED SEPARATELY, Trim, Glass Seal
5		{87660180}		AR	Window Adhesive
6		{87600221}		8	Glue Spacer; Not Illustrated
7		87642453		1	SEAL, Handle Mounting Seal, Lower; Not Illustrated
8		87642449		1	SEAL, Handle Mounting Seal, Upper; Not Illustrated
9		87642915		5	STRAP, CABLE
10		87642914		5	BASE, Base, Cable Tie
11		87718119		1	HARNESS, Door Harness
12		{86512463}		3	Screw, M6 X 25 4.8 ZND
13		86619800		2	NUT, LOCK, M6 x 1, Flg, Cl 8
14		9804277		1	NUT, M8 x 1.25, Flg, Cl 8
15		86634307		1	STUD, Ball Stud
16		87678399		1	LATCH, Rotary Latch; Includes Latch And Cover
17		87624641		1	SEAL, Bulb Seal

CAB DOOR - VISOR

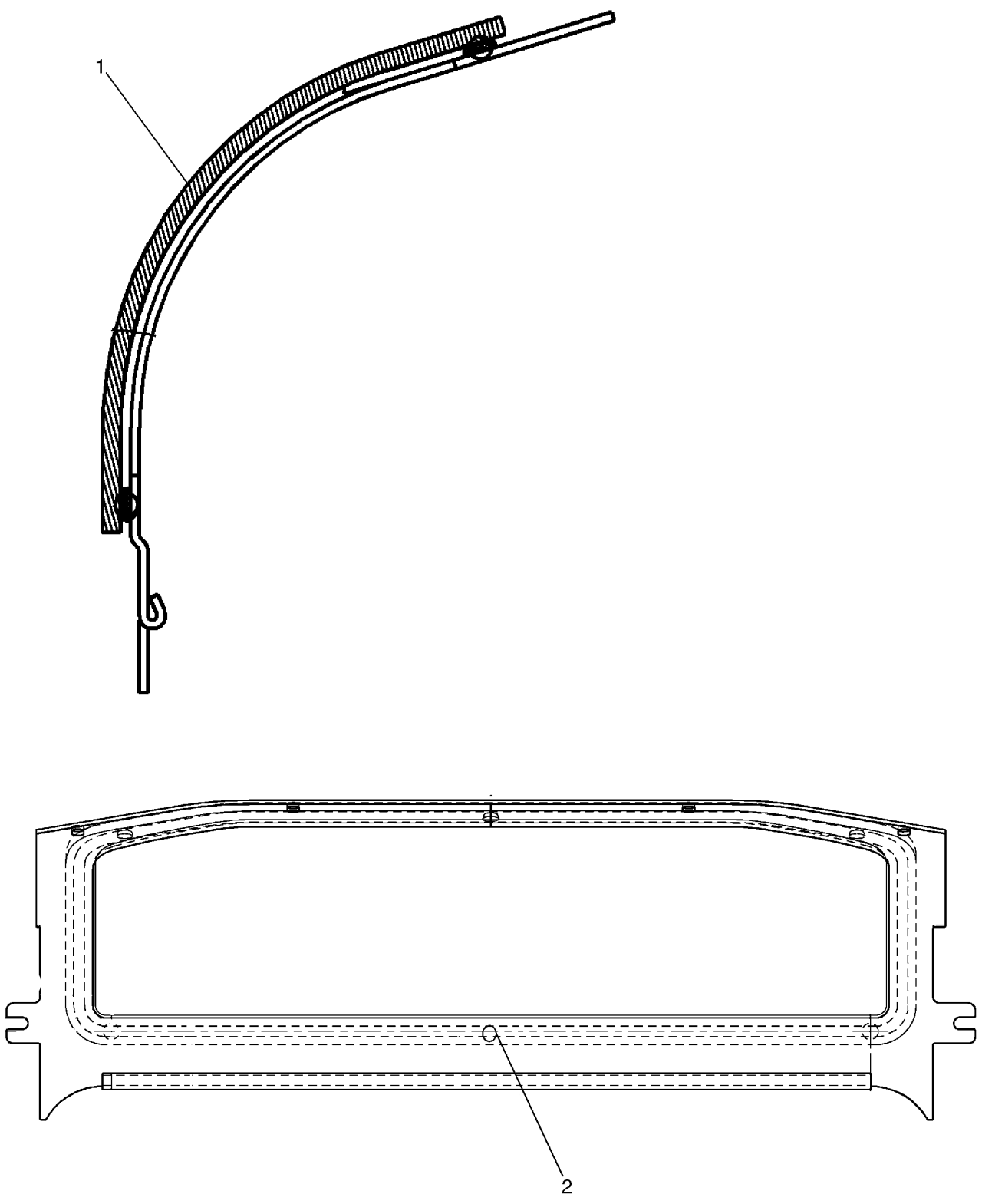

CAB DOOR - VISOR

REF	FN	PART NUMBER	YR/SN	QTY	DESCRIPTION
		{87627521}		1	Visor; Incl 1 - 4
1		87624623		1	GLASS, Glass, Visor
2		{87600221}		6	Glue Spacer
3		{87660180}		1	Window, Adhesive
4		{87669333}		1	Visor Frame, Black

CAB DOOR - WIPER MOUNTING

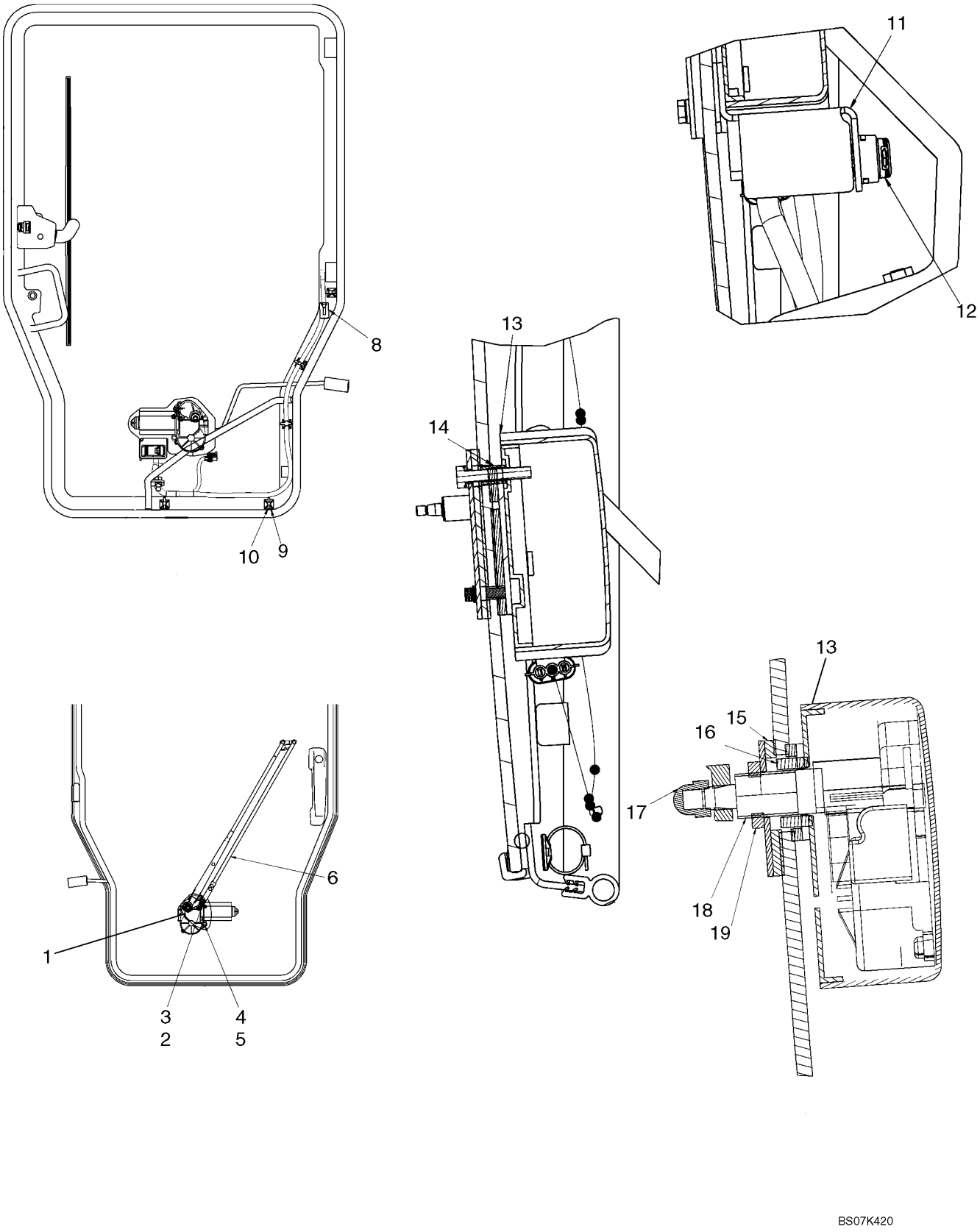

CAB DOOR - WIPER MOUNTING

REF	FN	PART NUMBER	YR/SN	QTY	DESCRIPTION
1		87716728		1	ADAPTER, Adapter, Pantograph
2		{87698769}		5	Bolt, M6 X 35
3		{86642465}		2	Washer, 6.6 X 12 X 1.6 MM
4		87680190		1	SPACER, Wiper Motor Spacer
5		87642543		1	SEAL, Wiper Switch Seal
6		87642544		1	WIPER ARM
7		87642545		1	WIPER BLADE
8		87718119		1	HARNESS, Door Harness
9		87642914		5	BASE, Mounting Base
10		87642915		5	STRAP, CABLE
11		87671857		1	BRACKET, Wiper Switch Bracket
12		87335499		1	SWITCH, Rocker Switch, Windshield Wiper/Washer
13		{87581666}		1	Wiper Motor Cover
14		87642540		1	SPACER, Wiper Motor Spacer
15		87716731		1	ADAPTER, Pantograph Adapter Seal
16		87642536		1	BUSHING, Wiper Motor Bushing
17		{412326}		1	Nut, Crown Dome M8
18		87678400		1	WIPER MOTOR
19		{87607505}		1	Wiper Nut, M18

CAB DOOR - HANDLE

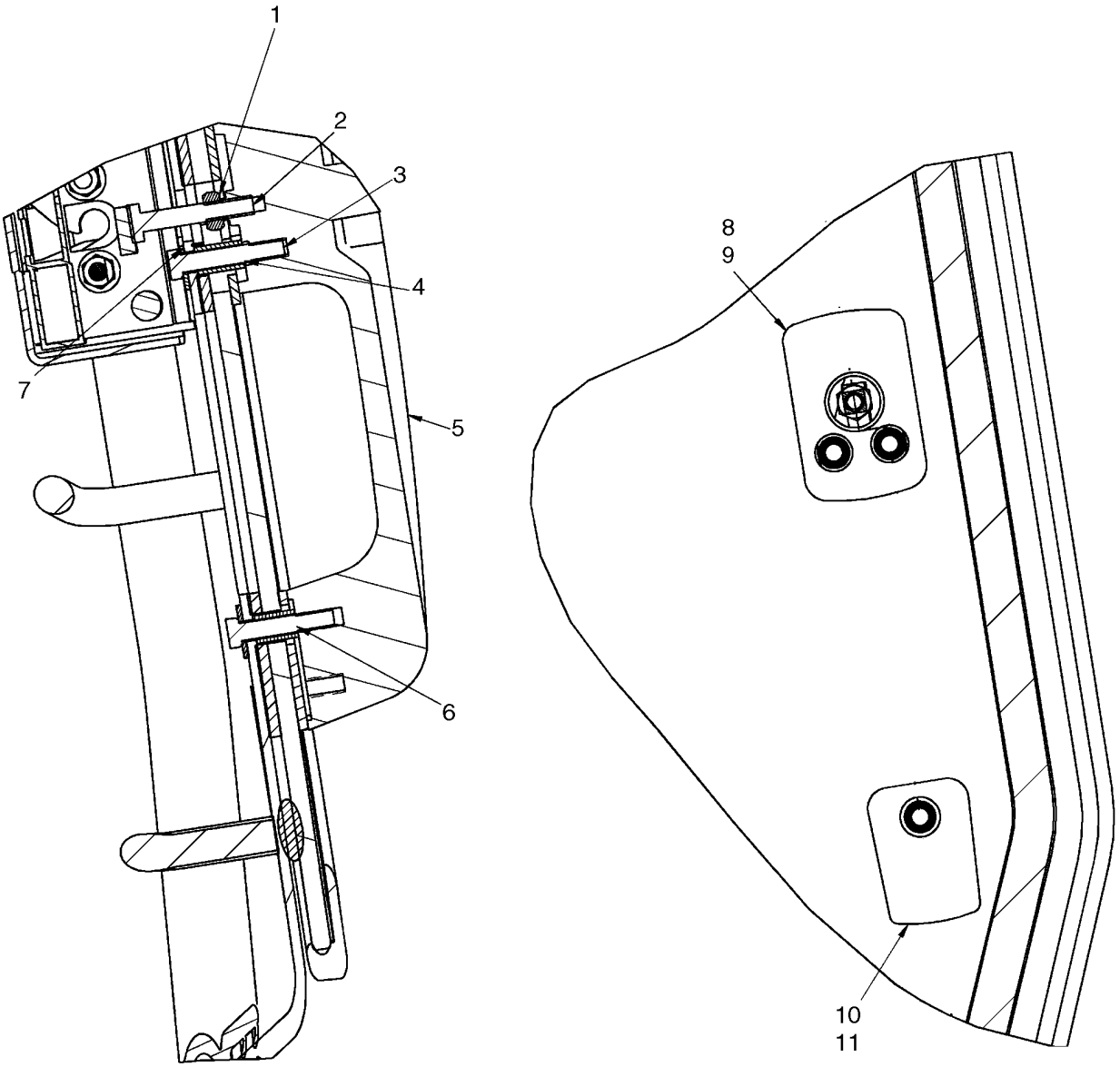

BS07K422

CAB DOOR - HANDLE

REF	FN	PART NUMBER	YR/SN	QTY	DESCRIPTION
1		1369		1	NUT, 1/4"-20, G5
2		280112		1	BOLT, Hex, 1/4"-20 x 1 1/2", G5
3		{87698769}		5	Bolt, M6 X 35
4		87642514		2	SPACER, Handle Mounting Spacer, Upper
5		60-7083T1		1	HANDLE, Cab Door Handle
6		87642529		1	SPACER, Handle Mounting Spacer, Lower
7		86624182		3	WASHER, M6 x 18 x 1.6
8		87642449		1	SEAL, Handle Mount Seal, Upper
9		87517940		1	GASKET, Door Handle Gasket, Upper
10		87517937		1	GASKET, Door Handle Gasket, Lower
11		87642453		1	SEAL, Handle Mount Seal, Lower

DEMOLITION DOOR - MOUNTING

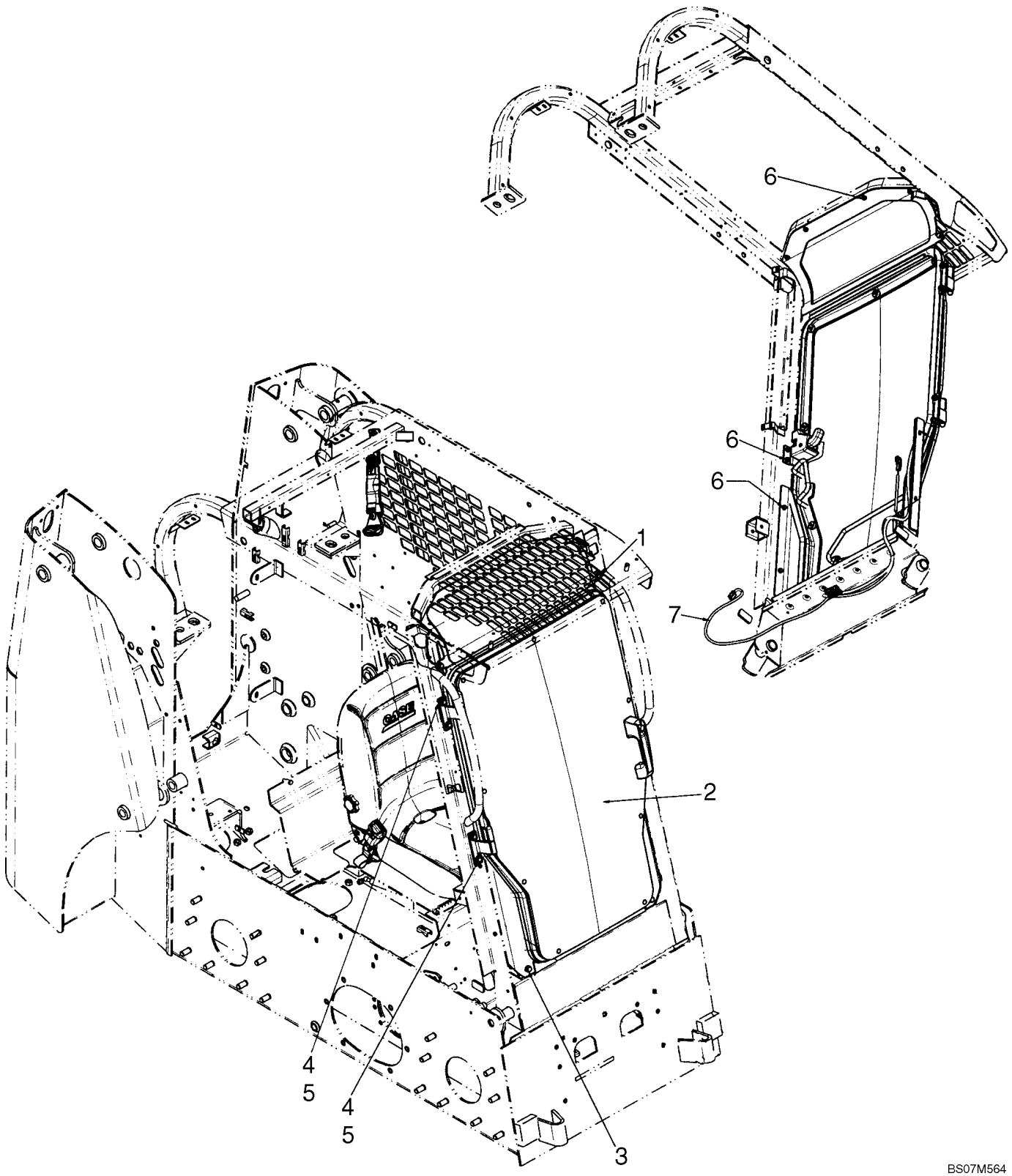

DEMOLITION DOOR - MOUNTING

REF	FN	PART NUMBER	YR/SN	QTY	DESCRIPTION
1		9804258		2	BOLT, Hex Flg, M8 x 20, 8.8
		87651126		1	KIT, SERVICE, Kit, Demolition Door; Incl 1 - 7
2		REF		1	INSTRUCTION, Demolition Door; See Fig 09-36
3		637964		2	SCREW, SELF TAP
4		120104		4	BOLT, Hex, M8 x 20, 8.8
5		86639313		4	WASHER, M8 x 20 x 1.6
6		87015862		10	BOLT, Hex Flg, M6 x 20, 8.8, Full Thd
7		87659212		1	HARNESS, Harness, Door Jumper

DEMOLITION DOOR

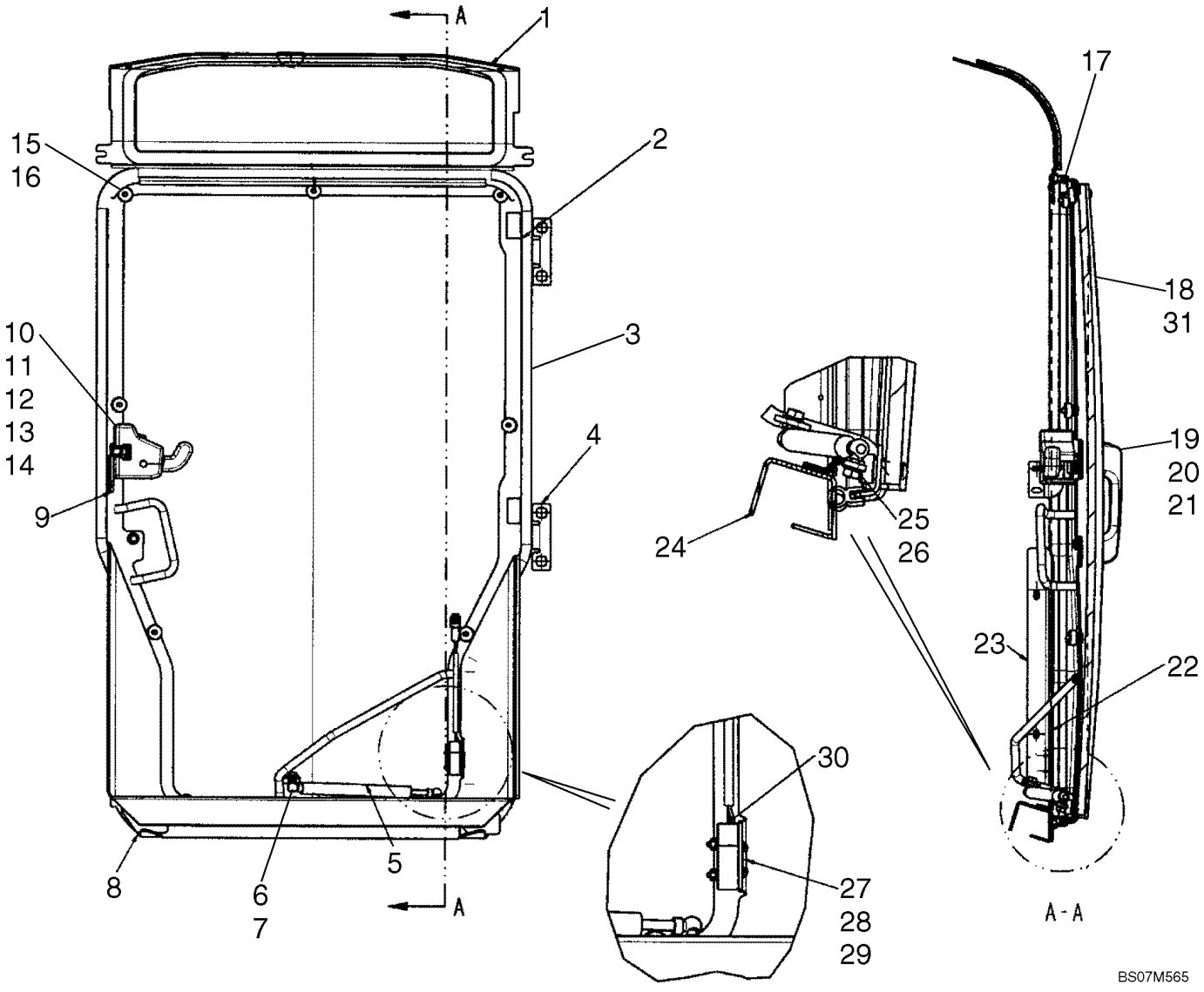

DEMOLITION DOOR

REF	FN	PART NUMBER	YR/SN	QTY	DESCRIPTION
1		REF		1	INSTRUCTION, Visor; See Fig 09-32
2		{87599753}		2	Bushing
3		NSS		1	NOT SERVICED SEPARATELY, Frame, Demolition Door
4		{87717283}		2	Door Hinge
5		{87642437}		1	Gas Spring
6		86619801		1	NUT, LOCK, M8 x 1.25, Flg, Cl 8
7		{87581669}		1	Ball Stud
8		{87717210}		1	Bracket, Lower Door LH
9		{87642394}		1	Stiker Latch
10		87678399		1	LATCH, Rotary Latch
11		{86512463}		3	Screw, M6 X 25
12		87642540		3	SPACER
13		{87698769}		3	Bolt, M6 X 35
14		86619800		2	NUT, LOCK, M6 x 1, Flg, Cl 8
15		NSS		9	NOT SERVICED SEPARATELY, Quick Release Knob
16		412327		9	BOLT, CARRIAGE, Short NK, M6 x 40, Cl8.8
17		87624641		1	SEAL, Bulb Seal
18		NSS		1	NOT SERVICED SEPARATELY, Polycarbonate Door
18		87640046		1	KIT, SERVICE, Kit, Demolition Door; Incl 15, 16, 18, 31
19		60-7083T1		1	HANDLE, Door Handle
20		{87723784}		2	Handle Seal, Lower
21		{87723771}		2	Handle Seal, Upper
22		{87717215}		1	Lower Door Bracket, RH
23		{87669915}		1	Spacer
24		{87722347}		1	Threshold
25		86619801		1	NUT, LOCK, M8 x 1.25, Flg, Cl 8
26		{87581669}		1	Ball Stud
27		NSS		1	NOT SERVICED SEPARATELY, U Bolt, Switch Mounting
28		87529123		2	WASHER, Washer, .156 X .375 X .049 in.
29		{87622767}		2	Nut, #6-32
30		87051110		1	SWITCH, DOOR, Seat Bar Switch
31		NSS		1	NOT SERVICED SEPARATELY, Foam Gasket

FLOOR MAT

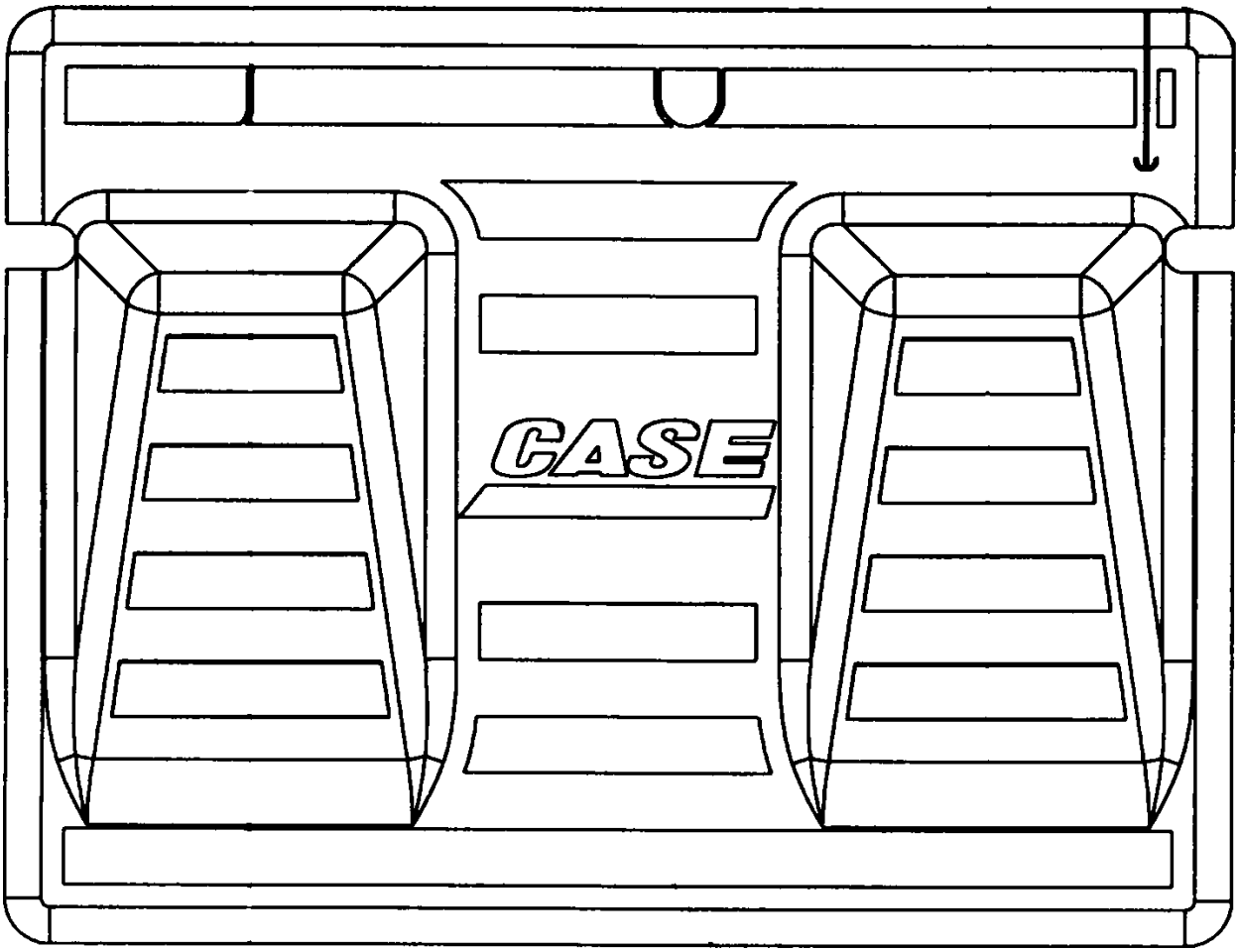

1

BS05D044

FLOOR MAT

REF	FN	PART NUMBER	YR/SN	QTY	DESCRIPTION
1		87461561		1	MAT, FLOOR, Rubber; Molded Foot Rests

CAB - FRAME AND SEAT BAR

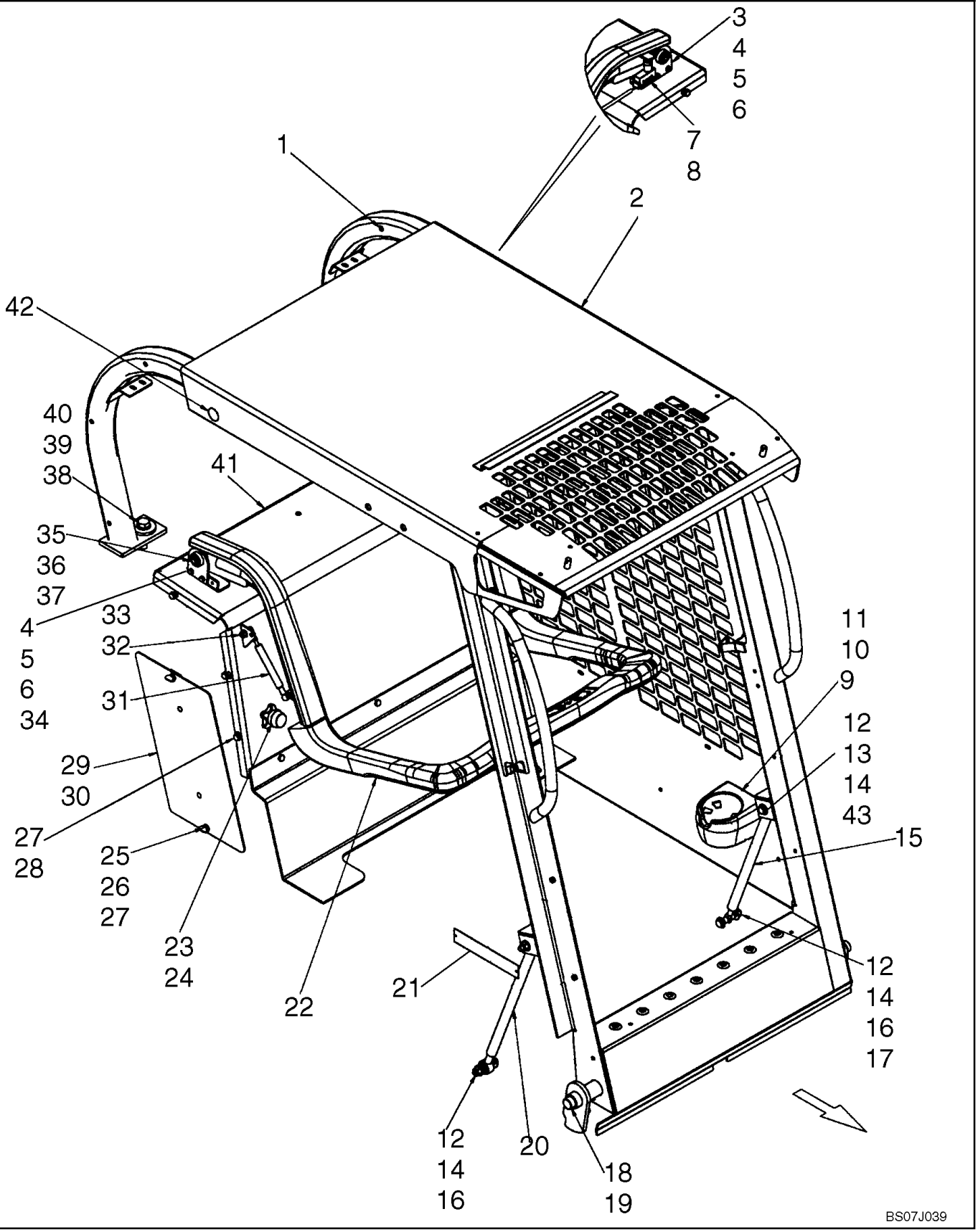

CAB - FRAME AND SEAT BAR

REF	FN	PART NUMBER	YR/SN	QTY	DESCRIPTION
1		419434A1		16	INSERT, Threaded Insert, M6
2		87635242		1	KIT, SERVICE, Cab, ROPS; Incl ROPS Structure, (1) Decal - Exiting, (1) Decal - Warning, General Instructions, (1) ROPS Model And Approval Plate
3		87645119		1	PLATE, PIVOT, Seat Bar Pivot, LH
4		120100		4	BOLT, Hex, M6 x 20, 8.8
5		86511444		4	NUT, M6, Flg Ser
6		86588450		4	WASHER, M6
7		87051110		1	SWITCH, DOOR, Seat Bar Switch
8		H435814		1	U-BOLT
9		{87672170}		1	Cup Holder
10		86637935		2	BOLT, Hex, 1/4"-20 x 1", G8, Full Thd
11		87016587		2	WASHER, 1/4"
12		100037		4	NUT, M10 x 1.5, Cl 8
13		83931335		2	BOLT, Hex, M10 x 75, 8.8
14		86625253		8	WASHER, M11 x 24 x 2
15		376669A1		1	GAS STRUT, ROPS Pivot Assist
15		87706925		1	KIT, SERVICE, Kit, Gas Strut; Incl 14 - 17 And 43
16		120070		2	BOLT, Hex, M10 x 60, 8.8
17		254697A1		2	SPACER, Pivot Spacer
18		373836A1		1	PIN, PIVOT
19		827695C1		2	RING
20		282002A2		1	GAS STRUT, ROPS Pivot Assist
21		NSS		1	NOT SERVICED SEPARATELY, ROPS Plate, Model And Approval
22		REF		1	INSTRUCTION, Seat Restraint; See Fig. 09-39
23		{87639912}		2	Knob
24		{87639914}		2	Seat Bar Stop
25		442856A1		4	WASHER
26		408117A2		4	SCREW, Thumb Screw, M8
27		140016		10	WASHER, M8 x 16 x 1.6
28		43128		6	BOLT, Hex, M8 x 30, 8.8
29		86625127		4	PLUG, Dome, .375" hole, Nylon
30		87460732		2	PANEL, Access Panel
31		87639899		1	CYLINDER, Seat Bar; Gas Strut

CAB - FRAME AND SEAT BAR

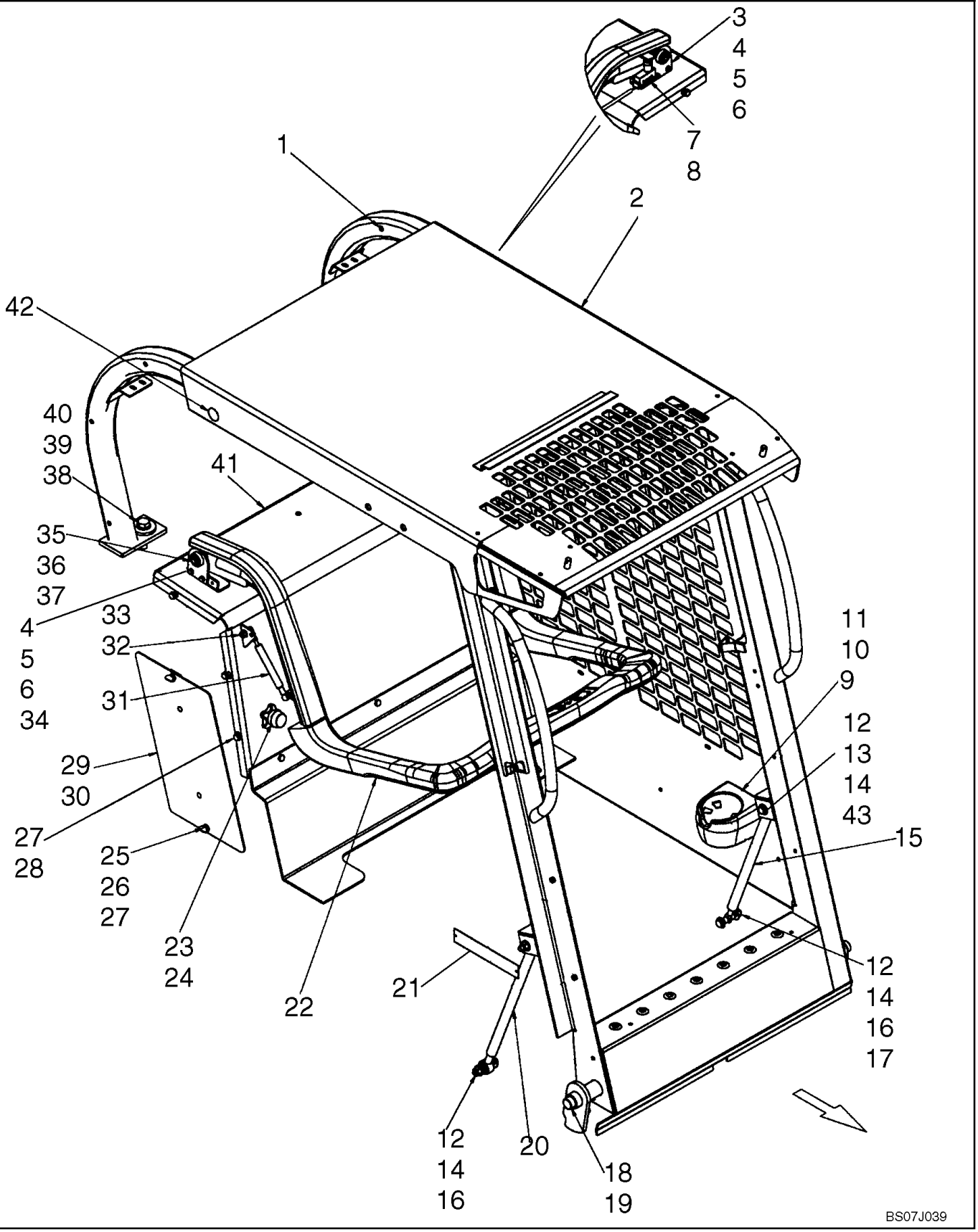

CAB - FRAME AND SEAT BAR

REF	FN	PART NUMBER	YR/SN	QTY	DESCRIPTION
32		86505868		11	NUT, M8, Flg Ser
33		189609A1		2	STUD, Metric Ball Stud, M8 X 1.25 Thd
34		{87645115}		1	Seat Bar Pivot, RH
35		87620895		2	BUSHING
36		86632589		2	WASHER
37		D143415		2	RING
38		86625266		2	WASHER, M17.5 x 30 x 4, HT
39		391703A2		2	WASHER
40		9828248		2	BOLT, Hex, M16 x 60, 10.9
41		{87668682}		1	Shield, Gray
42		86625129		2	PLUG, Dome, 1.000" hole, Nylon
43		254698A1		2	SPACER

SEAT BAR

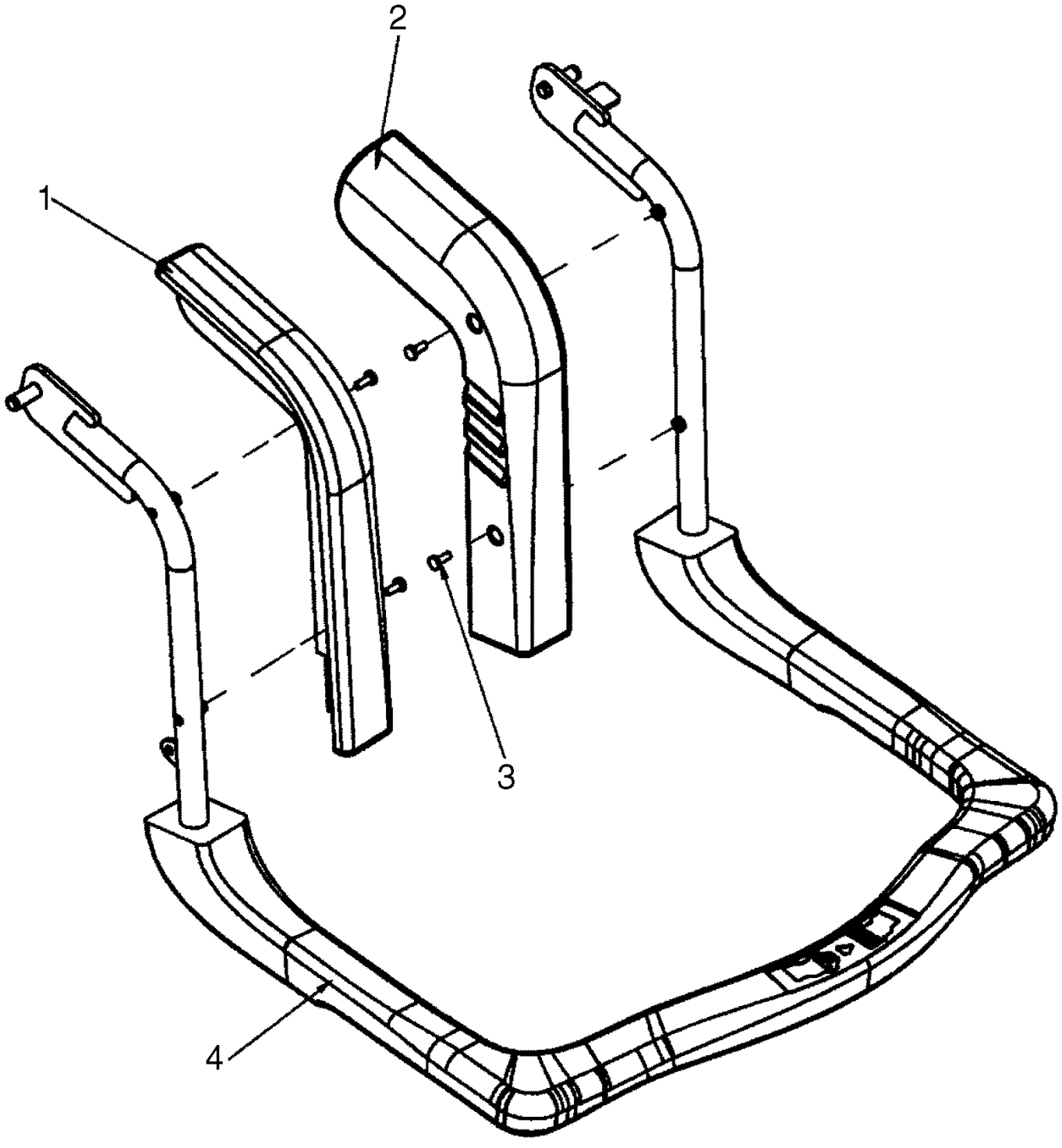

SEAT BAR

REF	FN	PART NUMBER	YR/SN	QTY	DESCRIPTION
1		87619938		1	SEAT, Arm, Upper Lap Bar, RH
2		87619939		1	SEAT, Arm, Upper Lap Bar, LH
3		86511829		4	SCREW, Cross Pan Hd, M6 x 16
4		87619935		1	SEAT, Lap Bar, Lower Section

SEAT BELT, LAP BELT (2 IN)

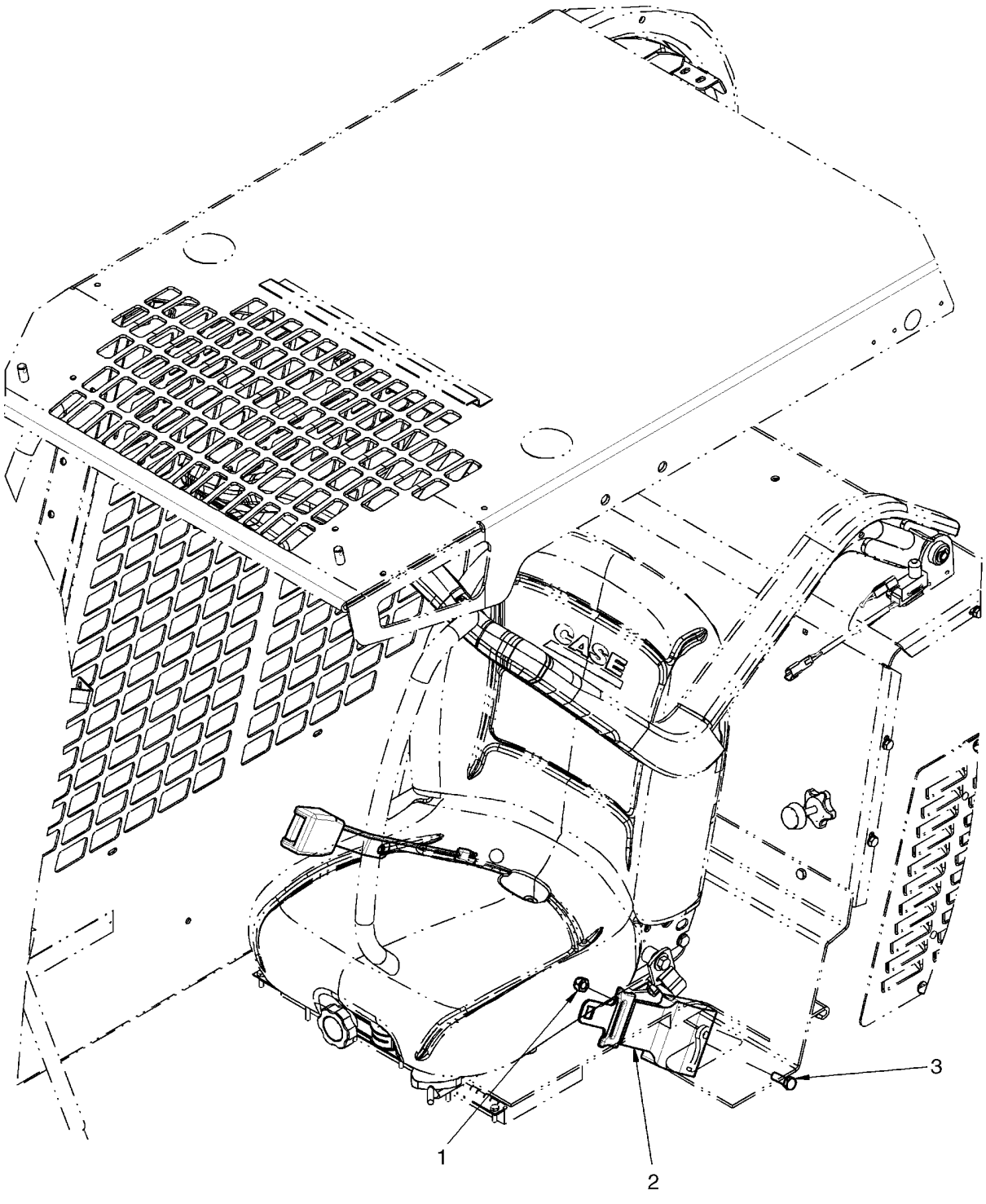

SEAT BELT, LAP BELT (2 IN)

REF	FN	PART NUMBER	YR/SN	QTY	DESCRIPTION
1		86512554		1	NUT, LOCK, M10 x 1.5, Cl 10
2		{87652259}		1	2" Lap Seat Belt
3		43140		1	BOLT, Hex, M10 x 30, 8.8, Full Thd

SEAT BELT, LAP BELT (3 IN)

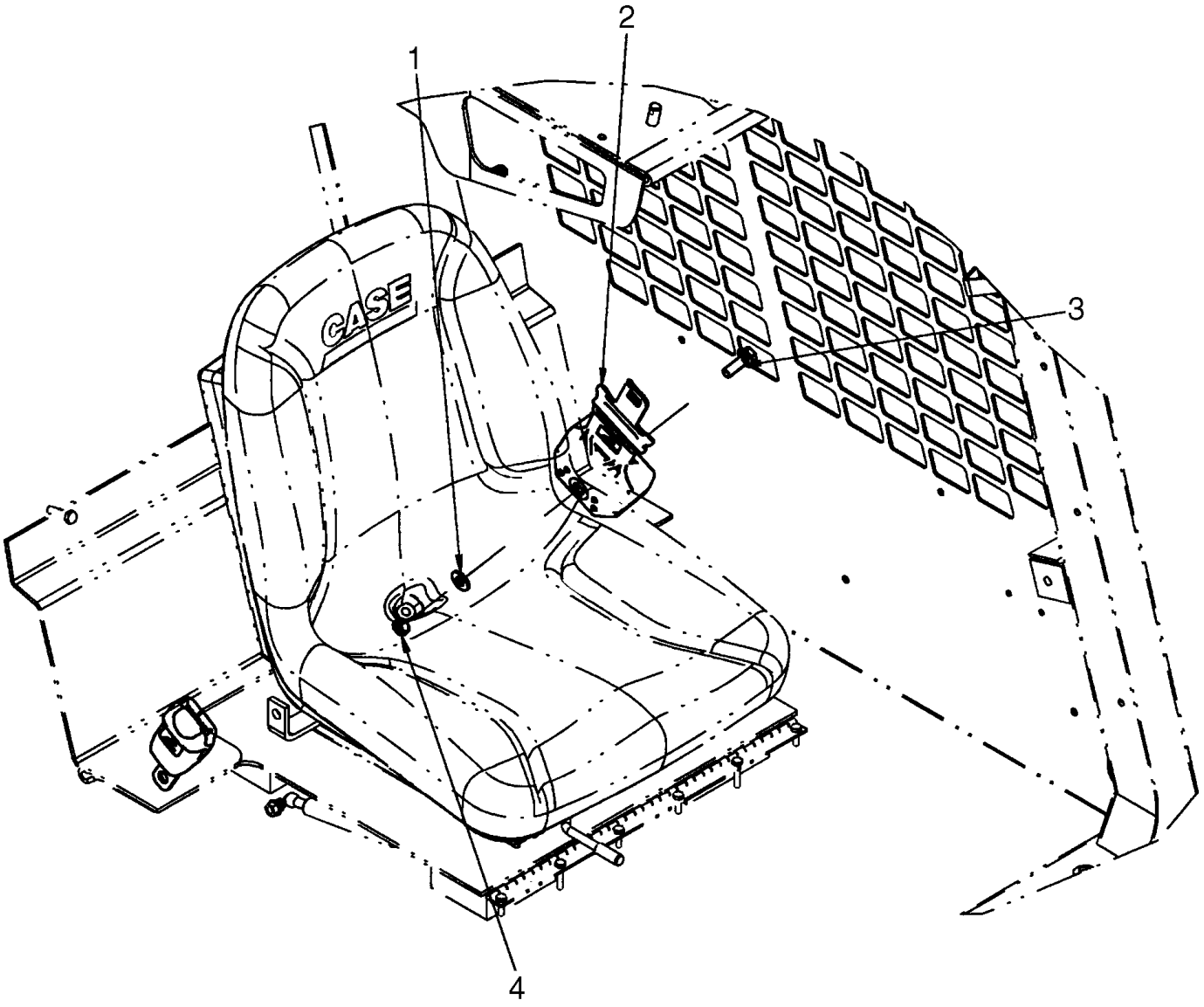

BS07K731

SEAT BELT, LAP BELT (3 IN)

REF	FN	PART NUMBER	YR/SN	QTY	DESCRIPTION
		87717673		1	KIT, SERVICE, Kit, 3 in. Lap Belt; Incl 1 - 4
1		86625253		1	WASHER, M11 x 24 x 2
2		87702506		1	SEAT BELT, 3" Lap Seat Belt
3		9804262		1	BOLT, Hex Flg, M10 x 30, 8.8
4		87030549		1	NUT, LOCK, M10 x 1.5, Cl 10

SHOULDER BELT

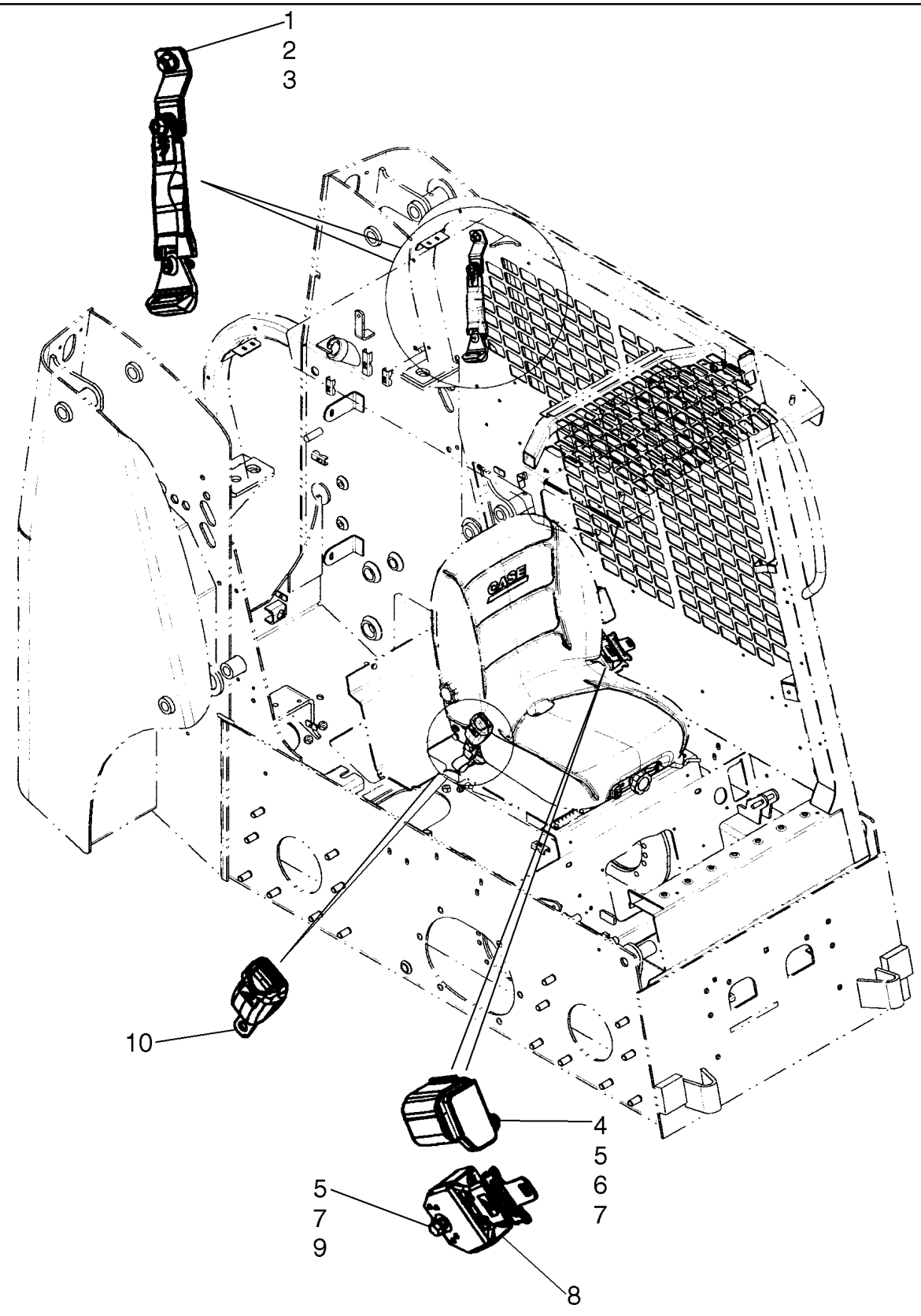

SHOULDER BELT

REF	FN	PART NUMBER	YR/SN	QTY	DESCRIPTION
		87717671		1	KIT, SERVICE, Kit, 2 in. Shoulder Belt; Incl 1 - 10
1		9804266		1	BOLT, Hex Flg, M12 x 25, 8.8
2		86625255		1	WASHER, M13.5 x 24.5 x 3, HT
3		9706685		1	NUT, M12, Cl 8
4		325829		1	BOLT, Hex, M10 x 45, 8.8
5		86625253		3	WASHER, M11 x 24 x 2
6		87047451		1	SPACER
7		87030549		2	NUT, LOCK, M10 x 1.5, Cl 10
8		87702278		1	SEAT BELT, 2 in Shoulder Belt Assy
9		9804262		1	BOLT, Hex Flg, M10 x 30, 8.8
10		REF			INSTRUCTION, Buckle Mounts To Seat Frame With Bolt And Washer Provided With Seat

REAR VIEW MIRROR

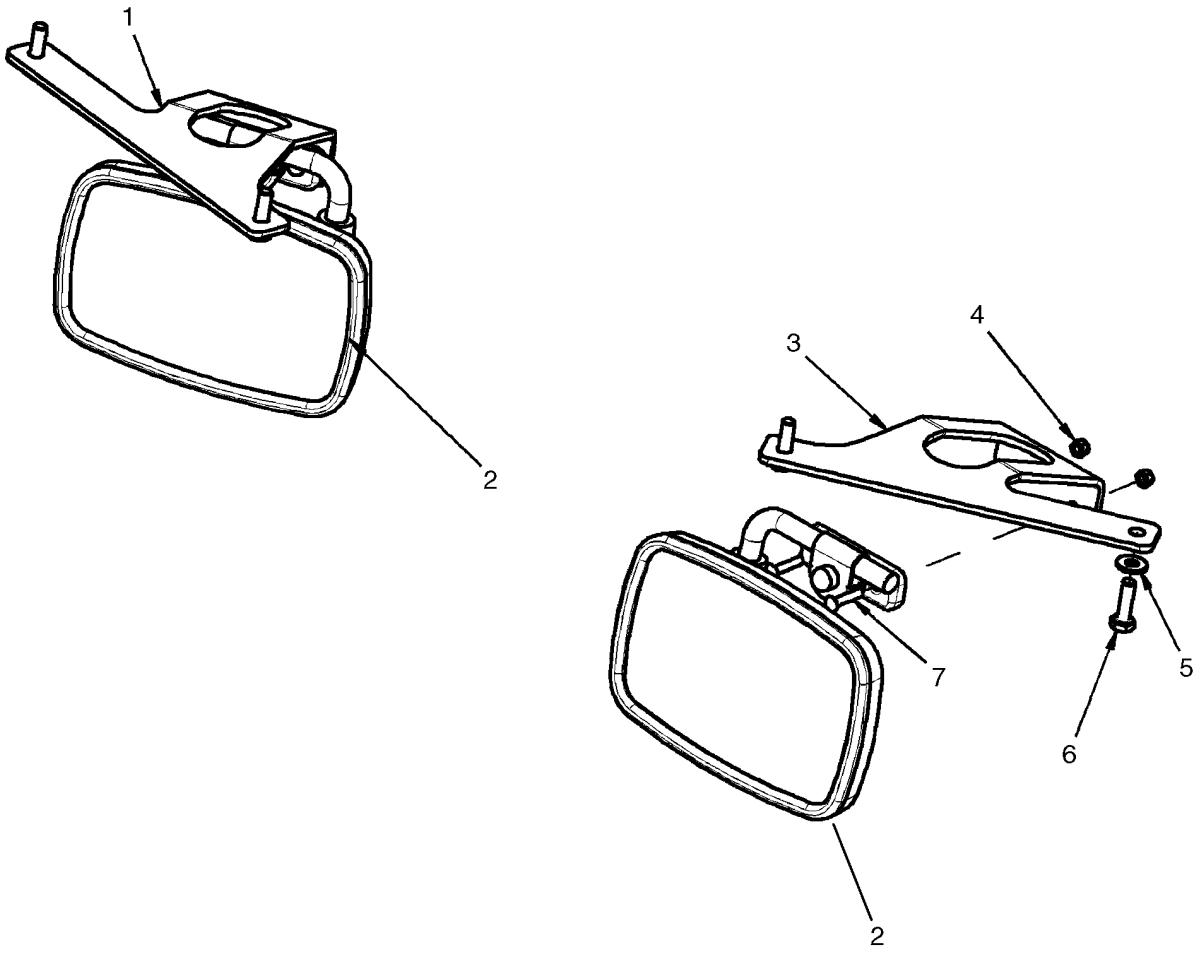

REAR VIEW MIRROR

REF	FN	PART NUMBER	YR/SN	QTY	DESCRIPTION
1		87734487		1	BRACKET, Bracket, LH Mirror Mount
2		3962022		2	MIRROR, LH
3		87734484		1	BRACKET, Bracket, RH Mirror Mount
4		385681		4	NUT, LOCK, M4 x .7, Cl 8
5		322357		4	WASHER, SPRING, Belleville, M6
6		120100		4	BOLT, Hex, M6 x 20, 8.8
7		43646		4	SCREW

SPECIAL PARTS FOR ITALY - MIRROR, REAR VIEW

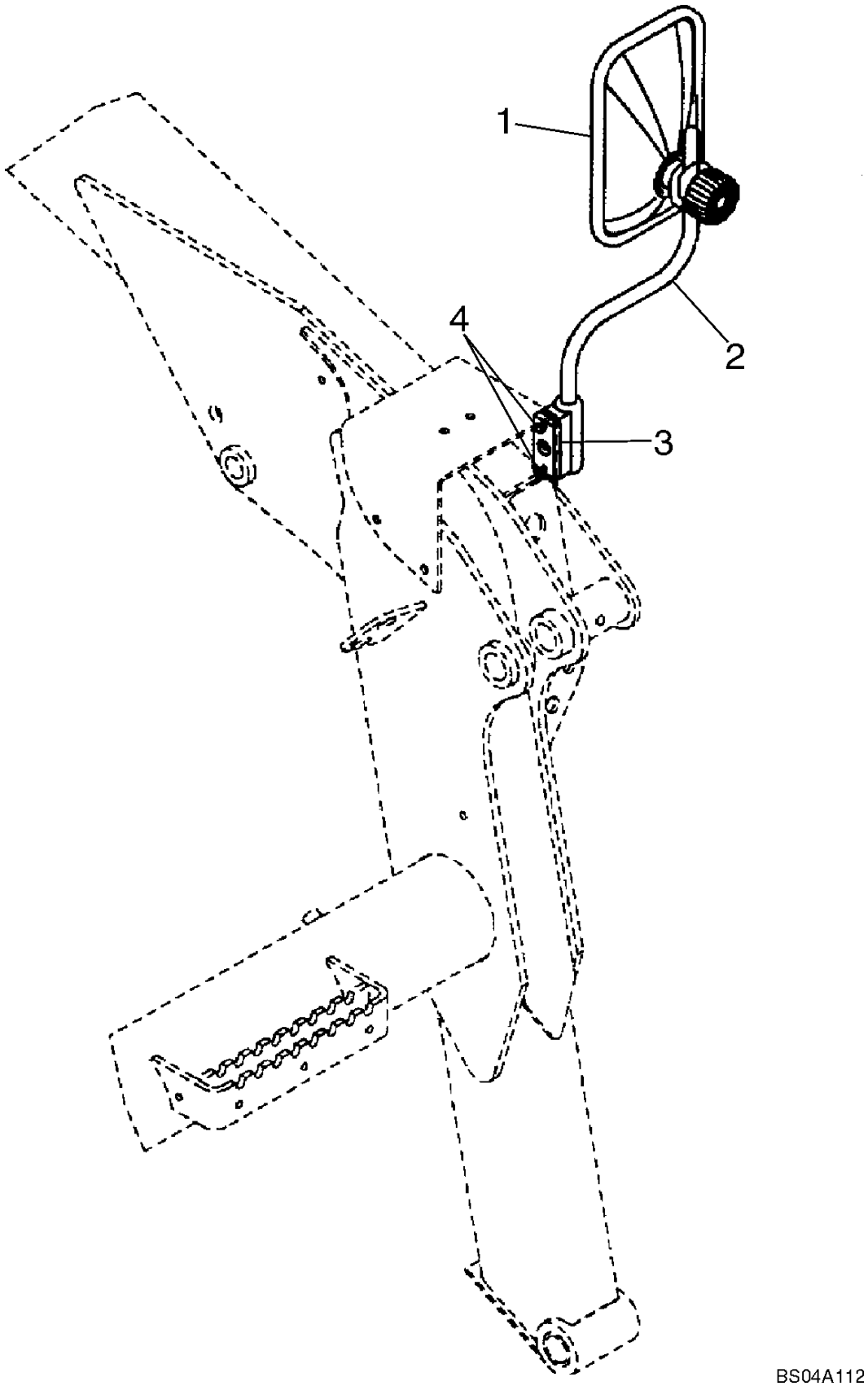

SPECIAL PARTS FOR ITALY - MIRROR, REAR VIEW

REF	FN	PART NUMBER	YR/SN	QTY	DESCRIPTION
1		235994A1		1	MIRROR
2		310860A1		1	SUPPORT
3		432895A1		1	SPACER
4		614-6025		2	BOLT, Hex, M6 x 25, 8.8, M6 x 25

09-45		p1	12/07

SEAT MOUNTING - STANDARD SEAT

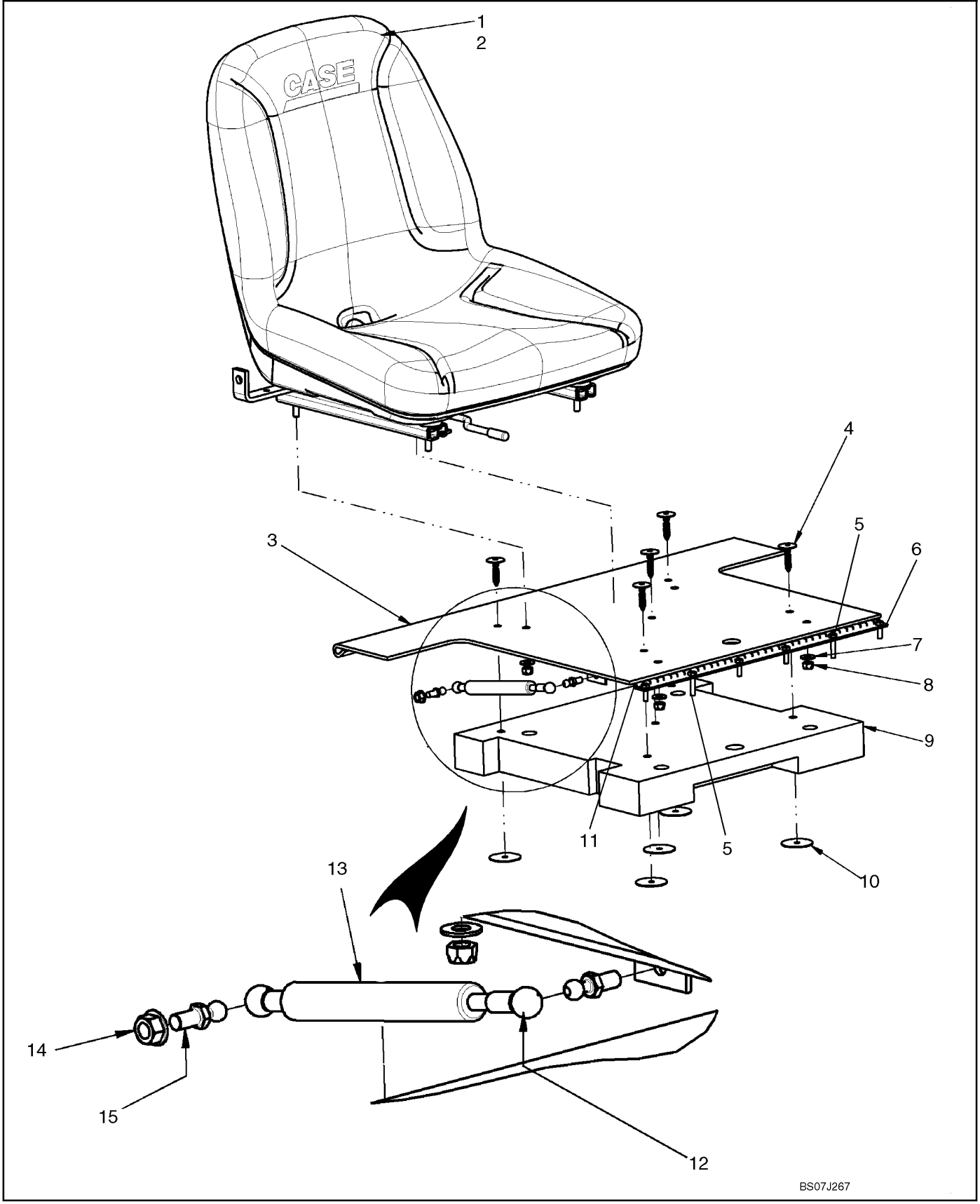

SEAT MOUNTING - STANDARD SEAT

REF	FN	PART NUMBER	YR/SN	QTY	DESCRIPTION
1		87405117		1	SEAT, Seat, Mid-Back - Wheat Color; Incl. 2
2		86603490		1	SWITCH, Operator Presence
2A		302137A2		1	HARNESS, Operator Presence Switch Harness With 2 Connectors; Not Illustrated
3		{87676122}		1	Seat Hinge Plate
4		348452A1		5	SCREW, Push In Fastener
5		80120101		2	SCREW, M6 x 30, 8.8 ZND
6		120100		4	BOLT, Hex, M6 x 20, 8.8
7		86625263		4	WASHER, M8 x 20 x 1.6
8		9628098		4	NUT, LOCK, M8 x 1.25, Cl 10
9		{87676124}		1	Pad, Seat Noise Control
10		348434A1		5	WASHER
11		{87676121}		1	Seat Hinge Stiffener
12		254307A1		2	RING, SPECIAL
13		189787A2		1	SHOCK ABSORBER
14		86505868		2	NUT, M8, Flg Ser
15		189609A1		2	STUD, Metric Ball Stud, 10mm Ball x M8 X 1.25 Thd

SEAT MOUNTING - SUSPENSION SEAT

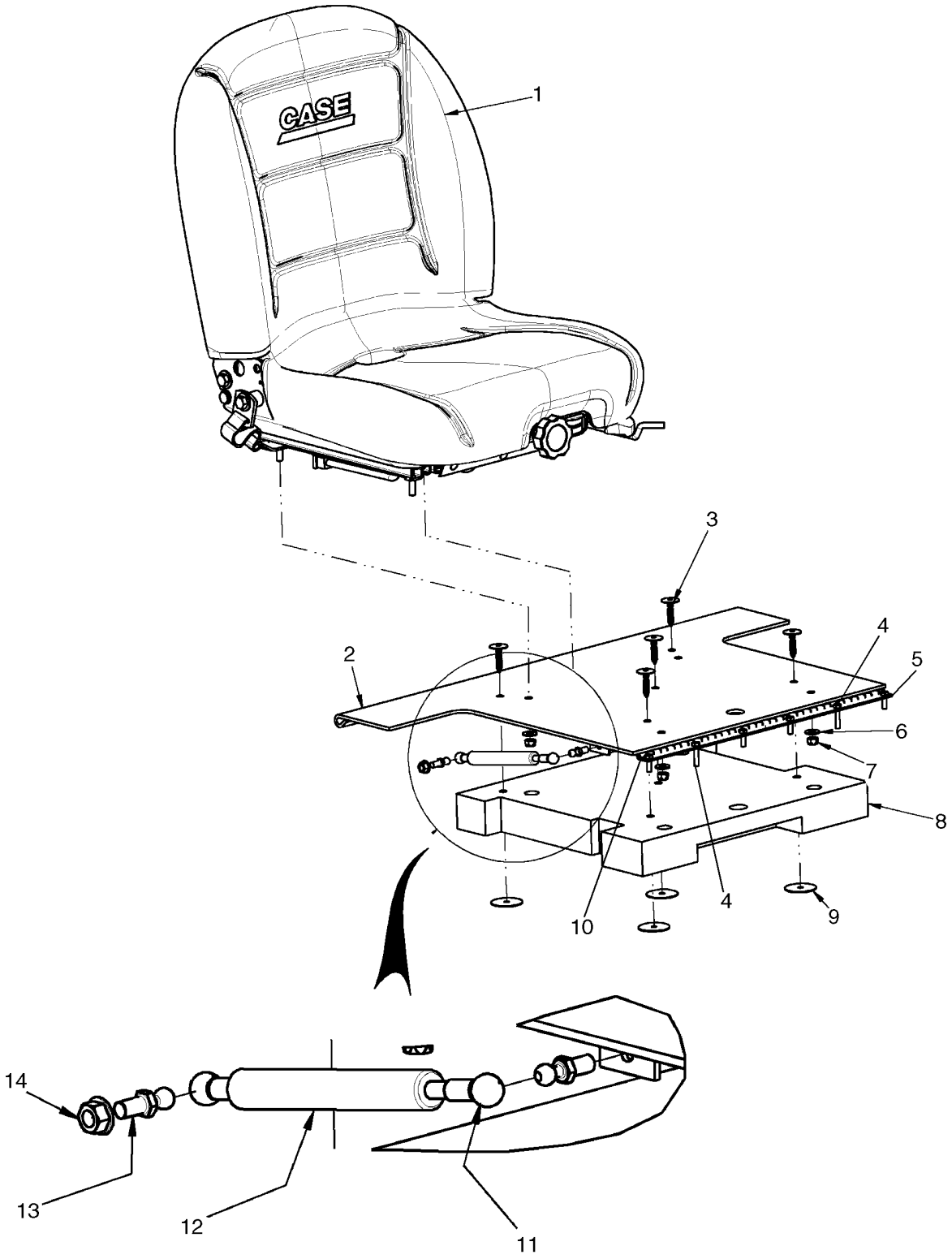

SEAT MOUNTING - SUSPENSION SEAT

REF	FN	PART NUMBER	YR/SN	QTY	DESCRIPTION
1		87662513		1	SEAT, Suspension Seat Assembly, Wheat Color
2		{87676122}		1	Seat Hinge Plate
3		348452A1		5	SCREW, Push In Fastener
4		80120101		2	SCREW, M6 X 30, 8.8 ZND
5		120100		4	BOLT, Hex, M6 x 20, 8.8
6		86625263		4	WASHER, M8 x 20 x 1.6
7		9628098		4	NUT, LOCK, M8 x 1.25, Cl 10
8		{87676124}		1	Pad, Seat Noise Control
9		348434A1		5	WASHER
10		{87676121}		1	Seat Hinge Stiffener
11		254307A1		2	RING, SPECIAL
12		189787A2		1	SHOCK ABSORBER
13		189609A1		2	STUD, Ball Stud, 10mm Ball X M8 X 1.25 Thd
14		86505868		2	NUT, M8, Flg Ser

SEAT MOUNTING - DELUXE SUSPENSION SEAT

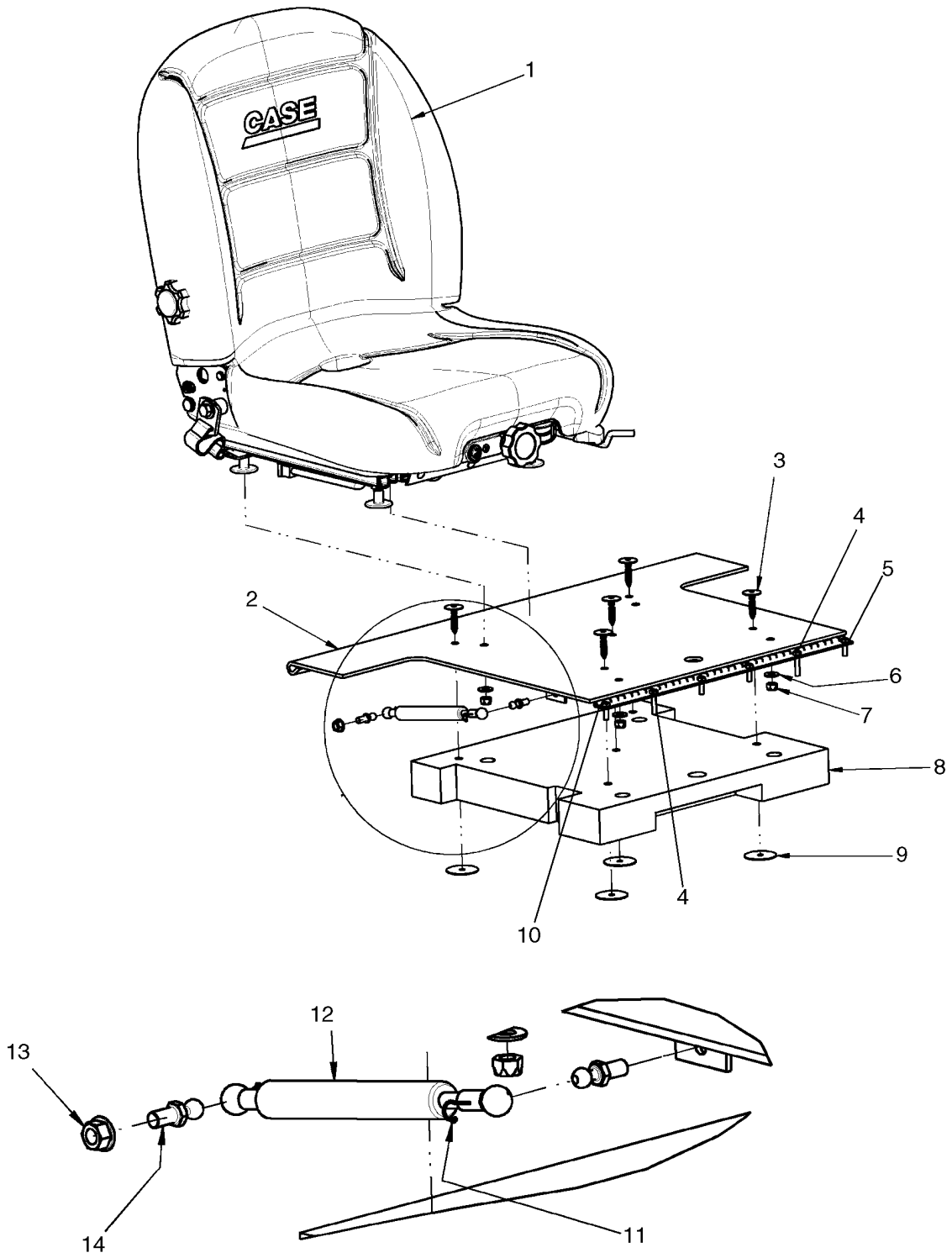

SEAT MOUNTING - DELUXE SUSPENSION SEAT

REF	FN	PART NUMBER	YR/SN	QTY	DESCRIPTION
1		87662514		1	SEAT, Suspension Seat Assembly - Deluxe, Cloth Seat
2		{87676122}		1	Seat Hinge Plate
3		348452A1		5	SCREW, Push In Fastener
4		80120101		2	SCREW, M6 X 30, 8.8
5		120100		4	BOLT, Hex, M6 x 20, 8.8
6		86625263		4	WASHER, M8 x 20 x 1.6
7		9628098		4	NUT, LOCK, M8 x 1.25, Cl 10
8		{87676124}		1	Pad, Seat Noise Control
9		348434A1		5	WASHER
10		{87676121}		1	Seat Hinge Stiffener
11		254307A1		2	RING, SPECIAL
12		189787A2		1	SHOCK ABSORBER
13		86505868		2	NUT, M8, Flg Ser
14		189609A1		2	STUD, Ball Stud, 10mm Ball X M8 X 1.25 Thd

REAR WINDOW

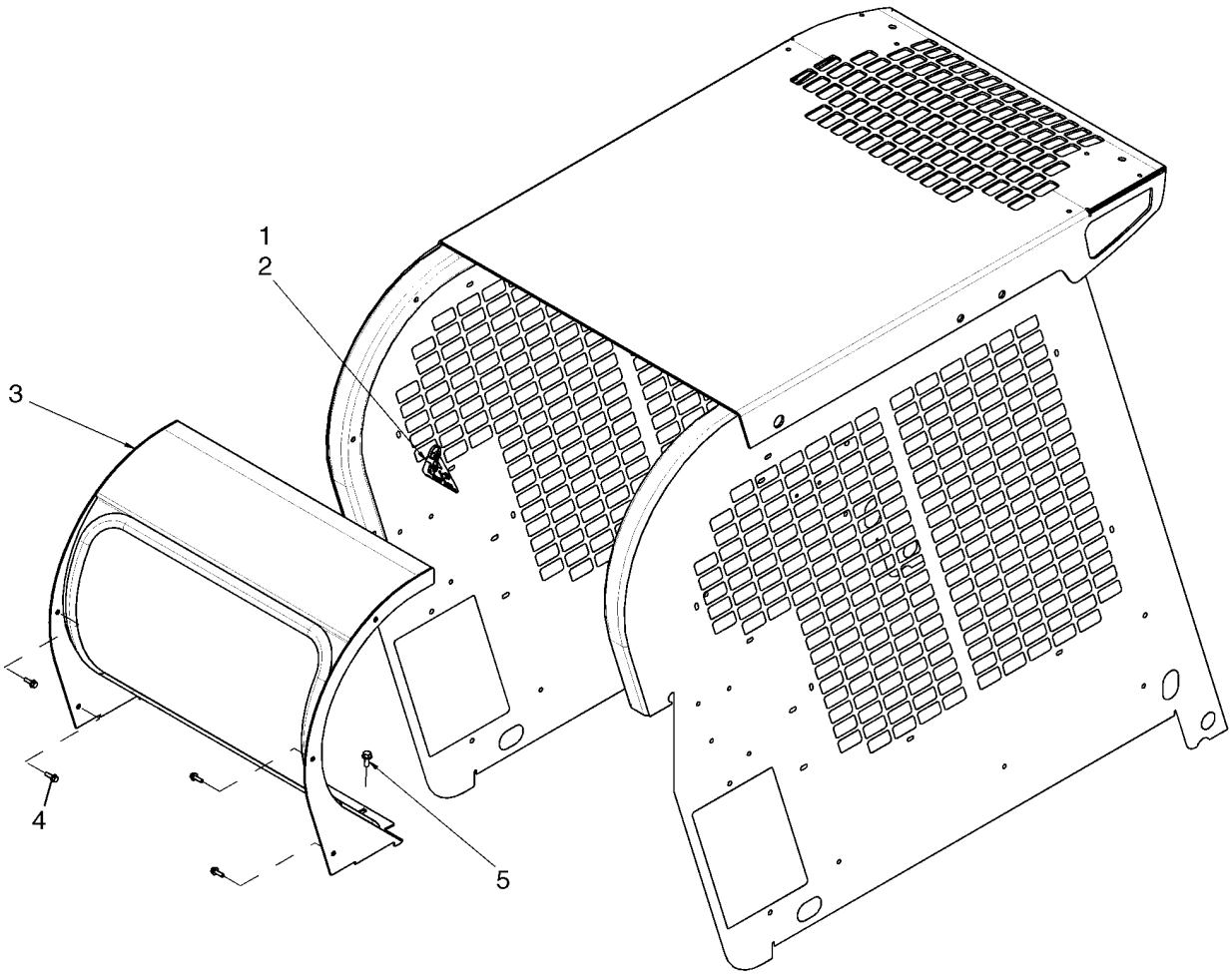

BS07K248

REAR WINDOW

REF	FN	PART NUMBER	YR/SN	QTY	DESCRIPTION
1		263117		1	STRAP, CABLE, .14" x 11 1/2"
2		87026871		1	PLASTIC SIGN, Exit Tag
3		87626406		1	WINDOW, Rear Window
4		9804256		9	BOLT, Hex Flg, M6 x 20, 8.8
5		9804258		3	BOLT, Hex Flg, M8 x 20, 8.8

REAR WINDOW - HEAT AND AIR CONDITIONING

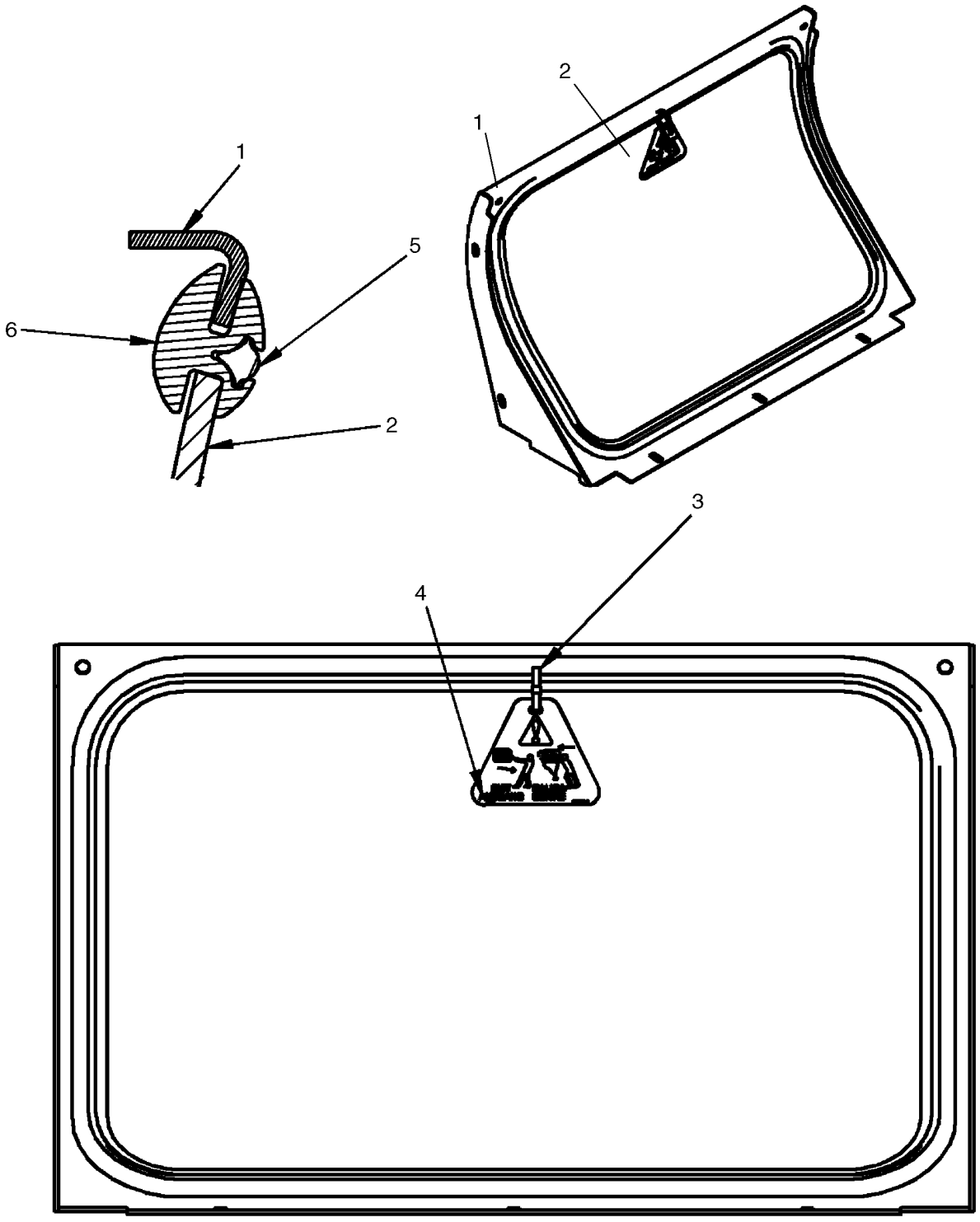

REAR WINDOW - HEAT AND AIR CONDITIONING

REF	FN	PART NUMBER	YR/SN	QTY	DESCRIPTION
1		{87705428}		1	Frame, Rear HVAC Window
2		{87641703}		1	Glass, Rear HVAC Window
3		263117		1	STRAP, CABLE, .14" x 11 1/2"
4		87026871		1	PLASTIC SIGN, Exit Tag
5		{87643808}		1	Key, Locking
6		{87641704}		1	Seal, H Channel HVAC Window

TOP WINDOW

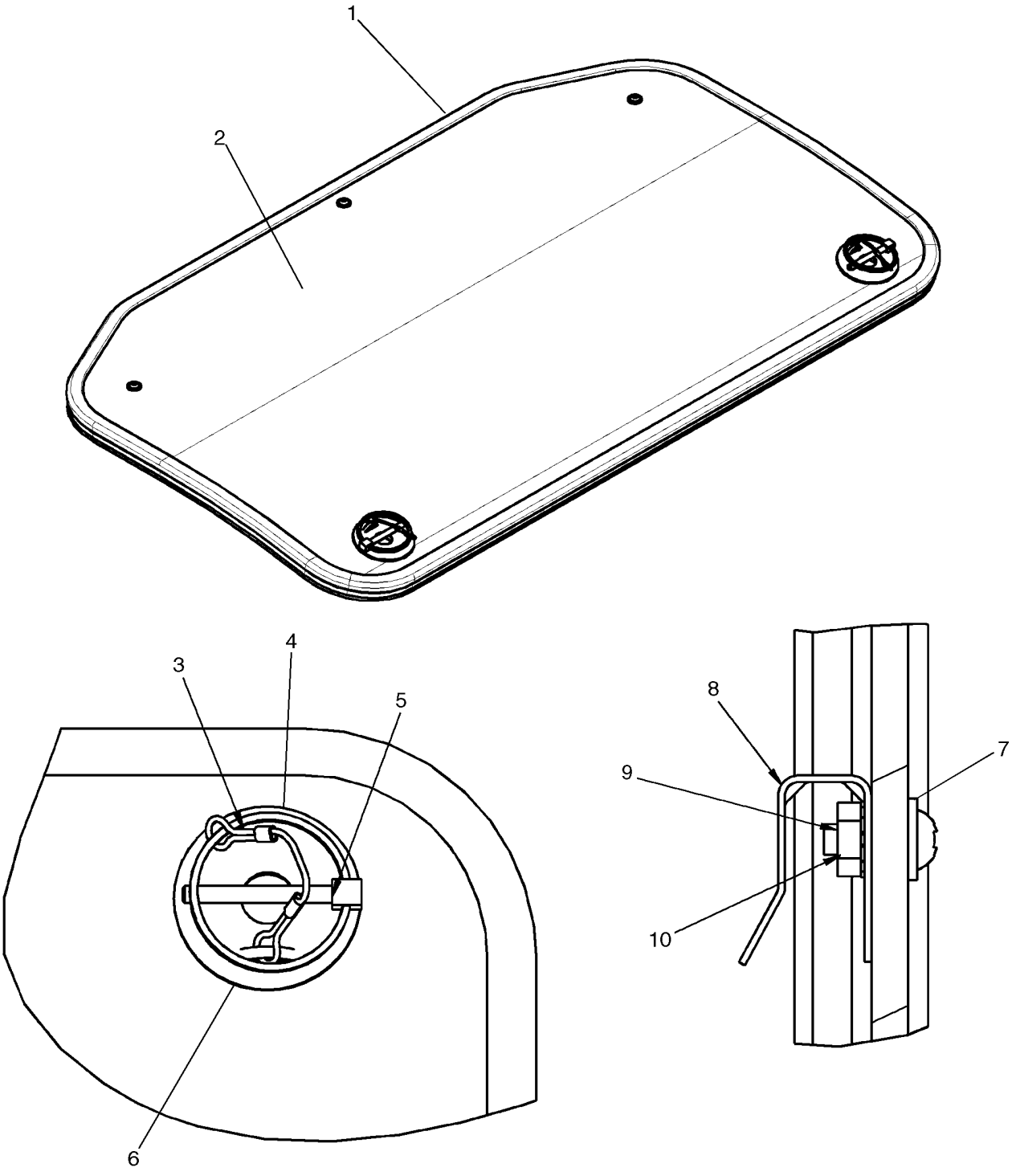

TOP WINDOW

REF	FN	PART NUMBER	YR/SN	QTY	DESCRIPTION
		87715833		1	PLASTIC, Top Window; Incl. 1 - 10
1		NSS		1	NOT SERVICED SEPARATELY, Bulb Seal
2		NSS		1	NOT SERVICED SEPARATELY, Window
3		NSS		2	NOT SERVICED SEPARATELY, Cable
4		NSS		4	NOT SERVICED SEPARATELY, Cable Crimp
5		NSS		2	NOT SERVICED SEPARATELY, Linch Pin
6		NSS		2	NOT SERVICED SEPARATELY, Mount, Skylight Pin
7		280299		3	WASHER, #8
8		NSS		3	NOT SERVICED SEPARATELY, Clip
9		NSS		3	NOT SERVICED SEPARATELY, Nut, #8-32 UNC
10		81822758		3	SCREW, Cross Pan Hd, #8-32 x 1/2"

SIDE WINDOWS

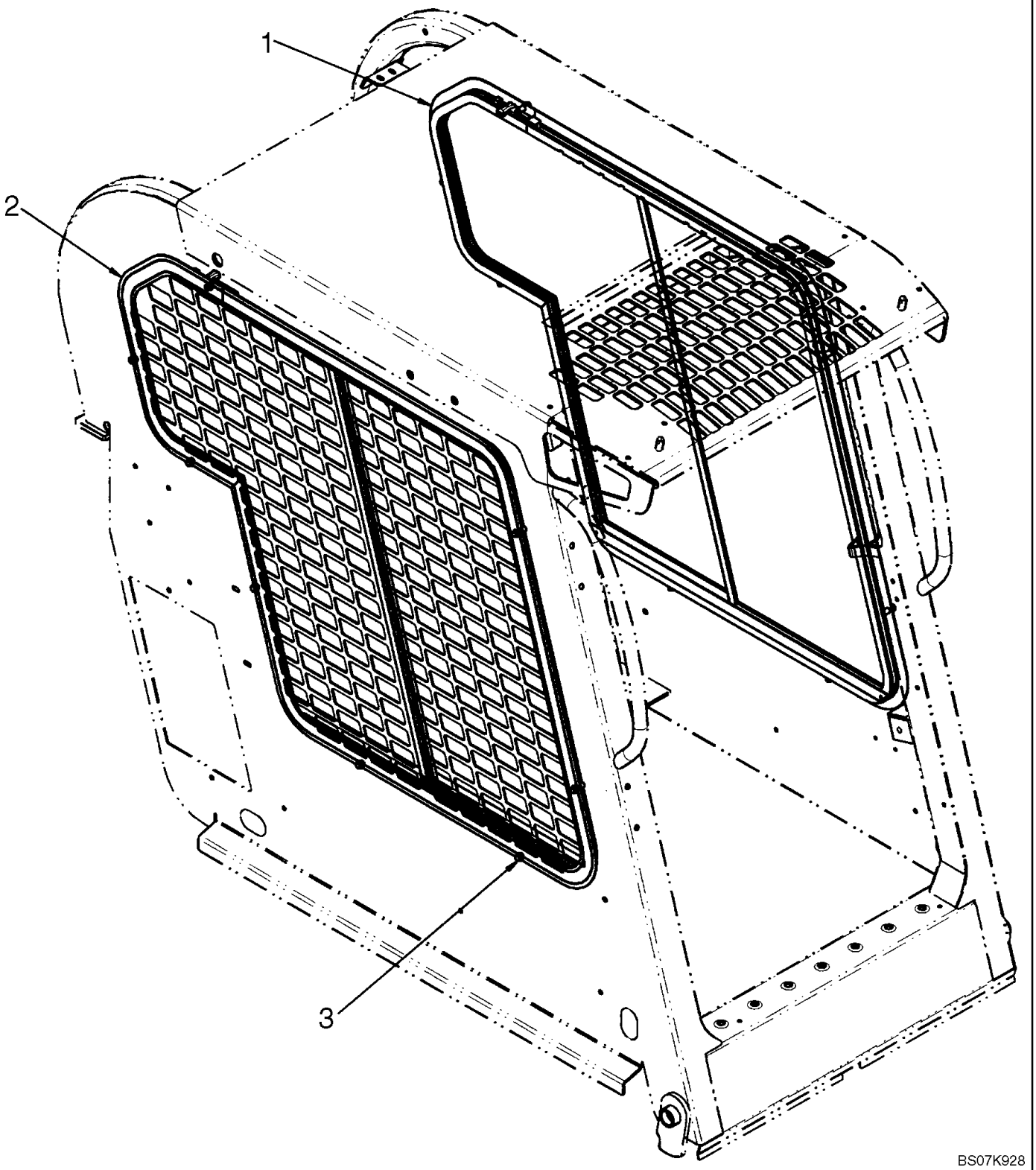

SIDE WINDOWS

REF	FN	PART NUMBER	YR/SN	QTY	DESCRIPTION
		87638358		1	KIT, SERVICE, Kit, Side Windows; Incl. 1 - 3 And Instructions
1		87657669		1	WINDOW, LH Side
2		87657670		1	WINDOW, RH Side
3		87030555		16	BOLT, Hex Flange Head M6 x 16 8.8 PHC

HEADLINER - STANDARD

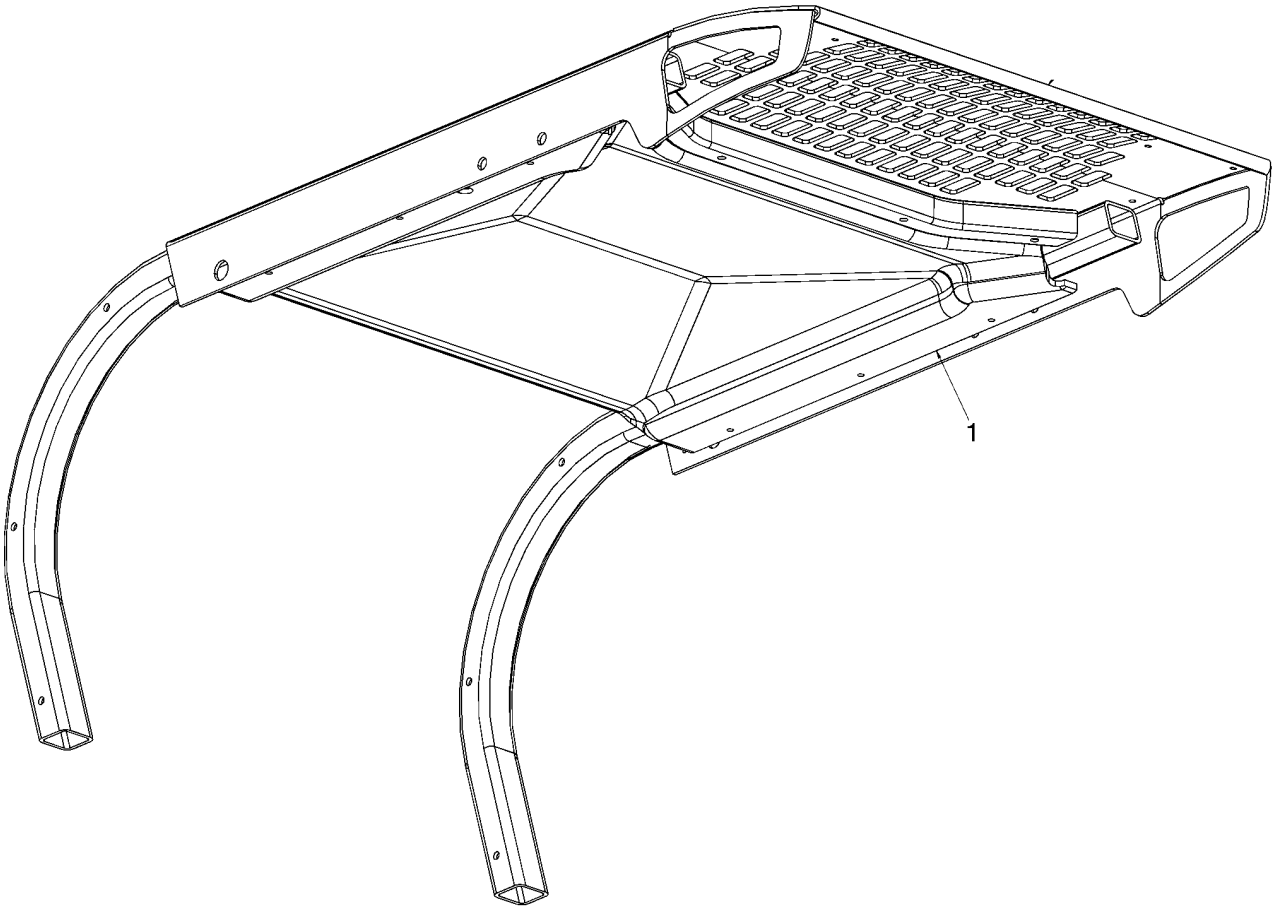

BS07K108

HEADLINER - STANDARD

REF	FN	PART NUMBER	YR/SN	QTY	DESCRIPTION
1		{87669944}		1	Headliner, Standard

HEADLINER - HEATER AND AIR CONDITIONING

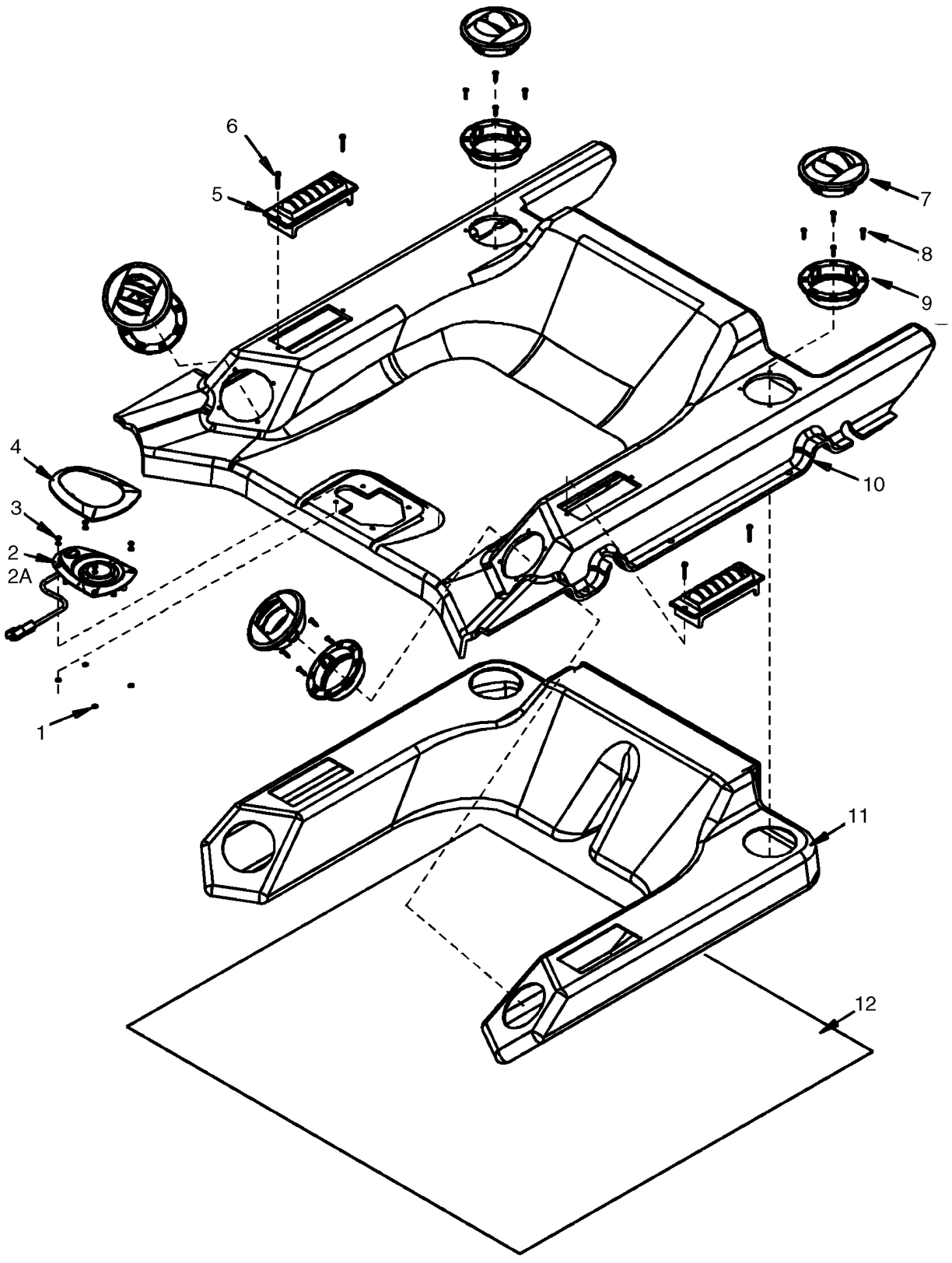

HEADLINER - HEATER AND AIR CONDITIONING

REF	FN	PART NUMBER	YR/SN	QTY	DESCRIPTION
1		NSS		4	NOT SERVICED SEPARATELY, Washer
2		87414959		1	LAMP, Incl 2A
2A		373114A1		1	BULB
3		NSS		4	NOT SERVICED SEPARATELY, Pop Rivet
4		NSS		1	NOT SERVICED SEPARATELY, Dome Light Bezel
5		86620864		2	VENT
6		NSS		4	NOT SERVICED SEPARATELY, Screw
7		NSS		4	NOT SERVICED SEPARATELY, Louver
8		NSS		16	NOT SERVICED SEPARATELY, Screw
9		NSS		4	NOT SERVICED SEPARATELY, Louver Housing
10		NSS		1	NOT SERVICED SEPARATELY, Headliner, CPXT
11		NSS		1	NOT SERVICED SEPARATELY, Duct
12		NSS		1	NOT SERVICED SEPARATELY, Insulation Wrap

INTERIOR TRIM

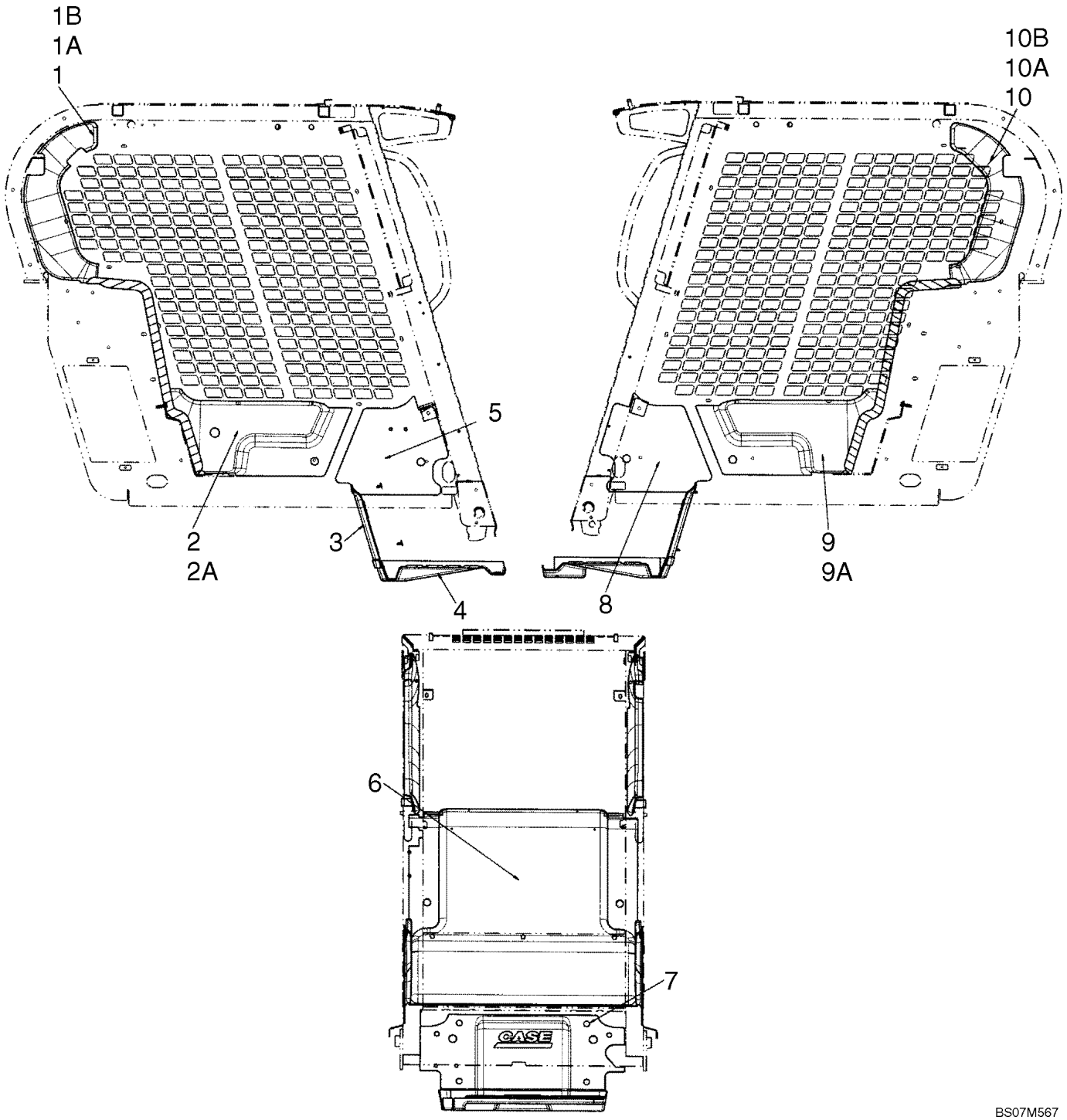

INTERIOR TRIM

REF	FN	PART NUMBER	YR/SN	QTY	DESCRIPTION
		87638514		1	KIT, SERVICE, Kit, Interior Trim; Incl 1 - 10B
1		87685891		1	LINER, Panel, Upper Right Rear; Incl 1A, 1B
1A		{87685911}		1	Retainer, Foam Block
1B		{87685909}		1	Retainer, Foam Block
2		87730070		1	LINER, Panel, Lower Right Rear
2A		{87685909}		1	Retainer, Foam Block
3		87730822		1	MAT, FLOOR, Mat, Heel Plate
4		87712700		1	MAT, FLOOR, Floor Mat
5		87727752		1	LINER, Interior Trim, Bottom RH
6		87672098		1	LINER, Trim, Interior Heat Shield
7		87712706		4	FASTENER, Fastener, Push In
8		87727748		1	LINER, Interior Trim, Bottom LH
9		87730069		1	LINER, Panel, Lower Left Rear
9A		{87685909}		1	Retainer, Foam Block
10		87685888		1	LINER, Panel, Upper Left Rear
10A		{87685911}		1	Retainer, Foam Block
10B		{87685909}		1	Retainer, Foam Block

RADIO - SPEAKERS AND ANTENNA

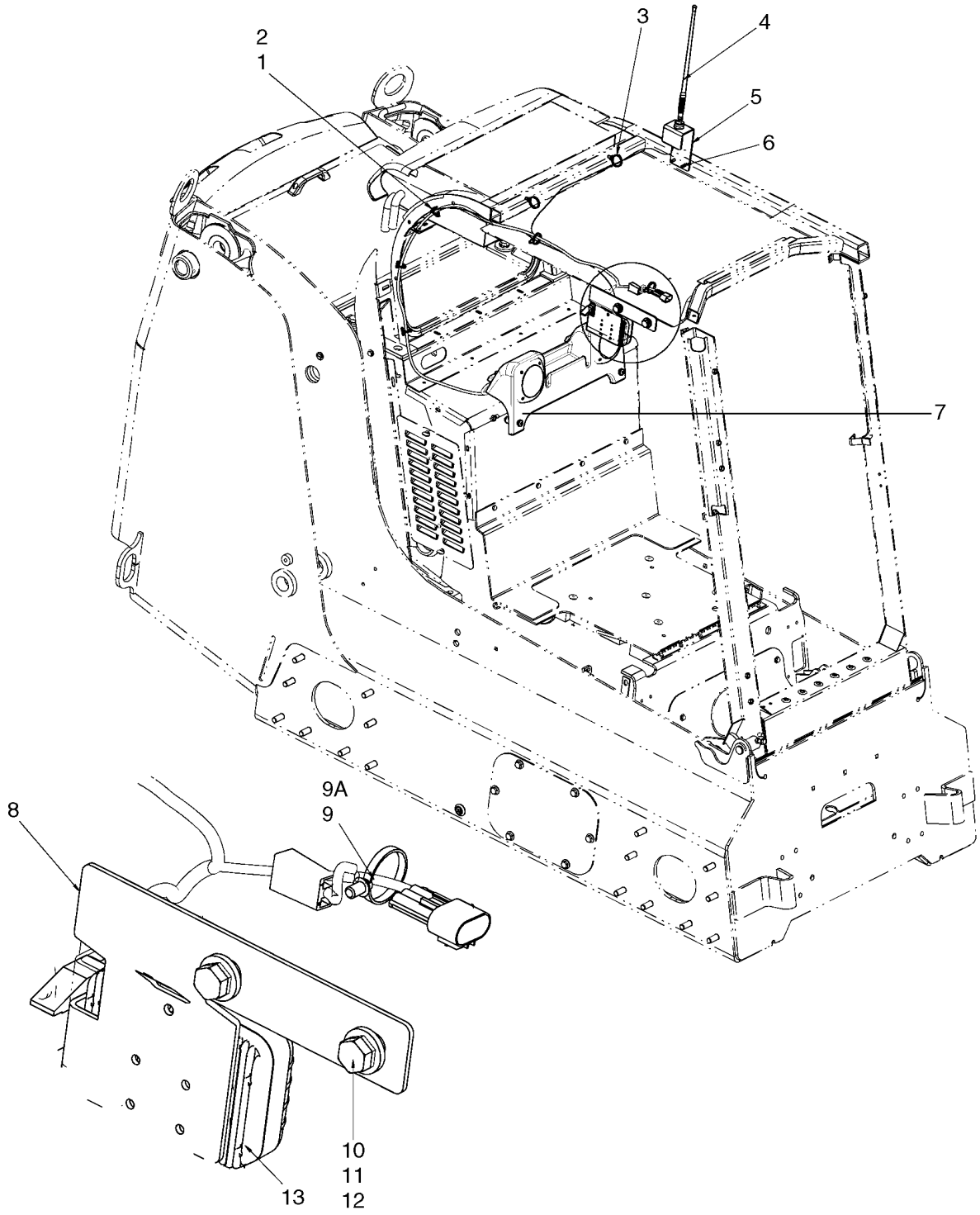

RADIO - SPEAKERS AND ANTENNA

REF	FN	PART NUMBER	YR/SN	QTY	DESCRIPTION
		87652337		1	KIT, SERVICE, Kit, Radio; Incl 1 - 13
1		87642915		3	STRAP, CABLE
2		87642914		3	BASE
3		87668737		4	STRAP
4		87668735		1	ANTENNA, Antenna, Rubber Mast
5		87682711		1	BRACKET, Antenna, Bracket
6		86625224		2	SCREW, Screw, 1/4-20 X 3/4 Hex Head
7		REF		1	INSTRUCTION, Speakers And Housing; See Fig 09-56
8		NSS		1	NOT SERVICED SEPARATELY, Radio Mounting Bracket
9		87658636		1	HARNESS, Radio Harness; Incl 9A
9A		A149796		1	FUSE, Fuse, 3A
10		43260		2	BOLT, Hex, M12 x 30, 10.9
11		412672		2	NUT, LOCK, M12 x 1.75, Cl 10
12		86625256		4	WASHER, M12 x 28.5 x 4, HT
13		NSS		1	NOT SERVICED SEPARATELY, Mini Radio, AM/FM/WX

RADIO - SPEAKERS AND HOUSING

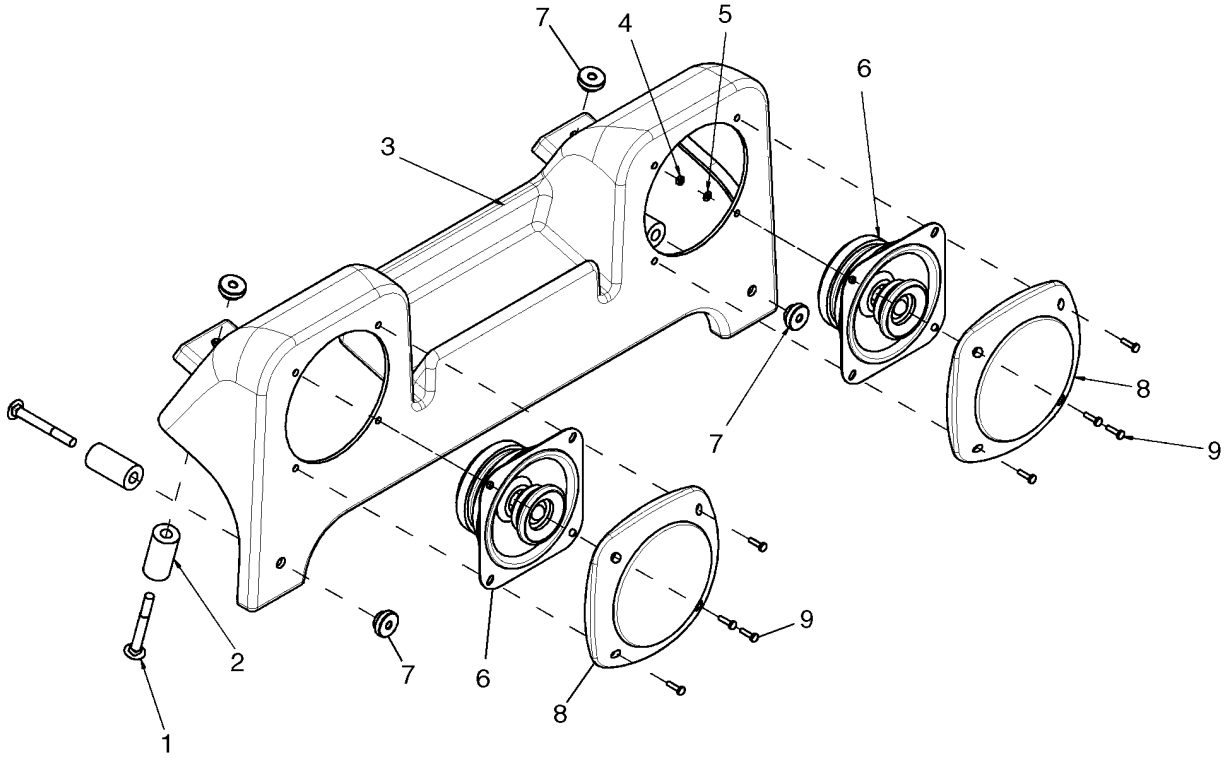

RADIO - SPEAKERS AND HOUSING

REF	FN	PART NUMBER	YR/SN	QTY	DESCRIPTION
1		280498		4	BOLT, CARRIAGE, Short NK, 1/4"-20 x 2 1/4", G5
2		87668006		4	SPACER, Spacer, 8.26 ID X 19.05 OD X 38.1 Length
3		87627524		1	HOUSING, Speaker Housing
4		86508812		8	NUT, M3, Cl 8
5		86639310		8	WASHER, M3
6		87672222		2	RADIO, Speaker, 4 in.
7		87667727		4	NUT, Nut, Plastic Thumb
8		87672257		2	RADIO, Speaker Grill
9		86599775		8	SCREW, Cross Pan Hd, M3 x 12

HEATER SYSTEM

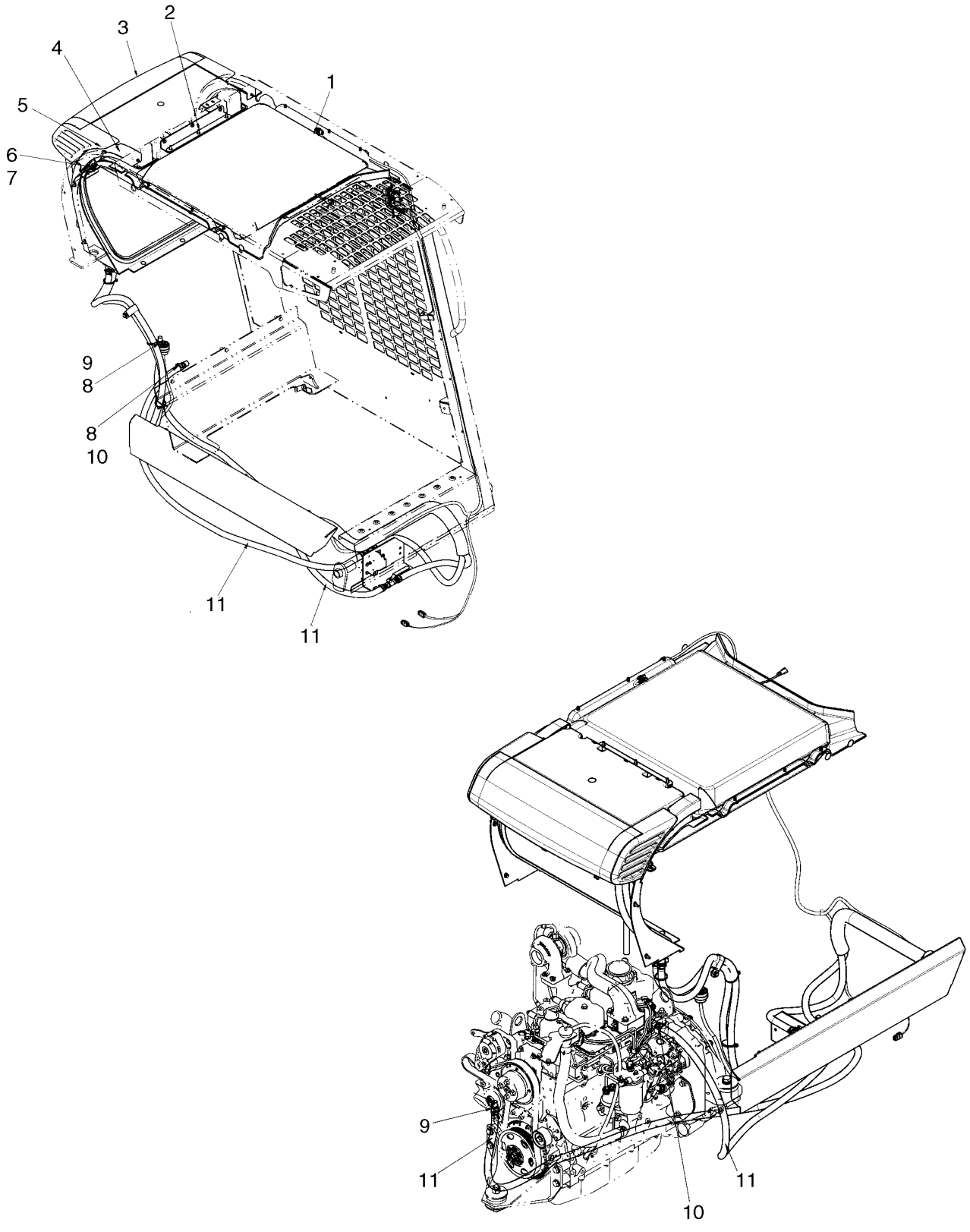

HEATER SYSTEM

REF	FN	PART NUMBER	YR/SN	QTY	DESCRIPTION
1		REF		1	INSTRUCTION, Heater System; See Fig 09-58
2		9804256		3	BOLT, Hex Flg, M6 x 20, 8.8
3		87653394		1	HEATER, See Fig 09-59
4		87450833		2	TAPE, ADHESIVE
5		291308		AR	STRIP, SEALING, 580mm (22 13/16 in.)
6		86619800		2	NUT, LOCK, M6 x 1, Flg, Cl 8
7		9804257		2	BOLT, Hex Flg, M6 x 25, 8.8
8		87443511		2	CLAMP
9		642560		1	FITTING, 5/8" Hose X 3/8" NPTF Beaded
10		87302136		1	FITTING, 5/8" Hose x 1/2" NPTF, Barbed
11		87691475		2	HOSE, Hose, Heater Supply, 1975mm (77 3/4 in.)

HEATER SYSTEM

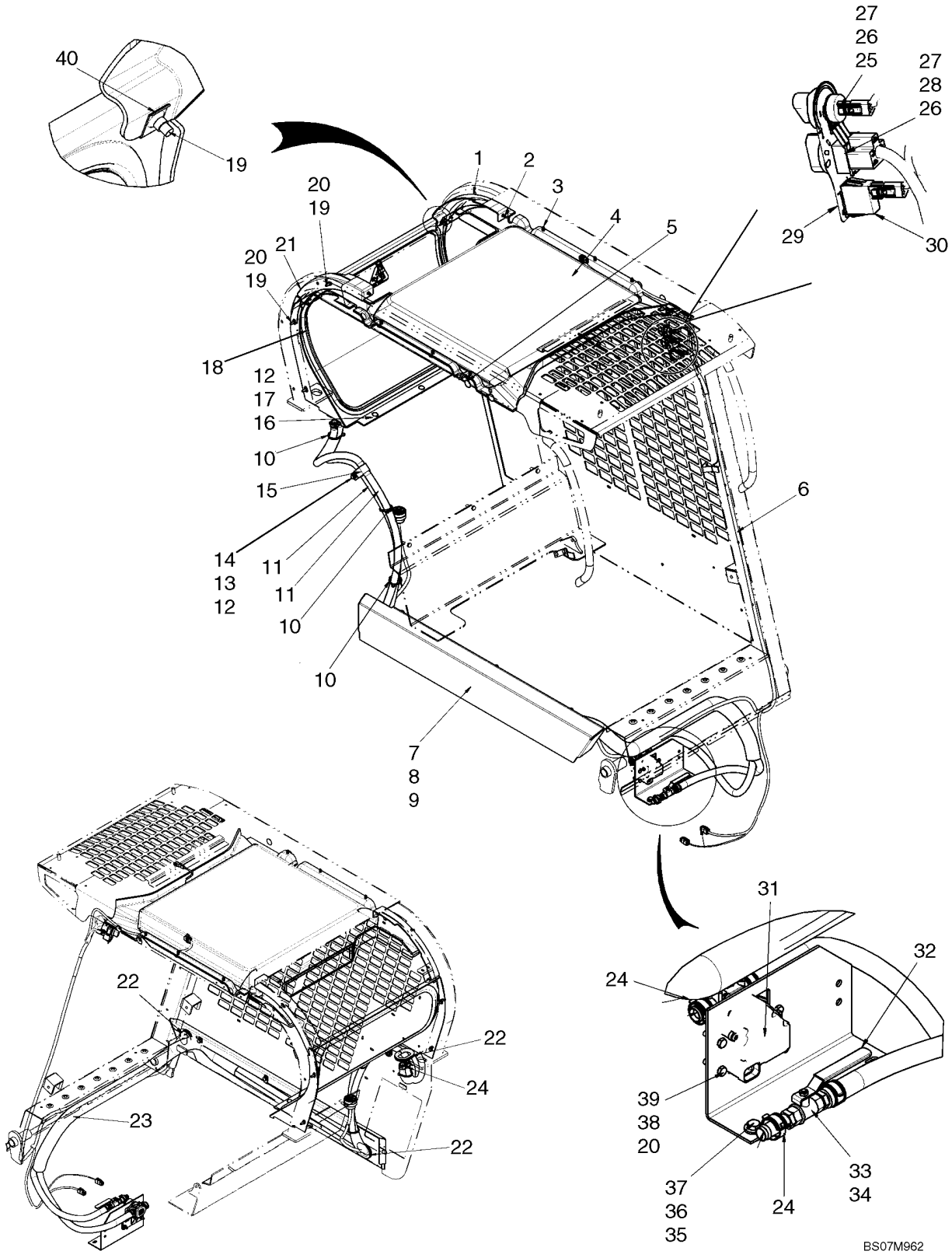

HEATER SYSTEM

REF	FN	PART NUMBER	YR/SN	QTY	DESCRIPTION
1		87705419		1	GLASS, Filler, Rear Window LH
2		87712706		2	FASTENER, Fastener, Push In
3		87713668		6	FASTENER, Fastener, Push In
4		REF		1	INSTRUCTION, Headliner, Heat And A/C; See Fig 09-53
5		414635A1		4	COVER, Lexan Cover, 25mm (1 in.) Dia.
6		87718151		1	HARNESS, Harness, HVAC
7		87703530		1	COVER, Hose Cover, RH
8		9804258		3	BOLT, Hex Flg, M8 x 20, 8.8
9		87016586		3	NUT, M8, U
10		L11541		3	STRAP, CABLE
11		87717211		2	HOSE, Heater Hose
12		86624184		4	WASHER, M8 x 16 x 1.6
13		86505868		1	NUT, M8, Flg Ser
14		120104		1	BOLT, Hex, M8 x 20, 8.8
15		H434289		1	MOUNTING CLIP
16		43362		3	NUT, M8, Cl 10
17		86507486		3	BOLT, CARRIAGE, Short NK, M8 x 20, Cl8.8, Full Thd
18		REF		1	INSTRUCTION, Rear Window, HVAC; See Fig 09-49
19		9804256		8	BOLT, Hex Flg, M6 x 20, 8.8
20		86588450		10	WASHER, M6
21		87705420		1	GLASS, Filler, Rear Window RH
22		87439844		3	GUARD
23		87441006		1	GUARD, Guard, A/C Hose
24		87443511		6	CLAMP
25		86729675		1	POTENTIOMETER
26		87310592		2	NUT, Jam, 7/16"-28, G5
27		86729670		2	KNOB
28		86729669		1	SWITCH, FAN, Blower Switch
29		{87687236}		1	Decal, HVAC Control
30		87555249		1	SWITCH, A/C Switch
31		87520839		1	VALVE
32		87462631		1	BRACKET, Water Valve And Dryer Bracket
33		87441937		1	VALVE, Heater Hose Ball Valve
34		642560		2	FITTING, 5/8" Hose X 3/8" NPTF Beaded

HEATER SYSTEM

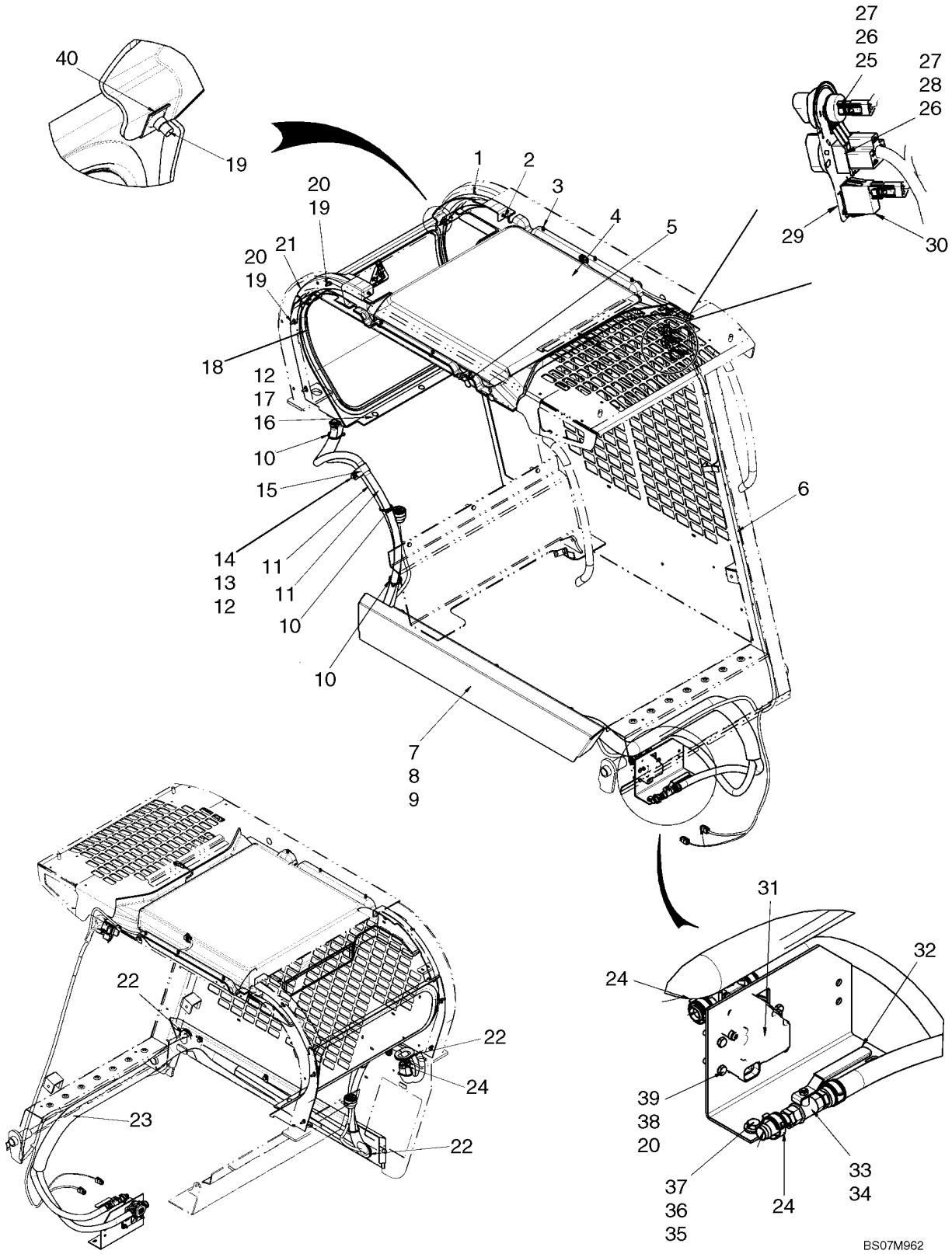

HEATER SYSTEM

REF	FN	PART NUMBER	YR/SN	QTY	DESCRIPTION
35		229197A1		2	NUT
36		87015284		2	WASHER, M8 x 21.5 x 2.5, HT
37		120103		2	BOLT, Hex, M8 x 16, 8.8
38		86511444		4	NUT, M6, Flg Ser
39		86977786		4	BOLT, Hex, M6 x 25, 8.8
40		87016585		2	NUT
41		{}			

AIR CONDITIONING SYSTEM

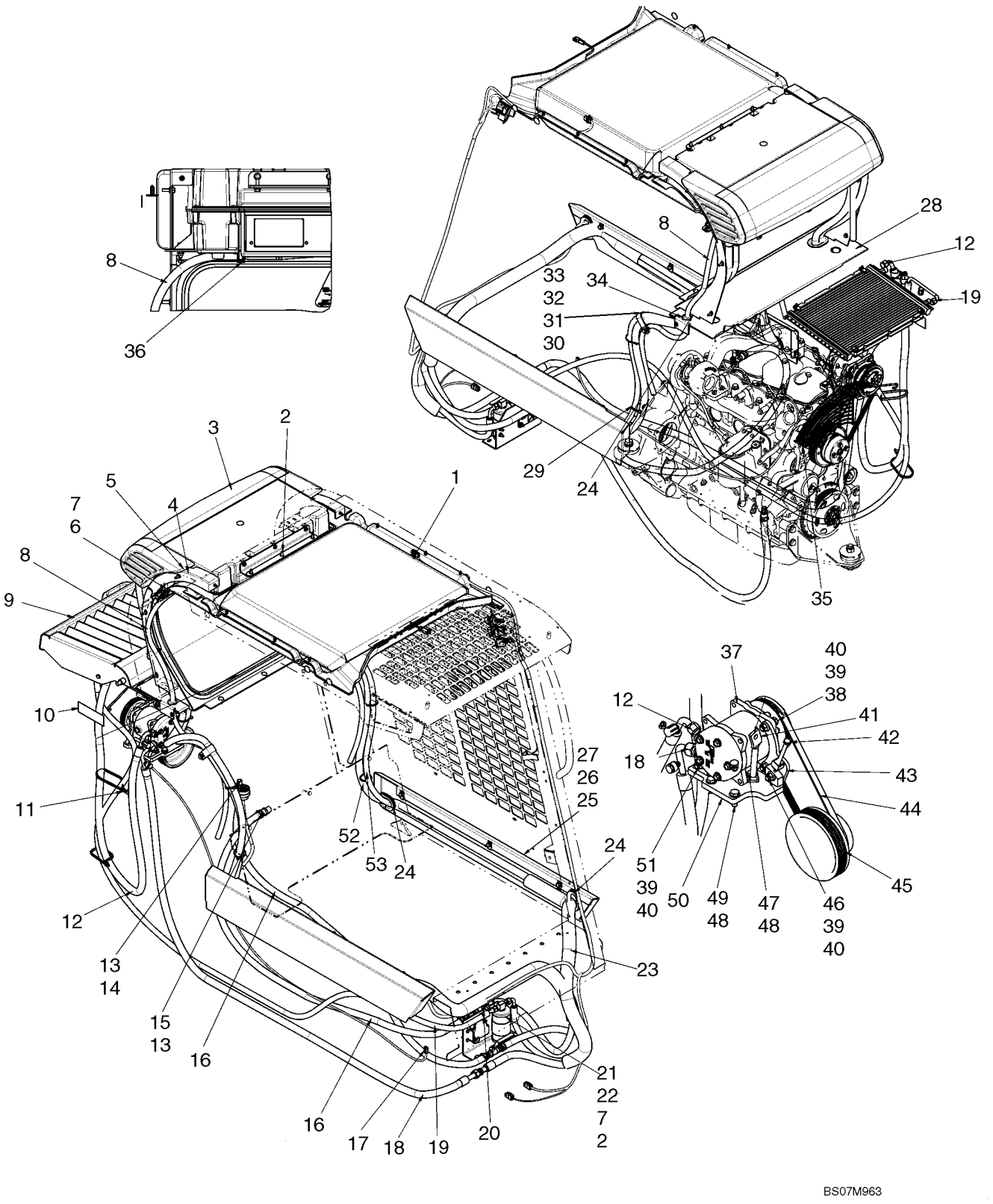

AIR CONDITIONING SYSTEM

REF	FN	PART NUMBER	YR/SN	QTY	DESCRIPTION
		87623657		1	KIT, SERVICE, Kit, Deluxe Heater And Air Conditioning; Incl 1 - 53
1		REF		1	INSTRUCTION, Heater System; See Fig 09-57, 09-58
2		9804256		5	BOLT, Hex Flg, M6 x 20, 8.8
3		87653393		1	HEATER, Heat And Air Conditioning Unit; See Fig 09-61
4		87450833		2	TAPE, ADHESIVE
5		291308		AR	STRIP, SEALING, 580mm (22 13/16 in.)
6		9804257		2	BOLT, Hex Flg, M6 x 25, 8.8
7		86619800		4	NUT, LOCK, M6 x 1, Flg, Cl 8
8		87691473		2	HOSE, Tube, A/C Drain
9		REF		1	INSTRUCTION, Hood, Air Conditioning; See Fig 09-25
10		86639409		1	DECAL, Decal, Air Conditioning Specifications
11		L18331		2	STRAP, CABLE
12		87452009		1	HOSE ASSY.
13		87443511		2	CLAMP
14		642560		1	FITTING, 5/8" Hose X 3/8" NPTF Beaded
15		86010532		1	FITTING, 5/8" Hose X 1/2" NPTF Beaded
16		87691475		2	HOSE, Hose, Heater Supply
17		87445908		1	HARNESS, Compressor Harness
18		87436118		1	HOSE ASSY.
19		87717220		1	HOSE, Hose, A/C Liquid
20		86625515		1	SWITCH, PRESSURE, Switch, A/C Pressure
21		86625481		1	RECEIVER-DRYER
22		87437501		1	BRACKET
23		87441006		1	GUARD
24		87439844		3	GUARD, Trim
25		87703555		1	COVER, Hose Cover, LH
26		9804258		3	BOLT, Hex Flg, M8 x 20, 8.8
27		87016586		3	NUT, M8, U
28		87716582		1	PANEL, INSULATING, Heat Shield Extension
29		L11541		3	STRAP, CABLE
30		H434289		1	MOUNTING CLIP
31		86624184		1	WASHER, M8 x 16 x 1.6

AIR CONDITIONING SYSTEM

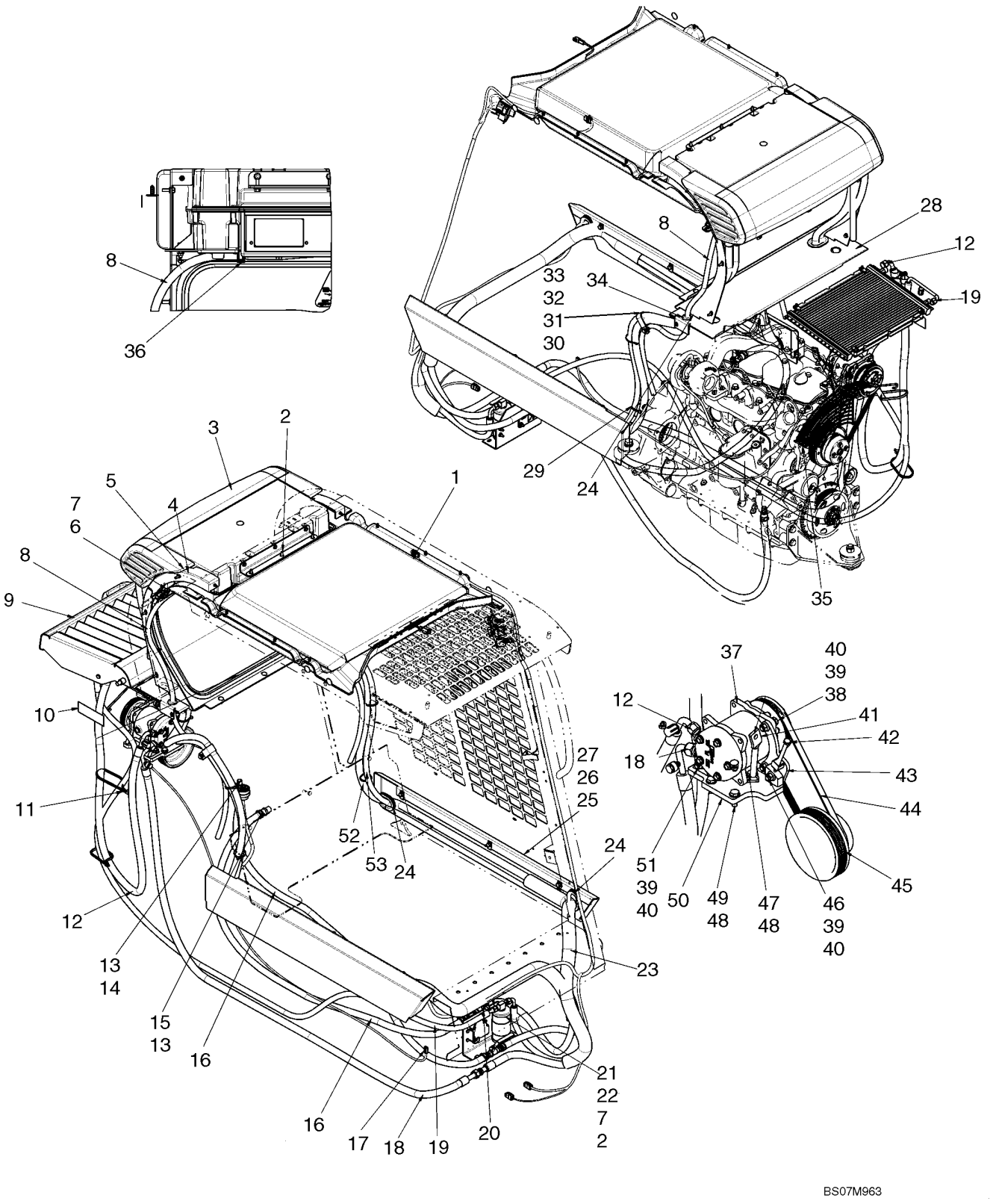

AIR CONDITIONING SYSTEM

REF	FN	PART NUMBER	YR/SN	QTY	DESCRIPTION
32		120104		1	BOLT, Hex, M8 x 20, 8.8
33		86505868		1	NUT, M8, Flg Ser
34		87307909		2	GROMMET
35		87594971		1	GUARD, Fan Guard
36		{87584302}		2	Clamp
37		87649991		1	COMPRESSOR, AIRCOND
38		9706704		2	BOLT, Hex, M10 x 35, 8.8, Full Thd
39		86050279		4	NUT, M10 x 1.5, Flg, Cl 10
40		86624176		4	WASHER, M10 x 20 x 2
41		87684742		1	ROD, Rod, Muffler
42		87649979		1	BOLT
43		87709877		1	BRACKET, Tensioner Bracket
44		87685981		1	BELT, Belt, A/C Drive
45		87669405		1	PULLEY, Pulley, Fan And Compressor
46		120068		1	BOLT, Hex, M10 x 40, 8.8, Full Thd
47		9861444		1	BOLT, Hex, M10 x 20, 10.9, Full Thd
48		140045		4	WASHER, SPRING, Belleville, M10
49		9515003		3	BOLT, Hex, M10 x 30, 10.9, Full Thd
50		87710177		1	BRACKET, Bracket, Compressor
51		7120741		1	BOLT
52		87691470		1	HOSE, Hose, A/C Suction
53		87691471		1	HOSE, Hose, A/C Liquid

HEATER ASSEMBLY

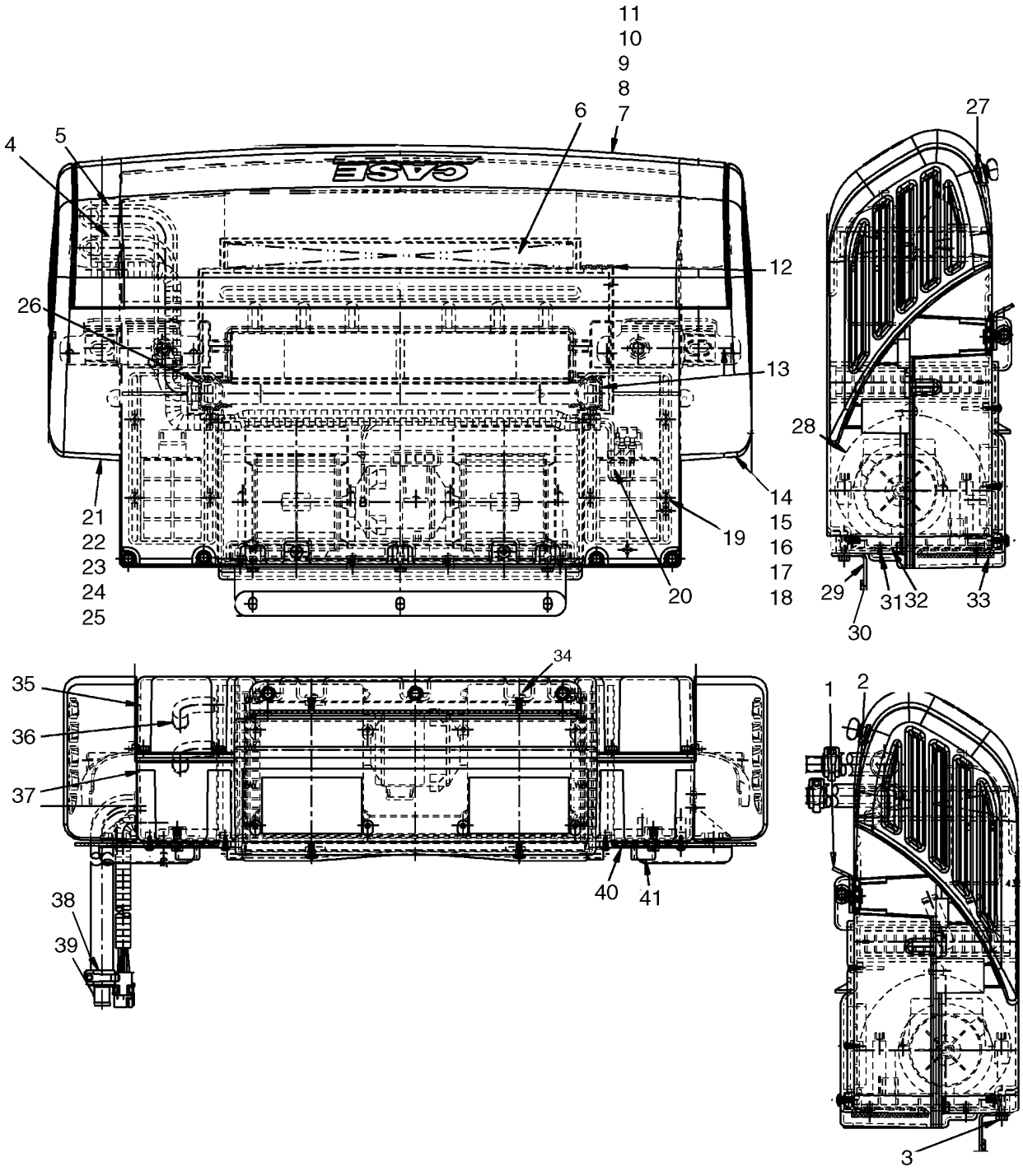

HEATER ASSEMBLY

REF	FN	PART NUMBER	YR/SN	QTY	DESCRIPTION
1		87656095		2	BRACKET, Bottom Bracket
2		87656096		2	GASKET, Neoprene Gasket, Bottom
3		NSS		5	NOT SERVICED SEPARATELY, Screw, M6 X 20
4		87656099		1	HOSE, Formed Hose, Short
5		87656098		1	HOSE, Formed Hose, Long
6		87656118		1	FILTER, Charcoal Filter
7		87656129		1	COVER, REAR, Rear Cover Assembly; Incl 8 - 11
8		87656125		3	SCREW, Wing Head Screw
9		87591148		3	RETAINER, Black Nylon Retainer
10		87656114		1	COVER, Rear Cover
11		87656130		1	FOAM, Foam Seal
12		NSS		1	NOT SERVICED SEPARATELY, Seal
13		NSS		1	NOT SERVICED SEPARATELY, Tank Seal
14		87656121		1	CAP, End Cap Assembly, LH; Incl 15 - 18
15		87656109		1	CAP, End Cap, LH
16		87656123		1	CAP, Partition
17		87591148		2	RETAINER, Black Nylon Retainer
18		87656127		2	SCREW
19		NSS		8	NOT SERVICED SEPARATELY, Screw
20		87656120		1	HARNESS, WIRE
21		87656122		1	CAP, End Cap Assembly, RH; Incl 22 - 25
22		87656105		1	CAP, End Cap, RH
23		87656124		1	CAP, Partition
24		87591148		2	RETAINER, Black Nylon Retainer
25		87656127		2	SCREW
26		NSS		1	NOT SERVICED SEPARATELY, Tank Seal, Tubes
27		87656126		7	CLIP, Recepticle, "U" Type
28		86592107		1	BLOWER, ELECTRIC
29		87656106		1	BRACKET, Front Bracket
30		87656097		1	GASKET, Neoprene Gasket, Front
31		NSS		8	NOT SERVICED SEPARATELY, Screw
32		87656107		1	PLATE, Blower Mount Plate
33		87656108		1	GASKET, Gasket, Blower Outlet
34		NSS		4	NOT SERVICED SEPARATELY, Screw
35		87658710		1	CASE, Top Case

HEATER ASSEMBLY

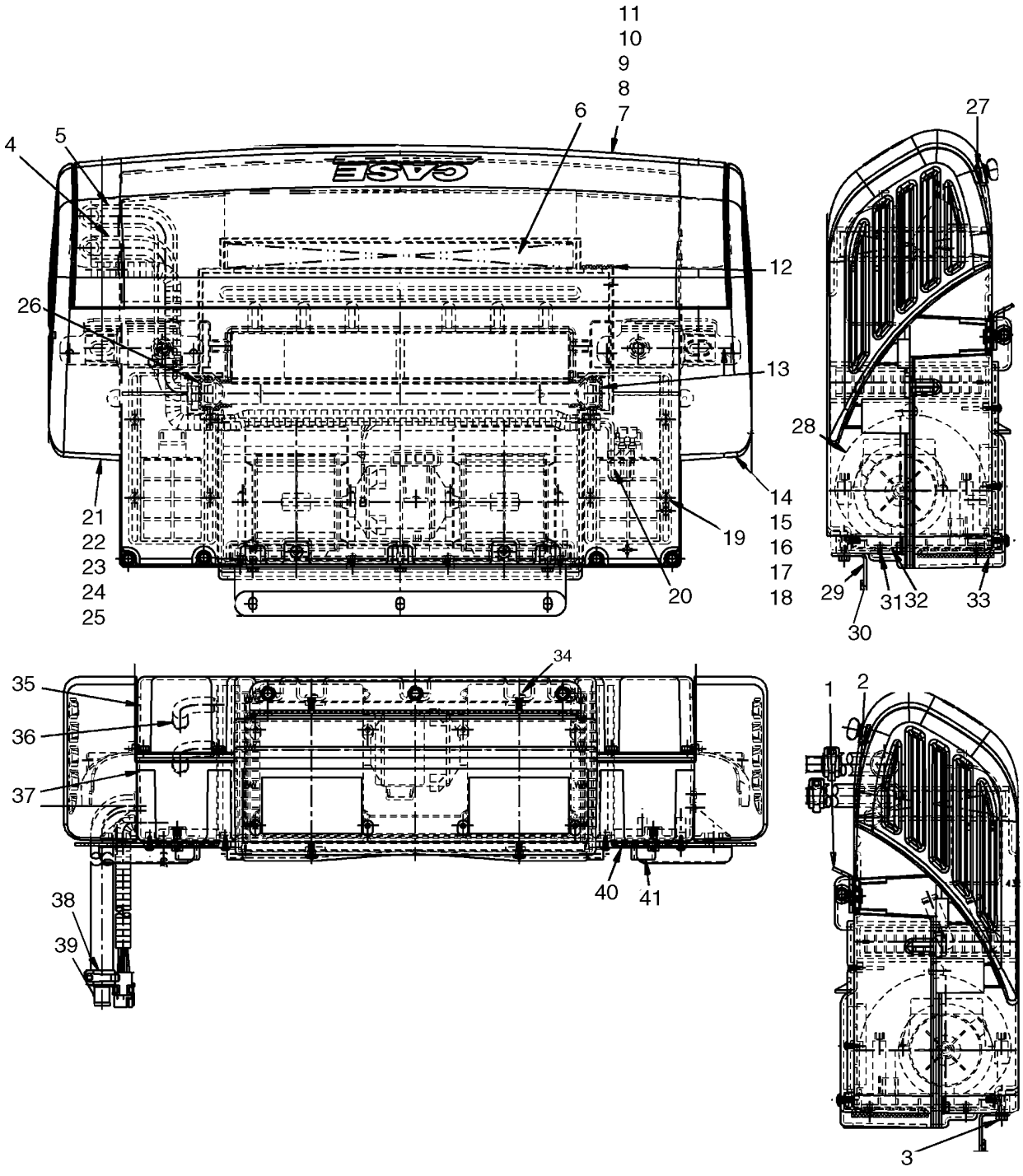

HEATER ASSEMBLY

REF	FN	PART NUMBER	YR/SN	QTY	DESCRIPTION
36		87656103		1	CORE, Heater Core
37		87658709		1	CASE, Bottom Case
38		NSS		4	NOT SERVICED SEPARATELY, Hose Clamp
39		87035457		2	TUBE
40		87656101		2	COVER
41		87656100		2	COVER

HEATER AND AIR CONDITIONING ASSEMBLY

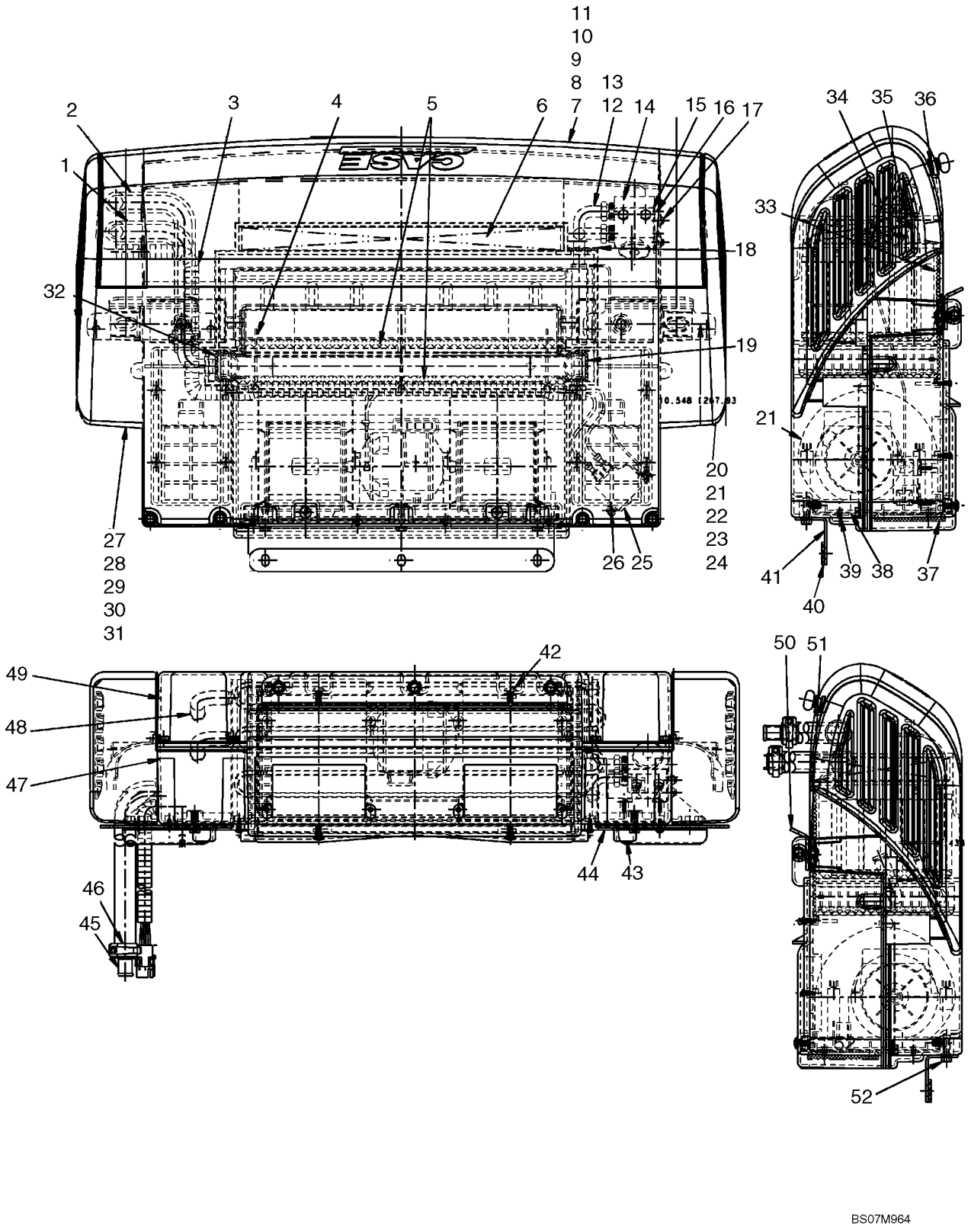

HEATER AND AIR CONDITIONING ASSEMBLY

REF	FN	PART NUMBER	YR/SN	QTY	DESCRIPTION
1		87656098		1	HOSE, Formed Hose, Long
2		87656099		1	HOSE, Formed Hose, Short
3		87656120		1	HARNESS, WIRE
4		NSS		6	NOT SERVICED SEPARATELY, Plastic Pick
5		87656119		2	INSULATION, FOAM, Foam Filter
6		87656118		1	FILTER, Charcoal Filter
7		87656129		1	COVER, REAR, Rear Cover Assembly; Incl 8 - 11
8		87656125		3	SCREW, Wing Head Screw
9		87591148		3	RETAINER, Black Nylon Retainer
10		87656114		1	COVER, Rear Cover
11		87656130		1	FOAM, Foam Seal, Filter
12		87656113		1	EVAPORATOR, Incl 13
13		87035782		1	VALVE, Expansion Valve
14		NSS		AR	NOT SERVICED SEPARATELY, Black Tar Tape, 610mm (24 in.) Required
15		87656112		1	BRACKET
16		87656111		1	GASKET, Expansion Valve Gasket
17		NSS		2	NOT SERVICED SEPARATELY, Screw
18		NSS		1	NOT SERVICED SEPARATELY, Tube Seal, Evaporator
19		NSS		1	NOT SERVICED SEPARATELY, Tank Seal
20		87656121		1	CAP, End Cap Assembly, LH; Incl 21 - 24
21		87656109		1	CAP, End Cap, LH
22		87656123		1	CAP, Partition
23		87591148		2	RETAINER, Black Nylon Retainer
24		87656127		2	SCREW
25		86625480		1	THERMOSTAT
26		NSS		10	NOT SERVICED SEPARATELY, Screw
27		87656122		1	CAP, End Cap Assembly, RH; Incl 28 - 31
28		87656105		1	CAP, End Cap, RH
29		87656124		1	CAP, Partition
30		87591148		2	RETAINER, Black Nylon Retainer
31		87656127		2	SCREW
32		NSS		1	NOT SERVICED SEPARATELY, Tank Seal, Tubes
33		87656110		1	FOAM, Foam, Drain Pan

HEATER AND AIR CONDITIONING ASSEMBLY

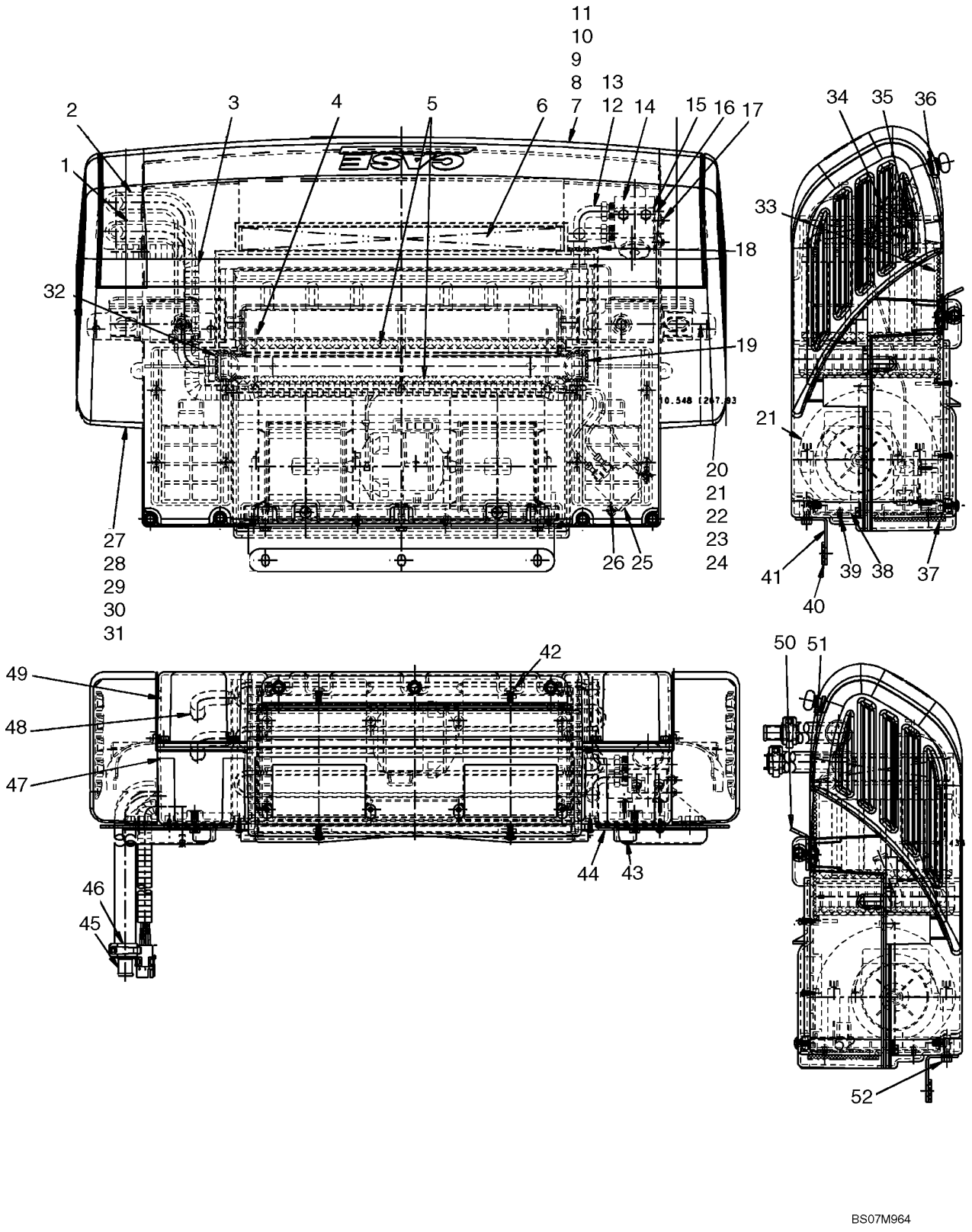

HEATER AND AIR CONDITIONING ASSEMBLY

REF	FN	PART NUMBER	YR/SN	QTY	DESCRIPTION
34		NSS		2	NOT SERVICED SEPARATELY, Bolt
35		NSS		2	NOT SERVICED SEPARATELY, Hex Nut
36		87656126		7	CLIP, Recepticle "U" Type
37		87656108		1	GASKET, Gasket, Blower Outlet
38		87656107		1	PLATE, Blower Mount Plate
39		NSS		8	NOT SERVICED SEPARATELY, Screw
40		87656097		1	GASKET, Neoprene Gasket, Front
41		87656106		1	BRACKET, Front Bracket
42		NSS		4	NOT SERVICED SEPARATELY, Screw
43		87656100		2	COVER
44		87656101		2	COVER
45		87035457		2	TUBE
46		NSS		4	NOT SERVICED SEPARATELY, Hose Clamp
47		87656102		1	BOTTOM, Bottom Case Half
48		87656103		1	CORE, Heater Core
49		87656104		1	TOP, Top Case Half
50		87656095		2	BRACKET
51		87656096		2	GASKET, Neoprene Gasket, Bottom
52		NSS		5	NOT SERVICED SEPARATELY, Screw

09-62		p1	12/07

HEAT SHIELD

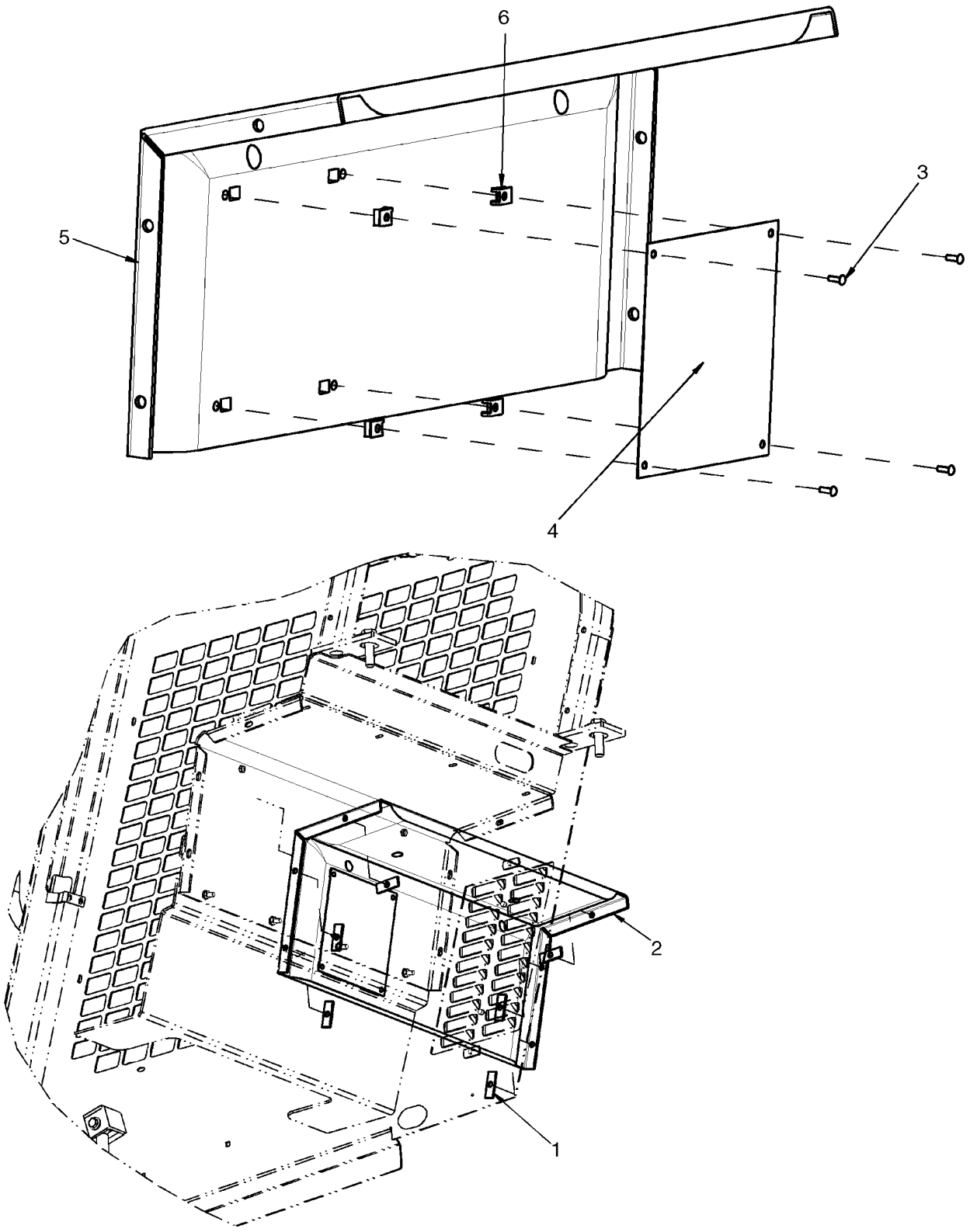

HEAT SHIELD

REF	FN	PART NUMBER	YR/SN	QTY	DESCRIPTION
1		87460558		6	BAR, Mounting Bar
2		{87679671}		1	Heat Shield
3		NSS		4	NOT SERVICED SEPARATELY, Screw, Pan Head #8 X 1/2 in.
4		NSS		1	NOT SERVICED SEPARATELY, Heat Shield
5		NSS		1	NOT SERVICED SEPARATELY, Heat Shield Insulation
6		NSS		4	NOT SERVICED SEPARATELY, Spring Nut

SOUNDPROOFING - SEAL

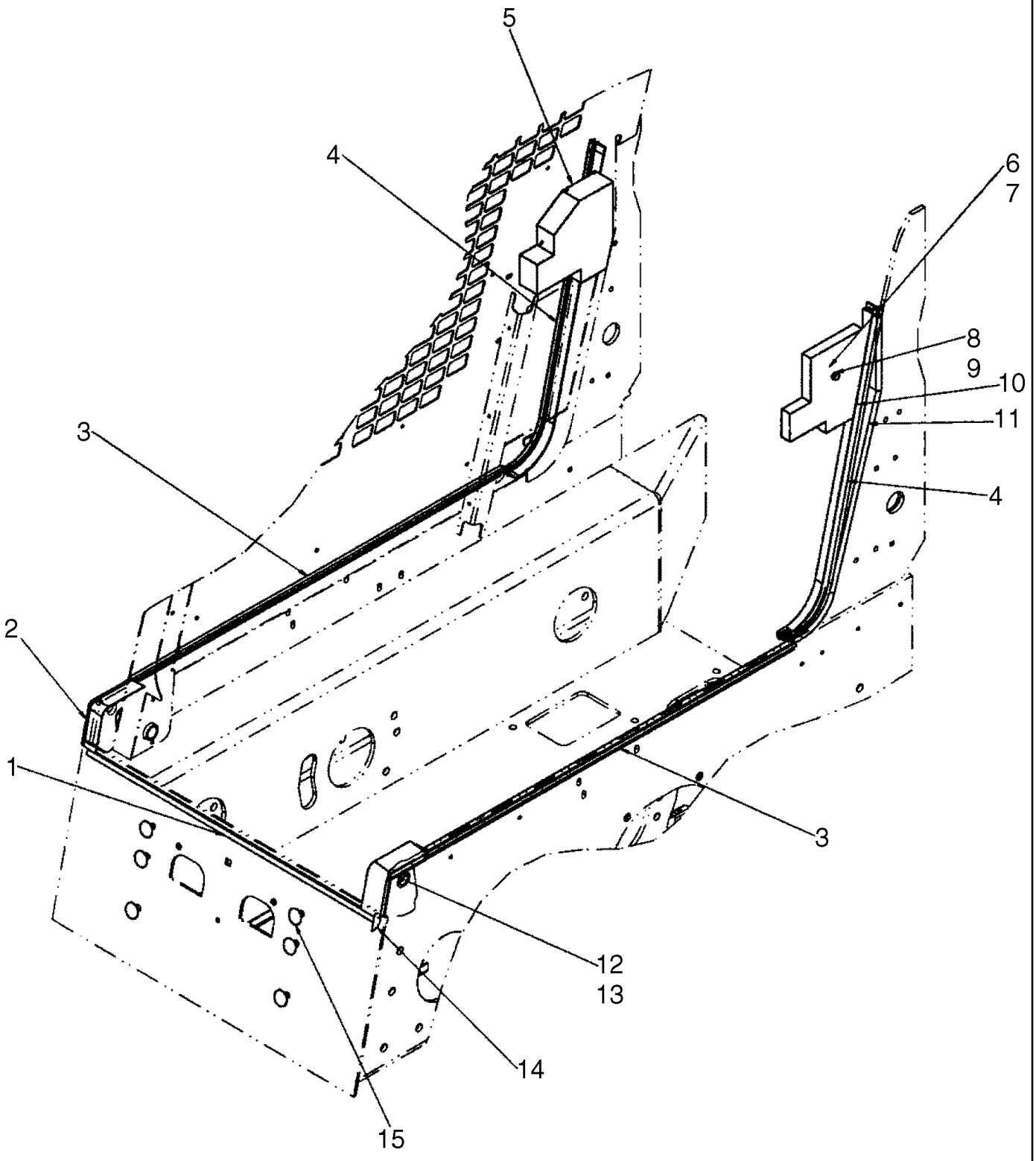

SOUNDPROOFING - SEAL

REF	FN	PART NUMBER	YR/SN	QTY	DESCRIPTION
1		381176A2		1	SEAL, Breast Plate Seal, 844mm (33 1/4 in.)
2		87719784		1	INSULATION, FOAM, Seal, Pivot RH
3		87719782		2	INSULATION, FOAM, Seal, Joggle
4		87719792		2	SEAL, Seal, Rear Cab
5		87714956		1	INSULATION, FOAM, Pad, ROPS RH
6		86639313		1	WASHER, M8 x 20 x 1.6
7		9628098		1	NUT, LOCK, M8 x 1.25, Cl 10
8		300381		1	BOLT, Hex, M8 x 35, 8.8
9		86624184		1	WASHER, M8 x 16 x 1.6
10		87714955		1	INSULATION, FOAM, Pad, ROPS LH
11		394745A2		1	SEAL, Seal, ROPS Wing
12		87719789		1	SEAL, Seal, Pivot LH
13		414010A1		1	STRIP, PROTECTION
14		394748A1		1	SEAL
15		299274A2		6	COVER

NOISE CONTROL - REAR DOOR (EUROPE)

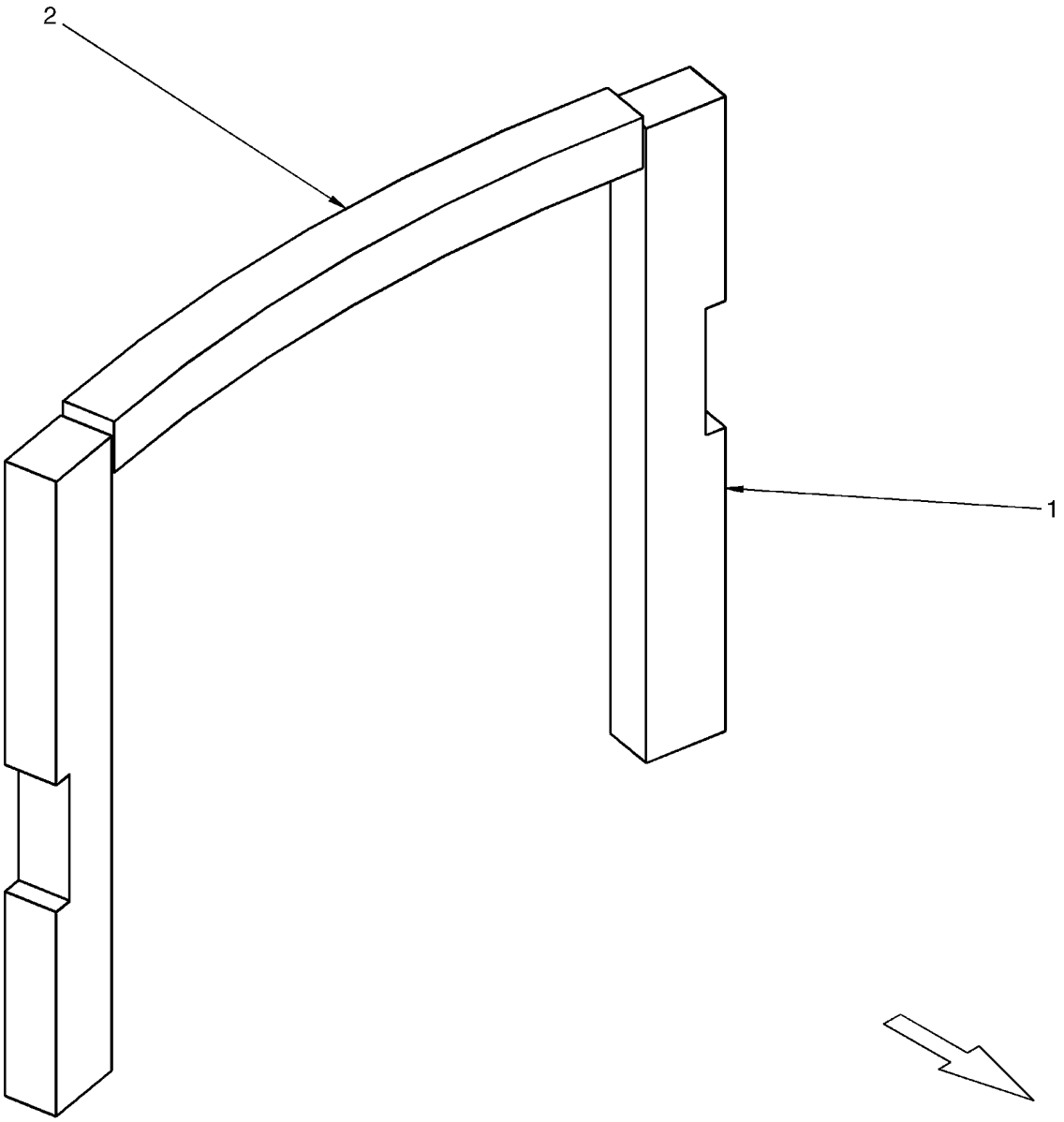

NOISE CONTROL - REAR DOOR (EUROPE)

REF	FN	PART NUMBER	YR/SN	QTY	DESCRIPTION
1		87460195		2	PAD, Pad, Rear Door
2		87714073		1	INSULATION, FOAM, Pad, Louvered Door

LIFT HOOK - SINGLE POINT

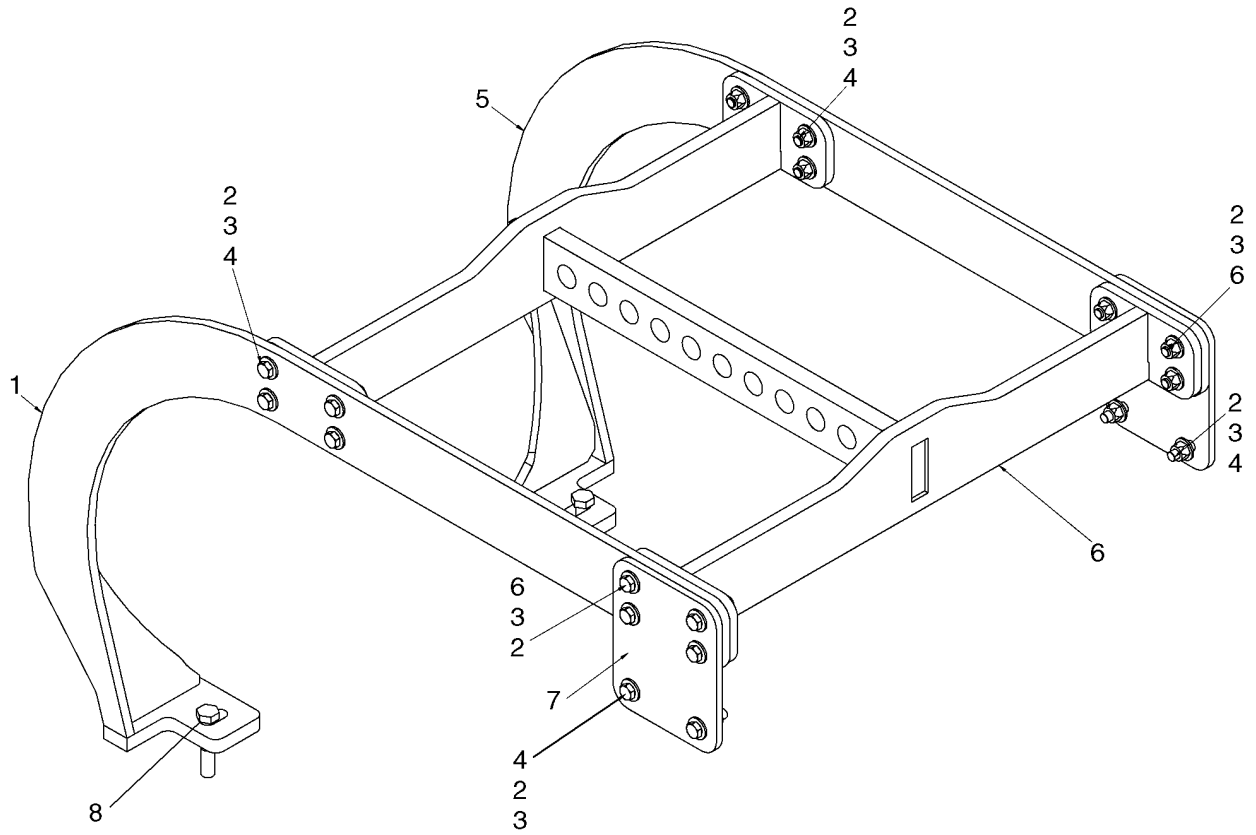

BS07N704

LIFT HOOK - SINGLE POINT

REF	FN	PART NUMBER	YR/SN	QTY	DESCRIPTION
		87673642		1	KIT, SERVICE, Kit, Lift Hook - Single Point; Incl 1 - 8
1		NSS		1	NOT SERVICED SEPARATELY, Lifter, RH
2		100038		20	SAFETY NUT, M12 x 1.75, Cl 8
3		86625254		40	WASHER, M12 x 28 x 2.5
4		9628065		12	BOLT, Hex, M12 x 45, 8.8
5		NSS		1	NOT SERVICED SEPARATELY, Lifter, LH
6		NSS		1	NOT SERVICED SEPARATELY, Lifter, Top
7		NSS		2	NOT SERVICED SEPARATELY, Plate, Mounting
8		86577946		2	BOLT, Hex, M16 x 80, 10.9

LIFT HOOK

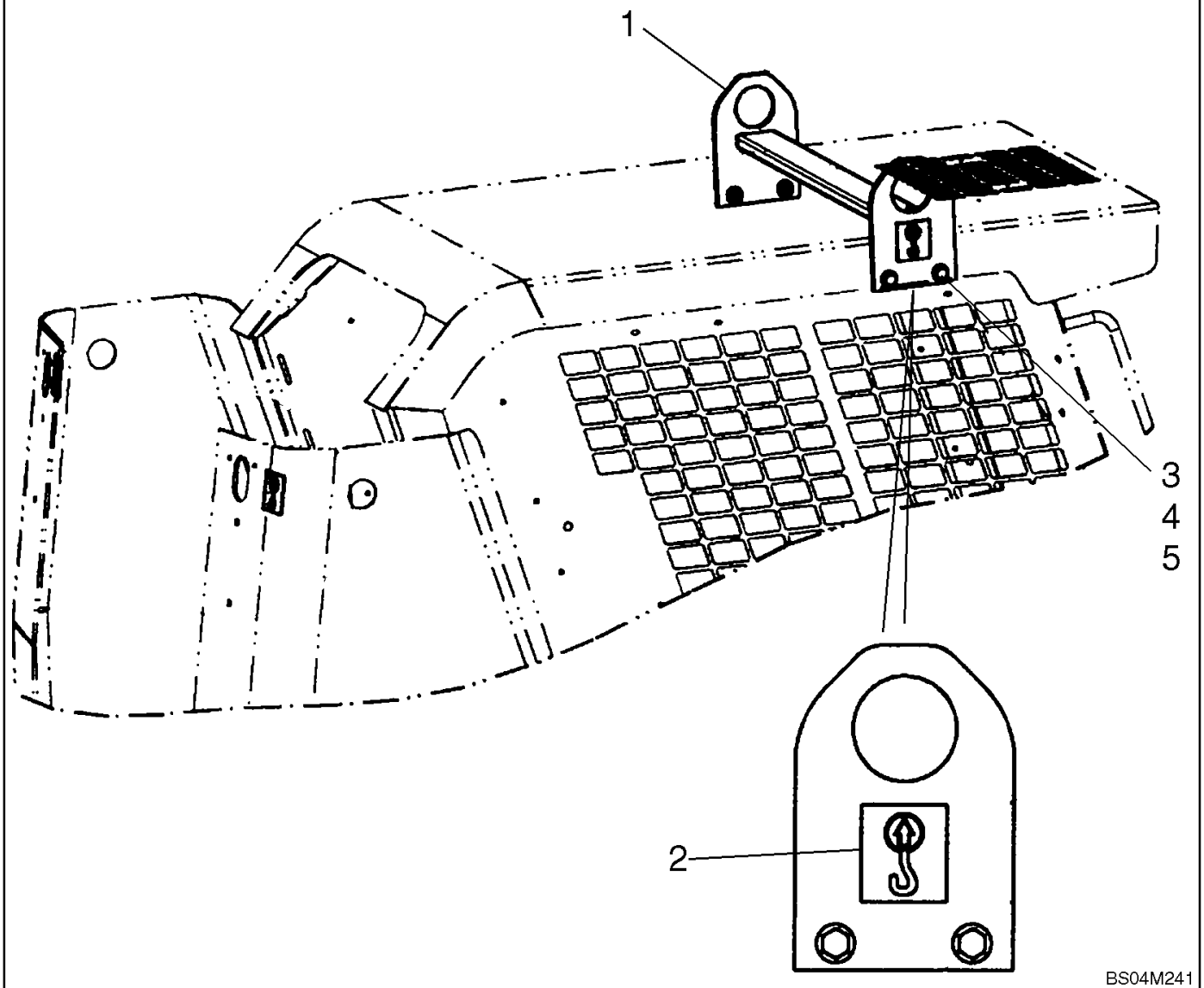

LIFT HOOK

REF	FN	PART NUMBER	YR/SN	QTY	DESCRIPTION
		87638451		1	KIT, SERVICE, Kit, Lift Hook - Front; Incl 1 - 5
1		87684094		1	BRACKET, Lift Hook
2		139729A1		4	DECAL
3		337563		4	BOLT, Hex, M12 x 40, 10.9, Full Thd
4		86625256		8	WASHER, M12 x 28.5 x 4, HT
5		412672		4	NUT, LOCK, M12 x 1.75, Cl 10

DECALS - ENGLISH

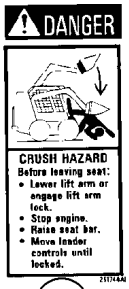

1



2



3

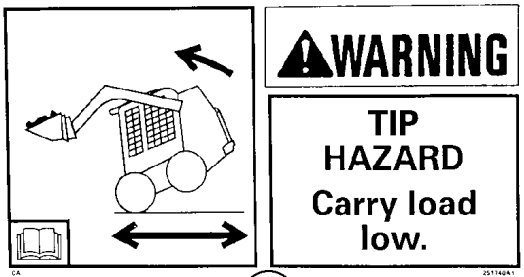

4

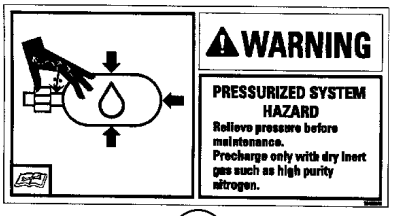

5

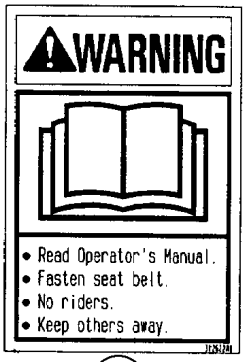

6



7

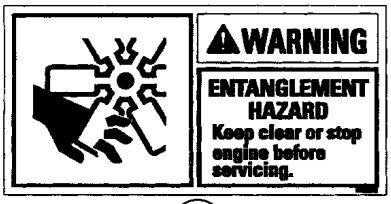

8

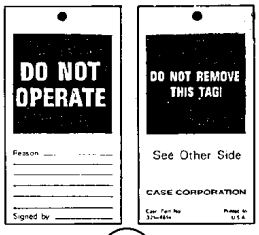

9

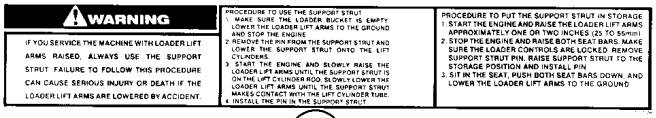

10



11



12



13



14

BS07A313

DECALS - ENGLISH

REF	FN	PART NUMBER	YR/SN	QTY	DESCRIPTION
1		433957A1		1	DECAL, Danger, Exiting
2		251745A1		1	DECAL, Danger, Crush Hazard
3		D137186		1	DECAL, Caution, Always Inspect
4		251748A1		1	DECAL, Warning, Tip Hazard
5		384260A1		1	DECAL, Warning, Ride Control, Pressurized System
6		382622A1		1	DECAL, Warning, Read The Operator's Manual
7		321-7040		1	DECAL, Danger, Starting In Gear
8		384267A1		1	DECAL, Warning, Keep Clear
9		321-4614		1	DECAL, Tag, Do Not Operate
10		321-7029		1	DECAL, Warning, Safety Strut
11		176332A1		1	DECAL, Battery
12		304083A1		1	DECAL, Ride Control
13		255927A1		1	DECAL, Warning, Do Not Turn Ride Control On
14		629086		1	DECAL, Ether Warning

DECAL (440CT)

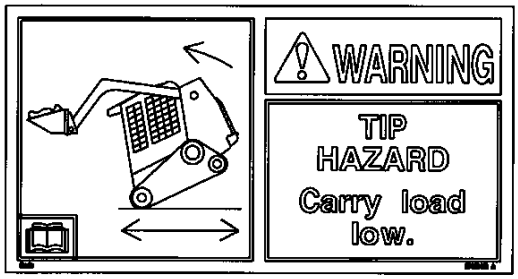

1

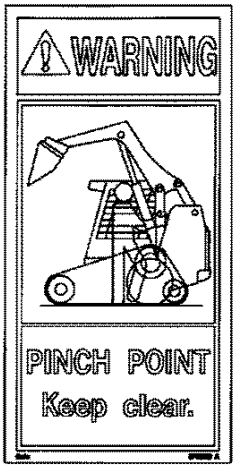

2

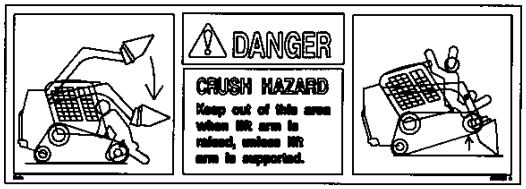

3

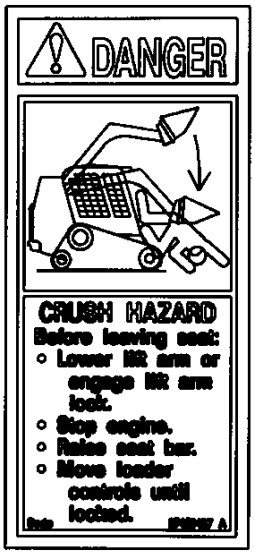

4

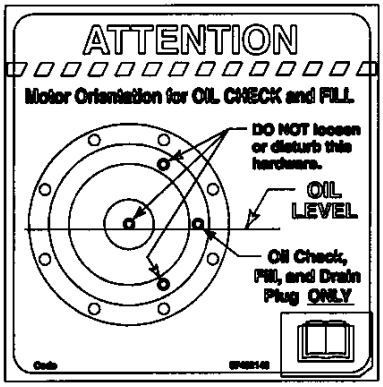

7

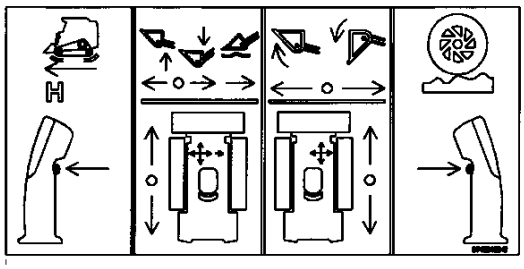

5



6

BS05C088

DECAL (440CT)

REF	FN	PART NUMBER	YR/SN	QTY	DESCRIPTION
1		87459440		1	DECAL, Warning Tip Hazard
2		87459439		2	DECAL, Warning Pinch Point
3		87459438		1	DECAL, Danger Crush Hazard Under Arm
4		87459437		1	DECAL, Danger Crush Hazard Before Leaving Seat
5		87459429		1	DECAL, Control Identification
6		87673472		2	DECAL, Warning- Grease Spring
7		87673471		2	DECAL, Attention - Oil Fill

DECALS

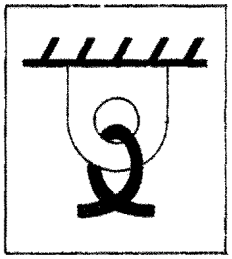
1

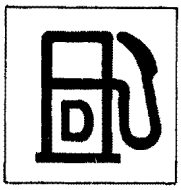
2


3

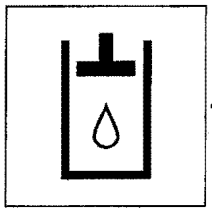
4

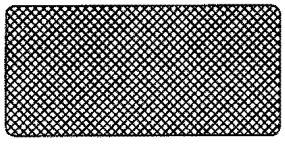
5

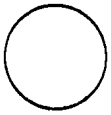
6

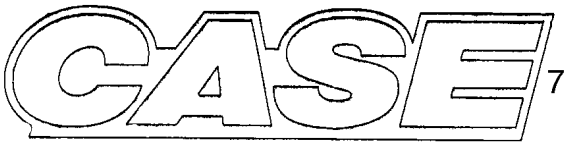
7


8

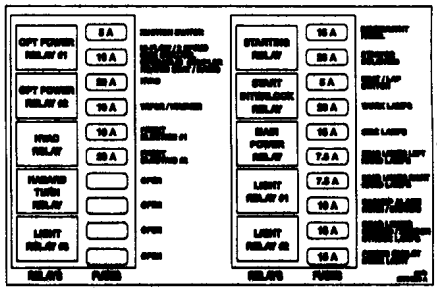
9

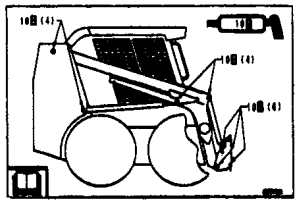
10

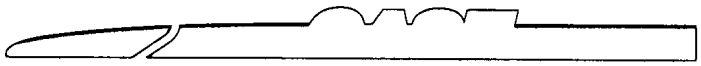
11

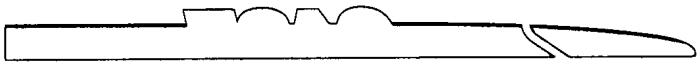
12

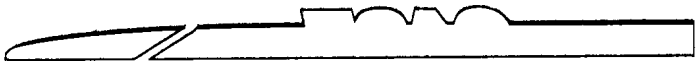
13

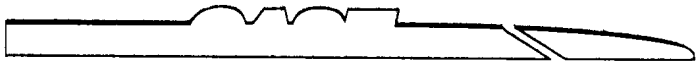
14

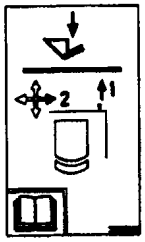
15

BS07M573

DECALS

REF	FN	PART NUMBER	YR/SN	QTY	DESCRIPTION
1		139728A1		1	DECAL, Decal, Tie Down
2		139879A1		1	DECAL, Decal, Diesel Fuel
3		251752A1		1	DECAL, Decal, Throttle
4		251753A1		1	DECAL, Decal, Hydraulic Fluid
5		294752A1		1	REFLECTOR, Decal, Reflector, Red
6		429630A2		1	COVER, CAP, Decal, Lexan Cover
7		87389371		1	DECAL, Decal, CASE Logo
8		87429186		1	EMBLEM, Decal, CASE Engine
9		87734526		1	DECAL, Decal, Fuse Box Layout
10		373248A2		1	DECAL, Decal, Lubrication Points
11		398798A1		1	DECAL, Decal, Case Stripe LH; Used On 410, 420/420CT
12		398796A1		1	DECAL, Decal, Case Stripe RH; Used On 410, 420/420CT
13		411516A1		1	DECAL, Decal, Case Stripe LH; Used On 430, 440/440CT
14		411515A1		1	DECAL, Decal, Case Stripe RH; Used On 430, 440/440CT
15		398728A2		1	DECAL, Decal, Lift Arm Bypass; Used On 420CT, 440CT

DECALS

440 Series 3 1

440CT Series 3 2

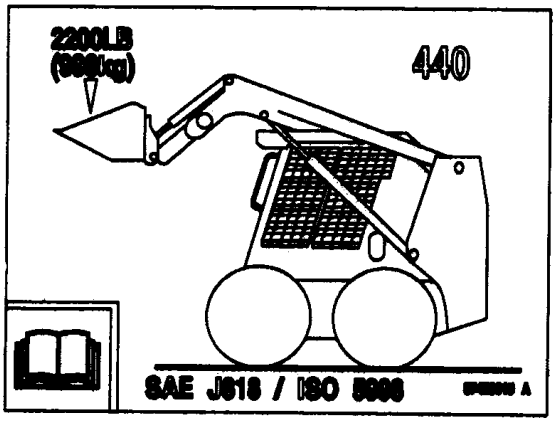

3

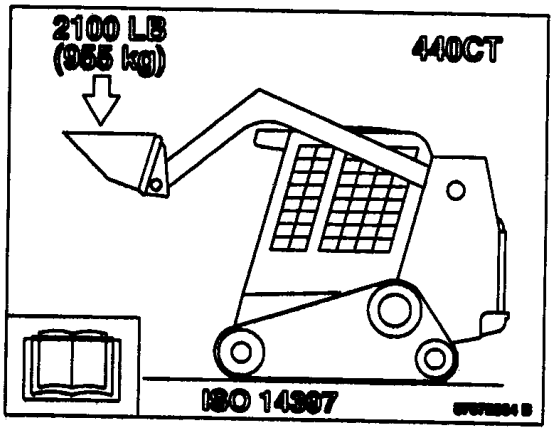

4

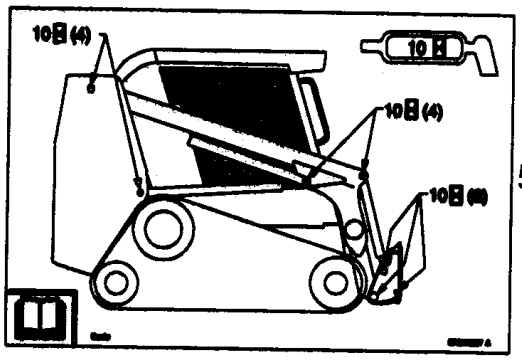

5

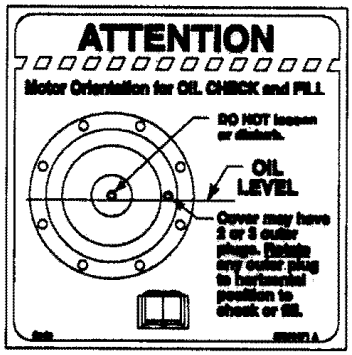

6



7

BS07M575

DECALS

REF	FN	PART NUMBER	YR/SN	QTY	DESCRIPTION
1		87710959		1	DECAL, Decal, 440
2		87710960		1	DECAL, Decal, 440CT
3		87459019		1	DECAL, Decal, Operating Capacity, 440
4		87372864		1	DECAL, Decal, Operating Capacity, 440CT
5		87372867		1	DECAL, Decal, Lubrication Points, 440CT
6		87673471		1	DECAL, Decal, Oil Fill And Check, 440CT
7		87673472		1	DECAL, Decal, Grease Spring Warning, 440CT

DECALS - DANISH, DUTCH, FINNISH

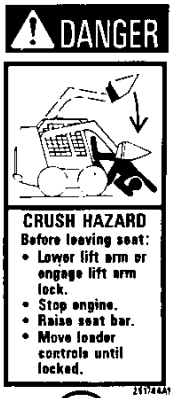

1

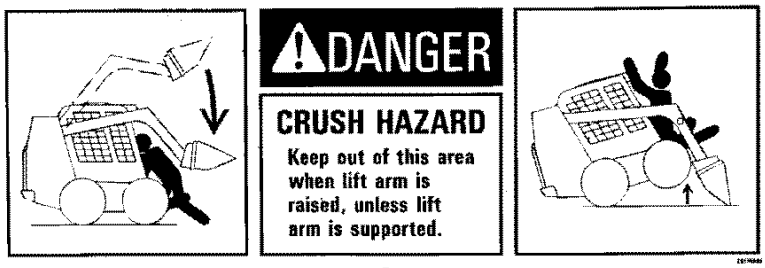

2

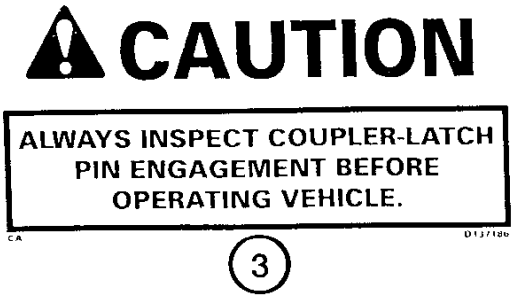

3

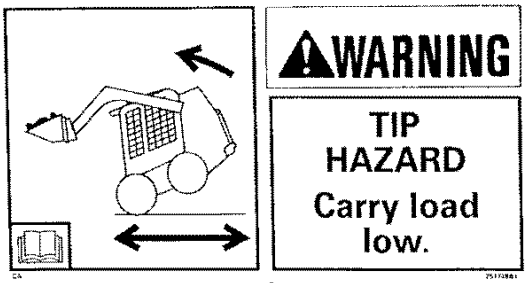

4

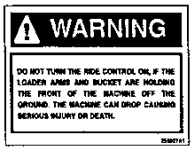

5

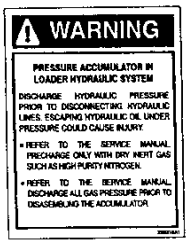

6

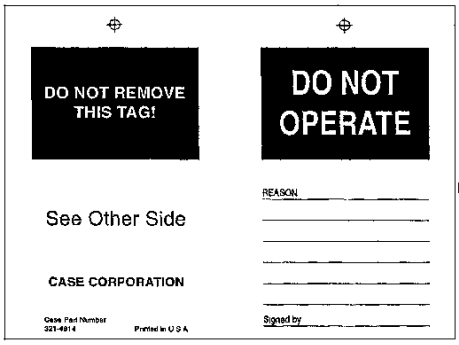

7

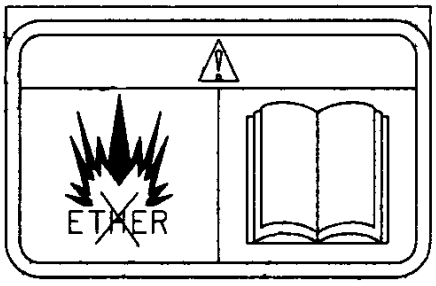

8

BS07A315

DECALS - DANISH, DUTCH, FINNISH

REF	FN	PART NUMBER	YR/SN	QTY	DESCRIPTION
		REF			INSTRUCTION, DANISH
1		434006A1		1	DECAL, Danger, Crush Hazard
2		297391A1		1	DECAL, Danger, Crush Hazard
3		175492A1		1	DECAL, Caution, Always Inspect
4		297377A1		1	DECAL, Warning, Tip Hazard
5		256455A1		1	ADHESIVE, Warning, Ride Control
6		256466A1		1	ADHESIVE, Warning, Accumulator
7		182609A1		1	DECAL, Do Not Operate
8		87802167		1	DECAL, Ether Warning
		REF			INSTRUCTION, DUTCH
1		434007A1		1	DECAL, Danger, Crush Hazard
2		297392A1		1	DECAL, Danger, Crush Hazard
3		175493A1		1	DECAL, Caution, Always Inspect
4		297378A1		1	DECAL, Warning, Tip Hazard
5		256463A1		1	ADHESIVE, Warning, Ride Control
6		256474A1		1	ADHESIVE, Warning, Accumulator
7		182596A1		1	NUT, Do Not Operate
8		87802167		1	DECAL, Ether Warning
		REF			INSTRUCTION, FINNISH
1		434008A1		1	DECAL, Danger, Crush Hazard
2		297393A1		1	DECAL, Danger, Crush Hazard
3		297409A1		1	DECAL, Caution, Always Inspect
4		297379A1		1	DECAL, Warning, Tip Hazard
5		256461A1		1	DECAL, Warning, Ride Control
6		256472A1		1	ADHESIVE, Warning, Accumulator
7		197380A1		1	TAG, Do Not Operate
8		87802167		1	DECAL, Ether Warning

DECALS - FRENCH, GERMAN, GREEK

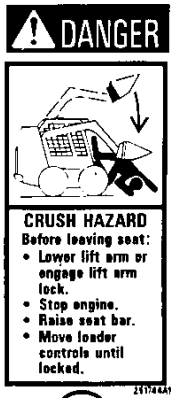

1

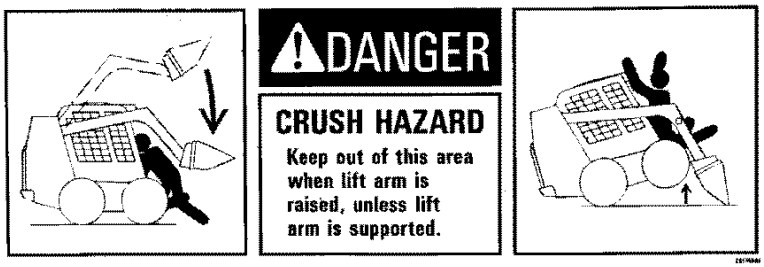

2



3

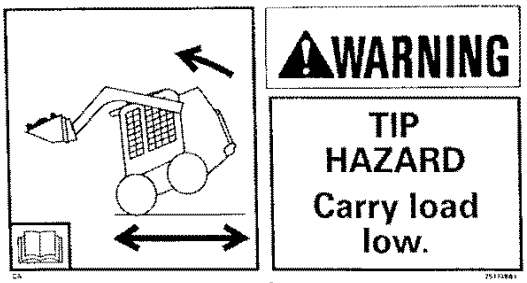

4

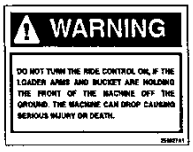

5

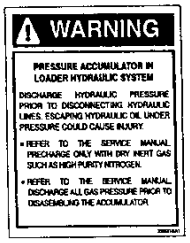

6

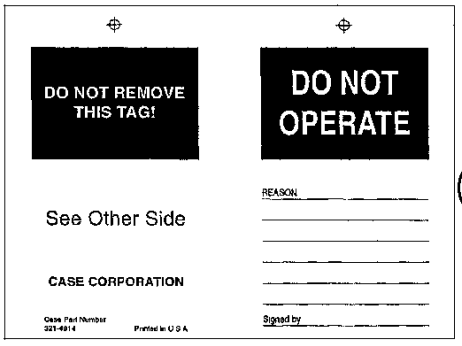

7



8

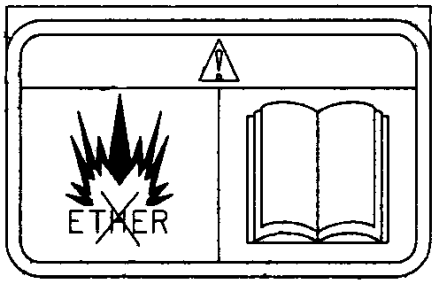

9

BS07A316

DECALS - FRENCH, GERMAN, GREEK

REF	FN	PART NUMBER	YR/SN	QTY	DESCRIPTION
		REF			INSTRUCTION, FRENCH
1		434009A1		1	DECAL, Danger, Crush Hazard
2		297394A1		1	DECAL, Danger, Crush Hazard
3		321-6861		1	DECAL, Caution, Always Inspect
4		297381A1		1	DECAL, Warning, Tip Hazard
5		256453A1		1	ADHESIVE, Warning, Ride Control
6		256464A1		1	ADHESIVE, Warning, Accumulator
7		321-5675		1	DECAL, Do Not Operate
8		682683		1	DECAL, Ether Warning
		REF			INSTRUCTION, GERMAN
1		434010A1		1	DECAL, Danger, Crush Hazard
2		297396A1		1	DECAL, Danger, Crush Hazard
3		321-6863		1	DECAL, Caution, Always Inspect
4		297382A1		1	DECAL, Warning, Tip Hazard
5		256454A1		1	ADHESIVE, Warning, Ride Control
6		256465A1		1	ADHESIVE, Warning, Accumulator
7		321-5676		1	DECAL, Do Not Operate
9		87802167		1	DECAL, Ether Warning
		REF			INSTRUCTION, GREEK
1		434011A1		1	DECAL, Danger, Crush Hazard
2		297397A1		1	DECAL, Danger, Crush Hazard
3		175495A1		1	DECAL, Caution, Always Inspect
4		297383A1		1	DECAL, Warning, Tip Hazard
5		256460A1		1	ADHESIVE, Warning, Ride Control
6		256471A1		1	ADHESIVE, Warning, Accumulator
7		182611A1		1	DECAL, Do Not Operate
9		87802167		1	DECAL, Ether Warning

DECALS - ITALIAN, NORWEGIAN, POLISH

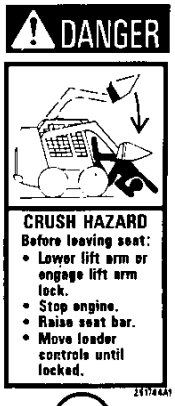

1

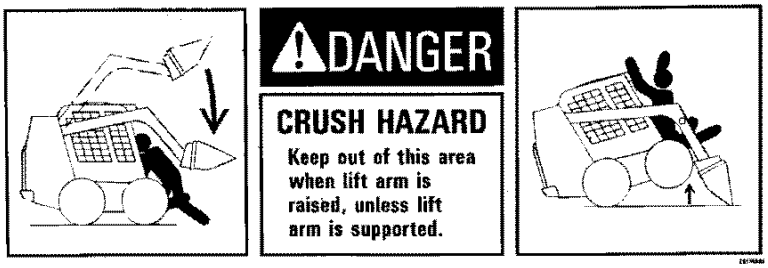

2

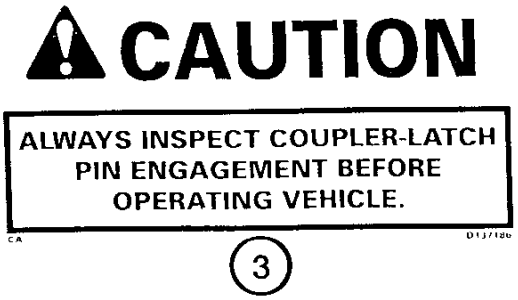

3

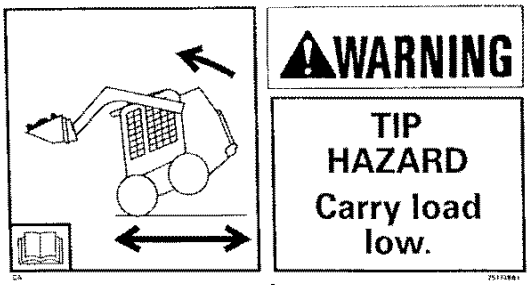

4

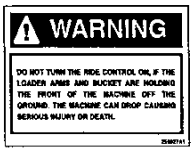

5

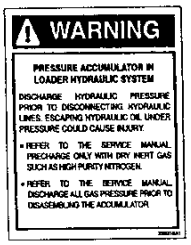

6

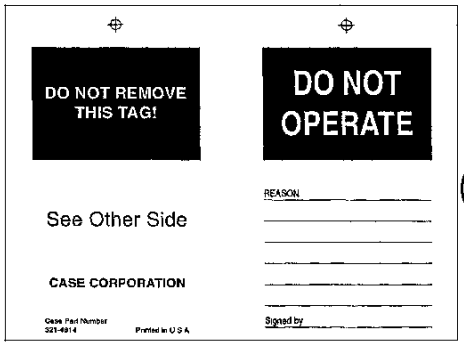

7

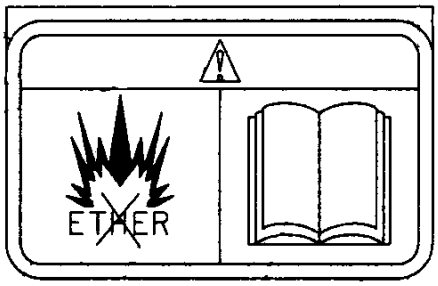

8

BS07A317

DECALS - ITALIAN, NORWEGIAN, POLISH

REF	FN	PART NUMBER	YR/SN	QTY	DESCRIPTION
		REF			INSTRUCTION, ITALIAN
1		434012A1		1	DECAL, Danger, Crush Hazard
2		297398A1		1	DECAL, Danger, Crush Hazard
3		321-7004		1	DECAL, Caution, Always Inspect
4		297384A1		1	DECAL, Warning, Tip Hazard
5		256457A1		1	ADHESIVE, Warning, Ride Control
6		256468A1		1	ADHESIVE, Warning, Accumulator
7		E137085		1	DECAL, Do Not Operate
8		87802167		1	DECAL, Ether Warning
		REF			INSTRUCTION, NORWEGIAN
1		434013A1		1	DECAL, Danger, Crush Hazard
2		297399A1		1	DECAL, Danger, Crush Hazard
3		297411A1		1	DECAL, Caution, Always Inspect
4		297385A1		1	DECAL, Warning, Tip Hazard
5		256462A1		1	DECAL, Warning, Ride Control
6		256473A1		1	DECAL, Warning, Accumulator
7		197381A1		1	TAG, Do Not Operate
8		87802167		1	DECAL, Ether Warning
		REF			INSTRUCTION, POLISH
1		434017A1		1	DECAL, Danger, Crush Hazard
2		297400A1		1	DECAL, Danger, Crush Hazard
3		297412A1		1	DECAL, Caution, Always Inspect
4		297386A1		1	DECAL, Warning, Tip Hazard
5		396700A1		1	DECAL, Warning, Ride Control
6		396701A1		1	DECAL, Warning, Accumulator
7		298520A1		1	TAG, Do Not Operate
8		87802167		1	DECAL, Ether Warning

DECALS - PORTGUESE, SPANISH, SWEDISH

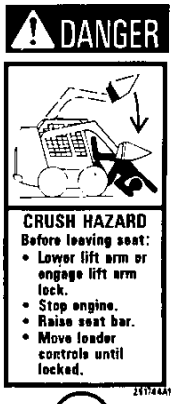

1

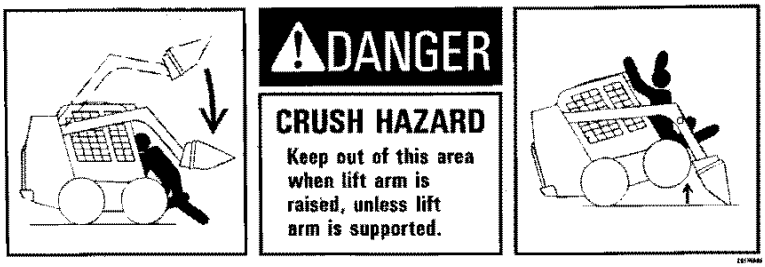

2



3

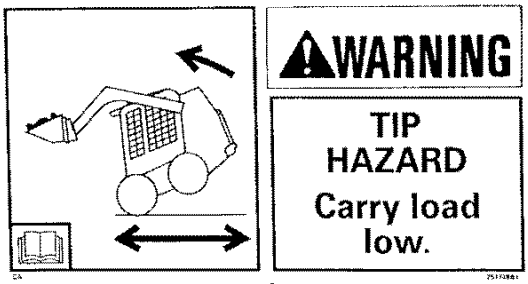

4

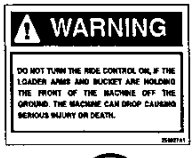

5

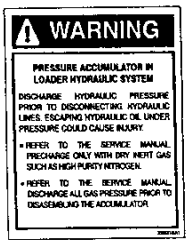

6

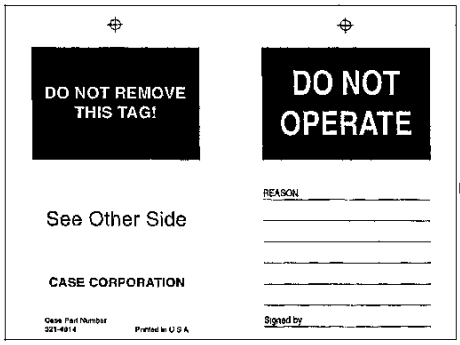

7

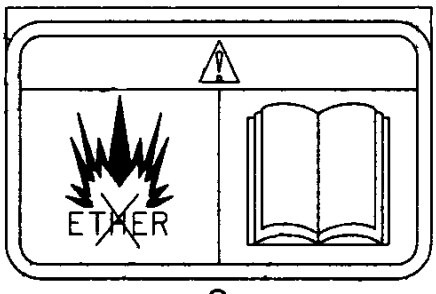

8



9



10

BS07A318

DECALS - PORTGUESE, SPANISH, SWEDISH

REF	FN	PART NUMBER	YR/SN	QTY	DESCRIPTION
		REF			INSTRUCTION, PORTUGUESE
1		434014A1		1	DECAL, Danger, Crush Hazard
2		297401A1		1	DECAL, Danger, Crush Hazard
3		175494A1		1	DECAL, Caution, Always Inspect
4		297387A1		1	DECAL, Warning, Tip Hazard
5		256459A1		1	ADHESIVE, Warning, Ride Control
6		256470A1		1	ADHESIVE, Warning, Accumulator
7		182610A1		1	DECAL, Do Not Operate
10		87527676		1	DECAL, Ether Warning
		REF			INSTRUCTION, SPANISH
1		434015A1		1	DECAL, Danger, Crush Hazard
2		297402A1		1	DECAL, Danger, Crush Hazard
3		321-6862		1	DECAL, Caution, Always Inspect
4		297388A1		1	DECAL, Warning, Tip Hazard
5		256456A1		1	ADHESIVE, Warning, Ride Control
6		256467A1		1	ADHESIVE, Warning, Accumulator
7		321-5677		1	DECAL, Do Not Operate
9		86600617		1	DECAL, Ether Warning
		REF			INSTRUCTION, SWEDISH
1		434016A1		1	DECAL, Danger, Crush Hazard
2		297404A1		1	DECAL, Danger, Crush Hazard
3		297414A1		1	DECAL, Caution, Always Inspect
4		297390A1		1	DECAL, Warning, Tip Hazard
5		256458A1		1	ADHESIVE, Warning, Ride Control
6		256469A1		1	ADHESIVE, Warning, Accumulator
7		197379A1		1	TAG, Do Not Operate
8		87802167		1	DECAL, Ether Warning

DECALS - BRAZILIAN PORTUGUESE, CANADIAN FRENCH, LATIN AMERICAN SPANISH

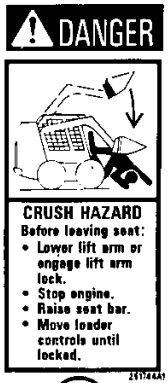

1

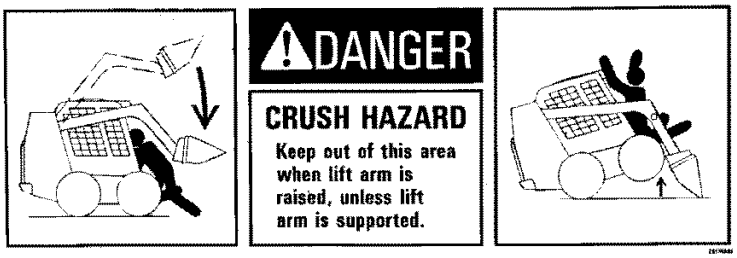

2



3

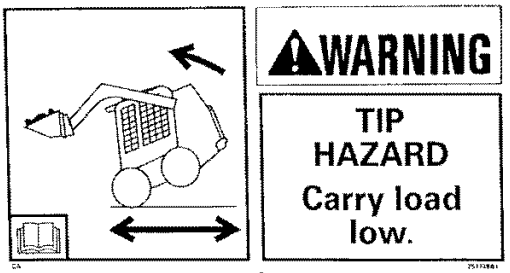

4

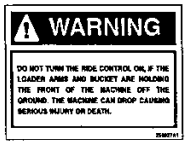

5

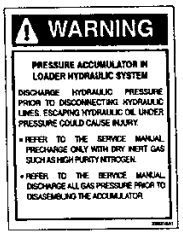

6

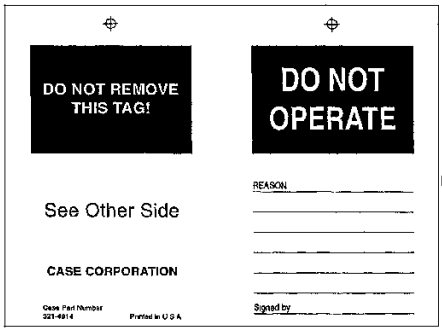

7



8



9



10

BS07A314

DECALS - BRAZILIAN PORTUGUESE, CANADIAN FRENCH, LATIN AMERICAN SPANISH

REF	FN	PART NUMBER	YR/SN	QTY	DESCRIPTION
		REF			INSTRUCTION, BRAZILIAN PORTUGUESE
1		434019A1		1	DECAL, Danger, Exiting
2		297408A1		1	DECAL, Danger, Crush Hazard
3		297406A1		1	DECAL, Caution, Always Inspect
4		297407A1		1	DECAL, Warning, Tip Hazard
5		353240A1		1	DECAL, Warning, Ride Control
6		353243A1		1	DECAL, Warning, Accumulator
7		298518A1		1	ADHESIVE, Do Not Operate
8		87527676		1	DECAL, Ether Warning
		REF			INSTRUCTION, CANADIAN FRENCH
1		434020A1		1	DECAL, Danger, Exiting
2		297394A1		1	DECAL, Danger, Crush Hazard
3		297410A1		1	DECAL, Caution, Always Inspect
4		297380A1		1	DECAL, Warning, Tip Hazard
5		353239A1		1	DECAL, Warning, Ride Control
6		353242A1		1	DECAL, Warning, Accumulator
7		321-5675		1	DECAL, Do Not Operate
9		682683		1	DECAL, Ether Warning
		REF			INSTRUCTION, LATIN AMERICAN SPANISH
1		434018A1		1	DECAL, Danger, Exiting
2		297403A2		1	DECAL, Danger, Crush Hazard
3		297413A1		1	DECAL, Caution, Always Inspect
4		297388A1		1	DECAL, Warning, Tip Hazard; Replaces 297389A1
5		353238A1		1	DECAL, Warning, Ride Control
6		353241A1		1	DECAL, Warning, Accumulator
7		298521A1		1	TAG, Do Not Operate
10		86600617		1	DECAL, Ether Warning

Number	Figure	Sequence	Ref.
{}	09-58		41
{2830159}	02-28		4
{2830160}	02-28		4
{2831472}	02-16		8
{2853132}	02-38		3
{2853805}	02-28		4
{2853815}	02-34		4
{2853816}	02-34		3
	02-34		4
{2853817}	02-34		4
{2853818}	02-34		4
{2853819}	02-34		4
{2853875}	02-28		4
{2853876}	02-28		4
{2854141}	02-28		4
{2854142}	02-28		4
{2854867}	02-38		7
{2855020}	02-34		3
{2855021}	02-34		3
{2855022}	02-34		3
{2855023}	02-34		3
{2855183}	02-33		7
{2855289}	02-10		4
{2855983}	02-27		1
{2856170}	02-33		5
{2856255}	03-10		1
{2856344}	02-19		8
{2856436}	03-10		
{2856484}	02-28		1
{2856485}	02-28		1
{2856713}	02-28		4
{2856714}	02-28		4
{412326}	09-33		17
{4895747}	02-29		1
{4899849}	03-03		4
{647429}	09-16		10
{86512463}	09-31		12
	09-36		11
{86618350}	09-06		1
{86625151}	08-13		12
	09-04		23
{86633059}	09-07		2
{86633060}	09-06		1
{86642465}	09-33		3
{87010188}	09-08		1
{87010189}	09-08		1
{87029968}	08-18		23
{87302733}	06-19		17
{87448935}	08-26		2
{87533547}	02-01		17
{87534725}	02-01		33
{87548828}	06-04		4
{87548838}	06-07		8
{87548840}	06-07		10
{87548843}	06-07		5
{87548871}	06-06		7
	06-08		9
{87548872}	06-06		8
	06-08		10
{87548873}	06-06		9
	06-08		11
{87556906}	06-15		20
	06-19		19
{87560205}	02-22		7
{87563975}	06-18		15
	06-22		12
{87564723}	06-15		23
	06-19		22
{87566701}	02-22		2
{87572831}	02-03		1
{87574281}	02-22		3
{87578980}	02-01		22
	09-26		5
	09-27		5
{87579303}	09-03		9
	09-04		10
{87581666}	09-33		13
{87581669}	09-30		18
{87581669}	09-36		26
	09-36		7
{87582179}	02-28		
{87582180}	02-28		
{87582181}	02-28		
{87584302}	09-59		36
{87594866}	06-07		9
{87594970}	02-01		4
{87599604}	09-01		17
{87599605}	09-01		22
{87599753}	09-30		16
	09-36		2
{87600221}	09-31		6
	09-32		2
{87602935}	09-01		8
{87607505}	09-33		19
{87612753}	08-13		27
	09-03		10
	09-04		11
{87612761}	02-22		6
{87618013}	04-06		6A
{87618650}	06-64		4
{87622767}	09-30		14
	09-36		29
{87622960}	04-15		4
{87623352}	04-01		4
	04-04		4
{87627521}	09-32		
{87639912}	09-38		23
{87639914}	09-38		24
{87641703}	09-49		2
{87641704}	09-49		6
{87642394}	09-30		22
	09-36		9
{87642437}	09-30		21
	09-36		5
{87643562}	03-02		3
{87643808}	09-49		5
{87645115}	09-38		34
{87648128}	02-01		23
	09-26		4
	09-27		6
{87648719}	02-04		4
{87650090}	03-02		27
{87652259}	09-40		2
{87652816}	04-09		5
	04-11		7
	04-13		8
{87652818}	04-10		4
	04-12		5
	04-14		5
{87655334}	04-05		12
	04-18		16
	04-19		19
	04-27		5
{87657980}	06-09		1
	06-12		1
	06-17		1
{87659996}	08-02		37
{87660180}	09-31		5
	09-32		3
{87661301}	09-17		2
	09-18		17
{87662349}	09-21		3
{87662357}	09-20		12
{87662429}	09-20		3
{87665327}	04-06		9
	04-07		8
{87667726}	04-09		6
	04-10		6
	04-11		8
	04-12		8
	04-13		9
	04-14		9
{87668682}	09-38		41
{87669333}	09-32		4
{87669915}	09-30		2
	09-36		23

Number	Figure	Sequence	Ref.
{87669944}	09-52		1
{87671496}	09-27		18
{87672011}	09-30		11
{87672170}	09-38		9
{87676121}	09-45		11
	09-46		10
	09-47		10
{87676122}	09-45		3
	09-46		2
	09-47		2
{87676124}	09-45		9
	09-46		8
	09-47		8
{87677739}	04-07		11
{87679671}	09-62		2
{87679715}	09-14		1
{87679718}	09-15		1
{87680073}	09-30		4
{87684229}	06-01		9
{87684387}	09-21		5
{87684388}	09-20		9
{87685909}	09-54		10B
	09-54		1B
	09-54		2A
	09-54		9A
{87685911}	09-54		10A
	09-54		1A
{87686721}	06-65		2
{87686722}	06-65		1
{87687236}	09-58		29
{87688638}	03-02		6
{87690479}	08-03		1
{87698769}	09-33		2
	09-34		3
	09-36		13
{87703828}	06-03		
{87703830}	06-02		
{87704477}	06-01		
{87705428}	09-49		1
{87705430}	09-17		4
	09-18		11
{87712605}	09-30		9
{87712606}	09-30		8
{87714131}	09-30		10
{87717210}	09-30		5
	09-36		8
{87717215}	09-30		3
	09-36		22
{87717283}	09-30		17
	09-36		4
{87722347}	09-30		20
	09-36		24
{87723771}	09-36		21
{87723784}	09-36		20
100-11137	06-35		26
	06-38		3
100-1650	08-11		7
100012	08-09		1
100037	09-38		12
100038	09-65		2
100197	06-09		54
	06-12		32
	06-18		16
100536A1	06-34		30
	06-37		30
100703A1	06-38		31
101462A1	06-33		17
103-21281	06-35		28
	06-38		2
108925A1	09-17		17
	09-19		2
110873A1	06-35		11
	06-38		20
115942A1	06-35		13
	06-38		18
115943A1	06-35		12
	06-38		19
115946A1	06-35		9
115946A1	06-38		22
115948A1	06-35		8
	06-38		23
115950A1	06-35		7
	06-38		24
118827	09-12		6
120040	06-13		23
120056	06-14		5
	06-22		7
120061	08-16		6
120068	09-59		46
120069	08-02		30
120070	09-01		7
	09-38		16
120071	02-01		8
120073	02-01		8
	08-17		1
120080	08-13		16
	09-04		21
120100	03-02		1
	04-23		4
	09-38		4
	09-43		6
	09-45		6
	09-46		5
	09-47		5
120101	08-08		6
120103	02-22		4
	04-15		10
	04-26		6
	06-11		12
	06-21		15
	09-29		11
	09-58		37
120104	02-01		1
	02-04		14
	02-05		12
	02-08		3
	06-10		18
	06-12		38
	06-18		28
	08-07		24
	08-08		24
	08-09		25
	09-01		12
	09-24		15
	09-29		4
	09-35		4
	09-58		14
	09-59		32
120106	04-03		4
120112	08-13		14
	09-03		13
	09-04		19
	09-05		8
120229A1	04-29		1
120952A1	09-22		26
121410A1	04-05		13
121412A1	04-05		14
121413A1	04-05		15
121414A1	04-05		16
121415A1	04-05		17
122158A1	08-07		25
	08-08		25
	08-09		27
126844A1	04-07		13
	04-08		5
1277297C1	06-35		4
	06-36		
128818	06-15		13
	06-19		13
	08-05		15
	08-18		11
128819	08-01		2
128822	08-02		15
128825	06-09		44
	06-15		14
	06-15		5

Number	Figure	Sequence	Ref.
128825	06-19		14
	06-19		5
	06-21		12
	06-59		25
	08-01		20
	08-01		3
	08-02		1A
	08-04		5
	08-05		14
	08-05		16
	08-05		19
	08-06		47
	08-06		49
	08-08		28
	08-18		12
128830	06-15		4
	06-19		4
	08-01		19
	08-04		4
	08-05		18
	08-06		46
128928A1	06-35		5
128929A1	06-38		26
128996	08-01		18
	08-05		6
129-667	06-32		8
129200	02-23		6
129878A1	08-06		45
13-836	06-38		33
133714A1	04-28		9
1342374C1	03-02		12
1369	09-34		1
138-217	06-36		
139398	06-01		1
	06-02		1
	06-03		1
	08-07		27
	08-09		31
	08-11		32
	08-13		38
139728A1	09-69		1
139729A1	09-66		2
139879A1	09-69		2
140008A1	06-33		
	06-34		
	06-36		
	06-37		
	06-38		
140016	06-23		5
	08-04		12
	09-19		12
	09-38		27
140017	08-01		16
	09-18		13
140018	09-23		20
140045	02-01		7
	02-03		15
	06-09		6
	06-12		5
	06-17		5
	09-59		48
140046	02-03		13
	02-06		5
	02-07		6
14142390	04-20		5
	04-21		5
14148190	04-20		2
	04-21		2
14152090	04-20		3
	04-21		3
142211A1	04-25		1
14301821	06-68		14
144121	06-09		19
	06-16		7
	06-17		20
14458681	02-18		2
14458781	02-22		13
1546028C1	08-16		9
1546028C1	08-17		7
15694	06-09		36
	06-16		22
	06-18		9
16044321	02-03		9
	03-02		26
	08-06		4
165202	06-15		10
	06-16		19
	06-18		14
	06-19		9
	08-07		13
	08-07		3
	08-07		9
	08-08		13
	08-08		3
	08-08		9
	08-09		21
	08-09		4
	08-09		6
	08-11		12
	08-11		6
	08-13		25
	08-13		31
16588324	08-18		19A
166-89	06-33		21
	06-36		11
16673635	02-17		1
16677734	02-13		3
167266	06-09		15
	06-09		32
	06-09		34
	06-09		46
	06-09		55
	06-09		58
	06-10		30
	06-11		16
	06-12		19
	06-12		33
	06-13		14
	06-15		18
	06-15		26
	06-15		31
	06-16		26
	06-16		9
	06-17		25
	06-18		11
	06-18		17
	06-18		39
	06-19		18
	06-19		24
	06-19		26
	06-19		30
	06-21		10
	06-21		21
	06-29		2
	06-29		8
	06-30		2
	06-30		5
	06-31		2
	06-31		8
	08-06		24
	08-18		10
	08-18		26
	08-18		3
	08-18		7
167268	06-09		10
	06-09		2
	06-09		27
	06-09		30
	06-11		2
	06-12		2
	06-17		12
	06-17		2
	06-17		31
	08-06		15
	08-18		24
167269	06-15		19

Number	Figure	Sequence	Ref.
167269	08-01		5
	08-02		34
	08-06		54
	08-18		5
16989	08-07		12
	08-08		12
	08-09		5
17044731	03-06		4
175492A1	09-71		3
175493A1	09-71		3
175494A1	09-74		3
175495A1	09-72		3
176332A1	04-15		1
	09-67		11
177239A2	04-22		1
180682A1	09-22		8
181680A1	06-35		33
182596A1	09-71		7
182609A1	09-71		7
182610A1	09-74		7
182611A1	09-72		7
186905A1	03-02		18
187035A2	03-02		17
187140A1	04-22		2
189609A1	09-24		9
	09-25		3
	09-38		33
	09-45		15
	09-46		13
	09-47		14
189787A2	09-45		13
	09-46		12
	09-47		12
189995A1	06-64		3
191048A2	06-64		4
193494A1	06-35		21
	06-38		10
194739A1	08-06		8
196985A1	04-05		5
197379A1	09-74		7
197380A1	09-71		7
197381A1	09-73		7
197805A1	06-64		8
214-1444	09-02		3
214389	06-56		24
	06-57		11
	06-59		24
	06-60		18
	08-15		7
216773	08-07		8
	08-08		8
	08-09		3
	08-11		11
	08-13		30
216791	08-01		27
217-374	07-01		19
219606	06-09		35
	06-16		23
	06-18		8
222004A2	04-05		7
222421A1	02-05		2
222422A1	02-05		3
223677A1	06-35		23
	06-38		6
223680A1	06-35		24
	06-38		7
226129	09-12		5
226130	09-12		9
228141A2	06-63		8
22907	06-09		29
229197A1	03-02		30
	04-15		12
	04-26		7
	06-17		19
	06-20		12
	06-21		17
	06-24		11
	07-01		18
229197A1	08-05		11
	09-24		10
	09-25		7
	09-29		10
	09-58		35
229398	02-23		7
230425A1	09-22		4
230426A1	09-22		1
230427A1	02-01		32
	08-01		15
233705	06-09		14
	06-12		18
	06-17		24
234726	09-22		12
	09-23		5
235994A1	09-44		1
236535A1	09-13		5
	09-15		5
236622	09-16		8
237-6004	06-36		21
237-6006	06-33		11
	06-33		20
	06-33		23
	06-34		4
	06-36		9
	06-37		5
	07-01		20
237-6008	06-56		25
237-6010	06-33		25
237-6012	06-33		6
	06-33		9
	06-36		19
	06-36		3
238-5131	06-34		15A
	06-37		15A
238-5443	06-63		3
238-6116	06-36		10
238-6238	06-35		36
244898A1	06-33		27
248461A1	09-26		18
248988A1	09-26		16
249367A2	09-22		39
251745A1	09-67		2
251748A1	09-67		4
251752A1	09-69		3
251753A1	09-69		4
254130A1	04-26		1
254307A1	09-45		12
	09-46		11
	09-47		11
254697A1	09-38		17
254698A1	09-38		43
255927A1	08-04		26
	09-67		13
256453A1	09-72		5
256454A1	09-72		5
256455A1	09-71		5
256456A1	09-74		5
256457A1	09-73		5
256458A1	09-74		5
256459A1	09-74		5
256460A1	09-72		5
256461A1	09-71		5
256462A1	09-73		5
256463A1	09-71		5
256464A1	09-72		6
256465A1	09-72		6
256466A1	09-71		6
256467A1	09-74		6
256468A1	09-73		6
256469A1	09-74		6
256470A1	09-74		6
256471A1	09-72		6
256472A1	09-71		6
256473A1	09-73		6
256474A1	09-71		6
257448A1	09-17		18
	09-19		3

Number	Figure	Sequence	Ref.	Number	Figure	Sequence	Ref.
257857A1	08-06		5	2852155	02-38		1
257859A1	08-06		7	2852161	02-37		2
	08-16		8	2852162	02-37		3
	08-17		6	2852163	02-37		1
257884A1	02-01		35	2852170	02-39		
259702A1	04-05		7A	2852171	02-39		3
259905A1	08-06		6	2852172	02-39		1
26-516	06-33		18	2852175	02-13		1
262159	08-02		23	2852180	04-02		4
	08-03		14	2852181	04-02		1
263117	04-06		7	2852183	02-40		1
	04-18		4	2852203	02-09		19
	04-19		5	2852221	02-31		2
	04-27		2	2852294	03-06		3
	09-48		1	2852364	02-31		3
	09-49		3	2852473	02-38		6
265235	08-11		5	2852507	02-41		3
	08-13		24	2852511	02-35		5
270192	08-14		13	2852519	02-10		7
272310	08-16		5	2852521	03-09		4
278332A1	09-17		11	2852531	02-25		1
	09-18		24	2852533	02-32		2
280112	09-34		2	2852547	03-03		1
280272	04-07		7	2852619	02-10		5
	04-08		4	2852729	02-15		2
280299	09-50		7	2852741	03-04		
280374	09-10		9	2852744	02-27		3
280476	04-18		11	2852834	02-27		3
	04-19		10	2852865	02-11		2
	08-01		11	2852866	02-30		3
	08-03		5	2852871	03-07		1
	08-17		22	2852872	03-07		2
280498	09-56		1	2852873	03-07		3
280724	08-15		5	2852874	03-07		4
281045	04-09		3	2852875	03-07		5
	04-10		3	2852876	03-07		6
	04-11		4	2852877	03-07		7
	04-12		4	2852878	03-07		8
	04-13		4	2852879	03-07		9
	04-14		4	2852880	03-07		10
282002A2	09-38		20	2852881	03-07		11
282775A1	04-07		2	2852882	03-07		12
2830083	02-09		1	2852883	03-07		13
2830156	03-05		2	2852884	03-07		14
2830158	02-28		4	2852885	03-06		2
2830266	03-05		1	2852889	02-24		3
2830281	02-14		9	2852894	02-14		5
2830411	03-03		7	2852978	02-17		5
2830445	02-27		2	2852995	02-18		6
2830559	02-19		10	2853010	02-39		7
2830775	02-14		8	2853047	02-17		4
2830784	02-14		7	2853050	02-17		9
2830919	02-16		15	2853075	02-26		6
2830920	02-16		15	2853076	02-26		8
2831297	02-29		3	2853133	02-38		4
2831298	02-29		1	2853146	08-18		19
283779A1	04-24		1	2853722	02-19		9
283781A1	04-24		2	2853781	02-19		3
283839A1	09-23		18	2853822	02-34		1
2852028	02-25		2	2853960	02-32		3
2852029	02-26		3	2853991	02-31		1
2852032	02-14		4	2854030	02-28		3
2852033	02-14		6	2854072	02-35		2
2852037	02-28		4	2854073	02-11		6
2852047	02-36		2	2854075	02-11		3
2852062	02-33		2	2854340	03-06		1
2852065	03-09		3	2854603	02-28		4
2852075	03-07			2854611	02-37		
2852088	03-04		3	2854866	02-11		2
2852089	03-04		4	2855103	03-03		2
2852093	03-09			2855180	02-11		9
2852094	03-09			2855287	02-10		9
2852105	03-08		1	2855531	02-28		1
2852108	03-08		2	2855903	03-09		6
2852111	03-08		3	2856017	02-16		3
2852134	02-18		1	2856334	03-04		1
2852145	02-35		3	2856343	02-19		
2852155	02-26		7	2856350	03-04		2

Number	Figure	Sequence	Ref.
2856455	02-38		2
2856462	02-26		1
2856541	02-38		5
2856715	02-20		1
291308	09-57		5
	09-59		5
293470A1	04-28		10
293828A1	04-28		8
294579A1	06-66		7
294650A1	08-05		21
294741A1	08-11		27
	08-13		44
294752A1	09-69		5
294911A2	09-17		14
	09-18		27
294943A1	09-17		16
	09-18		29
294967A1	09-17		12
	09-18		25
297244A1	09-28		2
297245A1	09-28		1
297246A1	09-28		3
297377A1	09-71		4
297378A1	09-71		4
297379A1	09-71		4
297380A1	09-75		4
297381A1	09-72		4
297382A1	09-72		4
297383A1	09-72		4
297384A1	09-73		4
297385A1	09-73		4
297386A1	09-73		4
297387A1	09-74		4
297388A1	09-74		4
	09-75		4
297390A1	09-74		4
297391A1	09-71		2
297392A1	09-71		2
297393A1	09-71		2
297394A1	09-72		2
	09-75		2
297396A1	09-72		2
297397A1	09-72		2
297398A1	09-73		2
297399A1	09-73		2
297400A1	09-73		2
297401A1	09-74		2
297402A1	09-74		2
297403A2	09-75		2
297404A1	09-74		2
297406A1	09-75		3
297407A1	09-75		4
297408A1	09-75		2
297409A1	09-71		3
297410A1	09-75		3
297411A1	09-73		3
297412A1	09-73		3
297413A1	09-75		3
297414A1	09-74		3
298518A1	09-75		7
298520A1	09-73		7
298521A1	09-75		7
299274A2	09-63		15
300381	09-25		27
	09-63		8
300388	02-22		11
	04-03		9
302137A2	09-45		2A
302960A2	09-23		2
303709A1	06-33		16
304083A1	08-04		25
	09-67		12
305412	06-12		9
308761	03-01		4
309096A1	04-01		14
310838A1	08-04		23
310860A1	09-44		2
3125705R1	04-28		3
3131227R1	04-22		3
3131234R1	04-22		4
321-4614	09-67		9
321-5675	09-72		7
	09-75		7
321-5676	09-72		7
321-5677	09-74		7
321-6861	09-72		3
321-6862	09-74		3
321-6863	09-72		3
321-7004	09-73		3
321-7029	09-67		10
321-7040	09-67		7
322357	04-04		5
	04-05		27
	09-43		5
322358	02-01		2
	02-06		14
	02-07		18
	02-22		5
	03-01		6
	04-01		2
322894	06-09		31
	06-10		29
	06-16		8
	06-18		38
	06-19		29
	06-21		20
	08-18		9
322896	06-09		45
	06-21		9
	06-29		1
	06-30		1
	06-31		1
	08-18		2
323238	06-30		10
	09-13		6
	09-21		2
323657A1	03-02		28
324299A1	04-23		3
324604A1	06-34		9B
	06-37		9B
324610A1	06-35		17
	06-38		14
325258A1	04-23		3
325829	08-17		9
	09-42		4
329-1010	09-10		9
330344	08-18		6
330345	08-02		33
330346	06-22		15
337475	06-68		5
337563	04-32		6
	09-66		3
338030A1	04-03		2
338413	08-11		23
	08-12		17
	08-18		14
338550A4	06-64		
338551A2	06-64		1
341837A2	06-64		5
348434A1	09-27		8
	09-45		10
	09-46		9
	09-47		9
348452A1	09-27		7
	09-45		4
	09-46		3
	09-47		3
350616	02-06		10
	02-07		1
353238A1	09-75		5
353239A1	09-75		5
353240A1	09-75		5
353241A1	09-75		6
353242A1	09-75		6
353243A1	09-75		6
364181A1	06-63		6

Number	Figure	Sequence	Ref.
367582A1	09-22		21
367585A2	09-22		37
370531A1	06-34		14
	06-37		14
373114A1	09-53		2A
373223A3	08-01		25
373225A3	08-01		26
373241A3	08-01		22
373248A2	09-69		10
373836A1	09-38		18
374835	06-68		26
374891	04-05		25
376523A2	08-02		6
376669A1	09-38		15
376843A4	04-05		2
38-11207	06-35		2
	06-38		29
380751A1	09-26		10
	09-27		11
381144	02-05		16
381176A2	09-63		1
382622A1	09-67		6
382837A1	09-01		2
382838A1	09-01		6
384260A1	08-04		3
	09-67		5
384267A1	09-67		8
385681	09-43		4
385783A3	09-22		24
386045	04-01		3
	08-05		20
388457A1	04-19		7
390211A1	08-02		5
390350A1	02-06		12
	02-07		19
390516A3	09-17		10
	09-18		23
391703A2	09-38		39
393394A1	08-06		22
393742A1	09-01		11
394582A2	09-05		12
394745A2	09-63		11
394748A1	09-63		14
395792A1	02-05		4
396052A2	08-11		2
3962022	09-43		2
396243A2	08-02		4
396700A1	09-73		5
396701A1	09-73		6
398194A1	08-13		15
	09-04		24
398196A1	08-13		19
	09-04		15
398728A2	09-69		15
398796A1	09-69		12
398798A1	09-69		11
399383A1	04-15		13
399384A1	04-15		9
399665A2	04-15		3
400473A1	09-24		11
402364A1	06-33		1
402365A1	06-36		1
402366A1	06-38		
404599A5	09-03		17
	09-05		1
405103A1	09-20		2
405853A1	09-01		9
405854A1	09-01		21
406088A1	08-01		9
406089A2	02-04		15
406242A1	08-01		8
406256A1	09-24		6
	09-25		18
406336A1	08-01		13
406342A1	08-02		3
406344A1	08-02		16
406938A2	04-26		2
406940A1	08-02		7
406941A1	08-02		9
407060A1	06-34		22
	06-37		22
408117A2	09-38		26
408127A1	06-65		
	06-66		10
408450A1	06-66		2
408856A3	06-66		1
409174A2	06-66		4
409422A1	09-01		23
409574A1	06-66		3
409783A1	08-13		3
	09-05		3
409844A1	09-22		36
409845A1	09-22		23
409856A1	09-22		22
411345A1	02-03		8
	09-22		17
411515A1	09-69		14
411516A1	09-69		13
412066	02-06		4
	02-07		7
412085	02-06		6
	02-07		5
412087	06-11		18
412123	02-22		12
412250	09-24		12
	09-26		8
	09-27		3
412327	09-36		16
412479	08-05		10
412641	09-19		15
412672	04-32		7
	08-06		33
	08-13		18
	09-04		14
	09-23		3
	09-55		11
	09-66		5
414010A1	09-63		13
414635A1	09-58		5
417779A3	08-13		1
	09-04		1
419431A1	04-22		10
419434A1	09-38		1
420-21032	09-10		8
425-1010	09-10		6
	09-10		9
425-108	06-36		13
	06-38		32
425-116	06-34		9
	06-37		9
427180A1	04-22		12
428239A2	04-29		2
429233A1	06-63		5
429619A1	09-02		1
429620A1	09-02		2
429630A2	09-69		6
430498A1	09-10		
430499A1	09-10		
430500A1	09-10		
43117	03-02		29
	09-22		27
43127	02-04		9
	02-05		9
	06-21		3
	06-68		10
	08-16		15
	09-01		15
	09-13		17
	09-25		8
43128	06-10		8
	06-16		6
	06-17		14
	09-19		11
	09-26		6
	09-27		1
	09-38		28

Number	Figure	Sequence	Ref.	Number	Figure	Sequence	Ref.
43129	02-23		9	4891353	02-09		6
43130	07-01		16	4892426	02-39		6
	08-17		4	4892708	02-29		2
43133	08-04		13	4892712	02-28		2
43138	02-01		30	4892713	02-28		3
	02-03		4	4892714	02-29		4
	06-09		7	4892715	02-29		4
	06-12		6	4892732	02-39		2
	06-17		6	4892808	02-14		2
	08-02		35	4892859	02-16		1
	09-22		10	4892860	02-30		4
43139	02-01		13	4892861	02-16		1
	02-03		17	4892867	02-32		3
	06-32		4	4892915	02-11		2
	08-13		21	4893036	02-11		12
	09-05		6	4893386	02-34		2
	09-13		21	4893391	02-19		8A
	09-18		12	4894095	03-08		4
	09-22		19	4894139	02-17		6
43140	02-03		19	4894218	02-09		18
	02-06		19	4894721	03-05		5
	02-07		15	4895017	02-34		4
	04-01		12	4895038	02-09		4
	09-40		3	4895039	02-09		3
43144	06-10		26	4895040	02-09		7
	06-12		48	4895045	02-19		5
	06-18		40	4895049	02-09		15
	09-01		5	4895078	02-38		8
43158	06-30		9	4895085	02-16		16
43168	02-01		20	4895133	02-41		2
43235	02-06		15	4895155	02-11		10
	02-07		17	4895166	03-03		5
43248	06-10		21		04-02		5
43260	06-10		23	4895179	02-16		12
	06-68		4	4895180	02-09		16
	09-55		10	4895183	02-16		4
432895A1	09-44		3	4895184	02-16		9
43362	03-01		5	4895187	02-16		6
	04-03		5	4895188	02-16		5
	09-19		13	4895195	02-30		1
	09-29		7	4895196	02-30		7
	09-58		16	4895198	02-30		9
433957A1	09-67		1	4895199	02-30		10
434006A1	09-71		1	4895200	02-30		11
434007A1	09-71		1	4895202	02-14		1
434008A1	09-71		1	4895204	02-30		12
434009A1	09-72		1	4895214	02-14		3
434010A1	09-72		1	4895215	02-16		8
434011A1	09-72		1	4895228	02-09		5
434012A1	09-73		1	4895244	03-09		1
434013A1	09-73		1	4895291	02-17		10
434014A1	09-74		1		04-02		3
434015A1	09-74		1	4895296	02-14		2
434016A1	09-74		1	4895297	03-10		2
434017A1	09-73		1	4895305	03-09		2
434018A1	09-75		1	4895316	02-26		4
434019A1	09-75		1	4895323	02-33		1
434020A1	09-75		1	4895325	02-26		
434346A1	09-11		5	4895336	02-27		4
43435	04-18		10	4895347	02-16		7
	04-19		9	4895355	02-10		8
	09-13		22	4895360	02-14		10
434817A1	09-10			4895361	02-30		2
435396A1	09-24		2	4895363	02-30		5
435565A1	09-22		2	4895364	02-30		6
436415A1	06-34		19	4895365	02-30		8
	06-37		19	4895378	02-11		4
436416A1	06-34		21	4895379	02-11		5
	06-37		21	4895392	02-09		13
43646	09-43		7		02-35		
442856A1	09-38		25	4895393	02-09		14
450051A1	09-02				02-35		7
4890732	02-39		4	4895394	02-35		6
4890832	02-12		4	4895406	02-18		3
4890833	02-11		8	4895414	02-34		3
4890964	03-05		4	4895538	04-02		6
4891209	02-12		5	4895610	02-18		5
4891252	02-36		1	4895623	02-35		8

Number	Figure	Sequence	Ref.
4895625	02-35		9
4895919	02-09		8
4895921	02-09		8
4896404	02-19		4
4896406	02-19		9
4896409	02-19		11
4896410	02-19		7
4896773	02-32		1
4896865	02-09		17
4896884	03-07		15
4896897	02-13		2
	08-18		19B
4897026	02-12		1
4897178	02-16		13
4897179	02-16		14
4897330	02-18		4
4897457	02-33		4
4897480	02-21		1
4897876	02-17		8
4897877	02-17		7
4898301	02-17		3
4899009	02-24		1
4899019	02-19		1
4899020	02-11		7
4899026	02-09		2
	02-10		1
	02-11		1
4899031	03-05		3
	04-02		2
4899032	02-15		1
	02-39		8
4899035	02-19		6
4899039	02-26		2
4899046	02-34		5
4899053	02-39		9
4899055	03-09		
4899063	02-12		3
4899068	02-11		11
	02-33		3
	03-03		3
4899072	02-24		2
4899073	02-10		3
	02-40		2
4899074	02-11		2
4899076	02-11		2
4899078	02-12		2
4899079	02-36		3
	02-37		5
4899080	02-33		6
4899090	02-21		2
4899091	02-10		2
	02-17		2
4899092	02-25		3
4899093	02-10		3
4899109	02-11		2
	02-35		1
	02-37		6
4899110	02-25		3
4899143	02-11		2
4899859	02-27		5
	02-41		4
4899921	02-26		5
493-21020	06-32		9
493-41033	06-34		18A
	06-37		18A
500322677	02-41		1
507586	02-04		1
516742	09-30		12
524036	08-03		12
52419	08-15		13
528359R4	04-05		3
529070	03-01		2
	04-03		10
	06-01		20
	06-02		16
	06-03		16
	06-10		4
	06-10		7
529070	06-11		13
	06-12		15
	06-16		14
	06-18		27
	06-22		11
	08-04		10
	08-07		10
	08-18		28
570024	06-12		8
574342	08-04		9
574518	02-22		8
595460	08-06		21
60-7083T1	09-34		5
	09-36		19
603022	09-13		18
608089	06-12		41
	06-18		37
	08-07		4
	08-08		4
	08-09		14
614-6025	09-44		4
627-6030	06-12		44
629086	09-67		14
631816	09-11		1
637964	09-29		3
	09-35		3
642560	09-57		9
	09-58		34
	09-59		14
682683	09-72		8
	09-75		9
694371	03-02		8
7120741	09-59		51
76344	06-14		1
	06-22		8
	07-01		1
	08-07		18
	08-08		18
	08-09		23
	08-11		19
	08-12		13
	08-13		48
76349	06-02		8
	06-03		8
	06-09		52
	06-14		17
	06-15		11
	06-18		22
	06-19		11
	06-33		10
	06-33		19
	06-34		3
	06-36		8
	06-37		4
	08-19		5
76350	06-01		3
	06-02		3
	06-03		3
	06-13		2
	06-14		6
	06-15		15
	06-19		15
	06-22		3
	06-23		9
	06-24		5
	07-01		9
	08-04		16
	08-11		21
	08-12		15
76355	06-23		2
	06-24		17
771714	08-14		7
774735	09-23		15A
783874	08-15		14
80120101	06-18		35
	08-07		6
	08-08		6
	08-09		15

Number	Figure	Sequence	Ref.
80120101	09-45		5
	09-46		4
	09-47		4
80681	08-16		7
	08-17		5
80682	03-02		5
80710	08-12		6
	09-03		20
	09-04		17
	09-05		11
80855	09-20		1
	09-22		5
81541	08-06		34
81822758	09-50		10
81827427	08-02		1
	08-06		48
825-5146	04-29		3
827695C1	09-38		19
83918746	09-18		8
83931335	09-38		13
83982664	04-18		6
840-1616	04-29		4
84384	06-18		13
84570	06-09		33
	06-16		18
	06-16		25
	06-18		10
	06-29		7
	06-30		4
	06-31		7
	08-06		23
	08-18		25
84674	02-01		11
	02-04		13
848220	08-15		2
853764	03-01		3
853765	04-18		3
	04-19		4
85821384	04-18		12
	04-19		11A
	04-20		
85821385	04-18		9
	04-19		11
	04-21		
85826230	02-06		2
	02-37		4
86010402	08-03		8
86010532	09-59		15
8602005	02-08		1
86025725	09-25		21
86050279	09-59		39
86050288	06-11		4
	06-18		23
86071	08-05		13
861-14080	06-56		5
	06-59		3
861-8040	06-56		17
	06-59		17
86500348	09-22		16
86500688	04-05		26
	09-20		4
	09-22		28
86500689	02-01		16
	08-02		21
	09-17		15
	09-18		28
86501706	08-01		10
86501801	09-08		2
	09-08		2
86501815	09-08		5
	09-08		5
86505868	09-13		16
	09-38		32
	09-45		14
	09-46		14
	09-47		13
	09-58		13
	09-59		33
86507486	09-58		17
86508568	04-22		8
86508569	09-17		6
86508570	08-11		13
	08-13		32
86508571	06-14		30
	06-20		10
	06-23		6
	06-24		9
86508624	06-68		8
86508812	09-56		4
86509028	06-13		4
	08-04		18
86509309	03-02		16
86509310	09-22		7
86510314	09-07		8
86510315	09-07		6
86510316	09-07		5
86511042	04-07		9
86511315	06-68		11
86511444	04-22		6
	04-23		6
	09-38		5
	09-58		38
86511827	09-24		4
	09-25		17
86511829	09-39		3
86512008	08-15		12
86512134	06-56		23
	06-59		23
86512142	06-56		7
	06-59		7
86512440	06-22		6
	08-06		41
	08-11		14
	08-12		18
	08-13		33
	09-23		10
86512446	08-06		31
	09-23		14
86512498	06-63		2
	06-66		9
	06-68		17
86512554	06-10		24
	06-12		49
	06-18		41
	06-32		3
	08-02		29
	08-06		13
	08-13		6
	09-01		4
	09-03		15
	09-04		26
	09-05		4
	09-18		14
	09-23		13
	09-40		1
86512555	06-11		7
	06-20		4
	06-24		2
	09-26		19
86512837	08-13		10
	09-03		19
	09-04		28
	09-05		7
86512934	08-11		28
	08-13		42
86512936	06-12		27
	06-21		27
86513019	08-07		2
	08-08		2
	08-09		20
86513020	06-14		32
	07-01		14
	08-04		7
	08-11		30
	08-13		40
86513144	08-17		23

Number	Figure	Sequence	Ref.	Number	Figure	Sequence	Ref.
86513653	07-01		4	86610167	09-03		7
	08-07		30		09-04		8
	08-08		30	86611740	08-15		4
	08-09		34	86611742	08-15		1
86517328	03-02		2	86614267	08-14		3
86520436	08-06		39	86614269	08-14		
	09-23		6	86618351	09-06		1
86521425	04-07		1	86618354	09-07		2
	04-08		1	86618355	09-07		2
86526	06-01		21	86618363	09-07		1
	06-02		20	86618364	09-07		1
	06-03		20	86619800	09-31		13
	06-15		27		09-36		14
	06-19		27		09-57		6
	08-04		14		09-59		7
86527861	08-19		3	86619801	09-36		25
86527863	08-19				09-36		6
86527865	08-19		6	86620864	09-53		5
86527866	08-19		2	86624005	08-03		4
86530079	09-11		2		08-10		6
86536660	06-09		38		08-12		2
	06-12		36	86624011	08-03		2
	06-17		29	86624092	09-03		11
	08-18		22		09-04		12
86536985	09-16		15	86624131	08-06		14
	09-19		17	86624176	08-02		22
86545825	09-17		5		08-06		12
	09-18		16		09-13		13
86548338	09-10		5		09-22		18
	09-10		8		09-59		40
	09-10		8	86624181	08-07		5
86563839	08-15		8		08-08		5
86565640	09-11		3		08-09		16
86565641	09-11		4	86624182	04-22		7
86574054	09-12				04-23		5
86574055	09-12				09-26		13
86577166	09-06		4		09-27		14
86577168	09-06		4		09-34		7
	09-07		4	86624184	02-01		3
	09-07		4		04-26		5
	09-08		3		06-09		22
	09-09				06-14		29
86577170	09-06		4		06-16		1
	09-09				06-17		15
86577173	09-10		7		06-20		11
86577946	06-63		4		06-21		2
	09-65		8		06-24		10
86588450	04-05		22		08-05		9
	06-09		49		08-06		9
	06-12		43		09-01		14
	06-14		3		09-29		8
	06-18		20		09-58		12
	06-22		5		09-59		31
	08-11		15		09-63		9
	08-12		19	86624185	02-08		2
	08-13		34		04-15		11
	08-18		13		07-01		17
	09-26		11	86624194	02-04		17
	09-27		12		08-04		2
	09-38		6	86624450	08-14		
	09-58		20		08-15		
86589764	09-12		2	86624451	08-15		
86589765	09-12		3	86624732	08-08		22
86592107	09-60		28	86624977	08-06		10
86592710	09-25		19	86625000	02-04		3
86595542	08-14		8	86625021	02-05		14
86598102	02-23		2	86625032	02-01		9
86599775	09-56		9		08-07		21
86600617	09-74		9		08-09		29
	09-75		10	86625033	08-02		12
86603490	09-45		2	86625034	08-08		21
86604657	04-18		17	86625074	04-03		6
	04-19		16	86625127	09-38		29
86606073	02-03		11	86625129	09-38		42
86608204	02-03		12	86625135	09-18		19
86609324	08-14		12	86625224	04-28		7
86610166	09-03		6		04-32		1
	09-04		7		09-55		6

Number	Figure	Sequence	Ref.	Number	Figure	Sequence	Ref.
86625234	02-01		26	86637783	04-09		1
86625253	02-01		14		04-10		1
	04-01		13		04-11		2
	08-13		7		04-12		1
	09-03		14		04-13		2
	09-04		25		04-14		1
	09-05		5		04-32		10
	09-38		14	86637935	09-38		10
	09-41		1	86637977	06-11		10
	09-42		5		06-21		16
86625254	02-01		18	86637978	04-05		8
	09-65		3	86637998	09-13		15
86625255	06-15		2	86639001	06-09		5
	06-19		1		06-12		4
	06-68		6		06-17		4
	08-13		17	86639003	04-04		3
	09-04		14A	86639006	06-10		14
	09-16		3		08-16		14
	09-19		6	86639241	09-24		3
	09-42		2		09-25		15
86625256	03-02		14	86639310	09-56		5
	04-04		11	86639313	02-04		7
	04-32		8		03-02		25
	06-10		22		09-29		5
	06-11		19		09-35		5
	09-55		12		09-63		6
	09-66		4	86639325	02-06		18
86625258	06-11		8		02-07		14
	06-20		2		06-10		25
	06-24		3		06-12		50
86625260	09-16		14		06-18		42
	09-19		16		06-32		5
86625263	02-03		5		08-02		36
	02-04		10		09-21		1
	02-05		10		09-22		9
	02-23		8	86639326	02-01		21
	06-10		17		06-68		9
	06-12		40	86639409	09-59		10
	06-18		29	86639773	09-12		1
	08-06		55	86705351	04-05		20
	08-07		26	86705580	06-20		5
	08-08		26		06-24		15
	08-09		26	86705988	06-14		31
	08-16		16	86729372	06-12		29
	09-25		9	86729669	04-07		5
	09-45		7		09-58		28
	09-46		6	86729670	04-07		4
	09-47		6		09-58		27
86625264	09-24		5	86729675	09-58		25
	09-25		16	86900574	09-08		3
86625266	02-06		9	86976064	03-02		22
	02-07		2		08-06		32
	09-26		20		09-23		7
	09-38		38	86977786	04-04		6
86625480	09-61		25		04-05		21
86625481	09-59		21		09-58		39
86625515	09-59		20	86977789	09-26		12
86627432	04-07		12		09-27		13
86629891	06-68		25	86977790	06-09		47
86631597	08-15		3		06-14		20
86631598	08-15				06-18		19
86631607	08-14		10	86990981	02-05		4A
	08-15		10	86993467	06-33		15
86631610	08-14		9		06-36		7B
	08-15		9	86993468	06-33		7A
86631616	08-14		11		06-36		5
	08-15		11	86993475	06-33		4
86632589	09-38		36		06-34		25
86632601	04-26		4		06-36		15
	09-26		7		06-37		25
	09-27		2	86993479	06-33		13
86633195	09-03		1		06-36		7
	09-04		4	86993480	06-33		14
86633196	09-03		2		06-36		7A
	09-04		3	86993483	06-34		27
86633356	04-22		11		06-37		27
86633393	02-03		6	86993484	06-34		24
86634307	09-31		15		06-37		24

Number	Figure	Sequence	Ref.
87000312	04-05		10
87010108	06-09		43
	06-21		11
87010110	08-08		27
87010593	06-32		13
87012669	08-16		3
	08-18		16
	08-19		
87013357	09-25		22
87013666	02-05		18
	04-03		11
87013729	06-10		13
	06-38		30
87014502	09-07		6
	09-07		6
	09-07		6
	09-07		6
87014503	09-07		5
	09-07		5
	09-07		5
	09-07		5
87014504	09-06		3
	09-06		3
	09-06		3
87014505	09-06		2
	09-06		2
	09-06		2
87015284	09-01		13
	09-24		8
	09-25		6
	09-26		9
	09-27		4
	09-58		36
87015460	09-07		7
	09-07		7
	09-07		7
	09-07		7
87015514	09-07		4
	09-07		4
	09-07		4
	09-09		
87015862	09-29		6
	09-35		6
87016334	06-11		5
87016486	08-18		27
87016585	09-58		40
87016586	09-58		9
	09-59		27
87016587	09-38		11
87016615	06-15		21
	06-19		20
	06-68		3
87016870	04-05		6
	04-22		5
87016983	09-06		5
	09-06		5
	09-06		5
87017348	08-06		56
	08-40		
87017686	02-08		
87017999	08-17		14
87019286	08-03		11
87019495	09-01		10
87019943	06-26		7
87020048	08-17		15
87020181	04-05		28
87020733	06-55		
	08-16		4
	08-18		20
87020743	08-17		11
87020901	06-32		1
87020980	02-01		34
87021047	07-01		21
87021266	06-11		3
87021277	07-01		3
87021824	06-09		26
	06-09		9
	06-17		11
87021825	02-01		24
87022172	06-09		39
87022174	06-10		28
	06-21		24
87022175	06-09		16
	06-21		22
87022177	07-01		12
87022436	07-01		7
87022437	07-01		11
87022438	06-09		25
87022671	08-17		25
87022672	08-17		26
87022737	08-17		10
	09-17		7
87023398	08-17		24
87023469	08-17		19
87023470	08-17		18
87023471	08-17		28
87023472	08-17		27
87023483	08-17		17
87023530	04-27		4
	08-03		10
87024208	08-03		9
87024539	02-06		13
87024588	02-06		16
87024695	06-10		12
	06-54		
87025275	08-17		16
87025470	02-01		6
87026695	08-17		3
87026696	08-17		2
87026871	09-48		2
	09-49		4
87027430	08-14		5
87028524	03-02		7
	04-27		3
87029843	04-23		1
87029930	08-02		8
87029961	02-03		10
87030508	09-16		11
	09-17		8
	09-18		2
87030547	09-22		3
87030549	04-22		9
	09-41		4
	09-42		7
87030555	09-51		3
87030561	04-05		23
	04-26		3
	06-12		42
	06-14		4
	06-18		36
	08-07		7
	08-08		7
	08-09		17
	09-21		6
	09-26		15
	09-27		16
87030567	02-05		11
	06-10		9
	06-11		11
	06-14		28
	06-16		2
87032107	02-05		
87032338	02-06		8
87033027	06-11		15
87033290	08-06		36
	09-23		19
87033361	02-03		7
87033645	09-20		11
87033823	06-09		18
	06-12		17
	06-17		22
87033824	06-11		1
	06-18		24
87034630	02-03		18
87034631	02-03		14
87035341	06-11		9

Number	Figure	Sequence	Ref.
87035341	06-20		1
	06-56		
	06-57		
	06-58		
87035342	06-23		3
	06-24		1
	06-59		
	06-60		
	06-61		
87035382	04-05		24
87035457	09-60		39
	09-61		45
87035782	09-61		13
87036285	09-20		7
87039085	06-10		6
	06-12		31
	06-18		26
	06-30		11
87039359	06-56		1
87039360	06-59		1
87039368	06-58		
87039369	06-61		
87039370	06-58		
87039371	06-61		
87039372	06-58		
	06-61		
87039611	06-33		24
87039612	06-33		2
	06-36		17
87039613	06-34		23
	06-37		23
87039614	06-34		26
	06-37		26
87039615	06-34		29
	06-37		29
87039622	06-34		16
	06-37		16
87039623	06-38		5
87039625	06-35		
87040707	08-02		18
87040758	02-05		7
87041763	02-06		3
	02-07		8
87041842	02-05		1
87042118	04-01		1
	04-04		1
87042214	06-54		1
	06-55		1
87042897	06-09		21
	06-16		3
	06-17		16
87042903	06-56		13
	06-59		13
87042904	06-56		11
	06-59		11
87042905	06-56		12
	06-59		12
87042906	06-56		14
	06-59		14
87042907	06-58		18
	06-61		19
87042908	06-56		3
	06-59		4
87042909	06-59		5
87042910	06-59		18
87042911	06-56		19
	06-59		19
87042912	06-56		6
	06-59		6
87042913	06-60		2
87042914	06-60		4
87042915	06-60		7
87042916	06-60		6
87042917	06-60		3
87042918	06-60		1
87042919	06-58		17
	06-61		20
87042921	06-56		8
87042921	06-59		8
87042922	06-56		22
	06-59		22
87042923	06-56		10
	06-59		10
87042924	06-58		19
	06-61		21
87042925	06-56		21
	06-59		21
87042926	06-56		9
	06-59		9
87042927	06-56		20
	06-59		20
87042928	06-57		5
	06-60		12
87042929	06-57		3
	06-60		10
87042930	06-57		10
	06-60		17
87042931	06-57		8
	06-60		15
87042932	06-57		9
	06-60		16
87042933	06-57		6
	06-60		13
87042934	06-57		1
	06-60		8
87042935	06-57		4
	06-60		11
87042941	06-56		2
	06-59		2
87042953	06-56		4
87042954	06-56		18
87043498	06-10		10
87043500	06-10		11
	06-33		
	06-34		
	06-35		
	06-36		
	06-37		
	06-38		
87047451	09-42		6
87050523	06-35		16
	06-38		13
87050524	06-35		20
	06-38		11
87050525	06-35		
87050526	06-38		
87051110	09-30		15
	09-36		30
	09-38		7
87052670	04-01		8
	04-03		3
87052671	04-15		8
87053083	04-01		5
87105748	02-08		4
87301324	09-25		20
87301328	08-06		30
87301344	08-06		16
87301359	06-09		23
	06-16		4
	06-17		17
87301588	04-03		8
	04-05		1
87302136	09-57		10
87302564	06-13		21
87303345	06-68		21
87303844	06-13		13
	06-19		25
87305403	09-25		11
87307884	02-23		5
87307909	09-59		34
87308282	04-05		4
87309725	09-20		10
	09-22		31
87309726	09-22		33
87310592	04-07		6
	09-58		26

Number	Figure	Sequence	Ref.
87311640	06-09		57
87316174	06-68		2
87335499	09-33		12
87351957	02-05		6
87352014	02-05		15
87352524	06-26		
87352527	06-26		3
	06-27		10
87353205	06-31		6
87354210	06-68		28
87356572	06-68		
87357240	06-01		14
	06-04		
87357241	06-01		15
	06-05		
87363008	06-68		19
87364	09-20		13
87364613	06-68		12
87364616	06-16		28
87364622	06-16		17
87364625	06-16		12
87364627	06-13		7
87364628	06-13		16
87364629	06-14		16
87364631	06-14		14
87364799	06-13		17
87364800	06-13		18
87364801	06-13		10
87364802	06-13		11
87364803	06-14		15
87364804	06-13		12
87364805	06-13		19
87364806	06-14		13
87364807	06-13		6
87364808	06-13		8
87366159	04-01		9
87367444	08-10		2
	08-12		1
87367445	08-10		5
	08-12		10
87368774	09-18		3
87368775	09-18		20
87368776	09-18		21
87368777	09-18		4
87368778	09-18		6
87370805	04-23		1
87372864	09-70		4
87372867	09-70		5
87374752	06-09		8
	06-12		10
	06-17		8
87376457	06-12		30
87376969	08-07		22
	08-09		28
87381	09-17		13
	09-18		26
87381264	09-24		14
	09-25		2
87384641	02-06		1
	02-07		11
87385021	08-02		10
87387193	08-01		21
87387540	08-11		8
	08-13		26
	09-03		4
	09-04		2
87388074	08-10		
87389371	09-69		7
87393399	02-03		21
87393628	06-12		35
	06-17		30
87403797	08-04		1
87403835	04-03		1
87404825	08-02		26
87404992	04-04		7
	06-09		48
	06-14		21
	06-18		21
87404992	08-18		15
87405117	09-45		1
87405135	08-02		13
87405137	08-02		14
87405141	08-02		24
87411208	09-16		12
	09-17		9
87412041	09-03		8
	09-04		9
87413030	08-13		37
	09-03		12
	09-04		13
	09-05		14
87413436	08-10		7
	08-12		11
87414	08-13		9
	08-14		6
	08-15		6
	09-03		21
	09-04		27
	09-05		13
87414769	08-16		19
87414959	09-53		2
87416539	03-02		20
87417084	06-11		14
87417085	06-09		40
87417308	08-06		20
87418259	06-09		28
87421454	08-05		17
87421480	08-11		18
	08-12		12
87423368	08-01		6
87423807	08-10		9
	08-12		8
87423833	08-06		25
	09-23		1
87423856	09-23		11
87424095	03-02		19
87424182	06-26		1
	07-01		22
87426293	08-03		13
87426545	06-26		4
	06-27		11
	06-28		11
87427685	04-13		7
87427686	04-14		8
87428143	06-63		7
87428444	08-04		22
87429186	09-69		8
87429625	06-23		7
	06-26		
87429698	09-24		13
87430292	09-09		1
87430661	06-09		11
	06-12		14
	06-32		
87430679	09-17		3
	09-18		15
87430855	06-23		1
	06-24		7
87431323	03-01		1
87432221	09-16		6
	09-19		10
87432267	02-22		14
87432275	02-22		9
87433495	06-26		5
87433496	06-26		2
	07-01		23
	08-11		18B
87433497	06-26		3
	06-28		10
87433499	06-26		6
87436118	09-59		18
87436539	08-05		4
87436668	08-05		3
87437076	09-26		14
	09-27		15
87437351	06-09		42

Number	Figure	Sequence	Ref.	Number	Figure	Sequence	Ref.
87437351	06-14		19	87445932	08-26		4
	06-18		18	87445935	08-20		5
87437501	09-59		22		08-21		4
87438190	08-02		2		08-22		4
	08-15				08-23		4
87438193	08-01		28	87445943	08-20		6
	08-14				08-21		5
87438418	02-22		10		08-22		5
87438564	09-09		1		08-23		5
87438566	09-09		1		08-26		3
87438766	08-07		15	87445987	08-20		9
	08-08		15		08-21		8
87439844	09-58		22		08-28		1
	09-59		24	87445988	08-20		8
87439984	06-32		6		08-21		7
87440124	09-26		2		08-27		1
	09-27		10	87446001	08-05		1
87440253	08-08		23	87446248	06-09		37
87440564	08-10		10		06-16		21
	08-12		7	87446614	09-23		17
87440565	08-10		8	87446617	08-21		9
	08-12		4		08-22		7
87440566	08-11		4		08-29		1
	08-13		23	87446825	08-10		1
87440568	08-11		17		08-12		9
	08-13		36	87446983	08-10		3
87440569	08-11		3	87447009	08-06		19
	08-13		22	87447010	08-06		11
87440570	08-11		16	87447123	08-19		1
	08-13		35	87447124	08-19		4
87441006	09-58		23	87447764	08-07		29
	09-59		23		08-08		29
87441276	07-01		6		08-09		33
87441574	04-27		1	87447793	08-05		12
87441649	06-29		3	87447813	08-03		6
	06-30		3	87447965	08-06		18
	06-31		3	87447970	08-07		11
87441786	08-09		9		08-08		11
87441937	09-58		33		08-16		20
87442326	08-14		1	87448095	09-01		
87442334	08-14		2	87449854	09-25		5
87442335	08-14		4	87449992	04-27		9
87442337	08-11		9	87450833	09-57		4
	08-13		28		09-59		4
87442439	08-06		40	87450956	04-03		7
	09-23		9	87452009	09-59		12
87443510	06-09		41	87452108	06-13		20
	06-14		23	87452146	06-13		22
	06-16		11	87453780	04-27		10
	06-20		7	87453999	08-16		12
	06-21		23		08-17		20
	06-24		14	87454000	08-16		11
	07-01		13		08-17		21
87443511	06-09		51	87454483	09-10		4
	06-16		16	87454488	09-10		7
	06-21		14	87454489	09-10		7
	09-57		8	87455257	08-40		
	09-58		24	87455258	08-40		
	09-59		13	87455274	08-40		
87444160	08-06		52	87455412	06-23		4
87444371	08-06		3		06-24		13
87444373	08-06		2	87456974	08-04		6
87444992	04-15		5	87458061	06-25		7
87445136	06-09		20		06-27		2
	06-16		5		06-28		2
	06-17		18		07-01		24
87445137	06-18		12	87458118	04-27		11
87445138	06-11		17	87458467	04-15		2
	06-16		24	87458510	09-22		13
	06-18		7	87458511	09-22		30
87445306	08-05		22	87458514	09-22		35
87445427	02-22		1	87458642	09-16		2
87445747	08-01		7		09-19		4
87445908	09-59		17	87458660	09-22		29
87445932	08-20		7	87458662	09-22		14
	08-21		6	87458664	09-21		4
	08-22		6		09-22		38
	08-23		6	87458665	09-22		32

Number	Figure	Sequence	Ref.
87458667	09-20		15
87458725	08-18		18
87458961	04-04		12
87458990	09-01		6
87458996	06-09		17
87458997	06-10		27
87459019	09-70		3
87459075	09-25		14
87459076	09-25		10
87459429	09-68		5
87459437	09-68		4
87459438	09-68		3
87459439	09-68		2
87459440	09-68		1
87459517	06-68		22
87459518	06-68		7
87459910	07-01		5
87460042	08-07		20
	08-08		20
	08-09		22
87460100	09-22		6
87460195	09-64		1
87460558	09-62		1
87460732	09-38		30
87460888	06-68		20
87461248	09-18		10
87461561	09-37		1
87461604	09-26		1
	09-27		17
87461859	06-62		1
87461995	02-03		2
87462103	06-29		5
	06-30		7
	06-31		4
87462215	08-06		1
87462287	06-68		15
87462631	09-58		32
87462741	09-20		6
87516044	08-09		12
87517937	09-34		10
87517940	09-34		9
87520839	09-58		31
87527676	09-74		10
	09-75		8
87529123	09-30		13
	09-36		28
87530614	04-28		6
87531091	08-01		12
87533223	09-03		3
	09-04		5
87534387	06-66		5
87534744	04-09		2
	04-10		2
	04-11		3
	04-12		3
	04-13		3
	04-14		3
87535230	08-05		12A
87535297	06-68		27
87535298	06-68		13
87535299	06-68		23
87541112	06-67		
87546971	06-20		9
	06-22		14
	06-25		1
87546973	06-22		1
87546974	08-01		1
	08-22		
87546975	08-07		1
	08-08		1
	08-16		2
	08-18		1
	08-23		
87546976	06-19		3
87546977	06-15		1
87546979	06-15		8
	06-19		8
87547003	02-06		17
87547003	02-07		16
87547032	06-14		12
	06-22		10
87547047	06-24		12
87547060	06-21		18
87547061	06-21		19
87547062	06-21		25
87547065	06-16		10
87547066	06-16		20
87547067	06-16		13
87547068	06-21		7
87547070	06-09		56
	06-12		34
	06-18		5
87548612	03-01		10
87548833	06-05		1
	06-06		2
	06-08		2
87548834	06-04		1
	06-07		2
87548835	06-05		2
	06-06		3
	06-08		3
87548836	06-04		2
	06-07		3
87548839	06-04		3
	06-07		4
87548846	06-04		10
	06-07		7
87548847	06-04		11
	06-07		11
87548848	06-04		12
	06-05		8
	06-07		12
87548874	06-04		13
	06-05		9
	06-06		10
	06-07		13
	06-08		12
87549658	08-18		8
87549660	08-18		17
87553599	06-39		20
	06-43		
	06-47		20
	06-50		
87553600	06-39		21
	06-44		
	06-47		21
	06-51		
87553601	06-39		22
	06-45		
	06-47		22
	06-52		
87553604	06-39		2
	06-41		
	06-47		2
	06-48		
87553605	06-39		3
	06-47		3
87553606	06-39		4
	06-47		4
87553607	06-47		5
87553608	06-39		6
	06-42		
	06-47		6
	06-49		
87553609	06-39		7
	06-47		7
87553610	06-39		
	06-42		3
	06-47		
	06-49		3
87553611	06-39		8
	06-47		8
87553612	06-39		19
	06-47		19
87553613	06-39		9
	06-47		9

Number	Figure	Sequence	Ref.
87553614	06-39		10
	06-47		10
87553615	06-39		11
	06-47		11
87553616	06-39		12
	06-42		11
	06-47		12
	06-49		11
87553617	06-39		13
	06-47		13
87553618	06-39		14
	06-47		14
87553619	06-39		15
	06-47		15
87553620	06-39		16
	06-47		16
87553621	06-39		17
	06-47		17
87553622	06-39		18
	06-47		18
87553623	06-43		1
	06-50		1
87554200	08-17		13
87554226	08-17		12
87554297	06-15		6
	06-19		6
87555249	09-58		30
87556251	09-13		1
	09-14		2
87562923	08-11		18C
87562926	08-11		18A
87563155	06-68		
87563692	09-25		13
87563968	06-12		47
	06-18		34
87563969	06-12		46
	06-18		33
87563970	08-07		16
	08-08		16
	08-09		18
87563971	06-12		21
	06-17		28
87563972	06-18		25
87563974	08-07		14
87563977	06-22		13
87563991	06-14		11
	06-22		18
87563992	06-14		10
	06-22		17
87563994	06-20		8
87563995	06-21		13
87563996	06-14		22
87563997	06-16		15
87563998	06-12		26
	06-18		4
87564000	06-12		23
	06-18		1
87564001	08-07		17
	08-08		17
	08-09		19
87564008	06-21		4
87564009	06-12		45
87564724	09-20		5
87565745	02-01		5
87565746	02-01		5
87568426	09-13		8
87568427	09-13		9
87568434	09-13		23
87568435	06-14		9
	06-22		2
87568437	09-13		4
	09-15		3
87571937	06-15		17
	06-19		23
87571954	06-62		5
87571958	06-62		6
87571969	06-62		3
87573371	06-02		17
87573371	06-03		17
	06-14		25
87574372	09-25		23
87575213	06-62		9
87575214	06-62		10
87575289	06-01		19
87575290	06-01		18
87575606	08-07		
87575684	06-16		27
	06-18		6
87576153	08-20		4
	08-21		3
	08-22		3
	08-23		3
	08-26		1
87576154	08-20		10
	08-23		7
	08-38		3
	08-39		3
87576157	08-20		11
	08-21		10
	08-22		8
	08-23		8
	08-30		1
87576158	08-20		13
	08-21		12
	08-22		11
	08-23		11
	08-30		9
87576160	08-20		14
	08-21		13
	08-22		12
	08-23		12
	08-30		12
87576161	08-20		15
	08-23		13
87576162	08-20		17
	08-21		15
	08-22		14
	08-23		14
	08-30		15
87576163	08-20		18
	08-21		16
	08-31		
87576168	08-21		17
	08-22		18
	08-32		
87576169	08-20		19
	08-21		18
	08-33		
87577076	06-14		24
	06-27		1
87577077	06-24		8
	06-28		1
87578653	06-66		6
87579238	06-62		11
87582844	06-68		18
87582846	06-68		1
87583285	08-01		1
	08-21		
87583286	08-09		13
	08-20		1
87584058	06-10		5
	06-17		27
87584554	03-01		7
87584639	03-01		9
87584781	02-03		20
87588579	06-25		2
	06-27		7
87588585	06-27		6
87588596	06-25		3
	06-27		4
87588597	06-27		5
87588928	08-04		24
87588929	08-04		20
87588930	08-04		21
87591148	09-60		17
	09-60		24

Number	Figure	Sequence	Ref.
87591148	09-60		9
	09-61		23
	09-61		30
	09-61		9
87593415	08-02		32
87593416	08-02		25
87593417	08-02		27
87593420	08-05		2
87593421	08-05		5
87593422	08-05		8
87593425	08-05		7
87594971	09-59		35
87597259	06-43		2
	06-44		2
	06-50		2
	06-51		2
87597260	06-43		3
	06-44		3
	06-50		3
	06-51		3
87597261	06-43		4
	06-50		4
87597262	06-43		5
	06-44		5
	06-50		5
	06-51		5
87597263	06-43		6
	06-44		6
	06-50		6
	06-51		6
87597264	06-43		7
	06-44		7
	06-50		7
	06-51		7
87597265	06-43		8
	06-44		8
	06-50		8
	06-51		8
87597266	06-43		9
	06-44		9
	06-50		9
	06-51		9
87597267	06-43		10
	06-44		10
	06-50		10
	06-51		10
87597268	06-43		11
	06-50		11
87597269	06-44		1
	06-51		1
87597271	06-44		4
	06-51		4
87597272	06-45		1
	06-52		1
87597274	06-45		2
	06-52		2
87597275	06-45		3
	06-52		3
87597276	06-45		4
	06-52		4
87597277	06-45		5
	06-52		5
87597281	06-45		6
	06-52		6
87597282	06-45		7
	06-52		7
87597283	06-46		1
87597284	06-40		8
	06-46		3
	06-53		3
87597285	06-40		9
	06-53		2
87597286	06-41		6
	06-48		6
87597287	06-42		1
	06-49		1
87597288	06-42		2
	06-49		2
87597289	06-42		4
	06-49		4
87597290	06-42		5
	06-49		5
87597291	06-42		6
	06-49		6
87597292	06-42		7
	06-49		7
87597293	06-42		8
	06-49		8
87597294	06-42		9
	06-49		9
87597295	06-42		10
	06-49		10
87597296	06-42		12
	06-49		12
87597297	06-42		13
	06-49		13
87597960	08-06		37
87598810	03-01		8
87599718	09-01		20
87600262	06-13		1A
	06-62		
87600262C	06-13		
	06-62		
87600262R	06-13		
	06-62		
87600263	06-13		1
	06-62		
87600263C	06-13		
	06-62		
87600263R	06-13		
	06-62		
87600622	06-02		14
	06-08		1
87600623	06-02		15
	06-03		15
	06-07		1
87600630	06-21		8
87601409	06-62		4
87602204	08-16		13
	08-18		21
87602985	06-68		16
87602987	06-68		
87602988	06-68		
87604061	06-01		11
87604062	06-01		6
	06-02		6
	06-03		6
87604063	06-01		12
87604064	06-01		7
87604069	06-01		8
	06-02		7
	06-03		7
87604070	06-02		12
	06-03		12
87604071	06-02		13
	06-03		13
87604072	06-02		11
	06-03		11
87604074	06-12		28
	06-15		7
87604075	06-19		7
	06-21		26
87604076	06-14		8
	06-22		1
87610349	08-20		2
	08-21		1
	08-24		
87610350	08-20		3
	08-21		2
	08-22		2
	08-23		2
	08-25		
87610351	08-20		12
	08-21		11
	08-22		9
	08-23		9

Number	Figure	Sequence	Ref.	Number	Figure	Sequence	Ref.
87610351	08-30		5	87614030	06-46		2
87610352	08-20		16	87614031	06-47		1
	08-21		14		06-53		
	08-22		13	87615741	02-04		12
87610517	08-22		1	87615742	02-04		16
	08-23		1	87615743	02-04		8
	08-34			87615745	02-04		5
87610530	08-22		10	87617017	08-09		
	08-23		10	87617091	09-16		13
87610531	08-22		15	87617092	09-18		22
	08-23		15	87617100	08-16		
	08-37				08-17		
87610532	08-22		16	87619935	09-39		4
	08-23		16	87619938	09-39		1
	08-36			87619939	09-39		2
87610533	08-22		17	87620412	08-13		2
	08-23		17		09-05		2
	08-35			87620458	04-01		6
87610718	08-11		10	87620895	09-38		35
	08-13		29	87620930	02-05		8
87611845	08-20		20	87621245	08-07		23
	08-23		18		08-09		30
	08-38			87622364	06-01		16
87611846	08-20		21	87623657	09-59		
	08-23		19	87624401	04-15		6
	08-39			87624623	09-32		1
87611848	08-20		22	87624640	09-31		2
	08-21		19	87624641	09-31		17
	08-28				09-36		17
87611849	08-20		23	87624736	08-02		31
	08-21		20	87625890	06-12		22
	08-27				06-18		2
87611850	08-21		21	87626406	09-48		3
	08-22		19	87626717	09-16		16
	08-29				09-19		14
87611854	06-03		14	87626729	02-01		25
	06-06		1	87627050	04-06		5
87612445	06-62		8		04-08		
87612446	06-62		7	87627051	09-29		2
87612449	06-62		2	87627383	06-10		20
87612749	03-02		21	87627399	06-39		
87612875	08-08		14		06-47		
87613733	09-22		34	87627518	06-08		6
87614009	06-25		8	87627520	09-31		1
	06-27		3	87627524	09-56		3
87614011	06-25		4	87627706	09-30		6
	06-27		8	87630124	04-04		8
87614012	06-25		5	87630125	04-04		9
	06-27		9	87630126	04-10		5
87614013	06-25		6		04-12		6
	06-27		12		04-14		6
87614014	06-27		10A	87630127	04-09		4
87614015	06-25		9		04-11		5
	06-27		3A		04-13		5
87614016	06-04		7	87630128	04-12		7
87614017	06-04		6		04-14		7
	06-05		4	87630129	04-11		1
	06-06		5		04-13		1
	06-08		7	87630130	04-12		2
87614018	06-04		5		04-14		2
87614019	06-04		9	87634133	04-18		18
	06-05		6		04-19		17
87614020	06-04		8	87634134	04-27		6
	06-05		7	87634135	04-27		7
	06-06		6	87634136	06-23		8
	06-07		6		06-24		18
	06-08		8	87634137	04-32		12
87614023	06-05		3	87635242	09-38		2
	06-06		4	87635322	09-29		
	06-08		4	87637186	06-15		22
	06-08		5		06-19		21
87614024	06-05		5	87638293	08-05		
87614027	06-39		23	87638304	08-04		
	06-46			87638327	02-04		
	06-47		23	87638358	09-51		
87614028	06-39		1	87638361	08-08		
	06-40			87638451	09-66		
87614029	06-39		5	87638500	04-28		

Number	Figure	Sequence	Ref.
87638514	09-54		
87638864	04-07		10
87638865	04-07		10
87638893	08-10		
87639899	09-38		31
87640046	09-36		18
87640048	04-27		
87641947	04-14		
87641948	04-13		
87642449	09-31		8
	09-34		8
87642453	09-31		7
	09-34		11
87642514	09-34		4
87642529	09-34		6
87642536	09-33		16
87642540	09-33		14
	09-36		12
87642543	09-33		5
87642544	09-33		6
87642545	09-33		7
87642911	08-12		3
87642912	04-19		18
87642913	04-11		6
	04-13		6
87642914	04-06		1
	09-31		10
	09-33		9
	09-55		2
87642915	04-06		2
	09-31		9
	09-33		10
	09-55		1
87644290	06-12		24
	06-18		3
87645119	09-38		3
87646401	09-13		11
87646402	09-13		7
87647549	02-28		
87647550	02-28		
87647551	02-28		
87647723	09-13		3
	09-15		4
87648094	09-16		9
	09-19		9
87648689	04-01		11
87649979	09-59		42
87649991	09-59		37
87650009	06-68		31
87650010	06-68		30
87650011	06-68		29
87650094	03-02		23
87650097	04-06		4
	04-16		
87650098	04-06		8
	04-17		
87651126	09-35		
87651799	02-01		31
87651800	02-01		29
87652238	04-01		7
87652336	04-32		
87652337	09-55		
87653393	09-59		3
87653394	09-57		3
87653980	06-09		3
	06-10		1
	06-12		3
	06-17		3
87653981	06-12		20
	06-17		26
87654919	02-03		3
87654923	02-04		2
87655055	09-30		7
87656095	09-60		1
	09-61		50
87656096	09-60		2
	09-61		51
87656097	09-60		30
87656097	09-61		40
87656098	09-60		5
	09-61		1
87656099	09-60		4
	09-61		2
87656100	09-60		41
	09-61		43
87656101	09-60		40
	09-61		44
87656102	09-61		47
87656103	09-60		36
	09-61		48
87656104	09-61		49
87656105	09-60		22
	09-61		28
87656106	09-60		29
	09-61		41
87656107	09-60		32
	09-61		38
87656108	09-60		33
	09-61		37
87656109	09-60		15
	09-61		21
87656110	09-61		33
87656111	09-61		16
87656112	09-61		15
87656113	09-61		12
87656114	09-60		10
	09-61		10
87656118	09-60		6
	09-61		6
87656119	09-61		5
87656120	09-60		20
	09-61		3
87656121	09-60		14
	09-61		20
87656122	09-60		21
	09-61		27
87656123	09-60		16
	09-61		22
87656124	09-60		23
	09-61		29
87656125	09-60		8
	09-61		8
87656126	09-60		27
	09-61		36
87656127	09-60		18
	09-60		25
	09-61		24
	09-61		31
87656129	09-60		7
	09-61		7
87656130	09-60		11
	09-61		11
87656866	04-10		
87656868	04-09		
87656870	04-12		
87656872	04-11		
87657080	08-09		2
87657669	09-51		1
87657670	09-51		2
87658636	09-55		9
87658709	09-60		37
87658710	09-60		35
87659208	04-18		14
	04-19		14
87659212	09-29		9
	09-35		7
87659253	08-03		7
87659406	08-13		8
	09-03		18
	09-04		18
87660800	09-26		3
87660828	02-01		15
87660842	02-01		27
	02-02		
87660856	06-09		24
	06-12		13

Number	Figure	Sequence	Ref.	Number	Figure	Sequence	Ref.
87660856	06-17		13	87688650	02-02		1
87661378	02-01		12	87691470	09-59		52
87661380	02-01		10	87691471	09-59		53
87661493	04-05		11	87691473	09-59		8
87662513	09-46		1	87691475	09-57		11
87662514	09-47		1		09-59		16
87665543	09-13		10	87692685	02-07		12
87665545	09-13		2	87694058	02-23		3
87665549	09-14		3	87702278	09-42		8
87665550	09-15		6	87702506	09-41		2
87666074	09-16		7	87703530	09-58		7
	09-19		8	87703555	09-59		25
87667727	09-56		7	87705419	09-58		1
87668006	09-56		2	87705420	09-58		21
87668728	04-06		6	87706925	09-38		15
	04-08		3	87707134	09-24		1
87668735	09-55		4	87707135	09-25		1
87668737	04-05		9	87709877	09-59		43
	04-06		3	87710177	09-59		50
	04-07		3	87710959	09-70		1
	04-08		2	87710960	09-70		2
	04-18		2	87711337	02-07		13
	04-19		3	87711364	09-01		18
	09-55		3	87711366	09-01		19
87668739	08-09		11	87712373	03-02		11
87669347	06-68		18	87712376	03-02		15
87669349	06-68		1	87712652	02-07		10
87669405	09-59		45	87712700	09-54		4
87670	06-15		3	87712706	09-54		7
	06-19		2		09-58		2
87671495	09-27		9	87713059	02-07		9
87671857	09-33		11	87713668	09-58		3
87672098	09-54		6	87714073	09-64		2
87672222	09-56		6	87714955	09-63		10
87672257	09-56		8	87714956	09-63		5
87673070	04-19		15	87715341	08-06		26
87673072	04-18		5	87715687	06-01		25
87673077	04-19		2	87715688	06-03		24
87673079	04-18		15	87715689	06-01		23
	04-19		6	87715690	06-01		24
87673471	09-68		7	87715691	06-03		22
	09-70		6	87715692	06-03		23
87673472	09-68		6	87715731	09-23		15
	09-70		7	87715833	09-50		
87673642	09-65			87716582	09-59		28
87676100	02-01		19	87716728	09-33		1
87676259	04-18			87716731	09-33		15
87676260	04-19			87717211	09-58		11
87678399	09-31		16	87717220	09-59		19
	09-36		10	87717671	09-42		
87678400	09-33		18	87717673	09-41		
87678506	06-18		32	87717689	09-31		2
87680190	09-33		4	87718119	09-31		11
87682711	09-55		5		09-33		8
87682712	04-28		5	87718151	09-58		6
87684094	09-66		1	87719782	09-63		3
87684180	06-01		10	87719784	09-63		2
	06-02		10	87719789	09-63		12
	06-03		10	87719792	09-63		4
87684217	06-01		13	87720245	04-18		13
87684218	06-01		5		04-19		13
	06-02		5	87720246	04-18		8
	06-03		5		04-19		12
87684742	09-59		41	87720912	06-29		6
87685888	09-54		10		06-30		6
87685891	09-54		1		06-31		9
87685962	08-03			87722140	02-22		1
87685981	09-59		44	87723831	04-32		4
87687021	02-07		3	87727413	04-32		9
87687372	02-02		1	87727414	04-32		3
87687373	02-02		3	87727417	04-32		2
87687374	02-02		4	87727748	09-54		8
87687375	02-01		28	87727752	09-54		5
	02-02		8	87728345	04-32		11
87687376	02-02		7	87728982	08-06		17
87688478	02-23		1	87728990	08-06		29
87688523	02-02		2	87729000	08-06		28
87688649	02-02		2	87729004	08-06		44

Number	Figure	Sequence	Ref.	Number	Figure	Sequence	Ref.
87729005	08-06		43	9617873	08-04		15
87730069	09-54		9		08-04		17
87730070	09-54		2		08-04		19
87730804	08-06				08-04		8
87730822	09-54		3		08-07		19
87734484	09-43		3		08-07		28
87734487	09-43		1		08-08		19
87734526	09-69		9		08-09		24
87735275	02-22		3		08-09		32
87739945	08-06		27		08-09		8
87739947	08-06		50		08-11		
87802167	09-71		8		08-11		20
	09-71		8		08-11		22
	09-71		8		08-11		26
	09-72		9		08-11		29
	09-72		9		08-11		31
	09-73		8		08-12		14
	09-73		8		08-12		16
	09-73		8		08-12		21
	09-74		8		08-13		39
87803194	03-03		6		08-13		41
87825	09-20		8		08-13		43
87848	09-20		14		08-13		46
88011	09-22		25		08-13		49
88098	03-02		4		08-19		5A
896-15008	02-05		17	9617891	08-01		4
906091R1	08-13		20		08-06		53
	09-03		16		08-18		4
	09-04		16	9618946	08-16		17
	09-05		9	9628065	09-65		4
933610R1	06-01		17	9628098	02-04		11
9512573	06-68		24		06-10		15
9515003	09-59		49		06-12		39
9615396	06-10		2		06-13		24
	06-12		11		06-18		30
	06-17		9		06-21		1
9617020	09-05		15		08-16		10
9617873	04-23		2		09-01		16
	06-01		2		09-24		7
	06-01		22		09-25		4
	06-01		4		09-45		8
	06-02		18		09-46		7
	06-02		2		09-47		7
	06-02		21		09-63		7
	06-02		4	9628503	09-22		15
	06-02		9	9635806	09-25		12
	06-03		18	9635884	09-18		7
	06-03		2	9672438	06-33		22
	06-03		21		06-36		
	06-03		4		06-36		20
	06-03		9	9672548	06-32		11
	06-09		53	9706685	04-04		10
	06-13		3		09-42		3
	06-13		5	9706690	02-04		6
	06-14		18		02-23		4
	06-14		2		08-04		11
	06-14		26		09-25		26
	06-14		33	9706704	04-27		8
	06-14		7		06-32		2
	06-15		12		08-01		14
	06-15		16		08-13		5
	06-15		28		09-05		10
	06-15		9		09-13		14
	06-19		10		09-22		20
	06-19		12		09-59		38
	06-19		16	9706717	02-03		16
	06-19		28	9707515	09-18		9
	06-20		6	9790526	08-17		8
	06-22		16	9790527	06-29		4
	06-22		4		06-30		8
	06-22		9		06-31		5
	06-23		10	9790547	06-09		12
	06-24		16		06-12		12
	06-24		6		06-17		10
	06-32		10	9800081	09-12		7
	07-01		10	9804256	09-48		4
	07-01		15		09-57		2
	07-01		2		09-58		19

Number	Figure	Sequence	Ref.
9804256	09-59		2
9804257	09-57		7
	09-59		6
9804258	09-29		1
	09-35		1
	09-48		5
	09-58		8
	09-59		26
9804262	02-02		5
	04-01		10
	09-41		3
	09-42		9
9804266	09-42		1
9804277	09-25		25
	09-30		19
	09-31		14
9804278	02-02		6
9821783	04-18		7
	04-19		8
9822175	09-06		6
	09-06		6
	09-06		6
	09-07		7
	09-08		4
	09-08		4
9824050	06-13		15
	06-13		9
	06-21		28
9824642	09-16		4
	09-19		7
9827902	06-10		19
	06-12		37
	06-18		31
	09-25		24
9828248	06-11		6
	06-20		3
	06-24		4
	09-26		17
	09-38		40
9829733	09-03		5
	09-04		6
9829786	09-07		8
	09-07		8
	09-07		8
	09-07		8
9840344	09-18		5
9840535	06-15		29
9841223	06-33		8
	06-36		18
9846848	06-15		24
9861444	09-59		47
9969430	04-21		1
9969431	04-20		1
9991976	06-15		25
	06-15		30
9993141	06-02		19
	06-03		19
	06-14		27
	08-11		25
	08-12		22
	08-13		47
9993143	08-11		24
	08-12		20
	08-13		45
A140221	02-06		7
	02-07		4
A149796	09-55		9A
A166057	04-04		2
	04-05		19
A177436	03-02		9
A184597	02-05		5
A29183	06-35		27
	06-38		4
A30338	08-13		13
	09-04		20
D120613	08-02		19
D120614	08-02		17
D120679	08-01		17
D120679	08-02		20
D124661	08-01		23
D131983	03-02		24
	08-06		38
	09-22		11
	09-23		4
D137186	09-67		3
D138889	08-13		11
	09-04		22
D143415	09-38		37
D55216	08-13		4
	09-05		
D63653	06-64		6
D67297	06-21		5
D68846	06-21		6
E137085	09-73		7
E38908	04-28		4
E99128	04-28		1
E99208	04-28		2
F23137	06-33		12
	06-36		6
H151399	06-09		13
	06-12		16
	06-17		21
H169920	03-02		10
H32961	08-06		51
H373779	08-06		42
	09-23		8
H407767	06-33		26
H434289	09-58		15
	09-59		30
H434900	08-01		24
H435770	06-34		20
	06-37		20
H435776	06-35		37
H435814	09-38		8
H436053	06-34		17
	06-37		17
H436054	06-34		18
	06-37		18
H436065	06-34		6
	06-37		6
H436704	06-35		3
	06-38		28
H436887	09-17		17
	09-19		1
H436914	09-16		5
	09-19		5
H437190	06-35		35
H438321	06-34		5
	06-37		3
H439276	09-28		4
H673773	06-34		
	06-37		
K608432	06-36		12
L104616	08-09		7
L11541	02-08		5
	04-15		7
	08-08		10
	08-09		10
	08-10		4
	09-13		12
	09-23		16
	09-58		10
	09-59		29
L14781	08-06		35
	09-23		21
L17985	02-05		13
L18331	06-17		23
	07-01		8
	08-03		3
	09-59		11
L71879	04-05		18
L78786	09-04		29
N13224	06-35		19
	06-38		12
N13226	06-34		11
	06-37		11

Number	Figure	Sequence	Ref.
N13234	06-35		30
N13241	06-34		10
	06-37		10
N13242	06-34		12
	06-37		12
N13244	06-35		25
N13247	06-35		32
N13254	06-35		18
	06-38		15
N13255	06-34		8
	06-37		8
N13260	06-34		2
	06-37		2
N13262	06-35		31
N13268	06-32		
N13994	06-35		1
	06-38		8
N13999	06-35		34
N14063	06-34		7
	06-37		7
N14103	06-35		29
N14666	06-34		13
	06-37		13
N14668	06-34		15
	06-37		15
N14848	06-33		
	06-36		
NSS	02-35		4
	02-39		5
	03-09		5
	04-16		1
	04-16		2
	04-16		3
	04-16		4
	04-16		5
	04-16		6
	04-16		7
	04-16		8
	04-16		9
	04-17		1
	04-17		2
	04-17		3
	04-17		4
	04-17		5
	04-17		6
	04-17		7
	04-17		8
	04-17		9
	04-20		4
	04-21		4
	04-32		5
	06-26		10
	06-26		11
	06-26		8
	06-26		9
	06-28		3
	06-28		4
	06-28		5
	06-28		6
	06-28		7
	06-28		8
	06-28		9
	06-32		12
	06-32		7
	06-33		29
	06-33		5
	06-33		7
	06-34		28
	06-35		10
	06-35		14
	06-35		15
	06-35		22
	06-35		6
	06-36		2
	06-36		4
	06-37		28
	06-38		16
	06-38		17
NSS	06-38		21
	06-38		25
	06-38		27
	06-38		9
	06-40		1
	06-40		2
	06-40		3
	06-40		4
	06-40		5
	06-40		6
	06-40		7
	06-41		1
	06-41		2
	06-41		3
	06-41		4
	06-41		5
	06-41		7
	06-48		1
	06-48		2
	06-48		3
	06-48		4
	06-48		5
	06-48		7
	06-53		1
	06-54		2
	06-54		3
	06-54		4
	06-54		5
	06-54		6
	06-54		7
	06-54		8
	06-55		2
	06-55		3
	06-55		4
	06-55		5
	06-55		6
	06-55		7
	06-55		8
	06-56		15
	06-56		16
	06-57		12
	06-57		2
	06-57		7
	06-58		1
	06-58		10
	06-58		11
	06-58		12
	06-58		13
	06-58		14
	06-58		15
	06-58		16
	06-58		2
	06-58		3
	06-58		4
	06-58		5
	06-58		6
	06-58		7
	06-58		8
	06-58		9
	06-59		15
	06-59		16
	06-60		14
	06-60		19
	06-60		5
	06-60		9
	06-61		1
	06-61		10
	06-61		11
	06-61		12
	06-61		13
	06-61		14
	06-61		15
	06-61		16
	06-61		17
	06-61		18
	06-61		2
	06-61		3
	06-61		4

Number	Figure	Sequence	Ref.	Number	Figure	Sequence	Ref.
NSS	06-61		5	NSS	08-31		8
	06-61		6		08-31		9
	06-61		7		08-32		1
	06-61		8		08-32		2
	06-61		9		08-32		3
	06-63		1		08-32		4
	06-64		2		08-32		5
	08-24		1		08-32		6
	08-24		2		08-32		7
	08-24		3		08-32		8
	08-24		4		08-33		1
	08-24		5		08-33		2
	08-24		6		08-33		3
	08-24		7		08-33		4
	08-24		8		08-33		5
	08-25		1		08-33		6
	08-25		10		08-33		7
	08-25		11		08-33		8
	08-25		12		08-34		1
	08-25		13		08-34		2
	08-25		14		08-34		3
	08-25		15		08-34		4
	08-25		16		08-34		5
	08-25		2		08-34		6
	08-25		3		08-34		7
	08-25		4		08-34		8
	08-25		5		08-34		9
	08-25		6		08-35		1
	08-25		7		08-35		2
	08-25		8		08-35		3
	08-25		9		08-35		4
	08-27		2		08-35		5
	08-27		3		08-35		6
	08-27		4		08-35		7
	08-27		5		08-36		1
	08-27		6		08-36		2
	08-27		7		08-36		3
	08-27		8		08-36		4
	08-27		9		08-36		5
	08-28		2		08-37		1
	08-28		3		08-37		2
	08-28		4		08-37		3
	08-28		5		08-37		4
	08-28		6		08-37		5
	08-29		2		08-37		6
	08-29		3		08-37		7
	08-29		4		08-38		1
	08-29		5		08-38		2
	08-29		6		08-38		4
	08-29		7		08-38		5
	08-29		8		08-38		6
	08-30		10		08-38		7
	08-30		11		08-39		1
	08-30		13		08-39		2
	08-30		14		08-39		4
	08-30		16		08-39		5
	08-30		17		08-39		6
	08-30		18		08-39		7
	08-30		2		08-40		1
	08-30		3		08-40		10
	08-30		4		08-40		11
	08-30		6		08-40		12
	08-30		7		08-40		13
	08-30		8		08-40		14
	08-31		1		08-40		15
	08-31		10		08-40		16
	08-31		11		08-40		17
	08-31		12		08-40		18
	08-31		13		08-40		19
	08-31		14		08-40		2
	08-31		15		08-40		3
	08-31		16		08-40		4
	08-31		2		08-40		5
	08-31		3		08-40		6
	08-31		4		08-40		7
	08-31		5		08-40		8
	08-31		6		08-40		9
	08-31		7		09-01		1

Number	Figure	Sequence	Ref.
NSS	09-07		3
	09-07		3
	09-07		3
	09-07		3
	09-07		3
	09-08		6
	09-08		6
	09-12		4
	09-12		8
	09-13		19
	09-13		20
	09-13		24
	09-13		25
	09-23		12
	09-31		3
	09-31		4
	09-36		15
	09-36		18
	09-36		27
	09-36		3
	09-36		31
	09-38		21
	09-50		1
	09-50		2
	09-50		3
	09-50		4
	09-50		5
	09-50		6
	09-50		8
	09-50		9
	09-53		1
	09-53		10
	09-53		11
	09-53		12
	09-53		3
	09-53		4
	09-53		6
	09-53		7
	09-53		8
	09-53		9
	09-55		13
	09-55		8
	09-60		12
	09-60		13
	09-60		19
	09-60		26
	09-60		3
	09-60		31
	09-60		34
	09-60		38
	09-61		14
	09-61		17
	09-61		18
	09-61		19
	09-61		26
	09-61		32
	09-61		34
	09-61		35
	09-61		39
	09-61		4
	09-61		42
	09-61		46
	09-61		52
	09-62		3
	09-62		4
	09-62		5
	09-62		6
	09-65		1
	09-65		5
	09-65		6
	09-65		7
P24576	06-10		16
R14771	03-02		13
R24703	08-02		11
R32216	06-64		7
REF	02-06		11
	02-07		20
	02-19		12
REF	02-27		6
	02-29		5
	02-29		6
	02-37		10
	02-37		7
	02-37		8
	02-37		9
	02-40		3
	02-41		5
	03-04		5
	03-06		5
	04-18		1
	04-19		1
	06-04		
	06-05		
	06-09		4
	06-09		50
	06-10		3
	06-12		25
	06-12		7
	06-17		7
	08-10		
	08-11		1
	08-12		5
	08-16		1
	08-16		18
	09-06		
	09-07		
	09-07		
	09-08		
	09-16		1
	09-16		1
	09-17		1
	09-18		1
	09-18		18
	09-18		18A
	09-19		18
	09-19		18A
	09-30		1
	09-35		2
	09-36		1
	09-38		22
	09-42		10
	09-55		7
	09-57		1
	09-58		18
	09-58		4
	09-59		1
	09-59		9
	09-71		
	09-71		
	09-71		
	09-72		
	09-72		
	09-72		
	09-73		
	09-73		
	09-73		
	09-74		
	09-74		
	09-74		
	09-75		
	09-75		
	09-75		
S99877	06-33		3
	06-36		16
V38371	06-33		28
ZPX24210	06-63		

CATALOGUE DES PIÉCES

CHARGEUSE COMPACTE
CHARGEUSE COMPACTE À CHENILLES
440
440CT
SERIES 3

APPLICABLE

ASN - N8M474469



BD07N496

Bur • Publication 01Jan 08
Imprimé aux États-Unis • Réf. Catalogue/formulaire 87632291 FC
Copyright © 2007. CNH America, LLC. Tous droits réservés.

La société CNH America LLC se réserve le droit de modifier sans préavis la conception ou les caractéristiques de ses machines, et ce sans encourir d'obligation quelconque de mettre en place les nouvelles caractéristiques sur des machines déjà en service.

Toutes les informations fournies dans ce manuel sont susceptibles de varier selon les besoins de la production. Les dimensions et les masses indiquées sont approximatives. Les illustrations ne montrent pas nécessairement les produits en état standard. Pour obtenir des données précises au sujet d'un modèle de machine particulier, consulter un concessionnaire.

LISTE DE RÉVISIONS			
Publication	Date de publication	Machines concernées	Remarques
Première édition	01Jan 08	440,440CT Series 3 Chargeuse Compacte/Chargeuse Compacte à Chenilles	87632291 FC

L'utilisation du texte ou des images de ce manuel est strictement interdite sans l'autorisation écrite de
CNH America LLC. Carol Stream, IL 60188 États-Unis

TABLE OF CONTENTS

02-01	VENTILATEUR, RADIATEUR - CIRCUIT DE RECUPERATION DU LIQUIDE DE REFROIDISSEMENT
02-02	RADIATEUR/REFROIDISSEUR D'HUILE
02-03	ECHAPPEMENT
02-04	ECHAPPEMENT, ASPIRATEUR
02-05	FILTRE A AIR - MOTEUR
02-06	MOTEUR - THERMIQUE SUPPORT
02-07	MOTEUR - THERMIQUE SUPPORT (EUROPE)
02-08	MOTEUR - CHAUFFE-BLOC
02-09	BLOC CYLINDRES
02-10	BLOC CYLINDRES - COUVERCLES, ARRIERE
02-11	BLOC CYLINDRES - COUVERCLES, VOLANT
02-12	BLOC CYLINDRES - COUVERCLES, AVANT
02-13	COUVERCLE DE PIGNONS- PLAQUE
02-14	COUVERCLES CULASSE
02-15	BLOC CYLINDRES STIFFENER PLATE
02-16	CULASSE DE CYLINDRE
02-17	POMPE À HUILE, CARTER
02-18	MOTEUR, HUILE
02-19	FILTRE ET REFROIDISSEUR D'HUILE
02-20	FILTRE A HUILE - MOTEUR
02-21	POMPE A HUILE - MOTEUR
02-22	REMPLISSAGE D'HUILE, MOTEUR
02-23	VIDANGE DE L'HUILE
02-24	CAPTEURS MOTEUR - MOTEUR, HUILE
02-25	RENIFLARD - MOTEUR
02-26	COLLECTEURS
02-27	COLLECTEURS
02-28	PISTONS - BIELLES
02-29	BIELLES
02-30	AXE DE CULBUTEUR
02-31	VOLANT - MOTEUR
02-32	POULIE - VILEBREQUIN
02-33	ARBRE À CAMES
02-34	VILEBREQUIN
02-35	CIRCUIT DE REFROIDISSEMENT - MOTEUR
02-36	POMPE A EAU
02-37	POMPE A EAU - COMMANDE
02-38	THERMOSTAT - REFROIDISSEMENT MOTEUR
02-39	COMMANDE DE VENTILATEUR
02-40	MOTEUR - CROCHET DE LEVAGE
02-41	TURBOCOMPRESSEUR
03-01	TUYAUX DE CARBURANT ET SYSTEME DE FILTRAGE
03-02	COMMANDES - PÉDALE D'ACCÉLÉRATION, ACCELERATEUR A MAIN
03-03	FILTRE COMBUSTIBLE
03-04	POMPE DINJECTION
03-05	POMPE D'ALIMENTATION
03-06	POMPE D'INJECTION - COMMANDE
03-07	SYSTÈME D'INJECTION - ALIMENTATION EN CARBURANT
03-08	SYSTÈME D'INJECTION - ALIMENTATION EN CARBURANT
03-09	SYSTÈME D'INJECTION - CONDUITE DE VIDANGE

TABLE OF CONTENTS

03-10	GROUPE D'INJECTION - INJECTEUR
04-01	DEMARREUR ET ALTERNATEUR
04-02	MONTAGE DE L'ALTERNATEUR
04-03	BATTERIE - CABLES
04-04	FAISCEAU, MOTEUR
04-05	CHASSIS, SYSTÈME ÉLECTRIQUE
04-06	CABINE ÉLECTRIQUE
04-07	CONSOLE DROITE
04-08	CONSOLE - GAUCHE
04-09	COMMANDES, POIGNEE DROITE - POIGNEE
04-10	COMMANDES, POIGNEE GAUCHE - POIGNEE
04-11	COMMANDES, POIGNEE DROITE - POIGNEE
04-12	COMMANDES, POIGNEE GAUCHE - POIGNEE
04-13	COMMANDES, POIGNEE DROITE - POIGNEE
04-14	COMMANDES, POIGNEE GAUCHE - POIGNEE
04-15	DECONNECTER LE CONTACTEUR - DÉMARRAGE ASSISTÉ À DISTANCE
04-16	PHARE DE TRAVAIL - GAUCHE
04-17	PHARE DE TRAVAIL - DROIT
04-18	SYSTÈME ÉLECTRIQUE - PHARES ET CABLAGE (NA)
04-19	SYSTÈME ÉLECTRIQUE - PHARES ET CABLAGE (EUROPE)
04-20	PHARES - DROIT
04-21	PHARES - GAUCHE
04-22	PHARES ARRIERE ET MONTAGES
04-23	ALARME DE RECUL
04-24	DOUILLE ACCESSOIRES ÉLECTRIQUES
04-25	DOUILLE ACCESSOIRES ÉLECTRIQUES (EUROPE)
04-26	AVERTISSEUR SONORE - SUPPORT
04-27	FAISCEAU, AVANT - AUXILIAIRE
04-28	GYROPHARE
04-29	PIÈCES SPÉCIALES POUR L'ITALIE - FEUX DECLAIRAGE DE PLAQUE DIMMATRICULATION
04-32	STROBOSCOPE
06-01	LEVIER DE COMMANDE - MODÈLE DE H
06-02	LEVIER DE COMMANDE - MODÈLE DE ISO (440)
06-03	LEVIER DE COMMANDE - MODÈLE DE ISO (440CT)
06-04	LEVIER DE COMMANDE, MONTAGE, GAUCHE - H MODÈLE
06-05	LEVIER DE COMMANDE, MONTAGE, DROIT - H MODÈLE
06-06	SYSTEME HYDROSTATIQUE - LEVIER DE COMMANDE COLIS, MODÈLE ISOMÉTRIQUE
06-07	CIRCUIT HYDRAULIQUE - LEVIER DE COMMANDE COLIS, MODÈLE ISOMÉTRIQUE
06-08	SYSTEME HYDROSTATIQUE - LEVIER DE COMMANDE COLIS, MODÈLE ISOMÉTRIQUE
06-09	SYSTEME HYDROSTATIQUE - POMPE, ASPIRATION ET REFOULEMENT (440)
06-10	POMPES DOUBLES - SUPPORT (440)
06-11	SYSTEME HYDROSTATIQUE - MOTEURS, VIDANGE DE CARTER (440)
06-12	SYSTEME HYDROSTATIQUE - POMPE, ASPIRATION ET REFOULEMENT (440CT)
06-13	SYSTEME HYDROSTATIQUE - MOTEURS (440CT)
06-14	SYSTEME HYDROSTATIQUE - MULTIPLE FONCTION (440CT)
06-15	SYSTEME HYDROSTATIQUE - POMPE RACCORDS (440CT)
06-16	HYDROSTATIQUE, TUYAUX, POMPE ET MOTEURS

TABLE OF CONTENTS

06-17	SYSTEME HYDROSTATIQUE - POMPE VERS REFROIDISSEUR (440 AVEC COMMANDE PILOTE)
06-18	SYSTEME HYDROSTATIQUE (COLLECTEURS/DISTRIBUTEUR DE COMMANDE, 440 AVEC COMMANDE PILOTE)
06-19	SYSTEME HYDROSTATIQUE - POMPE RACCORDS (440 AVEC COMMANDE PILOTE)
06-20	SYSTEME HYDROSTATIQUE - VITESSE SIMPLE, MOTEURS (440)
06-21	HYDROSTATIQUE, TUYAUX (440 AVEC COMMANDE PILOTE)
06-22	SYSTEME HYDROSTATIQUE - MULTIPLE FONCTION (440 AVEC COMMANDE)PILOTE
06-23	SYSTEME HYDROSTATIQUE - DEUX VITESSES, MOTEURS
06-24	SYSTEME HYDROSTATIQUE - DEUX VITESSES, MOTEURS (AVEC COMMANDE PILOTE)
06-25	SYSTEME HYDROSTATIQUE, MULTIPLE FONCTION MONTAGE
06-26	SYSTEME HYDROSTATIQUE - DEUX VITESSES, DISTRIBUTEUR
06-27	SYSTEME HYDROSTATIQUE - DEUX VITESSES, DISTRIBUTEUR (440CT)
06-28	SYSTEME HYDROSTATIQUE - DEUX VITESSES, DISTRIBUTEUR (AVEC COMMANDE PILOTE)
06-29	SYSTEME HYDROSTATIQUE (440CT EUROPE)
06-30	SYSTEME HYDROSTATIQUE (440 EUROPE)
06-31	SYSTEME HYDROSTATIQUE (440 EUROPE)
06-32	FILTRE - SUPPORT
06-33	POMPES DOUBLES (440)
06-34	POMPES DOUBLES (440)
06-35	POMPES DOUBLES (440)
06-36	POMPES DOUBLES (440)
06-37	POMPES DOUBLES (440)
06-38	POMPES DOUBLES (440)
06-39	POMPES DOUBLES - REXROTH (87546976)
06-40	POMPES DOUBLES - SOUPAPE DE REDUCTION PRESSION (87546976)
06-41	POMPES DOUBLES - SOUPAPE DE REDUCTION PRESSION (87546976)
06-42	POMPES DOUBLES - POMPE À ENGRENAGE (87546976)
06-43	POMPES DOUBLES - ROTATION MONTAGE, DROIT (87546976)
06-44	POMPES DOUBLES - ROTATION MONTAGE, GAUCHE ROTATION (87546976)
06-45	POMPES DOUBLES - COMMANDE HYDRAULIQUE (87546976)
06-46	POMPES DOUBLES - COMMANDE MONTAGE (87546976)
06-47	POMPES DOUBLES - REXROTH (87546977)
06-48	POMPES DOUBLES - SOUPAPE DE REDUCTION PRESSION (87546977)
06-49	POMPES DOUBLES - POMPE À ENGRENAGE (87546977)
06-50	POMPES DOUBLES - ROTATION MONTAGE, DROIT (87546977)
06-51	POMPES DOUBLES - ROTATION MONTAGE, GAUCHE ROTATION (87546977)
06-52	POMPES DOUBLES - COMMANDE HYDRAULIQUE (87546977)
06-53	POMPES DOUBLES - COMMANDE MONTAGE (87546977)
06-54	POMPE A ENGRENAGE
06-55	POMPE A ENGRENAGE (GRAND DEBIT)
06-56	MOTEUR - VITESSE SIMPLE
06-57	MOTEUR - VITESSE SIMPLE
06-58	MOTEUR - VITESSE SIMPLE
06-59	MOTEUR - DEUX VITESSES
06-60	MOTEUR - DEUX VITESSES
06-61	MOTEUR - DEUX VITESSES
06-62	MOTEUR - HYDROSTATICQUE (440CT)
06-63	CONDUITE D'ENTRAINEMENT

TABLE OF CONTENTS

06-64	ESSIEU
06-65	ROUES
06-66	ROUES
06-67	CHENILLE (440CT)
06-68	TRANSMISSION FINALE (440CT)
07-01	SYSTEME FREIN - CIRCUIT HYDRAULIQUE
08-01	SYSTEME HYDRAULIQUE - INCLINAISON
08-02	SYSTEME HYDRAULIQUE - RELEVAGE
08-03	SYSTEME HYDRAULIQUE - VIDANGE DE CARTER
08-04	SYSTEME HYDRAULIQUE - SYSTEME ANTI-TANGAGE
08-05	SYSTEME HYDRAULIQUE - MISE A NIVEAU AUTOMATIQUE
08-06	CIRCUIT AUXILIAIRE AVANT SECONDAIRE
08-07	OUTILS HYDRAULIQUES
08-08	OUTILS HYDRAULIQUES (AVEC COMMANDE PILOTE)
08-09	OUTILS HYDRAULIQUES
08-10	SYSTEME HYDRAULIQUE - SYSTEME DE RACCORDEMENT
08-11	SYSTEME HYDRAULIQUE - SYSTEME DE RACCORDEMENT
08-12	SYSTEME HYDRAULIQUE - SYSTEME DE RACCORDEMENT (ITALIEN)
08-13	SYSTEME HYDRAULIQUE - SYSTEME DE RACCORDEMENT (ITALIEN)
08-14	VERIN - INCLINAISON
08-15	VERIN - RELEVAGE
08-16	GRAND DEBIT, ASPIRATION ET REFOULEMENT
08-17	GRAND DEBIT - CIRCUIT AUXILIAIRE
08-18	GRAND DEBIT, DISTRIBUTEUR DE COMMANDE
08-19	COMMANDE DE DISTRIBUTEUR - GRAND DEBIT
08-20	COMMANDE DE DISTRIBUTEUR
08-21	DISTRIBUTEUR DE COMMANDE - 87583285 DISTRIBUTEUR
08-22	DISTRIBUTEUR DE COMMANDE - 87546974 DISTRIBUTEUR
08-23	DISTRIBUTEUR DE COMMANDE - 87546975 DISTRIBUTEUR
08-24	DISTRIBUTEUR DE COMMANDE - COLIS
08-25	DISTRIBUTEUR DE COMMANDE - SURETÉ, PRINCIPALE
08-26	DISTRIBUTEUR DE COMMANDE - CIRCUIT DE SÉCURITÉ
08-27	DISTRIBUTEUR DE COMMANDE, COLIS - TIROIRS
08-28	DISTRIBUTEUR DE COMMANDE, COLIS - TIROIRS
08-29	DISTRIBUTEUR DE COMMANDE, COLIS - TIROIRS
08-30	DISTRIBUTEUR DE COMMANDE, VÉRIFIEZ LA VALVE
08-31	DISTRIBUTEUR DE COMMANDE, COLIS - TIROIRS ET CLIQUETS
08-32	DISTRIBUTEUR DE COMMANDE, COLIS - TIROIRS
08-33	DISTRIBUTEUR DE COMMANDE, COLIS - TIROIRS
08-34	DISTRIBUTEUR DE COMMANDE - COLIS
08-35	DISTRIBUTEUR DE COMMANDE, COLIS - TIROIRS
08-36	DISTRIBUTEUR DE COMMANDE, COLIS - TIROIRS
08-37	DISTRIBUTEUR DE COMMANDE, COLIS - TIROIRS
08-38	DISTRIBUTEUR DE COMMANDE, COLIS - TIROIRS, EHPV
08-39	DISTRIBUTEUR DE COMMANDE, COLIS - TIROIRS, EHPV
08-40	CIRCUIT AUXILIAIRE AVANT SECONDAIRE - DISTRIBUTEUR
09-01	RELEVAGE DE LA CHARGEUSE
09-02	VERIN DE LEVAGE - COUVERCLES
09-03	COUPLEUR MECANIQUE
09-04	COUPLEUR MECANIQUE (ITALIEN)
09-05	COUPLEUR HYDRAULIQUE

TABLE OF CONTENTS

09-06	GODETS - CHARGEUSE, POUSSIÈRE/FONDERIE
09-07	GODETS - CHARGEUSE
09-08	GODETS - CHARGEUSE
09-09	GODETS - CHARGEUSE
09-10	REBORD COUPANT DU GODET, REBORD TRANCHANT VISSÉ
09-11	PIÈCES SPÉCIALES POUR L'ITALIE - GARANT DE LA GODET
09-12	FOURCHE A PALETTE
09-13	COMMANDES - MONTAGE
09-14	CONSOLE - DROIT
09-15	CONSOLE - GAUCHE
09-16	CHASSIS (440)
09-17	CHASSIS (440)
09-18	CHASSIS (440CT)
09-19	CHASSIS (440CT)
09-20	COMMANDES - CHARGEUSE ET ENTRAINEMENT DROIT
09-21	COMMANDES - CHARGEUSE ET ENTRAINEMENT GAUCHE
09-22	COMMANDES - CHARGEUSE ET ENTRAINEMENT
09-23	COMMANDES - CIRCUIT HYDRAULIQUE AUX.
09-24	CAPOT
09-25	CAPOT - CLIMATISATION
09-26	PORTE ARRIERE
09-27	PORTE ARRIERE
09-28	VERROU - PORTE ARRIERE
09-29	PORTE DE CABINE - MONTAGE
09-30	PORTE DE CABINE - LAVE-GLACE
09-31	PORTE DE CABINE
09-32	PORTE DE CABINE - VISIÈRE
09-33	PORTE DE CABINE - ESSUIE-GLACE, AVANT
09-34	PORTE DE CABINE - POIGNEE
09-35	PORTE DE DÉMOLITION - MONTAGE
09-36	PORTE DE DÉMOLITION
09-37	TAPIS DE PLANCHER
09-38	CADRE ET BARRE DE SECURITE
09-39	BARRE DE SECURITE
09-40	CEINTURES DE SÉCURITÉ (2 IN)
09-41	CEINTURES DE SÉCURITÉ (3 IN)
09-42	ENDOSSER LA CEINTURE
09-43	RETROVISEUR
09-44	PIÈCES SPÉCIALES POUR L'ITALIE - RÉTROVISSEUR
09-45	SUPPORT DU SIEGE - STANDARD
09-46	SUPPORT DU SIEGE - SUSPENSION
09-47	SUPPORT DU SIEGE - DELUXE SUSPENSION
09-48	VITRE, ARRIÈRE
09-49	VITRE, ARRIÈRE - CHAUFFAGE ET AIR CONDITIONNE
09-50	VITRES, DESSUS
09-51	VITRES, LATERAL
09-52	PAVILLON - STANDARD
09-53	CHAUFFAGE ET AIR CONDITIONNE - PAVILLON
09-54	BORD INTÉRIEUR
09-55	RADIO, HAUTPARLEUR ET ANTENNE
09-56	RADIO, HAUTPARLEUR ET ANTENNE

TABLE OF CONTENTS

09-57	CHAUFFAGE DELUXE
09-58	CHAUFFAGE DELUXE
09-59	CLIMATISATION
09-60	CHAUFFAGE
09-61	CHAUFFAGE ET AIR CONDITIONNE
09-62	ÉCRAN THERMIQUE
09-63	INSONORISATION MOTEUR
09-64	RÉDUCTION DU BRUIT, PORTE ARRIERE
09-65	CROCHET DE LEVAGE
09-66	CROCHET DE LEVAGE
09-67	AUTOCOLLANTS - ANGLAIS
09-68	AUTOCOLLANTS (440CT)
09-69	AUTOCOLLANTS
09-70	AUTOCOLLANTS
09-71	AUTOCOLLANTS - DANOIS, NÉERLANDAIS, FINNOIS
09-72	AUTOCOLLANTS - FRANÇAIS, ALLEMAND, GREC
09-73	AUTOCOLLANTS - ITALIEN, NORVÉGIEN, POLONAIS
09-74	AUTOCOLLANTS - PORTUGAIS, ESPAGNOL, SUEDOIS
09-75	AUTOCOLLANTS - PORTUGAIS DU BRÉSIL, FRANÇAIS CANADIEN, ESPAGNOL D'AMERIQUE LATINE

GÉNÉRALITÉS

AVIS DE PROPRIÉTÉ

Les données contenues dans ce manuel constituent la propriété de cette société. Toute reproduction ou utilisation de toute partie de ce manuel à d'autres fins que l'utilisation et l'entretien de notre matériel ne sont permises que si elles sont expressément autorisées par écrit.

Des copies supplémentaires peuvent être obtenues auprès du concessionnaire. Pour obtenir des exemplaires supplémentaires, s'adresser au concessionnaire et donner en référence le numéro de publication imprimé au bas de la couverture arrière de ce manuel ou sur la page de titre.

POLITIQUE DE LA SOCIÉTÉ

L'entreprise, dont la politique est fondée sur le progrès constant, se réserve le droit de changer ses prix et d'apporter des modifications à la conception et aux caractéristiques du matériel à tout moment, sans préavis et sans obligation de modifier les machines précédemment fabriquées.

Toutes les données qui apparaissent dans le présent manuel peuvent faire l'objet de variations dues aux contraintes de production. Les dimensions et les mesures de poids ne sont qu'approximatives et les machines illustrées ne sont pas nécessairement en état standard. Pour des données précises au sujet d'un modèle de machine en particulier, consulter un concessionnaire agréé.

PIÈCES ET ACCESSOIRES

Des pièces et des accessoires d'origine ont été conçus spécifiquement pour ces machines.

New Holland souhaite préciser que les pièces et accessoires « non originaux » n'ont PAS été examinés et mis en vente par la société. La pose et l'utilisation de ces produits pourraient s'avérer néfaste pour la conception de la machine et donc altérer ses caractéristiques de sécurité. La compagnie ne peut être tenue responsable des dégâts résultant de l'utilisation de pièces et d'accessoires « non originaux ».

AMÉLIORATIONS

Nous nous efforçons de sans cesse continuer à améliorer nos produits. Nous nous réservons le droit d'apporter des améliorations ou modifications dès qu'elles s'avèrent pratiques et possibles, sans engagement ni obligation d'apporter des modifications ou des ajouts sur les équipements vendus auparavant.

CODES DE MODÈLES

Les machines énumérées ne sont peut-être pas toutes disponibles dans tous les pays ou sur tous les marchés ; en conséquence, pour obtenir les informations les plus récentes, consulter le concessionnaire.

ASSISTANCE AU PROPRIÉTAIRE

Nous souhaitons que vous soyez entièrement satisfait de votre investissement. Tous les problèmes rencontrés lors de l'utilisation de l'équipement sont normalement gérés par le service Entretien des concessionnaires, mais il est possible que des malentendus aient lieu. Si le problème n'a pas été géré de façon satisfaisante, procéder comme suit.

1. Contacter le propriétaire ou le directeur de la concession, expliquer le problème et demander de l'aide. En cas de besoin d'assistance supplémentaire, le concessionnaire peut contacter directement nos bureaux.
2. Fournir au concessionnaire les renseignements suivants :
   - Nom, adresse et numéro de téléphone
   - Modèle de la machine et numéro de série
   - Nom et adresse du concessionnaire
   - Date d'achat et nombre d'heures d'utilisation
   - Nature du problème

Garder à l'esprit le fait que le problème sera très certainement réglé au sein de la concession, à l'aide des infrastructures, des équipements et du personnel du concessionnaire. C'est pourquoi il est important que le premier contact se situe au niveau du concessionnaire.

PIÈCES DÉTACHÉES

Pour maintenir un fonctionnement efficace, utiliser des pièces détachées d'origine.

Lors de la commande de pièces, fournir les informations suivantes.

- Modèle de la machine
- Numéros de série de la machine et du moteur
- Référence de la pièce du catalogue de pièces détachées

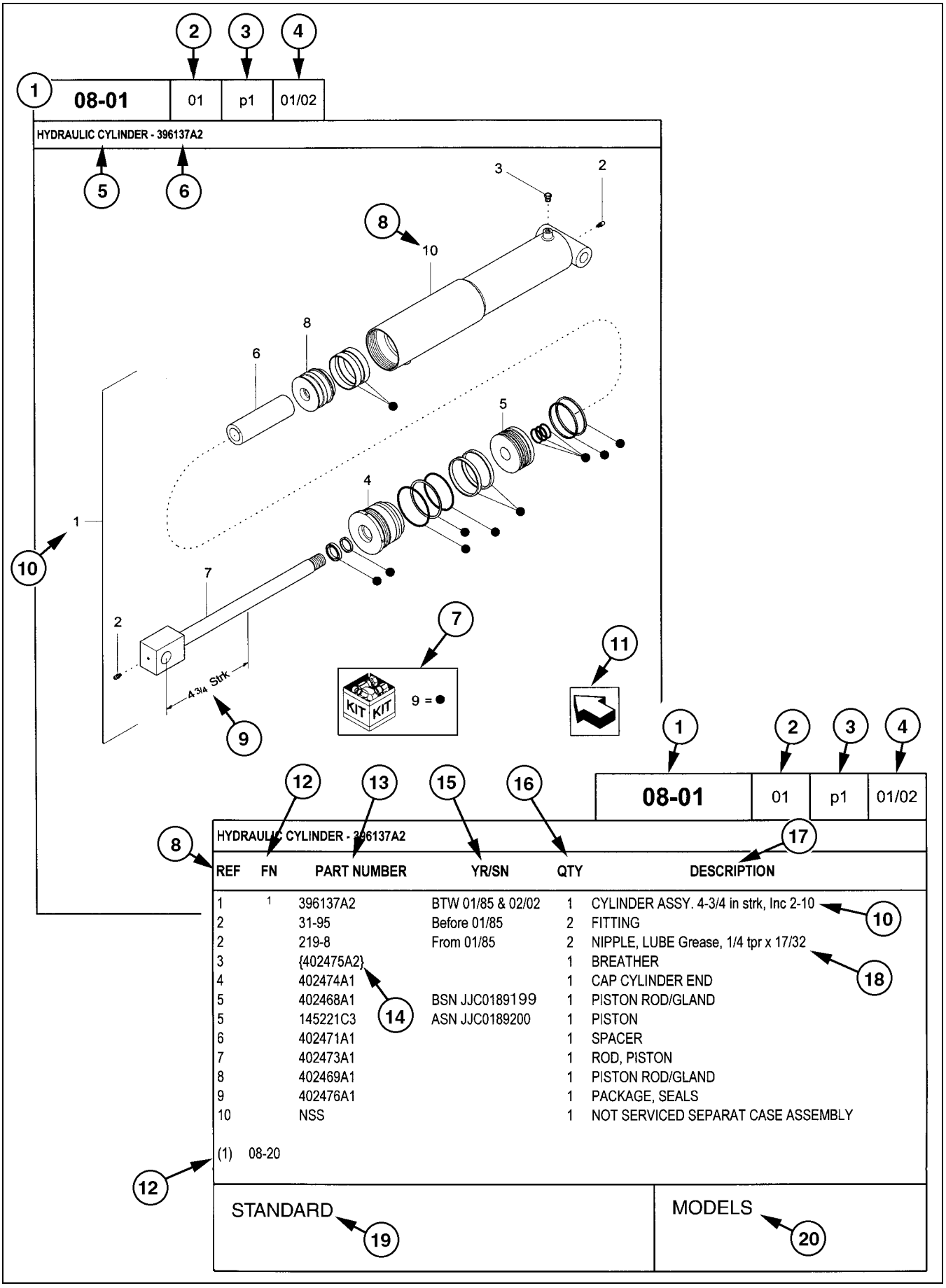

REF	FN	PART NUMBER	YR/SN	QTY	DESCRIPTION
1	1	396137A2	BTW 01/85 & 02/02	1	CYLINDER ASSY. 4-3/4 in strk, Inc 2-10
2		31-95	Before 01/85	2	FITTING
2		219-8	From 01/85	2	NIPPLE, LUBE Grease, 1/4 tpr x 17/32
3		{402475A2}		1	BREATHER
4		402474A1		1	CAP CYLINDER END
5		402468A1	BSN JJC0189199	1	PISTON ROD/GLAND
5		145221C3	ASN JJC0189200	1	PISTON
6		402471A1		1	SPACER
7		402473A1		1	ROD, PISTON
8		402469A1		1	PISTON ROD/GLAND
9		402476A1		1	PACKAGE, SEALS
10		NSS		1	NOT SERVICED SEPARAT CASE ASSEMBLY

(1) 08-20

STANDARD

MODELS

UTILISATION DU CATALOGUE DE PIÈCES

1. Numéro de la figure
2. Code de séquence dans le numéro de la figure
3. Numéro de la page dans le code de séquence
4. Date d'impression (mois/année)
5. Description de la figure
6. Informations générales relatives à la figure
7. Pièces fournies dans les kits de réparation selon référence de symbole
8. Chiffre-référence de la référence
9. Caractéristiques techniques relatives à la pièce indiquée
10. Le chiffre-référence de la figure inclut des articles entre crochets, les articles inclus peuvent aussi être énumérés dans la zone de description additionnelle
11. Orientation – La flèche indique l'avant de la machine
12. Note de pied de page – Informations supplémentaires relatives à la référence. Dans cet exemple, 08-20 correspond à une autre figure où cette pièce est illustrée
13. Référence
    NSS = pièces sans entretien
    Numéros entre parenthèses = localement non disponibles comme pièces détachées
14. Localement non disponible comme pièce détachée
15. Année/N° de série

    Année
    Avant 01/85 = pièce valable pour la production de janvier 1985 et antérieure
    À partir de 01/85 = pièce valable pour la production de janvier 1985 et postérieure
    Entre 01/85 et 02/02 = pièce valable pour les machines produites entre janvier 1985 et février 2002

    Numéro de série (P.I.N.)
    BSN JJC0268800 = pièce valable pour les numéros de série JJC0268800 et inférieurs
    ASN JJC0268800 = pièce valable pour les numéros de série JJC0268800 et supérieurs
    Entre JJC0178000 et JJC0179000 = pièce valable pour les numéros de série compris entre JJC0178000 et JJC0179000
16. La quantité totale de pièces auxquelles il est fait référence dans cette page. La quantité peut être remplacée par les indications suivantes :
    AR = Selon besoin
    X = Selon le besoin
17. Description
18. Description complémentaire de la pièce pour faciliter la confirmation de l'identification
19. Notes de la figure
20. Numéro(s) de modèle

GAUCHE ET DROIT

La référence aux côtés gauche et droit dans ce catalogue est identifiée par l'opérateur debout à l'arrière de l'unité de base (sans outil arrière), regardant vers l'avant de la machine (en marche avant normale).

Pour les pages concernant les outils de la machine, les côtés droit et gauche sont définis par l'opérateur assis en position correcte de commande de l'outil.

DIMENSIONS

Les dimensions impériales et métriques ne montrent pas les désignations numériques du filetage standard. Un chiffre suivant un point virgule (;) est la classe ou le grade de la visserie. Une virgule (,) représente le point séparateur décimal (.) du système impérial.

SIGNIFICATION DES ABRÉVIATIONS

AC	courant alternatif
adj	réglable
amp	ampère
AR	selon le besoin
ASN	numéro de série et supérieur P.I.N. et supérieur

blkhd	cloison
br	branche
BSN	avant numéro de série avant P.I.N.
BTW	entre

cc	centimètre cube
cl	classe
cmprsn	compression
cn pt	bout pointu
cp pt	bout cuvette
CRS	acier en alliage de chrome
CST	acier au carbone
cu yd	verge cube

DC	courant continu
deg	degré
dg pt	bout cylindrique long
dia	diamètre
dr type	type de transmission

fc	face
fc sl	joint à face
fem	femelle
fem PT	filetage de tube femelle
fl	évasement
flat pt	bout plat
ft	pied(s)

ga	jauge
gal	gallon(s)
gpm	gallons par minute
gr	grade

hd	tête
hdg pt	bout cylindrique court
hp	chevaux
ID	diamètre intérieur
in	pouce(s)
Incl.	comprend
inv fl	évasement inversé

K	kilo
kg	kilogramme
km/h	kilomètres/heure

L	litre
lb	livre
lb-ft	livre/pied
lg	long
LH	côté gauche
LH thd	filetage à gauche

M	(préfixe) taille métrique du filetage
m	mètre
ml	millilitre
mm	millimètre

NF	National Fine
No.	n°
NPT	pas de tuyauterie
NS	National Super Fine

OD	diamètre extérieur
ohm	ohm
Or	joint torique
ORB	bossage de joint torique
ORFS	joint torique à face
ov cntr	hypercentrique
ov pt	bout ovale
oz	once

P	pas
psi	livre par pouce carré
pt	pinte
PT	filetage de tuyau

rd	rond
rd holes	trous ronds
RH	droit
RH thd	filetage à droite
rpm	tr/mn

sl	autobloquant
sq	carré
SST	acier inoxydable
st	à auto-taraudage
strk	course
sw	pivot

T	dent
thk	épais
tpr	conique
tube OD	diamètre extérieur de tube

V	volt(s)
W	watt(s)
X	selon le besoin
yd	yard

SECTION INDEX

Moteur

02-01	VENTILATEUR, RADIATEUR - CIRCUIT DE RECUPERATION DU LIQUIDE DE REFROIDISSEMENT
02-02	RADIATEUR/REFROIDISSEUR D'HUILE
02-03	ECHAPPEMENT
02-04	ECHAPPEMENT, ASPIRATEUR
02-05	FILTRE A AIR - MOTEUR
02-06	MOTEUR - THERMIQUE SUPPORT
02-07	MOTEUR - THERMIQUE SUPPORT (EUROPE)
02-08	MOTEUR - CHAUFFE-BLOC
02-09	BLOC CYLINDRES
02-10	BLOC CYLINDRES - COUVERCLES, ARRIERE
02-11	BLOC CYLINDRES - COUVERCLES, VOLANT
02-12	BLOC CYLINDRES - COUVERCLES, AVANT
02-13	COUVERCLE DE PIGNONS- PLAQUE
02-14	COUVERCLES CULASSE
02-15	BLOC CYLINDRES STIFFENER PLATE
02-16	CULASSE DE CYLINDRE
02-17	POMPE À HUILE, CARTER
02-18	MOTEUR, HUILE
02-19	FILTRE ET REFROIDISSEUR D'HUILE
02-20	FILTRE A HUILE - MOTEUR
02-21	POMPE A HUILE - MOTEUR
02-22	REMPLISSAGE D'HUILE, MOTEUR
02-23	VIDANGE DE L'HUILE
02-24	CAPTEURS MOTEUR - MOTEUR, HUILE
02-25	RENIFLARD - MOTEUR
02-26	COLLECTEURS
02-27	COLLECTEURS
02-28	PISTONS - BIELLES
02-29	BIELLES
02-30	AXE DE CULBUTEUR
02-31	VOLANT - MOTEUR
02-32	POULIE - VILEBREQUIN
02-33	ARBRE À CAMES
02-34	VILEBREQUIN
02-35	CIRCUIT DE REFROIDISSEMENT - MOTEUR
02-36	POMPE A EAU
02-37	POMPE A EAU - COMMANDE
02-38	THERMOSTAT - REFROIDISSEMENT MOTEUR
02-39	COMMANDE DE VENTILATEUR
02-40	MOTEUR - CROCHET DE LEVAGE
02-41	TURBOCOMPRESSEUR

VENTILATEUR, RADIATEUR - CIRCUIT DE RECUPERATION DU LIQUIDE DE REFROIDISSEMENT

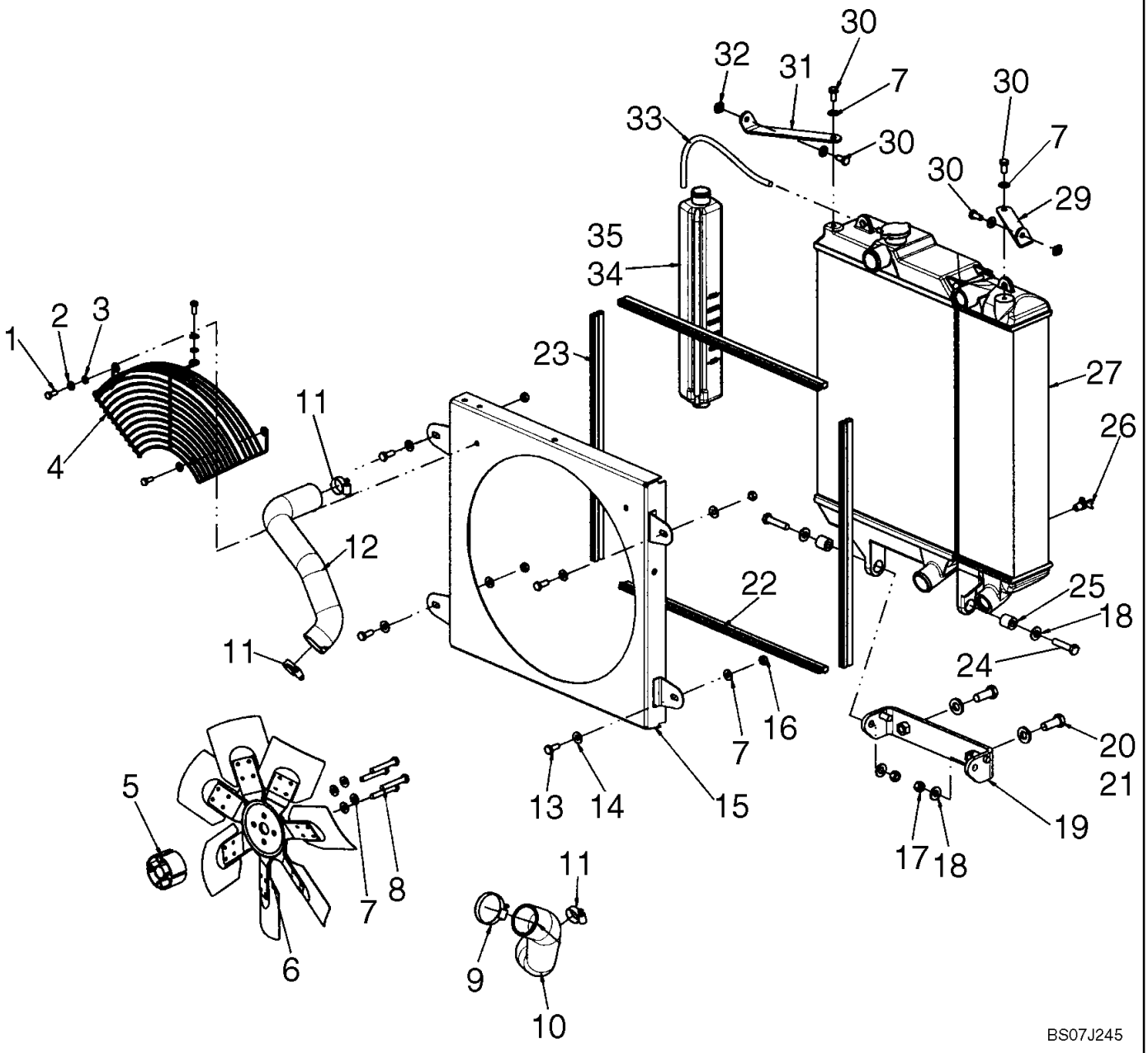

VENTILATEUR, RADIATEUR - CIRCUIT DE RECUPERATION DU LIQUIDE DE REFROIDISSEMENT

REF	FN	PART NUMBER	YR/SN	QTY	DESCRIPTION
1		120104		3	BOULON, Hex, M8 x 20, 8.8
2		322358		3	RONDELLE BELLEVILLE, Belleville, M8
3		86624184		3	RONDELLE, M8 x 16 x 1.6
4		{87594970}		1	Fan Guard
5		87565745		1	ENTRETOISE, Fan Spacer, 43mm
5		87565746		1	ENTRETOISE, Fan Spacer, 60mm (Europe)
6		87025470		1	VENTILATEUR, 480 Dia Pusher
7		140045		12	RONDELLE BELLEVILLE, Belleville, M10
8		120071		4	BOULON, Hex, M10 x 65, 8.8
8		120073		4	BOULON, Hex, M10 x 80, 8.8, Used With 87565746 Fan Spacer
9		86625032		1	BRIDE, FLEXIBLE, #48, 2.56/3.50 Type F Worm
10		87661380		1	FLEXIBLE, Formed Hose, Lower Radiator
11		84674		3	BRIDE, FLEXIBLE, #28, 1.31/2.25 Type F Worm
12		87661378		1	FLEXIBLE, Formed Hose, Upper Radiator
13		43139		4	VIS, M10 X 25 Full 8.8 ZND
14		86625253		4	RONDELLE, M11 x 24 x 2
15		87660828		1	BUSE, Fan Shroud
16		86500689		4	ECROU, M10, Cl 10
17		{87533547}		2	Nut, M12 x 1.75 10 ZND
18		86625254		4	RONDELLE, M12 x 28 x 2.5
19		87676100		1	PATTE FIXATION, Bracket, Lower Hinge Mount
20		43168		2	BOULON, Hex, M16 x 40, 8.8
21		86639326		2	RONDELLE, M17.5 x 34 x 5, HT
22		{87578980}		2	Bulb Seal, 590mm (23 1/4 in.)
23		{87648128}		2	Bulb Seal, 562mm (22 1/8 in.)
24		87021825		2	BOULON, Hex, M12 x 55, 10.9
25		87626729		2	ENTRETOISE
26		86625234		1	ROBINET DE VIDANGE
27		87660842		1	RADIATEUR, Radiator And Oil Cooler; See Fig 02-02
28		87687375		1	RADIATEUR, Radiator Cap
29		87651800		1	PATTE FIXATION, Upper Radiator Mount, LH
30		43138		4	VIS, Hex, M10 x 20, 8.8, Full Thd
31		87651799		1	PATTE FIXATION, Upper Radiator Mount, RH
32		230427A1		2	ECROU

VENTILATEUR, RADIATEUR - CIRCUIT DE RECUPERATION DU LIQUIDE DE REFROIDISSEMENT

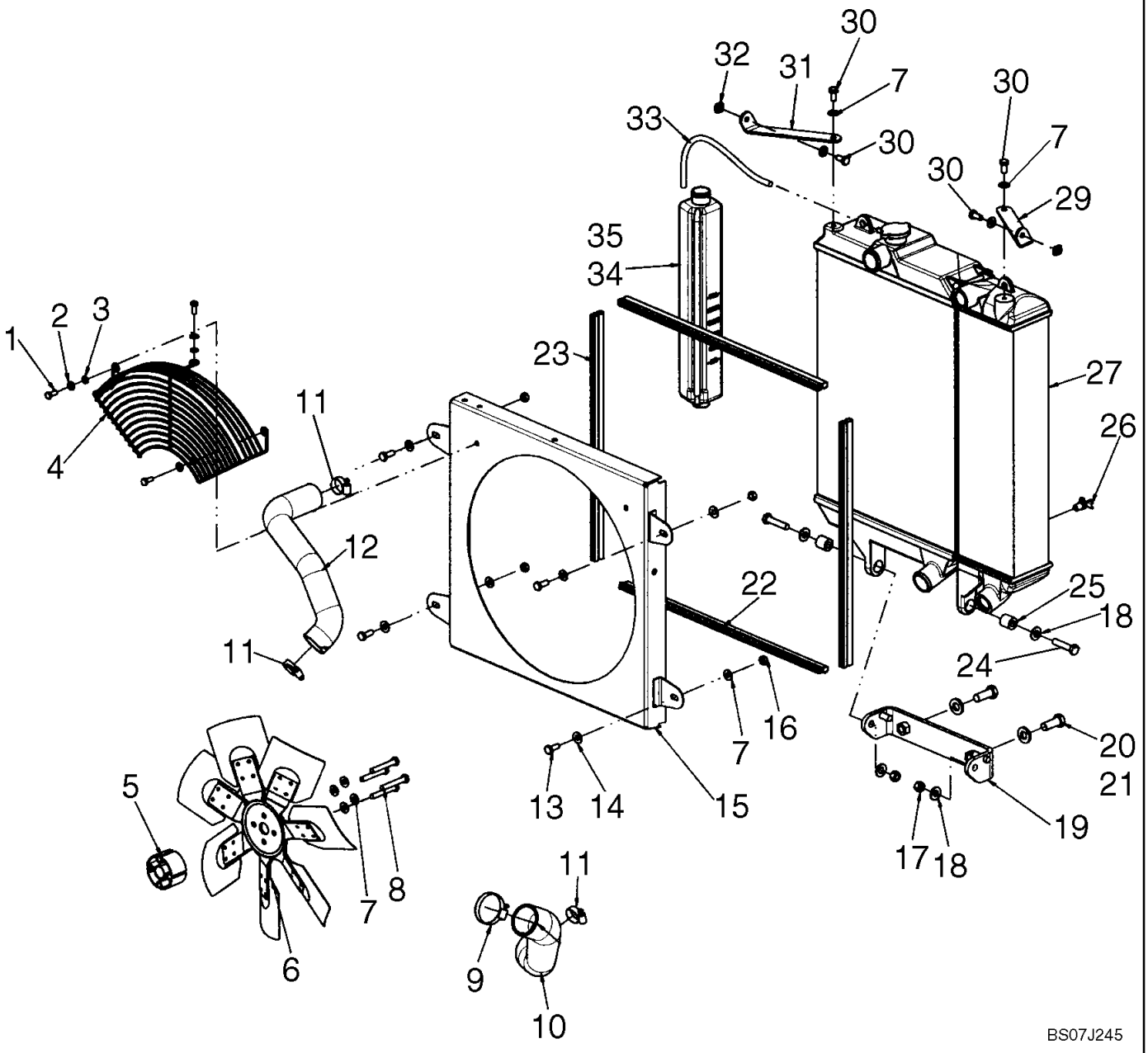

VENTILATEUR, RADIATEUR - CIRCUIT DE RECUPERATION DU LIQUIDE DE REFROIDISSEMENT

REF	FN	PART NUMBER	YR/SN	QTY	DESCRIPTION
33		{87534725}		1	Coolant Recovery Hose, 400mm (15 3/4 in.)
34		87020980		1	RESERVOIR DEPRESSEUR, Coolant Recovery Bottle; Incl. 35
35		257884A1		1	BOUCHON, Cap

RADIATEUR/REFROIDISSEUR D'HUILE

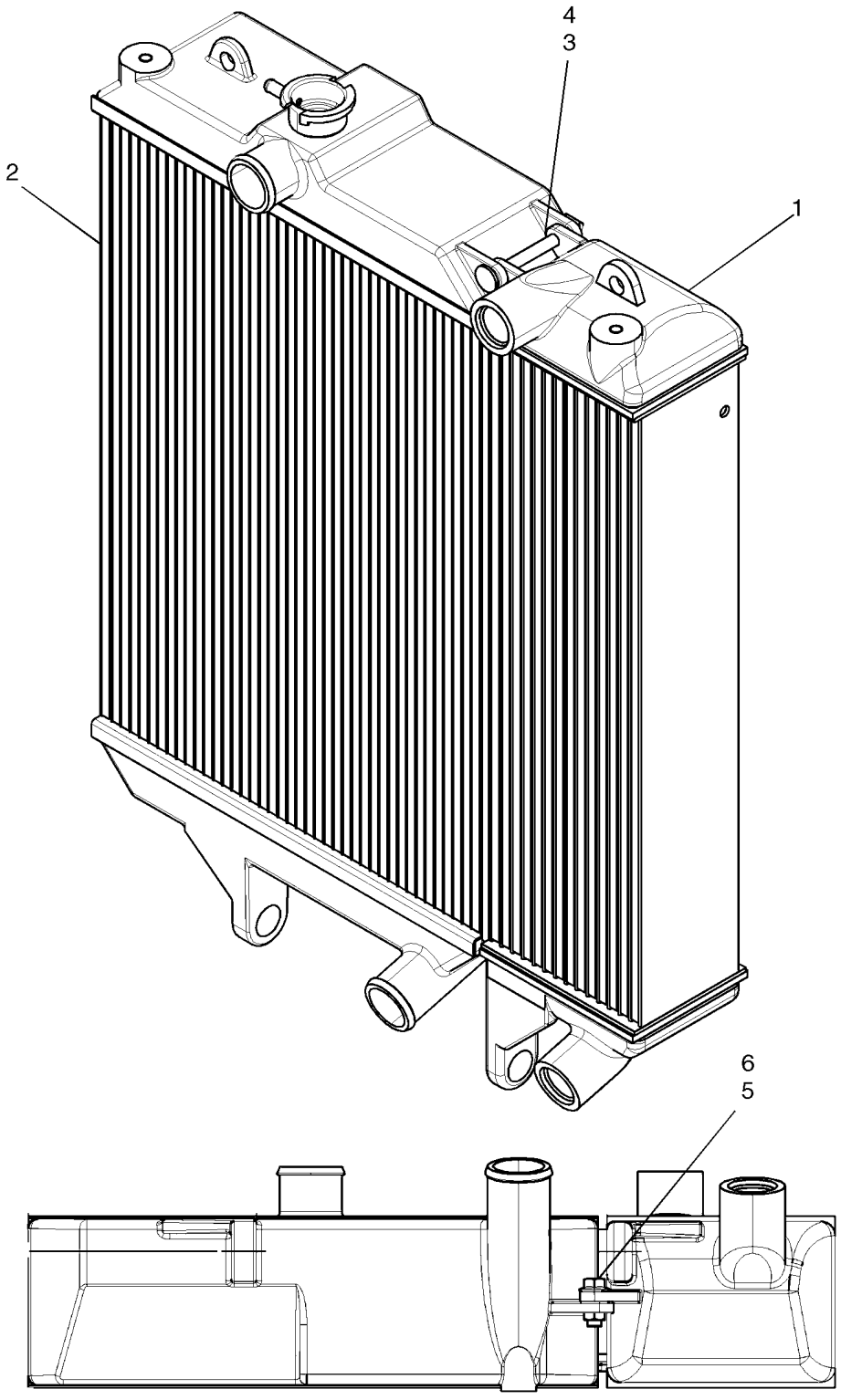

BS07K378

RADIATEUR/REFROIDISSEUR D'HUILE

REF	FN	PART NUMBER	YR/SN	QTY	DESCRIPTION
		87660842		1	RADIATEUR, Incl 1 - 8
1		87687372		1	RADIATEUR, Oil Cooler
1		87688650		1	REFROIDISSEUR D'HUILE, Low Fin Density Oil Cooler
2		87688523		1	RADIATEUR, Standard Radiator And Decal
2		87688649		1	RADIATEUR, Low Fin Density Radiator And Decal
3		87687373		1	RADIATEUR, Pin
4		87687374		1	RADIATEUR, Clip
5		9804262		1	BOULON, Hex Flg, M10 x 30, 8.8
6		9804278		1	ECROU, M10 x 1.5, Flg, Cl 8
7		87687376		1	RADIATEUR, Seal
8		87687375		1	RADIATEUR, Radiator Cap; Not Illustrated

ECHAPPEMENT

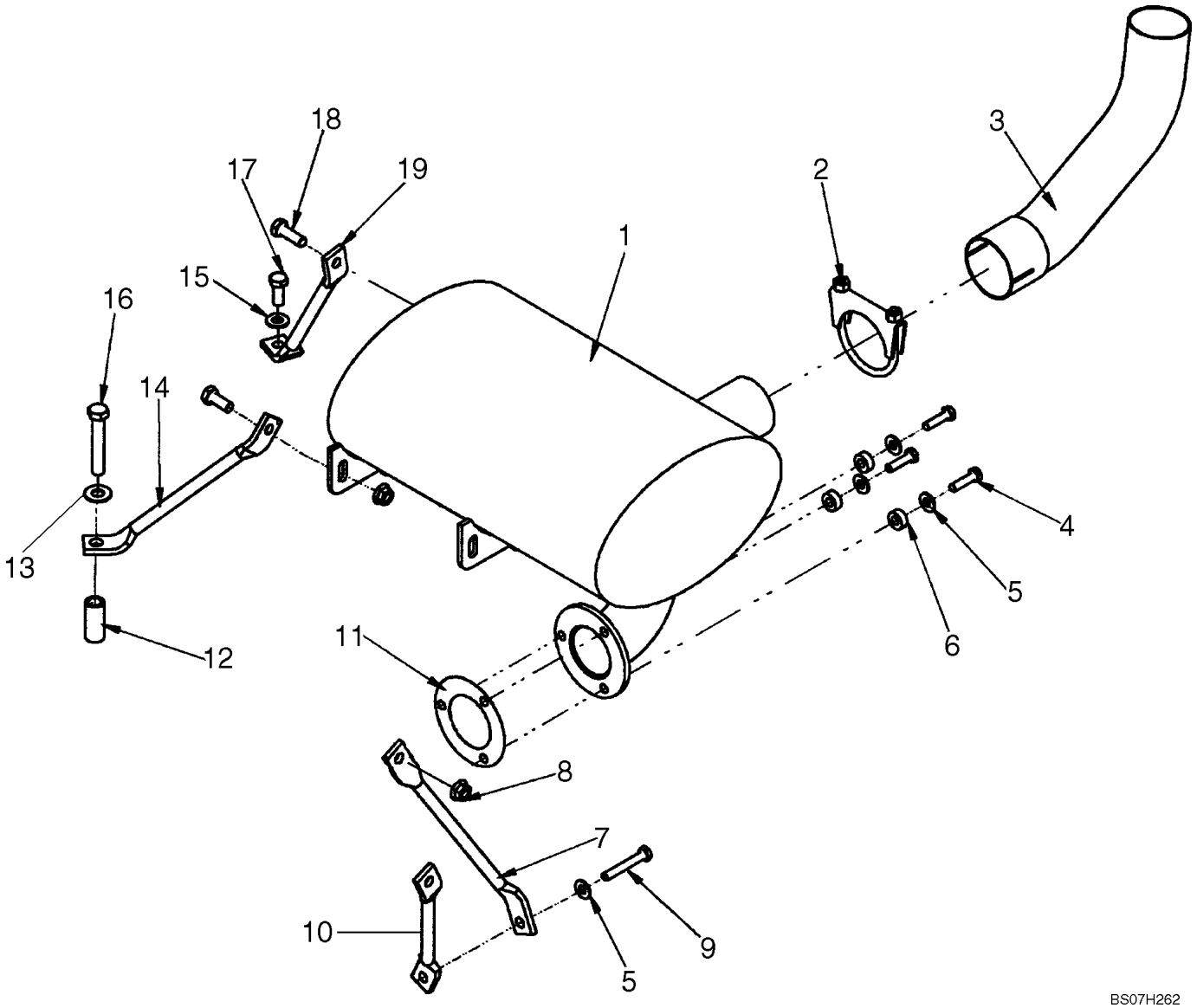

ECHAPPEMENT

REF	FN	PART NUMBER	YR/SN	QTY	DESCRIPTION
1		{87572831}		1	Muffler, Insulated
2		87461995		1	BRIDE
3		87654919		1	TUBE ECHAPPEMENT, Tube, Exhaust
4		43138		3	VIS, Hex, M10 x 20, 8.8, Full Thd
5		86625263		4	RONDELLE, M8 x 20 x 1.6
6		86633393		3	ENTRETOISE, 11/32 ID X 3/4 OD X 5/16 Thk; If Used
7		87033361		1	TRINGLE, Muffler Support
8		411345A1		3	ECROU, M10
9		16044321		1	BOULON, Hex, M8 x 55, 8.8
10		87029961		1	TRINGLE, Muffler Support
11		86606073		1	JOINT, Muffler
12		86608204		1	ENTRETOISE
13		140046		1	RONDELLE BELLEVILLE, Belleville, M12
14		87034631		1	TRINGLE, Muffler Support
15		140045		1	RONDELLE BELLEVILLE, Belleville, M10
16		9706717		1	BOULON, Hex, M12 x 70, 8.8, Full Thd
17		43139		3	VIS
18		87034630		1	TRINGLE, Muffler Support
19		43140		1	BOULON, Hex, M10 x 30, 8.8, Full Thd
20		87584781		1	SILENCIEUX, Muffler Wrap, Europe; Not Illustrated
21		87393399		9	RESSORT, Stainless Steel Tie; Not Illustrated

ECHAPPEMENT, ASPIRATEUR

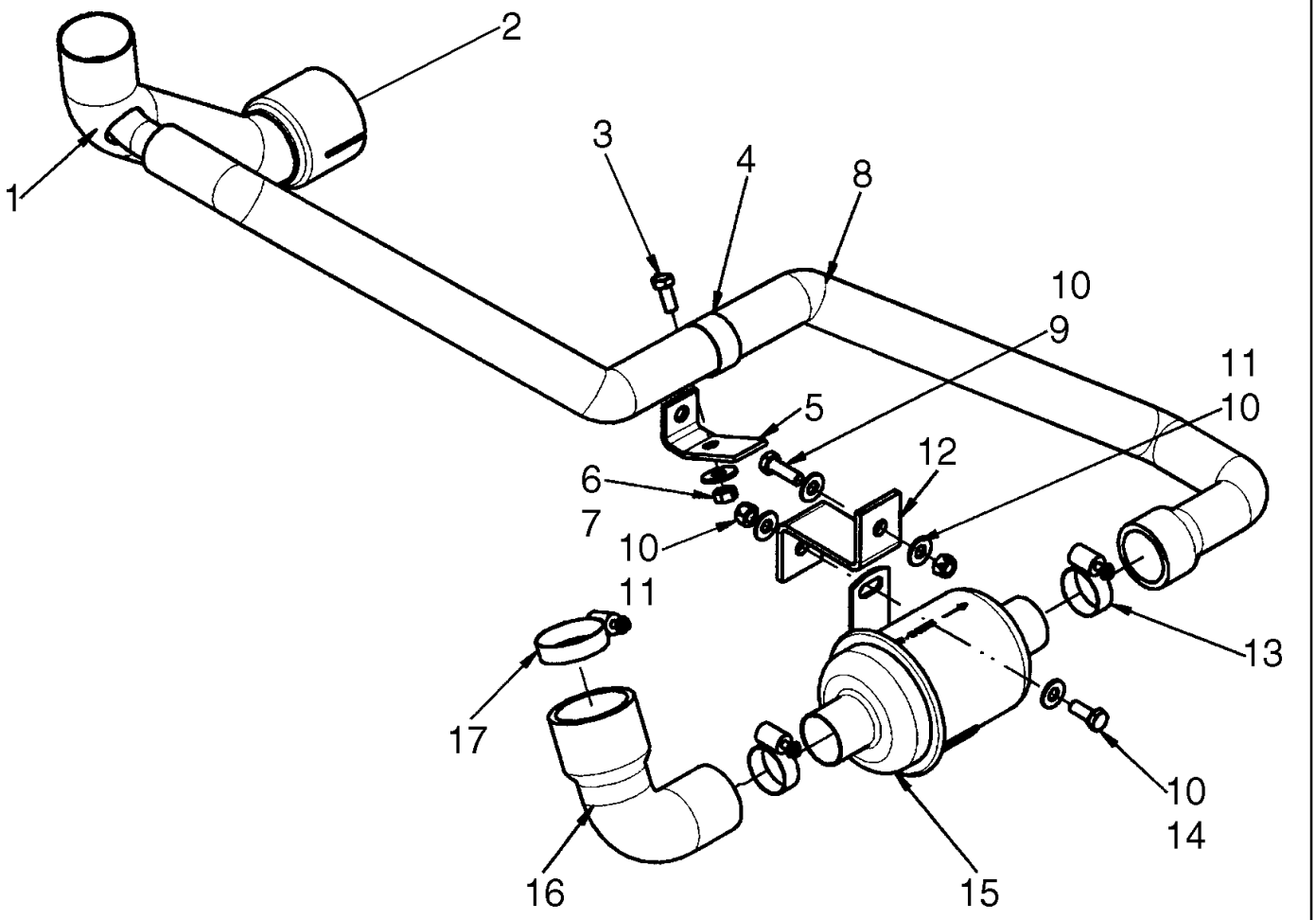

BS07K720

ECHAPPEMENT, ASPIRATEUR

REF	FN	PART NUMBER	YR/SN	QTY	DESCRIPTION
		87638327		1	KIT ASSISTANCE, Kit, Aspirator; Incl 1 - 17
1		507586		1	BRIDE, FLEXIBLE, #20, 0.81/1.75 Type F Worm
2		87654923		1	TUBE ECHAPPEMENT, Aspirator
3		86625000		1	BOULON, Hex, M8 x 18, 8.8, Full Thd
4		{87648719}		1	CLAMP 36.5 mm P Insul 3/8 Bolt
5		87615745		1	PATTE FIXATION, Aspirator Hose Support
6		9706690		1	ECROU, M8, Cl 8
7		86639313		1	RONDELLE, M8 x 20 x 1.6
8		87615743		1	FLEXIBLE, Tail Pipe To Aspirator
9		43127		1	BOULON, Hex, M8 x 25, 8.8
10		86625263		4	RONDELLE, M8 x 20 x 1.6
11		9628098		2	CONTRE-ECROU, M8 x 1.25, Cl 10
12		87615741		1	PATTE FIXATION, Aspirator Mounting
13		84674		2	BRIDE, FLEXIBLE, #28, 1.31/2.25 Type F Worm
14		120104		1	BOULON, Hex, M8 x 20, 8.8
15		406089A2		1	VALVE, Aspirator Check
16		87615742		1	FLEXIBLE, Air Cleaner To Aspirator
17		86624194		1	BRIDE, FLEXIBLE, #36, 1.81/2.75 Type F Worm

02-05		p1	11/07

FILTRE A AIR - MOTEUR

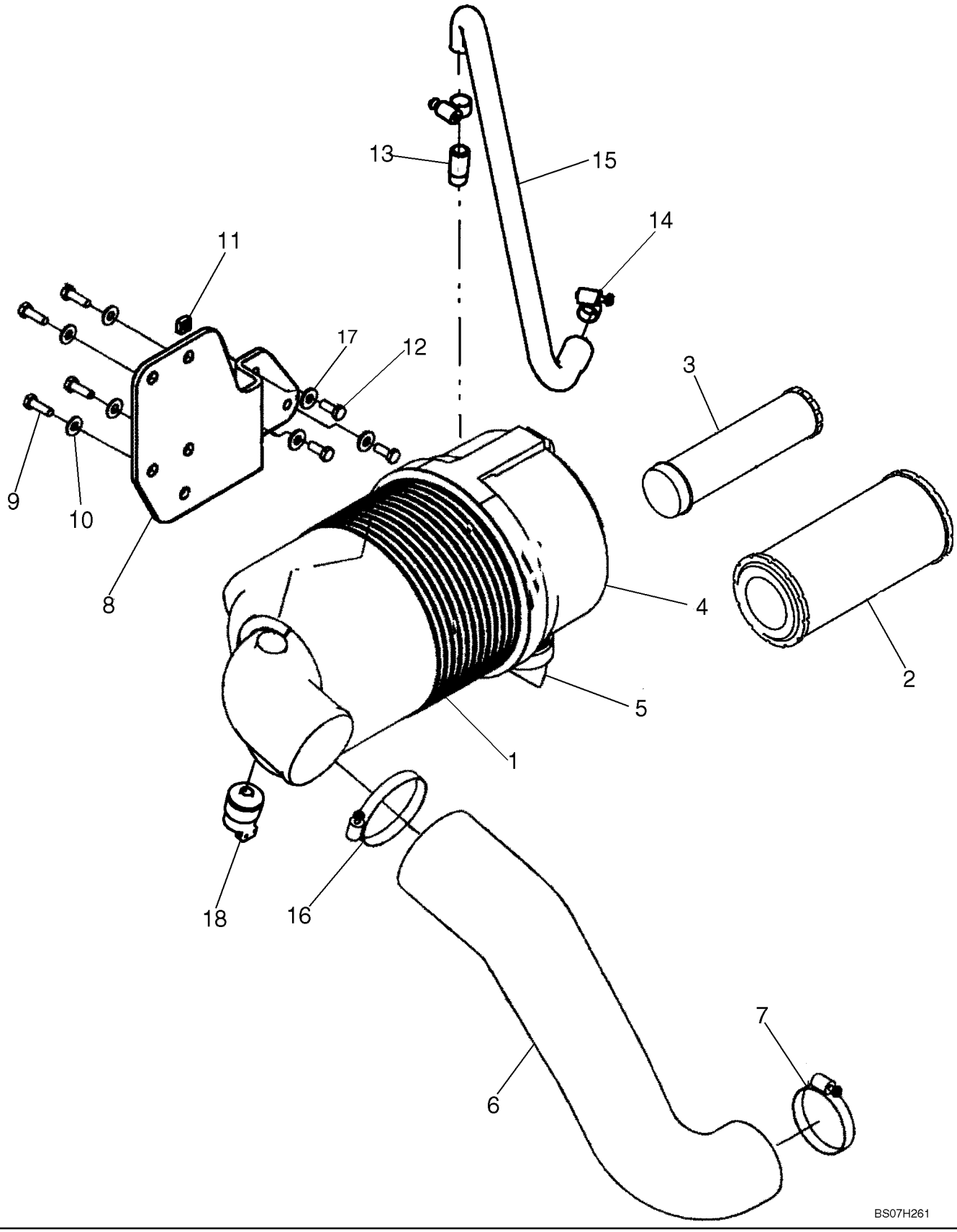

FILTRE A AIR - MOTEUR

REF	FN	PART NUMBER	YR/SN	QTY	DESCRIPTION
		87032107		1	NETTOYEUR, Incl. 1 - 5
1		87041842		1	FILTER A AIR, Body
2		222421A1		1	FILTRE A AIR, Primary
3		222422A1		1	ELÉMENT FILTRANT, Secondary
4		395792A1		1	COUVERCLE (ASSEMBLE), Incl. 4A
4A		86990981		1	DISPOSITIF DE FERMETURE, Not Illustrated Separately
5		A184597		1	CLAPET
6		87351957		1	FLEXIBLE, Air Cleaner Outlet
7		87040758		1	BRIDE, FLEXIBLE
8		87620930		1	PATTE FIXATION
9		43127		4	BOULON, Hex, M8 x 25, 8.8
10		86625263		4	RONDELLE, M8 x 20 x 1.6
11		87030567		3	ECROU
12		120104		3	BOULON, Hex, M8 x 20, 8.8
13		L17985		1	RACCORD
14		86625021		2	BRIDE, FLEXIBLE, #12, 0.69/1.25 Type F Worm
15		87352014		1	FLEXIBLE
16		381144		1	BRIDE, FLEXIBLE, #60, 3.31/4.25 Type F Worm
17		896-15008		3	RONDELLE, M8 x 21.5 x 2.5, HT
18		87013666		1	CONTACTEUR, Air Restriction

MOTEUR - THERMIQUE SUPPORT

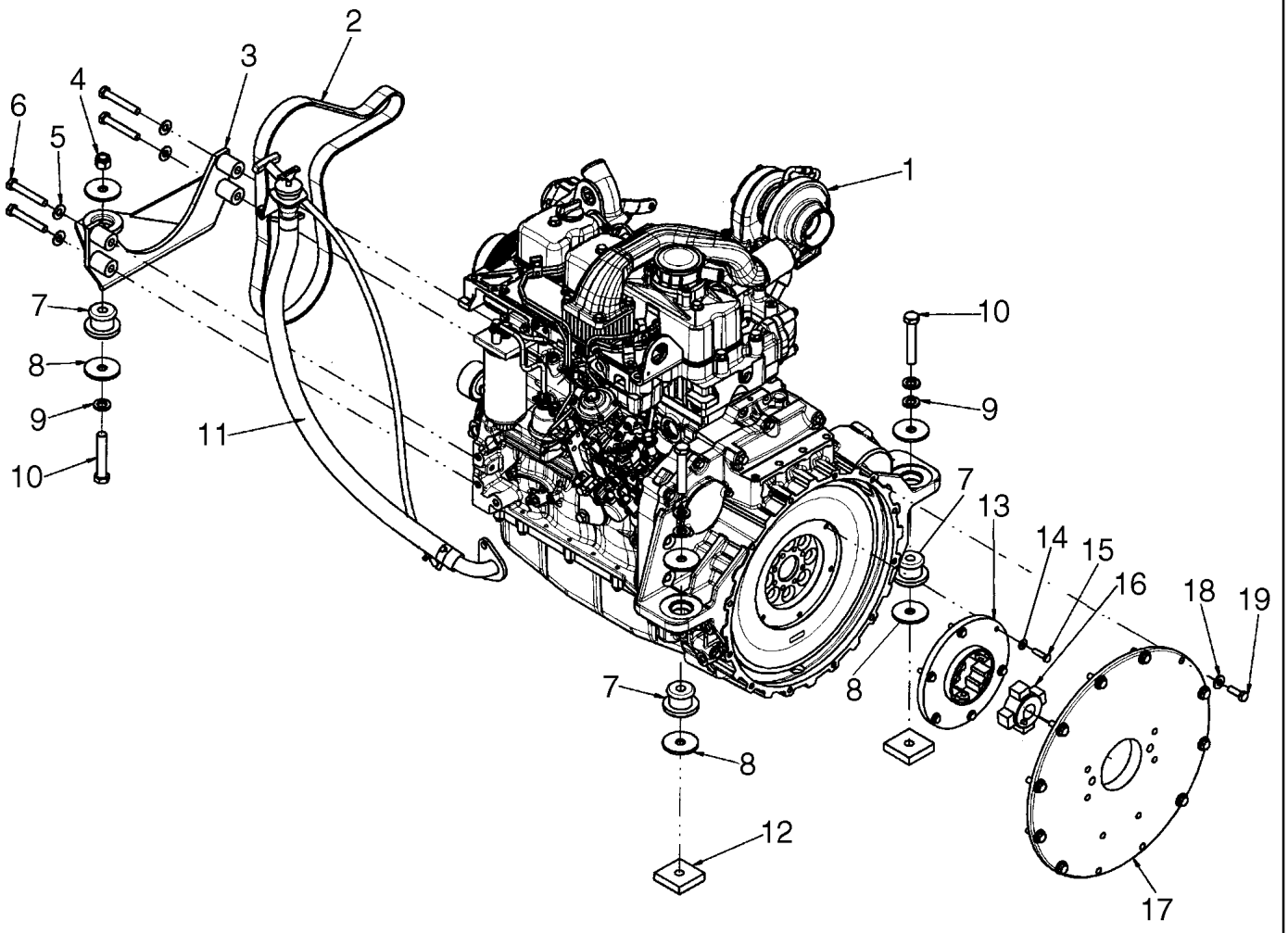

MOTEUR - THERMIQUE SUPPORT

REF	FN	PART NUMBER	YR/SN	QTY	DESCRIPTION
1		87384641		1	MOTEUR, NEF, 67 KW 296 Fan; Incl Parts on Figures 02-09 - 02-41, 03-03 - 03-10, 04-02
2		85826230		1	COURROIE
3		87041763		1	SUPPORT MOTEUR, Rear
4		412066		1	CONTRE-ECROU, M16 x 2, Cl 8
5		140046		4	RONDELLE BELLEVILLE, Belleville, M12
6		412085		4	BOULON, Hex, M12 x 80, 10.9
7		A140221		3	PIÈCES DE FIXATION
8		87032338		6	RONDELLE, 21/32" x 2 1/2" x .188", HDN
9		86625266		5	RONDELLE, M17.5 x 30 x 4, HT
10		350616		3	BOULON, Hex, M16 x 90, 8.8
11		REF			NOTICE, Dipstick Assy; See Figure 02-22
12		390350A1		2	PLAQUE
13		87024539		1	ELÉMENT, Pump Drive, 6.5 in
14		322358		6	RONDELLE BELLEVILLE, Belleville, M8
15		43235		6	BOULON, Hex, M8 x 30, 10.9
16		87024588		1	MOYEU, Pump Drive Star
17		87547003		1	PLAQUE, Pump Mounting
18		86639325		10	RONDELLE, M10 x 24.5 x 3, HT
19		43140		10	BOULON, Hex, M10 x 30, 8.8, Full Thd

MOTEUR - THERMIQUE SUPPORT (EUROPE)

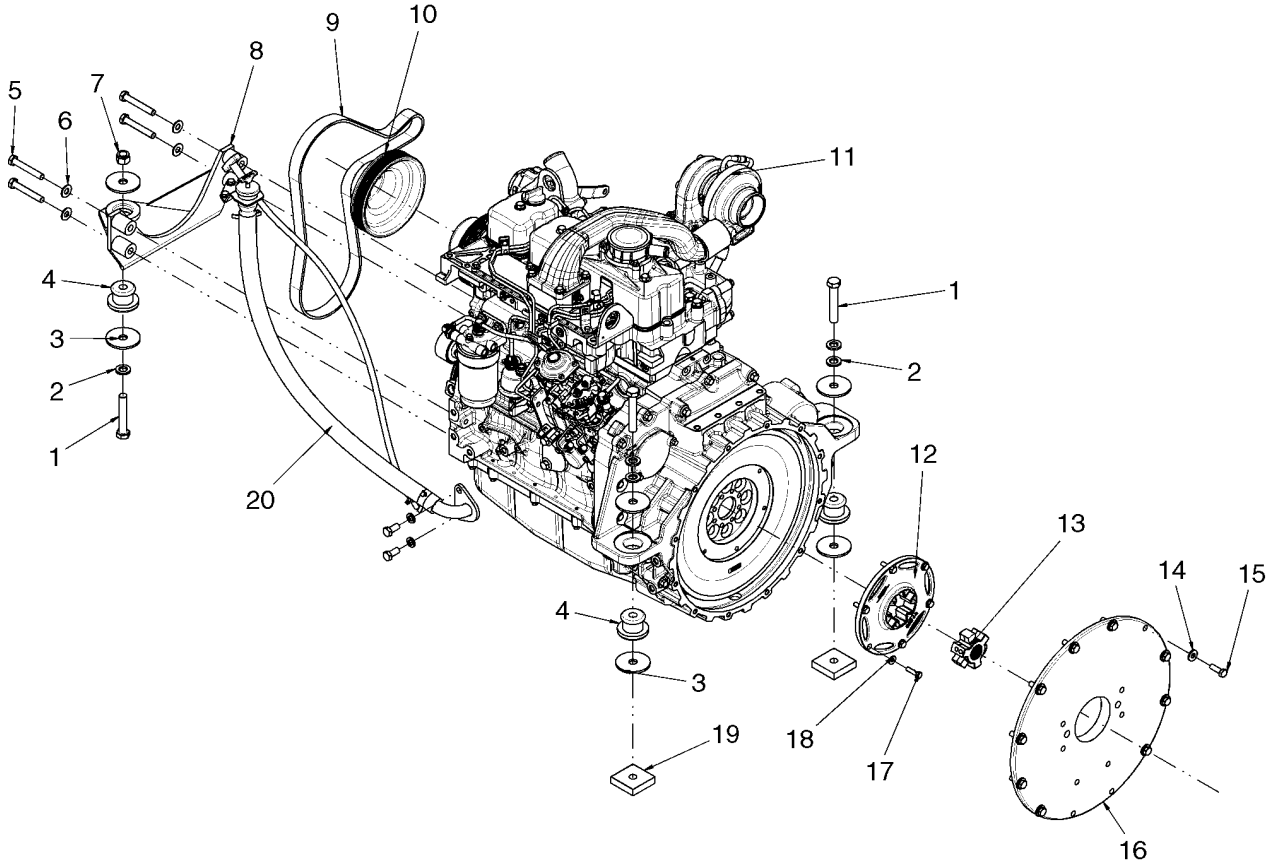

MOTEUR - THERMIQUE SUPPORT (EUROPE)

REF	FN	PART NUMBER	YR/SN	QTY	DESCRIPTION
1		350616		3	BOULON, Hex, M16 x 90, 8.8
2		86625266		5	RONDELLE, M17.5 x 30 x 4, HT
3		87687021		6	ATTACHE
4		A140221		3	PIÈCES DE FIXATION, Engine Mount
5		412085		4	BOULON, Hex, M12 x 80, 10.9
6		140046		4	RONDELLE BELLEVILLE, Belleville, M12
7		412066		1	CONTRE-ECROU, M16 x 2, Cl 8
8		87041763		1	SUPPORT MOTEUR, Rear Engine Mount
9		87713059		1	COURROIE, Belt, V Ribbed (Europe)
10		87712652		1	POULIE, Pulley (Europe)
11		87384641		1	MOTEUR, Engine, NEF
12		87692685		1	CARDAN, Coupling, Flexible
13		87711337		1	CARDAN, Coupling, Drive Star
14		86639325		10	RONDELLE, M10 x 24.5 x 3, HT
15		43140		10	BOULON, Hex, M10 x 30, 8.8, Full Thd
16		87547003		1	PLAQUE, Pump Mounting Plate
17		43235		6	BOULON, Hex, M8 x 30, 10.9
18		322358		6	RONDELLE BELLEVILLE, Belleville, M8
19		390350A1		2	PLAQUE
20		REF		1	NOTICE, Oil Fill; See Fig 02-22

MOTEUR - CHAUFFE-BLOC

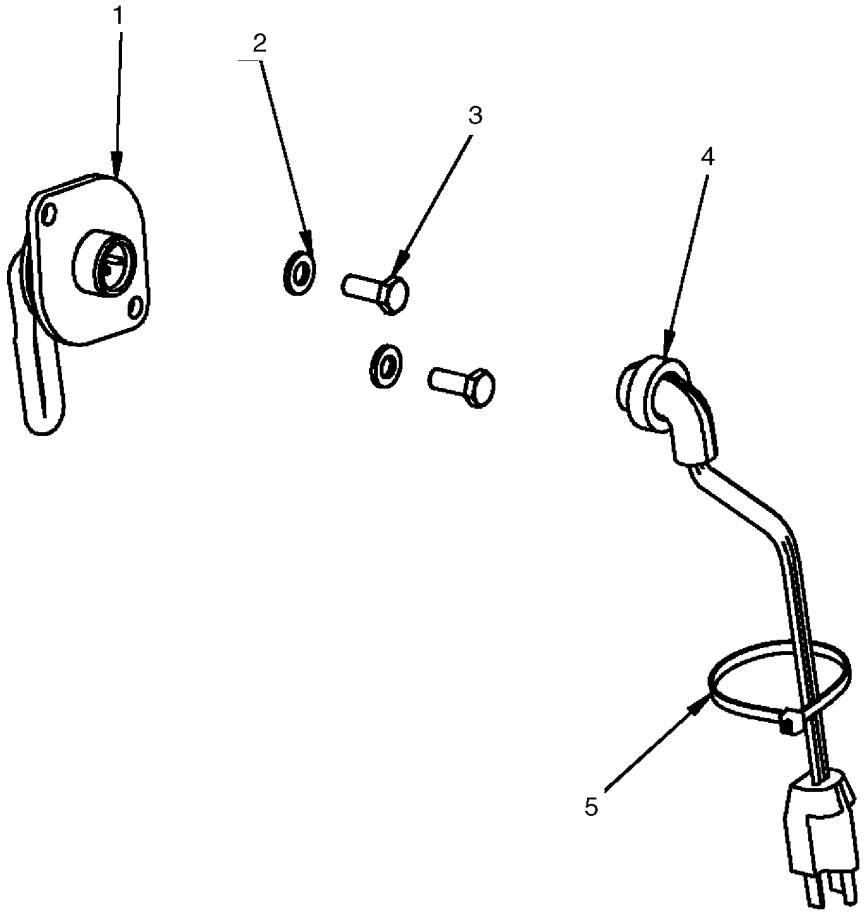

BS07K096

MOTEUR - CHAUFFE-BLOC

REF	FN	PART NUMBER	YR/SN	QTY	DESCRIPTION
		87017686		1	DIA, Construction, Kit, Block Heater; Incl 1 - 5
1		8602005		1	RECHAUFFEUR, Block Heater, 750W 120V
2		86624185		2	RONDELLE, M8 x 17.5 x 2, HT
3		120104		2	BOULON, Hex, M8 x 20, 8.8
4		87105748		1	CABLE ELECTRIQUE
5		L11541		1	SERRE-CABLE, Cable Tie

BLOC CYLINDRES

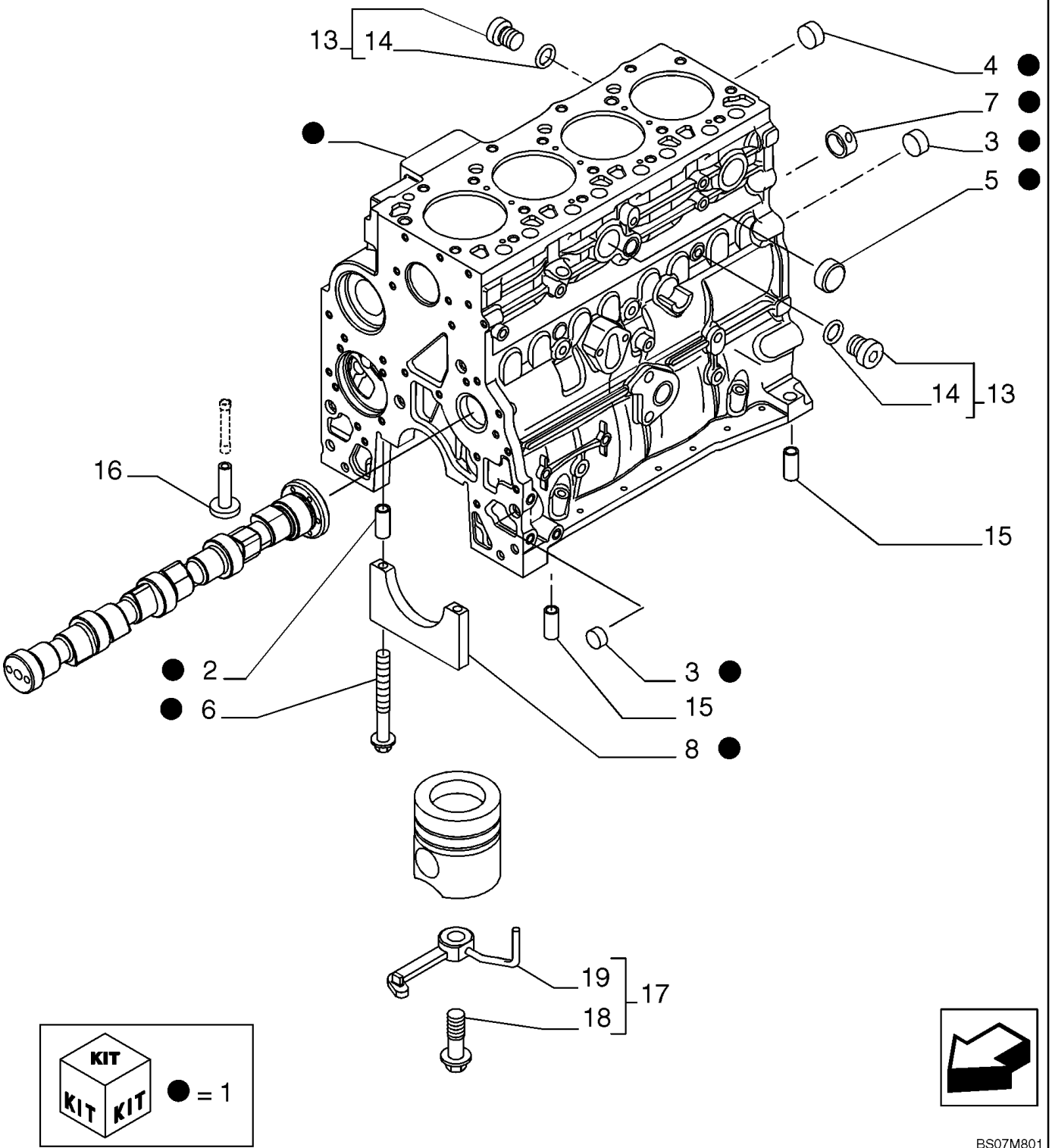

BLOC CYLINDRES

REF	FN	PART NUMBER	YR/SN	QTY	DESCRIPTION
1		2830083		1	BLOC MOTEUR, - ASSY
2		4899026		10	PION
3		4895039		3	BOUCHON
4		4895038		4	BOUCHON
5		4895228		2	BOUCHON
6		4891353		10	VIS, Flg Hd, M12 x 1.5 x 120
7		4895040		1	BAGUE
8		4895919		4	COUSSINET VILEBREQUI
8		4895921		1	COUSSINET VILEBREQUI
13		4895392		2	BOUCHON, - ASSY
14		4895393		2	JOINT THORIQUE
15		4895049		2	PION
16		4895180		8	POUSSOIR
17		4896865		4	GICLEUR, - ASSY
18		4894218		1	VIS
19		2852203		1	GICLEUR

BLOC CYLINDRES - COUVERCLES, ARRIERE

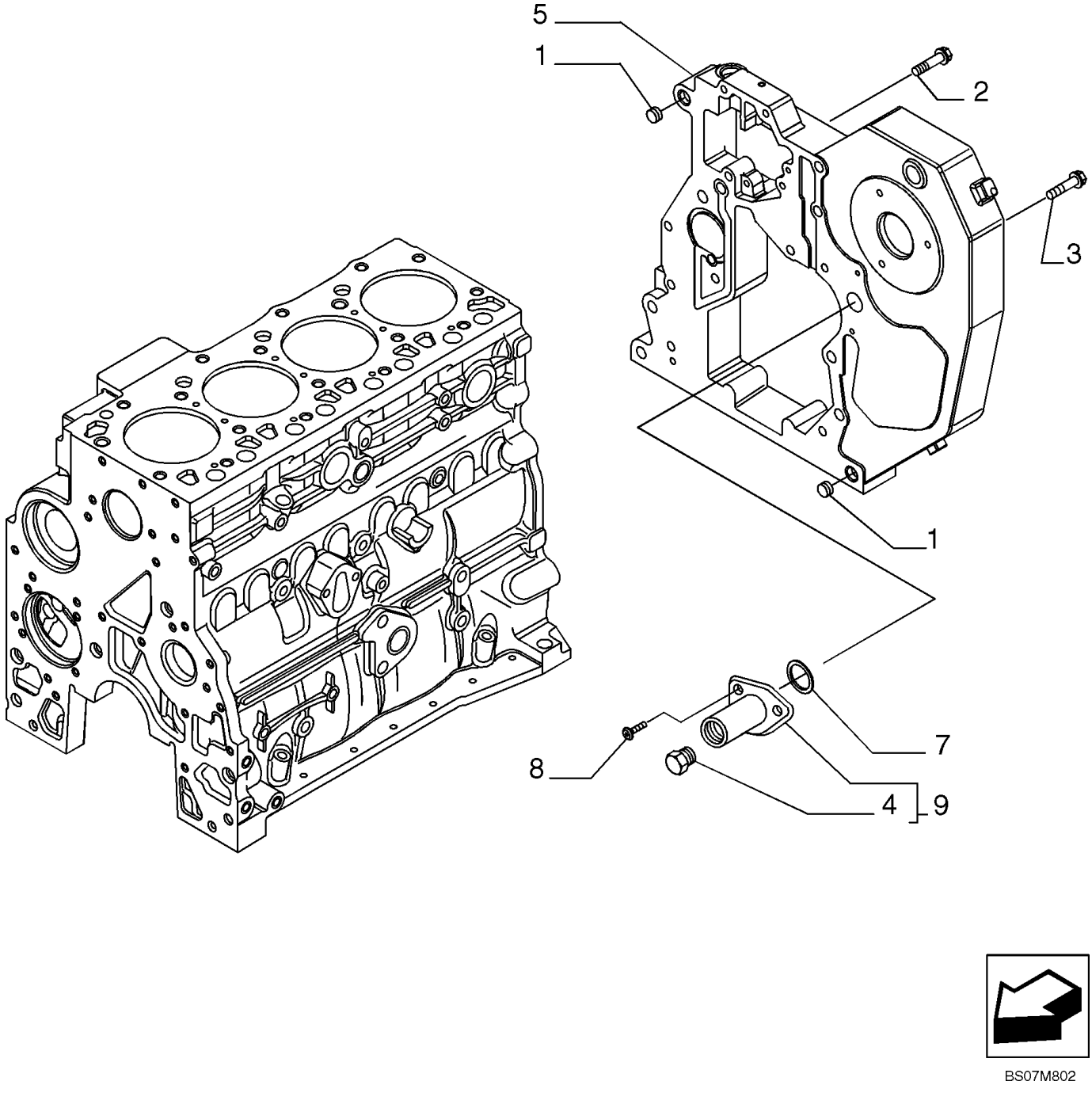

BS07M802

BLOC CYLINDRES - COUVERCLES, ARRIERE

REF	FN	PART NUMBER	YR/SN	QTY	DESCRIPTION
1		4899026		2	PION
2		4899091		4	VIS, Hex Flg, M8 x 1.25 x 40
3		4899093		5	VIS, Hex Flg, M10 x 1.5 x 30
3		4899073		1	VIS, Hex Flg, M12 x 1.75 x 30
4		{2855289}		1	Plug
5		2852619		1	CARTER
7		2852519		1	JOINT THORIQUE
8		4895355		2	VIS, Torx Rd Hd, M5 x .8 x 17
9		2855287		1	CARTER, - ASSY

BLOC CYLINDRES - COUVERCLES, VOLANT

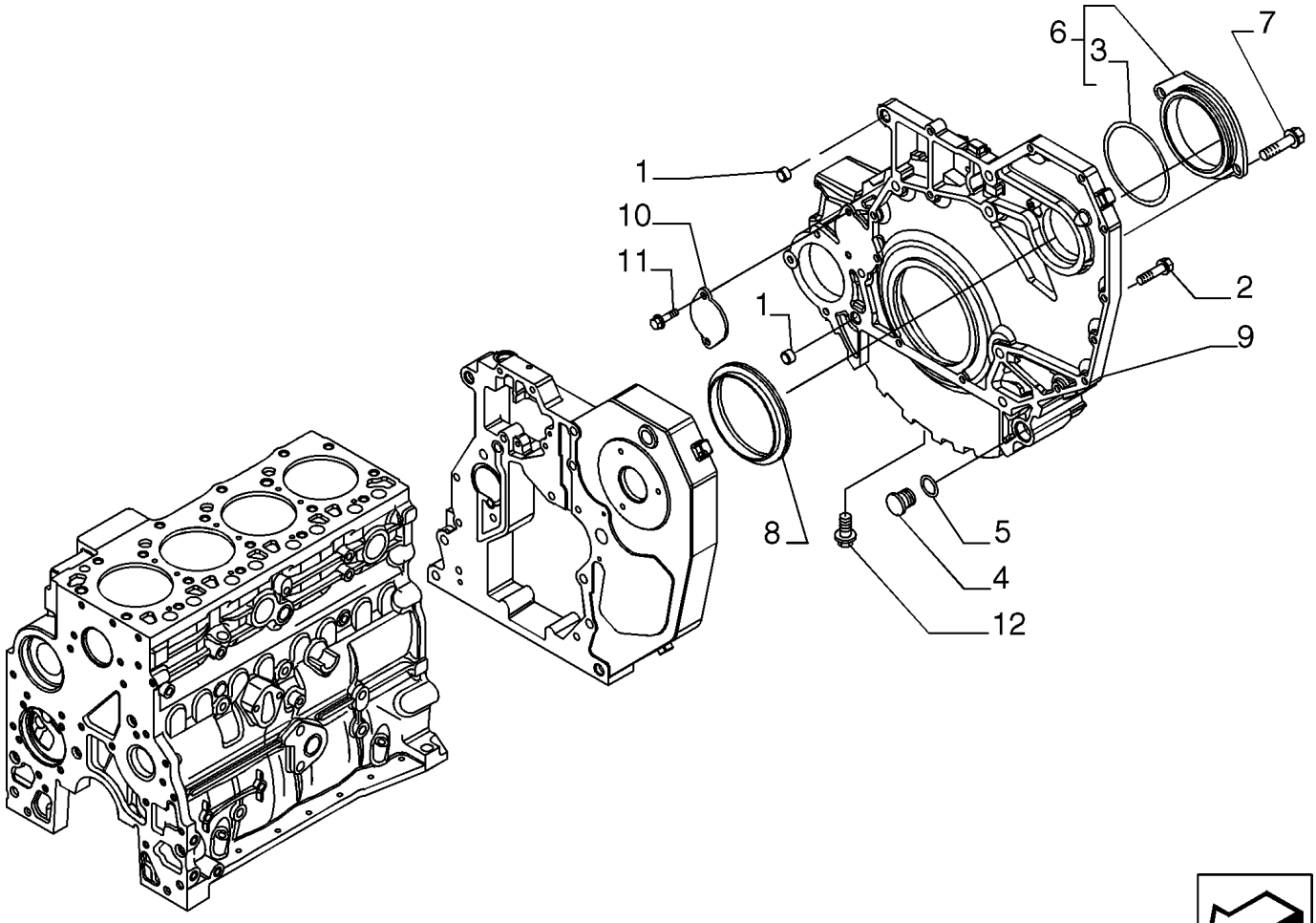

BS07M803

BLOC CYLINDRES - COUVERCLES, VOLANT

REF	FN	PART NUMBER	YR/SN	QTY	DESCRIPTION
1		4899026		2	PION
2		4892915		7	VIS
2		4899076		5	VIS, Hex Flg, M12 x 1.75 x 80
2		4899074		3	VIS, Hex Flg, M12 x 1.75 x 120
2		4899109		3	VIS, Hex, M10 x 1.5 x 80
2		4899143		1	VIS, Hex Flg, M10 x 1.5 x 140, IN ALTERNATIVE WITH 2854866
2		2852865		2	VIS
2		2854866		1	BOUCHON, IN ALTERNATIVE WITH 4899143
3		2854075		1	JOINT THORIQUE
4		4895378		2	BOUCHON
5		4895379		2	JOINT THORIQUE, M21.82 ID x 3.53 Thk
6		2854073		1	COUVERCLE, - ASSY
7		4899020		2	VIS
8		4890833		1	JOINT
9		2855180		1	CARTER, Flywheel
10		4895155		1	COUVERCLE
11		4899068		1	VIS, Hex Flg, M8 x 1.25 x 16
12		4893036		1	BOUCHON, - ASSY

BLOC CYLINDRES - COUVERCLES, AVANT

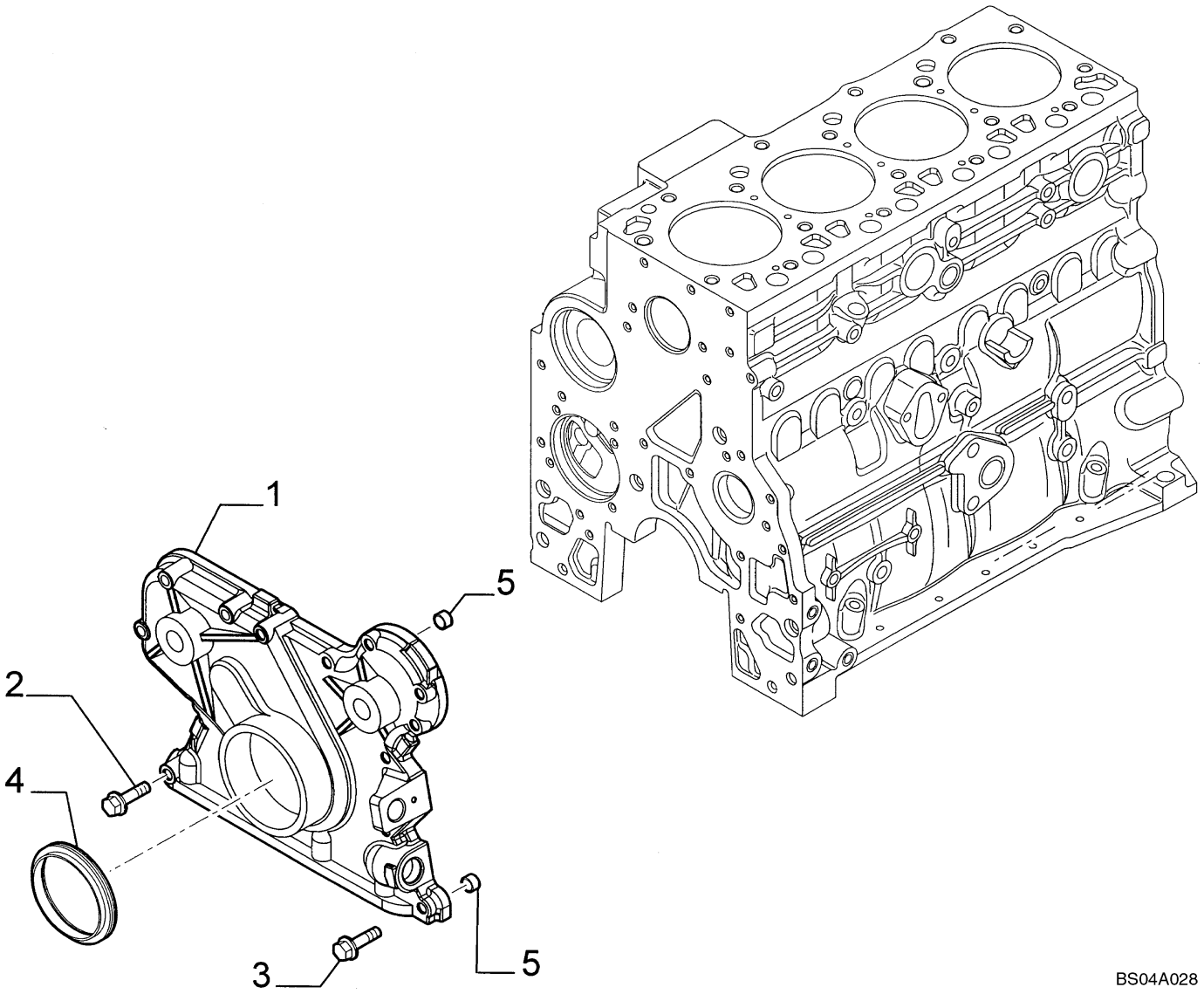

BLOC CYLINDRES - COUVERCLES, AVANT

REF	FN	PART NUMBER	YR/SN	QTY	DESCRIPTION
1		4897026		1	COUVERCLE, Front
2		4899078		5	VIS, Hex Flg, M8 x 1.25 x 45
3		4899063		8	VIS, Hex Flg, M8 x 1.25 x 30
4		4890832		1	JOINT
5		4891209		2	PION

COUVERCLE DE PIGNONS- PLAQUE

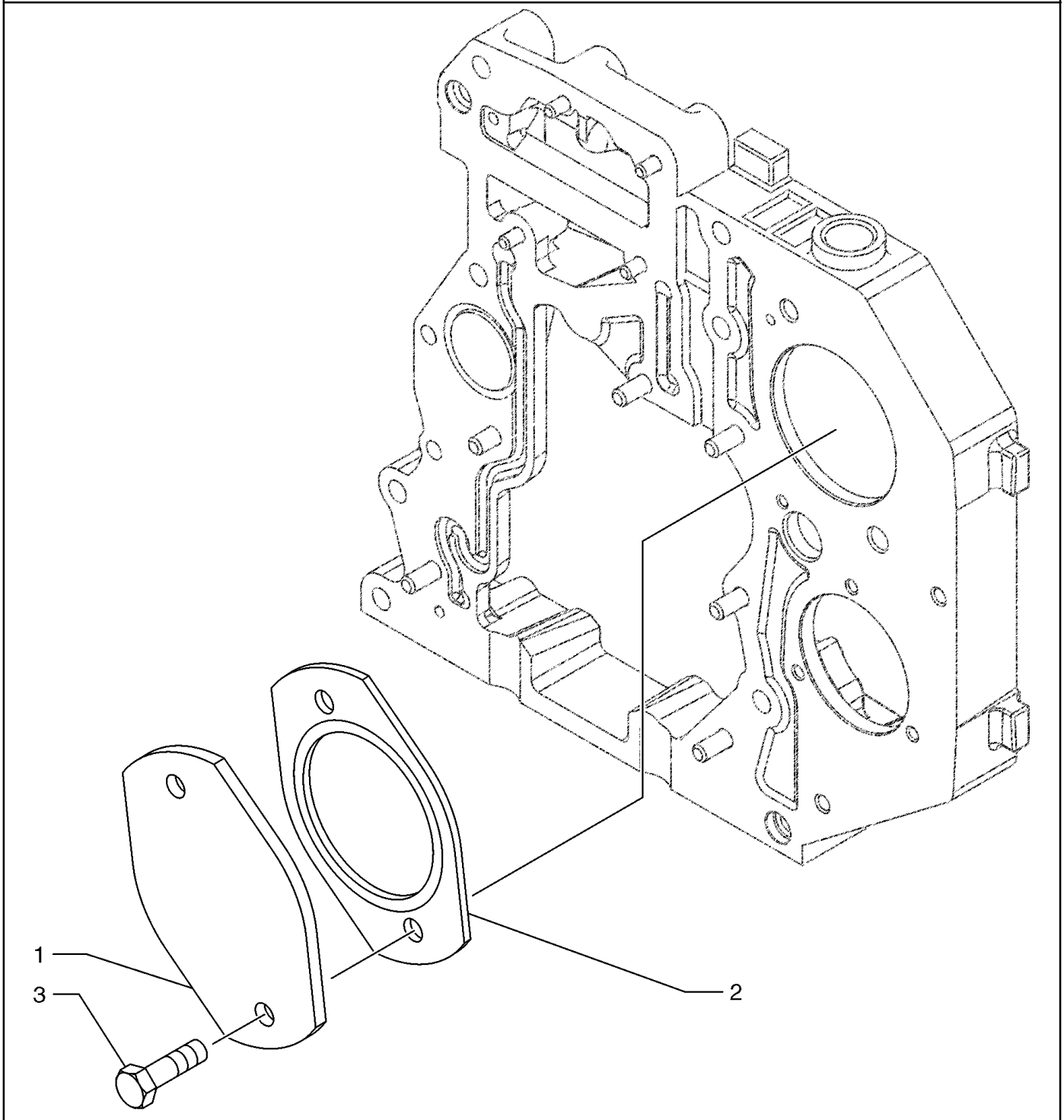

COUVERCLE DE PIGNONS- PLAQUE

REF	FN	PART NUMBER	YR/SN	QTY	DESCRIPTION
1		2852175		1	COUVERCLE
2		4896897		1	JOINT
3		16677734		2	VIS, Hex Flg, M12 x 1.75 x 25

COUVERCLES CULASSE

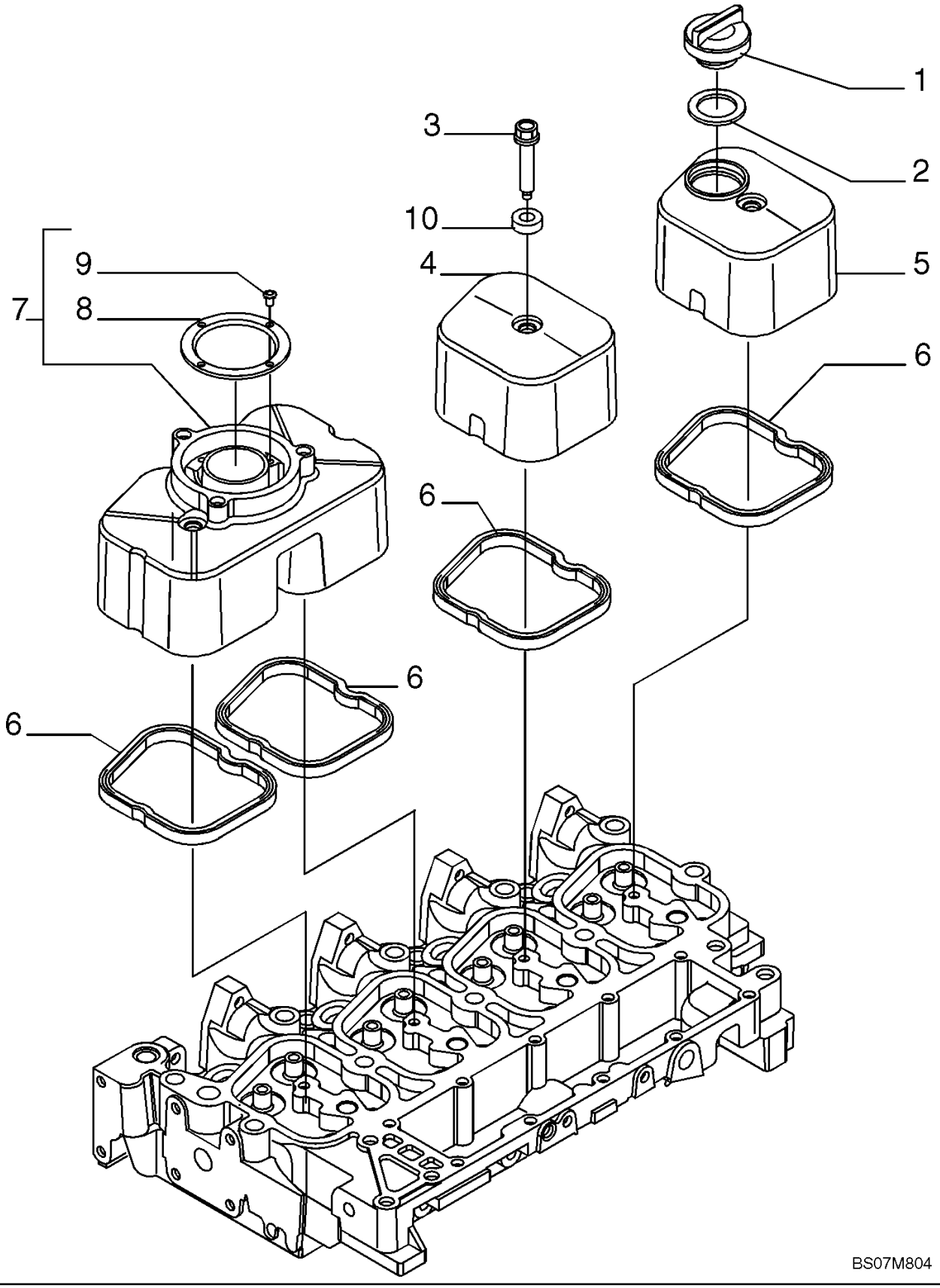

COUVERCLES CULASSE

REF	FN	PART NUMBER	YR/SN	QTY	DESCRIPTION
1		4895202		1	BOUCHON DE REMPL.
2		4895296		1	JOINT, IN ALTERNATIVE
2		4892808		1	JOINT, IN ALTERNATIVE
3		4895214		4	VIS
4		2852032		1	COUVERCLE
5		2852894		1	COUVERCLE
6		2852033		4	JOINT
7		2830784		1	CACHE-CULBUTEURS, - ASSY
8		2830775		1	DEFLECEUR D'HUILE
9		2830281		4	VIS AUTO-TARAUDEUSE
10		4895360		4	ISOLATEUR

BLOC CYLINDRES STIFFENER PLATE

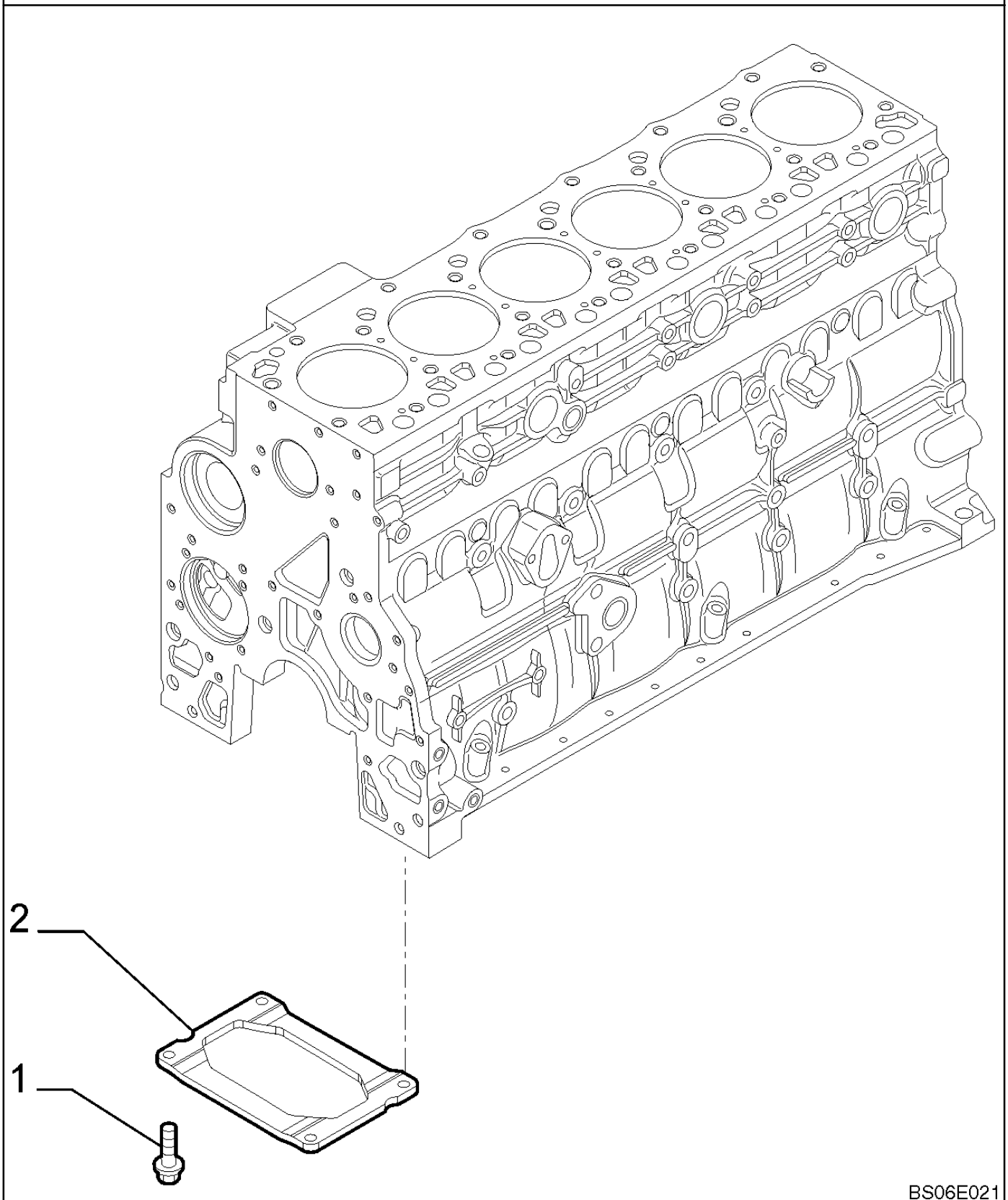

BLOC CYLINDRES STIFFENER PLATE

REF	FN	PART NUMBER	YR/SN	QTY	DESCRIPTION
1		4899032		4	VIS, Hex Flg, M10 x 1.5 x 25
2		2852729		1	RENFORT, Noise Reduction

CULASSE DE CYLINDRE

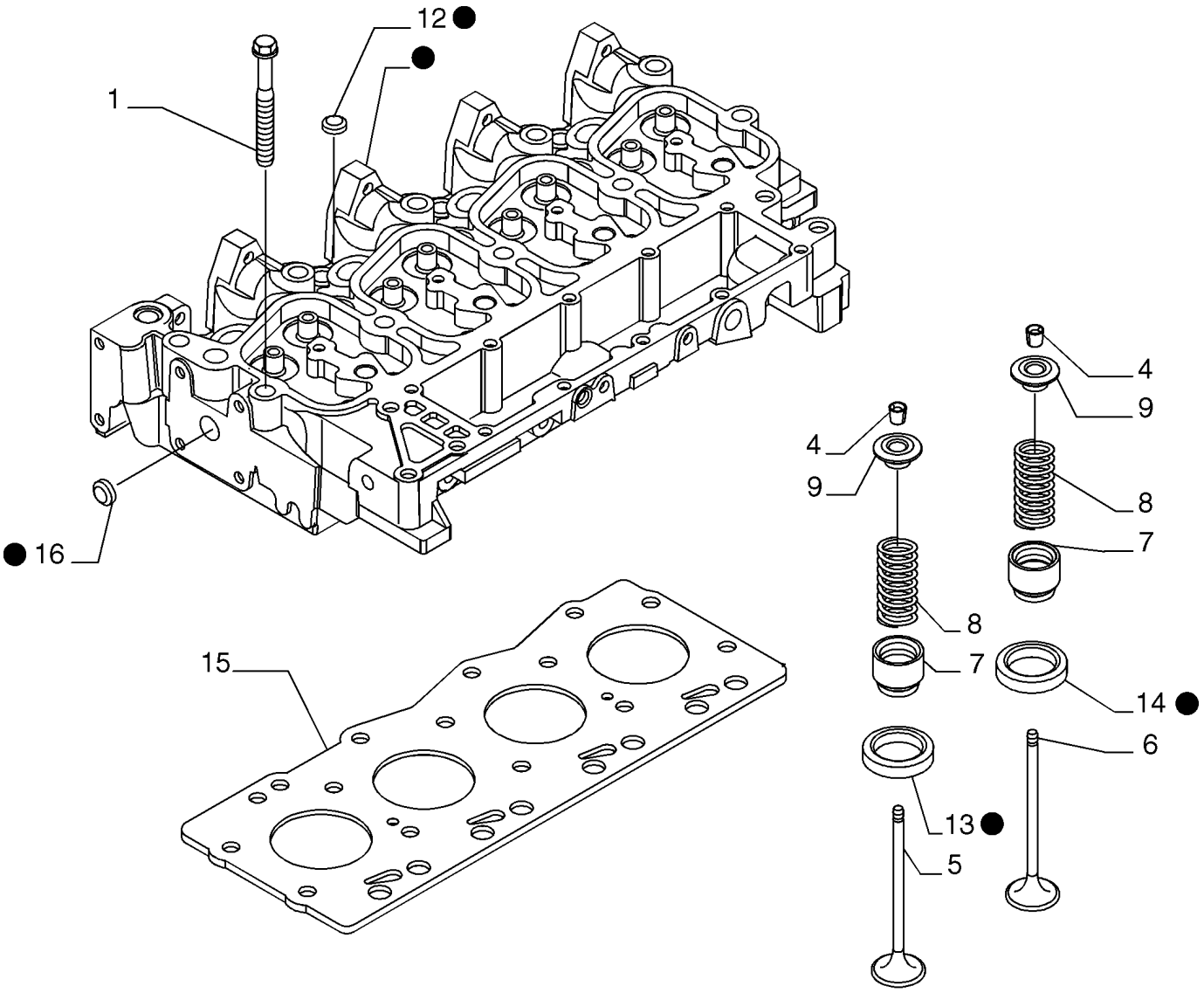

KIT KIT KIT ● = 3

BS07M811

CULASSE DE CYLINDRE

REF	FN	PART NUMBER	YR/SN	QTY	DESCRIPTION
1		4892861		4	VIS, Wash Hd, M12 x 1.25 x 73
1		4892859		10	VIS, Wash Hd, M12 x 1.25 x 143
3		2856017		1	CULASSE, Incl 12, 13, 14,16
4		4895183		16	DOUILLE
5		4895188		4	SOUPAPE D'ECHAPPEMENT
6		4895187		4	SOUPAPE D'ADMISSION
7		4895347		8	JOINT
8		4895215		8	RESSORT, SOUPAPE
8		{2831472}		8	Alternate To 4895215
9		4895184		8	RETENEUR
12		4895179		3	BOUCHON
13		4897178		4	SIEGE DE SOUPAPE, - INTAKE
14		4897179		4	SIEGE DE SOUPAPE, - EXHAUST
15		2830919		1	JOINT DE CULASSE, SP=1.25
15		2830920		1	JOINT DE CULASSE, SP=1.15
16		4895085		1	BOUCHON

POMPE À HUILE, CARTER

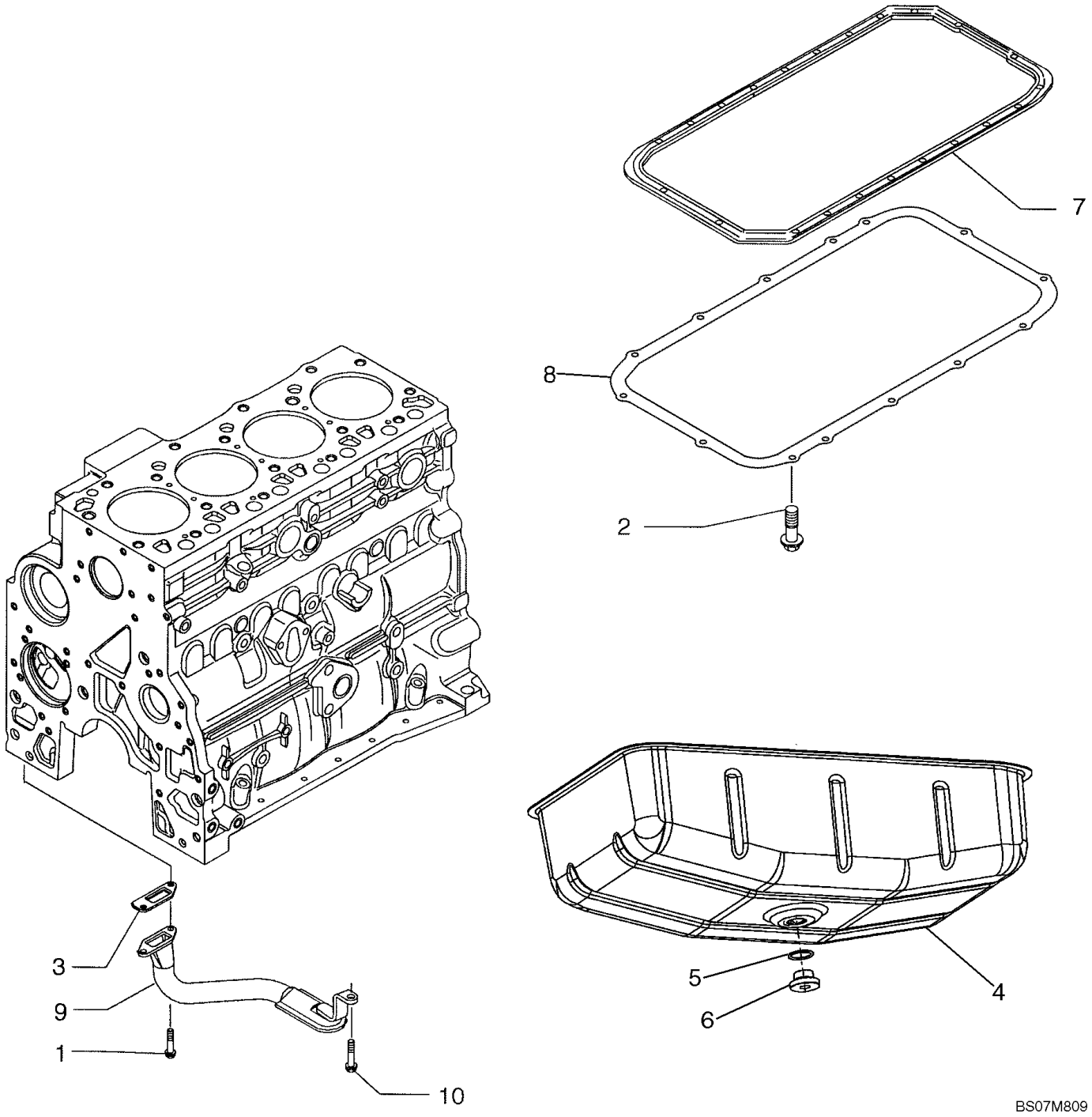

POMPE À HUILE, CARTER

REF	FN	PART NUMBER	YR/SN	QTY	DESCRIPTION
1		16673635		2	VIS
2		4899091		14	VIS, Hex Flg, M8 x 1.25 x 40
3		4898301		1	JOINT
4		2853047		1	CARTER D'HUILE, Oil Pan
5		2852978		1	JOINT THORIQUE
6		4894139		1	BOUCHON, 22 x 1.5; Does Not Include Seal, Purchase Seal Separately
7		4897877		1	JOINT
8		4897876		1	ENTRETOISE
9		2853050		1	TUYAU, Oil Suction; Includes Screen Which Is Not Serviced Separately
10		4895291		1	VIS, Hex Flg, M10 x 1.5 x 20

MOTEUR, HUILE

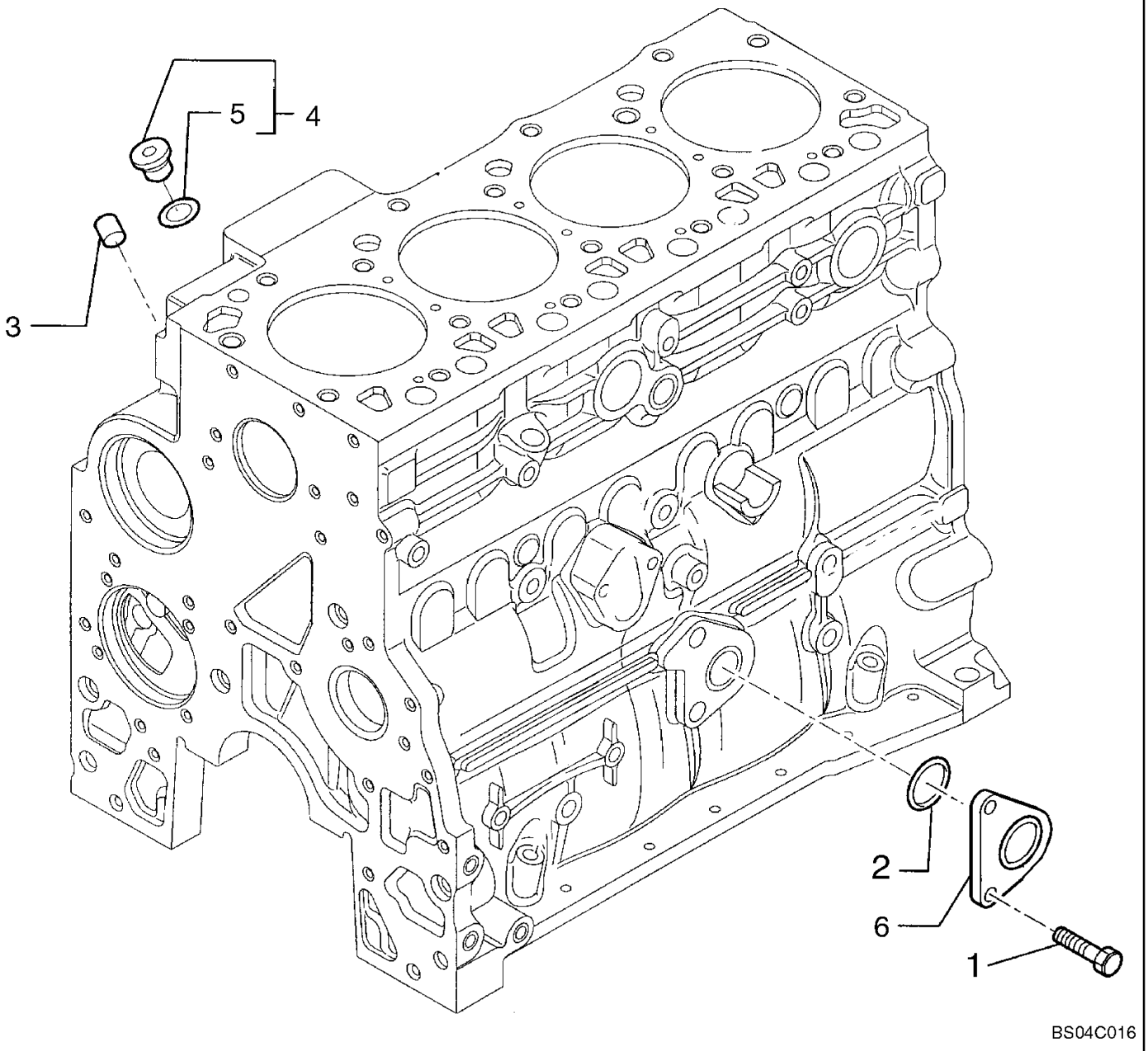

MOTEUR, HUILE

REF	FN	PART NUMBER	YR/SN	QTY	DESCRIPTION
1		2852134		2	VIS, Flange
2		14458681		1	JOINT THORIQUE, -128, Cl 7, 1.487" ID x .103" Thk
3		4895406		1	BOUCHON
4		4897330		2	BOUCHON, Assy; Incl. Ref 5
5		4895610		1	JOINT THORIQUE
6		2852995		1	FLASQUE

FILTRE ET REFROIDISSEUR D'HUILE

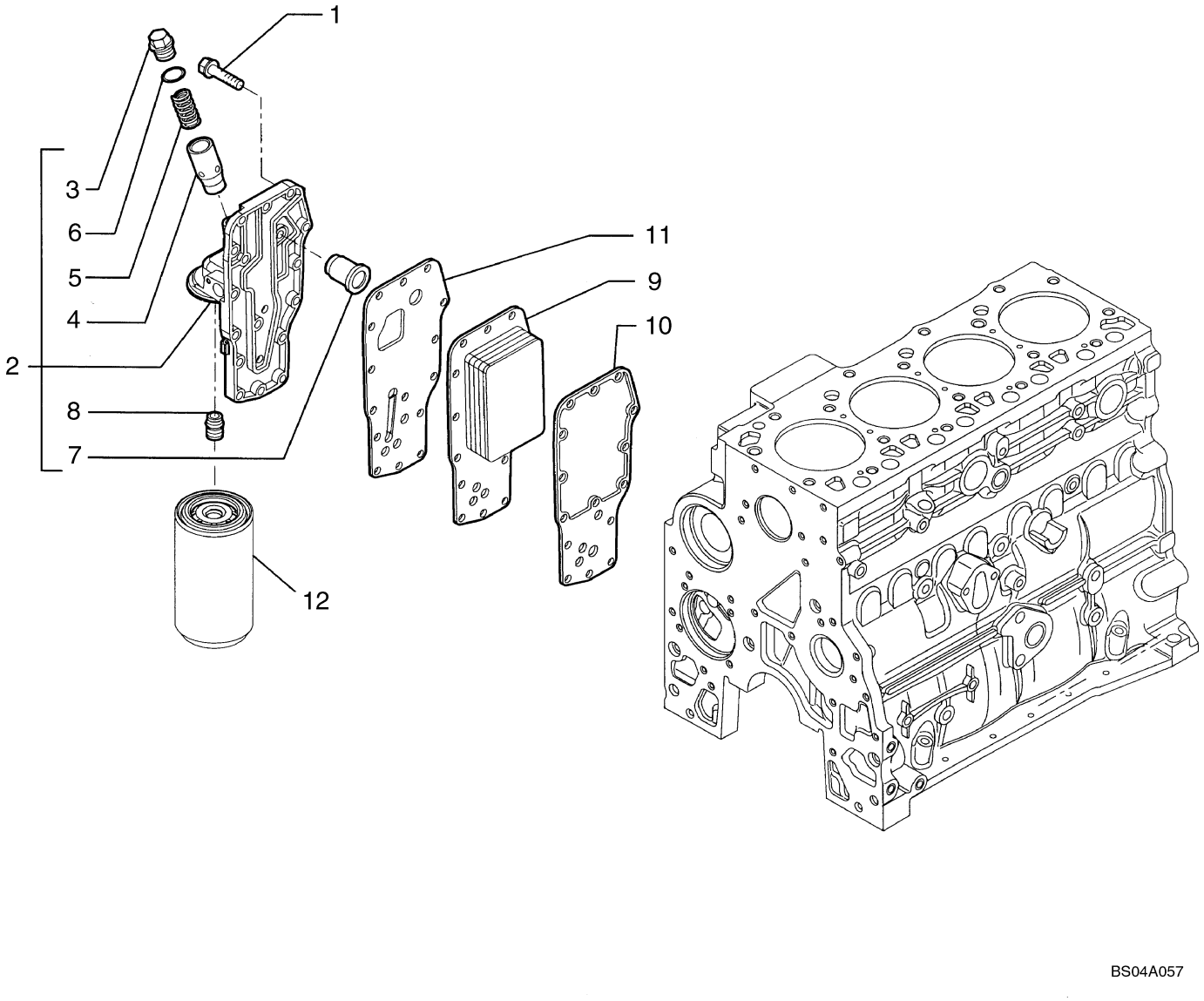

BS04A057

FILTRE ET REFROIDISSEUR D'HUILE

REF	FN	PART NUMBER	YR/SN	QTY	DESCRIPTION
1		4899019		15	VIS, Hex Flg, M8 x 1.25 x 35
		2856343		1	TETE DE FILTRE, Incl. Ref 3 - 8
3		2853781		1	BOUCHON
4		4896404		1	PLONGEUR, Plunger, Pressure Regulator
5		4895045		1	RESSORT
6		4899035		1	JOINT THORIQUE
7		4896410		1	SOUPAPE, DÉCHARGE, Pressure Relief
8		{2856344}		1	Head, Filter; Incl 8A
8A		4893391		1	ADAPTEUR
9		4896406		1	REFROIDISSEUR D'HUILE, Cooler Core
9		2853722		1	REFROIDISSEUR D'HUILE, Alternate Part to 4896406
10		2830559		1	JOINT, Core
11		4896409		1	JOINT, Head
12		REF		1	NOTICE, FILTER, ENGINE OIL; See Figure 02-20

FILTRE A HUILE - MOTEUR

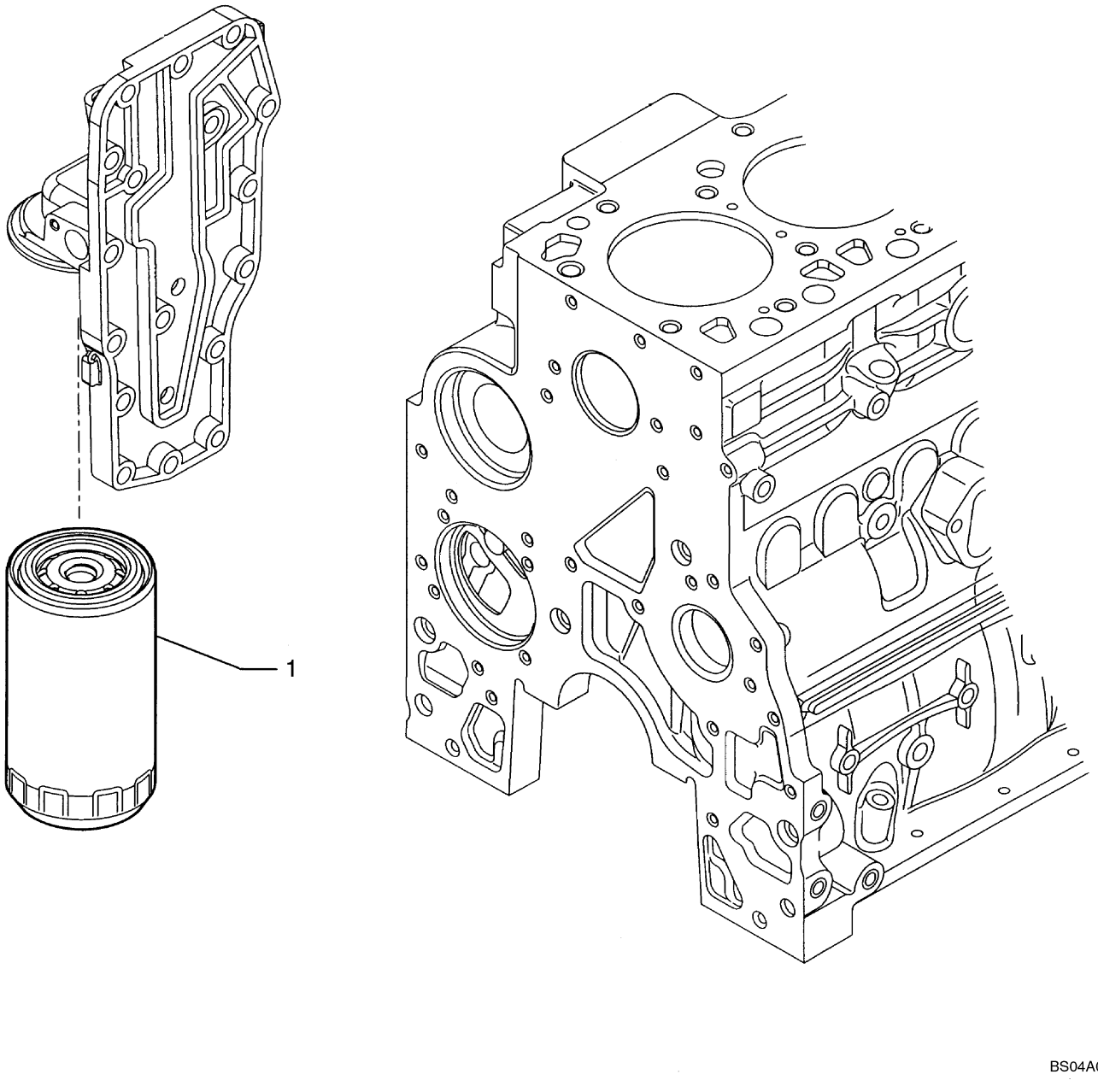

FILTRE A HUILE - MOTEUR

REF	FN	PART NUMBER	YR/SN	QTY	DESCRIPTION
1		2856715		1	FILTRE A HUILE MOTEUR

POMPE A HUILE - MOTEUR

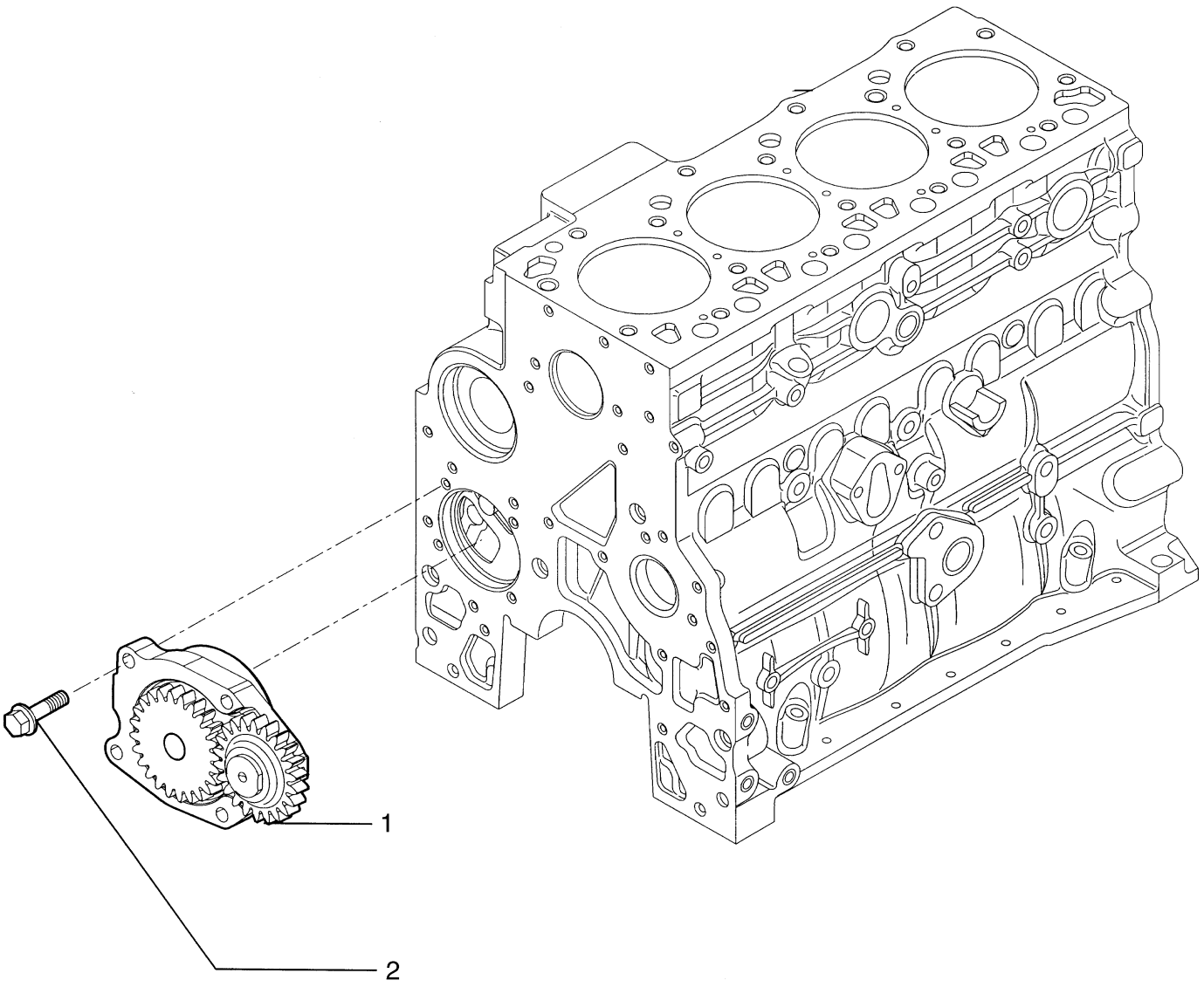

BS04A054

POMPE A HUILE - MOTEUR

REF	FN	PART NUMBER	YR/SN	QTY	DESCRIPTION
1		4897480		1	POMPE A HUILE
2		4899090		4	VIS, Hex Flg, M8 x 1.25 x 30

REMPLISSAGE D'HUILE, MOTEUR

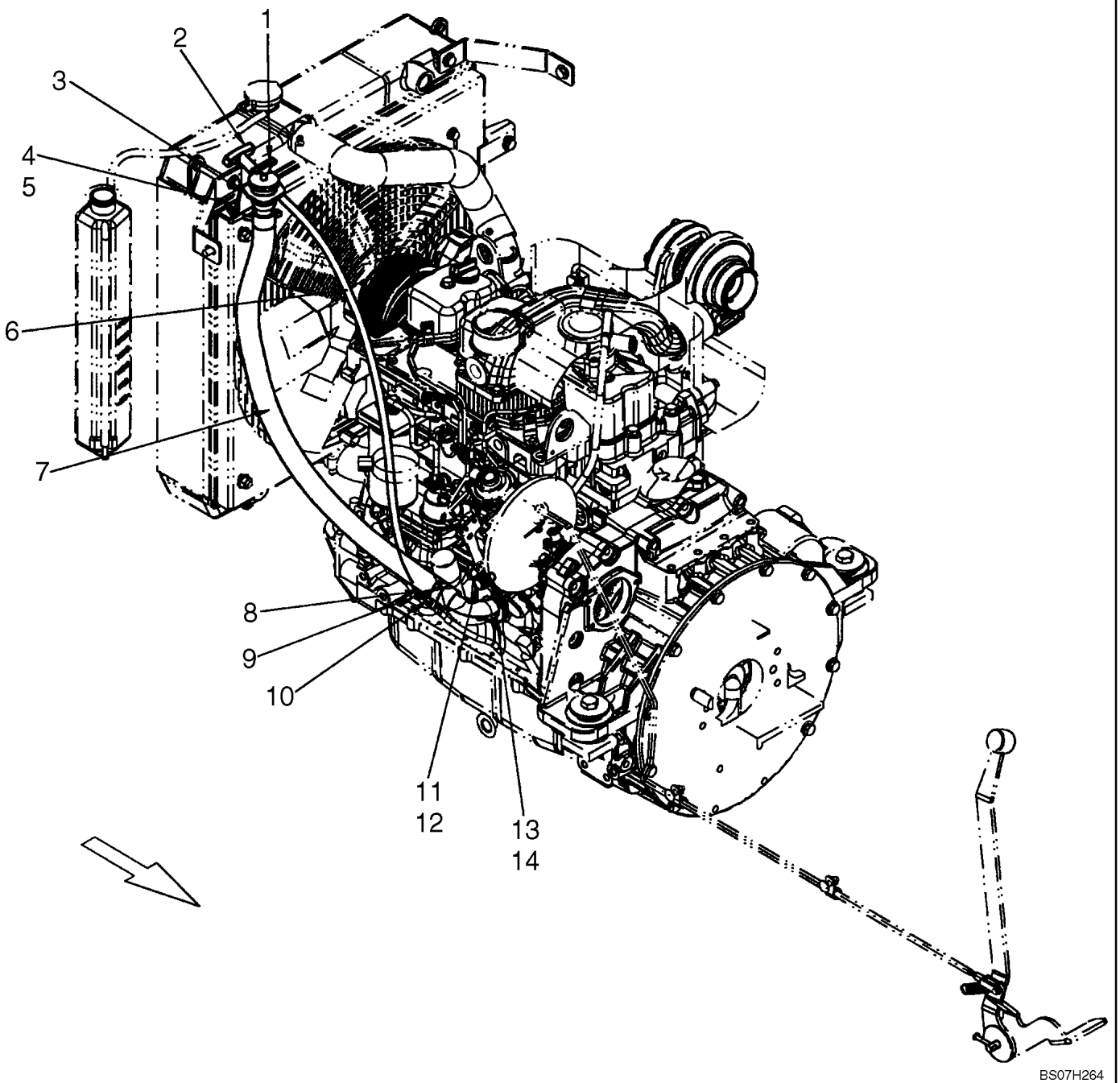

REMPLISSAGE D'HUILE, MOTEUR

REF	FN	PART NUMBER	YR/SN	QTY	DESCRIPTION
1		87445427		1	BOUCHON DE REMPL., Oil Fill
1		87722140		1	CHAPEAU, Oil Fill Cap, Europe
2		{87566701}		1	Dipstick
3		{87574281}		1	Bracket, Dipstick, Oil Fill Mounting
3		87735275		1	PATTE FIXATION, Bracket, Oil Fill Mounting, Europe
4		120103		2	BOULON, Hex, M8 x 16, 8.8
5		322358		2	RONDELLE BELLEVILLE, Belleville, M8
6		{87612761}		1	Tube; Dipstick
7		{87560205}		1	Tube; Remote Oil Fill
8		574518		1	BRIDE, FLEXIBLE, #4, 0.25/0.62 Type M Worm
9		87432275		2	RESSORT, Clamp, 35 mm
10		87438418		1	TUBE, Oil Guage
11		300388		2	VIS, Hex, M12 x 25, 8.8
12		412123		2	RONDELLE FREIN, M12
13		14458781		1	JOINT THORIQUE, -129, Cl 7, 1.549" ID x .103" Thk
14		87432267		1	TUBE, Oil Fill

VIDANGE DE L'HUILE

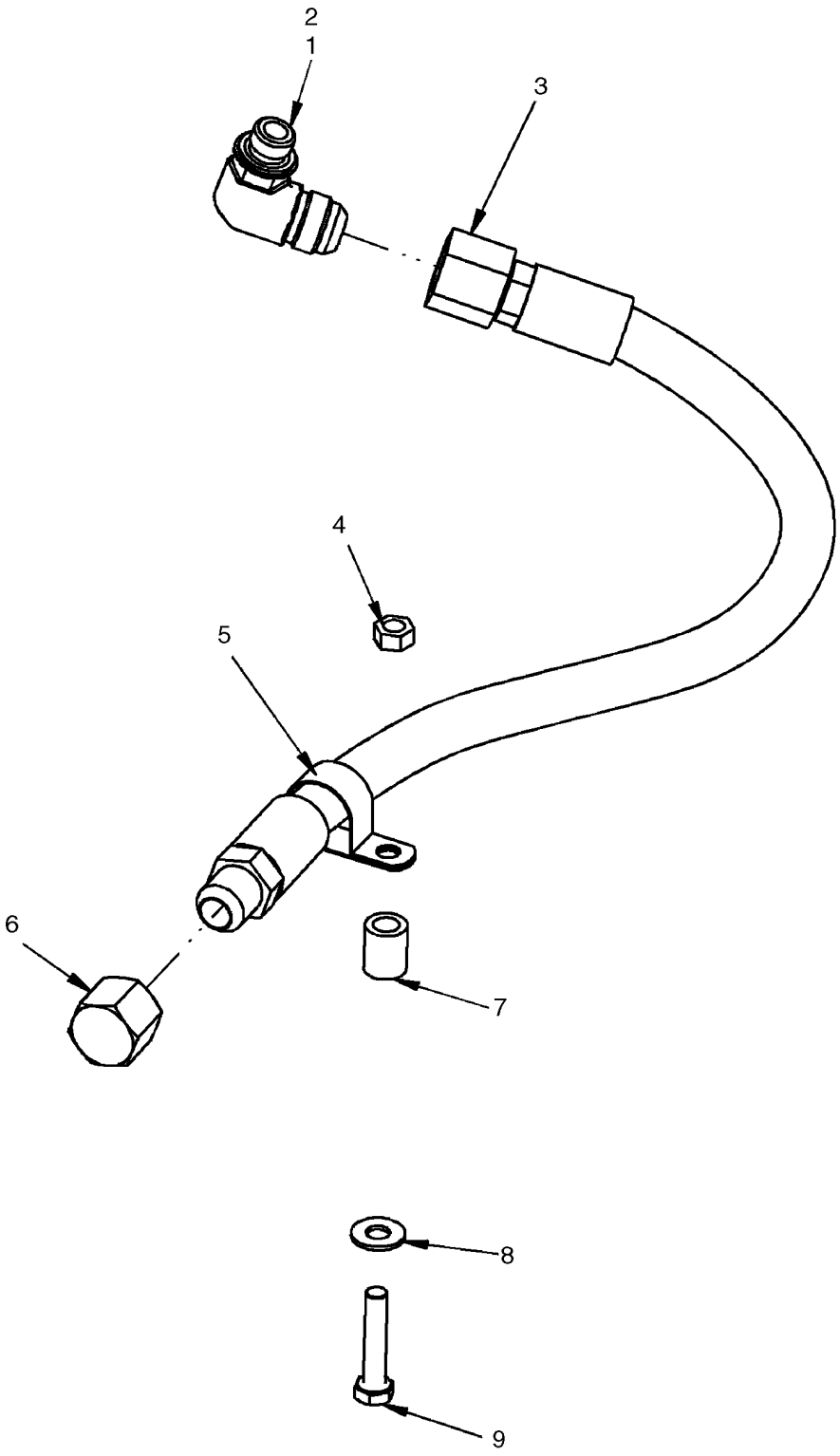

VIDANGE DE L'HUILE

REF	FN	PART NUMBER	YR/SN	QTY	DESCRIPTION
1		87688478		1	RACCORD, Oil Pan Fitting; Incl 2
2		86598102		1	JOINT THORIQUE, Cl 6, 19.3MM ID x 2.2 Thk
3		87694058		1	FLEXIBLE, Hose, Remote Oil Drain, 730mm (28 3/4 in.)
4		9706690		1	ECROU, M8, Cl 8
5		87307884		1	BRIDE
6		129200		1	CHAPEAU, 37º, 7/8"-14
7		229398		1	ENTRETOISE
8		86625263		1	RONDELLE, M8 x 20 x 1.6
9		43129		1	BOULON, Hex, M8 x 40, 8.8

CAPTEURS MOTEUR - MOTEUR, HUILE

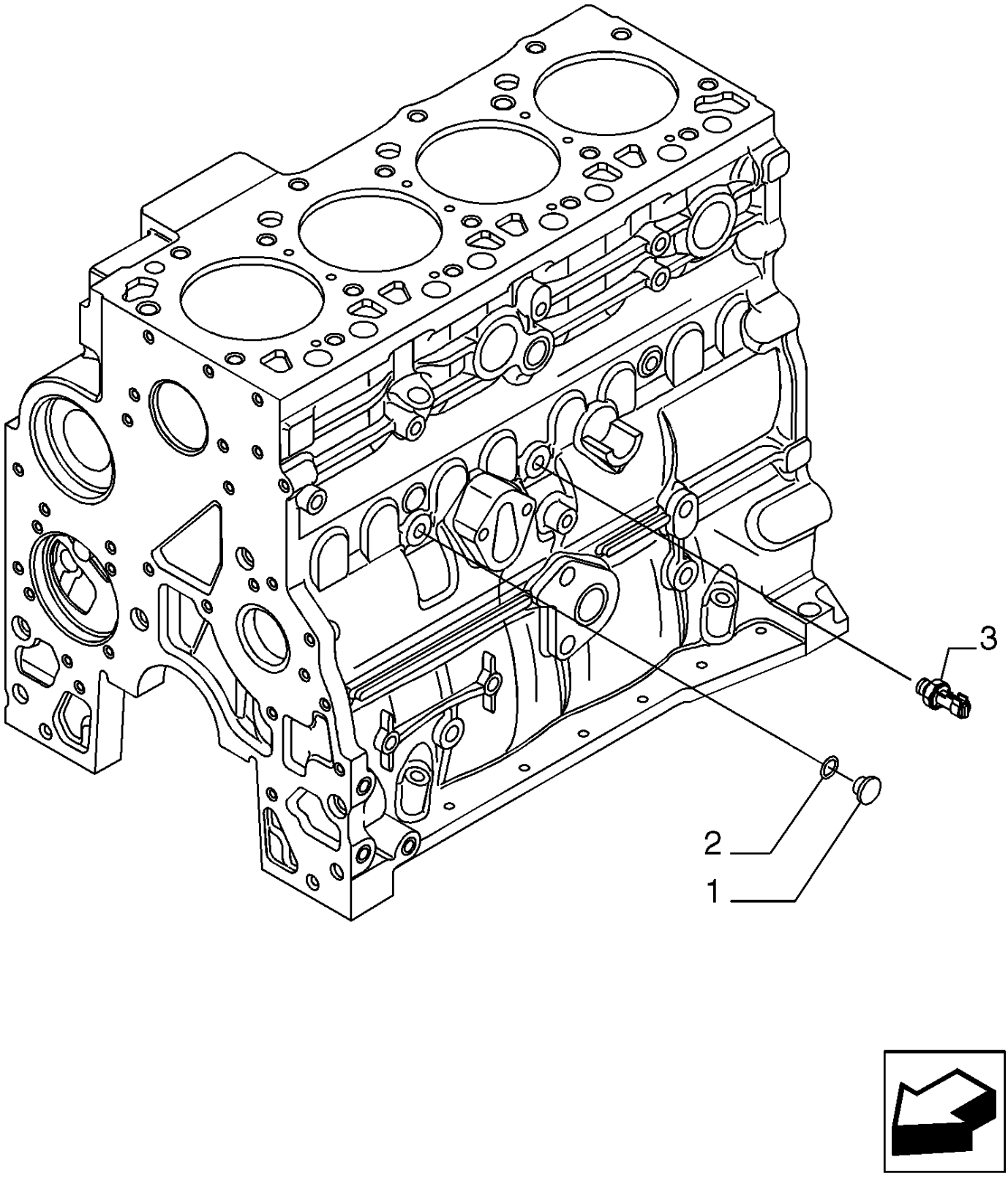

BS07M810

CAPTEURS MOTEUR - MOTEUR, HUILE

REF	FN	PART NUMBER	YR/SN	QTY	DESCRIPTION
1		4899009		1	BOUCHON, M10 x 1
2		4899072		1	JOINT THORIQUE
3		2852889		1	PRESSOSTAT, Engine Oil

RENIFLARD - MOTEUR

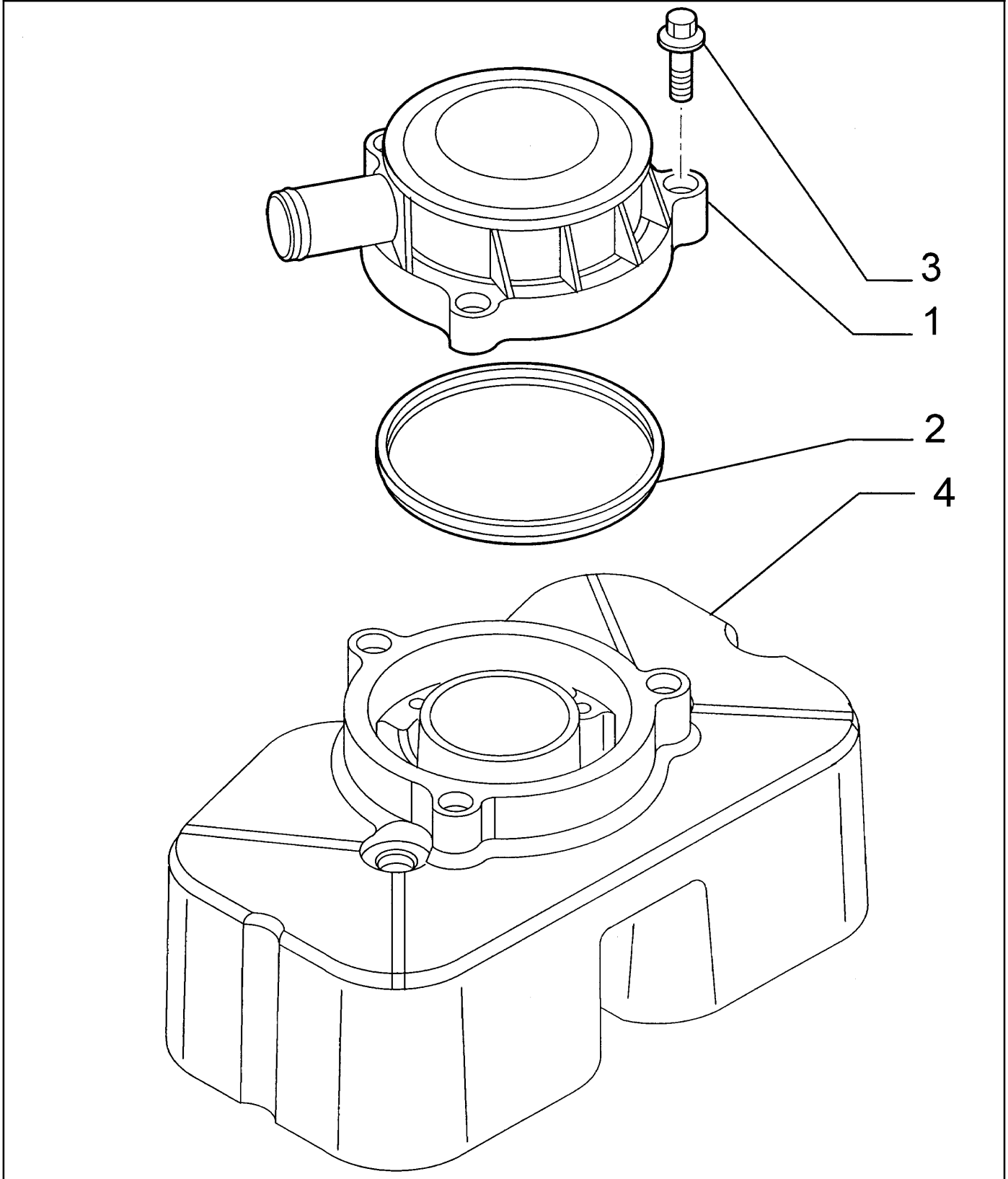

RENIFLARD - MOTEUR

REF	FN	PART NUMBER	YR/SN	QTY	DESCRIPTION
1		2852531		1	RENIFLARD
2		2852028		1	JOINT
3		4899110		3	VIS, Hex Flg, M6 x 1 x 20, In Alternative
3		4899092		3	VIS, Hex Flg, M6 x 1 x 25, In Alternative

COLLECTEURS

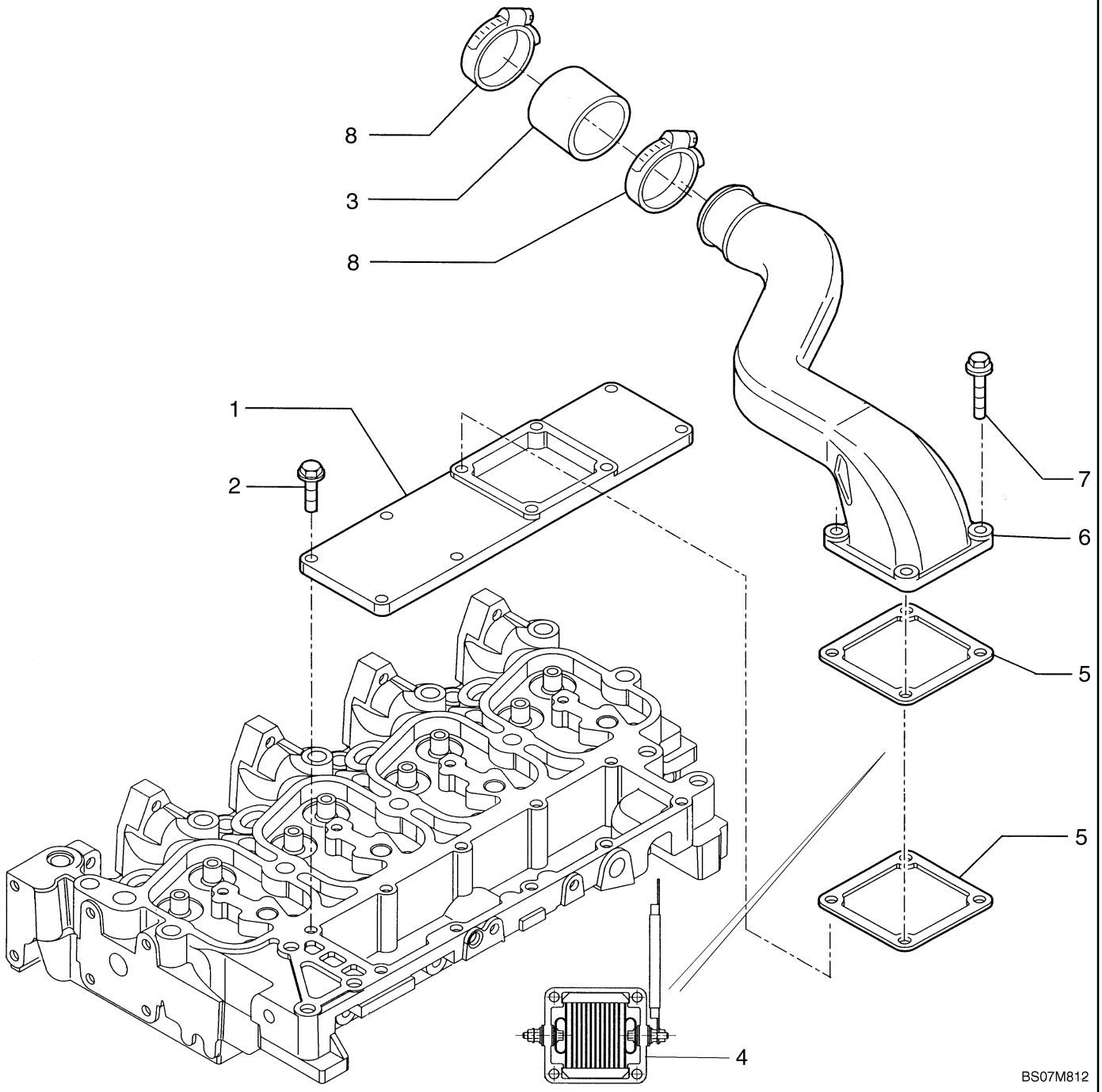

COLLECTEURS

REF	FN	PART NUMBER	YR/SN	QTY	DESCRIPTION
1		2856462		1	CONDUIT D'ADMISSION
2		4899039		6	VIS, Hex Flg, M8 x 1.25 x 25
3		2852029		1	MANCHON
4		4895316		1	RECHAUFFEUR
5		4899921		2	JOINT
6		2853075		1	COUDE, Hose Assy
7		2852155		4	VIS, Flange, M8 x 80
8		2853076		2	BRIDE, FLEXIBLE
		4895325		1	DECALCOMANIE, Warning, Do Not Use Ether

COLLECTEURS

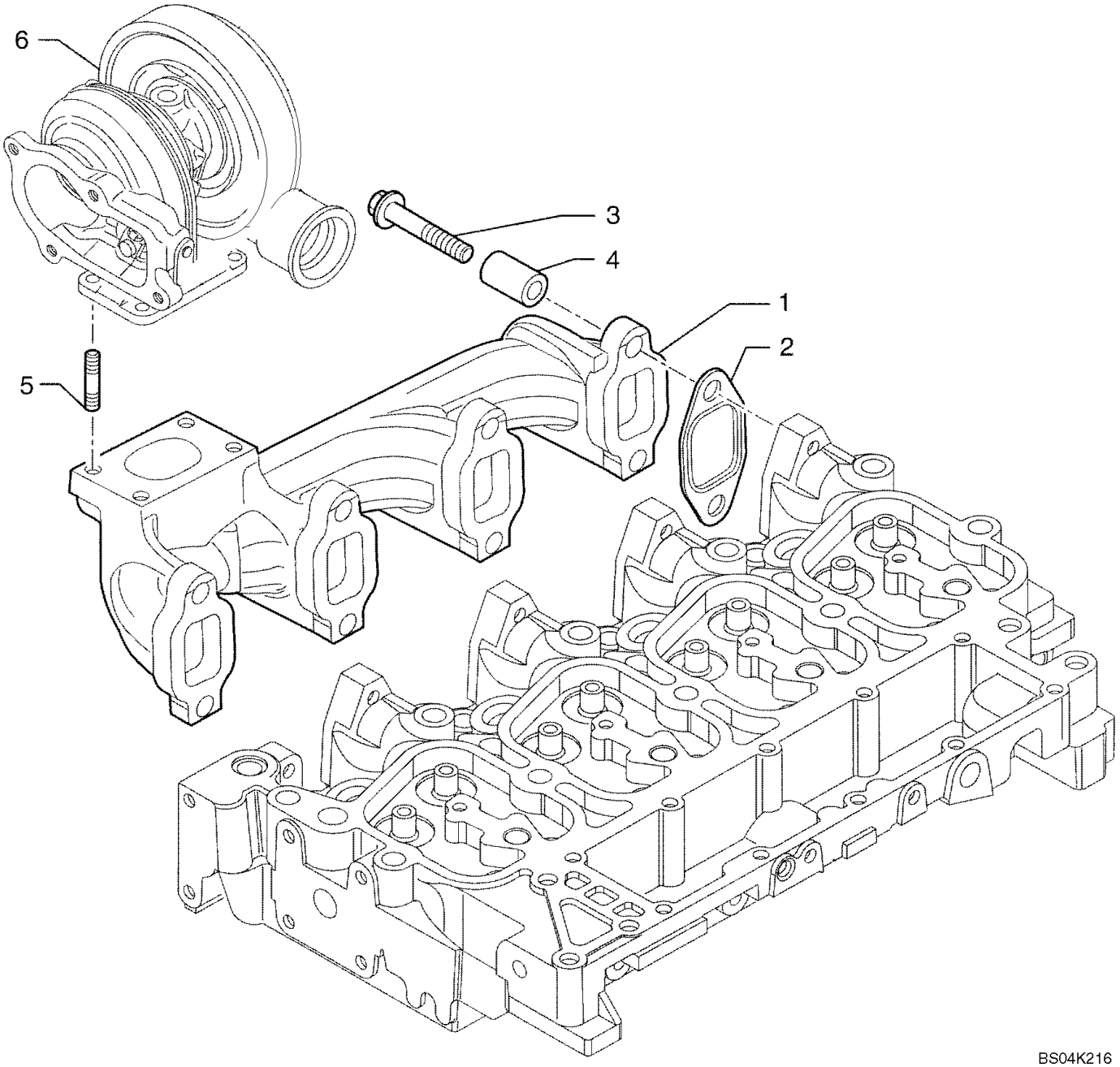

COLLECTEURS

REF	FN	PART NUMBER	YR/SN	QTY	DESCRIPTION
1		{2855983}		1	Exhaust Manifold
2		2830445		4	JOINT
3		2852834		8	VIS, Flange, M10 x 40; Models Without Turbocharged Engine
3		2852744		8	VIS, Flange, M10 x 65; Models With Turbocharged Engine
4		4895336		8	ENTRETOISE, Spacer; Models With Turbocharged Engine
5		4899859		4	GOUJON
6		REF		1	NOTICE, TURBOCHARGER; See Figure 02-41

PISTONS - BIELLES

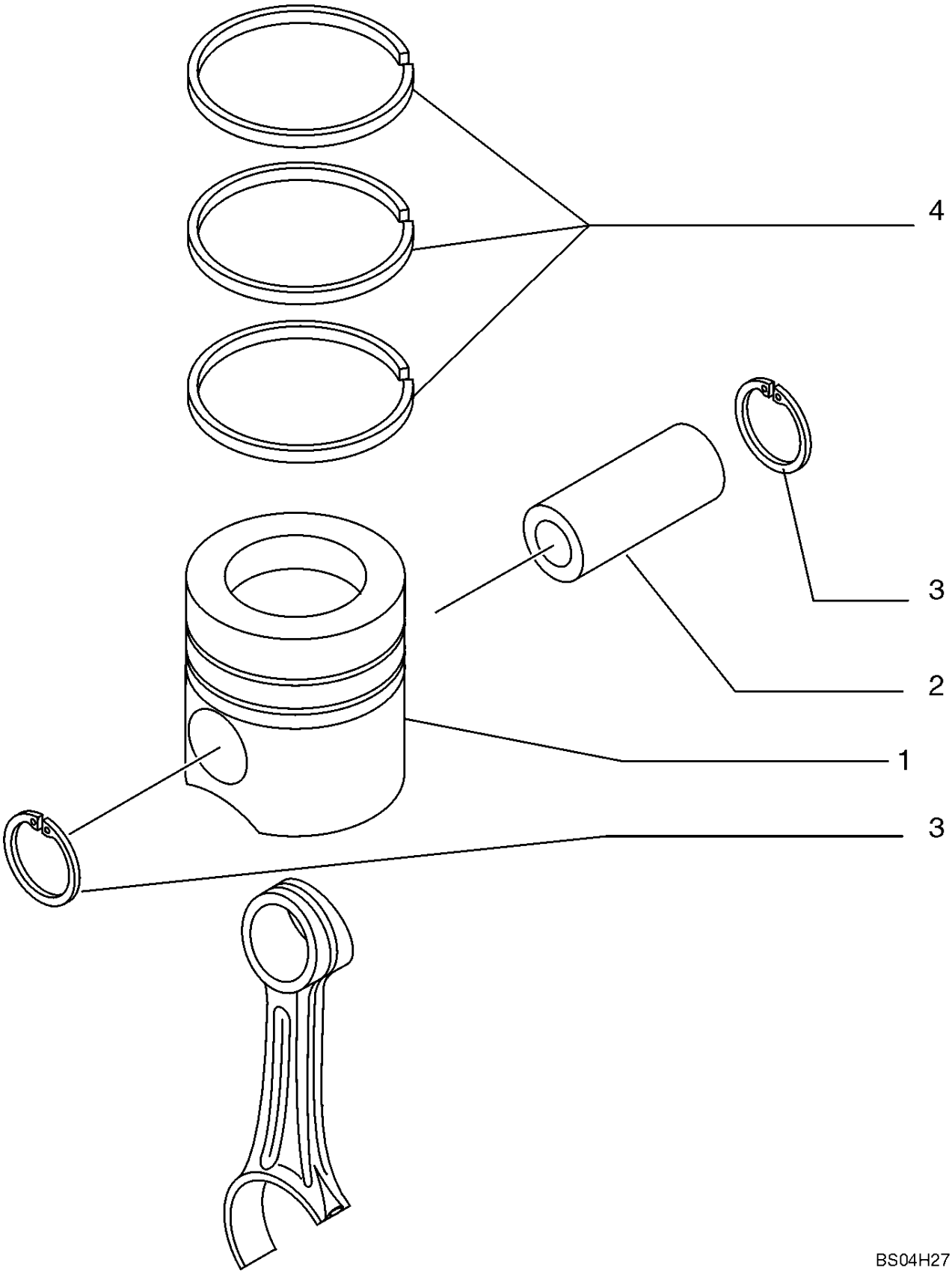

PISTONS - BIELLES

REF	FN	PART NUMBER	YR/SN	QTY	DESCRIPTION
		87647549		1	KIT DE PISTONS & SEGMENT, STD, Incl Piston 2855531, Top Compression Ring 2853805, Second Compression Ring 2830158, Oil Control Ring 2852037, Piston Pin 4892712, And Retainer 2854030
		87647550		1	KIT DE PISTONS & SEGMENT, 0.4 mm Oversize, Incl Piston 2856484, Top Compression Ring 2854141, Second Compression Ring 2830159, Oil Control Ring 2853875, Piston Pin 4892712, And Retainer 2854030
		87647551		1	KIT DE PISTONS & SEGMENT, 0.8 mm Oversize, Incl Piston 2856485, Top Compression Ring 2854142, Second Compression Ring 2830160, Oil Control Ring 2853876, Piston Pin 4892712, And Retainer 2854030
		{87582179}		1	Ring Kit; STD; Incl. Top Cmpression Ring 2854603, Second Compression Ring 2830158, Oil Control Ring 2852037
		{87582180}		1	Ring Kit; 0.4 mm Oversize; Incl. Top Cmpression Ring 2856713, Second Compression Ring 2830159, Oil Control Ring 2853875
		{87582181}		1	Ring Kit; 0.8 mm Oversize; Incl. Top Cmpression Ring 2856714, Second Compression Ring 2830160, Oil Control Ring 2853876
1		2855531		4	PISTON COMPLET, STD; Does Not Include Rings
1		{2856484}		4	0.4 Oversize; Does Not Include Rings
1		{2856485}		4	0.8 Oversize; Does Not Include Rings
2		4892712		4	AXE DE PISTON
3		2854030		8	ANNEAU D'ARRÊT
3		4892713		8	ANNEAU D'ARRÊT, Alternative To 2854030
4		{2853805}		4	Top Compression Ring; STD
4		{2854141}		4	Top Compression Ring; 0.4 Oversize
4		{2856713}		4	Top Compression Ring; 0.4 Oversize
4		{2856714}		4	Top Compression Ring; 0.4 Oversize
4		{2854142}		4	Top Compression Ring; 0.8 Oversize

PISTONS - BIELLES

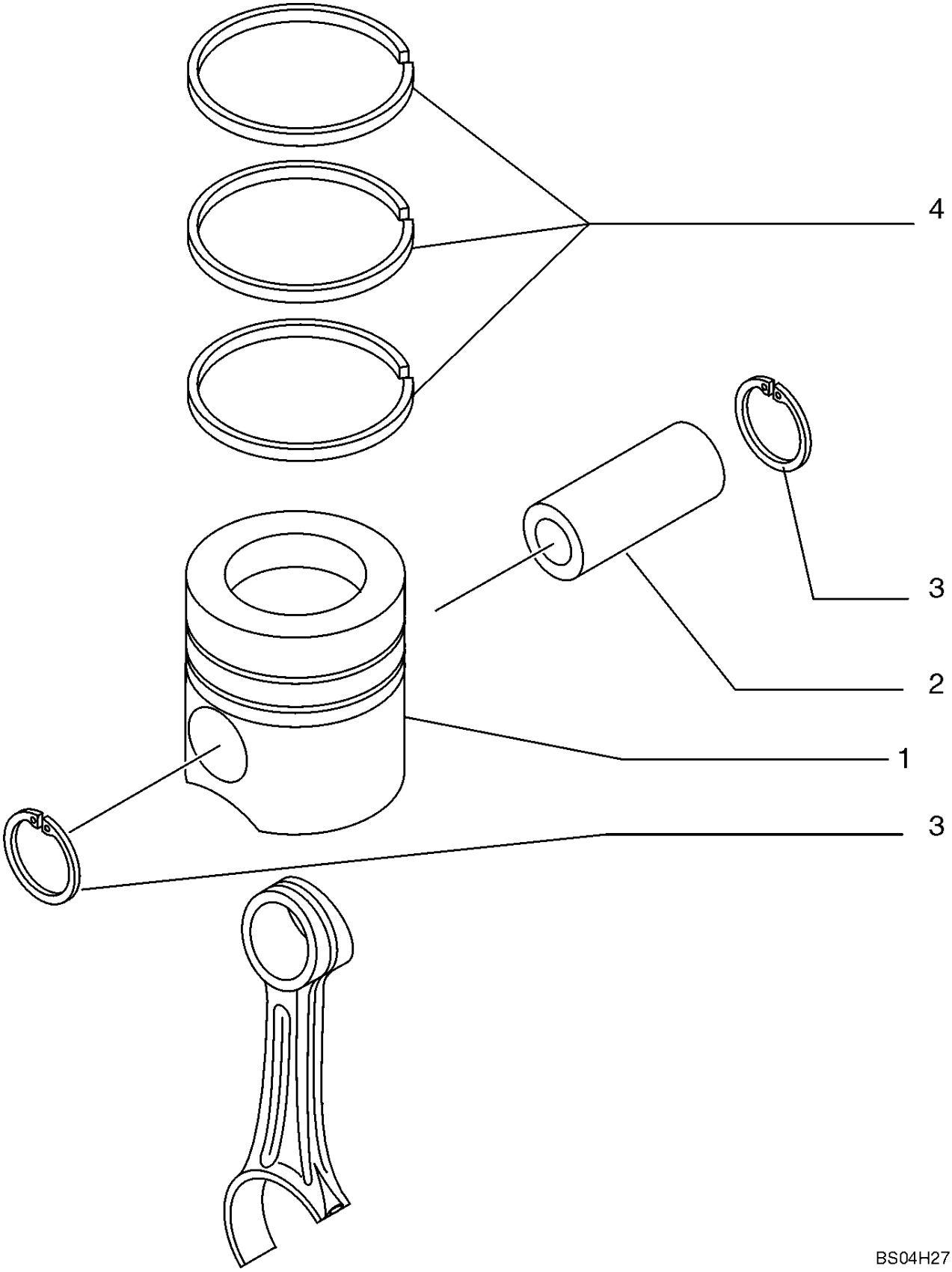

PISTONS - BIELLES

REF	FN	PART NUMBER	YR/SN	QTY	DESCRIPTION
4		2852037		4	SEGMENT RACLEUR, Oil Control; STD; Red Identification Mark
4		{2853875}		4	Oil Control Ring; 0.4 Oversize
4		{2853876}		4	Oil Control Ring; 0.8 Oversize
4		2830158		4	SEGMENT DE PISTON, Second Compression; STD; Yellow Identification Mark
4		{2830159}		4	Second Compression Ring; 0.4 mm Oversize
4		{2830160}		4	Second Compression Ring; 0.8 mm Oversize
4		2854603		4	KIT, Ring, Wear

BIELLES

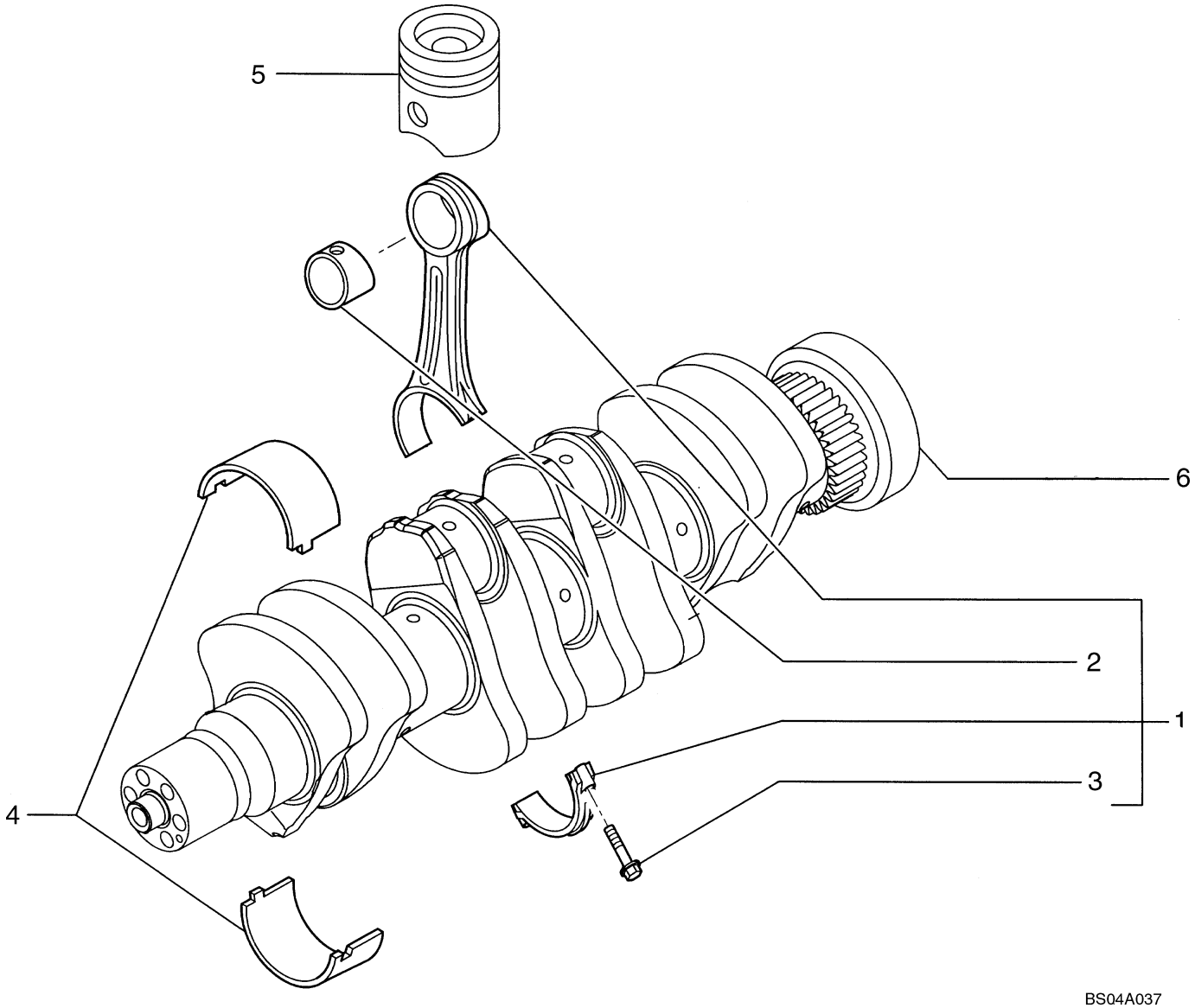

BIELLES

REF	FN	PART NUMBER	YR/SN	QTY	DESCRIPTION
1		2831298		4	BIELLE, Incl. Ref 2, 3
1		{4895747}		4	Connecting Rod; Alternate To 2831298; Incl. Ref 2, 3
2		4892708		1	BAGUE
3		2831297		2	VIS
4		4892714		4	COUSSINET VILEBREQUI
4		4892715		4	COUSSINET VILEBREQUI
5		REF		1	NOTICE, PISTON; See Figure 02-28
6		REF		1	NOTICE, CRANKSHAFT; See Figure 02-34

AXE DE CULBUTEUR

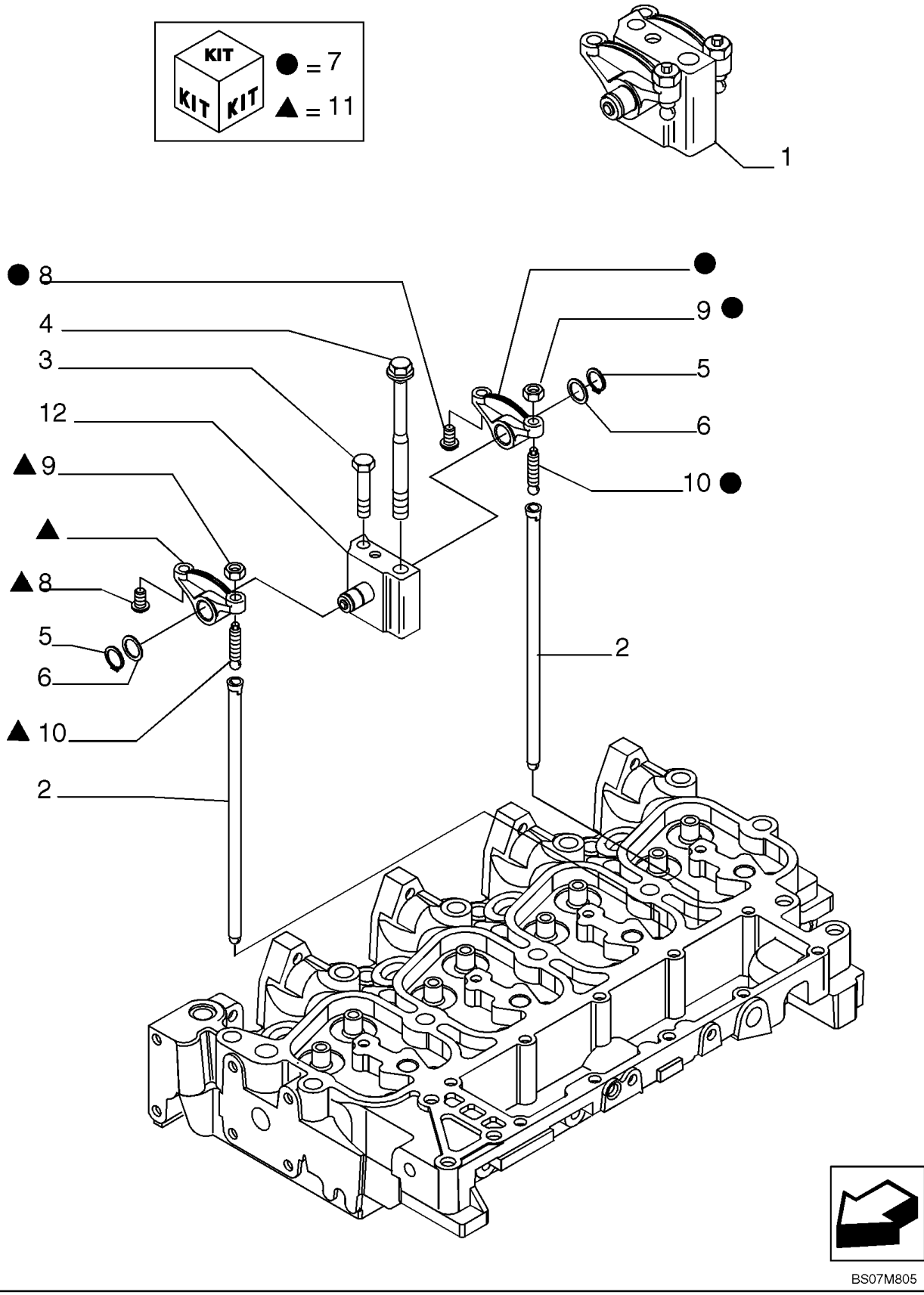

AXE DE CULBUTEUR

REF	FN	PART NUMBER	YR/SN	QTY	DESCRIPTION
1		4895195		4	CULBUTEUR, - ASSY
2		4895361		8	TIGE DE CULBUTEUR
3		2852866		4	VIS
4		4892860		4	VIS, Wash Hd, M12 x 1.25 x 183
5		4895363		2	ANNEAU D'ARRÊT
6		4895364		2	RONDELLE
7		4895196		1	CULBUTEUR, - ASSY
8		4895365		2	INSERT
9		4895198		2	ECROU
10		4895199		2	VIS
11		4895200		1	CULBUTEUR, - ASSY
12		4895204		1	SUPPORT

VOLANT - MOTEUR

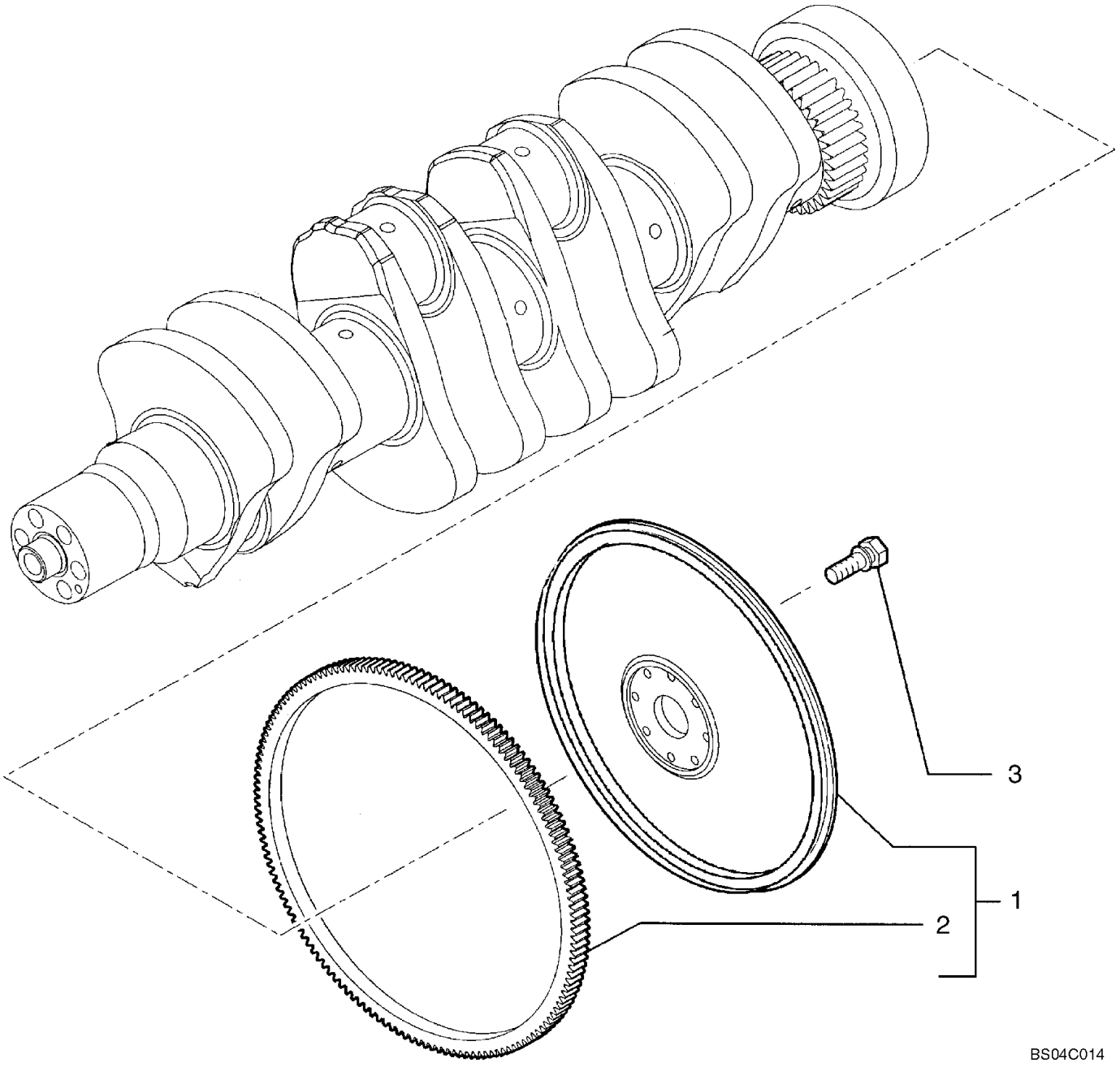

VOLANT - MOTEUR

REF	FN	PART NUMBER	YR/SN	QTY	DESCRIPTION
1		2853991		1	VOLANT DU MOTEUR, Incl. Ref 2
2		2852221		1	COURONNE DENTÉE
3		2852364		8	VIS, With Washer, M12 x 40

POULIE - VILEBREQUIN

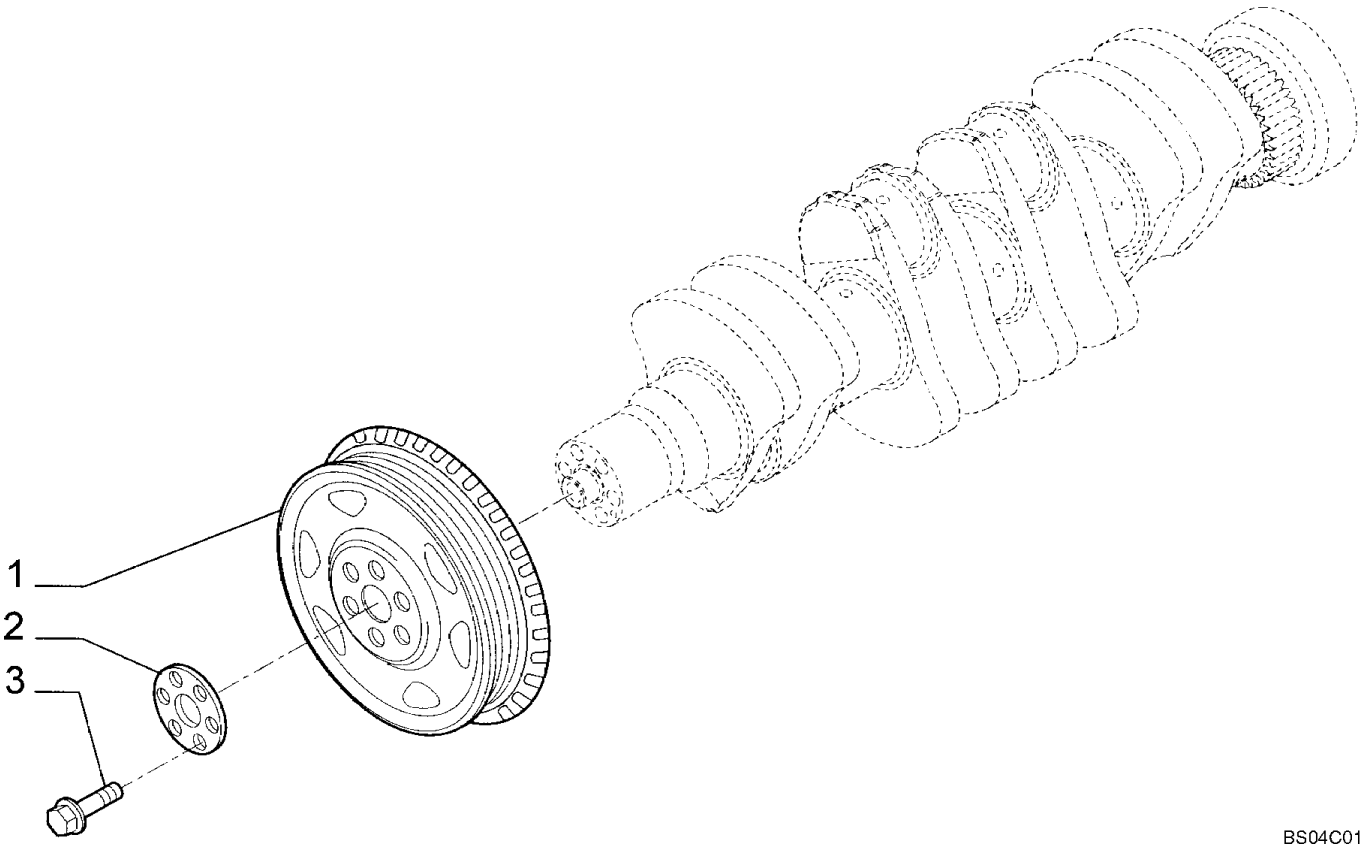

POULIE - VILEBREQUIN

REF	FN	PART NUMBER	YR/SN	QTY	DESCRIPTION
1		4896773		1	POULIE
2		2852533		1	RONDELLE, Clamping Plate
3		4892867		6	VIS, Torx Wash Hd, M12 x 1.25 x 78.5
3		2853960		6	VIS, Alternative To 4892867

ARBRE À CAMES

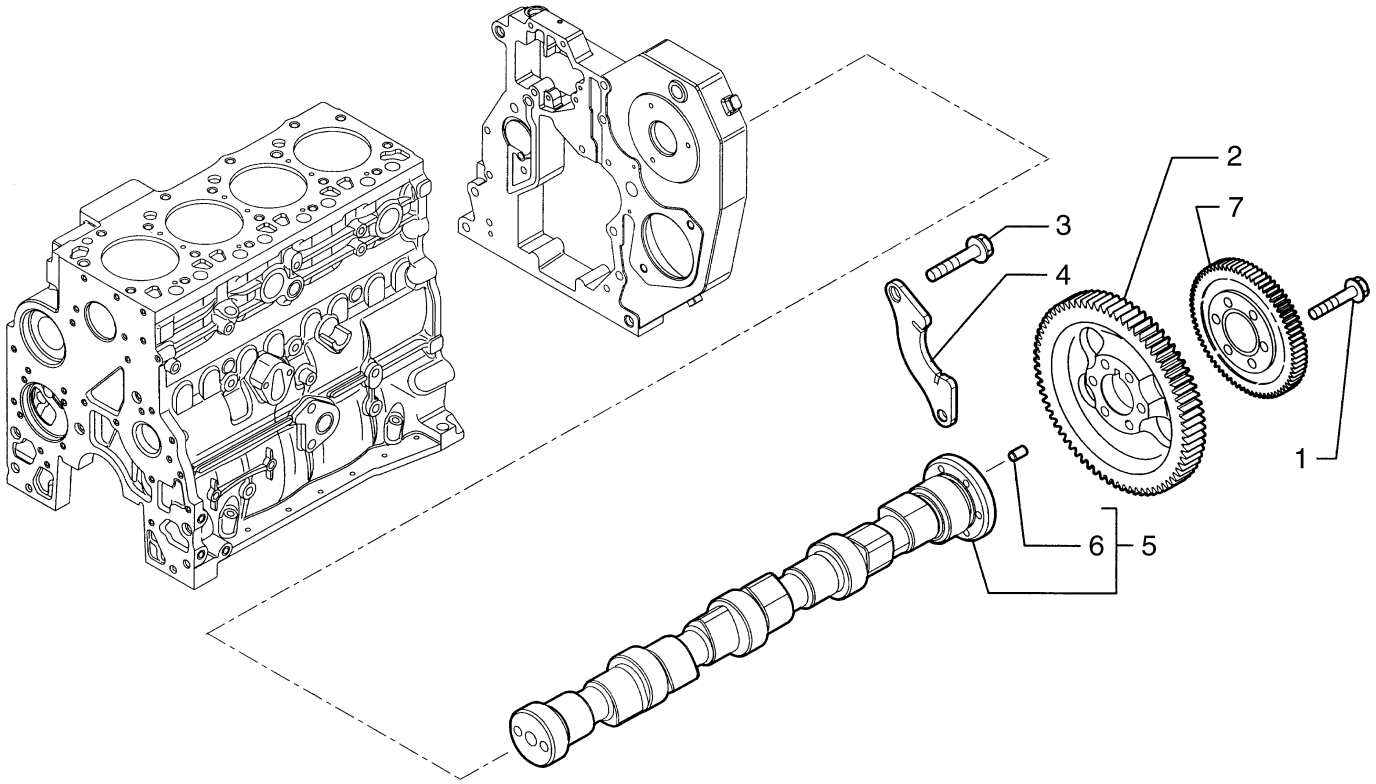

BS04A043

ARBRE À CAMES

REF	FN	PART NUMBER	YR/SN	QTY	DESCRIPTION
1		4895323		6	VIS, Flange, M8 x 40
2		2852062		1	PIGNON
3		4899068		2	VIS, Hex Flg, M8 x 1.25 x 16
4		4897457		1	FLASQUE
5		{2856170}		1	Camshaft; Incl. Ref 6
6		4899080		1	PION
7		{2855183}		1	Gear, Driven

VILEBREQUIN

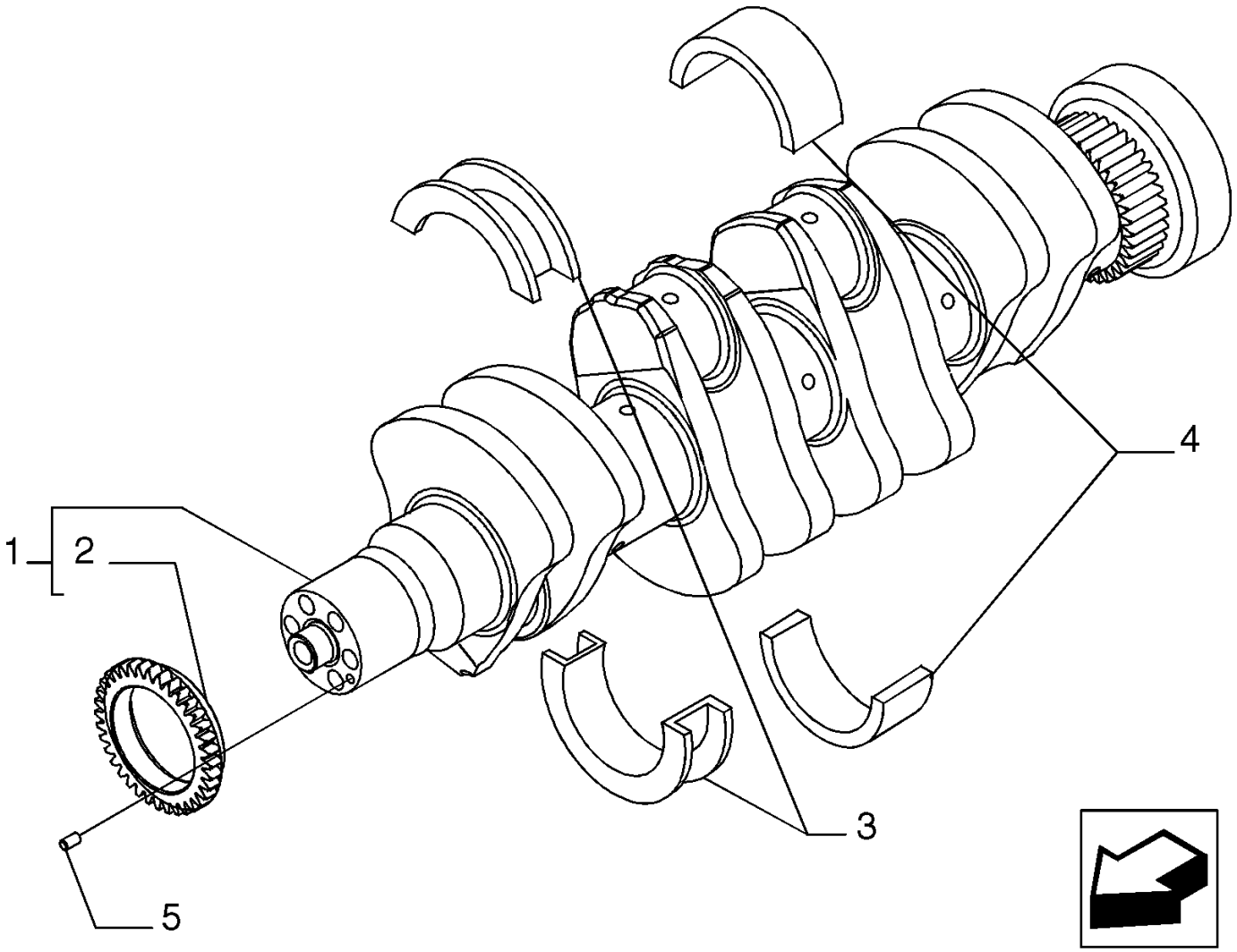

BS07M806

VILEBREQUIN

REF	FN	PART NUMBER	YR/SN	QTY	DESCRIPTION
1		2853822		1	VILEBREQUIN, - ASSY
2		4893386		1	PIGNON
3		{2853816}		1	Thrust Bearing Kit; STD.
3		{2855020}		1	Thrust Bearing Kit; -0.25
3		{2855021}		1	Thrust Bearing Kit; -0.5
3		{2855022}		1	Thrust Bearing Kit; -0.75
3		{2855023}		1	Thrust Bearing Kit; -1
3		4895414		1	COUSSINET VILEBREQUI
4		{2853815}		4	Main Bearing Kit; STD.
4		{2853816}		4	Main Bearing Kit; -0.25
4		{2853817}		4	Main Bearing Kit; -0.5
4		{2853818}		4	Main Bearing Kit; -0.75
4		{2853819}		4	Main Bearing Kit; -1
4		4895017		4	COUSSINET VILEBREQUI
5		4899046		1	PION

CIRCUIT DE REFROIDISSEMENT - MOTEUR

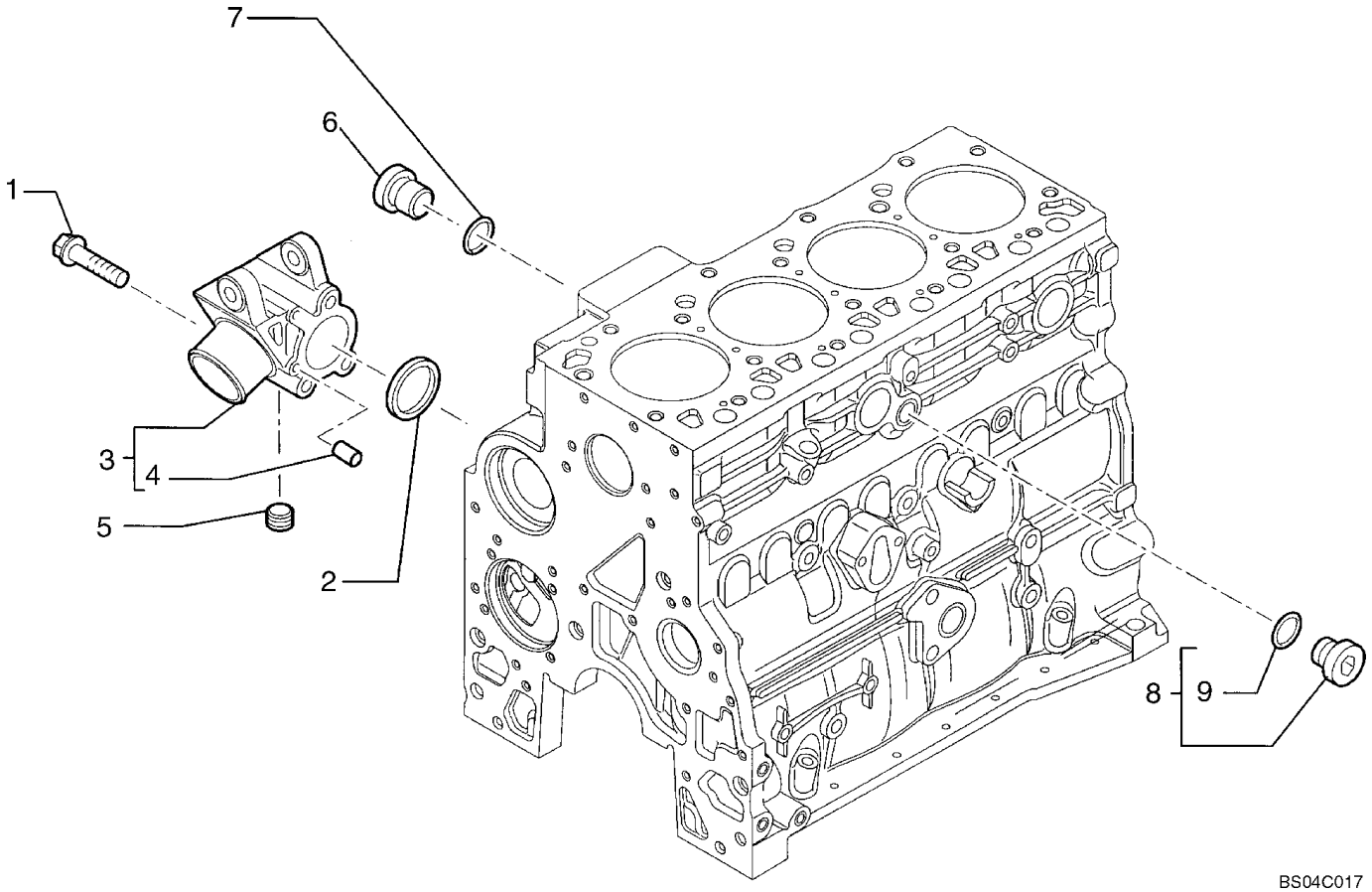

CIRCUIT DE REFROIDISSEMENT - MOTEUR

REF	FN	PART NUMBER	YR/SN	QTY	DESCRIPTION
1		4899109		3	VIS, Hex, M10 x 1.5 x 80
2		2854072		1	JOINT THORIQUE
3		2852145		1	SUPPORT, Incl. Ref 4
4		NSS		2	NON FOURNI SEPAREMENT, Dowel
5		2852511		1	BOUCHON
		4895392		1	BOUCHON, M18; Torque Converter Oil; Incl. Ref 6, 7
6		4895394		1	BOUCHON
7		4895393		1	JOINT THORIQUE
8		4895623		1	BOUCHON, Compressor Plumbing; Incl. Ref 9
9		4895625		1	JOINT THORIQUE

POMPE A EAU

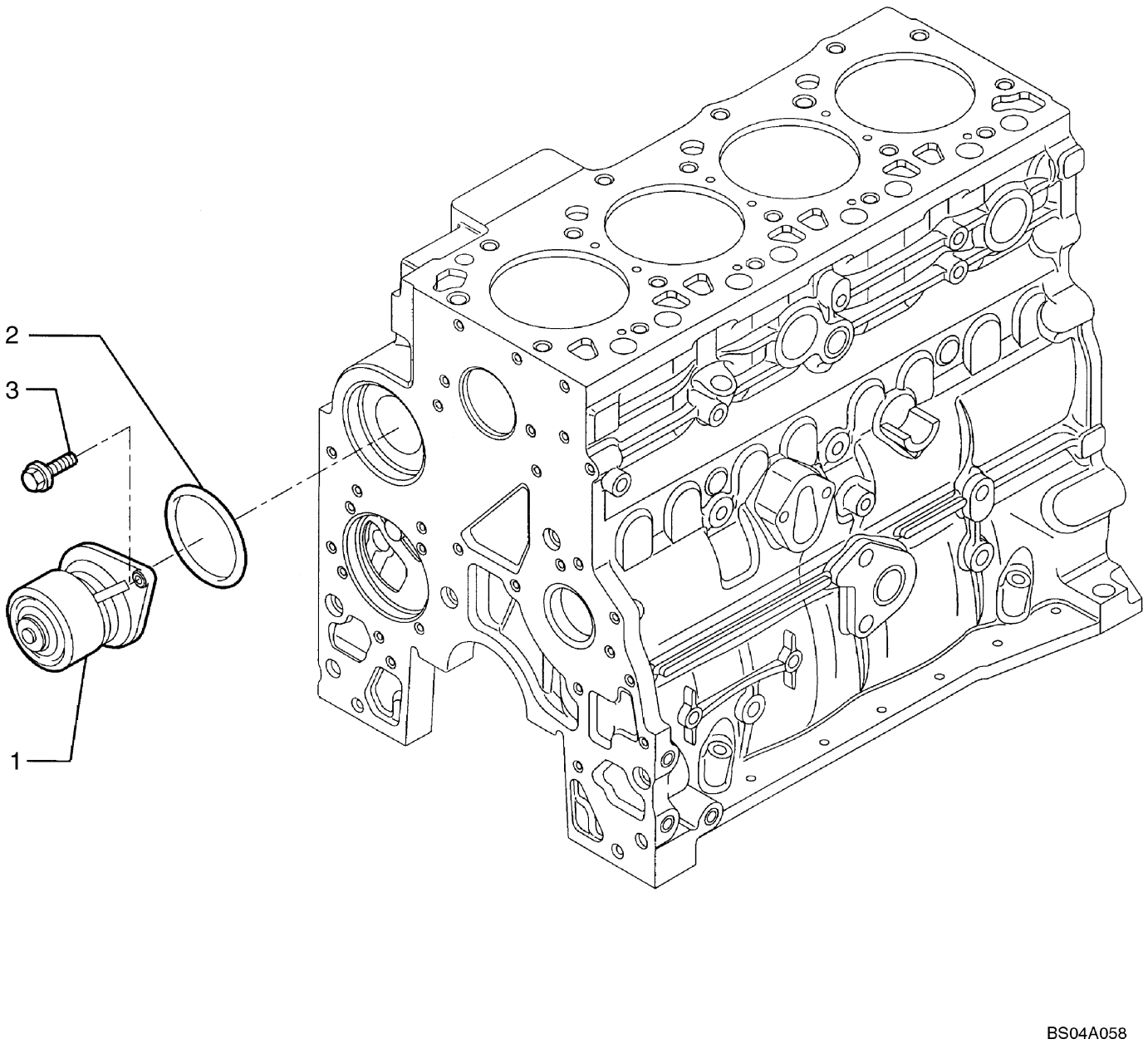

POMPE A EAU

REF	FN	PART NUMBER	YR/SN	QTY	DESCRIPTION
1		4891252		1	POMPE A EAU
2		2852047		1	JOINT, Gasket
3		4899079		2	VIS, Hex Flg, M8 x 1.25 x 25

POMPE A EAU - COMMANDE

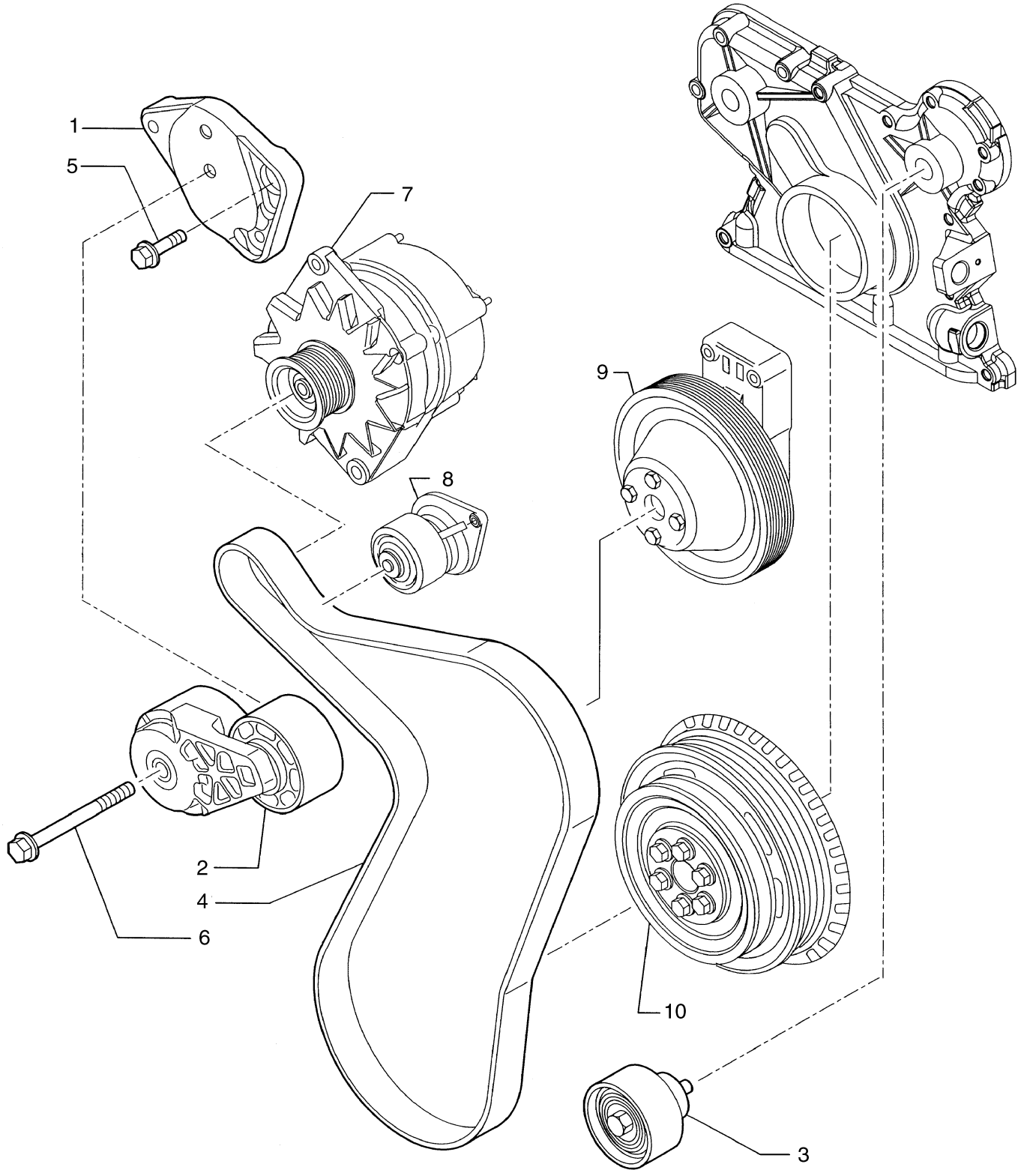

POMPE A EAU - COMMANDE

REF	FN	PART NUMBER	YR/SN	QTY	DESCRIPTION
1		2852163		1	PATTE FIXATION
		2854611		1	POULIE, Incls. 1,2,3,5 & 6
2		2852161		1	TENDEUR DE COURROIE
3		2852162		1	POULIE
4		85826230		1	COURROIE, See Figure 02-06
5		4899079		2	VIS, Hex Flg, M8 x 1.25 x 25
6		4899109		1	VIS, Hex, M10 x 1.5 x 80
7		REF		1	NOTICE, ALTERNATOR; See Figure 04-02
8		REF		1	NOTICE, WATER PUMP; See Figure 02-36
9		REF		1	NOTICE, FAN DRIVE; See Figure 02-39
10		REF		1	NOTICE, CRANKSHAFT PULLEY; See Figure 02-32

THERMOSTAT - REFROIDISSEMENT MOTEUR

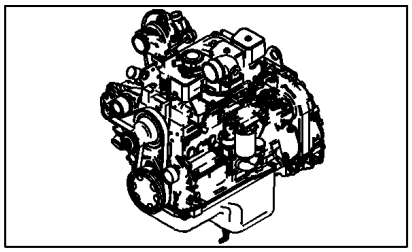

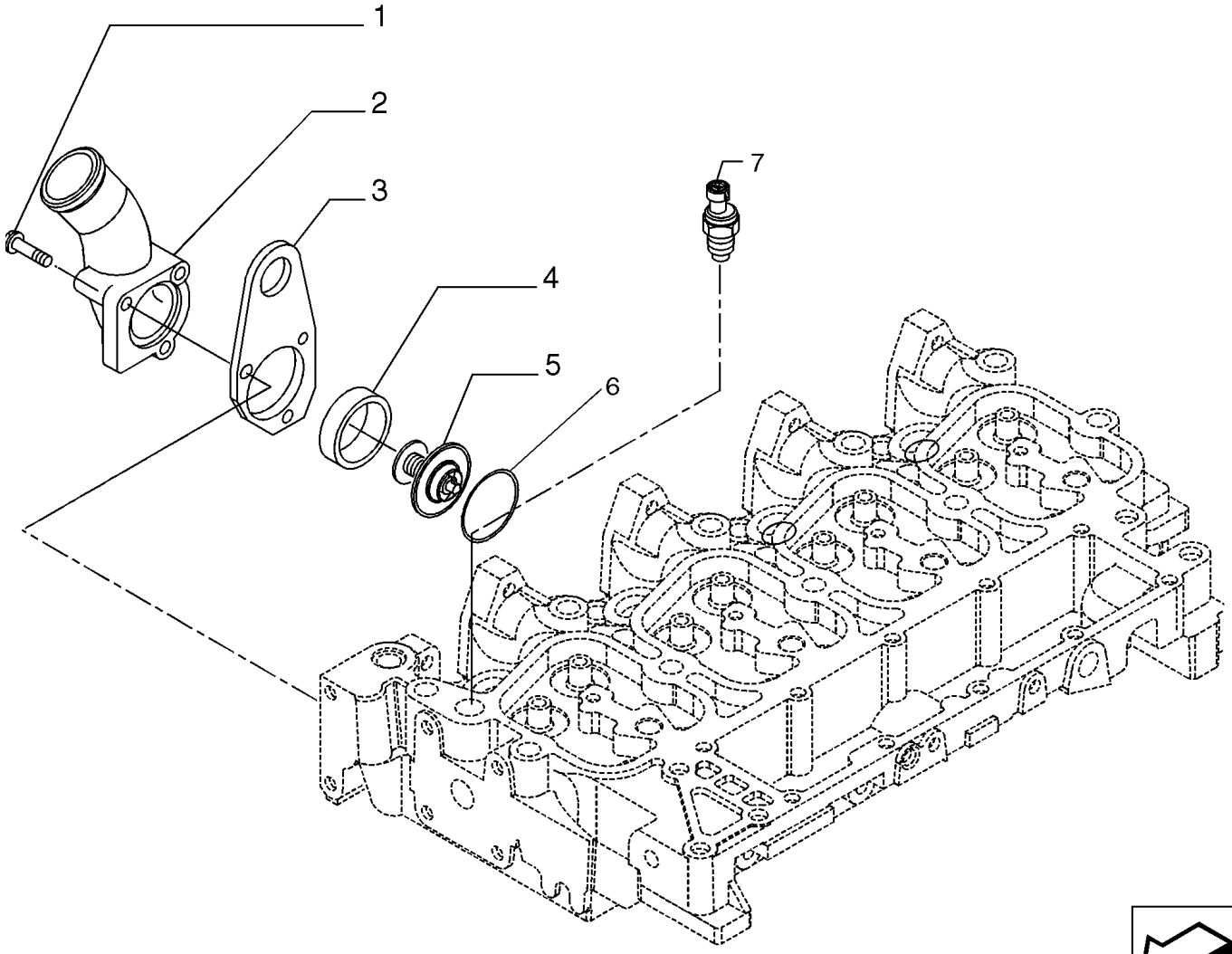

BS07M808

THERMOSTAT - REFROIDISSEMENT MOTEUR

REF	FN	PART NUMBER	YR/SN	QTY	DESCRIPTION
1		2852155		3	VIS
2		2856455		1	COLLECTEUR
3		{2853132}		1	Bracket; Engine Lifting
4		2853133		1	JOINT
5		2856541		1	THERMOSTAT, Incl 6
6		2852473		1	JOINT
7		{2854867}		1	SENSOR; Water Temp
8		4895078		1	BOUCHON, Not Illustrated

COMMANDE DE VENTILATEUR

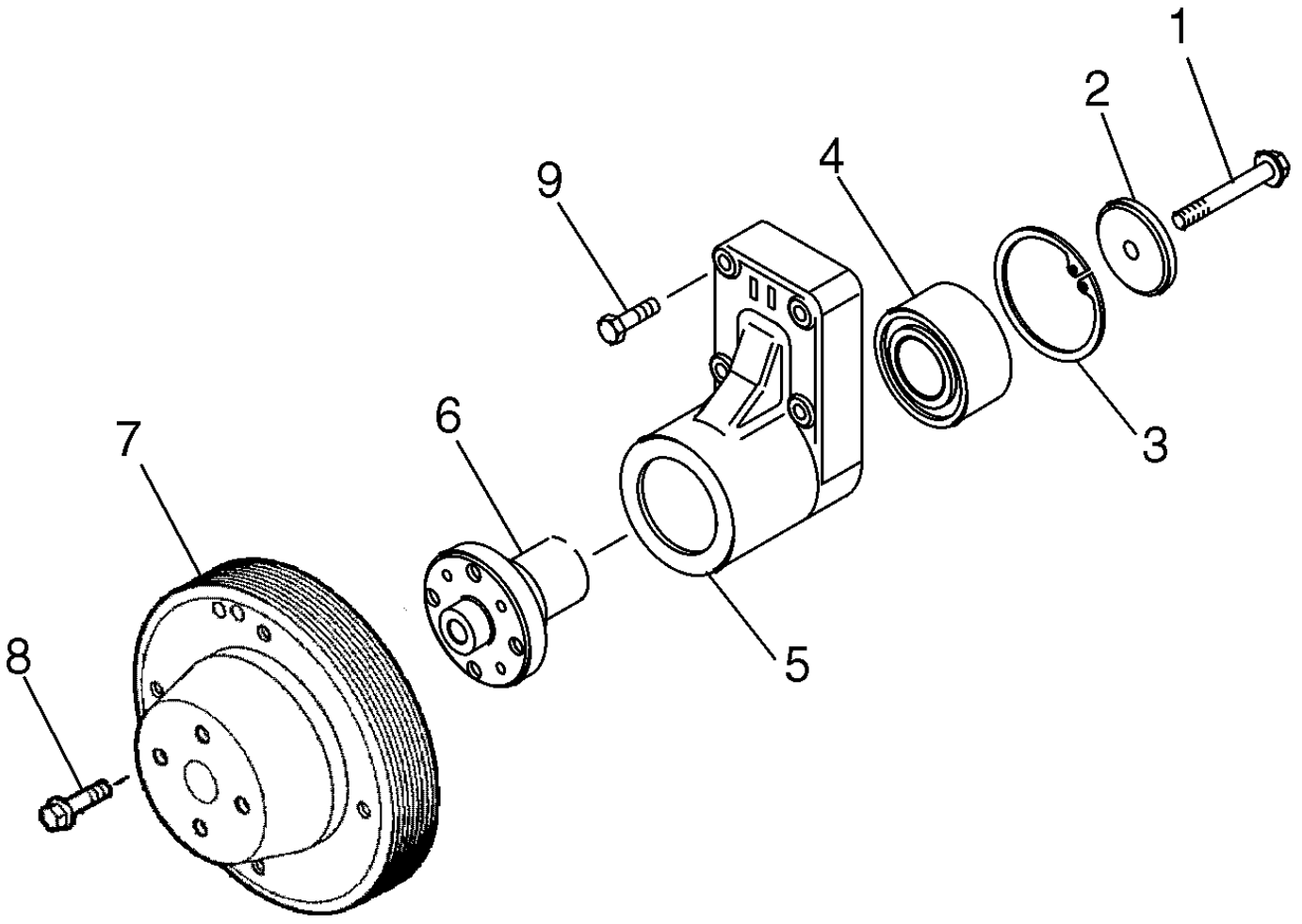

BS04K142

COMMANDE DE VENTILATEUR

REF	FN	PART NUMBER	YR/SN	QTY	DESCRIPTION
		2852170		1	SUPPORT, Incl. 1 - 6
1		2852172		1	VIS
2		4892732		1	ROULEMENT A BILLES
3		2852171		1	CIRCLIP
4		4890732		1	RETENEUR
5		NSS		1	NON FOURNI SEPAREMENT, Support
6		4892426		1	MOYEU
7		2853010		1	POULIE
8		4899032		4	VIS, Hex Flg, M10 x 1.5 x 25
9		4899053		4	VIS, Hex Flg, M8 x 45

MOTEUR - CROCHET DE LEVAGE

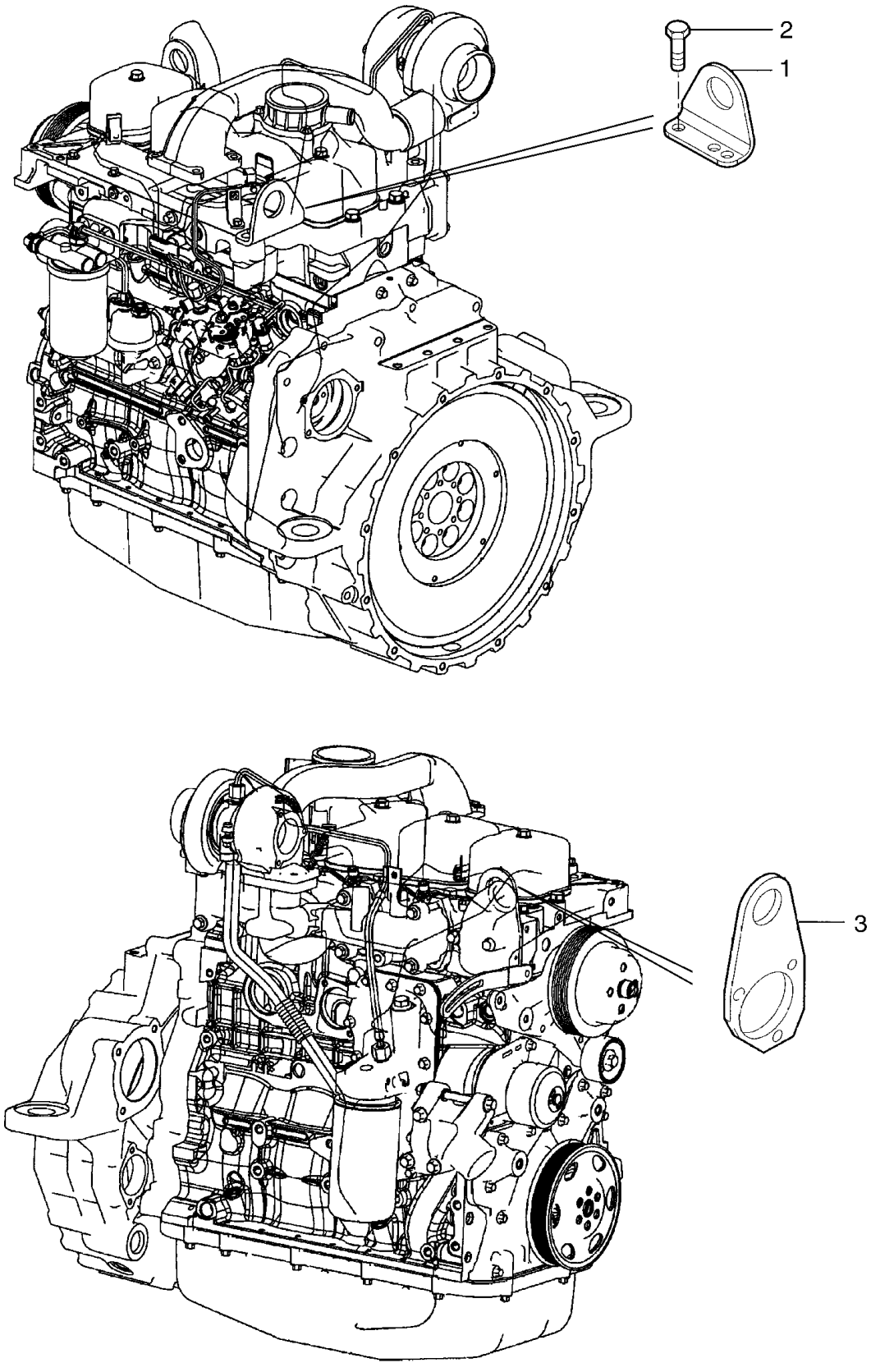

MOTEUR - CROCHET DE LEVAGE

REF	FN	PART NUMBER	YR/SN	QTY	DESCRIPTION
1		2852183		1	ANNEAU DE LEVAGE
2		4899073		2	VIS, Hex Flg, M12 x 1.75 x 30
3		REF		1	NOTICE, LIFT RING 2853132; See Figure 02-38

TURBOCOMPRESSEUR

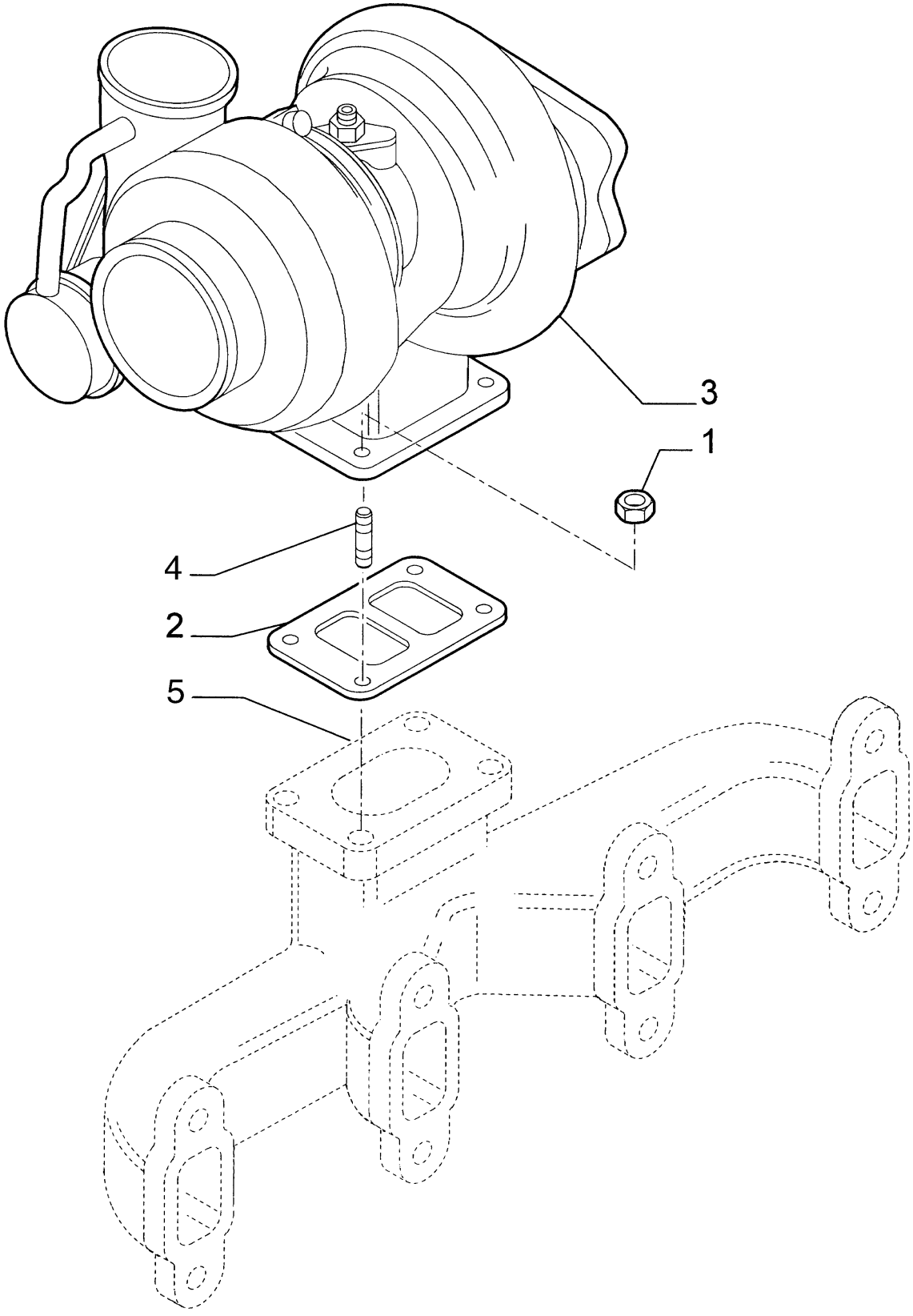

TURBOCOMPRESSEUR

REF	FN	PART NUMBER	YR/SN	QTY	DESCRIPTION
1		500322677		4	ECROU
2		4895133		1	JOINT
3		2852507		1	TURBOCOMPRESSEUR
4		4899859		4	GOUJON
5		REF			NOTICE, Exhaust Manifold; See Figure 02-27

NOTES

SECTION INDEX
Circuit de Carburant

03-01	TUYAUX DE CARBURANT ET SYSTEME DE FILTRAGE
03-02	COMMANDES - PÉDALE D'ACCÉLÉRATION, ACCELERATEUR A MAIN
03-03	FILTRE COMBUSTIBLE
03-04	POMPE DINJECTION
03-05	POMPE D'ALIMENTATION
03-06	POMPE D'INJECTION - COMMANDE
03-07	SYSTÈME D'INJECTION - ALIMENTATION EN CARBURANT
03-08	SYSTÈME D'INJECTION - ALIMENTATION EN CARBURANT
03-09	SYSTÈME D'INJECTION - CONDUITE DE VIDANGE
03-10	GROUPE D'INJECTION - INJECTEUR

TUYAUX DE CARBURANT ET SYSTEME DE FILTRAGE

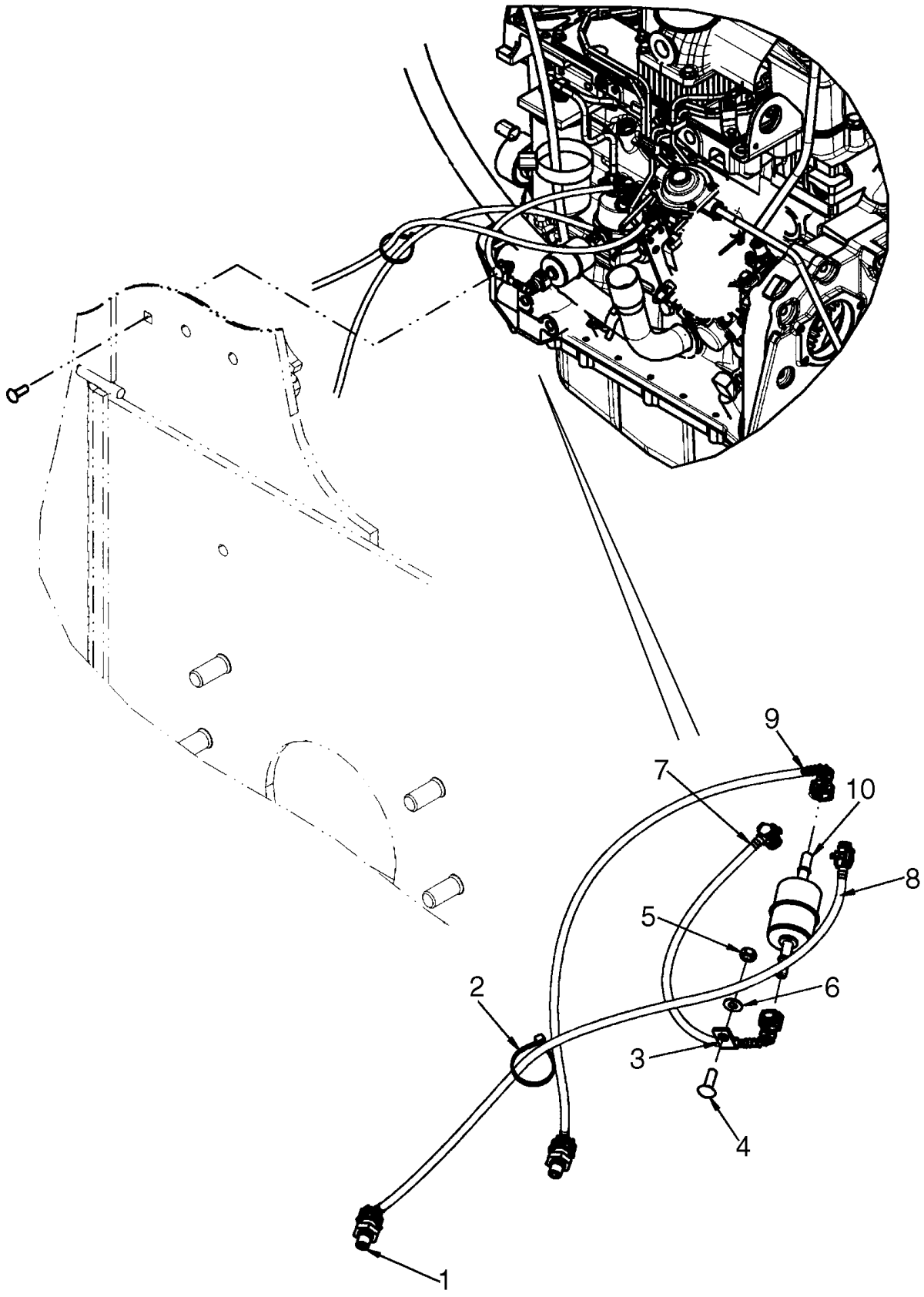

TUYAUX DE CARBURANT ET SYSTEME DE FILTRAGE

REF	FN	PART NUMBER	YR/SN	QTY	DESCRIPTION
1		87431323		1	ADAPTEUR, Fuel Line Adapter
2		529070		1	SERRE-CABLE, .30" x 14.5"
3		853764		1	BRIDE, 5/16", Insul, 5/16" Bolt
4		308761		1	BOULON TETE BOMBEE, Short NK, M8 x 25, Cl8.8, Full Thd
5		43362		1	ECROU, M8, Cl 10
6		322358		1	RONDELLE BELLEVILLE, Belleville, M8
7		87584554		1	FLEXIBLE, Fuel Line 355 mm (13.97 in)
8		87598810		1	FLEXIBLE, Return Fuel Line, 805 mm (31.7 in)
9		87584639		1	FLEXIBLE, Fuel Line, 650 mm (25.6 in)
10		87548612		1	FILTRE A COMBUSTIBLE, Inline

03-02		p1	11/07

COMMANDES - PÉDALE D'ACCÉLÉRATION, ACCELERATEUR A MAIN

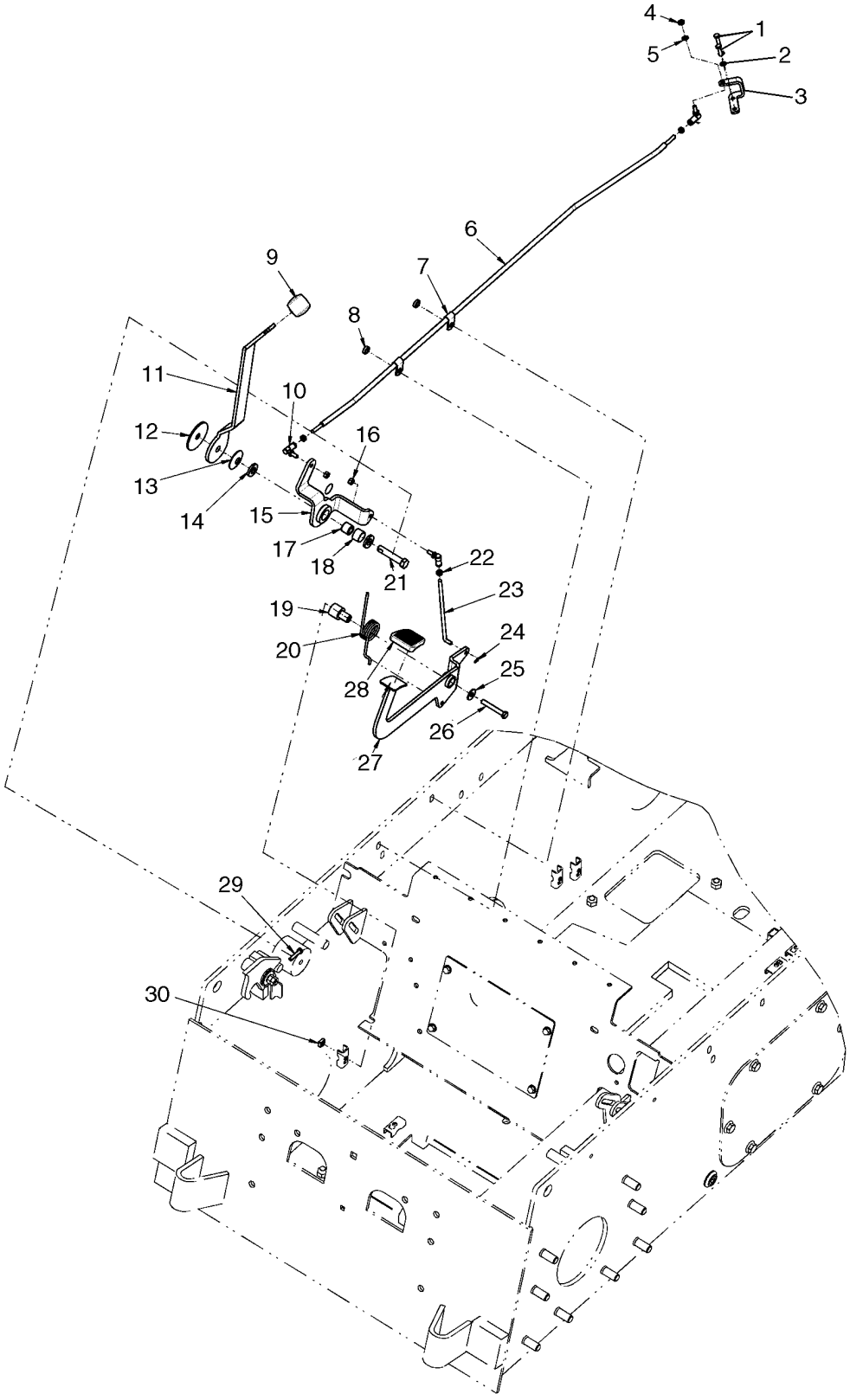

COMMANDES - PÉDALE D'ACCÉLÉRATION, ACCELERATEUR A MAIN

REF	FN	PART NUMBER	YR/SN	QTY	DESCRIPTION
1		120100		2	BOULON, Hex, M6 x 20, 8.8
2		86517328		2	RONDELLE FREIN, M6
3		{87643562}		1	Throttle Rod Bracket
4		88098		1	ECROU, Jam, 1/4"-28, G2
5		80682		1	RONDELLE FREIN, 1/4"
6		{87688638}		1	Throttle Rod
7		87028524		2	CRAMPON
8		694371		2	ENTRETOISE
9		A177436		1	PLAQUE
10		H169920		3	ROTULE
11		87712373		1	COMMANDE D'ACCELERATEUR, Hand Throttle
12		1342374C1		1	DISQUE
13		R14771		1	RONDELLE
14		86625256		2	RONDELLE, M12 x 28.5 x 4, HT
15		87712376		1	COMMANDE D'ACCELERATEUR, Throttle Control
16		86509309		2	ECROU, 1/4"-28, G5
17		187035A2		1	BAGUE
18		186905A1		1	BAGUE, Throttle Bushing
19		87424095		1	MANCHON, Throttle Pivot
20		87416539		1	RESSORT DE TORSION
21		87612749		1	ATTACHE, Bolt, M12 X 60 10.9
22		86976064		3	ECROU, Jam, 1/4"-28, G5
23		87650094		1	TRINGLE, Throttle Rod, Foot
24		D131983		1	AXE
25		86639313		1	RONDELLE, M8 x 20 x 1.6
26		16044321		1	BOULON, Hex, M8 x 55, 8.8
27		{87650090}		1	Foot Pedal
28		323657A1		1	TAMPON, Foot Pedal Pad
29		43117		1	BOULON, Hex, M6 x 30, 8.8, `
30		229197A1		1	ECROU

FILTRE COMBUSTIBLE

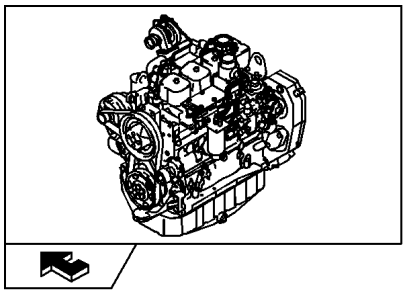

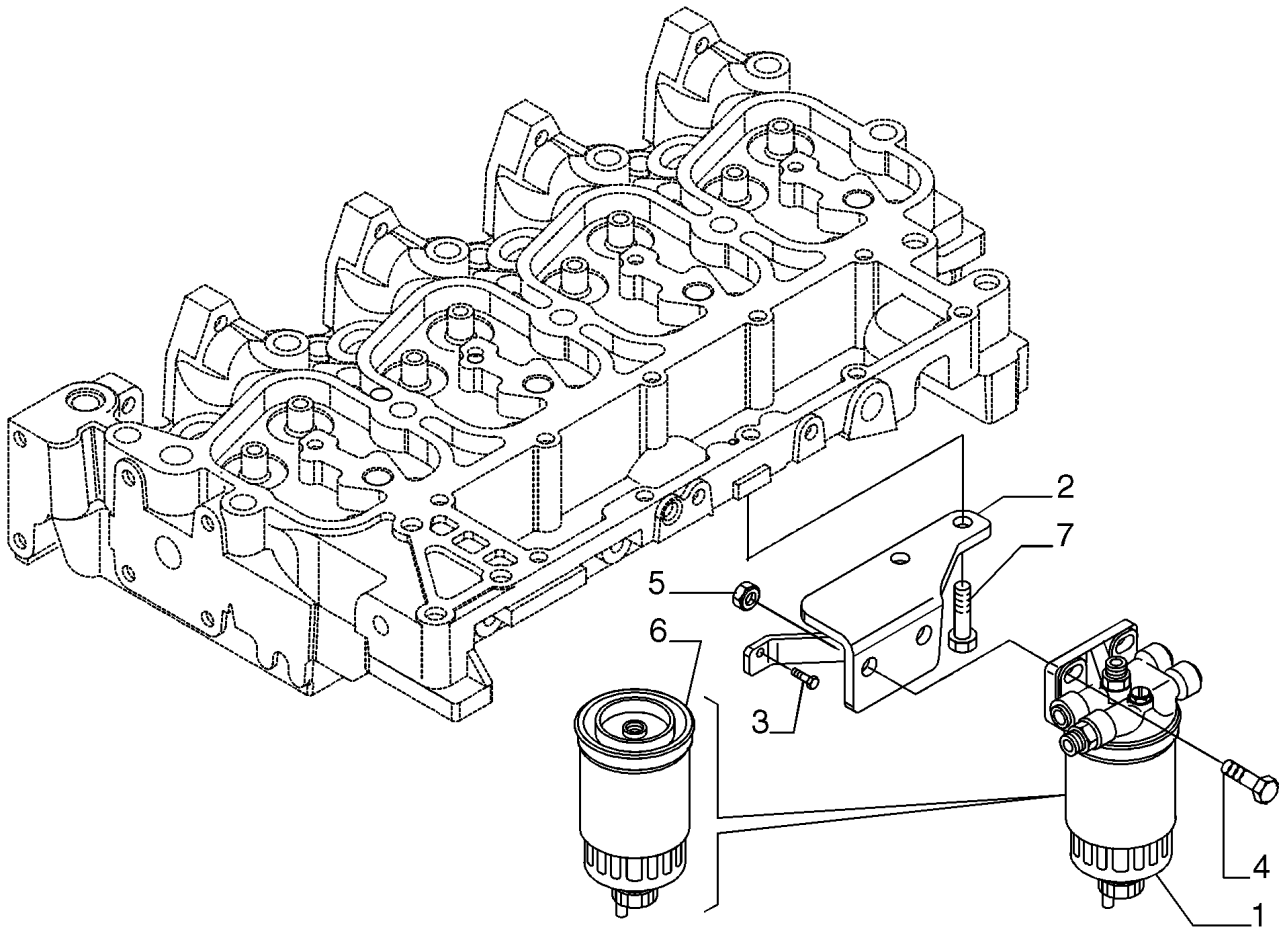

BS07M807

FILTRE COMBUSTIBLE

REF	FN	PART NUMBER	YR/SN	QTY	DESCRIPTION
1		2852547		1	FILTRE ASSY, Fuel
2		2855103		1	SUPPORT
3		4899068		1	VIS, Hex Flg, M8 x 1.25 x 16
4		{4899849}		2	Screw
5		4895166		2	ECROU, M10X1.5 mm
6		87803194		1	FILTRE A COMBUSTIBLE
7		2830411		2	VIS

POMPE DINJECTION

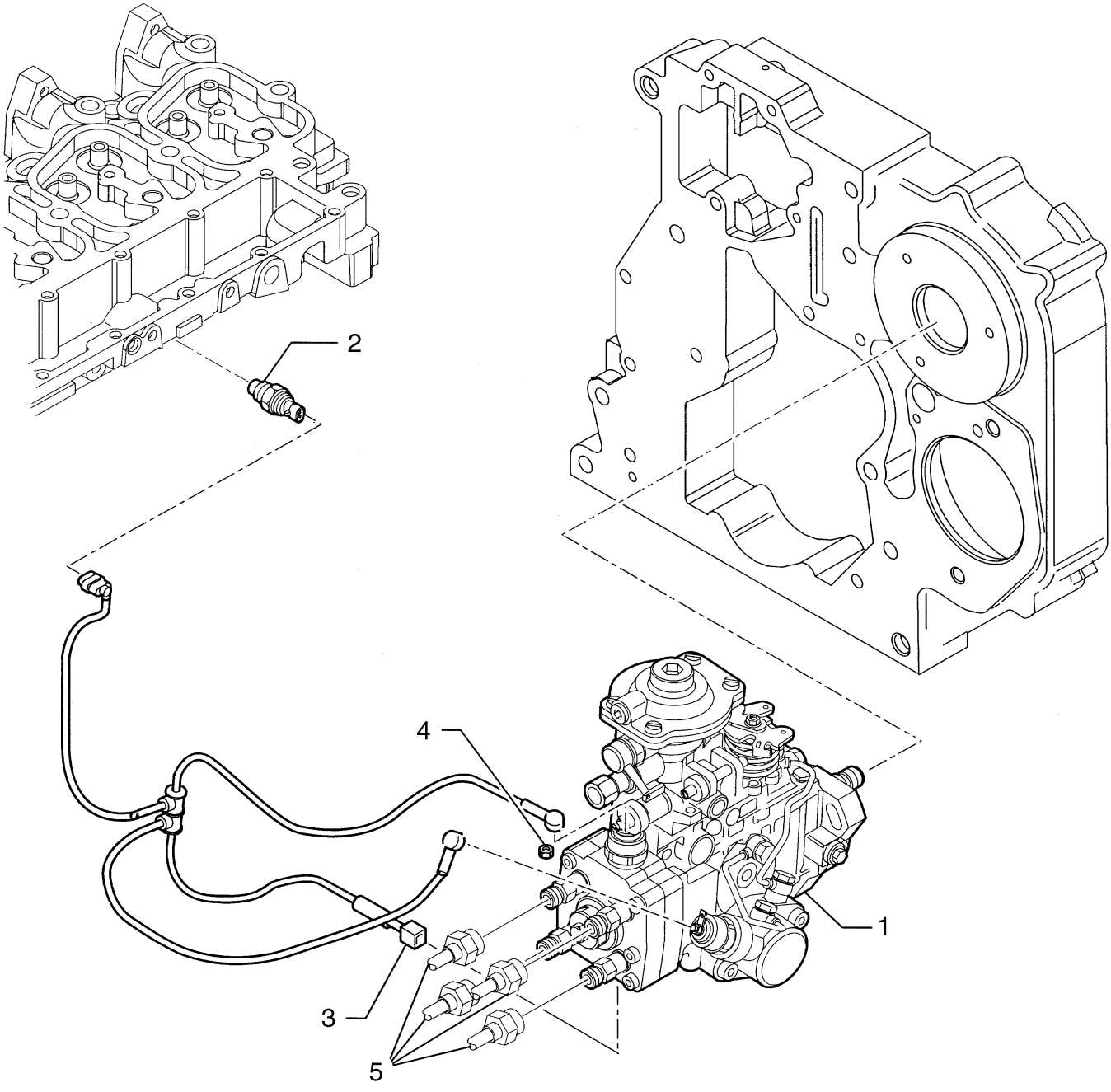

BS04A044

POMPE DINJECTION

REF	FN	PART NUMBER	YR/SN	QTY	DESCRIPTION
1		2856334		1	POMPE INJECTION, Incl 2852741
		2852741		1	SOLENOIDE, Fuel Shut Off
2		2856350		1	CAPTEUR, Water Temperature
3		2852088		1	FIL DE CONNECTION
4		2852089		2	ECROU, Lock
5		REF		1	NOTICE, TUBE; See Figure 03-07 for Tube Kit

POMPE D'ALIMENTATION

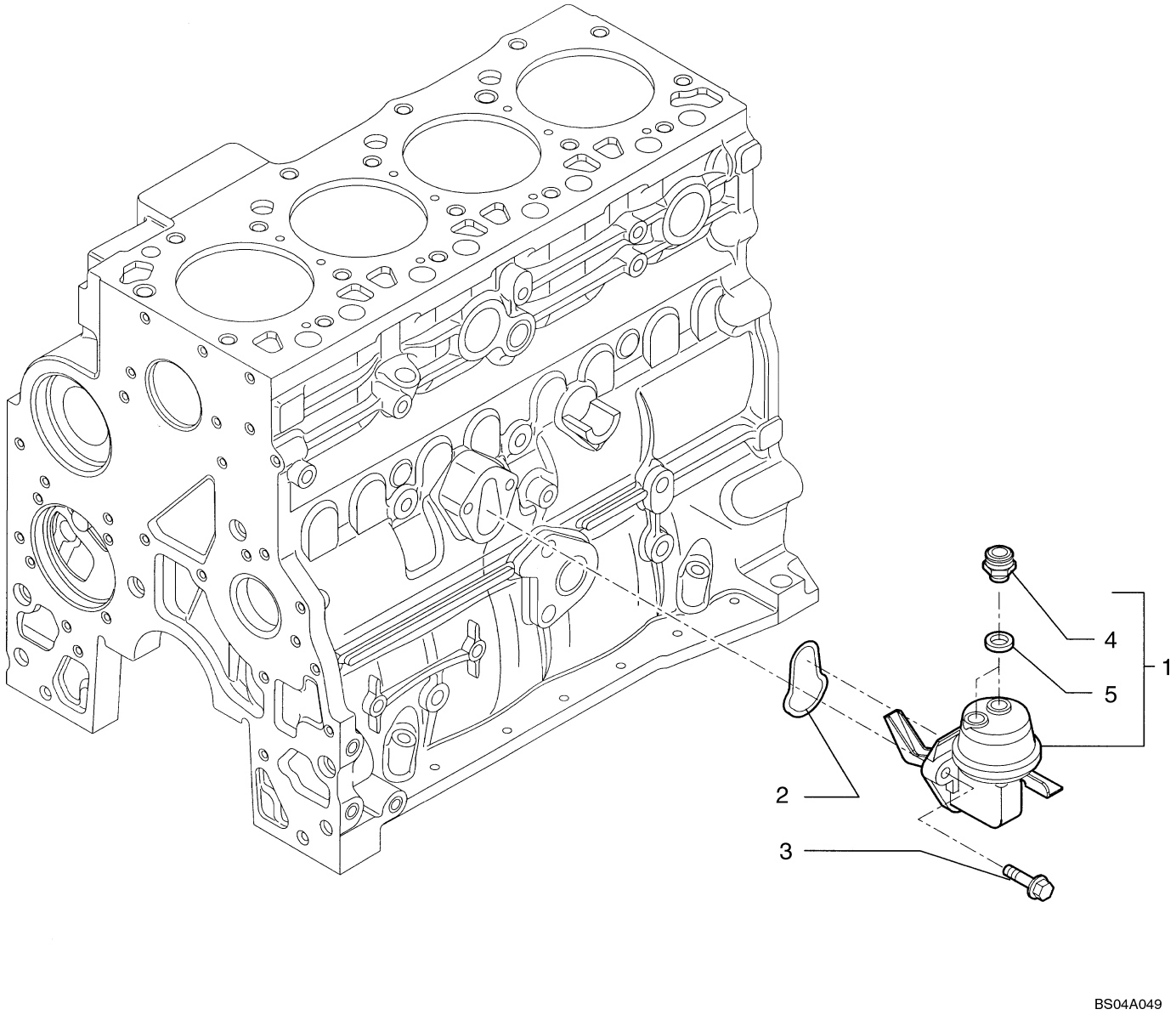

POMPE D'ALIMENTATION

REF	FN	PART NUMBER	YR/SN	QTY	DESCRIPTION
1		2830266		1	POMPE D'ALIMENTATION, Incl. Ref 4, 5
2		2830156		1	JOINT
3		4899031		2	VIS, Hex Flg, M8 x 1.25 x 25
4		4890964		2	RACCORD
5		4894721		2	RONDELLE D'ETANCHEITE

POMPE D'INJECTION - COMMANDE

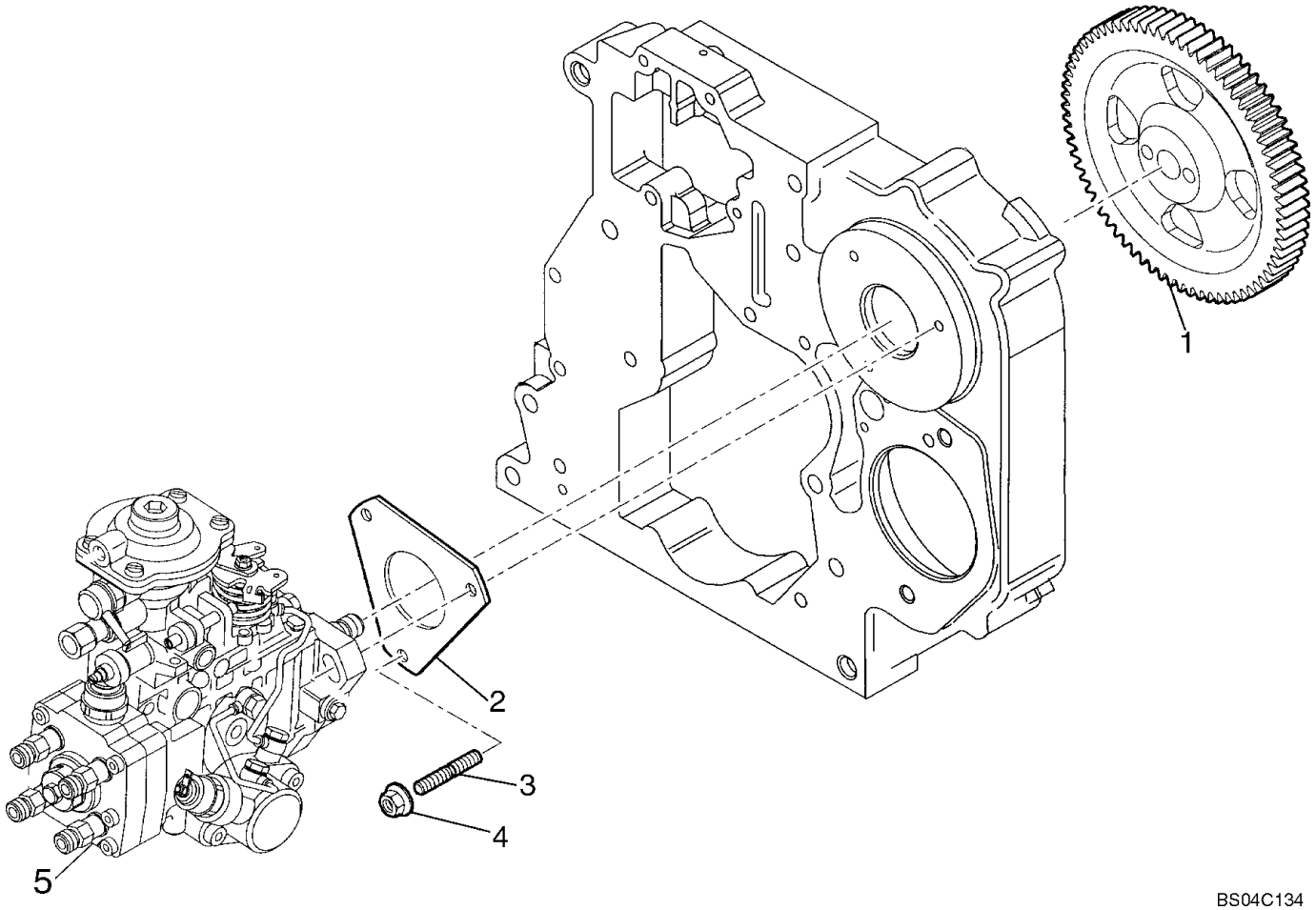

BS04C134

POMPE D'INJECTION - COMMANDE

REF	FN	PART NUMBER	YR/SN	QTY	DESCRIPTION
1		2854340		1	PIGNON, Injection Pump Control
2		2852885		1	JOINT
3		2852294		3	GOUJON
4		17044731		3	ECROU, Flg, M8 x 1.25
5		REF		1	NOTICE, INJECTION PUMP; See Figure 03-04

SYSTÈME D'INJECTION - ALIMENTATION EN CARBURANT

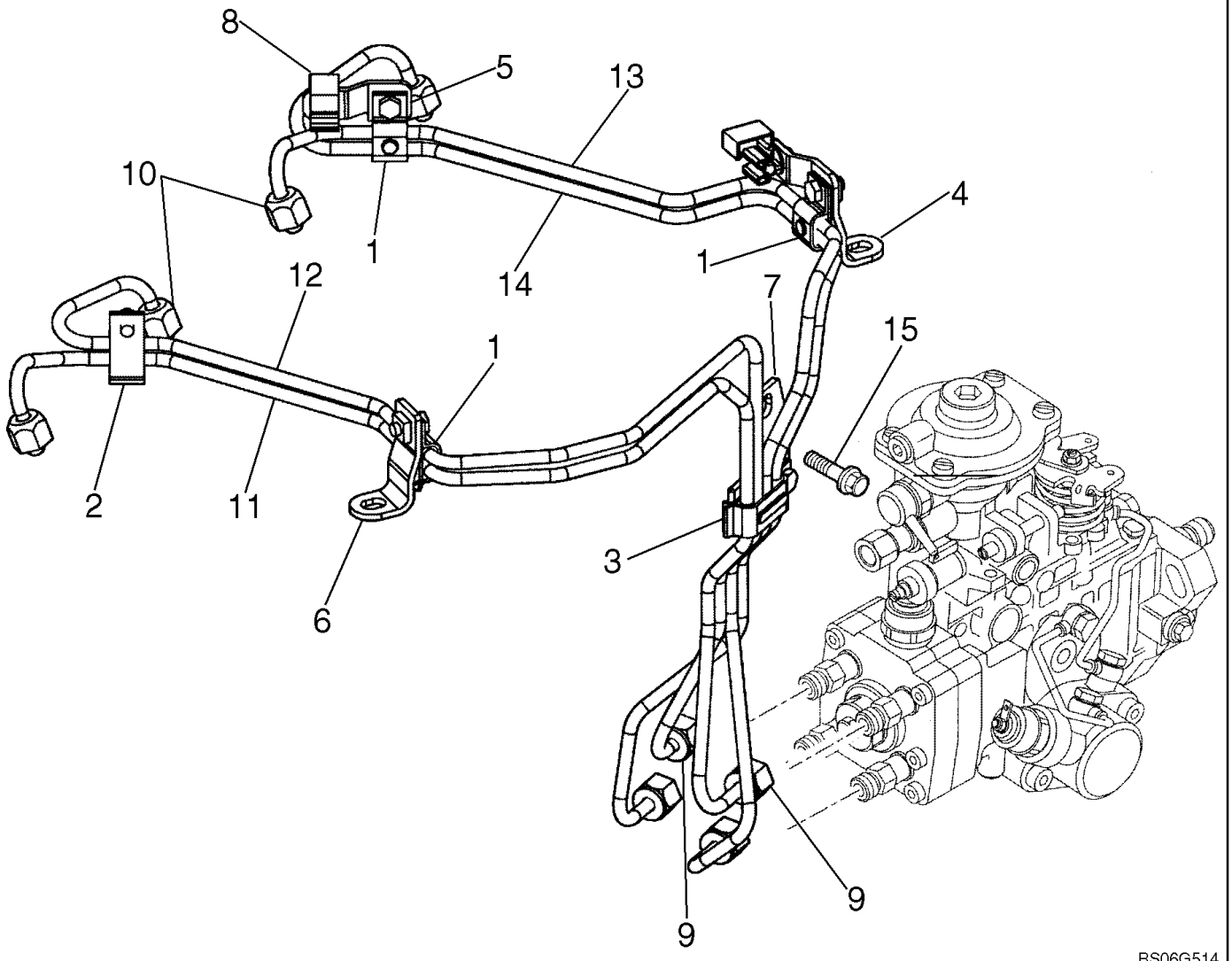

SYSTÈME D'INJECTION - ALIMENTATION EN CARBURANT

REF	FN	PART NUMBER	YR/SN	QTY	DESCRIPTION
		2852075		1	KIT, Fuel Injection Supply Pipe Assembly; Includes Ref 1-14
1		2852871		3	PATTE FIXATION, Fuel Injection Pipe Bracket
2		2852872		1	PATTE FIXATION, Fuel Injection Pipe Bracket
3		2852873		1	PATTE FIXATION, Fuel Injection Pipe Bracket
4		2852874		1	PATTE FIXATION, Fuel Injection Pipe Bracket
5		2852875		1	PATTE FIXATION, Fuel Injection Pipe Bracket
6		2852876		1	PATTE FIXATION, Fuel Injection Pipe Bracket
7		2852877		1	PATTE FIXATION, Fuel Injection Pipe Bracket
8		2852878		2	BRIDE DE FIXATION, Fuel Injection Pipe Bracket
9		2852879		4	ECROU, Hex Nut
10		2852880		4	ECROU, Hex Nut
11		2852881		1	TUBE D'INJECTION, Fuel Injector Supply Pipe
12		2852882		1	TUBE D'INJECTION, Fuel Injector Supply Pipe
13		2852883		1	TUBE D'INJECTION, Fuel Injector Supply Pipe
14		2852884		1	TUBE D'INJECTION, Fuel Injector Supply Pipe
15		4896884		1	VIS, M8x1.25x16

SYSTÈME D'INJECTION - ALIMENTATION EN CARBURANT

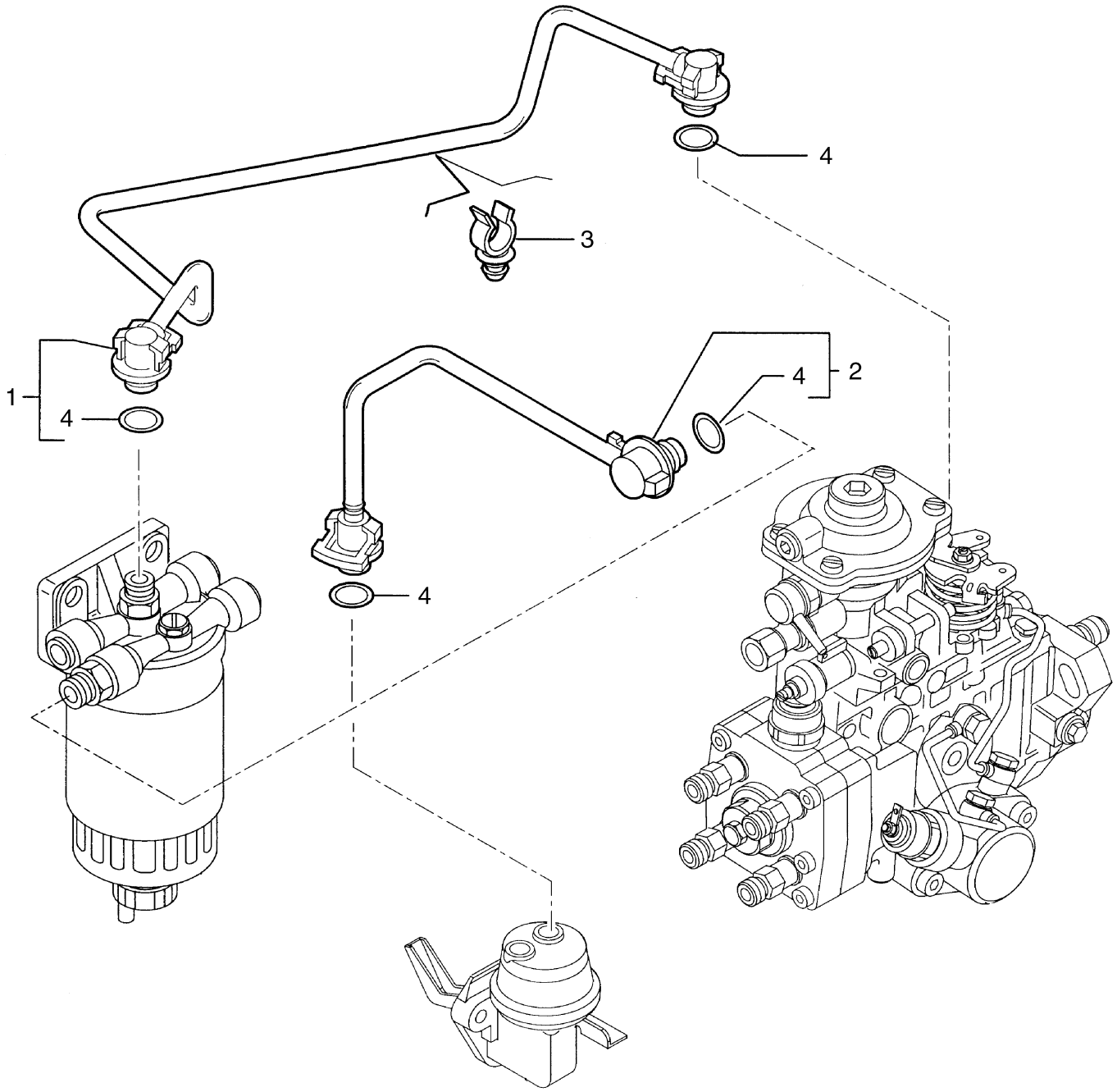

SYSTÈME D'INJECTION - ALIMENTATION EN CARBURANT

REF	FN	PART NUMBER	YR/SN	QTY	DESCRIPTION
1		2852105		1	TUBE, Fuel Pump Supply; Incl. Ref 4
2		2852108		1	TUYAU RIGIDE, Fuel Filter Supply; Incl. Ref 4
3		2852111		1	BRIDE
4		4894095		2	JOINT THORIQUE

SYSTÈME D'INJECTION - CONDUITE DE VIDANGE

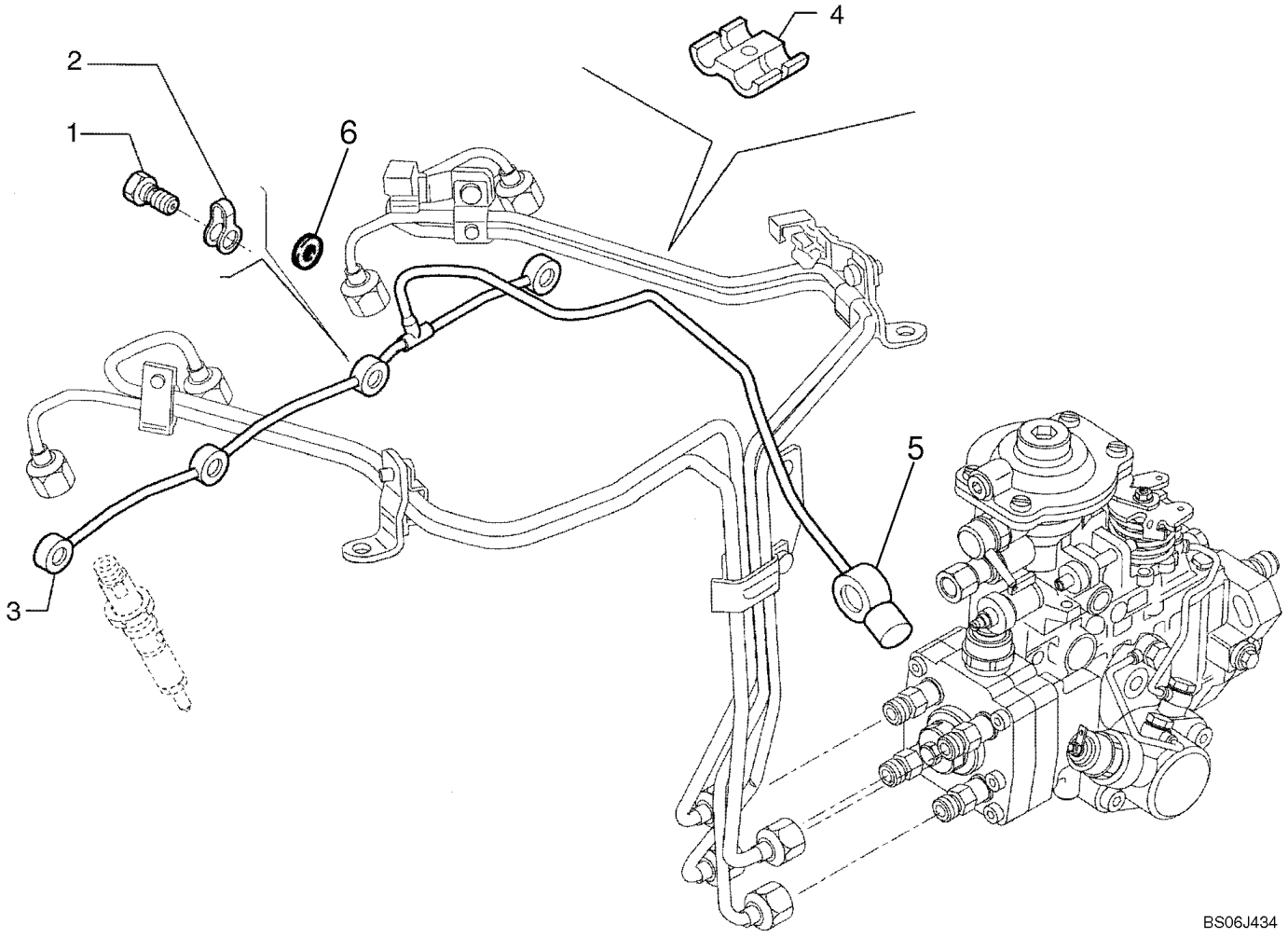

SYSTÈME D'INJECTION - CONDUITE DE VIDANGE

REF	FN	PART NUMBER	YR/SN	QTY	DESCRIPTION
1		4895244		4	VIS-RACCORD
2		4895305		4	JOINT
3		2852065		1	TUYAU RIGIDE, Fuel Drain
4		2852521		1	ATTACHE A RESSORT
5		NSS		1	NON FOURNI SEPAREMENT, Banjo Connector Assy; Order 2852065 Tube
6		2855903		8	RONDELLE D'ETANCHEITE, If Used
		2852093		1	BOUCHON, Incl. Plug And O-Ring; Not Illustrated
		2852094		1	BOUCHON
		4899055		1	JOINT THORIQUE

GROUPE D'INJECTION - INJECTEUR

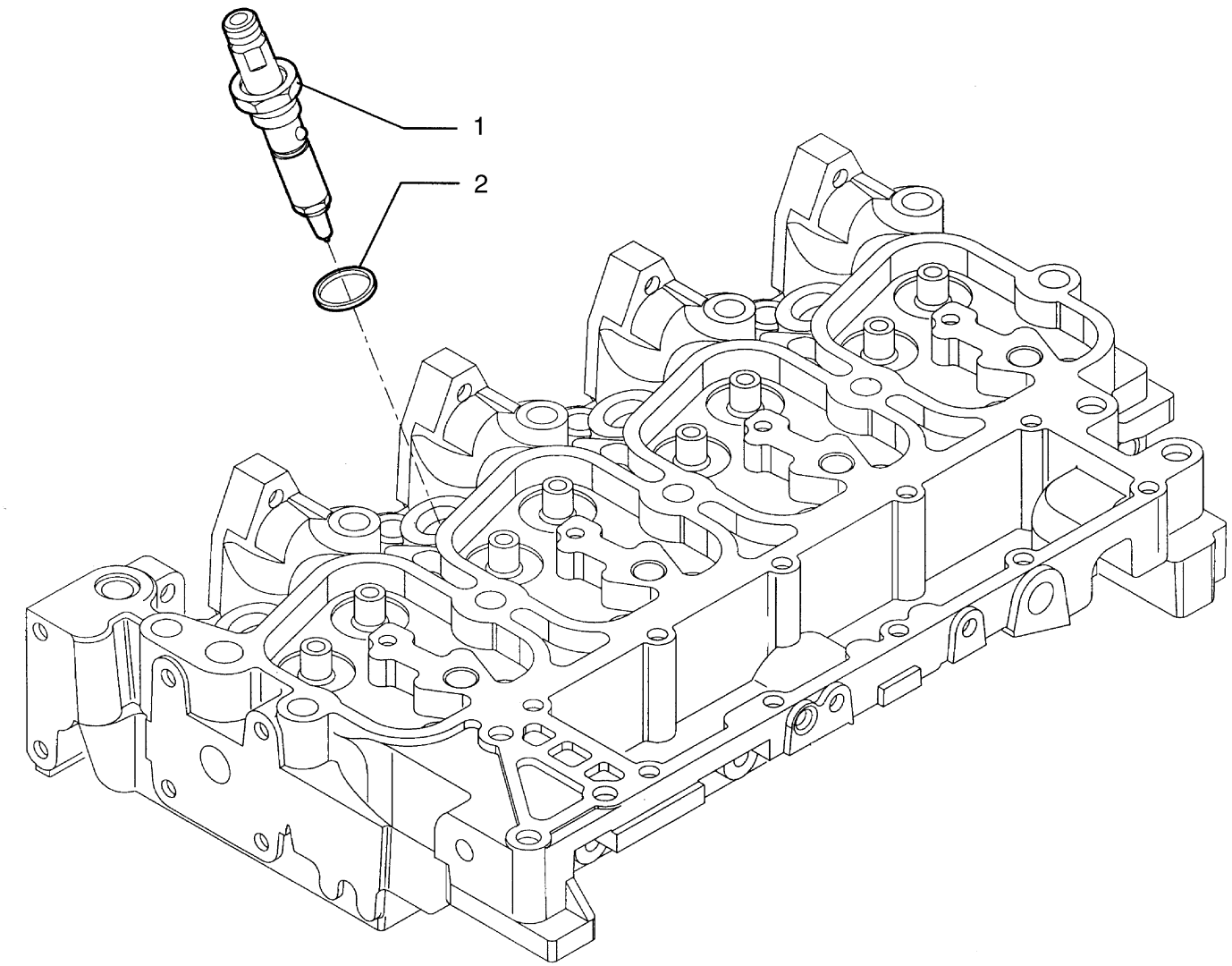

BS04A045

GROUPE D'INJECTION - INJECTEUR

REF	FN	PART NUMBER	YR/SN	QTY	DESCRIPTION
1		{2856255}		4	Fuel Injector; Incl. Seal 2856436
		{2856436}		1	
2		4895297		4	JOINT ANNULAIRE

NOTES

SECTION INDEX
Circuit électrique

04-01	DEMARREUR ET ALTERNATEUR
04-02	MONTAGE DE L'ALTERNATEUR
04-03	BATTERIE - CABLES
04-04	FAISCEAU, MOTEUR
04-05	CHASSIS, SYSTÈME ÉLECTRIQUE
04-06	CABINE ÉLECTRIQUE
04-07	CONSOLE DROITE
04-08	CONSOLE - GAUCHE
04-09	COMMANDES, POIGNEE DROITE - POIGNEE
04-10	COMMANDES, POIGNEE GAUCHE - POIGNEE
04-11	COMMANDES, POIGNEE DROITE - POIGNEE
04-12	COMMANDES, POIGNEE GAUCHE - POIGNEE
04-13	COMMANDES, POIGNEE DROITE - POIGNEE
04-14	COMMANDES, POIGNEE GAUCHE - POIGNEE
04-15	DECONNECTER LE CONTACTEUR - DÉMARRAGE ASSISTÉ À DISTANCE
04-16	PHARE DE TRAVAIL - GAUCHE
04-17	PHARE DE TRAVAIL - DROIT
04-18	SYSTÈME ÉLECTRIQUE - PHARES ET CABLAGE (NA)
04-19	SYSTÈME ÉLECTRIQUE - PHARES ET CABLAGE (EUROPE)
04-20	PHARES - DROIT
04-21	PHARES - GAUCHE
04-22	PHARES ARRIERE ET MONTAGES
04-23	ALARME DE RECUL
04-24	DOUILLE ACCESSOIRES ÉLECTRIQUES
04-25	DOUILLE ACCESSOIRES ÉLECTRIQUES (EUROPE)
04-26	AVERTISSEUR SONORE - SUPPORT
04-27	FAISCEAU, AVANT - AUXILIAIRE
04-28	GYROPHARE
04-29	PIÈCES SPÉCIALES POUR L'ITALIE - FEUX DECLAIRAGE DE PLAQUE DIMMATRICULATION
04-32	STROBOSCOPE

DEMARREUR ET ALTERNATEUR

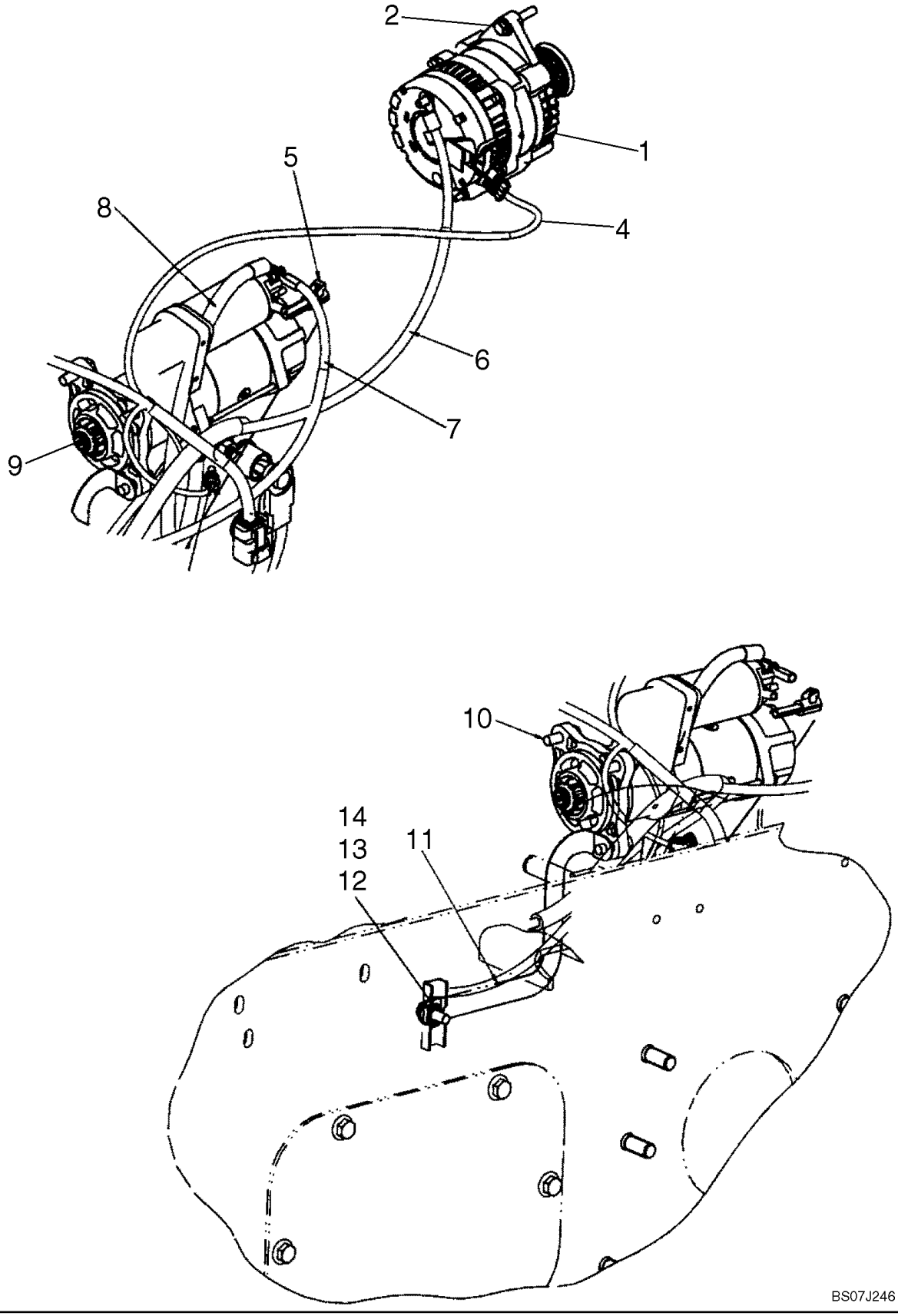

DEMARREUR ET ALTERNATEUR

REF	FN	PART NUMBER	YR/SN	QTY	DESCRIPTION
1		87042118		1	ALTERNATEUR, Delco
2		322358		1	RONDELLE BELLEVILLE, Belleville, M8
3		386045		1	BOULON, Hex, M8 x 45, 8.8
4		{87623352}		1	Harness; NEF Engine
5		87053083		1	FAISCEAU, Starter Jumper
6		87620458		1	CABLE, Harness, Starter To Alternator And Start Relay
7		87652238		1	CABLE, Starter To Power Distribution Block
8		87052670		1	CABLE (ASSEMBLE), Battery Cable; Positive; See Figure 04-03
9		87366159		1	DEMARREUR
10		9804262		3	BOULON, Hex Flg, M10 x 30, 8.8
11		87648689		1	TRESSE DE MASSE, Starter
12		43140		1	BOULON, Hex, M10 x 30, 8.8, Full Thd
13		86625253		1	RONDELLE, M11 x 24 x 2
14		309096A1		1	ECROU, Square M10-1.5 W/Retaining Cls 8 Znd

MONTAGE DE L'ALTERNATEUR

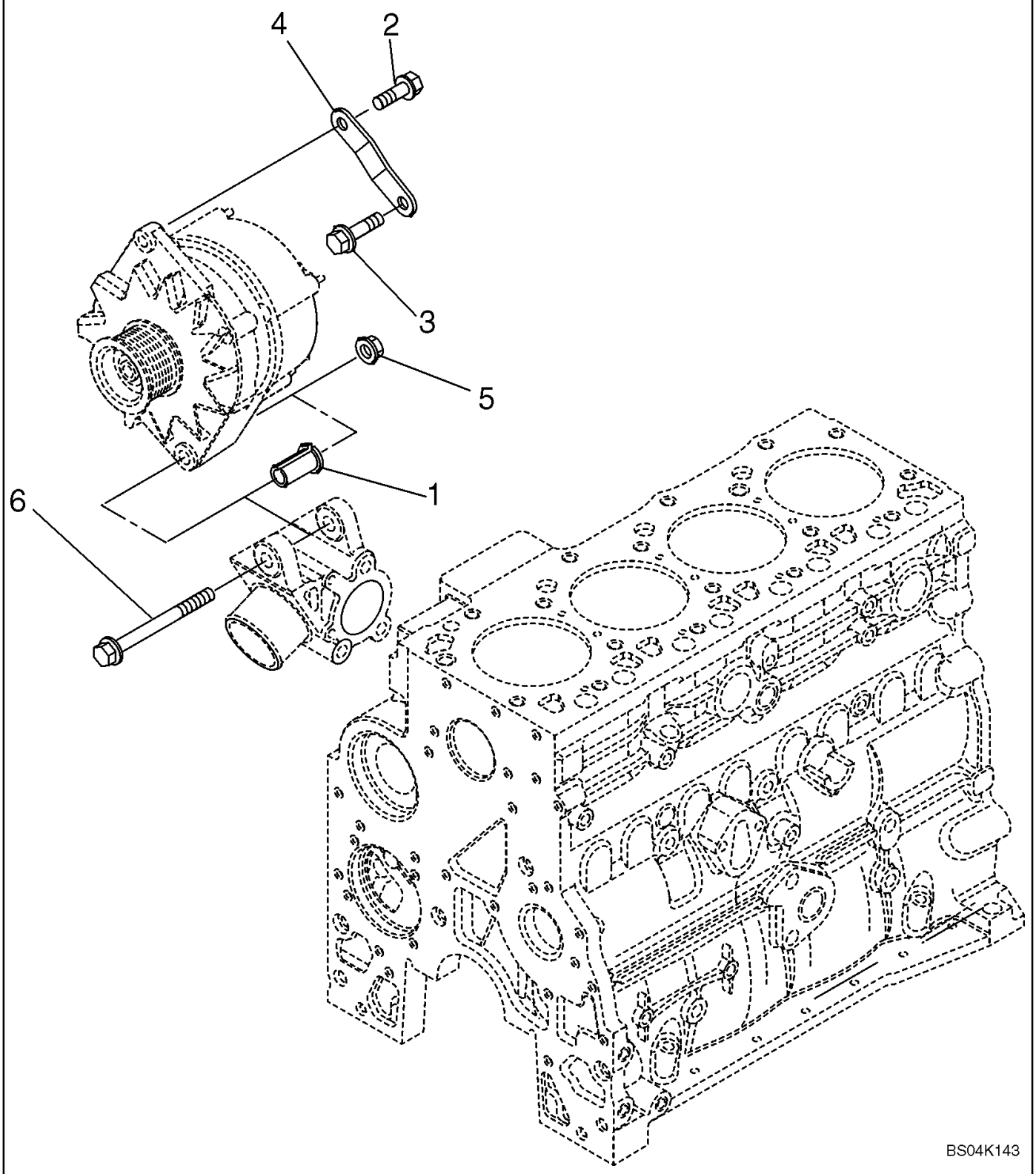

MONTAGE DE L'ALTERNATEUR

REF	FN	PART NUMBER	YR/SN	QTY	DESCRIPTION
1		2852181		1	ENTRETOISE
2		4899031		1	VIS, Hex Flg, M8 x 1.25 x 25
3		4895291		1	VIS, Hex Flg, M10 x 1.5 x 20
4		2852180		1	PATTE FIXATION
5		4895166		1	ECROU, M10 x 1.5
6		4895538		1	VIS

BATTERIE - CABLES

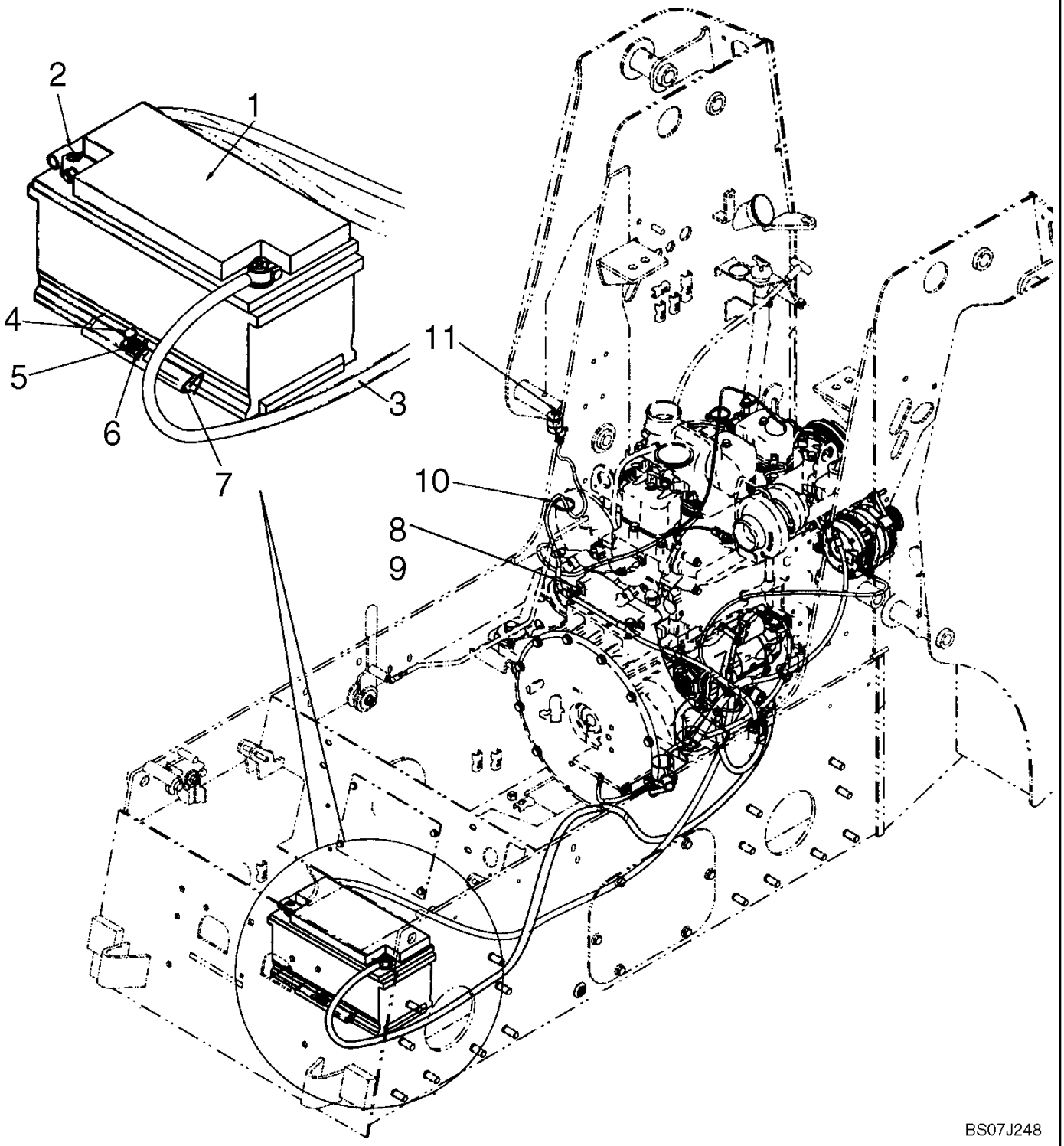

BATTERIE - CABLES

REF	FN	PART NUMBER	YR/SN	QTY	DESCRIPTION
1		87403835		1	BATTERIE HUMIDE, 850 CCA
2		338030A1		1	CABLE (ASSEMBLE), Battery; Negative
3		87052670		1	CABLE (ASSEMBLE), Battery; Positive
4		120106		1	BOULON, Hex, M8 x 40, 8.8, Full Thd
5		43362		1	ECROU, M8, Cl 10
6		86625074		1	ECROU
7		87450956		1	CORNIERE, Battery Hold Down
8		87301588		2	BRIDE, Clamp; 11.1 mm M12 Bolt
9		300388		3	VIS, Hex, M12 x 25, 8.8
10		529070		2	SERRE-CABLE, .30" x 14.5"
11		87013666		1	CONTACTEUR, Air Cleaner Restriction

04-04		p1	11/07

FAISCEAU, MOTEUR

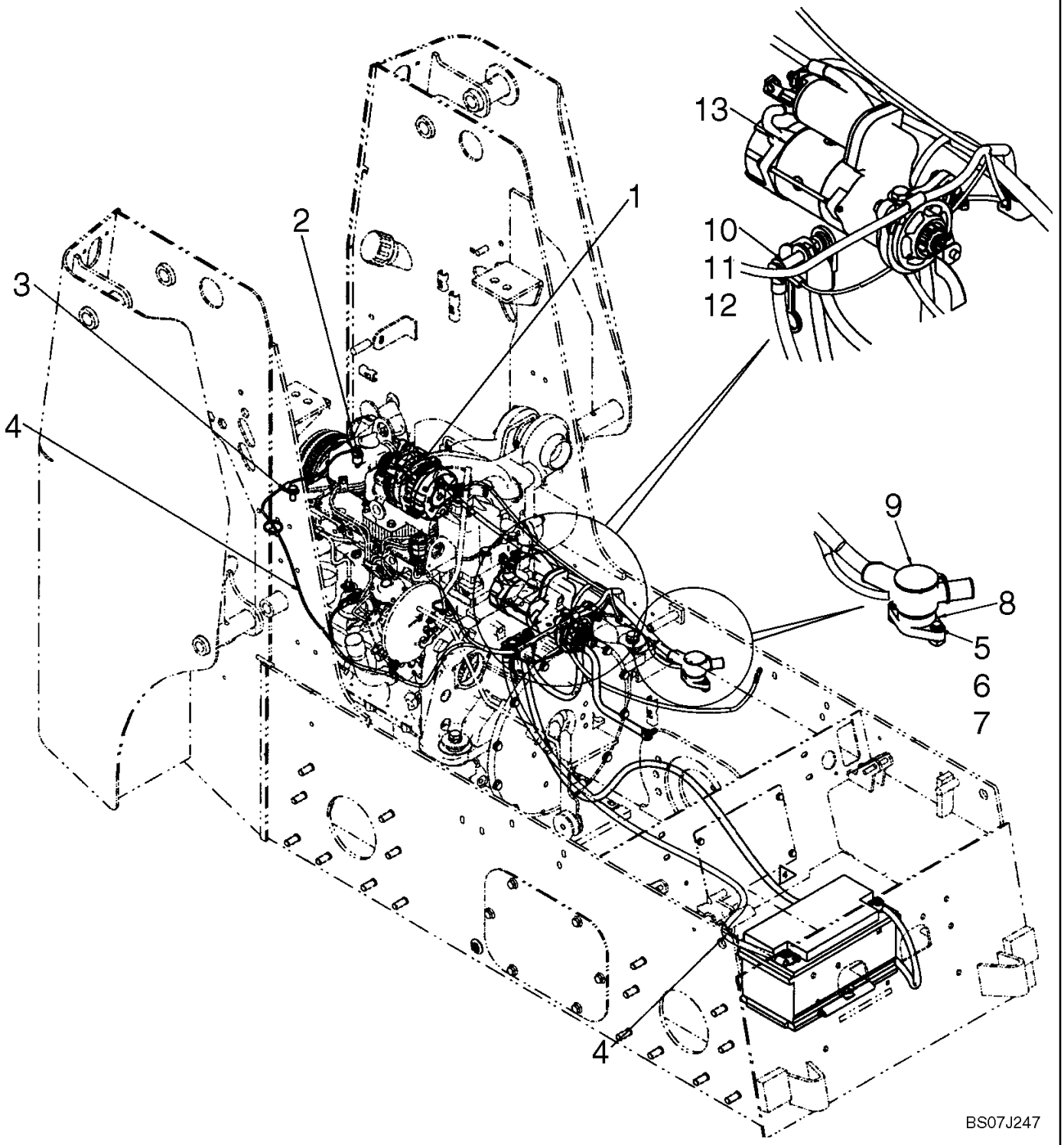

FAISCEAU, MOTEUR

REF	FN	PART NUMBER	YR/SN	QTY	DESCRIPTION
1		87042118			ALTERNATEUR, Alternator; See Figure 04-01
2		A166057		1	THERMO SONDE, Transmission Oil Temperature Sender
3		86639003		1	BRIDE, 3/8", Insul, 7/16" Bolt
4		{87623352}		1	Harness; NEF Engine
5		322357		2	RONDELLE BELLEVILLE, Belleville, M6
6		86977786		2	BOULON, Hex, M6 x 25, 8.8
7		87404992		2	ECROU, Square M6-1.0 Class 8 Znd
8		87630124		1	COLONNE, Power Distribution Post, 3/8 Stud
9		87630125		1	COIFFE, Boot For Power Distribution Post
10		9706685		1	ECROU, M12, Cl 8
11		86625256		1	RONDELLE, M12 x 28.5 x 4, HT
12		87458961		1	GOUJON, 12mm x 80mm

CHASSIS, SYSTÈME ÉLECTRIQUE

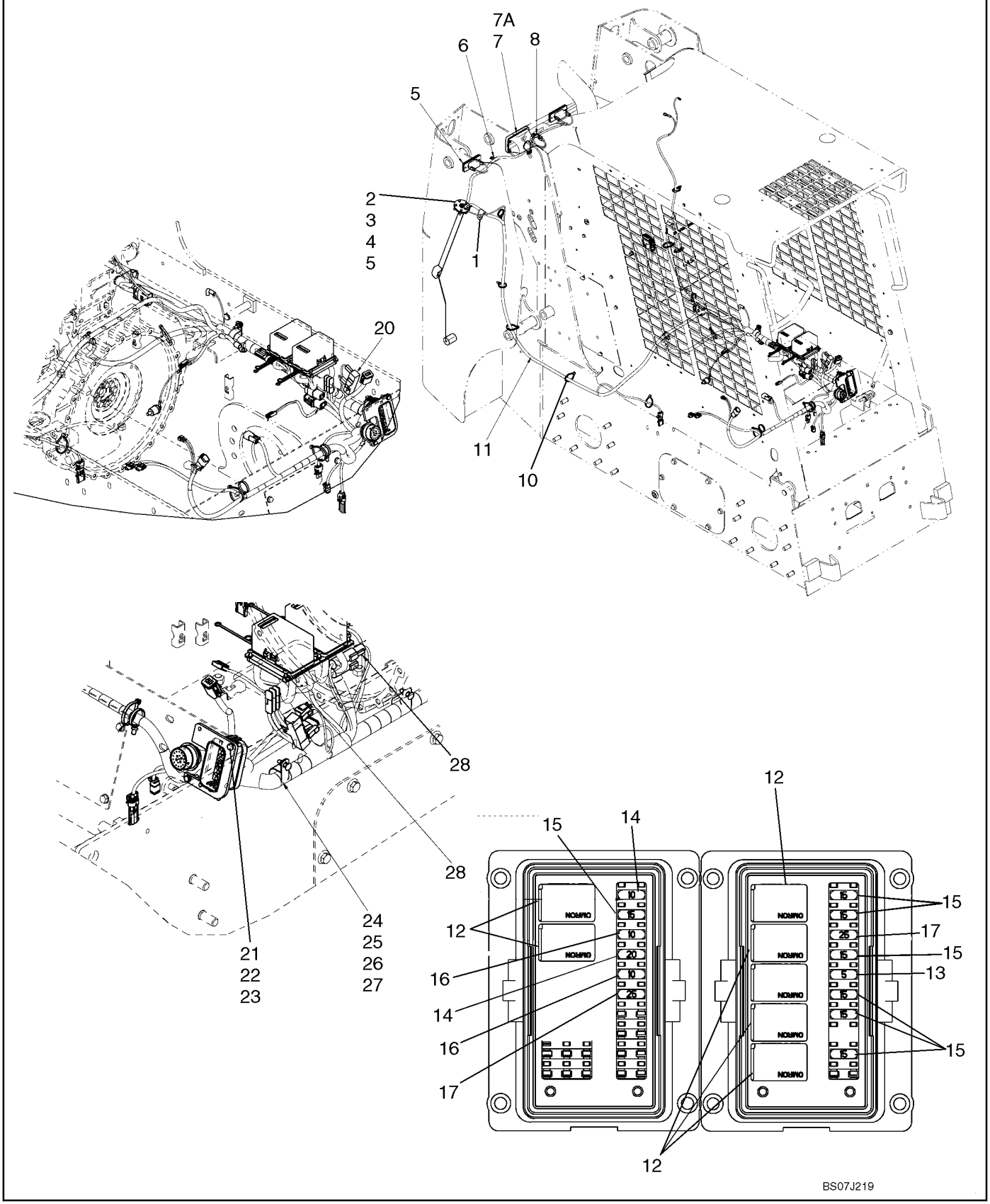

CHASSIS, SYSTÈME ÉLECTRIQUE

REF	FN	PART NUMBER	YR/SN	QTY	DESCRIPTION
1		87301588		1	BRIDE, Clamp,Closed 11.1mm Insulated 1/2 Bolt
2		376843A4		1	TRANSMETTEUR ASSY, Fuel Level Sender Unit
3		528359R4		1	JOINT, Sender Unit Gasket
4		87308282		5	VIS, Hex Hd, #10-32 x 3/4"
5		196985A1		5	TIGE FILETÉE
6		87016870		1	BRIDE, J, 7/16" Insul, 5/16" Bolt
7		222004A2		1	PHARE, Low Profile Halogen Lamp; Incl 7A
7A		259702A1		1	AMPOULE, Light Bulb, 50W 12.8V Halogen
8		86637978		1	BRIDE, 3/8", Insul, 5/16" Bolt
9		87668737		6	SANGLE, Strap, Fir Tree
10		87000312		8	SERRE-CABLE, Cable Tie
11		87661493		1	FAISCEAU, Chassis Harness; Incl 12 - 18
12		{87655334}		7	Relay,35A N.O.
13		121410A1		1	FUSIBLE, Fuse, 5A
14		121412A1		3	FUSIBLE, Fuse, 10A
15		121413A1		7	FUSIBLE, Fuse, 15A
16		121414A1		1	FUSIBLE, Fuse, 20A
17		121415A1		2	FUSIBLE, Fuse, 25A
18		L71879		3	SUPPORT-DE-DIODES, 3A Diode Connector
19		A166057		1	THERMO SONDE, Oil Temperature Sending Unit
20		86705351		1	RESISTANCE
21		86977786		2	BOULON, Hex, M6 x 25, 8.8
22		86588450		4	RONDELLE, M6
23		87030561		2	CONTRE-ECROU, M6 x 1, Cl 8
24		87035382		3	BRIDE, 1 3/16", Insul, 3/8" Bolt
25		374891		3	BOULON TETE BOMBEE, Short NK, M6 x 25, Cl8.8, Full Thd
26		86500688		3	ECROU, M6, Cl 10
27		322357		3	RONDELLE BELLEVILLE, Belleville, M6
28		87020181		8	VIS

CABINE ÉLECTRIQUE

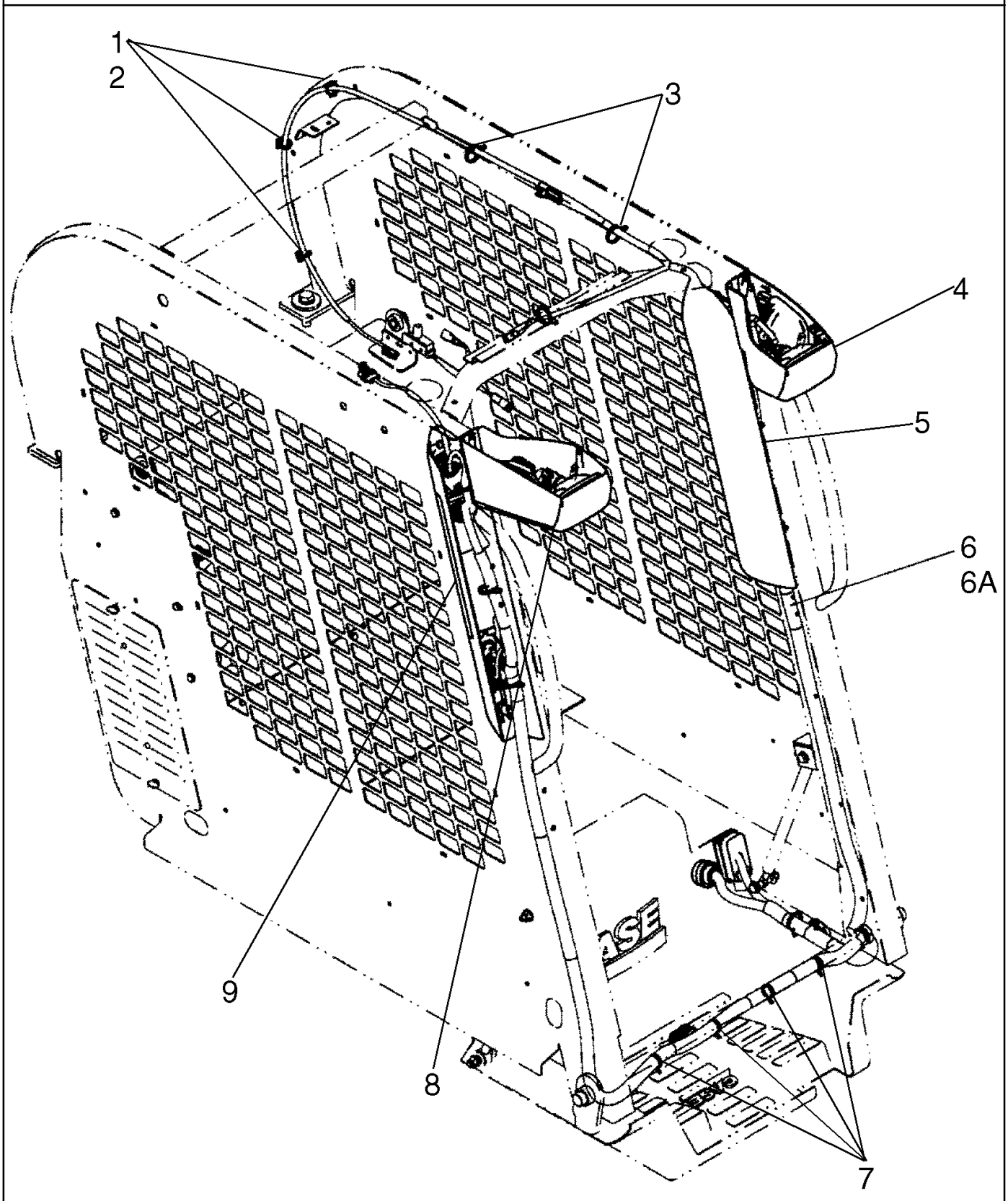

CABINE ÉLECTRIQUE

REF	FN	PART NUMBER	YR/SN	QTY	DESCRIPTION
1		87642914		3	SOCLE, Strap Mount
2		87642915		3	SERRE-CABLE
3		87668737		10	SANGLE, Strap With Mount
4		87650097		1	FEU, Work Light, LH; See Fig. 04-16
5		87627050		1	CONSOLE, Console, LH; See Fig. 04-08
6		87668728		1	FAISCEAU, Harness, Cab; Incl 6A
6A		{87618013}		1	6A Diode
7		263117		4	SERRE-CABLE, .14" x 11 1/2"
8		87650098		1	FEU, Work Light, RH; See Fig. 04-17
9		{87665327}		1	Console, RH; See Fig. 04-07

CONSOLE DROITE

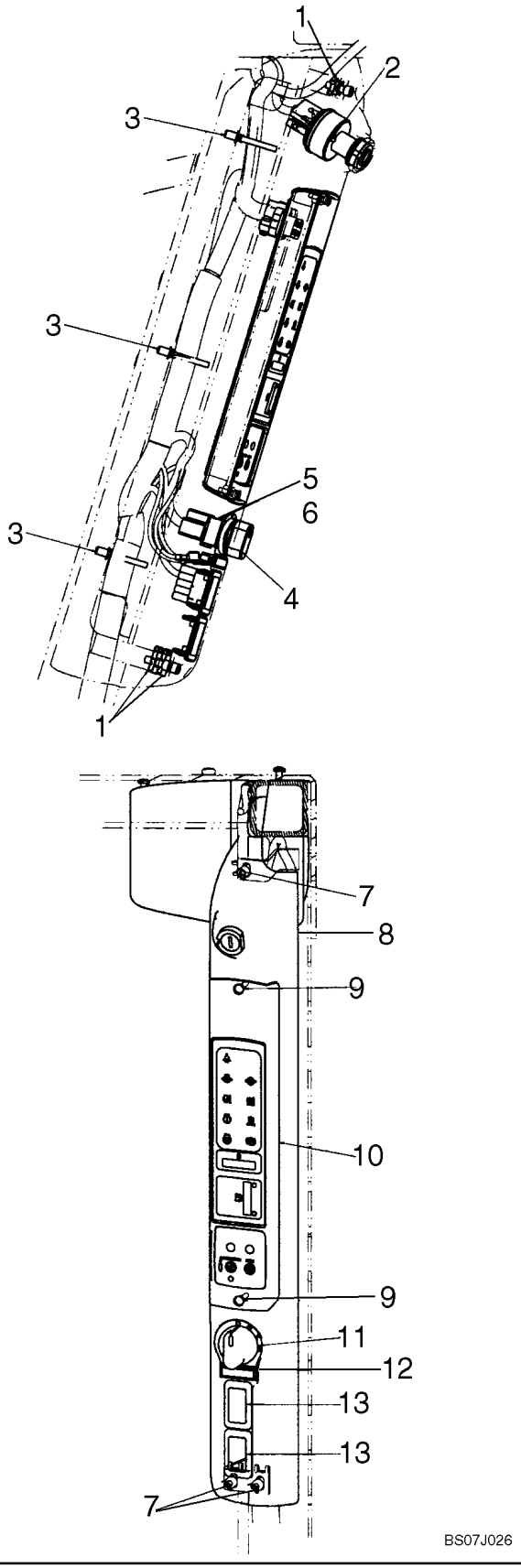

CONSOLE DROITE

REF	FN	PART NUMBER	YR/SN	QTY	DESCRIPTION
1		86521425		3	ECROU, Tinn, U, 1/4"-20
2		282775A1		1	COMMUTATEUR, DEM., Ignition Switch And 2 Keys
3		87668737		10	SANGLE, Strap With Fastener
4		86729670		1	POMMEAU
5		86729669		1	COMM. VENTILATEUR, Fan Speed Switch
6		87310592		1	ECROU, Jam, 7/16"-28, G5
7		280272		3	VIS, Hex Soc Hd, 1/4"-20 x 3/4"
8		{87665327}		1	Console, RH
9		86511042		2	VIS, Cross Pan Hd, M4 x 16
10		87638864		1	TABLEAU DE BORD, Instrument Panel, Standard (Shown In Illustration)
10		87638865		1	TABLEAU DE BORD, Instrument Panel, Deluxe
11		{87677739}		1	Decal, Light Switch
12		86627432		1	BOUCHON PLASTIQUE
13		126844A1		2	BOUCHON, Switch Hole Cover

CONSOLE - GAUCHE

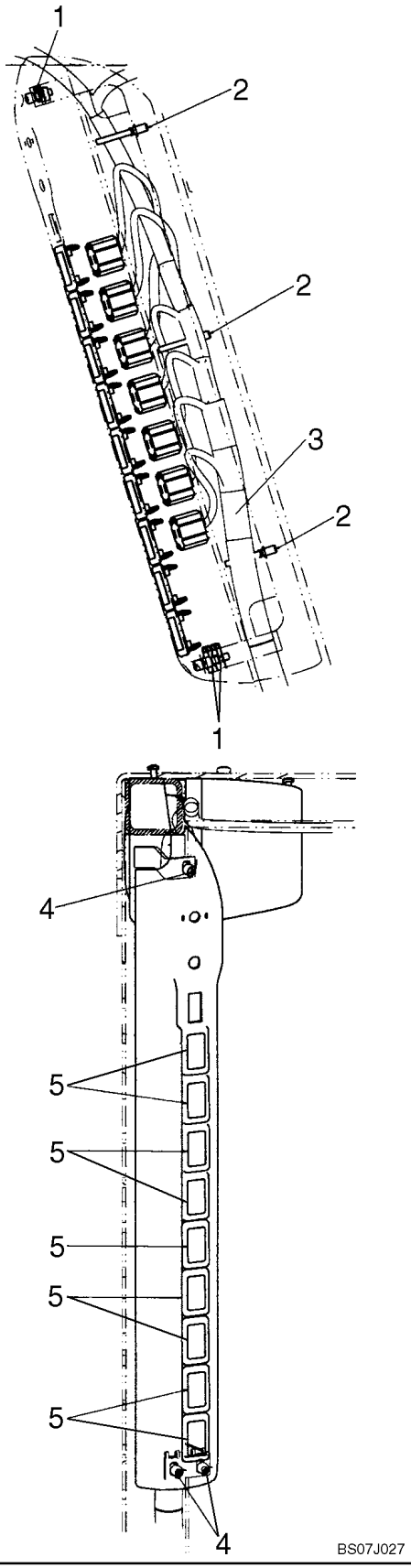

CONSOLE - GAUCHE

REF	FN	PART NUMBER	YR/SN	QTY	DESCRIPTION
		87627050		1	CONSOLE, Console, LH
1		86521425		3	ECROU, Tinn, U, 1/4"-20
2		87668737		3	SANGLE, Strap With Mount
3		87668728		1	FAISCEAU, Cab Harness
4		280272		3	VIS, Hex Soc Hd, 1/4"-20 x 3/4"
5		126844A1		11	BOUCHON, Switch Hole Cover

COMMANDES, POIGNEE DROITE - POIGNEE

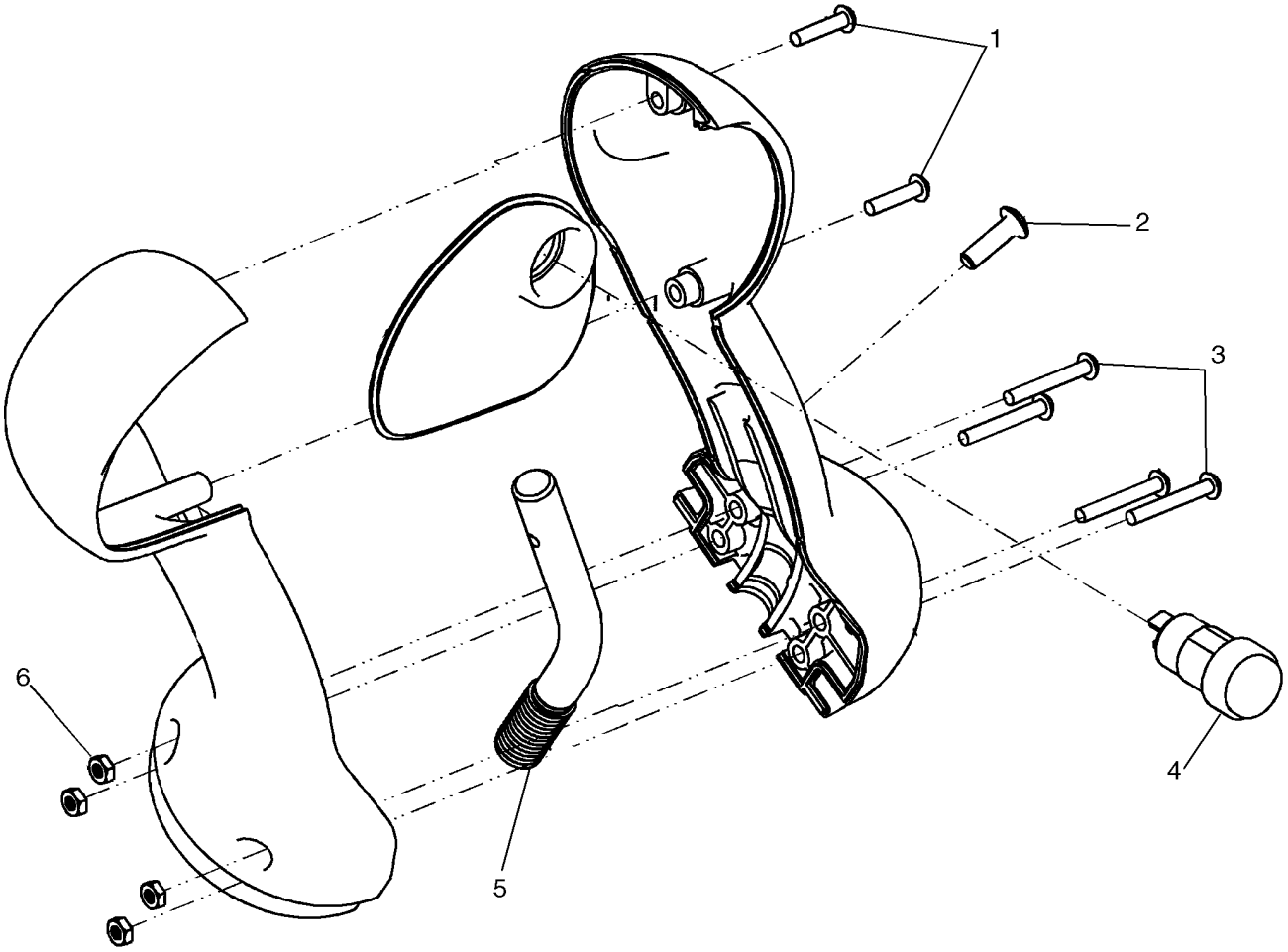

BS07J365

COMMANDES, POIGNEE DROITE - POIGNEE

REF	FN	PART NUMBER	YR/SN	QTY	DESCRIPTION
		87656868		1	POMMEAU, Handle, RH - Basic; Incl 1 - 6
1		86637783		2	VIS AUTO-TARAUDEUSE, Cross Pan Hd, #6 x 5/8"
2		87534744		1	ATTACHE
3		281045		4	VIS, Cross Pan Hd, #6-32 x 1"
4		87630127		1	CONTACTEUR, Parking Brake
5		{87652816}		1	Handle Mounting Rod
6		{87667726}		4	Nut, #6 - 32

COMMANDES, POIGNEE GAUCHE - POIGNEE

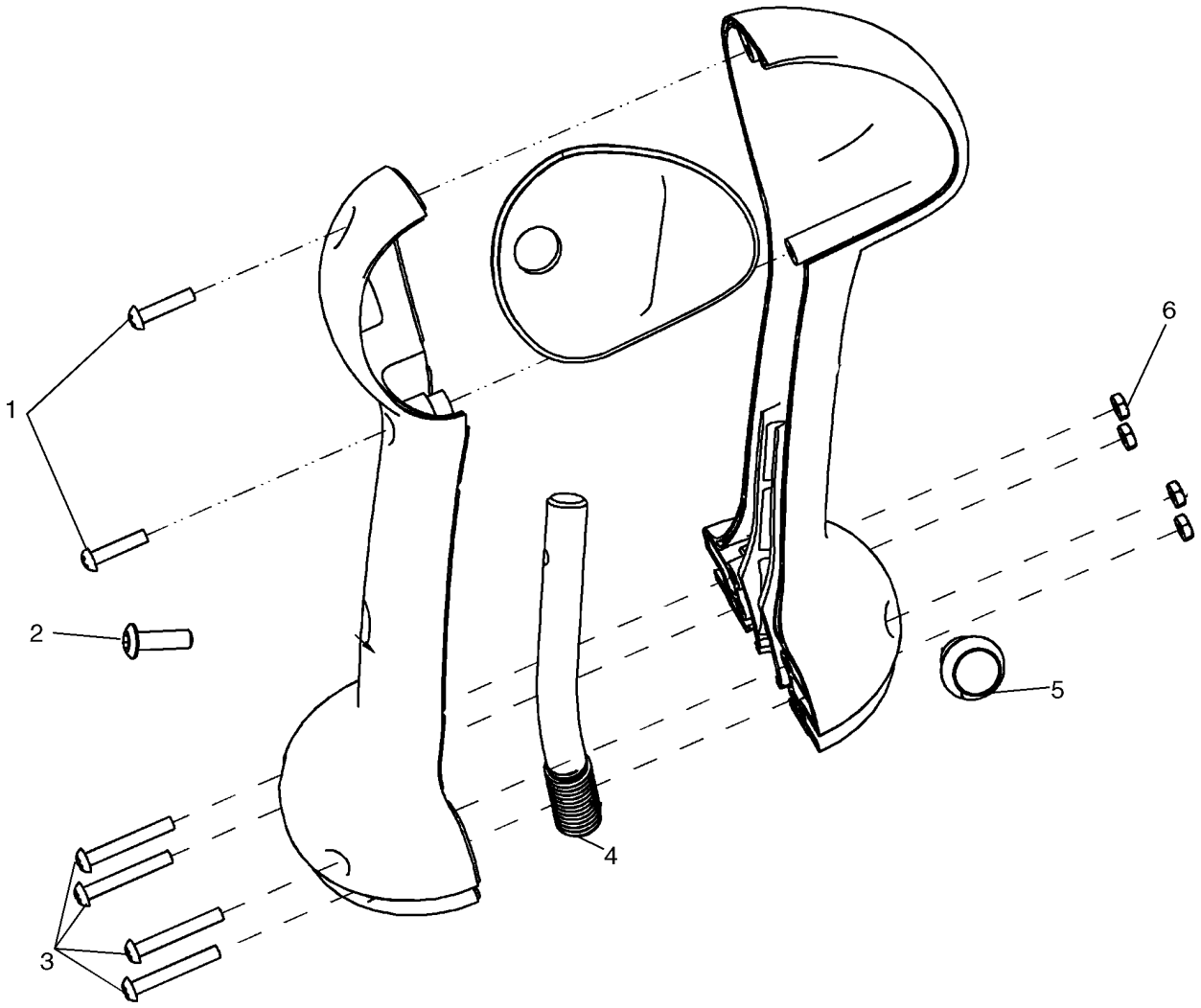

BS07J364

COMMANDES, POIGNEE GAUCHE - POIGNEE

REF	FN	PART NUMBER	YR/SN	QTY	DESCRIPTION
		87656866		1	POMMEAU, Handle, LH - Basic; Incl 1 - 6
1		86637783		2	VIS AUTO-TARAUDEUSE, Cross Pan Hd, #6 x 5/8"
2		87534744		1	ATTACHE
3		281045		4	VIS, Cross Pan Hd, #6-32 x 1"
4		{87652818}		1	Handle Mounting Rod
5		87630126		1	CONTACTEUR, Horn
6		{87667726}		4	Nut, #6 - 32

COMMANDES, POIGNEE DROITE - POIGNEE

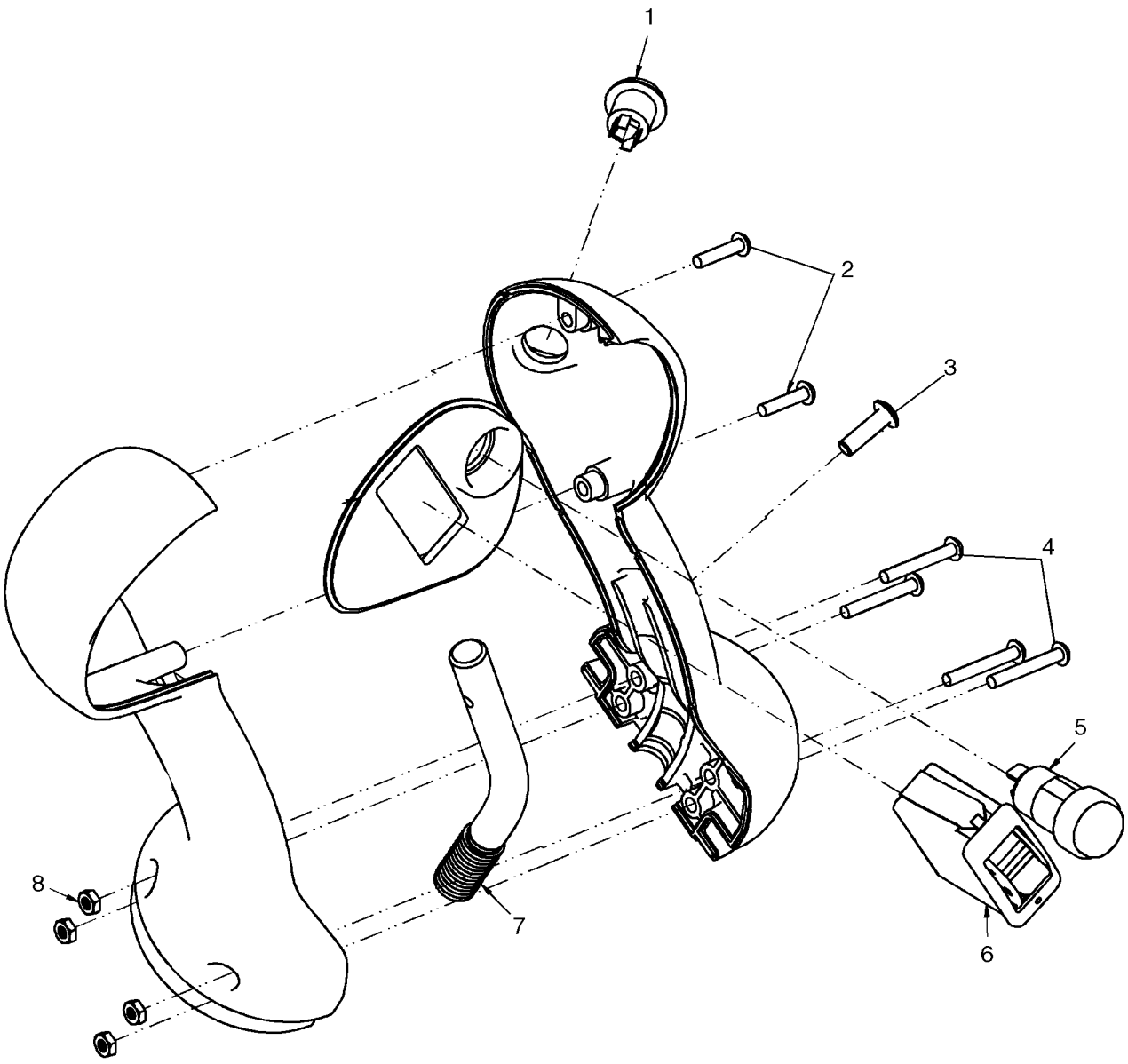

BS07J363

COMMANDES, POIGNEE DROITE - POIGNEE

REF	FN	PART NUMBER	YR/SN	QTY	DESCRIPTION
		87656872		1	POMMEAU, Handle, RH - Deluxe Without Aux Electric; Incl 1 - 8
1		87630129		1	CONTACTEUR, Ride Control
2		86637783		2	VIS AUTO-TARAUDEUSE, Cross Pan Hd, #6 x 5/8"
3		87534744		1	ATTACHE
4		281045		4	VIS, Cross Pan Hd, #6-32 x 1"
5		87630127		1	CONTACTEUR, Parking Brake
6		87642913		1	CONTACTEUR, Auxiliary Hydraulic
7		{87652816}		1	Handle Mounting Rod
8		{87667726}		4	Nut, #6 - 32

COMMANDES, POIGNEE GAUCHE - POIGNEE

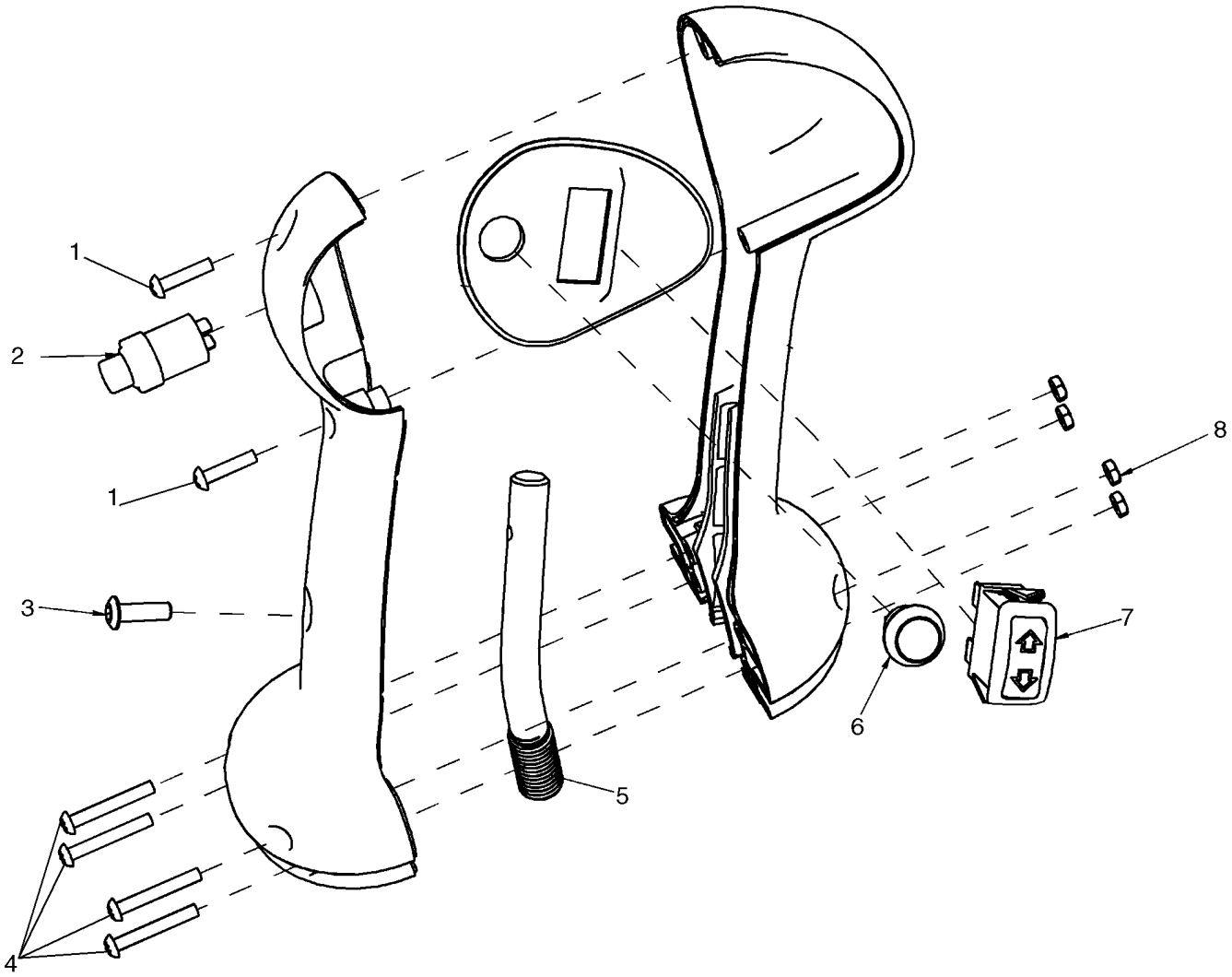

COMMANDES, POIGNEE GAUCHE - POIGNEE

REF	FN	PART NUMBER	YR/SN	QTY	DESCRIPTION
		87656870		1	POMMEAU, Handle, LH - Deluxe Without Aux Electric
1		86637783		2	VIS AUTO-TARAUDEUSE, Cross Pan Hd, #6 x 5/8"
2		87630130		1	CONTACTEUR, Two Speed
3		87534744		1	ATTACHE
4		281045		4	VIS, Cross Pan Hd, #6-32 x 1"
5		{87652818}		1	Handle Mounting Rod
6		87630126		1	CONTACTEUR, Horn
7		87630128		1	CONTACTEUR, Turn Signal
8		{87667726}		4	Nut, #6 - 32

04-13		p1	11/07

COMMANDES, POIGNEE DROITE - POIGNEE

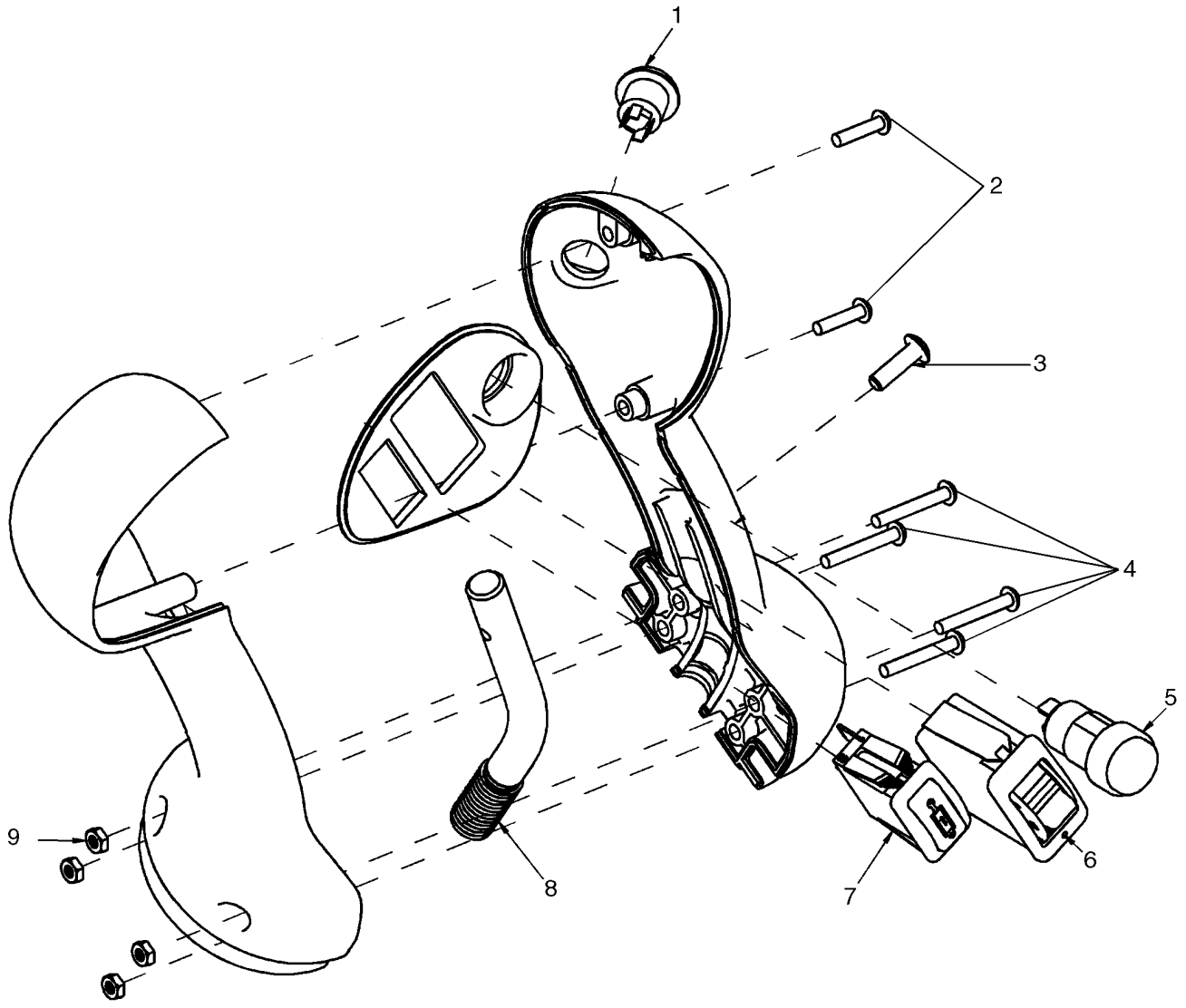

BS07J269

COMMANDES, POIGNEE DROITE - POIGNEE

REF	FN	PART NUMBER	YR/SN	QTY	DESCRIPTION
		87641948		1	POMMEAU, Handle, RH - Deluxe
1		87630129		1	CONTACTEUR, Ride Control
2		86637783		2	VIS AUTO-TARAUDEUSE, Cross Pan Hd, #6 x 5/8"
3		87534744		1	ATTACHE
4		281045		4	VIS, Cross Pan Hd, #6-32 x 1"
5		87630127		1	CONTACTEUR, Parking Brake
6		87642913		1	CONTACTEUR, Auxiliary Hydraulic
7		87427685		1	CONTACTEUR, Switch Hyd M-O-M
8		{87652816}		1	Handle Mounting Rod
9		{87667726}		4	Nut, #6 - 32

COMMANDES, POIGNEE GAUCHE - POIGNEE

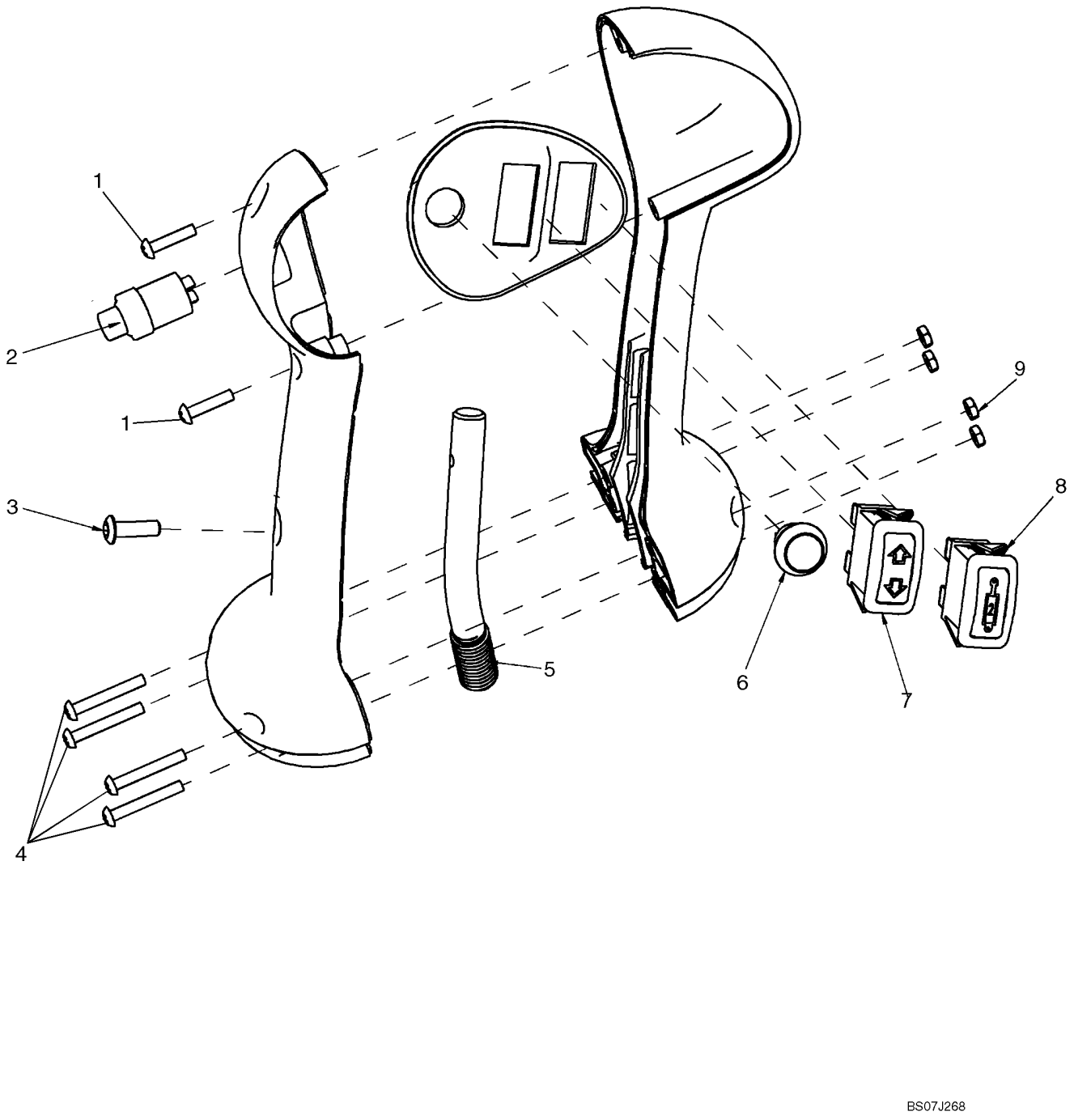

COMMANDES, POIGNEE GAUCHE - POIGNEE

REF	FN	PART NUMBER	YR/SN	QTY	DESCRIPTION
		87641947		1	POMMEAU, Handle, LH - Deluxe
1		86637783		2	VIS AUTO-TARAUDEUSE, Cross Pan Hd, #6 x 5/8"
2		87630130		1	CONTACTEUR, Two Speed
3		87534744		1	ATTACHE
4		281045		4	VIS, Cross Pan Hd, #6-32 x 1"
5		{87652818}		1	Handle Mounting Rod
6		87630126		1	CONTACTEUR, Horn
7		87630128		1	CONTACTEUR, Turn Signal
8		87427686		1	CONTACTEUR, Hyd M-O-M
9		{87667726}		4	Nut, #6 - 32

DECONNECTER LE CONTACTEUR - DÉMARRAGE ASSISTÉ À DISTANCE

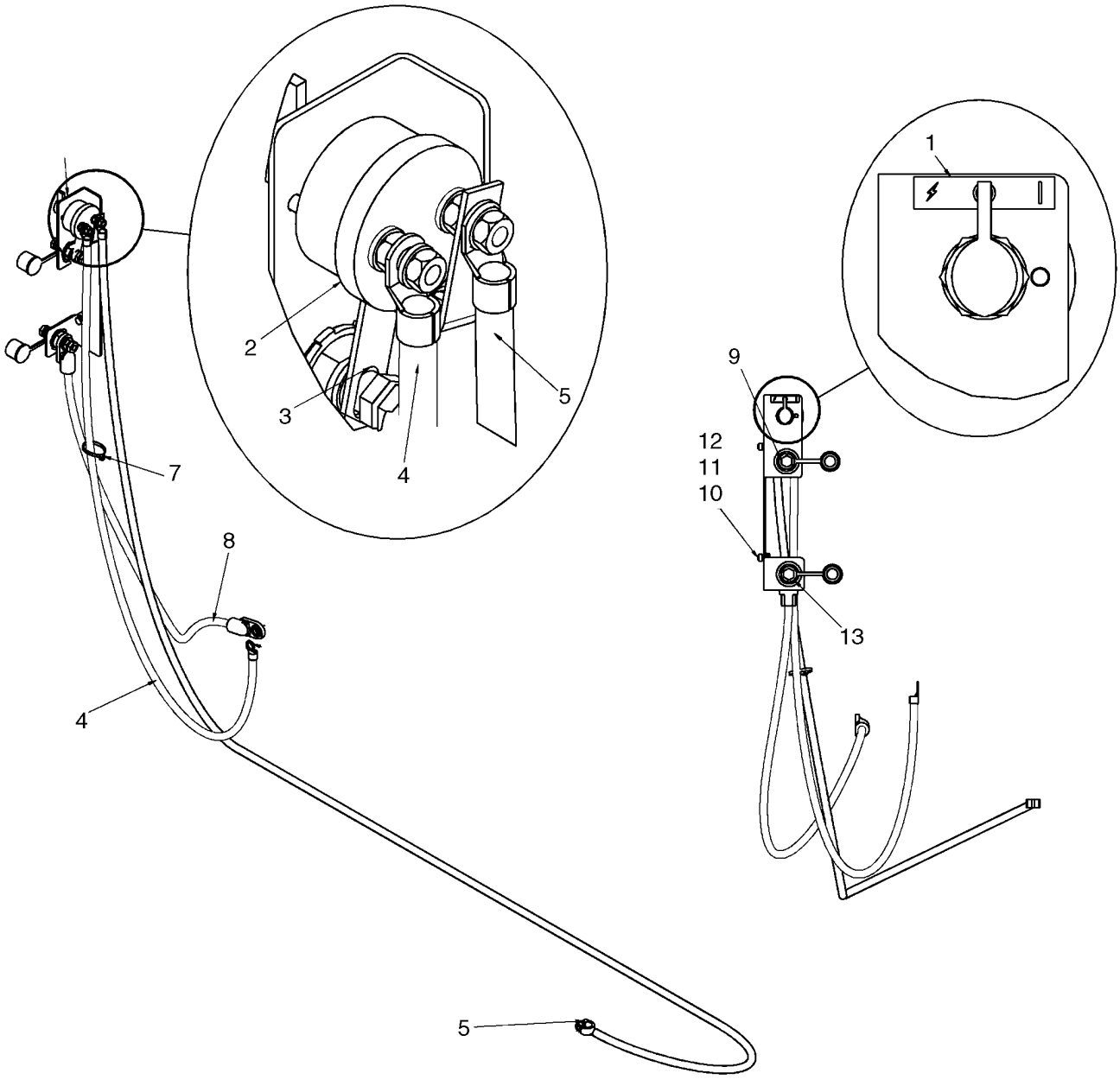

DECONNECTER LE CONTACTEUR - DÉMARRAGE ASSISTÉ À DISTANCE

REF	FN	PART NUMBER	YR/SN	QTY	DESCRIPTION
1		176332A1		1	DECALCOMANIE, Battery Disconnect
2		87458467		1	CONTACTEUR, Master Disconnect Switch
3		399665A2		1	PIECE DE FIXATION, Strip, Battery Jump Start
4		{87622960}		1	Battery Cable, Negative, 1200mm (47 1/4 in.)
5		87444992		1	CABLE (ASSEMBLE), Battery Cable, Negative, 2900mm (114 3/16 in.)
6		87624401		1	PATTE FIXATION, Remote Jump Start Bracket
7		L11541		1	SERRE-CABLE
8		87052671		1	CABLE (ASSEMBLE), Battery Cable, Positive
9		399384A1		1	COSSE, Terminal, Negative Remote Jump Start
10		120103		2	BOULON, Hex, M8 x 16, 8.8
11		86624185		2	RONDELLE, M8 x 17.5 x 2, HT
12		229197A1		2	ECROU
13		399383A1		1	COSSE, Terminal, Positive Remote Jump Start

04-16		p1	11/07

PHARE DE TRAVAIL - GAUCHE

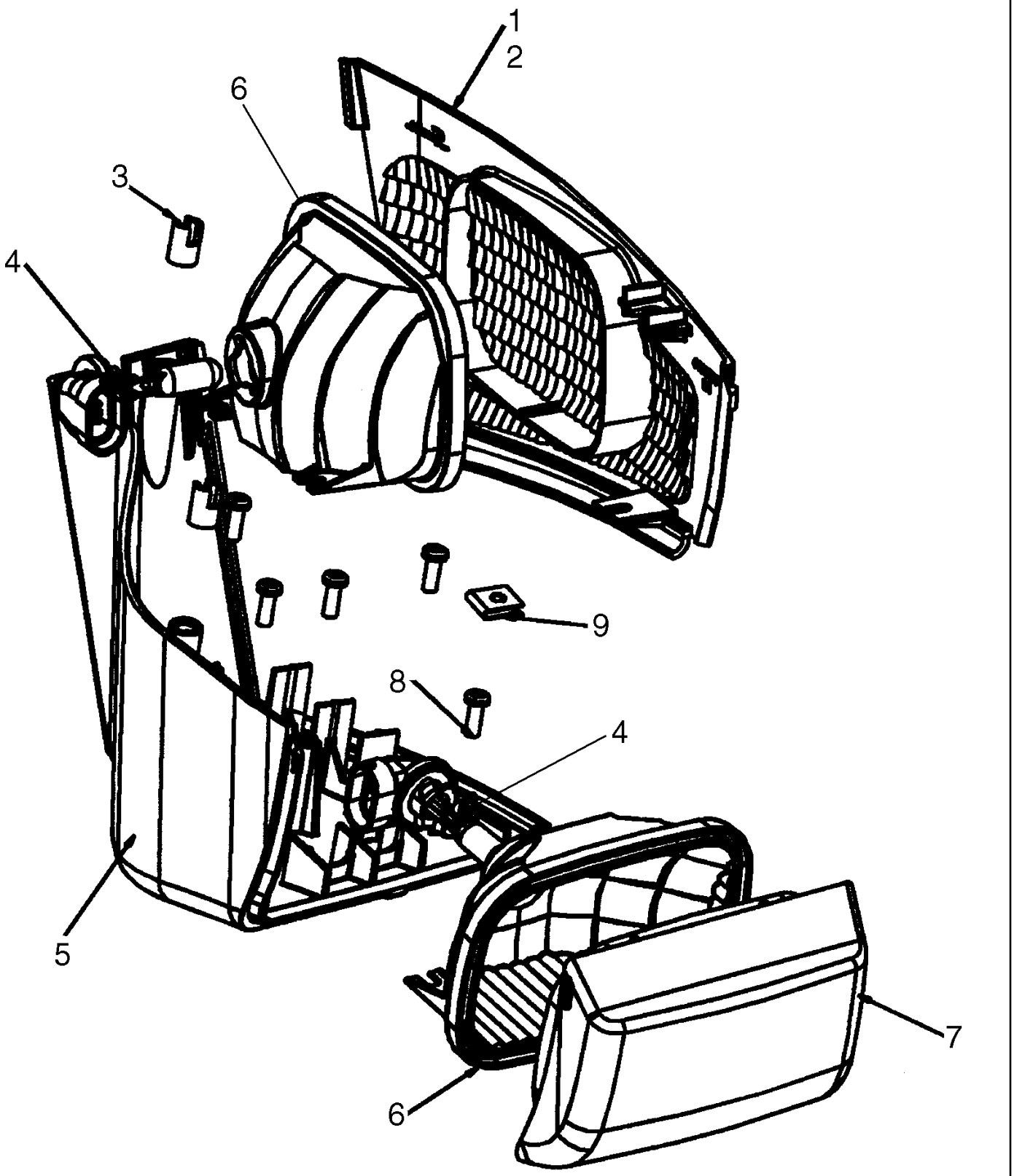

BS07J028

PHARE DE TRAVAIL - GAUCHE

REF	FN	PART NUMBER	YR/SN	QTY	DESCRIPTION
		87650097		1	FEU, Work Light, LH; Incl 1 - 9
1		NSS		AR	NON FOURNI SEPAREMENT, Adhesive Sealant
2		NSS		1	NON FOURNI SEPAREMENT, Side Lens, Clear
3		NSS		2	NON FOURNI SEPAREMENT, Threaded Brass Insert, M5 X 10
4		NSS		2	NON FOURNI SEPAREMENT, Bulb, 12.8V 50W Halogen
5		NSS		2	NON FOURNI SEPAREMENT, Housing
6		NSS		2	NON FOURNI SEPAREMENT, Reflector
7		NSS		1	NON FOURNI SEPAREMENT, Front Lens, Clear
8		NSS		5	NON FOURNI SEPAREMENT, Screw
9		NSS		1	NON FOURNI SEPAREMENT, Nut

PHARE DE TRAVAIL - DROIT

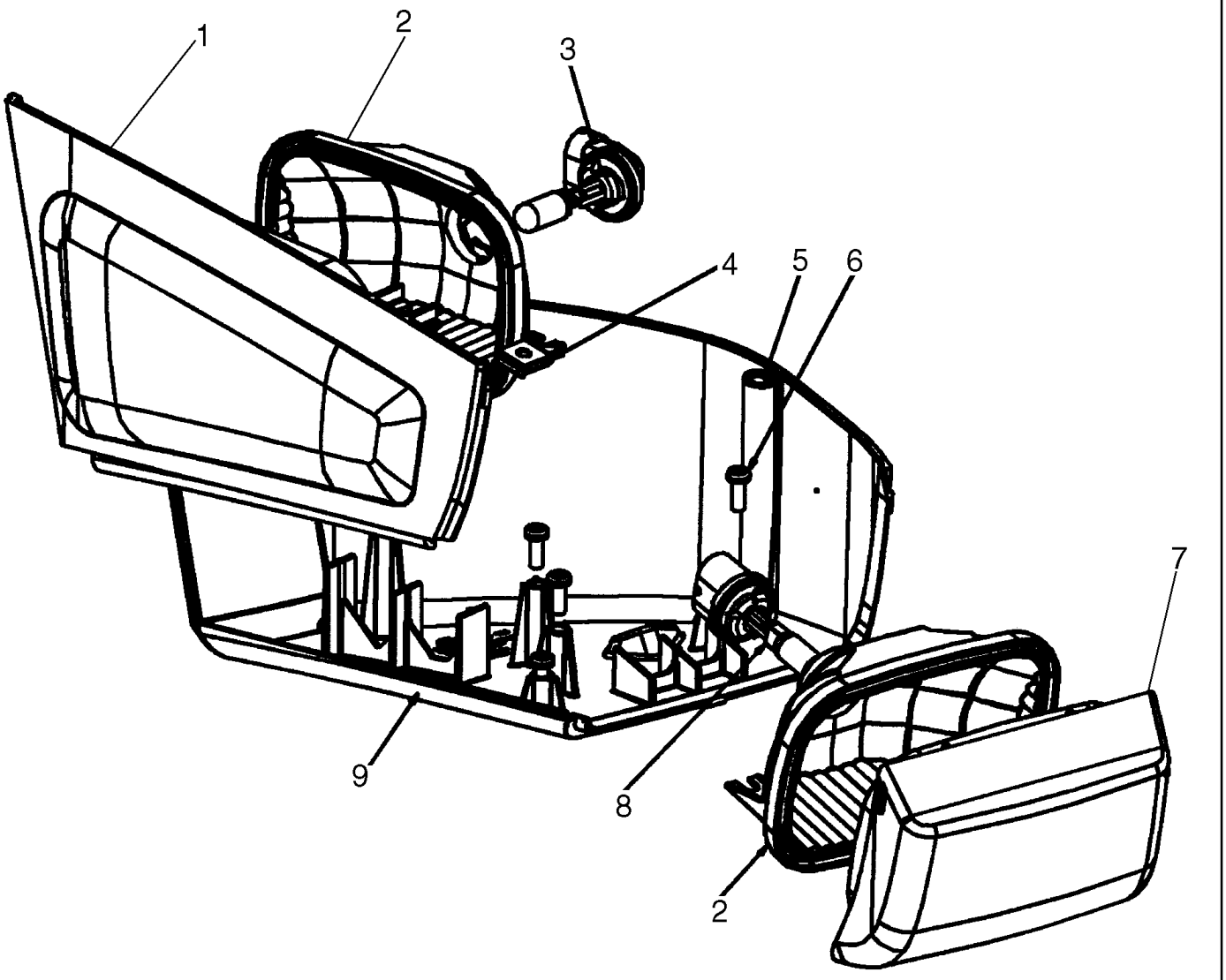

PHARE DE TRAVAIL - DROIT

REF	FN	PART NUMBER	YR/SN	QTY	DESCRIPTION
		87650098		1	FEU, Work Light, RH; Incl 1 - 9
1		NSS		1	NON FOURNI SEPAREMENT, Side Lens, Clear
2		NSS		2	NON FOURNI SEPAREMENT, Reflector
3		NSS		1	NON FOURNI SEPAREMENT, Bulb, 12.8V 50W Halogen
4		NSS		1	NON FOURNI SEPAREMENT, Nut
5		NSS		2	NON FOURNI SEPAREMENT, Threaded Brass Insert, M5 X 10
6		NSS		5	NON FOURNI SEPAREMENT, Screw
7		NSS		1	NON FOURNI SEPAREMENT, Front Lens, Clear
8		NSS		1	NON FOURNI SEPAREMENT, Bulb, 12V 50W
9		NSS		1	NON FOURNI SEPAREMENT, Housing

SYSTÈME ÉLECTRIQUE - PHARES ET CABLAGE (NA)

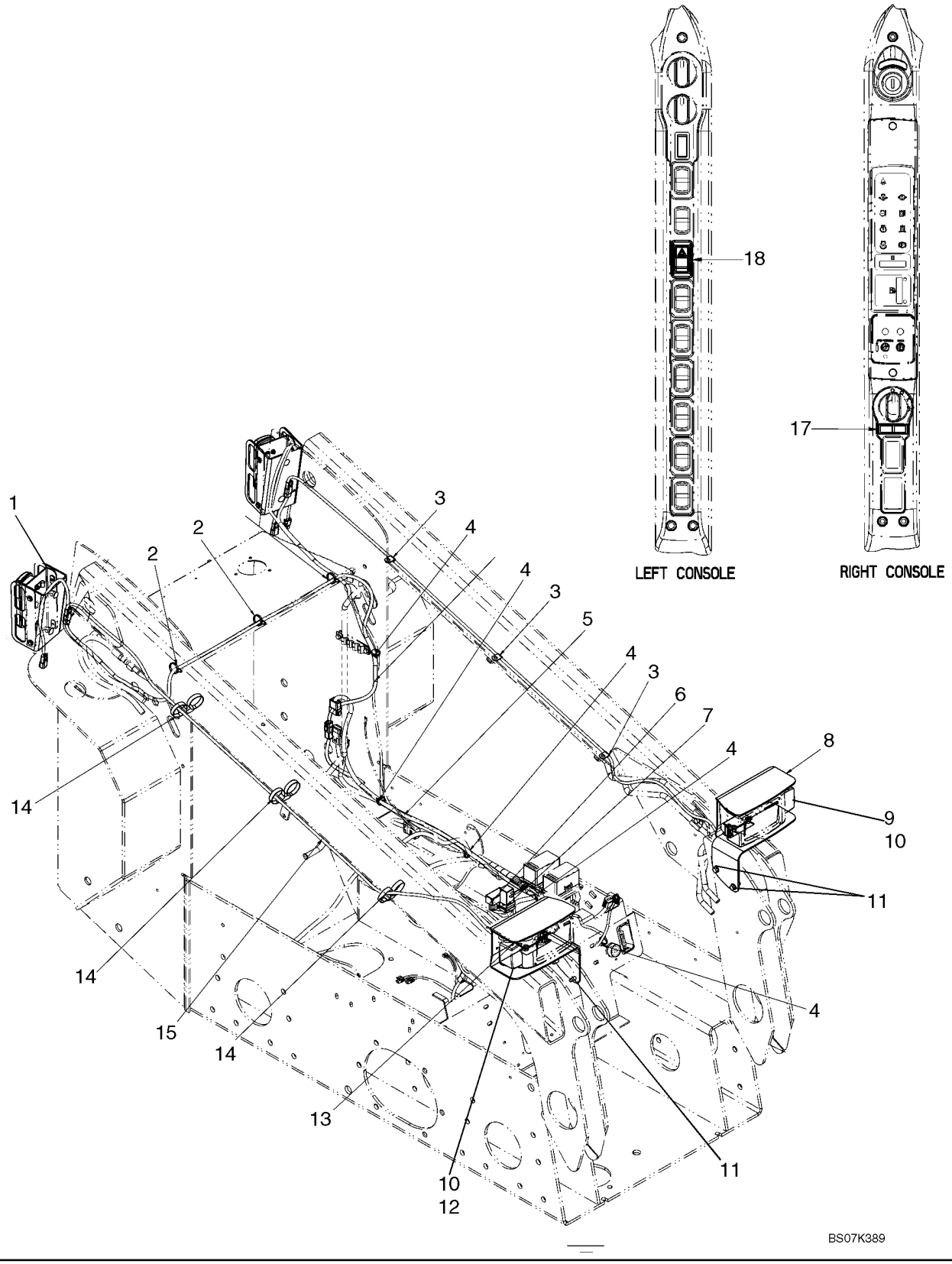

SYSTÈME ÉLECTRIQUE - PHARES ET CABLAGE (NA)

REF	FN	PART NUMBER	YR/SN	QTY	DESCRIPTION
		87676259		1	KIT ASSISTANCE, Kit, Road Lights (NA); Incl 1 - 18
1		REF		2	NOTICE, Rear Lights; See Fig 04-22
2		87668737		3	SANGLE
3		853765		3	BRIDE, 5/16", Insul, 3/8" Bolt
4		263117		5	SERRE-CABLE, .14" x 11 1/2"
5		87673072		1	FAISCEAU, Harness, Road Lights
6		83982664		1	RELAIS, Turn Signal Relay
7		9821783		1	CLIGNOTANT
8		87720246		1	PATTE FIXATION, Bracket, LH
9		85821385		1	FEU, GAUCHE, See Fig 04-21
10		43435		4	ECROU, M10, Flg Ser
11		280476		4	VIS AUTO-TARAUDEUSE, Hex Wash Hd, 3/8" x 1"
12		85821384		1	FEU, DROIT, See Fig 04-20
13		87720245		1	PATTE FIXATION, Bracket, RH
14		87659208		3	CIRCLIP, Strap, Dual Tie Releasable
15		87673079		2	FAISCEAU, Harness, Turn Signal
16		{87655334}		2	Relay
17		86604657		1	INDICATEUR DE DIRECTION
18		87634133		1	CONTACTEUR, Rocker Switch, Hazard Lights

SYSTÈME ÉLECTRIQUE - PHARES ET CABLAGE (EUROPE)

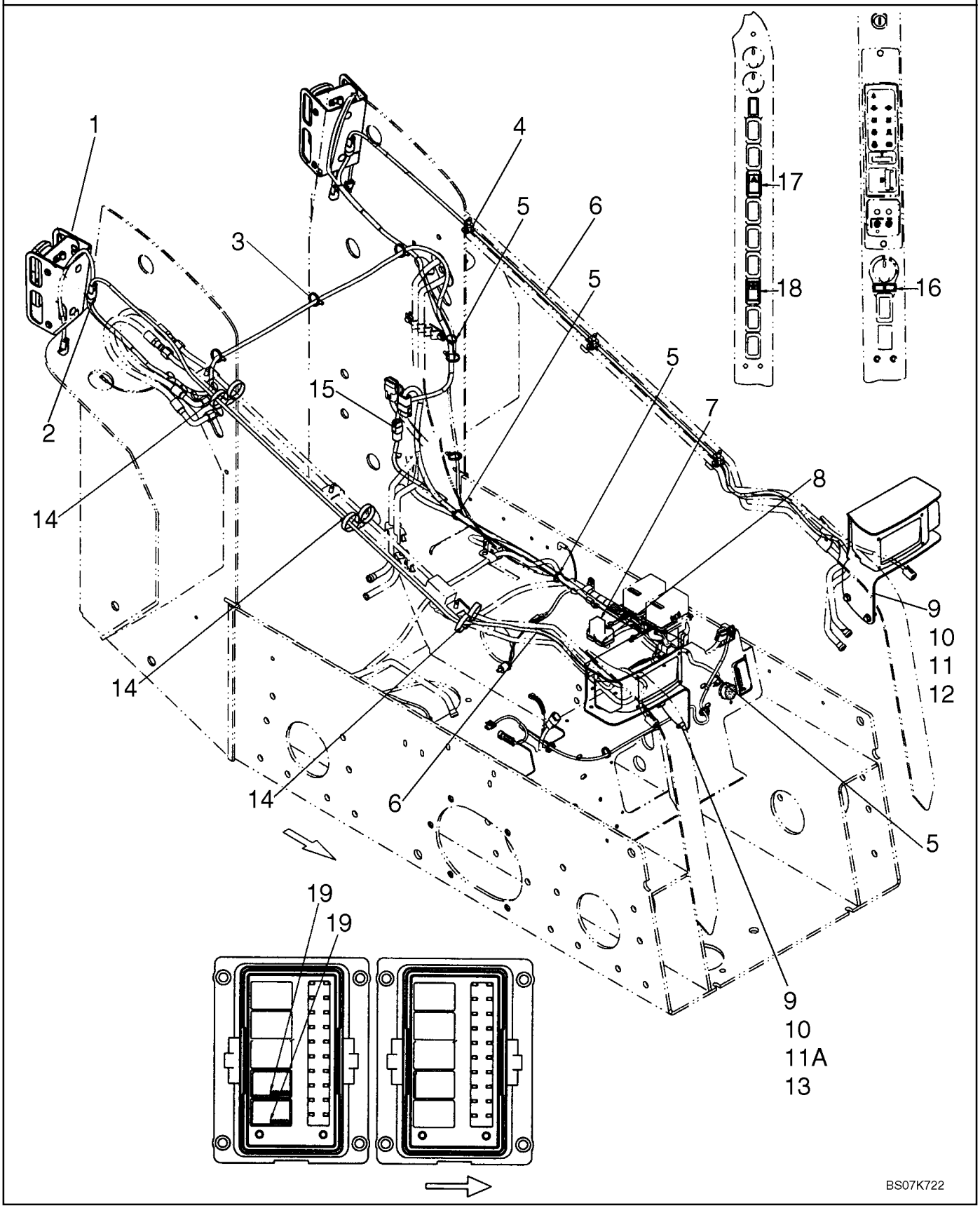

SYSTÈME ÉLECTRIQUE - PHARES ET CABLAGE (EUROPE)

REF	FN	PART NUMBER	YR/SN	QTY	DESCRIPTION
		87676260		1	KIT ASSISTANCE, Kit, Road Lights (EU); Incl 1 - 19
1		REF		2	NOTICE, Rear Lights; See Fig 04-22
2		87673077		1	FAISCEAU, Harness, Turn Signal
3		87668737		3	SANGLE
4		853765		3	BRIDE, 5/16", Insul, 3/8" Bolt
5		263117		4	SERRE-CABLE, .14" x 11 1/2"
6		87673079		2	FAISCEAU, Harness, Turn Signal Loader Arm
7		388457A1		1	RELAIS, Time Delay, Road Lights, Europe
8		9821783		1	CLIGNOTANT
9		43435		4	ECROU, M10, Flg Ser
10		280476		4	VIS AUTO-TARAUDEUSE, Hex Wash Hd, 3/8" x 1"
11		85821385		1	FEU, GAUCHE, See Fig 04-21
11A		85821384		1	FEU, DROIT, See Fig 04-20
12		87720246		1	PATTE FIXATION, Bracket, LH
13		87720245		1	PATTE FIXATION, Bracket, RH
14		87659208		3	CIRCLIP, Strap, Dual Tie Releasable
15		87673070		1	FAISCEAU, Harness, EU Adapter
16		86604657		1	INDICATEUR DE DIRECTION
17		87634133		1	CONTACTEUR, Rocker Switch, Hazard Lights
18		87642912		1	CONTACTEUR, Rocker Switch, Loader Lock
19		{87655334}		2	Relay, 35A, Road Lights

PHARES - DROIT

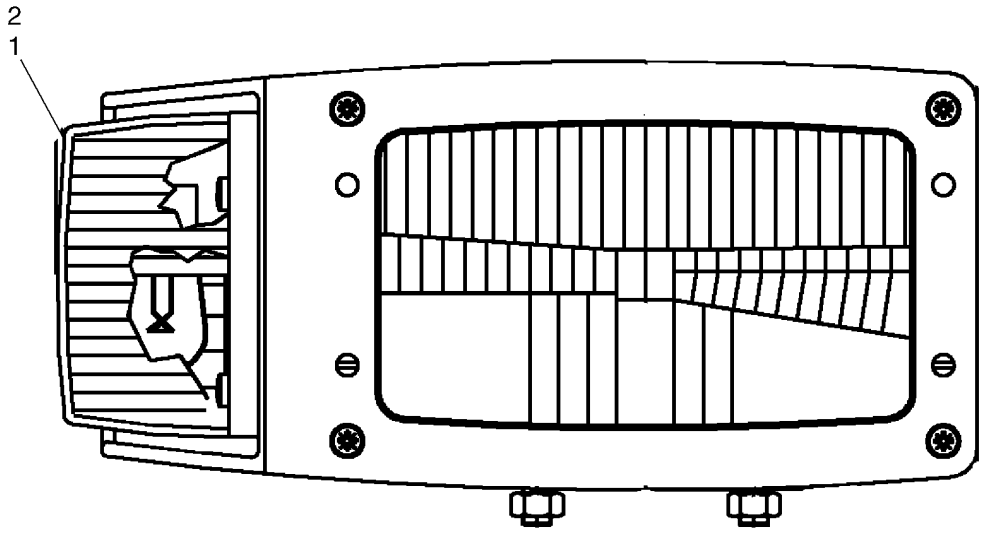

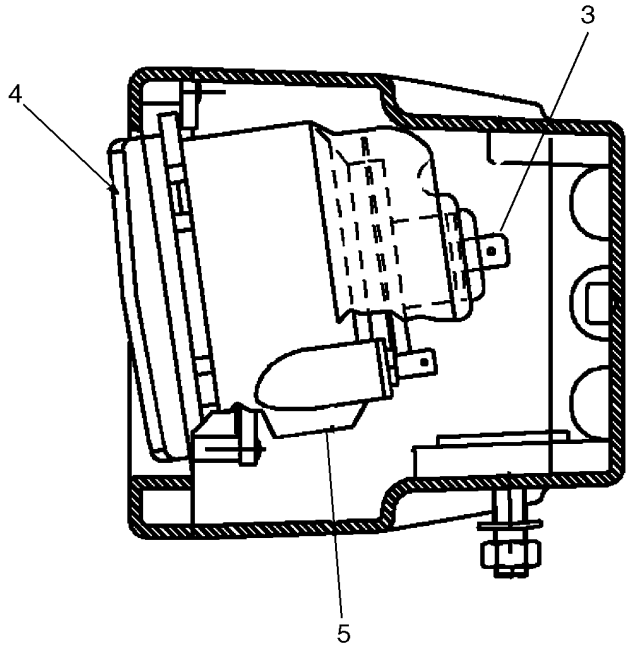

BS07K390

PHARES - DROIT

REF	FN	PART NUMBER	YR/SN	QTY	DESCRIPTION
		85821384		1	FEU, DROIT, Incl. 1 - 5
1		9969431		1	CABOCHON
2		14148190		1	AMPOULE, Bulb, 12V 21W
3		14152090		1	AMPOULE, Bulb, 12V 60/55 W
4		NSS		1	NON FOURNI SEPAREMENT, Lamp
5		14142390		1	AMPOULE, Bulb, 12V-4W

PHARES - GAUCHE

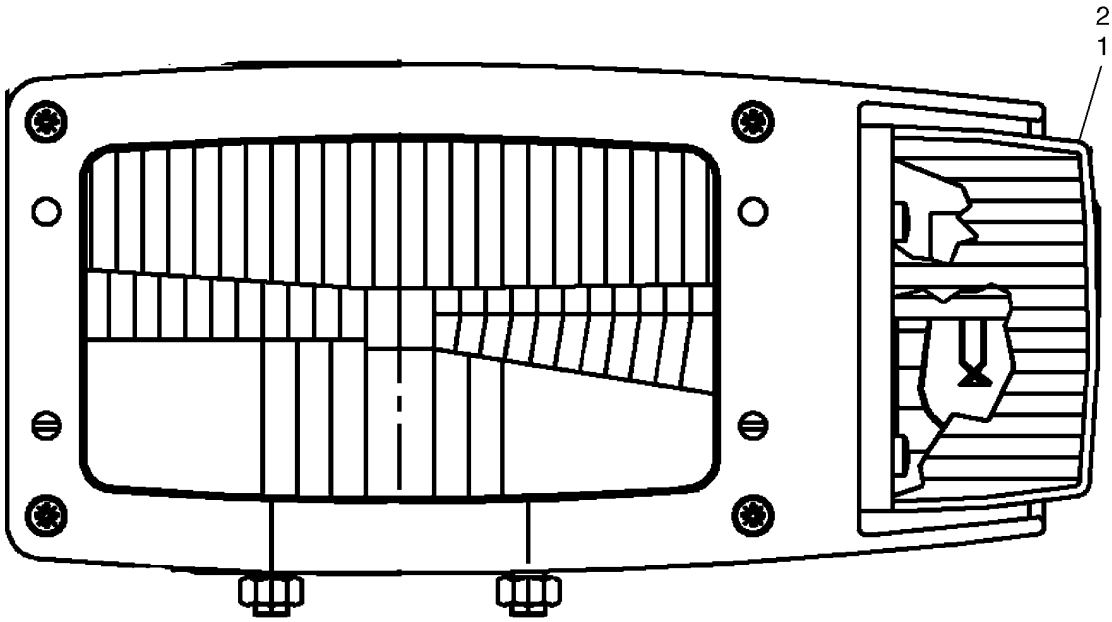

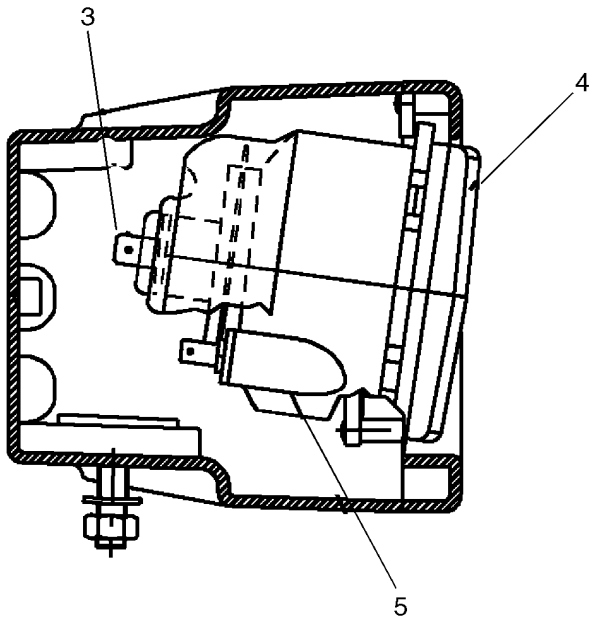

BS07K391

PHARES - GAUCHE

REF	FN	PART NUMBER	YR/SN	QTY	DESCRIPTION
		85821385		1	FEU, GAUCHE, Incl 1 - 5
1		9969430		1	CABOCHON
2		14148190		1	AMPOULE, Bulb, 12V 21W
3		14152090		1	AMPOULE, Bulb, 12V 60/55 W
4		NSS		1	NON FOURNI SEPAREMENT, Lamp
5		14142390		1	AMPOULE, Bulb, 12V 4W

PHARES ARRIERE ET MONTAGES

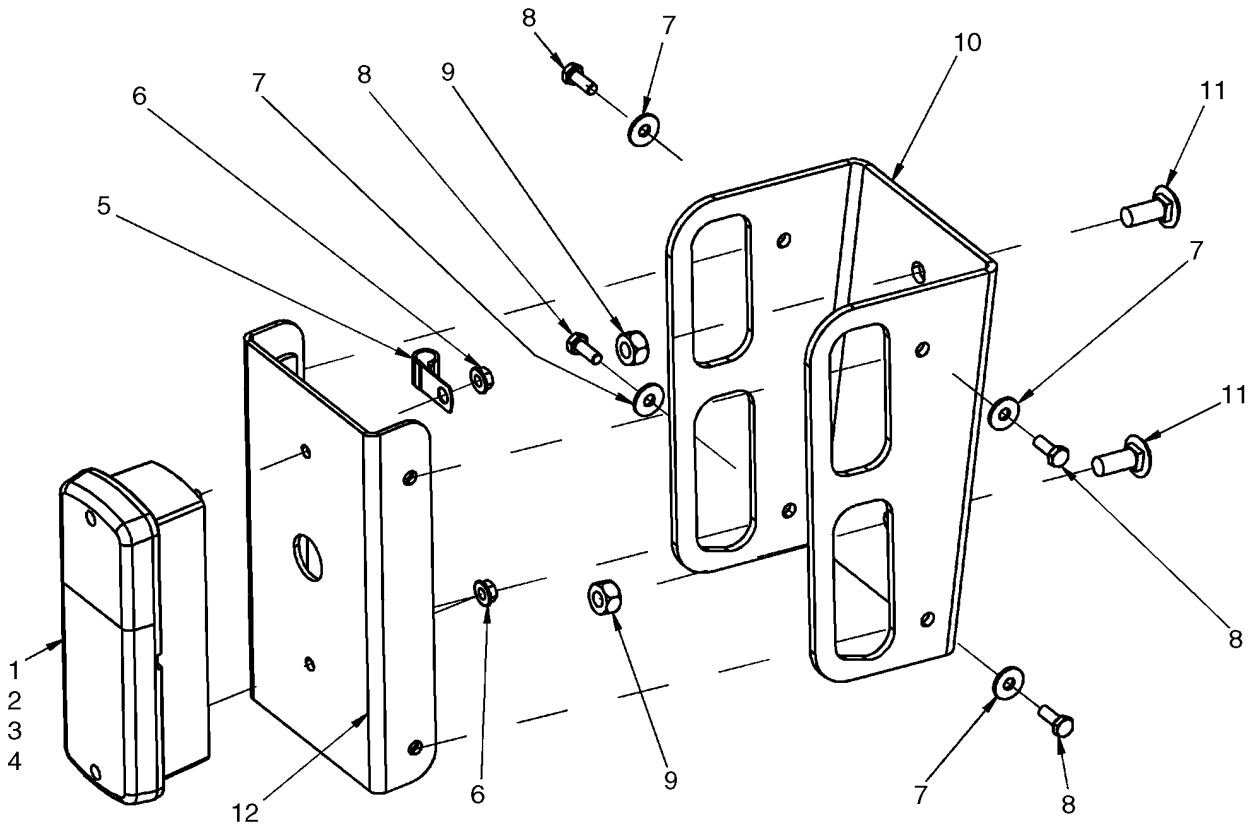

BS07K392

PHARES ARRIERE ET MONTAGES

REF	FN	PART NUMBER	YR/SN	QTY	DESCRIPTION
1		177239A2		2	FEU ARRIERE, Incl 2 - 4
2		187140A1		2	CABOCHON
3		3131227R1		2	AMPOULE, P25-1, 12V, 25W
4		3131234R1		2	AMPOULE, P25-2, 12V, 5W
5		87016870		2	BRIDE, J, 7/16" Insul, 5/16" Bolt
6		86511444		4	ECROU, M6, Flg Ser
7		86624182		8	RONDELLE, M6 x 18 x 1.6
8		86508568		8	BOULON, Hex, M6 x 16, 8.8
9		87030549		4	CONTRE-ECROU, M10 x 1.5, Cl 10
10		419431A1		2	PATTE FIXATION, Rear Turn Signal Bracket
11		86633356		4	BOULON TETE BOMBEE, Short NK, M10 x 25, Cl8.8, Full Thd
12		427180A1		2	PATTE FIXATION

ALARME DE RECUL

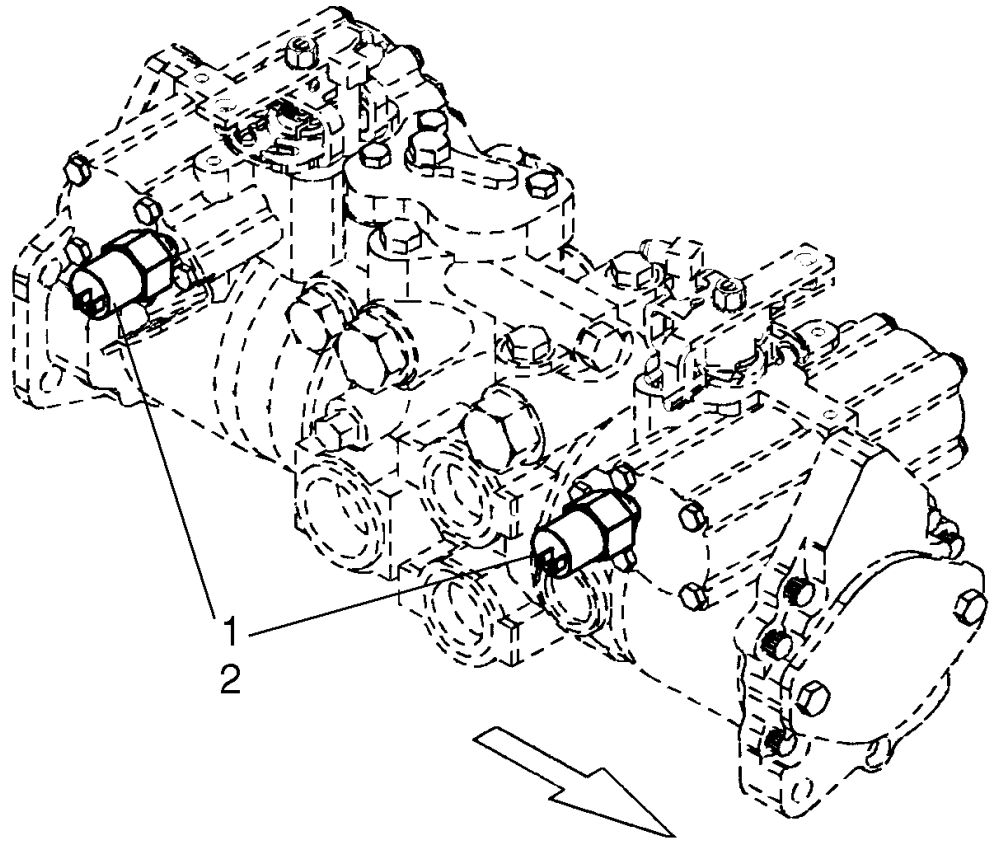

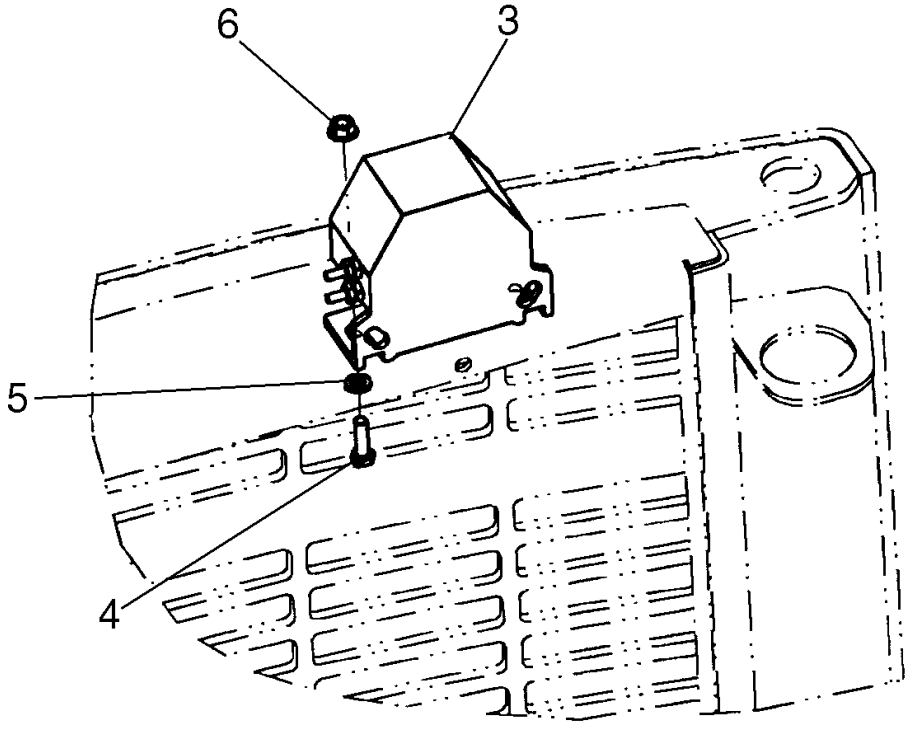

BS04K096

ALARME DE RECUL

REF	FN	PART NUMBER	YR/SN	QTY	DESCRIPTION
1		87029843		2	PRESSOSTAT, 600 PSI; Backup Alarm Control; Incl. 2; If Used
1		87370805		2	PRESSOSTAT, 2000 PSI; Backup Alarm Control; Incl. O-Ring 9617873; Replaces 87461545; If Used
2		9617873		1	JOINT THORIQUE, 6-1, 90 Duro, .468" ID x .078" Thk
3		324299A1		1	ALARME, For Service Order 325258A1
3		325258A1		1	KIT ASSISTANCE, Backup Alarm
4		120100		2	BOULON, Hex, M6 x 20, 8.8
5		86624182		2	RONDELLE, M6 x 18 x 1.6
6		86511444		2	ECROU, M6, Flg Ser

04-24		p1	11/07

DOUILLE ACCESSOIRES ÉLECTRIQUES

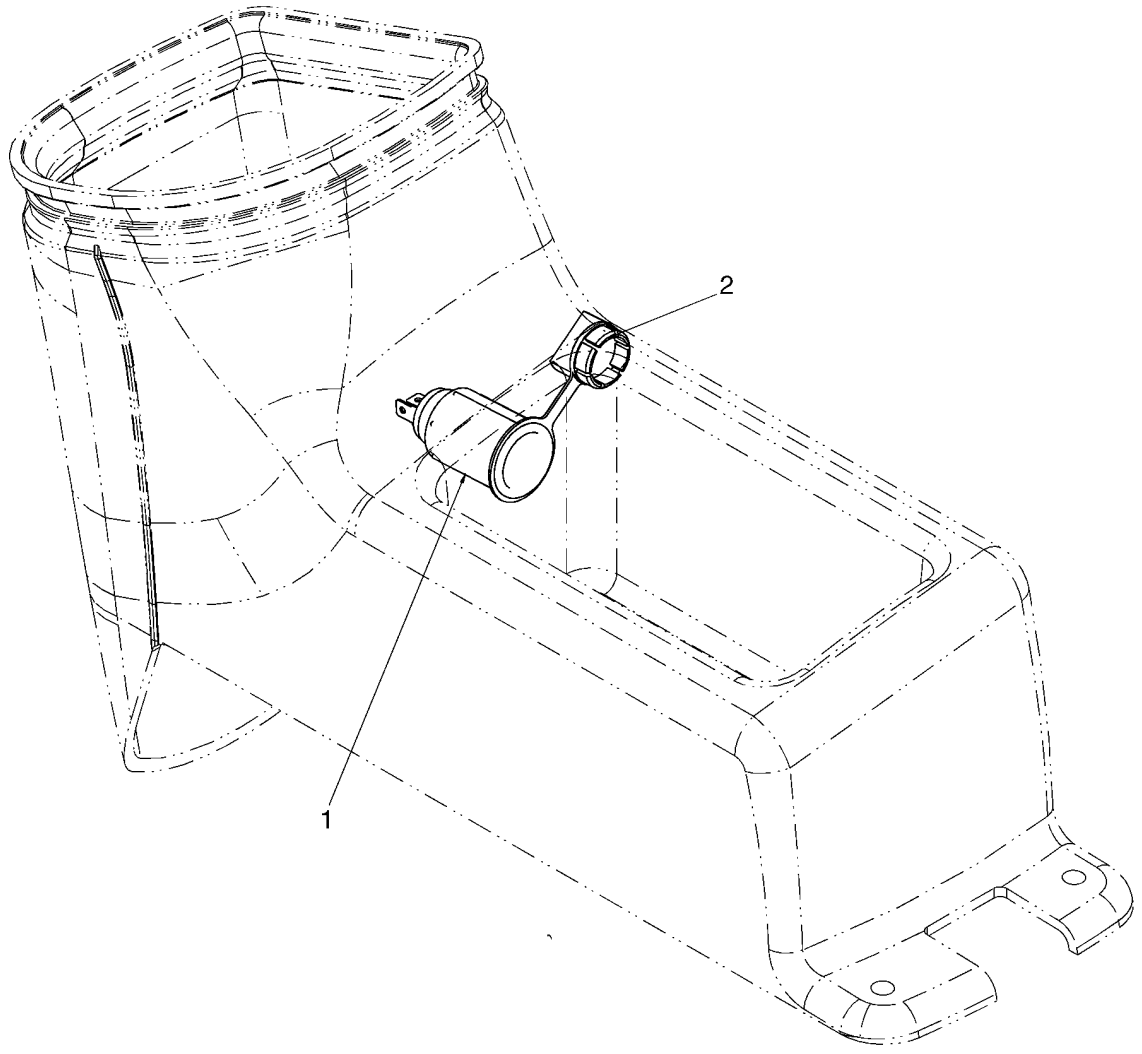

BS07K960

DOUILLE ACCESSOIRES ÉLECTRIQUES

REF	FN	PART NUMBER	YR/SN	QTY	DESCRIPTION
1		283779A1		1	SORTIE, Power Outlet
2		283781A1		1	CHAPEAU

DOUILLE ACCESSOIRES ÉLECTRIQUES (EUROPE)

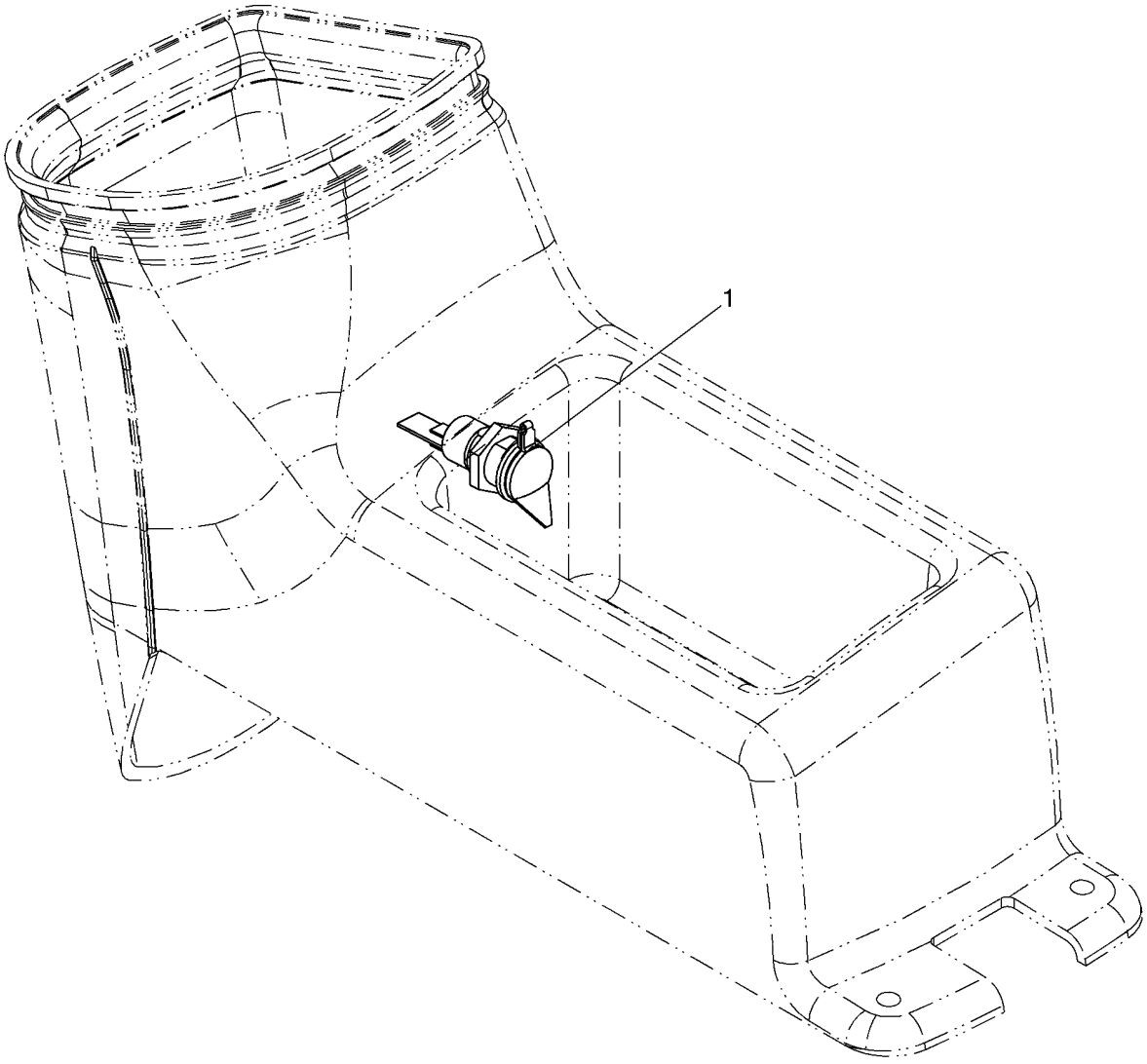

BS07K962

DOUILLE ACCESSOIRES ÉLECTRIQUES (EUROPE)

REF	FN	PART NUMBER	YR/SN	QTY	DESCRIPTION
1		142211A1		1	PRISE

AVERTISSEUR SONORE - SUPPORT

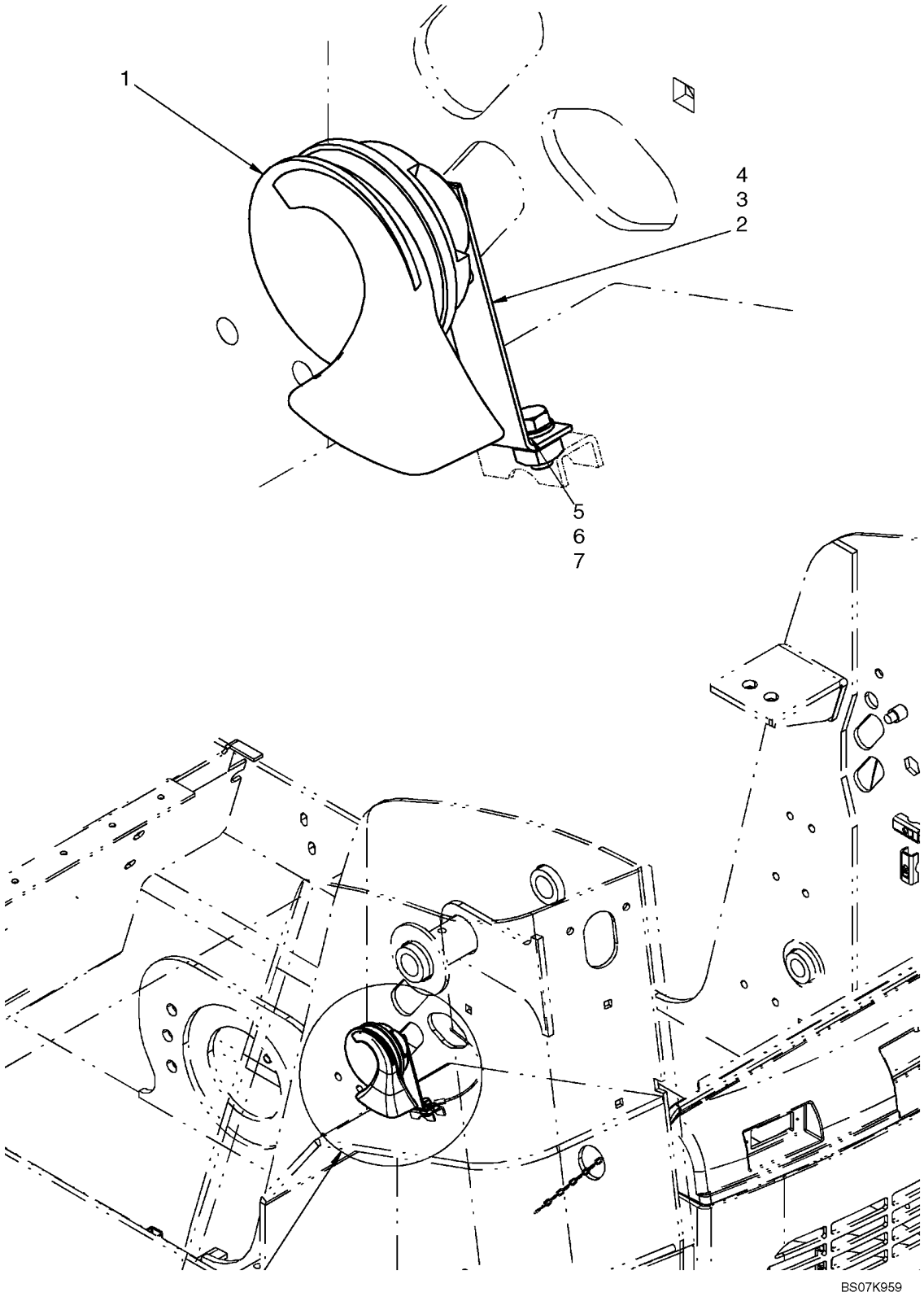

AVERTISSEUR SONORE - SUPPORT

REF	FN	PART NUMBER	YR/SN	QTY	DESCRIPTION
1		254130A1		1	KLAXON
2		406938A2		1	CORNIERE, Horn Mounting Bracket
3		87030561		1	CONTRE-ECROU, M6 x 1, Cl 8
4		86632601		2	RONDELLE FREIN, Ext Tooth, M8
5		86624184		1	RONDELLE, M8 x 16 x 1.6
6		120103		1	BOULON, Hex, M8 x 16, 8.8
7		229197A1		1	ECROU

FAISCEAU, AVANT - AUXILIAIRE

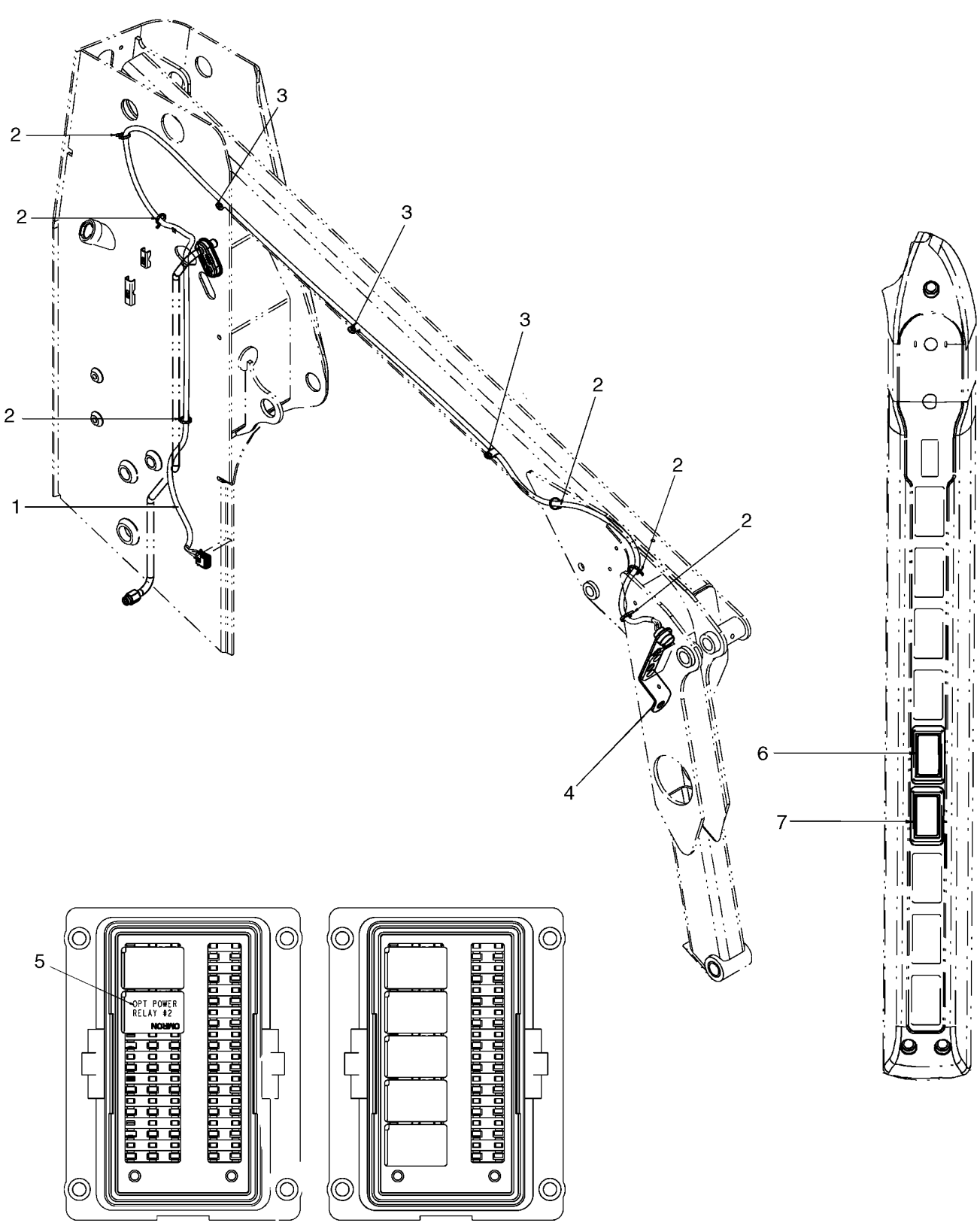

FAISCEAU, AVANT - AUXILIAIRE

REF	FN	PART NUMBER	YR/SN	QTY	DESCRIPTION
		87640048		1	KIT ASSISTANCE, Kit, Front Auxiliary Electric; Incl 1 - 11
1		87441574		1	FAISCEAU COMPLET, Front Auxiliary Harness
2		263117		6	SERRE-CABLE, .14" x 11 1/2"
3		87028524		3	CRAMPON
4		87023530		1	PATTE FIXATION
5		{87655334}		1	Relay
6		87634134		1	CONTACTEUR, Rocker Switch, Auxiliary Electric I/O
7		87634135		1	CONTACTEUR, Rocker Switch, Auxiliary Electric F/R
8		9706704		1	BOULON, Hex, M10 x 35, 8.8, Full Thd, Not Illustrated
9		87449992		1	PATTE FIXATION, Bracket, Auxiliary Electric; Not Illustrated
10		87453780		1	PATTE FIXATION, Bracket, Auxiliary Electric With Case Drain; Not Illustrated
11		87458118		1	PATTE FIXATION, Bracket, Auxiliary Electric Mount; Not Illustrated

GYROPHARE

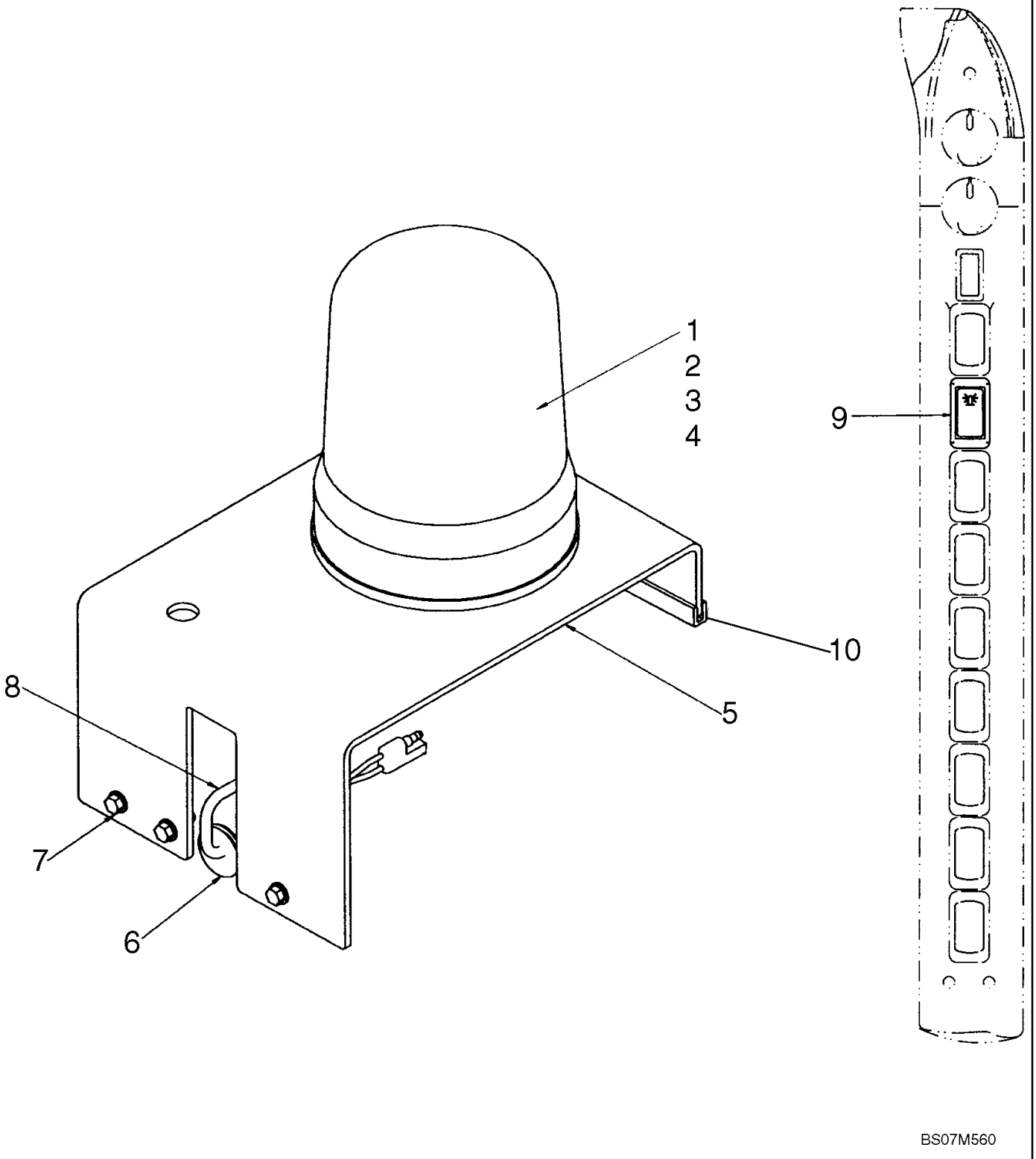

GYROPHARE

REF	FN	PART NUMBER	YR/SN	QTY	DESCRIPTION
		87638500		1	KIT ASSISTANCE, Kit, Rotating Beacon; Incl 1 - 10
1		E99128		1	GIROPHARE, Rotating Beacon; Incl 2 - 4
2		E99208		1	CABOCHON
3		3125705R1		1	AMPOULE
4		E38908		1	JOINT
5		87682712		1	PATTE FIXATION, Beacon Support
6		87530614		1	PASSE-FIL, Grommet
7		86625224		3	VIS, Screw, Hex Head #1/4-20 X 3/4
8		293828A1		1	FAISCEAU, Harness, Rotating Beacon
9		133714A1		1	CONTACTEUR, Rocker Switch, Rotating Beacon
10		293470A1		1	BANDE, ENJOLIVEUR, Edge Trim

PIÈCES SPÉCIALES POUR L'ITALIE - FEUX DECLAIRAGE DE PLAQUE DIMMATRICULATION

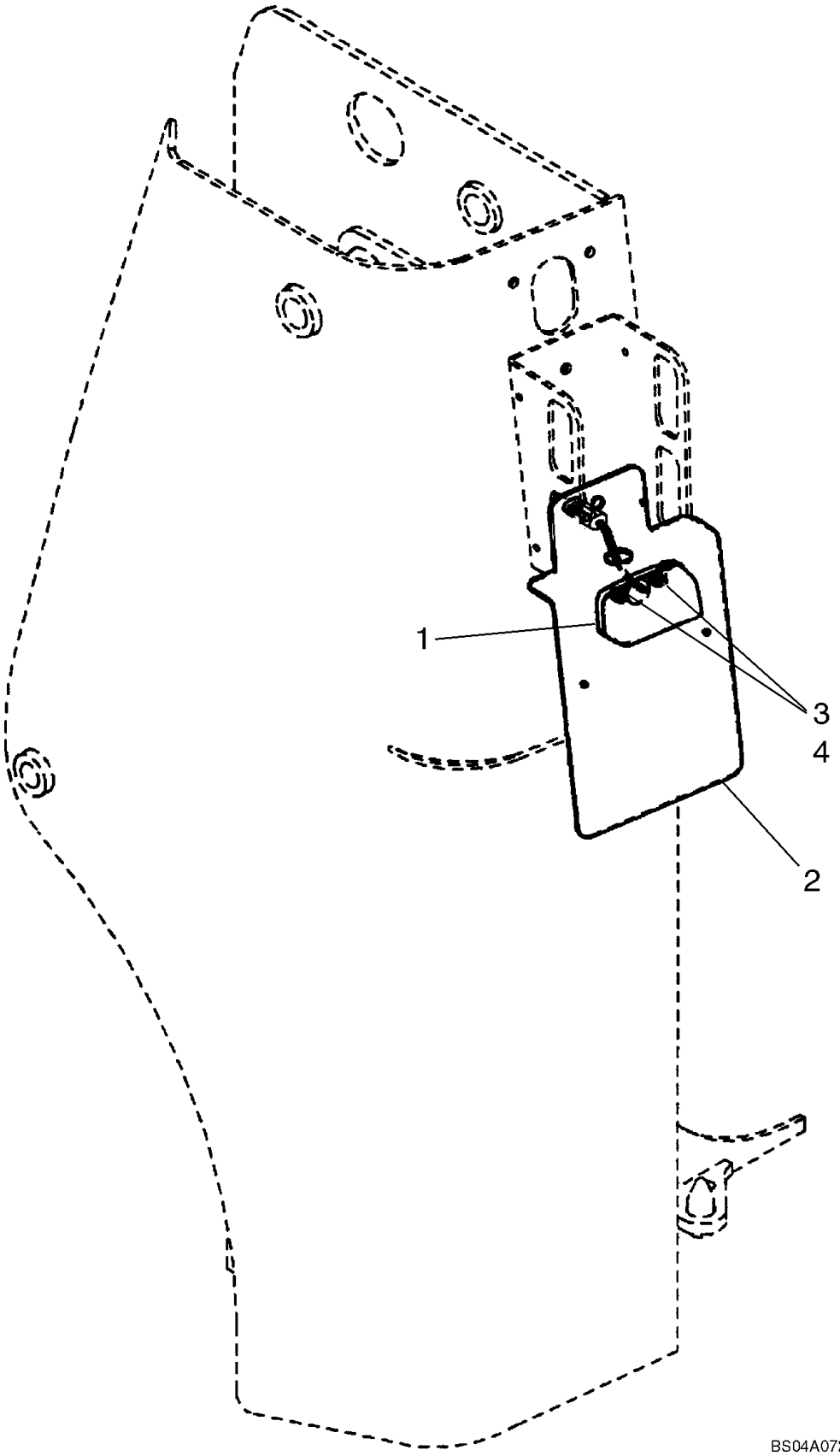

PIÈCES SPÉCIALES POUR L'ITALIE - FEUX DECLAIRAGE DE PLAQUE DIMMATRICULATION

REF	FN	PART NUMBER	YR/SN	QTY	DESCRIPTION
1		120229A1		1	FEU
2		428239A2		1	PLAQUE (ASSEMBLEE), License Plate Mounting
3		825-5146		2	ECROU, M6, Flg Ser
4		840-1616		2	VIS, Cross Pan Hd, M6 x 16

STROBOSCOPE

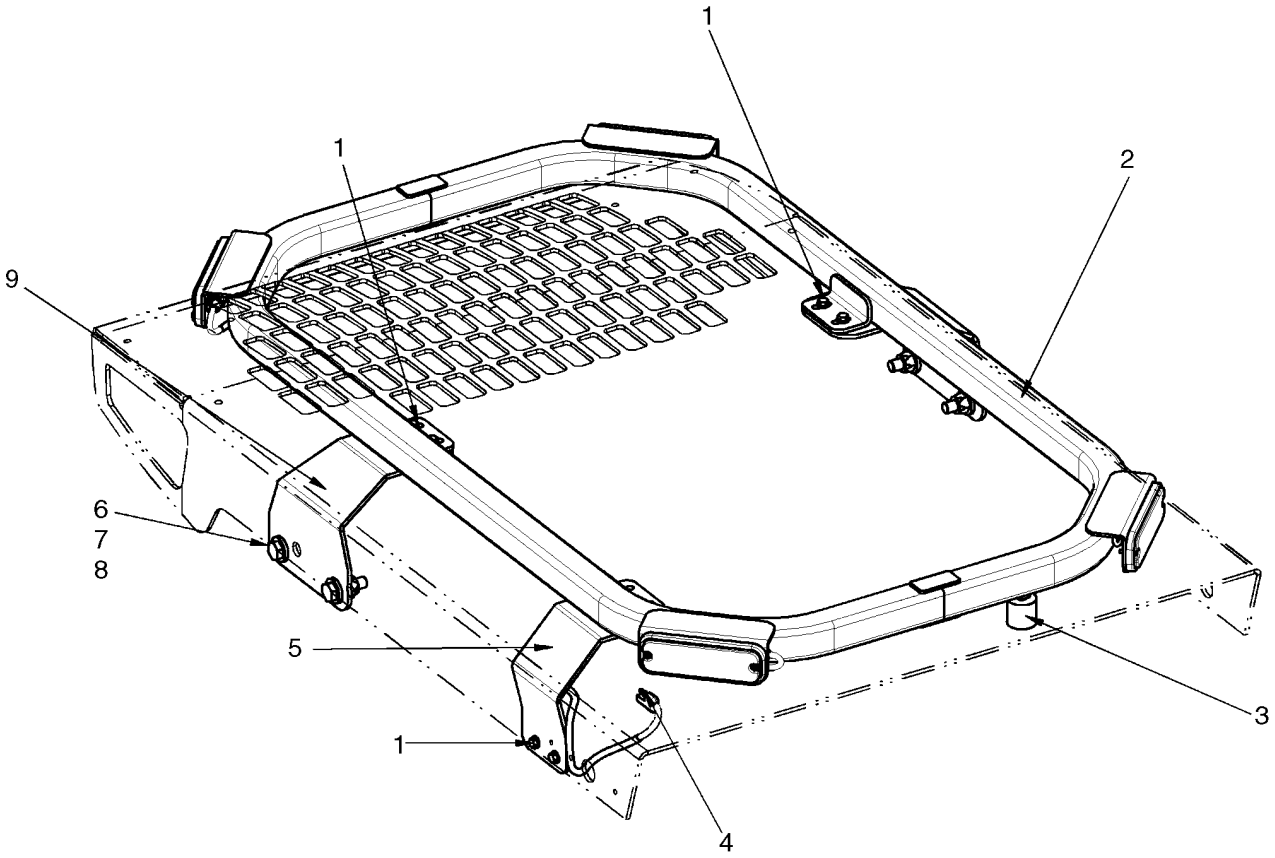

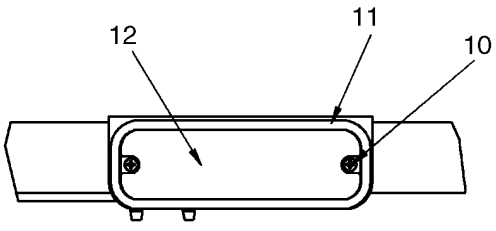

BS07N705

STROBOSCOPE

REF	FN	PART NUMBER	YR/SN	QTY	DESCRIPTION
		87652336		1	KIT ASSISTANCE, Kit, Strobe Light; Incl 1 - 12
1		86625224		6	VIS
2		87727417		1	CHASSIS
3		87727414		1	PARE-CHOCS, Rubber Feet
4		87723831		1	FAISCEAU, Harness, Strobe
5		NSS		1	NON FOURNI SEPAREMENT, Wire Guard
6		337563		4	BOULON, Hex, M12 x 40, 10.9, Full Thd
7		412672		4	CONTRE-ECROU, M12 x 1.75, Cl 10
8		86625256		8	RONDELLE, M12 x 28.5 x 4, HT
9		87727413		2	PATTE FIXATION, Strobe Mounting Bracket
10		86637783		8	VIS AUTO-TARAUDEUSE, Cross Pan Hd, #6 x 5/8"
11		87728345		4	ENCADREMENT, Strobe Light
12		87634137		4	FAISCEAU, Amber Strobe, LED

NOTES

SECTION INDEX
Chaîne cinématique

06-01	LEVIER DE COMMANDE - MODÈLE DE H
06-02	LEVIER DE COMMANDE - MODÈLE DE ISO (440)
06-03	LEVIER DE COMMANDE - MODÈLE DE ISO (440CT)
06-04	LEVIER DE COMMANDE, MONTAGE, GAUCHE - H MODÈLE
06-05	LEVIER DE COMMANDE, MONTAGE, DROIT - H MODÈLE
06-06	SYSTEME HYDROSTATIQUE - LEVIER DE COMMANDE COLIS, MODÈLE ISOMÉTRIQUE
06-07	CIRCUIT HYDRAULIQUE - LEVIER DE COMMANDE COLIS, MODÈLE ISOMÉTRIQUE
06-08	SYSTEME HYDROSTATIQUE - LEVIER DE COMMANDE COLIS, MODÈLE ISOMÉTRIQUE
06-09	SYSTEME HYDROSTATIQUE - POMPE, ASPIRATION ET REFOULEMENT (440)
06-10	POMPES DOUBLES - SUPPORT (440)
06-11	SYSTEME HYDROSTATIQUE - MOTEURS, VIDANGE DE CARTER (440)
06-12	SYSTEME HYDROSTATIQUE - POMPE, ASPIRATION ET REFOULEMENT (440CT)
06-13	SYSTEME HYDROSTATIQUE - MOTEURS (440CT)
06-14	SYSTEME HYDROSTATIQUE - MULTIPLE FONCTION (440CT)
06-15	SYSTEME HYDROSTATIQUE - POMPE RACCORDS (440CT)
06-16	HYDROSTATIQUE, TUYAUX, POMPE ET MOTEURS
06-17	SYSTEME HYDROSTATIQUE - POMPE VERS REFROIDISSEUR (440 AVEC COMMANDE PILOTE)
06-18	SYSTEME HYDROSTATIQUE (COLLECTEURS/DISTRIBUTEUR DE COMMANDE, 440 AVEC COMMANDE PILOTE)
06-19	SYSTEME HYDROSTATIQUE - POMPE RACCORDS (440 AVEC COMMANDE PILOTE)
06-20	SYSTEME HYDROSTATIQUE - VITESSE SIMPLE, MOTEURS (440)
06-21	HYDROSTATIQUE, TUYAUX (440 AVEC COMMANDE PILOTE)
06-22	SYSTEME HYDROSTATIQUE - MULTIPLE FONCTION (440 AVEC COMMANDE)PILOTE
06-23	SYSTEME HYDROSTATIQUE - DEUX VITESSES, MOTEURS
06-24	SYSTEME HYDROSTATIQUE - DEUX VITESSES, MOTEURS (AVEC COMMANDE PILOTE)
06-25	SYSTEME HYDROSTATIQUE, MULTIPLE FONCTION MONTAGE
06-26	SYSTEME HYDROSTATIQUE - DEUX VITESSES, DISTRIBUTEUR
06-27	SYSTEME HYDROSTATIQUE - DEUX VITESSES, DISTRIBUTEUR (440CT)
06-28	SYSTEME HYDROSTATIQUE - DEUX VITESSES, DISTRIBUTEUR (AVEC COMMANDE PILOTE)
06-29	SYSTEME HYDROSTATIQUE (440CT EUROPE)
06-30	SYSTEME HYDROSTATIQUE (440 EUROPE)
06-31	SYSTEME HYDROSTATIQUE (440 EUROPE)
06-32	FILTRE - SUPPORT
06-33	POMPES DOUBLES (440)
06-34	POMPES DOUBLES (440)
06-35	POMPES DOUBLES (440)
06-36	POMPES DOUBLES (440)
06-37	POMPES DOUBLES (440)
06-38	POMPES DOUBLES (440)
06-39	POMPES DOUBLES - REXROTH (87546976)
06-40	POMPES DOUBLES - SOUPAPE DE REDUCTION PRESSION (87546976)
06-41	POMPES DOUBLES - SOUPAPE DE REDUCTION PRESSION (87546976)
06-42	POMPES DOUBLES - POMPE À ENGRENAGE (87546976)
06-43	POMPES DOUBLES - ROTATION MONTAGE, DROIT (87546976)
06-44	POMPES DOUBLES - ROTATION MONTAGE, GAUCHE ROTATION (87546976)
06-45	POMPES DOUBLES - COMMANDE HYDRAULIQUE (87546976)

SECTION INDEX
Chaîne cinématique

06-46	POMPES DOUBLES - COMMANDE MONTAGE (87546976)
06-47	POMPES DOUBLES - REXROTH (87546977)
06-48	POMPES DOUBLES - SOUPAPE DE REDUCTION PRESSION (87546977)
06-49	POMPES DOUBLES - POMPE À ENGRENAGE (87546977)
06-50	POMPES DOUBLES - ROTATION MONTAGE, DROIT (87546977)
06-51	POMPES DOUBLES - ROTATION MONTAGE, GAUCHE ROTATION (87546977)
06-52	POMPES DOUBLES - COMMANDE HYDRAULIQUE (87546977)
06-53	POMPES DOUBLES - COMMANDE MONTAGE (87546977)
06-54	POMPE A ENGRENAGE
06-55	POMPE A ENGRENAGE (GRAND DEBIT)
06-56	MOTEUR - VITESSE SIMPLE
06-57	MOTEUR - VITESSE SIMPLE
06-58	MOTEUR - VITESSE SIMPLE
06-59	MOTEUR - DEUX VITESSES
06-60	MOTEUR - DEUX VITESSES
06-61	MOTEUR - DEUX VITESSES
06-62	MOTEUR - HYDROSTATICQUE (440CT)
06-63	CONDUITE D'ENTRAINEMENT
06-64	ESSIEU
06-65	ROUES
06-66	ROUES
06-67	CHENILLE (440CT)
06-68	TRANSMISSION FINALE (440CT)

NOTES

LEVIER DE COMMANDE - MODÈLE DE H

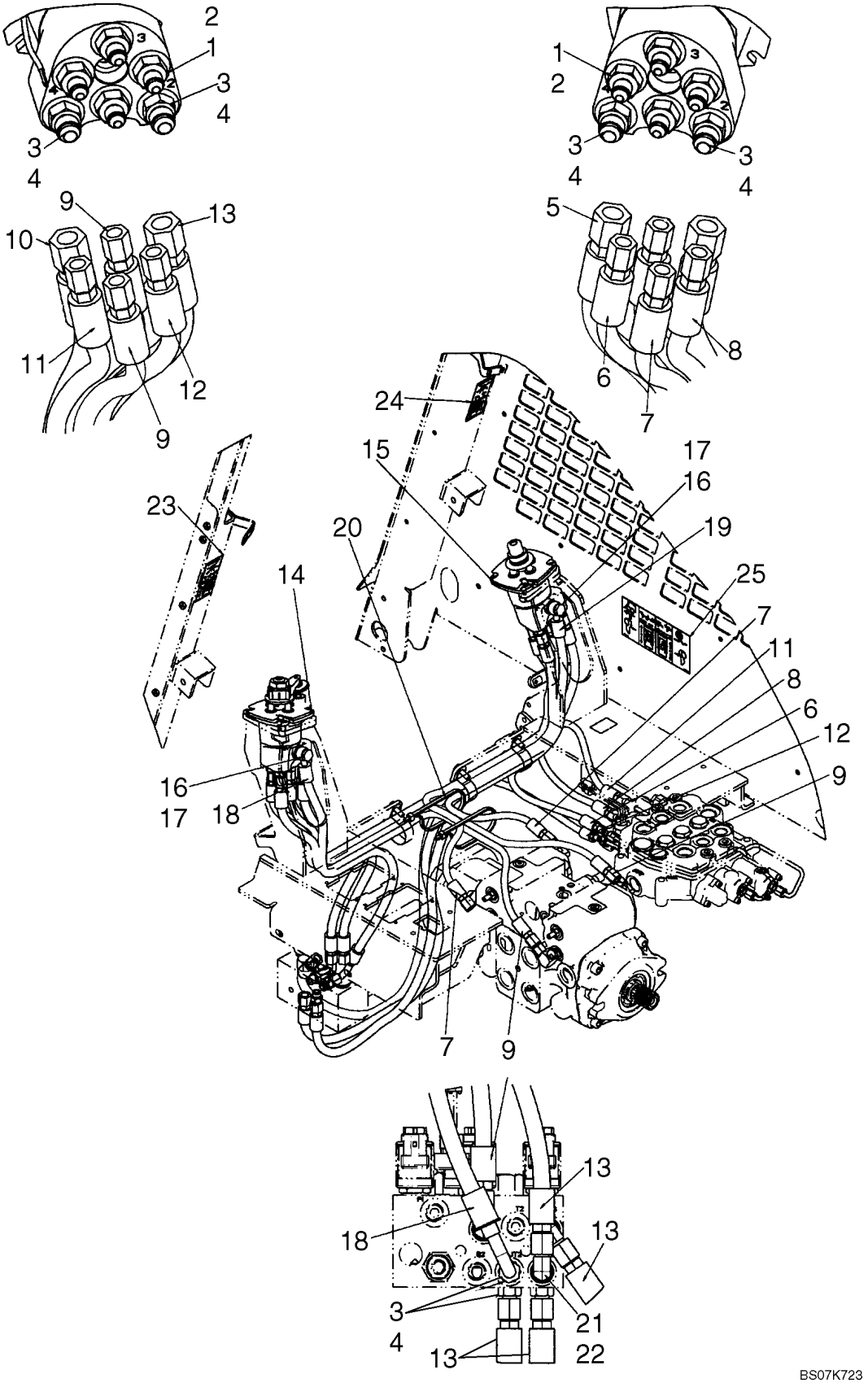

LEVIER DE COMMANDE - MODÈLE DE H

REF	FN	PART NUMBER	YR/SN	QTY	DESCRIPTION
		{87704477}		1	Kit; H Pattern Controls; Incl. 1 - 21 And Instructions
1		139398		8	RACCORD, 7/16"-20, 37º x 9/16"-18, O-Ring, Incl 2
2		9617873		8	JOINT THORIQUE, 6-1, 90 Duro, .468" ID x .078" Thk
3		76350		6	RACCORD, 9/16"-18, 37º x 9/16"-18, O-Ring, Incl 4
4		9617873		6	JOINT THORIQUE, 6-1, 90 Duro, .468" ID x .078" Thk
5		87684218		2	FLEXIBLE, 1300 mm (51.18 in) Joystick Supply Or Drain
6		87604062		1	FLEXIBLE, 590 mm (23.23 in) Pilot
7		87604064		2	FLEXIBLE, 850 mm (33.46 in) Pilot
8		87604069		1	FLEXIBLE, 490 mm (19.29 in) Pilot
9		{87684229}		2	915 mm (36.02 in) Pilot
10		87684180		1	FLEXIBLE, 620 mm (24.40 in) Joystick Drain
11		87604061		1	FLEXIBLE, 1055 mm (41.54 in) Pilot
12		87604063		1	FLEXIBLE, 930 mm (36.61 in) Pilot
13		87684217		1	FLEXIBLE, 690 mm (27.16 in) Joystick Supply
14		87357240		1	SOUPAPE HYDRAULIQUE, H Pattern Joystick Valve, Left Hand, See Figure 06-04
15		87357241		1	SOUPAPE HYDRAULIQUE, H Pattern Joystick Valve, Right Hand, See Figure 06-05
16		87622364		2	BOULON, Banjo Bolt, 10 Banjo 3/4 Hole
17		933610R1		4	RONDELLE D'ETANCHEITE, M14 x 18 x 1.8
18		87575290		1	FLEXIBLE, 776 mm (30.55 in) Joystick Supply
19		87575289		1	FLEXIBLE, 1260 mm (49.61 in) Joystick Supply
20		529070		2	SERRE-CABLE, .30" x 14.5"
21		86526		1	COUDE, 90º, 9/16"-18, 37º x 9/16"-18, LG, Incl. 22
22		9617873		1	JOINT THORIQUE, 6-1, 90 Duro, .468" ID x .078" Thk
23		87715689		1	DECALCOMANIE, Decal, H Pattern LH
24		87715690		1	DECALCOMANIE, Decal, H Pattern RH
25		87715687		1	DECALCOMANIE, Decal, H Pattern Control ID

LEVIER DE COMMANDE - MODÈLE DE ISO (440)

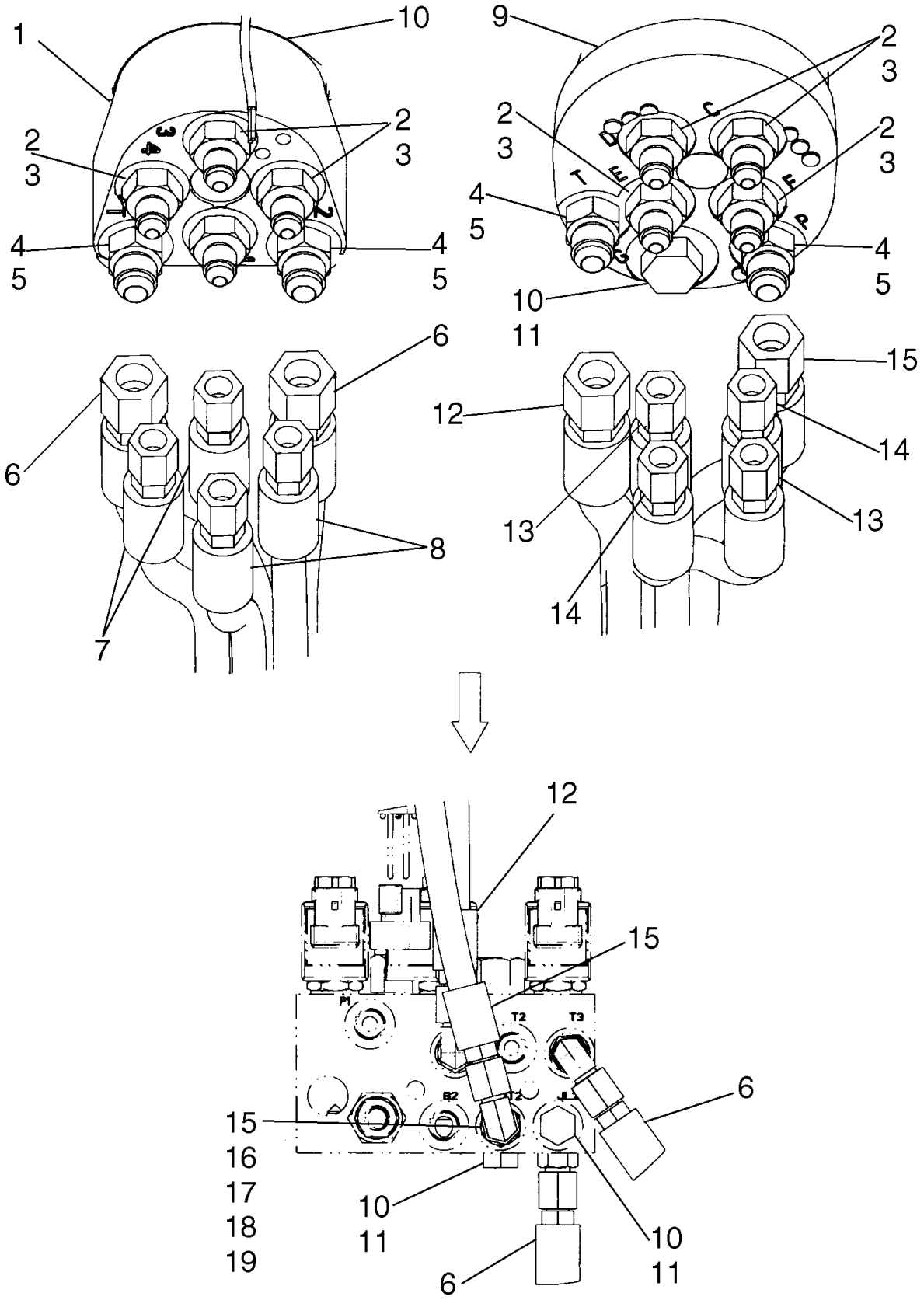

LEVIER DE COMMANDE - MODÈLE DE ISO (440)

REF	FN	PART NUMBER	YR/SN	QTY	DESCRIPTION
		{87703830}		1	Kit, ISO Pattern Control; Incl 1 - 21; 440
1		139398		8	RACCORD, 7/16"-20, 37° x 9/16"-18, O-Ring, Incl 3
2		9617873		8	JOINT THORIQUE, 6-1, 90 Duro, .468" ID x .078" Thk
3		76350		4	RACCORD, 9/16"-18, 37° x 9/16"-18, O-Ring, Incl 4
4		9617873		4	JOINT THORIQUE, 6-1, 90 Duro, .468" ID x .078" Thk
5		87684218		2	FLEXIBLE, 1300 mm (51.18 in) Joystick Drain Or Supply
6		87604062		2	FLEXIBLE, 590 mm (23.23 in) Pilot
7		87604069		2	FLEXIBLE, 490 mm (19.29 in) Pilot
8		76349		3	BOUCHON, Hex Hd, 9/16"-18 ORB, Incl 9
9		9617873		3	JOINT THORIQUE, 6-1, 90 Duro, .468" ID x .078" Thk
10		87684180		1	FLEXIBLE, 620 mm (24.40 in) Joystick Drain
11		87604072		2	FLEXIBLE, 800 mm (31.50 in) Pilot
12		87604070		2	FLEXIBLE, 920 mm (36.22 in) Pilot
13		87604071		1	FLEXIBLE, 680 mm (26.77 in) Joystick Supply
14		87600622		1	SOUPAPE, Joystick Valve, ISO Pattern LH; See Figure 06-08
15		87600623		1	SOUPAPE, Joystick Valve, ISO Pattern RH; See Figure 06-07
16		529070		2	SERRE-CABLE, .30" x 14.5"
17		87573371		1	ADAPTEUR, .38 OD Male x .38 OD Female; Incl 18, 19
18		9617873		1	JOINT THORIQUE, 6-1, 90 Duro, .468" ID x .078" Thk
19		9993141		1	JOINT THORIQUE, -012, 90 Duro, .364" ID x .070" Thk
20		86526		1	COUDE, 90°, 9/16"-18, 37° x 9/16"-18, LG, Incl 21
21		9617873		1	JOINT THORIQUE, 6-1, 90 Duro, .468" ID x .078" Thk

LEVIER DE COMMANDE - MODÈLE DE ISO (440CT)

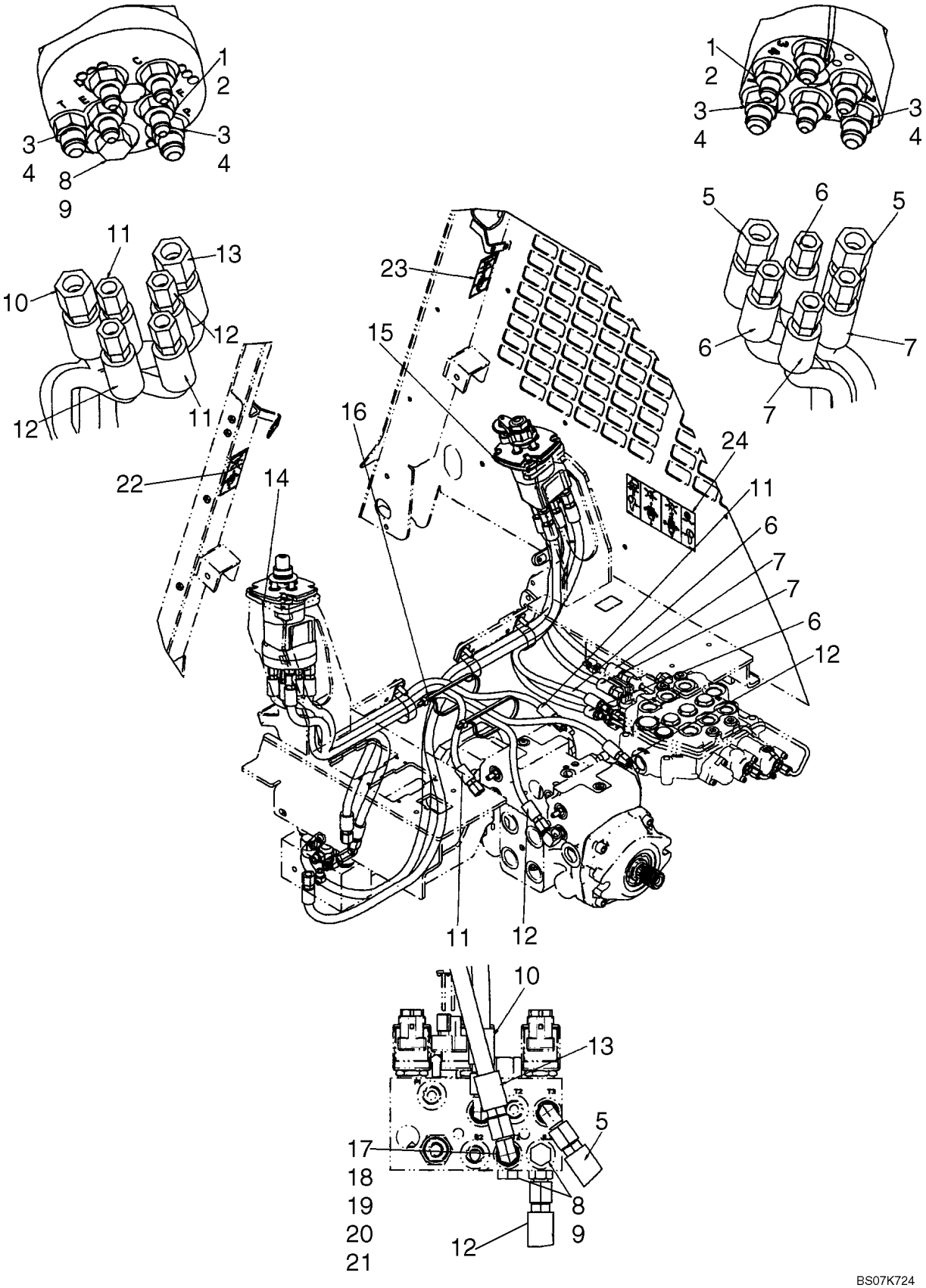

LEVIER DE COMMANDE - MODÈLE DE ISO (440CT)

REF	FN	PART NUMBER	YR/SN	QTY	DESCRIPTION
		{87703828}		1	Kit, ISO Pattern Control; Incl 1 - 21
1		139398		8	RACCORD, 7/16"-20, 37º x 9/16"-18, O-Ring, Incl 3
2		9617873		8	JOINT THORIQUE, 6-1, 90 Duro, .468" ID x .078" Thk
3		76350		4	RACCORD, 9/16"-18, 37º x 9/16"-18, O-Ring, Incl 4
4		9617873		4	JOINT THORIQUE, 6-1, 90 Duro, .468" ID x .078" Thk
5		87684218		2	FLEXIBLE, 1300 mm (51.18 in) Joystick Drain Or Supply
6		87604062		2	FLEXIBLE, 590 mm (23.23 in) Pilot
7		87604069		2	FLEXIBLE, 490 mm (19.29 in) Pilot
8		76349		3	BOUCHON, Hex Hd, 9/16"-18 ORB, Incl 9
9		9617873		3	JOINT THORIQUE, 6-1, 90 Duro, .468" ID x .078" Thk
10		87684180		1	FLEXIBLE, 620 mm (24.40 in) Joystick Drain
11		87604072		2	FLEXIBLE, 800 mm (31.50 in) Pilot
12		87604070		2	FLEXIBLE, 920 mm (36.22 in) Pilot
13		87604071		1	FLEXIBLE, 680 mm (26.77 in) Joystick Supply
14		87611854		1	SOUPAPE, Joystick Valve, ISO Pattern LH; See Figure 06-06
15		87600623		1	SOUPAPE, Joystick Valve, ISO Pattern RH; See Figure 06-07
16		529070		2	SERRE-CABLE, .30" x 14.5"
17		87573371		1	ADAPTEUR, .38 OD Male x .38 OD Female; Incl 18, 19
18		9617873		1	JOINT THORIQUE, 6-1, 90 Duro, .468" ID x .078" Thk
19		9993141		1	JOINT THORIQUE, -012, 90 Duro, .364" ID x .070" Thk
20		86526		1	COUDE, 90º, 9/16"-18, 37º x 9/16"-18, LG, Incl 21
21		9617873		1	JOINT THORIQUE, 6-1, 90 Duro, .468" ID x .078" Thk
22		87715691		1	DECALCOMANIE, Decal, ISO Pattern RH
23		87715692		1	DECALCOMANIE, Decal, ISO Pattern LH
24		87715688		1	DECALCOMANIE, Decal, Control ID ISO Pattern

06-04		p1	11/07

LEVIER DE COMMANDE, MONTAGE, GAUCHE - H MODÈLE

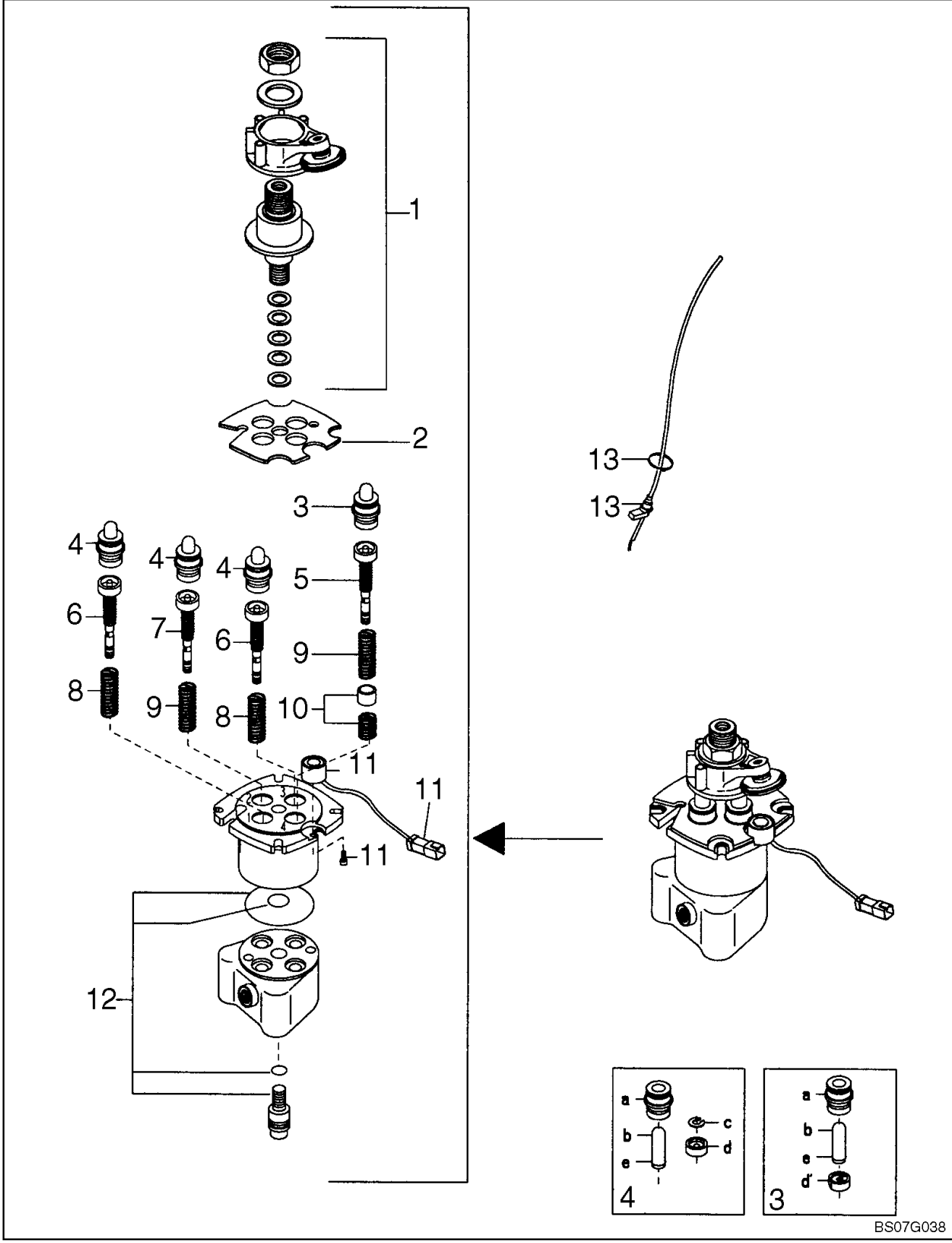

LEVIER DE COMMANDE, MONTAGE, GAUCHE - H MODÈLE

REF	FN	PART NUMBER	YR/SN	QTY	DESCRIPTION
		REF			NOTICE, MODELS WITH PILOT CONTROL
		87357240		1	SOUPAPE HYDRAULIQUE, Joystick Control; H Pattern Left Hand; Incl. 1 - 13
1		87548834		1	KIT ASSISTANCE, Cardan With Detent
2		87548836		1	KIT ASSISTANCE, Retaining Plate, Detent
3		87548839		1	KIT ASSISTANCE, Full Plunger Prefeeling
4		{87548828}		3	Hollow Plunger
5		87614018		1	REGULATEUR
6		87614017		2	REGULATEUR, With Plunger
7		87614016		1	REGULATEUR
8		87614020		1	RESSORT, Medium
9		87614019		1	RESSORT, Heavy
10		87548846		1	KIT ASSISTANCE, Prefeeling Point
11		87548847		1	KIT ASSISTANCE, Solenoid
12		87548848		1	KIT ASSISTANCE, Standard Seal
13		87548874		1	KIT ASSISTANCE, Cable

LEVIER DE COMMANDE, MONTAGE, DROIT - H MODÈLE

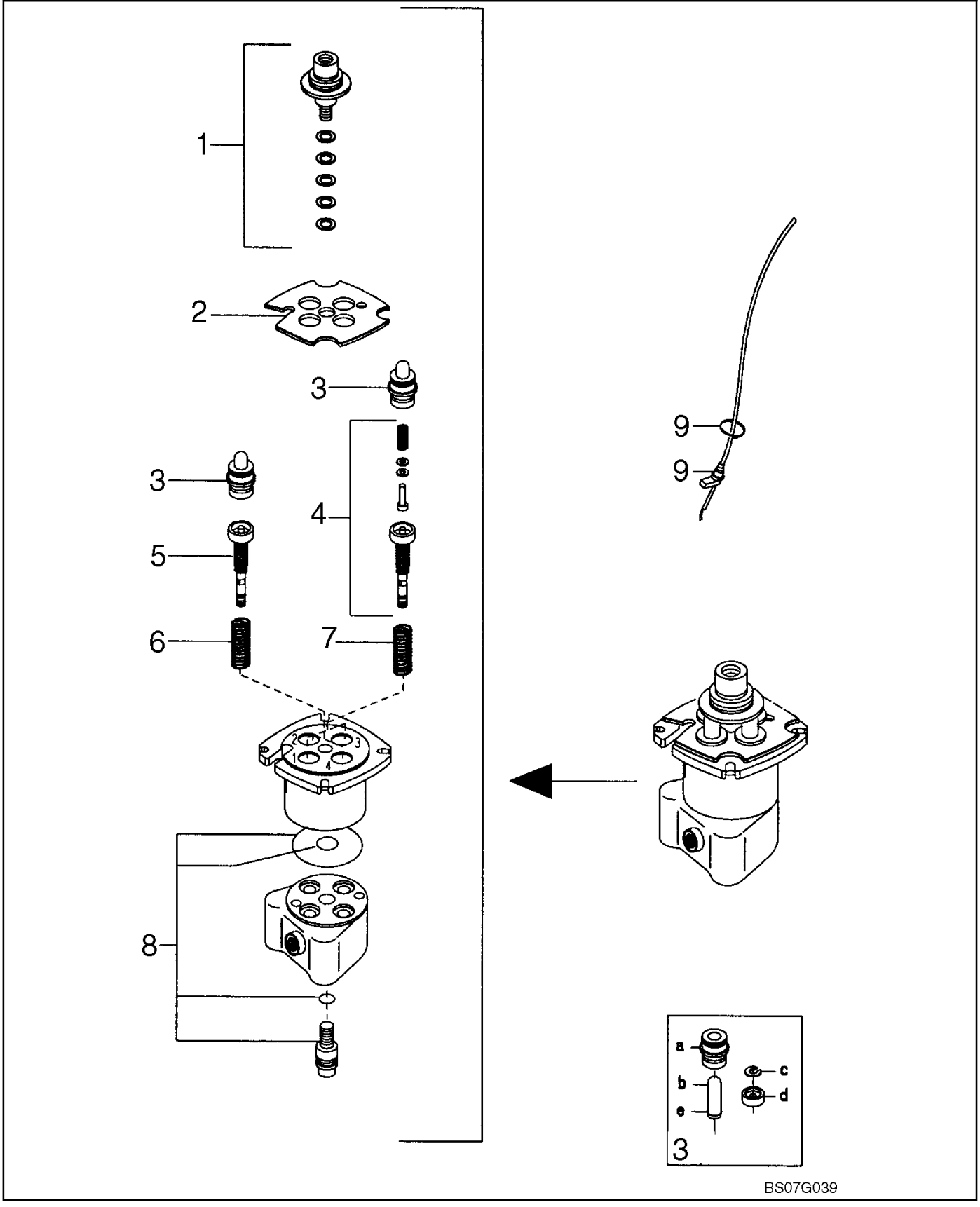

LEVIER DE COMMANDE, MONTAGE, DROIT - H MODÈLE

REF	FN	PART NUMBER	YR/SN	QTY	DESCRIPTION
		REF			NOTICE, MODELS WITH PILOT CONTROL
		87357241		1	SOUPAPE HYDRAULIQUE, Joystick Control; H Pattern Right Hand; Incl. 1 - 9
1		87548833		1	KIT ASSISTANCE, Bent Lever Cardan
2		87548835		1	PLAQUE, Retaining Plate, Standard
3		87614023		2	PLONGEUR, Hollow Plunger
4		87614017		2	REGULATEUR, With Plunger
5		87614024		1	REGULATEUR
6		87614019		1	RESSORT, Heavy
7		87614020		1	RESSORT, Medium
8		87548848		1	KIT ASSISTANCE, Standard Seal
9		87548874		1	KIT ASSISTANCE, Cable

06-06		p1	11/07

SYSTEME HYDROSTATIQUE - LEVIER DE COMMANDE COLIS, MODÈLE ISOMÉTRIQUE

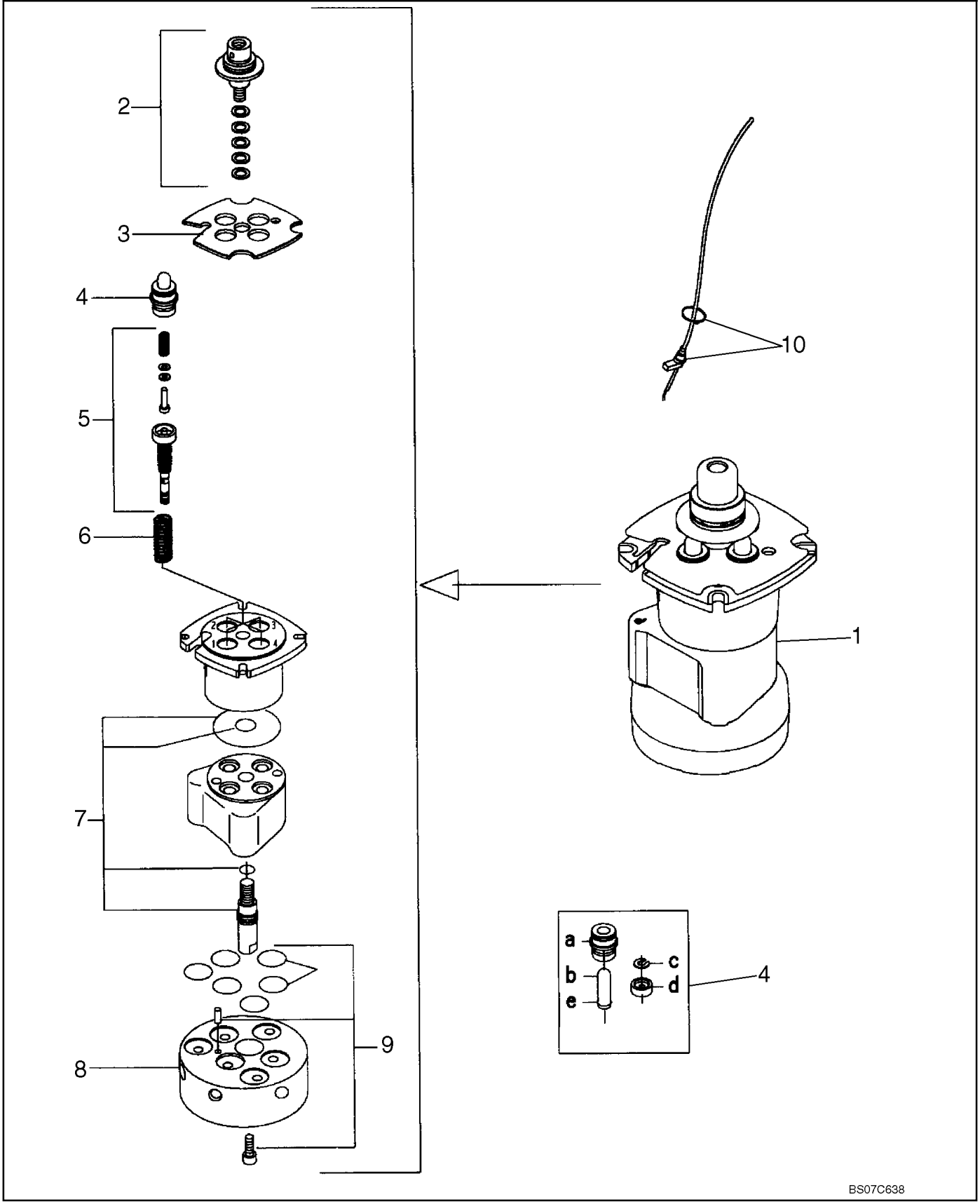

SYSTEME HYDROSTATIQUE - LEVIER DE COMMANDE COLIS, MODÈLE ISOMÉTRIQUE

REF	FN	PART NUMBER	YR/SN	QTY	DESCRIPTION
1		87611854		1	SOUPAPE, Joystick Valve, ISO Pattern LH
2		87548833		1	KIT ASSISTANCE, Bent Lever Cardan
3		87548835		1	PLAQUE, Retaining Plate, Standard
4		87614023		2	PLONGEUR, Kit, Hollow Plunger
5		87614017		4	REGULATEUR, Kit, Reg. Unit With Plunger C227
6		87614020		2	RESSORT, Kit, Medium Spring
7		{87548871}		1	Seal With Screw
8		{87548872}		1	
9		{87548873}		1	Flange Seal
10		87548874		1	KIT ASSISTANCE, Cable

CIRCUIT HYDRAULIQUE - LEVIER DE COMMANDE COLIS, MODÈLE ISOMÉTRIQUE

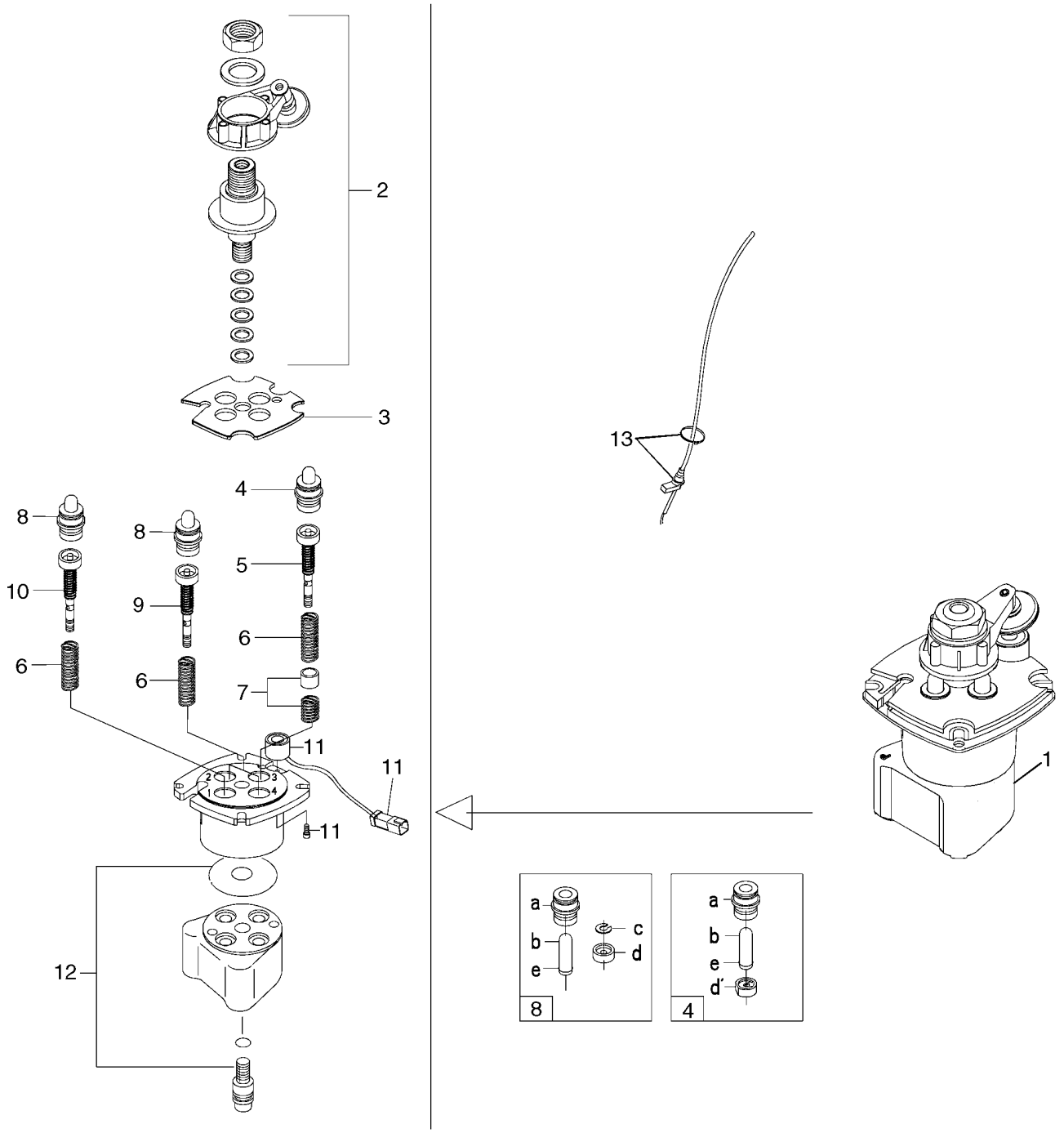

CIRCUIT HYDRAULIQUE - LEVIER DE COMMANDE COLIS, MODÈLE ISOMÉTRIQUE

REF	FN	PART NUMBER	YR/SN	QTY	DESCRIPTION
1		87600623		1	SOUPAPE, Joystick Valve, ISO Pattern, RH; Incl. 2 - 13
2		87548834		1	KIT ASSISTANCE, Kit, Cardan With Detent
3		87548836		1	KIT ASSISTANCE, Retaining Plate, Detent
4		87548839		1	KIT ASSISTANCE, Kit, Full Plunger Prefeeling
5		{87548843}		1	Kit, Regulation Unit Prefeeling Point
6		87614020		2	RESSORT, Kit, Medium Spring
7		87548846		1	KIT ASSISTANCE, Kit, Prefeeling Point
8		{87548838}		3	Kit, Hollow Plunger
9		{87594866}		2	Kit, Regulation Unit
10		{87548840}		1	Kit, Regulation Unit
11		87548847		1	KIT ASSISTANCE, Kit, Solenoid
12		87548848		1	KIT ASSISTANCE, Kit, Standard Seal
13		87548874		1	KIT ASSISTANCE, Kit, Cable

06-08		p1	11/07

SYSTEME HYDROSTATIQUE - LEVIER DE COMMANDE COLIS, MODÈLE ISOMÉTRIQUE

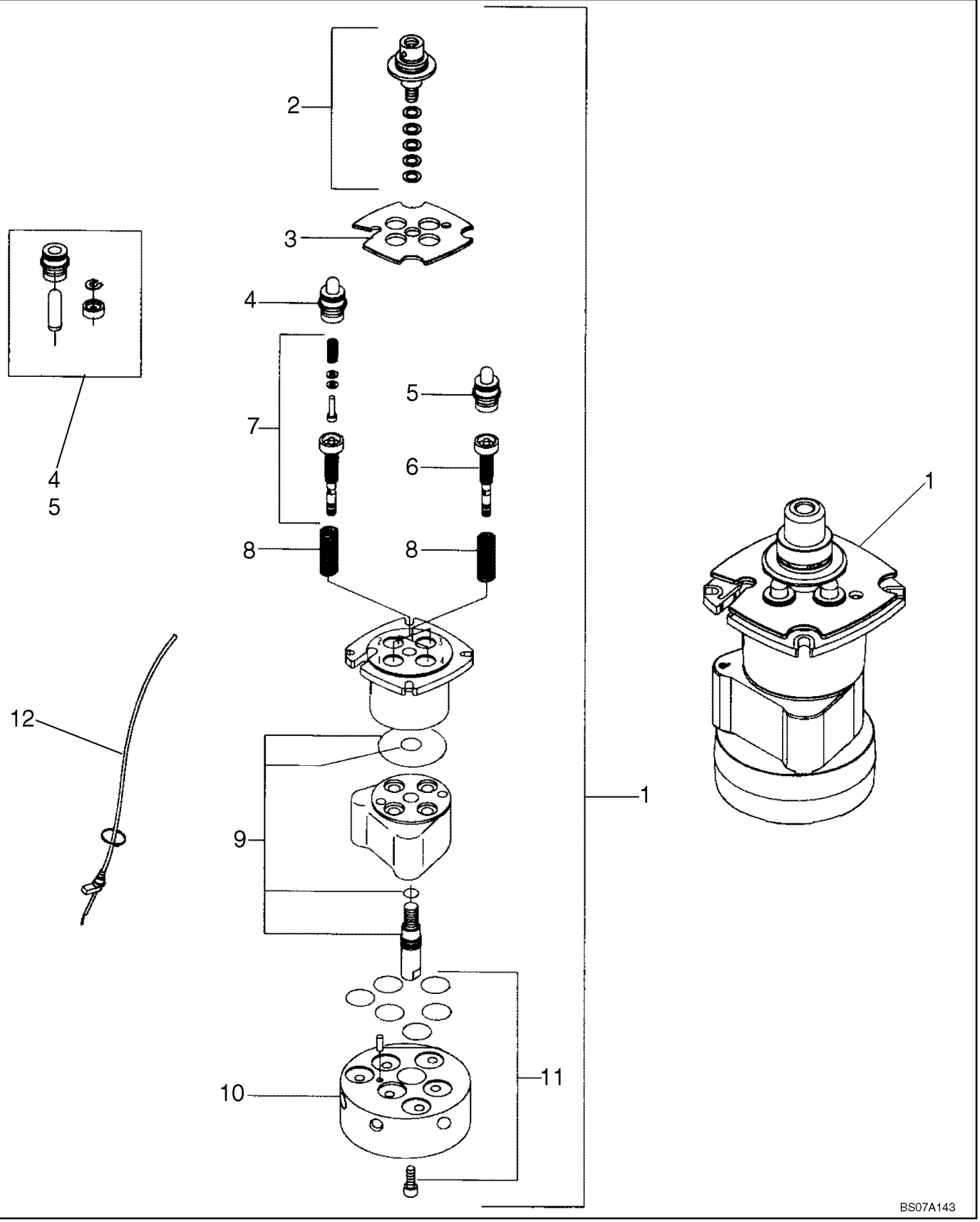

SYSTEME HYDROSTATIQUE - LEVIER DE COMMANDE COLIS, MODÈLE ISOMÉTRIQUE

REF	FN	PART NUMBER	YR/SN	QTY	DESCRIPTION
1		87600622		1	SOUPAPE, Joystick Valve, ISO Pattern
2		87548833		1	KIT ASSISTANCE, Kit, Bent Lever Cardan
3		87548835		1	PLAQUE, Retaining Plate, Standard
4		87614023		2	PLONGEUR, Kit, Hollow Plunger, Use On Ports 1, 3
5		87614023		2	PLONGEUR, Kit, Hollow Plunger, Use On Ports 2, 4
6		87627518		2	REGULATEUR, Kit, Reg Unit PP C229, Use On Ports 2, 4
7		87614017		2	REGULATEUR, Kit, Reg Unit With Plunger, Use On Ports 1, 3
8		87614020		1	RESSORT, Kit, Medium Spring
9		{87548871}		1	Kit, Seal
10		{87548872}		1	
11		{87548873}		1	Kit, Flange Seal
12		87548874		1	KIT ASSISTANCE, Kit, Cable

SYSTEME HYDROSTATIQUE - POMPE, ASPIRATION ET REFOULEMENT (440)

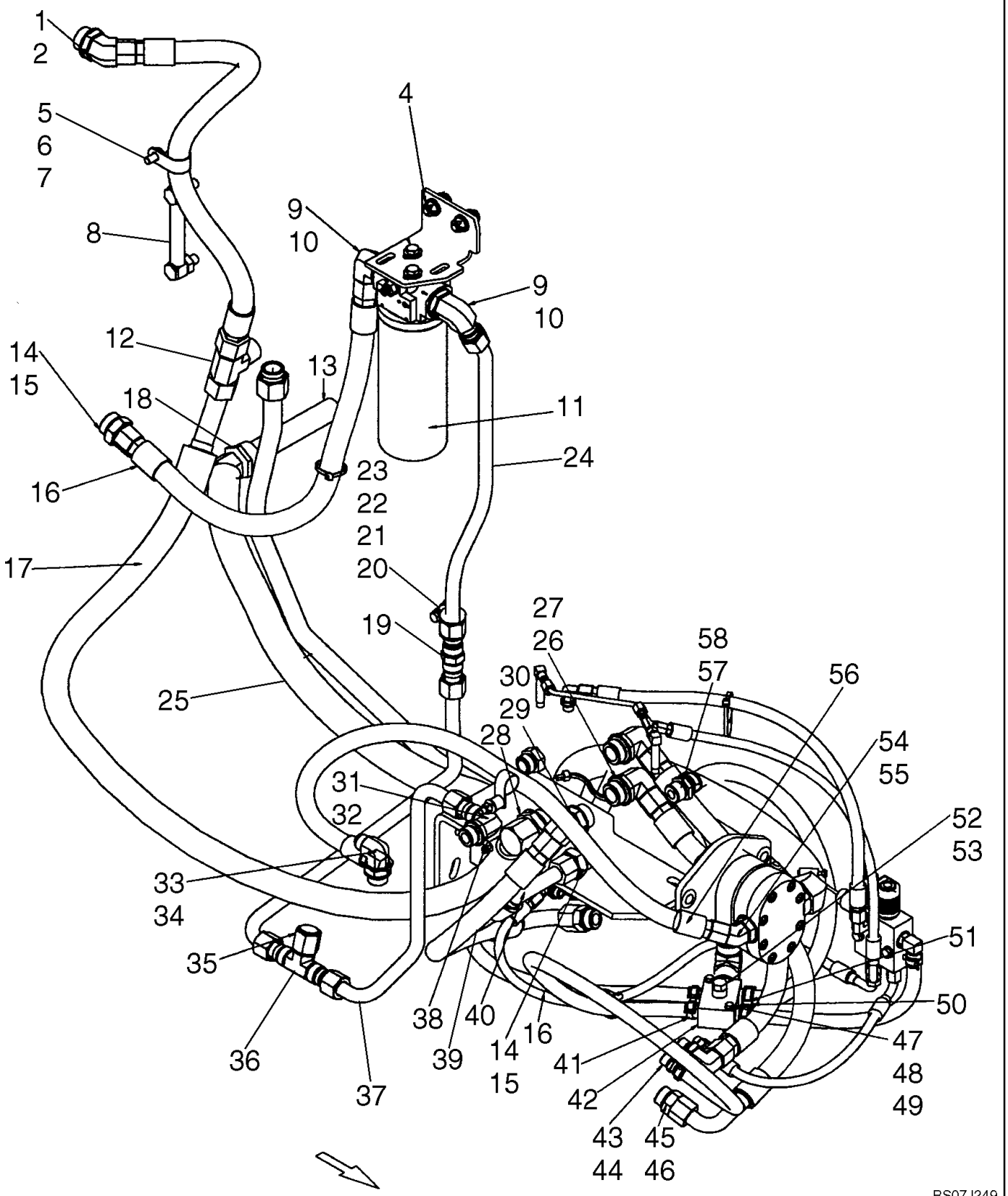

SYSTEME HYDROSTATIQUE - POMPE, ASPIRATION ET REFOULEMENT (440)

REF	FN	PART NUMBER	YR/SN	QTY	DESCRIPTION
1		{87657980}		1	Elbow; 37FL 45 ADJ 3/4 x 1.0 Tube; Incl 2; To Top Of Oil Cooler, See Figure 02-01
2		167268		1	JOINT THORIQUE, 16-1, 90 Duro, 1.171" ID x .116" Thk
3		87653980		1	FLEXIBLE, Upper Cooler
4		REF			NOTICE, For Filter Mounting, See Figure 06-32
5		86639001		1	BRIDE, 1 3/16", Insul, 7/16" Bolt
6		140045		1	RONDELLE BELLEVILLE, Belleville, M10
7		43138		1	VIS, Hex, M10 x 20, 8.8, Full Thd
8		87374752		1	JAUGE, Liquid Level
9		87021824		1	COUDE, 90º, 1 1/16"-12, 37º x 1 5/16"-12, O-Ring, Incl 10
10		167268		1	JOINT THORIQUE, 16-1, 90 Duro, 1.171" ID x .116" Thk
11		87430661		1	FILTRE, Hydrostatic Filter; For Breakdown And Mounting, See Figure 06-32, See Figure 02-01
12		9790547		1	TE, 1 5/16"-12, 37º x 1"-11 1/2, NPTF Br
13		H151399		1	CARTOUCHE-FILTRE, Suction Line
14		233705		1	RACCORD, 1 1/16"-12, 37º x 1 5/16"-12, O-Ring, Incl 15; To Bottom Of Oil Cooler
15		167266		1	JOINT THORIQUE, 12-1, 90 Duro, .924 ID x .116" Thk
16		87022175		1	FLEXIBLE (ASSEMBLE), 600 mm (23.62 in); Case Drain
17		87458996		1	FLEXIBLE (ASSEMBLE), 1680 mm (66.14 in); Suction
18		87033823		1	RACCORD, 1/4" Hose x 1/8" NPTF, Fem, Barbed
19		144121		1	UNION, 1 1/16"-12, 37º x 1 1/16"-12, 37º
20		87445136		1	ISOLATEUR, 3/4
21		87042897		1	ENTRETOISE
22		86624184		2	RONDELLE, M8 x 16 x 1.6
23		87301359		1	BRIDE, 1 1/8", 3/8" Bolt
24		87660856		1	TUYAU RIGIDE, Formed Tube; Valve To Filter, LH Wall

SYSTEME HYDROSTATIQUE - POMPE, ASPIRATION ET REFOULEMENT (440)

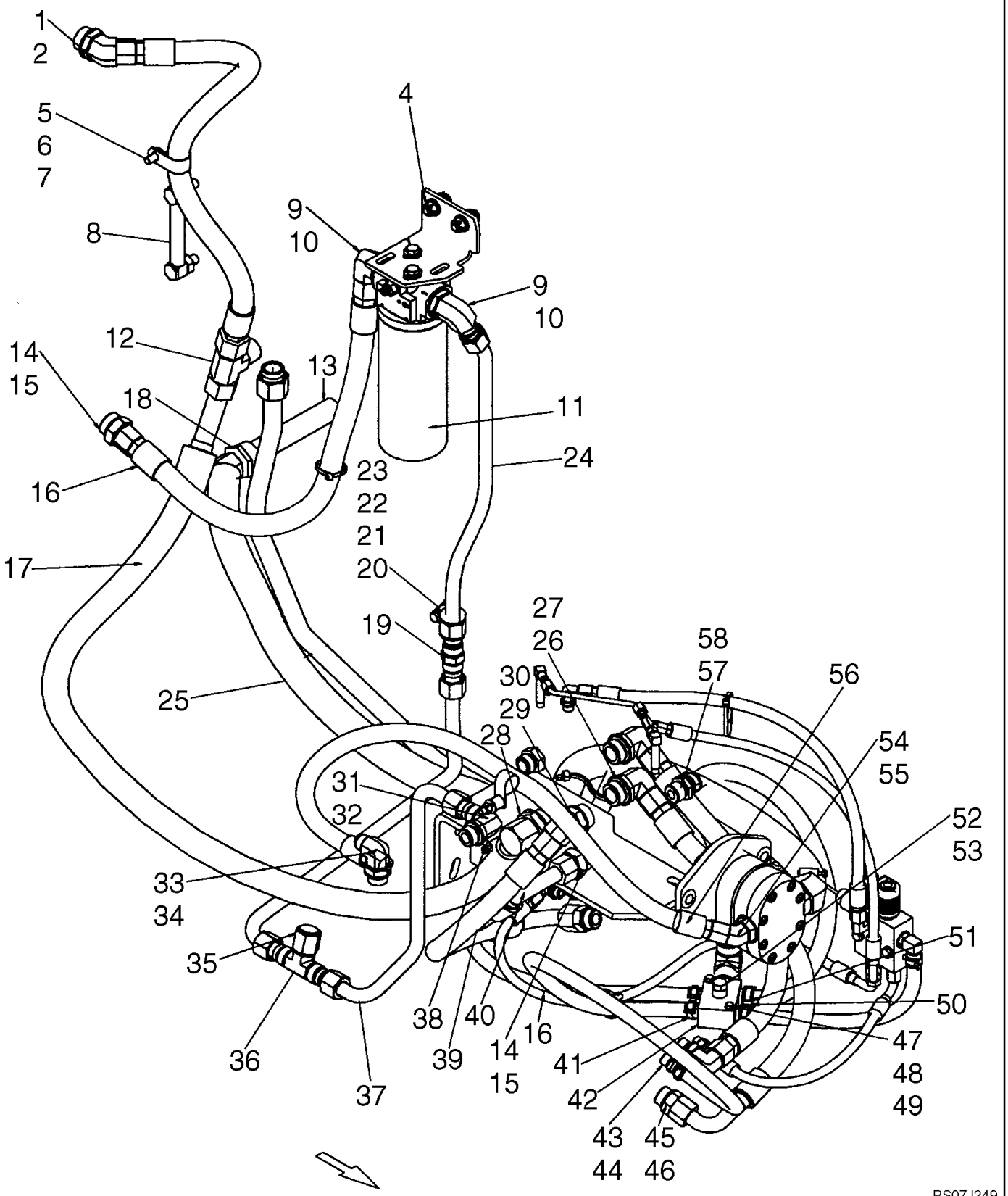

SYSTEME HYDROSTATIQUE - POMPE, ASPIRATION ET REFOULEMENT (440)

REF	FN	PART NUMBER	YR/SN	QTY	DESCRIPTION
25		87022438		1	FLEXIBLE (ASSEMBLE), 1610 mm (63.38 in); Suction
26		87021824		3	COUDE, 90º, 1 1/16"-12, 37º x 1 5/16"-12, O-Ring, Incl 27
27		167268		1	JOINT THORIQUE, 16-1, 90 Duro, 1.171" ID x .116" Thk
28		87418259		1	RACCORD, 90 Deg 20ORB x 16 Bead
29		22907		1	COUDE, 45º, 1 1/16"-12 x 1 5/16"-12, O-Ring, Incl 30
30		167268		1	JOINT THORIQUE, 16-1, 90 Duro, 1.171" ID x .116" Thk
31		322894		1	COUDE, 90º, 1 1/16"-12, 37º x 1 1/16"-12, O-Ring, Incl 32
32		167266		1	JOINT THORIQUE, 12-1, 90 Duro, .924 ID x .116" Thk
33		84570		1	COUDE, 90º, 7/8"-14, 37º x 1 1/16"-12, O-Ring, Incl 34
34		167266		1	JOINT THORIQUE, 12-1, 90 Duro, .924 ID x .116" Thk
35		219606		1	CHAPEAU, 37º, 1 1/16"-12
36		15694		1	TE, 1 1/16"-12 37º
37		87446248		1	TUYAUTERIE, Valve Out To Filter
38		86536660		1	BRIDE, FLEXIBLE, #16, 0.81/1.50 Type F Worm, 1.75 in
39		87022172		1	FLEXIBLE (ASSEMBLE), 650 mm (25.59 in); Loop
40		87417085		1	FLEXIBLE (ASSEMBLE), 445 mm (17.52in); Loop
41		87443510		4	BRIDE, FLEXIBLE, 20 mm
42		87437351		1	COLLECTEUR, Return, Oil
43		87010108		2	RACCORD, 1/2" Hose x 3/4"-16 ORB, Beaded, Incl 44
44		128825		1	JOINT THORIQUE, 8-1, 90 Duro, .644" ID x .087" Thk
45		322896		2	RACCORD, 1 1/16"-12, 37º x 1 1/16"-12, O-Ring, Incl 46
46		167266		1	JOINT THORIQUE, 12-1, 90 Duro, .924 ID x .116" Thk
47		86977790		2	BOULON, Hex, M6 x 45, 8.8
48		87404992		2	ECROU

SYSTEME HYDROSTATIQUE - POMPE, ASPIRATION ET REFOULEMENT (440)

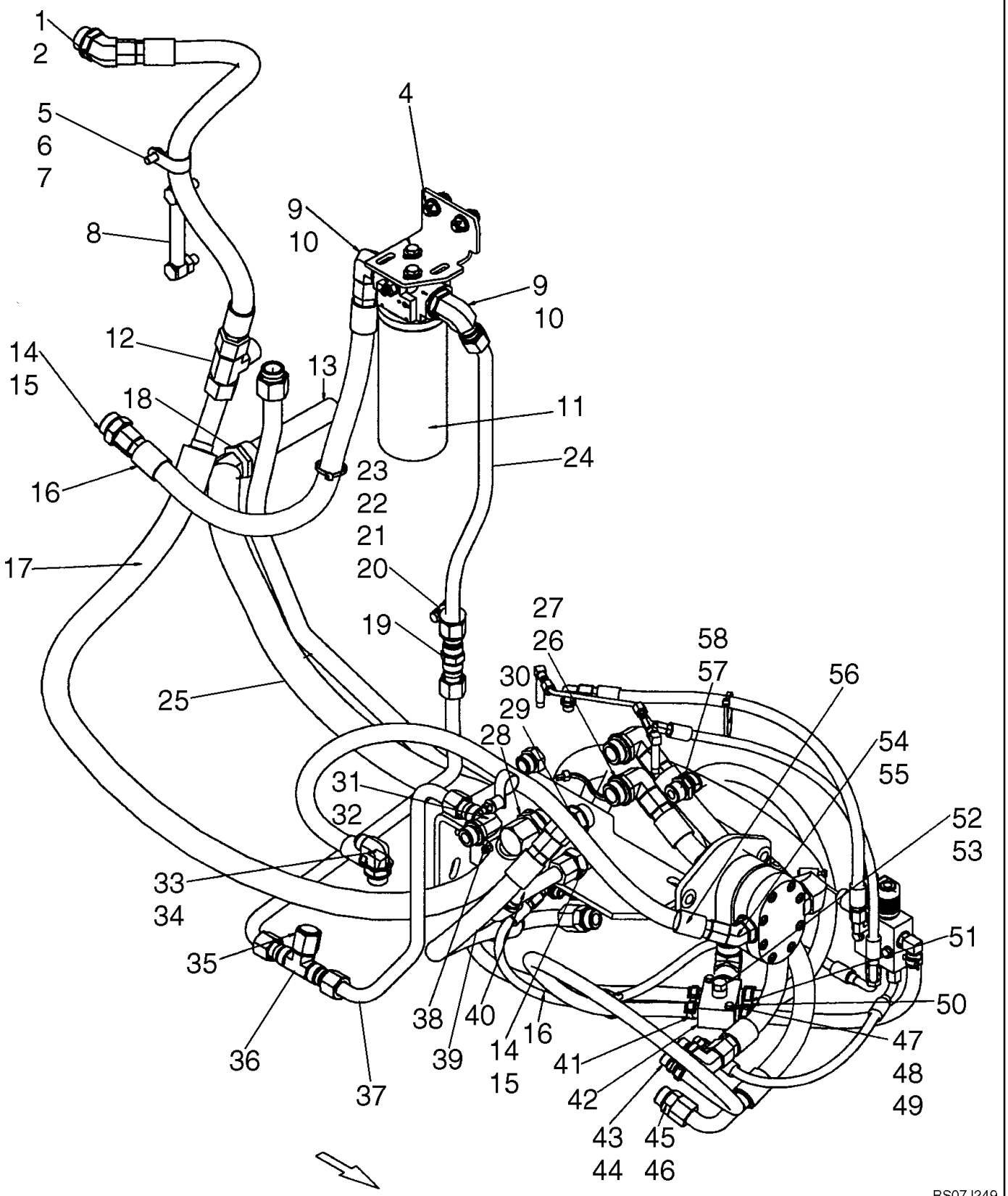

SYSTEME HYDROSTATIQUE - POMPE, ASPIRATION ET REFOULEMENT (440)

REF	FN	PART NUMBER	YR/SN	QTY	DESCRIPTION
49		86588450		2	RONDELLE, M6
50		REF			NOTICE, Brake; See Figure 07-01
51		87443511		2	BRIDE, 24 mm
52		76349		1	BOUCHON, Hex Hd, 9/16"-18 ORB, Incl 53
53		9617873		1	JOINT THORIQUE, 6-1, 90 Duro, .468" ID x .078" Thk
54		100197		1	COUDE, 45º, 7/8"-14 x 1 1/16"-12, O-Ring, Incl 55
55		167266		1	JOINT THORIQUE, 12-1, 90 Duro, .924 ID x .116" Thk
56		87547070		1	FLEXIBLE, 1000 mm (39.37 in); Valve Supply
57		87311640		1	RACCORD, 5/8 HOSE x 1-1/16-12 ORB STR Barb; Incl 58
58		167266		1	JOINT THORIQUE, 12-1, 90 Duro, .924 ID x .116" Thk

POMPES DOUBLES - SUPPORT (440)

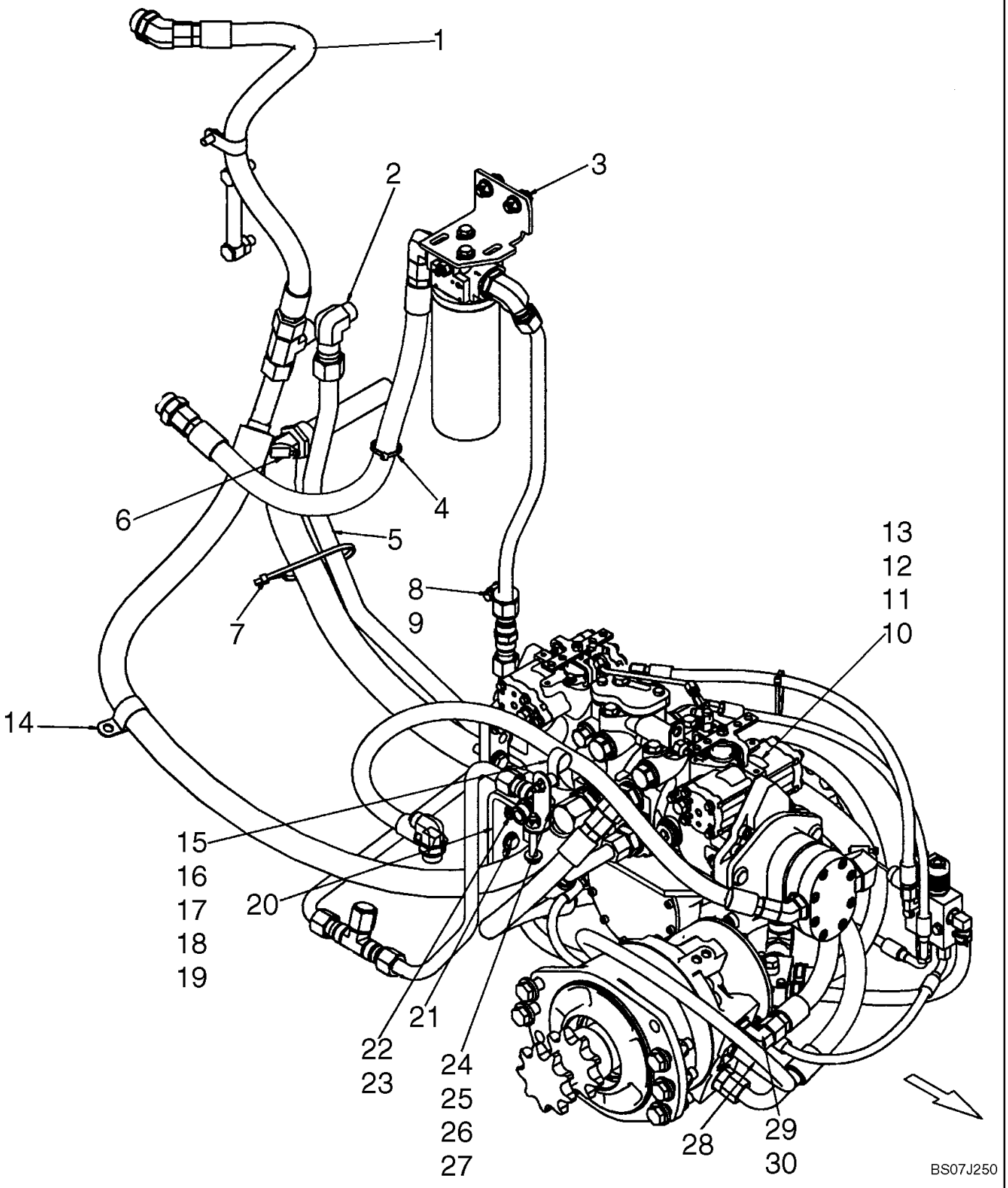

POMPES DOUBLES - SUPPORT (440)

REF	FN	PART NUMBER	YR/SN	QTY	DESCRIPTION
1		87653980			FLEXIBLE, Upper Cooler Hose; See Figure 06-10, Supply And Return
2		9615396		1	COUDE, 90º, 1 5/16"-12, 37º x 3/4"-14, NPTF
3		REF			NOTICE, Filter Assy And Mounting, See Figure 06-32
4		529070		1	SERRE-CABLE, .30" x 14.5"
5		87584058		1	TUYAU RIGIDE, Case Drain
6		87039085		2	BRIDE, FLEXIBLE, 1.25/2.125 HD Worm
7		529070		2	SERRE-CABLE, .30" x 14.5"
8		43128		1	BOULON, Hex, M8 x 30, 8.8
9		87030567		2	ECROU
10		87043498		1	POMPE, Tandem Pump; Incl 11, 12, 13
11		87043500		1	POMPE, Tandem Pump; See Figure 06-33 - 06-38
12		87024695		1	POMPE, Gear Pump; See Figure 06-54
13		87013729		1	JOINT THORIQUE, -044, 70 Duro, 3.739" ID x .070" Thk
14		86639006		1	BRIDE, 1 1/2", Insul, 1/2" Bolt
15		9628098		1	CONTRE-ECROU, M8 x 1.25, Cl 10
16		P24576		1	ENTRETOISE, 3/8" Pipe x 11/16", If Used Behind Bracket 87458997, Not Illustrated
17		86625263		1	RONDELLE, M8 x 20 x 1.6
18		120104		1	BOULON, Hex, M8 x 20, 8.8
19		9827902		1	BRIDE, 1", Insul, 3/8" Bolt
20		87627383		1	SUPPORT, Pump
21		43248		2	BOULON, Hex, M10 x 40, 10.9, Full Thd
22		86625256		4	RONDELLE, M12 x 28.5 x 4, HT
23		43260		4	BOULON, Hex, M12 x 30, 10.9
24		86512554		3	CONTRE-ECROU, M10 x 1.5, Cl 10
25		86639325		1	RONDELLE, M10 x 24.5 x 3, HT
26		43144		1	VIS, Hex, M10 x 70, 8.8
27		87458997		1	PATTE FIXATION, Valve
28		87022174		1	FLEXIBLE (ASSEMBLE), 950 mm (37.4 in); Case Drain
29		322894		1	COUDE, 90º, 1 1/16"-12, 37º x 1 1/16"-12, O-Ring, Incl 30

POMPES DOUBLES - SUPPORT (440)

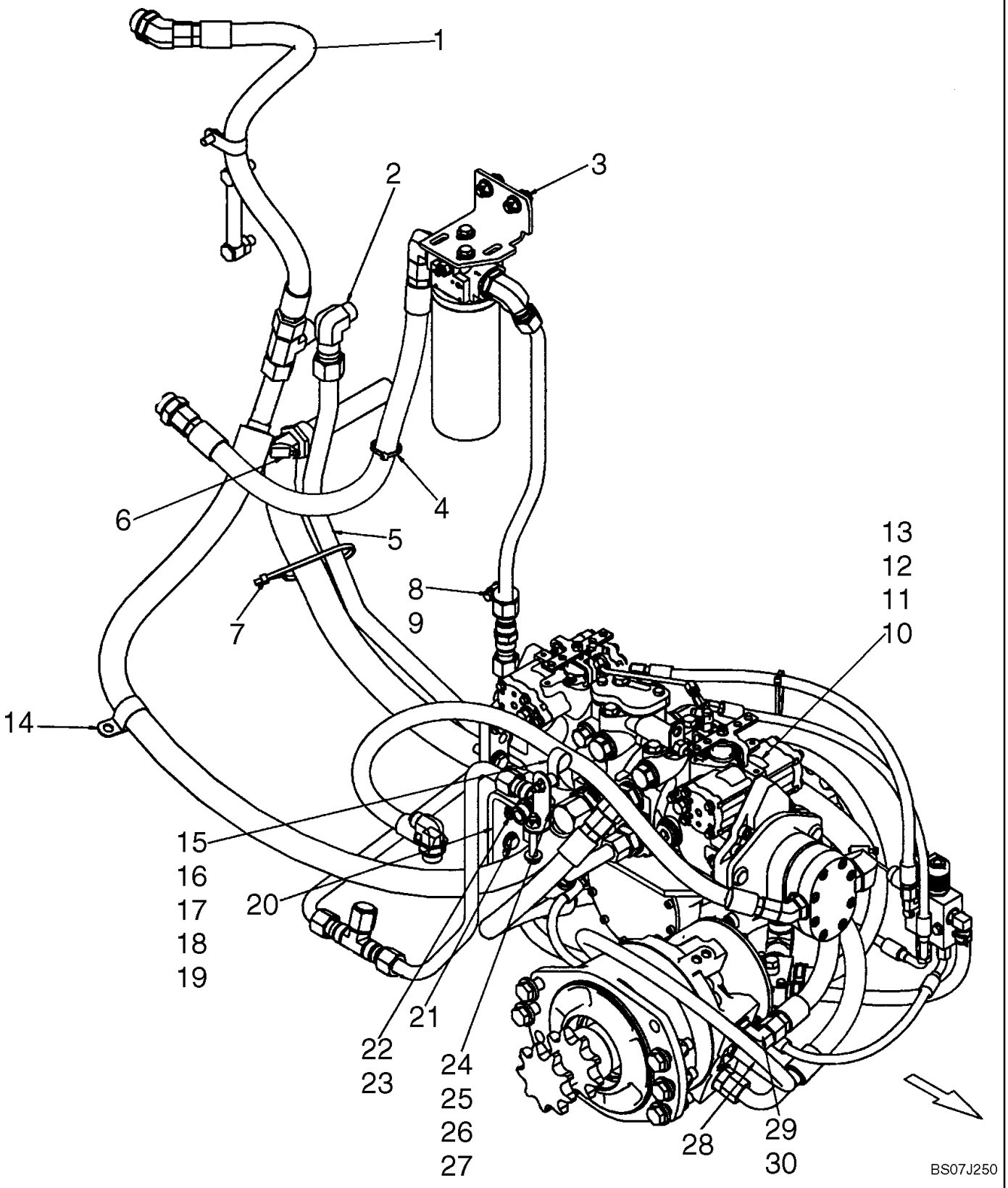

POMPES DOUBLES - SUPPORT (440)

REF	FN	PART NUMBER	YR/SN	QTY	DESCRIPTION
30		167266		1	JOINT THORIQUE, 12-1, 90 Duro, .924 ID x .116" Thk

SYSTEME HYDROSTATIQUE - MOTEURS, VIDANGE DE CARTER (440)

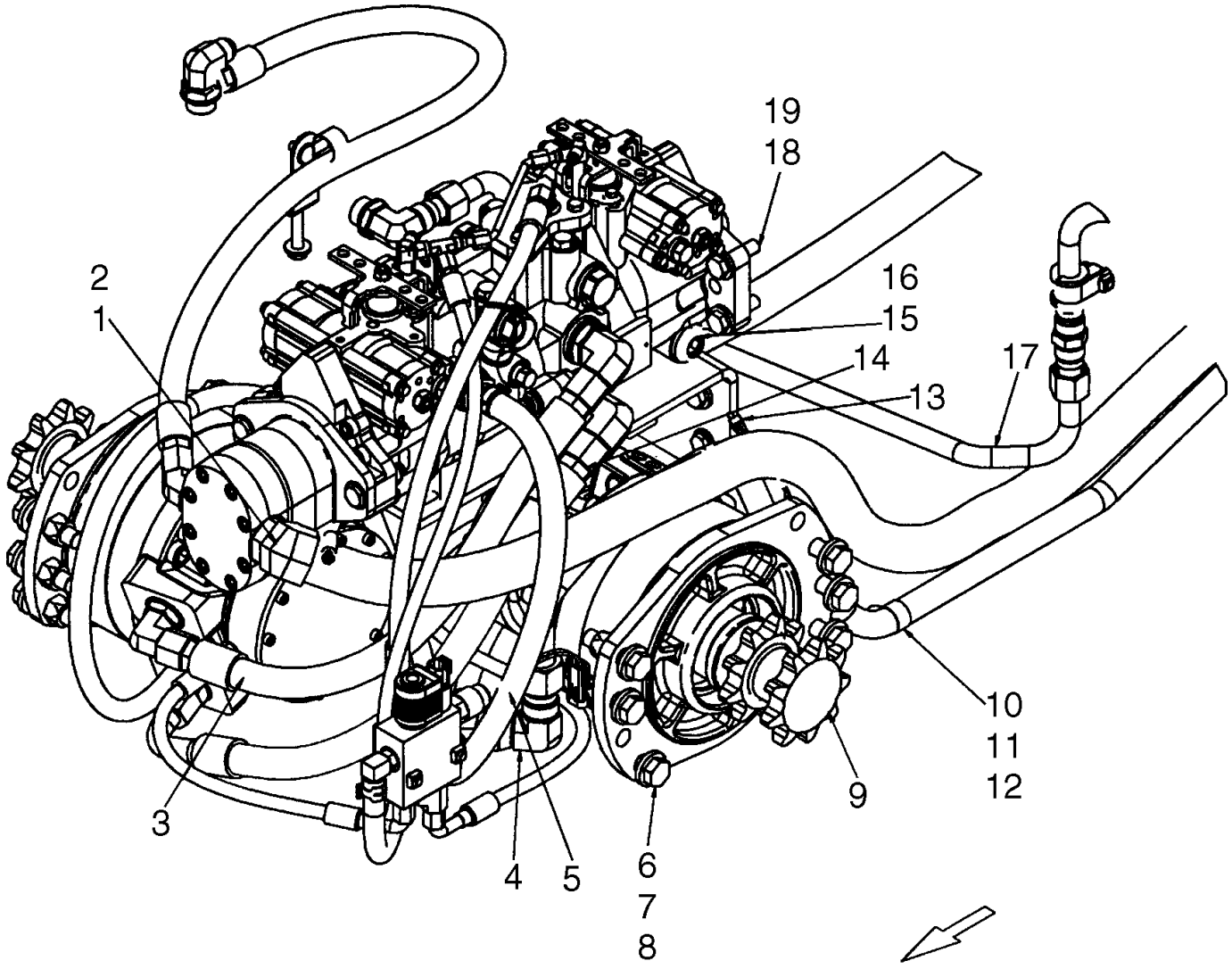

SYSTEME HYDROSTATIQUE - MOTEURS, VIDANGE DE CARTER (440)

REF	FN	PART NUMBER	YR/SN	QTY	DESCRIPTION
1		87033824		1	RACCORD, 45º, 1 1/4" Hose x 1 5/16"-12 ORB Beaded, Incl 2
2		167268		1	JOINT THORIQUE, 16-1, 90 Duro, 1.171" ID x .116" Thk
3		87021266		1	FLEXIBLE (ASSEMBLE), 560 mm (22 in); Loop
4		86050288		1	COUDE, 90º, 1 5/16"-12, 37º x 1 5/16"-12, 37º Fem Sw
5		87016334		1	FLEXIBLE (ASSEMBLE), 535 mm (21.06 in); Case Drain
6		9828248		12	BOULON, Hex, M16 x 60, 10.9
7		86512555		12	CONTRE-ECROU, M16 x 2, Cl 10
8		86625258		12	RONDELLE, M16 x 34.5 x 5, HT
9		87035341		2	MOTEUR HYDRAULIQUE, See Figure 06-56 - 06-58
10		86637977		1	BRIDE, 1", Insul, 5/16" Bolt
11		87030567		2	ECROU, Square, M8
12		120103		1	BOULON, Hex, M8 x 16, 8.8
13		529070		2	SERRE-CABLE, .30" x 14.5"
14		87417084		1	FLEXIBLE (ASSEMBLE), 625 mm (24.6 in); Loop
15		87033027		1	ADAPTEUR, ADAPTER; -12 SAE To 1/2 NPTF; Incl 16
16		167266		1	JOINT THORIQUE, 12-1, 90 Duro, .924 ID x .116" Thk
17		87445138		1	TUYAUTERIE, Valve Out To Filter
18		412087		4	BOULON, Hex, M12 x 45, 10.9, Full Thd
19		86625256		8	RONDELLE, M12 x 28.5 x 4, HT

SYSTEME HYDROSTATIQUE - POMPE, ASPIRATION ET REFOULEMENT (440CT)

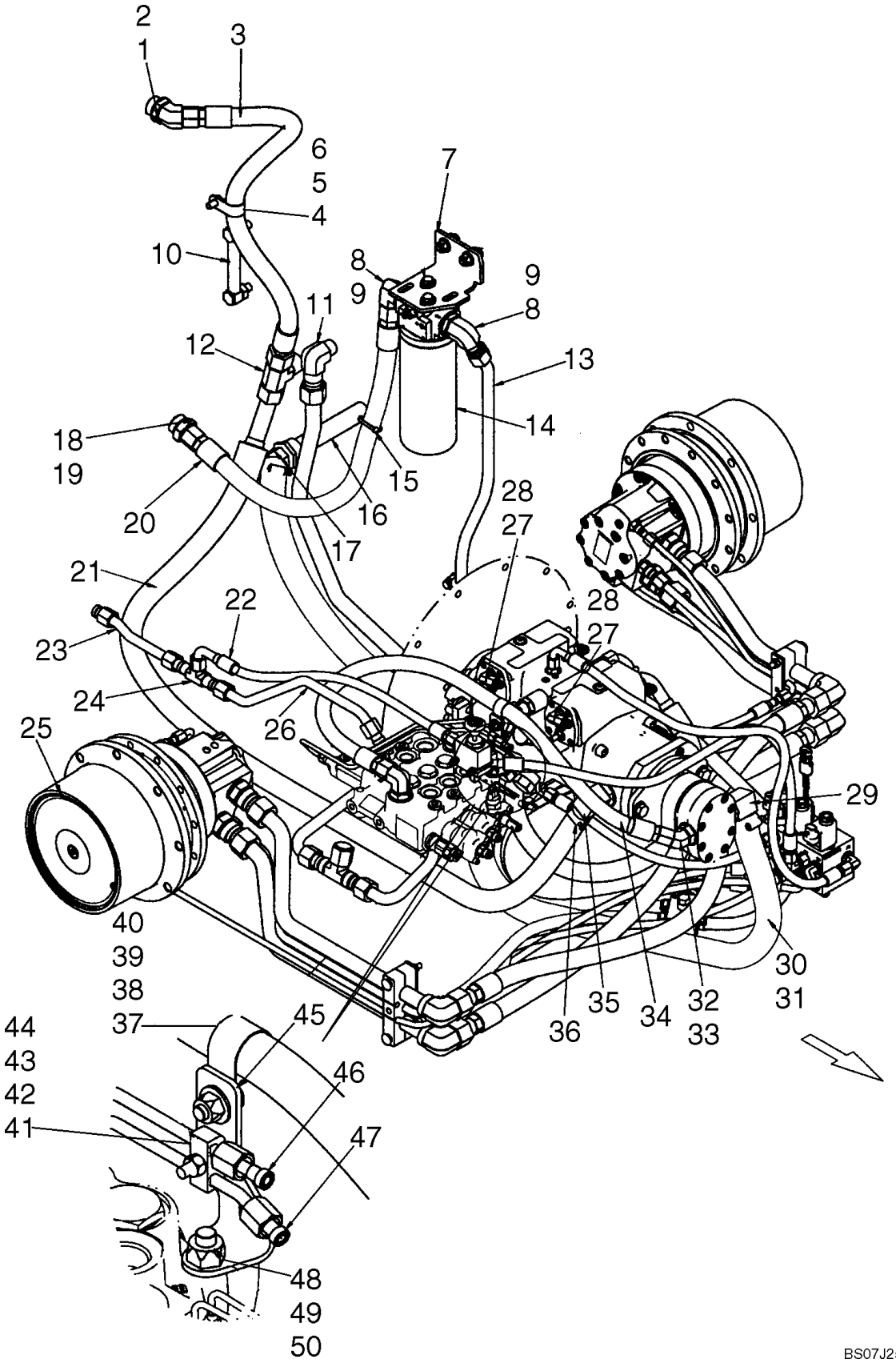

SYSTEME HYDROSTATIQUE - POMPE, ASPIRATION ET REFOULEMENT (440CT)

REF	FN	PART NUMBER	YR/SN	QTY	DESCRIPTION
1		{87657980}		1	Elbow; 37FL 45 ADJ 3/4 X 1.0 Tube; Incl 2
2		167268		1	JOINT THORIQUE, 16-1, 90 Duro, 1.171" ID x .116" Thk
3		87653980		1	FLEXIBLE, 810 mm (31.88 in); Upper Cooler
4		86639001		1	BRIDE, 1 3/16", Insul, 7/16" Bolt
5		140045		1	RONDELLE BELLEVILLE, Belleville, M10
6		43138		1	VIS, Hex, M10 x 20, 8.8, Full Thd
7		REF		1	NOTICE, Hydrostatic Filter; For Mounting, See Figure 06-32
8		570024		2	COUDE, 90º, 1 1/16"-12, 37º x 1 5/16"-12, O-Ring, Incl. 9
9		305412		2	JOINT TORIQUE
10		87374752		1	JAUGE, Liquid Level
11		9615396		1	COUDE, 90º, 1 5/16"-12, 37º x 3/4"-14, NPTF
12		9790547		1	TE, 1 5/16"-12, 37º x 1"-11 1/2, NPTF Br
13		87660856		1	TUYAU RIGIDE, Tube, Valve To Filter, LH Wall
14		87430661		1	FILTRE, Hydrostatic Filter; See Figure 06-32
15		529070		1	SERRE-CABLE, .30" x 14.5"
16		H151399		1	CARTOUCHE-FILTRE, Suction Line
17		87033823		1	RACCORD, 1/4" Hose x 1/8" NPTF, Fem, Barbed
18		233705		1	RACCORD, 1 1/16"-12, 37º x 1 5/16"-12, O-Ring, Incl. 19
19		167266		1	JOINT THORIQUE, 12-1, 90 Duro, .924 ID x .116" Thk
20		87653981		1	FLEXIBLE, 750mm (29.52 in); Lower Cooler
21		87563971		1	FLEXIBLE, 1859 mm (73.18 in); Charge Pump Supply
22		87625890		1	FLEXIBLE, 559 mm (22 in); Dump Valve Supply
23		87564000		1	TUYAU HYDRAULIQUE, Dump Valve Drain
24		87644290		1	RACCORD, Tee, 5/8 x 5/8 x 1/2 37 FL
25		REF			NOTICE, Undercarriage Plumbing; See Figure 06-13
26		87563998		1	TUYAU HYDRAULIQUE, Dump Valve Drain
27		86512936		2	COUDE, 90º, 9/16"-18, 37º x 7/16"-20, O-Ring
28		87604074		1	ADAPTEUR, 6FJ x 6MJ W/ 1.2 Orifice
29		86729372		1	RACCORD, 90º, 1 1/4" Hose x 1 5/16"-12 ORB Beaded

SYSTEME HYDROSTATIQUE - POMPE, ASPIRATION ET REFOULEMENT (440CT)

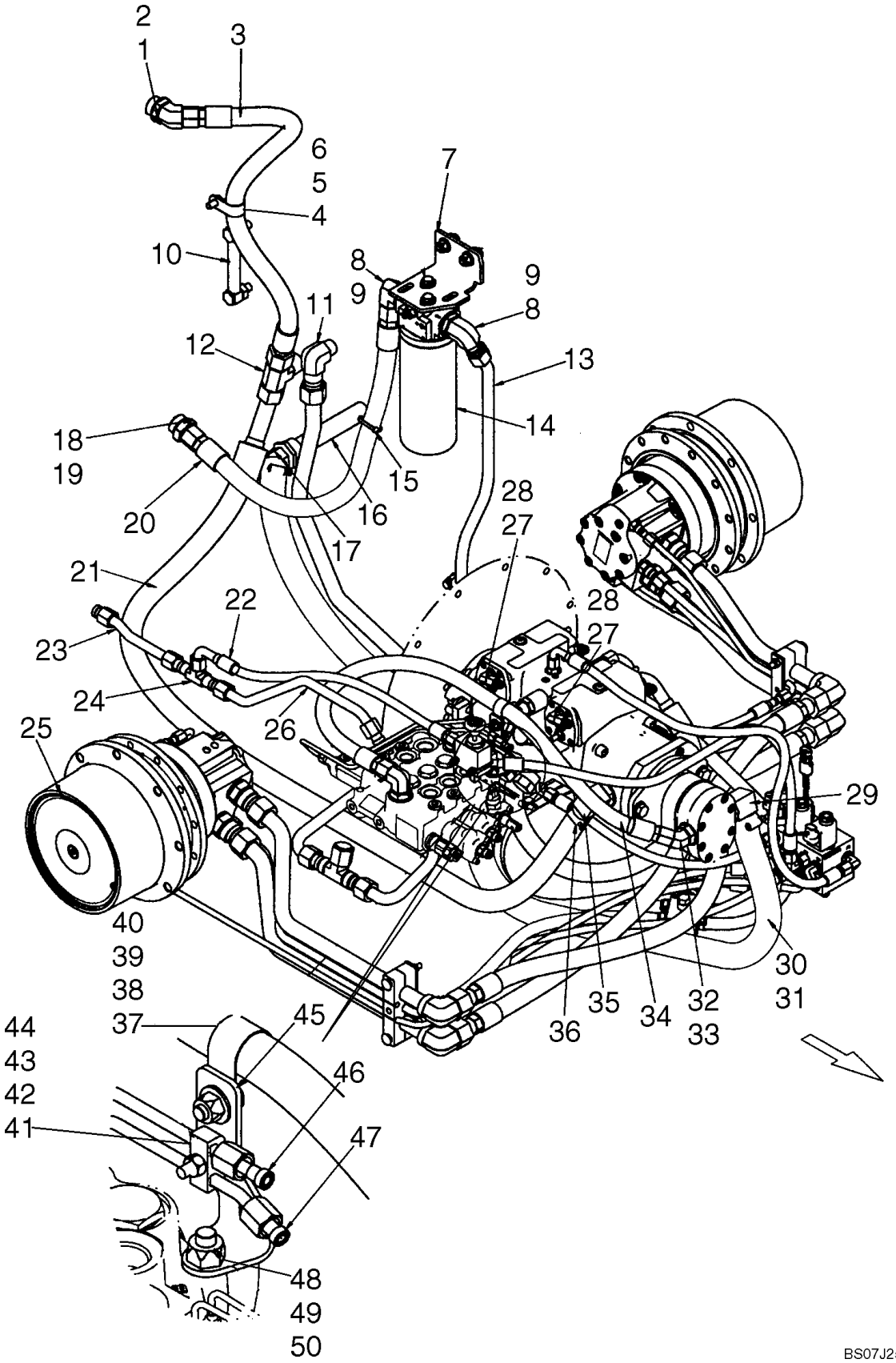

SYSTEME HYDROSTATIQUE - POMPE, ASPIRATION ET REFOULEMENT (440CT)

REF	FN	PART NUMBER	YR/SN	QTY	DESCRIPTION
30		87376457		1	FLEXIBLE, 1915 mm (75.39 in); Suction
31		87039085		2	BRIDE, FLEXIBLE, 1.25/2.125 HD Worm
32		100197		1	COUDE, 45°, 7/8"-14 x 1 1/16"-12, O-Ring, Incl.33
33		167266		1	JOINT THORIQUE, 12-1, 90 Duro, .924 ID x .116" Thk
34		87547070		1	FLEXIBLE, 1000 mm (39.37 in); Valve Supply
35		87393628		1	ADAPTEUR, 90 Barb 1 Hose x 1-5/16-12 OR
36		86536660		1	BRIDE, FLEXIBLE, #16, 0.81/1.50 Type F Worm
37		9827902		1	BRIDE, 1", Insul, 3/8" Bolt
38		120104		1	BOULON, Hex, M8 x 20, 8.8
39		9628098		1	CONTRE-ECROU, M8 x 1.25, Cl 10
40		86625263		2	RONDELLE, M8 x 20 x 1.6
41		608089		1	BRIDE, Double
42		87030561		1	CONTRE-ECROU, M6 x 1, Cl 8
43		86588450		1	RONDELLE, M6
44		627-6030		1	BOULON, Hex, M6 x 30, 10.9, Full Thd
45		87564009		1	PATTE FIXATION, Hose Support
46		87563969		1	TUYAU HYDRAULIQUE, Pilot
47		87563968		1	TUYAU HYDRAULIQUE, Pilot
48		43144		1	VIS, Hex, M10 x 70, 8.8
49		86512554		1	CONTRE-ECROU, M10 x 1.5, Cl 10
50		86639325		1	RONDELLE, M10 x 24.5 x 3, HT

SYSTEME HYDROSTATIQUE - MOTEURS (440CT)

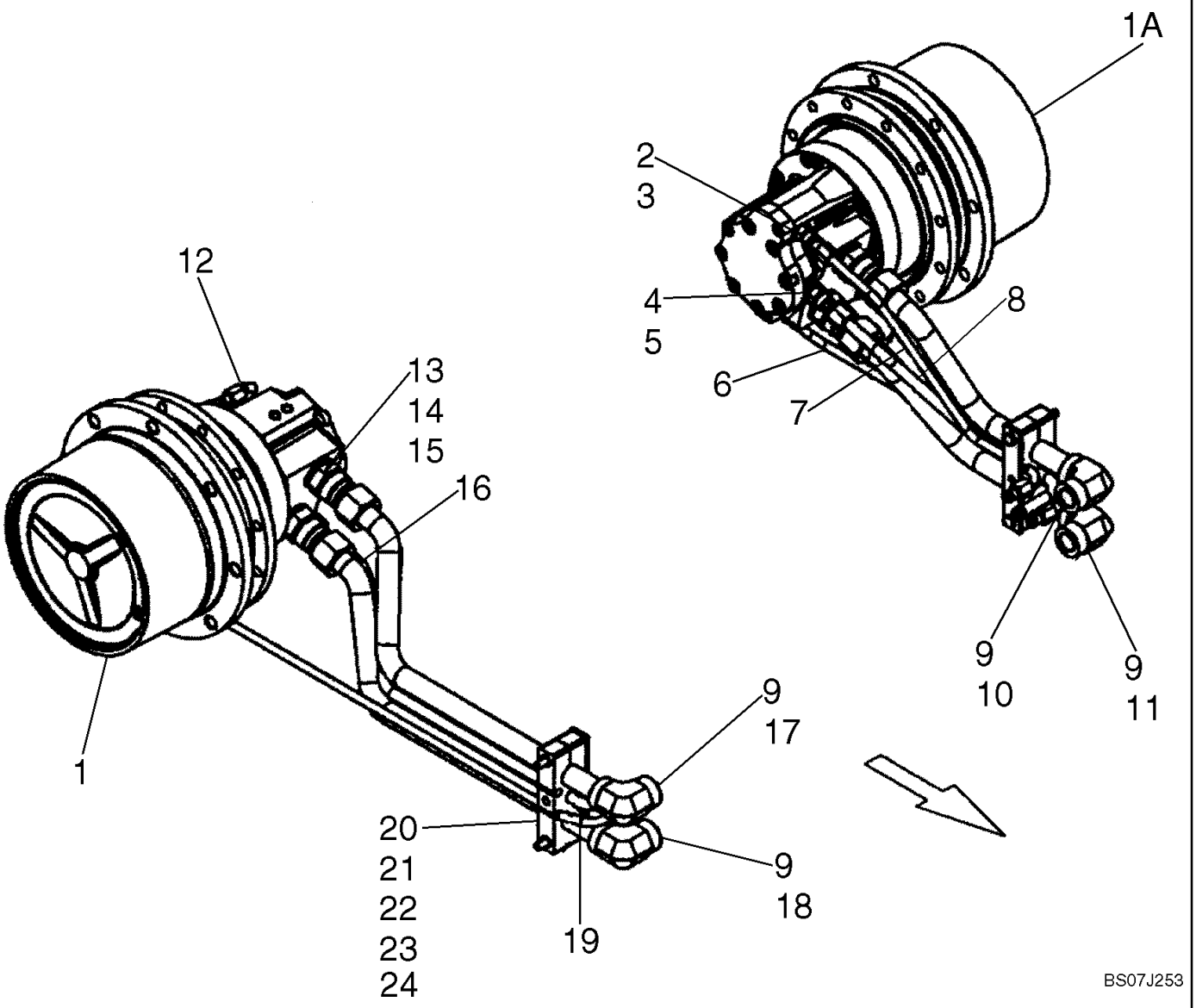

SYSTEME HYDROSTATIQUE - MOTEURS (440CT)

REF	FN	PART NUMBER	YR/SN	QTY	DESCRIPTION
1		87600263		1	MOTEUR, Drive Motor, RH; See Fig. 06-62
		87600263C		1	MOTEUR-HYD A RENOVER, Core - Motor Return Number, Use To Return Core For Credit When Using A Remanufactured Assy
		87600263R		1	MOTEUR-HYD RENOVE, Remanufactured Drive Motor
1A		87600262		1	MOTEUR, Drive Motor, LH; See Fig. 06-62
		87600262C		1	MOTEUR-HYD A RENOVER, Core - Motor Return Number, Use To Return Core For Credit When Using A Remanufactured Assy
		87600262R		1	MOTEUR-HYD RENOVE, Remanufactured Drive Motor
2		76350		4	RACCORD, 9/16"-18, 37° x 9/16"-18, O-Ring, Incl. 3
3		9617873		1	JOINT THORIQUE, 6-1, 90 Duro, .468" ID x .078" Thk
4		86509028		2	RACCORD, 3/4"-16, 37° x 9/16"-18, O-Ring, Incl. 5
5		9617873		1	JOINT THORIQUE, 6-1, 90 Duro, .468" ID x .078" Thk
6		87364807		1	TUBE, Brake Left Hand
7		87364627		1	TUBE, Two Speed Left Hand
8		87364808		1	TUBE, Case Drain Left Hand
9		9824050		4	JOINT THORIQUE, -021, 90 Duro, .926" ID x .070" Thk
10		87364801		1	TUBE, Left Hand Loop Top
11		87364802		1	TUBE, Left Hand Loop Bottom
12		87364804		1	TUBE, Brake Right Hand
13		87303844		4	RACCORD, 1 7/16"-12 ORFS x 1 1/16"-12 ORB, Incl. 14, 15
14		167266		1	JOINT THORIQUE, 12-1, 90 Duro, .924 ID x .116" Thk
15		9824050		1	JOINT THORIQUE, -021, 90 Duro, .926" ID x .070" Thk
16		87364628		1	TUBE, Two Speed Right Hand
17		87364799		1	TUBE, Right Hand Loop Top
18		87364800		1	TUBE, Right Hand Loop Bottom
19		87364805		1	TUBE, Case Drain Right Hand
20		87452108		4	BRIDE

SYSTEME HYDROSTATIQUE - MOTEURS (440CT)

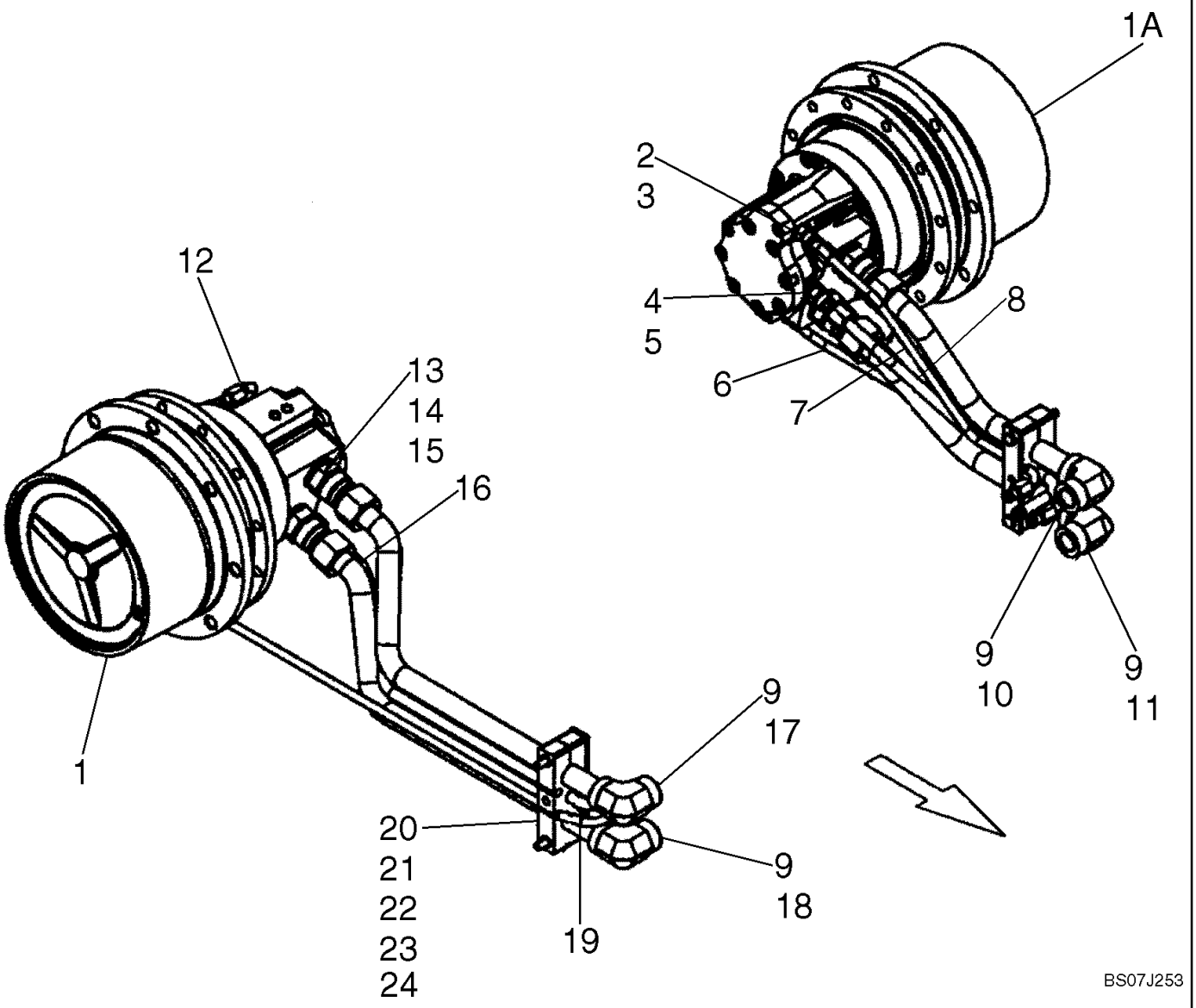

SYSTEME HYDROSTATIQUE - MOTEURS (440CT)

REF	FN	PART NUMBER	YR/SN	QTY	DESCRIPTION
21		87302564		4	ENTRETOISE, 1/4 x 2.000 STD Pipe ZND
22		87452146		2	BARRE, Clamp Top
23		120040		4	BOULON TETE BOMBEE, Short NK, M8 x 80, Cl8.8, Replaces 120062
24		9628098		4	CONTRE-ECROU, M8 x 1.25, Cl 10

SYSTEME HYDROSTATIQUE - MULTIPLE FONCTION (440CT)

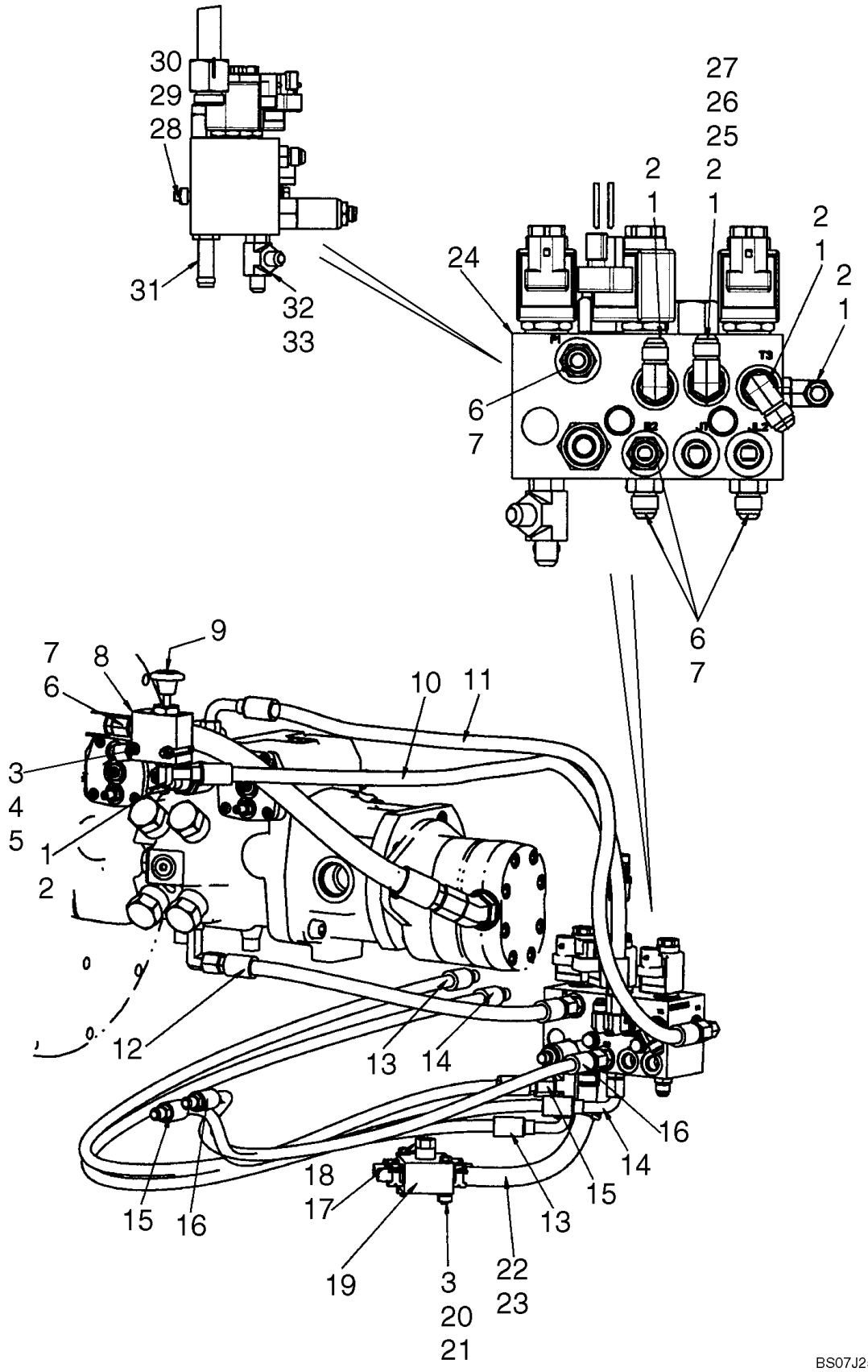

SYSTEME HYDROSTATIQUE - MULTIPLE FONCTION (440CT)

REF	FN	PART NUMBER	YR/SN	QTY	DESCRIPTION
1		76344		4	COUDE, 90º, 9/16"-18, 37º x 9/16"-18, O-Ring, Incl 2
2		9617873		1	JOINT THORIQUE, 6-1, 90 Duro, .468" ID x .078" Thk
3		86588450		4	RONDELLE, M6
4		87030561		2	CONTRE-ECROU, M6 x 1, Cl 8
5		120056		2	BOULON, Hex, M6 x 50, 8.8
6		76350		5	RACCORD, 9/16"-18, 37º x 9/16"-18, O-Ring, Incl 7
7		9617873		1	JOINT THORIQUE, 6-1, 90 Duro, .468" ID x .078" Thk
8		87604076		1	GUIDE-SOUPAPE ECHAPP.MAJ, Boom Override
9		87568435		1	DECALCOMANIE, Boom Override
10		87563992		1	FLEXIBLE, 820 mm (32.28 in); Dump Valve Drain
11		87563991		1	FLEXIBLE, 884 mm (34.8 in); DA pressure
12		87547032		1	FLEXIBLE, 467 mm (18.38 in); Charge pressure
13		87364806		1	FLEXIBLE, 1200 mm (47.24 in); 2 Speed LH
14		87364631		1	FLEXIBLE, 1250 mm (49.21 in); Brake LH
15		87364803		1	TUBE, 825 mm (32.48 in); 2 Speed RH
16		87364629		1	FLEXIBLE, 850 mm (33.46 in); Brake RH
17		76349		1	BOUCHON, Hex Hd, 9/16"-18 ORB, Incl 18
18		9617873		1	JOINT THORIQUE, 6-1, 90 Duro, .468" ID x .078" Thk
19		87437351		1	COLLECTEUR, Return oil
20		86977790		2	BOULON, Hex, M6 x 45, 8.8
21		87404992		2	ECROU, Square M6-1.0 Class 8 ZND
22		87563996		1	FLEXIBLE, 244 mm (9.6 in); Multi-Valve Drain
23		87443510		2	BRIDE, FLEXIBLE, 20 mm
24		87577076		1	VALVE DE PILOTAGE, Two Speed Track Models; See Figure 06-27
25		87573371		1	ADAPTEUR, Incl 26, 27
26		9617873		1	JOINT THORIQUE, 6-1, 90 Duro, .468" ID x .078" Thk
27		9993141		1	JOINT THORIQUE, -012, 90 Duro, .364" ID x .070" Thk
28		87030567		2	ECROU, Square M8 1.25 Class 8 ZND
29		86624184		4	RONDELLE, M8 x 16 x 1.6
30		86508571		2	BOULON, Hex, M8 x 90, 8.8
31		86705988		1	RACCORD, 1/2" Hose x 9/16"-18 ORB, Beaded
32		86513020		1	TE, 9/16"-18, 37º x 9/16"-18, O-Ring Run, Incl 33
33		9617873		1	JOINT THORIQUE, 6-1, 90 Duro, .468" ID x .078" Thk

SYSTEME HYDROSTATIQUE - POMPE RACCORDS (440CT)

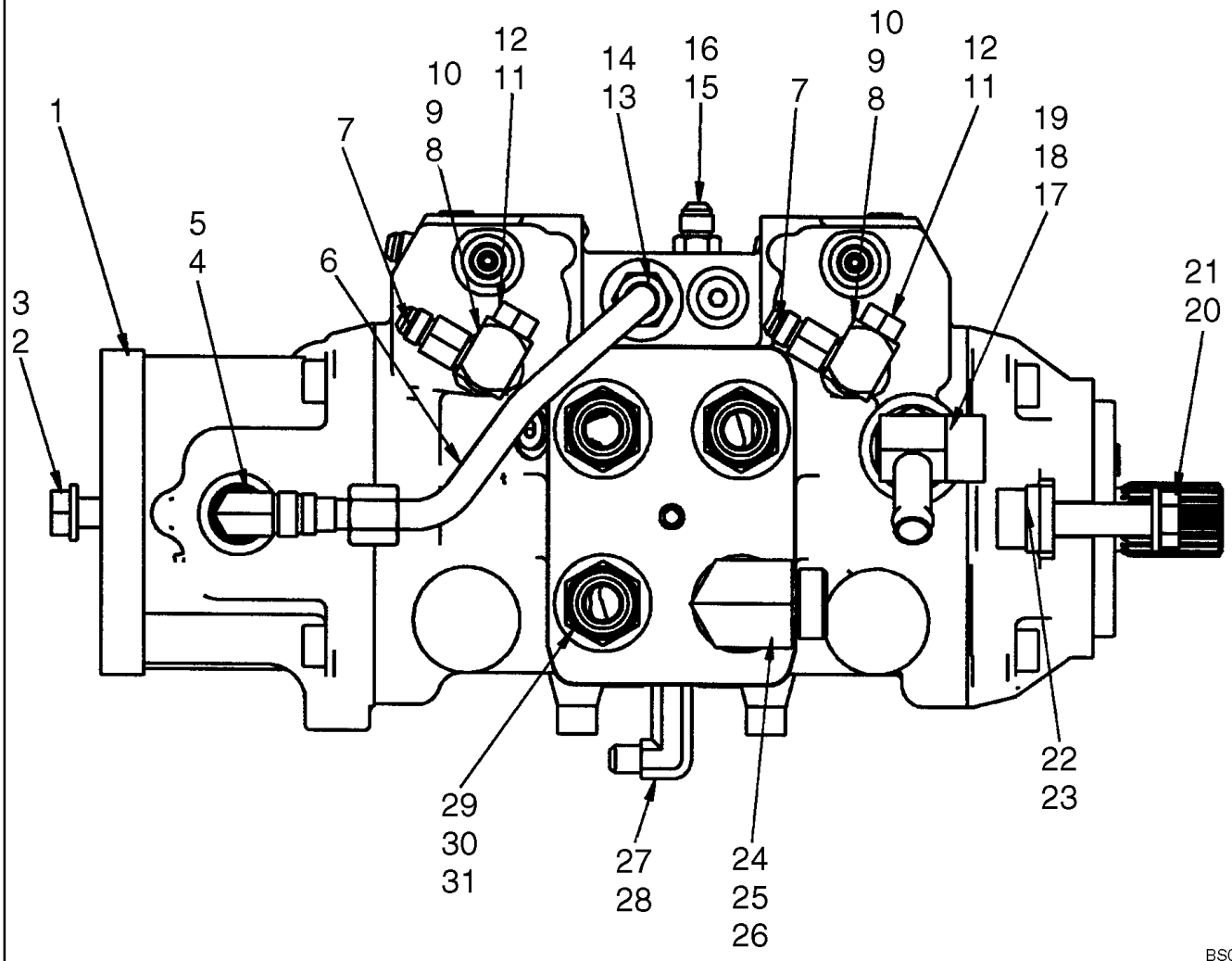

SYSTEME HYDROSTATIQUE - POMPE RACCORDS (440CT)

REF	FN	PART NUMBER	YR/SN	QTY	DESCRIPTION
1		87546977		1	POMPE, A22; See Figure 06-47 - 06-53
2		86625255		2	RONDELLE, M13.5 x 24.5 x 3, HT
3		87670		2	BOULON, Hex, 1/2"-13 x 1 1/4", G5, Full Thd
4		128830		1	COUDE, 90º, 3/4"-16, 37º x 3/4"-16, O-Ring, Incl 5
5		128825		1	JOINT THORIQUE, 8-1, 90 Duro, .644" ID x .087" Thk
6		87554297		1	TUYAU HYDRAULIQUE, Tube, Tandem Pump Supply
7		87604074		2	ADAPTEUR, 6FJ x 6MJ W/ 1.2 Orifice
8		87546979		2	ADAPTEUR, Incl 9, 10
9		9617873		1	JOINT THORIQUE, 6-1, 90 Duro, .468" ID x .078" Thk
10		165202		1	JOINT THORIQUE, 4-1, 90 Duro, .351" ID x .072" Thk
11		76349		2	BOUCHON, Hex Hd, 9/16"-18 ORB, Incl 12
12		9617873		1	JOINT THORIQUE, 6-1, 90 Duro, .468" ID x .078" Thk
13		128818		1	RACCORD, 3/4"-16, 37º x 3/4"-16, O-Ring, Incl 14
14		128825		1	JOINT THORIQUE, 8-1, 90 Duro, .644" ID x .087" Thk
15		76350		6	RACCORD, 9/16"-18, 37º x 9/16"-18, O-Ring, Incl 16
16		9617873		6	JOINT THORIQUE, 6-1, 90 Duro, .468" ID x .078" Thk
17		87571937		1	ADAPTEUR, Incl 18, 19
18		167266		1	JOINT THORIQUE, 12-1, 90 Duro, .924 ID x .116" Thk
19		167269		1	JOINT THORIQUE, 10-1, 90 Duro, .755" ID x .097" Thk
20		{87556906}		2	Bolt, Hex Head M14 x 70 ZND
21		87016615		2	RONDELLE, M12 x 28.5 x 3, HT
22		87637186		2	ECROU, M14 Class 10 ZND
23		{87564723}		4	Washer, 15.3 x 28.5 x 6 HTS ZND
24		9846848		1	COUDE, Incl. 25, 26
25		9991976		1	JOINT THORIQUE, -018, 90 Duro, .739" ID x .070" Thk
26		167266		1	JOINT THORIQUE, 12-1, 90 Duro, .924 ID x .116" Thk
27		86526		1	COUDE, 90º, 9/16"-18, 37º x 9/16"-18, LG, Incl 28
28		9617873		1	JOINT THORIQUE, 6-1, 90 Duro, .468" ID x .078" Thk
29		9840535		3	RACCORD, Incl 30, 31

SYSTEME HYDROSTATIQUE - POMPE RACCORDS (440CT)

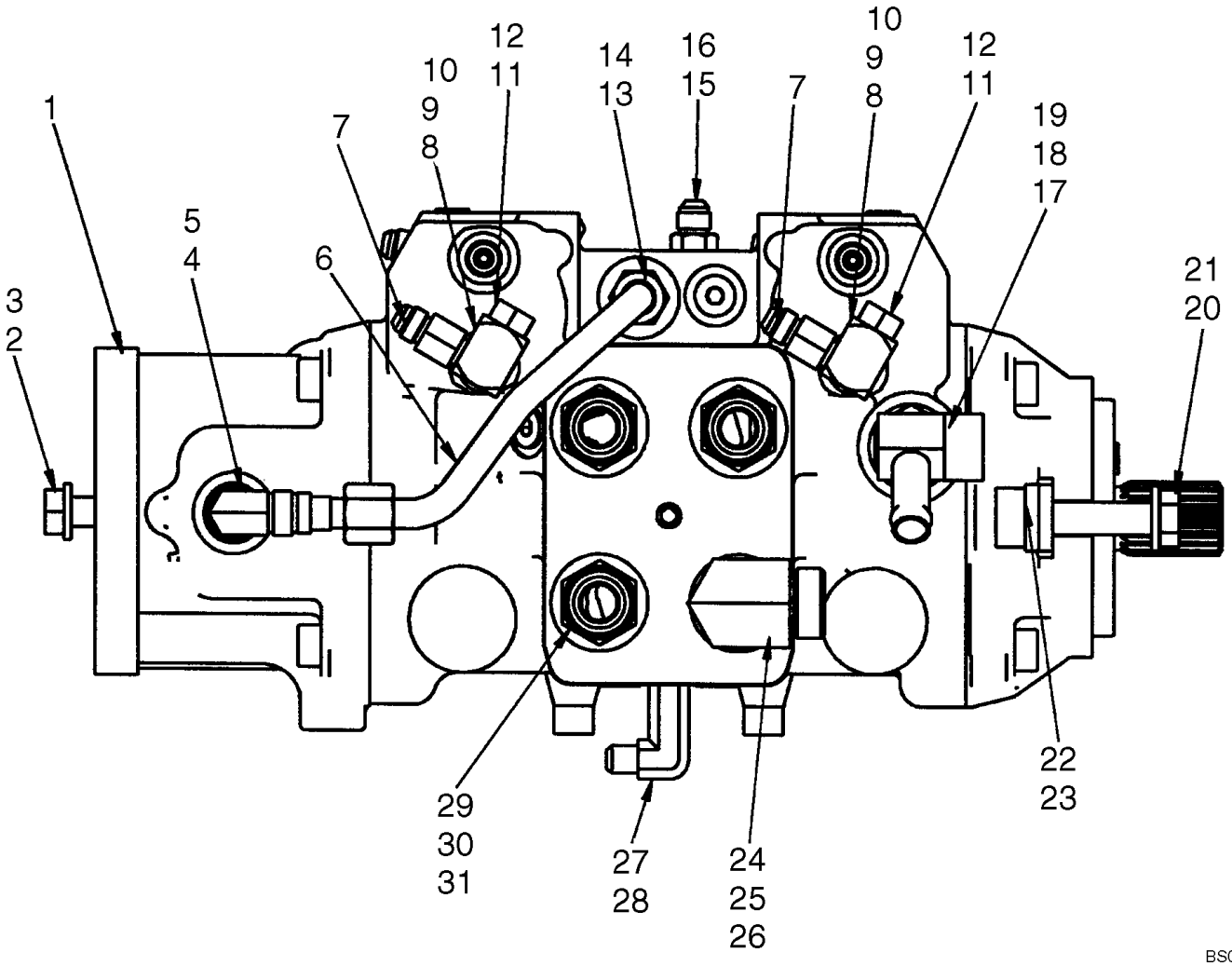

SYSTEME HYDROSTATIQUE - POMPE RACCORDS (440CT)

REF	FN	PART NUMBER	YR/SN	QTY	DESCRIPTION
30		9991976		1	JOINT THORIQUE, -018, 90 Duro, .739" ID x .070" Thk
31		167266		1	JOINT THORIQUE, 12-1, 90 Duro, .924 ID x .116" Thk

HYDROSTATIQUE, TUYAUX, POMPE ET MOTEURS

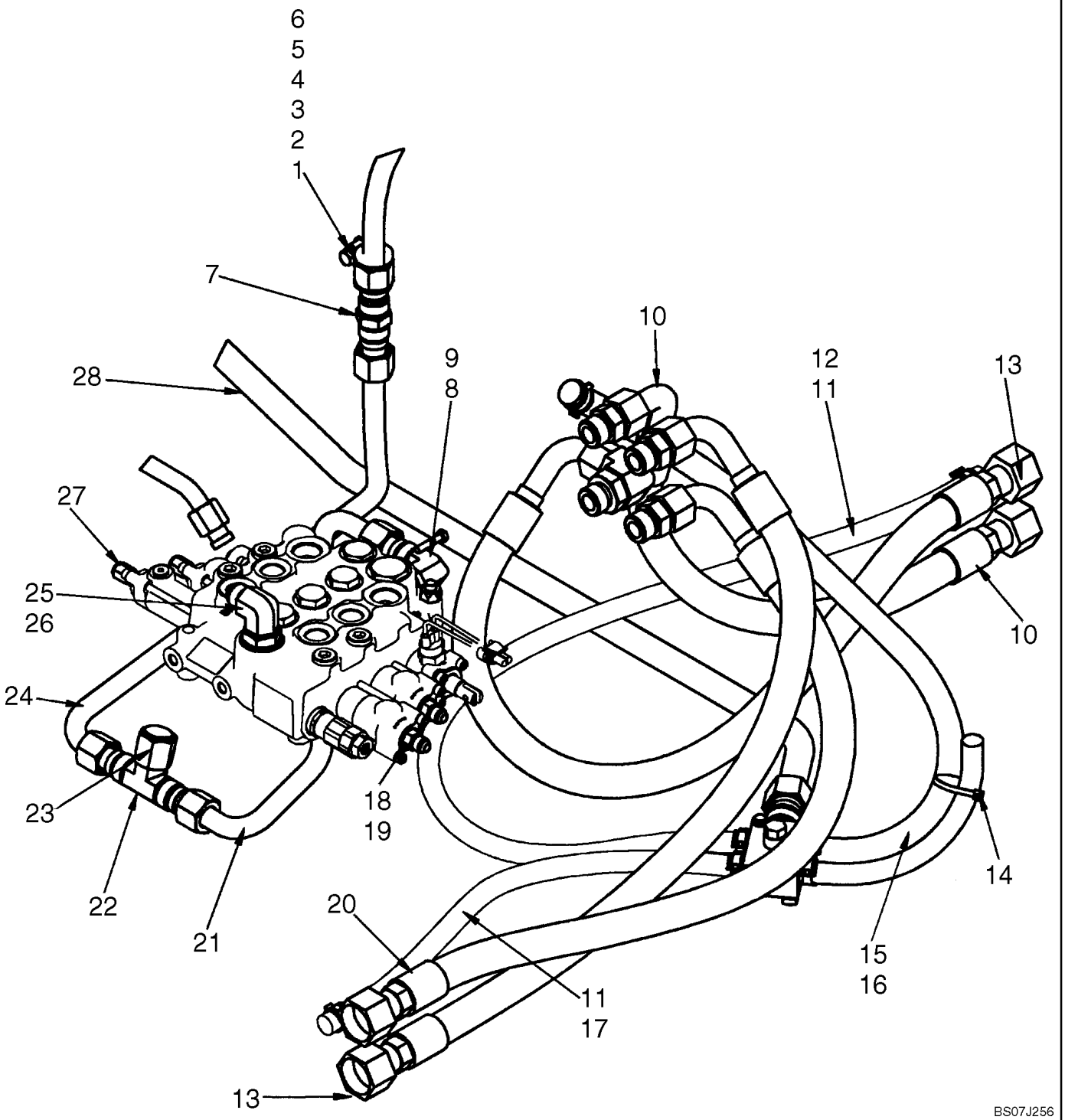

HYDROSTATIQUE, TUYAUX, POMPE ET MOTEURS

REF	FN	PART NUMBER	YR/SN	QTY	DESCRIPTION
1		86624184		1	RONDELLE, M8 x 16 x 1.6
2		87030567		1	ECROU, Square M8
3		87042897		1	ENTRETOISE
4		87301359		1	BRIDE, 1 1/8", 3/8" Bolt
5		87445136		1	ISOLATEUR, 3/4
6		43128		1	BOULON, Hex, M8 x 30, 8.8
7		144121		1	UNION, 1 1/16"-12, 37º x 1 1/16"-12, 37º
8		322894		1	COUDE, 90º, 1 1/16"-12, 37º x 1 1/16"-12, O-Ring, Incl. 9
9		167266		1	JOINT THORIQUE, 12-1, 90 Duro, .924 ID x .116" Thk
10		87547065		1	FLEXIBLE, 609 mm (24.00 in); Motor Pump Loop
11		87443510		4	BRIDE, FLEXIBLE
12		87364625		1	FLEXIBLE, 1000 mm (39.37 in); Case Drain,
13		87547067		1	FLEXIBLE, 930 mm (36.61 in); Motor To Pump Loop
14		529070		1	SERRE-CABLE, .30" x 14.5"
15		87563997		1	FLEXIBLE, 765 mm (30.12 in); Pump Drain
16		87443511		2	BRIDE
17		87364622		1	FLEXIBLE, 715 mm (28.15 in); Case Drain
18		84570		2	COUDE, 90º, 7/8"-14, 37º x 1 1/16"-12, O-Ring, Incl 19
19		165202		1	JOINT THORIQUE, 4-1, 90 Duro, .351" ID x .072" Thk
20		87547066		1	FLEXIBLE, 970 mm (38.20 in); Motor To Pump Loop
21		87446248		1	TUYAUTERIE, Valve To Filter
22		15694		1	TE, 1 1/16"-12 37º
23		219606		1	CHAPEAU, 37º, 1 1/16"-12
24		87445138		1	TUYAUTERIE, Valve To Filter
25		84570		1	COUDE, 90º, 7/8"-14, 37º x 1 1/16"-12, O-Ring, Incl. 26
26		167266		1	JOINT THORIQUE, 12-1, 90 Duro, .924 ID x .116" Thk
27		87575684		2	RACCORD, Flareless
28		87364616		1	TUBE, Case Drain

SYSTEME HYDROSTATIQUE - POMPE VERS REFROIDISSEUR (440 AVEC COMMANDE PILOTE)

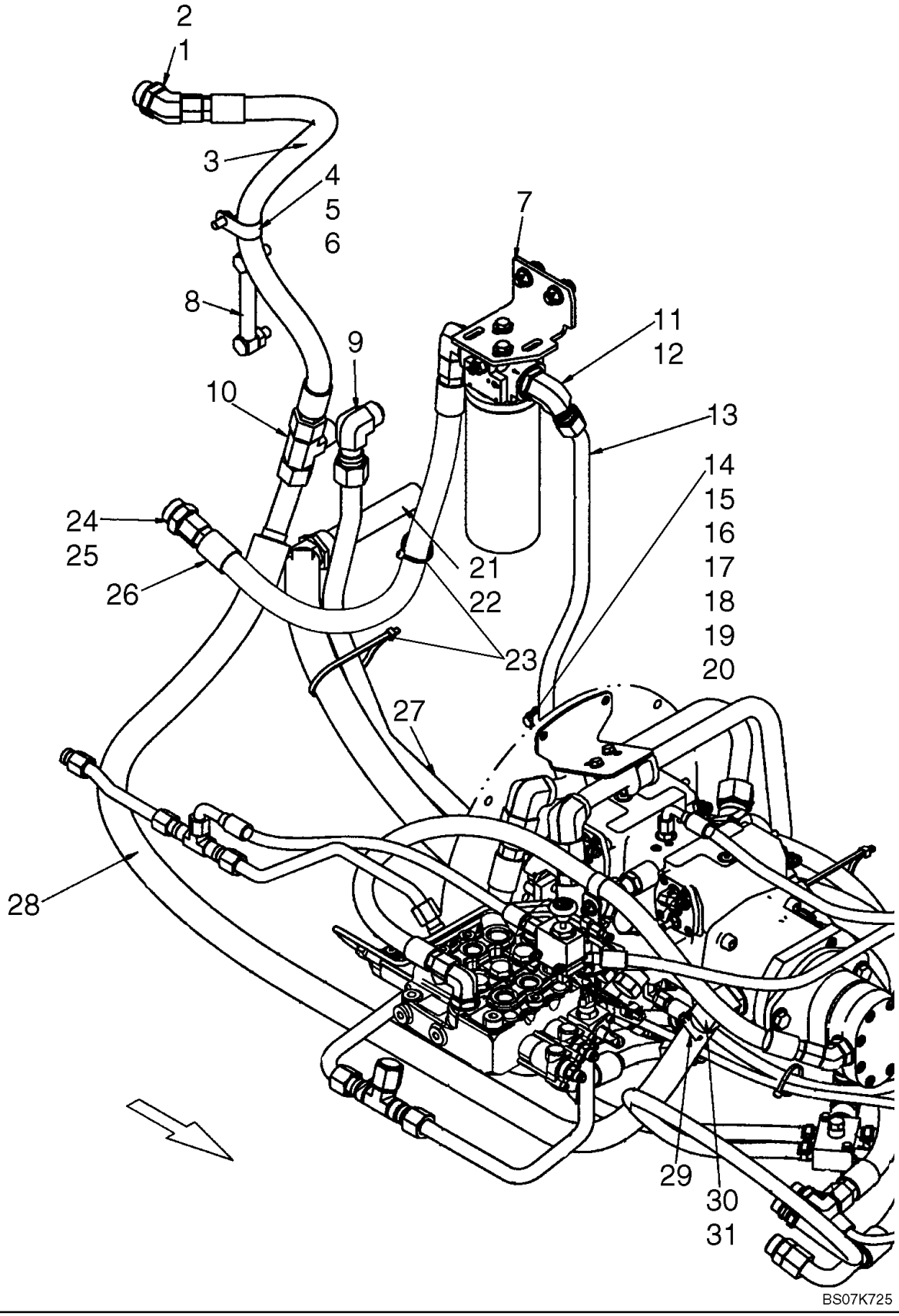

SYSTEME HYDROSTATIQUE - POMPE VERS REFROIDISSEUR (440 AVEC COMMANDE PILOTE)

REF	FN	PART NUMBER	YR/SN	QTY	DESCRIPTION
1		{87657980}		2	Elbow, 37FL 45 ADJ 3/4 x 1.0 Tube; To Oil Cooler; Incl 2
2		167268		1	JOINT THORIQUE, 16-1, 90 Duro, 1.171" ID x .116" Thk
3		87653980		1	FLEXIBLE, 810 mm (31.88 in) To Upper Oil Cooler
4		86639001		1	BRIDE, 1 3/16", Insul, 7/16" Bolt
5		140045		1	RONDELLE BELLEVILLE, Belleville, M10
6		43138		1	VIS, Hex, M10 x 20, 8.8, Full Thd
7		REF			NOTICE, For Filter Assy And Mounting See Fig 06-32
8		87374752		1	JAUGE, Liquid Level
9		9615396		1	COUDE, 90º, 1 5/16"-12, 37º x 3/4"-14, NPTF
10		9790547		1	TE, 1 5/16"-12, 37º x 1"-11 1/2, NPTF Br
11		87021824		2	COUDE, 90º, 1 1/16"-12, 37º x 1 5/16"-12, O-Ring, Incl 12
12		167268		1	JOINT THORIQUE, 16-1, 90 Duro, 1.171" ID x .116" Thk
13		87660856		1	TUYAU RIGIDE, Tube, Valve To Filter (LH Wall)
14		43128		1	BOULON, Hex, M8 x 30, 8.8
15		86624184		4	RONDELLE, M8 x 16 x 1.6
16		87042897		1	ENTRETOISE
17		87301359		1	BRIDE, 1 1/8", 3/8" Bolt
18		87445136		1	ISOLATEUR
19		229197A1		2	ECROU
20		144121		1	UNION, 1 1/16"-12, 37º x 1 1/16"-12, 37º
21		H151399		1	CARTOUCHE-FILTRE
22		87033823		1	RACCORD, 1/4" Hose x 1/8" NPTF, Fem, Barbed
23		L18331		2	SERRE-CABLE
24		233705		1	RACCORD, 1 1/16"-12, 37º x 1 5/16"-12, O-Ring, Incl 25
25		167266		2	JOINT THORIQUE, 12-1, 90 Duro, .924 ID x .116" Thk
26		87653981		1	FLEXIBLE, 750 mm (29.52 in) To Lower Oil Cooler
27		87584058		1	TUYAU RIGIDE, Case Drain
28		87563971		1	FLEXIBLE, 1859 mm (73.19 in) Charge Pump Suppply

SYSTEME HYDROSTATIQUE - POMPE VERS REFROIDISSEUR (440 AVEC COMMANDE PILOTE)

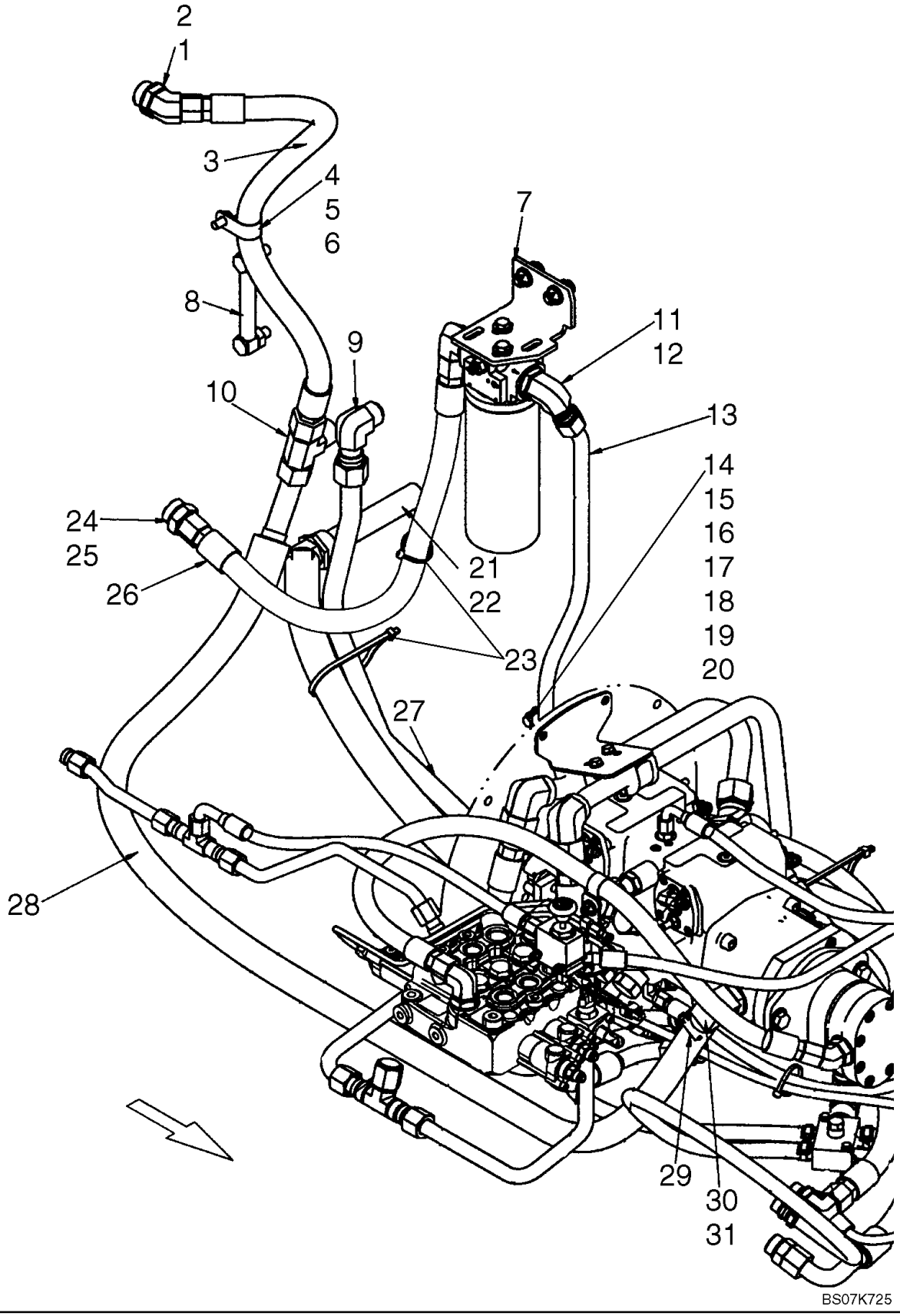

SYSTEME HYDROSTATIQUE - POMPE VERS REFROIDISSEUR (440 AVEC COMMANDE PILOTE)

REF	FN	PART NUMBER	YR/SN	QTY	DESCRIPTION
29		86536660		1	BRIDE, FLEXIBLE, #16, 0.81/1.50 Type F Worm
30		87393628		1	ADAPTEUR, Incl 31
31		167268		1	JOINT THORIQUE, 16-1, 90 Duro, 1.171" ID x .116" Thk

SYSTEME HYDROSTATIQUE (COLLECTEURS/DISTRIBUTEUR DE COMMANDE, 440 AVEC COMMANDE PILOTE)

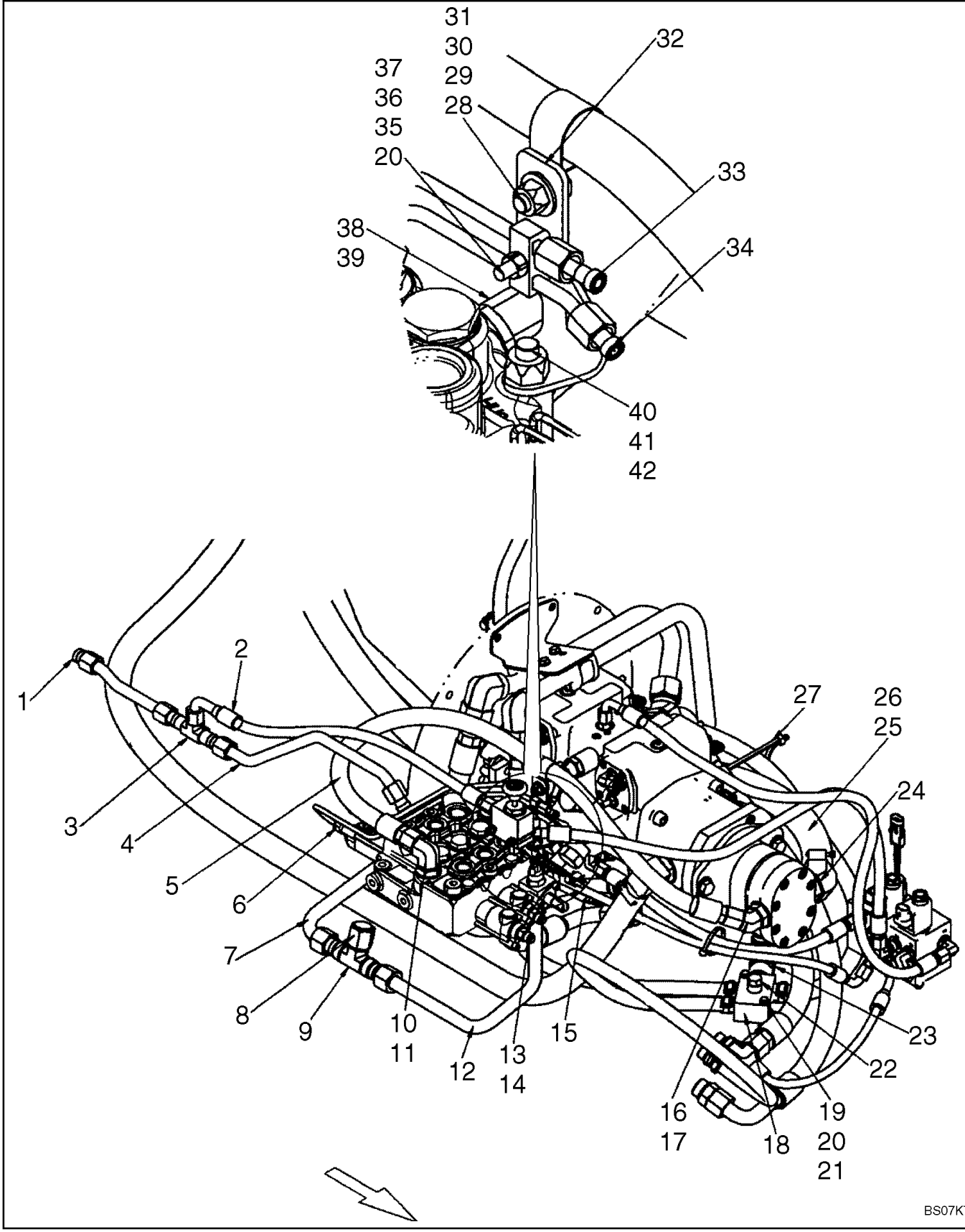

SYSTEME HYDROSTATIQUE (COLLECTEURS/DISTRIBUTEUR DE COMMANDE, 440 AVEC COMMANDE PILOTE)

REF	FN	PART NUMBER	YR/SN	QTY	DESCRIPTION
1		87564000		1	TUYAU HYDRAULIQUE, Dump Valve Drain
2		87625890		1	FLEXIBLE, (559 mm, 22.00 in) Dump Valve Supply
3		87644290		1	RACCORD
4		87563998		1	TUYAU HYDRAULIQUE, Dump Valve Drain
5		87547070		1	FLEXIBLE, 1000 mm (39.37 in) Valve Supply
6		87575684		2	RACCORD, Connector, Flareless
7		87445138		1	TUYAUTERIE, Valve Out To Filter
8		219606		1	CHAPEAU, 37º, 1 1/16"-12
9		15694		1	TE, 1 1/16"-12 37º
10		84570		1	COUDE, 90º, 7/8"-14, 37º x 1 1/16"-12, O-Ring, Incl 11
11		167266		1	JOINT THORIQUE, 12-1, 90 Duro, .924 ID x .116" Thk
12		87445137		1	TUYAUTERIE, Valve To Filter
13		84384		2	RACCORD, 9/16"-18, 37º x 7/16"-20, O-Ring, Incl 14
14		165202		2	JOINT THORIQUE, 4-1, 90 Duro, .351" ID x .072" Thk
15		{87563975}		1	Hose, 800 mm (31.49 in) LH Brake
16		100197		1	COUDE, 45º, 7/8"-14 x 1 1/16"-12, O-Ring, Incl 17
17		167266		1	JOINT THORIQUE, 12-1, 90 Duro, .924 ID x .116" Thk
18		87437351		1	COLLECTEUR
19		86977790		2	BOULON, Hex, M6 x 45, 8.8
20		86588450		3	RONDELLE, M6
21		87404992		2	ECROU
22		76349		1	BOUCHON, Hex Hd, 9/16"-18 ORB, Incl 19
23		86050288		1	COUDE, 90º, 1 5/16"-12, 37º x 1 5/16"-12, 37º Fem Sw
24		87033824		1	RACCORD, 45º, 1 1/4" Hose x 1 5/16"-12 ORB Beaded, Incl 21
25		87563972		1	FLEXIBLE, 553 mm (61.14 in) Loader Pump Supply
26		87039085		2	BRIDE, FLEXIBLE, 1.25/2.125 HD Worm
27		529070		2	SERRE-CABLE, .30" x 14.5"
28		120104		1	BOULON, Hex, M8 x 20, 8.8
29		86625263		2	RONDELLE, M8 x 20 x 1.6
30		9628098		1	CONTRE-ECROU, M8 x 1.25, Cl 10

SYSTEME HYDROSTATIQUE (COLLECTEURS/DISTRIBUTEUR DE COMMANDE, 440 AVEC COMMANDE PILOTE)

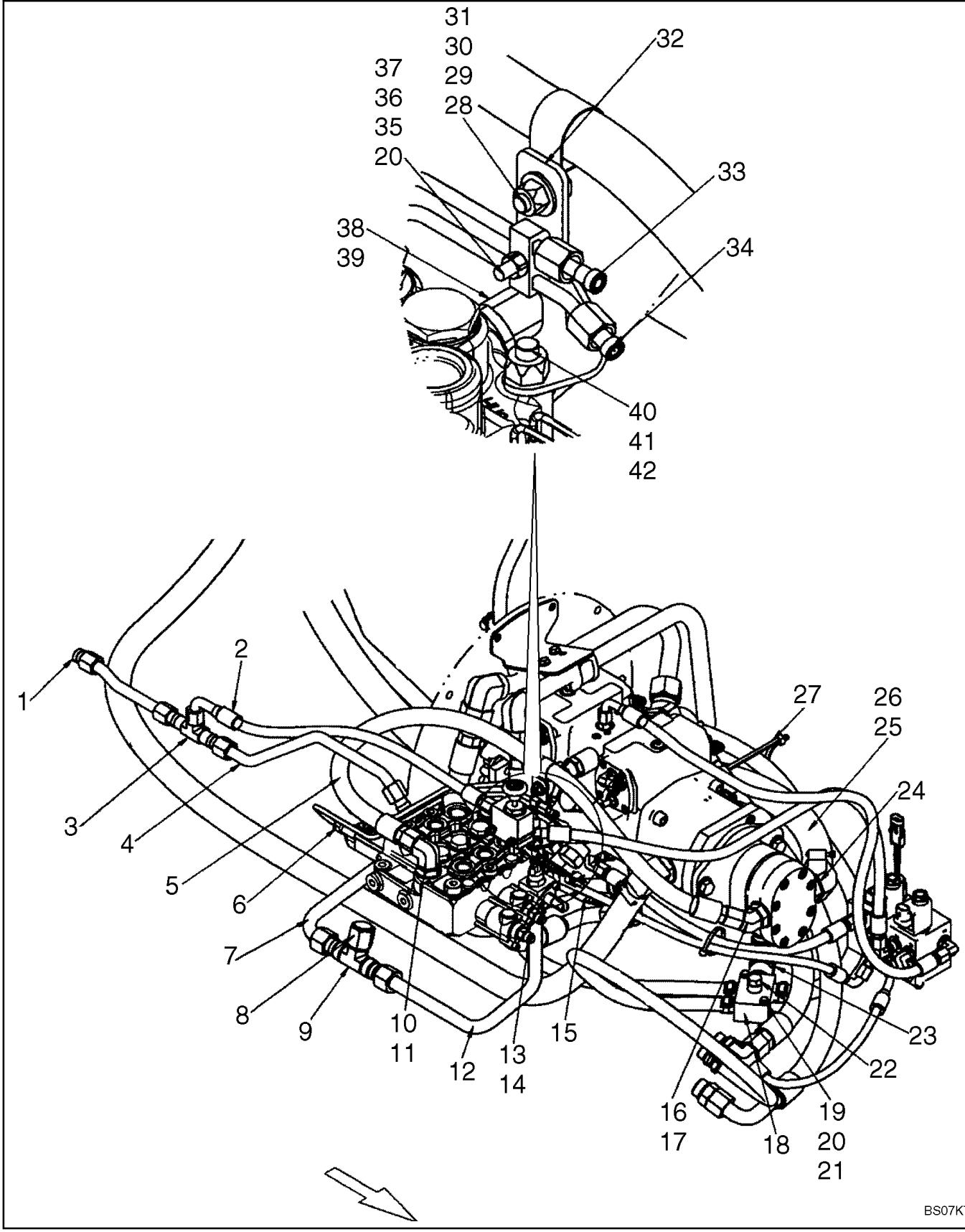

SYSTEME HYDROSTATIQUE (COLLECTEURS/DISTRIBUTEUR DE COMMANDE, 440 AVEC COMMANDE PILOTE)

REF	FN	PART NUMBER	YR/SN	QTY	DESCRIPTION
31		9827902		1	BRIDE, 1", Insul, 3/8" Bolt
32		87678506		1	PATTE FIXATION, Bracket, Hose Support
33		87563969		1	TUYAU HYDRAULIQUE
34		87563968		1	TUYAU HYDRAULIQUE
35		80120101		1	VIS
36		87030561		1	CONTRE-ECROU, M6 x 1, Cl 8
37		608089		1	BRIDE
38		322894		4	COUDE, 90°, 1 1/16"-12, 37° x 1 1/16"-12, O-Ring, Incl 39
39		167266		1	JOINT THORIQUE, 12-1, 90 Duro, .924 ID x .116" Thk
40		43144		1	VIS, Hex, M10 x 70, 8.8
41		86512554		1	CONTRE-ECROU, M10 x 1.5, Cl 10
42		86639325		1	RONDELLE, M10 x 24.5 x 3, HT

SYSTEME HYDROSTATIQUE - POMPE RACCORDS (440 AVEC COMMANDE PILOTE)

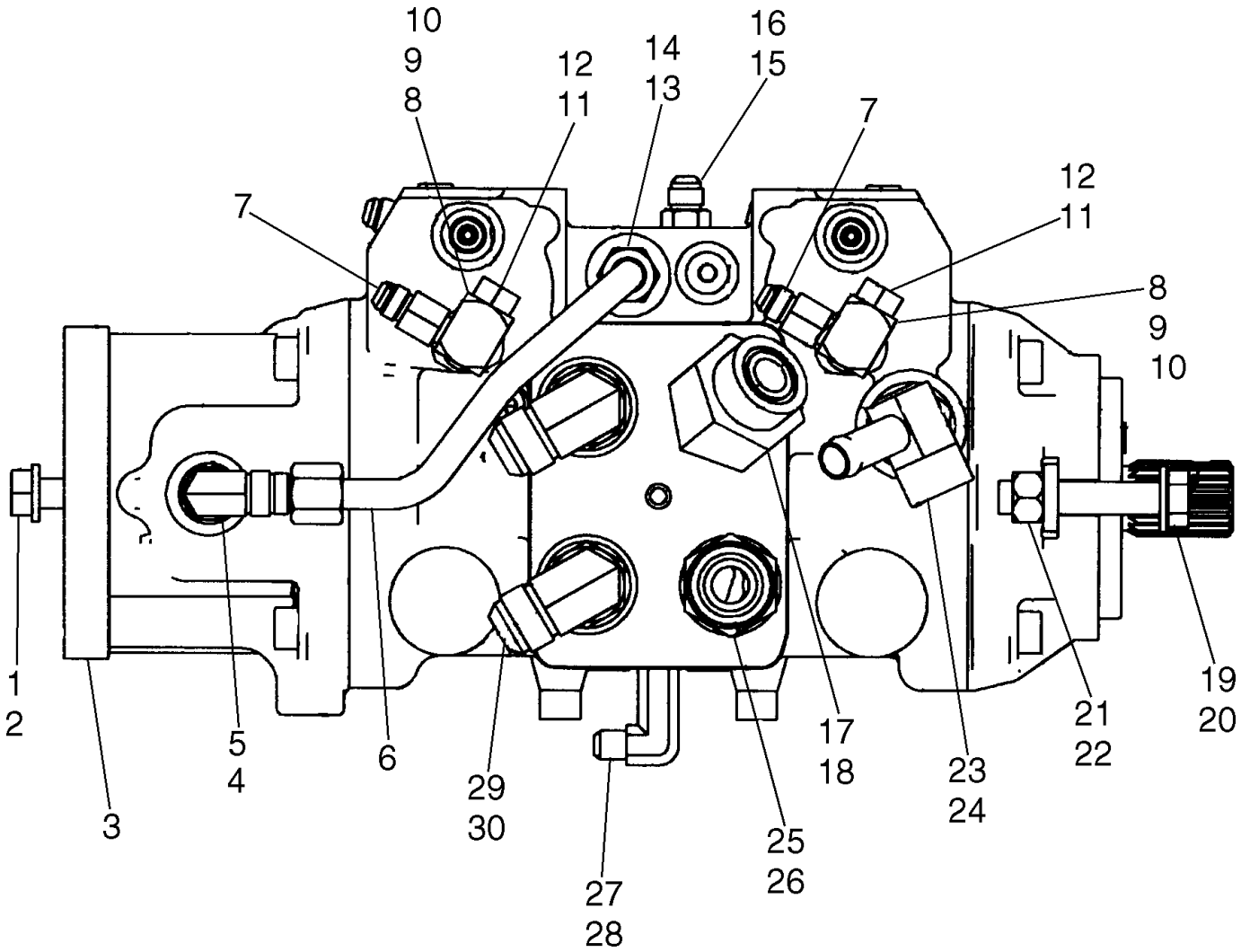

SYSTEME HYDROSTATIQUE - POMPE RACCORDS (440 AVEC COMMANDE PILOTE)

REF	FN	PART NUMBER	YR/SN	QTY	DESCRIPTION
1		86625255		2	RONDELLE, M13.5 x 24.5 x 3, HT
2		87670		2	BOULON, Hex, 1/2"-13 x 1 1/4", G5, Full Thd
3		87546976		1	POMPE, A22 Double Piston Pilot Control; See Figure 06-39
4		128830		1	COUDE, 90º, 3/4"-16, 37º x 3/4"-16, O-Ring, Incl. 5
5		128825		1	JOINT THORIQUE, 8-1, 90 Duro, .644" ID x .087" Thk
6		87554297		1	TUYAU HYDRAULIQUE, Tube, Tandem Pump Supply
7		87604075		4	ADAPTEUR, Connector With 1.0 mm Orifice
8		87546979		2	ADAPTEUR, Incl 9, 10
9		165202		1	JOINT THORIQUE, 4-1, 90 Duro, .351" ID x .072" Thk
10		9617873		1	JOINT THORIQUE, 6-1, 90 Duro, .468" ID x .078" Thk
11		76349		3	BOUCHON, Hex Hd, 9/16"-18 ORB, Incl 12
12		9617873		1	JOINT THORIQUE, 6-1, 90 Duro, .468" ID x .078" Thk
13		128818		1	RACCORD, 3/4"-16, 37º x 3/4"-16, O-Ring, Incl 14
14		128825		1	JOINT THORIQUE, 8-1, 90 Duro, .644" ID x .087" Thk
15		76350		6	RACCORD, 9/16"-18, 37º x 9/16"-18, O-Ring, Incl 16
16		9617873		1	JOINT THORIQUE, 6-1, 90 Duro, .468" ID x .078" Thk
17		{87302733}		1	Elbow 45 Adj. 1.0 ORFS-ORB 3/4; Incl 18
18		167266		1	JOINT THORIQUE, 12-1, 90 Duro, .924 ID x .116" Thk
19		{87556906}		2	Bolt, Hex Head M14 X 70 ZND
20		87016615		2	RONDELLE, M12 x 28.5 x 3, HT
21		87637186		2	ECROU
22		{87564723}		2	Washer
23		87571937		1	ADAPTEUR, Incl 24
24		167266		1	JOINT THORIQUE, 12-1, 90 Duro, .924 ID x .116" Thk
25		87303844		1	RACCORD, 1 7/16"-12 ORFS x 1 1/16"-12 ORB, Incl 26
26		167266		1	JOINT THORIQUE, 12-1, 90 Duro, .924 ID x .116" Thk
27		86526		1	COUDE, 90º, 9/16"-18, 37º x 9/16"-18, LG
28		9617873		1	JOINT THORIQUE, 6-1, 90 Duro, .468" ID x .078" Thk

SYSTEME HYDROSTATIQUE - POMPE RACCORDS (440 AVEC COMMANDE PILOTE)

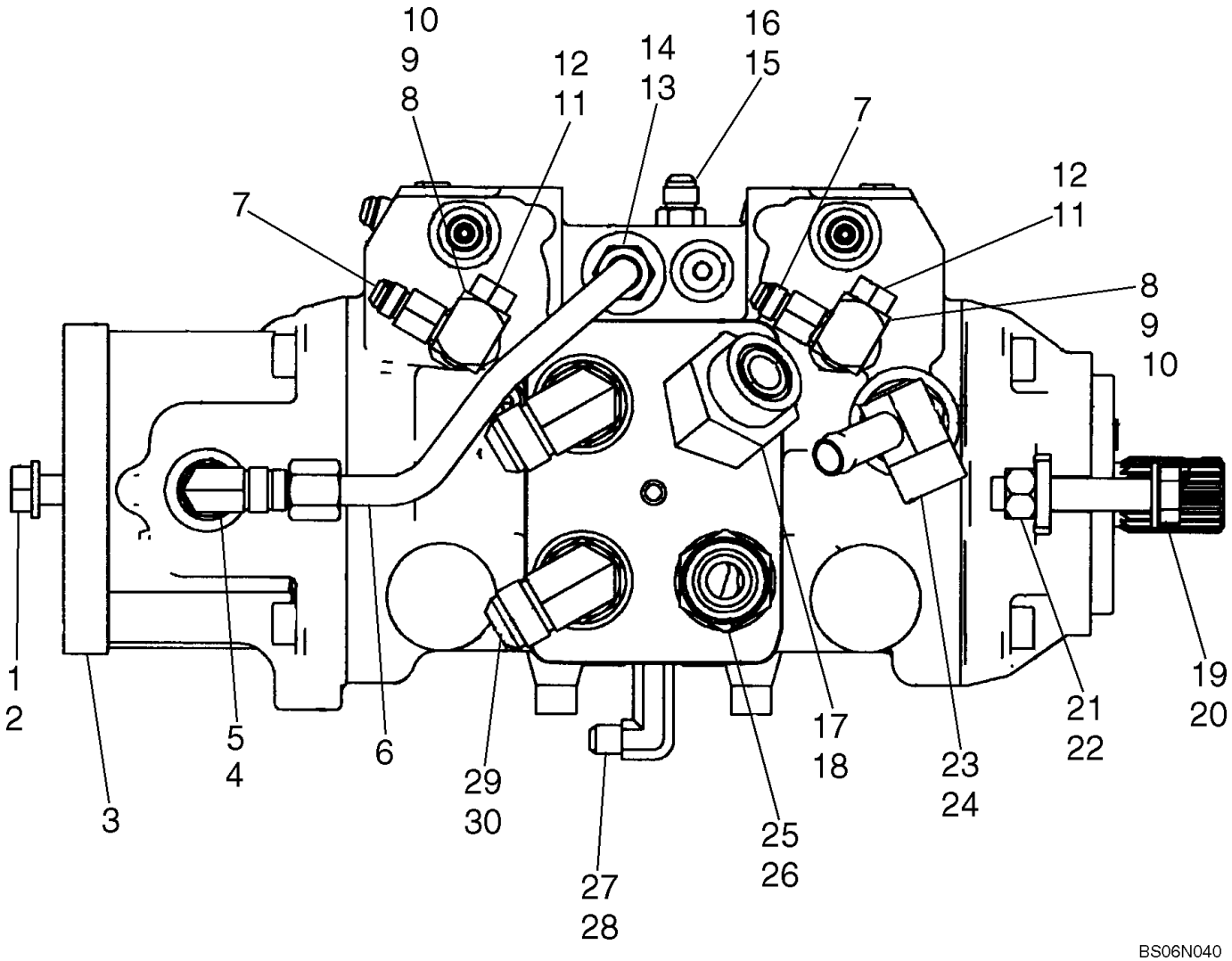

SYSTEME HYDROSTATIQUE - POMPE RACCORDS (440 AVEC COMMANDE PILOTE)

REF	FN	PART NUMBER	YR/SN	QTY	DESCRIPTION
29		322894		4	COUDE, 90º, 1 1/16"-12, 37º x 1 1/16"-12, O-Ring, Incl 30
30		167266		1	JOINT THORIQUE, 12-1, 90 Duro, .924 ID x .116" Thk

SYSTEME HYDROSTATIQUE - VITESSE SIMPLE, MOTEURS (440)

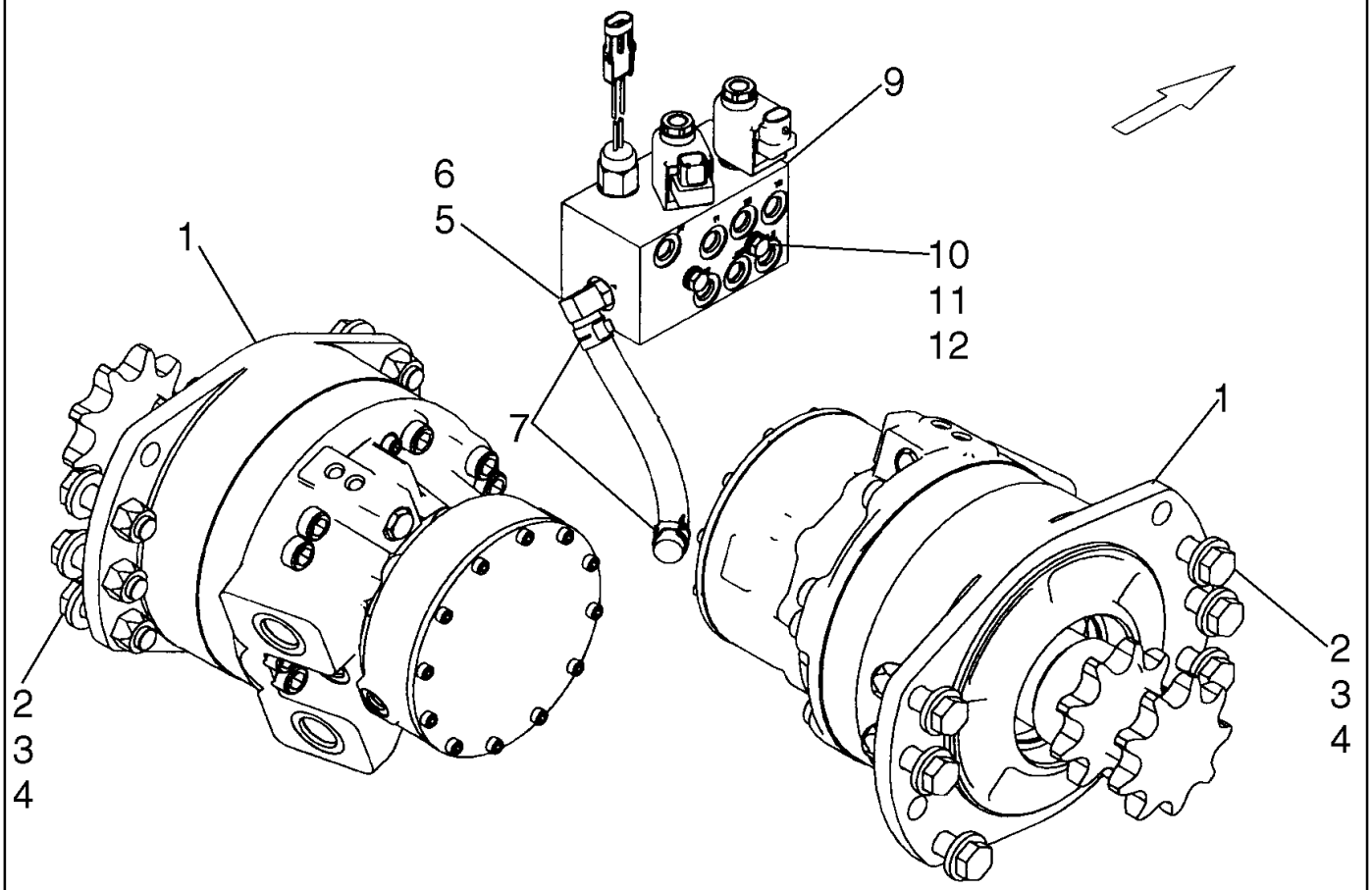

SYSTEME HYDROSTATIQUE - VITESSE SIMPLE, MOTEURS (440)

REF	FN	PART NUMBER	YR/SN	QTY	DESCRIPTION
1		87035341		2	MOTEUR HYDRAULIQUE, See Figure 06-56 - 06-58
2		86625258		12	RONDELLE, M16 x 34.5 x 5, HT
3		9828248		12	BOULON, Hex, M16 x 60, 10.9
4		86512555		12	CONTRE-ECROU, M16 x 2, Cl 10
5		86705580		1	RACCORD, 90º, 1/2" Hose x 9/16"-18 ORB Beaded, Incl. 6
6		9617873		1	JOINT THORIQUE, 6-1, 90 Duro, .468" ID x .078" Thk
7		87443510		2	BRIDE, FLEXIBLE, 20 mm
8		87563994		1	FLEXIBLE, 190 mm (7.48 in) Multi-Valve Drain
9		87546971		1	SOUPAPE HYDRAULIQUE, See Figure 06-25
10		86508571		2	BOULON, Hex, M8 x 90, 8.8
11		86624184		4	RONDELLE, M8 x 16 x 1.6
12		229197A1		2	ECROU

HYDROSTATIQUE, TUYAUX (440 AVEC COMMANDE PILOTE)

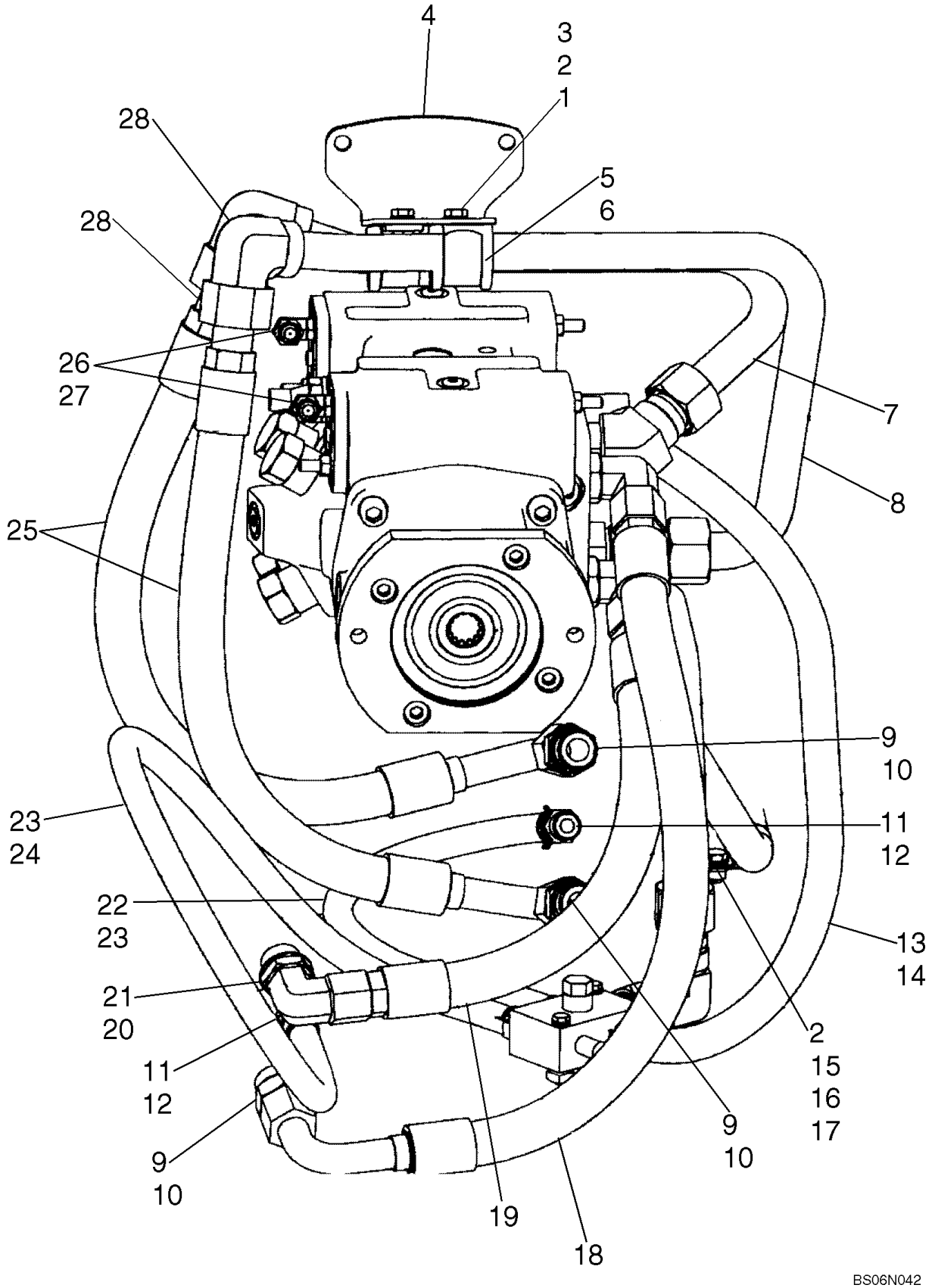

HYDROSTATIQUE, TUYAUX (440 AVEC COMMANDE PILOTE)

REF	FN	PART NUMBER	YR/SN	QTY	DESCRIPTION
1		9628098		3	CONTRE-ECROU, M8 x 1.25, Cl 10
2		86624184		2	RONDELLE, M8 x 16 x 1.6
3		43127		2	BOULON, Hex, M8 x 25, 8.8
4		87564008		1	BRIDE DE FIXATION
5		D67297		2	BLOC, Isolation
6		D68846		2	COLLIER
7		87547068		1	TUYAU HYDRAULIQUE, Motor To Pump Loop
8		87600630		1	TUYAU HYDRAULIQUE, Motor To Pump Loop
9		322896		3	RACCORD, 1 1/16"-12, 37º x 1 1/16"-12, O-Ring, Incl 10
10		167266		3	JOINT THORIQUE, 12-1, 90 Duro, .924 ID x .116" Thk
11		87010108		2	RACCORD, 1/2" Hose x 3/4"-16 ORB, Beaded, Incl 12
12		128825		2	JOINT THORIQUE, 8-1, 90 Duro, .644" ID x .087" Thk
13		87563995		1	FLEXIBLE, (657 mm, 25.87 in)Pump Drain
14		87443511		2	BRIDE
15		120103		1	BOULON, Hex, M8 x 16, 8.8
16		86637977		1	BRIDE, 1", Insul, 5/16" Bolt
17		229197A1		2	ECROU
18		87547060		1	FLEXIBLE, 675 mm (26.57 in) Motor To Pump Loop
19		87547061		1	FLEXIBLE, 505 mm (19.88 in)Motor To Pump Loop
20		322894		4	COUDE, 90º, 1 1/16"-12, 37º x 1 1/16"-12, O-Ring, Incl 21
21		167266		4	JOINT THORIQUE, 12-1, 90 Duro, .924 ID x .116" Thk
22		87022175		1	FLEXIBLE (ASSEMBLE), 600 mm (23.62 in)Case Drain
23		87443510		4	BRIDE, FLEXIBLE
24		87022174		1	FLEXIBLE (ASSEMBLE), 950 mm (37.40 in) Case Drain
25		87547062		2	FLEXIBLE, (646 mm, 25.43 in) Motor To Pump Loop
26		87604075		2	ADAPTEUR, Connector With 1.0 mm Orifice
27		86512936		2	COUDE, 90º, 9/16"-18, 37º x 7/16"-20, O-Ring, Incl 28
28		9824050		2	JOINT THORIQUE, -021, 90 Duro, .926" ID x .070" Thk

SYSTEME HYDROSTATIQUE - MULTIPLE FONCTION (440 AVEC COMMANDE)PILOTE

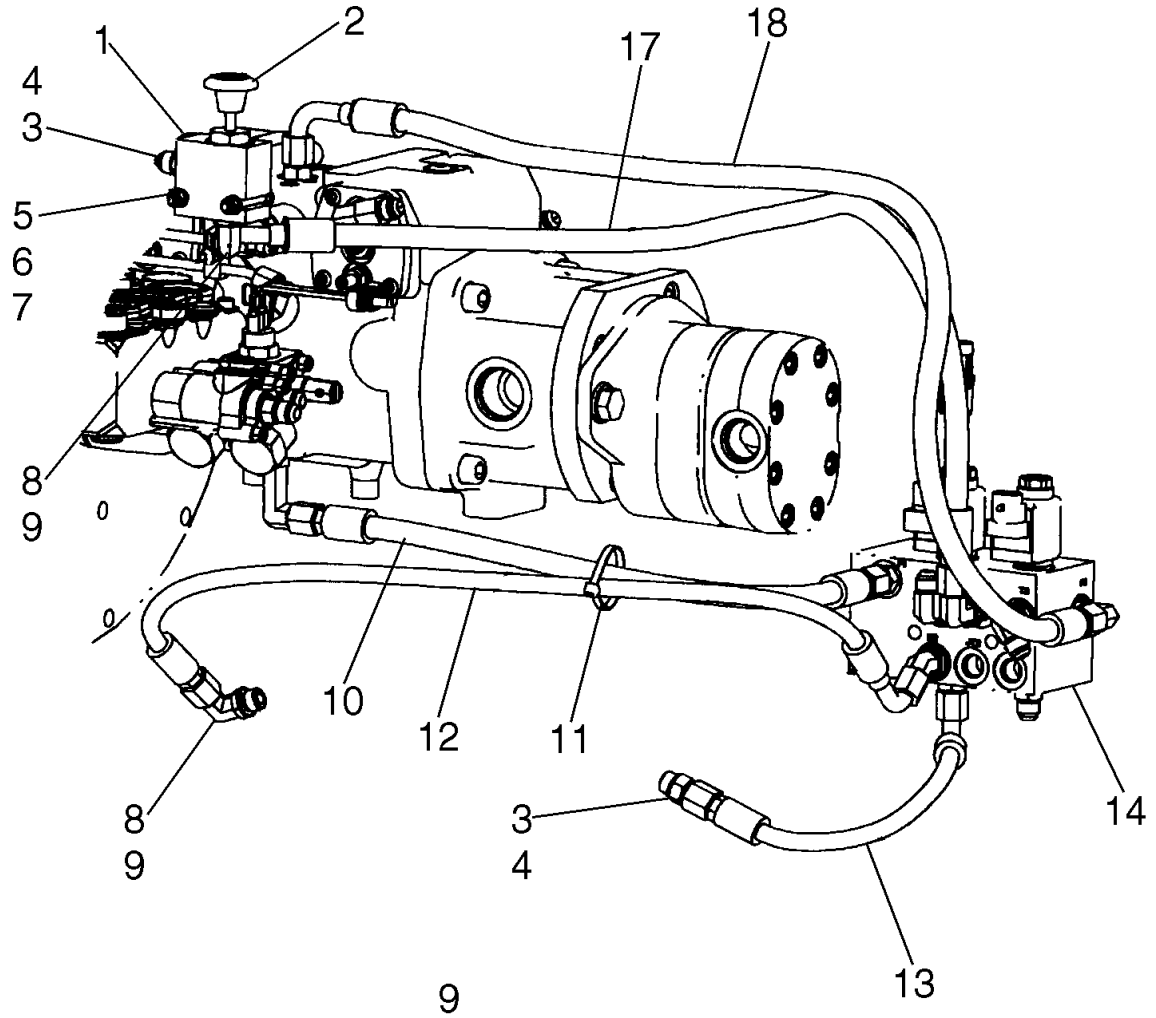

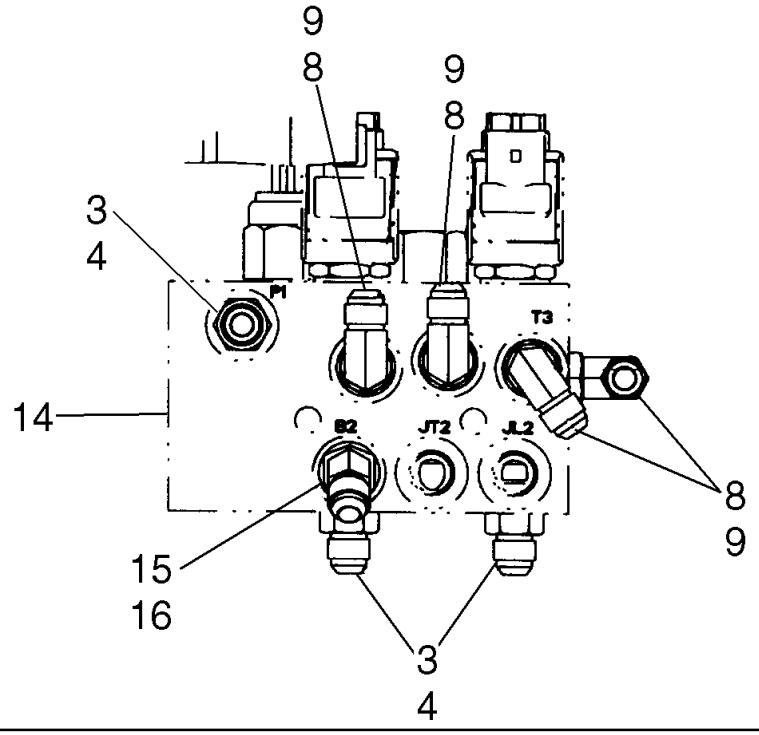

BS07K727

SYSTEME HYDROSTATIQUE - MULTIPLE FONCTION (440 AVEC COMMANDE)PILOTE

REF	FN	PART NUMBER	YR/SN	QTY	DESCRIPTION
1		87546973		1	SOUPAPE, Boom Override; Incl. Knob; If Used
1		87604076		1	GUIDE-SOUPAPE ECHAPP.MAJ, Boom Overide; If Used
2		87568435		1	DECALCOMANIE, Boom Override
3		76350		6	RACCORD, 9/16"-18, 37º x 9/16"-18, O-Ring, Incl. 4
4		9617873		6	JOINT THORIQUE, 6-1, 90 Duro, .468" ID x .078" Thk
5		86588450		7	RONDELLE, M6
6		86512440		2	CONTRE-ECROU
7		120056		2	BOULON, Hex, M6 x 50, 8.8
8		76344		6	COUDE, 90º, 9/16"-18, 37º x 9/16"-18, O-Ring, Incl. 9
9		9617873		6	JOINT THORIQUE, 6-1, 90 Duro, .468" ID x .078" Thk
10		87547032		1	FLEXIBLE
11		529070		1	SERRE-CABLE, .30" x 14.5"
12		{87563975}		1	Hose, 800 mm (31.50 in) Left Hand Brake
13		87563977		1	FLEXIBLE, 371 mm (14.61 in) Right Hand Brake
14		87546971		1	SOUPAPE HYDRAULIQUE, See Figure 06-25
15		330346		1	COUDE, 45º, 9/16"-18, 37º x 9/16"-18, O-Ring, Incl. 16
16		9617873		1	JOINT THORIQUE, 6-1, 90 Duro, .468" ID x .078" Thk
17		87563992		1	FLEXIBLE, 820 mm (32.28 in) Dump Valve Drain
18		87563991		1	FLEXIBLE, 884 mm (34.80 in) DA Pressure

SYSTEME HYDROSTATIQUE - DEUX VITESSES, MOTEURS

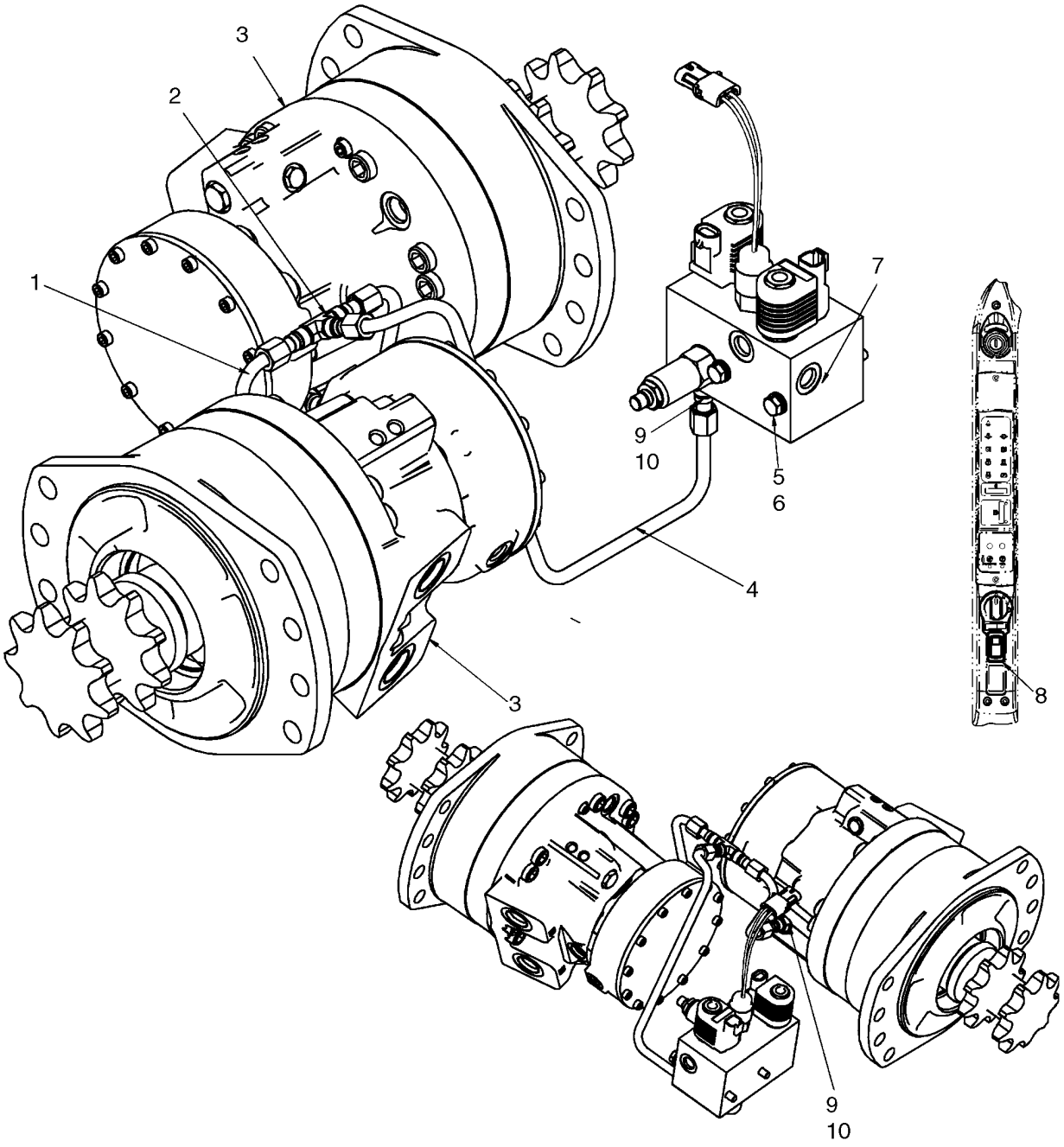

SYSTEME HYDROSTATIQUE - DEUX VITESSES, MOTEURS

REF	FN	PART NUMBER	YR/SN	QTY	DESCRIPTION
1		87430855		2	TUYAUTERIE
2		76355		1	TE, 9/16"-18, 37º
3		87035342		2	MOTEUR HYDRAULIQUE, See Fig 06-59 - 06-61
4		87455412		1	TUYAUTERIE
5		140016		4	RONDELLE, M8 x 16 x 1.6
6		86508571		2	BOULON, Hex, M8 x 90, 8.8
7		87429625		1	SOUPAPE HYDRAULIQUE, See Fig 06-26
8		87634136		1	CONTACTEUR, Indicator, High Speed
9		76350		3	RACCORD, 9/16"-18, 37º x 9/16"-18, O-Ring, Incl 10
10		9617873		3	JOINT THORIQUE, 6-1, 90 Duro, .468" ID x .078" Thk

SYSTEME HYDROSTATIQUE - DEUX VITESSES, MOTEURS (AVEC COMMANDE PILOTE)

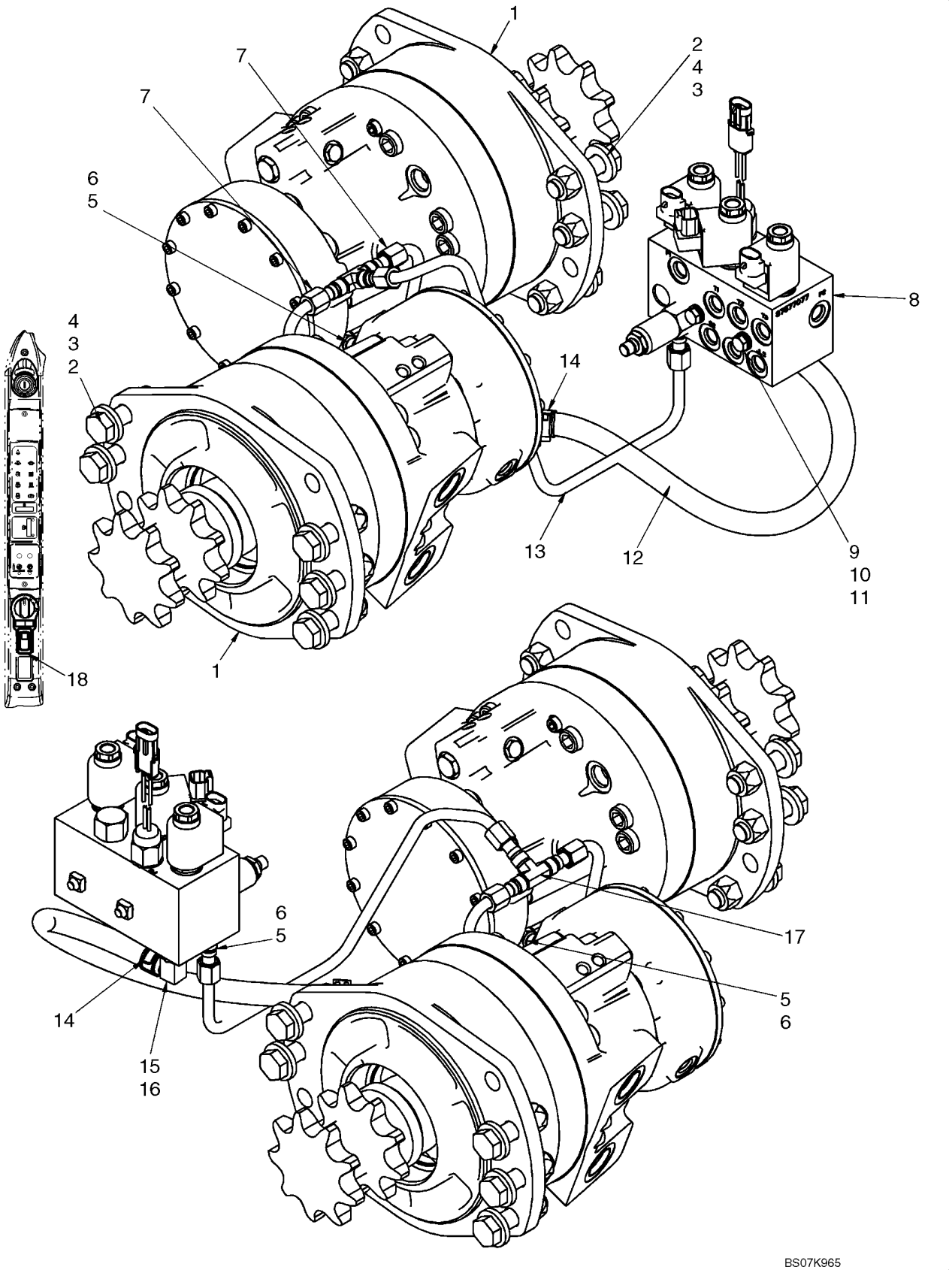

SYSTEME HYDROSTATIQUE - DEUX VITESSES, MOTEURS (AVEC COMMANDE PILOTE)

REF	FN	PART NUMBER	YR/SN	QTY	DESCRIPTION
1		87035342		2	MOTEUR HYDRAULIQUE, See Fig 06-59 - 06-61
2		86512555		12	CONTRE-ECROU, M16 x 2, Cl 10
3		86625258		12	RONDELLE, M16 x 34.5 x 5, HT
4		9828248		12	BOULON, Hex, M16 x 60, 10.9
5		76350		3	RACCORD, 9/16"-18, 37º x 9/16"-18, O-Ring, Incl 6
6		9617873		3	JOINT THORIQUE, 6-1, 90 Duro, .468" ID x .078" Thk
7		87430855		2	TUYAUTERIE
8		87577077		1	VALVE DE PILOTAGE, Pilot, Brake/Two Speed; See Fig 06-28
9		86508571		2	BOULON, Hex, M8 x 90, 8.8
10		86624184		4	RONDELLE, M8 x 16 x 1.6
11		229197A1		2	ECROU
12		87547047		1	FLEXIBLE, Hose, Multi Valve Drain, 520mm (20 1/2 in.)
13		87455412		1	TUYAUTERIE
14		87443510		2	BRIDE, FLEXIBLE
15		86705580		1	RACCORD, 90º, 1/2" Hose x 9/16"-18 ORB Beaded, Incl 16
16		9617873		1	JOINT THORIQUE, 6-1, 90 Duro, .468" ID x .078" Thk
17		76355		1	TE, 9/16"-18, 37º
18		87634136		1	CONTACTEUR, Indicator High Speed

SYSTEME HYDROSTATIQUE, MULTIPLE FONCTION MONTAGE

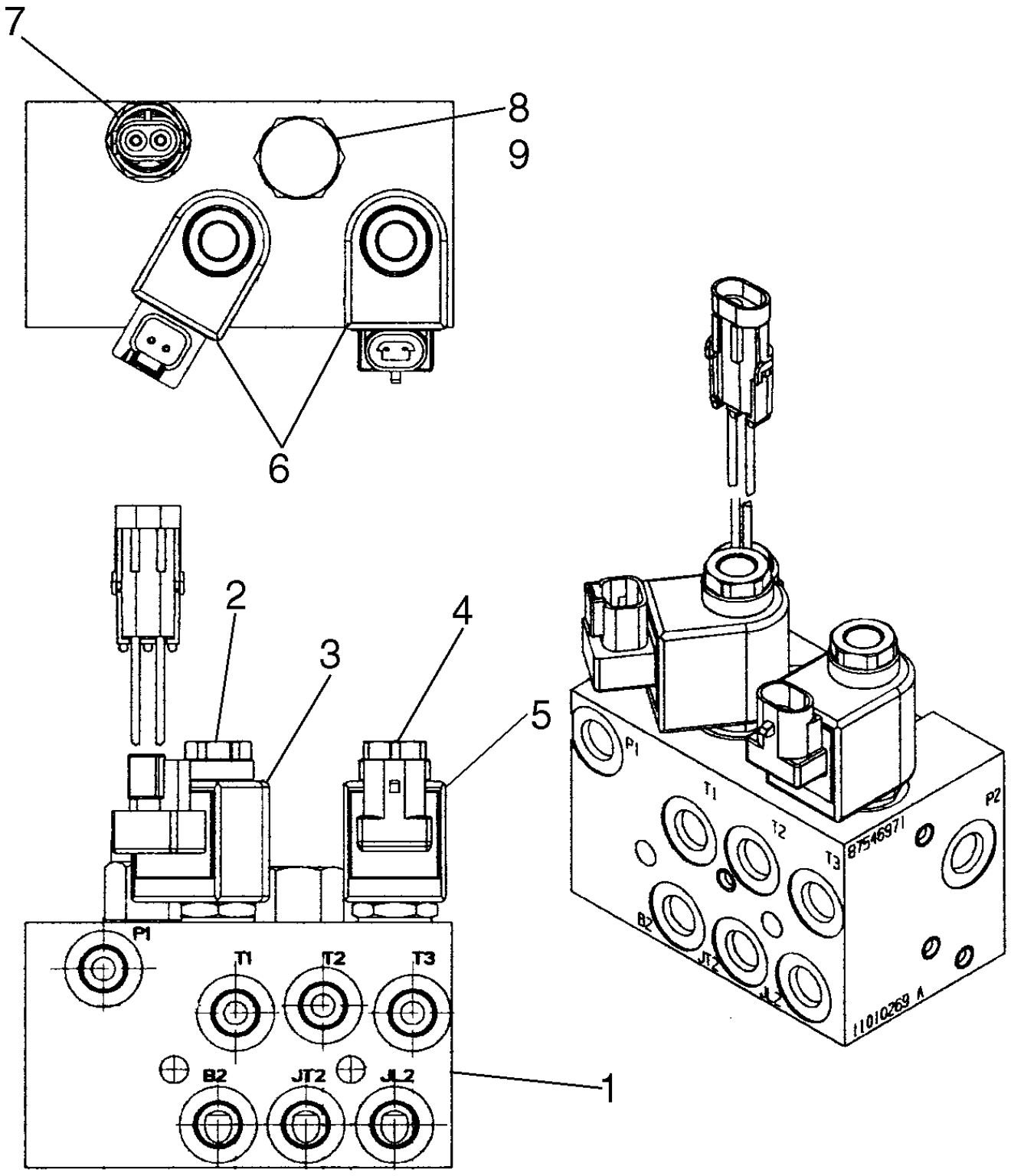

BS07G071

SYSTEME HYDROSTATIQUE, MULTIPLE FONCTION MONTAGE

REF	FN	PART NUMBER	YR/SN	QTY	DESCRIPTION
1		87546971		1	SOUPAPE HYDRAULIQUE, Pilot Control, Brake; Incl. 2 - 9
2		87588579		1	ELECTRO-VALVE
3		87588596		1	SOLENOIDE, Coil
4		87614011		1	ELECTRO-VALVE
5		87614012		1	BOBINE
6		87614013		1	POCHETTE DE JOINTS, Solenoid Valve
7		87458061		1	PRESSOSTAT, Charge Pressure
8		87614009		1	SOUPAPE, Cartridge Valve
9		87614015		1	POCHETTE DE JOINTS, Cartridge Valve

SYSTEME HYDROSTATIQUE - DEUX VITESSES, DISTRIBUTEUR

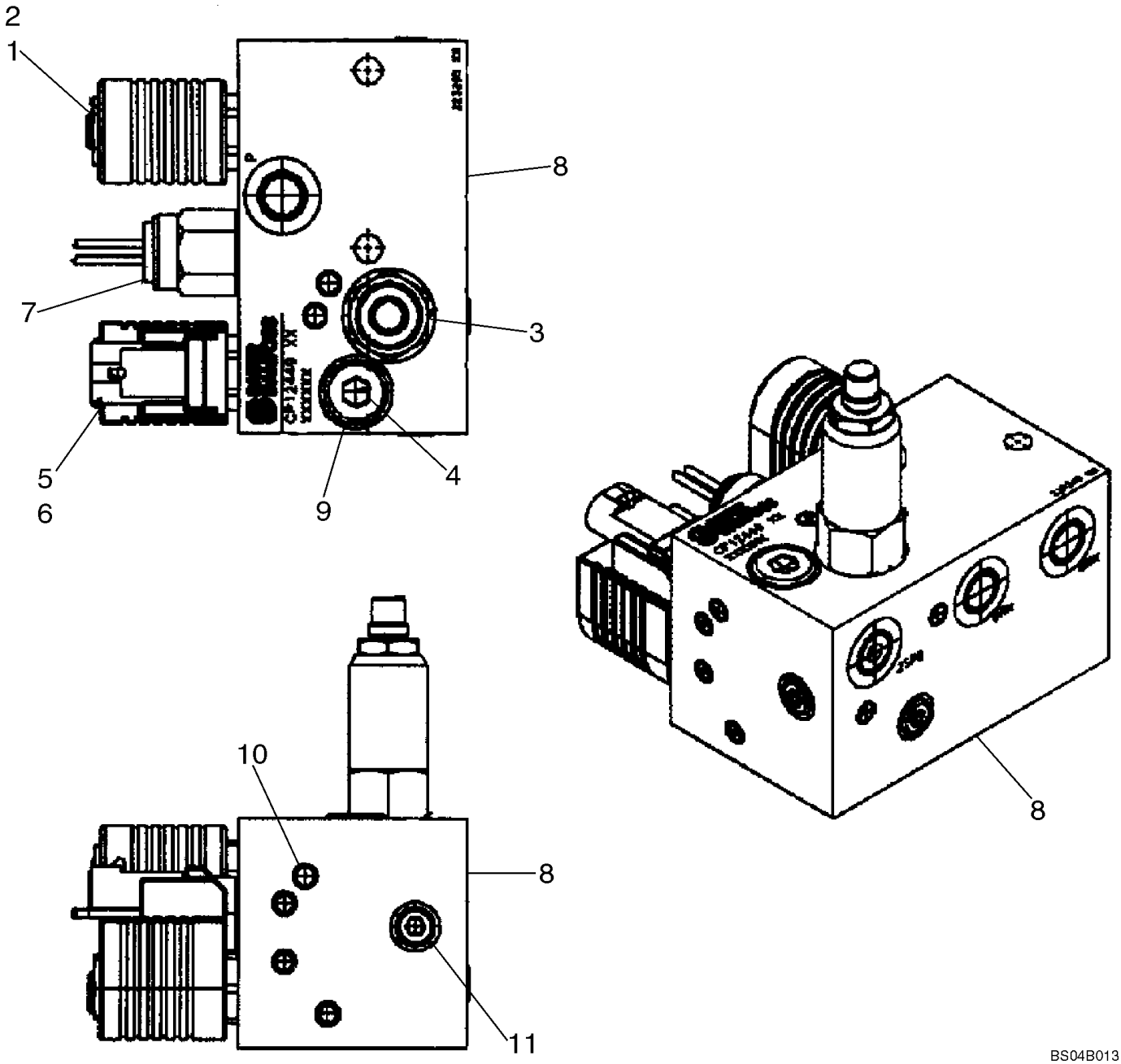

SYSTEME HYDROSTATIQUE - DEUX VITESSES, DISTRIBUTEUR

REF	FN	PART NUMBER	YR/SN	QTY	DESCRIPTION
		87429625		1	SOUPAPE HYDRAULIQUE, Two Speed; Incl. 1 - 11
		87352524		1	SOUPAPE, FREIN, Two Speed; Incl. 1 - 11
1		87424182		1	SOUPAPE, FREIN
2		87433496		X	BOBINE, Not Illustrated Separately
3		87433497		1	SOUPAPE, Sequence; Part of 87429625
3		87352527		1	VALVE, Sequence; Part of 87352524
4		87426545		1	ORIFICE, M12
5		87433495		1	ELECTRO-VALVE, Hydraulic Valve
6		87433499		X	BOBINE, Not Illustrated Separately
7		87019943		1	PRESSOSTAT, Hydraulic Valve
8		NSS		1	NON FOURNI SEPAREMENT, Body
9		NSS		1	NON FOURNI SEPAREMENT, Plug
10		NSS		11	NON FOURNI SEPAREMENT, Expansion Plug
11		NSS		3	NON FOURNI SEPAREMENT, Plug

SYSTEME HYDROSTATIQUE - DEUX VITESSES, DISTRIBUTEUR (440CT)

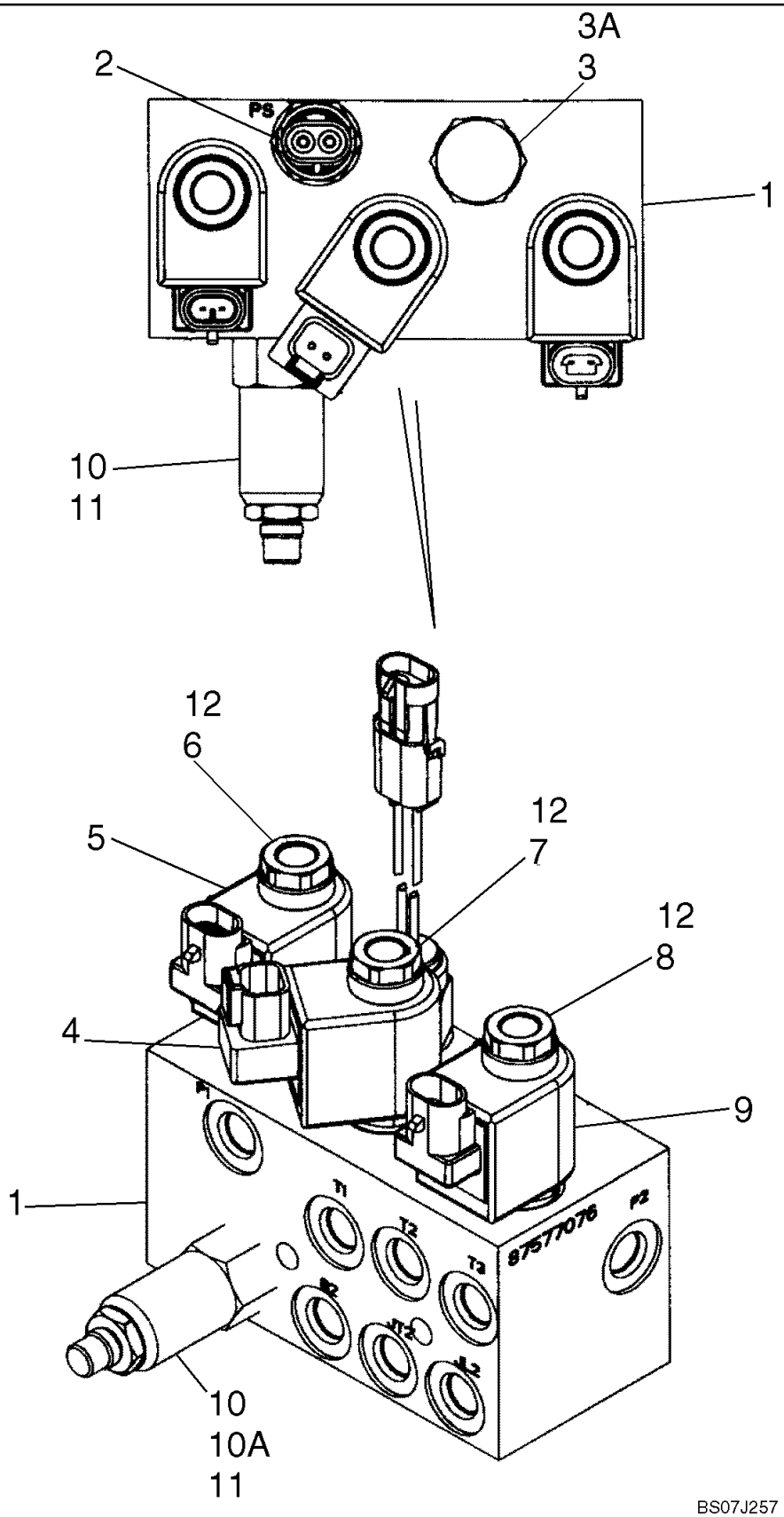

SYSTEME HYDROSTATIQUE - DEUX VITESSES, DISTRIBUTEUR (440CT)

REF	FN	PART NUMBER	YR/SN	QTY	DESCRIPTION
1		87577076		1	VALVE DE PILOTAGE, Brake Valve; Two Speed; Incl. 1 - 12
2		87458061		1	PRESSOSTAT, Brake Valve
3		87614009		1	SOUPAPE, Cartridge Valve
3A		87614015		1	POCHETTE DE JOINTS, Cartridge Valve
4		87588596		1	SOLENOIDE, Coil
5		87588597		1	SOLENOIDE, Coil
6		87588585		1	ELECTRO-VALVE, Sol Valve
7		87588579		1	ELECTRO-VALVE, Sol Valve
8		87614011		1	ELECTRO-VALVE, Sol Valve
9		87614012		1	BOBINE, Coil
10		87352527		1	VALVE, Sequence
10A		87614014		1	POCHETTE DE JOINTS, Solenoid Valve
11		87426545		1	ORIFICE, .017 Sauer
12		87614013		1	POCHETTE DE JOINTS, Solenoid Valve

SYSTEME HYDROSTATIQUE - DEUX VITESSES, DISTRIBUTEUR (AVEC COMMANDE PILOTE)

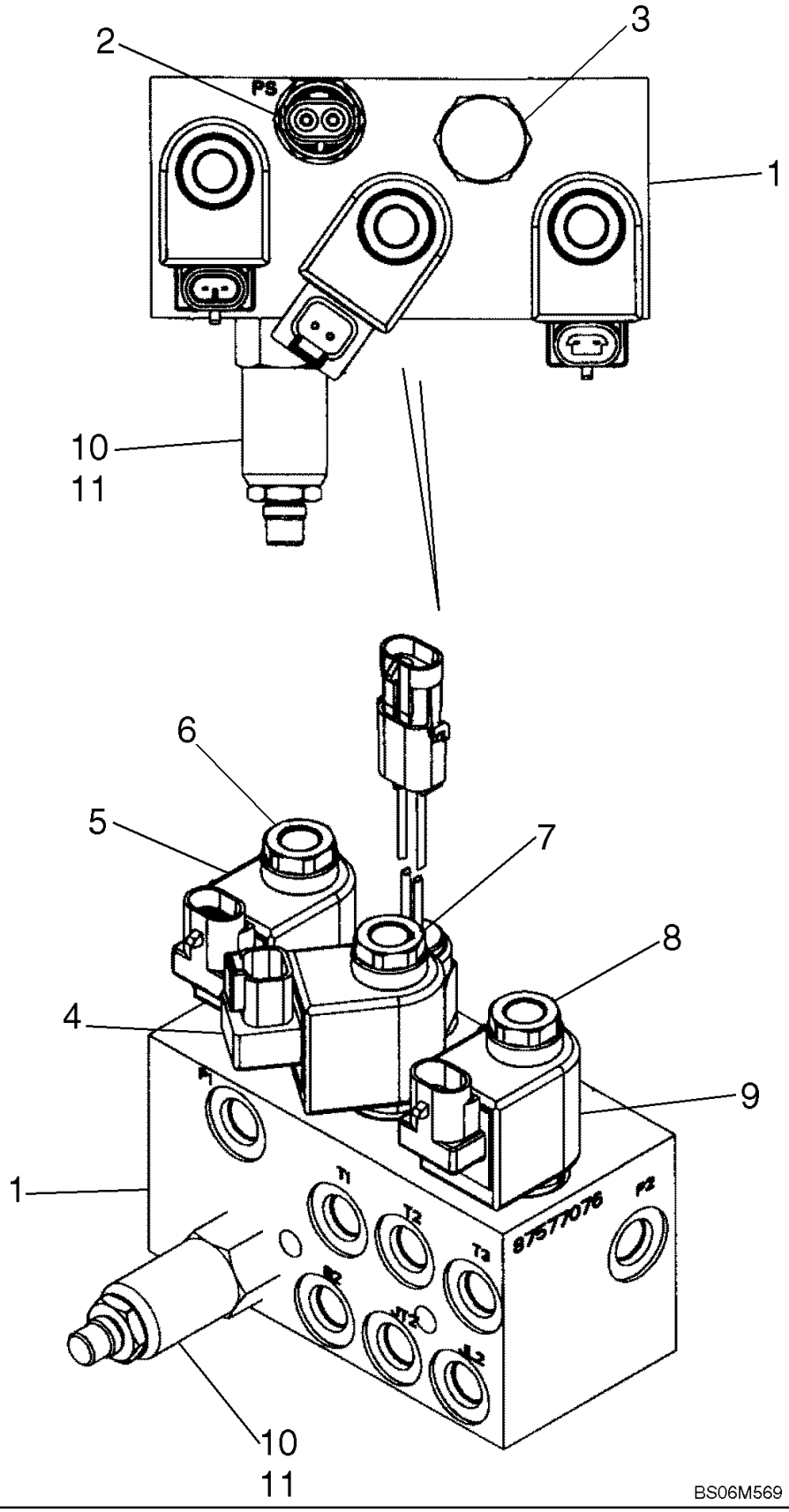

SYSTEME HYDROSTATIQUE - DEUX VITESSES, DISTRIBUTEUR (AVEC COMMANDE PILOTE)

REF	FN	PART NUMBER	YR/SN	QTY	DESCRIPTION
1		87577077		1	VALVE DE PILOTAGE, Brake Valve; Two Speed; Incl. 1 - 11
2		87458061		1	PRESSOSTAT, Brake Valve
3		NSS		1	NON FOURNI SEPAREMENT, Cartridge Valve
4		NSS		1	NON FOURNI SEPAREMENT, Coil
5		NSS		1	NON FOURNI SEPAREMENT, Coil
6		NSS		1	NON FOURNI SEPAREMENT, Sol Valve
7		NSS		1	NON FOURNI SEPAREMENT, Sol Valve
8		NSS		1	NON FOURNI SEPAREMENT, Sol Valve
9		NSS		1	NON FOURNI SEPAREMENT, Coil
10		87433497		1	SOUPAPE, Sequence
11		87426545		1	ORIFICE, .017 Sauer

SYSTEME HYDROSTATIQUE (440CT EUROPE)

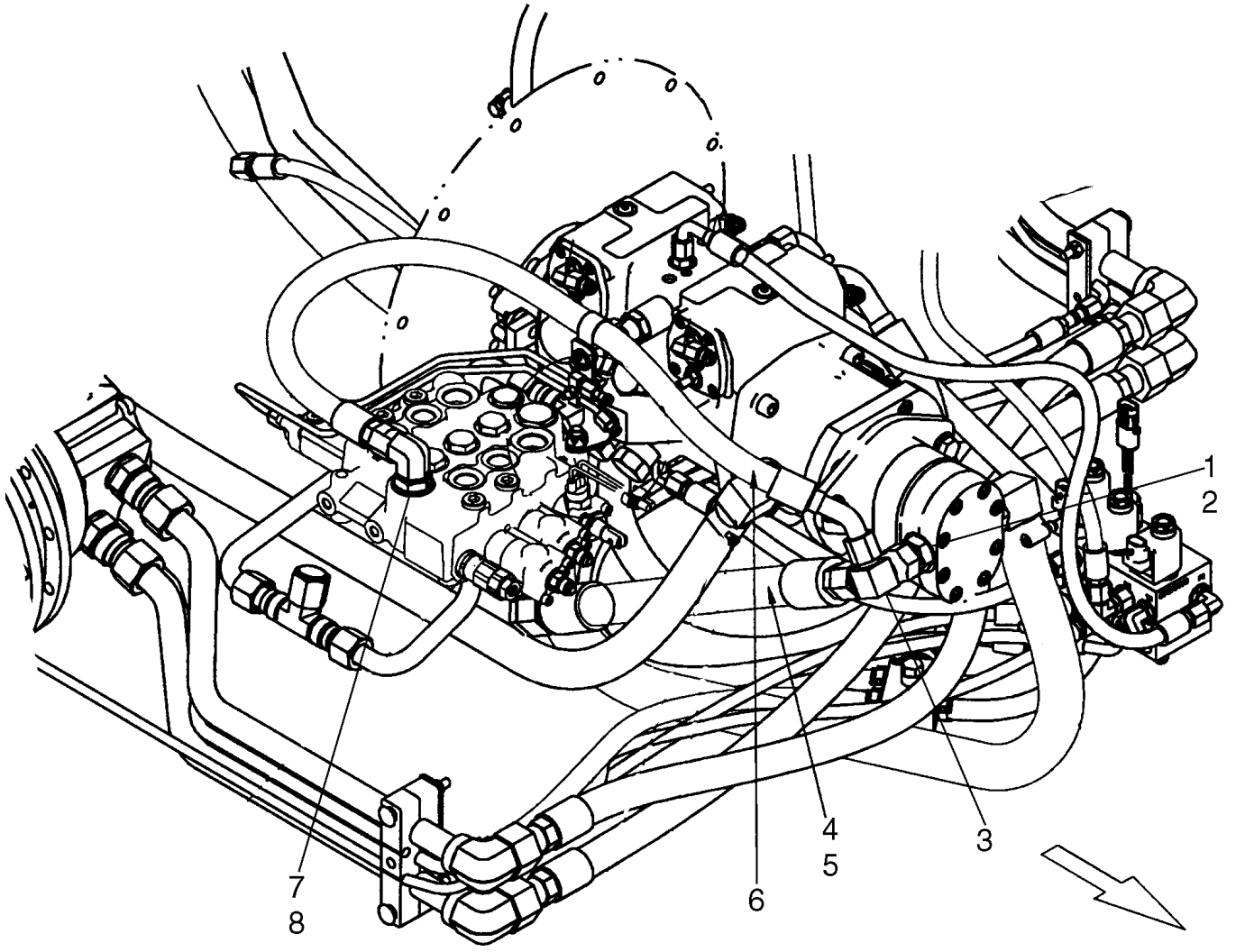

SYSTEME HYDROSTATIQUE (440CT EUROPE)

REF	FN	PART NUMBER	YR/SN	QTY	DESCRIPTION
1		322896		1	RACCORD, 1 1/16"-12, 37° x 1 1/16"-12, O-Ring, Incl 2
2		167266		1	JOINT THORIQUE, 12-1, 90 Duro, .924 ID x .116" Thk
3		87441649		1	ADAPTEUR
4		9790527		1	BOUCHON, 1 5/16"-12, 37°
5		87462103		1	FLEXIBLE (ASSEMBLE), Hose, Resonator
6		87720912		1	FLEXIBLE, Hose, Valve Supply 950mm (37 13/32 in.)
7		84570		1	COUDE, 90°, 7/8"-14, 37° x 1 1/16"-12, O-Ring, Incl 8
8		167266		1	JOINT THORIQUE, 12-1, 90 Duro, .924 ID x .116" Thk

SYSTEME HYDROSTATIQUE (440 EUROPE)

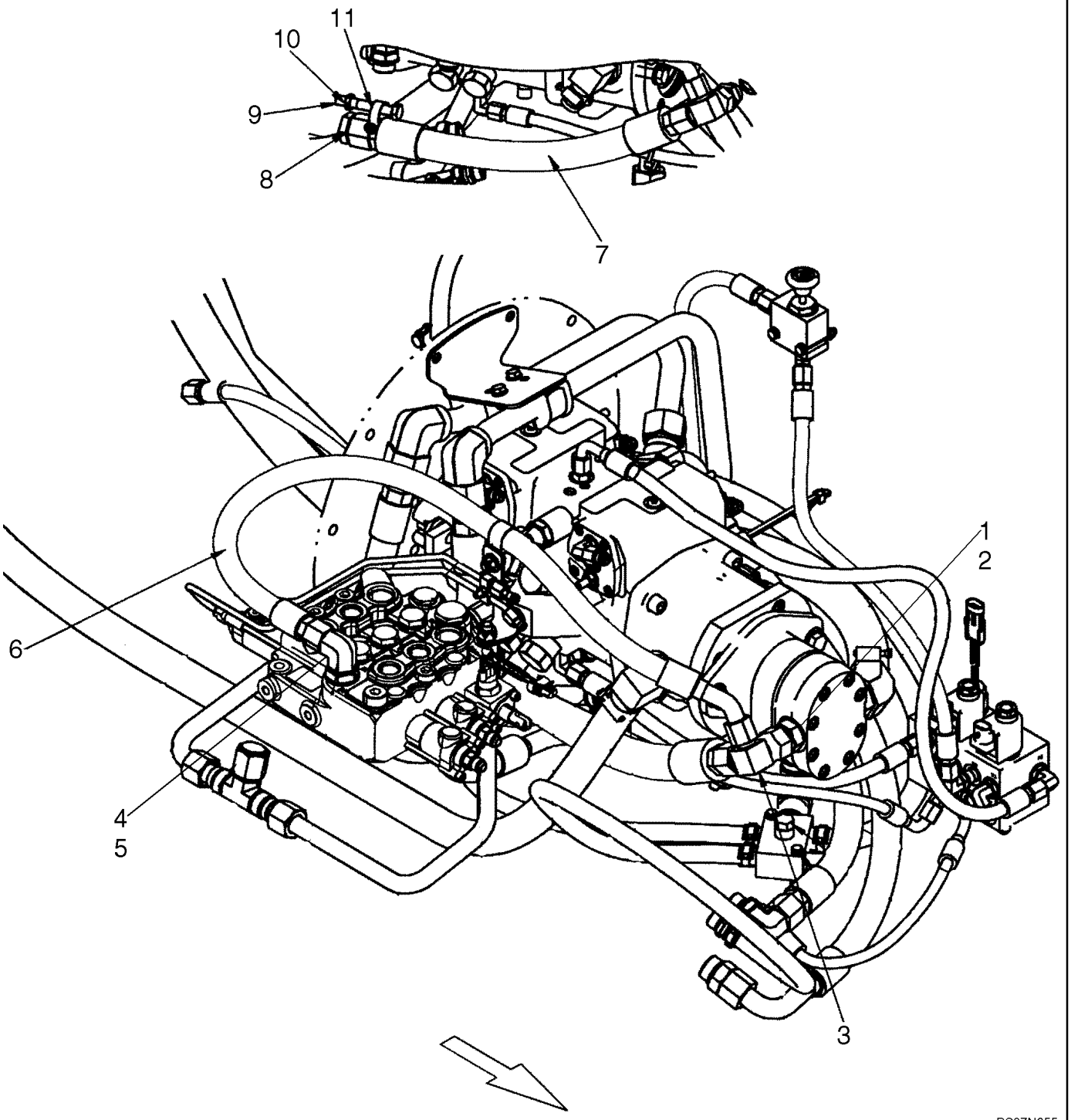

SYSTEME HYDROSTATIQUE (440 EUROPE)

REF	FN	PART NUMBER	YR/SN	QTY	DESCRIPTION
1		322896		1	RACCORD, 1 1/16"-12, 37° x 1 1/16"-12, O-Ring, Incl 2
2		167266		1	JOINT THORIQUE, 12-1, 90 Duro, .924 ID x .116" Thk
3		87441649		1	ADAPTEUR
4		84570		1	COUDE, 90°, 7/8"-14, 37° x 1 1/16"-12, O-Ring, Incl 5
5		167266		1	JOINT THORIQUE, 12-1, 90 Duro, .924 ID x .116" Thk
6		87720912		1	FLEXIBLE, Hose, Valve Supply 950mm (37 13/32 in.)
7		87462103		1	FLEXIBLE (ASSEMBLE), Hose, Resonator
8		9790527		1	BOUCHON, 1 5/16"-12, 37°
9		43158		1	BOULON, Hex, M12 x 80, 8.8
10		323238		1	ECROU, Thin, M12 x 1.75, Cl 05
11		87039085		1	BRIDE, FLEXIBLE, 1.25/2.125 HD Worm

SYSTEME HYDROSTATIQUE (440 EUROPE)

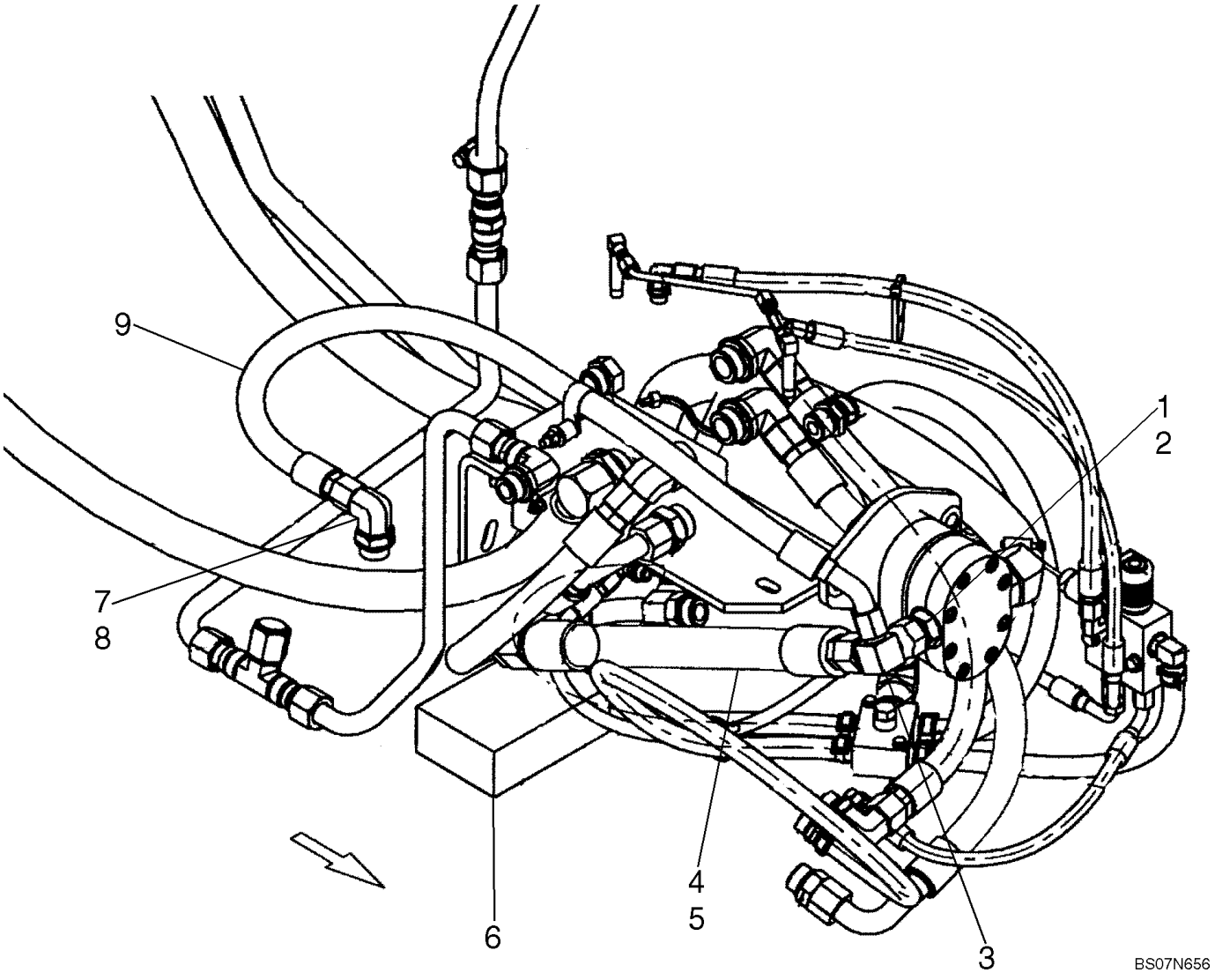

SYSTEME HYDROSTATIQUE (440 EUROPE)

REF	FN	PART NUMBER	YR/SN	QTY	DESCRIPTION
1		322896		1	RACCORD, 1 1/16"-12, 37° x 1 1/16"-12, O-Ring, Incl 2
2		167266		1	JOINT THORIQUE, 12-1, 90 Duro, .924 ID x .116" Thk
3		87441649		1	ADAPTEUR
4		87462103		1	FLEXIBLE (ASSEMBLE), Hose, Resonator
5		9790527		1	BOUCHON, 1 5/16"-12, 37°
6		87353205		1	TAMPON
7		84570		1	COUDE, 90°, 7/8"-14, 37° x 1 1/16"-12, O-Ring, Incl 8
8		167266		1	JOINT THORIQUE, 12-1, 90 Duro, .924 ID x .116" Thk
9		87720912		1	FLEXIBLE, Hose, Valve Supply 950mm (37 13/32 in.)

FILTRE - SUPPORT

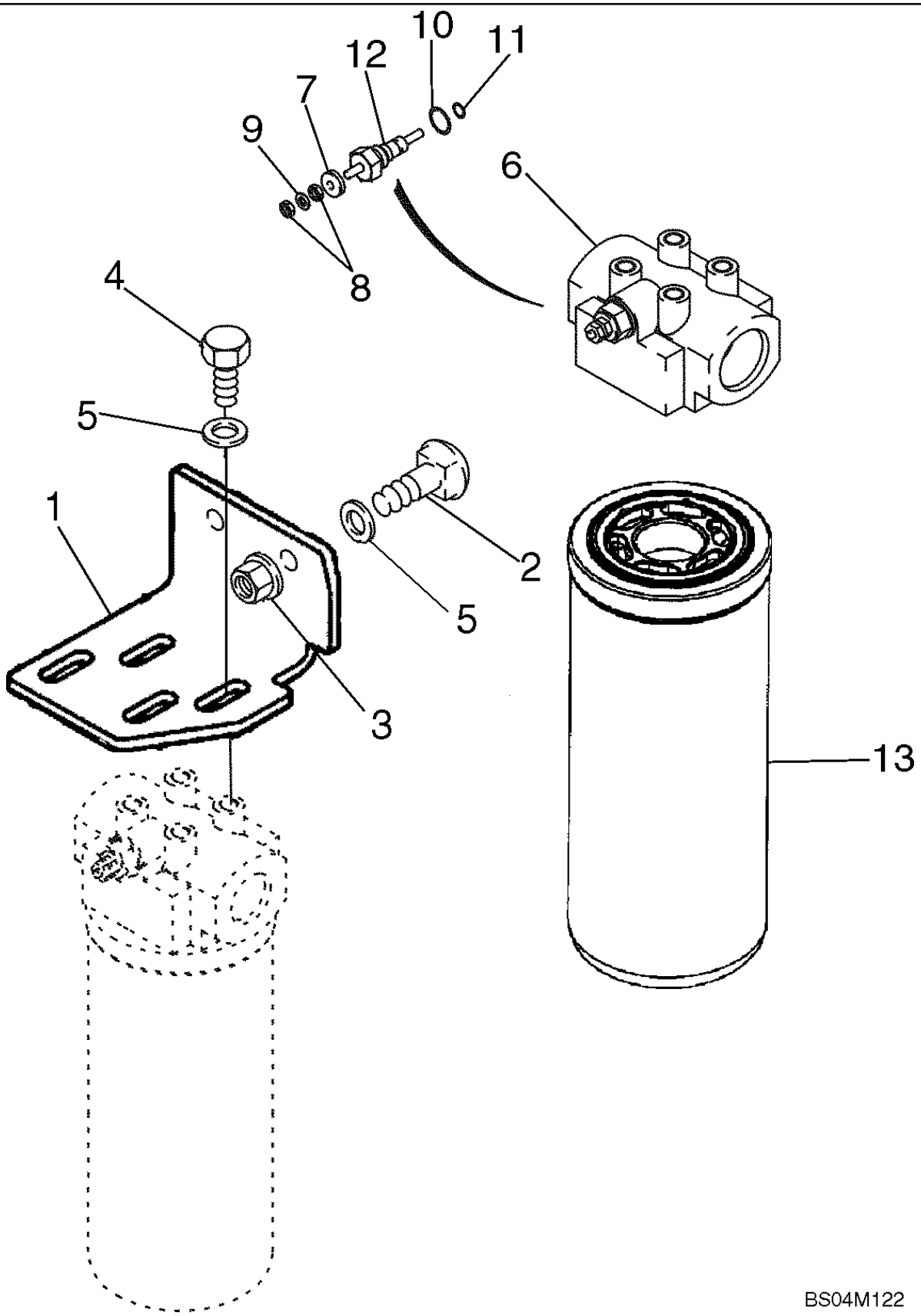

FILTRE - SUPPORT

REF	FN	PART NUMBER	YR/SN	QTY	DESCRIPTION
1		87020901		1	EQUERRE, Hydrostatic Filter
2		9706704		2	BOULON, Hex, M10 x 35, 8.8, Full Thd
3		86512554		2	CONTRE-ECROU, M10 x 1.5, Cl 10
4		43139		2	VIS, Hex, M10 x 25, 8.8, Full Thd
5		86639325		2	RONDELLE, M10 x 24.5 x 3, HT
		87430661		1	FILTRE, Hydrostatic Filter; Return; Incl. 6 - 13
6		87439984		1	TETE DE FILTRE, Hydrostatic Filter; Incl. N13268
		N13268		1	PRESSOSTAT, Hydrostatic Filter; Incl. 7 - 12
7		NSS		1	NON FOURNI SEPAREMENT, Washer; Red, White
8		129-667		2	ECROU, #10-32, LH
9		493-21020		1	RONDELLE FREIN, Int Tooth, #10
10		9617873		1	JOINT THORIQUE, 6-1, 90 Duro, .468" ID x .078" Thk
11		9672548		1	JOINT THORIQUE, -011, 70 Duro, .301" ID x .070" Thk
12		NSS		1	NON FOURNI SEPAREMENT, Body
13		87010593		1	ELÉMENT, Hydrostatic Filter

POMPES DOUBLES (440)

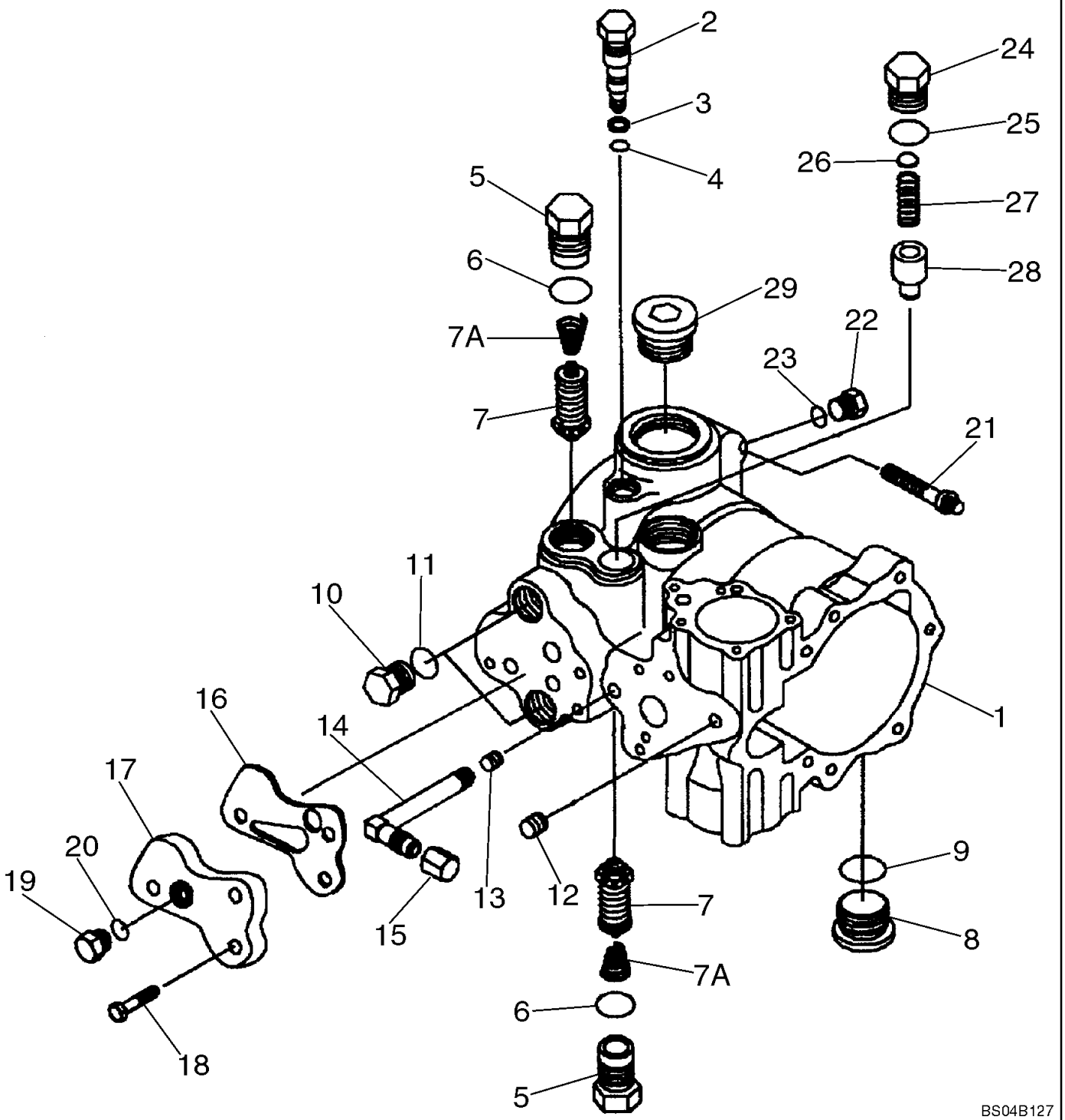

POMPES DOUBLES (440)

REF	FN	PART NUMBER	YR/SN	QTY	DESCRIPTION
					Front Pump
		87043500		1	POMPE, Incl. 1 - 29
1		402364A1		1	CARTER
2		87039612		1	VALVE BY-PASS, Incl. Ref 3, 4
3		S99877		1	ANNEAU
4		86993475		1	JOINT THORIQUE, 3/8 ID x 1/16; Included in 140008A1 Seal Kit
		N14848		2	SOUPAPE, DÉCHARGE, Incl. 5 - 7A
5		NSS		1	NON FOURNI SEPAREMENT, Plug
6		237-6012		1	JOINT THORIQUE, 12-1, 90 Duro, .924 ID x .118" Thk, Included in 140008A1 Seal Kit
7		NSS		1	NON FOURNI SEPAREMENT, Valve, Relief
7A		86993468		1	RESSORT
8		9841223		2	BOUCHON, Hex Soc, 1 1/16"-12 ORB, Incl. 9
9		237-6012		1	JOINT THORIQUE, 12-1, 90 Duro, .924 ID x .118" Thk
10		76349		2	BOUCHON, Hex Hd, 9/16"-18 ORB, Incl. 11
11		237-6006		1	JOINT THORIQUE, 6-1, 90 Duro, .468" ID x .078" Thk
12		F23137		1	BOUCHON
13		86993479		1	BOUCHON
14		86993480		1	COUDE
15		86993467		1	CHAPEAU
16		303709A1		1	JOINT, Filter Adapter; Included in 140008A1 Seal Kit
17		101462A1		1	ADAPTEUR, Suction Line Filter
18		26-516		3	BOULON, Hex, 5/16"-18 x 1", G8, Full Thd
19		76349		1	BOUCHON, Hex Hd, 9/16"-18 ORB, Incl. Ref 20
		140008A1		1	JEU JOINTS ETANCHEITE, Overhaul Seal And Gasket Kit; Incl. (10) Rings, (4) Bearings, (20) O-Rings, (6) Gaskets, (2) Seals; Incl. Ref 3, 4, 6, 16, 25
20		237-6006		1	JOINT THORIQUE, 6-1, 90 Duro, .468" ID x .078" Thk
21		166-89		2	VIS, 12 Pt Flg, 1/2"-13 x 2", G8
22		9672438		1	BOUCHON, Hex Hd, 7/16"-20 ORB, Incl. 23
23		237-6006		1	JOINT THORIQUE, 6-1, 90 Duro, .468" ID x .078" Thk
24		87039611		1	BOUCHON, Charge Relief; Incl. 25

POMPES DOUBLES (440)

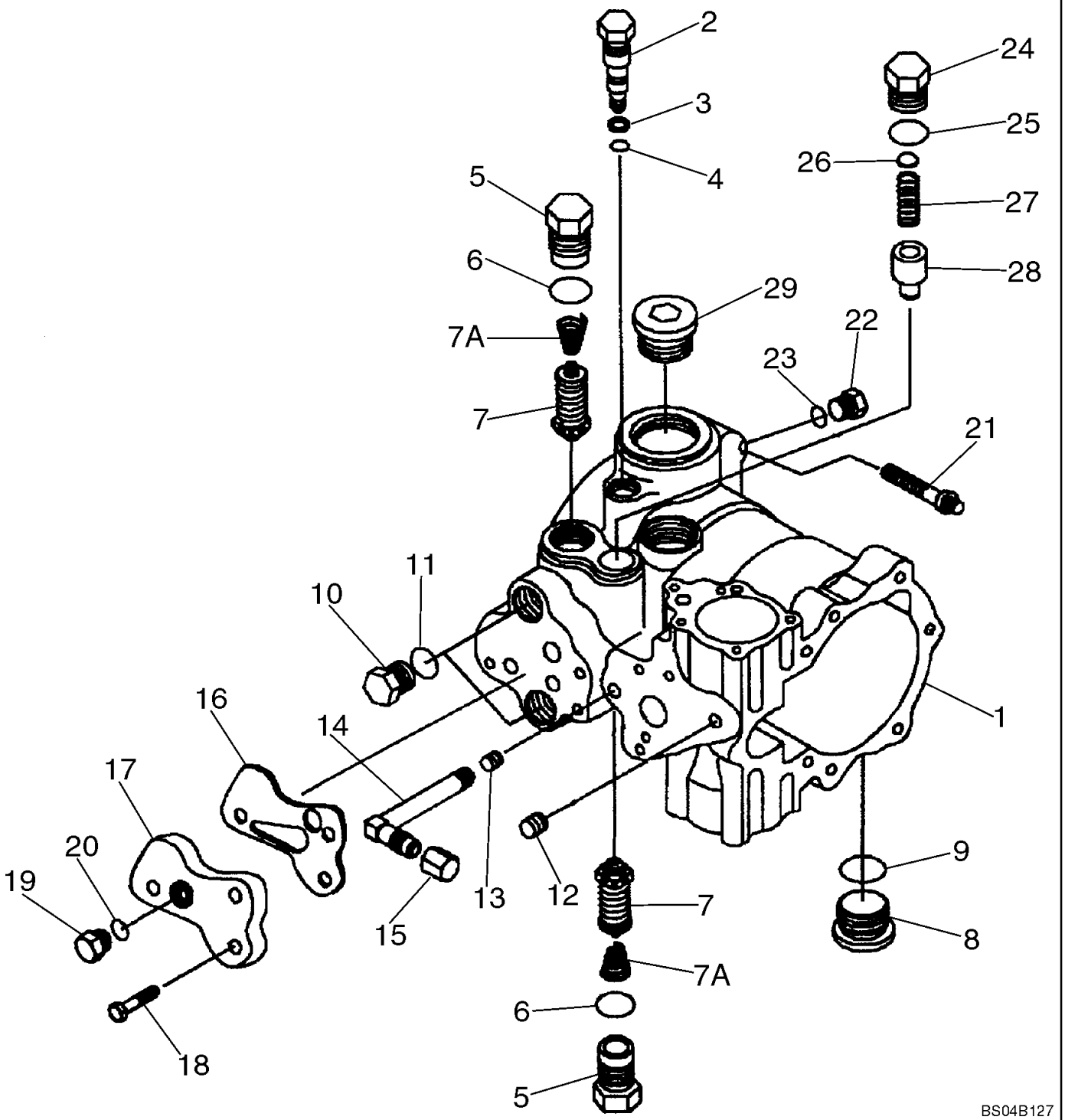

POMPES DOUBLES (440)

REF	FN	PART NUMBER	YR/SN	QTY	DESCRIPTION
25		237-6010		1	JOINT THORIQUE, 10-1, 90 Duro, .755" ID x .097" Thk, Included in 140008A1 Seal Kit
26		H407767		1	POCHETTE, Shim
27		244898A1		1	RESSORT
28		V38371		1	SOUPAPE, Charge Relief
29		NSS		1	NON FOURNI SEPAREMENT, Plug

POMPES DOUBLES (440)

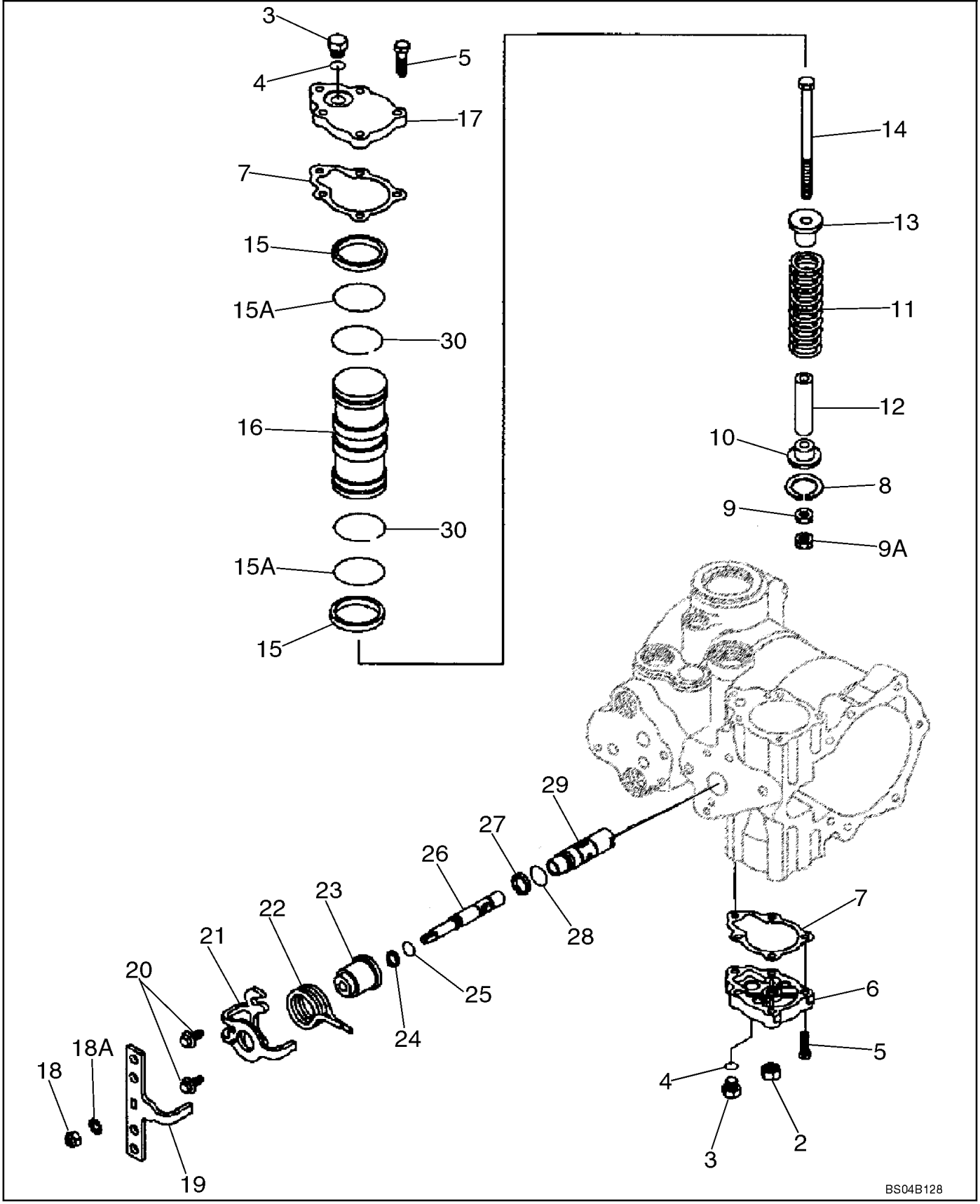

POMPES DOUBLES (440)

REF	FN	PART NUMBER	YR/SN	QTY	DESCRIPTION
					Front Pump
		87043500		1	POMPE, Incl. 2 - 30
2		N13260		1	ECROU, 5/8 NF
3		76349		2	BOUCHON, Hex Hd, 9/16"-18 ORB, Incl. 4
4		237-6006		1	JOINT THORIQUE, 6-1, 90 Duro, .468" ID x .078" Thk
5		H438321		10	BOULON, 1/4 x 1-1/4; 8
6		H436065		1	COUVERCLE, Included in 140008A1 Seal Kit
7		N14063		2	JOINT
8		N13255		1	ANNEAU
9		425-116		1	ECROU, 3/8"-24, G5
9B		324604A1		1	ECROU, 3/8 in
10		N13241		1	GUIDE
11		N13226		1	RESSORT
12		N13242		1	MANCHON
13		N14666		1	GUIDE
14		370531A1		1	VIS
		H673773		1	POCHETTE, Incl. 15, 15A; Incl. Rings For Rear Pump Pistons
15		N14668		4	SEGMENT DE PISTON, Included in 140008A1 Seal Kit
15A		238-5131		2	JOINT THORIQUE, -131, 70 Duro, 1.674" ID x .103" Thk, Included in 140008A1 Seal Kit
		140008A1		1	JEU JOINTS ETANCHEITE, Overhaul Seal And Gasket Kit; Incl. (10) Rings, (4) Bearings, (20) O-Rings, (6) Gaskets, (2) Seals; Incl. Ref 7, 15, 15A, 24, 25, 27, 28, 30
16		87039622		1	PISTON COMPLET, Incl. 15, 15A, 30
17		H436053		1	COUVERCLE
18		H436054		1	ECROU
18A		493-41033		1	RONDELLE FREIN, Ext Tooth, 5/16"
19		436415A1		1	POIGNÉE
20		H435770		2	VIS
21		436416A1		1	PATTE FIXATION
22		407060A1		1	RESSORT
23		87039613		1	GUIDE

POMPES DOUBLES (440)

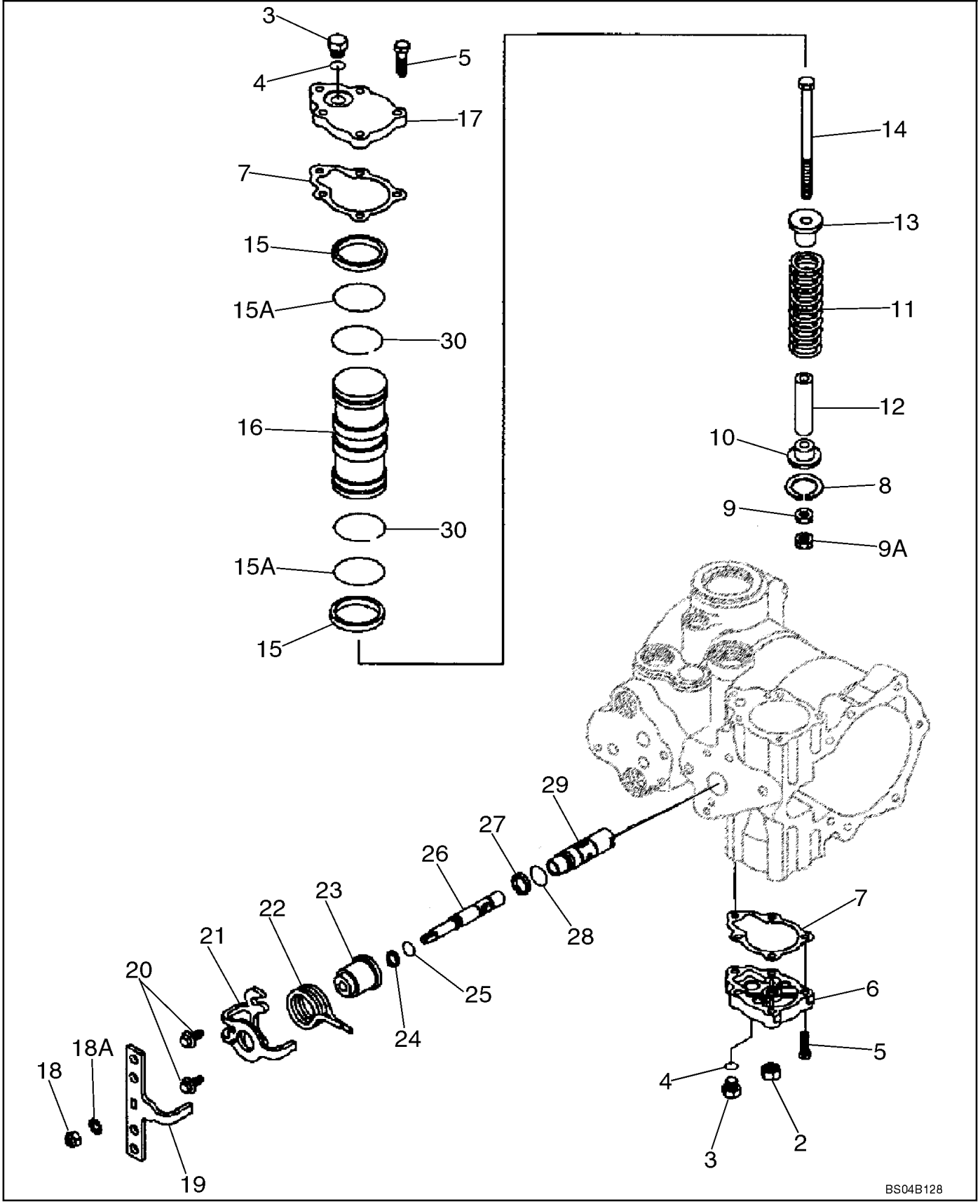

POMPES DOUBLES (440)

REF	FN	PART NUMBER	YR/SN	QTY	DESCRIPTION
24		86993484		1	ANNEAU, Included in 140008A1 Seal Kit
25		86993475		1	JOINT THORIQUE, Included in 140008A1 Seal Kit
26		87039614		1	TIROIR, Incl. 24, 25
27		86993483		1	ANNEAU, Included in 140008A1 Seal Kit
28		NSS		1	NON FOURNI SEPAREMENT, O-Ring; Included in 140008A1 Seal Kit
29		87039615		1	DOUILLE, Incl. 27, 28
30		100536A1		2	ANNEAU, Included in 140008A1 Seal Kit

POMPES DOUBLES (440)

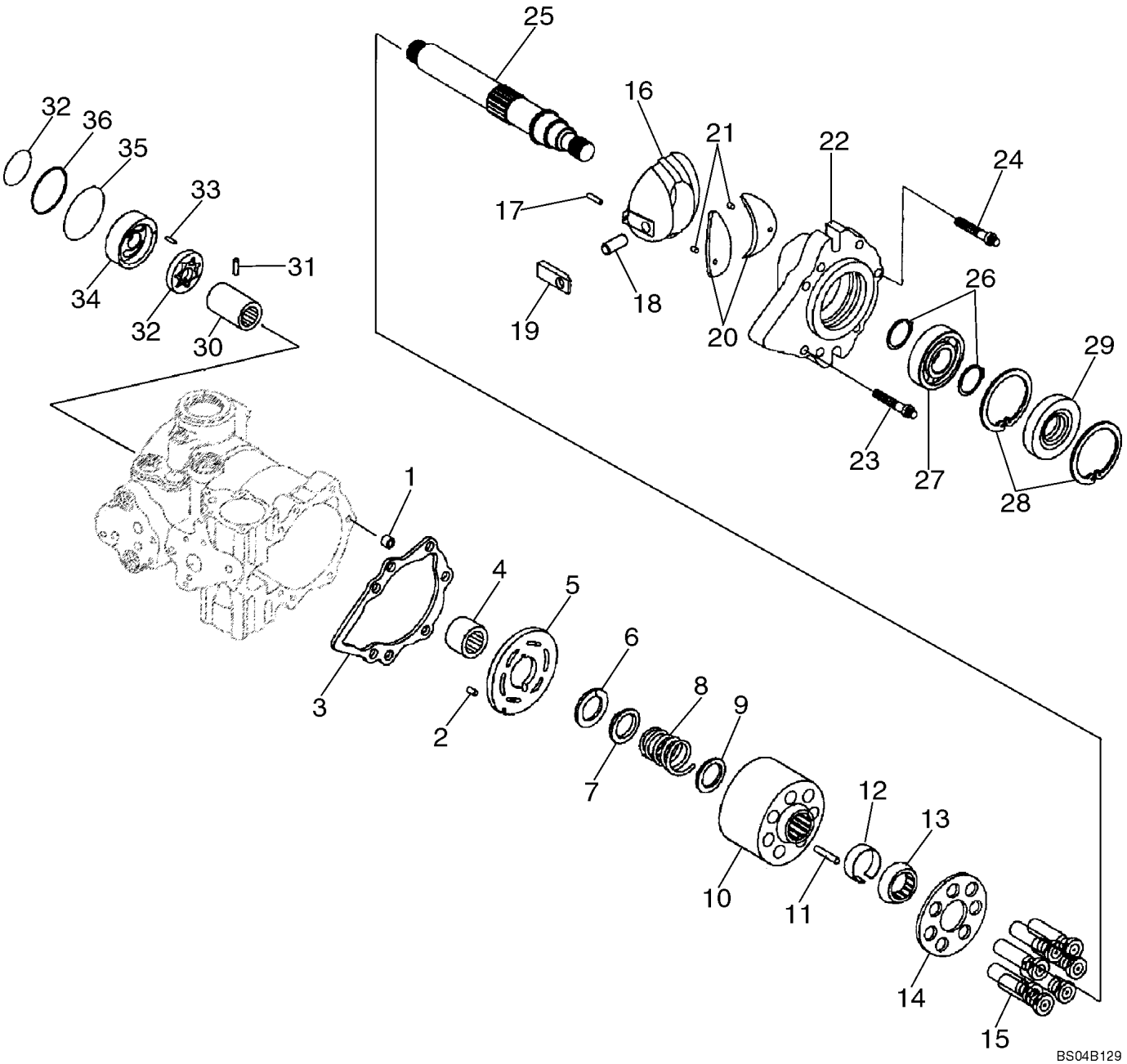

POMPES DOUBLES (440)

REF	FN	PART NUMBER	YR/SN	QTY	DESCRIPTION
					Front Pump
		87043500		1	POMPE, Incl. 1 - 37
1		N13994		1	ENTRETOISE
2		38-11207		1	CHEVILLE, 3/16" x 7/16", Slotted
3		H436704		1	JOINT, Included in 140008A1 Seal Kit
4		1277297C1		1	ROULEMENT
5		128928A1		1	PLAQUE, GRANDE
		87039625		1	KIT, Cylinder Block; Kit Includes Cylinder Block Parts For Rear Pump; Incl. 6 - 15
6		NSS		2	NON FOURNI SEPAREMENT, Ring, Retaining
7		115950A1		2	DISQUE
8		115948A1		2	RESSORT
9		115946A1		2	DISQUE
10		NSS		2	NON FOURNI SEPAREMENT, Block, Cylinder
11		110873A1		6	AXE, GROS
12		115943A1		2	MANCHON, Ring, Retaining
13		115942A1		2	GUIDE
14		NSS		2	NON FOURNI SEPAREMENT, Retainer
15		NSS		14	NON FOURNI SEPAREMENT, Piston
16		87050523		1	PLAQUE (ASSEMBLEE), Variable Swash Plate
17		324610A1		1	AXE, GROS
18		N13254		1	AXE
19		N13224		1	MANCHON
		87050525		1	COUVERCLE (ASSEMBLE), Incl. 20 - 22
20		87050524		2	ROULEMENT
21		193494A1		2	GOUPILLE ELASTIQUE
22		NSS		1	NON FOURNI SEPAREMENT
23		223677A1		6	VIS, 7/16 in
24		223680A1		1	BOULON SPECIAL, 3/8 in
25		N13244		1	ARBRE
26		100-11137		2	ANNEAU D'ARRÊT, #137, Ext
27		A29183		2	ROULEMENT A BILLES
28		103-21281		1	ANNEAU D'ARRÊT, 2.812", Int, #281
29		N14103		1	JOINT, Lip; Included in 140008A1 Seal Kit
30		N13234		1	ACCOUPLEMENT HYDR.

POMPES DOUBLES (440)

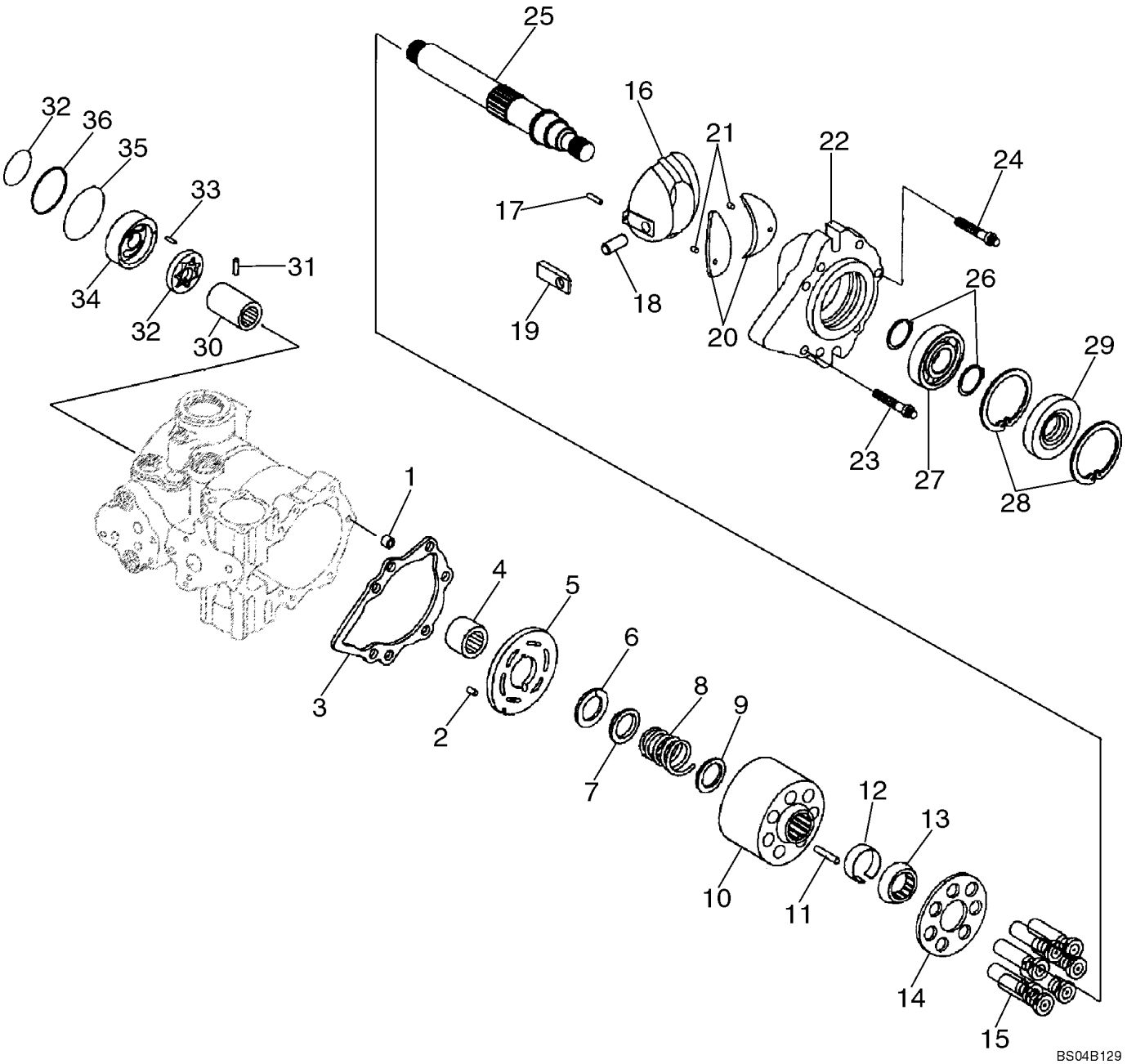

POMPES DOUBLES (440)

REF	FN	PART NUMBER	YR/SN	QTY	DESCRIPTION
31		N13262		2	AXE
32		N13247		1	JEU-DE-PIGNONS
33		181680A1		1	AXE
34		N13999		1	PLAQUE
35		H437190		1	JOINT TORIQUE, Included in 140008A1 Seal Kit
36		238-6238		1	JOINT THORIQUE, -238, 90 Duro, 3.484" ID x .139" Thk, Included in 140008A1 Seal Kit
37		H435776		1	JOINT TORIQUE, Included in 140008A1 Seal Kit

POMPES DOUBLES (440)

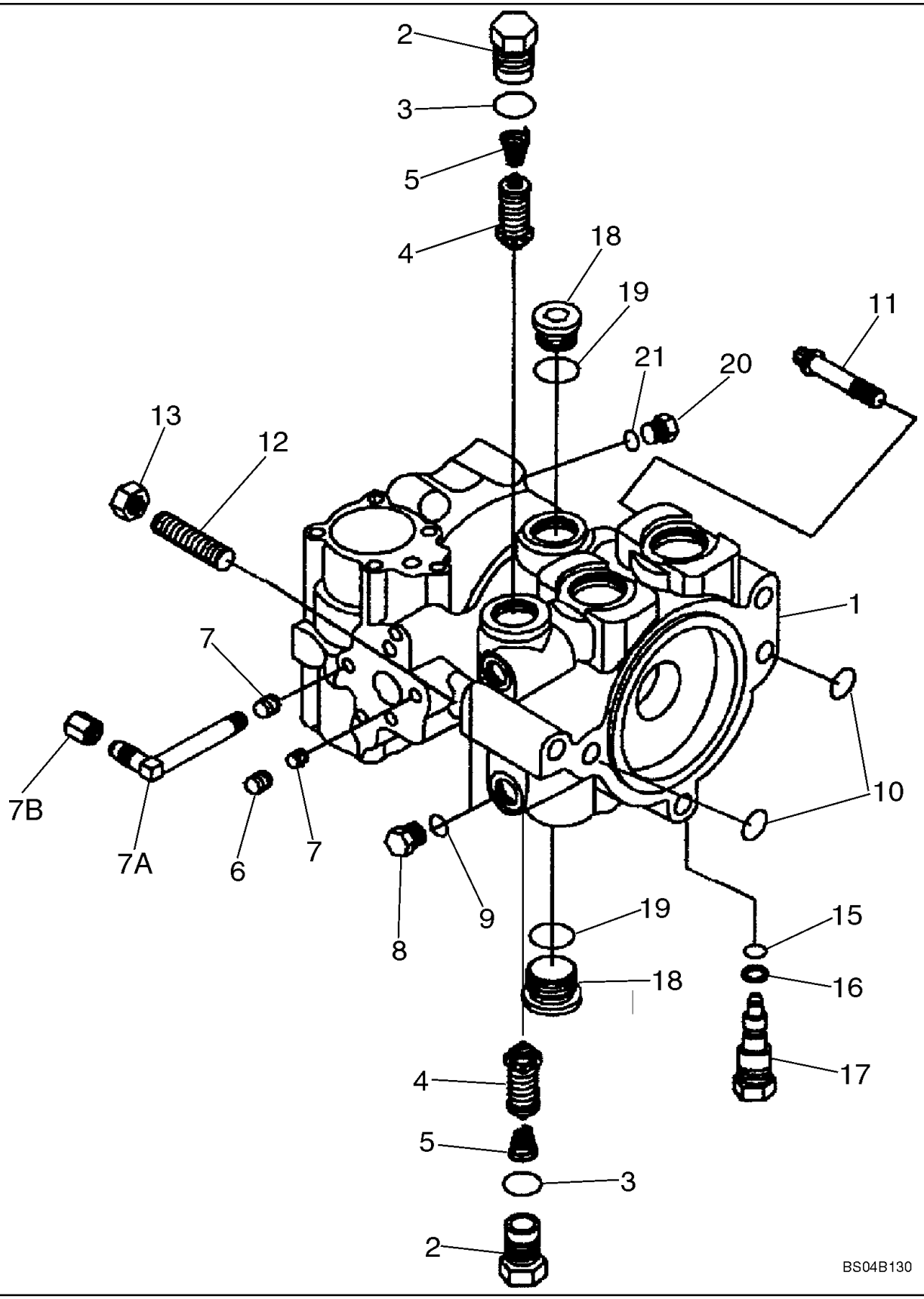

POMPES DOUBLES (440)

REF	FN	PART NUMBER	YR/SN	QTY	DESCRIPTION
					Rear Pump
		87043500		1	POMPE, Incl. 1 - 21
1		402365A1		1	CARTER, Incl. 1277297C1, 138-217, 9672438
		1277297C1		1	ROULEMENT
		138-217		1	CHEVILLE, 3/16" x 7/16", Slotted
		9672438		1	BOUCHON, Hex Hd, 7/16"-20 ORB
		N14848		2	SOUPAPE, DÉCHARGE, Incl. 2 - 5
2		NSS		1	NON FOURNI SEPAREMENT, Plug
3		237-6012		1	JOINT THORIQUE, 12-1, 90 Duro, .924 ID x .118" Thk, Included in 140008A1 Seal Kit
4		NSS		1	NON FOURNI SEPAREMENT, Valve, Relief
5		86993468		1	RESSORT
6		F23137		1	BOUCHON
7		86993479		2	BOUCHON
7A		86993480		1	COUDE, 90 deg
7B		86993467		1	CHAPEAU
		140008A1		1	JEU JOINTS ETANCHEITE, Overhaul Seal And Gasket Kit; Incl. (10) Rings, (4) Bearings, (20) O-Rings, (6) Gaskets, (2) Seals; Incl. Ref 3, 10, 15, 16
8		76349		2	BOUCHON, Hex Hd, 9/16"-18 ORB, Incl. 9
9		237-6006		1	JOINT THORIQUE, 6-1, 90 Duro, .468" ID x .078" Thk
10		238-6116		2	JOINT THORIQUE, -116, 90 Duro, .737" ID x .103" Thk, Included in 140008A1 Seal Kit
11		166-89		1	VIS, 12 Pt Flg, 1/2"-13 x 2", G8
12		K608432		1	GOUJON, Hex, M10 x 70, 8.8
13		425-108		1	ECROU, 1/2"-13, G5
15		86993475		1	JOINT THORIQUE, Included in 140008A1 Seal Kit
16		S99877		1	ANNEAU, Included in 140008A1 Seal Kit
17		87039612		1	VALVE BY-PASS, Incl. Ref 15, 16
18		9841223		2	BOUCHON, Hex Soc, 1 1/16"-12 ORB, Incl. 19
19		237-6012		1	JOINT THORIQUE, 12-1, 90 Duro, .924 ID x .118" Thk
20		9672438		1	BOUCHON, Hex Hd, 7/16"-20 ORB, Incl. 21
21		237-6004		1	JOINT THORIQUE, 4-1, 90 Duro, .351" ID x .072" Thk

POMPES DOUBLES (440)

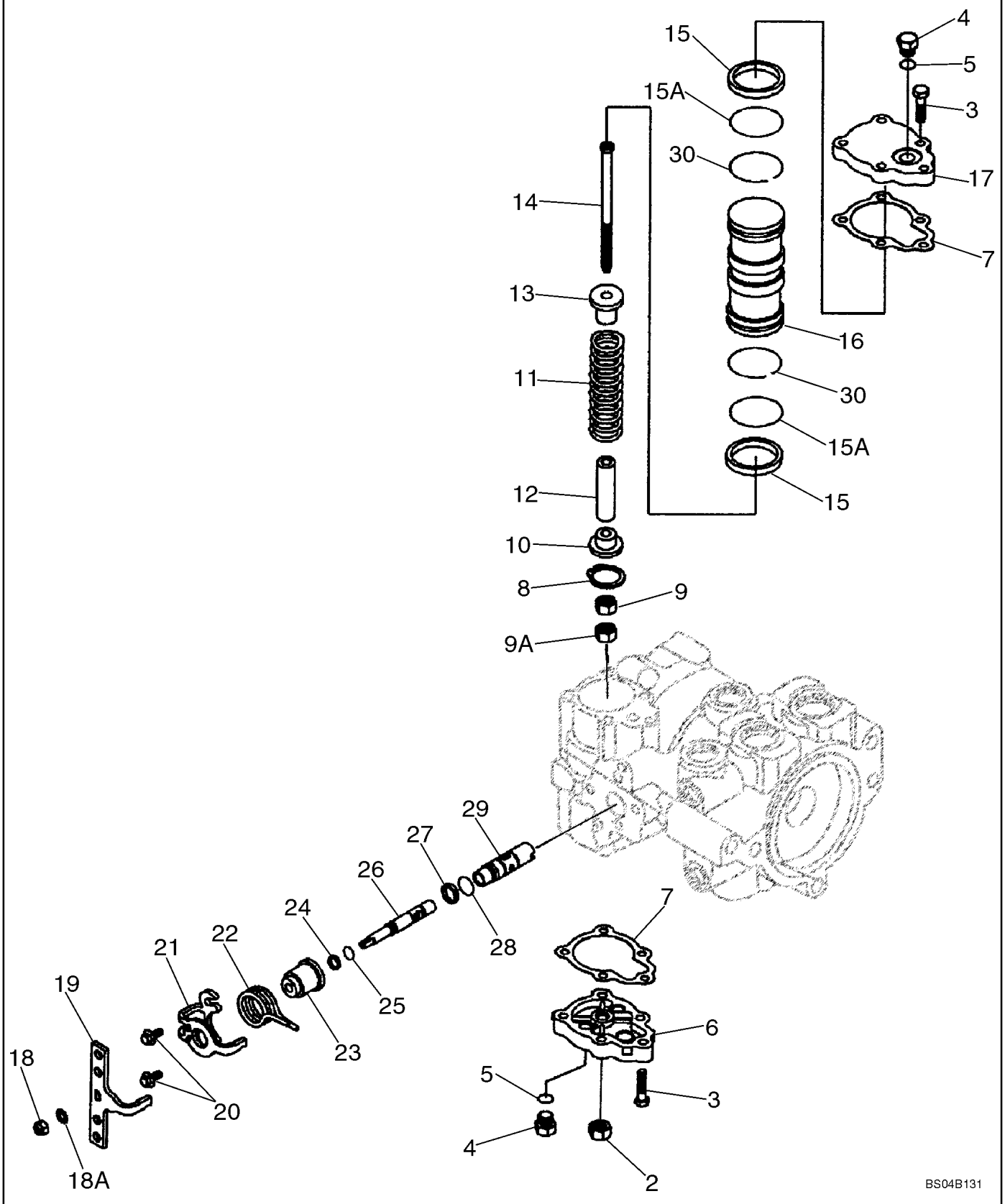

POMPES DOUBLES (440)

REF	FN	PART NUMBER	YR/SN	QTY	DESCRIPTION
					Rear Pump
		87043500		1	POMPE, Incl. 2 - 30
2		N13260		1	ECROU, 5/8 NF
3		H438321		10	BOULON, 1/4 x 1-1/4; 8
4		76349		2	BOUCHON, Hex Hd, 9/16"-18 ORB, Incl. 5
5		237-6006		1	JOINT THORIQUE, 6-1, 90 Duro, .468" ID x .078" Thk
6		H436065		1	COUVERCLE
7		N14063		2	JOINT, Included in 140008A1 Seal Kit
8		N13255		1	ANNEAU
9		425-116		1	ECROU, 3/8"-24, G5
9B		324604A1		1	ECROU, 3/8 in
10		N13241		1	GUIDE
11		N13226		1	RESSORT
12		N13242		1	MANCHON
13		N14666		1	GUIDE
14		370531A1		1	VIS
		H673773		1	POCHETTE, Piston Rings; Incl. Rings For Front Pump Piston; Incl. 15, 15A
15		N14668		4	SEGMENT DE PISTON, Included in 140008A1 Seal Kit
15A		238-5131		2	JOINT THORIQUE, -131, 70 Duro, 1.674" ID x .103" Thk, Included in 140008A1 Seal Kit
		140008A1		1	JEU JOINTS ETANCHEITE, Overhaul Seal And Gasket Kit; Incl. (10) Rings, (4) Bearings, (20) O-Rings, (6) Gaskets, (2) Seals; Incl. Ref 7, 15, 15A, 24, 25, 27, 28, 30
16		87039622		1	PISTON COMPLET, Incl. 15, 15A, 30
17		H436053		1	COUVERCLE
18		H436054		1	ECROU
18A		493-41033		1	RONDELLE FREIN, Ext Tooth, 5/16"
19		436415A1		1	POIGNÉE
20		H435770		2	VIS
21		436416A1		1	PATTE FIXATION
22		407060A1		1	RESSORT
23		87039613		1	GUIDE

POMPES DOUBLES (440)

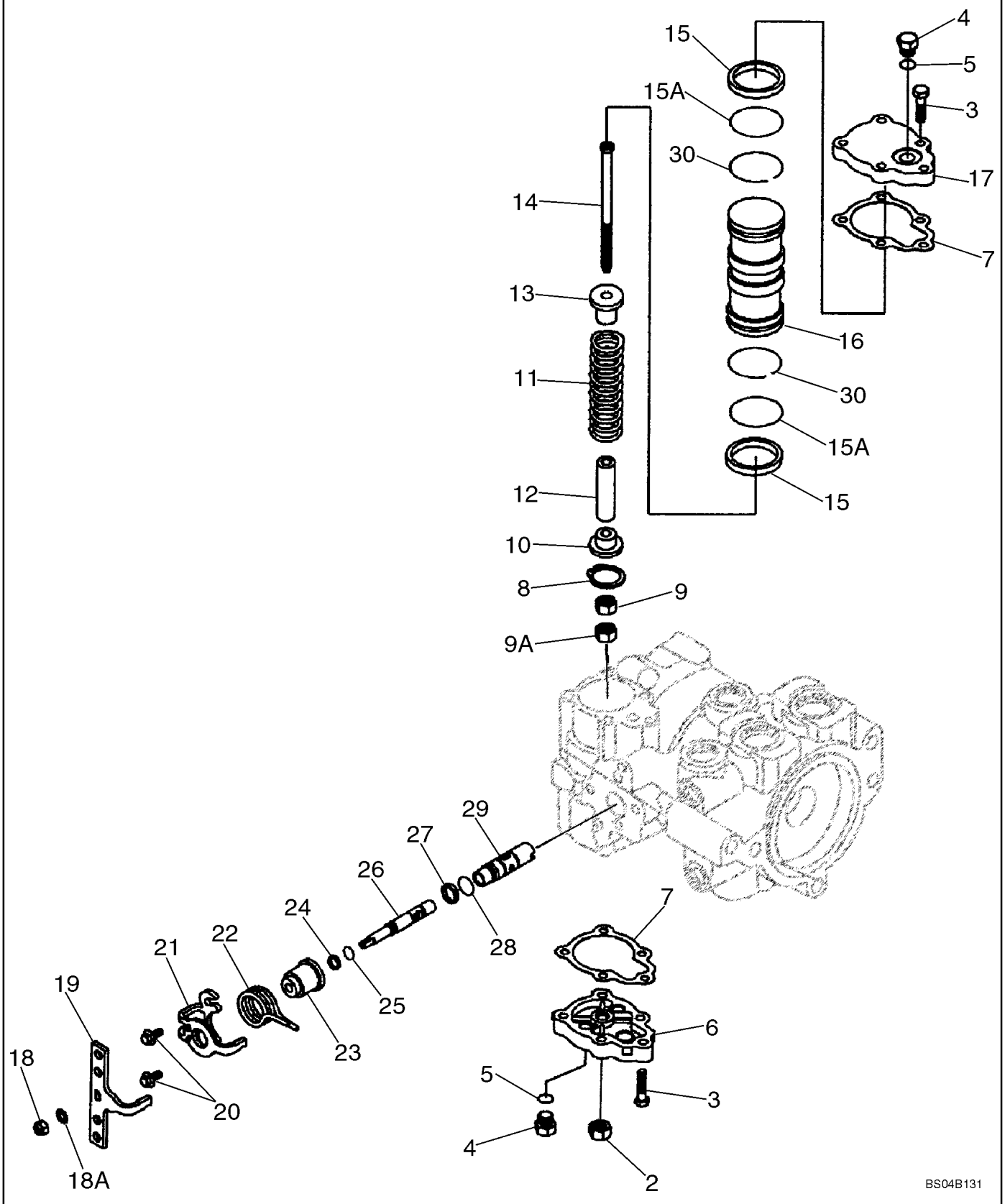

POMPES DOUBLES (440)

REF	FN	PART NUMBER	YR/SN	QTY	DESCRIPTION
24		86993484		1	ANNEAU, Included in 140008A1 Seal Kit
25		86993475		1	JOINT THORIQUE, Included in 140008A1 Seal Kit
26		87039614		1	TIROIR, Incl. 24, 25
27		86993483		1	ANNEAU, Included in 140008A1 Seal Kit
28		NSS		1	NON FOURNI SEPAREMENT, Included in 140008A1 Seal Kit
29		87039615		1	DOUILLE, Incl. 27, 28
30		100536A1		2	ANNEAU, Included in 140008A1 Seal Kit

POMPES DOUBLES (440)

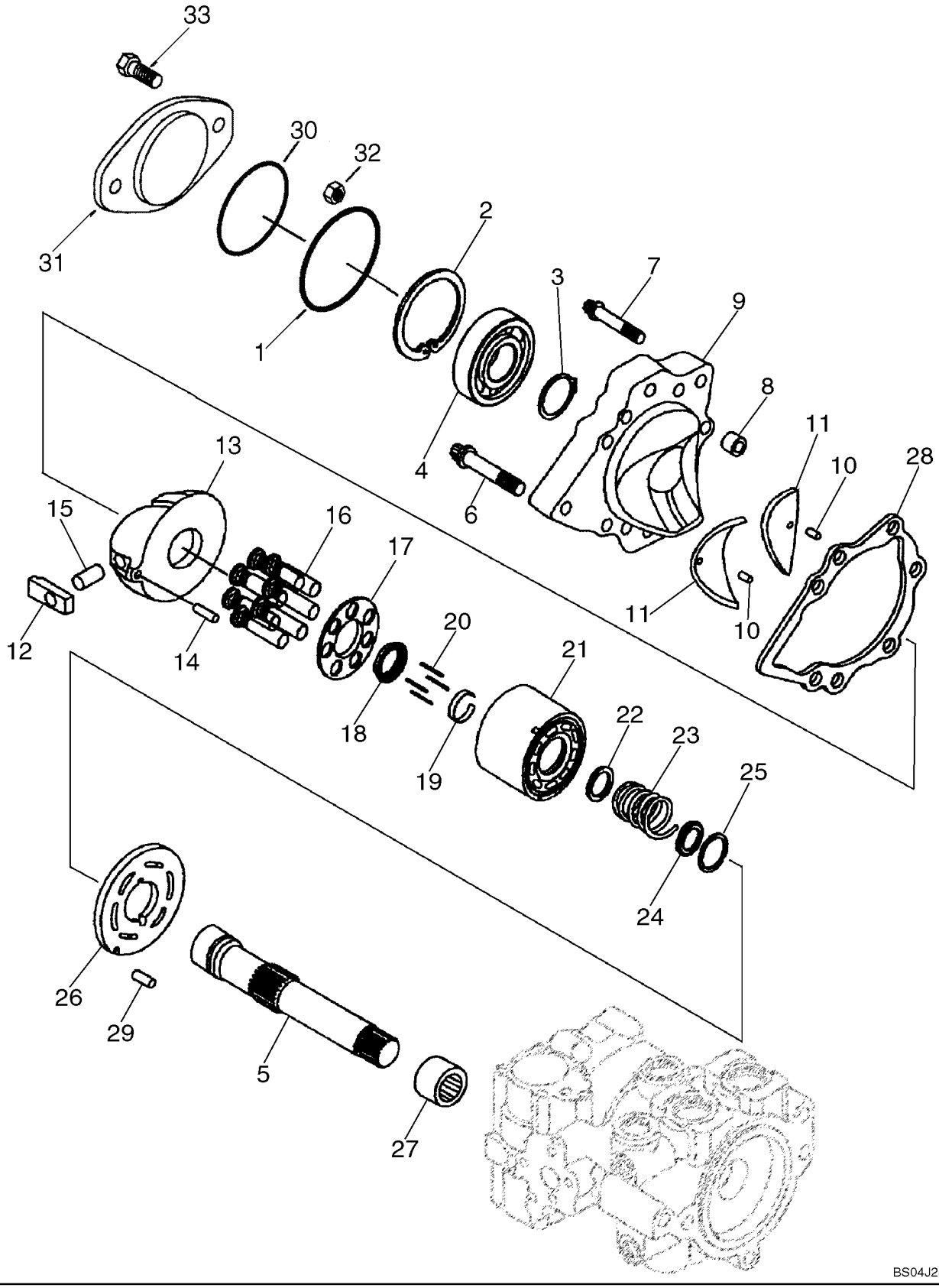

POMPES DOUBLES (440)

REF	FN	PART NUMBER	YR/SN	QTY	DESCRIPTION
					Rear Pump
		87043500		1	POMPE, Incl. 2 - 32
2		103-21281		1	ANNEAU D'ARRÊT, 2.812", Int, #281
3		100-11137		1	ANNEAU D'ARRÊT, #137, Ext
4		A29183		1	ROULEMENT A BILLES
5		87039623		1	ARBRE
6		223677A1		6	VIS, 7/16 in
7		223680A1		1	BOULON SPECIAL, 3/8 in
8		N13994		1	ENTRETOISE
		87050526		1	COUVERCLE (ASSEMBLE), Incl. Ref 9 - 11
9		NSS		1	NON FOURNI SEPAREMENT, Cover; Incl. 10, 11
10		193494A1		2	GOUPILLE ELASTIQUE
11		87050524		2	ROULEMENT
12		N13224		1	MANCHON
13		87050523		1	PLAQUE (ASSEMBLEE)
14		324610A1		1	AXE, GROS
15		N13254		1	AXE
		402366A1		1	POCHETTE, Cylinder Block; Components Not Serviced Separately; Incl. 16 - 25
16		NSS		14	NON FOURNI SEPAREMENT, Piston
17		NSS		2	NON FOURNI SEPAREMENT, Retainer
18		115942A1		2	GUIDE, Guide
19		115943A1		2	MANCHON, Ring, Retaining
20		110873A1		6	AXE, GROS, Pin
21		NSS		2	NON FOURNI SEPAREMENT, Block, Cylinder
22		115946A1		2	DISQUE
23		115948A1		2	RESSORT
24		115950A1		2	DISQUE
25		NSS		2	NON FOURNI SEPAREMENT, Ring, Retaining
26		128929A1		1	PLAQUE, GRANDE
27		NSS		1	NON FOURNI SEPAREMENT, Bearing, Needle
28		H436704		1	JOINT
29		38-11207		1	CHEVILLE, 3/16" x 7/16", Slotted
30		87013729		1	JOINT THORIQUE, -044, 70 Duro, 3.739" ID x .070" Thk, Included in 140008A1 Seal Kit

POMPES DOUBLES (440)

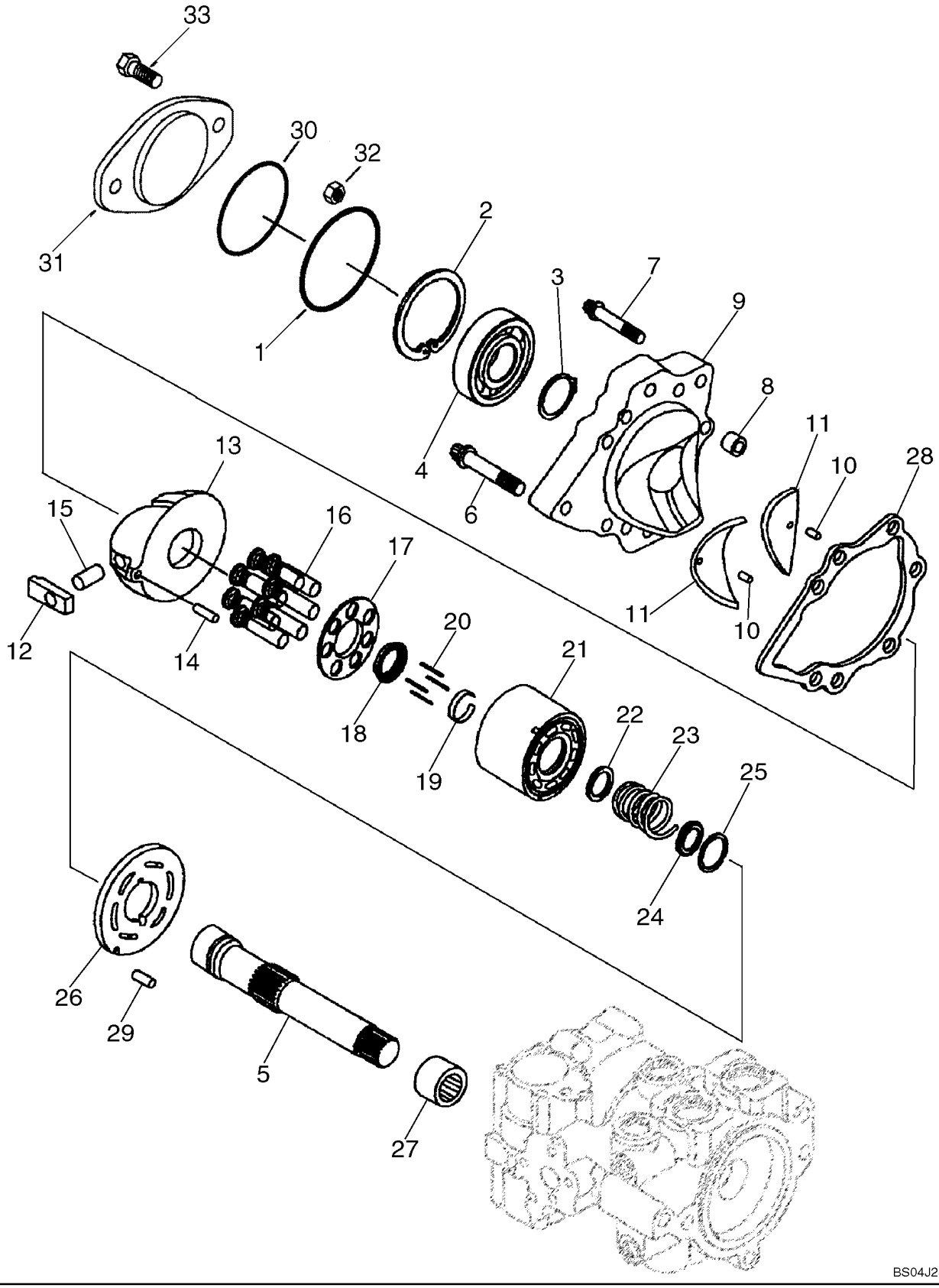

POMPES DOUBLES (440)

REF	FN	PART NUMBER	YR/SN	QTY	DESCRIPTION
31		100703A1		2	PLAQUETTE
32		425-108		2	ECROU, 1/2"-13, G5
33		13-836		2	BOULON, Hex, 1/2"-13 x 2 1/4", G5
		140008A1		1	JEU JOINTS ETANCHEITE, Overhaul Seal And Gasket Kit; Incl. (10) Rings, (4) Bearings, (20) O-Rings, (6) Gaskets, (2) Seals; Incl. Ref 34

POMPES DOUBLES - REXROTH (87546976)

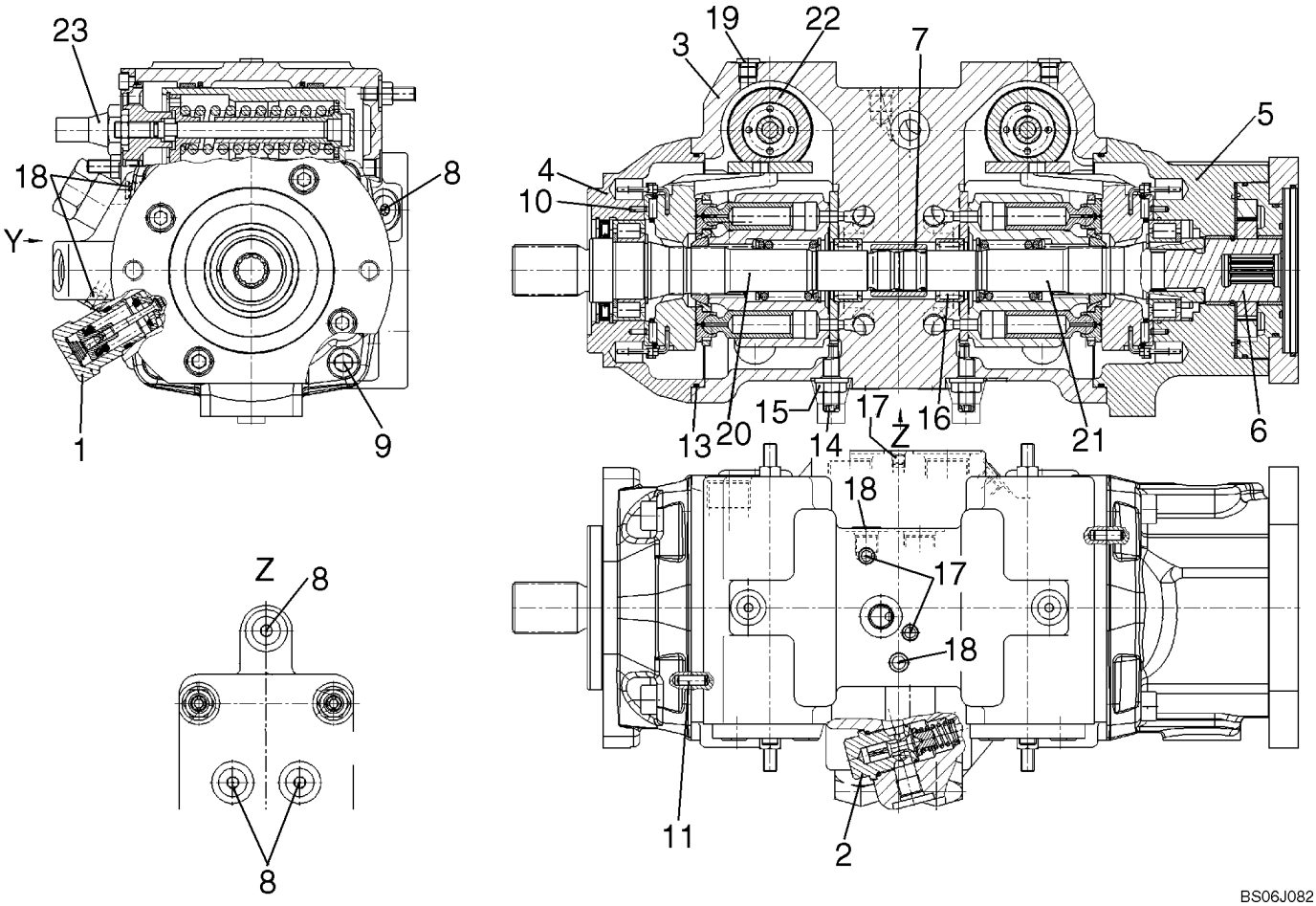

BS06J082

POMPES DOUBLES - REXROTH (87546976)

REF	FN	PART NUMBER	YR/SN	QTY	DESCRIPTION
1		87614028		4	SOUPAPE, DÉCHARGE, HD 300 Bar; See Fig. 06-40
2		87553604		1	SOUPAPE, DÉCHARGE, 15 - 30 Bar R-Ring Viton; See Fig. 06-41
3		87553605		1	CARTER, Pump
4		87553606		1	FLASQUE, Bearing
5		87614029		1	ROULEMENT, With Bushing
6		87553608		1	POMPE, Internal Gear Pump; See Fig. 06-42
7		87553609		1	CHAPE, Through Drive
8		87553611		5	FREIN-D'ECROU, 9/16 - 18UNF
9		87553613		8	VIS, Socket Head
10		87553614		4	AXE, Clamping
11		87553615		2	AXE, Cylinder
12		87553616		1	JOINT THORIQUE, Not Illustrated
13		87553617		2	JOINT THORIQUE
14		87553618		2	VIS, Eccentric Screw
15		87553619		2	CONTRE-ECROU, Seal
16		87553620		2	ROULEMENT A ROULEAU, Plain
17		87553621		2	AXE, Double Break Off
18		87553622		2	AXE, Double Break Off
19		87553612		2	FREIN-D'ECROU, 7/16 - 20UNF
20		87553599		1	KIT ASSISTANCE, Rotary Group, RH Rotation; See Fig. 06-43
21		87553600		1	KIT ASSISTANCE, Rotary Group, LH Rotation; See Fig. 06-44
22		87553601		2	COMMANDE, Hydraulic; See Fig. 06-45
23		87614027		1	CARTOUCHE, With Orifice; See Fig. 06-46
		87553610		1	PALIER, Bushing
		87627399		3	CHAPEAU

POMPES DOUBLES - SOUPAPE DE REDUCTION PRESSION (87546976)

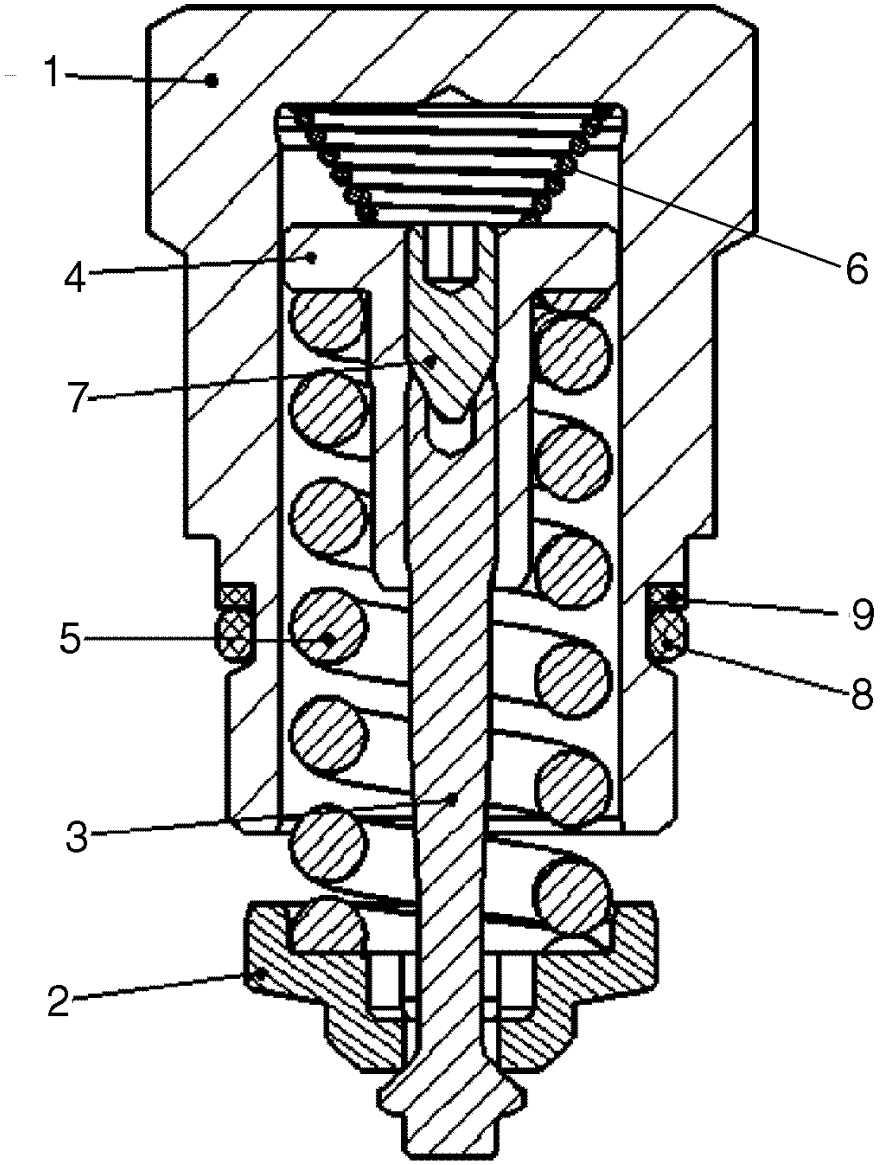

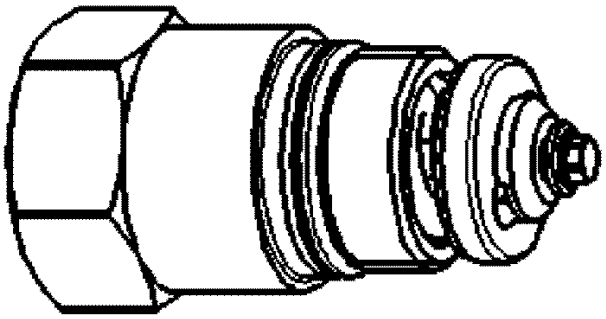

BS06J085

POMPES DOUBLES - SOUPAPE DE REDUCTION PRESSION (87546976)

REF	FN	PART NUMBER	YR/SN	QTY	DESCRIPTION
		87614028		1	SOUPAPE, DÉCHARGE, Incl. 1 - 9
1		NSS		1	NON FOURNI SEPAREMENT, Locking Screw
2		NSS		1	NON FOURNI SEPAREMENT, Valve Collar
3		NSS		1	NON FOURNI SEPAREMENT, Valve Spindle
4		NSS		1	NON FOURNI SEPAREMENT, Spring Loading Nut
5		NSS		1	NON FOURNI SEPAREMENT, Pressure Spring
6		NSS		1	NON FOURNI SEPAREMENT, Spring, Cone Shaped
7		NSS		1	NON FOURNI SEPAREMENT, Threaded Pin
8		87597284		1	JOINT THORIQUE
9		87597285		1	ANNEAU, Back Up

POMPES DOUBLES - SOUPAPE DE REDUCTION PRESSION (87546976)

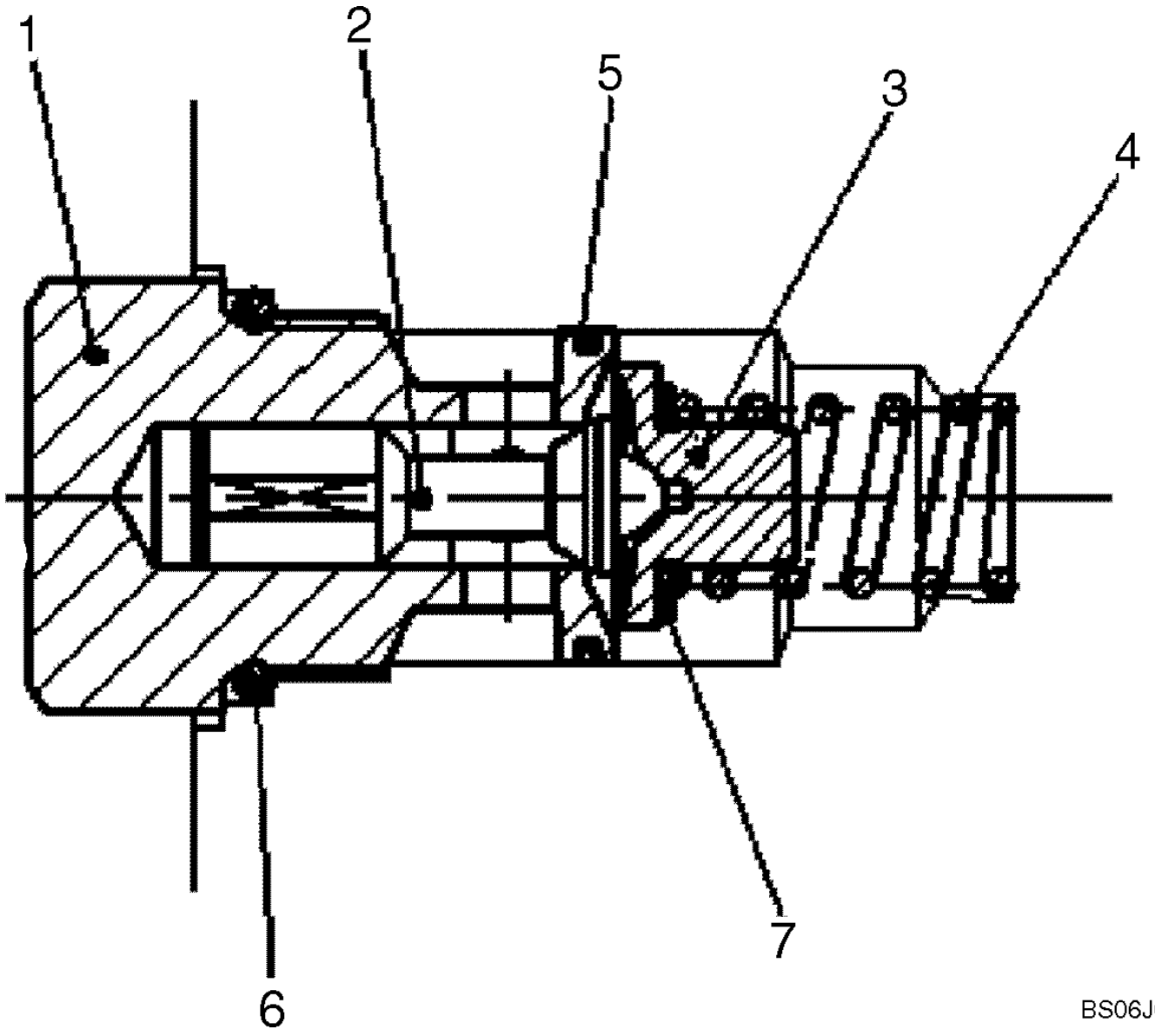

POMPES DOUBLES - SOUPAPE DE REDUCTION PRESSION (87546976)

REF	FN	PART NUMBER	YR/SN	QTY	DESCRIPTION
		87553604		1	SOUPAPE, DÉCHARGE, Pressure Relief Valve; Incl. 1 - 7
1		NSS		1	NON FOURNI SEPAREMENT, Locking Screw
2		NSS		1	NON FOURNI SEPAREMENT, Valve Piston
3		NSS		1	NON FOURNI SEPAREMENT, Spring Collar
4		NSS		1	NON FOURNI SEPAREMENT, Pressure Spring
5		NSS		1	NON FOURNI SEPAREMENT, Steel Sealing Spring
6		87597286		1	JOINT THORIQUE, O-ring
7		NSS		1	NON FOURNI SEPAREMENT, Shim

POMPES DOUBLES - POMPE À ENGRENAGE (87546976)

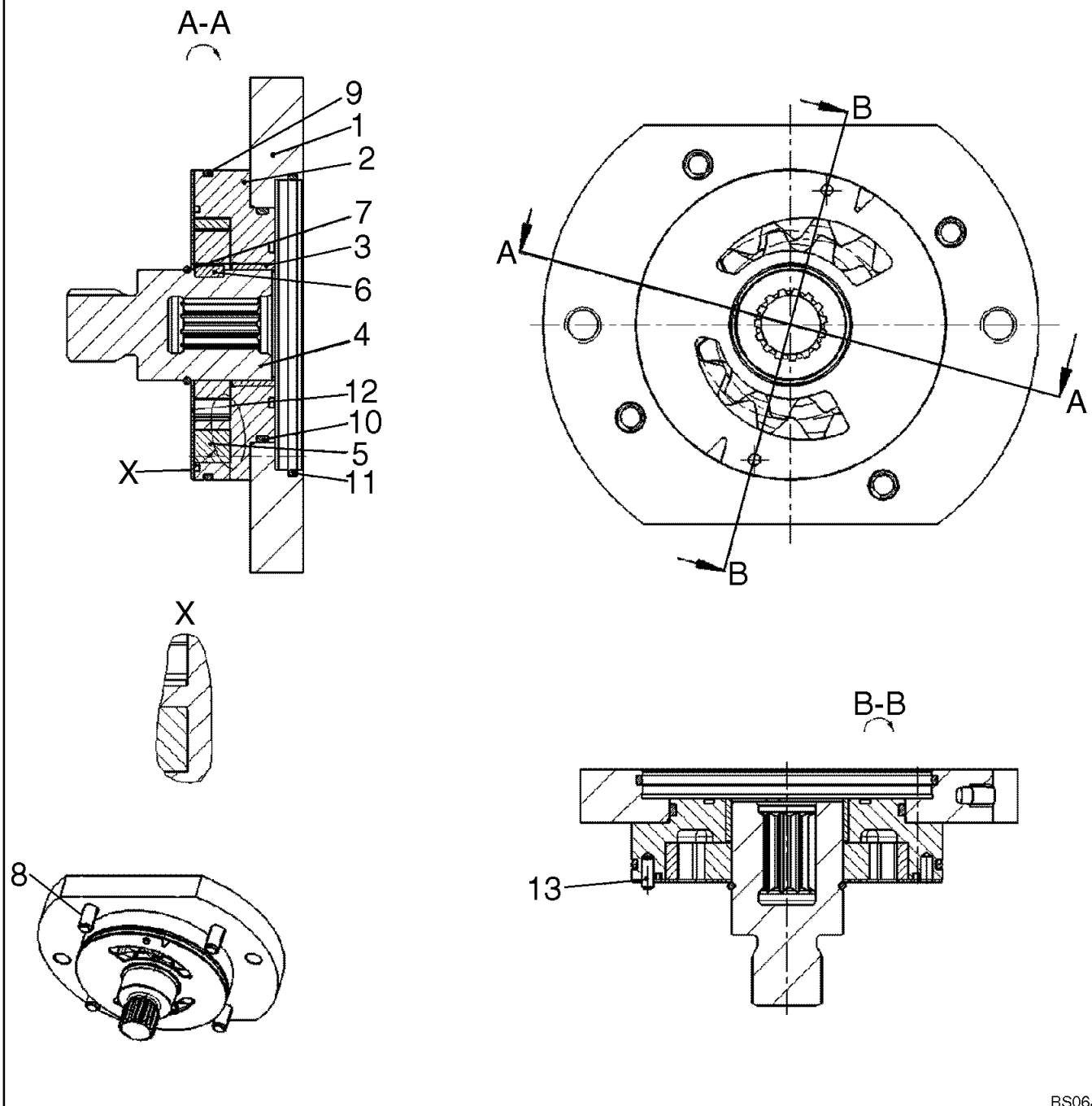

BS06J087

POMPES DOUBLES - POMPE À ENGRENAGE (87546976)

REF	FN	PART NUMBER	YR/SN	QTY	DESCRIPTION
		87553608		1	POMPE, Internal Gear Pump; Incl. 1 - 13
1		87597287		1	FLASQUE, Intermediate Flange
2		87597288		1	CARTER, IZP Housing
3		87553610		1	PALIER, Bearing Bushing
4		87597289		1	CHAPE, Through Drive Coupling
5		87597290		1	TRAIN DE ROUE, Wheel Set
6		87597291		1	CLE, Shaft Key
7		87597292		1	ANNEAU D'ARRÊT, Snap Ring
8		87597293		4	VIS, Socket Head Screw
9		87597294		1	JOINT THORIQUE, O-ring
10		87597295		1	JOINT THORIQUE, O-ring
11		87553616		1	JOINT THORIQUE, O-ring
12		87597296		1	PLAQUE, Wear Plate
13		87597297		1	AXE, Cylinder Pin

POMPES DOUBLES - ROTATION MONTAGE, DROIT (87546976)

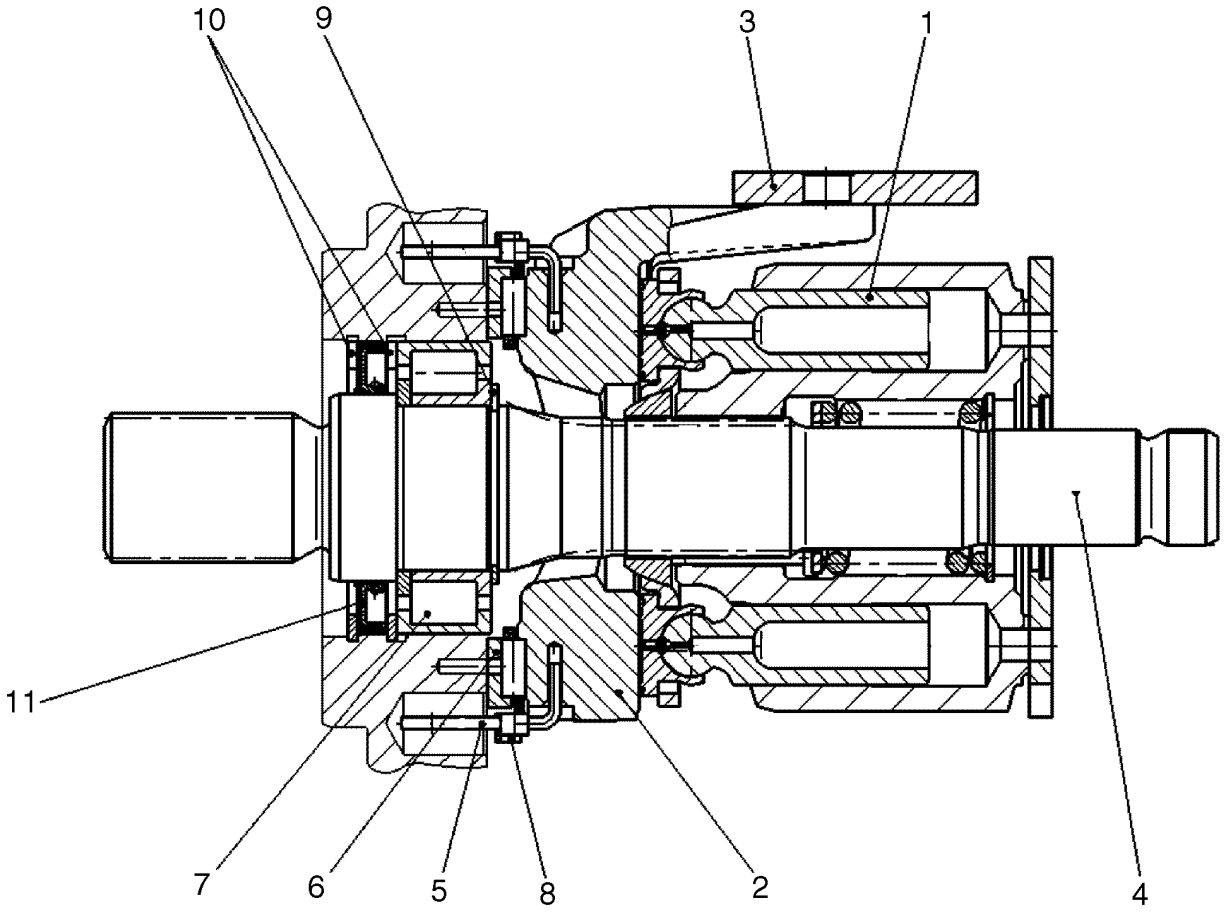

BS06J126

POMPES DOUBLES - ROTATION MONTAGE, DROIT (87546976)

REF	FN	PART NUMBER	YR/SN	QTY	DESCRIPTION
		87553599		1	KIT ASSISTANCE, Rotary Group, Right Hand Rotation; Incl. 1 - 11
1		87553623		1	SECTION DE VANNE, Rotary Group, Hydraulic Section
2		87597259		1	BERCEAU
3		87597260		1	GLISSIÈRE, Ring
4		87597261		1	ARBRE D'ENTRAINEMENT
5		87597262		2	FIL D'ACIER, With Coil
6		87597263		1	COUSSINET, Pair
7		87597264		1	PALIER, Plain Roller Bearing
8		87597265		1	BERCEAU, Bearing Assembly (set)
9		87597266		1	ANNEAU, Retaining Ring
10		87597267		2	ANNEAU, Seeger V-ring
11		87597268		1	ANNEAU, Shaft Seal Ring

POMPES DOUBLES - ROTATION MONTAGE, GAUCHE ROTATION (87546976)

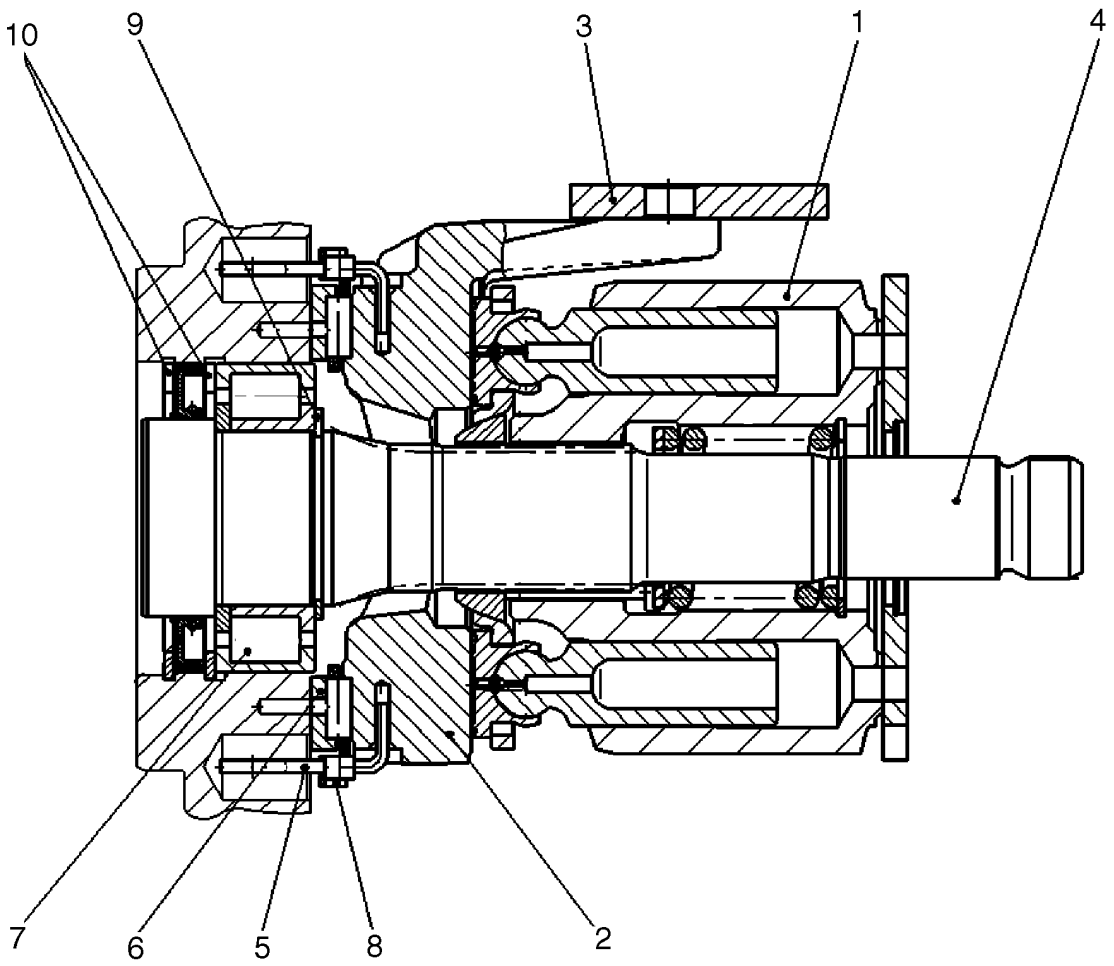

BS06J127

POMPES DOUBLES - ROTATION MONTAGE, GAUCHE ROTATION (87546976)

REF	FN	PART NUMBER	YR/SN	QTY	DESCRIPTION
		87553600		1	KIT ASSISTANCE, Rotary Group, Left Hand Rotation; Incl. 1 - 10
1		87597269		1	ELEMENT DISTR HYDR, Rotary Group, Hydraulic Section
2		87597259		1	BERCEAU, Cradle
3		87597260		1	GLISSIÈRE, Ring
4		87597271		1	ARBRE D'ENTRAINEMENT
5		87597262		2	FIL D'ACIER, With Coil
6		87597263		1	COUSSINET, Pair
7		87597264		1	PALIER, Plain Roller Bearing
8		87597265		1	BERCEAU, Bearing Assembly (set)
9		87597266		1	ANNEAU, Retaining Ring
10		87597267		2	ANNEAU, Seeger V-ring

POMPES DOUBLES - COMMANDE HYDRAULIQUE (87546976)

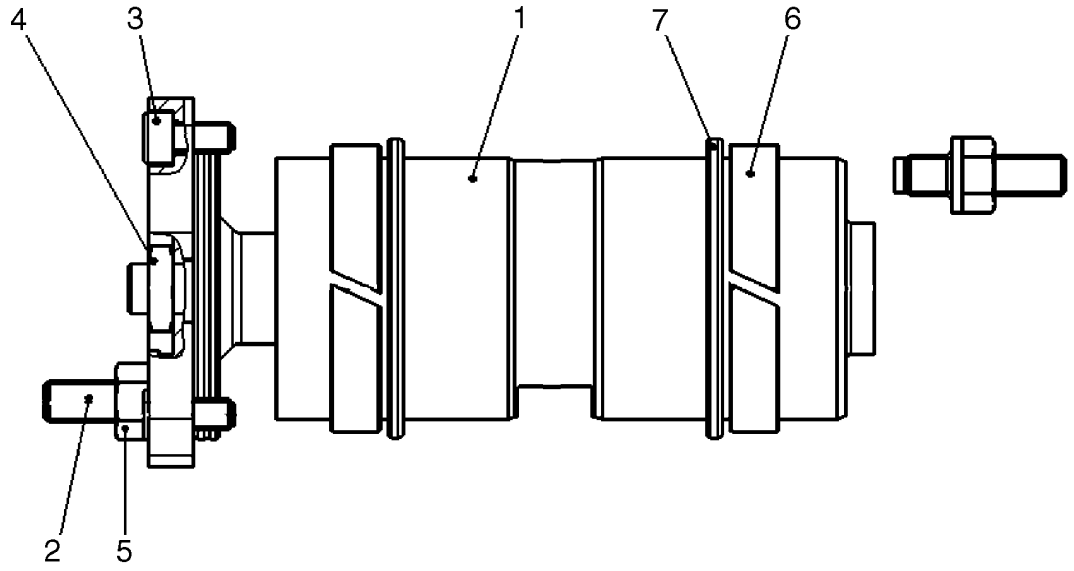

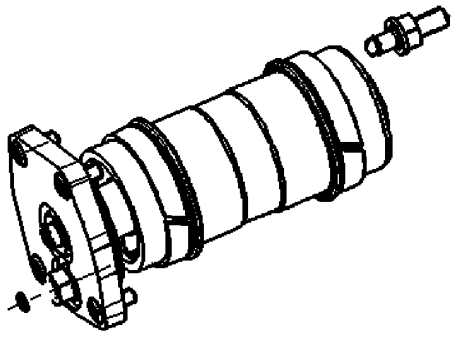

BS06J128

POMPES DOUBLES - COMMANDE HYDRAULIQUE (87546976)

REF	FN	PART NUMBER	YR/SN	QTY	DESCRIPTION
		87553601		1	COMMANDE, Control, Hydraulic; Incl. 1 - 7
1		87597272		1	PISTON, Positioning Piston, Complete
2		87597274		2	AXE, Threaded Pin
3		87597275		4	VIS, Socket Head Screw
4		87597276		1	ECROU, Hexagon Nut
5		87597277		2	ECROU, Seal, Lock Nut
6		87597281		2	BAGUE DE GUIDAGE, Guide Ring
7		87597282		2	KIT ASSISTANCE, Rod Seal Kit

POMPES DOUBLES - COMMANDE MONTAGE (87546976)

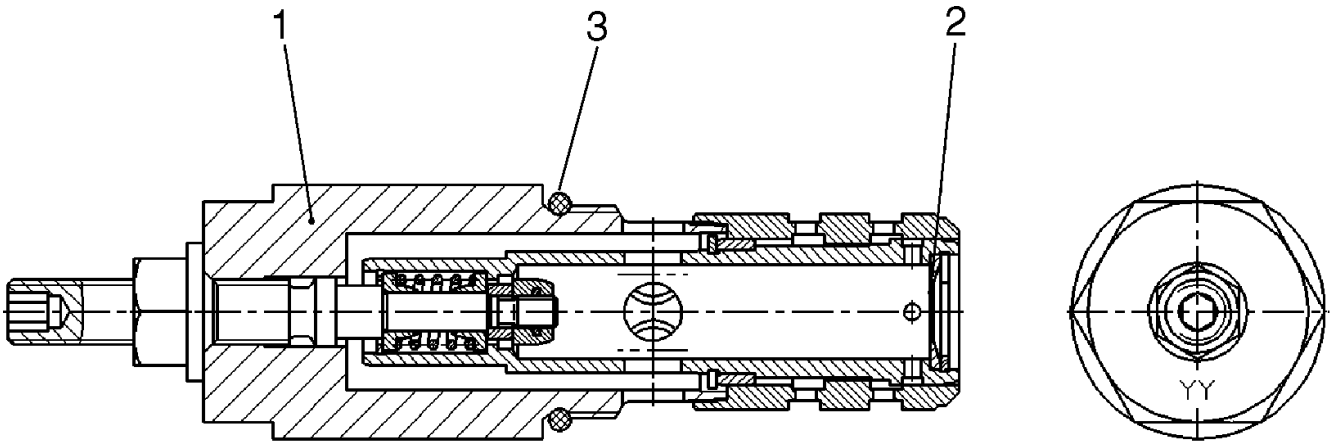

BS07A093

POMPES DOUBLES - COMMANDE MONTAGE (87546976)

REF	FN	PART NUMBER	YR/SN	QTY	DESCRIPTION
		87614027		1	CARTOUCHE, Control Cartridge With Orifice; Incl. 1 - 3
1		87597283		1	CARTOUCHE, Control Cartridge Without Orifice
2		87614030		1	ORIFICE
3		87597284		1	JOINT THORIQUE, O-Ring

POMPES DOUBLES - REXROTH (87546977)

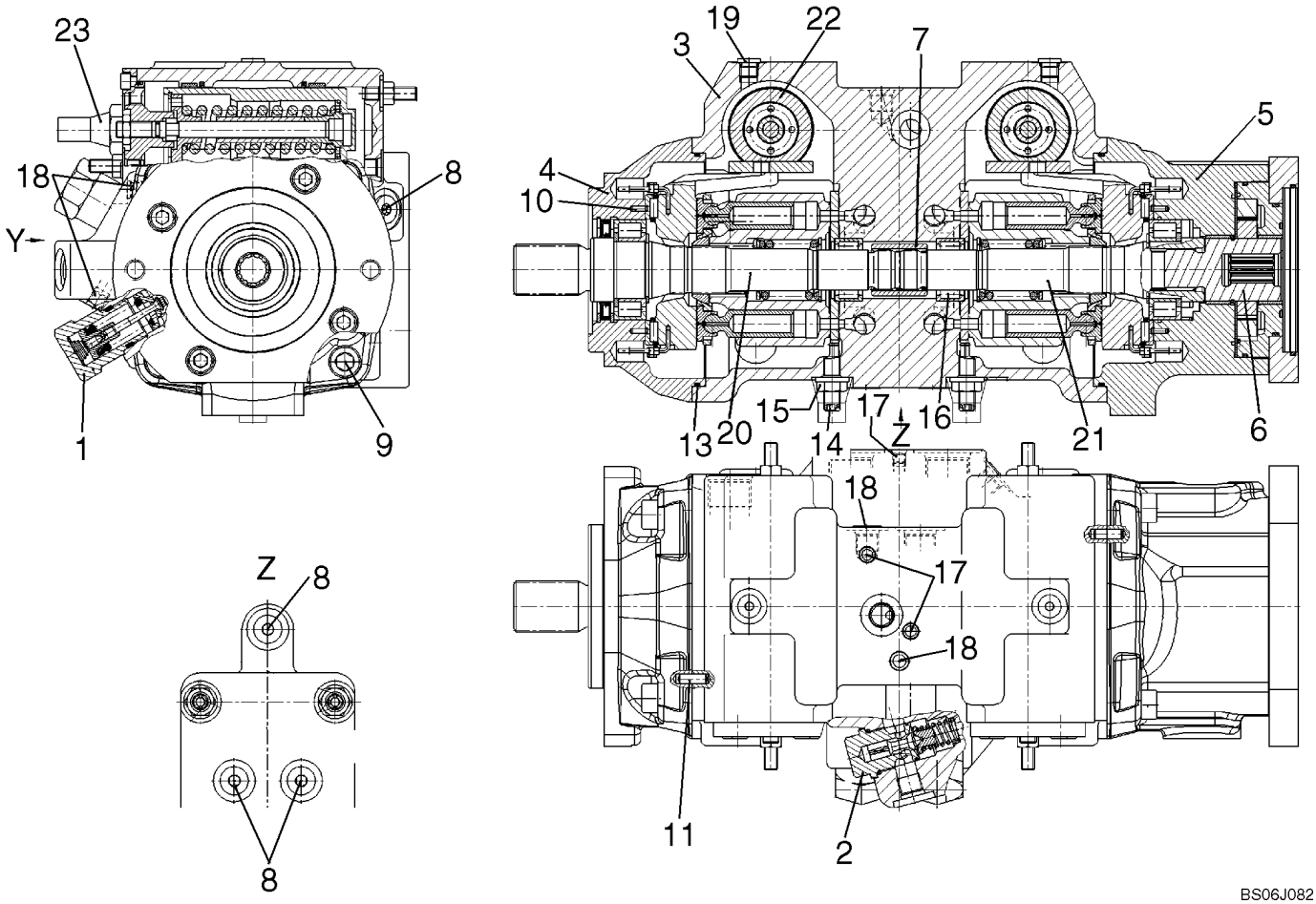

POMPES DOUBLES - REXROTH (87546977)

REF	FN	PART NUMBER	YR/SN	QTY	DESCRIPTION
1		87614031		4	SOUPAPE, DÉCHARGE, HD 360 Bar; See Fig. 06-53
2		87553604		1	SOUPAPE, DÉCHARGE, 15 - 30 Bar R-Ring Viton; See Fig. 06-48
3		87553605		1	CARTER, Pump
4		87553606		1	FLASQUE, Bearing
5		87553607		1	FLASQUE, Bearing With Bushing
6		87553608		1	POMPE, Internal Gear Pump; See Fig. 06-49
7		87553609		1	CHAPE, Through Drive
8		87553611		5	FREIN-D'ECROU, 9/16 - 18UNF
9		87553613		8	VIS, Socket Head
10		87553614		4	AXE, Clamping
11		87553615		2	AXE, Cylinder
12		87553616		1	JOINT THORIQUE, Not Illustrated
13		87553617		2	JOINT THORIQUE, O-Ring
14		87553618		2	VIS, Eccentric Screw
15		87553619		2	CONTRE-ECROU, Seal
16		87553620		2	ROULEMENT A ROULEAU, Plain
17		87553621		2	AXE, Double Break Off
18		87553622		2	AXE, Double Break Off
19		87553612		2	FREIN-D'ECROU, 7/16 - 20UNF
20		87553599		1	KIT ASSISTANCE, Rotary Group, RH Rotation; See Fig. 06-50
21		87553600		1	KIT ASSISTANCE, Rotary Group, LH Rotation; See Fig. 06-51
22		87553601		2	COMMANDE, Hydraulic; See Fig. 06-52
23		87614027		1	CARTOUCHE, With Orifice; See Fig. 06-46
		87553610		1	PALIER, Bushing
		87627399		3	CHAPEAU

POMPES DOUBLES - SOUPAPE DE REDUCTION PRESSION (87546977)

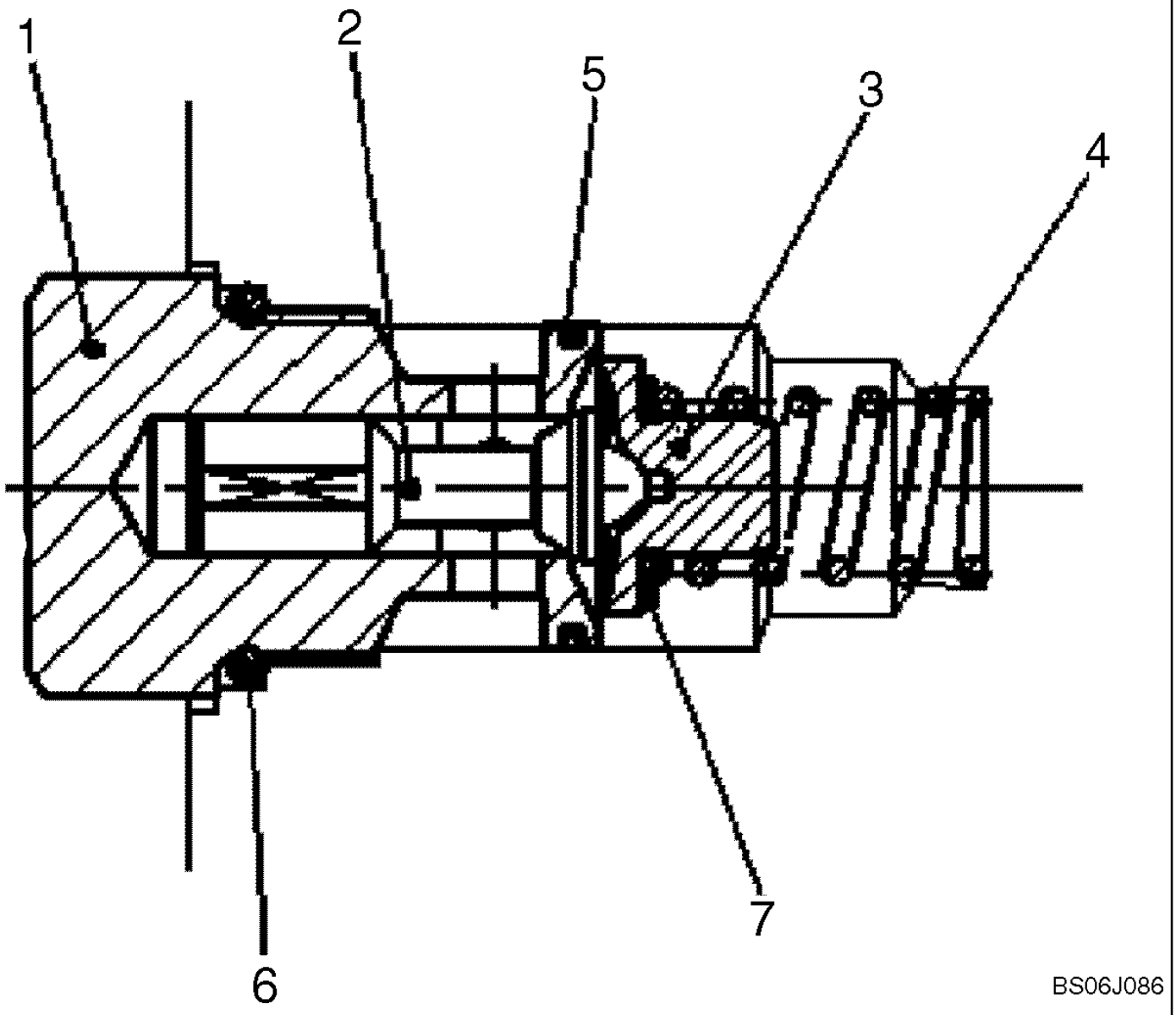

POMPES DOUBLES - SOUPAPE DE REDUCTION PRESSION (87546977)

REF	FN	PART NUMBER	YR/SN	QTY	DESCRIPTION
		87553604		1	SOUPAPE, DÉCHARGE, Pressure Relief Valve; Incl. 1 - 7
1		NSS		1	NON FOURNI SEPAREMENT, Locking Screw
2		NSS		1	NON FOURNI SEPAREMENT, Valve Piston
3		NSS		1	NON FOURNI SEPAREMENT, Spring Collar
4		NSS		1	NON FOURNI SEPAREMENT, Pressure Spring
5		NSS		1	NON FOURNI SEPAREMENT, Steel Sealing Spring
6		87597286		1	JOINT THORIQUE, O-ring
7		NSS		1	NON FOURNI SEPAREMENT, Shim

POMPES DOUBLES - POMPE À ENGRENAGE (87546977)

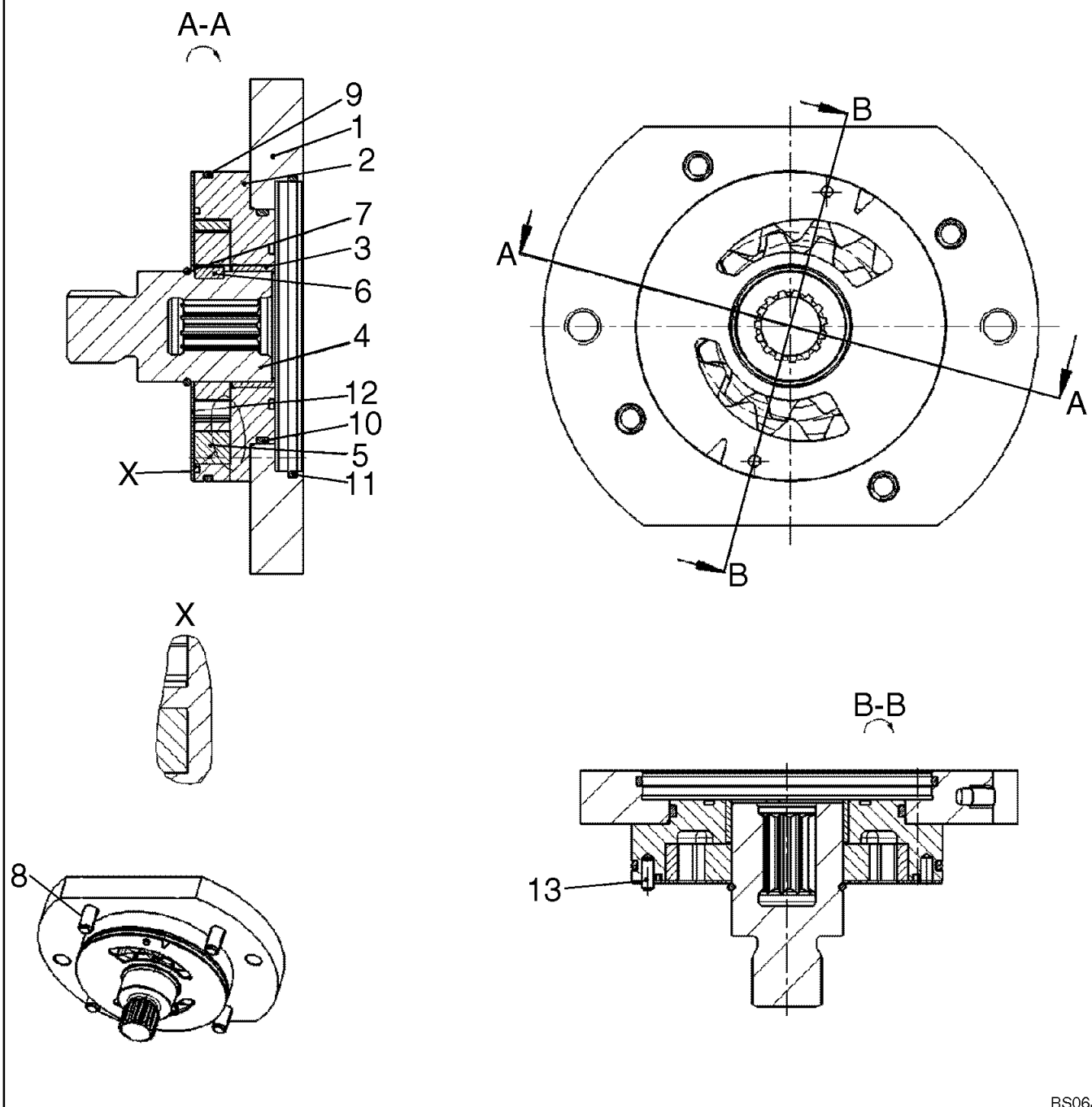

POMPES DOUBLES - POMPE À ENGRENAGE (87546977)

REF	FN	PART NUMBER	YR/SN	QTY	DESCRIPTION
		87553608		1	POMPE, Internal Gear Pump; Incl. 1 - 13
1		87597287		1	FLASQUE, Intermediate Flange
2		87597288		1	CARTER, IZP Housing
3		87553610		1	PALIER, Bearing Bushing
4		87597289		1	CHAPE, Through Drive Coupling
5		87597290		1	TRAIN DE ROUE, Wheel Set
6		87597291		1	CLE, Shaft Key
7		87597292		1	ANNEAU D'ARRÊT, Snap Ring
8		87597293		4	VIS, Socket Head Screw
9		87597294		1	JOINT THORIQUE, O-ring
10		87597295		1	JOINT THORIQUE, O-ring
11		87553616		1	JOINT THORIQUE, O-ring
12		87597296		1	PLAQUE, Wear Plate
13		87597297		1	AXE, Cylinder Pin

POMPES DOUBLES - ROTATION MONTAGE, DROIT (87546977)

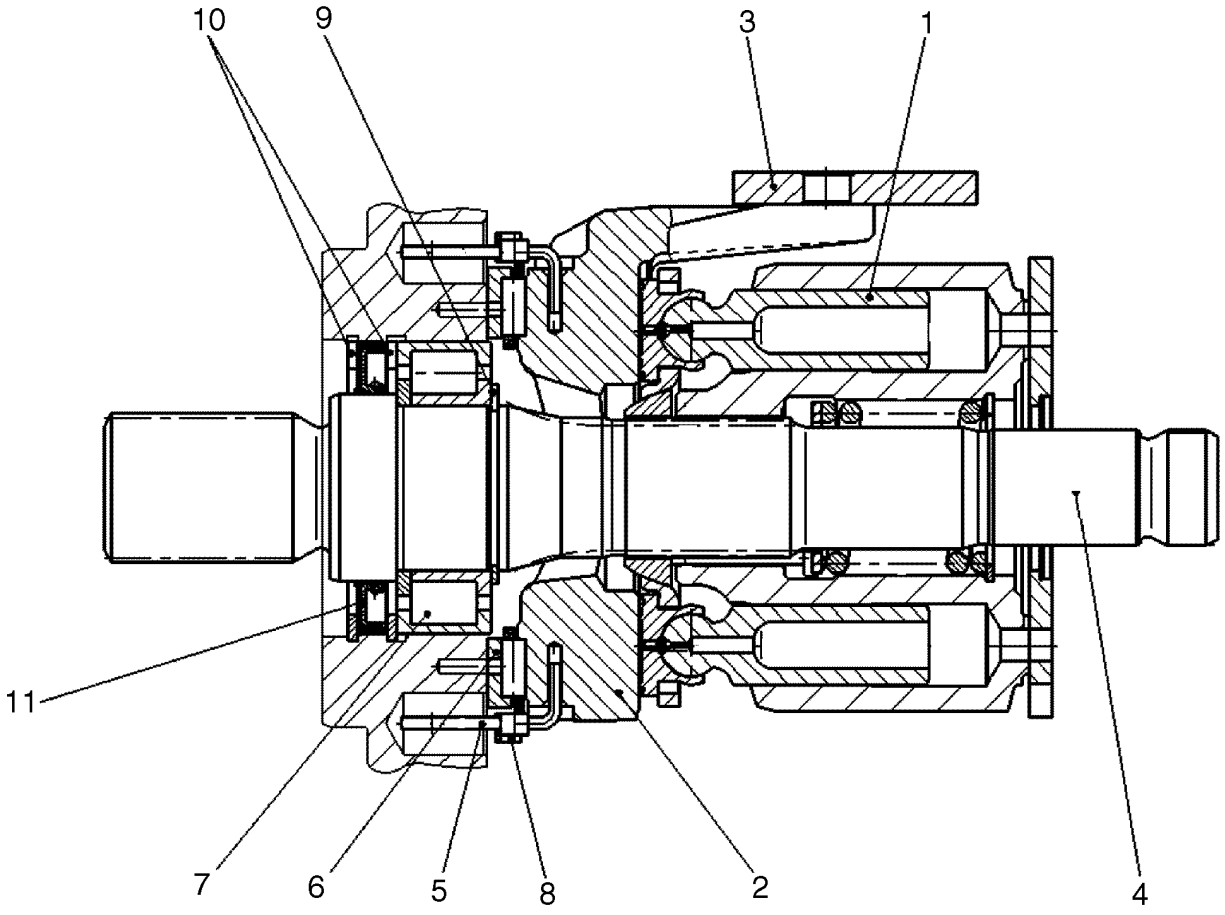

BS06J126

POMPES DOUBLES - ROTATION MONTAGE, DROIT (87546977)

REF	FN	PART NUMBER	YR/SN	QTY	DESCRIPTION
		87553599		1	KIT ASSISTANCE, Rotary Group, Right Hand Rotation; Incl. 1 - 11
1		87553623		1	SECTION DE VANNE, Rotary Group, Hydraulic Section
2		87597259		1	BERCEAU, Cradle
3		87597260		1	GLISSIÈRE, Ring
4		87597261		1	ARBRE D'ENTRAINEMENT, Drive Shaft
5		87597262		2	FIL D'ACIER, With Coil
6		87597263		1	COUSSINET, Pair
7		87597264		1	PALIER, Plain Roller Bearing
8		87597265		1	BERCEAU, Bearing Assembly (set)
9		87597266		1	ANNEAU, Retaining Ring
10		87597267		2	ANNEAU, Seeger V-ring
11		87597268		1	ANNEAU, Shaft Seal Ring

POMPES DOUBLES - ROTATION MONTAGE, GAUCHE ROTATION (87546977)

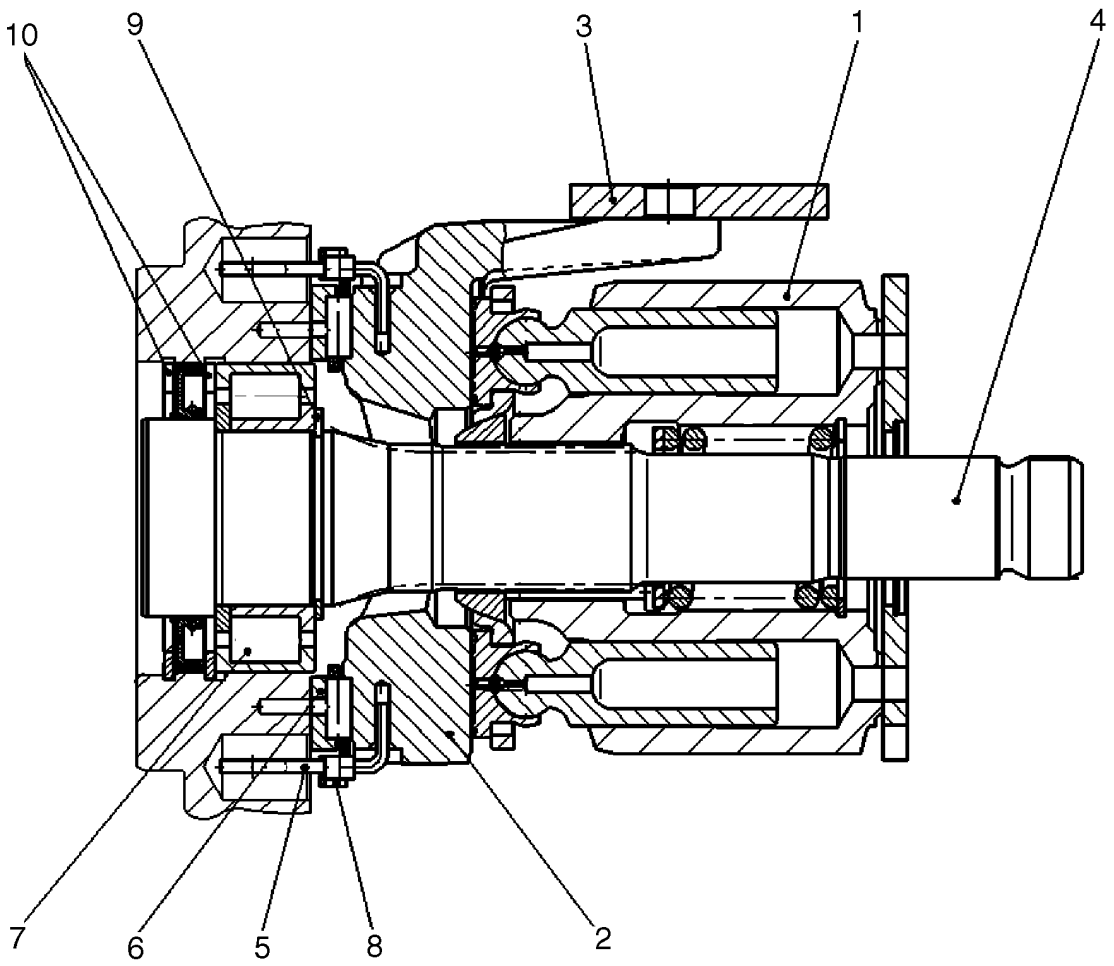

BS06J127

POMPES DOUBLES - ROTATION MONTAGE, GAUCHE ROTATION (87546977)

REF	FN	PART NUMBER	YR/SN	QTY	DESCRIPTION
		87553600		1	KIT ASSISTANCE, Rotary Group, Left Hand Rotation; Incl. 1 - 10
1		87597269		1	ELEMENT DISTR HYDR, Rotary Group, Hydraulic Section
2		87597259		1	BERCEAU, Cradle
3		87597260		1	GLISSIÈRE, Ring
4		87597271		1	ARBRE D'ENTRAINEMENT
5		87597262		2	FIL D'ACIER, With Coil
6		87597263		1	COUSSINET, Pair
7		87597264		1	PALIER, Plain Roller Bearing
8		87597265		1	BERCEAU, Bearing Assembly (set)
9		87597266		1	ANNEAU, Retaining Ring
10		87597267		2	ANNEAU, Seeger V-ring

POMPES DOUBLES - COMMANDE HYDRAULIQUE (87546977)

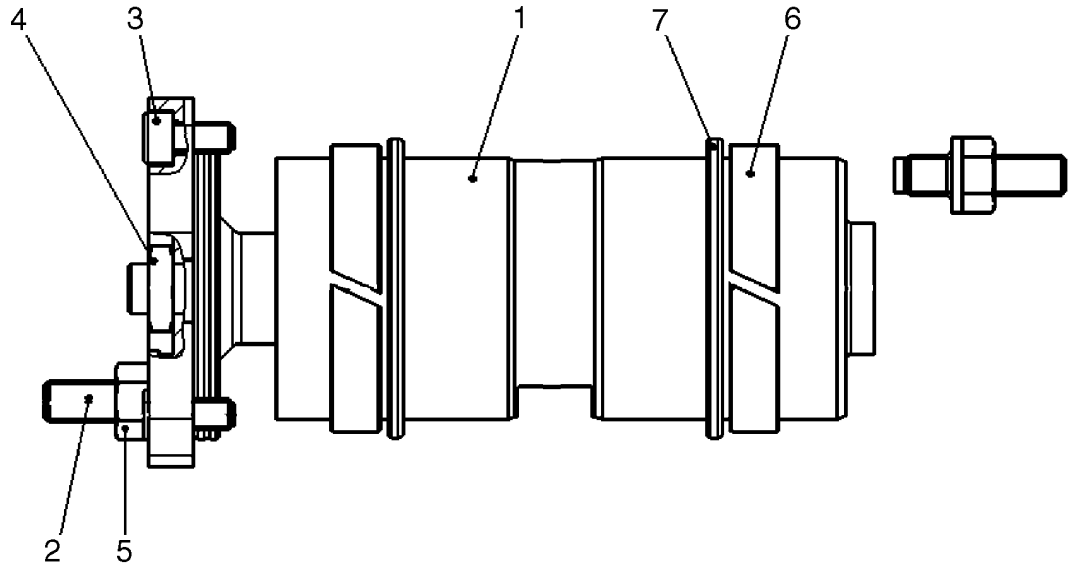

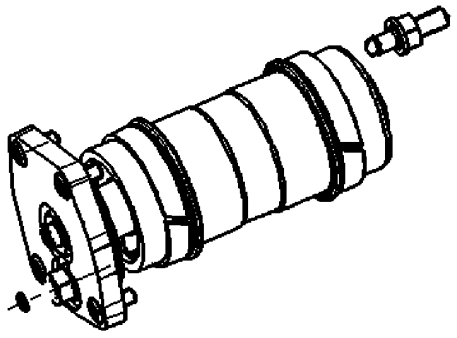

BS06J128

POMPES DOUBLES - COMMANDE HYDRAULIQUE (87546977)

REF	FN	PART NUMBER	YR/SN	QTY	DESCRIPTION
		87553601		1	COMMANDE, Control, Hydraulic; Incl. 1 - 7
1		87597272		1	PISTON, Positioning Piston, Complete
2		87597274		2	AXE, Threaded Pin
3		87597275		4	VIS, Socket Head Screw
4		87597276		1	ECROU, Hexagon Nut
5		87597277		2	ECROU, Seal, Lock Nut
6		87597281		2	BAGUE DE GUIDAGE, Guide Ring
7		87597282		2	KIT ASSISTANCE, Rod Seal Kit

POMPES DOUBLES - COMMANDE MONTAGE (87546977)

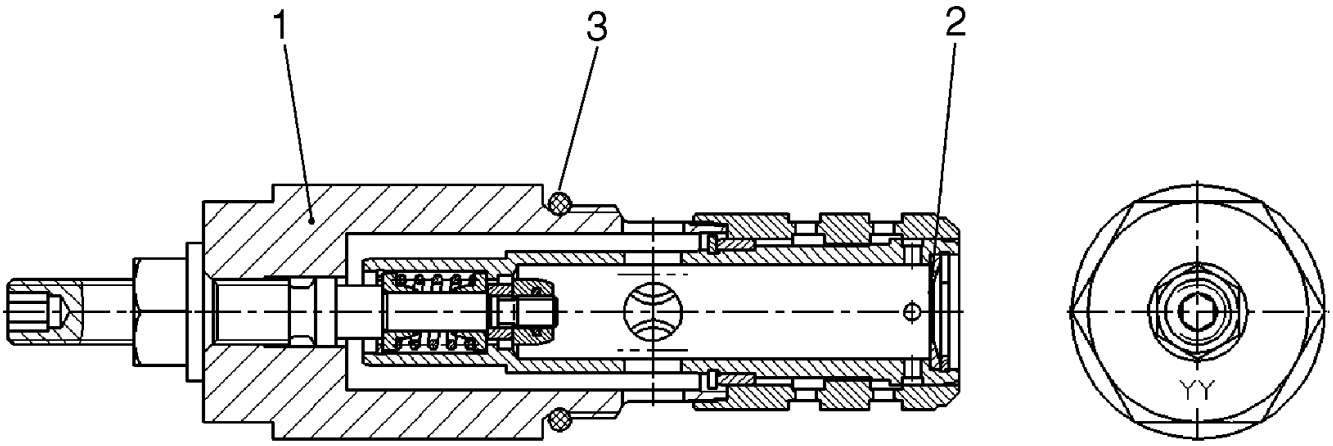

BS07A093

POMPES DOUBLES - COMMANDE MONTAGE (87546977)

REF	FN	PART NUMBER	YR/SN	QTY	DESCRIPTION
		87614031		1	SOUPAPE, DÉCHARGE, Control Cartridge With Orifice; Incl. 1 - 3
1		NSS		1	NON FOURNI SEPAREMENT, Control Cartridge Without Orifice
2		87597285		1	ANNEAU, Back Up Ring
3		87597284		1	JOINT THORIQUE, O-Ring

POMPE A ENGRENAGE

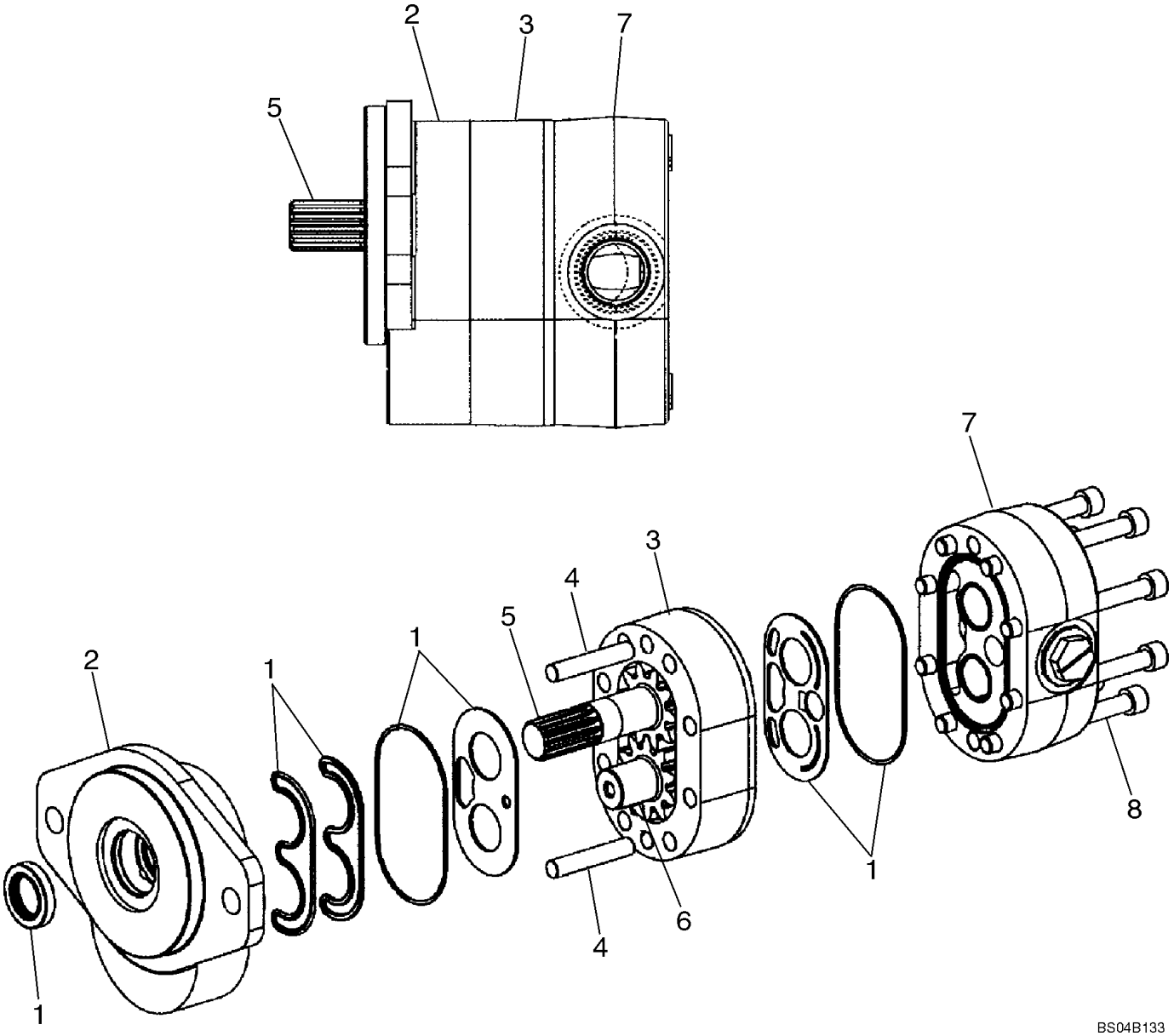

POMPE A ENGRENAGE

REF	FN	PART NUMBER	YR/SN	QTY	DESCRIPTION
		87024695		1	POMPE, Incl. 1 - 8; Models Without High Flow
1		87042214		1	POCHETTE DE JOINTS, Seal; Component Parts Not Serviced Separately
2		NSS		1	NON FOURNI SEPAREMENT, Cover
3		NSS		1	NON FOURNI SEPAREMENT, Plate, Gear
4		NSS		2	NON FOURNI SEPAREMENT, Pin, Dowel
5		NSS		1	NON FOURNI SEPAREMENT, Shaft, Drive
6		NSS		1	NON FOURNI SEPAREMENT, Shaft, Idler
7		NSS		1	NON FOURNI SEPAREMENT, Cover
8		NSS		8	NON FOURNI SEPAREMENT, Screw

POMPE A ENGRENAGE (GRAND DEBIT)

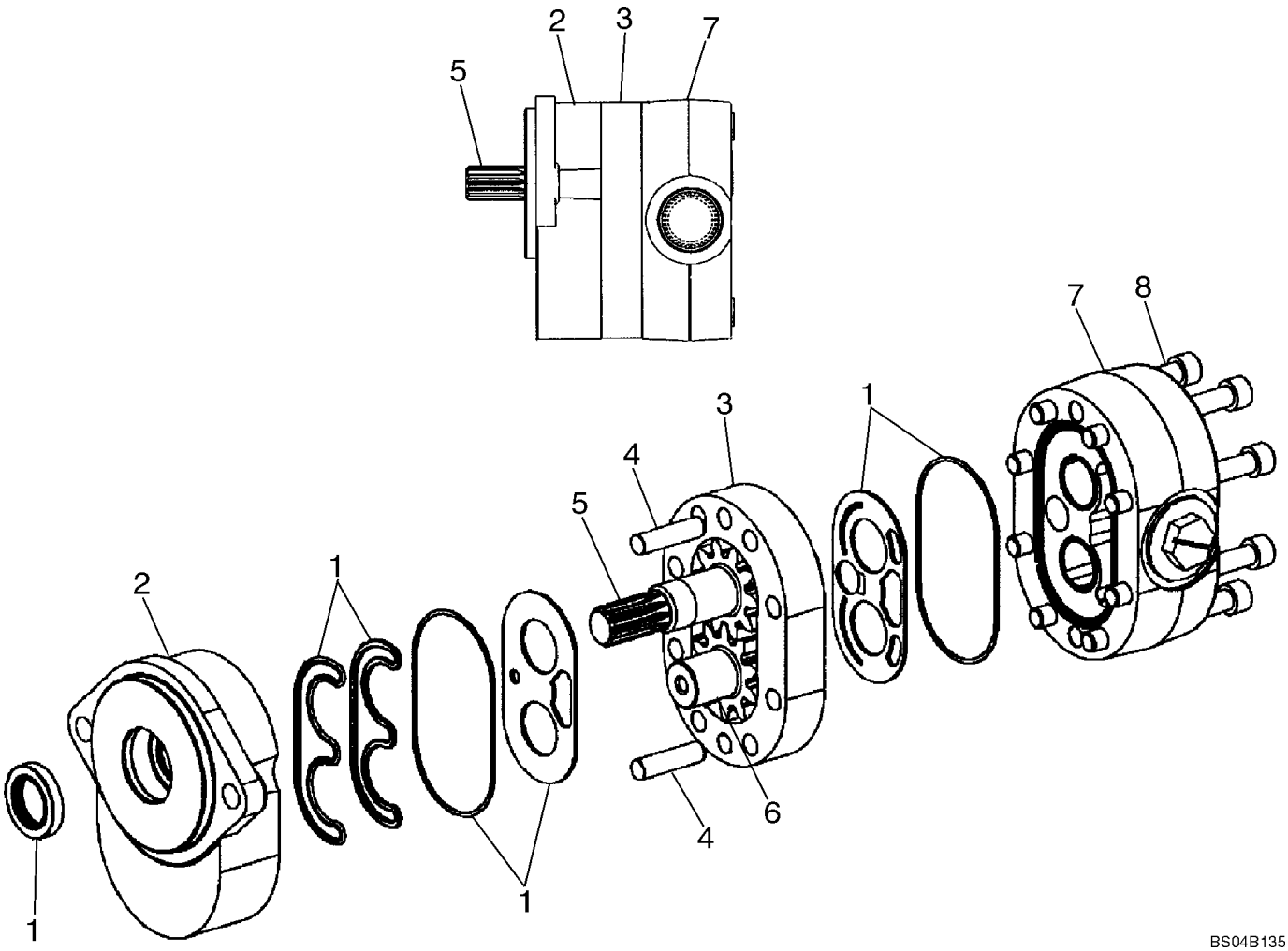

POMPE A ENGRENAGE (GRAND DEBIT)

REF	FN	PART NUMBER	YR/SN	QTY	DESCRIPTION
		87020733		1	POMPE, Incl. 1 - 8; Models With High Flow
1		87042214		1	POCHETTE DE JOINTS, Seal; Component Parts Not Serviced Separately
2		NSS		1	NON FOURNI SEPAREMENT, Cover
3		NSS		1	NON FOURNI SEPAREMENT, Plate, Gear
4		NSS		2	NON FOURNI SEPAREMENT, Pin, Dowel
5		NSS		1	NON FOURNI SEPAREMENT, Shaft, Drive
6		NSS		1	NON FOURNI SEPAREMENT, Shaft, Idler
7		NSS		1	NON FOURNI SEPAREMENT, Cover
8		NSS		8	NON FOURNI SEPAREMENT, Screw

MOTEUR - VITESSE SIMPLE

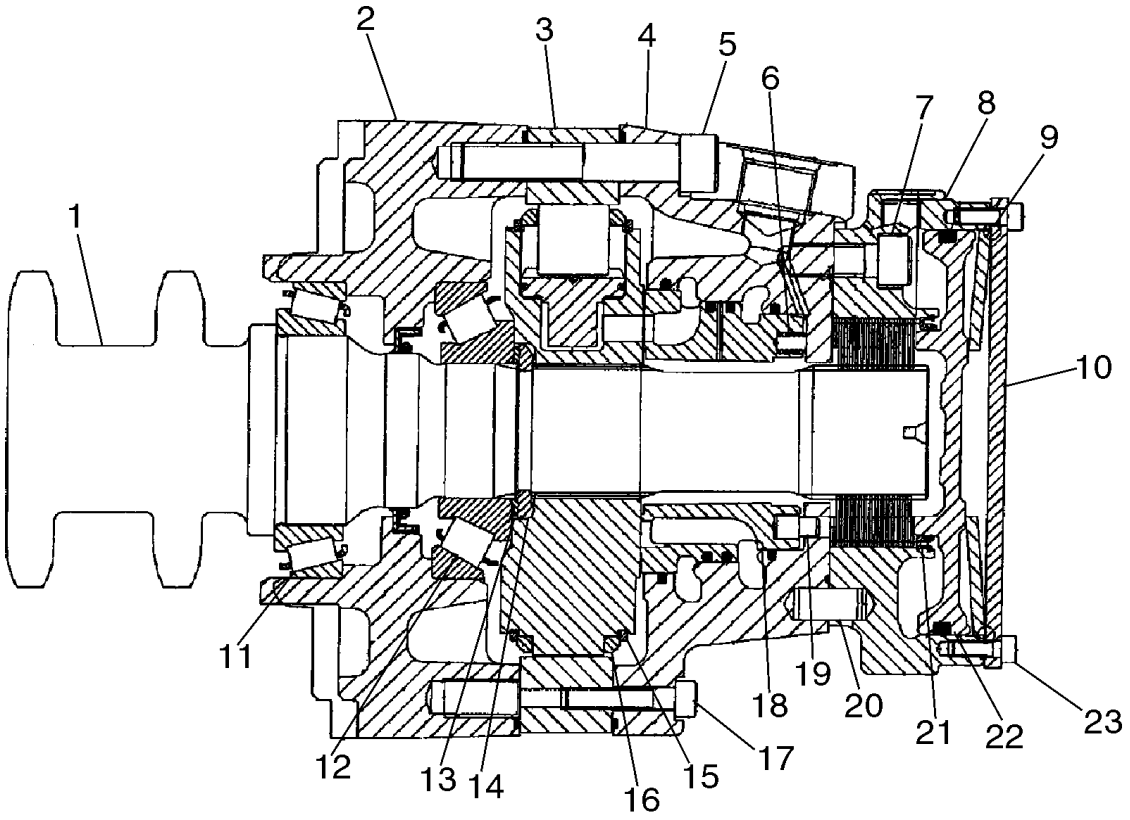

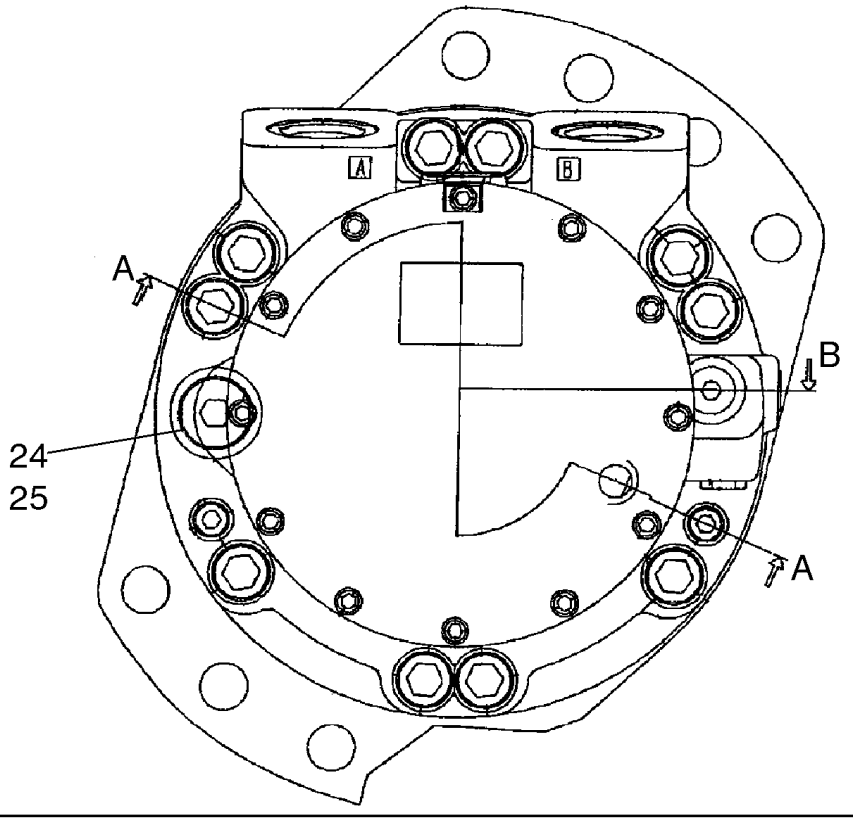

BS04B175

MOTEUR - VITESSE SIMPLE

REF	FN	PART NUMBER	YR/SN	QTY	DESCRIPTION
		87035341		2	MOTEUR HYDRAULIQUE, One Speed
1		87039359		1	KIT, Shaft And Bearing
2		87042941		1	CARTER-BOITE, Front
3		87042908		1	CAME, 680/470
4		87042953		1	CARTER-BOITE, Rear
5		861-14080		10	VIS, Hex Soc Hd, M14 x 80, 12.9
6		87042912		9	RESSORT
7		86512142		5	VIS, Hex Soc Hd, M12 x 30, 12.9
8		87042921		1	CARTER, Brake
9		87042926		1	RESSORT, Disc
10		87042923		1	COUVERCLE, End
11		87042904		1	ROULEMENT, 70 x 110 x 25
12		87042905		1	ROULEMENT, 50 x 110 x 29.25
13		87042903		1	KIT, Washer
14		87042906		1	ANNEAU, Split Ring
15		NSS			NON FOURNI SEPAREMENT
16		NSS			NON FOURNI SEPAREMENT
17		861-8040		2	VIS, Hex Soc Hd, M8 x 40, 12.9
18		87042954		1	ANNEAU, Distributor
19		87042911		1	AXE, Stop
20		87042927		3	AXE, 12 x 25
21		87042925		1	CLIP, 87 ID
22		87042922		1	PISTON, Brake Piston
23		86512134		12	VIS, Hex Soc Hd, M6 x 16, 12.9
24		214389		1	BOUCHON, Hex Hd, 3/4"-16 ORB, Incl. Ref. 25
25		237-6008		1	JOINT THORIQUE, 8-1, 90 Duro, .644" ID x .087" Thk

MOTEUR - VITESSE SIMPLE

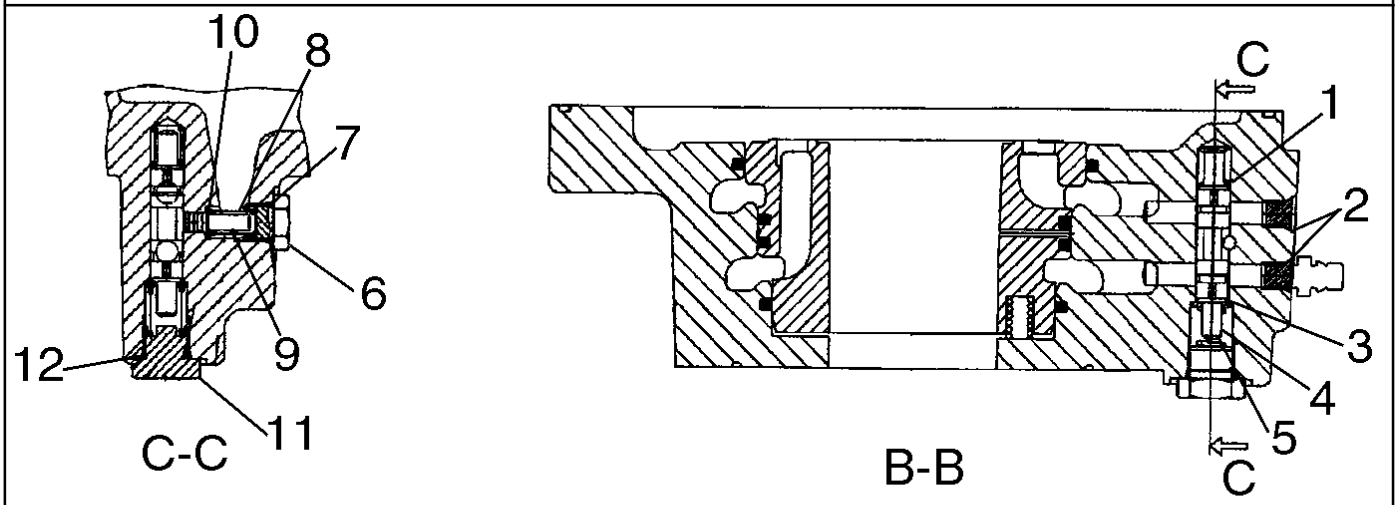

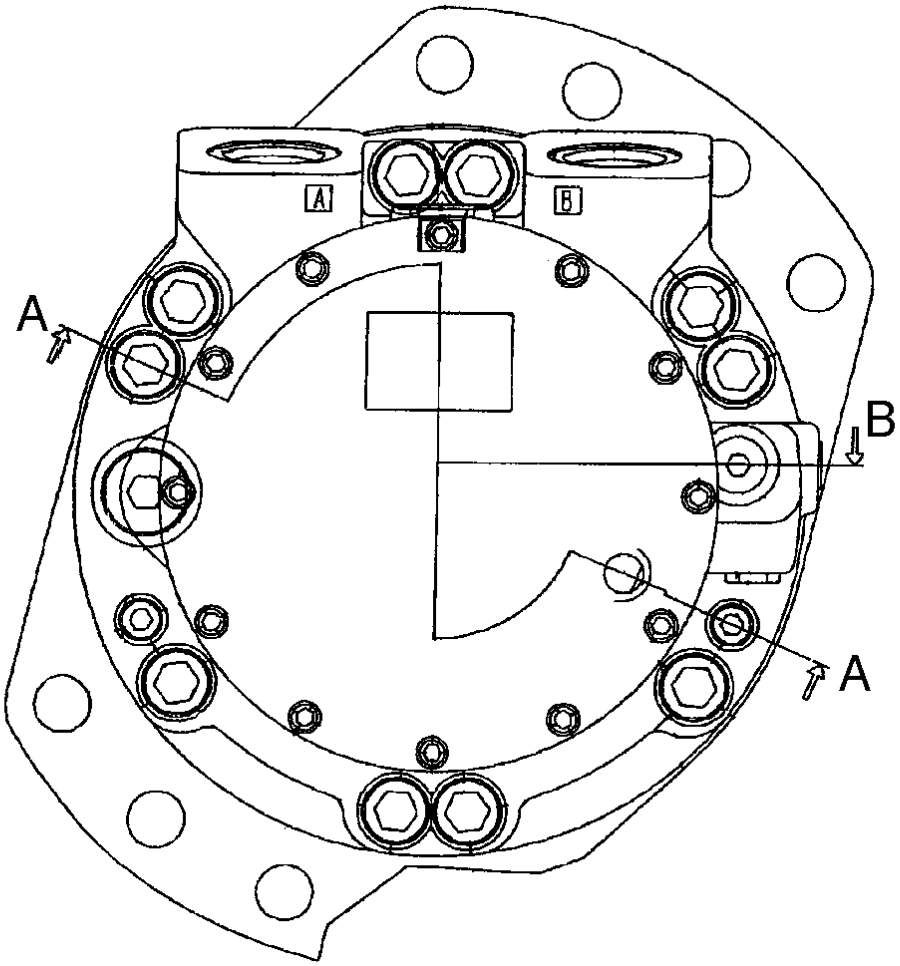

BS04B176

MOTEUR - VITESSE SIMPLE

REF	FN	PART NUMBER	YR/SN	QTY	DESCRIPTION
		87035341		2	MOTEUR HYDRAULIQUE, One Speed
1		87042934		1	RESSORT, Flushing Side A
2		NSS		2	NON FOURNI SEPAREMENT, Shear Plug; M8
3		87042929		1	RONDELLE, 1.5 Thick
4		87042935		1	RESSORT, Flushing Side B
5		87042928		1	TIROIR, Flushing
6		87042933		1	VALVE A CLAPET, Plug; 7/16
7		NSS		1	NON FOURNI SEPAREMENT, O-Ring; 8.92 x 1.83; Included In 87039370, Seal Kit, See Figure 06-58
8		87042931		1	VALVE A CLAPET, 1.7 Orifice
9		87042932		1	RESSORT, Flushing
10		87042930		1	CALE D'EPAISSEUR, 0.6
11		214389		1	BOUCHON, Hex Hd, 3/4"-16 ORB
12		NSS		1	NON FOURNI SEPAREMENT, O-Ring; 11.90 x 1.98; Incl. In 87039370, Seal Kit, See Figure 06-58

MOTEUR - VITESSE SIMPLE

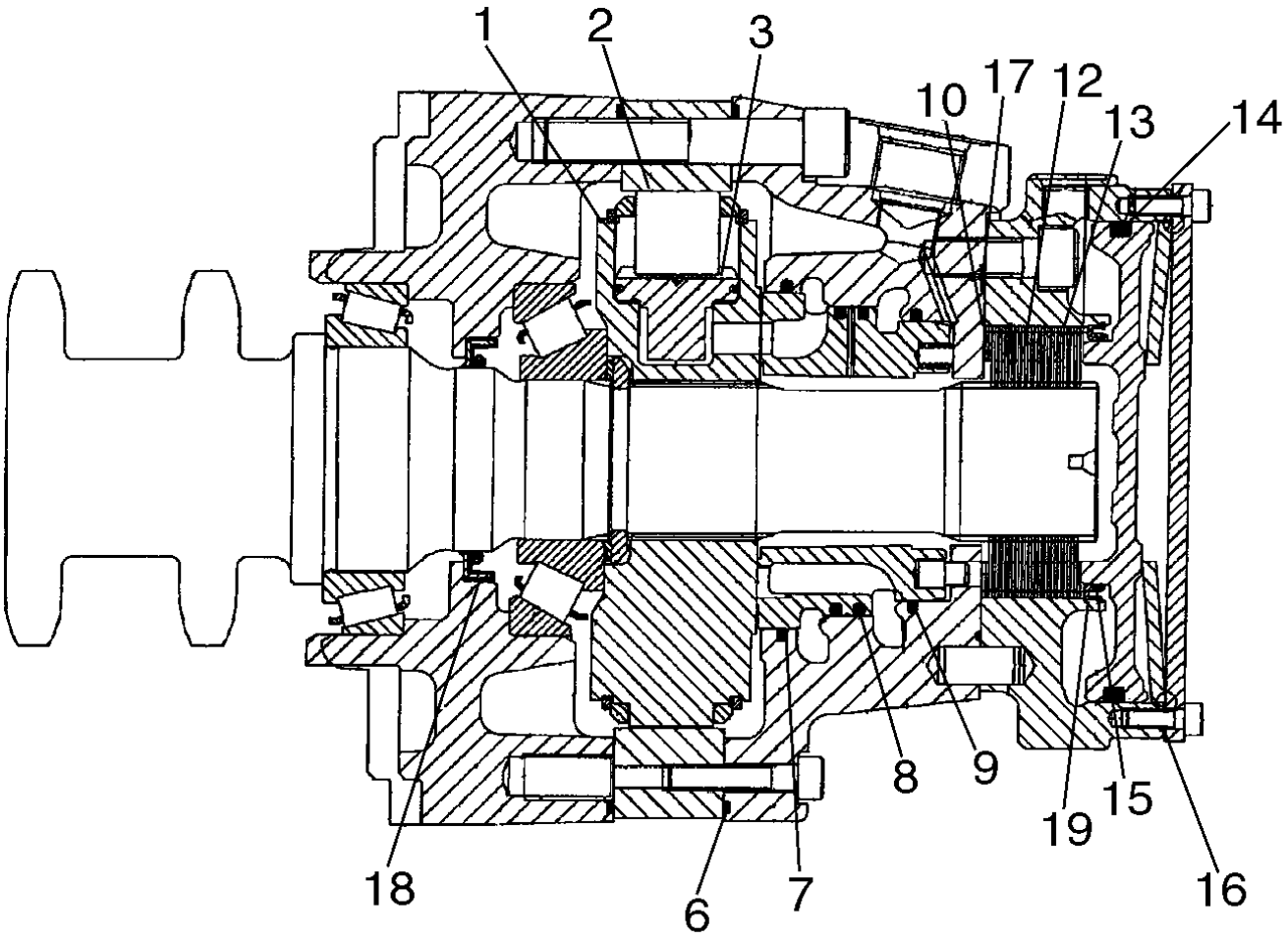

BS04B177

MOTEUR - VITESSE SIMPLE

REF	FN	PART NUMBER	YR/SN	QTY	DESCRIPTION
		87035341		2	MOTEUR HYDRAULIQUE, One Speed
		87039368		1	KIT, Brake; Incl. 1 - 3
1		NSS		1	NON FOURNI SEPAREMENT, Cylinder Block
2		NSS		8	NON FOURNI SEPAREMENT, Roll
3		NSS		8	NON FOURNI SEPAREMENT, Piston S/A
		87039370		1	KIT, Seal; Incl. 4 - 9
4		NSS		1	NON FOURNI SEPAREMENT, O-Ring; 11.90 x 1.98; For Illustration, See Figure 06-57, Ref 12
5		NSS		1	NON FOURNI SEPAREMENT, O-Ring; 8.92 x 1.83; For Illustration, See Figure 06-57, Ref 7
6		NSS		2	NON FOURNI SEPAREMENT, Square Ring; 213 x 2.51
7		NSS		1	NON FOURNI SEPAREMENT, Rod Seal; 105
8		NSS		1	NON FOURNI SEPAREMENT, Piston Seal; 96.5
9		NSS		1	NON FOURNI SEPAREMENT, Rod Seal; 87.15
		87039372		1	KIT, Rotating; Incl. 10 - 16
10		NSS		1	NON FOURNI SEPAREMENT, Shim; 80 x 63 x 0.1
11		NSS		1	NON FOURNI SEPAREMENT, Shim; 80 x 63 x 0.3
12		NSS		14	NON FOURNI SEPAREMENT, Inner Plate
13		NSS		16	NON FOURNI SEPAREMENT, Outer Plate
14		NSS		1	NON FOURNI SEPAREMENT, Square Ring; 139.07 x 5.16
15		NSS		1	NON FOURNI SEPAREMENT, O-ring; 75.92 x 1.78
16		NSS		1	NON FOURNI SEPAREMENT, Gasket; 0.5
17		87042919		1	JOINT THORIQUE, 107.67 x 1.78
18		87042907		1	JOINT A LÈVRES, 57.15
19		87042924		1	ANNEAU, Brake Seal

MOTEUR - DEUX VITESSES

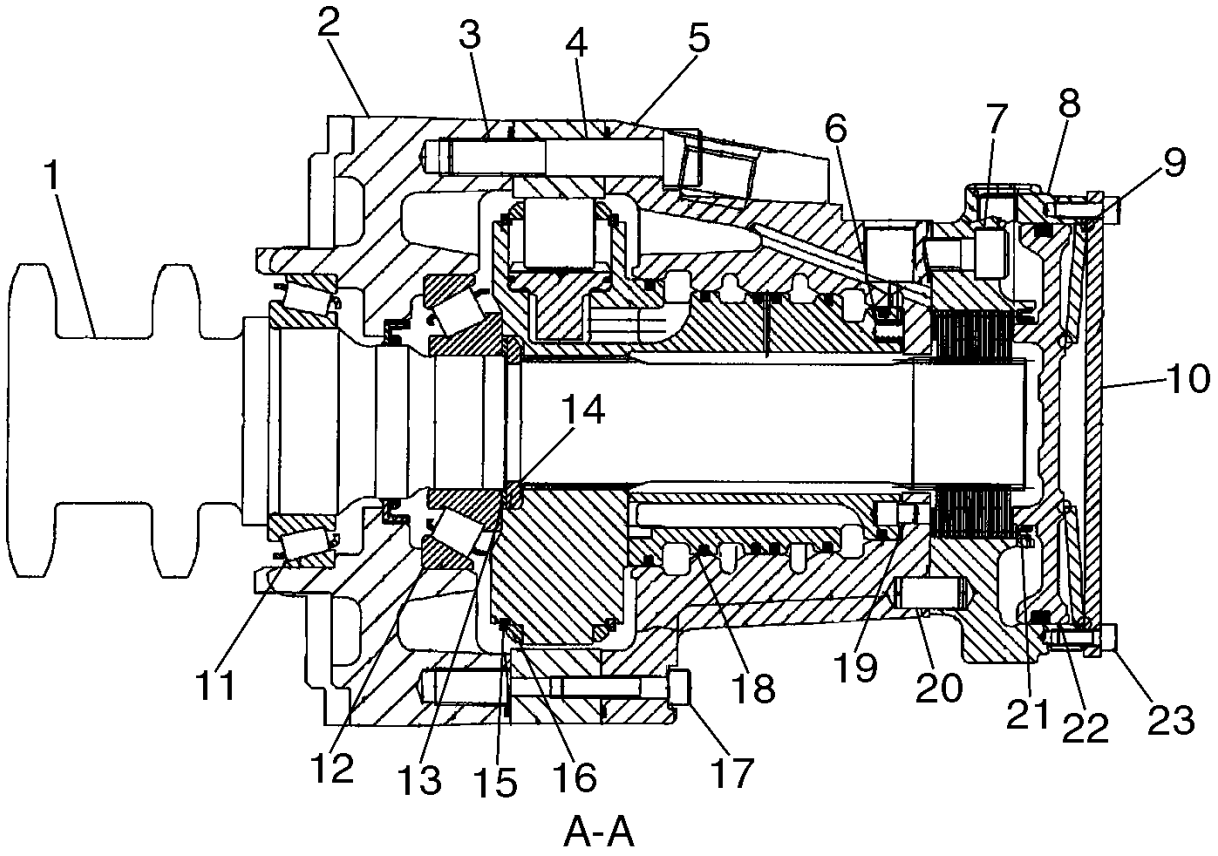

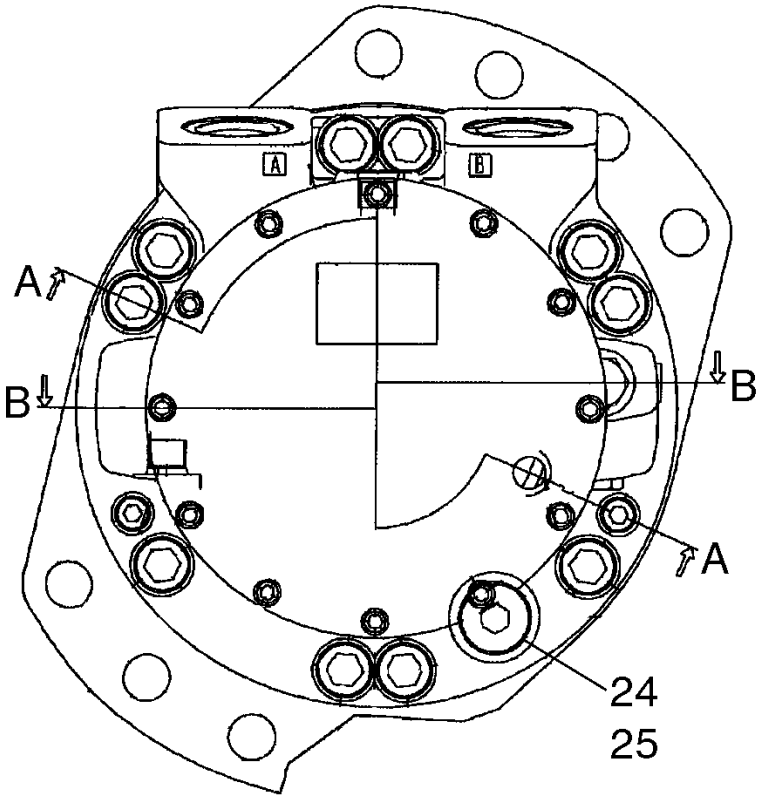

BS04B178

MOTEUR - DEUX VITESSES

REF	FN	PART NUMBER	YR/SN	QTY	DESCRIPTION
		87035342		2	MOTEUR HYDRAULIQUE, Two Speed
1		87039360		1	KIT, Shaft And Bearing
2		87042941		1	CARTER-BOITE, Front
3		861-14080		10	VIS, Hex Soc Hd, M14 x 80, 12.9
4		87042908		1	CAME, MCR3/5
5		87042909		1	CARTER-BOITE
6		87042912		16	RESSORT
7		86512142		5	VIS, Hex Soc Hd, M12 x 30, 12.9
8		87042921		1	CARTER, Brake Housing
9		87042926		1	RESSORT, Disc
10		87042923		1	COUVERCLE, End
11		87042904		1	ROULEMENT, 70 x 110 x 25
12		87042905		1	ROULEMENT, 50 x 110 x 29.25
13		87042903		1	KIT, Washer
14		87042906		1	ANNEAU, Split
15		NSS			NON FOURNI SEPAREMENT
16		NSS			NON FOURNI SEPAREMENT
17		861-8040		2	VIS, Hex Soc Hd, M8 x 40, 12.9
18		87042910		1	DISTRIBUTEUR
19		87042911		1	AXE, Stop
20		87042927		3	AXE, 12 x 25
21		87042925		1	CLIP, 87 ID
22		87042922		1	PISTON, Brake
23		86512134		12	VIS, Hex Soc Hd, M6 x 16, 12.9
24		214389		1	BOUCHON, Hex Hd, 3/4"-16 ORB, Incl. 25
25		128825		1	JOINT THORIQUE, 8-1, 90 Duro, .644" ID x .087" Thk

MOTEUR - DEUX VITESSES

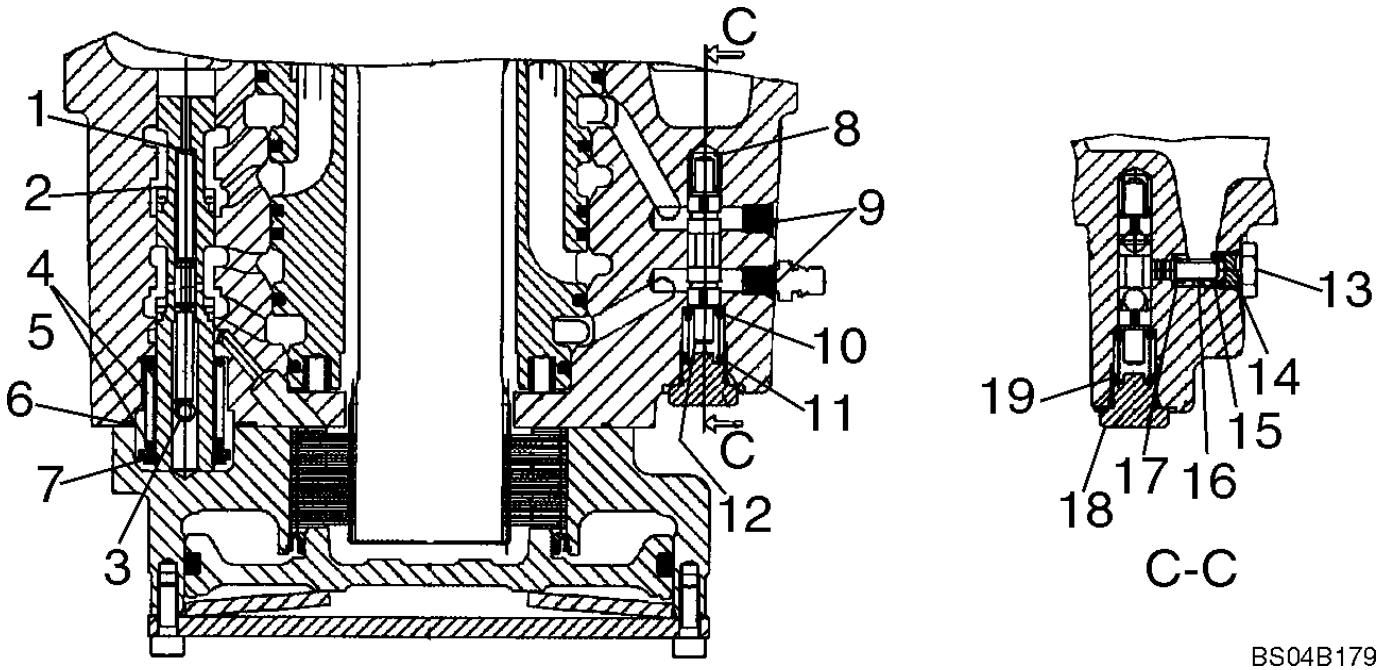

MOTEUR - DEUX VITESSES

REF	FN	PART NUMBER	YR/SN	QTY	DESCRIPTION
		87035342		2	MOTEUR HYDRAULIQUE, Two Speed
1		87042918		1	RESSORT, Shut Off
2		87042913		1	TIROIR
3		87042917		1	RESSORT, 6 x 16
4		87042914		1	KIT, Washer And Spring Kit; Incl. 5
5		NSS		1	NON FOURNI SEPAREMENT, Washer
6		87042916		1	JOINT THORIQUE, 34.65 x 1.78
7		87042915		1	CLIP, 18 dia
8		87042934		1	RESSORT, Flushing Side A
9		NSS		2	NON FOURNI SEPAREMENT, Shear Plug; M8
10		87042929		1	RONDELLE, 1.5 Thick
11		87042935		1	RESSORT, Flushing Side B
12		87042928		1	TIROIR, Flushing
13		87042933		1	VALVE A CLAPET, 7/16
14		NSS		1	NON FOURNI SEPAREMENT, O-Ring; 8.92 x 1.83; Included In 87039371, Seal Kit, See Figure 06-61
15		87042931		1	VALVE A CLAPET, 1.7 Orifice
16		87042932		1	RESSORT, Flushing
17		87042930		1	CALE D'EPAISSEUR, 0.6
18		214389		1	BOUCHON, Hex Hd, 3/4"-16 ORB
19		NSS		1	NON FOURNI SEPAREMENT, O-Ring 11.90 x 1.98; Included In 87039371 Seal Kit; See Figure 06-61

MOTEUR - DEUX VITESSES

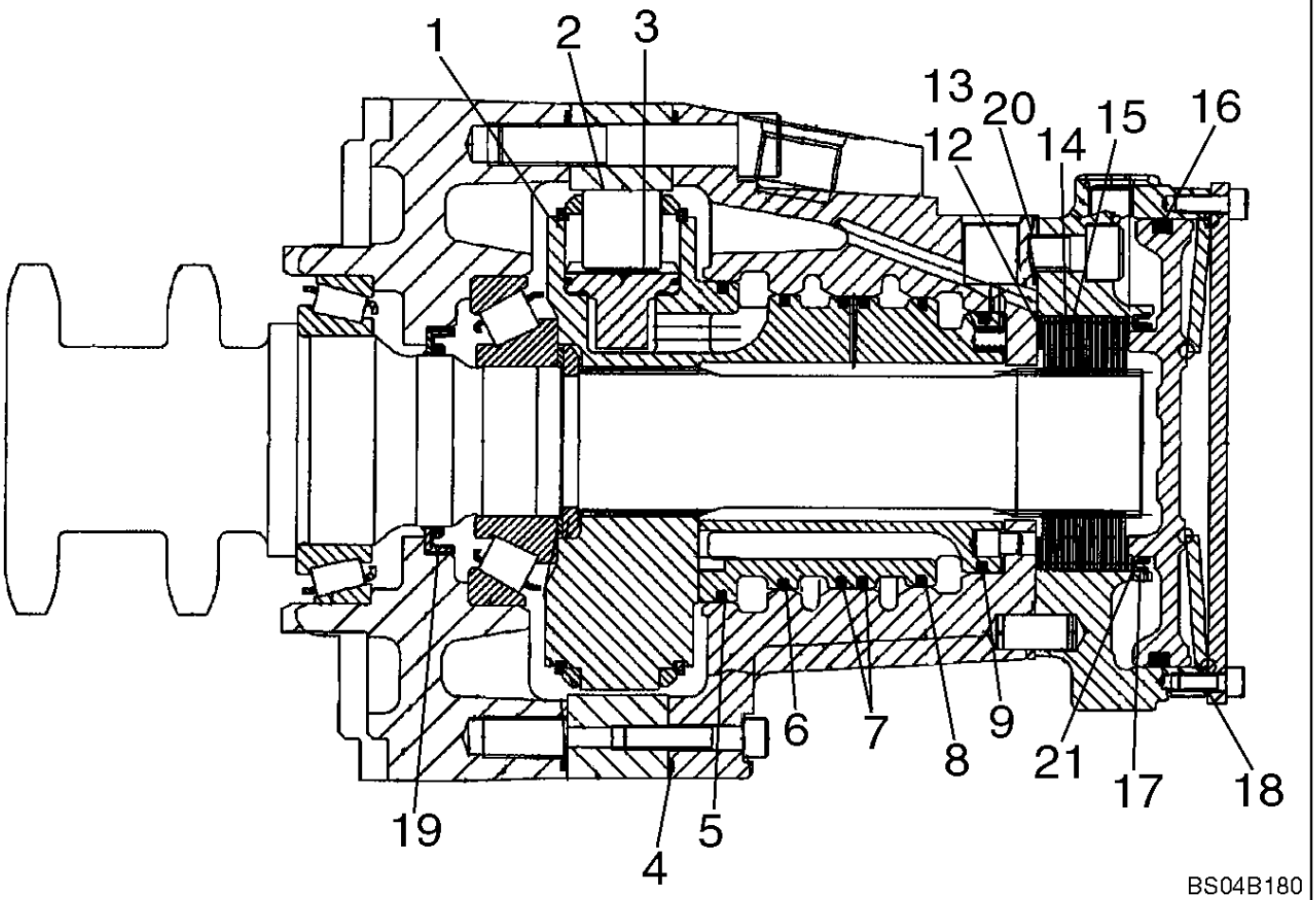

MOTEUR - DEUX VITESSES

REF	FN	PART NUMBER	YR/SN	QTY	DESCRIPTION
		87035342		2	MOTEUR HYDRAULIQUE, Two Speed
		87039369		1	KIT, Rotating; Incl. 1 - 3
1		NSS		1	NON FOURNI SEPAREMENT, Cylinder Block
2		NSS		8	NON FOURNI SEPAREMENT, Roll
3		NSS		8	NON FOURNI SEPAREMENT, Piston S/A
		87039371		1	POCHETTE DE JOINTS, Incl. 4 - 11, 19
4		NSS		2	NON FOURNI SEPAREMENT, Square Ring; 213 x 2.51
5		NSS		1	NON FOURNI SEPAREMENT, Piston Seal; 107.25
6		NSS		1	NON FOURNI SEPAREMENT, Piston Seal; 98.725
7		NSS		2	NON FOURNI SEPAREMENT, Piston Seal; 97.725
8		NSS		1	NON FOURNI SEPAREMENT, Piston Seal; 96.725
9		NSS		1	NON FOURNI SEPAREMENT, Piston Seal; 87.25
10		NSS		1	NON FOURNI SEPAREMENT, O-Ring; 11.90 x 1.98; For Illustration, See Figure 06-60, Ref 19
11		NSS		1	NON FOURNI SEPAREMENT, O-Ring; 8.92 x 1.83; For Illustration, See Figure 06-60, Ref 14
		87039372		1	KIT, Brake; Incl. 12 - 18
12		NSS		1	NON FOURNI SEPAREMENT, Shim; 80 x 63 x 0.1
13		NSS		1	NON FOURNI SEPAREMENT, Shim; 80 x 63 x 0.3
14		NSS		14	NON FOURNI SEPAREMENT, Inner Plate
15		NSS		16	NON FOURNI SEPAREMENT, Outer Plate
16		NSS		1	NON FOURNI SEPAREMENT, Square Ring; 139.07 x 5.16
17		NSS		1	NON FOURNI SEPAREMENT, O-ring; 75.92 x 1.78
18		NSS		1	NON FOURNI SEPAREMENT, Gasket; 0.5
19		87042907		1	JOINT A LÈVRES, 57.15
20		87042919		1	JOINT THORIQUE, 107.67 x 1.78
21		87042924		1	ANNEAU, Brake Seal Ring

MOTEUR - HYDROSTATICQUE (440CT)

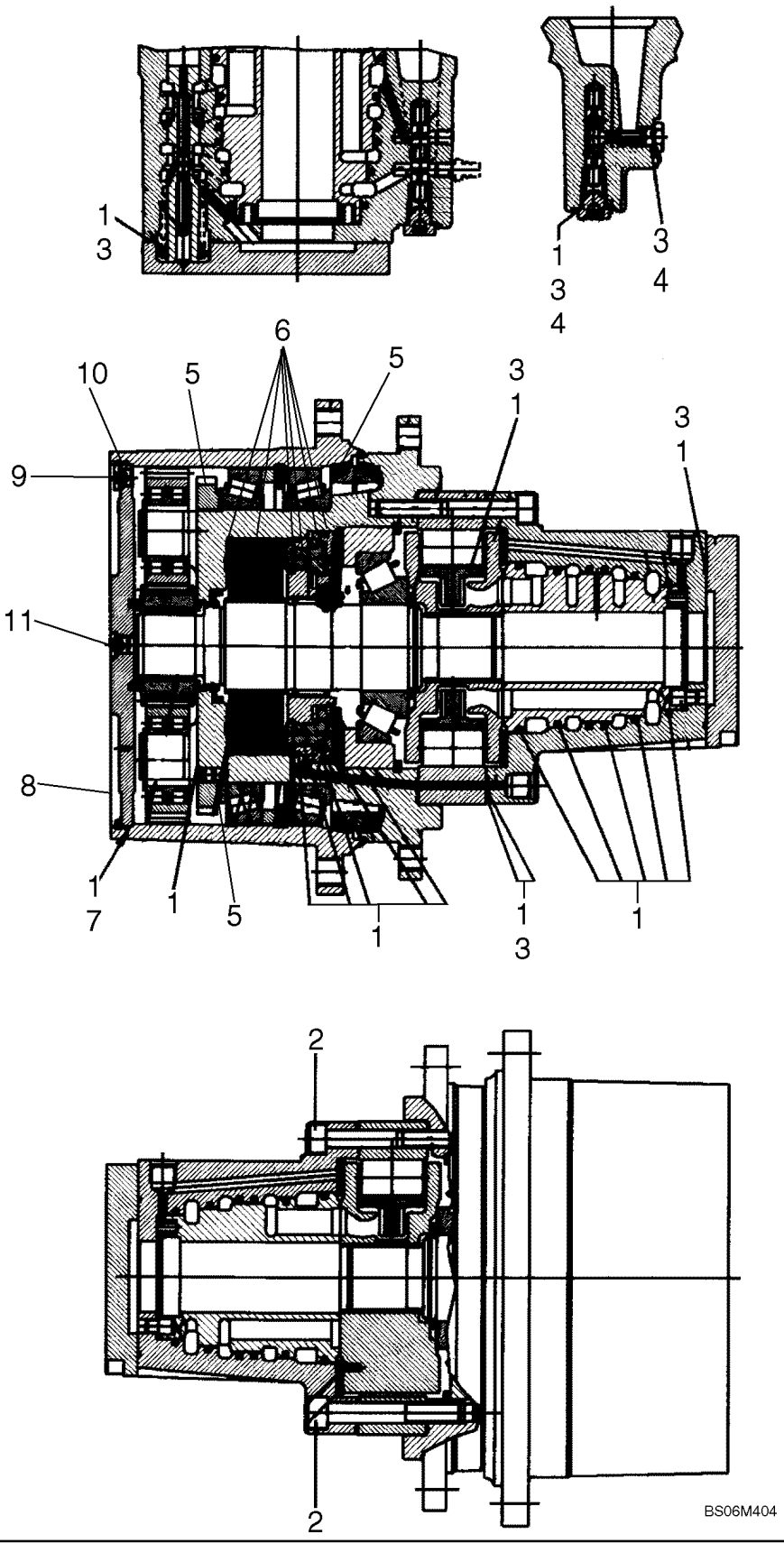

MOTEUR - HYDROSTATICQUE (440CT)

REF	FN	PART NUMBER	YR/SN	QTY	DESCRIPTION
		87600262		1	MOTEUR, Drive Motor, LH; Incl. 1 - 11
		87600262C		1	MOTEUR-HYD A RENOVER, Drive Motor, LH Core - Motor Return Number, Use To Return Core For Credit When Using A Remanufactured Assy
		87600262R		1	MOTEUR-HYD RENOVE, Reman - Motor, LH, Remanufactured
		87600263		1	MOTEUR, Drive Motor, RH; Incl. 1 - 11
		87600263C		1	MOTEUR-HYD A RENOVER, Drive Motor, RH Core - Motor Return Number, Use To Return Core For Credit When Using A Remanufactured Assy
		87600263R		1	MOTEUR-HYD RENOVE, Reman - Motor, RH, Remanufactured
1		87461859		1	POCHETTE DE JOINTS, Motor Seals; Includes (27) 0-Rings, (4) Quad Rings, (4) Rod Seals, (2) Piston Seals, (1) Shaft Seal, (8) Piston Rings
2		87612449		1	KIT ASSISTANCE, Cam Bolt; Includes (2) M12 x 75 Screws, (8) M10 x 80 Screws
3		87571969		1	KIT, External Seals; Includes (13) O-Rings, (3) Quad Rings, (8) Piston Rings
4		87601409		1	POCHETTE DE JOINTS, Flushing Seals; Includes (2) O-Rings
5		87571954		1	KIT, Face Seal; Includes (2) M6 x 16 Dowell Pins, (1) Shaft Nut, (1) Face Seal
6		87571958		1	KIT, Brake; Includes (14) O-Rings, (1) Quad Ring, (6) Shims, (37) Brake Plates
7		87612446		1	JOINT THORIQUE, 210 x 2.00
8		87612445		1	COUVERCLE
9		87575213		3	BOUCHON, Drain, M10 x 1
10		87575214		1	ANNEAU D'ARRÊT, Cover
11		87579238		1	BOUCHON, M16 x 1.5

CONDUITE D'ENTRAINEMENT

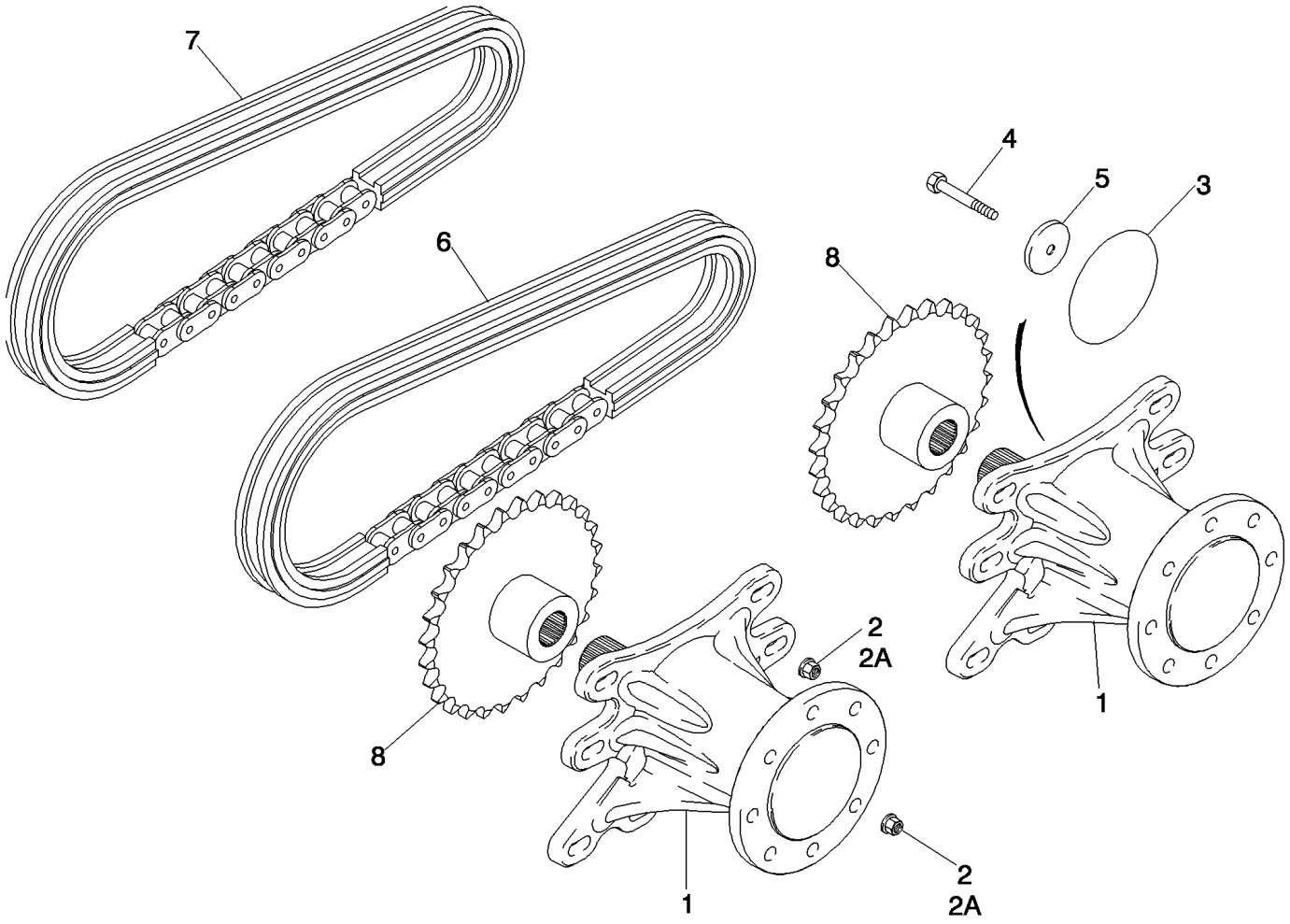

BS04B017

CONDUITE D'ENTRAINEMENT

REF	FN	PART NUMBER	YR/SN	QTY	DESCRIPTION
1		NSS		4	NON FOURNI SEPAREMENT, 338552A3 AXLE ASSY; Used In Production; See Figure 06-64
2		86512498		32	ECROU, M16 x 2, Flg, Cl 10
3		238-5443		4	JOINT THORIQUE, -443, 70 Duro, 7.500" ID x .275" Thk
4		86577946		4	BOULON, Hex, M16 x 80, 10.9, Use Permatex ZPX24210
		ZPX24210		X	JOINT ETANCHEITE AEROSOL, 10 ml
5		429233A1		4	RONDELLE
6		364181A1		2	CHAINE ASS (TP), 100/60P; Rear Chain
7		87428143		2	CHAINE ASS (TP), 100/46P; Front Chain
8		228141A2		4	PIGNON (ASSEMBLE), 28T

ESSIEU

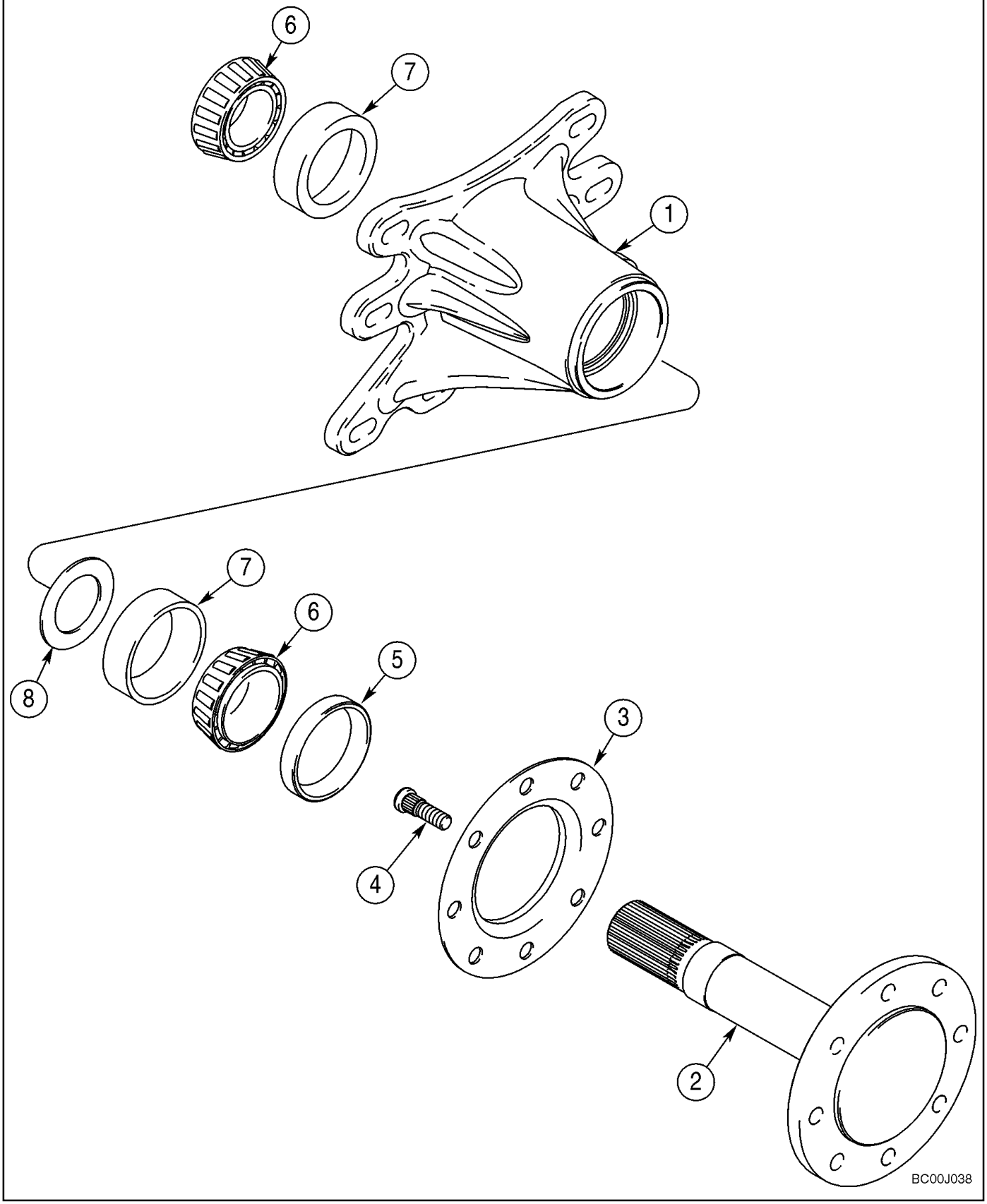

ESSIEU

REF	FN	PART NUMBER	YR/SN	QTY	DESCRIPTION
1		338551A2		1	MOYEU
		338550A4		1	AXE DE ROUE, Incl. 2 - 4
2		NSS		1	NON FOURNI SEPAREMENT, Shaft, Axle
3		189995A1		1	FLASQUE
4		191048A2		8	GOUJON, M16; Plain; Grade 9.8; If Used
4		{87618650}		8	M16; Phosphate Coated; Grade 9.8; If Used
5		341837A2		1	JOINT
6		D63653		2	ROULEMENT
7		R32216		2	CUVE, 3-1/4 OD
8		197805A1		1	RONDELLE

ROUES

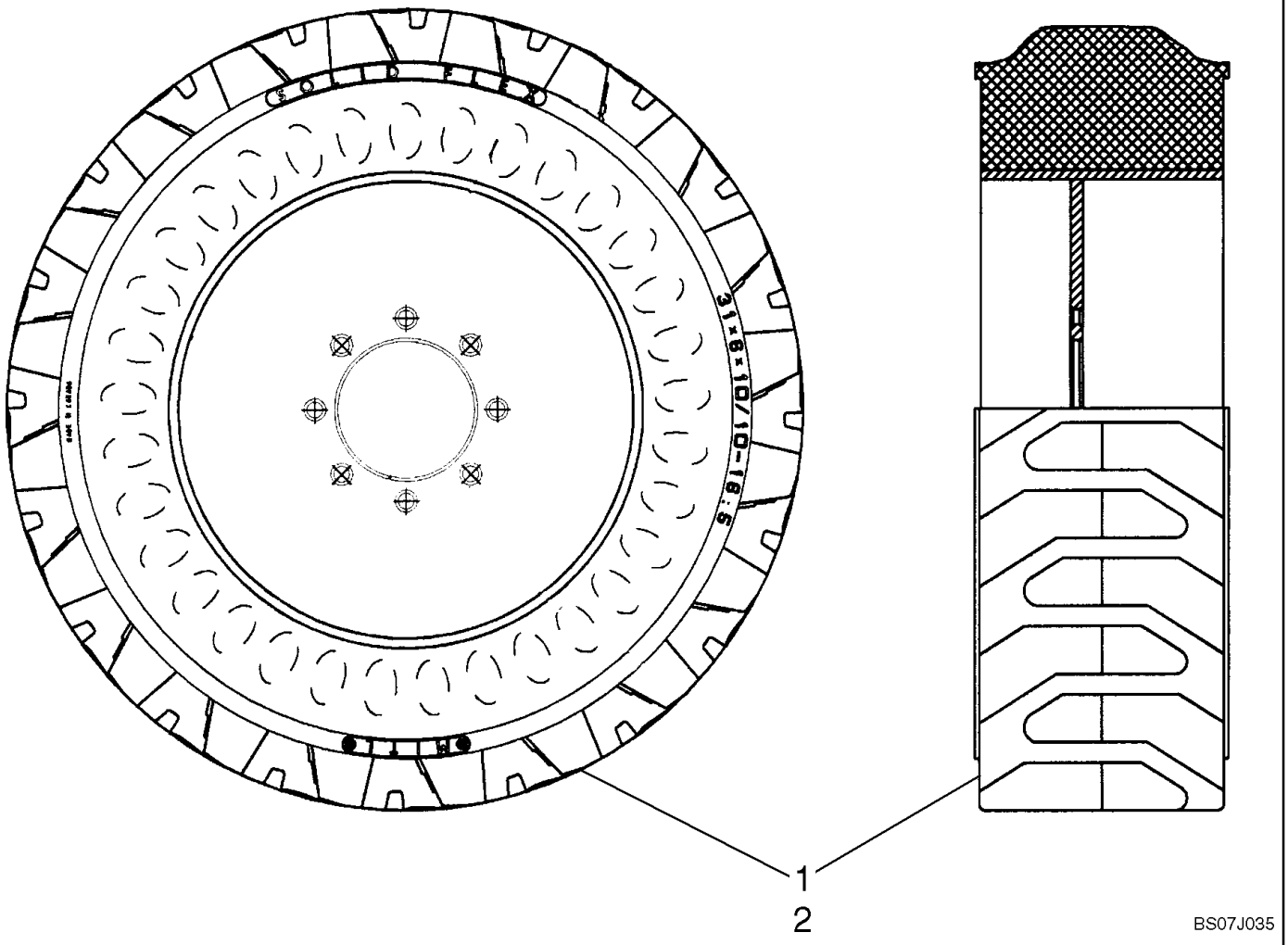

ROUES

REF	FN	PART NUMBER	YR/SN	QTY	DESCRIPTION
1		{87686722}		2	Tire, LH - 10 X 16.5 Galaxy Solid Flex
2		{87686721}		2	Tire, RH - 10 X 16.5 Galaxy Solid Flex
		408127A1		32	ECROU, Nut, M16, 90 Deg Taper

ROUES

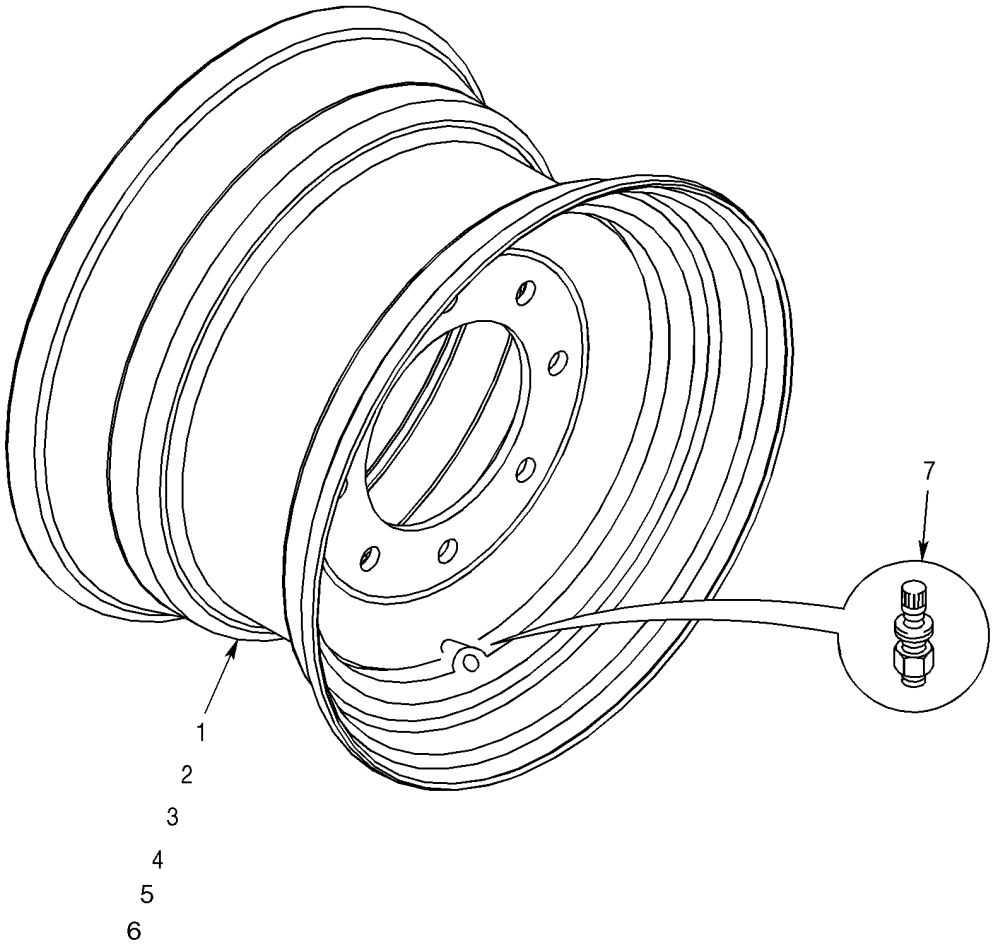

BS07K100

ROUES

REF	FN	PART NUMBER	YR/SN	QTY	DESCRIPTION
1		408856A3		4	JANTE, 16,5 x 8,25, Stamped Center; Used With 33/10 x 16.5 Tire; Uses Ref 7 Valve Stem And Ref 10 Nut
2		408450A1		4	JANTE, 16,5 x 9,75, Stamped Center; Used With 12 x 16.5 Inch Tire; Models With 64 in Over Tire Width; Uses Ref 7 Valve Stem And Ref 10 Nut
3		409574A1		4	JANTE, 16.5 x 9.75, Stamped Center; Used With 12 x 16.5 Inch Tire; Models With 71 in Over Tire Width; Uses Ref 7 Valve Stem And Ref 10 Nut
4		409174A2		4	JANTE, 16.5 x 12, Stamped Center; Used With 33/15.5 x 16.5 Tire; Models With 71 in Over Tire Width; Uses Ref 7 Valve Stem And Ref 10 Nut
5		87534387		4	JANTE, Rim, 16.5 X 9.75 Full Center, 13.84mm Offset; Uses Ref 7 Valve Stem And Ref 9 Nut
6		87578653		4	JANTE, Rim, 16.5 X 9.75 Full Center; Uses Ref 7 Valve Stem And Ref 9 Nut
7		294579A1		4	TIGE DE SOUPAPE
9		86512498		32	ECROU, M16 x 2, Flg, Cl 10, Nut, Hex Flange M16 10 ZND
10		408127A1		32	ECROU, Nut, M16 X 2, 90 Deg Taper

CHENILLE (440CT)

ART

NOT

AVAILABLE

CHENILLE (440CT)

REF	FN	PART NUMBER	YR/SN	QTY	DESCRIPTION
		87541112		2	CHENILLE CAOUTCHOUC, 50 x 86P x 400W

TRANSMISSION FINALE (440CT)

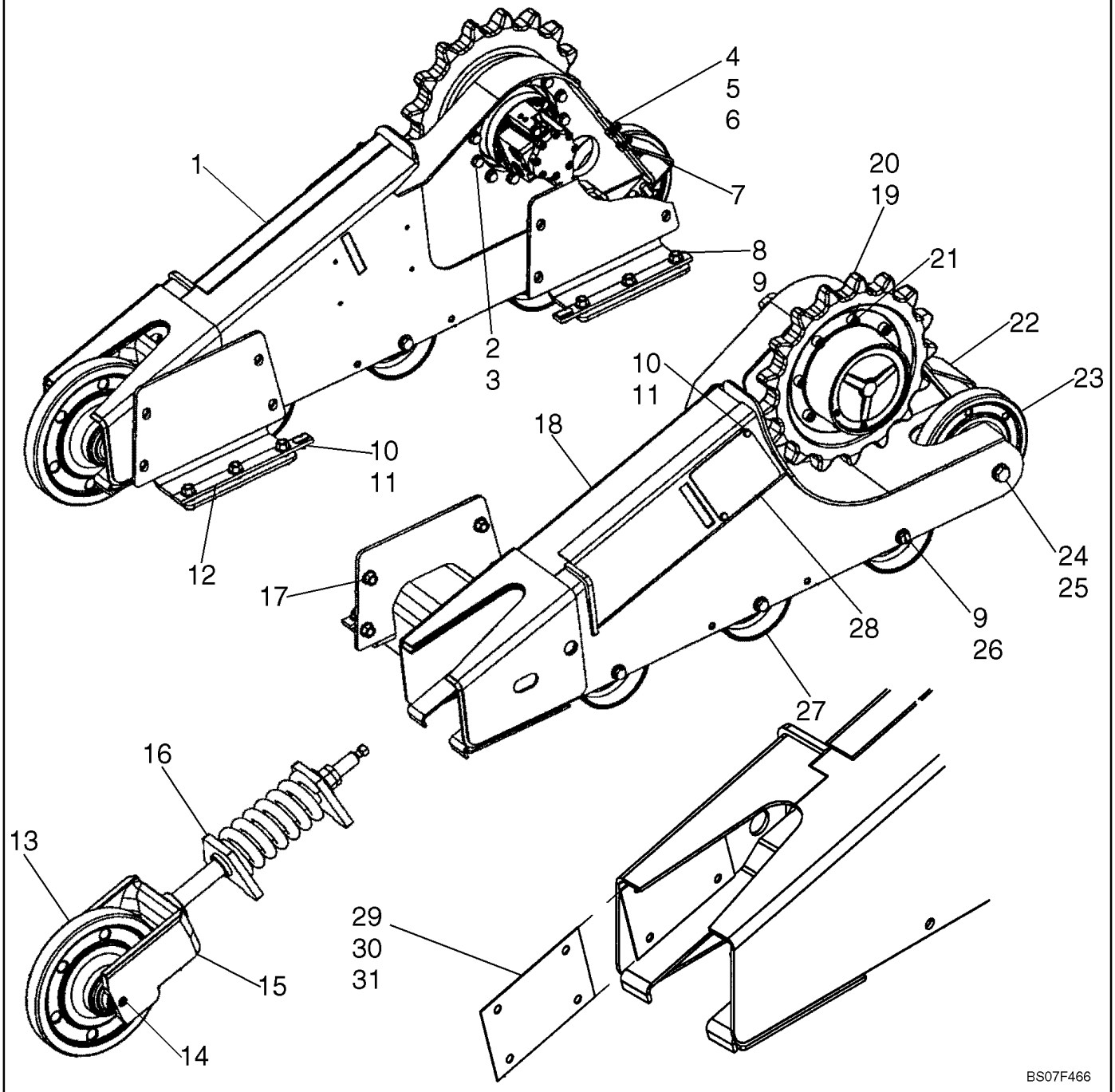

TRANSMISSION FINALE (440CT)

REF	FN	PART NUMBER	YR/SN	QTY	DESCRIPTION
		87563155		1	KIT, Roller And Idler; Includes Ref. 9, 13, 14, 23 - 26, 27 And Instructions
1		87582846		1	CHASSIS, RH; Replaces 87525673, 87459512; If Used
1		87669349		1	CHASSIS, RH; If Used
2		87316174		24	BOULON, Hex, M14 x 50
3		87016615		24	RONDELLE, M12 x 28.5 x 3, HT
4		43260		8	BOULON, Hex, M12 x 30, 10.9
5		337475		8	ECROU, M12, Cl 10
6		86625255		8	RONDELLE, M13.5 x 24.5 x 3, HT
7		87459518		1	RACLEUR, Scraper Plate, Right Hand
8		86508624		12	BOULON, Hex, M16 x 45, 10.9
9		86639326		24	RONDELLE, M17.5 x 34 x 5, HT
10		43127		4	BOULON, Hex, M8 x 25, 8.8
11		86511315		8	RONDELLE, M8 x 16 x 1.6
12		87364613		4	BARRE, Bar W/Undercarriage Mount
13		87535298		2	GALET TENDEUR AVANT, 350 mm, Front; Replaces 87462176
14		14301821		4	VIS, Hex Soc Hd, M10 x 16, 8.8
15		87462287		2	MACHOIRE, Front Idler
16		87602985		2	TENDEUR, Spring, Tension; Replaces 87458724
		87602988		1	TRINGLE, Piston Rod For Track Tensioner, Ref. 16
		87602987		1	KIT ASSISTANCE, Seal Kit For Track Tensioner, Ref. 16; Incl. Scraper, Spacer, And O-Ring
		87356572		1	VALVE, Grease Valve For Tension Spring Ref 16
17		86512498		16	ECROU, M16 x 2, Flg, Cl 10
18		87582844		1	CHASSIS, LH; Replaces 87525672, 87459511; If Used
18		87669347		1	CHASSIS, LH; If Used
19		87363008		2	ENTRETOISE, Motor Spacer
20		87460888		2	ROUE DENTEE, 17 Tooth - 86 Pitch
21		87303345		16	VIS, Hex Soc Hd, M16 x 40, 10.9
22		87459517		1	RACLEUR, Scraper Plate, Left Hand
23		87535299		2	GALET TENDEUR, 290 mm, Rear; Replaces 87447230

TRANSMISSION FINALE (440CT)

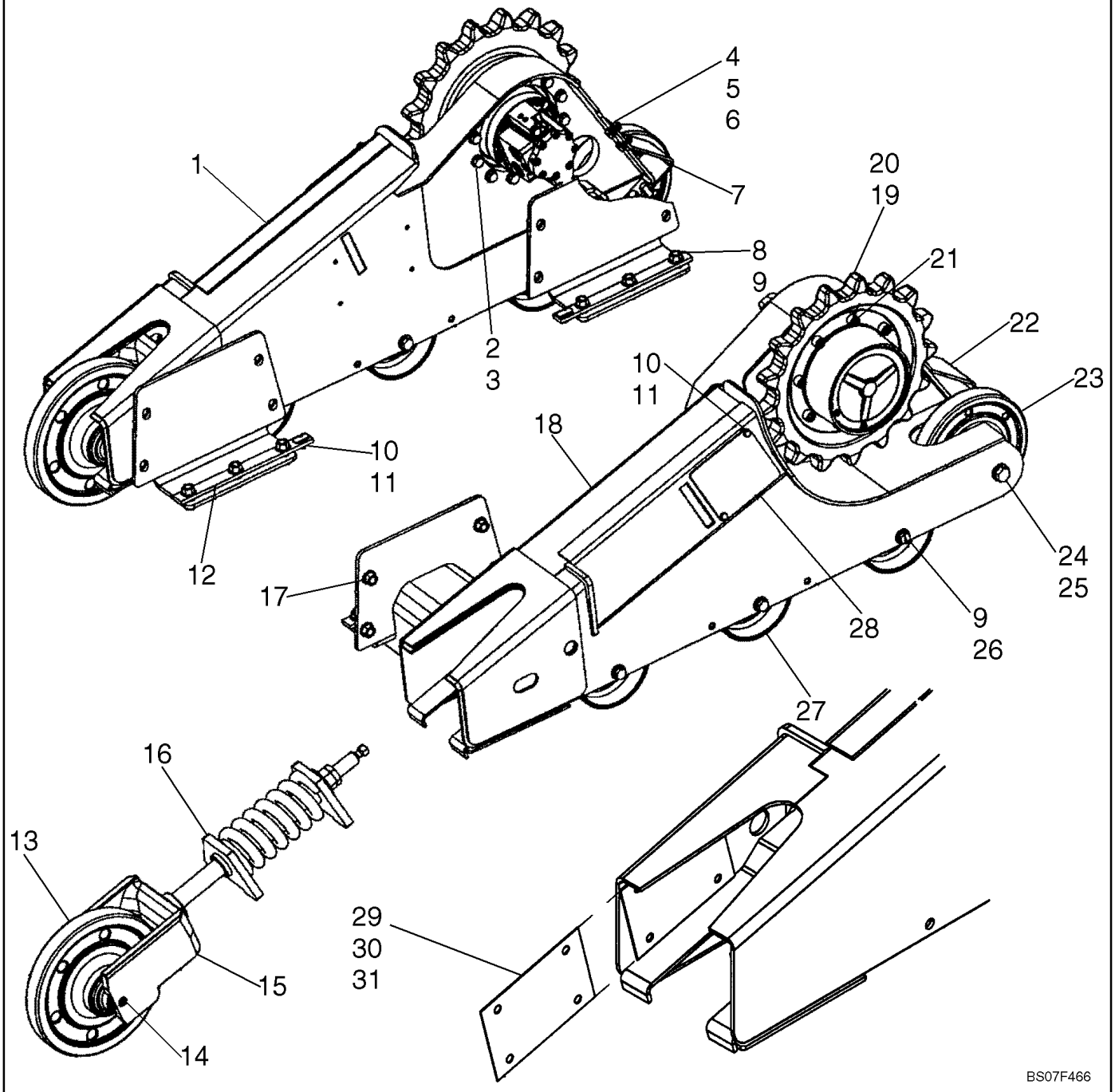

TRANSMISSION FINALE (440CT)

REF	FN	PART NUMBER	YR/SN	QTY	DESCRIPTION
24		9512573		4	BOULON, Hex, M20 x 40, 10.9
25		86629891		4	RONDELLE, M18 x 41.5 x 5, HT
26		374835		12	BOULON, Hex, M16 x 40, 10.9
27		87535297		6	GALET DE CHENILLE, Replaces 87447228
28		87354210		2	COUVERCLE, Plate, Zerk Cover
29		87650011		1	KIT ASSISTANCE, Yoke Shim Kit; Incl. 30, 31 And Instructions
30		87650010		2	PLAQUE, 16 Gage Shim
31		87650009		2	PLAQUE, 12 Gage Shim

NOTES

SECTION INDEX
Freins

07-01 SYSTEME FREIN - CIRCUIT HYDRAULIQUE

SYSTEME FREIN - CIRCUIT HYDRAULIQUE

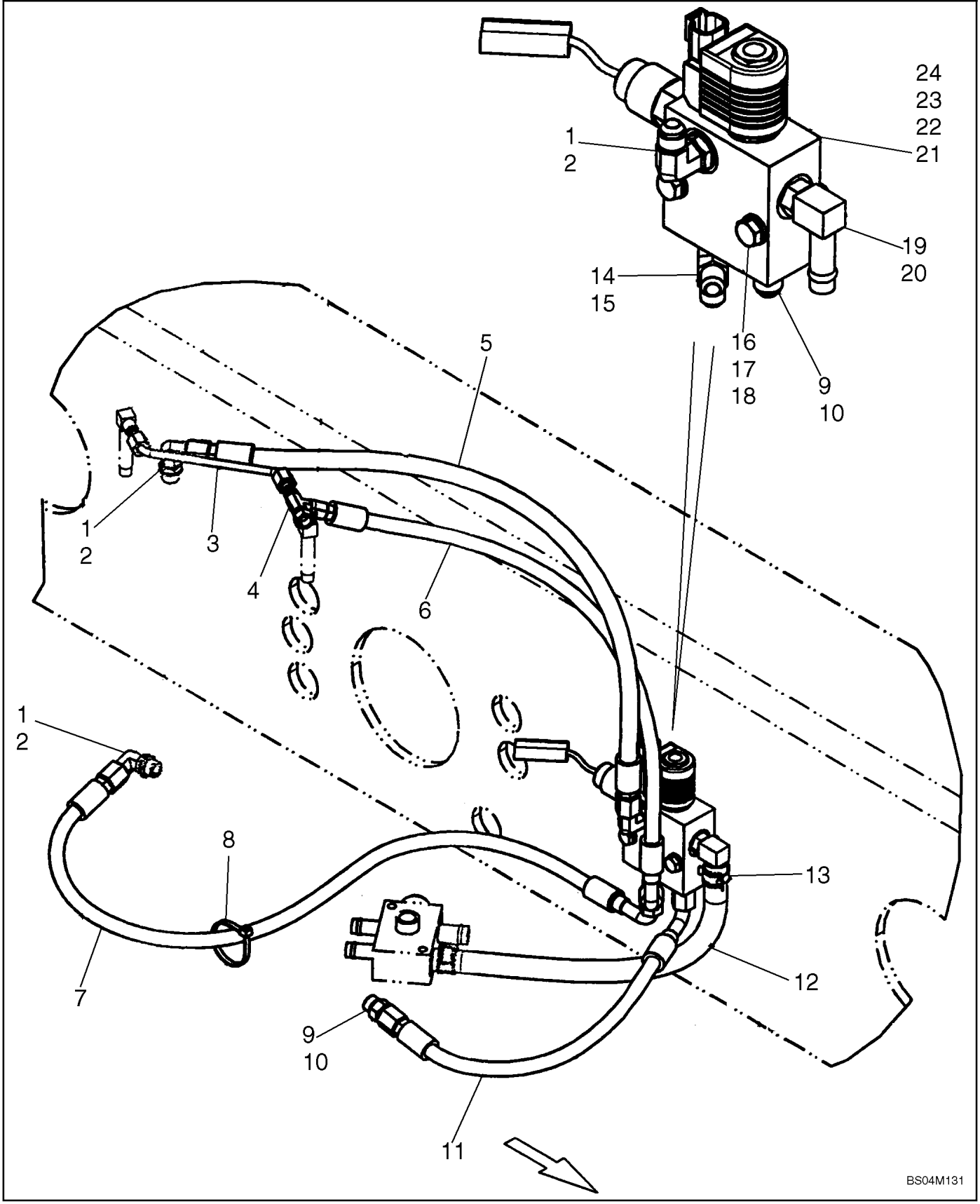

SYSTEME FREIN - CIRCUIT HYDRAULIQUE

REF	FN	PART NUMBER	YR/SN	QTY	DESCRIPTION
1		76344		4	COUDE, 90º, 9/16"-18, 37º x 9/16"-18, O-Ring, Incl 2
2		9617873		1	JOINT THORIQUE, 6-1, 90 Duro, .468" ID x .078" Thk
3		87021277		1	TUYAUTERIE
4		86513653		1	TE, 37º, 7/16"-20 x 7/16"-20, Fem Sw Run
5		87459910		1	FLEXIBLE (ASSEMBLE), 635 mm (25 in); Charge
6		87441276		1	FLEXIBLE (ASSEMBLE), 580 mm (22.83 in); NOR
7		87022436		1	FLEXIBLE (ASSEMBLE), 815 mm (32 in); Brake
8		L18331		1	SERRE-CABLE
9		76350		1	RACCORD, 9/16"-18, 37º x 9/16"-18, O-Ring, Incl 10
10		9617873		1	JOINT THORIQUE, 6-1, 90 Duro, .468" ID x .078" Thk
11		87022437		1	FLEXIBLE (ASSEMBLE), 420 mm (16.53 in); Brake
12		87022177		1	FLEXIBLE (ASSEMBLE), 340 mm (13.38 in); Drain
13		87443510		2	BRIDE, FLEXIBLE, 20 mm
14		86513020		1	TE, 9/16"-18, 37º x 9/16"-18, O-Ring Run, Incl. 15
15		9617873		1	JOINT THORIQUE, 6-1, 90 Duro, .468" ID x .078" Thk
16		43130		2	BOULON, Hex, M8 x 50, 8.8
17		86624185		2	RONDELLE, M8 x 17.5 x 2, HT
18		229197A1		2	ECROU, M8
19		217-374		1	RACCORD, 90º, 1/2" Hose x 9/16"-18 ORB Beaded, Incl 20
20		237-6006		1	JOINT THORIQUE, 6-1, 90 Duro, .468" ID x .078" Thk
21		87021047		1	SOUPAPE, FREIN, Incl 22 - 24
22		87424182		1	SOUPAPE, FREIN, Solenoid
23		87433496		X	BOBINE
24		87458061		1	PRESSOSTAT, Brake Valve

NOTES

SECTION INDEX
Installation hydraulique

08-01	SYSTEME HYDRAULIQUE - INCLINAISON
08-02	SYSTEME HYDRAULIQUE - RELEVAGE
08-03	SYSTEME HYDRAULIQUE - VIDANGE DE CARTER
08-04	SYSTEME HYDRAULIQUE - SYSTEME ANTI-TANGAGE
08-05	SYSTEME HYDRAULIQUE - MISE A NIVEAU AUTOMATIQUE
08-06	CIRCUIT AUXILIAIRE AVANT SECONDAIRE
08-07	OUTILS HYDRAULIQUES
08-08	OUTILS HYDRAULIQUES (AVEC COMMANDE PILOTE)
08-09	OUTILS HYDRAULIQUES
08-10	SYSTEME HYDRAULIQUE - SYSTEME DE RACCORDEMENT
08-11	SYSTEME HYDRAULIQUE - SYSTEME DE RACCORDEMENT
08-12	SYSTEME HYDRAULIQUE - SYSTEME DE RACCORDEMENT (ITALIEN)
08-13	SYSTEME HYDRAULIQUE - SYSTEME DE RACCORDEMENT (ITALIEN)
08-14	VERIN - INCLINAISON
08-15	VERIN - RELEVAGE
08-16	GRAND DEBIT, ASPIRATION ET REFOULEMENT
08-17	GRAND DEBIT - CIRCUIT AUXILIAIRE
08-18	GRAND DEBIT, DISTRIBUTEUR DE COMMANDE
08-19	COMMANDE DE DISTRIBUTEUR - GRAND DEBIT
08-20	COMMANDE DE DISTRIBUTEUR
08-21	DISTRIBUTEUR DE COMMANDE - 87583285 DISTRIBUTEUR
08-22	DISTRIBUTEUR DE COMMANDE - 87546974 DISTRIBUTEUR
08-23	DISTRIBUTEUR DE COMMANDE - 87546975 DISTRIBUTEUR
08-24	DISTRIBUTEUR DE COMMANDE - COLIS
08-25	DISTRIBUTEUR DE COMMANDE - SURETÉ, PRINCIPALE
08-26	DISTRIBUTEUR DE COMMANDE - CIRCUIT DE SÉCURITÉ
08-27	DISTRIBUTEUR DE COMMANDE, COLIS - TIROIRS
08-28	DISTRIBUTEUR DE COMMANDE, COLIS - TIROIRS
08-29	DISTRIBUTEUR DE COMMANDE, COLIS - TIROIRS
08-30	DISTRIBUTEUR DE COMMANDE, VÉRIFIEZ LA VALVE
08-31	DISTRIBUTEUR DE COMMANDE, COLIS - TIROIRS ET CLIQUETS
08-32	DISTRIBUTEUR DE COMMANDE, COLIS - TIROIRS
08-33	DISTRIBUTEUR DE COMMANDE, COLIS - TIROIRS
08-34	DISTRIBUTEUR DE COMMANDE - COLIS
08-35	DISTRIBUTEUR DE COMMANDE, COLIS - TIROIRS
08-36	DISTRIBUTEUR DE COMMANDE, COLIS - TIROIRS
08-37	DISTRIBUTEUR DE COMMANDE, COLIS - TIROIRS
08-38	DISTRIBUTEUR DE COMMANDE, COLIS - TIROIRS, EHPV
08-39	DISTRIBUTEUR DE COMMANDE, COLIS - TIROIRS, EHPV
08-40	CIRCUIT AUXILIAIRE AVANT SECONDAIRE - DISTRIBUTEUR

SYSTEME HYDRAULIQUE - INCLINAISON

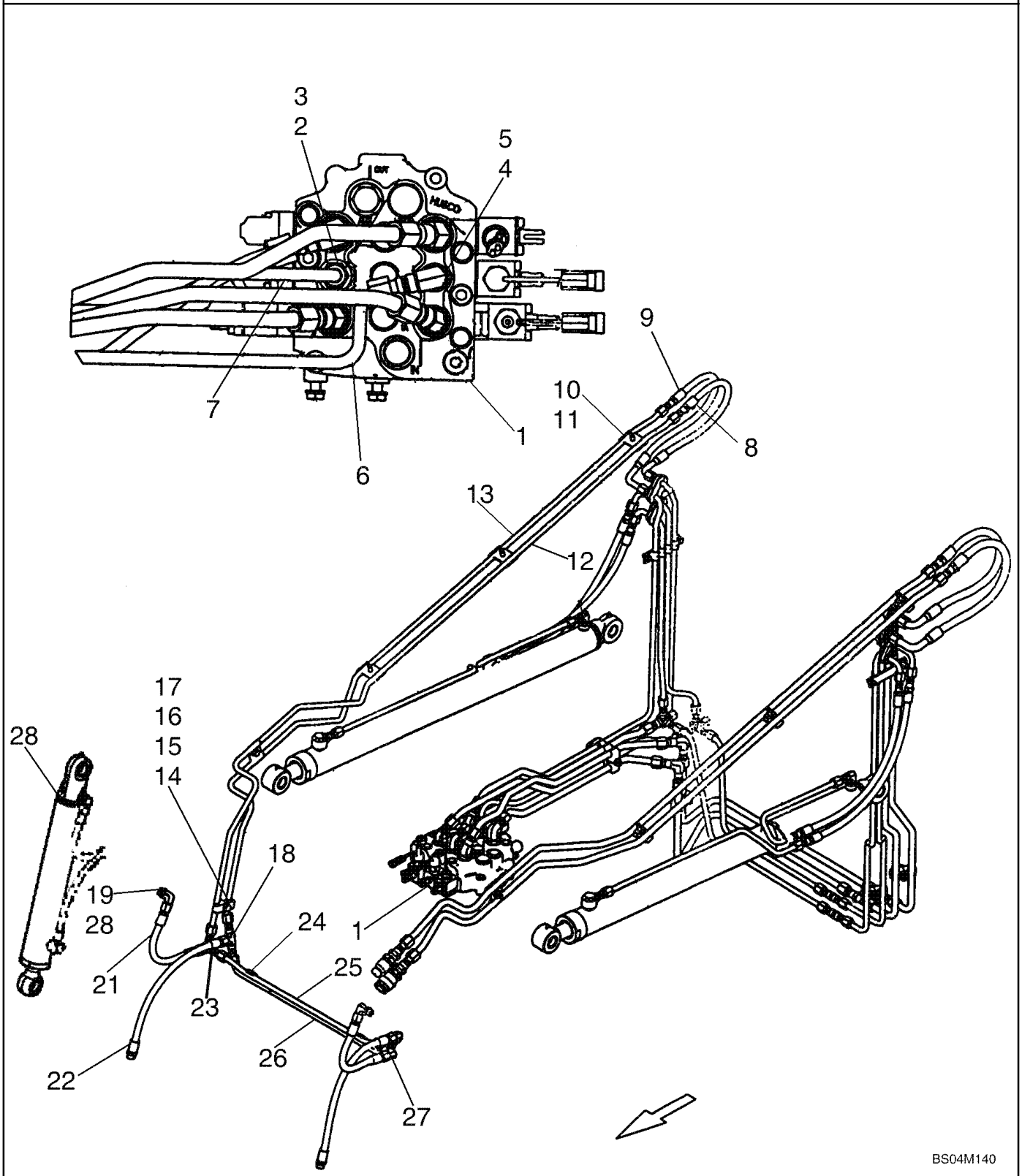

SYSTEME HYDRAULIQUE - INCLINAISON

REF	FN	PART NUMBER	YR/SN	QTY	DESCRIPTION
1		87583285		1	SOUPAPE, Control Valve; 440: See Figure 08-21
1		87546974		1	SOUPAPE HYDRAULIQUE, Control Valve; 440CT; See Figures 08-22
2		128819		1	RACCORD, 3/4"-16, 37º x 7/8"-14, O-Ring, Incl. 3
3		128825		1	JOINT THORIQUE, 8-1, 90 Duro, .644" ID x .087" Thk
4		9617891		1	COUDE, 90º, 3/4"-16, 37º x 7/8"-14, O-Ring, Incl. 5
5		167269		1	JOINT THORIQUE, 10-1, 90 Duro, .755" ID x .097" Thk
6		87423368		1	TUYAUTERIE, 1/2 Tube, Curl
7		87445747		1	TUYAUTERIE, 1/2 Tube, Dump
8		406242A1		1	FLEXIBLE (ASSEMBLE), 580 mm (22.83 in)
9		406088A1		1	FLEXIBLE (ASSEMBLE), 600 mm (23.62 in)
10		86501706		4	BRIDE, Double
11		280476		4	VIS AUTO-TARAUDEUSE, Hex Wash Hd, 3/8" x 1"
12		87531091		1	TUYAU HYDRAULIQUE, 1/2 Tube, Dump
13		406336A1		1	TUYAUTERIE, 1/2 Tube, Curl
14		9706704		1	BOULON, Hex, M10 x 35, 8.8, Full Thd
15		230427A1		1	ECROU, M10 -1.5
16		140017		1	RONDELLE, M10 x 20 x 2
17		D120679		1	COLLIER, 1/2 in
18		128996		1	TE, 3/4"-16, 37º
19		128830		2	COUDE, 90º, 3/4"-16, 37º x 3/4"-16, O-Ring, Incl. 20
20		128825		1	JOINT THORIQUE, 8-1, 90 Duro, .644" ID x .087" Thk
21		87387193		2	FLEXIBLE (ASSEMBLE), 355 mm, 14 in; Dump
22		373241A3		2	FLEXIBLE (ASSEMBLE), Curl
23		D124661		1	COUDE, Side Outlet
24		H434900		2	COLLIER
25		373223A3		1	TUYAUTERIE, Dump
26		373225A3		1	TUYAUTERIE, Curl
27		216791		1	COUDE, 90º, 3/4"-16, 37º x 3/4"-16, 37º
28		87438193		2	VERIN, Tilt; See Figure 08-14

SYSTEME HYDRAULIQUE - RELEVAGE

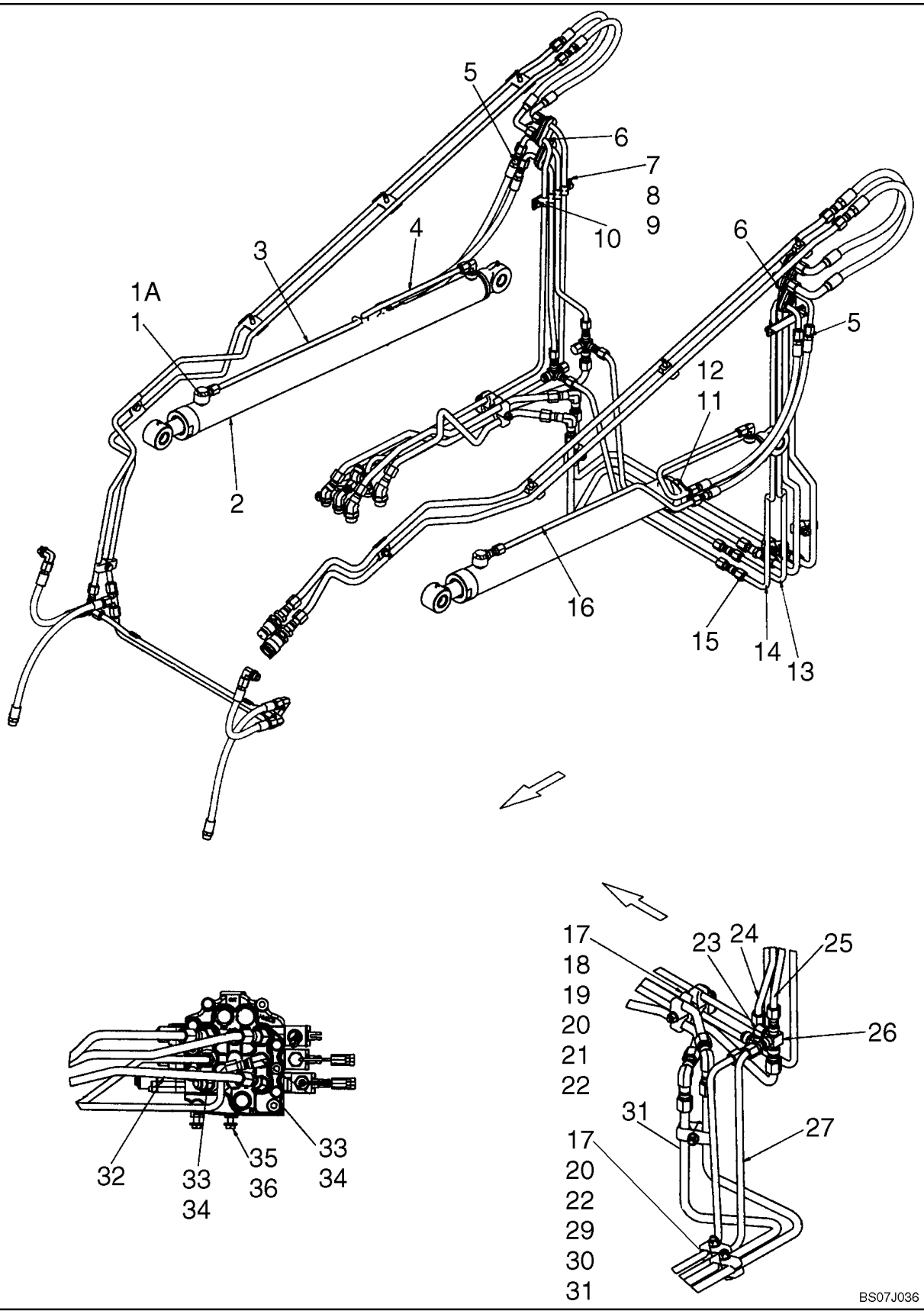

SYSTEME HYDRAULIQUE - RELEVAGE

REF	FN	PART NUMBER	YR/SN	QTY	DESCRIPTION
1		81827427		2	RACCORD, Incl 1A
1A		128825		2	JOINT THORIQUE, 8-1, 90 Duro, .644" ID x .087" Thk
2		87438190		2	VERIN, Lift Cylinder; See Figure 08-15
3		406342A1		1	TUYAUTERIE, Lift Cylinder, RH (Lower)
4		396243A2		2	TUYAUTERIE, Lift Cylinder (Raise)
5		390211A1		4	FLEXIBLE (ASSEMBLE), 575mm (22 5/8 in.) (Raise)
6		376523A2		6	SUPPORT, Hydraulic Tube Support
7		406940A1		1	BARRE, Bar Clamp, Back
8		87029930		1	VIS
9		406941A1		1	BARRE, Bar Clamp, Face
10		87385021		1	ATTACHE, Screw, Hex Washer Head 5/16 x 1/2
11		R24703		2	SUPPORT
12		86625033		2	BRIDE, FLEXIBLE, #56, 3.06/4.00 Type F Worm
13		87405135		1	TUYAUTERIE, Lift LH (Lower)
14		87405137		1	TUYAUTERIE, Lift LH (Raise)
15		128822		2	UNION, 3/4"-16, 37º x 3/4"-16, 37º
16		406344A1		1	TUYAUTERIE, Lift Cylinder LH (Lower)
17		D120614		2	COLLIER
18		87040707		1	ATTACHE, Washer, .531 X 2.25 X .179 in.
19		D120613		1	COLLIER
20		D120679		2	COLLIER
21		86500689		1	ECROU, M10, Cl 10
22		86624176		4	RONDELLE, M10 x 20 x 2
23		262159		2	CHAPEAU, 37º, 3/4"-16
24		87405141		1	TUYAUTERIE, Lift RH (Raise)
25		87593416		1	TUYAU HYDRAULIQUE, Lift RH (Raise)
26		87404825		1	TE
27		87593417		1	TUYAU HYDRAULIQUE, Lift LH (Lower)
29		86512554		1	CONTRE-ECROU, M10 x 1.5, Cl 10
30		120069		1	BOULON, Hex, M10 x 50, 8.8
31		87624736		1	TUYAU HYDRAULIQUE, Lift LH (Raise)
32		87593415		1	TUYAU HYDRAULIQUE, Lift (Lower)
33		330345		2	COUDE, 45º, 7/8"-14 x 7/8"-14, O-Ring, Incl 34
34		167269		2	JOINT THORIQUE, 10-1, 90 Duro, .755" ID x .097" Thk

SYSTEME HYDRAULIQUE - RELEVAGE

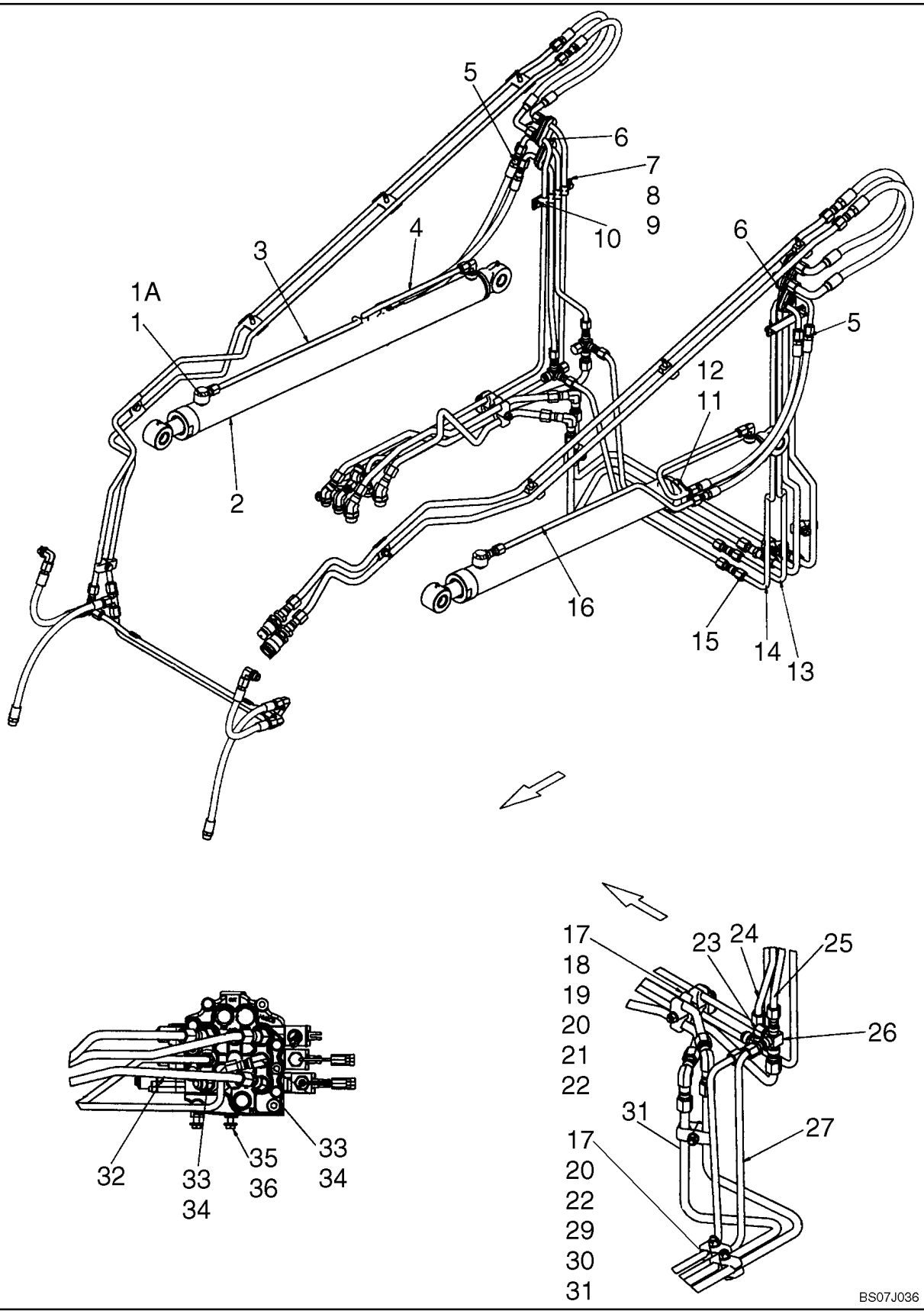

SYSTEME HYDRAULIQUE - RELEVAGE

REF	FN	PART NUMBER	YR/SN	QTY	DESCRIPTION
35		43138		2	VIS, Hex, M10 x 20, 8.8, Full Thd
36		86639325		2	RONDELLE, M10 x 24.5 x 3, HT
37		{87659996}		1	Tube; High Flow

SYSTEME HYDRAULIQUE - VIDANGE DE CARTER

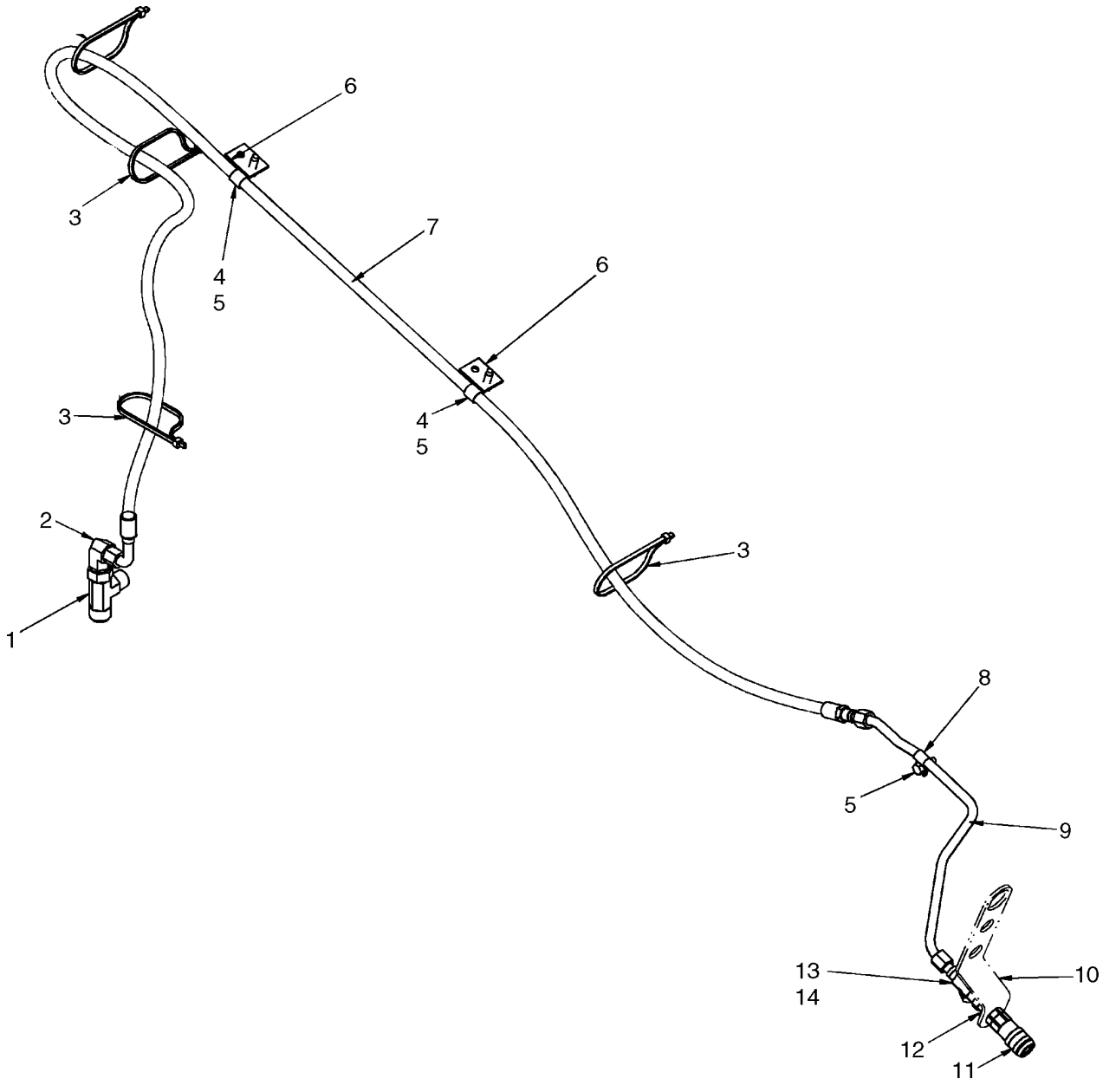

SYSTEME HYDRAULIQUE - VIDANGE DE CARTER

REF	FN	PART NUMBER	YR/SN	QTY	DESCRIPTION
		87685962		1	KIT ASSISTANCE, Kit, Loader Arm Case Drain; Incl 1 - 14
1		{87690479}		1	Tee, Male Branch 1.0 X 3/4 X 3/4 NP
2		86624011		1	COUDE, 90º, 3/4"-16, 37º x 1 1/16"-12, 37º Fem Sw
3		L18331		4	SERRE-CABLE
4		86624005		2	BRIDE, 3/4", Insul, 3/8" Bolt
5		280476		3	VIS AUTO-TARAUDEUSE, Hex Wash Hd, 3/8" x 1"
6		87447813		2	PATTE FIXATION
7		87659253		1	FLEXIBLE, Hose, Loader Arm Case Drain, 2880mm (113 13/32 in.)
8		86010402		1	BRIDE, 1/2", Insul, 3/8" Bolt
9		87024208		1	TUYAUTERIE
10		87023530		1	PATTE FIXATION
11		87019286		1	CHAPE, FF Coupler .38 Female 8MFB
12		524036		1	CONTRE-ECROU, Blkhd, 3/4"-16
13		87426293		1	TE, Tee, Swivel 37Fl 1/2 X 1/2 X 1/2
14		262159		1	CHAPEAU, 37º, 3/4"-16

SYSTEME HYDRAULIQUE - SYSTEME ANTI-TANGAGE

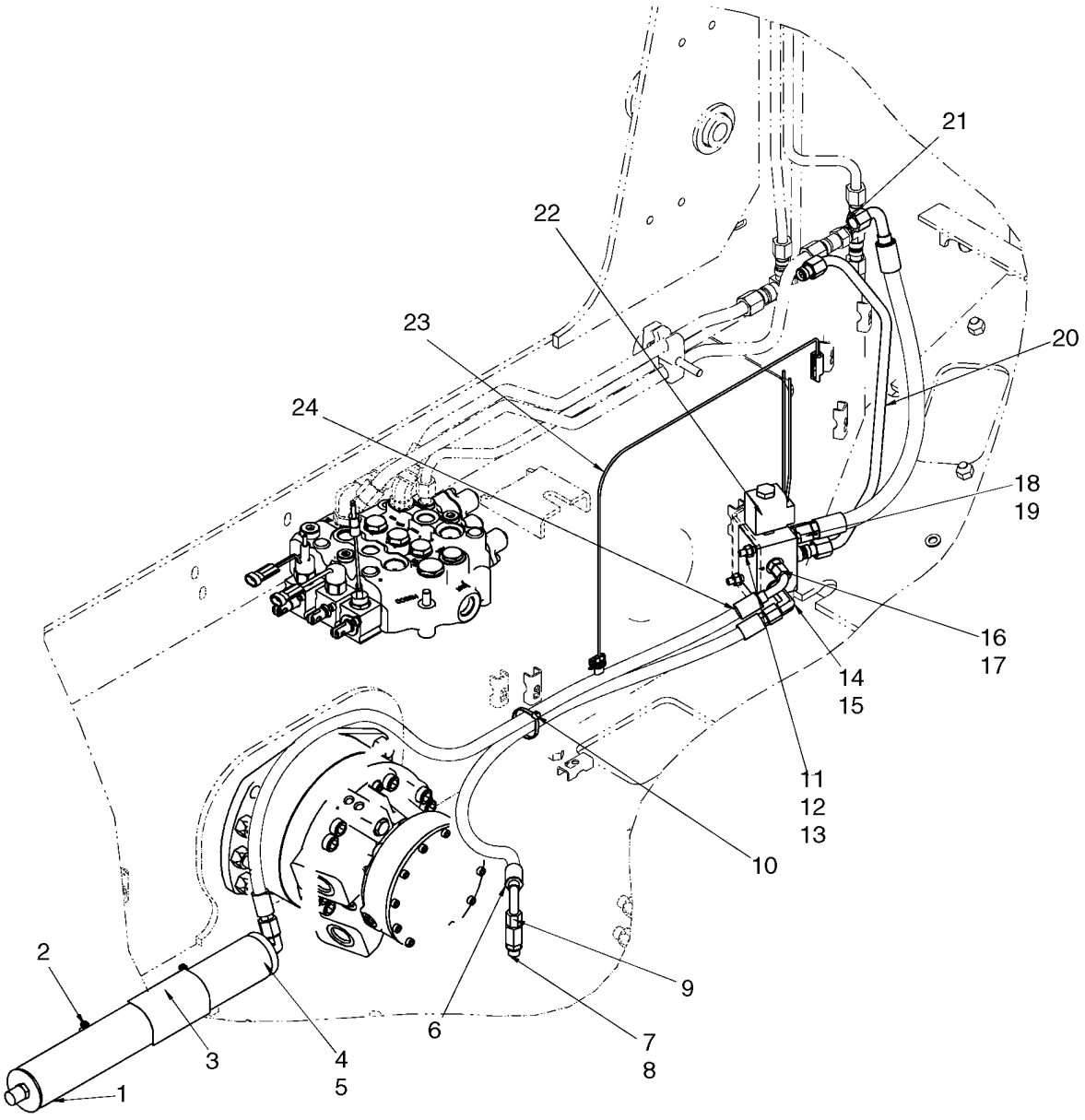

SYSTEME HYDRAULIQUE - SYSTEME ANTI-TANGAGE

REF	FN	PART NUMBER	YR/SN	QTY	DESCRIPTION
		87638304		1	KIT ASSISTANCE, Kit, Ride Control; Incl 1 - 26
1		87403797		1	ACCUMULATEUR, Hydraulic Accumulator
2		86624194		2	BRIDE, FLEXIBLE, #36, 1.81/2.75 Type F Worm
3		384260A1		1	DECALCOMANIE, Warning, Pressurized System
4		128830		1	COUDE, 90º, 3/4"-16, 37º x 3/4"-16, O-Ring, Incl 5
5		128825		1	JOINT THORIQUE, 8-1, 90 Duro, .644" ID x .087" Thk
6		87456974		1	FLEXIBLE (ASSEMBLE), 970mm (38 3/16 in.)
7		86513020		1	TE, 9/16"-18, 37º x 9/16"-18, O-Ring Run, Incl 8
8		9617873		1	JOINT THORIQUE, 6-1, 90 Duro, .468" ID x .078" Thk
9		574342		1	CHAPEAU, 37º, 9/16"-18
10		529070		1	SERRE-CABLE, .30" x 14.5"
11		9706690		2	ECROU, M8, Cl 8
12		140016		4	RONDELLE, M8 x 16 x 1.6
13		43133		2	BOULON, Hex, M8 x 80, 8.8
14		86526		1	COUDE, 90º, 9/16"-18, 37º x 9/16"-18, LG, Incl 15
15		9617873		1	JOINT THORIQUE, 6-1, 90 Duro, .468" ID x .078" Thk
16		76350		1	RACCORD, 9/16"-18, 37º x 9/16"-18, O-Ring, Incl 17
17		9617873		1	JOINT THORIQUE, 6-1, 90 Duro, .468" ID x .078" Thk
18		86509028		2	RACCORD, 3/4"-16, 37º x 9/16"-18, O-Ring, Incl 19
19		9617873		2	JOINT THORIQUE, 6-1, 90 Duro, .468" ID x .078" Thk
20		87588929		1	TUYAU HYDRAULIQUE, Valve To Cylinder Base
21		87588930		1	FLEXIBLE, 550mm (21 5/8 in.)
22		87428444		1	VALVE, Solenoid Valve, Ride Control
23		310838A1		1	FAISCEAU, Ride Control Harness
24		87588928		1	FLEXIBLE, Valve To Accumulator, 1200mm (47 1/4 in.)
25		304083A1		2	DECALCOMANIE, Ride Control; Not Illustrated
26		255927A1		1	DECALCOMANIE, Warning, Ride Control; Not Illustrated

SYSTEME HYDRAULIQUE - MISE A NIVEAU AUTOMATIQUE

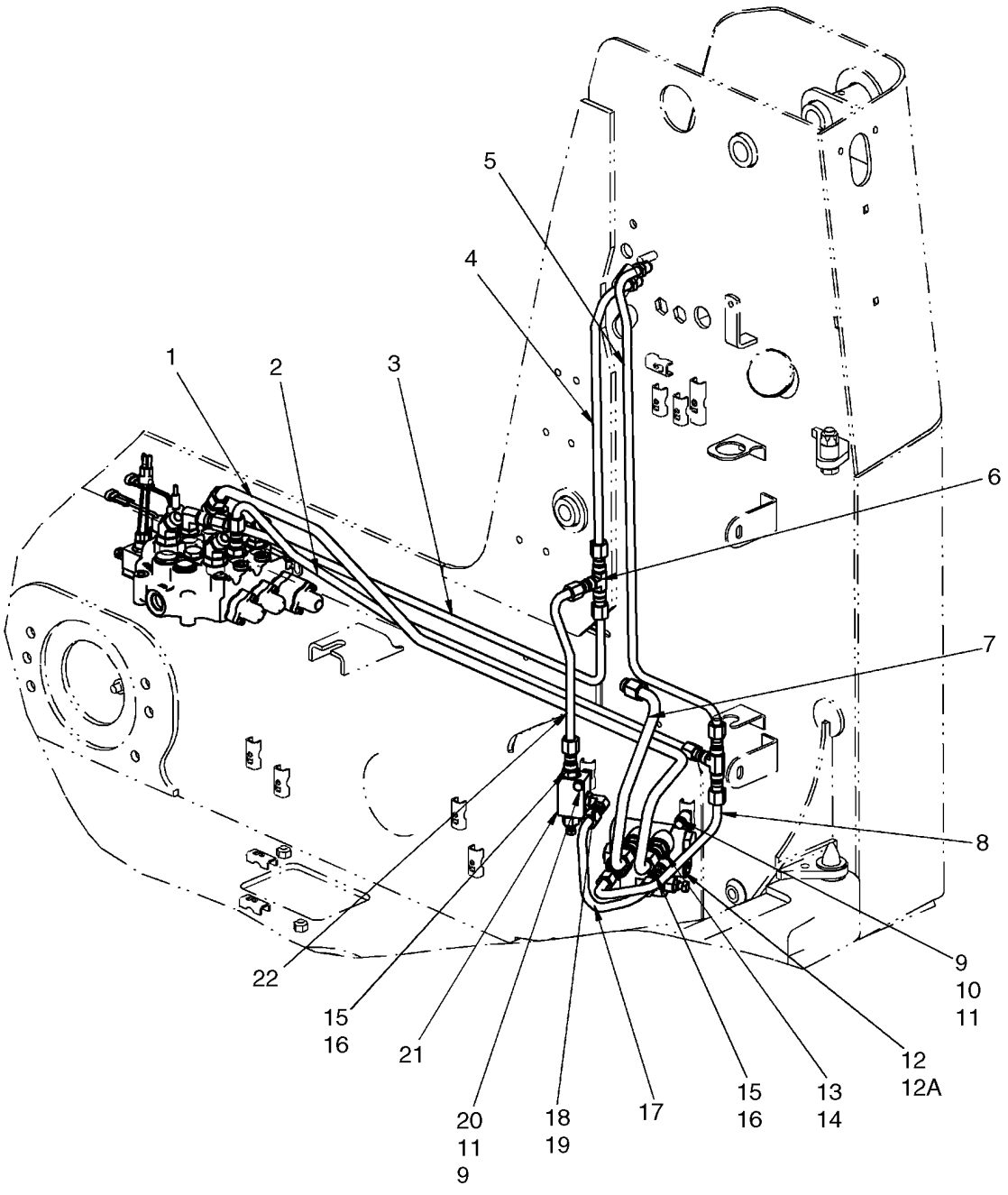

SYSTEME HYDRAULIQUE - MISE A NIVEAU AUTOMATIQUE

REF	FN	PART NUMBER	YR/SN	QTY	DESCRIPTION
		87638293		1	KIT ASSISTANCE, Kit, Single Hydraulic Self Level; Incl 1 - 22
1		87446001		1	TUYAUTERIE, Tube, Lift (Lower)
2		87593420		1	TUYAU HYDRAULIQUE, Tube, Tip (Dump)
3		87436668		1	TUYAUTERIE, Tube, Tip (Curl)
4		87436539		1	TUYAUTERIE, Tube, Tip (Curl)
5		87593421		1	TUYAU HYDRAULIQUE, Tube, Tip (Dump)
6		128996		2	TE, 3/4"-16, 37º
7		87593425		1	TUYAU HYDRAULIQUE, Valve Out
8		87593422		1	TUYAU HYDRAULIQUE, Tube, Valve To Bucket Base
9		86624184		3	RONDELLE, M8 x 16 x 1.6
10		412479		2	BOULON, Hex, M8 x 35, 8.8
11		229197A1		3	ECROU
12		87447793		1	SOUPAPE, Self Level; Incl 12A
12A		87535230		1	VALVE KIT, Kit, Seal
13		86071		2	RACCORD, 7/8"-14, 37º x 3/4"-16, O-Ring, Incl 14
14		128825		2	JOINT THORIQUE, 8-1, 90 Duro, .644" ID x .087" Thk
15		128818		3	RACCORD, 3/4"-16, 37º x 3/4"-16, O-Ring, Incl 16
16		128825		3	JOINT THORIQUE, 8-1, 90 Duro, .644" ID x .087" Thk
17		87421454		1	TUYAUTERIE, Self Level To Relief
18		128830		1	COUDE, 90º, 3/4"-16, 37º x 3/4"-16, O-Ring, Incl 19
19		128825		1	JOINT THORIQUE, 8-1, 90 Duro, .644" ID x .087" Thk
20		386045		1	BOULON, Hex, M8 x 45, 8.8
21		294650A1		1	VALVE, Relief Valve
22		87445306		1	TUYAUTERIE

CIRCUIT AUXILIAIRE AVANT SECONDAIRE

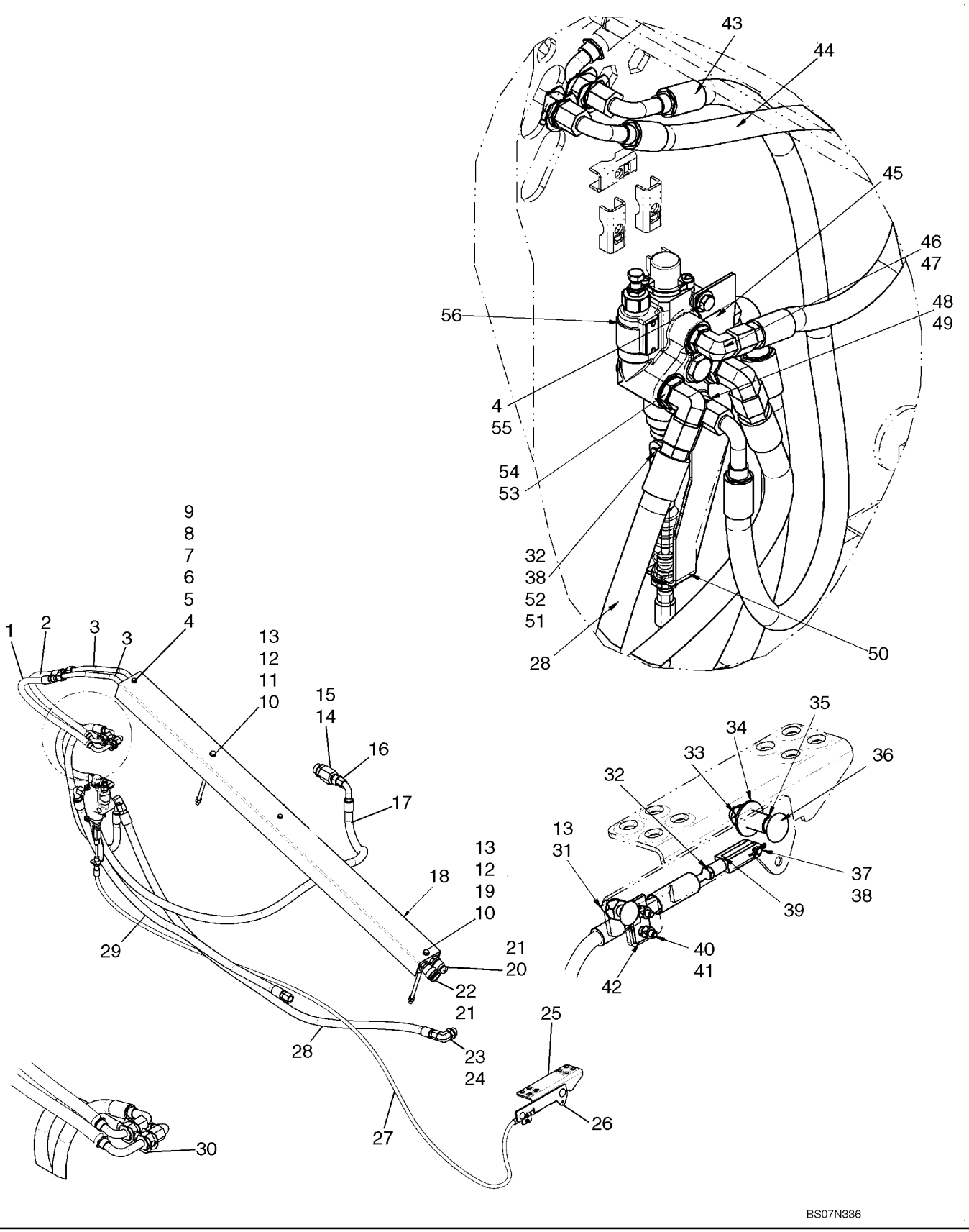

CIRCUIT AUXILIAIRE AVANT SECONDAIRE

REF	FN	PART NUMBER	YR/SN	QTY	DESCRIPTION
		87730804		1	KIT ASSISTANCE, Kit, Secondary Front Auxiliary; Incl 1 - 56
1		87462215		1	FLEXIBLE (ASSEMBLE), Hose, Secondary Auxiliary, 633mm (24 15/16 in.)
2		87444373		1	FLEXIBLE (ASSEMBLE), Hose Secondary Auxiliary, 583mm (23 in.)
3		87444371		2	TUYAUTERIE, Tube, Secondary Auxiliary
4		16044321		4	BOULON, Hex, M8 x 55, 8.8
5		257857A1		2	COLLIER
6		259905A1		2	ENTRETOISE, Spacer, 1/4 Sch 40 Pipe X 31 1/4 in. Lg
7		257859A1		2	PLAQUETTE
8		194739A1		2	CONTRE-PLAQUE
9		86624184		2	RONDELLE, M8 x 16 x 1.6
10		86624977		2	BOULON, Hex, M10 x 245, 8.8
11		87447010		1	ENTRETOISE
12		86624176		2	RONDELLE, M10 x 20 x 2
13		86512554		3	CONTRE-ECROU, M10 x 1.5, Cl 10
14		86624131		1	TE, 37º, 1 1/16"-12, 1 5/16"-12 O-Ring Run, 1 1/16"-12, Incl 15
15		167268		1	JOINT THORIQUE, 16-1, 90 Duro, 1.171" ID x .116" Thk
16		87301344		1	REDUCTEUR, 37º, 1 1/16"-12, Fem x 7/8"-14 Male
17		87728982		1	FLEXIBLE, Hose, Tank Return, 1773mm (69 13/16 in.)
18		87447965		1	COUVERCLE, Cover, Secondary Auxilary Tube
19		87447009		1	PATTE FIXATION
20		87417308		1	ACCOUPLEMENT HYDR., Coupler, 1/2 Male Quick Disconnect
21		595460		2	CONTRE-ECROU, Blkhd, 7/8"-14
22		393394A1		1	ACCOUPLEMENT HYDR., Coupler, 1/2 Female Quick Disconnect
23		84570		1	COUDE, 90º, 7/8"-14, 37º x 1 1/16"-12, O-Ring, Incl 24

CIRCUIT AUXILIAIRE AVANT SECONDAIRE

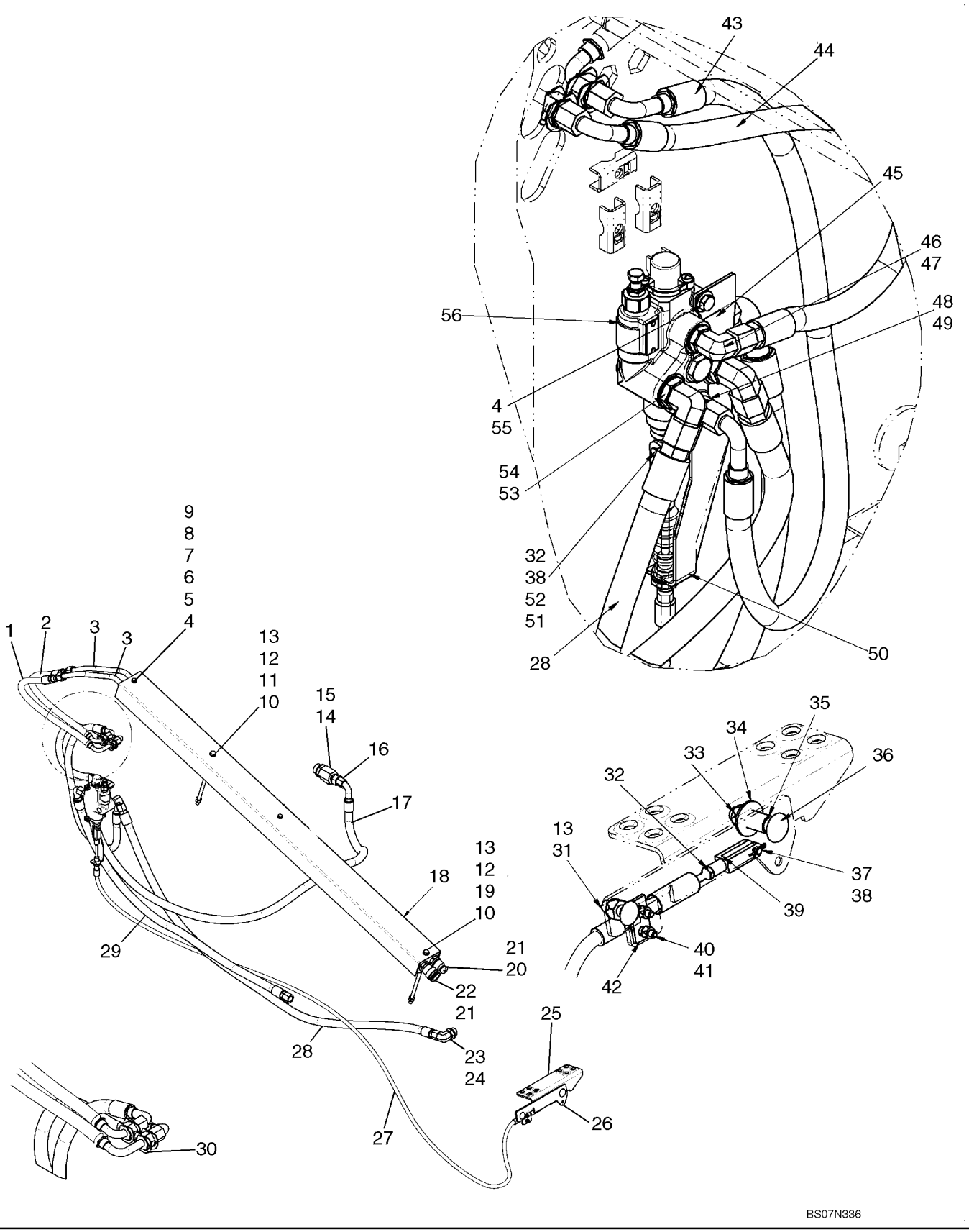

CIRCUIT AUXILIAIRE AVANT SECONDAIRE

REF	FN	PART NUMBER	YR/SN	QTY	DESCRIPTION
24		167266		1	JOINT THORIQUE, 12-1, 90 Duro, .924 ID x .116" Thk
25		87423833		1	PEDALE (ASSEMBLEE), Pedal, Auxiliary Hydraulic
26		87715341		1	PLAQUE, Mounting Plate
27		87739945		1	CABLE, Cable, Secondary Auxiliary
28		87729000		1	FLEXIBLE, Hose, Secondary Auxiliary Inlet, 1530mm (60 1/4 in.)
29		87728990		1	FLEXIBLE, Hose, Secondary Auxiliary Outlet, 1279mm (50 11/32 in.)
30		87301328		4	JONC D'ARRET, Retaining Ring, External "E" Style #98 Plated
31		86512446		1	BOULON TETE BOMBEE, Short NK, M10 x 30, Cl8.8, Full Thd
32		86976064		2	ECROU, Jam, 1/4"-28, G5
33		412672		1	CONTRE-ECROU, M12 x 1.75, Cl 10
34		81541		1	RONDELLE, 7/16"
35		L14781		1	BAGUE, Bronze Bushing
36		87033290		1	BOULON TETE BOMBEE, Short NK, M12 x 55, Cl8.8
37		87597960		1	AXE DE CHAPE
38		D131983		2	AXE
39		86520436		1	CHAPE DE RÉGLAGE, 1/4"-28
40		87442439		1	TRINGLE
41		86512440		2	CONTRE-ECROU
42		H373779		1	PLAQUE, GRANDE
43		87729005		1	FLEXIBLE, Hose, Secondary Auxiliary, 983mm (38 11/16 in.)
44		87729004		1	FLEXIBLE, Hose, Secondary Auxiliary, 589mm (23 3/16 in.)
45		129878A1		1	RACCORD
46		128830		1	COUDE, 90°, 3/4"-16, 37° x 3/4"-16, O-Ring, Incl 47
47		128825		1	JOINT THORIQUE, 8-1, 90 Duro, .644" ID x .087" Thk
48		81827427		1	RACCORD, Incl 49
49		128825		1	JOINT THORIQUE, 8-1, 90 Duro, .644" ID x .087" Thk
50		87739947		1	PATTE FIXATION, Cable Bracket
51		H32961		1	DISPOSITIF-TENSION

CIRCUIT AUXILIAIRE AVANT SECONDAIRE

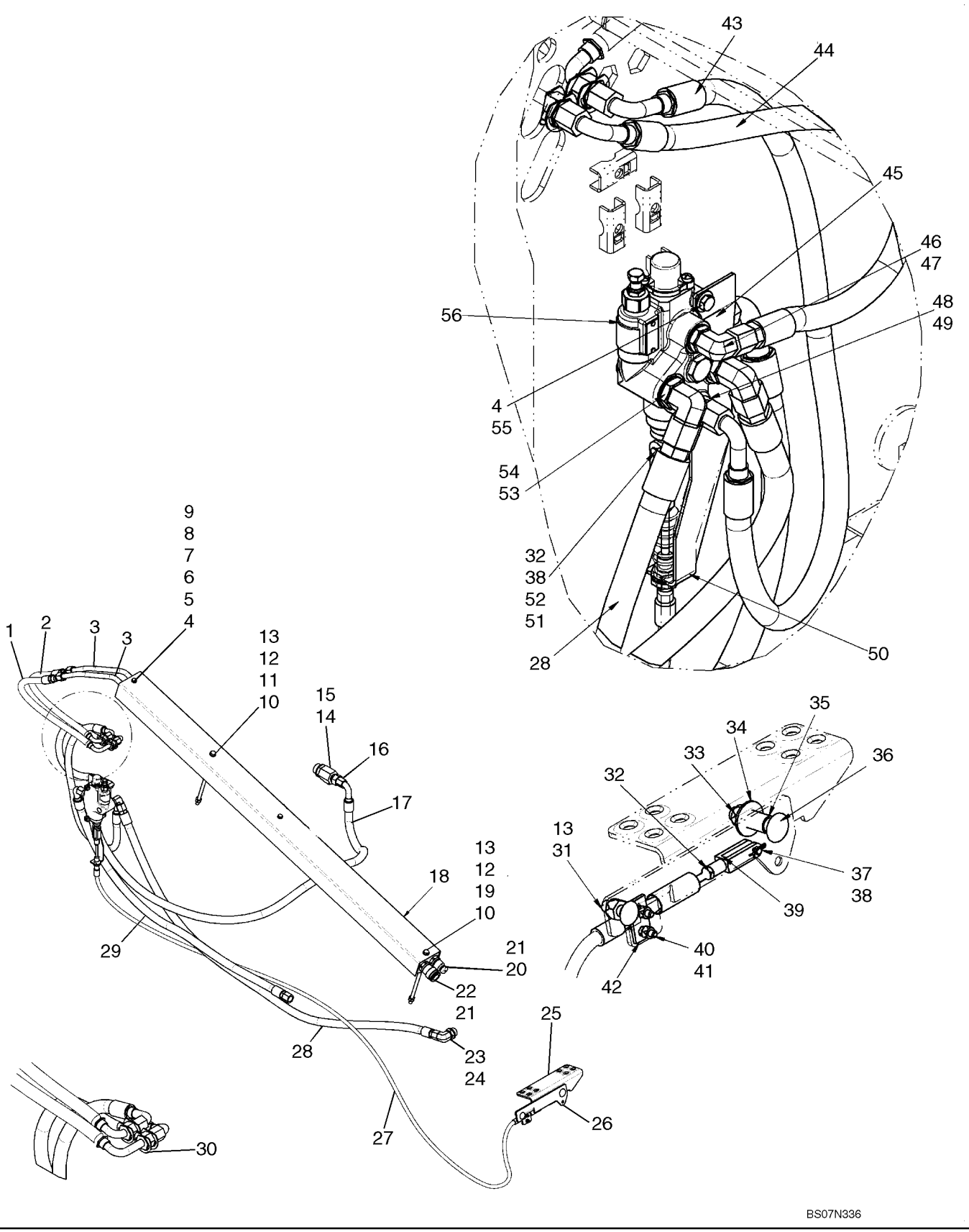

CIRCUIT AUXILIAIRE AVANT SECONDAIRE

REF	FN	PART NUMBER	YR/SN	QTY	DESCRIPTION
52		87444160		1	FOURCHETTE
53		9617891		2	COUDE, 90º, 3/4"-16, 37º x 7/8"-14, O-Ring, Incl 54
54		167269		2	JOINT THORIQUE, 10-1, 90 Duro, .755" ID x .097" Thk
55		86625263		2	RONDELLE, M8 x 20 x 1.6
56		87017348		1	SOUPAPE, Secondary Auxiliary Valve; See Fig 08-40

OUTILS HYDRAULIQUES

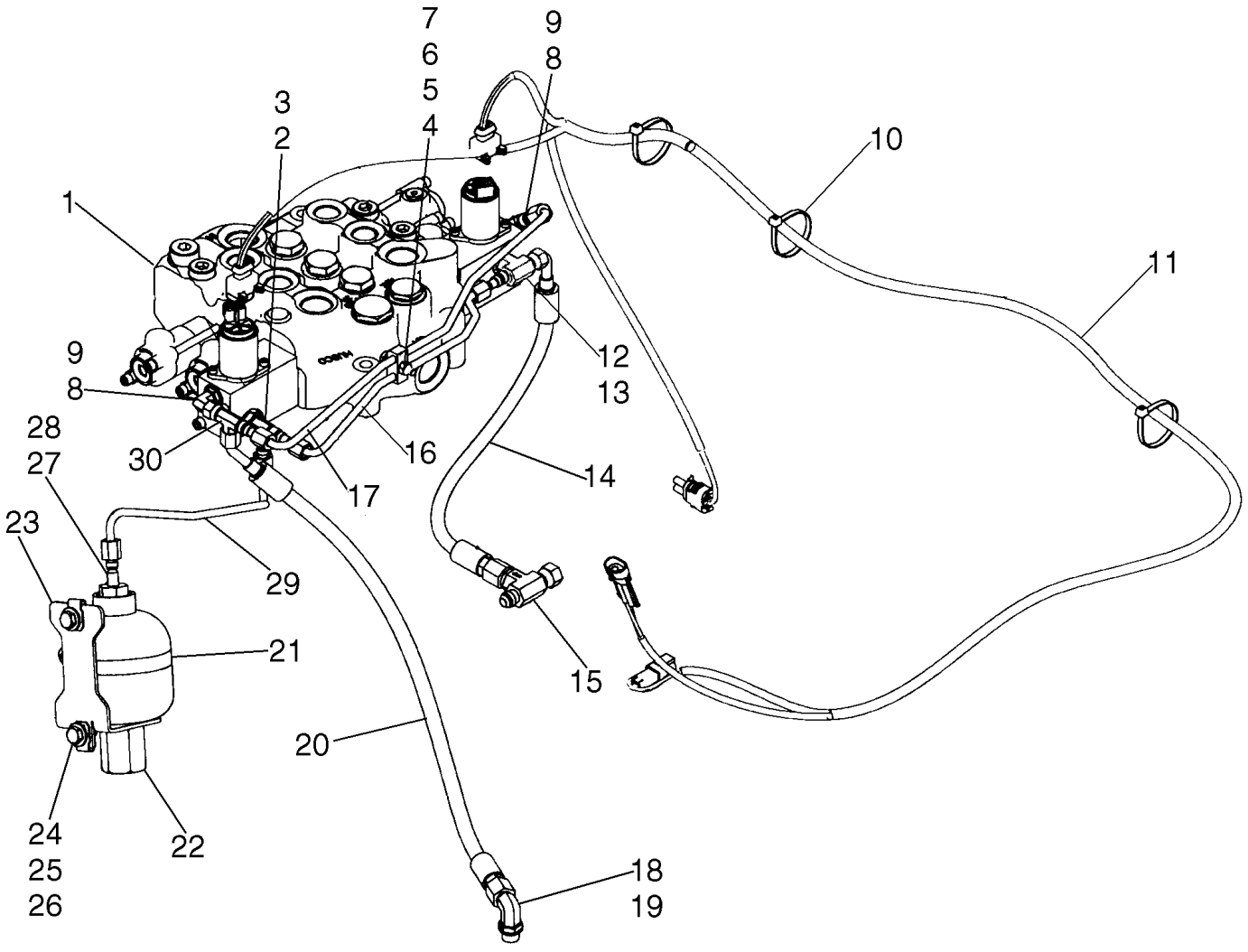

OUTILS HYDRAULIQUES

REF	FN	PART NUMBER	YR/SN	QTY	DESCRIPTION
		87575606		1	KIT ASSISTANCE, Electro-Hydraulic Valve Kit; Incl 1 - 30
1		87546975		1	SOUPAPE HYDRAULIQUE, Pilot Control Models With Hydraulic Attachment; See Fig. 08-23
2		86513019		1	TE, 7/16"-20, 37º x 7/16"-20, O-Ring Run, Incl. 3
3		165202		1	JOINT THORIQUE, 4-1, 90 Duro, .351" ID x .072" Thk
4		608089		1	BRIDE
5		86624181		1	RONDELLE, M6
6		80120101		1	VIS, M6 x 30
7		87030561		1	CONTRE-ECROU, M6 x 1, Cl 8
8		216773		2	COUDE, 90º, 7/16"-20, 37º x 7/16"-20, O-Ring, Incl. 9
9		165202		2	JOINT THORIQUE, 4-1, 90 Duro, .351" ID x .072" Thk
10		529070		3	SERRE-CABLE, .30" x 14.5"
11		87447970		1	FAISCEAU, Electro-Hydraulic Harness
12		16989		1	TE, 7/16"-20, 37º x 7/8"-14, O-Ring Br, Incl. 13
13		165202		1	JOINT THORIQUE, 4-1, 90 Duro, .351" ID x .072" Thk
14		87563974		1	FLEXIBLE, 424 mm (16.69 in) EH Supply
15		87438766		1	TE, Tee With Check Valve
16		87563970		1	TUYAU HYDRAULIQUE, Pilot Pressure
17		87564001		1	TUYAU HYDRAULIQUE, Drain
18		76344		1	COUDE, 90º, 9/16"-18, 37º x 9/16"-18, O-Ring, Incl 19
19		9617873		1	JOINT THORIQUE, 6-1, 90 Duro, .468" ID x .078" Thk
20		87460042		1	FLEXIBLE, Case Drain
21		86625032		1	BRIDE, FLEXIBLE, #48, 2.56/3.50 Type F Worm
22		87376969		1	ACCUMULATEUR
23		87621245		1	CORNIERE, Mounting Bracket
24		120104		2	BOULON, Hex, M8 x 20, 8.8
25		122158A1		2	ECROU, M8, U
26		86625263		2	RONDELLE, M8 x 20 x 1.6
27		139398		1	RACCORD, 7/16"-20, 37º x 9/16"-18, O-Ring, Incl. 28
28		9617873		1	JOINT THORIQUE, 6-1, 90 Duro, .468" ID x .078" Thk
29		87447764		1	TUYAUTERIE, Pilot Pressure
30		86513653		1	TE, 37º, 7/16"-20 x 7/16"-20, Fem Sw Run

OUTILS HYDRAULIQUES (AVEC COMMANDE PILOTE)

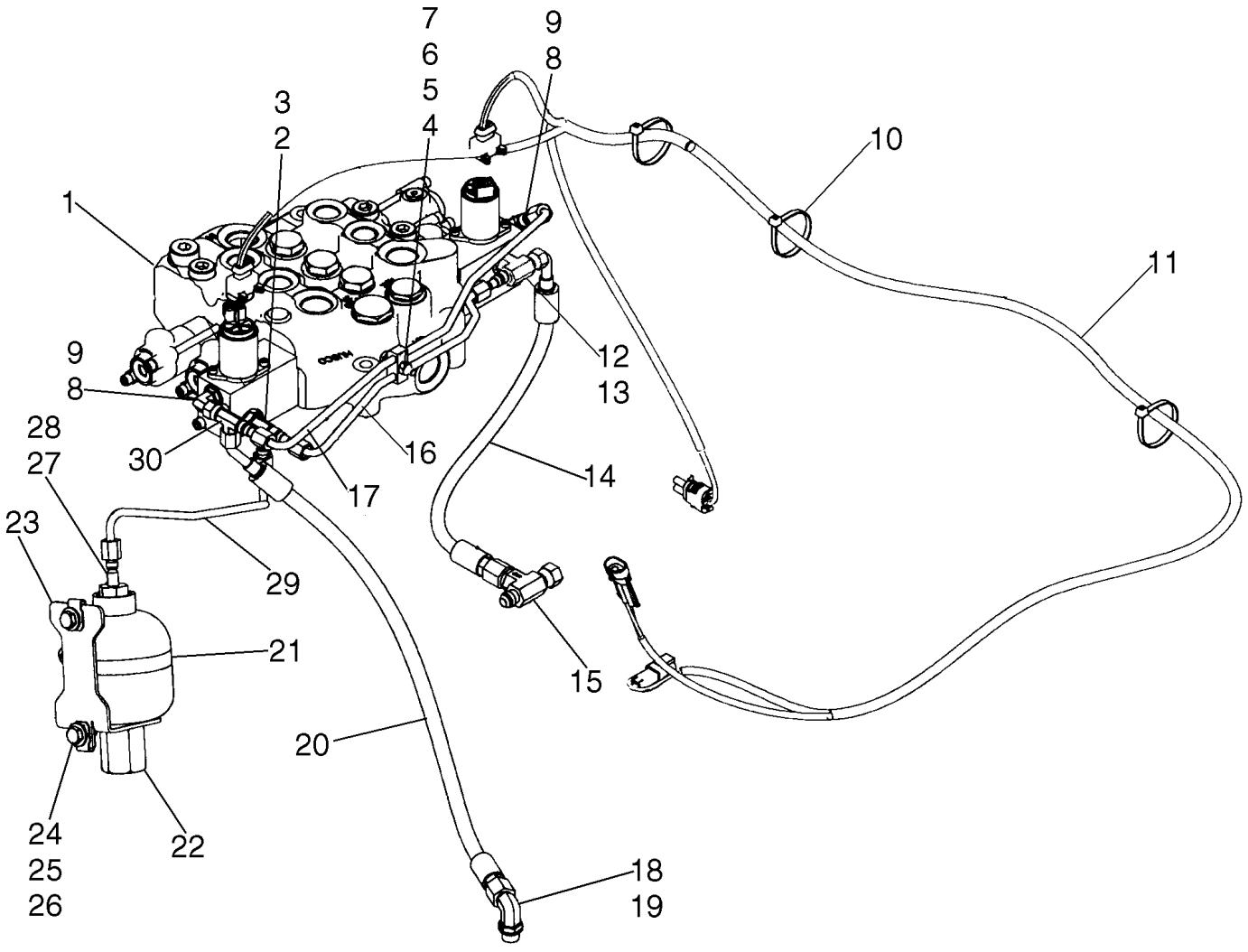

OUTILS HYDRAULIQUES (AVEC COMMANDE PILOTE)

REF	FN	PART NUMBER	YR/SN	QTY	DESCRIPTION
		87638361		1	KIT ASSISTANCE, Kit, EH Proportional Auxiliary Pilot Control; Incl. 1 - 30
1		87546975		1	SOUPAPE HYDRAULIQUE, Pilot Control Models With Hydraulic Attachment; See Fig. 08-23
2		86513019		1	TE, 7/16"-20, 37° x 7/16"-20, O-Ring Run, Incl. 3
3		165202		1	JOINT THORIQUE, 4-1, 90 Duro, .351" ID x .072" Thk
4		608089		1	BRIDE
5		86624181		1	RONDELLE, M6
6		120101		1	BOULON, Hex, M6 x 30, 8.8, Full Thd, If Used
7		87030561		1	CONTRE-ECROU, M6 x 1, Cl 8
6		80120101		1	VIS, If Used
8		216773		2	COUDE, 90°, 7/16"-20, 37° x 7/16"-20, O-Ring, Incl. 9
9		165202		2	JOINT THORIQUE, 4-1, 90 Duro, .351" ID x .072" Thk
10		L11541		3	SERRE-CABLE
11		87447970		1	FAISCEAU
12		16989		1	TE, 7/16"-20, 37° x 7/8"-14, O-Ring Br, Incl. 13
13		165202		1	JOINT THORIQUE, 4-1, 90 Duro, .351" ID x .072" Thk
14		87612875		1	FLEXIBLE, 350mm (22 13/16 in.)
15		87438766		1	TE, Tee With Check Valve
16		87563970		1	TUYAU HYDRAULIQUE, Pilot Pressure
17		87564001		1	TUYAU HYDRAULIQUE, Drain
18		76344		1	COUDE, 90°, 9/16"-18, 37° x 9/16"-18, O-Ring, Includes 19
19		9617873		1	JOINT THORIQUE, 6-1, 90 Duro, .468" ID x .078" Thk
20		87460042		1	FLEXIBLE, Case Drain
21		86625034		1	BRIDE, FLEXIBLE, #64, 3.56/4.50 Type F Worm
22		86624732		1	ACCUMULATEUR
23		87440253		1	CORNIERE, Mounting Bracket
24		120104		2	BOULON, Hex, M8 x 20, 8.8
25		122158A1		2	ECROU, M8, U
26		86625263		2	RONDELLE, M8 x 20 x 1.6
27		87010110		1	RACCORD, Straight; Incl. 28
28		128825		1	JOINT THORIQUE, 8-1, 90 Duro, .644" ID x .087" Thk
29		87447764		1	TUYAUTERIE, Pilot Pressure
30		86513653		1	TE, 37°, 7/16"-20 x 7/16"-20, Fem Sw Run

OUTILS HYDRAULIQUES

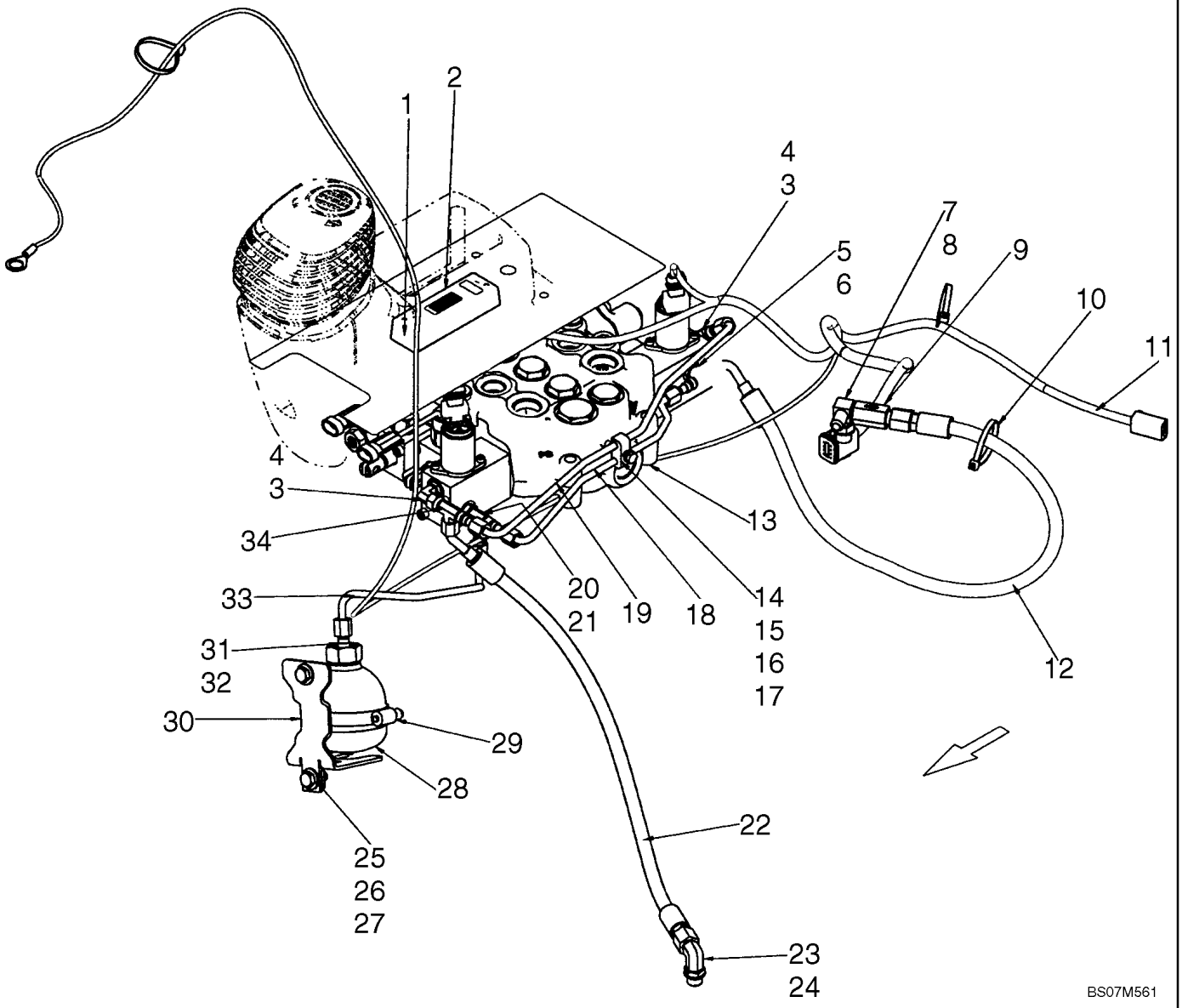

OUTILS HYDRAULIQUES

REF	FN	PART NUMBER	YR/SN	QTY	DESCRIPTION
1		100012		2	ECROU, M4, Cl 8
		87617017		1	KIT ASSISTANCE, Kit, EH Proportional Auxiliary, Mechanical Controls; Incl 1 - 34
2		87657080		1	SOUPAPE, PWM Driver
3		216773		2	COUDE, 90º, 7/16"-20, 37º x 7/16"-20, O-Ring, Incl 4
4		165202		2	JOINT THORIQUE, 4-1, 90 Duro, .351" ID x .072" Thk
5		16989		1	TE, 7/16"-20, 37º x 7/8"-14, O-Ring Br, Incl 6
6		165202		1	JOINT THORIQUE, 4-1, 90 Duro, .351" ID x .072" Thk
7		L104616		1	TE, Incl 8
8		9617873		1	JOINT THORIQUE, 6-1, 90 Duro, .468" ID x .078" Thk
9		87441786		1	SOUPAPE, In Line Check Valve
10		L11541		3	SERRE-CABLE
11		87668739		1	FAISCEAU, Harness, Electro-Hydraulic Auxiliary
12		87516044		1	FLEXIBLE, Hose, 750mm (29 1/2 in.)
13		87583286		1	SOUPAPE, Control Valve, Manual Control; See Fig 08-20
14		608089		1	BRIDE
15		80120101		1	VIS
16		86624181		1	RONDELLE, M6
17		87030561		1	CONTRE-ECROU, M6 x 1, Cl 8
18		87563970		1	TUYAU HYDRAULIQUE, Tube, Pilot Pressure
19		87564001		1	TUYAU HYDRAULIQUE, Tube, Drain
20		86513019		1	TE, 7/16"-20, 37º x 7/16"-20, O-Ring Run, Incl 21
21		165202		1	JOINT THORIQUE, 4-1, 90 Duro, .351" ID x .072" Thk
22		87460042		1	FLEXIBLE, Hose, Case Drain 580mm (22 13/16 in.)
23		76344		1	COUDE, 90º, 9/16"-18, 37º x 9/16"-18, O-Ring, Incl 24
24		9617873		1	JOINT THORIQUE, 6-1, 90 Duro, .468" ID x .078" Thk
25		120104		2	BOULON, Hex, M8 x 20, 8.8
26		86625263		2	RONDELLE, M8 x 20 x 1.6
27		122158A1		2	ECROU, M8, U
28		87376969		1	ACCUMULATEUR
29		86625032		1	BRIDE, FLEXIBLE, #48, 2.56/3.50 Type F Worm
30		87621245		1	CORNIERE
31		139398		1	RACCORD, 7/16"-20, 37º x 9/16"-18, O-Ring, Incl 32
32		9617873		1	JOINT THORIQUE, 6-1, 90 Duro, .468" ID x .078" Thk

OUTILS HYDRAULIQUES

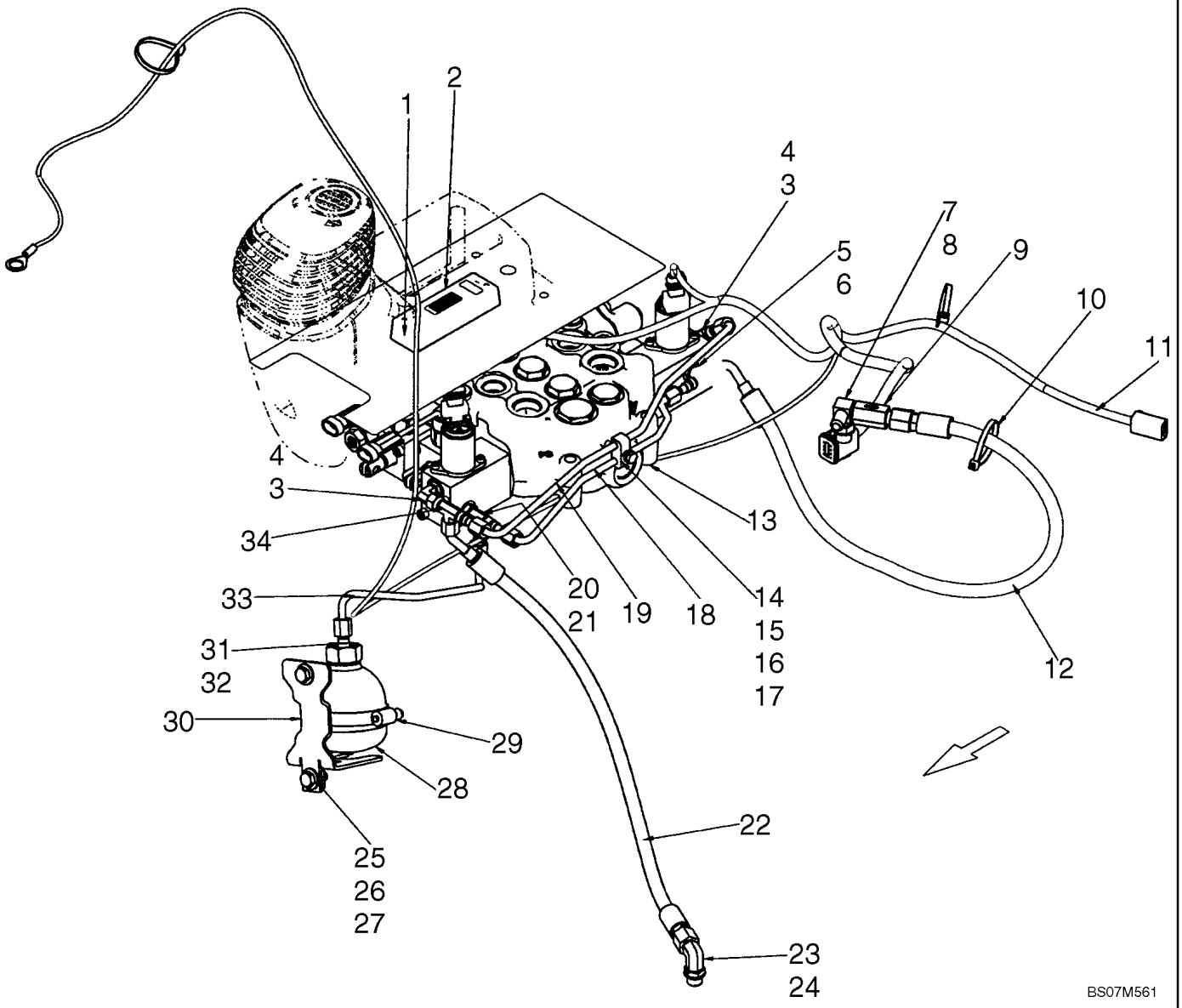

OUTILS HYDRAULIQUES

REF	FN	PART NUMBER	YR/SN	QTY	DESCRIPTION
33		87447764		1	TUYAUTERIE, Tube, Pilot Pressure
34		86513653		1	TE, 37º, 7/16"-20 x 7/16"-20, Fem Sw Run

SYSTEME HYDRAULIQUE - SYSTEME DE RACCORDEMENT

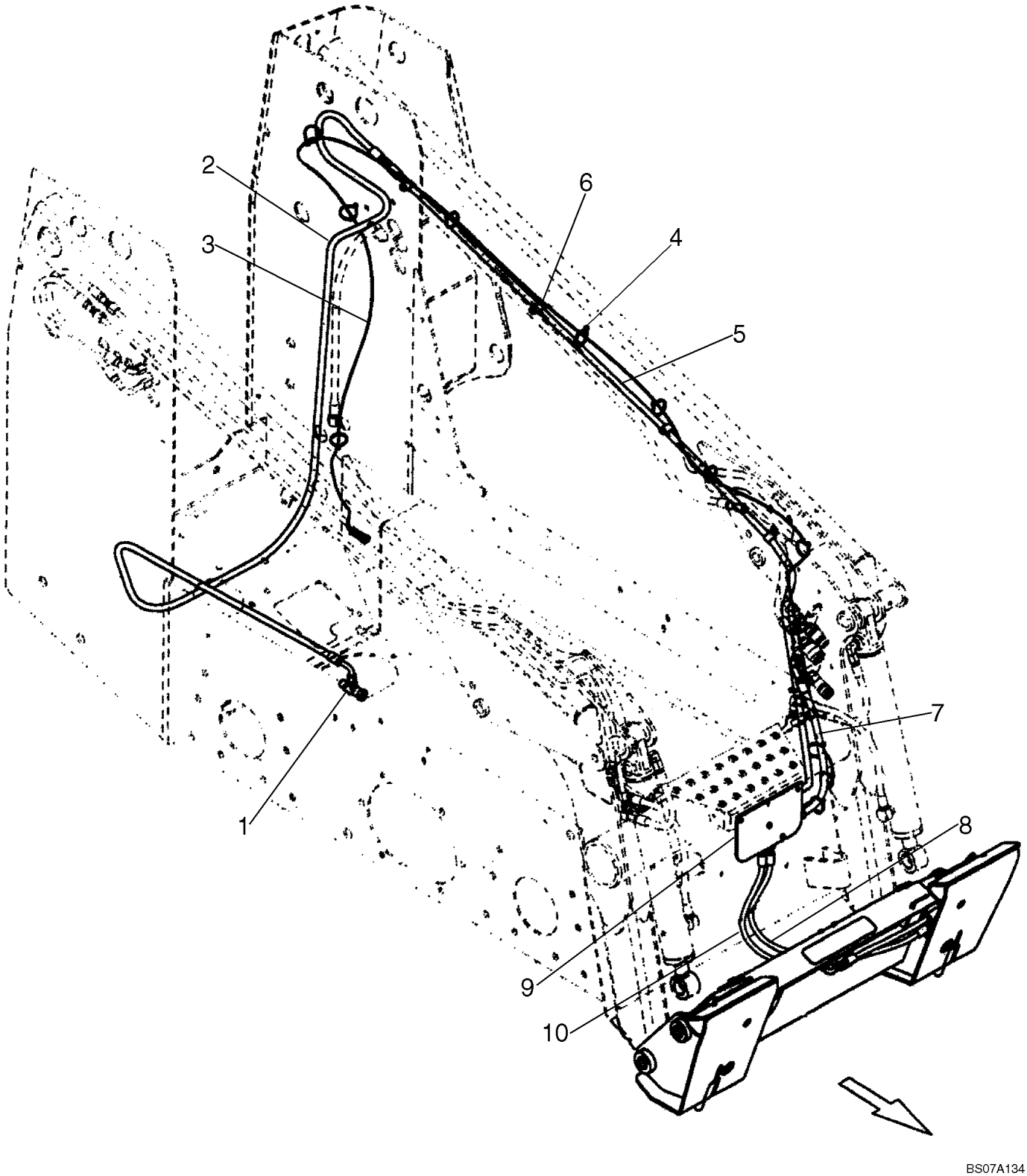

SYSTEME HYDRAULIQUE - SYSTEME DE RACCORDEMENT

REF	FN	PART NUMBER	YR/SN	QTY	DESCRIPTION
		REF			NOTICE, See Figure 08-11
		87638893		1	KIT ASSISTANCE, Kit, Hydraulic Coupler; Incl 1 - 10 And Fig 08-11
		87388074		1	KIT DE TRANSFORMATION, Kit To Convert From Connection Into Bucket Circuit To Connection Between Gear Pump And Loader Valve; Incl. Ref 1, 2, 4, 5, 6
1		87446825		1	TE
2		87367444		1	FLEXIBLE
3		87446983		1	FAISCEAU COMPLET
4		L11541		8	SERRE-CABLE
5		87367445		1	FLEXIBLE
6		86624005		4	BRIDE, 3/4", Insul, 3/8" Bolt
7		87413436		1	FLEXIBLE (ASSEMBLE), Case Drain
8		87440565		1	FLEXIBLE (ASSEMBLE), Step To Coupler
9		87423807		1	PLAQUE
10		87440564		1	FLEXIBLE (ASSEMBLE), Step To Coupler

SYSTEME HYDRAULIQUE - SYSTEME DE RACCORDEMENT

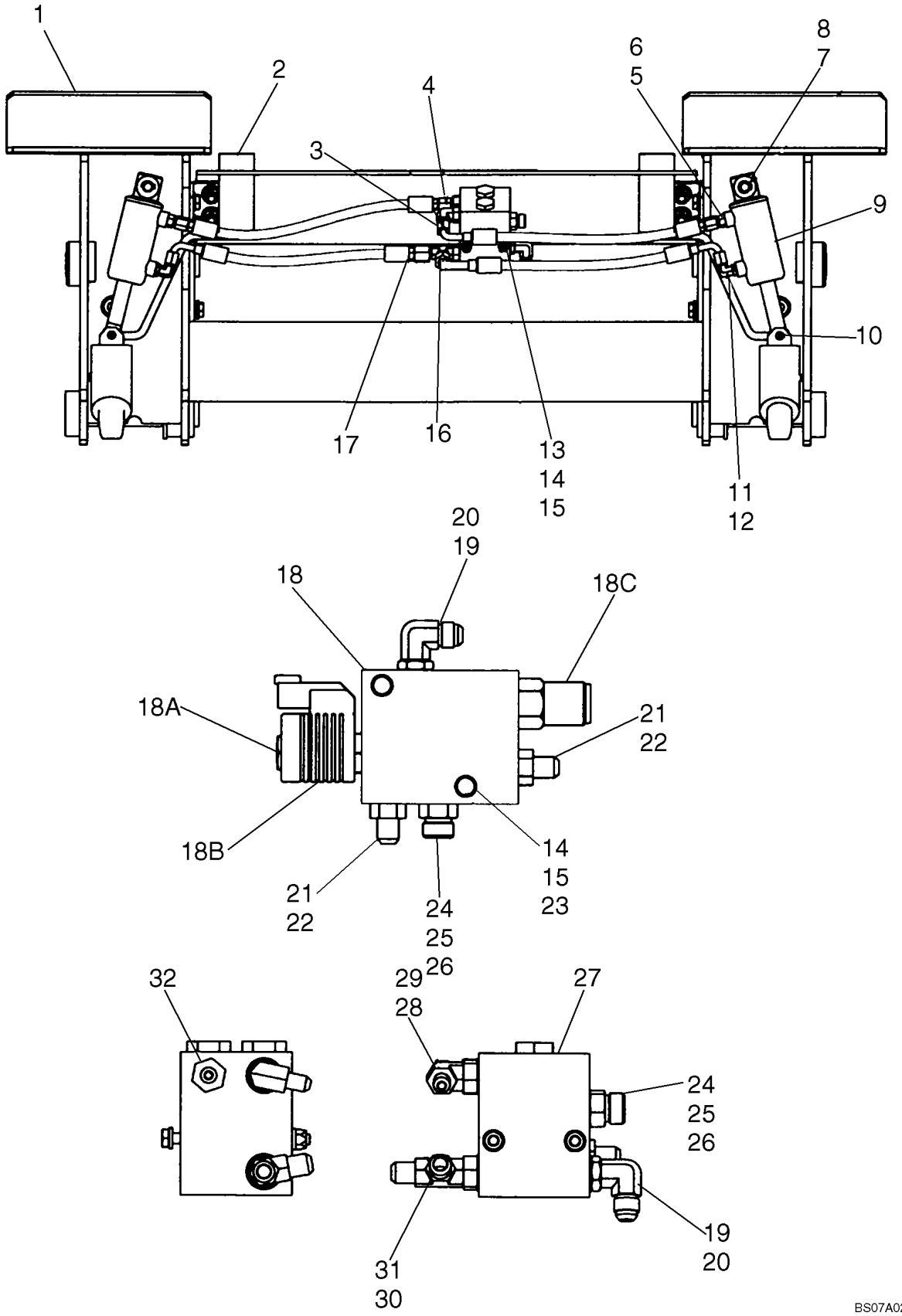

SYSTEME HYDRAULIQUE - SYSTEME DE RACCORDEMENT

REF	FN	PART NUMBER	YR/SN	QTY	DESCRIPTION
1		REF		1	NOTICE, Coupler Frame; See Figure 09-05; See Figure 08-10
2		396052A2		2	DRAPEAU
3		87440569		1	FLEXIBLE (ASSEMBLE), Left Hand; Base End
4		87440566		1	FLEXIBLE (ASSEMBLE), Right Hand; Base End
5		265235		2	RACCORD, 7/16"-20, 37° x 7/16"-20, O-Ring, Incl. 6
6		165202		1	JOINT THORIQUE, 4-1, 90 Duro, .351" ID x .072" Thk
7		100-1650		2	ANNEAU D'ARRÊT, #50, Ext
8		87387540		2	RETENEUR, Handle Pivot
9		87442337		2	VERIN, Component Parts Not Serviced Separately
10		87610718		2	AXE
11		216773		2	COUDE, 90°, 7/16"-20, 37° x 7/16"-20, O-Ring, Incl. 12
12		165202		1	JOINT THORIQUE, 4-1, 90 Duro, .351" ID x .072" Thk
13		86508570		2	BOULON, Hex, M6 x 80, 8.8
14		86512440		4	CONTRE-ECROU
15		86588450		8	RONDELLE, M6
16		87440570		1	FLEXIBLE (ASSEMBLE), Left Hand; Rod End
17		87440568		1	FLEXIBLE (ASSEMBLE), Right Hand; Rod End
18		87421480		1	SOUPAPE HYDRAULIQUE, Hydraulic Coupler; Incl.18A - 18C
18A		87562926		1	SOUPAPE, Sequence Valve Sauer No. CP538-1-U-0-12D-DE
18B		87433496		1	BOBINE, Sauer No. 322113
18C		87562923		1	SOUPAPE, Sequence Valve Sauer No. CP240-21-B-0-A-C-270
19		76344		2	COUDE, 90°, 9/16"-18, 37° x 9/16"-18, O-Ring, Includes 20
20		9617873		1	JOINT THORIQUE, 6-1, 90 Duro, .468" ID x .078" Thk
21		76350		2	RACCORD, 9/16"-18, 37° x 9/16"-18, O-Ring, Incl. 22
22		9617873		1	JOINT THORIQUE, 6-1, 90 Duro, .468" ID x .078" Thk
23		338413		2	BOULON, Hex, M6 x 60, 8.8
24		9993143		2	RACCORD, 11/16"-16 ORFS x 9/16"-18 ORB, Incl. 25, 26

SYSTEME HYDRAULIQUE - SYSTEME DE RACCORDEMENT

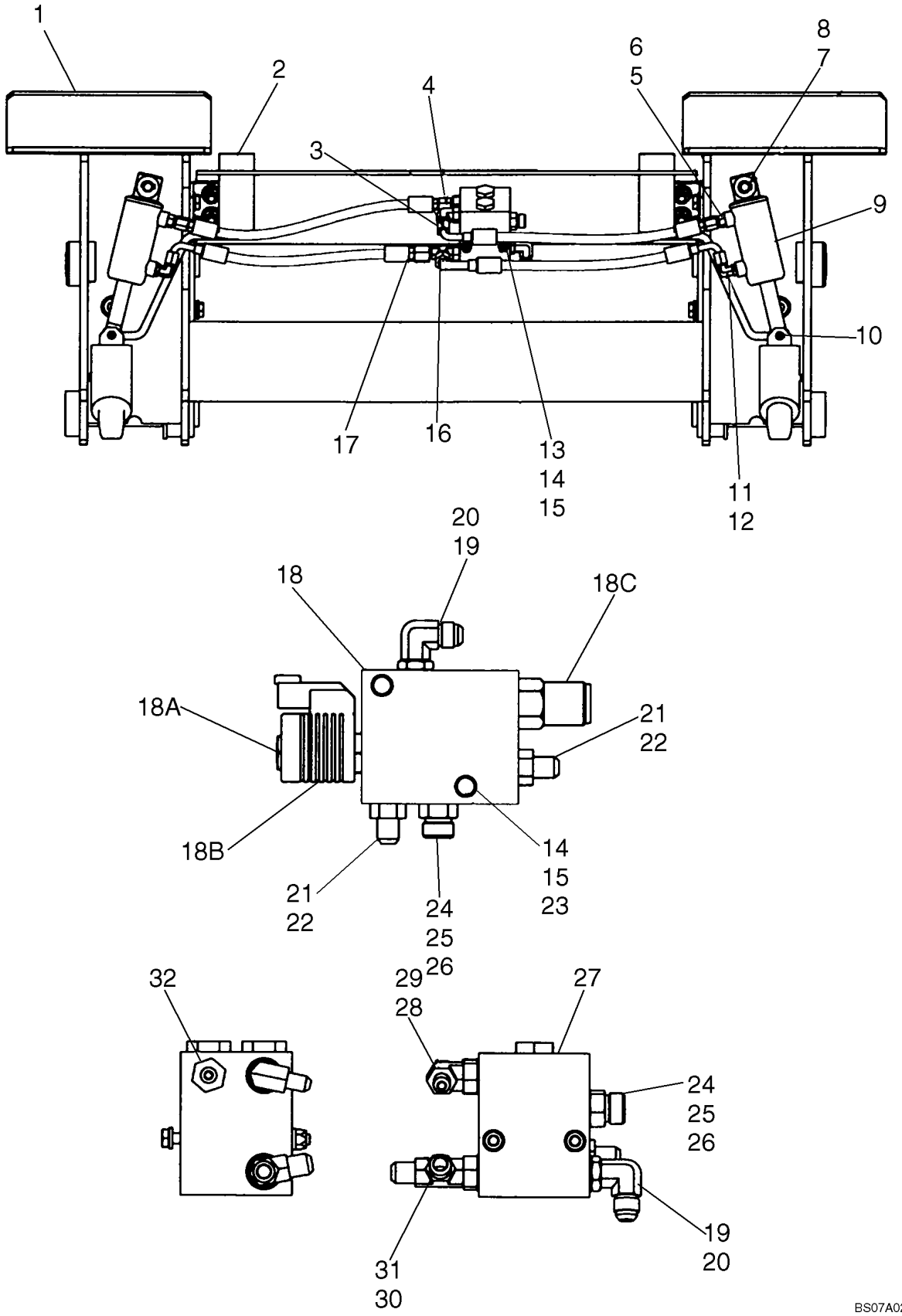

SYSTEME HYDRAULIQUE - SYSTEME DE RACCORDEMENT

REF	FN	PART NUMBER	YR/SN	QTY	DESCRIPTION
25		9993141		1	JOINT THORIQUE, -012, 90 Duro, .364" ID x .070" Thk
26		9617873		1	JOINT THORIQUE, 6-1, 90 Duro, .468" ID x .078" Thk
27		294741A1		1	CLAPET ANTI-RETOUR, Component Parts Not Serviced Separately
28		86512934		1	COUDE, 90º, 7/16"-20, 37º x 9/16"-18, O-Ring, Incl. 29
29		9617873		1	JOINT THORIQUE, 6-1, 90 Duro, .468" ID x .078" Thk
30		86513020		1	TE, 9/16"-18, 37º x 9/16"-18, O-Ring Run, Incl. 31
31		9617873		1	JOINT THORIQUE, 6-1, 90 Duro, .468" ID x .078" Thk
32		139398		1	RACCORD, 7/16"-20, 37º x 9/16"-18, O-Ring, Incl. 9617873
		9617873		1	JOINT THORIQUE, 6-1, 90 Duro, .468" ID x .078" Thk

SYSTEME HYDRAULIQUE - SYSTEME DE RACCORDEMENT (ITALIEN)

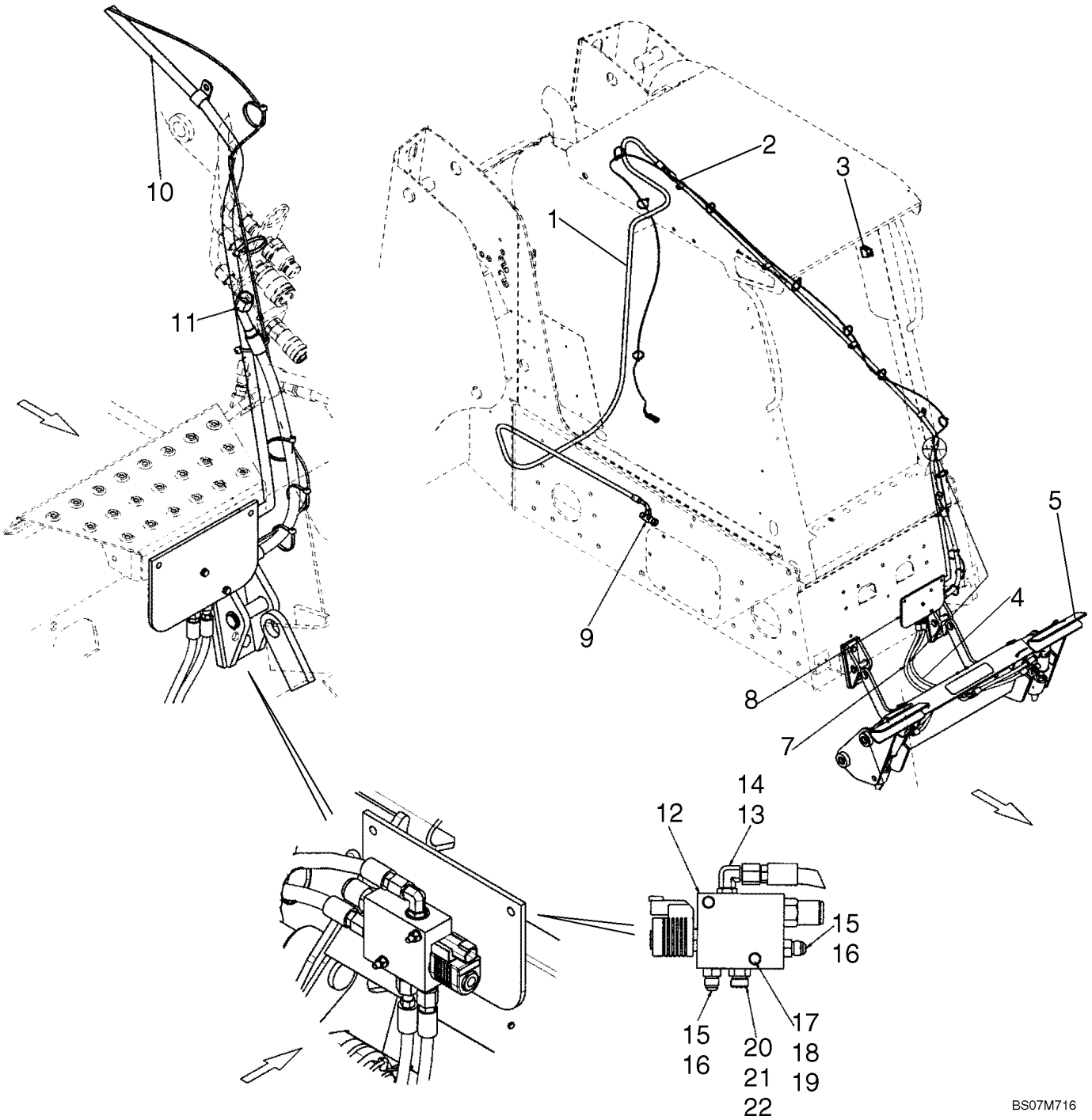

SYSTEME HYDRAULIQUE - SYSTEME DE RACCORDEMENT (ITALIEN)

REF	FN	PART NUMBER	YR/SN	QTY	DESCRIPTION
1		87367444		1	FLEXIBLE, Hose, Hydraulic Coupler, 3305mm (130 1/8 in.)
2		86624005		4	BRIDE, 3/4", Insul, 3/8" Bolt
3		87642911		1	CONTACTEUR, Rocker Switch, Hydraulic Coupler
4		87440565		1	FLEXIBLE (ASSEMBLE), Hose, Step To Coupler, 720mm (28 11/32 in.)
5		REF		1	NOTICE, Coupler; See Fig 08-12
6		80710		4	GRAISSEUR, 1/8"-27 x .66 lg
7		87440564		1	FLEXIBLE (ASSEMBLE), Hose, Step To Coupler, 690mm (27 3/16 in.)
8		87423807		1	PLAQUE
9		87446825		1	TE
10		87367445		1	FLEXIBLE, Hose, Hydraulic Coupler, 2482mm (97 11/16 in.)
11		87413436		1	FLEXIBLE (ASSEMBLE), Hose, Case Drain, 655mm (25 13/16 in.)
12		87421480		1	SOUPAPE HYDRAULIQUE
13		76344		2	COUDE, 90º, 9/16"-18, 37º x 9/16"-18, O-Ring, Incl 14
14		9617873		2	JOINT THORIQUE, 6-1, 90 Duro, .468" ID x .078" Thk
15		76350		2	RACCORD, 9/16"-18, 37º x 9/16"-18, O-Ring, Incl 16
16		9617873		2	JOINT THORIQUE, 6-1, 90 Duro, .468" ID x .078" Thk
17		338413		2	BOULON, Hex, M6 x 60, 8.8
18		86512440		4	CONTRE-ECROU
19		86588450		8	RONDELLE, M6
20		9993143		1	RACCORD, 11/16"-16 ORFS x 9/16"-18 ORB, Incl 21, 22
21		9617873		1	JOINT THORIQUE, 6-1, 90 Duro, .468" ID x .078" Thk
22		9993141		1	JOINT THORIQUE, -012, 90 Duro, .364" ID x .070" Thk

SYSTEME HYDRAULIQUE - SYSTEME DE RACCORDEMENT (ITALIEN)

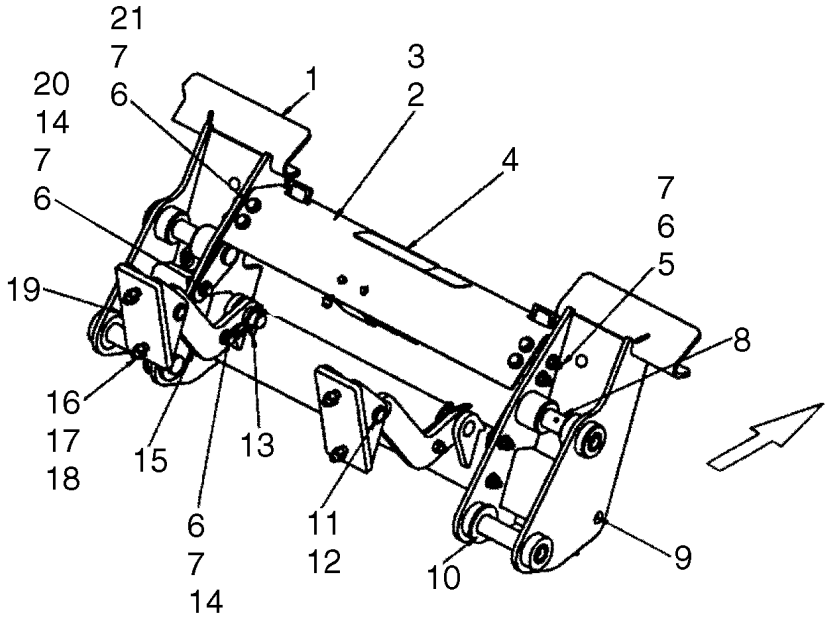

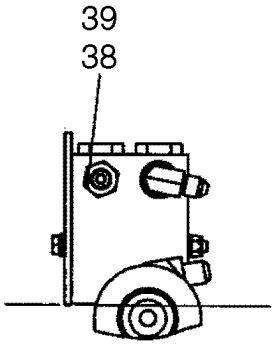

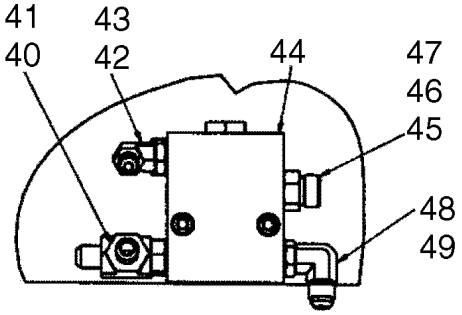

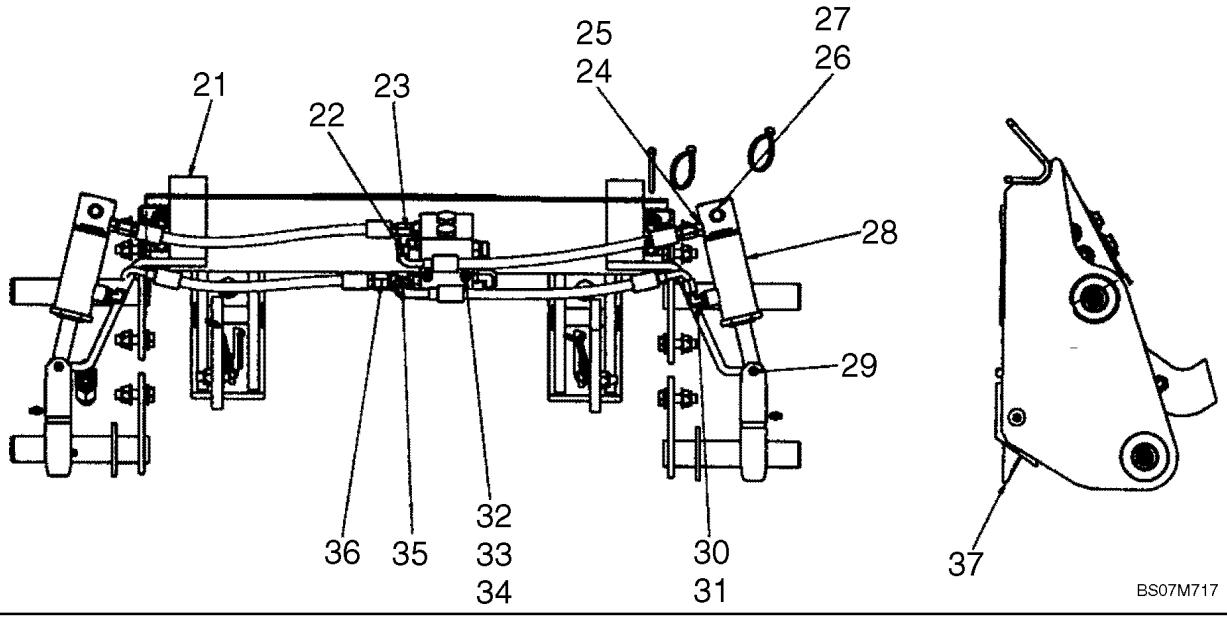

BS07M717

SYSTEME HYDRAULIQUE - SYSTEME DE RACCORDEMENT (ITALIEN)

REF	FN	PART NUMBER	YR/SN	QTY	DESCRIPTION
1		417779A3		1	BATI (ASSEMBLE), Coupler Frame, Italian
2		87620412		1	PLAQUE, Cover
3		409783A1		2	PATTE FIXATION
4		D55216		1	BANDE ANTI-DERAPANTE
5		9706704		4	BOULON, Hex, M10 x 35, 8.8, Full Thd
6		86512554		14	CONTRE-ECROU, M10 x 1.5, Cl 10
7		86625253		26	RONDELLE, M11 x 24 x 2
8		87659406		4	AXE
9		87414		2	GRAISSEUR, 1/4"-28 x .56" lg, Drive
10		86512837		2	RONDELLE, 1 1/4", SAE
11		D138889		2	AXE
12		{86625151}		4	Retaining Ring, External #87
13		A30338		2	AXE, Klik Pin
14		120112		6	BOULON, Hex, M10 x 40, 8.8, Full Thd
15		398194A1		2	MAILLON, Bucket Lock
16		120080		4	BOULON, Hex Head, M12 X 45 Cl 8.8
17		86625255		4	RONDELLE, M13.5 x 24.5 x 3, HT
18		412672		4	CONTRE-ECROU, M12 x 1.75, Cl 10
19		398196A1		2	PATTE FIXATION
20		906091R1		4	ENTRETOISE
21		43139		4	VIS
22		87440569		1	FLEXIBLE (ASSEMBLE), Hose, Base End LH, 365mm (14 3/8 in.)
23		87440566		1	FLEXIBLE (ASSEMBLE), Hose, Base End RH, 372mm (14 21/32 in.)
24		265235		2	RACCORD, 7/16"-20, 37° x 7/16"-20, O-Ring, Incl 25
25		165202		2	JOINT THORIQUE, 4-1, 90 Duro, .351" ID x .072" Thk
26		87387540		2	RETENEUR
27		{87612753}		2	Retaining Ring, External #50
28		87442337		2	VERIN
29		87610718		2	AXE
30		216773		2	COUDE, 90°, 7/16"-20, 37° x 7/16"-20, O-Ring, Incl 31
31		165202		2	JOINT THORIQUE, 4-1, 90 Duro, .351" ID x .072" Thk
32		86508570		2	BOULON, Hex, M6 x 80, 8.8
33		86512440		4	CONTRE-ECROU

SYSTEME HYDRAULIQUE - SYSTEME DE RACCORDEMENT (ITALIEN)

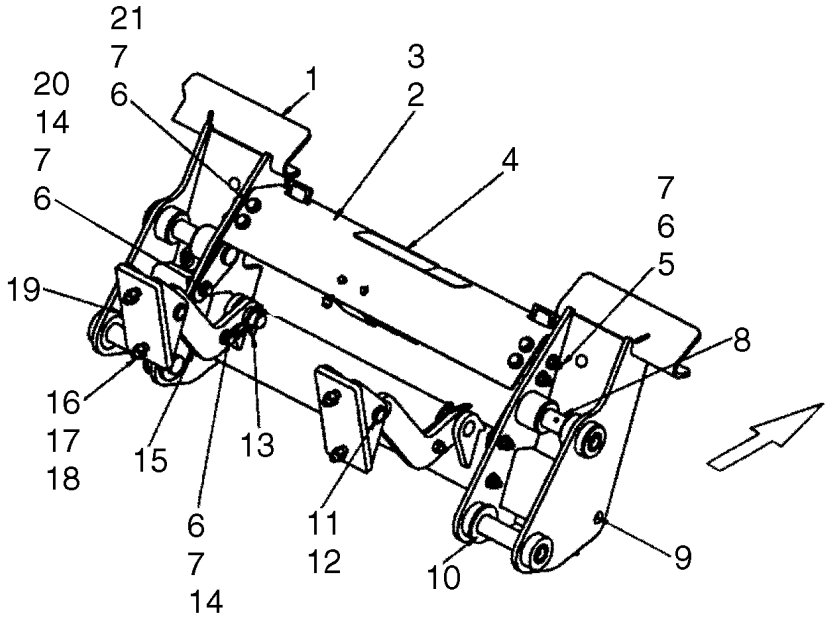

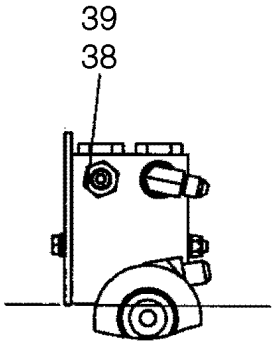

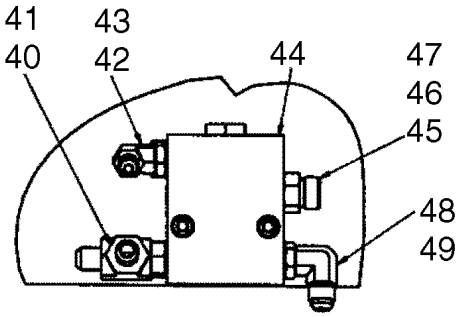

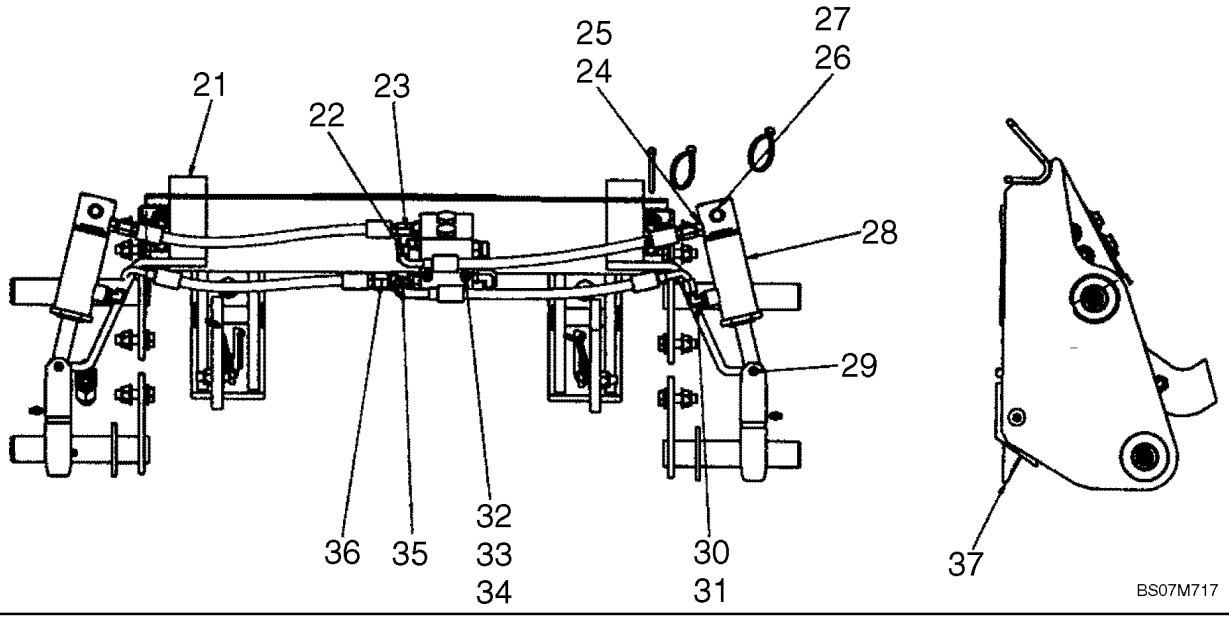

BS07M717

SYSTEME HYDRAULIQUE - SYSTEME DE RACCORDEMENT (ITALIEN)

REF	FN	PART NUMBER	YR/SN	QTY	DESCRIPTION
34		86588450		8	RONDELLE, M6
35		87440570		1	FLEXIBLE (ASSEMBLE), Hose, Rod End LH, 363mm (14 9/32 in.)
36		87440568		1	FLEXIBLE (ASSEMBLE), Hose, Rode End RH, 337mm (13 1/4 in.)
37		87413030		2	AXE
38		139398		1	RACCORD, 7/16"-20, 37º x 9/16"-18, O-Ring, Incl 39
39		9617873		1	JOINT THORIQUE, 6-1, 90 Duro, .468" ID x .078" Thk
40		86513020		1	TE, 9/16"-18, 37º x 9/16"-18, O-Ring Run, Incl 41
41		9617873		1	JOINT THORIQUE, 6-1, 90 Duro, .468" ID x .078" Thk
42		86512934		1	COUDE, 90º, 7/16"-20, 37º x 9/16"-18, O-Ring, Incl 43
43		9617873		1	JOINT THORIQUE, 6-1, 90 Duro, .468" ID x .078" Thk
44		294741A1		1	CLAPET ANTI-RETOUR
45		9993143		1	RACCORD, 11/16"-16 ORFS x 9/16"-18 ORB, Incl 46,47
46		9617873		1	JOINT THORIQUE, 6-1, 90 Duro, .468" ID x .078" Thk
47		9993141		1	JOINT THORIQUE, -012, 90 Duro, .364" ID x .070" Thk
48		76344		2	COUDE, 90º, 9/16"-18, 37º x 9/16"-18, O-Ring, Incl 49
49		9617873		2	JOINT THORIQUE, 6-1, 90 Duro, .468" ID x .078" Thk

VERIN - INCLINAISON

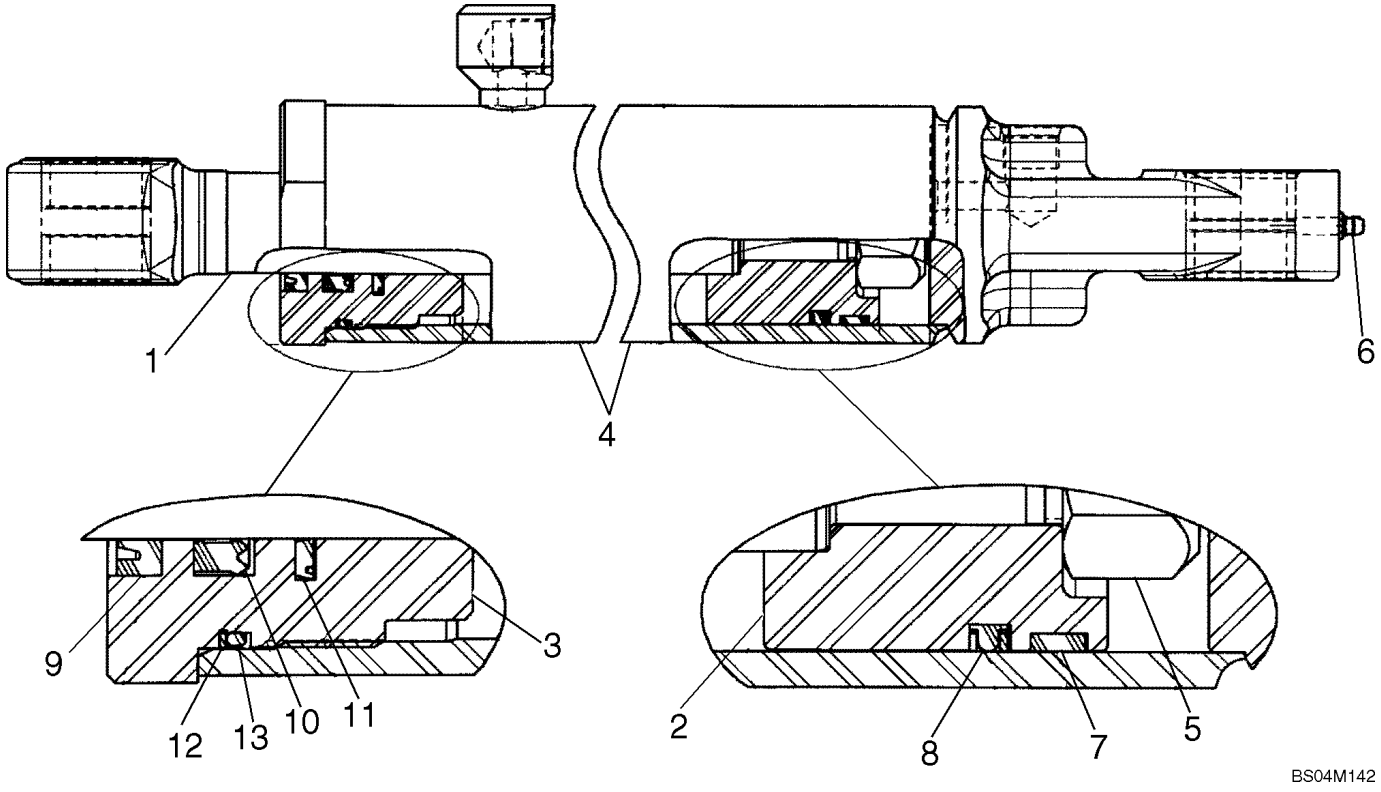

VERIN - INCLINAISON

REF	FN	PART NUMBER	YR/SN	QTY	DESCRIPTION
		87438193		2	VERIN, Tilt; 3.0 Bore, 14.56 Stroke; Incl. 1 - 6 and Seal Kit 86614269 Ref 7 - 13
1		87442326		1	TRINGLE (ASSEMBLEE), 38.1 Dia, 31.8 Pin
2		87442334		1	PISTON
3		86614267		1	CULASSE, 2.5 x 1.38
4		87442335		1	VERIN, Incl. Bushings, 86624450
		86624450		2	BAGUE
5		87027430		1	CONTRE-ECROU, 1 1/8"-12, GC
6		87414		1	GRAISSEUR, 1/4"-28 x .56" lg, Drive
		86614269		1	POCHETTE, Seal, 3.0 x 1.50; Incl. 7 - 13
7		771714		1	ANNEAU
8		86595542		1	JOINT, Seal, 3.0 Piston
9		86631610		1	JOINT, 1.50 Wiper
10		86631607		1	JOINT, 1.50 Rod
11		86631616		1	JOINT, 1.38 Buffer
12		86609324		1	JOINT-CIRCULAIRE
13		270192		1	JOINT THORIQUE, -335", 70 Duro, 2.725" ID x .210" Thk

VERIN - RELEVAGE

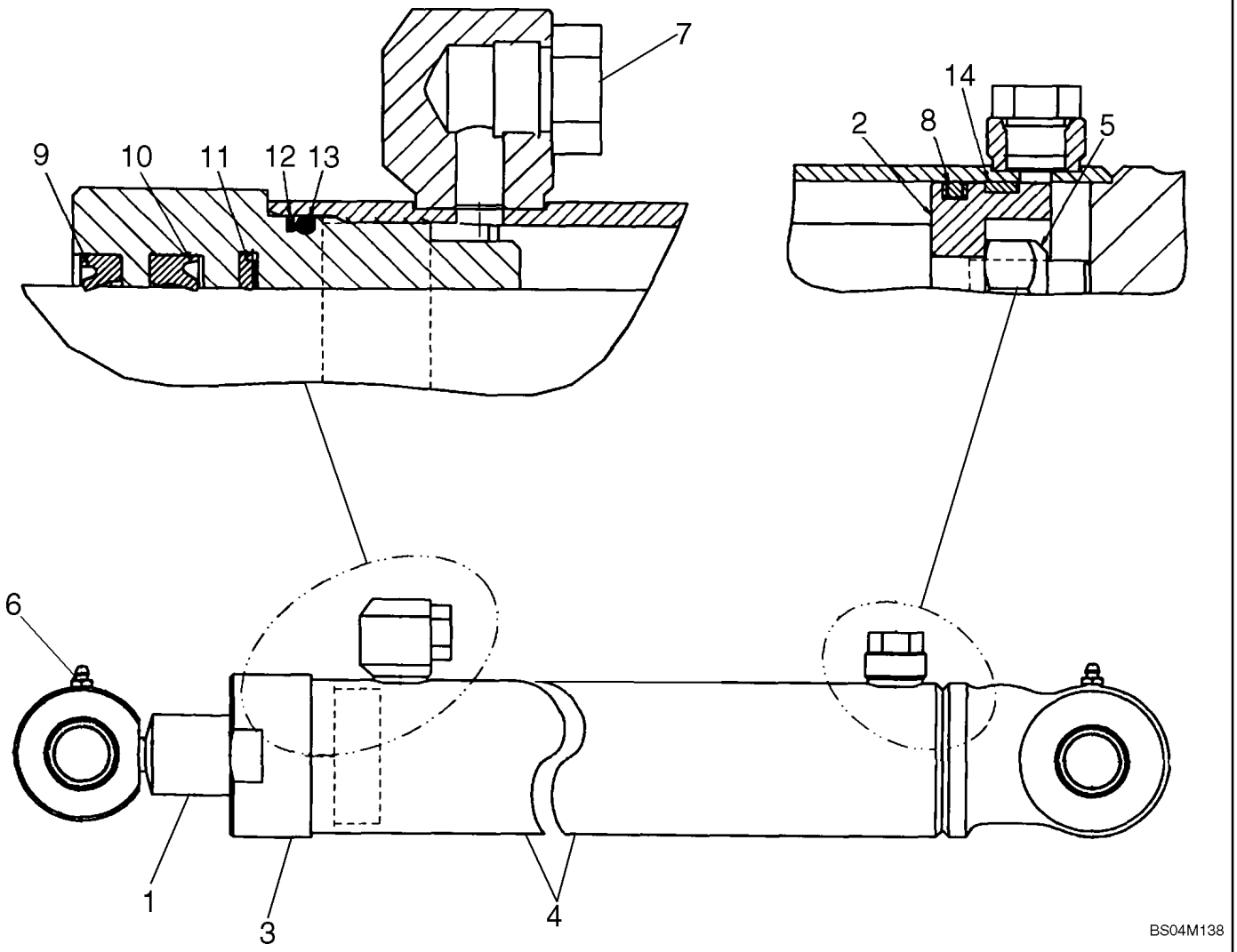

VERIN - RELEVAGE

REF	FN	PART NUMBER	YR/SN	QTY	DESCRIPTION
		87438190		2	VERIN, 2.50 Bore, 35.83 Stroke; Incl. 1 - 7 And Seal Kit 86631598 Ref 8 - 14
1		86611742		1	TRINGLE, Piston, Incl. Bushings 86624451
		86624451		2	BAGUE
2		848220		1	PISTON
3		86631597		1	CULASSE, 2.5 x 1.25
4		86611740		1	VERIN, Incl. Bushings 86624450
		86624450		2	BAGUE
5		280724		1	CONTRE-ECROU, 3/4"-16, GC
6		87414		2	GRAISSEUR, 1/4"-28 x .56" lg, Drive
7		214389		2	BOUCHON, Hex Hd, 3/4"-16 ORB, 1/2" OD Tube
		86631598		1	POCHETTE, Seal, Incl. 8 - 14
8		86563839		1	JOINT, 2.5
9		86631610		1	JOINT, 1.5 Wiper
10		86631607		1	JOINT, 1.5 Rod
11		86631616		1	JOINT, 1.5 Buffer
12		86512008		1	CONTRE-JOINT
13		52419		1	JOINT THORIQUE, -229, 70 Duro, 2.359" ID x .139" Thk
14		783874		1	BAGUE D"USURE

GRAND DEBIT, ASPIRATION ET REFOULEMENT

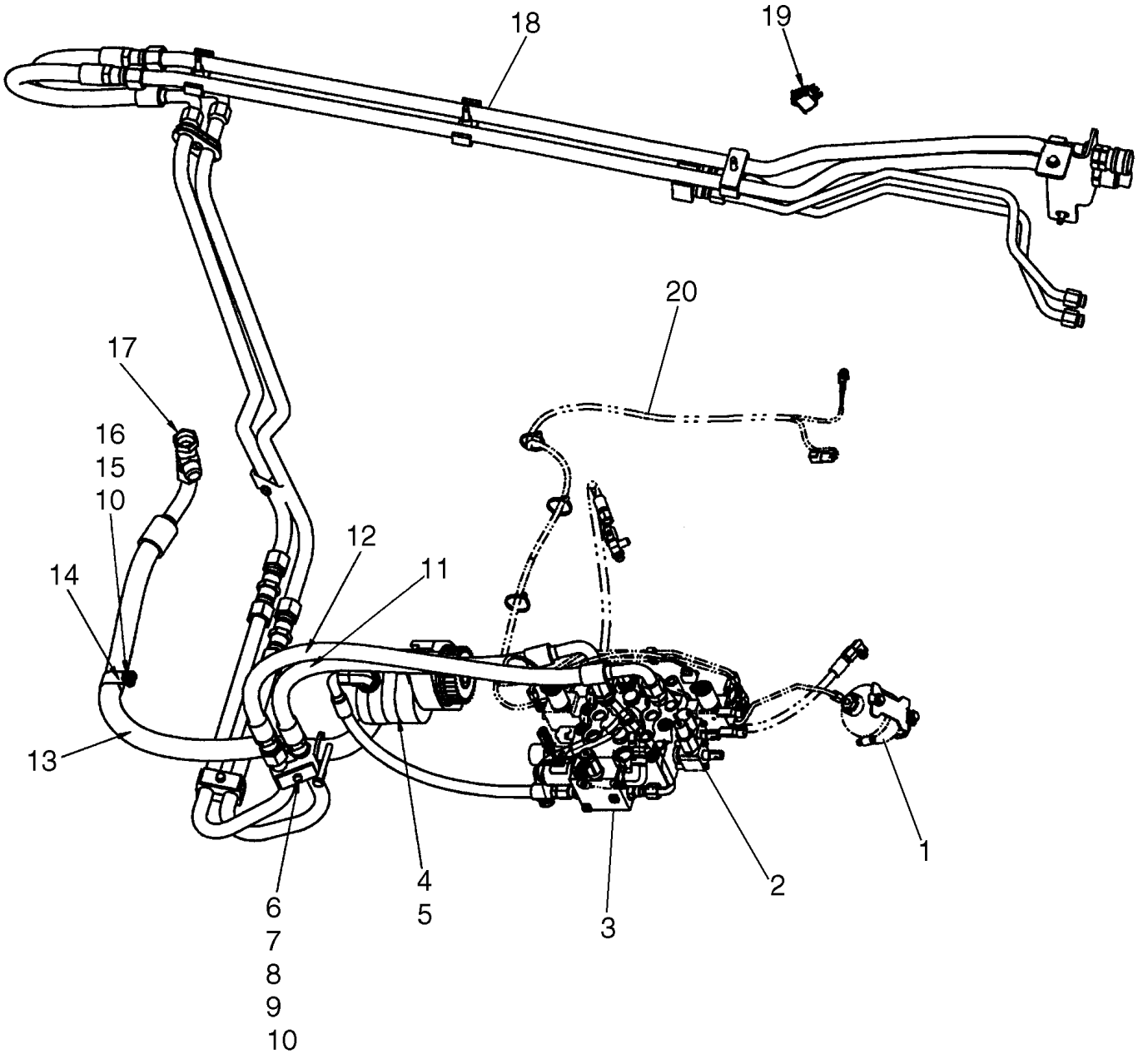

GRAND DEBIT, ASPIRATION ET REFOULEMENT

REF	FN	PART NUMBER	YR/SN	QTY	DESCRIPTION
		87617100		1	KIT ASSISTANCE, Kit, High Flow Bi-Directional Gear; Incl 1- 20
1		REF		1	NOTICE, Accumulator, See Fig 08-07
2		87546975			SOUPAPE HYDRAULIQUE, Control Valve, See Fig 08-23
3		87012669		1	SOUPAPE, See Fig 08-19
4		87020733		1	POMPE, See Fig 06-55
5		272310		1	JOINT THORIQUE, -042, 70 Duro, 3.239" ID x .070" Thk
6		120061		1	BOULON, Hex, M8 x 60, 8.8
7		80681		2	RONDELLE FREIN, 5/16"
8		257859A1		3	PLAQUETTE
9		1546028C1		2	COLLIER, 25.4 x 25.4
10		9628098		2	CONTRE-ECROU, M8 x 1.25, Cl 10
11		87454000		1	FLEXIBLE (ASSEMBLE), 860 mm (38.85 in) High Flow
12		87453999		1	FLEXIBLE (ASSEMBLE), 1020 mm (40.15 in) High Flow
13		87602204		1	FLEXIBLE, 1200 mm (47.24 in) High Flow Suction
14		86639006		1	BRIDE, 1 1/2", Insul, 1/2" Bolt
15		43127		1	BOULON, Hex, M8 x 25, 8.8
16		86625263		1	RONDELLE, M8 x 20 x 1.6
17		9618946		1	TE, 37°, 1 5/16"-12 x 1 5/16"-12, Fem Sw Run
18		REF			NOTICE, Auxiliary Hydraulics, See Fig 08-17
19		87414769		1	CONTACTEUR, Rocker, High Flow
20		87447970		1	FAISCEAU, Electro-Hydraulic Auxiliary

GRAND DEBIT - CIRCUIT AUXILIAIRE

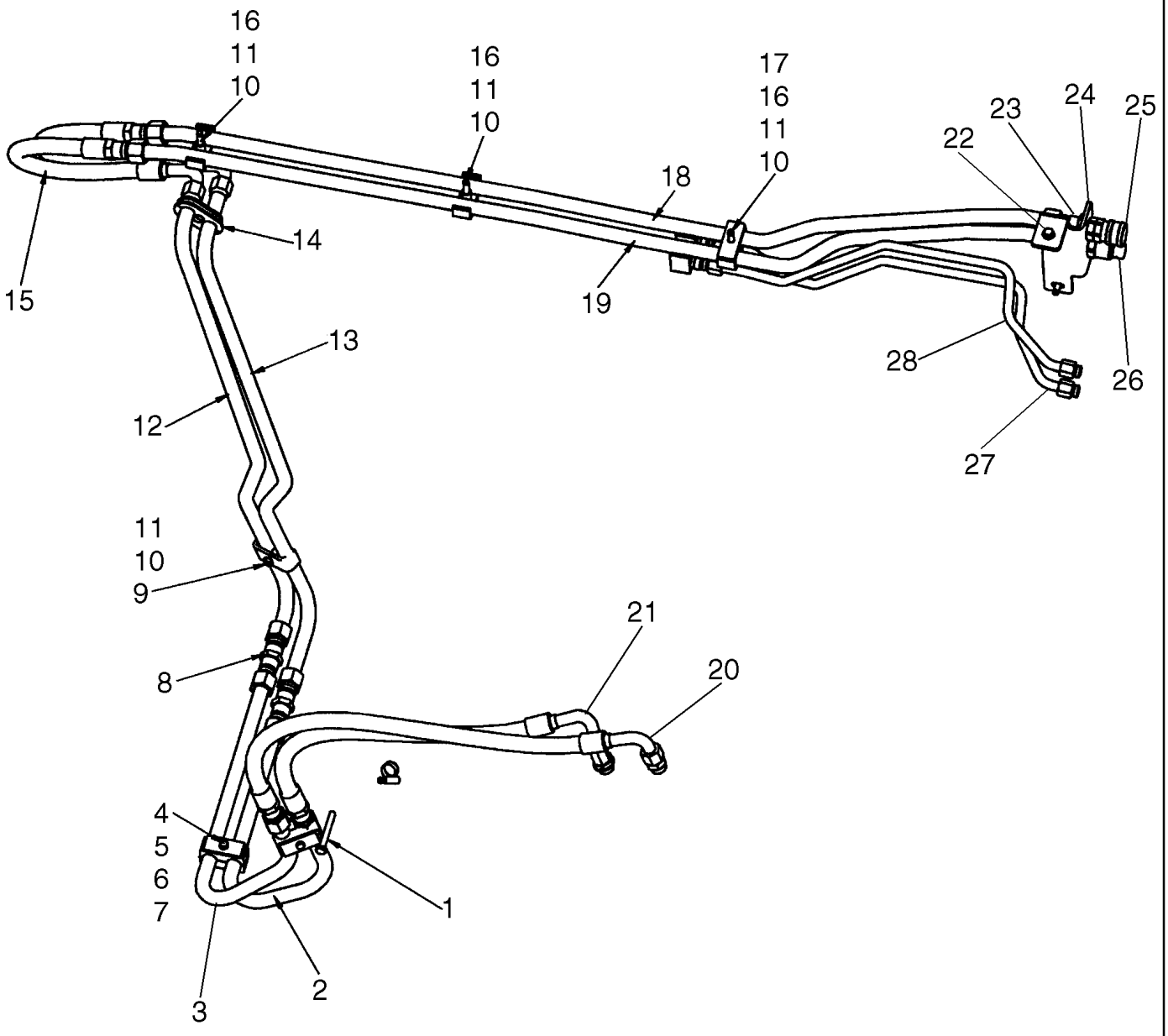

GRAND DEBIT - CIRCUIT AUXILIAIRE

REF	FN	PART NUMBER	YR/SN	QTY	DESCRIPTION
		87617100		1	KIT ASSISTANCE, Kit, High Flow Bi-Directional Gear; Incl 1 - 28 And Fig 08-16
1		120073		1	BOULON, Hex, M10 x 80, 8.8
2		87026696		1	TUYAUTERIE
3		87026695		1	TUYAUTERIE
4		43130		1	BOULON, Hex, M8 x 50, 8.8
5		80681		2	RONDELLE FREIN, 5/16"
6		257859A1		1	PLAQUETTE
7		1546028C1		1	COLLIER
8		9790526		1	UNION
9		325829		1	BOULON, Hex, M10 x 45, 8.8
10		87022737		4	ENTRETOISE
11		87020743		4	PATTE FIXATION
12		87554226		1	TUYAU HYDRAULIQUE, High Flow Aux
13		87554200		1	TUYAU HYDRAULIQUE, High Flow Aux
14		87017999		2	SUPPORT
15		87020048		2	FLEXIBLE, 675 mm (26.57 in)
16		87025275		3	VIS, 3/8 x 2.5
17		87023483		1	PLAQUE
18		87023470		1	TUYAUTERIE
19		87023469		1	TUYAUTERIE
20		87453999		1	FLEXIBLE (ASSEMBLE), 1020 mm (40.15 in) High Flow
21		87454000		1	FLEXIBLE (ASSEMBLE), 860 mm (33.85 in) High Flow
22		280476		2	VIS AUTO-TARAUDEUSE, Hex Wash Hd, 3/8" x 1"
23		86513144		2	CONTRE-ECROU, Blkhd, 1 5/16"-12
24		87023398		1	PATTE FIXATION
25		87022671		1	CHAPE, 5/8, Female; Mating Conector For 87022671 (Female) Is 395268A1 (Male)
26		87022672		1	CHAPE, 5/8, Male; Mating Connector For 87022672 (Male) Is 395267A1 (Female)
27		87023472		1	TUYAUTERIE
28		87023471		1	TUYAUTERIE

GRAND DEBIT, DISTRIBUTEUR DE COMMANDE

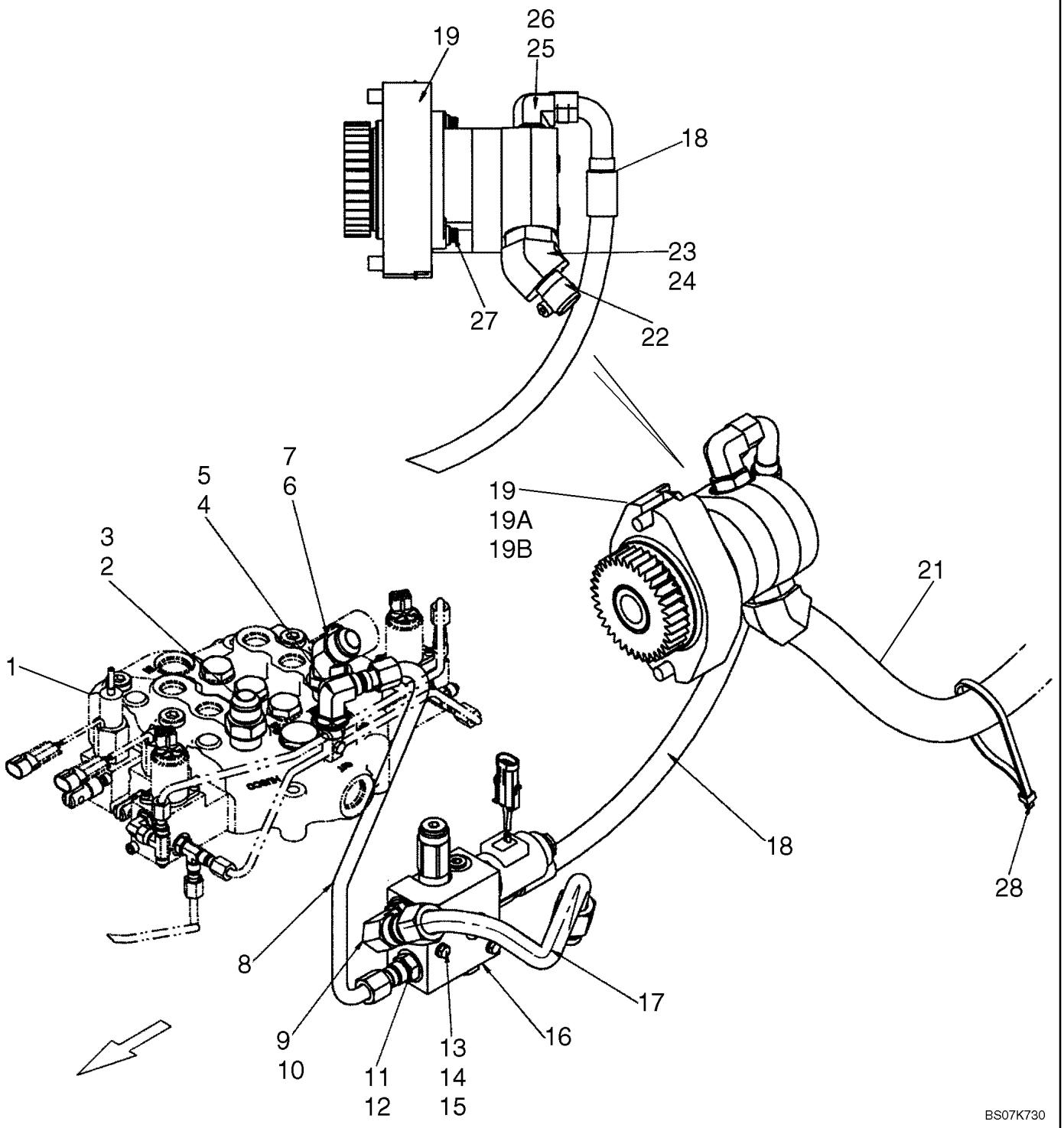

GRAND DEBIT, DISTRIBUTEUR DE COMMANDE

REF	FN	PART NUMBER	YR/SN	QTY	DESCRIPTION
1		87546975			SOUPAPE HYDRAULIQUE, Control Valve See Fig 08-23
2		322896		1	RACCORD, 1 1/16"-12, 37º x 1 1/16"-12, O-Ring, Incl 3
3		167266		1	JOINT THORIQUE, 12-1, 90 Duro, .924 ID x .116" Thk
4		9617891		1	COUDE, 90º, 3/4"-16, 37º x 7/8"-14, O-Ring, Incl 5
5		167269		1	JOINT THORIQUE, 10-1, 90 Duro, .755" ID x .097" Thk
6		330344		1	COUDE, 45º, 1 1/16"-12 x 1 1/16"-12, O-Ring, Incl 7
7		167266		1	JOINT THORIQUE, 12-1, 90 Duro, .924 ID x .116" Thk
8		87549658		1	TUYAU RIGIDE, Tube; High Flow Supply
9		322894		1	COUDE, 90º, 1 1/16"-12, 37º x 1 1/16"-12, O-Ring, Incl 10
10		167266		1	JOINT THORIQUE, 12-1, 90 Duro, .924 ID x .116" Thk
11		128818		2	RACCORD, 3/4"-16, 37º x 3/4"-16, O-Ring, Incl 12
12		128825		2	JOINT THORIQUE, 8-1, 90 Duro, .644" ID x .087" Thk
13		86588450		2	RONDELLE, M6
14		338413		2	BOULON, Hex, M6 x 60, 8.8
15		87404992		2	ECROU
16		87012669		1	SOUPAPE, Combination Valve; See Fig 08-19
17		87549660		1	TUYAU HYDRAULIQUE, Valve To Filter
18		87458725		1	FLEXIBLE, 565 mm (22.24 in) Supply
19		2853146		1	PRISE DE FORCE
19A		16588324		2	VIS
19B		4896897		1	JOINT
20		87020733		1	POMPE, Incl. Seal Kit 87042214, See Figure 06-55
21		87602204		1	FLEXIBLE, 1200 mm (47.24 in) High Flow Suction
22		86536660		1	BRIDE, FLEXIBLE, #16, 0.81/1.50 Type F Worm
23		{87029968}		1	STEM; 45 Bead Hose 1.0 ID x 1-5-16-12 THD; Incl 24
24		167268		1	JOINT THORIQUE, 16-1, 90 Duro, 1.171" ID x .116" Thk

GRAND DEBIT, DISTRIBUTEUR DE COMMANDE

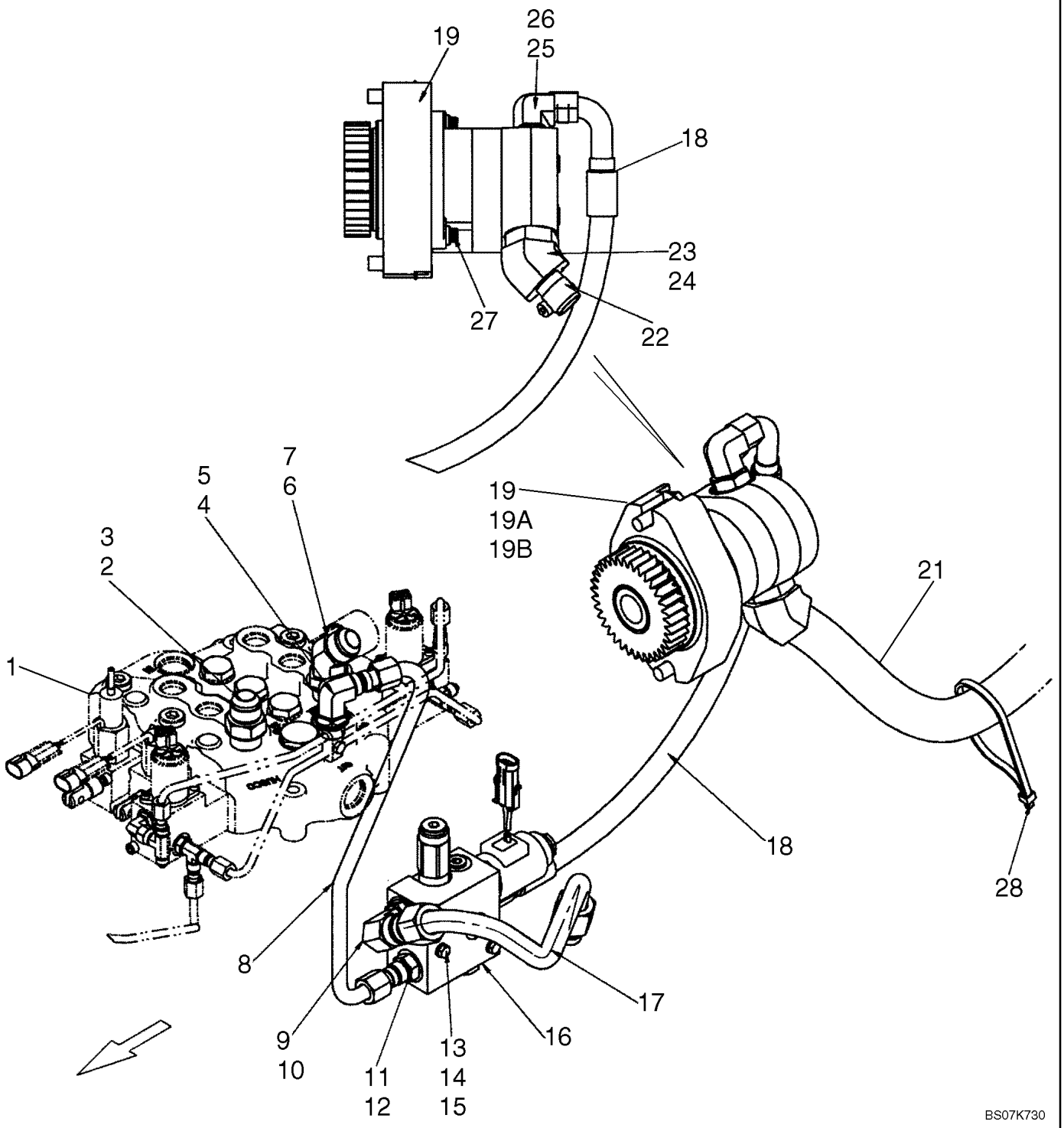

GRAND DEBIT, DISTRIBUTEUR DE COMMANDE

REF	FN	PART NUMBER	YR/SN	QTY	DESCRIPTION
25		84570		1	COUDE, 90º, 7/8"-14, 37º x 1 1/16"-12, O-Ring, Incl 26
26		167266		1	JOINT THORIQUE, 12-1, 90 Duro, .924 ID x .116" Thk
27		87016486		2	VIS, 12 Pt Hd, M10 x 30, 12.9
28		529070		1	SERRE-CABLE, .30" x 14.5"

COMMANDE DE DISTRIBUTEUR - GRAND DEBIT

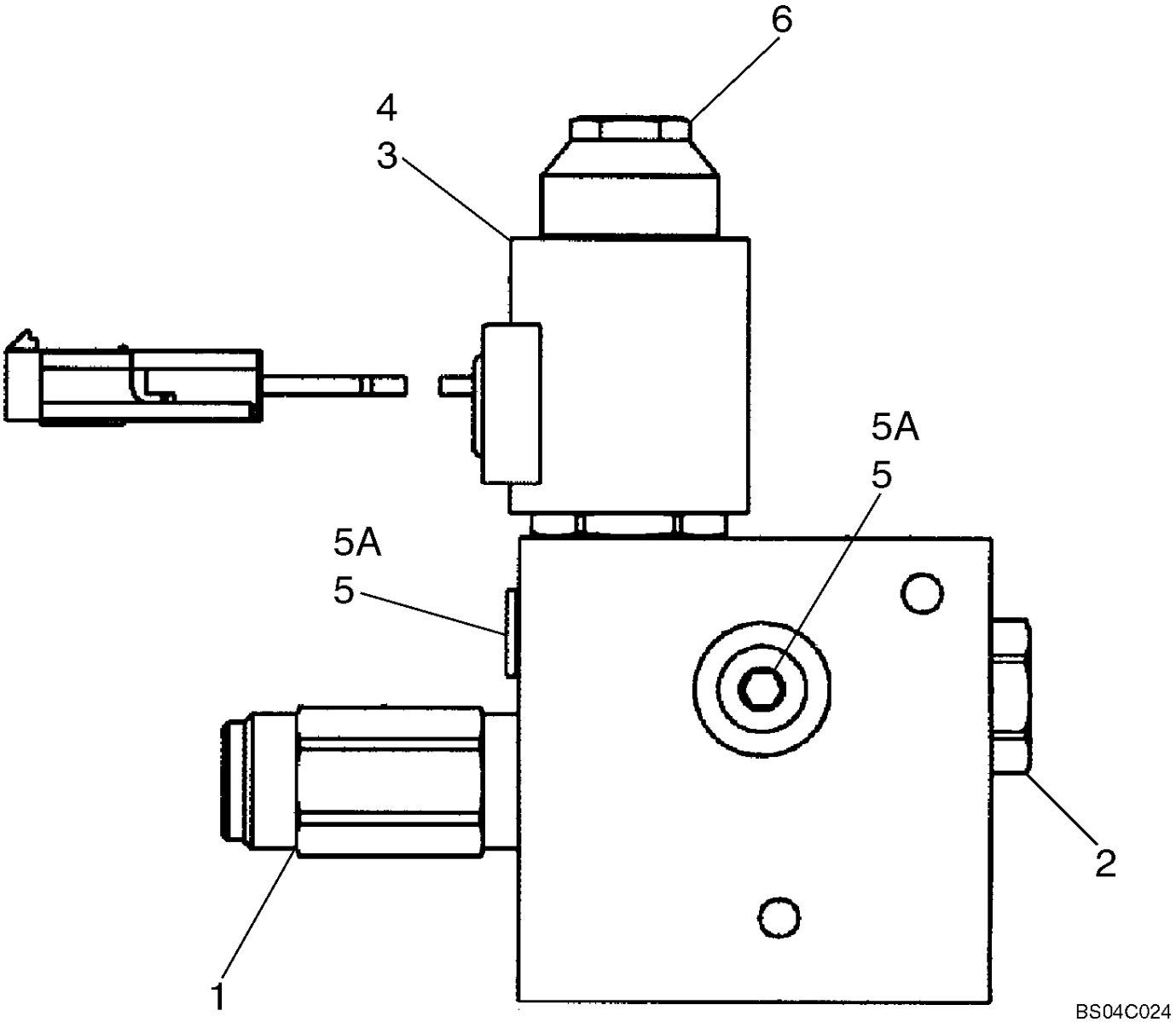

COMMANDE DE DISTRIBUTEUR - GRAND DEBIT

REF	FN	PART NUMBER	YR/SN	QTY	DESCRIPTION
		87012669		1	SOUPAPE, Combination Valve; High Flow; Incl. 1 - 6 And Seal Kit 86527863
1		87447123		1	VALVE, Relief Valve; Component Parts Not Serviced Separately
2		86527866		1	SOUPAPE HYDRAULIQUE, Check Valve; Component Parts Not Serviced Separately
3		86527861		1	SOUPAPE HYDRAULIQUE, Cartridge, Valve; Component Parts Not Serviced Separately
4		87447124		1	SOLENOIDE, Coil
5		76349		2	BOUCHON, Hex Hd, 9/16"-18 ORB, Incl. 5A
5A		9617873		1	JOINT THORIQUE, 6-1, 90 Duro, .468" ID x .078" Thk
6		86527865		1	ECROU
		86527863		1	POCHETTE DE JOINTS, Not Illustrated

COMMANDE DE DISTRIBUTEUR

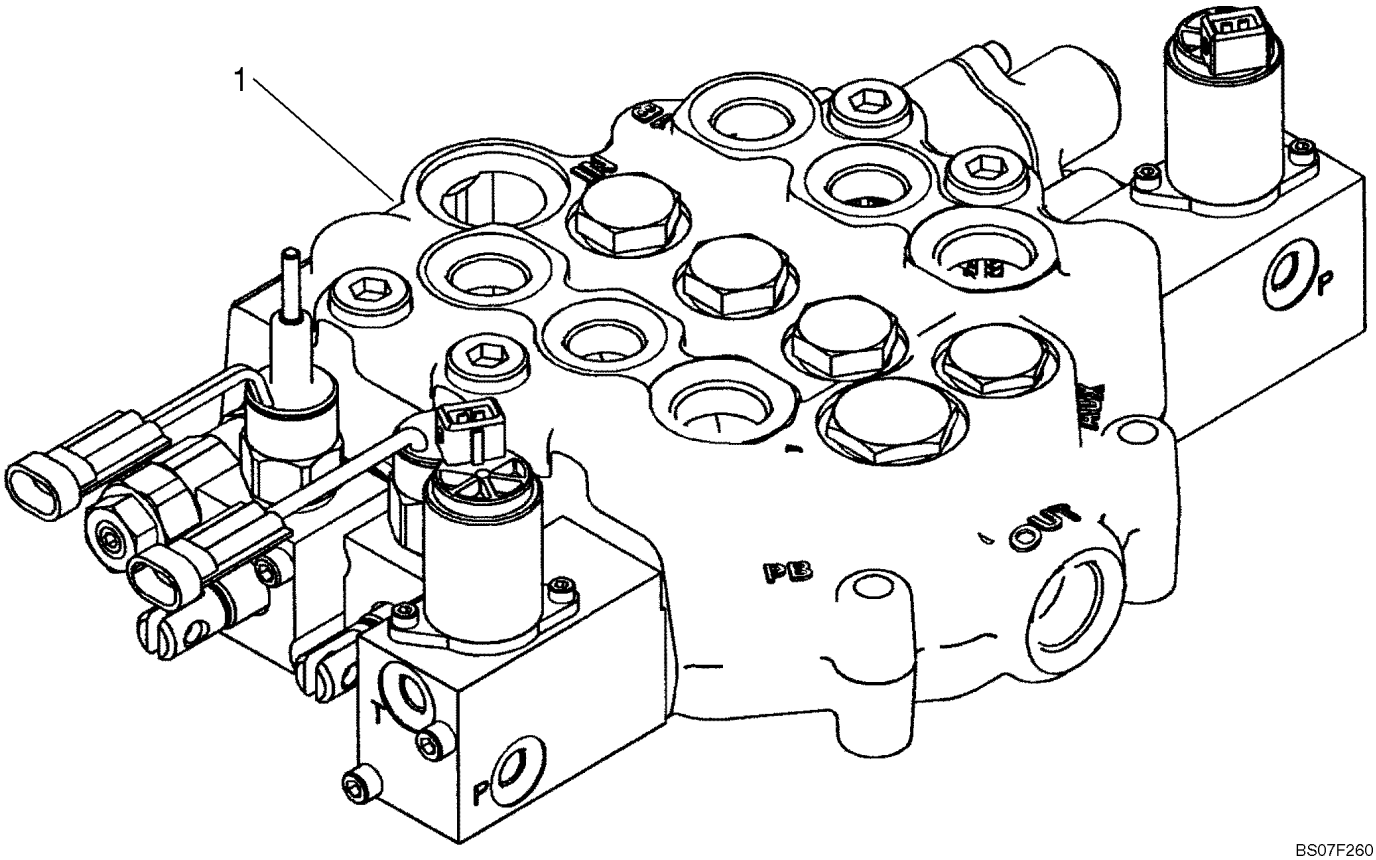

BS07F260

COMMANDE DE DISTRIBUTEUR

REF	FN	PART NUMBER	YR/SN	QTY	DESCRIPTION
1		87583286		1	SOUPAPE, Incl. 2 - 23
2		87610349		1	POCHETTE DE JOINTS, Seal Replacement Kit; See Fig 08-24
3		87610350		1	SOUPAPE, Main Relief Valve; See Fig 08-25
4		87576153		1	SOUPAPE, Workport Relief Valve; See Fig 08-26
5		87445935		1	VALVE, Workport Relief Valve; See Fig 08-26
6		87445943		1	VALVE, Workport Relief Valve; See Fig 08-26
7		87445932		1	VALVE, Workport Anti-Cavitation; See Fig 08-26
8		87445988		1	SOLENOIDE, Spool Lock Out Solenoid Manual; See Fig 08-27
9		87445987		1	SOLENOIDE, Spool Lock Out Solenoid Non-Manual; See Fig 08-28
10		87576154		2	ELECTRO-VALVE, Hi-Flow Solenoids For EH Auxiliary; See Fig 08-38
11		87576157		3	SOUPAPE, AMORTISSEMENT, Check Valve Group; See Fig 08-30
12		87610351		1	SOUPAPE, Check Valve Group; See Fig 08-30
13		87576158		1	BOUCHON, See Fig 08-30
14		87576160		1	BOUCHON, See Fig 08-30
15		87576161		1	BOUCHON
16		87610352		3	BOUCHON, Plug
17		87576162		1	BOUCHON, See Fig 08-30
18		87576163		1	TIROIR, Detent
19		87576169		1	TIROIR
20		87611845		1	TIROIR, EHPV; See Fig 08-38
21		87611846		1	TIROIR, EHPV; See Fig 08-39
22		87611848		1	TIROIR, Spool; See Fig 08-28
23		87611849		1	TIROIR, See Fig 08-27

DISTRIBUTEUR DE COMMANDE - 87583285 DISTRIBUTEUR

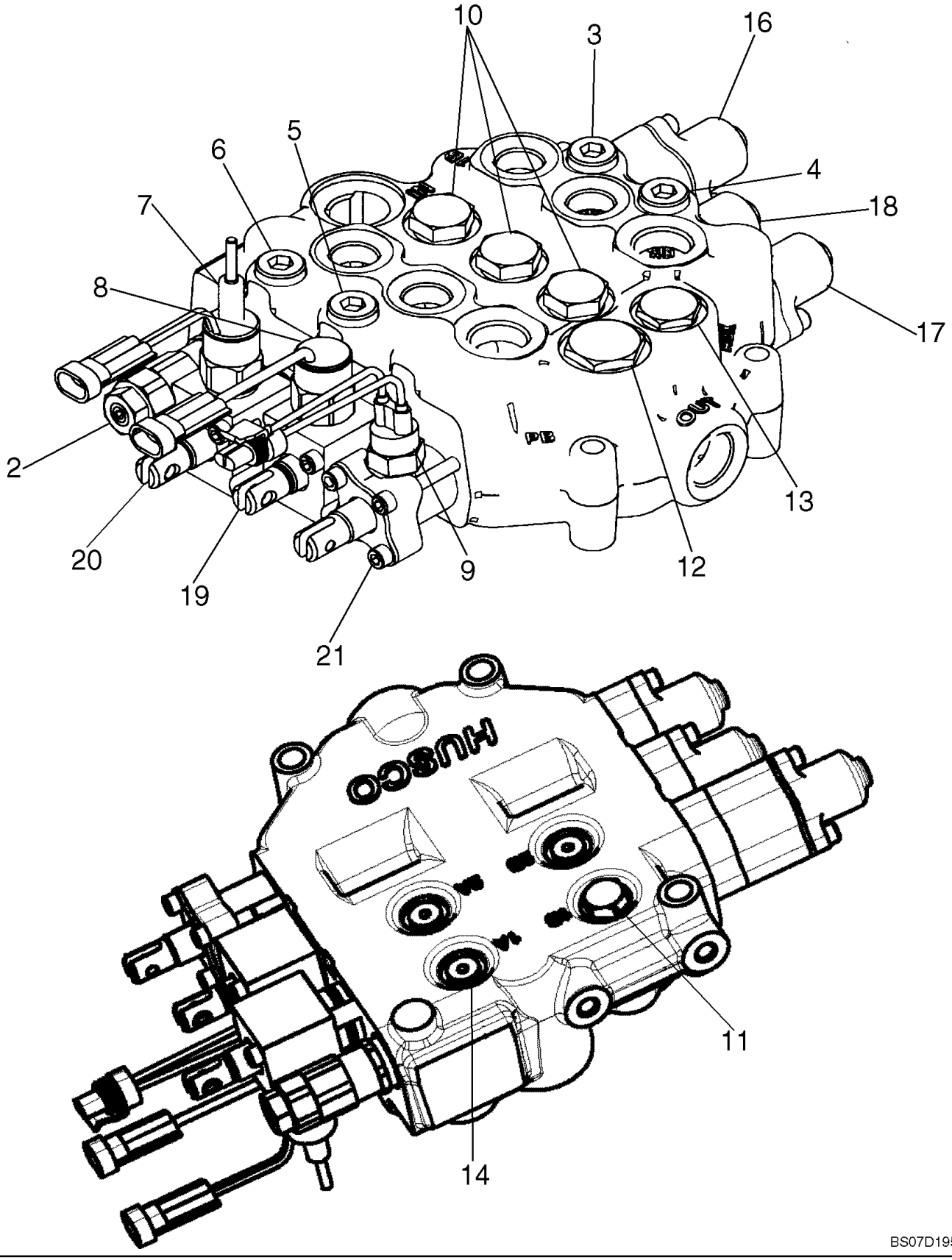

DISTRIBUTEUR DE COMMANDE - 87583285 DISTRIBUTEUR

REF	FN	PART NUMBER	YR/SN	QTY	DESCRIPTION
		87583285		1	SOUPAPE, Manual Control Valve
1		87610349		1	POCHETTE DE JOINTS, Seal Replacement Kit; See Fig. 08-24
2		87610350		1	SOUPAPE, Main Relief Valve, 210 Bar (3050 psi); See Fig. 08-25
3		87576153		1	SOUPAPE, Workport Relief Valve, 215 Bar; See Fig. 08-26
4		87445935		1	VALVE, Workport Relief Valve, 230 Bar; See Fig. 08-26
5		87445943		1	VALVE, Workport Relief Valve, 260 Bar; See Fig. 08-26
6		87445932		1	VALVE, Workport Anti-Cavitation; See Fig. 08-26
7		87445988		1	SOLENOIDE, Spool Lock Out Solenoid, Manual; See Fig. 08-27
8		87445987		1	SOLENOIDE, Spool Lock Out Solenoid, Non-Manual; See Fig. 08-26
9		87446617		1	CONTACTEUR, Auxiliary Spool Interlock Switch; See Fig. 08-29
10		87576157		3	SOUPAPE, AMORTISSEMENT, Check Valve Group; See Fig. 08-30
11		87610351		1	SOUPAPE, Check Valve Group; See Fig. 08-30
12		87576158		1	BOUCHON, Plug Assembly; See Fig. 08-30
13		87576160		1	BOUCHON, Plug Assembly; See Fig. 08-30
14		87610352		3	BOUCHON, Plug Assembly
15		87576162		1	BOUCHON, Plug Assembly, Metric; Not Illustrated; See Fig. 08-30
16		87576163		1	TIROIR, Spool End Group, Detent; See Fig. 08-31
17		87576168		1	TIROIR, Spool End Group; See Fig. 08-32
18		87576169		1	TIROIR, Spool End Group; See Fig. 08-33
19		87611848		1	TIROIR, Spool End Group; See Fig. 08-28
20		87611849		1	TIROIR, Spool End Group; See Fig. 08-27
21		87611850		1	TIROIR, Spool End Group; See Fig. 08-29

DISTRIBUTEUR DE COMMANDE - 87546974 DISTRIBUTEUR

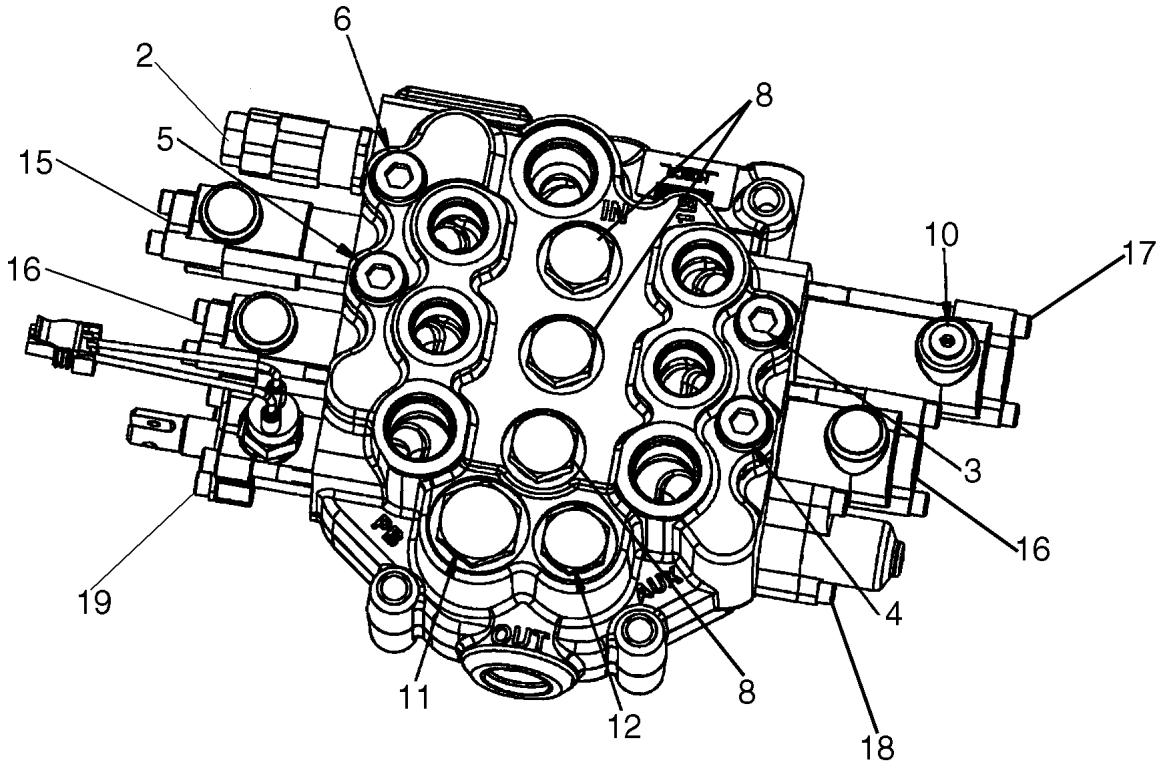

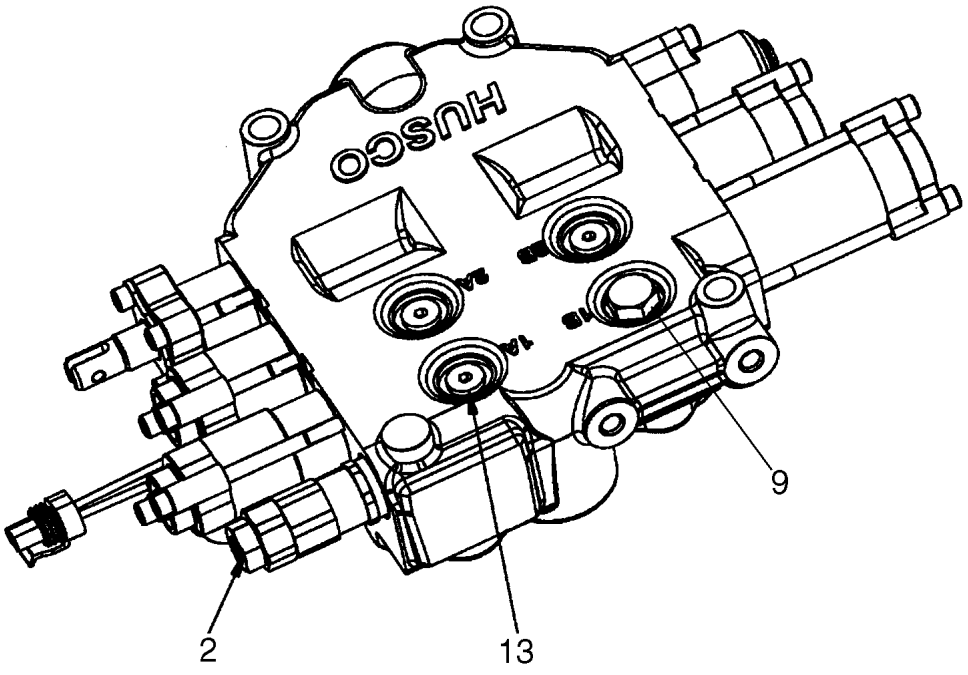

BS07H033

DISTRIBUTEUR DE COMMANDE - 87546974 DISTRIBUTEUR

REF	FN	PART NUMBER	YR/SN	QTY	DESCRIPTION
		87546974		1	SOUPAPE HYDRAULIQUE, Manual Control Valve; Models With Pilot Control
1		87610517		1	POCHETTE DE JOINTS, Seal Replacement Kit; See Fig. 08-34
2		87610350		1	SOUPAPE, Main Relief Valve, 210 Bar (3050 psi); See Fig. 08-25
3		87576153		1	SOUPAPE, Workport Relief Valve, 215 Bar; See Fig. 08-26
4		87445935		1	VALVE, Workport Relief Valve, 230 Bar; See Fig. 08-26
5		87445943		1	VALVE, Workport Relief Valve, 260 Bar; See Fig. 08-26
6		87445932		1	VALVE, Workport Anti-Cavitation; See Fig. 08-26
7		87446617		1	CONTACTEUR, Auxiliary Spool Interlock Switch; See Fig. 08-29
8		87576157		3	SOUPAPE, AMORTISSEMENT, Check Valve Group; See Fig. 08-30
9		87610351		1	SOUPAPE, Check Valve Group; See Fig. 08-30
10		87610530		1	BOUCHON, Plug Assy
11		87576158		1	BOUCHON, Plug Assembly; See Fig. 08-30
12		87576160		1	BOUCHON, Plug Assembly; See Fig. 08-30
13		87610352		3	BOUCHON, Plug Assembly
14		87576162		1	BOUCHON, Plug Assembly, Metric; Not Illustrated; See Fig. 08-30
15		87610531		1	TIROIR, Spool End Group; See Fig. 08-37
16		87610532		1	TIROIR, Spool End Group; See Fig. 08-36
17		87610533		1	TIROIR, Spool End Group; See Fig. 08-35
18		87576168		1	TIROIR, Spool End Group; See Fig. 08-32
19		87611850		1	TIROIR, Spool End Group; See Fig. 08-29

DISTRIBUTEUR DE COMMANDE - 87546975 DISTRIBUTEUR

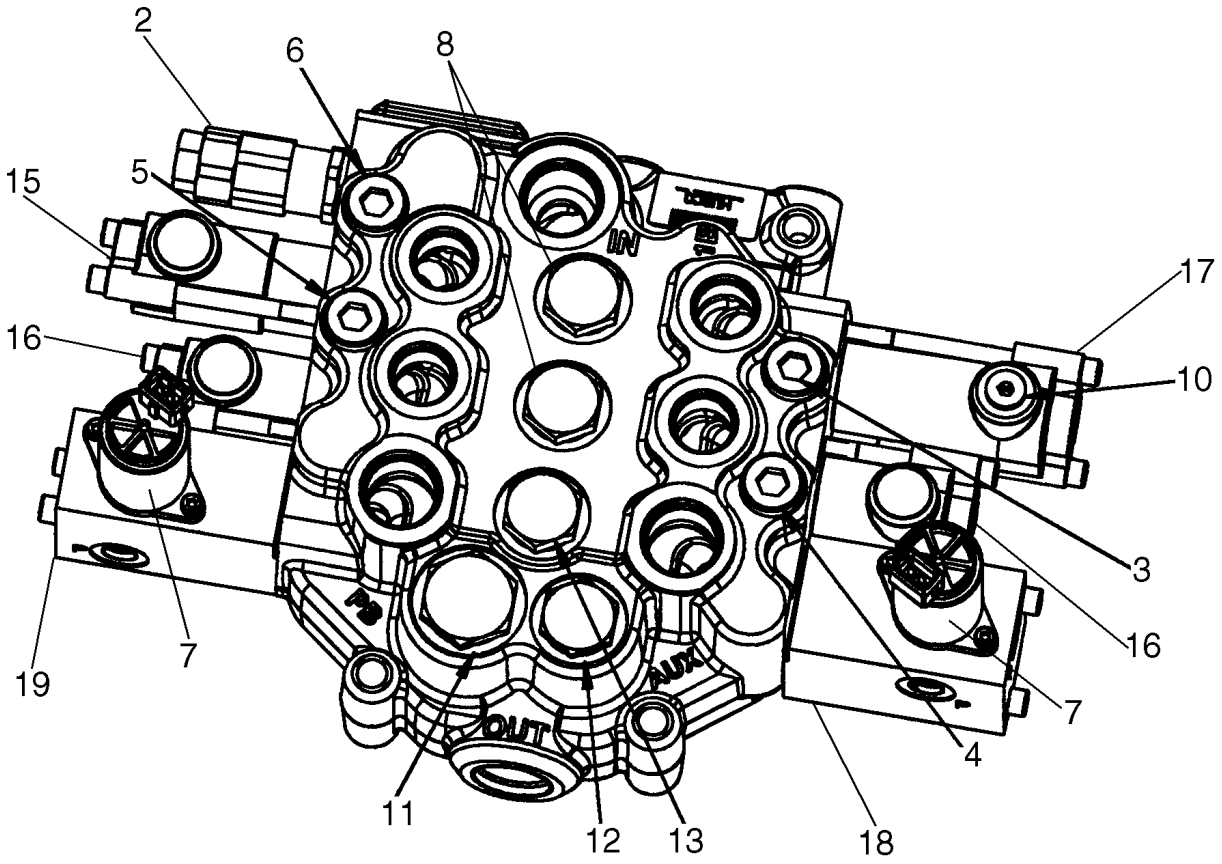

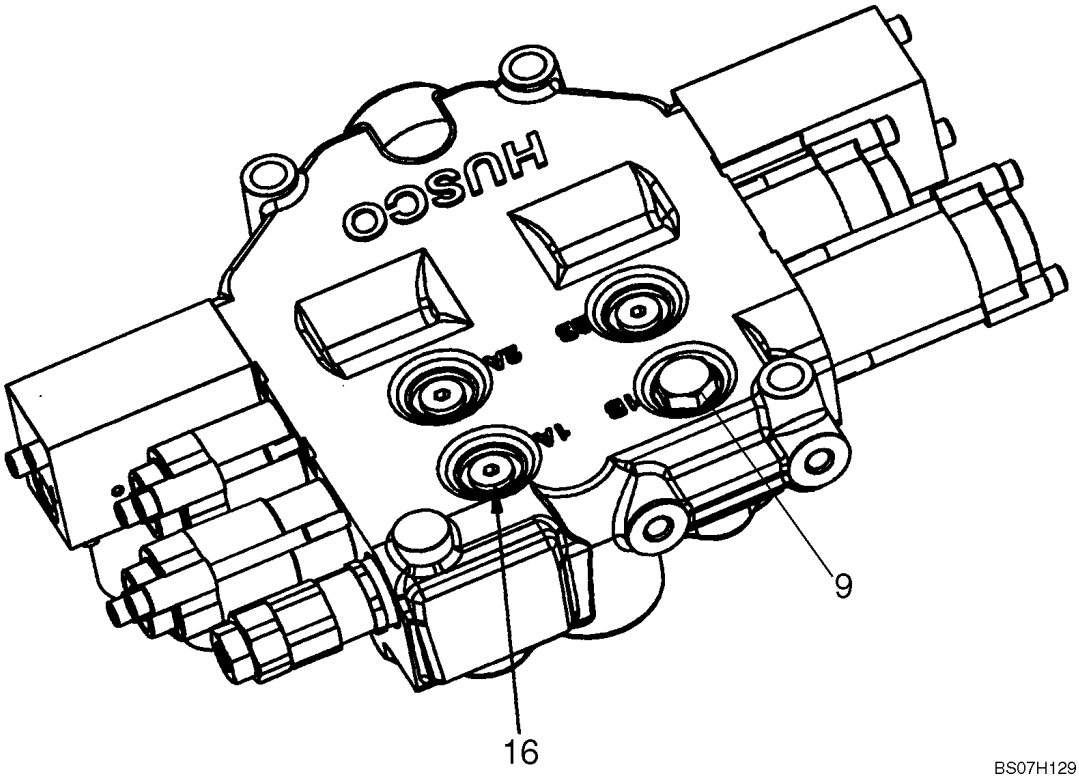

BS07H129

DISTRIBUTEUR DE COMMANDE - 87546975 DISTRIBUTEUR

REF	FN	PART NUMBER	YR/SN	QTY	DESCRIPTION
		87546975		1	SOUPAPE HYDRAULIQUE, Manual Control Valve; Pilot Control Models With Hydraulic Attachment
1		87610517		1	POCHETTE DE JOINTS, Seal Replacement Kit; See Fig. 08-34
2		87610350		1	SOUPAPE, Main Relief Valve, 210 Bar (3050 psi); See Fig. 08-25
3		87576153		1	SOUPAPE, Workport Relief Valve, 215 Bar; See Fig. 08-26
4		87445935		1	VALVE, Workport Relief Valve, 230 Bar; See Fig. 08-26
5		87445943		1	VALVE, Workport Relief Valve, 260 Bar; See Fig. 08-26
6		87445932		1	VALVE, Workport Anti-Cavitation; See Fig. 08-26
7		87576154		2	ELECTRO-VALVE, High Flow Solenoids For EH Auxiliary; See Fig. 08-38, 08-39
8		87576157		2	SOUPAPE, AMORTISSEMENT, Check Valve Group; See Fig. 08-30
9		87610351		1	SOUPAPE, Check Valve Group; See Fig. 08-30
10		87610530		1	BOUCHON, Plug Assy
11		87576158		1	BOUCHON, Assembly; See Fig. 08-30
12		87576160		1	BOUCHON, Assembly; See Fig. 08-30
13		87576161		1	BOUCHON, Assembly
14		87576162		1	BOUCHON, Assembly, Metric; Not Illustrated; See Fig. 08-30
15		87610531		1	TIROIR, Spool End Group; See Fig. 08-37
16		87610532		1	TIROIR, Spool End Group; See Fig. 08-36
17		87610533		1	TIROIR, Spool End Group; See Fig. 08-35
18		87611845		1	TIROIR, Spool End Group; EHPV; Incl. Ref 7; See Fig. 08-38
19		87611846		1	TIROIR, Spool End Group; EHPV; Incl. Ref 7; See Fig. 08-39

DISTRIBUTEUR DE COMMANDE - COLIS

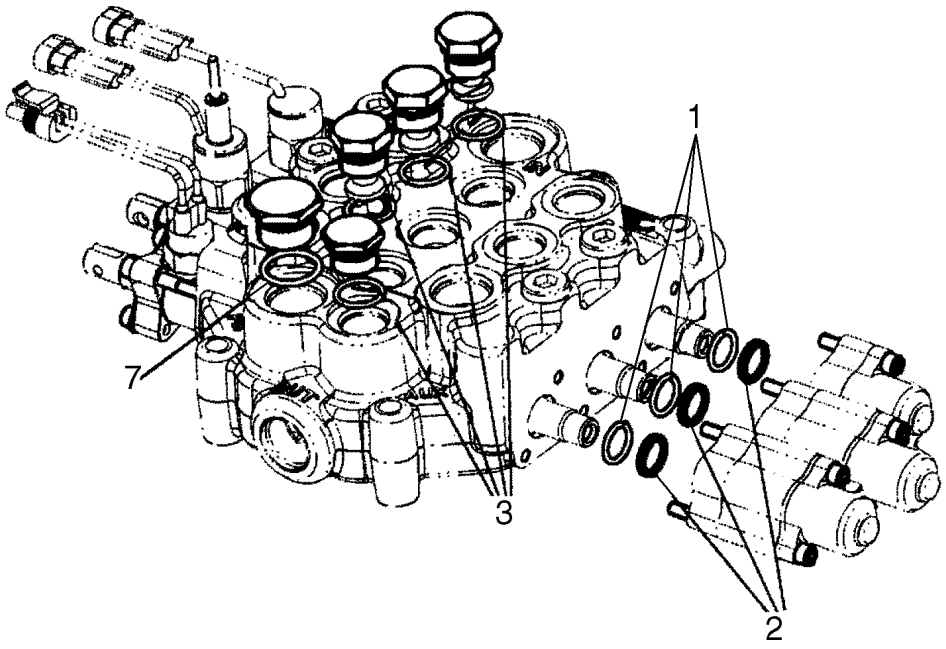

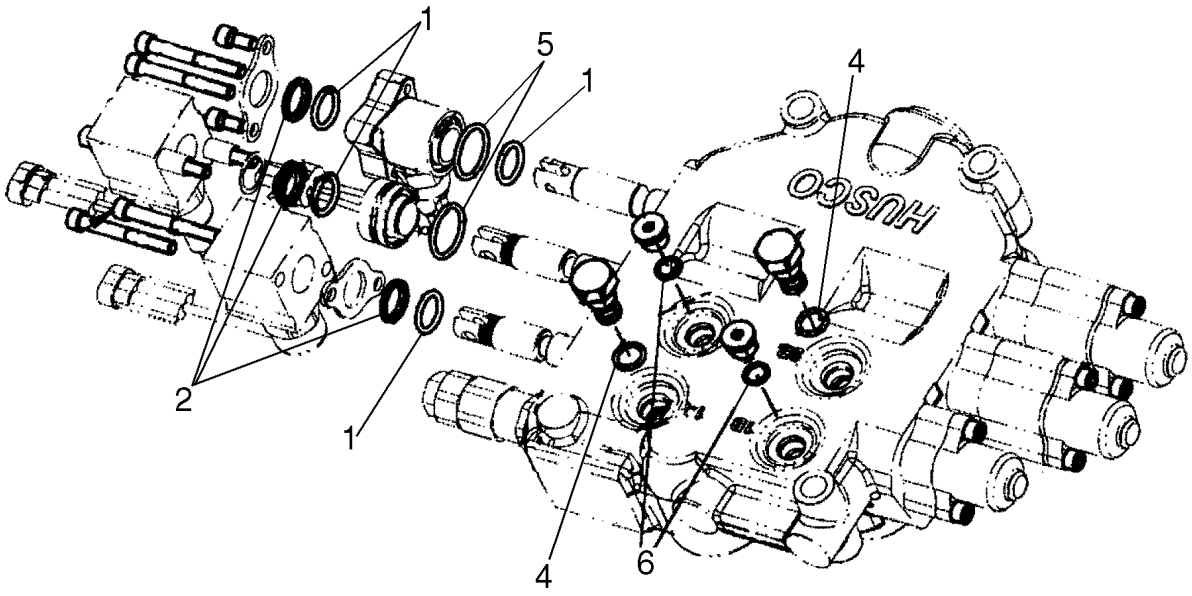

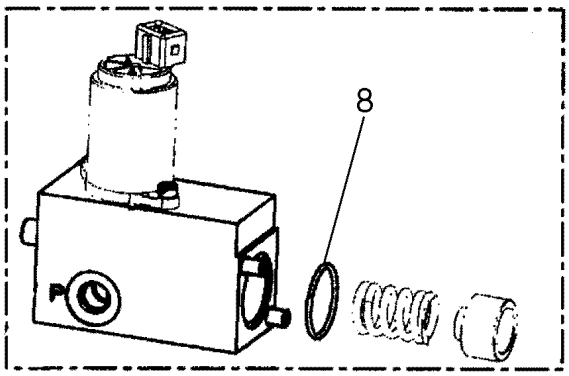

BS07D196

DISTRIBUTEUR DE COMMANDE - COLIS

REF	FN	PART NUMBER	YR/SN	QTY	DESCRIPTION
		87610349		1	POCHETTE DE JOINTS, Kit, Seal Replacement; Incl. 1 - 8
1		NSS		7	NON FOURNI SEPAREMENT, O-ring, .818 OD
2		NSS		6	NON FOURNI SEPAREMENT, Wiper, .796 OD
3		NSS		4	NON FOURNI SEPAREMENT, O-ring, .949 OD
4		NSS		2	NON FOURNI SEPAREMENT, O-ring, .614 OD
5		NSS		2	NON FOURNI SEPAREMENT, O-ring, 1.063 OD
6		NSS		3	NON FOURNI SEPAREMENT, O-ring, .498 OD
7		NSS		1	NON FOURNI SEPAREMENT, O-ring, 1.156 OD
8		NSS		2	NON FOURNI SEPAREMENT, O-ring, 1.129 OD

DISTRIBUTEUR DE COMMANDE - SURETÉ, PRINCIPALE

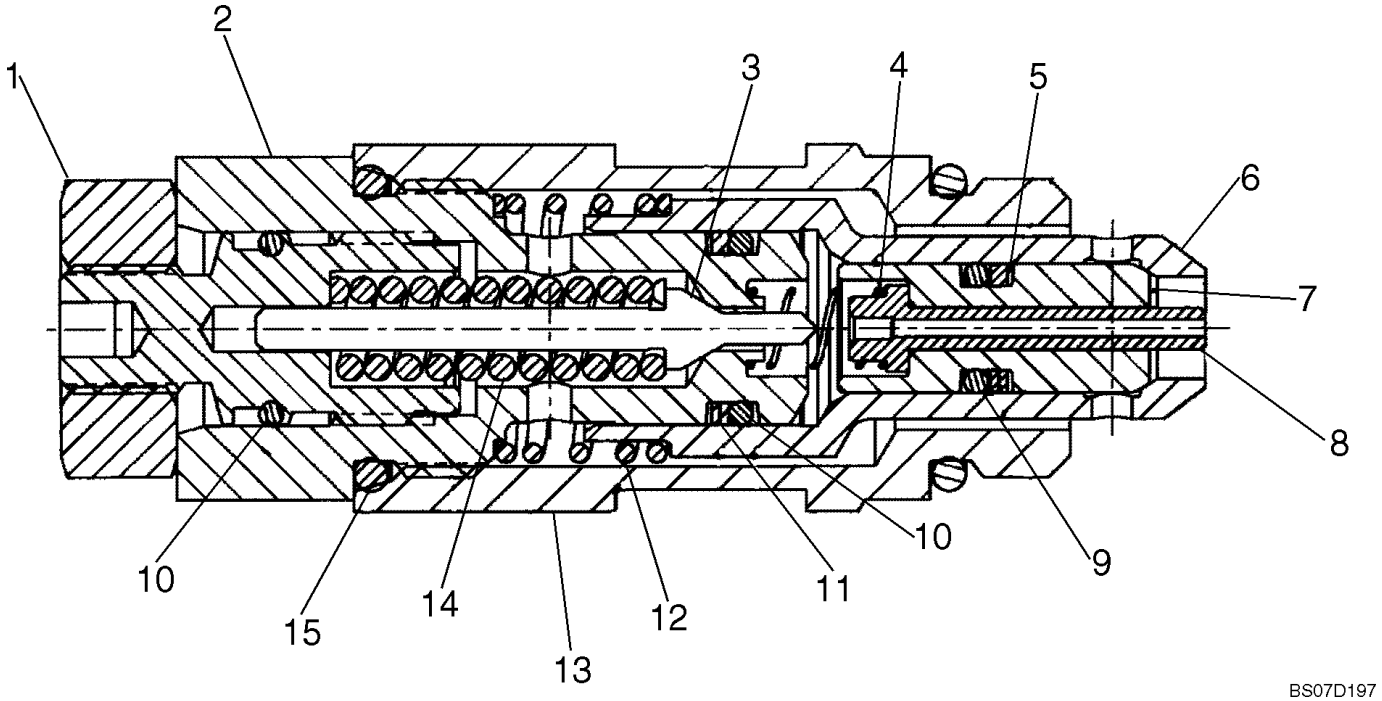

BS07D197

DISTRIBUTEUR DE COMMANDE - SURETÉ, PRINCIPALE

REF	FN	PART NUMBER	YR/SN	QTY	DESCRIPTION
		87610350		1	SOUPAPE, Main Relief Valve, 3050 PSI; Incl. 1 - 16
1		NSS		1	NON FOURNI SEPAREMENT, Nut
2		NSS		1	NON FOURNI SEPAREMENT, Plug
3		NSS		1	NON FOURNI SEPAREMENT, Poppet
4		NSS		1	NON FOURNI SEPAREMENT, Spring
5		NSS		1	NON FOURNI SEPAREMENT, Back-Up Ring
6		NSS		1	NON FOURNI SEPAREMENT, Poppet
7		NSS		1	NON FOURNI SEPAREMENT, Poppet
8		NSS		1	NON FOURNI SEPAREMENT, Piston
9		NSS		1	NON FOURNI SEPAREMENT, O-Ring
10		NSS		2	NON FOURNI SEPAREMENT, O-Ring
11		NSS		1	NON FOURNI SEPAREMENT, Back-Up Ring
12		NSS		1	NON FOURNI SEPAREMENT, Spring
13		NSS		1	NON FOURNI SEPAREMENT, Body
14		NSS		1	NON FOURNI SEPAREMENT, Spring
15		NSS		2	NON FOURNI SEPAREMENT, O-Ring
16		NSS		1	NON FOURNI SEPAREMENT, Adjust Screw

DISTRIBUTEUR DE COMMANDE - CIRCUIT DE SÉCURITÉ

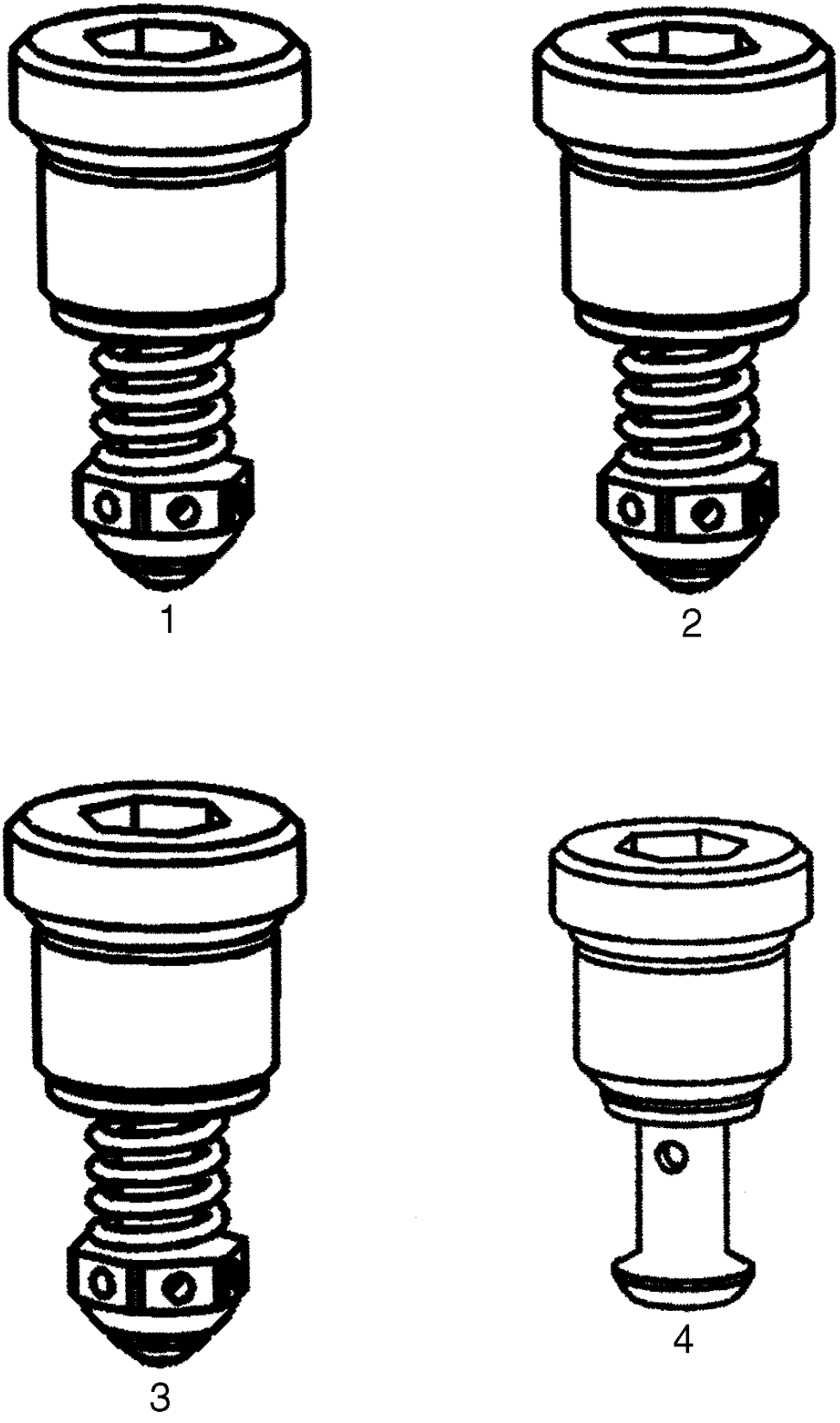

BS07D198

DISTRIBUTEUR DE COMMANDE - CIRCUIT DE SÉCURITÉ

REF	FN	PART NUMBER	YR/SN	QTY	DESCRIPTION
1		87576153		1	SOUPAPE, Workport Relief Valve, Non-Adjustable 215 Bar
2		{87448935}		1	Workport Relief Valve, Non-Adjustable 230 Bar
3		87445943		1	VALVE, Workport Relief Valve, Non-Adjustable 260 Bar
4		87445932		1	VALVE, Workport Anti-Cavitation Valve

DISTRIBUTEUR DE COMMANDE, COLIS - TIROIRS

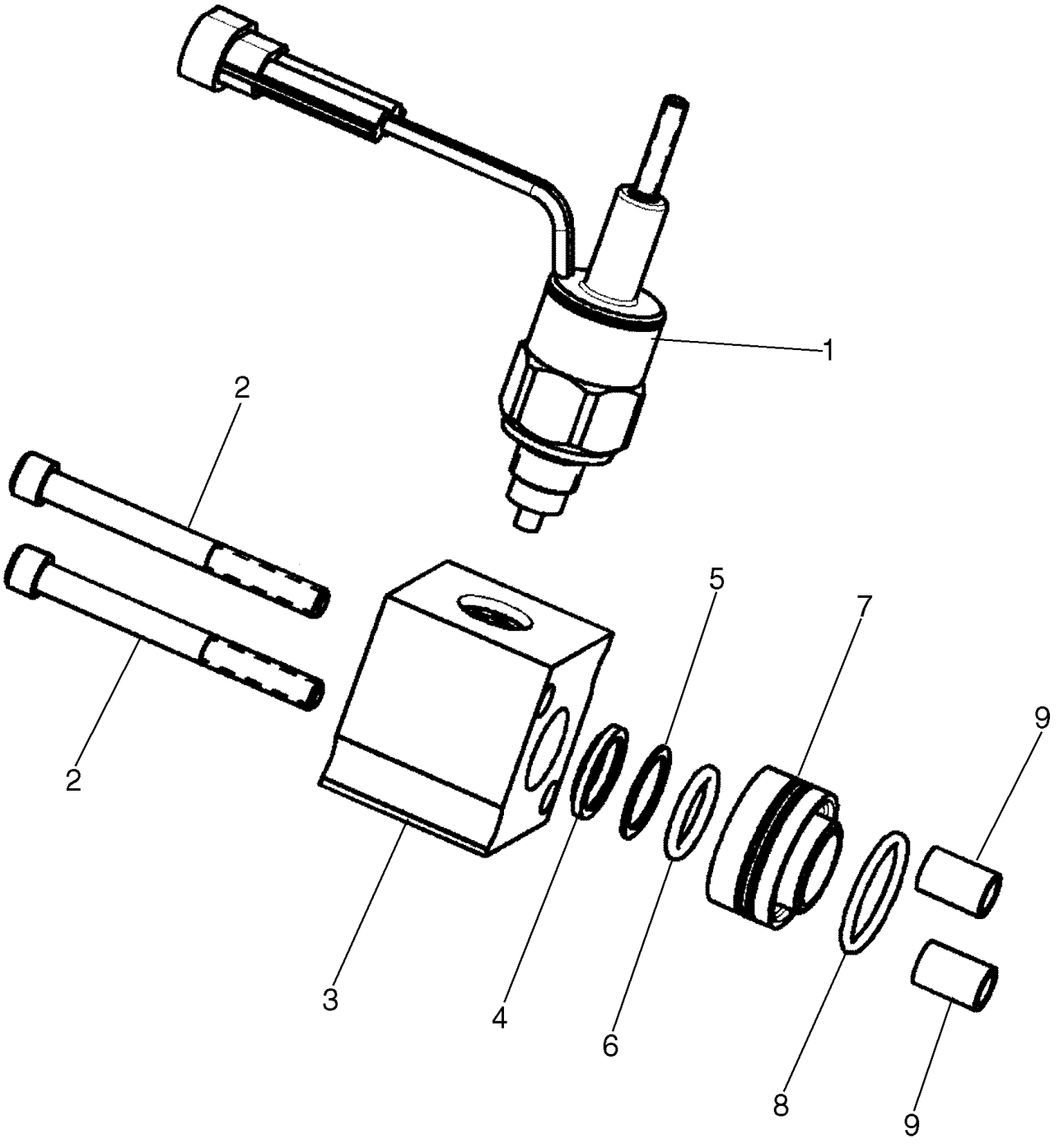

DISTRIBUTEUR DE COMMANDE, COLIS - TIROIRS

REF	FN	PART NUMBER	YR/SN	QTY	DESCRIPTION
		87611849		1	TIROIR, Spool End Group; Incl. 1 - 9
1		87445988		1	SOLENOIDE, Spool Lockout Solenoid With Manual Overide
2		NSS		2	NON FOURNI SEPAREMENT, Cap Screw
3		NSS		1	NON FOURNI SEPAREMENT, Spool Cap
4		NSS		1	NON FOURNI SEPAREMENT, Wiper
5		NSS		1	NON FOURNI SEPAREMENT, Washer
6		NSS		1	NON FOURNI SEPAREMENT, O-Ring
7		NSS		1	NON FOURNI SEPAREMENT, Spool Spacer
8		NSS		1	NON FOURNI SEPAREMENT, O-Ring
9		NSS		2	NON FOURNI SEPAREMENT, Spacer

DISTRIBUTEUR DE COMMANDE, COLIS - TIROIRS

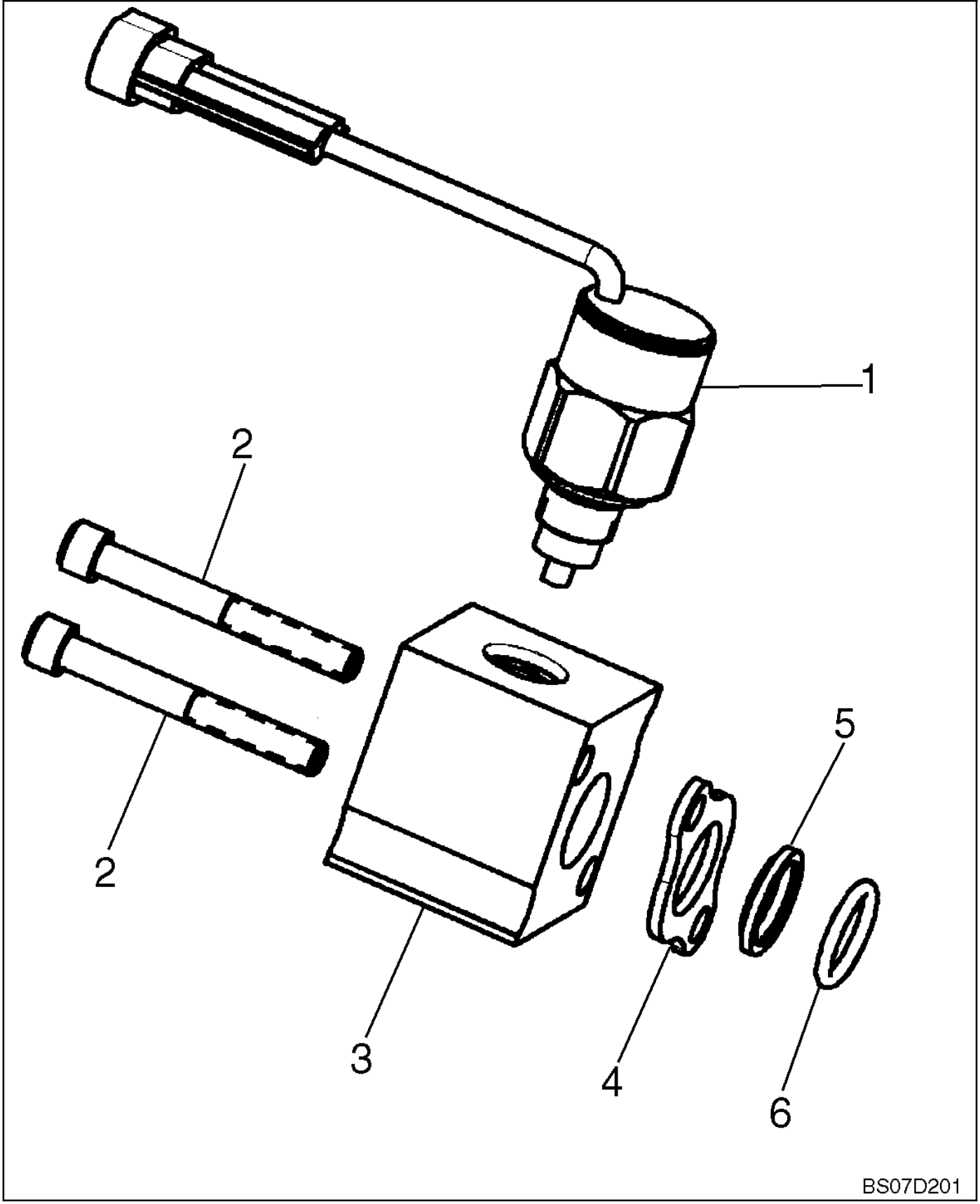

DISTRIBUTEUR DE COMMANDE, COLIS - TIROIRS

REF	FN	PART NUMBER	YR/SN	QTY	DESCRIPTION
		87611848		1	TIROIR, Spool End Group With Solenoid; Incl. 1 - 6
1		87445987		1	SOLENOIDE, Spool Lockout Solenoid, Non-Manual Overide
2		NSS		2	NON FOURNI SEPAREMENT, Cap Screw
3		NSS		1	NON FOURNI SEPAREMENT, Spool Cap
4		NSS		1	NON FOURNI SEPAREMENT, Seal Plate
5		NSS		1	NON FOURNI SEPAREMENT, Wiper
6		NSS		1	NON FOURNI SEPAREMENT, O-Ring

DISTRIBUTEUR DE COMMANDE, COLIS - TIROIRS

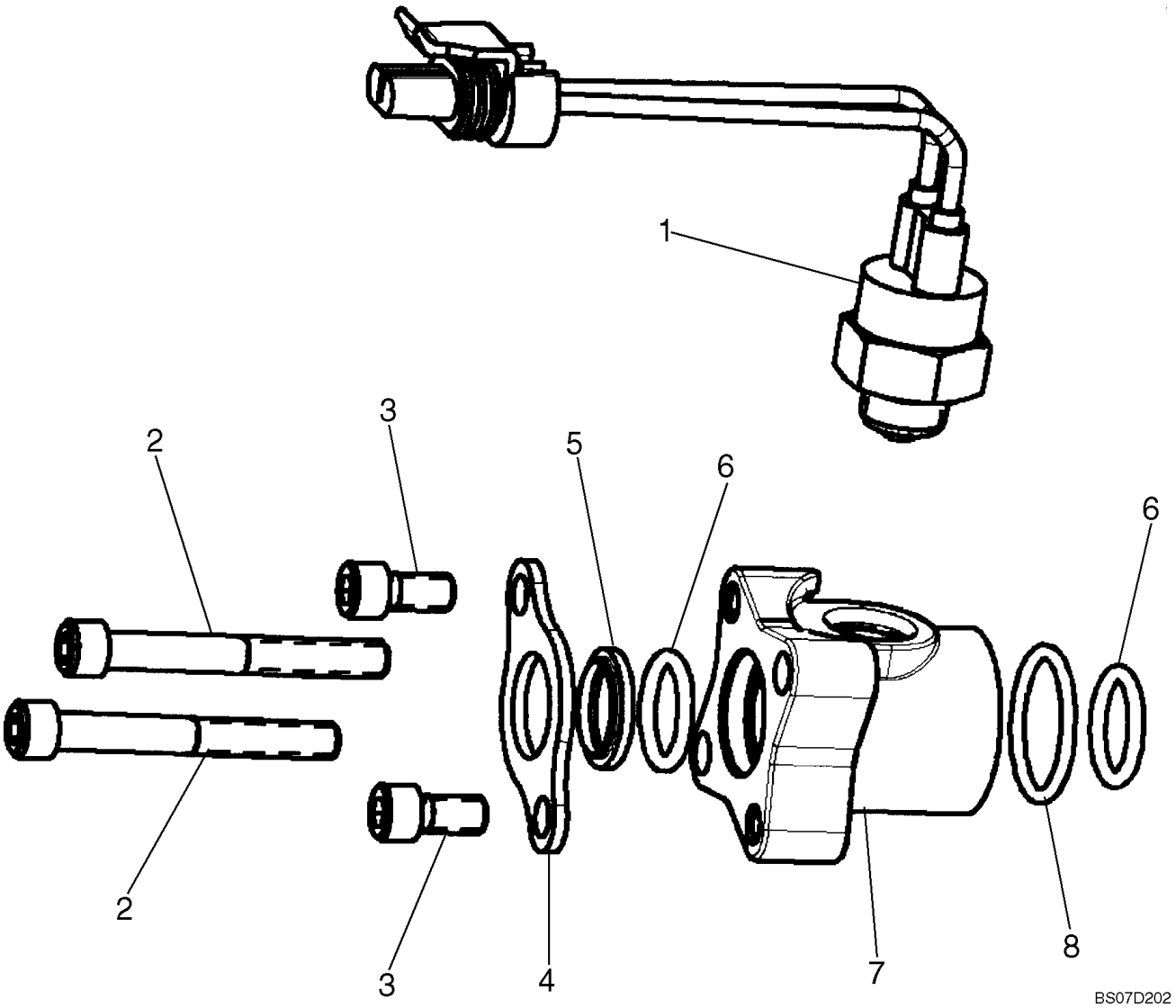

DISTRIBUTEUR DE COMMANDE, COLIS - TIROIRS

REF	FN	PART NUMBER	YR/SN	QTY	DESCRIPTION
		87611850		1	TIROIR, Spool End Group With Switch; Incl. 1 - 8
1		87446617		1	CONTACTEUR, Auxiliary Spool Ball Switch
2		NSS		2	NON FOURNI SEPAREMENT, Cap Screw
3		NSS		2	NON FOURNI SEPAREMENT, Cap Screw
4		NSS		1	NON FOURNI SEPAREMENT, Seal Plate
5		NSS		1	NON FOURNI SEPAREMENT, Wiper
6		NSS		2	NON FOURNI SEPAREMENT, O-Ring
7		NSS		1	NON FOURNI SEPAREMENT, Spool Cap
8		NSS		1	NON FOURNI SEPAREMENT, O-Ring

DISTRIBUTEUR DE COMMANDE, VÉRIFIEZ LA VALVE

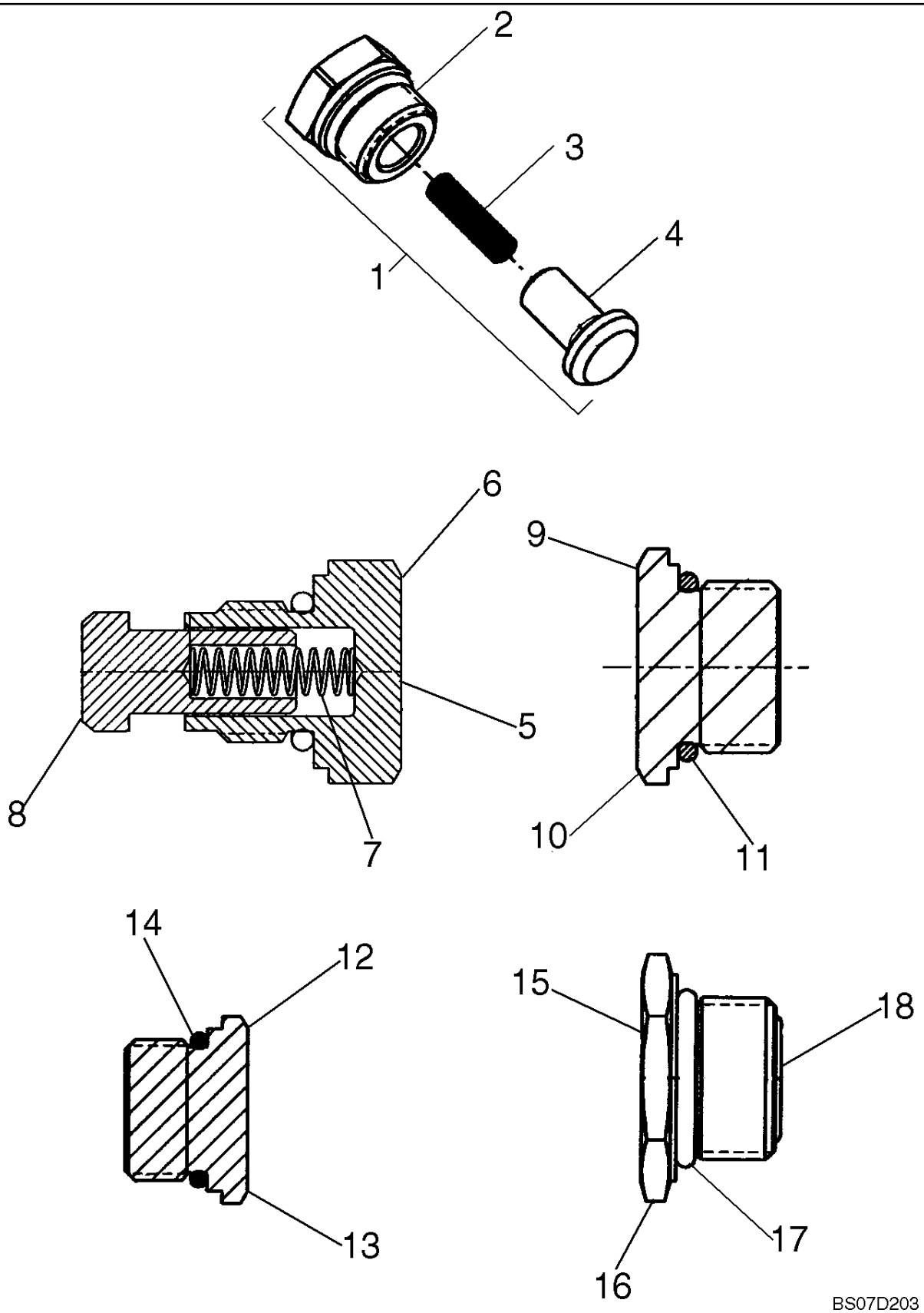

DISTRIBUTEUR DE COMMANDE, VÉRIFIEZ LA VALVE

REF	FN	PART NUMBER	YR/SN	QTY	DESCRIPTION
1		87576157		1	SOUPAPE, AMORTISSEMENT, Check Valve; Incl. 2 - 4
2		NSS		1	NON FOURNI SEPAREMENT, Plug
3		NSS		1	NON FOURNI SEPAREMENT, Spring
4		NSS		1	NON FOURNI SEPAREMENT, Poppet
5		87610351		1	SOUPAPE, Check Valve; Incl. 6 - 8
6		NSS		1	NON FOURNI SEPAREMENT, Plug, M14 X 1.5-6G Thd.
7		NSS		1	NON FOURNI SEPAREMENT, Spring
8		NSS		1	NON FOURNI SEPAREMENT, Poppet
9		87576158		1	BOUCHON, Plug Assembly, 1-1/16 - 12UN-2A Thd.; Incl. 10, 11
10		NSS		1	NON FOURNI SEPAREMENT, Plug, 1-1/16 - 12UN-2A Thd.
11		NSS		1	NON FOURNI SEPAREMENT, O-Ring
12		87576160		1	BOUCHON, Plug Assembly, 7/8 - 14UNF - 2A Thd.; Incl. 13, 14
13		NSS		1	NON FOURNI SEPAREMENT, Plug, 7/8 - 14UNF - 2A Thd.
14		NSS		1	NON FOURNI SEPAREMENT, O-Ring
15		87576162		1	BOUCHON, Plug Assembly, M18 X 1.5-6H Thd.; Incl. 16 - 18
16		NSS		1	NON FOURNI SEPAREMENT, Plug, M18 X 1.5-6H Thd.
17		NSS		1	NON FOURNI SEPAREMENT, O-Ring
18		NSS		1	NON FOURNI SEPAREMENT, O-Ring

DISTRIBUTEUR DE COMMANDE, COLIS - TIROIRS ET CLIQUETS

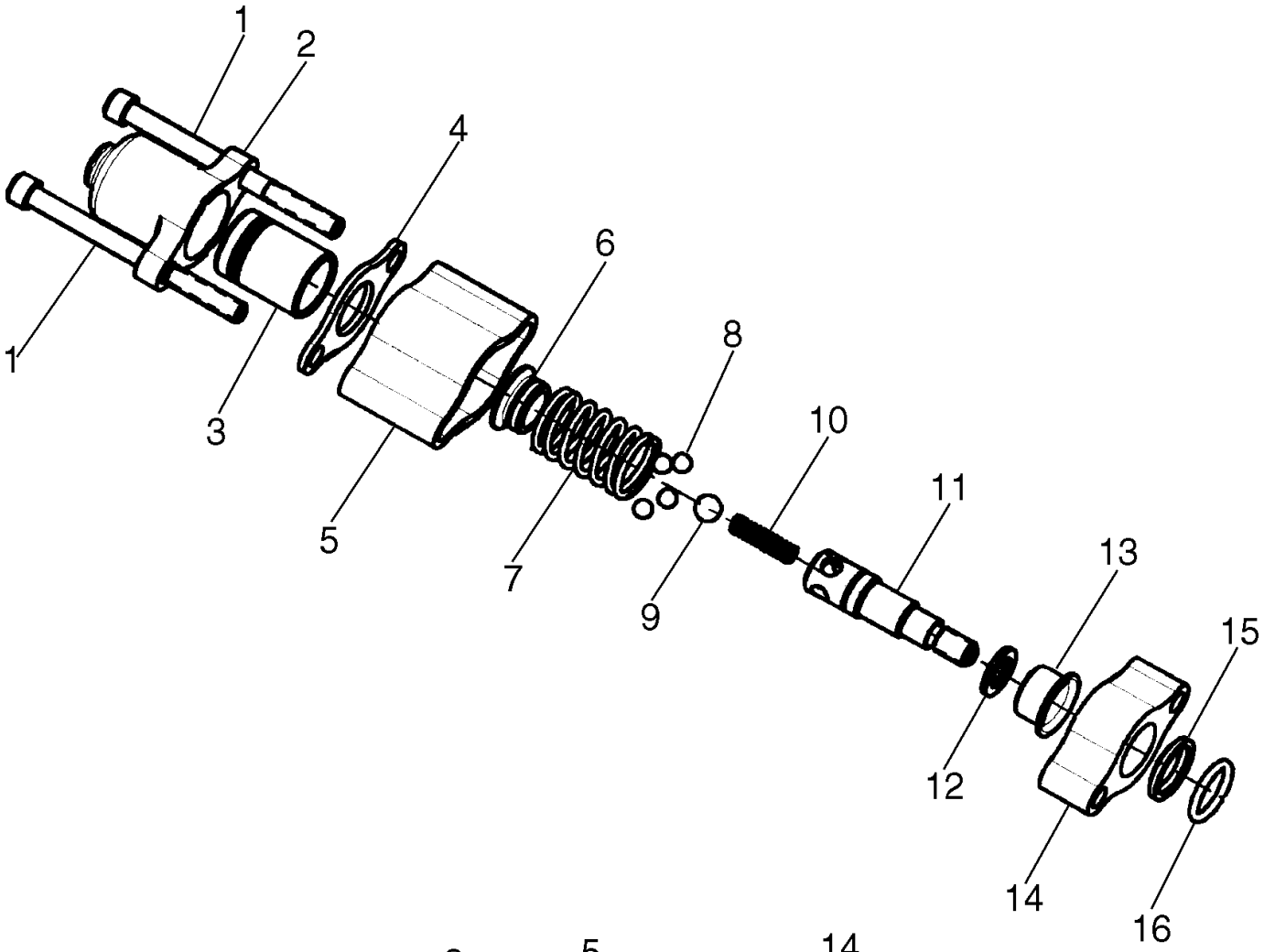

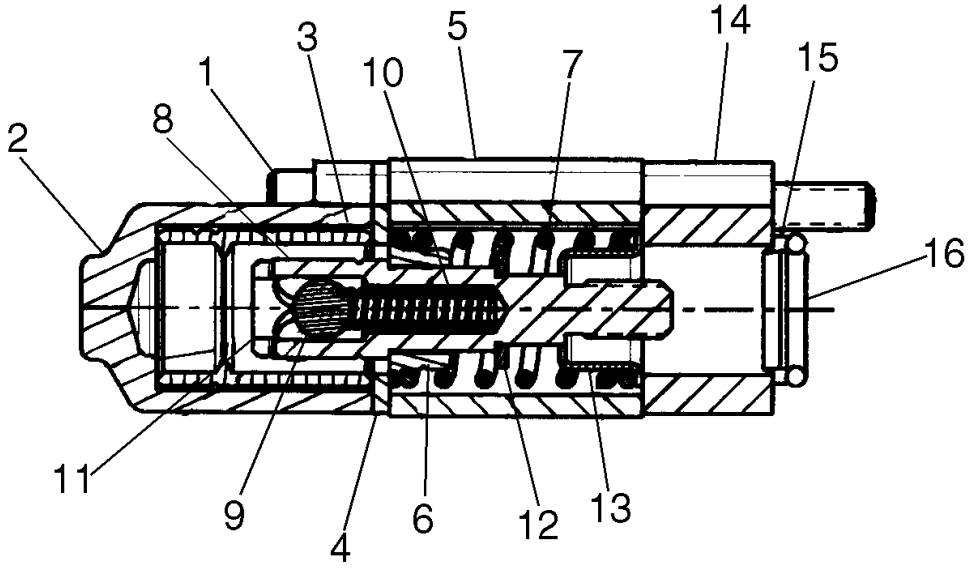

BS07D204

DISTRIBUTEUR DE COMMANDE, COLIS - TIROIRS ET CLIQUETS

REF	FN	PART NUMBER	YR/SN	QTY	DESCRIPTION
		87576163		1	TIROIR, Spool End Group - Detent; Incl. 1 - 16
1		NSS		2	NON FOURNI SEPAREMENT, Cap Screw
2		NSS		1	NON FOURNI SEPAREMENT, Spool Cap
3		NSS		1	NON FOURNI SEPAREMENT, Sleeve - Detent
4		NSS		1	NON FOURNI SEPAREMENT, Seal Plate
5		NSS		1	NON FOURNI SEPAREMENT, Spacer
6		NSS		1	NON FOURNI SEPAREMENT, Spring Seat
7		NSS		1	NON FOURNI SEPAREMENT, Spring
8		NSS		4	NON FOURNI SEPAREMENT, Ball
9		NSS		1	NON FOURNI SEPAREMENT, Ball
10		NSS		1	NON FOURNI SEPAREMENT, Spring
11		NSS		1	NON FOURNI SEPAREMENT, Spool End, Detent Pin
12		NSS		1	NON FOURNI SEPAREMENT, Washer
13		NSS		1	NON FOURNI SEPAREMENT, Spring Seat
14		NSS		1	NON FOURNI SEPAREMENT, Plate Seal
15		NSS		1	NON FOURNI SEPAREMENT, Wiper
16		NSS		1	NON FOURNI SEPAREMENT, O-Ring

DISTRIBUTEUR DE COMMANDE, COLIS - TIROIRS

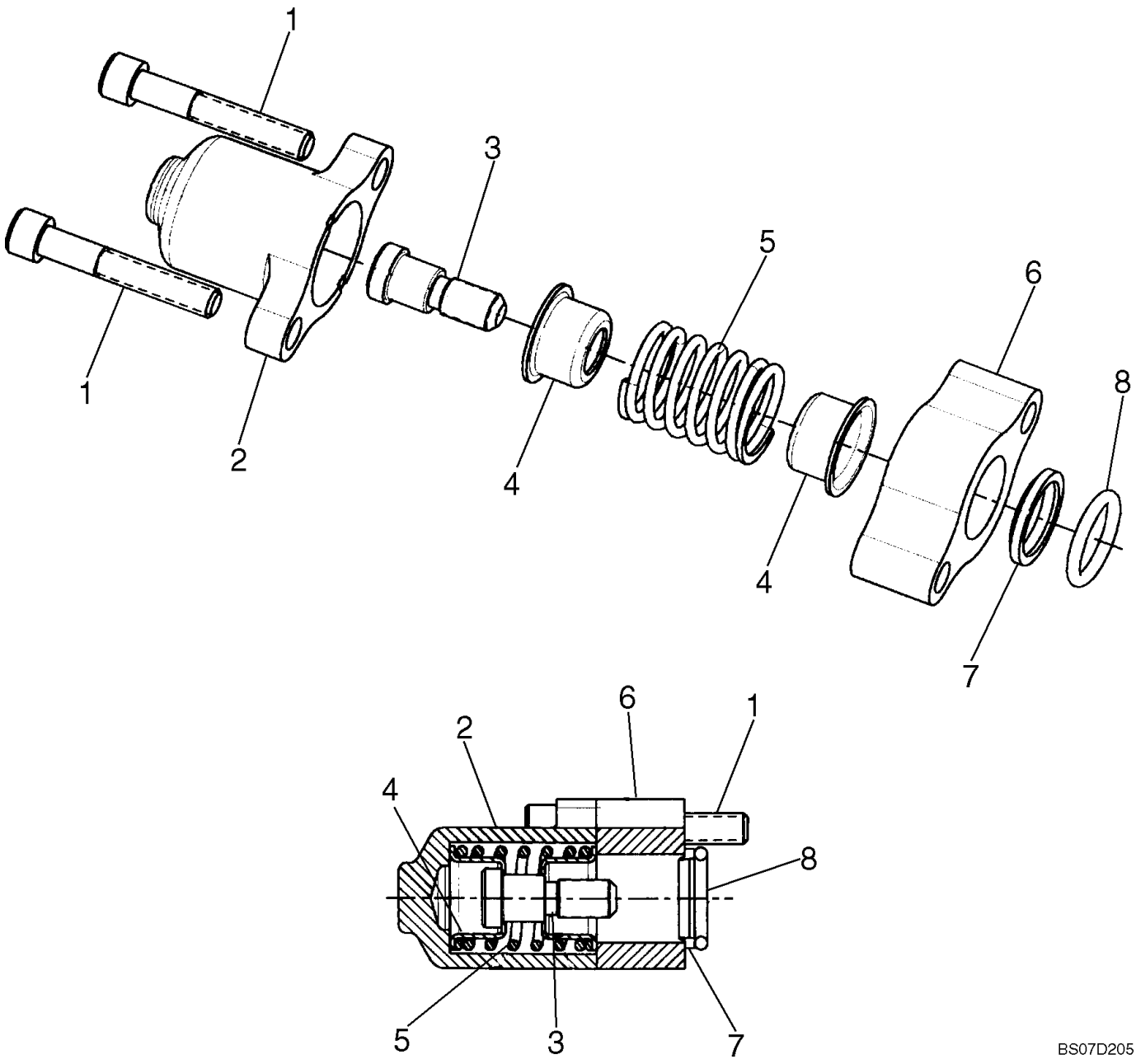

DISTRIBUTEUR DE COMMANDE, COLIS - TIROIRS

REF	FN	PART NUMBER	YR/SN	QTY	DESCRIPTION
		87576168		1	TIROIR, Spool End Group; Incl. 1 - 8
1		NSS		2	NON FOURNI SEPAREMENT, Cap Screw
2		NSS		1	NON FOURNI SEPAREMENT, Spool Cap
3		NSS		1	NON FOURNI SEPAREMENT, Spool End
4		NSS		2	NON FOURNI SEPAREMENT, Spring Seat
5		NSS		1	NON FOURNI SEPAREMENT, Spring
6		NSS		1	NON FOURNI SEPAREMENT, Plate - Seal
7		NSS		1	NON FOURNI SEPAREMENT, Wiper
8		NSS		1	NON FOURNI SEPAREMENT, O-Ring

DISTRIBUTEUR DE COMMANDE, COLIS - TIROIRS

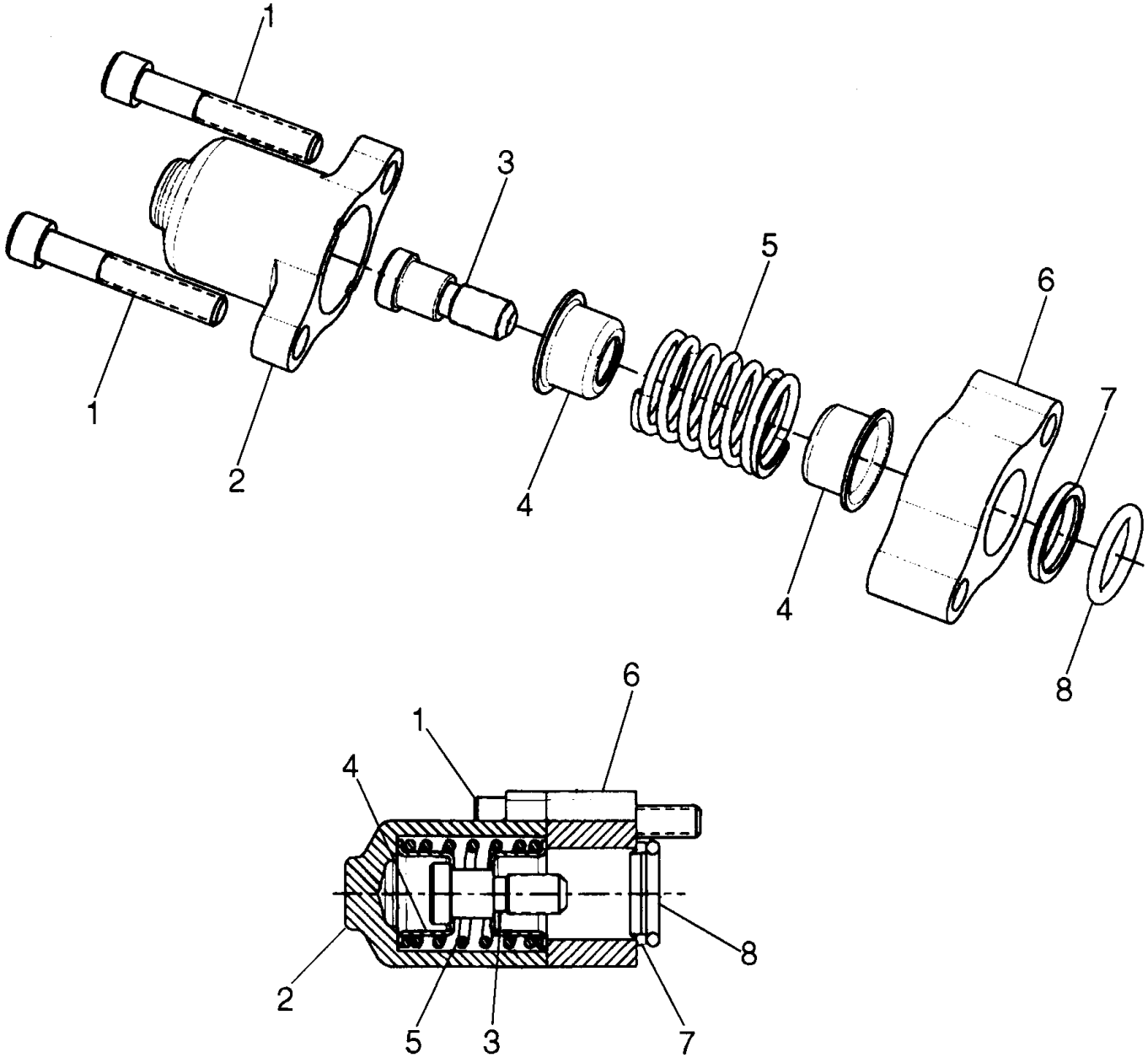

BS07D206

DISTRIBUTEUR DE COMMANDE, COLIS - TIROIRS

REF	FN	PART NUMBER	YR/SN	QTY	DESCRIPTION
		87576169		1	TIROIR, Spool End Group; Incl. 1 - 8
1		NSS		2	NON FOURNI SEPAREMENT, Cap Screw
2		NSS		1	NON FOURNI SEPAREMENT, Spool Cap
3		NSS		1	NON FOURNI SEPAREMENT, Spool End
4		NSS		2	NON FOURNI SEPAREMENT, Spring Seat
5		NSS		1	NON FOURNI SEPAREMENT, Spring
6		NSS		1	NON FOURNI SEPAREMENT, Plate, Seal
7		NSS		1	NON FOURNI SEPAREMENT, Wiper
8		NSS		1	NON FOURNI SEPAREMENT, O-Ring

DISTRIBUTEUR DE COMMANDE - COLIS

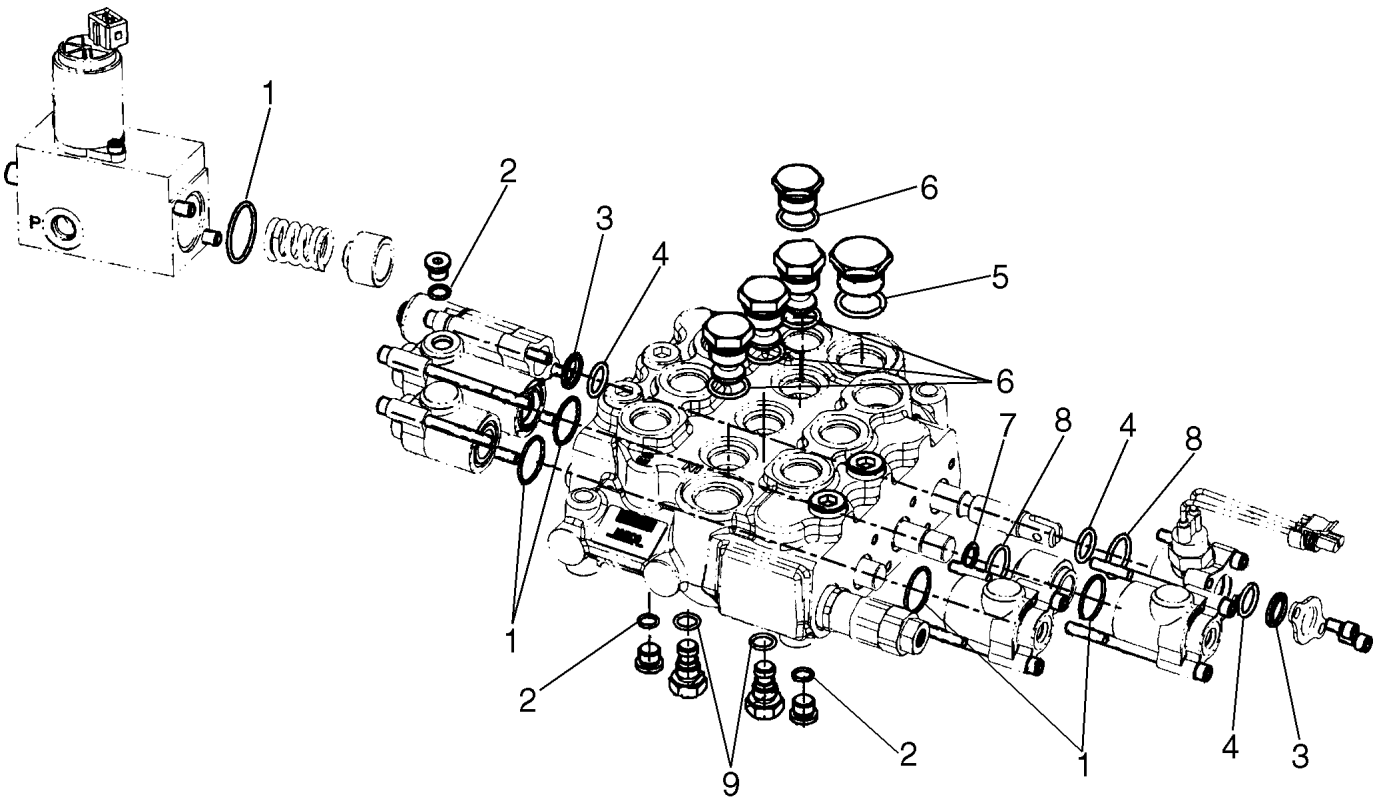

DISTRIBUTEUR DE COMMANDE - COLIS

REF	FN	PART NUMBER	YR/SN	QTY	DESCRIPTION
		87610517		1	POCHETTE DE JOINTS, Kit, Seal Replacement; Incl. 1 - 8
1		NSS		6	NON FOURNI SEPAREMENT, O-ring, 1.129 OD
2		NSS		3	NON FOURNI SEPAREMENT, O-ring, .498 OD
3		NSS		2	NON FOURNI SEPAREMENT, Wiper, .796 OD
4		NSS		3	NON FOURNI SEPAREMENT, O-ring, .818 OD
5		NSS		1	NON FOURNI SEPAREMENT, O-ring, 1.156 OD
6		NSS		4	NON FOURNI SEPAREMENT, O-ring, .949 OD
7		NSS		1	NON FOURNI SEPAREMENT, Back Up Ring, .673 OD
8		NSS		2	NON FOURNI SEPAREMENT, O-ring, 1.063 OD
9		NSS		2	NON FOURNI SEPAREMENT, O-ring, .614 OD

DISTRIBUTEUR DE COMMANDE, COLIS - TIROIRS

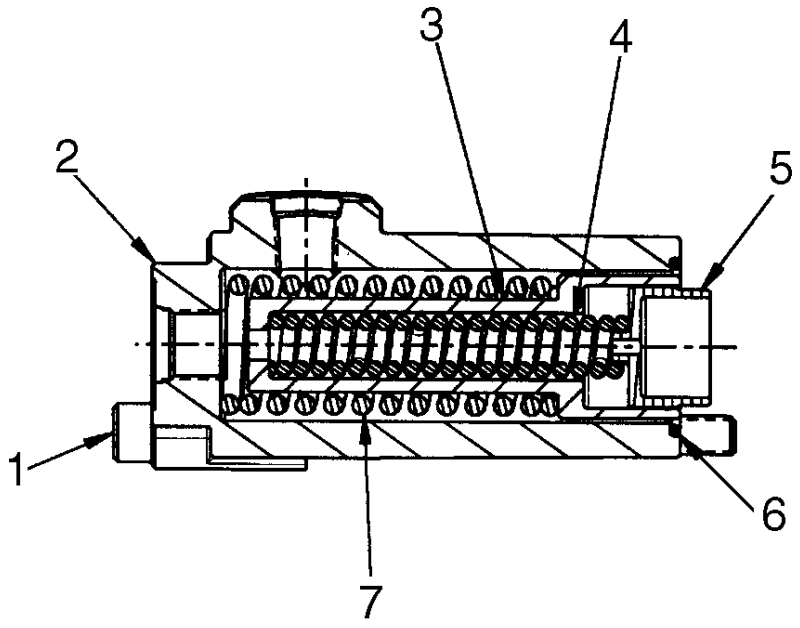

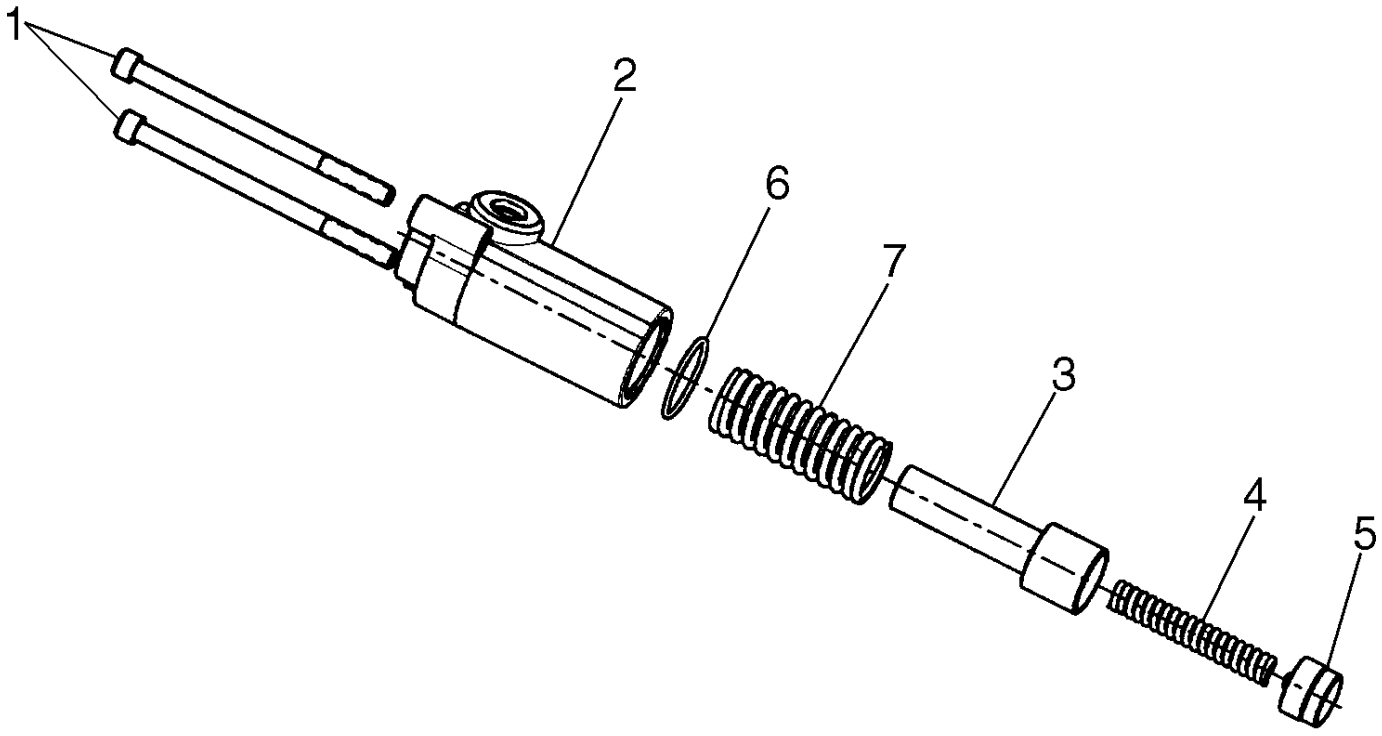

BS07H035

DISTRIBUTEUR DE COMMANDE, COLIS - TIROIRS

REF	FN	PART NUMBER	YR/SN	QTY	DESCRIPTION
		87610533		1	TIROIR, Spool End Group; Incl. 1 - 7
1		NSS		2	NON FOURNI SEPAREMENT, Cap Screw
2		NSS		1	NON FOURNI SEPAREMENT, Spool Cap
3		NSS		2	NON FOURNI SEPAREMENT, Spring Seat
4		NSS		1	NON FOURNI SEPAREMENT, Spring
5		NSS		2	NON FOURNI SEPAREMENT, Spring Seat
6		NSS		1	NON FOURNI SEPAREMENT, O-Ring
7		NSS		1	NON FOURNI SEPAREMENT, Spring

DISTRIBUTEUR DE COMMANDE, COLIS - TIROIRS

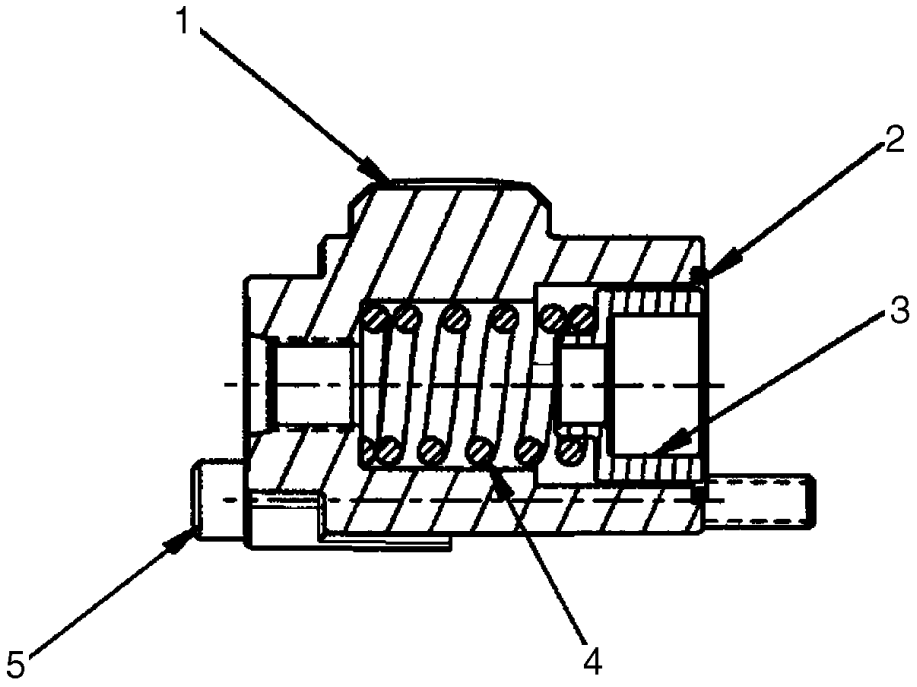

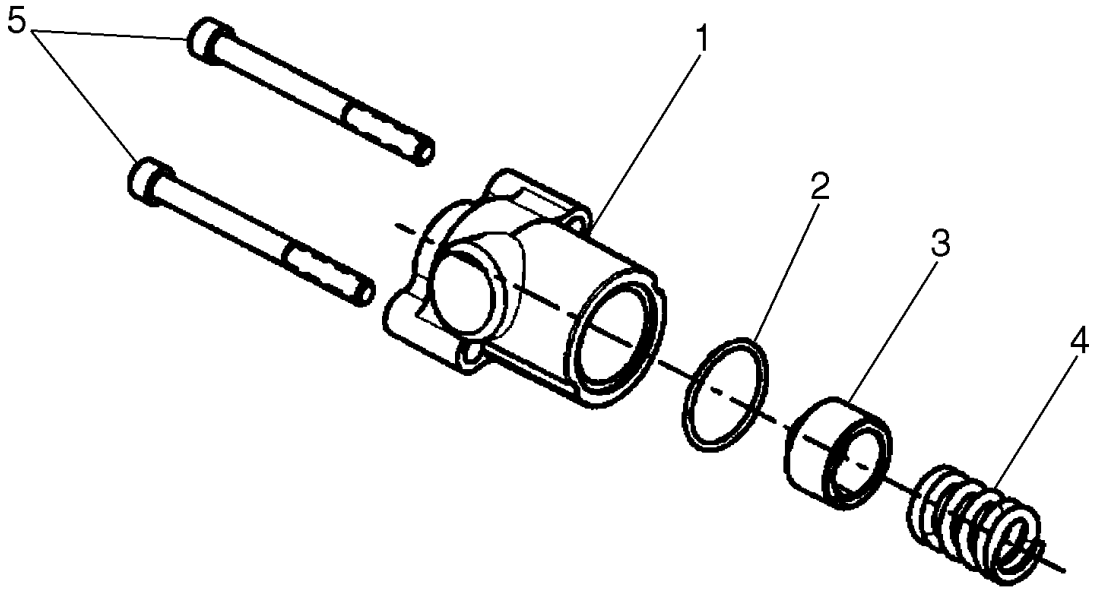

BS07H036

DISTRIBUTEUR DE COMMANDE, COLIS - TIROIRS

REF	FN	PART NUMBER	YR/SN	QTY	DESCRIPTION
		87610532		1	TIROIR, Spool End Group; Incl. 1 - 5
1		NSS		1	NON FOURNI SEPAREMENT, Spool Cap
2		NSS		1	NON FOURNI SEPAREMENT, O-Ring
3		NSS		1	NON FOURNI SEPAREMENT, Spring Seat
4		NSS		1	NON FOURNI SEPAREMENT, Spring
5		NSS		2	NON FOURNI SEPAREMENT, Cap Screw

DISTRIBUTEUR DE COMMANDE, COLIS - TIROIRS

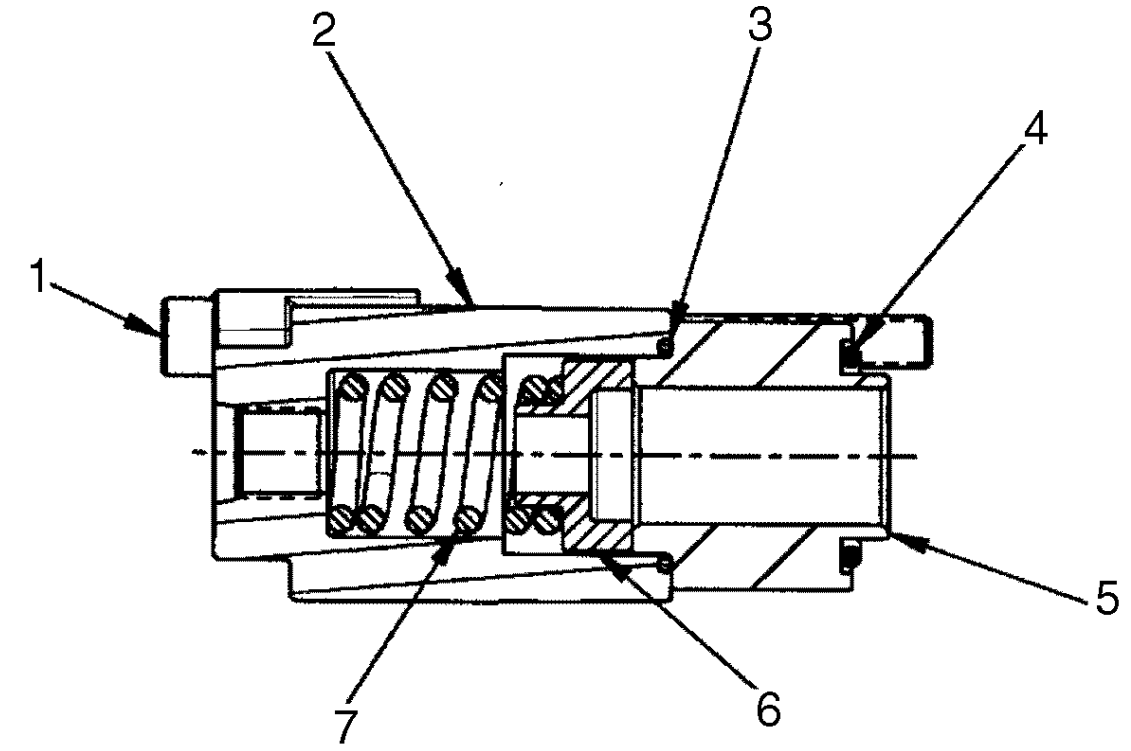

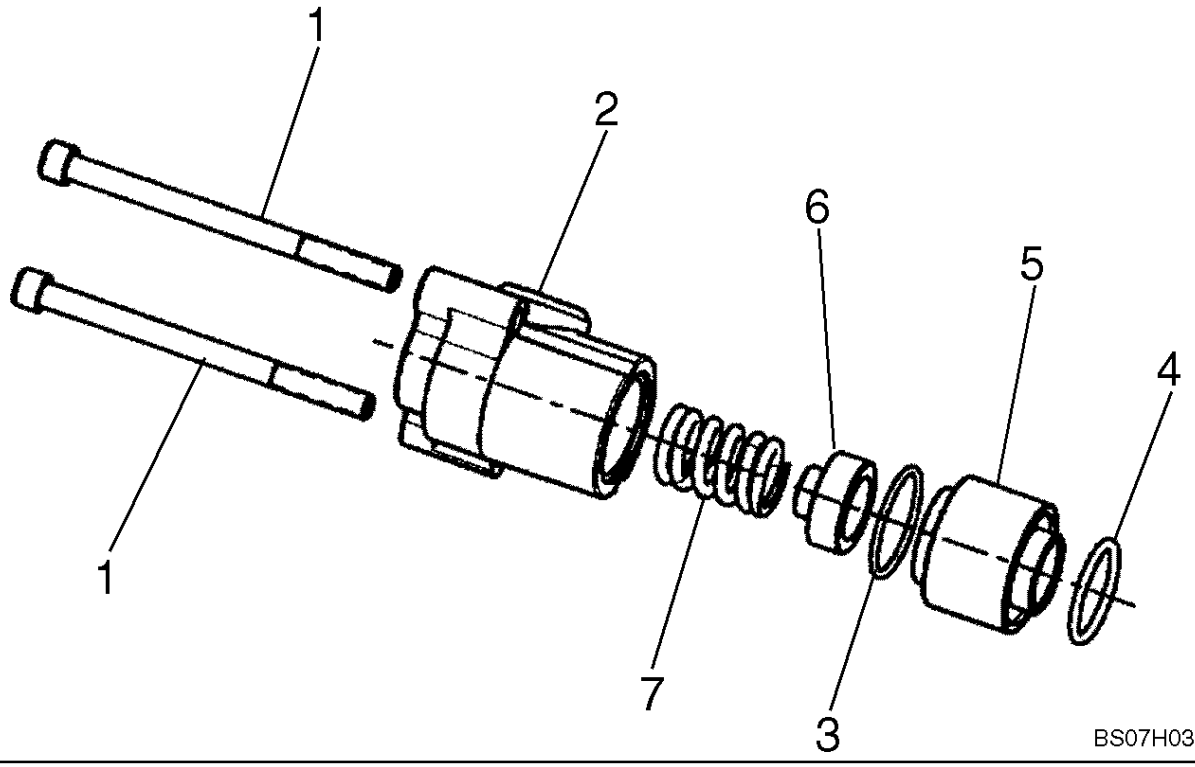

DISTRIBUTEUR DE COMMANDE, COLIS - TIROIRS

REF	FN	PART NUMBER	YR/SN	QTY	DESCRIPTION
		87610531		1	TIROIR, Spool End Group; Incl. 1 - 7
1		NSS		2	NON FOURNI SEPAREMENT, Cap Screw
2		NSS		1	NON FOURNI SEPAREMENT, Spool Cap
3		NSS		1	NON FOURNI SEPAREMENT, O-Ring
4		NSS		1	NON FOURNI SEPAREMENT, O-Ring
5		NSS		1	NON FOURNI SEPAREMENT, Retainer
6		NSS		1	NON FOURNI SEPAREMENT, Spring Seat
7		NSS		1	NON FOURNI SEPAREMENT, Spring

DISTRIBUTEUR DE COMMANDE, COLIS - TIROIRS, EHPV

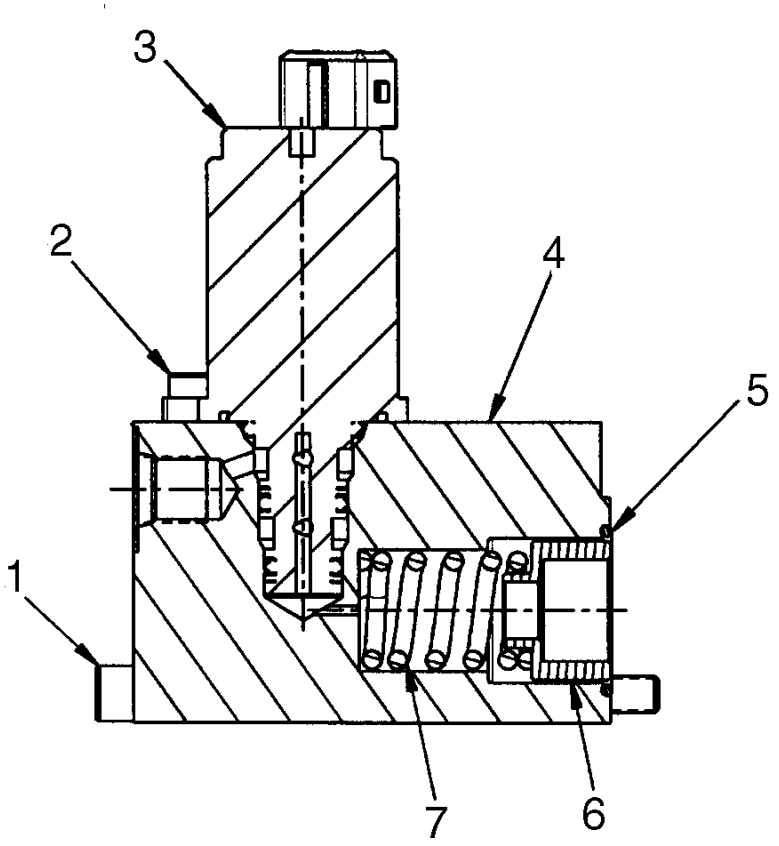

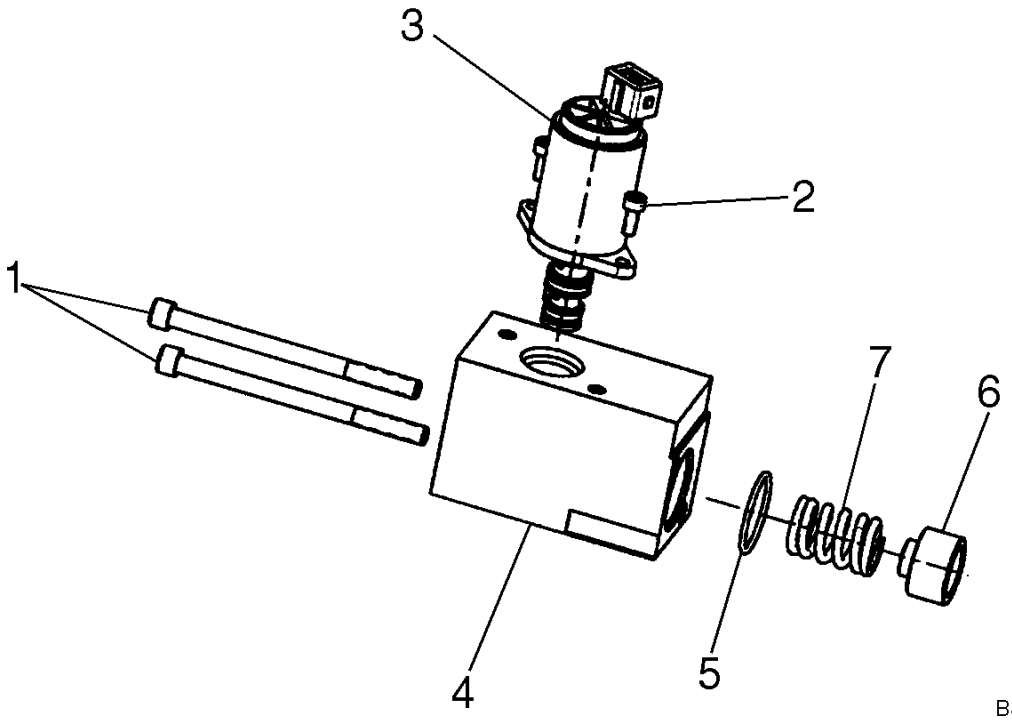

BS07H130

DISTRIBUTEUR DE COMMANDE, COLIS - TIROIRS, EHPV

REF	FN	PART NUMBER	YR/SN	QTY	DESCRIPTION
		87611845		1	TIROIR, Spool End Group, EHPV; Incl. 1 - 7
1		NSS		2	NON FOURNI SEPAREMENT, Cap Screw
2		NSS		2	NON FOURNI SEPAREMENT, Cap Screw
3		87576154		1	ELECTRO-VALVE, Proportional Pressure Reducing
4		NSS		1	NON FOURNI SEPAREMENT, End Cap
5		NSS		1	NON FOURNI SEPAREMENT, O-Ring
6		NSS		1	NON FOURNI SEPAREMENT, Spring Seat
7		NSS		1	NON FOURNI SEPAREMENT, Spring

DISTRIBUTEUR DE COMMANDE, COLIS - TIROIRS, EHPV

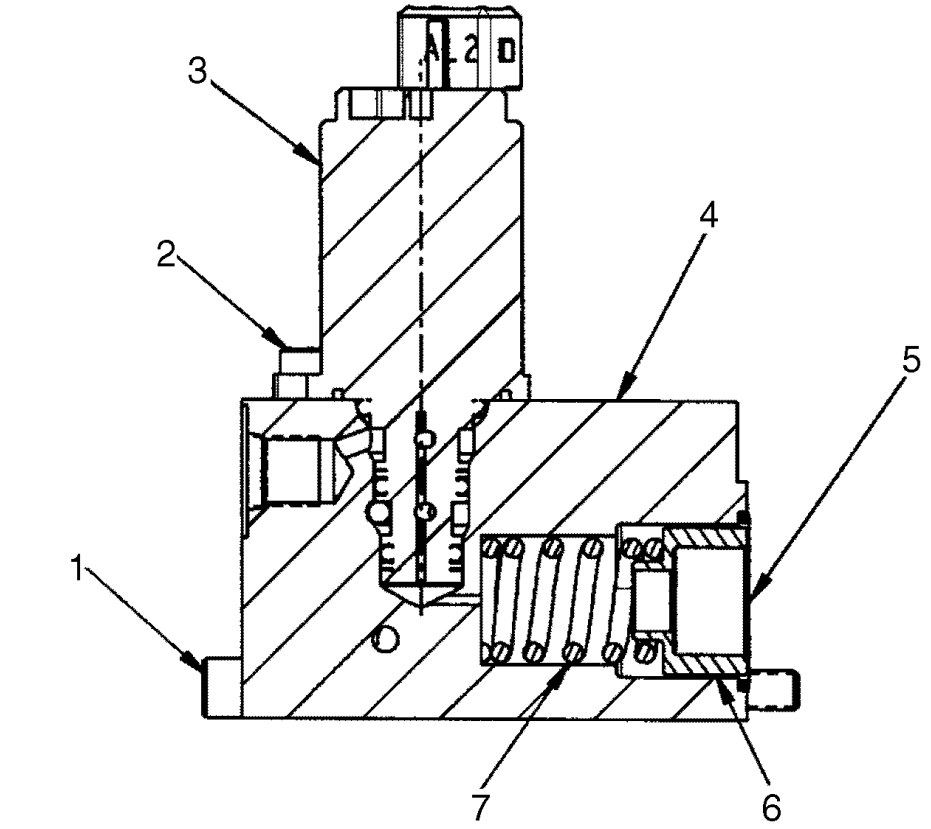

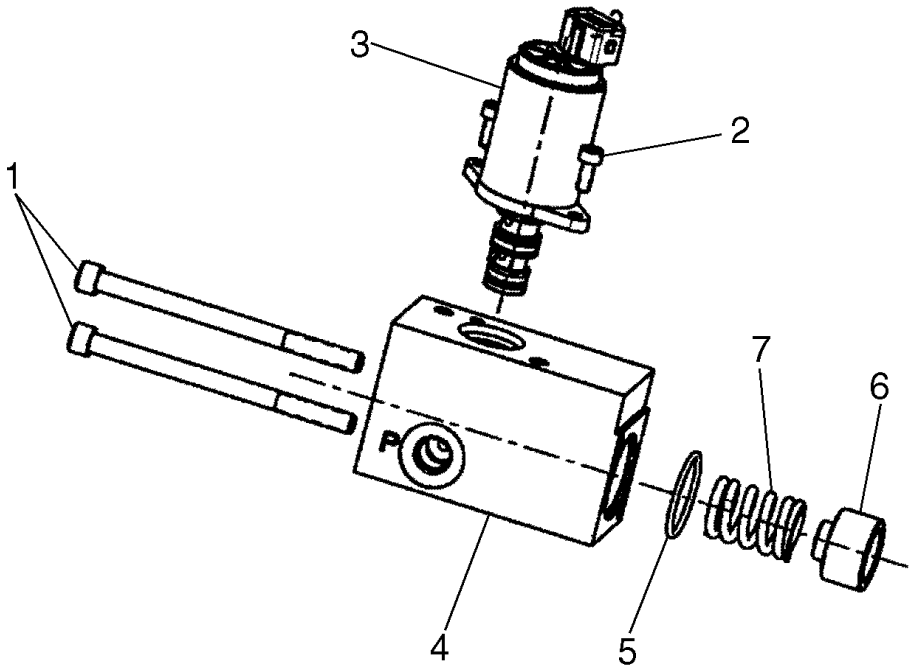

BS07H131

DISTRIBUTEUR DE COMMANDE, COLIS - TIROIRS, EHPV

REF	FN	PART NUMBER	YR/SN	QTY	DESCRIPTION
		87611846		1	TIROIR, Spool End Group, EHPV; Incl. 1 - 7
1		NSS		2	NON FOURNI SEPAREMENT, Cap Screw
2		NSS		2	NON FOURNI SEPAREMENT, Cap Screw
3		87576154		1	ELECTRO-VALVE, Proportional Pressure Reducing
4		NSS		1	NON FOURNI SEPAREMENT, End Cap
5		NSS		1	NON FOURNI SEPAREMENT, O-Ring
6		NSS		1	NON FOURNI SEPAREMENT, Spring Seat
7		NSS		1	NON FOURNI SEPAREMENT, Spring

CIRCUIT AUXILIAIRE AVANT SECONDAIRE - DISTRIBUTEUR

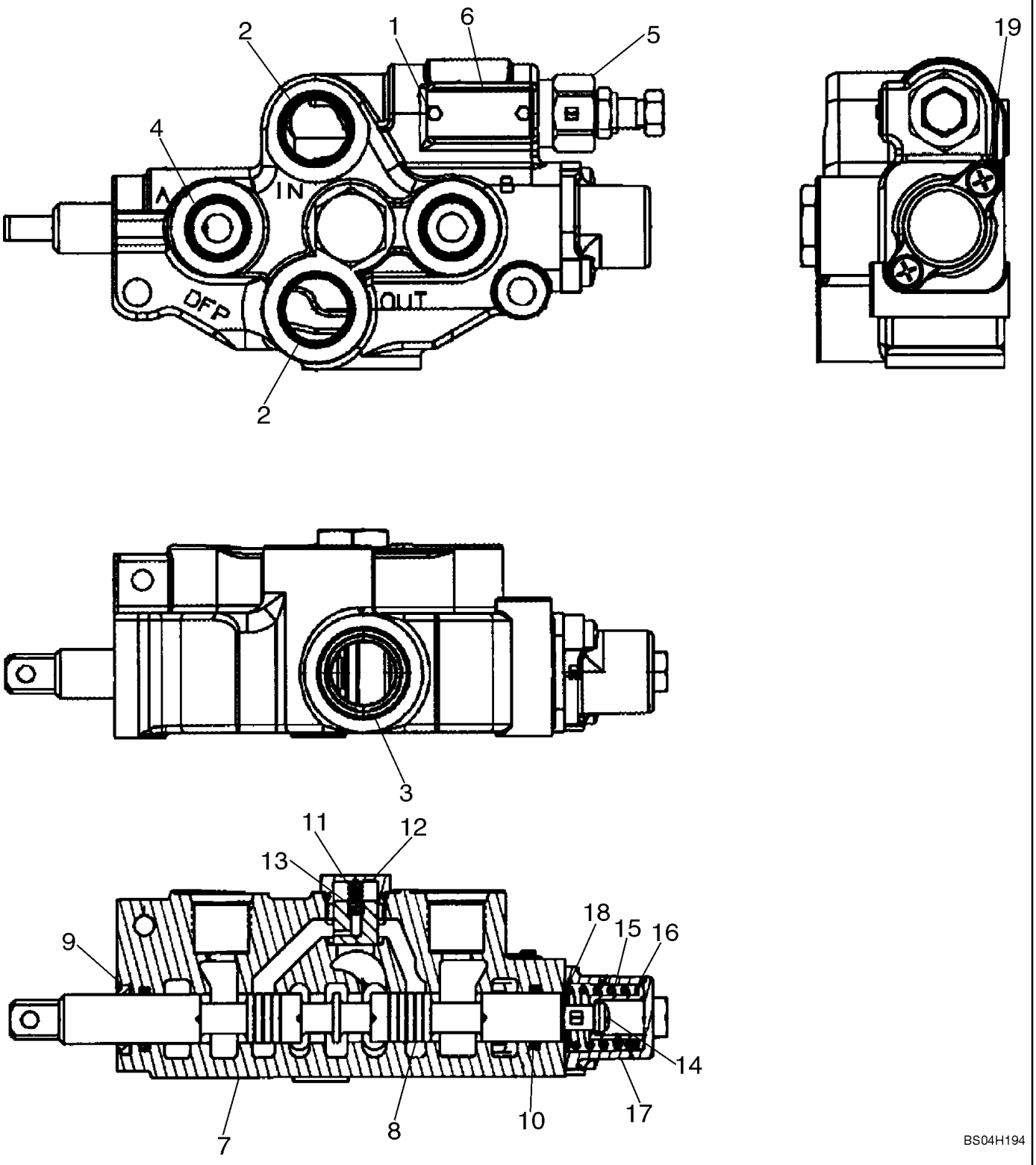

CIRCUIT AUXILIAIRE AVANT SECONDAIRE - DISTRIBUTEUR

REF	FN	PART NUMBER	YR/SN	QTY	DESCRIPTION
		87017348		1	SOUPAPE, Secondary Auxiliary Valve; Incl. 1 - 19
1		NSS		2	NON FOURNI SEPAREMENT, Screw, Drive
2		NSS		2	NON FOURNI SEPAREMENT, Shipping Plug
3		NSS		1	NON FOURNI SEPAREMENT, Shipping Plug
4		NSS		2	NON FOURNI SEPAREMENT, Shipping Plug
5		NSS		1	NON FOURNI SEPAREMENT, Relief Valve Assy
6		NSS		1	NON FOURNI SEPAREMENT, Name Plate
7		NSS		1	NON FOURNI SEPAREMENT, Body
8		NSS		1	NON FOURNI SEPAREMENT, Spool
		87455258		1	POCHETTE DE JOINTS, Incl. 9, 10
9		NSS		1	NON FOURNI SEPAREMENT, Ring, Wiper
10		NSS		2	NON FOURNI SEPAREMENT, O-Ring
		87455257		1	KIT, Load Check Kit; Incl. 11 - 13
11		NSS		1	NON FOURNI SEPAREMENT, Spring
12		NSS		1	NON FOURNI SEPAREMENT, Load Check Plug Assy
13		NSS		1	NON FOURNI SEPAREMENT, Poppet, Load Check
		87455274		1	JEU DE RESSORTS, Spring Center Kit; Incl. 14 - 19
14		NSS			NON FOURNI SEPAREMENT, Screw With Lock Washer
15		NSS			NON FOURNI SEPAREMENT, Spring
16		NSS			NON FOURNI SEPAREMENT, Spacer
17		NSS			NON FOURNI SEPAREMENT, End Cap
18		NSS			NON FOURNI SEPAREMENT, Washer
19		NSS			NON FOURNI SEPAREMENT, Screw With Lock Washer

NOTES

SECTION INDEX
Châssis

09-01	RELEVAGE DE LA CHARGEUSE
09-02	VERIN DE LEVAGE - COUVERCLES
09-03	COUPLEUR MECANIQUE
09-04	COUPLEUR MECANIQUE (ITALIEN)
09-05	COUPLEUR HYDRAULIQUE
09-06	GODETS - CHARGEUSE, POUSSIÈRE/FONDERIE
09-07	GODETS - CHARGEUSE
09-08	GODETS - CHARGEUSE
09-09	GODETS - CHARGEUSE
09-10	REBORD COUPANT DU GODET, REBORD TRANCHANT VISSÉ
09-11	PIÈCES SPÉCIALES POUR L'ITALIE - GARANT DE LA GODET
09-12	FOURCHE A PALETTE
09-13	COMMANDES - MONTAGE
09-14	CONSOLE - DROIT
09-15	CONSOLE - GAUCHE
09-16	CHASSIS (440)
09-17	CHASSIS (440)
09-18	CHASSIS (440CT)
09-19	CHASSIS (440CT)
09-20	COMMANDES - CHARGEUSE ET ENTRAINEMENT DROIT
09-21	COMMANDES - CHARGEUSE ET ENTRAINEMENT GAUCHE
09-22	COMMANDES - CHARGEUSE ET ENTRAINEMENT
09-23	COMMANDES - CIRCUIT HYDRAULIQUE AUX.
09-24	CAPOT
09-25	CAPOT - CLIMATISATION
09-26	PORTE ARRIERE
09-27	PORTE ARRIERE
09-28	VERROU - PORTE ARRIERE
09-29	PORTE DE CABINE - MONTAGE
09-30	PORTE DE CABINE - LAVE-GLACE
09-31	PORTE DE CABINE
09-32	PORTE DE CABINE - VISIÈRE
09-33	PORTE DE CABINE - ESSUIE-GLACE, AVANT
09-34	PORTE DE CABINE - POIGNEE
09-35	PORTE DE DÉMOLITION - MONTAGE
09-36	PORTE DE DÉMOLITION
09-37	TAPIS DE PLANCHER
09-38	CADRE ET BARRE DE SECURITE
09-39	BARRE DE SECURITE
09-40	CEINTURES DE SÉCURITÉ (2 IN)
09-41	CEINTURES DE SÉCURITÉ (3 IN)
09-42	ENDOSSER LA CEINTURE
09-43	RETROVISEUR
09-44	PIÈCES SPÉCIALES POUR L'ITALIE - RÉTROVISSEUR
09-45	SUPPORT DU SIEGE - STANDARD
09-46	SUPPORT DU SIEGE - SUSPENSION
09-47	SUPPORT DU SIEGE - DELUXE SUSPENSION
09-48	VITRE, ARRIÈRE
09-49	VITRE, ARRIÈRE - CHAUFFAGE ET AIR CONDITIONNE
09-50	VITRES, DESSUS
09-51	VITRES, LATERAL

SECTION INDEX
Châssis

09-52	PAVILLON - STANDARD
09-53	CHAUFFAGE ET AIR CONDITIONNE - PAVILLON
09-54	BORD INTÉRIEUR
09-55	RADIO, HAUTPARLEUR ET ANTENNE
09-56	RADIO, HAUTPARLEUR ET ANTENNE
09-57	CHAUFFAGE DELUXE
09-58	CHAUFFAGE DELUXE
09-59	CLIMATISATION
09-60	CHAUFFAGE
09-61	CHAUFFAGE ET AIR CONDITIONNE
09-62	ÉCRAN THERMIQUE
09-63	INSONORISATION MOTEUR
09-64	RÉDUCTION DU BRUIT, PORTE ARRIERE
09-65	CROCHET DE LEVAGE
09-66	CROCHET DE LEVAGE
09-67	AUTOCOLLANTS - ANGLAIS
09-68	AUTOCOLLANTS (440CT)
09-69	AUTOCOLLANTS
09-70	AUTOCOLLANTS
09-71	AUTOCOLLANTS - DANOIS, NÉERLANDAIS, FINNOIS
09-72	AUTOCOLLANTS - FRANÇAIS, ALLEMAND, GREC
09-73	AUTOCOLLANTS - ITALIEN, NORVÉGIEN, POLONAIS
09-74	AUTOCOLLANTS - PORTUGAIS, ESPAGNOL, SUEDOIS
09-75	AUTOCOLLANTS - PORTUGAIS DU BRÉSIL, FRANÇAIS CANADIEN, ESPAGNOL D'AMERIQUE LATINE

NOTES

09-01		p1	10/07

RELEVAGE DE LA CHARGEUSE

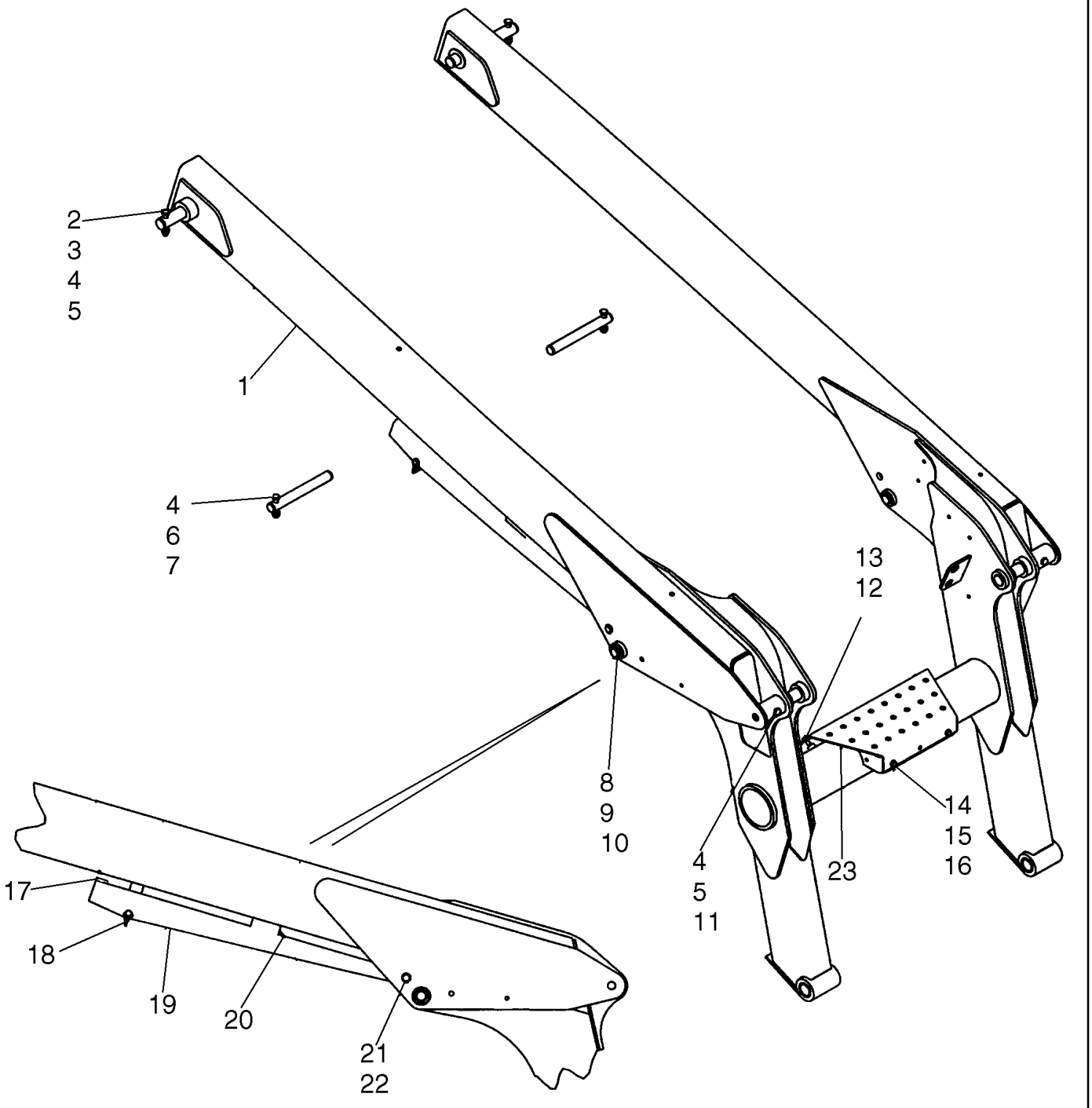

RELEVAGE DE LA CHARGEUSE

REF	FN	PART NUMBER	YR/SN	QTY	DESCRIPTION
		87448095		1	BATI (ASSEMBLE), Loader Arm Kit; Order From Machinery Price List; Incl. Ref 1 Loader Frame, Plus The Following Decals The Following Decals, 321-7029, 411515A1, 411516A1, (2) 87389371; See Decal Pages For Illustration
1		NSS		1	NON FOURNI SEPAREMENT, 87417491 Loader; Incl. (4) D33827 Bushings; Used In Production
2		382837A1		2	AXE, Lift Arm
4		86512554		6	CONTRE-ECROU, M10 x 1.5, Cl 10
5		43144		4	VIS, Hex, M10 x 70, 8.8
6		382838A1		2	AXE, Lift Cylinder
6		87458990		1	AXE, Lift Cylinder, Left Hand
7		120070		2	BOULON, Hex, M10 x 60, 8.8
8		{87602935}		10	WASHER, 1.0625 x 1.625 x 0.065
9		405853A1		2	AXE
10		87019495		4	ANNEAU D'ARRÊT, #98, Ext
11		393742A1		2	AXE, Cylinder
12		120104		2	BOULON, Hex, M8 x 20, 8.8
13		87015284		2	RONDELLE, M8 x 21.5 x 2.5, HT
14		86624184		2	RONDELLE, M8 x 16 x 1.6
15		43127		2	BOULON, Hex, M8 x 25, 8.8
16		9628098		2	CONTRE-ECROU, M8 x 1.25, Cl 10
17		{87599604}		1	Grommet
18		87711364		1	AXE, Pin
19		87711366		1	BRAS ANTI-SECOUSSE, Strut, Loader Support
20		87599718		1	MOUSSE ISOLANTE, Loader Strut; One Piece
21		405854A1		1	AXE, Cylinder
22		{87599605}		2	Ring
23		409422A1		1	MARCHE

VERIN DE LEVAGE - COUVERCLES

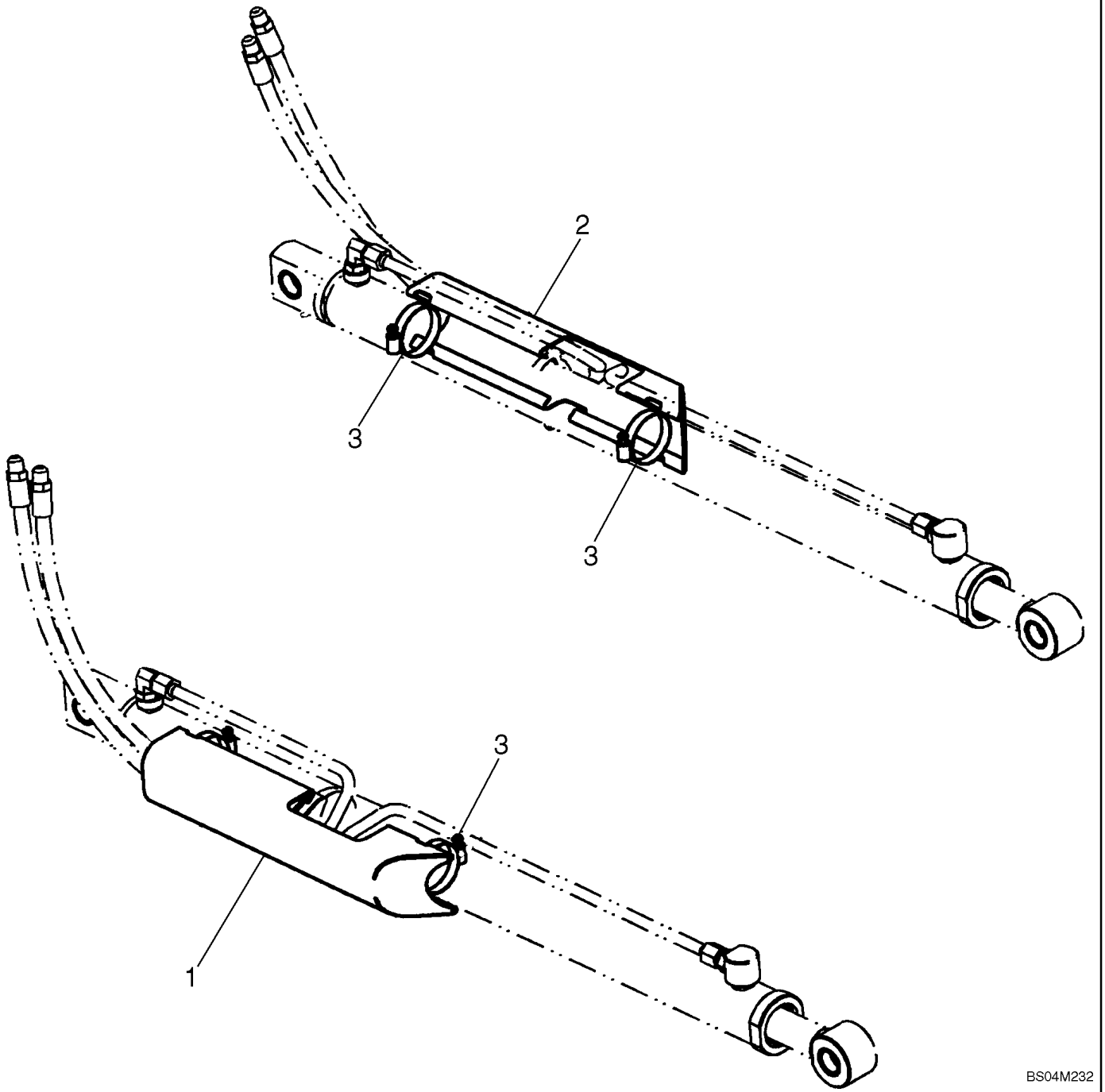

VERIN DE LEVAGE - COUVERCLES

REF	FN	PART NUMBER	YR/SN	QTY	DESCRIPTION
		450051A1		1	DIA KIT, PRODUITS ADDITIO, Kit, Lift Cylinder Cover; Incl 1 - 3
1		429619A1		1	COUVERCLE, Right Hand
2		429620A1		1	COUVERCLE, Left Hand
3		214-1444		4	BRIDE, FLEXIBLE, #44, 2.31/3.25 Type F Worm

09-03		p1	10/07

COUPLEUR MECANIQUE

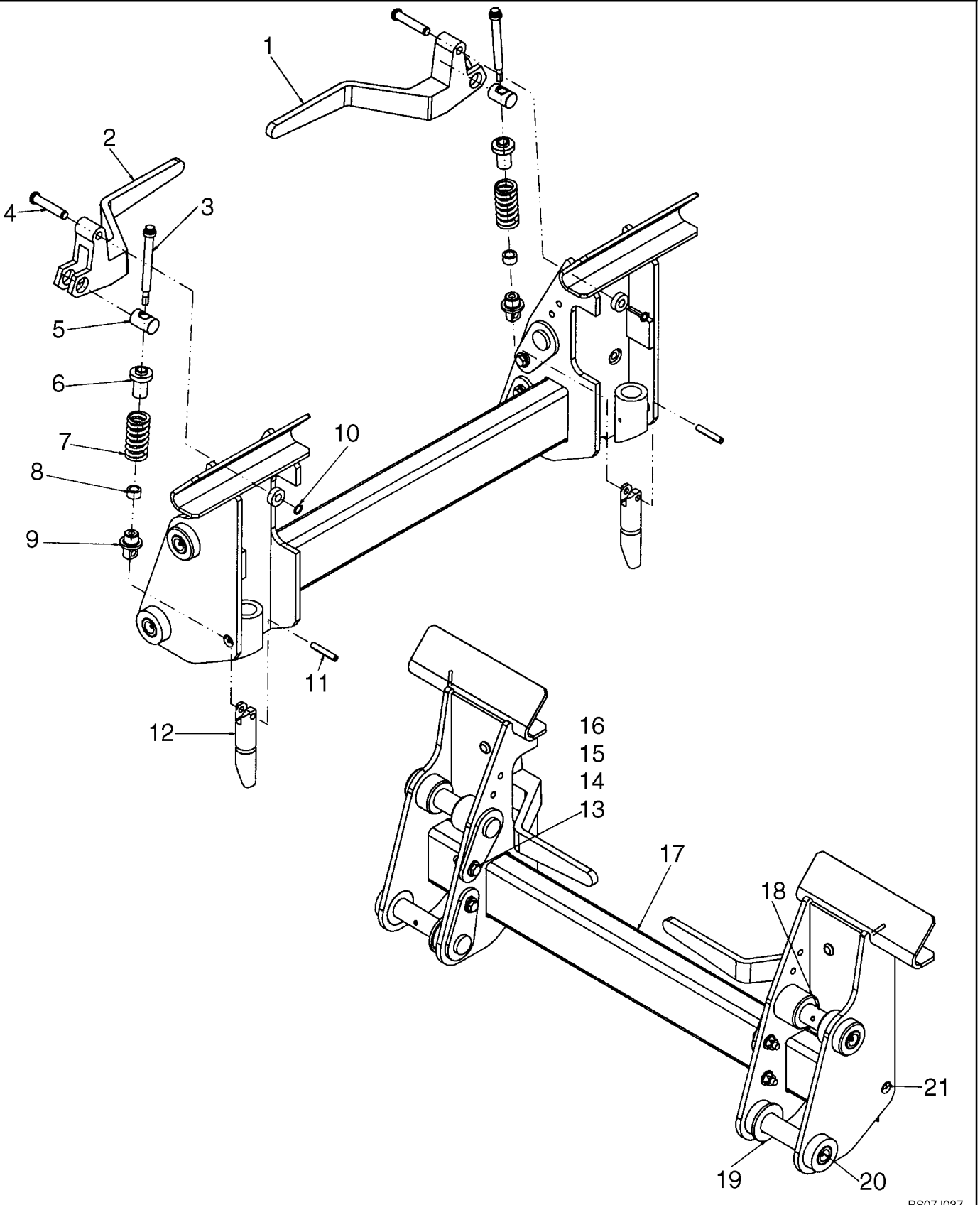

COUPLEUR MECANIQUE

REF	FN	PART NUMBER	YR/SN	QTY	DESCRIPTION
1		86633195		1	POIGNÉE, LH
2		86633196		1	POIGNÉE, RH
3		87533223		2	AXE, CS12PT Shoulder Bolt, 1/2 X 4.0
4		87387540		2	RETENEUR
5		9829733		2	AXE
6		86610166		2	GUIDE, Spring Guide
7		86610167		2	RESSORT
8		87412041		2	ENTRETOISE, Bushing Spacer
9		{87579303}		2	Pin
10		{87612753}		2	Retaining Ring, External #50 PLN
11		86624092		2	AXE, 3/8" x 2", Coiled
12		87413030		2	AXE, Latch Pin
13		120112		4	BOULON, Hex, M10 x 40, 8.8, Full Thd
14		86625253		8	RONDELLE, M11 x 24 x 2
15		86512554		4	CONTRE-ECROU, M10 x 1.5, Cl 10
16		906091R1		4	ENTRETOISE, 3/8" Pipe X 3/8" Length
17		404599A5		1	BATI (ASSEMBLE)
18		87659406		4	AXE
19		86512837		2	RONDELLE, 1 1/4", SAE
20		80710		4	GRAISSEUR, 1/8"-27 x .66 lg
21		87414		2	GRAISSEUR, 1/4"-28 x .56" lg, Drive

09-04		p1	11/07

COUPLEUR MECANIQUE (ITALIEN)

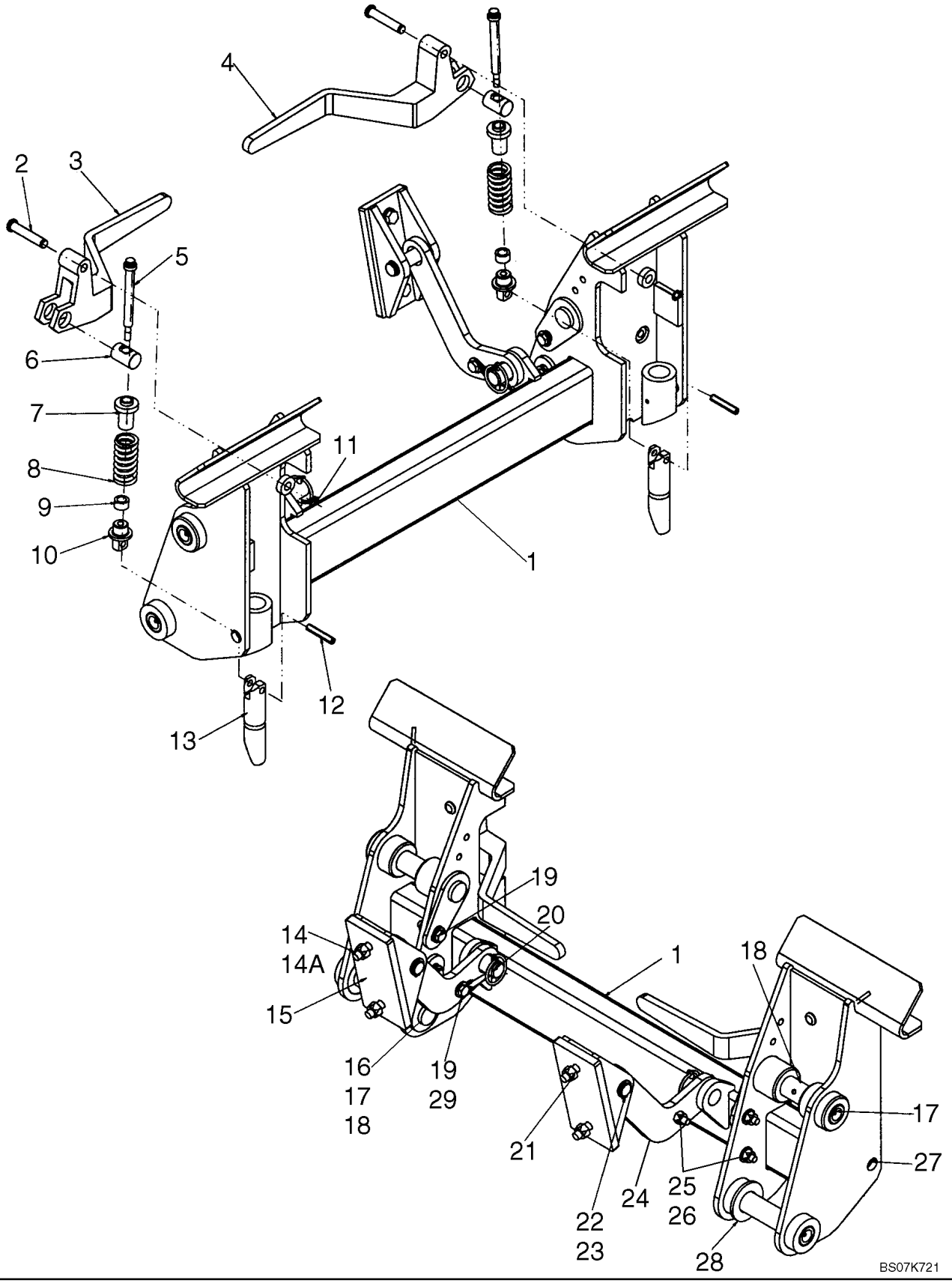

COUPLEUR MECANIQUE (ITALIEN)

REF	FN	PART NUMBER	YR/SN	QTY	DESCRIPTION
1		417779A3		1	BATI (ASSEMBLE), Coupler, Italian On Road
2		87387540		2	RETENEUR, Handle Pivot
3		86633196		1	POIGNÉE, Right Hand
4		86633195		1	POIGNÉE, Left Hand
5		87533223		2	AXE, CS12PT SHO PH .5 x 4.0
6		9829733		2	AXE
7		86610166		2	GUIDE
8		86610167		2	RESSORT, Compression
9		87412041		2	ENTRETOISE, Bushing
10		{87579303}		2	Pin
11		{87612753}		2	Retaining Ring # 50
12		86624092		2	AXE, 3/8" x 2", Coiled, Coiled Spring
13		87413030		2	AXE, Latch
14		412672		4	CONTRE-ECROU, M12 x 1.75, Cl 10
14A		86625255		4	RONDELLE, M13.5 x 24.5 x 3, HT
15		398196A1		2	PATTE FIXATION, Bucket Lock
16		906091R1		4	ENTRETOISE, 3/8 x 0.375 x Strg Pipe
17		80710		4	GRAISSEUR, 1/8"-27 x .66 lg
18		87659406		4	AXE
19		120112		4	BOULON, Hex, M10 x 40, 8.8, Full Thd
20		A30338		2	AXE
21		120080		4	BOULON
22		D138889		2	AXE, Lift Cylinder Pivot
23		{86625151}		4	Retaining Ring EXT HD #87
24		398194A1		2	MAILLON, Bucket Lock
25		86625253		10	RONDELLE, M11 x 24 x 2
26		86512554		6	CONTRE-ECROU, M10 x 1.5, Cl 10
27		87414		2	GRAISSEUR, 1/4"-28 x .56" lg, Drive
28		86512837		2	RONDELLE, 1 1/4", SAE
29		L78786		2	RETENEUR DE CABLE

COUPLEUR HYDRAULIQUE

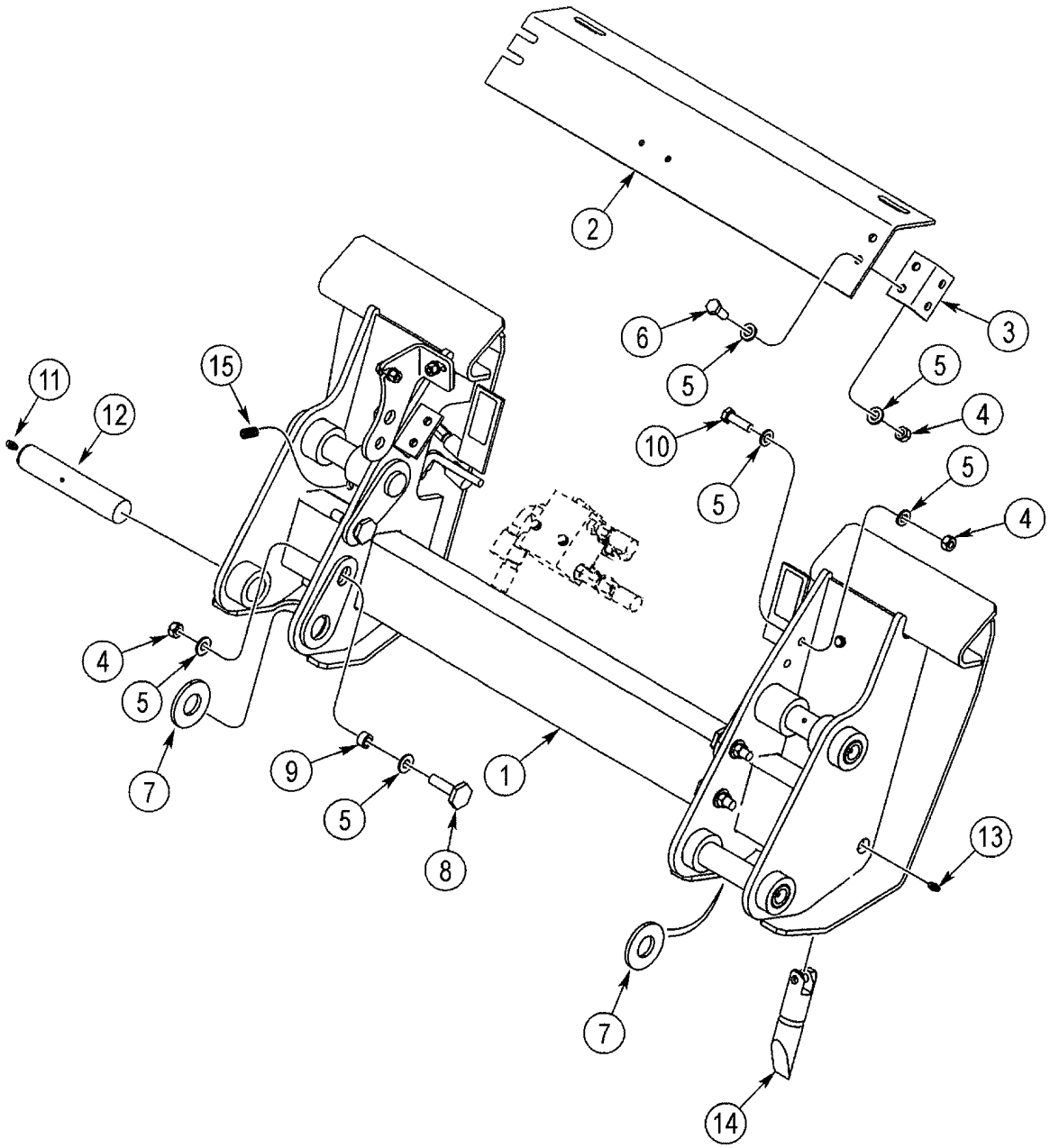

COUPLEUR HYDRAULIQUE

REF	FN	PART NUMBER	YR/SN	QTY	DESCRIPTION
1		404599A5		1	BATI (ASSEMBLE)
2		87620412		1	PLAQUE, Protective Cover
3		409783A1		2	PATTE FIXATION, Coupler Cover
4		86512554		12	CONTRE-ECROU, M10 x 1.5, Cl 10
5		86625253		24	RONDELLE, M11 x 24 x 2
6		43139		4	VIS, Hex, M10 x 25, 8.8, Full Thd
7		86512837		2	RONDELLE, 1 1/4", SAE
8		120112		4	BOULON, Hex, M10 x 40, 8.8, Full Thd
9		906091R1		4	ENTRETOISE, Spacer; 3/8 x 0.375 x Strg Pipe
10		9706704		4	BOULON, Hex, M10 x 35, 8.8, Full Thd
11		80710		4	GRAISSEUR, 1/8"-27 x .66 lg
12		394582A2		4	AXE
13		87414		2	GRAISSEUR, 1/4"-28 x .56" lg, Drive
14		87413030		2	AXE, Latch
15		9617020		2	BOUCHON, Hex Soc, 1/4"-18, If Used
		D55216		1	BANDE ANTI-DERAPANTE, Non-Slip

GODETS - CHARGEUSE, POUSSIÈRE/FONDERIE

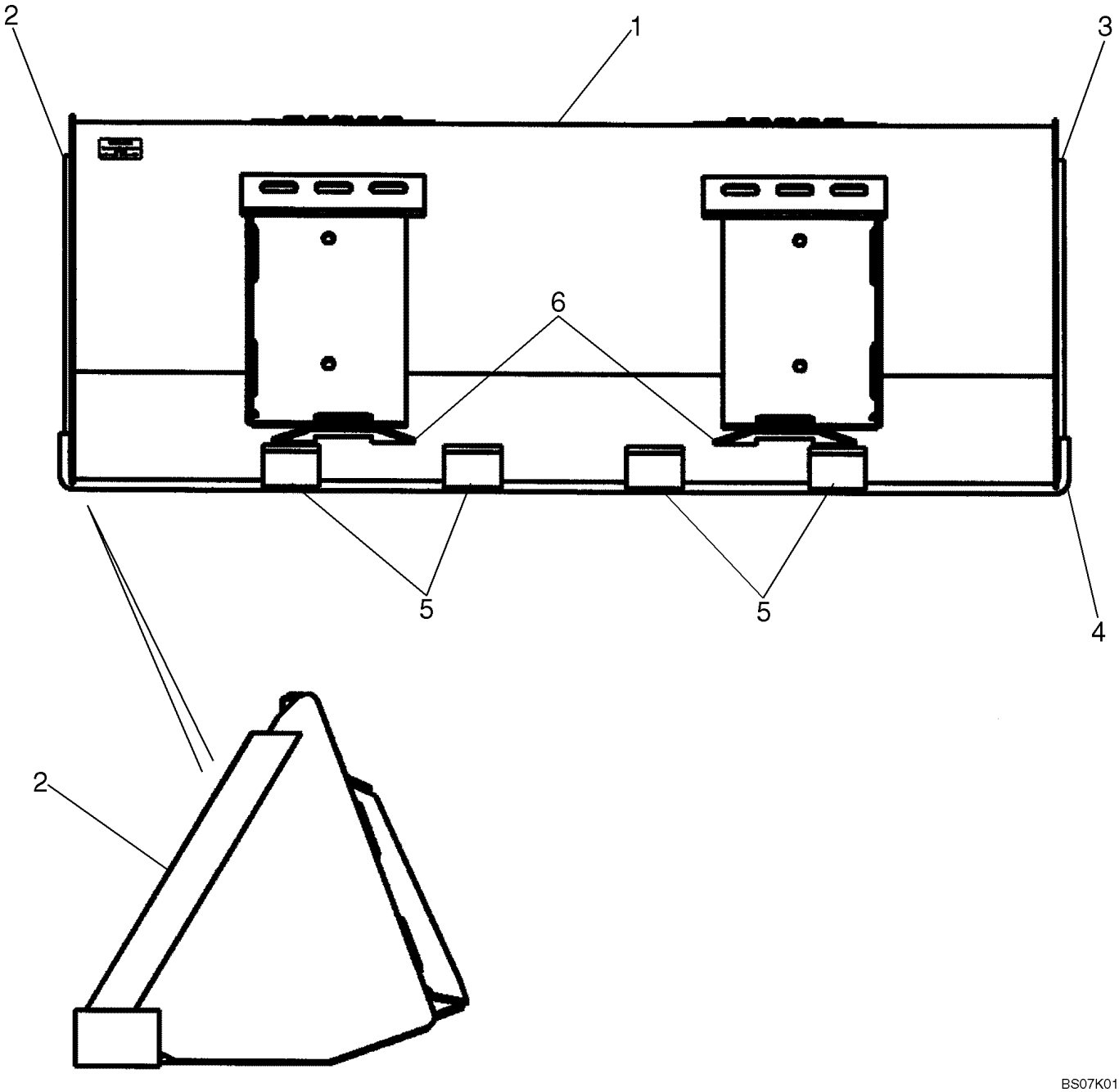

GODETS - CHARGEUSE, POUSSIÈRE/FONDERIE

REF	FN	PART NUMBER	YR/SN	QTY	DESCRIPTION
		REF			NOTICE, DIRT / FOUNDRY
1		{86618350}		1	BUCKET, 1676 mm (66 Inch); Order From Machinery Price List; Incl 2 - 6
2		87014505		1	LAME DE COUPE-B.DE C., LH Cutter
3		87014504		1	LAME DE COUPE-B.DE C., RH Cutter
4		86577166		1	LAME D'ATTAQUE, Weld On Blade 66 in
5		87016983		3	BARRE, Skid Bar
6		9822175		2	PLAQUE
1		86618351		1	GODET, 1829 mm (72 Inch); Order From Machinery Price List; Incl 2 - 6
2		87014505		1	LAME DE COUPE-B.DE C., LH Cutter
3		87014504		1	LAME DE COUPE-B.DE C., RH Cutter
4		86577168		1	LAME D'ATTAQUE, Weld On Blade 72 in
5		87016983		4	BARRE, Skid Bar
6		9822175		2	PLAQUE
1		{86633060}		1	BUCKET, 1981mm (78 Inch); Order From Machinery Price List; Incl 2 - 6
2		87014505		1	LAME DE COUPE-B.DE C., LH Cutter
3		87014504		1	LAME DE COUPE-B.DE C., RH Cutter
4		86577170		1	LAME D'ATTAQUE, Weld On Blade 78 in
5		87016983		4	BARRE, Skid Bar
6		9822175		2	PLAQUE

GODETS - CHARGEUSE

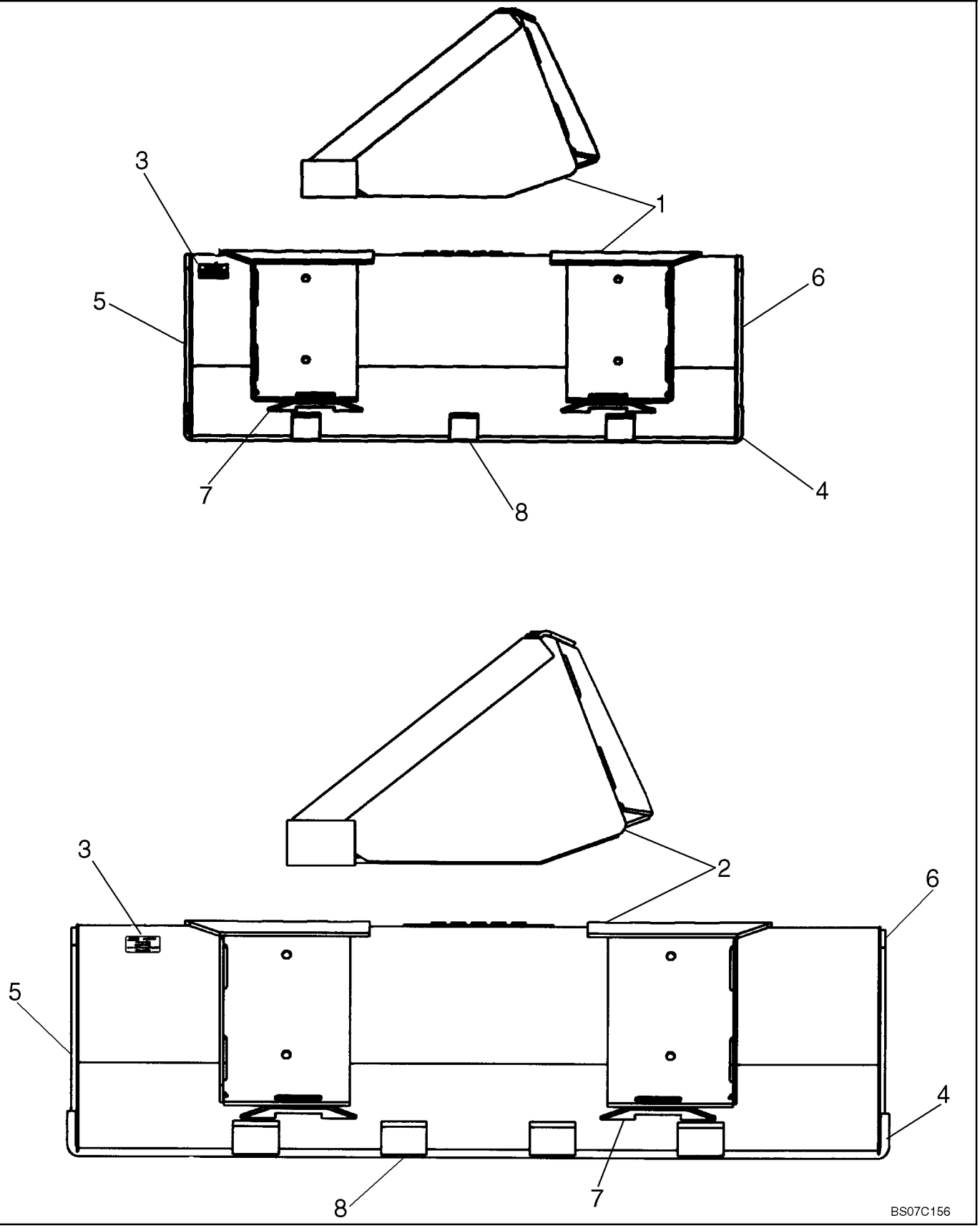

GODETS - CHARGEUSE

REF	FN	PART NUMBER	YR/SN	QTY	DESCRIPTION
		REF			NOTICE, LOW PROFILE
1		86618363		1	GODET, 1676 mm (66 Inch); Order From Machinery Price List; Incl. 3 - 8
3		NSS		1	NON FOURNI SEPAREMENT, Decal
4		87015514		1	LAME D'ATTAQUE, Weld On Blade
5		87014503		1	LAME D'ATTAQUE, Cutter Left Hand
6		87014502		1	LAME D'ATTAQUE, Cutter Right Hand
7		87015460		2	PLAQUE
8		9829786		3	BARRE, Skid Bar
1		86618364		1	GODET, 1820 mm (72 Inch); Order From Machinery Price List; Incl. 3 - 8
3		NSS		1	NON FOURNI SEPAREMENT, Decal
4		86577168		1	LAME D'ATTAQUE, Weld On Blade
5		87014503		1	LAME D'ATTAQUE, Cutter Left Hand
6		87014502		1	LAME D'ATTAQUE, Cutter Right Hand
7		87015460		2	PLAQUE
8		9829786		4	BARRE, Skid Bar
		REF			NOTICE, EXTENDED LOW PROFILE
2		86618354		1	GODET, 1676 mm (66 Inch); Order From Machinery Price List; Incl. 3 - 8
3		NSS		1	NON FOURNI SEPAREMENT, Decal
4		87015514		1	LAME D'ATTAQUE, Weld On Blade
5		87014503		1	LAME D'ATTAQUE, Cutter Left Hand
6		87014502		1	LAME D'ATTAQUE, Cutter Right Hand
7		9822175		2	PLAQUE
8		9829786		3	BARRE, Skid Bar
2		86618355		1	GODET, 1829 mm (72 Inch); Order From Machinery Price List; Incl. 3 - 8
3		NSS		1	NON FOURNI SEPAREMENT, Decal
4		86577168		1	LAME D'ATTAQUE, Weld On Blade
5		86510316		1	LAME D'ATTAQUE, Cutter Left Hand
6		86510315		1	LAME D'ATTAQUE, Cutter Right Hand
7		87015460		2	PLAQUE
8		86510314		3	BARRE, Skid Bar

GODETS - CHARGEUSE

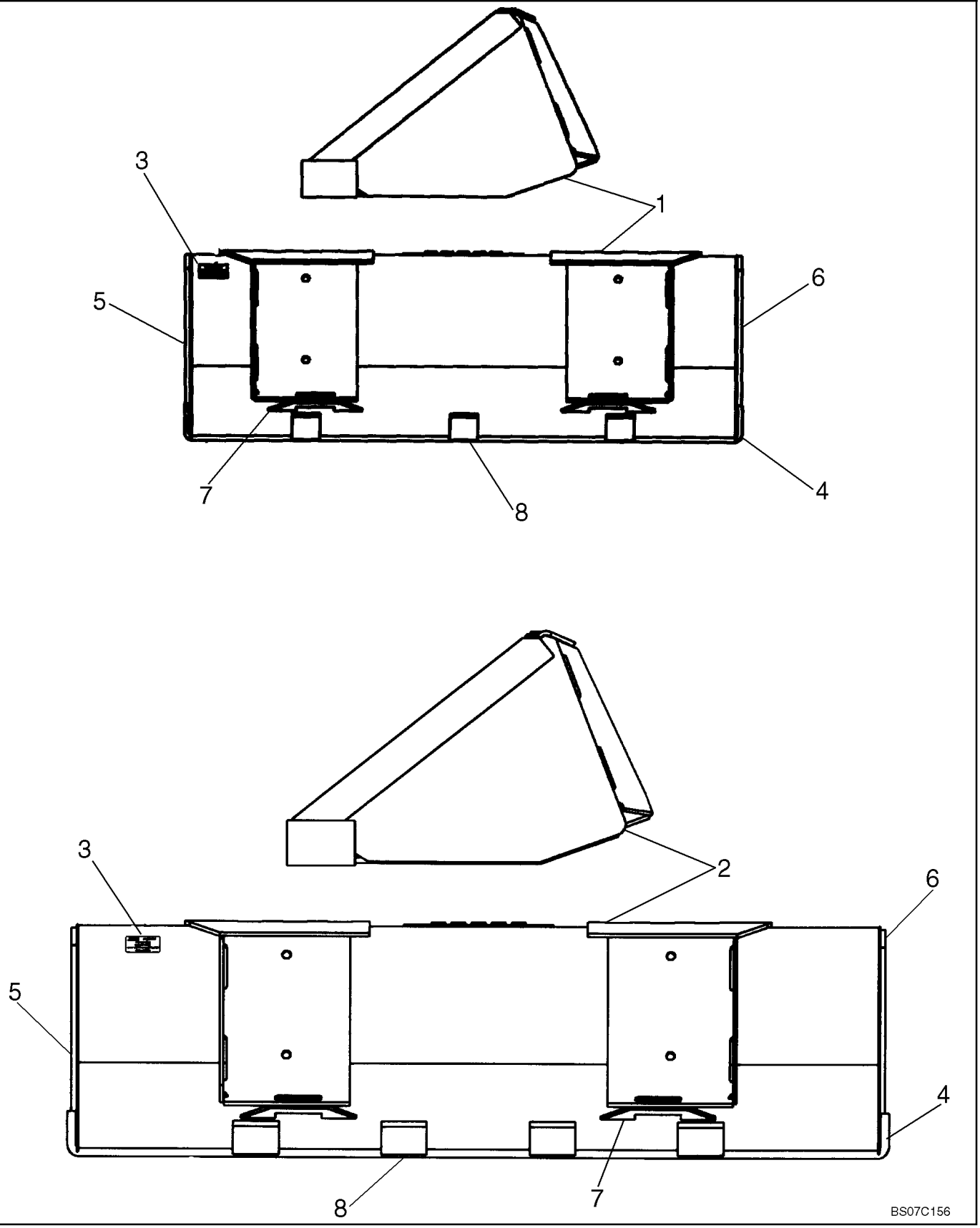

GODETS - CHARGEUSE

REF	FN	PART NUMBER	YR/SN	QTY	DESCRIPTION
2		{86633059}		1	BUCKET, 1981 mm (78 Inch); Order From Machinery Price List; Incl. 3 - 8
3		NSS		1	NON FOURNI SEPAREMENT, Decal
4		87015514		1	LAME D'ATTAQUE, Weld On Blade
5		87014503		1	LAME D'ATTAQUE, Cutter Left Hand
6		87014502		1	LAME D'ATTAQUE, Cutter Right Hand
7		87015460		2	PLAQUE
8		9829786		3	BARRE, Skid Bar

GODETS - CHARGEUSE

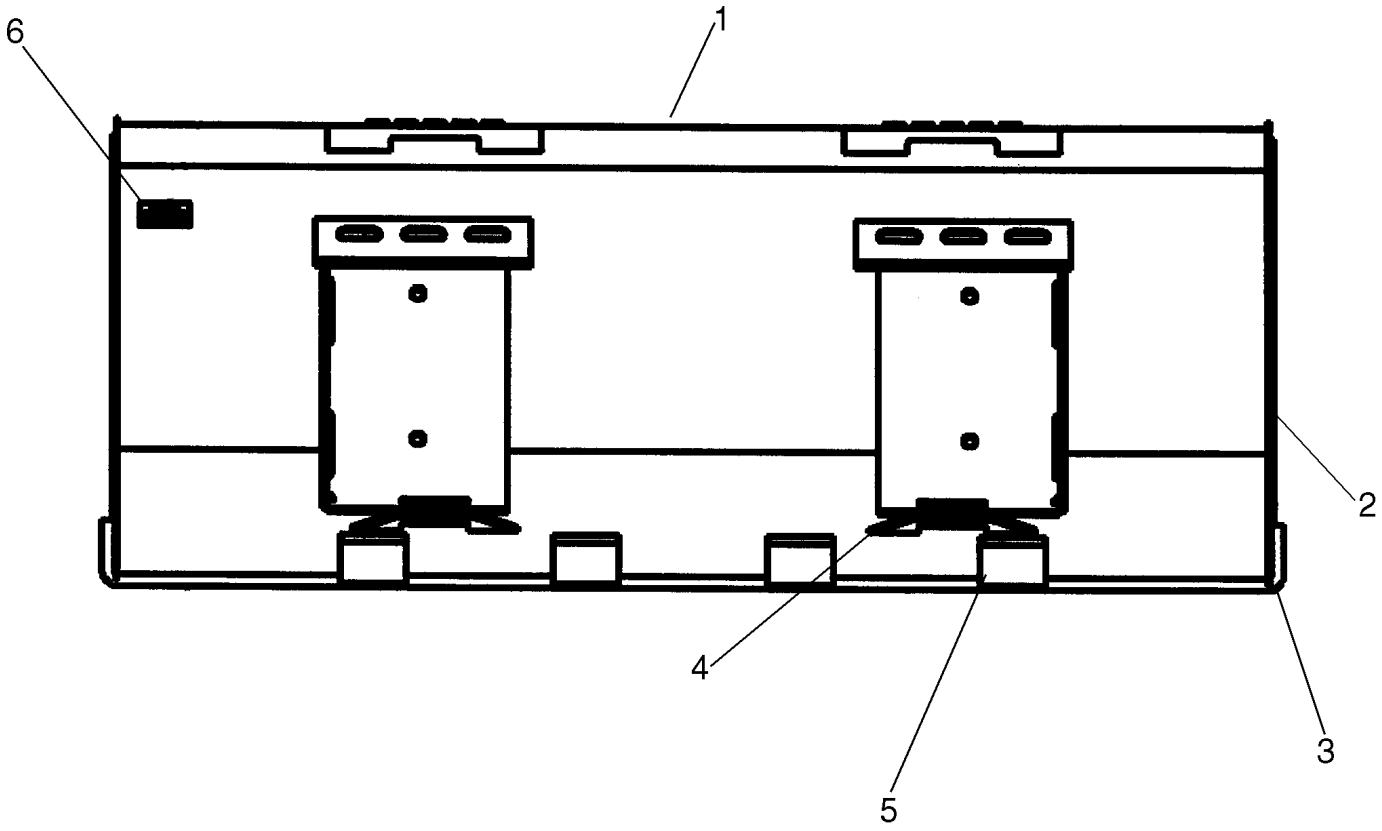

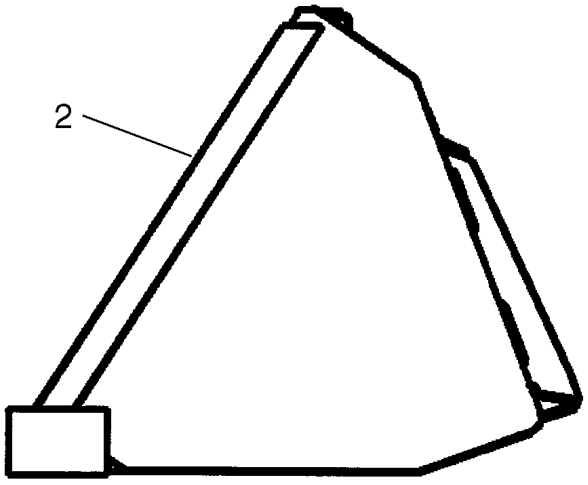

BS07K013

GODETS - CHARGEUSE

REF	FN	PART NUMBER	YR/SN	QTY	DESCRIPTION
		REF			NOTICE, UTILITY/LIGHT MATERIAL
1		{87010188}		1	BUCKET, 1829 mm (72 Inch), Order From Machinery Price List; Incl 2- 6
2		86501801		2	LAME D'ATTAQUE
3		86577168		1	LAME D'ATTAQUE, 72 in
4		9822175		2	PLAQUE
5		86501815		4	BARRE, Skid Bar
6		NSS		1	NON FOURNI SEPAREMENT, Decal
1		{87010189}		1	BUCKET, 2134 mm (84 Inch), Order From Machinery Price List; Incl 2- 6
2		86501801		2	LAME D'ATTAQUE
3		86900574		1	LAME D'ATTAQUE, 84 in
4		9822175		2	PLAQUE
5		86501815		5	BARRE, Skid Bar
6		NSS		1	NON FOURNI SEPAREMENT, Decal

GODETS - CHARGEUSE

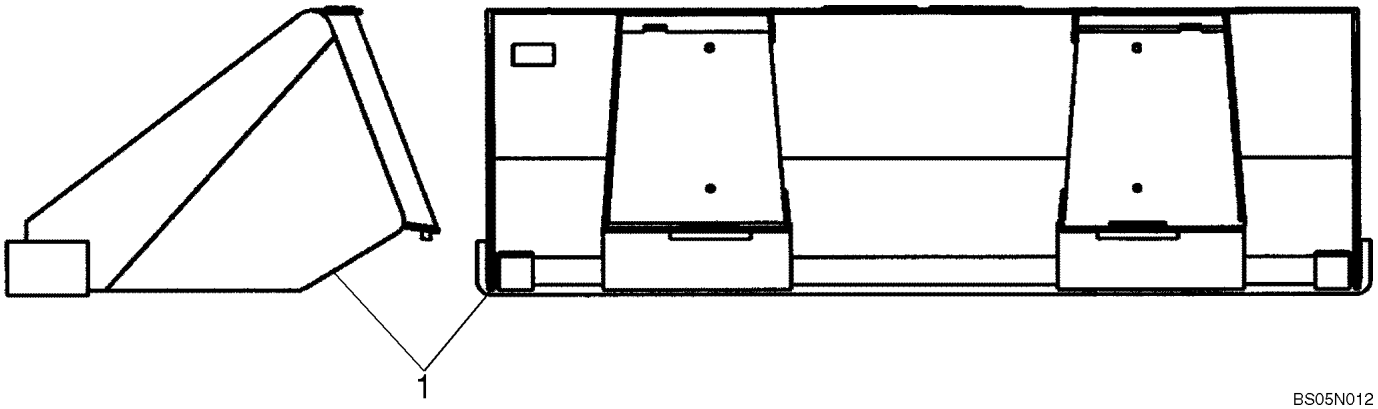

GODETS - CHARGEUSE

REF	FN	PART NUMBER	YR/SN	QTY	DESCRIPTION
1		87438564		1	GODET, 66" Heavy Duty Dirt: Incl 87015514
		87015514		1	LAME D'ATTAQUE, 66" Blade
1		87438566		1	GODET, 72" Heavy Duty Dirt; Incl 86577168
		86577168		1	LAME D'ATTAQUE, 72" Blade
1		87430292		1	GODET, 78" Heavy Duty Dirt; Incl 86577170
		86577170		1	LAME D'ATTAQUE, 78" Blade

09-10		p1	11/07

REBORD COUPANT DU GODET, REBORD TRANCHANT VISSÉ

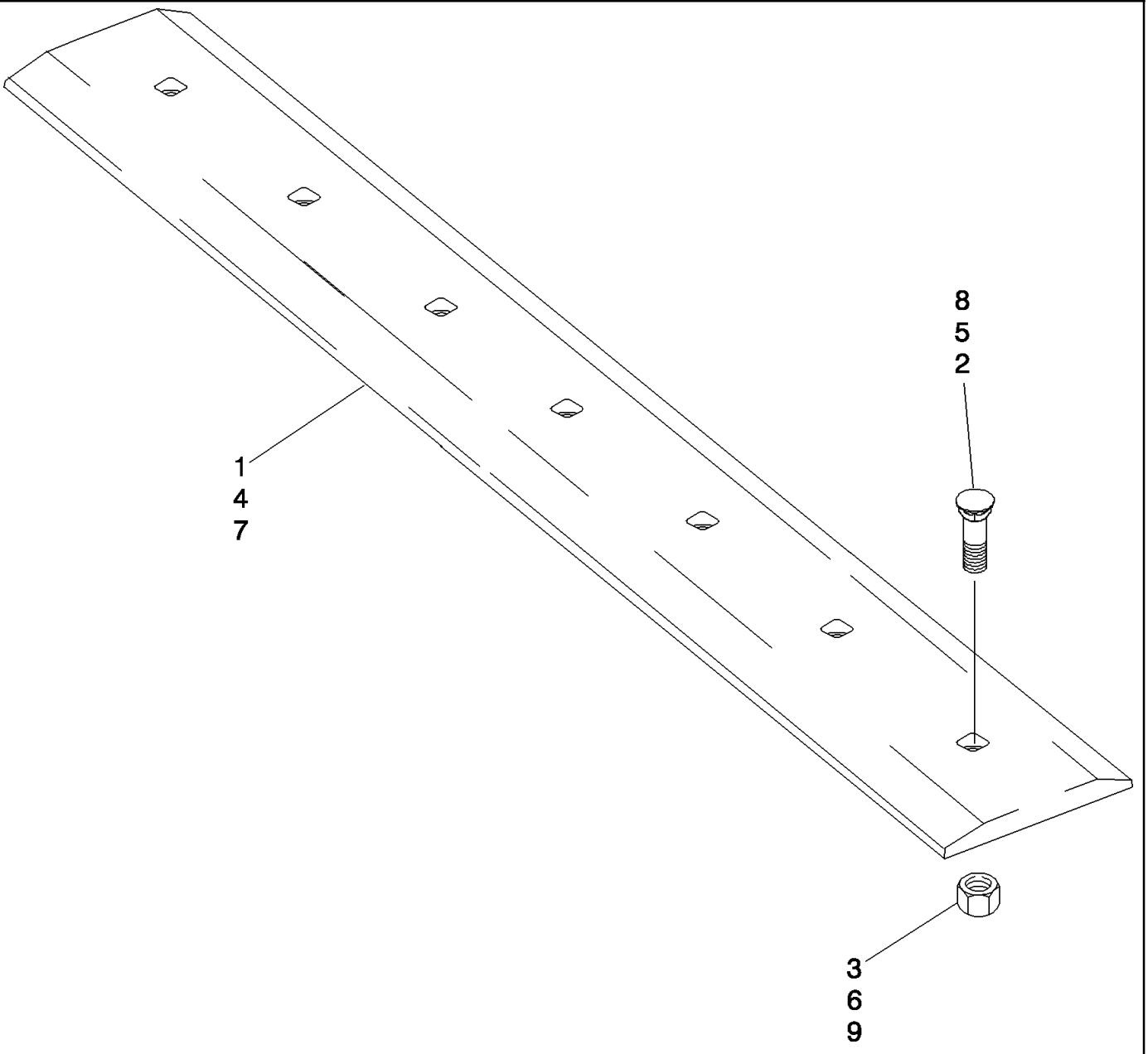

BS04A101

REBORD COUPANT DU GODET, REBORD TRANCHANT VISSÉ

REF	FN	PART NUMBER	YR/SN	QTY	DESCRIPTION
		430498A1		1	LAME D'ATTAQUE, Kit; 66 Inch; Incl. Ref 4 - 6
4		87454483		1	LAME D'ATTAQUE, 1676 mm (66 inch)
5		86548338		7	BOULON CHARRUE, 5/8"-11 x 2", G5
6		425-1010		7	ECROU, 5/8"-11, G5
		430499A1		1	LAME D'ATTAQUE, Kit; 72 Inch; Incl. Ref 7 - 9
7		87454488		1	LAME D'ATTAQUE, 1829 mm (72 inch)
8		86548338		7	BOULON CHARRUE, 5/8"-11 x 2", G5
9		425-1010		7	ECROU, 5/8"-11, G5
		434817A1		1	LAME D'ATTAQUE, Kit; 78 Inch; Incl. Ref 7 - 9
7		87454489		1	LAME D'ATTAQUE
8		86548338		7	BOULON CHARRUE, 5/8"-11 x 2", G5
9		280374		7	ECROU, 5/8"-11, G5
		430500A1		1	LAME D'ATTAQUE, Kit; 84 Inch; Incl. Ref 7 - 9
7		86577173		1	LAME D'ATTAQUE, 2134 mm (84 inch)
8		420-21032		9	BOULON TETE BOMBEE, 5/8"-11 x 2", G8, Full Thd
9		329-1010		9	ECROU, 5/8"-11, G8

PIÈCES SPÉCIALES POUR L'ITALIE - GARANT DE LA GODET

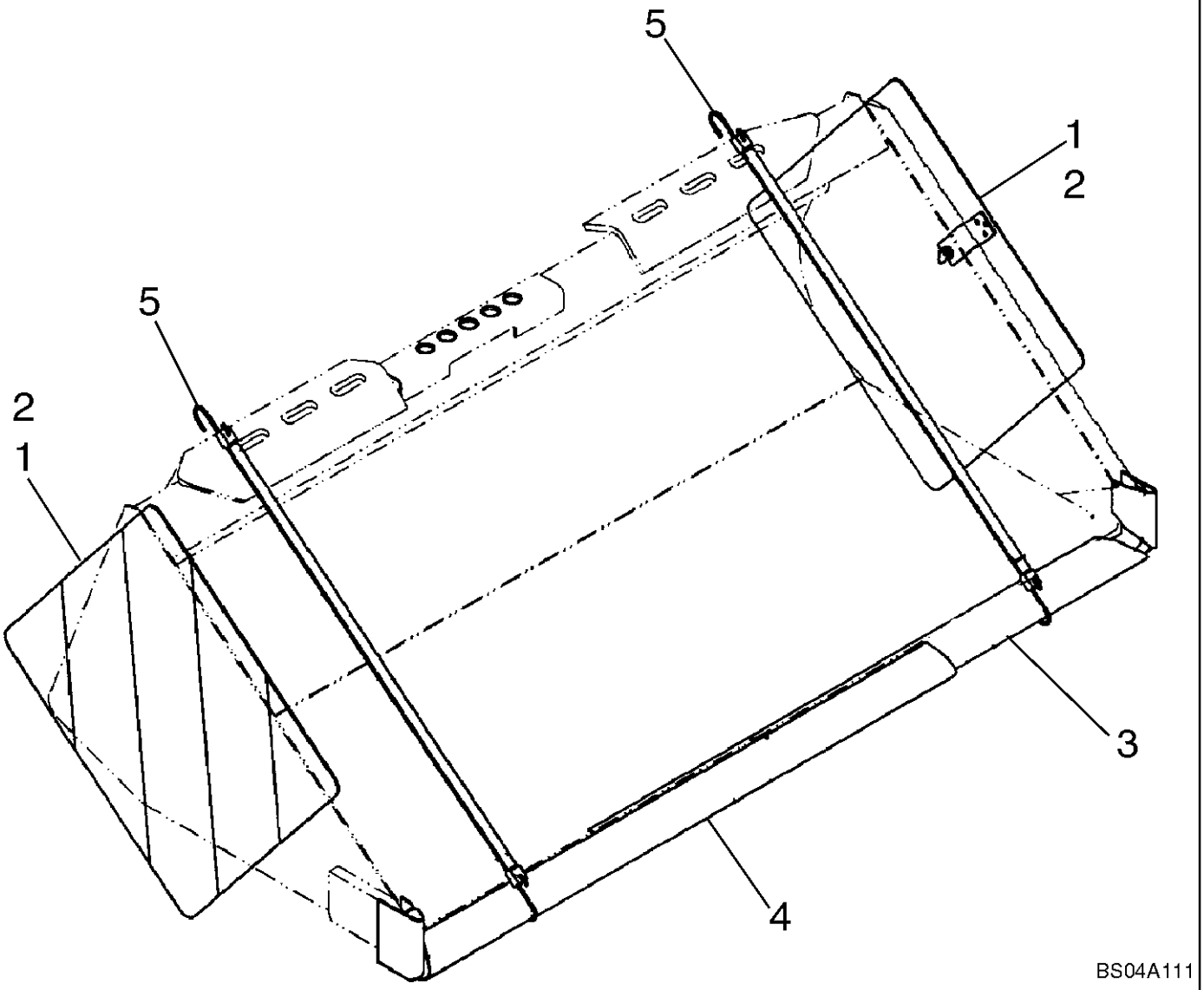

PIÈCES SPÉCIALES POUR L'ITALIE - GARANT DE LA GODET

REF	FN	PART NUMBER	YR/SN	QTY	DESCRIPTION
1		631816		2	VIS
2		86530079		2	GARANT, Bucket
3		86565640		1	GARANT, Right Hand
4		86565641		1	GARANT, Left Hand
5		434346A1		2	TENDEUR ELASTIQUE

09-12		p1	12/07

FOURCHE A PALETTE

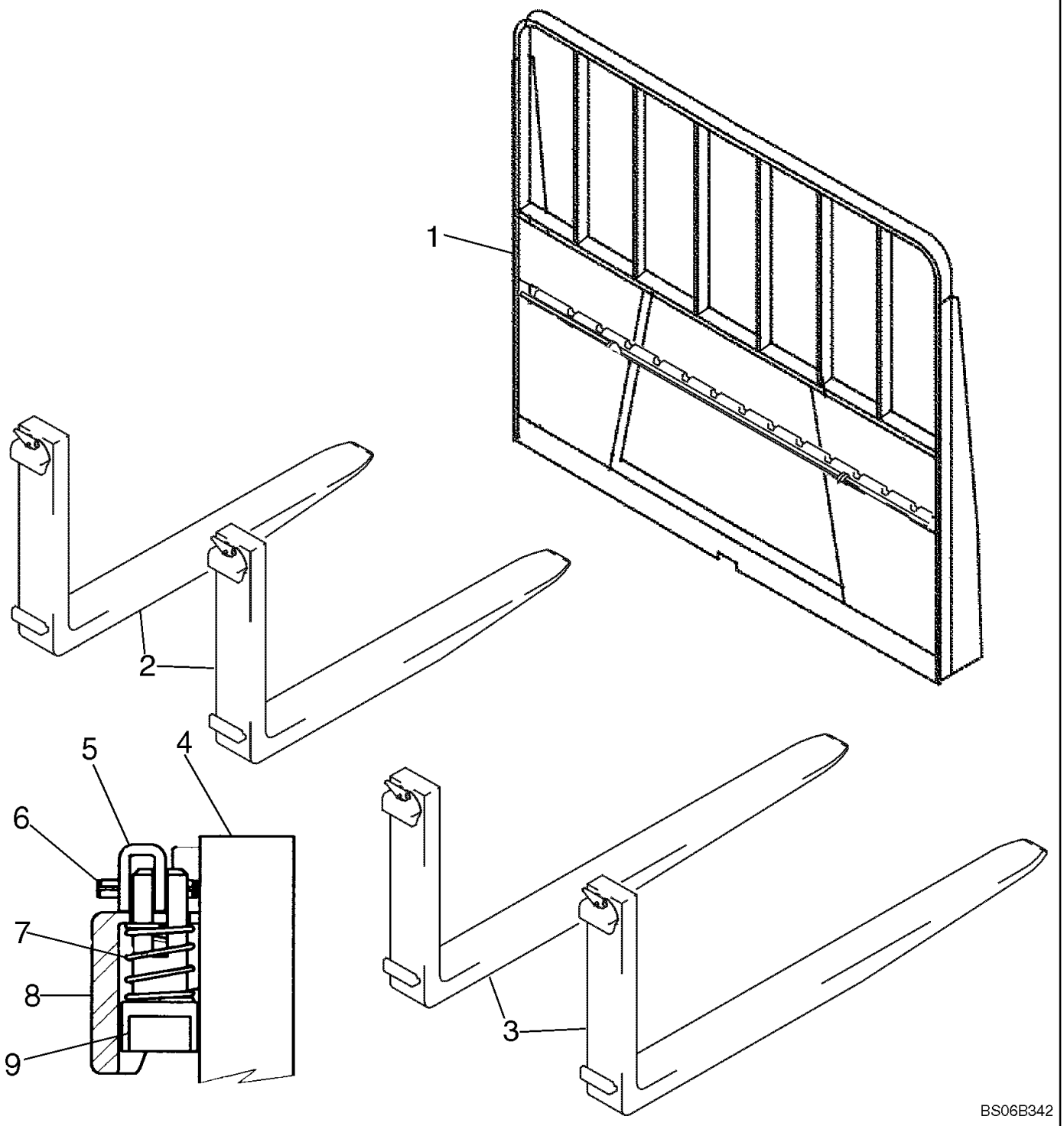

FOURCHE A PALETTE

REF	FN	PART NUMBER	YR/SN	QTY	DESCRIPTION
1		86639773		1	PIÈCES DE FIXATION, Pallet Fork
2		86589764		1	FOURCHE, 42 in. Pallet Fork Set; Incl. 86574054
		86574054		2	FOURCHE DE GODET, Fork Assy; 42 in.; Incl. 4 - 9
3		86589765		1	DIA, Construction, 48 in. Pallet Fork Set; Incl. 86574055
		86574055		2	FOURCHE DE GODET, Fork Assy; 48 in.; Incl. 4 - 9
4		NSS		1	NON FOURNI SEPAREMENT, Fork Arm
5		226129		1	POIGNÉE
6		118827		1	AXE, 3/16" x 1", Slotted
7		9800081		1	RESSORT
8		NSS		1	NON FOURNI SEPAREMENT, Top Hook
9		226130		1	AXE

COMMANDES - MONTAGE

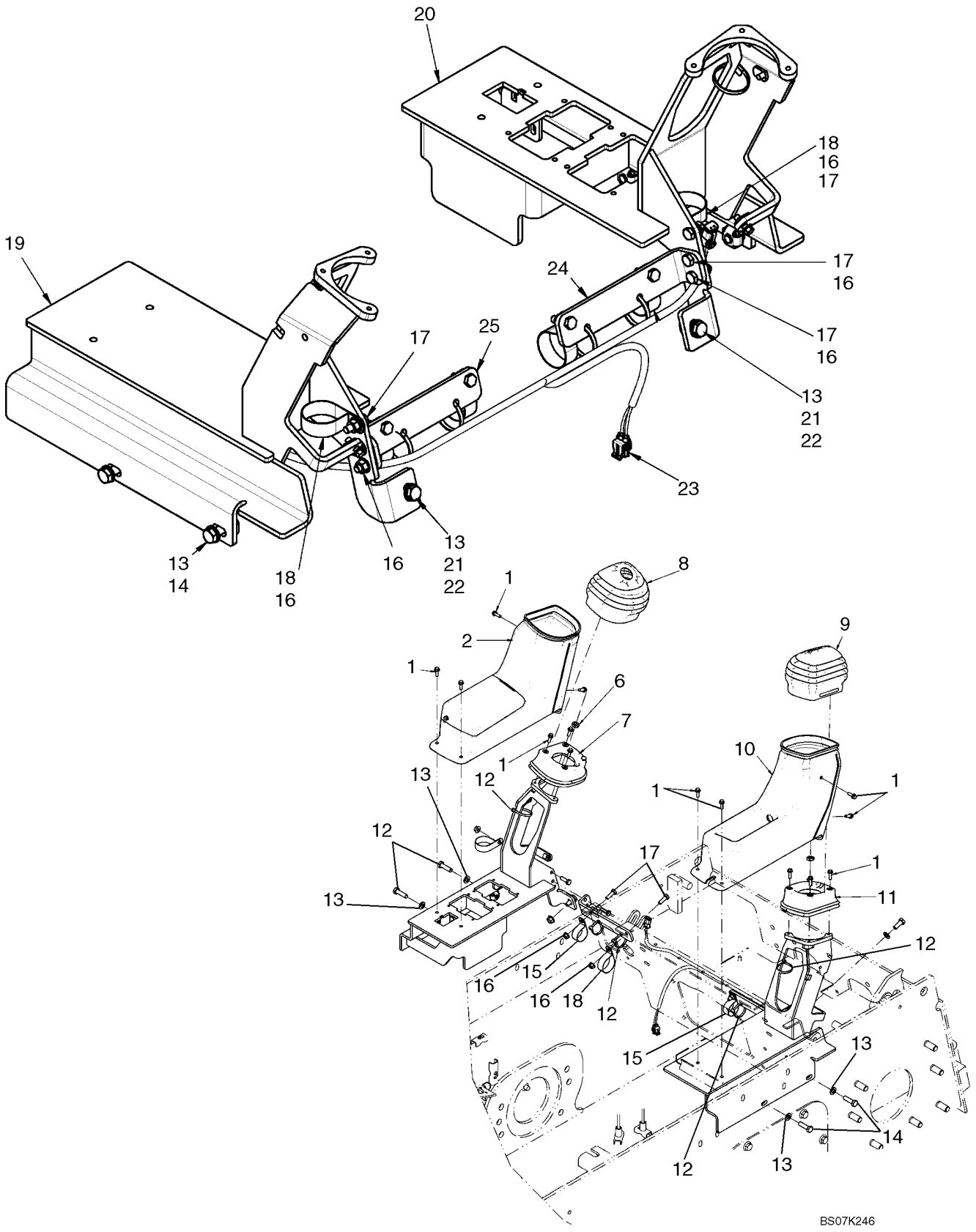

COMMANDES - MONTAGE

REF	FN	PART NUMBER	YR/SN	QTY	DESCRIPTION
1		87556251		14	VIS, Screw, 1/4-20 X 3/4
2		87665545		1	CONSOLE, Console, LH
3		87647723		1	COUVERTURE, Fuse Cover
4		87568437		1	ECROU A OREILLES, Knob, Latch
5		236535A1		1	CLIP, Clip, Latch
6		323238		2	ECROU, Thin, M12 x 1.75, Cl 05
7		87646402		1	JOINT, CAOUTCHOUC, Seal, LH
8		87568426		1	MANCHON-CAOUTCHOUC, Boot, LH
9		87568427		1	MANCHON-CAOUTCHOUC, Boot, RH
10		87665543		1	CONSOLE, Console, RH
11		87646401		1	JOINT, CAOUTCHOUC, Seal, RH
12		L11541		6	SERRE-CABLE
13		86624176		6	RONDELLE, M10 x 20 x 2
14		9706704		4	BOULON, Hex, M10 x 35, 8.8, Full Thd
15		86637998		3	BRIDE, 1 1/2", Insul, 3/8" Bolt
16		86505868		10	ECROU, M8, Flg Ser
17		43127		6	BOULON, Hex, M8 x 25, 8.8
18		603022		3	BRIDE, 1 3/4", Insul, 3/8" Bolt
19		NSS		1	NON FOURNI SEPAREMENT, Console, RH
20		NSS		1	NON FOURNI SEPAREMENT, Console, LH
21		43139		2	VIS
22		43435		2	ECROU, M10, Flg Ser
23		87568434		1	FAISCEAU, Pilot Harness
24		NSS		1	NON FOURNI SEPAREMENT, Hose Support, LH
25		NSS		1	NON FOURNI SEPAREMENT, Hose Support, RH

CONSOLE - DROIT

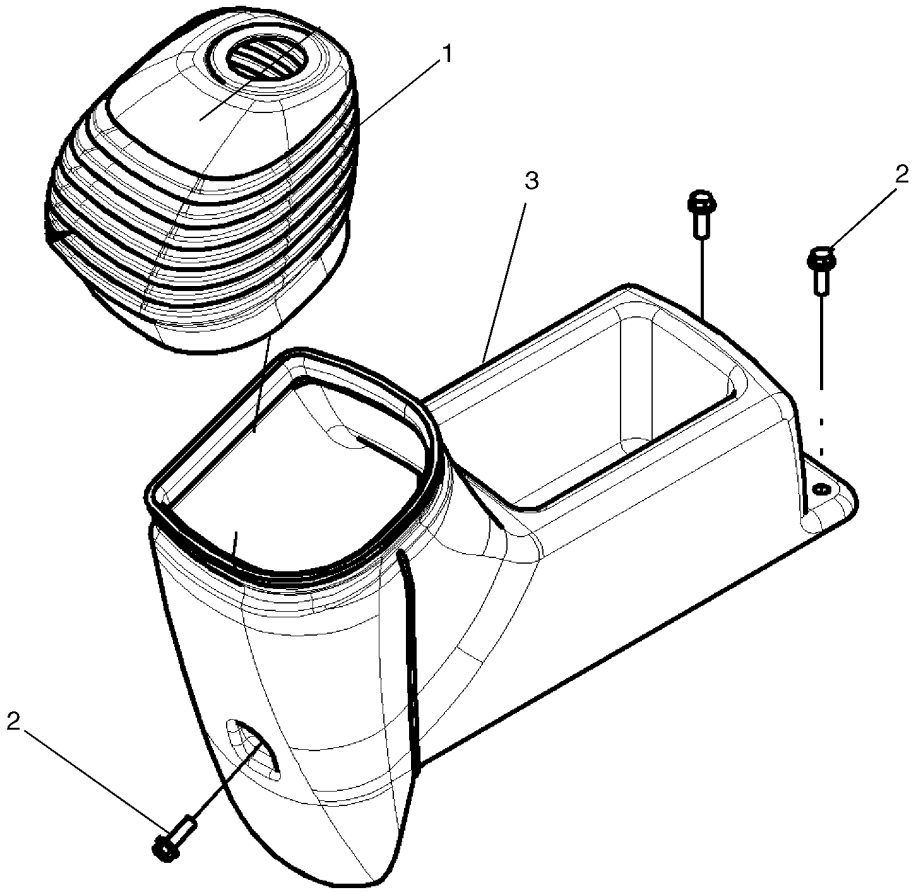

BS07J262

CONSOLE - DROIT

REF	FN	PART NUMBER	YR/SN	QTY	DESCRIPTION
1		{87679715}		1	Boot, RH Pilot
2		87556251		6	VIS
3		87665549		1	CONSOLE, Console, RH

CONSOLE - GAUCHE

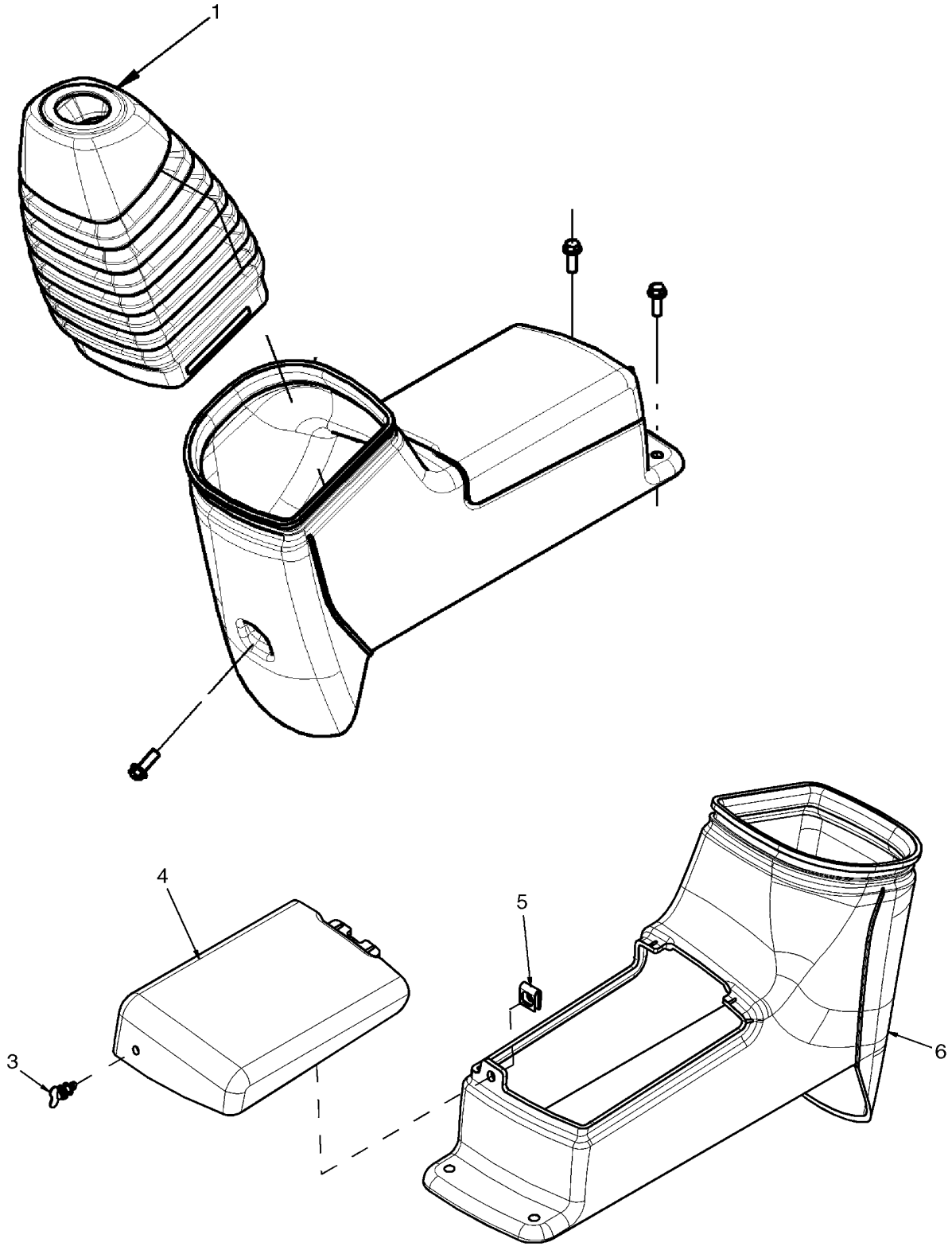

CONSOLE - GAUCHE

REF	FN	PART NUMBER	YR/SN	QTY	DESCRIPTION
1		{87679718}		1	Boot, LH Pilot
3		87568437		1	ECROU A OREILLES
4		87647723		1	COUVERTURE
5		236535A1		1	CLIP
6		87665550		1	CONSOLE, Console, LH

09-16		p1	12/07

CHASSIS (440)

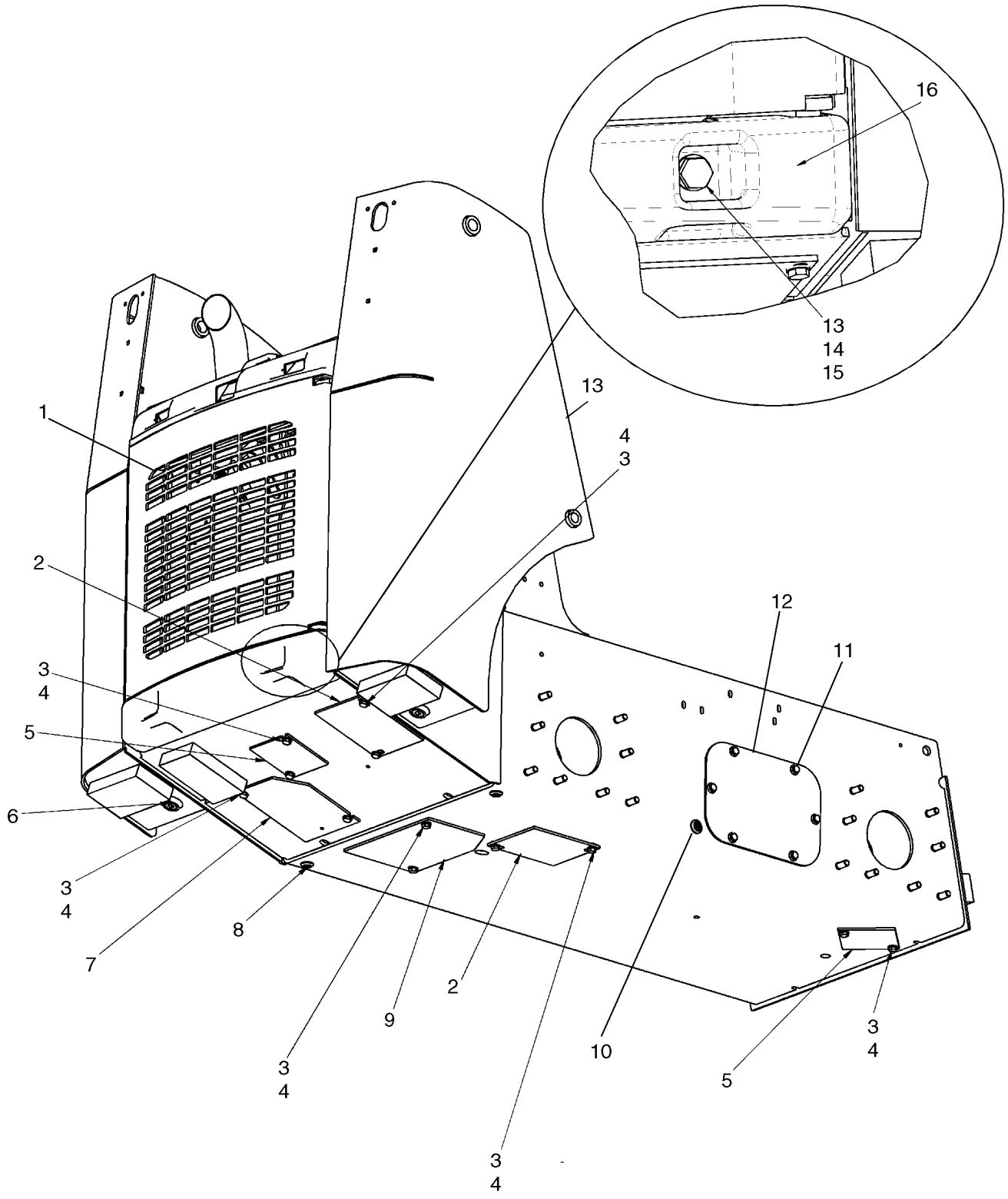

CHASSIS (440)

REF	FN	PART NUMBER	YR/SN	QTY	DESCRIPTION
1		REF		1	NOTICE, Rear Door; See Fig. 09-26
1		REF		1	NOTICE, Rear Door, Louvered, Europe; See Fig 09-27
2		87458642		2	PLAQUE, Plumbing Access Plate
3		86625255		16	RONDELLE, M13.5 x 24.5 x 3, HT
4		9824642		12	BOULON, Hex, M12 x 35, 10.9
5		H436914		2	PLAQUE, GRANDE
6		87432221		2	BOUCHON, Magnetic Plug
7		87666074		1	PLAQUETTE, Plumbing Access Plate
8		236622		2	BOUCHON, 3/8 - 18 NPTF
9		87648094		1	PLAQUE, Oil Drain Cover
10		{647429}		2	Plug, 1/2 - 14 NPTF
11		87030508		12	BOULON, Hex Flg, M12 x 30, 10.9, Full Thd
12		87411208		2	PLAQUETTE
13		87617091		1	KIT ASSISTANCE, Frame; Incl Ref 6, 8, 10 And Fig 09-16 Ref 17 (Non Locking Cap) 18, Fuel Sender And Gasket
14		86625260		2	RONDELLE, M20 x 37.5 x 4, HT
15		86536985		2	CONTRE-ECROU, M20 x 2.5, Cl 10
16		87626717		1	MASSELOTTE, Bumper, Counterweight

CHASSIS (440)

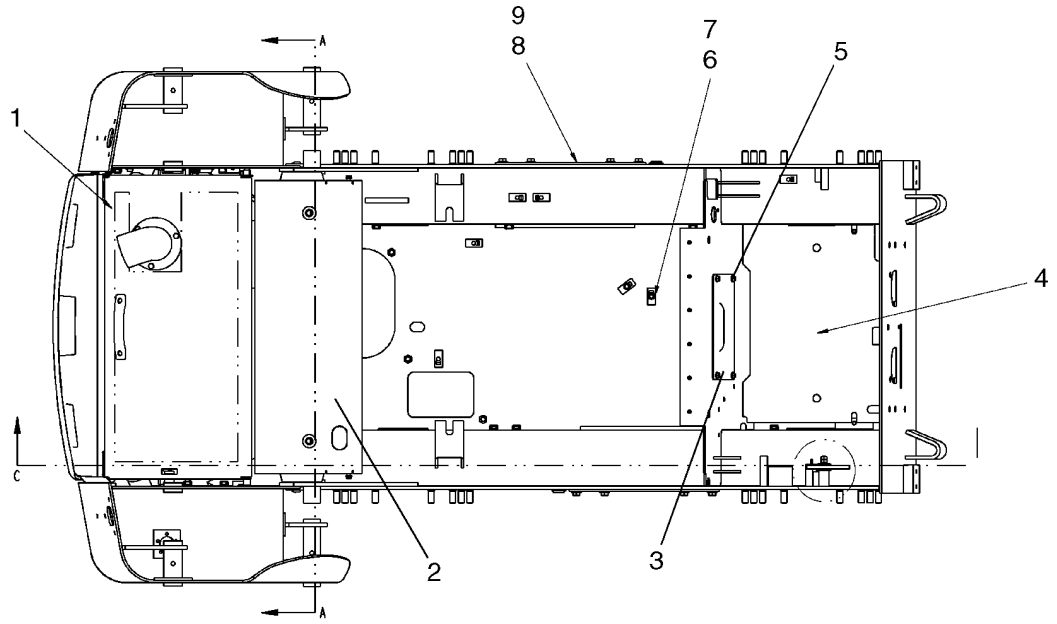

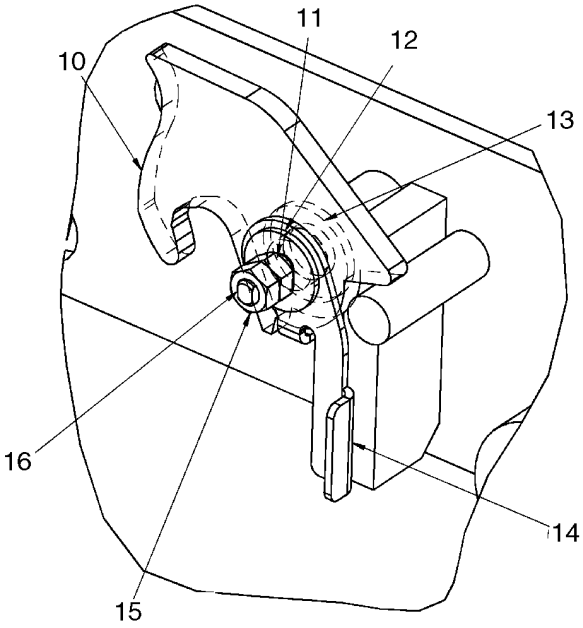

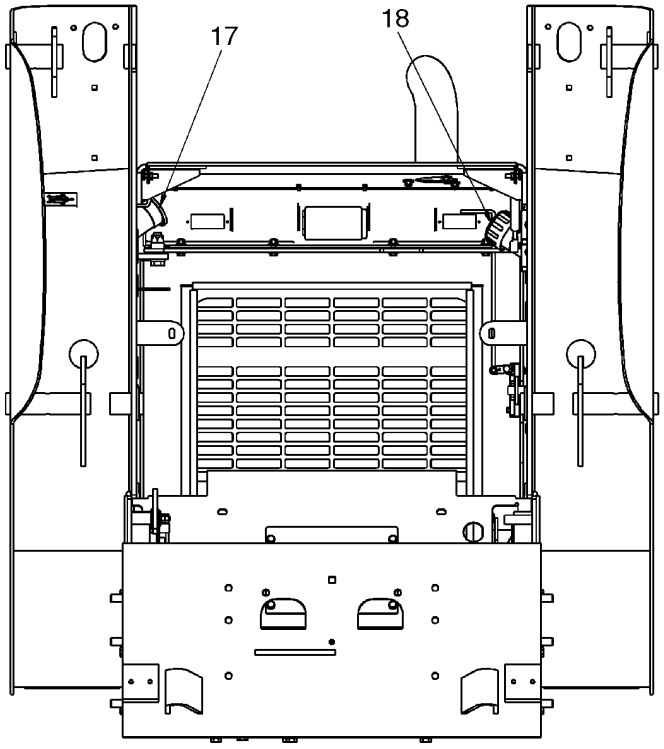

BS07K252

CHASSIS (440)

REF	FN	PART NUMBER	YR/SN	QTY	DESCRIPTION
1		REF		1	NOTICE, Rear Hood; See Fig. 09-24
2		{87661301}		1	Panel, Heat Shield Extension
3		87430679		1	PLAQUE, Cover Plate
4		{87705430}		1	Floor Plate - Tan
5		86545825		4	VIS AUTO-TARAUDEUSE, Hex Wash Hd, 5/16" x 5/8"
6		86508569		2	BOULON, Hex, M6 x 70, 8.8
7		87022737		2	ENTRETOISE
8		87030508		12	BOULON, Hex Flg, M12 x 30, 10.9, Full Thd
9		87411208		2	PLAQUETTE
10		390516A3		1	LOQUET, ROPS Latch Plate
11		278332A1		1	RONDELLE
12		294967A1		1	RONDELLE
13		87381		1	RONDELLE, 3/4", SAE
14		294911A2		1	CROCHET, Latch Return Plate
15		86500689		2	ECROU, M10, Cl 10
16		294943A1		1	GOUJON, Latch Mounting Stud
17		H436887		1	BOUCHON DE REMPL., Fuel Cap, Non Locking
17		108925A1		1	BOUCHON DE REMPL., Fuel Cap, Locking; Incl 2 Keys
18		257448A1		1	CHAPEAU, Hydraulic Fill Cap

CHASSIS (440CT)

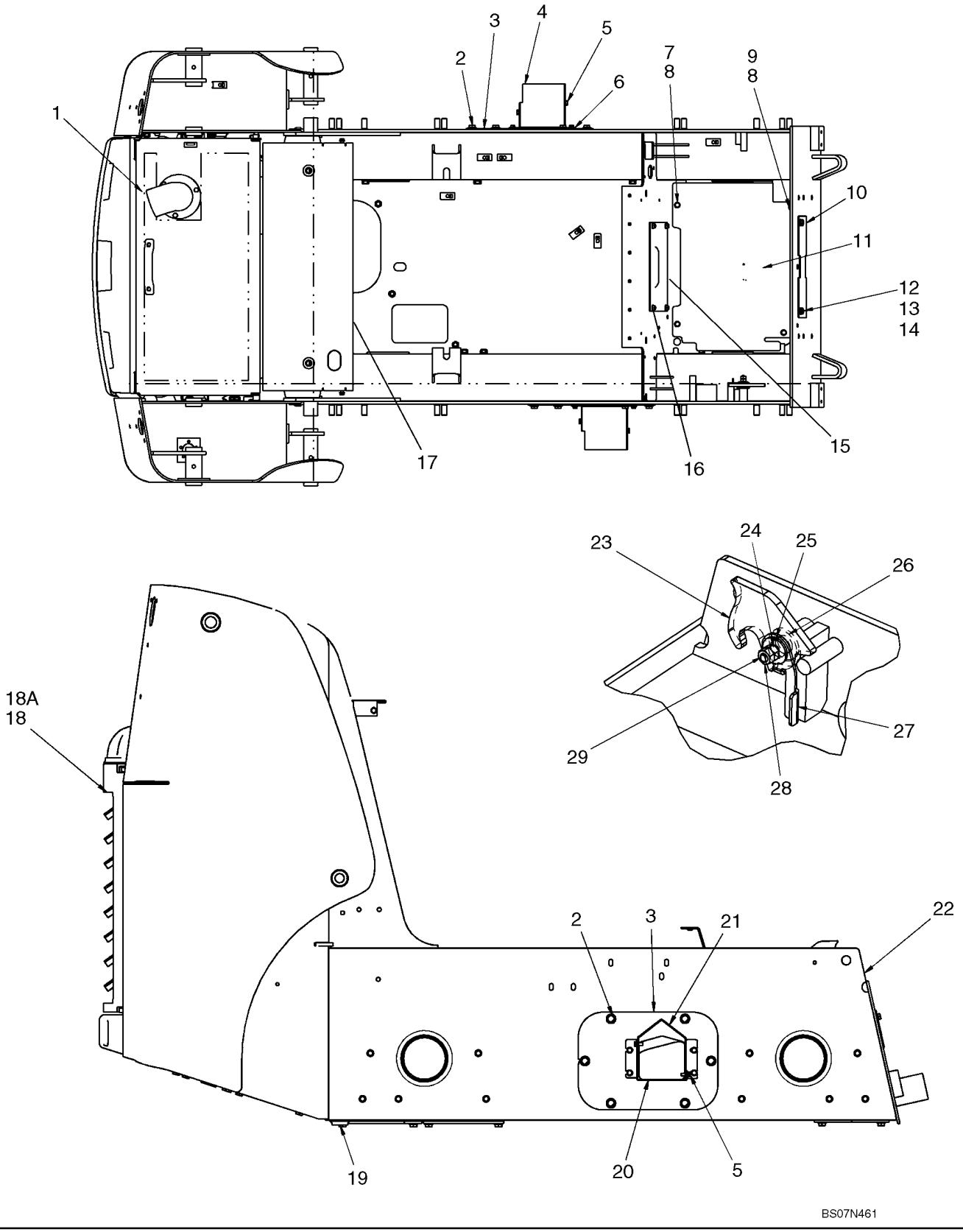

CHASSIS (440CT)

REF	FN	PART NUMBER	YR/SN	QTY	DESCRIPTION
1		REF		1	NOTICE, Rear Hood; See Fig 09-24
2		87030508		12	BOULON, Hex Flg, M12 x 30, 10.9, Full Thd
3		87368774		2	COUVERCLE
4		87368777		1	GARANT, Hose Guard, Lower Left
5		9840344		12	VIS
6		87368778		1	GARANT, Hose Guard, Upper Left
7		9635884		3	BOULON, Hex, 5/16"-18 x 1", G5, Full Thd
8		83918746		4	RONDELLE
9		9707515		1	BOULON, Hex, 5/16"-18 x 1 3/4", G5
10		87461248		1	PLAQUE, Cover Plate, Front Plate
11		{87705430}		1	Composite Floor Plate
12		43139		2	VIS
13		140017		4	RONDELLE, M10 x 20 x 2
14		86512554		2	CONTRE-ECROU, M10 x 1.5, Cl 10
15		87430679		1	PLAQUE
16		86545825		4	VIS AUTO-TARAUDEUSE, Hex Wash Hd, 5/16" x 5/8"
17		{87661301}		1	Heat Shield Extension
18		REF		1	NOTICE, Rear Door, Louvered, Europe; See Fig 09-27
18A		REF		1	NOTICE, Rear Door, Standard; See Fig 09-26
19		86625135		2	BOUCHON, Hex Soc, 1"-11 1/2 NPTF
20		87368775		1	GARANT, Hose Guard, Lower Right
21		87368776		1	GARANT, Hose Guard, Upper Right
22		87617092		1	KIT ASSISTANCE, Kit, Chassis; Incl Fuel Cap, Hydraulic Cap And Fuel Sender With Gasket
23		390516A3		1	LOQUET, ROPS Latch
24		278332A1		1	RONDELLE
25		294967A1		1	RONDELLE
26		87381		1	RONDELLE, 3/4", SAE
27		294911A2		1	CROCHET, Latch Return
28		86500689		2	ECROU, M10, Cl 10
29		294943A1		1	GOUJON

09-19		p1	12/07

CHASSIS (440CT)

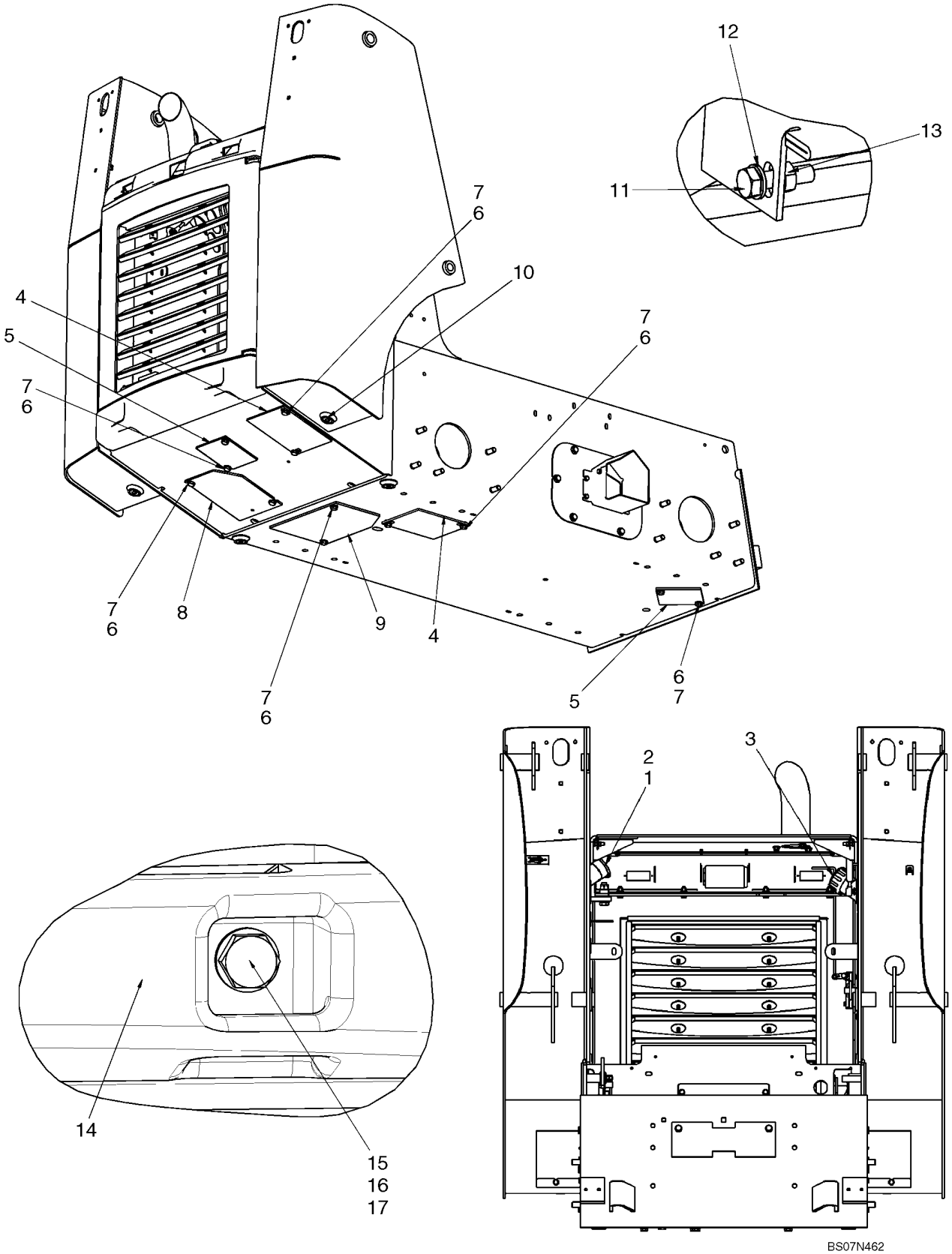

CHASSIS (440CT)

REF	FN	PART NUMBER	YR/SN	QTY	DESCRIPTION
1		H436887		1	BOUCHON DE REMPL., Non Locking
2		108925A1		1	BOUCHON DE REMPL., Locking
3		257448A1		1	CHAPEAU, Hydraulic Fill Cap
4		87458642		2	PLAQUE
5		H436914		2	PLAQUE, GRANDE
6		86625255		16	RONDELLE, M13.5 x 24.5 x 3, HT
7		9824642		12	BOULON, Hex, M12 x 35, 10.9
8		87666074		1	PLAQUETTE
9		87648094		1	PLAQUE, Oil Drain Cover
10		87432221		2	BOUCHON, Magnetic Plug
11		43128		2	BOULON, Hex, M8 x 30, 8.8
12		140016		4	RONDELLE, M8 x 16 x 1.6
13		43362		2	ECROU, M8, Cl 10
14		87626717		1	MASSELOTTE
15		412641		2	BOULON, Hex, M20 x 70, 10.9
16		86625260		2	RONDELLE, M20 x 37.5 x 4, HT
17		86536985		2	CONTRE-ECROU, M20 x 2.5, Cl 10
18		REF		1	NOTICE, Rear Door, Louvered, Europe; See Fig 09-27
18A		REF		1	NOTICE, Rear Door, Standard; See Fig 09-26

COMMANDES - CHARGEUSE ET ENTRAINEMENT DROIT

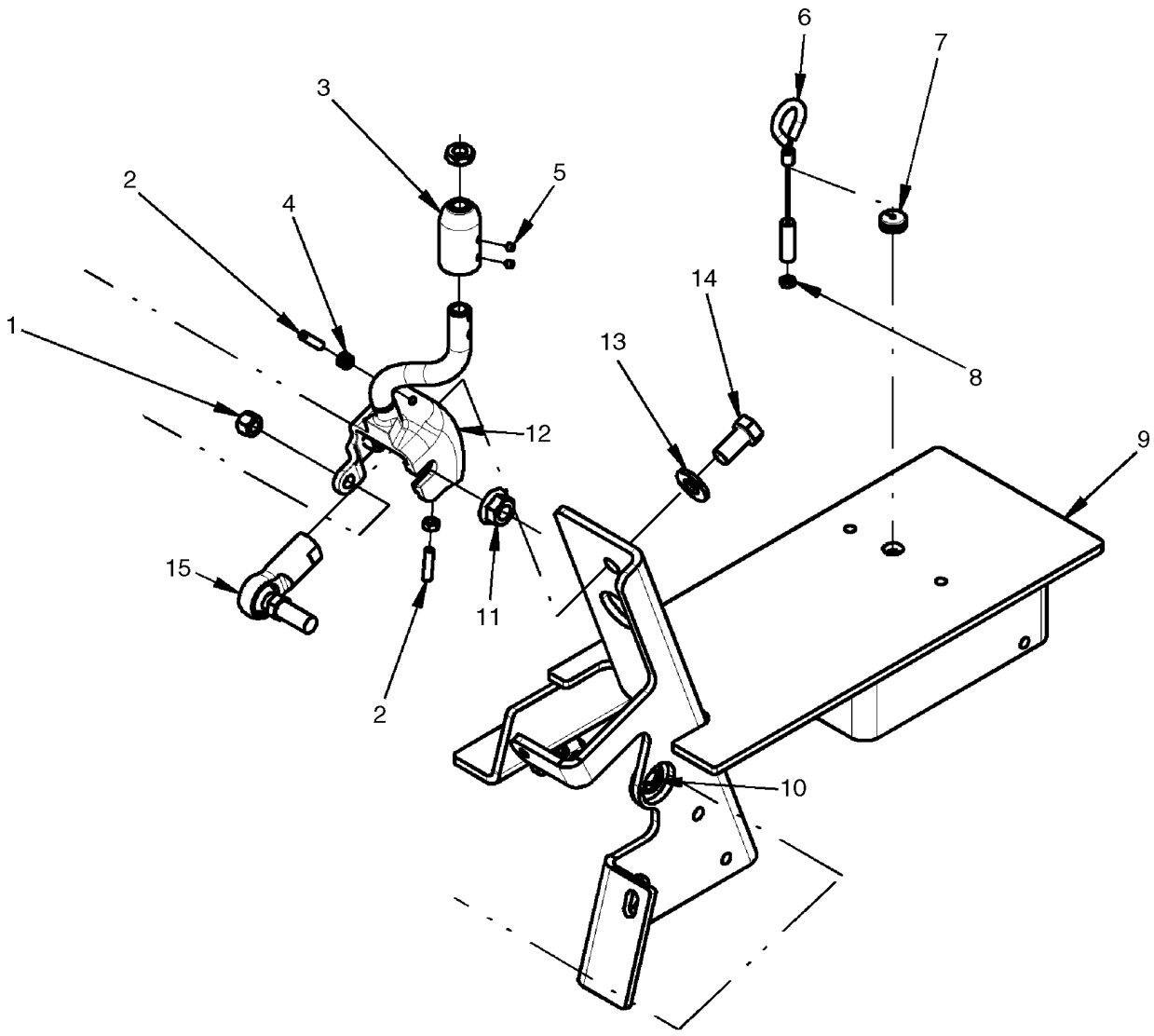

COMMANDES - CHARGEUSE ET ENTRAINEMENT DROIT

REF	FN	PART NUMBER	YR/SN	QTY	DESCRIPTION
1		80855		4	CONTRE-ECROU, 3/8"-24, GC
2		405103A1		2	VIS
3		{87662429}		1	Handle Mounting Adapter
4		86500688		5	ECROU, M6, Cl 10
5		87564724		2	VIS, Set Screw, #10-32 X 1/4
6		87462741		1	CABLE, Cable, Override
7		87036285		1	PASSE-FIL, 1/8" ID x 9/16" Groove Dia, Str Cut
8		87825		1	ECROU, #10-32
9		{87684388}		1	Frame, Control RH
10		87309725		4	ANNEAU D'ARRÊT, Retaining Ring, External "E" Style #62
11		87033645		2	CONTRE-ECROU, Flg, 1/2"-20
12		{87662357}		1	Control Lever, RH
13		87364		2	RONDELLE, 1/2", SAE
14		87848		2	BOULON, Hex, 1/2"-20 x 1", G5, Full Thd
15		87458667		1	ARTICULATION

COMMANDES - CHARGEUSE ET ENTRAINEMENT GAUCHE

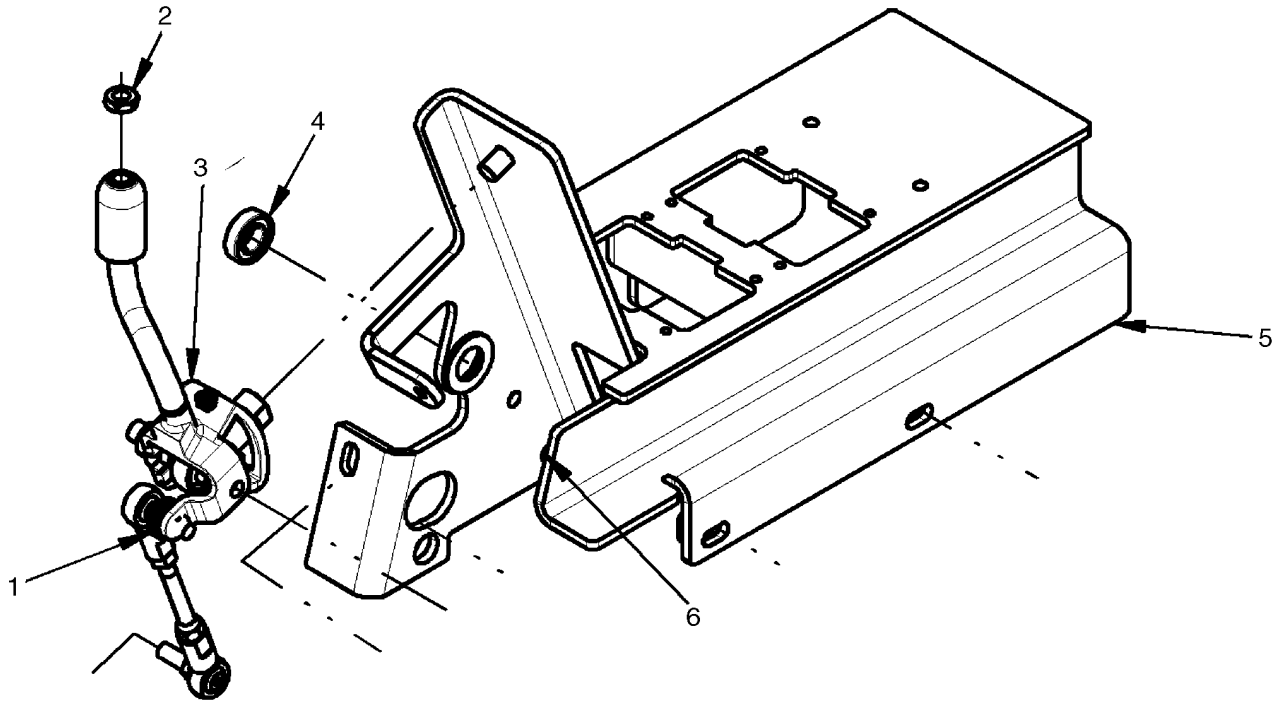

BS07J220

COMMANDES - CHARGEUSE ET ENTRAINEMENT GAUCHE

REF	FN	PART NUMBER	YR/SN	QTY	DESCRIPTION
1		86639325		3	RONDELLE, M10 x 24.5 x 3, HT
2		323238		2	ECROU, Thin, M12 x 1.75, Cl 05
3		{87662349}		1	Control Lever, LH
4		87458664		2	ROULEMENT A BILLES
5		{87684387}		1	Frame, Control LH
6		87030561		1	CONTRE-ECROU, M6 x 1, Cl 8

09-22		p1	12/07

COMMANDES - CHARGEUSE ET ENTRAINEMENT

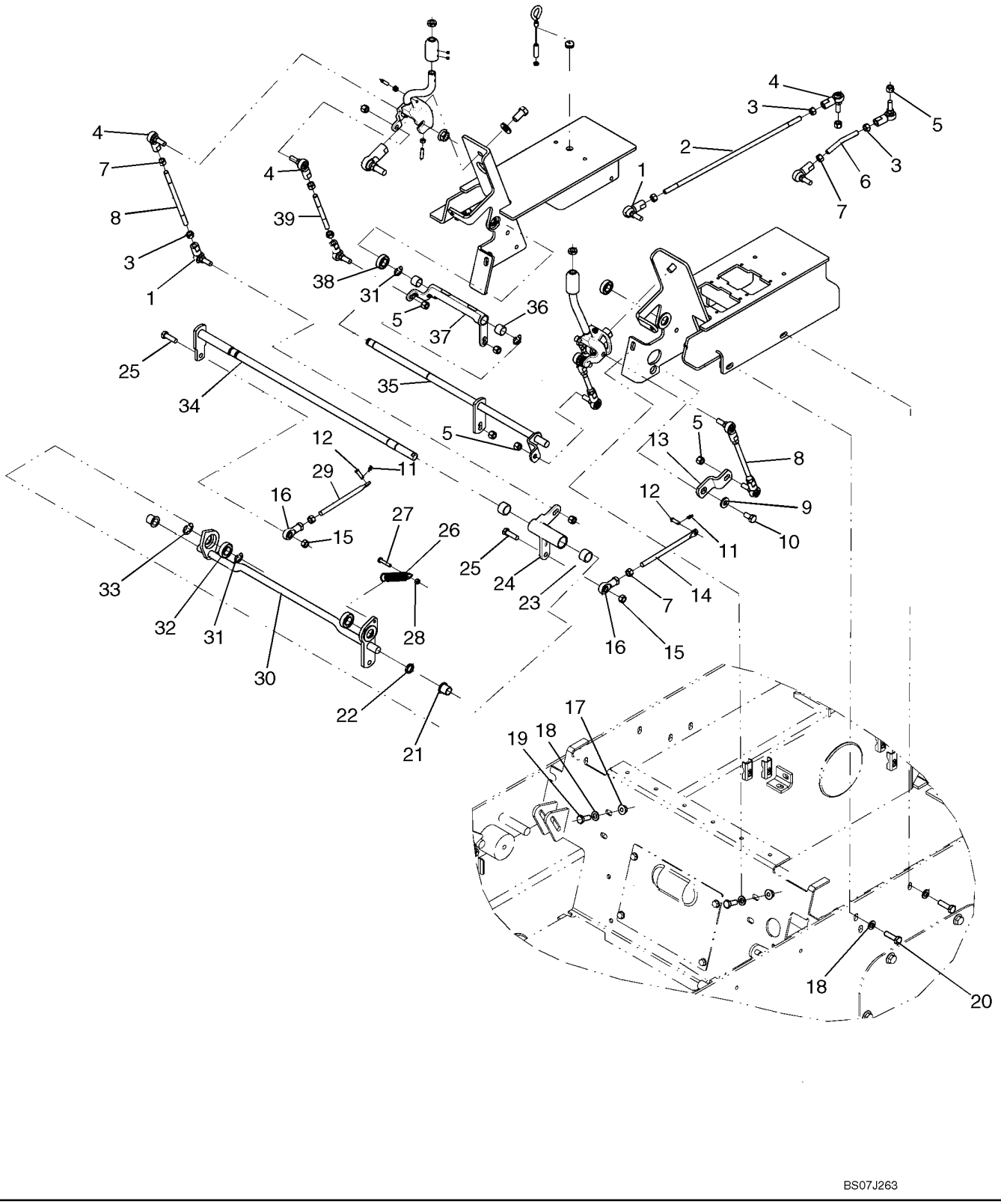

COMMANDES - CHARGEUSE ET ENTRAINEMENT

REF	FN	PART NUMBER	YR/SN	QTY	DESCRIPTION
1		230426A1		6	ROTULE
2		435565A1		1	TRINGLE
3		87030547		6	ECROU, 3/8"-24, G5, LH
4		230425A1		6	ROTULE
5		80855		12	CONTRE-ECROU, 3/8"-24, GC
6		87460100		1	TRINGLE
7		86509310		8	ECROU, 3/8"-24, G5
8		180682A1		2	TIGE
9		86639325		3	RONDELLE, M10 x 24.5 x 3, HT
10		43138		1	VIS, Hex, M10 x 20, 8.8, Full Thd
11		D131983		2	AXE
12		234726		2	AXE DE CHAPE, 1/4" x .770"
13		87458510		1	BRAS
14		87458662		1	TRINGLE
15		9628503		2	ECROU, 3/8"-16, G5
16		86500348		2	ROTULE
17		411345A1		2	ECROU
18		86624176		6	RONDELLE, M10 x 20 x 2
19		43139		2	VIS
20		9706704		4	BOULON, Hex, M10 x 35, 8.8, Full Thd
21		367582A1		2	COUSSINET EN NYLON
22		409856A1		1	ENTRETOISE
23		409845A1		2	ROULEMENT A AIGUILLES
24		385783A3		1	MANIVELLE
25		88011		2	BOULON, Hex, 3/8"-16 x 1 1/4", G5, Full Thd
26		120952A1		1	RESSORT
27		43117		1	BOULON, Hex, M6 x 30, 8.8
28		86500688		5	ECROU, M6, Cl 10
29		87458660		1	TRINGLE
30		87458511		1	ARBRE
31		87309725		4	ANNEAU D'ARRÊT, External "E" Style, #62
32		87458665		2	ROULEMENT A BILLES
33		87309726		1	ANNEAU D'ARRÊT, External "E" Style, #75
34		87613733		4	TRINGLE
35		87458514		1	TRINGLE (ASSEMBLEE)

COMMANDES - CHARGEUSE ET ENTRAINEMENT

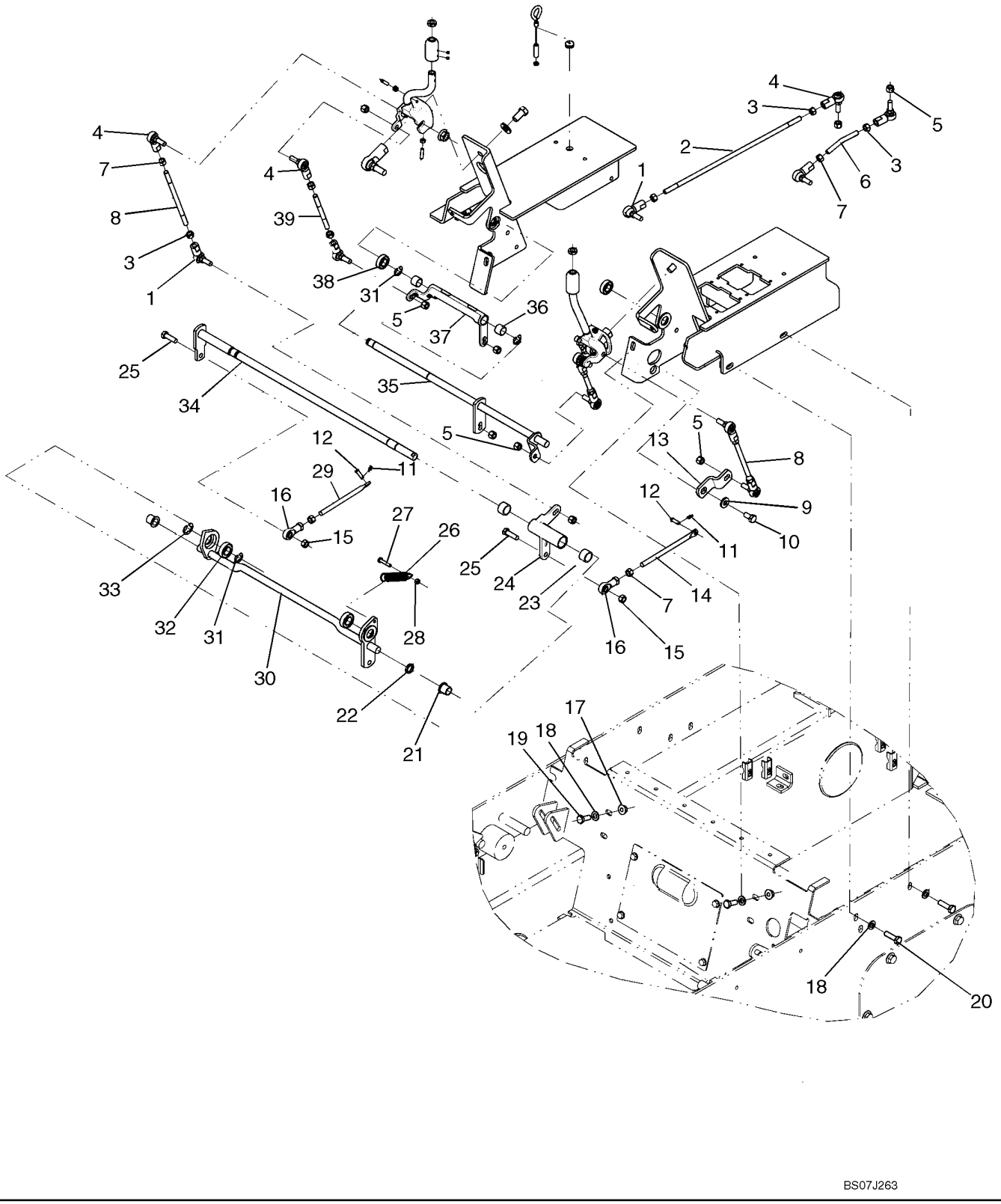

COMMANDES - CHARGEUSE ET ENTRAINEMENT

REF	FN	PART NUMBER	YR/SN	QTY	DESCRIPTION
36		409844A1		2	ROULEMENT A AIGUILLES
37		367585A2		1	MANIVELLE
38		87458664		2	ROULEMENT A BILLES
39		249367A2		2	AXE, GROS

COMMANDES - CIRCUIT HYDRAULIQUE AUX.

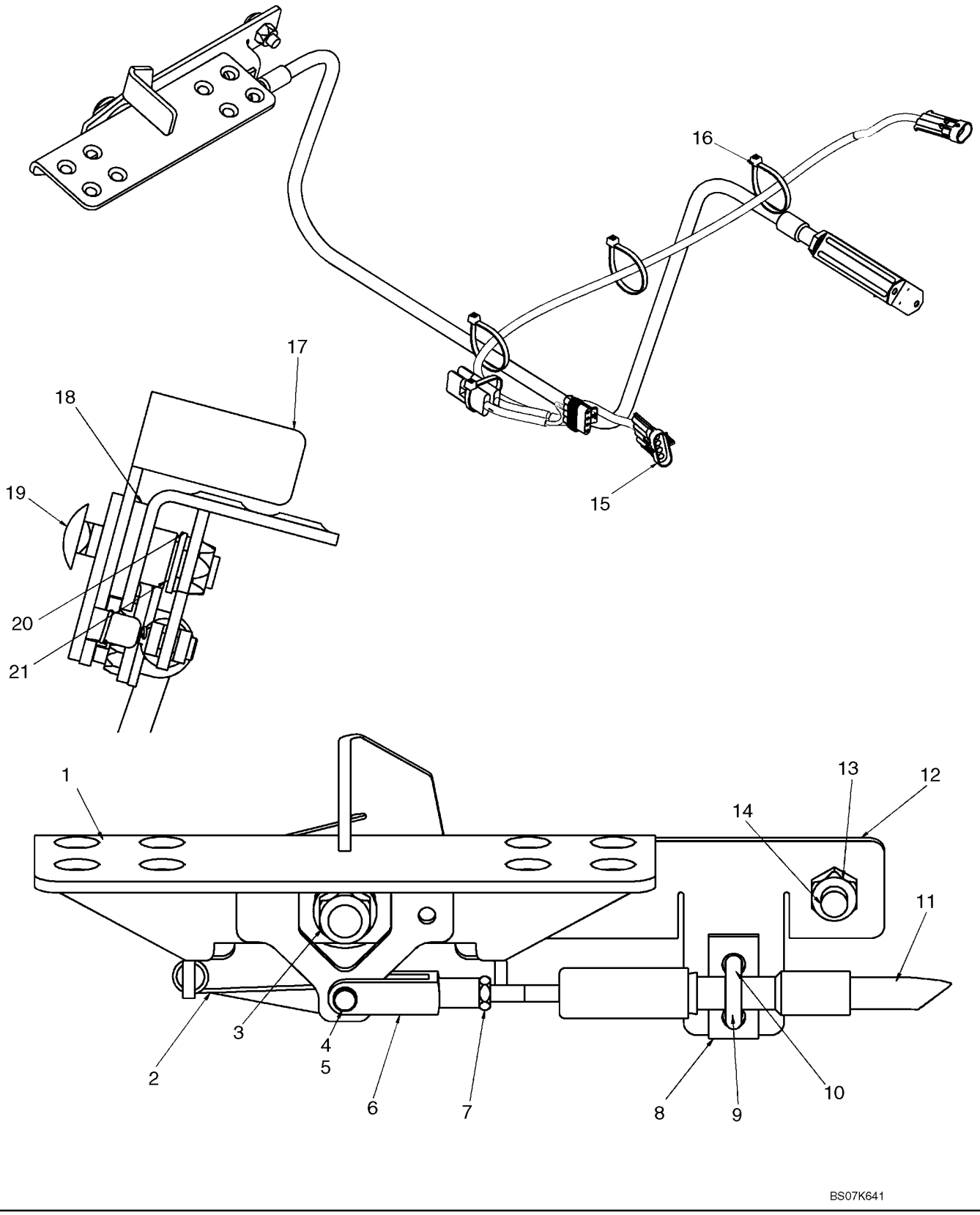

COMMANDES - CIRCUIT HYDRAULIQUE AUX.

REF	FN	PART NUMBER	YR/SN	QTY	DESCRIPTION
1		87423833		1	PEDALE (ASSEMBLEE)
2		302960A2		1	RESSORT
3		412672		1	CONTRE-ECROU, M12 x 1.75, Cl 10
4		D131983		1	AXE
5		234726		1	AXE DE CHAPE, 1/4" x .770"
6		86520436		1	CHAPE DE RÉGLAGE, 1/4"-28
7		86976064		1	ECROU, Jam, 1/4"-28, G5
8		H373779		1	PLAQUE, GRANDE, Spacer
9		87442439		1	TRINGLE
10		86512440		2	CONTRE-ECROU
11		87423856		1	CABLE (ASSEMBLE)
12		NSS		1	NON FOURNI SEPAREMENT, Mounting Plate
13		86512554		1	CONTRE-ECROU, M10 x 1.5, Cl 10
14		86512446		1	BOULON TETE BOMBEE, Short NK, M10 x 30, Cl8.8, Full Thd
15		87715731		1	FAISCEAU, Auxiliary Interlock Harness; Incl 15A
15A		774735		1	DIODE
16		L11541		3	SERRE-CABLE
17		87446614		1	LEVIER, Pedal Lock Lever
18		283839A1		1	ENTRETOISE, Rubber Spacer
19		87033290		1	BOULON TETE BOMBEE, Short NK, M12 x 55, Cl8.8
20		140018		1	RONDELLE, M12 x 24 x 2.5
21		L14781		1	BAGUE

09-24		p1	12/07

CAPOT

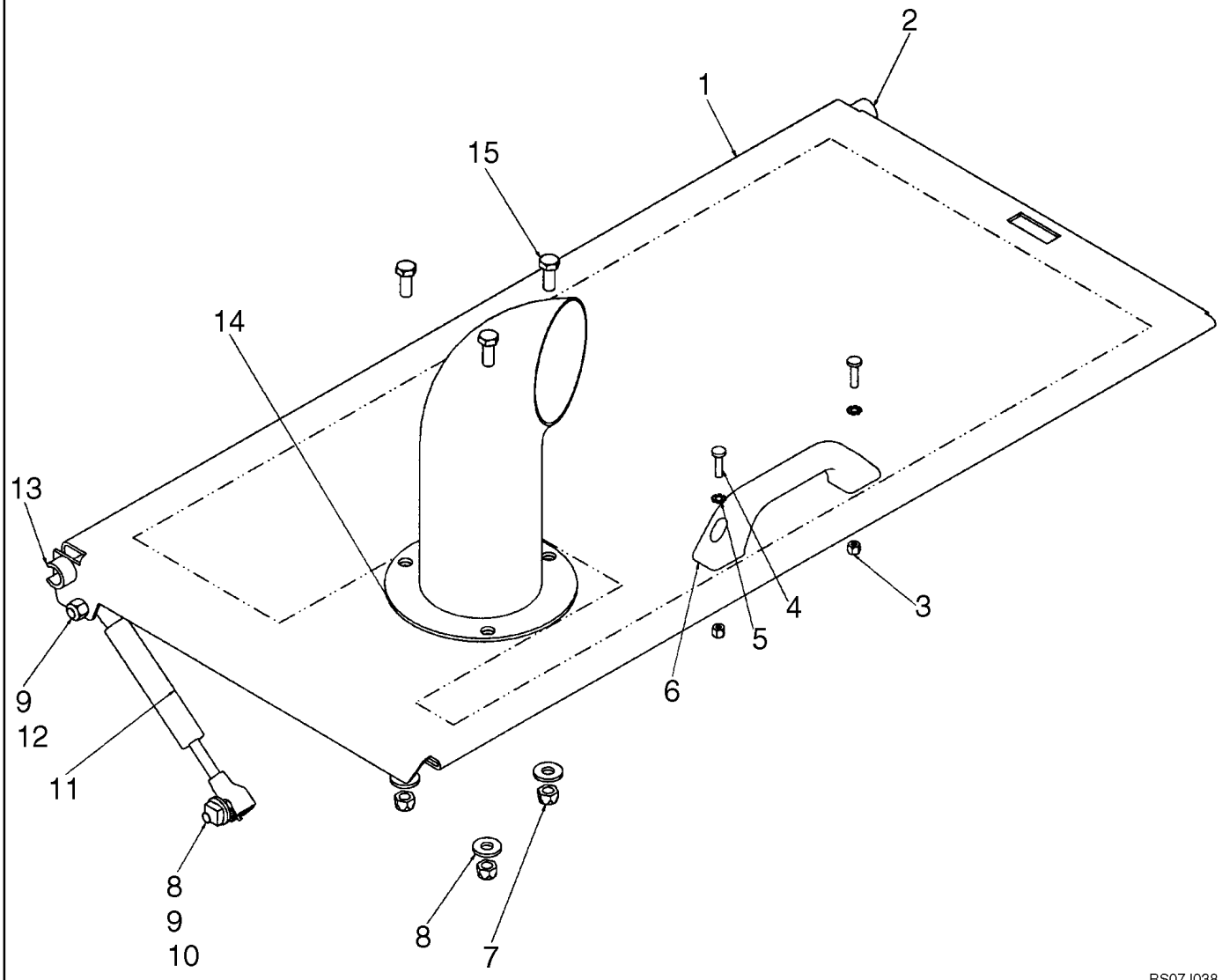

CAPOT

REF	FN	PART NUMBER	YR/SN	QTY	DESCRIPTION
1		87707134		1	CHASSIS, Frame, Rear Hood
2		435396A1		1	ENTRETOISE
3		86639241		2	CONTRE-ECROU, M5 x .8, Cl 8
4		86511827		2	VIS, Cross Pan Hd, M5 x 20
5		86625264		2	RONDELLE FREIN, Ext Tooth, M5
6		406256A1		1	POIGNÉE
7		9628098		3	CONTRE-ECROU, M8 x 1.25, Cl 10
8		87015284		4	RONDELLE, M8 x 21.5 x 2.5, HT
9		189609A1		2	GOUJON
10		229197A1		1	ECROU
11		400473A1		1	VERIN
12		412250		1	CONTRE-ECROU, M8 x 1.25, Cl 8
13		87429698		1	ENTRETOISE
14		87381264		1	TUYAU
15		120104		3	BOULON, Hex, M8 x 20, 8.8

09-25		p1	12/07

CAPOT - CLIMATISATION

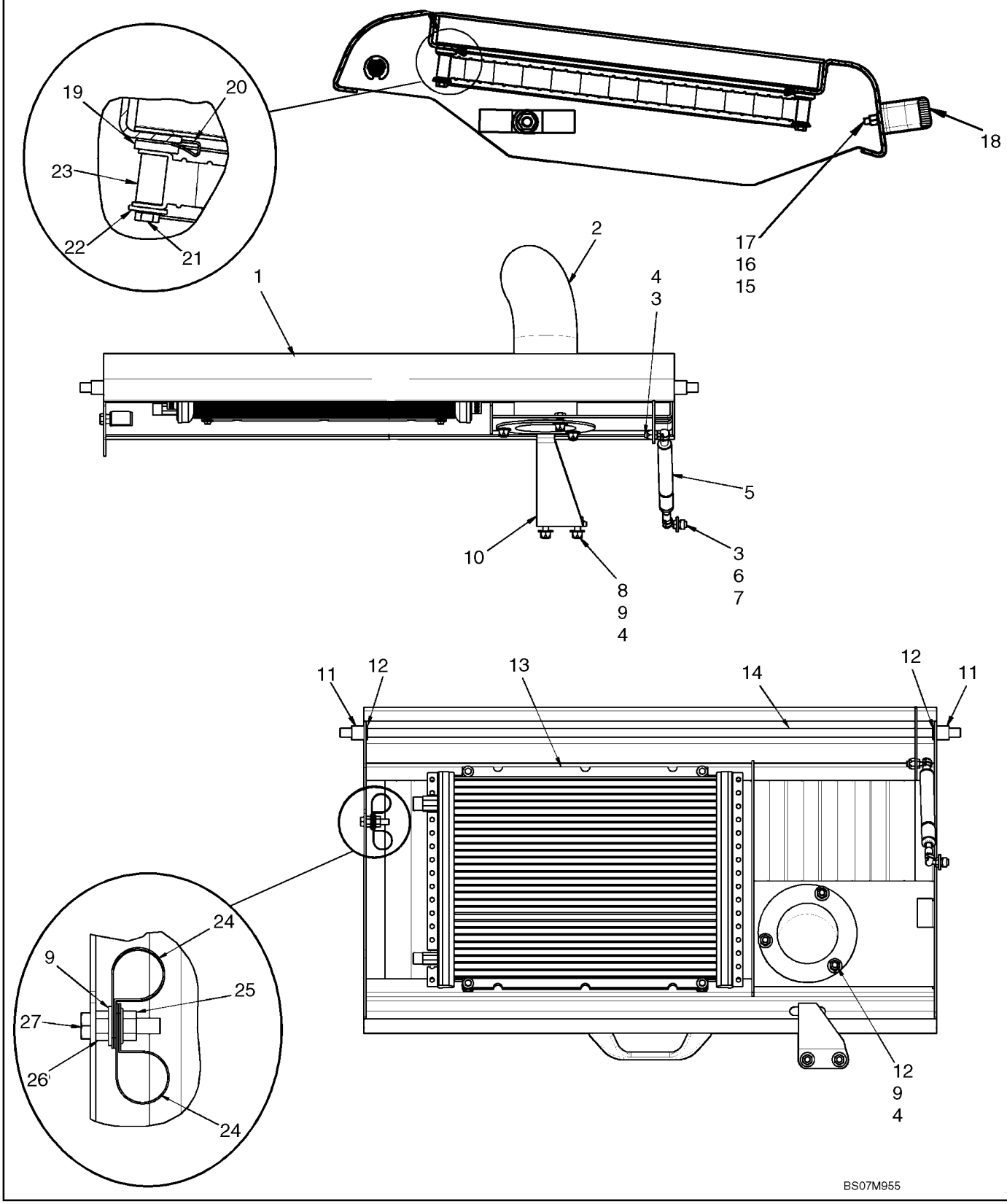

CAPOT - CLIMATISATION

REF	FN	PART NUMBER	YR/SN	QTY	DESCRIPTION
1		87707135		1	PORTE, Rear Hood, Air Conditioning
2		87381264		1	TUYAU, Exhaust Extension
3		189609A1		2	GOUJON, Ball Stud
4		9628098		6	CONTRE-ECROU, M8 x 1.25, Cl 10
5		87449854		1	SUPPORT
6		87015284		1	RONDELLE, M8 x 21.5 x 2.5, HT
7		229197A1		1	ECROU
8		43127		2	BOULON, Hex, M8 x 25, 8.8
9		86625263		8	RONDELLE, M8 x 20 x 1.6
10		87459076		1	VERROU
11		87305403		2	ENTRETOISE
12		9635806		2	CIRCLIP, #50, .392" Dia, E-Type
13		87563692		1	CONDENSATEUR, Air Conditioning Condensor
14		87459075		1	TRINGLE
15		86639241		2	CONTRE-ECROU, M5 x .8, Cl 8
16		86625264		2	RONDELLE FREIN, Ext Tooth, M5
17		86511827		2	VIS, Cross Pan Hd, M5 x 20
18		406256A1		1	POIGNÉE
19		86592710		4	RONDELLE, M6 x 17 x 3
20		87301324		4	ECROU, M5, U
21		86025725		4	BOULON, Hex, M5 x 40, 8.8
22		87013357		4	RONDELLE, M5 x 15 x 1.6
23		87574372		4	ENTRETOISE
24		9827902		2	BRIDE, 1", Insul, 3/8" Bolt
25		9804277		1	ECROU, M8 x 1.25, Flg, Cl 8
26		9706690		1	ECROU, M8, Cl 8
27		300381		1	BOULON, Hex, M8 x 35, 8.8

09-26		p1	12/07

PORTE ARRIERE

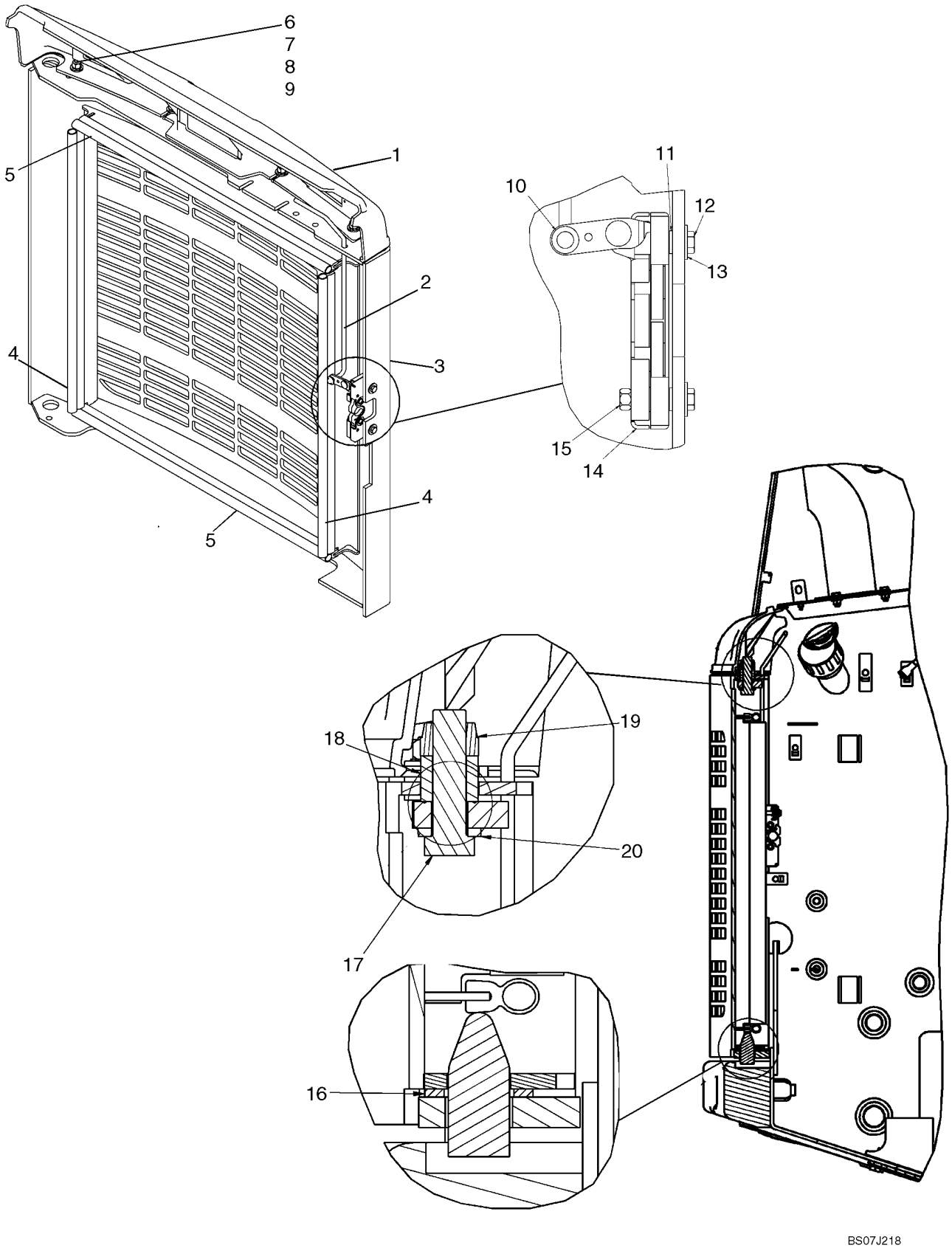

PORTE ARRIERE

REF	FN	PART NUMBER	YR/SN	QTY	DESCRIPTION
1		87461604		1	CAPUCHON DE FEU, Fairing, Rear Door Top
2		87440124		1	TRINGLE, Latch Pull Rod
3		87660800		1	PORTE, Rear Door
4		{87648128}		2	Bulb Seal, 562mm (22 1/8 in.)
5		{87578980}		2	Bulb Seal, 590mm (23 7/32 in.)
6		43128		4	BOULON, Hex, M8 x 30, 8.8
7		86632601		4	RONDELLE FREIN, Ext Tooth, M8
8		412250		4	CONTRE-ECROU, M8 x 1.25, Cl 8
9		87015284		12	RONDELLE, M8 x 21.5 x 2.5, HT
10		380751A1		1	ECROU
11		86588450		2	RONDELLE, M6
12		86977789		2	BOULON, Hex, M6 x 35, 8.8
13		86624182		2	RONDELLE, M6 x 18 x 1.6
14		87437076		1	LOQUET
15		87030561		2	CONTRE-ECROU, M6 x 1, Cl 8
16		248988A1		1	RONDELLE, Rear Door Thrust Washer
17		9828248		1	BOULON, Hex, M16 x 60, 10.9
18		248461A1		1	BAGUE, Door Hinge Bushing
19		86512555		1	CONTRE-ECROU, M16 x 2, Cl 10
20		86625266		1	RONDELLE, M17.5 x 30 x 4, HT

PORTE ARRIERE

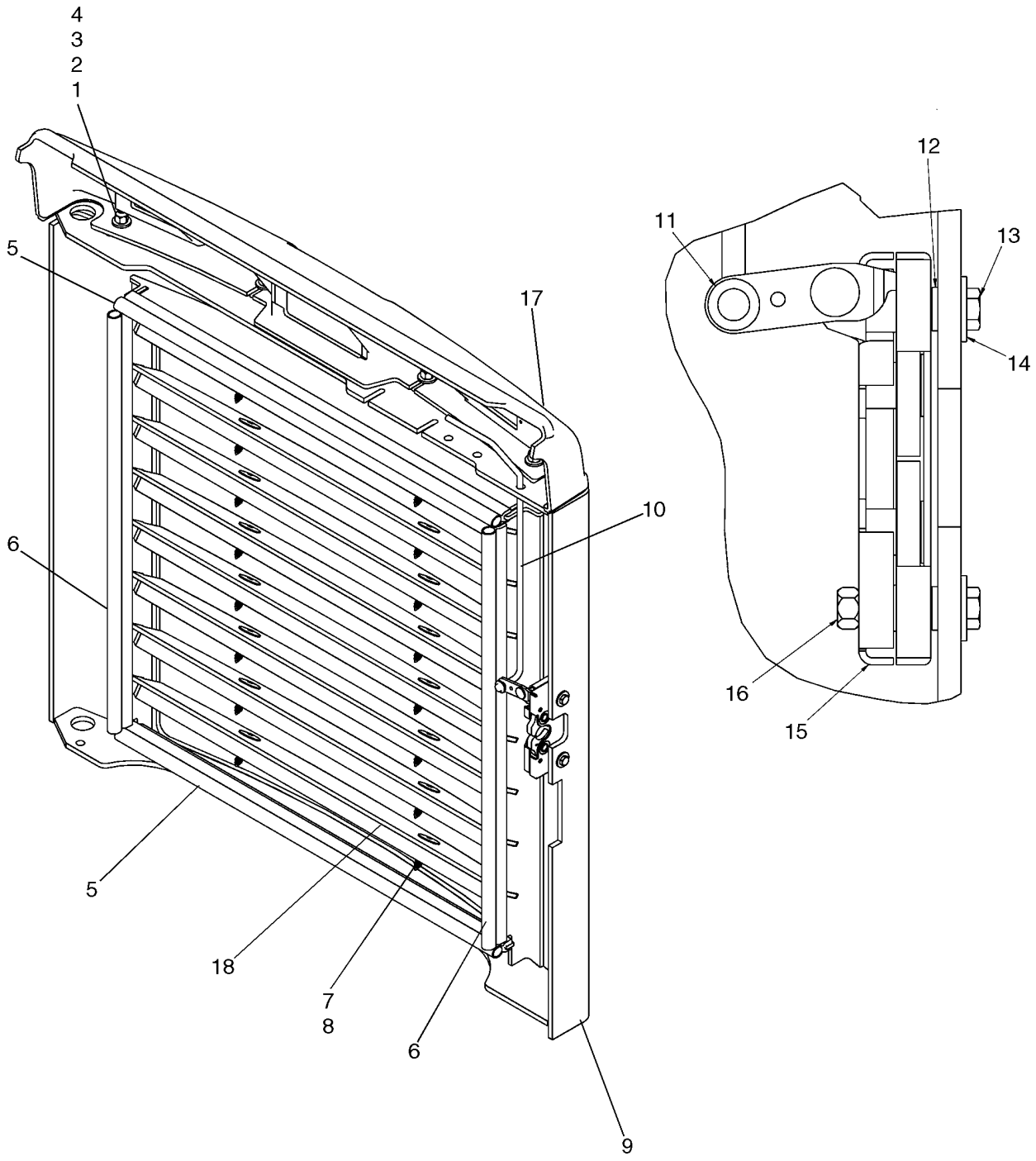

PORTE ARRIERE

REF	FN	PART NUMBER	YR/SN	QTY	DESCRIPTION
1		43128		4	BOULON, Hex, M8 x 30, 8.8
2		86632601		4	RONDELLE FREIN, Ext Tooth, M8
3		412250		4	CONTRE-ECROU, M8 x 1.25, Cl 8
4		87015284		8	RONDELLE, M8 x 21.5 x 2.5, HT
5		{87578980}		2	Bulb Seal, Top And Bottom
6		{87648128}		2	Bulb Seal, Side
7		348452A1		16	VIS
8		348434A1		16	RONDELLE
9		87671495		1	PORTE, Euro Louvered Door
10		87440124		1	TRINGLE, Latch Pull Rod
11		380751A1		1	ECROU
12		86588450		2	RONDELLE, M6
13		86977789		2	BOULON, Hex, M6 x 35, 8.8
14		86624182		2	RONDELLE, M6 x 18 x 1.6
15		87437076		1	LOQUET
16		87030561		2	CONTRE-ECROU, M6 x 1, Cl 8
17		87461604		1	CAPUCHON DE FEU
18		{87671496}		8	Sound Pad

VERROU - PORTE ARRIERE

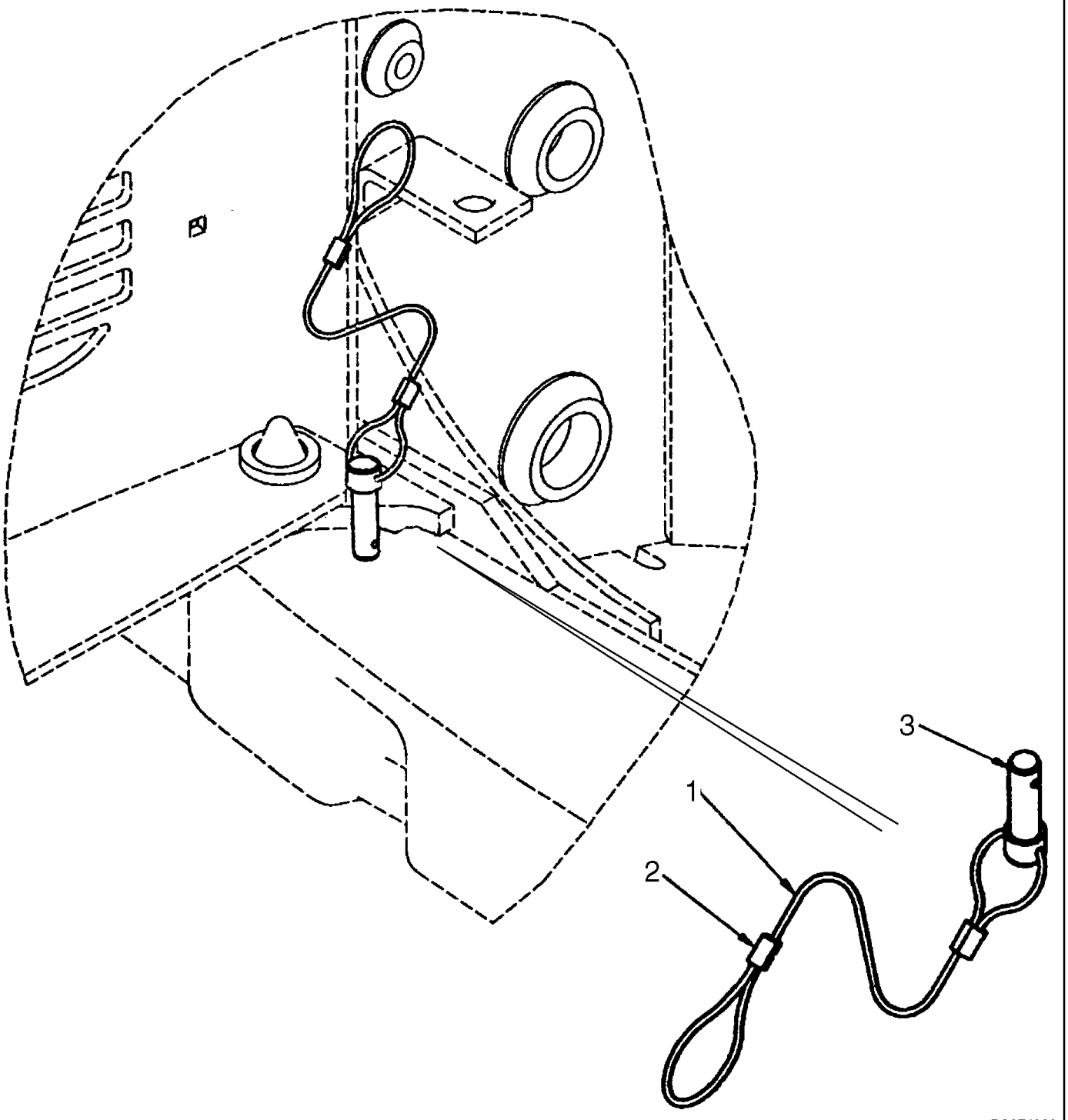

VERROU - PORTE ARRIERE

REF	FN	PART NUMBER	YR/SN	QTY	DESCRIPTION
1		297245A1		1	CABLE, Rear Door Lock; Incl. 2 - 4
2		297244A1		1	CABLE
3		297246A1		2	MANCHON
4		H439276		1	AXE, GROS

PORTE DE CABINE - MONTAGE

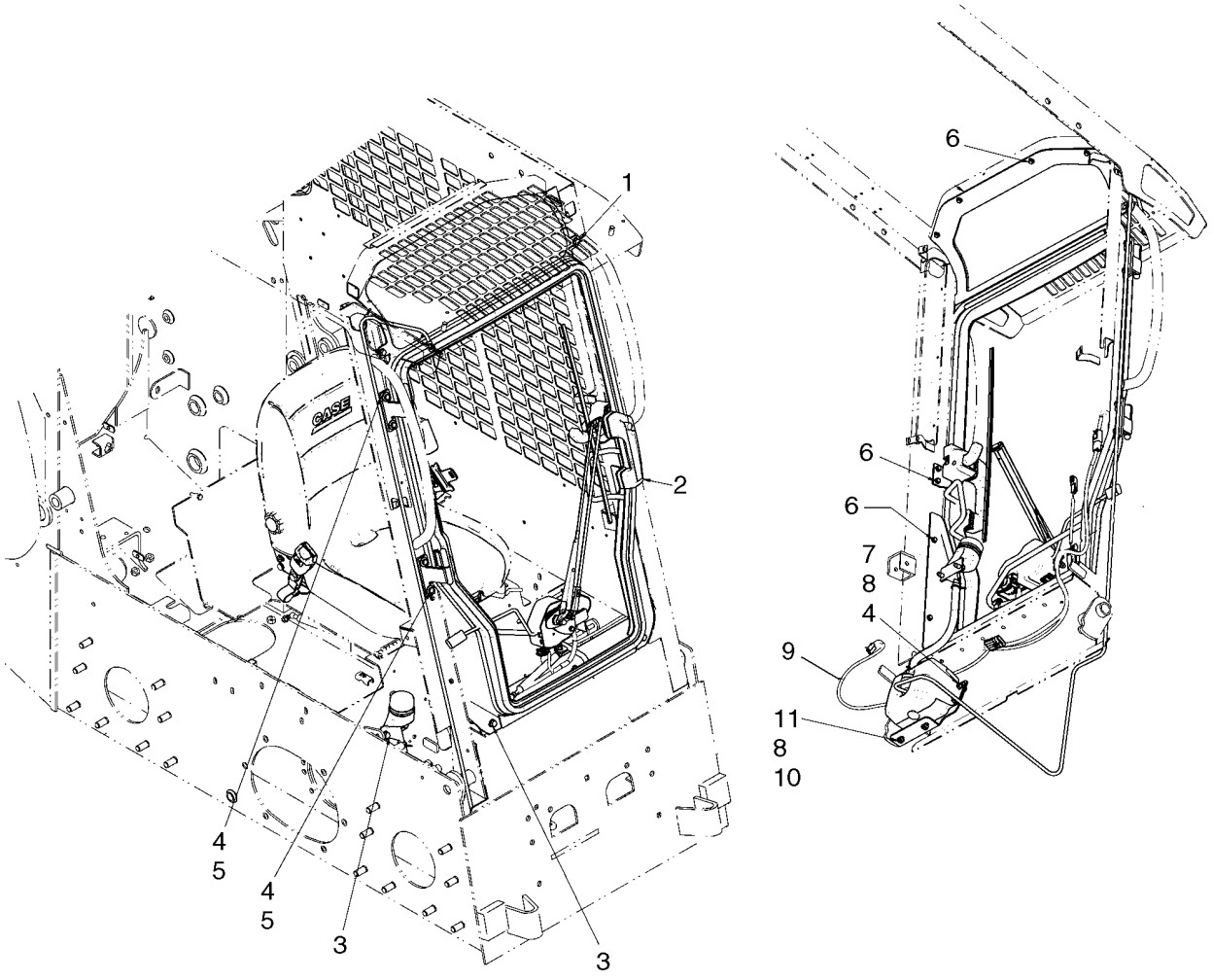

PORTE DE CABINE - MONTAGE

REF	FN	PART NUMBER	YR/SN	QTY	DESCRIPTION
1		9804258		2	BOULON, Hex Flg, M8 x 20, 8.8
		87635322		1	KIT ASSISTANCE, Kit, Front Door; Incl 1 - 11
2		87627051		1	PORTE, See Fig. 09-30
3		637964		4	VIS AUTO-TARAUDEUSE
4		120104		8	BOULON, Hex, M8 x 20, 8.8
5		86639313		4	RONDELLE, M8 x 20 x 1.6
6		87015862		10	BOULON, Hex Flg, M6 x 20, 8.8, Full Thd
7		43362		4	ECROU, M8, Cl 10
8		86624184		10	RONDELLE, M8 x 16 x 1.6
9		87659212		1	FAISCEAU, Door Jumper Harness
10		229197A1		2	ECROU
11		120103		2	BOULON, Hex, M8 x 16, 8.8

PORTE DE CABINE - LAVE-GLACE

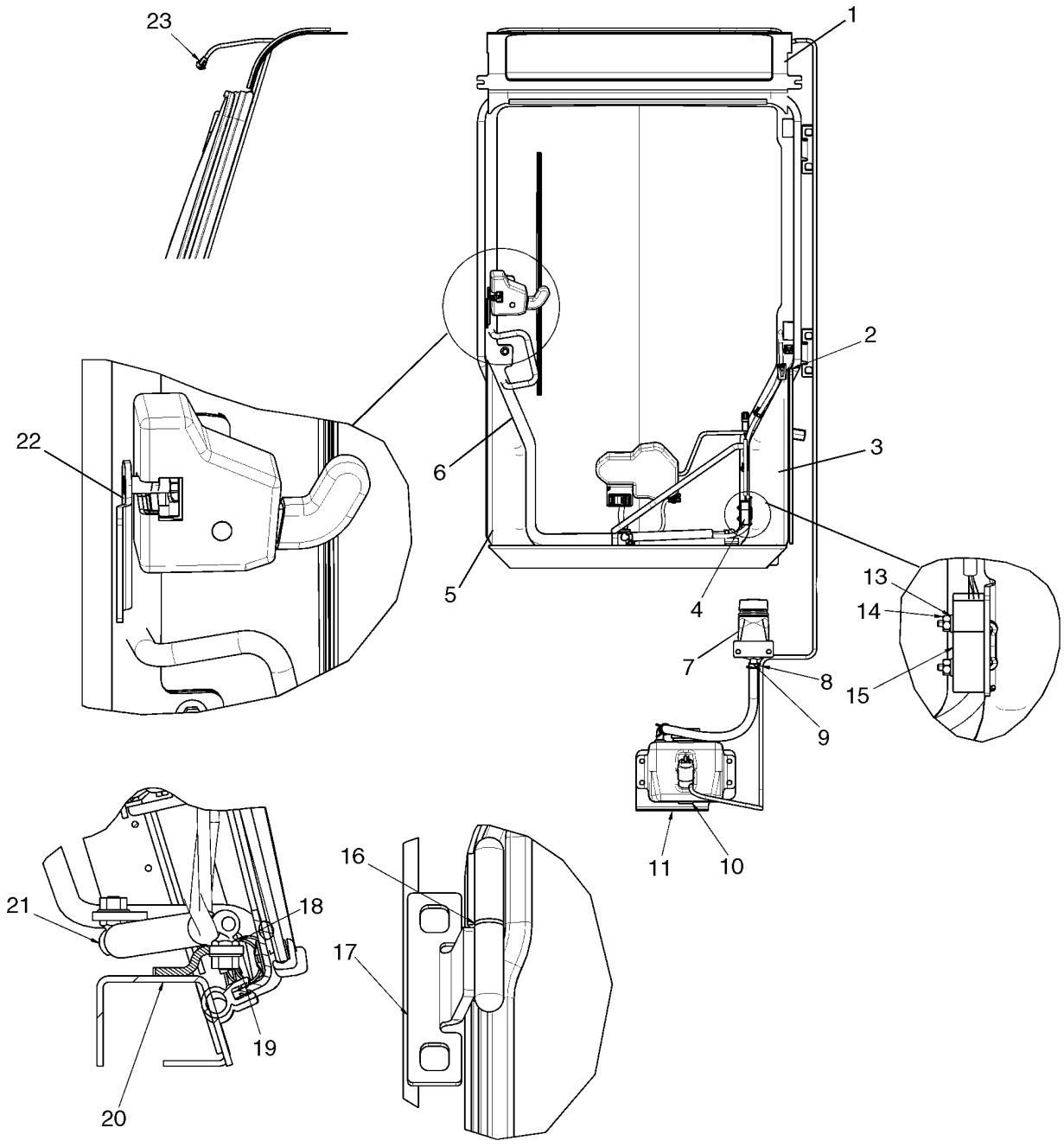

PORTE DE CABINE - LAVE-GLACE

REF	FN	PART NUMBER	YR/SN	QTY	DESCRIPTION
1		REF		1	NOTICE, Visor; See Fig 09-32
2		{87669915}		1	Spacer Plate, Black
3		{87717215}		1	Door Bracket, Lower RH
4		{87680073}		1	U-Bolt, Switch Mount
5		{87717210}		1	Door Bracket, Lower LH
6		87627706		1	PORTE, See Fig 09-30
7		87655055		1	GOULOT, Remote Washer Fill
8		{87712606}		1	Windshield Washer Tubing
9		{87712605}		1	Hose, Remote Fill
10		{87714131}		1	Washer Bottle
11		{87672011}		1	Washer Bracket
12		516742		2	BRIDE
13		87529123		2	RONDELLE, WASHER, 0.156 X 0.375 X 0.049 in.
14		{87622767}		2	Nut
15		87051110		1	COMMUTATEUR PORTE, Switch, Door Open
16		{87599753}		2	Bushing
17		{87717283}		2	Door Hinge
18		{87581669}		1	Ball Stud
19		9804277		1	ECROU, M8 x 1.25, Flg, Cl 8
20		{87722347}		1	Threshold, Black
21		{87642437}		1	Gas Spring
22		{87642394}		1	Striker Latch

PORTE DE CABINE

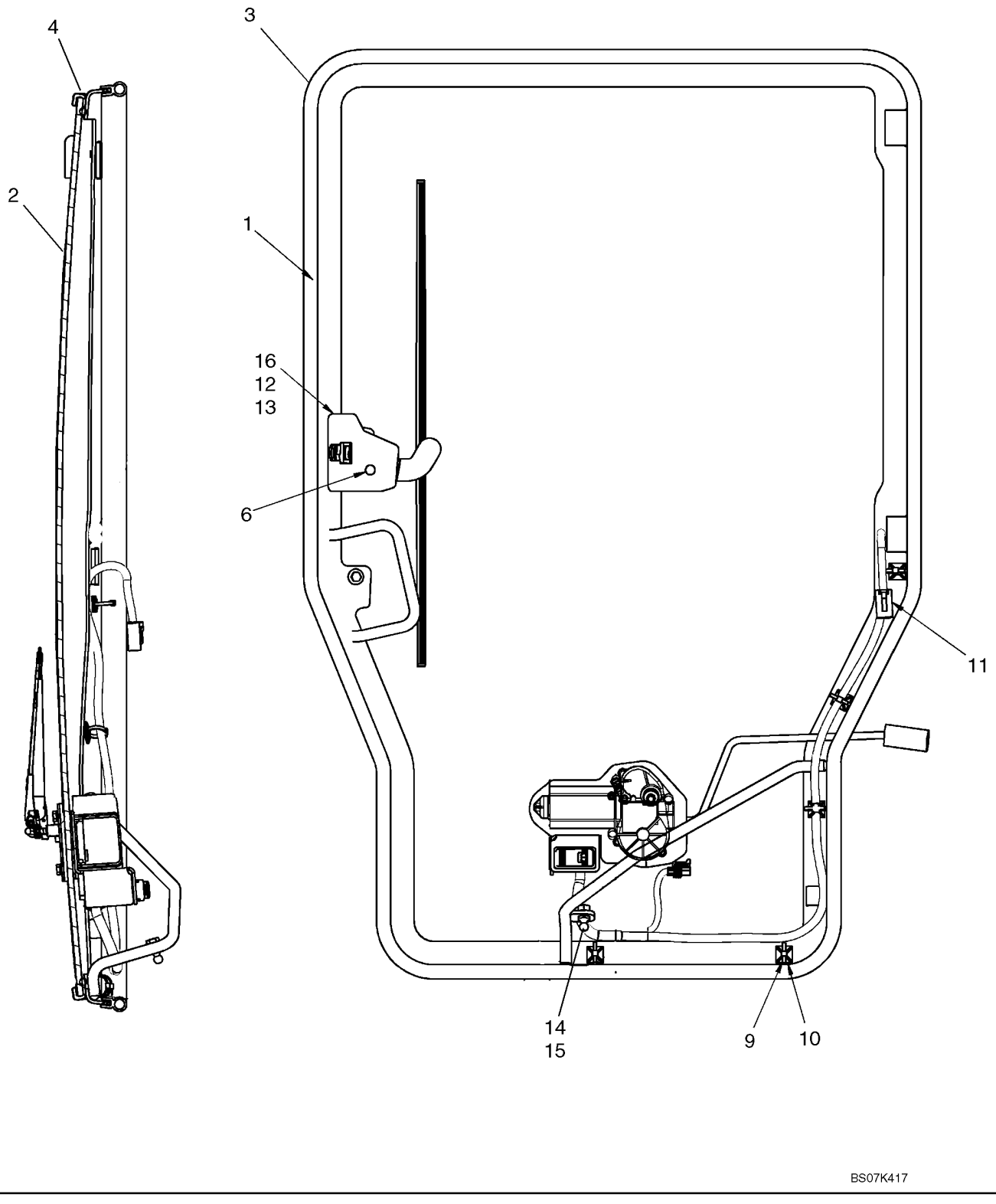

PORTE DE CABINE

REF	FN	PART NUMBER	YR/SN	QTY	DESCRIPTION
1		87627520		1	PORTE, Door With Glass; Incl. 2 - 8
2		87717689		1	KIT ASSISTANCE, Kit, Front Door Glass; Incl 2, 4
2		87624640		1	VITRE, Front Door Glass
3		NSS		1	NON FOURNI SEPAREMENT, Door, Black
4		NSS		1	NON FOURNI SEPAREMENT, Trim, Glass Seal
5		{87660180}		AR	Window Adhesive
6		{87600221}		8	Glue Spacer; Not Illustrated
7		87642453		1	JOINT, Handle Mounting Seal, Lower; Not Illustrated
8		87642449		1	JOINT, Handle Mounting Seal, Upper; Not Illustrated
9		87642915		5	SERRE-CABLE
10		87642914		5	SOCLE, Base, Cable Tie
11		87718119		1	FAISCEAU, Door Harness
12		{86512463}		3	Screw, M6 X 25 4.8 ZND
13		86619800		2	CONTRE-ECROU, M6 x 1, Flg, Cl 8
14		9804277		1	ECROU, M8 x 1.25, Flg, Cl 8
15		86634307		1	GOUJON, Ball Stud
16		87678399		1	LOQUET, Rotary Latch; Includes Latch And Cover
17		87624641		1	JOINT, Bulb Seal

PORTE DE CABINE - VISIÈRE

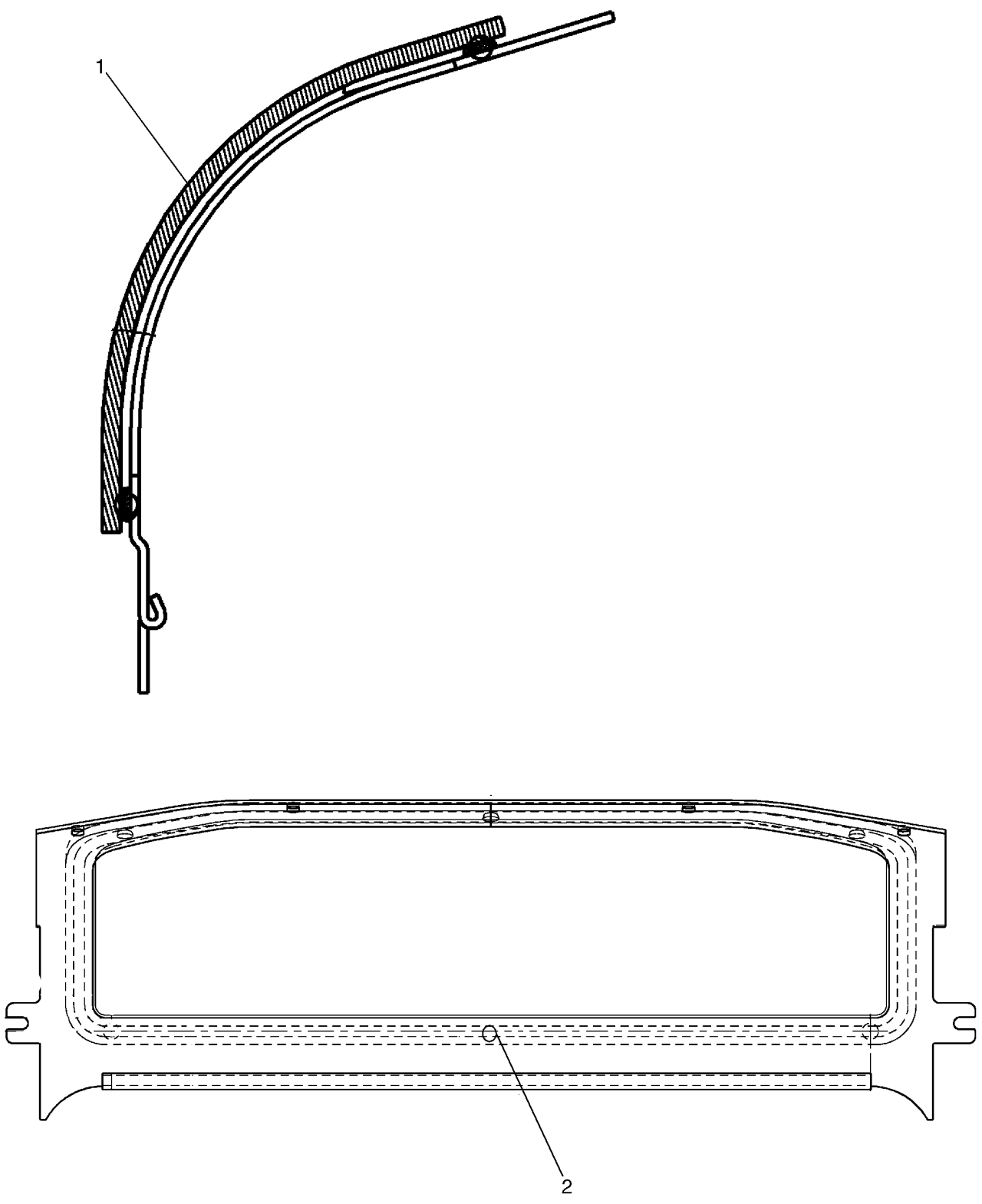

PORTE DE CABINE - VISIÈRE

REF	FN	PART NUMBER	YR/SN	QTY	DESCRIPTION
		{87627521}		1	Visor; Incl 1 - 4
1		87624623		1	VITRE, Glass, Visor
2		{87600221}		6	Glue Spacer
3		{87660180}		1	Window, Adhesive
4		{87669333}		1	Visor Frame, Black

PORTE DE CABINE - ESSUIE-GLACE, AVANT

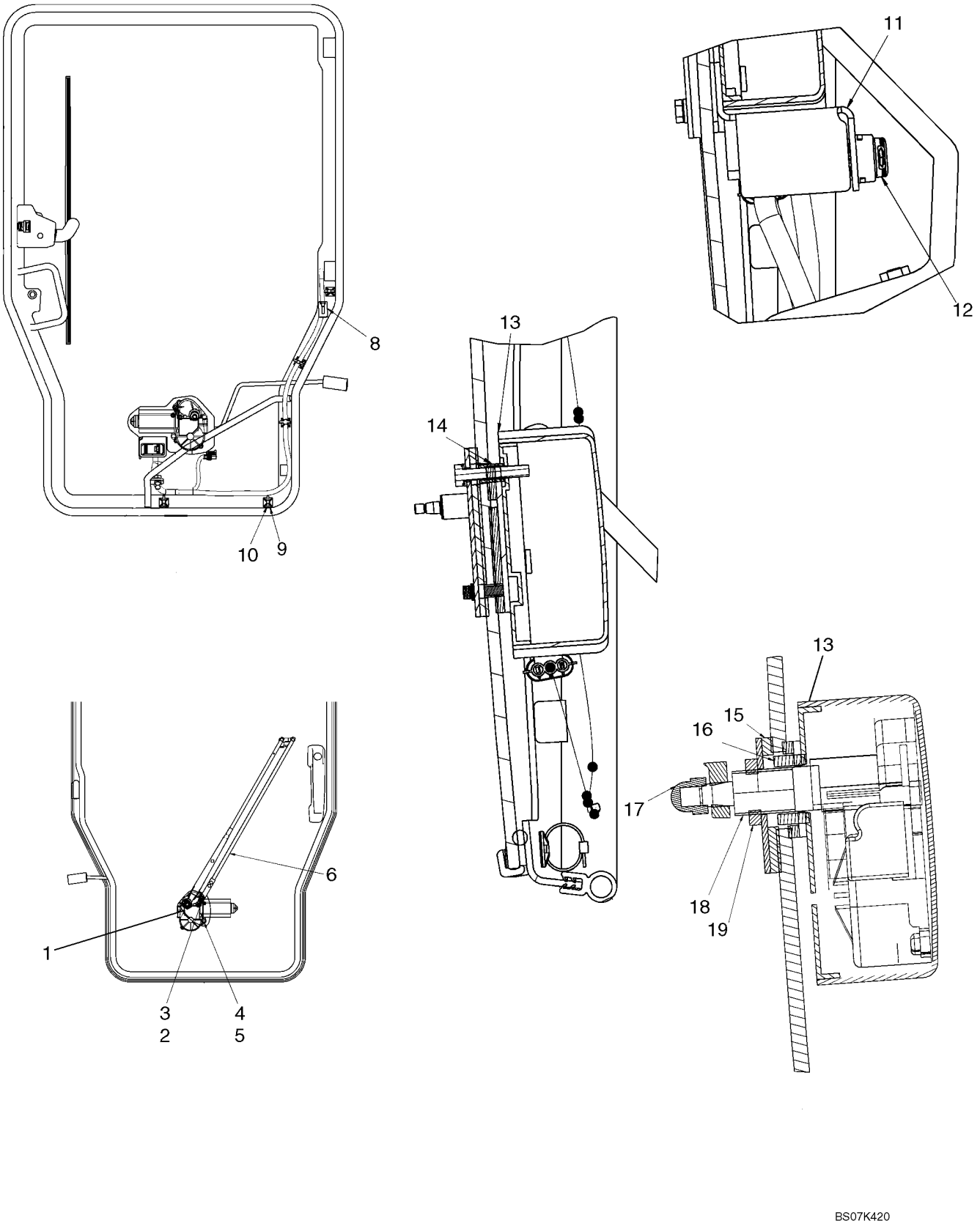

PORTE DE CABINE - ESSUIE-GLACE, AVANT

REF	FN	PART NUMBER	YR/SN	QTY	DESCRIPTION
1		87716728		1	ADAPTEUR, Adapter, Pantograph
2		{87698769}		5	Bolt, M6 X 35
3		{86642465}		2	Washer, 6.6 X 12 X 1.6 MM
4		87680190		1	ENTRETOISE, Wiper Motor Spacer
5		87642543		1	JOINT, Wiper Switch Seal
6		87642544		1	BRAS D'ESSUIE-GLACE
7		87642545		1	BALAI D'ESSUIE-GLACE
8		87718119		1	FAISCEAU, Door Harness
9		87642914		5	SOCLE, Mounting Base
10		87642915		5	SERRE-CABLE
11		87671857		1	PATTE FIXATION, Wiper Switch Bracket
12		87335499		1	CONTACTEUR, Rocker Switch, Windshield Wiper/Washer
13		{87581666}		1	Wiper Motor Cover
14		87642540		1	ENTRETOISE, Wiper Motor Spacer
15		87716731		1	ADAPTEUR, Pantograph Adapter Seal
16		87642536		1	BAGUE, Wiper Motor Bushing
17		{412326}		1	Nut, Crown Dome M8
18		87678400		1	MOTEUR D'ESSUIE-GLACE
19		{87607505}		1	Wiper Nut, M18

PORTE DE CABINE - POIGNEE

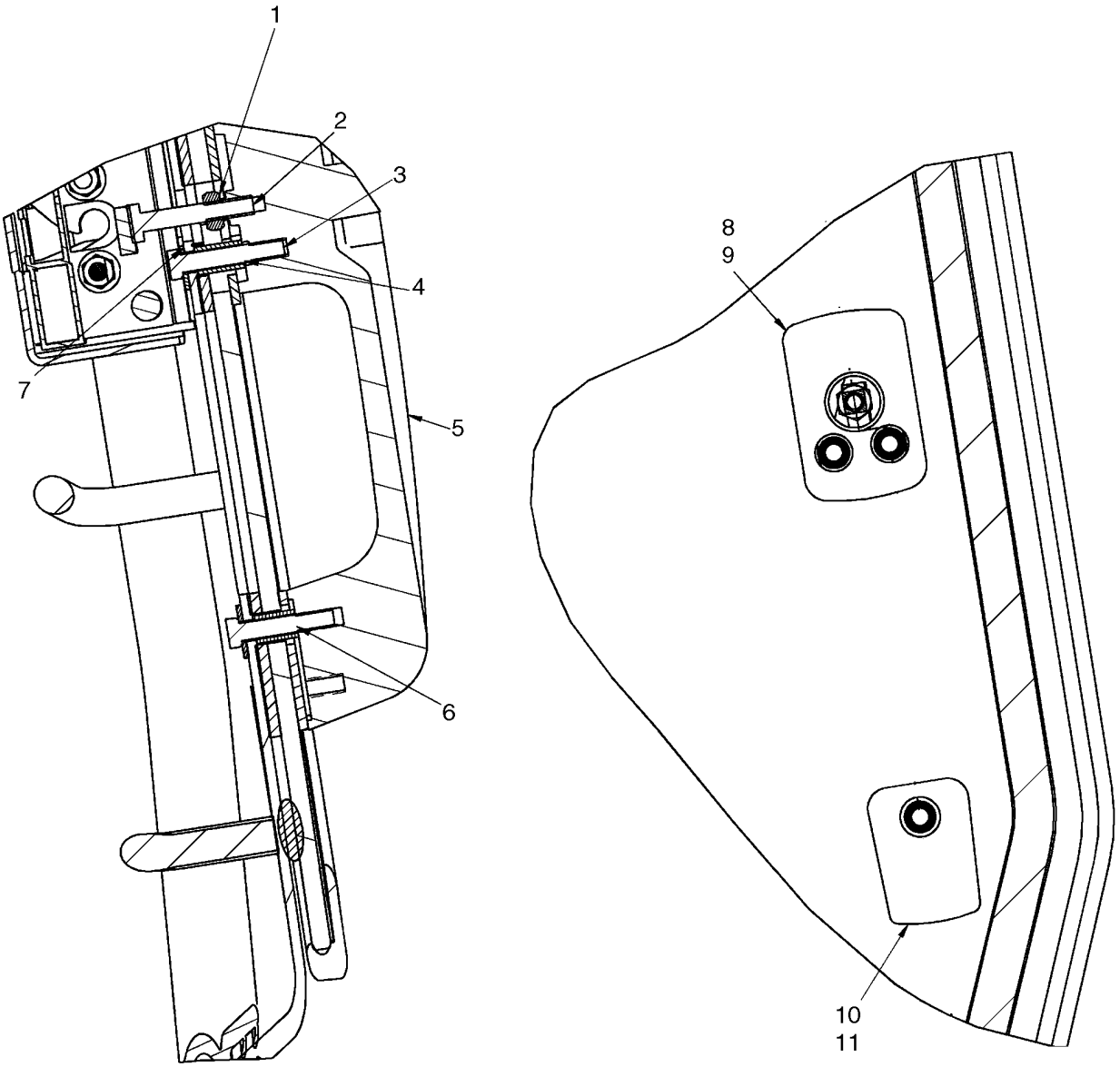

BS07K422

PORTE DE CABINE - POIGNEE

REF	FN	PART NUMBER	YR/SN	QTY	DESCRIPTION
1		1369		1	ECROU, 1/4"-20, G5
2		280112		1	BOULON, Hex, 1/4"-20 x 1 1/2", G5
3		{87698769}		5	Bolt, M6 X 35
4		87642514		2	ENTRETOISE, Handle Mounting Spacer, Upper
5		60-7083T1		1	POIGNÉE, Cab Door Handle
6		87642529		1	ENTRETOISE, Handle Mounting Spacer, Lower
7		86624182		3	RONDELLE, M6 x 18 x 1.6
8		87642449		1	JOINT, Handle Mount Seal, Upper
9		87517940		1	JOINT, Door Handle Gasket, Upper
10		87517937		1	JOINT, Door Handle Gasket, Lower
11		87642453		1	JOINT, Handle Mount Seal, Lower

PORTE DE DÉMOLITION - MONTAGE

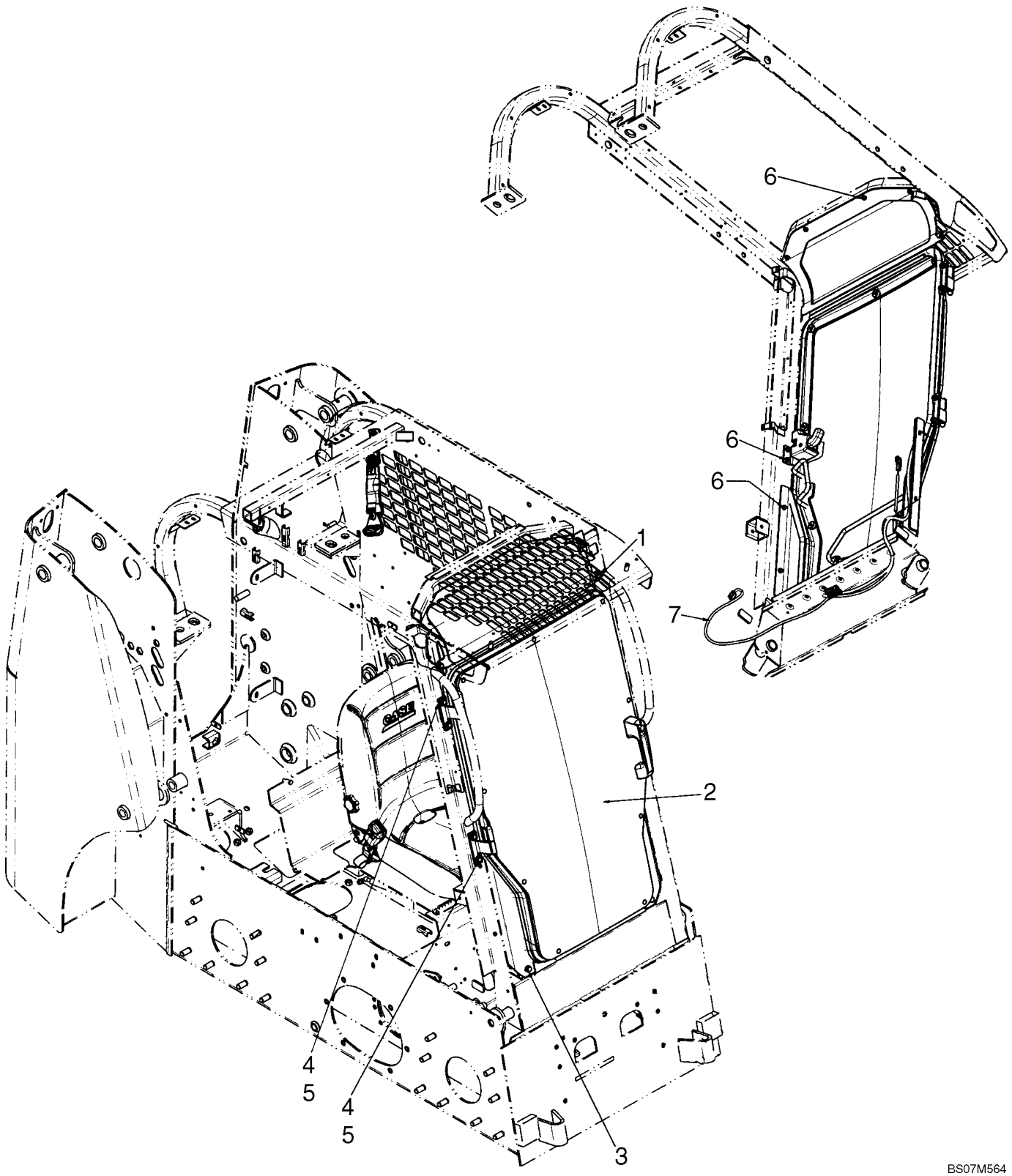

PORTE DE DÉMOLITION - MONTAGE

REF	FN	PART NUMBER	YR/SN	QTY	DESCRIPTION
1		9804258		2	BOULON, Hex Flg, M8 x 20, 8.8
		87651126		1	KIT ASSISTANCE, Kit, Demolition Door; Incl 1 - 7
2		REF		1	NOTICE, Demolition Door; See Fig 09-36
3		637964		2	VIS AUTO-TARAUDEUSE
4		120104		4	BOULON, Hex, M8 x 20, 8.8
5		86639313		4	RONDELLE, M8 x 20 x 1.6
6		87015862		10	BOULON, Hex Flg, M6 x 20, 8.8, Full Thd
7		87659212		1	FAISCEAU, Harness, Door Jumper

PORTE DE DÉMOLITION

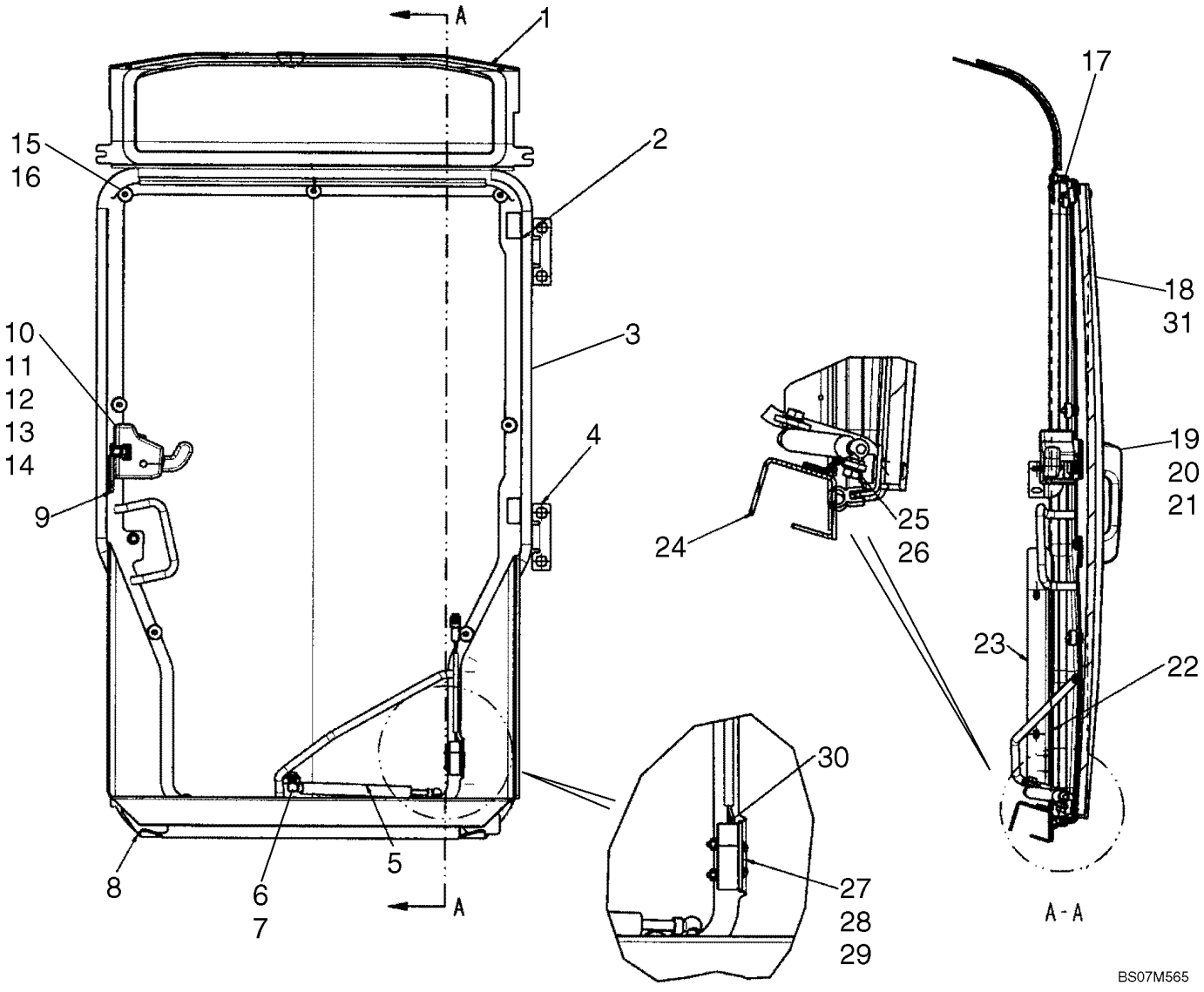

PORTE DE DÉMOLITION

REF	FN	PART NUMBER	YR/SN	QTY	DESCRIPTION
1		REF		1	NOTICE, Visor; See Fig 09-32
2		{87599753}		2	Bushing
3		NSS		1	NON FOURNI SEPAREMENT, Frame, Demolition Door
4		{87717283}		2	Door Hinge
5		{87642437}		1	Gas Spring
6		86619801		1	CONTRE-ECROU, M8 x 1.25, Flg, Cl 8
7		{87581669}		1	Ball Stud
8		{87717210}		1	Bracket, Lower Door LH
9		{87642394}		1	Stiker Latch
10		87678399		1	LOQUET, Rotary Latch
11		{86512463}		3	Screw, M6 X 25
12		87642540		3	ENTRETOISE
13		{87698769}		3	Bolt, M6 X 35
14		86619800		2	CONTRE-ECROU, M6 x 1, Flg, Cl 8
15		NSS		9	NON FOURNI SEPAREMENT, Quick Release Knob
16		412327		9	BOULON TETE BOMBEE, Short NK, M6 x 40, Cl8.8
17		87624641		1	JOINT, Bulb Seal
18		NSS		1	NON FOURNI SEPAREMENT, Polycarbonate Door
18		87640046		1	KIT ASSISTANCE, Kit, Demolition Door; Incl 15, 16, 18, 31
19		60-7083T1		1	POIGNÉE, Door Handle
20		{87723784}		2	Handle Seal, Lower
21		{87723771}		2	Handle Seal, Upper
22		{87717215}		1	Lower Door Bracket, RH
23		{87669915}		1	Spacer
24		{87722347}		1	Threshold
25		86619801		1	CONTRE-ECROU, M8 x 1.25, Flg, Cl 8
26		{87581669}		1	Ball Stud
27		NSS		1	NON FOURNI SEPAREMENT, U Bolt, Switch Mounting
28		87529123		2	RONDELLE, Washer, .156 X .375 X .049 in.
29		{87622767}		2	Nut, #6-32
30		87051110		1	COMMUTATEUR PORTE, Seat Bar Switch
31		NSS		1	NON FOURNI SEPAREMENT, Foam Gasket

TAPIS DE PLANCHER

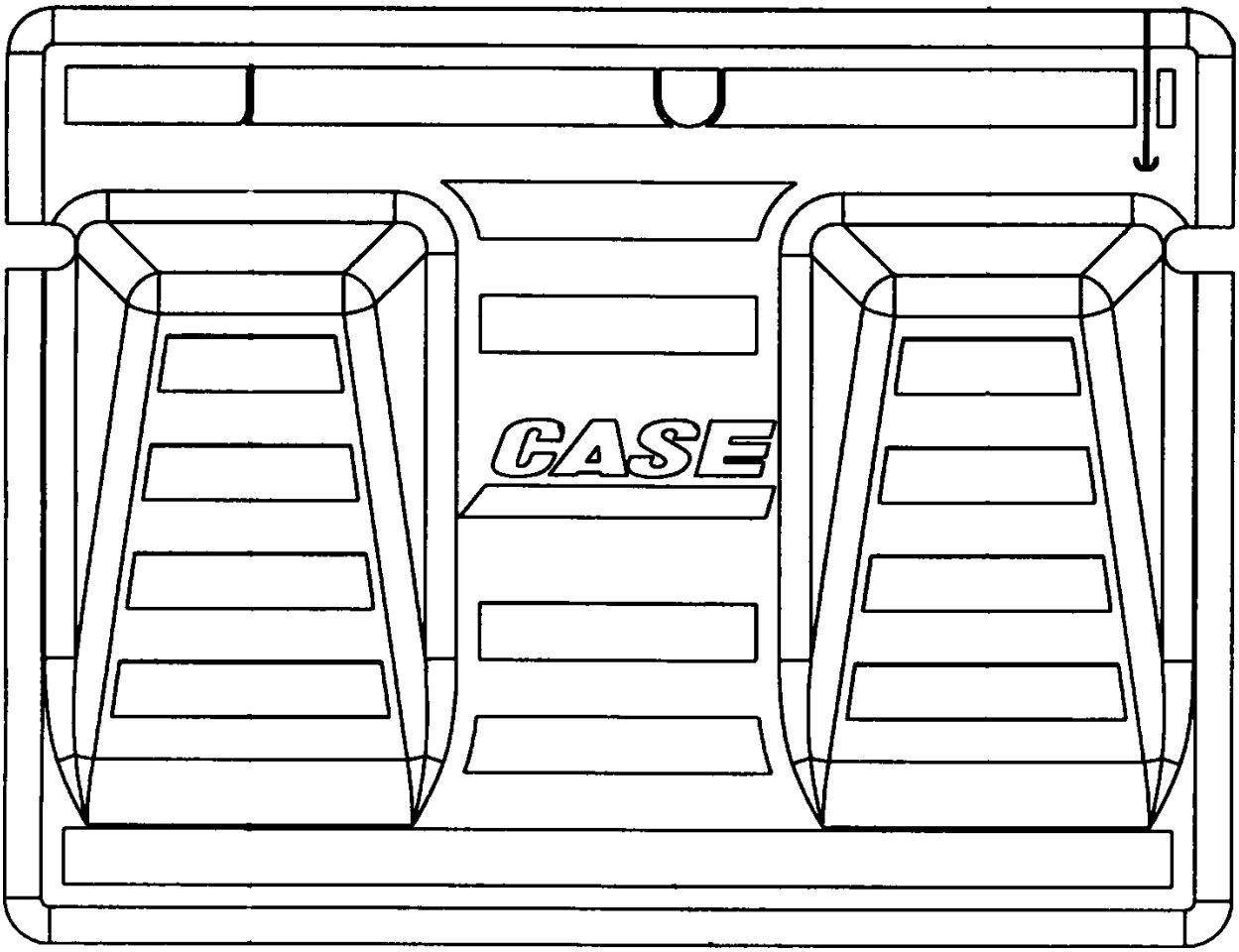

1

BS05D044

TAPIS DE PLANCHER

REF	FN	PART NUMBER	YR/SN	QTY	DESCRIPTION
1		87461561		1	TAPIS DE PLANCHER, Rubber; Molded Foot Rests

09-38		p1	12/07

CADRE ET BARRE DE SECURITE

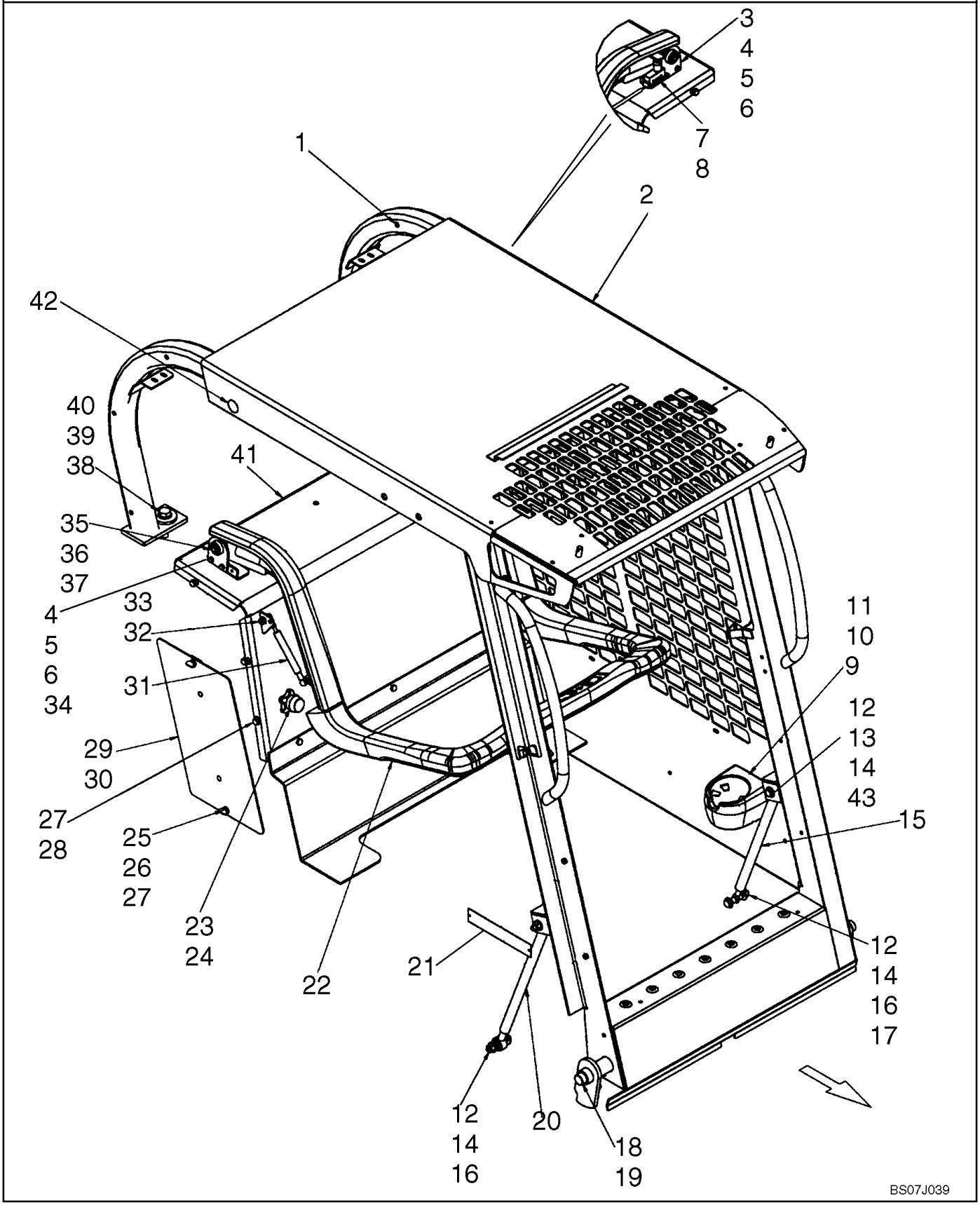

CADRE ET BARRE DE SECURITE

REF	FN	PART NUMBER	YR/SN	QTY	DESCRIPTION
1		419434A1		16	INSERT, Threaded Insert, M6
2		87635242		1	KIT ASSISTANCE, Cab, ROPS; Incl ROPS Structure, (1) Decal - Exiting, (1) Decal - Warning, General Instructions, (1) ROPS Model And Approval Plate
3		87645119		1	PLAQUE PIVOT, Seat Bar Pivot, LH
4		120100		4	BOULON, Hex, M6 x 20, 8.8
5		86511444		4	ECROU, M6, Flg Ser
6		86588450		4	RONDELLE, M6
7		87051110		1	COMMUTATEUR PORTE, Seat Bar Switch
8		H435814		1	CAVALIER
9		{87672170}		1	Cup Holder
10		86637935		2	BOULON, Hex, 1/4"-20 x 1", G8, Full Thd
11		87016587		2	RONDELLE, 1/4"
12		100037		4	ECROU, M10 x 1.5, Cl 8
13		83931335		2	BOULON, Hex, M10 x 75, 8.8
14		86625253		8	RONDELLE, M11 x 24 x 2
15		376669A1		1	COMPAS, ROPS Pivot Assist
15		87706925		1	KIT ASSISTANCE, Kit, Gas Strut; Incl 14 - 17 And 43
16		120070		2	BOULON, Hex, M10 x 60, 8.8
17		254697A1		2	ENTRETOISE, Pivot Spacer
18		373836A1		1	CHEVILLE PIVOT
19		827695C1		2	ANNEAU
20		282002A2		1	COMPAS, ROPS Pivot Assist
21		NSS		1	NON FOURNI SEPAREMENT, ROPS Plate, Model And Approval
22		REF		1	NOTICE, Seat Restraint; See Fig. 09-39
23		{87639912}		2	Knob
24		{87639914}		2	Seat Bar Stop
25		442856A1		4	RONDELLE
26		408117A2		4	VIS, Thumb Screw, M8
27		140016		10	RONDELLE, M8 x 16 x 1.6
28		43128		6	BOULON, Hex, M8 x 30, 8.8
29		86625127		4	BOUCHON, Dome, .375" hole, Nylon
30		87460732		2	PANNEAU, Access Panel
31		87639899		1	VERIN, Seat Bar; Gas Strut

09-38		p2	12/07

CADRE ET BARRE DE SECURITE

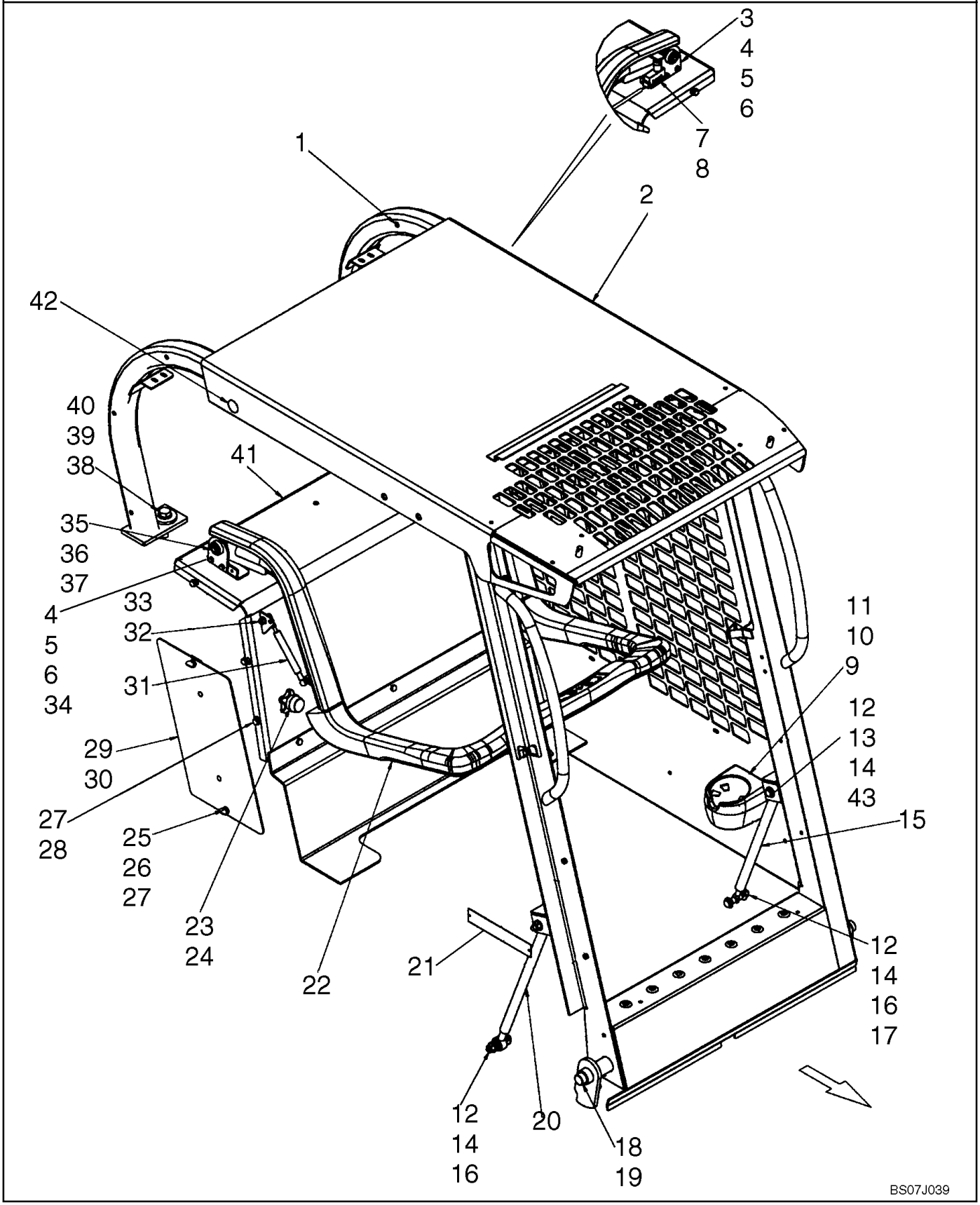

CADRE ET BARRE DE SECURITE

REF	FN	PART NUMBER	YR/SN	QTY	DESCRIPTION
32		86505868		11	ECROU, M8, Flg Ser
33		189609A1		2	GOUJON, Metric Ball Stud, M8 X 1.25 Thd
34		{87645115}		1	Seat Bar Pivot, RH
35		87620895		2	BAGUE
36		86632589		2	RONDELLE
37		D143415		2	ANNEAU
38		86625266		2	RONDELLE, M17.5 x 30 x 4, HT
39		391703A2		2	RONDELLE
40		9828248		2	BOULON, Hex, M16 x 60, 10.9
41		{87668682}		1	Shield, Gray
42		86625129		2	BOUCHON, Dome, 1.000" hole, Nylon
43		254698A1		2	ENTRETOISE

BARRE DE SECURITE

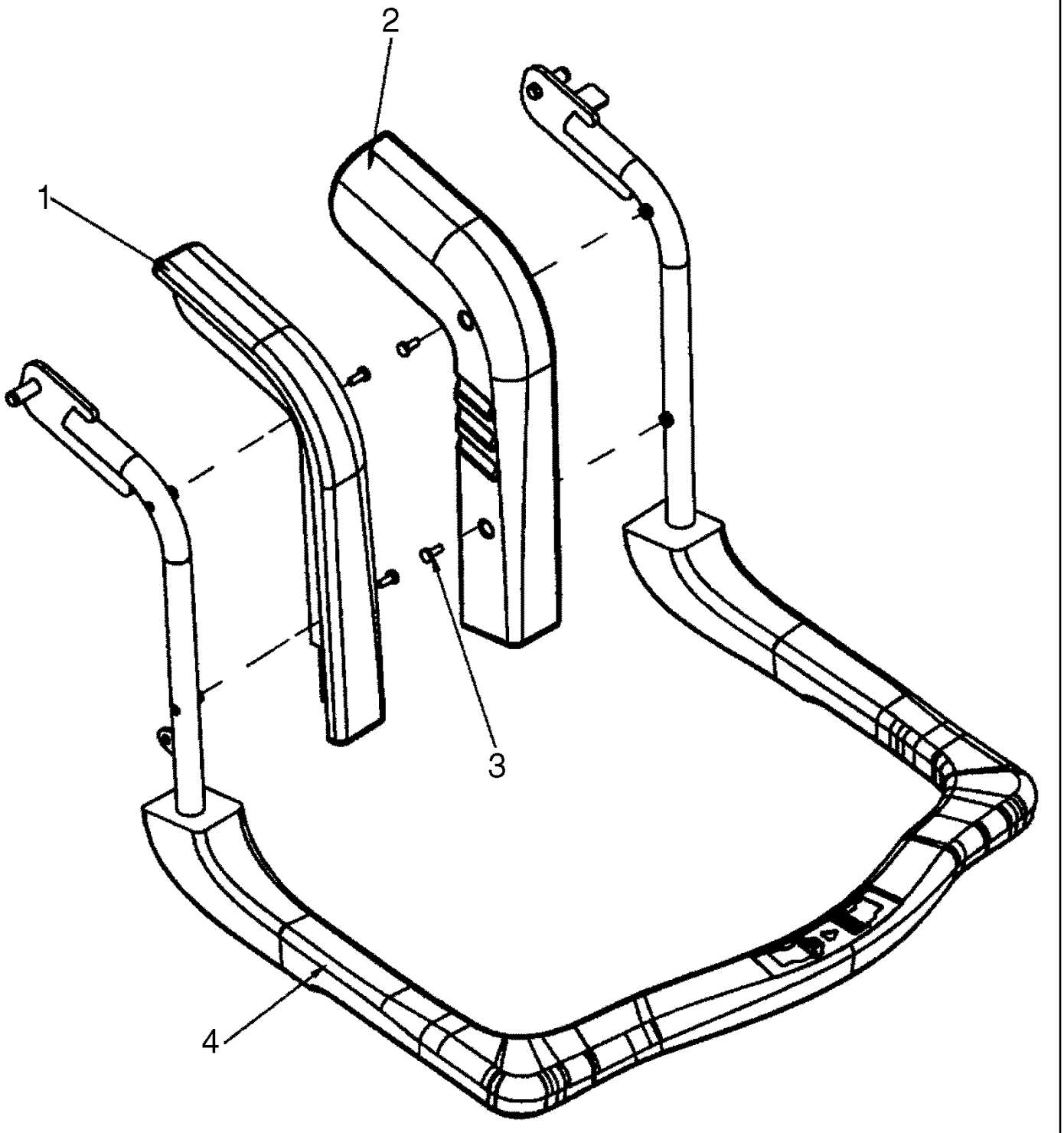

BARRE DE SECURITE

REF	FN	PART NUMBER	YR/SN	QTY	DESCRIPTION
1		87619938		1	SIÈGE, Arm, Upper Lap Bar, RH
2		87619939		1	SIÈGE, Arm, Upper Lap Bar, LH
3		86511829		4	VIS, Cross Pan Hd, M6 x 16
4		87619935		1	SIÈGE, Lap Bar, Lower Section

CEINTURES DE SÉCURITÉ (2 IN)

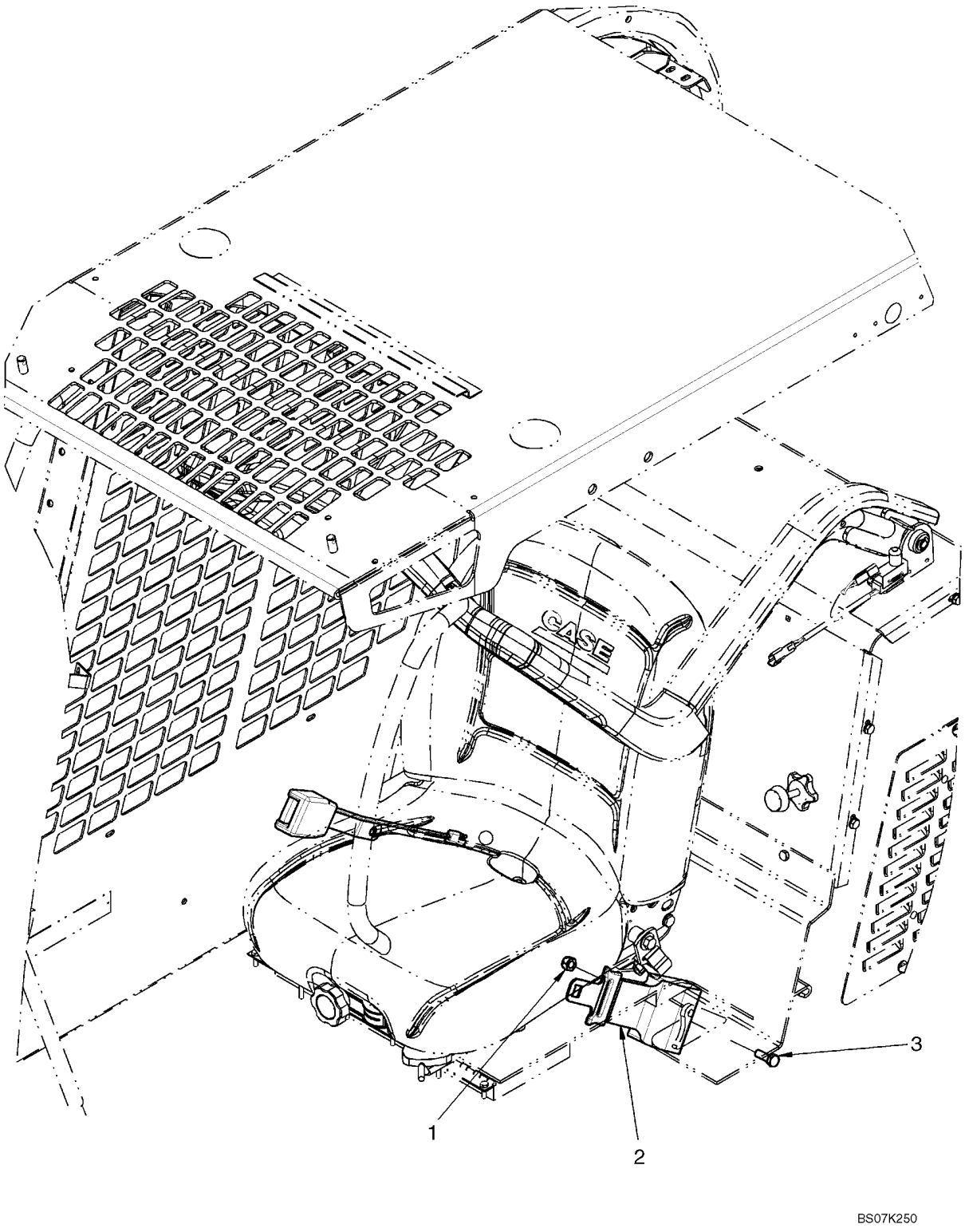

CEINTURES DE SÉCURITÉ (2 IN)

REF	FN	PART NUMBER	YR/SN	QTY	DESCRIPTION
1		86512554		1	CONTRE-ECROU, M10 x 1.5, Cl 10
2		{87652259}		1	2" Lap Seat Belt
3		43140		1	BOULON, Hex, M10 x 30, 8.8, Full Thd

CEINTURES DE SÉCURITÉ (3 IN)

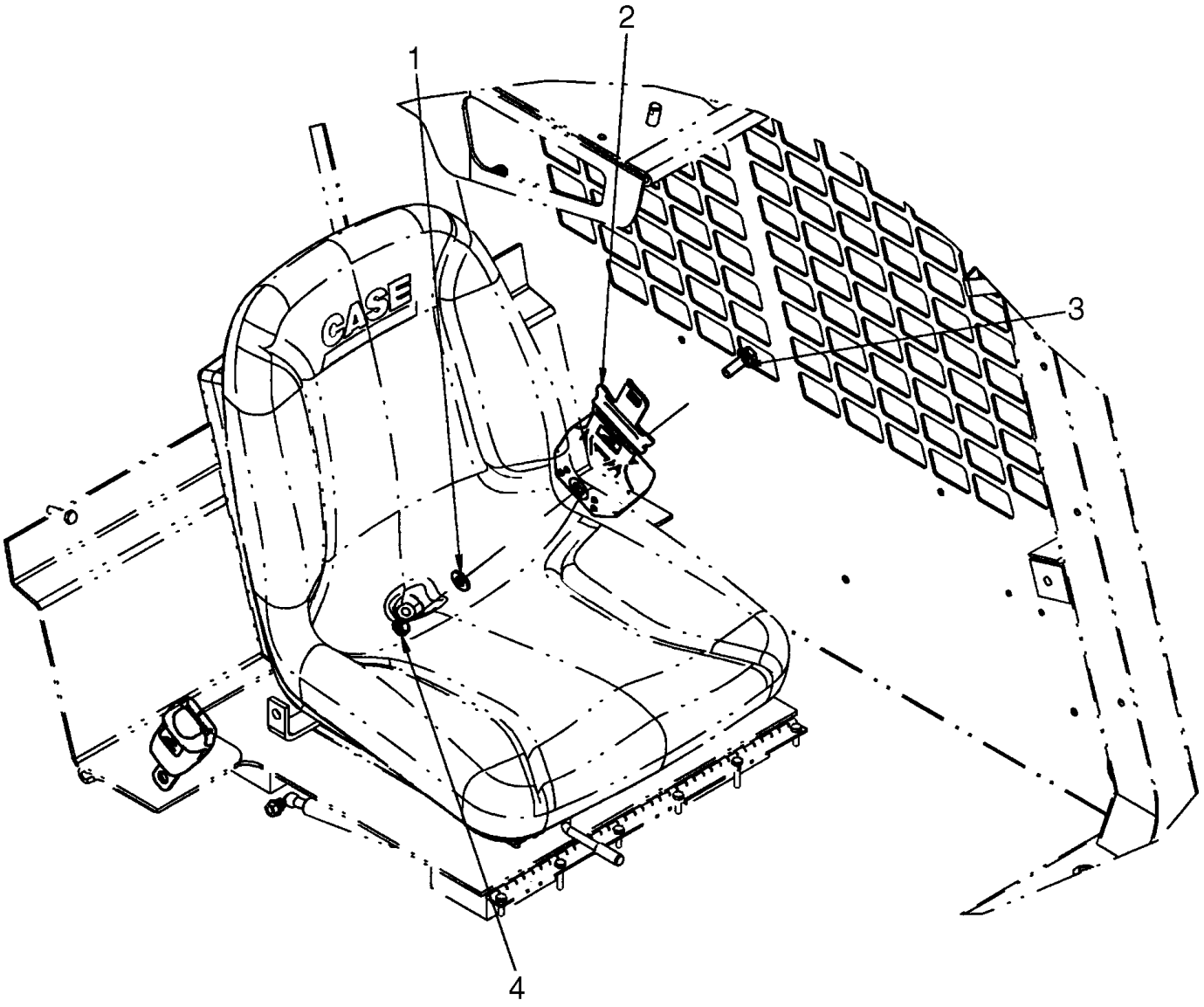

CEINTURES DE SÉCURITÉ (3 IN)

REF	FN	PART NUMBER	YR/SN	QTY	DESCRIPTION
		87717673		1	KIT ASSISTANCE, Kit, 3 in. Lap Belt; Incl 1 - 4
1		86625253		1	RONDELLE, M11 x 24 x 2
2		87702506		1	CEINTURE DE SÉCURITÉ, 3" Lap Seat Belt
3		9804262		1	BOULON, Hex Flg, M10 x 30, 8.8
4		87030549		1	CONTRE-ECROU, M10 x 1.5, Cl 10

09-42		p1	12/07

ENDOSSER LA CEINTURE

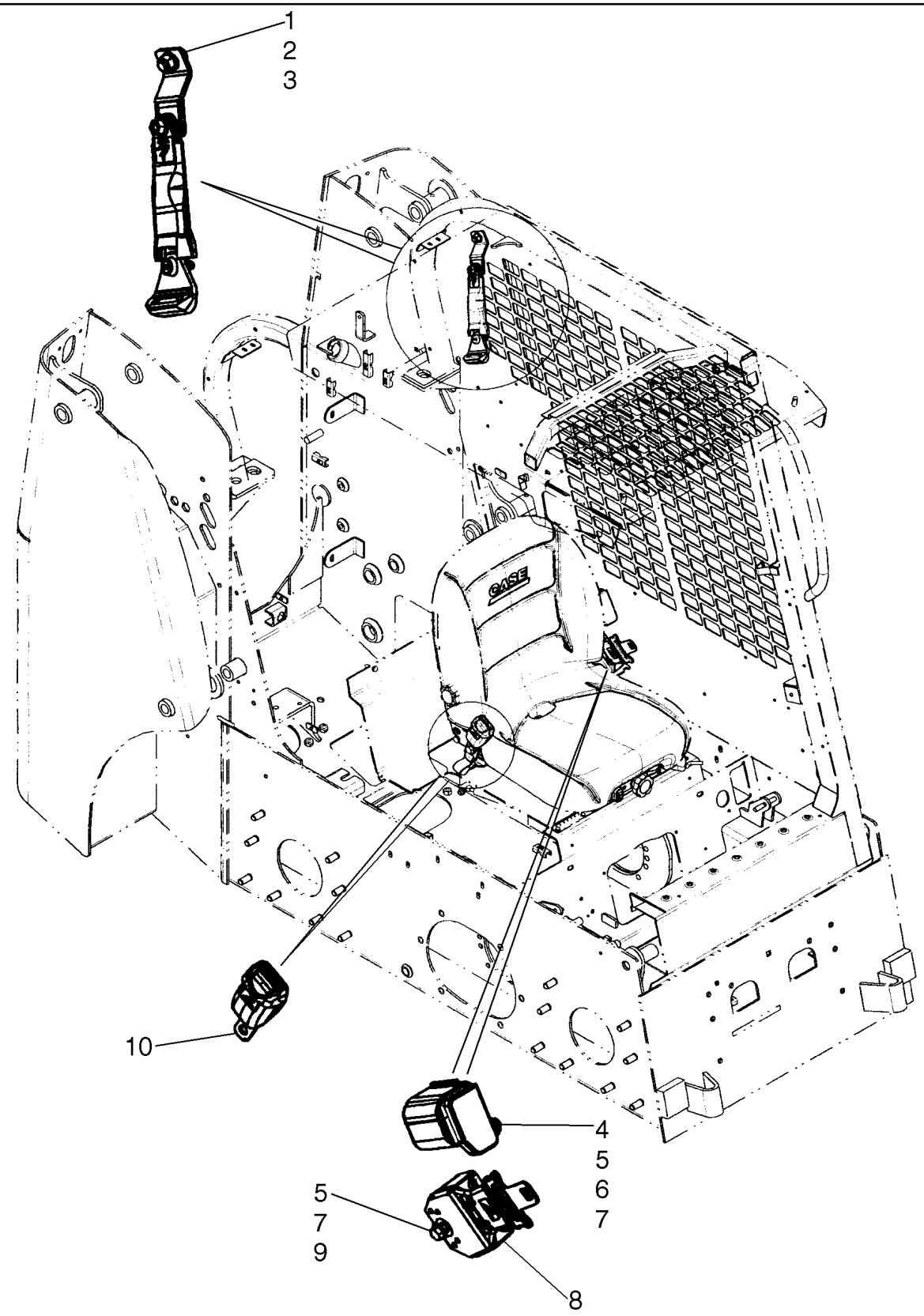

ENDOSSER LA CEINTURE

REF	FN	PART NUMBER	YR/SN	QTY	DESCRIPTION
		87717671		1	KIT ASSISTANCE, Kit, 2 in. Shoulder Belt; Incl 1 - 10
1		9804266		1	BOULON, Hex Flg, M12 x 25, 8.8
2		86625255		1	RONDELLE, M13.5 x 24.5 x 3, HT
3		9706685		1	ECROU, M12, Cl 8
4		325829		1	BOULON, Hex, M10 x 45, 8.8
5		86625253		3	RONDELLE, M11 x 24 x 2
6		87047451		1	ENTRETOISE
7		87030549		2	CONTRE-ECROU, M10 x 1.5, Cl 10
8		87702278		1	CEINTURE DE SÉCURITÉ, 2 in Shoulder Belt Assy
9		9804262		1	BOULON, Hex Flg, M10 x 30, 8.8
10		REF			NOTICE, Buckle Mounts To Seat Frame With Bolt And Washer Provided With Seat

RETROVISEUR

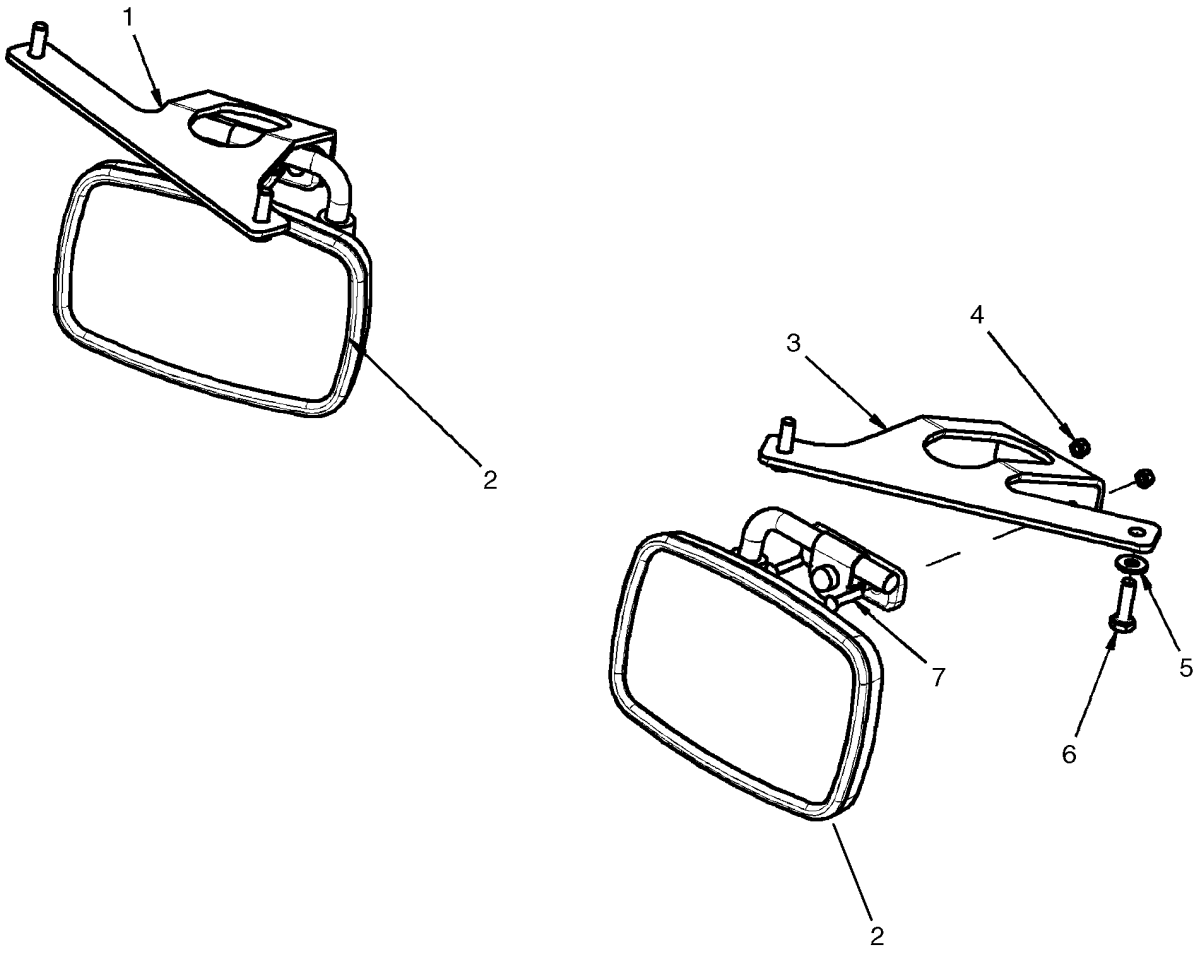

RETROVISEUR

REF	FN	PART NUMBER	YR/SN	QTY	DESCRIPTION
1		87734487		1	PATTE FIXATION, Bracket, LH Mirror Mount
2		3962022		2	RETROVISEUR, GCH
3		87734484		1	PATTE FIXATION, Bracket, RH Mirror Mount
4		385681		4	CONTRE-ECROU, M4 x .7, Cl 8
5		322357		4	RONDELLE BELLEVILLE, Belleville, M6
6		120100		4	BOULON, Hex, M6 x 20, 8.8
7		43646		4	VIS

PIÈCES SPÉCIALES POUR L'ITALIE - RÉTROVISSEUR

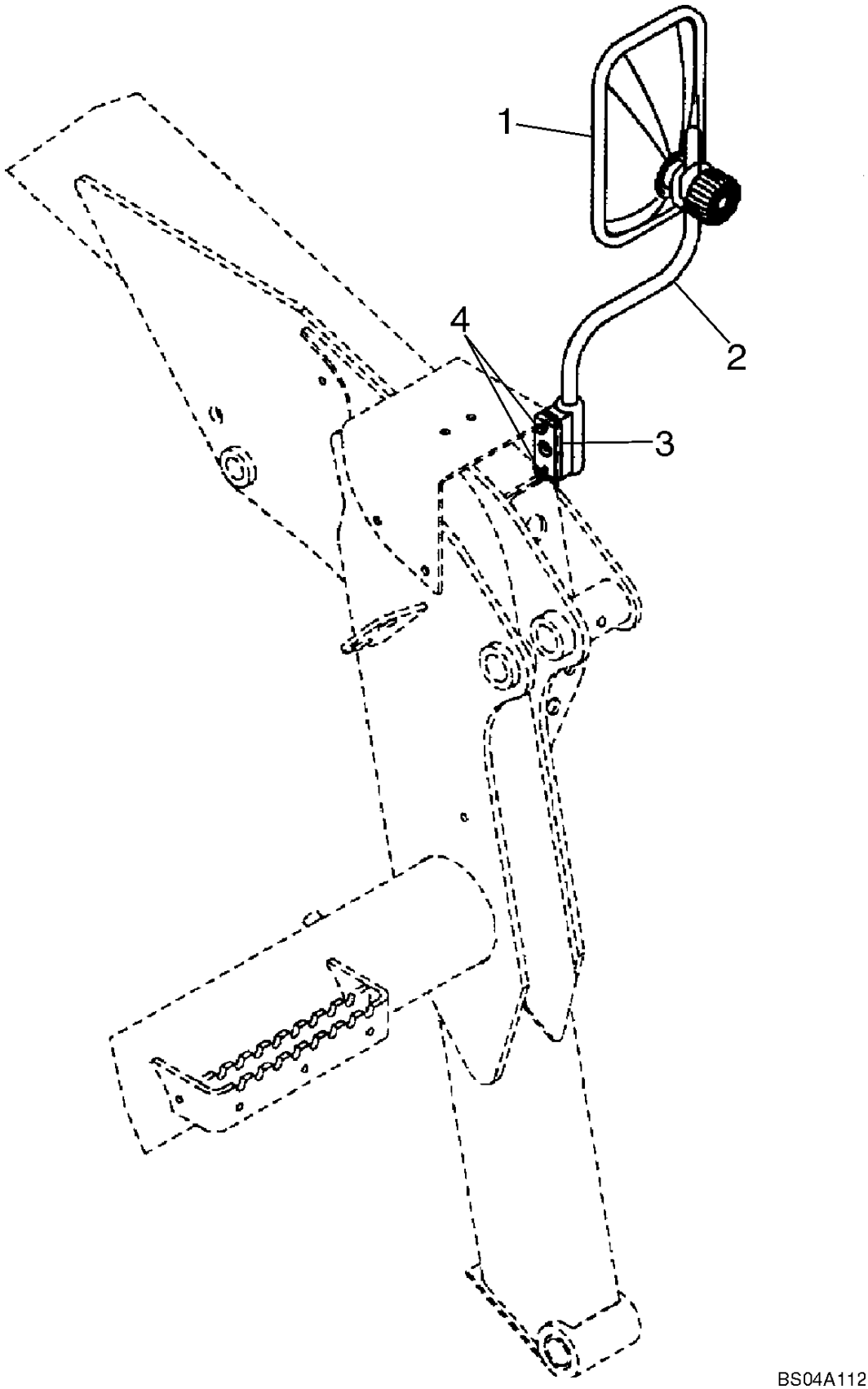

PIÈCES SPÉCIALES POUR L'ITALIE - RÉTROVISSEUR

REF	FN	PART NUMBER	YR/SN	QTY	DESCRIPTION
1		235994A1		1	RETROVISEUR
2		310860A1		1	SUPPORT
3		432895A1		1	ENTRETOISE
4		614-6025		2	BOULON, Hex, M6 x 25, 8.8, M6 x 25

SUPPORT DU SIEGE - STANDARD

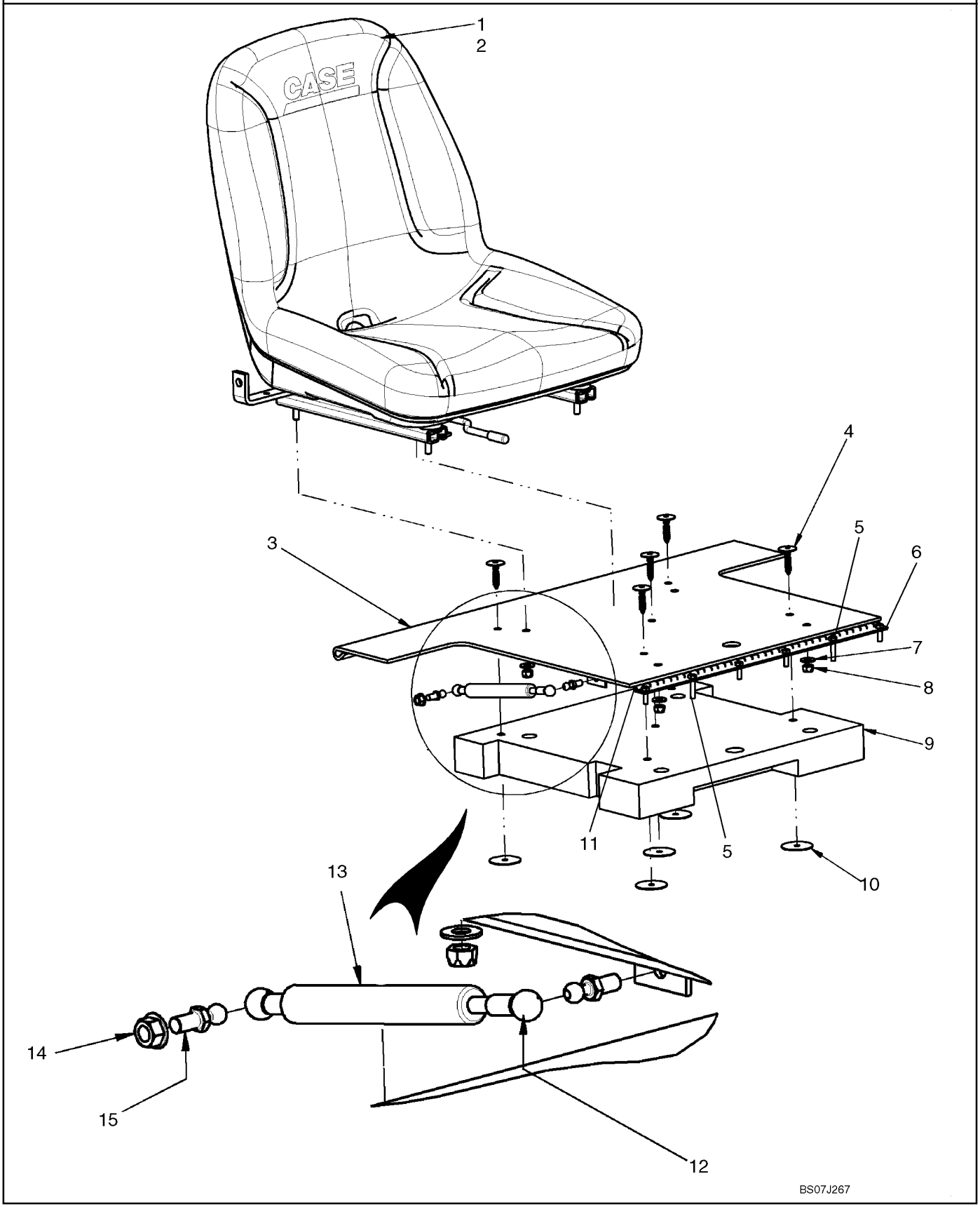

SUPPORT DU SIEGE - STANDARD

REF	FN	PART NUMBER	YR/SN	QTY	DESCRIPTION
1		87405117		1	SIÈGE, Seat, Mid-Back - Wheat Color; Incl. 2
2		86603490		1	CONTACTEUR, Operator Presence
2A		302137A2		1	FAISCEAU, Operator Presence Switch Harness With 2 Connectors; Not Illustrated
3		{87676122}		1	Seat Hinge Plate
4		348452A1		5	VIS, Push In Fastener
5		80120101		2	VIS, M6 x 30, 8.8 ZND
6		120100		4	BOULON, Hex, M6 x 20, 8.8
7		86625263		4	RONDELLE, M8 x 20 x 1.6
8		9628098		4	CONTRE-ECROU, M8 x 1.25, Cl 10
9		{87676124}		1	Pad, Seat Noise Control
10		348434A1		5	RONDELLE
11		{87676121}		1	Seat Hinge Stiffener
12		254307A1		2	JONC
13		189787A2		1	AMORTISSEUR
14		86505868		2	ECROU, M8, Flg Ser
15		189609A1		2	GOUJON, Metric Ball Stud, 10mm Ball x M8 X 1.25 Thd

SUPPORT DU SIEGE - SUSPENSION

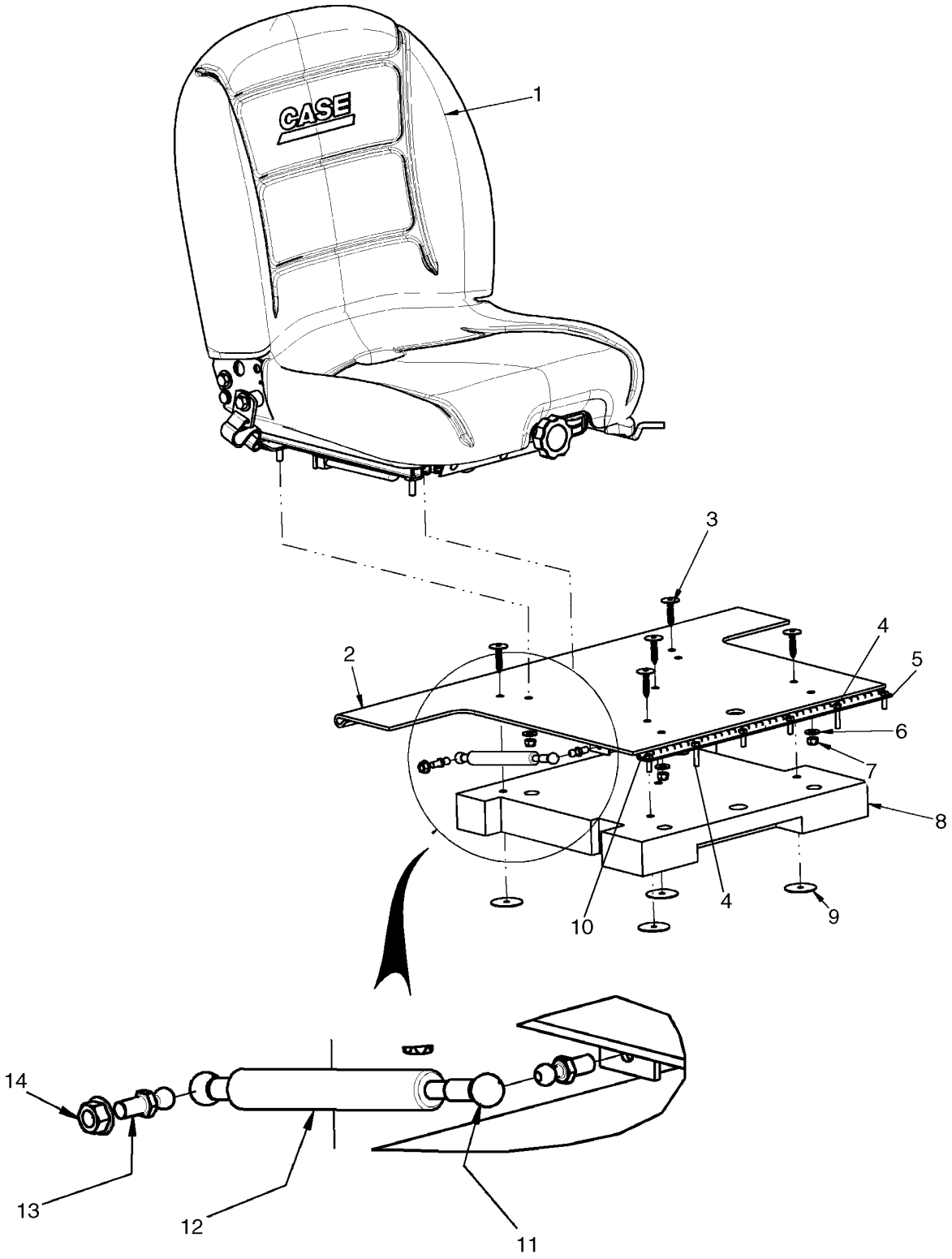

SUPPORT DU SIEGE - SUSPENSION

REF	FN	PART NUMBER	YR/SN	QTY	DESCRIPTION
1		87662513		1	SIÈGE, Suspension Seat Assembly, Wheat Color
2		{87676122}		1	Seat Hinge Plate
3		348452A1		5	VIS, Push In Fastener
4		80120101		2	VIS, M6 X 30, 8.8 ZND
5		120100		4	BOULON, Hex, M6 x 20, 8.8
6		86625263		4	RONDELLE, M8 x 20 x 1.6
7		9628098		4	CONTRE-ECROU, M8 x 1.25, Cl 10
8		{87676124}		1	Pad, Seat Noise Control
9		348434A1		5	RONDELLE
10		{87676121}		1	Seat Hinge Stiffener
11		254307A1		2	JONC
12		189787A2		1	AMORTISSEUR
13		189609A1		2	GOUJON, Ball Stud, 10mm Ball X M8 X 1.25 Thd
14		86505868		2	ECROU, M8, Flg Ser

SUPPORT DU SIEGE - DELUXE SUSPENSION

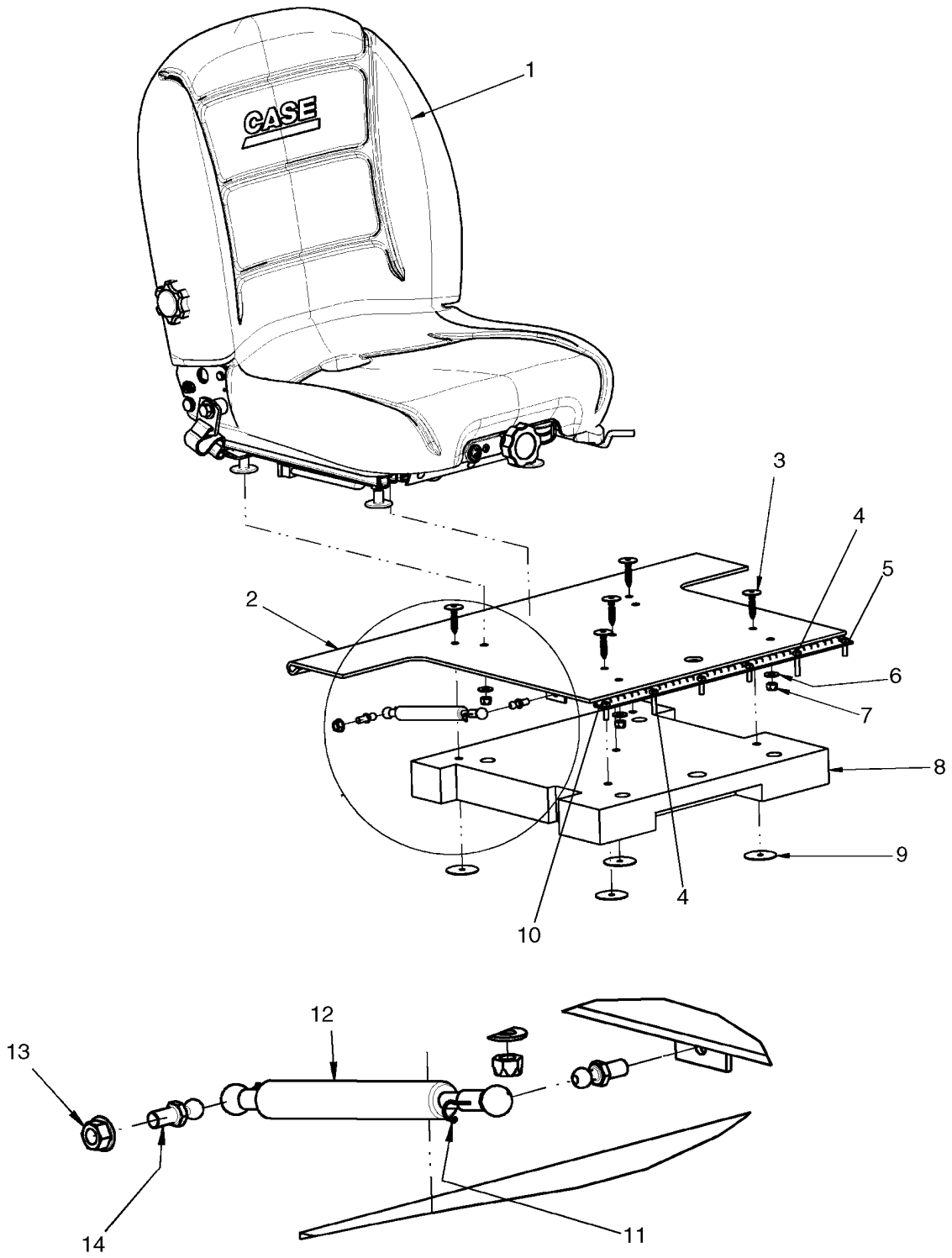

SUPPORT DU SIEGE - DELUXE SUSPENSION

REF	FN	PART NUMBER	YR/SN	QTY	DESCRIPTION
1		87662514		1	SIÈGE, Suspension Seat Assembly - Deluxe, Cloth Seat
2		{87676122}		1	Seat Hinge Plate
3		348452A1		5	VIS, Push In Fastener
4		80120101		2	VIS, M6 X 30, 8.8
5		120100		4	BOULON, Hex, M6 x 20, 8.8
6		86625263		4	RONDELLE, M8 x 20 x 1.6
7		9628098		4	CONTRE-ECROU, M8 x 1.25, Cl 10
8		{87676124}		1	Pad, Seat Noise Control
9		348434A1		5	RONDELLE
10		{87676121}		1	Seat Hinge Stiffener
11		254307A1		2	JONC
12		189787A2		1	AMORTISSEUR
13		86505868		2	ECROU, M8, Flg Ser
14		189609A1		2	GOUJON, Ball Stud, 10mm Ball X M8 X 1.25 Thd

VITRE, ARRIÈRE

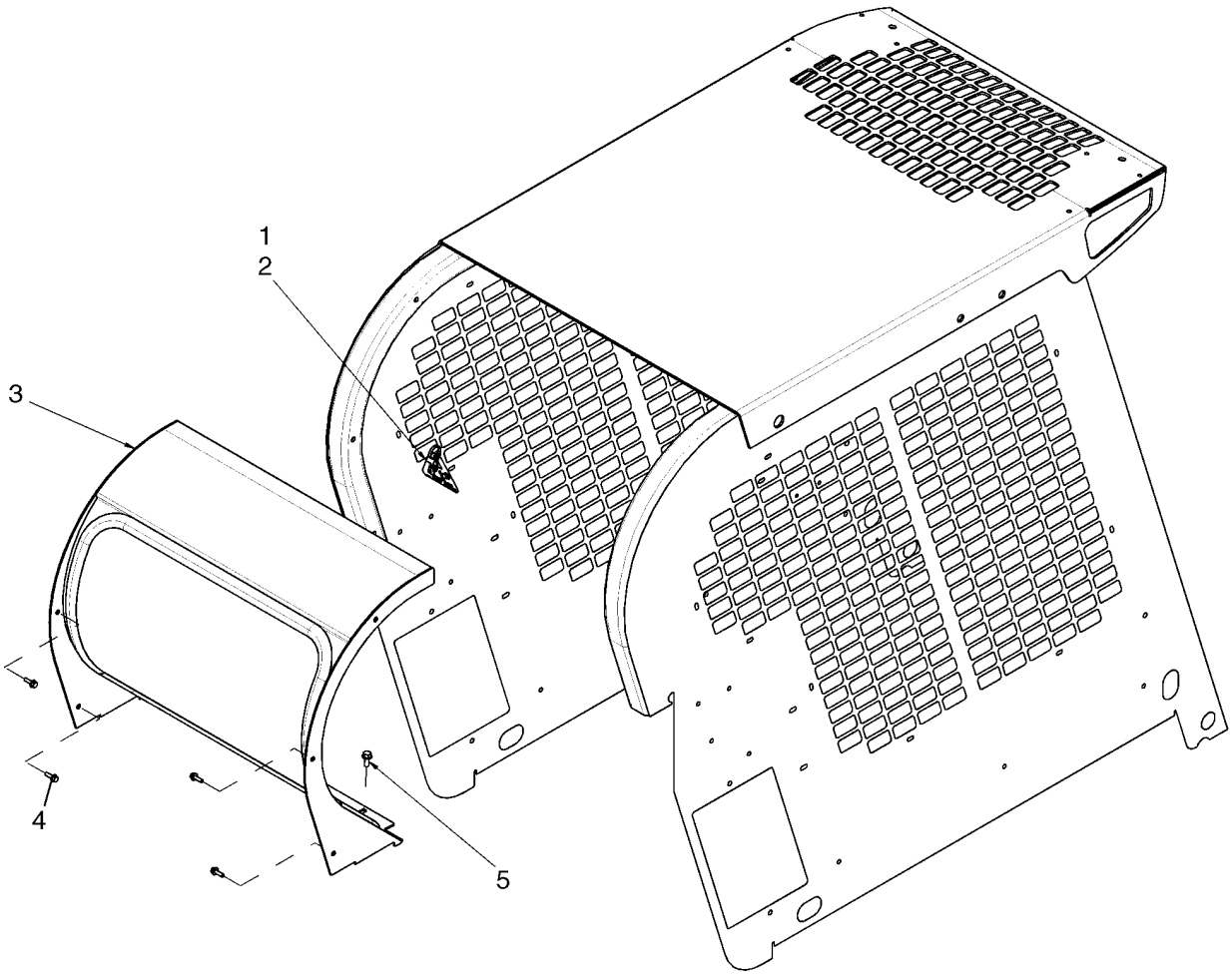

BS07K248

VITRE, ARRIÈRE

REF	FN	PART NUMBER	YR/SN	QTY	DESCRIPTION
1		263117		1	SERRE-CABLE, .14" x 11 1/2"
2		87026871		1	ENSEIGNE PLASTIQUE, Exit Tag
3		87626406		1	FENETRE, Rear Window
4		9804256		9	BOULON, Hex Flg, M6 x 20, 8.8
5		9804258		3	BOULON, Hex Flg, M8 x 20, 8.8

VITRE, ARRIÈRE - CHAUFFAGE ET AIR CONDITIONNE

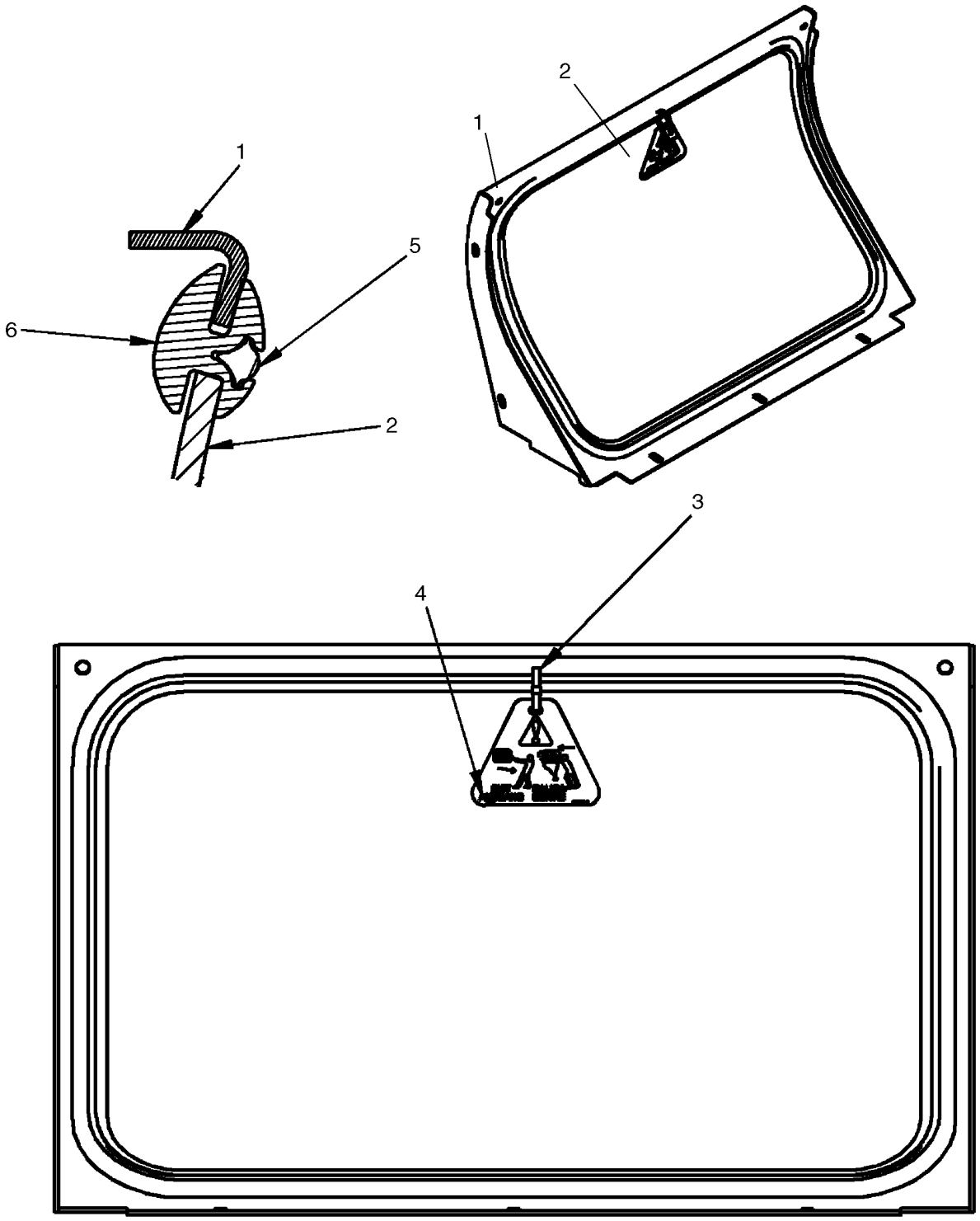

VITRE, ARRIÈRE - CHAUFFAGE ET AIR CONDITIONNE

REF	FN	PART NUMBER	YR/SN	QTY	DESCRIPTION
1		{87705428}		1	Frame, Rear HVAC Window
2		{87641703}		1	Glass, Rear HVAC Window
3		263117		1	SERRE-CABLE, .14" x 11 1/2"
4		87026871		1	ENSEIGNE PLASTIQUE, Exit Tag
5		{87643808}		1	Key, Locking
6		{87641704}		1	Seal, H Channel HVAC Window

VITRES, DESSUS

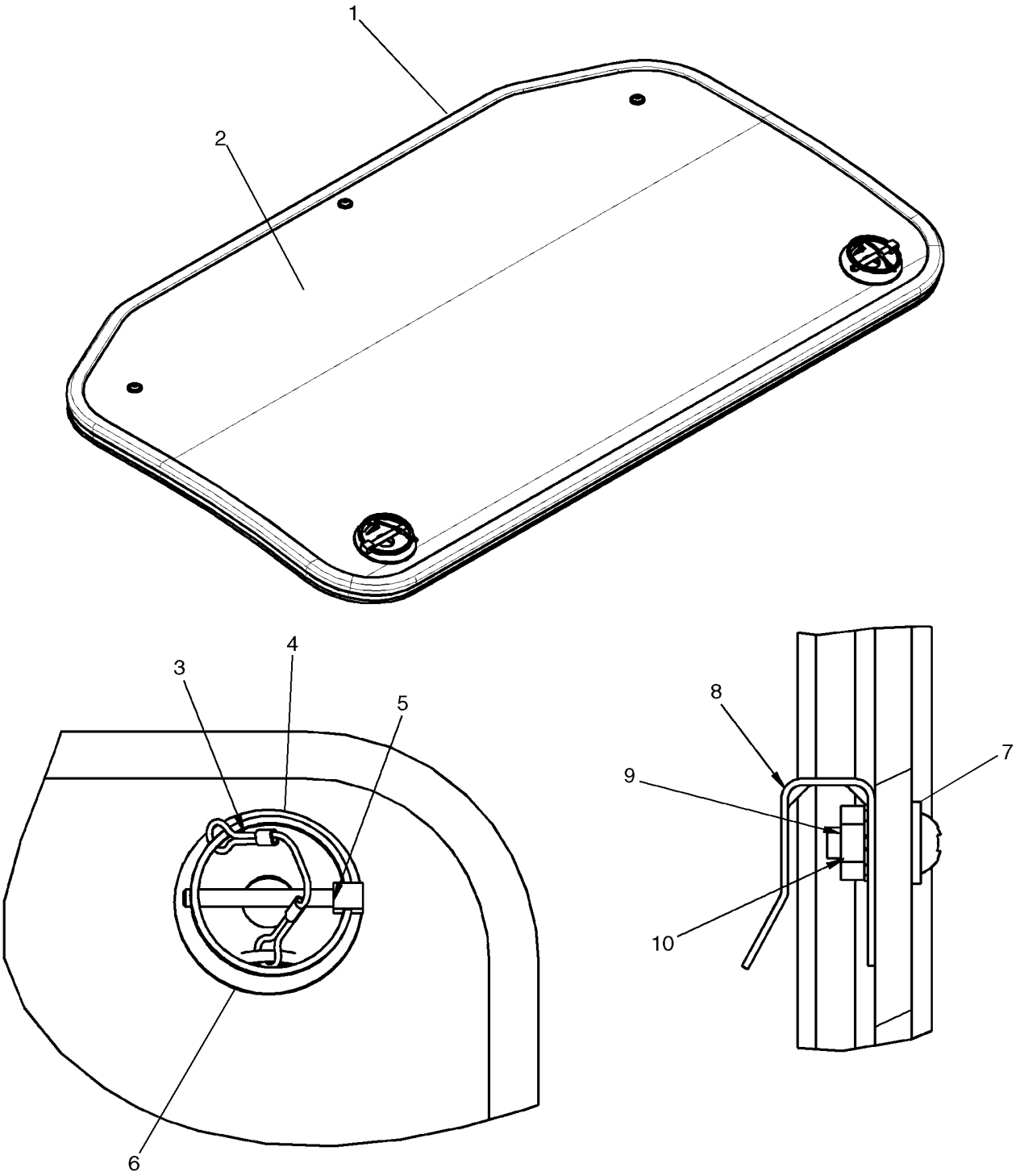

VITRES, DESSUS

REF	FN	PART NUMBER	YR/SN	QTY	DESCRIPTION
		87715833		1	FEUILLE, Top Window; Incl. 1 - 10
1		NSS		1	NON FOURNI SEPAREMENT, Bulb Seal
2		NSS		1	NON FOURNI SEPAREMENT, Window
3		NSS		2	NON FOURNI SEPAREMENT, Cable
4		NSS		4	NON FOURNI SEPAREMENT, Cable Crimp
5		NSS		2	NON FOURNI SEPAREMENT, Linch Pin
6		NSS		2	NON FOURNI SEPAREMENT, Mount, Skylight Pin
7		280299		3	RONDELLE, #8
8		NSS		3	NON FOURNI SEPAREMENT, Clip
9		NSS		3	NON FOURNI SEPAREMENT, Nut, #8-32 UNC
10		81822758		3	VIS, Cross Pan Hd, #8-32 x 1/2"

VITRES, LATERAL

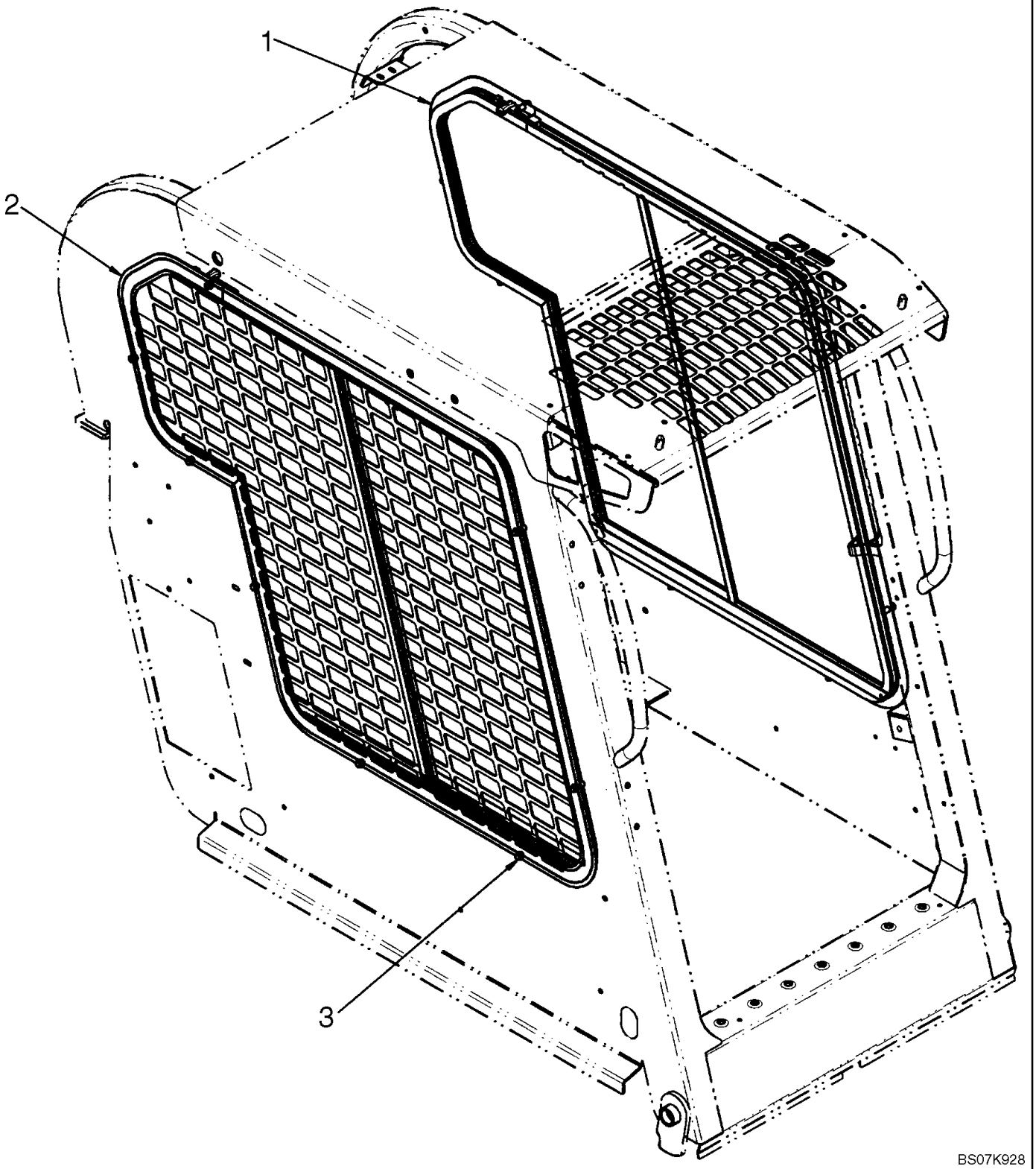

VITRES, LATERAL

REF	FN	PART NUMBER	YR/SN	QTY	DESCRIPTION
		87638358		1	KIT ASSISTANCE, Kit, Side Windows; Incl. 1 - 3 And Instructions
1		87657669		1	FENETRE, LH Side
2		87657670		1	FENETRE, RH Side
3		87030555		16	BOULON, Hex Flange Head M6 x 16 8.8 PHC

PAVILLON - STANDARD

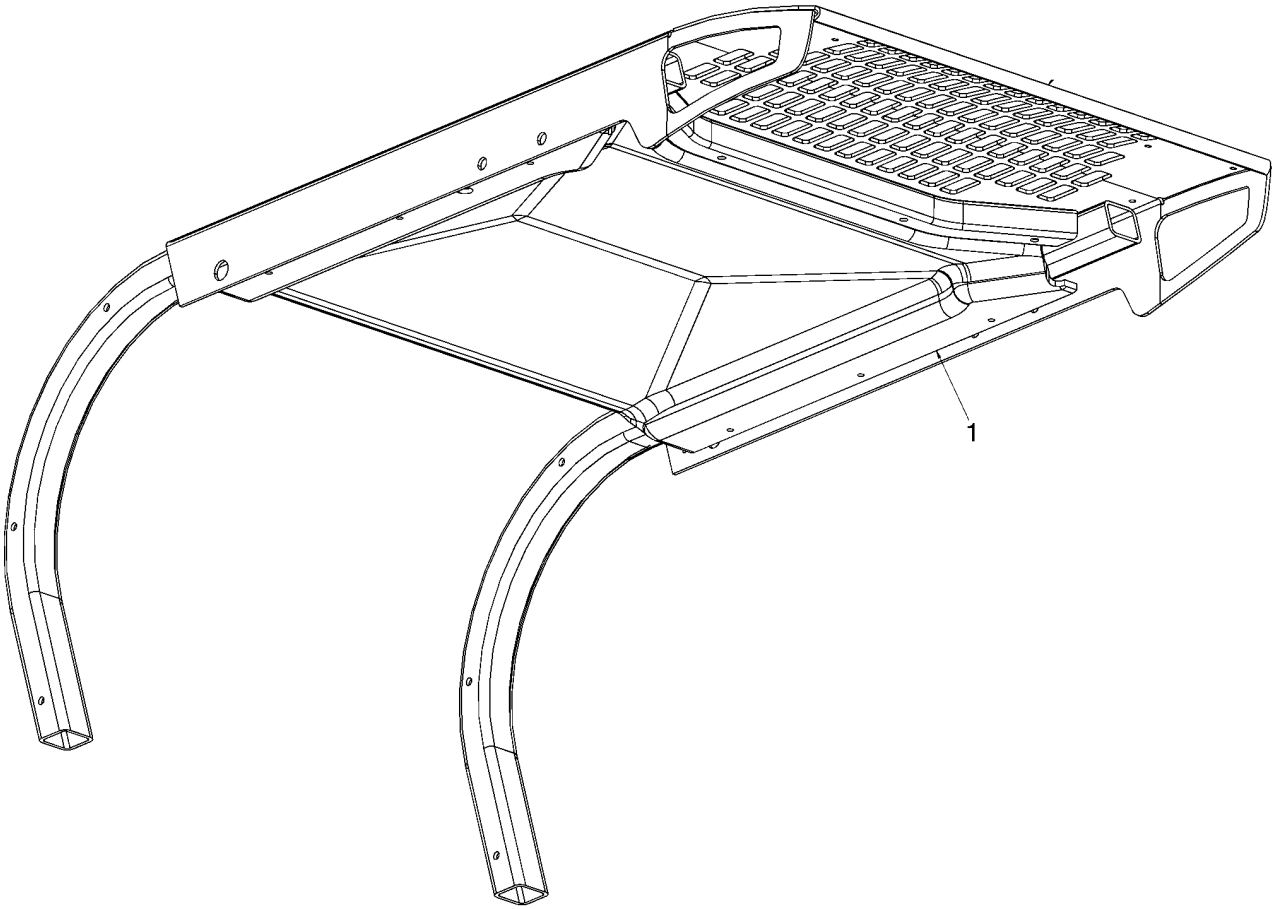

BS07K108

PAVILLON - STANDARD

REF	FN	PART NUMBER	YR/SN	QTY	DESCRIPTION
1		{87669944}		1	Headliner, Standard

CHAUFFAGE ET AIR CONDITIONNE - PAVILLON

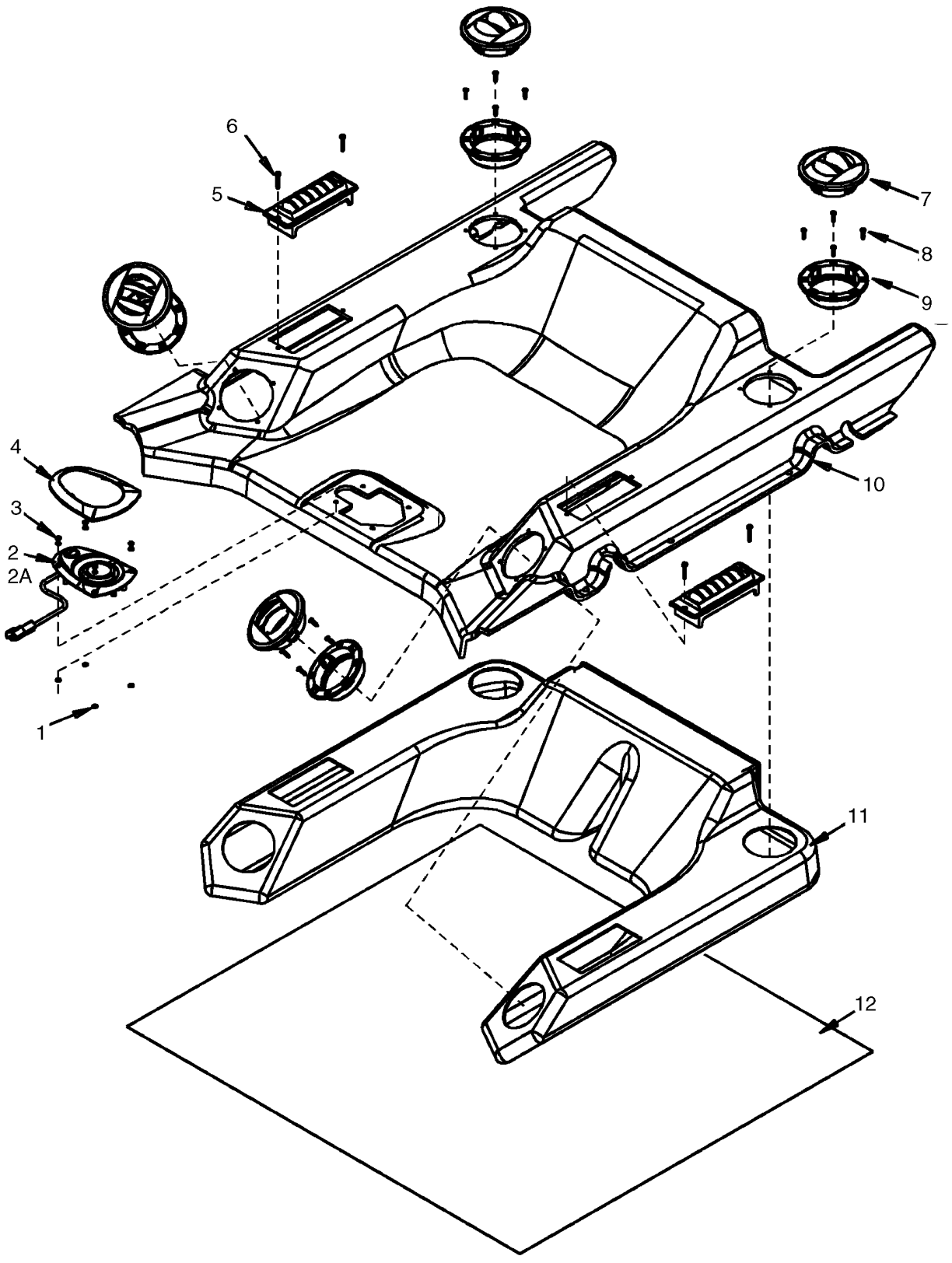

CHAUFFAGE ET AIR CONDITIONNE - PAVILLON

REF	FN	PART NUMBER	YR/SN	QTY	DESCRIPTION
1		NSS		4	NON FOURNI SEPAREMENT, Washer
2		87414959		1	LAMPE, Incl 2A
2A		373114A1		1	AMPOULE
3		NSS		4	NON FOURNI SEPAREMENT, Pop Rivet
4		NSS		1	NON FOURNI SEPAREMENT, Dome Light Bezel
5		86620864		2	BUSE D'AÉRATION
6		NSS		4	NON FOURNI SEPAREMENT, Screw
7		NSS		4	NON FOURNI SEPAREMENT, Louver
8		NSS		16	NON FOURNI SEPAREMENT, Screw
9		NSS		4	NON FOURNI SEPAREMENT, Louver Housing
10		NSS		1	NON FOURNI SEPAREMENT, Headliner, CPXT
11		NSS		1	NON FOURNI SEPAREMENT, Duct
12		NSS		1	NON FOURNI SEPAREMENT, Insulation Wrap

BORD INTÉRIEUR

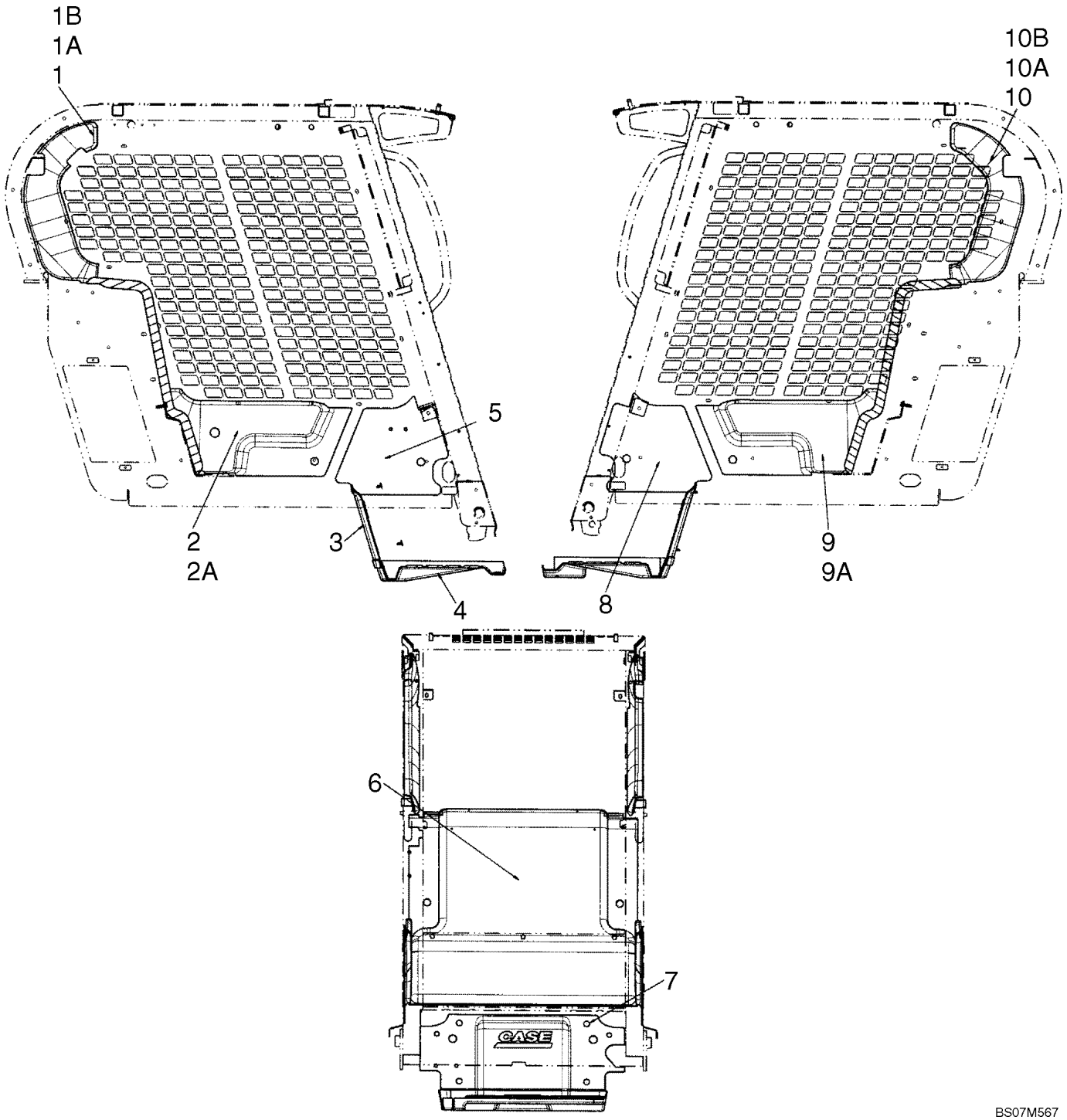

BORD INTÉRIEUR

REF	FN	PART NUMBER	YR/SN	QTY	DESCRIPTION
		87638514		1	KIT ASSISTANCE, Kit, Interior Trim; Incl 1 - 10B
1		87685891		1	TUBE ISOLANT, Panel, Upper Right Rear; Incl 1A, 1B
1A		{87685911}		1	Retainer, Foam Block
1B		{87685909}		1	Retainer, Foam Block
2		87730070		1	TUBE ISOLANT, Panel, Lower Right Rear
2A		{87685909}		1	Retainer, Foam Block
3		87730822		1	TAPIS DE PLANCHER, Mat, Heel Plate
4		87712700		1	TAPIS DE PLANCHER, Floor Mat
5		87727752		1	TUBE ISOLANT, Interior Trim, Bottom RH
6		87672098		1	TUBE ISOLANT, Trim, Interior Heat Shield
7		87712706		4	ATTACHE, Fastener, Push In
8		87727748		1	TUBE ISOLANT, Interior Trim, Bottom LH
9		87730069		1	TUBE ISOLANT, Panel, Lower Left Rear
9A		{87685909}		1	Retainer, Foam Block
10		87685888		1	TUBE ISOLANT, Panel, Upper Left Rear
10A		{87685911}		1	Retainer, Foam Block
10B		{87685909}		1	Retainer, Foam Block

09-55		p1	12/07

RADIO, HAUTPARLEUR ET ANTENNE

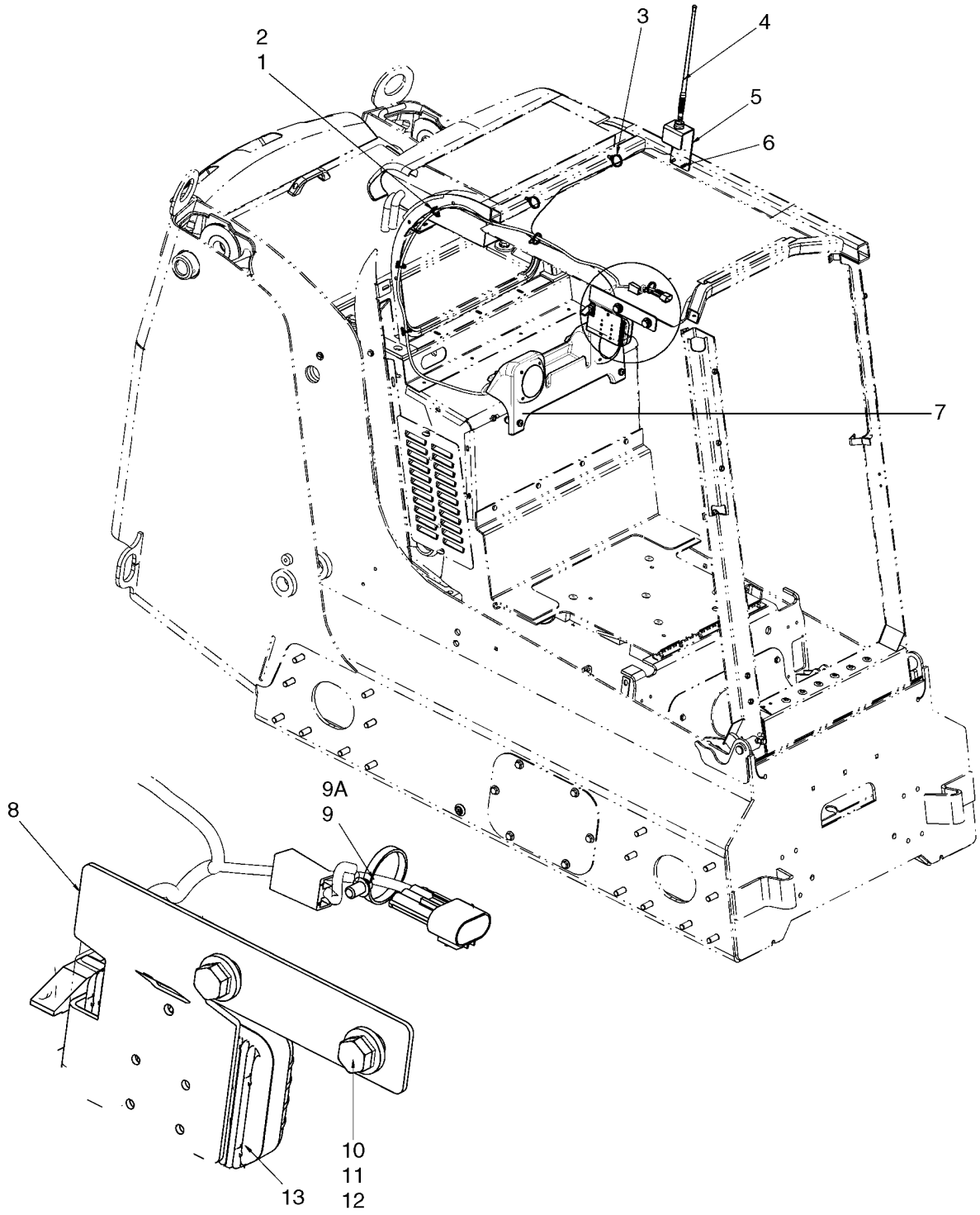

RADIO, HAUTPARLEUR ET ANTENNE

REF	FN	PART NUMBER	YR/SN	QTY	DESCRIPTION
		87652337		1	KIT ASSISTANCE, Kit, Radio; Incl 1 - 13
1		87642915		3	SERRE-CABLE
2		87642914		3	SOCLE
3		87668737		4	SANGLE
4		87668735		1	ANTENNE, Antenna, Rubber Mast
5		87682711		1	PATTE FIXATION, Antenna, Bracket
6		86625224		2	VIS, Screw, 1/4-20 X 3/4 Hex Head
7		REF		1	NOTICE, Speakers And Housing; See Fig 09-56
8		NSS		1	NON FOURNI SEPAREMENT, Radio Mounting Bracket
9		87658636		1	FAISCEAU, Radio Harness; Incl 9A
9A		A149796		1	FUSIBLE, Fuse, 3A
10		43260		2	BOULON, Hex, M12 x 30, 10.9
11		412672		2	CONTRE-ECROU, M12 x 1.75, Cl 10
12		86625256		4	RONDELLE, M12 x 28.5 x 4, HT
13		NSS		1	NON FOURNI SEPAREMENT, Mini Radio, AM/FM/WX

RADIO, HAUTPARLEUR ET ANTENNE

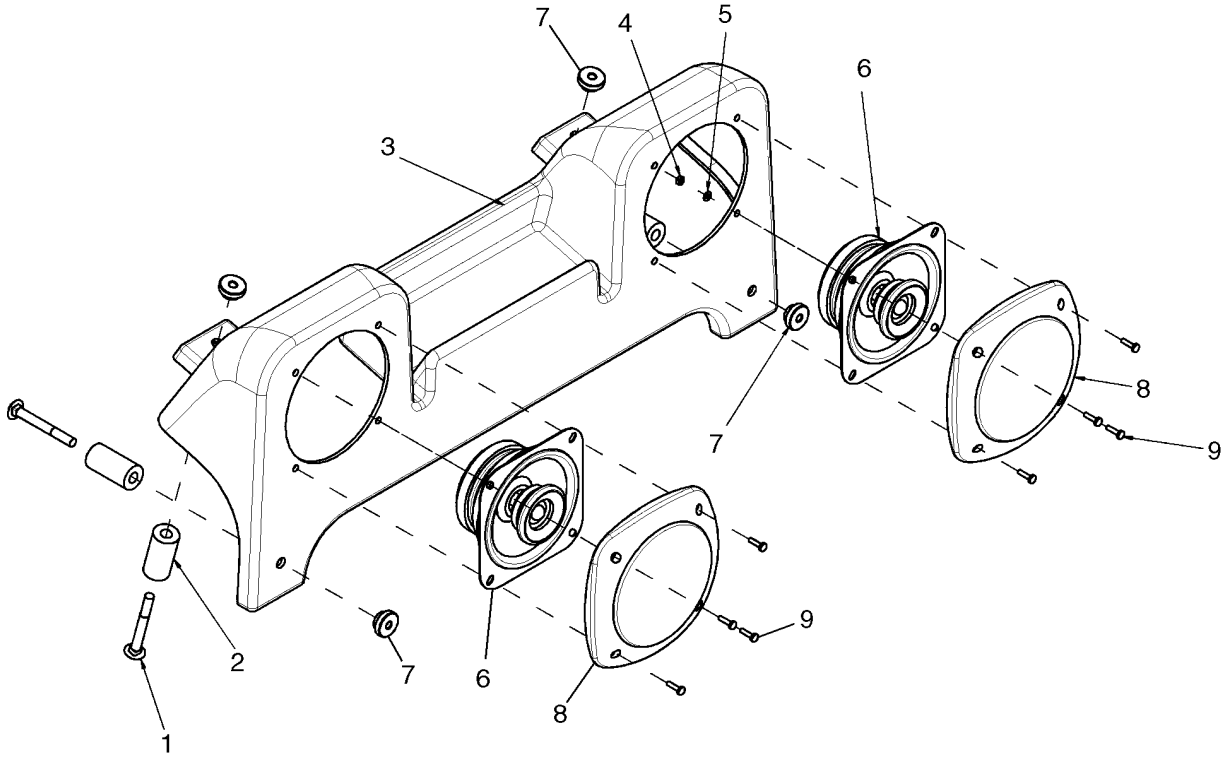

BS07K415

RADIO, HAUTPARLEUR ET ANTENNE

REF	FN	PART NUMBER	YR/SN	QTY	DESCRIPTION
1		280498		4	BOULON TETE BOMBEE, Short NK, 1/4"-20 x 2 1/4", G5
2		87668006		4	ENTRETOISE, Spacer, 8.26 ID X 19.05 OD X 38.1 Length
3		87627524		1	CARTER, Speaker Housing
4		86508812		8	ECROU, M3, Cl 8
5		86639310		8	RONDELLE, M3
6		87672222		2	RADIO, Speaker, 4 in.
7		87667727		4	ECROU, Nut, Plastic Thumb
8		87672257		2	RADIO, Speaker Grill
9		86599775		8	VIS, Cross Pan Hd, M3 x 12

CHAUFFAGE DELUXE

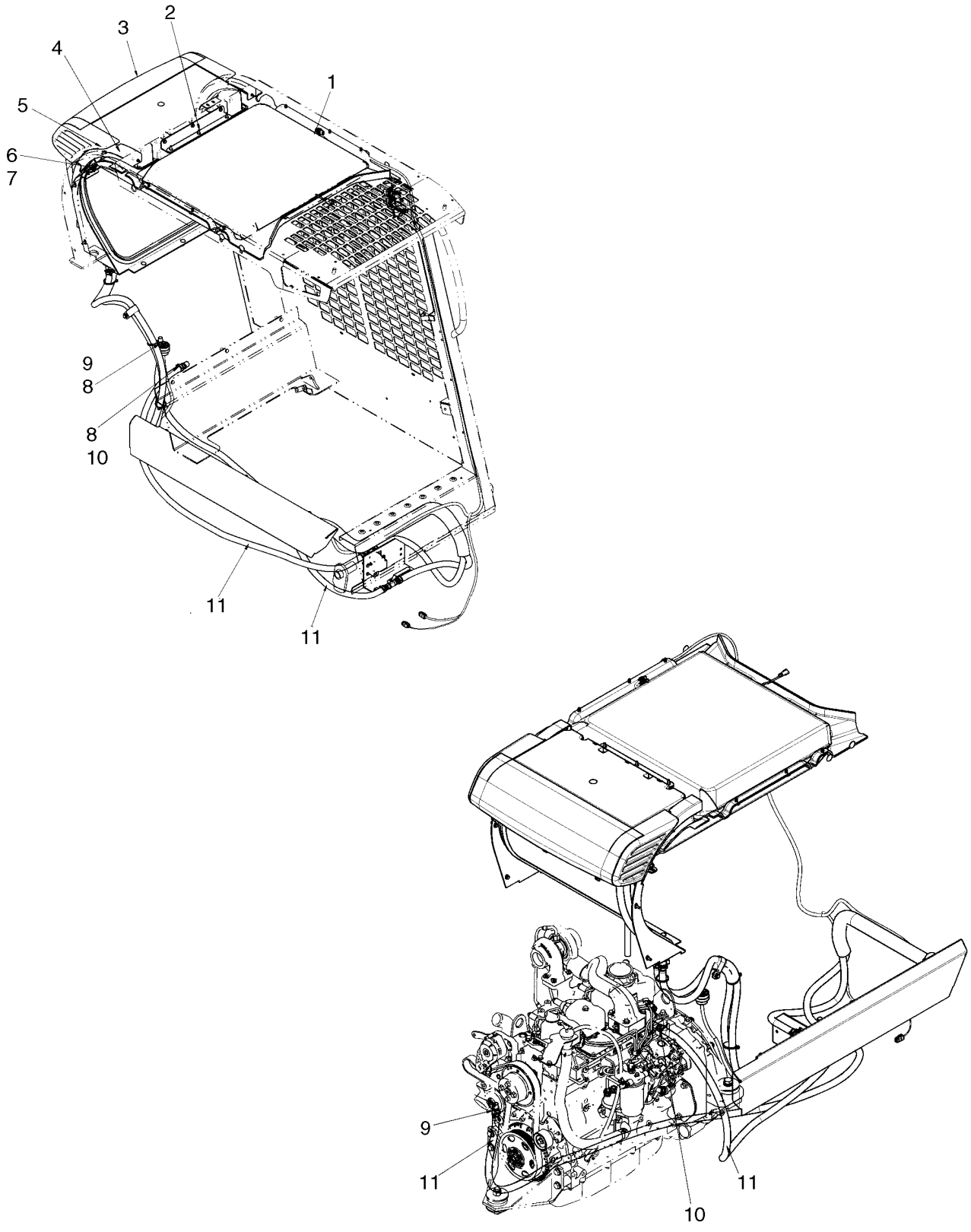

CHAUFFAGE DELUXE

REF	FN	PART NUMBER	YR/SN	QTY	DESCRIPTION
1		REF		1	NOTICE, Heater System; See Fig 09-58
2		9804256		3	BOULON, Hex Flg, M6 x 20, 8.8
3		87653394		1	RECHAUFFEUR, See Fig 09-59
4		87450833		2	RUBAN ADHESIF
5		291308		AR	BANDE D'ETANCHEITE, 580mm (22 13/16 in.)
6		86619800		2	CONTRE-ECROU, M6 x 1, Flg, Cl 8
7		9804257		2	BOULON, Hex Flg, M6 x 25, 8.8
8		87443511		2	BRIDE
9		642560		1	RACCORD, 5/8" Hose X 3/8" NPTF Beaded
10		87302136		1	RACCORD, 5/8" Hose x 1/2" NPTF, Barbed
11		87691475		2	FLEXIBLE, Hose, Heater Supply, 1975mm (77 3/4 in.)

CHAUFFAGE DELUXE

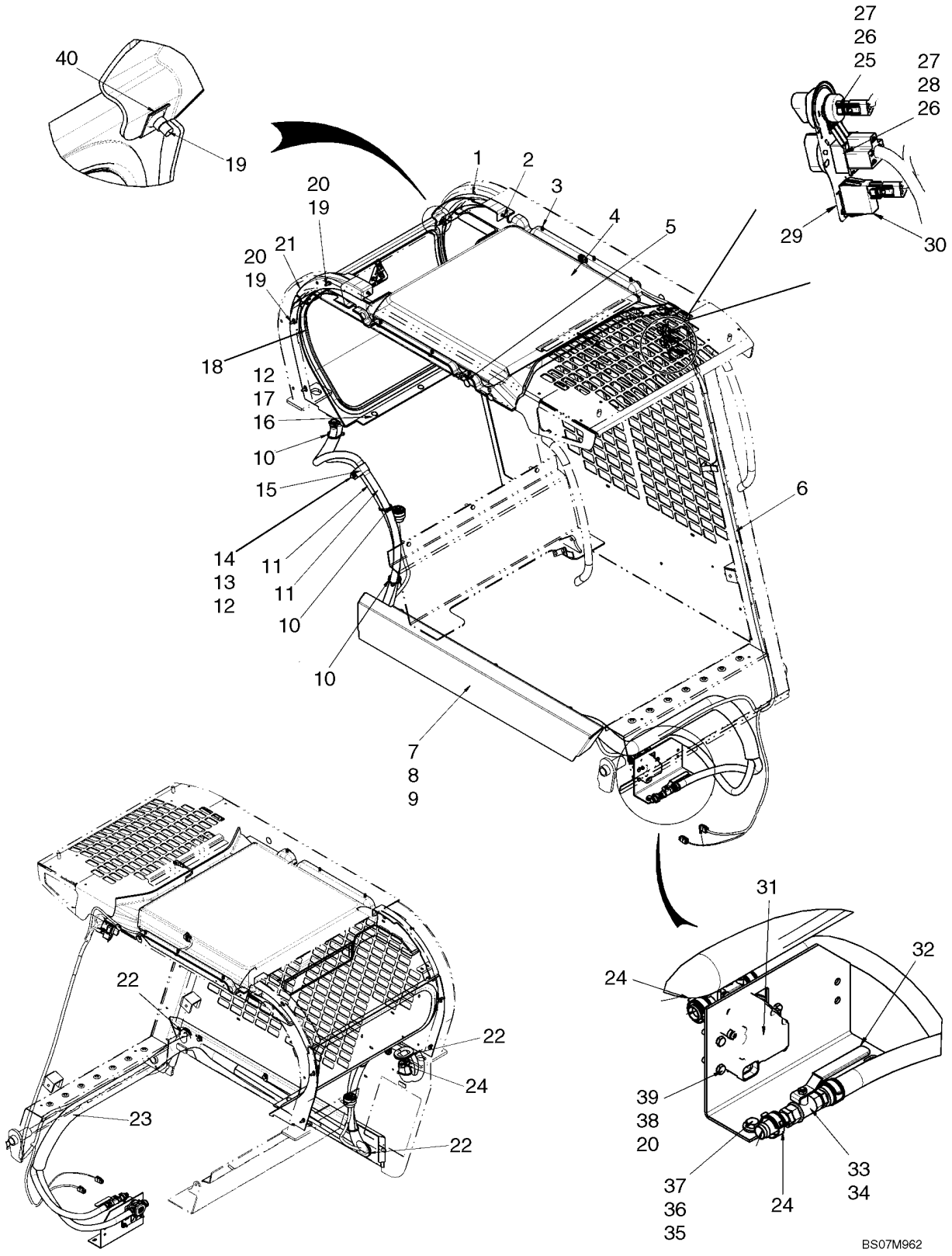

CHAUFFAGE DELUXE

REF	FN	PART NUMBER	YR/SN	QTY	DESCRIPTION
1		87705419		1	VITRE, Filler, Rear Window LH
2		87712706		2	ATTACHE, Fastener, Push In
3		87713668		6	ATTACHE, Fastener, Push In
4		REF		1	NOTICE, Headliner, Heat And A/C; See Fig 09-53
5		414635A1		4	COUVERCLE, Lexan Cover, 25mm (1 in.) Dia.
6		87718151		1	FAISCEAU, Harness, HVAC
7		87703530		1	COUVERTURE, Hose Cover, RH
8		9804258		3	BOULON, Hex Flg, M8 x 20, 8.8
9		87016586		3	ECROU, M8, U
10		L11541		3	SERRE-CABLE
11		87717211		2	FLEXIBLE, Heater Hose
12		86624184		4	RONDELLE, M8 x 16 x 1.6
13		86505868		1	ECROU, M8, Flg Ser
14		120104		1	BOULON, Hex, M8 x 20, 8.8
15		H434289		1	COLLIER-DE-FIXATION
16		43362		3	ECROU, M8, Cl 10
17		86507486		3	BOULON TETE BOMBEE, Short NK, M8 x 20, Cl8.8, Full Thd
18		REF		1	NOTICE, Rear Window, HVAC; See Fig 09-49
19		9804256		8	BOULON, Hex Flg, M6 x 20, 8.8
20		86588450		10	RONDELLE, M6
21		87705420		1	VITRE, Filler, Rear Window RH
22		87439844		3	GARANT
23		87441006		1	GARANT, Guard, A/C Hose
24		87443511		6	BRIDE
25		86729675		1	POTENTIOMETRE
26		87310592		2	ECROU, Jam, 7/16"-28, G5
27		86729670		2	POMMEAU
28		86729669		1	COMM. VENTILATEUR, Blower Switch
29		{87687236}		1	Decal, HVAC Control
30		87555249		1	CONTACTEUR, A/C Switch
31		87520839		1	SOUPAPE
32		87462631		1	PATTE FIXATION, Water Valve And Dryer Bracket
33		87441937		1	SOUPAPE, Heater Hose Ball Valve
34		642560		2	RACCORD, 5/8" Hose X 3/8" NPTF Beaded

CHAUFFAGE DELUXE

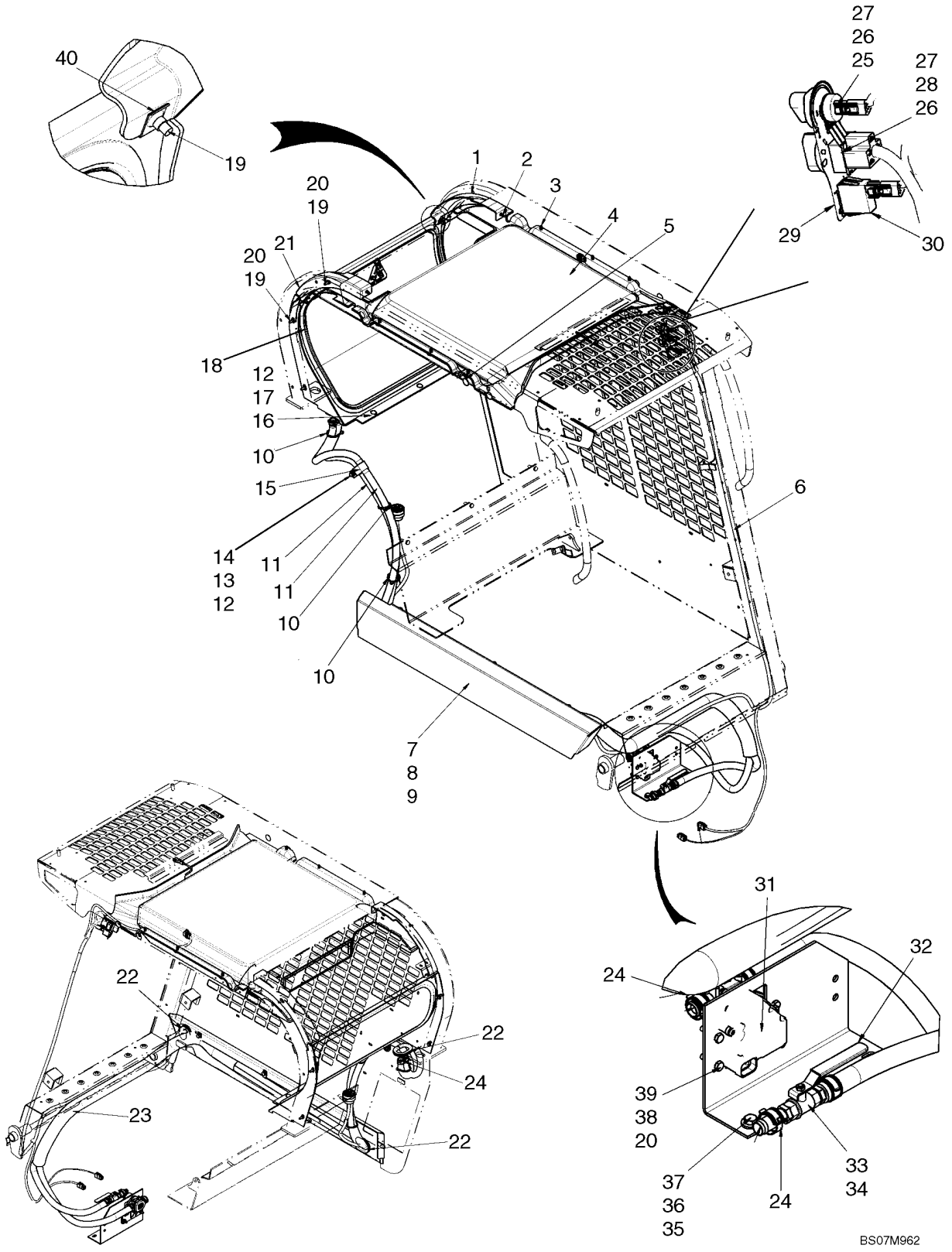

CHAUFFAGE DELUXE

REF	FN	PART NUMBER	YR/SN	QTY	DESCRIPTION
35		229197A1		2	ECROU
36		87015284		2	RONDELLE, M8 x 21.5 x 2.5, HT
37		120103		2	BOULON, Hex, M8 x 16, 8.8
38		86511444		4	ECROU, M6, Flg Ser
39		86977786		4	BOULON, Hex, M6 x 25, 8.8
40		87016585		2	ECROU
41		{}			

CLIMATISATION

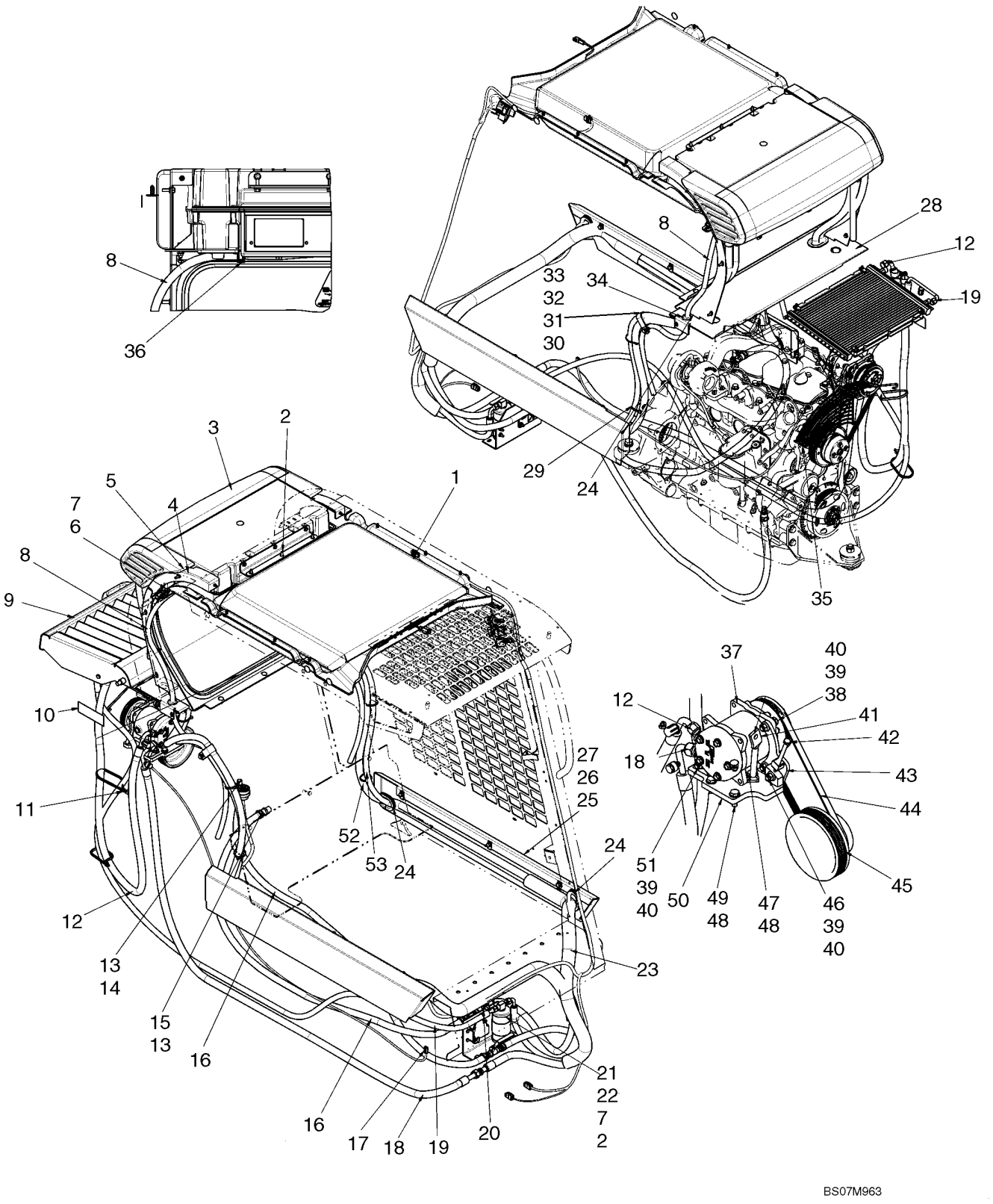

CLIMATISATION

REF	FN	PART NUMBER	YR/SN	QTY	DESCRIPTION
		87623657		1	KIT ASSISTANCE, Kit, Deluxe Heater And Air Conditioning; Incl 1 - 53
1		REF		1	NOTICE, Heater System; See Fig 09-57, 09-58
2		9804256		5	BOULON, Hex Flg, M6 x 20, 8.8
3		87653393		1	RECHAUFFEUR, Heat And Air Conditioning Unit; See Fig 09-61
4		87450833		2	RUBAN ADHESIF
5		291308		AR	BANDE D'ETANCHEITE, 580mm (22 13/16 in.)
6		9804257		2	BOULON, Hex Flg, M6 x 25, 8.8
7		86619800		4	CONTRE-ECROU, M6 x 1, Flg, Cl 8
8		87691473		2	FLEXIBLE, Tube, A/C Drain
9		REF		1	NOTICE, Hood, Air Conditioning; See Fig 09-25
10		86639409		1	DECALCOMANIE, Decal, Air Conditioning Specifications
11		L18331		2	SERRE-CABLE
12		87452009		1	FLEXIBLE (ASSEMBLE)
13		87443511		2	BRIDE
14		642560		1	RACCORD, 5/8" Hose X 3/8" NPTF Beaded
15		86010532		1	RACCORD, 5/8" Hose X 1/2" NPTF Beaded
16		87691475		2	FLEXIBLE, Hose, Heater Supply
17		87445908		1	FAISCEAU, Compressor Harness
18		87436118		1	FLEXIBLE (ASSEMBLE)
19		87717220		1	FLEXIBLE, Hose, A/C Liquid
20		86625515		1	PRESSOSTAT, Switch, A/C Pressure
21		86625481		1	RECEVEUR-DÉSHYDRAT.
22		87437501		1	PATTE FIXATION
23		87441006		1	GARANT
24		87439844		3	GARANT, Trim
25		87703555		1	COUVERTURE, Hose Cover, LH
26		9804258		3	BOULON, Hex Flg, M8 x 20, 8.8
27		87016586		3	ECROU, M8, U
28		87716582		1	REVETEMENT ISOLANT, Heat Shield Extension
29		L11541		3	SERRE-CABLE
30		H434289		1	COLLIER-DE-FIXATION
31		86624184		1	RONDELLE, M8 x 16 x 1.6

CLIMATISATION

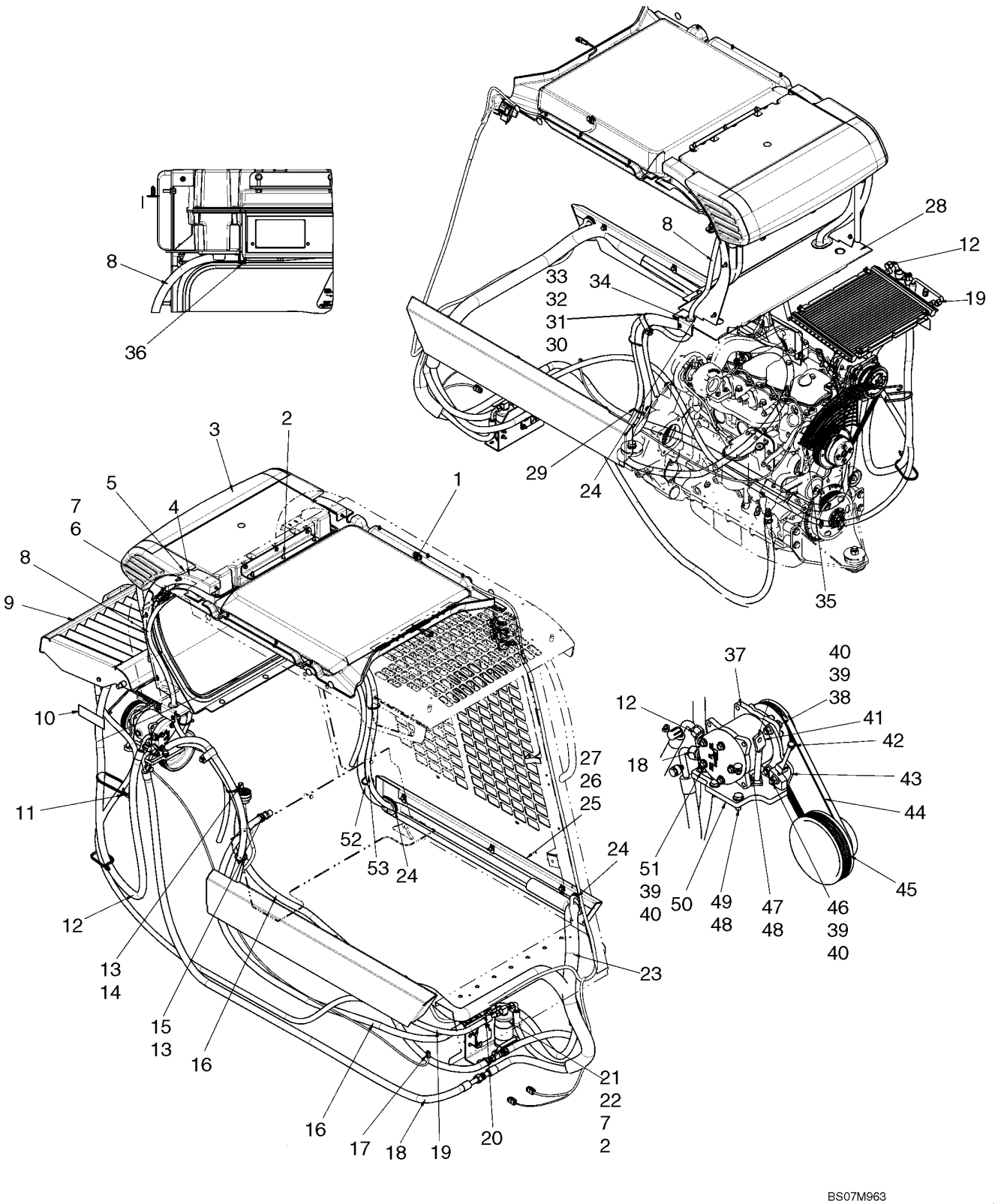

CLIMATISATION

REF	FN	PART NUMBER	YR/SN	QTY	DESCRIPTION
32		120104		1	BOULON, Hex, M8 x 20, 8.8
33		86505868		1	ECROU, M8, Flg Ser
34		87307909		2	PASSE-FIL
35		87594971		1	GARANT, Fan Guard
36		{87584302}		2	Clamp
37		87649991		1	COMPRESSEUR CLIMATIS.
38		9706704		2	BOULON, Hex, M10 x 35, 8.8, Full Thd
39		86050279		4	ECROU, M10 x 1.5, Flg, Cl 10
40		86624176		4	RONDELLE, M10 x 20 x 2
41		87684742		1	TRINGLE, Rod, Muffler
42		87649979		1	BOULON
43		87709877		1	PATTE FIXATION, Tensioner Bracket
44		87685981		1	COURROIE, Belt, A/C Drive
45		87669405		1	POULIE, Pulley, Fan And Compressor
46		120068		1	BOULON, Hex, M10 x 40, 8.8, Full Thd
47		9861444		1	BOULON, Hex, M10 x 20, 10.9, Full Thd
48		140045		4	RONDELLE BELLEVILLE, Belleville, M10
49		9515003		3	BOULON, Hex, M10 x 30, 10.9, Full Thd
50		87710177		1	PATTE FIXATION, Bracket, Compressor
51		7120741		1	BOULON
52		87691470		1	FLEXIBLE, Hose, A/C Suction
53		87691471		1	FLEXIBLE, Hose, A/C Liquid

CHAUFFAGE

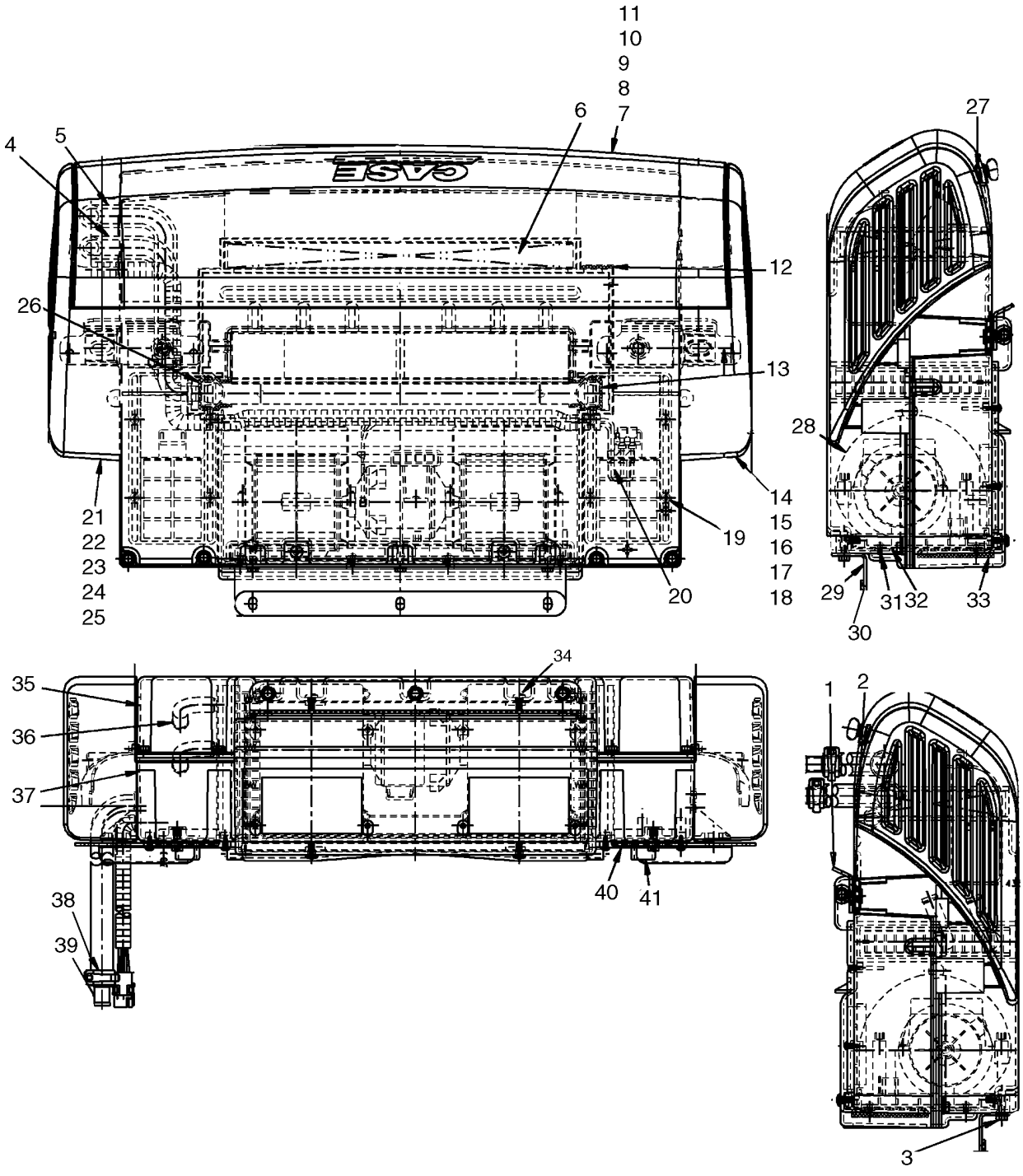
11
10
9
8
6
7
4
5
12
26
13
21
22
23
24
25
14
15
16
17
18
19
20
27
28
29
30
31
32
33
34
35
36
37
38
39
40
41
1
2
3
BS07M958

CHAUFFAGE

REF	FN	PART NUMBER	YR/SN	QTY	DESCRIPTION
1		87656095		2	PATTE FIXATION, Bottom Bracket
2		87656096		2	JOINT, Neoprene Gasket, Bottom
3		NSS		5	NON FOURNI SEPAREMENT, Screw, M6 X 20
4		87656099		1	FLEXIBLE, Formed Hose, Short
5		87656098		1	FLEXIBLE, Formed Hose, Long
6		87656118		1	FILTRE, Charcoal Filter
7		87656129		1	COUVERCLE ARRIERE, Rear Cover Assembly; Incl 8 - 11
8		87656125		3	VIS, Wing Head Screw
9		87591148		3	RETENEUR, Black Nylon Retainer
10		87656114		1	COUVERCLE, Rear Cover
11		87656130		1	MOUSSE, Foam Seal
12		NSS		1	NON FOURNI SEPAREMENT, Seal
13		NSS		1	NON FOURNI SEPAREMENT, Tank Seal
14		87656121		1	CHAPEAU, End Cap Assembly, LH; Incl 15 - 18
15		87656109		1	CHAPEAU, End Cap, LH
16		87656123		1	CHAPEAU, Partition
17		87591148		2	RETENEUR, Black Nylon Retainer
18		87656127		2	VIS
19		NSS		8	NON FOURNI SEPAREMENT, Screw
20		87656120		1	FAISCEAU COMPLET
21		87656122		1	CHAPEAU, End Cap Assembly, RH; Incl 22 - 25
22		87656105		1	CHAPEAU, End Cap, RH
23		87656124		1	CHAPEAU, Partition
24		87591148		2	RETENEUR, Black Nylon Retainer
25		87656127		2	VIS
26		NSS		1	NON FOURNI SEPAREMENT, Tank Seal, Tubes
27		87656126		7	CLIP, Recepticle, "U" Type
28		86592107		1	VENTILATEUR ELECTRIQUE
29		87656106		1	PATTE FIXATION, Front Bracket
30		87656097		1	JOINT, Neoprene Gasket, Front
31		NSS		8	NON FOURNI SEPAREMENT, Screw
32		87656107		1	PLAQUE, Blower Mount Plate
33		87656108		1	JOINT, Gasket, Blower Outlet
34		NSS		4	NON FOURNI SEPAREMENT, Screw

CHAUFFAGE

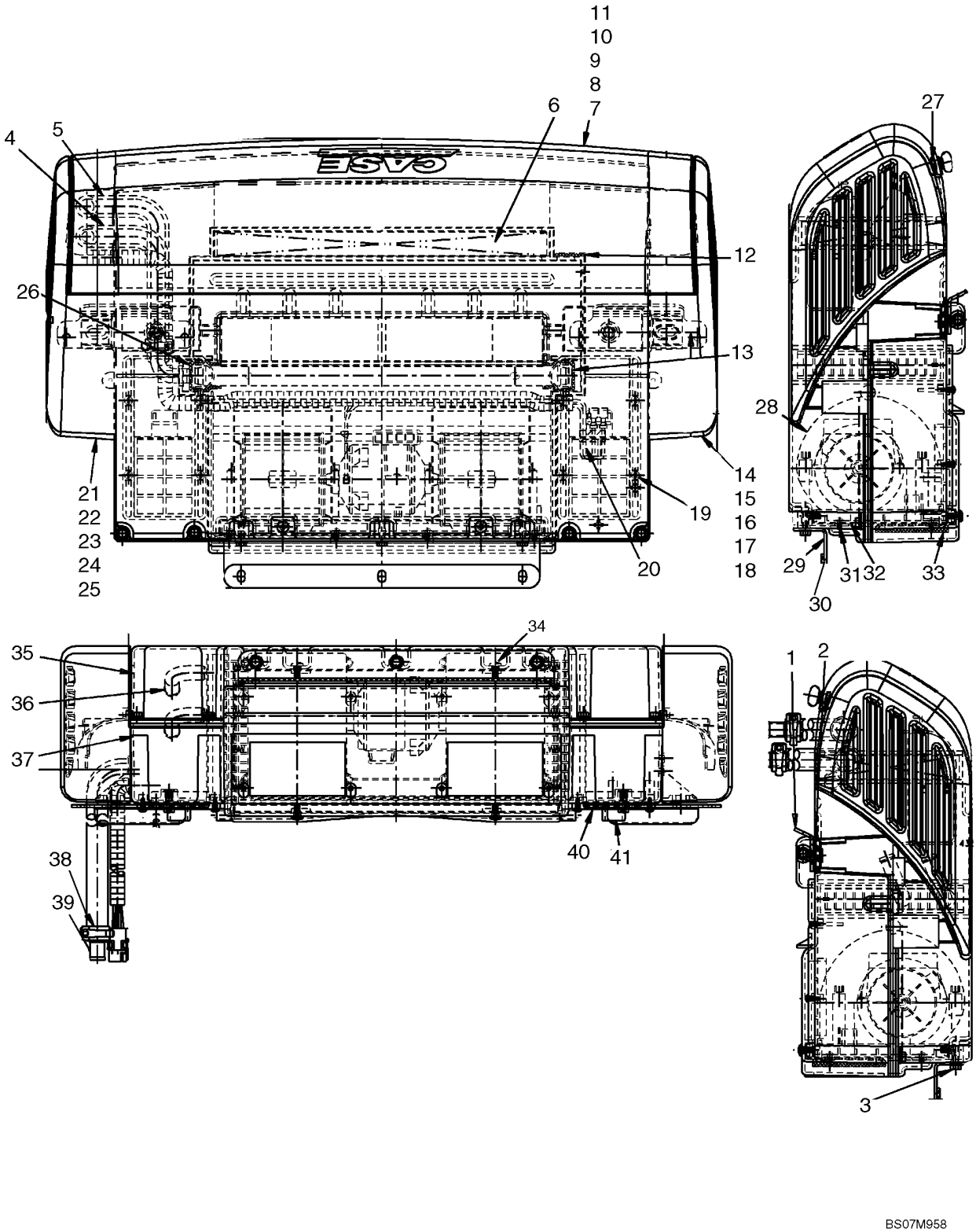
11
10
9
8
6
7
27
4
5
12
26
13
28
14
15
16
17
18
21
22
23
24
25
19
20
29
31
32
33
30
34
35
36
37
38
39
40
41
1
2
3
BS07M958

CHAUFFAGE

REF	FN	PART NUMBER	YR/SN	QTY	DESCRIPTION
35		87658710		1	CARTER-BOITE, Top Case
36		87656103		1	NOYAU, Heater Core
37		87658709		1	CARTER-BOITE, Bottom Case
38		NSS		4	NON FOURNI SEPAREMENT, Hose Clamp
39		87035457		2	TUBE
40		87656101		2	COUVERCLE
41		87656100		2	COUVERCLE

CHAUFFAGE ET AIR CONDITIONNE

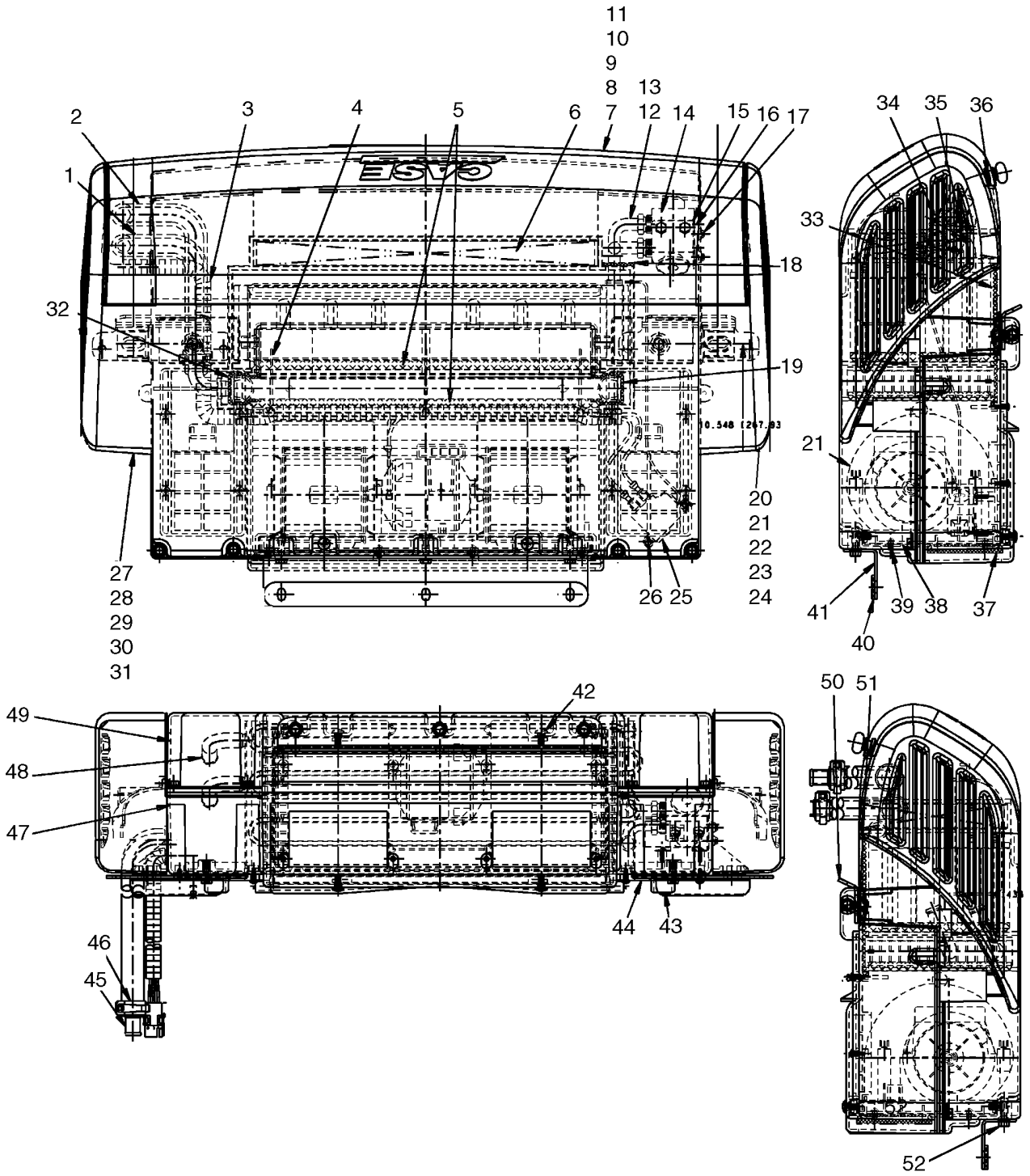

CHAUFFAGE ET AIR CONDITIONNE

REF	FN	PART NUMBER	YR/SN	QTY	DESCRIPTION
1		87656098		1	FLEXIBLE, Formed Hose, Long
2		87656099		1	FLEXIBLE, Formed Hose, Short
3		87656120		1	FAISCEAU COMPLET
4		NSS		6	NON FOURNI SEPAREMENT, Plastic Pick
5		87656119		2	MOUSSE ISOLANTE, Foam Filter
6		87656118		1	FILTRE, Charcoal Filter
7		87656129		1	COUVERCLE ARRIERE, Rear Cover Assembly; Incl 8 - 11
8		87656125		3	VIS, Wing Head Screw
9		87591148		3	RETENEUR, Black Nylon Retainer
10		87656114		1	COUVERCLE, Rear Cover
11		87656130		1	MOUSSE, Foam Seal, Filter
12		87656113		1	EVAPORATEUR, Incl 13
13		87035782		1	SOUPAPE, Expansion Valve
14		NSS		AR	NON FOURNI SEPAREMENT, Black Tar Tape, 610mm (24 in.) Required
15		87656112		1	PATTE FIXATION
16		87656111		1	JOINT, Expansion Valve Gasket
17		NSS		2	NON FOURNI SEPAREMENT, Screw
18		NSS		1	NON FOURNI SEPAREMENT, Tube Seal, Evaporator
19		NSS		1	NON FOURNI SEPAREMENT, Tank Seal
20		87656121		1	CHAPEAU, End Cap Assembly, LH; Incl 21 - 24
21		87656109		1	CHAPEAU, End Cap, LH
22		87656123		1	CHAPEAU, Partition
23		87591148		2	RETENEUR, Black Nylon Retainer
24		87656127		2	VIS
25		86625480		1	THERMOSTAT
26		NSS		10	NON FOURNI SEPAREMENT, Screw
27		87656122		1	CHAPEAU, End Cap Assembly, RH; Incl 28 - 31
28		87656105		1	CHAPEAU, End Cap, RH
29		87656124		1	CHAPEAU, Partition
30		87591148		2	RETENEUR, Black Nylon Retainer
31		87656127		2	VIS
32		NSS		1	NON FOURNI SEPAREMENT, Tank Seal, Tubes

CHAUFFAGE ET AIR CONDITIONNE

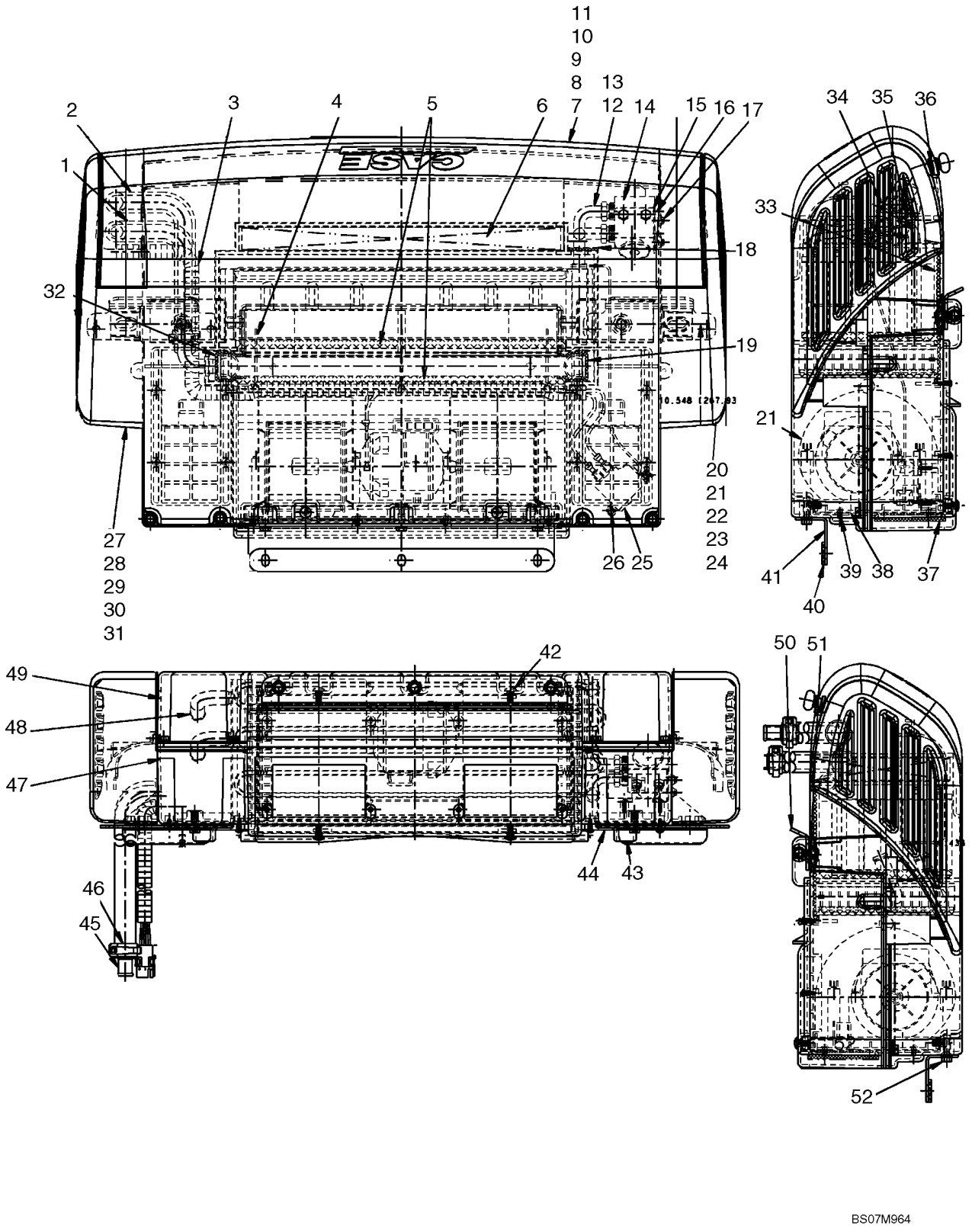

CHAUFFAGE ET AIR CONDITIONNE

REF	FN	PART NUMBER	YR/SN	QTY	DESCRIPTION
33		87656110		1	MOUSSE, Foam, Drain Pan
34		NSS		2	NON FOURNI SEPAREMENT, Bolt
35		NSS		2	NON FOURNI SEPAREMENT, Hex Nut
36		87656126		7	CLIP, Recepticle "U" Type
37		87656108		1	JOINT, Gasket, Blower Outlet
38		87656107		1	PLAQUE, Blower Mount Plate
39		NSS		8	NON FOURNI SEPAREMENT, Screw
40		87656097		1	JOINT, Neoprene Gasket, Front
41		87656106		1	PATTE FIXATION, Front Bracket
42		NSS		4	NON FOURNI SEPAREMENT, Screw
43		87656100		2	COUVERCLE
44		87656101		2	COUVERCLE
45		87035457		2	TUBE
46		NSS		4	NON FOURNI SEPAREMENT, Hose Clamp
47		87656102		1	FOND, Bottom Case Half
48		87656103		1	NOYAU, Heater Core
49		87656104		1	DESSUS, Top Case Half
50		87656095		2	PATTE FIXATION
51		87656096		2	JOINT, Neoprene Gasket, Bottom
52		NSS		5	NON FOURNI SEPAREMENT, Screw

09-62		p1	12/07

ÉCRAN THERMIQUE

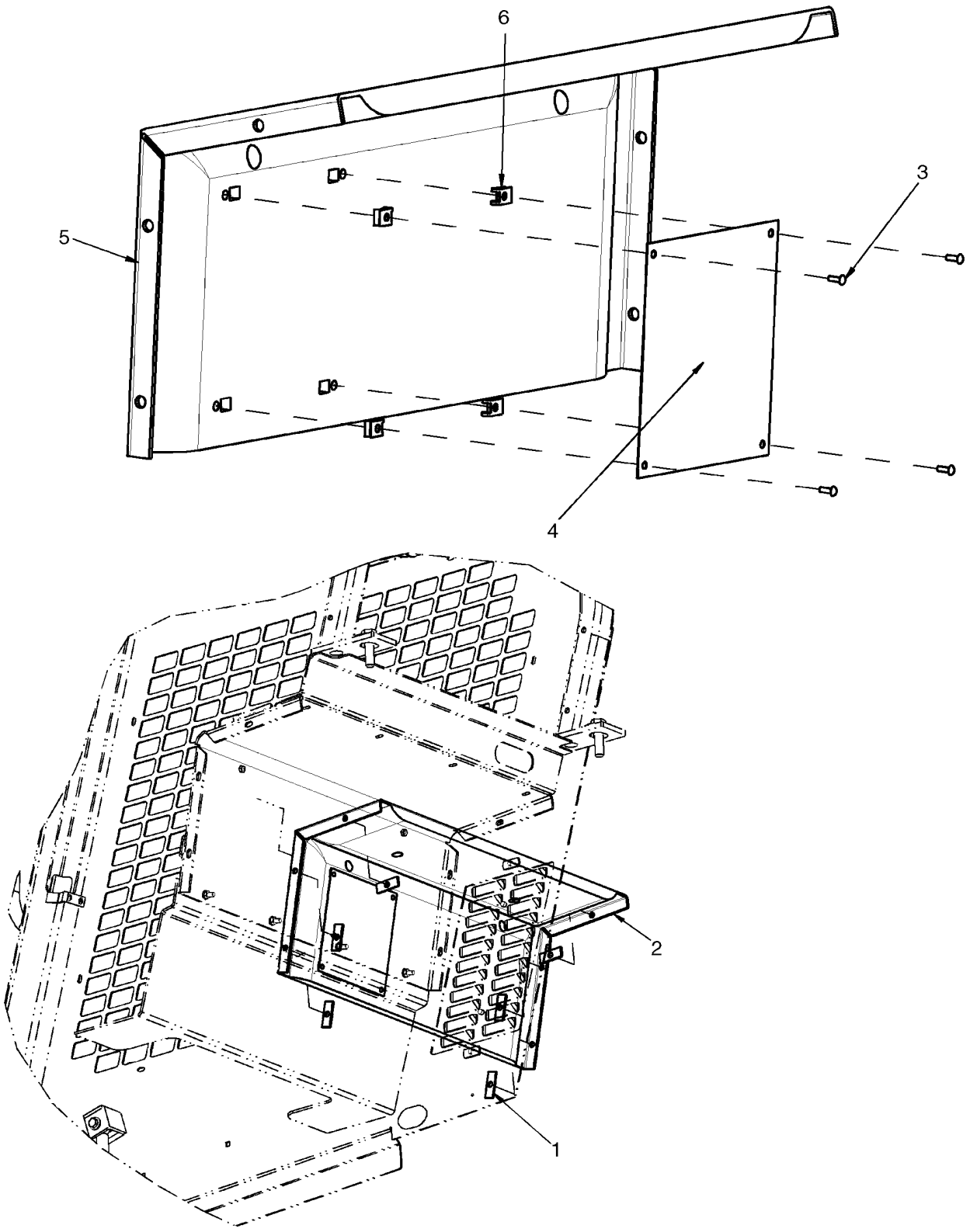

ÉCRAN THERMIQUE

REF	FN	PART NUMBER	YR/SN	QTY	DESCRIPTION
1		87460558		6	BARRE, Mounting Bar
2		{87679671}		1	Heat Shield
3		NSS		4	NON FOURNI SEPAREMENT, Screw, Pan Head #8 X 1/2 in.
4		NSS		1	NON FOURNI SEPAREMENT, Heat Shield
5		NSS		1	NON FOURNI SEPAREMENT, Heat Shield Insulation
6		NSS		4	NON FOURNI SEPAREMENT, Spring Nut

INSONORISATION MOTEUR

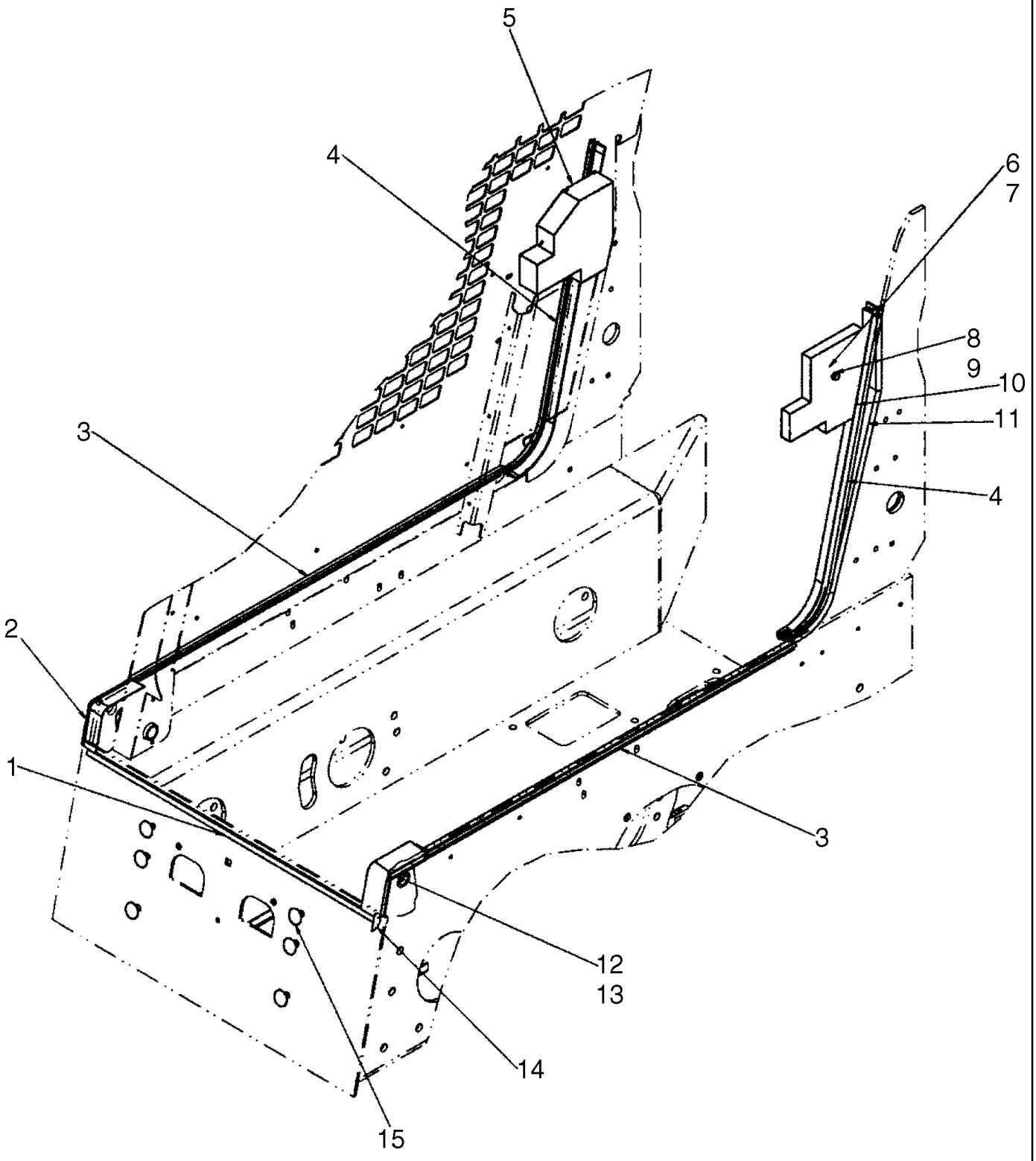

INSONORISATION MOTEUR

REF	FN	PART NUMBER	YR/SN	QTY	DESCRIPTION
1		381176A2		1	JOINT, Breast Plate Seal, 844mm (33 1/4 in.)
2		87719784		1	MOUSSE ISOLANTE, Seal, Pivot RH
3		87719782		2	MOUSSE ISOLANTE, Seal, Joggle
4		87719792		2	JOINT, Seal, Rear Cab
5		87714956		1	MOUSSE ISOLANTE, Pad, ROPS RH
6		86639313		1	RONDELLE, M8 x 20 x 1.6
7		9628098		1	CONTRE-ECROU, M8 x 1.25, Cl 10
8		300381		1	BOULON, Hex, M8 x 35, 8.8
9		86624184		1	RONDELLE, M8 x 16 x 1.6
10		87714955		1	MOUSSE ISOLANTE, Pad, ROPS LH
11		394745A2		1	JOINT, Seal, ROPS Wing
12		87719789		1	JOINT, Seal, Pivot LH
13		414010A1		1	PROFIL PROTECTEUR
14		394748A1		1	JOINT
15		299274A2		6	COUVERCLE

RÉDUCTION DU BRUIT, PORTE ARRIERE

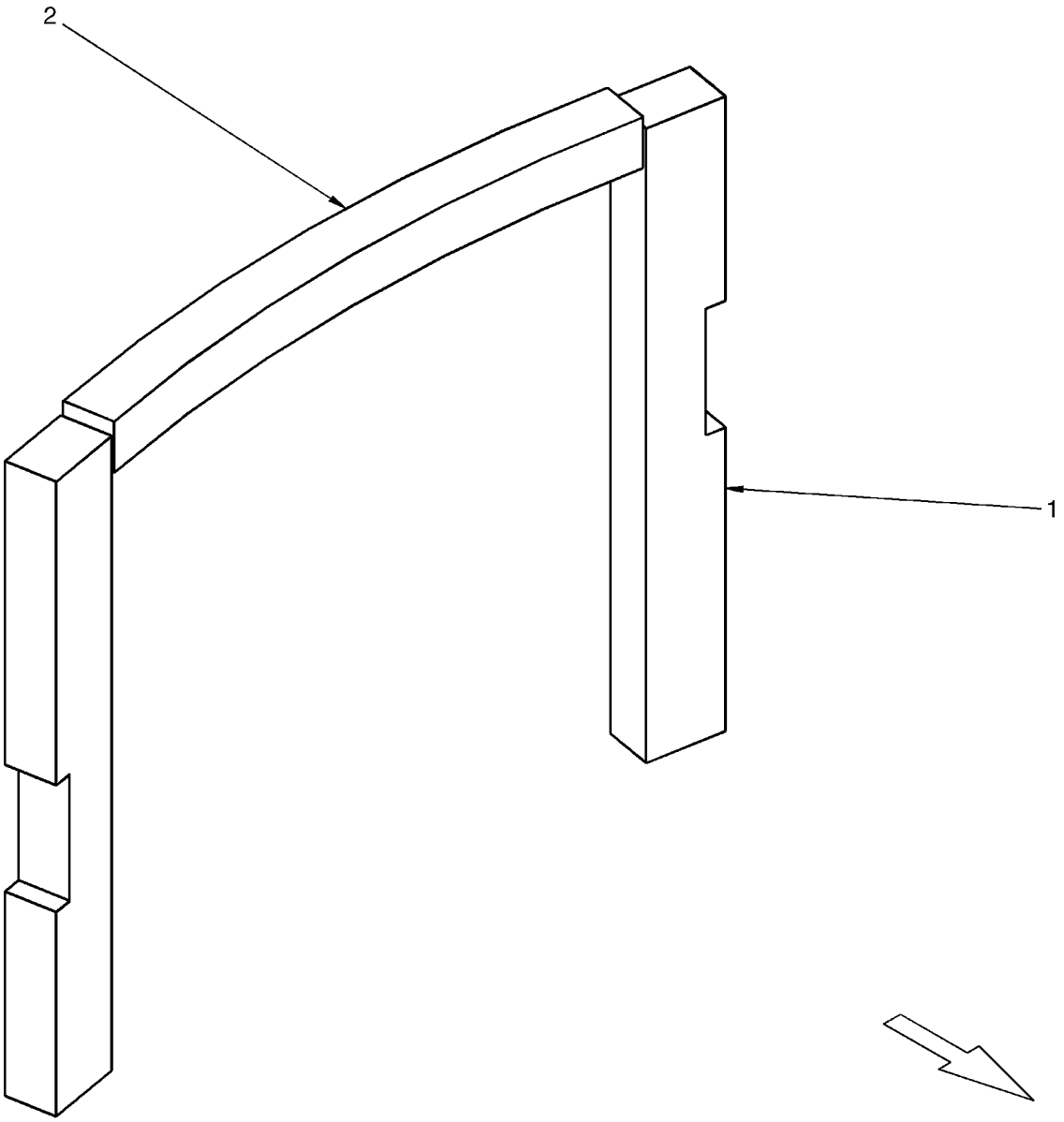

RÉDUCTION DU BRUIT, PORTE ARRIERE

REF	FN	PART NUMBER	YR/SN	QTY	DESCRIPTION
1		87460195		2	TAMPON, Pad, Rear Door
2		87714073		1	MOUSSE ISOLANTE, Pad, Louvered Door

CROCHET DE LEVAGE

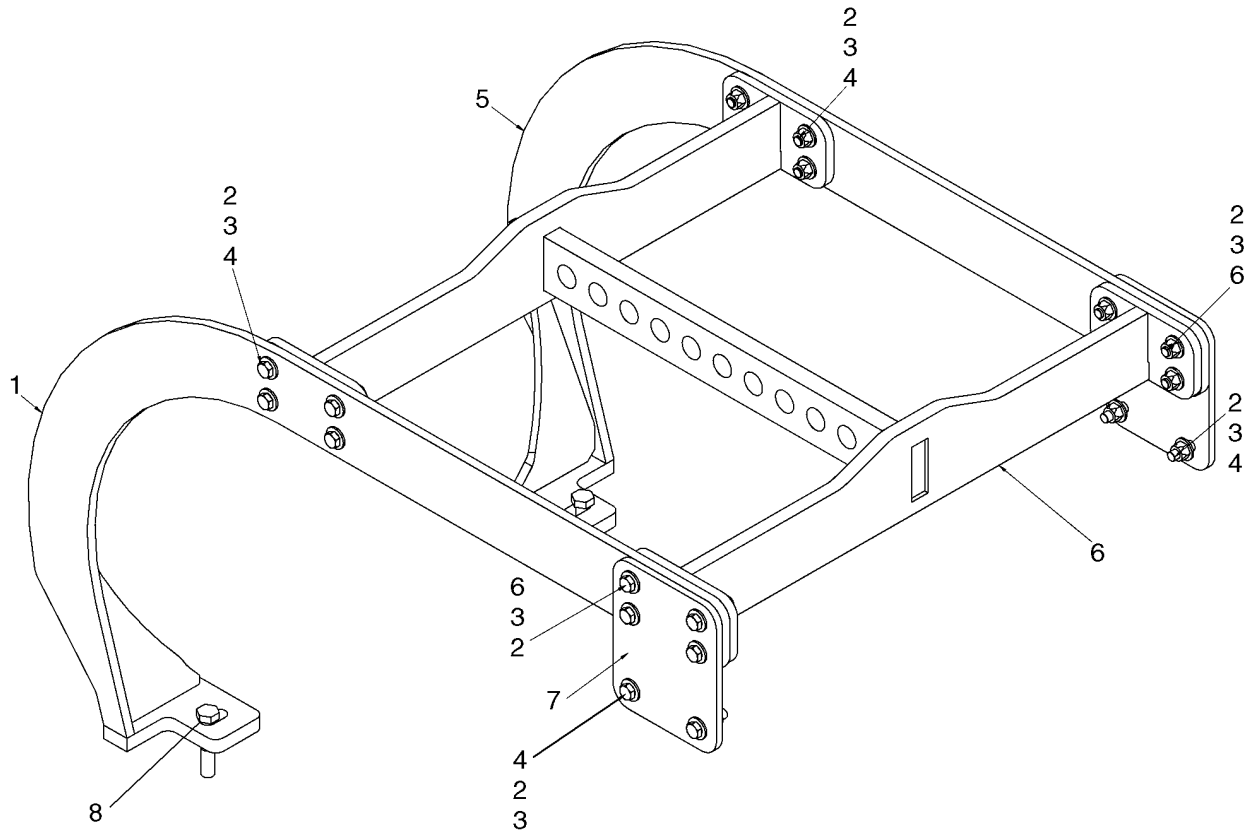

BS07N704

CROCHET DE LEVAGE

REF	FN	PART NUMBER	YR/SN	QTY	DESCRIPTION
		87673642		1	KIT ASSISTANCE, Kit, Lift Hook - Single Point; Incl 1 - 8
1		NSS		1	NON FOURNI SEPAREMENT, Lifter, RH
2		100038		20	ECROU-DE-SECURITE, M12 x 1.75, Cl 8
3		86625254		40	RONDELLE, M12 x 28 x 2.5
4		9628065		12	BOULON, Hex, M12 x 45, 8.8
5		NSS		1	NON FOURNI SEPAREMENT, Lifter, LH
6		NSS		1	NON FOURNI SEPAREMENT, Lifter, Top
7		NSS		2	NON FOURNI SEPAREMENT, Plate, Mounting
8		86577946		2	BOULON, Hex, M16 x 80, 10.9

CROCHET DE LEVAGE

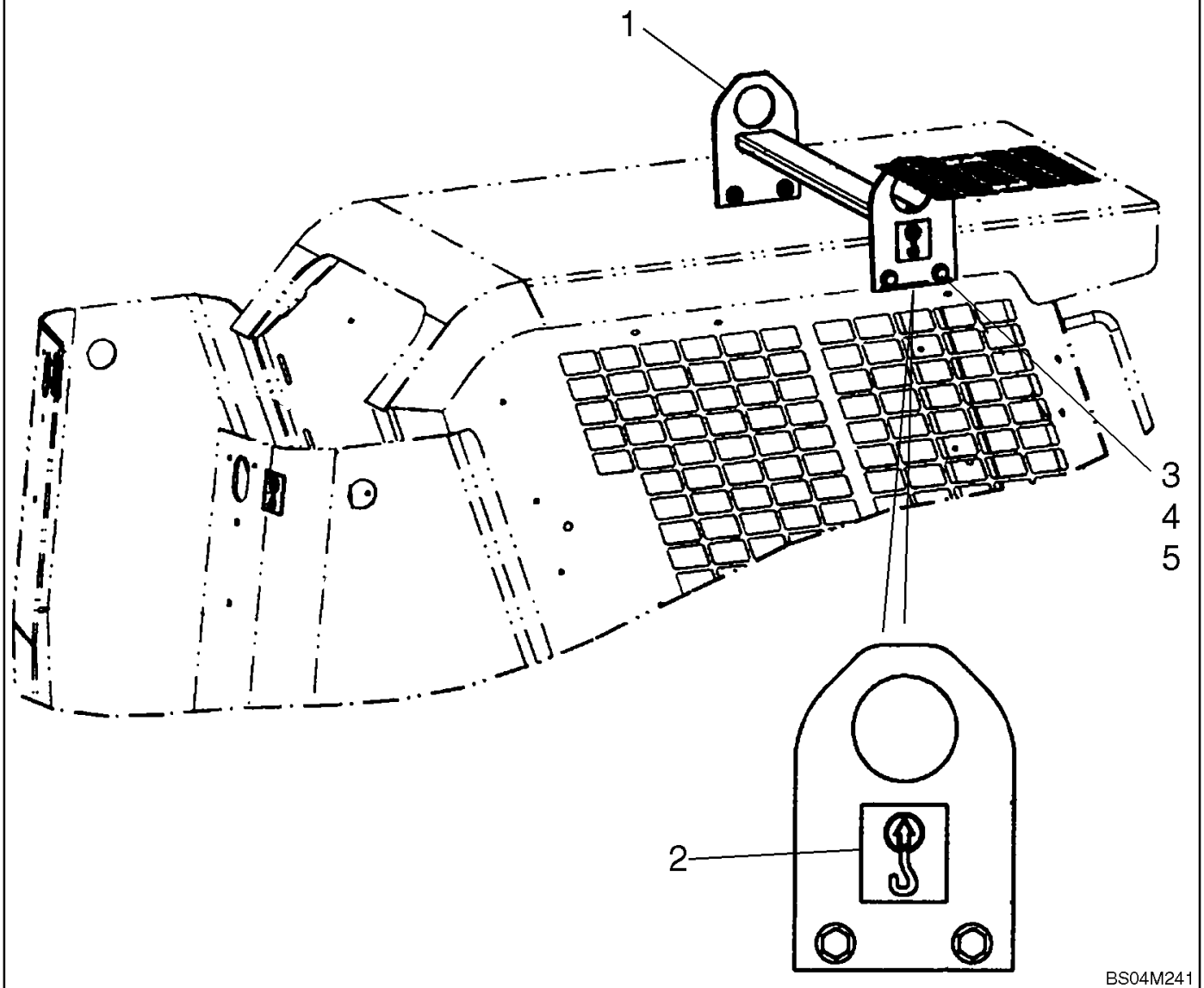

CROCHET DE LEVAGE

REF	FN	PART NUMBER	YR/SN	QTY	DESCRIPTION
		87638451		1	KIT ASSISTANCE, Kit, Lift Hook - Front; Incl 1 - 5
1		87684094		1	PATTE FIXATION, Lift Hook
2		139729A1		4	DECALCOMANIE
3		337563		4	BOULON, Hex, M12 x 40, 10.9, Full Thd
4		86625256		8	RONDELLE, M12 x 28.5 x 4, HT
5		412672		4	CONTRE-ECROU, M12 x 1.75, Cl 10

AUTOCOLLANTS - ANGLAIS

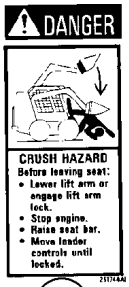

1



2



3

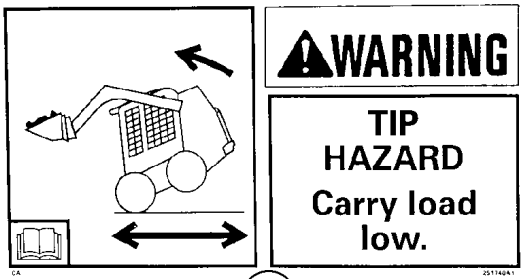

4

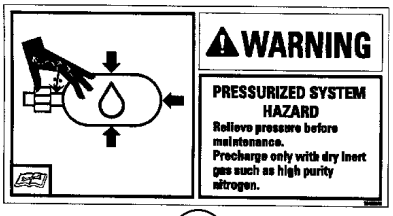

5

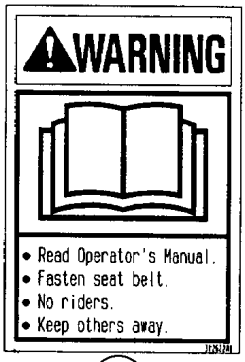

6



7

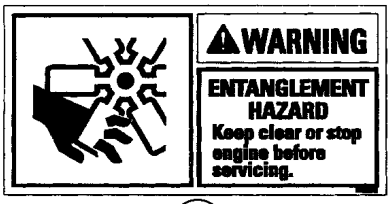

8

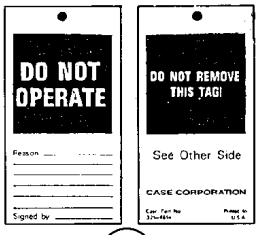

9

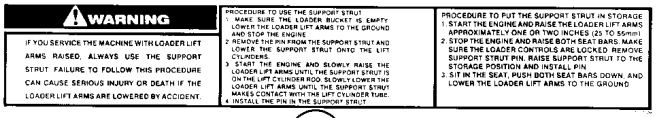

10



11



12



13



14

BS07A313

AUTOCOLLANTS - ANGLAIS

REF	FN	PART NUMBER	YR/SN	QTY	DESCRIPTION
1		433957A1		1	DECALCOMANIE, Danger, Exiting
2		251745A1		1	DECALCOMANIE, Danger, Crush Hazard
3		D137186		1	DECALCOMANIE, Caution, Always Inspect
4		251748A1		1	DECALCOMANIE, Warning, Tip Hazard
5		384260A1		1	DECALCOMANIE, Warning, Ride Control, Pressurized System
6		382622A1		1	DECALCOMANIE, Warning, Read The Operator's Manual
7		321-7040		1	DECALCOMANIE, Danger, Starting In Gear
8		384267A1		1	DECALCOMANIE, Warning, Keep Clear
9		321-4614		1	DECALCOMANIE, Tag, Do Not Operate
10		321-7029		1	DECALCOMANIE, Warning, Safety Strut
11		176332A1		1	DECALCOMANIE, Battery
12		304083A1		1	DECALCOMANIE, Ride Control
13		255927A1		1	DECALCOMANIE, Warning, Do Not Turn Ride Control On
14		629086		1	DECALCOMANIE, Ether Warning

AUTOCOLLANTS (440CT)

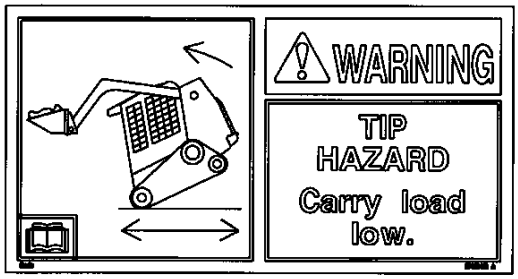

1

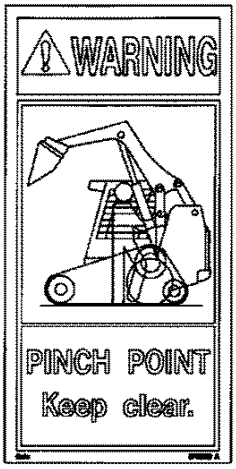

2

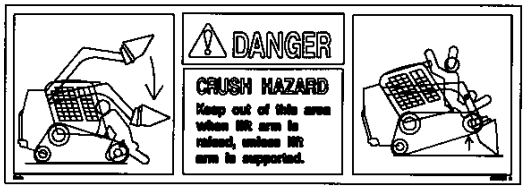

3

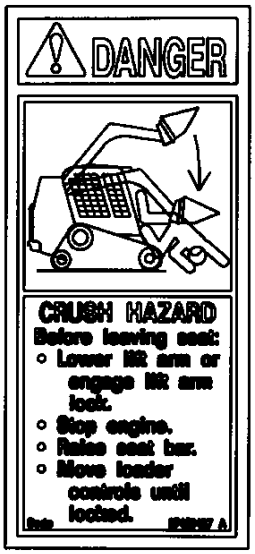

4

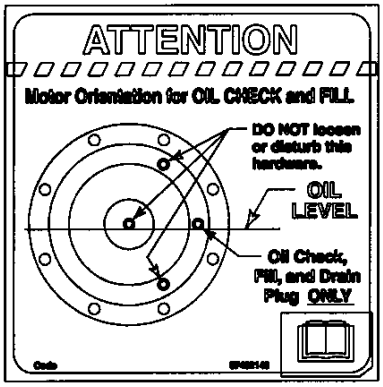

7

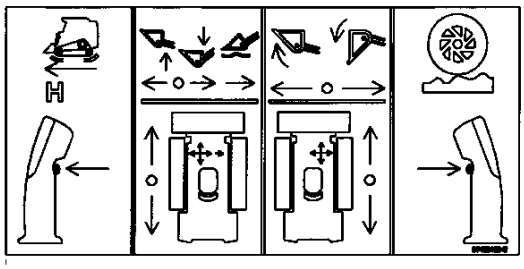

5



6

BS05C088

AUTOCOLLANTS (440CT)

REF	FN	PART NUMBER	YR/SN	QTY	DESCRIPTION
1		87459440		1	DECALCOMANIE, Warning Tip Hazard
2		87459439		2	DECALCOMANIE, Warning Pinch Point
3		87459438		1	DECALCOMANIE, Danger Crush Hazard Under Arm
4		87459437		1	DECALCOMANIE, Danger Crush Hazard Before Leaving Seat
5		87459429		1	DECALCOMANIE, Control Identification
6		87673472		2	DECALCOMANIE, Warning- Grease Spring
7		87673471		2	DECALCOMANIE, Attention - Oil Fill

AUTOCOLLANTS

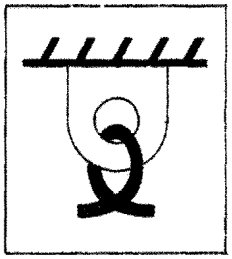
1

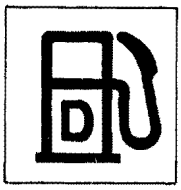
2


3

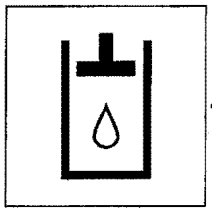
4

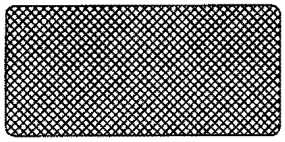
5

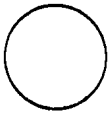
6

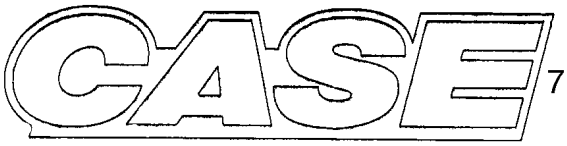
7


8

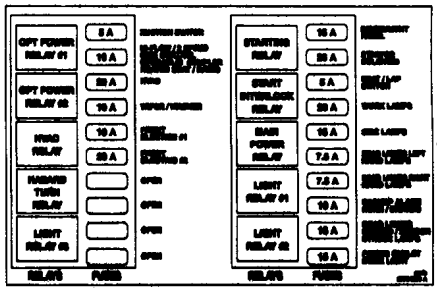
9

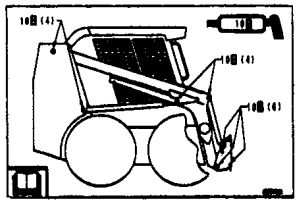
10

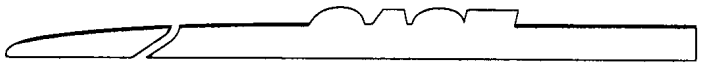
11

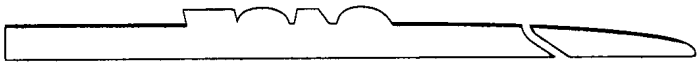
12

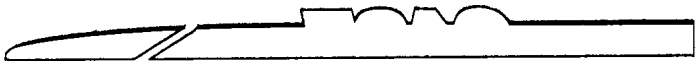
13

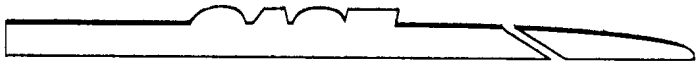
14

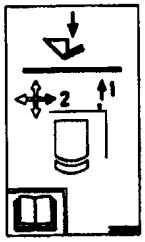
15

BS07M573

AUTOCOLLANTS

REF	FN	PART NUMBER	YR/SN	QTY	DESCRIPTION
1		139728A1		1	DECALCOMANIE, Decal, Tie Down
2		139879A1		1	DECALCOMANIE, Decal, Diesel Fuel
3		251752A1		1	DECALCOMANIE, Decal, Throttle
4		251753A1		1	DECALCOMANIE, Decal, Hydraulic Fluid
5		294752A1		1	CATADIOPTRE, Decal, Reflector, Red
6		429630A2		1	CACHE-BOUCHON, Decal, Lexan Cover
7		87389371		1	DECALCOMANIE, Decal, CASE Logo
8		87429186		1	EMBLÈME, Decal, CASE Engine
9		87734526		1	DECALCOMANIE, Decal, Fuse Box Layout
10		373248A2		1	DECALCOMANIE, Decal, Lubrication Points
11		398798A1		1	DECALCOMANIE, Decal, Case Stripe LH; Used On 410, 420/420CT
12		398796A1		1	DECALCOMANIE, Decal, Case Stripe RH; Used On 410, 420/420CT
13		411516A1		1	DECALCOMANIE, Decal, Case Stripe LH; Used On 430, 440/440CT
14		411515A1		1	DECALCOMANIE, Decal, Case Stripe RH; Used On 430, 440/440CT
15		398728A2		1	DECALCOMANIE, Decal, Lift Arm Bypass; Used On 420CT, 440CT

AUTOCOLLANTS

440 Series 3 1

440CT Series 3 2

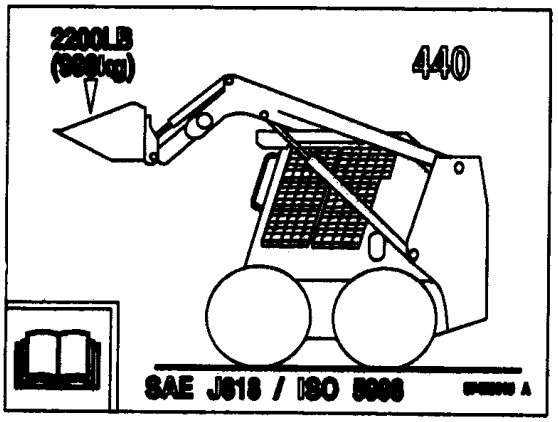

3

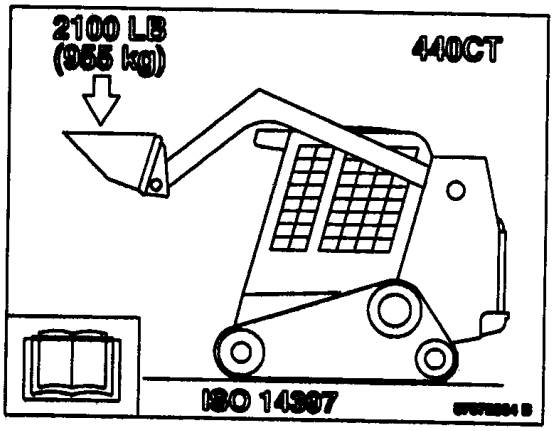

4

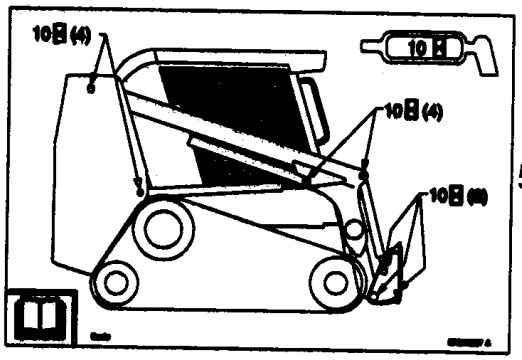

5

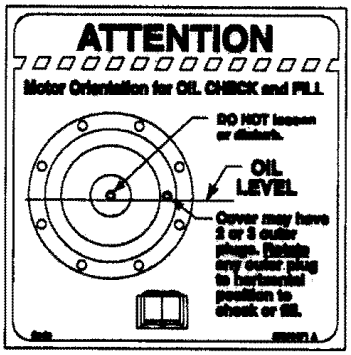

6



7

BS07M575

AUTOCOLLANTS

REF	FN	PART NUMBER	YR/SN	QTY	DESCRIPTION
1		87710959		1	DECALCOMANIE, Decal, 440
2		87710960		1	DECALCOMANIE, Decal, 440CT
3		87459019		1	DECALCOMANIE, Decal, Operating Capacity, 440
4		87372864		1	DECALCOMANIE, Decal, Operating Capacity, 440CT
5		87372867		1	DECALCOMANIE, Decal, Lubrication Points, 440CT
6		87673471		1	DECALCOMANIE, Decal, Oil Fill And Check, 440CT
7		87673472		1	DECALCOMANIE, Decal, Grease Spring Warning, 440CT

AUTOCOLLANTS - DANOIS, NÉERLANDAIS, FINNOIS

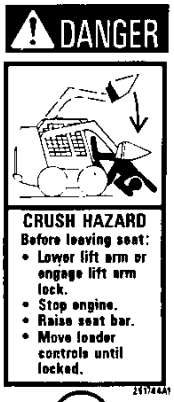

1

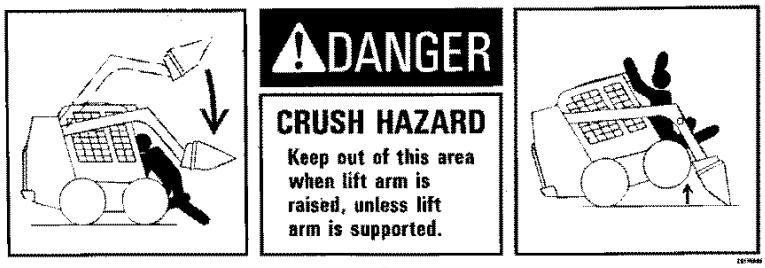

2



3

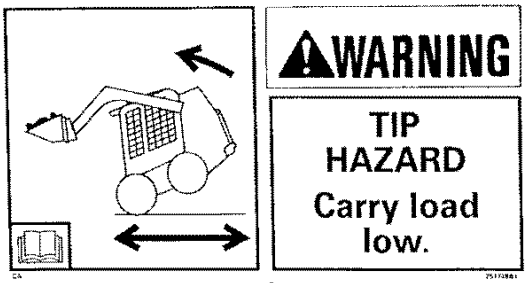

4

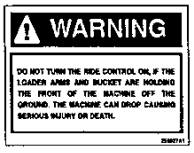

5

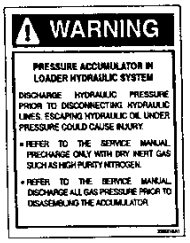

6

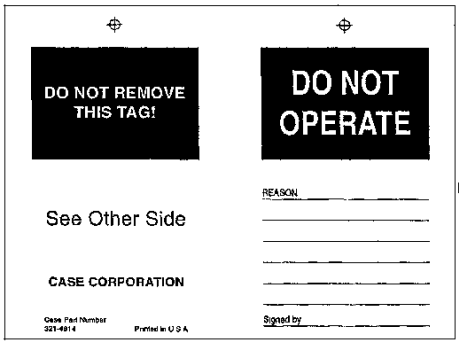

7

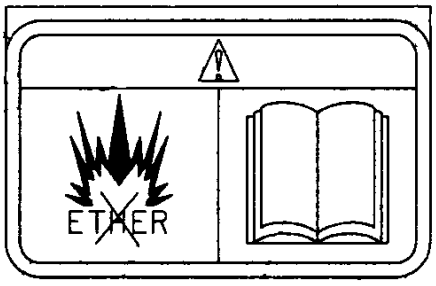

8

BS07A315

AUTOCOLLANTS - DANOIS, NÉERLANDAIS, FINNOIS

REF	FN	PART NUMBER	YR/SN	QTY	DESCRIPTION
		REF			NOTICE, DANISH
1		434006A1		1	DECALCOMANIE, Danger, Crush Hazard
2		297391A1		1	DECALCOMANIE, Danger, Crush Hazard
3		175492A1		1	DECALCOMANIE, Caution, Always Inspect
4		297377A1		1	DECALCOMANIE, Warning, Tip Hazard
5		256455A1		1	ADHESIF, Warning, Ride Control
6		256466A1		1	ADHESIF, Warning, Accumulator
7		182609A1		1	DECALCOMANIE, Do Not Operate
8		87802167		1	DECALCOMANIE, Ether Warning
		REF			NOTICE, DUTCH
1		434007A1		1	DECALCOMANIE, Danger, Crush Hazard
2		297392A1		1	DECALCOMANIE, Danger, Crush Hazard
3		175493A1		1	DECALCOMANIE, Caution, Always Inspect
4		297378A1		1	DECALCOMANIE, Warning, Tip Hazard
5		256463A1		1	ADHESIF, Warning, Ride Control
6		256474A1		1	ADHESIF, Warning, Accumulator
7		182596A1		1	ECROU, Do Not Operate
8		87802167		1	DECALCOMANIE, Ether Warning
		REF			NOTICE, FINNISH
1		434008A1		1	DECALCOMANIE, Danger, Crush Hazard
2		297393A1		1	DECALCOMANIE, Danger, Crush Hazard
3		297409A1		1	DECALCOMANIE, Caution, Always Inspect
4		297379A1		1	DECALCOMANIE, Warning, Tip Hazard
5		256461A1		1	DECALCOMANIE, Warning, Ride Control
6		256472A1		1	ADHESIF, Warning, Accumulator
7		197380A1		1	ETIQUETTE, Do Not Operate
8		87802167		1	DECALCOMANIE, Ether Warning

AUTOCOLLANTS - FRANÇAIS, ALLEMAND, GREC

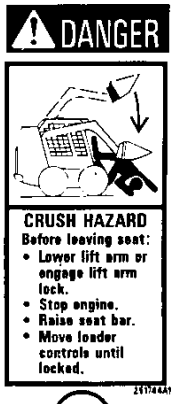

1

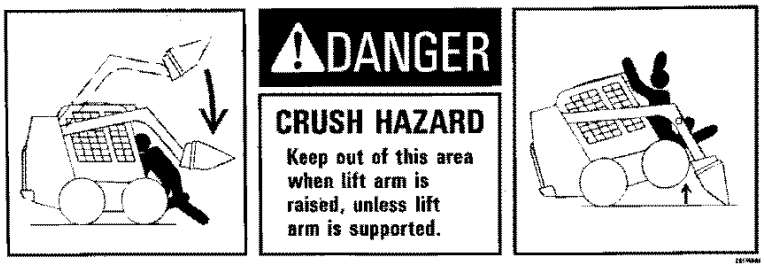

2



3

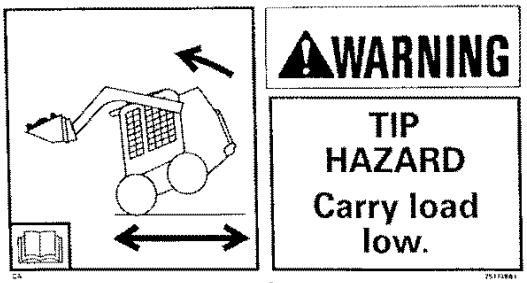

4

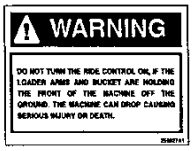

5

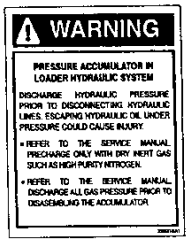

6

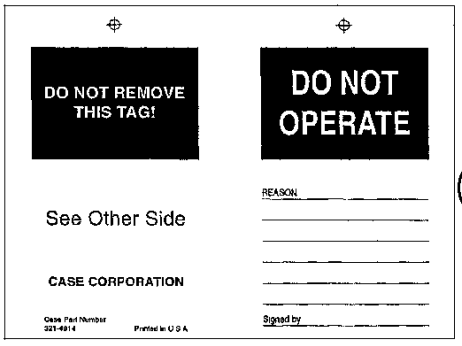

7



8

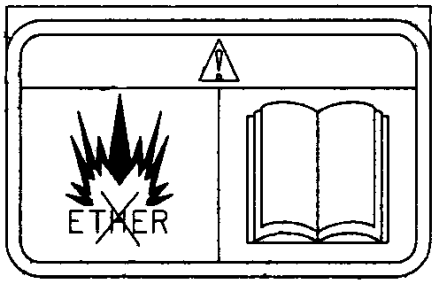

9

BS07A316

AUTOCOLLANTS - FRANÇAIS, ALLEMAND, GREC

REF	FN	PART NUMBER	YR/SN	QTY	DESCRIPTION
		REF			NOTICE, FRENCH
1		434009A1		1	DECALCOMANIE, Danger, Crush Hazard
2		297394A1		1	DECALCOMANIE, Danger, Crush Hazard
3		321-6861		1	DECALCOMANIE, Caution, Always Inspect
4		297381A1		1	DECALCOMANIE, Warning, Tip Hazard
5		256453A1		1	ADHESIF, Warning, Ride Control
6		256464A1		1	ADHESIF, Warning, Accumulator
7		321-5675		1	DECALCOMANIE, Do Not Operate
8		682683		1	DECALCOMANIE, Ether Warning
		REF			NOTICE, GERMAN
1		434010A1		1	DECALCOMANIE, Danger, Crush Hazard
2		297396A1		1	DECALCOMANIE, Danger, Crush Hazard
3		321-6863		1	DECALCOMANIE, Caution, Always Inspect
4		297382A1		1	DECALCOMANIE, Warning, Tip Hazard
5		256454A1		1	ADHESIF, Warning, Ride Control
6		256465A1		1	ADHESIF, Warning, Accumulator
7		321-5676		1	DECALCOMANIE, Do Not Operate
9		87802167		1	DECALCOMANIE, Ether Warning
		REF			NOTICE, GREEK
1		434011A1		1	DECALCOMANIE, Danger, Crush Hazard
2		297397A1		1	DECALCOMANIE, Danger, Crush Hazard
3		175495A1		1	DECALCOMANIE, Caution, Always Inspect
4		297383A1		1	DECALCOMANIE, Warning, Tip Hazard
5		256460A1		1	ADHESIF, Warning, Ride Control
6		256471A1		1	ADHESIF, Warning, Accumulator
7		182611A1		1	DECALCOMANIE, Do Not Operate
9		87802167		1	DECALCOMANIE, Ether Warning

AUTOCOLLANTS - ITALIEN, NORVÉGIEN, POLONAIS

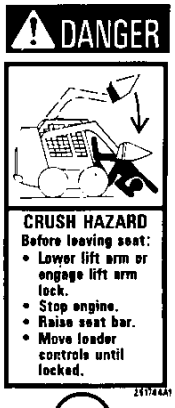

1

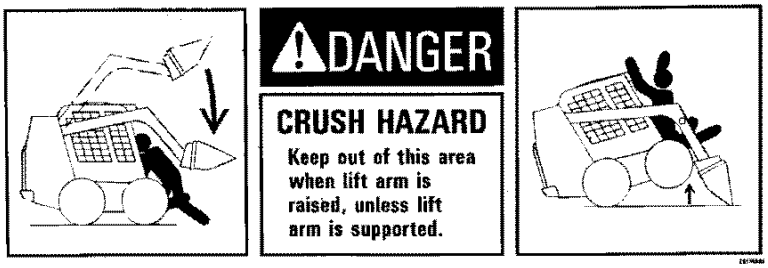

2



3

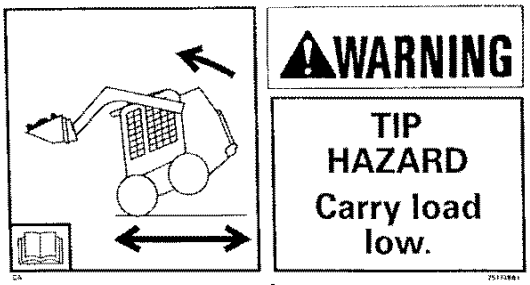

4

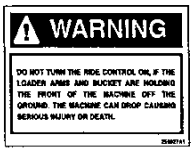

5

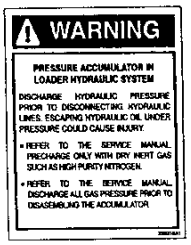

6

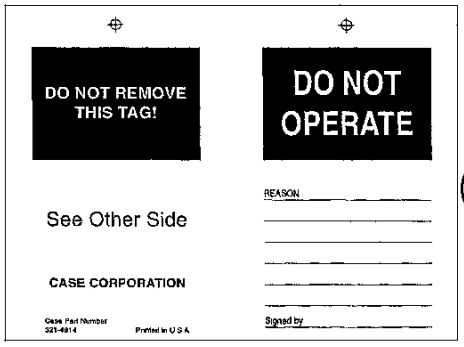

7

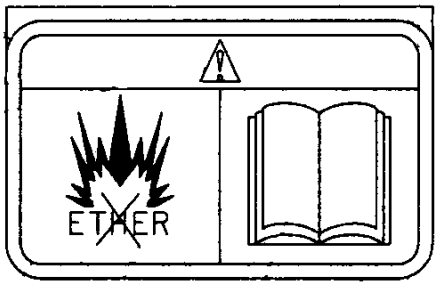

8

BS07A317

AUTOCOLLANTS - ITALIEN, NORVÉGIEN, POLONAIS

REF	FN	PART NUMBER	YR/SN	QTY	DESCRIPTION
		REF			NOTICE, ITALIAN
1		434012A1		1	DECALCOMANIE, Danger, Crush Hazard
2		297398A1		1	DECALCOMANIE, Danger, Crush Hazard
3		321-7004		1	DECALCOMANIE, Caution, Always Inspect
4		297384A1		1	DECALCOMANIE, Warning, Tip Hazard
5		256457A1		1	ADHESIF, Warning, Ride Control
6		256468A1		1	ADHESIF, Warning, Accumulator
7		E137085		1	DECALCOMANIE, Do Not Operate
8		87802167		1	DECALCOMANIE, Ether Warning
		REF			NOTICE, NORWEGIAN
1		434013A1		1	DECALCOMANIE, Danger, Crush Hazard
2		297399A1		1	DECALCOMANIE, Danger, Crush Hazard
3		297411A1		1	DECALCOMANIE, Caution, Always Inspect
4		297385A1		1	DECALCOMANIE, Warning, Tip Hazard
5		256462A1		1	DECALCOMANIE, Warning, Ride Control
6		256473A1		1	DECALCOMANIE, Warning, Accumulator
7		197381A1		1	ETIQUETTE, Do Not Operate
8		87802167		1	DECALCOMANIE, Ether Warning
		REF			NOTICE, POLISH
1		434017A1		1	DECALCOMANIE, Danger, Crush Hazard
2		297400A1		1	DECALCOMANIE, Danger, Crush Hazard
3		297412A1		1	DECALCOMANIE, Caution, Always Inspect
4		297386A1		1	DECALCOMANIE, Warning, Tip Hazard
5		396700A1		1	DECALCOMANIE, Warning, Ride Control
6		396701A1		1	DECALCOMANIE, Warning, Accumulator
7		298520A1		1	ETIQUETTE, Do Not Operate
8		87802167		1	DECALCOMANIE, Ether Warning

AUTOCOLLANTS - PORTUGAIS, ESPAGNOL, SUEDOIS

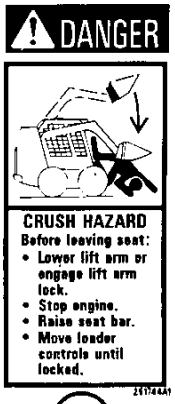

1

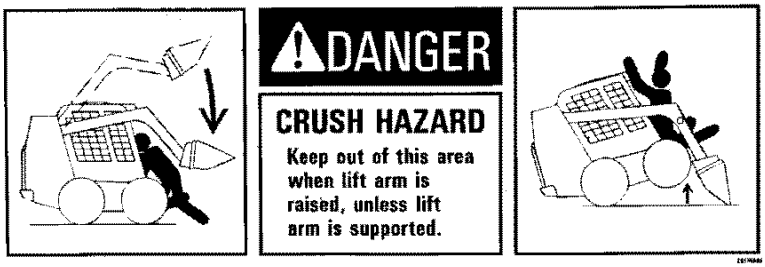

2



3

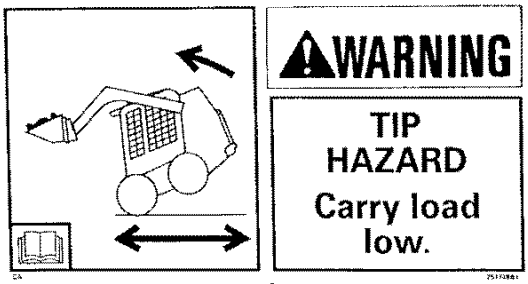

4

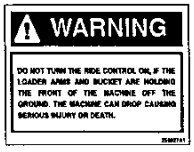

5

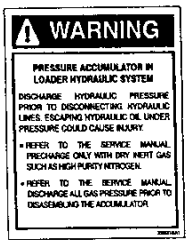

6

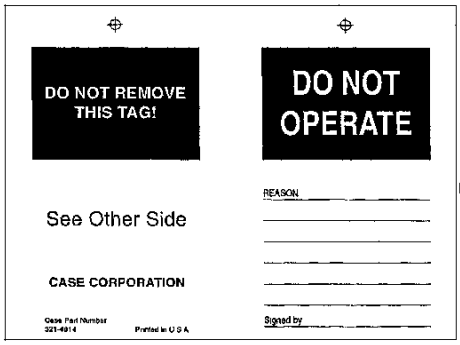

7

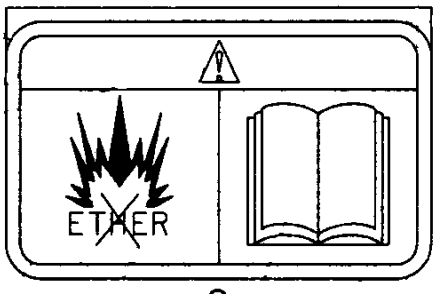

8



9



10

BS07A318

AUTOCOLLANTS - PORTUGAIS, ESPAGNOL, SUEDOIS

REF	FN	PART NUMBER	YR/SN	QTY	DESCRIPTION
		REF			NOTICE, PORTUGUESE
1		434014A1		1	DECALCOMANIE, Danger, Crush Hazard
2		297401A1		1	DECALCOMANIE, Danger, Crush Hazard
3		175494A1		1	DECALCOMANIE, Caution, Always Inspect
4		297387A1		1	DECALCOMANIE, Warning, Tip Hazard
5		256459A1		1	ADHESIF, Warning, Ride Control
6		256470A1		1	ADHESIF, Warning, Accumulator
7		182610A1		1	DECALCOMANIE, Do Not Operate
10		87527676		1	DECALCOMANIE, Ether Warning
		REF			NOTICE, SPANISH
1		434015A1		1	DECALCOMANIE, Danger, Crush Hazard
2		297402A1		1	DECALCOMANIE, Danger, Crush Hazard
3		321-6862		1	DECALCOMANIE, Caution, Always Inspect
4		297388A1		1	DECALCOMANIE, Warning, Tip Hazard
5		256456A1		1	ADHESIF, Warning, Ride Control
6		256467A1		1	ADHESIF, Warning, Accumulator
7		321-5677		1	DECALCOMANIE, Do Not Operate
9		86600617		1	DECALCOMANIE, Ether Warning
		REF			NOTICE, SWEDISH
1		434016A1		1	DECALCOMANIE, Danger, Crush Hazard
2		297404A1		1	DECALCOMANIE, Danger, Crush Hazard
3		297414A1		1	DECALCOMANIE, Caution, Always Inspect
4		297390A1		1	DECALCOMANIE, Warning, Tip Hazard
5		256458A1		1	ADHESIF, Warning, Ride Control
6		256469A1		1	ADHESIF, Warning, Accumulator
7		197379A1		1	ETIQUETTE, Do Not Operate
8		87802167		1	DECALCOMANIE, Ether Warning

AUTOCOLLANTS - PORTUGAIS DU BRÉSIL, FRANÇAIS CANADIEN, ESPAGNOL D'AMERIQUE LATINE

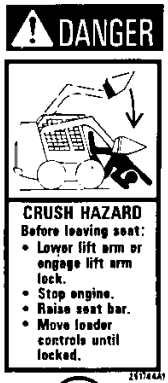

1

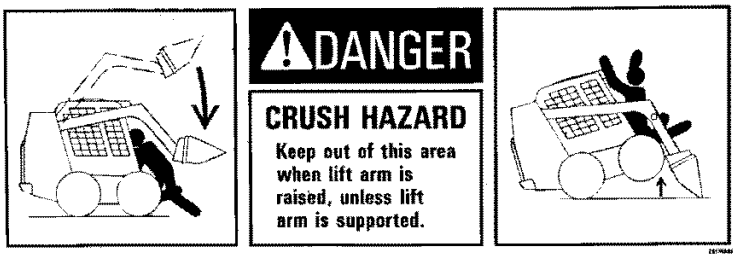

2

CAUTION

ALWAYS INSPECT COUPLER-LATCH PIN ENGAGEMENT BEFORE OPERATING VEHICLE.

3

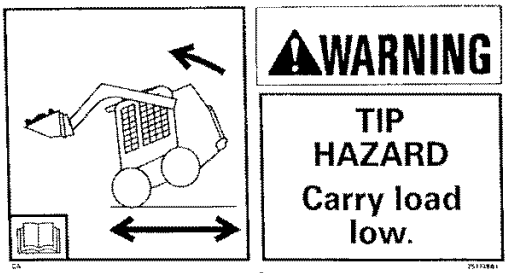

4

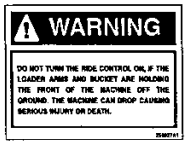

5



6

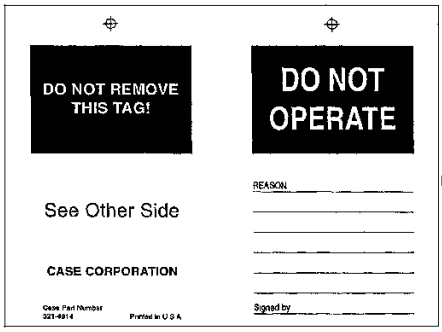

7



8



9



10

BS07A314

AUTOCOLLANTS - PORTUGAIS DU BRÉSIL, FRANÇAIS CANADIEN, ESPAGNOL D'AMERIQUE LATINE

REF	FN	PART NUMBER	YR/SN	QTY	DESCRIPTION
		REF			NOTICE, BRAZILIAN PORTUGUESE
1		434019A1		1	DECALCOMANIE, Danger, Exiting
2		297408A1		1	DECALCOMANIE, Danger, Crush Hazard
3		297406A1		1	DECALCOMANIE, Caution, Always Inspect
4		297407A1		1	DECALCOMANIE, Warning, Tip Hazard
5		353240A1		1	DECALCOMANIE, Warning, Ride Control
6		353243A1		1	DECALCOMANIE, Warning, Accumulator
7		298518A1		1	ADHESIF, Do Not Operate
8		87527676		1	DECALCOMANIE, Ether Warning
		REF			NOTICE, CANADIAN FRENCH
1		434020A1		1	DECALCOMANIE, Danger, Exiting
2		297394A1		1	DECALCOMANIE, Danger, Crush Hazard
3		297410A1		1	DECALCOMANIE, Caution, Always Inspect
4		297380A1		1	DECALCOMANIE, Warning, Tip Hazard
5		353239A1		1	DECALCOMANIE, Warning, Ride Control
6		353242A1		1	DECALCOMANIE, Warning, Accumulator
7		321-5675		1	DECALCOMANIE, Do Not Operate
9		682683		1	DECALCOMANIE, Ether Warning
		REF			NOTICE, LATIN AMERICAN SPANISH
1		434018A1		1	DECALCOMANIE, Danger, Exiting
2		297403A2		1	DECALCOMANIE, Danger, Crush Hazard
3		297413A1		1	DECALCOMANIE, Caution, Always Inspect
4		297388A1		1	DECALCOMANIE, Warning, Tip Hazard; Replaces 297389A1
5		353238A1		1	DECALCOMANIE, Warning, Ride Control
6		353241A1		1	DECALCOMANIE, Warning, Accumulator
7		298521A1		1	ETIQUETTE, Do Not Operate
10		86600617		1	DECALCOMANIE, Ether Warning

Number	Figure	Sequence	Ref.
{}	09-58		41
{2830159}	02-28		4
{2830160}	02-28		4
{2831472}	02-16		8
{2853132}	02-38		3
{2853805}	02-28		4
{2853815}	02-34		4
{2853816}	02-34		3
	02-34		4
{2853817}	02-34		4
{2853818}	02-34		4
{2853819}	02-34		4
{2853875}	02-28		4
{2853876}	02-28		4
{2854141}	02-28		4
{2854142}	02-28		4
{2854867}	02-38		7
{2855020}	02-34		3
{2855021}	02-34		3
{2855022}	02-34		3
{2855023}	02-34		3
{2855183}	02-33		7
{2855289}	02-10		4
{2855983}	02-27		1
{2856170}	02-33		5
{2856255}	03-10		1
{2856344}	02-19		8
{2856436}	03-10		
{2856484}	02-28		1
{2856485}	02-28		1
{2856713}	02-28		4
{2856714}	02-28		4
{412326}	09-33		17
{4895747}	02-29		1
{4899849}	03-03		4
{647429}	09-16		10
{86512463}	09-31		12
	09-36		11
{86618350}	09-06		1
{86625151}	08-13		12
	09-04		23
{86633059}	09-07		2
{86633060}	09-06		1
{86642465}	09-33		3
{87010188}	09-08		1
{87010189}	09-08		1
{87029968}	08-18		23
{87302733}	06-19		17
{87448935}	08-26		2
{87533547}	02-01		17
{87534725}	02-01		33
{87548828}	06-04		4
{87548838}	06-07		8
{87548840}	06-07		10
{87548843}	06-07		5
{87548871}	06-06		7
	06-08		9
{87548872}	06-06		8
	06-08		10
{87548873}	06-06		9
	06-08		11
{87556906}	06-15		20
	06-19		19
{87560205}	02-22		7
{87563975}	06-18		15
	06-22		12
{87564723}	06-15		23
	06-19		22
{87566701}	02-22		2
{87572831}	02-03		1
{87574281}	02-22		3
{87578980}	02-01		22
	09-26		5
	09-27		5
{87579303}	09-03		9
	09-04		10
{87581666}	09-33		13
{87581669}	09-30		18
{87581669}	09-36		26
	09-36		7
{87582179}	02-28		
{87582180}	02-28		
{87582181}	02-28		
{87584302}	09-59		36
{87594866}	06-07		9
{87594970}	02-01		4
{87599604}	09-01		17
{87599605}	09-01		22
{87599753}	09-30		16
	09-36		2
{87600221}	09-31		6
	09-32		2
{87602935}	09-01		8
{87607505}	09-33		19
{87612753}	08-13		27
	09-03		10
	09-04		11
{87612761}	02-22		6
{87618013}	04-06		6A
{87618650}	06-64		4
{87622767}	09-30		14
	09-36		29
{87622960}	04-15		4
{87623352}	04-01		4
	04-04		4
{87627521}	09-32		
{87639912}	09-38		23
{87639914}	09-38		24
{87641703}	09-49		2
{87641704}	09-49		6
{87642394}	09-30		22
	09-36		9
{87642437}	09-30		21
	09-36		5
{87643562}	03-02		3
{87643808}	09-49		5
{87645115}	09-38		34
{87648128}	02-01		23
	09-26		4
	09-27		6
{87648719}	02-04		4
{87650090}	03-02		27
{87652259}	09-40		2
{87652816}	04-09		5
	04-11		7
	04-13		8
{87652818}	04-10		4
	04-12		5
	04-14		5
{87655334}	04-05		12
	04-18		16
	04-19		19
	04-27		5
{87657980}	06-09		1
	06-12		1
	06-17		1
{87659996}	08-02		37
{87660180}	09-31		5
	09-32		3
{87661301}	09-17		2
	09-18		17
{87662349}	09-21		3
{87662357}	09-20		12
{87662429}	09-20		3
{87665327}	04-06		9
	04-07		8
{87667726}	04-09		6
	04-10		6
	04-11		8
	04-12		8
	04-13		9
	04-14		9
{87668682}	09-38		41
{87669333}	09-32		4
{87669915}	09-30		2
	09-36		23

Number	Figure	Sequence	Ref.
{87669944}	09-52		1
{87671496}	09-27		18
{87672011}	09-30		11
{87672170}	09-38		9
{87676121}	09-45		11
	09-46		10
	09-47		10
{87676122}	09-45		3
	09-46		2
	09-47		2
{87676124}	09-45		9
	09-46		8
	09-47		8
{87677739}	04-07		11
{87679671}	09-62		2
{87679715}	09-14		1
{87679718}	09-15		1
{87680073}	09-30		4
{87684229}	06-01		9
{87684387}	09-21		5
{87684388}	09-20		9
{87685909}	09-54		10B
	09-54		1B
	09-54		2A
	09-54		9A
{87685911}	09-54		10A
	09-54		1A
{87686721}	06-65		2
{87686722}	06-65		1
{87687236}	09-58		29
{87688638}	03-02		6
{87690479}	08-03		1
{87698769}	09-33		2
	09-34		3
	09-36		13
{87703828}	06-03		
{87703830}	06-02		
{87704477}	06-01		
{87705428}	09-49		1
{87705430}	09-17		4
	09-18		11
{87712605}	09-30		9
{87712606}	09-30		8
{87714131}	09-30		10
{87717210}	09-30		5
	09-36		8
{87717215}	09-30		3
	09-36		22
{87717283}	09-30		17
	09-36		4
{87722347}	09-30		20
	09-36		24
{87723771}	09-36		21
{87723784}	09-36		20
100-11137	06-35		26
	06-38		3
100-1650	08-11		7
100012	08-09		1
100037	09-38		12
100038	09-65		2
100197	06-09		54
	06-12		32
	06-18		16
100536A1	06-34		30
	06-37		30
100703A1	06-38		31
101462A1	06-33		17
103-21281	06-35		28
	06-38		2
108925A1	09-17		17
	09-19		2
110873A1	06-35		11
	06-38		20
115942A1	06-35		13
	06-38		18
115943A1	06-35		12
	06-38		19
115946A1	06-35		9
115946A1	06-38		22
115948A1	06-35		8
	06-38		23
115950A1	06-35		7
	06-38		24
118827	09-12		6
120040	06-13		23
120056	06-14		5
	06-22		7
120061	08-16		6
120068	09-59		46
120069	08-02		30
120070	09-01		7
	09-38		16
120071	02-01		8
120073	02-01		8
	08-17		1
120080	08-13		16
	09-04		21
120100	03-02		1
	04-23		4
	09-38		4
	09-43		6
	09-45		6
	09-46		5
	09-47		5
120101	08-08		6
120103	02-22		4
	04-15		10
	04-26		6
	06-11		12
	06-21		15
	09-29		11
	09-58		37
120104	02-01		1
	02-04		14
	02-05		12
	02-08		3
	06-10		18
	06-12		38
	06-18		28
	08-07		24
	08-08		24
	08-09		25
	09-01		12
	09-24		15
	09-29		4
	09-35		4
	09-58		14
	09-59		32
120106	04-03		4
120112	08-13		14
	09-03		13
	09-04		19
	09-05		8
120229A1	04-29		1
120952A1	09-22		26
121410A1	04-05		13
121412A1	04-05		14
121413A1	04-05		15
121414A1	04-05		16
121415A1	04-05		17
122158A1	08-07		25
	08-08		25
	08-09		27
126844A1	04-07		13
	04-08		5
1277297C1	06-35		4
	06-36		
128818	06-15		13
	06-19		13
	08-05		15
	08-18		11
128819	08-01		2
128822	08-02		15
128825	06-09		44
	06-15		14
	06-15		5

Number	Figure	Sequence	Ref.
128825	06-19		14
	06-19		5
	06-21		12
	06-59		25
	08-01		20
	08-01		3
	08-02		1A
	08-04		5
	08-05		14
	08-05		16
	08-05		19
	08-06		47
	08-06		49
	08-08		28
	08-18		12
128830	06-15		4
	06-19		4
	08-01		19
	08-04		4
	08-05		18
	08-06		46
128928A1	06-35		5
128929A1	06-38		26
128996	08-01		18
	08-05		6
129-667	06-32		8
129200	02-23		6
129878A1	08-06		45
13-836	06-38		33
133714A1	04-28		9
1342374C1	03-02		12
1369	09-34		1
138-217	06-36		
139398	06-01		1
	06-02		1
	06-03		1
	08-07		27
	08-09		31
	08-11		32
	08-13		38
139728A1	09-69		1
139729A1	09-66		2
139879A1	09-69		2
140008A1	06-33		
	06-34		
	06-36		
	06-37		
	06-38		
140016	06-23		5
	08-04		12
	09-19		12
	09-38		27
140017	08-01		16
	09-18		13
140018	09-23		20
140045	02-01		7
	02-03		15
	06-09		6
	06-12		5
	06-17		5
	09-59		48
140046	02-03		13
	02-06		5
	02-07		6
14142390	04-20		5
	04-21		5
14148190	04-20		2
	04-21		2
14152090	04-20		3
	04-21		3
142211A1	04-25		1
14301821	06-68		14
144121	06-09		19
	06-16		7
	06-17		20
14458681	02-18		2
14458781	02-22		13
1546028C1	08-16		9
1546028C1	08-17		7
15694	06-09		36
	06-16		22
	06-18		9
16044321	02-03		9
	03-02		26
	08-06		4
165202	06-15		10
	06-16		19
	06-18		14
	06-19		9
	08-07		13
	08-07		3
	08-07		9
	08-08		13
	08-08		3
	08-08		9
	08-09		21
	08-09		4
	08-09		6
	08-11		12
	08-11		6
	08-13		25
	08-13		31
16588324	08-18		19A
166-89	06-33		21
	06-36		11
16673635	02-17		1
16677734	02-13		3
167266	06-09		15
	06-09		32
	06-09		34
	06-09		46
	06-09		55
	06-09		58
	06-10		30
	06-11		16
	06-12		19
	06-12		33
	06-13		14
	06-15		18
	06-15		26
	06-15		31
	06-16		26
	06-16		9
	06-17		25
	06-18		11
	06-18		17
	06-18		39
	06-19		18
	06-19		24
	06-19		26
	06-19		30
	06-21		10
	06-21		21
	06-29		2
	06-29		8
	06-30		2
	06-30		5
	06-31		2
	06-31		8
	08-06		24
	08-18		10
	08-18		26
	08-18		3
	08-18		7
167268	06-09		10
	06-09		2
	06-09		27
	06-09		30
	06-11		2
	06-12		2
	06-17		12
	06-17		2
	06-17		31
	08-06		15
	08-18		24
167269	06-15		19

Number	Figure	Sequence	Ref.
167269	08-01		5
	08-02		34
	08-06		54
	08-18		5
16989	08-07		12
	08-08		12
	08-09		5
17044731	03-06		4
175492A1	09-71		3
175493A1	09-71		3
175494A1	09-74		3
175495A1	09-72		3
176332A1	04-15		1
	09-67		11
177239A2	04-22		1
180682A1	09-22		8
181680A1	06-35		33
182596A1	09-71		7
182609A1	09-71		7
182610A1	09-74		7
182611A1	09-72		7
186905A1	03-02		18
187035A2	03-02		17
187140A1	04-22		2
189609A1	09-24		9
	09-25		3
	09-38		33
	09-45		15
	09-46		13
	09-47		14
189787A2	09-45		13
	09-46		12
	09-47		12
189995A1	06-64		3
191048A2	06-64		4
193494A1	06-35		21
	06-38		10
194739A1	08-06		8
196985A1	04-05		5
197379A1	09-74		7
197380A1	09-71		7
197381A1	09-73		7
197805A1	06-64		8
214-1444	09-02		3
214389	06-56		24
	06-57		11
	06-59		24
	06-60		18
	08-15		7
216773	08-07		8
	08-08		8
	08-09		3
	08-11		11
	08-13		30
216791	08-01		27
217-374	07-01		19
219606	06-09		35
	06-16		23
	06-18		8
222004A2	04-05		7
222421A1	02-05		2
222422A1	02-05		3
223677A1	06-35		23
	06-38		6
223680A1	06-35		24
	06-38		7
226129	09-12		5
226130	09-12		9
228141A2	06-63		8
22907	06-09		29
229197A1	03-02		30
	04-15		12
	04-26		7
	06-17		19
	06-20		12
	06-21		17
	06-24		11
	07-01		18
229197A1	08-05		11
	09-24		10
	09-25		7
	09-29		10
	09-58		35
229398	02-23		7
230425A1	09-22		4
230426A1	09-22		1
230427A1	02-01		32
	08-01		15
233705	06-09		14
	06-12		18
	06-17		24
234726	09-22		12
	09-23		5
235994A1	09-44		1
236535A1	09-13		5
	09-15		5
236622	09-16		8
237-6004	06-36		21
237-6006	06-33		11
	06-33		20
	06-33		23
	06-34		4
	06-36		9
	06-37		5
	07-01		20
237-6008	06-56		25
237-6010	06-33		25
237-6012	06-33		6
	06-33		9
	06-36		19
	06-36		3
238-5131	06-34		15A
	06-37		15A
238-5443	06-63		3
238-6116	06-36		10
238-6238	06-35		36
244898A1	06-33		27
248461A1	09-26		18
248988A1	09-26		16
249367A2	09-22		39
251745A1	09-67		2
251748A1	09-67		4
251752A1	09-69		3
251753A1	09-69		4
254130A1	04-26		1
254307A1	09-45		12
	09-46		11
	09-47		11
254697A1	09-38		17
254698A1	09-38		43
255927A1	08-04		26
	09-67		13
256453A1	09-72		5
256454A1	09-72		5
256455A1	09-71		5
256456A1	09-74		5
256457A1	09-73		5
256458A1	09-74		5
256459A1	09-74		5
256460A1	09-72		5
256461A1	09-71		5
256462A1	09-73		5
256463A1	09-71		5
256464A1	09-72		6
256465A1	09-72		6
256466A1	09-71		6
256467A1	09-74		6
256468A1	09-73		6
256469A1	09-74		6
256470A1	09-74		6
256471A1	09-72		6
256472A1	09-71		6
256473A1	09-73		6
256474A1	09-71		6
257448A1	09-17		18
	09-19		3

Number	Figure	Sequence	Ref.	Number	Figure	Sequence	Ref.
257857A1	08-06		5	2852155	02-38		1
257859A1	08-06		7	2852161	02-37		2
	08-16		8	2852162	02-37		3
	08-17		6	2852163	02-37		1
257884A1	02-01		35	2852170	02-39		
259702A1	04-05		7A	2852171	02-39		3
259905A1	08-06		6	2852172	02-39		1
26-516	06-33		18	2852175	02-13		1
262159	08-02		23	2852180	04-02		4
	08-03		14	2852181	04-02		1
263117	04-06		7	2852183	02-40		1
	04-18		4	2852203	02-09		19
	04-19		5	2852221	02-31		2
	04-27		2	2852294	03-06		3
	09-48		1	2852364	02-31		3
	09-49		3	2852473	02-38		6
265235	08-11		5	2852507	02-41		3
	08-13		24	2852511	02-35		5
270192	08-14		13	2852519	02-10		7
272310	08-16		5	2852521	03-09		4
278332A1	09-17		11	2852531	02-25		1
	09-18		24	2852533	02-32		2
280112	09-34		2	2852547	03-03		1
280272	04-07		7	2852619	02-10		5
	04-08		4	2852729	02-15		2
280299	09-50		7	2852741	03-04		
280374	09-10		9	2852744	02-27		3
280476	04-18		11	2852834	02-27		3
	04-19		10	2852865	02-11		2
	08-01		11	2852866	02-30		3
	08-03		5	2852871	03-07		1
	08-17		22	2852872	03-07		2
280498	09-56		1	2852873	03-07		3
280724	08-15		5	2852874	03-07		4
281045	04-09		3	2852875	03-07		5
	04-10		3	2852876	03-07		6
	04-11		4	2852877	03-07		7
	04-12		4	2852878	03-07		8
	04-13		4	2852879	03-07		9
	04-14		4	2852880	03-07		10
282002A2	09-38		20	2852881	03-07		11
282775A1	04-07		2	2852882	03-07		12
2830083	02-09		1	2852883	03-07		13
2830156	03-05		2	2852884	03-07		14
2830158	02-28		4	2852885	03-06		2
2830266	03-05		1	2852889	02-24		3
2830281	02-14		9	2852894	02-14		5
2830411	03-03		7	2852978	02-17		5
2830445	02-27		2	2852995	02-18		6
2830559	02-19		10	2853010	02-39		7
2830775	02-14		8	2853047	02-17		4
2830784	02-14		7	2853050	02-17		9
2830919	02-16		15	2853075	02-26		6
2830920	02-16		15	2853076	02-26		8
2831297	02-29		3	2853133	02-38		4
2831298	02-29		1	2853146	08-18		19
283779A1	04-24		1	2853722	02-19		9
283781A1	04-24		2	2853781	02-19		3
283839A1	09-23		18	2853822	02-34		1
2852028	02-25		2	2853960	02-32		3
2852029	02-26		3	2853991	02-31		1
2852032	02-14		4	2854030	02-28		3
2852033	02-14		6	2854072	02-35		2
2852037	02-28		4	2854073	02-11		6
2852047	02-36		2	2854075	02-11		3
2852062	02-33		2	2854340	03-06		1
2852065	03-09		3	2854603	02-28		4
2852075	03-07			2854611	02-37		
2852088	03-04		3	2854866	02-11		2
2852089	03-04		4	2855103	03-03		2
2852093	03-09			2855180	02-11		9
2852094	03-09			2855287	02-10		9
2852105	03-08		1	2855531	02-28		1
2852108	03-08		2	2855903	03-09		6
2852111	03-08		3	2856017	02-16		3
2852134	02-18		1	2856334	03-04		1
2852145	02-35		3	2856343	02-19		
2852155	02-26		7	2856350	03-04		2

Number	Figure	Sequence	Ref.
2856455	02-38		2
2856462	02-26		1
2856541	02-38		5
2856715	02-20		1
291308	09-57		5
	09-59		5
293470A1	04-28		10
293828A1	04-28		8
294579A1	06-66		7
294650A1	08-05		21
294741A1	08-11		27
	08-13		44
294752A1	09-69		5
294911A2	09-17		14
	09-18		27
294943A1	09-17		16
	09-18		29
294967A1	09-17		12
	09-18		25
297244A1	09-28		2
297245A1	09-28		1
297246A1	09-28		3
297377A1	09-71		4
297378A1	09-71		4
297379A1	09-71		4
297380A1	09-75		4
297381A1	09-72		4
297382A1	09-72		4
297383A1	09-72		4
297384A1	09-73		4
297385A1	09-73		4
297386A1	09-73		4
297387A1	09-74		4
297388A1	09-74		4
	09-75		4
297390A1	09-74		4
297391A1	09-71		2
297392A1	09-71		2
297393A1	09-71		2
297394A1	09-72		2
	09-75		2
297396A1	09-72		2
297397A1	09-72		2
297398A1	09-73		2
297399A1	09-73		2
297400A1	09-73		2
297401A1	09-74		2
297402A1	09-74		2
297403A2	09-75		2
297404A1	09-74		2
297406A1	09-75		3
297407A1	09-75		4
297408A1	09-75		2
297409A1	09-71		3
297410A1	09-75		3
297411A1	09-73		3
297412A1	09-73		3
297413A1	09-75		3
297414A1	09-74		3
298518A1	09-75		7
298520A1	09-73		7
298521A1	09-75		7
299274A2	09-63		15
300381	09-25		27
	09-63		8
300388	02-22		11
	04-03		9
302137A2	09-45		2A
302960A2	09-23		2
303709A1	06-33		16
304083A1	08-04		25
	09-67		12
305412	06-12		9
308761	03-01		4
309096A1	04-01		14
310838A1	08-04		23
310860A1	09-44		2
3125705R1	04-28		3
3131227R1	04-22		3
3131234R1	04-22		4
321-4614	09-67		9
321-5675	09-72		7
	09-75		7
321-5676	09-72		7
321-5677	09-74		7
321-6861	09-72		3
321-6862	09-74		3
321-6863	09-72		3
321-7004	09-73		3
321-7029	09-67		10
321-7040	09-67		7
322357	04-04		5
	04-05		27
	09-43		5
322358	02-01		2
	02-06		14
	02-07		18
	02-22		5
	03-01		6
	04-01		2
322894	06-09		31
	06-10		29
	06-16		8
	06-18		38
	06-19		29
	06-21		20
	08-18		9
322896	06-09		45
	06-21		9
	06-29		1
	06-30		1
	06-31		1
	08-18		2
323238	06-30		10
	09-13		6
	09-21		2
323657A1	03-02		28
324299A1	04-23		3
324604A1	06-34		9B
	06-37		9B
324610A1	06-35		17
	06-38		14
325258A1	04-23		3
325829	08-17		9
	09-42		4
329-1010	09-10		9
330344	08-18		6
330345	08-02		33
330346	06-22		15
337475	06-68		5
337563	04-32		6
	09-66		3
338030A1	04-03		2
338413	08-11		23
	08-12		17
	08-18		14
338550A4	06-64		
338551A2	06-64		1
341837A2	06-64		5
348434A1	09-27		8
	09-45		10
	09-46		9
	09-47		9
348452A1	09-27		7
	09-45		4
	09-46		3
	09-47		3
350616	02-06		10
	02-07		1
353238A1	09-75		5
353239A1	09-75		5
353240A1	09-75		5
353241A1	09-75		6
353242A1	09-75		6
353243A1	09-75		6
364181A1	06-63		6

Number	Figure	Sequence	Ref.
367582A1	09-22		21
367585A2	09-22		37
370531A1	06-34		14
	06-37		14
373114A1	09-53		2A
373223A3	08-01		25
373225A3	08-01		26
373241A3	08-01		22
373248A2	09-69		10
373836A1	09-38		18
374835	06-68		26
374891	04-05		25
376523A2	08-02		6
376669A1	09-38		15
376843A4	04-05		2
38-11207	06-35		2
	06-38		29
380751A1	09-26		10
	09-27		11
381144	02-05		16
381176A2	09-63		1
382622A1	09-67		6
382837A1	09-01		2
382838A1	09-01		6
384260A1	08-04		3
	09-67		5
384267A1	09-67		8
385681	09-43		4
385783A3	09-22		24
386045	04-01		3
	08-05		20
388457A1	04-19		7
390211A1	08-02		5
390350A1	02-06		12
	02-07		19
390516A3	09-17		10
	09-18		23
391703A2	09-38		39
393394A1	08-06		22
393742A1	09-01		11
394582A2	09-05		12
394745A2	09-63		11
394748A1	09-63		14
395792A1	02-05		4
396052A2	08-11		2
3962022	09-43		2
396243A2	08-02		4
396700A1	09-73		5
396701A1	09-73		6
398194A1	08-13		15
	09-04		24
398196A1	08-13		19
	09-04		15
398728A2	09-69		15
398796A1	09-69		12
398798A1	09-69		11
399383A1	04-15		13
399384A1	04-15		9
399665A2	04-15		3
400473A1	09-24		11
402364A1	06-33		1
402365A1	06-36		1
402366A1	06-38		
404599A5	09-03		17
	09-05		1
405103A1	09-20		2
405853A1	09-01		9
405854A1	09-01		21
406088A1	08-01		9
406089A2	02-04		15
406242A1	08-01		8
406256A1	09-24		6
	09-25		18
406336A1	08-01		13
406342A1	08-02		3
406344A1	08-02		16
406938A2	04-26		2
406940A1	08-02		7
406941A1	08-02		9
407060A1	06-34		22
	06-37		22
408117A2	09-38		26
408127A1	06-65		
	06-66		10
408450A1	06-66		2
408856A3	06-66		1
409174A2	06-66		4
409422A1	09-01		23
409574A1	06-66		3
409783A1	08-13		3
	09-05		3
409844A1	09-22		36
409845A1	09-22		23
409856A1	09-22		22
411345A1	02-03		8
	09-22		17
411515A1	09-69		14
411516A1	09-69		13
412066	02-06		4
	02-07		7
412085	02-06		6
	02-07		5
412087	06-11		18
412123	02-22		12
412250	09-24		12
	09-26		8
	09-27		3
412327	09-36		16
412479	08-05		10
412641	09-19		15
412672	04-32		7
	08-06		33
	08-13		18
	09-04		14
	09-23		3
	09-55		11
	09-66		5
414010A1	09-63		13
414635A1	09-58		5
417779A3	08-13		1
	09-04		1
419431A1	04-22		10
419434A1	09-38		1
420-21032	09-10		8
425-1010	09-10		6
	09-10		9
425-108	06-36		13
	06-38		32
425-116	06-34		9
	06-37		9
427180A1	04-22		12
428239A2	04-29		2
429233A1	06-63		5
429619A1	09-02		1
429620A1	09-02		2
429630A2	09-69		6
430498A1	09-10		
430499A1	09-10		
430500A1	09-10		
43117	03-02		29
	09-22		27
43127	02-04		9
	02-05		9
	06-21		3
	06-68		10
	08-16		15
	09-01		15
	09-13		17
	09-25		8
43128	06-10		8
	06-16		6
	06-17		14
	09-19		11
	09-26		6
	09-27		1
	09-38		28

Number	Figure	Sequence	Ref.	Number	Figure	Sequence	Ref.
43129	02-23		9	4891353	02-09		6
43130	07-01		16	4892426	02-39		6
	08-17		4	4892708	02-29		2
43133	08-04		13	4892712	02-28		2
43138	02-01		30	4892713	02-28		3
	02-03		4	4892714	02-29		4
	06-09		7	4892715	02-29		4
	06-12		6	4892732	02-39		2
	06-17		6	4892808	02-14		2
	08-02		35	4892859	02-16		1
	09-22		10	4892860	02-30		4
43139	02-01		13	4892861	02-16		1
	02-03		17	4892867	02-32		3
	06-32		4	4892915	02-11		2
	08-13		21	4893036	02-11		12
	09-05		6	4893386	02-34		2
	09-13		21	4893391	02-19		8A
	09-18		12	4894095	03-08		4
	09-22		19	4894139	02-17		6
43140	02-03		19	4894218	02-09		18
	02-06		19	4894721	03-05		5
	02-07		15	4895017	02-34		4
	04-01		12	4895038	02-09		4
	09-40		3	4895039	02-09		3
43144	06-10		26	4895040	02-09		7
	06-12		48	4895045	02-19		5
	06-18		40	4895049	02-09		15
	09-01		5	4895078	02-38		8
43158	06-30		9	4895085	02-16		16
43168	02-01		20	4895133	02-41		2
43235	02-06		15	4895155	02-11		10
	02-07		17	4895166	03-03		5
43248	06-10		21		04-02		5
43260	06-10		23	4895179	02-16		12
	06-68		4	4895180	02-09		16
	09-55		10	4895183	02-16		4
432895A1	09-44		3	4895184	02-16		9
43362	03-01		5	4895187	02-16		6
	04-03		5	4895188	02-16		5
	09-19		13	4895195	02-30		1
	09-29		7	4895196	02-30		7
	09-58		16	4895198	02-30		9
433957A1	09-67		1	4895199	02-30		10
434006A1	09-71		1	4895200	02-30		11
434007A1	09-71		1	4895202	02-14		1
434008A1	09-71		1	4895204	02-30		12
434009A1	09-72		1	4895214	02-14		3
434010A1	09-72		1	4895215	02-16		8
434011A1	09-72		1	4895228	02-09		5
434012A1	09-73		1	4895244	03-09		1
434013A1	09-73		1	4895291	02-17		10
434014A1	09-74		1		04-02		3
434015A1	09-74		1	4895296	02-14		2
434016A1	09-74		1	4895297	03-10		2
434017A1	09-73		1	4895305	03-09		2
434018A1	09-75		1	4895316	02-26		4
434019A1	09-75		1	4895323	02-33		1
434020A1	09-75		1	4895325	02-26		
434346A1	09-11		5	4895336	02-27		4
43435	04-18		10	4895347	02-16		7
	04-19		9	4895355	02-10		8
	09-13		22	4895360	02-14		10
434817A1	09-10			4895361	02-30		2
435396A1	09-24		2	4895363	02-30		5
435565A1	09-22		2	4895364	02-30		6
436415A1	06-34		19	4895365	02-30		8
	06-37		19	4895378	02-11		4
436416A1	06-34		21	4895379	02-11		5
	06-37		21	4895392	02-09		13
43646	09-43		7		02-35		
442856A1	09-38		25	4895393	02-09		14
450051A1	09-02				02-35		7
4890732	02-39		4	4895394	02-35		6
4890832	02-12		4	4895406	02-18		3
4890833	02-11		8	4895414	02-34		3
4890964	03-05		4	4895538	04-02		6
4891209	02-12		5	4895610	02-18		5
4891252	02-36		1	4895623	02-35		8

Number	Figure	Sequence	Ref.
4895625	02-35		9
4895919	02-09		8
4895921	02-09		8
4896404	02-19		4
4896406	02-19		9
4896409	02-19		11
4896410	02-19		7
4896773	02-32		1
4896865	02-09		17
4896884	03-07		15
4896897	02-13		2
	08-18		19B
4897026	02-12		1
4897178	02-16		13
4897179	02-16		14
4897330	02-18		4
4897457	02-33		4
4897480	02-21		1
4897876	02-17		8
4897877	02-17		7
4898301	02-17		3
4899009	02-24		1
4899019	02-19		1
4899020	02-11		7
4899026	02-09		2
	02-10		1
	02-11		1
4899031	03-05		3
	04-02		2
4899032	02-15		1
	02-39		8
4899035	02-19		6
4899039	02-26		2
4899046	02-34		5
4899053	02-39		9
4899055	03-09		
4899063	02-12		3
4899068	02-11		11
	02-33		3
	03-03		3
4899072	02-24		2
4899073	02-10		3
	02-40		2
4899074	02-11		2
4899076	02-11		2
4899078	02-12		2
4899079	02-36		3
	02-37		5
4899080	02-33		6
4899090	02-21		2
4899091	02-10		2
	02-17		2
4899092	02-25		3
4899093	02-10		3
4899109	02-11		2
	02-35		1
	02-37		6
4899110	02-25		3
4899143	02-11		2
4899859	02-27		5
	02-41		4
4899921	02-26		5
493-21020	06-32		9
493-41033	06-34		18A
	06-37		18A
500322677	02-41		1
507586	02-04		1
516742	09-30		12
524036	08-03		12
52419	08-15		13
528359R4	04-05		3
529070	03-01		2
	04-03		10
	06-01		20
	06-02		16
	06-03		16
	06-10		4
	06-10		7
529070	06-11		13
	06-12		15
	06-16		14
	06-18		27
	06-22		11
	08-04		10
	08-07		10
	08-18		28
570024	06-12		8
574342	08-04		9
574518	02-22		8
595460	08-06		21
60-7083T1	09-34		5
	09-36		19
603022	09-13		18
608089	06-12		41
	06-18		37
	08-07		4
	08-08		4
	08-09		14
614-6025	09-44		4
627-6030	06-12		44
629086	09-67		14
631816	09-11		1
637964	09-29		3
	09-35		3
642560	09-57		9
	09-58		34
	09-59		14
682683	09-72		8
	09-75		9
694371	03-02		8
7120741	09-59		51
76344	06-14		1
	06-22		8
	07-01		1
	08-07		18
	08-08		18
	08-09		23
	08-11		19
	08-12		13
	08-13		48
76349	06-02		8
	06-03		8
	06-09		52
	06-14		17
	06-15		11
	06-18		22
	06-19		11
	06-33		10
	06-33		19
	06-34		3
	06-36		8
	06-37		4
	08-19		5
76350	06-01		3
	06-02		3
	06-03		3
	06-13		2
	06-14		6
	06-15		15
	06-19		15
	06-22		3
	06-23		9
	06-24		5
	07-01		9
	08-04		16
	08-11		21
	08-12		15
76355	06-23		2
	06-24		17
771714	08-14		7
774735	09-23		15A
783874	08-15		14
80120101	06-18		35
	08-07		6
	08-08		6
	08-09		15

Number	Figure	Sequence	Ref.
80120101	09-45		5
	09-46		4
	09-47		4
80681	08-16		7
	08-17		5
80682	03-02		5
80710	08-12		6
	09-03		20
	09-04		17
	09-05		11
80855	09-20		1
	09-22		5
81541	08-06		34
81822758	09-50		10
81827427	08-02		1
	08-06		48
825-5146	04-29		3
827695C1	09-38		19
83918746	09-18		8
83931335	09-38		13
83982664	04-18		6
840-1616	04-29		4
84384	06-18		13
84570	06-09		33
	06-16		18
	06-16		25
	06-18		10
	06-29		7
	06-30		4
	06-31		7
	08-06		23
	08-18		25
84674	02-01		11
	02-04		13
848220	08-15		2
853764	03-01		3
853765	04-18		3
	04-19		4
85821384	04-18		12
	04-19		11A
	04-20		
85821385	04-18		9
	04-19		11
	04-21		
85826230	02-06		2
	02-37		4
86010402	08-03		8
86010532	09-59		15
8602005	02-08		1
86025725	09-25		21
86050279	09-59		39
86050288	06-11		4
	06-18		23
86071	08-05		13
861-14080	06-56		5
	06-59		3
861-8040	06-56		17
	06-59		17
86500348	09-22		16
86500688	04-05		26
	09-20		4
	09-22		28
86500689	02-01		16
	08-02		21
	09-17		15
	09-18		28
86501706	08-01		10
86501801	09-08		2
	09-08		2
86501815	09-08		5
	09-08		5
86505868	09-13		16
	09-38		32
	09-45		14
	09-46		14
	09-47		13
	09-58		13
	09-59		33
86507486	09-58		17
86508568	04-22		8
86508569	09-17		6
86508570	08-11		13
	08-13		32
86508571	06-14		30
	06-20		10
	06-23		6
	06-24		9
86508624	06-68		8
86508812	09-56		4
86509028	06-13		4
	08-04		18
86509309	03-02		16
86509310	09-22		7
86510314	09-07		8
86510315	09-07		6
86510316	09-07		5
86511042	04-07		9
86511315	06-68		11
86511444	04-22		6
	04-23		6
	09-38		5
	09-58		38
86511827	09-24		4
	09-25		17
86511829	09-39		3
86512008	08-15		12
86512134	06-56		23
	06-59		23
86512142	06-56		7
	06-59		7
86512440	06-22		6
	08-06		41
	08-11		14
	08-12		18
	08-13		33
	09-23		10
86512446	08-06		31
	09-23		14
86512498	06-63		2
	06-66		9
	06-68		17
86512554	06-10		24
	06-12		49
	06-18		41
	06-32		3
	08-02		29
	08-06		13
	08-13		6
	09-01		4
	09-03		15
	09-04		26
	09-05		4
	09-18		14
	09-23		13
	09-40		1
86512555	06-11		7
	06-20		4
	06-24		2
	09-26		19
86512837	08-13		10
	09-03		19
	09-04		28
	09-05		7
86512934	08-11		28
	08-13		42
86512936	06-12		27
	06-21		27
86513019	08-07		2
	08-08		2
	08-09		20
86513020	06-14		32
	07-01		14
	08-04		7
	08-11		30
	08-13		40
86513144	08-17		23

Number	Figure	Sequence	Ref.	Number	Figure	Sequence	Ref.
86513653	07-01		4	86610167	09-03		7
	08-07		30		09-04		8
	08-08		30	86611740	08-15		4
	08-09		34	86611742	08-15		1
86517328	03-02		2	86614267	08-14		3
86520436	08-06		39	86614269	08-14		
	09-23		6	86618351	09-06		1
86521425	04-07		1	86618354	09-07		2
	04-08		1	86618355	09-07		2
86526	06-01		21	86618363	09-07		1
	06-02		20	86618364	09-07		1
	06-03		20	86619800	09-31		13
	06-15		27		09-36		14
	06-19		27		09-57		6
	08-04		14		09-59		7
86527861	08-19		3	86619801	09-36		25
86527863	08-19				09-36		6
86527865	08-19		6	86620864	09-53		5
86527866	08-19		2	86624005	08-03		4
86530079	09-11		2		08-10		6
86536660	06-09		38		08-12		2
	06-12		36	86624011	08-03		2
	06-17		29	86624092	09-03		11
	08-18		22		09-04		12
86536985	09-16		15	86624131	08-06		14
	09-19		17	86624176	08-02		22
86545825	09-17		5		08-06		12
	09-18		16		09-13		13
86548338	09-10		5		09-22		18
	09-10		8		09-59		40
	09-10		8	86624181	08-07		5
86563839	08-15		8		08-08		5
86565640	09-11		3		08-09		16
86565641	09-11		4	86624182	04-22		7
86574054	09-12				04-23		5
86574055	09-12				09-26		13
86577166	09-06		4		09-27		14
86577168	09-06		4		09-34		7
	09-07		4	86624184	02-01		3
	09-07		4		04-26		5
	09-08		3		06-09		22
	09-09				06-14		29
86577170	09-06		4		06-16		1
	09-09				06-17		15
86577173	09-10		7		06-20		11
86577946	06-63		4		06-21		2
	09-65		8		06-24		10
86588450	04-05		22		08-05		9
	06-09		49		08-06		9
	06-12		43		09-01		14
	06-14		3		09-29		8
	06-18		20		09-58		12
	06-22		5		09-59		31
	08-11		15		09-63		9
	08-12		19	86624185	02-08		2
	08-13		34		04-15		11
	08-18		13		07-01		17
	09-26		11	86624194	02-04		17
	09-27		12		08-04		2
	09-38		6	86624450	08-14		
	09-58		20		08-15		
86589764	09-12		2	86624451	08-15		
86589765	09-12		3	86624732	08-08		22
86592107	09-60		28	86624977	08-06		10
86592710	09-25		19	86625000	02-04		3
86595542	08-14		8	86625021	02-05		14
86598102	02-23		2	86625032	02-01		9
86599775	09-56		9		08-07		21
86600617	09-74		9		08-09		29
	09-75		10	86625033	08-02		12
86603490	09-45		2	86625034	08-08		21
86604657	04-18		17	86625074	04-03		6
	04-19		16	86625127	09-38		29
86606073	02-03		11	86625129	09-38		42
86608204	02-03		12	86625135	09-18		19
86609324	08-14		12	86625224	04-28		7
86610166	09-03		6		04-32		1
	09-04		7		09-55		6

Number	Figure	Sequence	Ref.	Number	Figure	Sequence	Ref.
86625234	02-01		26	86637783	04-09		1
86625253	02-01		14		04-10		1
	04-01		13		04-11		2
	08-13		7		04-12		1
	09-03		14		04-13		2
	09-04		25		04-14		1
	09-05		5		04-32		10
	09-38		14	86637935	09-38		10
	09-41		1	86637977	06-11		10
	09-42		5		06-21		16
86625254	02-01		18	86637978	04-05		8
	09-65		3	86637998	09-13		15
86625255	06-15		2	86639001	06-09		5
	06-19		1		06-12		4
	06-68		6		06-17		4
	08-13		17	86639003	04-04		3
	09-04		14A	86639006	06-10		14
	09-16		3		08-16		14
	09-19		6	86639241	09-24		3
	09-42		2		09-25		15
86625256	03-02		14	86639310	09-56		5
	04-04		11	86639313	02-04		7
	04-32		8		03-02		25
	06-10		22		09-29		5
	06-11		19		09-35		5
	09-55		12		09-63		6
	09-66		4	86639325	02-06		18
86625258	06-11		8		02-07		14
	06-20		2		06-10		25
	06-24		3		06-12		50
86625260	09-16		14		06-18		42
	09-19		16		06-32		5
86625263	02-03		5		08-02		36
	02-04		10		09-21		1
	02-05		10		09-22		9
	02-23		8	86639326	02-01		21
	06-10		17		06-68		9
	06-12		40	86639409	09-59		10
	06-18		29	86639773	09-12		1
	08-06		55	86705351	04-05		20
	08-07		26	86705580	06-20		5
	08-08		26		06-24		15
	08-09		26	86705988	06-14		31
	08-16		16	86729372	06-12		29
	09-25		9	86729669	04-07		5
	09-45		7		09-58		28
	09-46		6	86729670	04-07		4
	09-47		6		09-58		27
86625264	09-24		5	86729675	09-58		25
	09-25		16	86900574	09-08		3
86625266	02-06		9	86976064	03-02		22
	02-07		2		08-06		32
	09-26		20		09-23		7
	09-38		38	86977786	04-04		6
86625480	09-61		25		04-05		21
86625481	09-59		21		09-58		39
86625515	09-59		20	86977789	09-26		12
86627432	04-07		12		09-27		13
86629891	06-68		25	86977790	06-09		47
86631597	08-15		3		06-14		20
86631598	08-15				06-18		19
86631607	08-14		10	86990981	02-05		4A
	08-15		10	86993467	06-33		15
86631610	08-14		9		06-36		7B
	08-15		9	86993468	06-33		7A
86631616	08-14		11		06-36		5
	08-15		11	86993475	06-33		4
86632589	09-38		36		06-34		25
86632601	04-26		4		06-36		15
	09-26		7		06-37		25
	09-27		2	86993479	06-33		13
86633195	09-03		1		06-36		7
	09-04		4	86993480	06-33		14
86633196	09-03		2		06-36		7A
	09-04		3	86993483	06-34		27
86633356	04-22		11		06-37		27
86633393	02-03		6	86993484	06-34		24
86634307	09-31		15		06-37		24

Number	Figure	Sequence	Ref.
87000312	04-05		10
87010108	06-09		43
	06-21		11
87010110	08-08		27
87010593	06-32		13
87012669	08-16		3
	08-18		16
	08-19		
87013357	09-25		22
87013666	02-05		18
	04-03		11
87013729	06-10		13
	06-38		30
87014502	09-07		6
	09-07		6
	09-07		6
	09-07		6
87014503	09-07		5
	09-07		5
	09-07		5
	09-07		5
87014504	09-06		3
	09-06		3
	09-06		3
87014505	09-06		2
	09-06		2
	09-06		2
87015284	09-01		13
	09-24		8
	09-25		6
	09-26		9
	09-27		4
	09-58		36
87015460	09-07		7
	09-07		7
	09-07		7
	09-07		7
87015514	09-07		4
	09-07		4
	09-07		4
	09-09		
87015862	09-29		6
	09-35		6
87016334	06-11		5
87016486	08-18		27
87016585	09-58		40
87016586	09-58		9
	09-59		27
87016587	09-38		11
87016615	06-15		21
	06-19		20
	06-68		3
87016870	04-05		6
	04-22		5
87016983	09-06		5
	09-06		5
	09-06		5
87017348	08-06		56
	08-40		
87017686	02-08		
87017999	08-17		14
87019286	08-03		11
87019495	09-01		10
87019943	06-26		7
87020048	08-17		15
87020181	04-05		28
87020733	06-55		
	08-16		4
	08-18		20
87020743	08-17		11
87020901	06-32		1
87020980	02-01		34
87021047	07-01		21
87021266	06-11		3
87021277	07-01		3
87021824	06-09		26
	06-09		9
	06-17		11
87021825	02-01		24
87022172	06-09		39
87022174	06-10		28
	06-21		24
87022175	06-09		16
	06-21		22
87022177	07-01		12
87022436	07-01		7
87022437	07-01		11
87022438	06-09		25
87022671	08-17		25
87022672	08-17		26
87022737	08-17		10
	09-17		7
87023398	08-17		24
87023469	08-17		19
87023470	08-17		18
87023471	08-17		28
87023472	08-17		27
87023483	08-17		17
87023530	04-27		4
	08-03		10
87024208	08-03		9
87024539	02-06		13
87024588	02-06		16
87024695	06-10		12
	06-54		
87025275	08-17		16
87025470	02-01		6
87026695	08-17		3
87026696	08-17		2
87026871	09-48		2
	09-49		4
87027430	08-14		5
87028524	03-02		7
	04-27		3
87029843	04-23		1
87029930	08-02		8
87029961	02-03		10
87030508	09-16		11
	09-17		8
	09-18		2
87030547	09-22		3
87030549	04-22		9
	09-41		4
	09-42		7
87030555	09-51		3
87030561	04-05		23
	04-26		3
	06-12		42
	06-14		4
	06-18		36
	08-07		7
	08-08		7
	08-09		17
	09-21		6
	09-26		15
	09-27		16
87030567	02-05		11
	06-10		9
	06-11		11
	06-14		28
	06-16		2
87032107	02-05		
87032338	02-06		8
87033027	06-11		15
87033290	08-06		36
	09-23		19
87033361	02-03		7
87033645	09-20		11
87033823	06-09		18
	06-12		17
	06-17		22
87033824	06-11		1
	06-18		24
87034630	02-03		18
87034631	02-03		14
87035341	06-11		9

Number	Figure	Sequence	Ref.
87035341	06-20		1
	06-56		
	06-57		
	06-58		
87035342	06-23		3
	06-24		1
	06-59		
	06-60		
	06-61		
87035382	04-05		24
87035457	09-60		39
	09-61		45
87035782	09-61		13
87036285	09-20		7
87039085	06-10		6
	06-12		31
	06-18		26
	06-30		11
87039359	06-56		1
87039360	06-59		1
87039368	06-58		
87039369	06-61		
87039370	06-58		
87039371	06-61		
87039372	06-58		
	06-61		
87039611	06-33		24
87039612	06-33		2
	06-36		17
87039613	06-34		23
	06-37		23
87039614	06-34		26
	06-37		26
87039615	06-34		29
	06-37		29
87039622	06-34		16
	06-37		16
87039623	06-38		5
87039625	06-35		
87040707	08-02		18
87040758	02-05		7
87041763	02-06		3
	02-07		8
87041842	02-05		1
87042118	04-01		1
	04-04		1
87042214	06-54		1
	06-55		1
87042897	06-09		21
	06-16		3
	06-17		16
87042903	06-56		13
	06-59		13
87042904	06-56		11
	06-59		11
87042905	06-56		12
	06-59		12
87042906	06-56		14
	06-59		14
87042907	06-58		18
	06-61		19
87042908	06-56		3
	06-59		4
87042909	06-59		5
87042910	06-59		18
87042911	06-56		19
	06-59		19
87042912	06-56		6
	06-59		6
87042913	06-60		2
87042914	06-60		4
87042915	06-60		7
87042916	06-60		6
87042917	06-60		3
87042918	06-60		1
87042919	06-58		17
	06-61		20
87042921	06-56		8
87042921	06-59		8
87042922	06-56		22
	06-59		22
87042923	06-56		10
	06-59		10
87042924	06-58		19
	06-61		21
87042925	06-56		21
	06-59		21
87042926	06-56		9
	06-59		9
87042927	06-56		20
	06-59		20
87042928	06-57		5
	06-60		12
87042929	06-57		3
	06-60		10
87042930	06-57		10
	06-60		17
87042931	06-57		8
	06-60		15
87042932	06-57		9
	06-60		16
87042933	06-57		6
	06-60		13
87042934	06-57		1
	06-60		8
87042935	06-57		4
	06-60		11
87042941	06-56		2
	06-59		2
87042953	06-56		4
87042954	06-56		18
87043498	06-10		10
87043500	06-10		11
	06-33		
	06-34		
	06-35		
	06-36		
	06-37		
	06-38		
87047451	09-42		6
87050523	06-35		16
	06-38		13
87050524	06-35		20
	06-38		11
87050525	06-35		
87050526	06-38		
87051110	09-30		15
	09-36		30
	09-38		7
87052670	04-01		8
	04-03		3
87052671	04-15		8
87053083	04-01		5
87105748	02-08		4
87301324	09-25		20
87301328	08-06		30
87301344	08-06		16
87301359	06-09		23
	06-16		4
	06-17		17
87301588	04-03		8
	04-05		1
87302136	09-57		10
87302564	06-13		21
87303345	06-68		21
87303844	06-13		13
	06-19		25
87305403	09-25		11
87307884	02-23		5
87307909	09-59		34
87308282	04-05		4
87309725	09-20		10
	09-22		31
87309726	09-22		33
87310592	04-07		6
	09-58		26

Number	Figure	Sequence	Ref.
87311640	06-09		57
87316174	06-68		2
87335499	09-33		12
87351957	02-05		6
87352014	02-05		15
87352524	06-26		
87352527	06-26		3
	06-27		10
87353205	06-31		6
87354210	06-68		28
87356572	06-68		
87357240	06-01		14
	06-04		
87357241	06-01		15
	06-05		
87363008	06-68		19
87364	09-20		13
87364613	06-68		12
87364616	06-16		28
87364622	06-16		17
87364625	06-16		12
87364627	06-13		7
87364628	06-13		16
87364629	06-14		16
87364631	06-14		14
87364799	06-13		17
87364800	06-13		18
87364801	06-13		10
87364802	06-13		11
87364803	06-14		15
87364804	06-13		12
87364805	06-13		19
87364806	06-14		13
87364807	06-13		6
87364808	06-13		8
87366159	04-01		9
87367444	08-10		2
	08-12		1
87367445	08-10		5
	08-12		10
87368774	09-18		3
87368775	09-18		20
87368776	09-18		21
87368777	09-18		4
87368778	09-18		6
87370805	04-23		1
87372864	09-70		4
87372867	09-70		5
87374752	06-09		8
	06-12		10
	06-17		8
87376457	06-12		30
87376969	08-07		22
	08-09		28
87381	09-17		13
	09-18		26
87381264	09-24		14
	09-25		2
87384641	02-06		1
	02-07		11
87385021	08-02		10
87387193	08-01		21
87387540	08-11		8
	08-13		26
	09-03		4
	09-04		2
87388074	08-10		
87389371	09-69		7
87393399	02-03		21
87393628	06-12		35
	06-17		30
87403797	08-04		1
87403835	04-03		1
87404825	08-02		26
87404992	04-04		7
	06-09		48
	06-14		21
	06-18		21
87404992	08-18		15
87405117	09-45		1
87405135	08-02		13
87405137	08-02		14
87405141	08-02		24
87411208	09-16		12
	09-17		9
87412041	09-03		8
	09-04		9
87413030	08-13		37
	09-03		12
	09-04		13
	09-05		14
87413436	08-10		7
	08-12		11
87414	08-13		9
	08-14		6
	08-15		6
	09-03		21
	09-04		27
	09-05		13
87414769	08-16		19
87414959	09-53		2
87416539	03-02		20
87417084	06-11		14
87417085	06-09		40
87417308	08-06		20
87418259	06-09		28
87421454	08-05		17
87421480	08-11		18
	08-12		12
87423368	08-01		6
87423807	08-10		9
	08-12		8
87423833	08-06		25
	09-23		1
87423856	09-23		11
87424095	03-02		19
87424182	06-26		1
	07-01		22
87426293	08-03		13
87426545	06-26		4
	06-27		11
	06-28		11
87427685	04-13		7
87427686	04-14		8
87428143	06-63		7
87428444	08-04		22
87429186	09-69		8
87429625	06-23		7
	06-26		
87429698	09-24		13
87430292	09-09		1
87430661	06-09		11
	06-12		14
	06-32		
87430679	09-17		3
	09-18		15
87430855	06-23		1
	06-24		7
87431323	03-01		1
87432221	09-16		6
	09-19		10
87432267	02-22		14
87432275	02-22		9
87433495	06-26		5
87433496	06-26		2
	07-01		23
	08-11		18B
87433497	06-26		3
	06-28		10
87433499	06-26		6
87436118	09-59		18
87436539	08-05		4
87436668	08-05		3
87437076	09-26		14
	09-27		15
87437351	06-09		42

Number	Figure	Sequence	Ref.	Number	Figure	Sequence	Ref.
87437351	06-14		19	87445932	08-26		4
	06-18		18	87445935	08-20		5
87437501	09-59		22		08-21		4
87438190	08-02		2		08-22		4
	08-15				08-23		4
87438193	08-01		28	87445943	08-20		6
	08-14				08-21		5
87438418	02-22		10		08-22		5
87438564	09-09		1		08-23		5
87438566	09-09		1		08-26		3
87438766	08-07		15	87445987	08-20		9
	08-08		15		08-21		8
87439844	09-58		22		08-28		1
	09-59		24	87445988	08-20		8
87439984	06-32		6		08-21		7
87440124	09-26		2		08-27		1
	09-27		10	87446001	08-05		1
87440253	08-08		23	87446248	06-09		37
87440564	08-10		10		06-16		21
	08-12		7	87446614	09-23		17
87440565	08-10		8	87446617	08-21		9
	08-12		4		08-22		7
87440566	08-11		4		08-29		1
	08-13		23	87446825	08-10		1
87440568	08-11		17		08-12		9
	08-13		36	87446983	08-10		3
87440569	08-11		3	87447009	08-06		19
	08-13		22	87447010	08-06		11
87440570	08-11		16	87447123	08-19		1
	08-13		35	87447124	08-19		4
87441006	09-58		23	87447764	08-07		29
	09-59		23		08-08		29
87441276	07-01		6		08-09		33
87441574	04-27		1	87447793	08-05		12
87441649	06-29		3	87447813	08-03		6
	06-30		3	87447965	08-06		18
	06-31		3	87447970	08-07		11
87441786	08-09		9		08-08		11
87441937	09-58		33		08-16		20
87442326	08-14		1	87448095	09-01		
87442334	08-14		2	87449854	09-25		5
87442335	08-14		4	87449992	04-27		9
87442337	08-11		9	87450833	09-57		4
	08-13		28		09-59		4
87442439	08-06		40	87450956	04-03		7
	09-23		9	87452009	09-59		12
87443510	06-09		41	87452108	06-13		20
	06-14		23	87452146	06-13		22
	06-16		11	87453780	04-27		10
	06-20		7	87453999	08-16		12
	06-21		23		08-17		20
	06-24		14	87454000	08-16		11
	07-01		13		08-17		21
87443511	06-09		51	87454483	09-10		4
	06-16		16	87454488	09-10		7
	06-21		14	87454489	09-10		7
	09-57		8	87455257	08-40		
	09-58		24	87455258	08-40		
	09-59		13	87455274	08-40		
87444160	08-06		52	87455412	06-23		4
87444371	08-06		3		06-24		13
87444373	08-06		2	87456974	08-04		6
87444992	04-15		5	87458061	06-25		7
87445136	06-09		20		06-27		2
	06-16		5		06-28		2
	06-17		18		07-01		24
87445137	06-18		12	87458118	04-27		11
87445138	06-11		17	87458467	04-15		2
	06-16		24	87458510	09-22		13
	06-18		7	87458511	09-22		30
87445306	08-05		22	87458514	09-22		35
87445427	02-22		1	87458642	09-16		2
87445747	08-01		7		09-19		4
87445908	09-59		17	87458660	09-22		29
87445932	08-20		7	87458662	09-22		14
	08-21		6	87458664	09-21		4
	08-22		6		09-22		38
	08-23		6	87458665	09-22		32

Number	Figure	Sequence	Ref.
87458667	09-20		15
87458725	08-18		18
87458961	04-04		12
87458990	09-01		6
87458996	06-09		17
87458997	06-10		27
87459019	09-70		3
87459075	09-25		14
87459076	09-25		10
87459429	09-68		5
87459437	09-68		4
87459438	09-68		3
87459439	09-68		2
87459440	09-68		1
87459517	06-68		22
87459518	06-68		7
87459910	07-01		5
87460042	08-07		20
	08-08		20
	08-09		22
87460100	09-22		6
87460195	09-64		1
87460558	09-62		1
87460732	09-38		30
87460888	06-68		20
87461248	09-18		10
87461561	09-37		1
87461604	09-26		1
	09-27		17
87461859	06-62		1
87461995	02-03		2
87462103	06-29		5
	06-30		7
	06-31		4
87462215	08-06		1
87462287	06-68		15
87462631	09-58		32
87462741	09-20		6
87516044	08-09		12
87517937	09-34		10
87517940	09-34		9
87520839	09-58		31
87527676	09-74		10
	09-75		8
87529123	09-30		13
	09-36		28
87530614	04-28		6
87531091	08-01		12
87533223	09-03		3
	09-04		5
87534387	06-66		5
87534744	04-09		2
	04-10		2
	04-11		3
	04-12		3
	04-13		3
	04-14		3
87535230	08-05		12A
87535297	06-68		27
87535298	06-68		13
87535299	06-68		23
87541112	06-67		
87546971	06-20		9
	06-22		14
	06-25		1
87546973	06-22		1
87546974	08-01		1
	08-22		
87546975	08-07		1
	08-08		1
	08-16		2
	08-18		1
	08-23		
87546976	06-19		3
87546977	06-15		1
87546979	06-15		8
	06-19		8
87547003	02-06		17
87547003	02-07		16
87547032	06-14		12
	06-22		10
87547047	06-24		12
87547060	06-21		18
87547061	06-21		19
87547062	06-21		25
87547065	06-16		10
87547066	06-16		20
87547067	06-16		13
87547068	06-21		7
87547070	06-09		56
	06-12		34
	06-18		5
87548612	03-01		10
87548833	06-05		1
	06-06		2
	06-08		2
87548834	06-04		1
	06-07		2
87548835	06-05		2
	06-06		3
	06-08		3
87548836	06-04		2
	06-07		3
87548839	06-04		3
	06-07		4
87548846	06-04		10
	06-07		7
87548847	06-04		11
	06-07		11
87548848	06-04		12
	06-05		8
	06-07		12
87548874	06-04		13
	06-05		9
	06-06		10
	06-07		13
	06-08		12
87549658	08-18		8
87549660	08-18		17
87553599	06-39		20
	06-43		
	06-47		20
	06-50		
87553600	06-39		21
	06-44		
	06-47		21
	06-51		
87553601	06-39		22
	06-45		
	06-47		22
	06-52		
87553604	06-39		2
	06-41		
	06-47		2
	06-48		
87553605	06-39		3
	06-47		3
87553606	06-39		4
	06-47		4
87553607	06-47		5
87553608	06-39		6
	06-42		
	06-47		6
	06-49		
87553609	06-39		7
	06-47		7
87553610	06-39		
	06-42		3
	06-47		
	06-49		3
87553611	06-39		8
	06-47		8
87553612	06-39		19
	06-47		19
87553613	06-39		9
	06-47		9

Number	Figure	Sequence	Ref.
87553614	06-39		10
	06-47		10
87553615	06-39		11
	06-47		11
87553616	06-39		12
	06-42		11
	06-47		12
	06-49		11
87553617	06-39		13
	06-47		13
87553618	06-39		14
	06-47		14
87553619	06-39		15
	06-47		15
87553620	06-39		16
	06-47		16
87553621	06-39		17
	06-47		17
87553622	06-39		18
	06-47		18
87553623	06-43		1
	06-50		1
87554200	08-17		13
87554226	08-17		12
87554297	06-15		6
	06-19		6
87555249	09-58		30
87556251	09-13		1
	09-14		2
87562923	08-11		18C
87562926	08-11		18A
87563155	06-68		
87563692	09-25		13
87563968	06-12		47
	06-18		34
87563969	06-12		46
	06-18		33
87563970	08-07		16
	08-08		16
	08-09		18
87563971	06-12		21
	06-17		28
87563972	06-18		25
87563974	08-07		14
87563977	06-22		13
87563991	06-14		11
	06-22		18
87563992	06-14		10
	06-22		17
87563994	06-20		8
87563995	06-21		13
87563996	06-14		22
87563997	06-16		15
87563998	06-12		26
	06-18		4
87564000	06-12		23
	06-18		1
87564001	08-07		17
	08-08		17
	08-09		19
87564008	06-21		4
87564009	06-12		45
87564724	09-20		5
87565745	02-01		5
87565746	02-01		5
87568426	09-13		8
87568427	09-13		9
87568434	09-13		23
87568435	06-14		9
	06-22		2
87568437	09-13		4
	09-15		3
87571937	06-15		17
	06-19		23
87571954	06-62		5
87571958	06-62		6
87571969	06-62		3
87573371	06-02		17
87573371	06-03		17
	06-14		25
87574372	09-25		23
87575213	06-62		9
87575214	06-62		10
87575289	06-01		19
87575290	06-01		18
87575606	08-07		
87575684	06-16		27
	06-18		6
87576153	08-20		4
	08-21		3
	08-22		3
	08-23		3
	08-26		1
87576154	08-20		10
	08-23		7
	08-38		3
	08-39		3
87576157	08-20		11
	08-21		10
	08-22		8
	08-23		8
	08-30		1
87576158	08-20		13
	08-21		12
	08-22		11
	08-23		11
	08-30		9
87576160	08-20		14
	08-21		13
	08-22		12
	08-23		12
	08-30		12
87576161	08-20		15
	08-23		13
87576162	08-20		17
	08-21		15
	08-22		14
	08-23		14
	08-30		15
87576163	08-20		18
	08-21		16
	08-31		
87576168	08-21		17
	08-22		18
	08-32		
87576169	08-20		19
	08-21		18
	08-33		
87577076	06-14		24
	06-27		1
87577077	06-24		8
	06-28		1
87578653	06-66		6
87579238	06-62		11
87582844	06-68		18
87582846	06-68		1
87583285	08-01		1
	08-21		
87583286	08-09		13
	08-20		1
87584058	06-10		5
	06-17		27
87584554	03-01		7
87584639	03-01		9
87584781	02-03		20
87588579	06-25		2
	06-27		7
87588585	06-27		6
87588596	06-25		3
	06-27		4
87588597	06-27		5
87588928	08-04		24
87588929	08-04		20
87588930	08-04		21
87591148	09-60		17
	09-60		24

Number	Figure	Sequence	Ref.
87591148	09-60		9
	09-61		23
	09-61		30
	09-61		9
87593415	08-02		32
87593416	08-02		25
87593417	08-02		27
87593420	08-05		2
87593421	08-05		5
87593422	08-05		8
87593425	08-05		7
87594971	09-59		35
87597259	06-43		2
	06-44		2
	06-50		2
	06-51		2
87597260	06-43		3
	06-44		3
	06-50		3
	06-51		3
87597261	06-43		4
	06-50		4
87597262	06-43		5
	06-44		5
	06-50		5
	06-51		5
87597263	06-43		6
	06-44		6
	06-50		6
	06-51		6
87597264	06-43		7
	06-44		7
	06-50		7
	06-51		7
87597265	06-43		8
	06-44		8
	06-50		8
	06-51		8
87597266	06-43		9
	06-44		9
	06-50		9
	06-51		9
87597267	06-43		10
	06-44		10
	06-50		10
	06-51		10
87597268	06-43		11
	06-50		11
87597269	06-44		1
	06-51		1
87597271	06-44		4
	06-51		4
87597272	06-45		1
	06-52		1
87597274	06-45		2
	06-52		2
87597275	06-45		3
	06-52		3
87597276	06-45		4
	06-52		4
87597277	06-45		5
	06-52		5
87597281	06-45		6
	06-52		6
87597282	06-45		7
	06-52		7
87597283	06-46		1
87597284	06-40		8
	06-46		3
	06-53		3
87597285	06-40		9
	06-53		2
87597286	06-41		6
	06-48		6
87597287	06-42		1
	06-49		1
87597288	06-42		2
	06-49		2
87597289	06-42		4
	06-49		4
87597290	06-42		5
	06-49		5
87597291	06-42		6
	06-49		6
87597292	06-42		7
	06-49		7
87597293	06-42		8
	06-49		8
87597294	06-42		9
	06-49		9
87597295	06-42		10
	06-49		10
87597296	06-42		12
	06-49		12
87597297	06-42		13
	06-49		13
87597960	08-06		37
87598810	03-01		8
87599718	09-01		20
87600262	06-13		1A
	06-62		
87600262C	06-13		
	06-62		
87600262R	06-13		
	06-62		
87600263	06-13		1
	06-62		
87600263C	06-13		
	06-62		
87600263R	06-13		
	06-62		
87600622	06-02		14
	06-08		1
87600623	06-02		15
	06-03		15
	06-07		1
87600630	06-21		8
87601409	06-62		4
87602204	08-16		13
	08-18		21
87602985	06-68		16
87602987	06-68		
87602988	06-68		
87604061	06-01		11
87604062	06-01		6
	06-02		6
	06-03		6
87604063	06-01		12
87604064	06-01		7
87604069	06-01		8
	06-02		7
	06-03		7
87604070	06-02		12
	06-03		12
87604071	06-02		13
	06-03		13
87604072	06-02		11
	06-03		11
87604074	06-12		28
	06-15		7
87604075	06-19		7
	06-21		26
87604076	06-14		8
	06-22		1
87610349	08-20		2
	08-21		1
	08-24		
87610350	08-20		3
	08-21		2
	08-22		2
	08-23		2
	08-25		
87610351	08-20		12
	08-21		11
	08-22		9
	08-23		9

Number	Figure	Sequence	Ref.	Number	Figure	Sequence	Ref.
87610351	08-30		5	87614030	06-46		2
87610352	08-20		16	87614031	06-47		1
	08-21		14		06-53		
	08-22		13	87615741	02-04		12
87610517	08-22		1	87615742	02-04		16
	08-23		1	87615743	02-04		8
	08-34			87615745	02-04		5
87610530	08-22		10	87617017	08-09		
	08-23		10	87617091	09-16		13
87610531	08-22		15	87617092	09-18		22
	08-23		15	87617100	08-16		
	08-37				08-17		
87610532	08-22		16	87619935	09-39		4
	08-23		16	87619938	09-39		1
	08-36			87619939	09-39		2
87610533	08-22		17	87620412	08-13		2
	08-23		17		09-05		2
	08-35			87620458	04-01		6
87610718	08-11		10	87620895	09-38		35
	08-13		29	87620930	02-05		8
87611845	08-20		20	87621245	08-07		23
	08-23		18		08-09		30
	08-38			87622364	06-01		16
87611846	08-20		21	87623657	09-59		
	08-23		19	87624401	04-15		6
	08-39			87624623	09-32		1
87611848	08-20		22	87624640	09-31		2
	08-21		19	87624641	09-31		17
	08-28				09-36		17
87611849	08-20		23	87624736	08-02		31
	08-21		20	87625890	06-12		22
	08-27				06-18		2
87611850	08-21		21	87626406	09-48		3
	08-22		19	87626717	09-16		16
	08-29				09-19		14
87611854	06-03		14	87626729	02-01		25
	06-06		1	87627050	04-06		5
87612445	06-62		8		04-08		
87612446	06-62		7	87627051	09-29		2
87612449	06-62		2	87627383	06-10		20
87612749	03-02		21	87627399	06-39		
87612875	08-08		14		06-47		
87613733	09-22		34	87627518	06-08		6
87614009	06-25		8	87627520	09-31		1
	06-27		3	87627524	09-56		3
87614011	06-25		4	87627706	09-30		6
	06-27		8	87630124	04-04		8
87614012	06-25		5	87630125	04-04		9
	06-27		9	87630126	04-10		5
87614013	06-25		6		04-12		6
	06-27		12		04-14		6
87614014	06-27		10A	87630127	04-09		4
87614015	06-25		9		04-11		5
	06-27		3A		04-13		5
87614016	06-04		7	87630128	04-12		7
87614017	06-04		6		04-14		7
	06-05		4	87630129	04-11		1
	06-06		5		04-13		1
	06-08		7	87630130	04-12		2
87614018	06-04		5		04-14		2
87614019	06-04		9	87634133	04-18		18
	06-05		6		04-19		17
87614020	06-04		8	87634134	04-27		6
	06-05		7	87634135	04-27		7
	06-06		6	87634136	06-23		8
	06-07		6		06-24		18
	06-08		8	87634137	04-32		12
87614023	06-05		3	87635242	09-38		2
	06-06		4	87635322	09-29		
	06-08		4	87637186	06-15		22
	06-08		5		06-19		21
87614024	06-05		5	87638293	08-05		
87614027	06-39		23	87638304	08-04		
	06-46			87638327	02-04		
	06-47		23	87638358	09-51		
87614028	06-39		1	87638361	08-08		
	06-40			87638451	09-66		
87614029	06-39		5	87638500	04-28		

Number	Figure	Sequence	Ref.
87638514	09-54		
87638864	04-07		10
87638865	04-07		10
87638893	08-10		
87639899	09-38		31
87640046	09-36		18
87640048	04-27		
87641947	04-14		
87641948	04-13		
87642449	09-31		8
	09-34		8
87642453	09-31		7
	09-34		11
87642514	09-34		4
87642529	09-34		6
87642536	09-33		16
87642540	09-33		14
	09-36		12
87642543	09-33		5
87642544	09-33		6
87642545	09-33		7
87642911	08-12		3
87642912	04-19		18
87642913	04-11		6
	04-13		6
87642914	04-06		1
	09-31		10
	09-33		9
	09-55		2
87642915	04-06		2
	09-31		9
	09-33		10
	09-55		1
87644290	06-12		24
	06-18		3
87645119	09-38		3
87646401	09-13		11
87646402	09-13		7
87647549	02-28		
87647550	02-28		
87647551	02-28		
87647723	09-13		3
	09-15		4
87648094	09-16		9
	09-19		9
87648689	04-01		11
87649979	09-59		42
87649991	09-59		37
87650009	06-68		31
87650010	06-68		30
87650011	06-68		29
87650094	03-02		23
87650097	04-06		4
	04-16		
87650098	04-06		8
	04-17		
87651126	09-35		
87651799	02-01		31
87651800	02-01		29
87652238	04-01		7
87652336	04-32		
87652337	09-55		
87653393	09-59		3
87653394	09-57		3
87653980	06-09		3
	06-10		1
	06-12		3
	06-17		3
87653981	06-12		20
	06-17		26
87654919	02-03		3
87654923	02-04		2
87655055	09-30		7
87656095	09-60		1
	09-61		50
87656096	09-60		2
	09-61		51
87656097	09-60		30
87656097	09-61		40
87656098	09-60		5
	09-61		1
87656099	09-60		4
	09-61		2
87656100	09-60		41
	09-61		43
87656101	09-60		40
	09-61		44
87656102	09-61		47
87656103	09-60		36
	09-61		48
87656104	09-61		49
87656105	09-60		22
	09-61		28
87656106	09-60		29
	09-61		41
87656107	09-60		32
	09-61		38
87656108	09-60		33
	09-61		37
87656109	09-60		15
	09-61		21
87656110	09-61		33
87656111	09-61		16
87656112	09-61		15
87656113	09-61		12
87656114	09-60		10
	09-61		10
87656118	09-60		6
	09-61		6
87656119	09-61		5
87656120	09-60		20
	09-61		3
87656121	09-60		14
	09-61		20
87656122	09-60		21
	09-61		27
87656123	09-60		16
	09-61		22
87656124	09-60		23
	09-61		29
87656125	09-60		8
	09-61		8
87656126	09-60		27
	09-61		36
87656127	09-60		18
	09-60		25
	09-61		24
	09-61		31
87656129	09-60		7
	09-61		7
87656130	09-60		11
	09-61		11
87656866	04-10		
87656868	04-09		
87656870	04-12		
87656872	04-11		
87657080	08-09		2
87657669	09-51		1
87657670	09-51		2
87658636	09-55		9
87658709	09-60		37
87658710	09-60		35
87659208	04-18		14
	04-19		14
87659212	09-29		9
	09-35		7
87659253	08-03		7
87659406	08-13		8
	09-03		18
	09-04		18
87660800	09-26		3
87660828	02-01		15
87660842	02-01		27
	02-02		
87660856	06-09		24
	06-12		13

Number	Figure	Sequence	Ref.	Number	Figure	Sequence	Ref.
87660856	06-17		13	87688650	02-02		1
87661378	02-01		12	87691470	09-59		52
87661380	02-01		10	87691471	09-59		53
87661493	04-05		11	87691473	09-59		8
87662513	09-46		1	87691475	09-57		11
87662514	09-47		1		09-59		16
87665543	09-13		10	87692685	02-07		12
87665545	09-13		2	87694058	02-23		3
87665549	09-14		3	87702278	09-42		8
87665550	09-15		6	87702506	09-41		2
87666074	09-16		7	87703530	09-58		7
	09-19		8	87703555	09-59		25
87667727	09-56		7	87705419	09-58		1
87668006	09-56		2	87705420	09-58		21
87668728	04-06		6	87706925	09-38		15
	04-08		3	87707134	09-24		1
87668735	09-55		4	87707135	09-25		1
87668737	04-05		9	87709877	09-59		43
	04-06		3	87710177	09-59		50
	04-07		3	87710959	09-70		1
	04-08		2	87710960	09-70		2
	04-18		2	87711337	02-07		13
	04-19		3	87711364	09-01		18
	09-55		3	87711366	09-01		19
87668739	08-09		11	87712373	03-02		11
87669347	06-68		18	87712376	03-02		15
87669349	06-68		1	87712652	02-07		10
87669405	09-59		45	87712700	09-54		4
87670	06-15		3	87712706	09-54		7
	06-19		2		09-58		2
87671495	09-27		9	87713059	02-07		9
87671857	09-33		11	87713668	09-58		3
87672098	09-54		6	87714073	09-64		2
87672222	09-56		6	87714955	09-63		10
87672257	09-56		8	87714956	09-63		5
87673070	04-19		15	87715341	08-06		26
87673072	04-18		5	87715687	06-01		25
87673077	04-19		2	87715688	06-03		24
87673079	04-18		15	87715689	06-01		23
	04-19		6	87715690	06-01		24
87673471	09-68		7	87715691	06-03		22
	09-70		6	87715692	06-03		23
87673472	09-68		6	87715731	09-23		15
	09-70		7	87715833	09-50		
87673642	09-65			87716582	09-59		28
87676100	02-01		19	87716728	09-33		1
87676259	04-18			87716731	09-33		15
87676260	04-19			87717211	09-58		11
87678399	09-31		16	87717220	09-59		19
	09-36		10	87717671	09-42		
87678400	09-33		18	87717673	09-41		
87678506	06-18		32	87717689	09-31		2
87680190	09-33		4	87718119	09-31		11
87682711	09-55		5		09-33		8
87682712	04-28		5	87718151	09-58		6
87684094	09-66		1	87719782	09-63		3
87684180	06-01		10	87719784	09-63		2
	06-02		10	87719789	09-63		12
	06-03		10	87719792	09-63		4
87684217	06-01		13	87720245	04-18		13
87684218	06-01		5		04-19		13
	06-02		5	87720246	04-18		8
	06-03		5		04-19		12
87684742	09-59		41	87720912	06-29		6
87685888	09-54		10		06-30		6
87685891	09-54		1		06-31		9
87685962	08-03			87722140	02-22		1
87685981	09-59		44	87723831	04-32		4
87687021	02-07		3	87727413	04-32		9
87687372	02-02		1	87727414	04-32		3
87687373	02-02		3	87727417	04-32		2
87687374	02-02		4	87727748	09-54		8
87687375	02-01		28	87727752	09-54		5
	02-02		8	87728345	04-32		11
87687376	02-02		7	87728982	08-06		17
87688478	02-23		1	87728990	08-06		29
87688523	02-02		2	87729000	08-06		28
87688649	02-02		2	87729004	08-06		44

Number	Figure	Sequence	Ref.	Number	Figure	Sequence	Ref.
87729005	08-06		43	9617873	08-04		15
87730069	09-54		9		08-04		17
87730070	09-54		2		08-04		19
87730804	08-06				08-04		8
87730822	09-54		3		08-07		19
87734484	09-43		3		08-07		28
87734487	09-43		1		08-08		19
87734526	09-69		9		08-09		24
87735275	02-22		3		08-09		32
87739945	08-06		27		08-09		8
87739947	08-06		50		08-11		
87802167	09-71		8		08-11		20
	09-71		8		08-11		22
	09-71		8		08-11		26
	09-72		9		08-11		29
	09-72		9		08-11		31
	09-73		8		08-12		14
	09-73		8		08-12		16
	09-73		8		08-12		21
	09-74		8		08-13		39
87803194	03-03		6		08-13		41
87825	09-20		8		08-13		43
87848	09-20		14		08-13		46
88011	09-22		25		08-13		49
88098	03-02		4		08-19		5A
896-15008	02-05		17	9617891	08-01		4
906091R1	08-13		20		08-06		53
	09-03		16		08-18		4
	09-04		16	9618946	08-16		17
	09-05		9	9628065	09-65		4
933610R1	06-01		17	9628098	02-04		11
9512573	06-68		24		06-10		15
9515003	09-59		49		06-12		39
9615396	06-10		2		06-13		24
	06-12		11		06-18		30
	06-17		9		06-21		1
9617020	09-05		15		08-16		10
9617873	04-23		2		09-01		16
	06-01		2		09-24		7
	06-01		22		09-25		4
	06-01		4		09-45		8
	06-02		18		09-46		7
	06-02		2		09-47		7
	06-02		21		09-63		7
	06-02		4	9628503	09-22		15
	06-02		9	9635806	09-25		12
	06-03		18	9635884	09-18		7
	06-03		2	9672438	06-33		22
	06-03		21		06-36		
	06-03		4		06-36		20
	06-03		9	9672548	06-32		11
	06-09		53	9706685	04-04		10
	06-13		3		09-42		3
	06-13		5	9706690	02-04		6
	06-14		18		02-23		4
	06-14		2		08-04		11
	06-14		26		09-25		26
	06-14		33	9706704	04-27		8
	06-14		7		06-32		2
	06-15		12		08-01		14
	06-15		16		08-13		5
	06-15		28		09-05		10
	06-15		9		09-13		14
	06-19		10		09-22		20
	06-19		12		09-59		38
	06-19		16	9706717	02-03		16
	06-19		28	9707515	09-18		9
	06-20		6	9790526	08-17		8
	06-22		16	9790527	06-29		4
	06-22		4		06-30		8
	06-22		9		06-31		5
	06-23		10	9790547	06-09		12
	06-24		16		06-12		12
	06-24		6		06-17		10
	06-32		10	9800081	09-12		7
	07-01		10	9804256	09-48		4
	07-01		15		09-57		2
	07-01		2		09-58		19

Number	Figure	Sequence	Ref.
9804256	09-59		2
9804257	09-57		7
	09-59		6
9804258	09-29		1
	09-35		1
	09-48		5
	09-58		8
	09-59		26
9804262	02-02		5
	04-01		10
	09-41		3
	09-42		9
9804266	09-42		1
9804277	09-25		25
	09-30		19
	09-31		14
9804278	02-02		6
9821783	04-18		7
	04-19		8
9822175	09-06		6
	09-06		6
	09-06		6
	09-07		7
	09-08		4
	09-08		4
9824050	06-13		15
	06-13		9
	06-21		28
9824642	09-16		4
	09-19		7
9827902	06-10		19
	06-12		37
	06-18		31
	09-25		24
9828248	06-11		6
	06-20		3
	06-24		4
	09-26		17
	09-38		40
9829733	09-03		5
	09-04		6
9829786	09-07		8
	09-07		8
	09-07		8
	09-07		8
9840344	09-18		5
9840535	06-15		29
9841223	06-33		8
	06-36		18
9846848	06-15		24
9861444	09-59		47
9969430	04-21		1
9969431	04-20		1
9991976	06-15		25
	06-15		30
9993141	06-02		19
	06-03		19
	06-14		27
	08-11		25
	08-12		22
	08-13		47
9993143	08-11		24
	08-12		20
	08-13		45
A140221	02-06		7
	02-07		4
A149796	09-55		9A
A166057	04-04		2
	04-05		19
A177436	03-02		9
A184597	02-05		5
A29183	06-35		27
	06-38		4
A30338	08-13		13
	09-04		20
D120613	08-02		19
D120614	08-02		17
D120679	08-01		17
D120679	08-02		20
D124661	08-01		23
D131983	03-02		24
	08-06		38
	09-22		11
	09-23		4
D137186	09-67		3
D138889	08-13		11
	09-04		22
D143415	09-38		37
D55216	08-13		4
	09-05		
D63653	06-64		6
D67297	06-21		5
D68846	06-21		6
E137085	09-73		7
E38908	04-28		4
E99128	04-28		1
E99208	04-28		2
F23137	06-33		12
	06-36		6
H151399	06-09		13
	06-12		16
	06-17		21
H169920	03-02		10
H32961	08-06		51
H373779	08-06		42
	09-23		8
H407767	06-33		26
H434289	09-58		15
	09-59		30
H434900	08-01		24
H435770	06-34		20
	06-37		20
H435776	06-35		37
H435814	09-38		8
H436053	06-34		17
	06-37		17
H436054	06-34		18
	06-37		18
H436065	06-34		6
	06-37		6
H436704	06-35		3
	06-38		28
H436887	09-17		17
	09-19		1
H436914	09-16		5
	09-19		5
H437190	06-35		35
H438321	06-34		5
	06-37		3
H439276	09-28		4
H673773	06-34		
	06-37		
K608432	06-36		12
L104616	08-09		7
L11541	02-08		5
	04-15		7
	08-08		10
	08-09		10
	08-10		4
	09-13		12
	09-23		16
	09-58		10
	09-59		29
L14781	08-06		35
	09-23		21
L17985	02-05		13
L18331	06-17		23
	07-01		8
	08-03		3
	09-59		11
L71879	04-05		18
L78786	09-04		29
N13224	06-35		19
	06-38		12
N13226	06-34		11
	06-37		11

Number	Figure	Sequence	Ref.
N13234	06-35		30
N13241	06-34		10
	06-37		10
N13242	06-34		12
	06-37		12
N13244	06-35		25
N13247	06-35		32
N13254	06-35		18
	06-38		15
N13255	06-34		8
	06-37		8
N13260	06-34		2
	06-37		2
N13262	06-35		31
N13268	06-32		
N13994	06-35		1
	06-38		8
N13999	06-35		34
N14063	06-34		7
	06-37		7
N14103	06-35		29
N14666	06-34		13
	06-37		13
N14668	06-34		15
	06-37		15
N14848	06-33		
	06-36		
NSS	02-35		4
	02-39		5
	03-09		5
	04-16		1
	04-16		2
	04-16		3
	04-16		4
	04-16		5
	04-16		6
	04-16		7
	04-16		8
	04-16		9
	04-17		1
	04-17		2
	04-17		3
	04-17		4
	04-17		5
	04-17		6
	04-17		7
	04-17		8
	04-17		9
	04-20		4
	04-21		4
	04-32		5
	06-26		10
	06-26		11
	06-26		8
	06-26		9
	06-28		3
	06-28		4
	06-28		5
	06-28		6
	06-28		7
	06-28		8
	06-28		9
	06-32		12
	06-32		7
	06-33		29
	06-33		5
	06-33		7
	06-34		28
	06-35		10
	06-35		14
	06-35		15
	06-35		22
	06-35		6
	06-36		2
	06-36		4
	06-37		28
	06-38		16
	06-38		17
NSS	06-38		21
	06-38		25
	06-38		27
	06-38		9
	06-40		1
	06-40		2
	06-40		3
	06-40		4
	06-40		5
	06-40		6
	06-40		7
	06-41		1
	06-41		2
	06-41		3
	06-41		4
	06-41		5
	06-41		7
	06-48		1
	06-48		2
	06-48		3
	06-48		4
	06-48		5
	06-48		7
	06-53		1
	06-54		2
	06-54		3
	06-54		4
	06-54		5
	06-54		6
	06-54		7
	06-54		8
	06-55		2
	06-55		3
	06-55		4
	06-55		5
	06-55		6
	06-55		7
	06-55		8
	06-56		15
	06-56		16
	06-57		12
	06-57		2
	06-57		7
	06-58		1
	06-58		10
	06-58		11
	06-58		12
	06-58		13
	06-58		14
	06-58		15
	06-58		16
	06-58		2
	06-58		3
	06-58		4
	06-58		5
	06-58		6
	06-58		7
	06-58		8
	06-58		9
	06-59		15
	06-59		16
	06-60		14
	06-60		19
	06-60		5
	06-60		9
	06-61		1
	06-61		10
	06-61		11
	06-61		12
	06-61		13
	06-61		14
	06-61		15
	06-61		16
	06-61		17
	06-61		18
	06-61		2
	06-61		3
	06-61		4

Number	Figure	Sequence	Ref.	Number	Figure	Sequence	Ref.
NSS	06-61		5	NSS	08-31		8
	06-61		6		08-31		9
	06-61		7		08-32		1
	06-61		8		08-32		2
	06-61		9		08-32		3
	06-63		1		08-32		4
	06-64		2		08-32		5
	08-24		1		08-32		6
	08-24		2		08-32		7
	08-24		3		08-32		8
	08-24		4		08-33		1
	08-24		5		08-33		2
	08-24		6		08-33		3
	08-24		7		08-33		4
	08-24		8		08-33		5
	08-25		1		08-33		6
	08-25		10		08-33		7
	08-25		11		08-33		8
	08-25		12		08-34		1
	08-25		13		08-34		2
	08-25		14		08-34		3
	08-25		15		08-34		4
	08-25		16		08-34		5
	08-25		2		08-34		6
	08-25		3		08-34		7
	08-25		4		08-34		8
	08-25		5		08-34		9
	08-25		6		08-35		1
	08-25		7		08-35		2
	08-25		8		08-35		3
	08-25		9		08-35		4
	08-27		2		08-35		5
	08-27		3		08-35		6
	08-27		4		08-35		7
	08-27		5		08-36		1
	08-27		6		08-36		2
	08-27		7		08-36		3
	08-27		8		08-36		4
	08-27		9		08-36		5
	08-28		2		08-37		1
	08-28		3		08-37		2
	08-28		4		08-37		3
	08-28		5		08-37		4
	08-28		6		08-37		5
	08-29		2		08-37		6
	08-29		3		08-37		7
	08-29		4		08-38		1
	08-29		5		08-38		2
	08-29		6		08-38		4
	08-29		7		08-38		5
	08-29		8		08-38		6
	08-30		10		08-38		7
	08-30		11		08-39		1
	08-30		13		08-39		2
	08-30		14		08-39		4
	08-30		16		08-39		5
	08-30		17		08-39		6
	08-30		18		08-39		7
	08-30		2		08-40		1
	08-30		3		08-40		10
	08-30		4		08-40		11
	08-30		6		08-40		12
	08-30		7		08-40		13
	08-30		8		08-40		14
	08-31		1		08-40		15
	08-31		10		08-40		16
	08-31		11		08-40		17
	08-31		12		08-40		18
	08-31		13		08-40		19
	08-31		14		08-40		2
	08-31		15		08-40		3
	08-31		16		08-40		4
	08-31		2		08-40		5
	08-31		3		08-40		6
	08-31		4		08-40		7
	08-31		5		08-40		8
	08-31		6		08-40		9
	08-31		7		09-01		1

Number	Figure	Sequence	Ref.
NSS	09-07		3
	09-07		3
	09-07		3
	09-07		3
	09-07		3
	09-08		6
	09-08		6
	09-12		4
	09-12		8
	09-13		19
	09-13		20
	09-13		24
	09-13		25
	09-23		12
	09-31		3
	09-31		4
	09-36		15
	09-36		18
	09-36		27
	09-36		3
	09-36		31
	09-38		21
	09-50		1
	09-50		2
	09-50		3
	09-50		4
	09-50		5
	09-50		6
	09-50		8
	09-50		9
	09-53		1
	09-53		10
	09-53		11
	09-53		12
	09-53		3
	09-53		4
	09-53		6
	09-53		7
	09-53		8
	09-53		9
	09-55		13
	09-55		8
	09-60		12
	09-60		13
	09-60		19
	09-60		26
	09-60		3
	09-60		31
	09-60		34
	09-60		38
	09-61		14
	09-61		17
	09-61		18
	09-61		19
	09-61		26
	09-61		32
	09-61		34
	09-61		35
	09-61		39
	09-61		4
	09-61		42
	09-61		46
	09-61		52
	09-62		3
	09-62		4
	09-62		5
	09-62		6
	09-65		1
	09-65		5
	09-65		6
	09-65		7
P24576	06-10		16
R14771	03-02		13
R24703	08-02		11
R32216	06-64		7
REF	02-06		11
	02-07		20
	02-19		12
REF	02-27		6
	02-29		5
	02-29		6
	02-37		10
	02-37		7
	02-37		8
	02-37		9
	02-40		3
	02-41		5
	03-04		5
	03-06		5
	04-18		1
	04-19		1
	06-04		
	06-05		
	06-09		4
	06-09		50
	06-10		3
	06-12		25
	06-12		7
	06-17		7
	08-10		
	08-11		1
	08-12		5
	08-16		1
	08-16		18
	09-06		
	09-07		
	09-07		
	09-08		
	09-16		1
	09-16		1
	09-17		1
	09-18		1
	09-18		18
	09-18		18A
	09-19		18
	09-19		18A
	09-30		1
	09-35		2
	09-36		1
	09-38		22
	09-42		10
	09-55		7
	09-57		1
	09-58		18
	09-58		4
	09-59		1
	09-59		9
	09-71		
	09-71		
	09-71		
	09-72		
	09-72		
	09-72		
	09-73		
	09-73		
	09-73		
	09-74		
	09-74		
	09-74		
	09-75		
	09-75		
	09-75		
S99877	06-33		3
	06-36		16
V38371	06-33		28
ZPX24210	06-63		

CATÁLOGO DE PIEZAS

SKID STEER

440
440CT
SERIES 3

APPLICABLE

ASN - N8M474469



BD07N496

Bur • Publicado en 01Jan 08
Impreso en EE.UU. • Número de libro/formulario 87632291 LAS
Copyright © 2007. CNH America, LLC. Todos los derechos reservados.

CNH America LLC se reserva el derecho a mejorar el diseño o cambiar las especificaciones en cualquier momento sin incurrir por ello en la obligación de actualizar correspondientemente las unidades vendidas previamente.

Todos los datos de esta publicación están sujetos a variaciones en la producción. Las dimensiones y los pesos son sólo aproximados. Las ilustraciones no muestran necesariamente productos con su dotación estándar. Para obtener información exacta sobre cualquier producto en particular, ponerse en contacto con el distribuidor.

HISTORIAL DE REVISIONES			
Publicación	Fecha de publicación	Máquinas aplicables	Observaciones
Primera edición	01Jan 08	440, 440CT Series 3 Skid Steer	87632291 LAS

Se prohíbe terminantemente el uso del contenido editorial o gráfico sin el consentimiento expreso por escrito de
CNH America LLC. Carol Stream, IL 60188 EE.UU.

TABLE OF CONTENTS

02-01	VENTILADOR, RADIADOR - SISTEMA DE RECUPERACION DEL REFRIGERANTE
02-02	RADIADOR/REFRIGERADOR DE ACEITE
02-03	ESCAPE
02-04	ESCAPE, ASPIRADOR
02-05	FILTRO DE AIRE - MOTOR
02-06	MOTOR - TERMICO SOPORTE
02-07	MOTOR - TERMICO SOPORTE (EUROPA)
02-08	MOTOR - CALENTADOR DEL BLOQUE
02-09	BLOQUE DE CILINDROS
02-10	BLOQUE DE CILINDROS - CUBIERTAS, TRASERO
02-11	BLOQUE DE CILINDROS - CUBIERTAS, VOLANTE
02-12	BLOQUE DE CILINDROS - CUBIERTAS, DELANTERO
02-13	TAPA DE ENGRANAJES- PLACA
02-14	TAPAS CULATA
02-15	BLOQUE DE CILINDROS STIFFENER PLATE
02-16	CULATA DE CILINDROS
02-17	BOMBA DE ACEITE, BANDEJA
02-18	MOTOR, ACEITE
02-19	FILTRO Y REFRIGERADOR DE ACEITE
02-20	FILTRO DE ACEITE - MOTOR
02-21	BOMBA DE ACEITE - MOTOR
02-22	LLENADO DE ACEITE, MOTOR
02-23	DRENAJE DE ACEITE
02-24	SENSORES MOTOR - MOTOR, ACEITE
02-25	RESPIRADERO - MOTOR
02-26	COLECTOR ESCAPE
02-27	COLECTOR ESCAPE
02-28	PISTONES - VARILLAS CONECTORAS
02-29	VARILLAS CONECTORAS
02-30	EJE BALANCINES
02-31	VOLANTE MOTOR
02-32	POLEA - CIGUENAL
02-33	EJE DE LEVAS
02-34	CIGUENAL
02-35	SISTEMA DE REFRIGERACIÓN - MOTOR
02-36	BOMBA DE AGUA
02-37	BOMBA DE AGUA - MANDO
02-38	TERMOSTATO - REFRIGERACION DEL MOTOR
02-39	POLEA DEL VENTILADOR
02-40	MOTOR - GANCHO DE ELEVACION
02-41	TURBOCOMPRESOR
03-01	CANALIZACIONES DEL COMBUSTIBLE Y FILTRO
03-02	CONTROLES - ACELERADOR DE PEDAL, ACELERADOR DE MANO
03-03	FILTRO COMBUSTIBLE
03-04	BOMBA DE INYECCION
03-05	BOMBA DE ALIMENTACION
03-06	BOMBA DE INYECCION - MANDO
03-07	SISTEMA DE INYECCION DE SISTEMA DE INYECCION DE COMBUSTIBLE, SUMINISTRO
03-08	SISTEMA DE INYECCION DE COMBUSTIBLE COMBUSTIBLE, SUMINISTRO
03-09	SISTEMA DE INYECCION DE COMBUSTIBLE - LÍNEA DE DRENAJE

TABLE OF CONTENTS

03-10	GRUPO DE INYECCION - INYECTOR
04-01	ARRANQUE Y ALTERNADOR
04-02	MONTAJE DEL ALTERNADOR
04-03	BATERIA - CABLES
04-04	MAZO DE CABLES, MOTOR
04-05	CHASIS, ELECTRICO
04-06	CABINA, ELECTRICO
04-07	CONSOLA, LADO DERECHO
04-08	CONSOLA - IZQUIERDA
04-09	CONTROLES, DERECHA - MANILLA
04-10	CONTROLES, IZQUIERDA - MANILLA
04-11	CONTROLES, DERECHA - MANILLA
04-12	CONTROLES, IZQUIERDA - MANILLA
04-13	CONTROLES, DERECHA - MANILLA
04-14	CONTROLES, IZQUIERDA - MANILLA
04-15	INTERRUPTOR DE DESCONEXION - ARRANQUE POR PUENTE REMOTO
04-16	LUZ DE TRABAJO - IZQUIERDA
04-17	LUZ DE TRABAJO - LADO DERECHO
04-18	ELECTRICO - LUCES DE CARRETERA Y CABLEADO (NA)
04-19	ELECTRICO - LUCES DE CARRETERA Y CABLEADO (EUROPE)
04-20	FAROS - LADO DERECHO
04-21	FAROS - IZQUIERDA
04-22	LAMPARAS TRASERAS Y MONTAJE
04-23	ALARMA DE RETROCESO
04-24	ACCESORIOS ELECTRICOS
04-25	ACCESORIOS ELECTRICOS (EUROPA)
04-26	BOCINA - SOPORTE
04-27	MAZO DE CABLES, DELANTERO - AUXILIAR
04-28	FARO, GIRATORIO
04-29	PIEZAS ESPECIALES PARA ITALIA - LUCES DE MATRICULA
04-32	FARO
06-01	PALANCA DE CONTROL - PATRÓN DE H
06-02	PALANCA DE CONTROL - PATRÓN DE ISO (440)
06-03	PALANCA DE CONTROL - PATRÓN DE ISO (440CT)
06-04	PALANCA DE CONTROL, MONTAJE, IZQUIERDA - H MODELO
06-05	PALANCA DE CONTROL, MONTAJE, LADO DERECHO - H MODELO
06-06	HIDROSTATICA - PALANCA DE CONTROL KITS, PATRÓN ISOMÉTRICO
06-07	HIDRAULICO - PALANCA DE CONTROL KITS, PATRÓN ISOMÉTRICO
06-08	HIDROSTATICA - PALANCA DE CONTROL KITS, PATRÓN ISOMÉTRICO
06-09	HIDROSTATICA - BOMBA, CARGA Y DESCARGA (440)
06-10	BOMBA, TANDEM - SOPORTE (440)
06-11	HIDROSTATICA - MOTORES DE ACCIONAMIENTO. DRENAJE DE LA CAJA (440)
06-12	HIDROSTATICA - BOMBA, CARGA Y DESCARGA (440CT)
06-13	HIDROSTATICA - MOTORES DE ACCIONAMIENTO (440CT)
06-14	HIDROSTATICA - FUNCIÓN MÚLTIPLE (440CT)
06-15	HIDROSTATICA - BOMBA ACOPLAMIENTOS (440CT)
06-16	SISTEMA HIDROSTATICO, MANGUERAS, BOMBA Y MOTOR DE TRANSMISION
06-17	HIDROSTATICA - DE LA BOMBA AL REFRIGERADOR (440 CON CONTROL PILOTO)
06-18	HIDROSTATICA - COLECTOR ESCAPE/VALVULA DE CONTROL, 440 CON CONTROL PILOTO
06-19	HIDROSTATICA - BOMBA ACOPLAMIENTOS (440 CON CONTROL PILOTO)

TABLE OF CONTENTS

06-20	HIDROSTATICA - UNA SOLA VELOCIDAD, MOTORES DE ACCIONAMIENTO (440)
06-21	SISTEMA HIDROSTATICO, MANGUERAS (440 CON CONTROL PILOTO)
06-22	HIDROSTATICA - FUNCIÓN MÚLTIPLE (440 CON CONTROL PILOTO)
06-23	HIDROSTATICA - DOS VELOCIDADES, MOTORES DE ACCIONAMIENTO
06-24	HIDROSTATICA - DOS VELOCIDADES, MOTORES DE ACCIONAMIENTO (CON CONTROL PILOTO)
06-25	HIDROSTATICA, FUNCIÓN MÚLTIPLEMONTAJE
06-26	HIDROSTATICA - DOS VELOCIDADES, CONJUNTO DE LA VALVULA
06-27	HIDROSTATICA - DOS VELOCIDADES, CONJUNTO DE LA VALVULA (440CT)
06-28	HIDROSTATICA - DOS VELOCIDADES, CONJUNTO DE LA VALVULA (CON CONTROL PILOTO)
06-29	HIDROSTATICA (440CT EUROPA)
06-30	HIDROSTATICA (440 EUROPA)
06-31	HIDROSTATICA (440 EUROPA)
06-32	FILTRO - SOPORTE
06-33	BOMBA, TANDEM (440)
06-34	BOMBA, TANDEM (440)
06-35	BOMBA, TANDEM (440)
06-36	BOMBA, TANDEM (440)
06-37	BOMBA, TANDEM (440)
06-38	BOMBA, TANDEM (440)
06-39	BOMBA, TANDEM -REXROTH (87546976)
06-40	VALVULA DE REDUCCION DEPRESION (87546976)
06-41	BOMBA, TANDEM - VALVULA DE REDUCCION DEPRESION (87546976)
06-42	BOMBA, TANDEM - CONJUNTO DE LA BOMBA DE ENGRANAJES (87546976)
06-43	BOMBA, TANDEM - ROTACIÓN MONTAJE, LADO DERECHO (87546976)
06-44	BOMBA, TANDEM - ROTACIÓN MONTAJE, IZQUIERDA ROTACIÓN (87546976)
06-45	BOMBA, TANDEM - CONTROL, HIDRAULICO (87546976)
06-46	BOMBA, TANDEM - CONTROL MONTAJE (87546976)
06-47	BOMBA, TANDEM -REXROTH (87546977)
06-48	BOMBA, TANDEM - VALVULA DE REDUCCION DEPRESION (87546977)
06-49	BOMBA, TANDEM - CONJUNTO DE LA BOMBA DE ENGRANAJES (87546977)
06-50	BOMBA, TANDEM - ROTACIÓN MONTAJE, LADO DERECHO (87546977)
06-51	BOMBA, TANDEM - ROTACIÓN MONTAJE, IZQUIERDA ROTACIÓN (87546977)
06-52	BOMBA, TANDEM - CONTROL, HIDRAULICO (87546977)
06-53	BOMBA, TANDEM - CONTROL MONTAJE (87546977)
06-54	BOMBA, ENGRANAJE
06-55	BOMBA, ENGRANAJE (FLUJO ALTO)
06-56	MOTOR - UNA SOLA VELOCIDAD
06-57	MOTOR - UNA SOLA VELOCIDAD
06-58	MOTOR - UNA SOLA VELOCIDAD
06-59	MOTOR - DOS VELOCIDADES
06-60	MOTOR - DOS VELOCIDADES
06-61	MOTOR - DOS VELOCIDADES
06-62	MOTOR - ACCIONAMIENTO HIDROSTATICO (440CT)
06-63	LINEA DE TRANSMISION
06-64	EJE
06-65	RUEDAS
06-66	RUEDAS
06-67	ORUGA (440CT)
06-68	CONJUNTO DE LA TRANSMISIÓN FINAL (440CT)

TABLE OF CONTENTS

07-01	SISTEMA DE FRENOS - HIDRAULICO
08-01	HIDRAULICA - INCLINACIÓN
08-02	HIDRAULICA - ALZAMIENTO
08-03	HIDRAULICA - DRENAJE DE LA CAJA
08-04	HIDRAULICA - DISPOSITIVO ANTICABECEO
08-05	HIDRAULICA - AUTONIVELADOR
08-06	AUXILIAR SECUNDARIO DELANTERO
08-07	ACCESORIOS, HIDRAULICA
08-08	ACCESORIOS, HIDRAULICA (CON CONTROL PILOTO)
08-09	ACCESORIOS, HIDRAULICA
08-10	HIDRAULICA - SISTEMA DE ACOPLAMIENTO
08-11	HIDRAULICA - SISTEMA DE ACOPLAMIENTO
08-12	HIDRAULICA - SISTEMA DE ACOPLAMIENTO (ITALIANO)
08-13	HIDRAULICA - SISTEMA DE ACOPLAMIENTO (ITALIANO)
08-14	CILINDRO - INCLINACIÓN
08-15	CILINDRO - ELEVACIÓN
08-16	ALTO CAUDAL, CARGA Y DESCARGA
08-17	FLUJO ALTO - CIRCUITO AUXILIAR
08-18	ALTO CAUDAL, VALVULA DE CONTROL
08-19	CONTROL DEL MONTAJE DE LA VÁLVULA - FLUJO ALTO
08-20	CONTROL DEL MONTAJE DE LA VÁLVULA
08-21	VALVULA DE CONTROL - 87583285 CONJUNTO DE LA VALVULA
08-22	VALVULA DE CONTROL - 87546974 CONJUNTO DE LA VALVULA
08-23	VALVULA DE CONTROL - 87546975 CONJUNTO DE LA VALVULA
08-24	VALVULA DE CONTROL - JUEGOS DE REEMPLAZO DE LA JUNTA
08-25	VALVULA DE CONTROL - DESCARGA, PRINCIPLA
08-26	VALVULA DE CONTROL - DESCARGA, CIRCUITO
08-27	VALVULA DE CONTROL, JUEGOS DE REEMPLAZO DE LA JUNTA - BOBINAS
08-28	VALVULA DE CONTROL, JUEGOS DE REEMPLAZO DE LA JUNTA - BOBINAS
08-29	VALVULA DE CONTROL, JUEGOS DE REEMPLAZO DE LA JUNTA - BOBINAS
08-30	VALVULA DE CONTROL, VERIFIQUE LA VÁLVULA
08-31	VALVULA DE CONTROL, JUEGOS DE REEMPLAZO DE LA JUNTA - BOBINAS Y RETENES
08-32	VALVULA DE CONTROL, JUEGOS DE REEMPLAZO DE LA JUNTA - BOBINAS
08-33	VALVULA DE CONTROL, JUEGOS DE REEMPLAZO DE LA JUNTA - BOBINAS
08-34	VALVULA DE CONTROL - JUEGOS DE REEMPLAZO DE LA JUNTA
08-35	VALVULA DE CONTROL, JUEGOS DE REEMPLAZO DE LA JUNTA - BOBINAS
08-36	VALVULA DE CONTROL, JUEGOS DE REEMPLAZO DE LA JUNTA - BOBINAS
08-37	VALVULA DE CONTROL, JUEGOS DE REEMPLAZO DE LA JUNTA - BOBINAS
08-38	VALVULA DE CONTROL, JUEGOS DE REEMPLAZO DE LA JUNTA - BOBINAS, EHPV
08-39	VALVULA DE CONTROL, JUEGOS DE REEMPLAZO DE LA JUNTA - BOBINAS, EHPV
08-40	AUXILIAR SECUNDARIO DELANTERO - CONJUNTO DE LA VALVULA
09-01	ELEVADOR DE LA CARGADORA
09-02	GATO DE LEVANTAMIONTO - CUBIERTAS
09-03	ACOPLAMIENTO, MECANICO
09-04	ACOPLAMIENTO, MECANICO (ITALIANO)
09-05	ACOPLAMIENTO, HIDRAULICO
09-06	CUCHARON - CARGADORA, SUCIEDAD/FUNDICIÓN
09-07	CUCHARON - CARGADORA
09-08	CUCHARON - CARGADORA
09-09	CUCHARON - CARGADORA

TABLE OF CONTENTS

09-10	BORDE DE CORTE DEL CUCHARÓN, BORDE DE CORTE EMPERNADO
09-11	PIEZAS ESPECIALES PARA ITALIA - PROTECTOR, CUCHARA
09-12	HORQUILLA
09-13	CONTROLES - MONTAJE
09-14	CONSOLA - LADO DERECHO
09-15	CONSOLA - IZQUIERDA
09-16	CHASIS (440)
09-17	CHASIS (440)
09-18	CHASIS (440CT)
09-19	CHASIS (440CT)
09-20	CONTROLES - CARICATORE E COMANDO DI AVANZAMENTO LADO DERECHO
09-21	CONTROLES - CARICATORE E COMANDO DI AVANZAMENTO IZQUIERDA
09-22	CONTROLES - CARICATORE E COMANDO DI AVANZAMENTO
09-23	CONTROLES - SISTEMA HIDRAULICO AUXILIAR
09-24	CAPO
09-25	CAPO - AIRE ACONDICIONADO
09-26	PUERTA, TRASERA
09-27	PUERTA, TRASERA
09-28	TRABA - PUERTA, TRASERA
09-29	PUERTA DE CABINA - MONTAJE
09-30	PUERTA DE CABINA - ARANDELA, PARABRISAS
09-31	PUERTA DE CABINA
09-32	PUERTA DE CABINA - VISOR
09-33	PUERTA DE CABINA - LIMPIAPARABRISAS, DELANTERO
09-34	PUERTA DE CABINA - MANILLA
09-35	PORTEZUELA DE DEMOLICIÓN - MONTAJE
09-36	PORTEZUELA DE DEMOLICIÓN
09-37	ALFOMBRILLA, SUELO
09-38	MARCO Y BARRA DEL ASIENTO
09-39	BARRA DEL ASIENTO
09-40	CINTURONES DE SEGURIDAD (2 IN)
09-41	CINTURONES DE SEGURIDAD (3 IN)
09-42	CINTURON DE HOMBRO
09-43	ESPEJO RETROVISOR TRASERO
09-44	PIEZAS ESPECIALES PARA ITALIA - ESPEJO, VISTA TRASERA
09-45	ASIENTO, SOPORTE - ESTANDAR
09-46	ASIENTO, SOPORTE - SUSPENSION
09-47	ASIENTO, SOPORTE - DELUXE SUSPENSION
09-48	VENTANA, TRASERA
09-49	VENTANA, TRASERA - CALEFACCION Y AIRE ACONDICIONADO
09-50	VENTANAS, ARRIBA
09-51	VENTANAS, LATERAL
09-52	CUBIERTA DEL TECHO - ESTANDAR
09-53	CALEFACCION Y AIRE ACONDICIONADO - CUBIERTA DEL TECHO
09-54	REVESTIMIENTO INTERIOR
09-55	RADIO, ALTAVOZ Y ANTENA
09-56	RADIO, ALTAVOZ Y ANTENA
09-57	CALENTADOR, DELUXE
09-58	CALENTADOR, DELUXE
09-59	SISTEMA DE AIRE ACONDICIONADO
09-60	CALENTADOR

TABLE OF CONTENTS

09-61	CALEFACCION Y AIRE ACONDICIONADO
09-62	PROTECTOR TÉRMICO
09-63	INSONORISACION
09-64	CONTROL DE RUIDO, PUERTA, TRASERA
09-65	GANCHO DE ELEVACION
09-66	GANCHO DE ELEVACION
09-67	CALCOMANIAS - INGLES
09-68	CALCOMANIAS (440CT)
09-69	CALCOMANIAS
09-70	CALCOMANIAS
09-71	CALCOMANIAS - DANES, HOLANDES, FINLANDES
09-72	CALCOMANIAS - FRANCES, ALEMAN, GRIEGO
09-73	CALCOMANIAS - ITALIANO, NORUEGO, POLACO
09-74	CALCOMANIAS - PORTUGUÉS, ESPAÑOL, SUECO
09-75	CALCOMANIAS - PORTUGUES DE BRADIL, FRANCES DE CANADA, ESPAÑOL LATINOAMERICANO

INFORMACIÓN GENERAL

NOTA DE PATENTE

El contenido de este manual es propiedad de esta compañía. La reproducción o el uso de cualquier parte para cualquier otro propósito que no sea el funcionamiento y mantenimiento de nuestro equipo está permitido solamente si se autoriza expresamente por escrito.

Pueden obtenerse copias adicionales en su concesionario. Dirigir sus pedidos a su concesionario y hacer referencia al número de publicación que aparece en la parte inferior de la contraportada o en la cubierta de su manual.

POLÍTICA DE LA COMPAÑÍA

La política de la compañía, de mejora continua, se reserva el derecho a cambiar los precios y a realizar cambios en el diseño y las especificaciones en cualquier momento sin previo aviso ni obligación de modificar las unidades fabricadas con anterioridad.

Todos los datos que se dan en este libro están sujetos a variaciones de producción. Las dimensiones y los pesos son aproximados solamente y las ilustraciones no muestran necesariamente las máquinas en condiciones estándar. Para información exacta sobre cualquier máquina en particular, ponerse en contacto con el concesionario.

PIEZAS Y ACCESORIOS

Se han diseñado piezas y accesorios específicamente para estas máquinas.

Quisiéramos señalar que la compañía NO ha examinado y aprobado otras piezas y accesorios “no genuinos”. La instalación y/o el uso de tales productos puede tener efectos negativos en las características de diseño de su máquina y, por lo tanto, afectar su seguridad. La compañía no se responsabiliza por los daños causados por el uso de piezas y accesorios “no genuinos”.

MEJORAS

Estamos continuamente intentando mejorar nuestros productos. Se reserva el derecho a mejorar el diseño o realizar cambios cuando resulte práctico y posible llevarlo a cabo, sin incurrir por ello en la obligación de realizar estos cambios o actualizar las unidades vendidas previamente.

CÓDIGOS DE LOS MODELOS

El rango de las máquinas que se incluyen puede que no esté disponible en todos los países o mercados. Por lo tanto, para obtener la información más actualizada consultar con su concesionario local.

AYUDA AL PROPIETARIO

Deseamos que esté completamente satisfecho con su inversión. Normalmente, cualquier problema con el equipo, será resuelto por el departamento de mantenimiento del concesionario. Sin embargo, pueden producirse malentendidos. Si el problema no ha sido resuelto a su satisfacción, le sugerimos lo siguiente:

1. Hablar con el propietario o gerente general del concesionario, explicar el problema y solicitar su ayuda. Cuando se necesite de ayuda especial, el concesionario tiene acceso directo con nuestras oficinas.
2. Proporcione al concesionario la siguiente información:
   - Su nombre, dirección y número de teléfono
   - Modelo de la máquina y número de serie
   - Nombre del concesionario y dirección
   - Fecha de compra de la máquina y tiempo de uso
   - Naturaleza del problema

Recuerde que el problema probablemente será resuelto en el concesionario, utilizando las instalaciones, equipo y personal del mismo. Así que es importante que el primer contacto sea con el concesionario.

PIEZAS DE REPUESTO

Para mantener la eficacia operativa, usar piezas de repuesto originales.

Al pedir piezas, proporcionar la siguiente información:

- Modelo de la máquina
- Números de serie de la máquina y el motor
- Número de pieza del catálogo de piezas

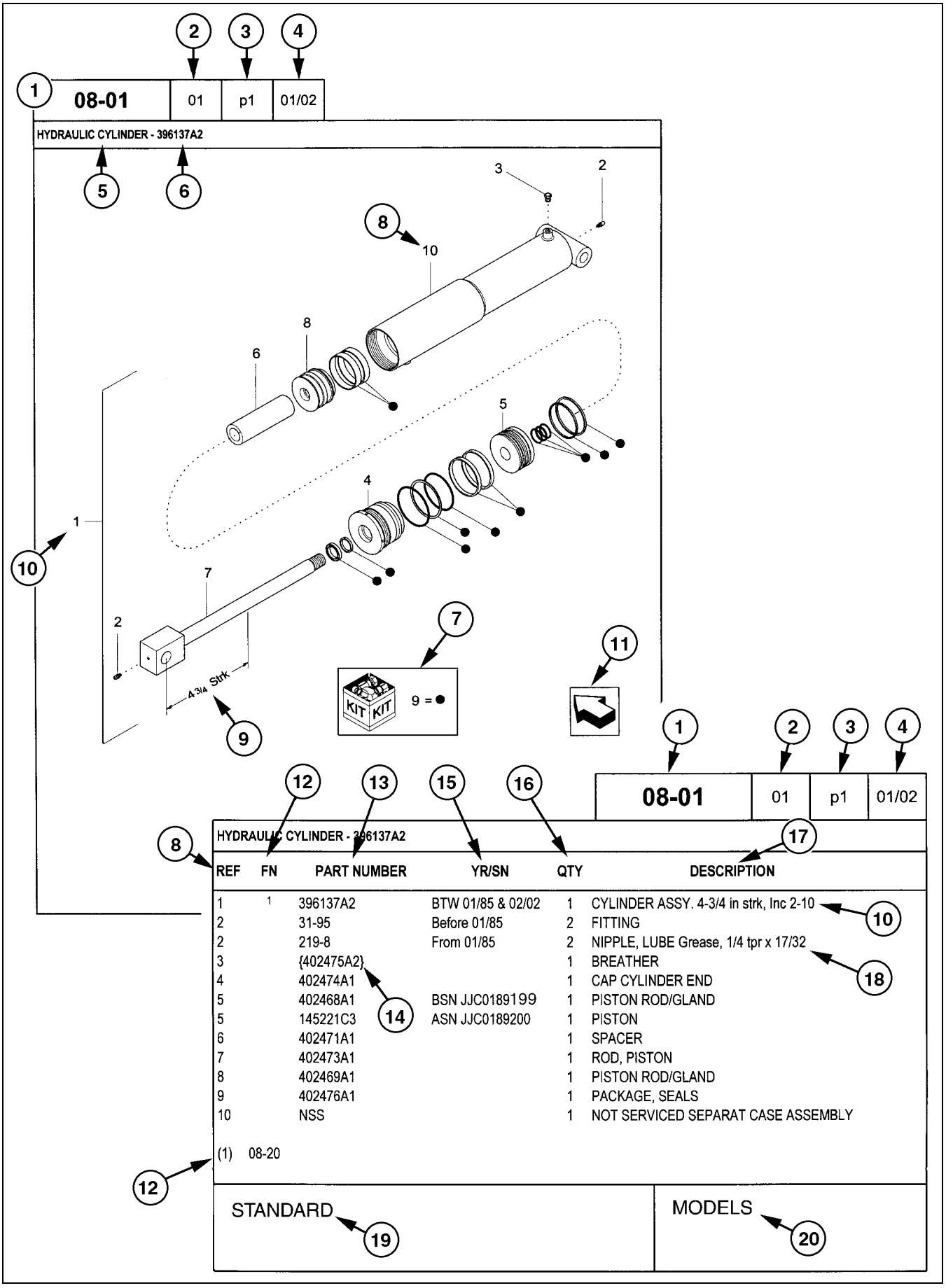

REF	FN	PART NUMBER	YR/SN	QTY	DESCRIPTION
1	1	396137A2	BTW 01/85 & 02/02	1	CYLINDER ASSY. 4-3/4 in strk, Inc 2-10
2		31-95	Before 01/85	2	FITTING
2		219-8	From 01/85	2	NIPPLE, LUBE Grease, 1/4 tpr x 17/32
3		{402475A2}		1	BREATHER
4		402474A1		1	CAP CYLINDER END
5		402468A1	BSN JJC0189199	1	PISTON ROD/GLAND
5		145221C3	ASN JJC0189200	1	PISTON
6		402471A1		1	SPACER
7		402473A1		1	ROD, PISTON
8		402469A1		1	PISTON ROD/GLAND
9		402476A1		1	PACKAGE, SEALS
10		NSS		1	NOT SERVICED SEPARAT CASE ASSEMBLY

(1) 08-20

STANDARD

MODELS

CÓMO USAR EL CATÁLOGO DE PIEZAS

1. Número de figura
2. Código de secuencia con número de figura
3. Número de página en el código de secuencia
4. Fecha de impresión (mes/año)
5. Descripción de la figura
6. Información general sobre la figura
7. Piezas suministradas en los juegos de reparación según la referencia del símbolo
8. Leyenda de referencia del número de pieza (REF)
9. Especificaciones técnicas referentes a la pieza indicada
10. Leyenda de figura que incluye artículos en paréntesis, los artículos incluidos pueden encontrarse también en el área de descripción adicional
11. Orientación – La flecha muestra la parte delantera de la máquina.
12. Pie de página – Información adicional referente al número de pieza. En este ejemplo, 08-20 equivale a otra figura en la que se muestra esta pieza.
13. Número de pieza
    NSS = Piezas que no reciben mantenimiento por separado (piezas sin mantenimiento)
    Números en paréntesis = No disponibles como piezas de mantenimiento en este mercado
14. No disponibles como piezas de mantenimiento en este mercado
15. YR/SN

    Año
    Antes de 01/85 = Pieza en fabricación en enero de 1985 y anteriormente
    Desde 01/85 = Pieza en fabricación desde enero de 1985 y posteriormente
    BTW 01/85 & 02/02 = Pieza válida para máquinas fabricadas entre enero de 1985 y febrero de 2002

    Número de serie (N.I.P.)
    BSN JJC0268800 = Pieza válida para el número de serie JJC0268800 y anteriores
    ASN JJC0268800 = Pieza válida para el número de serie JJC0268800 y posteriores
    BTW JJC0178000 & JJC0179000 = Pieza válida para los números de serie entre JJC0178000 y JJC0179000
16. Cantidad total de piezas referidas en la página. La cantidad puede reemplazarse por las siguientes instrucciones:
    SR = Según se requiera
    X = Según se requiera
17. Descripción de la pieza
18. Información adicional sobre la pieza para ayudar a confirmar la identificación
19. Notas de figura
20. Número(s) de modelo

LADO DERECHO E IZQUIERDO

La referencia al lado derecho e izquierdo en este catálogo se identifica con el operador de pie en la parte trasera de la unidad básica (sin accesorio trasero), mirando hacia el frente de la máquina (con desplazamiento de avance normal).

Para las páginas que cubren los accesorios de la máquina, el lado derecho e izquierdo se definen con el operador sentado en la posición correcta de funcionamiento del accesorio.

DIMENSIONES

Las dimensiones métricas e imperiales de la tornillería no muestran el número de medida de roscas anchas estándares. El número después de un punto y coma (;) es la clase o el grado de la tornillería. Una coma (,) representa el punto decimal (.) usando en dimensiones imperiales (EE.UU.).

EXPLICACIÓN DE LAS ABREVIATURAS

AC	corriente alterna
adj	ajustable
amp	amperios
AR	según sea necesario
ASN	número de serie y posterior NIP y posterior

blkhd	mamparo
br	sucursal
BSN	antes del número de serie antes del NIP
BTW	entre

cc	centímetros cúbicos
cl	clase
cmprsn	compresión
cn pt	punto de cono
cp pt	punto de copa
CRS	acero de aleación de cromo
CST	acero al carbono
cu yd	yarda cúbica

DC	corriente continua
deg	grados
dg pt	punto de garra
dia	diámetro
dr type	tipo de transmisión

fc	superficie
fc sl	superficie de sellado
fem	hembra
fem PT	rosca hembra de tubería
fl	ensanche
flat pt	punto plano
ft	pies (o pie)

ga	calibre
gal	galón o galones
gpm	galones por minuto
gr	grado

hd	cabeza
hdg pt	punto de media garra
hp	potencia en C.V.
ID	diámetro interior
in	pulgada o pulgadas
Incl.	incluye
inv fl	ensanche invertido

K	kilo
kg	kilogramo
km/h	kilómetros por hora

L	litro
lb	libras
lb-ft	libra pie
lg	largo
LH	lado izquierdo
LH thd	rosca izquierda

M	(prefijo) tamaño de rosca en métrico
m	metro
ml	milímetro
mm	milímetros

NF	National Fine
No.	número
NPT	National Pipe Thread
NS	National Super Fine

OD	diámetro exterior
ohm	unidad eléctrica de resistencia
Or	junta tórica
ORB	refuerzo de junta tórica
ORFS	superficie de sellado de junta tórica
ov cntr	sobre el centro
ov pt	punto oval
oz	onza

P	pitch
psi	libras por pulgada cuadrada
pt	pinta
PT	rosca de la tubería

rd	redondo/a
rd holes	agujeros redondos
RH	lado derecho
RH thd	rosca derecha
rpm	revoluciones por minuto

sl	autobloqueante
sq	cuadrado/a
SST	acero inoxidable
st	autorroscante
strk	carrera
sw	balancín

T	dientes
thk	grueso/a
tpr	ahusado/a
tube OD	diámetro exterior del tubo

V	voltio o voltios
W	vatio o vatios
X	según sea necesario
yd	yardas

SECTION INDEX
Motor

02-01	VENTILADOR, RADIADOR - SISTEMA DE RECUPERACION DEL REFRIGERANTE
02-02	RADIADOR/REFRIGERADOR DE ACEITE
02-03	ESCAPE
02-04	ESCAPE, ASPIRADOR
02-05	FILTRO DE AIRE - MOTOR
02-06	MOTOR - TERMICO SOPORTE
02-07	MOTOR - TERMICO SOPORTE (EUROPA)
02-08	MOTOR - CALENTADOR DEL BLOQUE
02-09	BLOQUE DE CILINDROS
02-10	BLOQUE DE CILINDROS - CUBIERTAS, TRASERO
02-11	BLOQUE DE CILINDROS - CUBIERTAS, VOLANTE
02-12	BLOQUE DE CILINDROS - CUBIERTAS, DELANTERO
02-13	TAPA DE ENGRANAJES- PLACA
02-14	TAPAS CULATA
02-15	BLOQUE DE CILINDROS STIFFENER PLATE
02-16	CULATA DE CILINDROS
02-17	BOMBA DE ACEITE, BANDEJA
02-18	MOTOR, ACEITE
02-19	FILTRO Y REFRIGERADOR DE ACEITE
02-20	FILTRO DE ACEITE - MOTOR
02-21	BOMBA DE ACEITE - MOTOR
02-22	LLENADO DE ACEITE, MOTOR
02-23	DRENAJE DE ACEITE
02-24	SENSORES MOTOR - MOTOR, ACEITE
02-25	RESPIRADERO - MOTOR
02-26	COLECTOR ESCAPE
02-27	COLECTOR ESCAPE
02-28	PISTONES - VARILLAS CONECTORAS
02-29	VARILLAS CONECTORAS
02-30	EJE BALANCINES
02-31	VOLANTE MOTOR
02-32	POLEA - CIGUENAL
02-33	EJE DE LEVAS
02-34	CIGUENAL
02-35	SISTEMA DE REFRIGERACIÓN - MOTOR
02-36	BOMBA DE AGUA
02-37	BOMBA DE AGUA - MANDO
02-38	TERMOSTATO - REFRIGERACION DEL MOTOR
02-39	POLEA DEL VENTILADOR
02-40	MOTOR - GANCHO DE ELEVACION
02-41	TURBOCOMPRESOR

VENTILADOR, RADIADOR - SISTEMA DE RECUPERACION DEL REFRIGERANTE

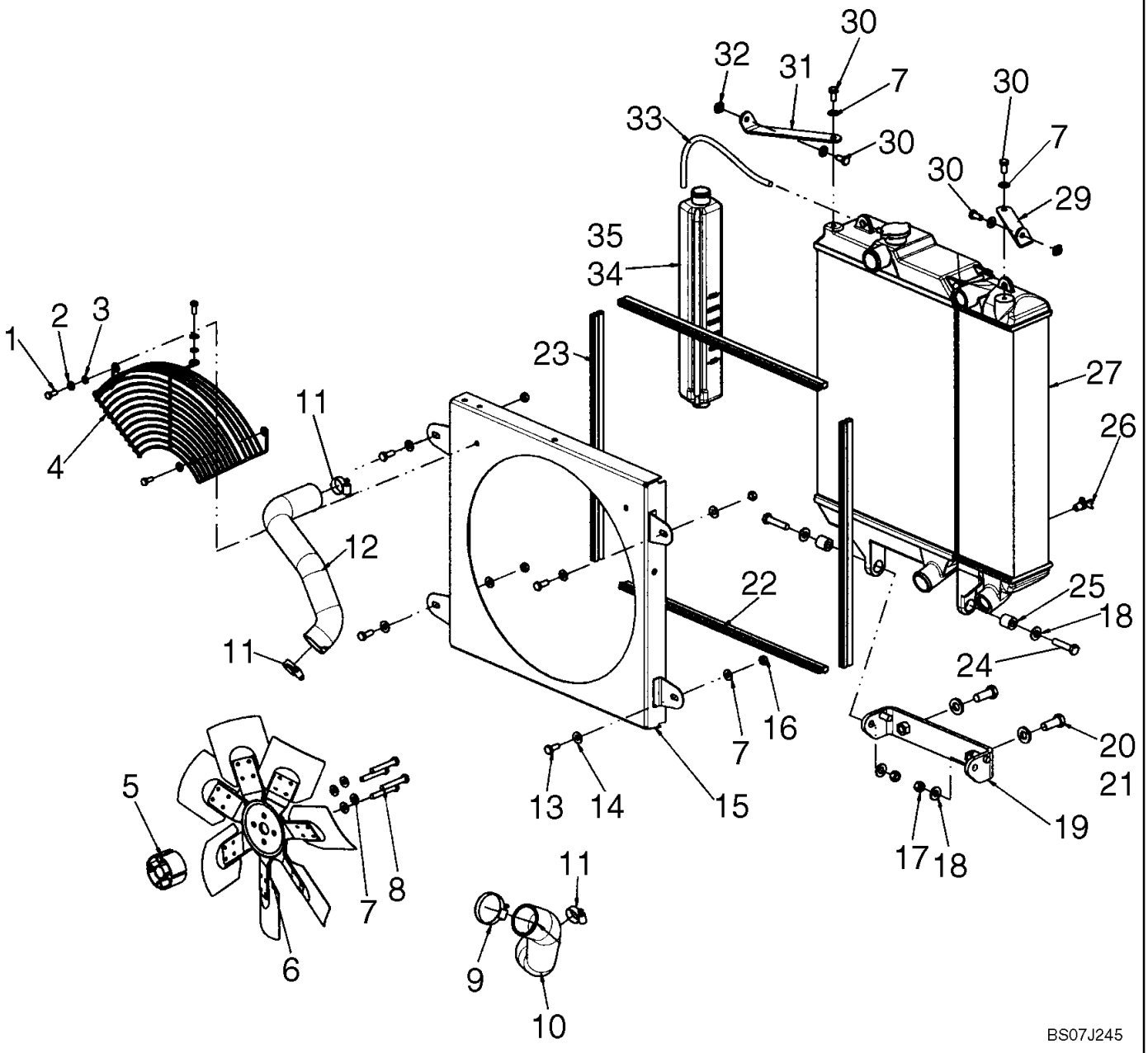

VENTILADOR, RADIADOR - SISTEMA DE RECUPERACION DEL REFRIGERANTE

REF	FN	PART NUMBER	YR/SN	QTY	DENOMINACION
1		120104		3	TORNILLO, Hex, M8 x 20, 8.8
2		322358		3	ARANDELA ABANICO, Belleville, M8
3		86624184		3	ARANDELA, M8 x 16 x 1.6
4		{87594970}		1	Fan Guard
5		87565745		1	SEPARADOR, Fan Spacer, 43mm
5		87565746		1	SEPARADOR, Fan Spacer, 60mm (Europe)
6		87025470		1	VENTILADOR, 480 Dia Pusher
7		140045		12	ARANDELA ABANICO, Belleville, M10
8		120071		4	TORNILLO, Hex, M10 x 65, 8.8
8		120073		4	TORNILLO, Hex, M10 x 80, 8.8, Used With 87565746 Fan Spacer
9		86625032		1	ABRAZADERA MANGUERA, #48, 2.56/3.50 Type F Worm
10		87661380		1	MANGA, Formed Hose, Lower Radiator
11		84674		3	ABRAZADERA MANGUERA, #28, 1.31/2.25 Type F Worm
12		87661378		1	MANGA, Formed Hose, Upper Radiator
13		43139		4	TORNILLO, M10 X 25 Full 8.8 ZND
14		86625253		4	ARANDELA, M11 x 24 x 2
15		87660828		1	BOQUILLA, Fan Shroud
16		86500689		4	TUERCA, M10, Cl 10
17		{87533547}		2	Nut, M12 x 1.75 10 ZND
18		86625254		4	ARANDELA, M12 x 28 x 2.5
19		87676100		1	PIEZA DE SOPORTE, Bracket, Lower Hinge Mount
20		43168		2	TORNILLO, Hex, M16 x 40, 8.8
21		86639326		2	ARANDELA, M17.5 x 34 x 5, HT
22		{87578980}		2	Bulb Seal, 590mm (23 1/4 in.)
23		{87648128}		2	Bulb Seal, 562mm (22 1/8 in.)
24		87021825		2	TORNILLO, Hex, M12 x 55, 10.9
25		87626729		2	SEPARADOR
26		86625234		1	LLAVE DE PASO
27		87660842		1	RADIADOR, Radiator And Oil Cooler; See Fig 02-02
28		87687375		1	RADIADOR, Radiator Cap
29		87651800		1	PIEZA DE SOPORTE, Upper Radiator Mount, LH
30		43138		4	TORNILLO, Hex, M10 x 20, 8.8, Full Thd

VENTILADOR, RADIADOR - SISTEMA DE RECUPERACION DEL REFRIGERANTE

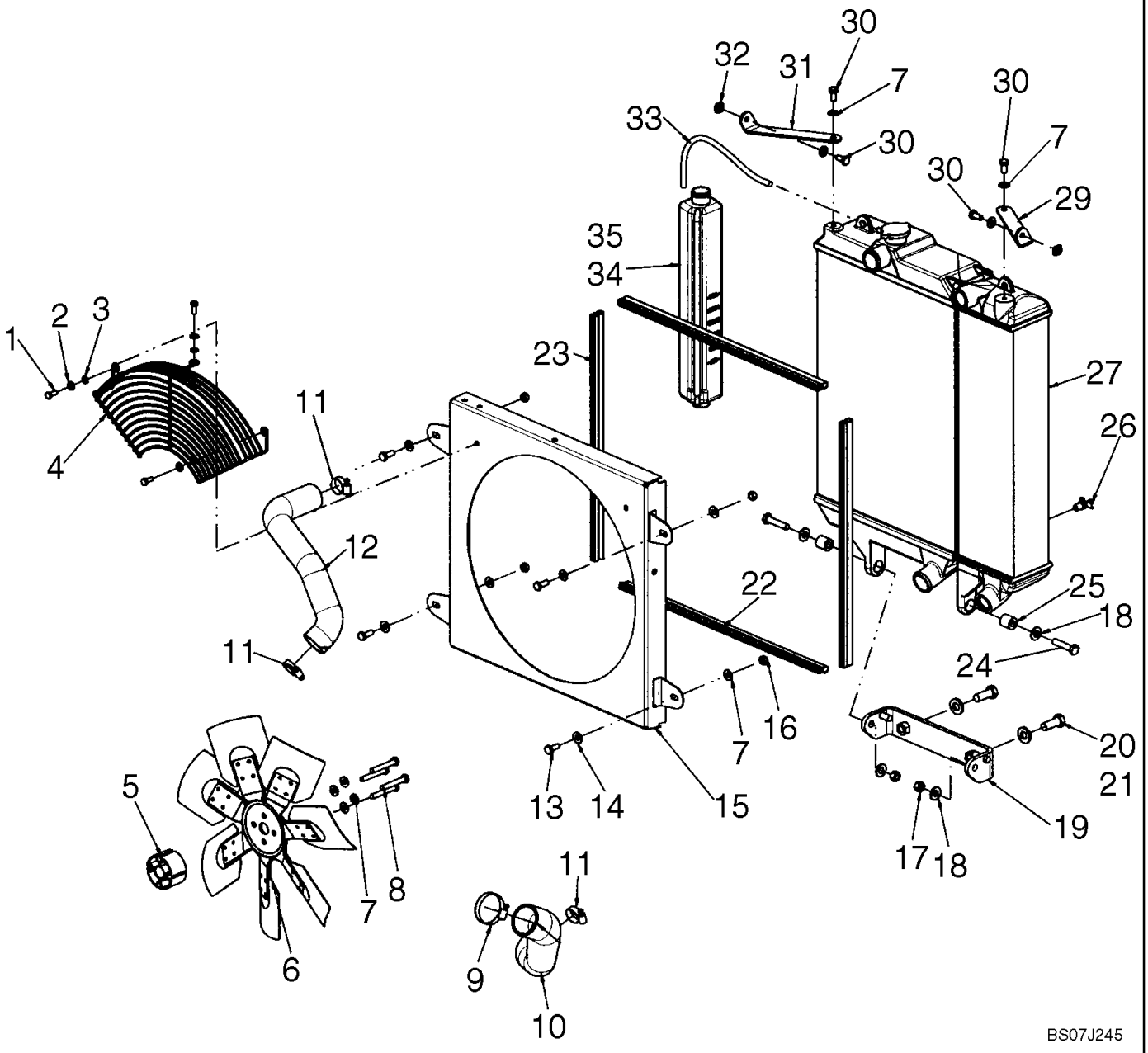

VENTILADOR, RADIADOR - SISTEMA DE RECUPERACION DEL REFRIGERANTE

REF	FN	PART NUMBER	YR/SN	QTY	DENOMINACION
31		87651799		1	PIEZA DE SOPORTE, Upper Radiator Mount, RH
32		230427A1		2	TUERCA
33		{87534725}		1	Coolant Recovery Hose, 400mm (15 3/4 in.)
34		87020980		1	DEPOSITO DE VACIO, Coolant Recovery Bottle; Incl. 35
35		257884A1		1	TAPÓN, Cap

RADIADOR/REFRIGERADOR DE ACEITE

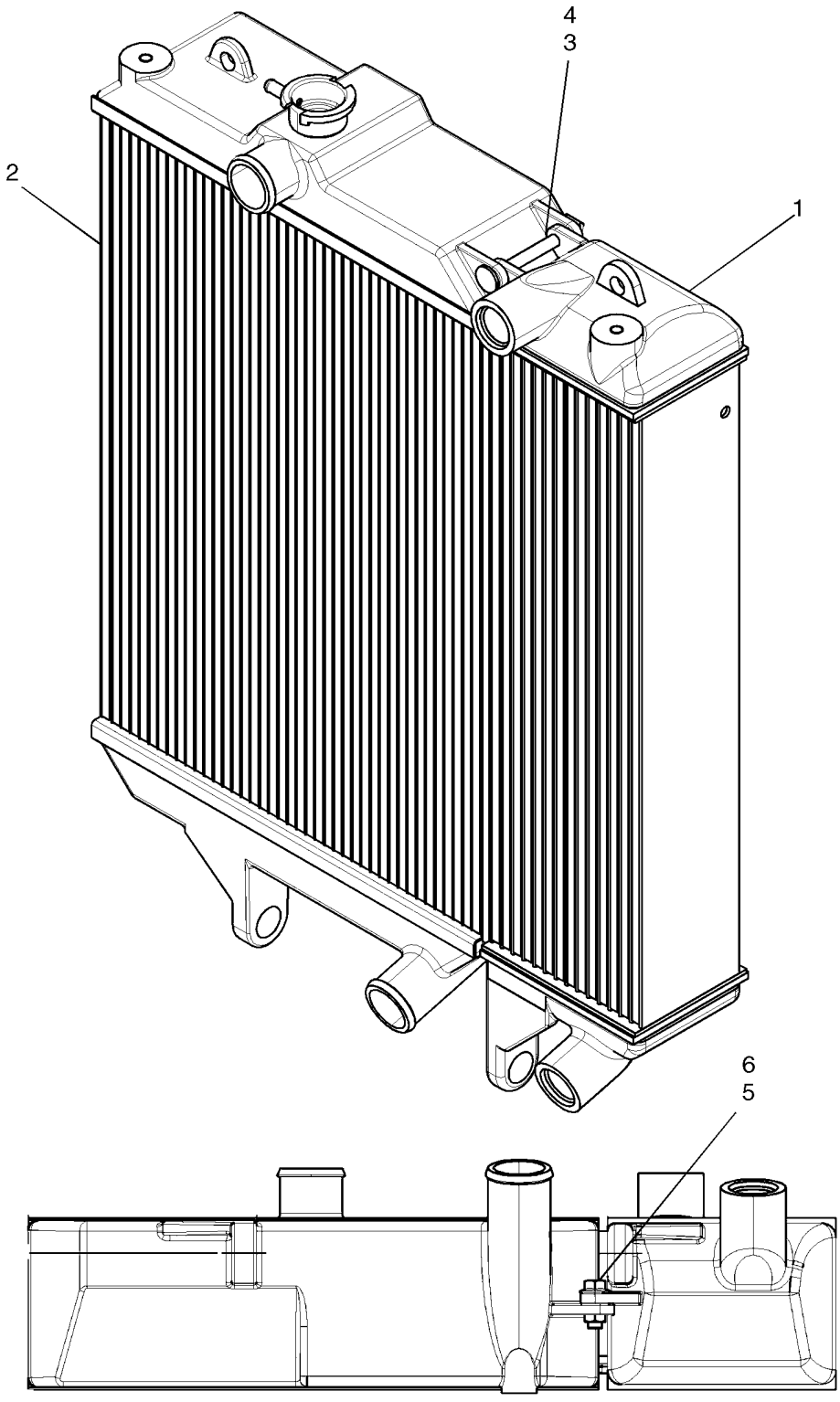

BS07K378

RADIADOR/REFRIGERADOR DE ACEITE

REF	FN	PART NUMBER	YR/SN	QTY	DENOMINACION
		87660842		1	RADIADOR, Incl 1 - 8
1		87687372		1	RADIADOR, Oil Cooler
1		87688650		1	RADIADOR ACEITE, Low Fin Density Oil Cooler
2		87688523		1	RADIADOR, Standard Radiator And Decal
2		87688649		1	RADIADOR, Low Fin Density Radiator And Decal
3		87687373		1	RADIADOR, Pin
4		87687374		1	RADIADOR, Clip
5		9804262		1	TORNILLO, Hex Flg, M10 x 30, 8.8
6		9804278		1	TUERCA, M10 x 1.5, Flg, Cl 8
7		87687376		1	RADIADOR, Seal
8		87687375		1	RADIADOR, Radiator Cap; Not Illustrated

ESCAPE

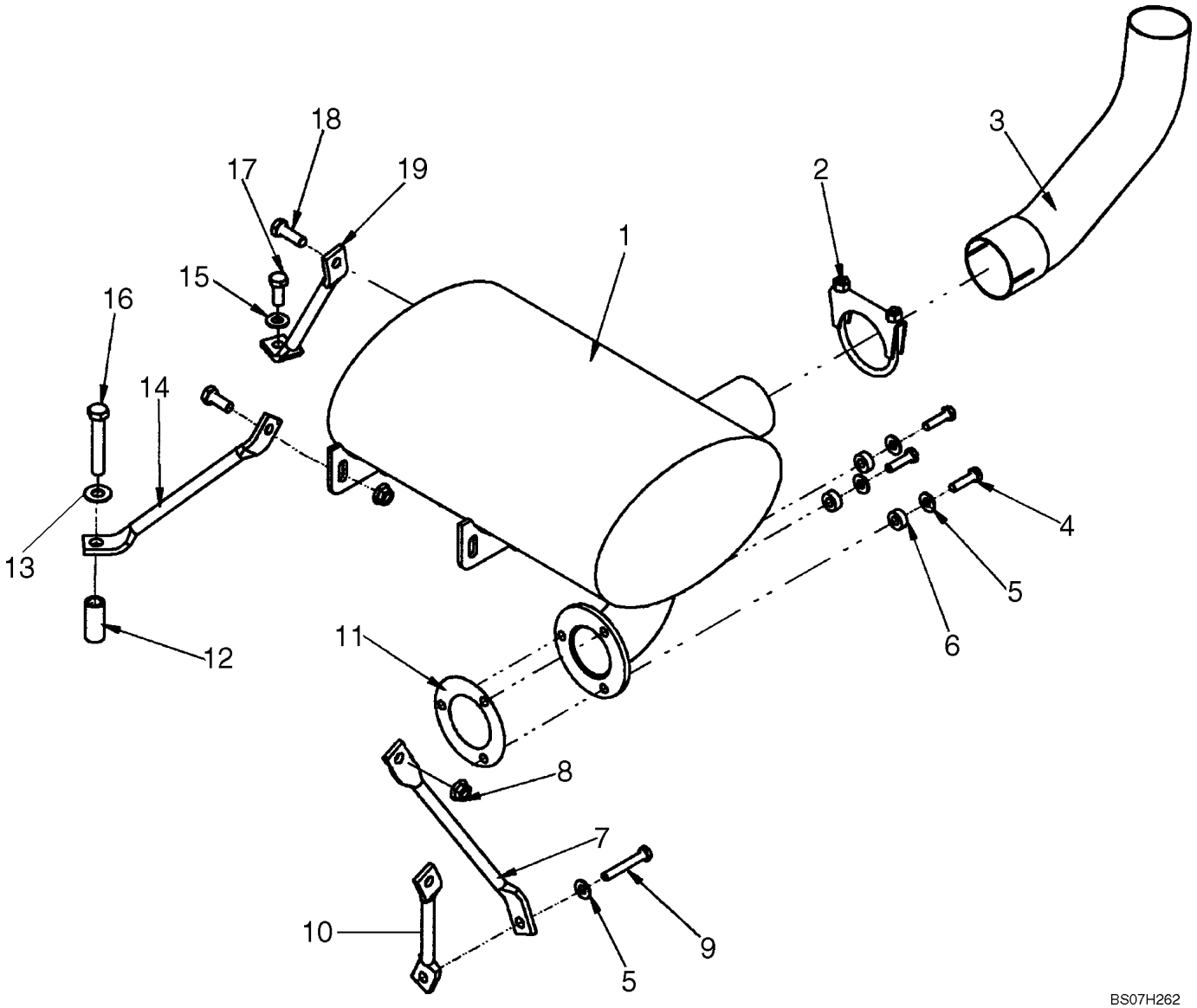

ESCAPE

REF	FN	PART NUMBER	YR/SN	QTY	DENOMINACION
1		{87572831}		1	Muffler, Insulated
2		87461995		1	BORNE
3		87654919		1	TUBO DE ESCAPE, Tube, Exhaust
4		43138		3	TORNILLO, Hex, M10 x 20, 8.8, Full Thd
5		86625263		4	ARANDELA, M8 x 20 x 1.6
6		86633393		3	SEPARADOR, 11/32 ID X 3/4 OD X 5/16 Thk; If Used
7		87033361		1	VARILLA, Muffler Support
8		411345A1		3	TUERCA, M10
9		16044321		1	TORNILLO, Hex, M8 x 55, 8.8
10		87029961		1	VARILLA, Muffler Support
11		86606073		1	JUNTA HERMETICA, Muffler
12		86608204		1	SEPARADOR
13		140046		1	ARANDELA ABANICO, Belleville, M12
14		87034631		1	VARILLA, Muffler Support
15		140045		1	ARANDELA ABANICO, Belleville, M10
16		9706717		1	TORNILLO, Hex, M12 x 70, 8.8, Full Thd
17		43139		3	TORNILLO
18		87034630		1	VARILLA, Muffler Support
19		43140		1	TORNILLO, Hex, M10 x 30, 8.8, Full Thd
20		87584781		1	AUSPUFFTOPF, Muffler Wrap, Europe; Not Illustrated
21		87393399		9	RESORTE, Stainless Steel Tie; Not Illustrated

ESCAPE, ASPIRADOR

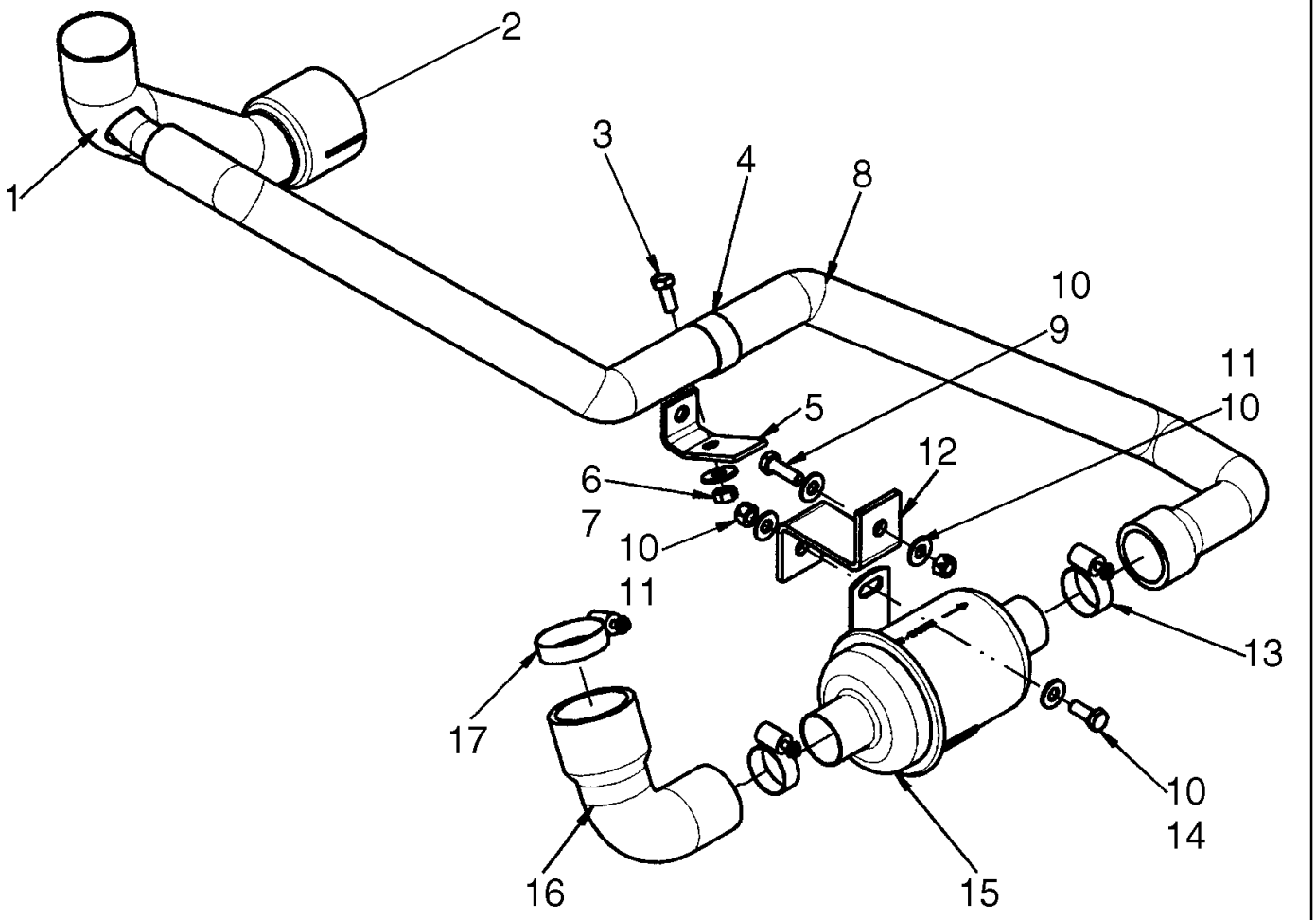

BS07K720

ESCAPE, ASPIRADOR

REF	FN	PART NUMBER	YR/SN	QTY	DENOMINACION
		87638327		1	KIT, SERVICE, Kit, Aspirator; Incl 1 - 17
1		507586		1	ABRAZADERA MANGUERA, #20, 0.81/1.75 Type F Worm
2		87654923		1	TUBO DE ESCAPE, Aspirator
3		86625000		1	TORNILLO, Hex, M8 x 18, 8.8, Full Thd
4		{87648719}		1	CLAMP 36.5 mm P Insul 3/8 Bolt
5		87615745		1	PIEZA DE SOPORTE, Aspirator Hose Support
6		9706690		1	TUERCA, M8, Cl 8
7		86639313		1	ARANDELA, M8 x 20 x 1.6
8		87615743		1	MANGA, Tail Pipe To Aspirator
9		43127		1	TORNILLO, Hex, M8 x 25, 8.8
10		86625263		4	ARANDELA, M8 x 20 x 1.6
11		9628098		2	CONTRA TUERCA, M8 x 1.25, Cl 10
12		87615741		1	PIEZA DE SOPORTE, Aspirator Mounting
13		84674		2	ABRAZADERA MANGUERA, #28, 1.31/2.25 Type F Worm
14		120104		1	TORNILLO, Hex, M8 x 20, 8.8
15		406089A2		1	VALVULA, Aspirator Check
16		87615742		1	MANGA, Air Cleaner To Aspirator
17		86624194		1	ABRAZADERA MANGUERA, #36, 1.81/2.75 Type F Worm

02-05		p1	11/07

FILTRO DE AIRE - MOTOR

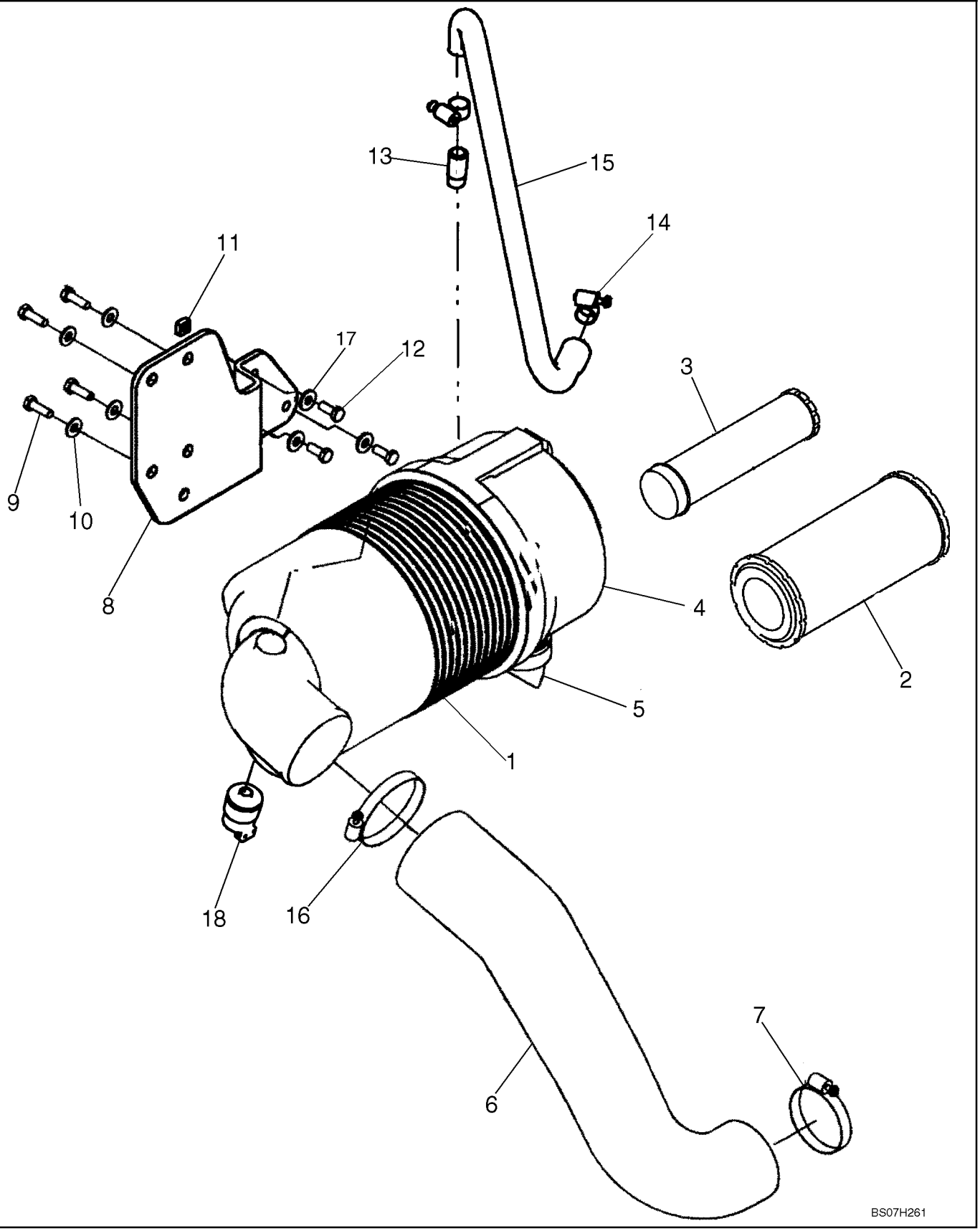

FILTRO DE AIRE - MOTOR

REF	FN	PART NUMBER	YR/SN	QTY	DENOMINACION
		87032107		1	PULIDOR, Incl. 1 - 5
1		87041842		1	DEPURADOR, Body
2		222421A1		1	FILTRO DE AIRE, Primary
3		222422A1		1	ELEMENTO DE FILTRADO, Secondary
4		395792A1		1	TABA (CONJUNTO), Incl. 4A
4A		86990981		1	DISP. DE CIERRE, Not Illustrated Separately
5		A184597		1	VÁLVULA DE PASO
6		87351957		1	MANGA, Air Cleaner Outlet
7		87040758		1	ABRAZADERA MANGUERA
8		87620930		1	PIEZA DE SOPORTE
9		43127		4	TORNILLO, Hex, M8 x 25, 8.8
10		86625263		4	ARANDELA, M8 x 20 x 1.6
11		87030567		3	TUERCA
12		120104		3	TORNILLO, Hex, M8 x 20, 8.8
13		L17985		1	CONEXION
14		86625021		2	ABRAZADERA MANGUERA, #12, 0.69/1.25 Type F Worm
15		87352014		1	MANGA
16		381144		1	ABRAZADERA MANGUERA, #60, 3.31/4.25 Type F Worm
17		896-15008		3	ARANDELA, M8 x 21.5 x 2.5, HT
18		87013666		1	CONTACTOR, Air Restriction

MOTOR - TERMICO SOPORTE

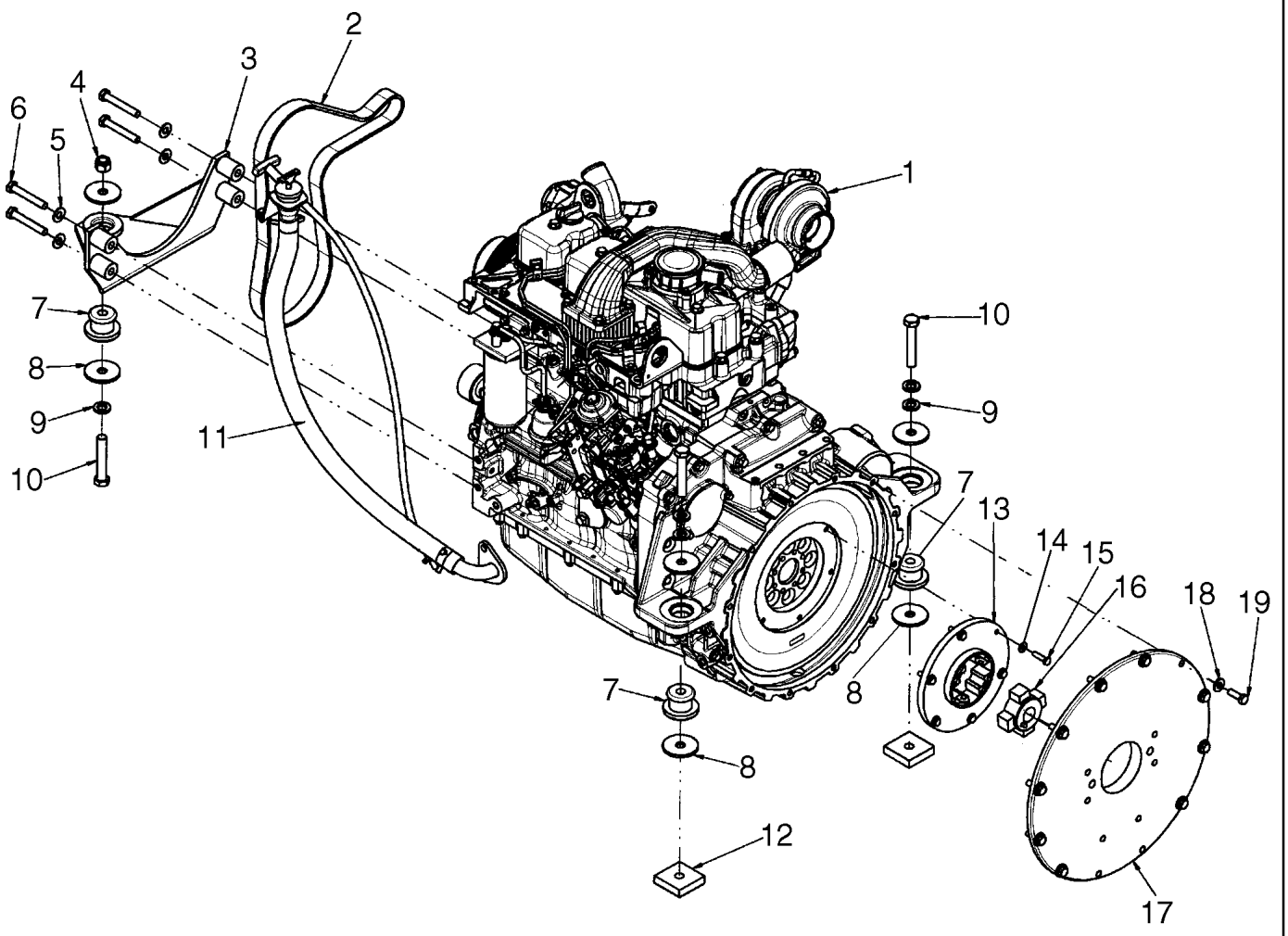

MOTOR - TERMICO SOPORTE

REF	FN	PART NUMBER	YR/SN	QTY	DENOMINACION
1		87384641		1	MOTOR, NEF, 67 KW 296 Fan; Incl Parts on Figures 02-09 - 02-41, 03-03 - 03-10, 04-02
2		85826230		1	CORREA
3		87041763		1	SOPORTE MOTOR, Rear
4		412066		1	CONTRA TUERCA, M16 x 2, Cl 8
5		140046		4	ARANDELA ABANICO, Belleville, M12
6		412085		4	TORNILLO, Hex, M12 x 80, 10.9
7		A140221		3	PIEZAS DE FIJACIÓN
8		87032338		6	ARANDELA, 21/32" x 2 1/2" x .188", HDN
9		86625266		5	ARANDELA, M17.5 x 30 x 4, HT
10		350616		3	TORNILLO, Hex, M16 x 90, 8.8
11		REF			MANUAL, Dipstick Assy; See Figure 02-22
12		390350A1		2	PLACA
13		87024539		1	ELEMENTO, Pump Drive, 6.5 in
14		322358		6	ARANDELA ABANICO, Belleville, M8
15		43235		6	TORNILLO, Hex, M8 x 30, 10.9
16		87024588		1	CUBO, Pump Drive Star
17		87547003		1	PLACA, Pump Mounting
18		86639325		10	ARANDELA, M10 x 24.5 x 3, HT
19		43140		10	TORNILLO, Hex, M10 x 30, 8.8, Full Thd

MOTOR - TERMICO SOPORTE (EUROPA)

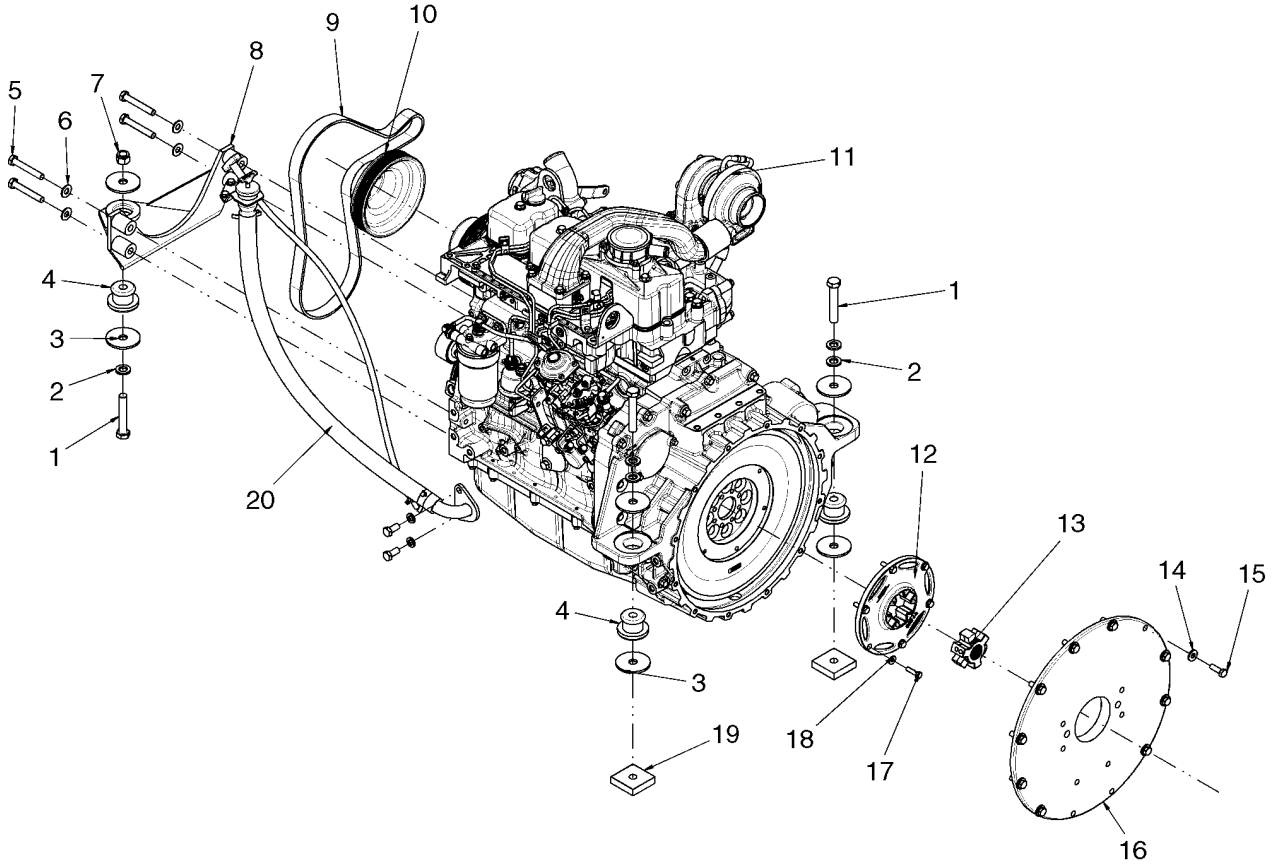

MOTOR - TERMICO SOPORTE (EUROPA)

REF	FN	PART NUMBER	YR/SN	QTY	DENOMINACION
1		350616		3	TORNILLO, Hex, M16 x 90, 8.8
2		86625266		5	ARANDELA, M17.5 x 30 x 4, HT
3		87687021		6	BOTON DE RESORTE
4		A140221		3	PIEZAS DE FIJACIÓN, Engine Mount
5		412085		4	TORNILLO, Hex, M12 x 80, 10.9
6		140046		4	ARANDELA ABANICO, Belleville, M12
7		412066		1	CONTRA TUERCA, M16 x 2, Cl 8
8		87041763		1	SOPORTE MOTOR, Rear Engine Mount
9		87713059		1	CORREA, Belt, V Ribbed (Europe)
10		87712652		1	POLEA, Pulley (Europe)
11		87384641		1	MOTOR, Engine, NEF
12		87692685		1	CARDAN, Coupling, Flexible
13		87711337		1	CARDAN, Coupling, Drive Star
14		86639325		10	ARANDELA, M10 x 24.5 x 3, HT
15		43140		10	TORNILLO, Hex, M10 x 30, 8.8, Full Thd
16		87547003		1	PLACA, Pump Mounting Plate
17		43235		6	TORNILLO, Hex, M8 x 30, 10.9
18		322358		6	ARANDELA ABANICO, Belleville, M8
19		390350A1		2	PLACA
20		REF		1	MANUAL, Oil Fill; See Fig 02-22

MOTOR - CALENTADOR DEL BLOQUE

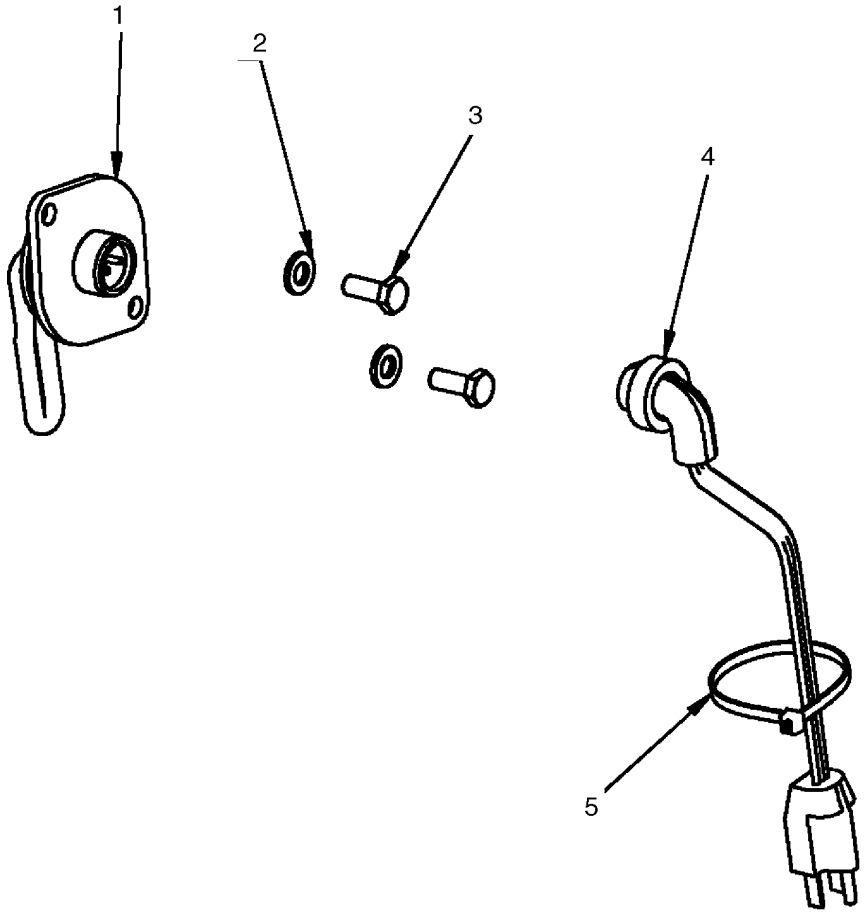

BS07K096

MOTOR - CALENTADOR DEL BLOQUE

REF	FN	PART NUMBER	YR/SN	QTY	DENOMINACION
		87017686		1	DIA, Construccion, Kit, Block Heater; Incl 1 - 5
1		8602005		1	RECALENTADOR, Block Heater, 750W 120V
2		86624185		2	ARANDELA, M8 x 17.5 x 2, HT
3		120104		2	TORNILLO, Hex, M8 x 20, 8.8
4		87105748		1	CABLE ELECTRICO
5		L11541		1	CIERRA CABLES, Cable Tie

BLOQUE DE CILINDROS

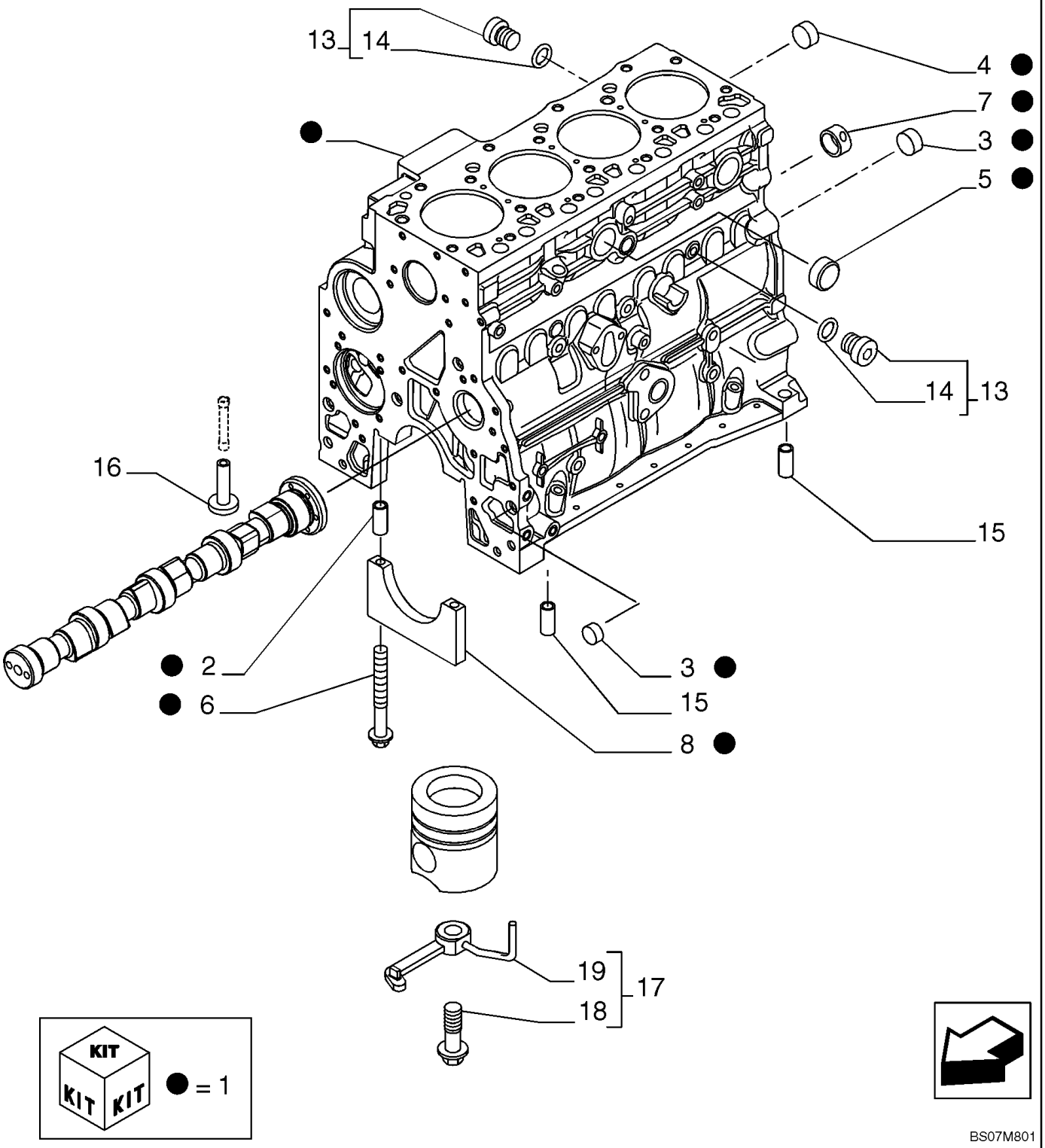

BLOQUE DE CILINDROS

REF	FN	PART NUMBER	YR/SN	QTY	DENOMINACION
1		2830083		1	BLOQUE DE CILINDROS, - ASSY
2		4899026		10	PITON
3		4895039		3	TAPÓN
4		4895038		4	TAPÓN
5		4895228		2	TAPÓN
6		4891353		10	TORNILLO, Flg Hd, M12 x 1.5 x 120
7		4895040		1	CASQUILLO
8		4895919		4	COJINETTE CIGUENAL
8		4895921		1	COJINETTE CIGUENAL
13		4895392		2	TAPÓN, - ASSY
14		4895393		2	JUNTA HERMETICA
15		4895049		2	PITON
16		4895180		8	EMPUJADOR
17		4896865		4	TOBERA, - ASSY
18		4894218		1	TORNILLO
19		2852203		1	TOBERA

BLOQUE DE CILINDROS - CUBIERTAS, TRASERO

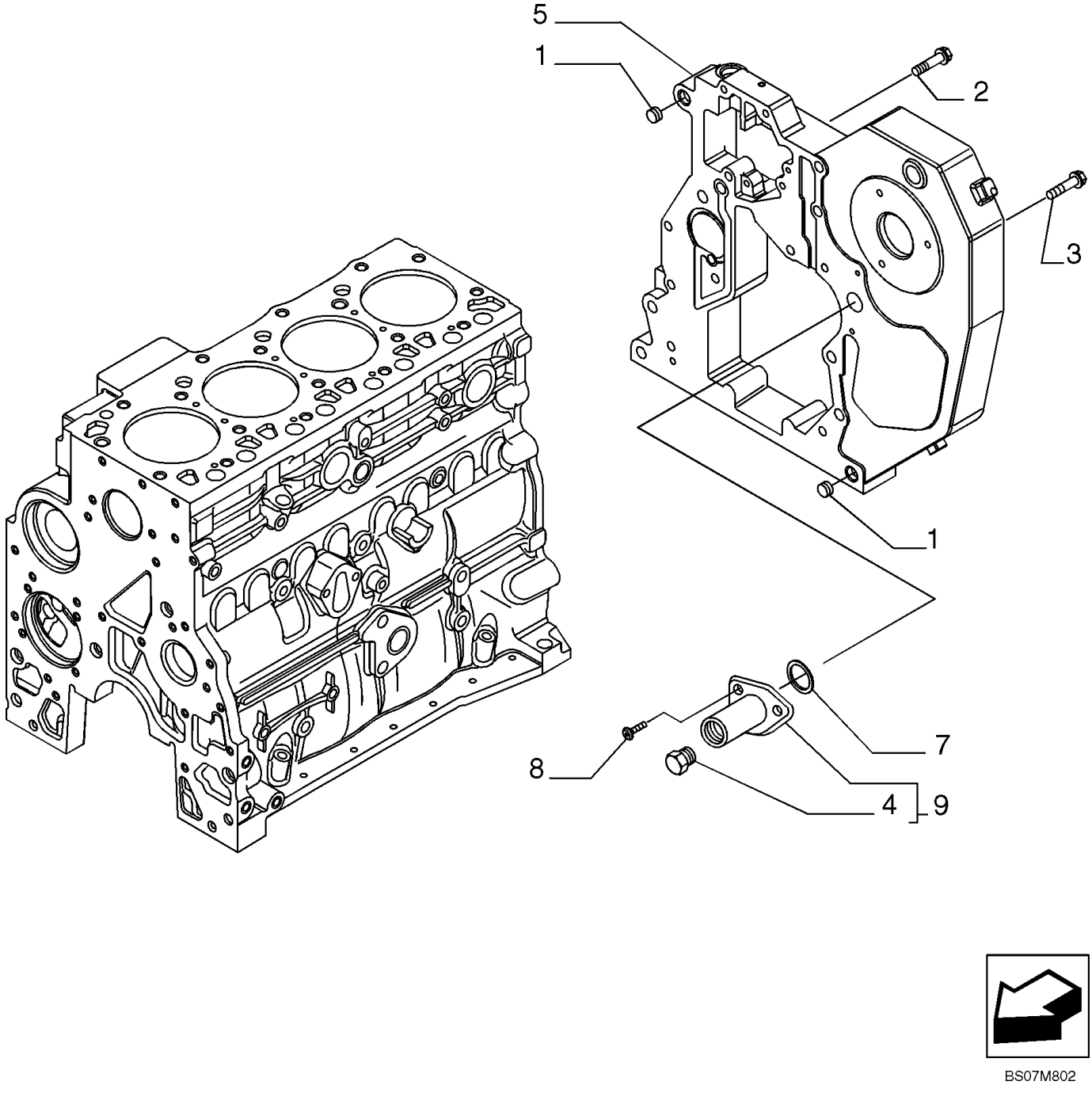

BS07M802

BLOQUE DE CILINDROS - CUBIERTAS, TRASERO

REF	FN	PART NUMBER	YR/SN	QTY	DENOMINACION
1		4899026		2	PITON
2		4899091		4	TORNILLO, Hex Flg, M8 x 1.25 x 40
3		4899093		5	TORNILLO, Hex Flg, M10 x 1.5 x 30
3		4899073		1	TORNILLO, Hex Flg, M12 x 1.75 x 30
4		{2855289}		1	Plug
5		2852619		1	CAVIDAD
7		2852519		1	JUNTA HERMETICA
8		4895355		2	TORNILLO, Torx Rd Hd, M5 x .8 x 17
9		2855287		1	CAVIDAD, - ASSY

BLOQUE DE CILINDROS - CUBIERTAS, VOLANTE

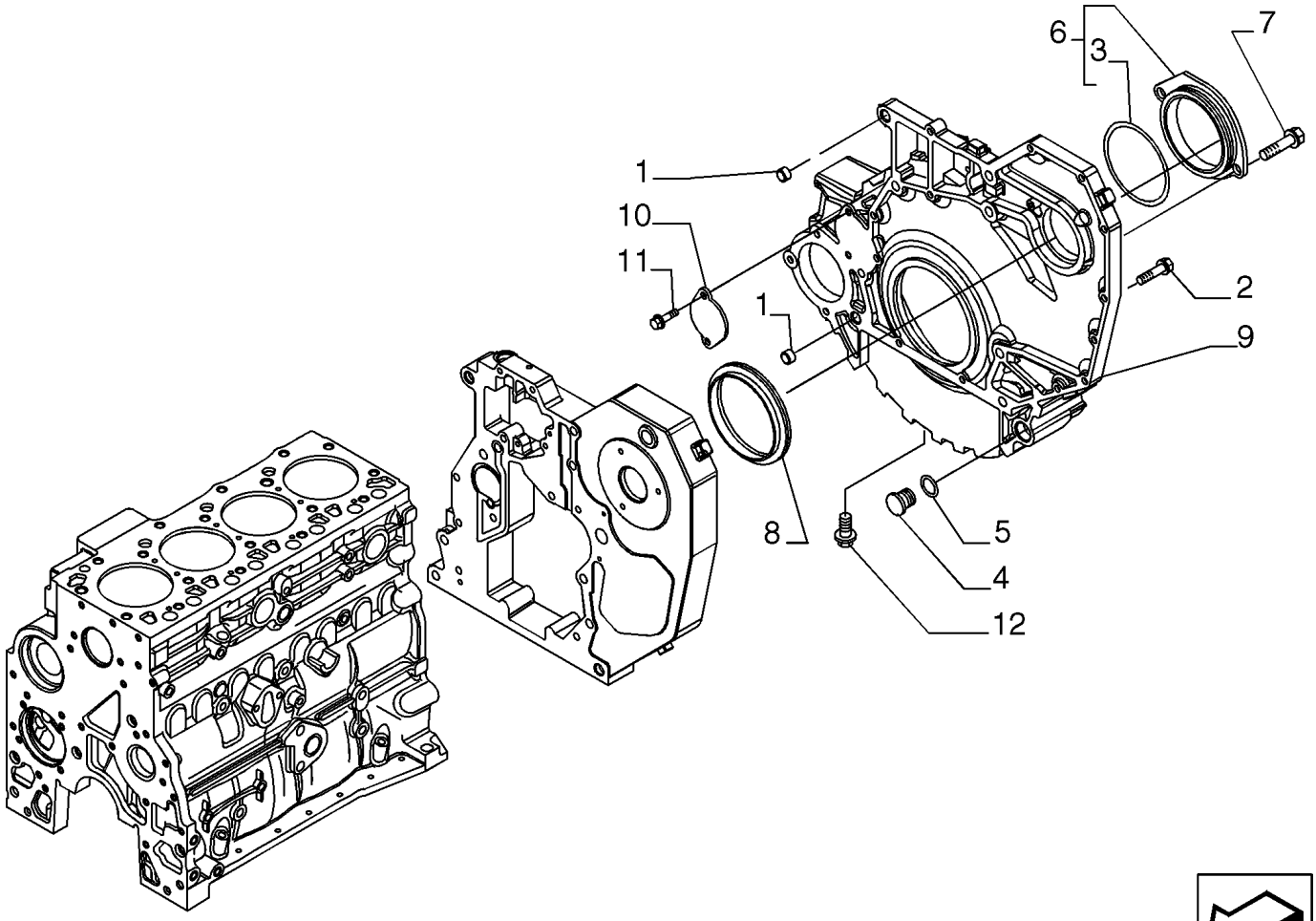

BS07M803

BLOQUE DE CILINDROS - CUBIERTAS, VOLANTE

REF	FN	PART NUMBER	YR/SN	QTY	DENOMINACION
1		4899026		2	PITON
2		4892915		7	TORNILLO
2		4899076		5	TORNILLO, Hex Flg, M12 x 1.75 x 80
2		4899074		3	TORNILLO, Hex Flg, M12 x 1.75 x 120
2		4899109		3	TORNILLO, Hex, M10 x 1.5 x 80
2		4899143		1	TORNILLO, Hex Flg, M10 x 1.5 x 140, IN ALTERNATIVE WITH 2854866
2		2852865		2	TORNILLO
2		2854866		1	TAPÓN, IN ALTERNATIVE WITH 4899143
3		2854075		1	JUNTA HERMETICA
4		4895378		2	TAPÓN
5		4895379		2	JUNTA HERMETICA, M21.82 ID x 3.53 Thk
6		2854073		1	TAPADERA, - ASSY
7		4899020		2	TORNILLO
8		4890833		1	ANILLO DE CIERRE
9		2855180		1	CAVIDAD, Flywheel
10		4895155		1	TAPADERA
11		4899068		1	TORNILLO, Hex Flg, M8 x 1.25 x 16
12		4893036		1	TAPÓN, - ASSY

BLOQUE DE CILINDROS - CUBIERTAS, DELANTERO

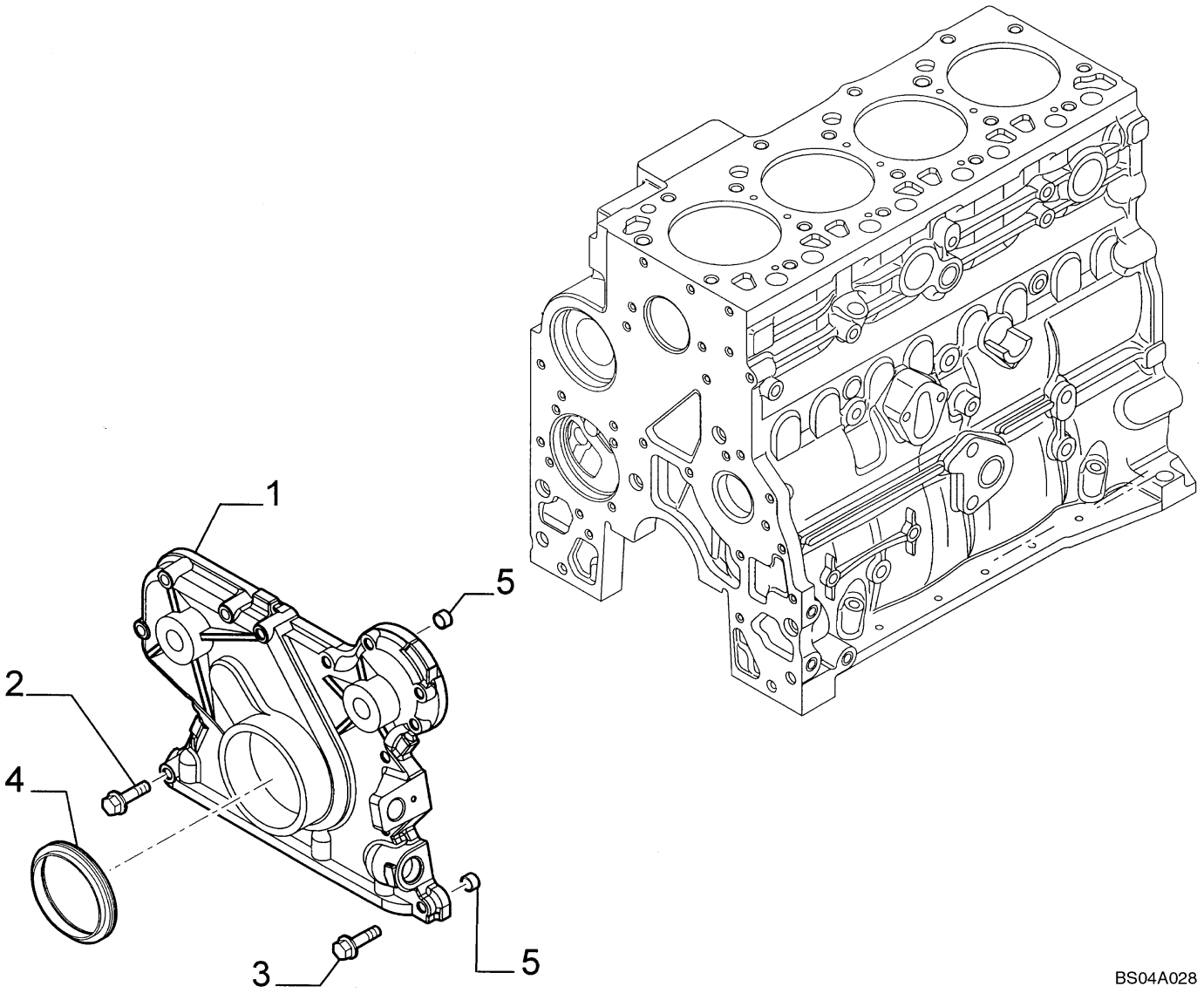

BLOQUE DE CILINDROS - CUBIERTAS, DELANTERO

REF	FN	PART NUMBER	YR/SN	QTY	DENOMINACION
1		4897026		1	TAPADERA, Front
2		4899078		5	TORNILLO, Hex Flg, M8 x 1.25 x 45
3		4899063		8	TORNILLO, Hex Flg, M8 x 1.25 x 30
4		4890832		1	ANILLO DE CIERRE
5		4891209		2	PITON

TAPA DE ENGRANAJES- PLACA

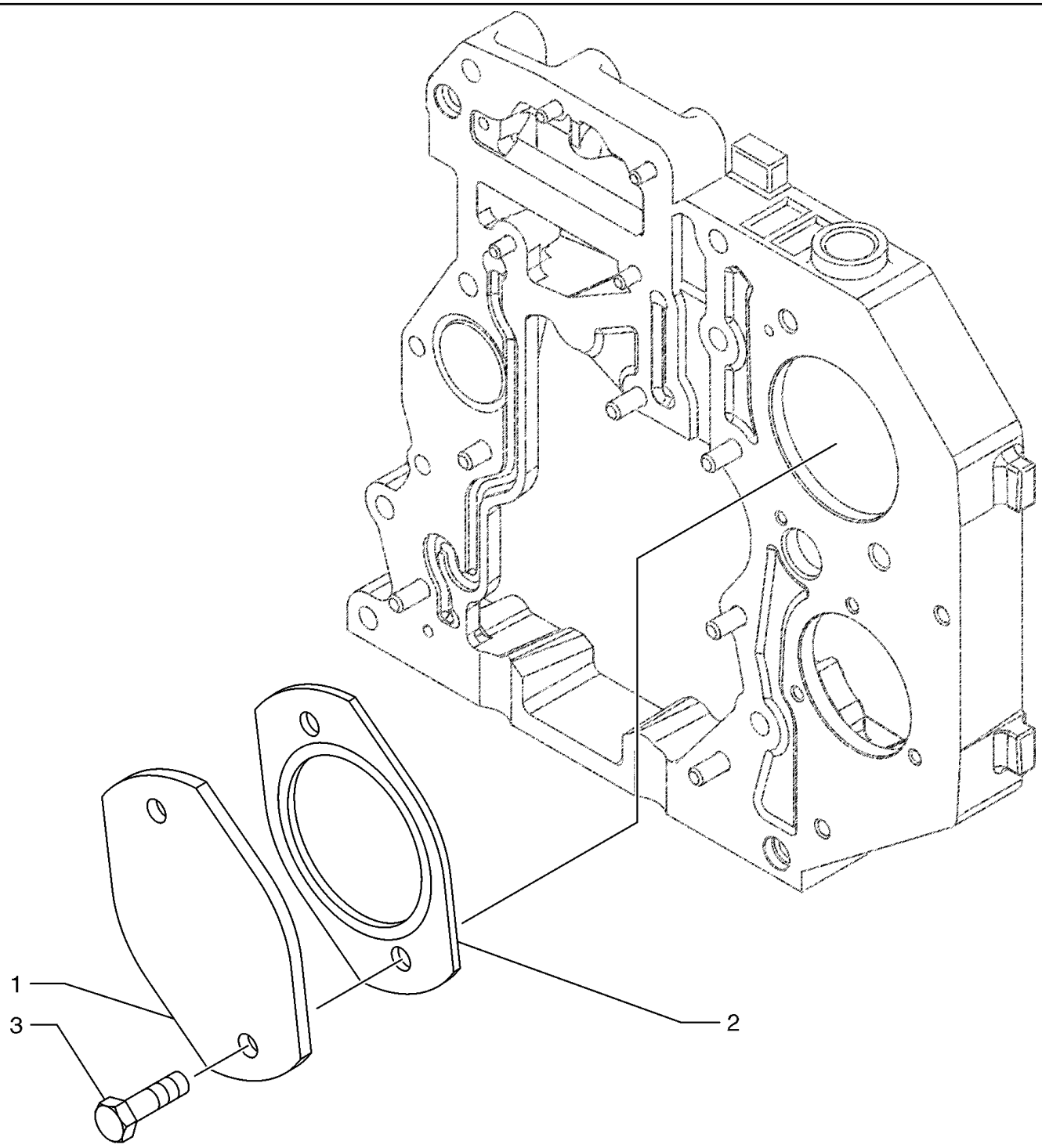

BS04A022

TAPA DE ENGRANAJES- PLACA

REF	FN	PART NUMBER	YR/SN	QTY	DENOMINACION
1		2852175		1	TAPADERA
2		4896897		1	JUNTA HERMETICA
3		16677734		2	TORNILLO, Hex Flg, M12 x 1.75 x 25

TAPAS CULATA

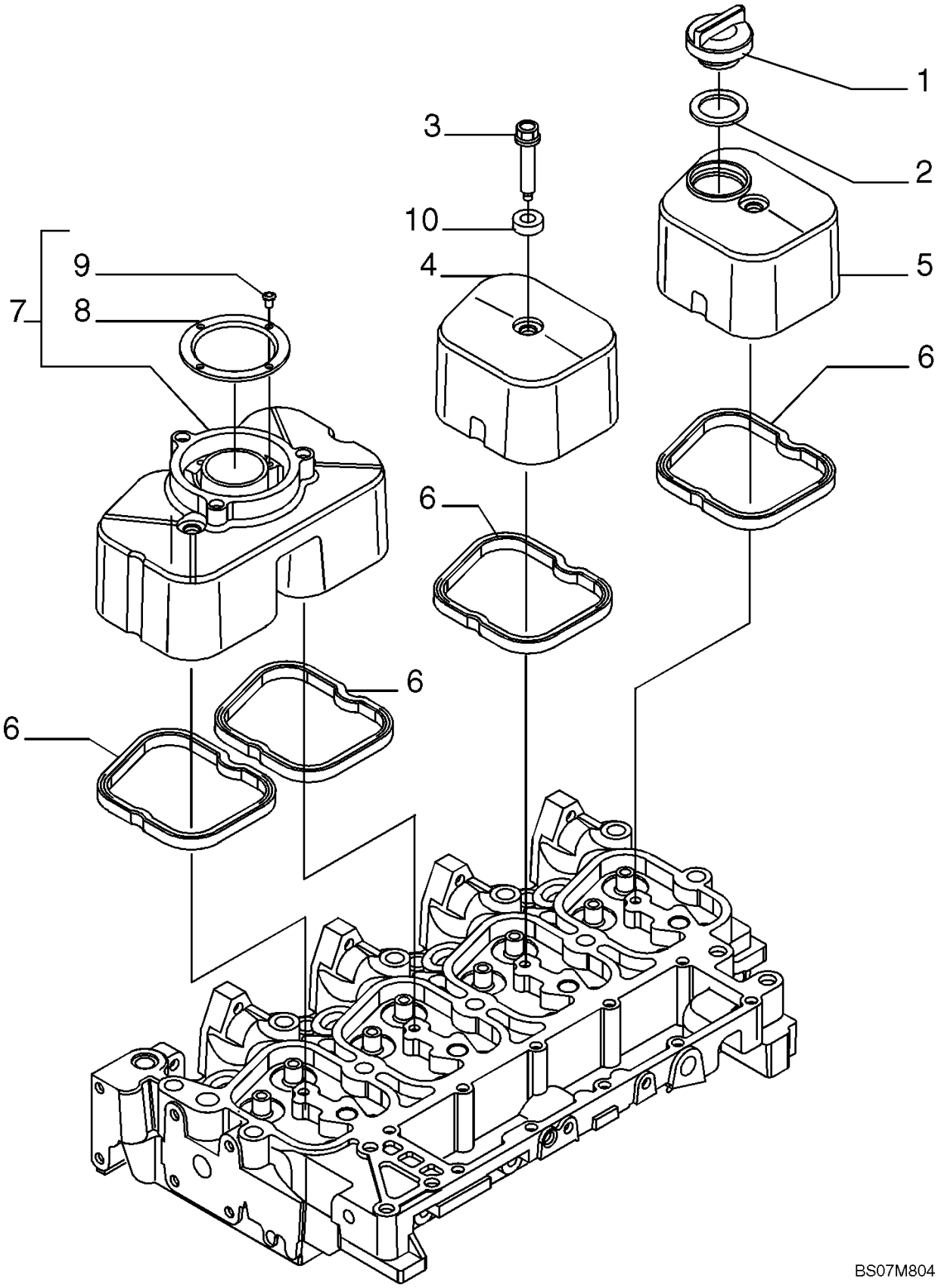

TAPAS CULATA

REF	FN	PART NUMBER	YR/SN	QTY	DENOMINACION
1		4895202		1	TAPA DE DEPOSITO
2		4895296		1	ANILLO DE CIERRE, IN ALTERNATIVE
2		4892808		1	ANILLO DE CIERRE, IN ALTERNATIVE
3		4895214		4	TORNILLO
4		2852032		1	TAPADERA
5		2852894		1	TAPADERA
6		2852033		4	JUNTA HERMETICA
7		2830784		1	CUBRE VÁLVULA, - ASSY
8		2830775		1	LANZADOR DE ACEITE
9		2830281		4	TORNILLO AUTOROSCANTE
10		4895360		4	AISLADOR

BLOQUE DE CILINDROS STIFFENER PLATE

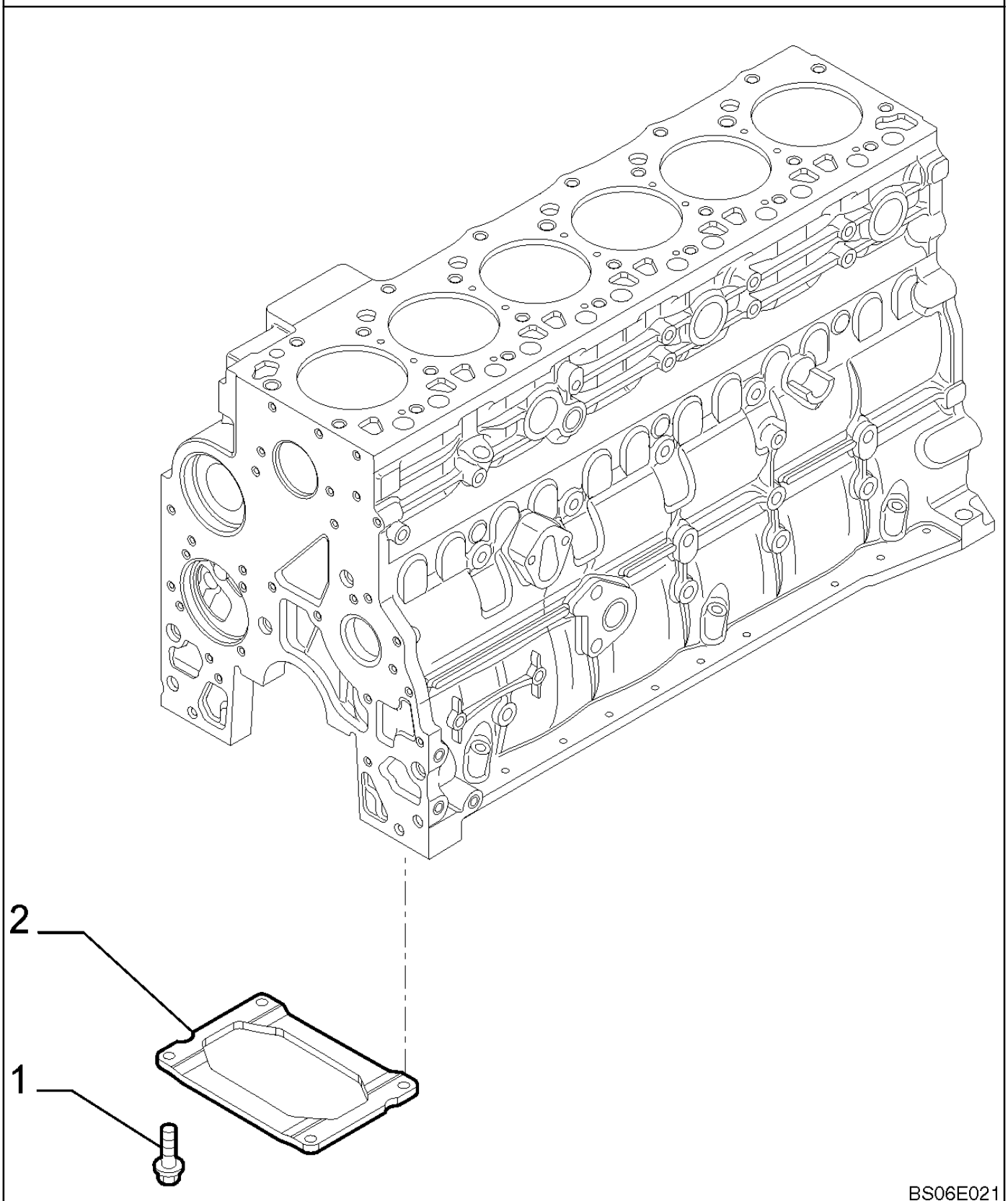

BLOQUE DE CILINDROS STIFFENER PLATE

REF	FN	PART NUMBER	YR/SN	QTY	DENOMINACION
1		4899032		4	TORNILLO, Hex Flg, M10 x 1.5 x 25
2		2852729		1	REFUERZO, Noise Reduction

CULATA DE CILINDROS

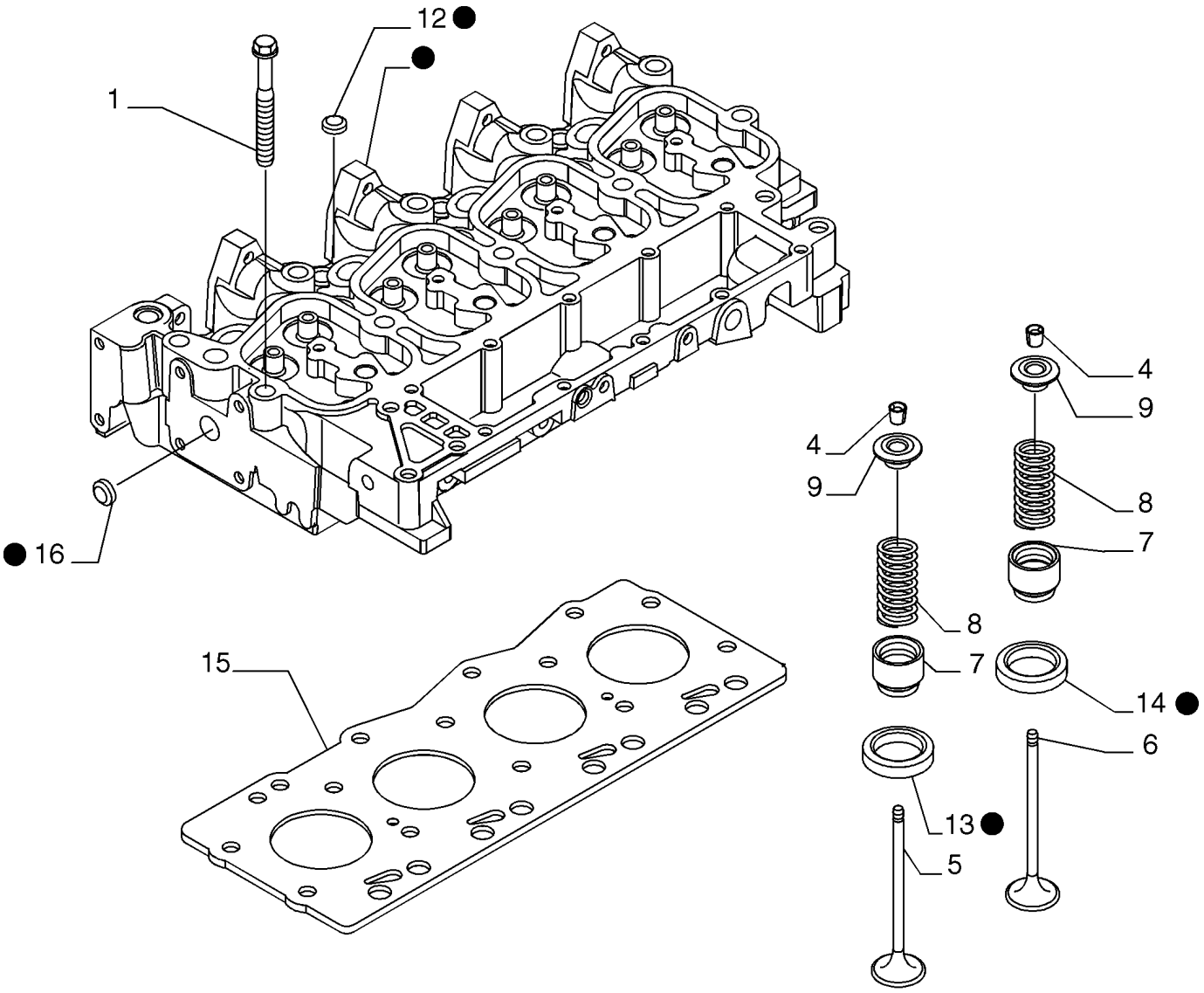

KIT KIT KIT ● = 3

BS07M811

CULATA DE CILINDROS

REF	FN	PART NUMBER	YR/SN	QTY	DENOMINACION
1		4892861		4	TORNILLO, Wash Hd, M12 x 1.25 x 73
1		4892859		10	TORNILLO, Wash Hd, M12 x 1.25 x 143
3		2856017		1	CULATA, Incl 12, 13, 14,16
4		4895183		16	CASQUILLO
5		4895188		4	VALVULA DE ESCAPE
6		4895187		4	VÁLVULA DE ADMISIÓN
7		4895347		8	ANILLO DE CIERRE
8		4895215		8	MUELLE, VALVULA
8		{2831472}		8	Alternate To 4895215
9		4895184		8	RETENEDOR
12		4895179		3	TAPÓN
13		4897178		4	ASIENTO DE VALVULA, - INTAKE
14		4897179		4	ASIENTO DE VALVULA, - EXHAUST
15		2830919		1	JUNTA DE CULATA, SP=1.25
15		2830920		1	JUNTA DE CULATA, SP=1.15
16		4895085		1	TAPÓN

BOMBA DE ACEITE, BANDEJA

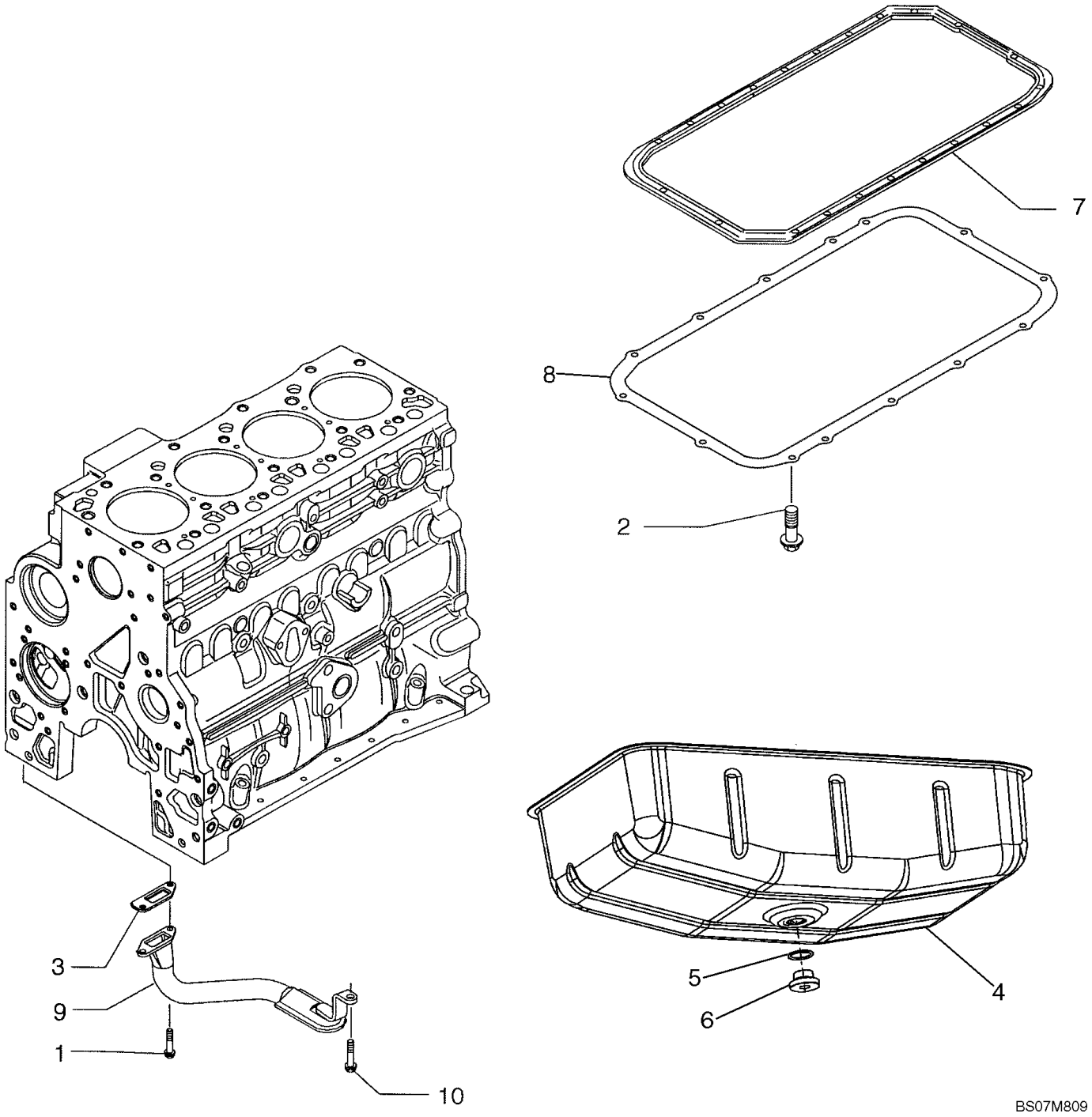

BOMBA DE ACEITE, BANDEJA

REF	FN	PART NUMBER	YR/SN	QTY	DENOMINACION
1		16673635		2	TORNILLO
2		4899091		14	TORNILLO, Hex Flg, M8 x 1.25 x 40
3		4898301		1	JUNTA HERMETICA
4		2853047		1	CARTER DE ACEITE, Oil Pan
5		2852978		1	JUNTA HERMETICA
6		4894139		1	TAPÓN, 22 x 1.5; Does Not Include Seal, Purchase Seal Separately
7		4897877		1	JUNTA HERMETICA
8		4897876		1	SEPARADOR
9		2853050		1	CUELLO DE CARGA, Oil Suction; Includes Screen Which Is Not Serviced Separately
10		4895291		1	TORNILLO, Hex Flg, M10 x 1.5 x 20

MOTOR, ACEITE

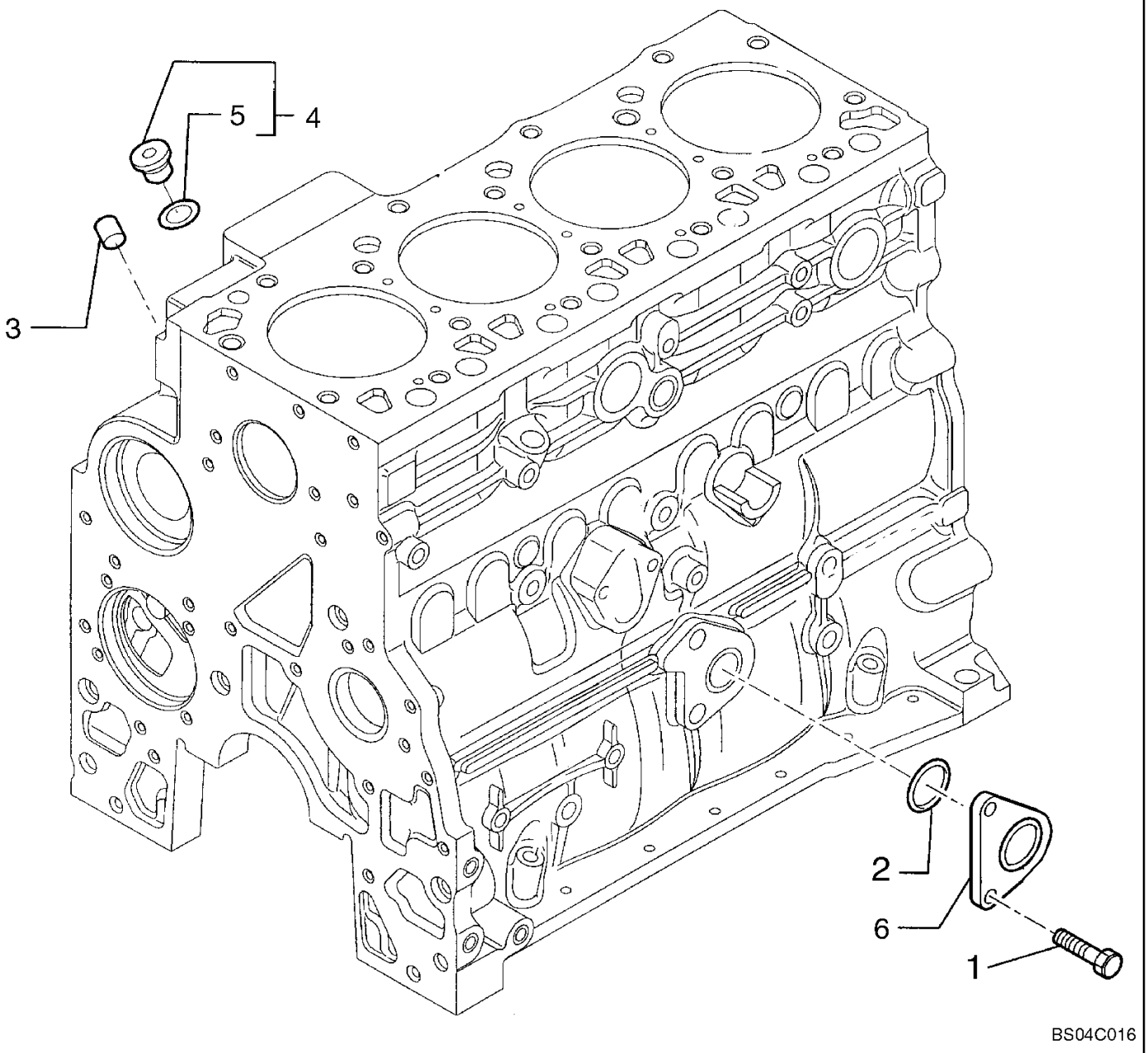

MOTOR, ACEITE

REF	FN	PART NUMBER	YR/SN	QTY	DENOMINACION
1		2852134		2	TORNILLO, Flange
2		14458681		1	JUNTA HERMETICA, -128, Cl 7, 1.487" ID x .103" Thk
3		4895406		1	TAPÓN
4		4897330		2	TAPÓN, Assy; Incl. Ref 5
5		4895610		1	JUNTA HERMETICA
6		2852995		1	BRIDA

FILTRO Y REFRIGERADOR DE ACEITE

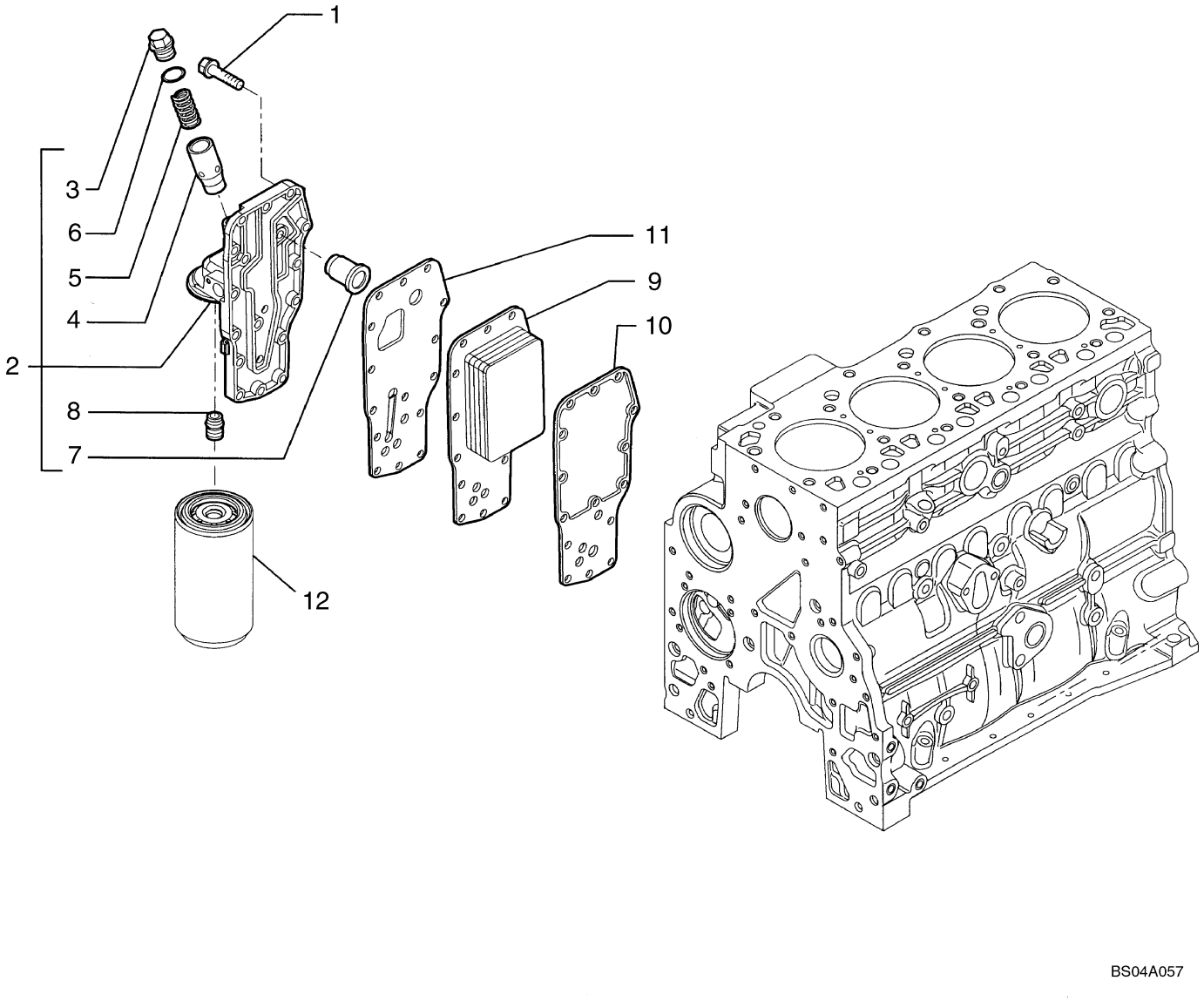

FILTRO Y REFRIGERADOR DE ACEITE

REF	FN	PART NUMBER	YR/SN	QTY	DENOMINACION
1		4899019		15	TORNILLO, Hex Flg, M8 x 1.25 x 35
		2856343		1	CABEZA DE FILTRO, Incl. Ref 3 - 8
3		2853781		1	TAPÓN
4		4896404		1	EMBOLO, Plunger, Pressure Regulator
5		4895045		1	RESORTE
6		4899035		1	JUNTA HERMETICA
7		4896410		1	VÁLVULA, DESCARGA, Pressure Relief
8		{2856344}		1	Head, Filter; Incl 8A
8A		4893391		1	ADAPTOR
9		4896406		1	RADIADOR ACEITE, Cooler Core
9		2853722		1	RADIADOR ACEITE, Alternate Part to 4896406
10		2830559		1	JUNTA HERMETICA, Core
11		4896409		1	JUNTA HERMETICA, Head
12		REF		1	MANUAL, FILTER, ENGINE OIL; See Figure 02-20

FILTRO DE ACEITE - MOTOR

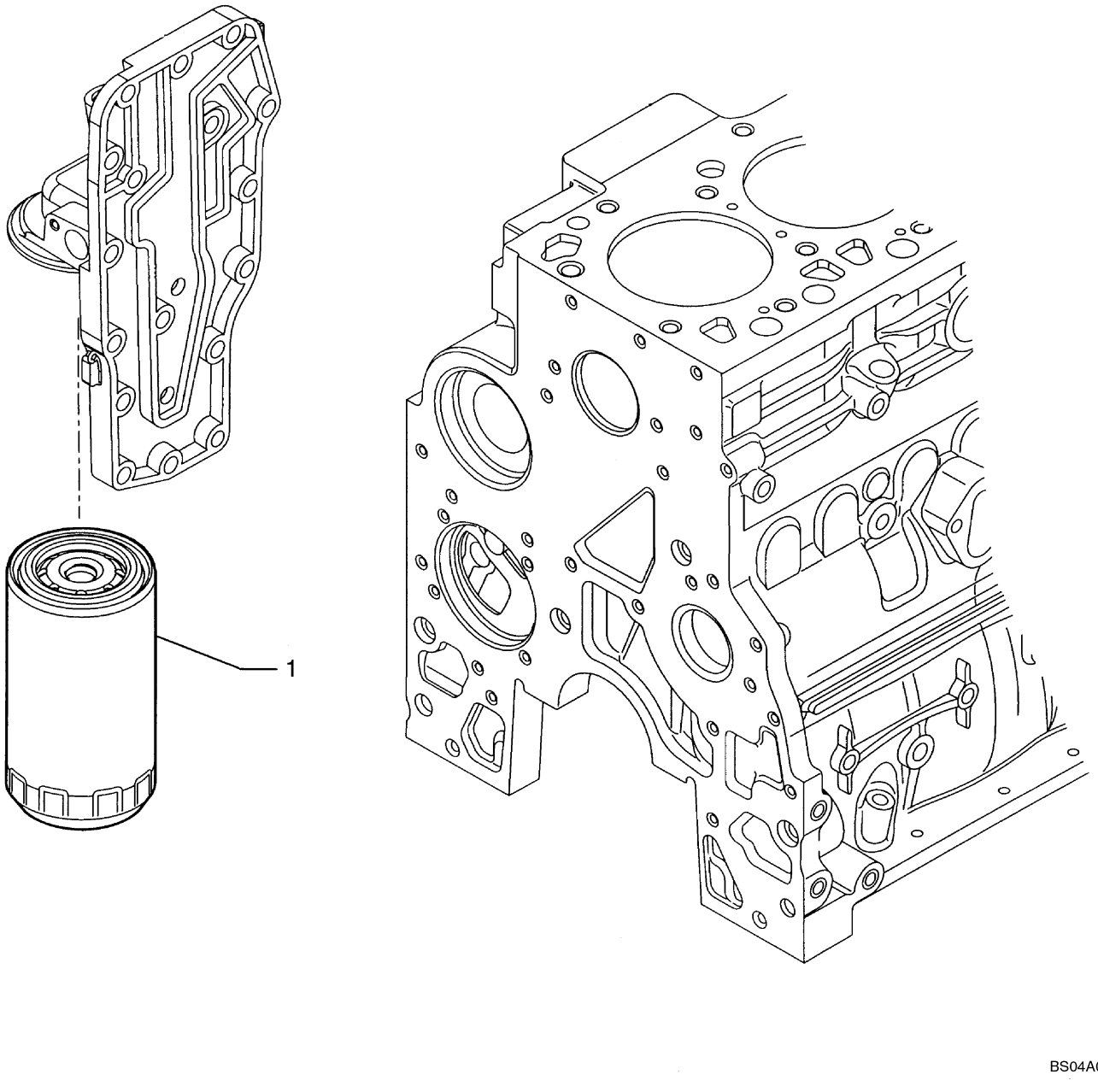

FILTRO DE ACEITE - MOTOR

REF	FN	PART NUMBER	YR/SN	QTY	DENOMINACION
1		2856715		1	FILTRO DE ACEITE

BOMBA DE ACEITE - MOTOR

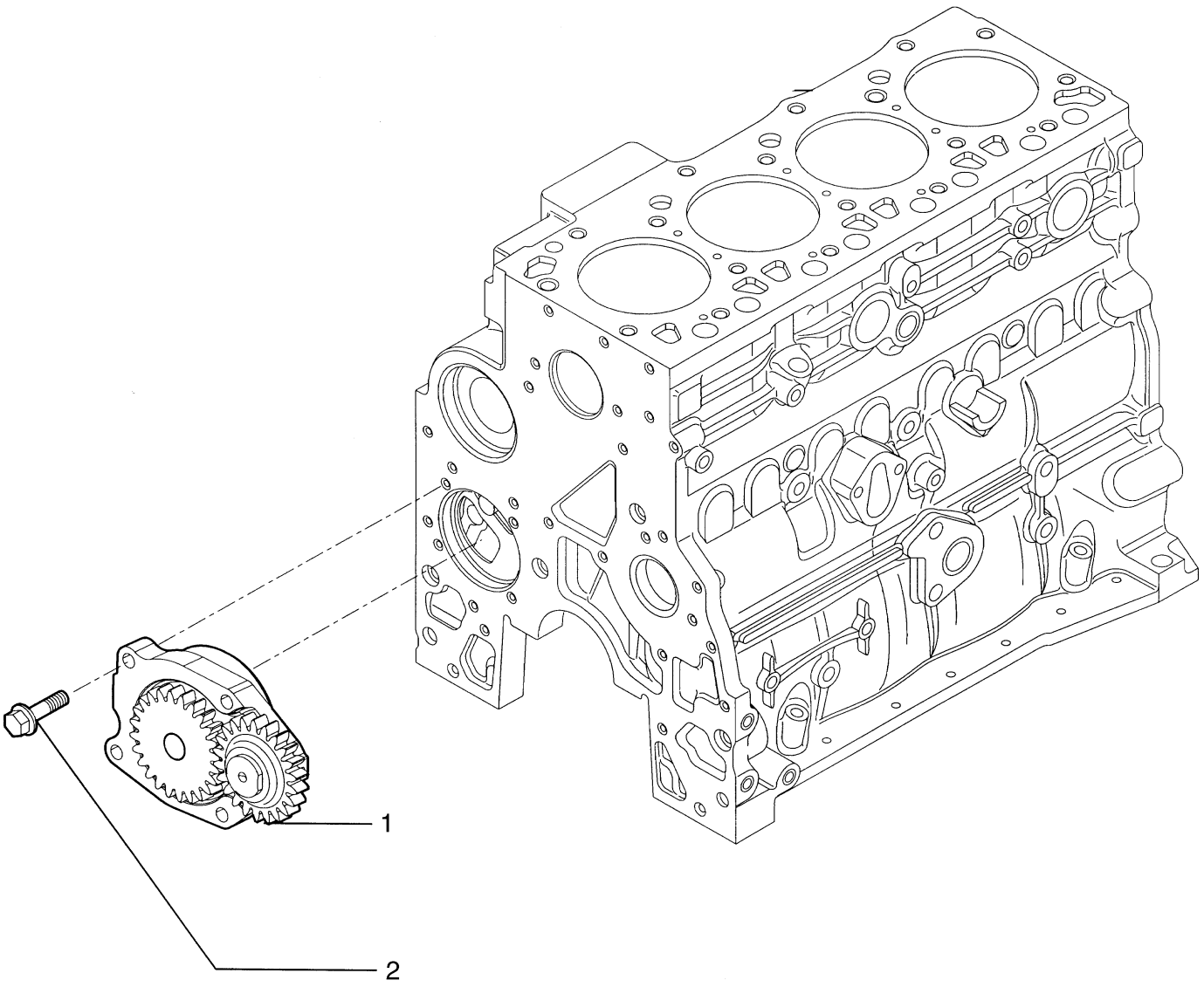

BS04A054

BOMBA DE ACEITE - MOTOR

REF	FN	PART NUMBER	YR/SN	QTY	DENOMINACION
1		4897480		1	BOMBA DE ACEITE
2		4899090		4	TORNILLO, Hex Flg, M8 x 1.25 x 30

LLENADO DE ACEITE, MOTOR

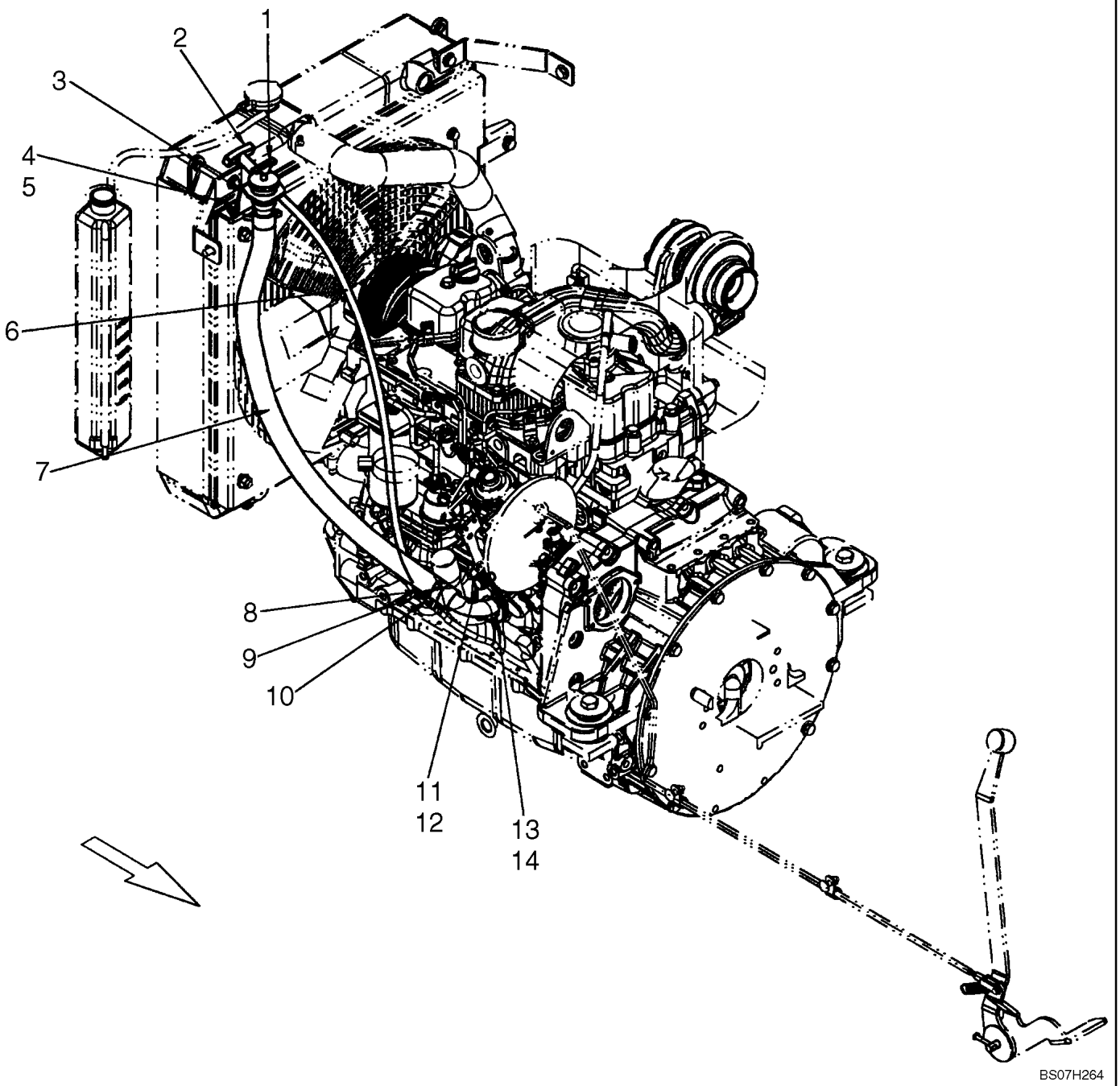

LLENADO DE ACEITE, MOTOR

REF	FN	PART NUMBER	YR/SN	QTY	DENOMINACION
1		87445427		1	TAPA DE DEPOSITO, Oil Fill
1		87722140		1	TAPON DEL DEPOSITO, Oil Fill Cap, Europe
2		{87566701}		1	Dipstick
3		{87574281}		1	Bracket, Dipstick, Oil Fill Mounting
3		87735275		1	PIEZA DE SOPORTE, Bracket, Oil Fill Mounting, Europe
4		120103		2	TORNILLO, Hex, M8 x 16, 8.8
5		322358		2	ARANDELA ABANICO, Belleville, M8
6		{87612761}		1	Tube; Dipstick
7		{87560205}		1	Tube; Remote Oil Fill
8		574518		1	ABRAZADERA MANGUERA, #4, 0.25/0.62 Type M Worm
9		87432275		2	RESORTE, Clamp, 35 mm
10		87438418		1	TUBO, Oil Guage
11		300388		2	TORNILLO, Hex, M12 x 25, 8.8
12		412123		2	ARANDELA DE FRENO, M12
13		14458781		1	JUNTA HERMETICA, -129, Cl 7, 1.549" ID x .103" Thk
14		87432267		1	TUBO, Oil Fill

DRENAJE DE ACEITE

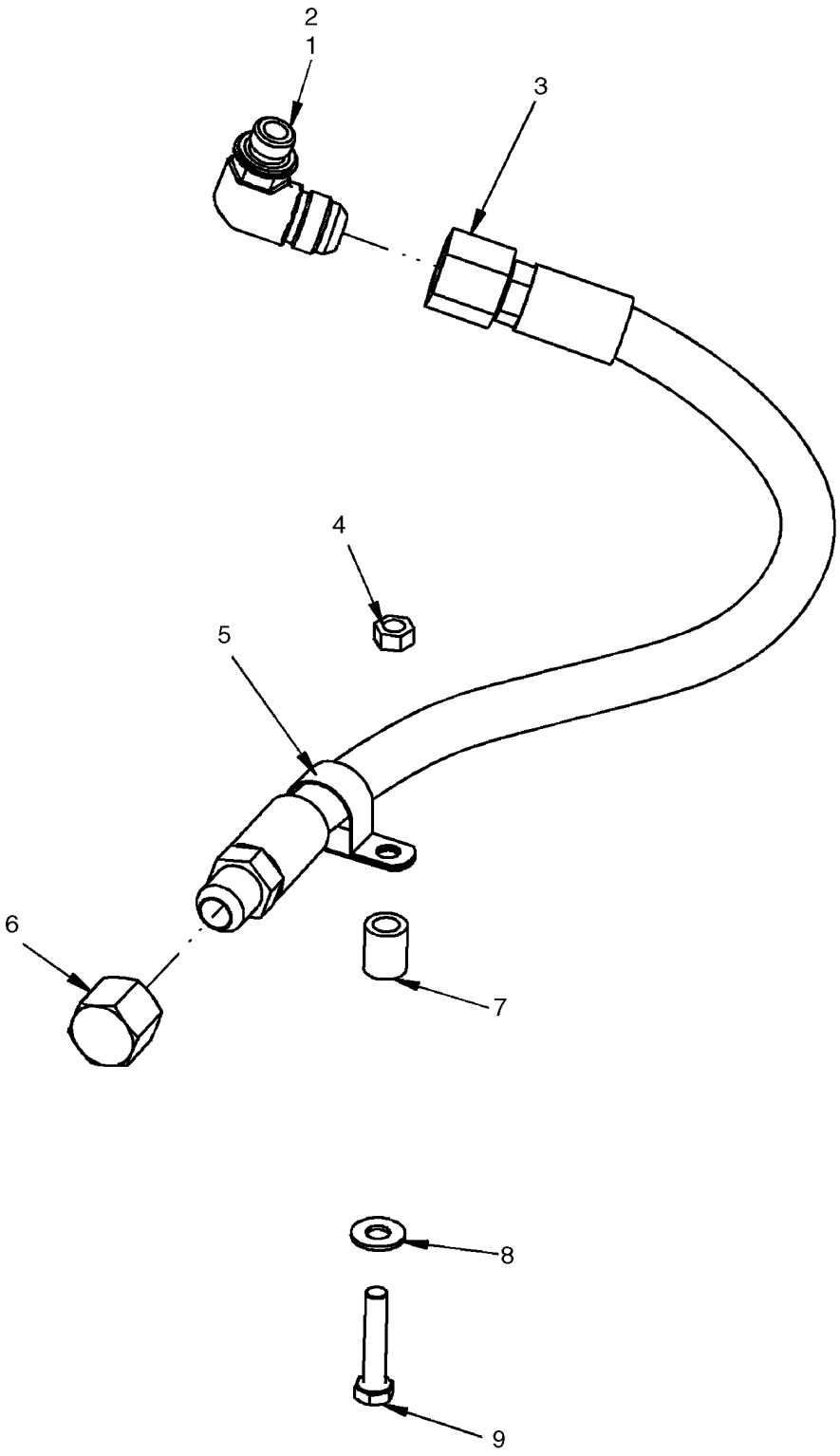

BS07K954

DRENAJE DE ACEITE

REF	FN	PART NUMBER	YR/SN	QTY	DENOMINACION
1		87688478		1	CONEXION, Oil Pan Fitting; Incl 2
2		86598102		1	JUNTA HERMETICA, Cl 6, 19.3MM ID x 2.2 Thk
3		87694058		1	MANGA, Hose, Remote Oil Drain, 730mm (28 3/4 in.)
4		9706690		1	TUERCA, M8, Cl 8
5		87307884		1	BORNE
6		129200		1	TAPON DEL DEPOSITO, 37º, 7/8"-14
7		229398		1	SEPARADOR
8		86625263		1	ARANDELA, M8 x 20 x 1.6
9		43129		1	TORNILLO, Hex, M8 x 40, 8.8

SENSORES MOTOR - MOTOR, ACEITE

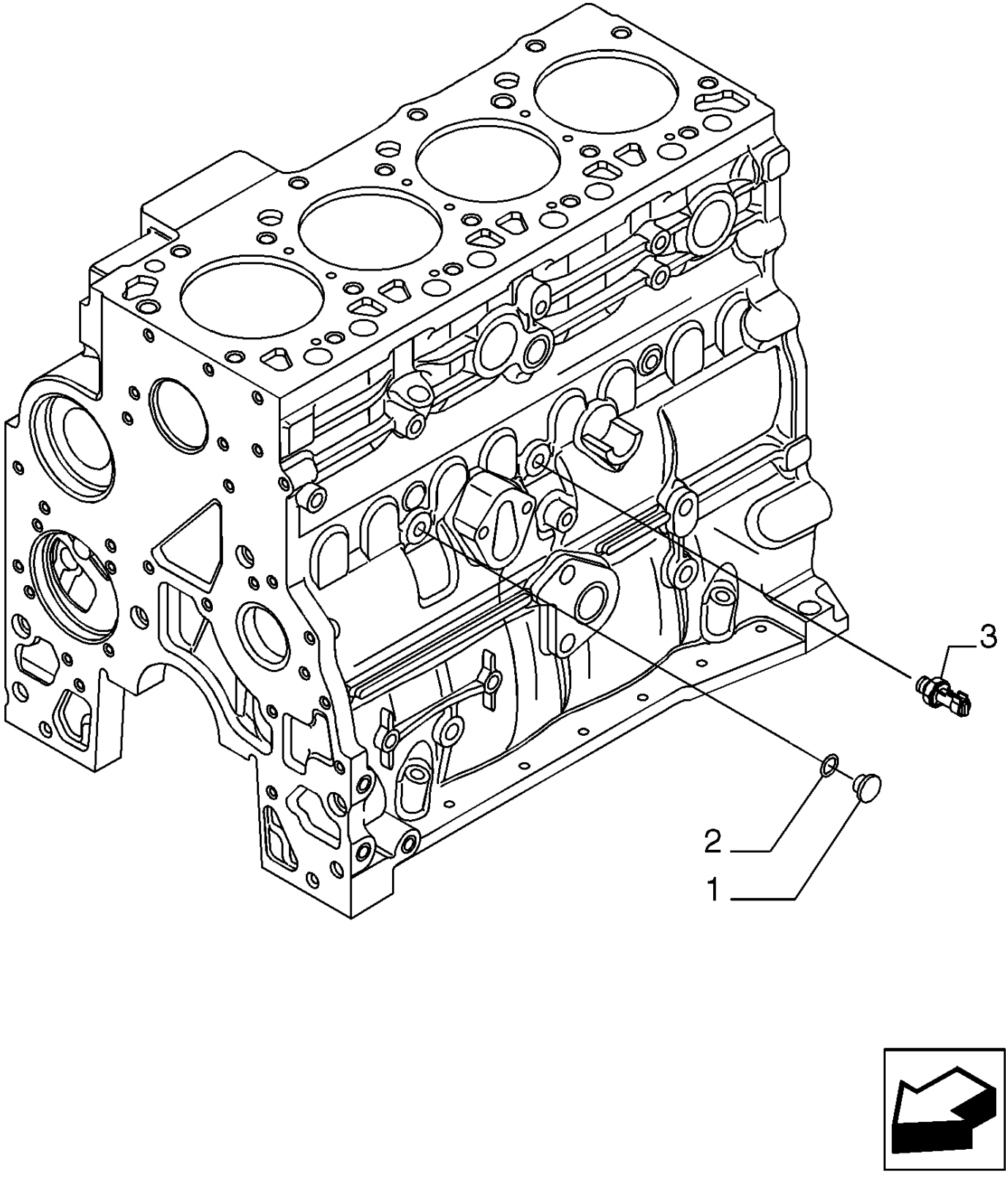

BS07M810

SENSORES MOTOR - MOTOR, ACEITE

REF	FN	PART NUMBER	YR/SN	QTY	DENOMINACION
1		4899009		1	TAPÓN, M10 x 1
2		4899072		1	JUNTA HERMETICA
3		2852889		1	INTERRUPTOR DE PRESION, Engine Oil

RESPIRADERO - MOTOR

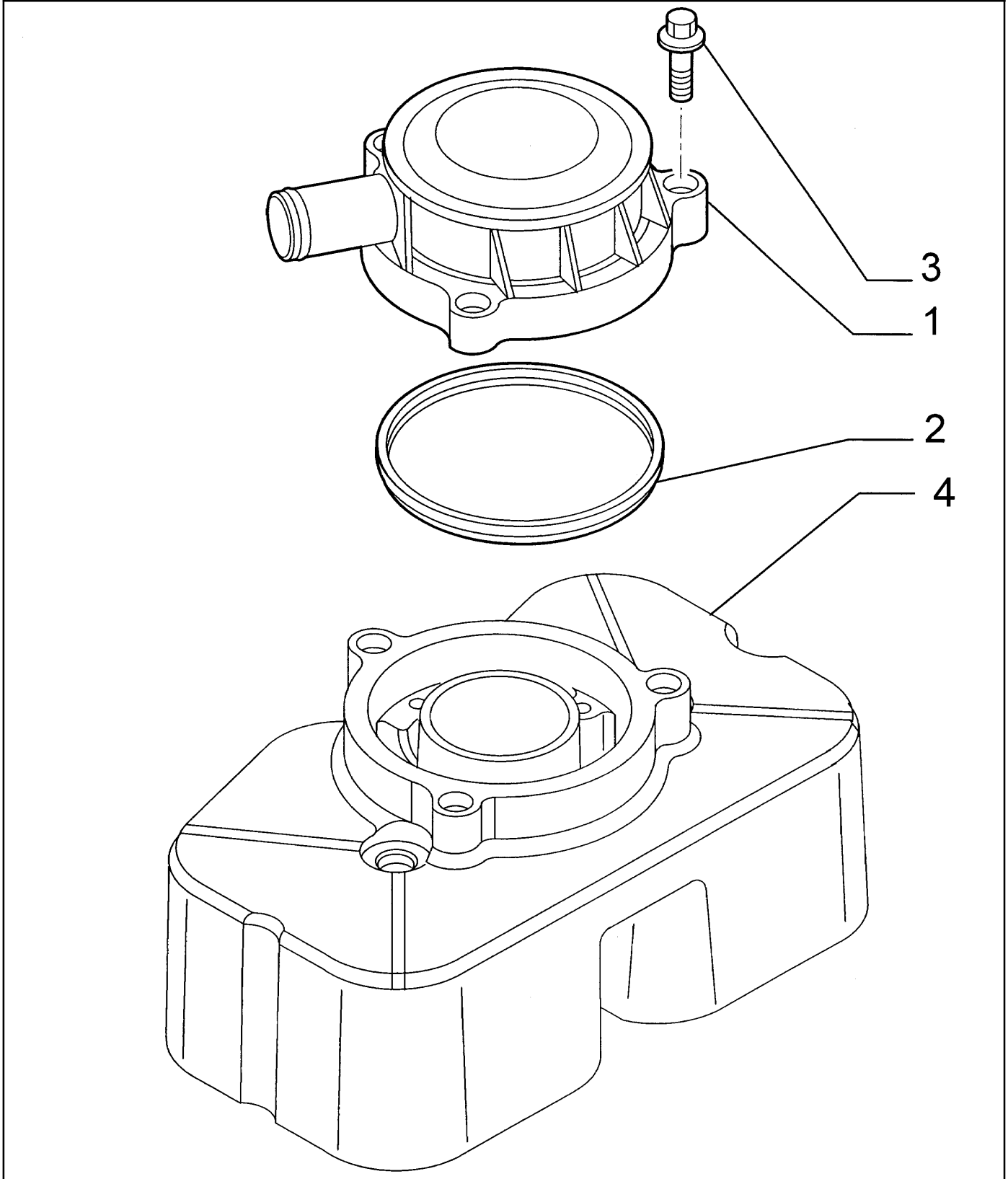

RESPIRADERO - MOTOR

REF	FN	PART NUMBER	YR/SN	QTY	DENOMINACION
1		2852531		1	RESPIRADERO
2		2852028		1	JUNTA HERMETICA
3		4899110		3	TORNILLO, Hex Flg, M6 x 1 x 20, In Alternative
3		4899092		3	TORNILLO, Hex Flg, M6 x 1 x 25, In Alternative

COLECTOR ESCAPE

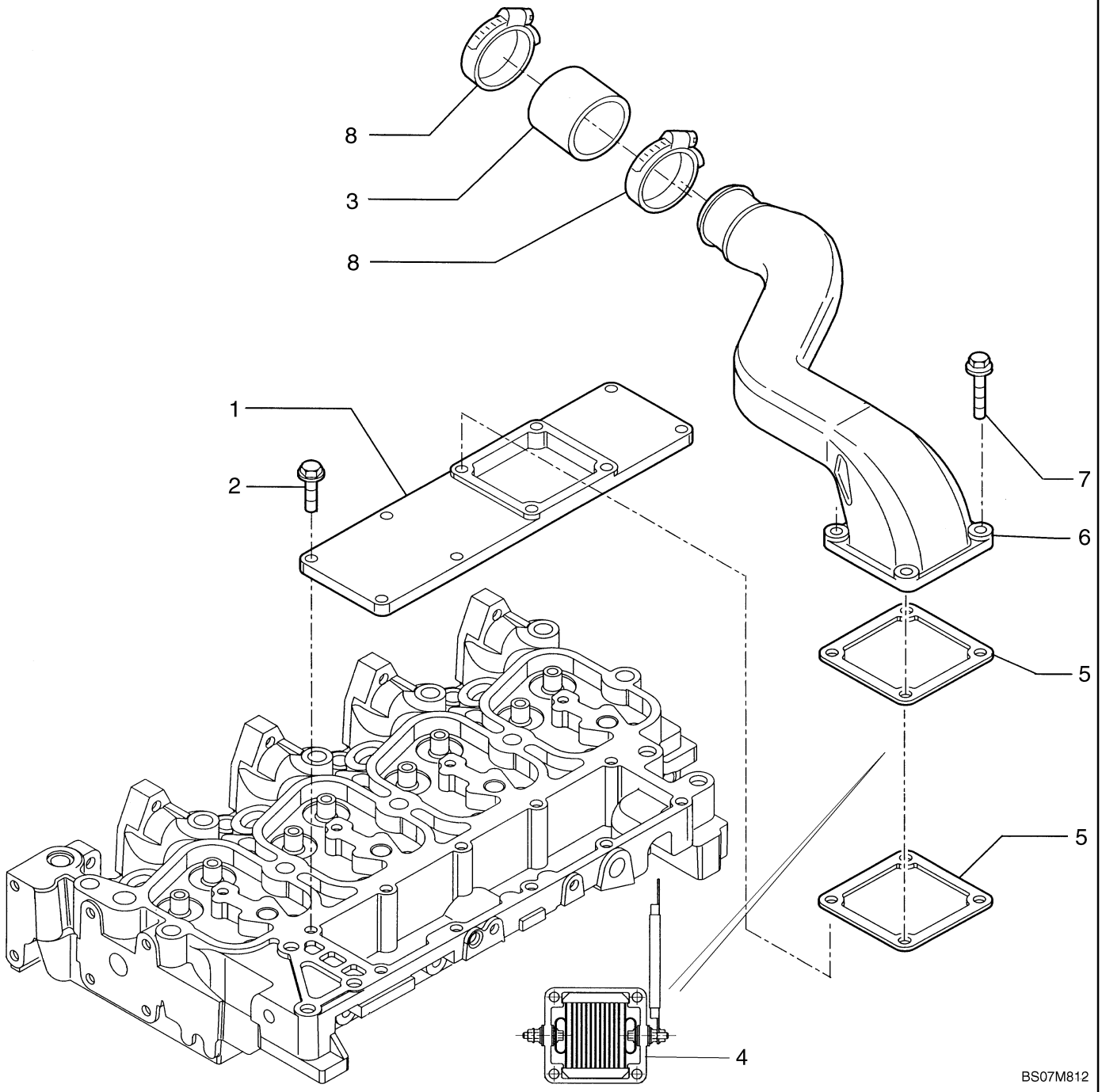

COLECTOR ESCAPE

REF	FN	PART NUMBER	YR/SN	QTY	DENOMINACION
1		2856462		1	COLECTOR DE ADMISION
2		4899039		6	TORNILLO, Hex Flg, M8 x 1.25 x 25
3		2852029		1	MANGUITO
4		4895316		1	RECALENTADOR
5		4899921		2	JUNTA HERMETICA
6		2853075		1	CODO, Hose Assy
7		2852155		4	TORNILLO, Flange, M8 x 80
8		2853076		2	ABRAZADERA MANGUERA
		4895325		1	CALCOMANIA, Warning, Do Not Use Ether

COLECTOR ESCAPE

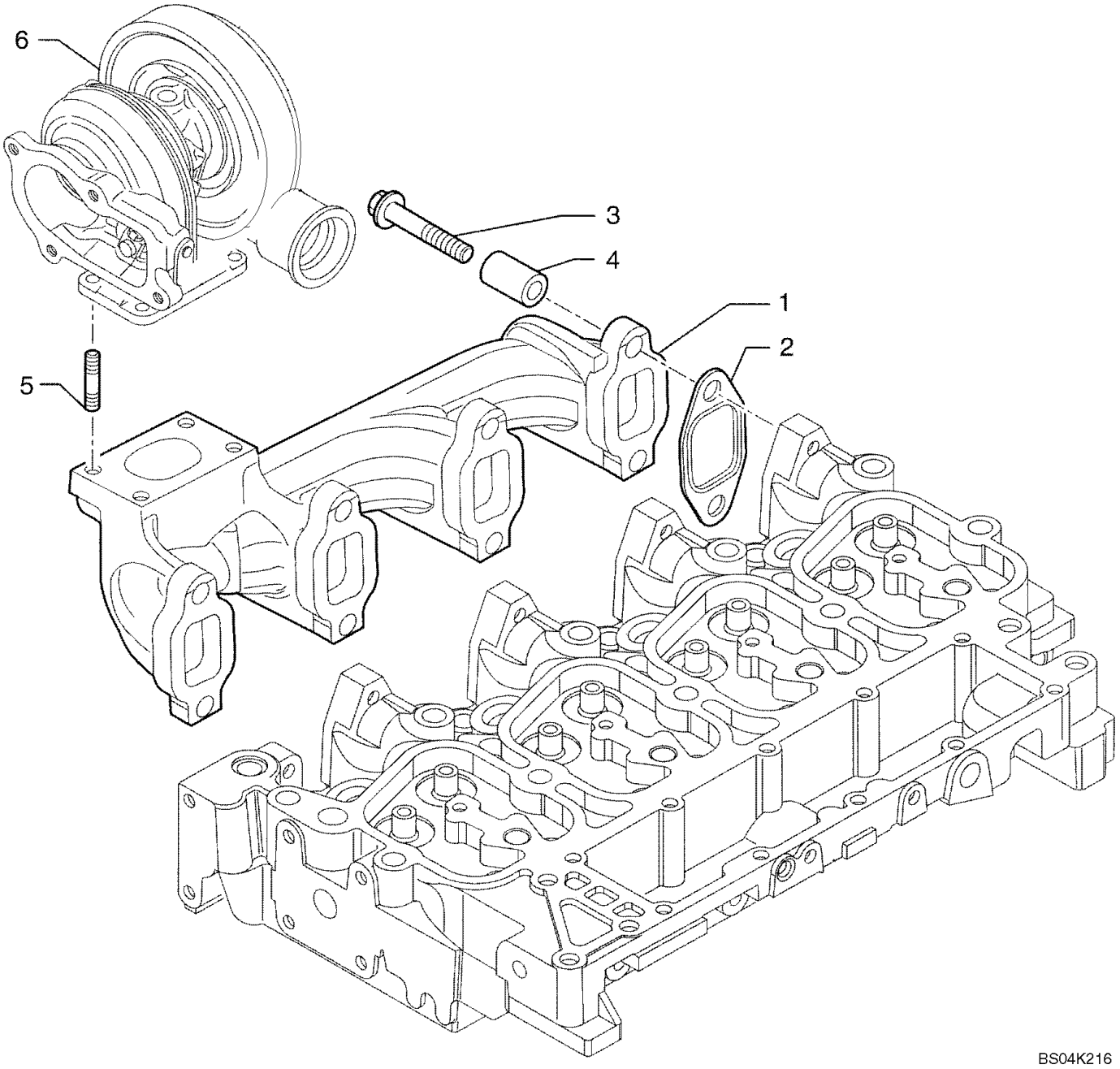

COLECTOR ESCAPE

REF	FN	PART NUMBER	YR/SN	QTY	DENOMINACION
1		{2855983}		1	Exhaust Manifold
2		2830445		4	JUNTA HERMETICA
3		2852834		8	TORNILLO, Flange, M10 x 40; Models Without Turbocharged Engine
3		2852744		8	TORNILLO, Flange, M10 x 65; Models With Turbocharged Engine
4		4895336		8	SEPARADOR, Spacer; Models With Turbocharged Engine
5		4899859		4	PRISIONERO
6		REF		1	MANUAL, TURBOCHARGER; See Figure 02-41

PISTONES - VARILLAS CONECTORAS

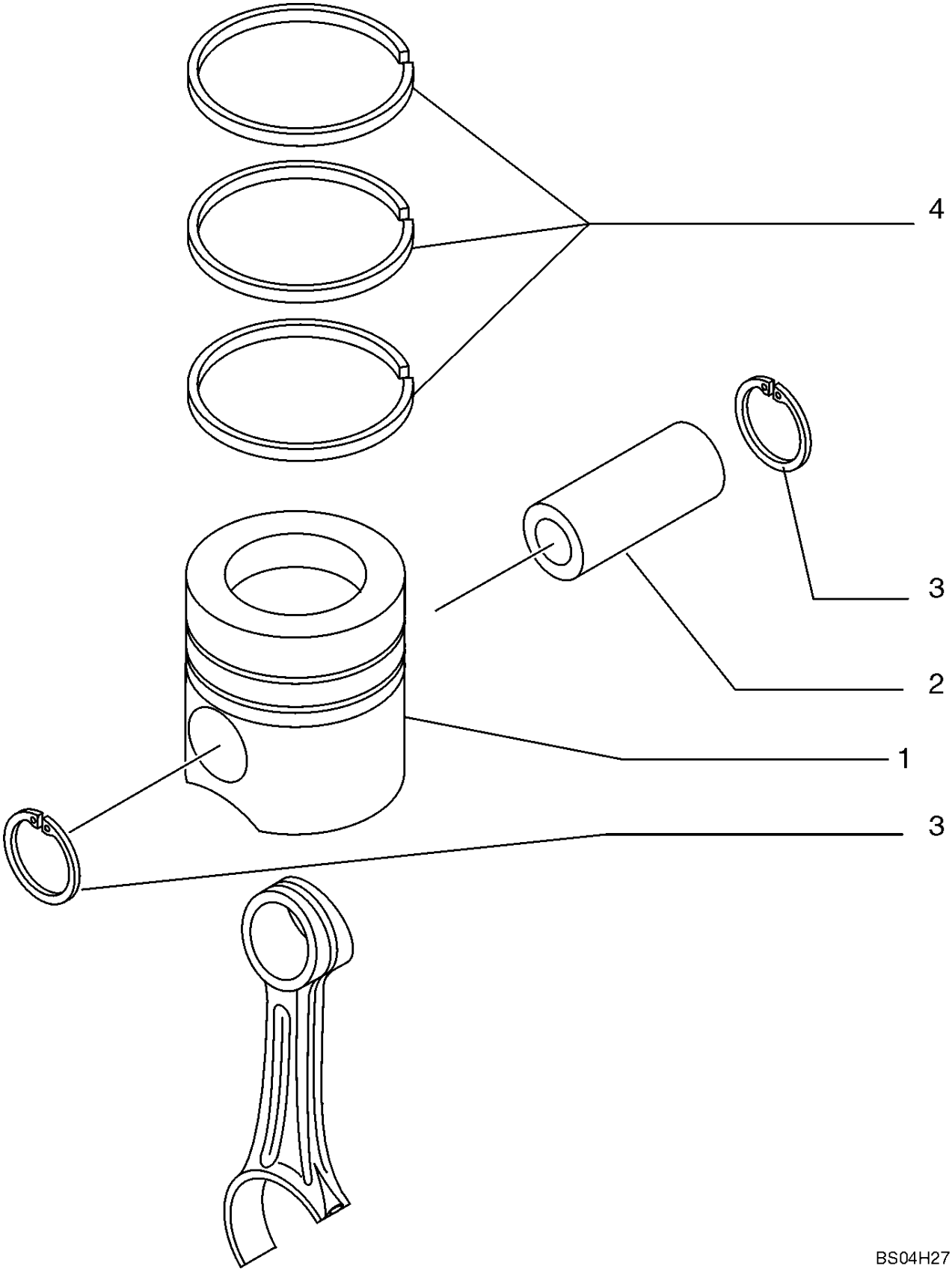

PISTONES - VARILLAS CONECTORAS

REF	FN	PART NUMBER	YR/SN	QTY	DENOMINACION
		87647549		1	SERIE PISTONES, STD, Incl Piston 2855531, Top Compression Ring 2853805, Second Compression Ring 2830158, Oil Control Ring 2852037, Piston Pin 4892712, And Retainer 2854030
		87647550		1	SERIE PISTONES, 0.4 mm Oversize, Incl Piston 2856484, Top Compression Ring 2854141, Second Compression Ring 2830159, Oil Control Ring 2853875, Piston Pin 4892712, And Retainer 2854030
		87647551		1	SERIE PISTONES, 0.8 mm Oversize, Incl Piston 2856485, Top Compression Ring 2854142, Second Compression Ring 2830160, Oil Control Ring 2853876, Piston Pin 4892712, And Retainer 2854030
		{87582179}		1	Ring Kit; STD; Incl. Top Cmpression Ring 2854603, Second Compression Ring 2830158, Oil Control Ring 2852037
		{87582180}		1	Ring Kit; 0.4 mm Oversize; Incl. Top Cmpression Ring 2856713, Second Compression Ring 2830159, Oil Control Ring 2853875
		{87582181}		1	Ring Kit; 0.8 mm Oversize; Incl. Top Cmpression Ring 2856714, Second Compression Ring 2830160, Oil Control Ring 2853876
1		2855531		4	EMBOLO COMPL, STD; Does Not Include Rings
1		{2856484}		4	0.4 Oversize; Does Not Include Rings
1		{2856485}		4	0.8 Oversize; Does Not Include Rings
2		4892712		4	BULON DEL EMBOLO
3		2854030		8	ANILLO DE RESORTE
3		4892713		8	ANILLO DE RESORTE, Alternative To 2854030
4		{2853805}		4	Top Compression Ring; STD
4		{2854141}		4	Top Compression Ring; 0.4 Oversize
4		{2856713}		4	Top Compression Ring; 0.4 Oversize
4		{2856714}		4	Top Compression Ring; 0.4 Oversize
4		{2854142}		4	Top Compression Ring; 0.8 Oversize
4		2852037		4	ARO RASCADOR DE ACEITE, Oil Control; STD; Red Identification Mark
4		{2853875}		4	Oil Control Ring; 0.4 Oversize

PISTONES - VARILLAS CONECTORAS

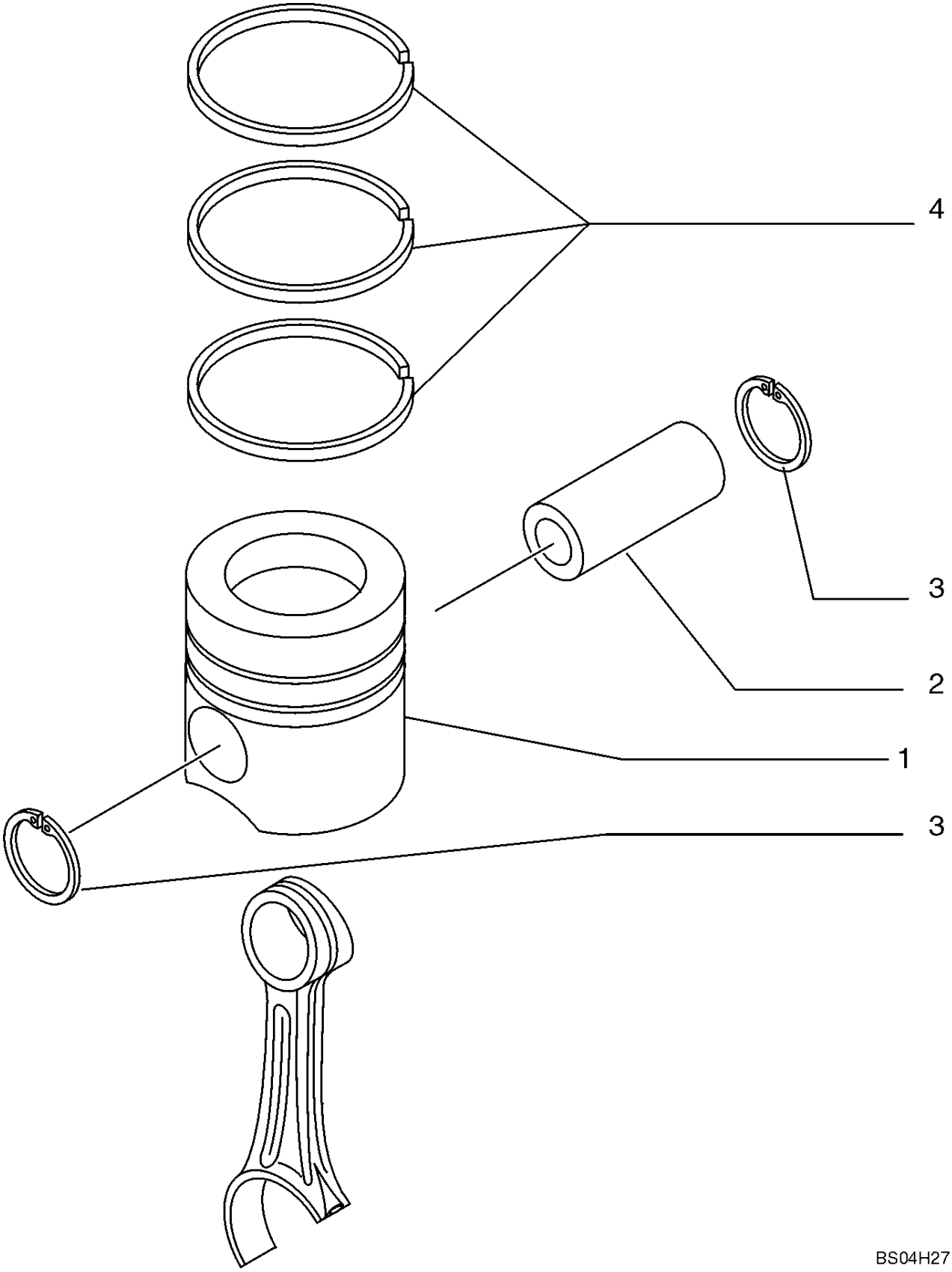

PISTONES - VARILLAS CONECTORAS

REF	FN	PART NUMBER	YR/SN	QTY	DENOMINACION
4		{2853876}		4	Oil Control Ring; 0.8 Oversize
4		2830158		4	ARO DE EMBOLO, Second Compression; STD; Yellow Identification Mark
4		{2830159}		4	Second Compression Ring; 0.4 mm Oversize
4		{2830160}		4	Second Compression Ring; 0.8 mm Oversize
4		2854603		4	EQUIPO, Ring, Wear

VARILLAS CONECTORAS

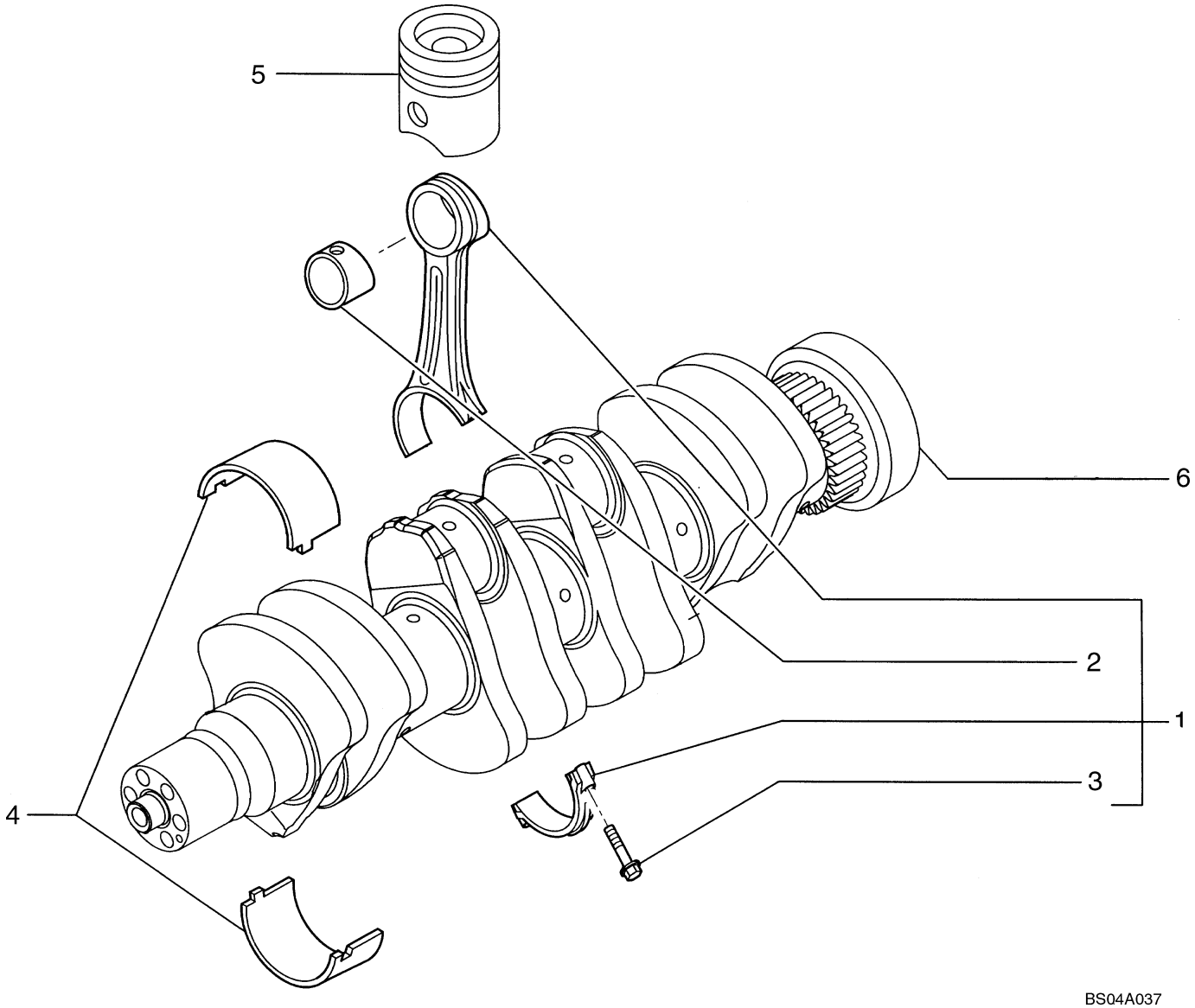

VARILLAS CONECTORAS

REF	FN	PART NUMBER	YR/SN	QTY	DENOMINACION
1		2831298		4	BIELA DE EMBOLO, Incl. Ref 2, 3
1		{4895747}		4	Connecting Rod; Alternate To 2831298; Incl. Ref 2, 3
2		4892708		1	CASQUILLO
3		2831297		2	TORNILLO
4		4892714		4	COJINETTE CIGUENAL
4		4892715		4	COJINETTE CIGUENAL
5		REF		1	MANUAL, PISTON; See Figure 02-28
6		REF		1	MANUAL, CRANKSHAFT; See Figure 02-34

EJE BALANCINES

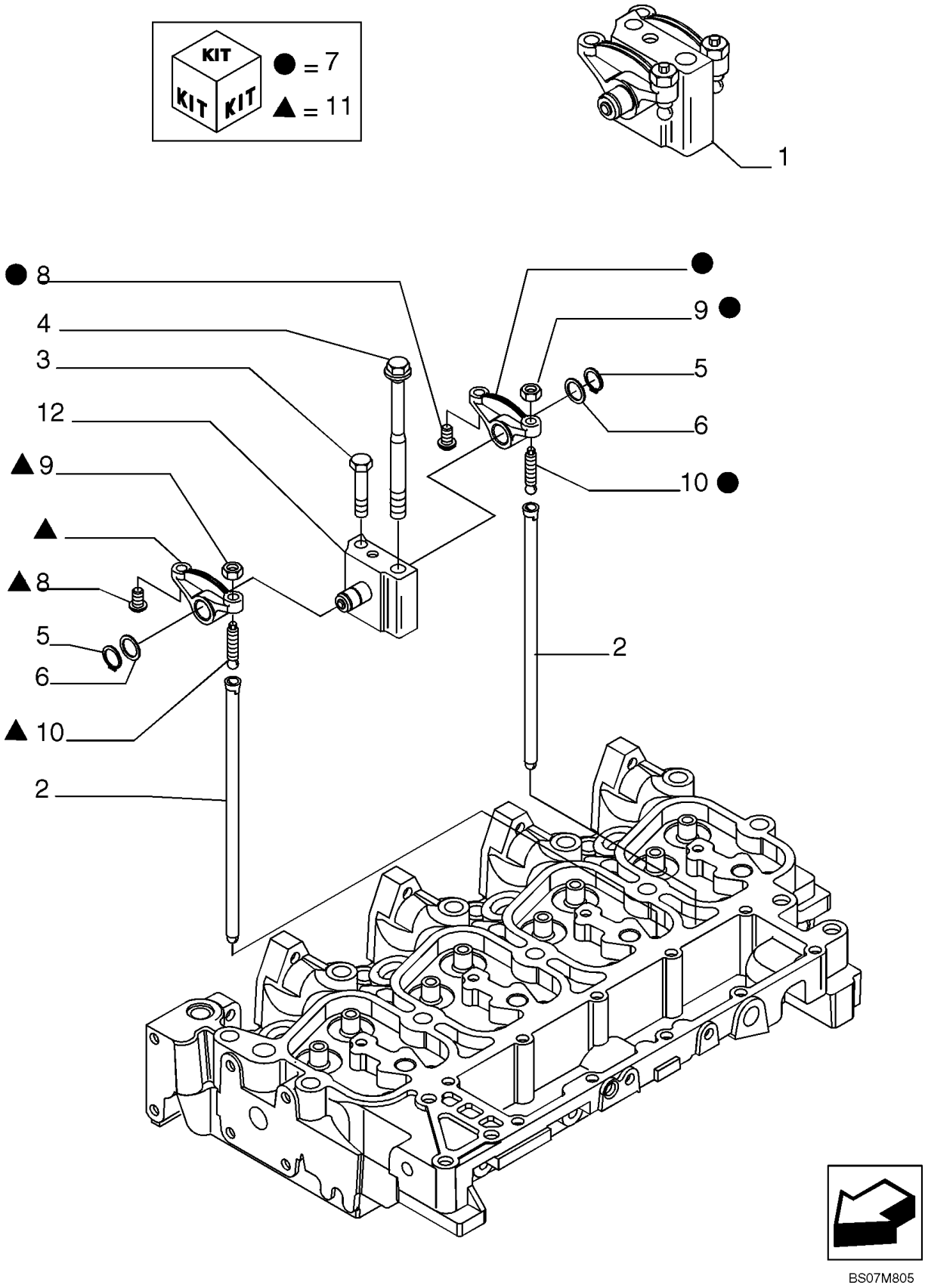

EJE BALANCINES

REF	FN	PART NUMBER	YR/SN	QTY	DENOMINACION
1		4895195		4	BALANCIN, - ASSY
2		4895361		8	VARILLA DE EMPUJE
3		2852866		4	TORNILLO
4		4892860		4	TORNILLO, Wash Hd, M12 x 1.25 x 183
5		4895363		2	ANILLO DE RESORTE
6		4895364		2	ARANDELA
7		4895196		1	BALANCIN, - ASSY
8		4895365		2	INTRODUCTOR
9		4895198		2	TUERCA
10		4895199		2	TORNILLO
11		4895200		1	BALANCIN, - ASSY
12		4895204		1	SOPORTE

VOLANTE MOTOR

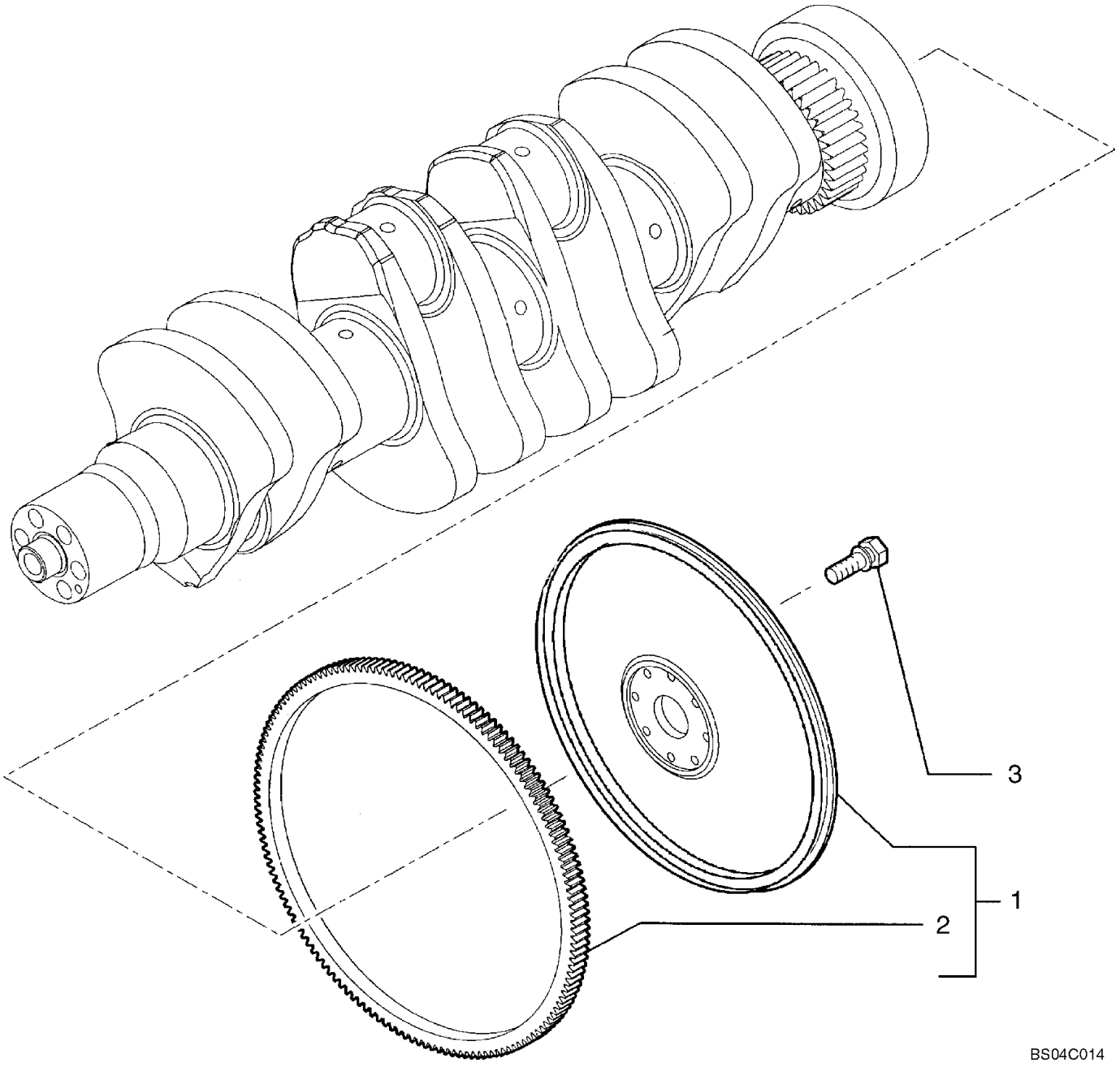

VOLANTE MOTOR

REF	FN	PART NUMBER	YR/SN	QTY	DENOMINACION
1		2853991		1	VOLANTE DEL MOTOR, Incl. Ref 2
2		2852221		1	CORONA DENTADA
3		2852364		8	TORNILLO, With Washer, M12 x 40

POLEA - CIGUENAL

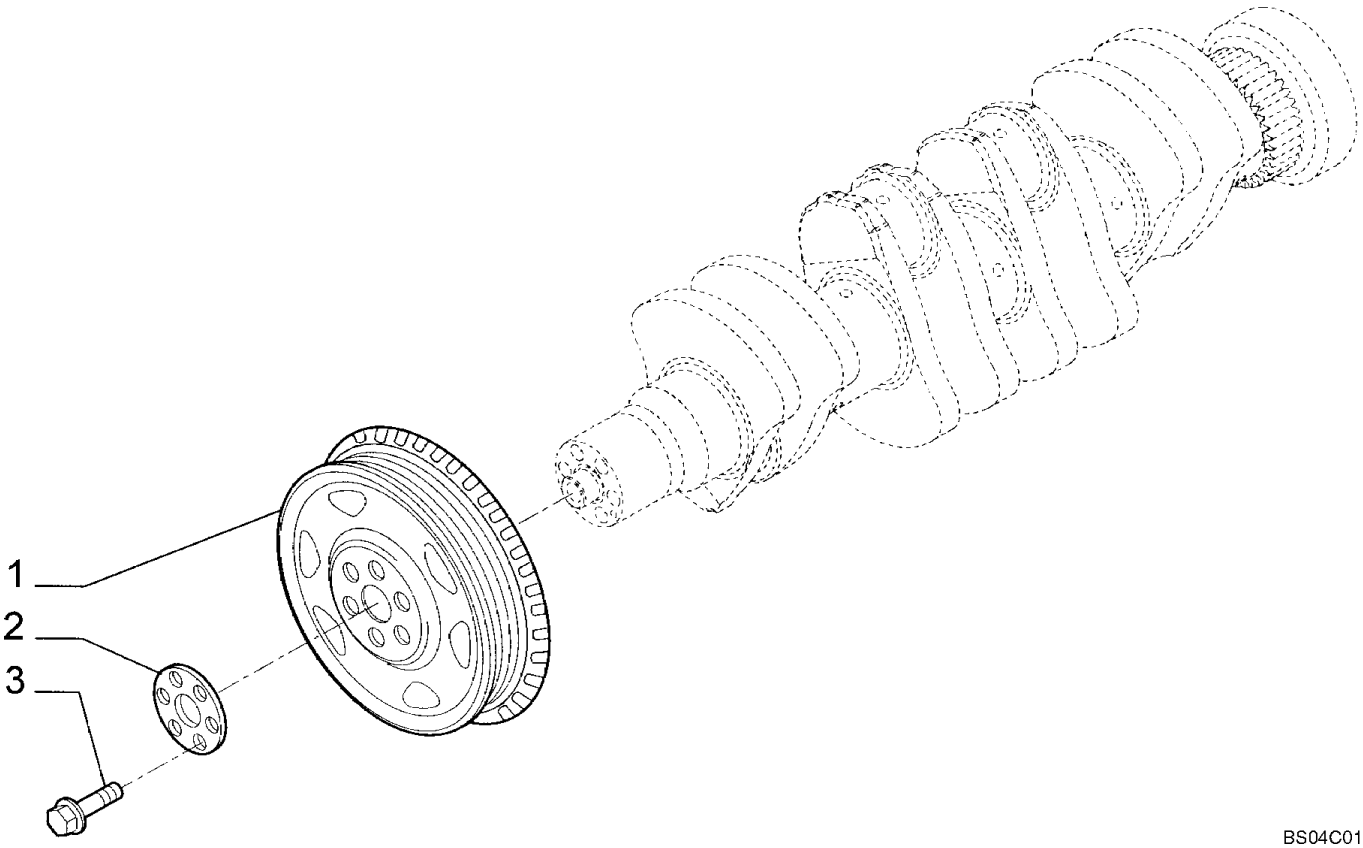

POLEA - CIGUENAL

REF	FN	PART NUMBER	YR/SN	QTY	DENOMINACION
1		4896773		1	POLEA
2		2852533		1	ARANDELA, Clamping Plate
3		4892867		6	TORNILLO, Torx Wash Hd, M12 x 1.25 x 78.5
3		2853960		6	TORNILLO, Alternative To 4892867

EJE DE LEVAS

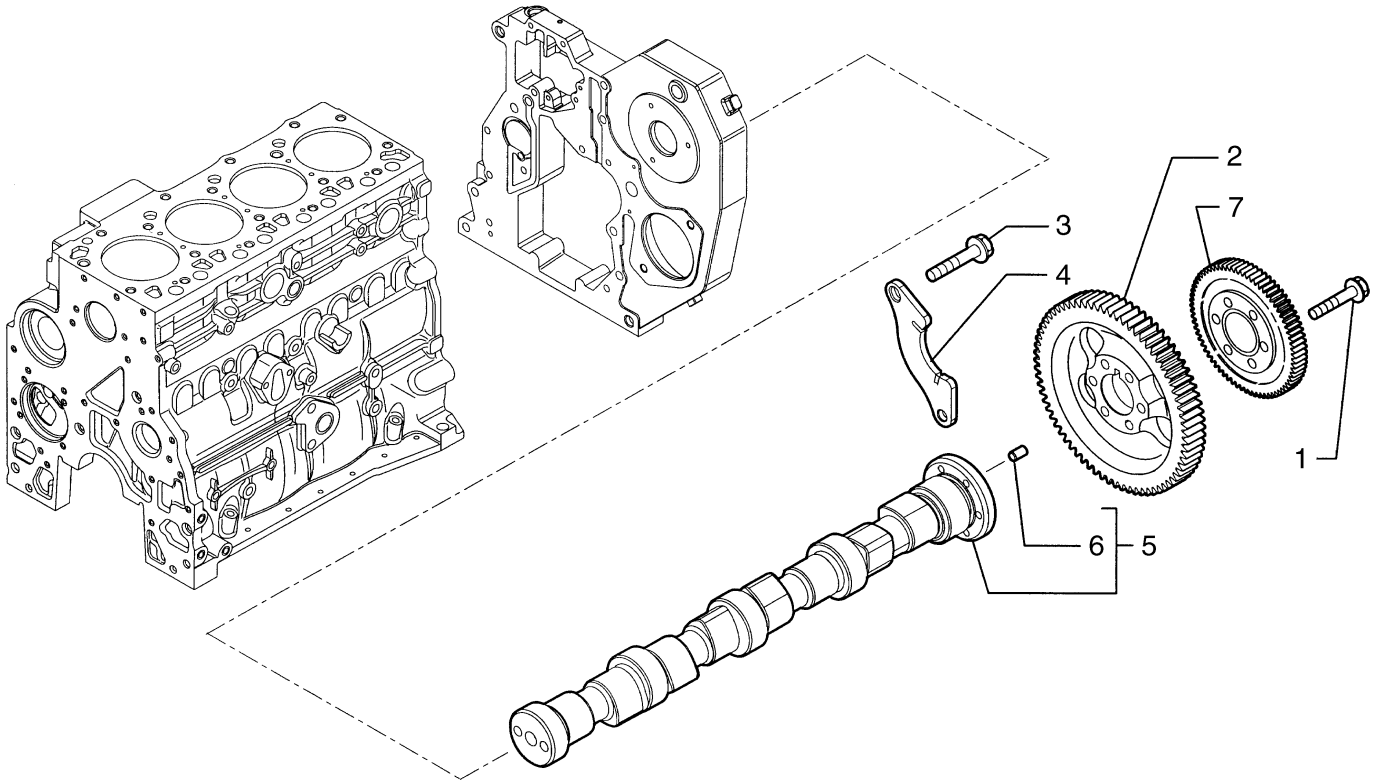

BS04A043

EJE DE LEVAS

REF	FN	PART NUMBER	YR/SN	QTY	DENOMINACION
1		4895323		6	TORNILLO, Flange, M8 x 40
2		2852062		1	ENGRANAJE
3		4899068		2	TORNILLO, Hex Flg, M8 x 1.25 x 16
4		4897457		1	BRIDA
5		{2856170}		1	Camshaft; Incl. Ref 6
6		4899080		1	PITON
7		{2855183}		1	Gear, Driven

CIGUENAL

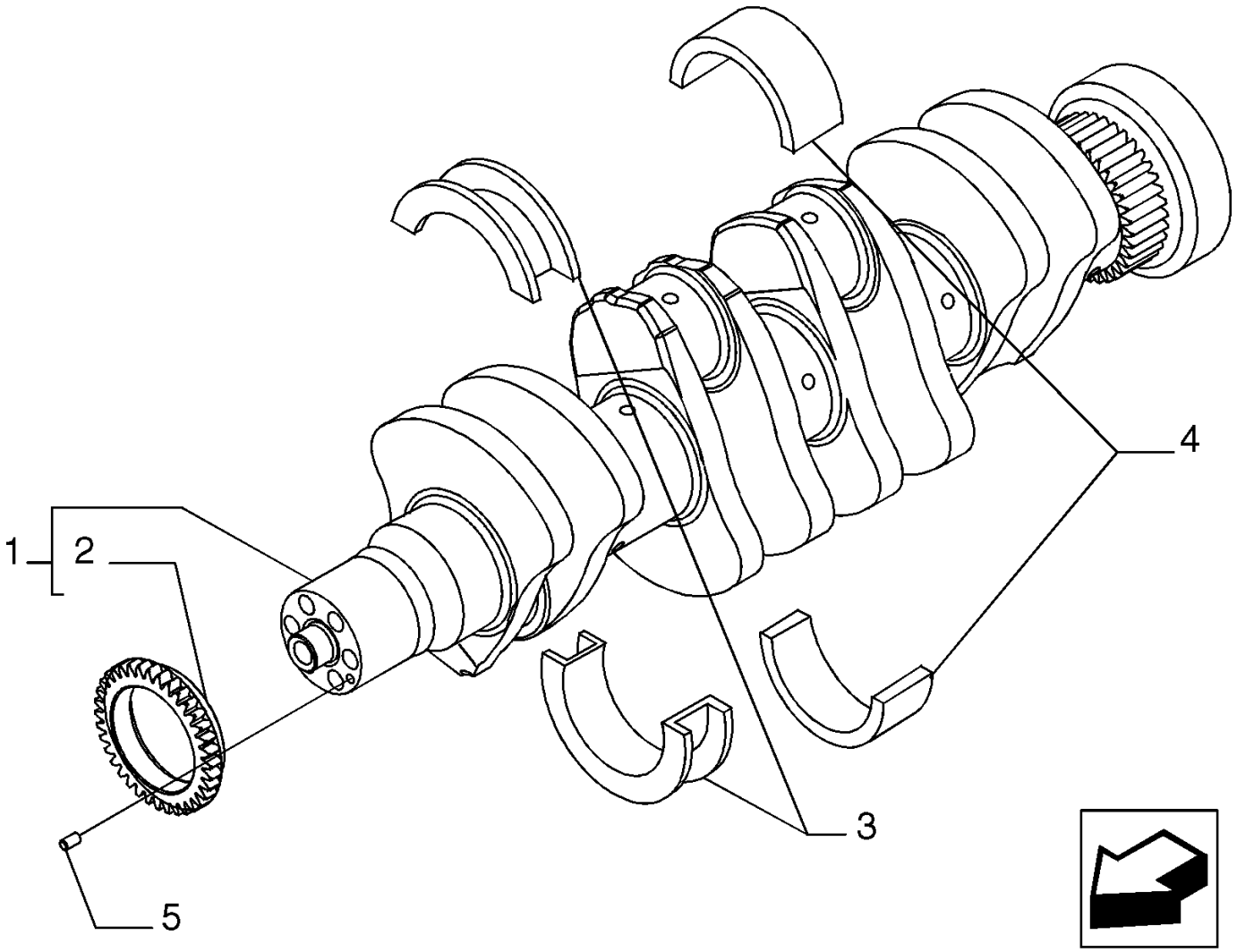

BS07M806

CIGUENAL

REF	FN	PART NUMBER	YR/SN	QTY	DENOMINACION
1		2853822		1	CIGÜEÑAL, - ASSY
2		4893386		1	ENGRANAJE
3		{2853816}		1	Thrust Bearing Kit; STD.
3		{2855020}		1	Thrust Bearing Kit; -0.25
3		{2855021}		1	Thrust Bearing Kit; -0.5
3		{2855022}		1	Thrust Bearing Kit; -0.75
3		{2855023}		1	Thrust Bearing Kit; -1
3		4895414		1	COJINETTE CIGUENAL
4		{2853815}		4	Main Bearing Kit; STD.
4		{2853816}		4	Main Bearing Kit; -0.25
4		{2853817}		4	Main Bearing Kit; -0.5
4		{2853818}		4	Main Bearing Kit; -0.75
4		{2853819}		4	Main Bearing Kit; -1
4		4895017		4	COJINETTE CIGUENAL
5		4899046		1	PITON

SISTEMA DE REFRIGERACIÓN - MOTOR

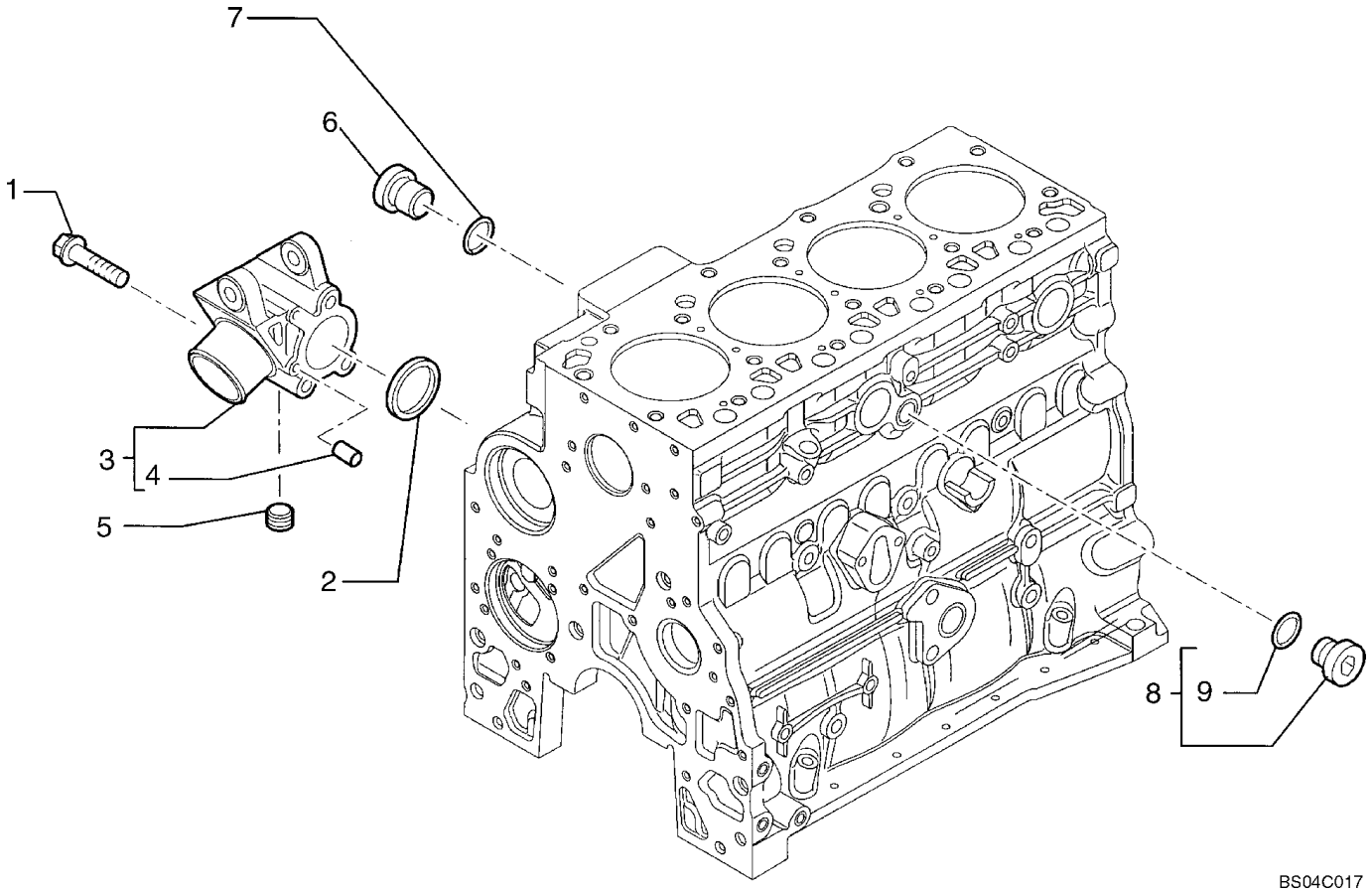

SISTEMA DE REFRIGERACIÓN - MOTOR

REF	FN	PART NUMBER	YR/SN	QTY	DENOMINACION
1		4899109		3	TORNILLO, Hex, M10 x 1.5 x 80
2		2854072		1	JUNTA HERMETICA
3		2852145		1	SOPORTE, Incl. Ref 4
4		NSS		2	NO SE REPARA SEPARADAM., Dowel
5		2852511		1	TAPÓN
		4895392		1	TAPÓN, M18; Torque Converter Oil; Incl. Ref 6, 7
6		4895394		1	TAPÓN
7		4895393		1	JUNTA HERMETICA
8		4895623		1	TAPÓN, Compressor Plumbing; Incl. Ref 9
9		4895625		1	JUNTA HERMETICA

BOMBA DE AGUA

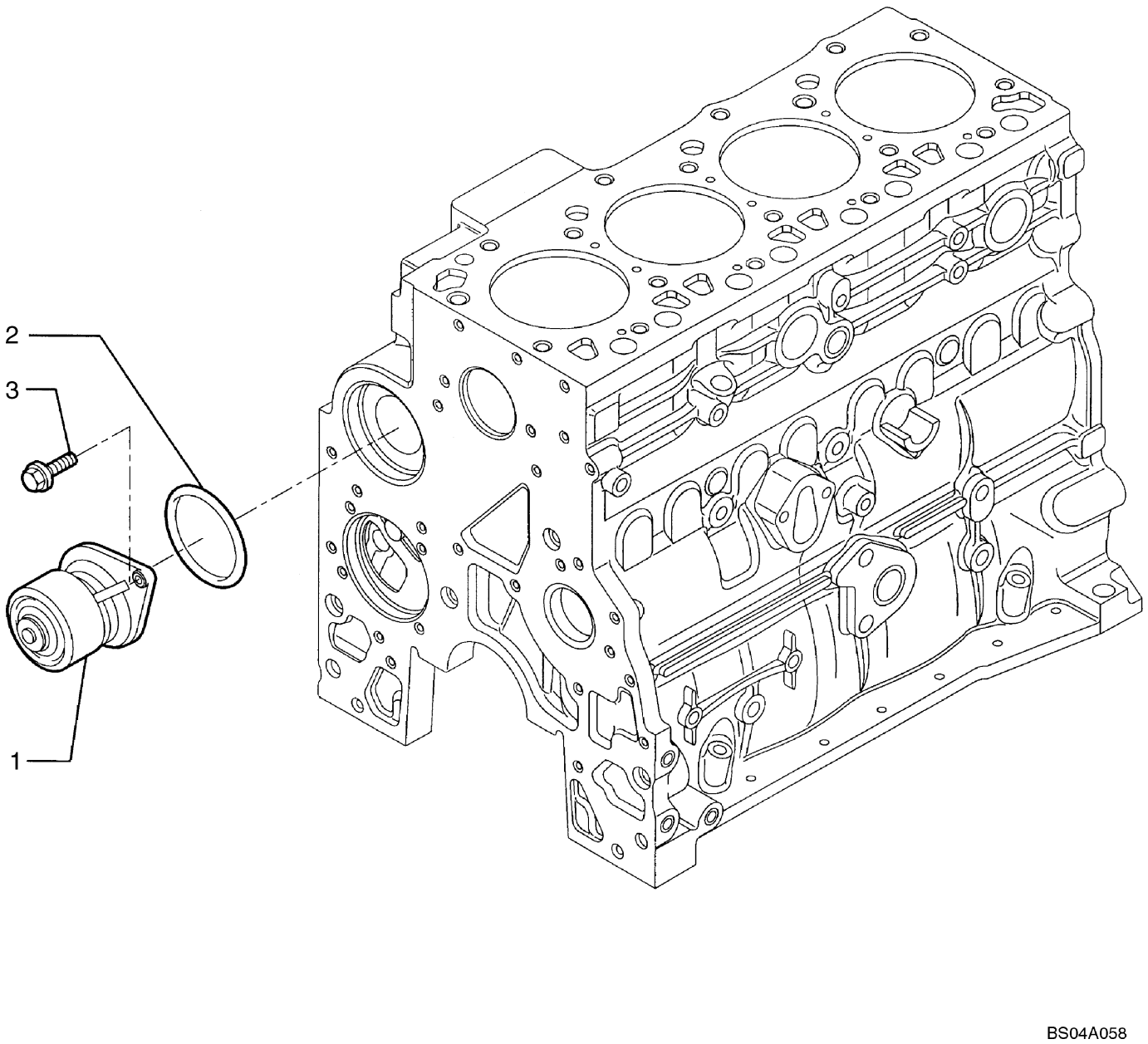

BOMBA DE AGUA

REF	FN	PART NUMBER	YR/SN	QTY	DENOMINACION
1		4891252		1	BOMBA DE AGUA
2		2852047		1	JUNTA HERMETICA, Gasket
3		4899079		2	TORNILLO, Hex Flg, M8 x 1.25 x 25

BOMBA DE AGUA - MANDO

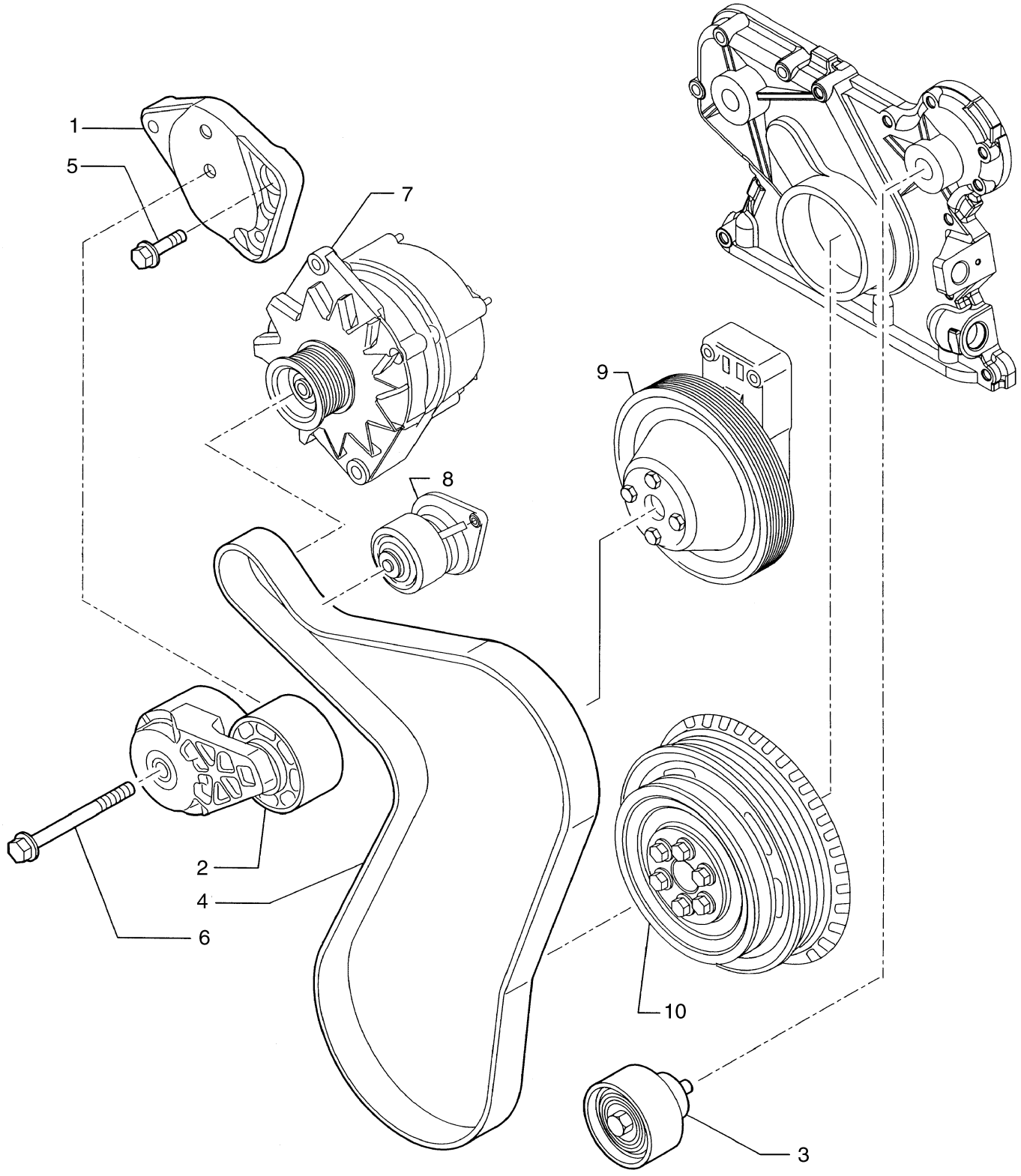

BOMBA DE AGUA - MANDO

REF	FN	PART NUMBER	YR/SN	QTY	DENOMINACION
1		2852163		1	PIEZA DE SOPORTE
		2854611		1	POLEA, Incls. 1,2,3,5 & 6
2		2852161		1	TENSOR DE CORREA
3		2852162		1	POLEA
4		85826230		1	CORREA, See Figure 02-06
5		4899079		2	TORNILLO, Hex Flg, M8 x 1.25 x 25
6		4899109		1	TORNILLO, Hex, M10 x 1.5 x 80
7		REF		1	MANUAL, ALTERNATOR; See Figure 04-02
8		REF		1	MANUAL, WATER PUMP; See Figure 02-36
9		REF		1	MANUAL, FAN DRIVE; See Figure 02-39
10		REF		1	MANUAL, CRANKSHAFT PULLEY; See Figure 02-32

TERMOSTATO - REFRIGERACION DEL MOTOR

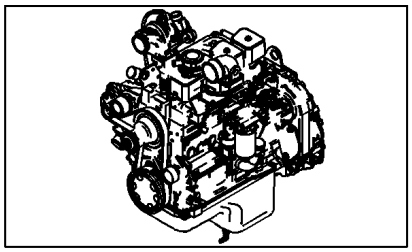

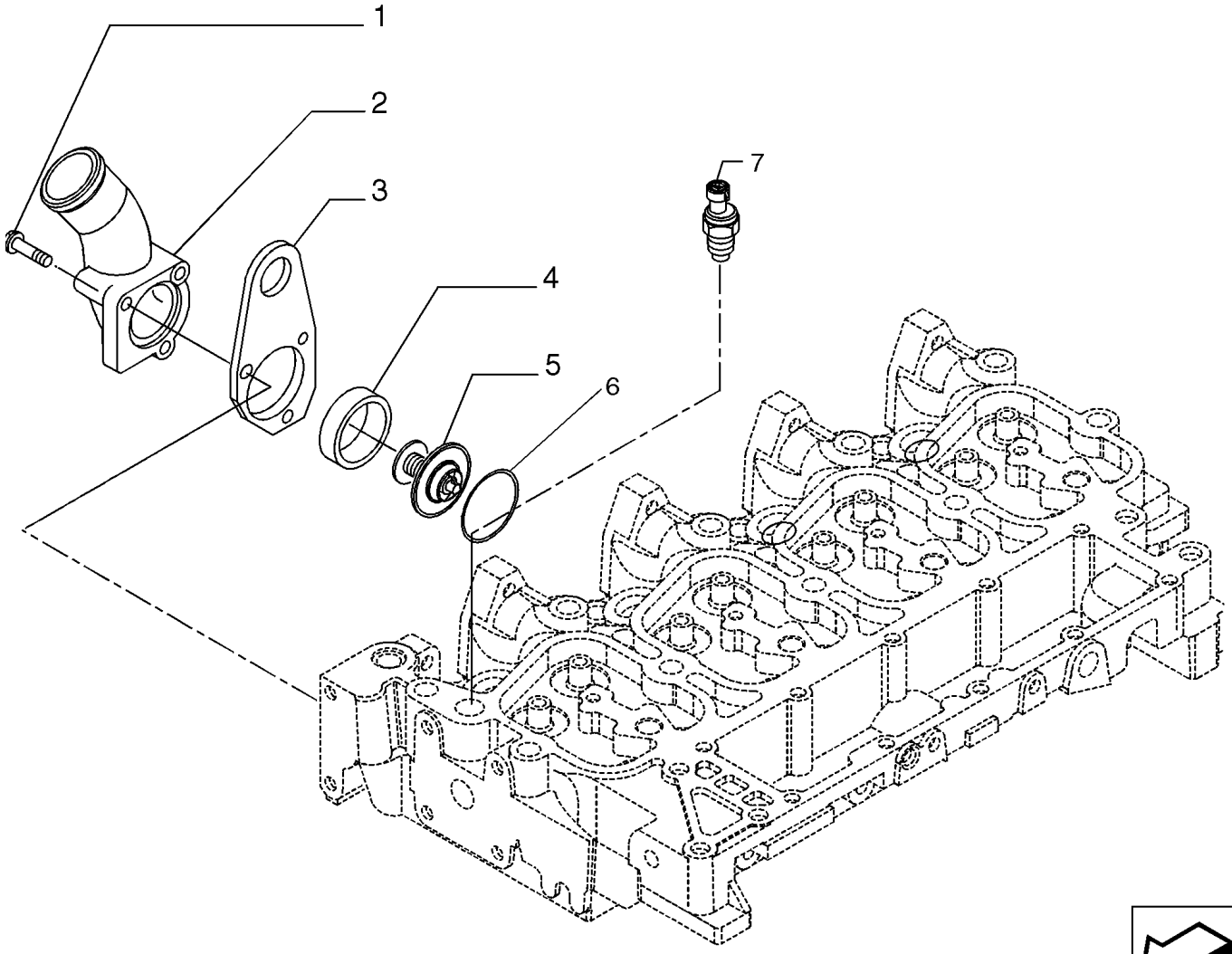

BS07M808

TERMOSTATO - REFRIGERACION DEL MOTOR

REF	FN	PART NUMBER	YR/SN	QTY	DENOMINACION
1		2852155		3	TORNILLO
2		2856455		1	COLECTOR
3		{2853132}		1	Bracket; Engine Lifting
4		2853133		1	ANILLO DE CIERRE
5		2856541		1	TERMOSTATO, Incl 6
6		2852473		1	JUNTA HERMETICA
7		{2854867}		1	SENSOR; Water Temp
8		4895078		1	TAPÓN, Not Illustrated

POLEA DEL VENTILADOR

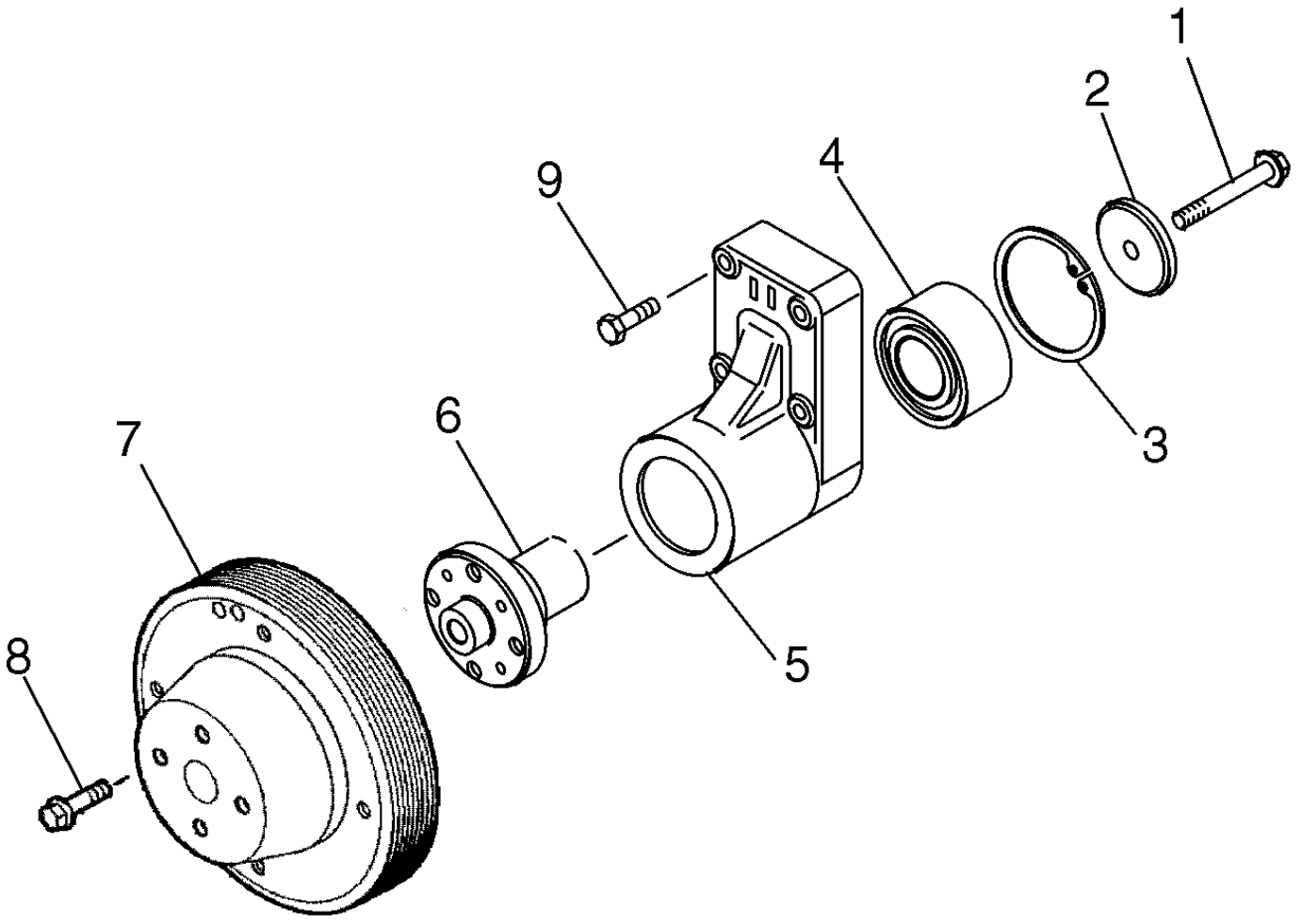

BS04K142

POLEA DEL VENTILADOR

REF	FN	PART NUMBER	YR/SN	QTY	DENOMINACION
		2852170		1	SOPORTE, Incl. 1 - 6
1		2852172		1	TORNILLO
2		4892732		1	RODAMIENTO DE BOLAS
3		2852171		1	RETENEDOR
4		4890732		1	RETENEDOR
5		NSS		1	NO SE REPARA SEPARADAM., Support
6		4892426		1	CUBO
7		2853010		1	POLEA
8		4899032		4	TORNILLO, Hex Flg, M10 x 1.5 x 25
9		4899053		4	TORNILLO, Hex Flg, M8 x 45

MOTOR - GANCHO DE ELEVACION

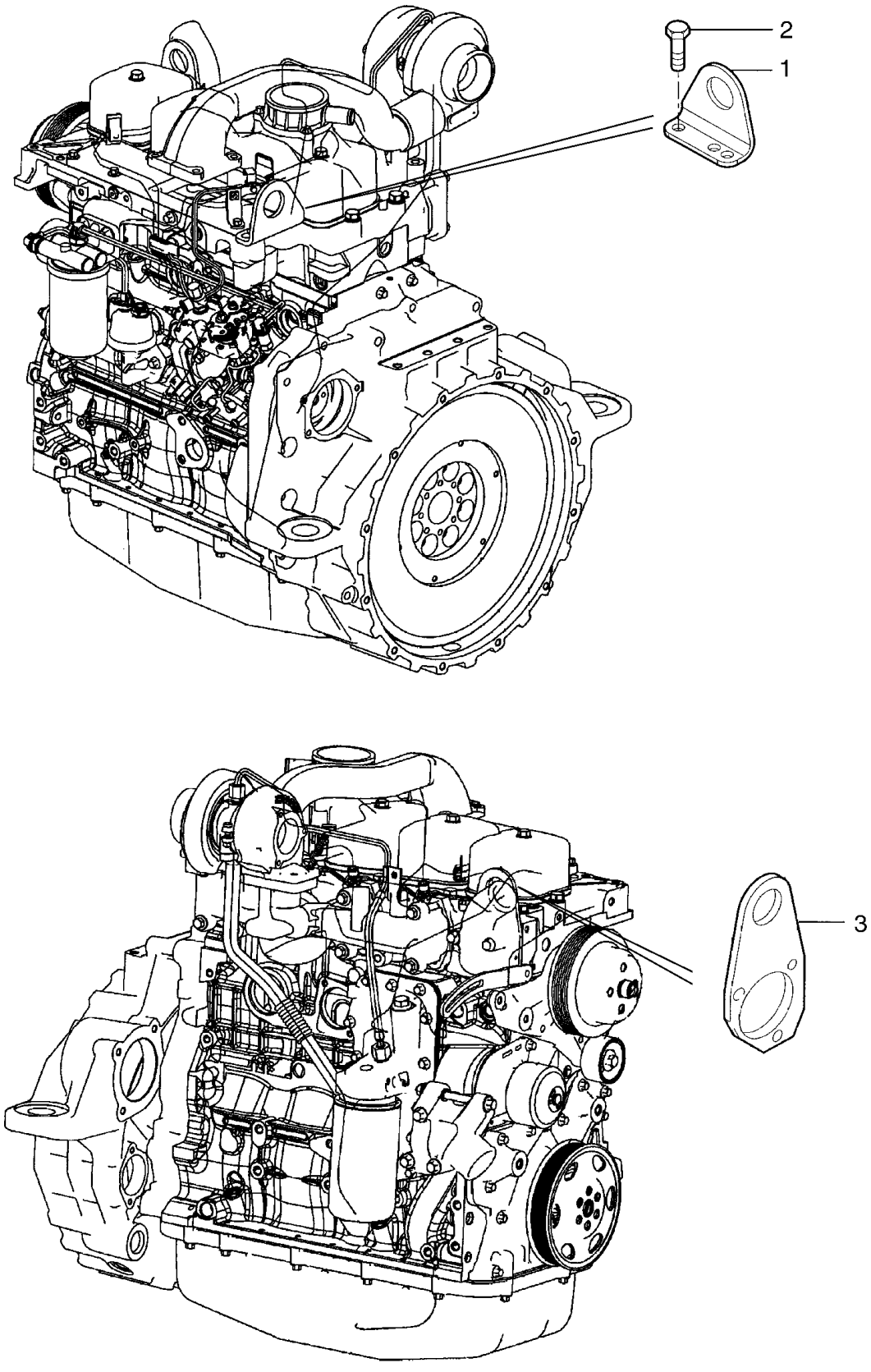

MOTOR - GANCHO DE ELEVACION

REF	FN	PART NUMBER	YR/SN	QTY	DENOMINACION
1		2852183		1	ANILLO DE ELEVACIÓN
2		4899073		2	TORNILLO, Hex Flg, M12 x 1.75 x 30
3		REF		1	MANUAL, LIFT RING 2853132; See Figure 02-38

TURBOCOMPRESOR

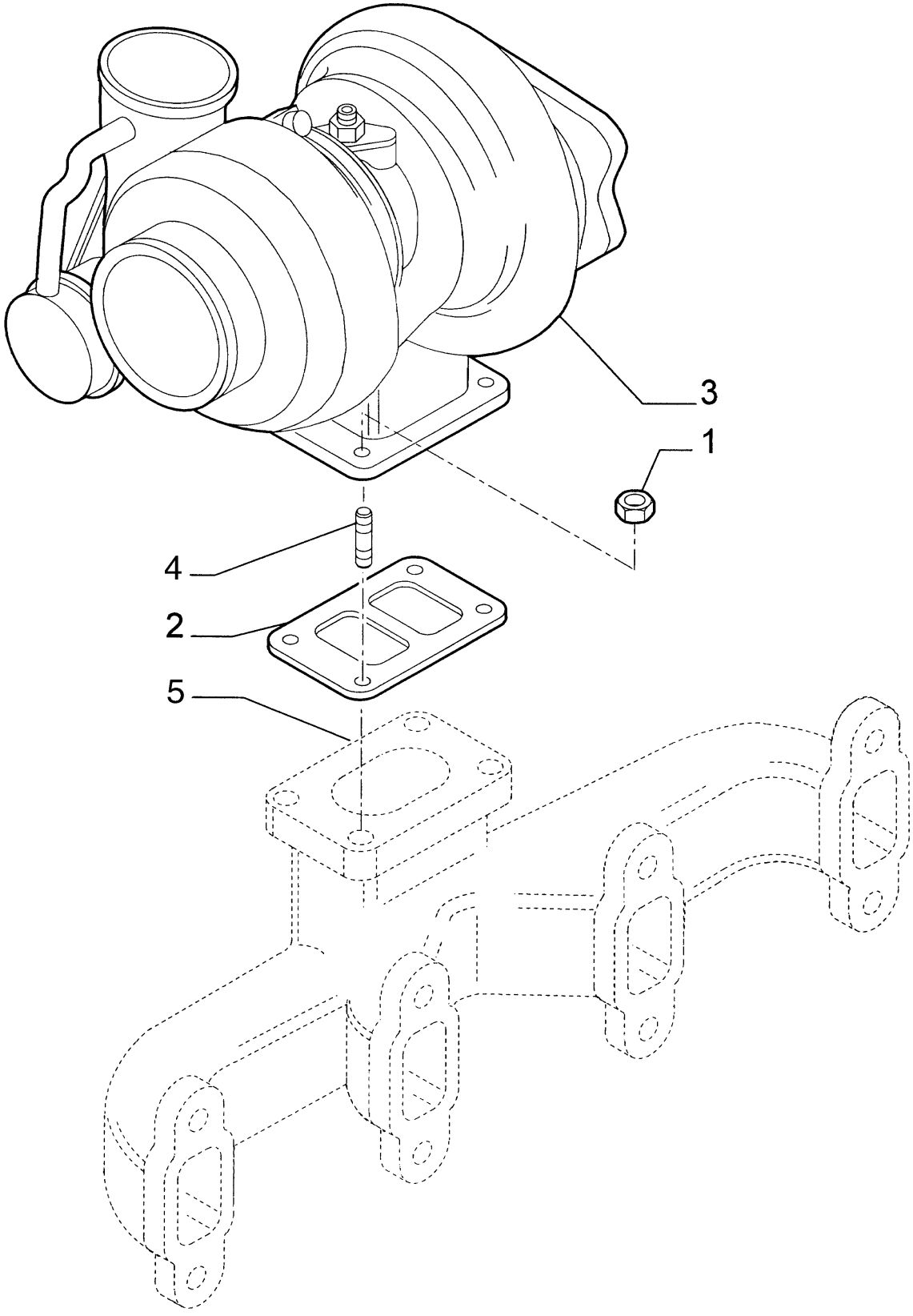

TURBOCOMPRESOR

REF	FN	PART NUMBER	YR/SN	QTY	DENOMINACION
1		500322677		4	TUERCA
2		4895133		1	JUNTA HERMETICA
3		2852507		1	TURBOCOMPRESOR
4		4899859		4	PRISIONERO
5		REF			MANUAL, Exhaust Manifold; See Figure 02-27

NOTAS

SECTION INDEX
Sistema de Combustible

03-01	CANALIZACIONES DEL COMBUSTIBLE Y FILTRO
03-02	CONTROLES - ACELERADOR DE PEDAL, ACELERADOR DE MANO
03-03	FILTRO COMBUSTIBLE
03-04	BOMBA DE INYECCION
03-05	BOMBA DE ALIMENTACION
03-06	BOMBA DE INYECCION - MANDO
03-07	SISTEMA DE INYECCION DE SISTEMA DE INYECCION DE COMBUSTIBLE, SUMINISTRO
03-08	SISTEMA DE INYECCION DE COMBUSTIBLE COMBUSTIBLE, SUMINISTRO
03-09	SISTEMA DE INYECCION DE COMBUSTIBLE - LÍNEA DE DRENAJE
03-10	GRUPO DE INYECCION - INYECTOR

CANALIZACIONES DEL COMBUSTIBLE Y FILTRO

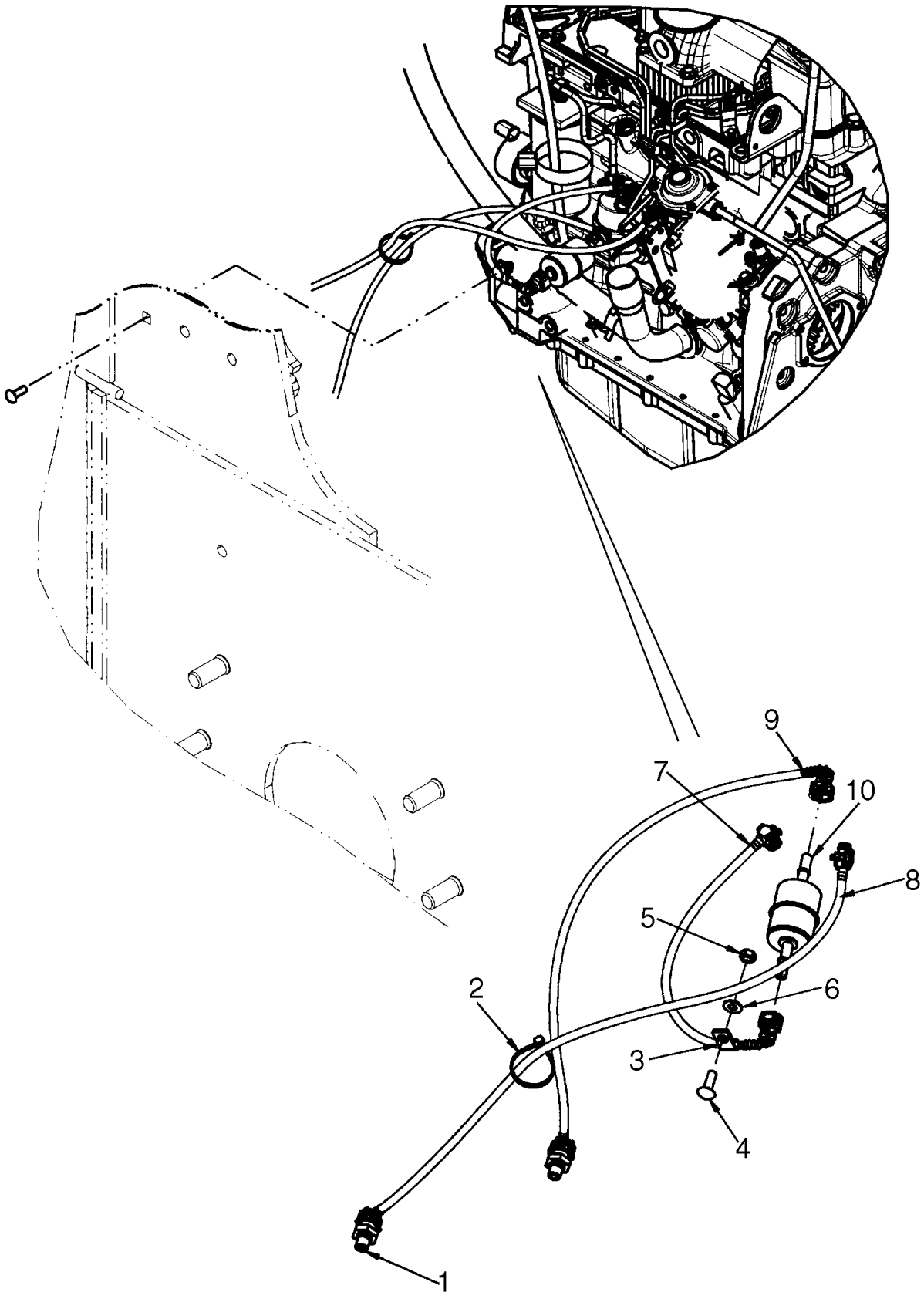

CANALIZACIONES DEL COMBUSTIBLE Y FILTRO

REF	FN	PART NUMBER	YR/SN	QTY	DENOMINACION
1		87431323		1	ADAPTOR, Fuel Line Adapter
2		529070		1	CIERRA CABLES, .30" x 14.5"
3		853764		1	BORNE, 5/16", Insul, 5/16" Bolt
4		308761		1	PERNO, CABEZA RONDA, Short NK, M8 x 25, Cl8.8, Full Thd
5		43362		1	TUERCA, M8, Cl 10
6		322358		1	ARANDELA ABANICO, Belleville, M8
7		87584554		1	MANGA, Fuel Line 355 mm (13.97 in)
8		87598810		1	MANGA, Return Fuel Line, 805 mm (31.7 in)
9		87584639		1	MANGA, Fuel Line, 650 mm (25.6 in)
10		87548612		1	FILTRO DE COMBUSTIBLE, Inline

CONTROLES - ACELERADOR DE PEDAL, ACELERADOR DE MANO

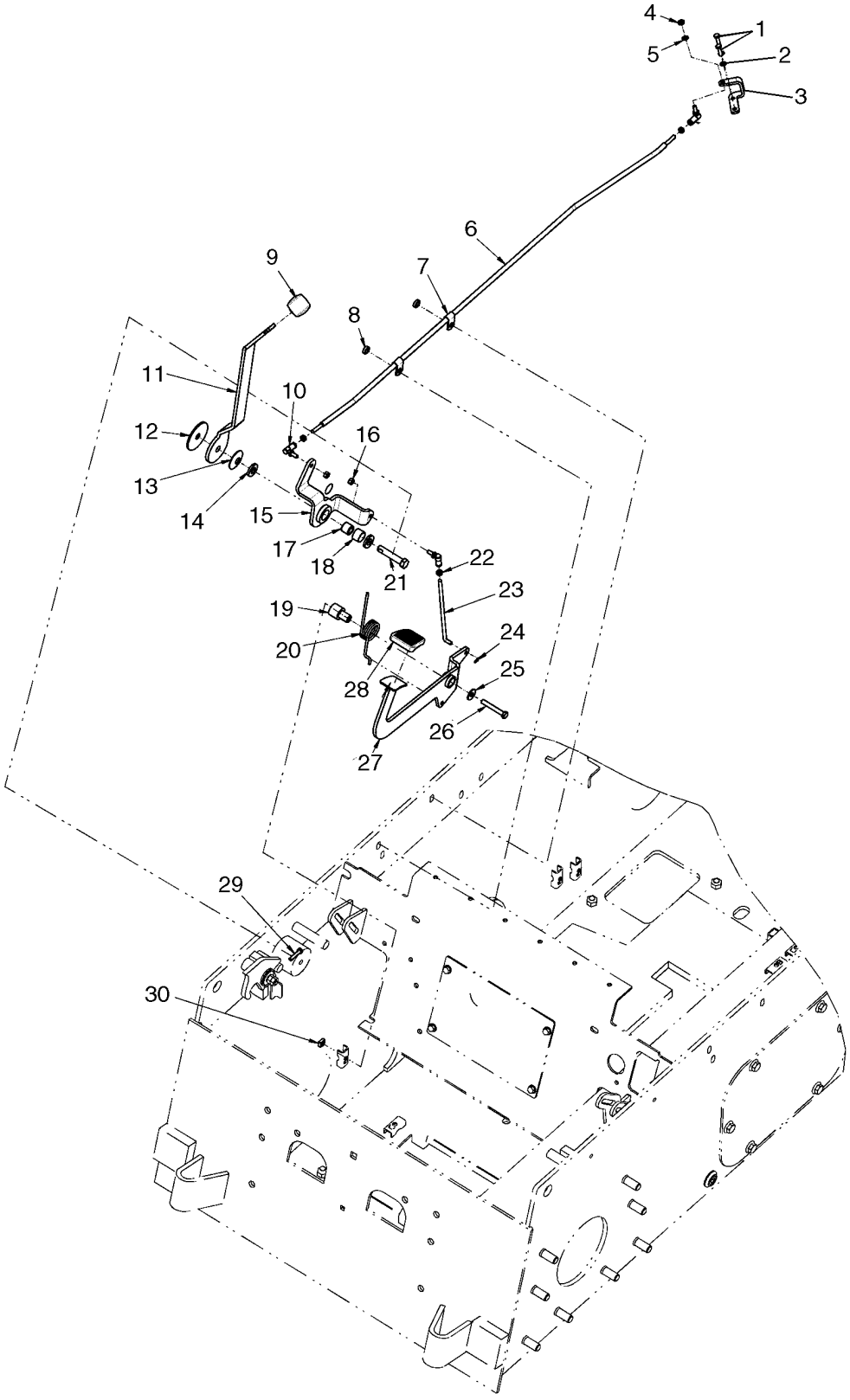

CONTROLES - ACELERADOR DE PEDAL, ACELERADOR DE MANO

REF	FN	PART NUMBER	YR/SN	QTY	DENOMINACION
1		120100		2	TORNILLO, Hex, M6 x 20, 8.8
2		86517328		2	ARANDELA DE FRENO, M6
3		{87643562}		1	Throttle Rod Bracket
4		88098		1	TUERCA, Jam, 1/4"-28, G2
5		80682		1	ARANDELA DE FRENO, 1/4"
6		{87688638}		1	Throttle Rod
7		87028524		2	GRAPON
8		694371		2	SEPARADOR
9		A177436		1	PLACA
10		H169920		3	JUNTA DE ROTULA
11		87712373		1	MANDO DEL ACELERADOR, Hand Throttle
12		1342374C1		1	DISCO
13		R14771		1	ARANDELA
14		86625256		2	ARANDELA, M12 x 28.5 x 4, HT
15		87712376		1	MANDO DEL ACELERADOR, Throttle Control
16		86509309		2	TUERCA, 1/4"-28, G5
17		187035A2		1	CASQUILLO
18		186905A1		1	CASQUILLO, Throttle Bushing
19		87424095		1	MANGUITO, Throttle Pivot
20		87416539		1	MUELLE TORSION
21		87612749		1	BOTON DE RESORTE, Bolt, M12 X 60 10.9
22		86976064		3	TUERCA, Jam, 1/4"-28, G5
23		87650094		1	VARILLA, Throttle Rod, Foot
24		D131983		1	PERNO
25		86639313		1	ARANDELA, M8 x 20 x 1.6
26		16044321		1	TORNILLO, Hex, M8 x 55, 8.8
27		{87650090}		1	Foot Pedal
28		323657A1		1	TACO, Foot Pedal Pad
29		43117		1	TORNILLO, Hex, M6 x 30, 8.8, `
30		229197A1		1	TUERCA

FILTRO COMBUSTIBLE

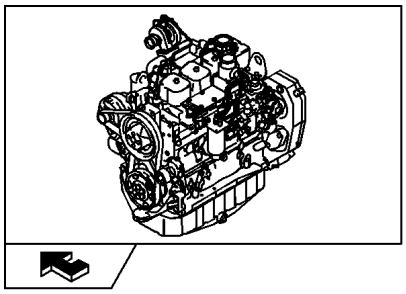

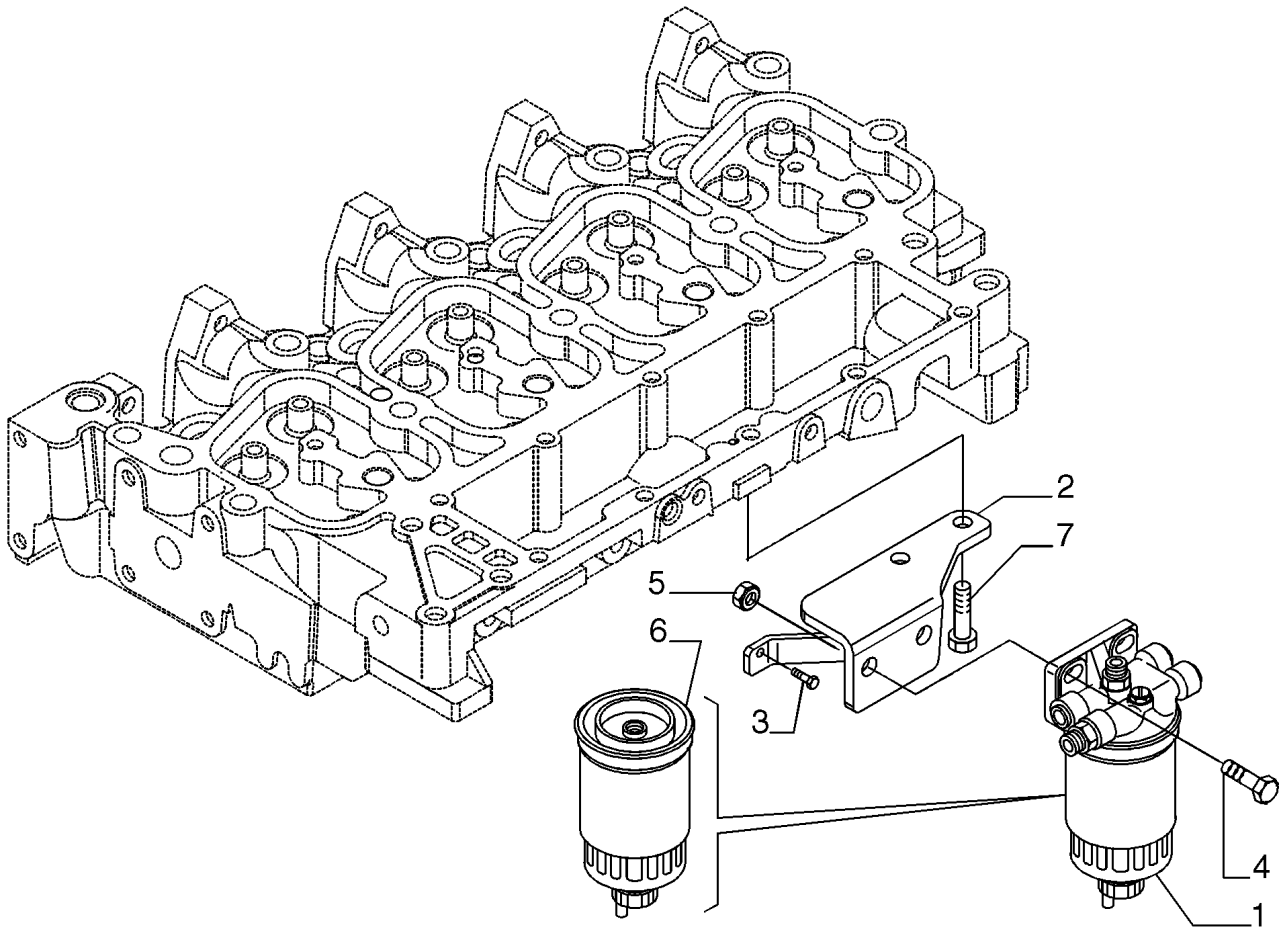

BS07M807

FILTRO COMBUSTIBLE

REF	FN	PART NUMBER	YR/SN	QTY	DENOMINACION
1		2852547		1	FILTRO CONJ, Fuel
2		2855103		1	SOPORTE
3		4899068		1	TORNILLO, Hex Flg, M8 x 1.25 x 16
4		{4899849}		2	Screw
5		4895166		2	TUERCA, M10X1.5 mm
6		87803194		1	FILTRO DE COMBUSTIBLE
7		2830411		2	TORNILLO

BOMBA DE INYECCION

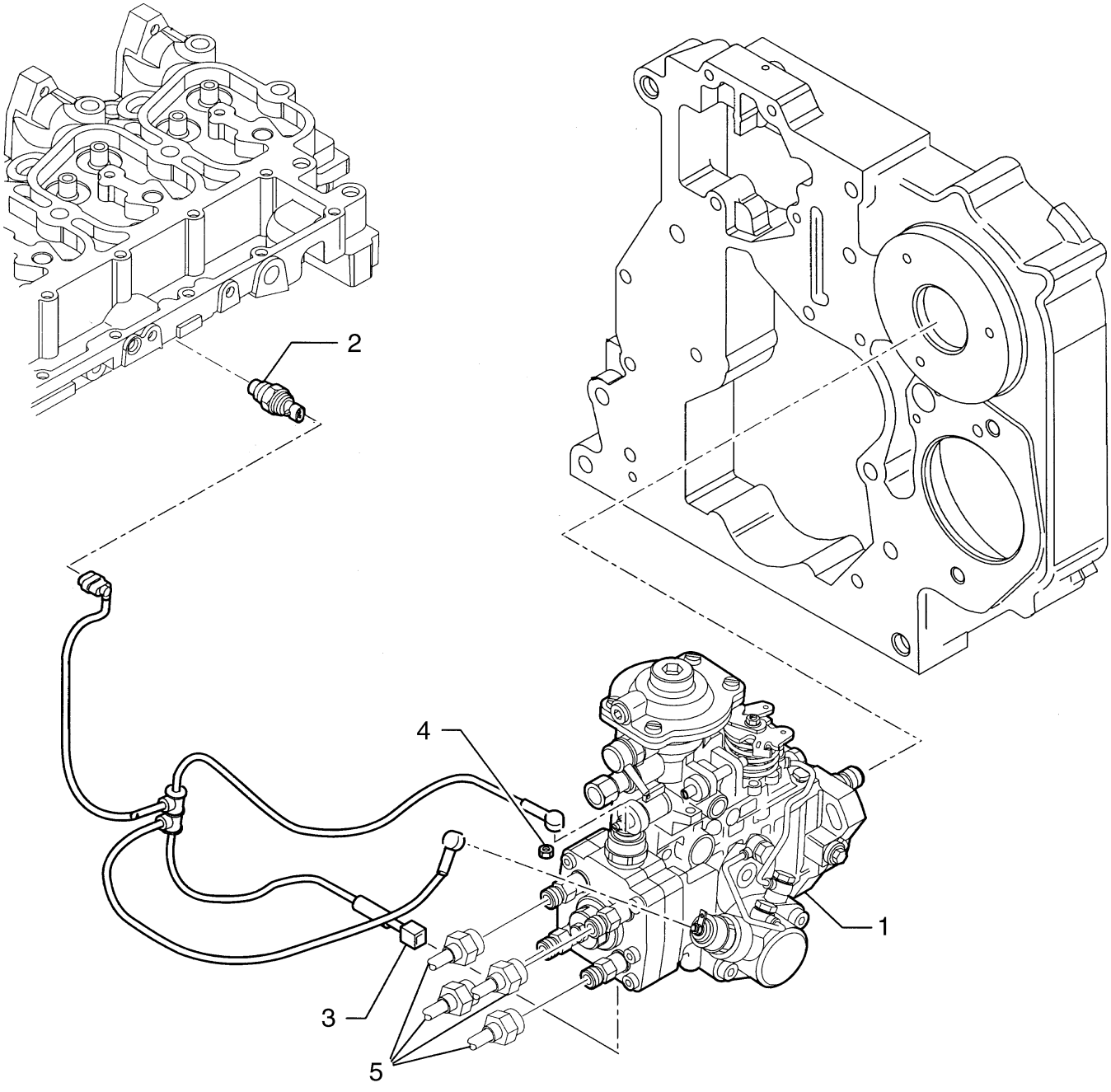

BS04A044

BOMBA DE INYECCION

REF	FN	PART NUMBER	YR/SN	QTY	DENOMINACION
1		2856334		1	BOMBA DE INYECCION, Incl 2852741
		2852741		1	SOLENOIDE, Fuel Shut Off
2		2856350		1	SENSOR, Water Temperature
3		2852088		1	CONTACTO
4		2852089		2	TUERCA, Lock
5		REF		1	MANUAL, TUBE; See Figure 03-07 for Tube Kit

BOMBA DE ALIMENTACION

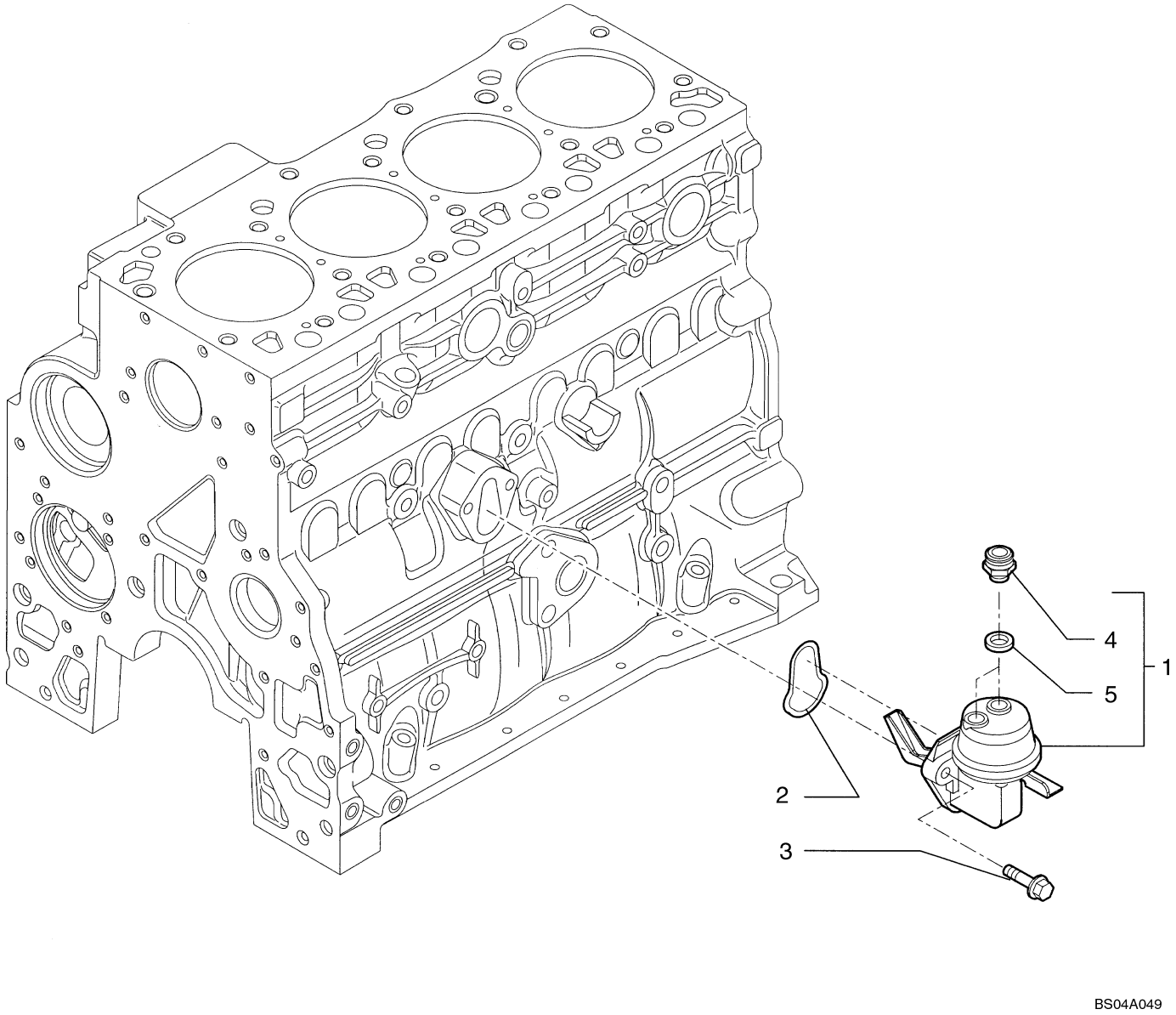

BOMBA DE ALIMENTACION

REF	FN	PART NUMBER	YR/SN	QTY	DENOMINACION
1		2830266		1	BOMBA DE ALIMENTACION, Incl. Ref 4, 5
2		2830156		1	JUNTA HERMETICA
3		4899031		2	TORNILLO, Hex Flg, M8 x 1.25 x 25
4		4890964		2	CONEXION
5		4894721		2	JUNTA HERMETICA

BOMBA DE INYECCION - MANDO

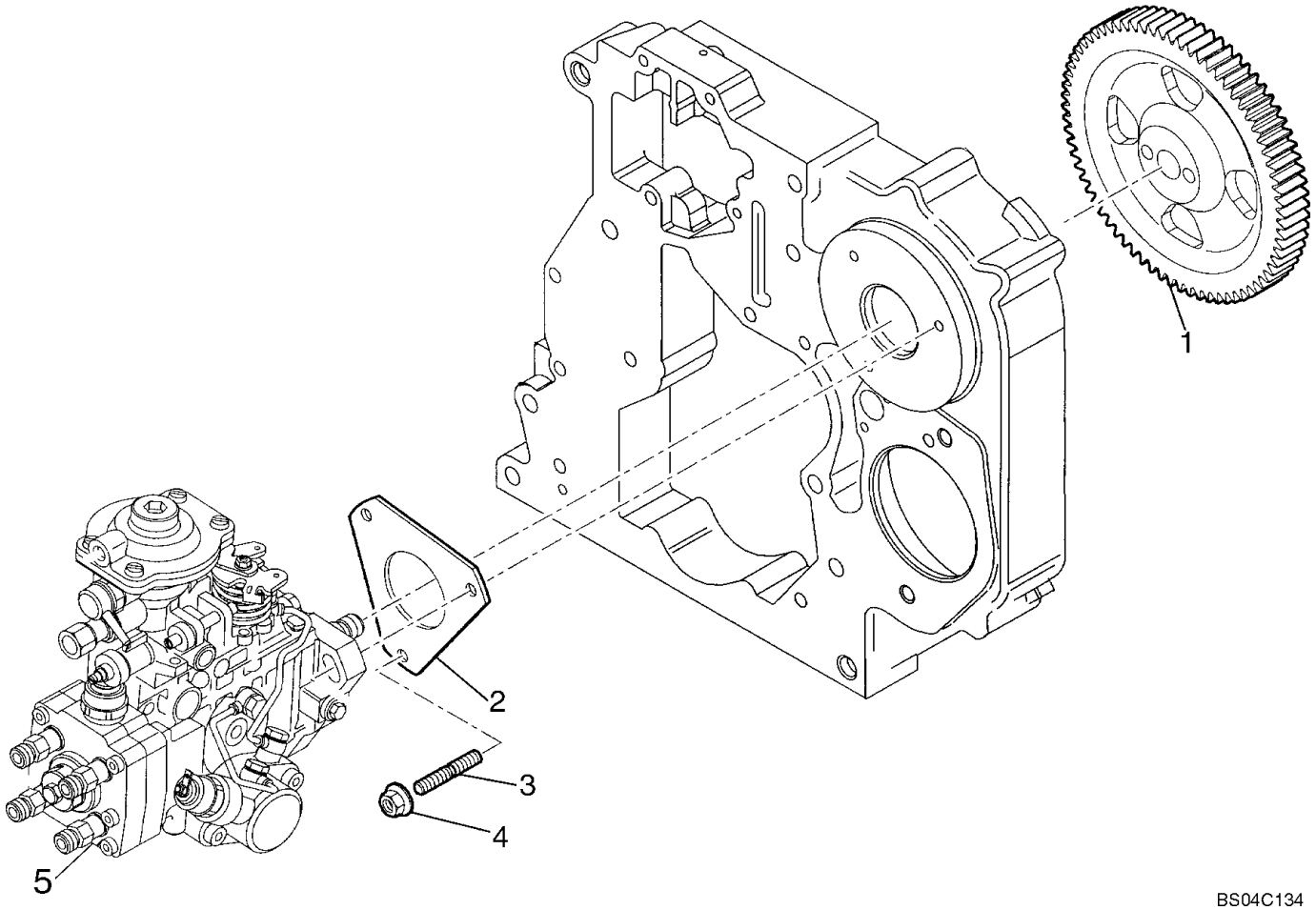

BS04C134

BOMBA DE INYECCION - MANDO

REF	FN	PART NUMBER	YR/SN	QTY	DENOMINACION
1		2854340		1	ENGRANAJE, Injection Pump Control
2		2852885		1	JUNTA HERMETICA
3		2852294		3	PRISIONERO
4		17044731		3	TUERCA, Flg, M8 x 1.25
5		REF		1	MANUAL, INJECTION PUMP; See Figure 03-04

SISTEMA DE INYECCION DE SISTEMA DE INYECCION DE COMBUSTIBLE, SUMINISTRO

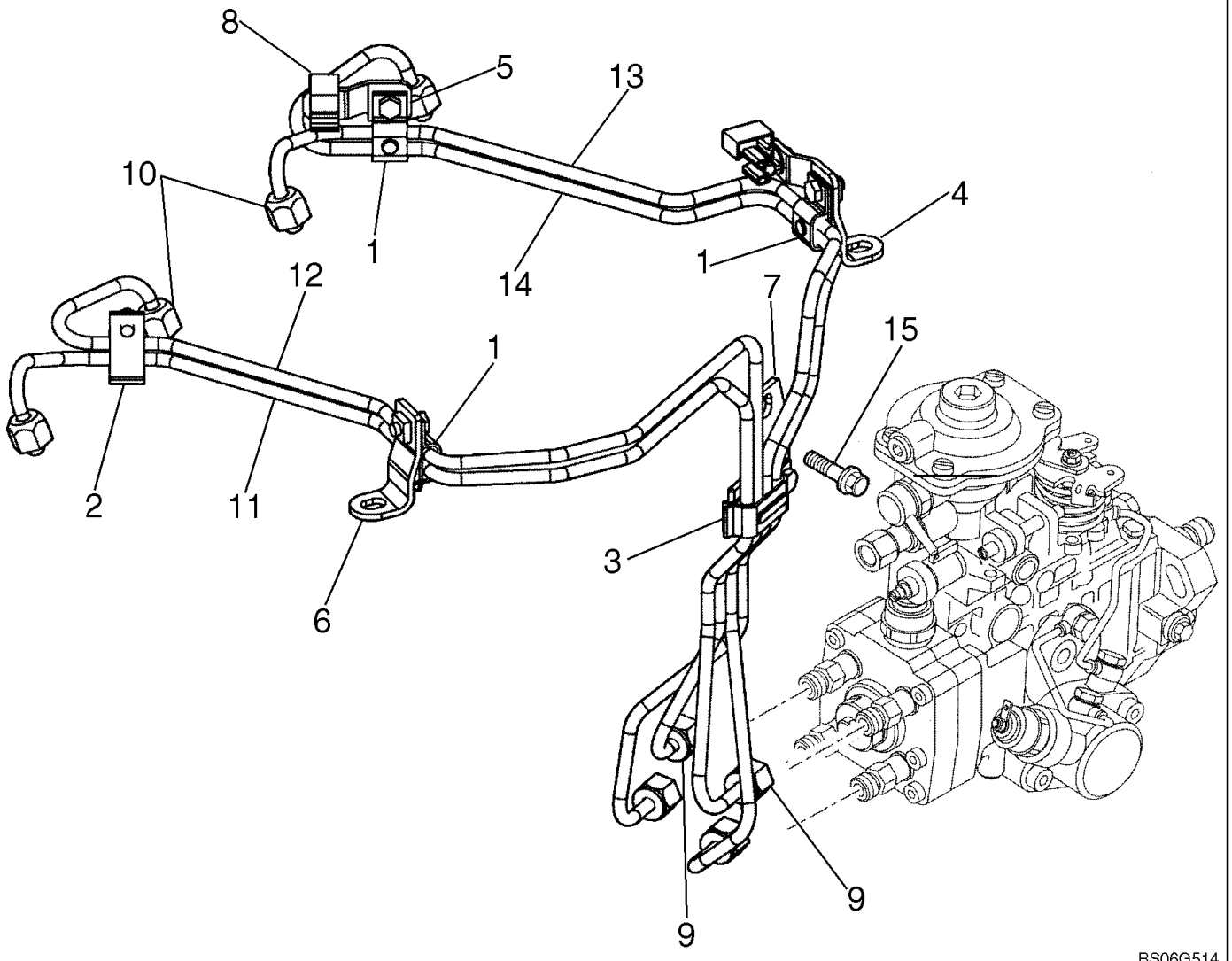

SISTEMA DE INYECCION DE SISTEMA DE INYECCION DE COMBUSTIBLE, SUMINISTRO

REF	FN	PART NUMBER	YR/SN	QTY	DENOMINACION
		2852075		1	EQUIPO, Fuel Injection Supply Pipe Assembly; Includes Ref 1-14
1		2852871		3	PIEZA DE SOPORTE, Fuel Injection Pipe Bracket
2		2852872		1	PIEZA DE SOPORTE, Fuel Injection Pipe Bracket
3		2852873		1	PIEZA DE SOPORTE, Fuel Injection Pipe Bracket
4		2852874		1	PIEZA DE SOPORTE, Fuel Injection Pipe Bracket
5		2852875		1	PIEZA DE SOPORTE, Fuel Injection Pipe Bracket
6		2852876		1	PIEZA DE SOPORTE, Fuel Injection Pipe Bracket
7		2852877		1	PIEZA DE SOPORTE, Fuel Injection Pipe Bracket
8		2852878		2	BRIDA DE APRIETE, Fuel Injection Pipe Bracket
9		2852879		4	TUERCA, Hex Nut
10		2852880		4	TUERCA, Hex Nut
11		2852881		1	MANGUERA INJECCION, Fuel Injector Supply Pipe
12		2852882		1	MANGUERA INJECCION, Fuel Injector Supply Pipe
13		2852883		1	MANGUERA INJECCION, Fuel Injector Supply Pipe
14		2852884		1	MANGUERA INJECCION, Fuel Injector Supply Pipe
15		4896884		1	TORNILLO, M8x1.25x16

SISTEMA DE INYECCION DE COMBUSTIBLE COMBUSTIBLE, SUMINISTRO

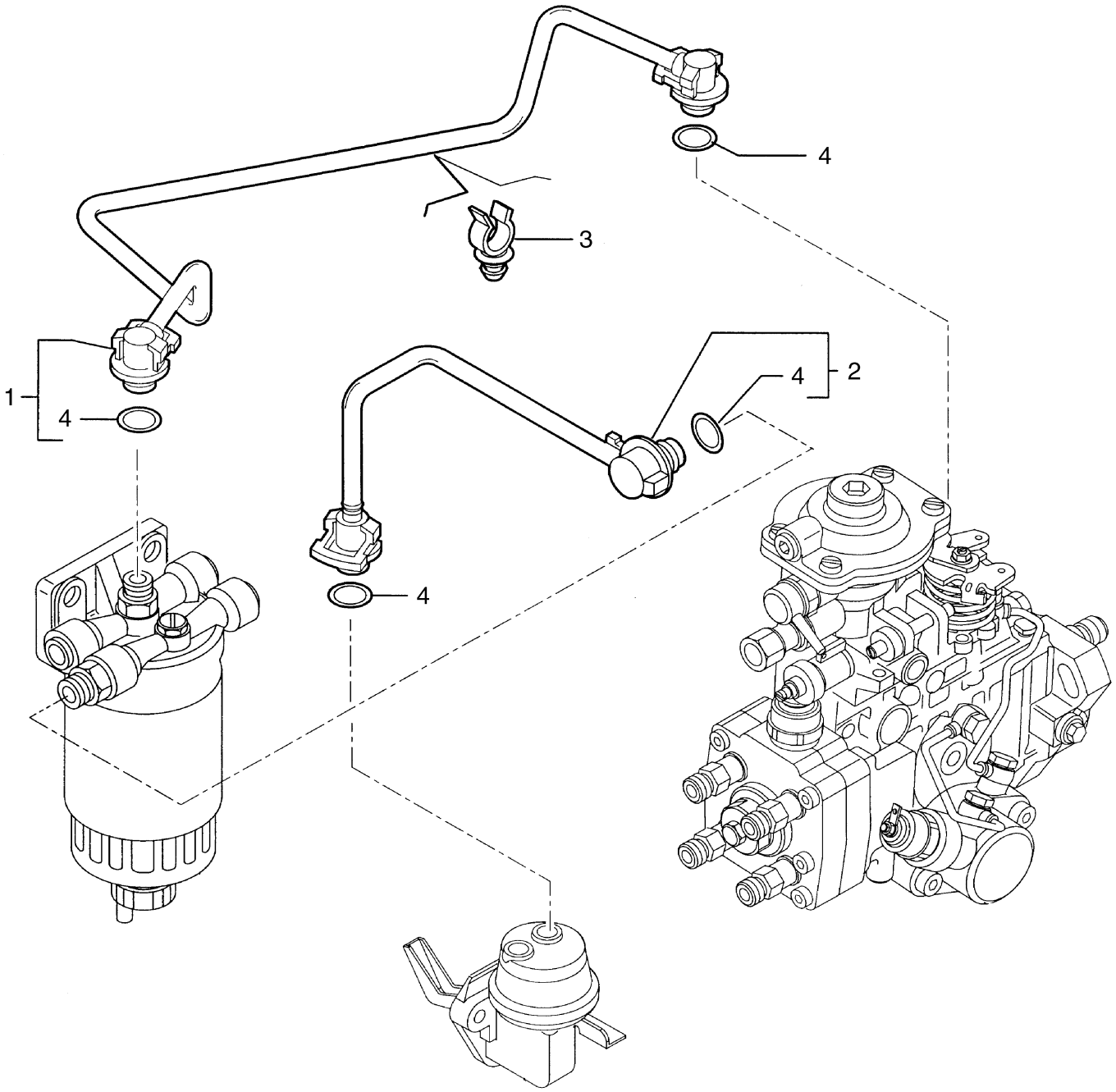

SISTEMA DE INYECCION DE COMBUSTIBLE COMBUSTIBLE, SUMINISTRO

REF	FN	PART NUMBER	YR/SN	QTY	DENOMINACION
1		2852105		1	TUBO, Fuel Pump Supply; Incl. Ref 4
2		2852108		1	TUBO RIGIDO, Fuel Filter Supply; Incl. Ref 4
3		2852111		1	BORNE
4		4894095		2	JUNTA HERMETICA

SISTEMA DE INYECCION DE COMBUSTIBLE - LÍNEA DE DRENAJE

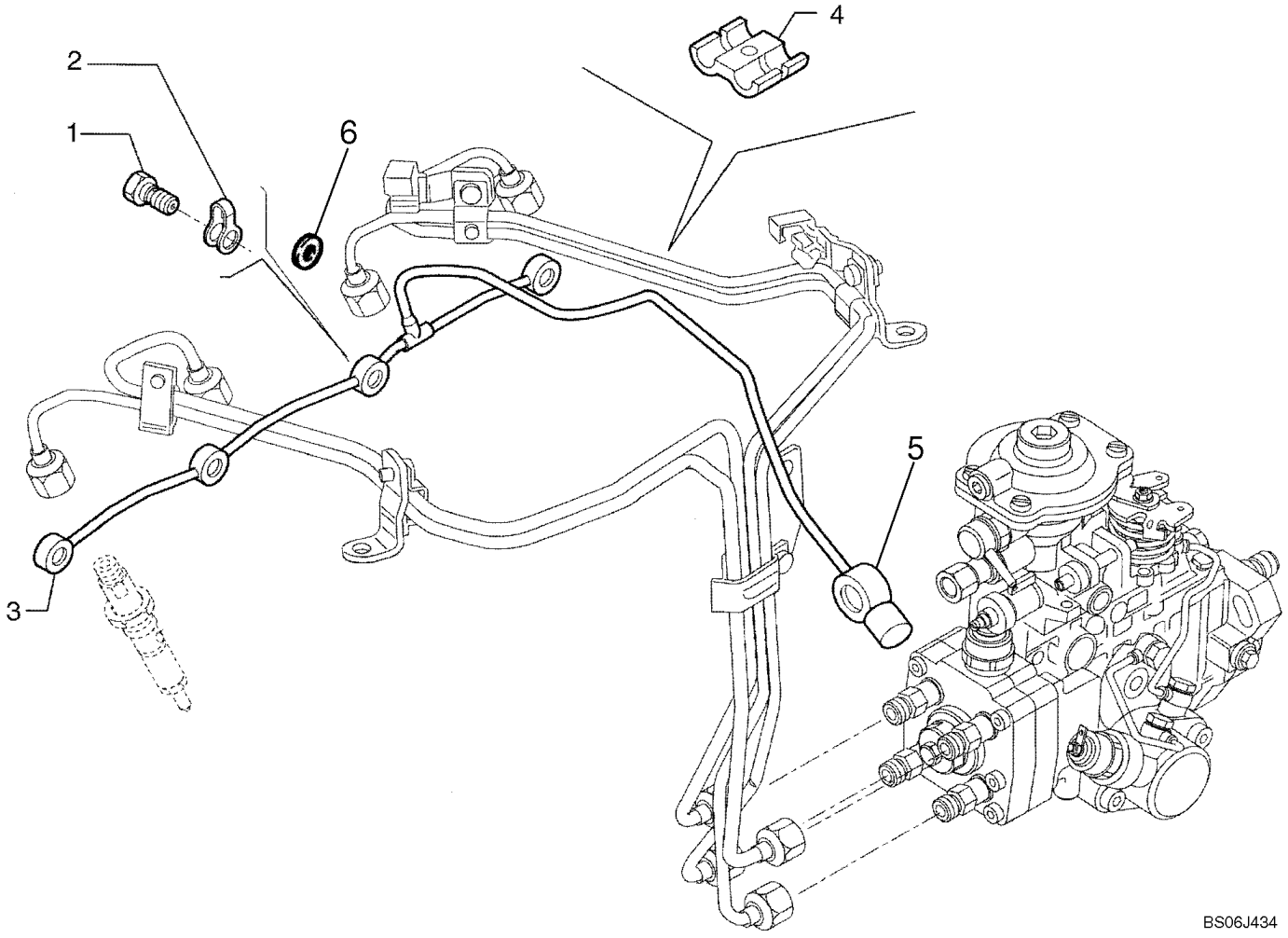

SISTEMA DE INYECCION DE COMBUSTIBLE - LÍNEA DE DRENAJE

REF	FN	PART NUMBER	YR/SN	QTY	DENOMINACION
1		4895244		4	BOQUILLA
2		4895305		4	ANILLO DE CIERRE
3		2852065		1	TUBO RIGIDO, Fuel Drain
4		2852521		1	SUJETADOR DE RESORTE
5		NSS		1	NO SE REPARA SEPARADAM., Banjo Connector Assy; Order 2852065 Tube
6		2855903		8	JUNTA HERMETICA, If Used
		2852093		1	TAPÓN, Incl. Plug And O-Ring; Not Illustrated
		2852094		1	TAPÓN
		4899055		1	JUNTA HERMETICA

GRUPO DE INYECCION - INYECTOR

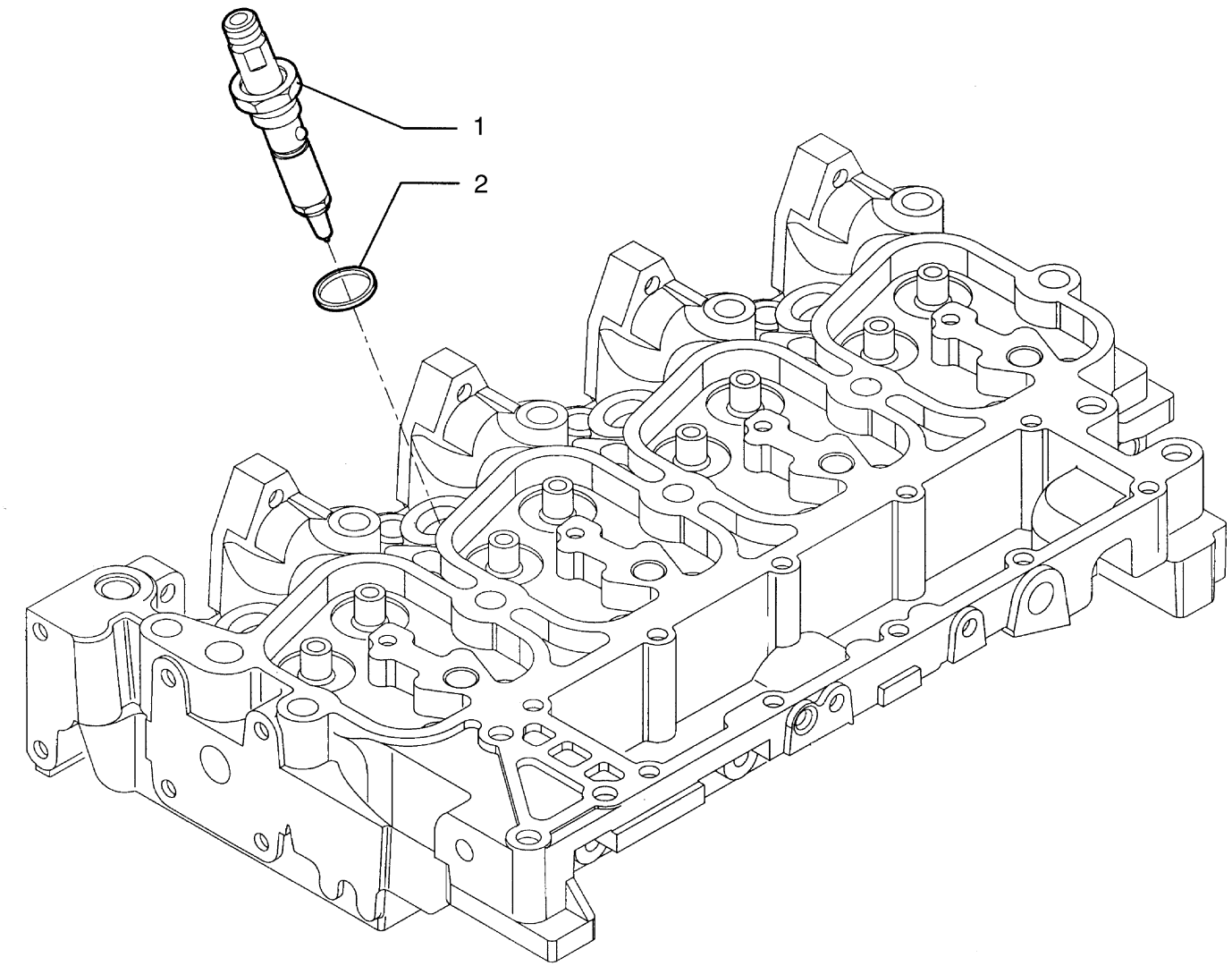

BS04A045

GRUPO DE INYECCION - INYECTOR

REF	FN	PART NUMBER	YR/SN	QTY	DENOMINACION
1		{2856255}		4	Fuel Injector; Incl. Seal 2856436
		{2856436}		1	
2		4895297		4	RETEN

NOTAS

SECTION INDEX
Sistema Eléctrico

04-01	ARRANQUE Y ALTERNADOR
04-02	MONTAJE DEL ALTERNADOR
04-03	BATERIA - CABLES
04-04	MAZO DE CABLES, MOTOR
04-05	CHASIS, ELECTRICO
04-06	CABINA, ELECTRICO
04-07	CONSOLA, LADO DERECHO
04-08	CONSOLA - IZQUIERDA
04-09	CONTROLES, DERECHA - MANILLA
04-10	CONTROLES, IZQUIERDA - MANILLA
04-11	CONTROLES, DERECHA - MANILLA
04-12	CONTROLES, IZQUIERDA - MANILLA
04-13	CONTROLES, DERECHA - MANILLA
04-14	CONTROLES, IZQUIERDA - MANILLA
04-15	INTERRUPTOR DE DESCONEXION - ARRANQUE POR PUENTE REMOTO
04-16	LUZ DE TRABAJO - IZQUIERDA
04-17	LUZ DE TRABAJO - LADO DERECHO
04-18	ELECTRICO - LUCES DE CARRETERA Y CABLEADO (NA)
04-19	ELECTRICO - LUCES DE CARRETERA Y CABLEADO (EUROPE)
04-20	FAROS - LADO DERECHO
04-21	FAROS - IZQUIERDA
04-22	LAMPARAS TRASERAS Y MONTAJE
04-23	ALARMA DE RETROCESO
04-24	ACCESORIOS ELECTRICOS
04-25	ACCESORIOS ELECTRICOS (EUROPA)
04-26	BOCINA - SOPORTE
04-27	MAZO DE CABLES, DELANTERO - AUXILIAR
04-28	FARO, GIRATORIO
04-29	PIEZAS ESPECIALES PARA ITALIA - LUCES DE MATRICULA
04-32	FARO

ARRANQUE Y ALTERNADOR

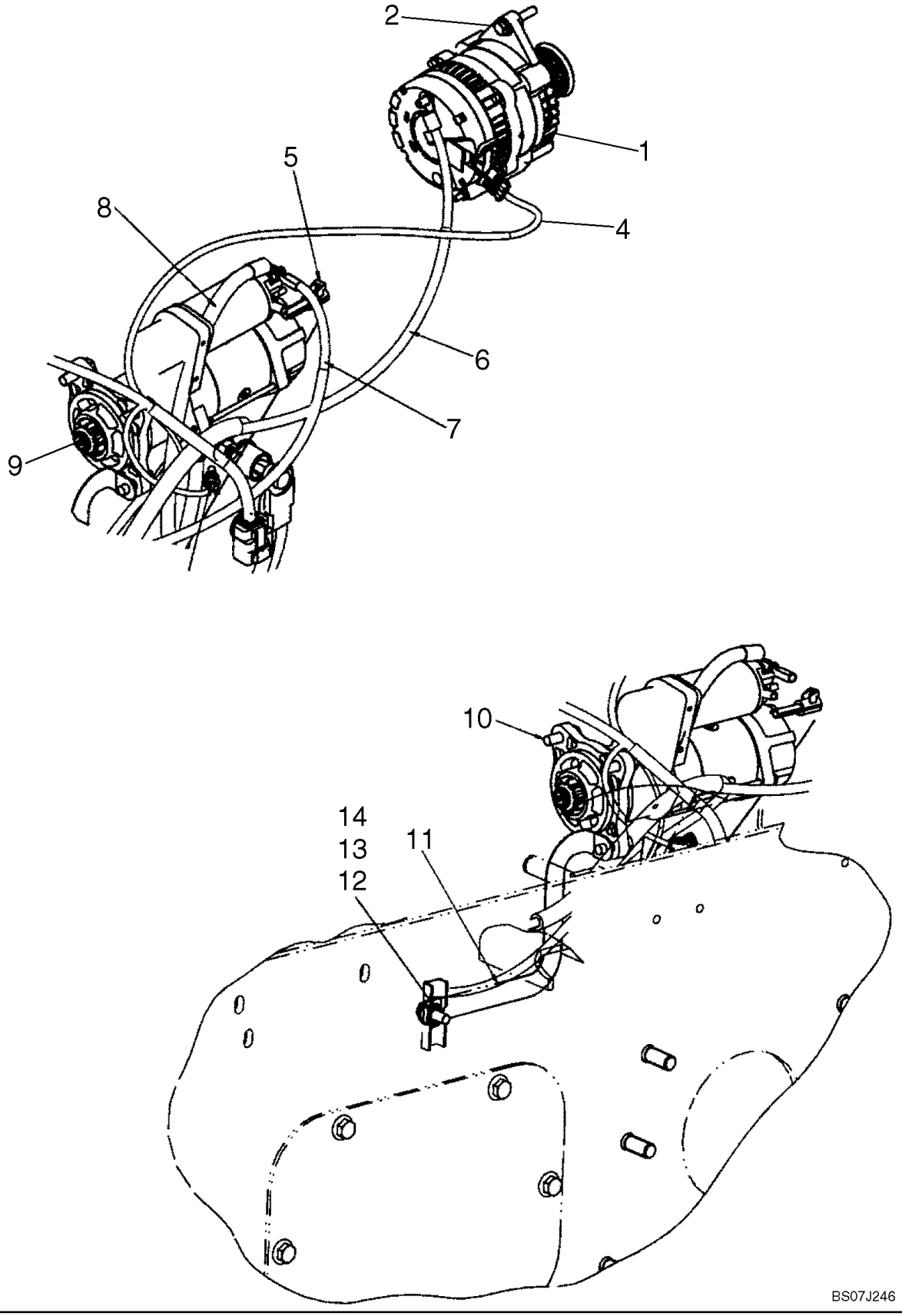

ARRANQUE Y ALTERNADOR

REF	FN	PART NUMBER	YR/SN	QTY	DENOMINACION
1		87042118		1	ALTERNADOR, Delco
2		322358		1	ARANDELA ABANICO, Belleville, M8
3		386045		1	TORNILLO, Hex, M8 x 45, 8.8
4		{87623352}		1	Harness; NEF Engine
5		87053083		1	HAZ, Starter Jumper
6		87620458		1	CABLE, Harness, Starter To Alternator And Start Relay
7		87652238		1	CABLE, Starter To Power Distribution Block
8		87052670		1	CABLE (CONJUNTO), Battery Cable; Positive; See Figure 04-03
9		87366159		1	ARRANCADOR
10		9804262		3	TORNILLO, Hex Flg, M10 x 30, 8.8
11		87648689		1	CABLE DE MASA, Starter
12		43140		1	TORNILLO, Hex, M10 x 30, 8.8, Full Thd
13		86625253		1	ARANDELA, M11 x 24 x 2
14		309096A1		1	TUERCA, Square M10-1.5 W/Retaining Cls 8 Znd

MONTAJE DEL ALTERNADOR

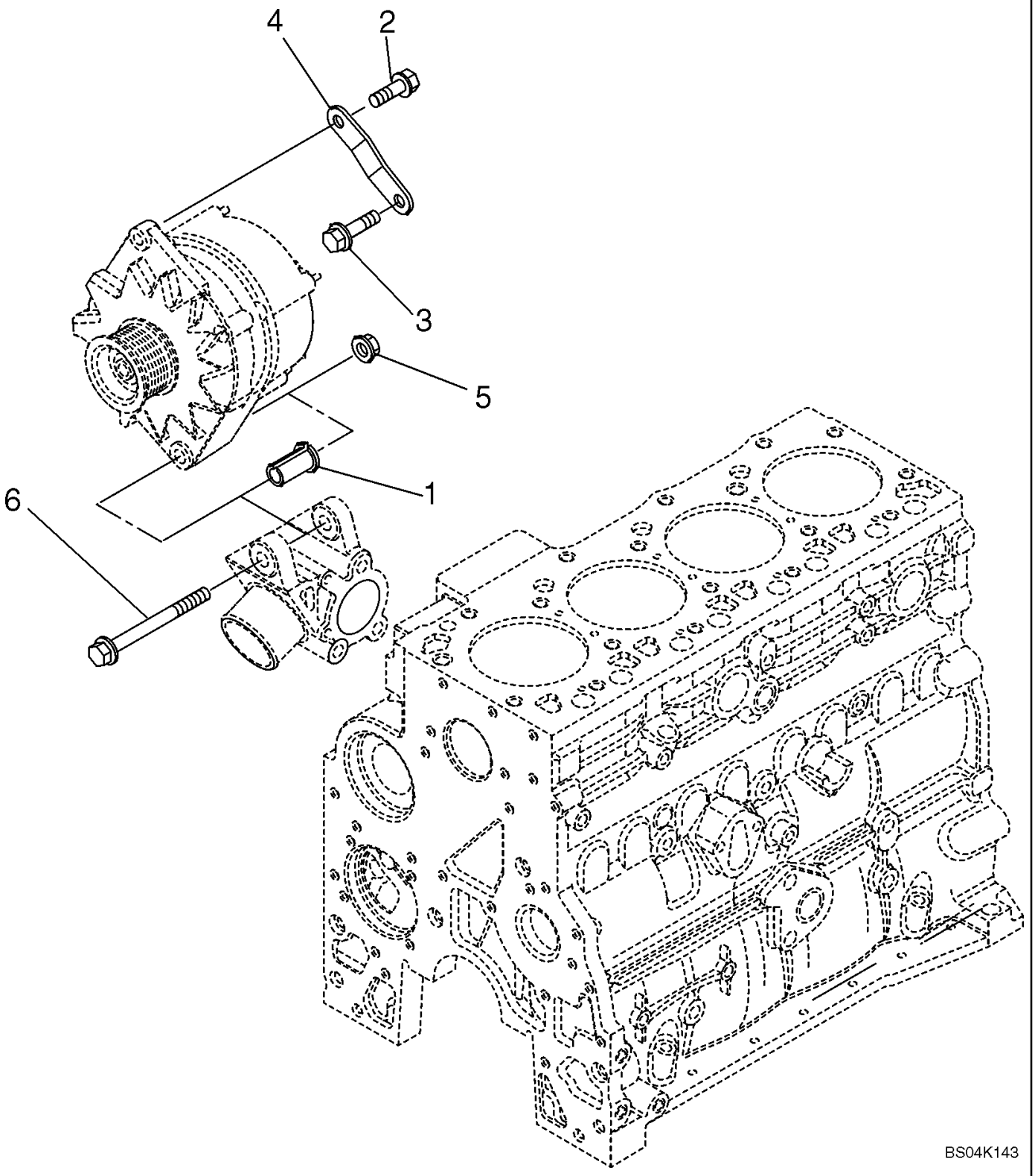

MONTAJE DEL ALTERNADOR

REF	FN	PART NUMBER	YR/SN	QTY	DENOMINACION
1		2852181		1	SEPARADOR
2		4899031		1	TORNILLO, Hex Flg, M8 x 1.25 x 25
3		4895291		1	TORNILLO, Hex Flg, M10 x 1.5 x 20
4		2852180		1	PIEZA DE SOPORTE
5		4895166		1	TUERCA, M10 x 1.5
6		4895538		1	TORNILLO

BATERIA - CABLES

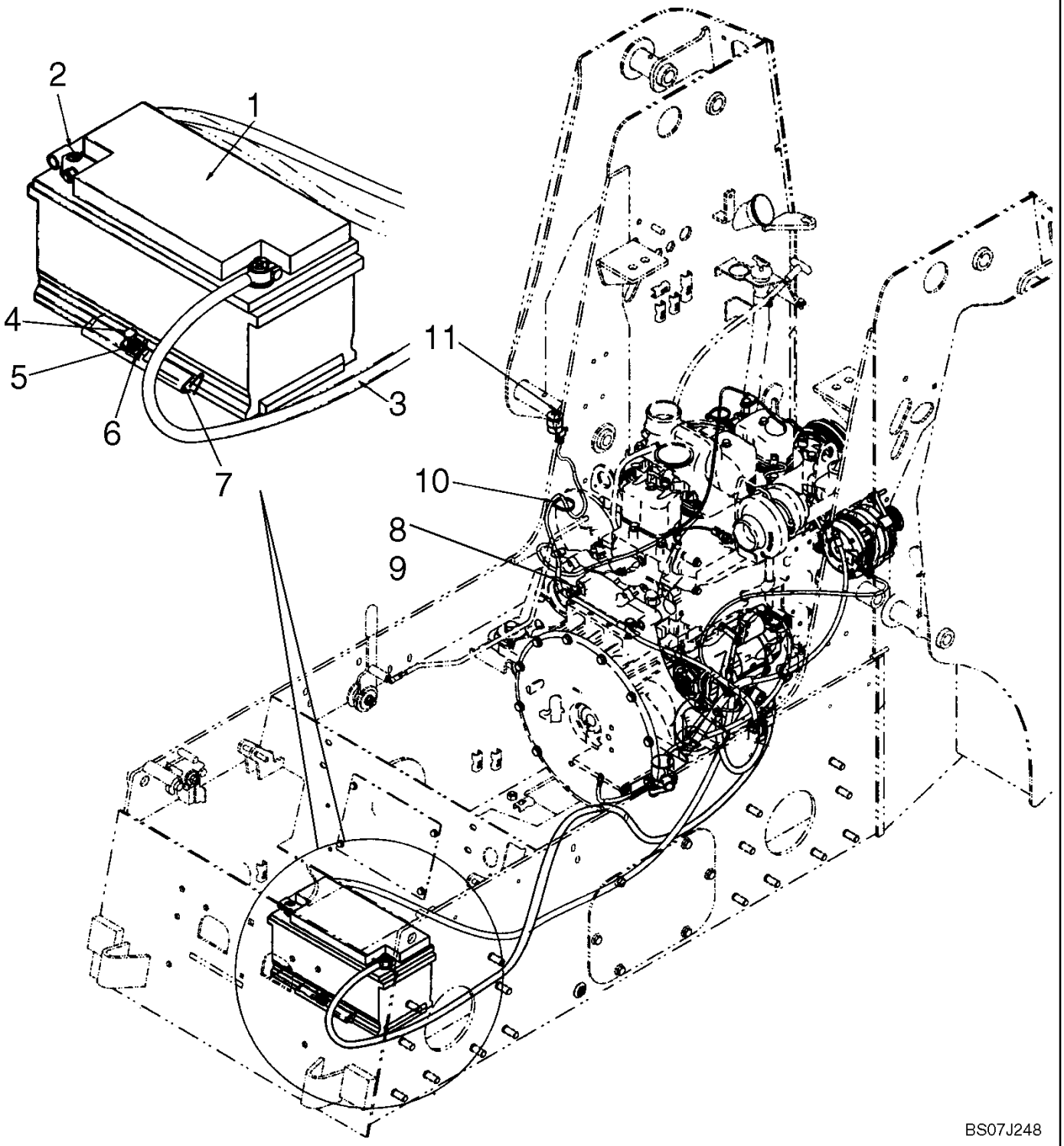

BATERIA - CABLES

REF	FN	PART NUMBER	YR/SN	QTY	DENOMINACION
1		87403835		1	BATERIA CARGA HUMEDA, 850 CCA
2		338030A1		1	CABLE (CONJUNTO), Battery; Negative
3		87052670		1	CABLE (CONJUNTO), Battery; Positive
4		120106		1	TORNILLO, Hex, M8 x 40, 8.8, Full Thd
5		43362		1	TUERCA, M8, Cl 10
6		86625074		1	TUERCA
7		87450956		1	PIEZ ANGULAR, Battery Hold Down
8		87301588		2	BORNE, Clamp; 11.1 mm M12 Bolt
9		300388		3	TORNILLO, Hex, M12 x 25, 8.8
10		529070		2	CIERRA CABLES, .30" x 14.5"
11		87013666		1	CONTACTOR, Air Cleaner Restriction

MAZO DE CABLES, MOTOR

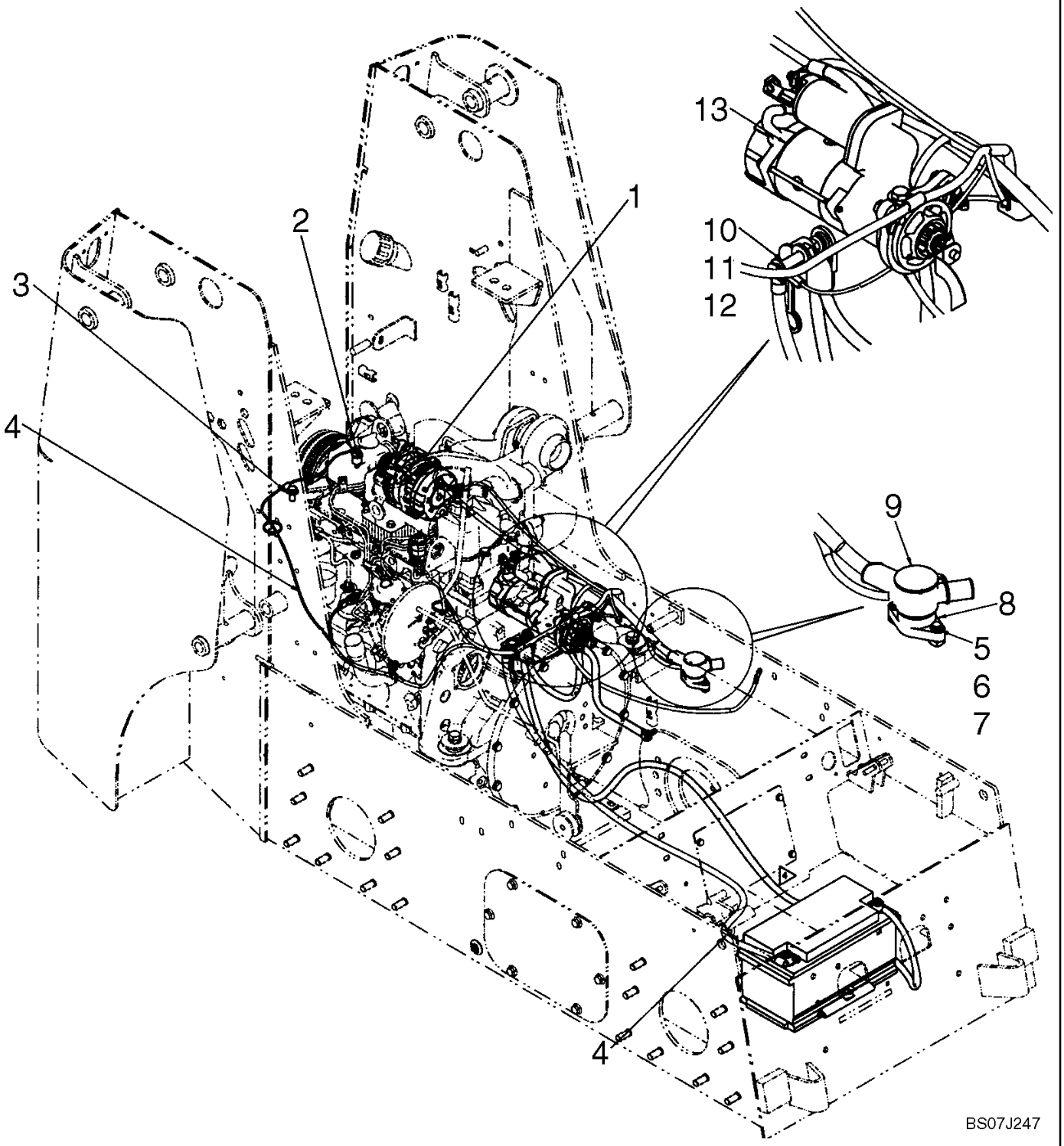

MAZO DE CABLES, MOTOR

REF	FN	PART NUMBER	YR/SN	QTY	DENOMINACION
1		87042118			ALTERNADOR, Alternator; See Figure 04-01
2		A166057		1	TERMOSONDA, Transmission Oil Temperature Sender
3		86639003		1	BORNE, 3/8", Insul, 7/16" Bolt
4		{87623352}		1	Harness; NEF Engine
5		322357		2	ARANDELA ABANICO, Belleville, M6
6		86977786		2	TORNILLO, Hex, M6 x 25, 8.8
7		87404992		2	TUERCA, Square M6-1.0 Class 8 Znd
8		87630124		1	POSTA, Power Distribution Post, 3/8 Stud
9		87630125		1	CASQUETE, Boot For Power Distribution Post
10		9706685		1	TUERCA, M12, Cl 8
11		86625256		1	ARANDELA, M12 x 28.5 x 4, HT
12		87458961		1	PRISIONERO, 12mm x 80mm

CHASIS, ELECTRICO

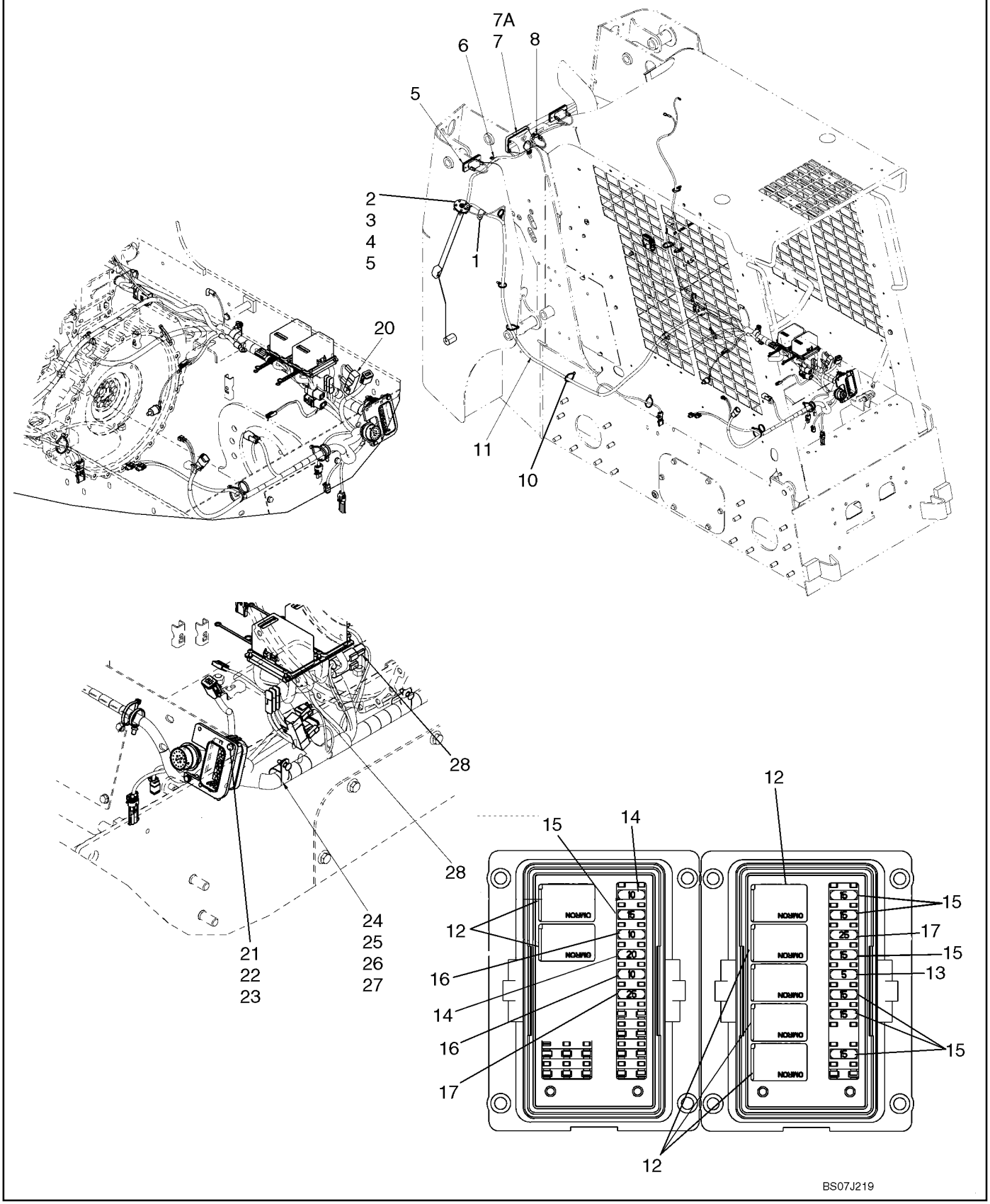

CHASIS, ELECTRICO

REF	FN	PART NUMBER	YR/SN	QTY	DENOMINACION
1		87301588		1	BORNE, Clamp,Closed 11.1mm Insulated 1/2 Bolt
2		376843A4		1	CONTACTOR, Fuel Level Sender Unit
3		528359R4		1	JUNTA HERMETICA, Sender Unit Gasket
4		87308282		5	TORNILLO, Hex Hd, #10-32 x 3/4"
5		196985A1		5	VARILLA ROSCADA
6		87016870		1	BORNE, J, 7/16" Insul, 5/16" Bolt
7		222004A2		1	FARO, Low Profile Halogen Lamp; Incl 7A
7A		259702A1		1	AMPOLLA, Light Bulb, 50W 12.8V Halogen
8		86637978		1	BORNE, 3/8", Insul, 5/16" Bolt
9		87668737		6	BANDA, Strap, Fir Tree
10		87000312		8	CIERRA CABLES, Cable Tie
11		87661493		1	HAZ, Chassis Harness; Incl 12 - 18
12		{87655334}		7	Relay,35A N.O.
13		121410A1		1	FUSIBLE, Fuse, 5A
14		121412A1		3	FUSIBLE, Fuse, 10A
15		121413A1		7	FUSIBLE, Fuse, 15A
16		121414A1		1	FUSIBLE, Fuse, 20A
17		121415A1		2	FUSIBLE, Fuse, 25A
18		L71879		3	SOPORTE DE DIODO, 3A Diode Connector
19		A166057		1	TERMOSONDA, Oil Temperature Sending Unit
20		86705351		1	RESISTENCIA
21		86977786		2	TORNILLO, Hex, M6 x 25, 8.8
22		86588450		4	ARANDELA, M6
23		87030561		2	CONTRA TUERCA, M6 x 1, Cl 8
24		87035382		3	BORNE, 1 3/16", Insul, 3/8" Bolt
25		374891		3	PERNO, CABEZA RONDA, Short NK, M6 x 25, Cl8.8, Full Thd
26		86500688		3	TUERCA, M6, Cl 10
27		322357		3	ARANDELA ABANICO, Belleville, M6
28		87020181		8	TORNILLO

CABINA, ELECTRICO

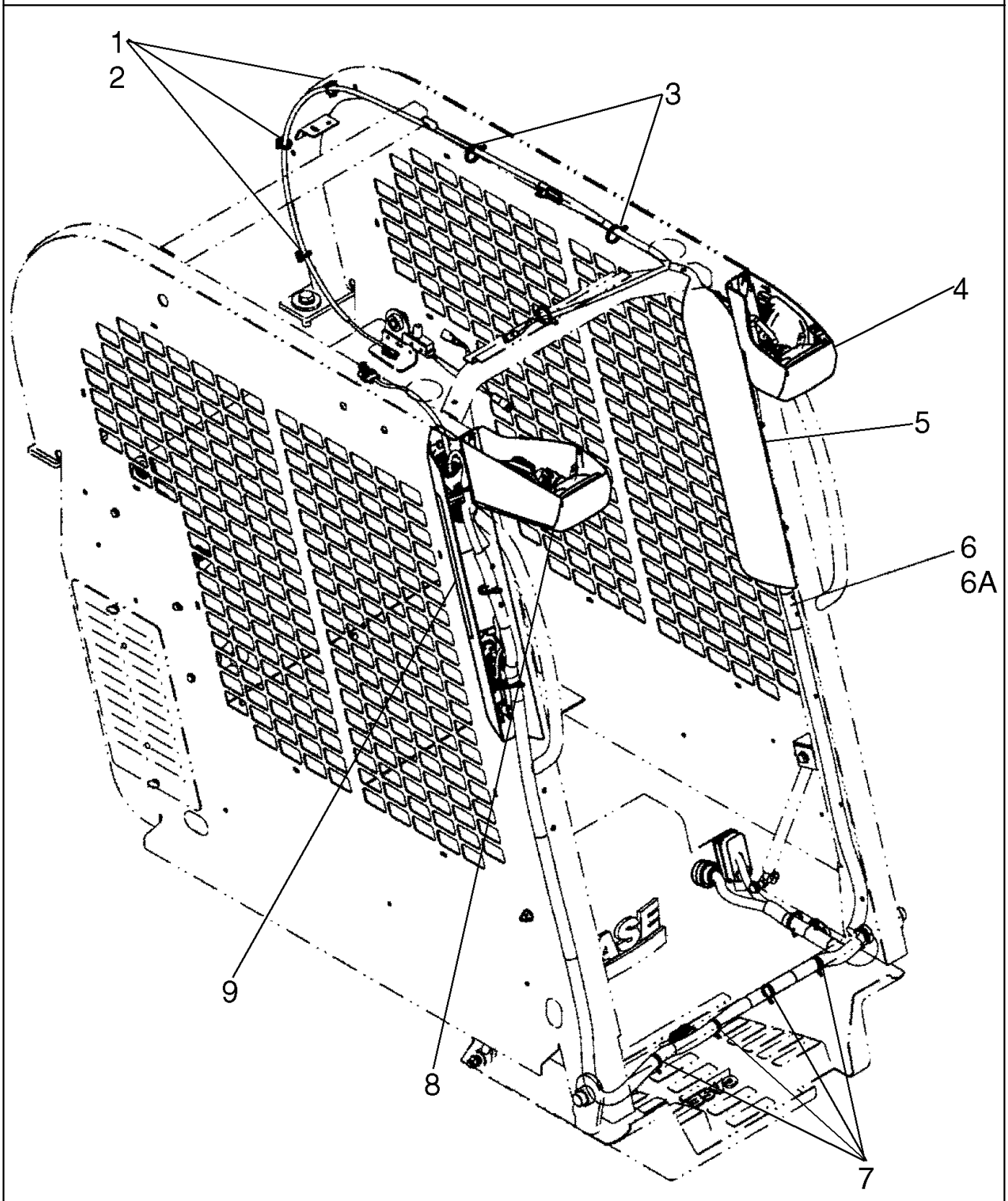

CABINA, ELECTRICO

REF	FN	PART NUMBER	YR/SN	QTY	DENOMINACION
1		87642914		3	APOYO, Strap Mount
2		87642915		3	CIERRA CABLES
3		87668737		10	BANDA, Strap With Mount
4		87650097		1	PILOTO, Work Light, LH; See Fig. 04-16
5		87627050		1	REPISA, Console, LH; See Fig. 04-08
6		87668728		1	HAZ, Harness, Cab; Incl 6A
6A		{87618013}		1	6A Diode
7		263117		4	CIERRA CABLES, .14" x 11 1/2"
8		87650098		1	PILOTO, Work Light, RH; See Fig. 04-17
9		{87665327}		1	Console, RH; See Fig. 04-07

CONSOLA, LADO DERECHO

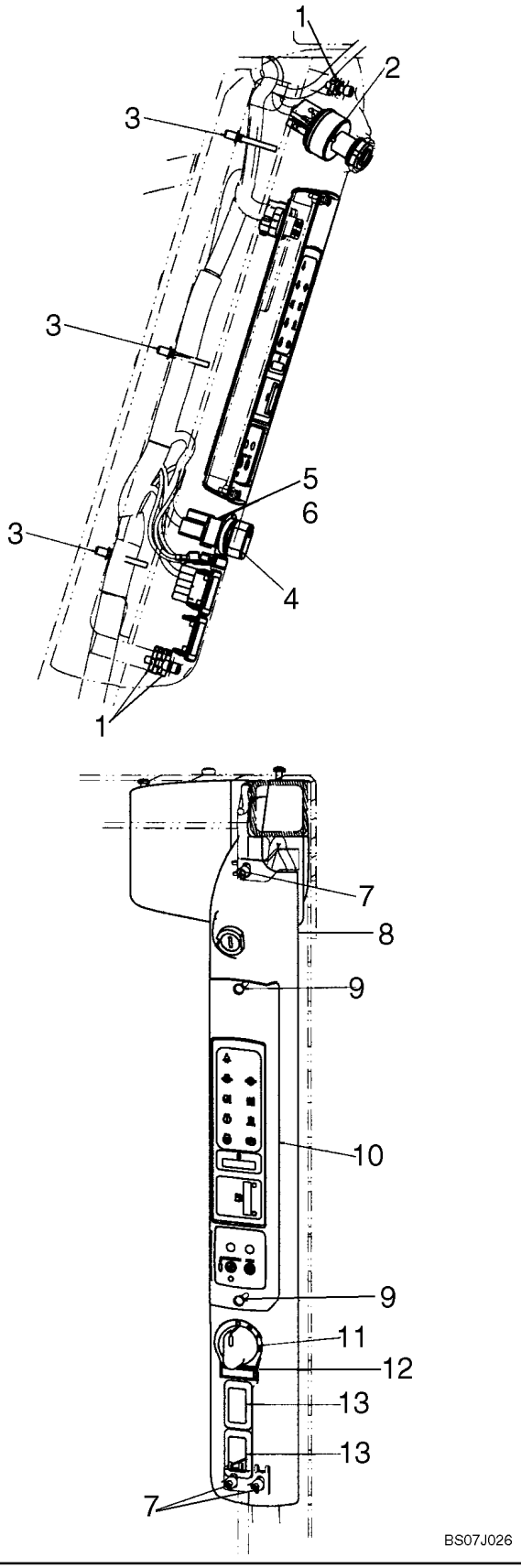

CONSOLA, LADO DERECHO

REF	FN	PART NUMBER	YR/SN	QTY	DENOMINACION
1		86521425		3	TUERCA, Tinn, U, 1/4"-20
2		282775A1		1	CONMUTADOR DE ARRANQ, Ignition Switch And 2 Keys
3		87668737		10	BANDA, Strap With Fastener
4		86729670		1	POMO
5		86729669		1	INTERRUPTOR VENTILADOR, Fan Speed Switch
6		87310592		1	TUERCA, Jam, 7/16"-28, G5
7		280272		3	TORNILLO, Hex Soc Hd, 1/4"-20 x 3/4"
8		{87665327}		1	Console, RH
9		86511042		2	TORNILLO, Cross Pan Hd, M4 x 16
10		87638864		1	TABLERO DE INSTRUMENTOS, Instrument Panel, Standard (Shown In Illustration)
10		87638865		1	TABLERO DE INSTRUMENTOS, Instrument Panel, Deluxe
11		{87677739}		1	Decal, Light Switch
12		86627432		1	TAPÓN PLÁSTICO
13		126844A1		2	TAPÓN, Switch Hole Cover

CONSOLA - IZQUIERDA

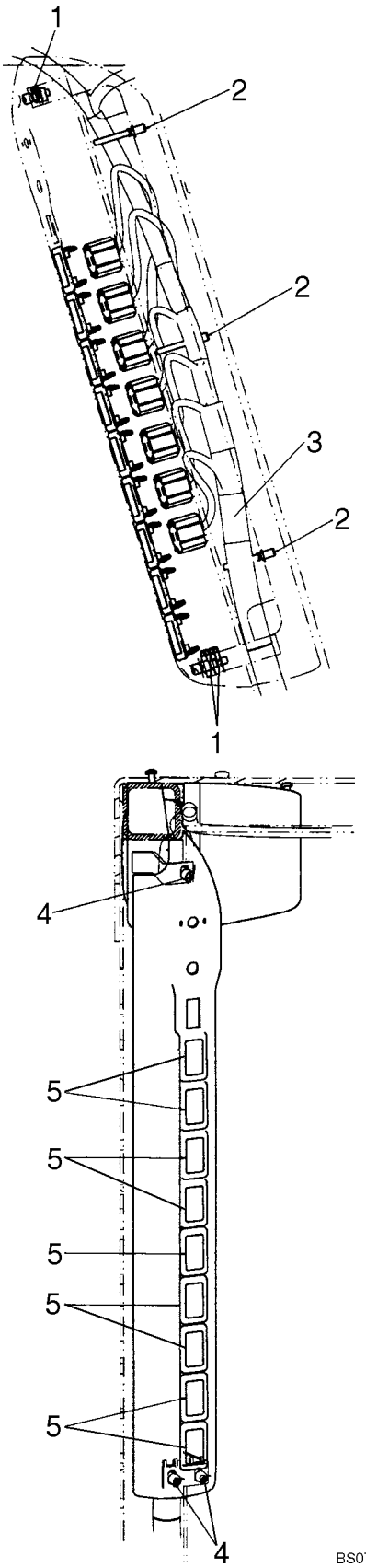

CONSOLA - IZQUIERDA

REF	FN	PART NUMBER	YR/SN	QTY	DENOMINACION
		87627050		1	REPISA, Console, LH
1		86521425		3	TUERCA, Tinn, U, 1/4"-20
2		87668737		3	BANDA, Strap With Mount
3		87668728		1	HAZ, Cab Harness
4		280272		3	TORNILLO, Hex Soc Hd, 1/4"-20 x 3/4"
5		126844A1		11	TAPÓN, Switch Hole Cover

04-09		p1	11/07

CONTROLES, DERECHA - MANILLA

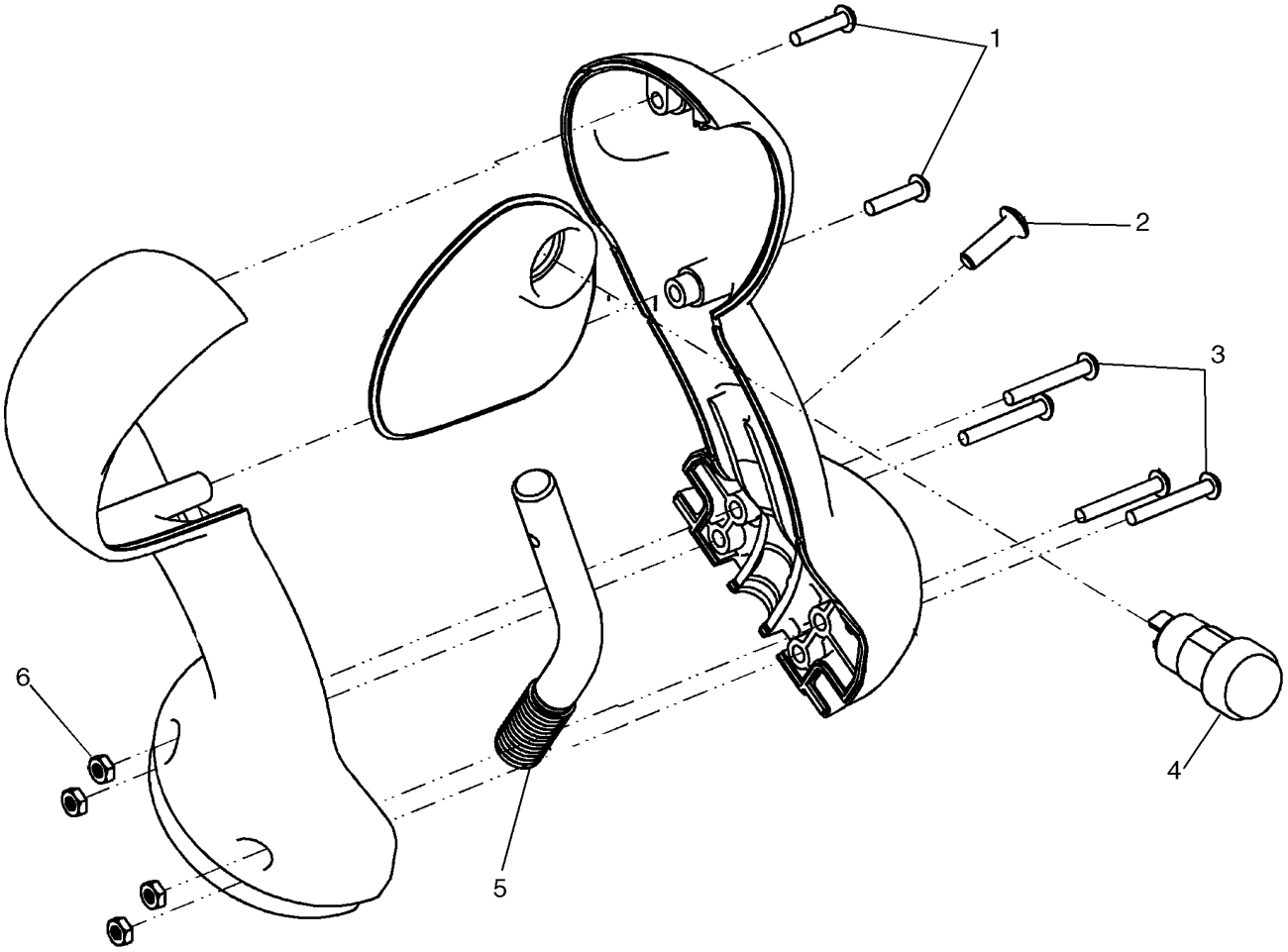

BS07J365

CONTROLES, DERECHA - MANILLA

REF	FN	PART NUMBER	YR/SN	QTY	DENOMINACION
		87656868		1	PERILLA, Handle, RH - Basic; Incl 1 - 6
1		86637783		2	TORNILLO AUTOROSCANTE, Cross Pan Hd, #6 x 5/8"
2		87534744		1	BOTON DE RESORTE
3		281045		4	TORNILLO, Cross Pan Hd, #6-32 x 1"
4		87630127		1	CONTACTOR, Parking Brake
5		{87652816}		1	Handle Mounting Rod
6		{87667726}		4	Nut, #6 - 32

CONTROLES, IZQUIERDA - MANILLA

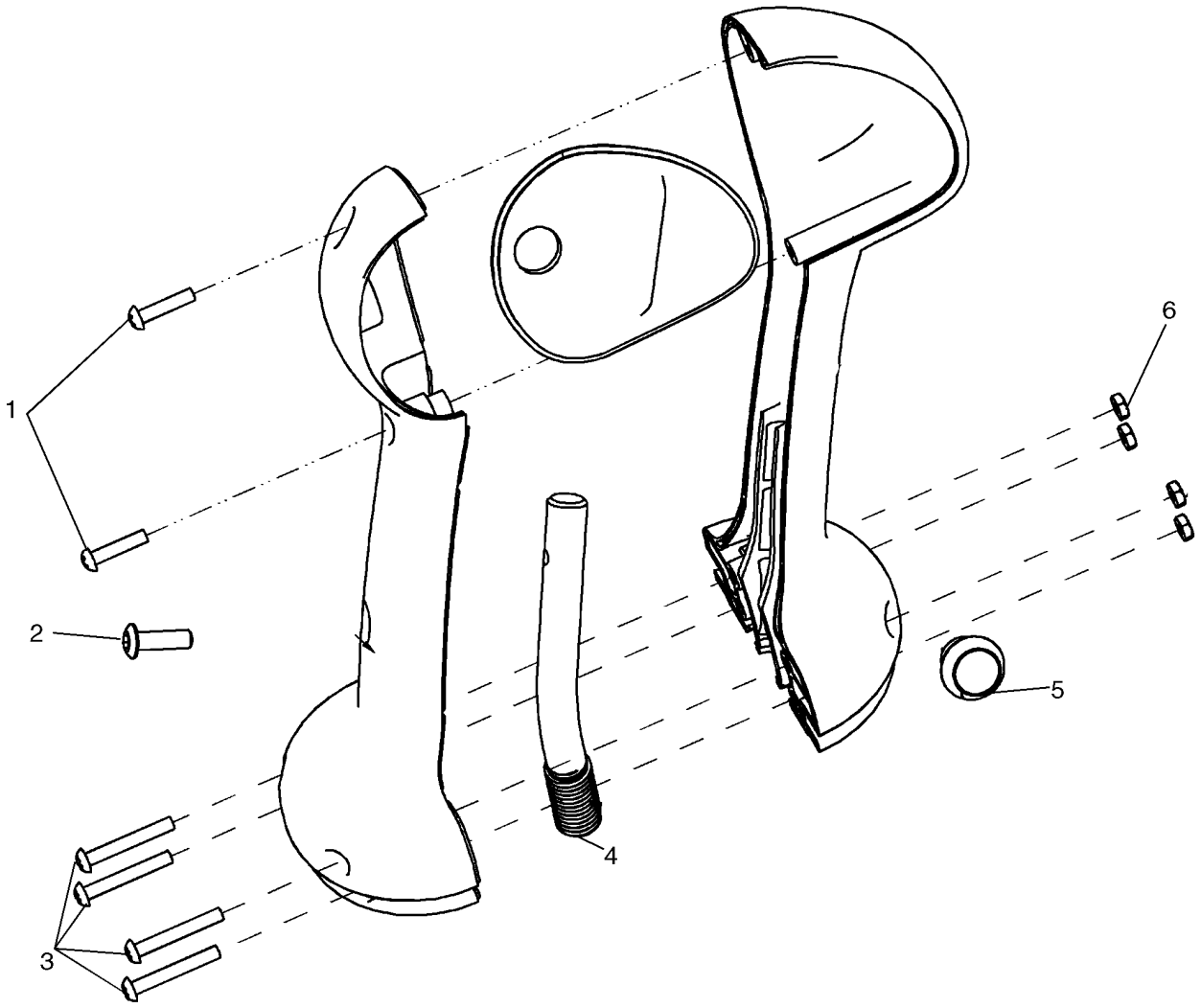

BS07J364

CONTROLES, IZQUIERDA - MANILLA

REF	FN	PART NUMBER	YR/SN	QTY	DENOMINACION
		87656866		1	PERILLA, Handle, LH - Basic; Incl 1 - 6
1		86637783		2	TORNILLO AUTOROSCANTE, Cross Pan Hd, #6 x 5/8"
2		87534744		1	BOTON DE RESORTE
3		281045		4	TORNILLO, Cross Pan Hd, #6-32 x 1"
4		{87652818}		1	Handle Mounting Rod
5		87630126		1	CONTACTOR, Horn
6		{87667726}		4	Nut, #6 - 32

CONTROLES, DERECHA - MANILLA

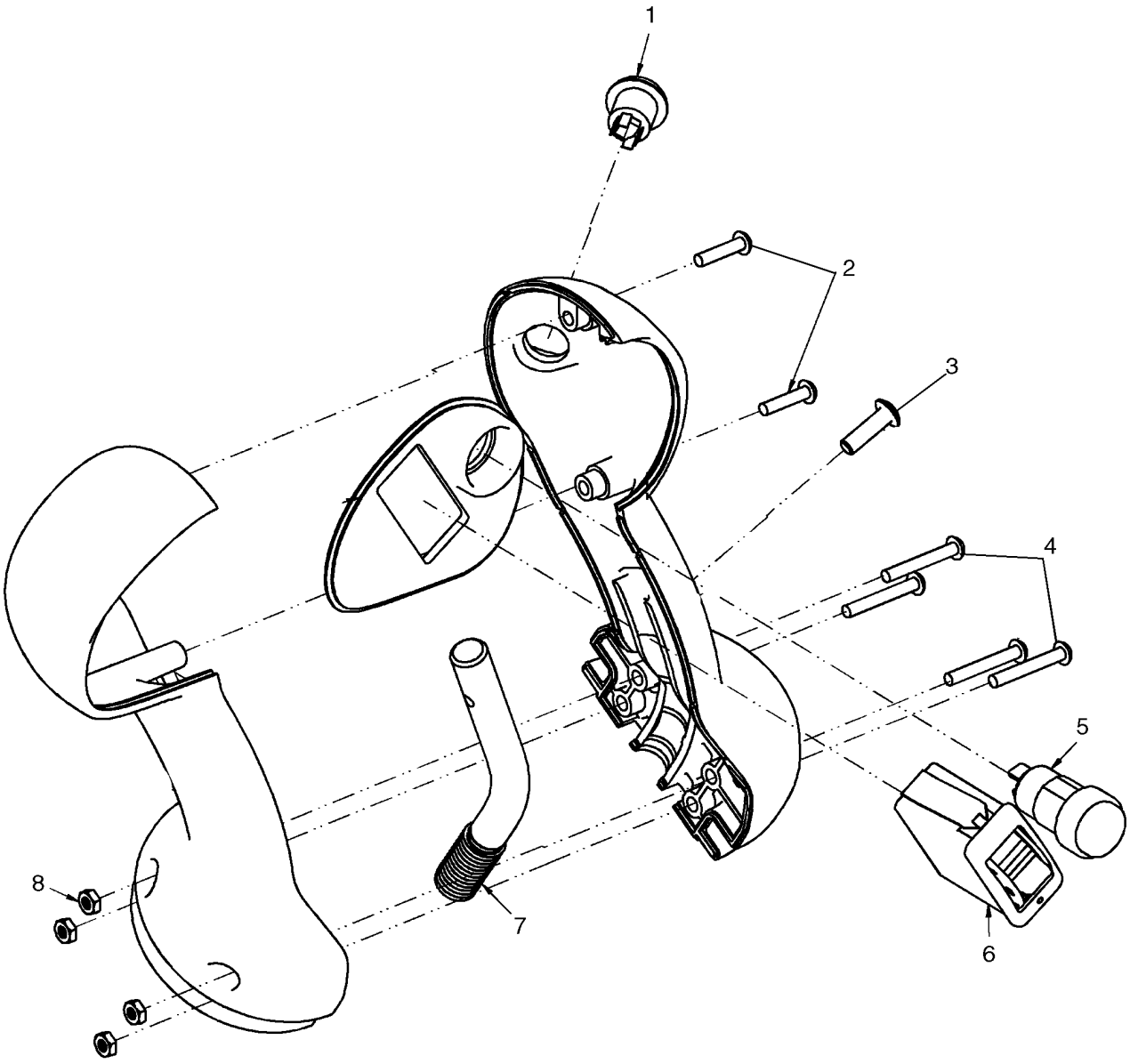

BS07J363

CONTROLES, DERECHA - MANILLA

REF	FN	PART NUMBER	YR/SN	QTY	DENOMINACION
		87656872		1	PERILLA, Handle, RH - Deluxe Without Aux Electric; Incl 1 - 8
1		87630129		1	CONTACTOR, Ride Control
2		86637783		2	TORNILLO AUTOROSCANTE, Cross Pan Hd, #6 x 5/8"
3		87534744		1	BOTON DE RESORTE
4		281045		4	TORNILLO, Cross Pan Hd, #6-32 x 1"
5		87630127		1	CONTACTOR, Parking Brake
6		87642913		1	CONTACTOR, Auxiliary Hydraulic
7		{87652816}		1	Handle Mounting Rod
8		{87667726}		4	Nut, #6 - 32

CONTROLES, IZQUIERDA - MANILLA

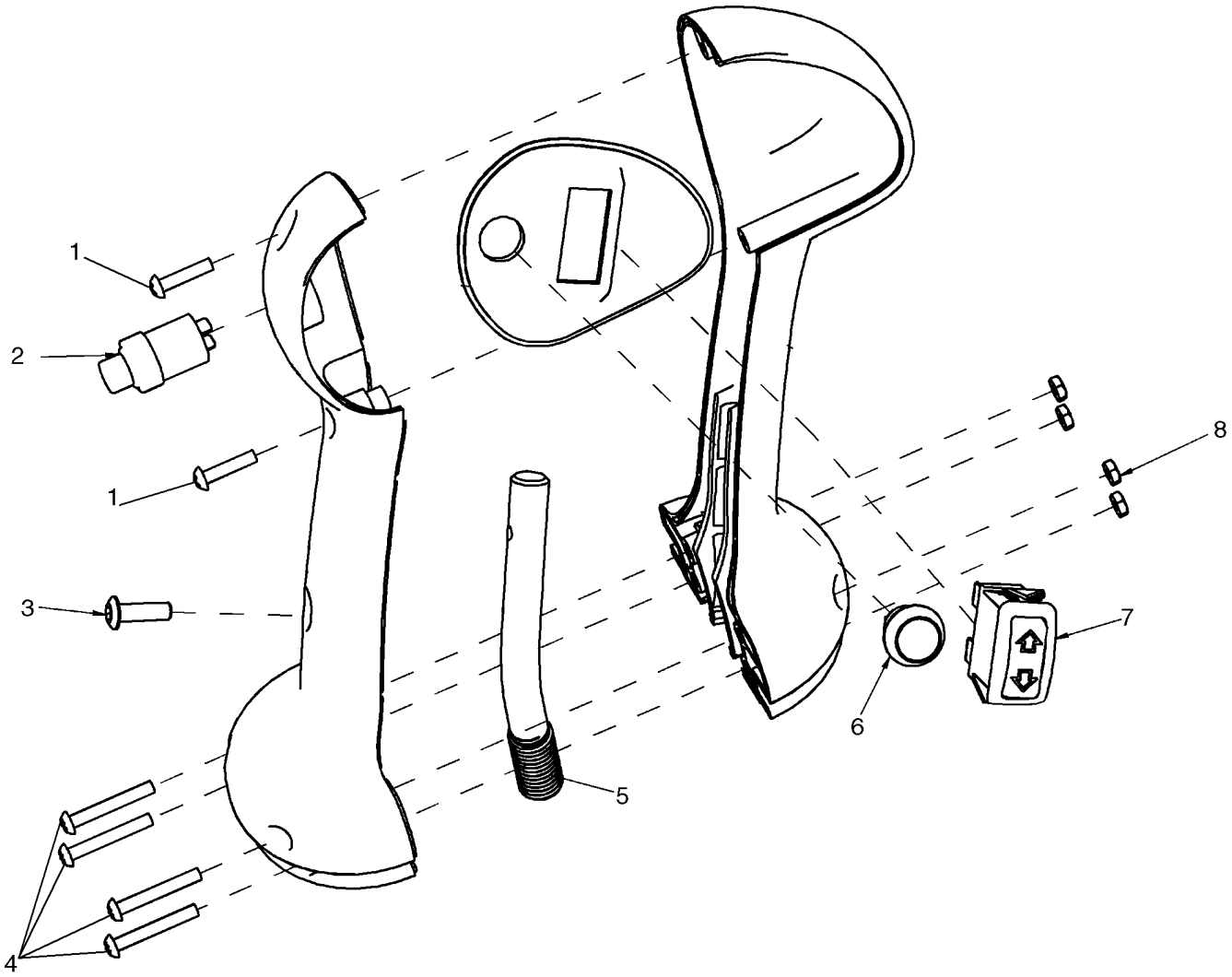

CONTROLES, IZQUIERDA - MANILLA

REF	FN	PART NUMBER	YR/SN	QTY	DENOMINACION
		87656870		1	PERILLA, Handle, LH - Deluxe Without Aux Electric
1		86637783		2	TORNILLO AUTOROSCANTE, Cross Pan Hd, #6 x 5/8"
2		87630130		1	CONTACTOR, Two Speed
3		87534744		1	BOTON DE RESORTE
4		281045		4	TORNILLO, Cross Pan Hd, #6-32 x 1"
5		{87652818}		1	Handle Mounting Rod
6		87630126		1	CONTACTOR, Horn
7		87630128		1	CONTACTOR, Turn Signal
8		{87667726}		4	Nut, #6 - 32

04-13		p1	11/07

CONTROLES, DERECHA - MANILLA

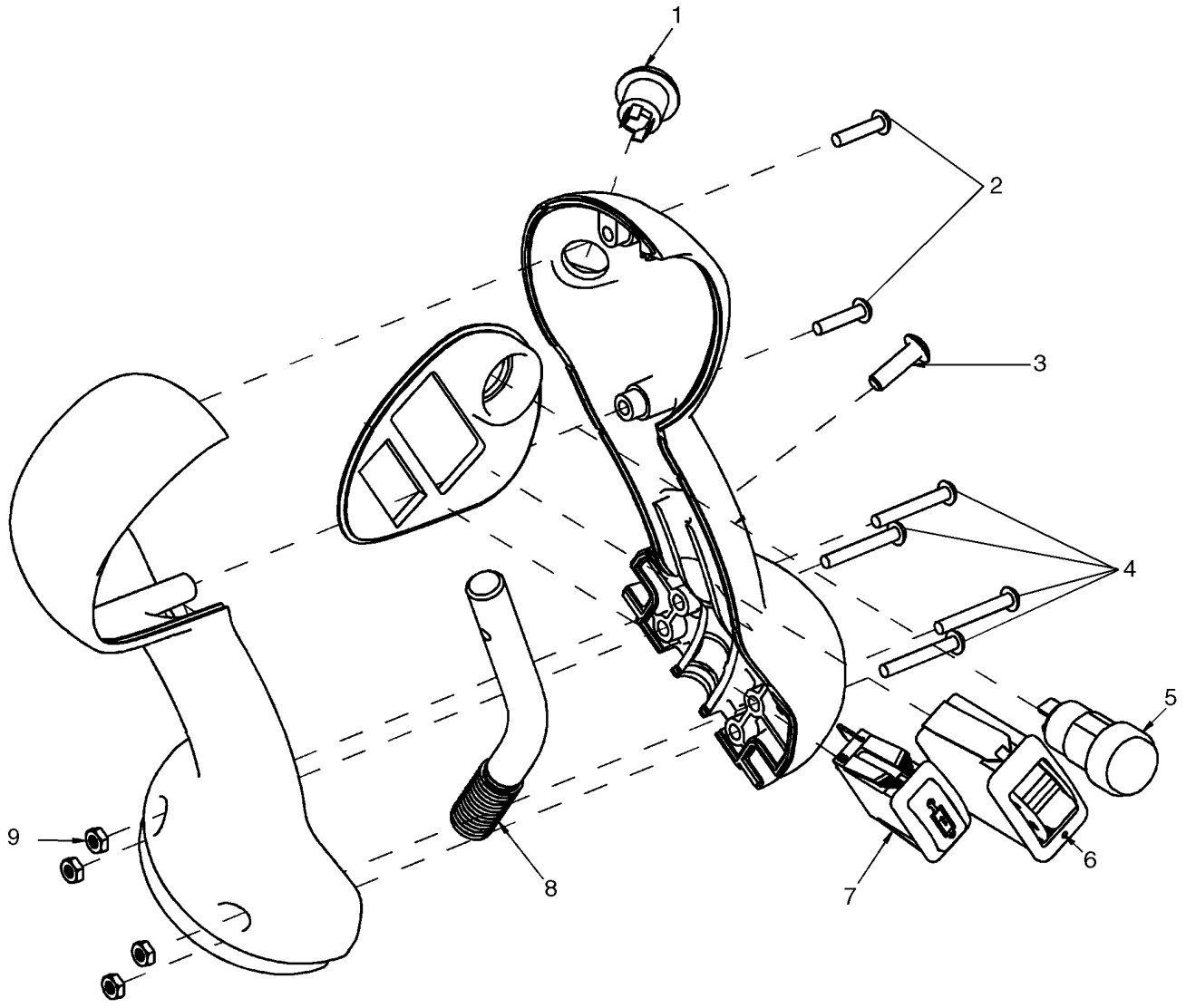

BS07J269

CONTROLES, DERECHA - MANILLA

REF	FN	PART NUMBER	YR/SN	QTY	DENOMINACION
		87641948		1	PERILLA, Handle, RH - Deluxe
1		87630129		1	CONTACTOR, Ride Control
2		86637783		2	TORNILLO AUTOROSCANTE, Cross Pan Hd, #6 x 5/8"
3		87534744		1	BOTON DE RESORTE
4		281045		4	TORNILLO, Cross Pan Hd, #6-32 x 1"
5		87630127		1	CONTACTOR, Parking Brake
6		87642913		1	CONTACTOR, Auxiliary Hydraulic
7		87427685		1	CONTACTOR, Switch Hyd M-O-M
8		{87652816}		1	Handle Mounting Rod
9		{87667726}		4	Nut, #6 - 32

04-14		p1	11/07

CONTROLES, IZQUIERDA - MANILLA

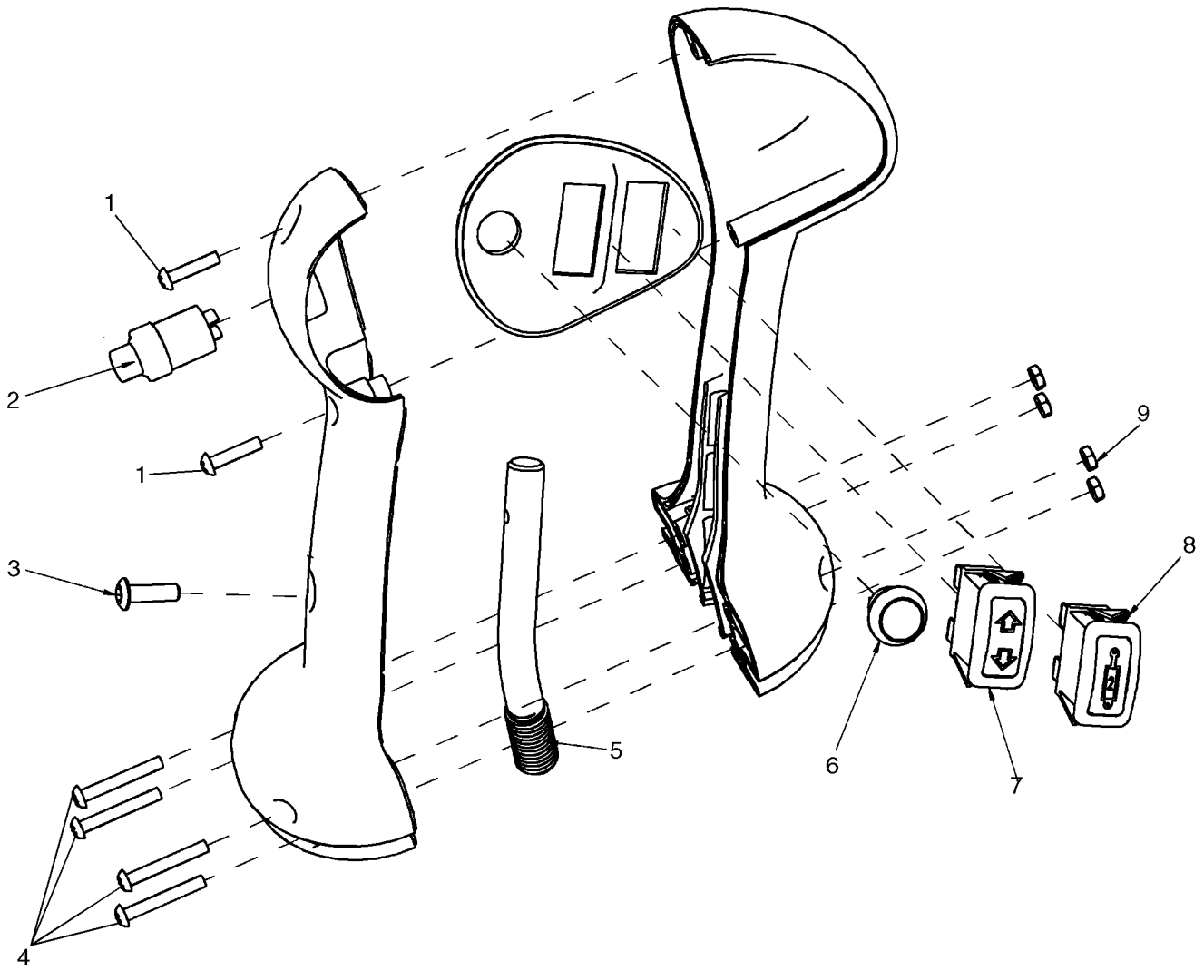

CONTROLES, IZQUIERDA - MANILLA

REF	FN	PART NUMBER	YR/SN	QTY	DENOMINACION
		87641947		1	PERILLA, Handle, LH - Deluxe
1		86637783		2	TORNILLO AUTOROSCANTE, Cross Pan Hd, #6 x 5/8"
2		87630130		1	CONTACTOR, Two Speed
3		87534744		1	BOTON DE RESORTE
4		281045		4	TORNILLO, Cross Pan Hd, #6-32 x 1"
5		{87652818}		1	Handle Mounting Rod
6		87630126		1	CONTACTOR, Horn
7		87630128		1	CONTACTOR, Turn Signal
8		87427686		1	CONTACTOR, Hyd M-O-M
9		{87667726}		4	Nut, #6 - 32

INTERRUPTOR DE DESCONEXION - ARRANQUE POR PUENTE REMOTO

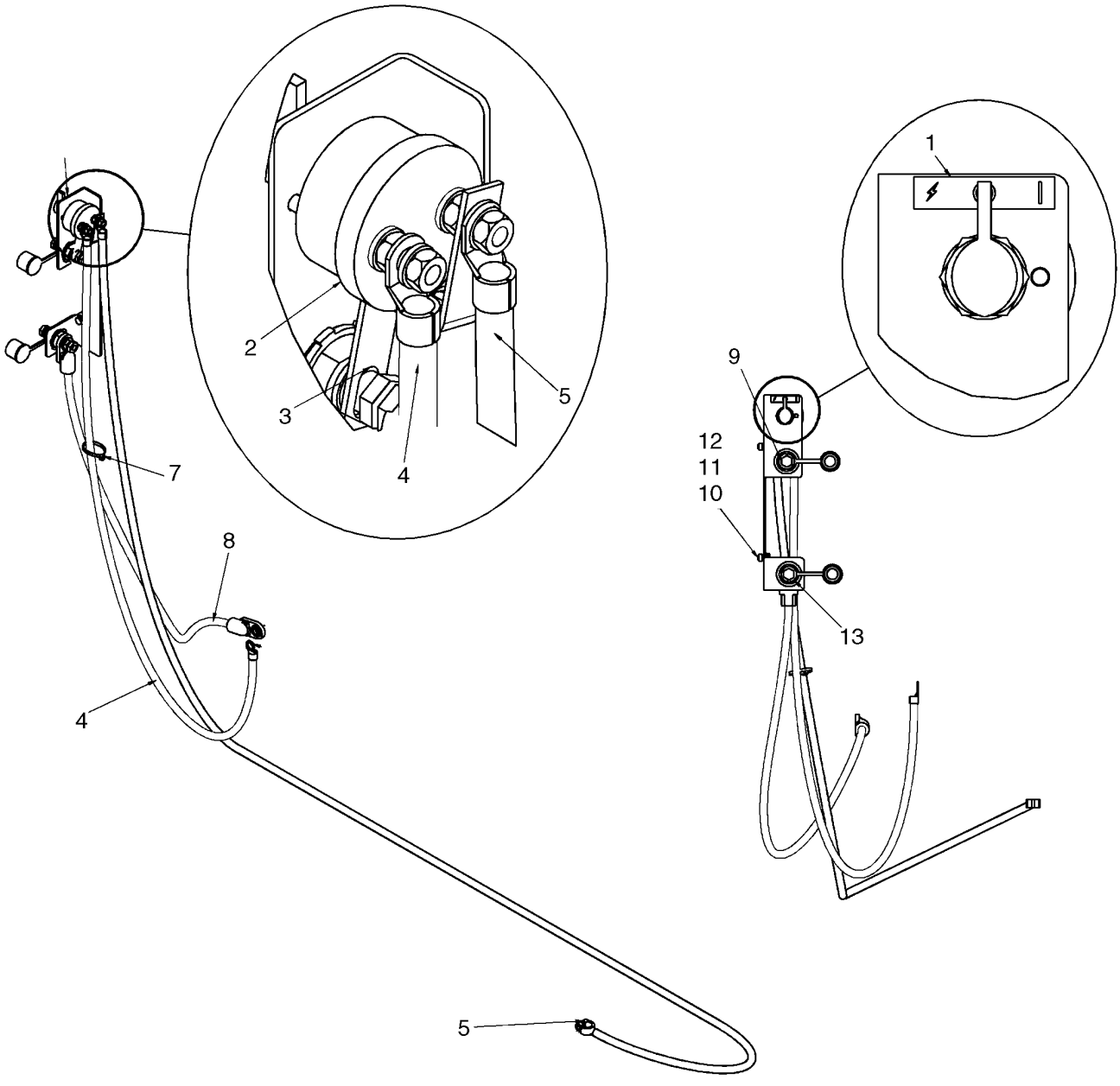

INTERRUPTOR DE DESCONEXION - ARRANQUE POR PUENTE REMOTO

REF	FN	PART NUMBER	YR/SN	QTY	DENOMINACION
1		176332A1		1	CALCOMANIA, Battery Disconnect
2		87458467		1	CONTACTOR, Master Disconnect Switch
3		399665A2		1	FIJACION, Strip, Battery Jump Start
4		{87622960}		1	Battery Cable, Negative, 1200mm (47 1/4 in.)
5		87444992		1	CABLE (CONJUNTO), Battery Cable, Negative, 2900mm (114 3/16 in.)
6		87624401		1	PIEZA DE SOPORTE, Remote Jump Start Bracket
7		L11541		1	CIERRA CABLES
8		87052671		1	CABLE (CONJUNTO), Battery Cable, Positive
9		399384A1		1	TERMINAL, Terminal, Negative Remote Jump Start
10		120103		2	TORNILLO, Hex, M8 x 16, 8.8
11		86624185		2	ARANDELA, M8 x 17.5 x 2, HT
12		229197A1		2	TUERCA
13		399383A1		1	TERMINAL, Terminal, Positive Remote Jump Start

04-16		p1	11/07

LUZ DE TRABAJO - IZQUIERDA

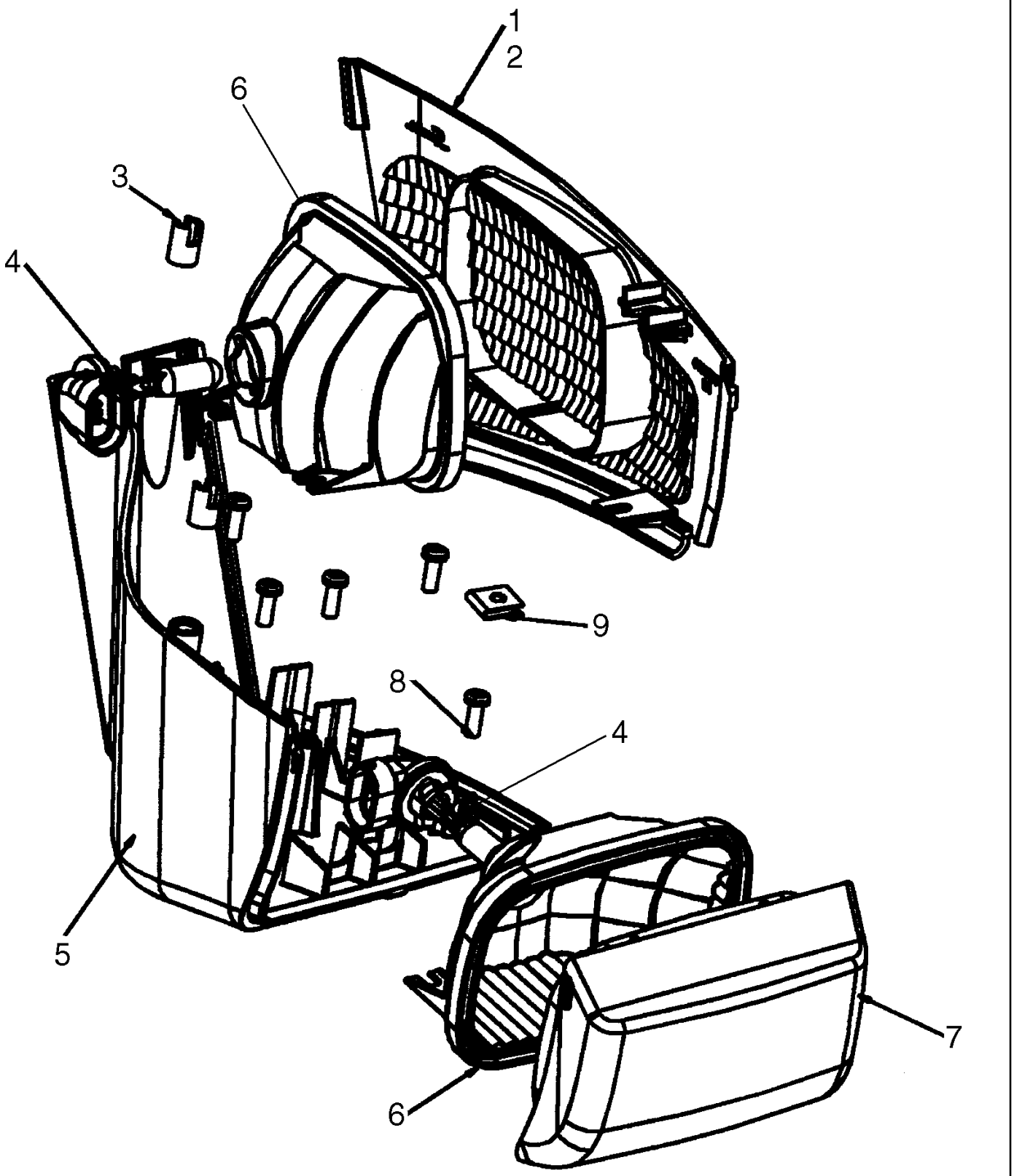

LUZ DE TRABAJO - IZQUIERDA

REF	FN	PART NUMBER	YR/SN	QTY	DENOMINACION
		87650097		1	PILOTO, Work Light, LH; Incl 1 - 9
1		NSS		AR	NO SE REPARA SEPARADAM., Adhesive Sealant
2		NSS		1	NO SE REPARA SEPARADAM., Side Lens, Clear
3		NSS		2	NO SE REPARA SEPARADAM., Threaded Brass Insert, M5 X 10
4		NSS		2	NO SE REPARA SEPARADAM., Bulb, 12.8V 50W Halogen
5		NSS		2	NO SE REPARA SEPARADAM., Housing
6		NSS		2	NO SE REPARA SEPARADAM., Reflector
7		NSS		1	NO SE REPARA SEPARADAM., Front Lens, Clear
8		NSS		5	NO SE REPARA SEPARADAM., Screw
9		NSS		1	NO SE REPARA SEPARADAM., Nut

LUZ DE TRABAJO - LADO DERECHO

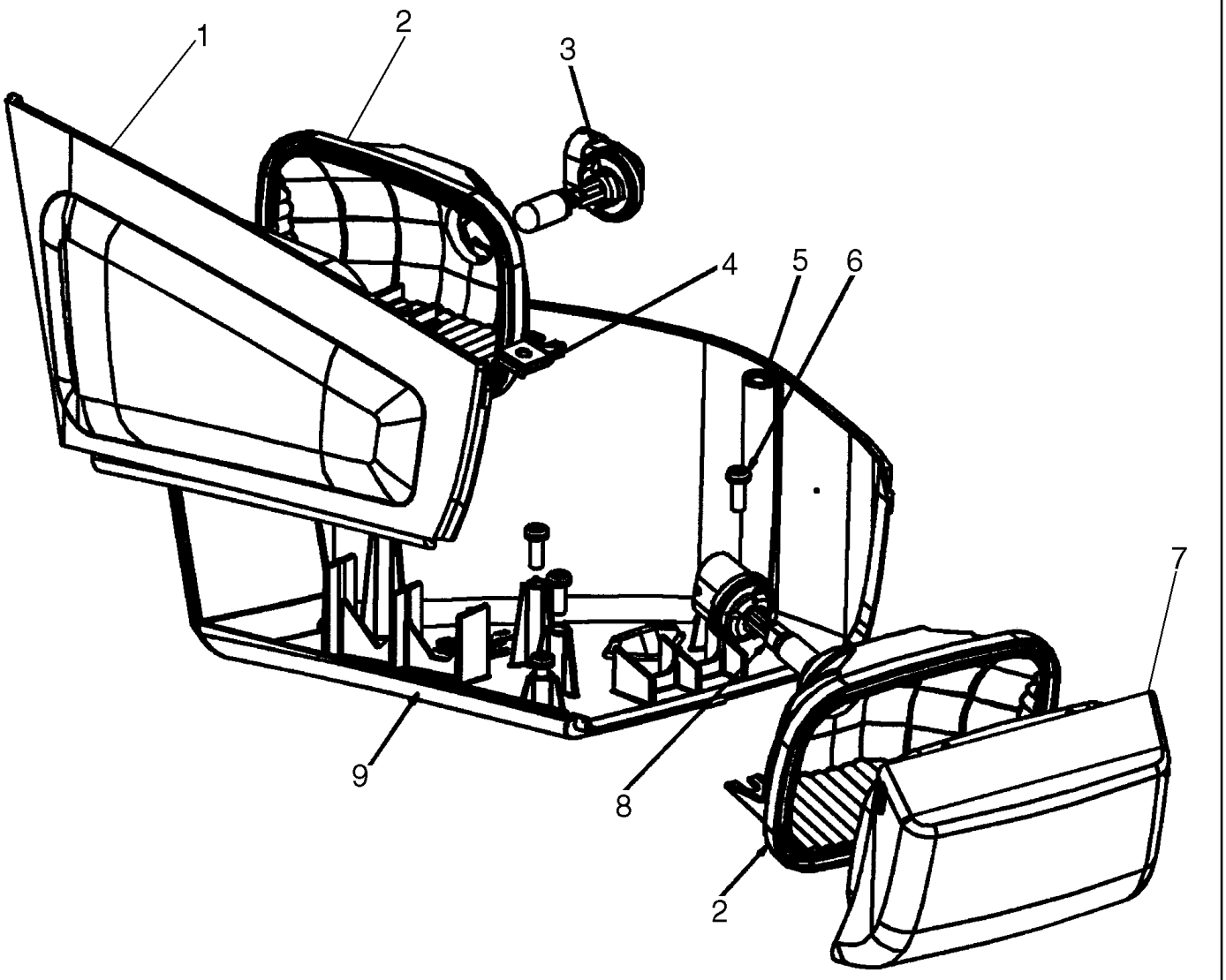

LUZ DE TRABAJO - LADO DERECHO

REF	FN	PART NUMBER	YR/SN	QTY	DENOMINACION
		87650098		1	PILOTO, Work Light, RH; Incl 1 - 9
1		NSS		1	NO SE REPARA SEPARADAM., Side Lens, Clear
2		NSS		2	NO SE REPARA SEPARADAM., Reflector
3		NSS		1	NO SE REPARA SEPARADAM., Bulb, 12.8V 50W Halogen
4		NSS		1	NO SE REPARA SEPARADAM., Nut
5		NSS		2	NO SE REPARA SEPARADAM., Threaded Brass Insert, M5 X 10
6		NSS		5	NO SE REPARA SEPARADAM., Screw
7		NSS		1	NO SE REPARA SEPARADAM., Front Lens, Clear
8		NSS		1	NO SE REPARA SEPARADAM., Bulb, 12V 50W
9		NSS		1	NO SE REPARA SEPARADAM., Housing

ELECTRICO - LUCES DE CARRETERA Y CABLEADO (NA)

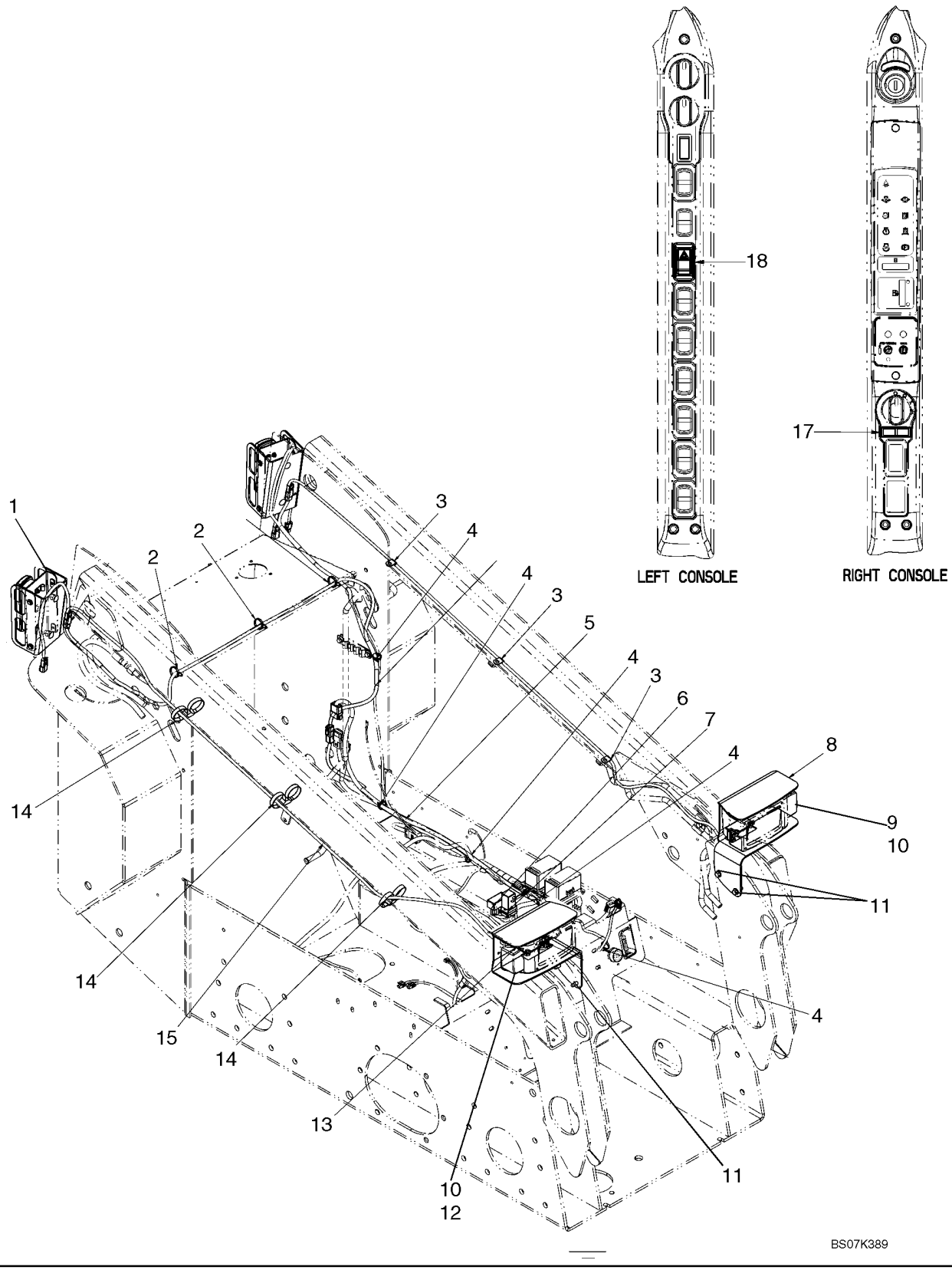

ELECTRICO - LUCES DE CARRETERA Y CABLEADO (NA)

REF	FN	PART NUMBER	YR/SN	QTY	DENOMINACION
		87676259		1	KIT, SERVICE, Kit, Road Lights (NA); Incl 1 - 18
1		REF		2	MANUAL, Rear Lights; See Fig 04-22
2		87668737		3	BANDA
3		853765		3	BORNE, 5/16", Insul, 3/8" Bolt
4		263117		5	CIERRA CABLES, .14" x 11 1/2"
5		87673072		1	HAZ, Harness, Road Lights
6		83982664		1	CONECTADOR, Turn Signal Relay
7		9821783		1	RELE DE INTERMITENCIA
8		87720246		1	PIEZA DE SOPORTE, Bracket, LH
9		85821385		1	FARO, IZQ., See Fig 04-21
10		43435		4	TUERCA, M10, Flg Ser
11		280476		4	TORNILLO AUTOROSCANTE, Hex Wash Hd, 3/8" x 1"
12		85821384		1	FARO, DER., See Fig 04-20
13		87720245		1	PIEZA DE SOPORTE, Bracket, RH
14		87659208		3	RETENEDOR, Strap, Dual Tie Releasable
15		87673079		2	HAZ, Harness, Turn Signal
16		{87655334}		2	Relay
17		86604657		1	INDICADOR DE DIRECCION
18		87634133		1	CONTACTOR, Rocker Switch, Hazard Lights

ELECTRICO - LUCES DE CARRETERA Y CABLEADO (EUROPE)

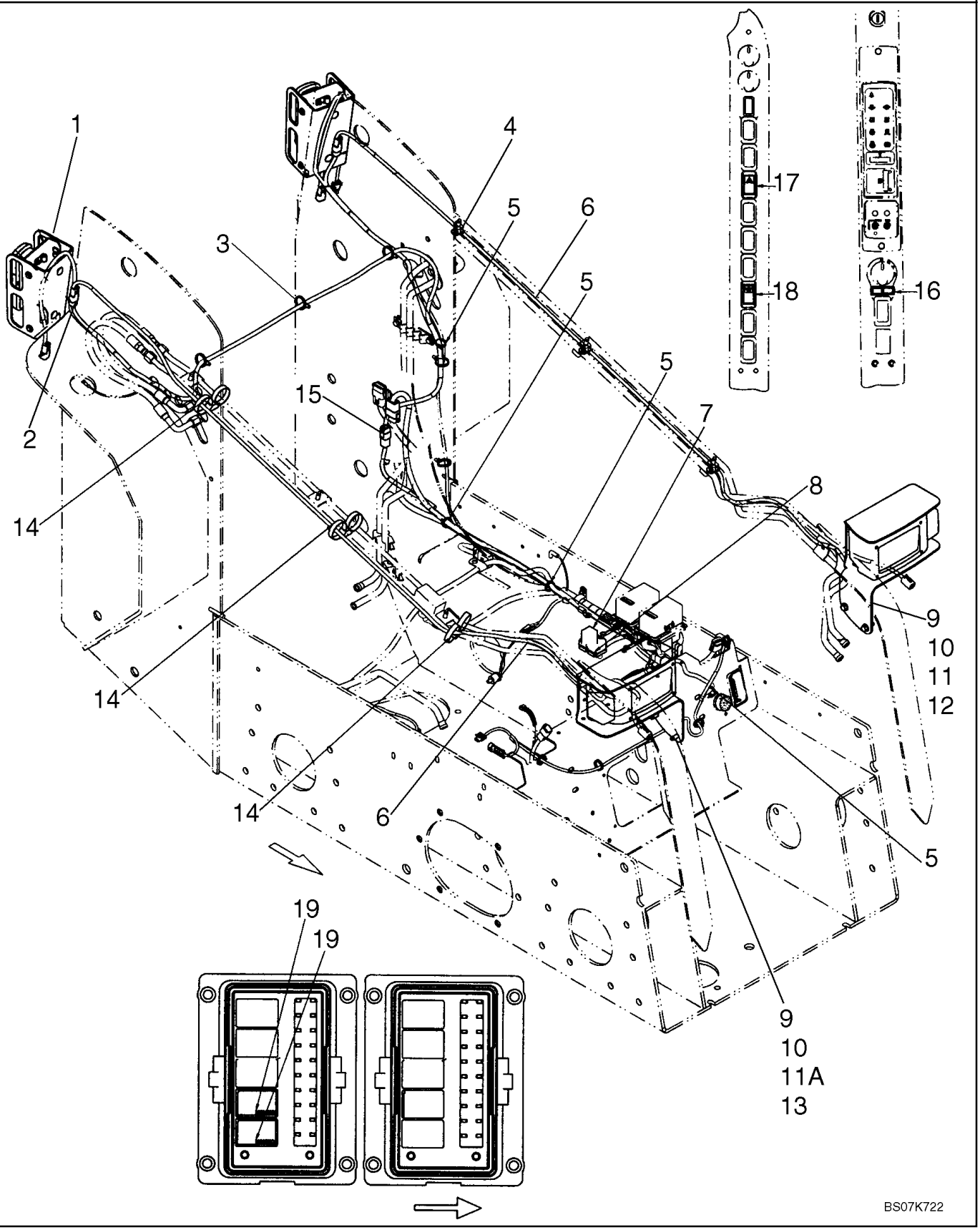

ELECTRICO - LUCES DE CARRETERA Y CABLEADO (EUROPE)

REF	FN	PART NUMBER	YR/SN	QTY	DENOMINACION
		87676260		1	KIT, SERVICE, Kit, Road Lights (EU); Incl 1 - 19
1		REF		2	MANUAL, Rear Lights; See Fig 04-22
2		87673077		1	HAZ, Harness, Turn Signal
3		87668737		3	BANDA
4		853765		3	BORNE, 5/16", Insul, 3/8" Bolt
5		263117		4	CIERRA CABLES, .14" x 11 1/2"
6		87673079		2	HAZ, Harness, Turn Signal Loader Arm
7		388457A1		1	CONECTADOR, Time Delay, Road Lights, Europe
8		9821783		1	RELE DE INTERMITENCIA
9		43435		4	TUERCA, M10, Flg Ser
10		280476		4	TORNILLO AUTOROSCANTE, Hex Wash Hd, 3/8" x 1"
11		85821385		1	FARO, IZQ., See Fig 04-21
11A		85821384		1	FARO, DER., See Fig 04-20
12		87720246		1	PIEZA DE SOPORTE, Bracket, LH
13		87720245		1	PIEZA DE SOPORTE, Bracket, RH
14		87659208		3	RETENEDOR, Strap, Dual Tie Releasable
15		87673070		1	HAZ, Harness, EU Adapter
16		86604657		1	INDICADOR DE DIRECCION
17		87634133		1	CONTACTOR, Rocker Switch, Hazard Lights
18		87642912		1	CONTACTOR, Rocker Switch, Loader Lock
19		{87655334}		2	Relay, 35A, Road Lights

FAROS - LADO DERECHO

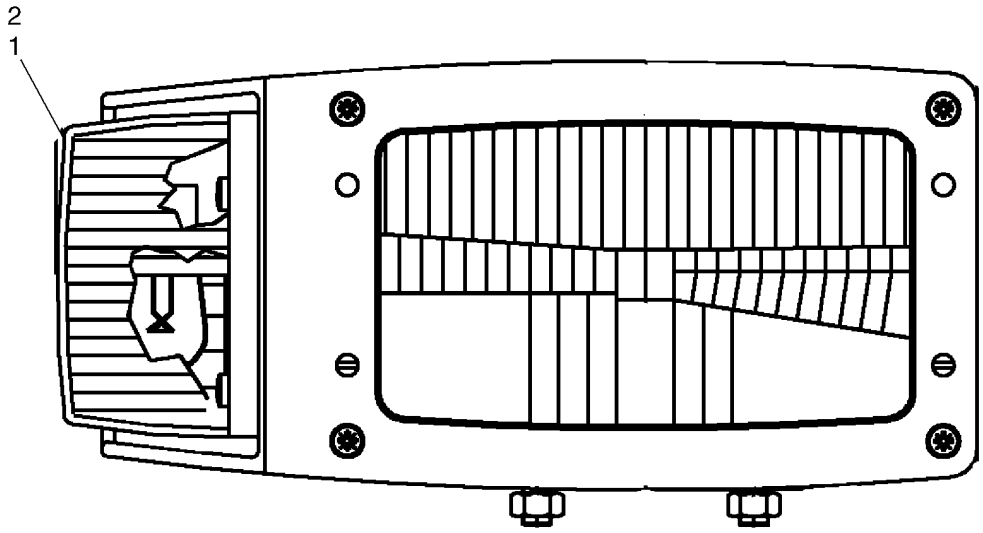

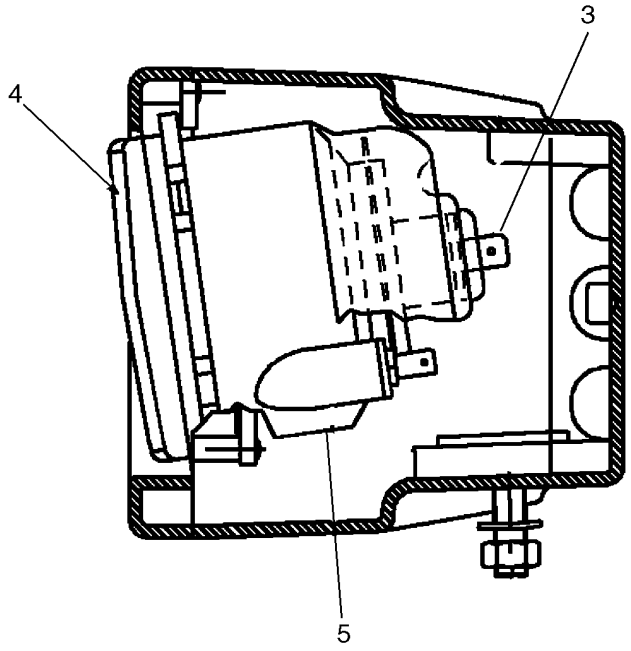

BS07K390

FAROS - LADO DERECHO

REF	FN	PART NUMBER	YR/SN	QTY	DENOMINACION
		85821384		1	FARO, DER., Incl. 1 - 5
1		9969431		1	TAPA TRANSLUCIDA
2		14148190		1	BOMBILLA, Bulb, 12V 21W
3		14152090		1	BOMBILLA, Bulb, 12V 60/55 W
4		NSS		1	NO SE REPARA SEPARADAM., Lamp
5		14142390		1	BOMBILLA, Bulb, 12V-4W

FAROS - IZQUIERDA

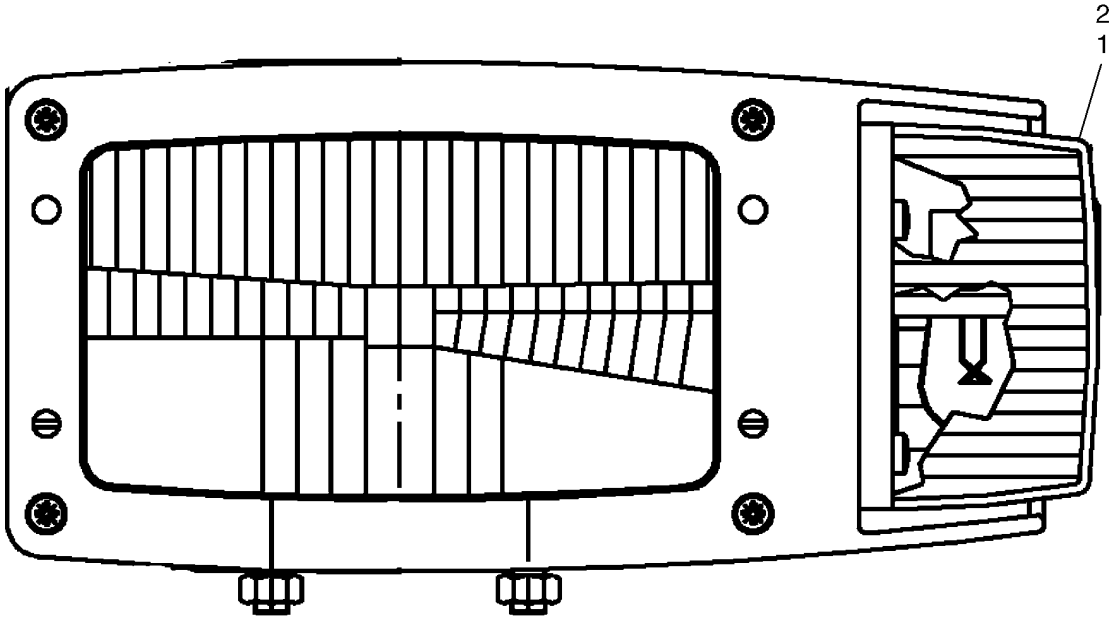

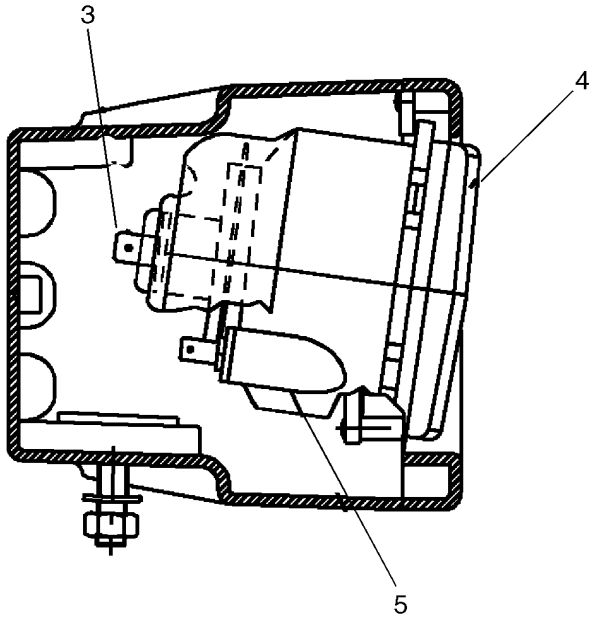

BS07K391

FAROS - IZQUIERDA

REF	FN	PART NUMBER	YR/SN	QTY	DENOMINACION
		85821385		1	FARO, IZQ., Incl 1 - 5
1		9969430		1	TAPA TRANSLUCIDA
2		14148190		1	BOMBILLA, Bulb, 12V 21W
3		14152090		1	BOMBILLA, Bulb, 12V 60/55 W
4		NSS		1	NO SE REPARA SEPARADAM., Lamp
5		14142390		1	BOMBILLA, Bulb, 12V 4W

LAMPARAS TRASERAS Y MONTAJE

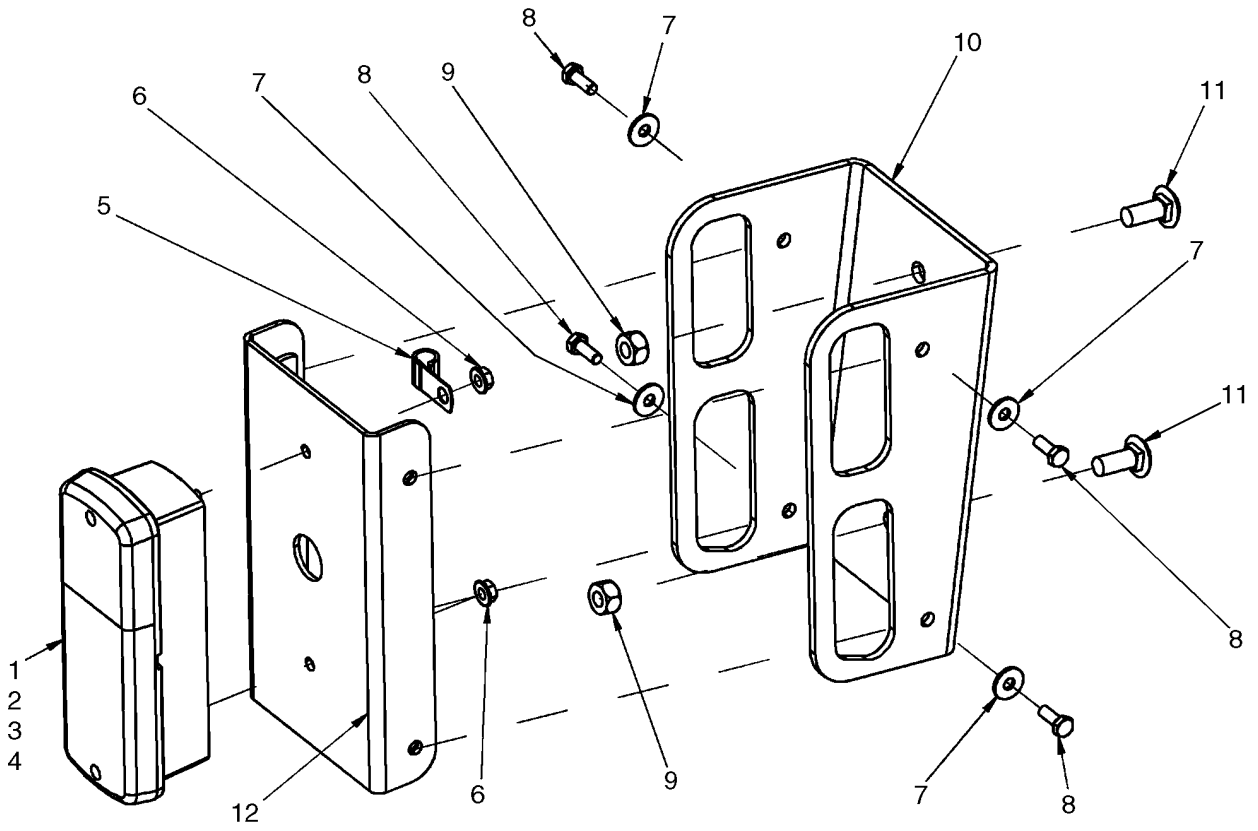

BS07K392

LAMPARAS TRASERAS Y MONTAJE

REF	FN	PART NUMBER	YR/SN	QTY	DENOMINACION
1		177239A2		2	LUNA FARO, Incl 2 - 4
2		187140A1		2	TAPA TRANSLUCIDA
3		3131227R1		2	BOMBILLA, P25-1, 12V, 25W
4		3131234R1		2	BOMBILLA, P25-2, 12V, 5W
5		87016870		2	BORNE, J, 7/16" Insul, 5/16" Bolt
6		86511444		4	TUERCA, M6, Flg Ser
7		86624182		8	ARANDELA, M6 x 18 x 1.6
8		86508568		8	TORNILLO, Hex, M6 x 16, 8.8
9		87030549		4	CONTRA TUERCA, M10 x 1.5, Cl 10
10		419431A1		2	PIEZA DE SOPORTE, Rear Turn Signal Bracket
11		86633356		4	PERNO, CABEZA RONDA, Short NK, M10 x 25, Cl8.8, Full Thd
12		427180A1		2	PIEZA DE SOPORTE

ALARMA DE RETROCESO

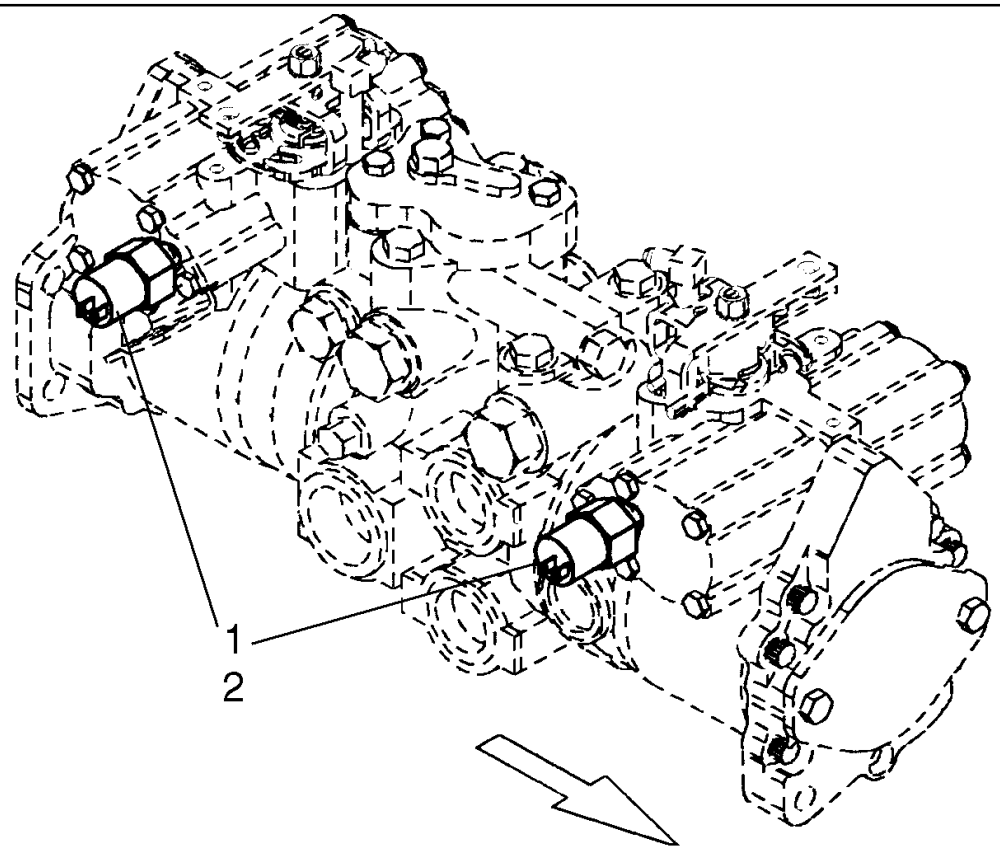

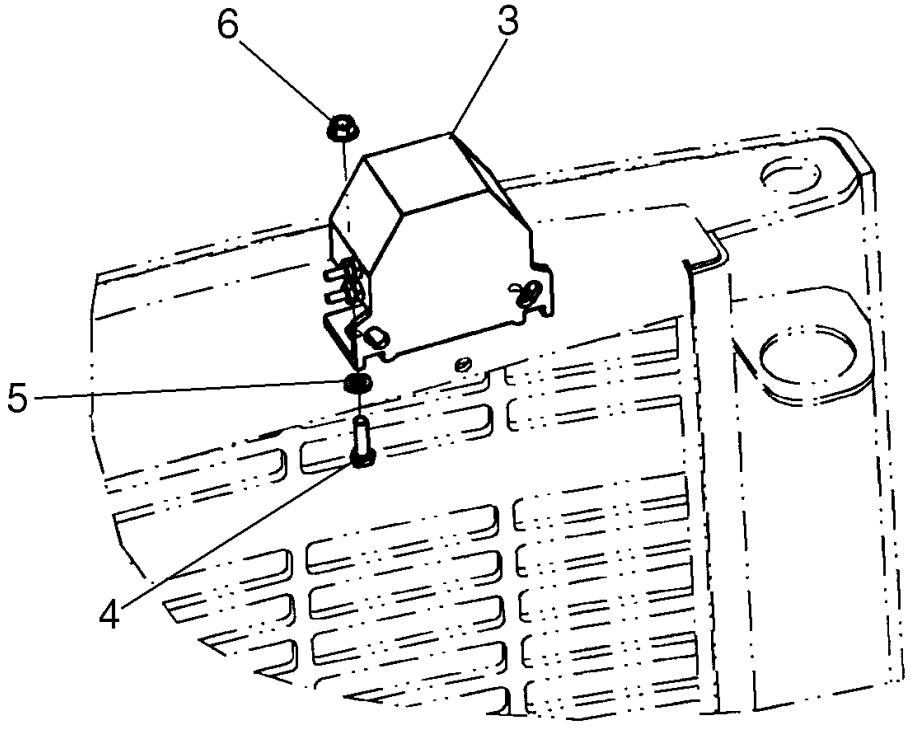

BS04K096

ALARMA DE RETROCESO

REF	FN	PART NUMBER	YR/SN	QTY	DENOMINACION
1		87029843		2	INTERRUPTOR DE PRESION, 600 PSI; Backup Alarm Control; Incl. 2; If Used
1		87370805		2	INTERRUPTOR DE PRESION, 2000 PSI; Backup Alarm Control; Incl. O-Ring 9617873; Replaces 87461545; If Used
2		9617873		1	JUNTA HERMETICA, 6-1, 90 Duro, .468" ID x .078" Thk
3		324299A1		1	ALARMA, For Service Order 325258A1
3		325258A1		1	KIT, SERVICE, Backup Alarm
4		120100		2	TORNILLO, Hex, M6 x 20, 8.8
5		86624182		2	ARANDELA, M6 x 18 x 1.6
6		86511444		2	TUERCA, M6, Flg Ser

ACCESORIOS ELECTRICOS

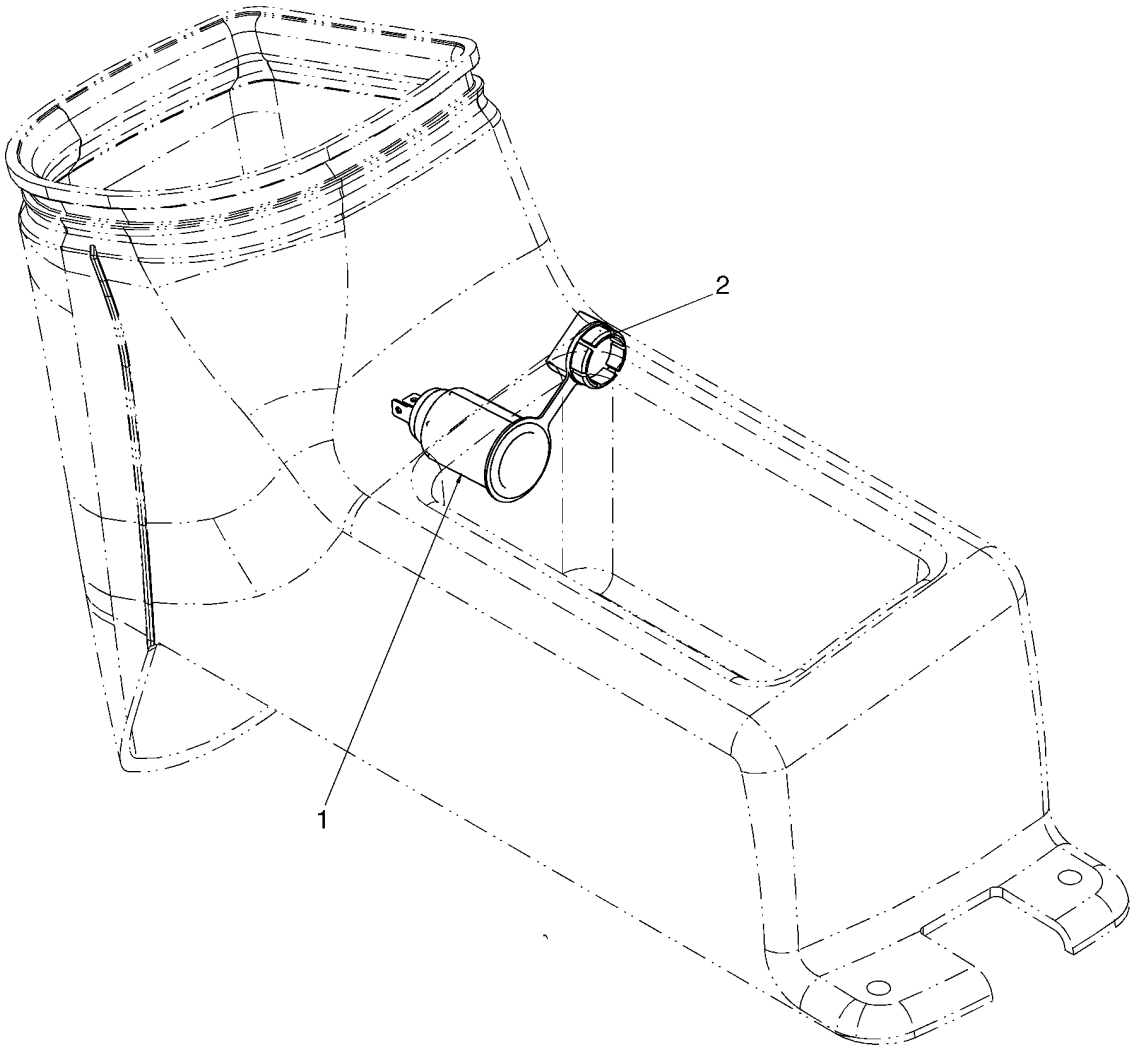

BS07K960

ACCESORIOS ELECTRICOS

REF	FN	PART NUMBER	YR/SN	QTY	DENOMINACION
1		283779A1		1	SALIDA, Power Outlet
2		283781A1		1	TAPON DEL DEPOSITO

ACCESORIOS ELECTRICOS (EUROPA)

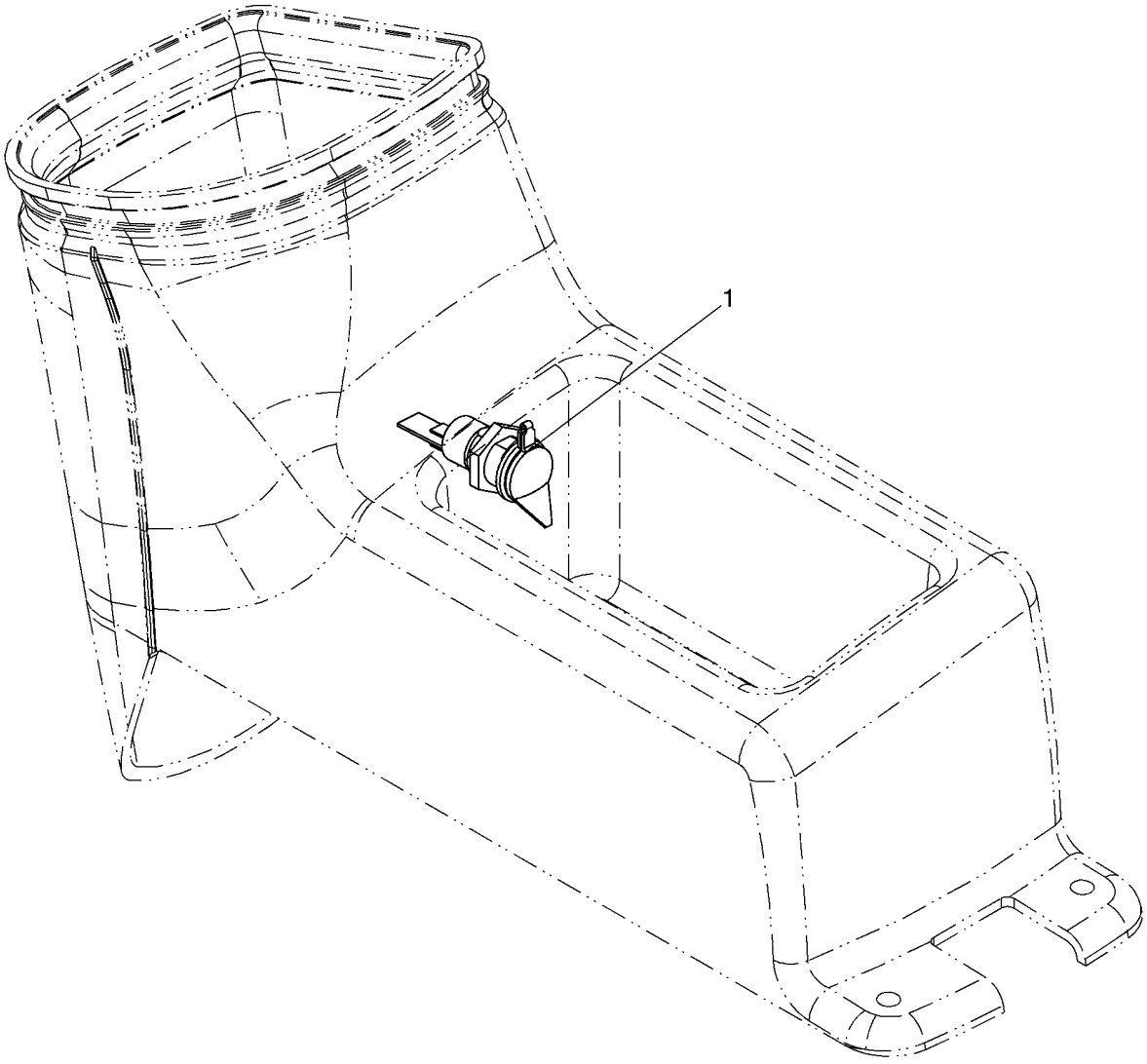

BS07K962

ACCESORIOS ELECTRICOS (EUROPA)

REF	FN	PART NUMBER	YR/SN	QTY	DENOMINACION
1		142211A1		1	ENCAJE

BOCINA - SOPORTE

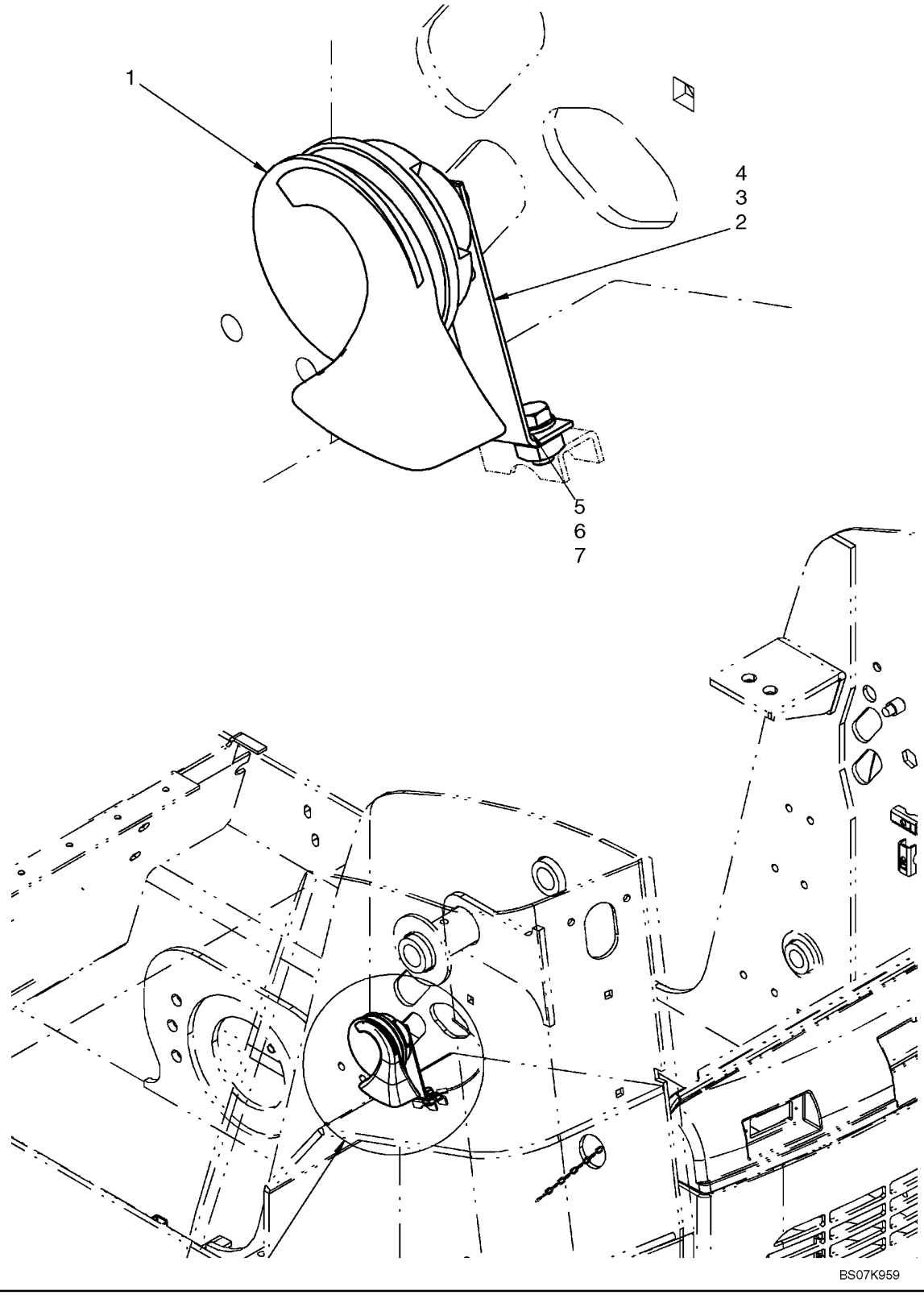

BOCINA - SOPORTE

REF	FN	PART NUMBER	YR/SN	QTY	DENOMINACION
1		254130A1		1	BOCINA
2		406938A2		1	PIEZA ANGULAR, Horn Mounting Bracket
3		87030561		1	CONTRA TUERCA, M6 x 1, Cl 8
4		86632601		2	ARANDELA DE FRENO, Ext Tooth, M8
5		86624184		1	ARANDELA, M8 x 16 x 1.6
6		120103		1	TORNILLO, Hex, M8 x 16, 8.8
7		229197A1		1	TUERCA

MAZO DE CABLES, DELANTERO - AUXILIAR

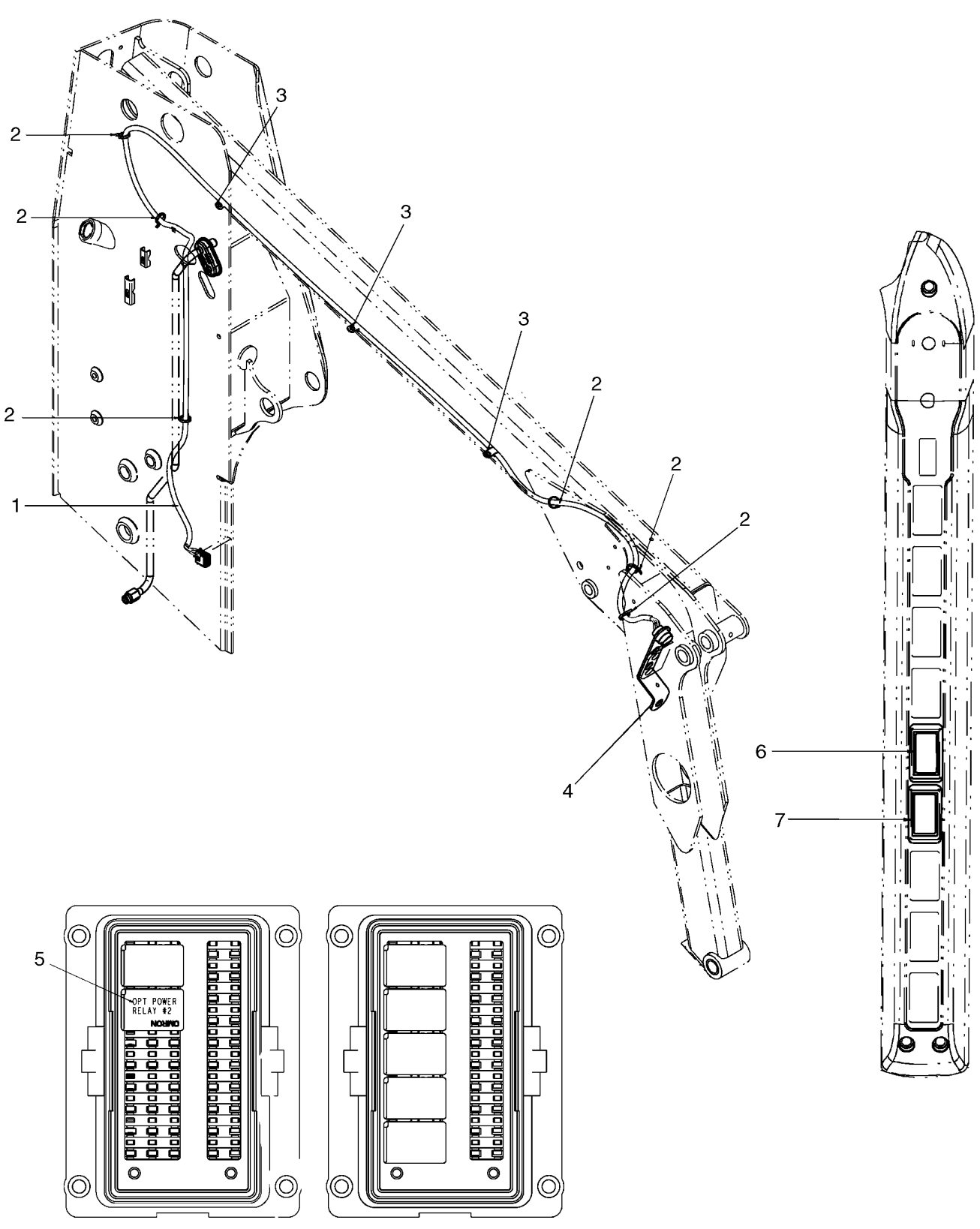

MAZO DE CABLES, DELANTERO - AUXILIAR

REF	FN	PART NUMBER	YR/SN	QTY	DENOMINACION
		87640048		1	KIT, SERVICE, Kit, Front Auxiliary Electric; Incl 1 - 11
1		87441574		1	GRUPO DE CABLES, Front Auxiliary Harness
2		263117		6	CIERRA CABLES, .14" x 11 1/2"
3		87028524		3	GRAPON
4		87023530		1	PIEZA DE SOPORTE
5		{87655334}		1	Relay
6		87634134		1	CONTACTOR, Rocker Switch, Auxiliary Electric I/O
7		87634135		1	CONTACTOR, Rocker Switch, Auxiliary Electric F/R
8		9706704		1	TORNILLO, Hex, M10 x 35, 8.8, Full Thd, Not Illustrated
9		87449992		1	PIEZA DE SOPORTE, Bracket, Auxiliary Electric; Not Illustrated
10		87453780		1	PIEZA DE SOPORTE, Bracket, Auxiliary Electric With Case Drain; Not Illustrated
11		87458118		1	PIEZA DE SOPORTE, Bracket, Auxiliary Electric Mount; Not Illustrated

04-28		p1	12/07

FARO, GIRATORIO

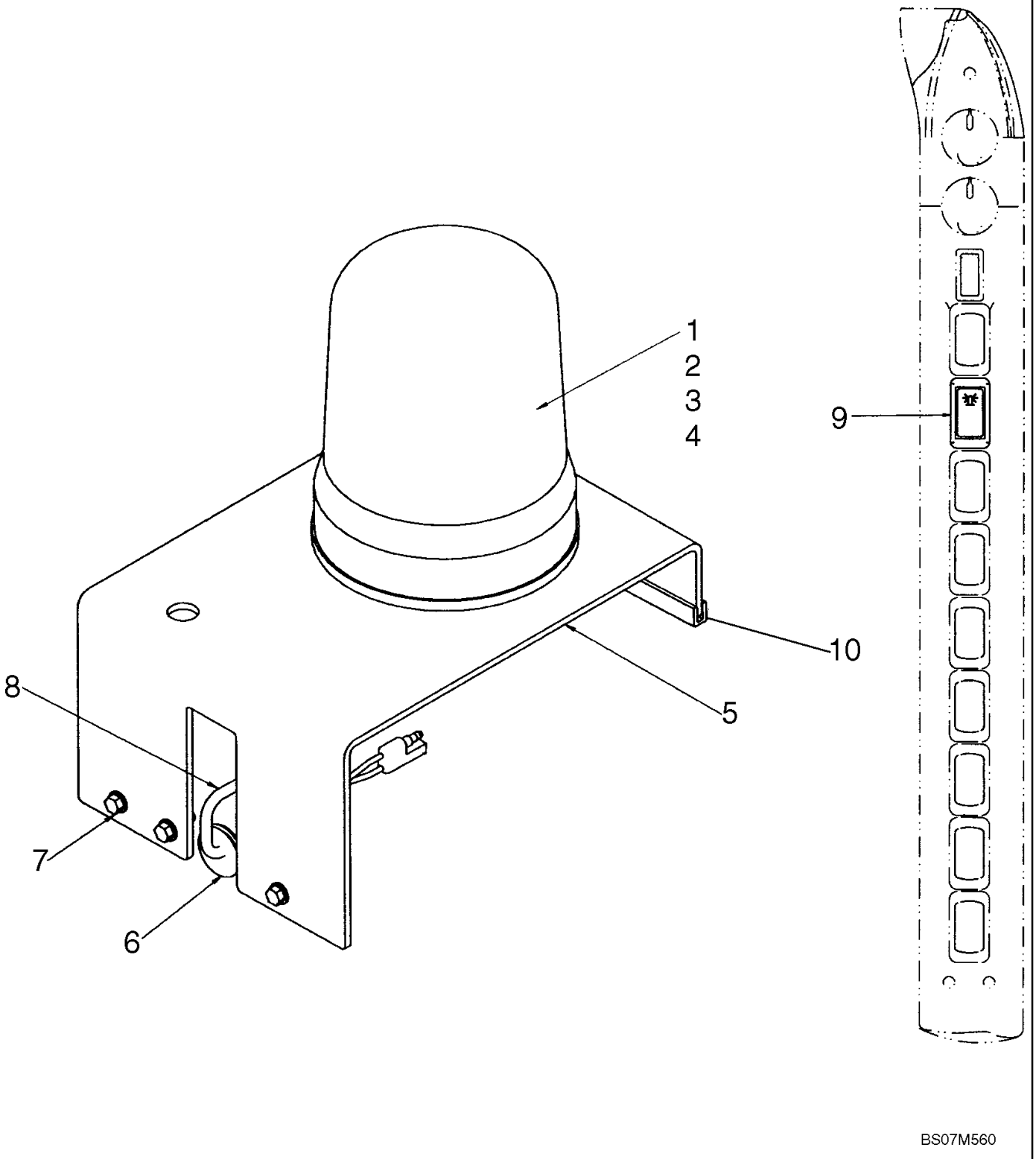

FARO, GIRATORIO

REF	FN	PART NUMBER	YR/SN	QTY	DENOMINACION
		87638500		1	KIT, SERVICE, Kit, Rotating Beacon; Incl 1 - 10
1		E99128		1	PILOTO ROTATIVO, Rotating Beacon; Incl 2 - 4
2		E99208		1	TAPA TRANSLUCIDA
3		3125705R1		1	BOMBILLA
4		E38908		1	ANILLO DE CIERRE
5		87682712		1	PIEZA DE SOPORTE, Beacon Support
6		87530614		1	PASACABLES, Grommet
7		86625224		3	TORNILLO, Screw, Hex Head #1/4-20 X 3/4
8		293828A1		1	HAZ, Harness, Rotating Beacon
9		133714A1		1	CONTACTOR, Rocker Switch, Rotating Beacon
10		293470A1		1	CINTA DE ADEREZO, Edge Trim

PIEZAS ESPECIALES PARA ITALIA - LUCES DE MATRICULA

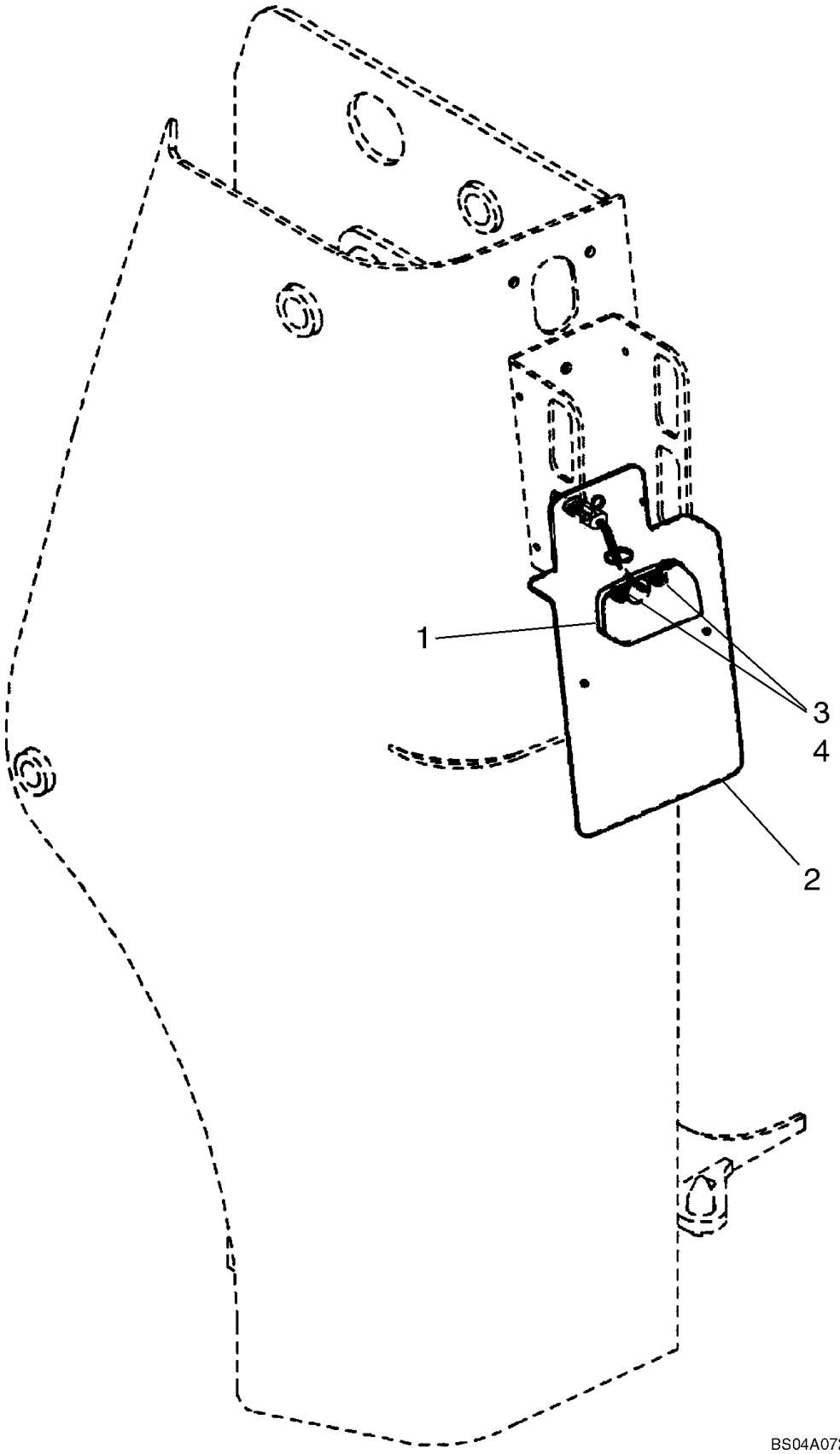

PIEZAS ESPECIALES PARA ITALIA - LUCES DE MATRICULA

REF	FN	PART NUMBER	YR/SN	QTY	DENOMINACION
1		120229A1		1	PILOTO
2		428239A2		1	PLACA (CONJUNTO), License Plate Mounting
3		825-5146		2	TUERCA, M6, Flg Ser
4		840-1616		2	TORNILLO, Cross Pan Hd, M6 x 16

FARO

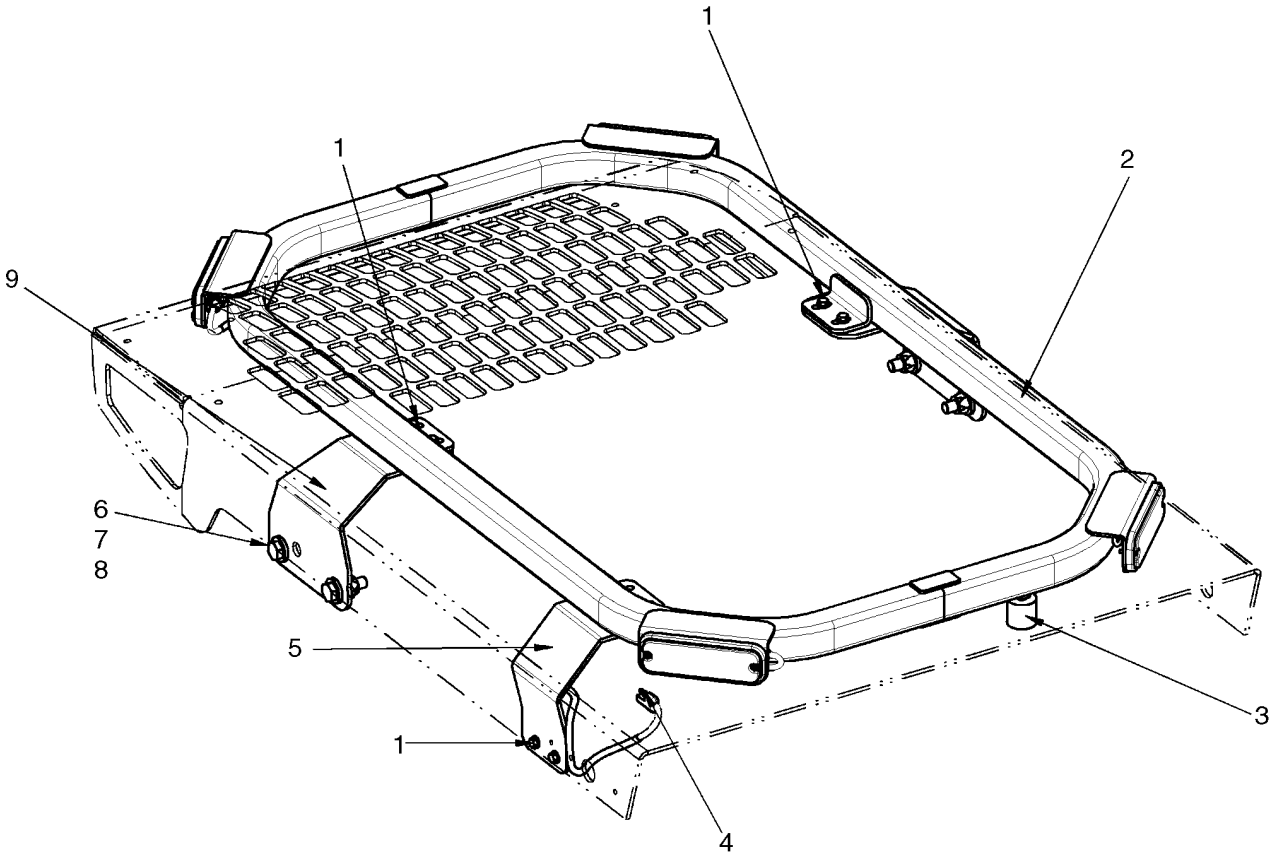

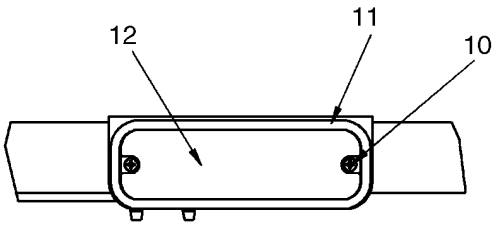

BS07N705

FARO

REF	FN	PART NUMBER	YR/SN	QTY	DENOMINACION
		87652336		1	KIT, SERVICE, Kit, Strobe Light; Incl 1 - 12
1		86625224		6	TORNILLO
2		87727417		1	BASTIDOR
3		87727414		1	PARACHOQUES, Rubber Feet
4		87723831		1	HAZ, Harness, Strobe
5		NSS		1	NO SE REPARA SEPARADAM., Wire Guard
6		337563		4	TORNILLO, Hex, M12 x 40, 10.9, Full Thd
7		412672		4	CONTRA TUERCA, M12 x 1.75, Cl 10
8		86625256		8	ARANDELA, M12 x 28.5 x 4, HT
9		87727413		2	PIEZA DE SOPORTE, Strobe Mounting Bracket
10		86637783		8	TORNILLO AUTOROSCANTE, Cross Pan Hd, #6 x 5/8"
11		87728345		4	MARCO, Strobe Light
12		87634137		4	HAZ, Amber Strobe, LED

NOTAS

SECTION INDEX
Cadena Cinemática

06-01	PALANCA DE CONTROL - PATRÓN DE H
06-02	PALANCA DE CONTROL - PATRÓN DE ISO (440)
06-03	PALANCA DE CONTROL - PATRÓN DE ISO (440CT)
06-04	PALANCA DE CONTROL, MONTAJE, IZQUIERDA - H MODELO
06-05	PALANCA DE CONTROL, MONTAJE, LADO DERECHO - H MODELO
06-06	HIDROSTATICA - PALANCA DE CONTROL KITS, PATRÓN ISOMÉTRICO
06-07	HIDRAULICO - PALANCA DE CONTROL KITS, PATRÓN ISOMÉTRICO
06-08	HIDROSTATICA - PALANCA DE CONTROL KITS, PATRÓN ISOMÉTRICO
06-09	HIDROSTATICA - BOMBA, CARGA Y DESCARGA (440)
06-10	BOMBA, TANDEM - SOPORTE (440)
06-11	HIDROSTATICA - MOTORES DE ACCIONAMIENTO. DRENAJE DE LA CAJA (440)
06-12	HIDROSTATICA - BOMBA, CARGA Y DESCARGA (440CT)
06-13	HIDROSTATICA - MOTORES DE ACCIONAMIENTO (440CT)
06-14	HIDROSTATICA - FUNCIÓN MÚLTIPLE (440CT)
06-15	HIDROSTATICA - BOMBA ACOPLAMIENTOS (440CT)
06-16	SISTEMA HIDROSTATICO, MANGUERAS, BOMBA Y MOTOR DE TRANSMISION
06-17	HIDROSTATICA - DE LA BOMBA AL REFRIGERADOR (440 CON CONTROL PILOTO)
06-18	HIDROSTATICA - COLECTOR ESCAPE/VALVULA DE CONTROL, 440 CON CONTROL PILOTO
06-19	HIDROSTATICA - BOMBA ACOPLAMIENTOS (440 CON CONTROL PILOTO)
06-20	HIDROSTATICA - UNA SOLA VELOCIDAD, MOTORES DE ACCIONAMIENTO (440)
06-21	SISTEMA HIDROSTATICO, MANGUERAS (440 CON CONTROL PILOTO)
06-22	HIDROSTATICA - FUNCIÓN MÚLTIPLE (440 CON CONTROL PILOTO)
06-23	HIDROSTATICA - DOS VELOCIDADES, MOTORES DE ACCIONAMIENTO
06-24	HIDROSTATICA - DOS VELOCIDADES, MOTORES DE ACCIONAMIENTO (CON CONTROL PILOTO)
06-25	HIDROSTATICA, FUNCIÓN MÚLTIPLEMONTAJE
06-26	HIDROSTATICA - DOS VELOCIDADES, CONJUNTO DE LA VALVULA
06-27	HIDROSTATICA - DOS VELOCIDADES, CONJUNTO DE LA VALVULA (440CT)
06-28	HIDROSTATICA - DOS VELOCIDADES, CONJUNTO DE LA VALVULA (CON CONTROL PILOTO)
06-29	HIDROSTATICA (440CT EUROPA)
06-30	HIDROSTATICA (440 EUROPA)
06-31	HIDROSTATICA (440 EUROPA)
06-32	FILTRO - SOPORTE
06-33	BOMBA, TANDEM (440)
06-34	BOMBA, TANDEM (440)
06-35	BOMBA, TANDEM (440)
06-36	BOMBA, TANDEM (440)
06-37	BOMBA, TANDEM (440)
06-38	BOMBA, TANDEM (440)
06-39	BOMBA, TANDEM -REXROTH (87546976)
06-40	VALVULA DE REDUCCION DEPRESION (87546976)
06-41	BOMBA, TANDEM - VALVULA DE REDUCCION DEPRESION (87546976)
06-42	BOMBA, TANDEM - CONJUNTO DE LA BOMBA DE ENGRANAJES (87546976)
06-43	BOMBA, TANDEM - ROTACIÓN MONTAJE, LADO DERECHO (87546976)
06-44	BOMBA, TANDEM - ROTACIÓN MONTAJE, IZQUIERDA ROTACIÓN (87546976)
06-45	BOMBA, TANDEM - CONTROL, HIDRAULICO (87546976)
06-46	BOMBA, TANDEM - CONTROL MONTAJE (87546976)
06-47	BOMBA, TANDEM -REXROTH (87546977)
06-48	BOMBA, TANDEM - VALVULA DE REDUCCION DEPRESION (87546977)

SECTION INDEX
Cadena Cinemática

06-49	BOMBA, TANDEM - CONJUNTO DE LA BOMBA DE ENGRANAJES (87546977)
06-50	BOMBA, TANDEM - ROTACIÓN MONTAJE, LADO DERECHO (87546977)
06-51	BOMBA, TANDEM - ROTACIÓN MONTAJE, IZQUIERDA ROTACIÓN (87546977)
06-52	BOMBA, TANDEM - CONTROL, HIDRAULICO (87546977)
06-53	BOMBA, TANDEM - CONTROL MONTAJE (87546977)
06-54	BOMBA, ENGRANAJE
06-55	BOMBA, ENGRANAJE (FLUJO ALTO)
06-56	MOTOR - UNA SOLA VELOCIDAD
06-57	MOTOR - UNA SOLA VELOCIDAD
06-58	MOTOR - UNA SOLA VELOCIDAD
06-59	MOTOR - DOS VELOCIDADES
06-60	MOTOR - DOS VELOCIDADES
06-61	MOTOR - DOS VELOCIDADES
06-62	MOTOR - ACCIONAMIENTO HIDROSTATICO (440CT)
06-63	LINEA DE TRANSMISION
06-64	EJE
06-65	RUEDAS
06-66	RUEDAS
06-67	ORUGA (440CT)
06-68	CONJUNTO DE LA TRANSMISIÓN FINAL (440CT)

NOTAS

PALANCA DE CONTROL - PATRÓN DE H

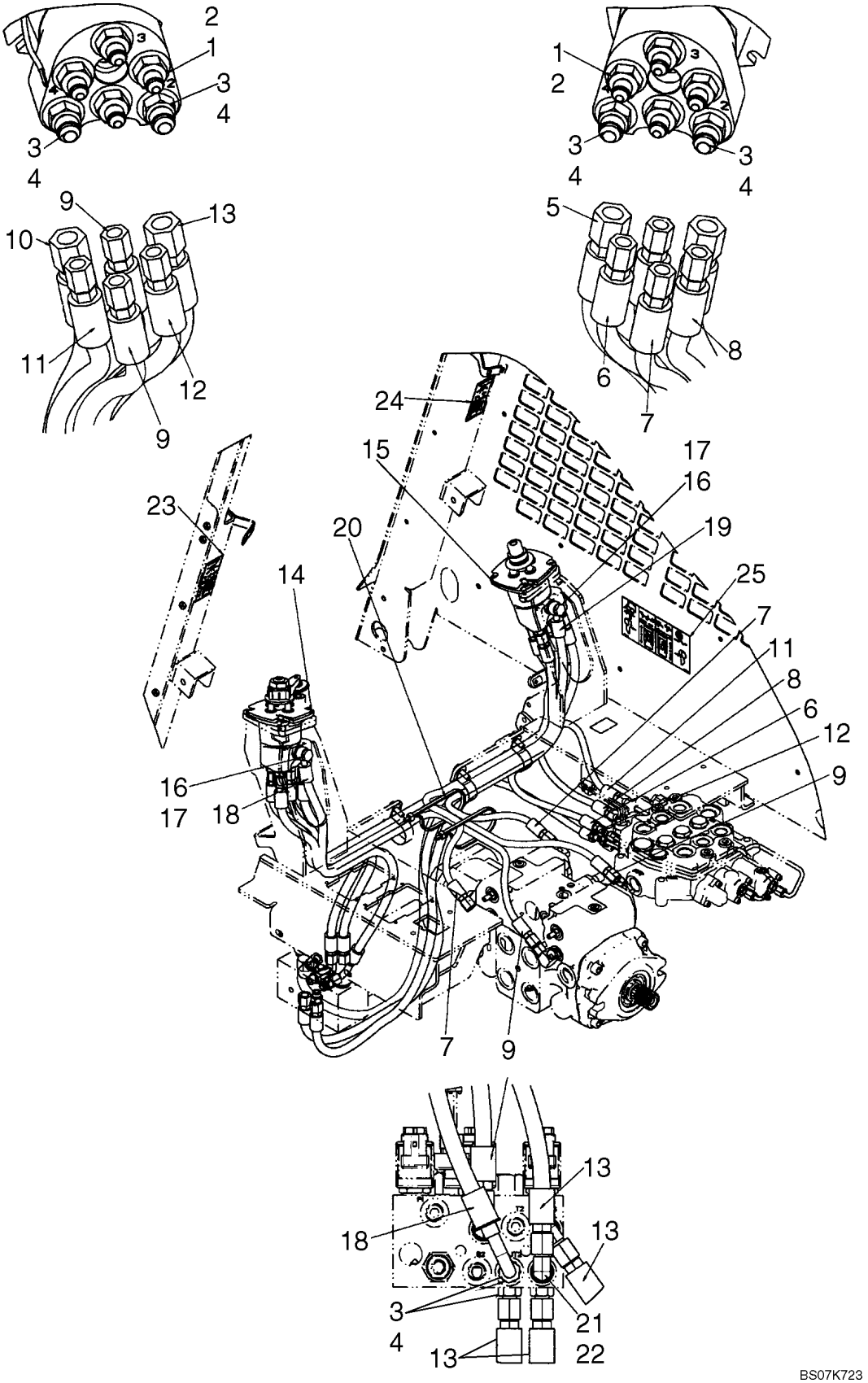

PALANCA DE CONTROL - PATRÓN DE H

REF	FN	PART NUMBER	YR/SN	QTY	DENOMINACION
		{87704477}		1	Kit; H Pattern Controls; Incl. 1 - 21 And Instructions
1		139398		8	RACOR, 7/16"-20, 37º x 9/16"-18, O-Ring, Incl 2
2		9617873		8	JUNTA HERMETICA, 6-1, 90 Duro, .468" ID x .078" Thk
3		76350		6	RACOR, 9/16"-18, 37º x 9/16"-18, O-Ring, Incl 4
4		9617873		6	JUNTA HERMETICA, 6-1, 90 Duro, .468" ID x .078" Thk
5		87684218		2	MANGA, 1300 mm (51.18 in) Joystick Supply Or Drain
6		87604062		1	MANGA, 590 mm (23.23 in) Pilot
7		87604064		2	MANGA, 850 mm (33.46 in) Pilot
8		87604069		1	MANGA, 490 mm (19.29 in) Pilot
9		{87684229}		2	915 mm (36.02 in) Pilot
10		87684180		1	MANGA, 620 mm (24.40 in) Joystick Drain
11		87604061		1	MANGA, 1055 mm (41.54 in) Pilot
12		87604063		1	MANGA, 930 mm (36.61 in) Pilot
13		87684217		1	MANGA, 690 mm (27.16 in) Joystick Supply
14		87357240		1	VALVULA HIDRAULICA, H Pattern Joystick Valve, Left Hand, See Figure 06-04
15		87357241		1	VALVULA HIDRAULICA, H Pattern Joystick Valve, Right Hand, See Figure 06-05
16		87622364		2	TORNILLO, Banjo Bolt, 10 Banjo 3/4 Hole
17		933610R1		4	JUNTA HERMETICA, M14 x 18 x 1.8
18		87575290		1	MANGA, 776 mm (30.55 in) Joystick Supply
19		87575289		1	MANGA, 1260 mm (49.61 in) Joystick Supply
20		529070		2	CIERRA CABLES, .30" x 14.5"
21		86526		1	CODO, 90º, 9/16"-18, 37º x 9/16"-18, LG, Incl. 22
22		9617873		1	JUNTA HERMETICA, 6-1, 90 Duro, .468" ID x .078" Thk
23		87715689		1	CALCOMANIA, Decal, H Pattern LH
24		87715690		1	CALCOMANIA, Decal, H Pattern RH
25		87715687		1	CALCOMANIA, Decal, H Pattern Control ID

PALANCA DE CONTROL - PATRÓN DE ISO (440)

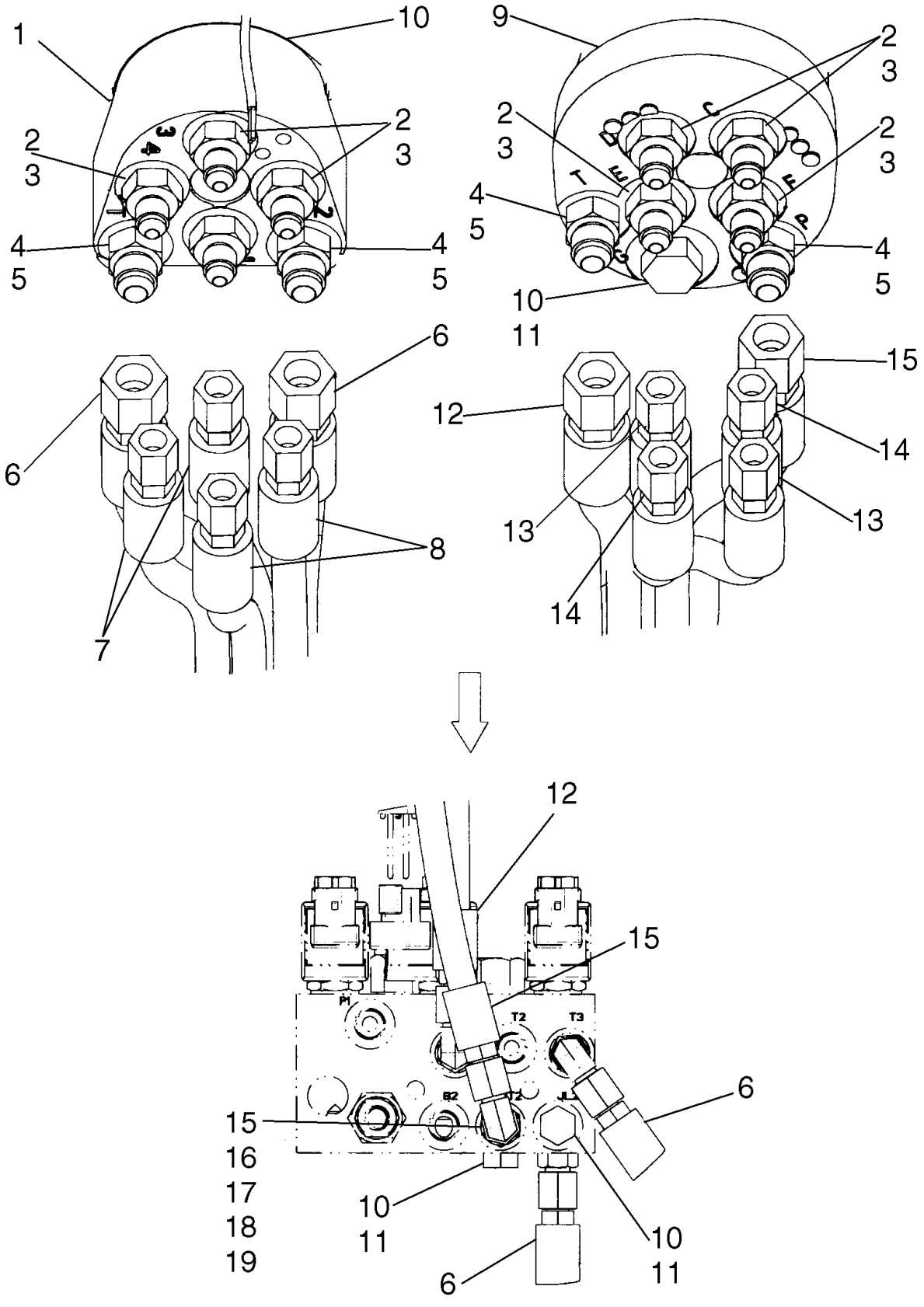

PALANCA DE CONTROL - PATRÓN DE ISO (440)

REF	FN	PART NUMBER	YR/SN	QTY	DENOMINACION
		{87703830}		1	Kit, ISO Pattern Control; Incl 1 - 21; 440
1		139398		8	RACOR, 7/16"-20, 37º x 9/16"-18, O-Ring, Incl 3
2		9617873		8	JUNTA HERMETICA, 6-1, 90 Duro, .468" ID x .078" Thk
3		76350		4	RACOR, 9/16"-18, 37º x 9/16"-18, O-Ring, Incl 4
4		9617873		4	JUNTA HERMETICA, 6-1, 90 Duro, .468" ID x .078" Thk
5		87684218		2	MANGA, 1300 mm (51.18 in) Joystick Drain Or Supply
6		87604062		2	MANGA, 590 mm (23.23 in) Pilot
7		87604069		2	MANGA, 490 mm (19.29 in) Pilot
8		76349		3	TAPÓN, Hex Hd, 9/16"-18 ORB, Incl 9
9		9617873		3	JUNTA HERMETICA, 6-1, 90 Duro, .468" ID x .078" Thk
10		87684180		1	MANGA, 620 mm (24.40 in) Joystick Drain
11		87604072		2	MANGA, 800 mm (31.50 in) Pilot
12		87604070		2	MANGA, 920 mm (36.22 in) Pilot
13		87604071		1	MANGA, 680 mm (26.77 in) Joystick Supply
14		87600622		1	VALVULA, Joystick Valve, ISO Pattern LH; See Figure 06-08
15		87600623		1	VALVULA, Joystick Valve, ISO Pattern RH; See Figure 06-07
16		529070		2	CIERRA CABLES, .30" x 14.5"
17		87573371		1	ADAPTOR, .38 OD Male x .38 OD Female; Incl 18, 19
18		9617873		1	JUNTA HERMETICA, 6-1, 90 Duro, .468" ID x .078" Thk
19		9993141		1	JUNTA HERMETICA, -012, 90 Duro, .364" ID x .070" Thk
20		86526		1	CODO, 90º, 9/16"-18, 37º x 9/16"-18, LG, Incl 21
21		9617873		1	JUNTA HERMETICA, 6-1, 90 Duro, .468" ID x .078" Thk

PALANCA DE CONTROL - PATRÓN DE ISO (440CT)

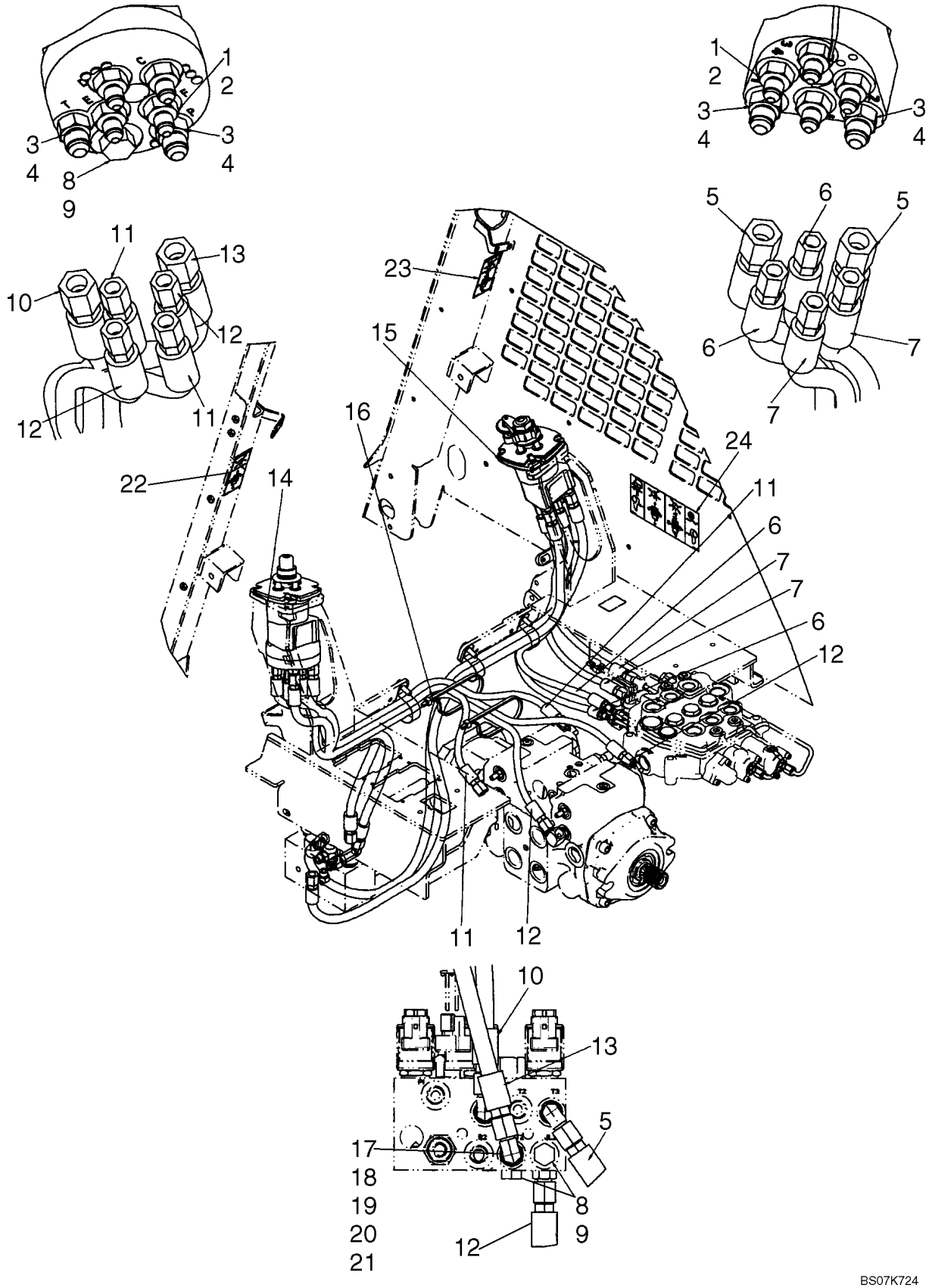

PALANCA DE CONTROL - PATRÓN DE ISO (440CT)

REF	FN	PART NUMBER	YR/SN	QTY	DENOMINACION
		{87703828}		1	Kit, ISO Pattern Control; Incl 1 - 21
1		139398		8	RACOR, 7/16"-20, 37º x 9/16"-18, O-Ring, Incl 3
2		9617873		8	JUNTA HERMETICA, 6-1, 90 Duro, .468" ID x .078" Thk
3		76350		4	RACOR, 9/16"-18, 37º x 9/16"-18, O-Ring, Incl 4
4		9617873		4	JUNTA HERMETICA, 6-1, 90 Duro, .468" ID x .078" Thk
5		87684218		2	MANGA, 1300 mm (51.18 in) Joystick Drain Or Supply
6		87604062		2	MANGA, 590 mm (23.23 in) Pilot
7		87604069		2	MANGA, 490 mm (19.29 in) Pilot
8		76349		3	TAPÓN, Hex Hd, 9/16"-18 ORB, Incl 9
9		9617873		3	JUNTA HERMETICA, 6-1, 90 Duro, .468" ID x .078" Thk
10		87684180		1	MANGA, 620 mm (24.40 in) Joystick Drain
11		87604072		2	MANGA, 800 mm (31.50 in) Pilot
12		87604070		2	MANGA, 920 mm (36.22 in) Pilot
13		87604071		1	MANGA, 680 mm (26.77 in) Joystick Supply
14		87611854		1	VALVULA, Joystick Valve, ISO Pattern LH; See Figure 06-06
15		87600623		1	VALVULA, Joystick Valve, ISO Pattern RH; See Figure 06-07
16		529070		2	CIERRA CABLES, .30" x 14.5"
17		87573371		1	ADAPTOR, .38 OD Male x .38 OD Female; Incl 18, 19
18		9617873		1	JUNTA HERMETICA, 6-1, 90 Duro, .468" ID x .078" Thk
19		9993141		1	JUNTA HERMETICA, -012, 90 Duro, .364" ID x .070" Thk
20		86526		1	CODO, 90º, 9/16"-18, 37º x 9/16"-18, LG, Incl 21
21		9617873		1	JUNTA HERMETICA, 6-1, 90 Duro, .468" ID x .078" Thk
22		87715691		1	CALCOMANIA, Decal, ISO Pattern RH
23		87715692		1	CALCOMANIA, Decal, ISO Pattern LH
24		87715688		1	CALCOMANIA, Decal, Control ID ISO Pattern

06-04		p1	11/07

PALANCA DE CONTROL, MONTAJE, IZQUIERDA - H MODELO

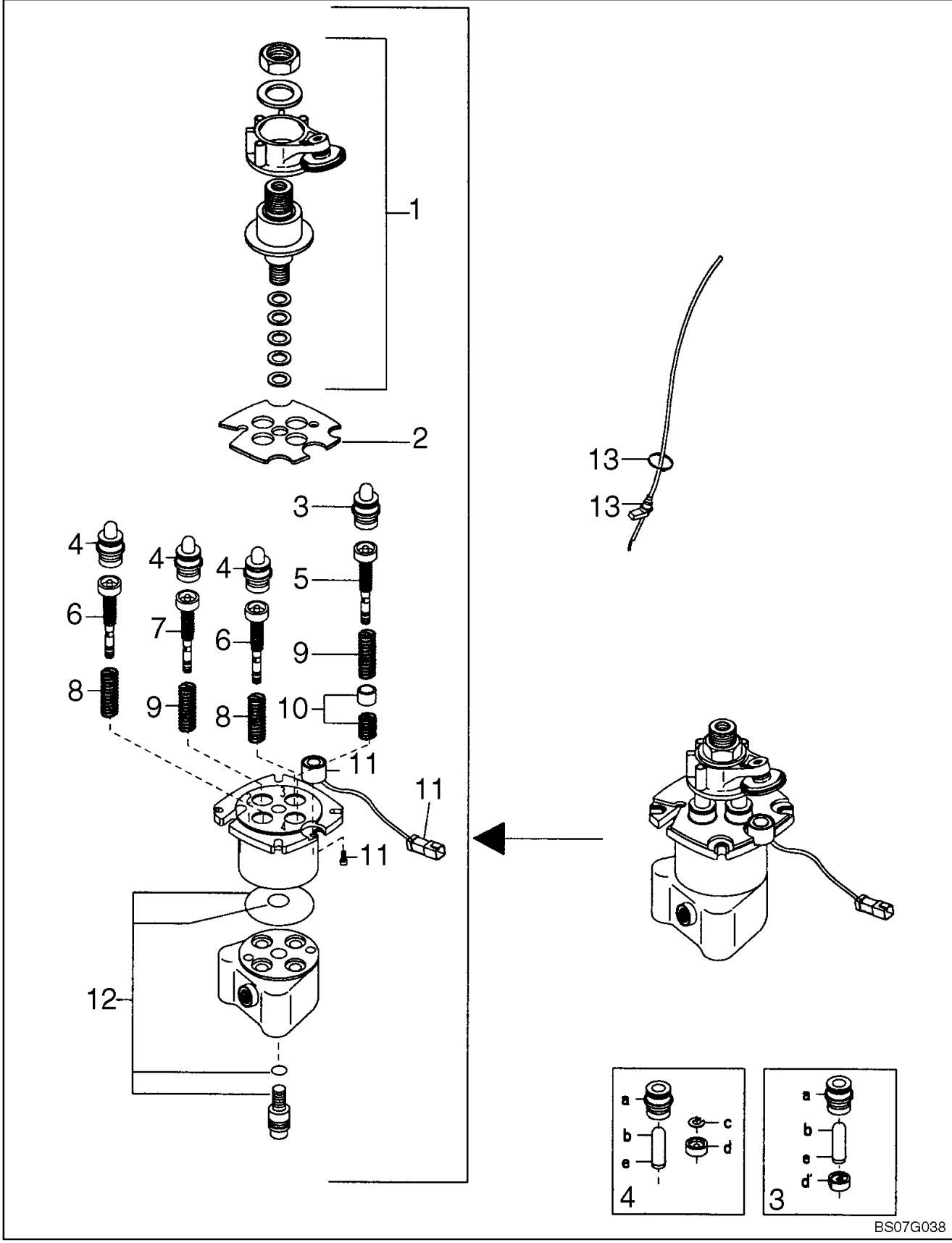

PALANCA DE CONTROL, MONTAJE, IZQUIERDA - H MODELO

REF	FN	PART NUMBER	YR/SN	QTY	DENOMINACION
		REF			MANUAL, MODELS WITH PILOT CONTROL
		87357240		1	VALVULA HIDRAULICA, Joystick Control; H Pattern Left Hand; Incl. 1 - 13
1		87548834		1	KIT, SERVICE, Cardan With Detent
2		87548836		1	KIT, SERVICE, Retaining Plate, Detent
3		87548839		1	KIT, SERVICE, Full Plunger Prefeeling
4		{87548828}		3	Hollow Plunger
5		87614018		1	REGULADOR
6		87614017		2	REGULADOR, With Plunger
7		87614016		1	REGULADOR
8		87614020		1	RESORTE, Medium
9		87614019		1	RESORTE, Heavy
10		87548846		1	KIT, SERVICE, Prefeeling Point
11		87548847		1	KIT, SERVICE, Solenoid
12		87548848		1	KIT, SERVICE, Standard Seal
13		87548874		1	KIT, SERVICE, Cable

PALANCA DE CONTROL, MONTAJE, LADO DERECHO - H MODELO

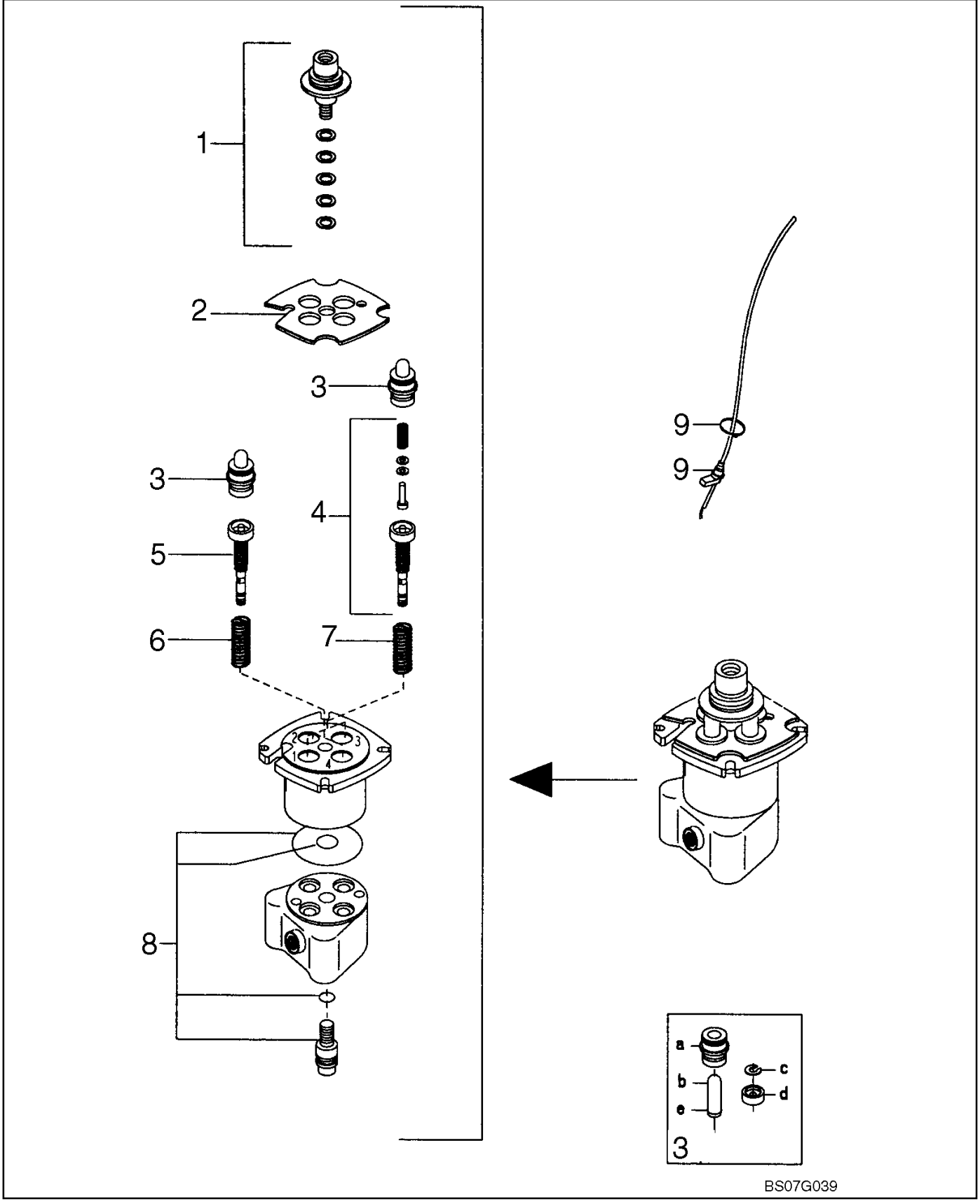

PALANCA DE CONTROL, MONTAJE, LADO DERECHO - H MODELO

REF	FN	PART NUMBER	YR/SN	QTY	DENOMINACION
		REF			MANUAL, MODELS WITH PILOT CONTROL
		87357241		1	VALVULA HIDRAULICA, Joystick Control; H Pattern Right Hand; Incl. 1 - 9
1		87548833		1	KIT, SERVICE, Bent Lever Cardan
2		87548835		1	PLACA, Retaining Plate, Standard
3		87614023		2	EMBOLO, Hollow Plunger
4		87614017		2	REGULADOR, With Plunger
5		87614024		1	REGULADOR
6		87614019		1	RESORTE, Heavy
7		87614020		1	RESORTE, Medium
8		87548848		1	KIT, SERVICE, Standard Seal
9		87548874		1	KIT, SERVICE, Cable

HIDROSTATICA - PALANCA DE CONTROL KITS, PATRÓN ISOMÉTRICO

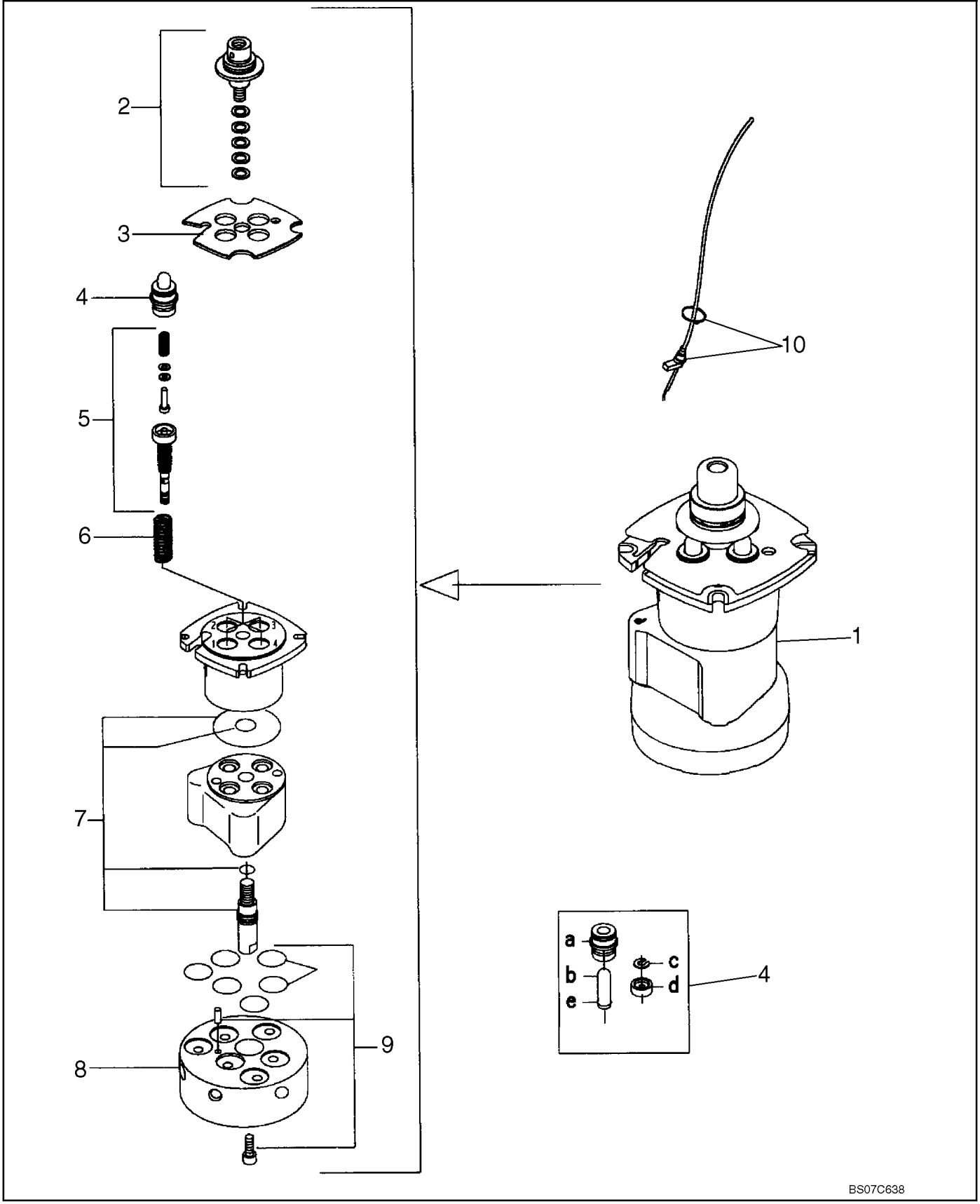

HIDROSTATICA - PALANCA DE CONTROL KITS, PATRÓN ISOMÉTRICO

REF	FN	PART NUMBER	YR/SN	QTY	DENOMINACION
1		87611854		1	VALVULA, Joystick Valve, ISO Pattern LH
2		87548833		1	KIT, SERVICE, Bent Lever Cardan
3		87548835		1	PLACA, Retaining Plate, Standard
4		87614023		2	EMBOLO, Kit, Hollow Plunger
5		87614017		4	REGULADOR, Kit, Reg. Unit With Plunger C227
6		87614020		2	RESORTE, Kit, Medium Spring
7		{87548871}		1	Seal With Screw
8		{87548872}		1	
9		{87548873}		1	Flange Seal
10		87548874		1	KIT, SERVICE, Cable

HIDRAULICO - PALANCA DE CONTROL KITS, PATRÓN ISOMÉTRICO

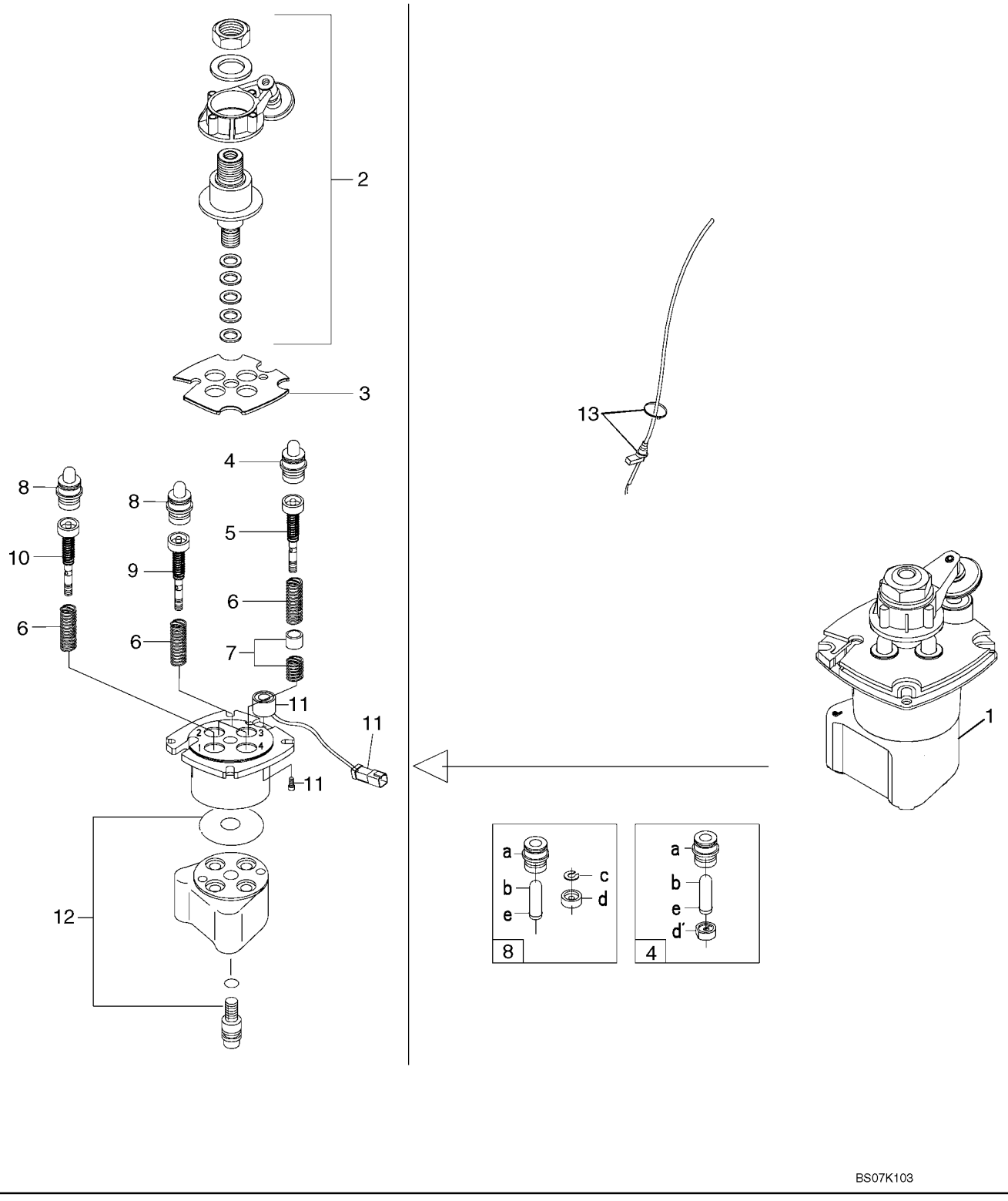

HIDRAULICO - PALANCA DE CONTROL KITS, PATRÓN ISOMÉTRICO

REF	FN	PART NUMBER	YR/SN	QTY	DENOMINACION
1		87600623		1	VALVULA, Joystick Valve, ISO Pattern, RH; Incl. 2 - 13
2		87548834		1	KIT, SERVICE, Kit, Cardan With Detent
3		87548836		1	KIT, SERVICE, Retaining Plate, Detent
4		87548839		1	KIT, SERVICE, Kit, Full Plunger Prefeeling
5		{87548843}		1	Kit, Regulation Unit Prefeeling Point
6		87614020		2	RESORTE, Kit, Medium Spring
7		87548846		1	KIT, SERVICE, Kit, Prefeeling Point
8		{87548838}		3	Kit, Hollow Plunger
9		{87594866}		2	Kit, Regulation Unit
10		{87548840}		1	Kit, Regulation Unit
11		87548847		1	KIT, SERVICE, Kit, Solenoid
12		87548848		1	KIT, SERVICE, Kit, Standard Seal
13		87548874		1	KIT, SERVICE, Kit, Cable

HIDROSTATICA - PALANCA DE CONTROL KITS, PATRÓN ISOMÉTRICO

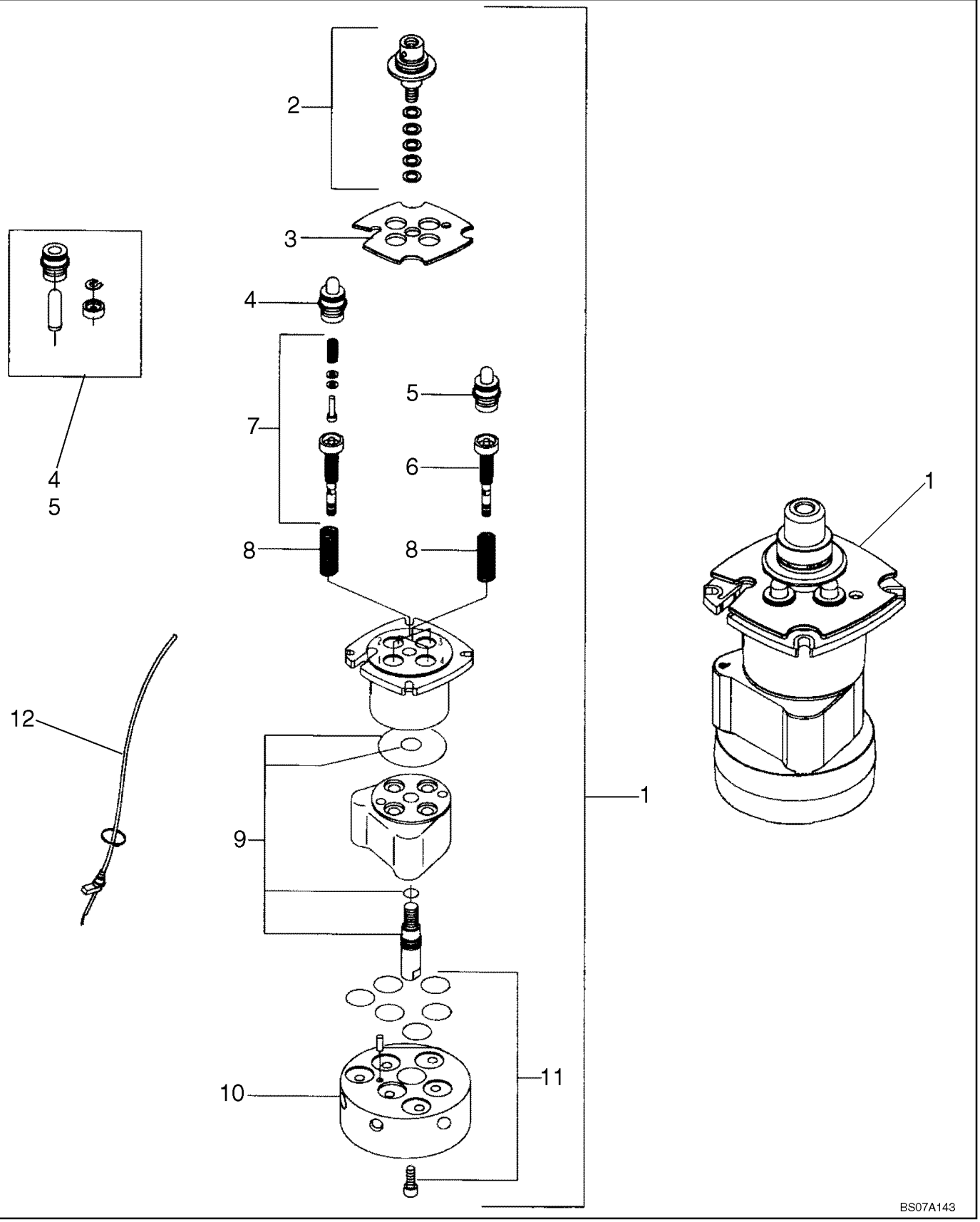

HIDROSTATICA - PALANCA DE CONTROL KITS, PATRÓN ISOMÉTRICO

REF	FN	PART NUMBER	YR/SN	QTY	DENOMINACION
1		87600622		1	VALVULA, Joystick Valve, ISO Pattern
2		87548833		1	KIT, SERVICE, Kit, Bent Lever Cardan
3		87548835		1	PLACA, Retaining Plate, Standard
4		87614023		2	EMBOLO, Kit, Hollow Plunger, Use On Ports 1, 3
5		87614023		2	EMBOLO, Kit, Hollow Plunger, Use On Ports 2, 4
6		87627518		2	REGULADOR, Kit, Reg Unit PP C229, Use On Ports 2, 4
7		87614017		2	REGULADOR, Kit, Reg Unit With Plunger, Use On Ports 1, 3
8		87614020		1	RESORTE, Kit, Medium Spring
9		{87548871}		1	Kit, Seal
10		{87548872}		1	
11		{87548873}		1	Kit, Flange Seal
12		87548874		1	KIT, SERVICE, Kit, Cable

HIDROSTATICA - BOMBA, CARGA Y DESCARGA (440)

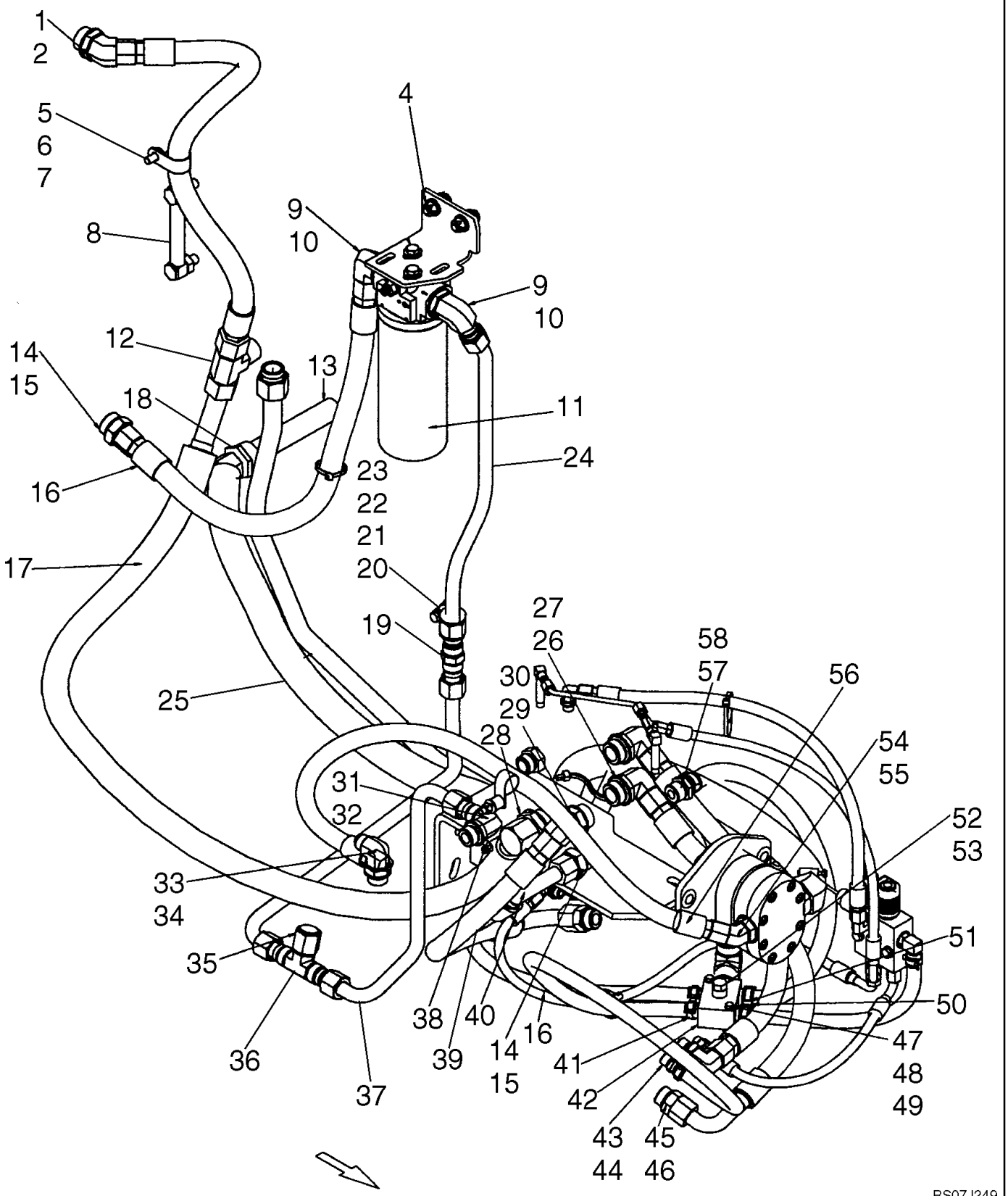

HIDROSTATICA - BOMBA, CARGA Y DESCARGA (440)

REF	FN	PART NUMBER	YR/SN	QTY	DENOMINACION
1		{87657980}		1	Elbow; 37FL 45 ADJ 3/4 x 1.0 Tube; Incl 2; To Top Of Oil Cooler, See Figure 02-01
2		167268		1	JUNTA HERMETICA, 16-1, 90 Duro, 1.171" ID x .116" Thk
3		87653980		1	MANGA, Upper Cooler
4		REF			MANUAL, For Filter Mounting, See Figure 06-32
5		86639001		1	BORNE, 1 3/16", Insul, 7/16" Bolt
6		140045		1	ARANDELA ABANICO, Belleville, M10
7		43138		1	TORNILLO, Hex, M10 x 20, 8.8, Full Thd
8		87374752		1	CALIBRE, Liquid Level
9		87021824		1	CODO, 90º, 1 1/16"-12, 37º x 1 5/16"-12, O-Ring, Incl 10
10		167268		1	JUNTA HERMETICA, 16-1, 90 Duro, 1.171" ID x .116" Thk
11		87430661		1	FILTRO, Hydrostatic Filter; For Breakdown And Mounting, See Figure 06-32, See Figure 02-01
12		9790547		1	RACOR-T, 1 5/16"-12, 37º x 1"-11 1/2, NPTF Br
13		H151399		1	CARTUCHO FILTRO, Suction Line
14		233705		1	RACOR, 1 1/16"-12, 37º x 1 5/16"-12, O-Ring, Incl 15; To Bottom Of Oil Cooler
15		167266		1	JUNTA HERMETICA, 12-1, 90 Duro, .924 ID x .116" Thk
16		87022175		1	MANGUERA (CONJUNTO), 600 mm (23.62 in); Case Drain
17		87458996		1	MANGUERA (CONJUNTO), 1680 mm (66.14 in); Suction
18		87033823		1	CONEXION, 1/4" Hose x 1/8" NPTF, Fem, Barbed
19		144121		1	CONEXION, 1 1/16"-12, 37º x 1 1/16"-12, 37º
20		87445136		1	AISLADOR, 3/4
21		87042897		1	ESPACIADOR
22		86624184		2	ARANDELA, M8 x 16 x 1.6
23		87301359		1	BORNE, 1 1/8", 3/8" Bolt
24		87660856		1	TUBO RIGIDO, Formed Tube; Valve To Filter, LH Wall

HIDROSTATICA - BOMBA, CARGA Y DESCARGA (440)

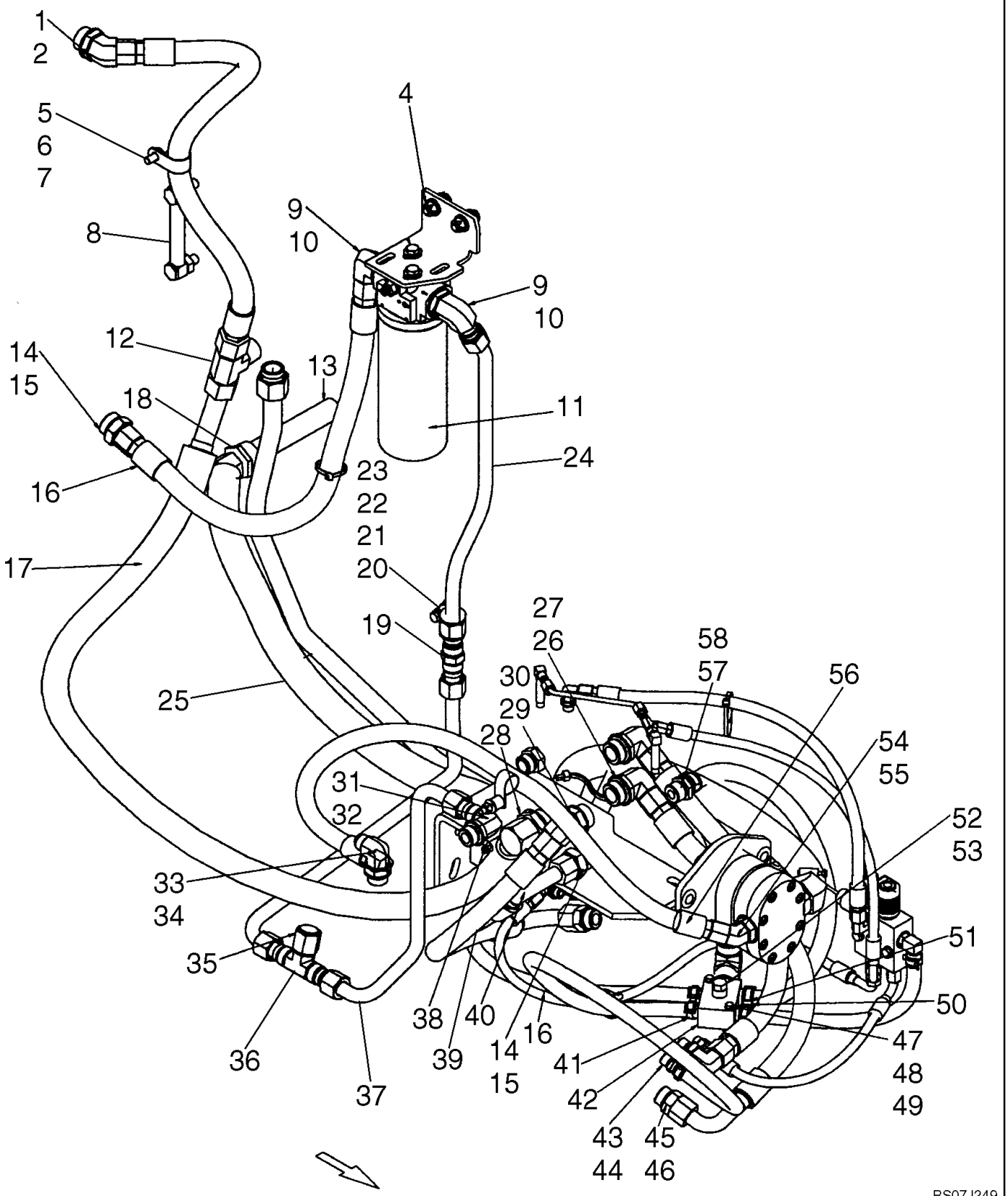

HIDROSTATICA - BOMBA, CARGA Y DESCARGA (440)

REF	FN	PART NUMBER	YR/SN	QTY	DENOMINACION
25		87022438		1	MANGUERA (CONJUNTO), 1610 mm (63.38 in); Suction
26		87021824		3	CODO, 90º, 1 1/16"-12, 37º x 1 5/16"-12, O-Ring, Incl 27
27		167268		1	JUNTA HERMETICA, 16-1, 90 Duro, 1.171" ID x .116" Thk
28		87418259		1	CONEXION, 90 Deg 20ORB x 16 Bead
29		22907		1	CODO, 45º, 1 1/16"-12 x 1 5/16"-12, O-Ring, Incl 30
30		167268		1	JUNTA HERMETICA, 16-1, 90 Duro, 1.171" ID x .116" Thk
31		322894		1	CODO, 90º, 1 1/16"-12, 37º x 1 1/16"-12, O-Ring, Incl 32
32		167266		1	JUNTA HERMETICA, 12-1, 90 Duro, .924 ID x .116" Thk
33		84570		1	CODO, 90º, 7/8"-14, 37º x 1 1/16"-12, O-Ring, Incl 34
34		167266		1	JUNTA HERMETICA, 12-1, 90 Duro, .924 ID x .116" Thk
35		219606		1	TAPON DEL DEPOSITO, 37º, 1 1/16"-12
36		15694		1	RACOR-T, 1 1/16"-12 37º
37		87446248		1	TUBO (CONJUNTO), Valve Out To Filter
38		86536660		1	ABRAZADERA MANGUERA, #16, 0.81/1.50 Type F Worm, 1.75 in
39		87022172		1	MANGUERA (CONJUNTO), 650 mm (25.59 in); Loop
40		87417085		1	MANGUERA (CONJUNTO), 445 mm (17.52in); Loop
41		87443510		4	ABRAZADERA MANGUERA, 20 mm
42		87437351		1	COLECTOR, Return, Oil
43		87010108		2	CONEXION, 1/2" Hose x 3/4"-16 ORB, Beaded, Incl 44
44		128825		1	JUNTA HERMETICA, 8-1, 90 Duro, .644" ID x .087" Thk
45		322896		2	RACOR, 1 1/16"-12, 37º x 1 1/16"-12, O-Ring, Incl 46
46		167266		1	JUNTA HERMETICA, 12-1, 90 Duro, .924 ID x .116" Thk
47		86977790		2	TORNILLO, Hex, M6 x 45, 8.8
48		87404992		2	TUERCA

HIDROSTATICA - BOMBA, CARGA Y DESCARGA (440)

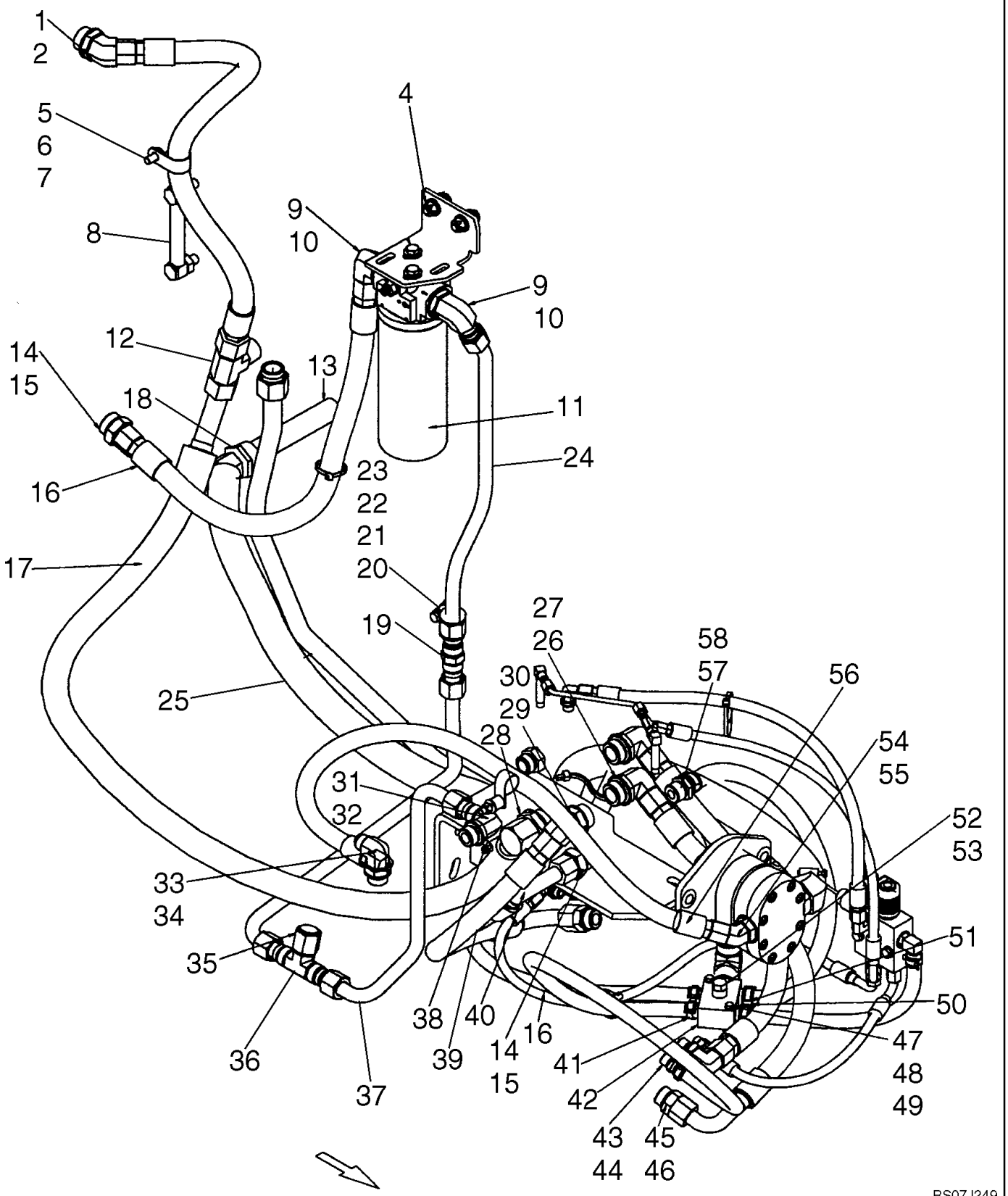

HIDROSTATICA - BOMBA, CARGA Y DESCARGA (440)

REF	FN	PART NUMBER	YR/SN	QTY	DENOMINACION
49		86588450		2	ARANDELA, M6
50		REF			MANUAL, Brake; See Figure 07-01
51		87443511		2	BORNE, 24 mm
52		76349		1	TAPÓN, Hex Hd, 9/16"-18 ORB, Incl 53
53		9617873		1	JUNTA HERMETICA, 6-1, 90 Duro, .468" ID x .078" Thk
54		100197		1	CODO, 45º, 7/8"-14 x 1 1/16"-12, O-Ring, Incl 55
55		167266		1	JUNTA HERMETICA, 12-1, 90 Duro, .924 ID x .116" Thk
56		87547070		1	MANGA, 1000 mm (39.37 in); Valve Supply
57		87311640		1	RACOR, 5/8 HOSE x 1-1/16-12 ORB STR Barb; Incl 58
58		167266		1	JUNTA HERMETICA, 12-1, 90 Duro, .924 ID x .116" Thk

BOMBA, TANDEM - SOPORTE (440)

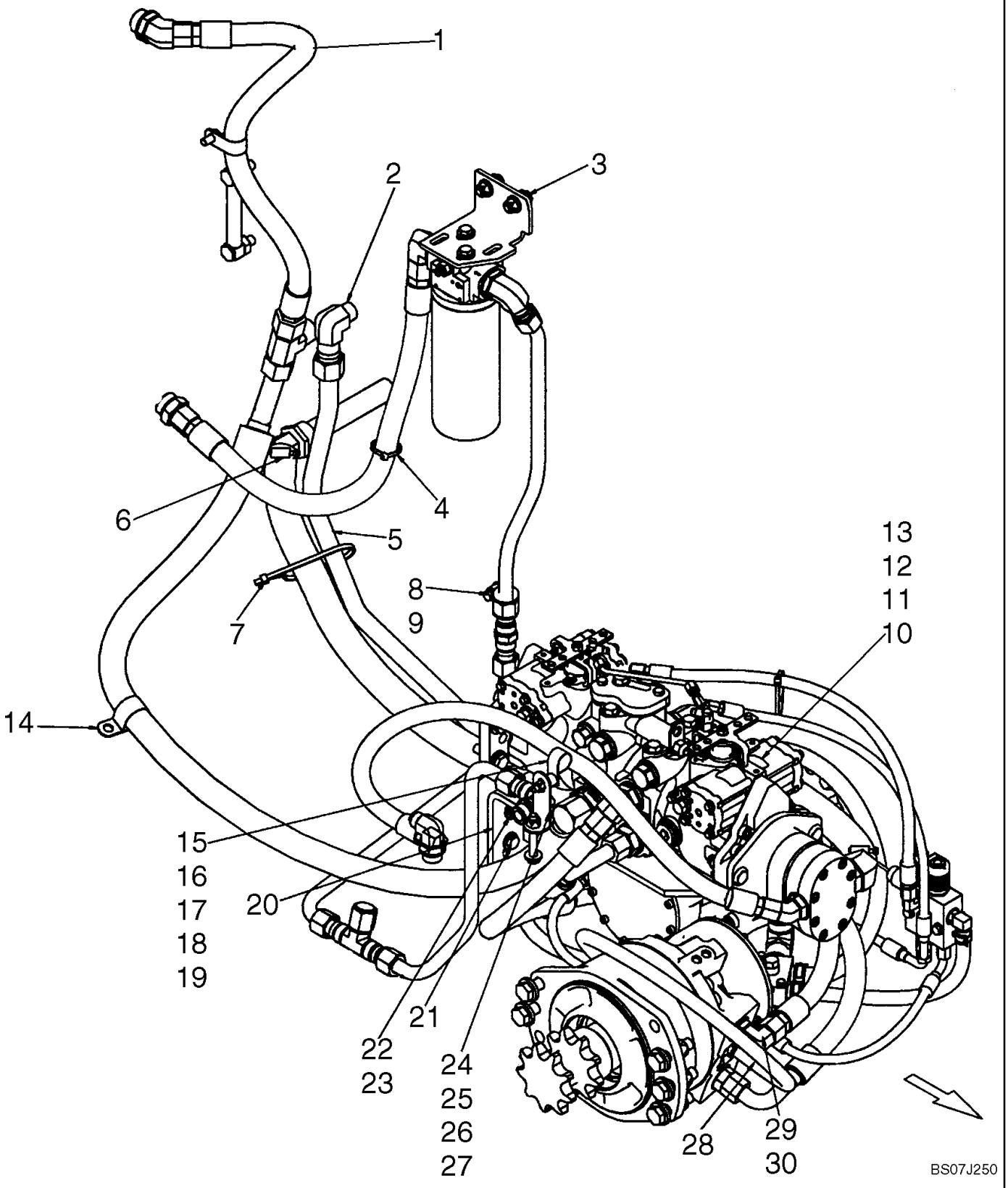

BOMBA, TANDEM - SOPORTE (440)

REF	FN	PART NUMBER	YR/SN	QTY	DENOMINACION
1		87653980			MANGA, Upper Cooler Hose; See Figure 06-10, Supply And Return
2		9615396		1	CODO, 90º, 1 5/16"-12, 37º x 3/4"-14, NPTF
3		REF			MANUAL, Filter Assy And Mounting, See Figure 06-32
4		529070		1	CIERRA CABLES, .30" x 14.5"
5		87584058		1	TUBO RIGIDO, Case Drain
6		87039085		2	ABRAZADERA MANGUERA, 1.25/2.125 HD Worm
7		529070		2	CIERRA CABLES, .30" x 14.5"
8		43128		1	TORNILLO, Hex, M8 x 30, 8.8
9		87030567		2	TUERCA
10		87043498		1	BOMBA, Tandem Pump; Incl 11, 12, 13
11		87043500		1	BOMBA, Tandem Pump; See Figure 06-33 - 06-38
12		87024695		1	BOMBA, Gear Pump; See Figure 06-54
13		87013729		1	JUNTA HERMETICA, -044, 70 Duro, 3.739" ID x .070" Thk
14		86639006		1	BORNE, 1 1/2", Insul, 1/2" Bolt
15		9628098		1	CONTRA TUERCA, M8 x 1.25, Cl 10
16		P24576		1	SEPARADOR, 3/8" Pipe x 11/16", If Used Behind Bracket 87458997, Not Illustrated
17		86625263		1	ARANDELA, M8 x 20 x 1.6
18		120104		1	TORNILLO, Hex, M8 x 20, 8.8
19		9827902		1	BORNE, 1", Insul, 3/8" Bolt
20		87627383		1	SOPORTE, Pump
21		43248		2	TORNILLO, Hex, M10 x 40, 10.9, Full Thd
22		86625256		4	ARANDELA, M12 x 28.5 x 4, HT
23		43260		4	TORNILLO, Hex, M12 x 30, 10.9
24		86512554		3	CONTRA TUERCA, M10 x 1.5, Cl 10
25		86639325		1	ARANDELA, M10 x 24.5 x 3, HT
26		43144		1	TORNILLO, Hex, M10 x 70, 8.8
27		87458997		1	PIEZA DE SOPORTE, Valve
28		87022174		1	MANGUERA (CONJUNTO), 950 mm (37.4 in); Case Drain
29		322894		1	CODO, 90º, 1 1/16"-12, 37º x 1 1/16"-12, O-Ring, Incl 30

BOMBA, TANDEM - SOPORTE (440)

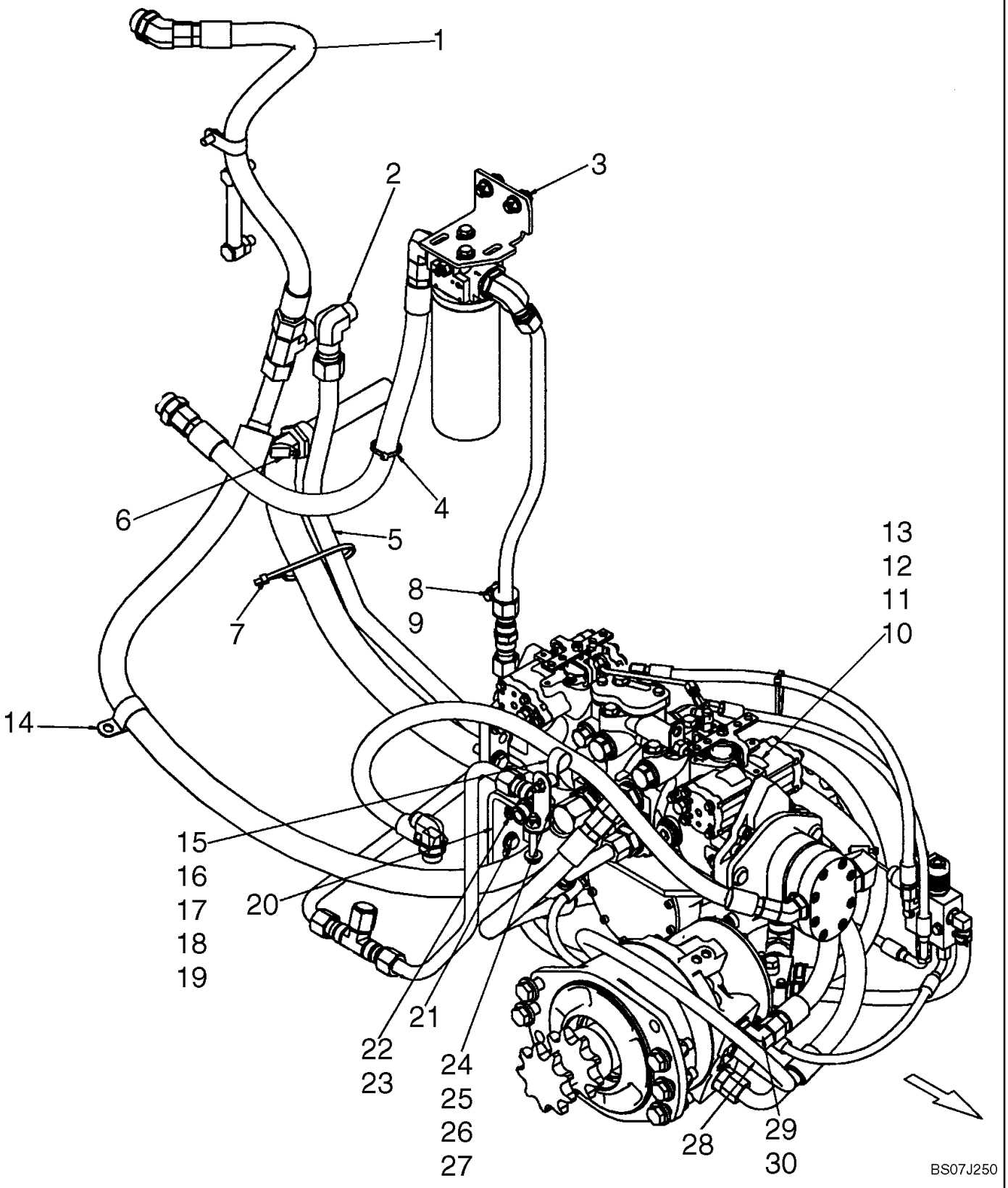

BOMBA, TANDEM - SOPORTE (440)

REF	FN	PART NUMBER	YR/SN	QTY	DENOMINACION
30		167266		1	JUNTA HERMETICA, 12-1, 90 Duro, .924 ID x .116" Thk

HIDROSTATICA - MOTORES DE ACCIONAMIENTO. DRENAJE DE LA CAJA (440)

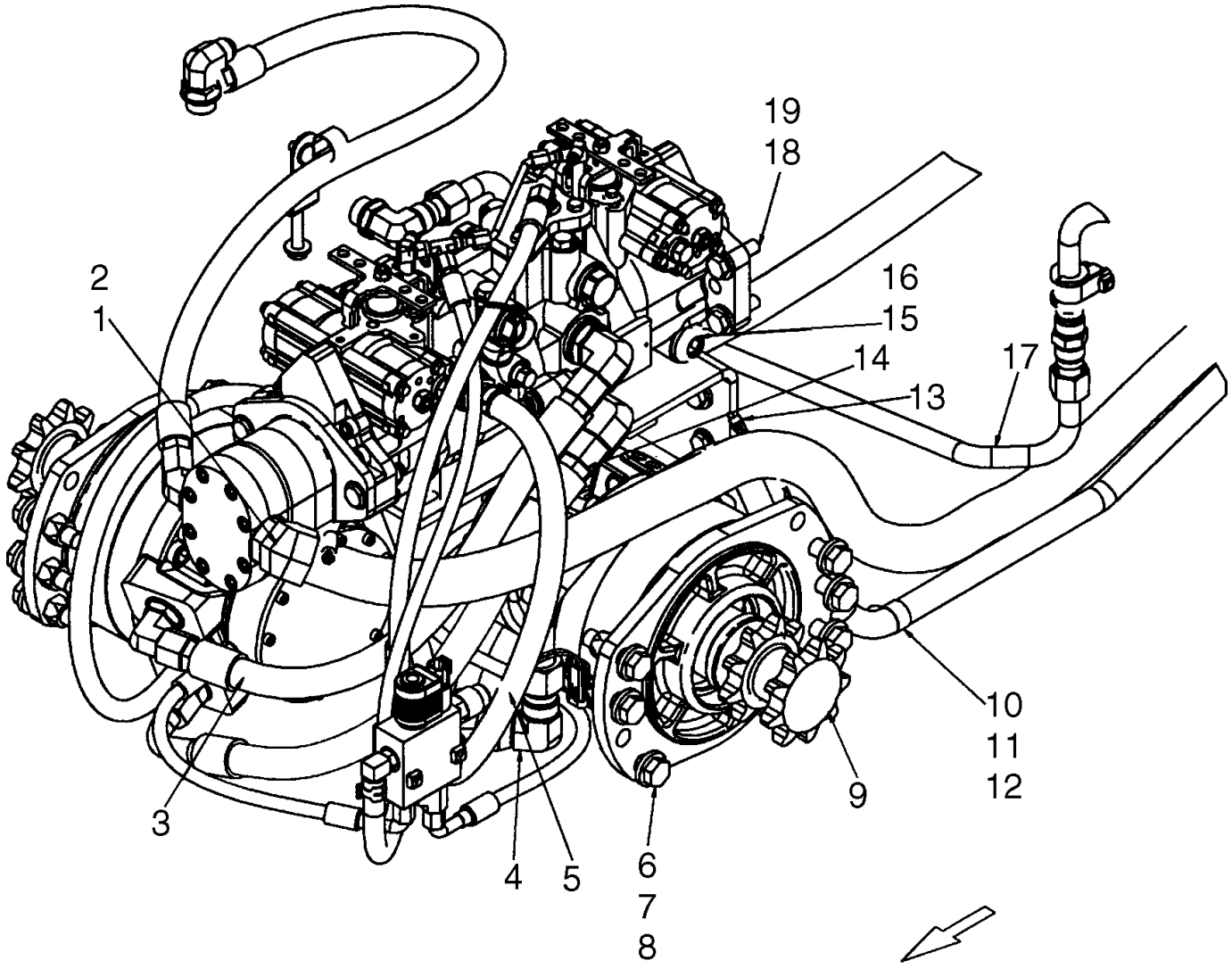

BS07J251

HIDROSTATICA - MOTORES DE ACCIONAMIENTO. DRENAJE DE LA CAJA (440)

REF	FN	PART NUMBER	YR/SN	QTY	DENOMINACION
1		87033824		1	CONEXION, 45º, 1 1/4" Hose x 1 5/16"-12 ORB Beaded, Incl 2
2		167268		1	JUNTA HERMETICA, 16-1, 90 Duro, 1.171" ID x .116" Thk
3		87021266		1	MANGUERA (CONJUNTO), 560 mm (22 in); Loop
4		86050288		1	CODO, 90º, 1 5/16"-12, 37º x 1 5/16"-12, 37º Fem Sw
5		87016334		1	MANGUERA (CONJUNTO), 535 mm (21.06 in); Case Drain
6		9828248		12	TORNILLO, Hex, M16 x 60, 10.9
7		86512555		12	CONTRA TUERCA, M16 x 2, Cl 10
8		86625258		12	ARANDELA, M16 x 34.5 x 5, HT
9		87035341		2	MOTOR-HIDRÁULICO, See Figure 06-56 - 06-58
10		86637977		1	BORNE, 1", Insul, 5/16" Bolt
11		87030567		2	TUERCA, Square, M8
12		120103		1	TORNILLO, Hex, M8 x 16, 8.8
13		529070		2	CIERRA CABLES, .30" x 14.5"
14		87417084		1	MANGUERA (CONJUNTO), 625 mm (24.6 in); Loop
15		87033027		1	ADAPTOR, ADAPTER; -12 SAE To 1/2 NPTF; Incl 16
16		167266		1	JUNTA HERMETICA, 12-1, 90 Duro, .924 ID x .116" Thk
17		87445138		1	TUBO (CONJUNTO), Valve Out To Filter
18		412087		4	TORNILLO, Hex, M12 x 45, 10.9, Full Thd
19		86625256		8	ARANDELA, M12 x 28.5 x 4, HT

HIDROSTATICA - BOMBA, CARGA Y DESCARGA (440CT)

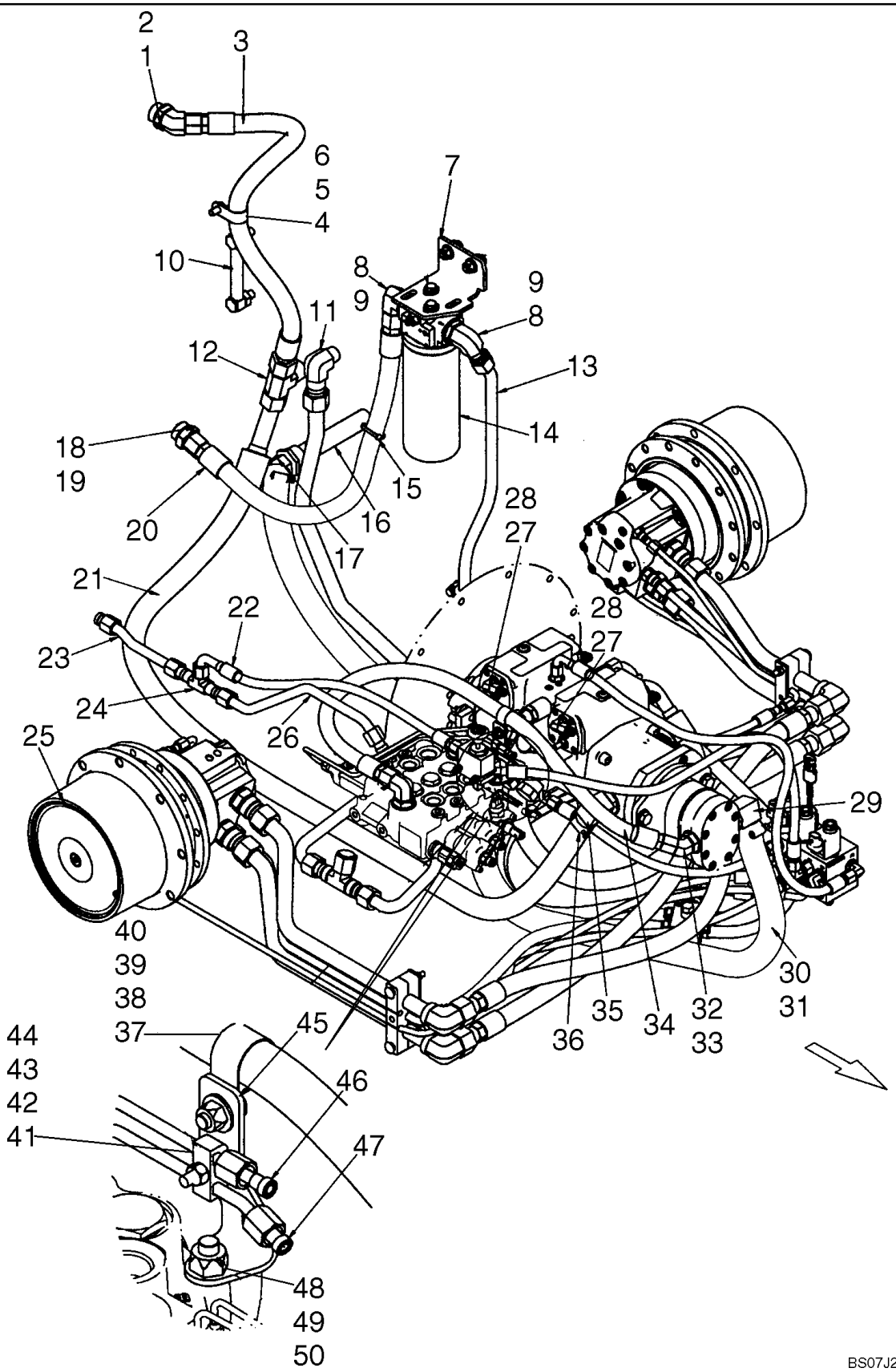

HIDROSTATICA - BOMBA, CARGA Y DESCARGA (440CT)

REF	FN	PART NUMBER	YR/SN	QTY	DENOMINACION
1		{87657980}		1	Elbow; 37FL 45 ADJ 3/4 X 1.0 Tube; Incl 2
2		167268		1	JUNTA HERMETICA, 16-1, 90 Duro, 1.171" ID x .116" Thk
3		87653980		1	MANGA, 810 mm (31.88 in); Upper Cooler
4		86639001		1	BORNE, 1 3/16", Insul, 7/16" Bolt
5		140045		1	ARANDELA ABANICO, Belleville, M10
6		43138		1	TORNILLO, Hex, M10 x 20, 8.8, Full Thd
7		REF		1	MANUAL, Hydrostatic Filter; For Mounting, See Figure 06-32
8		570024		2	CODO, 90º, 1 1/16"-12, 37º x 1 5/16"-12, O-Ring, Incl. 9
9		305412		2	JUNTA HERMETICA
10		87374752		1	CALIBRE, Liquid Level
11		9615396		1	CODO, 90º, 1 5/16"-12, 37º x 3/4"-14, NPTF
12		9790547		1	RACOR-T, 1 5/16"-12, 37º x 1"-11 1/2, NPTF Br
13		87660856		1	TUBO RIGIDO, Tube, Valve To Filter, LH Wall
14		87430661		1	FILTRO, Hydrostatic Filter; See Figure 06-32
15		529070		1	CIERRA CABLES, .30" x 14.5"
16		H151399		1	CARTUCHO FILTRO, Suction Line
17		87033823		1	CONEXION, 1/4" Hose x 1/8" NPTF, Fem, Barbed
18		233705		1	RACOR, 1 1/16"-12, 37º x 1 5/16"-12, O-Ring, Incl. 19
19		167266		1	JUNTA HERMETICA, 12-1, 90 Duro, .924 ID x .116" Thk
20		87653981		1	MANGA, 750mm (29.52 in); Lower Cooler
21		87563971		1	MANGA, 1859 mm (73.18 in); Charge Pump Supply
22		87625890		1	MANGA, 559 mm (22 in); Dump Valve Supply
23		87564000		1	TUBERIA HIDRAULICO, Dump Valve Drain
24		87644290		1	RACOR, Tee, 5/8 x 5/8 x 1/2 37 FL
25		REF			MANUAL, Undercarriage Plumbing; See Figure 06-13
26		87563998		1	TUBERIA HIDRAULICO, Dump Valve Drain
27		86512936		2	CODO, 90º, 9/16"-18, 37º x 7/16"-20, O-Ring
28		87604074		1	ADAPTOR, 6FJ x 6MJ W/ 1.2 Orifice
29		86729372		1	CONEXION, 90º, 1 1/4" Hose x 1 5/16"-12 ORB Beaded
30		87376457		1	MANGA, 1915 mm (75.39 in); Suction

HIDROSTATICA - BOMBA, CARGA Y DESCARGA (440CT)

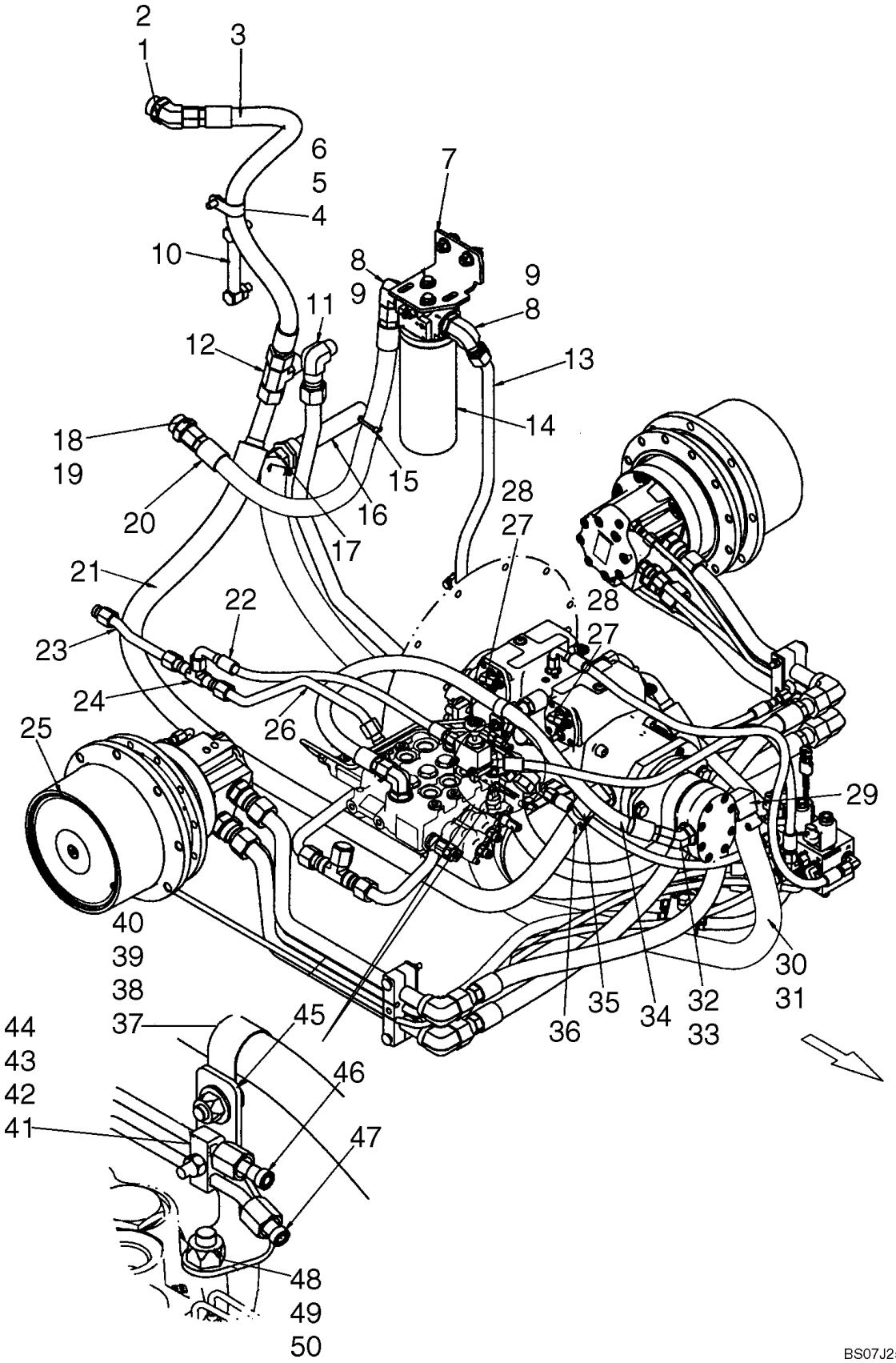

HIDROSTATICA - BOMBA, CARGA Y DESCARGA (440CT)

REF	FN	PART NUMBER	YR/SN	QTY	DENOMINACION
31		87039085		2	ABRAZADERA MANGUERA, 1.25/2.125 HD Worm
32		100197		1	CODO, 45º, 7/8"-14 x 1 1/16"-12, O-Ring, Incl.33
33		167266		1	JUNTA HERMETICA, 12-1, 90 Duro, .924 ID x .116" Thk
34		87547070		1	MANGA, 1000 mm (39.37 in); Valve Supply
35		87393628		1	ADAPTOR, 90 Barb 1 Hose x 1-5/16-12 OR
36		86536660		1	ABRAZADERA MANGUERA, #16, 0.81/1.50 Type F Worm
37		9827902		1	BORNE, 1", Insul, 3/8" Bolt
38		120104		1	TORNILLO, Hex, M8 x 20, 8.8
39		9628098		1	CONTRA TUERCA, M8 x 1.25, Cl 10
40		86625263		2	ARANDELA, M8 x 20 x 1.6
41		608089		1	BORNE, Double
42		87030561		1	CONTRA TUERCA, M6 x 1, Cl 8
43		86588450		1	ARANDELA, M6
44		627-6030		1	TORNILLO, Hex, M6 x 30, 10.9, Full Thd
45		87564009		1	PIEZA DE SOPORTE, Hose Support
46		87563969		1	TUBERIA HIDRAULICO, Pilot
47		87563968		1	TUBERIA HIDRAULICO, Pilot
48		43144		1	TORNILLO, Hex, M10 x 70, 8.8
49		86512554		1	CONTRA TUERCA, M10 x 1.5, Cl 10
50		86639325		1	ARANDELA, M10 x 24.5 x 3, HT

HIDROSTATICA - MOTORES DE ACCIONAMIENTO (440CT)

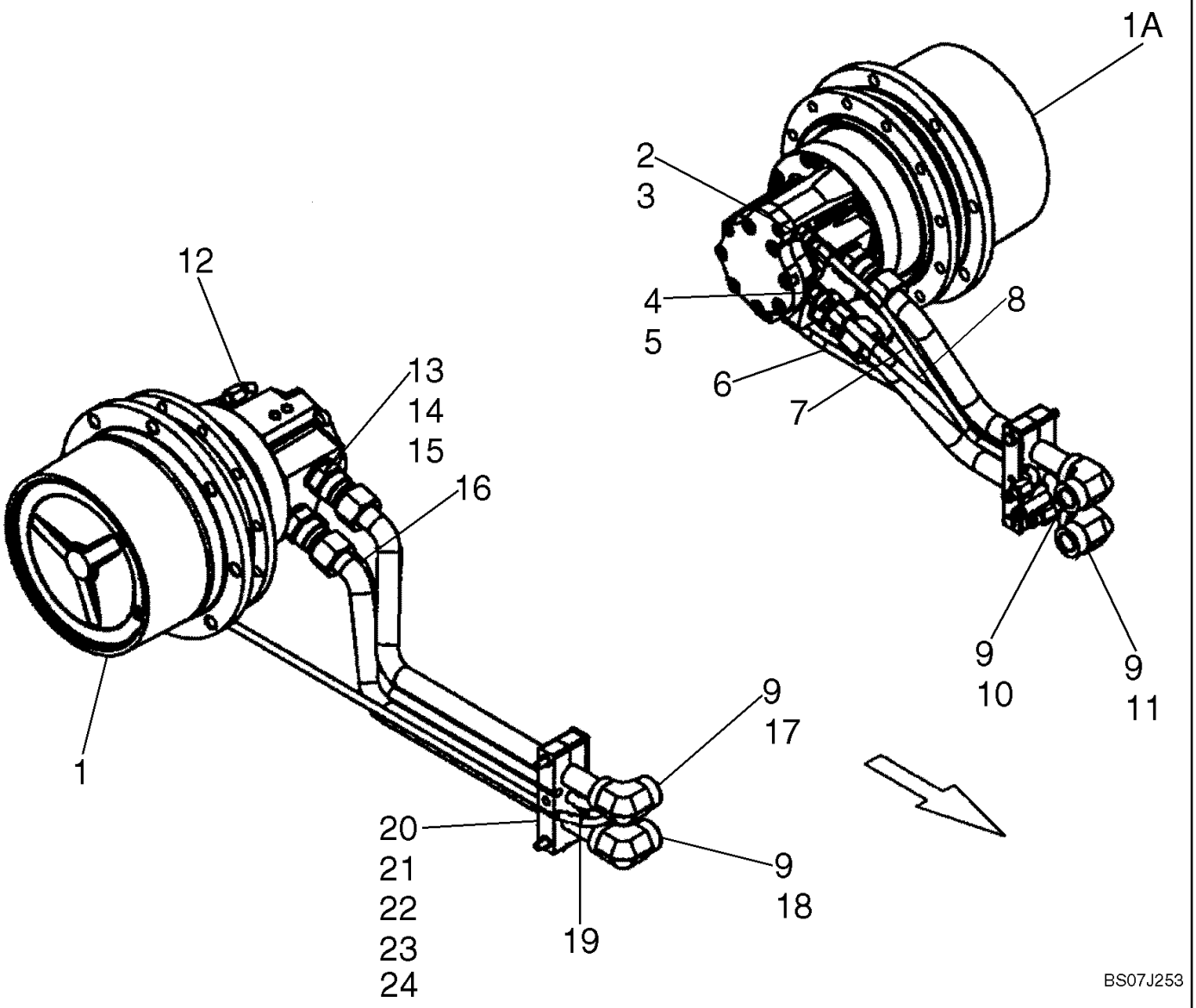

HIDROSTATICA - MOTORES DE ACCIONAMIENTO (440CT)

REF	FN	PART NUMBER	YR/SN	QTY	DENOMINACION
1		87600263		1	MOTOR, Drive Motor, RH; See Fig. 06-62
		87600263C		1	MOTOR-HIDR A RENOVAR, Core - Motor Return Number, Use To Return Core For Credit When Using A Remanufactured Assy
		87600263R		1	MOTOR-HIDR RENOVADO, Remanufactured Drive Motor
1A		87600262		1	MOTOR, Drive Motor, LH; See Fig. 06-62
		87600262C		1	MOTOR-HIDR A RENOVAR, Core - Motor Return Number, Use To Return Core For Credit When Using A Remanufactured Assy
		87600262R		1	MOTOR-HIDR RENOVADO, Remanufactured Drive Motor
2		76350		4	RACOR, 9/16"-18, 37º x 9/16"-18, O-Ring, Incl. 3
3		9617873		1	JUNTA HERMETICA, 6-1, 90 Duro, .468" ID x .078" Thk
4		86509028		2	RACOR, 3/4"-16, 37º x 9/16"-18, O-Ring, Incl. 5
5		9617873		1	JUNTA HERMETICA, 6-1, 90 Duro, .468" ID x .078" Thk
6		87364807		1	TUBO, Brake Left Hand
7		87364627		1	TUBO, Two Speed Left Hand
8		87364808		1	TUBO, Case Drain Left Hand
9		9824050		4	JUNTA HERMETICA, -021, 90 Duro, .926" ID x .070" Thk
10		87364801		1	TUBO, Left Hand Loop Top
11		87364802		1	TUBO, Left Hand Loop Bottom
12		87364804		1	TUBO, Brake Right Hand
13		87303844		4	RACOR, 1 7/16"-12 ORFS x 1 1/16"-12 ORB, Incl. 14, 15
14		167266		1	JUNTA HERMETICA, 12-1, 90 Duro, .924 ID x .116" Thk
15		9824050		1	JUNTA HERMETICA, -021, 90 Duro, .926" ID x .070" Thk
16		87364628		1	TUBO, Two Speed Right Hand
17		87364799		1	TUBO, Right Hand Loop Top
18		87364800		1	TUBO, Right Hand Loop Bottom

HIDROSTATICA - MOTORES DE ACCIONAMIENTO (440CT)

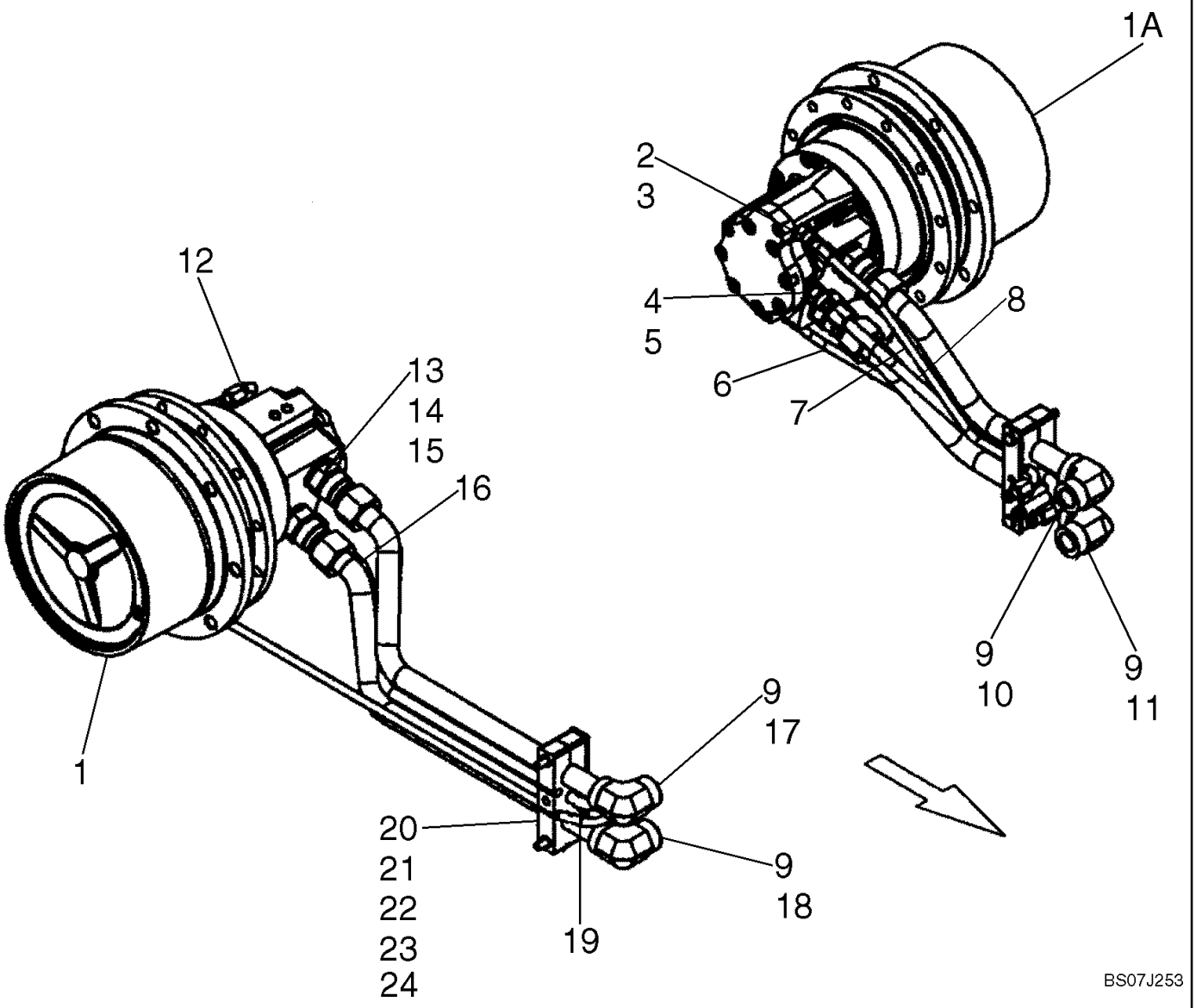

HIDROSTATICA - MOTORES DE ACCIONAMIENTO (440CT)

REF	FN	PART NUMBER	YR/SN	QTY	DENOMINACION
19		87364805		1	TUBO, Case Drain Right Hand
20		87452108		4	BORNE
21		87302564		4	SEPARADOR, 1/4 x 2.000 STD Pipe ZND
22		87452146		2	BARRA, Clamp Top
23		120040		4	PERNO, CABEZA RONDA, Short NK, M8 x 80, Cl8.8, Replaces 120062
24		9628098		4	CONTRA TUERCA, M8 x 1.25, Cl 10

HIDROSTATICA - FUNCIÓN MÚLTIPLE (440CT)

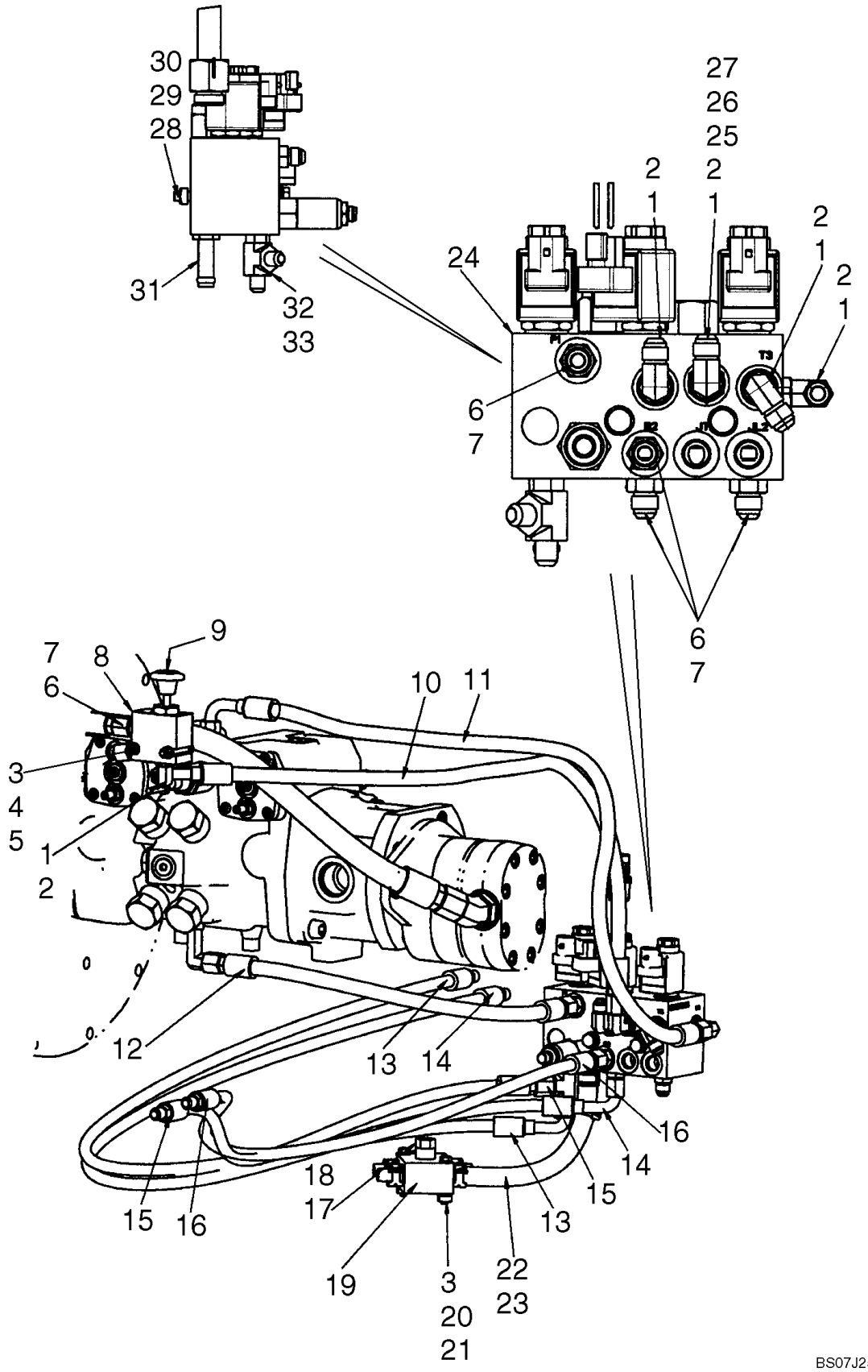

HIDROSTATICA - FUNCIÓN MÚLTIPLE (440CT)

REF	FN	PART NUMBER	YR/SN	QTY	DENOMINACION
1		76344		4	CODO, 90º, 9/16"-18, 37º x 9/16"-18, O-Ring, Incl 2
2		9617873		1	JUNTA HERMETICA, 6-1, 90 Duro, .468" ID x .078" Thk
3		86588450		4	ARANDELA, M6
4		87030561		2	CONTRA TUERCA, M6 x 1, Cl 8
5		120056		2	TORNILLO, Hex, M6 x 50, 8.8
6		76350		5	RACOR, 9/16"-18, 37º x 9/16"-18, O-Ring, Incl 7
7		9617873		1	JUNTA HERMETICA, 6-1, 90 Duro, .468" ID x .078" Thk
8		87604076		1	GUIA VALV.DE ESCAPE AUM., Boom Override
9		87568435		1	CALCOMANIA, Boom Override
10		87563992		1	MANGA, 820 mm (32.28 in); Dump Valve Drain
11		87563991		1	MANGA, 884 mm (34.8 in); DA pressure
12		87547032		1	MANGA, 467 mm (18.38 in); Charge pressure
13		87364806		1	MANGA, 1200 mm (47.24 in); 2 Speed LH
14		87364631		1	MANGA, 1250 mm (49.21 in); Brake LH
15		87364803		1	TUBO, 825 mm (32.48 in); 2 Speed RH
16		87364629		1	MANGA, 850 mm (33.46 in); Brake RH
17		76349		1	TAPÓN, Hex Hd, 9/16"-18 ORB, Incl 18
18		9617873		1	JUNTA HERMETICA, 6-1, 90 Duro, .468" ID x .078" Thk
19		87437351		1	COLECTOR, Return oil
20		86977790		2	TORNILLO, Hex, M6 x 45, 8.8
21		87404992		2	TUERCA, Square M6-1.0 Class 8 ZND
22		87563996		1	MANGA, 244 mm (9.6 in); Multi-Valve Drain
23		87443510		2	ABRAZADERA MANGUERA, 20 mm
24		87577076		1	VÁLVULA DE PILOTAJE, Two Speed Track Models; See Figure 06-27
25		87573371		1	ADAPTOR, Incl 26, 27
26		9617873		1	JUNTA HERMETICA, 6-1, 90 Duro, .468" ID x .078" Thk
27		9993141		1	JUNTA HERMETICA, -012, 90 Duro, .364" ID x .070" Thk
28		87030567		2	TUERCA, Square M8 1.25 Class 8 ZND
29		86624184		4	ARANDELA, M8 x 16 x 1.6

HIDROSTATICA - FUNCIÓN MÚLTIPLE (440CT)

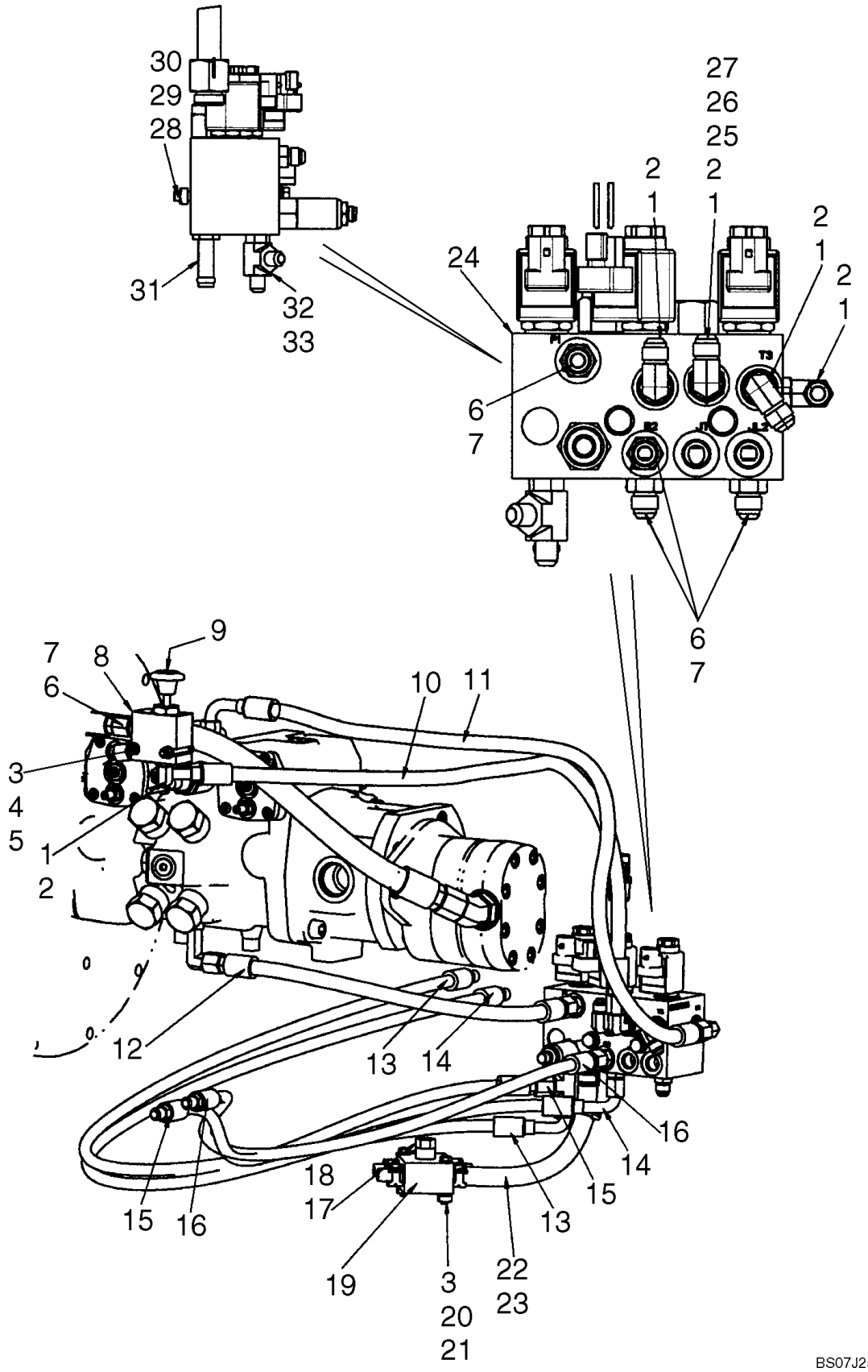

HIDROSTATICA - FUNCIÓN MÚLTIPLE (440CT)

REF	FN	PART NUMBER	YR/SN	QTY	DENOMINACION
30		86508571		2	TORNILLO, Hex, M8 x 90, 8.8
31		86705988		1	CONEXION, 1/2" Hose x 9/16"-18 ORB, Beaded
32		86513020		1	RACOR-T, 9/16"-18, 37º x 9/16"-18, O-Ring Run, Incl 33
33		9617873		1	JUNTA HERMETICA, 6-1, 90 Duro, .468" ID x .078" Thk

HIDROSTATICA - BOMBA ACOPLAMIENTOS (440CT)

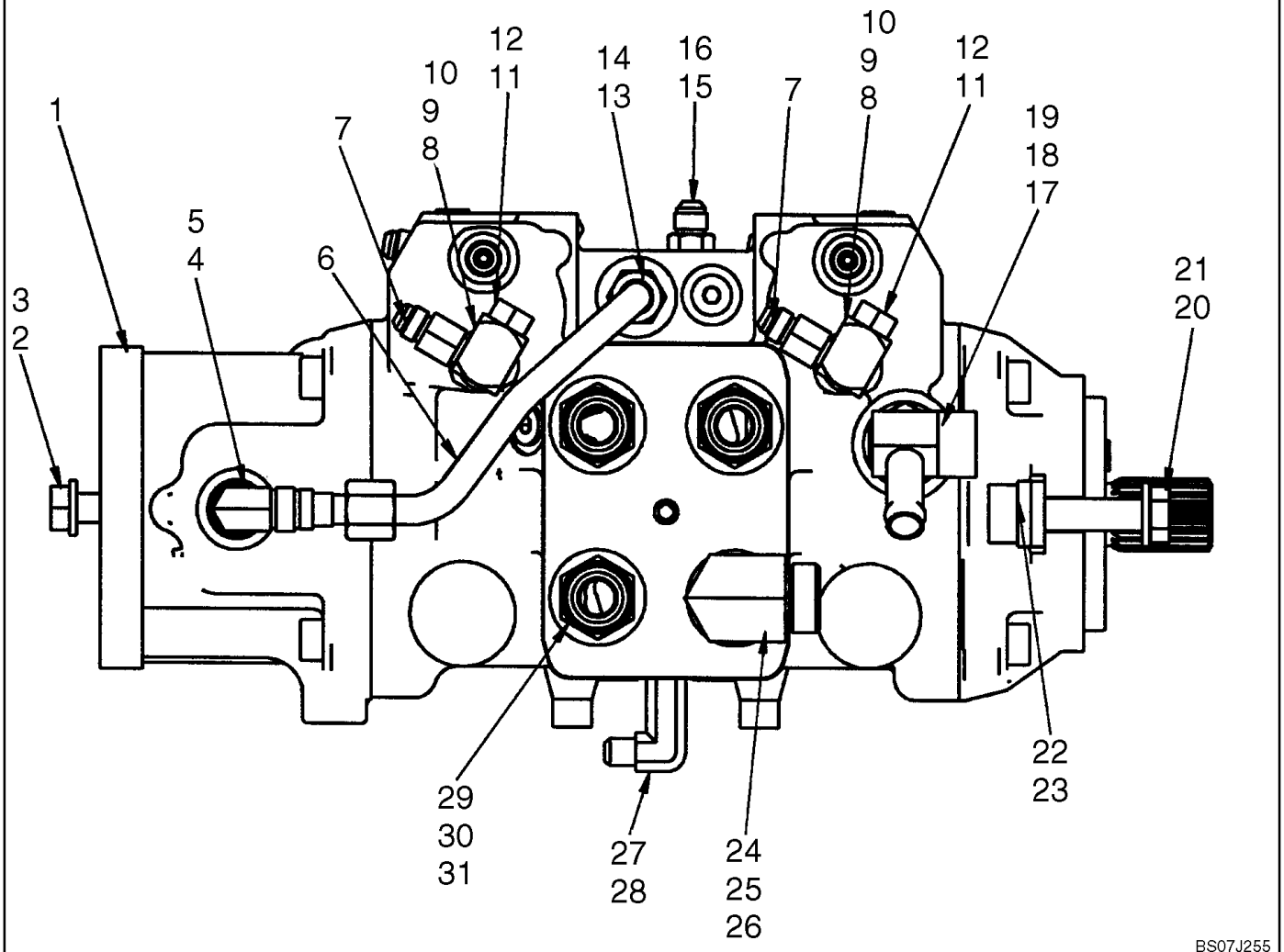

HIDROSTATICA - BOMBA ACOPLAMIENTOS (440CT)

REF	FN	PART NUMBER	YR/SN	QTY	DENOMINACION
1		87546977		1	BOMBA, A22; See Figure 06-47 - 06-53
2		86625255		2	ARANDELA, M13.5 x 24.5 x 3, HT
3		87670		2	TORNILLO, Hex, 1/2"-13 x 1 1/4", G5, Full Thd
4		128830		1	CODO, 90º, 3/4"-16, 37º x 3/4"-16, O-Ring, Incl 5
5		128825		1	JUNTA HERMETICA, 8-1, 90 Duro, .644" ID x .087" Thk
6		87554297		1	TUBERIA HIDRAULICO, Tube, Tandem Pump Supply
7		87604074		2	ADAPTOR, 6FJ x 6MJ W/ 1.2 Orifice
8		87546979		2	ADAPTOR, Incl 9, 10
9		9617873		1	JUNTA HERMETICA, 6-1, 90 Duro, .468" ID x .078" Thk
10		165202		1	JUNTA HERMETICA, 4-1, 90 Duro, .351" ID x .072" Thk
11		76349		2	TAPÓN, Hex Hd, 9/16"-18 ORB, Incl 12
12		9617873		1	JUNTA HERMETICA, 6-1, 90 Duro, .468" ID x .078" Thk
13		128818		1	RACOR, 3/4"-16, 37º x 3/4"-16, O-Ring, Incl 14
14		128825		1	JUNTA HERMETICA, 8-1, 90 Duro, .644" ID x .087" Thk
15		76350		6	RACOR, 9/16"-18, 37º x 9/16"-18, O-Ring, Incl 16
16		9617873		6	JUNTA HERMETICA, 6-1, 90 Duro, .468" ID x .078" Thk
17		87571937		1	ADAPTOR, Incl 18, 19
18		167266		1	JUNTA HERMETICA, 12-1, 90 Duro, .924 ID x .116" Thk
19		167269		1	JUNTA HERMETICA, 10-1, 90 Duro, .755" ID x .097" Thk
20		{87556906}		2	Bolt, Hex Head M14 x 70 ZND
21		87016615		2	ARANDELA, M12 x 28.5 x 3, HT
22		87637186		2	TUERCA, M14 Class 10 ZND
23		{87564723}		4	Washer, 15.3 x 28.5 x 6 HTS ZND
24		9846848		1	CODO, Incl. 25, 26
25		9991976		1	JUNTA HERMETICA, -018, 90 Duro, .739" ID x .070" Thk

HIDROSTATICA - BOMBA ACOPLAMIENTOS (440CT)

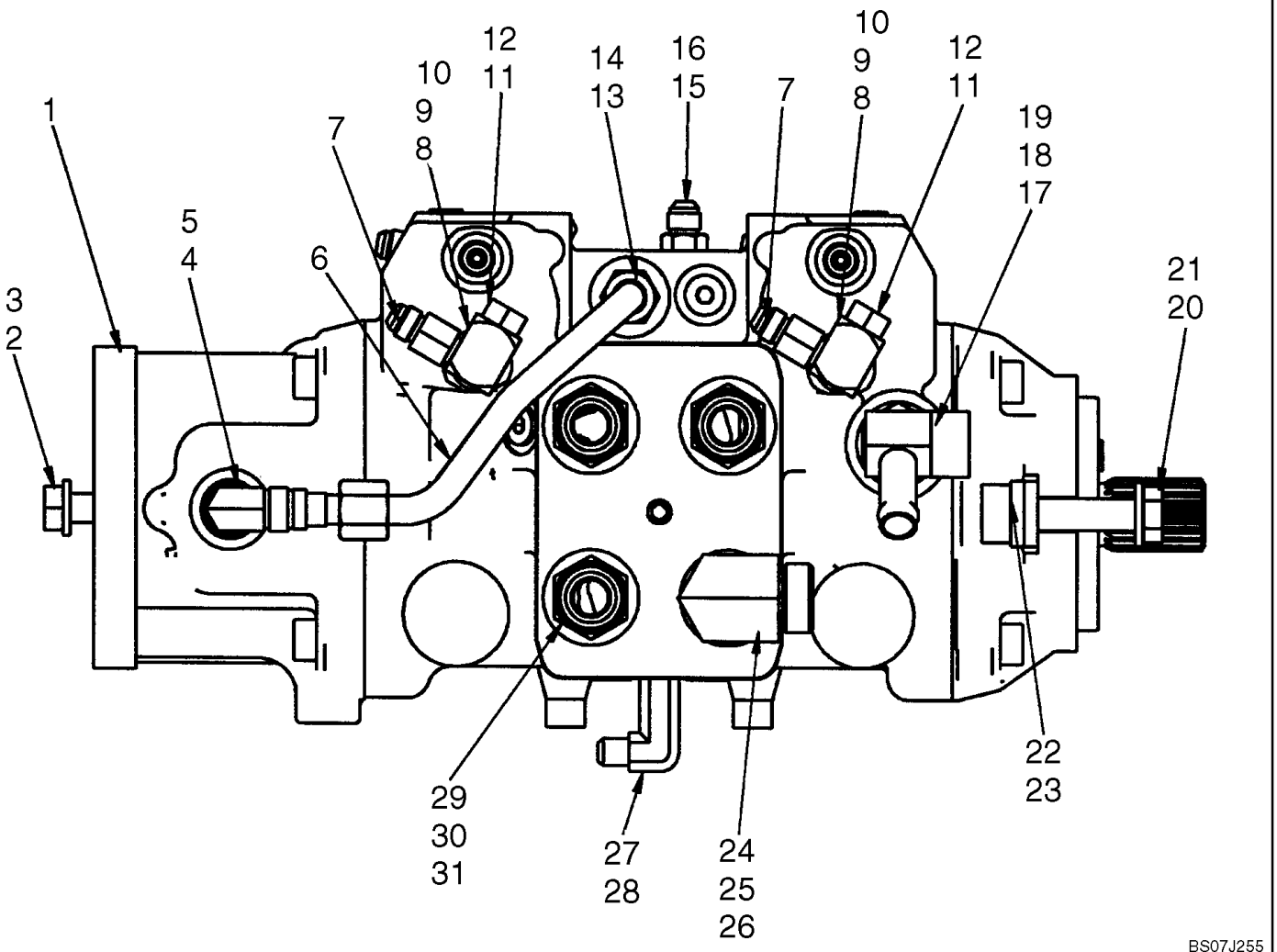

HIDROSTATICA - BOMBA ACOPLAMIENTOS (440CT)

REF	FN	PART NUMBER	YR/SN	QTY	DENOMINACION
26		167266		1	JUNTA HERMETICA, 12-1, 90 Duro, .924 ID x .116" Thk
27		86526		1	CODO, 90º, 9/16"-18, 37º x 9/16"-18, LG, Incl 28
28		9617873		1	JUNTA HERMETICA, 6-1, 90 Duro, .468" ID x .078" Thk
29		9840535		3	RACOR, Incl 30, 31
30		9991976		1	JUNTA HERMETICA, -018, 90 Duro, .739" ID x .070" Thk
31		167266		1	JUNTA HERMETICA, 12-1, 90 Duro, .924 ID x .116" Thk

SISTEMA HIDROSTATICO, MANGUERAS, BOMBA Y MOTOR DE TRANSMISION

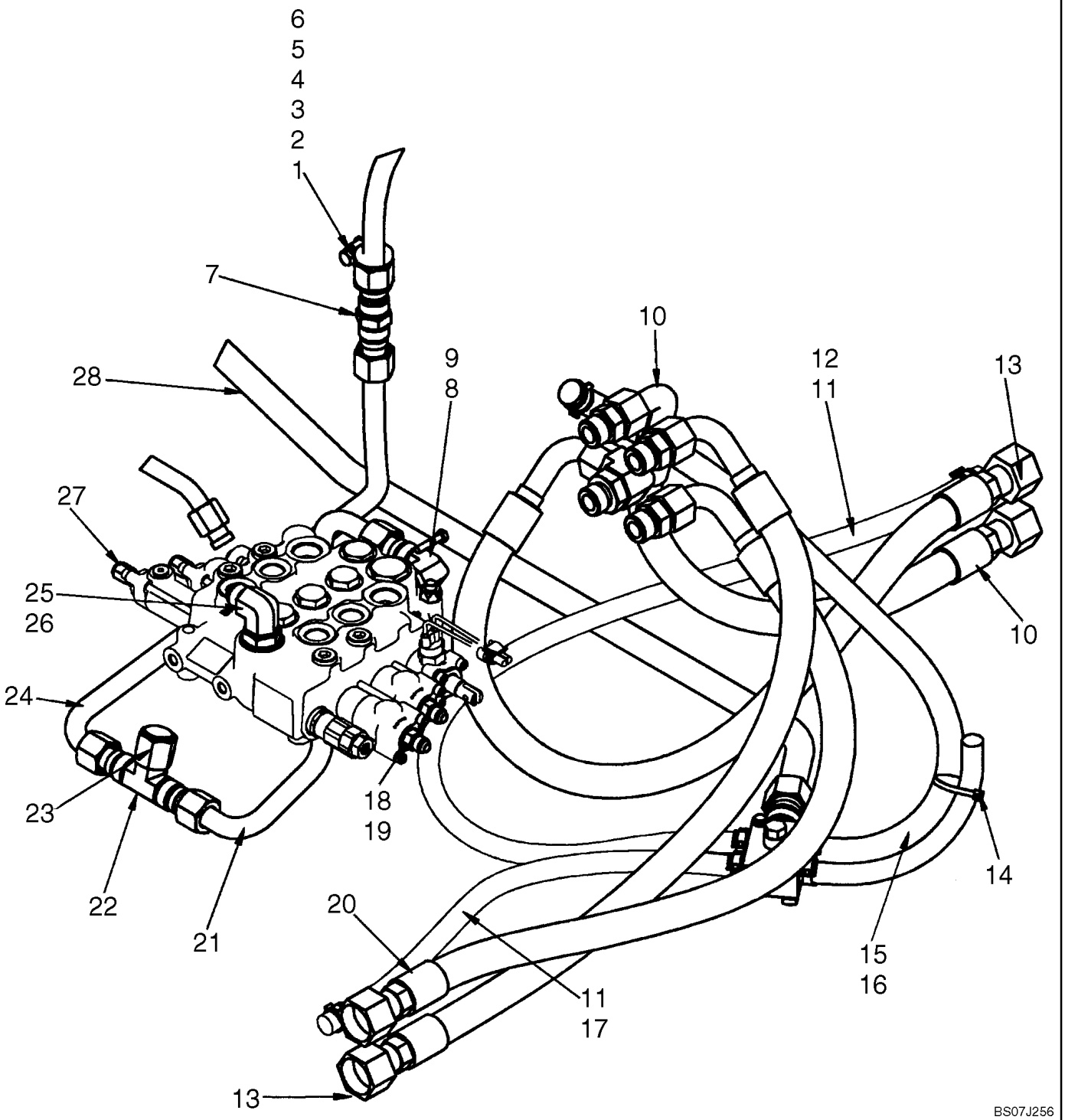

SISTEMA HIDROSTATICO, MANGUERAS, BOMBA Y MOTOR DE TRANSMISION

REF	FN	PART NUMBER	YR/SN	QTY	DENOMINACION
1		86624184		1	ARANDELA, M8 x 16 x 1.6
2		87030567		1	TUERCA, Square M8
3		87042897		1	ESPACIADOR
4		87301359		1	BORNE, 1 1/8", 3/8" Bolt
5		87445136		1	AISLADOR, 3/4
6		43128		1	TORNILLO, Hex, M8 x 30, 8.8
7		144121		1	CONEXION, 1 1/16"-12, 37º x 1 1/16"-12, 37º
8		322894		1	CODO, 90º, 1 1/16"-12, 37º x 1 1/16"-12, O-Ring, Incl. 9
9		167266		1	JUNTA HERMETICA, 12-1, 90 Duro, .924 ID x .116" Thk
10		87547065		1	MANGA, 609 mm (24.00 in); Motor Pump Loop
11		87443510		4	ABRAZADERA MANGUERA
12		87364625		1	MANGA, 1000 mm (39.37 in); Case Drain,
13		87547067		1	MANGA, 930 mm (36.61 in); Motor To Pump Loop
14		529070		1	CIERRA CABLES, .30" x 14.5"
15		87563997		1	MANGA, 765 mm (30.12 in); Pump Drain
16		87443511		2	BORNE
17		87364622		1	MANGA, 715 mm (28.15 in); Case Drain
18		84570		2	CODO, 90º, 7/8"-14, 37º x 1 1/16"-12, O-Ring, Incl 19
19		165202		1	JUNTA HERMETICA, 4-1, 90 Duro, .351" ID x .072" Thk
20		87547066		1	MANGA, 970 mm (38.20 in); Motor To Pump Loop
21		87446248		1	TUBO (CONJUNTO), Valve To Filter
22		15694		1	RACOR-T, 1 1/16"-12 37º
23		219606		1	TAPON DEL DEPOSITO, 37º, 1 1/16"-12
24		87445138		1	TUBO (CONJUNTO), Valve To Filter
25		84570		1	CODO, 90º, 7/8"-14, 37º x 1 1/16"-12, O-Ring, Incl. 26
26		167266		1	JUNTA HERMETICA, 12-1, 90 Duro, .924 ID x .116" Thk
27		87575684		2	RACOR, Flareless
28		87364616		1	TUBO, Case Drain

HIDROSTATICA - DE LA BOMBA AL REFRIGERADOR (440 CON CONTROL PILOTO)

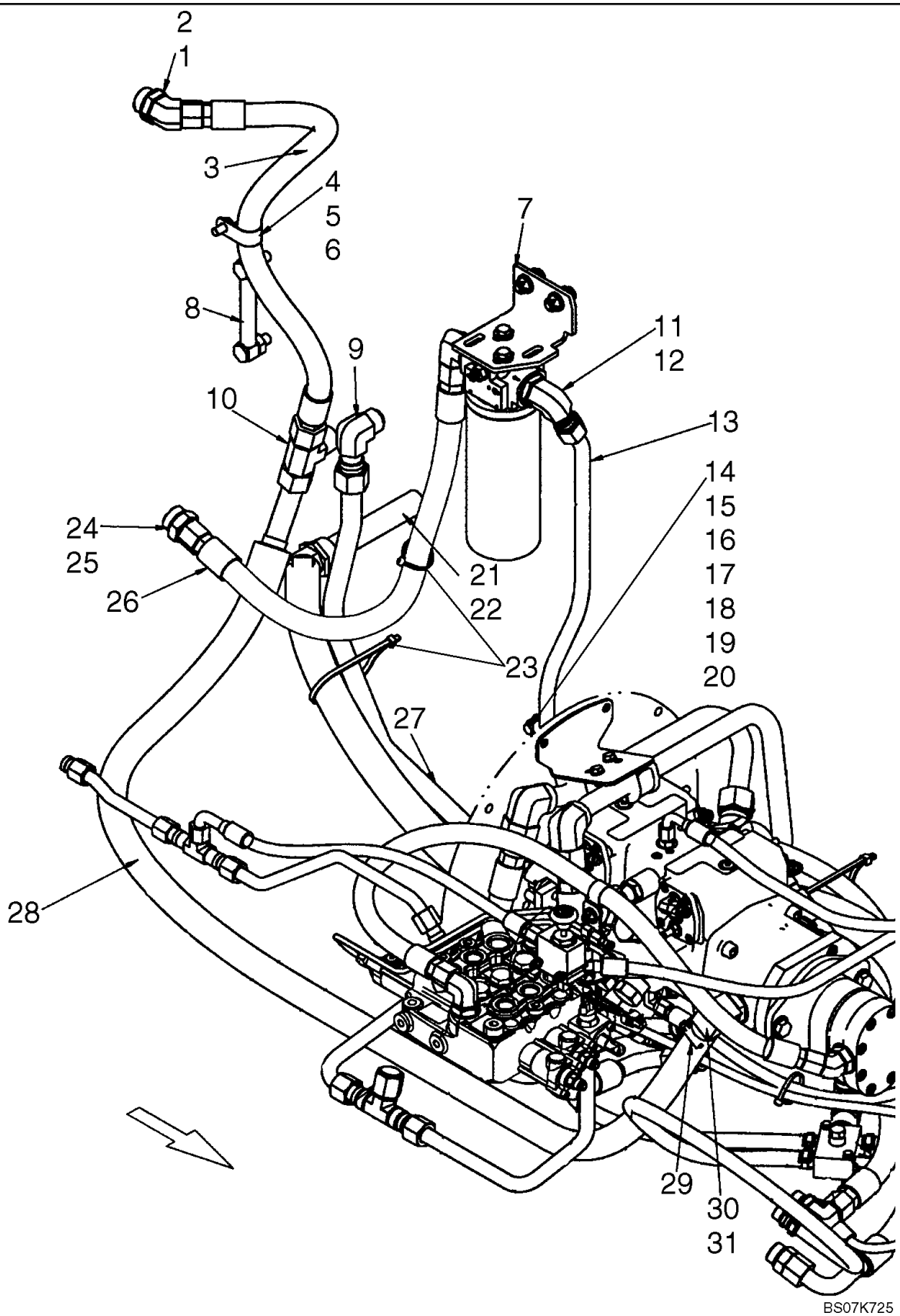

HIDROSTATICA - DE LA BOMBA AL REFRIGERADOR (440 CON CONTROL PILOTO)

REF	FN	PART NUMBER	YR/SN	QTY	DENOMINACION
1		{87657980}		2	Elbow, 37FL 45 ADJ 3/4 x 1.0 Tube; To Oil Cooler; Incl 2
2		167268		1	JUNTA HERMETICA, 16-1, 90 Duro, 1.171" ID x .116" Thk
3		87653980		1	MANGA, 810 mm (31.88 in) To Upper Oil Cooler
4		86639001		1	BORNE, 1 3/16", Insul, 7/16" Bolt
5		140045		1	ARANDELA ABANICO, Belleville, M10
6		43138		1	TORNILLO, Hex, M10 x 20, 8.8, Full Thd
7		REF			MANUAL, For Filter Assy And Mounting See Fig 06-32
8		87374752		1	CALIBRE, Liquid Level
9		9615396		1	CODO, 90º, 1 5/16"-12, 37º x 3/4"-14, NPTF
10		9790547		1	RACOR-T, 1 5/16"-12, 37º x 1"-11 1/2, NPTF Br
11		87021824		2	CODO, 90º, 1 1/16"-12, 37º x 1 5/16"-12, O-Ring, Incl 12
12		167268		1	JUNTA HERMETICA, 16-1, 90 Duro, 1.171" ID x .116" Thk
13		87660856		1	TUBO RIGIDO, Tube, Valve To Filter (LH Wall)
14		43128		1	TORNILLO, Hex, M8 x 30, 8.8
15		86624184		4	ARANDELA, M8 x 16 x 1.6
16		87042897		1	ESPACIADOR
17		87301359		1	BORNE, 1 1/8", 3/8" Bolt
18		87445136		1	AISLADOR
19		229197A1		2	TUERCA
20		144121		1	CONEXION, 1 1/16"-12, 37º x 1 1/16"-12, 37º
21		H151399		1	CARTUCHO FILTRO
22		87033823		1	CONEXION, 1/4" Hose x 1/8" NPTF, Fem, Barbed
23		L18331		2	CIERRA CABLES
24		233705		1	RACOR, 1 1/16"-12, 37º x 1 5/16"-12, O-Ring, Incl 25
25		167266		2	JUNTA HERMETICA, 12-1, 90 Duro, .924 ID x .116" Thk
26		87653981		1	MANGA, 750 mm (29.52 in) To Lower Oil Cooler
27		87584058		1	TUBO RIGIDO, Case Drain
28		87563971		1	MANGA, 1859 mm (73.19 in) Charge Pump Suppply

HIDROSTATICA - DE LA BOMBA AL REFRIGERADOR (440 CON CONTROL PILOTO)

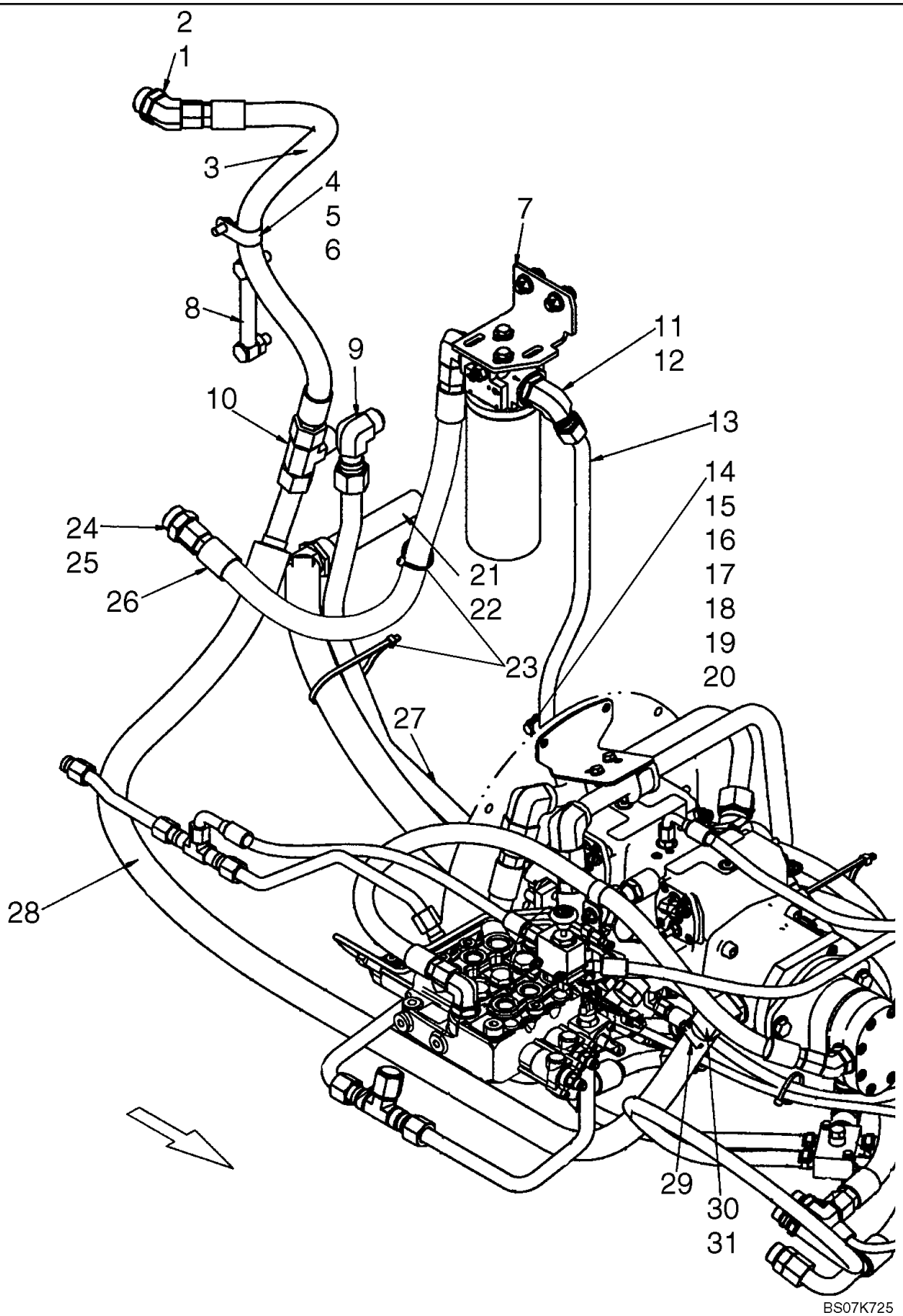

HIDROSTATICA - DE LA BOMBA AL REFRIGERADOR (440 CON CONTROL PILOTO)

REF	FN	PART NUMBER	YR/SN	QTY	DENOMINACION
29		86536660		1	ABRAZADERA MANGUERA, #16, 0.81/1.50 Type F Worm
30		87393628		1	ADAPTOR, Incl 31
31		167268		1	JUNTA HERMETICA, 16-1, 90 Duro, 1.171" ID x .116" Thk

HIDROSTATICA - COLECTOR ESCAPE/VALVULA DE CONTROL, 440 CON CONTROL PILOTO

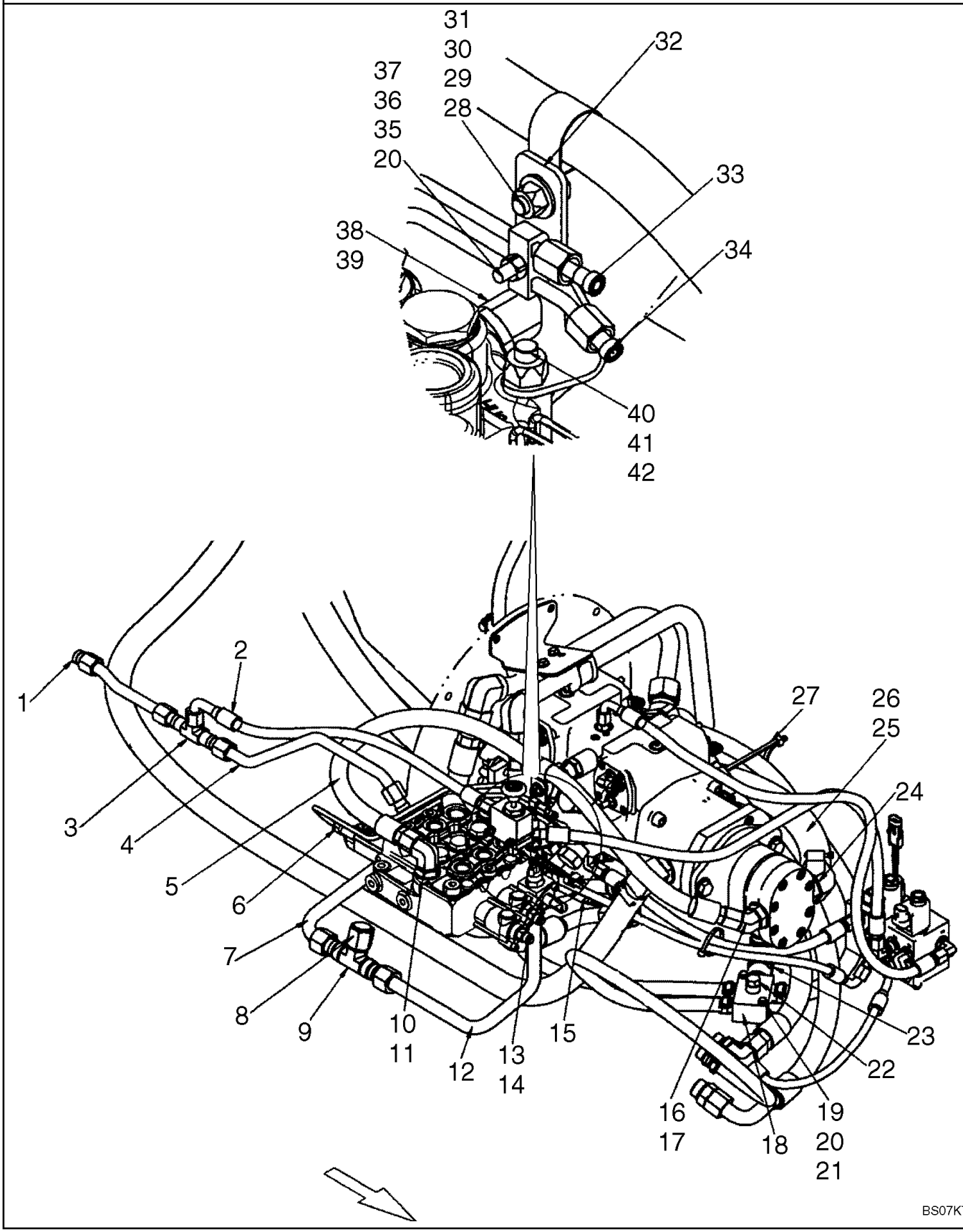

HIDROSTATICA - COLECTOR ESCAPE/VALVULA DE CONTROL, 440 CON CONTROL PILOTO

REF	FN	PART NUMBER	YR/SN	QTY	DENOMINACION
1		87564000		1	TUBERIA HIDRAULICO, Dump Valve Drain
2		87625890		1	MANGA, (559 mm, 22.00 in) Dump Valve Supply
3		87644290		1	RACOR
4		87563998		1	TUBERIA HIDRAULICO, Dump Valve Drain
5		87547070		1	MANGA, 1000 mm (39.37 in) Valve Supply
6		87575684		2	RACOR, Connector, Flareless
7		87445138		1	TUBO (CONJUNTO), Valve Out To Filter
8		219606		1	TAPON DEL DEPOSITO, 37º, 1 1/16"-12
9		15694		1	RACOR-T, 1 1/16"-12 37º
10		84570		1	CODO, 90º, 7/8"-14, 37º x 1 1/16"-12, O-Ring, Incl 11
11		167266		1	JUNTA HERMETICA, 12-1, 90 Duro, .924 ID x .116" Thk
12		87445137		1	TUBO (CONJUNTO), Valve To Filter
13		84384		2	RACOR, 9/16"-18, 37º x 7/16"-20, O-Ring, Incl 14
14		165202		2	JUNTA HERMETICA, 4-1, 90 Duro, .351" ID x .072" Thk
15		{87563975}		1	Hose, 800 mm (31.49 in) LH Brake
16		100197		1	CODO, 45º, 7/8"-14 x 1 1/16"-12, O-Ring, Incl 17
17		167266		1	JUNTA HERMETICA, 12-1, 90 Duro, .924 ID x .116" Thk
18		87437351		1	COLECTOR
19		86977790		2	TORNILLO, Hex, M6 x 45, 8.8
20		86588450		3	ARANDELA, M6
21		87404992		2	TUERCA
22		76349		1	TAPÓN, Hex Hd, 9/16"-18 ORB, Incl 19
23		86050288		1	CODO, 90º, 1 5/16"-12, 37º x 1 5/16"-12, 37º Fem Sw
24		87033824		1	CONEXION, 45º, 1 1/4" Hose x 1 5/16"-12 ORB Beaded, Incl 21
25		87563972		1	MANGA, 553 mm (61.14 in) Loader Pump Supply
26		87039085		2	ABRAZADERA MANGUERA, 1.25/2.125 HD Worm
27		529070		2	CIERRA CABLES, .30" x 14.5"
28		120104		1	TORNILLO, Hex, M8 x 20, 8.8
29		86625263		2	ARANDELA, M8 x 20 x 1.6
30		9628098		1	CONTRA TUERCA, M8 x 1.25, Cl 10
31		9827902		1	BORNE, 1", Insul, 3/8" Bolt

HIDROSTATICA - COLECTOR ESCAPE/VALVULA DE CONTROL, 440 CON CONTROL PILOTO

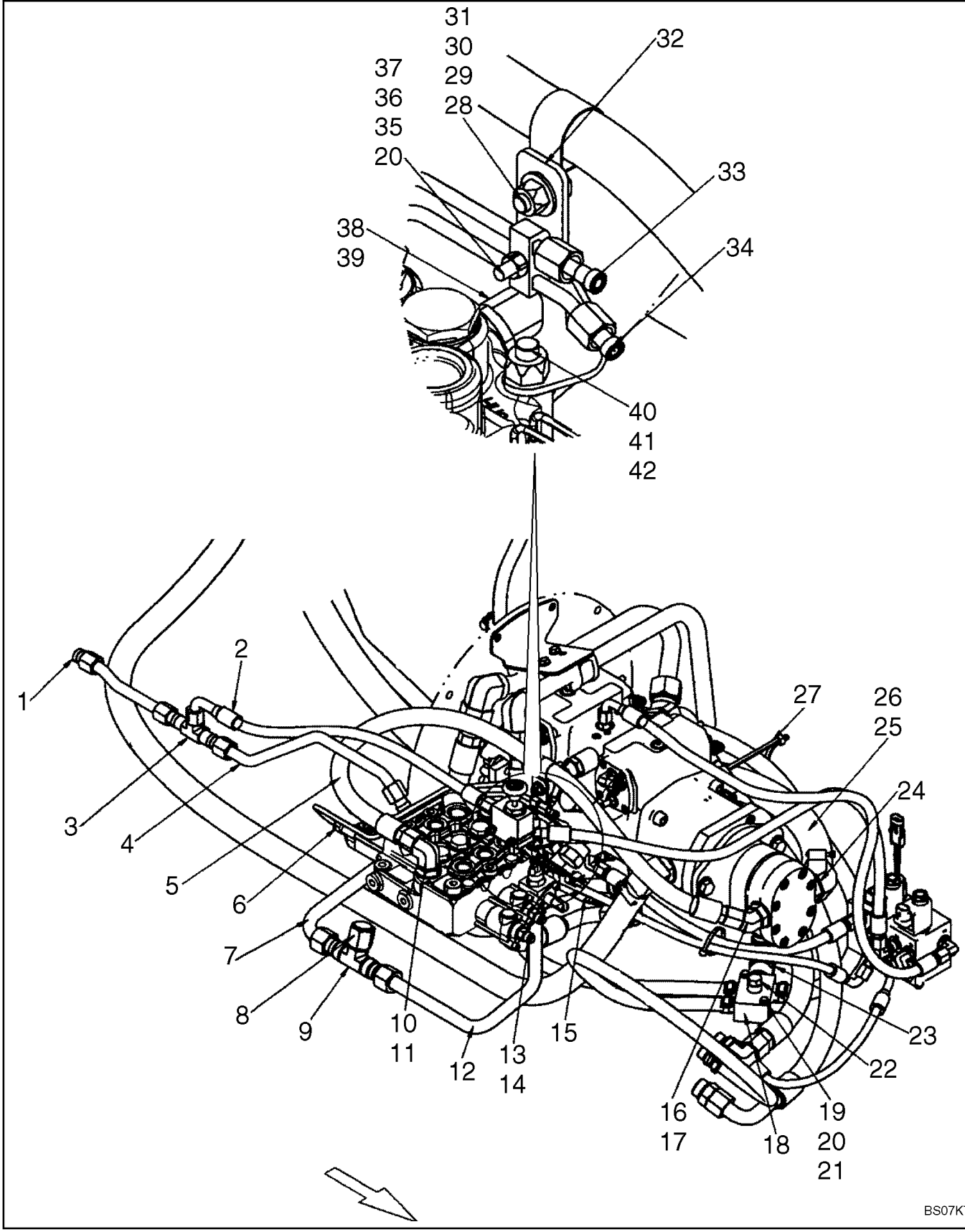

HIDROSTATICA - COLECTOR ESCAPE/VALVULA DE CONTROL, 440 CON CONTROL PILOTO

REF	FN	PART NUMBER	YR/SN	QTY	DENOMINACION
32		87678506		1	PIEZA DE SOPORTE, Bracket, Hose Support
33		87563969		1	TUBERIA HIDRAULICO
34		87563968		1	TUBERIA HIDRAULICO
35		80120101		1	TORNILLO
36		87030561		1	CONTRA TUERCA, M6 x 1, Cl 8
37		608089		1	BORNE
38		322894		4	CODO, 90º, 1 1/16"-12, 37º x 1 1/16"-12, O-Ring, Incl 39
39		167266		1	JUNTA HERMETICA, 12-1, 90 Duro, .924 ID x .116" Thk
40		43144		1	TORNILLO, Hex, M10 x 70, 8.8
41		86512554		1	CONTRA TUERCA, M10 x 1.5, Cl 10
42		86639325		1	ARANDELA, M10 x 24.5 x 3, HT

HIDROSTATICA - BOMBA ACOPLAMIENTOS (440 CON CONTROL PILOTO)

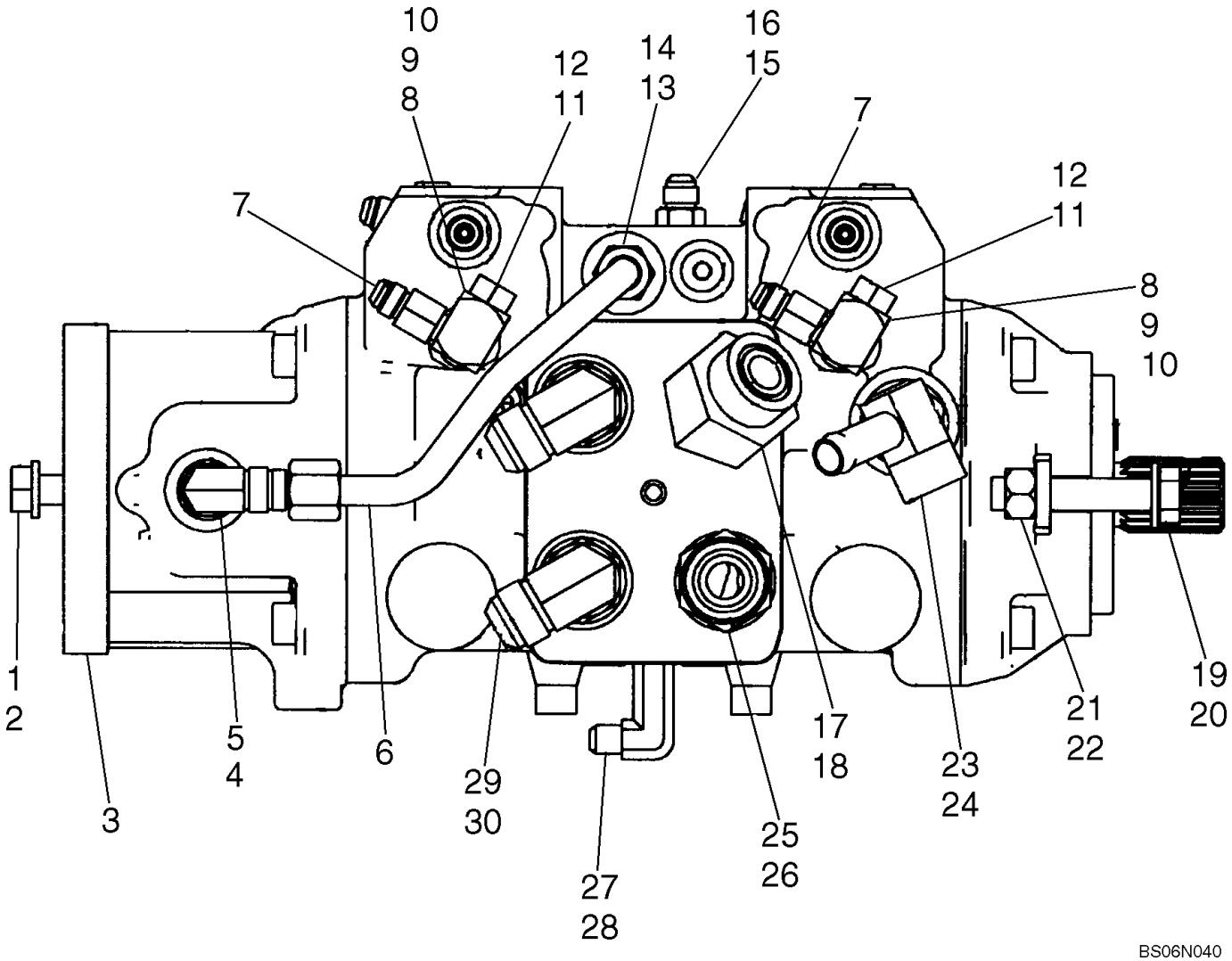

HIDROSTATICA - BOMBA ACOPLAMIENTOS (440 CON CONTROL PILOTO)

REF	FN	PART NUMBER	YR/SN	QTY	DENOMINACION
1		86625255		2	ARANDELA, M13.5 x 24.5 x 3, HT
2		87670		2	TORNILLO, Hex, 1/2"-13 x 1 1/4", G5, Full Thd
3		87546976		1	BOMBA, A22 Double Piston Pilot Control; See Figure 06-39
4		128830		1	CODO, 90º, 3/4"-16, 37º x 3/4"-16, O-Ring, Incl. 5
5		128825		1	JUNTA HERMETICA, 8-1, 90 Duro, .644" ID x .087" Thk
6		87554297		1	TUBERIA HIDRAULICO, Tube, Tandem Pump Supply
7		87604075		4	ADAPTOR, Connector With 1.0 mm Orifice
8		87546979		2	ADAPTOR, Incl 9, 10
9		165202		1	JUNTA HERMETICA, 4-1, 90 Duro, .351" ID x .072" Thk
10		9617873		1	JUNTA HERMETICA, 6-1, 90 Duro, .468" ID x .078" Thk
11		76349		3	TAPÓN, Hex Hd, 9/16"-18 ORB, Incl 12
12		9617873		1	JUNTA HERMETICA, 6-1, 90 Duro, .468" ID x .078" Thk
13		128818		1	RACOR, 3/4"-16, 37º x 3/4"-16, O-Ring, Incl 14
14		128825		1	JUNTA HERMETICA, 8-1, 90 Duro, .644" ID x .087" Thk
15		76350		6	RACOR, 9/16"-18, 37º x 9/16"-18, O-Ring, Incl 16
16		9617873		1	JUNTA HERMETICA, 6-1, 90 Duro, .468" ID x .078" Thk
17		{87302733}		1	Elbow 45 Adj. 1.0 ORFS-ORB 3/4; Incl 18
18		167266		1	JUNTA HERMETICA, 12-1, 90 Duro, .924 ID x .116" Thk
19		{87556906}		2	Bolt, Hex Head M14 X 70 ZND
20		87016615		2	ARANDELA, M12 x 28.5 x 3, HT
21		87637186		2	TUERCA
22		{87564723}		2	Washer
23		87571937		1	ADAPTOR, Incl 24
24		167266		1	JUNTA HERMETICA, 12-1, 90 Duro, .924 ID x .116" Thk
25		87303844		1	RACOR, 1 7/16"-12 ORFS x 1 1/16"-12 ORB, Incl 26

HIDROSTATICA - BOMBA ACOPLAMIENTOS (440 CON CONTROL PILOTO)

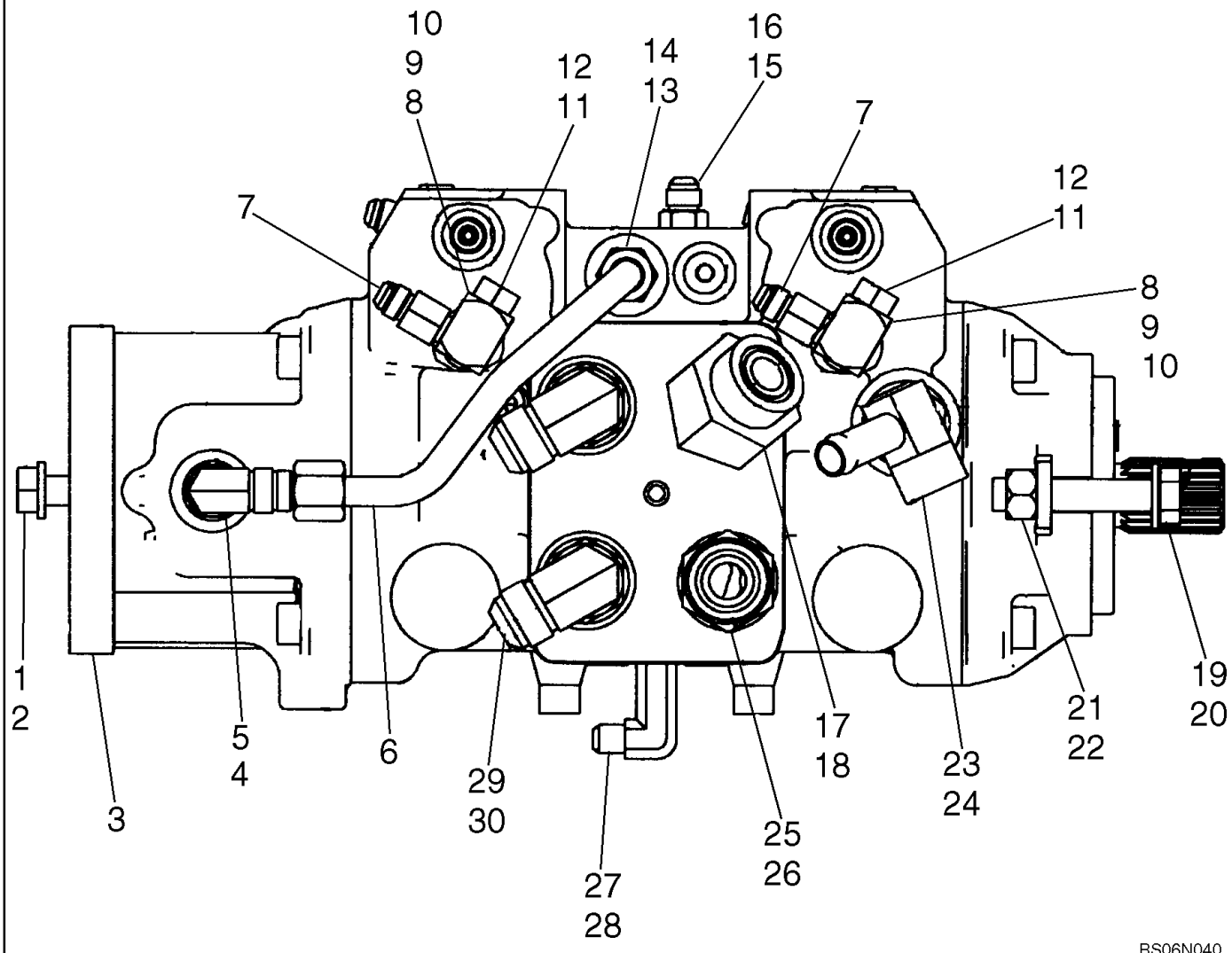

HIDROSTATICA - BOMBA ACOPLAMIENTOS (440 CON CONTROL PILOTO)

REF	FN	PART NUMBER	YR/SN	QTY	DENOMINACION
26		167266		1	JUNTA HERMETICA, 12-1, 90 Duro, .924 ID x .116" Thk
27		86526		1	CODO, 90º, 9/16"-18, 37º x 9/16"-18, LG
28		9617873		1	JUNTA HERMETICA, 6-1, 90 Duro, .468" ID x .078" Thk
29		322894		4	CODO, 90º, 1 1/16"-12, 37º x 1 1/16"-12, O-Ring, Incl 30
30		167266		1	JUNTA HERMETICA, 12-1, 90 Duro, .924 ID x .116" Thk

HIDROSTATICA - UNA SOLA VELOCIDAD, MOTORES DE ACCIONAMIENTO (440)

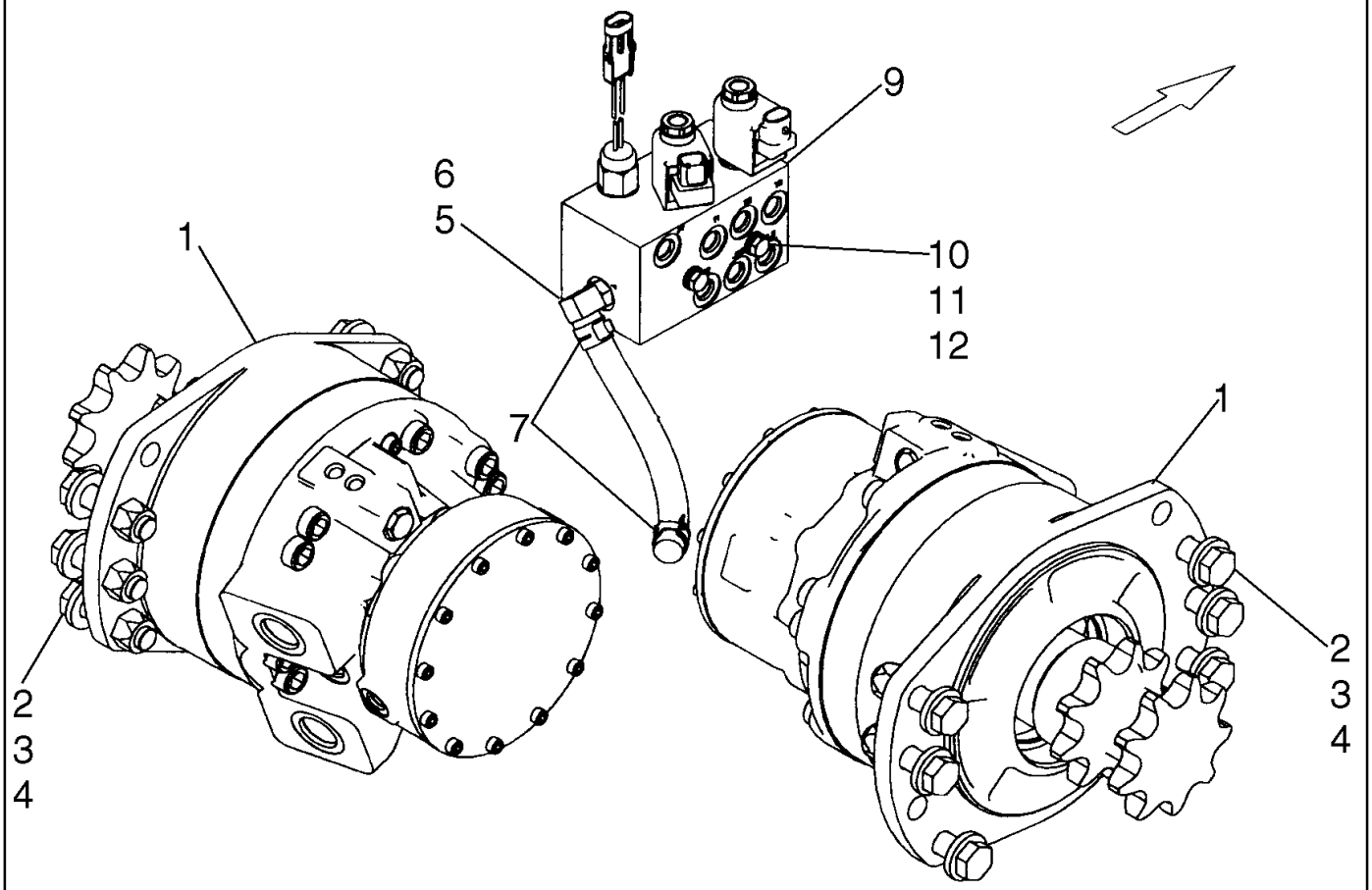

HIDROSTATICA - UNA SOLA VELOCIDAD, MOTORES DE ACCIONAMIENTO (440)

REF	FN	PART NUMBER	YR/SN	QTY	DENOMINACION
1		87035341		2	MOTOR-HIDRÁULICO, See Figure 06-56 - 06-58
2		86625258		12	ARANDELA, M16 x 34.5 x 5, HT
3		9828248		12	TORNILLO, Hex, M16 x 60, 10.9
4		86512555		12	CONTRA TUERCA, M16 x 2, Cl 10
5		86705580		1	CONEXION, 90º, 1/2" Hose x 9/16"-18 ORB Beaded, Incl. 6
6		9617873		1	JUNTA HERMETICA, 6-1, 90 Duro, .468" ID x .078" Thk
7		87443510		2	ABRAZADERA MANGUERA, 20 mm
8		87563994		1	MANGA, 190 mm (7.48 in) Multi-Valve Drain
9		87546971		1	VALVULA HIDRAULICA, See Figure 06-25
10		86508571		2	TORNILLO, Hex, M8 x 90, 8.8
11		86624184		4	ARANDELA, M8 x 16 x 1.6
12		229197A1		2	TUERCA

SISTEMA HIDROSTATICO, MANGUERAS (440 CON CONTROL PILOTO)

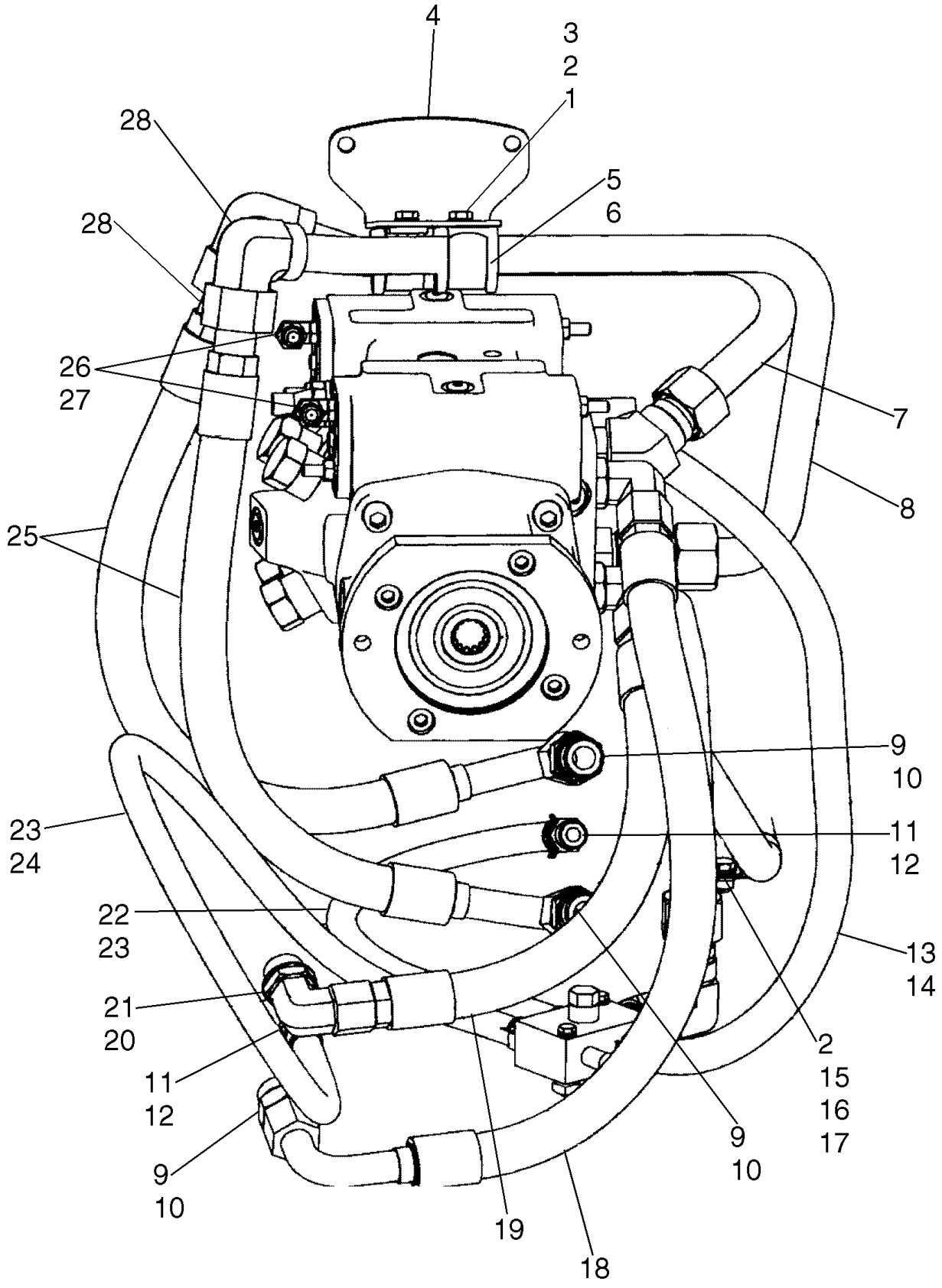

SISTEMA HIDROSTATICO, MANGUERAS (440 CON CONTROL PILOTO)

REF	FN	PART NUMBER	YR/SN	QTY	DENOMINACION
1		9628098		3	CONTRA TUERCA, M8 x 1.25, Cl 10
2		86624184		2	ARANDELA, M8 x 16 x 1.6
3		43127		2	TORNILLO, Hex, M8 x 25, 8.8
4		87564008		1	BRIDA DE APRIETE
5		D67297		2	BLOQUE MOTOR, Isolation
6		D68846		2	COLLAR
7		87547068		1	TUBERIA HIDRAULICO, Motor To Pump Loop
8		87600630		1	TUBERIA HIDRAULICO, Motor To Pump Loop
9		322896		3	RACOR, 1 1/16"-12, 37º x 1 1/16"-12, O-Ring, Incl 10
10		167266		3	JUNTA HERMETICA, 12-1, 90 Duro, .924 ID x .116" Thk
11		87010108		2	CONEXION, 1/2" Hose x 3/4"-16 ORB, Beaded, Incl 12
12		128825		2	JUNTA HERMETICA, 8-1, 90 Duro, .644" ID x .087" Thk
13		87563995		1	MANGA, (657 mm, 25.87 in)Pump Drain
14		87443511		2	BORNE
15		120103		1	TORNILLO, Hex, M8 x 16, 8.8
16		86637977		1	BORNE, 1", Insul, 5/16" Bolt
17		229197A1		2	TUERCA
18		87547060		1	MANGA, 675 mm (26.57 in) Motor To Pump Loop
19		87547061		1	MANGA, 505 mm (19.88 in)Motor To Pump Loop
20		322894		4	CODO, 90º, 1 1/16"-12, 37º x 1 1/16"-12, O-Ring, Incl 21
21		167266		4	JUNTA HERMETICA, 12-1, 90 Duro, .924 ID x .116" Thk
22		87022175		1	MANGUERA (CONJUNTO), 600 mm (23.62 in)Case Drain
23		87443510		4	ABRAZADERA MANGUERA
24		87022174		1	MANGUERA (CONJUNTO), 950 mm (37.40 in) Case Drain
25		87547062		2	MANGA, (646 mm, 25.43 in) Motor To Pump Loop
26		87604075		2	ADAPTOR, Connector With 1.0 mm Orifice
27		86512936		2	CODO, 90º, 9/16"-18, 37º x 7/16"-20, O-Ring, Incl 28

SISTEMA HIDROSTATICO, MANGUERAS (440 CON CONTROL PILOTO)

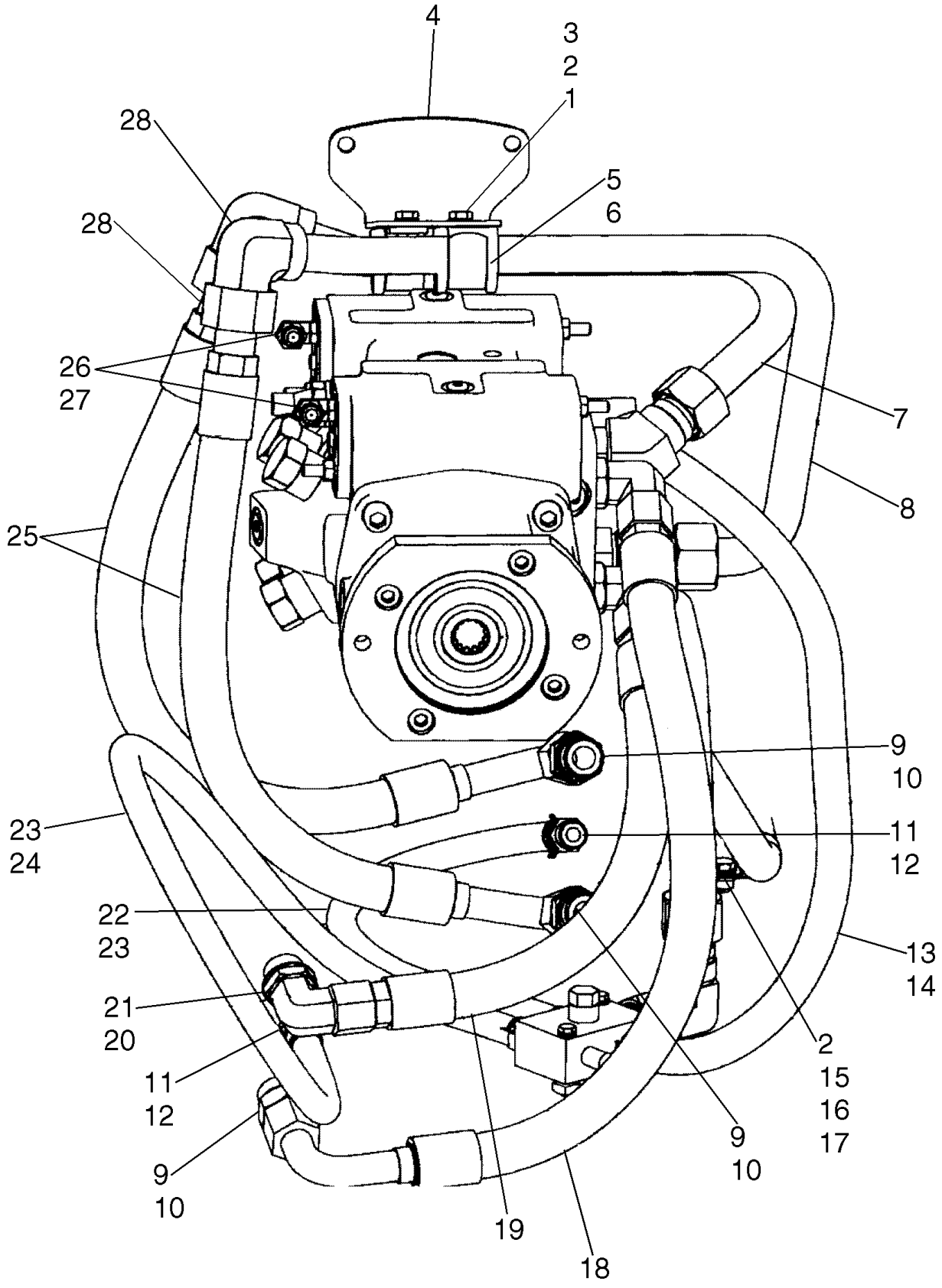

SISTEMA HIDROSTATICO, MANGUERAS (440 CON CONTROL PILOTO)

REF	FN	PART NUMBER	YR/SN	QTY	DENOMINACION
28		9824050		2	JUNTA HERMETICA, -021, 90 Duro, .926" ID x .070" Thk

HIDROSTATICA - FUNCIÓN MÚLTIPLE (440 CON CONTROL PILOTO)

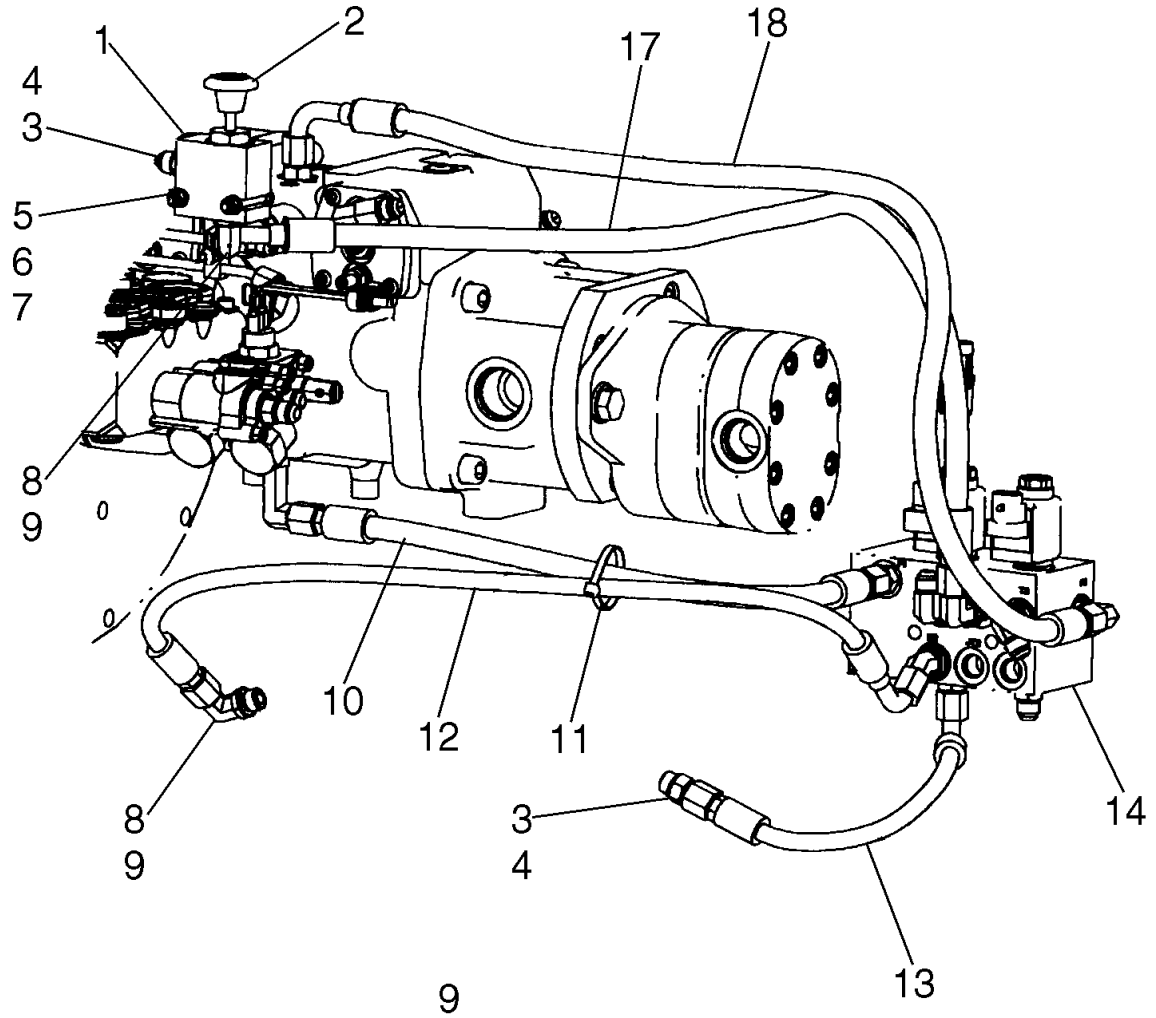

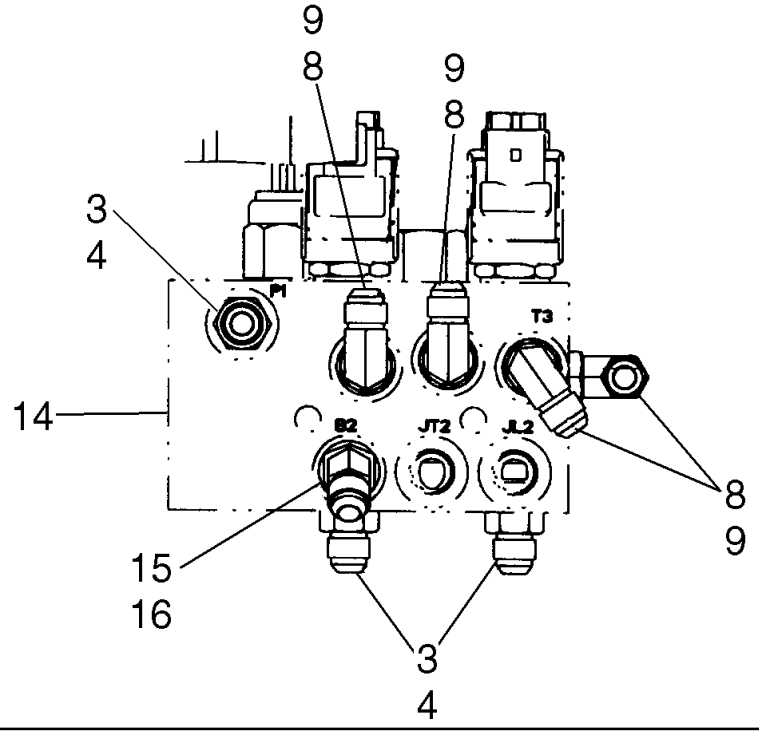

BS07K727

HIDROSTATICA - FUNCIÓN MÚLTIPLE (440 CON CONTROL PILOTO)

REF	FN	PART NUMBER	YR/SN	QTY	DENOMINACION
1		87546973		1	VALVULA, Boom Override; Incl. Knob; If Used
1		87604076		1	GUIA VALV.DE ESCAPE AUM., Boom Overide; If Used
2		87568435		1	CALCOMANIA, Boom Override
3		76350		6	RACOR, 9/16"-18, 37º x 9/16"-18, O-Ring, Incl. 4
4		9617873		6	JUNTA HERMETICA, 6-1, 90 Duro, .468" ID x .078" Thk
5		86588450		7	ARANDELA, M6
6		86512440		2	CONTRA TUERCA
7		120056		2	TORNILLO, Hex, M6 x 50, 8.8
8		76344		6	CODO, 90º, 9/16"-18, 37º x 9/16"-18, O-Ring, Incl. 9
9		9617873		6	JUNTA HERMETICA, 6-1, 90 Duro, .468" ID x .078" Thk
10		87547032		1	MANGA
11		529070		1	CIERRA CABLES, .30" x 14.5"
12		{87563975}		1	Hose, 800 mm (31.50 in) Left Hand Brake
13		87563977		1	MANGA, 371 mm (14.61 in) Right Hand Brake
14		87546971		1	VALVULA HIDRAULICA, See Figure 06-25
15		330346		1	CODO, 45º, 9/16"-18, 37º x 9/16"-18, O-Ring, Incl. 16
16		9617873		1	JUNTA HERMETICA, 6-1, 90 Duro, .468" ID x .078" Thk
17		87563992		1	MANGA, 820 mm (32.28 in) Dump Valve Drain
18		87563991		1	MANGA, 884 mm (34.80 in) DA Pressure

HIDROSTATICA - DOS VELOCIDADES, MOTORES DE ACCIONAMIENTO

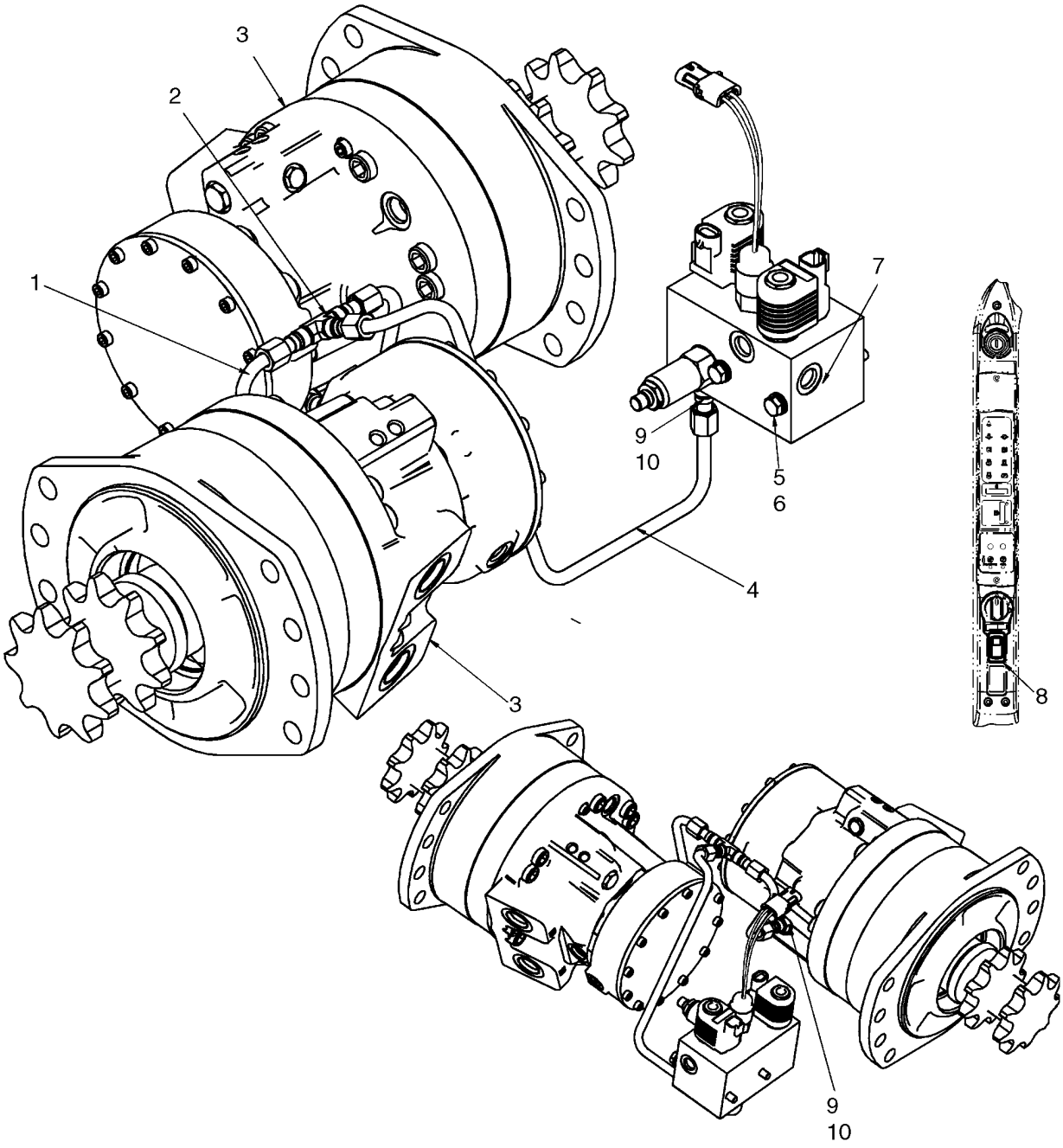

HIDROSTATICA - DOS VELOCIDADES, MOTORES DE ACCIONAMIENTO

REF	FN	PART NUMBER	YR/SN	QTY	DENOMINACION
1		87430855		2	TUBO (CONJUNTO)
2		76355		1	RACOR-T, 9/16"-18, 37º
3		87035342		2	MOTOR-HIDRÁULICO, See Fig 06-59 - 06-61
4		87455412		1	TUBO (CONJUNTO)
5		140016		4	ARANDELA, M8 x 16 x 1.6
6		86508571		2	TORNILLO, Hex, M8 x 90, 8.8
7		87429625		1	VALVULA HIDRAULICA, See Fig 06-26
8		87634136		1	CONTACTOR, Indicator, High Speed
9		76350		3	RACOR, 9/16"-18, 37º x 9/16"-18, O-Ring, Incl 10
10		9617873		3	JUNTA HERMETICA, 6-1, 90 Duro, .468" ID x .078" Thk

HIDROSTATICA - DOS VELOCIDADES, MOTORES DE ACCIONAMIENTO (CON CONTROL PILOTO)

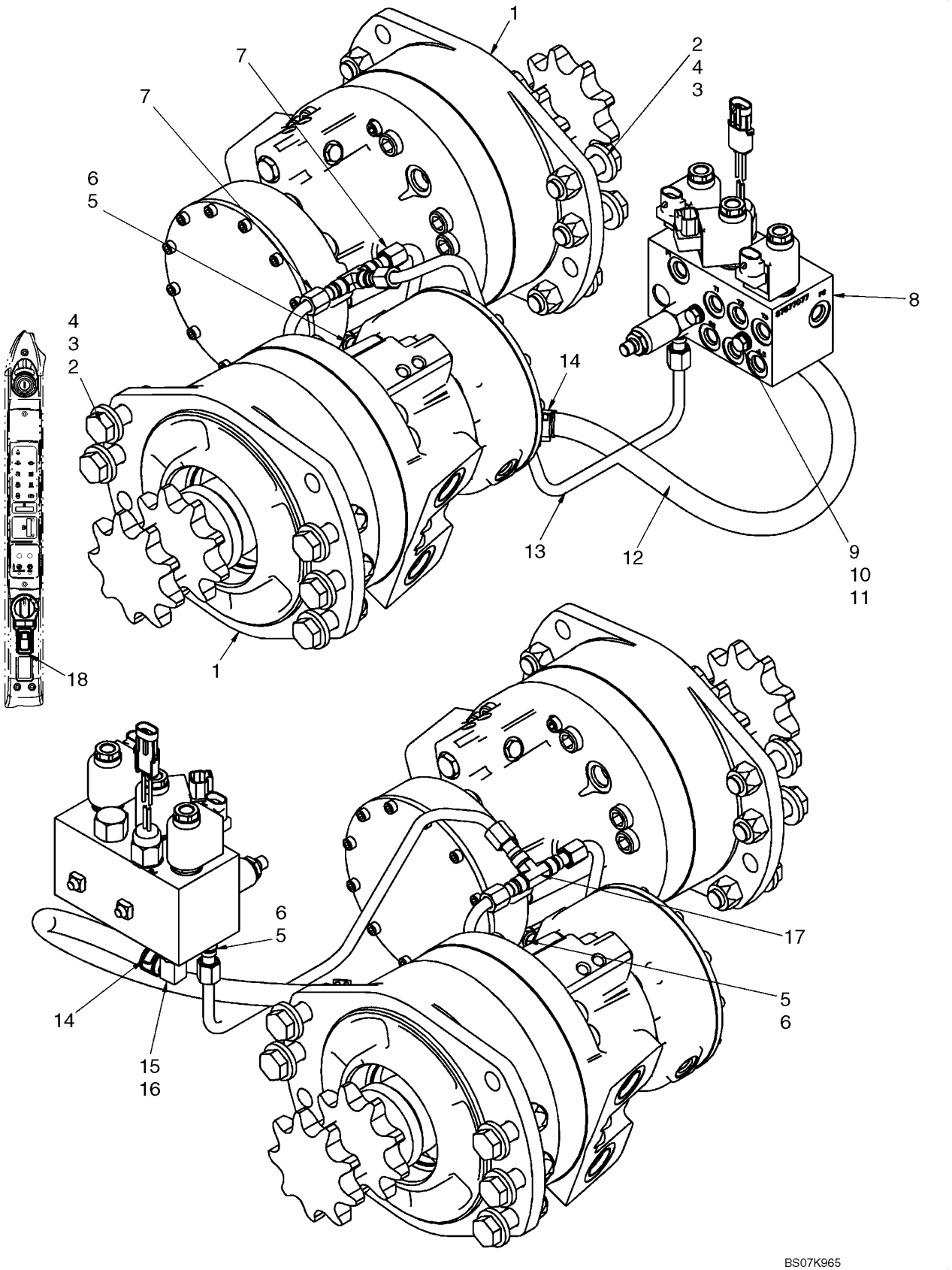

HIDROSTATICA - DOS VELOCIDADES, MOTORES DE ACCIONAMIENTO (CON CONTROL PILOTO)

REF	FN	PART NUMBER	YR/SN	QTY	DENOMINACION
1		87035342		2	MOTOR-HIDRÁULICO, See Fig 06-59 - 06-61
2		86512555		12	CONTRA TUERCA, M16 x 2, Cl 10
3		86625258		12	ARANDELA, M16 x 34.5 x 5, HT
4		9828248		12	TORNILLO, Hex, M16 x 60, 10.9
5		76350		3	RACOR, 9/16"-18, 37º x 9/16"-18, O-Ring, Incl 6
6		9617873		3	JUNTA HERMETICA, 6-1, 90 Duro, .468" ID x .078" Thk
7		87430855		2	TUBO (CONJUNTO)
8		87577077		1	VÁLVULA DE PILOTAJE, Pilot, Brake/Two Speed; See Fig 06-28
9		86508571		2	TORNILLO, Hex, M8 x 90, 8.8
10		86624184		4	ARANDELA, M8 x 16 x 1.6
11		229197A1		2	TUERCA
12		87547047		1	MANGA, Hose, Multi Valve Drain, 520mm (20 1/2 in.)
13		87455412		1	TUBO (CONJUNTO)
14		87443510		2	ABRAZADERA MANGUERA
15		86705580		1	CONEXION, 90º, 1/2" Hose x 9/16"-18 ORB Beaded, Incl 16
16		9617873		1	JUNTA HERMETICA, 6-1, 90 Duro, .468" ID x .078" Thk
17		76355		1	RACOR-T, 9/16"-18, 37º
18		87634136		1	CONTACTOR, Indicator High Speed

HIDROSTATICA, FUNCIÓN MÚLTIPLEMONTAJE

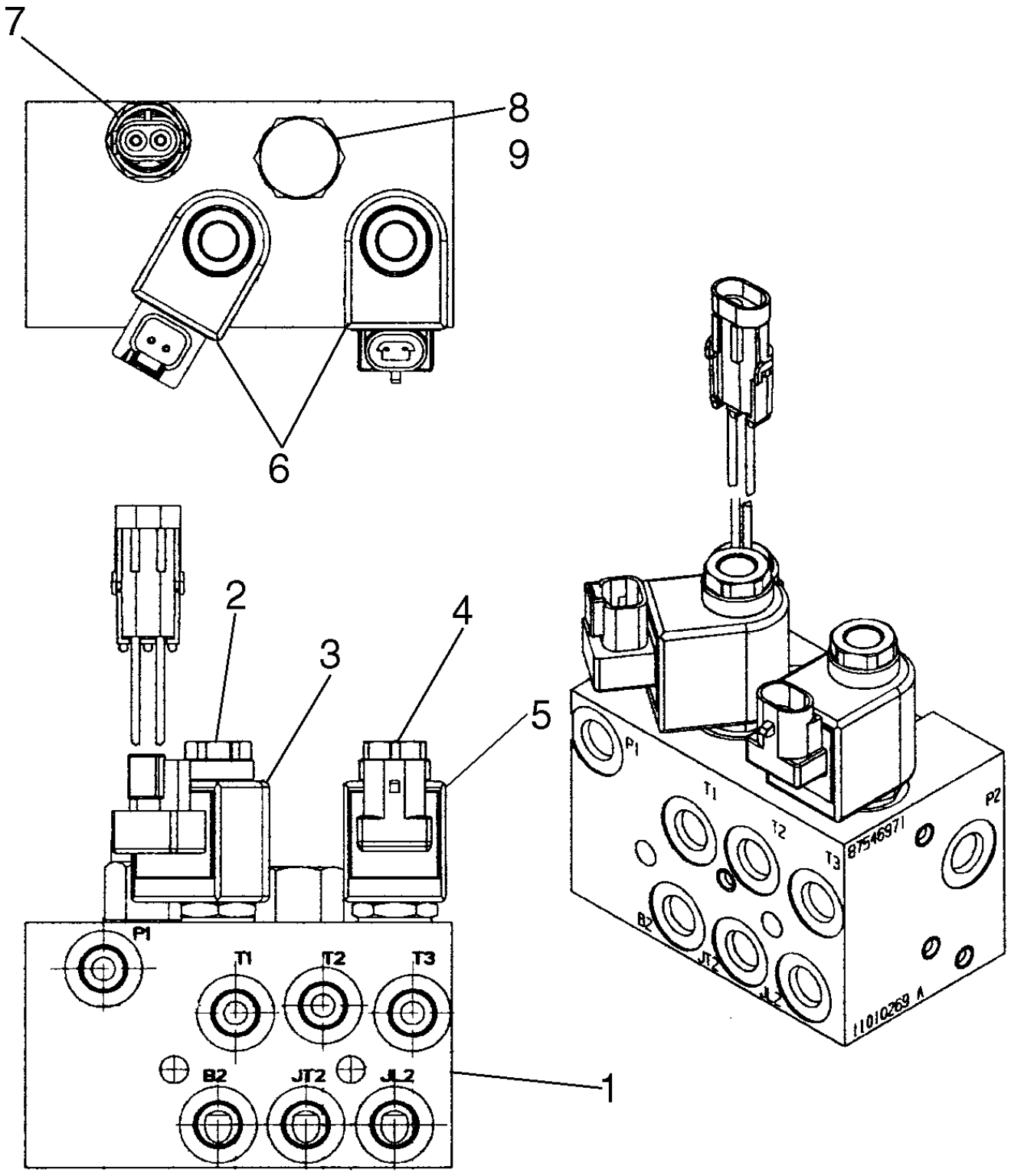

BS07G071

HIDROSTATICA, FUNCIÓN MÚLTIPLEMONTAJE

REF	FN	PART NUMBER	YR/SN	QTY	DENOMINACION
1		87546971		1	VALVULA HIDRAULICA, Pilot Control, Brake; Incl. 2 - 9
2		87588579		1	ELECTROVÁLVULA
3		87588596		1	SOLENOIDE, Coil
4		87614011		1	ELECTROVÁLVULA
5		87614012		1	BOBINA
6		87614013		1	SERIE DE JUNTAS, Solenoid Valve
7		87458061		1	INTERRUPTOR DE PRESION, Charge Pressure
8		87614009		1	VALVULA, Cartridge Valve
9		87614015		1	SERIE DE JUNTAS, Cartridge Valve

HIDROSTATICA - DOS VELOCIDADES, CONJUNTO DE LA VALVULA

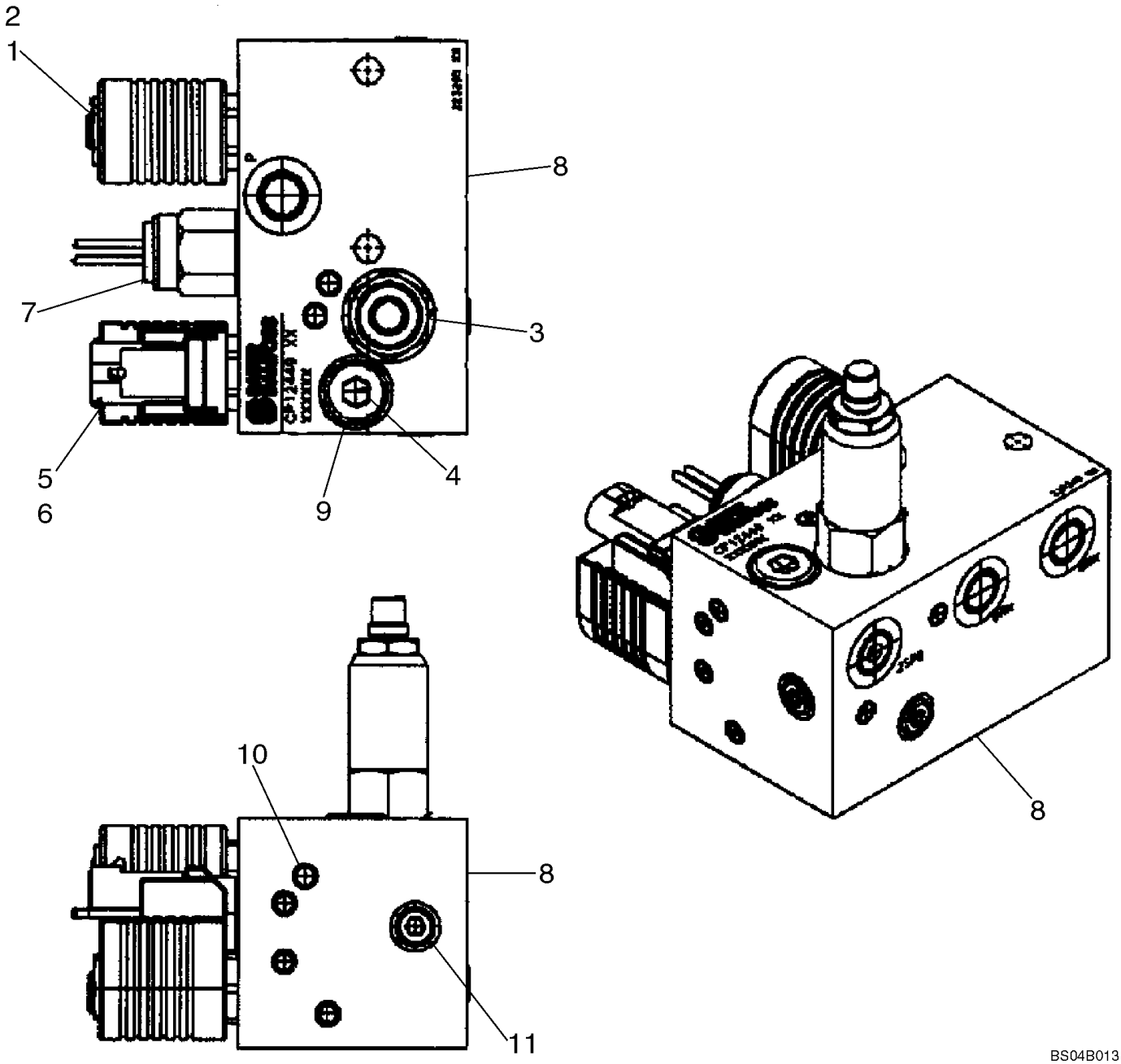

HIDROSTATICA - DOS VELOCIDADES, CONJUNTO DE LA VALVULA

REF	FN	PART NUMBER	YR/SN	QTY	DENOMINACION
		87429625		1	VALVULA HIDRAULICA, Two Speed; Incl. 1 - 11
		87352524		1	VÁLVULA DE FRENO, Two Speed; Incl. 1 - 11
1		87424182		1	VÁLVULA DE FRENO
2		87433496		X	BOBINA, Not Illustrated Separately
3		87433497		1	VALVULA, Sequence; Part of 87429625
3		87352527		1	VALVULA, Sequence; Part of 87352524
4		87426545		1	ORIFICIO, M12
5		87433495		1	ELECTROVÁLVULA, Hydraulic Valve
6		87433499		X	BOBINA, Not Illustrated Separately
7		87019943		1	INTERRUPTOR DE PRESION, Hydraulic Valve
8		NSS		1	NO SE REPARA SEPARADAM., Body
9		NSS		1	NO SE REPARA SEPARADAM., Plug
10		NSS		11	NO SE REPARA SEPARADAM., Expansion Plug
11		NSS		3	NO SE REPARA SEPARADAM., Plug

HIDROSTATICA - DOS VELOCIDADES, CONJUNTO DE LA VALVULA (440CT)

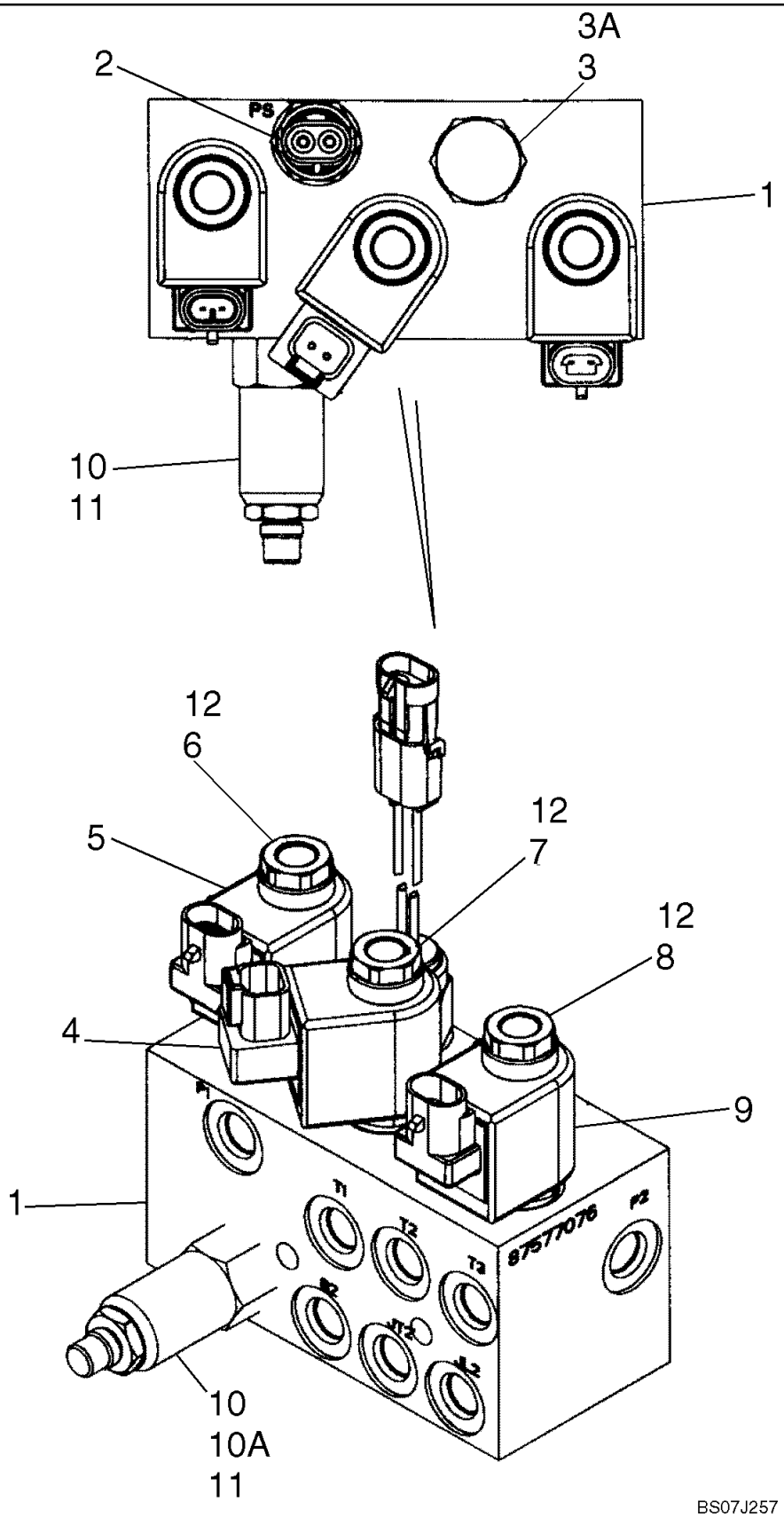

HIDROSTATICA - DOS VELOCIDADES, CONJUNTO DE LA VALVULA (440CT)

REF	FN	PART NUMBER	YR/SN	QTY	DENOMINACION
1		87577076		1	VÁLVULA DE PILOTAJE, Brake Valve; Two Speed; Incl. 1 - 12
2		87458061		1	INTERRUPTOR DE PRESION, Brake Valve
3		87614009		1	VALVULA, Cartridge Valve
3A		87614015		1	SERIE DE JUNTAS, Cartridge Valve
4		87588596		1	SOLENOIDE, Coil
5		87588597		1	SOLENOIDE, Coil
6		87588585		1	ELECTROVÁLVULA, Sol Valve
7		87588579		1	ELECTROVÁLVULA, Sol Valve
8		87614011		1	ELECTROVÁLVULA, Sol Valve
9		87614012		1	BOBINA, Coil
10		87352527		1	VALVULA, Sequence
10A		87614014		1	SERIE DE JUNTAS, Solenoid Valve
11		87426545		1	ORIFICIO, .017 Sauer
12		87614013		1	SERIE DE JUNTAS, Solenoid Valve

HIDROSTATICA - DOS VELOCIDADES, CONJUNTO DE LA VALVULA (CON CONTROL PILOTO)

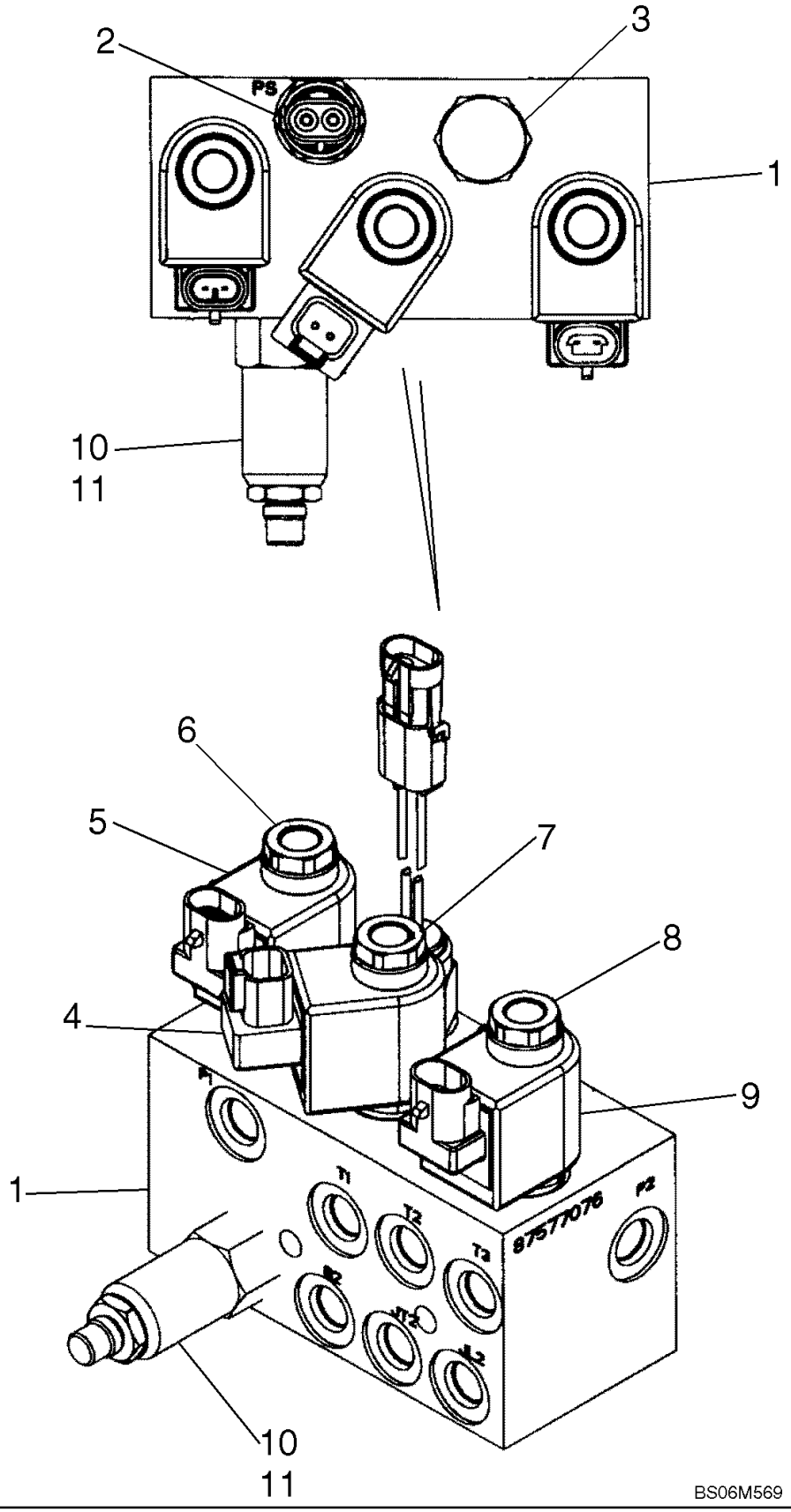

HIDROSTATICA - DOS VELOCIDADES, CONJUNTO DE LA VALVULA (CON CONTROL PILOTO)

REF	FN	PART NUMBER	YR/SN	QTY	DENOMINACION
1		87577077		1	VÁLVULA DE PILOTAJE, Brake Valve; Two Speed; Incl. 1 - 11
2		87458061		1	INTERRUPTOR DE PRESION, Brake Valve
3		NSS		1	NO SE REPARA SEPARADAM., Cartridge Valve
4		NSS		1	NO SE REPARA SEPARADAM., Coil
5		NSS		1	NO SE REPARA SEPARADAM., Coil
6		NSS		1	NO SE REPARA SEPARADAM., Sol Valve
7		NSS		1	NO SE REPARA SEPARADAM., Sol Valve
8		NSS		1	NO SE REPARA SEPARADAM., Sol Valve
9		NSS		1	NO SE REPARA SEPARADAM., Coil
10		87433497		1	VALVULA, Sequence
11		87426545		1	ORIFICIO, .017 Sauer

HIDROSTATICA (440CT EUROPA)

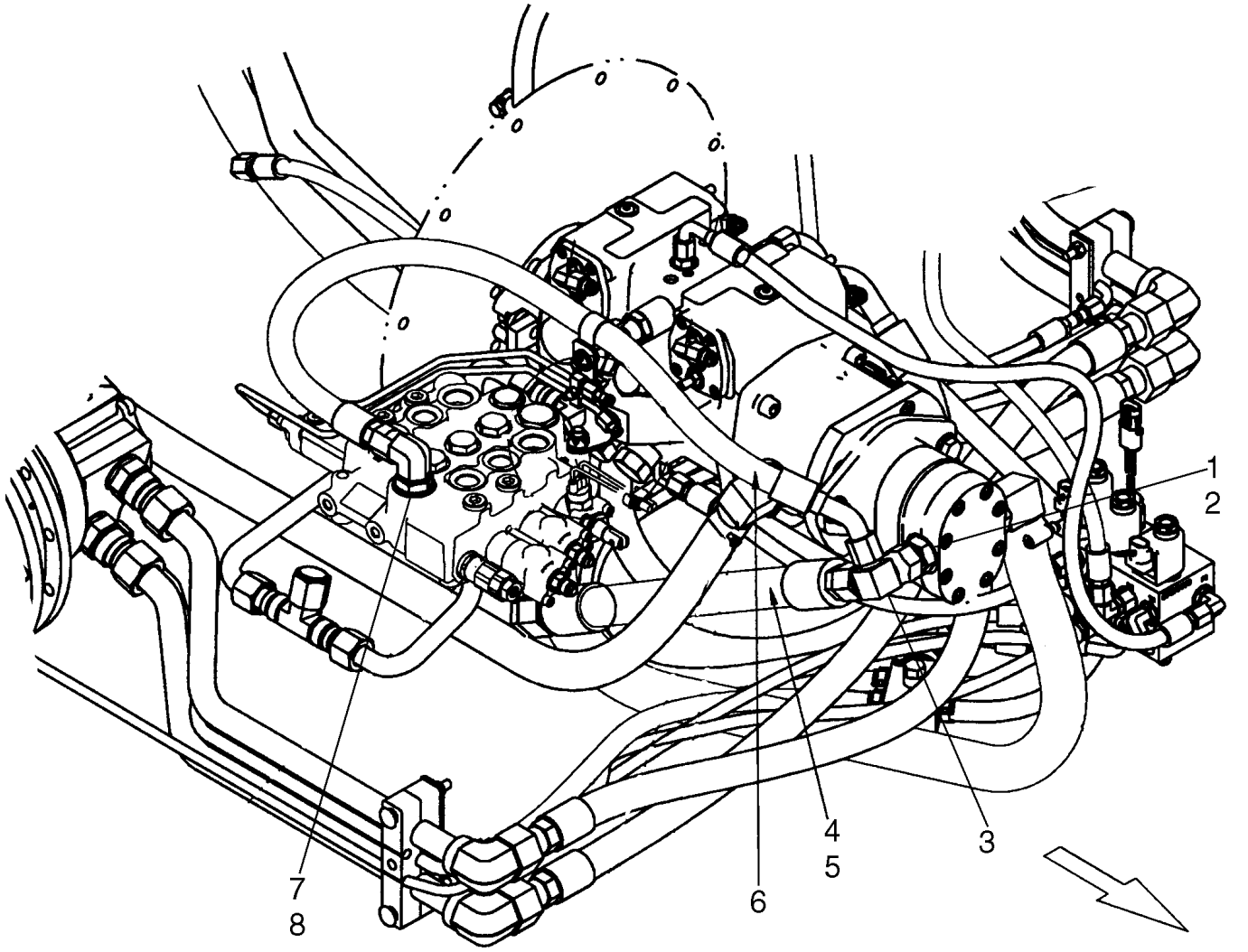

HIDROSTATICA (440CT EUROPA)

REF	FN	PART NUMBER	YR/SN	QTY	DENOMINACION
1		322896		1	RACOR, 1 1/16"-12, 37º x 1 1/16"-12, O-Ring, Incl 2
2		167266		1	JUNTA HERMETICA, 12-1, 90 Duro, .924 ID x .116" Thk
3		87441649		1	ADAPTOR
4		9790527		1	TAPÓN, 1 5/16"-12, 37º
5		87462103		1	MANGUERA (CONJUNTO), Hose, Resonator
6		87720912		1	MANGA, Hose, Valve Supply 950mm (37 13/32 in.)
7		84570		1	CODO, 90º, 7/8"-14, 37º x 1 1/16"-12, O-Ring, Incl 8
8		167266		1	JUNTA HERMETICA, 12-1, 90 Duro, .924 ID x .116" Thk

HIDROSTATICA (440 EUROPA)

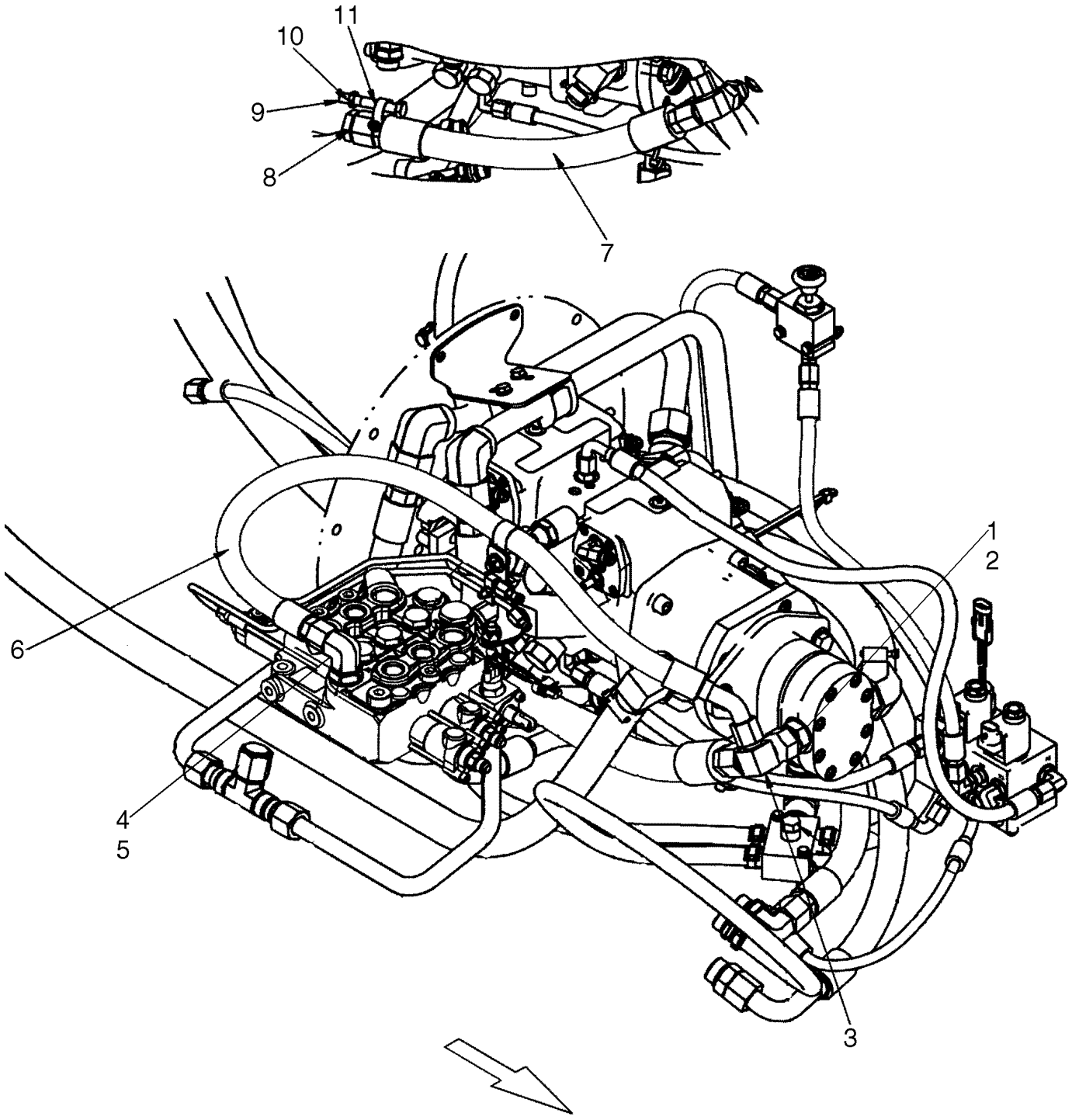

HIDROSTATICA (440 EUROPA)

REF	FN	PART NUMBER	YR/SN	QTY	DENOMINACION
1		322896		1	RACOR, 1 1/16"-12, 37º x 1 1/16"-12, O-Ring, Incl 2
2		167266		1	JUNTA HERMETICA, 12-1, 90 Duro, .924 ID x .116" Thk
3		87441649		1	ADAPTOR
4		84570		1	CODO, 90º, 7/8"-14, 37º x 1 1/16"-12, O-Ring, Incl 5
5		167266		1	JUNTA HERMETICA, 12-1, 90 Duro, .924 ID x .116" Thk
6		87720912		1	MANGA, Hose, Valve Supply 950mm (37 13/32 in.)
7		87462103		1	MANGUERA (CONJUNTO), Hose, Resonator
8		9790527		1	TAPÓN, 1 5/16"-12, 37º
9		43158		1	TORNILLO, Hex, M12 x 80, 8.8
10		323238		1	TUERCA, Thin, M12 x 1.75, Cl 05
11		87039085		1	ABRAZADERA MANGUERA, 1.25/2.125 HD Worm

HIDROSTATICA (440 EUROPA)

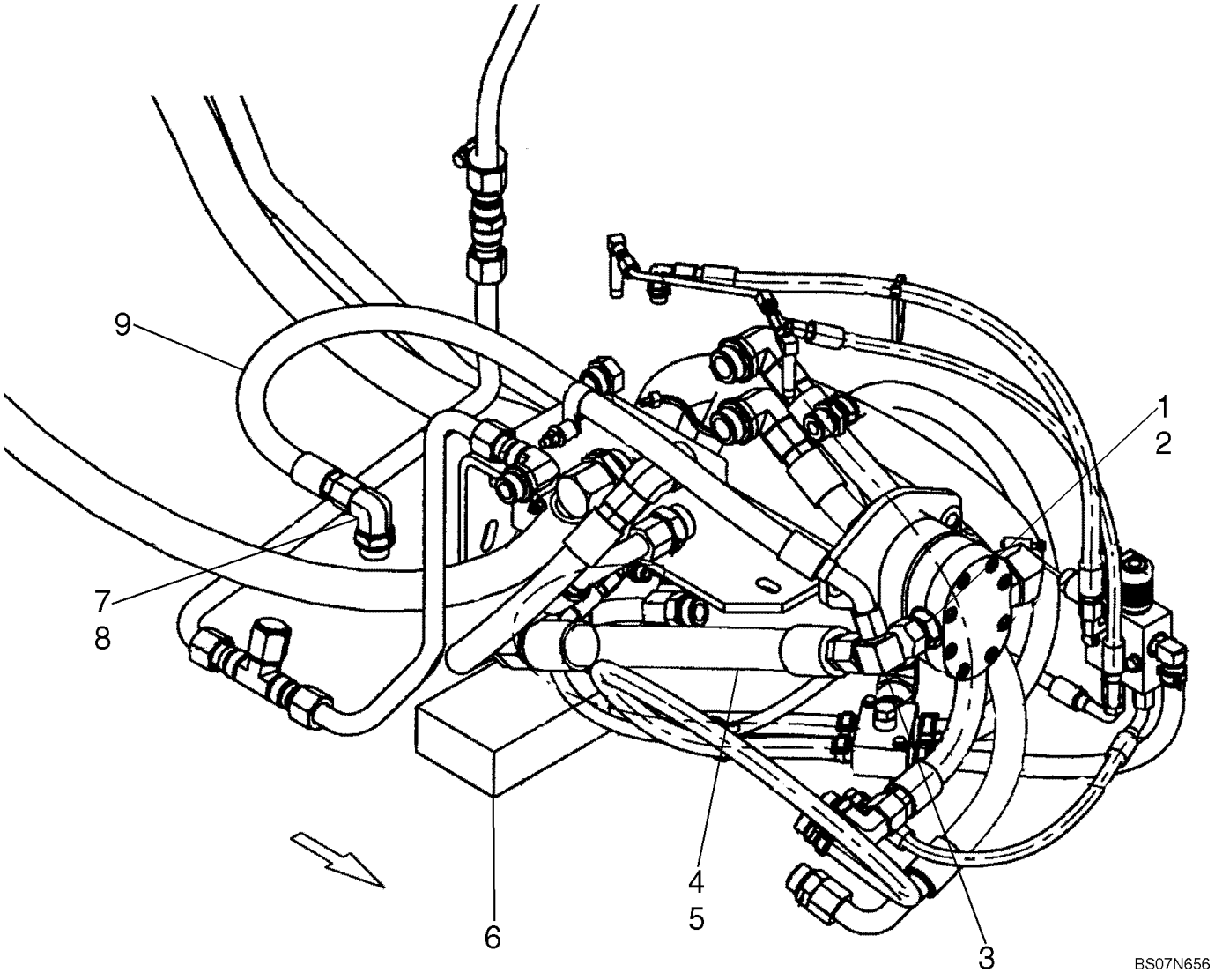

HIDROSTATICA (440 EUROPA)

REF	FN	PART NUMBER	YR/SN	QTY	DENOMINACION
1		322896		1	RACOR, 1 1/16"-12, 37º x 1 1/16"-12, O-Ring, Incl 2
2		167266		1	JUNTA HERMETICA, 12-1, 90 Duro, .924 ID x .116" Thk
3		87441649		1	ADAPTOR
4		87462103		1	MANGUERA (CONJUNTO), Hose, Resonator
5		9790527		1	TAPÓN, 1 5/16"-12, 37º
6		87353205		1	TACO
7		84570		1	CODO, 90º, 7/8"-14, 37º x 1 1/16"-12, O-Ring, Incl 8
8		167266		1	JUNTA HERMETICA, 12-1, 90 Duro, .924 ID x .116" Thk
9		87720912		1	MANGA, Hose, Valve Supply 950mm (37 13/32 in.)

FILTRO - SOPORTE

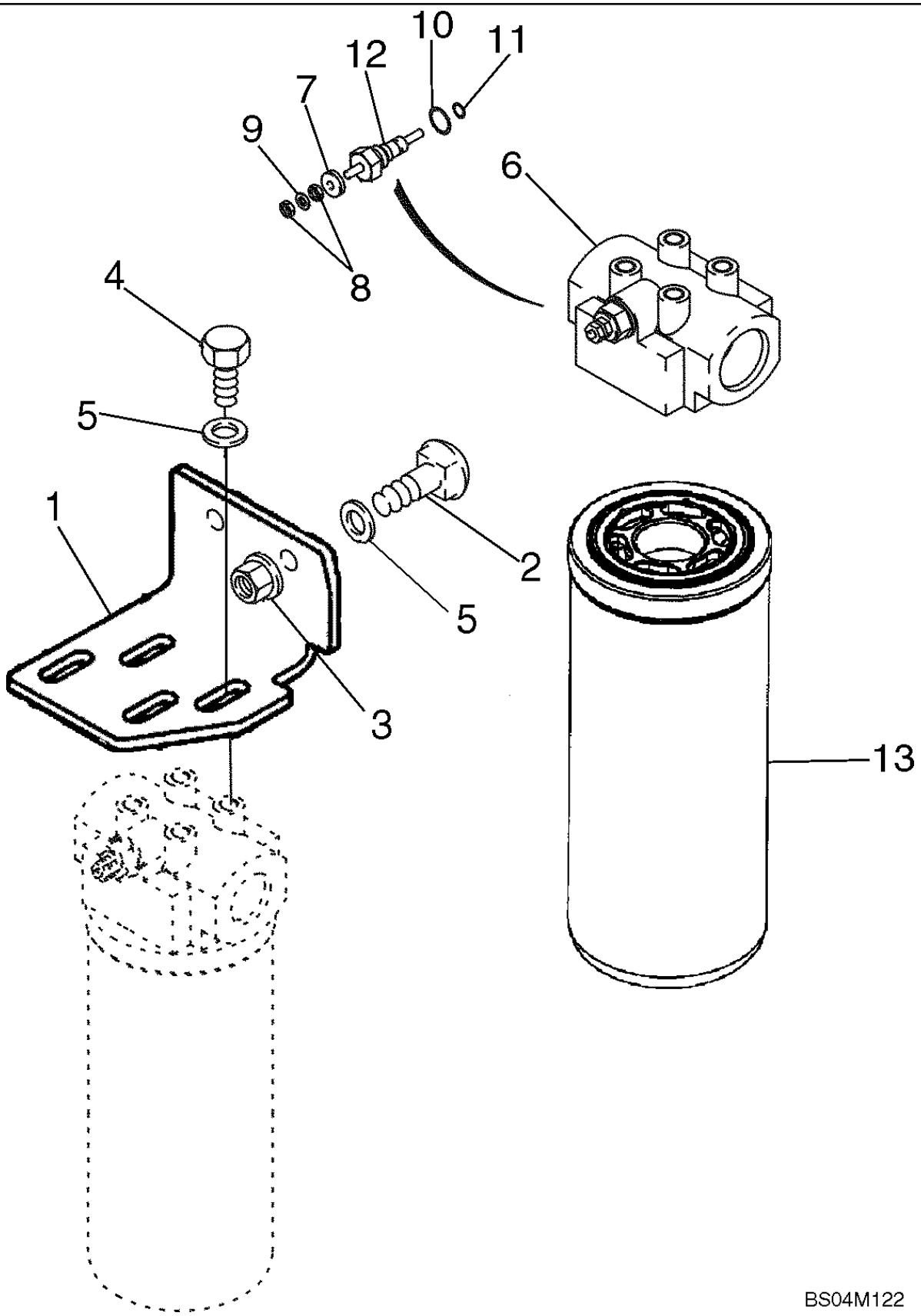

FILTRO - SOPORTE

REF	FN	PART NUMBER	YR/SN	QTY	DENOMINACION
1		87020901		1	PIEZA DE APOYO, Hydrostatic Filter
2		9706704		2	TORNILLO, Hex, M10 x 35, 8.8, Full Thd
3		86512554		2	CONTRA TUERCA, M10 x 1.5, Cl 10
4		43139		2	TORNILLO, Hex, M10 x 25, 8.8, Full Thd
5		86639325		2	ARANDELA, M10 x 24.5 x 3, HT
		87430661		1	FILTRO, Hydrostatic Filter; Return; Incl. 6 - 13
6		87439984		1	CABEZA DE FILTRO, Hydrostatic Filter; Incl. N13268
		N13268		1	INTERRUPTOR DE PRESION, Hydrostatic Filter; Incl. 7 - 12
7		NSS		1	NO SE REPARA SEPARADAM., Washer; Red, White
8		129-667		2	TUERCA, #10-32, LH
9		493-21020		1	ARANDELA DE FRENO, Int Tooth, #10
10		9617873		1	JUNTA HERMETICA, 6-1, 90 Duro, .468" ID x .078" Thk
11		9672548		1	JUNTA HERMETICA, -011, 70 Duro, .301" ID x .070" Thk
12		NSS		1	NO SE REPARA SEPARADAM., Body
13		87010593		1	ELEMENTO, Hydrostatic Filter

BOMBA, TANDEM (440)

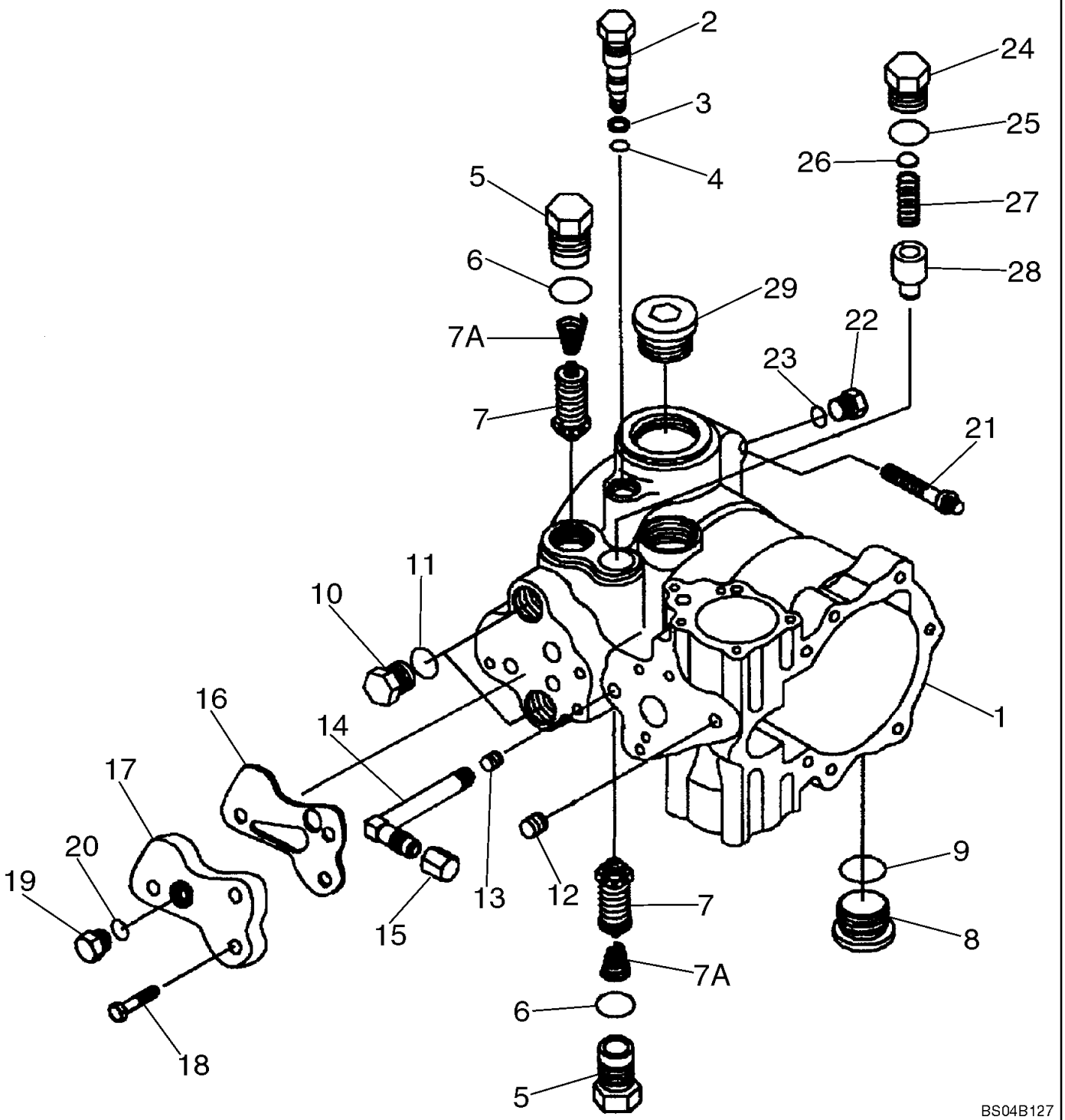

BOMBA, TANDEM (440)

REF	FN	PART NUMBER	YR/SN	QTY	DENOMINACION
					Front Pump
		87043500		1	BOMBA, Incl. 1 - 29
1		402364A1		1	CAVIDAD
2		87039612		1	VÁLVULA BYPASS, Incl. Ref 3, 4
3		S99877		1	ANILLO
4		86993475		1	JUNTA HERMETICA, 3/8 ID x 1/16; Included in 140008A1 Seal Kit
		N14848		2	VÁLVULA, DESCARGA, Incl. 5 - 7A
5		NSS		1	NO SE REPARA SEPARADAM., Plug
6		237-6012		1	JUNTA HERMETICA, 12-1, 90 Duro, .924 ID x .118" Thk, Included in 140008A1 Seal Kit
7		NSS		1	NO SE REPARA SEPARADAM., Valve, Relief
7A		86993468		1	RESORTE
8		9841223		2	TAPÓN, Hex Soc, 1 1/16"-12 ORB, Incl. 9
9		237-6012		1	JUNTA HERMETICA, 12-1, 90 Duro, .924 ID x .118" Thk
10		76349		2	TAPÓN, Hex Hd, 9/16"-18 ORB, Incl. 11
11		237-6006		1	JUNTA HERMETICA, 6-1, 90 Duro, .468" ID x .078" Thk
12		F23137		1	TAPÓN
13		86993479		1	TAPÓN
14		86993480		1	CODO
15		86993467		1	TAPON DEL DEPOSITO
16		303709A1		1	ANILLO DE CIERRE, Filter Adapter; Included in 140008A1 Seal Kit
17		101462A1		1	ADAPTOR, Suction Line Filter
18		26-516		3	TORNILLO, Hex, 5/16"-18 x 1", G8, Full Thd
19		76349		1	TAPÓN, Hex Hd, 9/16"-18 ORB, Incl. Ref 20
		140008A1		1	EMPAQUE DE JUNTAS, Overhaul Seal And Gasket Kit; Incl. (10) Rings, (4) Bearings, (20) O-Rings, (6) Gaskets, (2) Seals; Incl. Ref 3, 4, 6, 16, 25
20		237-6006		1	JUNTA HERMETICA, 6-1, 90 Duro, .468" ID x .078" Thk
21		166-89		2	TORNILLO, 12 Pt Flg, 1/2"-13 x 2", G8
22		9672438		1	TAPÓN, Hex Hd, 7/16"-20 ORB, Incl. 23

BOMBA, TANDEM (440)

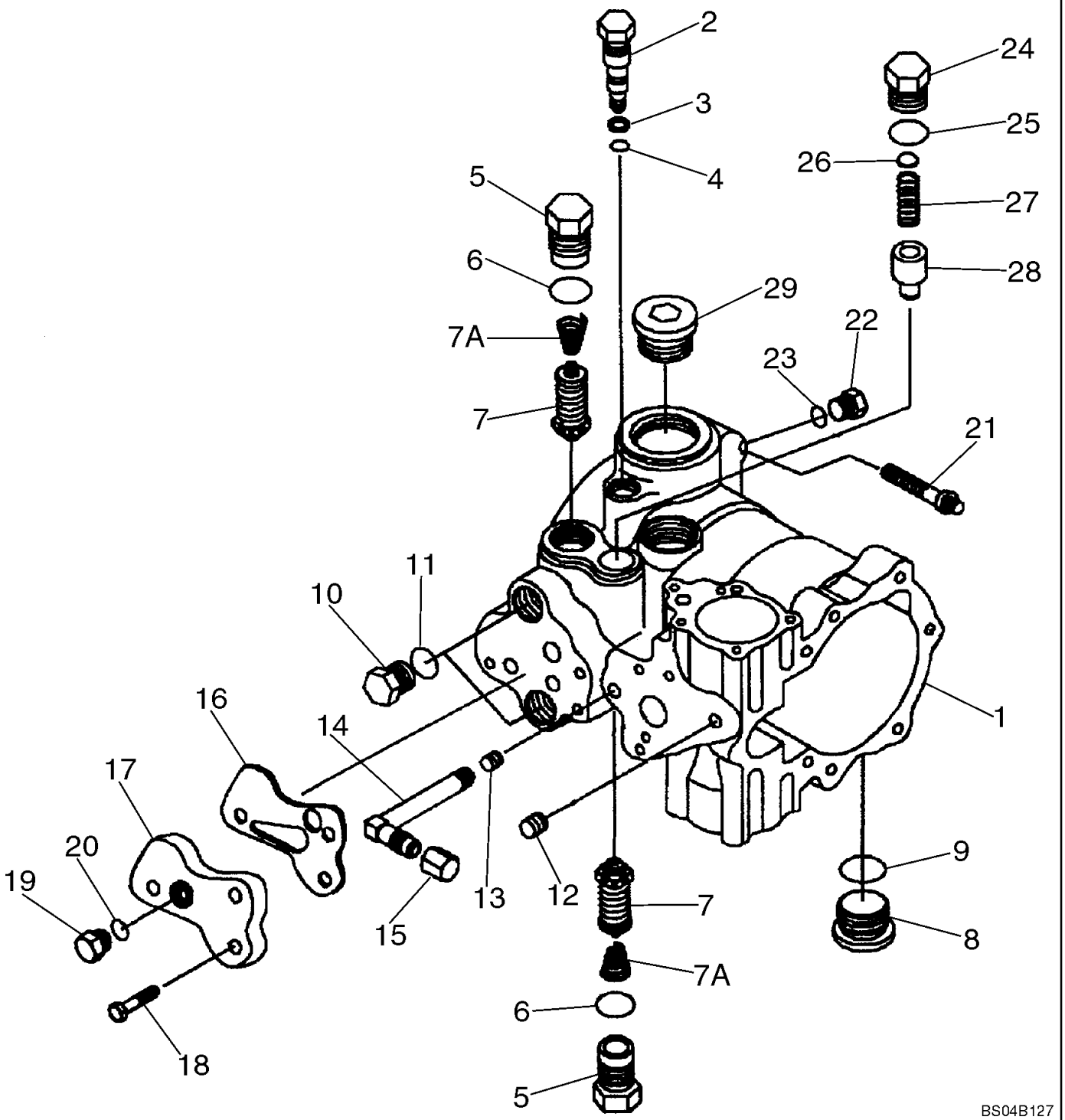

BOMBA, TANDEM (440)

REF	FN	PART NUMBER	YR/SN	QTY	DENOMINACION
23		237-6006		1	JUNTA HERMETICA, 6-1, 90 Duro, .468" ID x .078" Thk
24		87039611		1	TAPÓN, Charge Relief; Incl. 25
25		237-6010		1	JUNTA HERMETICA, 10-1, 90 Duro, .755" ID x .097" Thk, Included in 140008A1 Seal Kit
26		H407767		1	JEUGO, Shim
27		244898A1		1	RESORTE
28		V38371		1	VALVULA, Charge Relief
29		NSS		1	NO SE REPARA SEPARADAM., Plug

BOMBA, TANDEM (440)

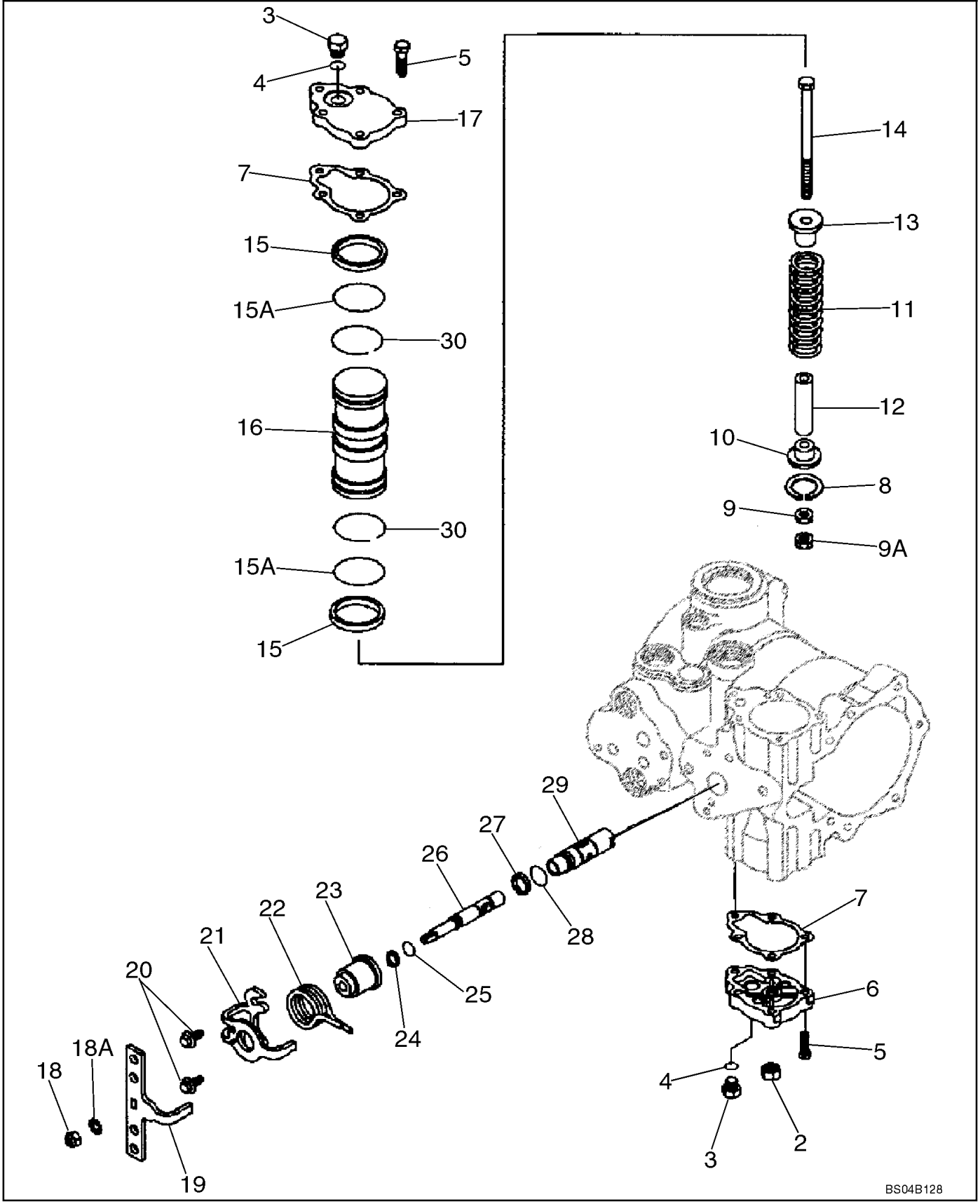

BOMBA, TANDEM (440)

REF	FN	PART NUMBER	YR/SN	QTY	DENOMINACION
					Front Pump
		87043500		1	BOMBA, Incl. 2 - 30
2		N13260		1	TUERCA, 5/8 NF
3		76349		2	TAPÓN, Hex Hd, 9/16"-18 ORB, Incl. 4
4		237-6006		1	JUNTA HERMETICA, 6-1, 90 Duro, .468" ID x .078" Thk
5		H438321		10	TORNILLO, 1/4 x 1-1/4; 8
6		H436065		1	TAPA, Included in 140008A1 Seal Kit
7		N14063		2	JUNTA HERMETICA
8		N13255		1	ANILLO
9		425-116		1	TUERCA, 3/8"-24, G5
9B		324604A1		1	TUERCA, 3/8 in
10		N13241		1	GUIA
11		N13226		1	RESORTE
12		N13242		1	MANGUITO
13		N14666		1	GUIA
14		370531A1		1	TORNILLO
		H673773		1	JEUGO, Incl. 15, 15A; Incl. Rings For Rear Pump Pistons
15		N14668		4	ARO DE EMBOLO, Included in 140008A1 Seal Kit
15A		238-5131		2	JUNTA HERMETICA, -131, 70 Duro, 1.674" ID x .103" Thk, Included in 140008A1 Seal Kit
		140008A1		1	EMPAQUE DE JUNTAS, Overhaul Seal And Gasket Kit; Incl. (10) Rings, (4) Bearings, (20) O-Rings, (6) Gaskets, (2) Seals; Incl. Ref 7, 15, 15A, 24, 25, 27, 28, 30
16		87039622		1	EMBOLO COMPL, Incl. 15, 15A, 30
17		H436053		1	TAPA
18		H436054		1	TUERCA
18A		493-41033		1	ARANDELA DE FRENO, Ext Tooth, 5/16"
19		436415A1		1	MANECILLA
20		H435770		2	TORNILLO
21		436416A1		1	PIEZA DE SOPORTE
22		407060A1		1	RESORTE
23		87039613		1	GUIA

BOMBA, TANDEM (440)

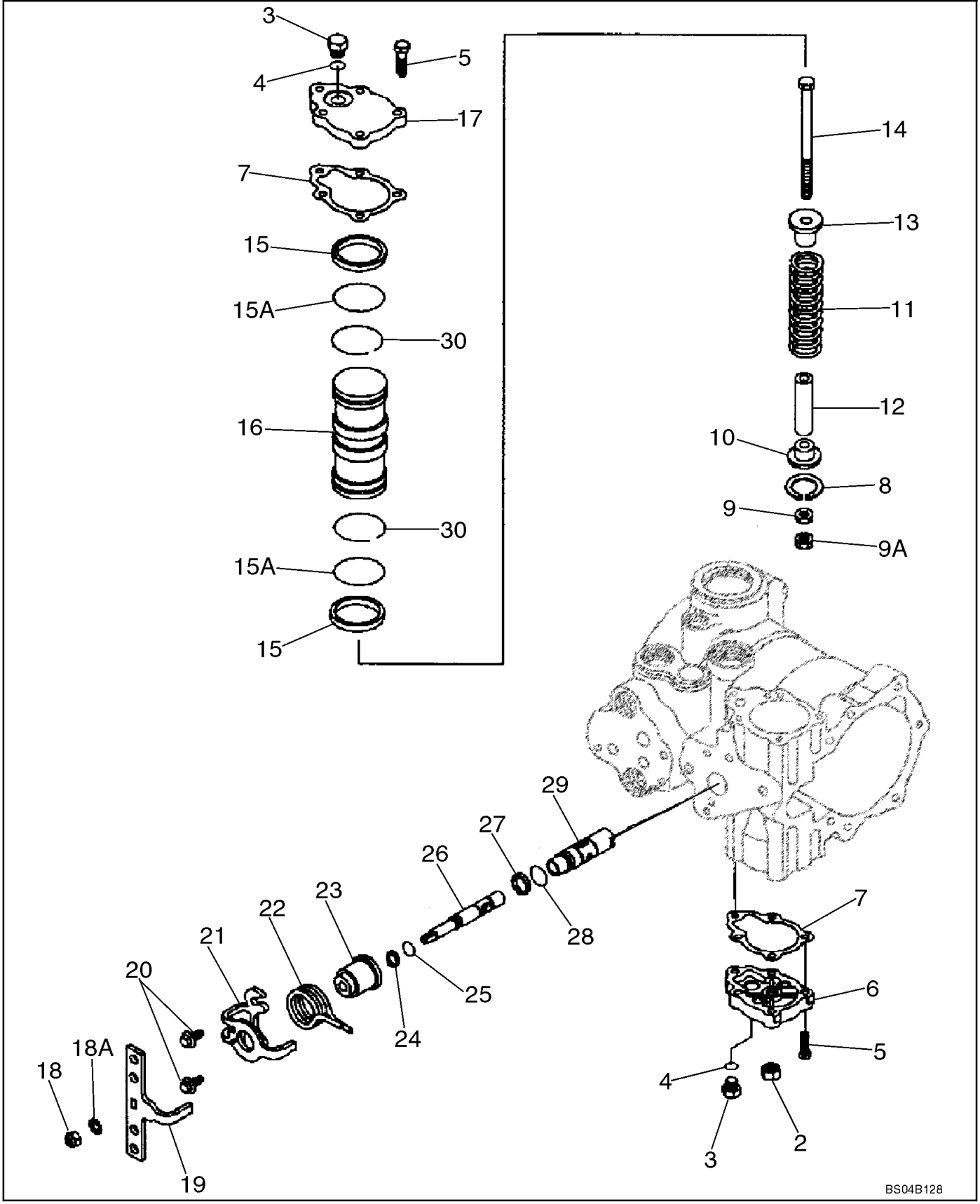

BOMBA, TANDEM (440)

REF	FN	PART NUMBER	YR/SN	QTY	DENOMINACION
24		86993484		1	ANILLO, Included in 140008A1 Seal Kit
25		86993475		1	JUNTA HERMETICA, Included in 140008A1 Seal Kit
26		87039614		1	PISTONCILLO, Incl. 24, 25
27		86993483		1	ANILLO, Included in 140008A1 Seal Kit
28		NSS		1	NO SE REPARA SEPARADAM., O-Ring; Included in 140008A1 Seal Kit
29		87039615		1	BUJE, Incl. 27, 28
30		100536A1		2	ANILLO, Included in 140008A1 Seal Kit

BOMBA, TANDEM (440)

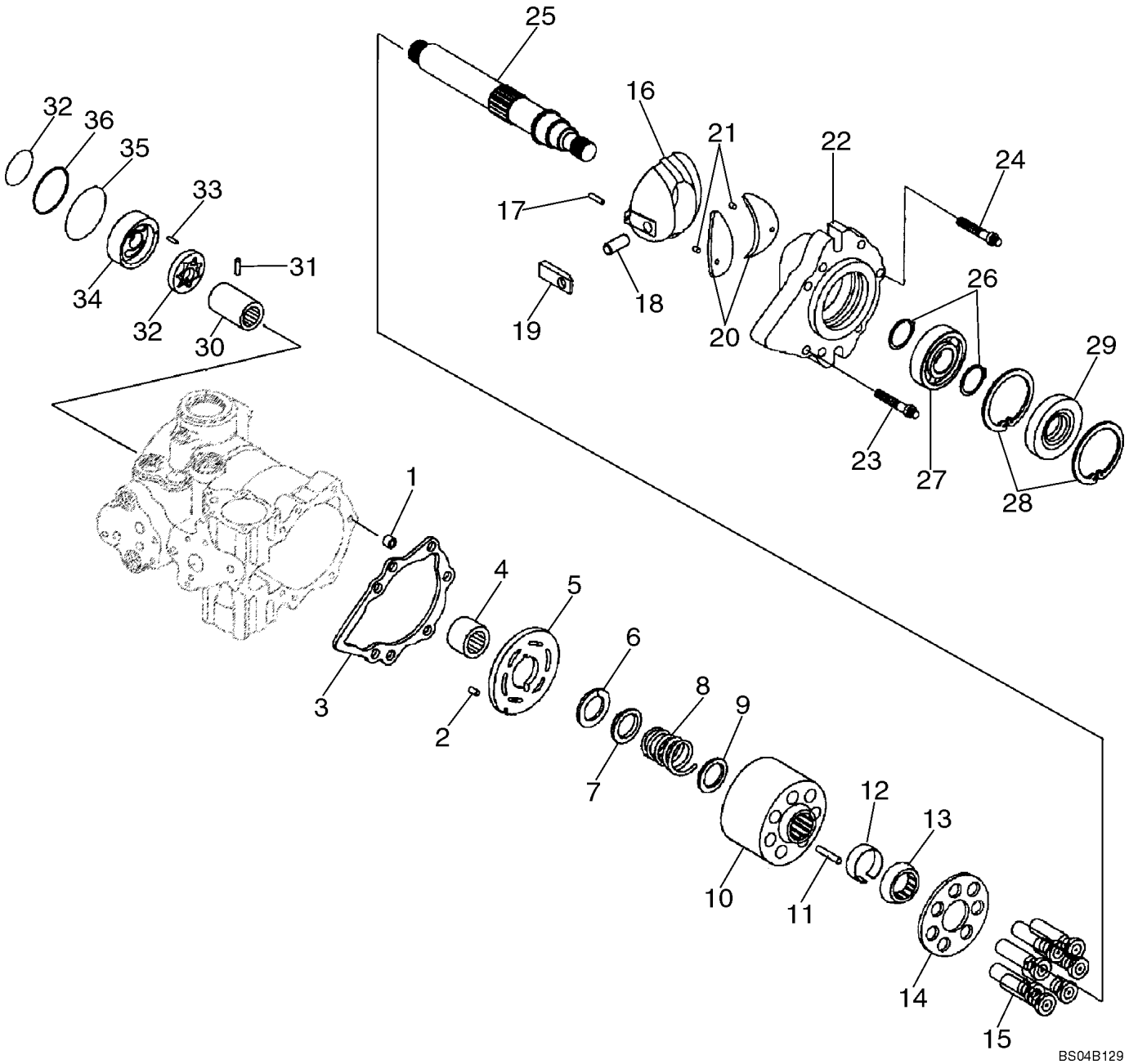

BOMBA, TANDEM (440)

REF	FN	PART NUMBER	YR/SN	QTY	DENOMINACION
					Front Pump
		87043500		1	BOMBA, Incl. 1 - 37
1		N13994		1	ESPACIADOR
2		38-11207		1	PASADOR DE FIJACION, 3/16" x 7/16", Slotted
3		H436704		1	JUNTA HERMETICA, Included in 140008A1 Seal Kit
4		1277297C1		1	COJINETE
5		128928A1		1	PLACA, GRANDE
		87039625		1	EQUIPO, Cylinder Block; Kit Includes Cylinder Block Parts For Rear Pump; Incl. 6 - 15
6		NSS		2	NO SE REPARA SEPARADAM., Ring, Retaining
7		115950A1		2	DISCO
8		115948A1		2	RESORTE
9		115946A1		2	DISCO
10		NSS		2	NO SE REPARA SEPARADAM., Block, Cylinder
11		110873A1		6	BULON/PIN, LARGO
12		115943A1		2	MANGUITO, Ring, Retaining
13		115942A1		2	GUIA
14		NSS		2	NO SE REPARA SEPARADAM., Retainer
15		NSS		14	NO SE REPARA SEPARADAM., Piston
16		87050523		1	PLACA (CONJUNTO), Variable Swash Plate
17		324610A1		1	BULON/PIN, LARGO
18		N13254		1	PERNO
19		N13224		1	MANGUITO
		87050525		1	TABA (CONJUNTO), Incl. 20 - 22
20		87050524		2	COJINETE
21		193494A1		2	PASADOR TUBOLAR
22		NSS		1	NO SE REPARA SEPARADAM.
23		223677A1		6	TORNILLO, 7/16 in
24		223680A1		1	PERNO ESPECIAL, 3/8 in
25		N13244		1	EJE
26		100-11137		2	ANILLO DE RESORTE, #137, Ext
27		A29183		2	RODAMIENTO DE BOLAS
28		103-21281		1	ANILLO DE RESORTE, 2.812", Int, #281
29		N14103		1	ANILLO DE CIERRE, Lip; Included in 140008A1 Seal Kit

BOMBA, TANDEM (440)

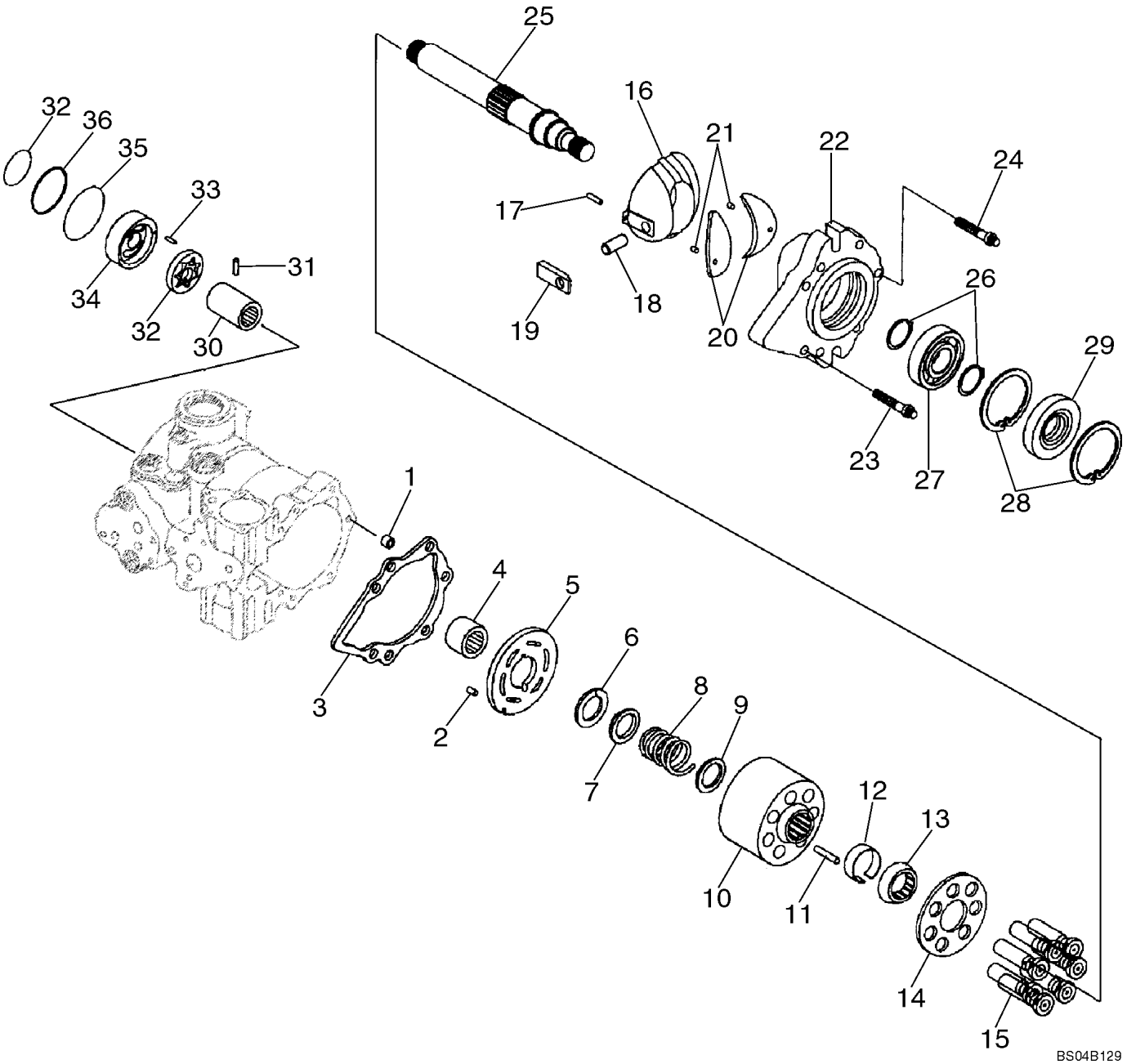

BOMBA, TANDEM (440)

REF	FN	PART NUMBER	YR/SN	QTY	DENOMINACION
30		N13234		1	ACOPLAMIENTO
31		N13262		2	PERNO
32		N13247		1	JUEGO DE PINONES
33		181680A1		1	PERNO
34		N13999		1	PLACA
35		H437190		1	JUNTA HERMETICA, Included in 140008A1 Seal Kit
36		238-6238		1	JUNTA HERMETICA, -238, 90 Duro, 3.484" ID x .139" Thk, Included in 140008A1 Seal Kit
37		H435776		1	JUNTA HERMETICA, Included in 140008A1 Seal Kit

BOMBA, TANDEM (440)

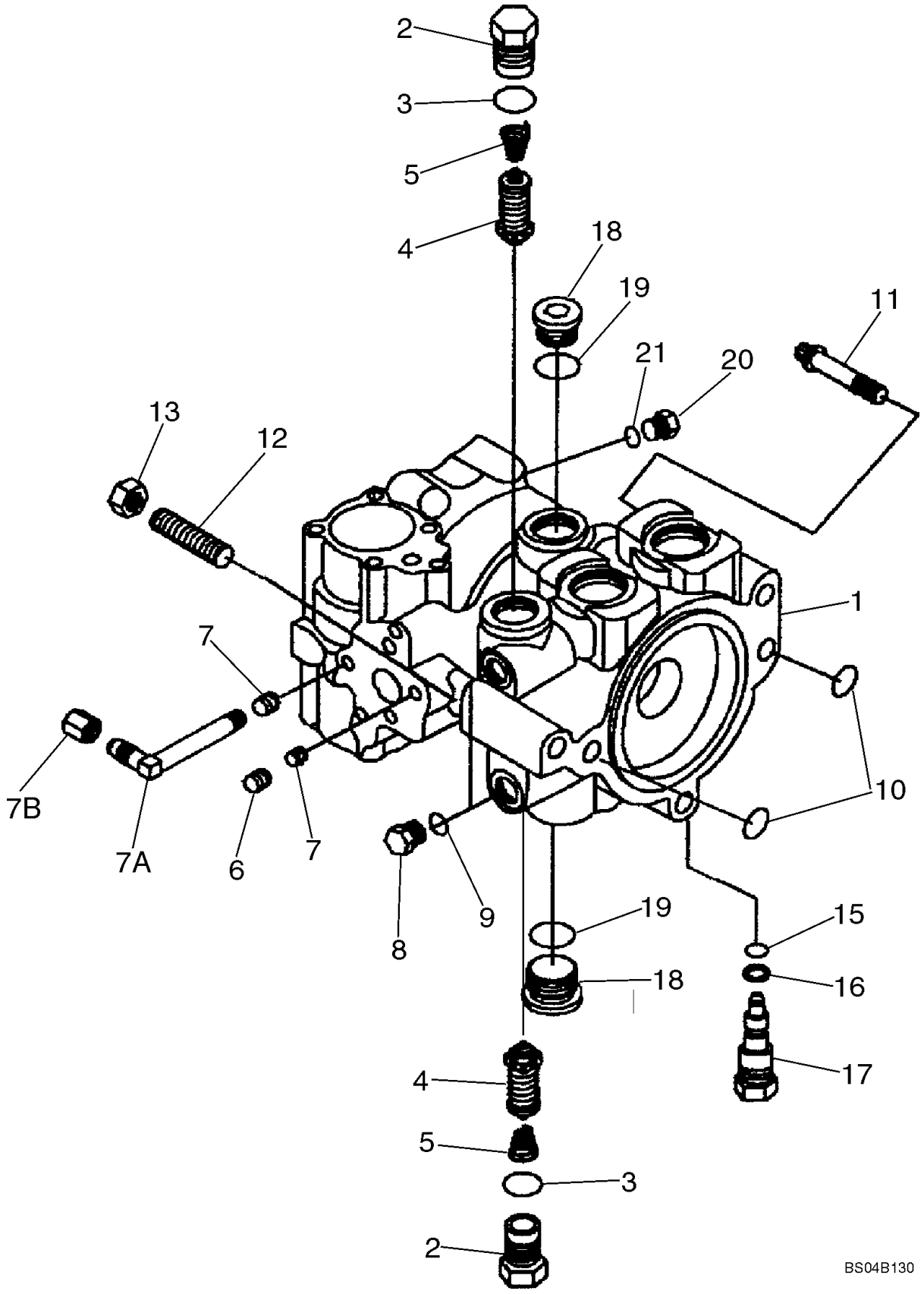

BOMBA, TANDEM (440)

REF	FN	PART NUMBER	YR/SN	QTY	DENOMINACION
					Rear Pump
		87043500		1	BOMBA, Incl. 1 - 21
1		402365A1		1	CAVIDAD, Incl. 1277297C1, 138-217, 9672438
		1277297C1		1	COJINETE
		138-217		1	PASADOR DE FIJACION, 3/16" x 7/16", Slotted
		9672438		1	TAPÓN, Hex Hd, 7/16"-20 ORB
		N14848		2	VÁLVULA, DESCARGA, Incl. 2 - 5
2		NSS		1	NO SE REPARA SEPARADAM., Plug
3		237-6012		1	JUNTA HERMETICA, 12-1, 90 Duro, .924 ID x .118" Thk, Included in 140008A1 Seal Kit
4		NSS		1	NO SE REPARA SEPARADAM., Valve, Relief
5		86993468		1	RESORTE
6		F23137		1	TAPÓN
7		86993479		2	TAPÓN
7A		86993480		1	CODO, 90 deg
7B		86993467		1	TAPON DEL DEPOSITO
		140008A1		1	EMPAQUE DE JUNTAS, Overhaul Seal And Gasket Kit; Incl. (10) Rings, (4) Bearings, (20) O-Rings, (6) Gaskets, (2) Seals; Incl. Ref 3, 10, 15, 16
8		76349		2	TAPÓN, Hex Hd, 9/16"-18 ORB, Incl. 9
9		237-6006		1	JUNTA HERMETICA, 6-1, 90 Duro, .468" ID x .078" Thk
10		238-6116		2	JUNTA HERMETICA, -116, 90 Duro, .737" ID x .103" Thk, Included in 140008A1 Seal Kit
11		166-89		1	TORNILLO, 12 Pt Flg, 1/2"-13 x 2", G8
12		K608432		1	PRISIONERO, Hex, M10 x 70, 8.8
13		425-108		1	TUERCA, 1/2"-13, G5
15		86993475		1	JUNTA HERMETICA, Included in 140008A1 Seal Kit
16		S99877		1	ANILLO, Included in 140008A1 Seal Kit
17		87039612		1	VÁLVULA BYPASS, Incl. Ref 15, 16
18		9841223		2	TAPÓN, Hex Soc, 1 1/16"-12 ORB, Incl. 19
19		237-6012		1	JUNTA HERMETICA, 12-1, 90 Duro, .924 ID x .118" Thk
20		9672438		1	TAPÓN, Hex Hd, 7/16"-20 ORB, Incl. 21

BOMBA, TANDEM (440)

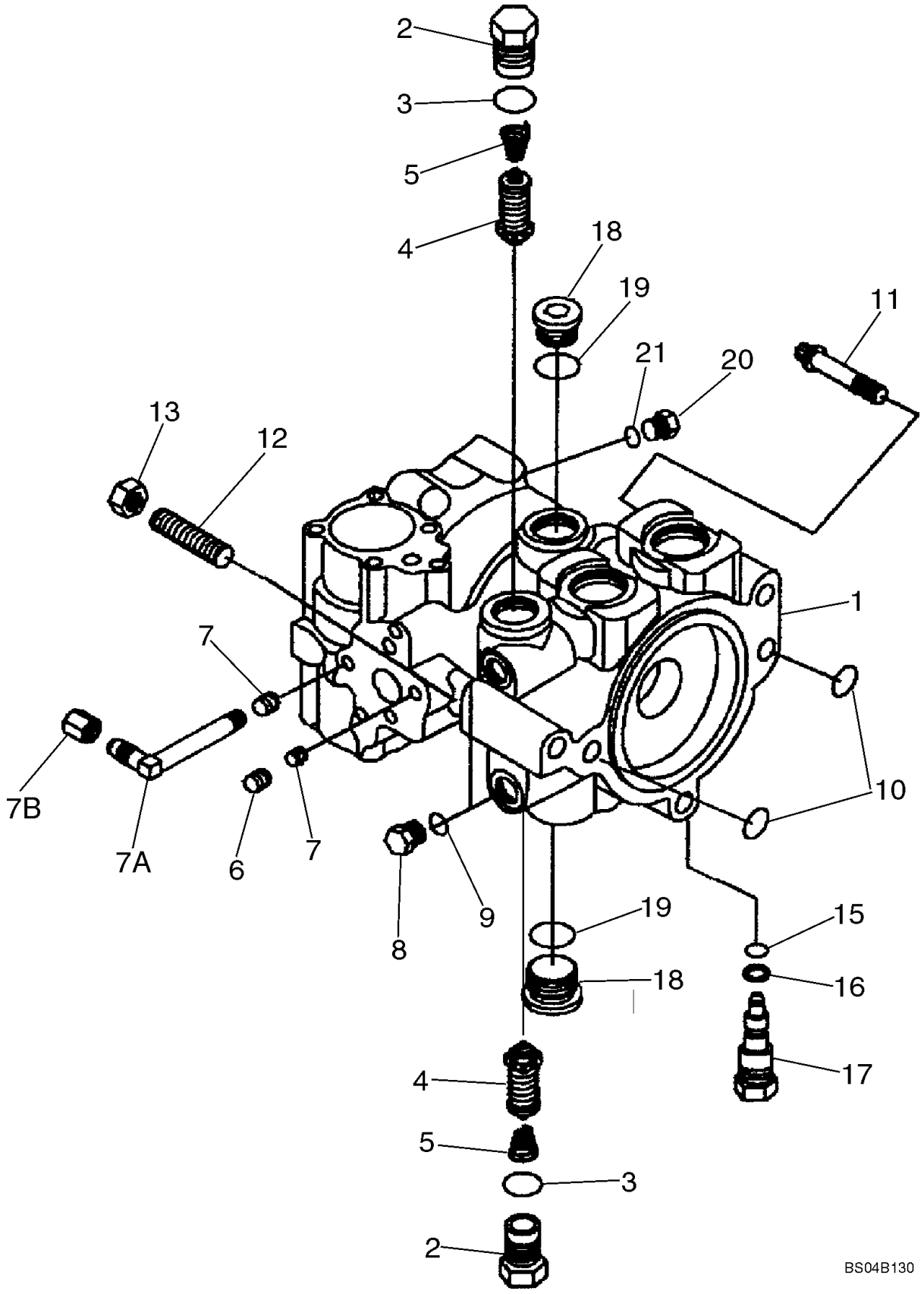

BOMBA, TANDEM (440)

REF	FN	PART NUMBER	YR/SN	QTY	DENOMINACION
21		237-6004		1	JUNTA HERMETICA, 4-1, 90 Duro, .351" ID x .072" Thk

BOMBA, TANDEM (440)

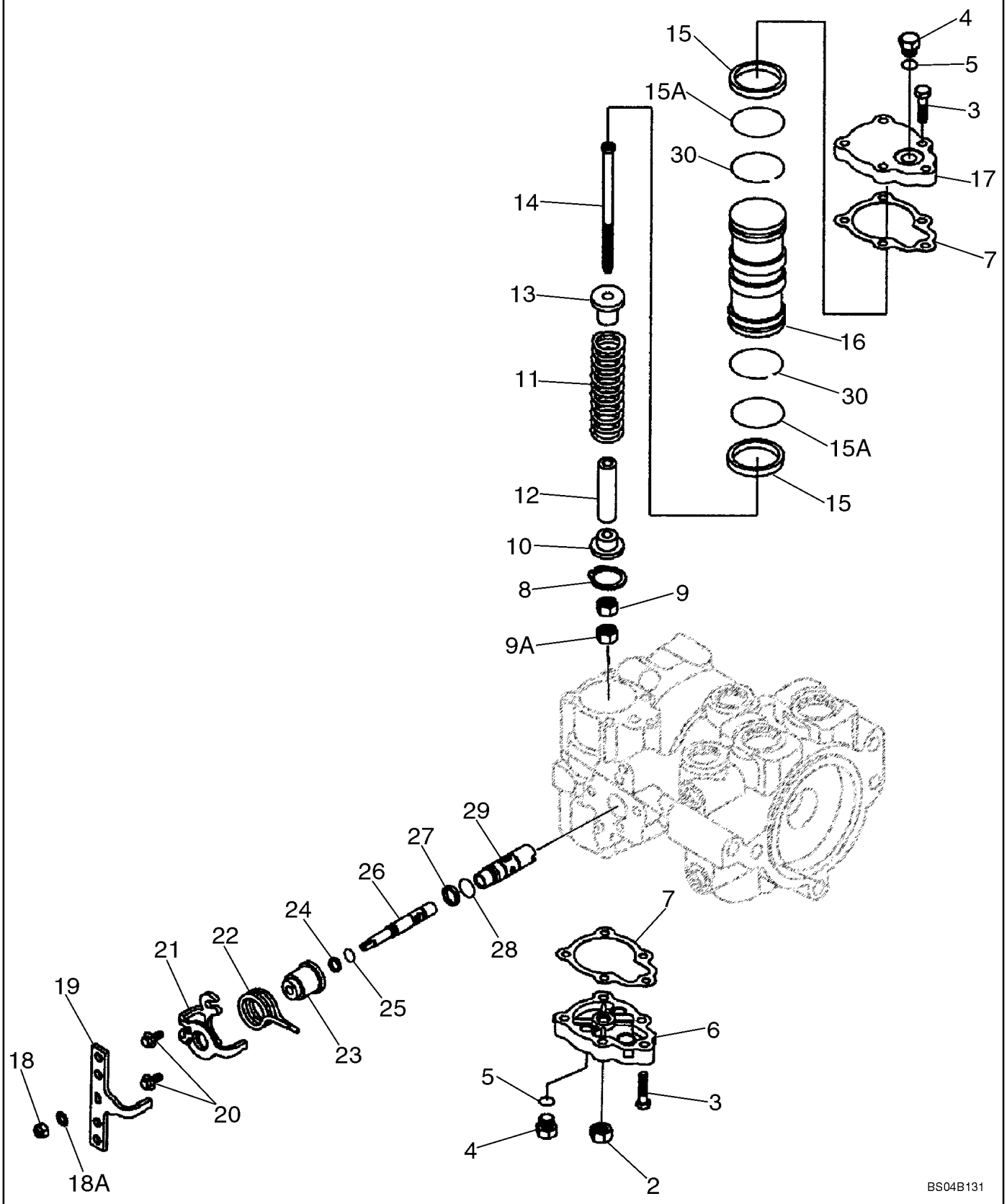

BOMBA, TANDEM (440)

REF	FN	PART NUMBER	YR/SN	QTY	DENOMINACION
					Rear Pump
		87043500		1	BOMBA, Incl. 2 - 30
2		N13260		1	TUERCA, 5/8 NF
3		H438321		10	TORNILLO, 1/4 x 1-1/4; 8
4		76349		2	TAPÓN, Hex Hd, 9/16"-18 ORB, Incl. 5
5		237-6006		1	JUNTA HERMETICA, 6-1, 90 Duro, .468" ID x .078" Thk
6		H436065		1	TAPA
7		N14063		2	JUNTA HERMETICA, Included in 140008A1 Seal Kit
8		N13255		1	ANILLO
9		425-116		1	TUERCA, 3/8"-24, G5
9B		324604A1		1	TUERCA, 3/8 in
10		N13241		1	GUIA
11		N13226		1	RESORTE
12		N13242		1	MANGUITO
13		N14666		1	GUIA
14		370531A1		1	TORNILLO
		H673773		1	JEUGO, Piston Rings; Incl. Rings For Front Pump Piston; Incl. 15, 15A
15		N14668		4	ARO DE EMBOLO, Included in 140008A1 Seal Kit
15A		238-5131		2	JUNTA HERMETICA, -131, 70 Duro, 1.674" ID x .103" Thk, Included in 140008A1 Seal Kit
		140008A1		1	EMPAQUE DE JUNTAS, Overhaul Seal And Gasket Kit; Incl. (10) Rings, (4) Bearings, (20) O-Rings, (6) Gaskets, (2) Seals; Incl. Ref 7, 15, 15A, 24, 25, 27, 28, 30
16		87039622		1	EMBOLO COMPL, Incl. 15, 15A, 30
17		H436053		1	TAPA
18		H436054		1	TUERCA
18A		493-41033		1	ARANDELA DE FRENO, Ext Tooth, 5/16"
19		436415A1		1	MANECILLA
20		H435770		2	TORNILLO
21		436416A1		1	PIEZA DE SOPORTE
22		407060A1		1	RESORTE
23		87039613		1	GUIA

BOMBA, TANDEM (440)

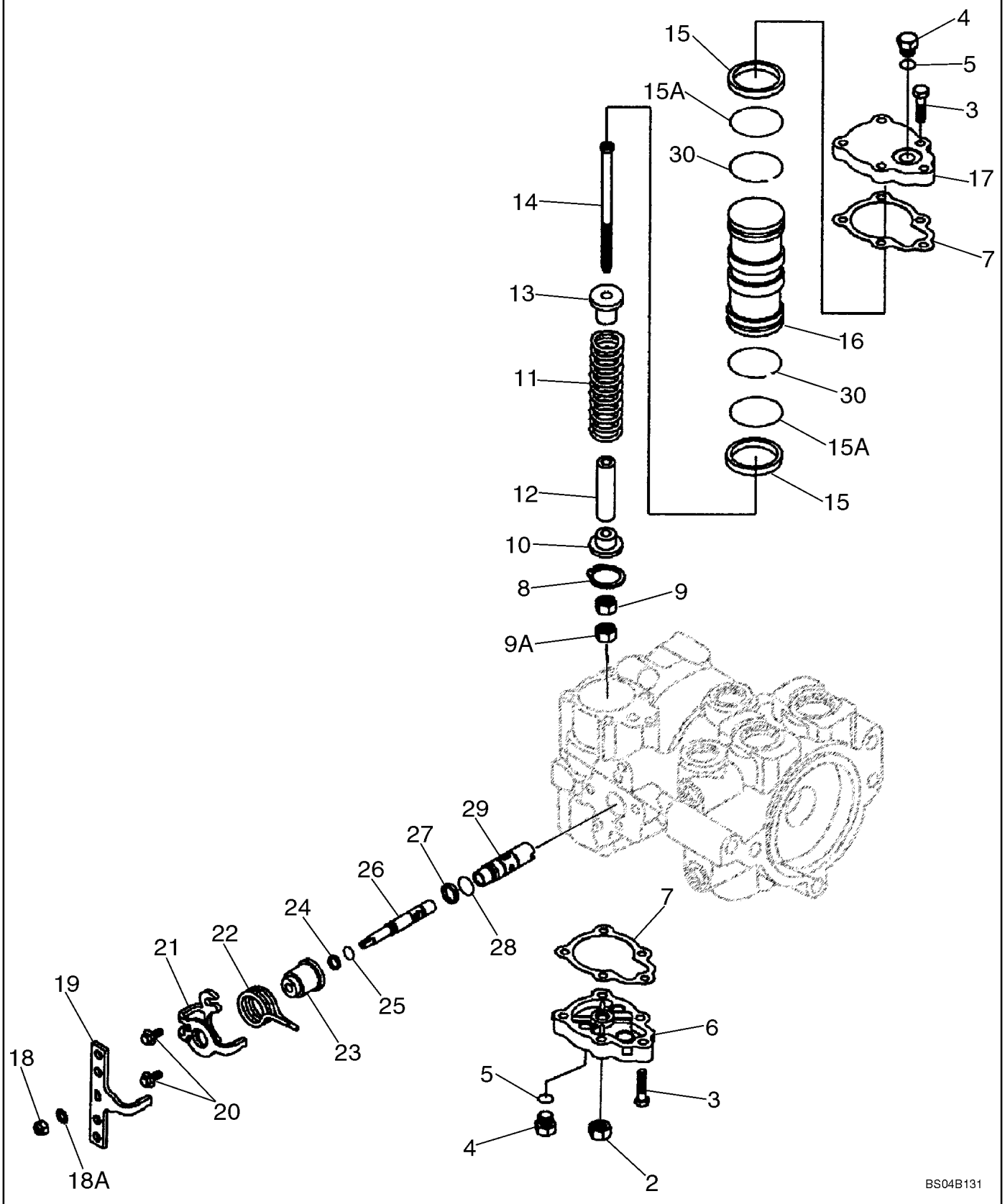

BOMBA, TANDEM (440)

REF	FN	PART NUMBER	YR/SN	QTY	DENOMINACION
24		86993484		1	ANILLO, Included in 140008A1 Seal Kit
25		86993475		1	JUNTA HERMETICA, Included in 140008A1 Seal Kit
26		87039614		1	PISTONCILLO, Incl. 24, 25
27		86993483		1	ANILLO, Included in 140008A1 Seal Kit
28		NSS		1	NO SE REPARA SEPARADAM., Included in 140008A1 Seal Kit
29		87039615		1	BUJE, Incl. 27, 28
30		100536A1		2	ANILLO, Included in 140008A1 Seal Kit

BOMBA, TANDEM (440)

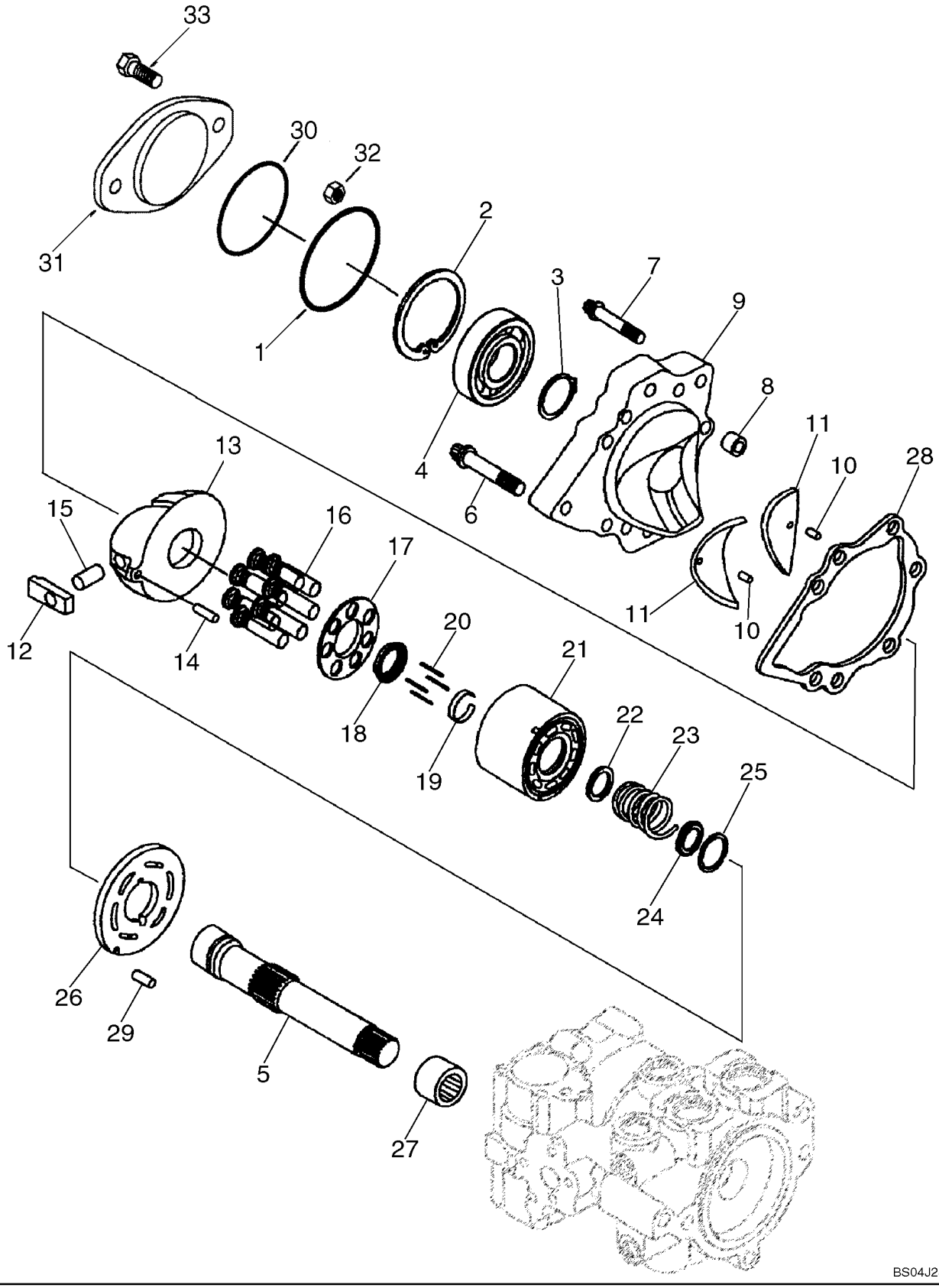

BOMBA, TANDEM (440)

REF	FN	PART NUMBER	YR/SN	QTY	DENOMINACION
					Rear Pump
		87043500		1	BOMBA, Incl. 2 - 32
2		103-21281		1	ANILLO DE RESORTE, 2.812", Int, #281
3		100-11137		1	ANILLO DE RESORTE, #137, Ext
4		A29183		1	RODAMIENTO DE BOLAS
5		87039623		1	EJE
6		223677A1		6	TORNILLO, 7/16 in
7		223680A1		1	PERNO ESPECIAL, 3/8 in
8		N13994		1	ESPACIADOR
		87050526		1	TABA (CONJUNTO), Incl. Ref 9 - 11
9		NSS		1	NO SE REPARA SEPARADAM., Cover; Incl. 10, 11
10		193494A1		2	PASADOR TUBOLAR
11		87050524		2	COJINETE
12		N13224		1	MANGUITO
13		87050523		1	PLACA (CONJUNTO)
14		324610A1		1	BULON/PIN, LARGO
15		N13254		1	PERNO
		402366A1		1	JEUGO, Cylinder Block; Components Not Serviced Separately; Incl. 16 - 25
16		NSS		14	NO SE REPARA SEPARADAM., Piston
17		NSS		2	NO SE REPARA SEPARADAM., Retainer
18		115942A1		2	GUIA, Guide
19		115943A1		2	MANGUITO, Ring, Retaining
20		110873A1		6	BULON/PIN, LARGO, Pin
21		NSS		2	NO SE REPARA SEPARADAM., Block, Cylinder
22		115946A1		2	DISCO
23		115948A1		2	RESORTE
24		115950A1		2	DISCO
25		NSS		2	NO SE REPARA SEPARADAM., Ring, Retaining
26		128929A1		1	PLACA, GRANDE
27		NSS		1	NO SE REPARA SEPARADAM., Bearing, Needle
28		H436704		1	JUNTA HERMETICA
29		38-11207		1	PASADOR DE FIJACION, 3/16" x 7/16", Slotted
30		87013729		1	JUNTA HERMETICA, -044, 70 Duro, 3.739" ID x .070" Thk, Included in 140008A1 Seal Kit

BOMBA, TANDEM (440)

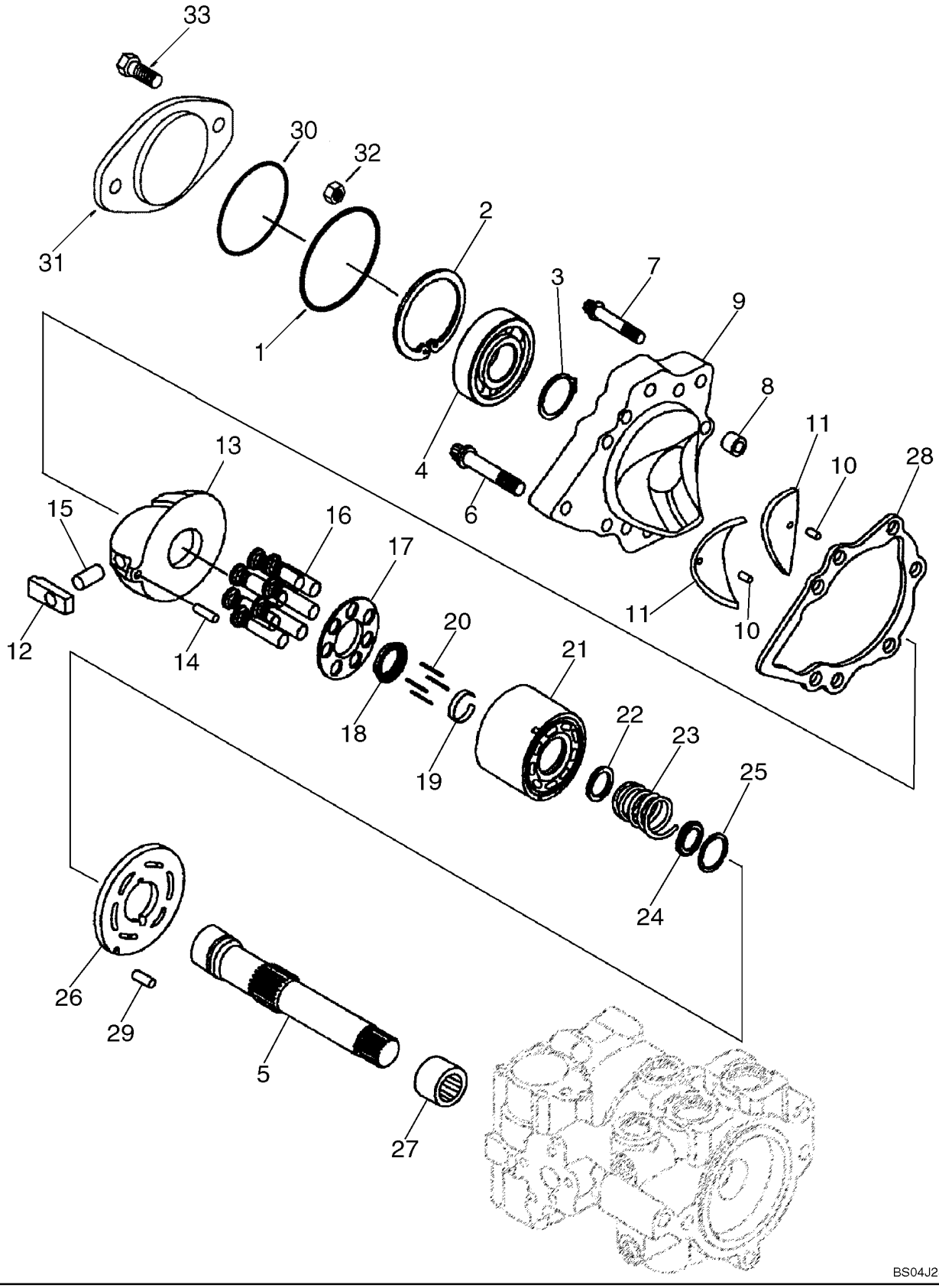

BOMBA, TANDEM (440)

REF	FN	PART NUMBER	YR/SN	QTY	DENOMINACION
31		100703A1		2	PLAQUETA
32		425-108		2	TUERCA, 1/2"-13, G5
33		13-836		2	TORNILLO, Hex, 1/2"-13 x 2 1/4", G5
		140008A1		1	EMPAQUE DE JUNTAS, Overhaul Seal And Gasket Kit; Incl. (10) Rings, (4) Bearings, (20) O-Rings, (6) Gaskets, (2) Seals; Incl. Ref 34

BOMBA, TANDEM -REXROTH (87546976)

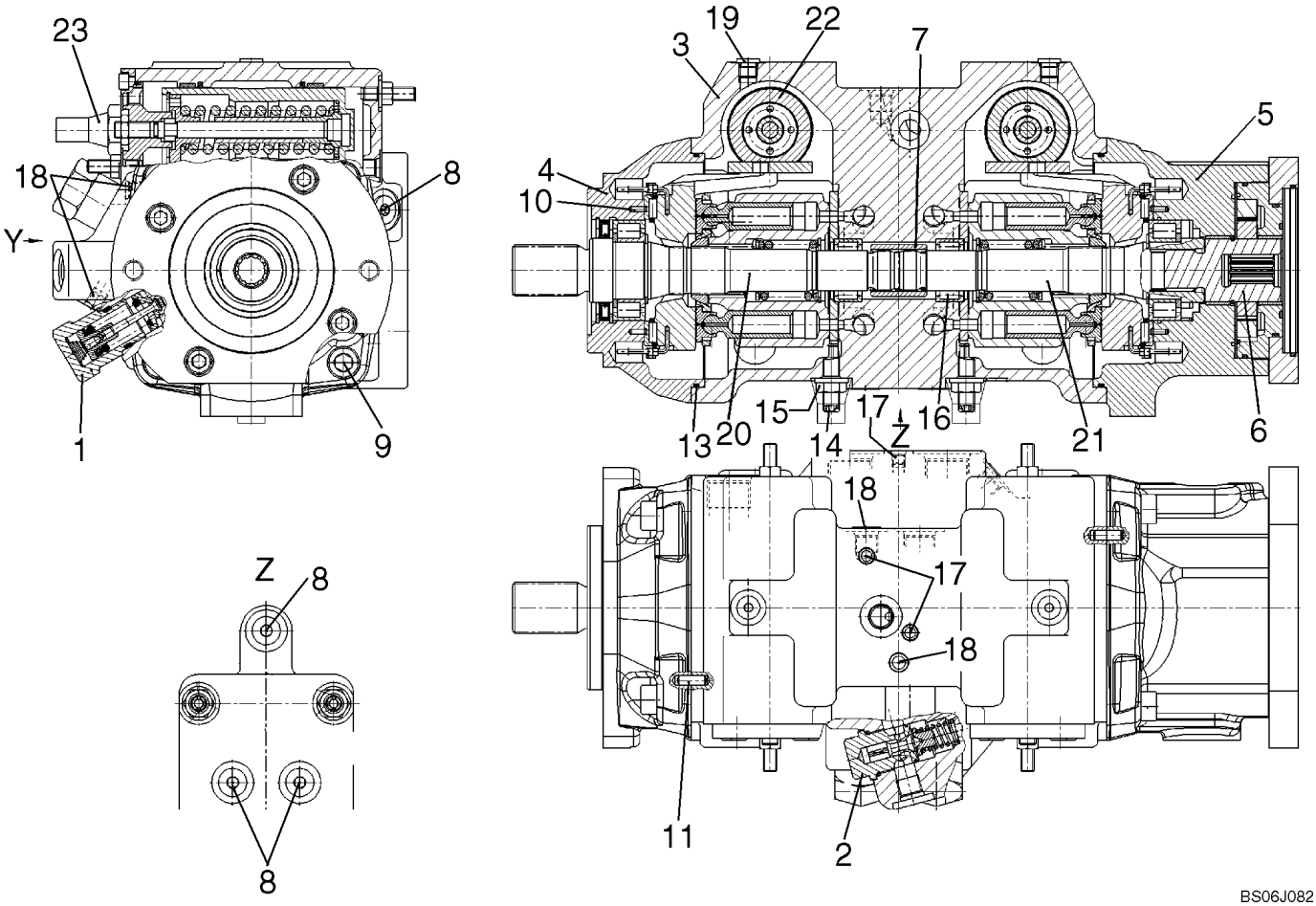

BOMBA, TANDEM -REXROTH (87546976)

REF	FN	PART NUMBER	YR/SN	QTY	DENOMINACION
1		87614028		4	VÁLVULA, DESCARGA, HD 300 Bar; See Fig. 06-40
2		87553604		1	VÁLVULA, DESCARGA, 15 - 30 Bar R-Ring Viton; See Fig. 06-41
3		87553605		1	CAVIDAD, Pump
4		87553606		1	BRIDA, Bearing
5		87614029		1	COJINETE, With Bushing
6		87553608		1	BOMBA, Internal Gear Pump; See Fig. 06-42
7		87553609		1	ELEMENTO DE ACOPLAM., Through Drive
8		87553611		5	TUERCA DE FRENO, 9/16 - 18UNF
9		87553613		8	TORNILLO, Socket Head
10		87553614		4	PERNO, Clamping
11		87553615		2	PERNO, Cylinder
12		87553616		1	JUNTA HERMETICA, Not Illustrated
13		87553617		2	JUNTA HERMETICA
14		87553618		2	TORNILLO, Eccentric Screw
15		87553619		2	CONTRA TUERCA, Seal
16		87553620		2	RODAMIENTO DE RODILLOS, Plain
17		87553621		2	PERNO, Double Break Off
18		87553622		2	PERNO, Double Break Off
19		87553612		2	TUERCA DE FRENO, 7/16 - 20UNF
20		87553599		1	KIT, SERVICE, Rotary Group, RH Rotation; See Fig. 06-43
21		87553600		1	KIT, SERVICE, Rotary Group, LH Rotation; See Fig. 06-44
22		87553601		2	MANDO, Hydraulic; See Fig. 06-45
23		87614027		1	CARTUCHO, With Orifice; See Fig. 06-46
		87553610		1	COJINETE, Bushing
		87627399		3	TAPON DEL DEPOSITO

VALVULA DE REDUCCION DEPRESION (87546976)

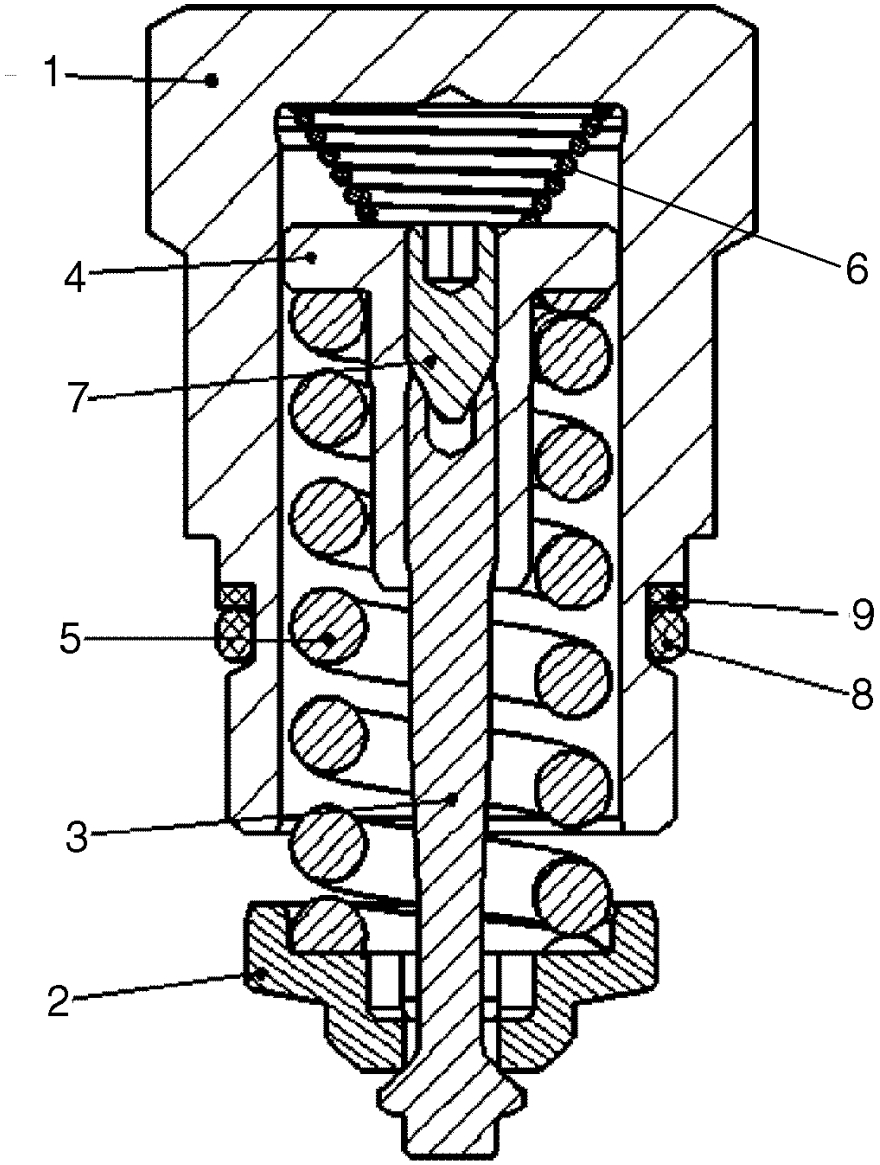

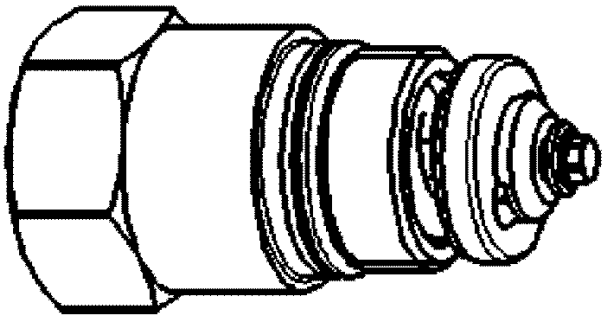

BS06J085

VALVULA DE REDUCCION DEPRESION (87546976)

REF	FN	PART NUMBER	YR/SN	QTY	DENOMINACION
		87614028		1	VÁLVULA, DESCARGA, Incl. 1 - 9
1		NSS		1	NO SE REPARA SEPARADAM., Locking Screw
2		NSS		1	NO SE REPARA SEPARADAM., Valve Collar
3		NSS		1	NO SE REPARA SEPARADAM., Valve Spindle
4		NSS		1	NO SE REPARA SEPARADAM., Spring Loading Nut
5		NSS		1	NO SE REPARA SEPARADAM., Pressure Spring
6		NSS		1	NO SE REPARA SEPARADAM., Spring, Cone Shaped
7		NSS		1	NO SE REPARA SEPARADAM., Threaded Pin
8		87597284		1	JUNTA HERMETICA
9		87597285		1	ANILLO, Back Up

BOMBA, TANDEM - VALVULA DE REDUCCION DEPRESION (87546976)

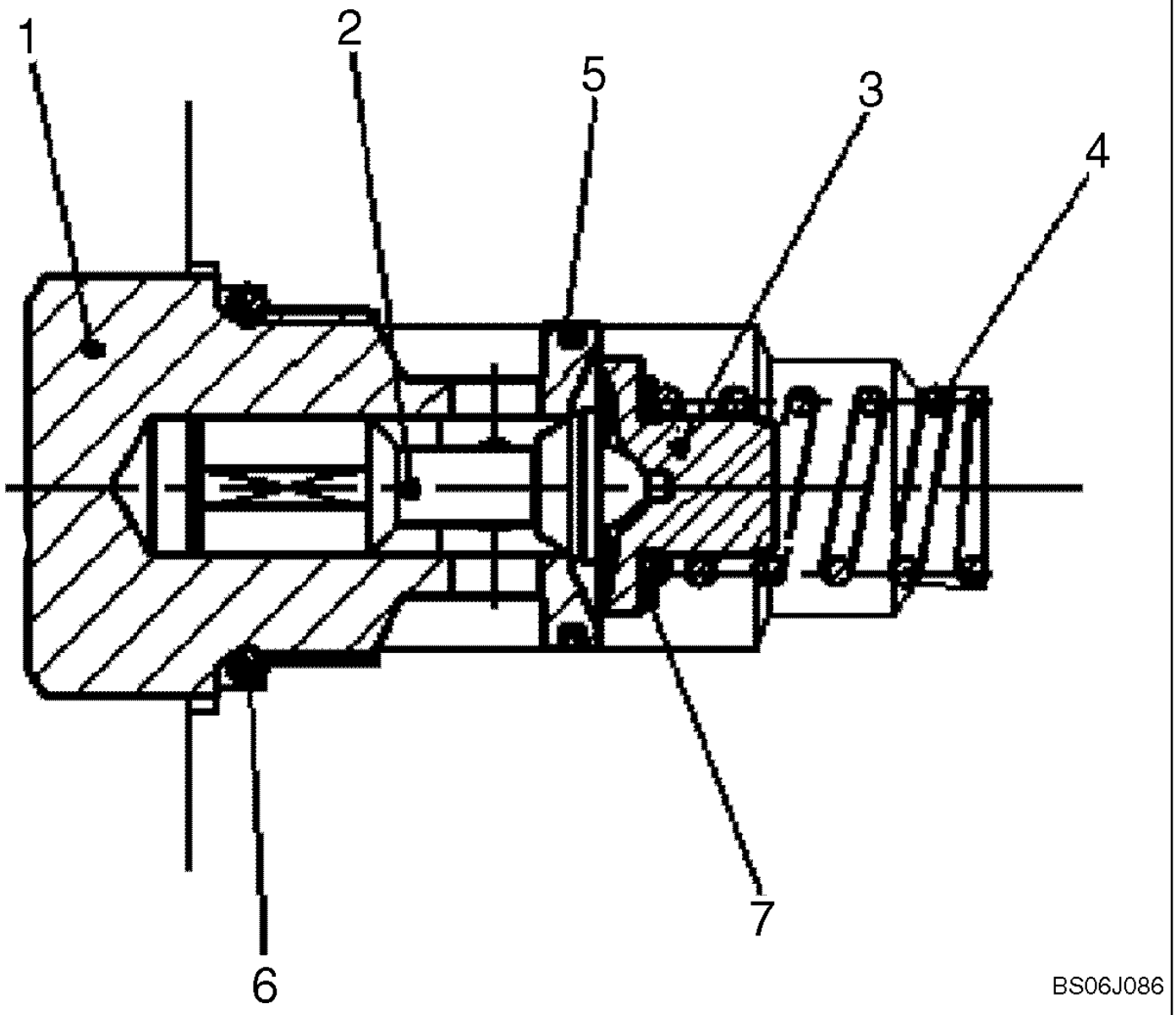

BOMBA, TANDEM - VALVULA DE REDUCCION DEPRESION (87546976)

REF	FN	PART NUMBER	YR/SN	QTY	DENOMINACION
		87553604		1	VÁLVULA, DESCARGA, Pressure Relief Valve; Incl. 1 - 7
1		NSS		1	NO SE REPARA SEPARADAM., Locking Screw
2		NSS		1	NO SE REPARA SEPARADAM., Valve Piston
3		NSS		1	NO SE REPARA SEPARADAM., Spring Collar
4		NSS		1	NO SE REPARA SEPARADAM., Pressure Spring
5		NSS		1	NO SE REPARA SEPARADAM., Steel Sealing Spring
6		87597286		1	JUNTA HERMETICA, O-ring
7		NSS		1	NO SE REPARA SEPARADAM., Shim

BOMBA, TANDEM - CONJUNTO DE LA BOMBA DE ENGRANAJES (87546976)

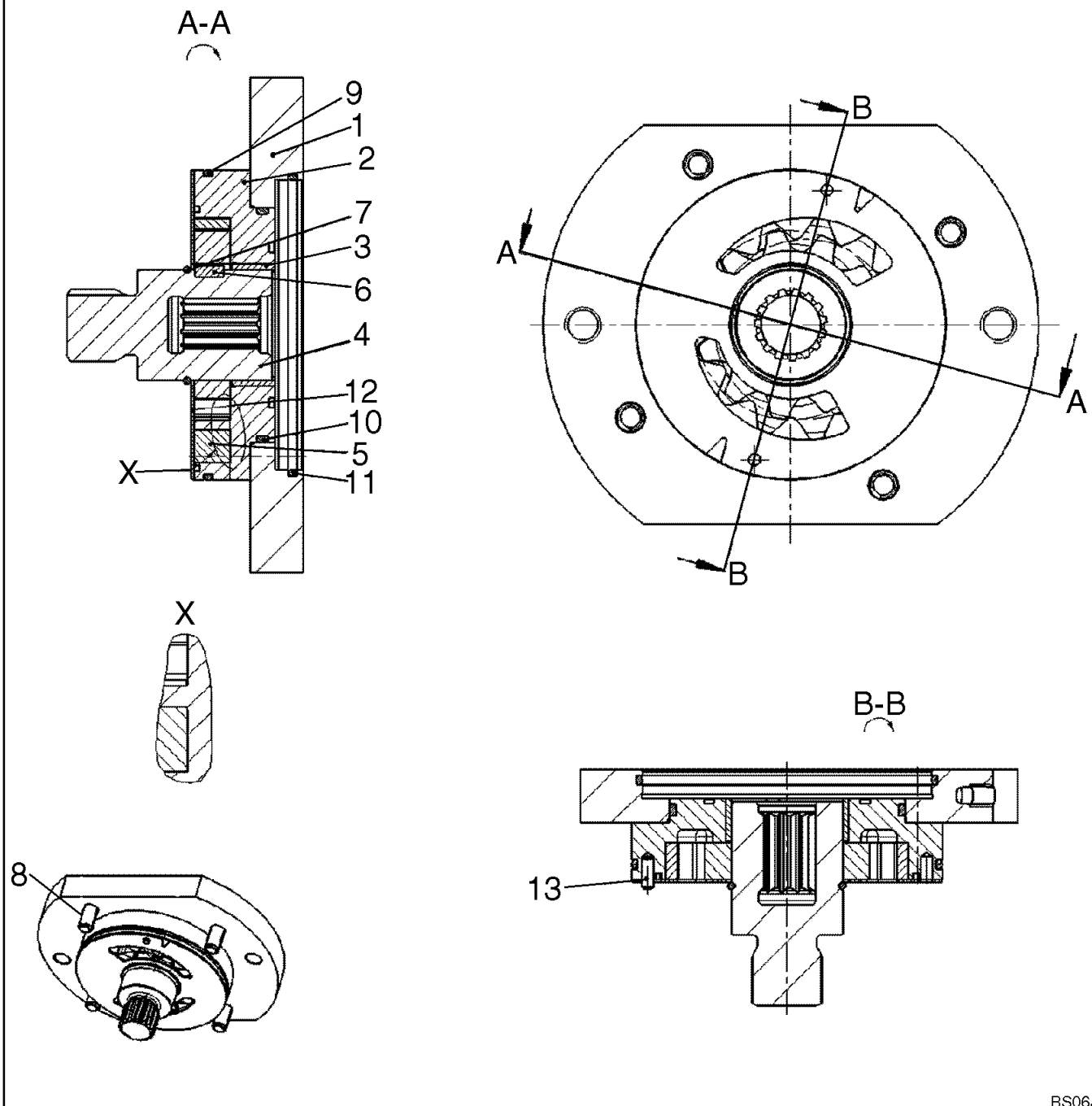

BS06J087

BOMBA, TANDEM - CONJUNTO DE LA BOMBA DE ENGRANAJES (87546976)

REF	FN	PART NUMBER	YR/SN	QTY	DENOMINACION
		87553608		1	BOMBA, Internal Gear Pump; Incl. 1 - 13
1		87597287		1	BRIDA, Intermediate Flange
2		87597288		1	CAVIDAD, IZP Housing
3		87553610		1	COJINETE, Bearing Bushing
4		87597289		1	ELEMENTO DE ACOPLAM., Through Drive Coupling
5		87597290		1	CARRO DE TRANSPORTE, Wheel Set
6		87597291		1	LLAVE, Shaft Key
7		87597292		1	ANILLO DE RESORTE, Snap Ring
8		87597293		4	TORNILLO, Socket Head Screw
9		87597294		1	JUNTA HERMETICA, O-ring
10		87597295		1	JUNTA HERMETICA, O-ring
11		87553616		1	JUNTA HERMETICA, O-ring
12		87597296		1	PLACA, Wear Plate
13		87597297		1	PERNO, Cylinder Pin

BOMBA, TANDEM - ROTACIÓN MONTAJE, LADO DERECHO (87546976)

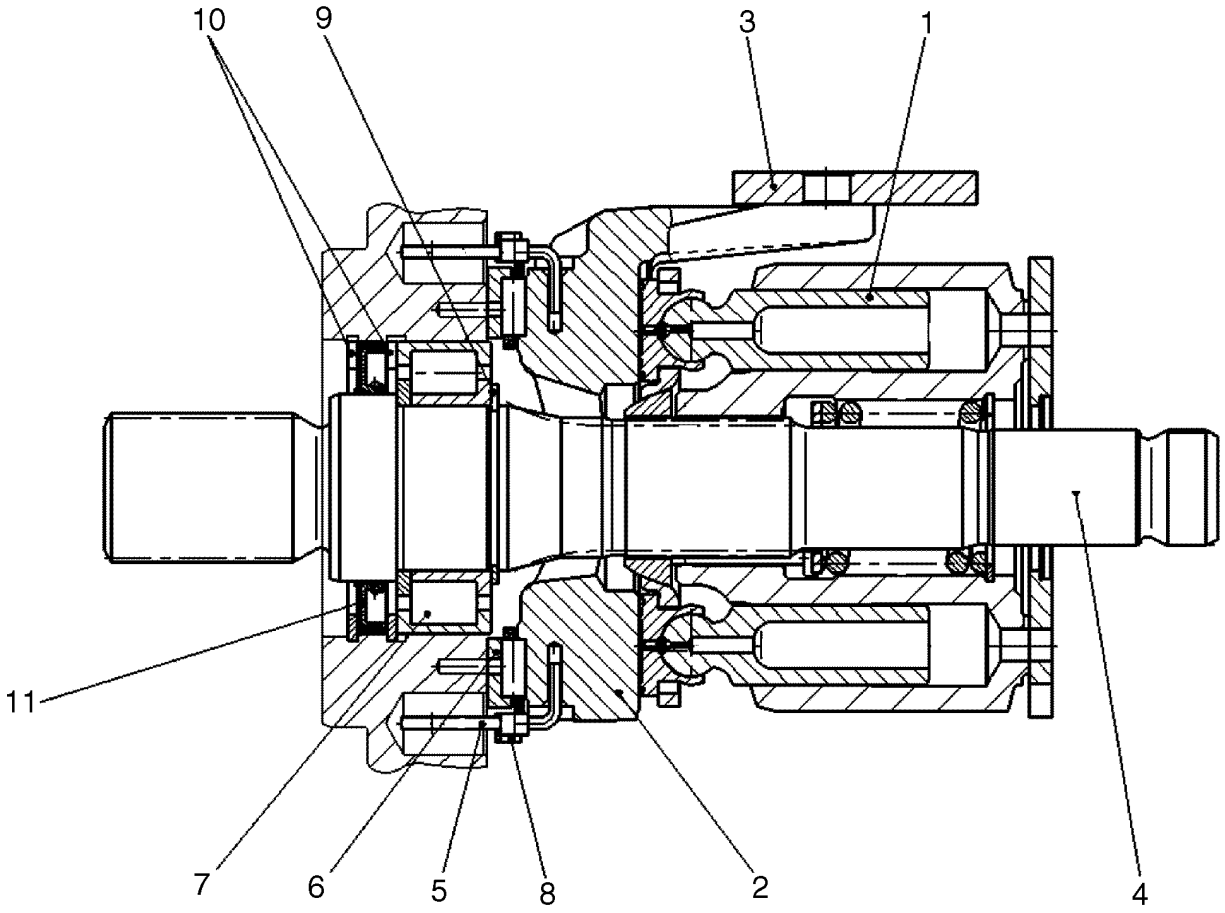

BS06J126

BOMBA, TANDEM - ROTACIÓN MONTAJE, LADO DERECHO (87546976)

REF	FN	PART NUMBER	YR/SN	QTY	DENOMINACION
		87553599		1	KIT, SERVICE, Rotary Group, Right Hand Rotation; Incl. 1 - 11
1		87553623		1	SECCIÓN DE LA VÁLVULA, Rotary Group, Hydraulic Section
2		87597259		1	SOPORTE
3		87597260		1	DESLIZADOR, Ring
4		87597261		1	ARBOL DE MANDO
5		87597262		2	ALAMBRE DE ACERO, With Coil
6		87597263		1	COJINETE, Pair
7		87597264		1	COJINETE, Plain Roller Bearing
8		87597265		1	SOPORTE, Bearing Assembly (set)
9		87597266		1	ANILLO, Retaining Ring
10		87597267		2	ANILLO, Seeger V-ring
11		87597268		1	ANILLO, Shaft Seal Ring

BOMBA, TANDEM - ROTACIÓN MONTAJE, IZQUIERDA ROTACIÓN (87546976)

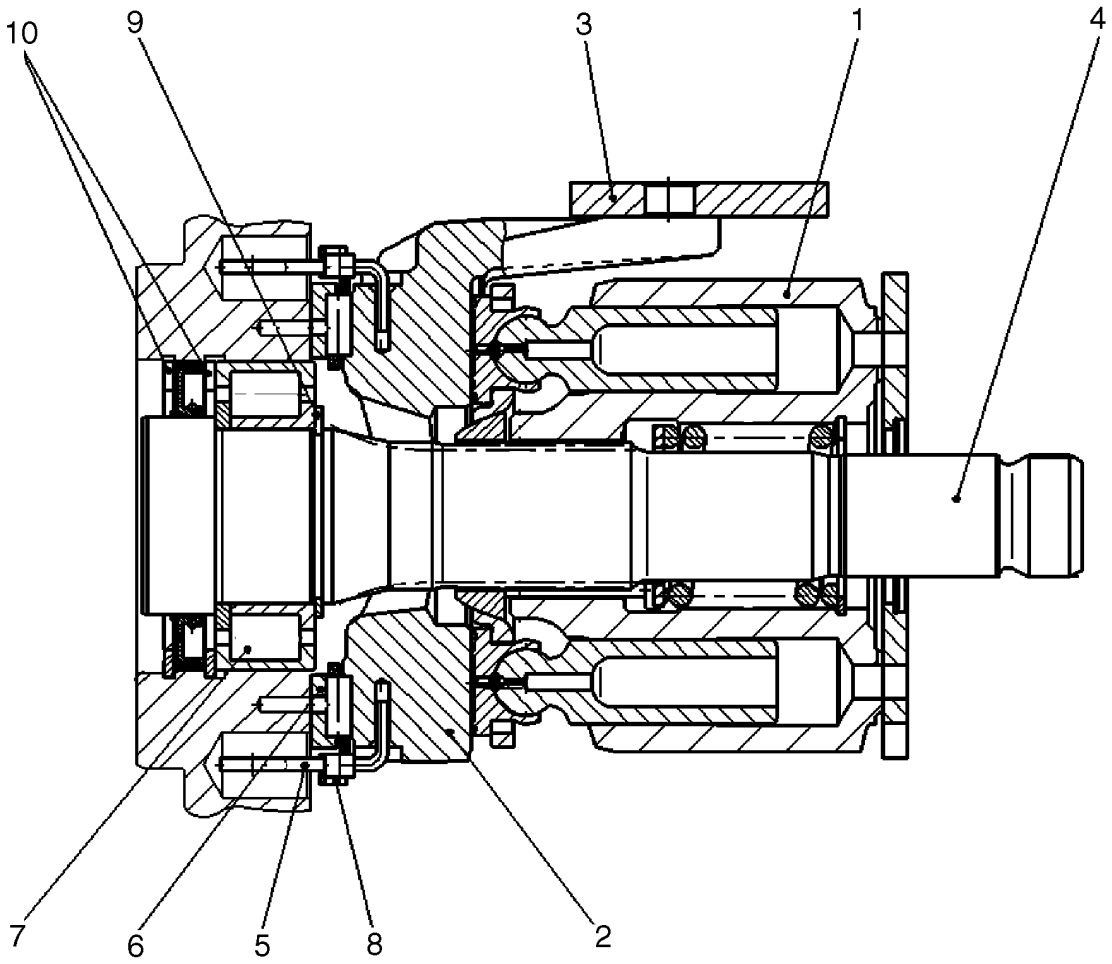

BS06J127

BOMBA, TANDEM - ROTACIÓN MONTAJE, IZQUIERDA ROTACIÓN (87546976)

REF	FN	PART NUMBER	YR/SN	QTY	DENOMINACION
		87553600		1	KIT, SERVICE, Rotary Group, Left Hand Rotation; Incl. 1 - 10
1		87597269		1	DISTRIBUIDOR HYDR, Rotary Group, Hydraulic Section
2		87597259		1	SOPORTE, Cradle
3		87597260		1	DESLIZADOR, Ring
4		87597271		1	ARBOL DE MANDO
5		87597262		2	ALAMBRE DE ACERO, With Coil
6		87597263		1	COJINETE, Pair
7		87597264		1	COJINETE, Plain Roller Bearing
8		87597265		1	SOPORTE, Bearing Assembly (set)
9		87597266		1	ANILLO, Retaining Ring
10		87597267		2	ANILLO, Seeger V-ring

BOMBA, TANDEM - CONTROL, HIDRAULICO (87546976)

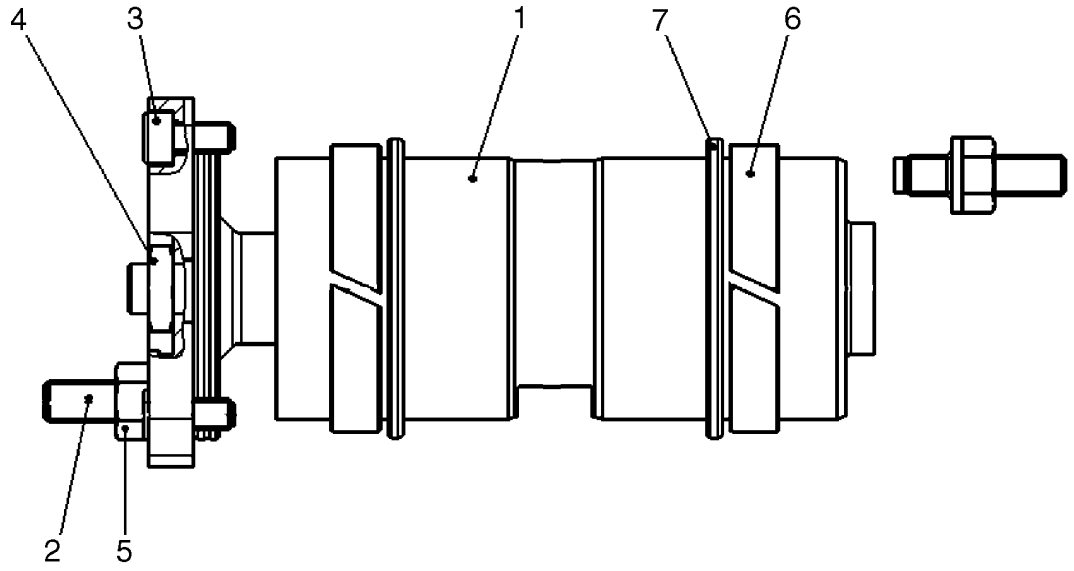

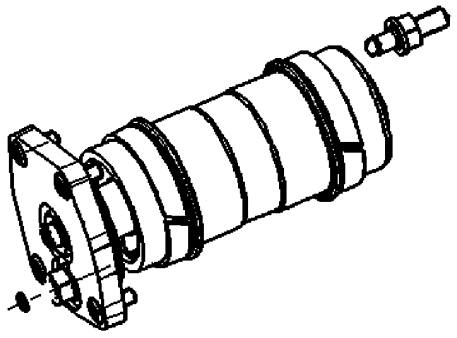

BS06J128

BOMBA, TANDEM - CONTROL, HIDRAULICO (87546976)

REF	FN	PART NUMBER	YR/SN	QTY	DENOMINACION
		87553601		1	MANDO, Control, Hydraulic; Incl. 1 - 7
1		87597272		1	EMBOLO, Positioning Piston, Complete
2		87597274		2	PERNO, Threaded Pin
3		87597275		4	TORNILLO, Socket Head Screw
4		87597276		1	TUERCA, Hexagon Nut
5		87597277		2	TUERCA, Seal, Lock Nut
6		87597281		2	CASQUILLO GUIA, Guide Ring
7		87597282		2	KIT, SERVICE, Rod Seal Kit

BOMBA, TANDEM - CONTROL MONTAJE (87546976)

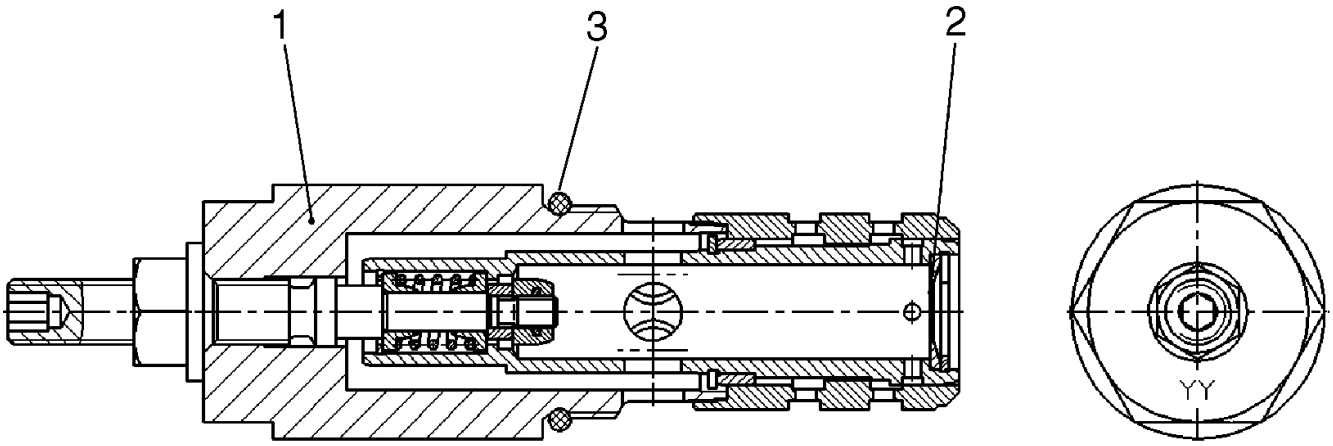

BS07A093

BOMBA, TANDEM - CONTROL MONTAJE (87546976)

REF	FN	PART NUMBER	YR/SN	QTY	DENOMINACION
		87614027		1	CARTUCHO, Control Cartridge With Orifice; Incl. 1 - 3
1		87597283		1	CARTUCHO, Control Cartridge Without Orifice
2		87614030		1	ORIFICIO
3		87597284		1	JUNTA HERMETICA, O-Ring

BOMBA, TANDEM -REXROTH (87546977)

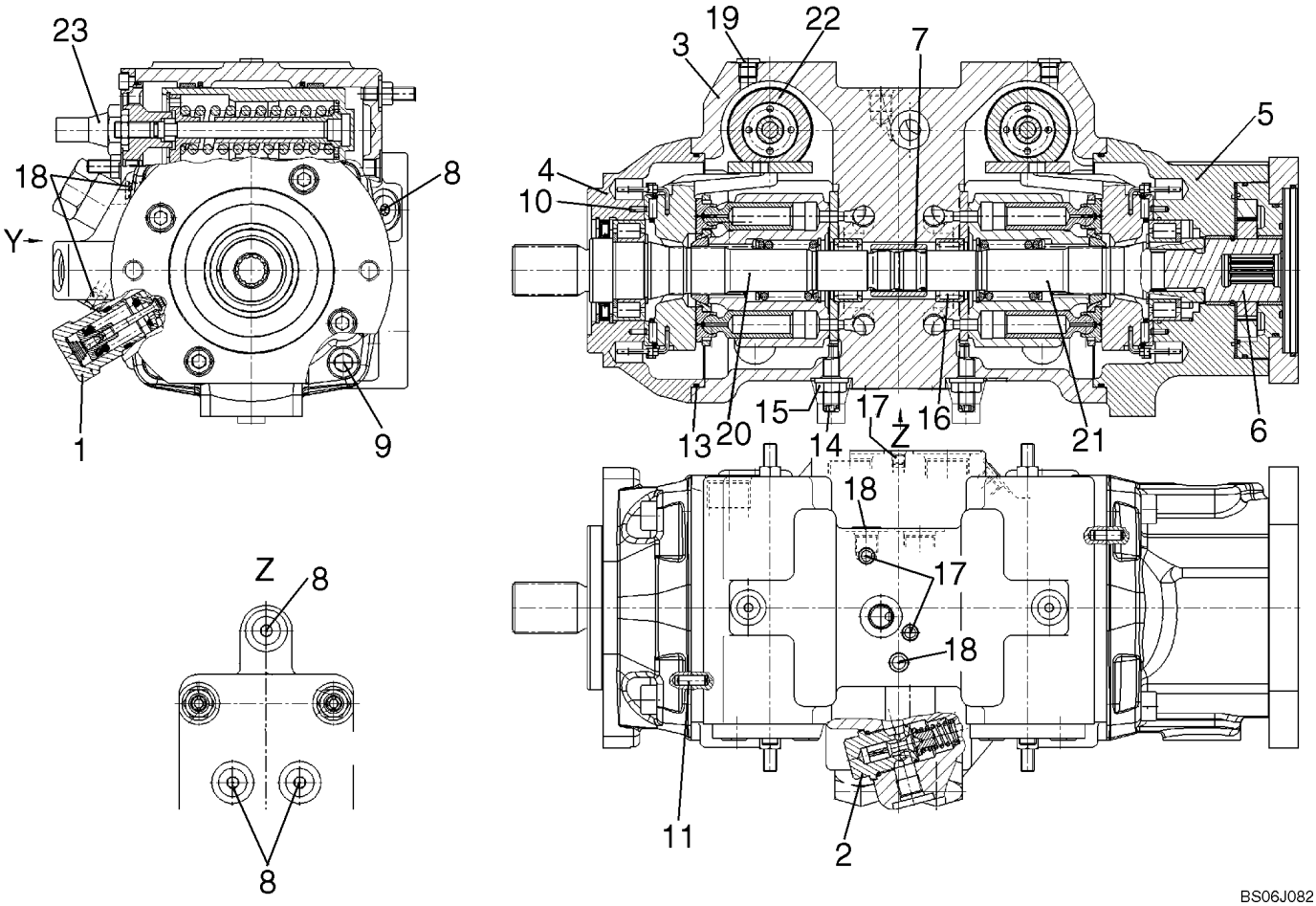

BS06J082

BOMBA, TANDEM -REXROTH (87546977)

REF	FN	PART NUMBER	YR/SN	QTY	DENOMINACION
1		87614031		4	VÁLVULA, DESCARGA, HD 360 Bar; See Fig. 06-53
2		87553604		1	VÁLVULA, DESCARGA, 15 - 30 Bar R-Ring Viton; See Fig. 06-48
3		87553605		1	CAVIDAD, Pump
4		87553606		1	BRIDA, Bearing
5		87553607		1	BRIDA, Bearing With Bushing
6		87553608		1	BOMBA, Internal Gear Pump; See Fig. 06-49
7		87553609		1	ELEMENTO DE ACOPLAM., Through Drive
8		87553611		5	TUERCA DE FRENO, 9/16 - 18UNF
9		87553613		8	TORNILLO, Socket Head
10		87553614		4	PERNO, Clamping
11		87553615		2	PERNO, Cylinder
12		87553616		1	JUNTA HERMETICA, Not Illustrated
13		87553617		2	JUNTA HERMETICA, O-Ring
14		87553618		2	TORNILLO, Eccentric Screw
15		87553619		2	CONTRA TUERCA, Seal
16		87553620		2	RODAMIENTO DE RODILLOS, Plain
17		87553621		2	PERNO, Double Break Off
18		87553622		2	PERNO, Double Break Off
19		87553612		2	TUERCA DE FRENO, 7/16 - 20UNF
20		87553599		1	KIT, SERVICE, Rotary Group, RH Rotation; See Fig. 06-50
21		87553600		1	KIT, SERVICE, Rotary Group, LH Rotation; See Fig. 06-51
22		87553601		2	MANDO, Hydraulic; See Fig. 06-52
23		87614027		1	CARTUCHO, With Orifice; See Fig. 06-46
		87553610		1	COJINETE, Bushing
		87627399		3	TAPON DEL DEPOSITO

BOMBA, TANDEM - VALVULA DE REDUCCION DEPRESION (87546977)

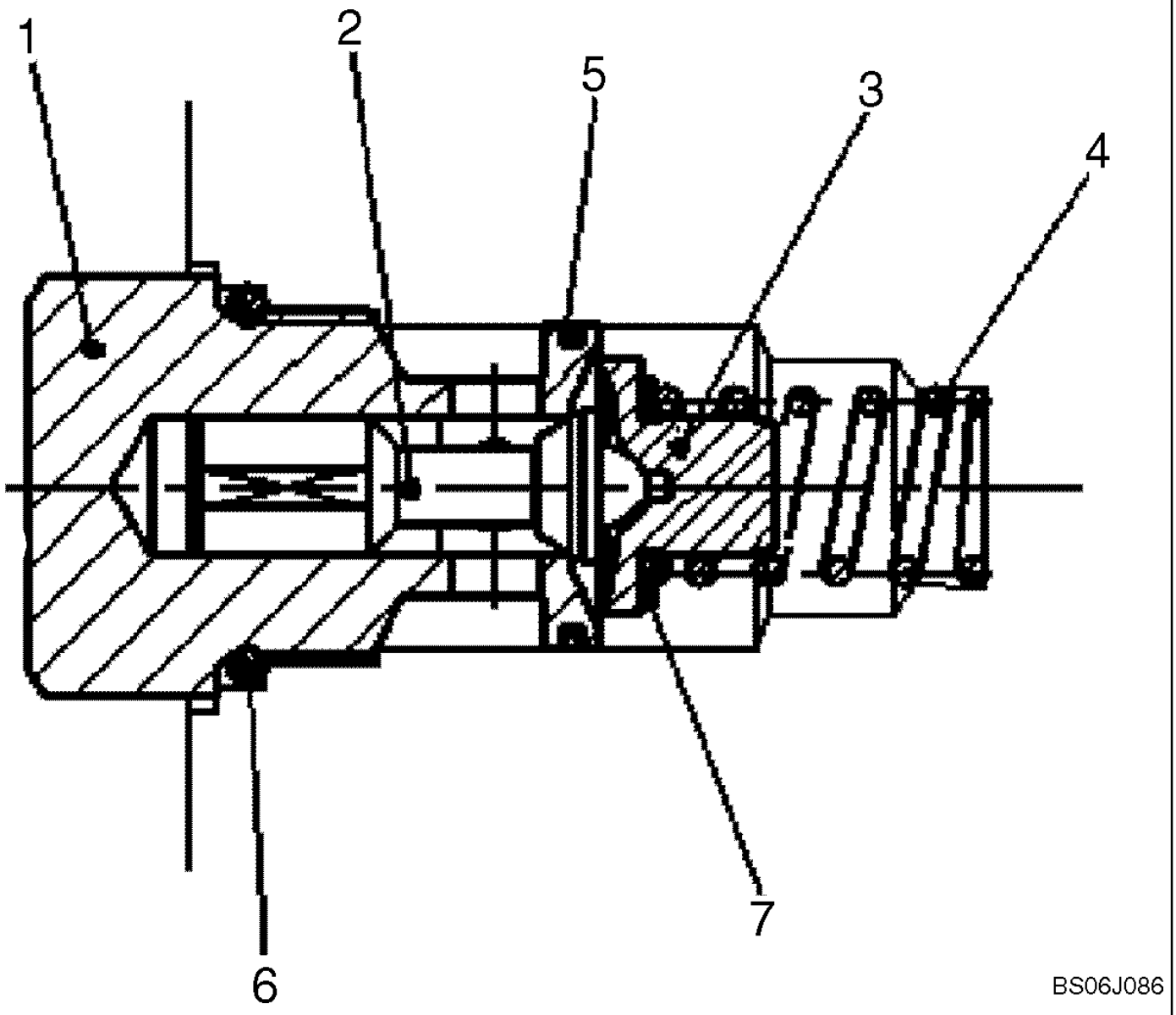

BOMBA, TANDEM - VALVULA DE REDUCCION DEPRESION (87546977)

REF	FN	PART NUMBER	YR/SN	QTY	DENOMINACION
		87553604		1	VÁLVULA, DESCARGA, Pressure Relief Valve; Incl. 1 - 7
1		NSS		1	NO SE REPARA SEPARADAM., Locking Screw
2		NSS		1	NO SE REPARA SEPARADAM., Valve Piston
3		NSS		1	NO SE REPARA SEPARADAM., Spring Collar
4		NSS		1	NO SE REPARA SEPARADAM., Pressure Spring
5		NSS		1	NO SE REPARA SEPARADAM., Steel Sealing Spring
6		87597286		1	JUNTA HERMETICA, O-ring
7		NSS		1	NO SE REPARA SEPARADAM., Shim

BOMBA, TANDEM - CONJUNTO DE LA BOMBA DE ENGRANAJES (87546977)

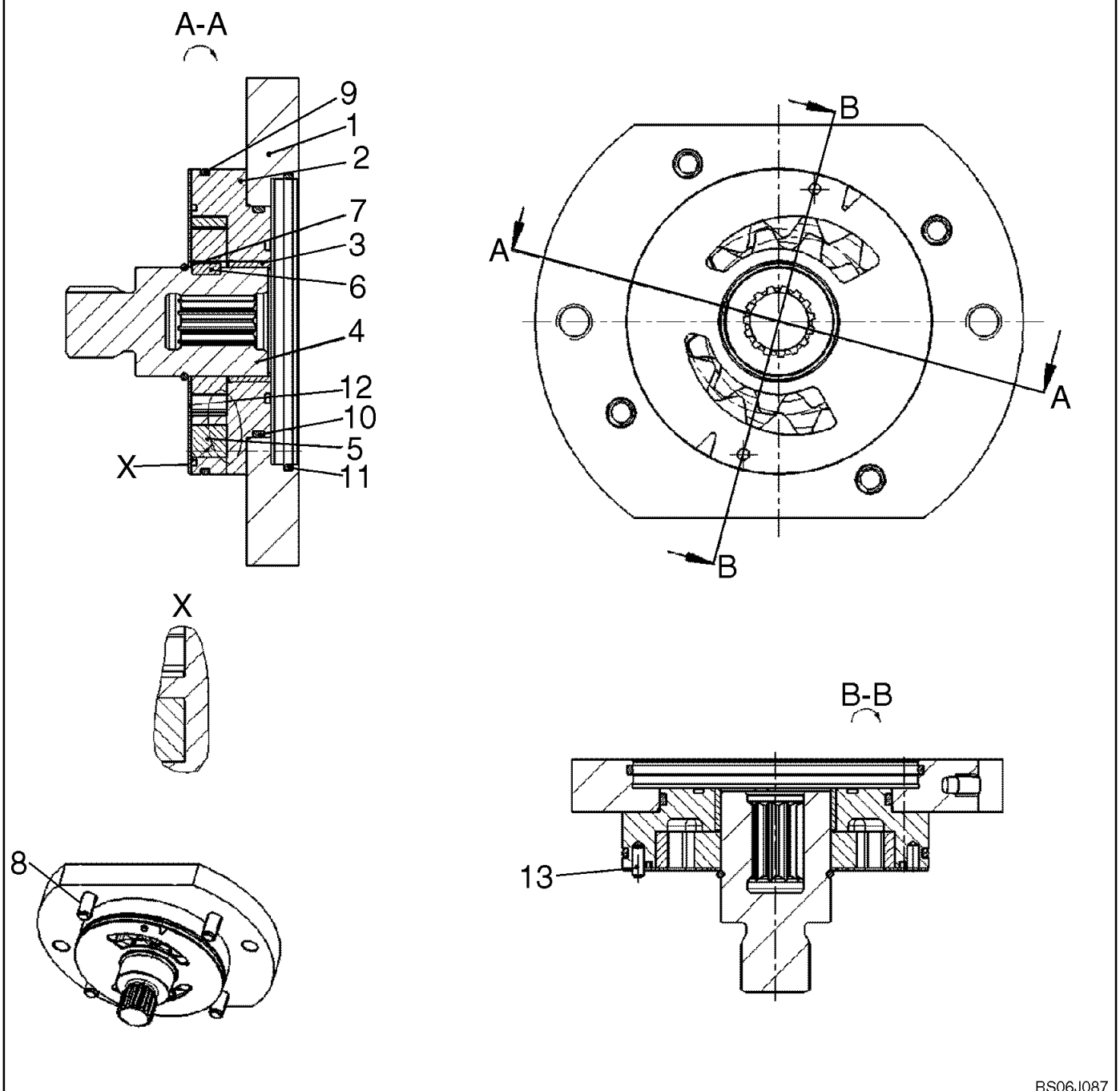

BOMBA, TANDEM - CONJUNTO DE LA BOMBA DE ENGRANAJES (87546977)

REF	FN	PART NUMBER	YR/SN	QTY	DENOMINACION
		87553608		1	BOMBA, Internal Gear Pump; Incl. 1 - 13
1		87597287		1	BRIDA, Intermediate Flange
2		87597288		1	CAVIDAD, IZP Housing
3		87553610		1	COJINETE, Bearing Bushing
4		87597289		1	ELEMENTO DE ACOPLAM., Through Drive Coupling
5		87597290		1	CARRO DE TRANSPORTE, Wheel Set
6		87597291		1	LLAVE, Shaft Key
7		87597292		1	ANILLO DE RESORTE, Snap Ring
8		87597293		4	TORNILLO, Socket Head Screw
9		87597294		1	JUNTA HERMETICA, O-ring
10		87597295		1	JUNTA HERMETICA, O-ring
11		87553616		1	JUNTA HERMETICA, O-ring
12		87597296		1	PLACA, Wear Plate
13		87597297		1	PERNO, Cylinder Pin

BOMBA, TANDEM - ROTACIÓN MONTAJE, LADO DERECHO (87546977)

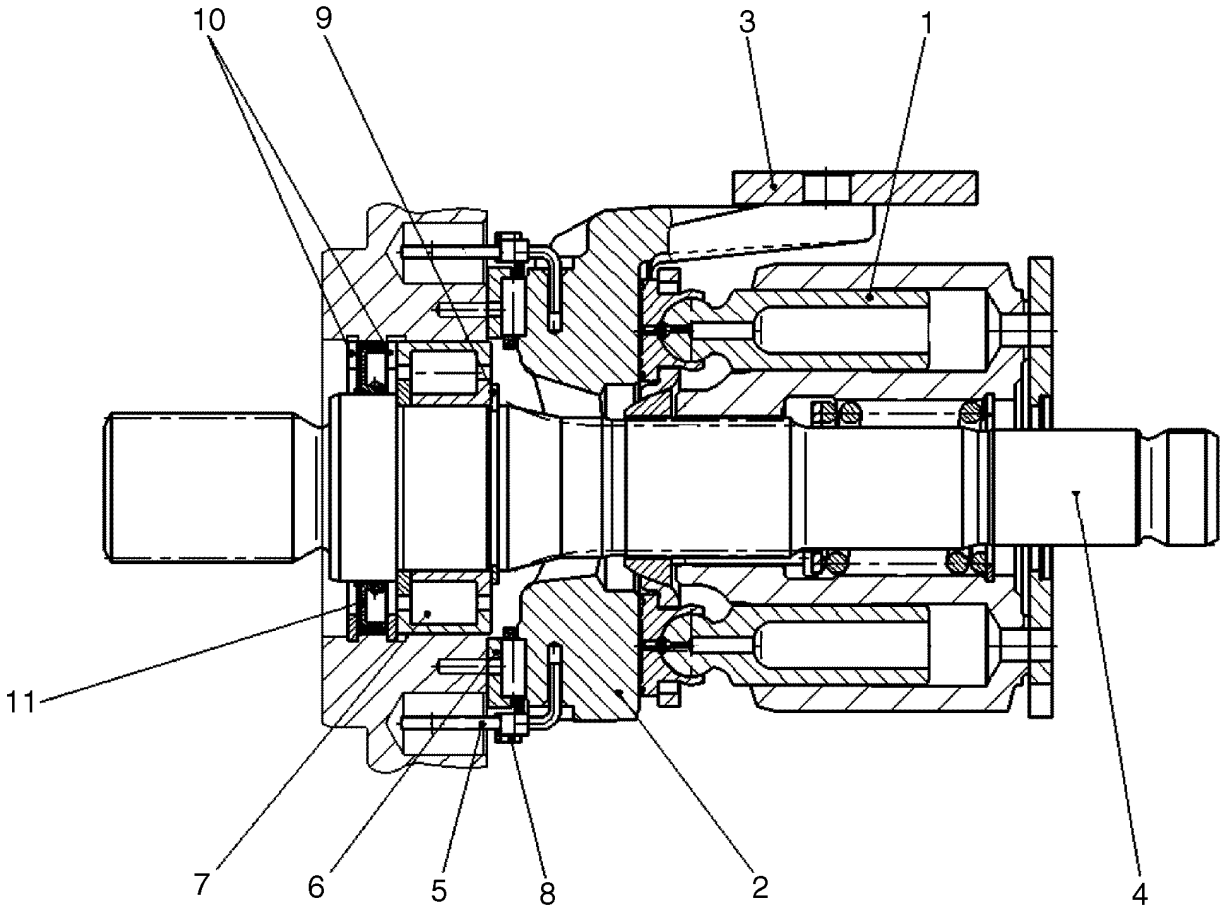

BS06J126

BOMBA, TANDEM - ROTACIÓN MONTAJE, LADO DERECHO (87546977)

REF	FN	PART NUMBER	YR/SN	QTY	DENOMINACION
		87553599		1	KIT, SERVICE, Rotary Group, Right Hand Rotation; Incl. 1 - 11
1		87553623		1	SECCIÓN DE LA VÁLVULA, Rotary Group, Hydraulic Section
2		87597259		1	SOPORTE, Cradle
3		87597260		1	DESLIZADOR, Ring
4		87597261		1	ARBOL DE MANDO, Drive Shaft
5		87597262		2	ALAMBRE DE ACERO, With Coil
6		87597263		1	COJINETE, Pair
7		87597264		1	COJINETE, Plain Roller Bearing
8		87597265		1	SOPORTE, Bearing Assembly (set)
9		87597266		1	ANILLO, Retaining Ring
10		87597267		2	ANILLO, Seeger V-ring
11		87597268		1	ANILLO, Shaft Seal Ring

BOMBA, TANDEM - ROTACIÓN MONTAJE, IZQUIERDA ROTACIÓN (87546977)

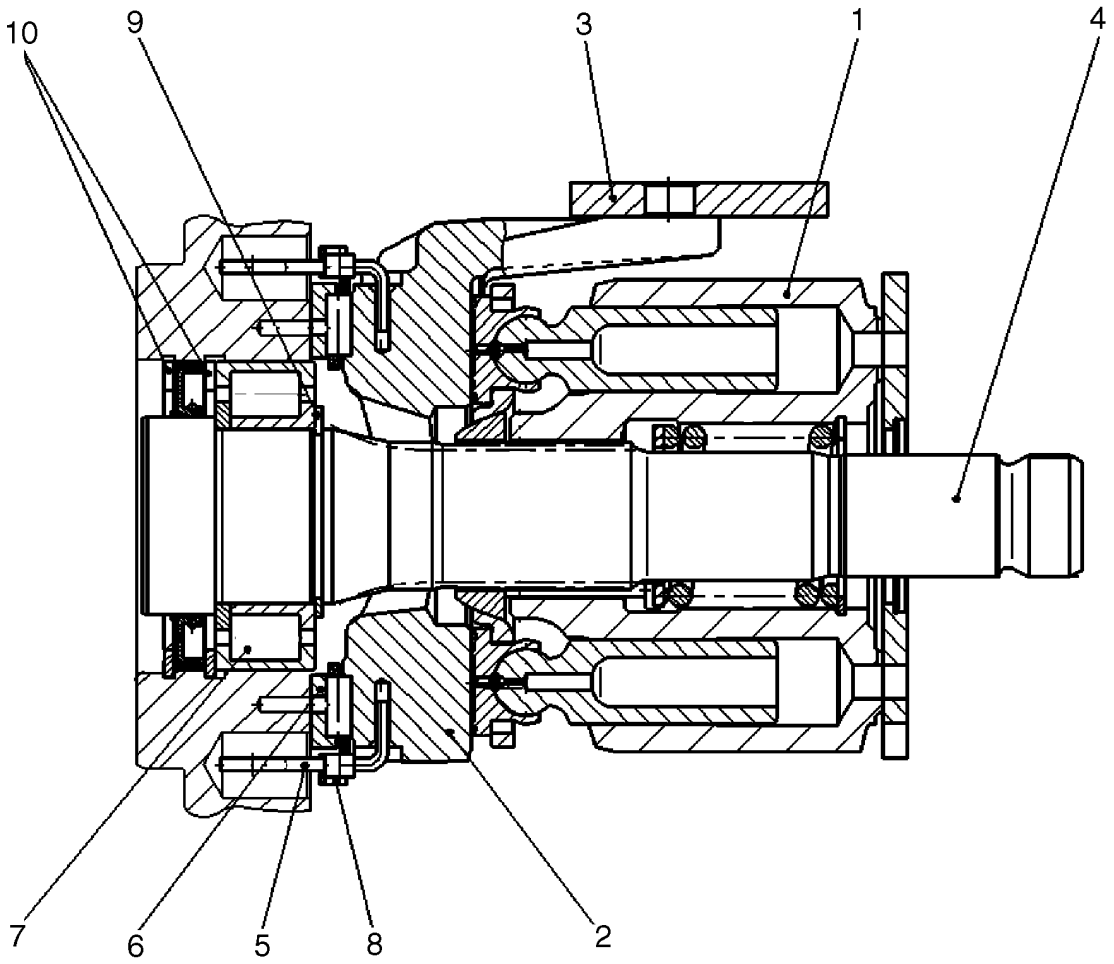

BS06J127

BOMBA, TANDEM - ROTACIÓN MONTAJE, IZQUIERDA ROTACIÓN (87546977)

REF	FN	PART NUMBER	YR/SN	QTY	DENOMINACION
		87553600		1	KIT, SERVICE, Rotary Group, Left Hand Rotation; Incl. 1 - 10
1		87597269		1	DISTRIBUIDOR HYDR, Rotary Group, Hydraulic Section
2		87597259		1	SOPORTE, Cradle
3		87597260		1	DESLIZADOR, Ring
4		87597271		1	ARBOL DE MANDO
5		87597262		2	ALAMBRE DE ACERO, With Coil
6		87597263		1	COJINETE, Pair
7		87597264		1	COJINETE, Plain Roller Bearing
8		87597265		1	SOPORTE, Bearing Assembly (set)
9		87597266		1	ANILLO, Retaining Ring
10		87597267		2	ANILLO, Seeger V-ring

BOMBA, TANDEM - CONTROL, HIDRAULICO (87546977)

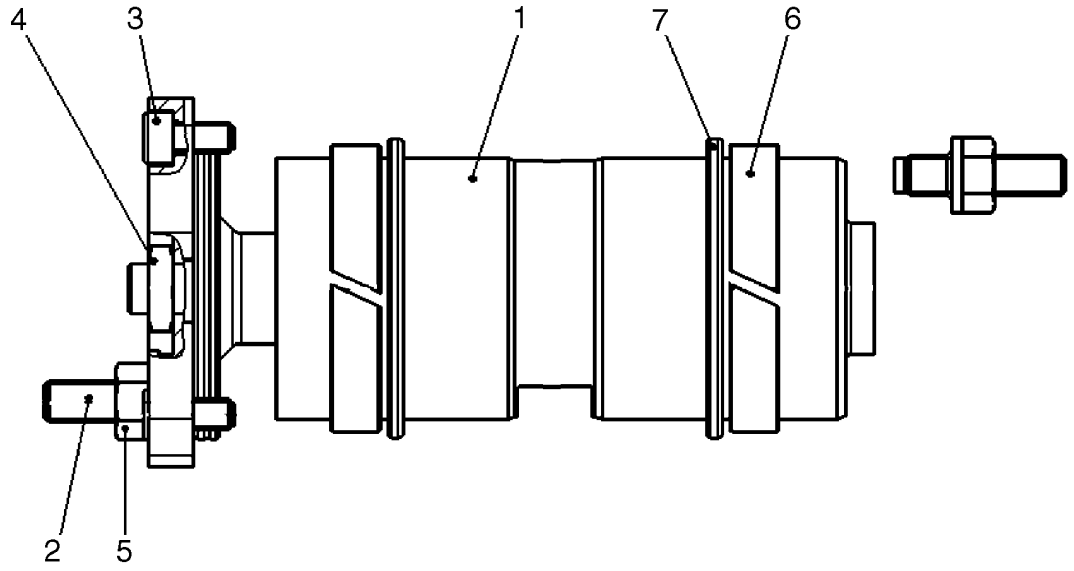

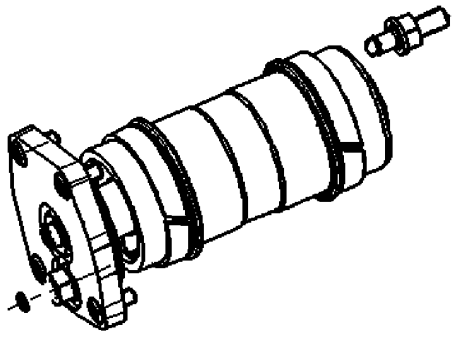

BS06J128

BOMBA, TANDEM - CONTROL, HIDRAULICO (87546977)

REF	FN	PART NUMBER	YR/SN	QTY	DENOMINACION
		87553601		1	MANDO, Control, Hydraulic; Incl. 1 - 7
1		87597272		1	EMBOLO, Positioning Piston, Complete
2		87597274		2	PERNO, Threaded Pin
3		87597275		4	TORNILLO, Socket Head Screw
4		87597276		1	TUERCA, Hexagon Nut
5		87597277		2	TUERCA, Seal, Lock Nut
6		87597281		2	CASQUILLO GUIA, Guide Ring
7		87597282		2	KIT, SERVICE, Rod Seal Kit

BOMBA, TANDEM - CONTROL MONTAJE (87546977)

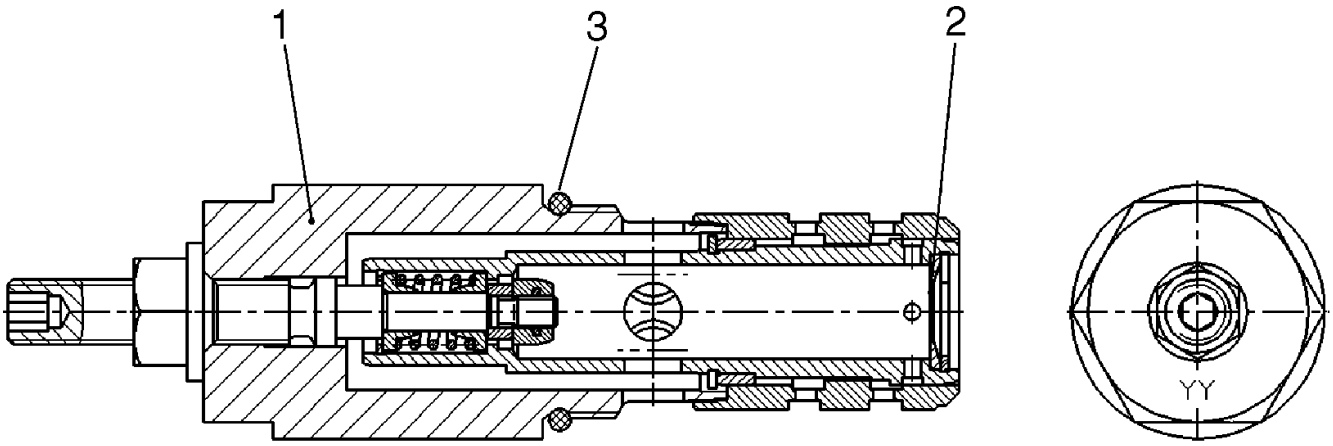

BS07A093

BOMBA, TANDEM - CONTROL MONTAJE (87546977)

REF	FN	PART NUMBER	YR/SN	QTY	DENOMINACION
		87614031		1	VÁLVULA, DESCARGA, Control Cartridge With Orifice; Incl. 1 - 3
1		NSS		1	NO SE REPARA SEPARADAM., Control Cartridge Without Orifice
2		87597285		1	ANILLO, Back Up Ring
3		87597284		1	JUNTA HERMETICA, O-Ring

BOMBA, ENGRANAJE

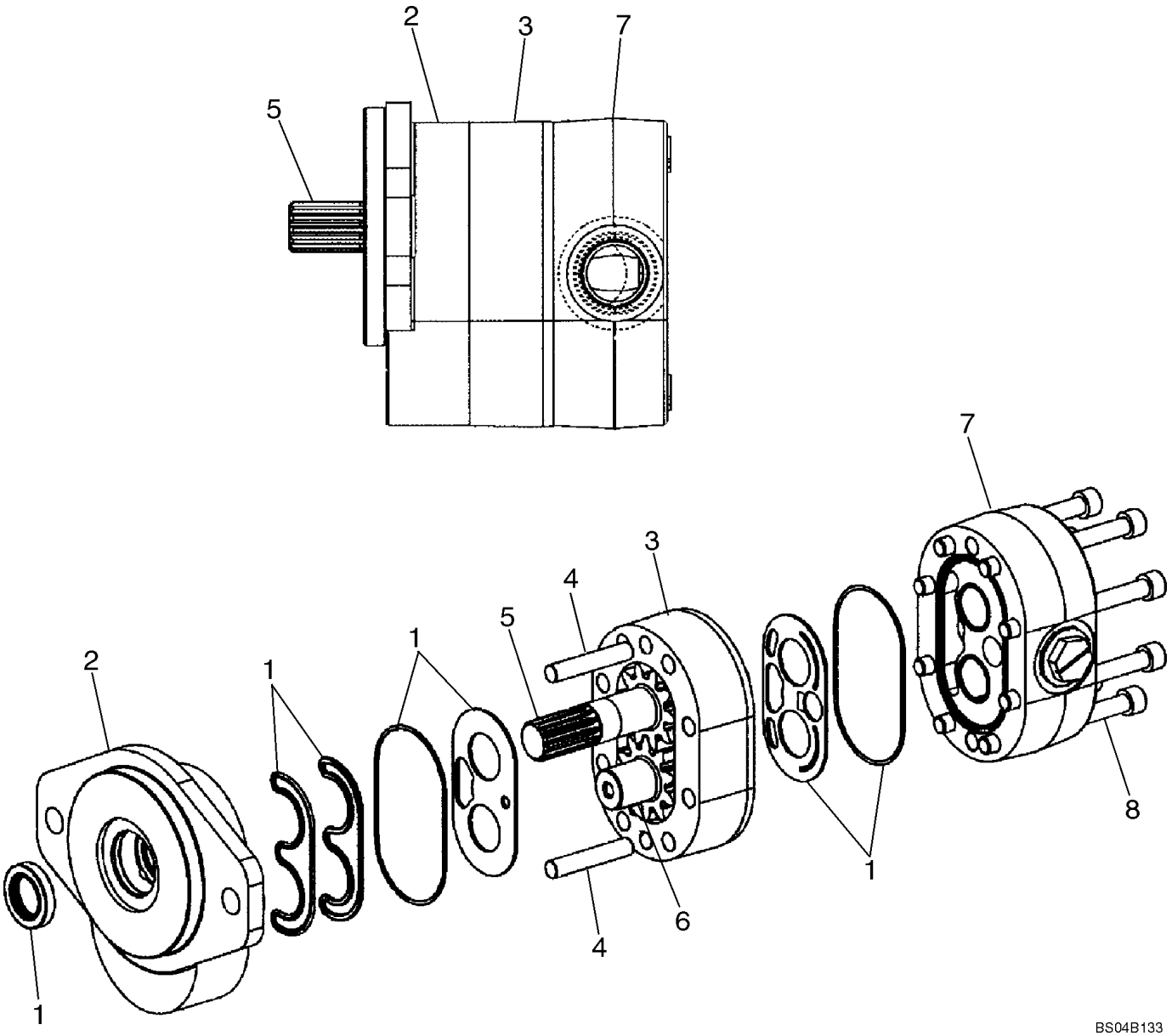

BOMBA, ENGRANAJE

REF	FN	PART NUMBER	YR/SN	QTY	DENOMINACION
		87024695		1	BOMBA, Incl. 1 - 8; Models Without High Flow
1		87042214		1	SERIE DE JUNTAS, Seal; Component Parts Not Serviced Separately
2		NSS		1	NO SE REPARA SEPARADAM., Cover
3		NSS		1	NO SE REPARA SEPARADAM., Plate, Gear
4		NSS		2	NO SE REPARA SEPARADAM., Pin, Dowel
5		NSS		1	NO SE REPARA SEPARADAM., Shaft, Drive
6		NSS		1	NO SE REPARA SEPARADAM., Shaft, Idler
7		NSS		1	NO SE REPARA SEPARADAM., Cover
8		NSS		8	NO SE REPARA SEPARADAM., Screw

BOMBA, ENGRANAJE (FLUJO ALTO)

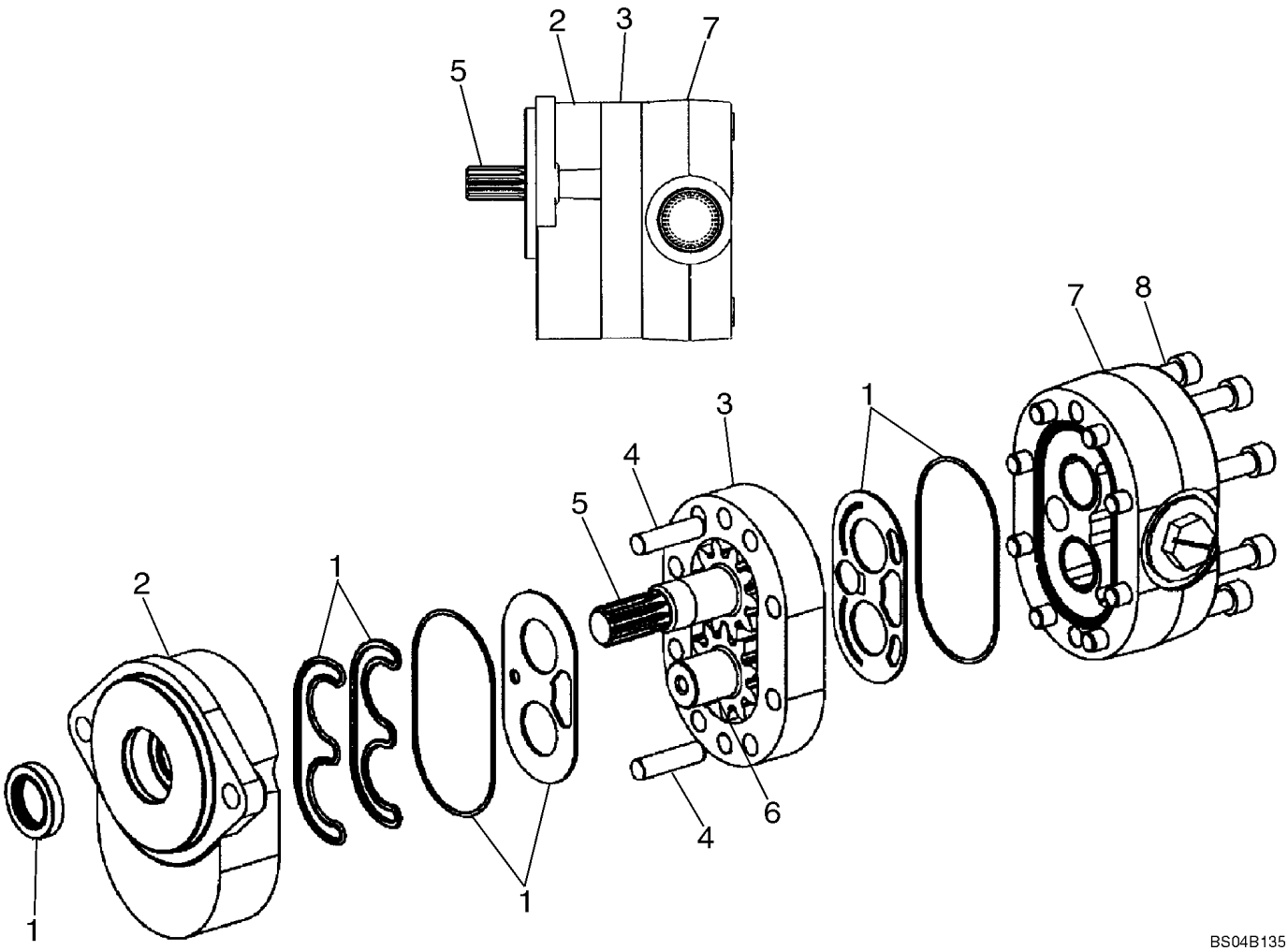

BOMBA, ENGRANAJE (FLUJO ALTO)

REF	FN	PART NUMBER	YR/SN	QTY	DENOMINACION
		87020733		1	BOMBA, Incl. 1 - 8; Models With High Flow
1		87042214		1	SERIE DE JUNTAS, Seal; Component Parts Not Serviced Separately
2		NSS		1	NO SE REPARA SEPARADAM., Cover
3		NSS		1	NO SE REPARA SEPARADAM., Plate, Gear
4		NSS		2	NO SE REPARA SEPARADAM., Pin, Dowel
5		NSS		1	NO SE REPARA SEPARADAM., Shaft, Drive
6		NSS		1	NO SE REPARA SEPARADAM., Shaft, Idler
7		NSS		1	NO SE REPARA SEPARADAM., Cover
8		NSS		8	NO SE REPARA SEPARADAM., Screw

MOTOR - UNA SOLA VELOCIDAD

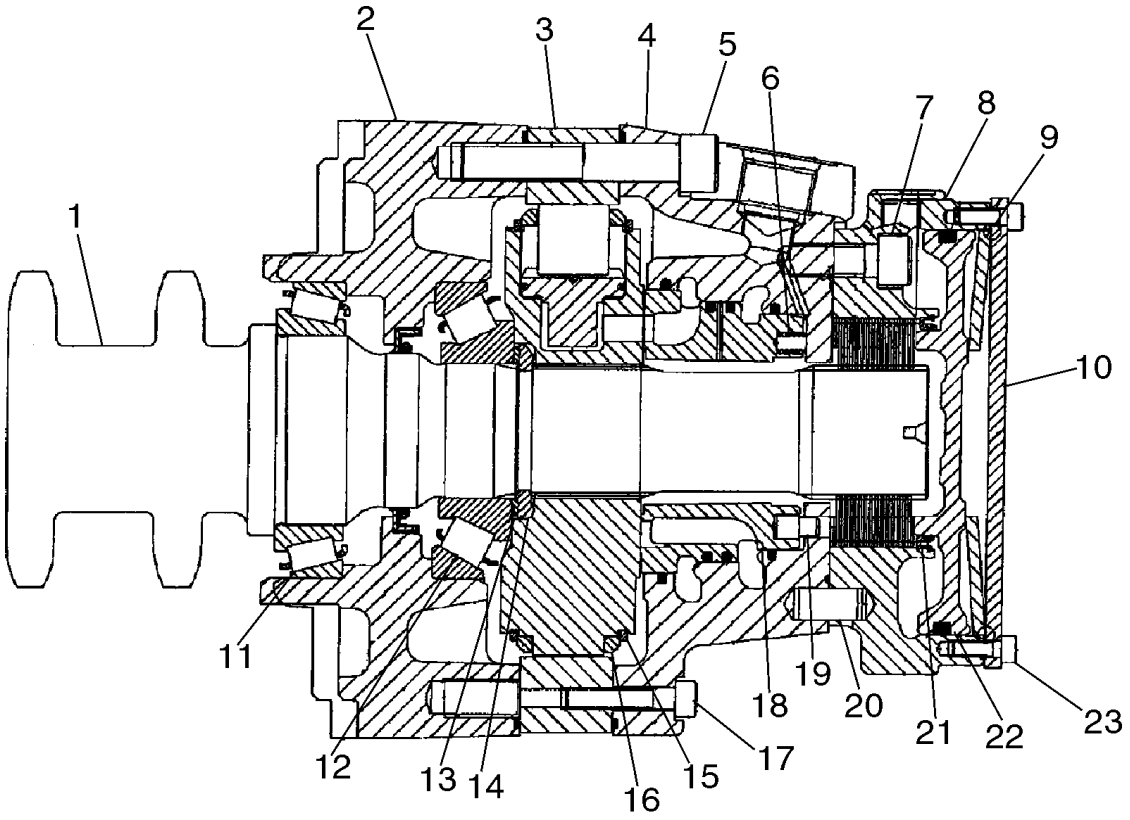

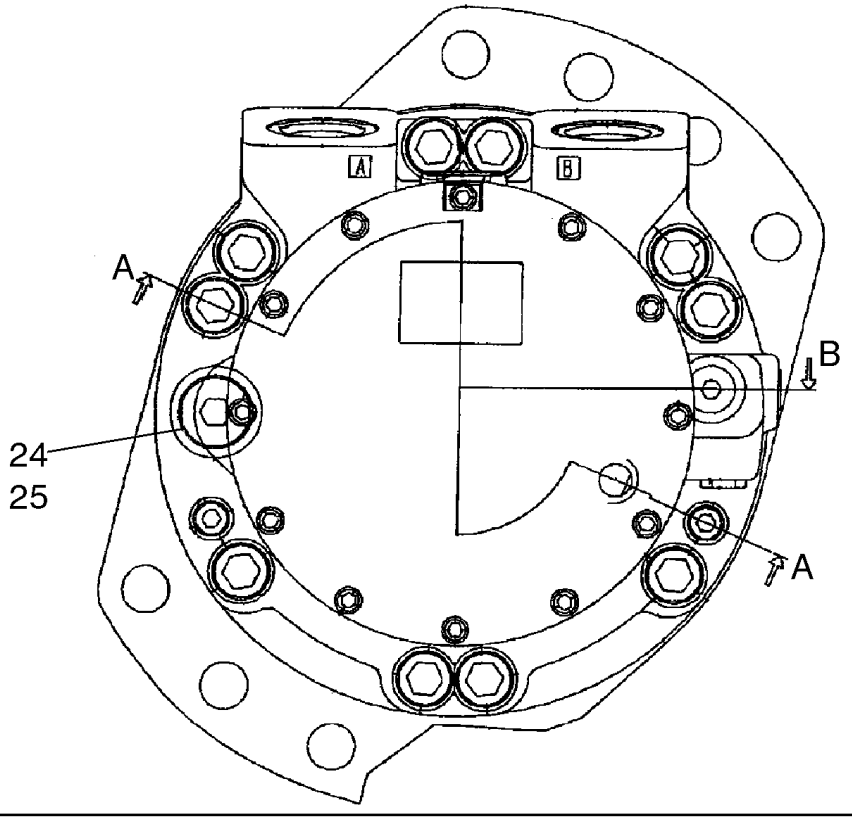

MOTOR - UNA SOLA VELOCIDAD

REF	FN	PART NUMBER	YR/SN	QTY	DENOMINACION
		87035341		2	MOTOR-HIDRÁULICO, One Speed
1		87039359		1	EQUIPO, Shaft And Bearing
2		87042941		1	ESTUCHE, Front
3		87042908		1	LEVA, 680/470
4		87042953		1	ESTUCHE, Rear
5		861-14080		10	TORNILLO, Hex Soc Hd, M14 x 80, 12.9
6		87042912		9	RESORTE
7		86512142		5	TORNILLO, Hex Soc Hd, M12 x 30, 12.9
8		87042921		1	CAVIDAD, Brake
9		87042926		1	RESORTE, Disc
10		87042923		1	TAPADERA, End
11		87042904		1	COJINETE, 70 x 110 x 25
12		87042905		1	COJINETE, 50 x 110 x 29.25
13		87042903		1	EQUIPO, Washer
14		87042906		1	ANILLO, Split Ring
15		NSS			NO SE REPARA SEPARADAM.
16		NSS			NO SE REPARA SEPARADAM.
17		861-8040		2	TORNILLO, Hex Soc Hd, M8 x 40, 12.9
18		87042954		1	ANILLO, Distributor
19		87042911		1	PERNO, Stop
20		87042927		3	PERNO, 12 x 25
21		87042925		1	SUJETADOR, 87 ID
22		87042922		1	EMBOLO, Brake Piston
23		86512134		12	TORNILLO, Hex Soc Hd, M6 x 16, 12.9
24		214389		1	TAPÓN, Hex Hd, 3/4"-16 ORB, Incl. Ref. 25
25		237-6008		1	JUNTA HERMETICA, 8-1, 90 Duro, .644" ID x .087" Thk

MOTOR - UNA SOLA VELOCIDAD

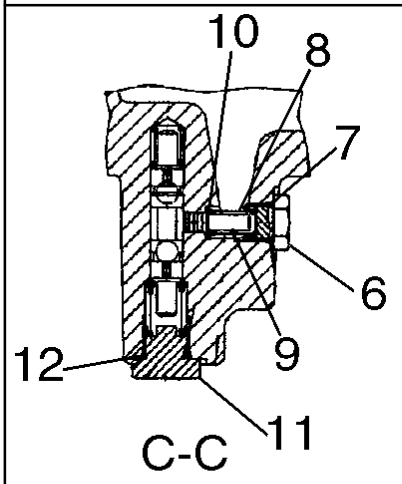

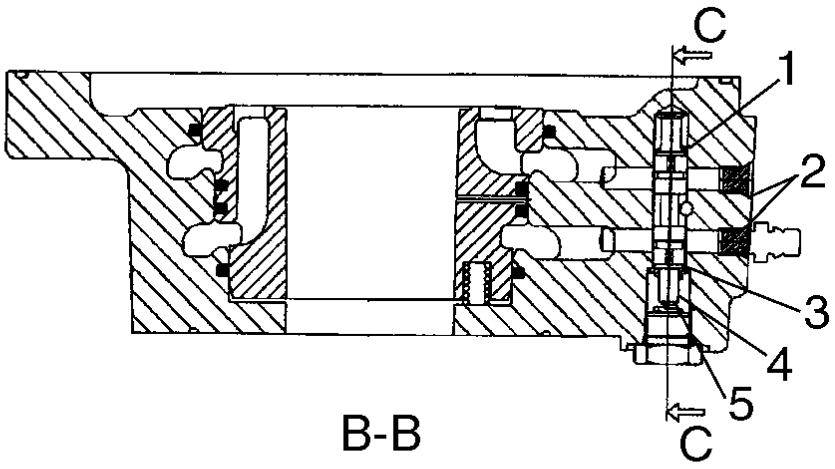

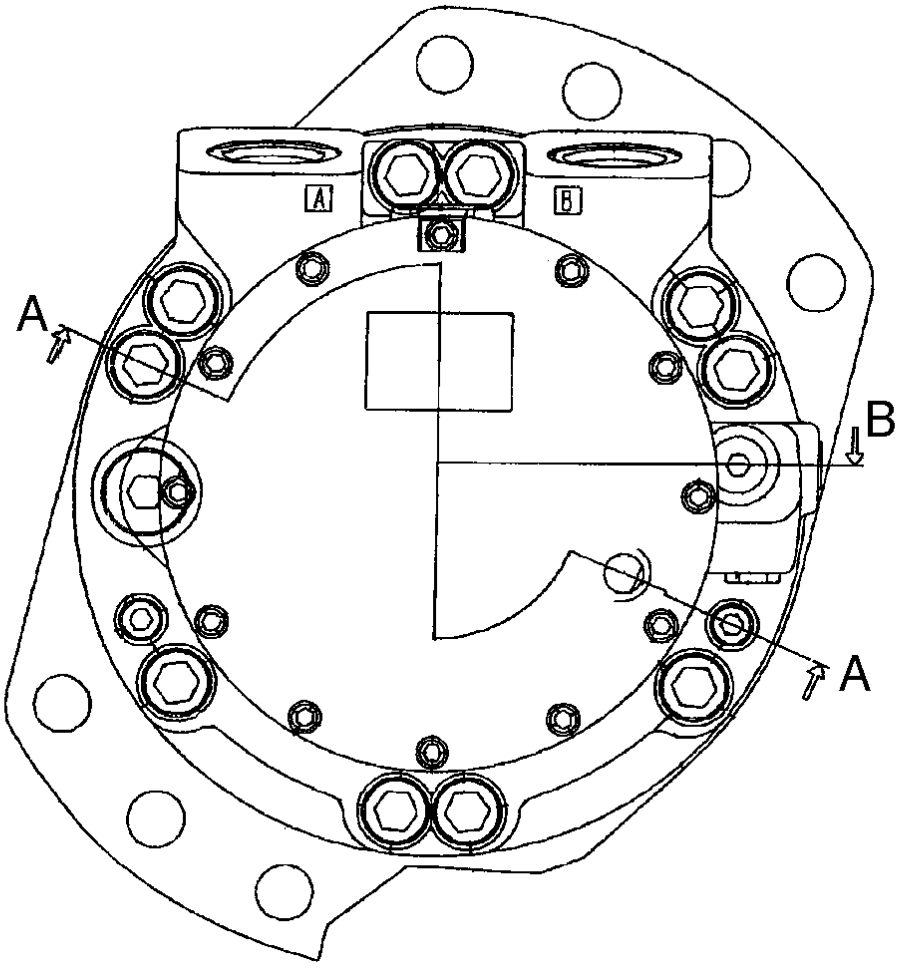

BS04B176

MOTOR - UNA SOLA VELOCIDAD

REF	FN	PART NUMBER	YR/SN	QTY	DENOMINACION
		87035341		2	MOTOR-HIDRÁULICO, One Speed
1		87042934		1	RESORTE, Flushing Side A
2		NSS		2	NO SE REPARA SEPARADAM., Shear Plug; M8
3		87042929		1	ARANDELA, 1.5 Thick
4		87042935		1	RESORTE, Flushing Side B
5		87042928		1	PISTONCILLO, Flushing
6		87042933		1	POPPET, Plug; 7/16
7		NSS		1	NO SE REPARA SEPARADAM., O-Ring; 8.92 x 1.83; Included In 87039370, Seal Kit, See Figure 06-58
8		87042931		1	POPPET, 1.7 Orifice
9		87042932		1	RESORTE, Flushing
10		87042930		1	SUPLEMENTO, 0.6
11		214389		1	TAPÓN, Hex Hd, 3/4"-16 ORB
12		NSS		1	NO SE REPARA SEPARADAM., O-Ring; 11.90 x 1.98; Incl. In 87039370, Seal Kit, See Figure 06-58

MOTOR - UNA SOLA VELOCIDAD

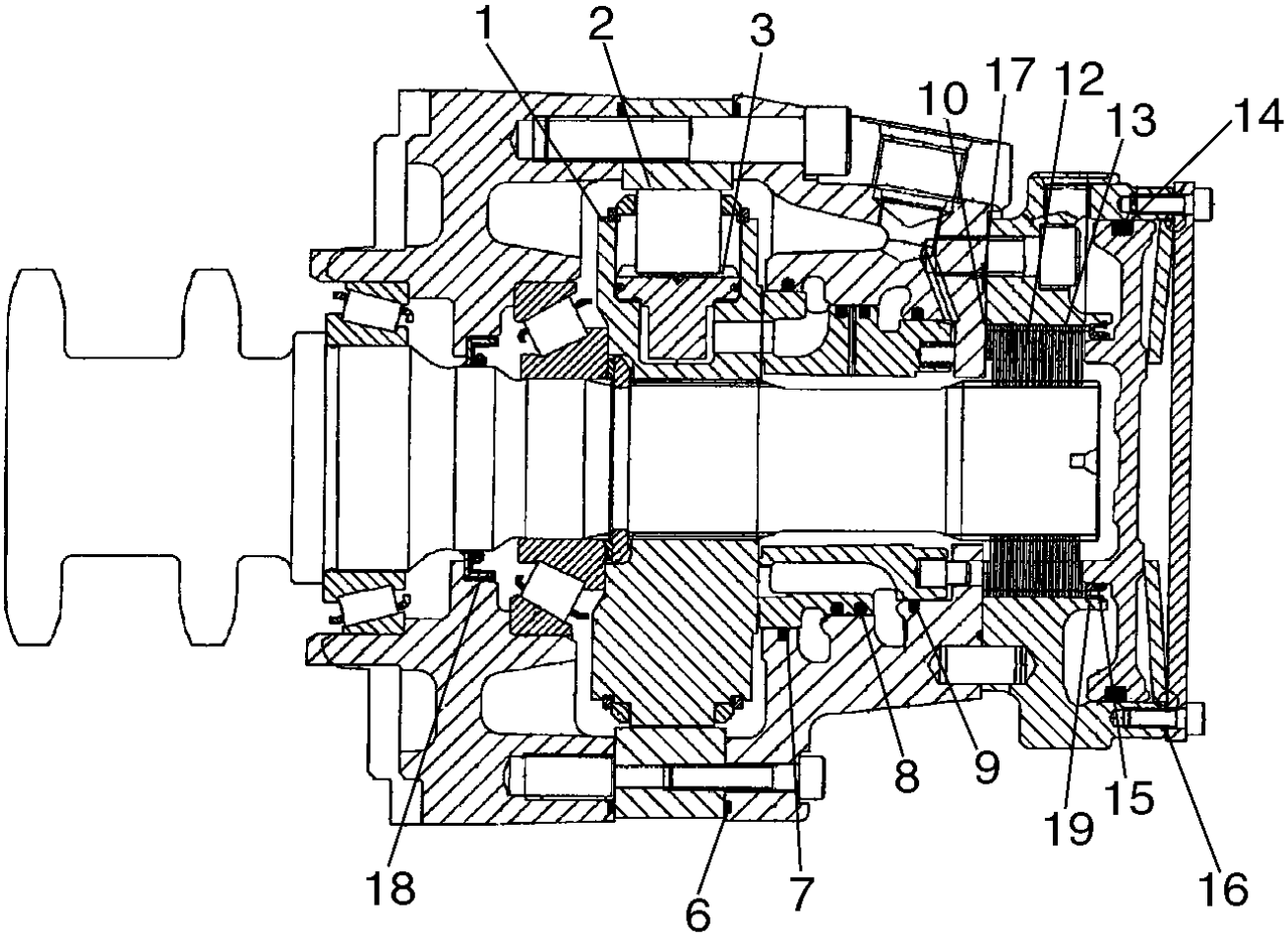

BS04B177

MOTOR - UNA SOLA VELOCIDAD

REF	FN	PART NUMBER	YR/SN	QTY	DENOMINACION
		87035341		2	MOTOR-HIDRÁULICO, One Speed
		87039368		1	EQUIPO, Brake; Incl. 1 - 3
1		NSS		1	NO SE REPARA SEPARADAM., Cylinder Block
2		NSS		8	NO SE REPARA SEPARADAM., Roll
3		NSS		8	NO SE REPARA SEPARADAM., Piston S/A
		87039370		1	EQUIPO, Seal; Incl. 4 - 9
4		NSS		1	NO SE REPARA SEPARADAM., O-Ring; 11.90 x 1.98; For Illustration, See Figure 06-57, Ref 12
5		NSS		1	NO SE REPARA SEPARADAM., O-Ring; 8.92 x 1.83; For Illustration, See Figure 06-57, Ref 7
6		NSS		2	NO SE REPARA SEPARADAM., Square Ring; 213 x 2.51
7		NSS		1	NO SE REPARA SEPARADAM., Rod Seal; 105
8		NSS		1	NO SE REPARA SEPARADAM., Piston Seal; 96.5
9		NSS		1	NO SE REPARA SEPARADAM., Rod Seal; 87.15
		87039372		1	EQUIPO, Rotating; Incl. 10 - 16
10		NSS		1	NO SE REPARA SEPARADAM., Shim; 80 x 63 x 0.1
11		NSS		1	NO SE REPARA SEPARADAM., Shim; 80 x 63 x 0.3
12		NSS		14	NO SE REPARA SEPARADAM., Inner Plate
13		NSS		16	NO SE REPARA SEPARADAM., Outer Plate
14		NSS		1	NO SE REPARA SEPARADAM., Square Ring; 139.07 x 5.16
15		NSS		1	NO SE REPARA SEPARADAM., O-ring; 75.92 x 1.78
16		NSS		1	NO SE REPARA SEPARADAM., Gasket; 0.5
17		87042919		1	JUNTA HERMETICA, 107.67 x 1.78
18		87042907		1	JUNTA DE LABIOS, 57.15
19		87042924		1	ANILLO, Brake Seal

MOTOR - DOS VELOCIDADES

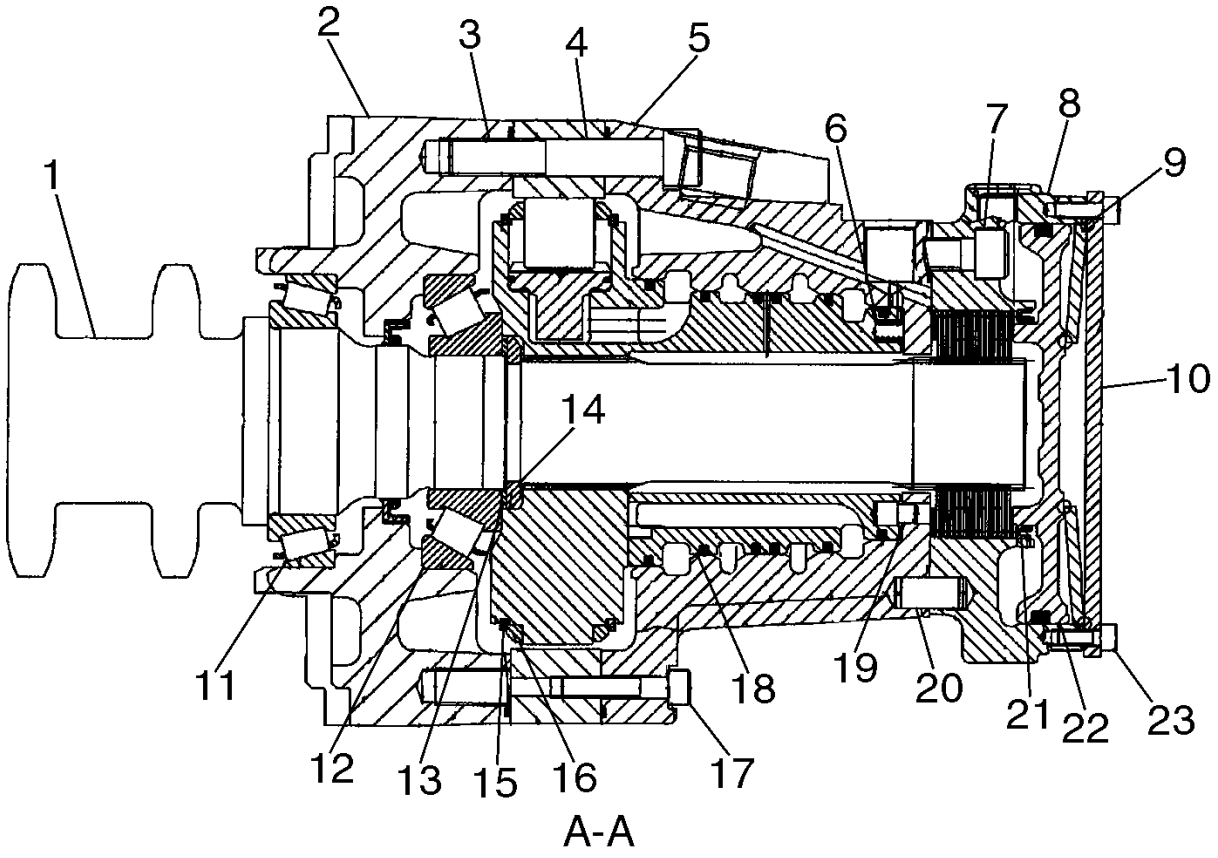

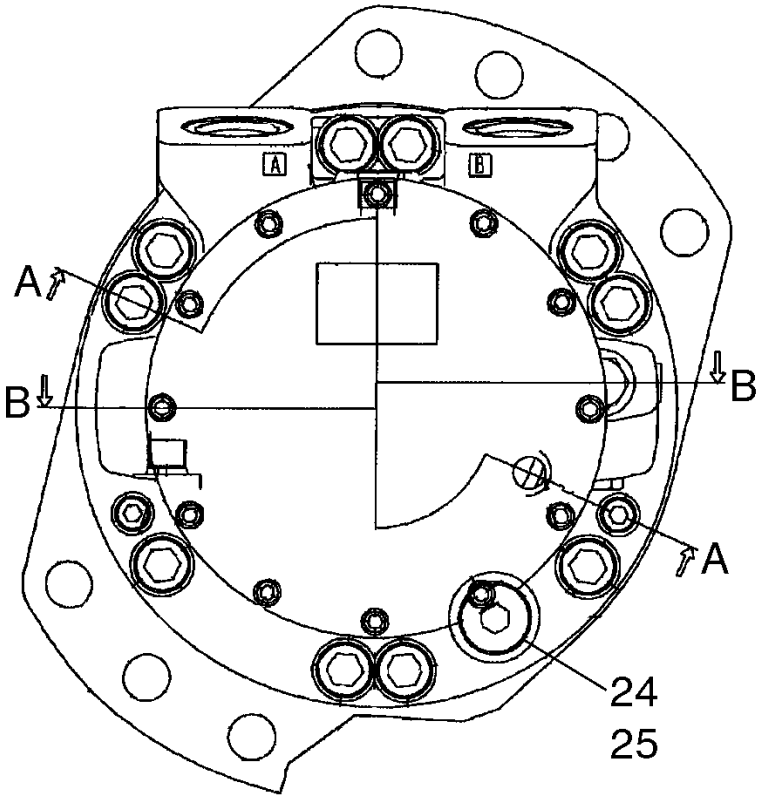

BS04B178

MOTOR - DOS VELOCIDADES

REF	FN	PART NUMBER	YR/SN	QTY	DENOMINACION
		87035342		2	MOTOR-HIDRÁULICO, Two Speed
1		87039360		1	EQUIPO, Shaft And Bearing
2		87042941		1	ESTUCHE, Front
3		861-14080		10	TORNILLO, Hex Soc Hd, M14 x 80, 12.9
4		87042908		1	LEVA, MCR3/5
5		87042909		1	ESTUCHE
6		87042912		16	RESORTE
7		86512142		5	TORNILLO, Hex Soc Hd, M12 x 30, 12.9
8		87042921		1	CAVIDAD, Brake Housing
9		87042926		1	RESORTE, Disc
10		87042923		1	TAPADERA, End
11		87042904		1	COJINETE, 70 x 110 x 25
12		87042905		1	COJINETE, 50 x 110 x 29.25
13		87042903		1	EQUIPO, Washer
14		87042906		1	ANILLO, Split
15		NSS			NO SE REPARA SEPARADAM.
16		NSS			NO SE REPARA SEPARADAM.
17		861-8040		2	TORNILLO, Hex Soc Hd, M8 x 40, 12.9
18		87042910		1	DISTRIBUDOR
19		87042911		1	PERNO, Stop
20		87042927		3	PERNO, 12 x 25
21		87042925		1	SUJETADOR, 87 ID
22		87042922		1	EMBOLO, Brake
23		86512134		12	TORNILLO, Hex Soc Hd, M6 x 16, 12.9
24		214389		1	TAPÓN, Hex Hd, 3/4"-16 ORB, Incl. 25
25		128825		1	JUNTA HERMETICA, 8-1, 90 Duro, .644" ID x .087" Thk

MOTOR - DOS VELOCIDADES

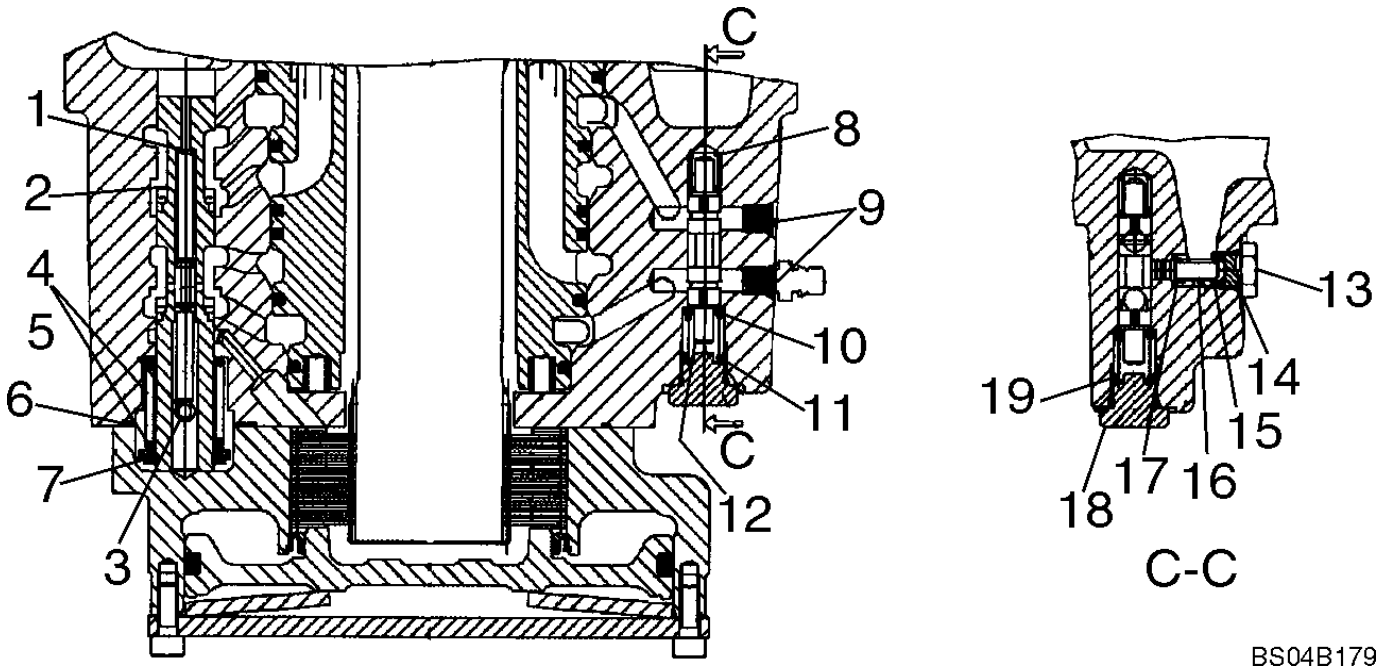

MOTOR - DOS VELOCIDADES

REF	FN	PART NUMBER	YR/SN	QTY	DENOMINACION
		87035342		2	MOTOR-HIDRÁULICO, Two Speed
1		87042918		1	RESORTE, Shut Off
2		87042913		1	PISTONCILLO
3		87042917		1	RESORTE, 6 x 16
4		87042914		1	EQUIPO, Washer And Spring Kit; Incl. 5
5		NSS		1	NO SE REPARA SEPARADAM., Washer
6		87042916		1	JUNTA HERMETICA, 34.65 x 1.78
7		87042915		1	SUJETADOR, 18 dia
8		87042934		1	RESORTE, Flushing Side A
9		NSS		2	NO SE REPARA SEPARADAM., Shear Plug; M8
10		87042929		1	ARANDELA, 1.5 Thick
11		87042935		1	RESORTE, Flushing Side B
12		87042928		1	PISTONCILLO, Flushing
13		87042933		1	POPPET, 7/16
14		NSS		1	NO SE REPARA SEPARADAM., O-Ring; 8.92 x 1.83; Included In 87039371, Seal Kit, See Figure 06-61
15		87042931		1	POPPET, 1.7 Orifice
16		87042932		1	RESORTE, Flushing
17		87042930		1	SUPLEMENTO, 0.6
18		214389		1	TAPÓN, Hex Hd, 3/4"-16 ORB
19		NSS		1	NO SE REPARA SEPARADAM., O-Ring 11.90 x 1.98; Included In 87039371 Seal Kit; See Figure 06-61

MOTOR - DOS VELOCIDADES

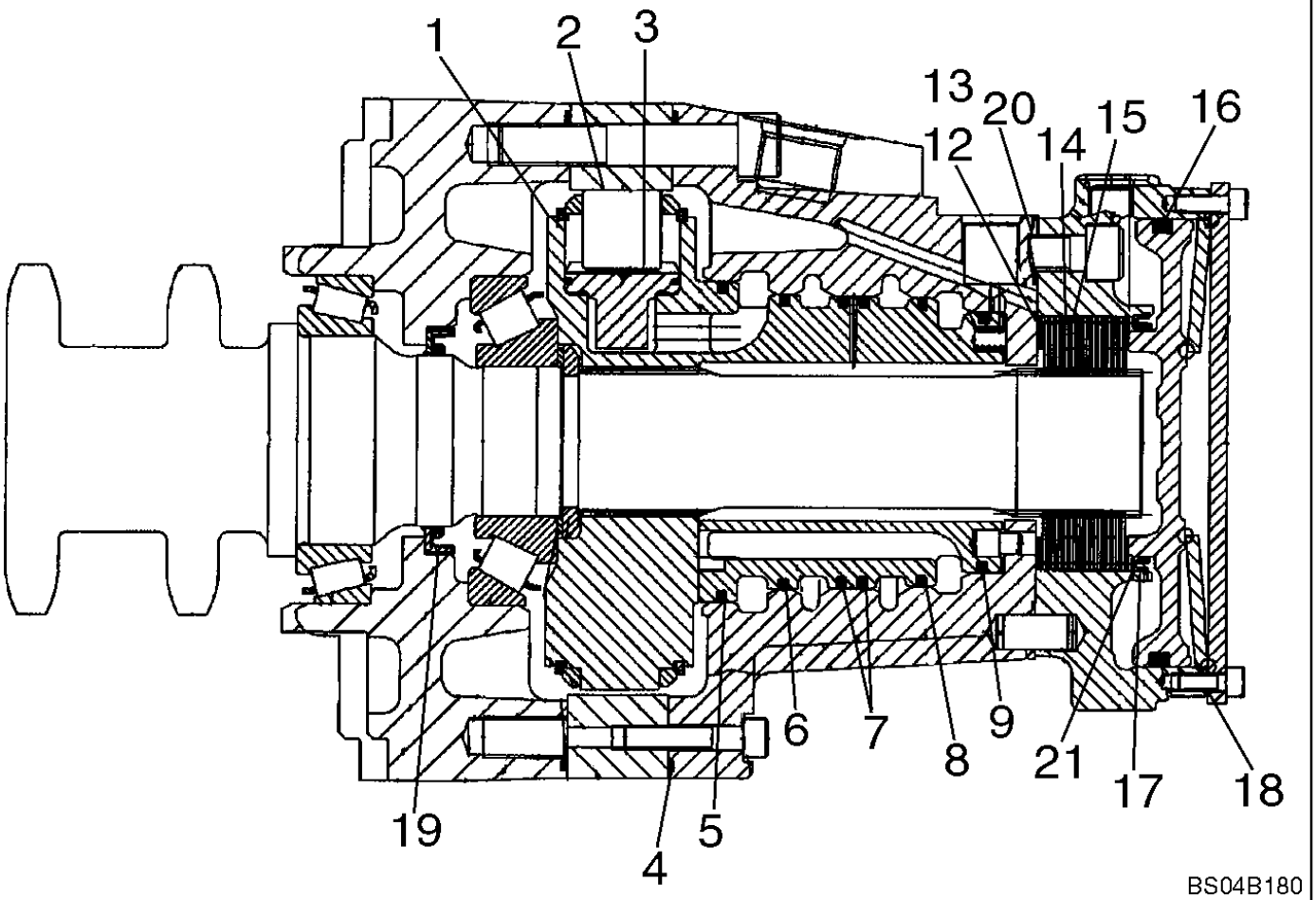

MOTOR - DOS VELOCIDADES

REF	FN	PART NUMBER	YR/SN	QTY	DENOMINACION
		87035342		2	MOTOR-HIDRÁULICO, Two Speed
		87039369		1	EQUIPO, Rotating; Incl. 1 - 3
1		NSS		1	NO SE REPARA SEPARADAM., Cylinder Block
2		NSS		8	NO SE REPARA SEPARADAM., Roll
3		NSS		8	NO SE REPARA SEPARADAM., Piston S/A
		87039371		1	SERIE DE JUNTAS, Incl. 4 - 11, 19
4		NSS		2	NO SE REPARA SEPARADAM., Square Ring; 213 x 2.51
5		NSS		1	NO SE REPARA SEPARADAM., Piston Seal; 107.25
6		NSS		1	NO SE REPARA SEPARADAM., Piston Seal; 98.725
7		NSS		2	NO SE REPARA SEPARADAM., Piston Seal; 97.725
8		NSS		1	NO SE REPARA SEPARADAM., Piston Seal; 96.725
9		NSS		1	NO SE REPARA SEPARADAM., Piston Seal; 87.25
10		NSS		1	NO SE REPARA SEPARADAM., O-Ring; 11.90 x 1.98; For Illustration, See Figure 06-60, Ref 19
11		NSS		1	NO SE REPARA SEPARADAM., O-Ring; 8.92 x 1.83; For Illustration, See Figure 06-60, Ref 14
		87039372		1	EQUIPO, Brake; Incl. 12 - 18
12		NSS		1	NO SE REPARA SEPARADAM., Shim; 80 x 63 x 0.1
13		NSS		1	NO SE REPARA SEPARADAM., Shim; 80 x 63 x 0.3
14		NSS		14	NO SE REPARA SEPARADAM., Inner Plate
15		NSS		16	NO SE REPARA SEPARADAM., Outer Plate
16		NSS		1	NO SE REPARA SEPARADAM., Square Ring; 139.07 x 5.16
17		NSS		1	NO SE REPARA SEPARADAM., O-ring; 75.92 x 1.78
18		NSS		1	NO SE REPARA SEPARADAM., Gasket; 0.5
19		87042907		1	JUNTA DE LABIOS, 57.15
20		87042919		1	JUNTA HERMETICA, 107.67 x 1.78
21		87042924		1	ANILLO, Brake Seal Ring

MOTOR - ACCIONAMIENTO HIDROSTATICO (440CT)

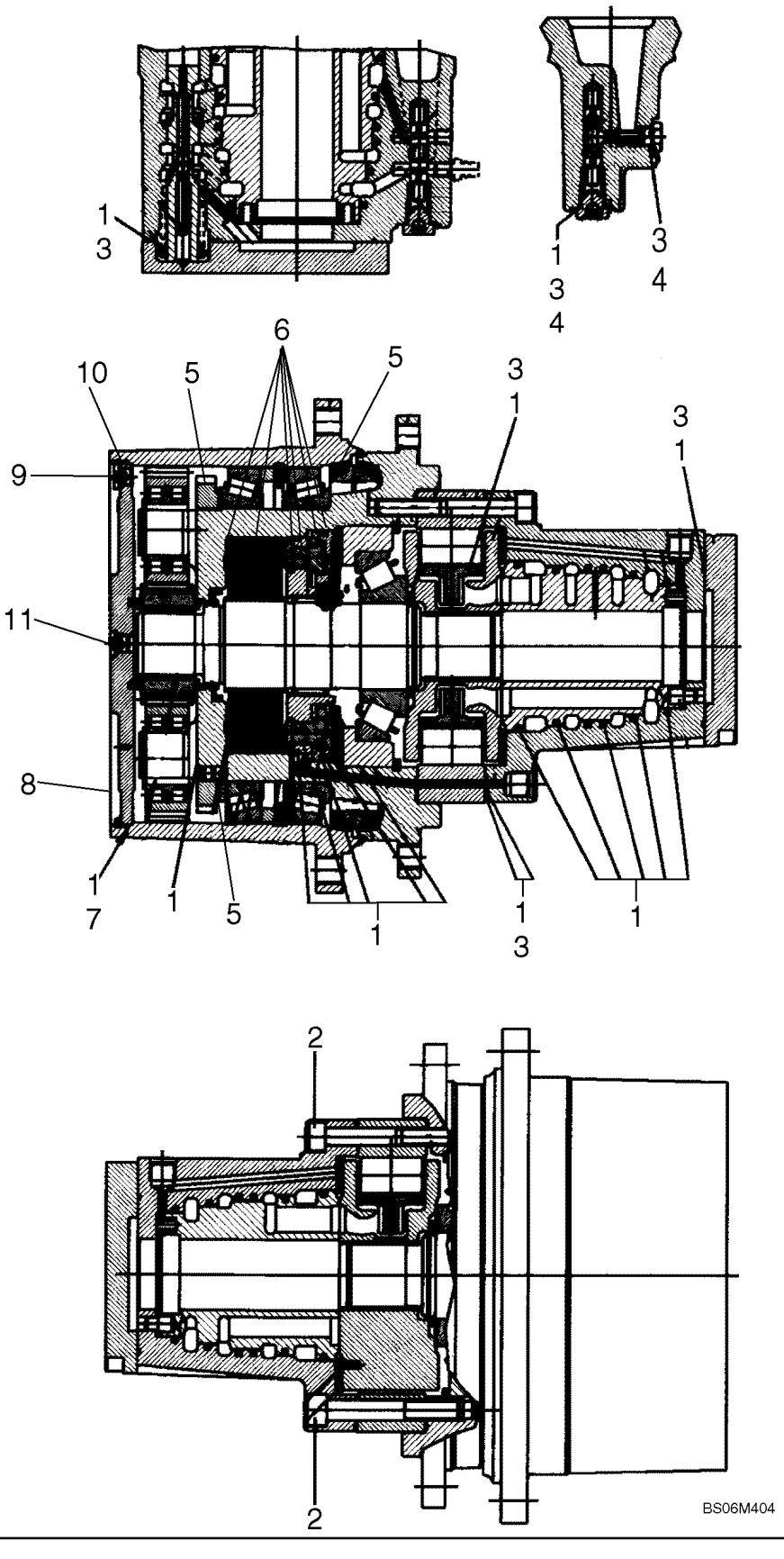

MOTOR - ACCIONAMIENTO HIDROSTATICO (440CT)

REF	FN	PART NUMBER	YR/SN	QTY	DENOMINACION
		87600262		1	MOTOR, Drive Motor, LH; Incl. 1 - 11
		87600262C		1	MOTOR-HIDR A RENOVAR, Drive Motor, LH Core - Motor Return Number, Use To Return Core For Credit When Using A Remanufactured Assy
		87600262R		1	MOTOR-HIDR RENOVADO, Reman - Motor, LH, Remanufactured
		87600263		1	MOTOR, Drive Motor, RH; Incl. 1 - 11
		87600263C		1	MOTOR-HIDR A RENOVAR, Drive Motor, RH Core - Motor Return Number, Use To Return Core For Credit When Using A Remanufactured Assy
		87600263R		1	MOTOR-HIDR RENOVADO, Reman - Motor, RH, Remanufactured
1		87461859		1	SERIE DE JUNTAS, Motor Seals; Includes (27) 0-Rings, (4) Quad Rings, (4) Rod Seals, (2) Piston Seals, (1) Shaft Seal, (8) Piston Rings
2		87612449		1	KIT, SERVICE, Cam Bolt; Includes (2) M12 x 75 Screws, (8) M10 x 80 Screws
3		87571969		1	EQUIPO, External Seals; Includes (13) O-Rings, (3) Quad Rings, (8) Piston Rings
4		87601409		1	SERIE DE JUNTAS, Flushing Seals; Includes (2) O-Rings
5		87571954		1	EQUIPO, Face Seal; Includes (2) M6 x 16 Dowell Pins, (1) Shaft Nut, (1) Face Seal
6		87571958		1	EQUIPO, Brake; Includes (14) O-Rings, (1) Quad Ring, (6) Shims, (37) Brake Plates
7		87612446		1	JUNTA HERMETICA, 210 x 2.00
8		87612445		1	TAPADERA
9		87575213		3	TAPÓN, Drain, M10 x 1
10		87575214		1	ANILLO DE RESORTE, Cover
11		87579238		1	TAPÓN, M16 x 1.5

LINEA DE TRANSMISION

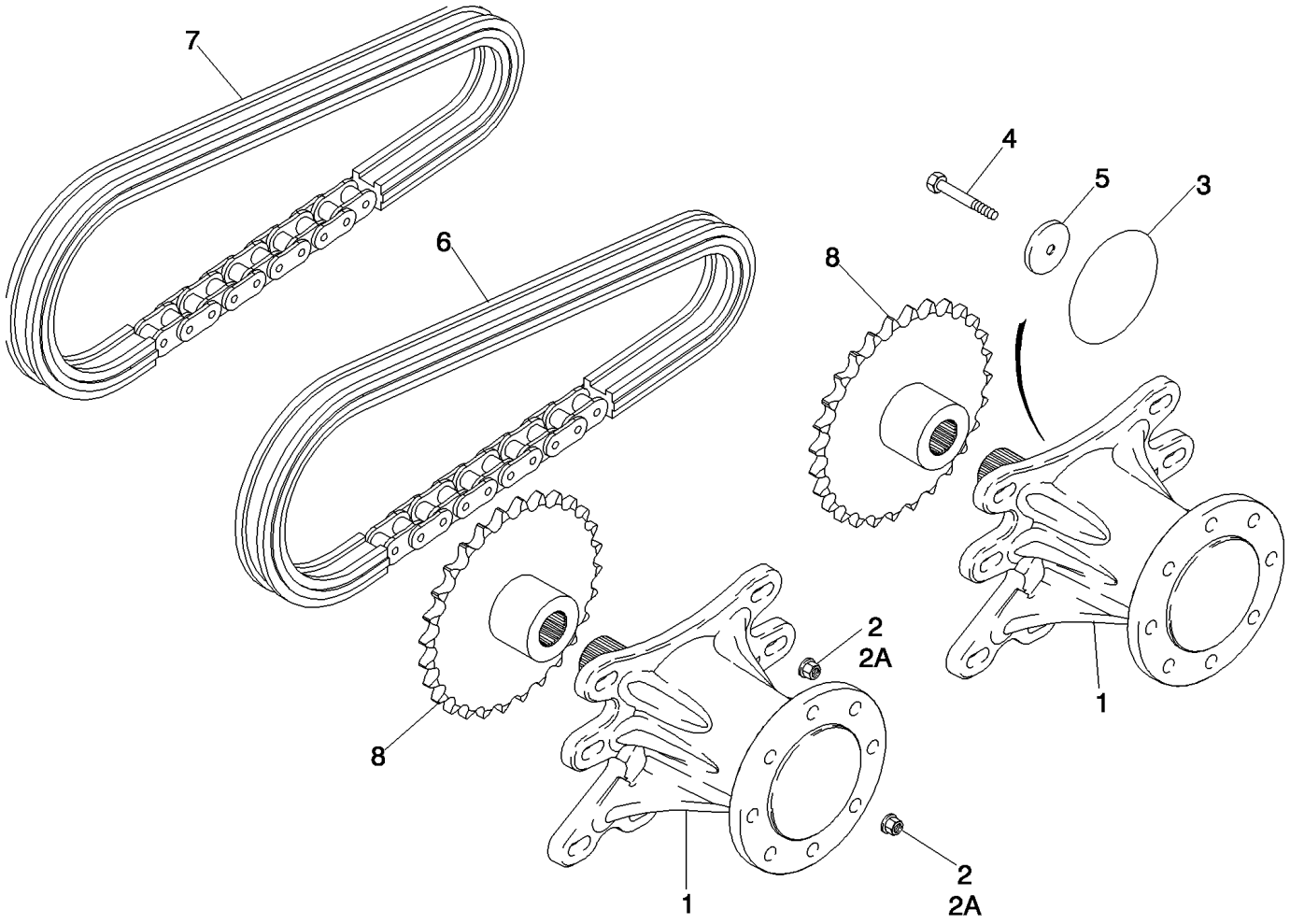

LINEA DE TRANSMISION

REF	FN	PART NUMBER	YR/SN	QTY	DENOMINACION
1		NSS		4	NO SE REPARA SEPARADAM., 338552A3 AXLE ASSY; Used In Production; See Figure 06-64
2		86512498		32	TUERCA, M16 x 2, Flg, Cl 10
3		238-5443		4	JUNTA HERMETICA, -443, 70 Duro, 7.500" ID x .275" Thk
4		86577946		4	TORNILLO, Hex, M16 x 80, 10.9, Use Permatex ZPX24210
		ZPX24210		X	LOCTITE, 10 ml
5		429233A1		4	ARANDELA
6		364181A1		2	CADENA (CONJUNTO), 100/60P; Rear Chain
7		87428143		2	CADENA (CONJUNTO), 100/46P; Front Chain
8		228141A2		4	RUEDA DENTADA (CJTO), 28T

EJE

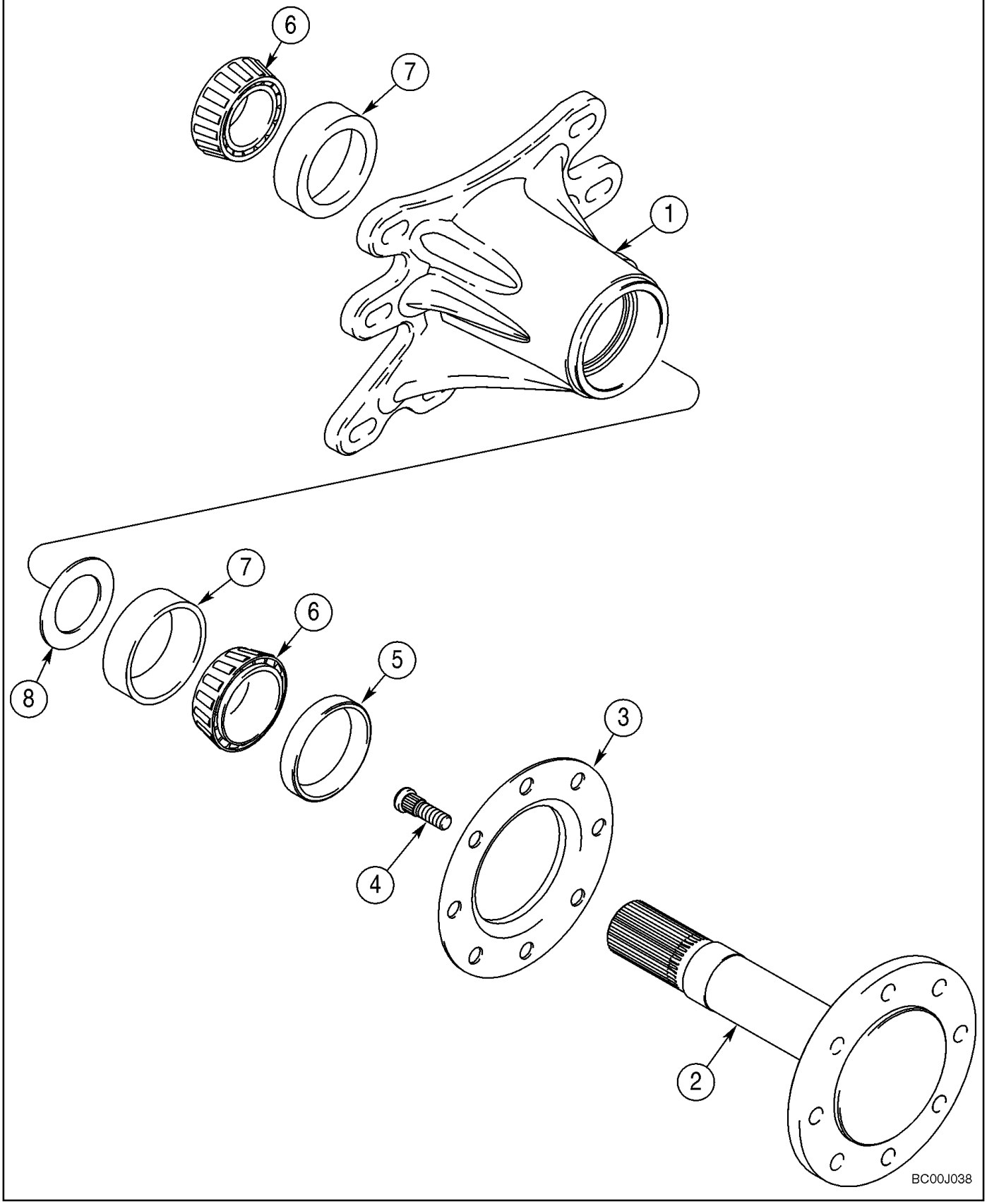

EJE

REF	FN	PART NUMBER	YR/SN	QTY	DENOMINACION
1		338551A2		1	CUBO
		338550A4		1	EJE RUEDA, Incl. 2 - 4
2		NSS		1	NO SE REPARA SEPARADAM., Shaft, Axle
3		189995A1		1	TAPA
4		191048A2		8	PRISIONERO, M16; Plain; Grade 9.8; If Used
4		{87618650}		8	M16; Phosphate Coated; Grade 9.8; If Used
5		341837A2		1	ANILLO DE CIERRE
6		D63653		2	COJINETE
7		R32216		2	TAZA, 3-1/4 OD
8		197805A1		1	ARANDELA

RUEDAS

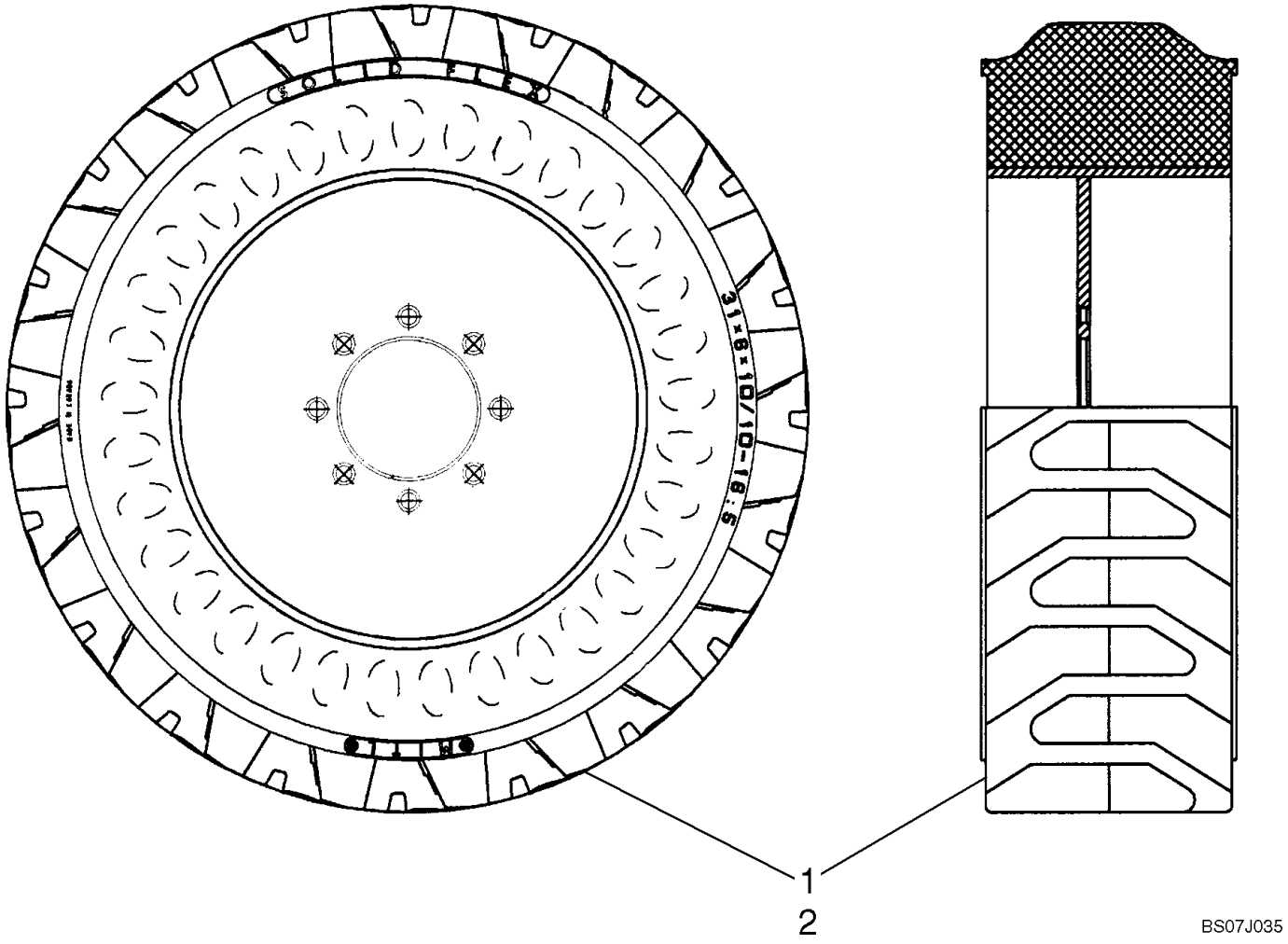

RUEDAS

REF	FN	PART NUMBER	YR/SN	QTY	DENOMINACION
1		{87686722}		2	Tire, LH - 10 X 16.5 Galaxy Solid Flex
2		{87686721}		2	Tire, RH - 10 X 16.5 Galaxy Solid Flex
		408127A1		32	TUERCA, Nut, M16, 90 Deg Taper

RUEDAS

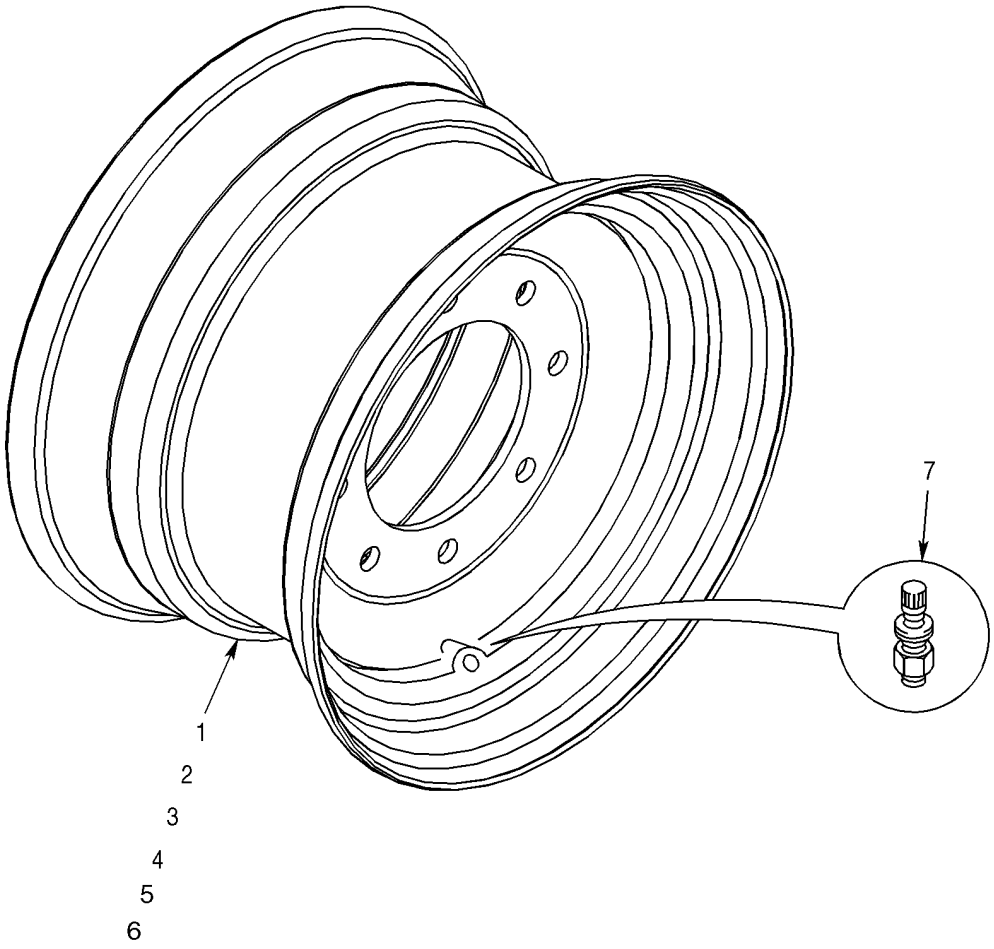

BS07K100

RUEDAS

REF	FN	PART NUMBER	YR/SN	QTY	DENOMINACION
1		408856A3		4	RIN, 16,5 x 8,25, Stamped Center; Used With 33/10 x 16.5 Tire; Uses Ref 7 Valve Stem And Ref 10 Nut
2		408450A1		4	RIN, 16,5 x 9,75, Stamped Center; Used With 12 x 16.5 Inch Tire; Models With 64 in Over Tire Width; Uses Ref 7 Valve Stem And Ref 10 Nut
3		409574A1		4	RIN, 16.5 x 9.75, Stamped Center; Used With 12 x 16.5 Inch Tire; Models With 71 in Over Tire Width; Uses Ref 7 Valve Stem And Ref 10 Nut
4		409174A2		4	RIN, 16.5 x 12, Stamped Center; Used With 33/15.5 x 16.5 Tire; Models With 71 in Over Tire Width; Uses Ref 7 Valve Stem And Ref 10 Nut
5		87534387		4	RIN, Rim, 16.5 X 9.75 Full Center, 13.84mm Offset; Uses Ref 7 Valve Stem And Ref 9 Nut
6		87578653		4	RIN, Rim, 16.5 X 9.75 Full Center; Uses Ref 7 Valve Stem And Ref 9 Nut
7		294579A1		4	VASTAGO DE VALVULA
9		86512498		32	TUERCA, M16 x 2, Flg, Cl 10, Nut, Hex Flange M16 10 ZND
10		408127A1		32	TUERCA, Nut, M16 X 2, 90 Deg Taper

06-67		p1	12/07

ORUGA (440CT)

ART

NOT

AVAILABLE

ORUGA (440CT)

REF	FN	PART NUMBER	YR/SN	QTY	DENOMINACION
		87541112		2	DEGOMA PISTA, 50 x 86P x 400W

06-68		p1	12/07

CONJUNTO DE LA TRANSMISIÓN FINAL (440CT)

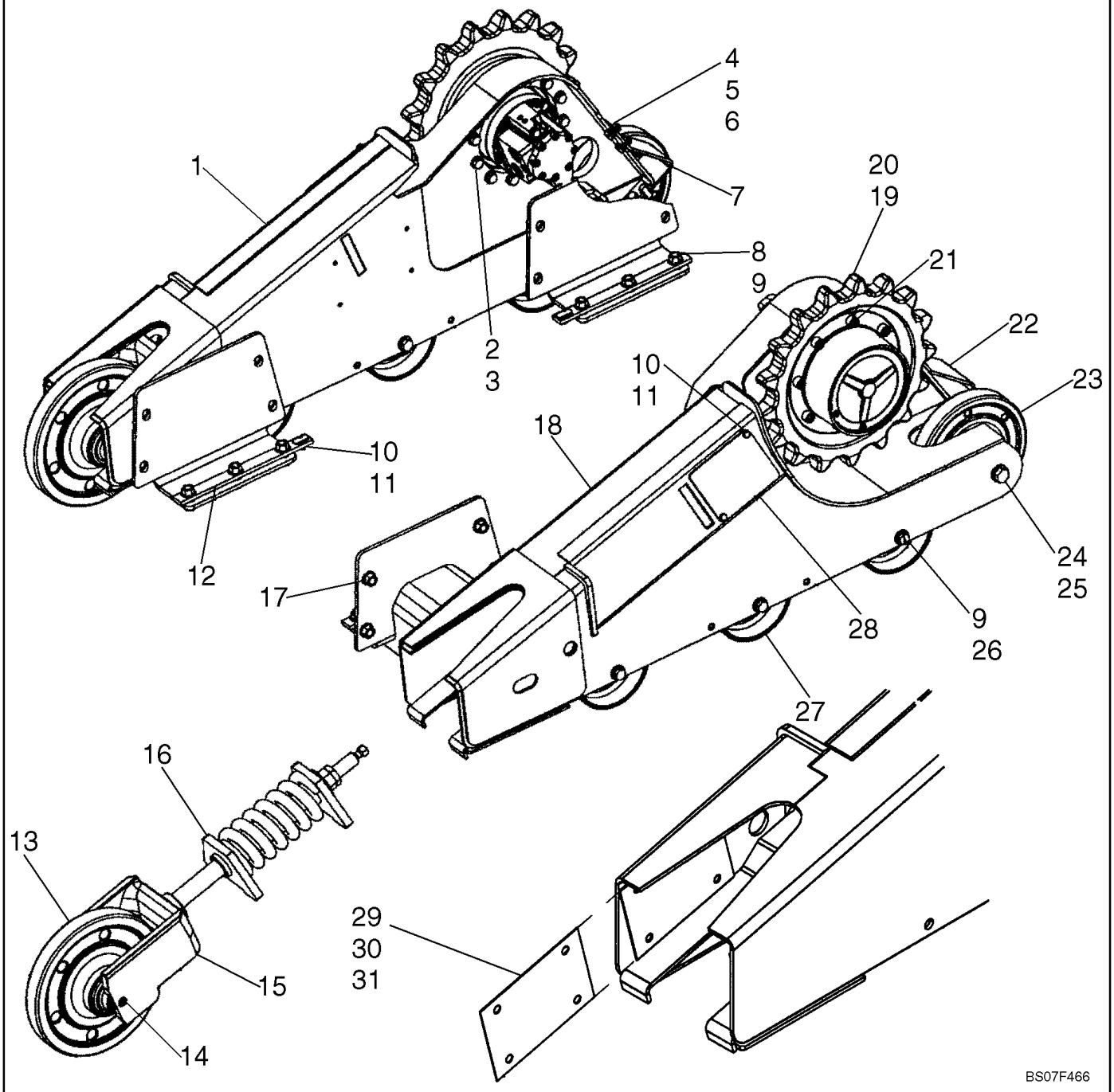

CONJUNTO DE LA TRANSMISIÓN FINAL (440CT)

REF	FN	PART NUMBER	YR/SN	QTY	DENOMINACION
		87563155		1	EQUIPO, Roller And Idler; Includes Ref. 9, 13, 14, 23 - 26, 27 And Instructions
1		87582846		1	BASTIDOR, RH; Replaces 87525673, 87459512; If Used
1		87669349		1	BASTIDOR, RH; If Used
2		87316174		24	TORNILLO, Hex, M14 x 50
3		87016615		24	ARANDELA, M12 x 28.5 x 3, HT
4		43260		8	TORNILLO, Hex, M12 x 30, 10.9
5		337475		8	TUERCA, M12, Cl 10
6		86625255		8	ARANDELA, M13.5 x 24.5 x 3, HT
7		87459518		1	RASQUETA, Scraper Plate, Right Hand
8		86508624		12	TORNILLO, Hex, M16 x 45, 10.9
9		86639326		24	ARANDELA, M17.5 x 34 x 5, HT
10		43127		4	TORNILLO, Hex, M8 x 25, 8.8
11		86511315		8	ARANDELA, M8 x 16 x 1.6
12		87364613		4	BARRA, Bar W/Undercarriage Mount
13		87535298		2	RODILLO LOJO DELANTE, 350 mm, Front; Replaces 87462176
14		14301821		4	TORNILLO, Hex Soc Hd, M10 x 16, 8.8
15		87462287		2	HORQUILLA, Front Idler
16		87602985		2	LLAVE DE PASO, Spring, Tension; Replaces 87458724
		87602988		1	VARILLA, Piston Rod For Track Tensioner, Ref. 16
		87602987		1	KIT, SERVICE, Seal Kit For Track Tensioner, Ref. 16; Incl. Scraper, Spacer, And O-Ring
		87356572		1	VALVULA, Grease Valve For Tension Spring Ref 16
17		86512498		16	TUERCA, M16 x 2, Flg, Cl 10
18		87582844		1	BASTIDOR, LH; Replaces 87525672, 87459511; If Used
18		87669347		1	BASTIDOR, LH; If Used
19		87363008		2	SEPARADOR, Motor Spacer
20		87460888		2	RUEDA DENTADA, 17 Tooth - 86 Pitch
21		87303345		16	TORNILLO, Hex Soc Hd, M16 x 40, 10.9
22		87459517		1	RASQUETA, Scraper Plate, Left Hand

CONJUNTO DE LA TRANSMISIÓN FINAL (440CT)

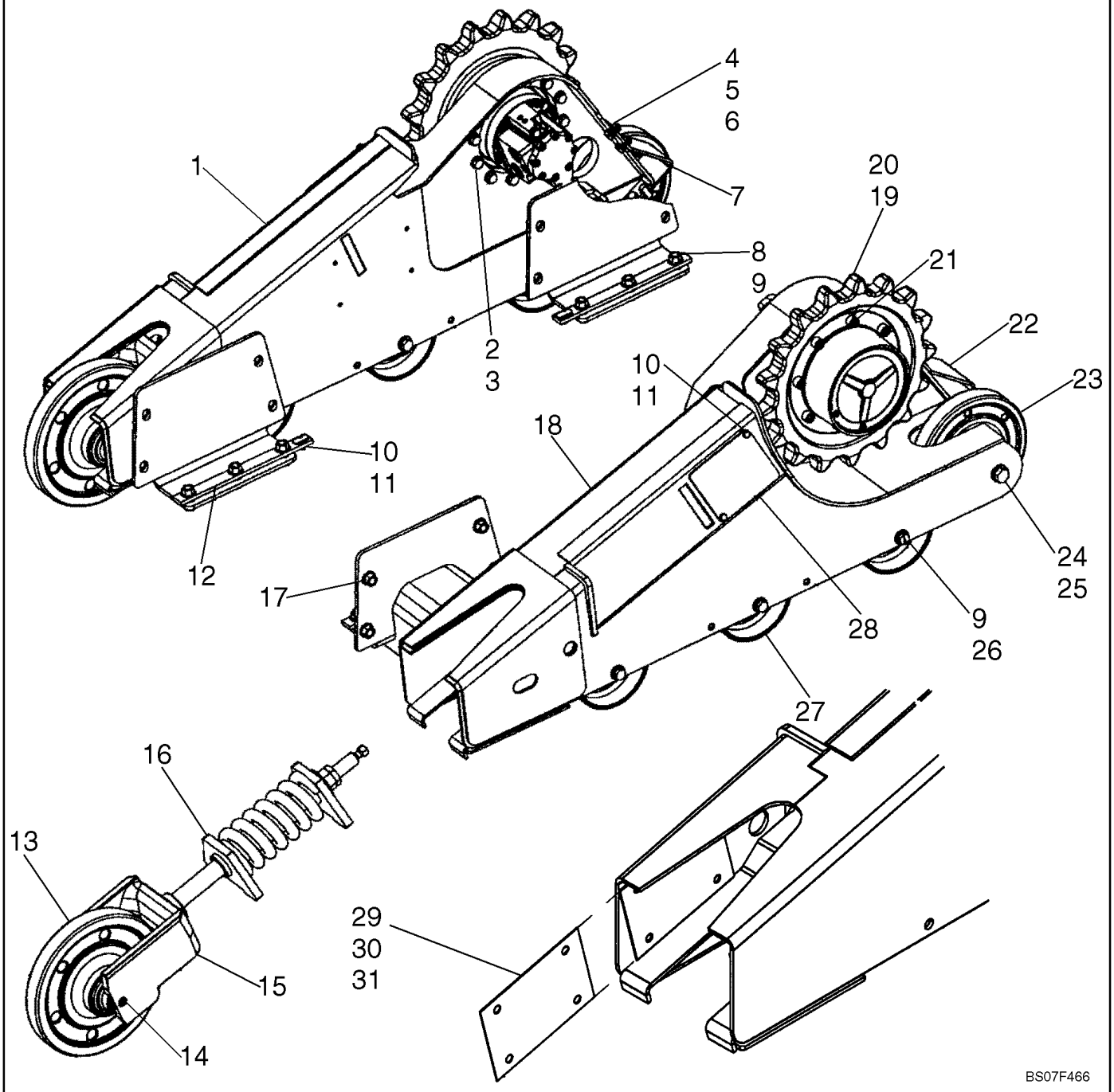

CONJUNTO DE LA TRANSMISIÓN FINAL (440CT)

REF	FN	PART NUMBER	YR/SN	QTY	DENOMINACION
23		87535299		2	RODILLO TENSADOR, 290 mm, Rear; Replaces 87447230
24		9512573		4	TORNILLO, Hex, M20 x 40, 10.9
25		86629891		4	ARANDELA, M18 x 41.5 x 5, HT
26		374835		12	TORNILLO, Hex, M16 x 40, 10.9
27		87535297		6	RODILLO PARA CADENA, Replaces 87447228
28		87354210		2	TAPA, Plate, Zerk Cover
29		87650011		1	KIT, SERVICE, Yoke Shim Kit; Incl. 30, 31 And Instructions
30		87650010		2	PLACA, 16 Gage Shim
31		87650009		2	PLACA, 12 Gage Shim

NOTAS

SECTION INDEX
Frenos

07-01 SISTEMA DE FRENOS - HIDRAULICO

SISTEMA DE FRENOS - HIDRAULICO

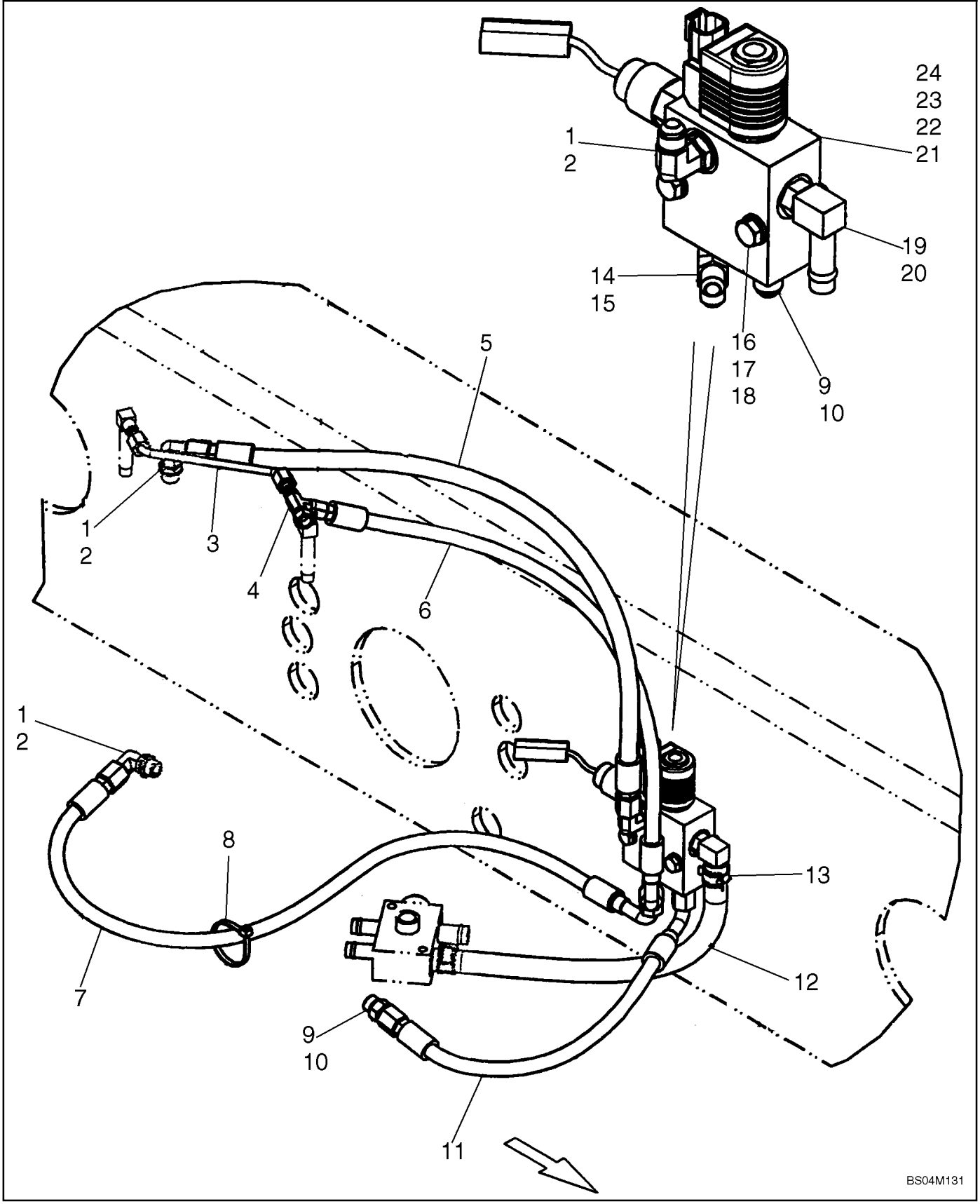

SISTEMA DE FRENOS - HIDRAULICO

REF	FN	PART NUMBER	YR/SN	QTY	DENOMINACION
1		76344		4	CODO, 90º, 9/16"-18, 37º x 9/16"-18, O-Ring, Incl 2
2		9617873		1	JUNTA HERMETICA, 6-1, 90 Duro, .468" ID x .078" Thk
3		87021277		1	TUBO (CONJUNTO)
4		86513653		1	RACOR-T, 37º, 7/16"-20 x 7/16"-20, Fem Sw Run
5		87459910		1	MANGUERA (CONJUNTO), 635 mm (25 in); Charge
6		87441276		1	MANGUERA (CONJUNTO), 580 mm (22.83 in); NOR
7		87022436		1	MANGUERA (CONJUNTO), 815 mm (32 in); Brake
8		L18331		1	CIERRA CABLES
9		76350		1	RACOR, 9/16"-18, 37º x 9/16"-18, O-Ring, Incl 10
10		9617873		1	JUNTA HERMETICA, 6-1, 90 Duro, .468" ID x .078" Thk
11		87022437		1	MANGUERA (CONJUNTO), 420 mm (16.53 in); Brake
12		87022177		1	MANGUERA (CONJUNTO), 340 mm (13.38 in); Drain
13		87443510		2	ABRAZADERA MANGUERA, 20 mm
14		86513020		1	RACOR-T, 9/16"-18, 37º x 9/16"-18, O-Ring Run, Incl. 15
15		9617873		1	JUNTA HERMETICA, 6-1, 90 Duro, .468" ID x .078" Thk
16		43130		2	TORNILLO, Hex, M8 x 50, 8.8
17		86624185		2	ARANDELA, M8 x 17.5 x 2, HT
18		229197A1		2	TUERCA, M8
19		217-374		1	CONEXION, 90º, 1/2" Hose x 9/16"-18 ORB Beaded, Incl 20
20		237-6006		1	JUNTA HERMETICA, 6-1, 90 Duro, .468" ID x .078" Thk
21		87021047		1	VÁLVULA DE FRENO, Incl 22 - 24
22		87424182		1	VÁLVULA DE FRENO, Solenoid
23		87433496		X	BOBINA
24		87458061		1	INTERRUPTOR DE PRESION, Brake Valve

NOTAS

SECTION INDEX
Sistema Hidráulico

08-01	HIDRAULICA - INCLINACIÓN
08-02	HIDRAULICA - ALZAMIENTO
08-03	HIDRAULICA - DRENAJE DE LA CAJA
08-04	HIDRAULICA - DISPOSITIVO ANTICABECEO
08-05	HIDRAULICA - AUTONIVELADOR
08-06	AUXILIAR SECUNDARIO DELANTERO
08-07	ACCESORIOS, HIDRAULICA
08-08	ACCESORIOS, HIDRAULICA (CON CONTROL PILOTO)
08-09	ACCESORIOS, HIDRAULICA
08-10	HIDRAULICA - SISTEMA DE ACOPLAMIENTO
08-11	HIDRAULICA - SISTEMA DE ACOPLAMIENTO
08-12	HIDRAULICA - SISTEMA DE ACOPLAMIENTO (ITALIANO)
08-13	HIDRAULICA - SISTEMA DE ACOPLAMIENTO (ITALIANO)
08-14	CILINDRO - INCLINACIÓN
08-15	CILINDRO - ELEVACIÓN
08-16	ALTO CAUDAL, CARGA Y DESCARGA
08-17	FLUJO ALTO - CIRCUITO AUXILIAR
08-18	ALTO CAUDAL, VALVULA DE CONTROL
08-19	CONTROL DEL MONTAJE DE LA VÁLVULA - FLUJO ALTO
08-20	CONTROL DEL MONTAJE DE LA VÁLVULA
08-21	VALVULA DE CONTROL - 87583285 CONJUNTO DE LA VALVULA
08-22	VALVULA DE CONTROL - 87546974 CONJUNTO DE LA VALVULA
08-23	VALVULA DE CONTROL - 87546975 CONJUNTO DE LA VALVULA
08-24	VALVULA DE CONTROL - JUEGOS DE REEMPLAZO DE LA JUNTA
08-25	VALVULA DE CONTROL - DESCARGA, PRINCIPLA
08-26	VALVULA DE CONTROL - DESCARGA, CIRCUITO
08-27	VALVULA DE CONTROL, JUEGOS DE REEMPLAZO DE LA JUNTA - BOBINAS
08-28	VALVULA DE CONTROL, JUEGOS DE REEMPLAZO DE LA JUNTA - BOBINAS
08-29	VALVULA DE CONTROL, JUEGOS DE REEMPLAZO DE LA JUNTA - BOBINAS
08-30	VALVULA DE CONTROL, VERIFIQUE LA VÁLVULA
08-31	VALVULA DE CONTROL, JUEGOS DE REEMPLAZO DE LA JUNTA - BOBINAS Y RETENES
08-32	VALVULA DE CONTROL, JUEGOS DE REEMPLAZO DE LA JUNTA - BOBINAS
08-33	VALVULA DE CONTROL, JUEGOS DE REEMPLAZO DE LA JUNTA - BOBINAS
08-34	VALVULA DE CONTROL - JUEGOS DE REEMPLAZO DE LA JUNTA
08-35	VALVULA DE CONTROL, JUEGOS DE REEMPLAZO DE LA JUNTA - BOBINAS
08-36	VALVULA DE CONTROL, JUEGOS DE REEMPLAZO DE LA JUNTA - BOBINAS
08-37	VALVULA DE CONTROL, JUEGOS DE REEMPLAZO DE LA JUNTA - BOBINAS
08-38	VALVULA DE CONTROL, JUEGOS DE REEMPLAZO DE LA JUNTA - BOBINAS, EHPV
08-39	VALVULA DE CONTROL, JUEGOS DE REEMPLAZO DE LA JUNTA - BOBINAS, EHPV
08-40	AUXILIAR SECUNDARIO DELANTERO - CONJUNTO DE LA VALVULA

HIDRAULICA - INCLINACIÓN

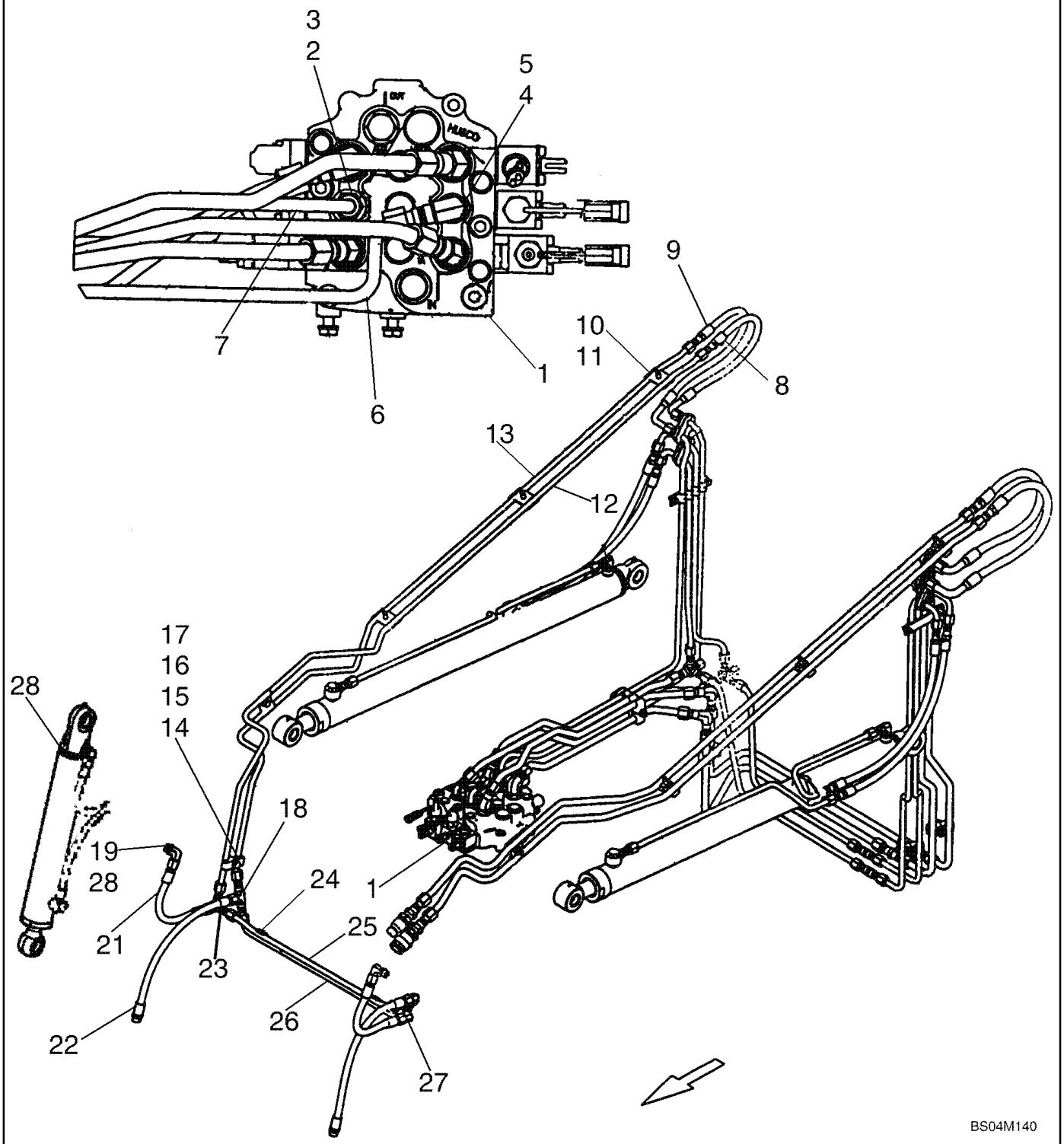

HIDRAULICA - INCLINACIÓN

REF	FN	PART NUMBER	YR/SN	QTY	DENOMINACION
1		87583285		1	VALVULA, Control Valve; 440: See Figure 08-21
1		87546974		1	VALVULA HIDRAULICA, Control Valve; 440CT; See Figures 08-22
2		128819		1	RACOR, 3/4"-16, 37º x 7/8"-14, O-Ring, Incl. 3
3		128825		1	JUNTA HERMETICA, 8-1, 90 Duro, .644" ID x .087" Thk
4		9617891		1	CODO, 90º, 3/4"-16, 37º x 7/8"-14, O-Ring, Incl. 5
5		167269		1	JUNTA HERMETICA, 10-1, 90 Duro, .755" ID x .097" Thk
6		87423368		1	TUBO (CONJUNTO), 1/2 Tube, Curl
7		87445747		1	TUBO (CONJUNTO), 1/2 Tube, Dump
8		406242A1		1	MANGUERA (CONJUNTO), 580 mm (22.83 in)
9		406088A1		1	MANGUERA (CONJUNTO), 600 mm (23.62 in)
10		86501706		4	BORNE, Double
11		280476		4	TORNILLO AUTOROSCANTE, Hex Wash Hd, 3/8" x 1"
12		87531091		1	TUBERIA HIDRAULICO, 1/2 Tube, Dump
13		406336A1		1	TUBO (CONJUNTO), 1/2 Tube, Curl
14		9706704		1	TORNILLO, Hex, M10 x 35, 8.8, Full Thd
15		230427A1		1	TUERCA, M10 -1.5
16		140017		1	ARANDELA, M10 x 20 x 2
17		D120679		1	COLLAR, 1/2 in
18		128996		1	RACOR-T, 3/4"-16, 37º
19		128830		2	CODO, 90º, 3/4"-16, 37º x 3/4"-16, O-Ring, Incl. 20
20		128825		1	JUNTA HERMETICA, 8-1, 90 Duro, .644" ID x .087" Thk
21		87387193		2	MANGUERA (CONJUNTO), 355 mm, 14 in; Dump
22		373241A3		2	MANGUERA (CONJUNTO), Curl
23		D124661		1	CODO, Side Outlet
24		H434900		2	COLLAR
25		373223A3		1	TUBO (CONJUNTO), Dump
26		373225A3		1	TUBO (CONJUNTO), Curl
27		216791		1	CODO, 90º, 3/4"-16, 37º x 3/4"-16, 37º
28		87438193		2	CILINDRO (CONJUNTO), Tilt; See Figure 08-14

HIDRAULICA - ALZAMIENTO

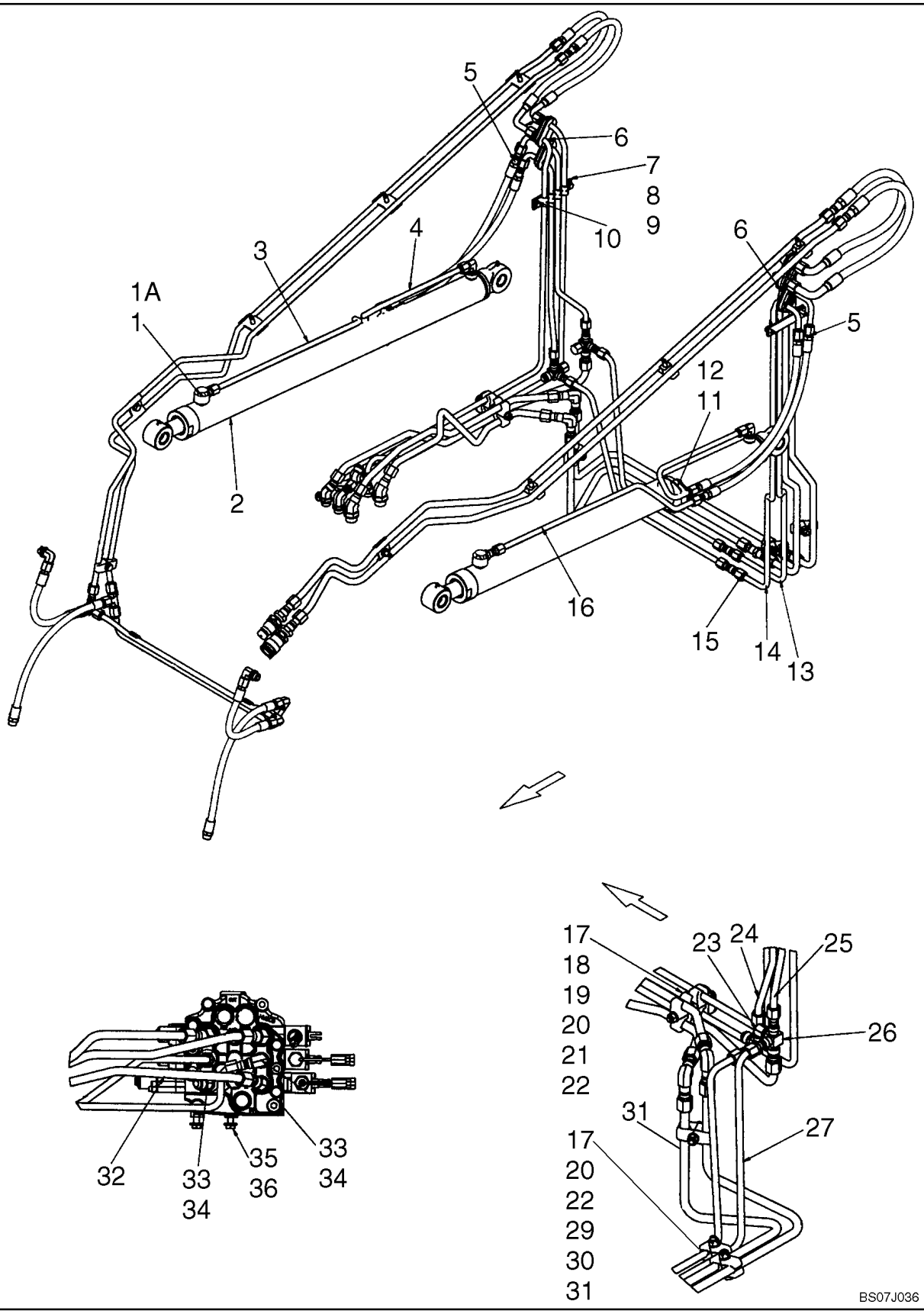

HIDRAULICA - ALZAMIENTO

REF	FN	PART NUMBER	YR/SN	QTY	DENOMINACION
1		81827427		2	RACOR, Incl 1A
1A		128825		2	JUNTA HERMETICA, 8-1, 90 Duro, .644" ID x .087" Thk
2		87438190		2	CILINDRO (CONJUNTO), Lift Cylinder; See Figure 08-15
3		406342A1		1	TUBO (CONJUNTO), Lift Cylinder, RH (Lower)
4		396243A2		2	TUBO (CONJUNTO), Lift Cylinder (Raise)
5		390211A1		4	MANGUERA (CONJUNTO), 575mm (22 5/8 in.) (Raise)
6		376523A2		6	APOYADERO, Hydraulic Tube Support
7		406940A1		1	BARRA, Bar Clamp, Back
8		87029930		1	TORNILLO
9		406941A1		1	BARRA, Bar Clamp, Face
10		87385021		1	BOTON DE RESORTE, Screw, Hex Washer Head 5/16 x 1/2
11		R24703		2	APOYADERO
12		86625033		2	ABRAZADERA MANGUERA, #56, 3.06/4.00 Type F Worm
13		87405135		1	TUBO (CONJUNTO), Lift LH (Lower)
14		87405137		1	TUBO (CONJUNTO), Lift LH (Raise)
15		128822		2	CONEXION, 3/4"-16, 37º x 3/4"-16, 37º
16		406344A1		1	TUBO (CONJUNTO), Lift Cylinder LH (Lower)
17		D120614		2	COLLAR
18		87040707		1	BOTON DE RESORTE, Washer, .531 X 2.25 X .179 in.
19		D120613		1	COLLAR
20		D120679		2	COLLAR
21		86500689		1	TUERCA, M10, Cl 10
22		86624176		4	ARANDELA, M10 x 20 x 2
23		262159		2	TAPON DEL DEPOSITO, 37º, 3/4"-16
24		87405141		1	TUBO (CONJUNTO), Lift RH (Raise)
25		87593416		1	TUBERIA HIDRAULICO, Lift RH (Raise)
26		87404825		1	RACOR-T
27		87593417		1	TUBERIA HIDRAULICO, Lift LH (Lower)
29		86512554		1	CONTRA TUERCA, M10 x 1.5, Cl 10

HIDRAULICA - ALZAMIENTO

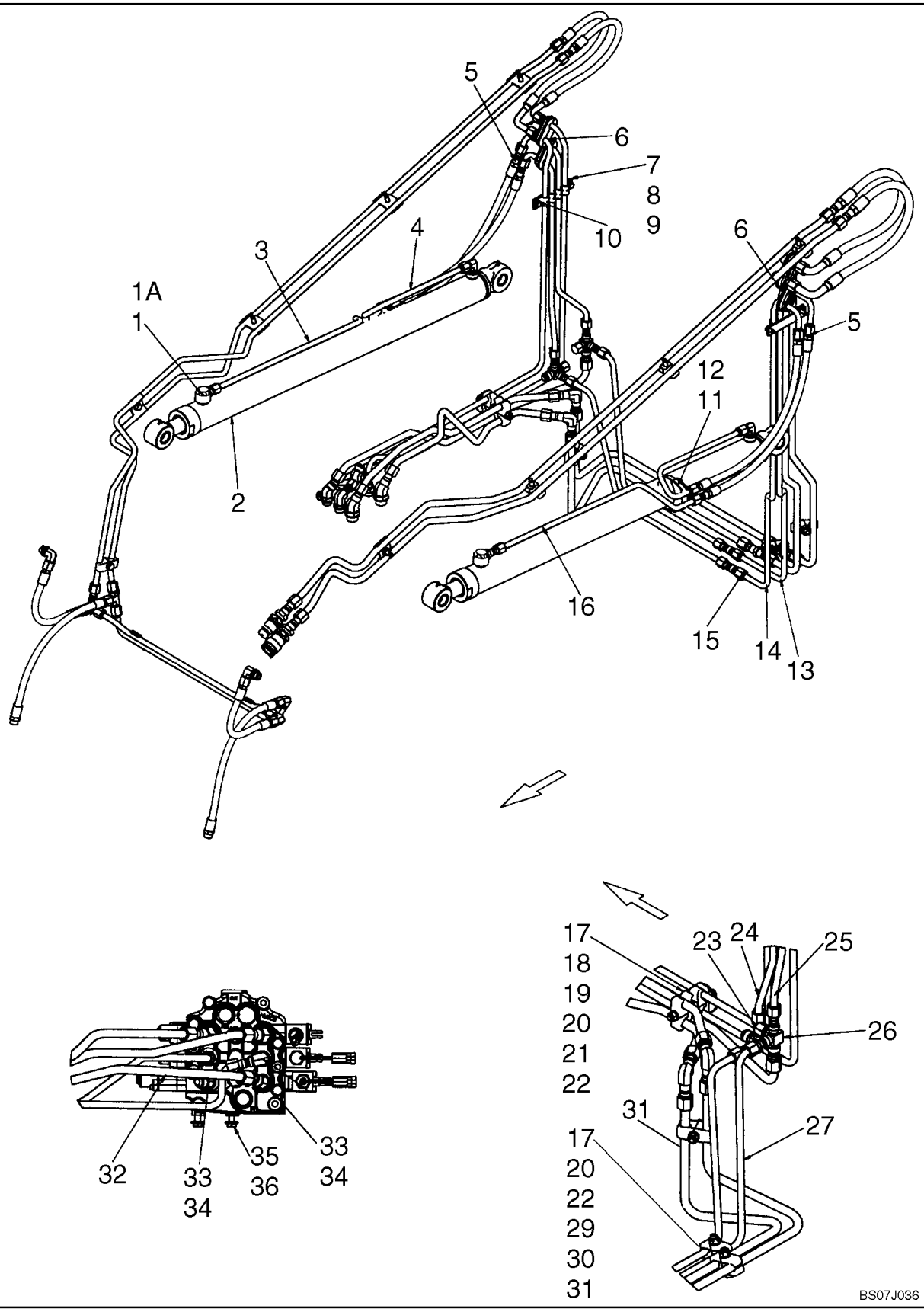

HIDRAULICA - ALZAMIENTO

REF	FN	PART NUMBER	YR/SN	QTY	DENOMINACION
30		120069		1	TORNILLO, Hex, M10 x 50, 8.8
31		87624736		1	TUBERIA HIDRAULICO, Lift LH (Raise)
32		87593415		1	TUBERIA HIDRAULICO, Lift (Lower)
33		330345		2	CODO, 45º, 7/8"-14 x 7/8"-14, O-Ring, Incl 34
34		167269		2	JUNTA HERMETICA, 10-1, 90 Duro, .755" ID x .097" Thk
35		43138		2	TORNILLO, Hex, M10 x 20, 8.8, Full Thd
36		86639325		2	ARANDELA, M10 x 24.5 x 3, HT
37		{87659996}		1	Tube; High Flow

HIDRAULICA - DRENAJE DE LA CAJA

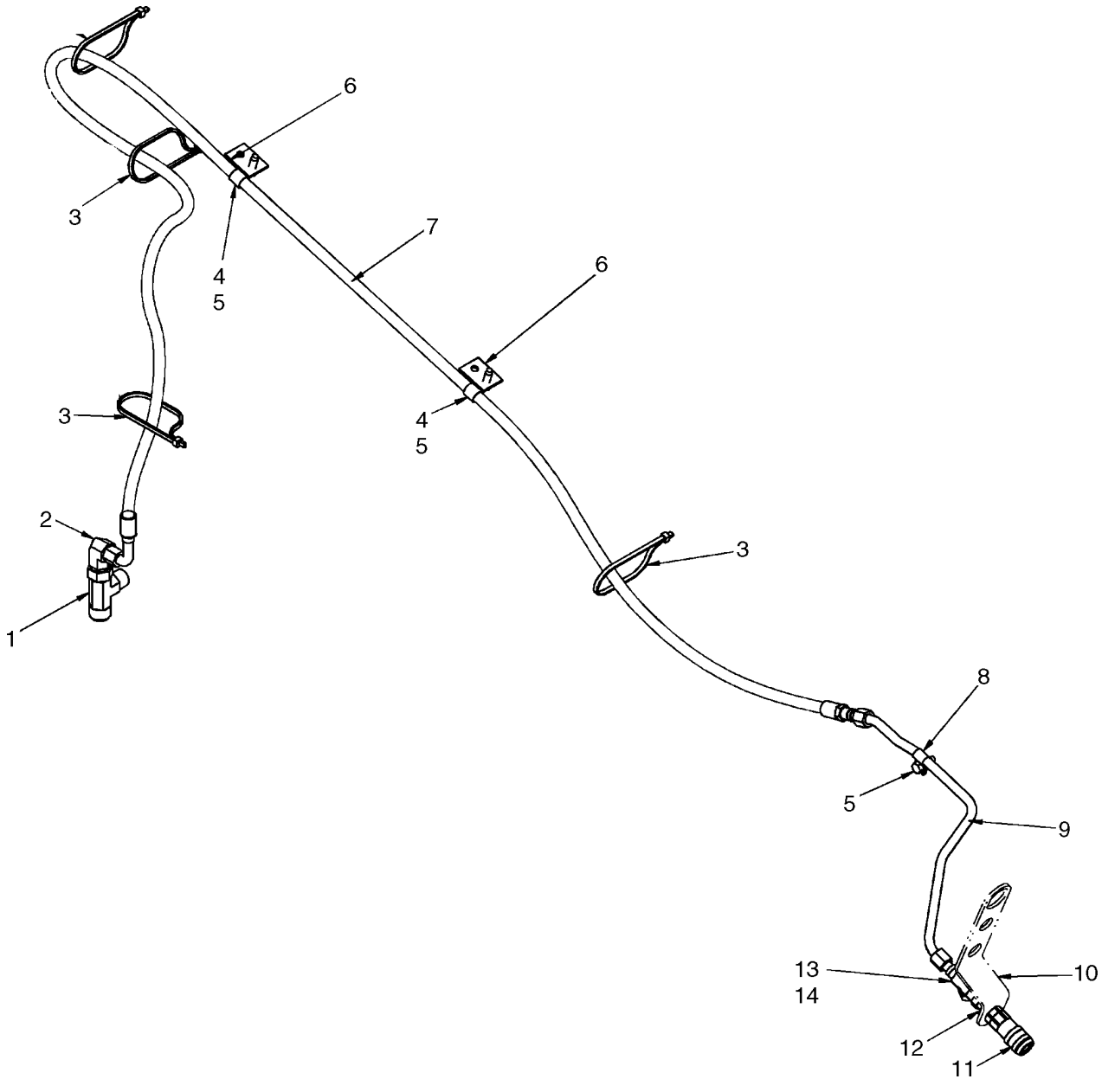

HIDRAULICA - DRENAJE DE LA CAJA

REF	FN	PART NUMBER	YR/SN	QTY	DENOMINACION
		87685962		1	KIT, SERVICE, Kit, Loader Arm Case Drain; Incl 1 - 14
1		{87690479}		1	Tee, Male Branch 1.0 X 3/4 X 3/4 NP
2		86624011		1	CODO, 90º, 3/4"-16, 37º x 1 1/16"-12, 37º Fem Sw
3		L18331		4	CIERRA CABLES
4		86624005		2	BORNE, 3/4", Insul, 3/8" Bolt
5		280476		3	TORNILLO AUTOROSCANTE, Hex Wash Hd, 3/8" x 1"
6		87447813		2	PIEZA DE SOPORTE
7		87659253		1	MANGA, Hose, Loader Arm Case Drain, 2880mm (113 13/32 in.)
8		86010402		1	BORNE, 1/2", Insul, 3/8" Bolt
9		87024208		1	TUBO (CONJUNTO)
10		87023530		1	PIEZA DE SOPORTE
11		87019286		1	ELEMENTO DE ACOPLAM., FF Coupler .38 Female 8MFB
12		524036		1	CONTRA TUERCA, Blkhd, 3/4"-16
13		87426293		1	RACOR-T, Tee, Swivel 37Fl 1/2 X 1/2 X 1/2
14		262159		1	TAPON DEL DEPOSITO, 37º, 3/4"-16

HIDRAULICA - DISPOSITIVO ANTICABECEO

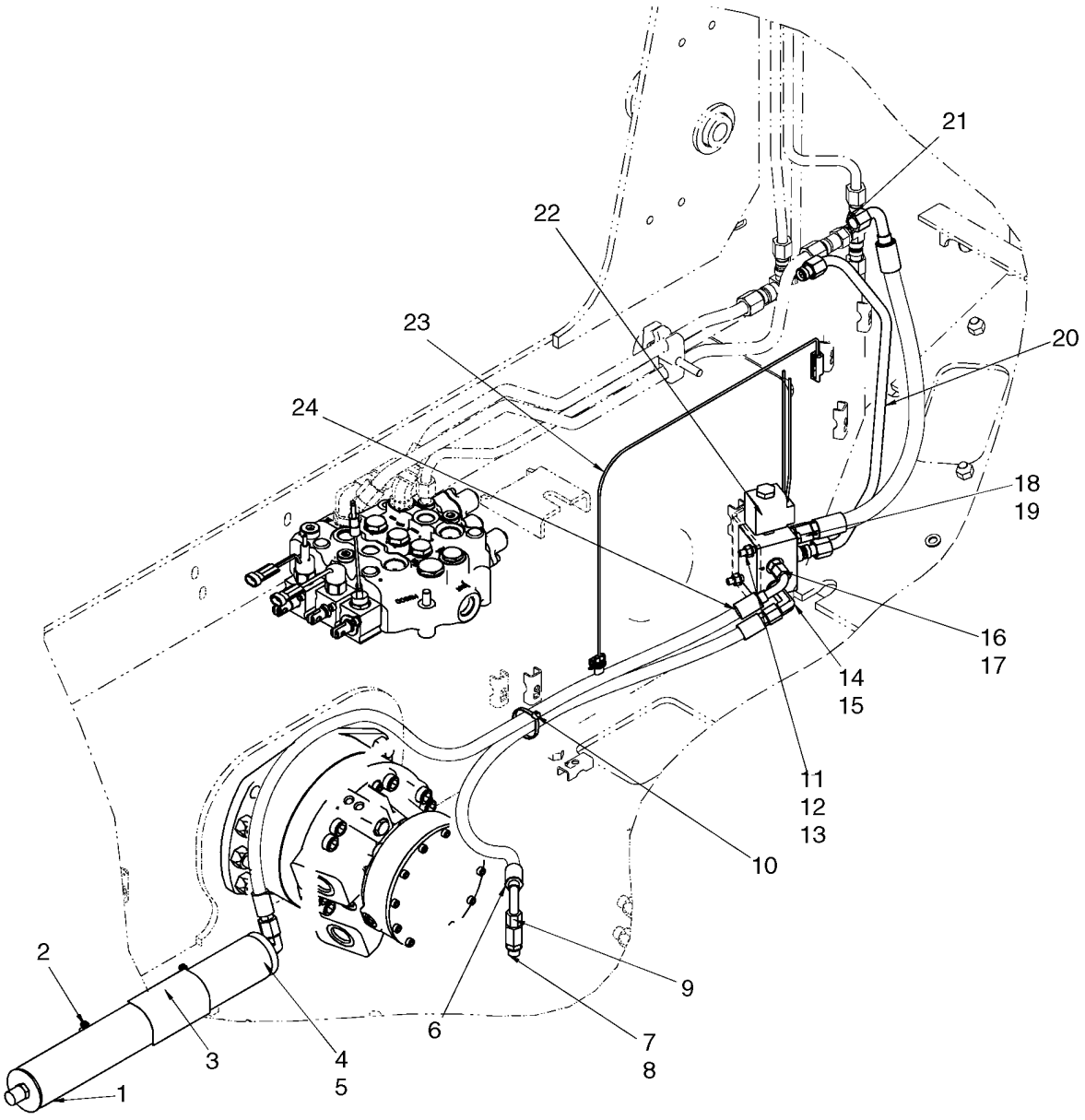

HIDRAULICA - DISPOSITIVO ANTICABECEO

REF	FN	PART NUMBER	YR/SN	QTY	DENOMINACION
		87638304		1	KIT, SERVICE, Kit, Ride Control; Incl 1 - 26
1		87403797		1	ACUMULADOR, Hydraulic Accumulator
2		86624194		2	ABRAZADERA MANGUERA, #36, 1.81/2.75 Type F Worm
3		384260A1		1	CALCOMANIA, Warning, Pressurized System
4		128830		1	CODO, 90º, 3/4"-16, 37º x 3/4"-16, O-Ring, Incl 5
5		128825		1	JUNTA HERMETICA, 8-1, 90 Duro, .644" ID x .087" Thk
6		87456974		1	MANGUERA (CONJUNTO), 970mm (38 3/16 in.)
7		86513020		1	RACOR-T, 9/16"-18, 37º x 9/16"-18, O-Ring Run, Incl 8
8		9617873		1	JUNTA HERMETICA, 6-1, 90 Duro, .468" ID x .078" Thk
9		574342		1	TAPON DEL DEPOSITO, 37º, 9/16"-18
10		529070		1	CIERRA CABLES, .30" x 14.5"
11		9706690		2	TUERCA, M8, Cl 8
12		140016		4	ARANDELA, M8 x 16 x 1.6
13		43133		2	TORNILLO, Hex, M8 x 80, 8.8
14		86526		1	CODO, 90º, 9/16"-18, 37º x 9/16"-18, LG, Incl 15
15		9617873		1	JUNTA HERMETICA, 6-1, 90 Duro, .468" ID x .078" Thk
16		76350		1	RACOR, 9/16"-18, 37º x 9/16"-18, O-Ring, Incl 17
17		9617873		1	JUNTA HERMETICA, 6-1, 90 Duro, .468" ID x .078" Thk
18		86509028		2	RACOR, 3/4"-16, 37º x 9/16"-18, O-Ring, Incl 19
19		9617873		2	JUNTA HERMETICA, 6-1, 90 Duro, .468" ID x .078" Thk
20		87588929		1	TUBERIA HIDRAULICO, Valve To Cylinder Base
21		87588930		1	MANGA, 550mm (21 5/8 in.)
22		87428444		1	VALVULA, Solenoid Valve, Ride Control
23		310838A1		1	HAZ, Ride Control Harness
24		87588928		1	MANGA, Valve To Accumulator, 1200mm (47 1/4 in.)
25		304083A1		2	CALCOMANIA, Ride Control; Not Illustrated
26		255927A1		1	CALCOMANIA, Warning, Ride Control; Not Illustrated

HIDRAULICA - AUTONIVELADOR

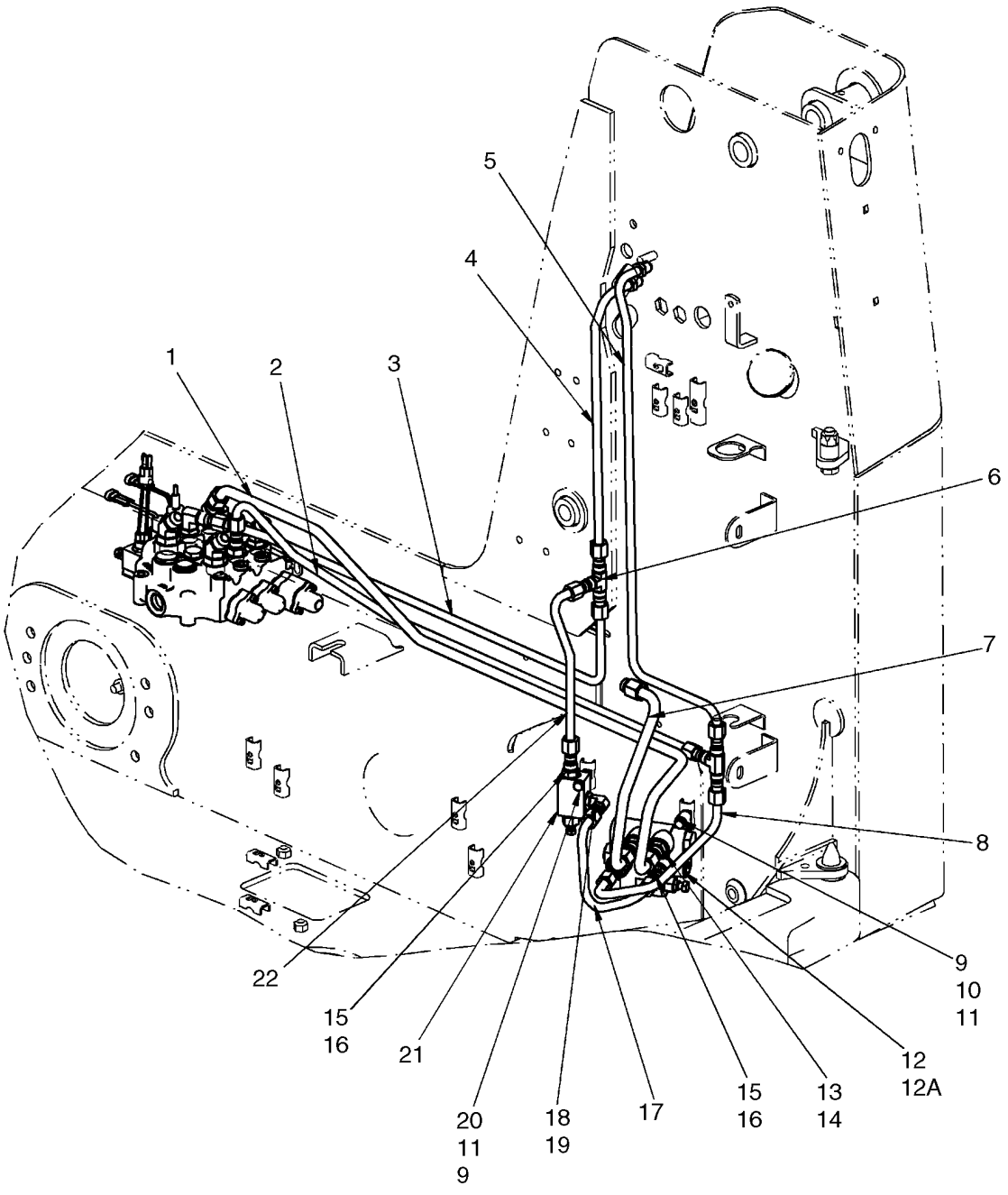

HIDRAULICA - AUTONIVELADOR

REF	FN	PART NUMBER	YR/SN	QTY	DENOMINACION
		87638293		1	KIT, SERVICE, Kit, Single Hydraulic Self Level; Incl 1 - 22
1		87446001		1	TUBO (CONJUNTO), Tube, Lift (Lower)
2		87593420		1	TUBERIA HIDRAULICO, Tube, Tip (Dump)
3		87436668		1	TUBO (CONJUNTO), Tube, Tip (Curl)
4		87436539		1	TUBO (CONJUNTO), Tube, Tip (Curl)
5		87593421		1	TUBERIA HIDRAULICO, Tube, Tip (Dump)
6		128996		2	RACOR-T, 3/4"-16, 37º
7		87593425		1	TUBERIA HIDRAULICO, Valve Out
8		87593422		1	TUBERIA HIDRAULICO, Tube, Valve To Bucket Base
9		86624184		3	ARANDELA, M8 x 16 x 1.6
10		412479		2	TORNILLO, Hex, M8 x 35, 8.8
11		229197A1		3	TUERCA
12		87447793		1	VALVULA, Self Level; Incl 12A
12A		87535230		1	VALVULA EQUIPO, Kit, Seal
13		86071		2	RACOR, 7/8"-14, 37º x 3/4"-16, O-Ring, Incl 14
14		128825		2	JUNTA HERMETICA, 8-1, 90 Duro, .644" ID x .087" Thk
15		128818		3	RACOR, 3/4"-16, 37º x 3/4"-16, O-Ring, Incl 16
16		128825		3	JUNTA HERMETICA, 8-1, 90 Duro, .644" ID x .087" Thk
17		87421454		1	TUBO (CONJUNTO), Self Level To Relief
18		128830		1	CODO, 90º, 3/4"-16, 37º x 3/4"-16, O-Ring, Incl 19
19		128825		1	JUNTA HERMETICA, 8-1, 90 Duro, .644" ID x .087" Thk
20		386045		1	TORNILLO, Hex, M8 x 45, 8.8
21		294650A1		1	VALVULA, Relief Valve
22		87445306		1	TUBO (CONJUNTO)

08-06		p1	12/07

AUXILIAR SECUNDARIO DELANTERO

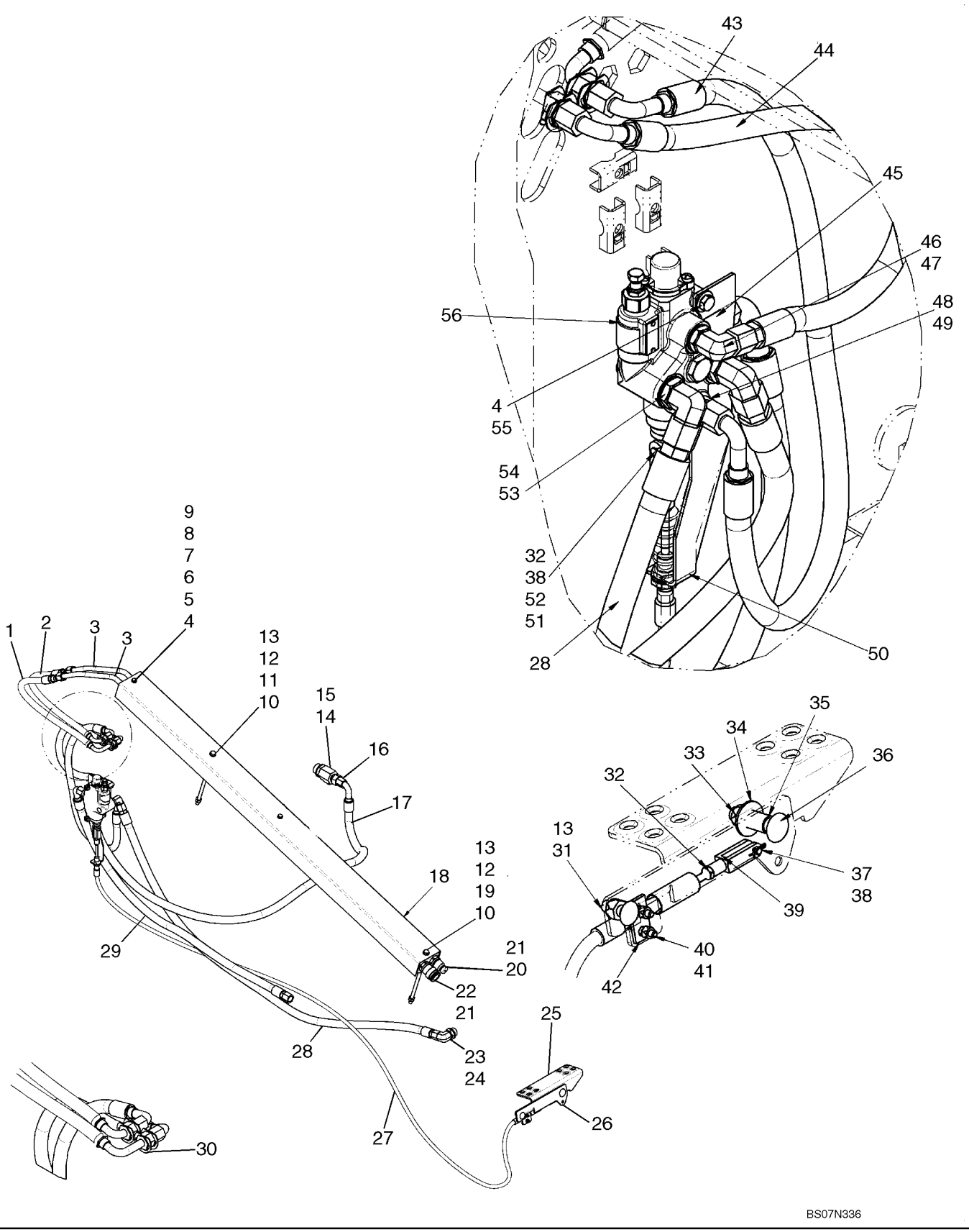

AUXILIAR SECUNDARIO DELANTERO

REF	FN	PART NUMBER	YR/SN	QTY	DENOMINACION
		87730804		1	KIT, SERVICE, Kit, Secondary Front Auxiliary; Incl 1 - 56
1		87462215		1	MANGUERA (CONJUNTO), Hose, Secondary Auxiliary, 633mm (24 15/16 in.)
2		87444373		1	MANGUERA (CONJUNTO), Hose Secondary Auxiliary, 583mm (23 in.)
3		87444371		2	TUBO (CONJUNTO), Tube, Secondary Auxiliary
4		16044321		4	TORNILLO, Hex, M8 x 55, 8.8
5		257857A1		2	COLLAR
6		259905A1		2	ESPACIADOR, Spacer, 1/4 Sch 40 Pipe X 31 1/4 in. Lg
7		257859A1		2	PLAQUETA
8		194739A1		2	PLACA DE ROCE
9		86624184		2	ARANDELA, M8 x 16 x 1.6
10		86624977		2	TORNILLO, Hex, M10 x 245, 8.8
11		87447010		1	SEPARADOR
12		86624176		2	ARANDELA, M10 x 20 x 2
13		86512554		3	CONTRA TUERCA, M10 x 1.5, Cl 10
14		86624131		1	RACOR-T, 37º, 1 1/16"-12, 1 5/16"-12 O-Ring Run, 1 1/16"-12, Incl 15
15		167268		1	JUNTA HERMETICA, 16-1, 90 Duro, 1.171" ID x .116" Thk
16		87301344		1	REDUCTOR, 37º, 1 1/16"-12, Fem x 7/8"-14 Male
17		87728982		1	MANGA, Hose, Tank Return, 1773mm (69 13/16 in.)
18		87447965		1	TAPADERA, Cover, Secondary Auxilary Tube
19		87447009		1	PIEZA DE SOPORTE
20		87417308		1	ACOPLAMIENTO, Coupler, 1/2 Male Quick Disconnect
21		595460		2	CONTRA TUERCA, Blkhd, 7/8"-14
22		393394A1		1	ACOPLAMIENTO, Coupler, 1/2 Female Quick Disconnect
23		84570		1	CODO, 90º, 7/8"-14, 37º x 1 1/16"-12, O-Ring, Incl 24
24		167266		1	JUNTA HERMETICA, 12-1, 90 Duro, .924 ID x .116" Thk
25		87423833		1	PEDAL (CONJUNTO), Pedal, Auxiliary Hydraulic

AUXILIAR SECUNDARIO DELANTERO

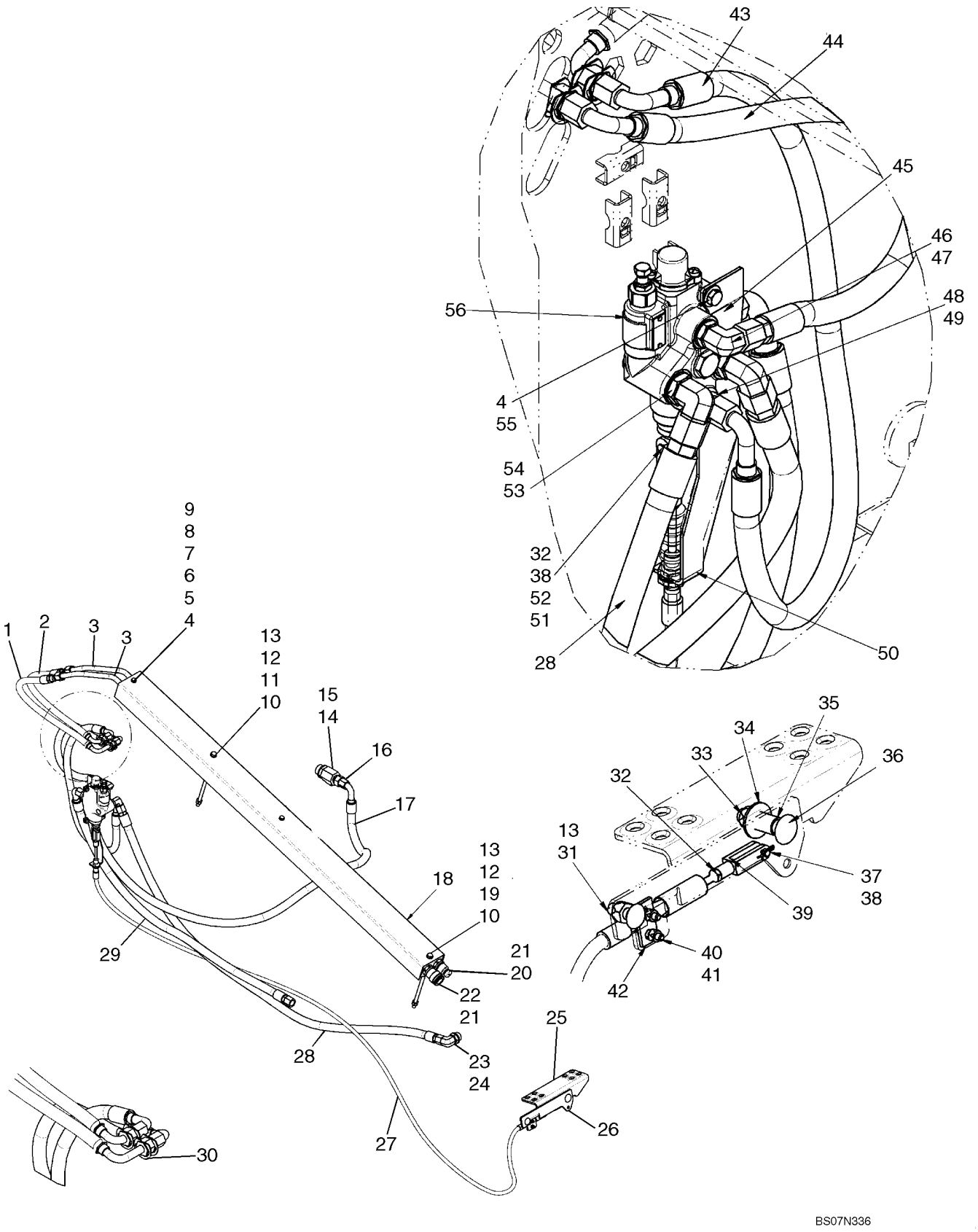

AUXILIAR SECUNDARIO DELANTERO

REF	FN	PART NUMBER	YR/SN	QTY	DENOMINACION
26		87715341		1	PLACA, Mounting Plate
27		87739945		1	CABLE, Cable, Secondary Auxiliary
28		87729000		1	MANGA, Hose, Secondary Auxiliary Inlet, 1530mm (60 1/4 in.)
29		87728990		1	MANGA, Hose, Secondary Auxiliary Outlet, 1279mm (50 11/32 in.)
30		87301328		4	ANILLO DE FRENO, Retaining Ring, External "E" Style #98 Plated
31		86512446		1	PERNO, CABEZA RONDA, Short NK, M10 x 30, Cl8.8, Full Thd
32		86976064		2	TUERCA, Jam, 1/4"-28, G5
33		412672		1	CONTRA TUERCA, M12 x 1.75, Cl 10
34		81541		1	ARANDELA, 7/16"
35		L14781		1	CASQUILLO, Bronze Bushing
36		87033290		1	PERNO, CABEZA RONDA, Short NK, M12 x 55, Cl8.8
37		87597960		1	PASADOR DE HORQUILLA
38		D131983		2	PERNO
39		86520436		1	HORQUILLA DE AJUSTE, 1/4"-28
40		87442439		1	VARILLA
41		86512440		2	CONTRA TUERCA
42		H373779		1	PLACA, GRANDE
43		87729005		1	MANGA, Hose, Secondary Auxiliary, 983mm (38 11/16 in.)
44		87729004		1	MANGA, Hose, Secondary Auxiliary, 589mm (23 3/16 in.)
45		129878A1		1	CONEXION
46		128830		1	CODO, 90º, 3/4"-16, 37º x 3/4"-16, O-Ring, Incl 47
47		128825		1	JUNTA HERMETICA, 8-1, 90 Duro, .644" ID x .087" Thk
48		81827427		1	RACOR, Incl 49
49		128825		1	JUNTA HERMETICA, 8-1, 90 Duro, .644" ID x .087" Thk
50		87739947		1	PIEZA DE SOPORTE, Cable Bracket
51		H32961		1	TENSOR
52		87444160		1	HORQUILLA PEQUENA

AUXILIAR SECUNDARIO DELANTERO

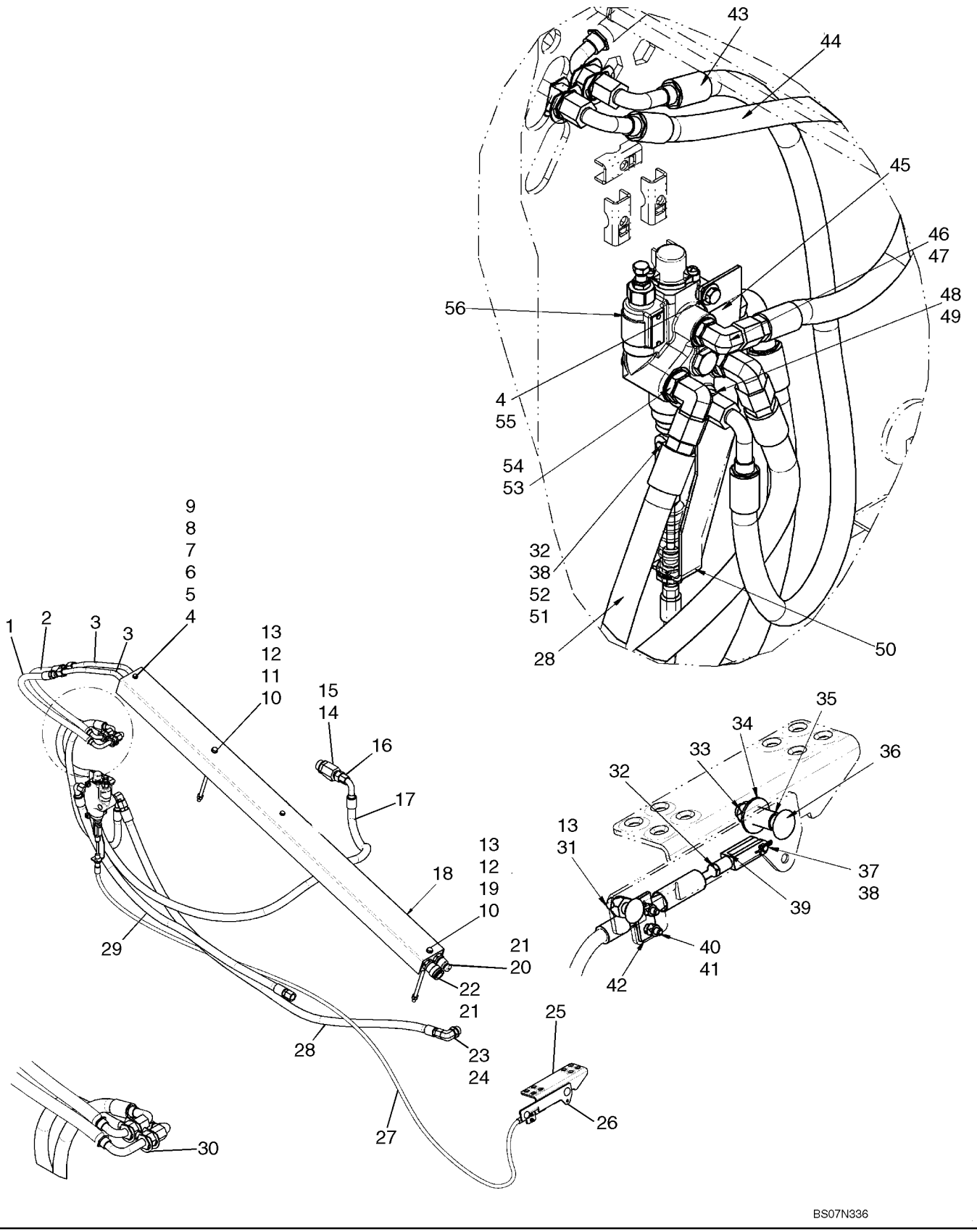

AUXILIAR SECUNDARIO DELANTERO

REF	FN	PART NUMBER	YR/SN	QTY	DENOMINACION
53		9617891		2	CODO, 90º, 3/4"-16, 37º x 7/8"-14, O-Ring, Incl 54
54		167269		2	JUNTA HERMETICA, 10-1, 90 Duro, .755" ID x .097" Thk
55		86625263		2	ARANDELA, M8 x 20 x 1.6
56		87017348		1	VALVULA, Secondary Auxiliary Valve; See Fig 08-40

ACCESORIOS, HIDRAULICA

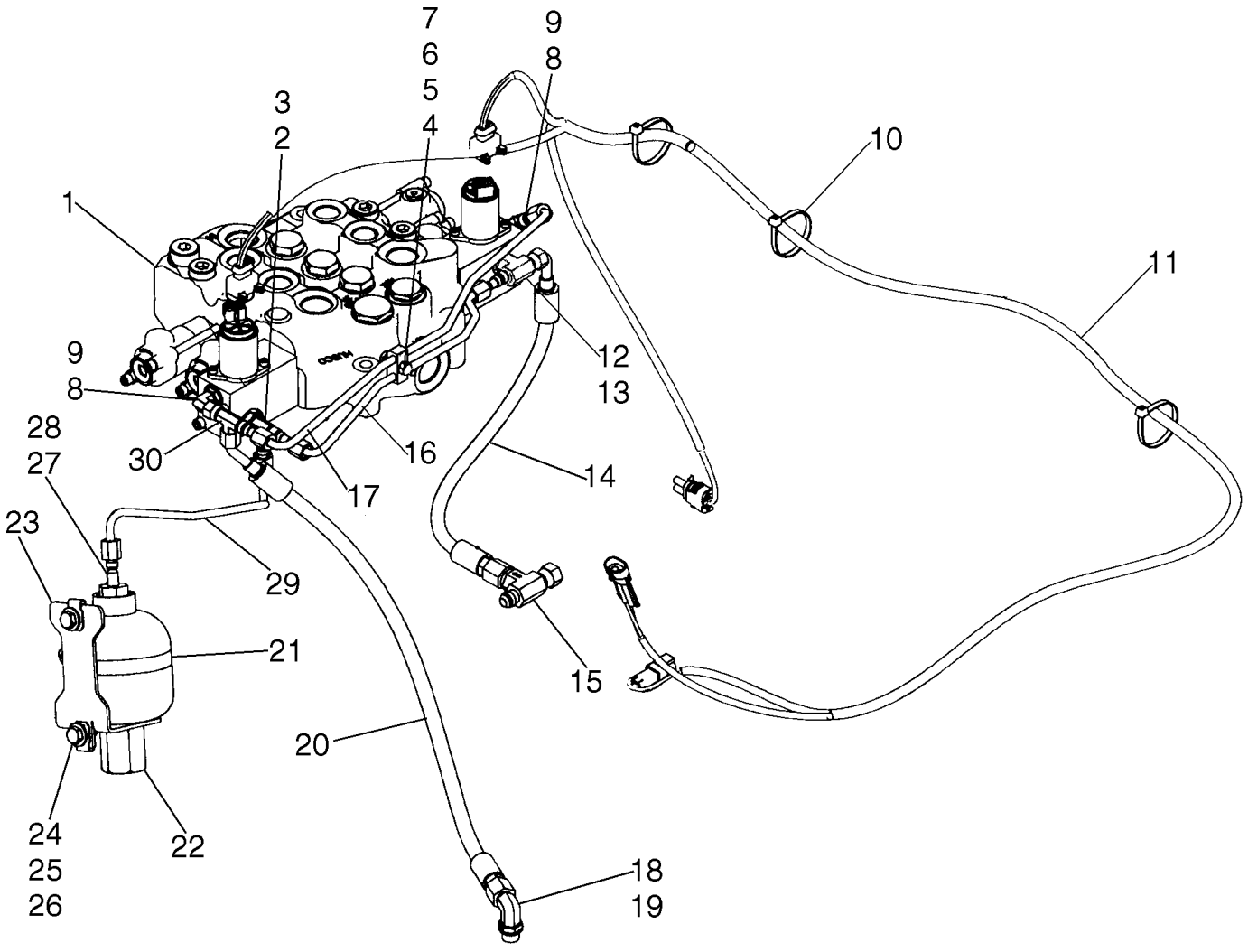

ACCESORIOS, HIDRAULICA

REF	FN	PART NUMBER	YR/SN	QTY	DENOMINACION
		87575606		1	KIT, SERVICE, Electro-Hydraulic Valve Kit; Incl 1 - 30
1		87546975		1	VALVULA HIDRAULICA, Pilot Control Models With Hydraulic Attachment; See Fig. 08-23
2		86513019		1	RACOR-T, 7/16"-20, 37º x 7/16"-20, O-Ring Run, Incl. 3
3		165202		1	JUNTA HERMETICA, 4-1, 90 Duro, .351" ID x .072" Thk
4		608089		1	BORNE
5		86624181		1	ARANDELA, M6
6		80120101		1	TORNILLO, M6 x 30
7		87030561		1	CONTRA TUERCA, M6 x 1, Cl 8
8		216773		2	CODO, 90º, 7/16"-20, 37º x 7/16"-20, O-Ring, Incl. 9
9		165202		2	JUNTA HERMETICA, 4-1, 90 Duro, .351" ID x .072" Thk
10		529070		3	CIERRA CABLES, .30" x 14.5"
11		87447970		1	HAZ, Electro-Hydraulic Harness
12		16989		1	RACOR-T, 7/16"-20, 37º x 7/8"-14, O-Ring Br, Incl. 13
13		165202		1	JUNTA HERMETICA, 4-1, 90 Duro, .351" ID x .072" Thk
14		87563974		1	MANGA, 424 mm (16.69 in) EH Supply
15		87438766		1	RACOR-T, Tee With Check Valve
16		87563970		1	TUBERIA HIDRAULICO, Pilot Pressure
17		87564001		1	TUBERIA HIDRAULICO, Drain
18		76344		1	CODO, 90º, 9/16"-18, 37º x 9/16"-18, O-Ring, Incl 19
19		9617873		1	JUNTA HERMETICA, 6-1, 90 Duro, .468" ID x .078" Thk
20		87460042		1	MANGA, Case Drain
21		86625032		1	ABRAZADERA MANGUERA, #48, 2.56/3.50 Type F Worm
22		87376969		1	ACUMULADOR
23		87621245		1	PIEZ ANGULAR, Mounting Bracket
24		120104		2	TORNILLO, Hex, M8 x 20, 8.8
25		122158A1		2	TUERCA, M8, U
26		86625263		2	ARANDELA, M8 x 20 x 1.6
27		139398		1	RACOR, 7/16"-20, 37º x 9/16"-18, O-Ring, Incl. 28

ACCESORIOS, HIDRAULICA

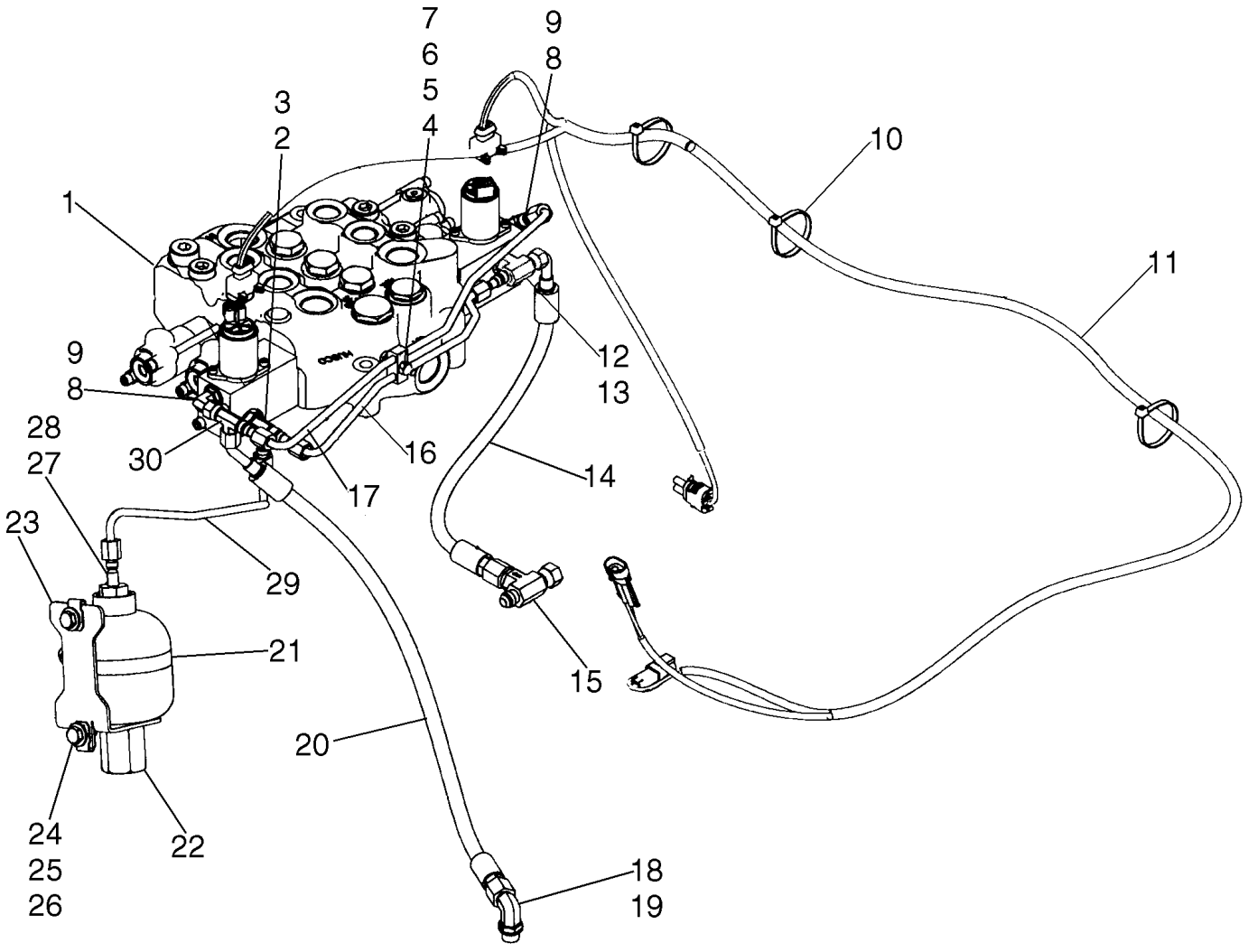

ACCESORIOS, HIDRAULICA

REF	FN	PART NUMBER	YR/SN	QTY	DENOMINACION
28		9617873		1	JUNTA HERMETICA, 6-1, 90 Duro, .468" ID x .078" Thk
29		87447764		1	TUBO (CONJUNTO), Pilot Pressure
30		86513653		1	RACOR-T, 37º, 7/16"-20 x 7/16"-20, Fem Sw Run

ACCESORIOS, HIDRAULICA (CON CONTROL PILOTO)

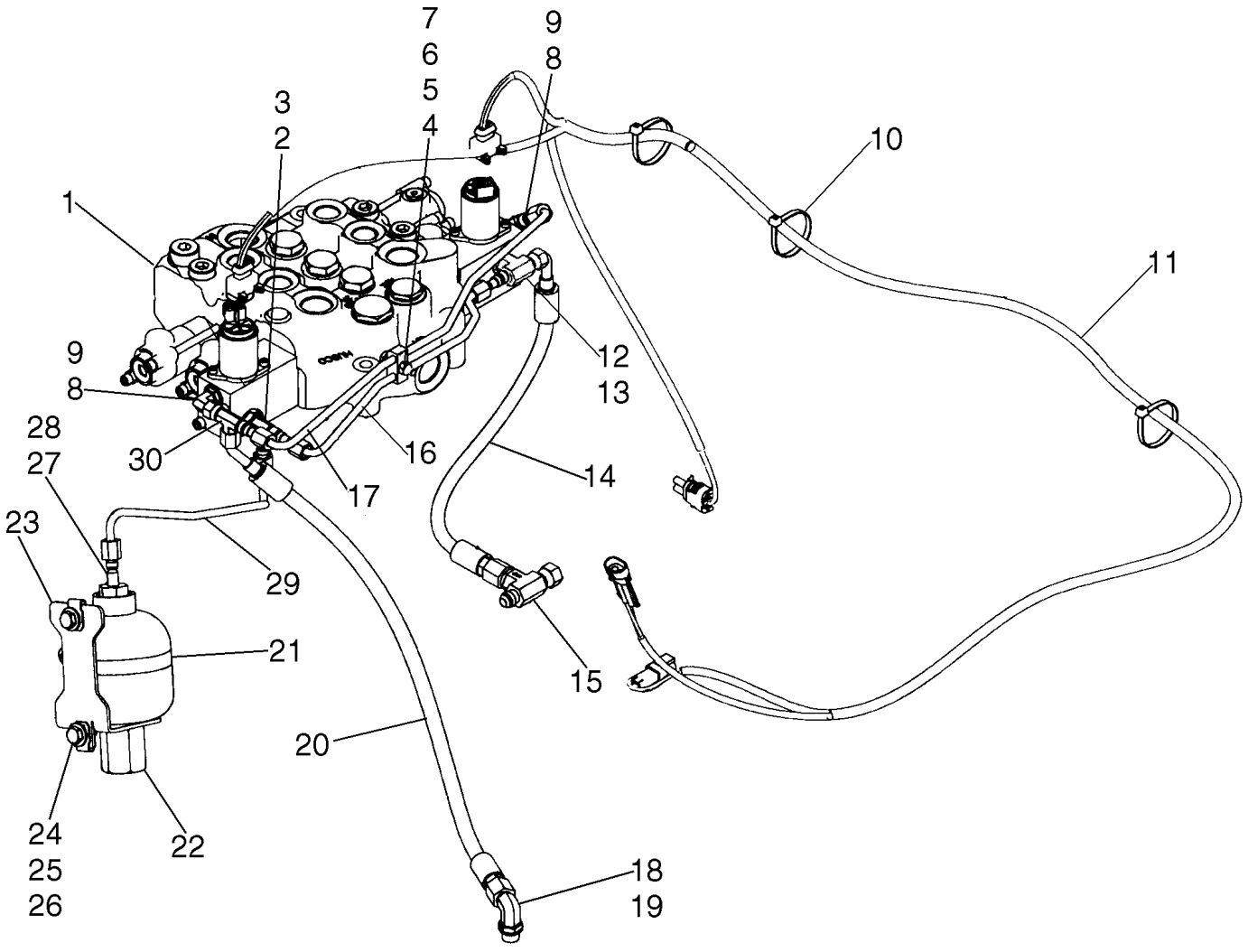

ACCESORIOS, HIDRAULICA (CON CONTROL PILOTO)

REF	FN	PART NUMBER	YR/SN	QTY	DENOMINACION
		87638361		1	KIT, SERVICE, Kit, EH Proportional Auxiliary Pilot Control; Incl. 1 - 30
1		87546975		1	VALVULA HIDRAULICA, Pilot Control Models With Hydraulic Attachment; See Fig. 08-23
2		86513019		1	RACOR-T, 7/16"-20, 37º x 7/16"-20, O-Ring Run, Incl. 3
3		165202		1	JUNTA HERMETICA, 4-1, 90 Duro, .351" ID x .072" Thk
4		608089		1	BORNE
5		86624181		1	ARANDELA, M6
6		120101		1	TORNILLO, Hex, M6 x 30, 8.8, Full Thd, If Used
7		87030561		1	CONTRA TUERCA, M6 x 1, Cl 8
6		80120101		1	TORNILLO, If Used
8		216773		2	CODO, 90º, 7/16"-20, 37º x 7/16"-20, O-Ring, Incl. 9
9		165202		2	JUNTA HERMETICA, 4-1, 90 Duro, .351" ID x .072" Thk
10		L11541		3	CIERRA CABLES
11		87447970		1	HAZ
12		16989		1	RACOR-T, 7/16"-20, 37º x 7/8"-14, O-Ring Br, Incl. 13
13		165202		1	JUNTA HERMETICA, 4-1, 90 Duro, .351" ID x .072" Thk
14		87612875		1	MANGA, 350mm (22 13/16 in.)
15		87438766		1	RACOR-T, Tee With Check Valve
16		87563970		1	TUBERIA HIDRAULICO, Pilot Pressure
17		87564001		1	TUBERIA HIDRAULICO, Drain
18		76344		1	CODO, 90º, 9/16"-18, 37º x 9/16"-18, O-Ring, Includes 19
19		9617873		1	JUNTA HERMETICA, 6-1, 90 Duro, .468" ID x .078" Thk
20		87460042		1	MANGA, Case Drain
21		86625034		1	ABRAZADERA MANGUERA, #64, 3.56/4.50 Type F Worm
22		86624732		1	ACUMULADOR
23		87440253		1	PIEZA ANGULAR, Mounting Bracket
24		120104		2	TORNILLO, Hex, M8 x 20, 8.8

ACCESORIOS, HIDRAULICA (CON CONTROL PILOTO)

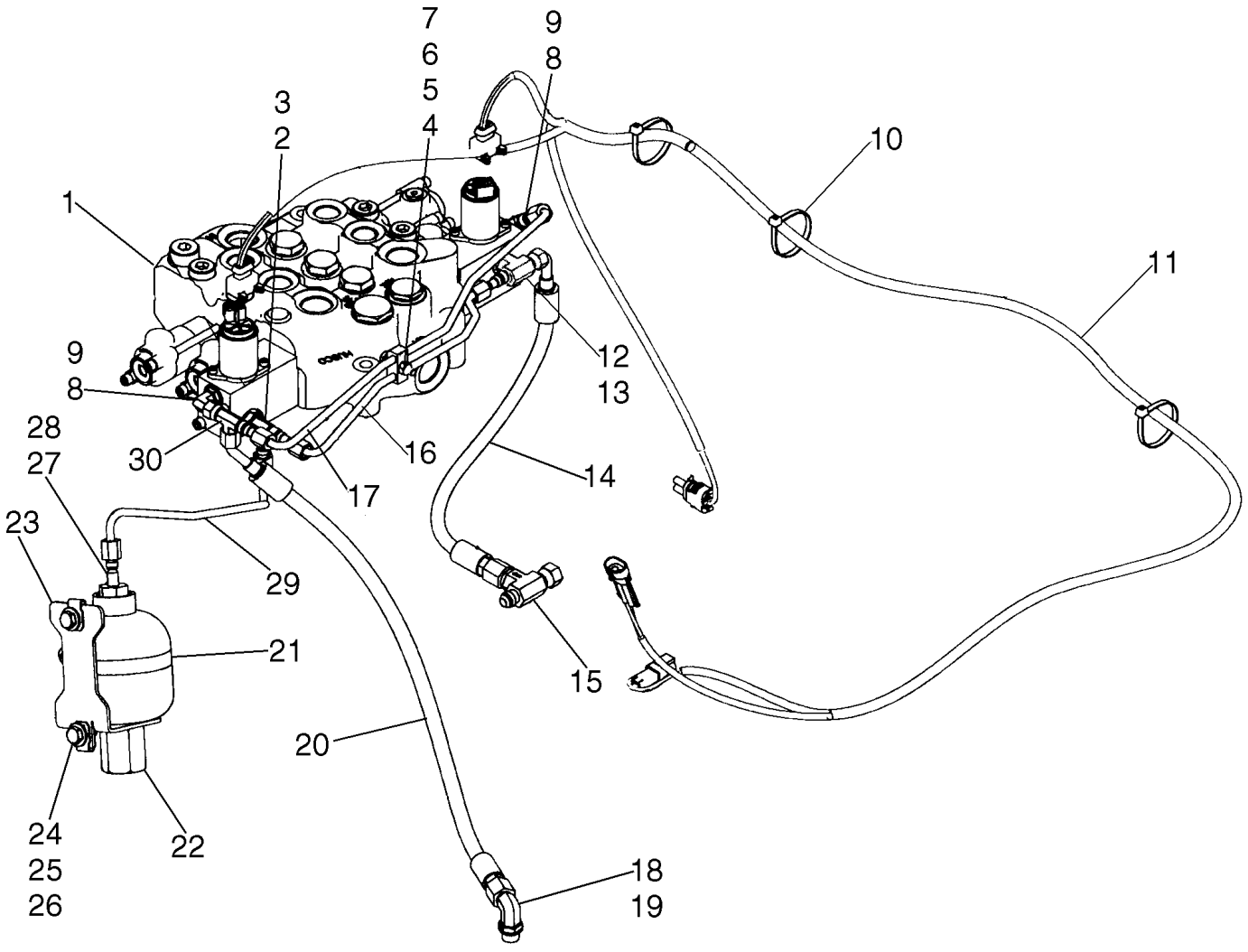

ACCESORIOS, HIDRAULICA (CON CONTROL PILOTO)

REF	FN	PART NUMBER	YR/SN	QTY	DENOMINACION
25		122158A1		2	TUERCA, M8, U
26		86625263		2	ARANDELA, M8 x 20 x 1.6
27		87010110		1	RACOR, Straight; Incl. 28
28		128825		1	JUNTA HERMETICA, 8-1, 90 Duro, .644" ID x .087" Thk
29		87447764		1	TUBO (CONJUNTO), Pilot Pressure
30		86513653		1	RACOR-T, 37º, 7/16"-20 x 7/16"-20, Fem Sw Run

ACCESORIOS, HIDRAULICA

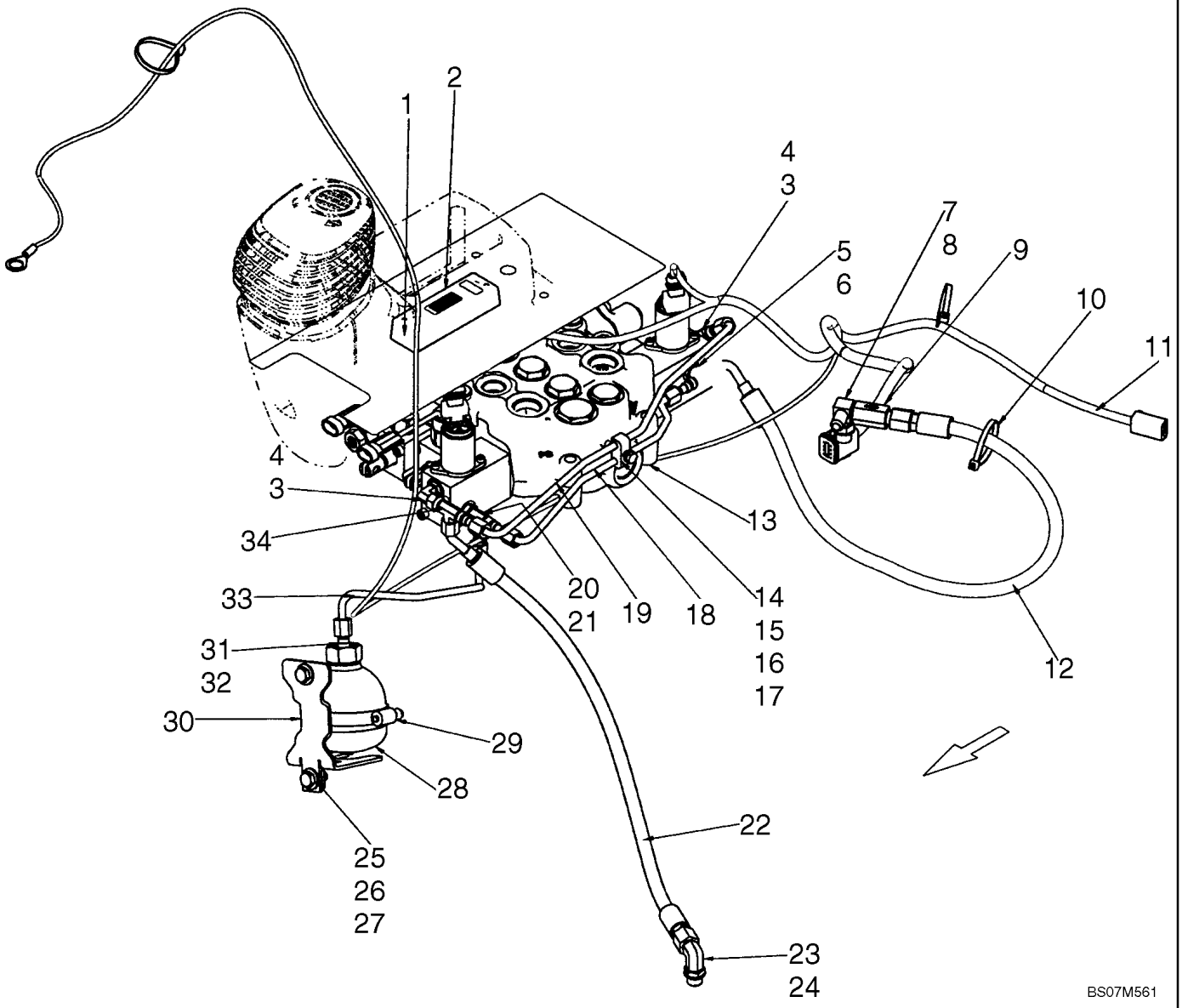

ACCESORIOS, HIDRAULICA

REF	FN	PART NUMBER	YR/SN	QTY	DENOMINACION
1		100012		2	TUERCA, M4, Cl 8
		87617017		1	KIT, SERVICE, Kit, EH Proportional Auxiliary, Mechanical Controls; Incl 1 - 34
2		87657080		1	VALVULA, PWM Driver
3		216773		2	CODO, 90º, 7/16"-20, 37º x 7/16"-20, O-Ring, Incl 4
4		165202		2	JUNTA HERMETICA, 4-1, 90 Duro, .351" ID x .072" Thk
5		16989		1	RACOR-T, 7/16"-20, 37º x 7/8"-14, O-Ring Br, Incl 6
6		165202		1	JUNTA HERMETICA, 4-1, 90 Duro, .351" ID x .072" Thk
7		L104616		1	RACOR-T, Incl 8
8		9617873		1	JUNTA HERMETICA, 6-1, 90 Duro, .468" ID x .078" Thk
9		87441786		1	VALVULA, In Line Check Valve
10		L11541		3	CIERRA CABLES
11		87668739		1	HAZ, Harness, Electro-Hydraulic Auxiliary
12		87516044		1	MANGA, Hose, 750mm (29 1/2 in.)
13		87583286		1	VALVULA, Control Valve, Manual Control; See Fig 08-20
14		608089		1	BORNE
15		80120101		1	TORNILLO
16		86624181		1	ARANDELA, M6
17		87030561		1	CONTRA TUERCA, M6 x 1, Cl 8
18		87563970		1	TUBERIA HIDRAULICO, Tube, Pilot Pressure
19		87564001		1	TUBERIA HIDRAULICO, Tube, Drain
20		86513019		1	RACOR-T, 7/16"-20, 37º x 7/16"-20, O-Ring Run, Incl 21
21		165202		1	JUNTA HERMETICA, 4-1, 90 Duro, .351" ID x .072" Thk
22		87460042		1	MANGA, Hose, Case Drain 580mm (22 13/16 in.)
23		76344		1	CODO, 90º, 9/16"-18, 37º x 9/16"-18, O-Ring, Incl 24
24		9617873		1	JUNTA HERMETICA, 6-1, 90 Duro, .468" ID x .078" Thk
25		120104		2	TORNILLO, Hex, M8 x 20, 8.8
26		86625263		2	ARANDELA, M8 x 20 x 1.6

ACCESORIOS, HIDRAULICA

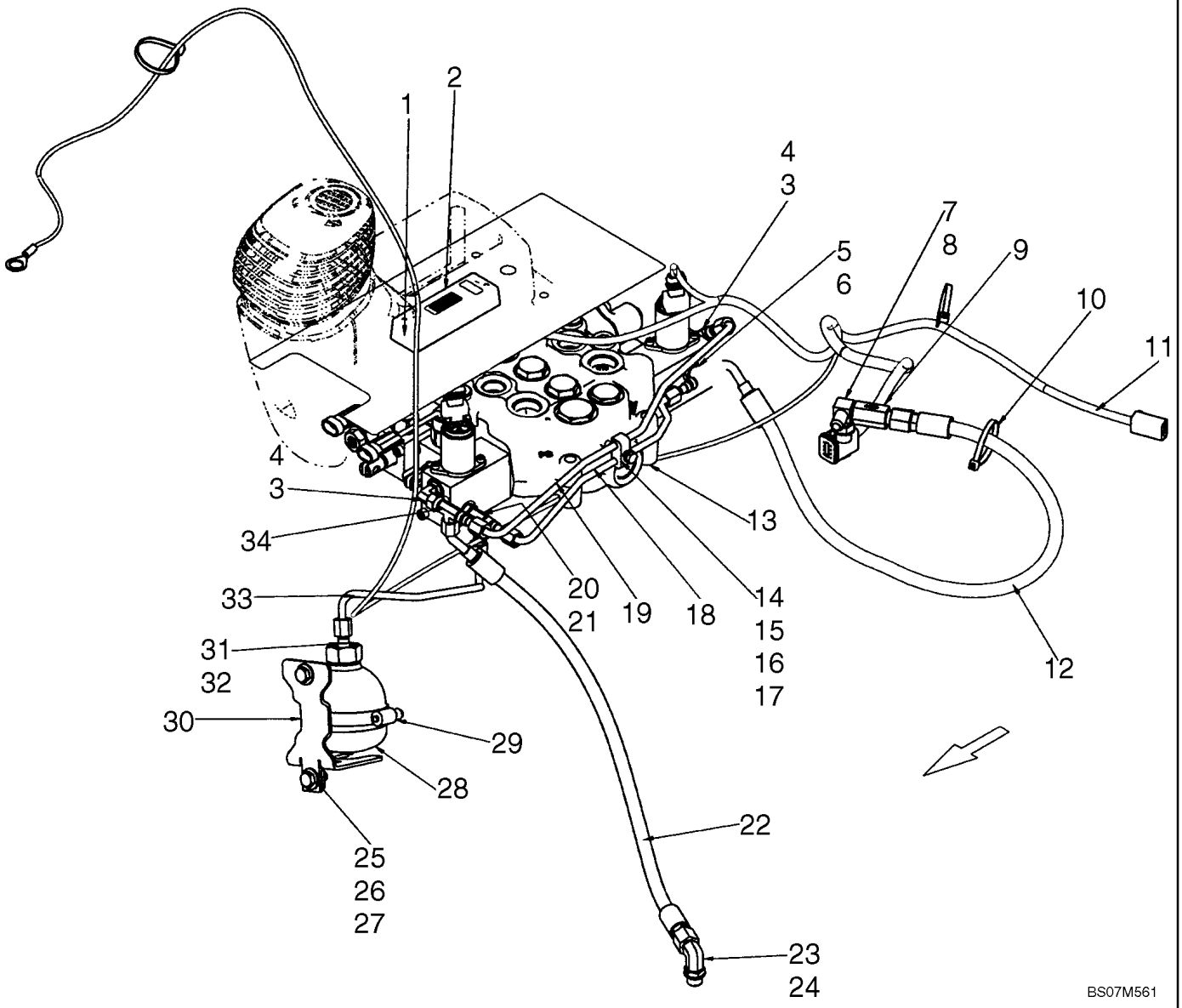

ACCESORIOS, HIDRAULICA

REF	FN	PART NUMBER	YR/SN	QTY	DENOMINACION
27		122158A1		2	TUERCA, M8, U
28		87376969		1	ACUMULADOR
29		86625032		1	ABRAZADERA MANGUERA, #48, 2.56/3.50 Type F Worm
30		87621245		1	PIEZ ANGULAR
31		139398		1	RACOR, 7/16"-20, 37º x 9/16"-18, O-Ring, Incl 32
32		9617873		1	JUNTA HERMETICA, 6-1, 90 Duro, .468" ID x .078" Thk
33		87447764		1	TUBO (CONJUNTO), Tube, Pilot Pressure
34		86513653		1	RACOR-T, 37º, 7/16"-20 x 7/16"-20, Fem Sw Run

HIDRAULICA - SISTEMA DE ACOPLAMIENTO

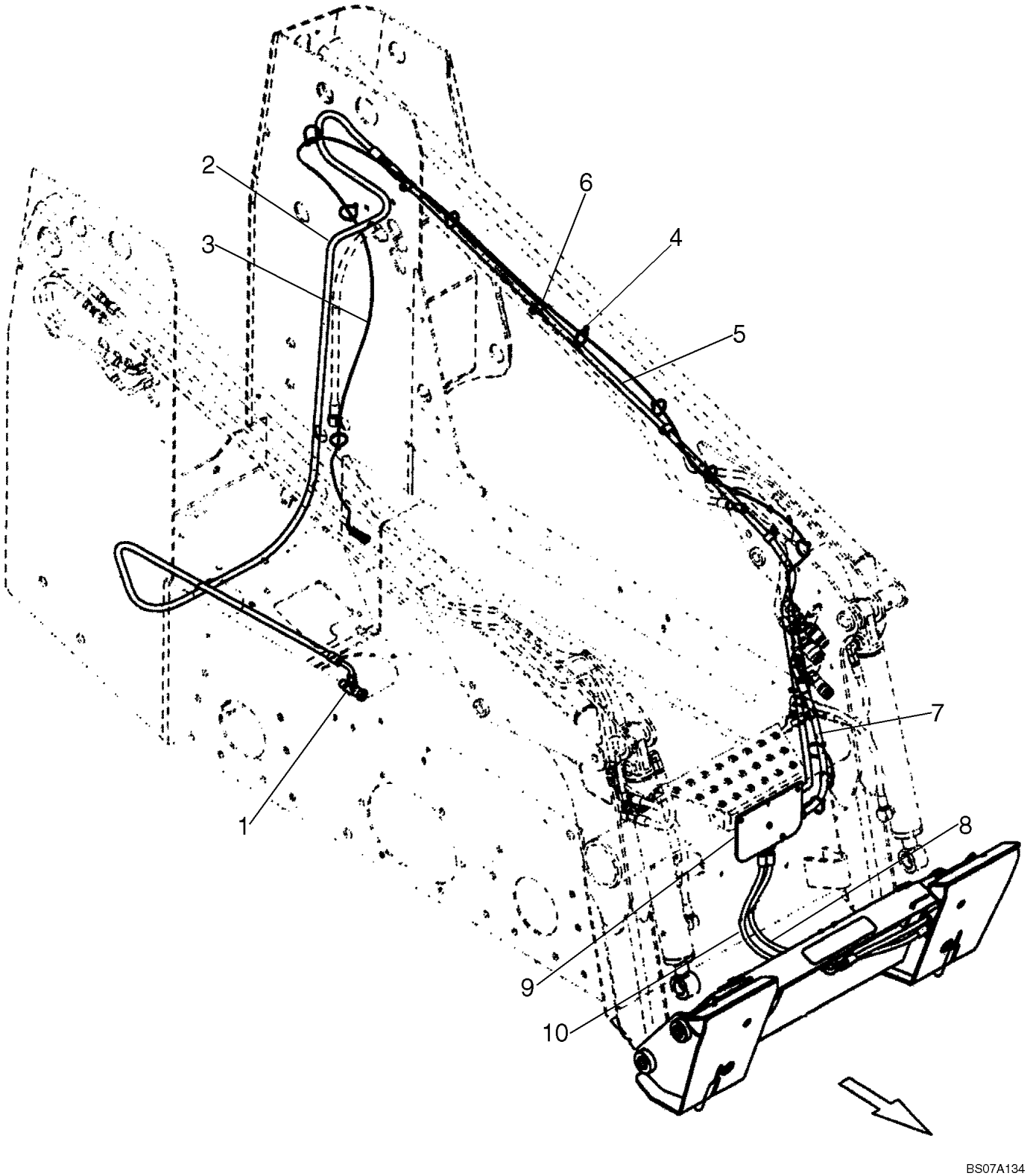

HIDRAULICA - SISTEMA DE ACOPLAMIENTO

REF	FN	PART NUMBER	YR/SN	QTY	DENOMINACION
		REF			MANUAL, See Figure 08-11
		87638893		1	KIT, SERVICE, Kit, Hydraulic Coupler; Incl 1 - 10 And Fig 08-11
		87388074		1	KIT DE MODIFICACION, Kit To Convert From Connection Into Bucket Circuit To Connection Between Gear Pump And Loader Valve; Incl. Ref 1, 2, 4, 5, 6
1		87446825		1	RACOR-T
2		87367444		1	MANGA
3		87446983		1	GRUPO DE CABLES
4		L11541		8	CIERRA CABLES
5		87367445		1	MANGA
6		86624005		4	BORNE, 3/4", Insul, 3/8" Bolt
7		87413436		1	MANGUERA (CONJUNTO), Case Drain
8		87440565		1	MANGUERA (CONJUNTO), Step To Coupler
9		87423807		1	PLACA
10		87440564		1	MANGUERA (CONJUNTO), Step To Coupler

HIDRAULICA - SISTEMA DE ACOPLAMIENTO

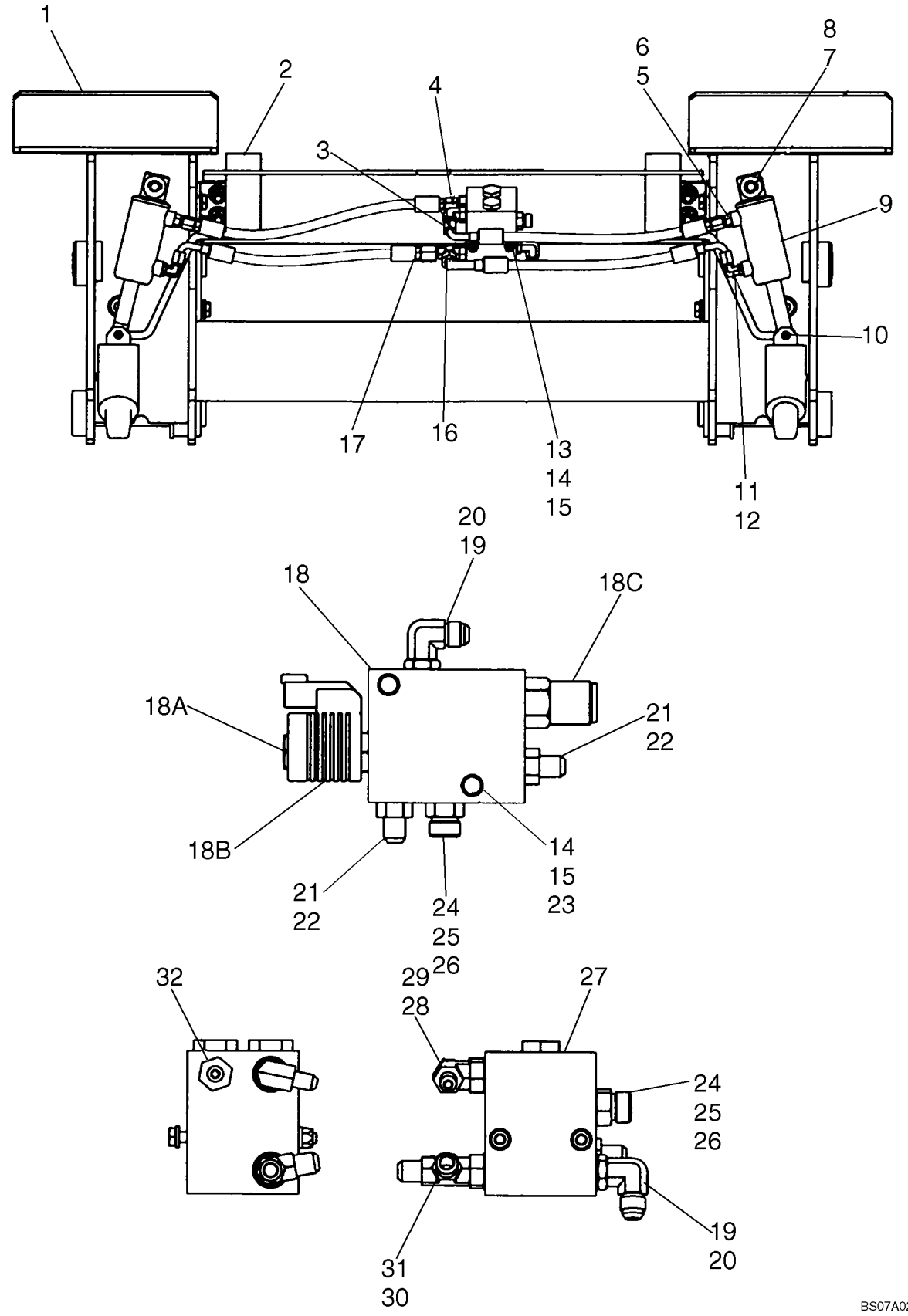

HIDRAULICA - SISTEMA DE ACOPLAMIENTO

REF	FN	PART NUMBER	YR/SN	QTY	DENOMINACION
1		REF		1	MANUAL, Coupler Frame; See Figure 09-05; See Figure 08-10
2		396052A2		2	BANDERA
3		87440569		1	MANGUERA (CONJUNTO), Left Hand; Base End
4		87440566		1	MANGUERA (CONJUNTO), Right Hand; Base End
5		265235		2	RACOR, 7/16"-20, 37º x 7/16"-20, O-Ring, Incl. 6
6		165202		1	JUNTA HERMETICA, 4-1, 90 Duro, .351" ID x .072" Thk
7		100-1650		2	ANILLO DE RESORTE, #50, Ext
8		87387540		2	RETENEDOR, Handle Pivot
9		87442337		2	CILINDRO, Component Parts Not Serviced Separately
10		87610718		2	PERNO
11		216773		2	CODO, 90º, 7/16"-20, 37º x 7/16"-20, O-Ring, Incl. 12
12		165202		1	JUNTA HERMETICA, 4-1, 90 Duro, .351" ID x .072" Thk
13		86508570		2	TORNILLO, Hex, M6 x 80, 8.8
14		86512440		4	CONTRA TUERCA
15		86588450		8	ARANDELA, M6
16		87440570		1	MANGUERA (CONJUNTO), Left Hand; Rod End
17		87440568		1	MANGUERA (CONJUNTO), Right Hand; Rod End
18		87421480		1	VALVULA HIDRAULICA, Hydraulic Coupler; Incl.18A - 18C
18A		87562926		1	VALVULA, Sequence Valve Sauer No. CP538-1-U-0-12D-DE
18B		87433496		1	BOBINA, Sauer No. 322113
18C		87562923		1	VALVULA, Sequence Valve Sauer No. CP240-21-B-0-A-C-270
19		76344		2	CODO, 90º, 9/16"-18, 37º x 9/16"-18, O-Ring, Includes 20
20		9617873		1	JUNTA HERMETICA, 6-1, 90 Duro, .468" ID x .078" Thk
21		76350		2	RACOR, 9/16"-18, 37º x 9/16"-18, O-Ring, Incl. 22
22		9617873		1	JUNTA HERMETICA, 6-1, 90 Duro, .468" ID x .078" Thk

HIDRAULICA - SISTEMA DE ACOPLAMIENTO

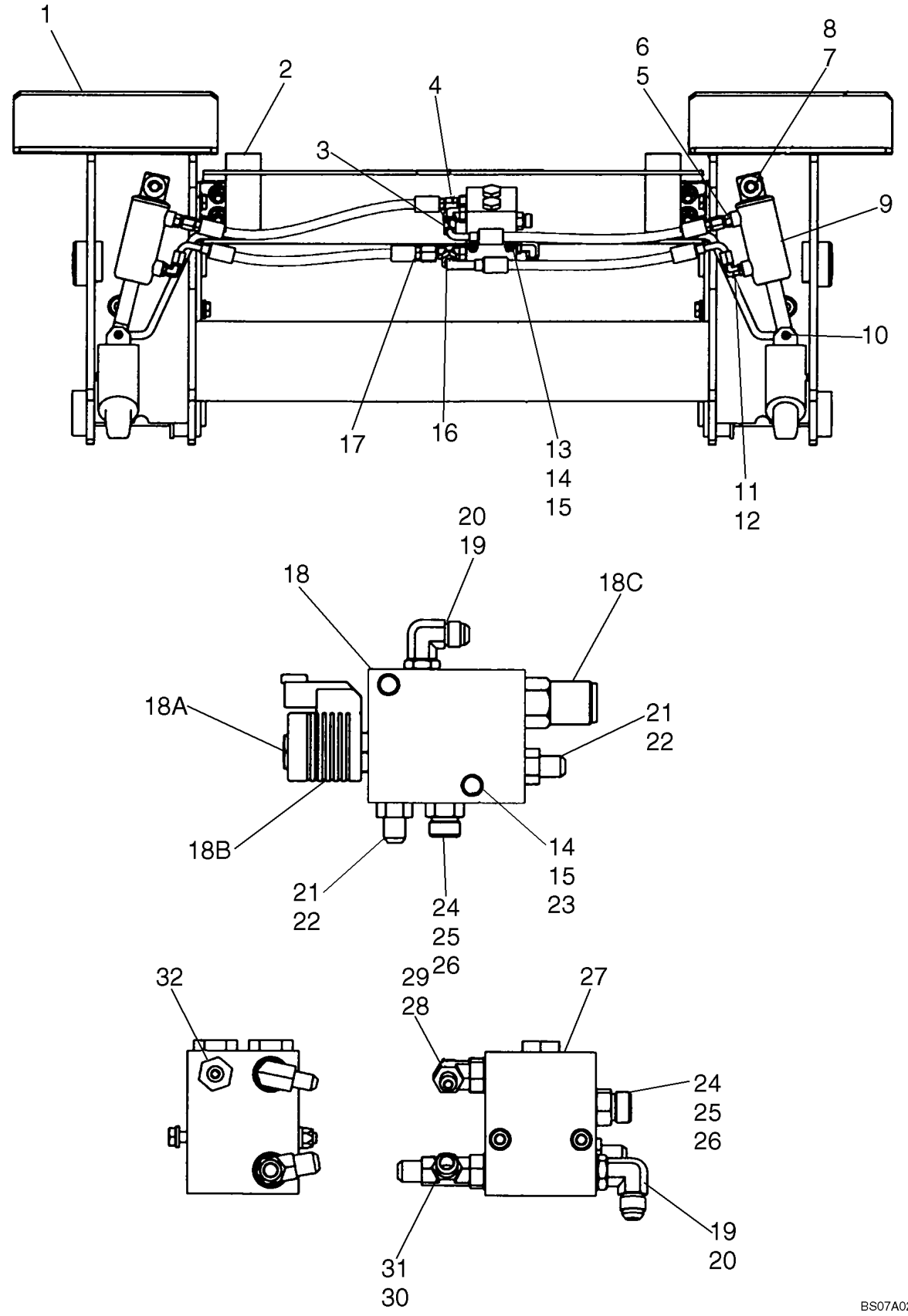

HIDRAULICA - SISTEMA DE ACOPLAMIENTO

REF	FN	PART NUMBER	YR/SN	QTY	DENOMINACION
23		338413		2	TORNILLO, Hex, M6 x 60, 8.8
24		9993143		2	RACOR, 11/16"-16 ORFS x 9/16"-18 ORB, Incl. 25, 26
25		9993141		1	JUNTA HERMETICA, -012, 90 Duro, .364" ID x .070" Thk
26		9617873		1	JUNTA HERMETICA, 6-1, 90 Duro, .468" ID x .078" Thk
27		294741A1		1	VALVULA DE CIERRE, Component Parts Not Serviced Separately
28		86512934		1	CODO, 90º, 7/16"-20, 37º x 9/16"-18, O-Ring, Incl. 29
29		9617873		1	JUNTA HERMETICA, 6-1, 90 Duro, .468" ID x .078" Thk
30		86513020		1	RACOR-T, 9/16"-18, 37º x 9/16"-18, O-Ring Run, Incl. 31
31		9617873		1	JUNTA HERMETICA, 6-1, 90 Duro, .468" ID x .078" Thk
32		139398		1	RACOR, 7/16"-20, 37º x 9/16"-18, O-Ring, Incl. 9617873
		9617873		1	JUNTA HERMETICA, 6-1, 90 Duro, .468" ID x .078" Thk

HIDRAULICA - SISTEMA DE ACOPLAMIENTO (ITALIANO)

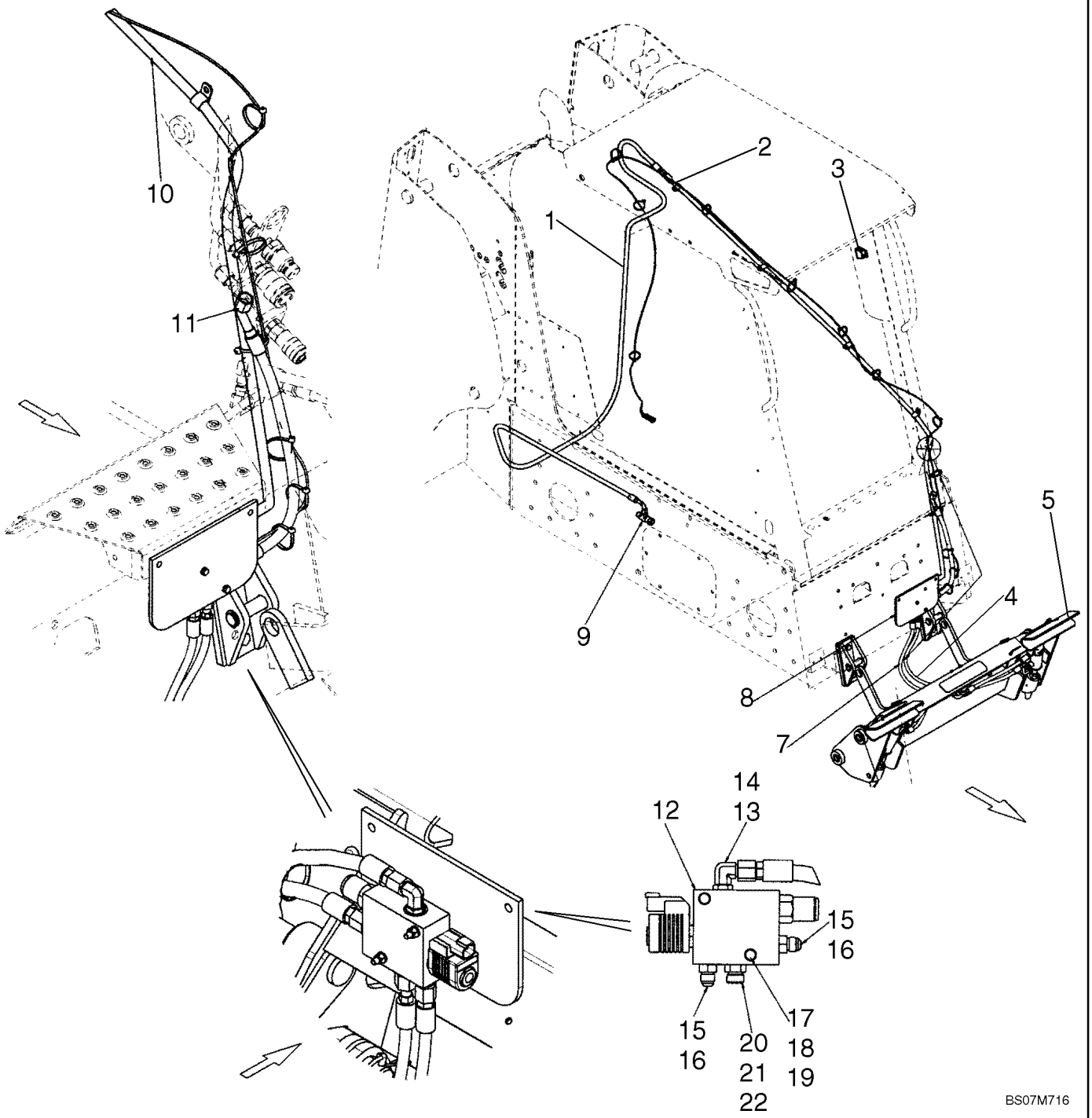

HIDRAULICA - SISTEMA DE ACOPLAMIENTO (ITALIANO)

REF	FN	PART NUMBER	YR/SN	QTY	DENOMINACION
1		87367444		1	MANGA, Hose, Hydraulic Coupler, 3305mm (130 1/8 in.)
2		86624005		4	BORNE, 3/4", Insul, 3/8" Bolt
3		87642911		1	CONTACTOR, Rocker Switch, Hydraulic Coupler
4		87440565		1	MANGUERA (CONJUNTO), Hose, Step To Coupler, 720mm (28 11/32 in.)
5		REF		1	MANUAL, Coupler; See Fig 08-12
6		80710		4	ENGRASADOR, 1/8"-27 x .66 lg
7		87440564		1	MANGUERA (CONJUNTO), Hose, Step To Coupler, 690mm (27 3/16 in.)
8		87423807		1	PLACA
9		87446825		1	RACOR-T
10		87367445		1	MANGA, Hose, Hydraulic Coupler, 2482mm (97 11/16 in.)
11		87413436		1	MANGUERA (CONJUNTO), Hose, Case Drain, 655mm (25 13/16 in.)
12		87421480		1	VALVULA HIDRAULICA
13		76344		2	CODO, 90º, 9/16"-18, 37º x 9/16"-18, O-Ring, Incl 14
14		9617873		2	JUNTA HERMETICA, 6-1, 90 Duro, .468" ID x .078" Thk
15		76350		2	RACOR, 9/16"-18, 37º x 9/16"-18, O-Ring, Incl 16
16		9617873		2	JUNTA HERMETICA, 6-1, 90 Duro, .468" ID x .078" Thk
17		338413		2	TORNILLO, Hex, M6 x 60, 8.8
18		86512440		4	CONTRA TUERCA
19		86588450		8	ARANDELA, M6
20		9993143		1	RACOR, 11/16"-16 ORFS x 9/16"-18 ORB, Incl 21, 22
21		9617873		1	JUNTA HERMETICA, 6-1, 90 Duro, .468" ID x .078" Thk
22		9993141		1	JUNTA HERMETICA, -012, 90 Duro, .364" ID x .070" Thk

HIDRAULICA - SISTEMA DE ACOPLAMIENTO (ITALIANO)

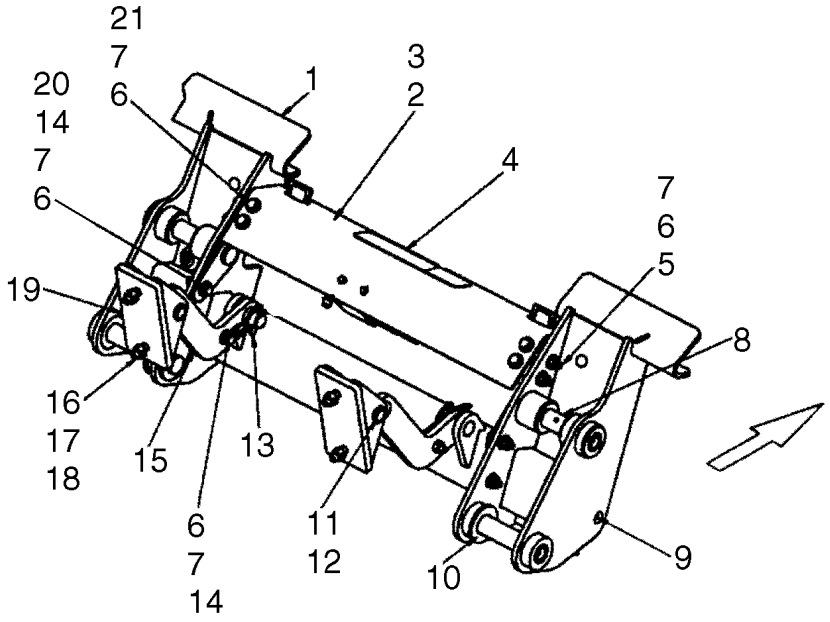

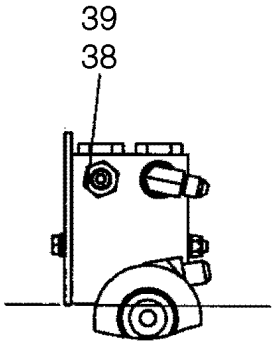

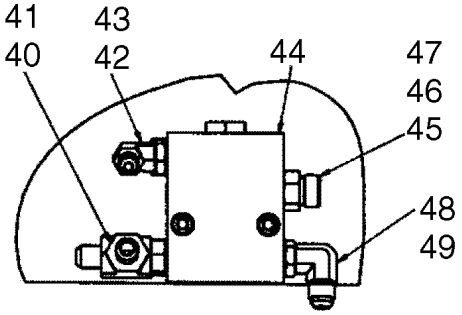

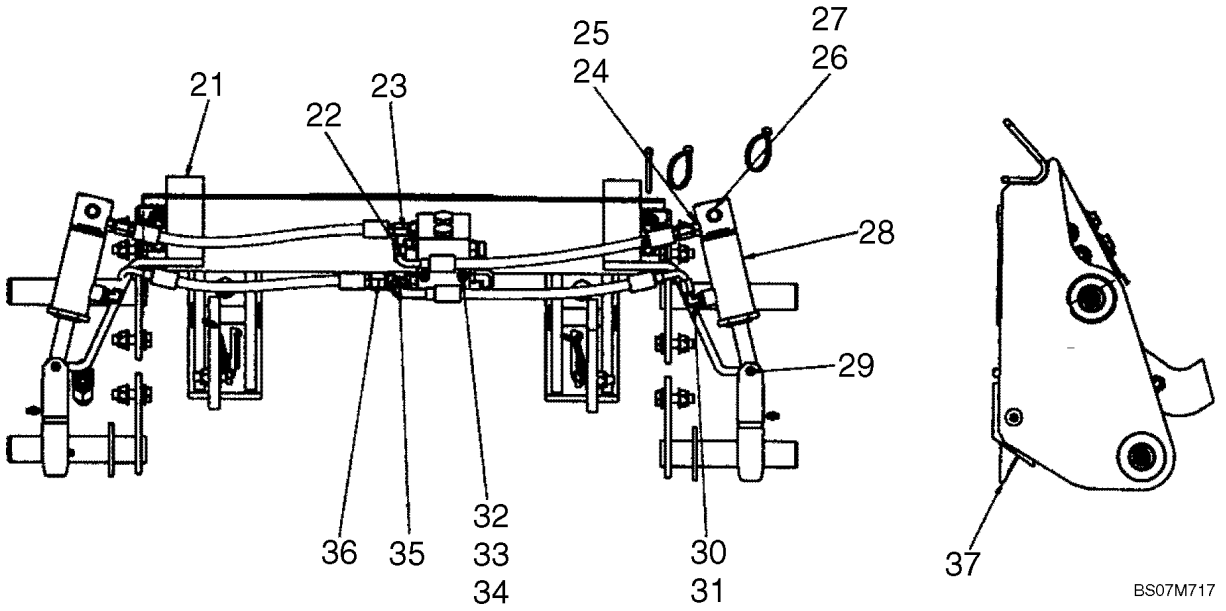

BS07M717

HIDRAULICA - SISTEMA DE ACOPLAMIENTO (ITALIANO)

REF	FN	PART NUMBER	YR/SN	QTY	DENOMINACION
1		417779A3		1	BASTIDOR (CONJUNTO), Coupler Frame, Italian
2		87620412		1	PLACA, Cover
3		409783A1		2	PIEZA DE SOPORTE
4		D55216		1	TIRA CONTRA DESLIZAM.
5		9706704		4	TORNILLO, Hex, M10 x 35, 8.8, Full Thd
6		86512554		14	CONTRA TUERCA, M10 x 1.5, Cl 10
7		86625253		26	ARANDELA, M11 x 24 x 2
8		87659406		4	PERNO
9		87414		2	ENGRASADOR, 1/4"-28 x .56" lg, Drive
10		86512837		2	ARANDELA, 1 1/4", SAE
11		D138889		2	PERNO
12		{86625151}		4	Retaining Ring, External #87
13		A30338		2	PERNO, Klik Pin
14		120112		6	TORNILLO, Hex, M10 x 40, 8.8, Full Thd
15		398194A1		2	ESLABON, Bucket Lock
16		120080		4	TORNILLO, Hex Head, M12 X 45 Cl 8.8
17		86625255		4	ARANDELA, M13.5 x 24.5 x 3, HT
18		412672		4	CONTRA TUERCA, M12 x 1.75, Cl 10
19		398196A1		2	PIEZA DE SOPORTE
20		906091R1		4	SEPARADOR
21		43139		4	TORNILLO
22		87440569		1	MANGUERA (CONJUNTO), Hose, Base End LH, 365mm (14 3/8 in.)
23		87440566		1	MANGUERA (CONJUNTO), Hose, Base End RH, 372mm (14 21/32 in.)
24		265235		2	RACOR, 7/16"-20, 37º x 7/16"-20, O-Ring, Incl 25
25		165202		2	JUNTA HERMETICA, 4-1, 90 Duro, .351" ID x .072" Thk
26		87387540		2	RETENEDOR
27		{87612753}		2	Retaining Ring, External #50
28		87442337		2	CILINDRO
29		87610718		2	PERNO
30		216773		2	CODO, 90º, 7/16"-20, 37º x 7/16"-20, O-Ring, Incl 31
31		165202		2	JUNTA HERMETICA, 4-1, 90 Duro, .351" ID x .072" Thk

HIDRAULICA - SISTEMA DE ACOPLAMIENTO (ITALIANO)

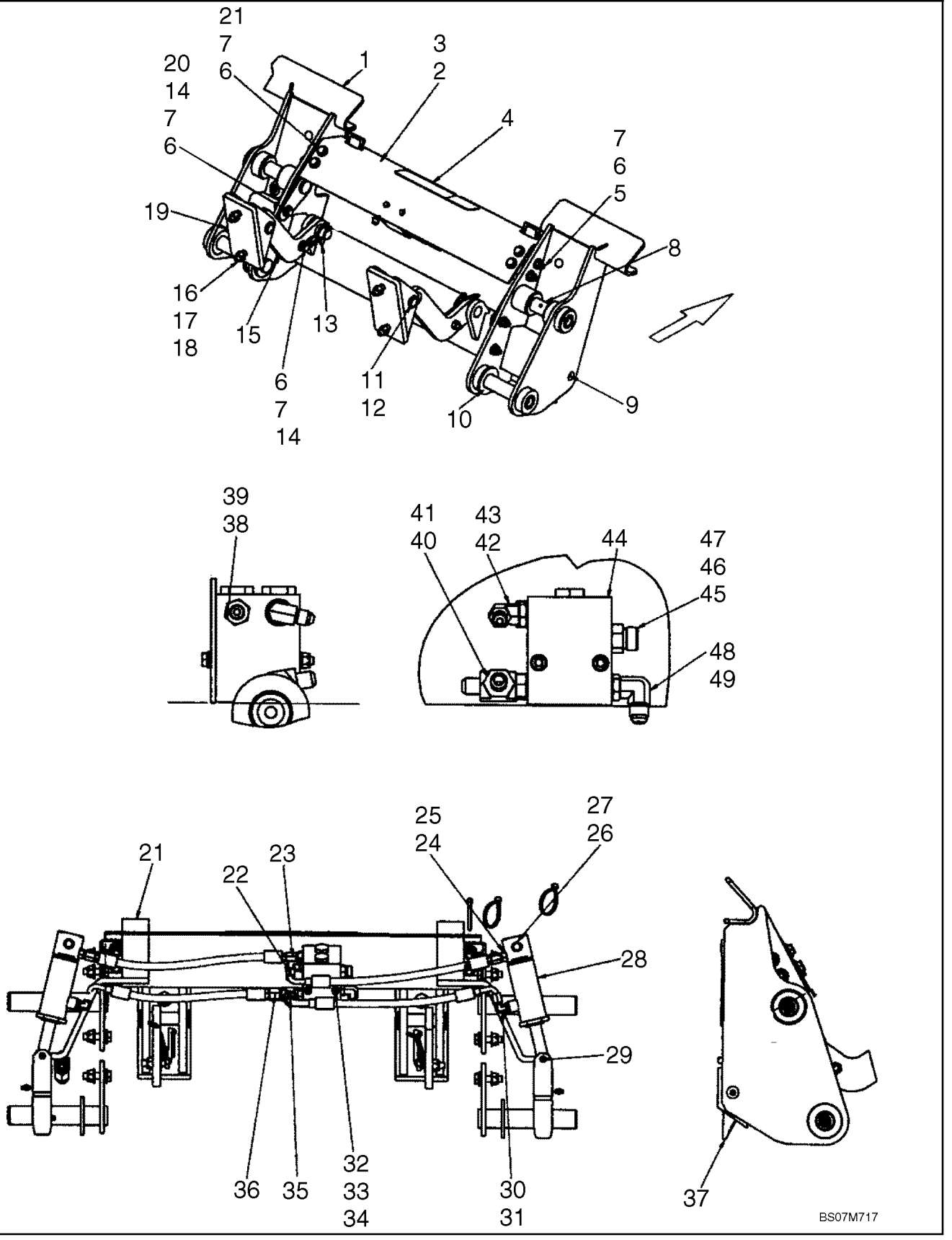

HIDRAULICA - SISTEMA DE ACOPLAMIENTO (ITALIANO)

REF	FN	PART NUMBER	YR/SN	QTY	DENOMINACION
32		86508570		2	TORNILLO, Hex, M6 x 80, 8.8
33		86512440		4	CONTRA TUERCA
34		86588450		8	ARANDELA, M6
35		87440570		1	MANGUERA (CONJUNTO), Hose, Rod End LH, 363mm (14 9/32 in.)
36		87440568		1	MANGUERA (CONJUNTO), Hose, Rode End RH, 337mm (13 1/4 in.)
37		87413030		2	PERNO
38		139398		1	RACOR, 7/16"-20, 37º x 9/16"-18, O-Ring, Incl 39
39		9617873		1	JUNTA HERMETICA, 6-1, 90 Duro, .468" ID x .078" Thk
40		86513020		1	RACOR-T, 9/16"-18, 37º x 9/16"-18, O-Ring Run, Incl 41
41		9617873		1	JUNTA HERMETICA, 6-1, 90 Duro, .468" ID x .078" Thk
42		86512934		1	CODO, 90º, 7/16"-20, 37º x 9/16"-18, O-Ring, Incl 43
43		9617873		1	JUNTA HERMETICA, 6-1, 90 Duro, .468" ID x .078" Thk
44		294741A1		1	VALVULA DE CIERRE
45		9993143		1	RACOR, 11/16"-16 ORFS x 9/16"-18 ORB, Incl 46,47
46		9617873		1	JUNTA HERMETICA, 6-1, 90 Duro, .468" ID x .078" Thk
47		9993141		1	JUNTA HERMETICA, -012, 90 Duro, .364" ID x .070" Thk
48		76344		2	CODO, 90º, 9/16"-18, 37º x 9/16"-18, O-Ring, Incl 49
49		9617873		2	JUNTA HERMETICA, 6-1, 90 Duro, .468" ID x .078" Thk

CILINDRO - INCLINACIÓN

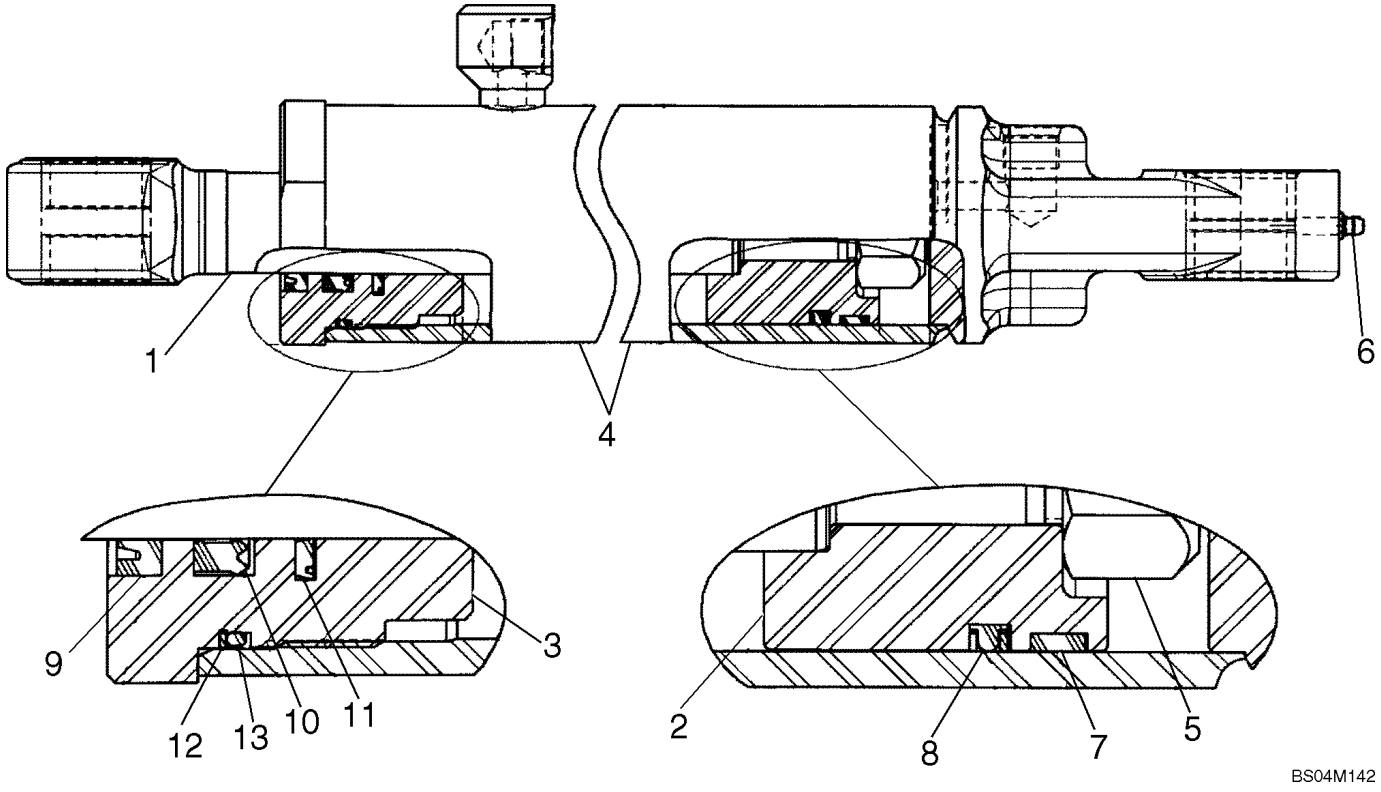

CILINDRO - INCLINACIÓN

REF	FN	PART NUMBER	YR/SN	QTY	DENOMINACION
		87438193		2	CILINDRO (CONJUNTO), Tilt; 3.0 Bore, 14.56 Stroke; Incl. 1 - 6 and Seal Kit 86614269 Ref 7 - 13
1		87442326		1	VARILLA (CONJUNTO), 38.1 Dia, 31.8 Pin
2		87442334		1	EMBOLO
3		86614267		1	CULATA, 2.5 x 1.38
4		87442335		1	CILINDRO, Incl. Bushings, 86624450
		86624450		2	CASQUILLO
5		87027430		1	CONTRA TUERCA, 1 1/8"-12, GC
6		87414		1	ENGRASADOR, 1/4"-28 x .56" lg, Drive
		86614269		1	JEUGO, Seal, 3.0 x 1.50; Incl. 7 - 13
7		771714		1	ANILLO
8		86595542		1	ANILLO DE CIERRE, Seal, 3.0 Piston
9		86631610		1	ANILLO DE CIERRE, 1.50 Wiper
10		86631607		1	ANILLO DE CIERRE, 1.50 Rod
11		86631616		1	ANILLO DE CIERRE, 1.38 Buffer
12		86609324		1	JUNTA CIRCULAR
13		270192		1	JUNTA HERMETICA, -335", 70 Duro, 2.725" ID x .210" Thk

CILINDRO - ELEVACIÓN

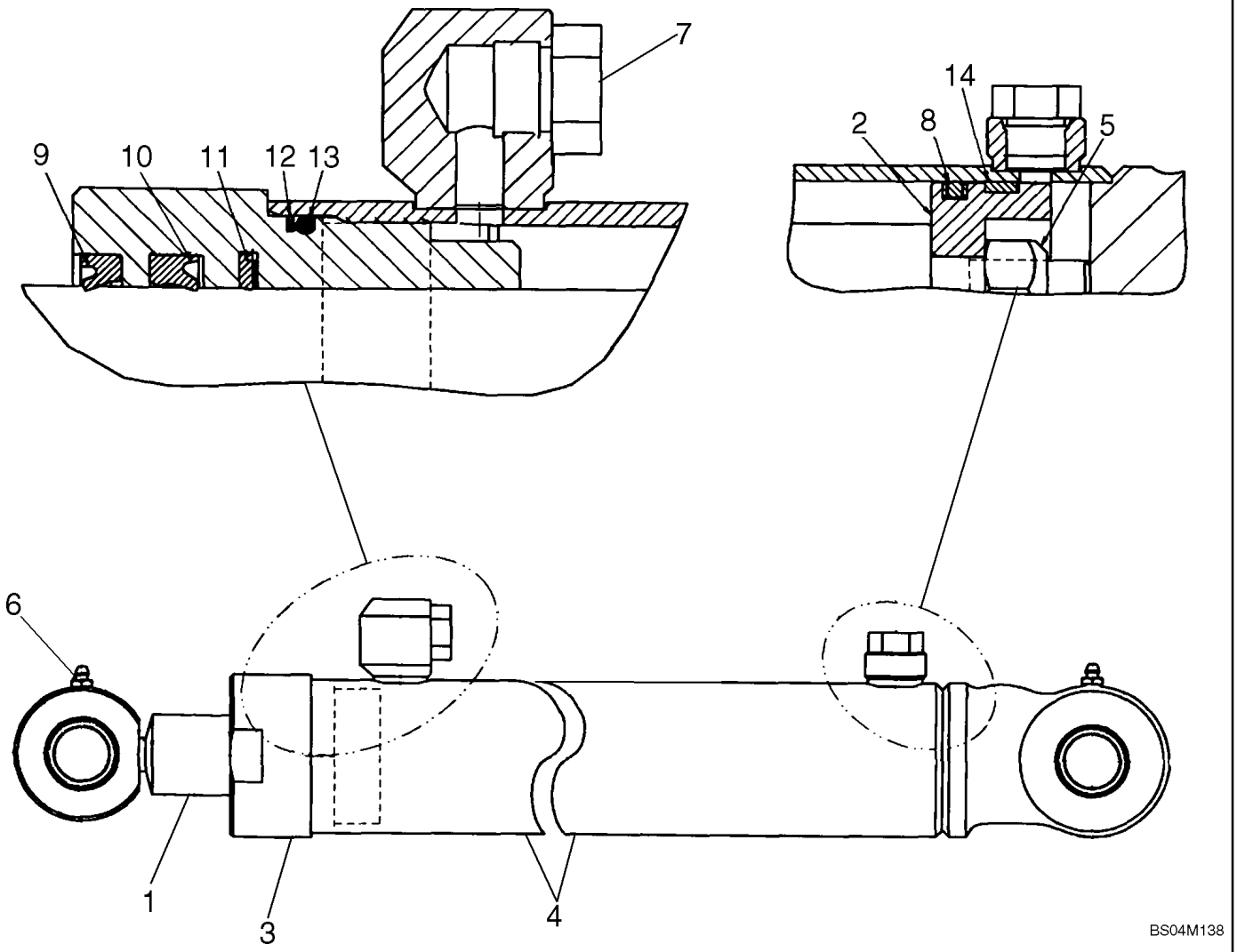

CILINDRO - ELEVACIÓN

REF	FN	PART NUMBER	YR/SN	QTY	DENOMINACION
		87438190		2	CILINDRO (CONJUNTO), 2.50 Bore, 35.83 Stroke; Incl. 1 - 7 And Seal Kit 86631598 Ref 8 - 14
1		86611742		1	VARILLA, Piston, Incl. Bushings 86624451
		86624451		2	CASQUILLO
2		848220		1	EMBOLO
3		86631597		1	CULATA, 2.5 x 1.25
4		86611740		1	CILINDRO, Incl. Bushings 86624450
		86624450		2	CASQUILLO
5		280724		1	CONTRA TUERCA, 3/4"-16, GC
6		87414		2	ENGRASADOR, 1/4"-28 x .56" lg, Drive
7		214389		2	TAPÓN, Hex Hd, 3/4"-16 ORB, 1/2" OD Tube
		86631598		1	JEUGO, Seal, Incl. 8 - 14
8		86563839		1	ANILLO DE CIERRE, 2.5
9		86631610		1	ANILLO DE CIERRE, 1.5 Wiper
10		86631607		1	ANILLO DE CIERRE, 1.5 Rod
11		86631616		1	ANILLO DE CIERRE, 1.5 Buffer
12		86512008		1	JUNTA
13		52419		1	JUNTA HERMETICA, -229, 70 Duro, 2.359" ID x .139" Thk
14		783874		1	ANILLO DE DESGASTE

ALTO CAUDAL, CARGA Y DESCARGA

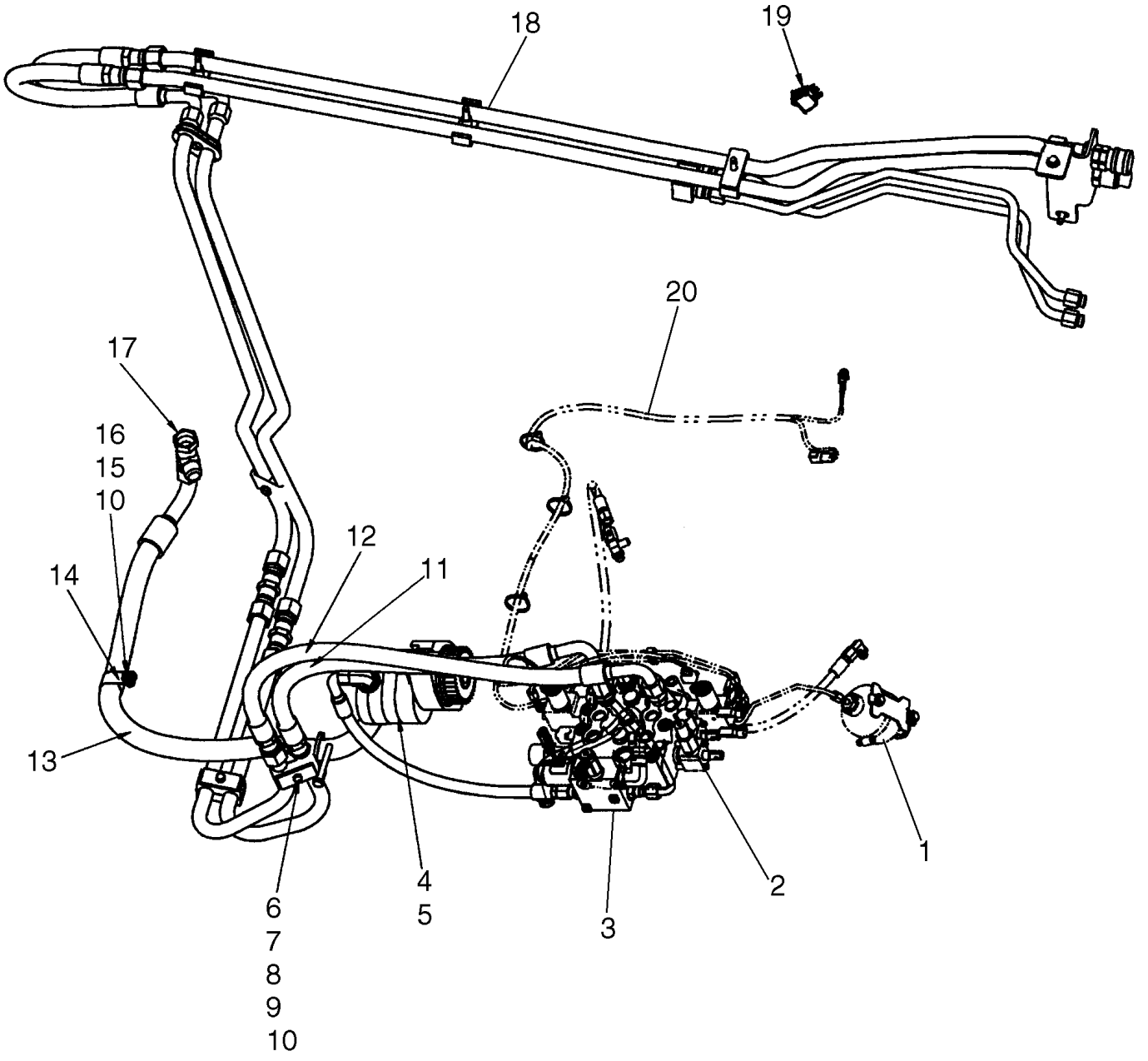

ALTO CAUDAL, CARGA Y DESCARGA

REF	FN	PART NUMBER	YR/SN	QTY	DENOMINACION
		87617100		1	KIT, SERVICE, Kit, High Flow Bi-Directional Gear; Incl 1- 20
1		REF		1	MANUAL, Accumulator, See Fig 08-07
2		87546975			VALVULA HIDRAULICA, Control Valve, See Fig 08-23
3		87012669		1	VALVULA, See Fig 08-19
4		87020733		1	BOMBA, See Fig 06-55
5		272310		1	JUNTA HERMETICA, -042, 70 Duro, 3.239" ID x .070" Thk
6		120061		1	TORNILLO, Hex, M8 x 60, 8.8
7		80681		2	ARANDELA DE FRENO, 5/16"
8		257859A1		3	PLAQUETA
9		1546028C1		2	COLLAR, 25.4 x 25.4
10		9628098		2	CONTRA TUERCA, M8 x 1.25, Cl 10
11		87454000		1	MANGUERA (CONJUNTO), 860 mm (38.85 in) High Flow
12		87453999		1	MANGUERA (CONJUNTO), 1020 mm (40.15 in) High Flow
13		87602204		1	MANGA, 1200 mm (47.24 in) High Flow Suction
14		86639006		1	BORNE, 1 1/2", Insul, 1/2" Bolt
15		43127		1	TORNILLO, Hex, M8 x 25, 8.8
16		86625263		1	ARANDELA, M8 x 20 x 1.6
17		9618946		1	RACOR-T, 37º, 1 5/16"-12 x 1 5/16"-12, Fem Sw Run
18		REF			MANUAL, Auxiliary Hydraulics, See Fig 08-17
19		87414769		1	CONTACTOR, Rocker, High Flow
20		87447970		1	HAZ, Electro-Hydraulic Auxiliary

FLUJO ALTO - CIRCUITO AUXILIAR

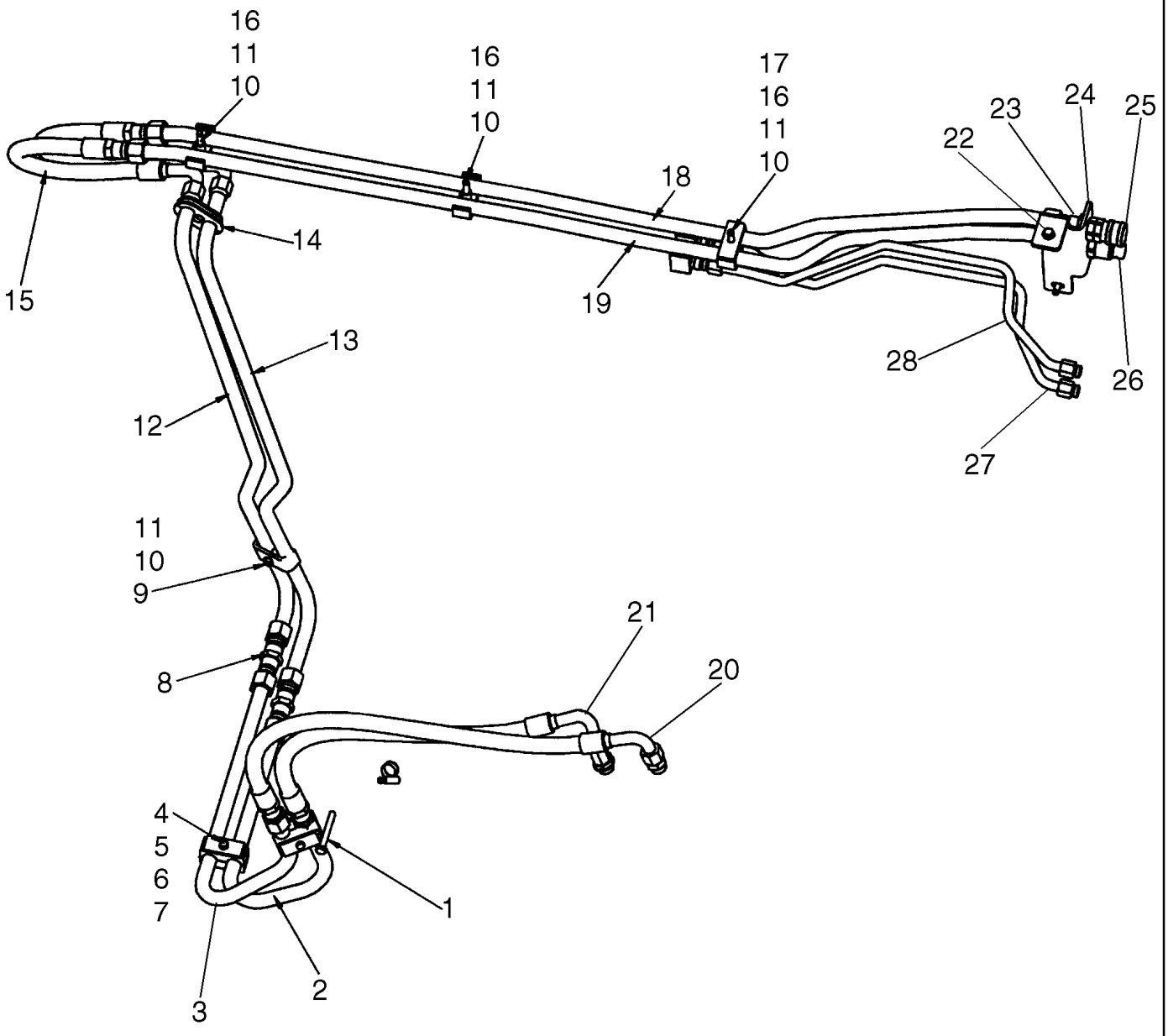

FLUJO ALTO - CIRCUITO AUXILIAR

REF	FN	PART NUMBER	YR/SN	QTY	DENOMINACION
		87617100		1	KIT, SERVICE, Kit, High Flow Bi-Directional Gear; Incl 1 - 28 And Fig 08-16
1		120073		1	TORNILLO, Hex, M10 x 80, 8.8
2		87026696		1	TUBO (CONJUNTO)
3		87026695		1	TUBO (CONJUNTO)
4		43130		1	TORNILLO, Hex, M8 x 50, 8.8
5		80681		2	ARANDELA DE FRENO, 5/16"
6		257859A1		1	PLAQUETA
7		1546028C1		1	COLLAR
8		9790526		1	CONEXION
9		325829		1	TORNILLO, Hex, M10 x 45, 8.8
10		87022737		4	ESPACIADOR
11		87020743		4	PIEZA DE SOPORTE
12		87554226		1	TUBERIA HIDRAULICO, High Flow Aux
13		87554200		1	TUBERIA HIDRAULICO, High Flow Aux
14		87017999		2	SOPORTE
15		87020048		2	MANGA, 675 mm (26.57 in)
16		87025275		3	TORNILLO, 3/8 x 2.5
17		87023483		1	PLACA
18		87023470		1	TUBO (CONJUNTO)
19		87023469		1	TUBO (CONJUNTO)
20		87453999		1	MANGUERA (CONJUNTO), 1020 mm (40.15 in) High Flow
21		87454000		1	MANGUERA (CONJUNTO), 860 mm (33.85 in) High Flow
22		280476		2	TORNILLO AUTOROSCANTE, Hex Wash Hd, 3/8" x 1"
23		86513144		2	CONTRA TUERCA, Blkhd, 1 5/16"-12
24		87023398		1	PIEZA DE SOPORTE
25		87022671		1	ELEMENTO DE ACOPLAM., 5/8, Female; Mating Conector For 87022671 (Female) Is 395268A1 (Male)
26		87022672		1	ELEMENTO DE ACOPLAM., 5/8, Male; Mating Connector For 87022672 (Male) Is 395267A1 (Female)

FLUJO ALTO - CIRCUITO AUXILIAR

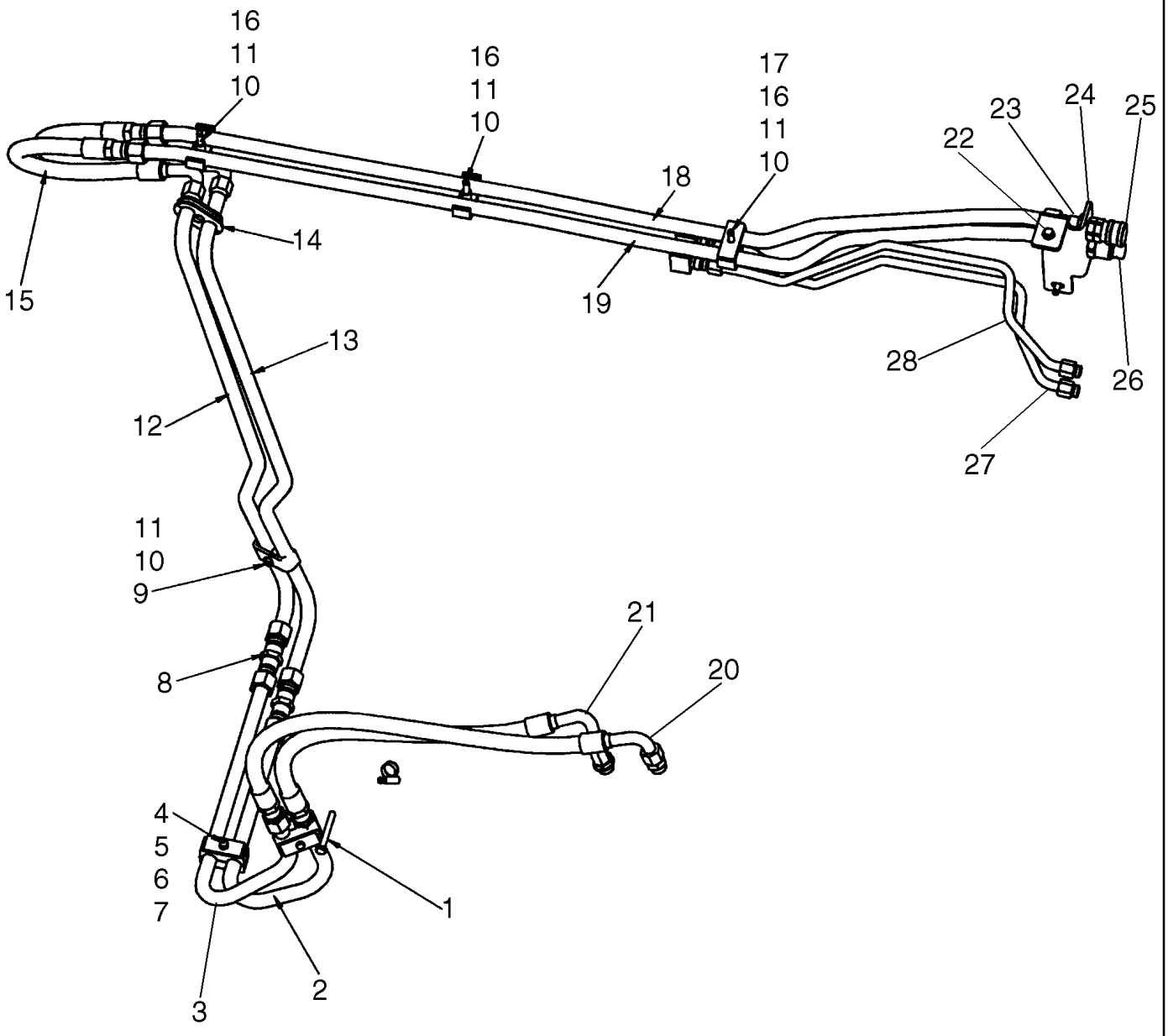

FLUJO ALTO - CIRCUITO AUXILIAR

REF	FN	PART NUMBER	YR/SN	QTY	DENOMINACION
27		87023472		1	TUBO (CONJUNTO)
28		87023471		1	TUBO (CONJUNTO)

ALTO CAUDAL, VALVULA DE CONTROL

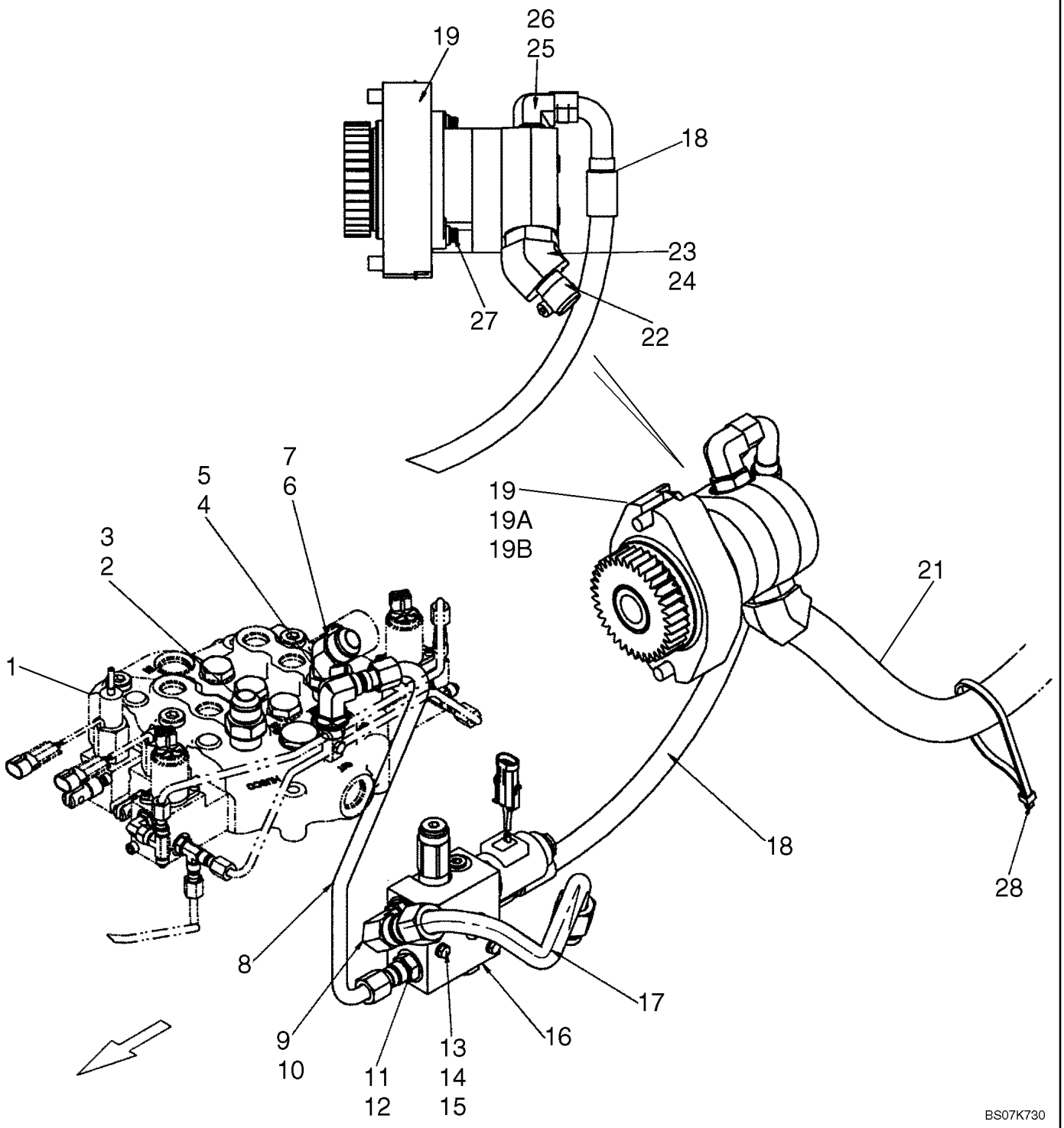

ALTO CAUDAL, VALVULA DE CONTROL

REF	FN	PART NUMBER	YR/SN	QTY	DENOMINACION
1		87546975			VALVULA HIDRAULICA, Control Valve See Fig 08-23
2		322896		1	RACOR, 1 1/16"-12, 37º x 1 1/16"-12, O-Ring, Incl 3
3		167266		1	JUNTA HERMETICA, 12-1, 90 Duro, .924 ID x .116" Thk
4		9617891		1	CODO, 90º, 3/4"-16, 37º x 7/8"-14, O-Ring, Incl 5
5		167269		1	JUNTA HERMETICA, 10-1, 90 Duro, .755" ID x .097" Thk
6		330344		1	CODO, 45º, 1 1/16"-12 x 1 1/16"-12, O-Ring, Incl 7
7		167266		1	JUNTA HERMETICA, 12-1, 90 Duro, .924 ID x .116" Thk
8		87549658		1	TUBO RIGIDO, Tube; High Flow Supply
9		322894		1	CODO, 90º, 1 1/16"-12, 37º x 1 1/16"-12, O-Ring, Incl 10
10		167266		1	JUNTA HERMETICA, 12-1, 90 Duro, .924 ID x .116" Thk
11		128818		2	RACOR, 3/4"-16, 37º x 3/4"-16, O-Ring, Incl 12
12		128825		2	JUNTA HERMETICA, 8-1, 90 Duro, .644" ID x .087" Thk
13		86588450		2	ARANDELA, M6
14		338413		2	TORNILLO, Hex, M6 x 60, 8.8
15		87404992		2	TUERCA
16		87012669		1	VALVULA, Combination Valve; See Fig 08-19
17		87549660		1	TUBERIA HIDRAULICO, Valve To Filter
18		87458725		1	MANGA, 565 mm (22.24 in) Supply
19		2853146		1	TOMA DE FUERZA
19A		16588324		2	TORNILLO
19B		4896897		1	JUNTA HERMETICA
20		87020733		1	BOMBA, Incl. Seal Kit 87042214, See Figure 06-55
21		87602204		1	MANGA, 1200 mm (47.24 in) High Flow Suction
22		86536660		1	ABRAZADERA MANGUERA, #16, 0.81/1.50 Type F Worm
23		{87029968}		1	STEM; 45 Bead Hose 1.0 ID x 1-5-16-12 THD; Incl 24
24		167268		1	JUNTA HERMETICA, 16-1, 90 Duro, 1.171" ID x .116" Thk

ALTO CAUDAL, VALVULA DE CONTROL

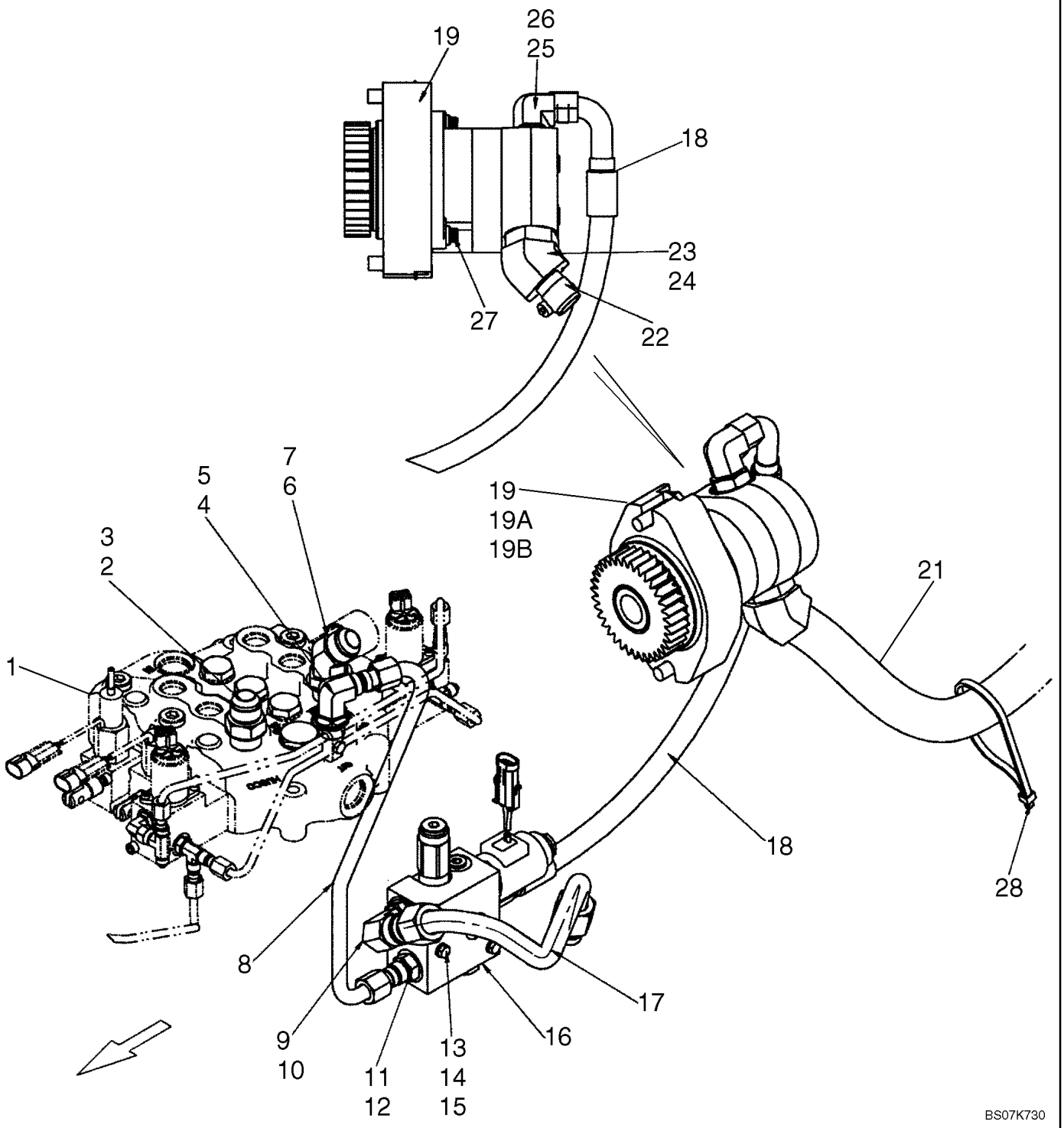

ALTO CAUDAL, VALVULA DE CONTROL

REF	FN	PART NUMBER	YR/SN	QTY	DENOMINACION
25		84570		1	CODO, 90º, 7/8"-14, 37º x 1 1/16"-12, O-Ring, Incl 26
26		167266		1	JUNTA HERMETICA, 12-1, 90 Duro, .924 ID x .116" Thk
27		87016486		2	TORNILLO, 12 Pt Hd, M10 x 30, 12.9
28		529070		1	CIERRA CABLES, .30" x 14.5"

CONTROL DEL MONTAJE DE LA VÁLVULA - FLUJO ALTO

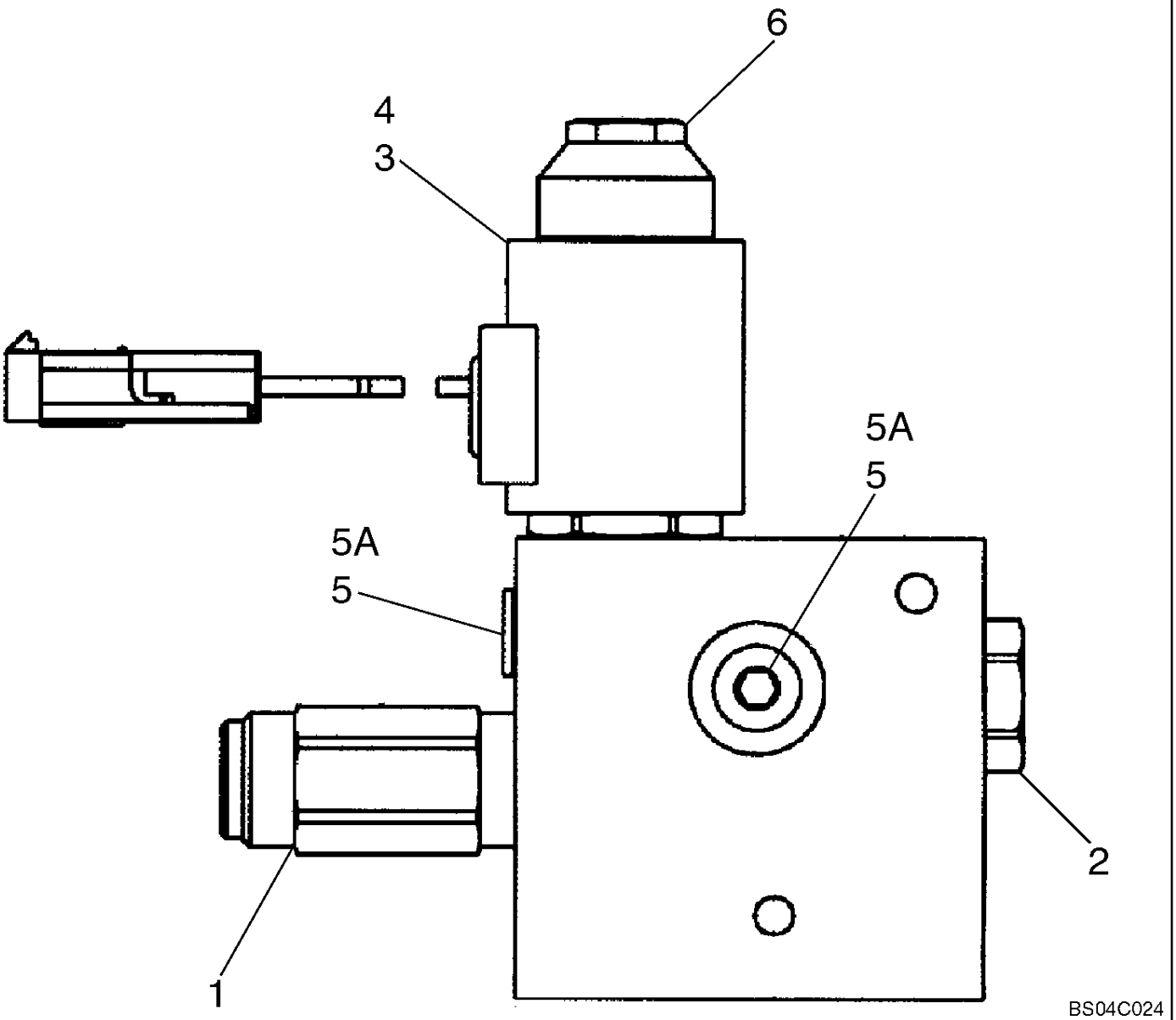

CONTROL DEL MONTAJE DE LA VÁLVULA - FLUJO ALTO

REF	FN	PART NUMBER	YR/SN	QTY	DENOMINACION
		87012669		1	VALVULA, Combination Valve; High Flow; Incl. 1 - 6 And Seal Kit 86527863
1		87447123		1	VALVULA, Relief Valve; Component Parts Not Serviced Separately
2		86527866		1	VALVULA HIDRAULICA, Check Valve; Component Parts Not Serviced Separately
3		86527861		1	VALVULA HIDRAULICA, Cartridge, Valve; Component Parts Not Serviced Separately
4		87447124		1	SOLENOIDE, Coil
5		76349		2	TAPÓN, Hex Hd, 9/16"-18 ORB, Incl. 5A
5A		9617873		1	JUNTA HERMETICA, 6-1, 90 Duro, .468" ID x .078" Thk
6		86527865		1	TUERCA
		86527863		1	SERIE DE JUNTAS, Not Illustrated

CONTROL DEL MONTAJE DE LA VÁLVULA

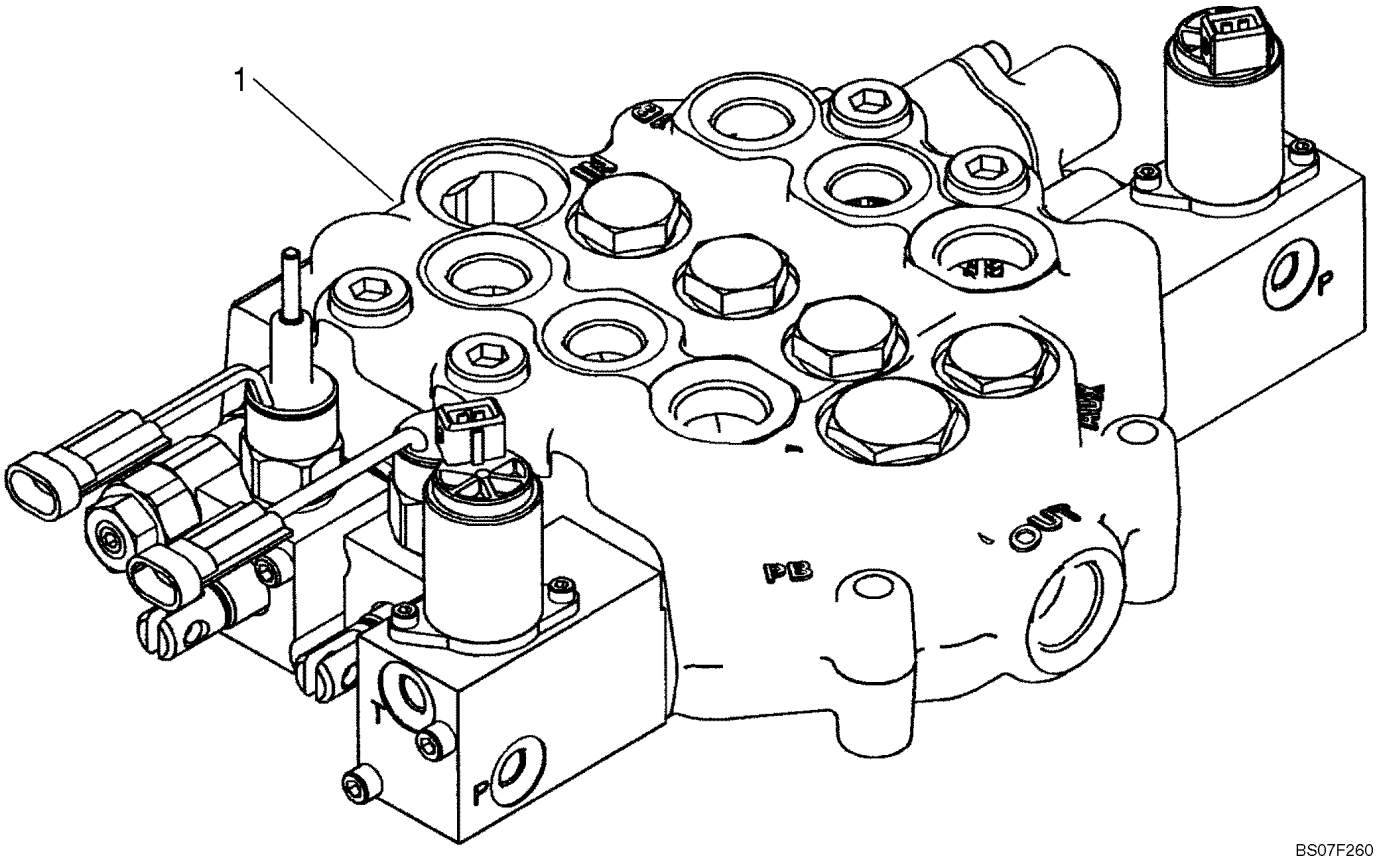

BS07F260

CONTROL DEL MONTAJE DE LA VÁLVULA

REF	FN	PART NUMBER	YR/SN	QTY	DENOMINACION
1		87583286		1	VALVULA, Incl. 2 - 23
2		87610349		1	SERIE DE JUNTAS, Seal Replacement Kit; See Fig 08-24
3		87610350		1	VALVULA, Main Relief Valve; See Fig 08-25
4		87576153		1	VALVULA, Workport Relief Valve; See Fig 08-26
5		87445935		1	VALVULA, Workport Relief Valve; See Fig 08-26
6		87445943		1	VALVULA, Workport Relief Valve; See Fig 08-26
7		87445932		1	VALVULA, Workport Anti-Cavitation; See Fig 08-26
8		87445988		1	SOLENOIDE, Spool Lock Out Solenoid Manual; See Fig 08-27
9		87445987		1	SOLENOIDE, Spool Lock Out Solenoid Non-Manual; See Fig 08-28
10		87576154		2	ELECTROVÁLVULA, Hi-Flow Solenoids For EH Auxiliary; See Fig 08-38
11		87576157		3	VALVULA AMORTIGUADORA, Check Valve Group; See Fig 08-30
12		87610351		1	VALVULA, Check Valve Group; See Fig 08-30
13		87576158		1	TAPÓN, See Fig 08-30
14		87576160		1	TAPÓN, See Fig 08-30
15		87576161		1	TAPÓN
16		87610352		3	TAPÓN, Plug
17		87576162		1	TAPÓN, See Fig 08-30
18		87576163		1	PISTONCILLO, Detent
19		87576169		1	PISTONCILLO
20		87611845		1	PISTONCILLO, EHPV; See Fig 08-38
21		87611846		1	PISTONCILLO, EHPV; See Fig 08-39
22		87611848		1	PISTONCILLO, Spool; See Fig 08-28
23		87611849		1	PISTONCILLO, See Fig 08-27

VALVULA DE CONTROL - 87583285 CONJUNTO DE LA VALVULA

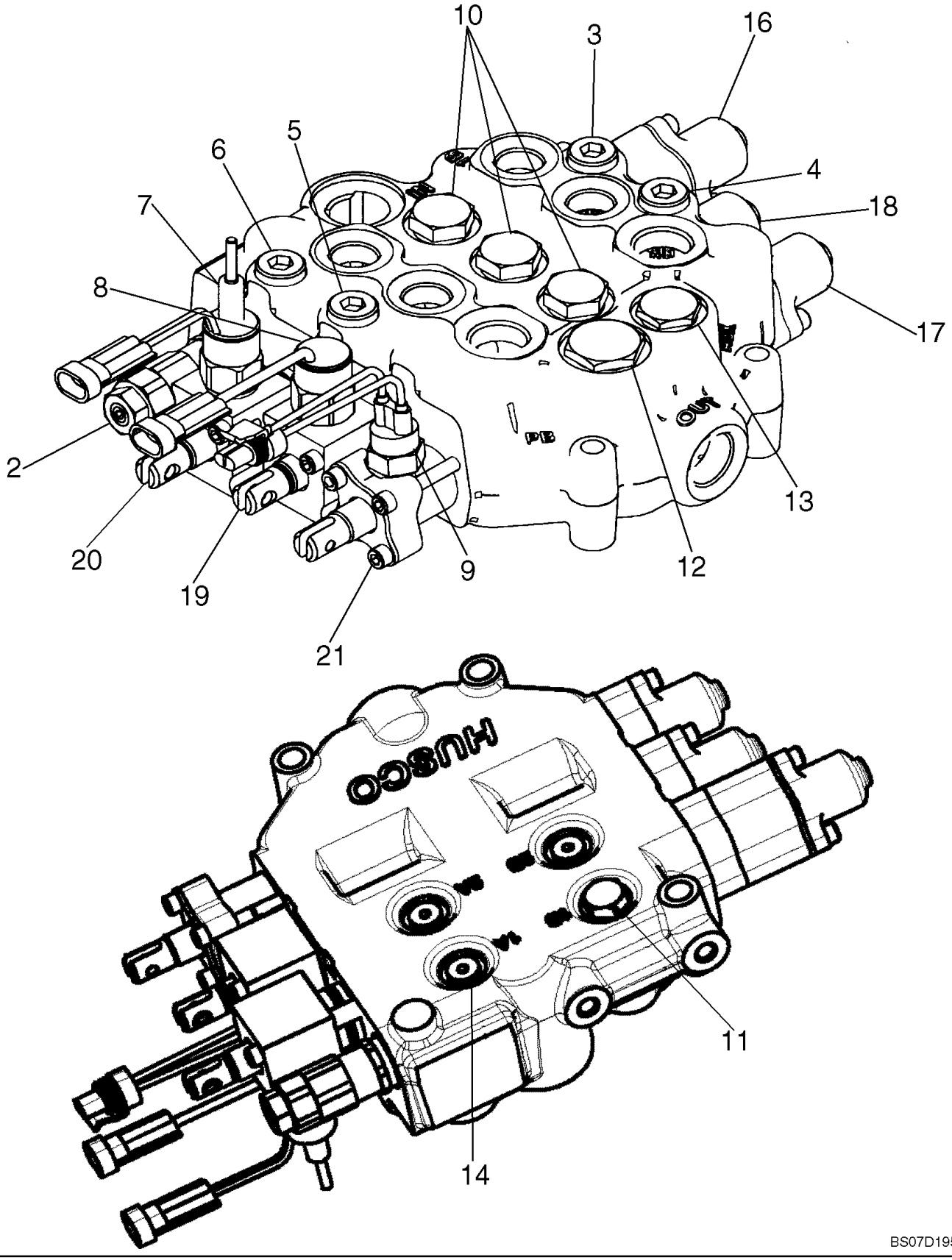

VALVULA DE CONTROL - 87583285 CONJUNTO DE LA VALVULA

REF	FN	PART NUMBER	YR/SN	QTY	DENOMINACION
		87583285		1	VALVULA, Manual Control Valve
1		87610349		1	SERIE DE JUNTAS, Seal Replacement Kit; See Fig. 08-24
2		87610350		1	VALVULA, Main Relief Valve, 210 Bar (3050 psi); See Fig. 08-25
3		87576153		1	VALVULA, Workport Relief Valve, 215 Bar; See Fig. 08-26
4		87445935		1	VALVULA, Workport Relief Valve, 230 Bar; See Fig. 08-26
5		87445943		1	VALVULA, Workport Relief Valve, 260 Bar; See Fig. 08-26
6		87445932		1	VALVULA, Workport Anti-Cavitation; See Fig. 08-26
7		87445988		1	SOLENOIDE, Spool Lock Out Solenoid, Manual; See Fig. 08-27
8		87445987		1	SOLENOIDE, Spool Lock Out Solenoid, Non-Manual; See Fig. 08-26
9		87446617		1	CONTACTOR, Auxiliary Spool Interlock Switch; See Fig. 08-29
10		87576157		3	VALVULA AMORTIGUADORA, Check Valve Group; See Fig. 08-30
11		87610351		1	VALVULA, Check Valve Group; See Fig. 08-30
12		87576158		1	TAPÓN, Plug Assembly; See Fig. 08-30
13		87576160		1	TAPÓN, Plug Assembly; See Fig. 08-30
14		87610352		3	TAPÓN, Plug Assembly
15		87576162		1	TAPÓN, Plug Assembly, Metric; Not Illustrated; See Fig. 08-30
16		87576163		1	PISTONCILLO, Spool End Group, Detent; See Fig. 08-31
17		87576168		1	PISTONCILLO, Spool End Group; See Fig. 08-32
18		87576169		1	PISTONCILLO, Spool End Group; See Fig. 08-33
19		87611848		1	PISTONCILLO, Spool End Group; See Fig. 08-28
20		87611849		1	PISTONCILLO, Spool End Group; See Fig. 08-27
21		87611850		1	PISTONCILLO, Spool End Group; See Fig. 08-29

VALVULA DE CONTROL - 87546974 CONJUNTO DE LA VALVULA

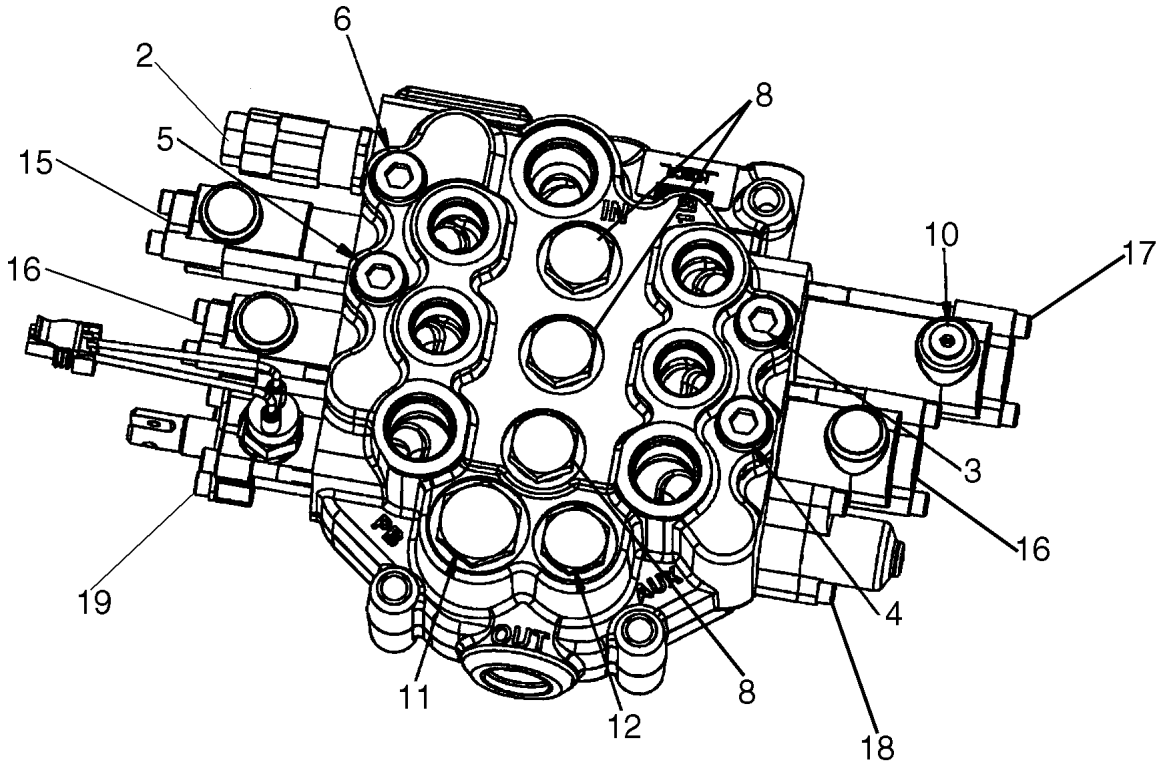

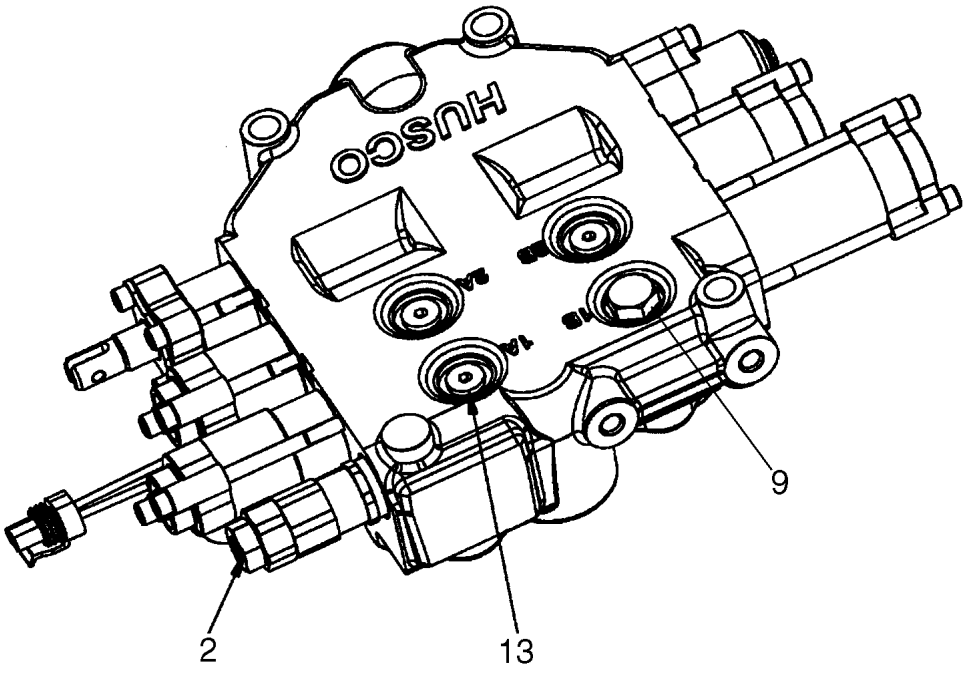

BS07H033

VALVULA DE CONTROL - 87546974 CONJUNTO DE LA VALVULA

REF	FN	PART NUMBER	YR/SN	QTY	DENOMINACION
		87546974		1	VALVULA HIDRAULICA, Manual Control Valve; Models With Pilot Control
1		87610517		1	SERIE DE JUNTAS, Seal Replacement Kit; See Fig. 08-34
2		87610350		1	VALVULA, Main Relief Valve, 210 Bar (3050 psi); See Fig. 08-25
3		87576153		1	VALVULA, Workport Relief Valve, 215 Bar; See Fig. 08-26
4		87445935		1	VALVULA, Workport Relief Valve, 230 Bar; See Fig. 08-26
5		87445943		1	VALVULA, Workport Relief Valve, 260 Bar; See Fig. 08-26
6		87445932		1	VALVULA, Workport Anti-Cavitation; See Fig. 08-26
7		87446617		1	CONTACTOR, Auxiliary Spool Interlock Switch; See Fig. 08-29
8		87576157		3	VALVULA AMORTIGUADORA, Check Valve Group; See Fig. 08-30
9		87610351		1	VALVULA, Check Valve Group; See Fig. 08-30
10		87610530		1	TAPÓN, Plug Assy
11		87576158		1	TAPÓN, Plug Assembly; See Fig. 08-30
12		87576160		1	TAPÓN, Plug Assembly; See Fig. 08-30
13		87610352		3	TAPÓN, Plug Assembly
14		87576162		1	TAPÓN, Plug Assembly, Metric; Not Illustrated; See Fig. 08-30
15		87610531		1	PISTONCILLO, Spool End Group; See Fig. 08-37
16		87610532		1	PISTONCILLO, Spool End Group; See Fig. 08-36
17		87610533		1	PISTONCILLO, Spool End Group; See Fig. 08-35
18		87576168		1	PISTONCILLO, Spool End Group; See Fig. 08-32
19		87611850		1	PISTONCILLO, Spool End Group; See Fig. 08-29

VALVULA DE CONTROL - 87546975 CONJUNTO DE LA VALVULA

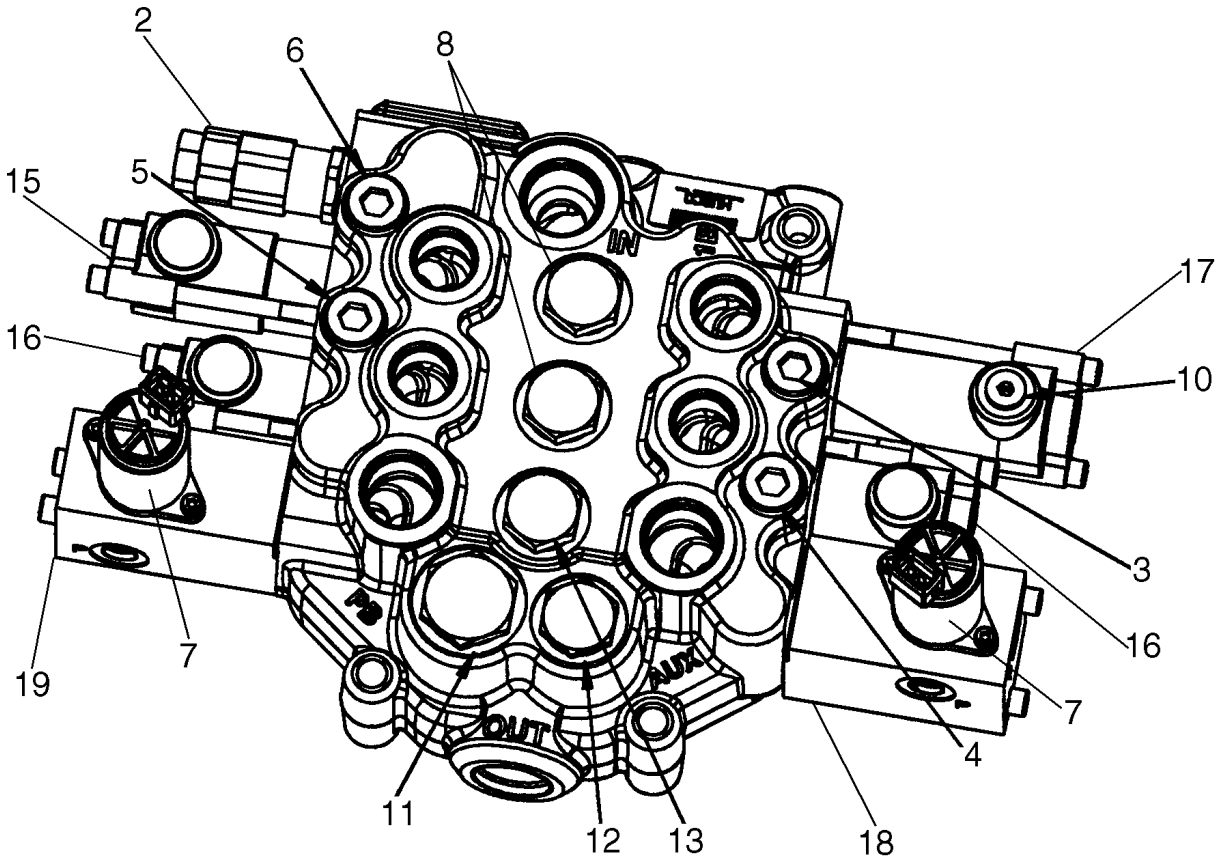

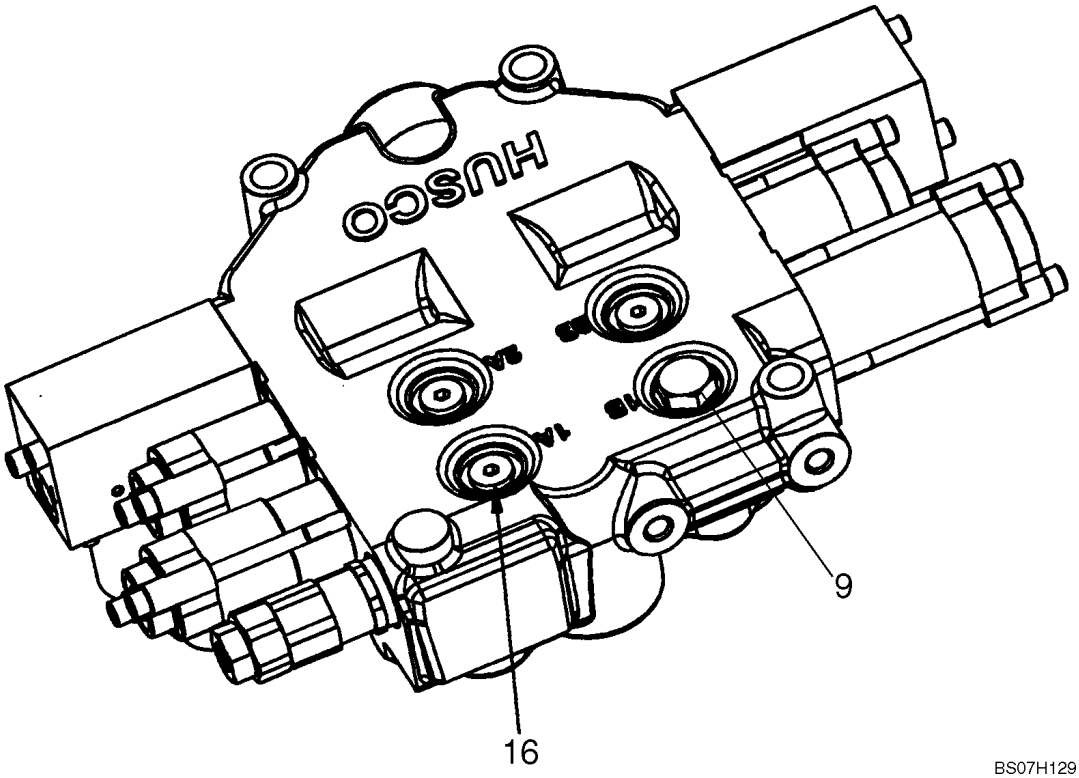

BS07H129

VALVULA DE CONTROL - 87546975 CONJUNTO DE LA VALVULA

REF	FN	PART NUMBER	YR/SN	QTY	DENOMINACION
		87546975		1	VALVULA HIDRAULICA, Manual Control Valve; Pilot Control Models With Hydraulic Attachment
1		87610517		1	SERIE DE JUNTAS, Seal Replacement Kit; See Fig. 08-34
2		87610350		1	VALVULA, Main Relief Valve, 210 Bar (3050 psi); See Fig. 08-25
3		87576153		1	VALVULA, Workport Relief Valve, 215 Bar; See Fig. 08-26
4		87445935		1	VALVULA, Workport Relief Valve, 230 Bar; See Fig. 08-26
5		87445943		1	VALVULA, Workport Relief Valve, 260 Bar; See Fig. 08-26
6		87445932		1	VALVULA, Workport Anti-Cavitation; See Fig. 08-26
7		87576154		2	ELECTROVÁLVULA, High Flow Solenoids For EH Auxiliary; See Fig. 08-38, 08-39
8		87576157		2	VALVULA AMORTIGUADORA, Check Valve Group; See Fig. 08-30
9		87610351		1	VALVULA, Check Valve Group; See Fig. 08-30
10		87610530		1	TAPÓN, Plug Assy
11		87576158		1	TAPÓN, Assembly; See Fig. 08-30
12		87576160		1	TAPÓN, Assembly; See Fig. 08-30
13		87576161		1	TAPÓN, Assembly
14		87576162		1	TAPÓN, Assembly, Metric; Not Illustrated; See Fig. 08-30
15		87610531		1	PISTONCILLO, Spool End Group; See Fig. 08-37
16		87610532		1	PISTONCILLO, Spool End Group; See Fig. 08-36
17		87610533		1	PISTONCILLO, Spool End Group; See Fig. 08-35
18		87611845		1	PISTONCILLO, Spool End Group; EHPV; Incl. Ref 7; See Fig. 08-38
19		87611846		1	PISTONCILLO, Spool End Group; EHPV; Incl. Ref 7; See Fig. 08-39

VALVULA DE CONTROL - JUEGOS DE REEMPLAZO DE LA JUNTA

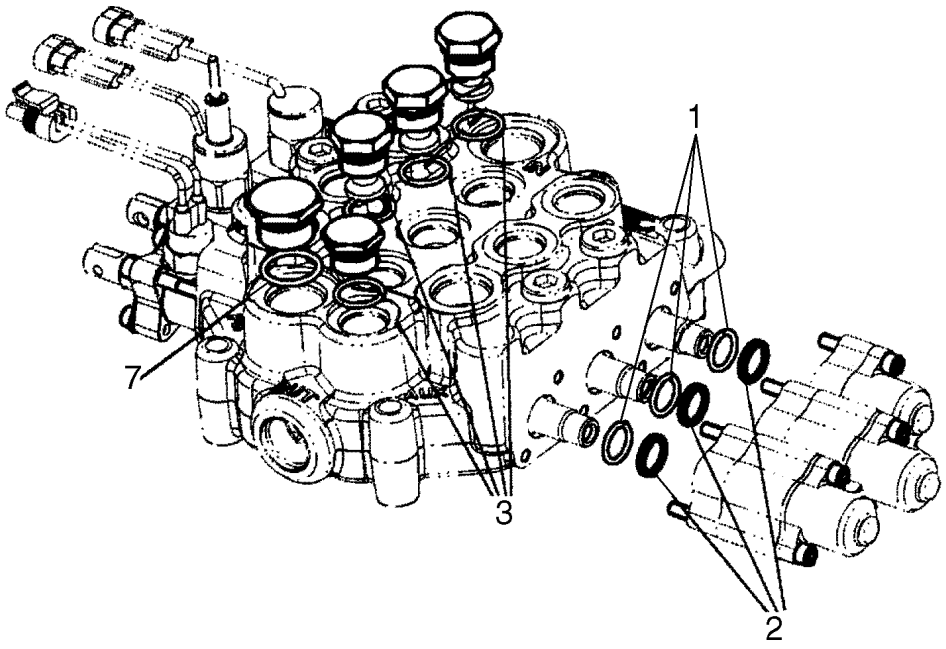

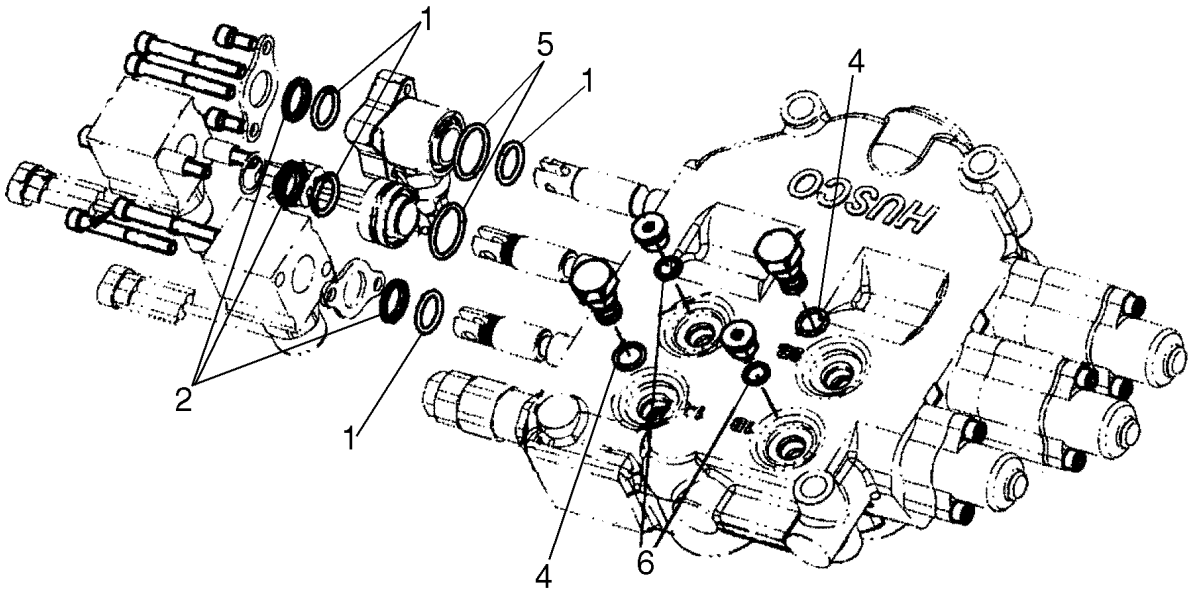

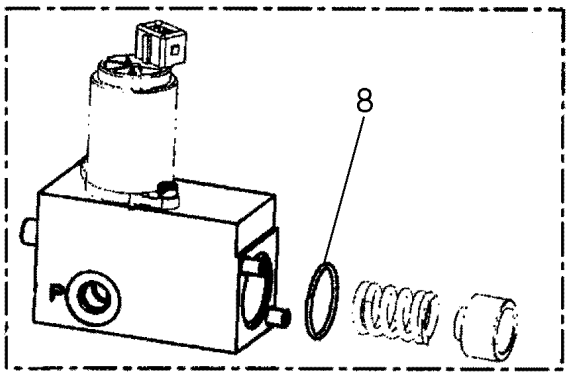

BS07D196

VALVULA DE CONTROL - JUEGOS DE REEMPLAZO DE LA JUNTA

REF	FN	PART NUMBER	YR/SN	QTY	DENOMINACION
		87610349		1	SERIE DE JUNTAS, Kit, Seal Replacement; Incl. 1 - 8
1		NSS		7	NO SE REPARA SEPARADAM., O-ring, .818 OD
2		NSS		6	NO SE REPARA SEPARADAM., Wiper, .796 OD
3		NSS		4	NO SE REPARA SEPARADAM., O-ring, .949 OD
4		NSS		2	NO SE REPARA SEPARADAM., O-ring, .614 OD
5		NSS		2	NO SE REPARA SEPARADAM., O-ring, 1.063 OD
6		NSS		3	NO SE REPARA SEPARADAM., O-ring, .498 OD
7		NSS		1	NO SE REPARA SEPARADAM., O-ring, 1.156 OD
8		NSS		2	NO SE REPARA SEPARADAM., O-ring, 1.129 OD

VALVULA DE CONTROL - DESCARGA, PRINCIPLA

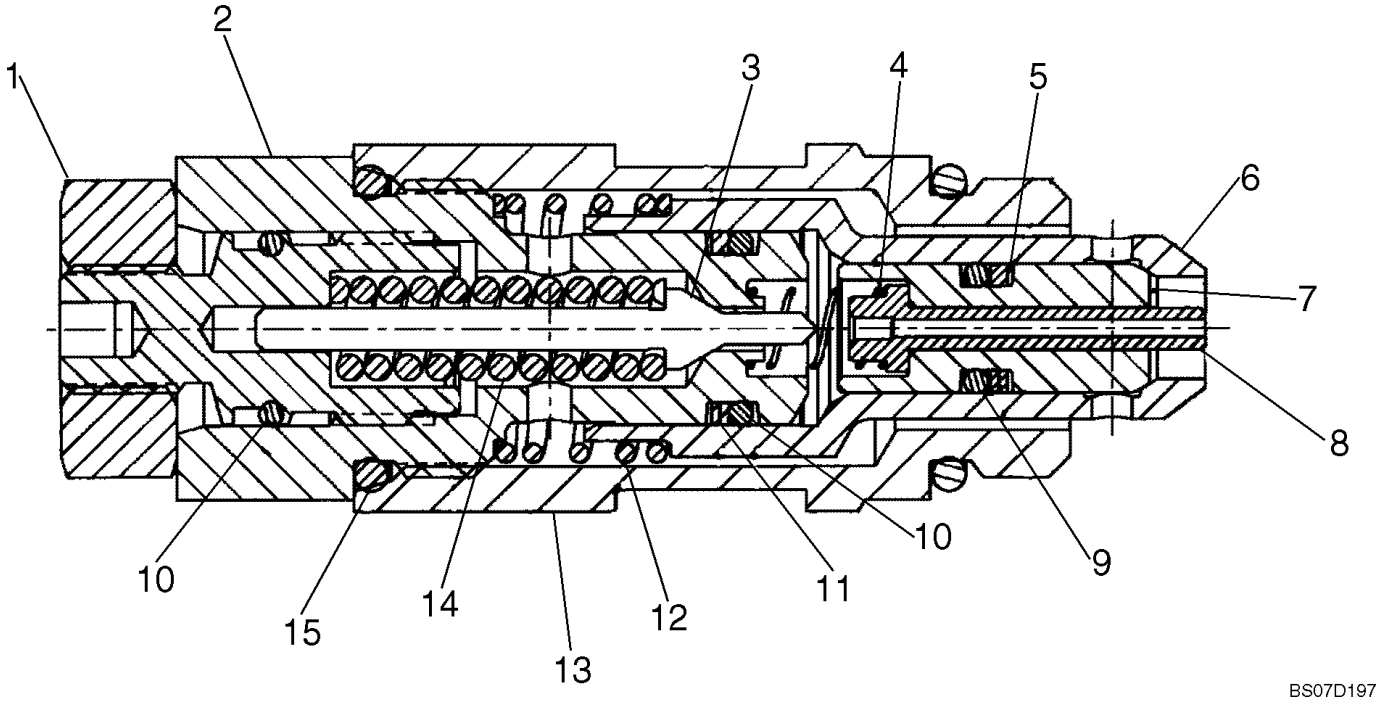

VALVULA DE CONTROL - DESCARGA, PRINCIPLA

REF	FN	PART NUMBER	YR/SN	QTY	DENOMINACION
		87610350		1	VALVULA, Main Relief Valve, 3050 PSI; Incl. 1 - 16
1		NSS		1	NO SE REPARA SEPARADAM., Nut
2		NSS		1	NO SE REPARA SEPARADAM., Plug
3		NSS		1	NO SE REPARA SEPARADAM., Poppet
4		NSS		1	NO SE REPARA SEPARADAM., Spring
5		NSS		1	NO SE REPARA SEPARADAM., Back-Up Ring
6		NSS		1	NO SE REPARA SEPARADAM., Poppet
7		NSS		1	NO SE REPARA SEPARADAM., Poppet
8		NSS		1	NO SE REPARA SEPARADAM., Piston
9		NSS		1	NO SE REPARA SEPARADAM., O-Ring
10		NSS		2	NO SE REPARA SEPARADAM., O-Ring
11		NSS		1	NO SE REPARA SEPARADAM., Back-Up Ring
12		NSS		1	NO SE REPARA SEPARADAM., Spring
13		NSS		1	NO SE REPARA SEPARADAM., Body
14		NSS		1	NO SE REPARA SEPARADAM., Spring
15		NSS		2	NO SE REPARA SEPARADAM., O-Ring
16		NSS		1	NO SE REPARA SEPARADAM., Adjust Screw

VALVULA DE CONTROL - DESCARGA, CIRCUITO

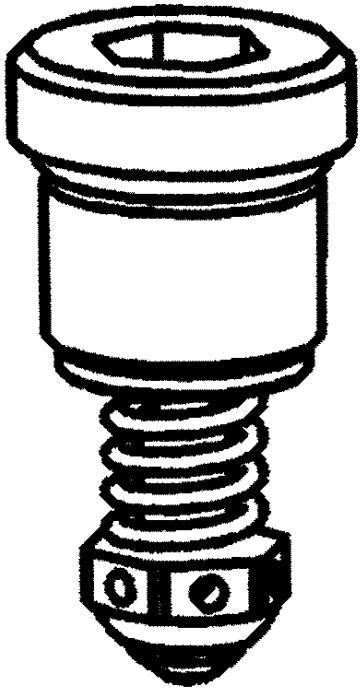

1

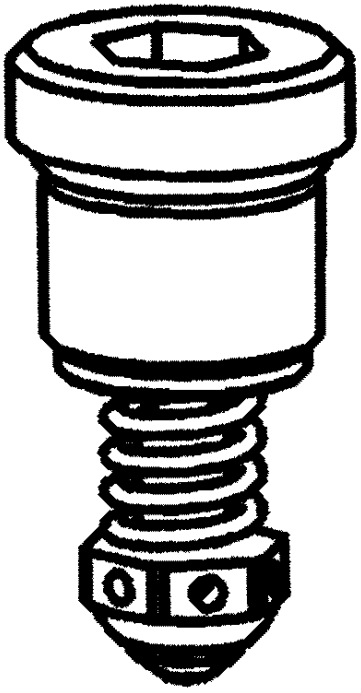

2

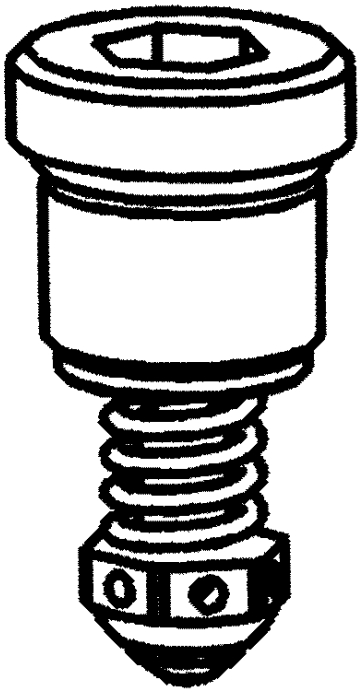

3

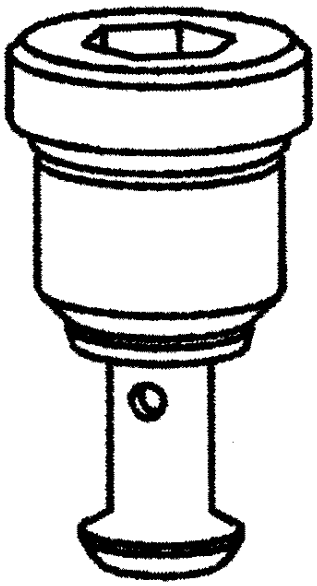

4

BS07D198

VALVULA DE CONTROL - DESCARGA, CIRCUITO

REF	FN	PART NUMBER	YR/SN	QTY	DENOMINACION
1		87576153		1	VALVULA, Workport Relief Valve, Non-Adjustable 215 Bar
2		{87448935}		1	Workport Relief Valve, Non-Adjustable 230 Bar
3		87445943		1	VALVULA, Workport Relief Valve, Non-Adjustable 260 Bar
4		87445932		1	VALVULA, Workport Anti-Cavitation Valve

VALVULA DE CONTROL, JUEGOS DE REEMPLAZO DE LA JUNTA - BOBINAS

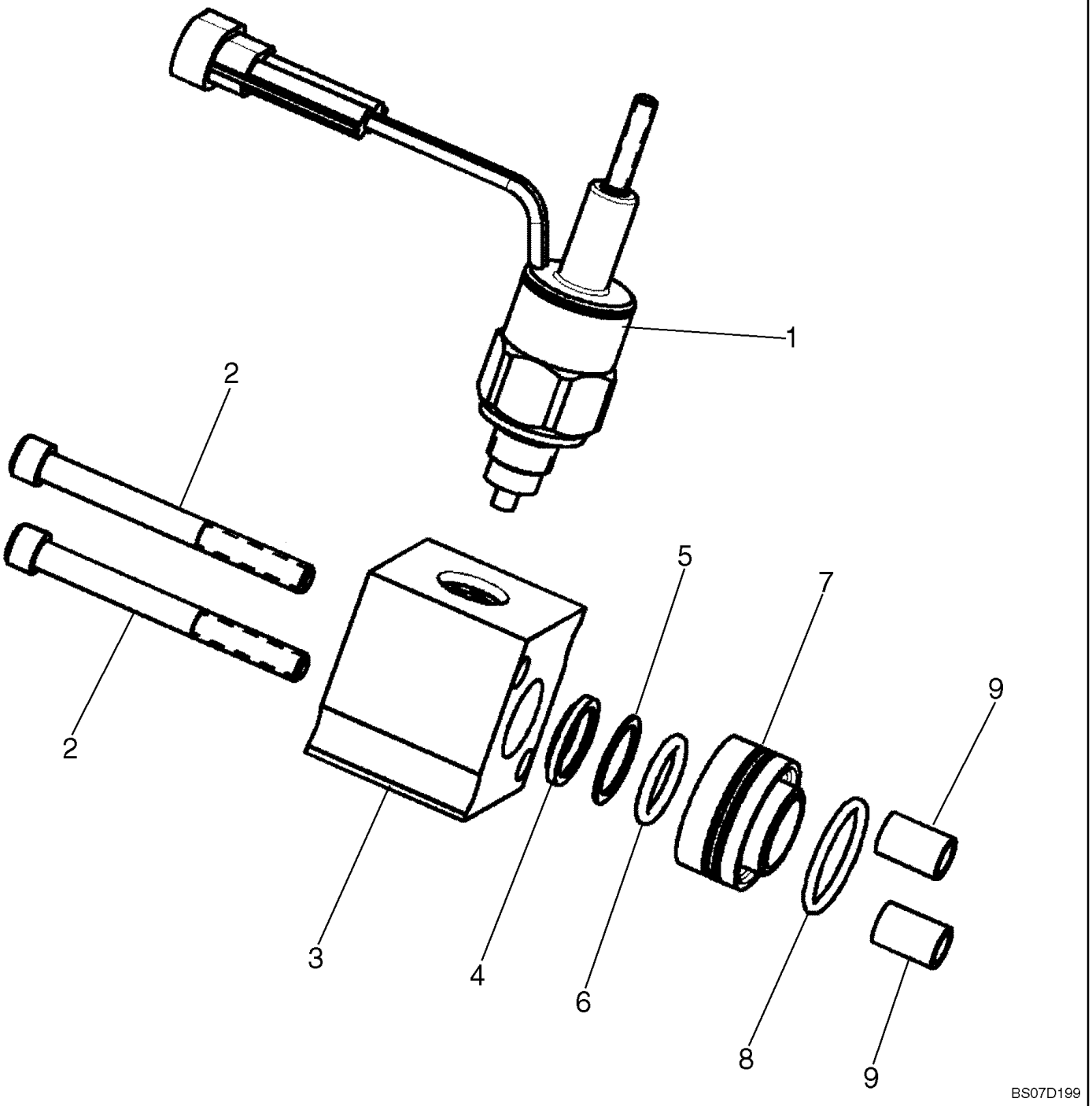

VALVULA DE CONTROL, JUEGOS DE REEMPLAZO DE LA JUNTA - BOBINAS

REF	FN	PART NUMBER	YR/SN	QTY	DENOMINACION
		87611849		1	PISTONCILLO, Spool End Group; Incl. 1 - 9
1		87445988		1	SOLENOIDE, Spool Lockout Solenoid With Manual Overide
2		NSS		2	NO SE REPARA SEPARADAM., Cap Screw
3		NSS		1	NO SE REPARA SEPARADAM., Spool Cap
4		NSS		1	NO SE REPARA SEPARADAM., Wiper
5		NSS		1	NO SE REPARA SEPARADAM., Washer
6		NSS		1	NO SE REPARA SEPARADAM., O-Ring
7		NSS		1	NO SE REPARA SEPARADAM., Spool Spacer
8		NSS		1	NO SE REPARA SEPARADAM., O-Ring
9		NSS		2	NO SE REPARA SEPARADAM., Spacer

VALVULA DE CONTROL, JUEGOS DE REEMPLAZO DE LA JUNTA - BOBINAS

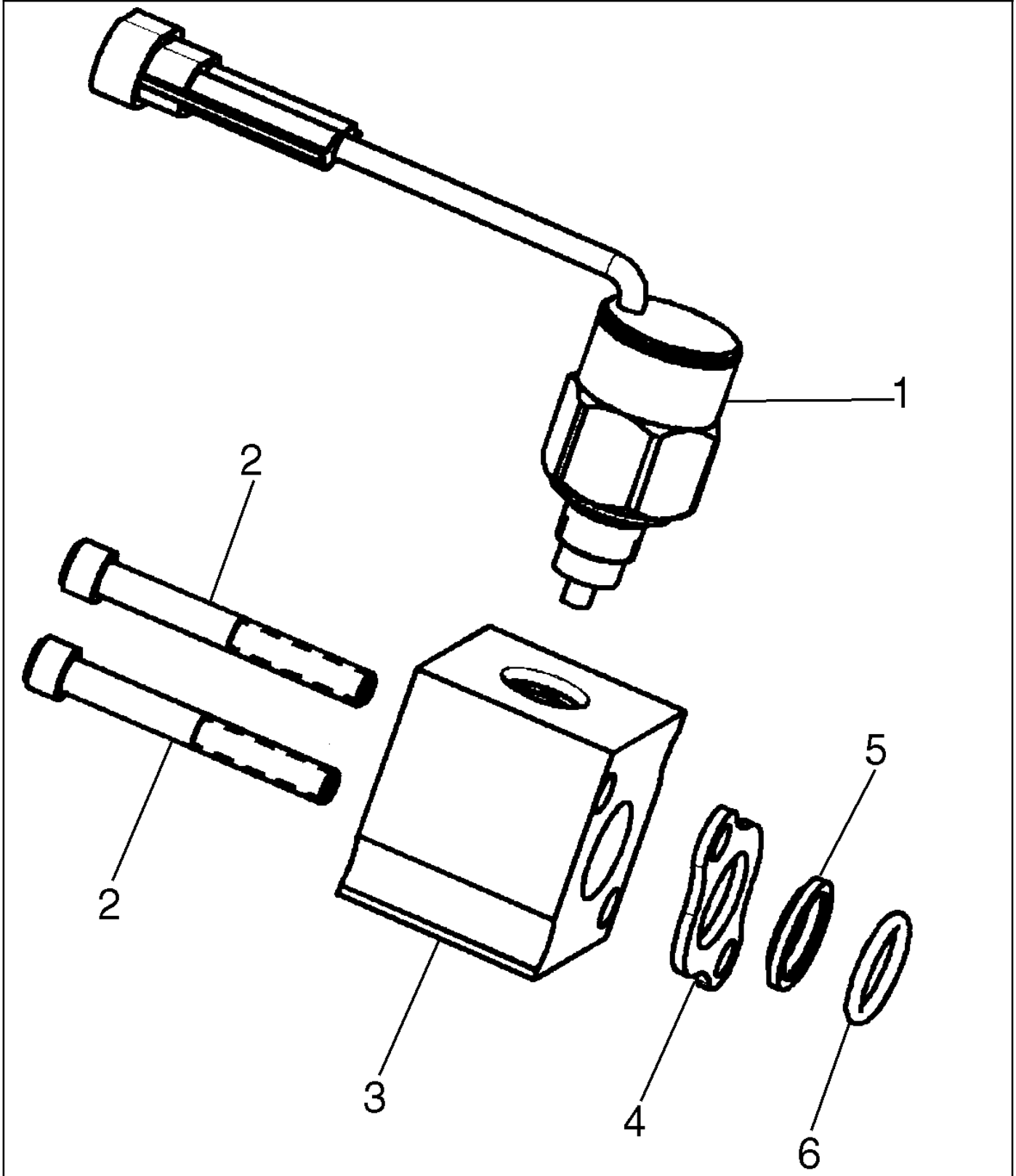

VALVULA DE CONTROL, JUEGOS DE REEMPLAZO DE LA JUNTA - BOBINAS

REF	FN	PART NUMBER	YR/SN	QTY	DENOMINACION
		87611848		1	PISTONCILLO, Spool End Group With Solenoid; Incl. 1 - 6
1		87445987		1	SOLENOIDE, Spool Lockout Solenoid, Non-Manual Overide
2		NSS		2	NO SE REPARA SEPARADAM., Cap Screw
3		NSS		1	NO SE REPARA SEPARADAM., Spool Cap
4		NSS		1	NO SE REPARA SEPARADAM., Seal Plate
5		NSS		1	NO SE REPARA SEPARADAM., Wiper
6		NSS		1	NO SE REPARA SEPARADAM., O-Ring

VALVULA DE CONTROL, JUEGOS DE REEMPLAZO DE LA JUNTA - BOBINAS

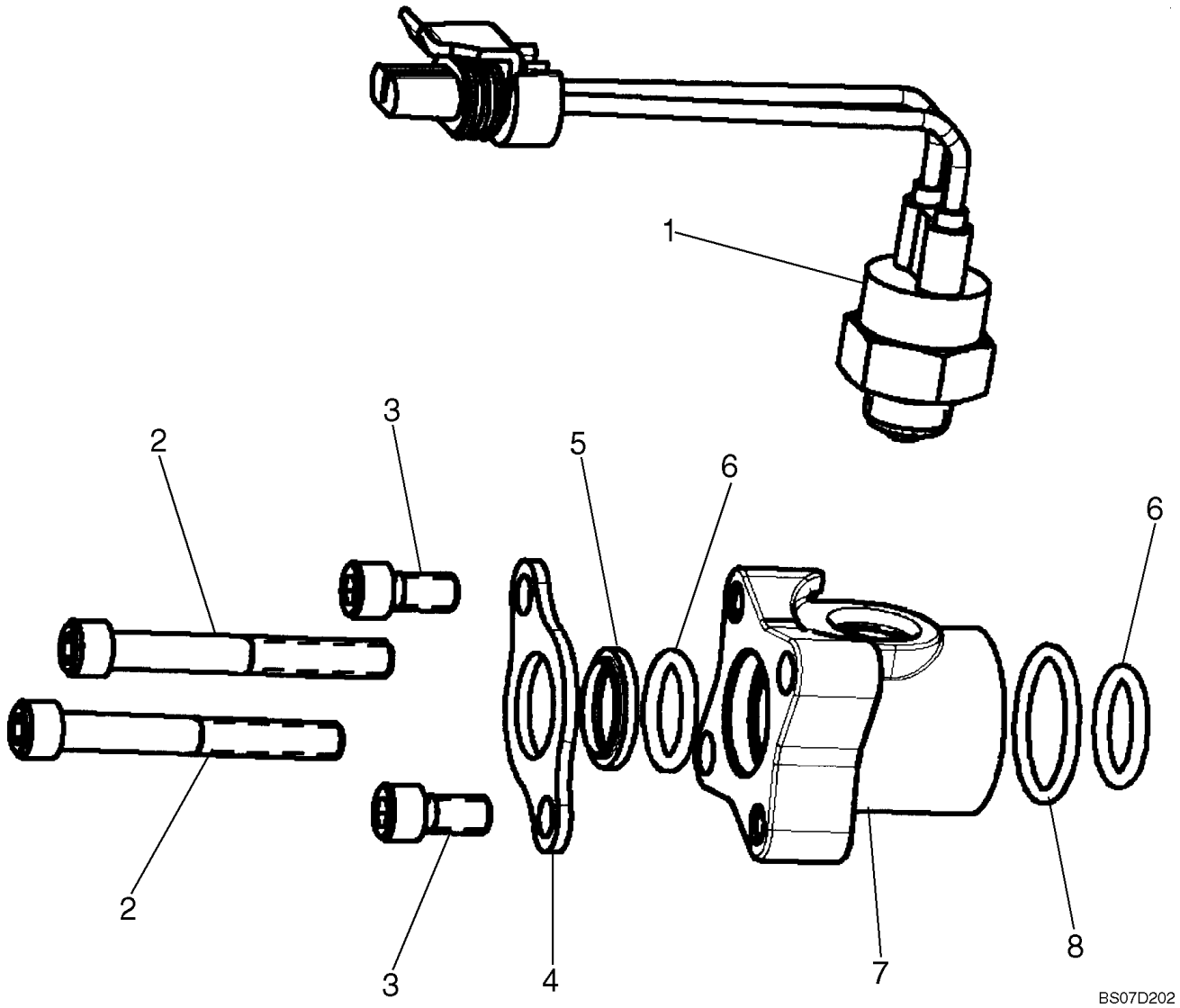

VALVULA DE CONTROL, JUEGOS DE REEMPLAZO DE LA JUNTA - BOBINAS

REF	FN	PART NUMBER	YR/SN	QTY	DENOMINACION
		87611850		1	PISTONCILLO, Spool End Group With Switch; Incl. 1 - 8
1		87446617		1	CONTACTOR, Auxiliary Spool Ball Switch
2		NSS		2	NO SE REPARA SEPARADAM., Cap Screw
3		NSS		2	NO SE REPARA SEPARADAM., Cap Screw
4		NSS		1	NO SE REPARA SEPARADAM., Seal Plate
5		NSS		1	NO SE REPARA SEPARADAM., Wiper
6		NSS		2	NO SE REPARA SEPARADAM., O-Ring
7		NSS		1	NO SE REPARA SEPARADAM., Spool Cap
8		NSS		1	NO SE REPARA SEPARADAM., O-Ring

VALVULA DE CONTROL, VERIFIQUE LA VÁLVULA

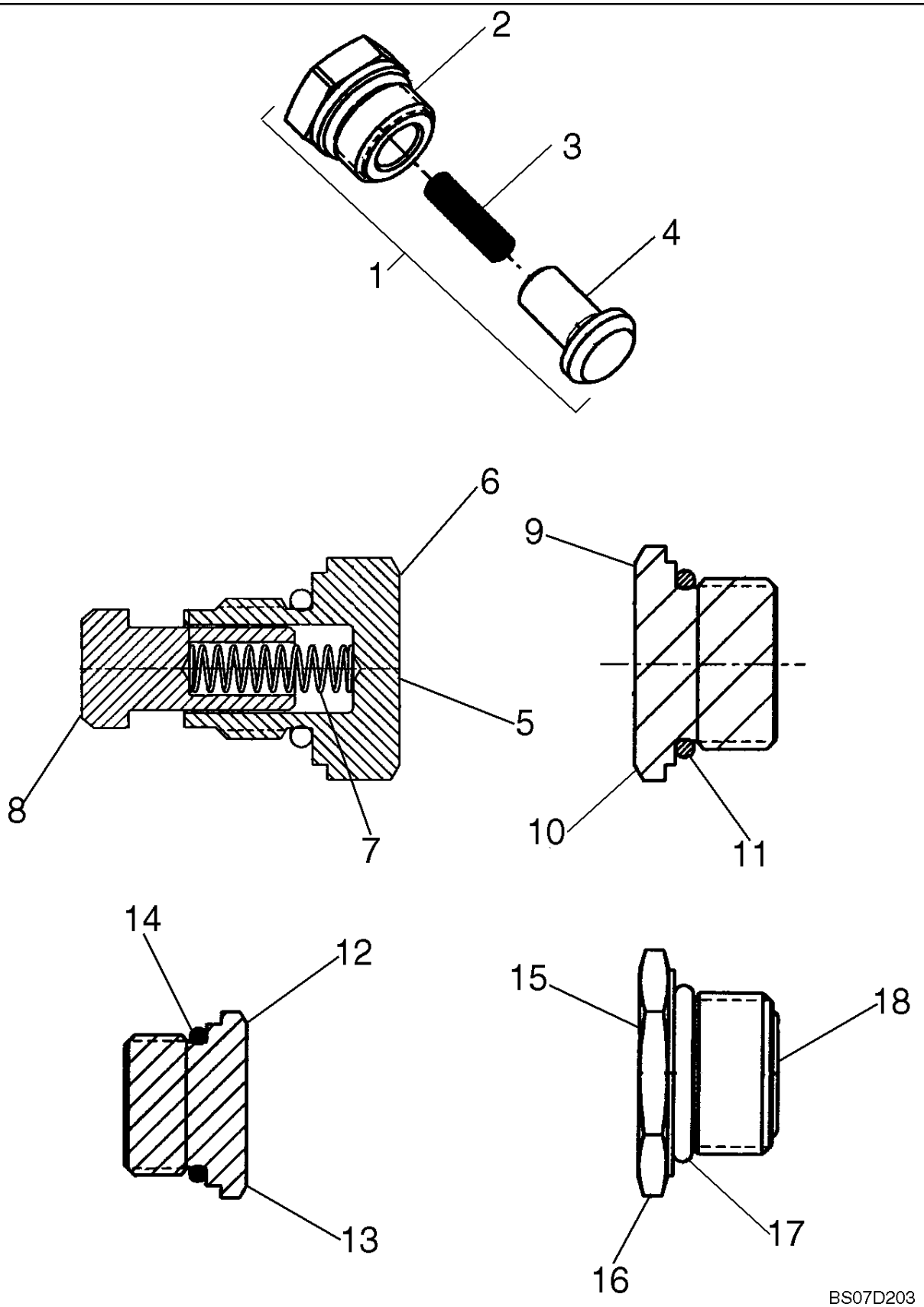

VALVULA DE CONTROL, VERIFIQUE LA VÁLVULA

REF	FN	PART NUMBER	YR/SN	QTY	DENOMINACION
1		87576157		1	VALVULA AMORTIGUADORA, Check Valve; Incl. 2 - 4
2		NSS		1	NO SE REPARA SEPARADAM., Plug
3		NSS		1	NO SE REPARA SEPARADAM., Spring
4		NSS		1	NO SE REPARA SEPARADAM., Poppet
5		87610351		1	VALVULA, Check Valve; Incl. 6 - 8
6		NSS		1	NO SE REPARA SEPARADAM., Plug, M14 X 1.5-6G Thd.
7		NSS		1	NO SE REPARA SEPARADAM., Spring
8		NSS		1	NO SE REPARA SEPARADAM., Poppet
9		87576158		1	TAPÓN, Plug Assembly, 1-1/16 - 12UN-2A Thd.; Incl. 10, 11
10		NSS		1	NO SE REPARA SEPARADAM., Plug, 1-1/16 - 12UN-2A Thd.
11		NSS		1	NO SE REPARA SEPARADAM., O-Ring
12		87576160		1	TAPÓN, Plug Assembly, 7/8 - 14UNF - 2A Thd.; Incl. 13, 14
13		NSS		1	NO SE REPARA SEPARADAM., Plug, 7/8 - 14UNF - 2A Thd.
14		NSS		1	NO SE REPARA SEPARADAM., O-Ring
15		87576162		1	TAPÓN, Plug Assembly, M18 X 1.5-6H Thd.; Incl. 16 - 18
16		NSS		1	NO SE REPARA SEPARADAM., Plug, M18 X 1.5-6H Thd.
17		NSS		1	NO SE REPARA SEPARADAM., O-Ring
18		NSS		1	NO SE REPARA SEPARADAM., O-Ring

VALVULA DE CONTROL, JUEGOS DE REEMPLAZO DE LA JUNTA - BOBINAS Y RETENES

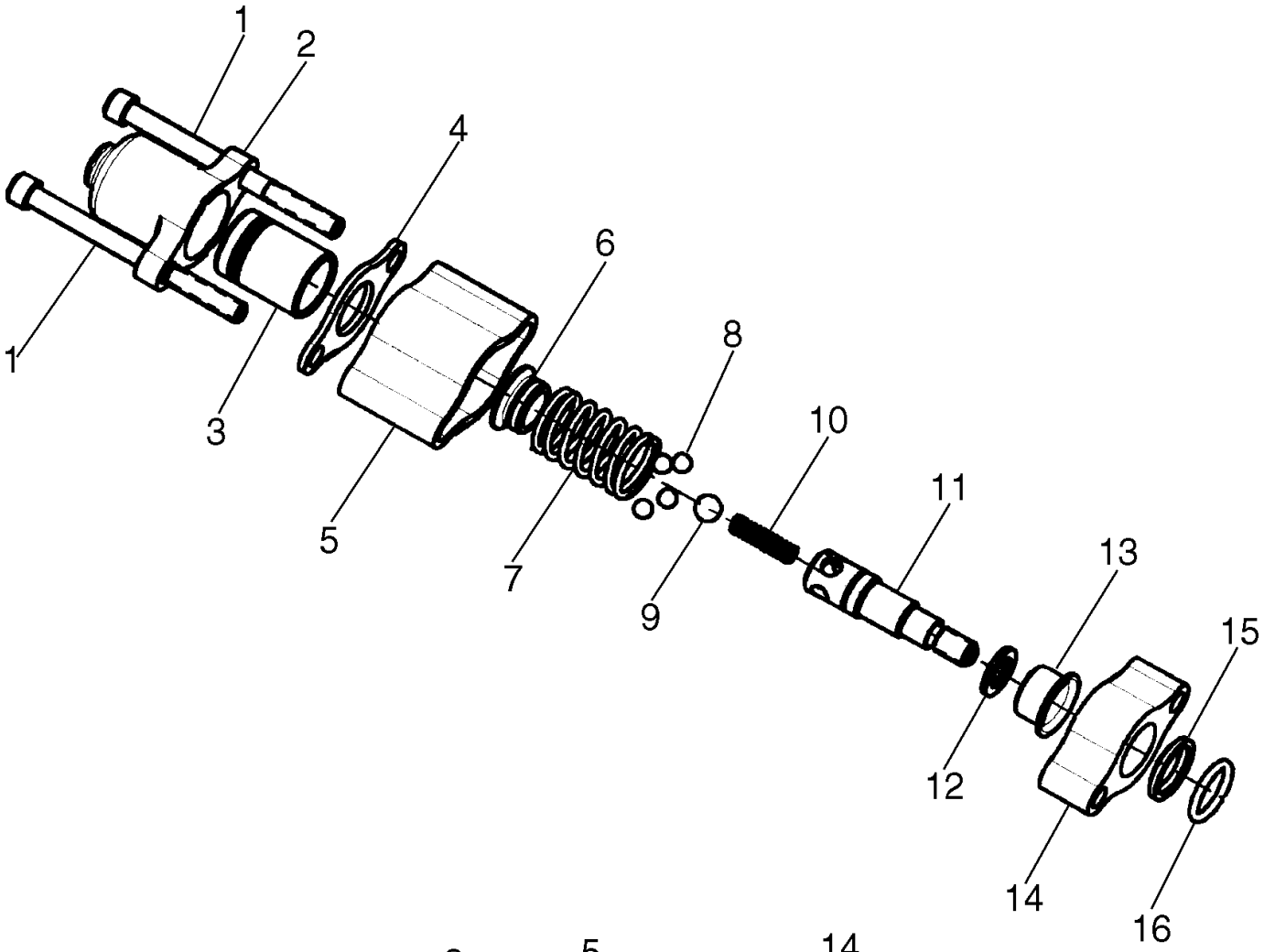

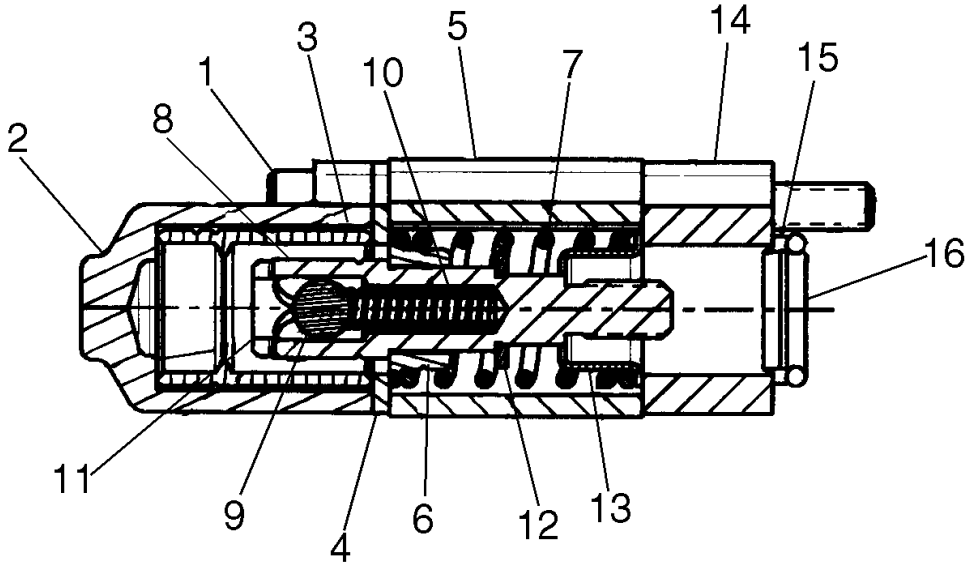

BS07D204

VALVULA DE CONTROL, JUEGOS DE REEMPLAZO DE LA JUNTA - BOBINAS Y RETENES

REF	FN	PART NUMBER	YR/SN	QTY	DENOMINACION
		87576163		1	PISTONCILLO, Spool End Group - Detent; Incl. 1 - 16
1		NSS		2	NO SE REPARA SEPARADAM., Cap Screw
2		NSS		1	NO SE REPARA SEPARADAM., Spool Cap
3		NSS		1	NO SE REPARA SEPARADAM., Sleeve - Detent
4		NSS		1	NO SE REPARA SEPARADAM., Seal Plate
5		NSS		1	NO SE REPARA SEPARADAM., Spacer
6		NSS		1	NO SE REPARA SEPARADAM., Spring Seat
7		NSS		1	NO SE REPARA SEPARADAM., Spring
8		NSS		4	NO SE REPARA SEPARADAM., Ball
9		NSS		1	NO SE REPARA SEPARADAM., Ball
10		NSS		1	NO SE REPARA SEPARADAM., Spring
11		NSS		1	NO SE REPARA SEPARADAM., Spool End, Detent Pin
12		NSS		1	NO SE REPARA SEPARADAM., Washer
13		NSS		1	NO SE REPARA SEPARADAM., Spring Seat
14		NSS		1	NO SE REPARA SEPARADAM., Plate Seal
15		NSS		1	NO SE REPARA SEPARADAM., Wiper
16		NSS		1	NO SE REPARA SEPARADAM., O-Ring

VALVULA DE CONTROL, JUEGOS DE REEMPLAZO DE LA JUNTA - BOBINAS

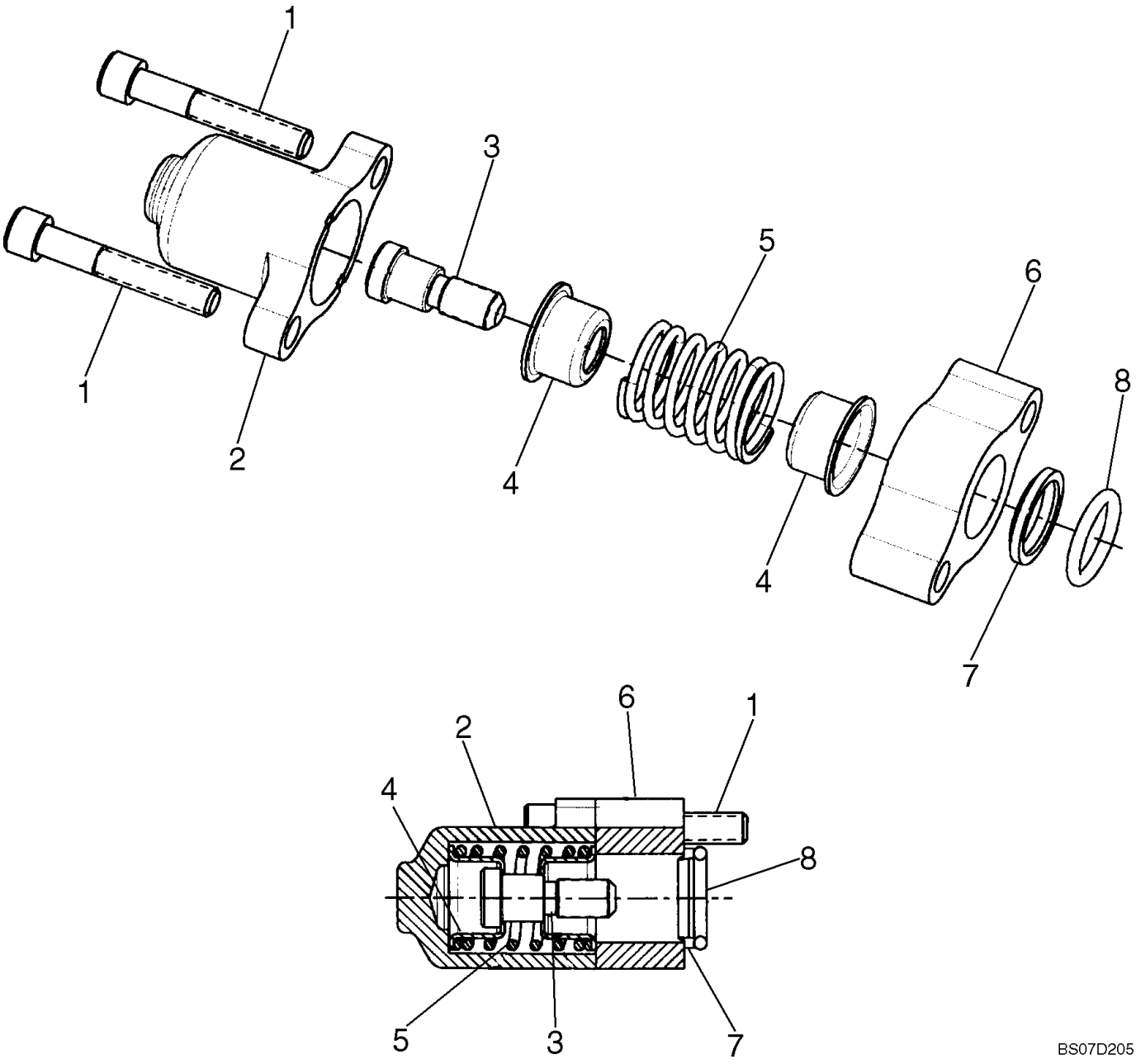

VALVULA DE CONTROL, JUEGOS DE REEMPLAZO DE LA JUNTA - BOBINAS

REF	FN	PART NUMBER	YR/SN	QTY	DENOMINACION
		87576168		1	PISTONCILLO, Spool End Group; Incl. 1 - 8
1		NSS		2	NO SE REPARA SEPARADAM., Cap Screw
2		NSS		1	NO SE REPARA SEPARADAM., Spool Cap
3		NSS		1	NO SE REPARA SEPARADAM., Spool End
4		NSS		2	NO SE REPARA SEPARADAM., Spring Seat
5		NSS		1	NO SE REPARA SEPARADAM., Spring
6		NSS		1	NO SE REPARA SEPARADAM., Plate - Seal
7		NSS		1	NO SE REPARA SEPARADAM., Wiper
8		NSS		1	NO SE REPARA SEPARADAM., O-Ring

VALVULA DE CONTROL, JUEGOS DE REEMPLAZO DE LA JUNTA - BOBINAS

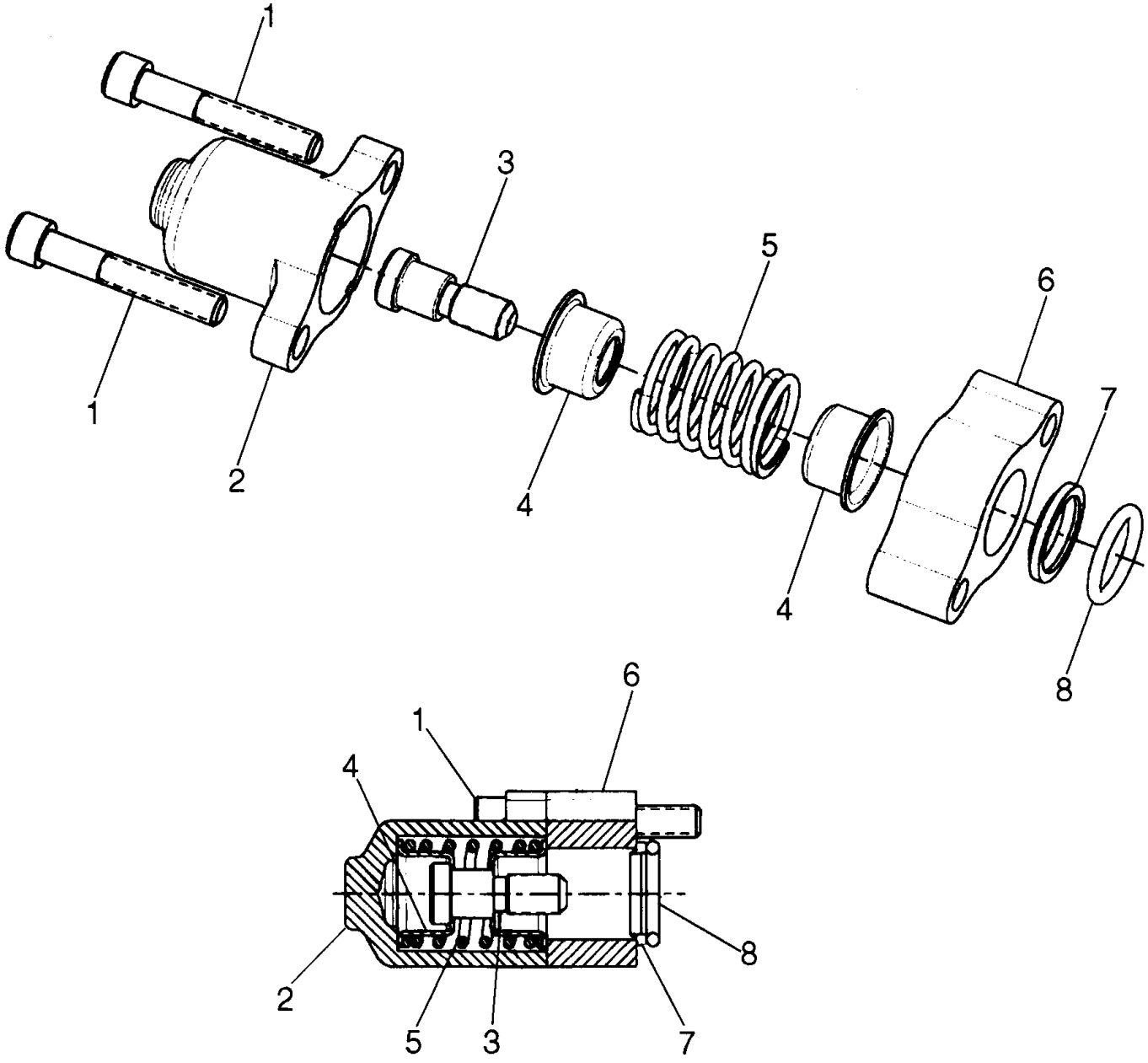

VALVULA DE CONTROL, JUEGOS DE REEMPLAZO DE LA JUNTA - BOBINAS

REF	FN	PART NUMBER	YR/SN	QTY	DENOMINACION
		87576169		1	PISTONCILLO, Spool End Group; Incl. 1 - 8
1		NSS		2	NO SE REPARA SEPARADAM., Cap Screw
2		NSS		1	NO SE REPARA SEPARADAM., Spool Cap
3		NSS		1	NO SE REPARA SEPARADAM., Spool End
4		NSS		2	NO SE REPARA SEPARADAM., Spring Seat
5		NSS		1	NO SE REPARA SEPARADAM., Spring
6		NSS		1	NO SE REPARA SEPARADAM., Plate, Seal
7		NSS		1	NO SE REPARA SEPARADAM., Wiper
8		NSS		1	NO SE REPARA SEPARADAM., O-Ring

VALVULA DE CONTROL - JUEGOS DE REEMPLAZO DE LA JUNTA

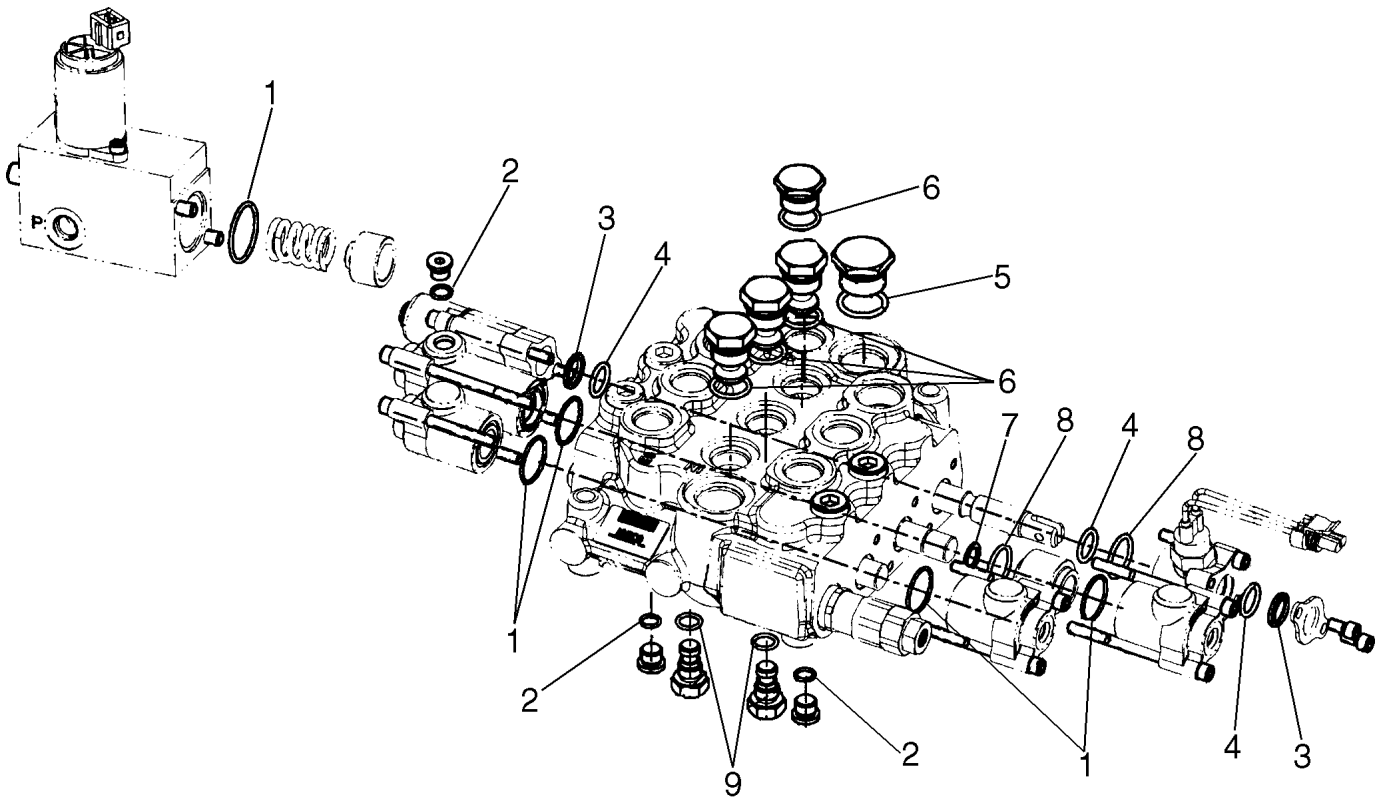

VALVULA DE CONTROL - JUEGOS DE REEMPLAZO DE LA JUNTA

REF	FN	PART NUMBER	YR/SN	QTY	DENOMINACION
		87610517		1	SERIE DE JUNTAS, Kit, Seal Replacement; Incl. 1 - 8
1		NSS		6	NO SE REPARA SEPARADAM., O-ring, 1.129 OD
2		NSS		3	NO SE REPARA SEPARADAM., O-ring, .498 OD
3		NSS		2	NO SE REPARA SEPARADAM., Wiper, .796 OD
4		NSS		3	NO SE REPARA SEPARADAM., O-ring, .818 OD
5		NSS		1	NO SE REPARA SEPARADAM., O-ring, 1.156 OD
6		NSS		4	NO SE REPARA SEPARADAM., O-ring, .949 OD
7		NSS		1	NO SE REPARA SEPARADAM., Back Up Ring, .673 OD
8		NSS		2	NO SE REPARA SEPARADAM., O-ring, 1.063 OD
9		NSS		2	NO SE REPARA SEPARADAM., O-ring, .614 OD

VALVULA DE CONTROL, JUEGOS DE REEMPLAZO DE LA JUNTA - BOBINAS

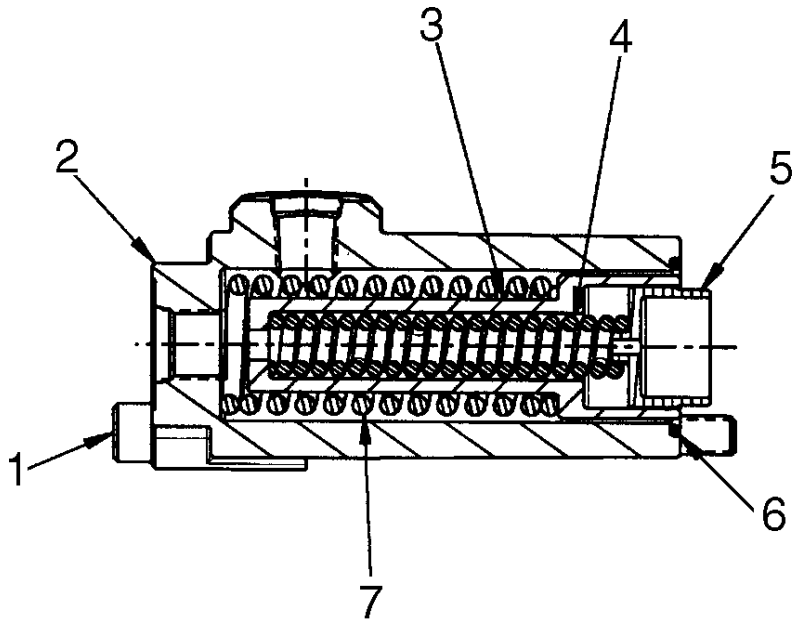

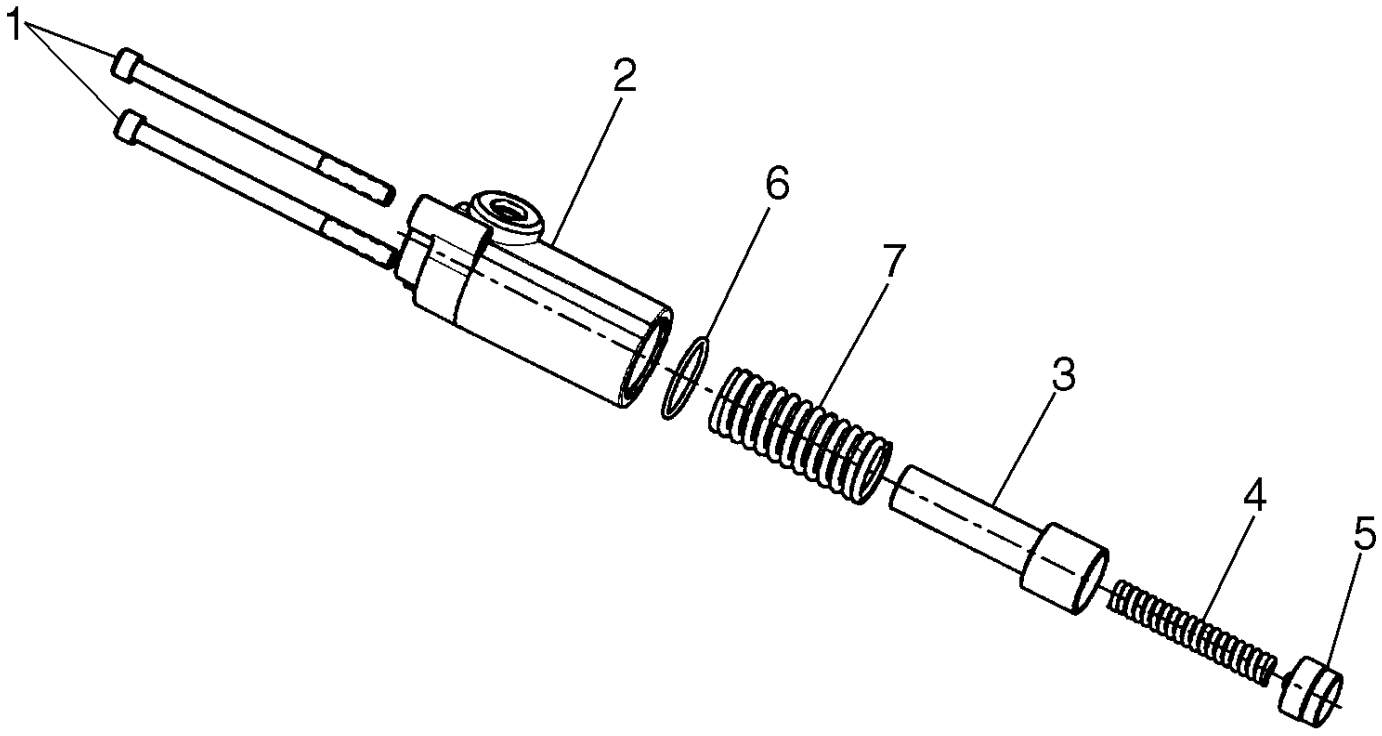

BS07H035

VALVULA DE CONTROL, JUEGOS DE REEMPLAZO DE LA JUNTA - BOBINAS

REF	FN	PART NUMBER	YR/SN	QTY	DENOMINACION
		87610533		1	PISTONCILLO, Spool End Group; Incl. 1 - 7
1		NSS		2	NO SE REPARA SEPARADAM., Cap Screw
2		NSS		1	NO SE REPARA SEPARADAM., Spool Cap
3		NSS		2	NO SE REPARA SEPARADAM., Spring Seat
4		NSS		1	NO SE REPARA SEPARADAM., Spring
5		NSS		2	NO SE REPARA SEPARADAM., Spring Seat
6		NSS		1	NO SE REPARA SEPARADAM., O-Ring
7		NSS		1	NO SE REPARA SEPARADAM., Spring

VALVULA DE CONTROL, JUEGOS DE REEMPLAZO DE LA JUNTA - BOBINAS

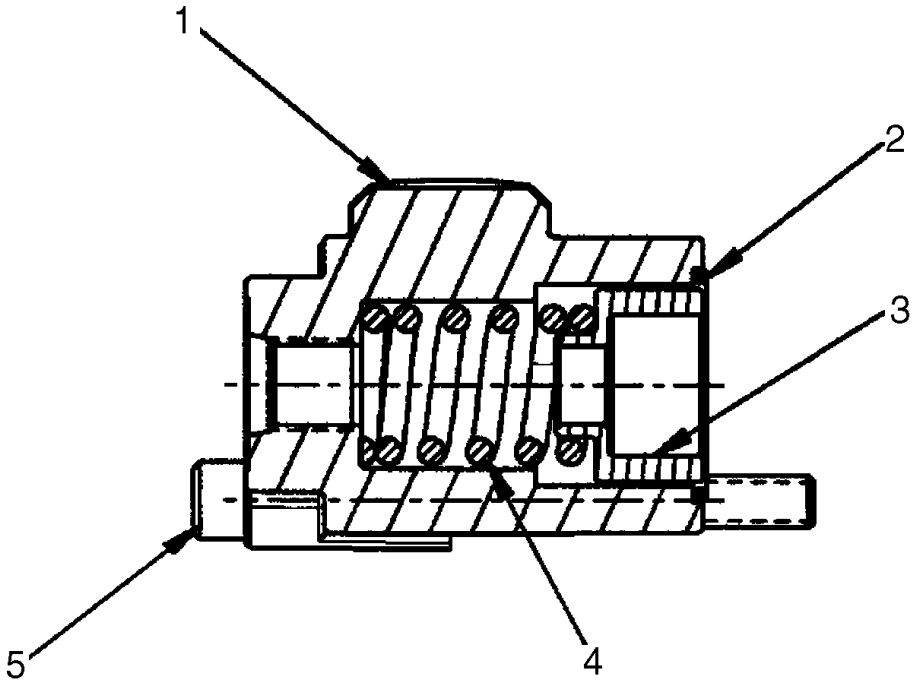

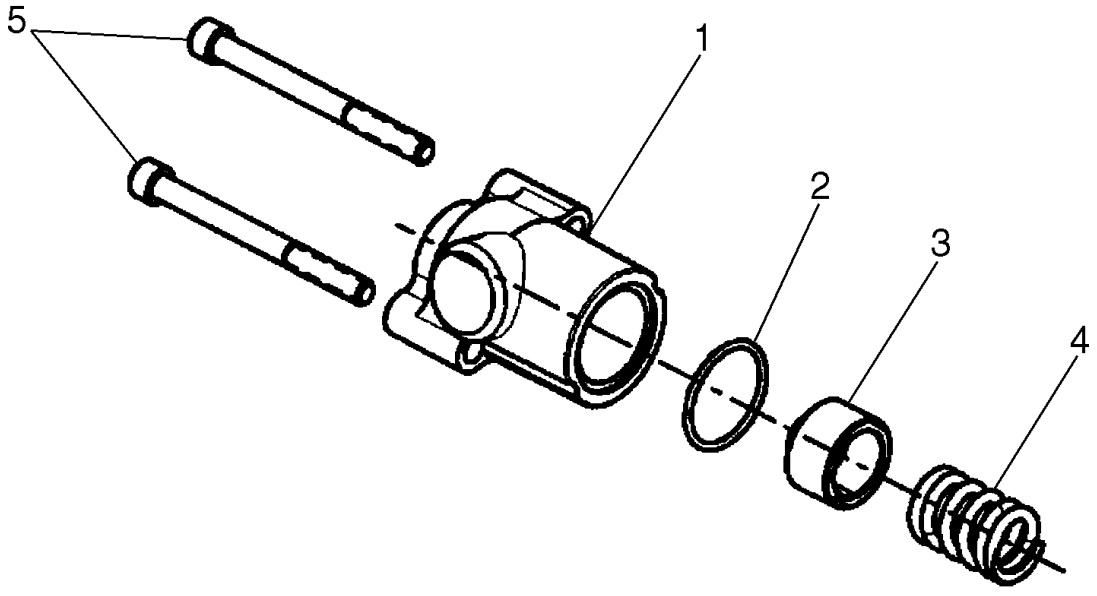

BS07H036

VALVULA DE CONTROL, JUEGOS DE REEMPLAZO DE LA JUNTA - BOBINAS

REF	FN	PART NUMBER	YR/SN	QTY	DENOMINACION
		87610532		1	PISTONCILLO, Spool End Group; Incl. 1 - 5
1		NSS		1	NO SE REPARA SEPARADAM., Spool Cap
2		NSS		1	NO SE REPARA SEPARADAM., O-Ring
3		NSS		1	NO SE REPARA SEPARADAM., Spring Seat
4		NSS		1	NO SE REPARA SEPARADAM., Spring
5		NSS		2	NO SE REPARA SEPARADAM., Cap Screw

VALVULA DE CONTROL, JUEGOS DE REEMPLAZO DE LA JUNTA - BOBINAS

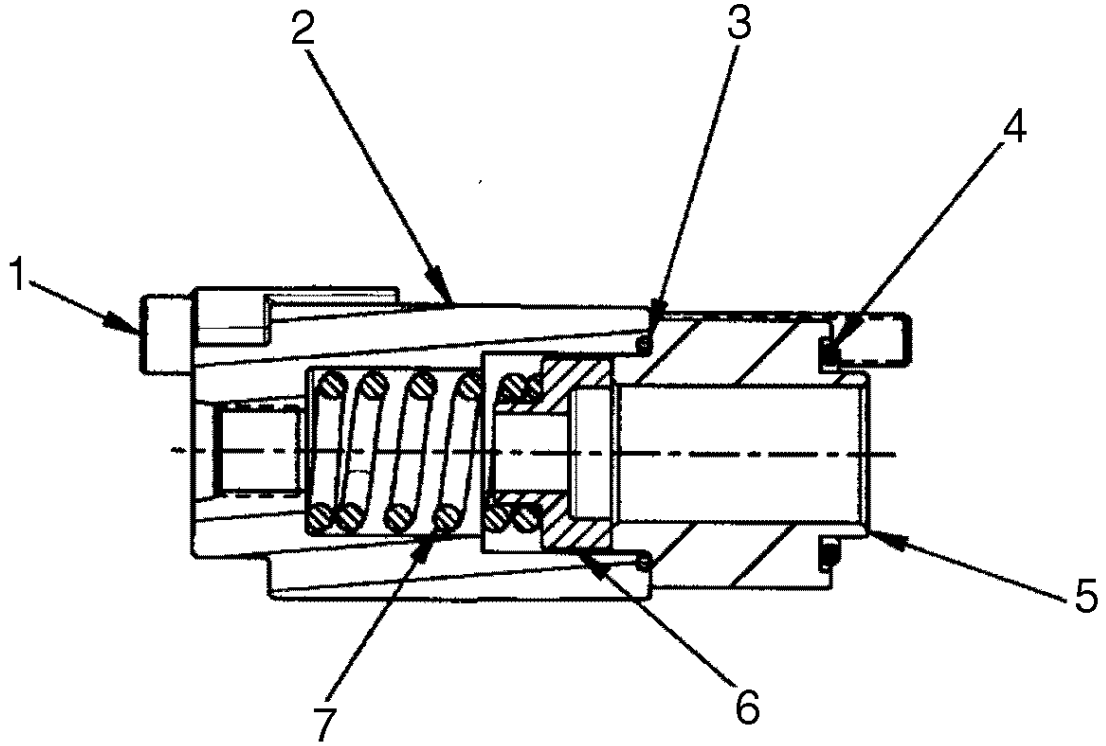

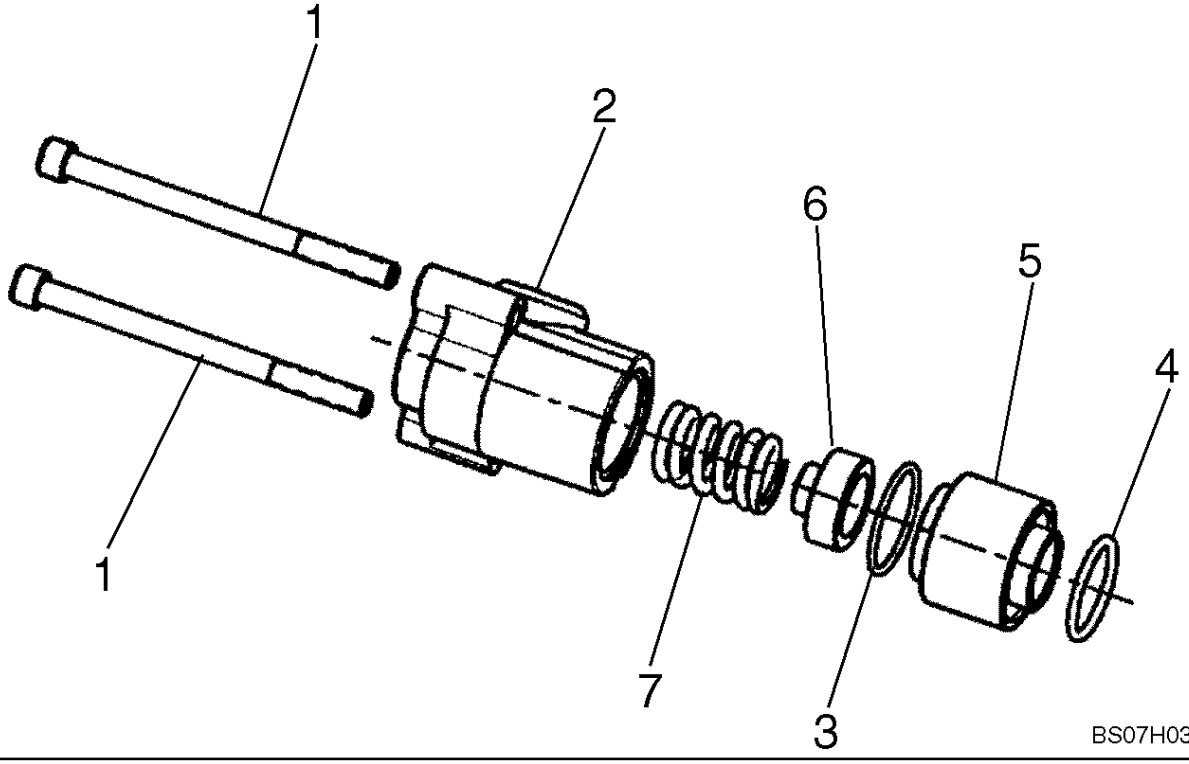

VALVULA DE CONTROL, JUEGOS DE REEMPLAZO DE LA JUNTA - BOBINAS

REF	FN	PART NUMBER	YR/SN	QTY	DENOMINACION
		87610531		1	PISTONCILLO, Spool End Group; Incl. 1 - 7
1		NSS		2	NO SE REPARA SEPARADAM., Cap Screw
2		NSS		1	NO SE REPARA SEPARADAM., Spool Cap
3		NSS		1	NO SE REPARA SEPARADAM., O-Ring
4		NSS		1	NO SE REPARA SEPARADAM., O-Ring
5		NSS		1	NO SE REPARA SEPARADAM., Retainer
6		NSS		1	NO SE REPARA SEPARADAM., Spring Seat
7		NSS		1	NO SE REPARA SEPARADAM., Spring

VALVULA DE CONTROL, JUEGOS DE REEMPLAZO DE LA JUNTA - BOBINAS, EHPV

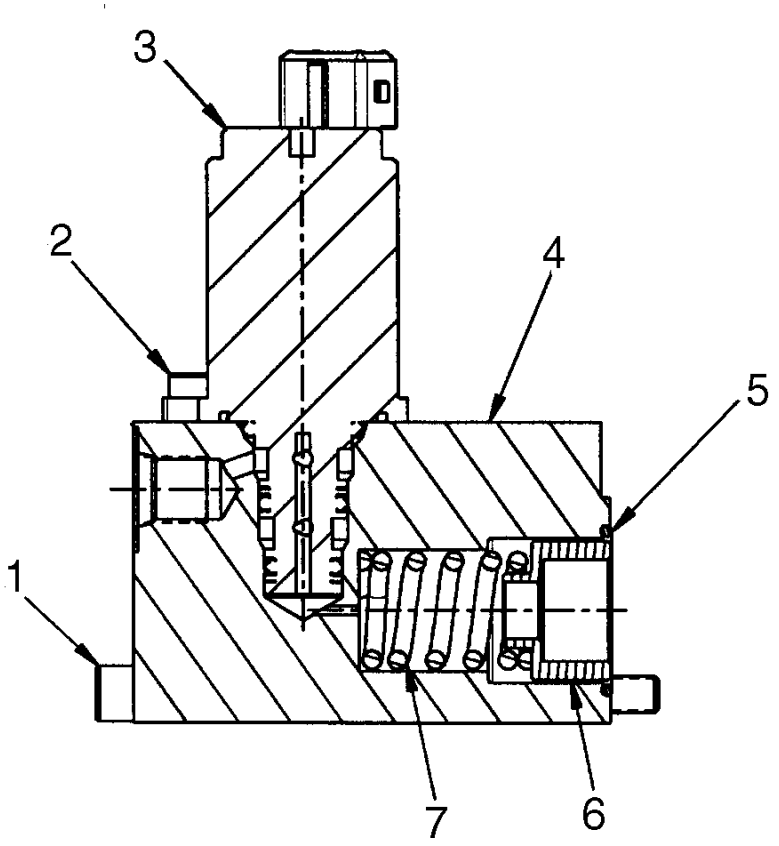

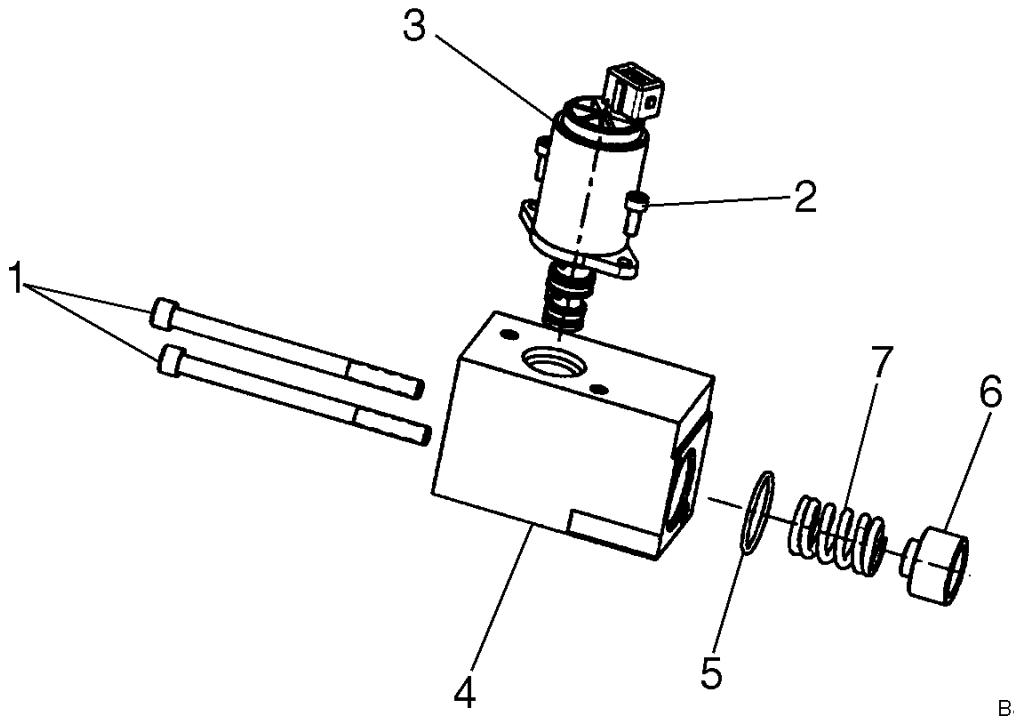

BS07H130

VALVULA DE CONTROL, JUEGOS DE REEMPLAZO DE LA JUNTA - BOBINAS, EHPV

REF	FN	PART NUMBER	YR/SN	QTY	DENOMINACION
		87611845		1	PISTONCILLO, Spool End Group, EHPV; Incl. 1 - 7
1		NSS		2	NO SE REPARA SEPARADAM., Cap Screw
2		NSS		2	NO SE REPARA SEPARADAM., Cap Screw
3		87576154		1	ELECTROVÁLVULA, Proportional Pressure Reducing
4		NSS		1	NO SE REPARA SEPARADAM., End Cap
5		NSS		1	NO SE REPARA SEPARADAM., O-Ring
6		NSS		1	NO SE REPARA SEPARADAM., Spring Seat
7		NSS		1	NO SE REPARA SEPARADAM., Spring

VALVULA DE CONTROL, JUEGOS DE REEMPLAZO DE LA JUNTA - BOBINAS, EHPV

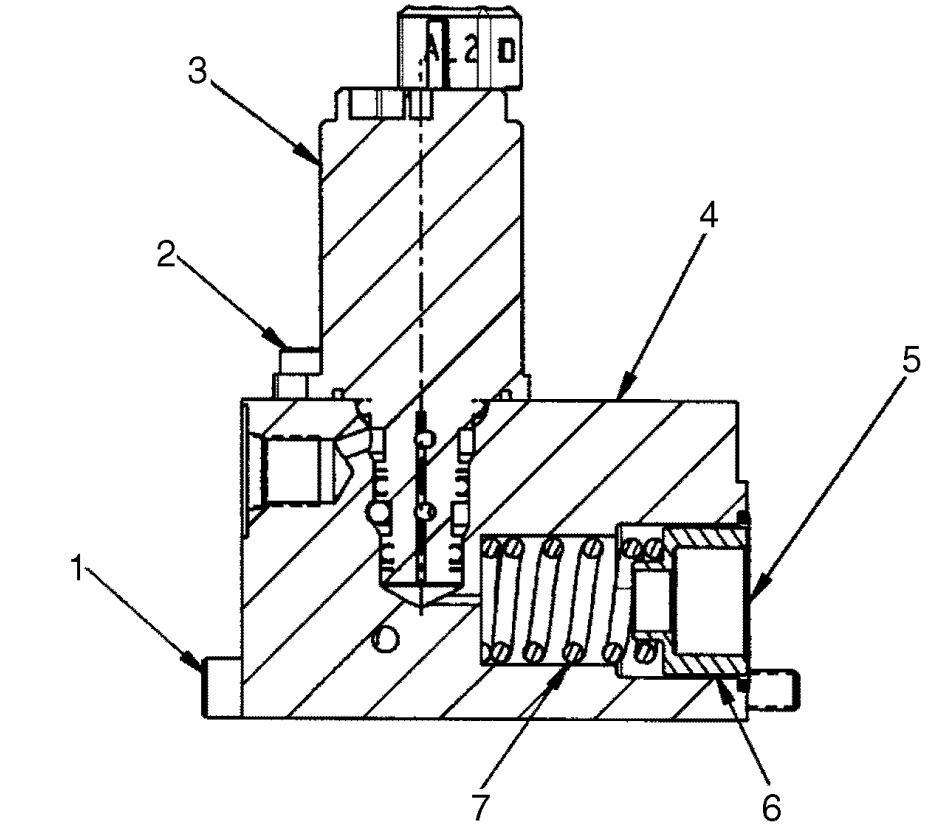

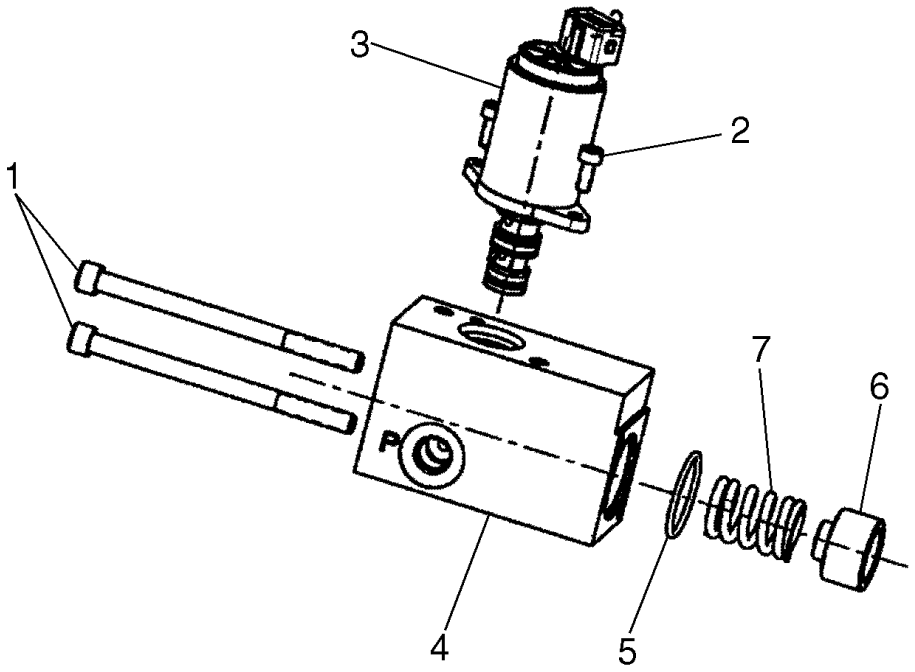

BS07H131

VALVULA DE CONTROL, JUEGOS DE REEMPLAZO DE LA JUNTA - BOBINAS, EHPV

REF	FN	PART NUMBER	YR/SN	QTY	DENOMINACION
		87611846		1	PISTONCILLO, Spool End Group, EHPV; Incl. 1 - 7
1		NSS		2	NO SE REPARA SEPARADAM., Cap Screw
2		NSS		2	NO SE REPARA SEPARADAM., Cap Screw
3		87576154		1	ELECTROVÁLVULA, Proportional Pressure Reducing
4		NSS		1	NO SE REPARA SEPARADAM., End Cap
5		NSS		1	NO SE REPARA SEPARADAM., O-Ring
6		NSS		1	NO SE REPARA SEPARADAM., Spring Seat
7		NSS		1	NO SE REPARA SEPARADAM., Spring

AUXILIAR SECUNDARIO DELANTERO - CONJUNTO DE LA VALVULA

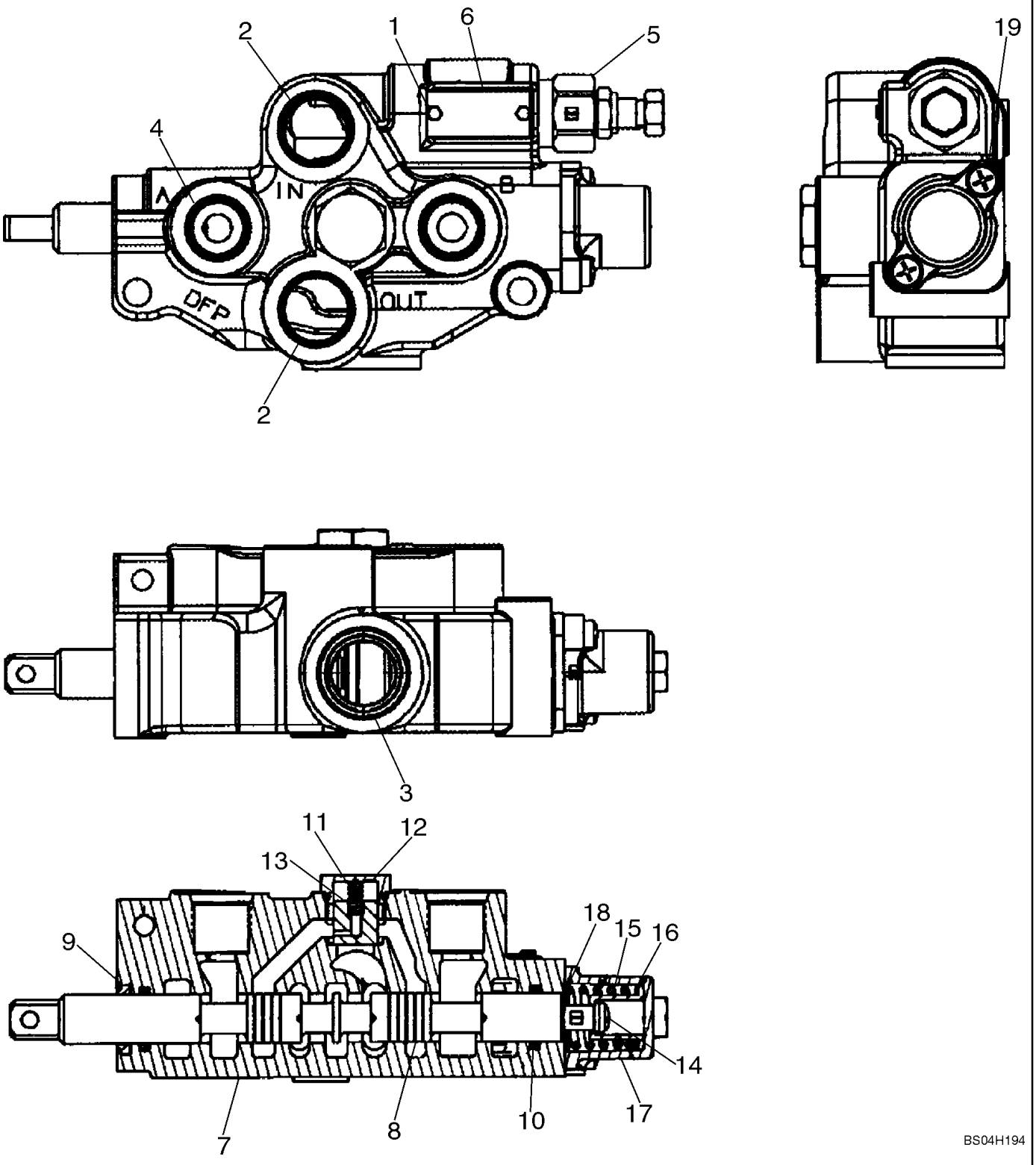

AUXILIAR SECUNDARIO DELANTERO - CONJUNTO DE LA VALVULA

REF	FN	PART NUMBER	YR/SN	QTY	DENOMINACION
		87017348		1	VALVULA, Secondary Auxiliary Valve; Incl. 1 - 19
1		NSS		2	NO SE REPARA SEPARADAM., Screw, Drive
2		NSS		2	NO SE REPARA SEPARADAM., Shipping Plug
3		NSS		1	NO SE REPARA SEPARADAM., Shipping Plug
4		NSS		2	NO SE REPARA SEPARADAM., Shipping Plug
5		NSS		1	NO SE REPARA SEPARADAM., Relief Valve Assy
6		NSS		1	NO SE REPARA SEPARADAM., Name Plate
7		NSS		1	NO SE REPARA SEPARADAM., Body
8		NSS		1	NO SE REPARA SEPARADAM., Spool
		87455258		1	SERIE DE JUNTAS, Incl. 9, 10
9		NSS		1	NO SE REPARA SEPARADAM., Ring, Wiper
10		NSS		2	NO SE REPARA SEPARADAM., O-Ring
		87455257		1	EQUIPO, Load Check Kit; Incl. 11 - 13
11		NSS		1	NO SE REPARA SEPARADAM., Spring
12		NSS		1	NO SE REPARA SEPARADAM., Load Check Plug Assy
13		NSS		1	NO SE REPARA SEPARADAM., Poppet, Load Check
		87455274		1	JUEGO MUELLES, Spring Center Kit; Incl. 14 - 19
14		NSS			NO SE REPARA SEPARADAM., Screw With Lock Washer
15		NSS			NO SE REPARA SEPARADAM., Spring
16		NSS			NO SE REPARA SEPARADAM., Spacer
17		NSS			NO SE REPARA SEPARADAM., End Cap
18		NSS			NO SE REPARA SEPARADAM., Washer
19		NSS			NO SE REPARA SEPARADAM., Screw With Lock Washer

NOTAS

SECTION INDEX
Bastidor

09-01	ELEVADOR DE LA CARGADORA
09-02	GATO DE LEVANTAMIONTO - CUBIERTAS
09-03	ACOPLAMIENTO, MECANICO
09-04	ACOPLAMIENTO, MECANICO (ITALIANO)
09-05	ACOPLAMIENTO, HIDRAULICO
09-06	CUCHARON - CARGADORA, SUCIEDAD/FUNDICIÓN
09-07	CUCHARON - CARGADORA
09-08	CUCHARON - CARGADORA
09-09	CUCHARON - CARGADORA
09-10	BORDE DE CORTE DEL CUCHARÓN, BORDE DE CORTE EMPERNADO
09-11	PIEZAS ESPECIALES PARA ITALIA - PROTECTOR, CUCHARA
09-12	HORQUILLA
09-13	CONTROLES - MONTAJE
09-14	CONSOLA - LADO DERECHO
09-15	CONSOLA - IZQUIERDA
09-16	CHASIS (440)
09-17	CHASIS (440)
09-18	CHASIS (440CT)
09-19	CHASIS (440CT)
09-20	CONTROLES - CARICATORE E COMANDO DI AVANZAMENTO LADO DERECHO
09-21	CONTROLES - CARICATORE E COMANDO DI AVANZAMENTO IZQUIERDA
09-22	CONTROLES - CARICATORE E COMANDO DI AVANZAMENTO
09-23	CONTROLES - SISTEMA HIDRAULICO AUXILIAR
09-24	CAPO
09-25	CAPO - AIRE ACONDICIONADO
09-26	PUERTA, TRASERA
09-27	PUERTA, TRASERA
09-28	TRABA - PUERTA, TRASERA
09-29	PUERTA DE CABINA - MONTAJE
09-30	PUERTA DE CABINA - ARANDELA, PARABRISAS
09-31	PUERTA DE CABINA
09-32	PUERTA DE CABINA - VISOR
09-33	PUERTA DE CABINA - LIMPIAPARABRISAS, DELANTERO
09-34	PUERTA DE CABINA - MANILLA
09-35	PORTEZUELA DE DEMOLICIÓN - MONTAJE
09-36	PORTEZUELA DE DEMOLICIÓN
09-37	ALFOMBRILLA, SUELO
09-38	MARCO Y BARRA DEL ASIENTO
09-39	BARRA DEL ASIENTO
09-40	CINTURONES DE SEGURIDAD (2 IN)
09-41	CINTURONES DE SEGURIDAD (3 IN)
09-42	CINTURON DE HOMBRO
09-43	ESPEJO RETROVISOR TRASERO
09-44	PIEZAS ESPECIALES PARA ITALIA - ESPEJO, VISTA TRASERA
09-45	ASIENTO, SOPORTE - ESTANDAR
09-46	ASIENTO, SOPORTE - SUSPENSION
09-47	ASIENTO, SOPORTE - DELUXE SUSPENSION
09-48	VENTANA, TRASERA
09-49	VENTANA, TRASERA - CALEFACCION Y AIRE ACONDICIONADO
09-50	VENTANAS, ARRIBA
09-51	VENTANAS, LATERAL

SECTION INDEX
Bastidor

09-52	CUBIERTA DEL TECHO - ESTANDAR
09-53	CALEFACCION Y AIRE ACONDICIONADO - CUBIERTA DEL TECHO
09-54	REVESTIMIENTO INTERIOR
09-55	RADIO, ALTAVOZ Y ANTENA
09-56	RADIO, ALTAVOZ Y ANTENA
09-57	CALENTADOR, DELUXE
09-58	CALENTADOR, DELUXE
09-59	SISTEMA DE AIRE ACONDICIONADO
09-60	CALENTADOR
09-61	CALEFACCION Y AIRE ACONDICIONADO
09-62	PROTECTOR TÉRMICO
09-63	INSONORISACION
09-64	CONTROL DE RUIDO, PUERTA, TRASERA
09-65	GANCHO DE ELEVACION
09-66	GANCHO DE ELEVACION
09-67	CALCOMANIAS - INGLES
09-68	CALCOMANIAS (440CT)
09-69	CALCOMANIAS
09-70	CALCOMANIAS
09-71	CALCOMANIAS - DANES, HOLANDES, FINLANDES
09-72	CALCOMANIAS - FRANCES, ALEMAN, GRIEGO
09-73	CALCOMANIAS - ITALIANO, NORUEGO, POLACO
09-74	CALCOMANIAS - PORTUGUÉS, ESPAÑOL, SUECO
09-75	CALCOMANIAS - PORTUGUES DE BRADIL, FRANCES DE CANADA, ESPAÑOL LATINOAMERICANO

NOTAS

09-01		p1	10/07

ELEVADOR DE LA CARGADORA

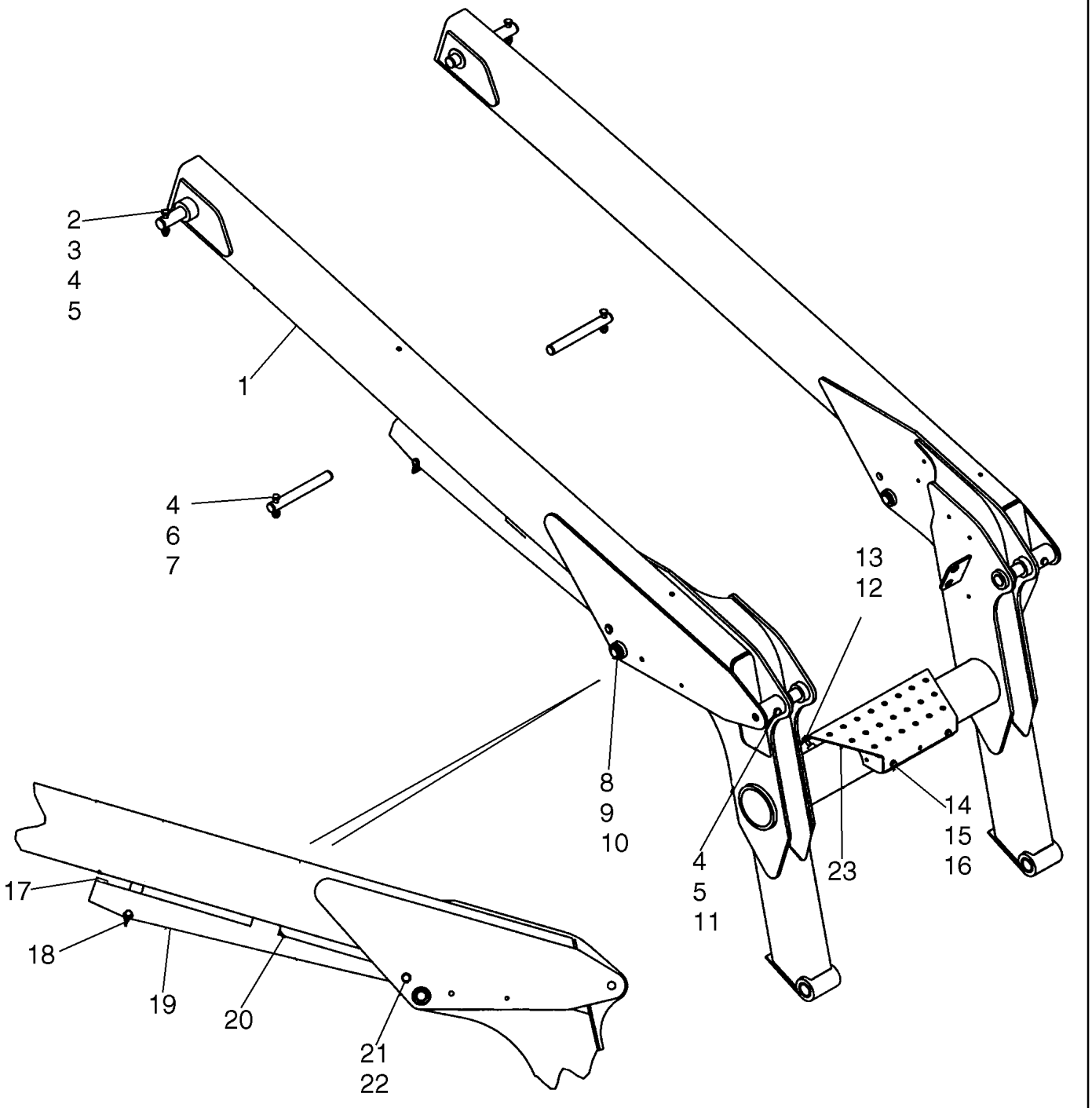

ELEVADOR DE LA CARGADORA

REF	FN	PART NUMBER	YR/SN	QTY	DENOMINACION
		87448095		1	BASTIDOR (CONJUNTO), Loader Arm Kit; Order From Machinery Price List; Incl. Ref 1 Loader Frame, Plus The Following Decals The Following Decals, 321-7029, 411515A1, 411516A1, (2) 87389371; See Decal Pages For Illustration
1		NSS		1	NO SE REPARA SEPARADAM., 87417491 Loader; Incl. (4) D33827 Bushings; Used In Production
2		382837A1		2	PERNO, Lift Arm
4		86512554		6	CONTRA TUERCA, M10 x 1.5, Cl 10
5		43144		4	TORNILLO, Hex, M10 x 70, 8.8
6		382838A1		2	PERNO, Lift Cylinder
6		87458990		1	PERNO, Lift Cylinder, Left Hand
7		120070		2	TORNILLO, Hex, M10 x 60, 8.8
8		{87602935}		10	WASHER, 1.0625 x 1.625 x 0.065
9		405853A1		2	PERNO
10		87019495		4	ANILLO DE RESORTE, #98, Ext
11		393742A1		2	PERNO, Cylinder
12		120104		2	TORNILLO, Hex, M8 x 20, 8.8
13		87015284		2	ARANDELA, M8 x 21.5 x 2.5, HT
14		86624184		2	ARANDELA, M8 x 16 x 1.6
15		43127		2	TORNILLO, Hex, M8 x 25, 8.8
16		9628098		2	CONTRA TUERCA, M8 x 1.25, Cl 10
17		{87599604}		1	Grommet
18		87711364		1	PERNO, Pin
19		87711366		1	BARRA ESTABILIZADORA, Strut, Loader Support
20		87599718		1	ESPUMA AISLANTE, Loader Strut; One Piece
21		405854A1		1	PERNO, Cylinder
22		{87599605}		2	Ring
23		409422A1		1	ESCALON

GATO DE LEVANTAMIONTO - CUBIERTAS

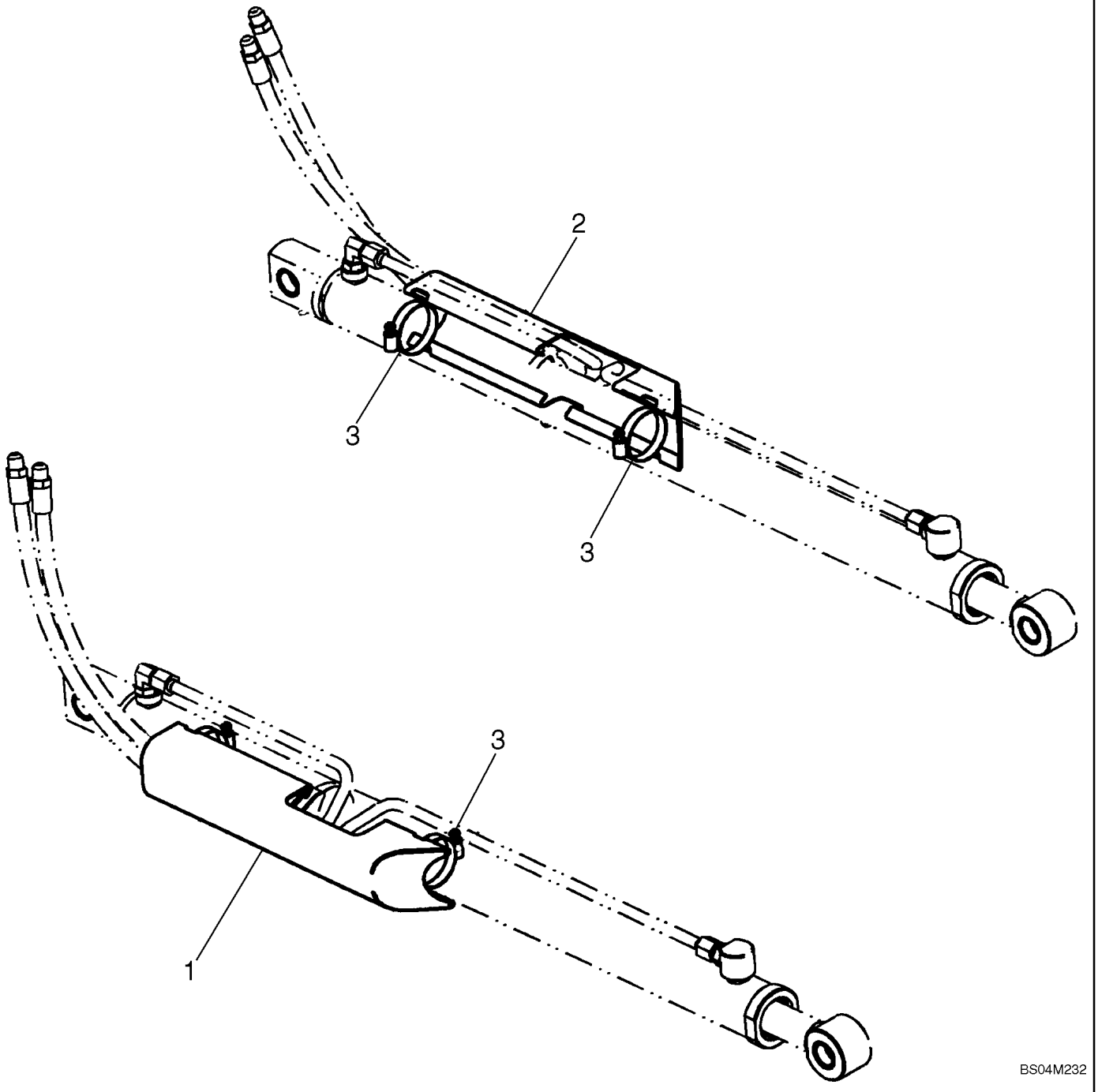

GATO DE LEVANTAMIONTO - CUBIERTAS

REF	FN	PART NUMBER	YR/SN	QTY	DENOMINACION
		450051A1		1	DIA KIT,, Kit, Lift Cylinder Cover; Incl 1 - 3
1		429619A1		1	TAPA, Right Hand
2		429620A1		1	TAPA, Left Hand
3		214-1444		4	ABRAZADERA MANGUERA, #44, 2.31/3.25 Type F Worm

09-03		p1	10/07

ACOPLAMIENTO, MECANICO

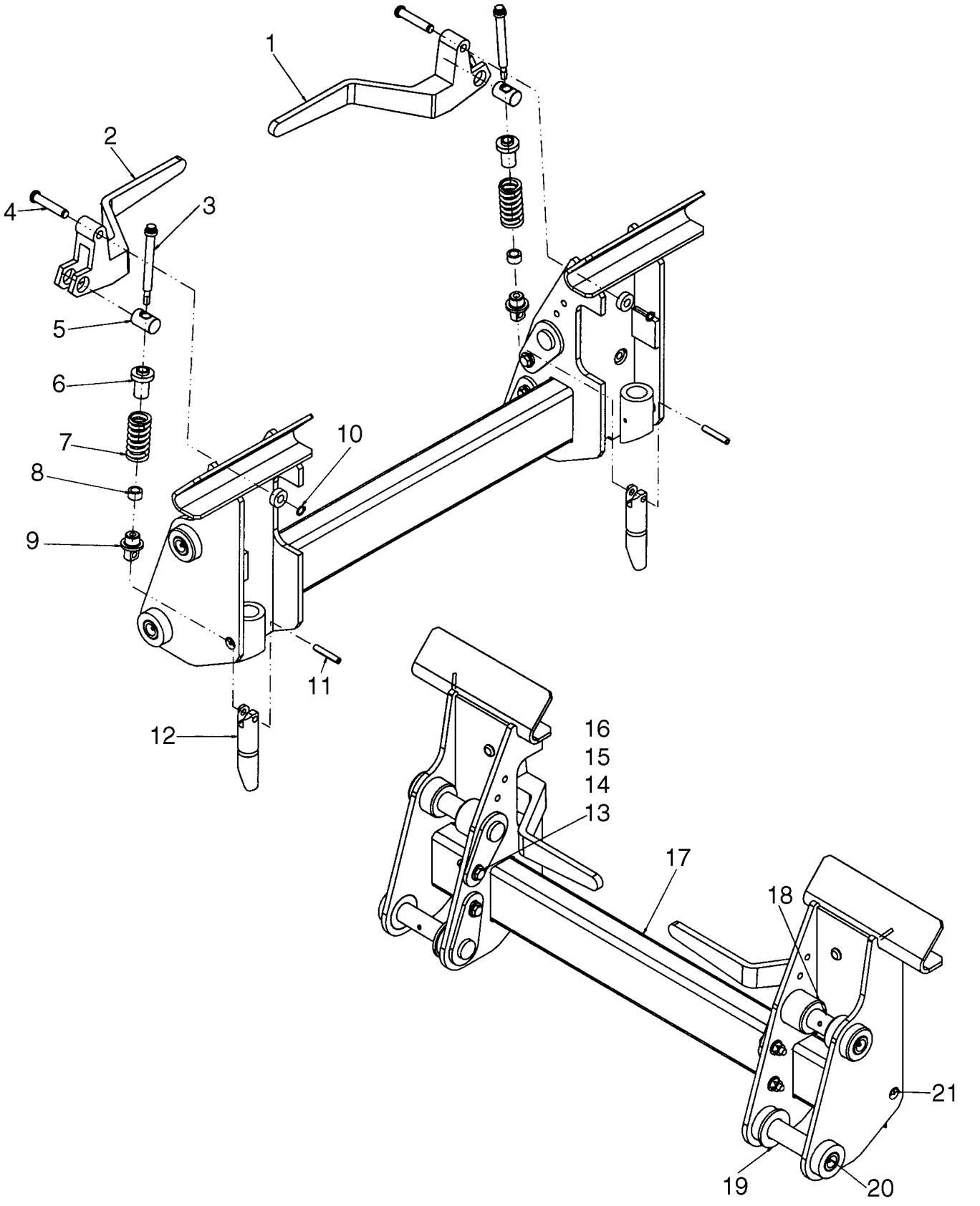

ACOPLAMIENTO, MECANICO

REF	FN	PART NUMBER	YR/SN	QTY	DENOMINACION
1		86633195		1	MANECILLA, LH
2		86633196		1	MANECILLA, RH
3		87533223		2	PERNO, CS12PT Shoulder Bolt, 1/2 X 4.0
4		87387540		2	RETENEDOR
5		9829733		2	PERNO
6		86610166		2	GUIA, Spring Guide
7		86610167		2	RESORTE
8		87412041		2	SEPARADOR, Bushing Spacer
9		{87579303}		2	Pin
10		{87612753}		2	Retaining Ring, External #50 PLN
11		86624092		2	PERNO, 3/8" x 2", Coiled
12		87413030		2	PERNO, Latch Pin
13		120112		4	TORNILLO, Hex, M10 x 40, 8.8, Full Thd
14		86625253		8	ARANDELA, M11 x 24 x 2
15		86512554		4	CONTRA TUERCA, M10 x 1.5, Cl 10
16		906091R1		4	SEPARADOR, 3/8" Pipe X 3/8" Length
17		404599A5		1	BASTIDOR (CONJUNTO)
18		87659406		4	PERNO
19		86512837		2	ARANDELA, 1 1/4", SAE
20		80710		4	ENGRASADOR, 1/8"-27 x .66 lg
21		87414		2	ENGRASADOR, 1/4"-28 x .56" lg, Drive

09-04		p1	11/07

ACOPLAMIENTO, MECANICO (ITALIANO)

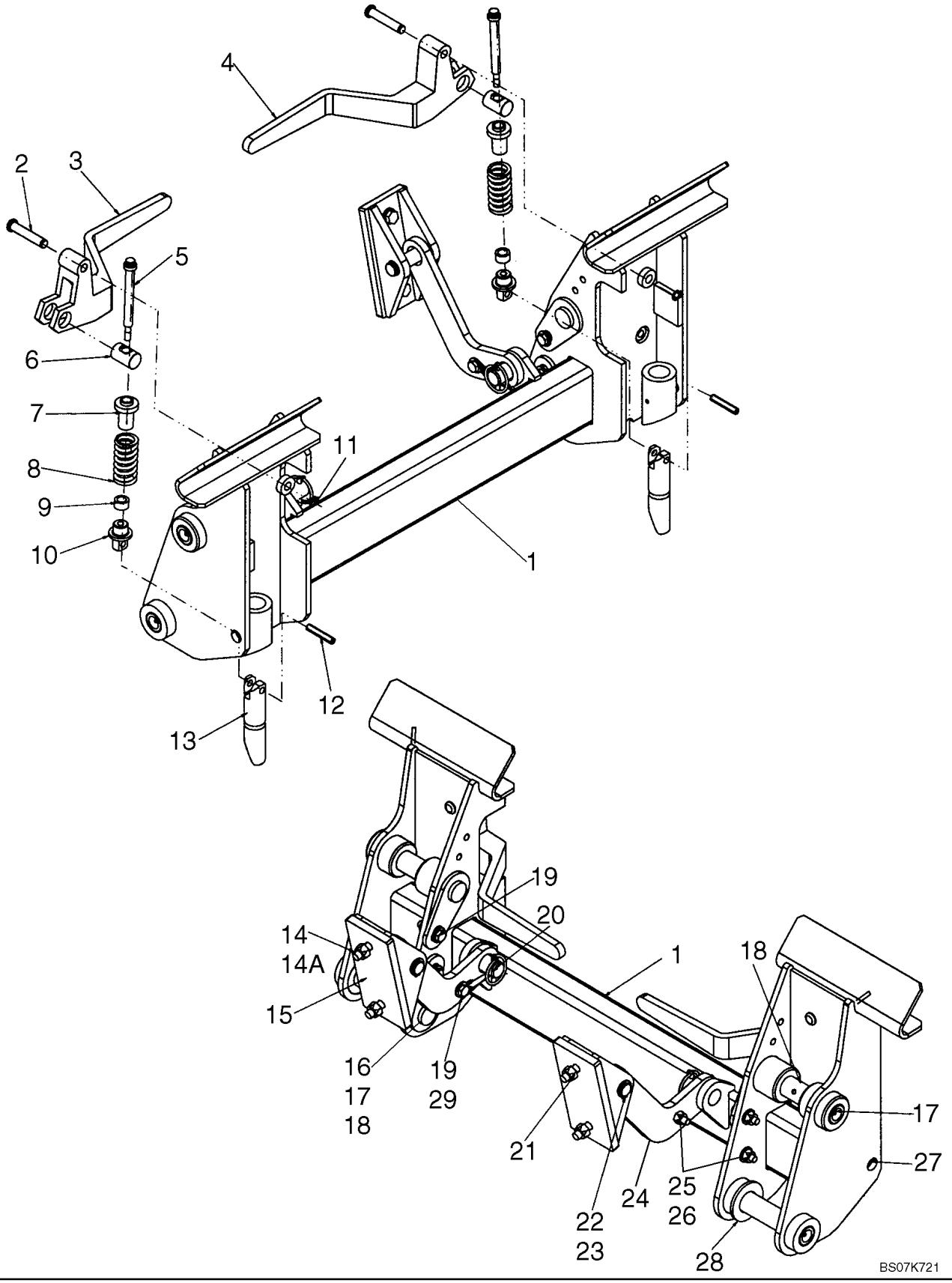

ACOPLAMIENTO, MECANICO (ITALIANO)

REF	FN	PART NUMBER	YR/SN	QTY	DENOMINACION
1		417779A3		1	BASTIDOR (CONJUNTO), Coupler, Italian On Road
2		87387540		2	RETENEDOR, Handle Pivot
3		86633196		1	MANECILLA, Right Hand
4		86633195		1	MANECILLA, Left Hand
5		87533223		2	PERNO, CS12PT SHO PH .5 x 4.0
6		9829733		2	PERNO
7		86610166		2	GUIA
8		86610167		2	RESORTE, Compression
9		87412041		2	SEPARADOR, Bushing
10		{87579303}		2	Pin
11		{87612753}		2	Retaining Ring # 50
12		86624092		2	PERNO, 3/8" x 2", Coiled, Coiled Spring
13		87413030		2	PERNO, Latch
14		412672		4	CONTRA TUERCA, M12 x 1.75, Cl 10
14A		86625255		4	ARANDELA, M13.5 x 24.5 x 3, HT
15		398196A1		2	PIEZA DE SOPORTE, Bucket Lock
16		906091R1		4	SEPARADOR, 3/8 x 0.375 x Strg Pipe
17		80710		4	ENGRASADOR, 1/8"-27 x .66 lg
18		87659406		4	PERNO
19		120112		4	TORNILLO, Hex, M10 x 40, 8.8, Full Thd
20		A30338		2	PERNO
21		120080		4	TORNILLO
22		D138889		2	PERNO, Lift Cylinder Pivot
23		{86625151}		4	Retaining Ring EXT HD #87
24		398194A1		2	ESLABON, Bucket Lock
25		86625253		10	ARANDELA, M11 x 24 x 2
26		86512554		6	CONTRA TUERCA, M10 x 1.5, Cl 10
27		87414		2	ENGRASADOR, 1/4"-28 x .56" lg, Drive
28		86512837		2	ARANDELA, 1 1/4", SAE
29		L78786		2	RETENADOR DE CABLE

ACOPLAMIENTO, HIDRAULICO

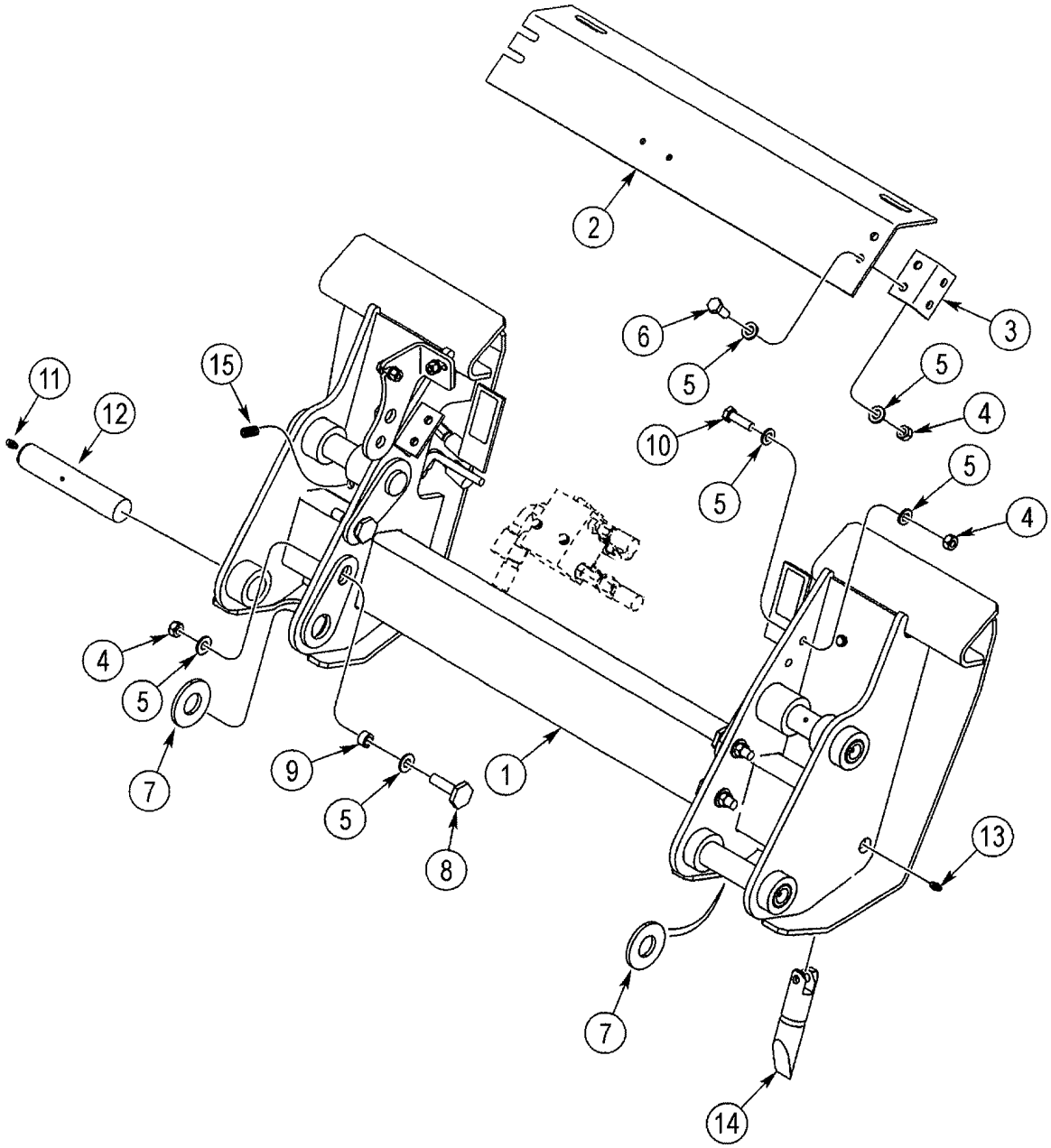

ACOPLAMIENTO, HIDRAULICO

REF	FN	PART NUMBER	YR/SN	QTY	DENOMINACION
1		404599A5		1	BASTIDOR (CONJUNTO)
2		87620412		1	PLACA, Protective Cover
3		409783A1		2	PIEZA DE SOPORTE, Coupler Cover
4		86512554		12	CONTRA TUERCA, M10 x 1.5, Cl 10
5		86625253		24	ARANDELA, M11 x 24 x 2
6		43139		4	TORNILLO, Hex, M10 x 25, 8.8, Full Thd
7		86512837		2	ARANDELA, 1 1/4", SAE
8		120112		4	TORNILLO, Hex, M10 x 40, 8.8, Full Thd
9		906091R1		4	SEPARADOR, Spacer; 3/8 x 0.375 x Strg Pipe
10		9706704		4	TORNILLO, Hex, M10 x 35, 8.8, Full Thd
11		80710		4	ENGRASADOR, 1/8"-27 x .66 lg
12		394582A2		4	PERNO
13		87414		2	ENGRASADOR, 1/4"-28 x .56" lg, Drive
14		87413030		2	PERNO, Latch
15		9617020		2	TAPÓN, Hex Soc, 1/4"-18, If Used
		D55216		1	TIRA CONTRA DESLIZAM., Non-Slip

CUCHARON - CARGADORA, SUCIEDAD/FUNDICIÓN

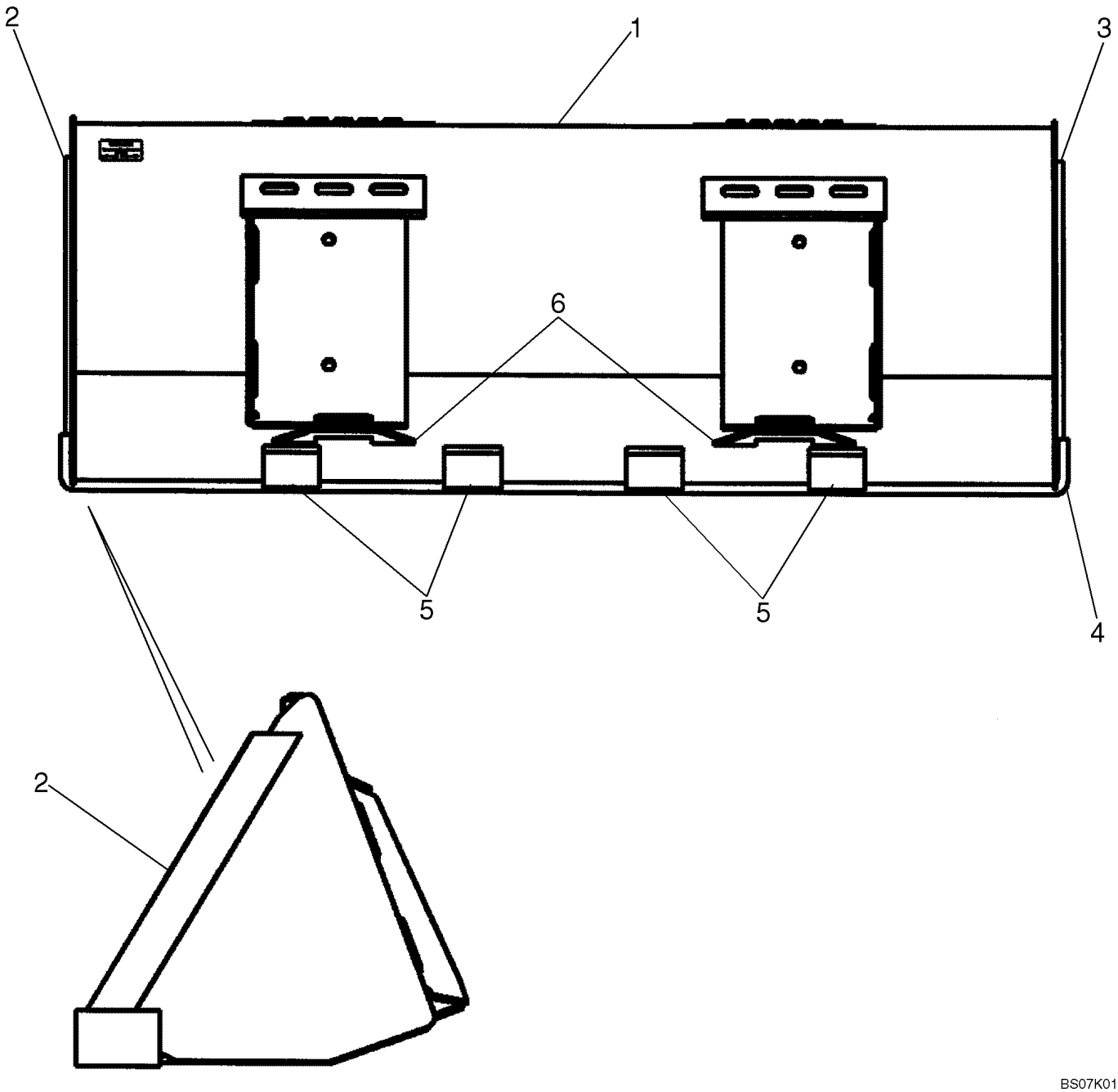

CUCHARON - CARGADORA, SUCIEDAD/FUNDICIÓN

REF	FN	PART NUMBER	YR/SN	QTY	DENOMINACION
		REF			MANUAL, DIRT / FOUNDRY
1		{86618350}		1	BUCKET, 1676 mm (66 Inch); Order From Machinery Price List; Incl 2 - 6
2		87014505		1	HOJA DE CORTE, LH Cutter
3		87014504		1	HOJA DE CORTE, RH Cutter
4		86577166		1	CUCHILLA DE ATAQUE, Weld On Blade 66 in
5		87016983		3	BARRA, Skid Bar
6		9822175		2	PLACA
1		86618351		1	CUCHARA, 1829 mm (72 Inch); Order From Machinery Price List; Incl 2 - 6
2		87014505		1	HOJA DE CORTE, LH Cutter
3		87014504		1	HOJA DE CORTE, RH Cutter
4		86577168		1	CUCHILLA DE ATAQUE, Weld On Blade 72 in
5		87016983		4	BARRA, Skid Bar
6		9822175		2	PLACA
1		{86633060}		1	BUCKET, 1981mm (78 Inch); Order From Machinery Price List; Incl 2 - 6
2		87014505		1	HOJA DE CORTE, LH Cutter
3		87014504		1	HOJA DE CORTE, RH Cutter
4		86577170		1	CUCHILLA DE ATAQUE, Weld On Blade 78 in
5		87016983		4	BARRA, Skid Bar
6		9822175		2	PLACA

CUCHARON - CARGADORA

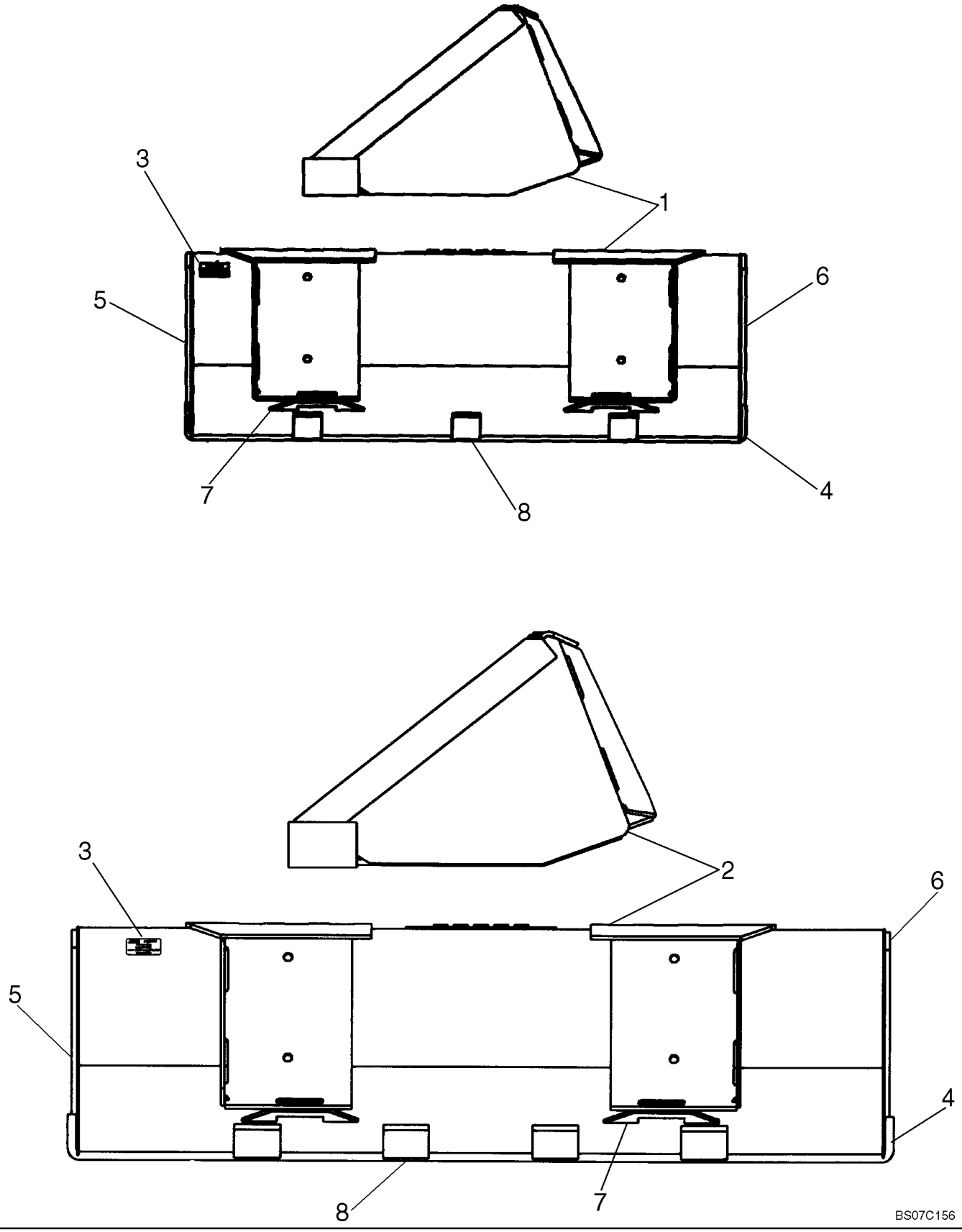

CUCHARON - CARGADORA

REF	FN	PART NUMBER	YR/SN	QTY	DENOMINACION
		REF			MANUAL, LOW PROFILE
1		86618363		1	CUCHARA, 1676 mm (66 Inch); Order From Machinery Price List; Incl. 3 - 8
3		NSS		1	NO SE REPARA SEPARADAM., Decal
4		87015514		1	CUCHILLA DE ATAQUE, Weld On Blade
5		87014503		1	CUCHILLA DE ATAQUE, Cutter Left Hand
6		87014502		1	CUCHILLA DE ATAQUE, Cutter Right Hand
7		87015460		2	PLACA
8		9829786		3	BARRA, Skid Bar
1		86618364		1	CUCHARA, 1820 mm (72 Inch); Order From Machinery Price List; Incl. 3 - 8
3		NSS		1	NO SE REPARA SEPARADAM., Decal
4		86577168		1	CUCHILLA DE ATAQUE, Weld On Blade
5		87014503		1	CUCHILLA DE ATAQUE, Cutter Left Hand
6		87014502		1	CUCHILLA DE ATAQUE, Cutter Right Hand
7		87015460		2	PLACA
8		9829786		4	BARRA, Skid Bar
		REF			MANUAL, EXTENDED LOW PROFILE
2		86618354		1	CUCHARA, 1676 mm (66 Inch); Order From Machinery Price List; Incl. 3 - 8
3		NSS		1	NO SE REPARA SEPARADAM., Decal
4		87015514		1	CUCHILLA DE ATAQUE, Weld On Blade
5		87014503		1	CUCHILLA DE ATAQUE, Cutter Left Hand
6		87014502		1	CUCHILLA DE ATAQUE, Cutter Right Hand
7		9822175		2	PLACA
8		9829786		3	BARRA, Skid Bar
2		86618355		1	CUCHARA, 1829 mm (72 Inch); Order From Machinery Price List; Incl. 3 - 8
3		NSS		1	NO SE REPARA SEPARADAM., Decal
4		86577168		1	CUCHILLA DE ATAQUE, Weld On Blade
5		86510316		1	CUCHILLA DE ATAQUE, Cutter Left Hand
6		86510315		1	CUCHILLA DE ATAQUE, Cutter Right Hand
7		87015460		2	PLACA
8		86510314		3	BARRA, Skid Bar

CUCHARON - CARGADORA

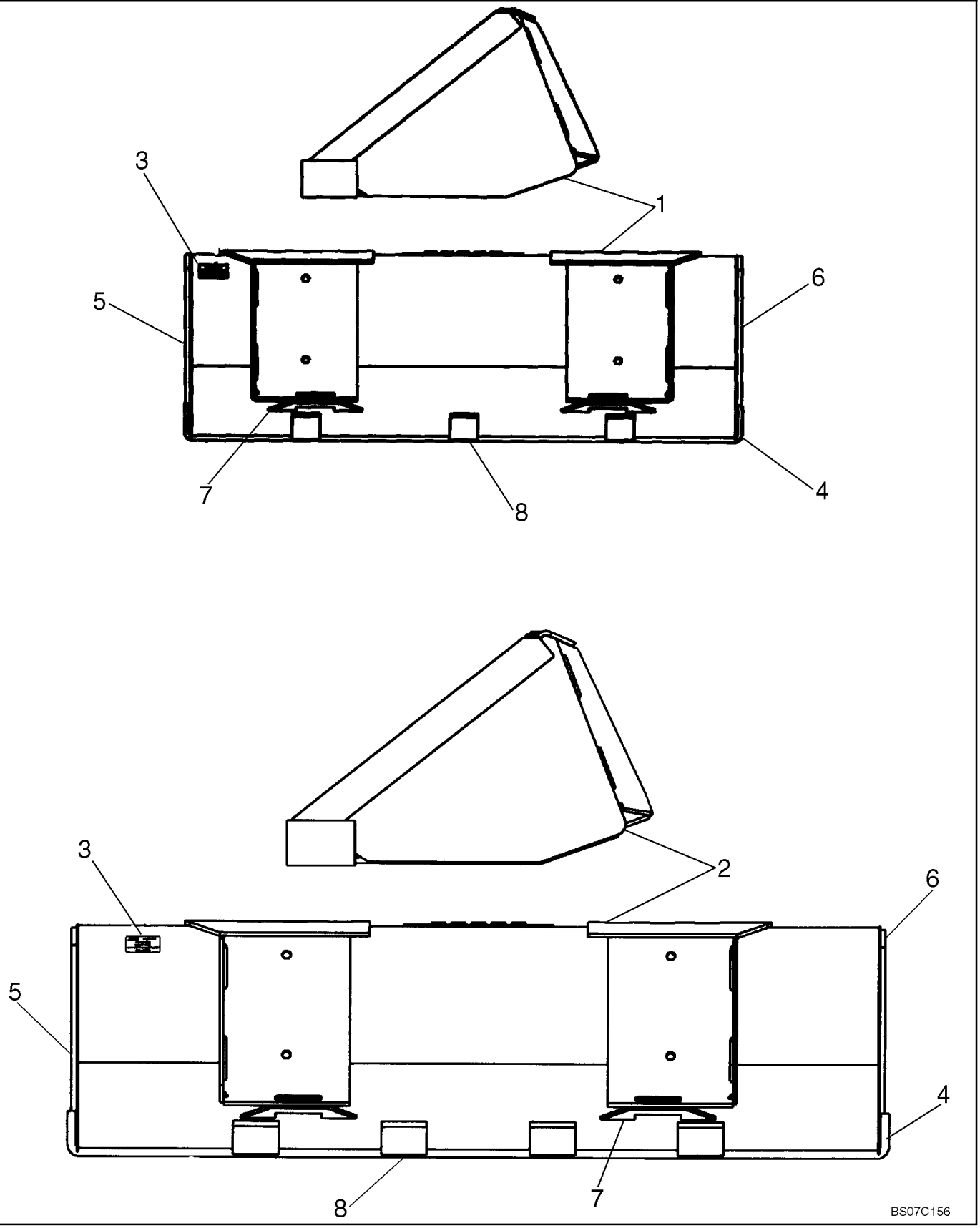

CUCHARON - CARGADORA

REF	FN	PART NUMBER	YR/SN	QTY	DENOMINACION
2		{86633059}		1	BUCKET, 1981 mm (78 Inch); Order From Machinery Price List; Incl. 3 - 8
3		NSS		1	NO SE REPARA SEPARADAM., Decal
4		87015514		1	CUCHILLA DE ATAQUE, Weld On Blade
5		87014503		1	CUCHILLA DE ATAQUE, Cutter Left Hand
6		87014502		1	CUCHILLA DE ATAQUE, Cutter Right Hand
7		87015460		2	PLACA
8		9829786		3	BARRA, Skid Bar

CUCHARON - CARGADORA

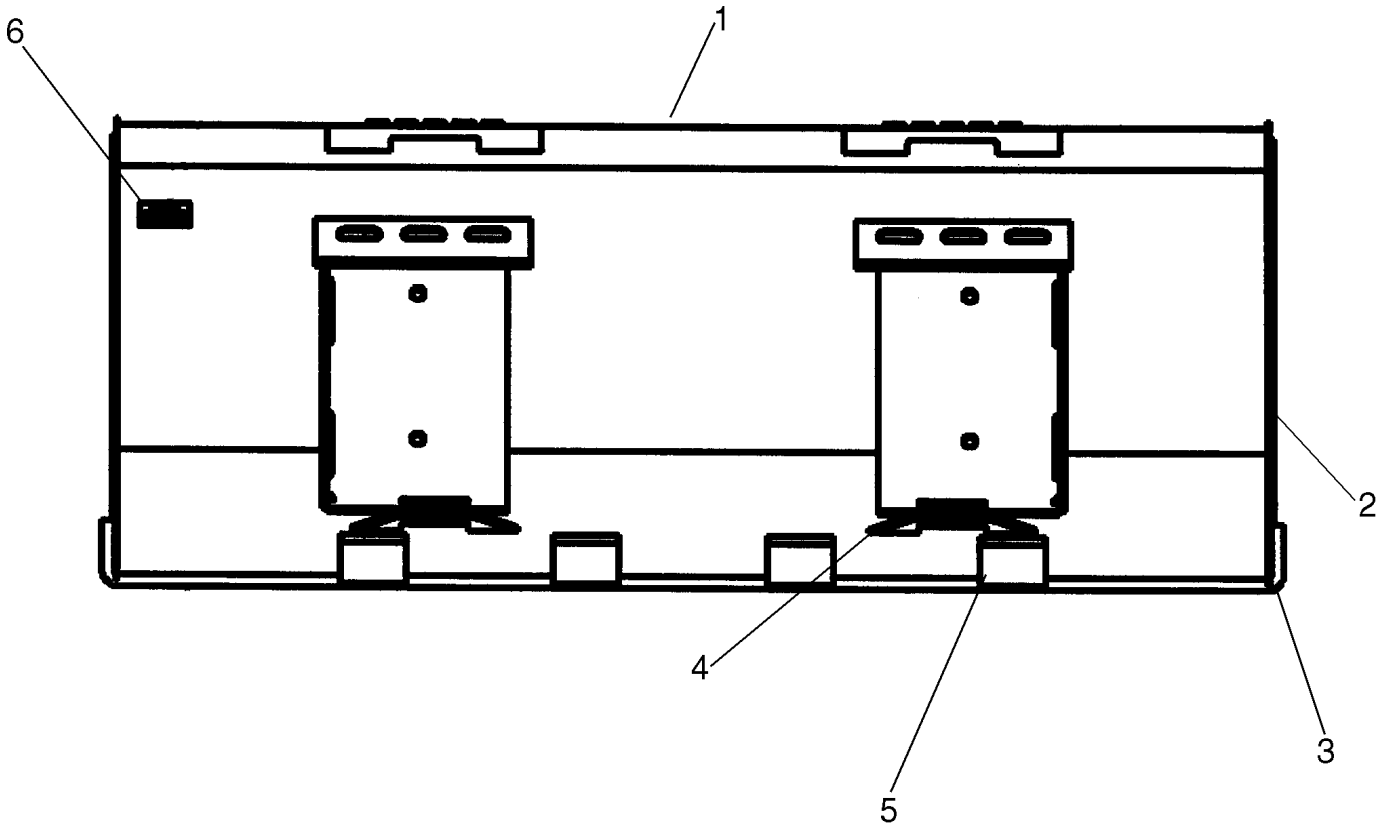

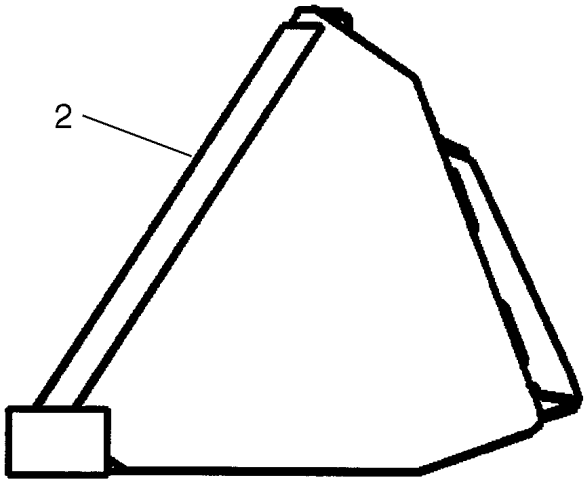

BS07K013

CUCHARON - CARGADORA

REF	FN	PART NUMBER	YR/SN	QTY	DENOMINACION
		REF			MANUAL, UTILITY/LIGHT MATERIAL
1		{87010188}		1	BUCKET, 1829 mm (72 Inch), Order From Machinery Price List; Incl 2- 6
2		86501801		2	CUCHILLA DE ATAQUE
3		86577168		1	CUCHILLA DE ATAQUE, 72 in
4		9822175		2	PLACA
5		86501815		4	BARRA, Skid Bar
6		NSS		1	NO SE REPARA SEPARADAM., Decal
1		{87010189}		1	BUCKET, 2134 mm (84 Inch), Order From Machinery Price List; Incl 2- 6
2		86501801		2	CUCHILLA DE ATAQUE
3		86900574		1	CUCHILLA DE ATAQUE, 84 in
4		9822175		2	PLACA
5		86501815		5	BARRA, Skid Bar
6		NSS		1	NO SE REPARA SEPARADAM., Decal

CUCHARON - CARGADORA

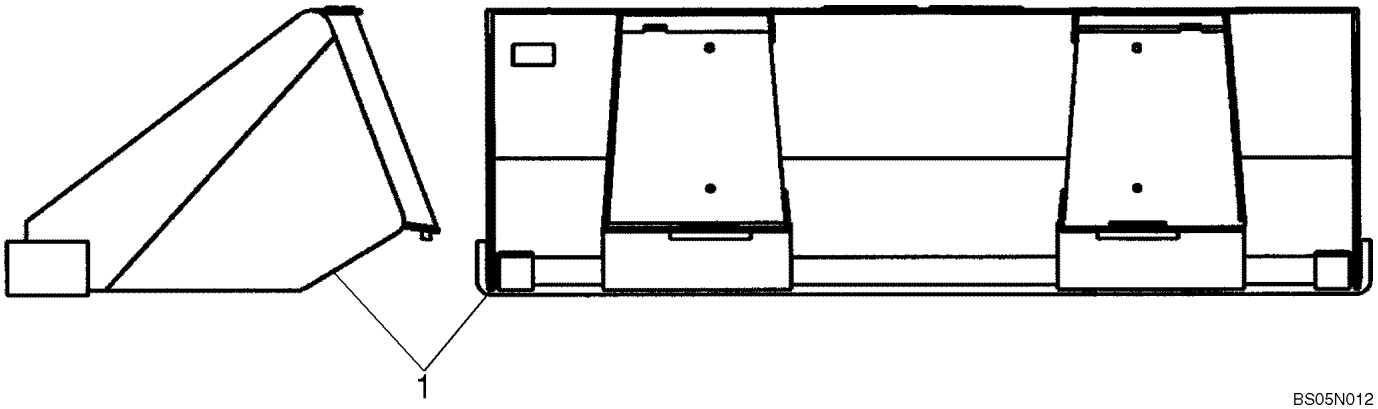

CUCHARON - CARGADORA

REF	FN	PART NUMBER	YR/SN	QTY	DENOMINACION
1		87438564		1	CUCHARA, 66" Heavy Duty Dirt: Incl 87015514
		87015514		1	CUCHILLA DE ATAQUE, 66" Blade
1		87438566		1	CUCHARA, 72" Heavy Duty Dirt; Incl 86577168
		86577168		1	CUCHILLA DE ATAQUE, 72" Blade
1		87430292		1	CUCHARA, 78" Heavy Duty Dirt; Incl 86577170
		86577170		1	CUCHILLA DE ATAQUE, 78" Blade

BORDE DE CORTE DEL CUCHARÓN, BORDE DE CORTE EMPERNADO

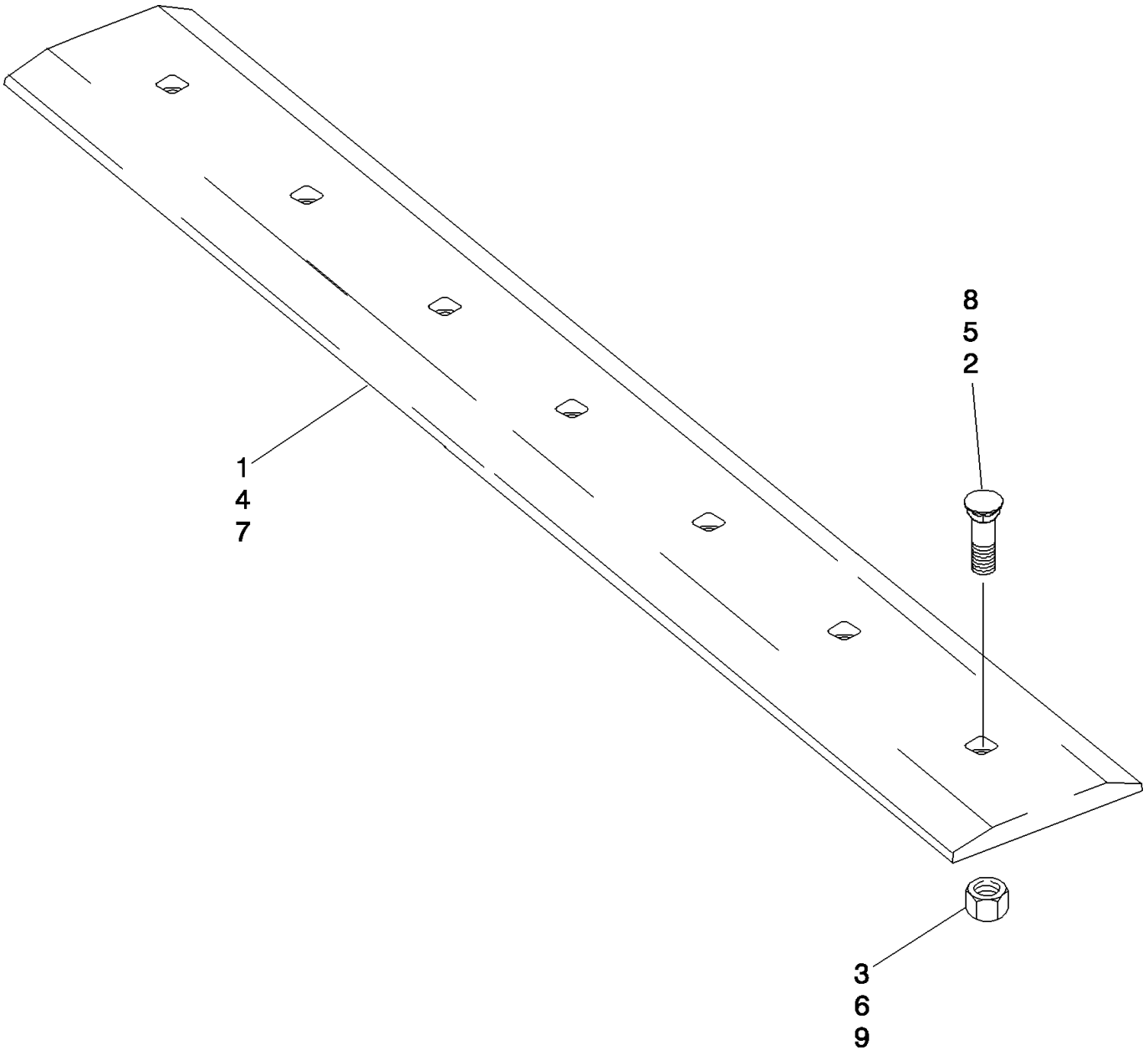

BS04A101

BORDE DE CORTE DEL CUCHARÓN, BORDE DE CORTE EMPERNADO

REF	FN	PART NUMBER	YR/SN	QTY	DENOMINACION
		430498A1		1	CUCHILLA DE ATAQUE, Kit; 66 Inch; Incl. Ref 4 - 6
4		87454483		1	CUCHILLA DE ATAQUE, 1676 mm (66 inch)
5		86548338		7	PERNO DE ARADO, 5/8"-11 x 2", G5
6		425-1010		7	TUERCA, 5/8"-11, G5
		430499A1		1	CUCHILLA DE ATAQUE, Kit; 72 Inch; Incl. Ref 7 - 9
7		87454488		1	CUCHILLA DE ATAQUE, 1829 mm (72 inch)
8		86548338		7	PERNO DE ARADO, 5/8"-11 x 2", G5
9		425-1010		7	TUERCA, 5/8"-11, G5
		434817A1		1	CUCHILLA DE ATAQUE, Kit; 78 Inch; Incl. Ref 7 - 9
7		87454489		1	CUCHILLA DE ATAQUE
8		86548338		7	PERNO DE ARADO, 5/8"-11 x 2", G5
9		280374		7	TUERCA, 5/8"-11, G5
		430500A1		1	CUCHILLA DE ATAQUE, Kit; 84 Inch; Incl. Ref 7 - 9
7		86577173		1	CUCHILLA DE ATAQUE, 2134 mm (84 inch)
8		420-21032		9	PERNO, CABEZA RONDA, 5/8"-11 x 2", G8, Full Thd
9		329-1010		9	TUERCA, 5/8"-11, G8

PIEZAS ESPECIALES PARA ITALIA - PROTECTOR, CUCHARA

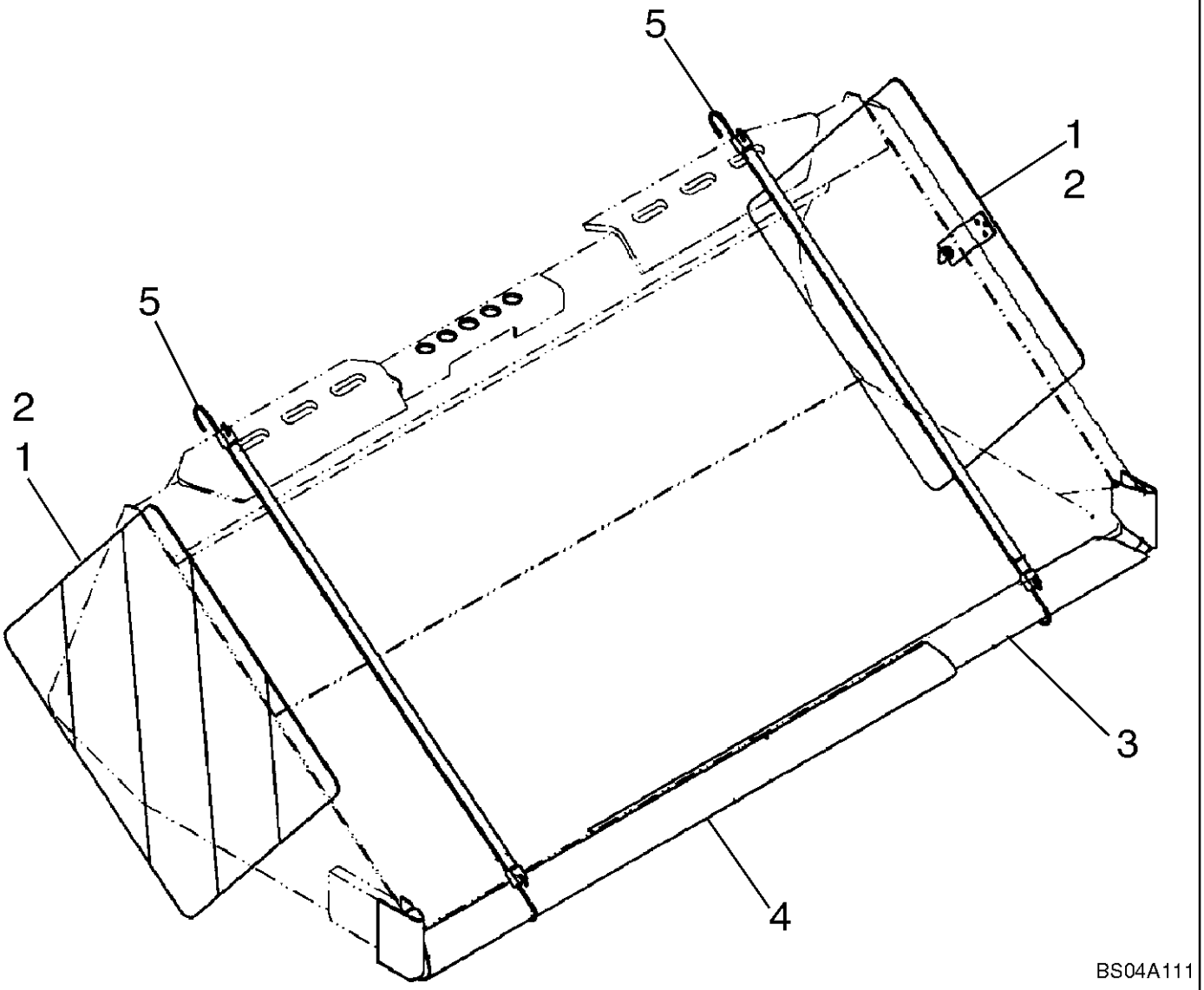

PIEZAS ESPECIALES PARA ITALIA - PROTECTOR, CUCHARA

REF	FN	PART NUMBER	YR/SN	QTY	DENOMINACION
1		631816		2	TORNILLO
2		86530079		2	DEFENSA, Bucket
3		86565640		1	DEFENSA, Right Hand
4		86565641		1	DEFENSA, Left Hand
5		434346A1		2	TENSOR ELASTICO

09-12		p1	12/07

HORQUILLA

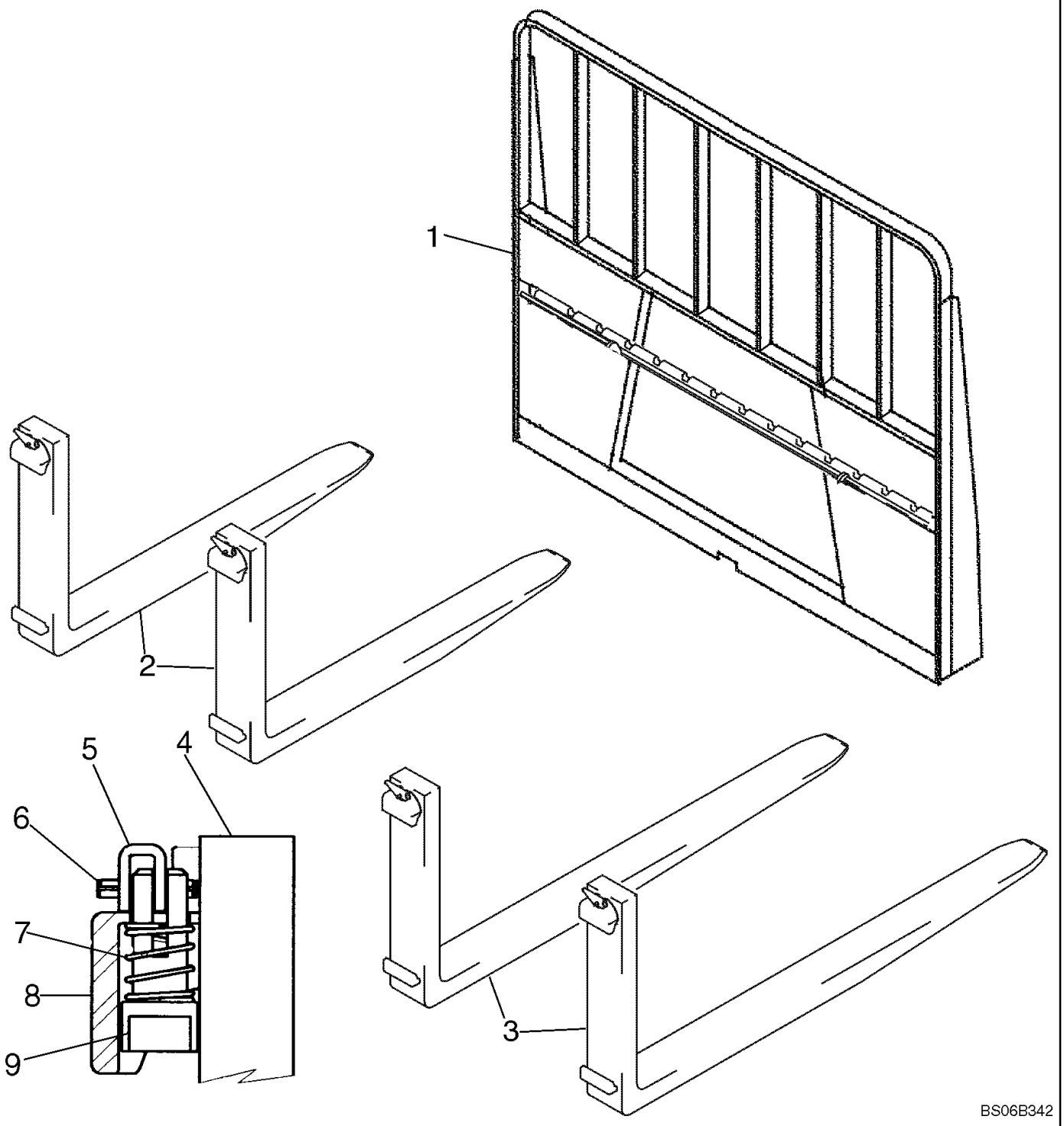

HORQUILLA

REF	FN	PART NUMBER	YR/SN	QTY	DENOMINACION
1		86639773		1	PIEZAS DE FIJACIÓN, Pallet Fork
2		86589764		1	HORQUETA, 42 in. Pallet Fork Set; Incl. 86574054
		86574054		2	HORUILLA PARA CUCHARA, Fork Assy; 42 in.; Incl. 4 - 9
3		86589765		1	DIA, Construccion, 48 in. Pallet Fork Set; Incl. 86574055
		86574055		2	HORUILLA PARA CUCHARA, Fork Assy; 48 in.; Incl. 4 - 9
4		NSS		1	NO SE REPARA SEPARADAM., Fork Arm
5		226129		1	MANECILLA
6		118827		1	PERNO, 3/16" x 1", Slotted
7		9800081		1	RESORTE
8		NSS		1	NO SE REPARA SEPARADAM., Top Hook
9		226130		1	PERNO

CONTROLES - MONTAJE

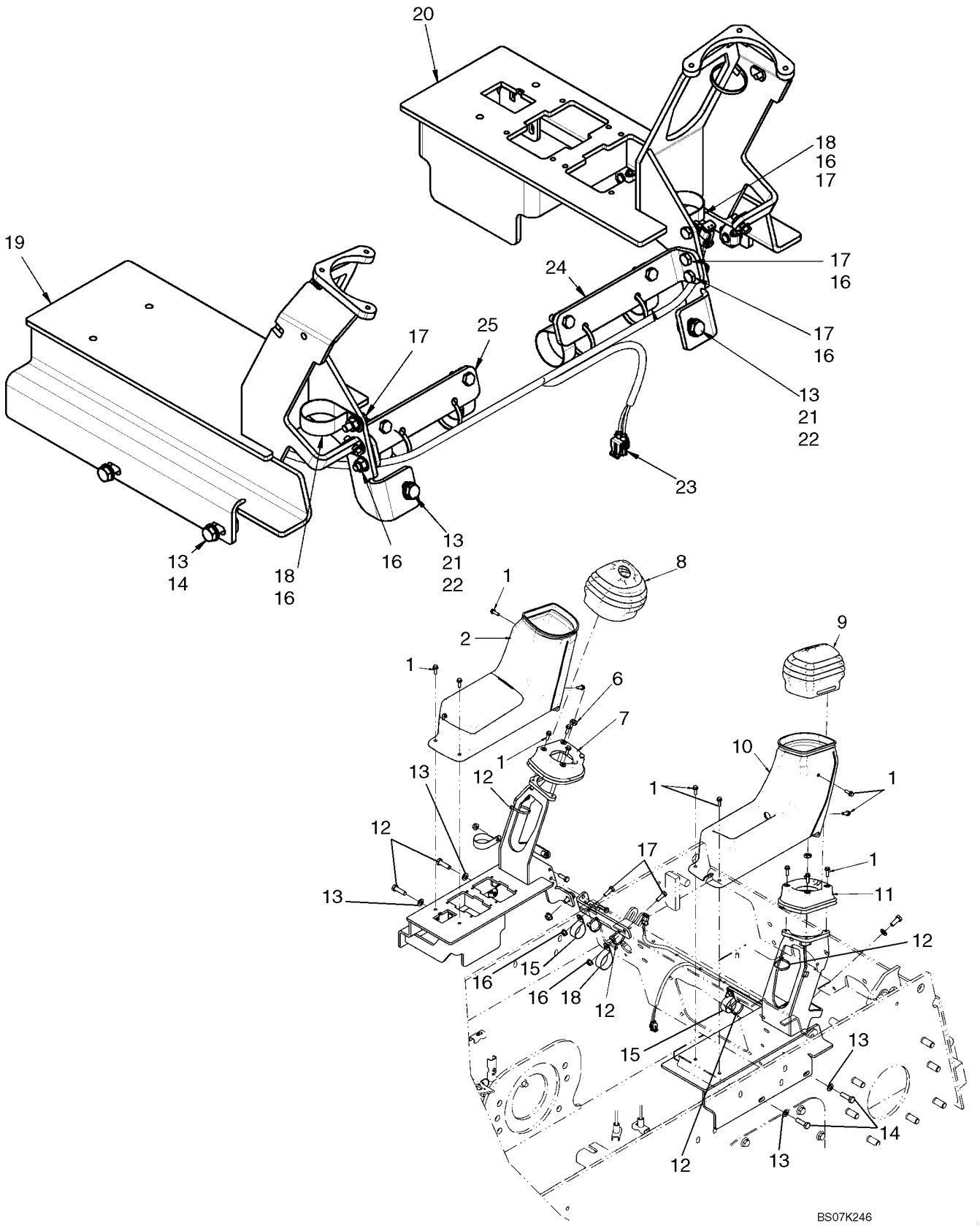

CONTROLES - MONTAJE

REF	FN	PART NUMBER	YR/SN	QTY	DENOMINACION
1		87556251		14	TORNILLO, Screw, 1/4-20 X 3/4
2		87665545		1	REPISA, Console, LH
3		87647723		1	COBERTURA, Fuse Cover
4		87568437		1	TUERCA MARIPOSA, Knob, Latch
5		236535A1		1	CLIP ELECTRICO, Clip, Latch
6		323238		2	TUERCA, Thin, M12 x 1.75, Cl 05
7		87646402		1	JUNTA DE CAUCHO, Seal, LH
8		87568426		1	MANGUITO CAUCHO, Boot, LH
9		87568427		1	MANGUITO CAUCHO, Boot, RH
10		87665543		1	REPISA, Console, RH
11		87646401		1	JUNTA DE CAUCHO, Seal, RH
12		L11541		6	CIERRA CABLES
13		86624176		6	ARANDELA, M10 x 20 x 2
14		9706704		4	TORNILLO, Hex, M10 x 35, 8.8, Full Thd
15		86637998		3	BORNE, 1 1/2", Insul, 3/8" Bolt
16		86505868		10	TUERCA, M8, Flg Ser
17		43127		6	TORNILLO, Hex, M8 x 25, 8.8
18		603022		3	BORNE, 1 3/4", Insul, 3/8" Bolt
19		NSS		1	NO SE REPARA SEPARADAM., Console, RH
20		NSS		1	NO SE REPARA SEPARADAM., Console, LH
21		43139		2	TORNILLO
22		43435		2	TUERCA, M10, Flg Ser
23		87568434		1	HAZ, Pilot Harness
24		NSS		1	NO SE REPARA SEPARADAM., Hose Support, LH
25		NSS		1	NO SE REPARA SEPARADAM., Hose Support, RH

CONSOLA - LADO DERECHO

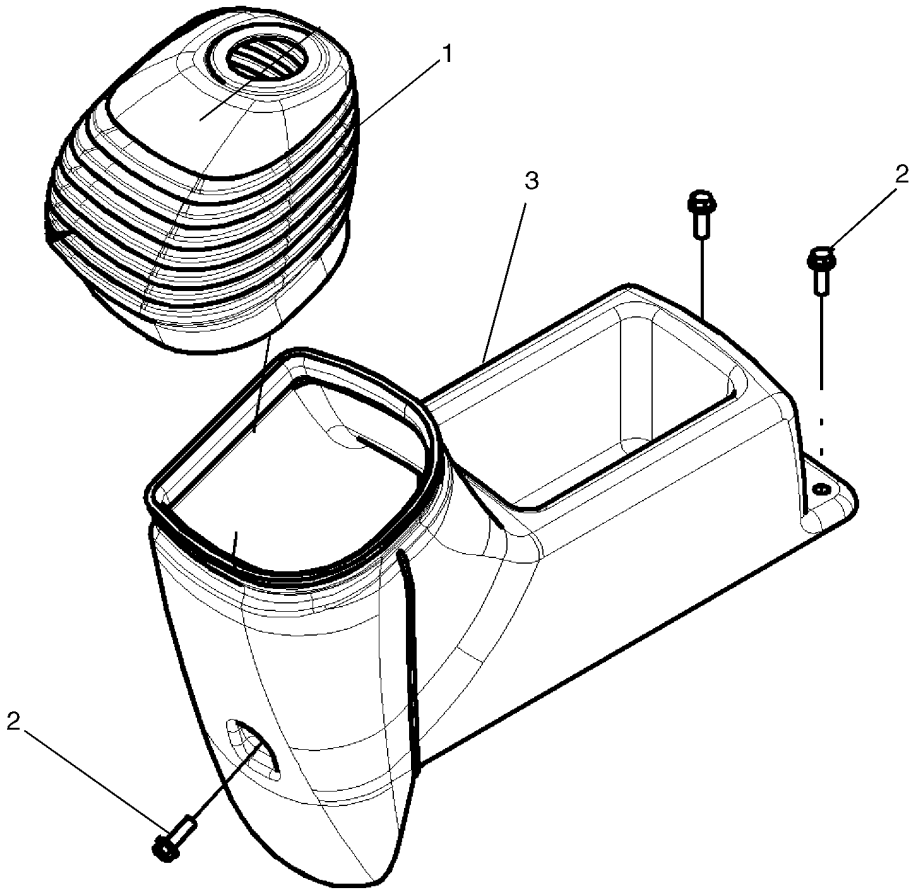

BS07J262

CONSOLA - LADO DERECHO

REF	FN	PART NUMBER	YR/SN	QTY	DENOMINACION
1		{87679715}		1	Boot, RH Pilot
2		87556251		6	TORNILLO
3		87665549		1	REPISA, Console, RH

09-15		p1	12/07

CONSOLA - IZQUIERDA

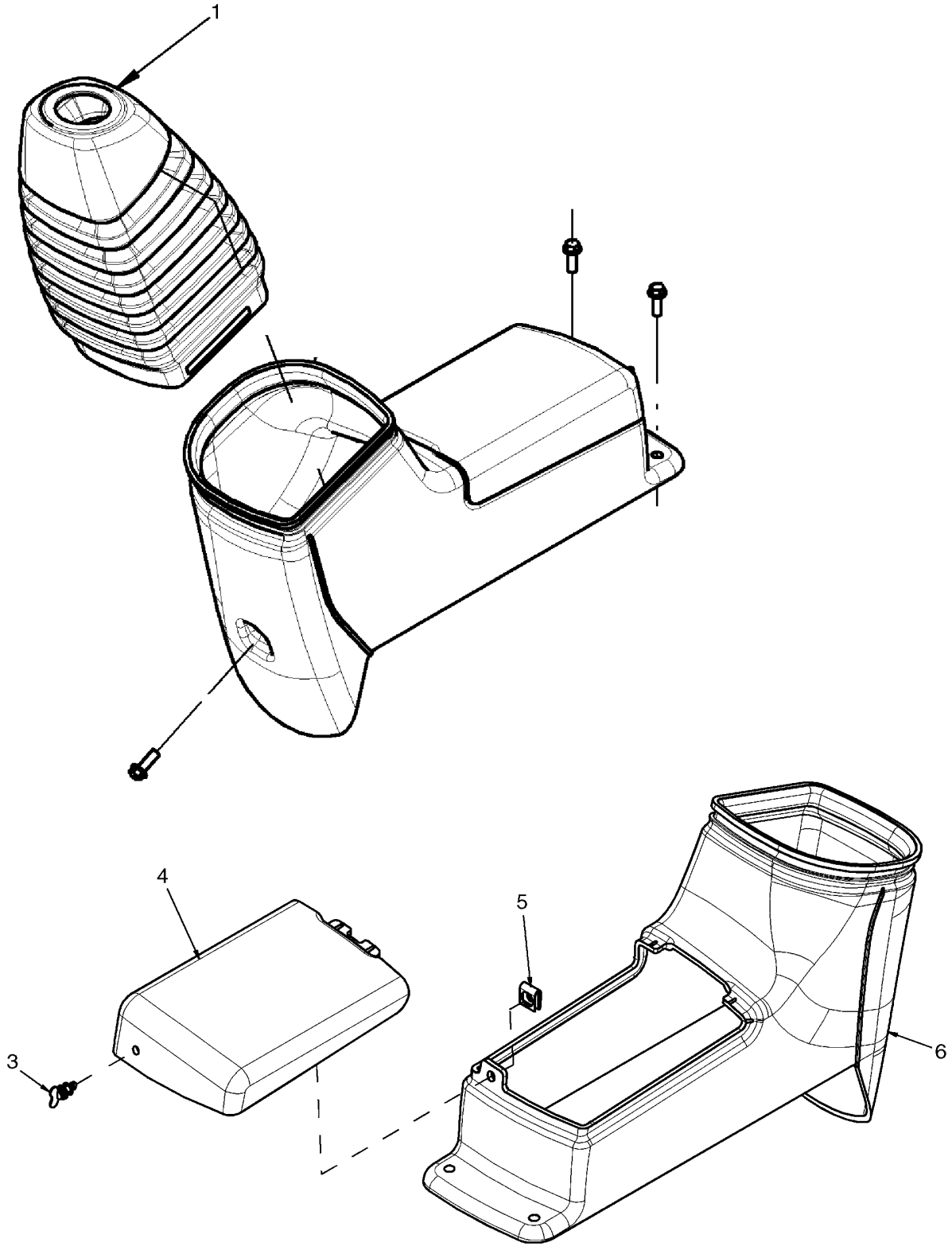

CONSOLA - IZQUIERDA

REF	FN	PART NUMBER	YR/SN	QTY	DENOMINACION
1		{87679718}		1	Boot, LH Pilot
3		87568437		1	TUERCA MARIPOSA
4		87647723		1	COBERTURA
5		236535A1		1	CLIP ELECTRICO
6		87665550		1	REPISA, Console, LH

CHASIS (440)

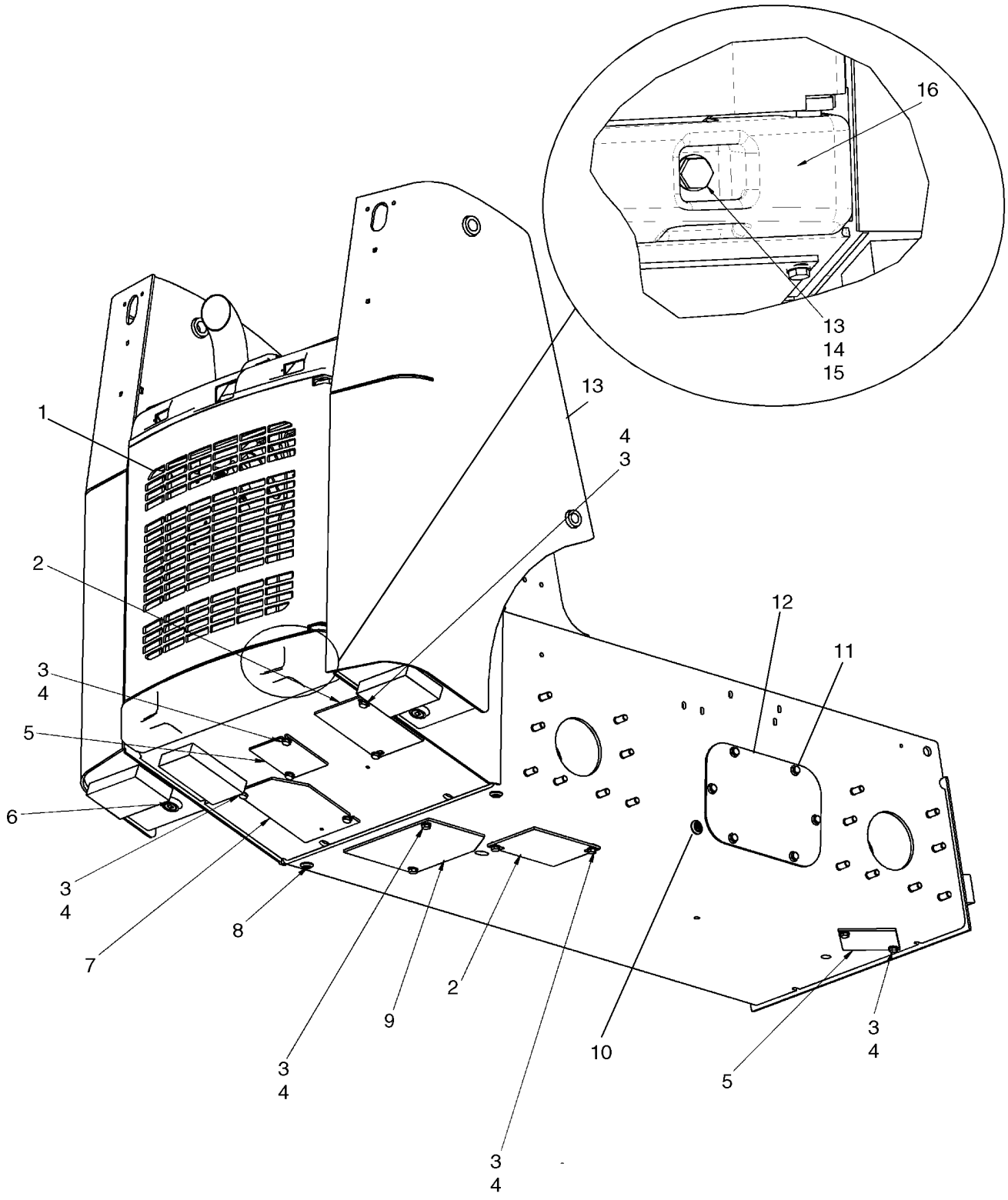

CHASIS (440)

REF	FN	PART NUMBER	YR/SN	QTY	DENOMINACION
1		REF		1	MANUAL, Rear Door; See Fig. 09-26
1		REF		1	MANUAL, Rear Door, Louvered, Europe; See Fig 09-27
2		87458642		2	PLACA, Plumbing Access Plate
3		86625255		16	ARANDELA, M13.5 x 24.5 x 3, HT
4		9824642		12	TORNILLO, Hex, M12 x 35, 10.9
5		H436914		2	PLACA, GRANDE
6		87432221		2	TAPÓN, Magnetic Plug
7		87666074		1	PLAQUITA, Plumbing Access Plate
8		236622		2	TAPÓN, 3/8 - 18 NPTF
9		87648094		1	PLACA, Oil Drain Cover
10		{647429}		2	Plug, 1/2 - 14 NPTF
11		87030508		12	TORNILLO, Hex Flg, M12 x 30, 10.9, Full Thd
12		87411208		2	PLAQUITA
13		87617091		1	KIT, SERVICE, Frame; Incl Ref 6, 8, 10 And Fig 09-16 Ref 17 (Non Locking Cap) 18, Fuel Sender And Gasket
14		86625260		2	ARANDELA, M20 x 37.5 x 4, HT
15		86536985		2	CONTRA TUERCA, M20 x 2.5, Cl 10
16		87626717		1	CONTRAPESO, Bumper, Counterweight

CHASIS (440)

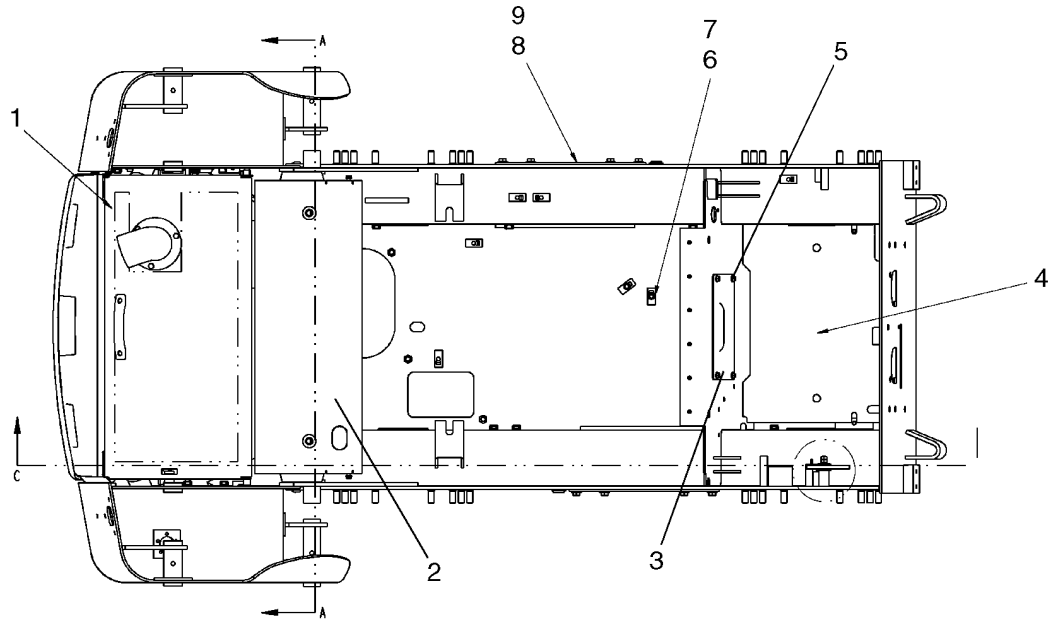

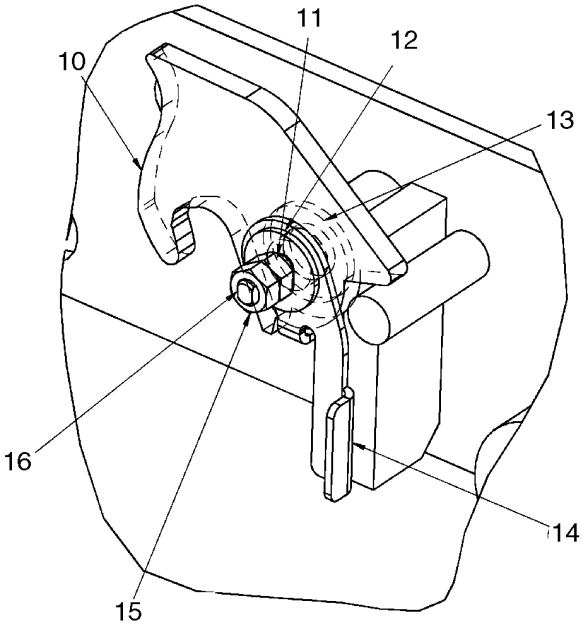

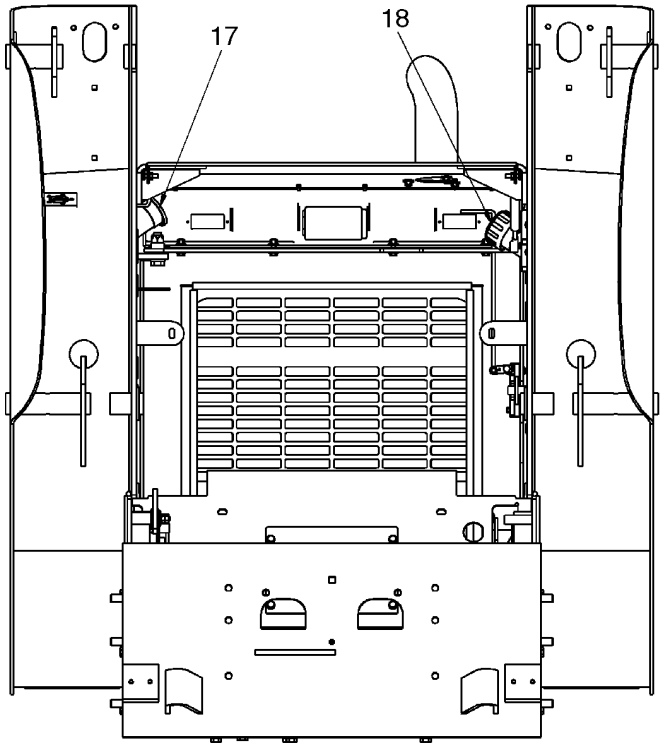

BS07K252

CHASIS (440)

REF	FN	PART NUMBER	YR/SN	QTY	DENOMINACION
1		REF		1	MANUAL, Rear Hood; See Fig. 09-24
2		{87661301}		1	Panel, Heat Shield Extension
3		87430679		1	PLACA, Cover Plate
4		{87705430}		1	Floor Plate - Tan
5		86545825		4	TORNILLO AUTOROSCANTE, Hex Wash Hd, 5/16" x 5/8"
6		86508569		2	TORNILLO, Hex, M6 x 70, 8.8
7		87022737		2	ESPACIADOR
8		87030508		12	TORNILLO, Hex Flg, M12 x 30, 10.9, Full Thd
9		87411208		2	PLAQUITA
10		390516A3		1	PESTILLO, ROPS Latch Plate
11		278332A1		1	ARANDELA
12		294967A1		1	ARANDELA
13		87381		1	ARANDELA, 3/4", SAE
14		294911A2		1	GANCHO, Latch Return Plate
15		86500689		2	TUERCA, M10, Cl 10
16		294943A1		1	PRISIONERO, Latch Mounting Stud
17		H436887		1	TAPA DE DEPOSITO, Fuel Cap, Non Locking
17		108925A1		1	TAPA DE DEPOSITO, Fuel Cap, Locking; Incl 2 Keys
18		257448A1		1	TAPON DEL DEPOSITO, Hydraulic Fill Cap

CHASIS (440CT)

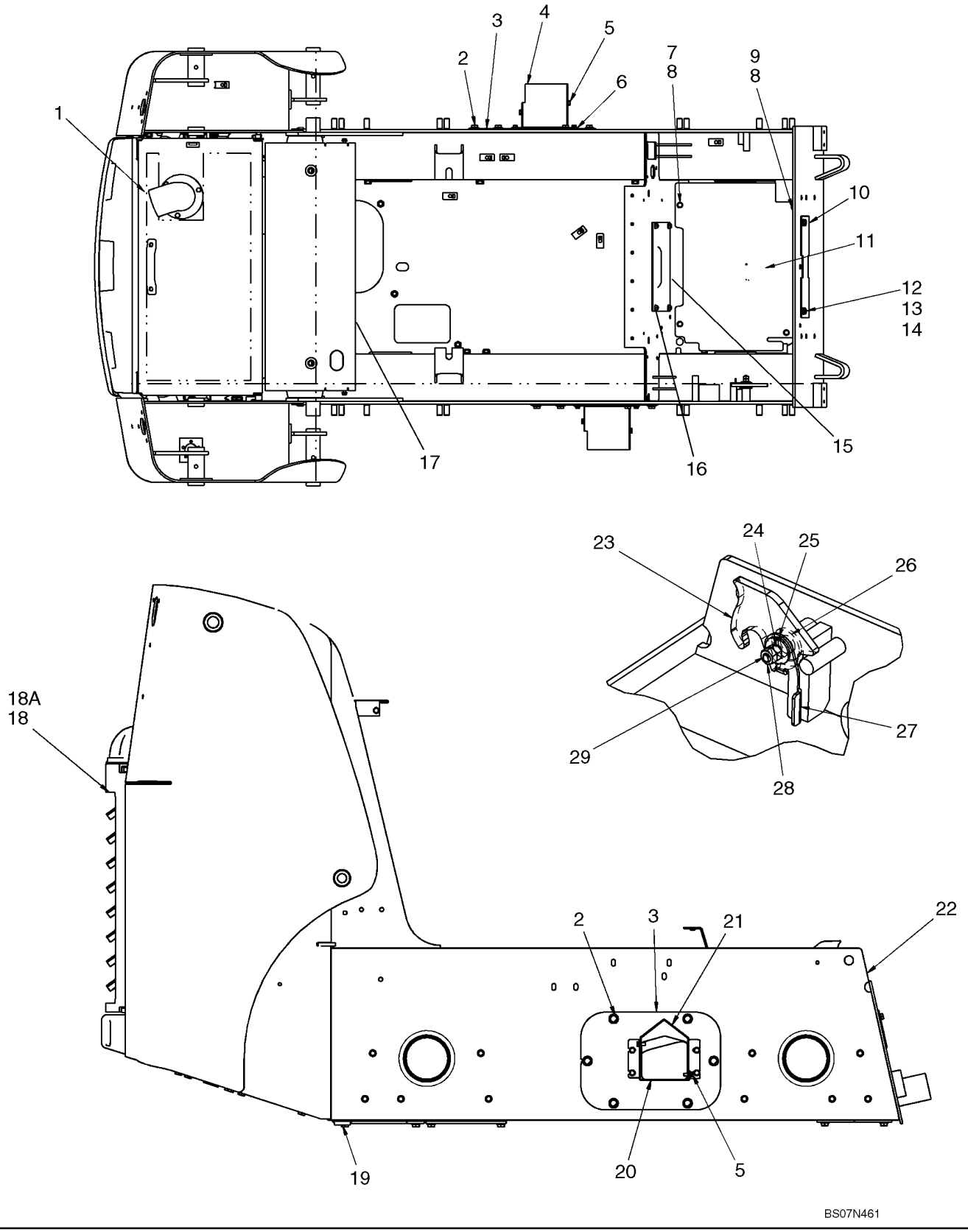

CHASIS (440CT)

REF	FN	PART NUMBER	YR/SN	QTY	DENOMINACION
1		REF		1	MANUAL, Rear Hood; See Fig 09-24
2		87030508		12	TORNILLO, Hex Flg, M12 x 30, 10.9, Full Thd
3		87368774		2	TAPA
4		87368777		1	DEFENSA, Hose Guard, Lower Left
5		9840344		12	TORNILLO
6		87368778		1	DEFENSA, Hose Guard, Upper Left
7		9635884		3	TORNILLO, Hex, 5/16"-18 x 1", G5, Full Thd
8		83918746		4	ARANDELA
9		9707515		1	TORNILLO, Hex, 5/16"-18 x 1 3/4", G5
10		87461248		1	PLACA, Cover Plate, Front Plate
11		{87705430}		1	Composite Floor Plate
12		43139		2	TORNILLO
13		140017		4	ARANDELA, M10 x 20 x 2
14		86512554		2	CONTRA TUERCA, M10 x 1.5, Cl 10
15		87430679		1	PLACA
16		86545825		4	TORNILLO AUTOROSCANTE, Hex Wash Hd, 5/16" x 5/8"
17		{87661301}		1	Heat Shield Extension
18		REF		1	MANUAL, Rear Door, Louvered, Europe; See Fig 09-27
18A		REF		1	MANUAL, Rear Door, Standard; See Fig 09-26
19		86625135		2	TAPÓN, Hex Soc, 1"-11 1/2 NPTF
20		87368775		1	DEFENSA, Hose Guard, Lower Right
21		87368776		1	DEFENSA, Hose Guard, Upper Right
22		87617092		1	KIT, SERVICE, Kit, Chassis; Incl Fuel Cap, Hydraulic Cap And Fuel Sender With Gasket
23		390516A3		1	PESTILLO, ROPS Latch
24		278332A1		1	ARANDELA
25		294967A1		1	ARANDELA
26		87381		1	ARANDELA, 3/4", SAE
27		294911A2		1	GANCHO, Latch Return
28		86500689		2	TUERCA, M10, Cl 10
29		294943A1		1	PRISIONERO

09-19		p1	12/07

CHASIS (440CT)

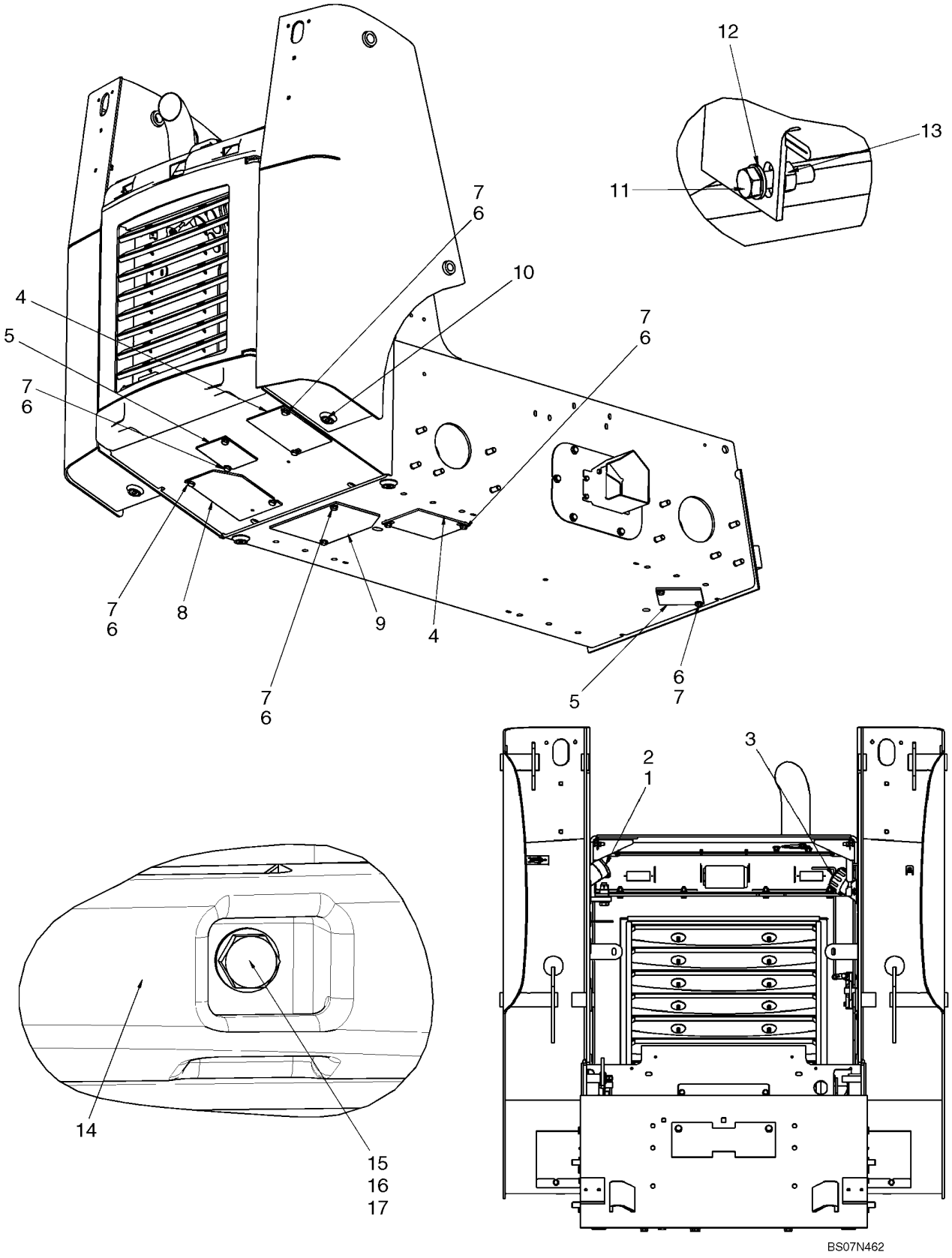

CHASIS (440CT)

REF	FN	PART NUMBER	YR/SN	QTY	DENOMINACION
1		H436887		1	TAPA DE DEPOSITO, Non Locking
2		108925A1		1	TAPA DE DEPOSITO, Locking
3		257448A1		1	TAPON DEL DEPOSITO, Hydraulic Fill Cap
4		87458642		2	PLACA
5		H436914		2	PLACA, GRANDE
6		86625255		16	ARANDELA, M13.5 x 24.5 x 3, HT
7		9824642		12	TORNILLO, Hex, M12 x 35, 10.9
8		87666074		1	PLAQUITA
9		87648094		1	PLACA, Oil Drain Cover
10		87432221		2	TAPÓN, Magnetic Plug
11		43128		2	TORNILLO, Hex, M8 x 30, 8.8
12		140016		4	ARANDELA, M8 x 16 x 1.6
13		43362		2	TUERCA, M8, Cl 10
14		87626717		1	CONTRAPESO
15		412641		2	TORNILLO, Hex, M20 x 70, 10.9
16		86625260		2	ARANDELA, M20 x 37.5 x 4, HT
17		86536985		2	CONTRA TUERCA, M20 x 2.5, Cl 10
18		REF		1	MANUAL, Rear Door, Louvered, Europe; See Fig 09-27
18A		REF		1	MANUAL, Rear Door, Standard; See Fig 09-26

CONTROLES - CARICATORE E COMANDO DI AVANZAMENTO LADO DERECHO

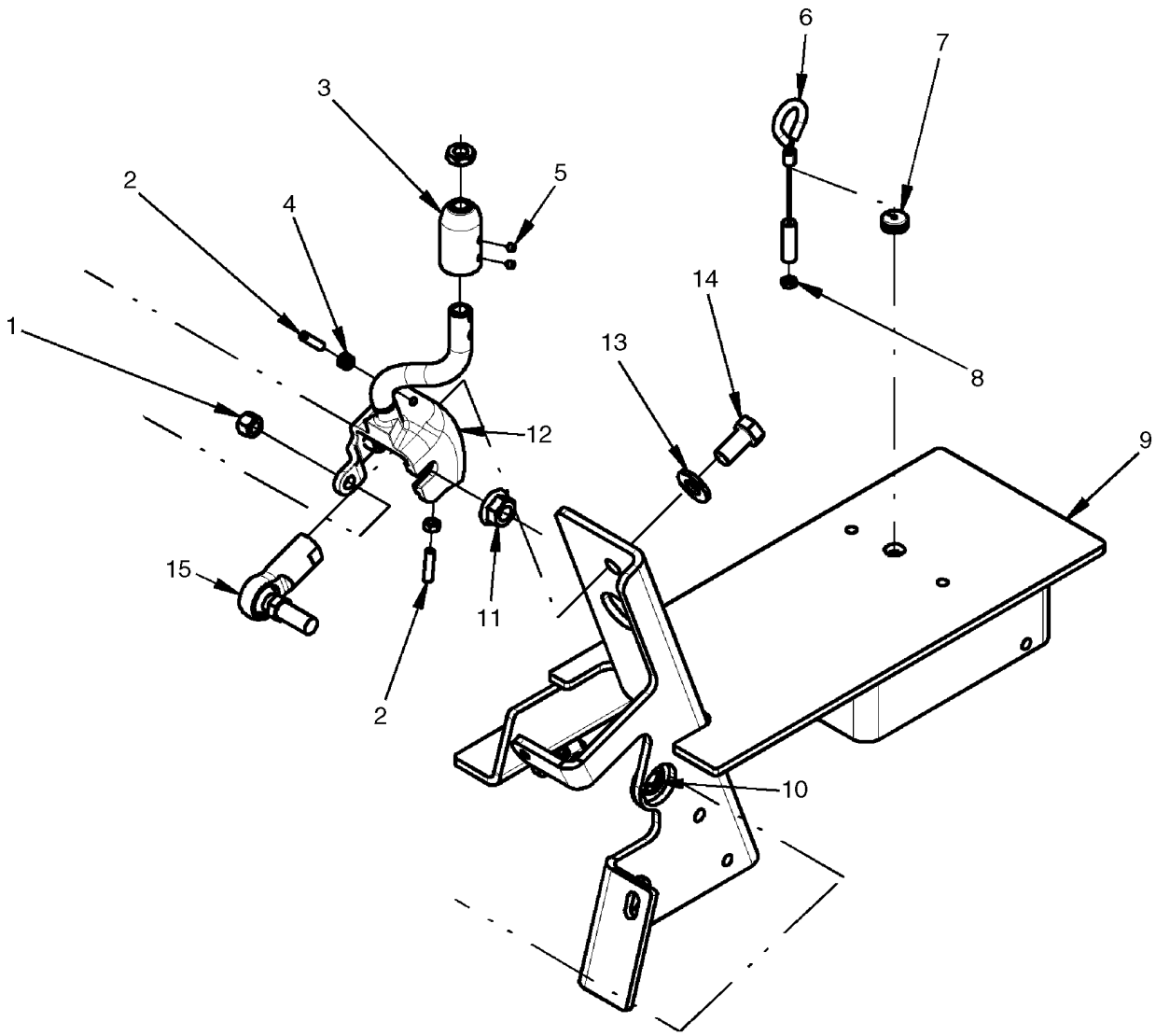

CONTROLES - CARICATORE E COMANDO DI AVANZAMENTO LADO DERECHO

REF	FN	PART NUMBER	YR/SN	QTY	DENOMINACION
1		80855		4	CONTRA TUERCA, 3/8"-24, GC
2		405103A1		2	TORNILLO
3		{87662429}		1	Handle Mounting Adapter
4		86500688		5	TUERCA, M6, Cl 10
5		87564724		2	TORNILLO, Set Screw, #10-32 X 1/4
6		87462741		1	CABLE, Cable, Override
7		87036285		1	PASACABLES, 1/8" ID x 9/16" Groove Dia, Str Cut
8		87825		1	TUERCA, #10-32
9		{87684388}		1	Frame, Control RH
10		87309725		4	ANILLO DE RESORTE, Retaining Ring, External "E" Style #62
11		87033645		2	CONTRA TUERCA, Flg, 1/2"-20
12		{87662357}		1	Control Lever, RH
13		87364		2	ARANDELA, 1/2", SAE
14		87848		2	TORNILLO, Hex, 1/2"-20 x 1", G5, Full Thd
15		87458667		1	ARTICULACION

CONTROLES - CARICATORE E COMANDO DI AVANZAMENTO IZQUIERDA

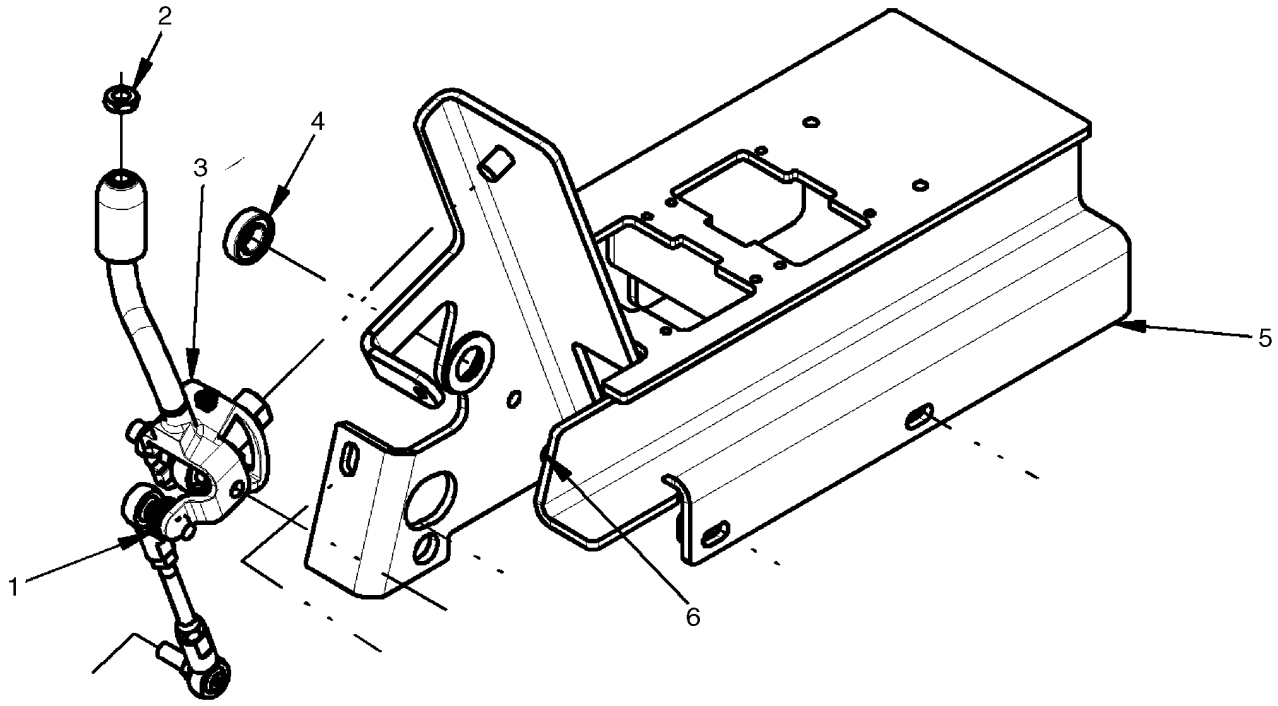

BS07J220

CONTROLES - CARICATORE E COMANDO DI AVANZAMENTO IZQUIERDA

REF	FN	PART NUMBER	YR/SN	QTY	DENOMINACION
1		86639325		3	ARANDELA, M10 x 24.5 x 3, HT
2		323238		2	TUERCA, Thin, M12 x 1.75, Cl 05
3		{87662349}		1	Control Lever, LH
4		87458664		2	RODAMIENTO DE BOLAS
5		{87684387}		1	Frame, Control LH
6		87030561		1	CONTRA TUERCA, M6 x 1, Cl 8

CONTROLES - CARICATORE E COMANDO DI AVANZAMENTO

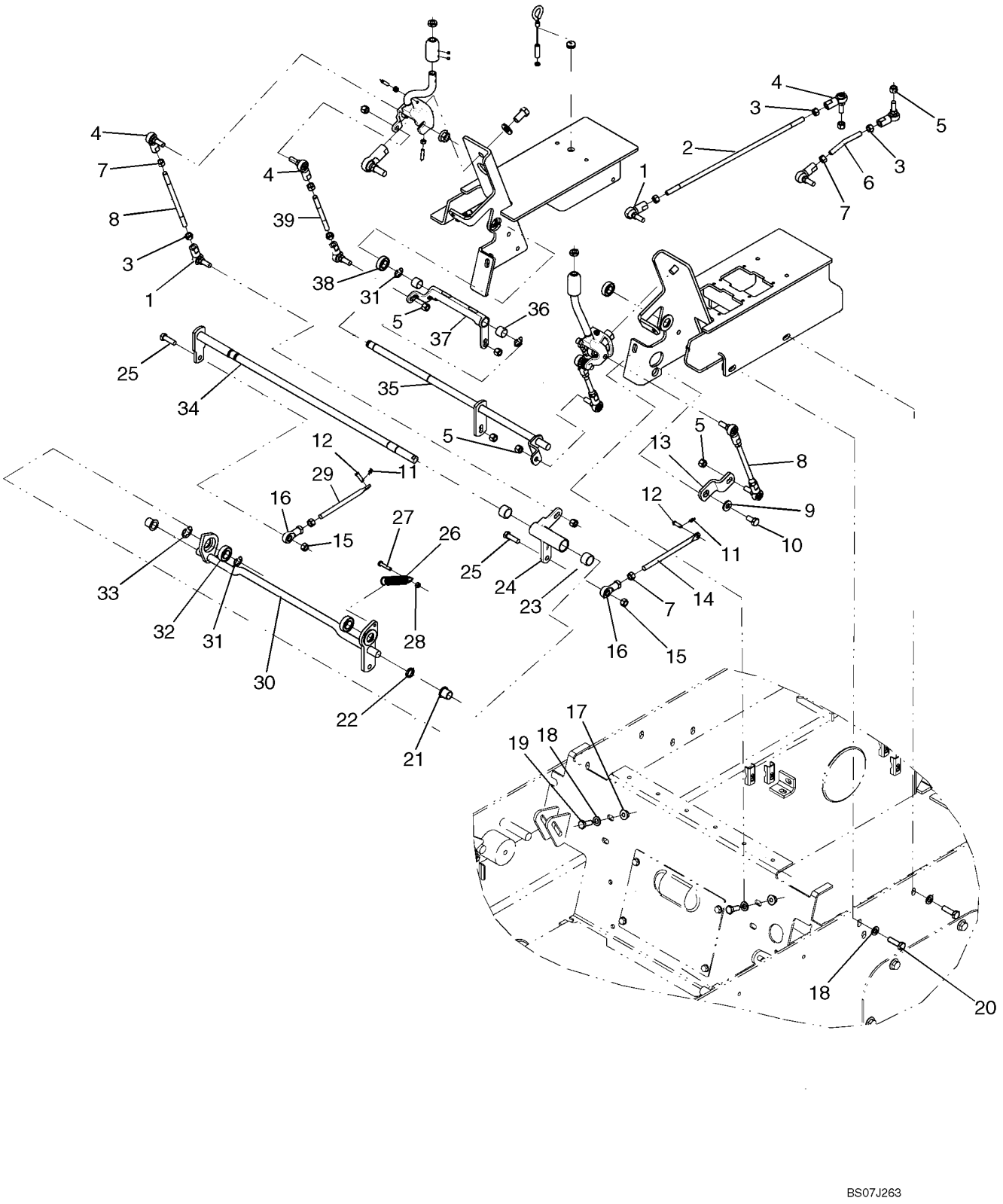

CONTROLES - CARICATORE E COMANDO DI AVANZAMENTO

REF	FN	PART NUMBER	YR/SN	QTY	DENOMINACION
1		230426A1		6	JUNTA DE ROTULA
2		435565A1		1	VARILLA
3		87030547		6	TUERCA, 3/8"-24, G5, LH
4		230425A1		6	JUNTA DE ROTULA
5		80855		12	CONTRA TUERCA, 3/8"-24, GC
6		87460100		1	VARILLA
7		86509310		8	TUERCA, 3/8"-24, G5
8		180682A1		2	ESPIGA
9		86639325		3	ARANDELA, M10 x 24.5 x 3, HT
10		43138		1	TORNILLO, Hex, M10 x 20, 8.8, Full Thd
11		D131983		2	PERNO
12		234726		2	PASADOR DE HORQUILLA, 1/4" x .770"
13		87458510		1	BRAZO
14		87458662		1	VARILLA
15		9628503		2	TUERCA, 3/8"-16, G5
16		86500348		2	JUNTA DE ROTULA
17		411345A1		2	TUERCA
18		86624176		6	ARANDELA, M10 x 20 x 2
19		43139		2	TORNILLO
20		9706704		4	TORNILLO, Hex, M10 x 35, 8.8, Full Thd
21		367582A1		2	COJINETTE, NYLON
22		409856A1		1	ESPACIADOR
23		409845A1		2	RODAMIENTO DE AGUJA
24		385783A3		1	MANIVELA
25		88011		2	TORNILLO, Hex, 3/8"-16 x 1 1/4", G5, Full Thd
26		120952A1		1	RESORTE
27		43117		1	TORNILLO, Hex, M6 x 30, 8.8
28		86500688		5	TUERCA, M6, Cl 10
29		87458660		1	VARILLA
30		87458511		1	EJE
31		87309725		4	ANILLO DE RESORTE, External "E" Style, #62
32		87458665		2	RODAMIENTO DE BOLAS
33		87309726		1	ANILLO DE RESORTE, External "E" Style, #75
34		87613733		4	VARILLA
35		87458514		1	VARILLA (CONJUNTO)

CONTROLES - CARICATORE E COMANDO DI AVANZAMENTO

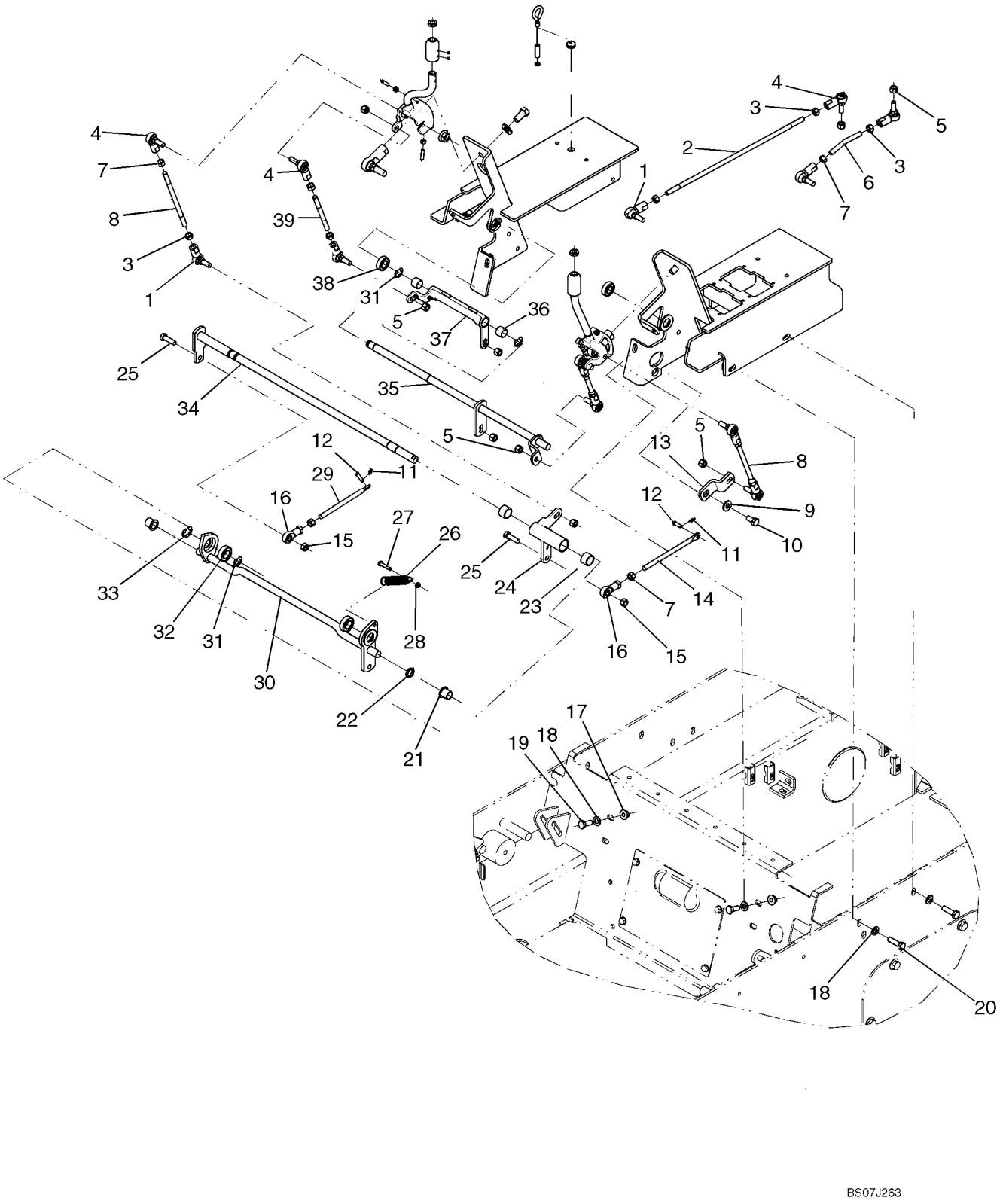

CONTROLES - CARICATORE E COMANDO DI AVANZAMENTO

REF	FN	PART NUMBER	YR/SN	QTY	DENOMINACION
36		409844A1		2	RODAMIENTO DE AGUJA
37		367585A2		1	MANIVELA
38		87458664		2	RODAMIENTO DE BOLAS
39		249367A2		2	BULON/PIN, LARGO

CONTROLES - SISTEMA HIDRAULICO AUXILIAR

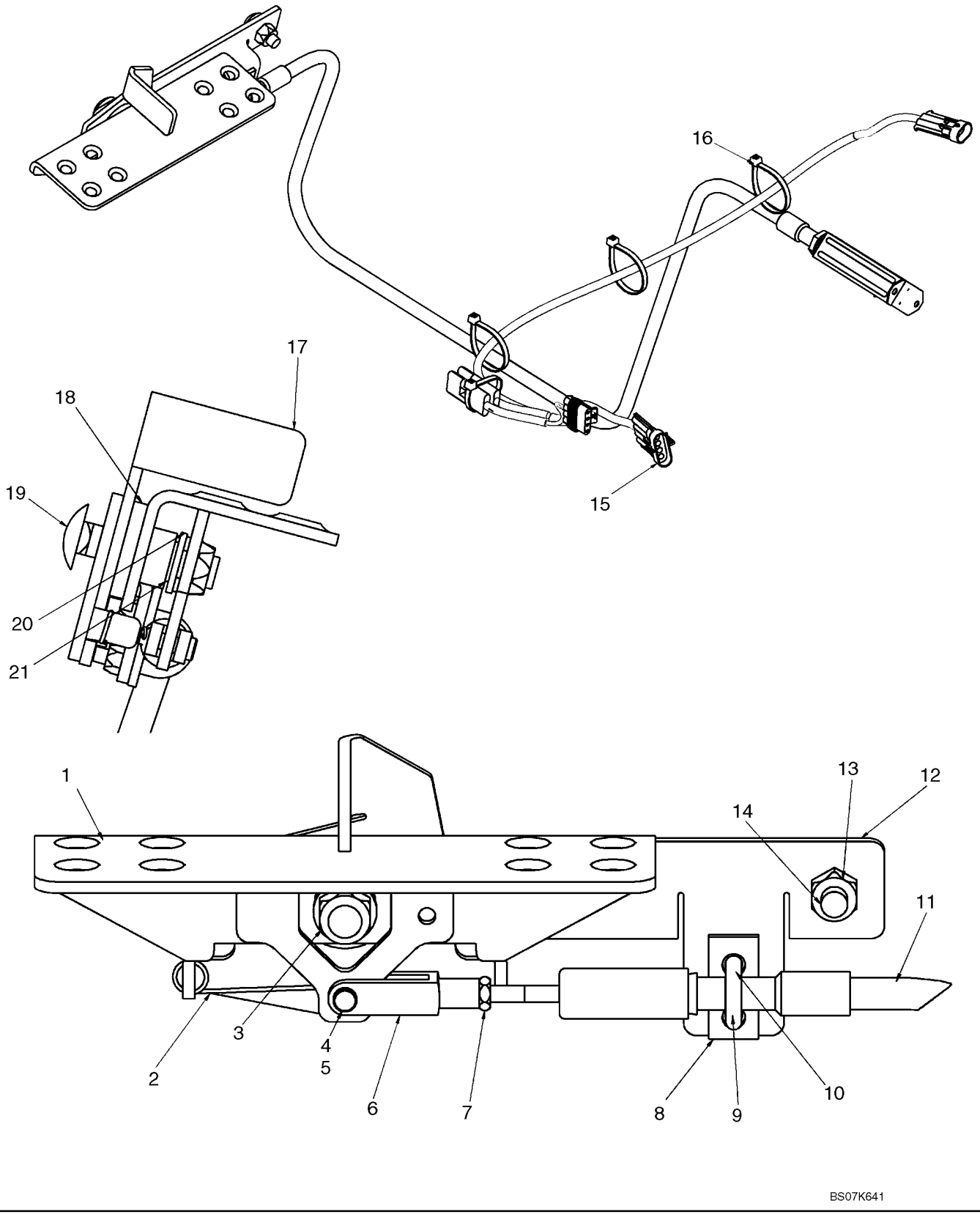

CONTROLES - SISTEMA HIDRAULICO AUXILIAR

REF	FN	PART NUMBER	YR/SN	QTY	DENOMINACION
1		87423833		1	PEDAL (CONJUNTO)
2		302960A2		1	RESORTE
3		412672		1	CONTRA TUERCA, M12 x 1.75, Cl 10
4		D131983		1	PERNO
5		234726		1	PASADOR DE HORQUILLA, 1/4" x .770"
6		86520436		1	HORQUILLA DE AJUSTE, 1/4"-28
7		86976064		1	TUERCA, Jam, 1/4"-28, G5
8		H373779		1	PLACA, GRANDE, Spacer
9		87442439		1	VARILLA
10		86512440		2	CONTRA TUERCA
11		87423856		1	CABLE (CONJUNTO)
12		NSS		1	NO SE REPARA SEPARADAM., Mounting Plate
13		86512554		1	CONTRA TUERCA, M10 x 1.5, Cl 10
14		86512446		1	PERNO, CABEZA RONDA, Short NK, M10 x 30, Cl8.8, Full Thd
15		87715731		1	HAZ, Auxiliary Interlock Harness; Incl 15A
15A		774735		1	DIODO
16		L11541		3	CIERRA CABLES
17		87446614		1	PALANCA, Pedal Lock Lever
18		283839A1		1	ESPACIADOR, Rubber Spacer
19		87033290		1	PERNO, CABEZA RONDA, Short NK, M12 x 55, Cl8.8
20		140018		1	ARANDELA, M12 x 24 x 2.5
21		L14781		1	CASQUILLO

09-24		p1	12/07

CAPO

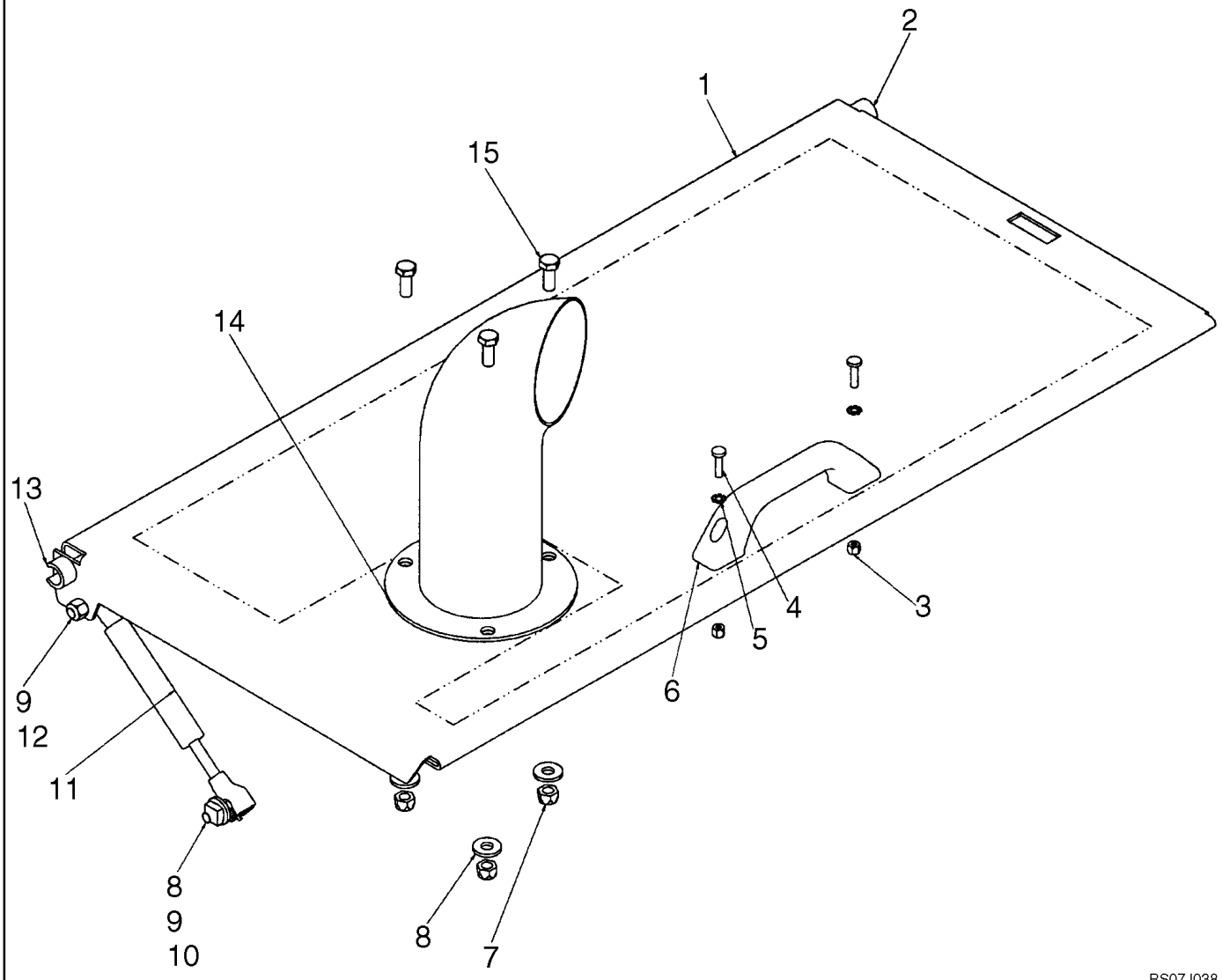

CAPO

REF	FN	PART NUMBER	YR/SN	QTY	DENOMINACION
1		87707134		1	BASTIDOR, Frame, Rear Hood
2		435396A1		1	ESPACIADOR
3		86639241		2	CONTRA TUERCA, M5 x .8, Cl 8
4		86511827		2	TORNILLO, Cross Pan Hd, M5 x 20
5		86625264		2	ARANDELA DE FRENO, Ext Tooth, M5
6		406256A1		1	MANECILLA
7		9628098		3	CONTRA TUERCA, M8 x 1.25, Cl 10
8		87015284		4	ARANDELA, M8 x 21.5 x 2.5, HT
9		189609A1		2	PRISIONERO
10		229197A1		1	TUERCA
11		400473A1		1	CILINDRO (CONJUNTO)
12		412250		1	CONTRA TUERCA, M8 x 1.25, Cl 8
13		87429698		1	ESPACIADOR
14		87381264		1	CUELLO DE CARGA
15		120104		3	TORNILLO, Hex, M8 x 20, 8.8

09-25		p1	12/07

CAPO - AIRE ACONDICIONADO

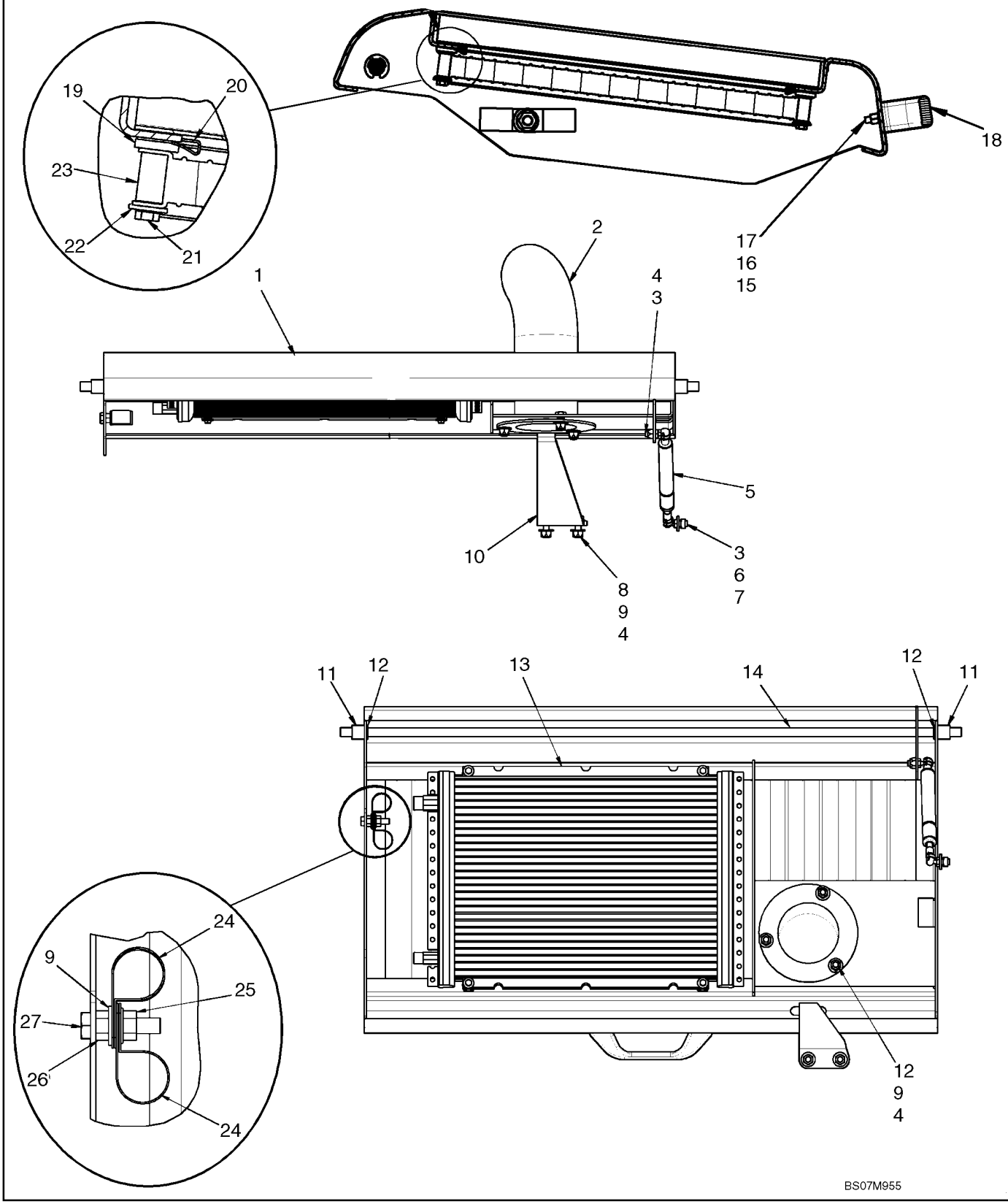

CAPO - AIRE ACONDICIONADO

REF	FN	PART NUMBER	YR/SN	QTY	DENOMINACION
1		87707135		1	PUERTA, Rear Hood, Air Conditioning
2		87381264		1	CUELLO DE CARGA, Exhaust Extension
3		189609A1		2	PRISIONERO, Ball Stud
4		9628098		6	CONTRA TUERCA, M8 x 1.25, Cl 10
5		87449854		1	SOPORTE
6		87015284		1	ARANDELA, M8 x 21.5 x 2.5, HT
7		229197A1		1	TUERCA
8		43127		2	TORNILLO, Hex, M8 x 25, 8.8
9		86625263		8	ARANDELA, M8 x 20 x 1.6
10		87459076		1	CERROJO
11		87305403		2	ESPACIADOR
12		9635806		2	RETENEDOR, #50, .392" Dia, E-Type
13		87563692		1	CONDENSADOR, Air Conditioning Condensor
14		87459075		1	VARILLA
15		86639241		2	CONTRA TUERCA, M5 x .8, Cl 8
16		86625264		2	ARANDELA DE FRENO, Ext Tooth, M5
17		86511827		2	TORNILLO, Cross Pan Hd, M5 x 20
18		406256A1		1	MANECILLA
19		86592710		4	ARANDELA, M6 x 17 x 3
20		87301324		4	TUERCA, M5, U
21		86025725		4	TORNILLO, Hex, M5 x 40, 8.8
22		87013357		4	ARANDELA, M5 x 15 x 1.6
23		87574372		4	SEPARADOR
24		9827902		2	BORNE, 1", Insul, 3/8" Bolt
25		9804277		1	TUERCA, M8 x 1.25, Flg, Cl 8
26		9706690		1	TUERCA, M8, Cl 8
27		300381		1	TORNILLO, Hex, M8 x 35, 8.8

PUERTA, TRASERA

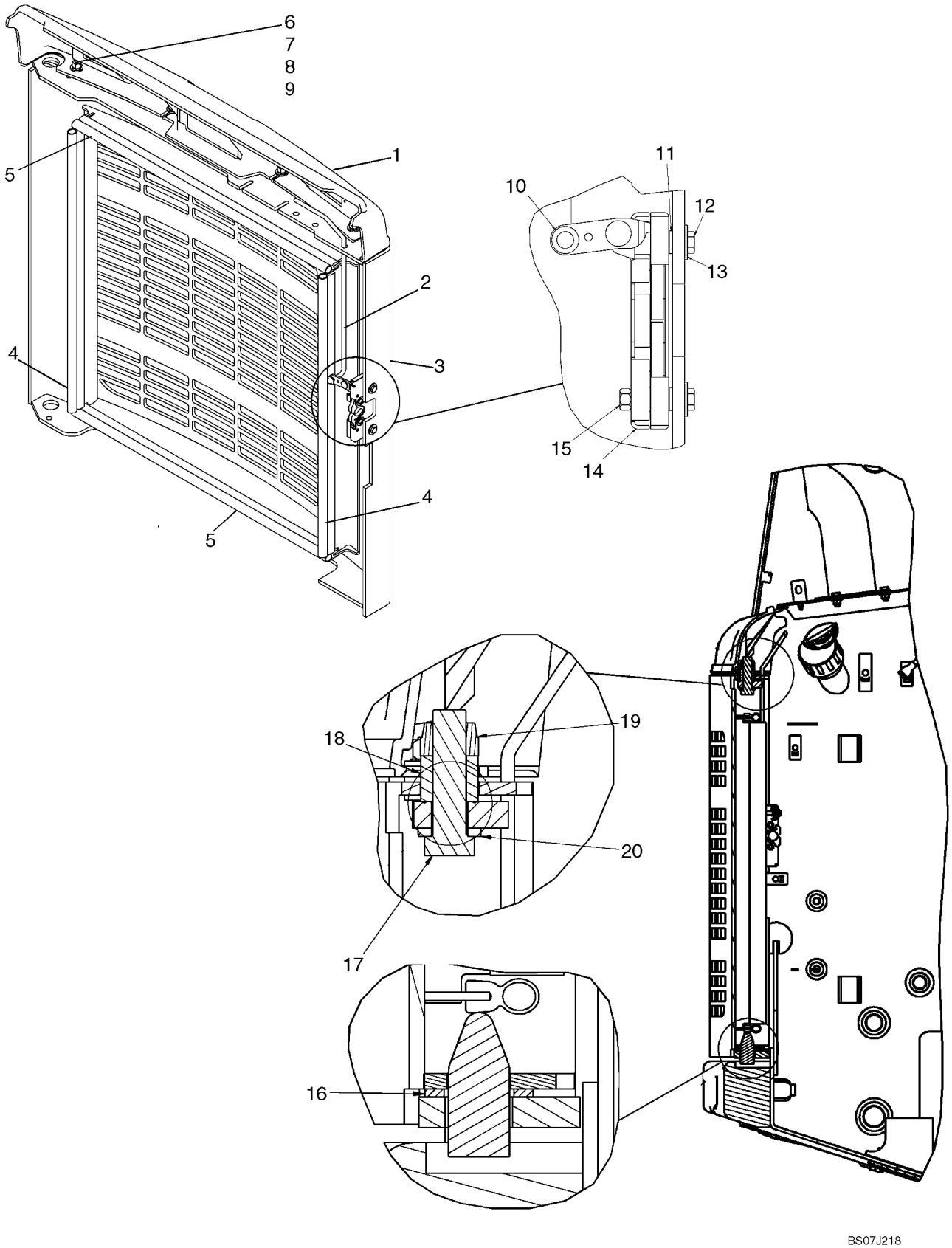

PUERTA, TRASERA

REF	FN	PART NUMBER	YR/SN	QTY	DENOMINACION
1		87461604		1	CARENA DE LUZ, Fairing, Rear Door Top
2		87440124		1	VARILLA, Latch Pull Rod
3		87660800		1	PUERTA, Rear Door
4		{87648128}		2	Bulb Seal, 562mm (22 1/8 in.)
5		{87578980}		2	Bulb Seal, 590mm (23 7/32 in.)
6		43128		4	TORNILLO, Hex, M8 x 30, 8.8
7		86632601		4	ARANDELA DE FRENO, Ext Tooth, M8
8		412250		4	CONTRA TUERCA, M8 x 1.25, Cl 8
9		87015284		12	ARANDELA, M8 x 21.5 x 2.5, HT
10		380751A1		1	TUERCA
11		86588450		2	ARANDELA, M6
12		86977789		2	TORNILLO, Hex, M6 x 35, 8.8
13		86624182		2	ARANDELA, M6 x 18 x 1.6
14		87437076		1	PESTILLO
15		87030561		2	CONTRA TUERCA, M6 x 1, Cl 8
16		248988A1		1	ARANDELA, Rear Door Thrust Washer
17		9828248		1	TORNILLO, Hex, M16 x 60, 10.9
18		248461A1		1	CASQUILLO, Door Hinge Bushing
19		86512555		1	CONTRA TUERCA, M16 x 2, Cl 10
20		86625266		1	ARANDELA, M17.5 x 30 x 4, HT

PUERTA, TRASERA

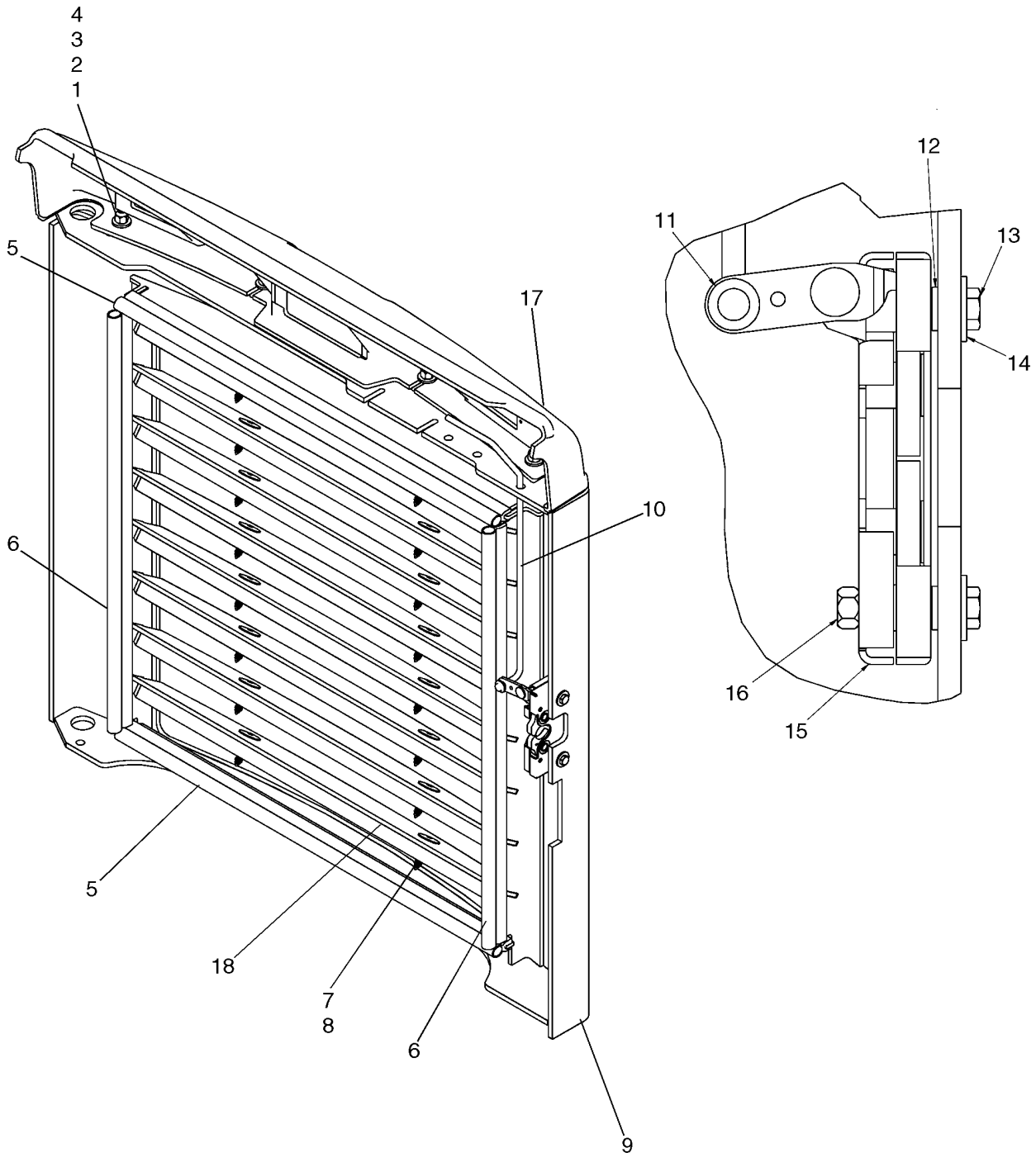

PUERTA, TRASERA

REF	FN	PART NUMBER	YR/SN	QTY	DENOMINACION
1		43128		4	TORNILLO, Hex, M8 x 30, 8.8
2		86632601		4	ARANDELA DE FRENO, Ext Tooth, M8
3		412250		4	CONTRA TUERCA, M8 x 1.25, Cl 8
4		87015284		8	ARANDELA, M8 x 21.5 x 2.5, HT
5		{87578980}		2	Bulb Seal, Top And Bottom
6		{87648128}		2	Bulb Seal, Side
7		348452A1		16	TORNILLO
8		348434A1		16	ARANDELA
9		87671495		1	PUERTA, Euro Louvered Door
10		87440124		1	VARILLA, Latch Pull Rod
11		380751A1		1	TUERCA
12		86588450		2	ARANDELA, M6
13		86977789		2	TORNILLO, Hex, M6 x 35, 8.8
14		86624182		2	ARANDELA, M6 x 18 x 1.6
15		87437076		1	PESTILLO
16		87030561		2	CONTRA TUERCA, M6 x 1, Cl 8
17		87461604		1	CARENA DE LUZ
18		{87671496}		8	Sound Pad

TRABA - PUERTA, TRASERA

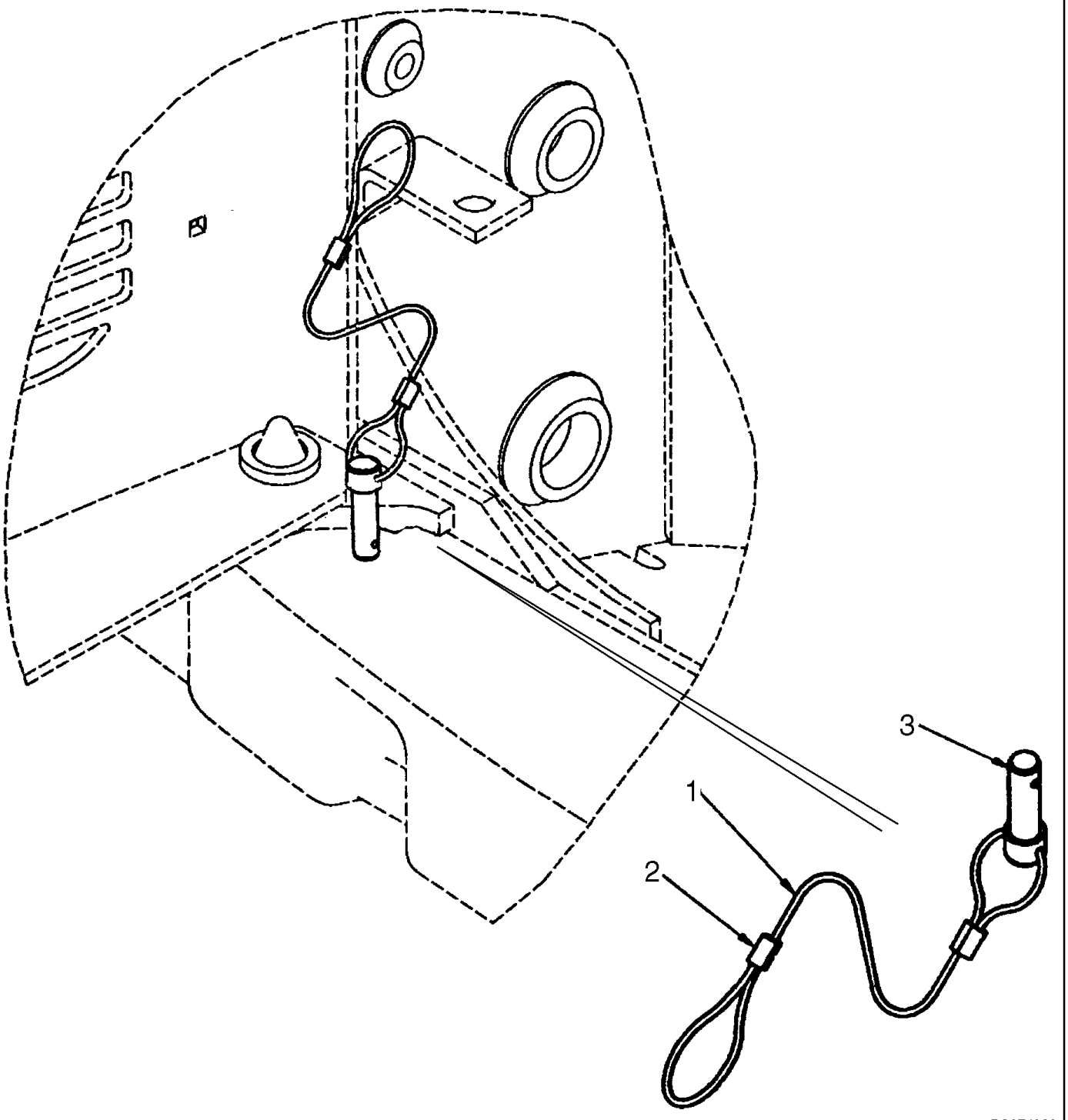

TRABA - PUERTA, TRASERA

REF	FN	PART NUMBER	YR/SN	QTY	DENOMINACION
1		297245A1		1	CABLE, Rear Door Lock; Incl. 2 - 4
2		297244A1		1	CABLE
3		297246A1		2	MANGUITO
4		H439276		1	BULON/PIN, LARGO

PUERTA DE CABINA - MONTAJE

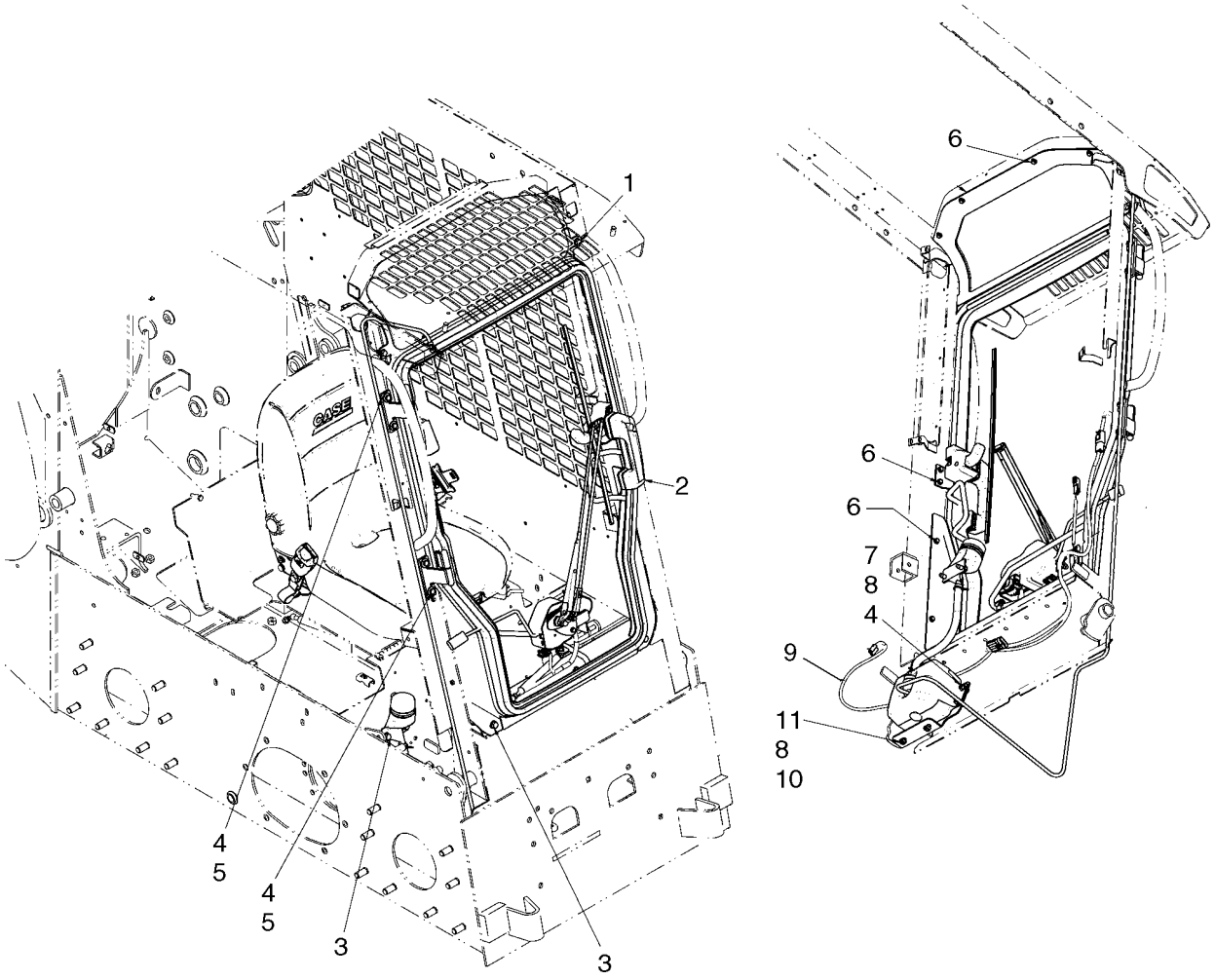

PUERTA DE CABINA - MONTAJE

REF	FN	PART NUMBER	YR/SN	QTY	DENOMINACION
1		9804258		2	TORNILLO, Hex Flg, M8 x 20, 8.8
		87635322		1	KIT, SERVICE, Kit, Front Door; Incl 1 - 11
2		87627051		1	PUERTA, See Fig. 09-30
3		637964		4	TORNILLO AUTOROSCANTE
4		120104		8	TORNILLO, Hex, M8 x 20, 8.8
5		86639313		4	ARANDELA, M8 x 20 x 1.6
6		87015862		10	TORNILLO, Hex Flg, M6 x 20, 8.8, Full Thd
7		43362		4	TUERCA, M8, Cl 10
8		86624184		10	ARANDELA, M8 x 16 x 1.6
9		87659212		1	HAZ, Door Jumper Harness
10		229197A1		2	TUERCA
11		120103		2	TORNILLO, Hex, M8 x 16, 8.8

PUERTA DE CABINA - ARANDELA, PARABRISAS

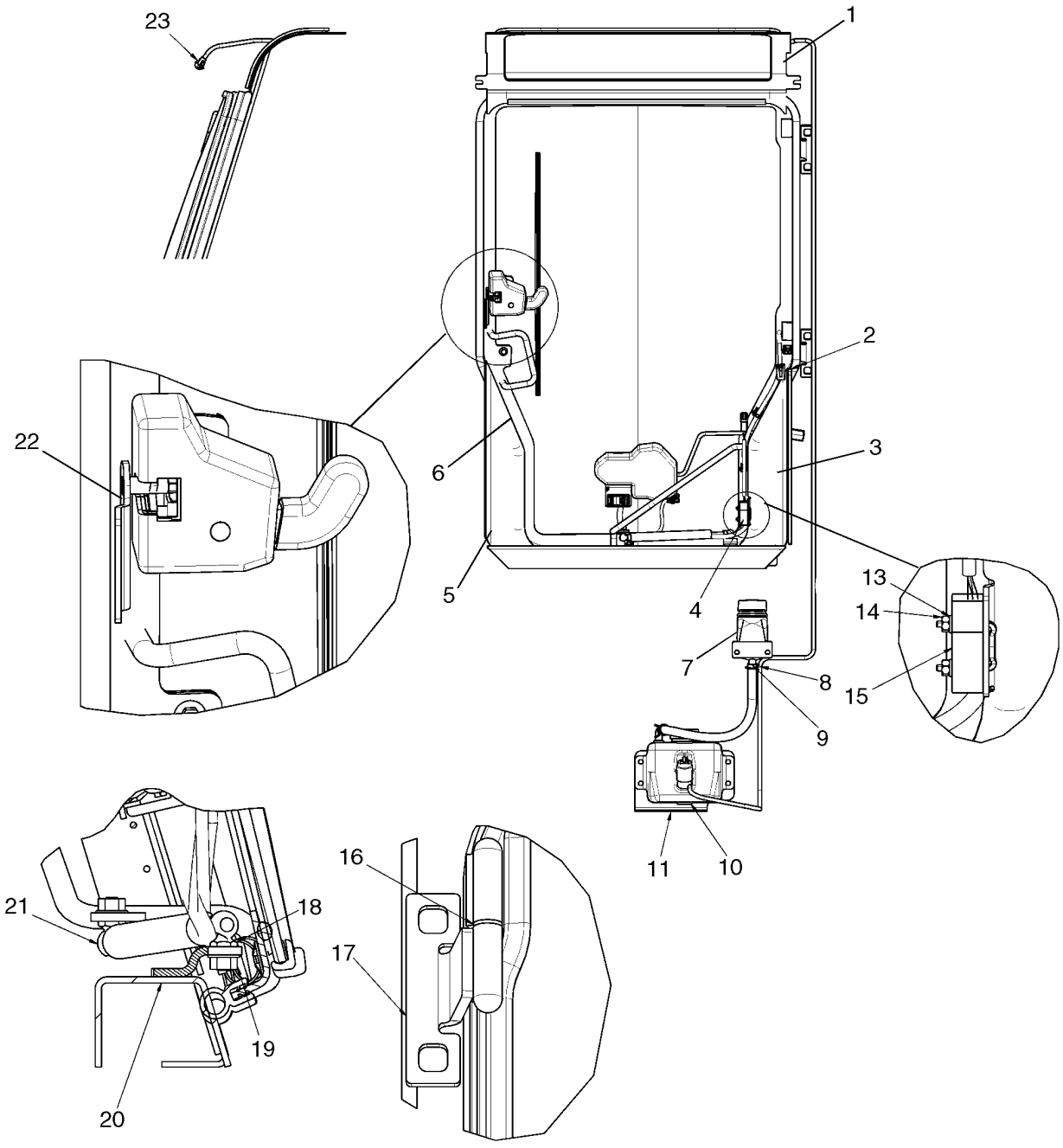

PUERTA DE CABINA - ARANDELA, PARABRISAS

REF	FN	PART NUMBER	YR/SN	QTY	DENOMINACION
1		REF		1	MANUAL, Visor; See Fig 09-32
2		{87669915}		1	Spacer Plate, Black
3		{87717215}		1	Door Bracket, Lower RH
4		{87680073}		1	U-Bolt, Switch Mount
5		{87717210}		1	Door Bracket, Lower LH
6		87627706		1	PUERTA, See Fig 09-30
7		87655055		1	GOLLETE, Remote Washer Fill
8		{87712606}		1	Windshield Washer Tubing
9		{87712605}		1	Hose, Remote Fill
10		{87714131}		1	Washer Bottle
11		{87672011}		1	Washer Bracket
12		516742		2	BORNE
13		87529123		2	ARANDELA, WASHER, 0.156 X 0.375 X 0.049 in.
14		{87622767}		2	Nut
15		87051110		1	INTERRUPTOR PUERTA, Switch, Door Open
16		{87599753}		2	Bushing
17		{87717283}		2	Door Hinge
18		{87581669}		1	Ball Stud
19		9804277		1	TUERCA, M8 x 1.25, Flg, Cl 8
20		{87722347}		1	Threshold, Black
21		{87642437}		1	Gas Spring
22		{87642394}		1	Striker Latch

PUERTA DE CABINA

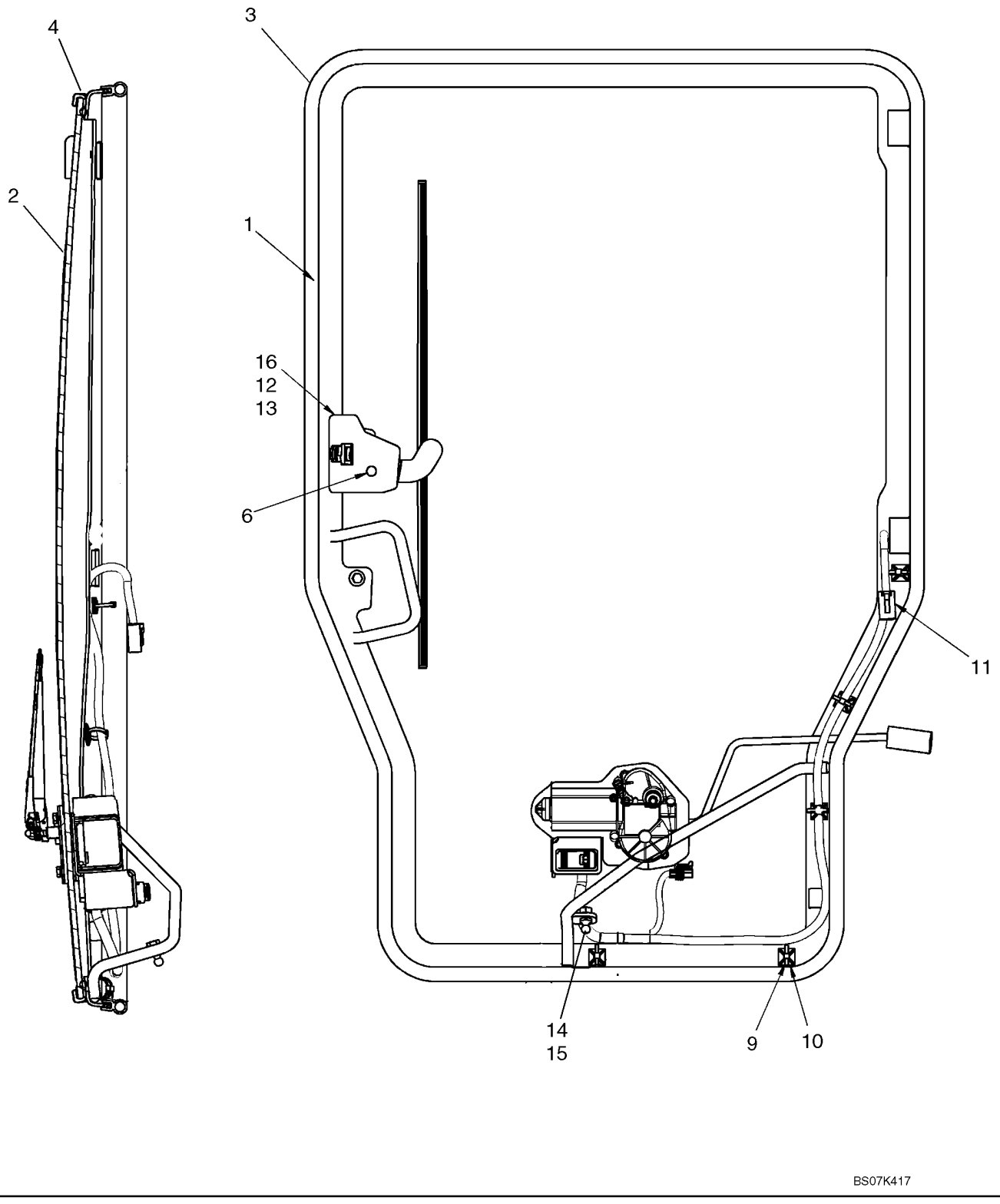

PUERTA DE CABINA

REF	FN	PART NUMBER	YR/SN	QTY	DENOMINACION
1		87627520		1	PUERTA, Door With Glass; Incl. 2 - 8
2		87717689		1	KIT, SERVICE, Kit, Front Door Glass; Incl 2, 4
2		87624640		1	VIDRIO, Front Door Glass
3		NSS		1	NO SE REPARA SEPARADAM., Door, Black
4		NSS		1	NO SE REPARA SEPARADAM., Trim, Glass Seal
5		{87660180}		AR	Window Adhesive
6		{87600221}		8	Glue Spacer; Not Illustrated
7		87642453		1	ANILLO DE CIERRE, Handle Mounting Seal, Lower; Not Illustrated
8		87642449		1	ANILLO DE CIERRE, Handle Mounting Seal, Upper; Not Illustrated
9		87642915		5	CIERRA CABLES
10		87642914		5	APOYO, Base, Cable Tie
11		87718119		1	HAZ, Door Harness
12		{86512463}		3	Screw, M6 X 25 4.8 ZND
13		86619800		2	CONTRA TUERCA, M6 x 1, Flg, Cl 8
14		9804277		1	TUERCA, M8 x 1.25, Flg, Cl 8
15		86634307		1	PRISIONERO, Ball Stud
16		87678399		1	PESTILLO, Rotary Latch; Includes Latch And Cover
17		87624641		1	ANILLO DE CIERRE, Bulb Seal

PUERTA DE CABINA - VISOR

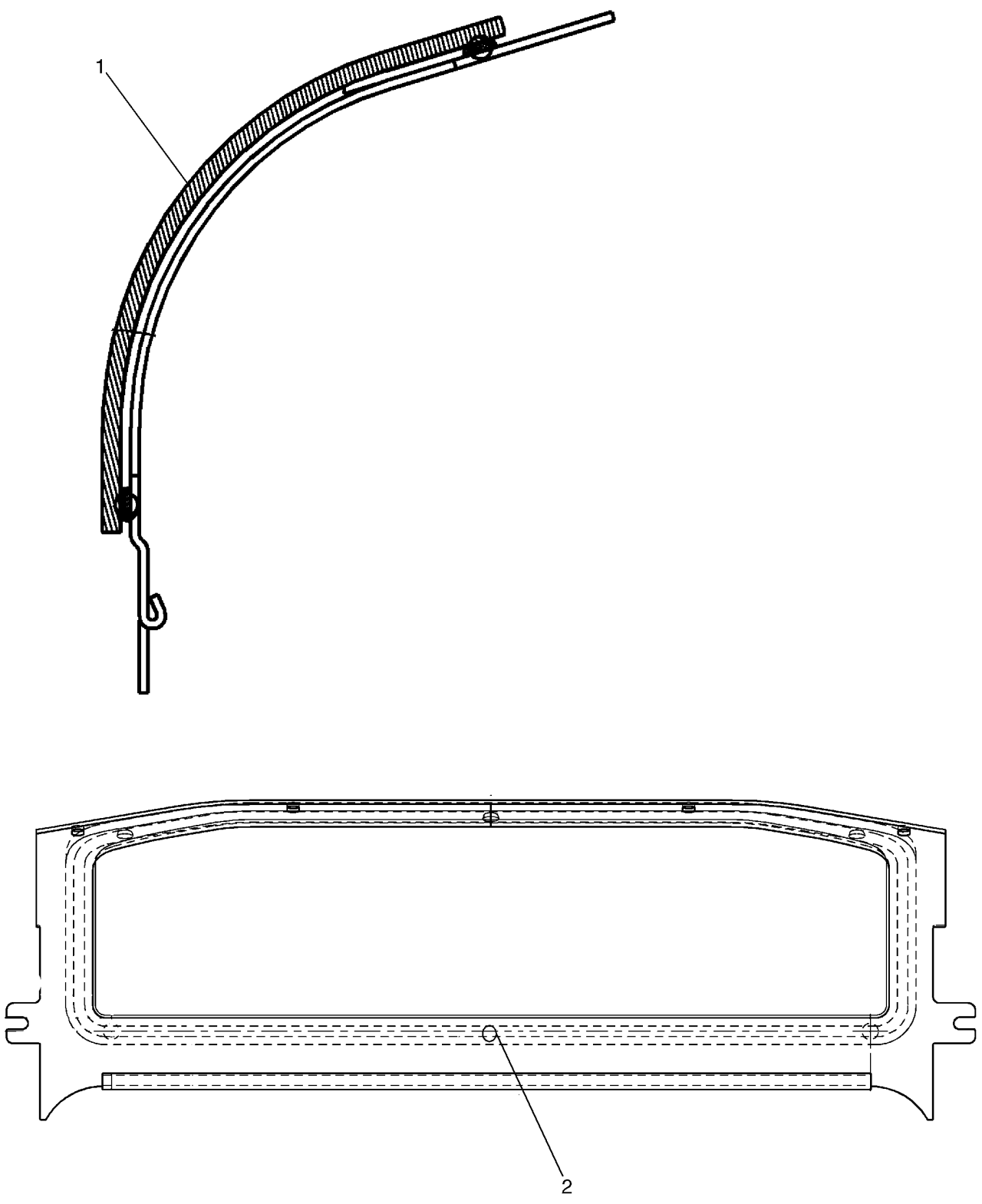

PUERTA DE CABINA - VISOR

REF	FN	PART NUMBER	YR/SN	QTY	DENOMINACION
		{87627521}		1	Visor; Incl 1 - 4
1		87624623		1	VIDRIO, Glass, Visor
2		{87600221}		6	Glue Spacer
3		{87660180}		1	Window, Adhesive
4		{87669333}		1	Visor Frame, Black

PUERTA DE CABINA - LIMPIAPARABRISAS, DELANTERO

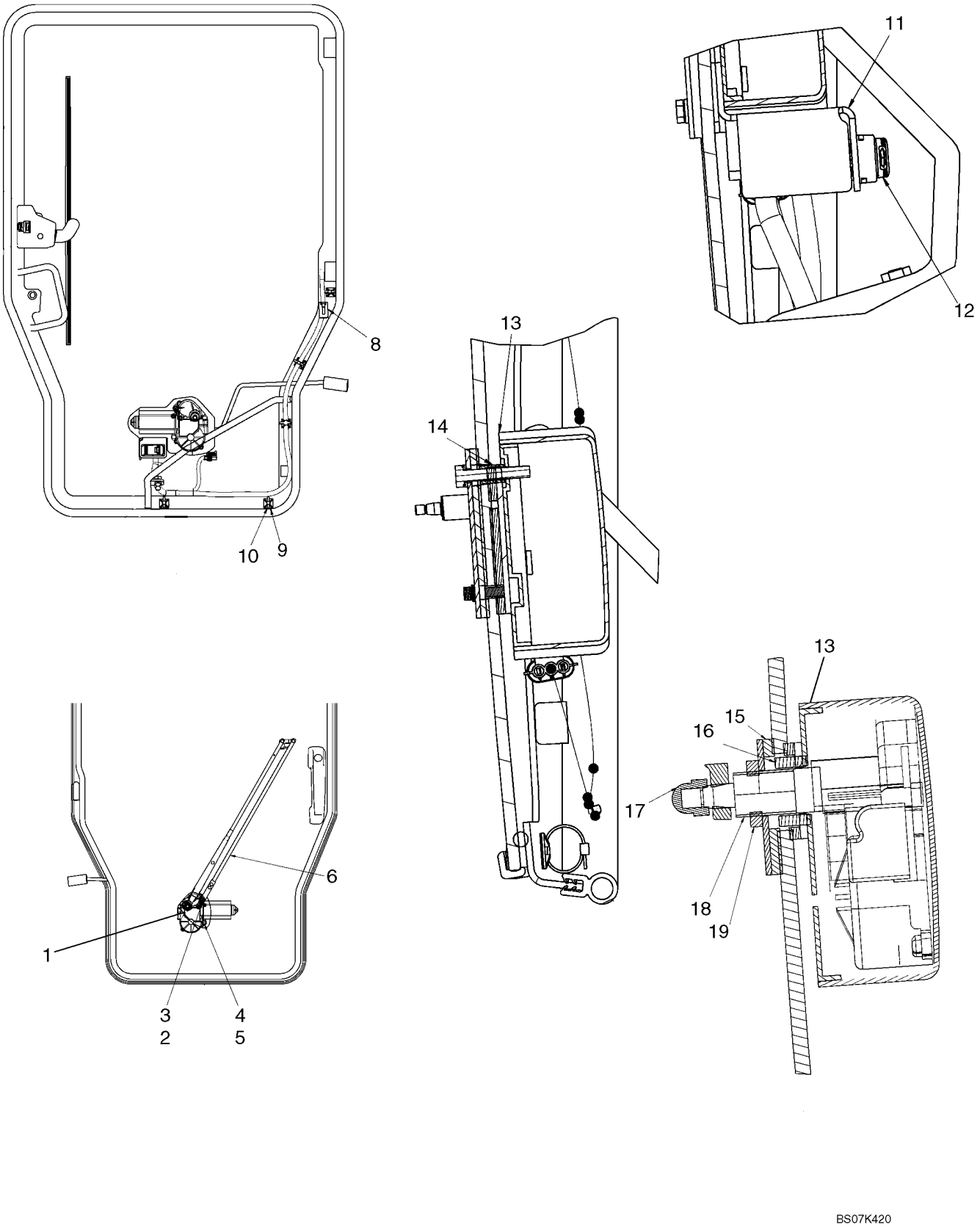

PUERTA DE CABINA - LIMPIAPARABRISAS, DELANTERO

REF	FN	PART NUMBER	YR/SN	QTY	DENOMINACION
1		87716728		1	ADAPTOR, Adapter, Pantograph
2		{87698769}		5	Bolt, M6 X 35
3		{86642465}		2	Washer, 6.6 X 12 X 1.6 MM
4		87680190		1	SEPARADOR, Wiper Motor Spacer
5		87642543		1	ANILLO DE CIERRE, Wiper Switch Seal
6		87642544		1	BRAZO LIMPIAPARABRISAS
7		87642545		1	RASQUETA LIMPIAPARABR.
8		87718119		1	HAZ, Door Harness
9		87642914		5	APOYO, Mounting Base
10		87642915		5	CIERRA CABLES
11		87671857		1	PIEZA DE SOPORTE, Wiper Switch Bracket
12		87335499		1	CONTACTOR, Rocker Switch, Windshield Wiper/Washer
13		{87581666}		1	Wiper Motor Cover
14		87642540		1	SEPARADOR, Wiper Motor Spacer
15		87716731		1	ADAPTOR, Pantograph Adapter Seal
16		87642536		1	CASQUILLO, Wiper Motor Bushing
17		{412326}		1	Nut, Crown Dome M8
18		87678400		1	LIMPIA-PARABRISAS
19		{87607505}		1	Wiper Nut, M18

PUERTA DE CABINA - MANILLA

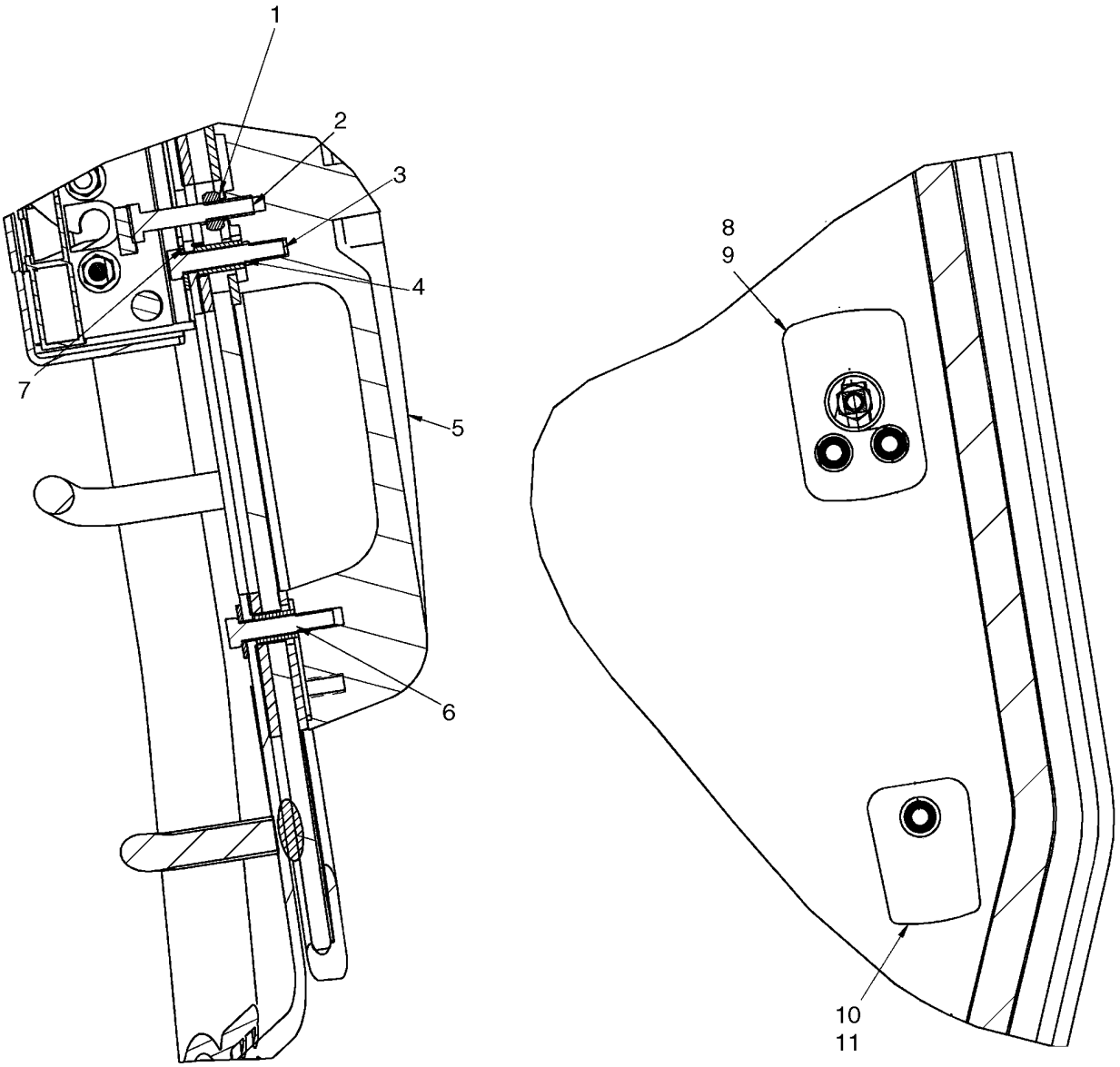

BS07K422

PUERTA DE CABINA - MANILLA

REF	FN	PART NUMBER	YR/SN	QTY	DENOMINACION
1		1369		1	TUERCA, 1/4"-20, G5
2		280112		1	TORNILLO, Hex, 1/4"-20 x 1 1/2", G5
3		{87698769}		5	Bolt, M6 X 35
4		87642514		2	SEPARADOR, Handle Mounting Spacer, Upper
5		60-7083T1		1	MANECILLA, Cab Door Handle
6		87642529		1	SEPARADOR, Handle Mounting Spacer, Lower
7		86624182		3	ARANDELA, M6 x 18 x 1.6
8		87642449		1	ANILLO DE CIERRE, Handle Mount Seal, Upper
9		87517940		1	JUNTA HERMETICA, Door Handle Gasket, Upper
10		87517937		1	JUNTA HERMETICA, Door Handle Gasket, Lower
11		87642453		1	ANILLO DE CIERRE, Handle Mount Seal, Lower

PORTEZUELA DE DEMOLICIÓN - MONTAJE

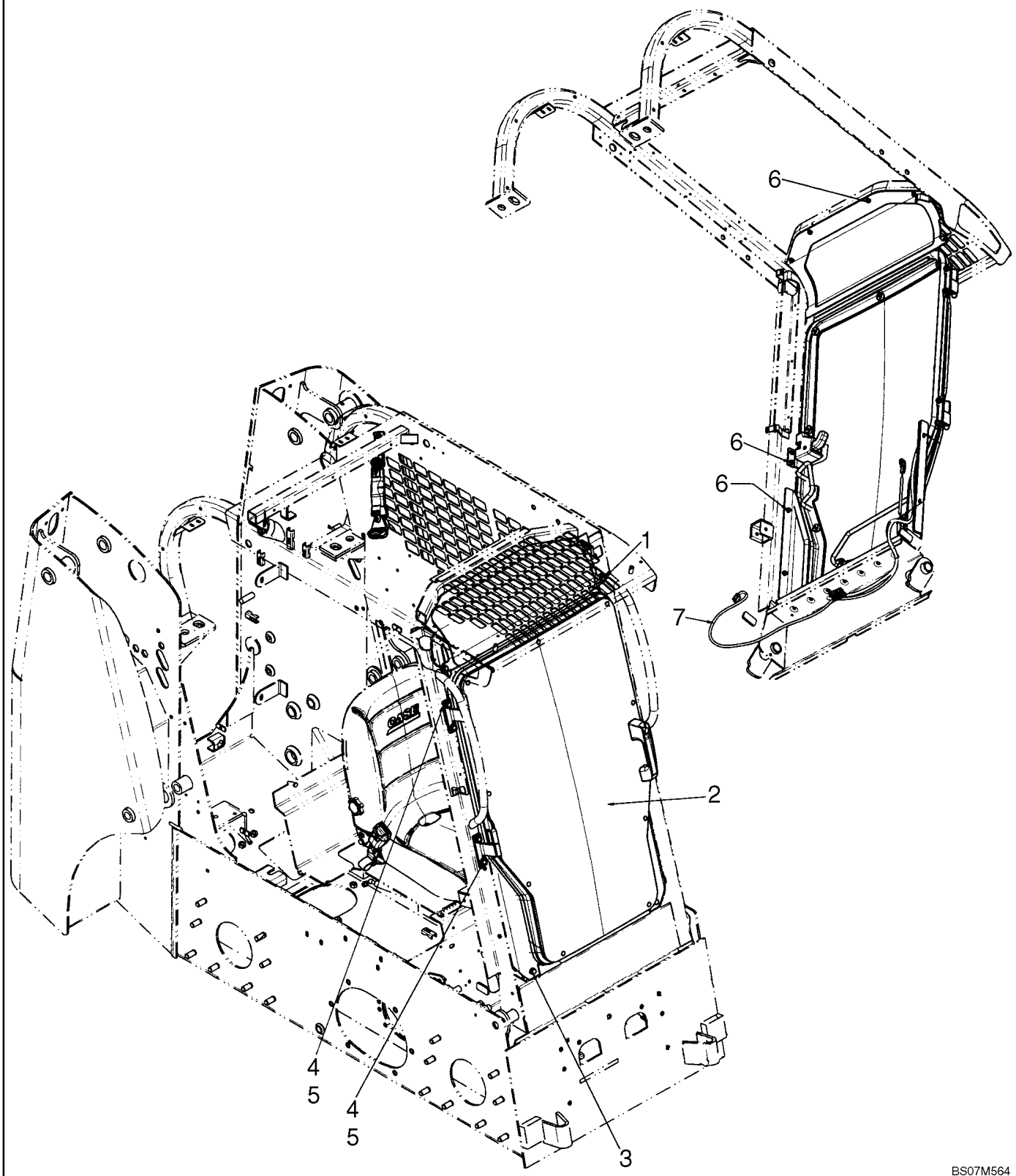

PORTEZUELA DE DEMOLICIÓN - MONTAJE

REF	FN	PART NUMBER	YR/SN	QTY	DENOMINACION
1		9804258		2	TORNILLO, Hex Flg, M8 x 20, 8.8
		87651126		1	KIT, SERVICE, Kit, Demolition Door; Incl 1 - 7
2		REF		1	MANUAL, Demolition Door; See Fig 09-36
3		637964		2	TORNILLO AUTOROSCANTE
4		120104		4	TORNILLO, Hex, M8 x 20, 8.8
5		86639313		4	ARANDELA, M8 x 20 x 1.6
6		87015862		10	TORNILLO, Hex Flg, M6 x 20, 8.8, Full Thd
7		87659212		1	HAZ, Harness, Door Jumper

PORTEZUELA DE DEMOLICIÓN

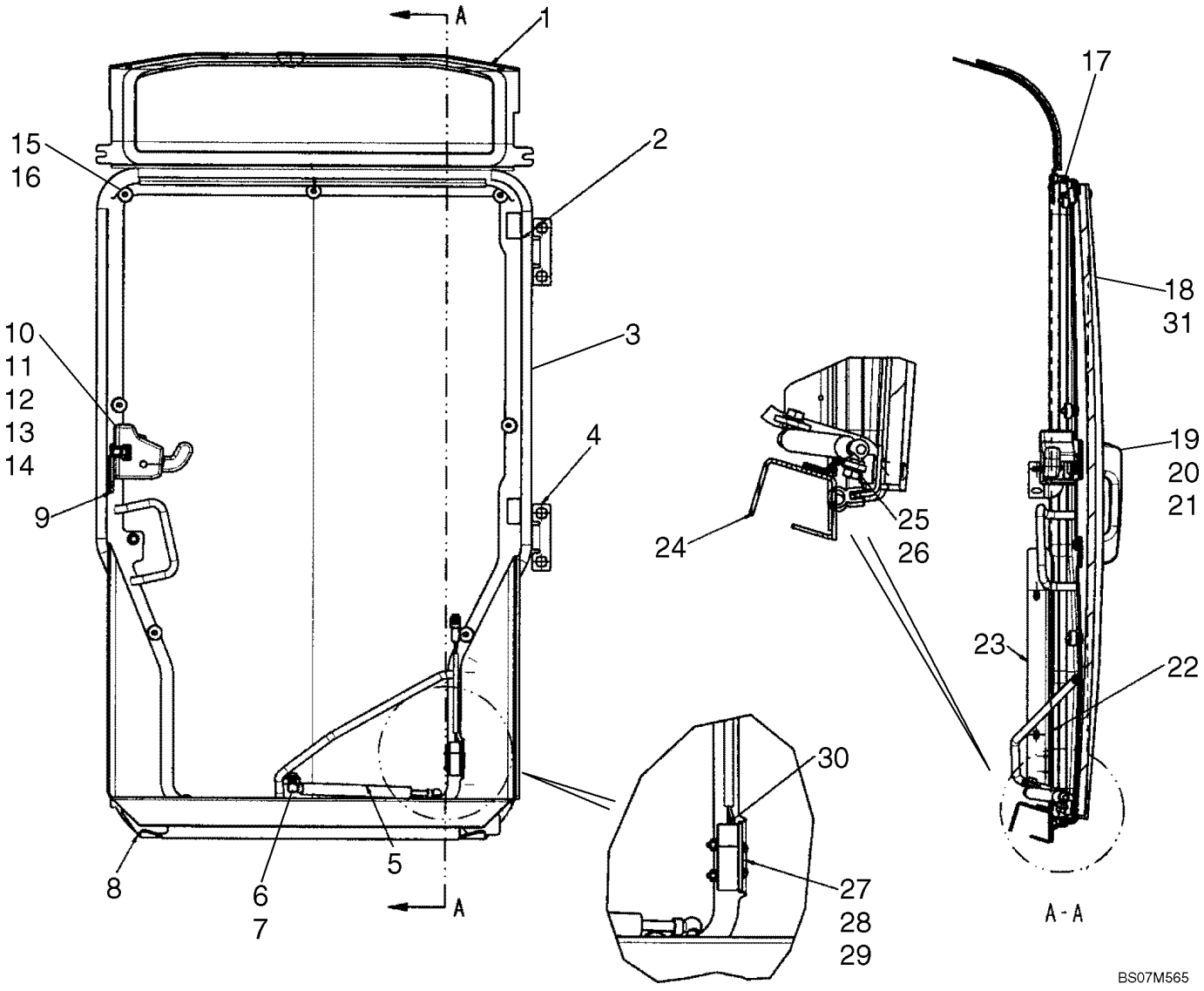

PORTEZUELA DE DEMOLICIÓN

REF	FN	PART NUMBER	YR/SN	QTY	DENOMINACION
1		REF		1	MANUAL, Visor; See Fig 09-32
2		{87599753}		2	Bushing
3		NSS		1	NO SE REPARA SEPARADAM., Frame, Demolition Door
4		{87717283}		2	Door Hinge
5		{87642437}		1	Gas Spring
6		86619801		1	CONTRA TUERCA, M8 x 1.25, Flg, Cl 8
7		{87581669}		1	Ball Stud
8		{87717210}		1	Bracket, Lower Door LH
9		{87642394}		1	Stiker Latch
10		87678399		1	PESTILLO, Rotary Latch
11		{86512463}		3	Screw, M6 X 25
12		87642540		3	SEPARADOR
13		{87698769}		3	Bolt, M6 X 35
14		86619800		2	CONTRA TUERCA, M6 x 1, Flg, Cl 8
15		NSS		9	NO SE REPARA SEPARADAM., Quick Release Knob
16		412327		9	PERNO, CABEZA RONDA, Short NK, M6 x 40, Cl8.8
17		87624641		1	ANILLO DE CIERRE, Bulb Seal
18		NSS		1	NO SE REPARA SEPARADAM., Polycarbonate Door
18		87640046		1	KIT, SERVICE, Kit, Demolition Door; Incl 15, 16, 18, 31
19		60-7083T1		1	MANECILLA, Door Handle
20		{87723784}		2	Handle Seal, Lower
21		{87723771}		2	Handle Seal, Upper
22		{87717215}		1	Lower Door Bracket, RH
23		{87669915}		1	Spacer
24		{87722347}		1	Threshold
25		86619801		1	CONTRA TUERCA, M8 x 1.25, Flg, Cl 8
26		{87581669}		1	Ball Stud
27		NSS		1	NO SE REPARA SEPARADAM., U Bolt, Switch Mounting
28		87529123		2	ARANDELA, Washer, .156 X .375 X .049 in.
29		{87622767}		2	Nut, #6-32
30		87051110		1	INTERRUPTOR PUERTA, Seat Bar Switch
31		NSS		1	NO SE REPARA SEPARADAM., Foam Gasket

ALFOMBRILLA, SUELO

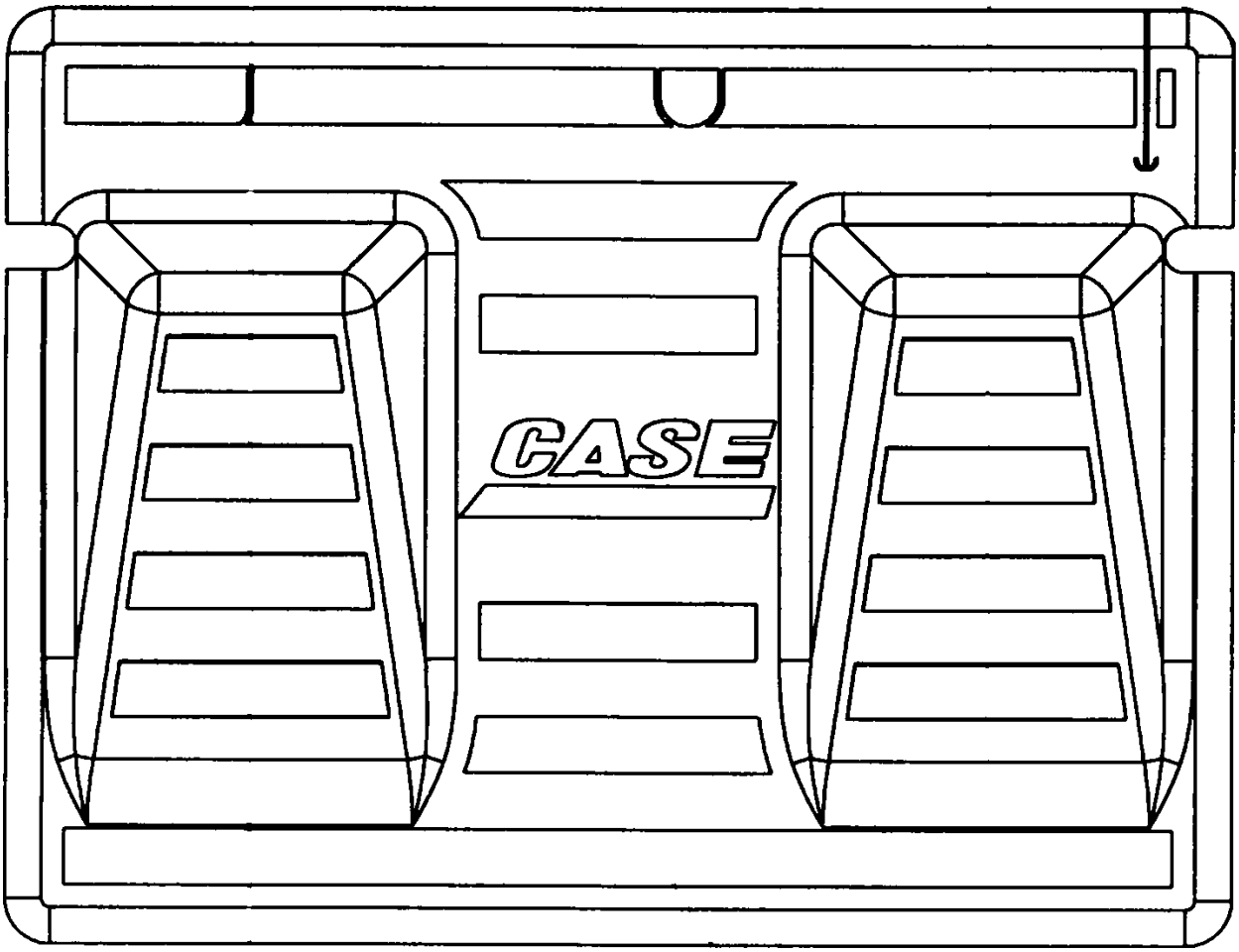

1

BS05D044

ALFOMBRILLA, SUELO

REF	FN	PART NUMBER	YR/SN	QTY	DENOMINACION
1		87461561		1	TAPETE DE SUELO, Rubber; Molded Foot Rests

09-38		p1	12/07

MARCO Y BARRA DEL ASIENTO

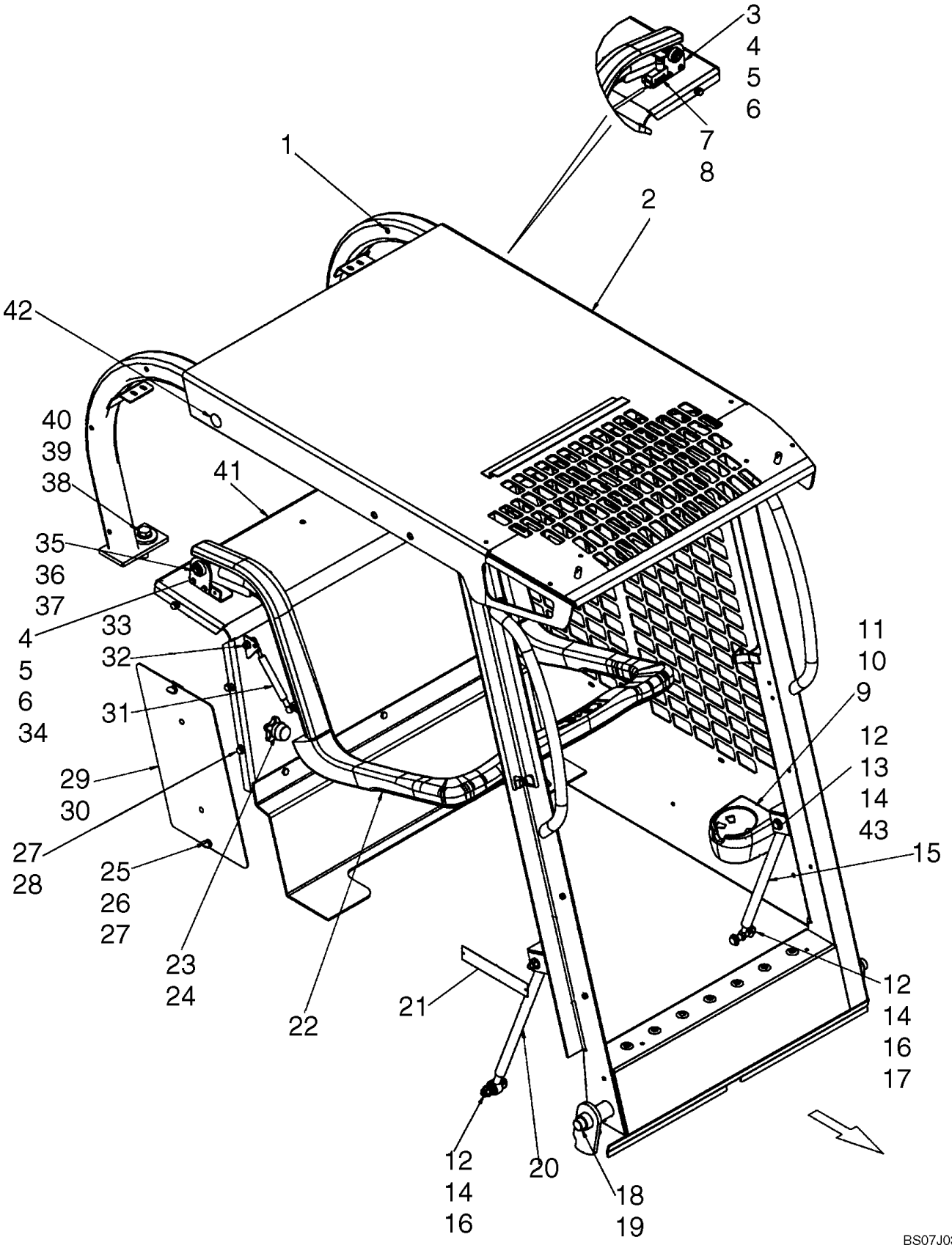

MARCO Y BARRA DEL ASIENTO

REF	FN	PART NUMBER	YR/SN	QTY	DENOMINACION
1		419434A1		16	INTRODUCTOR, Threaded Insert, M6
2		87635242		1	KIT, SERVICE, Cab, ROPS; Incl ROPS Structure, (1) Decal - Exiting, (1) Decal - Warning, General Instructions, (1) ROPS Model And Approval Plate
3		87645119		1	PLACA PIVOTE, Seat Bar Pivot, LH
4		120100		4	TORNILLO, Hex, M6 x 20, 8.8
5		86511444		4	TUERCA, M6, Flg Ser
6		86588450		4	ARANDELA, M6
7		87051110		1	INTERRUPTOR PUERTA, Seat Bar Switch
8		H435814		1	HORQUILLA
9		{87672170}		1	Cup Holder
10		86637935		2	TORNILLO, Hex, 1/4"-20 x 1", G8, Full Thd
11		87016587		2	ARANDELA, 1/4"
12		100037		4	TUERCA, M10 x 1.5, Cl 8
13		83931335		2	TORNILLO, Hex, M10 x 75, 8.8
14		86625253		8	ARANDELA, M11 x 24 x 2
15		376669A1		1	COMPAS, ROPS Pivot Assist
15		87706925		1	KIT, SERVICE, Kit, Gas Strut; Incl 14 - 17 And 43
16		120070		2	TORNILLO, Hex, M10 x 60, 8.8
17		254697A1		2	ESPACIADOR, Pivot Spacer
18		373836A1		1	PERNO DE PIVOTE
19		827695C1		2	ANILLO
20		282002A2		1	COMPAS, ROPS Pivot Assist
21		NSS		1	NO SE REPARA SEPARADAM., ROPS Plate, Model And Approval
22		REF		1	MANUAL, Seat Restraint; See Fig. 09-39
23		{87639912}		2	Knob
24		{87639914}		2	Seat Bar Stop
25		442856A1		4	ARANDELA
26		408117A2		4	TORNILLO, Thumb Screw, M8
27		140016		10	ARANDELA, M8 x 16 x 1.6
28		43128		6	TORNILLO, Hex, M8 x 30, 8.8
29		86625127		4	TAPÓN, Dome, .375" hole, Nylon
30		87460732		2	CONTRAPANEL, Access Panel
31		87639899		1	CILINDRO, Seat Bar; Gas Strut

MARCO Y BARRA DEL ASIENTO

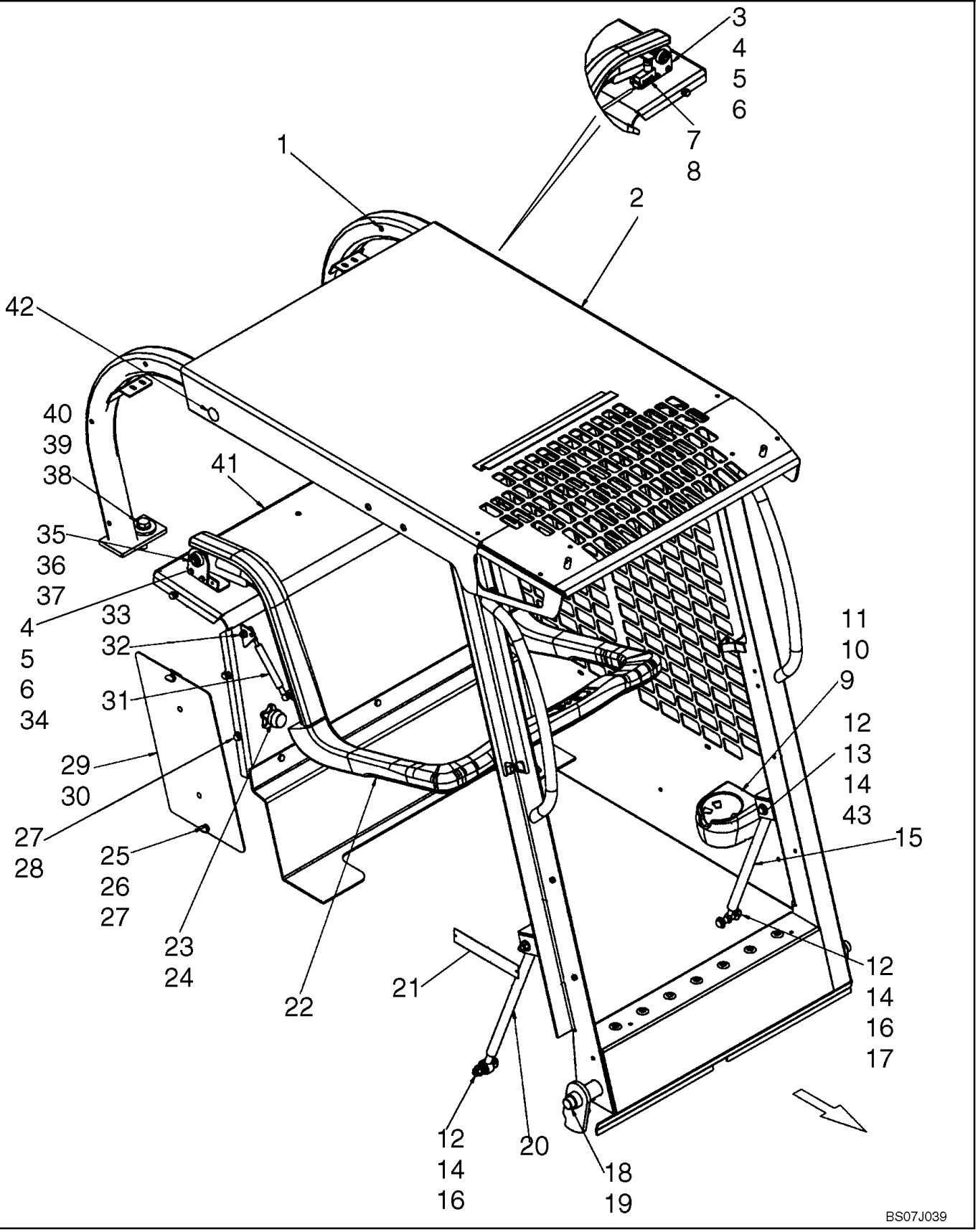

MARCO Y BARRA DEL ASIENTO

REF	FN	PART NUMBER	YR/SN	QTY	DENOMINACION
32		86505868		11	TUERCA, M8, Flg Ser
33		189609A1		2	PRISIONERO, Metric Ball Stud, M8 X 1.25 Thd
34		{87645115}		1	Seat Bar Pivot, RH
35		87620895		2	CASQUILLO
36		86632589		2	ARANDELA
37		D143415		2	ANILLO
38		86625266		2	ARANDELA, M17.5 x 30 x 4, HT
39		391703A2		2	ARANDELA
40		9828248		2	TORNILLO, Hex, M16 x 60, 10.9
41		{87668682}		1	Shield, Gray
42		86625129		2	TAPÓN, Dome, 1.000" hole, Nylon
43		254698A1		2	ESPACIADOR

BARRA DEL ASIENTO

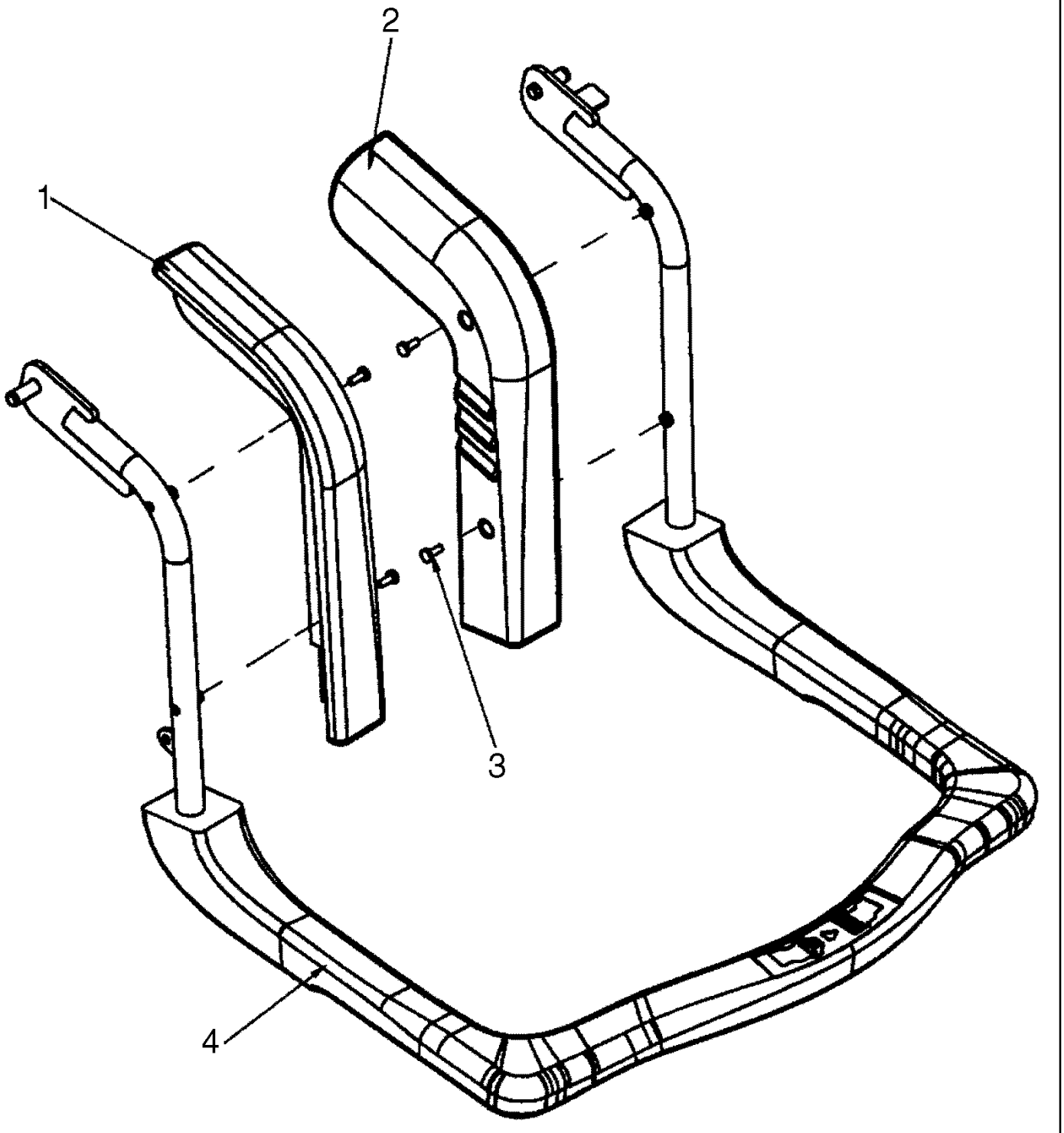

BS07J040

BARRA DEL ASIENTO

REF	FN	PART NUMBER	YR/SN	QTY	DENOMINACION
1		87619938		1	ASIENTO, Arm, Upper Lap Bar, RH
2		87619939		1	ASIENTO, Arm, Upper Lap Bar, LH
3		86511829		4	TORNILLO, Cross Pan Hd, M6 x 16
4		87619935		1	ASIENTO, Lap Bar, Lower Section

CINTURONES DE SEGURIDAD (2 IN)

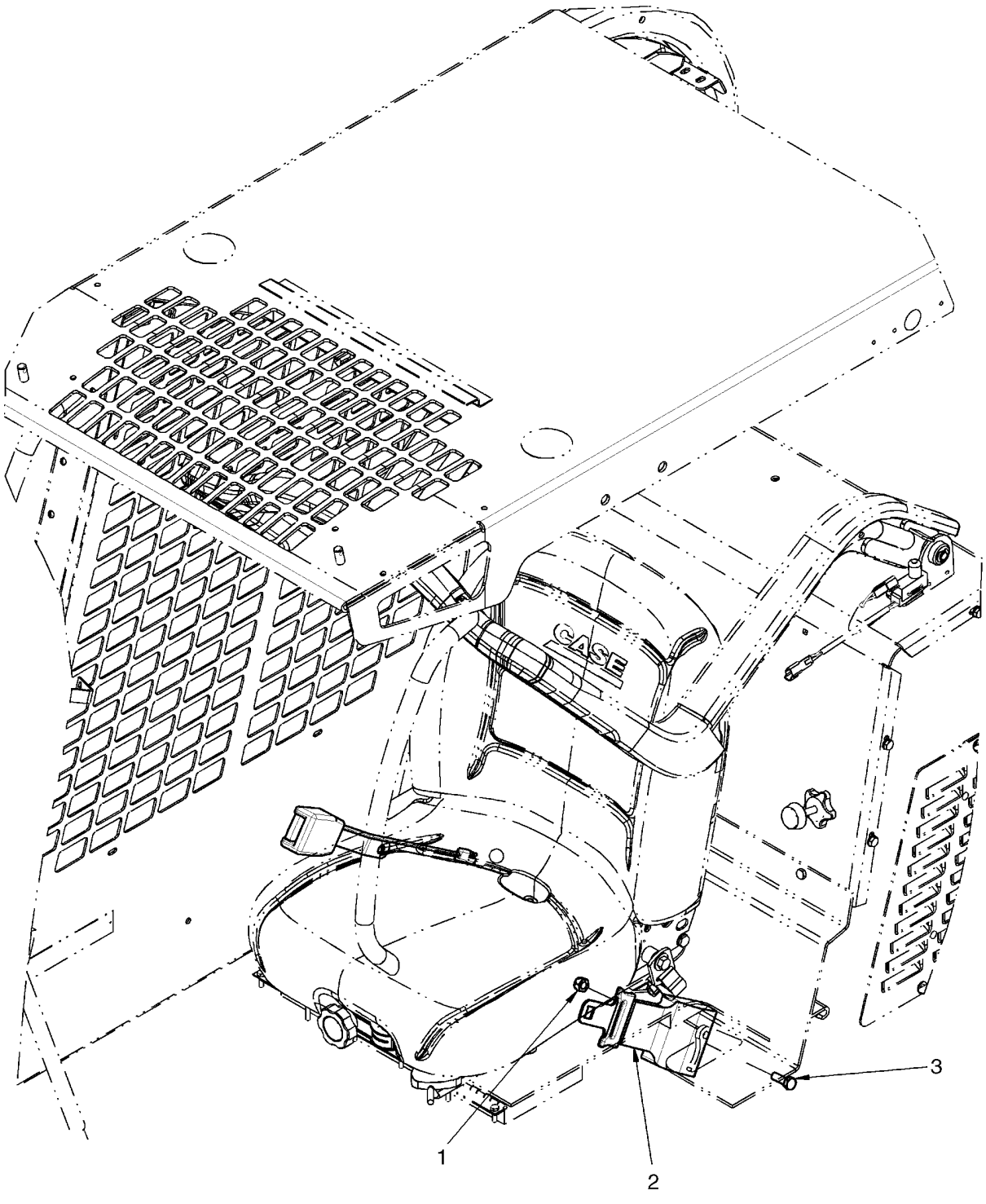

CINTURONES DE SEGURIDAD (2 IN)

REF	FN	PART NUMBER	YR/SN	QTY	DENOMINACION
1		86512554		1	CONTRA TUERCA, M10 x 1.5, Cl 10
2		{87652259}		1	2" Lap Seat Belt
3		43140		1	TORNILLO, Hex, M10 x 30, 8.8, Full Thd

CINTURONES DE SEGURIDAD (3 IN)

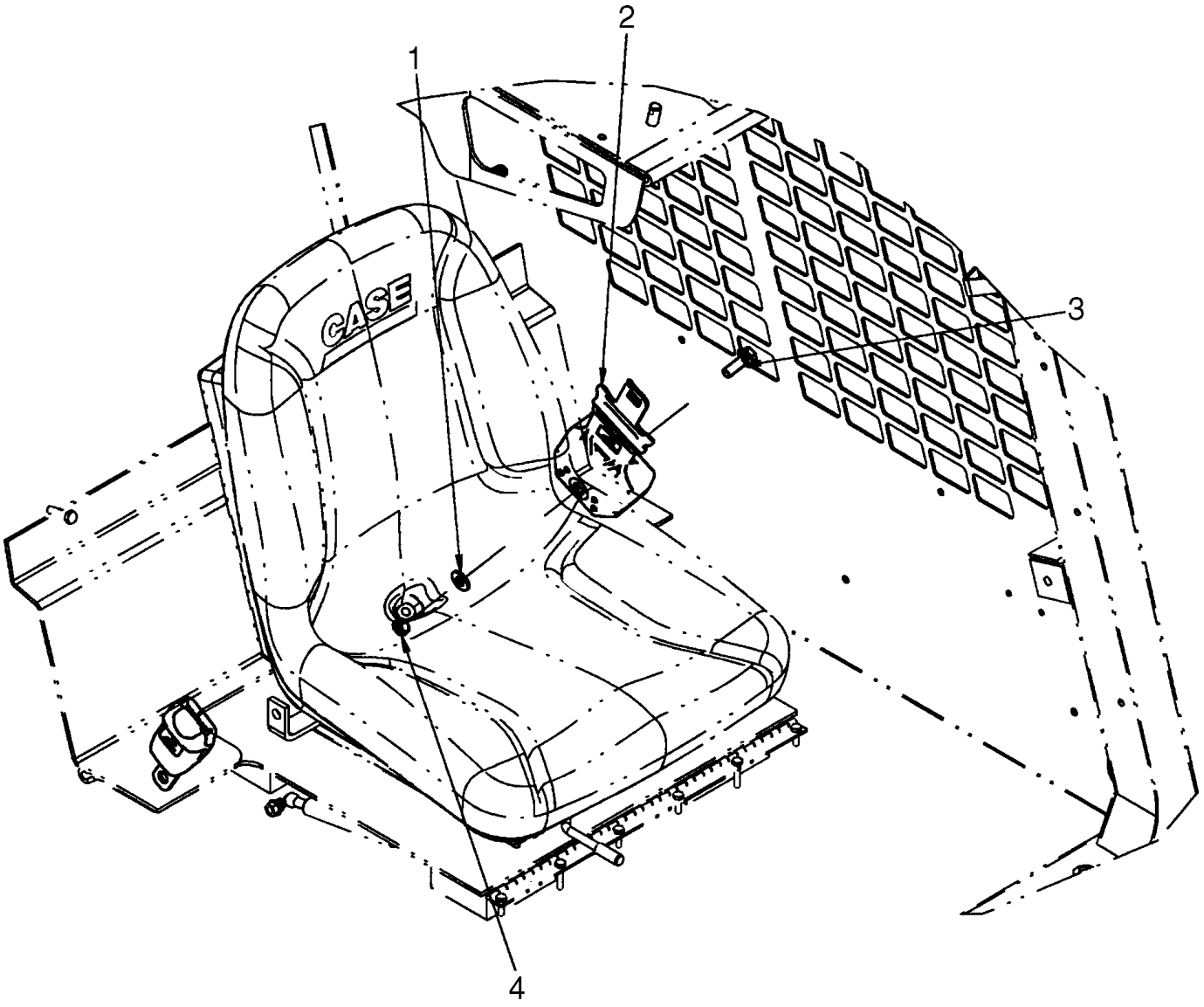

BS07K731

CINTURONES DE SEGURIDAD (3 IN)

REF	FN	PART NUMBER	YR/SN	QTY	DENOMINACION
		87717673		1	KIT, SERVICE, Kit, 3 in. Lap Belt; Incl 1 - 4
1		86625253		1	ARANDELA, M11 x 24 x 2
2		87702506		1	CINTURÓN, SEGURIDAD, 3" Lap Seat Belt
3		9804262		1	TORNILLO, Hex Flg, M10 x 30, 8.8
4		87030549		1	CONTRA TUERCA, M10 x 1.5, Cl 10

09-42		p1	12/07

CINTURON DE HOMBRO

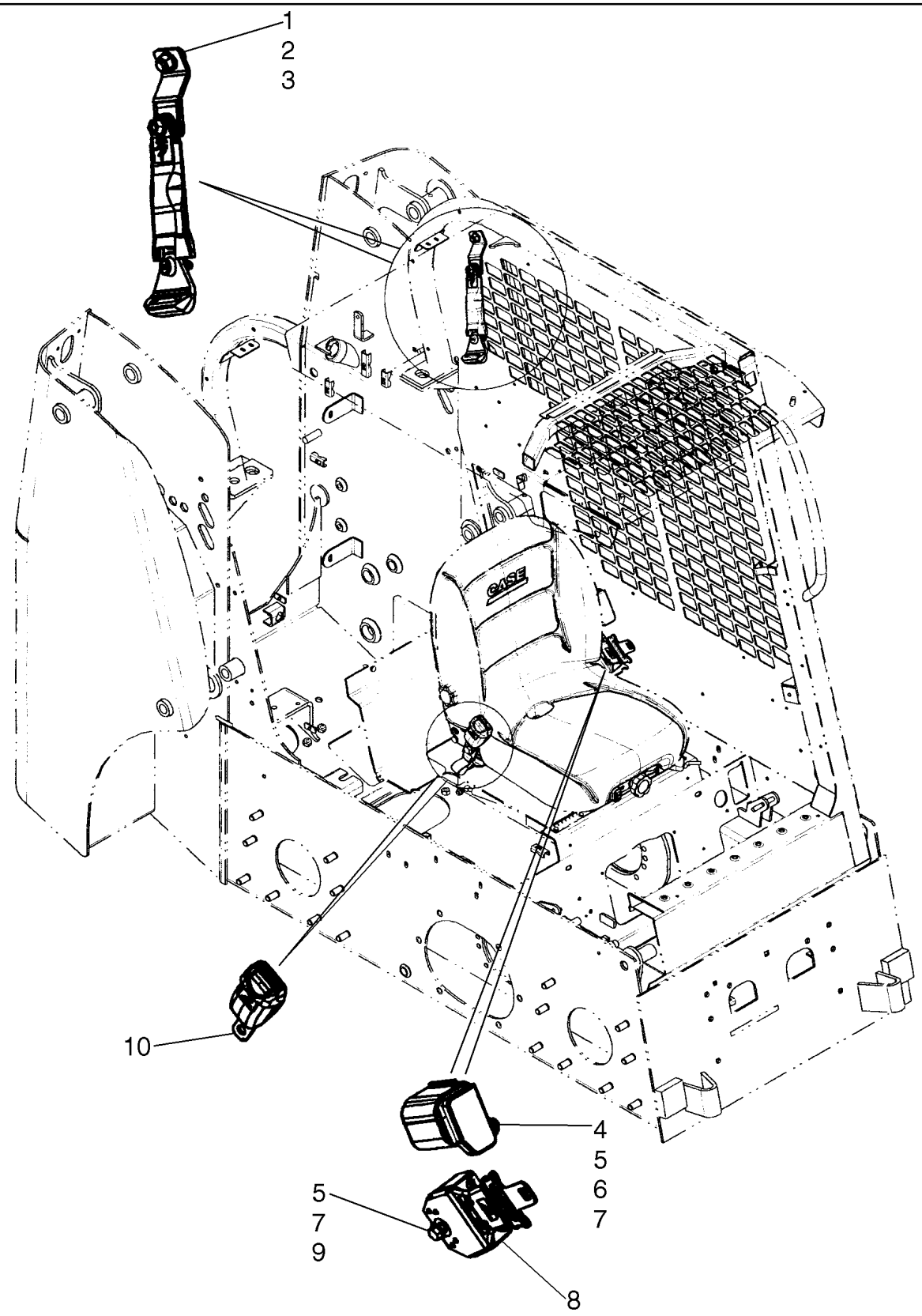

CINTURON DE HOMBRO

REF	FN	PART NUMBER	YR/SN	QTY	DENOMINACION
		87717671		1	KIT, SERVICE, Kit, 2 in. Shoulder Belt; Incl 1 - 10
1		9804266		1	TORNILLO, Hex Flg, M12 x 25, 8.8
2		86625255		1	ARANDELA, M13.5 x 24.5 x 3, HT
3		9706685		1	TUERCA, M12, Cl 8
4		325829		1	TORNILLO, Hex, M10 x 45, 8.8
5		86625253		3	ARANDELA, M11 x 24 x 2
6		87047451		1	SEPARADOR
7		87030549		2	CONTRA TUERCA, M10 x 1.5, Cl 10
8		87702278		1	CINTURÓN, SEGURIDAD, 2 in Shoulder Belt Assy
9		9804262		1	TORNILLO, Hex Flg, M10 x 30, 8.8
10		REF			MANUAL, Buckle Mounts To Seat Frame With Bolt And Washer Provided With Seat

ESPEJO RETROVISOR TRASERO

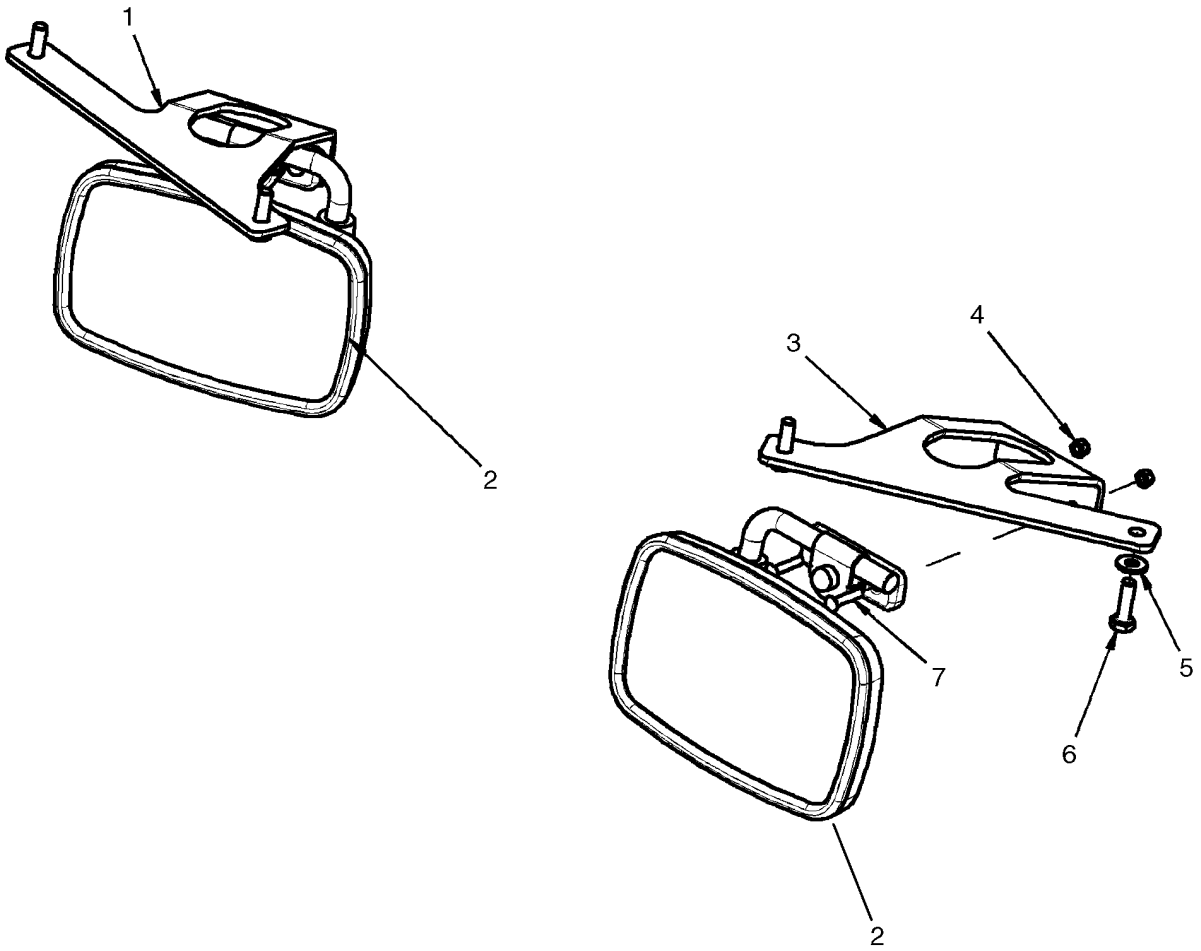

ESPEJO RETROVISOR TRASERO

REF	FN	PART NUMBER	YR/SN	QTY	DENOMINACION
1		87734487		1	PIEZA DE SOPORTE, Bracket, LH Mirror Mount
2		3962022		2	ESPEJO
3		87734484		1	PIEZA DE SOPORTE, Bracket, RH Mirror Mount
4		385681		4	CONTRA TUERCA, M4 x .7, Cl 8
5		322357		4	ARANDELA ABANICO, Belleville, M6
6		120100		4	TORNILLO, Hex, M6 x 20, 8.8
7		43646		4	TORNILLO

PIEZAS ESPECIALES PARA ITALIA - ESPEJO, VISTA TRASERA

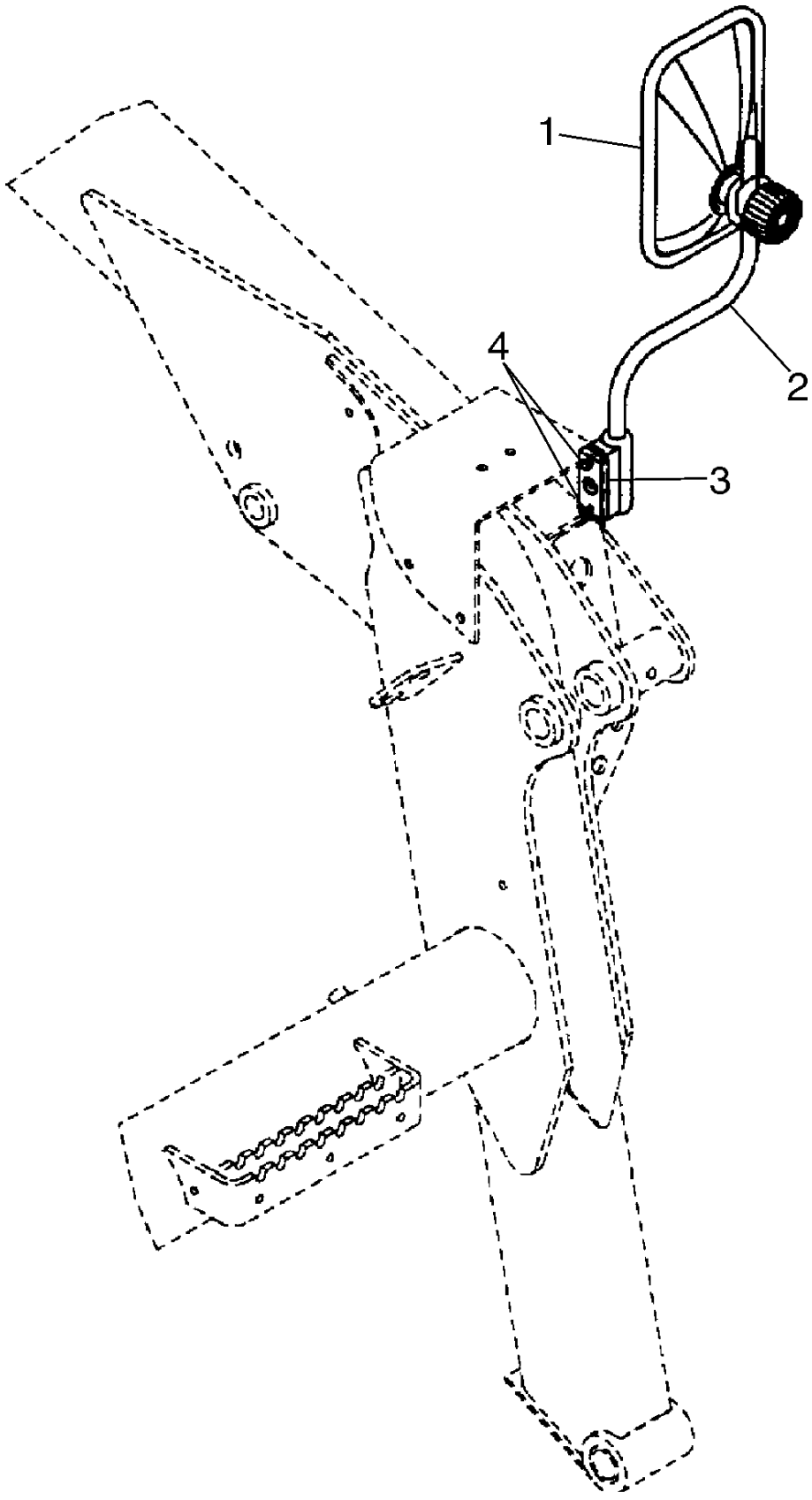

PIEZAS ESPECIALES PARA ITALIA - ESPEJO, VISTA TRASERA

REF	FN	PART NUMBER	YR/SN	QTY	DENOMINACION
1		235994A1		1	ESPEJO
2		310860A1		1	APOYADERO
3		432895A1		1	ESPACIADOR
4		614-6025		2	TORNILLO, Hex, M6 x 25, 8.8, M6 x 25

09-45		p1	12/07

ASIENTO, SOPORTE - ESTANDAR

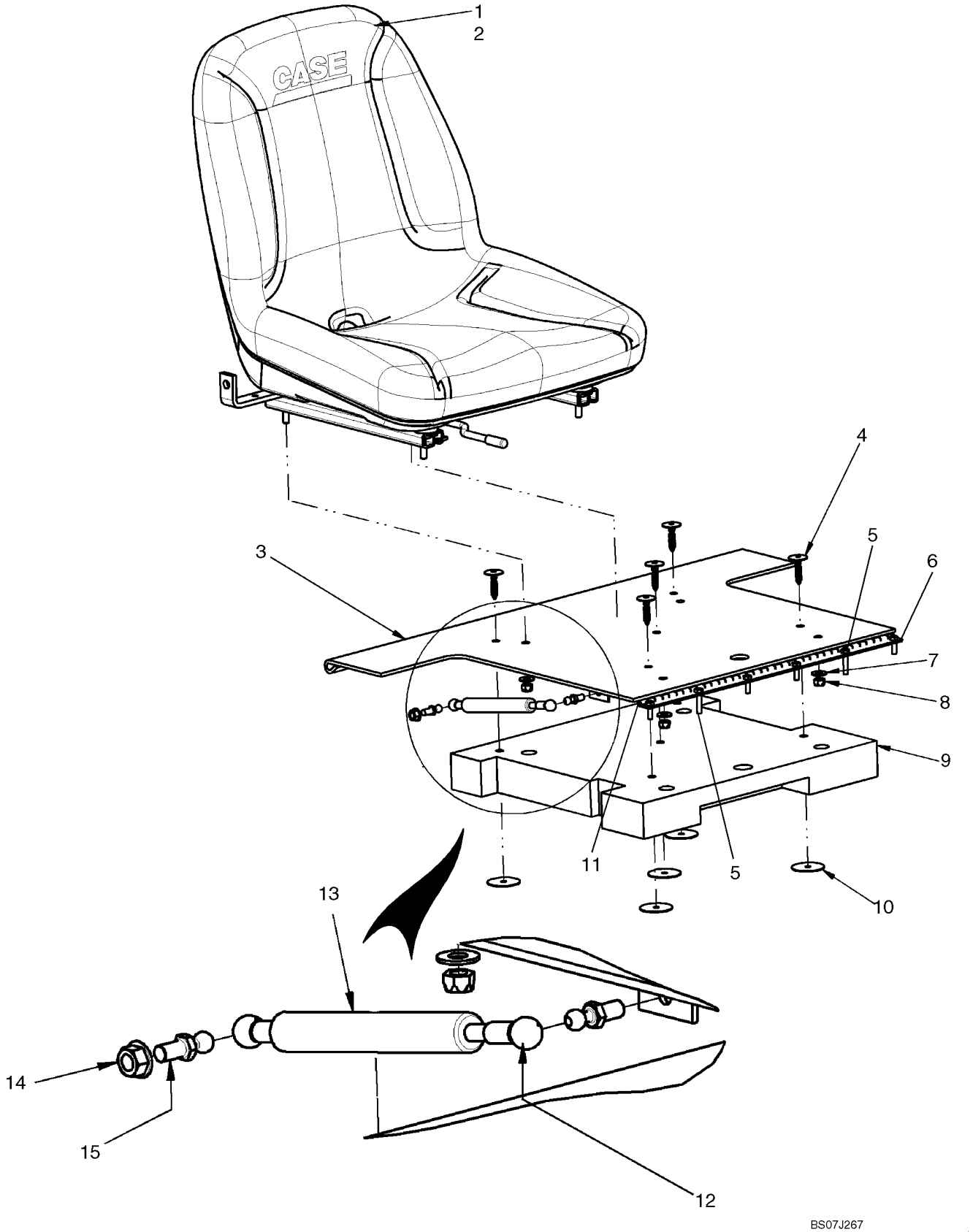

ASIENTO, SOPORTE - ESTANDAR

REF	FN	PART NUMBER	YR/SN	QTY	DENOMINACION
1		87405117		1	ASIENTO, Seat, Mid-Back - Wheat Color; Incl. 2
2		86603490		1	CONTACTOR, Operator Presence
2A		302137A2		1	HAZ, Operator Presence Switch Harness With 2 Connectors; Not Illustrated
3		{87676122}		1	Seat Hinge Plate
4		348452A1		5	TORNILLO, Push In Fastener
5		80120101		2	TORNILLO, M6 x 30, 8.8 ZND
6		120100		4	TORNILLO, Hex, M6 x 20, 8.8
7		86625263		4	ARANDELA, M8 x 20 x 1.6
8		9628098		4	CONTRA TUERCA, M8 x 1.25, Cl 10
9		{87676124}		1	Pad, Seat Noise Control
10		348434A1		5	ARANDELA
11		{87676121}		1	Seat Hinge Stiffener
12		254307A1		2	JUNQUILLO
13		189787A2		1	AMORTIGUADOR
14		86505868		2	TUERCA, M8, Flg Ser
15		189609A1		2	PRISIONERO, Metric Ball Stud, 10mm Ball x M8 X 1.25 Thd

ASIENTO, SOPORTE - SUSPENSION

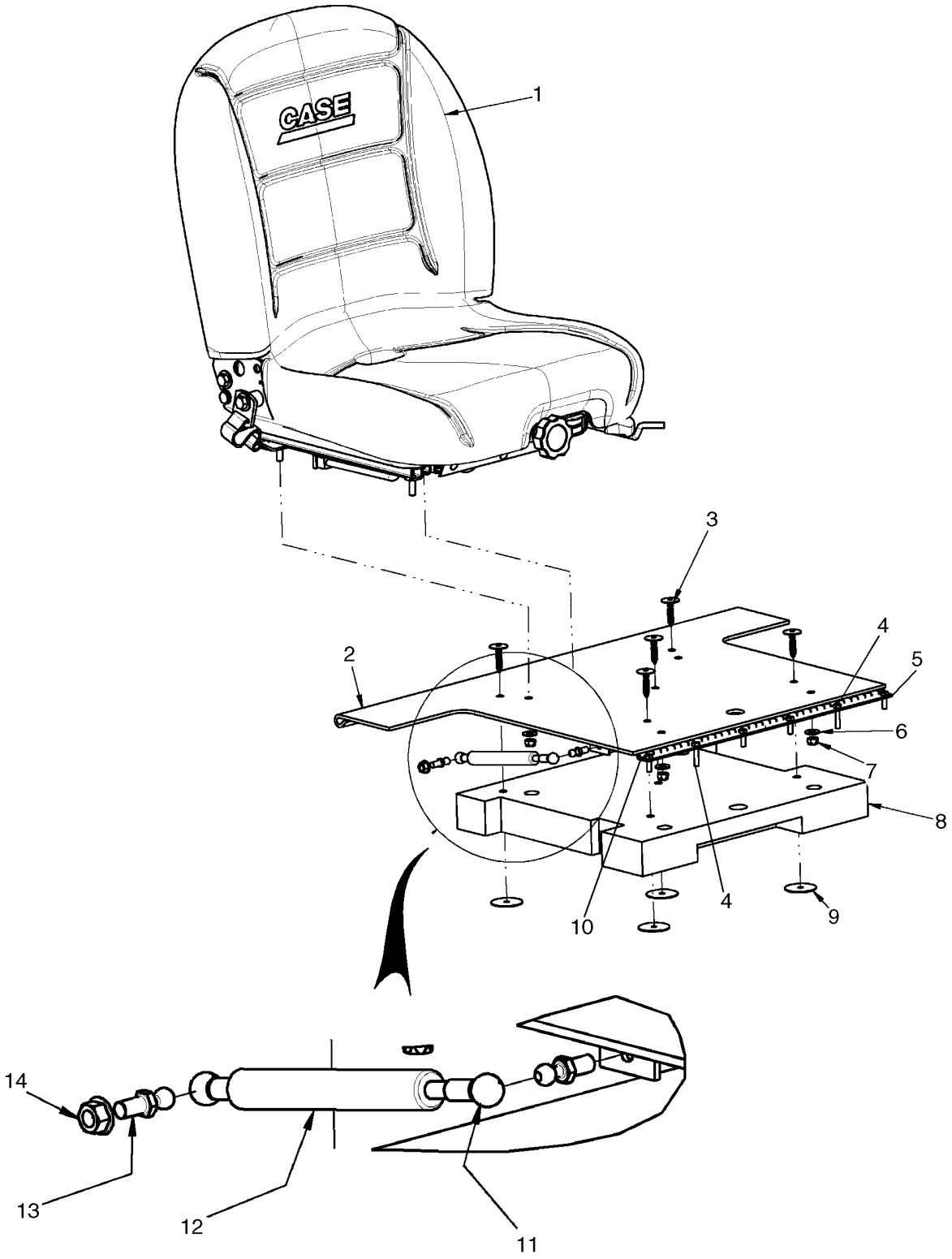

ASIENTO, SOPORTE - SUSPENSION

REF	FN	PART NUMBER	YR/SN	QTY	DENOMINACION
1		87662513		1	ASIENTO, Suspension Seat Assembly, Wheat Color
2		{87676122}		1	Seat Hinge Plate
3		348452A1		5	TORNILLO, Push In Fastener
4		80120101		2	TORNILLO, M6 X 30, 8.8 ZND
5		120100		4	TORNILLO, Hex, M6 x 20, 8.8
6		86625263		4	ARANDELA, M8 x 20 x 1.6
7		9628098		4	CONTRA TUERCA, M8 x 1.25, Cl 10
8		{87676124}		1	Pad, Seat Noise Control
9		348434A1		5	ARANDELA
10		{87676121}		1	Seat Hinge Stiffener
11		254307A1		2	JUNQUILLO
12		189787A2		1	AMORTIGUADOR
13		189609A1		2	PRISIONERO, Ball Stud, 10mm Ball X M8 X 1.25 Thd
14		86505868		2	TUERCA, M8, Flg Ser

ASIENTO, SOPORTE - DELUXE SUSPENSION

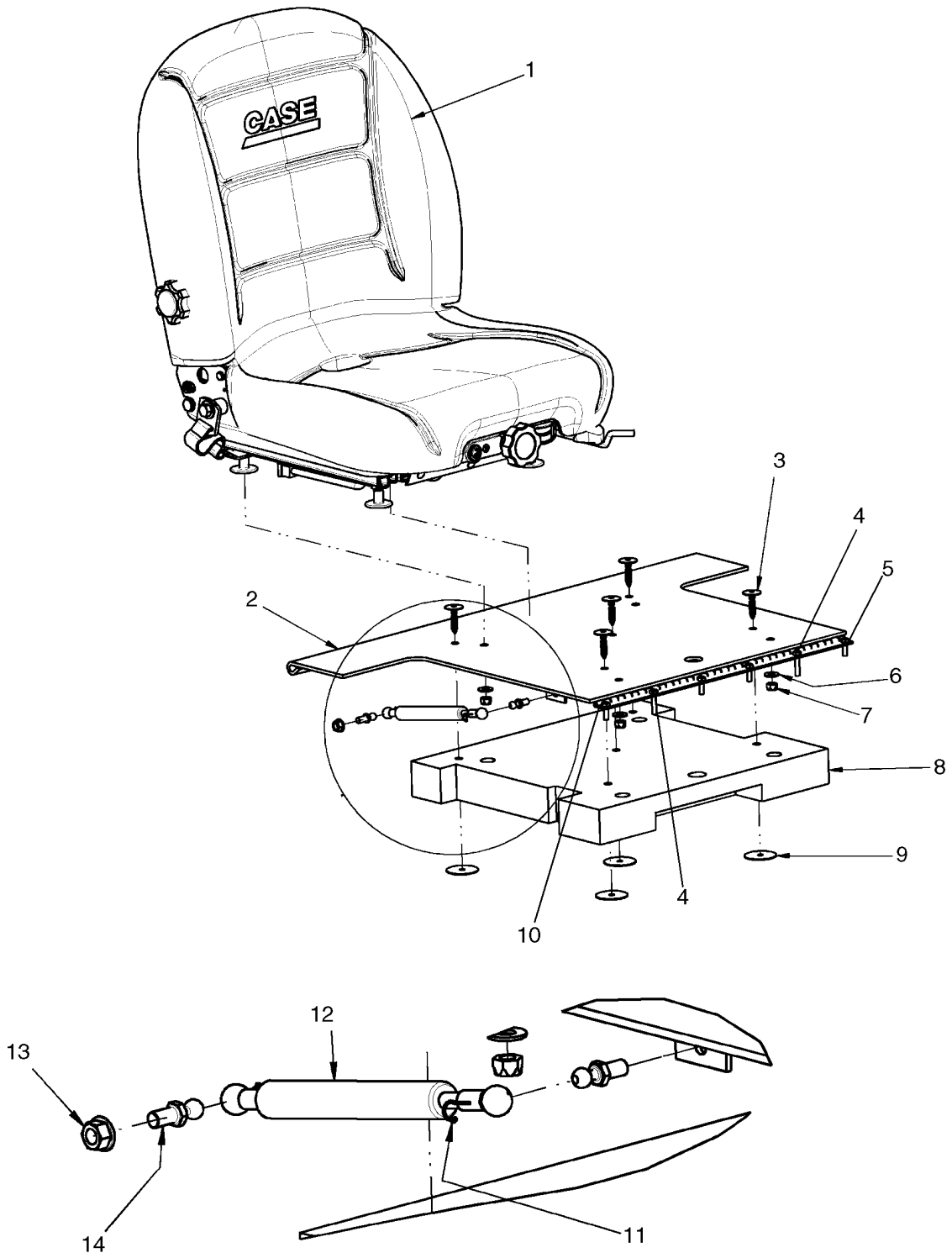

ASIENTO, SOPORTE - DELUXE SUSPENSION

REF	FN	PART NUMBER	YR/SN	QTY	DENOMINACION
1		87662514		1	ASIENTO, Suspension Seat Assembly - Deluxe, Cloth Seat
2		{87676122}		1	Seat Hinge Plate
3		348452A1		5	TORNILLO, Push In Fastener
4		80120101		2	TORNILLO, M6 X 30, 8.8
5		120100		4	TORNILLO, Hex, M6 x 20, 8.8
6		86625263		4	ARANDELA, M8 x 20 x 1.6
7		9628098		4	CONTRA TUERCA, M8 x 1.25, Cl 10
8		{87676124}		1	Pad, Seat Noise Control
9		348434A1		5	ARANDELA
10		{87676121}		1	Seat Hinge Stiffener
11		254307A1		2	JUNQUILLO
12		189787A2		1	AMORTIGUADOR
13		86505868		2	TUERCA, M8, Flg Ser
14		189609A1		2	PRISIONERO, Ball Stud, 10mm Ball X M8 X 1.25 Thd

09-48		p1	12/07

VENTANA, TRASERA

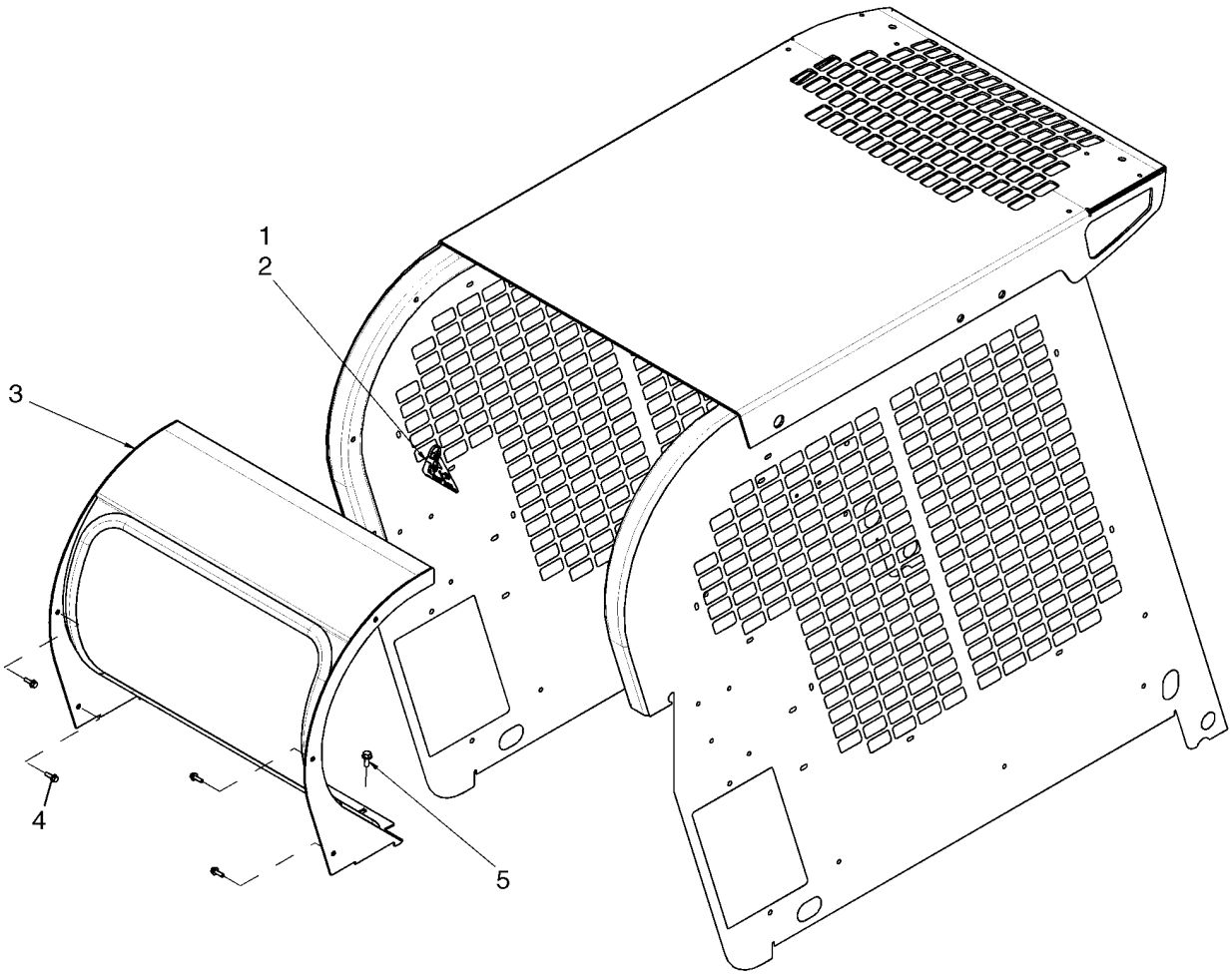

BS07K248

VENTANA, TRASERA

REF	FN	PART NUMBER	YR/SN	QTY	DENOMINACION
1		263117		1	CIERRA CABLES, .14" x 11 1/2"
2		87026871		1	SENAL DE PLASTICO, Exit Tag
3		87626406		1	VENTANILLA, Rear Window
4		9804256		9	TORNILLO, Hex Flg, M6 x 20, 8.8
5		9804258		3	TORNILLO, Hex Flg, M8 x 20, 8.8

VENTANA, TRASERA - CALEFACCION Y AIRE ACONDICIONADO

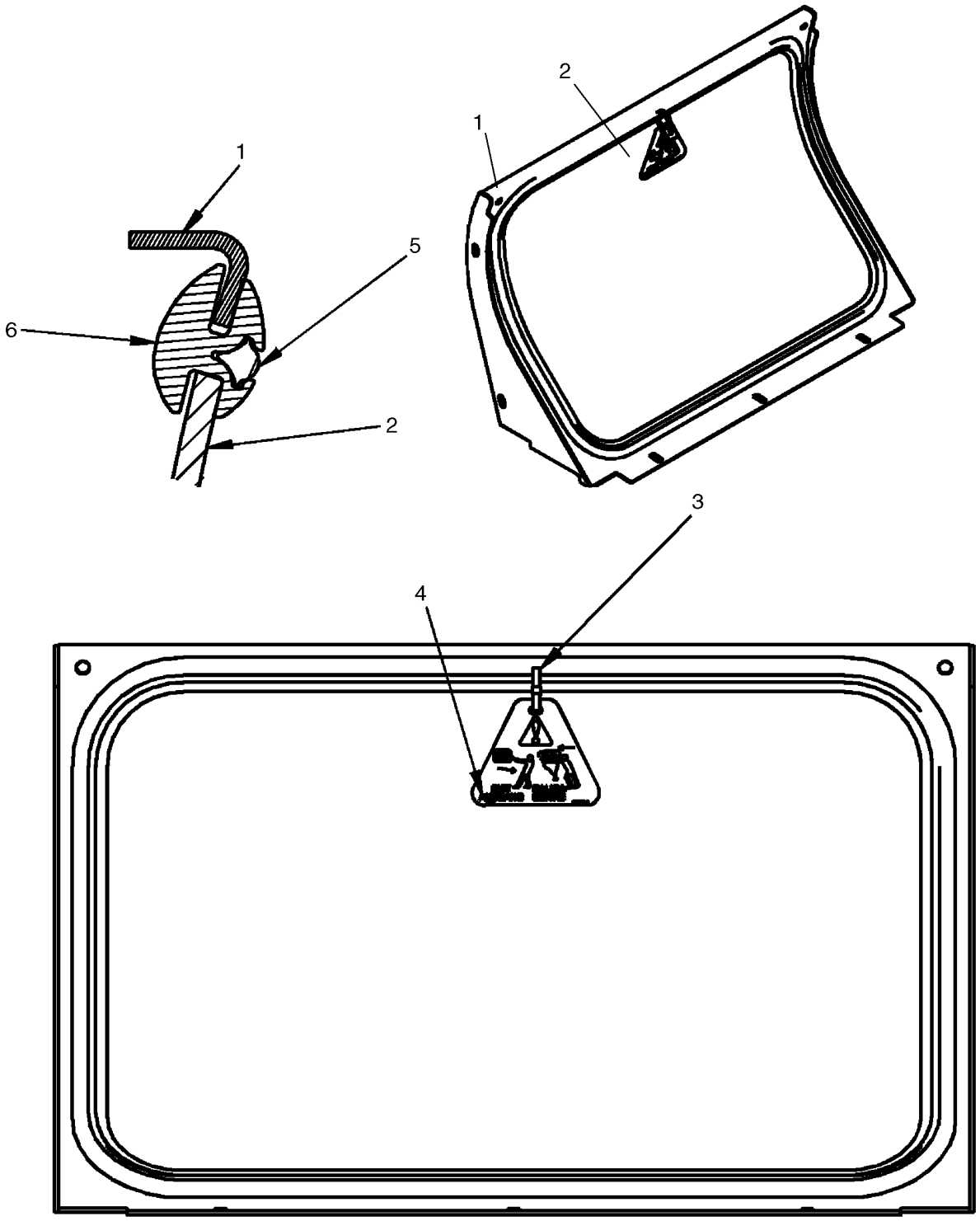

VENTANA, TRASERA - CALEFACCION Y AIRE ACONDICIONADO

REF	FN	PART NUMBER	YR/SN	QTY	DENOMINACION
1		{87705428}		1	Frame, Rear HVAC Window
2		{87641703}		1	Glass, Rear HVAC Window
3		263117		1	CIERRA CABLES, .14" x 11 1/2"
4		87026871		1	SENAL DE PLASTICO, Exit Tag
5		{87643808}		1	Key, Locking
6		{87641704}		1	Seal, H Channel HVAC Window

VENTANAS, ARRIBA

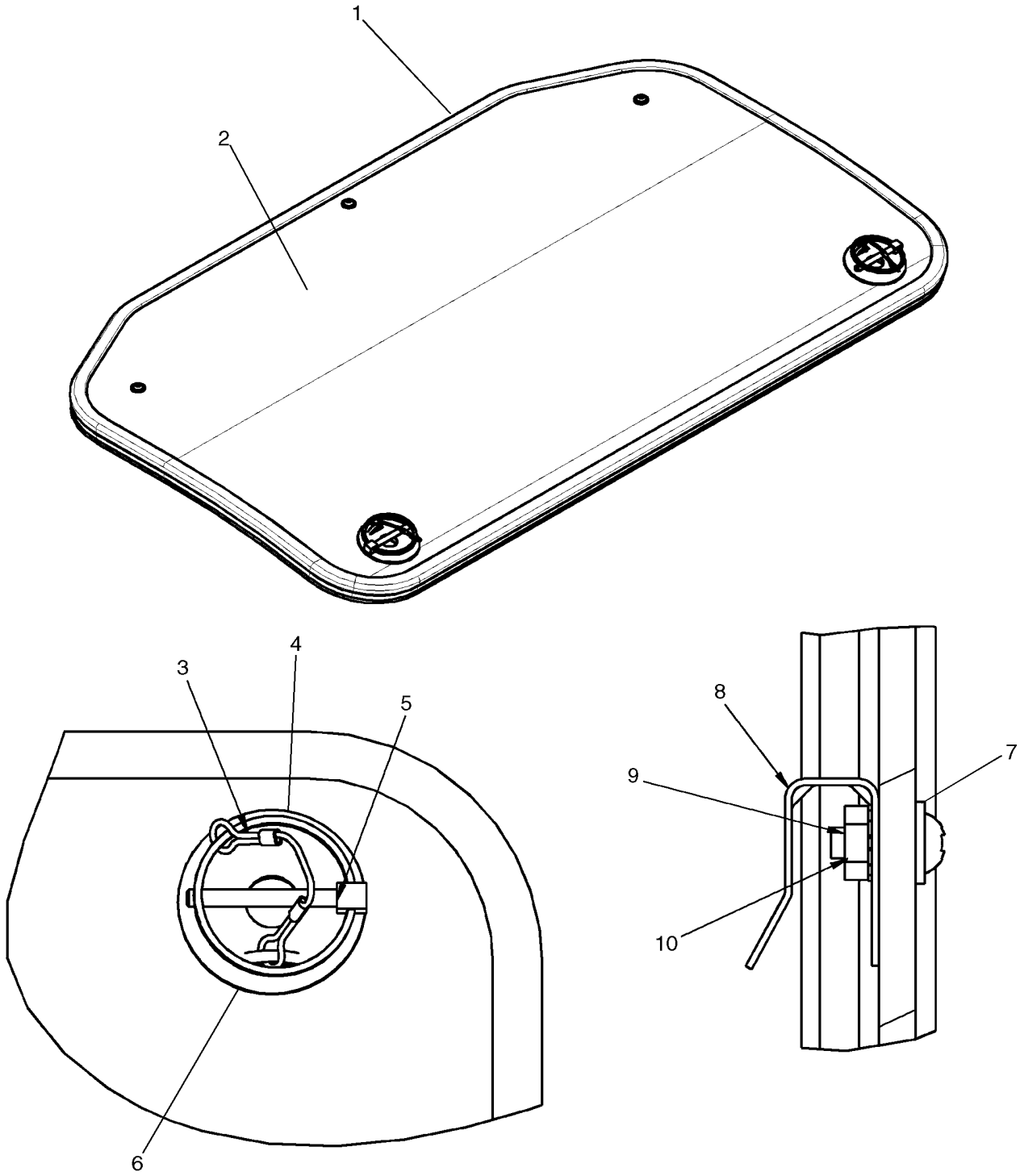

VENTANAS, ARRIBA

REF	FN	PART NUMBER	YR/SN	QTY	DENOMINACION
		87715833		1	HOJA, Top Window; Incl. 1 - 10
1		NSS		1	NO SE REPARA SEPARADAM., Bulb Seal
2		NSS		1	NO SE REPARA SEPARADAM., Window
3		NSS		2	NO SE REPARA SEPARADAM., Cable
4		NSS		4	NO SE REPARA SEPARADAM., Cable Crimp
5		NSS		2	NO SE REPARA SEPARADAM., Linch Pin
6		NSS		2	NO SE REPARA SEPARADAM., Mount, Skylight Pin
7		280299		3	ARANDELA, #8
8		NSS		3	NO SE REPARA SEPARADAM., Clip
9		NSS		3	NO SE REPARA SEPARADAM., Nut, #8-32 UNC
10		81822758		3	TORNILLO, Cross Pan Hd, #8-32 x 1/2"

09-51		p1	12/07

VENTANAS, LATERAL

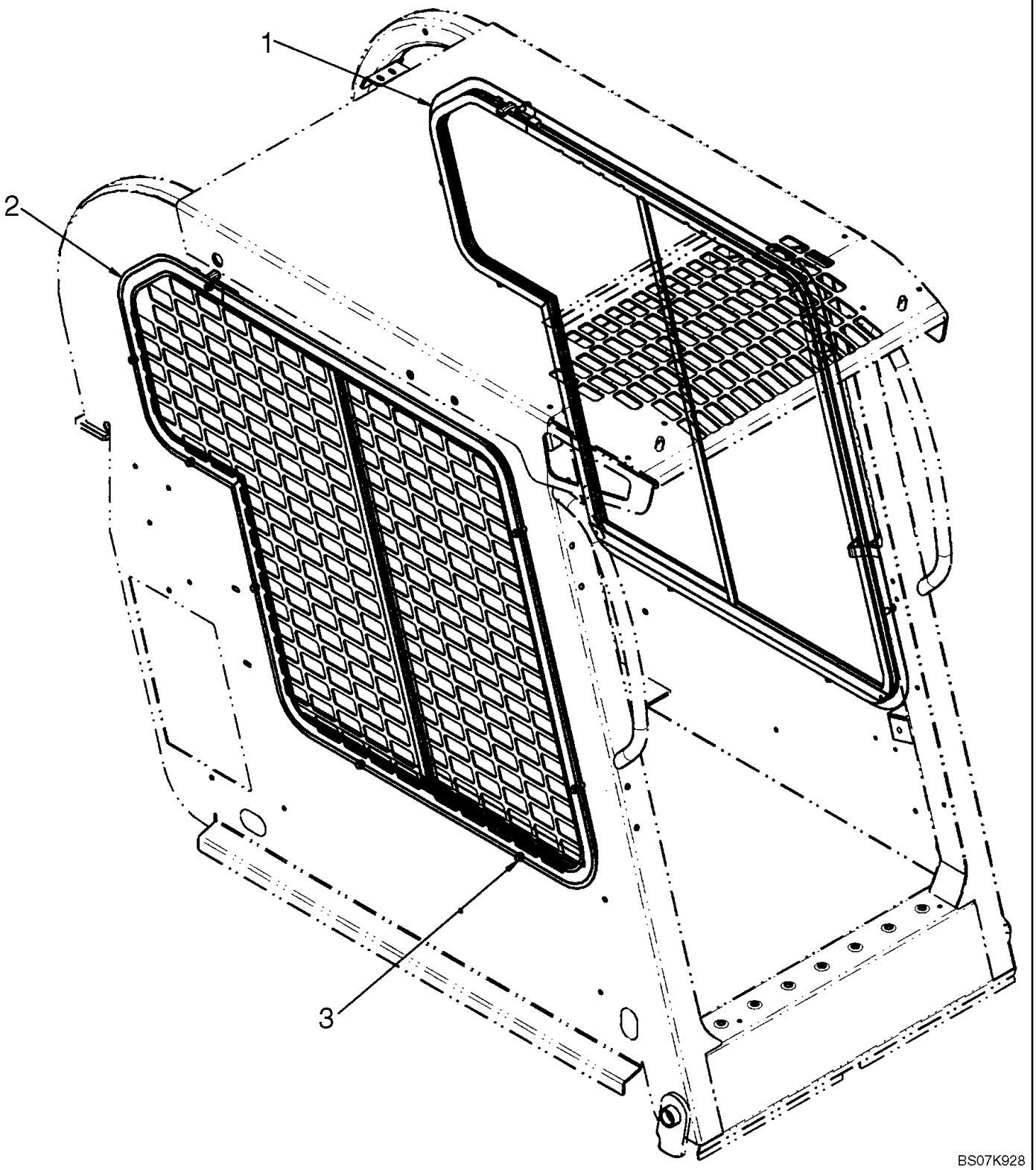

VENTANAS, LATERAL

REF	FN	PART NUMBER	YR/SN	QTY	DENOMINACION
		87638358		1	KIT, SERVICE, Kit, Side Windows; Incl. 1 - 3 And Instructions
1		87657669		1	VENTANILLA, LH Side
2		87657670		1	VENTANILLA, RH Side
3		87030555		16	TORNILLO, Hex Flange Head M6 x 16 8.8 PHC

09-52		p1	12/07

CUBIERTA DEL TECHO - ESTANDAR

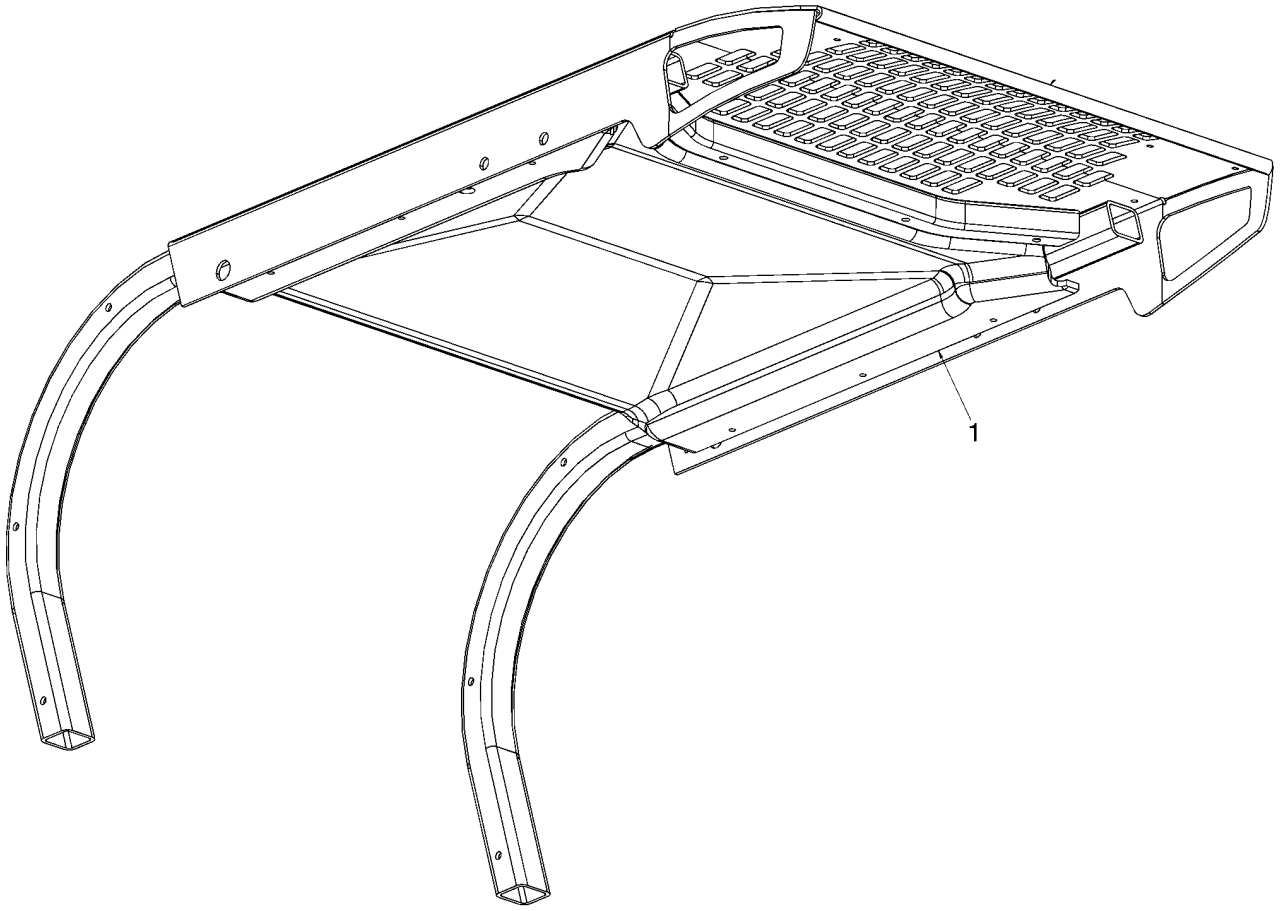

BS07K108

CUBIERTA DEL TECHO - ESTANDAR

REF	FN	PART NUMBER	YR/SN	QTY	DENOMINACION
1		{87669944}		1	Headliner, Standard

CALEFACCION Y AIRE ACONDICIONADO - CUBIERTA DEL TECHO

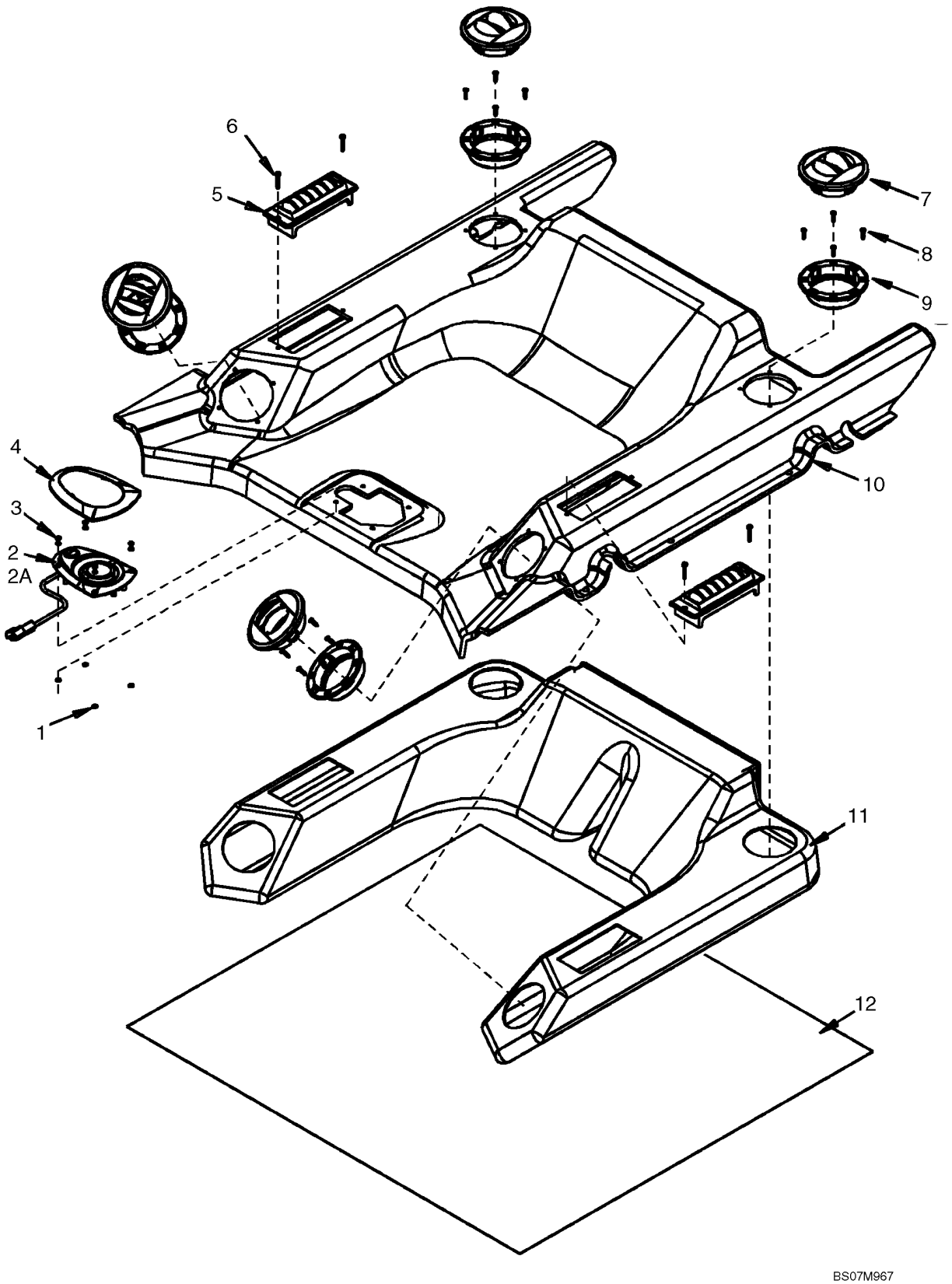

CALEFACCION Y AIRE ACONDICIONADO - CUBIERTA DEL TECHO

REF	FN	PART NUMBER	YR/SN	QTY	DENOMINACION
1		NSS		4	NO SE REPARA SEPARADAM., Washer
2		87414959		1	FARO, Incl 2A
2A		373114A1		1	BOMBILLA
3		NSS		4	NO SE REPARA SEPARADAM., Pop Rivet
4		NSS		1	NO SE REPARA SEPARADAM., Dome Light Bezel
5		86620864		2	RESPIRADERO
6		NSS		4	NO SE REPARA SEPARADAM., Screw
7		NSS		4	NO SE REPARA SEPARADAM., Louver
8		NSS		16	NO SE REPARA SEPARADAM., Screw
9		NSS		4	NO SE REPARA SEPARADAM., Louver Housing
10		NSS		1	NO SE REPARA SEPARADAM., Headliner, CPXT
11		NSS		1	NO SE REPARA SEPARADAM., Duct
12		NSS		1	NO SE REPARA SEPARADAM., Insulation Wrap

REVESTIMIENTO INTERIOR

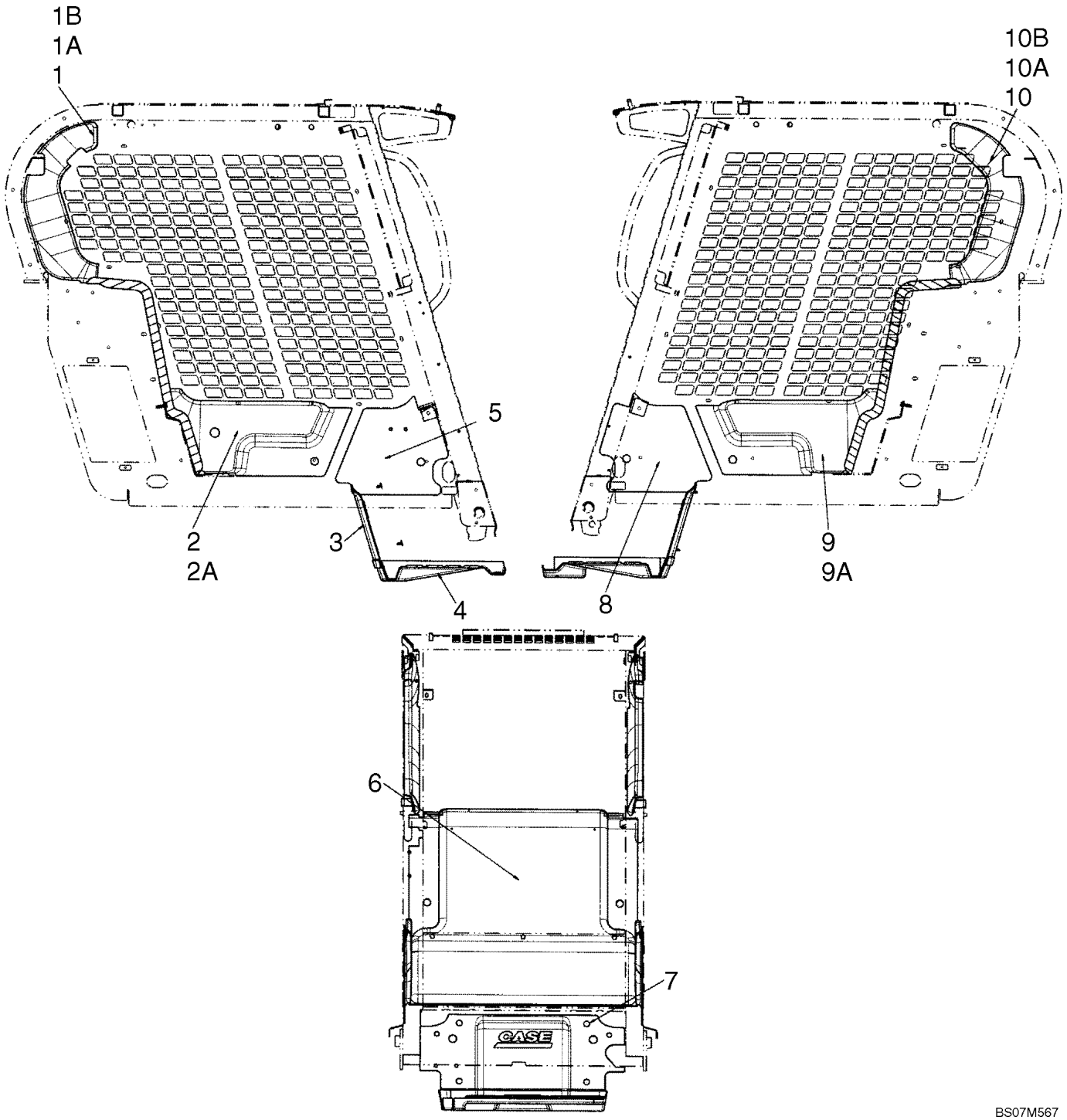

REVESTIMIENTO INTERIOR

REF	FN	PART NUMBER	YR/SN	QTY	DENOMINACION
		87638514		1	KIT, SERVICE, Kit, Interior Trim; Incl 1 - 10B
1		87685891		1	TUBO AISLANTE, Panel, Upper Right Rear; Incl 1A, 1B
1A		{87685911}		1	Retainer, Foam Block
1B		{87685909}		1	Retainer, Foam Block
2		87730070		1	TUBO AISLANTE, Panel, Lower Right Rear
2A		{87685909}		1	Retainer, Foam Block
3		87730822		1	TAPETE DE SUELO, Mat, Heel Plate
4		87712700		1	TAPETE DE SUELO, Floor Mat
5		87727752		1	TUBO AISLANTE, Interior Trim, Bottom RH
6		87672098		1	TUBO AISLANTE, Trim, Interior Heat Shield
7		87712706		4	BOTON DE RESORTE, Fastener, Push In
8		87727748		1	TUBO AISLANTE, Interior Trim, Bottom LH
9		87730069		1	TUBO AISLANTE, Panel, Lower Left Rear
9A		{87685909}		1	Retainer, Foam Block
10		87685888		1	TUBO AISLANTE, Panel, Upper Left Rear
10A		{87685911}		1	Retainer, Foam Block
10B		{87685909}		1	Retainer, Foam Block

RADIO, ALTAVOZ Y ANTENA

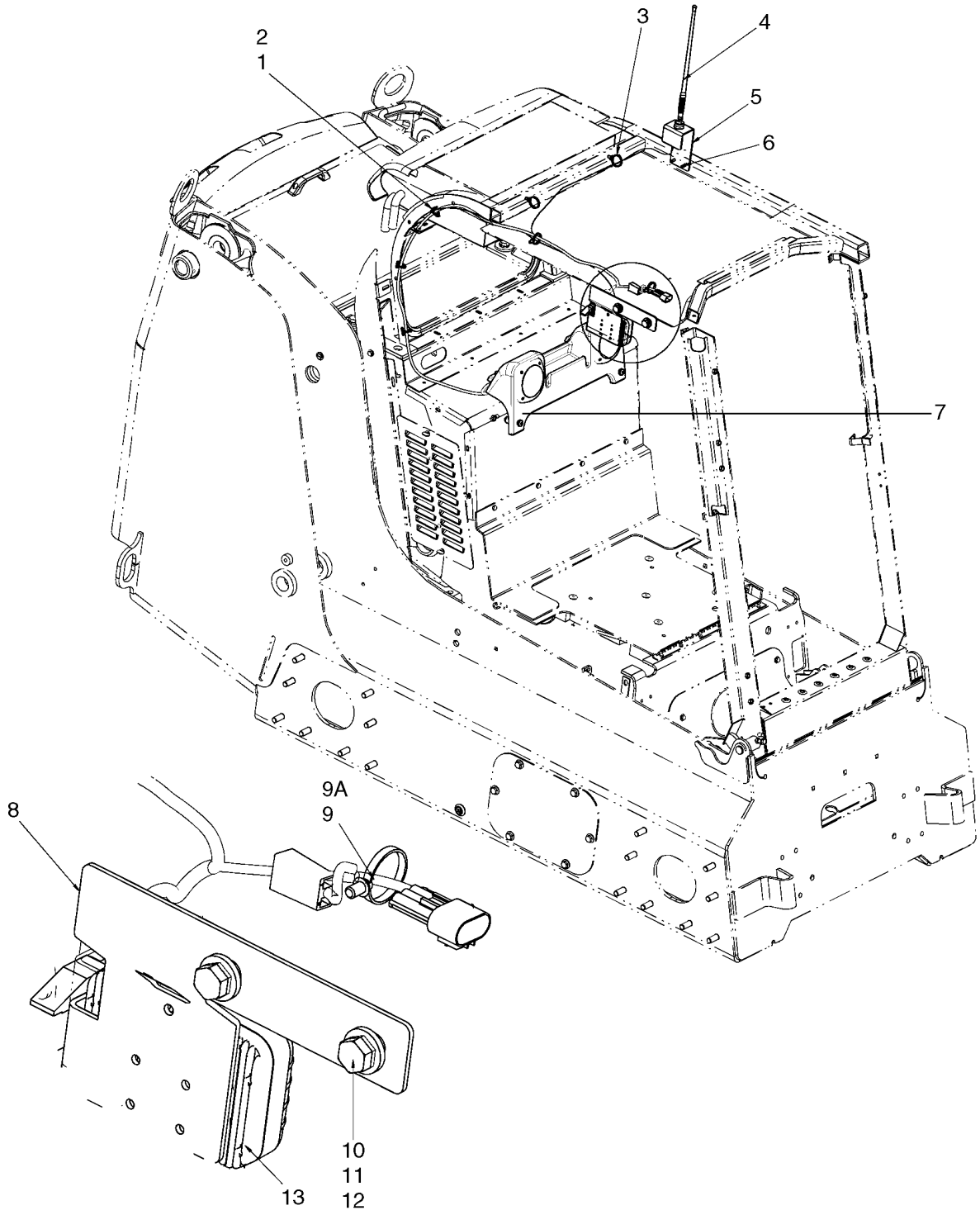

RADIO, ALTAVOZ Y ANTENA

REF	FN	PART NUMBER	YR/SN	QTY	DENOMINACION
		87652337		1	KIT, SERVICE, Kit, Radio; Incl 1 - 13
1		87642915		3	CIERRA CABLES
2		87642914		3	APOYO
3		87668737		4	BANDA
4		87668735		1	ANTENA ELECTRICA, Antenna, Rubber Mast
5		87682711		1	PIEZA DE SOPORTE, Antenna, Bracket
6		86625224		2	TORNILLO, Screw, 1/4-20 X 3/4 Hex Head
7		REF		1	MANUAL, Speakers And Housing; See Fig 09-56
8		NSS		1	NO SE REPARA SEPARADAM., Radio Mounting Bracket
9		87658636		1	HAZ, Radio Harness; Incl 9A
9A		A149796		1	FUSIBLE, Fuse, 3A
10		43260		2	TORNILLO, Hex, M12 x 30, 10.9
11		412672		2	CONTRA TUERCA, M12 x 1.75, Cl 10
12		86625256		4	ARANDELA, M12 x 28.5 x 4, HT
13		NSS		1	NO SE REPARA SEPARADAM., Mini Radio, AM/FM/WX

RADIO, ALTAVOZ Y ANTENA

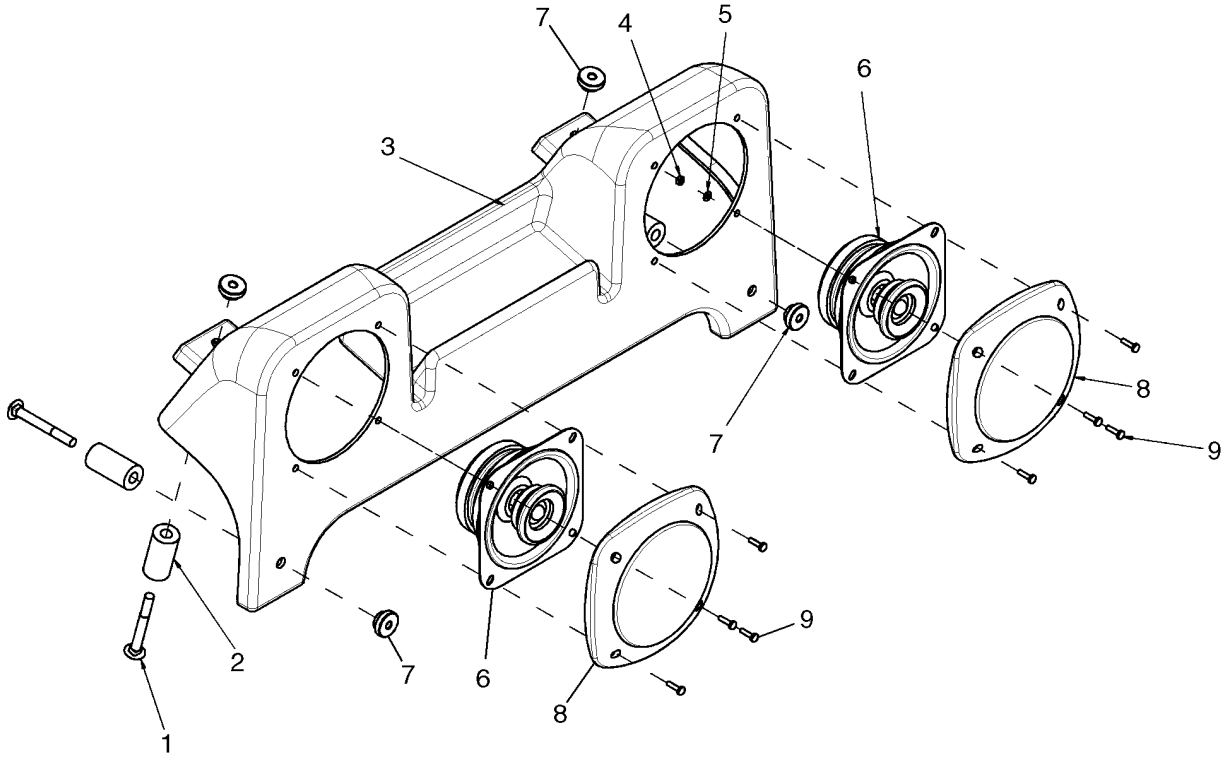

BS07K415

RADIO, ALTAVOZ Y ANTENA

REF	FN	PART NUMBER	YR/SN	QTY	DENOMINACION
1		280498		4	PERNO, CABEZA RONDA, Short NK, 1/4"-20 x 2 1/4", G5
2		87668006		4	SEPARADOR, Spacer, 8.26 ID X 19.05 OD X 38.1 Length
3		87627524		1	CAVIDAD, Speaker Housing
4		86508812		8	TUERCA, M3, Cl 8
5		86639310		8	ARANDELA, M3
6		87672222		2	RADIO, Speaker, 4 in.
7		87667727		4	TUERCA, Nut, Plastic Thumb
8		87672257		2	RADIO, Speaker Grill
9		86599775		8	TORNILLO, Cross Pan Hd, M3 x 12

CALENTADOR, DELUXE

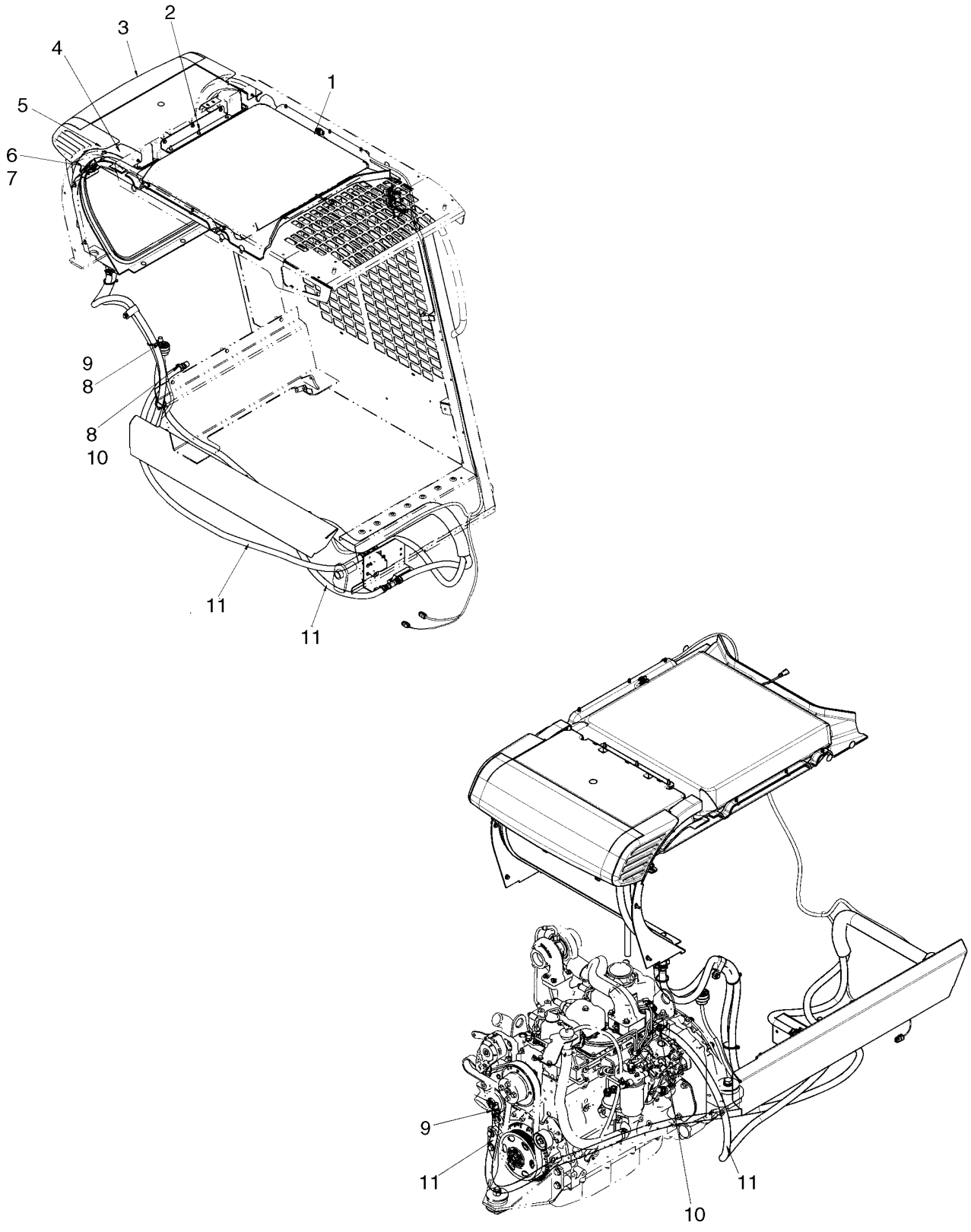

CALENTADOR, DELUXE

REF	FN	PART NUMBER	YR/SN	QTY	DENOMINACION
1		REF		1	MANUAL, Heater System; See Fig 09-58
2		9804256		3	TORNILLO, Hex Flg, M6 x 20, 8.8
3		87653394		1	RECALENTADOR, See Fig 09-59
4		87450833		2	CINTA
5		291308		AR	BANDA HERMETICIDAD, 580mm (22 13/16 in.)
6		86619800		2	CONTRA TUERCA, M6 x 1, Flg, Cl 8
7		9804257		2	TORNILLO, Hex Flg, M6 x 25, 8.8
8		87443511		2	BORNE
9		642560		1	CONEXION, 5/8" Hose X 3/8" NPTF Beaded
10		87302136		1	CONEXION, 5/8" Hose x 1/2" NPTF, Barbed
11		87691475		2	MANGA, Hose, Heater Supply, 1975mm (77 3/4 in.)

09-58		p1	12/07

CALENTADOR, DELUXE

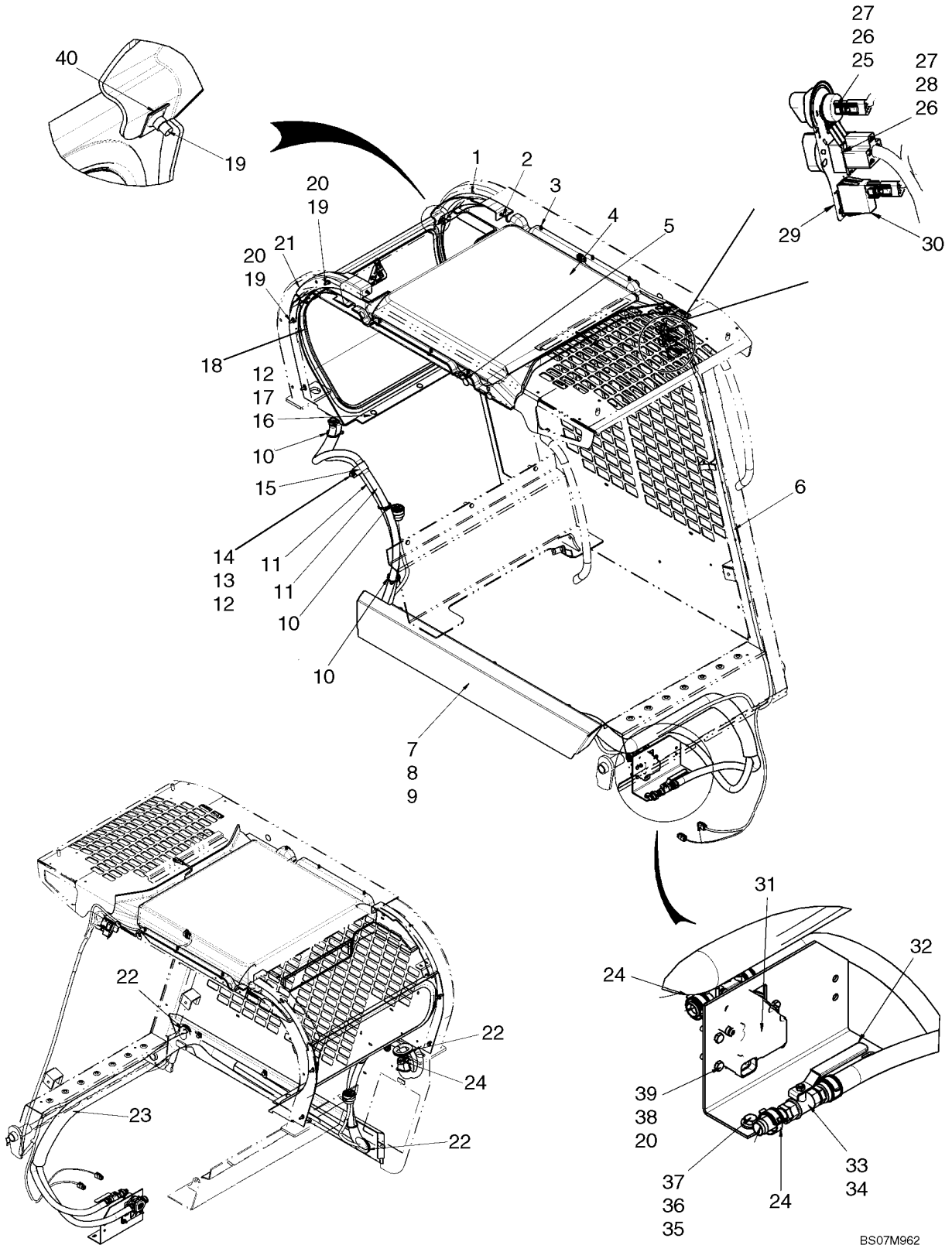

CALENTADOR, DELUXE

REF	FN	PART NUMBER	YR/SN	QTY	DENOMINACION
1		87705419		1	VIDRIO, Filler, Rear Window LH
2		87712706		2	BOTON DE RESORTE, Fastener, Push In
3		87713668		6	BOTON DE RESORTE, Fastener, Push In
4		REF		1	MANUAL, Headliner, Heat And A/C; See Fig 09-53
5		414635A1		4	TAPA, Lexan Cover, 25mm (1 in.) Dia.
6		87718151		1	HAZ, Harness, HVAC
7		87703530		1	COBERTURA, Hose Cover, RH
8		9804258		3	TORNILLO, Hex Flg, M8 x 20, 8.8
9		87016586		3	TUERCA, M8, U
10		L11541		3	CIERRA CABLES
11		87717211		2	MANGA, Heater Hose
12		86624184		4	ARANDELA, M8 x 16 x 1.6
13		86505868		1	TUERCA, M8, Flg Ser
14		120104		1	TORNILLO, Hex, M8 x 20, 8.8
15		H434289		1	ARGOLLA DE FIJACION
16		43362		3	TUERCA, M8, Cl 10
17		86507486		3	PERNO, CABEZA RONDA, Short NK, M8 x 20, Cl8.8, Full Thd
18		REF		1	MANUAL, Rear Window, HVAC; See Fig 09-49
19		9804256		8	TORNILLO, Hex Flg, M6 x 20, 8.8
20		86588450		10	ARANDELA, M6
21		87705420		1	VIDRIO, Filler, Rear Window RH
22		87439844		3	DEFENSA
23		87441006		1	DEFENSA, Guard, A/C Hose
24		87443511		6	BORNE
25		86729675		1	POTENCIOMETRO
26		87310592		2	TUERCA, Jam, 7/16"-28, G5
27		86729670		2	POMO
28		86729669		1	INTERRUPTOR VENTILADOR, Blower Switch
29		{87687236}		1	Decal, HVAC Control
30		87555249		1	CONTACTOR, A/C Switch
31		87520839		1	VALVULA
32		87462631		1	PIEZA DE SOPORTE, Water Valve And Dryer Bracket
33		87441937		1	VALVULA, Heater Hose Ball Valve

CALENTADOR, DELUXE

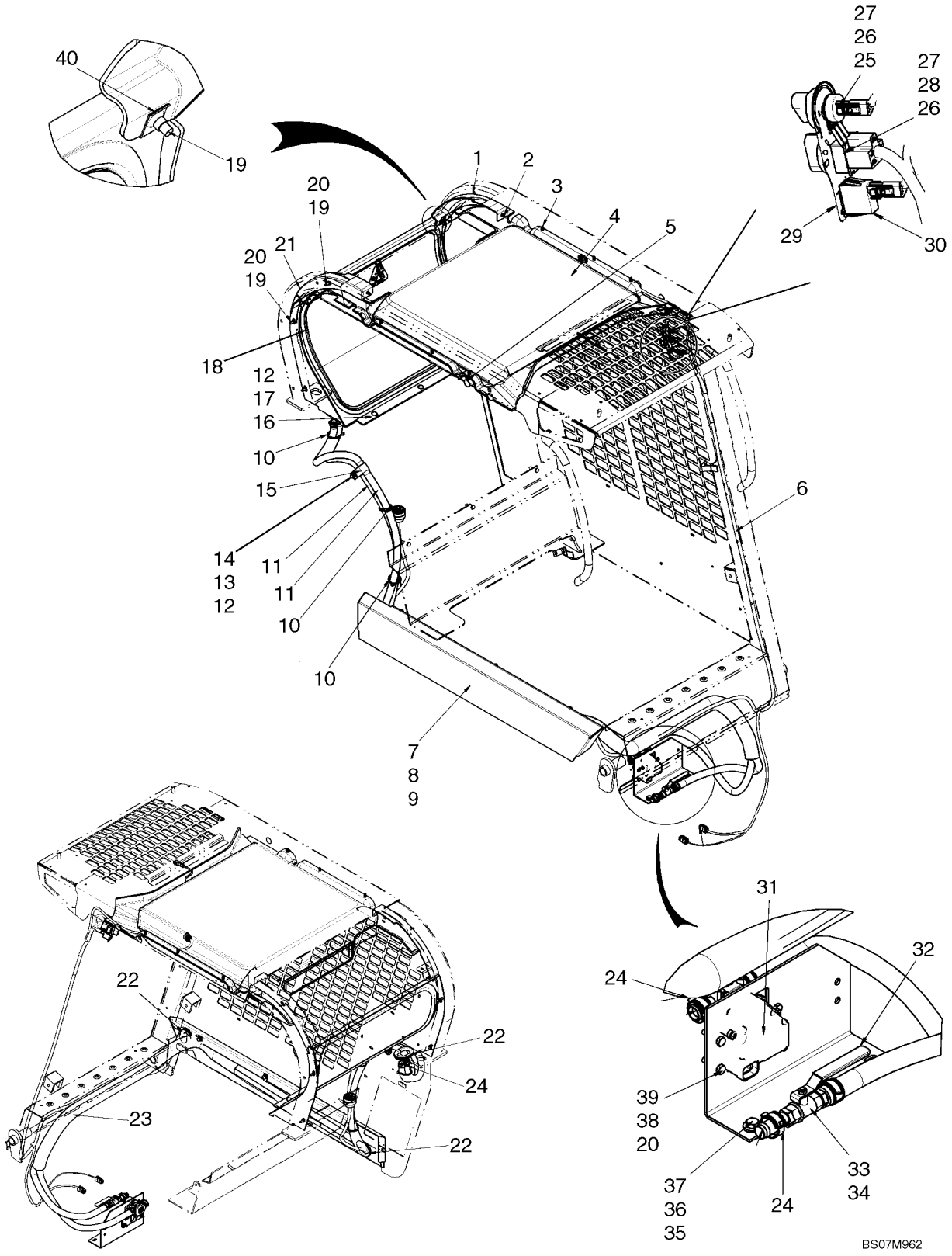

CALENTADOR, DELUXE

REF	FN	PART NUMBER	YR/SN	QTY	DENOMINACION
34		642560		2	CONEXION, 5/8" Hose X 3/8" NPTF Beaded
35		229197A1		2	TUERCA
36		87015284		2	ARANDELA, M8 x 21.5 x 2.5, HT
37		120103		2	TORNILLO, Hex, M8 x 16, 8.8
38		86511444		4	TUERCA, M6, Flg Ser
39		86977786		4	TORNILLO, Hex, M6 x 25, 8.8
40		87016585		2	TUERCA
41		{}			

SISTEMA DE AIRE ACONDICIONADO

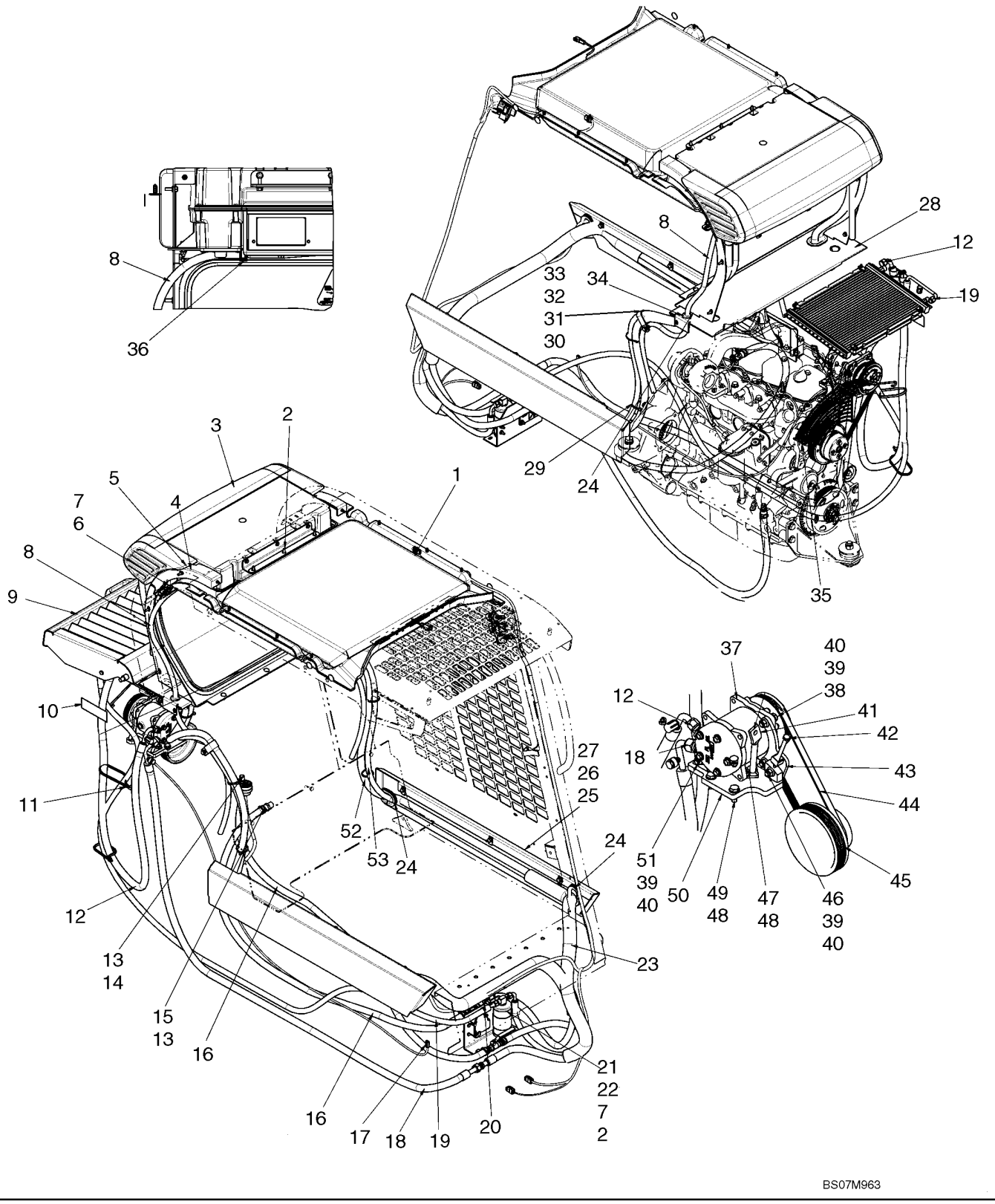

SISTEMA DE AIRE ACONDICIONADO

REF	FN	PART NUMBER	YR/SN	QTY	DENOMINACION
		87623657		1	KIT, SERVICE, Kit, Deluxe Heater And Air Conditioning; Incl 1 - 53
1		REF		1	MANUAL, Heater System; See Fig 09-57, 09-58
2		9804256		5	TORNILLO, Hex Flg, M6 x 20, 8.8
3		87653393		1	RECALENTADOR, Heat And Air Conditioning Unit; See Fig 09-61
4		87450833		2	CINTA
5		291308		AR	BANDA HERMETICIDAD, 580mm (22 13/16 in.)
6		9804257		2	TORNILLO, Hex Flg, M6 x 25, 8.8
7		86619800		4	CONTRA TUERCA, M6 x 1, Flg, Cl 8
8		87691473		2	MANGA, Tube, A/C Drain
9		REF		1	MANUAL, Hood, Air Conditioning; See Fig 09-25
10		86639409		1	CALCOMANIA, Decal, Air Conditioning Specifications
11		L18331		2	CIERRA CABLES
12		87452009		1	MANGUERA (CONJUNTO)
13		87443511		2	BORNE
14		642560		1	CONEXION, 5/8" Hose X 3/8" NPTF Beaded
15		86010532		1	CONEXION, 5/8" Hose X 1/2" NPTF Beaded
16		87691475		2	MANGA, Hose, Heater Supply
17		87445908		1	HAZ, Compressor Harness
18		87436118		1	MANGUERA (CONJUNTO)
19		87717220		1	MANGA, Hose, A/C Liquid
20		86625515		1	INTERRUPTOR DE PRESION, Switch, A/C Pressure
21		86625481		1	RECEPTOR-DESHIDRAT.
22		87437501		1	PIEZA DE SOPORTE
23		87441006		1	DEFENSA
24		87439844		3	DEFENSA, Trim
25		87703555		1	COBERTURA, Hose Cover, LH
26		9804258		3	TORNILLO, Hex Flg, M8 x 20, 8.8
27		87016586		3	TUERCA, M8, U
28		87716582		1	FORRO AISLANTE, Heat Shield Extension
29		L11541		3	CIERRA CABLES
30		H434289		1	ARGOLLA DE FIJACION
31		86624184		1	ARANDELA, M8 x 16 x 1.6
32		120104		1	TORNILLO, Hex, M8 x 20, 8.8

SISTEMA DE AIRE ACONDICIONADO

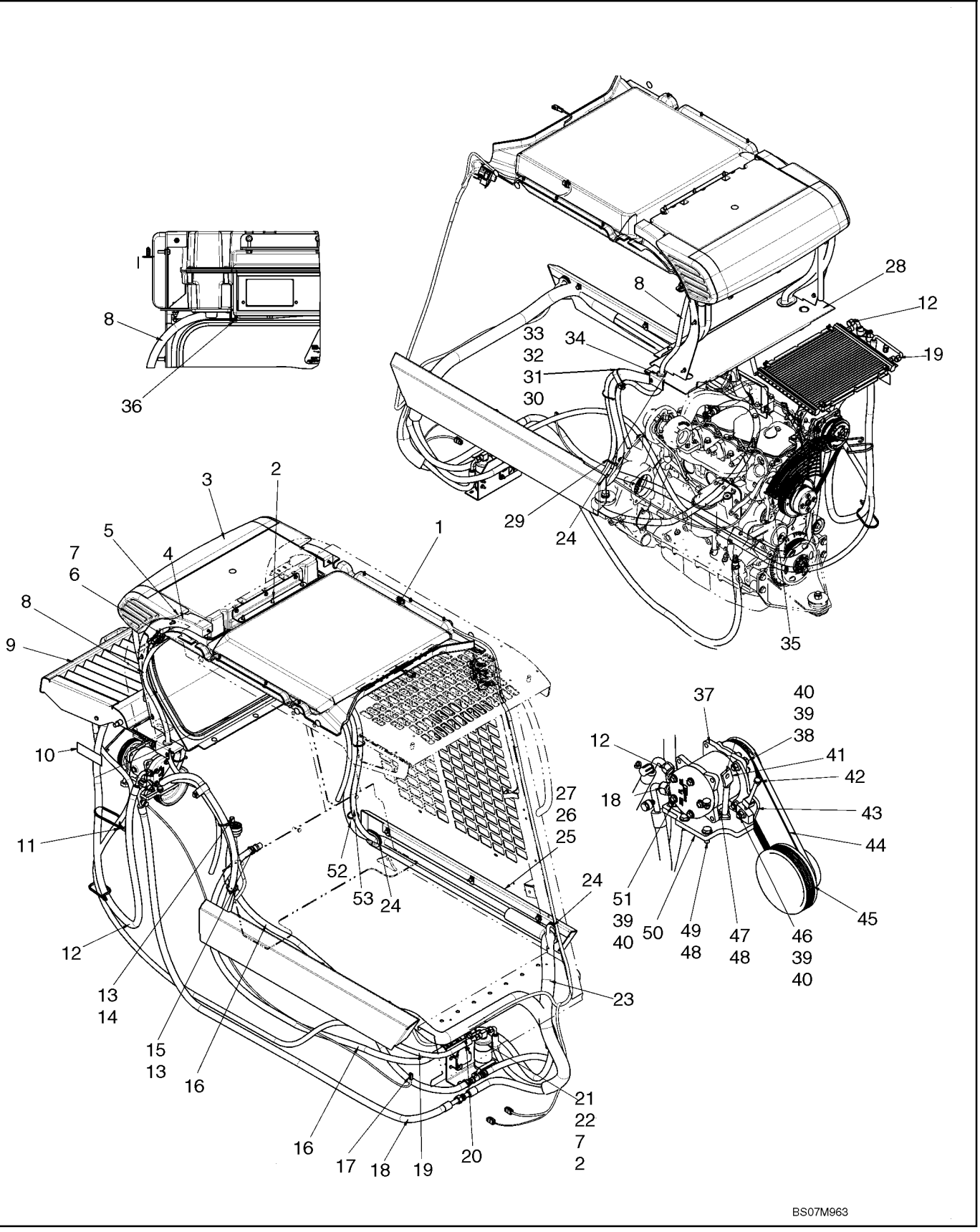

SISTEMA DE AIRE ACONDICIONADO

REF	FN	PART NUMBER	YR/SN	QTY	DENOMINACION
33		86505868		1	TUERCA, M8, Flg Ser
34		87307909		2	PASACABLES
35		87594971		1	DEFENSA, Fan Guard
36		{87584302}		2	Clamp
37		87649991		1	COMPRESOR ACOND.
38		9706704		2	TORNILLO, Hex, M10 x 35, 8.8, Full Thd
39		86050279		4	TUERCA, M10 x 1.5, Flg, Cl 10
40		86624176		4	ARANDELA, M10 x 20 x 2
41		87684742		1	VARILLA, Rod, Muffler
42		87649979		1	TORNILLO
43		87709877		1	PIEZA DE SOPORTE, Tensioner Bracket
44		87685981		1	CORREA, Belt, A/C Drive
45		87669405		1	POLEA, Pulley, Fan And Compressor
46		120068		1	TORNILLO, Hex, M10 x 40, 8.8, Full Thd
47		9861444		1	TORNILLO, Hex, M10 x 20, 10.9, Full Thd
48		140045		4	ARANDELA ABANICO, Belleville, M10
49		9515003		3	TORNILLO, Hex, M10 x 30, 10.9, Full Thd
50		87710177		1	PIEZA DE SOPORTE, Bracket, Compressor
51		7120741		1	TORNILLO
52		87691470		1	MANGA, Hose, A/C Suction
53		87691471		1	MANGA, Hose, A/C Liquid

CALENTADOR

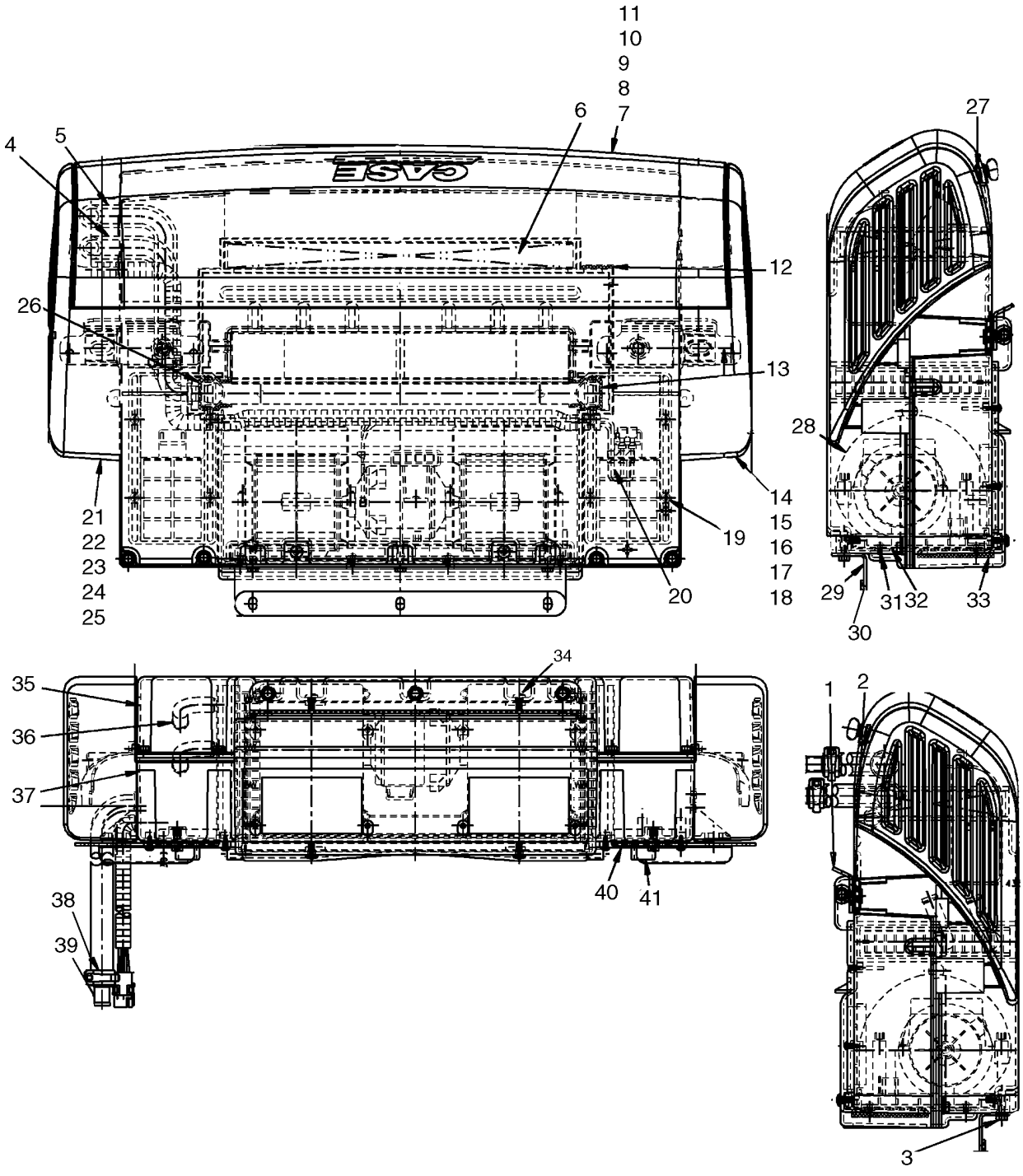
11
10
9
8
6
7
4
5
12
26
13
21
22
23
24
25
14
15
16
17
18
19
20
27
28
29
30
31
32
33
34
35
36
37
38
39
40
41
1
2
3
BS07M958

CALENTADOR

REF	FN	PART NUMBER	YR/SN	QTY	DENOMINACION
1		87656095		2	PIEZA DE SOPORTE, Bottom Bracket
2		87656096		2	JUNTA HERMETICA, Neoprene Gasket, Bottom
3		NSS		5	NO SE REPARA SEPARADAM., Screw, M6 X 20
4		87656099		1	MANGA, Formed Hose, Short
5		87656098		1	MANGA, Formed Hose, Long
6		87656118		1	FILTRO, Charcoal Filter
7		87656129		1	TRASERA TAPA, Rear Cover Assembly; Incl 8 - 11
8		87656125		3	TORNILLO, Wing Head Screw
9		87591148		3	RETENEDOR, Black Nylon Retainer
10		87656114		1	TAPADERA, Rear Cover
11		87656130		1	ESPUMA, Foam Seal
12		NSS		1	NO SE REPARA SEPARADAM., Seal
13		NSS		1	NO SE REPARA SEPARADAM., Tank Seal
14		87656121		1	TAPON DEL DEPOSITO, End Cap Assembly, LH; Incl 15 - 18
15		87656109		1	TAPON DEL DEPOSITO, End Cap, LH
16		87656123		1	TAPON DEL DEPOSITO, Partition
17		87591148		2	RETENEDOR, Black Nylon Retainer
18		87656127		2	TORNILLO
19		NSS		8	NO SE REPARA SEPARADAM., Screw
20		87656120		1	GRUPO DE CABLES
21		87656122		1	TAPON DEL DEPOSITO, End Cap Assembly, RH; Incl 22 - 25
22		87656105		1	TAPON DEL DEPOSITO, End Cap, RH
23		87656124		1	TAPON DEL DEPOSITO, Partition
24		87591148		2	RETENEDOR, Black Nylon Retainer
25		87656127		2	TORNILLO
26		NSS		1	NO SE REPARA SEPARADAM., Tank Seal, Tubes
27		87656126		7	SUJETADOR, Recepticle, "U" Type
28		86592107		1	ELECTROVENTILADOR
29		87656106		1	PIEZA DE SOPORTE, Front Bracket
30		87656097		1	JUNTA HERMETICA, Neoprene Gasket, Front
31		NSS		8	NO SE REPARA SEPARADAM., Screw
32		87656107		1	PLACA, Blower Mount Plate
33		87656108		1	JUNTA HERMETICA, Gasket, Blower Outlet

CALENTADOR

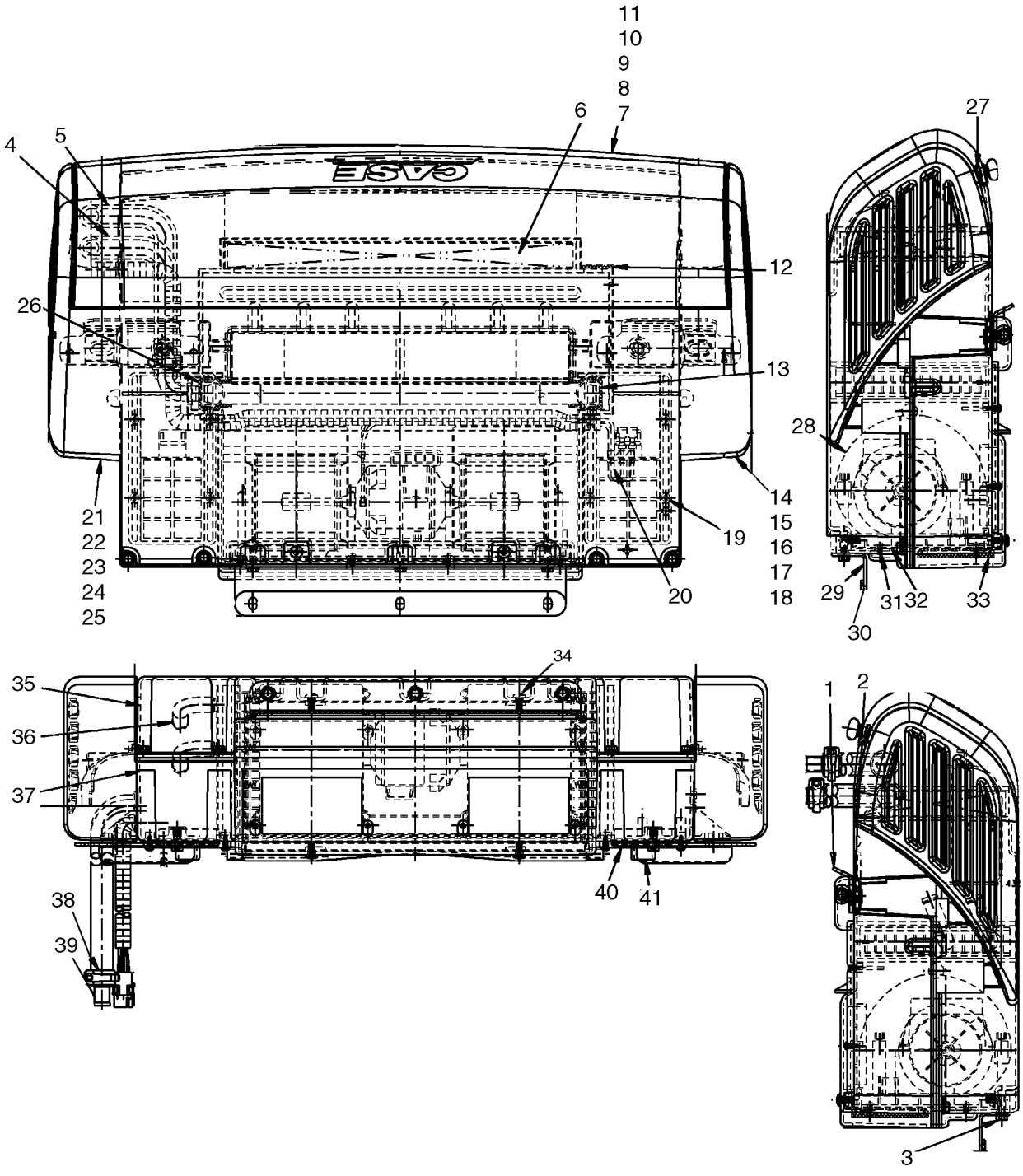
11
10
9
8
6
7
5
4
27
12
26
13
28
14
15
16
17
18
21
22
23
24
25
19
20
29
31
32
33
30
34
35
36
37
38
39
40
41
1
2
3
BS07M958

CALENTADOR

REF	FN	PART NUMBER	YR/SN	QTY	DENOMINACION
34		NSS		4	NO SE REPARA SEPARADAM., Screw
35		87658710		1	ESTUCHE, Top Case
36		87656103		1	NÚCLEO, Heater Core
37		87658709		1	ESTUCHE, Bottom Case
38		NSS		4	NO SE REPARA SEPARADAM., Hose Clamp
39		87035457		2	TUBO
40		87656101		2	TAPADERA
41		87656100		2	TAPADERA

CALEFACCION Y AIRE ACONDICIONADO

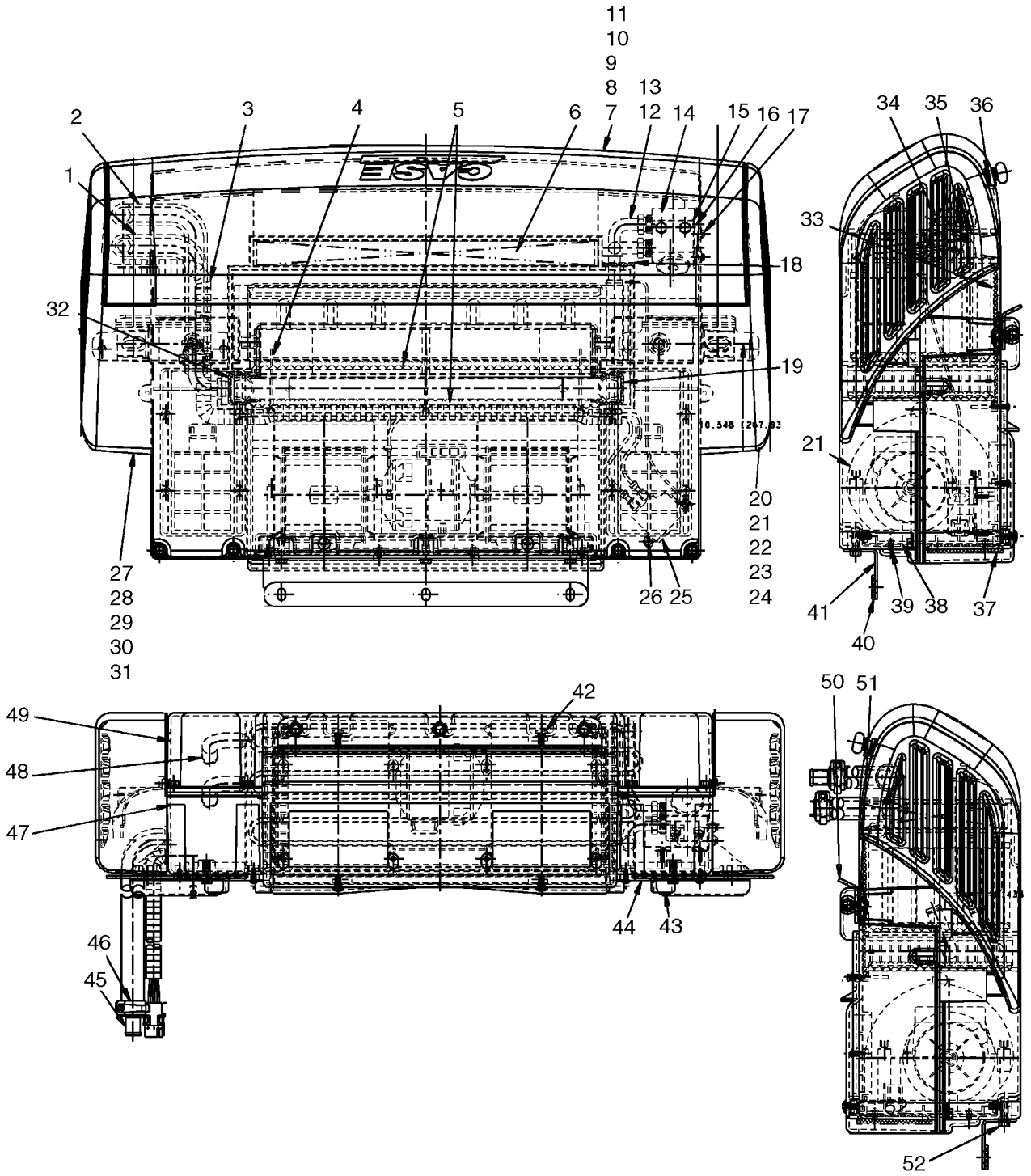

CALEFACCION Y AIRE ACONDICIONADO

REF	FN	PART NUMBER	YR/SN	QTY	DENOMINACION
1		87656098		1	MANGA, Formed Hose, Long
2		87656099		1	MANGA, Formed Hose, Short
3		87656120		1	GRUPO DE CABLES
4		NSS		6	NO SE REPARA SEPARADAM., Plastic Pick
5		87656119		2	ESPUMA AISLANTE, Foam Filter
6		87656118		1	FILTRO, Charcoal Filter
7		87656129		1	TRASERA TAPA, Rear Cover Assembly; Incl 8 - 11
8		87656125		3	TORNILLO, Wing Head Screw
9		87591148		3	RETENEDOR, Black Nylon Retainer
10		87656114		1	TAPADERA, Rear Cover
11		87656130		1	ESPUMA, Foam Seal, Filter
12		87656113		1	EVAPORADOR, Incl 13
13		87035782		1	VALVULA, Expansion Valve
14		NSS		AR	NO SE REPARA SEPARADAM., Black Tar Tape, 610mm (24 in.) Required
15		87656112		1	PIEZA DE SOPORTE
16		87656111		1	JUNTA HERMETICA, Expansion Valve Gasket
17		NSS		2	NO SE REPARA SEPARADAM., Screw
18		NSS		1	NO SE REPARA SEPARADAM., Tube Seal, Evaporator
19		NSS		1	NO SE REPARA SEPARADAM., Tank Seal
20		87656121		1	TAPON DEL DEPOSITO, End Cap Assembly, LH; Incl 21 - 24
21		87656109		1	TAPON DEL DEPOSITO, End Cap, LH
22		87656123		1	TAPON DEL DEPOSITO, Partition
23		87591148		2	RETENEDOR, Black Nylon Retainer
24		87656127		2	TORNILLO
25		86625480		1	TERMOSTATO
26		NSS		10	NO SE REPARA SEPARADAM., Screw
27		87656122		1	TAPON DEL DEPOSITO, End Cap Assembly, RH; Incl 28 - 31
28		87656105		1	TAPON DEL DEPOSITO, End Cap, RH
29		87656124		1	TAPON DEL DEPOSITO, Partition
30		87591148		2	RETENEDOR, Black Nylon Retainer
31		87656127		2	TORNILLO

CALEFACCION Y AIRE ACONDICIONADO

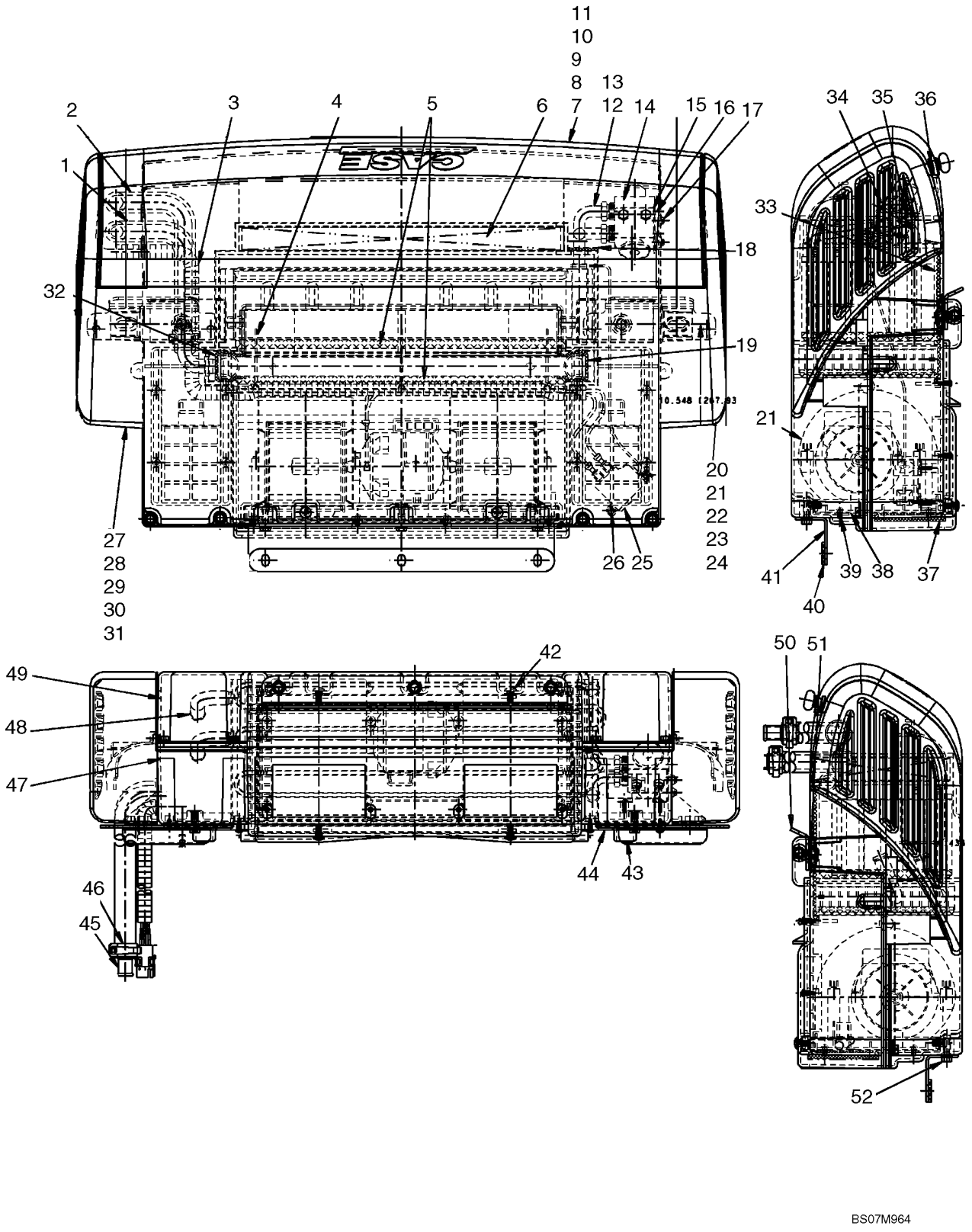

CALEFACCION Y AIRE ACONDICIONADO

REF	FN	PART NUMBER	YR/SN	QTY	DENOMINACION
32		NSS		1	NO SE REPARA SEPARADAM., Tank Seal, Tubes
33		87656110		1	ESPUMA, Foam, Drain Pan
34		NSS		2	NO SE REPARA SEPARADAM., Bolt
35		NSS		2	NO SE REPARA SEPARADAM., Hex Nut
36		87656126		7	SUJETADOR, Recepticle "U" Type
37		87656108		1	JUNTA HERMETICA, Gasket, Blower Outlet
38		87656107		1	PLACA, Blower Mount Plate
39		NSS		8	NO SE REPARA SEPARADAM., Screw
40		87656097		1	JUNTA HERMETICA, Neoprene Gasket, Front
41		87656106		1	PIEZA DE SOPORTE, Front Bracket
42		NSS		4	NO SE REPARA SEPARADAM., Screw
43		87656100		2	TAPADERA
44		87656101		2	TAPADERA
45		87035457		2	TUBO
46		NSS		4	NO SE REPARA SEPARADAM., Hose Clamp
47		87656102		1	FONDO, Bottom Case Half
48		87656103		1	NÚCLEO, Heater Core
49		87656104		1	ARRIBA, Top Case Half
50		87656095		2	PIEZA DE SOPORTE
51		87656096		2	JUNTA HERMETICA, Neoprene Gasket, Bottom
52		NSS		5	NO SE REPARA SEPARADAM., Screw

PROTECTOR TÉRMICO

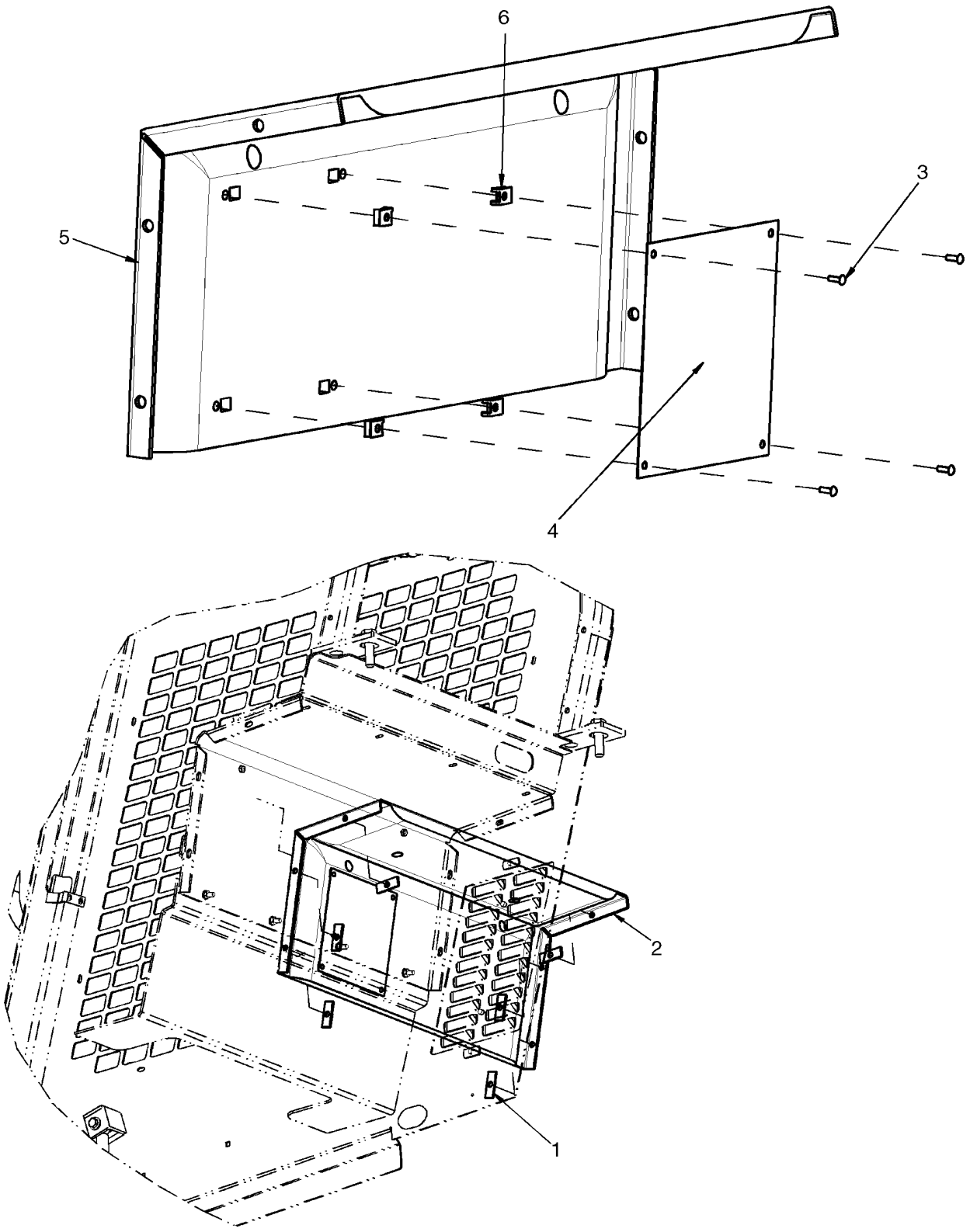

PROTECTOR TÉRMICO

REF	FN	PART NUMBER	YR/SN	QTY	DENOMINACION
1		87460558		6	BARRA, Mounting Bar
2		{87679671}		1	Heat Shield
3		NSS		4	NO SE REPARA SEPARADAM., Screw, Pan Head #8 X 1/2 in.
4		NSS		1	NO SE REPARA SEPARADAM., Heat Shield
5		NSS		1	NO SE REPARA SEPARADAM., Heat Shield Insulation
6		NSS		4	NO SE REPARA SEPARADAM., Spring Nut

INSONORISACION

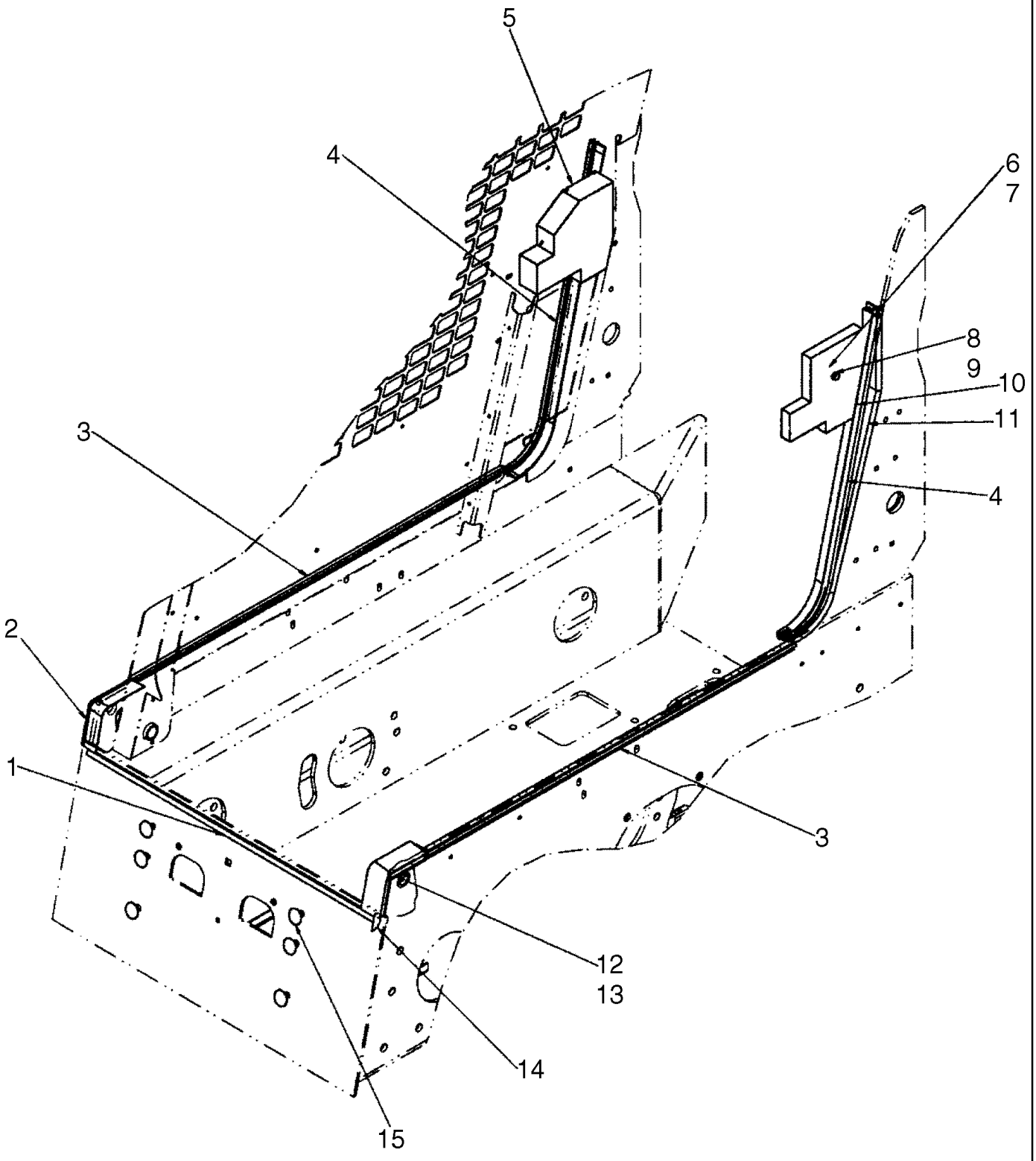

INSONORISACION

REF	FN	PART NUMBER	YR/SN	QTY	DENOMINACION
1		381176A2		1	ANILLO DE CIERRE, Breast Plate Seal, 844mm (33 1/4 in.)
2		87719784		1	ESPUMA AISLANTE, Seal, Pivot RH
3		87719782		2	ESPUMA AISLANTE, Seal, Joggle
4		87719792		2	ANILLO DE CIERRE, Seal, Rear Cab
5		87714956		1	ESPUMA AISLANTE, Pad, ROPS RH
6		86639313		1	ARANDELA, M8 x 20 x 1.6
7		9628098		1	CONTRA TUERCA, M8 x 1.25, Cl 10
8		300381		1	TORNILLO, Hex, M8 x 35, 8.8
9		86624184		1	ARANDELA, M8 x 16 x 1.6
10		87714955		1	ESPUMA AISLANTE, Pad, ROPS LH
11		394745A2		1	ANILLO DE CIERRE, Seal, ROPS Wing
12		87719789		1	ANILLO DE CIERRE, Seal, Pivot LH
13		414010A1		1	BANDA DE PROTECCIÓN
14		394748A1		1	ANILLO DE CIERRE
15		299274A2		6	TAPA

CONTROL DE RUIDO, PUERTA, TRASERA

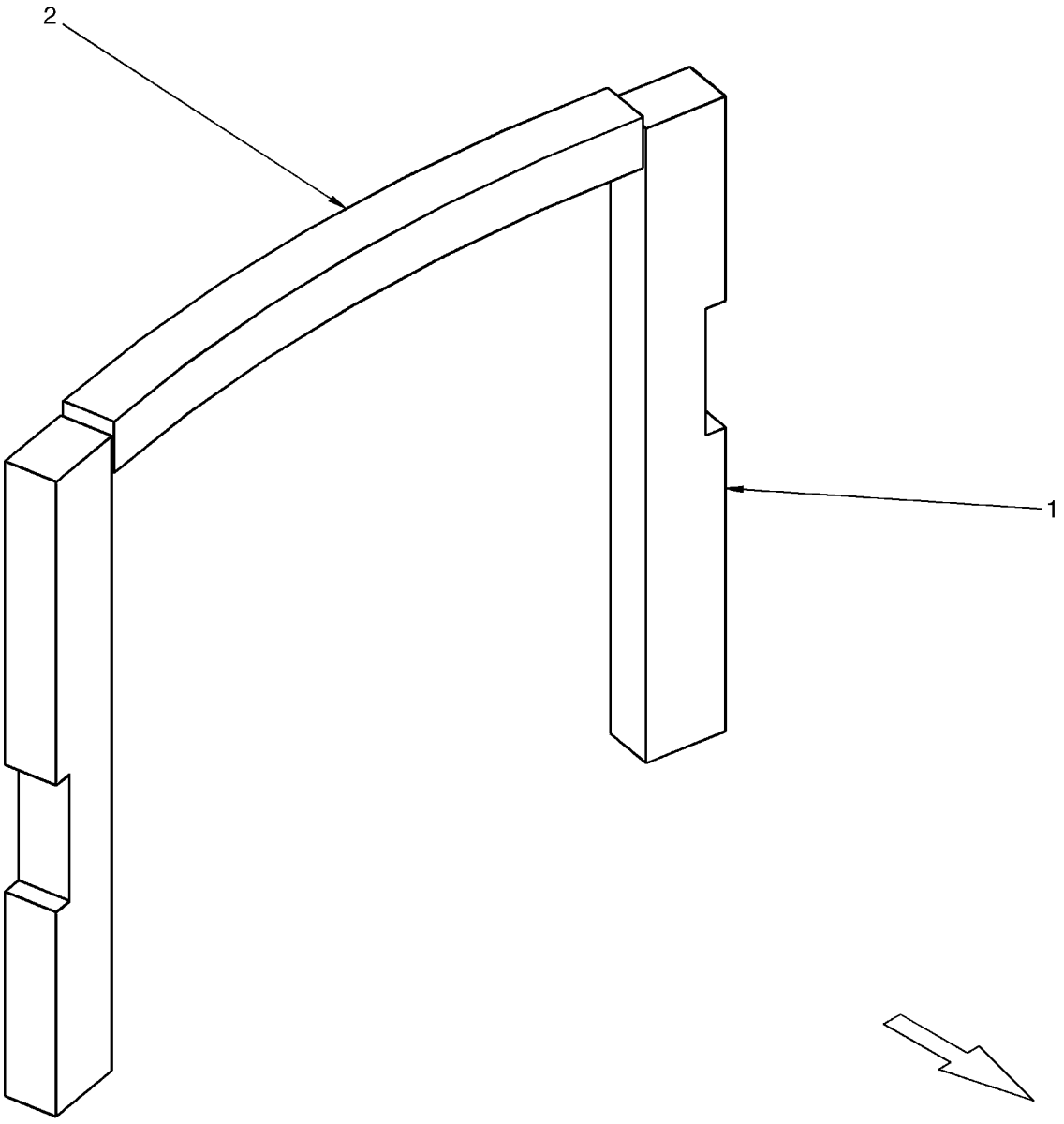

CONTROL DE RUIDO, PUERTA, TRASERA

REF	FN	PART NUMBER	YR/SN	QTY	DENOMINACION
1		87460195		2	TACO, Pad, Rear Door
2		87714073		1	ESPUMA AISLANTE, Pad, Louvered Door

GANCHO DE ELEVACION

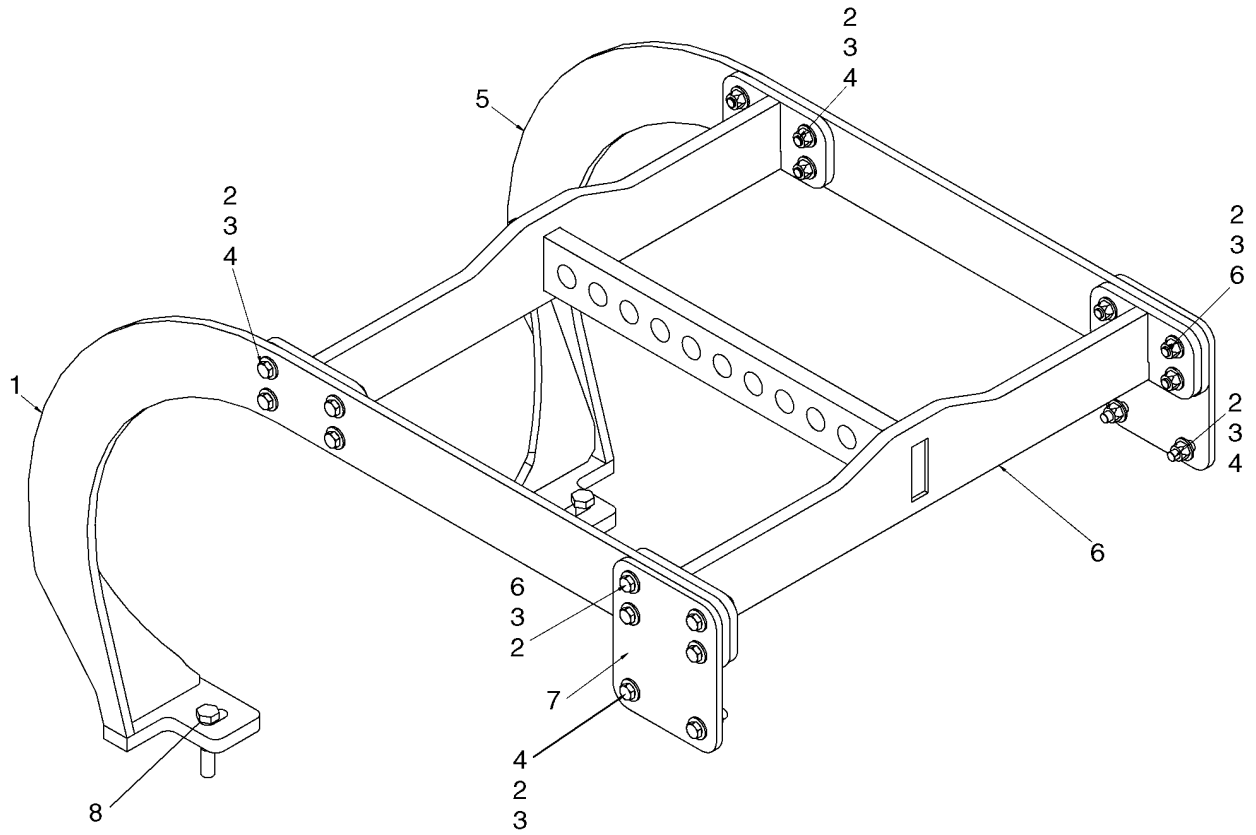

BS07N704

GANCHO DE ELEVACION

REF	FN	PART NUMBER	YR/SN	QTY	DENOMINACION
		87673642		1	KIT, SERVICE, Kit, Lift Hook - Single Point; Incl 1 - 8
1		NSS		1	NO SE REPARA SEPARADAM., Lifter, RH
2		100038		20	TUERCA SEGURIDAD, M12 x 1.75, Cl 8
3		86625254		40	ARANDELA, M12 x 28 x 2.5
4		9628065		12	TORNILLO, Hex, M12 x 45, 8.8
5		NSS		1	NO SE REPARA SEPARADAM., Lifter, LH
6		NSS		1	NO SE REPARA SEPARADAM., Lifter, Top
7		NSS		2	NO SE REPARA SEPARADAM., Plate, Mounting
8		86577946		2	TORNILLO, Hex, M16 x 80, 10.9

GANCHO DE ELEVACION

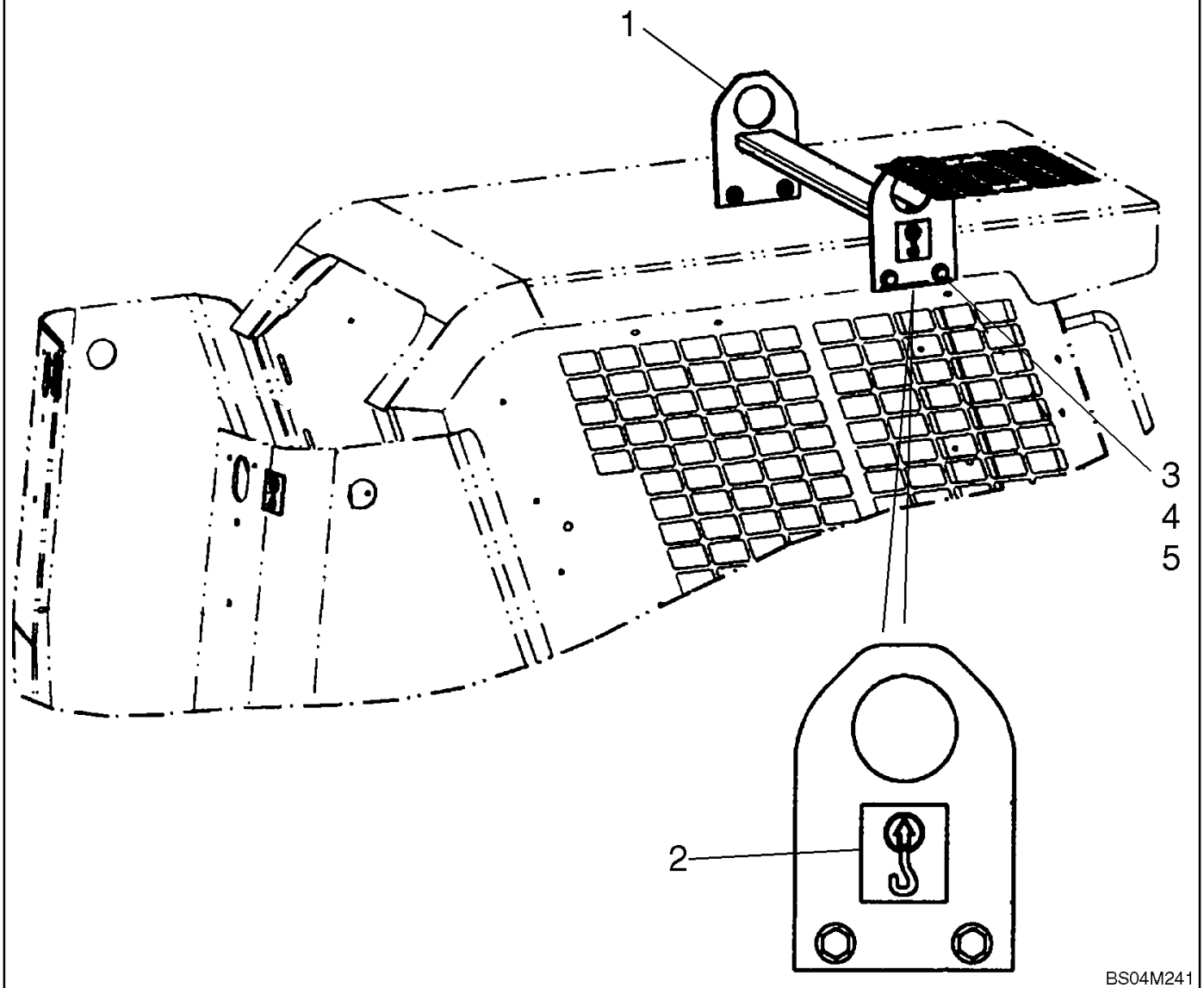

GANCHO DE ELEVACION

REF	FN	PART NUMBER	YR/SN	QTY	DENOMINACION
		87638451		1	KIT, SERVICE, Kit, Lift Hook - Front; Incl 1 - 5
1		87684094		1	PIEZA DE SOPORTE, Lift Hook
2		139729A1		4	CALCOMANIA
3		337563		4	TORNILLO, Hex, M12 x 40, 10.9, Full Thd
4		86625256		8	ARANDELA, M12 x 28.5 x 4, HT
5		412672		4	CONTRA TUERCA, M12 x 1.75, Cl 10

CALCOMANIAS - INGLES

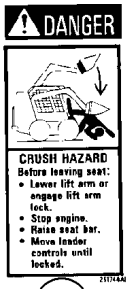

1

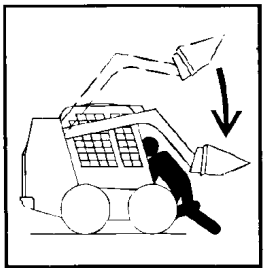



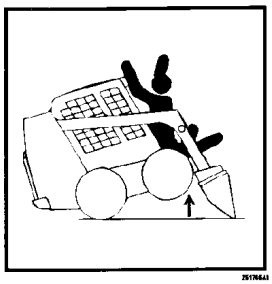

2



3

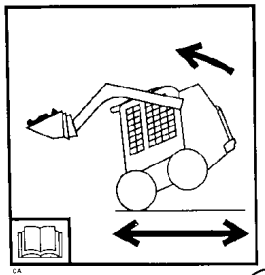



4

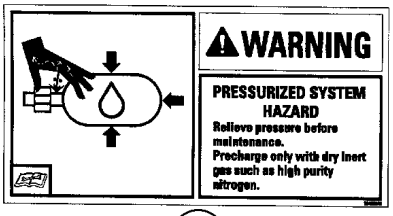

5

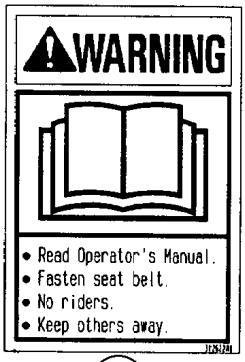

6



7

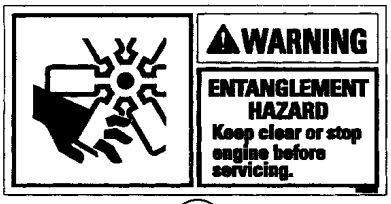

8

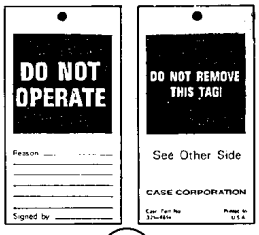

9

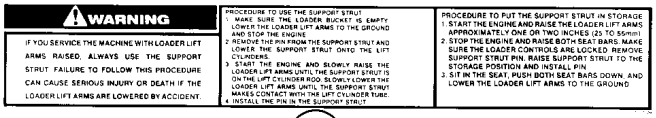

10



11



12



13



14

BS07A313

CALCOMANIAS - INGLES

REF	FN	PART NUMBER	YR/SN	QTY	DENOMINACION
1		433957A1		1	CALCOMANIA, Danger, Exiting
2		251745A1		1	CALCOMANIA, Danger, Crush Hazard
3		D137186		1	CALCOMANIA, Caution, Always Inspect
4		251748A1		1	CALCOMANIA, Warning, Tip Hazard
5		384260A1		1	CALCOMANIA, Warning, Ride Control, Pressurized System
6		382622A1		1	CALCOMANIA, Warning, Read The Operator's Manual
7		321-7040		1	CALCOMANIA, Danger, Starting In Gear
8		384267A1		1	CALCOMANIA, Warning, Keep Clear
9		321-4614		1	CALCOMANIA, Tag, Do Not Operate
10		321-7029		1	CALCOMANIA, Warning, Safety Strut
11		176332A1		1	CALCOMANIA, Battery
12		304083A1		1	CALCOMANIA, Ride Control
13		255927A1		1	CALCOMANIA, Warning, Do Not Turn Ride Control On
14		629086		1	CALCOMANIA, Ether Warning

CALCOMANIAS (440CT)

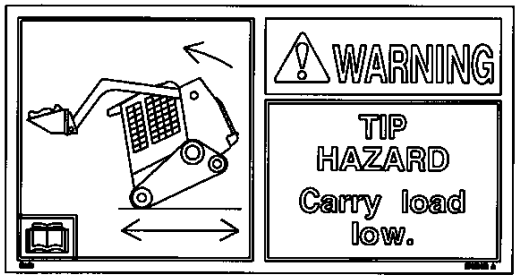

1

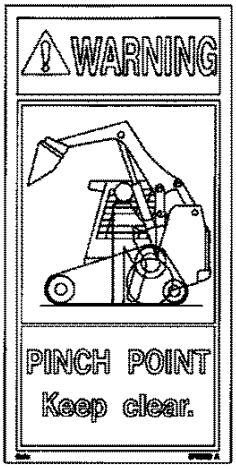

2

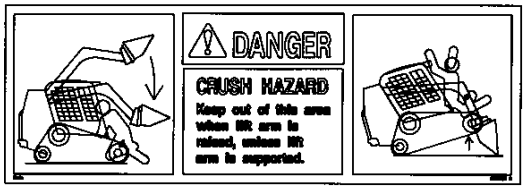

3

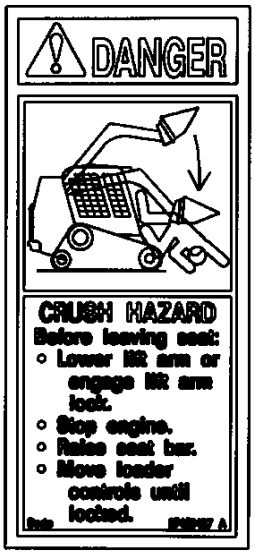

4

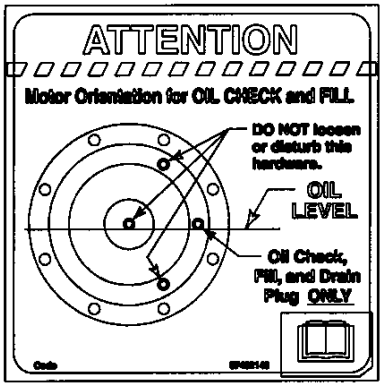

7

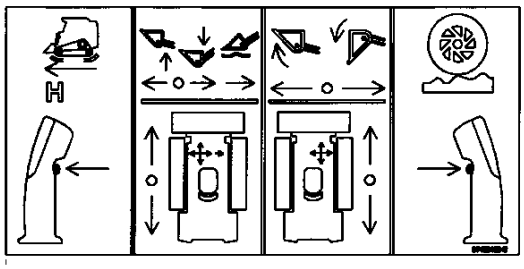

5



6

BS05C088

CALCOMANIAS (440CT)

REF	FN	PART NUMBER	YR/SN	QTY	DENOMINACION
1		87459440		1	CALCOMANIA, Warning Tip Hazard
2		87459439		2	CALCOMANIA, Warning Pinch Point
3		87459438		1	CALCOMANIA, Danger Crush Hazard Under Arm
4		87459437		1	CALCOMANIA, Danger Crush Hazard Before Leaving Seat
5		87459429		1	CALCOMANIA, Control Identification
6		87673472		2	CALCOMANIA, Warning- Grease Spring
7		87673471		2	CALCOMANIA, Attention - Oil Fill

CALCOMANIAS

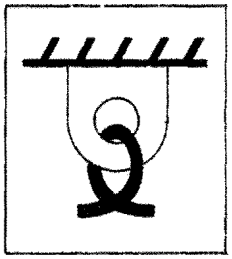
1

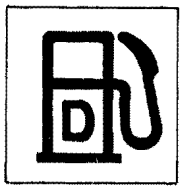
2


3

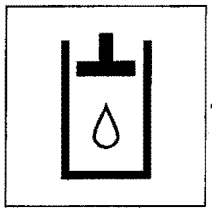
4

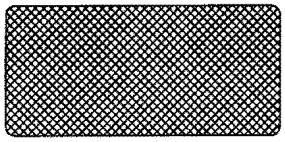
5

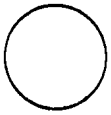
6

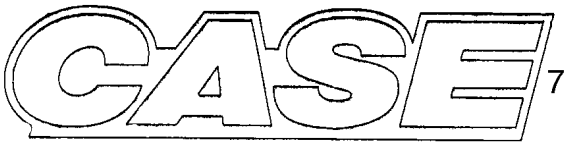
7


8

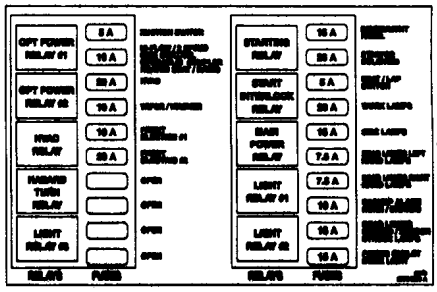
9

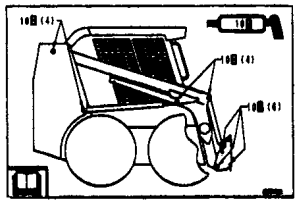
10

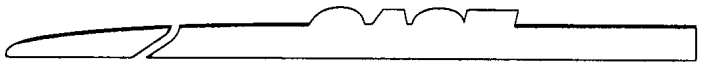
11

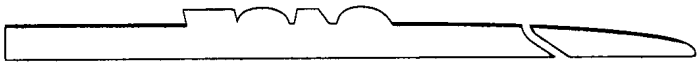
12

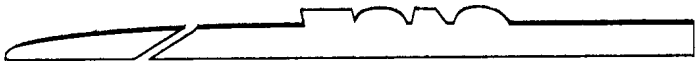
13

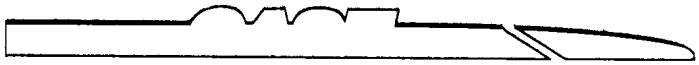
14

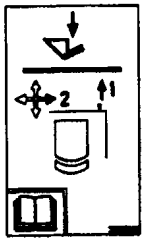
15

BS07M573

CALCOMANIAS

REF	FN	PART NUMBER	YR/SN	QTY	DENOMINACION
1		139728A1		1	CALCOMANIA, Decal, Tie Down
2		139879A1		1	CALCOMANIA, Decal, Diesel Fuel
3		251752A1		1	CALCOMANIA, Decal, Throttle
4		251753A1		1	CALCOMANIA, Decal, Hydraulic Fluid
5		294752A1		1	CATADIOPTRICO, Decal, Reflector, Red
6		429630A2		1	CAPUCHA DE TAPON, Decal, Lexan Cover
7		87389371		1	CALCOMANIA, Decal, CASE Logo
8		87429186		1	SIMBOLO, Decal, CASE Engine
9		87734526		1	CALCOMANIA, Decal, Fuse Box Layout
10		373248A2		1	CALCOMANIA, Decal, Lubrication Points
11		398798A1		1	CALCOMANIA, Decal, Case Stripe LH; Used On 410, 420/420CT
12		398796A1		1	CALCOMANIA, Decal, Case Stripe RH; Used On 410, 420/420CT
13		411516A1		1	CALCOMANIA, Decal, Case Stripe LH; Used On 430, 440/440CT
14		411515A1		1	CALCOMANIA, Decal, Case Stripe RH; Used On 430, 440/440CT
15		398728A2		1	CALCOMANIA, Decal, Lift Arm Bypass; Used On 420CT, 440CT

CALCOMANIAS

440 Series 3 1

440CT Series 3 2

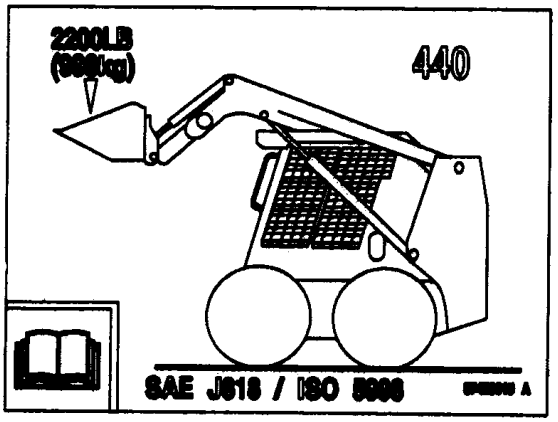

3

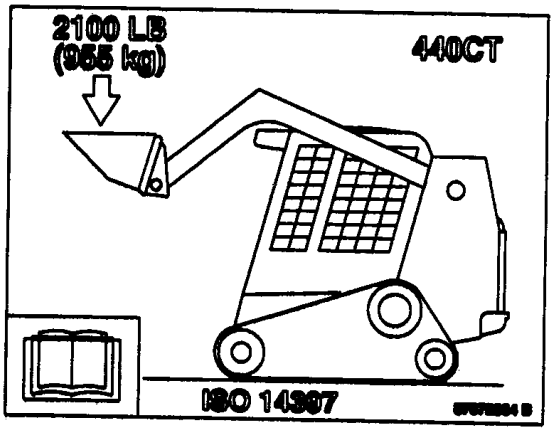

4

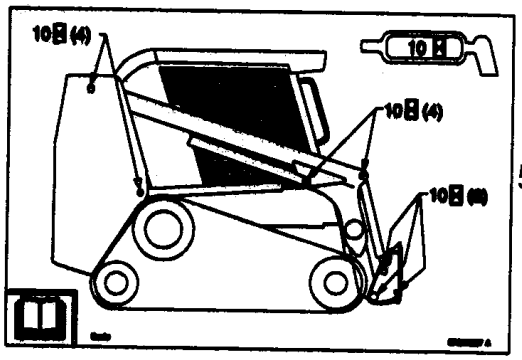

5

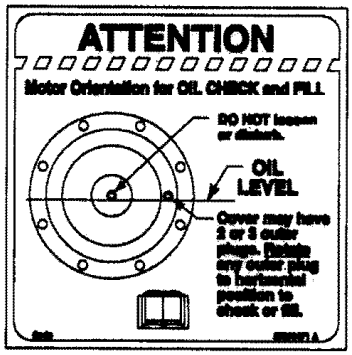

6



7

BS07M575

CALCOMANIAS

REF	FN	PART NUMBER	YR/SN	QTY	DENOMINACION
1		87710959		1	CALCOMANIA, Decal, 440
2		87710960		1	CALCOMANIA, Decal, 440CT
3		87459019		1	CALCOMANIA, Decal, Operating Capacity, 440
4		87372864		1	CALCOMANIA, Decal, Operating Capacity, 440CT
5		87372867		1	CALCOMANIA, Decal, Lubrication Points, 440CT
6		87673471		1	CALCOMANIA, Decal, Oil Fill And Check, 440CT
7		87673472		1	CALCOMANIA, Decal, Grease Spring Warning, 440CT

CALCOMANIAS - DANES, HOLANDES, FINLANDES

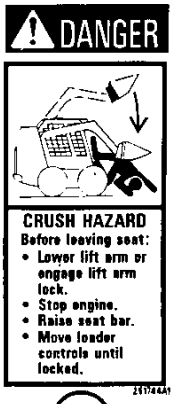

1

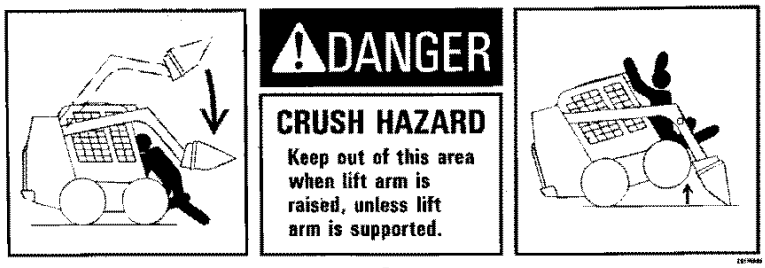

2



3

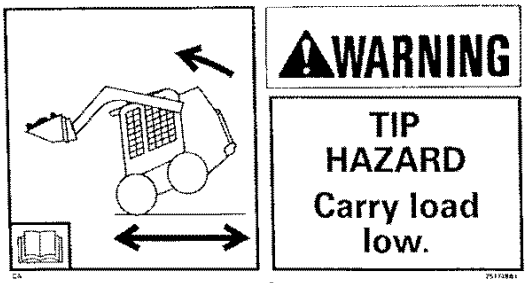

4

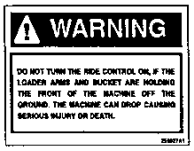

5

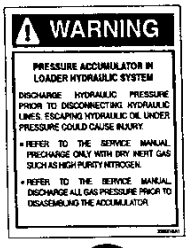

6

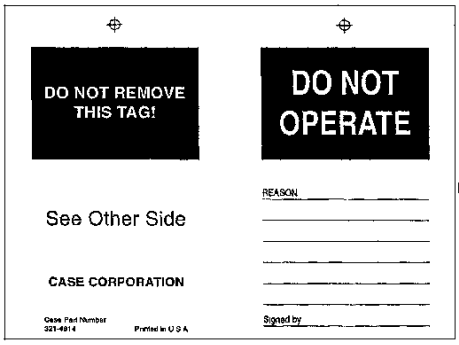

7

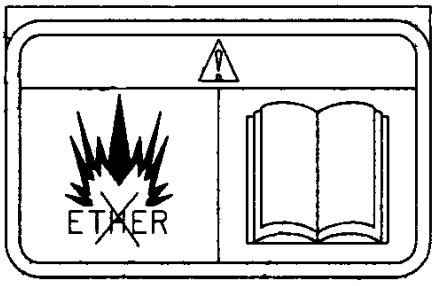

8

BS07A315

CALCOMANIAS - DANES, HOLANDES, FINLANDES

REF	FN	PART NUMBER	YR/SN	QTY	DENOMINACION
		REF			MANUAL, DANISH
1		434006A1		1	CALCOMANIA, Danger, Crush Hazard
2		297391A1		1	CALCOMANIA, Danger, Crush Hazard
3		175492A1		1	CALCOMANIA, Caution, Always Inspect
4		297377A1		1	CALCOMANIA, Warning, Tip Hazard
5		256455A1		1	ADHESIVO, Warning, Ride Control
6		256466A1		1	ADHESIVO, Warning, Accumulator
7		182609A1		1	CALCOMANIA, Do Not Operate
8		87802167		1	CALCOMANIA, Ether Warning
		REF			MANUAL, DUTCH
1		434007A1		1	CALCOMANIA, Danger, Crush Hazard
2		297392A1		1	CALCOMANIA, Danger, Crush Hazard
3		175493A1		1	CALCOMANIA, Caution, Always Inspect
4		297378A1		1	CALCOMANIA, Warning, Tip Hazard
5		256463A1		1	ADHESIVO, Warning, Ride Control
6		256474A1		1	ADHESIVO, Warning, Accumulator
7		182596A1		1	TUERCA, Do Not Operate
8		87802167		1	CALCOMANIA, Ether Warning
		REF			MANUAL, FINNISH
1		434008A1		1	CALCOMANIA, Danger, Crush Hazard
2		297393A1		1	CALCOMANIA, Danger, Crush Hazard
3		297409A1		1	CALCOMANIA, Caution, Always Inspect
4		297379A1		1	CALCOMANIA, Warning, Tip Hazard
5		256461A1		1	CALCOMANIA, Warning, Ride Control
6		256472A1		1	ADHESIVO, Warning, Accumulator
7		197380A1		1	ETIQUETA, Do Not Operate
8		87802167		1	CALCOMANIA, Ether Warning

CALCOMANIAS - FRANCES, ALEMAN, GRIEGO

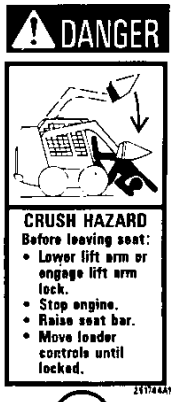

1

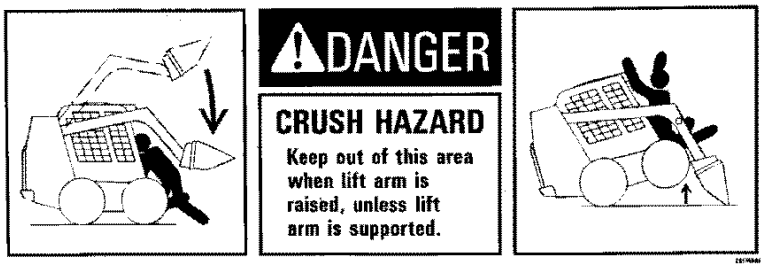

2

CAUTION

ALWAYS INSPECT COUPLER-LATCH PIN ENGAGEMENT BEFORE OPERATING VEHICLE.

3

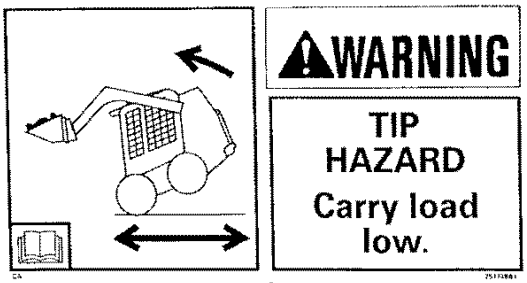

4

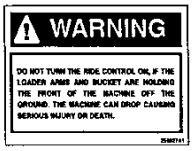

5

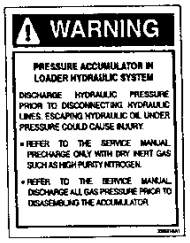

6

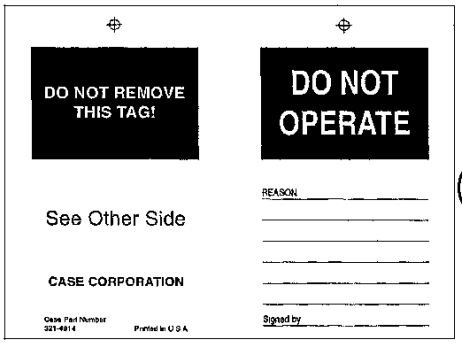

7



8

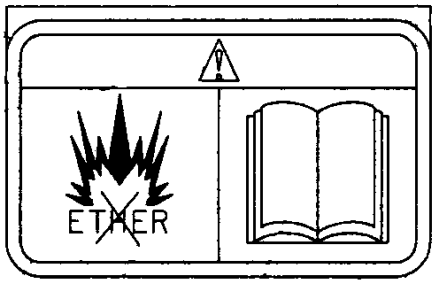

9

BS07A316

CALCOMANIAS - FRANCES, ALEMAN, GRIEGO

REF	FN	PART NUMBER	YR/SN	QTY	DENOMINACION
		REF			MANUAL, FRENCH
1		434009A1		1	CALCOMANIA, Danger, Crush Hazard
2		297394A1		1	CALCOMANIA, Danger, Crush Hazard
3		321-6861		1	CALCOMANIA, Caution, Always Inspect
4		297381A1		1	CALCOMANIA, Warning, Tip Hazard
5		256453A1		1	ADHESIVO, Warning, Ride Control
6		256464A1		1	ADHESIVO, Warning, Accumulator
7		321-5675		1	CALCOMANIA, Do Not Operate
8		682683		1	CALCOMANIA, Ether Warning
		REF			MANUAL, GERMAN
1		434010A1		1	CALCOMANIA, Danger, Crush Hazard
2		297396A1		1	CALCOMANIA, Danger, Crush Hazard
3		321-6863		1	CALCOMANIA, Caution, Always Inspect
4		297382A1		1	CALCOMANIA, Warning, Tip Hazard
5		256454A1		1	ADHESIVO, Warning, Ride Control
6		256465A1		1	ADHESIVO, Warning, Accumulator
7		321-5676		1	CALCOMANIA, Do Not Operate
9		87802167		1	CALCOMANIA, Ether Warning
		REF			MANUAL, GREEK
1		434011A1		1	CALCOMANIA, Danger, Crush Hazard
2		297397A1		1	CALCOMANIA, Danger, Crush Hazard
3		175495A1		1	CALCOMANIA, Caution, Always Inspect
4		297383A1		1	CALCOMANIA, Warning, Tip Hazard
5		256460A1		1	ADHESIVO, Warning, Ride Control
6		256471A1		1	ADHESIVO, Warning, Accumulator
7		182611A1		1	CALCOMANIA, Do Not Operate
9		87802167		1	CALCOMANIA, Ether Warning

CALCOMANIAS - ITALIANO, NORUEGO, POLACO

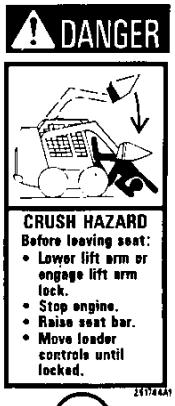

1

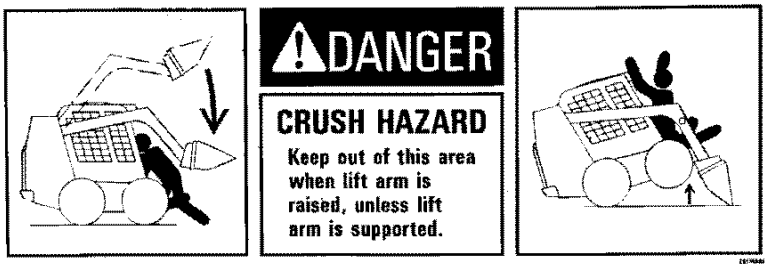

2



3

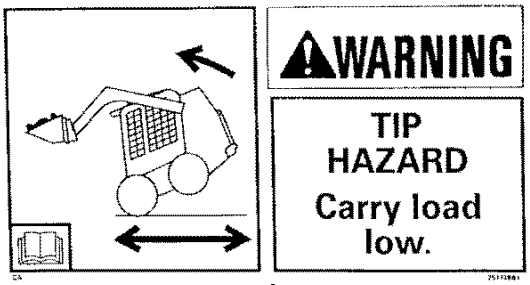

4

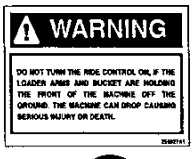

5

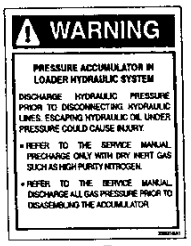

6

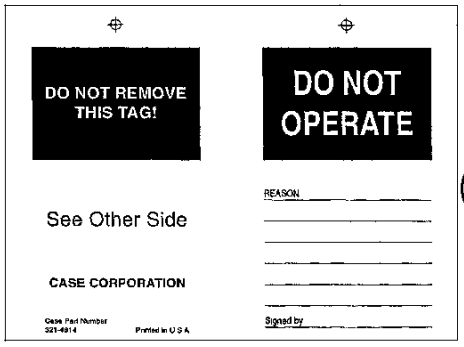

7

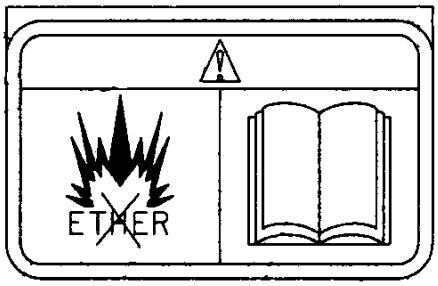

8

BS07A317

CALCOMANIAS - ITALIANO, NORUEGO, POLACO

REF	FN	PART NUMBER	YR/SN	QTY	DENOMINACION
		REF			MANUAL, ITALIAN
1		434012A1		1	CALCOMANIA, Danger, Crush Hazard
2		297398A1		1	CALCOMANIA, Danger, Crush Hazard
3		321-7004		1	CALCOMANIA, Caution, Always Inspect
4		297384A1		1	CALCOMANIA, Warning, Tip Hazard
5		256457A1		1	ADHESIVO, Warning, Ride Control
6		256468A1		1	ADHESIVO, Warning, Accumulator
7		E137085		1	CALCOMANIA, Do Not Operate
8		87802167		1	CALCOMANIA, Ether Warning
		REF			MANUAL, NORWEGIAN
1		434013A1		1	CALCOMANIA, Danger, Crush Hazard
2		297399A1		1	CALCOMANIA, Danger, Crush Hazard
3		297411A1		1	CALCOMANIA, Caution, Always Inspect
4		297385A1		1	CALCOMANIA, Warning, Tip Hazard
5		256462A1		1	CALCOMANIA, Warning, Ride Control
6		256473A1		1	CALCOMANIA, Warning, Accumulator
7		197381A1		1	ETIQUETA, Do Not Operate
8		87802167		1	CALCOMANIA, Ether Warning
		REF			MANUAL, POLISH
1		434017A1		1	CALCOMANIA, Danger, Crush Hazard
2		297400A1		1	CALCOMANIA, Danger, Crush Hazard
3		297412A1		1	CALCOMANIA, Caution, Always Inspect
4		297386A1		1	CALCOMANIA, Warning, Tip Hazard
5		396700A1		1	CALCOMANIA, Warning, Ride Control
6		396701A1		1	CALCOMANIA, Warning, Accumulator
7		298520A1		1	ETIQUETA, Do Not Operate
8		87802167		1	CALCOMANIA, Ether Warning

CALCOMANIAS - PORTUGUÉS, ESPAÑOL, SUECO

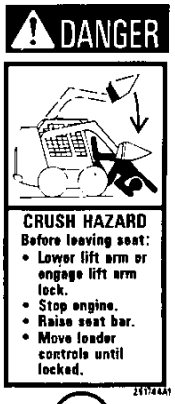

1

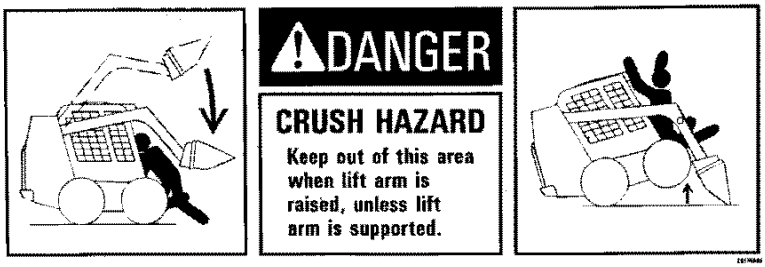

2



3

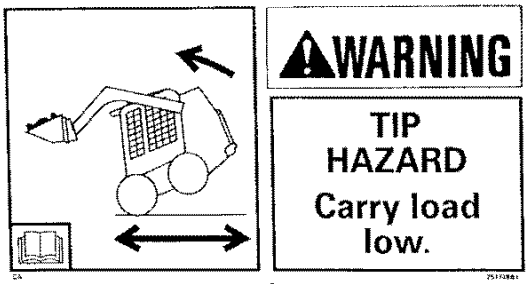

4

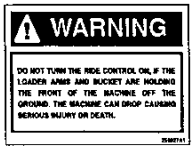

5

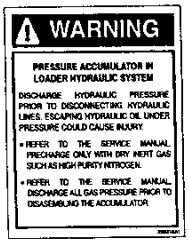

6

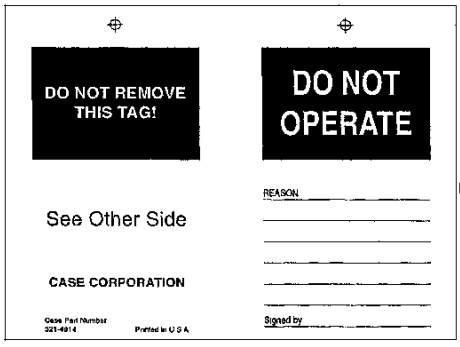

7

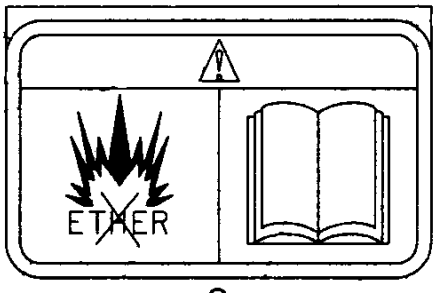

8



9



10

BS07A318

CALCOMANIAS - PORTUGUÉS, ESPAÑOL, SUECO

REF	FN	PART NUMBER	YR/SN	QTY	DENOMINACION
		REF			MANUAL, PORTUGUESE
1		434014A1		1	CALCOMANIA, Danger, Crush Hazard
2		297401A1		1	CALCOMANIA, Danger, Crush Hazard
3		175494A1		1	CALCOMANIA, Caution, Always Inspect
4		297387A1		1	CALCOMANIA, Warning, Tip Hazard
5		256459A1		1	ADHESIVO, Warning, Ride Control
6		256470A1		1	ADHESIVO, Warning, Accumulator
7		182610A1		1	CALCOMANIA, Do Not Operate
10		87527676		1	CALCOMANIA, Ether Warning
		REF			MANUAL, SPANISH
1		434015A1		1	CALCOMANIA, Danger, Crush Hazard
2		297402A1		1	CALCOMANIA, Danger, Crush Hazard
3		321-6862		1	CALCOMANIA, Caution, Always Inspect
4		297388A1		1	CALCOMANIA, Warning, Tip Hazard
5		256456A1		1	ADHESIVO, Warning, Ride Control
6		256467A1		1	ADHESIVO, Warning, Accumulator
7		321-5677		1	CALCOMANIA, Do Not Operate
9		86600617		1	CALCOMANIA, Ether Warning
		REF			MANUAL, SWEDISH
1		434016A1		1	CALCOMANIA, Danger, Crush Hazard
2		297404A1		1	CALCOMANIA, Danger, Crush Hazard
3		297414A1		1	CALCOMANIA, Caution, Always Inspect
4		297390A1		1	CALCOMANIA, Warning, Tip Hazard
5		256458A1		1	ADHESIVO, Warning, Ride Control
6		256469A1		1	ADHESIVO, Warning, Accumulator
7		197379A1		1	ETIQUETA, Do Not Operate
8		87802167		1	CALCOMANIA, Ether Warning

CALCOMANIAS - PORTUGUES DE BRADIL, FRANCES DE CANADA, ESPAÑOL LATINOAMERICANO

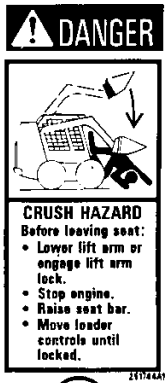

1

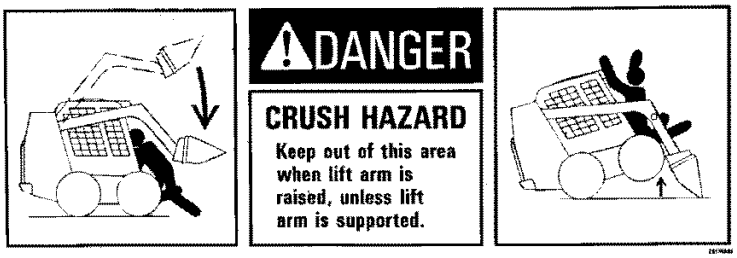

2



3

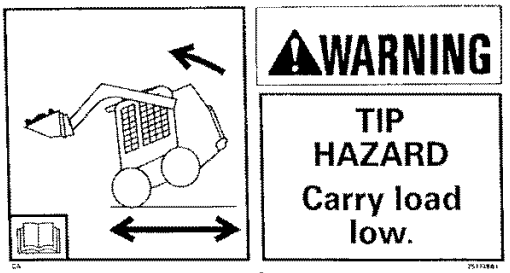

4

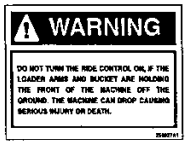

5

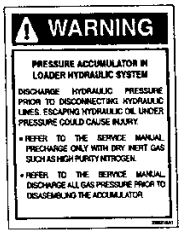

6

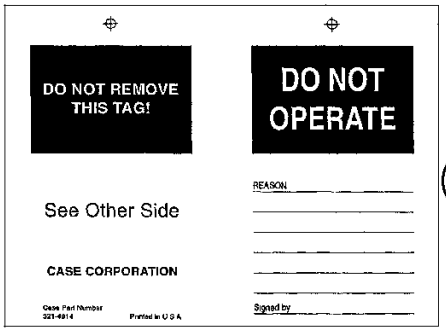

7



8



9



10

BS07A314

CALCOMANIAS - PORTUGUES DE BRADIL, FRANCES DE CANADA, ESPAÑOL LATINOAMERICANO

REF	FN	PART NUMBER	YR/SN	QTY	DENOMINACION
		REF			MANUAL, BRAZILIAN PORTUGUESE
1		434019A1		1	CALCOMANIA, Danger, Exiting
2		297408A1		1	CALCOMANIA, Danger, Crush Hazard
3		297406A1		1	CALCOMANIA, Caution, Always Inspect
4		297407A1		1	CALCOMANIA, Warning, Tip Hazard
5		353240A1		1	CALCOMANIA, Warning, Ride Control
6		353243A1		1	CALCOMANIA, Warning, Accumulator
7		298518A1		1	ADHESIVO, Do Not Operate
8		87527676		1	CALCOMANIA, Ether Warning
		REF			MANUAL, CANADIAN FRENCH
1		434020A1		1	CALCOMANIA, Danger, Exiting
2		297394A1		1	CALCOMANIA, Danger, Crush Hazard
3		297410A1		1	CALCOMANIA, Caution, Always Inspect
4		297380A1		1	CALCOMANIA, Warning, Tip Hazard
5		353239A1		1	CALCOMANIA, Warning, Ride Control
6		353242A1		1	CALCOMANIA, Warning, Accumulator
7		321-5675		1	CALCOMANIA, Do Not Operate
9		682683		1	CALCOMANIA, Ether Warning
		REF			MANUAL, LATIN AMERICAN SPANISH
1		434018A1		1	CALCOMANIA, Danger, Exiting
2		297403A2		1	CALCOMANIA, Danger, Crush Hazard
3		297413A1		1	CALCOMANIA, Caution, Always Inspect
4		297388A1		1	CALCOMANIA, Warning, Tip Hazard; Replaces 297389A1
5		353238A1		1	CALCOMANIA, Warning, Ride Control
6		353241A1		1	CALCOMANIA, Warning, Accumulator
7		298521A1		1	ETIQUETA, Do Not Operate
10		86600617		1	CALCOMANIA, Ether Warning

Number	Figure	Sequence	Ref.
{}	09-58		41
{2830159}	02-28		4
{2830160}	02-28		4
{2831472}	02-16		8
{2853132}	02-38		3
{2853805}	02-28		4
{2853815}	02-34		4
{2853816}	02-34		3
	02-34		4
{2853817}	02-34		4
{2853818}	02-34		4
{2853819}	02-34		4
{2853875}	02-28		4
{2853876}	02-28		4
{2854141}	02-28		4
{2854142}	02-28		4
{2854867}	02-38		7
{2855020}	02-34		3
{2855021}	02-34		3
{2855022}	02-34		3
{2855023}	02-34		3
{2855183}	02-33		7
{2855289}	02-10		4
{2855983}	02-27		1
{2856170}	02-33		5
{2856255}	03-10		1
{2856344}	02-19		8
{2856436}	03-10		
{2856484}	02-28		1
{2856485}	02-28		1
{2856713}	02-28		4
{2856714}	02-28		4
{412326}	09-33		17
{4895747}	02-29		1
{4899849}	03-03		4
{647429}	09-16		10
{86512463}	09-31		12
	09-36		11
{86618350}	09-06		1
{86625151}	08-13		12
	09-04		23
{86633059}	09-07		2
{86633060}	09-06		1
{86642465}	09-33		3
{87010188}	09-08		1
{87010189}	09-08		1
{87029968}	08-18		23
{87302733}	06-19		17
{87448935}	08-26		2
{87533547}	02-01		17
{87534725}	02-01		33
{87548828}	06-04		4
{87548838}	06-07		8
{87548840}	06-07		10
{87548843}	06-07		5
{87548871}	06-06		7
	06-08		9
{87548872}	06-06		8
	06-08		10
{87548873}	06-06		9
	06-08		11
{87556906}	06-15		20
	06-19		19
{87560205}	02-22		7
{87563975}	06-18		15
	06-22		12
{87564723}	06-15		23
	06-19		22
{87566701}	02-22		2
{87572831}	02-03		1
{87574281}	02-22		3
{87578980}	02-01		22
	09-26		5
	09-27		5
{87579303}	09-03		9
	09-04		10
{87581666}	09-33		13
{87581669}	09-30		18
{87581669}	09-36		26
	09-36		7
{87582179}	02-28		
{87582180}	02-28		
{87582181}	02-28		
{87584302}	09-59		36
{87594866}	06-07		9
{87594970}	02-01		4
{87599604}	09-01		17
{87599605}	09-01		22
{87599753}	09-30		16
	09-36		2
{87600221}	09-31		6
	09-32		2
{87602935}	09-01		8
{87607505}	09-33		19
{87612753}	08-13		27
	09-03		10
	09-04		11
{87612761}	02-22		6
{87618013}	04-06		6A
{87618650}	06-64		4
{87622767}	09-30		14
	09-36		29
{87622960}	04-15		4
{87623352}	04-01		4
	04-04		4
{87627521}	09-32		
{87639912}	09-38		23
{87639914}	09-38		24
{87641703}	09-49		2
{87641704}	09-49		6
{87642394}	09-30		22
	09-36		9
{87642437}	09-30		21
	09-36		5
{87643562}	03-02		3
{87643808}	09-49		5
{87645115}	09-38		34
{87648128}	02-01		23
	09-26		4
	09-27		6
{87648719}	02-04		4
{87650090}	03-02		27
{87652259}	09-40		2
{87652816}	04-09		5
	04-11		7
	04-13		8
{87652818}	04-10		4
	04-12		5
	04-14		5
{87655334}	04-05		12
	04-18		16
	04-19		19
	04-27		5
{87657980}	06-09		1
	06-12		1
	06-17		1
{87659996}	08-02		37
{87660180}	09-31		5
	09-32		3
{87661301}	09-17		2
	09-18		17
{87662349}	09-21		3
{87662357}	09-20		12
{87662429}	09-20		3
{87665327}	04-06		9
	04-07		8
{87667726}	04-09		6
	04-10		6
	04-11		8
	04-12		8
	04-13		9
	04-14		9
{87668682}	09-38		41
{87669333}	09-32		4
{87669915}	09-30		2
	09-36		23

Number	Figure	Sequence	Ref.
{87669944}	09-52		1
{87671496}	09-27		18
{87672011}	09-30		11
{87672170}	09-38		9
{87676121}	09-45		11
	09-46		10
	09-47		10
{87676122}	09-45		3
	09-46		2
	09-47		2
{87676124}	09-45		9
	09-46		8
	09-47		8
{87677739}	04-07		11
{87679671}	09-62		2
{87679715}	09-14		1
{87679718}	09-15		1
{87680073}	09-30		4
{87684229}	06-01		9
{87684387}	09-21		5
{87684388}	09-20		9
{87685909}	09-54		10B
	09-54		1B
	09-54		2A
	09-54		9A
{87685911}	09-54		10A
	09-54		1A
{87686721}	06-65		2
{87686722}	06-65		1
{87687236}	09-58		29
{87688638}	03-02		6
{87690479}	08-03		1
{87698769}	09-33		2
	09-34		3
	09-36		13
{87703828}	06-03		
{87703830}	06-02		
{87704477}	06-01		
{87705428}	09-49		1
{87705430}	09-17		4
	09-18		11
{87712605}	09-30		9
{87712606}	09-30		8
{87714131}	09-30		10
{87717210}	09-30		5
	09-36		8
{87717215}	09-30		3
	09-36		22
{87717283}	09-30		17
	09-36		4
{87722347}	09-30		20
	09-36		24
{87723771}	09-36		21
{87723784}	09-36		20
100-11137	06-35		26
	06-38		3
100-1650	08-11		7
100012	08-09		1
100037	09-38		12
100038	09-65		2
100197	06-09		54
	06-12		32
	06-18		16
100536A1	06-34		30
	06-37		30
100703A1	06-38		31
101462A1	06-33		17
103-21281	06-35		28
	06-38		2
108925A1	09-17		17
	09-19		2
110873A1	06-35		11
	06-38		20
115942A1	06-35		13
	06-38		18
115943A1	06-35		12
	06-38		19
115946A1	06-35		9
115946A1	06-38		22
115948A1	06-35		8
	06-38		23
115950A1	06-35		7
	06-38		24
118827	09-12		6
120040	06-13		23
120056	06-14		5
	06-22		7
120061	08-16		6
120068	09-59		46
120069	08-02		30
120070	09-01		7
	09-38		16
120071	02-01		8
120073	02-01		8
	08-17		1
120080	08-13		16
	09-04		21
120100	03-02		1
	04-23		4
	09-38		4
	09-43		6
	09-45		6
	09-46		5
	09-47		5
120101	08-08		6
120103	02-22		4
	04-15		10
	04-26		6
	06-11		12
	06-21		15
	09-29		11
	09-58		37
120104	02-01		1
	02-04		14
	02-05		12
	02-08		3
	06-10		18
	06-12		38
	06-18		28
	08-07		24
	08-08		24
	08-09		25
	09-01		12
	09-24		15
	09-29		4
	09-35		4
	09-58		14
	09-59		32
120106	04-03		4
120112	08-13		14
	09-03		13
	09-04		19
	09-05		8
120229A1	04-29		1
120952A1	09-22		26
121410A1	04-05		13
121412A1	04-05		14
121413A1	04-05		15
121414A1	04-05		16
121415A1	04-05		17
122158A1	08-07		25
	08-08		25
	08-09		27
126844A1	04-07		13
	04-08		5
1277297C1	06-35		4
	06-36		
128818	06-15		13
	06-19		13
	08-05		15
	08-18		11
128819	08-01		2
128822	08-02		15
128825	06-09		44
	06-15		14
	06-15		5

Number	Figure	Sequence	Ref.
128825	06-19		14
	06-19		5
	06-21		12
	06-59		25
	08-01		20
	08-01		3
	08-02		1A
	08-04		5
	08-05		14
	08-05		16
	08-05		19
	08-06		47
	08-06		49
	08-08		28
	08-18		12
128830	06-15		4
	06-19		4
	08-01		19
	08-04		4
	08-05		18
	08-06		46
128928A1	06-35		5
128929A1	06-38		26
128996	08-01		18
	08-05		6
129-667	06-32		8
129200	02-23		6
129878A1	08-06		45
13-836	06-38		33
133714A1	04-28		9
1342374C1	03-02		12
1369	09-34		1
138-217	06-36		
139398	06-01		1
	06-02		1
	06-03		1
	08-07		27
	08-09		31
	08-11		32
	08-13		38
139728A1	09-69		1
139729A1	09-66		2
139879A1	09-69		2
140008A1	06-33		
	06-34		
	06-36		
	06-37		
	06-38		
140016	06-23		5
	08-04		12
	09-19		12
	09-38		27
140017	08-01		16
	09-18		13
140018	09-23		20
140045	02-01		7
	02-03		15
	06-09		6
	06-12		5
	06-17		5
	09-59		48
140046	02-03		13
	02-06		5
	02-07		6
14142390	04-20		5
	04-21		5
14148190	04-20		2
	04-21		2
14152090	04-20		3
	04-21		3
142211A1	04-25		1
14301821	06-68		14
144121	06-09		19
	06-16		7
	06-17		20
14458681	02-18		2
14458781	02-22		13
1546028C1	08-16		9
1546028C1	08-17		7
15694	06-09		36
	06-16		22
	06-18		9
16044321	02-03		9
	03-02		26
	08-06		4
165202	06-15		10
	06-16		19
	06-18		14
	06-19		9
	08-07		13
	08-07		3
	08-07		9
	08-08		13
	08-08		3
	08-08		9
	08-09		21
	08-09		4
	08-09		6
	08-11		12
	08-11		6
	08-13		25
	08-13		31
16588324	08-18		19A
166-89	06-33		21
	06-36		11
16673635	02-17		1
16677734	02-13		3
167266	06-09		15
	06-09		32
	06-09		34
	06-09		46
	06-09		55
	06-09		58
	06-10		30
	06-11		16
	06-12		19
	06-12		33
	06-13		14
	06-15		18
	06-15		26
	06-15		31
	06-16		26
	06-16		9
	06-17		25
	06-18		11
	06-18		17
	06-18		39
	06-19		18
	06-19		24
	06-19		26
	06-19		30
	06-21		10
	06-21		21
	06-29		2
	06-29		8
	06-30		2
	06-30		5
	06-31		2
	06-31		8
	08-06		24
	08-18		10
	08-18		26
	08-18		3
	08-18		7
167268	06-09		10
	06-09		2
	06-09		27
	06-09		30
	06-11		2
	06-12		2
	06-17		12
	06-17		2
	06-17		31
	08-06		15
	08-18		24
167269	06-15		19

Number	Figure	Sequence	Ref.
167269	08-01		5
	08-02		34
	08-06		54
	08-18		5
16989	08-07		12
	08-08		12
	08-09		5
17044731	03-06		4
175492A1	09-71		3
175493A1	09-71		3
175494A1	09-74		3
175495A1	09-72		3
176332A1	04-15		1
	09-67		11
177239A2	04-22		1
180682A1	09-22		8
181680A1	06-35		33
182596A1	09-71		7
182609A1	09-71		7
182610A1	09-74		7
182611A1	09-72		7
186905A1	03-02		18
187035A2	03-02		17
187140A1	04-22		2
189609A1	09-24		9
	09-25		3
	09-38		33
	09-45		15
	09-46		13
	09-47		14
189787A2	09-45		13
	09-46		12
	09-47		12
189995A1	06-64		3
191048A2	06-64		4
193494A1	06-35		21
	06-38		10
194739A1	08-06		8
196985A1	04-05		5
197379A1	09-74		7
197380A1	09-71		7
197381A1	09-73		7
197805A1	06-64		8
214-1444	09-02		3
214389	06-56		24
	06-57		11
	06-59		24
	06-60		18
	08-15		7
216773	08-07		8
	08-08		8
	08-09		3
	08-11		11
	08-13		30
216791	08-01		27
217-374	07-01		19
219606	06-09		35
	06-16		23
	06-18		8
222004A2	04-05		7
222421A1	02-05		2
222422A1	02-05		3
223677A1	06-35		23
	06-38		6
223680A1	06-35		24
	06-38		7
226129	09-12		5
226130	09-12		9
228141A2	06-63		8
22907	06-09		29
229197A1	03-02		30
	04-15		12
	04-26		7
	06-17		19
	06-20		12
	06-21		17
	06-24		11
	07-01		18
229197A1	08-05		11
	09-24		10
	09-25		7
	09-29		10
	09-58		35
229398	02-23		7
230425A1	09-22		4
230426A1	09-22		1
230427A1	02-01		32
	08-01		15
233705	06-09		14
	06-12		18
	06-17		24
234726	09-22		12
	09-23		5
235994A1	09-44		1
236535A1	09-13		5
	09-15		5
236622	09-16		8
237-6004	06-36		21
237-6006	06-33		11
	06-33		20
	06-33		23
	06-34		4
	06-36		9
	06-37		5
	07-01		20
237-6008	06-56		25
237-6010	06-33		25
237-6012	06-33		6
	06-33		9
	06-36		19
	06-36		3
238-5131	06-34		15A
	06-37		15A
238-5443	06-63		3
238-6116	06-36		10
238-6238	06-35		36
244898A1	06-33		27
248461A1	09-26		18
248988A1	09-26		16
249367A2	09-22		39
251745A1	09-67		2
251748A1	09-67		4
251752A1	09-69		3
251753A1	09-69		4
254130A1	04-26		1
254307A1	09-45		12
	09-46		11
	09-47		11
254697A1	09-38		17
254698A1	09-38		43
255927A1	08-04		26
	09-67		13
256453A1	09-72		5
256454A1	09-72		5
256455A1	09-71		5
256456A1	09-74		5
256457A1	09-73		5
256458A1	09-74		5
256459A1	09-74		5
256460A1	09-72		5
256461A1	09-71		5
256462A1	09-73		5
256463A1	09-71		5
256464A1	09-72		6
256465A1	09-72		6
256466A1	09-71		6
256467A1	09-74		6
256468A1	09-73		6
256469A1	09-74		6
256470A1	09-74		6
256471A1	09-72		6
256472A1	09-71		6
256473A1	09-73		6
256474A1	09-71		6
257448A1	09-17		18
	09-19		3

Number	Figure	Sequence	Ref.	Number	Figure	Sequence	Ref.
257857A1	08-06		5	2852155	02-38		1
257859A1	08-06		7	2852161	02-37		2
	08-16		8	2852162	02-37		3
	08-17		6	2852163	02-37		1
257884A1	02-01		35	2852170	02-39		
259702A1	04-05		7A	2852171	02-39		3
259905A1	08-06		6	2852172	02-39		1
26-516	06-33		18	2852175	02-13		1
262159	08-02		23	2852180	04-02		4
	08-03		14	2852181	04-02		1
263117	04-06		7	2852183	02-40		1
	04-18		4	2852203	02-09		19
	04-19		5	2852221	02-31		2
	04-27		2	2852294	03-06		3
	09-48		1	2852364	02-31		3
	09-49		3	2852473	02-38		6
265235	08-11		5	2852507	02-41		3
	08-13		24	2852511	02-35		5
270192	08-14		13	2852519	02-10		7
272310	08-16		5	2852521	03-09		4
278332A1	09-17		11	2852531	02-25		1
	09-18		24	2852533	02-32		2
280112	09-34		2	2852547	03-03		1
280272	04-07		7	2852619	02-10		5
	04-08		4	2852729	02-15		2
280299	09-50		7	2852741	03-04		
280374	09-10		9	2852744	02-27		3
280476	04-18		11	2852834	02-27		3
	04-19		10	2852865	02-11		2
	08-01		11	2852866	02-30		3
	08-03		5	2852871	03-07		1
	08-17		22	2852872	03-07		2
280498	09-56		1	2852873	03-07		3
280724	08-15		5	2852874	03-07		4
281045	04-09		3	2852875	03-07		5
	04-10		3	2852876	03-07		6
	04-11		4	2852877	03-07		7
	04-12		4	2852878	03-07		8
	04-13		4	2852879	03-07		9
	04-14		4	2852880	03-07		10
282002A2	09-38		20	2852881	03-07		11
282775A1	04-07		2	2852882	03-07		12
2830083	02-09		1	2852883	03-07		13
2830156	03-05		2	2852884	03-07		14
2830158	02-28		4	2852885	03-06		2
2830266	03-05		1	2852889	02-24		3
2830281	02-14		9	2852894	02-14		5
2830411	03-03		7	2852978	02-17		5
2830445	02-27		2	2852995	02-18		6
2830559	02-19		10	2853010	02-39		7
2830775	02-14		8	2853047	02-17		4
2830784	02-14		7	2853050	02-17		9
2830919	02-16		15	2853075	02-26		6
2830920	02-16		15	2853076	02-26		8
2831297	02-29		3	2853133	02-38		4
2831298	02-29		1	2853146	08-18		19
283779A1	04-24		1	2853722	02-19		9
283781A1	04-24		2	2853781	02-19		3
283839A1	09-23		18	2853822	02-34		1
2852028	02-25		2	2853960	02-32		3
2852029	02-26		3	2853991	02-31		1
2852032	02-14		4	2854030	02-28		3
2852033	02-14		6	2854072	02-35		2
2852037	02-28		4	2854073	02-11		6
2852047	02-36		2	2854075	02-11		3
2852062	02-33		2	2854340	03-06		1
2852065	03-09		3	2854603	02-28		4
2852075	03-07			2854611	02-37		
2852088	03-04		3	2854866	02-11		2
2852089	03-04		4	2855103	03-03		2
2852093	03-09			2855180	02-11		9
2852094	03-09			2855287	02-10		9
2852105	03-08		1	2855531	02-28		1
2852108	03-08		2	2855903	03-09		6
2852111	03-08		3	2856017	02-16		3
2852134	02-18		1	2856334	03-04		1
2852145	02-35		3	2856343	02-19		
2852155	02-26		7	2856350	03-04		2

Number	Figure	Sequence	Ref.
2856455	02-38		2
2856462	02-26		1
2856541	02-38		5
2856715	02-20		1
291308	09-57		5
	09-59		5
293470A1	04-28		10
293828A1	04-28		8
294579A1	06-66		7
294650A1	08-05		21
294741A1	08-11		27
	08-13		44
294752A1	09-69		5
294911A2	09-17		14
	09-18		27
294943A1	09-17		16
	09-18		29
294967A1	09-17		12
	09-18		25
297244A1	09-28		2
297245A1	09-28		1
297246A1	09-28		3
297377A1	09-71		4
297378A1	09-71		4
297379A1	09-71		4
297380A1	09-75		4
297381A1	09-72		4
297382A1	09-72		4
297383A1	09-72		4
297384A1	09-73		4
297385A1	09-73		4
297386A1	09-73		4
297387A1	09-74		4
297388A1	09-74		4
	09-75		4
297390A1	09-74		4
297391A1	09-71		2
297392A1	09-71		2
297393A1	09-71		2
297394A1	09-72		2
	09-75		2
297396A1	09-72		2
297397A1	09-72		2
297398A1	09-73		2
297399A1	09-73		2
297400A1	09-73		2
297401A1	09-74		2
297402A1	09-74		2
297403A2	09-75		2
297404A1	09-74		2
297406A1	09-75		3
297407A1	09-75		4
297408A1	09-75		2
297409A1	09-71		3
297410A1	09-75		3
297411A1	09-73		3
297412A1	09-73		3
297413A1	09-75		3
297414A1	09-74		3
298518A1	09-75		7
298520A1	09-73		7
298521A1	09-75		7
299274A2	09-63		15
300381	09-25		27
	09-63		8
300388	02-22		11
	04-03		9
302137A2	09-45		2A
302960A2	09-23		2
303709A1	06-33		16
304083A1	08-04		25
	09-67		12
305412	06-12		9
308761	03-01		4
309096A1	04-01		14
310838A1	08-04		23
310860A1	09-44		2
3125705R1	04-28		3
3131227R1	04-22		3
3131234R1	04-22		4
321-4614	09-67		9
321-5675	09-72		7
	09-75		7
321-5676	09-72		7
321-5677	09-74		7
321-6861	09-72		3
321-6862	09-74		3
321-6863	09-72		3
321-7004	09-73		3
321-7029	09-67		10
321-7040	09-67		7
322357	04-04		5
	04-05		27
	09-43		5
322358	02-01		2
	02-06		14
	02-07		18
	02-22		5
	03-01		6
	04-01		2
322894	06-09		31
	06-10		29
	06-16		8
	06-18		38
	06-19		29
	06-21		20
	08-18		9
322896	06-09		45
	06-21		9
	06-29		1
	06-30		1
	06-31		1
	08-18		2
323238	06-30		10
	09-13		6
	09-21		2
323657A1	03-02		28
324299A1	04-23		3
324604A1	06-34		9B
	06-37		9B
324610A1	06-35		17
	06-38		14
325258A1	04-23		3
325829	08-17		9
	09-42		4
329-1010	09-10		9
330344	08-18		6
330345	08-02		33
330346	06-22		15
337475	06-68		5
337563	04-32		6
	09-66		3
338030A1	04-03		2
338413	08-11		23
	08-12		17
	08-18		14
338550A4	06-64		
338551A2	06-64		1
341837A2	06-64		5
348434A1	09-27		8
	09-45		10
	09-46		9
	09-47		9
348452A1	09-27		7
	09-45		4
	09-46		3
	09-47		3
350616	02-06		10
	02-07		1
353238A1	09-75		5
353239A1	09-75		5
353240A1	09-75		5
353241A1	09-75		6
353242A1	09-75		6
353243A1	09-75		6
364181A1	06-63		6

Number	Figure	Sequence	Ref.
367582A1	09-22		21
367585A2	09-22		37
370531A1	06-34		14
	06-37		14
373114A1	09-53		2A
373223A3	08-01		25
373225A3	08-01		26
373241A3	08-01		22
373248A2	09-69		10
373836A1	09-38		18
374835	06-68		26
374891	04-05		25
376523A2	08-02		6
376669A1	09-38		15
376843A4	04-05		2
38-11207	06-35		2
	06-38		29
380751A1	09-26		10
	09-27		11
381144	02-05		16
381176A2	09-63		1
382622A1	09-67		6
382837A1	09-01		2
382838A1	09-01		6
384260A1	08-04		3
	09-67		5
384267A1	09-67		8
385681	09-43		4
385783A3	09-22		24
386045	04-01		3
	08-05		20
388457A1	04-19		7
390211A1	08-02		5
390350A1	02-06		12
	02-07		19
390516A3	09-17		10
	09-18		23
391703A2	09-38		39
393394A1	08-06		22
393742A1	09-01		11
394582A2	09-05		12
394745A2	09-63		11
394748A1	09-63		14
395792A1	02-05		4
396052A2	08-11		2
3962022	09-43		2
396243A2	08-02		4
396700A1	09-73		5
396701A1	09-73		6
398194A1	08-13		15
	09-04		24
398196A1	08-13		19
	09-04		15
398728A2	09-69		15
398796A1	09-69		12
398798A1	09-69		11
399383A1	04-15		13
399384A1	04-15		9
399665A2	04-15		3
400473A1	09-24		11
402364A1	06-33		1
402365A1	06-36		1
402366A1	06-38		
404599A5	09-03		17
	09-05		1
405103A1	09-20		2
405853A1	09-01		9
405854A1	09-01		21
406088A1	08-01		9
406089A2	02-04		15
406242A1	08-01		8
406256A1	09-24		6
	09-25		18
406336A1	08-01		13
406342A1	08-02		3
406344A1	08-02		16
406938A2	04-26		2
406940A1	08-02		7
406941A1	08-02		9
407060A1	06-34		22
	06-37		22
408117A2	09-38		26
408127A1	06-65		
	06-66		10
408450A1	06-66		2
408856A3	06-66		1
409174A2	06-66		4
409422A1	09-01		23
409574A1	06-66		3
409783A1	08-13		3
	09-05		3
409844A1	09-22		36
409845A1	09-22		23
409856A1	09-22		22
411345A1	02-03		8
	09-22		17
411515A1	09-69		14
411516A1	09-69		13
412066	02-06		4
	02-07		7
412085	02-06		6
	02-07		5
412087	06-11		18
412123	02-22		12
412250	09-24		12
	09-26		8
	09-27		3
412327	09-36		16
412479	08-05		10
412641	09-19		15
412672	04-32		7
	08-06		33
	08-13		18
	09-04		14
	09-23		3
	09-55		11
	09-66		5
414010A1	09-63		13
414635A1	09-58		5
417779A3	08-13		1
	09-04		1
419431A1	04-22		10
419434A1	09-38		1
420-21032	09-10		8
425-1010	09-10		6
	09-10		9
425-108	06-36		13
	06-38		32
425-116	06-34		9
	06-37		9
427180A1	04-22		12
428239A2	04-29		2
429233A1	06-63		5
429619A1	09-02		1
429620A1	09-02		2
429630A2	09-69		6
430498A1	09-10		
430499A1	09-10		
430500A1	09-10		
43117	03-02		29
	09-22		27
43127	02-04		9
	02-05		9
	06-21		3
	06-68		10
	08-16		15
	09-01		15
	09-13		17
	09-25		8
43128	06-10		8
	06-16		6
	06-17		14
	09-19		11
	09-26		6
	09-27		1
	09-38		28

Number	Figure	Sequence	Ref.	Number	Figure	Sequence	Ref.
43129	02-23		9	4891353	02-09		6
43130	07-01		16	4892426	02-39		6
	08-17		4	4892708	02-29		2
43133	08-04		13	4892712	02-28		2
43138	02-01		30	4892713	02-28		3
	02-03		4	4892714	02-29		4
	06-09		7	4892715	02-29		4
	06-12		6	4892732	02-39		2
	06-17		6	4892808	02-14		2
	08-02		35	4892859	02-16		1
	09-22		10	4892860	02-30		4
43139	02-01		13	4892861	02-16		1
	02-03		17	4892867	02-32		3
	06-32		4	4892915	02-11		2
	08-13		21	4893036	02-11		12
	09-05		6	4893386	02-34		2
	09-13		21	4893391	02-19		8A
	09-18		12	4894095	03-08		4
	09-22		19	4894139	02-17		6
43140	02-03		19	4894218	02-09		18
	02-06		19	4894721	03-05		5
	02-07		15	4895017	02-34		4
	04-01		12	4895038	02-09		4
	09-40		3	4895039	02-09		3
43144	06-10		26	4895040	02-09		7
	06-12		48	4895045	02-19		5
	06-18		40	4895049	02-09		15
	09-01		5	4895078	02-38		8
43158	06-30		9	4895085	02-16		16
43168	02-01		20	4895133	02-41		2
43235	02-06		15	4895155	02-11		10
	02-07		17	4895166	03-03		5
43248	06-10		21		04-02		5
43260	06-10		23	4895179	02-16		12
	06-68		4	4895180	02-09		16
	09-55		10	4895183	02-16		4
432895A1	09-44		3	4895184	02-16		9
43362	03-01		5	4895187	02-16		6
	04-03		5	4895188	02-16		5
	09-19		13	4895195	02-30		1
	09-29		7	4895196	02-30		7
	09-58		16	4895198	02-30		9
433957A1	09-67		1	4895199	02-30		10
434006A1	09-71		1	4895200	02-30		11
434007A1	09-71		1	4895202	02-14		1
434008A1	09-71		1	4895204	02-30		12
434009A1	09-72		1	4895214	02-14		3
434010A1	09-72		1	4895215	02-16		8
434011A1	09-72		1	4895228	02-09		5
434012A1	09-73		1	4895244	03-09		1
434013A1	09-73		1	4895291	02-17		10
434014A1	09-74		1		04-02		3
434015A1	09-74		1	4895296	02-14		2
434016A1	09-74		1	4895297	03-10		2
434017A1	09-73		1	4895305	03-09		2
434018A1	09-75		1	4895316	02-26		4
434019A1	09-75		1	4895323	02-33		1
434020A1	09-75		1	4895325	02-26		
434346A1	09-11		5	4895336	02-27		4
43435	04-18		10	4895347	02-16		7
	04-19		9	4895355	02-10		8
	09-13		22	4895360	02-14		10
434817A1	09-10			4895361	02-30		2
435396A1	09-24		2	4895363	02-30		5
435565A1	09-22		2	4895364	02-30		6
436415A1	06-34		19	4895365	02-30		8
	06-37		19	4895378	02-11		4
436416A1	06-34		21	4895379	02-11		5
	06-37		21	4895392	02-09		13
43646	09-43		7		02-35		
442856A1	09-38		25	4895393	02-09		14
450051A1	09-02				02-35		7
4890732	02-39		4	4895394	02-35		6
4890832	02-12		4	4895406	02-18		3
4890833	02-11		8	4895414	02-34		3
4890964	03-05		4	4895538	04-02		6
4891209	02-12		5	4895610	02-18		5
4891252	02-36		1	4895623	02-35		8

Number	Figure	Sequence	Ref.
4895625	02-35		9
4895919	02-09		8
4895921	02-09		8
4896404	02-19		4
4896406	02-19		9
4896409	02-19		11
4896410	02-19		7
4896773	02-32		1
4896865	02-09		17
4896884	03-07		15
4896897	02-13		2
	08-18		19B
4897026	02-12		1
4897178	02-16		13
4897179	02-16		14
4897330	02-18		4
4897457	02-33		4
4897480	02-21		1
4897876	02-17		8
4897877	02-17		7
4898301	02-17		3
4899009	02-24		1
4899019	02-19		1
4899020	02-11		7
4899026	02-09		2
	02-10		1
	02-11		1
4899031	03-05		3
	04-02		2
4899032	02-15		1
	02-39		8
4899035	02-19		6
4899039	02-26		2
4899046	02-34		5
4899053	02-39		9
4899055	03-09		
4899063	02-12		3
4899068	02-11		11
	02-33		3
	03-03		3
4899072	02-24		2
4899073	02-10		3
	02-40		2
4899074	02-11		2
4899076	02-11		2
4899078	02-12		2
4899079	02-36		3
	02-37		5
4899080	02-33		6
4899090	02-21		2
4899091	02-10		2
	02-17		2
4899092	02-25		3
4899093	02-10		3
4899109	02-11		2
	02-35		1
	02-37		6
4899110	02-25		3
4899143	02-11		2
4899859	02-27		5
	02-41		4
4899921	02-26		5
493-21020	06-32		9
493-41033	06-34		18A
	06-37		18A
500322677	02-41		1
507586	02-04		1
516742	09-30		12
524036	08-03		12
52419	08-15		13
528359R4	04-05		3
529070	03-01		2
	04-03		10
	06-01		20
	06-02		16
	06-03		16
	06-10		4
	06-10		7
529070	06-11		13
	06-12		15
	06-16		14
	06-18		27
	06-22		11
	08-04		10
	08-07		10
	08-18		28
570024	06-12		8
574342	08-04		9
574518	02-22		8
595460	08-06		21
60-7083T1	09-34		5
	09-36		19
603022	09-13		18
608089	06-12		41
	06-18		37
	08-07		4
	08-08		4
	08-09		14
614-6025	09-44		4
627-6030	06-12		44
629086	09-67		14
631816	09-11		1
637964	09-29		3
	09-35		3
642560	09-57		9
	09-58		34
	09-59		14
682683	09-72		8
	09-75		9
694371	03-02		8
7120741	09-59		51
76344	06-14		1
	06-22		8
	07-01		1
	08-07		18
	08-08		18
	08-09		23
	08-11		19
	08-12		13
	08-13		48
76349	06-02		8
	06-03		8
	06-09		52
	06-14		17
	06-15		11
	06-18		22
	06-19		11
	06-33		10
	06-33		19
	06-34		3
	06-36		8
	06-37		4
	08-19		5
76350	06-01		3
	06-02		3
	06-03		3
	06-13		2
	06-14		6
	06-15		15
	06-19		15
	06-22		3
	06-23		9
	06-24		5
	07-01		9
	08-04		16
	08-11		21
	08-12		15
76355	06-23		2
	06-24		17
771714	08-14		7
774735	09-23		15A
783874	08-15		14
80120101	06-18		35
	08-07		6
	08-08		6
	08-09		15

Number	Figure	Sequence	Ref.
80120101	09-45		5
	09-46		4
	09-47		4
80681	08-16		7
	08-17		5
80682	03-02		5
80710	08-12		6
	09-03		20
	09-04		17
	09-05		11
80855	09-20		1
	09-22		5
81541	08-06		34
81822758	09-50		10
81827427	08-02		1
	08-06		48
825-5146	04-29		3
827695C1	09-38		19
83918746	09-18		8
83931335	09-38		13
83982664	04-18		6
840-1616	04-29		4
84384	06-18		13
84570	06-09		33
	06-16		18
	06-16		25
	06-18		10
	06-29		7
	06-30		4
	06-31		7
	08-06		23
	08-18		25
84674	02-01		11
	02-04		13
848220	08-15		2
853764	03-01		3
853765	04-18		3
	04-19		4
85821384	04-18		12
	04-19		11A
	04-20		
85821385	04-18		9
	04-19		11
	04-21		
85826230	02-06		2
	02-37		4
86010402	08-03		8
86010532	09-59		15
8602005	02-08		1
86025725	09-25		21
86050279	09-59		39
86050288	06-11		4
	06-18		23
86071	08-05		13
861-14080	06-56		5
	06-59		3
861-8040	06-56		17
	06-59		17
86500348	09-22		16
86500688	04-05		26
	09-20		4
	09-22		28
86500689	02-01		16
	08-02		21
	09-17		15
	09-18		28
86501706	08-01		10
86501801	09-08		2
	09-08		2
86501815	09-08		5
	09-08		5
86505868	09-13		16
	09-38		32
	09-45		14
	09-46		14
	09-47		13
	09-58		13
	09-59		33
86507486	09-58		17
86508568	04-22		8
86508569	09-17		6
86508570	08-11		13
	08-13		32
86508571	06-14		30
	06-20		10
	06-23		6
	06-24		9
86508624	06-68		8
86508812	09-56		4
86509028	06-13		4
	08-04		18
86509309	03-02		16
86509310	09-22		7
86510314	09-07		8
86510315	09-07		6
86510316	09-07		5
86511042	04-07		9
86511315	06-68		11
86511444	04-22		6
	04-23		6
	09-38		5
	09-58		38
86511827	09-24		4
	09-25		17
86511829	09-39		3
86512008	08-15		12
86512134	06-56		23
	06-59		23
86512142	06-56		7
	06-59		7
86512440	06-22		6
	08-06		41
	08-11		14
	08-12		18
	08-13		33
	09-23		10
86512446	08-06		31
	09-23		14
86512498	06-63		2
	06-66		9
	06-68		17
86512554	06-10		24
	06-12		49
	06-18		41
	06-32		3
	08-02		29
	08-06		13
	08-13		6
	09-01		4
	09-03		15
	09-04		26
	09-05		4
	09-18		14
	09-23		13
	09-40		1
86512555	06-11		7
	06-20		4
	06-24		2
	09-26		19
86512837	08-13		10
	09-03		19
	09-04		28
	09-05		7
86512934	08-11		28
	08-13		42
86512936	06-12		27
	06-21		27
86513019	08-07		2
	08-08		2
	08-09		20
86513020	06-14		32
	07-01		14
	08-04		7
	08-11		30
	08-13		40
86513144	08-17		23

Number	Figure	Sequence	Ref.	Number	Figure	Sequence	Ref.
86513653	07-01		4	86610167	09-03		7
	08-07		30		09-04		8
	08-08		30	86611740	08-15		4
	08-09		34	86611742	08-15		1
86517328	03-02		2	86614267	08-14		3
86520436	08-06		39	86614269	08-14		
	09-23		6	86618351	09-06		1
86521425	04-07		1	86618354	09-07		2
	04-08		1	86618355	09-07		2
86526	06-01		21	86618363	09-07		1
	06-02		20	86618364	09-07		1
	06-03		20	86619800	09-31		13
	06-15		27		09-36		14
	06-19		27		09-57		6
	08-04		14		09-59		7
86527861	08-19		3	86619801	09-36		25
86527863	08-19				09-36		6
86527865	08-19		6	86620864	09-53		5
86527866	08-19		2	86624005	08-03		4
86530079	09-11		2		08-10		6
86536660	06-09		38		08-12		2
	06-12		36	86624011	08-03		2
	06-17		29	86624092	09-03		11
	08-18		22		09-04		12
86536985	09-16		15	86624131	08-06		14
	09-19		17	86624176	08-02		22
86545825	09-17		5		08-06		12
	09-18		16		09-13		13
86548338	09-10		5		09-22		18
	09-10		8		09-59		40
	09-10		8	86624181	08-07		5
86563839	08-15		8		08-08		5
86565640	09-11		3		08-09		16
86565641	09-11		4	86624182	04-22		7
86574054	09-12				04-23		5
86574055	09-12				09-26		13
86577166	09-06		4		09-27		14
86577168	09-06		4		09-34		7
	09-07		4	86624184	02-01		3
	09-07		4		04-26		5
	09-08		3		06-09		22
	09-09				06-14		29
86577170	09-06		4		06-16		1
	09-09				06-17		15
86577173	09-10		7		06-20		11
86577946	06-63		4		06-21		2
	09-65		8		06-24		10
86588450	04-05		22		08-05		9
	06-09		49		08-06		9
	06-12		43		09-01		14
	06-14		3		09-29		8
	06-18		20		09-58		12
	06-22		5		09-59		31
	08-11		15		09-63		9
	08-12		19	86624185	02-08		2
	08-13		34		04-15		11
	08-18		13		07-01		17
	09-26		11	86624194	02-04		17
	09-27		12		08-04		2
	09-38		6	86624450	08-14		
	09-58		20		08-15		
86589764	09-12		2	86624451	08-15		
86589765	09-12		3	86624732	08-08		22
86592107	09-60		28	86624977	08-06		10
86592710	09-25		19	86625000	02-04		3
86595542	08-14		8	86625021	02-05		14
86598102	02-23		2	86625032	02-01		9
86599775	09-56		9		08-07		21
86600617	09-74		9		08-09		29
	09-75		10	86625033	08-02		12
86603490	09-45		2	86625034	08-08		21
86604657	04-18		17	86625074	04-03		6
	04-19		16	86625127	09-38		29
86606073	02-03		11	86625129	09-38		42
86608204	02-03		12	86625135	09-18		19
86609324	08-14		12	86625224	04-28		7
86610166	09-03		6		04-32		1
	09-04		7		09-55		6

Number	Figure	Sequence	Ref.	Number	Figure	Sequence	Ref.
86625234	02-01		26	86637783	04-09		1
86625253	02-01		14		04-10		1
	04-01		13		04-11		2
	08-13		7		04-12		1
	09-03		14		04-13		2
	09-04		25		04-14		1
	09-05		5		04-32		10
	09-38		14	86637935	09-38		10
	09-41		1	86637977	06-11		10
	09-42		5		06-21		16
86625254	02-01		18	86637978	04-05		8
	09-65		3	86637998	09-13		15
86625255	06-15		2	86639001	06-09		5
	06-19		1		06-12		4
	06-68		6		06-17		4
	08-13		17	86639003	04-04		3
	09-04		14A	86639006	06-10		14
	09-16		3		08-16		14
	09-19		6	86639241	09-24		3
	09-42		2		09-25		15
86625256	03-02		14	86639310	09-56		5
	04-04		11	86639313	02-04		7
	04-32		8		03-02		25
	06-10		22		09-29		5
	06-11		19		09-35		5
	09-55		12		09-63		6
	09-66		4	86639325	02-06		18
86625258	06-11		8		02-07		14
	06-20		2		06-10		25
	06-24		3		06-12		50
86625260	09-16		14		06-18		42
	09-19		16		06-32		5
86625263	02-03		5		08-02		36
	02-04		10		09-21		1
	02-05		10		09-22		9
	02-23		8	86639326	02-01		21
	06-10		17		06-68		9
	06-12		40	86639409	09-59		10
	06-18		29	86639773	09-12		1
	08-06		55	86705351	04-05		20
	08-07		26	86705580	06-20		5
	08-08		26		06-24		15
	08-09		26	86705988	06-14		31
	08-16		16	86729372	06-12		29
	09-25		9	86729669	04-07		5
	09-45		7		09-58		28
	09-46		6	86729670	04-07		4
	09-47		6		09-58		27
86625264	09-24		5	86729675	09-58		25
	09-25		16	86900574	09-08		3
86625266	02-06		9	86976064	03-02		22
	02-07		2		08-06		32
	09-26		20		09-23		7
	09-38		38	86977786	04-04		6
86625480	09-61		25		04-05		21
86625481	09-59		21		09-58		39
86625515	09-59		20	86977789	09-26		12
86627432	04-07		12		09-27		13
86629891	06-68		25	86977790	06-09		47
86631597	08-15		3		06-14		20
86631598	08-15				06-18		19
86631607	08-14		10	86990981	02-05		4A
	08-15		10	86993467	06-33		15
86631610	08-14		9		06-36		7B
	08-15		9	86993468	06-33		7A
86631616	08-14		11		06-36		5
	08-15		11	86993475	06-33		4
86632589	09-38		36		06-34		25
86632601	04-26		4		06-36		15
	09-26		7		06-37		25
	09-27		2	86993479	06-33		13
86633195	09-03		1		06-36		7
	09-04		4	86993480	06-33		14
86633196	09-03		2		06-36		7A
	09-04		3	86993483	06-34		27
86633356	04-22		11		06-37		27
86633393	02-03		6	86993484	06-34		24
86634307	09-31		15		06-37		24

Number	Figure	Sequence	Ref.
87000312	04-05		10
87010108	06-09		43
	06-21		11
87010110	08-08		27
87010593	06-32		13
87012669	08-16		3
	08-18		16
	08-19		
87013357	09-25		22
87013666	02-05		18
	04-03		11
87013729	06-10		13
	06-38		30
87014502	09-07		6
	09-07		6
	09-07		6
	09-07		6
87014503	09-07		5
	09-07		5
	09-07		5
	09-07		5
87014504	09-06		3
	09-06		3
	09-06		3
87014505	09-06		2
	09-06		2
	09-06		2
87015284	09-01		13
	09-24		8
	09-25		6
	09-26		9
	09-27		4
	09-58		36
87015460	09-07		7
	09-07		7
	09-07		7
	09-07		7
87015514	09-07		4
	09-07		4
	09-07		4
	09-09		
87015862	09-29		6
	09-35		6
87016334	06-11		5
87016486	08-18		27
87016585	09-58		40
87016586	09-58		9
	09-59		27
87016587	09-38		11
87016615	06-15		21
	06-19		20
	06-68		3
87016870	04-05		6
	04-22		5
87016983	09-06		5
	09-06		5
	09-06		5
87017348	08-06		56
	08-40		
87017686	02-08		
87017999	08-17		14
87019286	08-03		11
87019495	09-01		10
87019943	06-26		7
87020048	08-17		15
87020181	04-05		28
87020733	06-55		
	08-16		4
	08-18		20
87020743	08-17		11
87020901	06-32		1
87020980	02-01		34
87021047	07-01		21
87021266	06-11		3
87021277	07-01		3
87021824	06-09		26
	06-09		9
	06-17		11
87021825	02-01		24
87022172	06-09		39
87022174	06-10		28
	06-21		24
87022175	06-09		16
	06-21		22
87022177	07-01		12
87022436	07-01		7
87022437	07-01		11
87022438	06-09		25
87022671	08-17		25
87022672	08-17		26
87022737	08-17		10
	09-17		7
87023398	08-17		24
87023469	08-17		19
87023470	08-17		18
87023471	08-17		28
87023472	08-17		27
87023483	08-17		17
87023530	04-27		4
	08-03		10
87024208	08-03		9
87024539	02-06		13
87024588	02-06		16
87024695	06-10		12
	06-54		
87025275	08-17		16
87025470	02-01		6
87026695	08-17		3
87026696	08-17		2
87026871	09-48		2
	09-49		4
87027430	08-14		5
87028524	03-02		7
	04-27		3
87029843	04-23		1
87029930	08-02		8
87029961	02-03		10
87030508	09-16		11
	09-17		8
	09-18		2
87030547	09-22		3
87030549	04-22		9
	09-41		4
	09-42		7
87030555	09-51		3
87030561	04-05		23
	04-26		3
	06-12		42
	06-14		4
	06-18		36
	08-07		7
	08-08		7
	08-09		17
	09-21		6
	09-26		15
	09-27		16
87030567	02-05		11
	06-10		9
	06-11		11
	06-14		28
	06-16		2
87032107	02-05		
87032338	02-06		8
87033027	06-11		15
87033290	08-06		36
	09-23		19
87033361	02-03		7
87033645	09-20		11
87033823	06-09		18
	06-12		17
	06-17		22
87033824	06-11		1
	06-18		24
87034630	02-03		18
87034631	02-03		14
87035341	06-11		9

Number	Figure	Sequence	Ref.
87035341	06-20		1
	06-56		
	06-57		
	06-58		
87035342	06-23		3
	06-24		1
	06-59		
	06-60		
	06-61		
87035382	04-05		24
87035457	09-60		39
	09-61		45
87035782	09-61		13
87036285	09-20		7
87039085	06-10		6
	06-12		31
	06-18		26
	06-30		11
87039359	06-56		1
87039360	06-59		1
87039368	06-58		
87039369	06-61		
87039370	06-58		
87039371	06-61		
87039372	06-58		
	06-61		
87039611	06-33		24
87039612	06-33		2
	06-36		17
87039613	06-34		23
	06-37		23
87039614	06-34		26
	06-37		26
87039615	06-34		29
	06-37		29
87039622	06-34		16
	06-37		16
87039623	06-38		5
87039625	06-35		
87040707	08-02		18
87040758	02-05		7
87041763	02-06		3
	02-07		8
87041842	02-05		1
87042118	04-01		1
	04-04		1
87042214	06-54		1
	06-55		1
87042897	06-09		21
	06-16		3
	06-17		16
87042903	06-56		13
	06-59		13
87042904	06-56		11
	06-59		11
87042905	06-56		12
	06-59		12
87042906	06-56		14
	06-59		14
87042907	06-58		18
	06-61		19
87042908	06-56		3
	06-59		4
87042909	06-59		5
87042910	06-59		18
87042911	06-56		19
	06-59		19
87042912	06-56		6
	06-59		6
87042913	06-60		2
87042914	06-60		4
87042915	06-60		7
87042916	06-60		6
87042917	06-60		3
87042918	06-60		1
87042919	06-58		17
	06-61		20
87042921	06-56		8
87042921	06-59		8
87042922	06-56		22
	06-59		22
87042923	06-56		10
	06-59		10
87042924	06-58		19
	06-61		21
87042925	06-56		21
	06-59		21
87042926	06-56		9
	06-59		9
87042927	06-56		20
	06-59		20
87042928	06-57		5
	06-60		12
87042929	06-57		3
	06-60		10
87042930	06-57		10
	06-60		17
87042931	06-57		8
	06-60		15
87042932	06-57		9
	06-60		16
87042933	06-57		6
	06-60		13
87042934	06-57		1
	06-60		8
87042935	06-57		4
	06-60		11
87042941	06-56		2
	06-59		2
87042953	06-56		4
87042954	06-56		18
87043498	06-10		10
87043500	06-10		11
	06-33		
	06-34		
	06-35		
	06-36		
	06-37		
	06-38		
87047451	09-42		6
87050523	06-35		16
	06-38		13
87050524	06-35		20
	06-38		11
87050525	06-35		
87050526	06-38		
87051110	09-30		15
	09-36		30
	09-38		7
87052670	04-01		8
	04-03		3
87052671	04-15		8
87053083	04-01		5
87105748	02-08		4
87301324	09-25		20
87301328	08-06		30
87301344	08-06		16
87301359	06-09		23
	06-16		4
	06-17		17
87301588	04-03		8
	04-05		1
87302136	09-57		10
87302564	06-13		21
87303345	06-68		21
87303844	06-13		13
	06-19		25
87305403	09-25		11
87307884	02-23		5
87307909	09-59		34
87308282	04-05		4
87309725	09-20		10
	09-22		31
87309726	09-22		33
87310592	04-07		6
	09-58		26

Number	Figure	Sequence	Ref.
87311640	06-09		57
87316174	06-68		2
87335499	09-33		12
87351957	02-05		6
87352014	02-05		15
87352524	06-26		
87352527	06-26		3
	06-27		10
87353205	06-31		6
87354210	06-68		28
87356572	06-68		
87357240	06-01		14
	06-04		
87357241	06-01		15
	06-05		
87363008	06-68		19
87364	09-20		13
87364613	06-68		12
87364616	06-16		28
87364622	06-16		17
87364625	06-16		12
87364627	06-13		7
87364628	06-13		16
87364629	06-14		16
87364631	06-14		14
87364799	06-13		17
87364800	06-13		18
87364801	06-13		10
87364802	06-13		11
87364803	06-14		15
87364804	06-13		12
87364805	06-13		19
87364806	06-14		13
87364807	06-13		6
87364808	06-13		8
87366159	04-01		9
87367444	08-10		2
	08-12		1
87367445	08-10		5
	08-12		10
87368774	09-18		3
87368775	09-18		20
87368776	09-18		21
87368777	09-18		4
87368778	09-18		6
87370805	04-23		1
87372864	09-70		4
87372867	09-70		5
87374752	06-09		8
	06-12		10
	06-17		8
87376457	06-12		30
87376969	08-07		22
	08-09		28
87381	09-17		13
	09-18		26
87381264	09-24		14
	09-25		2
87384641	02-06		1
	02-07		11
87385021	08-02		10
87387193	08-01		21
87387540	08-11		8
	08-13		26
	09-03		4
	09-04		2
87388074	08-10		
87389371	09-69		7
87393399	02-03		21
87393628	06-12		35
	06-17		30
87403797	08-04		1
87403835	04-03		1
87404825	08-02		26
87404992	04-04		7
	06-09		48
	06-14		21
	06-18		21
87404992	08-18		15
87405117	09-45		1
87405135	08-02		13
87405137	08-02		14
87405141	08-02		24
87411208	09-16		12
	09-17		9
87412041	09-03		8
	09-04		9
87413030	08-13		37
	09-03		12
	09-04		13
	09-05		14
87413436	08-10		7
	08-12		11
87414	08-13		9
	08-14		6
	08-15		6
	09-03		21
	09-04		27
	09-05		13
87414769	08-16		19
87414959	09-53		2
87416539	03-02		20
87417084	06-11		14
87417085	06-09		40
87417308	08-06		20
87418259	06-09		28
87421454	08-05		17
87421480	08-11		18
	08-12		12
87423368	08-01		6
87423807	08-10		9
	08-12		8
87423833	08-06		25
	09-23		1
87423856	09-23		11
87424095	03-02		19
87424182	06-26		1
	07-01		22
87426293	08-03		13
87426545	06-26		4
	06-27		11
	06-28		11
87427685	04-13		7
87427686	04-14		8
87428143	06-63		7
87428444	08-04		22
87429186	09-69		8
87429625	06-23		7
	06-26		
87429698	09-24		13
87430292	09-09		1
87430661	06-09		11
	06-12		14
	06-32		
87430679	09-17		3
	09-18		15
87430855	06-23		1
	06-24		7
87431323	03-01		1
87432221	09-16		6
	09-19		10
87432267	02-22		14
87432275	02-22		9
87433495	06-26		5
87433496	06-26		2
	07-01		23
	08-11		18B
87433497	06-26		3
	06-28		10
87433499	06-26		6
87436118	09-59		18
87436539	08-05		4
87436668	08-05		3
87437076	09-26		14
	09-27		15
87437351	06-09		42

Number	Figure	Sequence	Ref.	Number	Figure	Sequence	Ref.
87437351	06-14		19	87445932	08-26		4
	06-18		18	87445935	08-20		5
87437501	09-59		22		08-21		4
87438190	08-02		2		08-22		4
	08-15				08-23		4
87438193	08-01		28	87445943	08-20		6
	08-14				08-21		5
87438418	02-22		10		08-22		5
87438564	09-09		1		08-23		5
87438566	09-09		1		08-26		3
87438766	08-07		15	87445987	08-20		9
	08-08		15		08-21		8
87439844	09-58		22		08-28		1
	09-59		24	87445988	08-20		8
87439984	06-32		6		08-21		7
87440124	09-26		2		08-27		1
	09-27		10	87446001	08-05		1
87440253	08-08		23	87446248	06-09		37
87440564	08-10		10		06-16		21
	08-12		7	87446614	09-23		17
87440565	08-10		8	87446617	08-21		9
	08-12		4		08-22		7
87440566	08-11		4		08-29		1
	08-13		23	87446825	08-10		1
87440568	08-11		17		08-12		9
	08-13		36	87446983	08-10		3
87440569	08-11		3	87447009	08-06		19
	08-13		22	87447010	08-06		11
87440570	08-11		16	87447123	08-19		1
	08-13		35	87447124	08-19		4
87441006	09-58		23	87447764	08-07		29
	09-59		23		08-08		29
87441276	07-01		6		08-09		33
87441574	04-27		1	87447793	08-05		12
87441649	06-29		3	87447813	08-03		6
	06-30		3	87447965	08-06		18
	06-31		3	87447970	08-07		11
87441786	08-09		9		08-08		11
87441937	09-58		33		08-16		20
87442326	08-14		1	87448095	09-01		
87442334	08-14		2	87449854	09-25		5
87442335	08-14		4	87449992	04-27		9
87442337	08-11		9	87450833	09-57		4
	08-13		28		09-59		4
87442439	08-06		40	87450956	04-03		7
	09-23		9	87452009	09-59		12
87443510	06-09		41	87452108	06-13		20
	06-14		23	87452146	06-13		22
	06-16		11	87453780	04-27		10
	06-20		7	87453999	08-16		12
	06-21		23		08-17		20
	06-24		14	87454000	08-16		11
	07-01		13		08-17		21
87443511	06-09		51	87454483	09-10		4
	06-16		16	87454488	09-10		7
	06-21		14	87454489	09-10		7
	09-57		8	87455257	08-40		
	09-58		24	87455258	08-40		
	09-59		13	87455274	08-40		
87444160	08-06		52	87455412	06-23		4
87444371	08-06		3		06-24		13
87444373	08-06		2	87456974	08-04		6
87444992	04-15		5	87458061	06-25		7
87445136	06-09		20		06-27		2
	06-16		5		06-28		2
	06-17		18		07-01		24
87445137	06-18		12	87458118	04-27		11
87445138	06-11		17	87458467	04-15		2
	06-16		24	87458510	09-22		13
	06-18		7	87458511	09-22		30
87445306	08-05		22	87458514	09-22		35
87445427	02-22		1	87458642	09-16		2
87445747	08-01		7		09-19		4
87445908	09-59		17	87458660	09-22		29
87445932	08-20		7	87458662	09-22		14
	08-21		6	87458664	09-21		4
	08-22		6		09-22		38
	08-23		6	87458665	09-22		32

Number	Figure	Sequence	Ref.
87458667	09-20		15
87458725	08-18		18
87458961	04-04		12
87458990	09-01		6
87458996	06-09		17
87458997	06-10		27
87459019	09-70		3
87459075	09-25		14
87459076	09-25		10
87459429	09-68		5
87459437	09-68		4
87459438	09-68		3
87459439	09-68		2
87459440	09-68		1
87459517	06-68		22
87459518	06-68		7
87459910	07-01		5
87460042	08-07		20
	08-08		20
	08-09		22
87460100	09-22		6
87460195	09-64		1
87460558	09-62		1
87460732	09-38		30
87460888	06-68		20
87461248	09-18		10
87461561	09-37		1
87461604	09-26		1
	09-27		17
87461859	06-62		1
87461995	02-03		2
87462103	06-29		5
	06-30		7
	06-31		4
87462215	08-06		1
87462287	06-68		15
87462631	09-58		32
87462741	09-20		6
87516044	08-09		12
87517937	09-34		10
87517940	09-34		9
87520839	09-58		31
87527676	09-74		10
	09-75		8
87529123	09-30		13
	09-36		28
87530614	04-28		6
87531091	08-01		12
87533223	09-03		3
	09-04		5
87534387	06-66		5
87534744	04-09		2
	04-10		2
	04-11		3
	04-12		3
	04-13		3
	04-14		3
87535230	08-05		12A
87535297	06-68		27
87535298	06-68		13
87535299	06-68		23
87541112	06-67		
87546971	06-20		9
	06-22		14
	06-25		1
87546973	06-22		1
87546974	08-01		1
	08-22		
87546975	08-07		1
	08-08		1
	08-16		2
	08-18		1
	08-23		
87546976	06-19		3
87546977	06-15		1
87546979	06-15		8
	06-19		8
87547003	02-06		17
87547003	02-07		16
87547032	06-14		12
	06-22		10
87547047	06-24		12
87547060	06-21		18
87547061	06-21		19
87547062	06-21		25
87547065	06-16		10
87547066	06-16		20
87547067	06-16		13
87547068	06-21		7
87547070	06-09		56
	06-12		34
	06-18		5
87548612	03-01		10
87548833	06-05		1
	06-06		2
	06-08		2
87548834	06-04		1
	06-07		2
87548835	06-05		2
	06-06		3
	06-08		3
87548836	06-04		2
	06-07		3
87548839	06-04		3
	06-07		4
87548846	06-04		10
	06-07		7
87548847	06-04		11
	06-07		11
87548848	06-04		12
	06-05		8
	06-07		12
87548874	06-04		13
	06-05		9
	06-06		10
	06-07		13
	06-08		12
87549658	08-18		8
87549660	08-18		17
87553599	06-39		20
	06-43		
	06-47		20
	06-50		
87553600	06-39		21
	06-44		
	06-47		21
	06-51		
87553601	06-39		22
	06-45		
	06-47		22
	06-52		
87553604	06-39		2
	06-41		
	06-47		2
	06-48		
87553605	06-39		3
	06-47		3
87553606	06-39		4
	06-47		4
87553607	06-47		5
87553608	06-39		6
	06-42		
	06-47		6
	06-49		
87553609	06-39		7
	06-47		7
87553610	06-39		
	06-42		3
	06-47		
	06-49		3
87553611	06-39		8
	06-47		8
87553612	06-39		19
	06-47		19
87553613	06-39		9
	06-47		9

Number	Figure	Sequence	Ref.
87553614	06-39		10
	06-47		10
87553615	06-39		11
	06-47		11
87553616	06-39		12
	06-42		11
	06-47		12
	06-49		11
87553617	06-39		13
	06-47		13
87553618	06-39		14
	06-47		14
87553619	06-39		15
	06-47		15
87553620	06-39		16
	06-47		16
87553621	06-39		17
	06-47		17
87553622	06-39		18
	06-47		18
87553623	06-43		1
	06-50		1
87554200	08-17		13
87554226	08-17		12
87554297	06-15		6
	06-19		6
87555249	09-58		30
87556251	09-13		1
	09-14		2
87562923	08-11		18C
87562926	08-11		18A
87563155	06-68		
87563692	09-25		13
87563968	06-12		47
	06-18		34
87563969	06-12		46
	06-18		33
87563970	08-07		16
	08-08		16
	08-09		18
87563971	06-12		21
	06-17		28
87563972	06-18		25
87563974	08-07		14
87563977	06-22		13
87563991	06-14		11
	06-22		18
87563992	06-14		10
	06-22		17
87563994	06-20		8
87563995	06-21		13
87563996	06-14		22
87563997	06-16		15
87563998	06-12		26
	06-18		4
87564000	06-12		23
	06-18		1
87564001	08-07		17
	08-08		17
	08-09		19
87564008	06-21		4
87564009	06-12		45
87564724	09-20		5
87565745	02-01		5
87565746	02-01		5
87568426	09-13		8
87568427	09-13		9
87568434	09-13		23
87568435	06-14		9
	06-22		2
87568437	09-13		4
	09-15		3
87571937	06-15		17
	06-19		23
87571954	06-62		5
87571958	06-62		6
87571969	06-62		3
87573371	06-02		17
87573371	06-03		17
	06-14		25
87574372	09-25		23
87575213	06-62		9
87575214	06-62		10
87575289	06-01		19
87575290	06-01		18
87575606	08-07		
87575684	06-16		27
	06-18		6
87576153	08-20		4
	08-21		3
	08-22		3
	08-23		3
	08-26		1
87576154	08-20		10
	08-23		7
	08-38		3
	08-39		3
87576157	08-20		11
	08-21		10
	08-22		8
	08-23		8
	08-30		1
87576158	08-20		13
	08-21		12
	08-22		11
	08-23		11
	08-30		9
87576160	08-20		14
	08-21		13
	08-22		12
	08-23		12
	08-30		12
87576161	08-20		15
	08-23		13
87576162	08-20		17
	08-21		15
	08-22		14
	08-23		14
	08-30		15
87576163	08-20		18
	08-21		16
	08-31		
87576168	08-21		17
	08-22		18
	08-32		
87576169	08-20		19
	08-21		18
	08-33		
87577076	06-14		24
	06-27		1
87577077	06-24		8
	06-28		1
87578653	06-66		6
87579238	06-62		11
87582844	06-68		18
87582846	06-68		1
87583285	08-01		1
	08-21		
87583286	08-09		13
	08-20		1
87584058	06-10		5
	06-17		27
87584554	03-01		7
87584639	03-01		9
87584781	02-03		20
87588579	06-25		2
	06-27		7
87588585	06-27		6
87588596	06-25		3
	06-27		4
87588597	06-27		5
87588928	08-04		24
87588929	08-04		20
87588930	08-04		21
87591148	09-60		17
	09-60		24

Number	Figure	Sequence	Ref.
87591148	09-60		9
	09-61		23
	09-61		30
	09-61		9
87593415	08-02		32
87593416	08-02		25
87593417	08-02		27
87593420	08-05		2
87593421	08-05		5
87593422	08-05		8
87593425	08-05		7
87594971	09-59		35
87597259	06-43		2
	06-44		2
	06-50		2
	06-51		2
87597260	06-43		3
	06-44		3
	06-50		3
	06-51		3
87597261	06-43		4
	06-50		4
87597262	06-43		5
	06-44		5
	06-50		5
	06-51		5
87597263	06-43		6
	06-44		6
	06-50		6
	06-51		6
87597264	06-43		7
	06-44		7
	06-50		7
	06-51		7
87597265	06-43		8
	06-44		8
	06-50		8
	06-51		8
87597266	06-43		9
	06-44		9
	06-50		9
	06-51		9
87597267	06-43		10
	06-44		10
	06-50		10
	06-51		10
87597268	06-43		11
	06-50		11
87597269	06-44		1
	06-51		1
87597271	06-44		4
	06-51		4
87597272	06-45		1
	06-52		1
87597274	06-45		2
	06-52		2
87597275	06-45		3
	06-52		3
87597276	06-45		4
	06-52		4
87597277	06-45		5
	06-52		5
87597281	06-45		6
	06-52		6
87597282	06-45		7
	06-52		7
87597283	06-46		1
87597284	06-40		8
	06-46		3
	06-53		3
87597285	06-40		9
	06-53		2
87597286	06-41		6
	06-48		6
87597287	06-42		1
	06-49		1
87597288	06-42		2
	06-49		2
87597289	06-42		4
	06-49		4
87597290	06-42		5
	06-49		5
87597291	06-42		6
	06-49		6
87597292	06-42		7
	06-49		7
87597293	06-42		8
	06-49		8
87597294	06-42		9
	06-49		9
87597295	06-42		10
	06-49		10
87597296	06-42		12
	06-49		12
87597297	06-42		13
	06-49		13
87597960	08-06		37
87598810	03-01		8
87599718	09-01		20
87600262	06-13		1A
	06-62		
87600262C	06-13		
	06-62		
87600262R	06-13		
	06-62		
87600263	06-13		1
	06-62		
87600263C	06-13		
	06-62		
87600263R	06-13		
	06-62		
87600622	06-02		14
	06-08		1
87600623	06-02		15
	06-03		15
	06-07		1
87600630	06-21		8
87601409	06-62		4
87602204	08-16		13
	08-18		21
87602985	06-68		16
87602987	06-68		
87602988	06-68		
87604061	06-01		11
87604062	06-01		6
	06-02		6
	06-03		6
87604063	06-01		12
87604064	06-01		7
87604069	06-01		8
	06-02		7
	06-03		7
87604070	06-02		12
	06-03		12
87604071	06-02		13
	06-03		13
87604072	06-02		11
	06-03		11
87604074	06-12		28
	06-15		7
87604075	06-19		7
	06-21		26
87604076	06-14		8
	06-22		1
87610349	08-20		2
	08-21		1
	08-24		
87610350	08-20		3
	08-21		2
	08-22		2
	08-23		2
	08-25		
87610351	08-20		12
	08-21		11
	08-22		9
	08-23		9

Number	Figure	Sequence	Ref.	Number	Figure	Sequence	Ref.
87610351	08-30		5	87614030	06-46		2
87610352	08-20		16	87614031	06-47		1
	08-21		14		06-53		
	08-22		13	87615741	02-04		12
87610517	08-22		1	87615742	02-04		16
	08-23		1	87615743	02-04		8
	08-34			87615745	02-04		5
87610530	08-22		10	87617017	08-09		
	08-23		10	87617091	09-16		13
87610531	08-22		15	87617092	09-18		22
	08-23		15	87617100	08-16		
	08-37				08-17		
87610532	08-22		16	87619935	09-39		4
	08-23		16	87619938	09-39		1
	08-36			87619939	09-39		2
87610533	08-22		17	87620412	08-13		2
	08-23		17		09-05		2
	08-35			87620458	04-01		6
87610718	08-11		10	87620895	09-38		35
	08-13		29	87620930	02-05		8
87611845	08-20		20	87621245	08-07		23
	08-23		18		08-09		30
	08-38			87622364	06-01		16
87611846	08-20		21	87623657	09-59		
	08-23		19	87624401	04-15		6
	08-39			87624623	09-32		1
87611848	08-20		22	87624640	09-31		2
	08-21		19	87624641	09-31		17
	08-28				09-36		17
87611849	08-20		23	87624736	08-02		31
	08-21		20	87625890	06-12		22
	08-27				06-18		2
87611850	08-21		21	87626406	09-48		3
	08-22		19	87626717	09-16		16
	08-29				09-19		14
87611854	06-03		14	87626729	02-01		25
	06-06		1	87627050	04-06		5
87612445	06-62		8		04-08		
87612446	06-62		7	87627051	09-29		2
87612449	06-62		2	87627383	06-10		20
87612749	03-02		21	87627399	06-39		
87612875	08-08		14		06-47		
87613733	09-22		34	87627518	06-08		6
87614009	06-25		8	87627520	09-31		1
	06-27		3	87627524	09-56		3
87614011	06-25		4	87627706	09-30		6
	06-27		8	87630124	04-04		8
87614012	06-25		5	87630125	04-04		9
	06-27		9	87630126	04-10		5
87614013	06-25		6		04-12		6
	06-27		12		04-14		6
87614014	06-27		10A	87630127	04-09		4
87614015	06-25		9		04-11		5
	06-27		3A		04-13		5
87614016	06-04		7	87630128	04-12		7
87614017	06-04		6		04-14		7
	06-05		4	87630129	04-11		1
	06-06		5		04-13		1
	06-08		7	87630130	04-12		2
87614018	06-04		5		04-14		2
87614019	06-04		9	87634133	04-18		18
	06-05		6		04-19		17
87614020	06-04		8	87634134	04-27		6
	06-05		7	87634135	04-27		7
	06-06		6	87634136	06-23		8
	06-07		6		06-24		18
	06-08		8	87634137	04-32		12
87614023	06-05		3	87635242	09-38		2
	06-06		4	87635322	09-29		
	06-08		4	87637186	06-15		22
	06-08		5		06-19		21
87614024	06-05		5	87638293	08-05		
87614027	06-39		23	87638304	08-04		
	06-46			87638327	02-04		
	06-47		23	87638358	09-51		
87614028	06-39		1	87638361	08-08		
	06-40			87638451	09-66		
87614029	06-39		5	87638500	04-28		

Number	Figure	Sequence	Ref.
87638514	09-54		
87638864	04-07		10
87638865	04-07		10
87638893	08-10		
87639899	09-38		31
87640046	09-36		18
87640048	04-27		
87641947	04-14		
87641948	04-13		
87642449	09-31		8
	09-34		8
87642453	09-31		7
	09-34		11
87642514	09-34		4
87642529	09-34		6
87642536	09-33		16
87642540	09-33		14
	09-36		12
87642543	09-33		5
87642544	09-33		6
87642545	09-33		7
87642911	08-12		3
87642912	04-19		18
87642913	04-11		6
	04-13		6
87642914	04-06		1
	09-31		10
	09-33		9
	09-55		2
87642915	04-06		2
	09-31		9
	09-33		10
	09-55		1
87644290	06-12		24
	06-18		3
87645119	09-38		3
87646401	09-13		11
87646402	09-13		7
87647549	02-28		
87647550	02-28		
87647551	02-28		
87647723	09-13		3
	09-15		4
87648094	09-16		9
	09-19		9
87648689	04-01		11
87649979	09-59		42
87649991	09-59		37
87650009	06-68		31
87650010	06-68		30
87650011	06-68		29
87650094	03-02		23
87650097	04-06		4
	04-16		
87650098	04-06		8
	04-17		
87651126	09-35		
87651799	02-01		31
87651800	02-01		29
87652238	04-01		7
87652336	04-32		
87652337	09-55		
87653393	09-59		3
87653394	09-57		3
87653980	06-09		3
	06-10		1
	06-12		3
	06-17		3
87653981	06-12		20
	06-17		26
87654919	02-03		3
87654923	02-04		2
87655055	09-30		7
87656095	09-60		1
	09-61		50
87656096	09-60		2
	09-61		51
87656097	09-60		30
87656097	09-61		40
87656098	09-60		5
	09-61		1
87656099	09-60		4
	09-61		2
87656100	09-60		41
	09-61		43
87656101	09-60		40
	09-61		44
87656102	09-61		47
87656103	09-60		36
	09-61		48
87656104	09-61		49
87656105	09-60		22
	09-61		28
87656106	09-60		29
	09-61		41
87656107	09-60		32
	09-61		38
87656108	09-60		33
	09-61		37
87656109	09-60		15
	09-61		21
87656110	09-61		33
87656111	09-61		16
87656112	09-61		15
87656113	09-61		12
87656114	09-60		10
	09-61		10
87656118	09-60		6
	09-61		6
87656119	09-61		5
87656120	09-60		20
	09-61		3
87656121	09-60		14
	09-61		20
87656122	09-60		21
	09-61		27
87656123	09-60		16
	09-61		22
87656124	09-60		23
	09-61		29
87656125	09-60		8
	09-61		8
87656126	09-60		27
	09-61		36
87656127	09-60		18
	09-60		25
	09-61		24
	09-61		31
87656129	09-60		7
	09-61		7
87656130	09-60		11
	09-61		11
87656866	04-10		
87656868	04-09		
87656870	04-12		
87656872	04-11		
87657080	08-09		2
87657669	09-51		1
87657670	09-51		2
87658636	09-55		9
87658709	09-60		37
87658710	09-60		35
87659208	04-18		14
	04-19		14
87659212	09-29		9
	09-35		7
87659253	08-03		7
87659406	08-13		8
	09-03		18
	09-04		18
87660800	09-26		3
87660828	02-01		15
87660842	02-01		27
	02-02		
87660856	06-09		24
	06-12		13

Number	Figure	Sequence	Ref.	Number	Figure	Sequence	Ref.
87660856	06-17		13	87688650	02-02		1
87661378	02-01		12	87691470	09-59		52
87661380	02-01		10	87691471	09-59		53
87661493	04-05		11	87691473	09-59		8
87662513	09-46		1	87691475	09-57		11
87662514	09-47		1		09-59		16
87665543	09-13		10	87692685	02-07		12
87665545	09-13		2	87694058	02-23		3
87665549	09-14		3	87702278	09-42		8
87665550	09-15		6	87702506	09-41		2
87666074	09-16		7	87703530	09-58		7
	09-19		8	87703555	09-59		25
87667727	09-56		7	87705419	09-58		1
87668006	09-56		2	87705420	09-58		21
87668728	04-06		6	87706925	09-38		15
	04-08		3	87707134	09-24		1
87668735	09-55		4	87707135	09-25		1
87668737	04-05		9	87709877	09-59		43
	04-06		3	87710177	09-59		50
	04-07		3	87710959	09-70		1
	04-08		2	87710960	09-70		2
	04-18		2	87711337	02-07		13
	04-19		3	87711364	09-01		18
	09-55		3	87711366	09-01		19
87668739	08-09		11	87712373	03-02		11
87669347	06-68		18	87712376	03-02		15
87669349	06-68		1	87712652	02-07		10
87669405	09-59		45	87712700	09-54		4
87670	06-15		3	87712706	09-54		7
	06-19		2		09-58		2
87671495	09-27		9	87713059	02-07		9
87671857	09-33		11	87713668	09-58		3
87672098	09-54		6	87714073	09-64		2
87672222	09-56		6	87714955	09-63		10
87672257	09-56		8	87714956	09-63		5
87673070	04-19		15	87715341	08-06		26
87673072	04-18		5	87715687	06-01		25
87673077	04-19		2	87715688	06-03		24
87673079	04-18		15	87715689	06-01		23
	04-19		6	87715690	06-01		24
87673471	09-68		7	87715691	06-03		22
	09-70		6	87715692	06-03		23
87673472	09-68		6	87715731	09-23		15
	09-70		7	87715833	09-50		
87673642	09-65			87716582	09-59		28
87676100	02-01		19	87716728	09-33		1
87676259	04-18			87716731	09-33		15
87676260	04-19			87717211	09-58		11
87678399	09-31		16	87717220	09-59		19
	09-36		10	87717671	09-42		
87678400	09-33		18	87717673	09-41		
87678506	06-18		32	87717689	09-31		2
87680190	09-33		4	87718119	09-31		11
87682711	09-55		5		09-33		8
87682712	04-28		5	87718151	09-58		6
87684094	09-66		1	87719782	09-63		3
87684180	06-01		10	87719784	09-63		2
	06-02		10	87719789	09-63		12
	06-03		10	87719792	09-63		4
87684217	06-01		13	87720245	04-18		13
87684218	06-01		5		04-19		13
	06-02		5	87720246	04-18		8
	06-03		5		04-19		12
87684742	09-59		41	87720912	06-29		6
87685888	09-54		10		06-30		6
87685891	09-54		1		06-31		9
87685962	08-03			87722140	02-22		1
87685981	09-59		44	87723831	04-32		4
87687021	02-07		3	87727413	04-32		9
87687372	02-02		1	87727414	04-32		3
87687373	02-02		3	87727417	04-32		2
87687374	02-02		4	87727748	09-54		8
87687375	02-01		28	87727752	09-54		5
	02-02		8	87728345	04-32		11
87687376	02-02		7	87728982	08-06		17
87688478	02-23		1	87728990	08-06		29
87688523	02-02		2	87729000	08-06		28
87688649	02-02		2	87729004	08-06		44

Number	Figure	Sequence	Ref.	Number	Figure	Sequence	Ref.
87729005	08-06		43	9617873	08-04		15
87730069	09-54		9		08-04		17
87730070	09-54		2		08-04		19
87730804	08-06				08-04		8
87730822	09-54		3		08-07		19
87734484	09-43		3		08-07		28
87734487	09-43		1		08-08		19
87734526	09-69		9		08-09		24
87735275	02-22		3		08-09		32
87739945	08-06		27		08-09		8
87739947	08-06		50		08-11		
87802167	09-71		8		08-11		20
	09-71		8		08-11		22
	09-71		8		08-11		26
	09-72		9		08-11		29
	09-72		9		08-11		31
	09-73		8		08-12		14
	09-73		8		08-12		16
	09-73		8		08-12		21
	09-74		8		08-13		39
87803194	03-03		6		08-13		41
87825	09-20		8		08-13		43
87848	09-20		14		08-13		46
88011	09-22		25		08-13		49
88098	03-02		4		08-19		5A
896-15008	02-05		17	9617891	08-01		4
906091R1	08-13		20		08-06		53
	09-03		16		08-18		4
	09-04		16	9618946	08-16		17
	09-05		9	9628065	09-65		4
933610R1	06-01		17	9628098	02-04		11
9512573	06-68		24		06-10		15
9515003	09-59		49		06-12		39
9615396	06-10		2		06-13		24
	06-12		11		06-18		30
	06-17		9		06-21		1
9617020	09-05		15		08-16		10
9617873	04-23		2		09-01		16
	06-01		2		09-24		7
	06-01		22		09-25		4
	06-01		4		09-45		8
	06-02		18		09-46		7
	06-02		2		09-47		7
	06-02		21		09-63		7
	06-02		4	9628503	09-22		15
	06-02		9	9635806	09-25		12
	06-03		18	9635884	09-18		7
	06-03		2	9672438	06-33		22
	06-03		21		06-36		
	06-03		4		06-36		20
	06-03		9	9672548	06-32		11
	06-09		53	9706685	04-04		10
	06-13		3		09-42		3
	06-13		5	9706690	02-04		6
	06-14		18		02-23		4
	06-14		2		08-04		11
	06-14		26		09-25		26
	06-14		33	9706704	04-27		8
	06-14		7		06-32		2
	06-15		12		08-01		14
	06-15		16		08-13		5
	06-15		28		09-05		10
	06-15		9		09-13		14
	06-19		10		09-22		20
	06-19		12		09-59		38
	06-19		16	9706717	02-03		16
	06-19		28	9707515	09-18		9
	06-20		6	9790526	08-17		8
	06-22		16	9790527	06-29		4
	06-22		4		06-30		8
	06-22		9		06-31		5
	06-23		10	9790547	06-09		12
	06-24		16		06-12		12
	06-24		6		06-17		10
	06-32		10	9800081	09-12		7
	07-01		10	9804256	09-48		4
	07-01		15		09-57		2
	07-01		2		09-58		19

Number	Figure	Sequence	Ref.
9804256	09-59		2
9804257	09-57		7
	09-59		6
9804258	09-29		1
	09-35		1
	09-48		5
	09-58		8
	09-59		26
9804262	02-02		5
	04-01		10
	09-41		3
	09-42		9
9804266	09-42		1
9804277	09-25		25
	09-30		19
	09-31		14
9804278	02-02		6
9821783	04-18		7
	04-19		8
9822175	09-06		6
	09-06		6
	09-06		6
	09-07		7
	09-08		4
	09-08		4
9824050	06-13		15
	06-13		9
	06-21		28
9824642	09-16		4
	09-19		7
9827902	06-10		19
	06-12		37
	06-18		31
	09-25		24
9828248	06-11		6
	06-20		3
	06-24		4
	09-26		17
	09-38		40
9829733	09-03		5
	09-04		6
9829786	09-07		8
	09-07		8
	09-07		8
	09-07		8
9840344	09-18		5
9840535	06-15		29
9841223	06-33		8
	06-36		18
9846848	06-15		24
9861444	09-59		47
9969430	04-21		1
9969431	04-20		1
9991976	06-15		25
	06-15		30
9993141	06-02		19
	06-03		19
	06-14		27
	08-11		25
	08-12		22
	08-13		47
9993143	08-11		24
	08-12		20
	08-13		45
A140221	02-06		7
	02-07		4
A149796	09-55		9A
A166057	04-04		2
	04-05		19
A177436	03-02		9
A184597	02-05		5
A29183	06-35		27
	06-38		4
A30338	08-13		13
	09-04		20
D120613	08-02		19
D120614	08-02		17
D120679	08-01		17
D120679	08-02		20
D124661	08-01		23
D131983	03-02		24
	08-06		38
	09-22		11
	09-23		4
D137186	09-67		3
D138889	08-13		11
	09-04		22
D143415	09-38		37
D55216	08-13		4
	09-05		
D63653	06-64		6
D67297	06-21		5
D68846	06-21		6
E137085	09-73		7
E38908	04-28		4
E99128	04-28		1
E99208	04-28		2
F23137	06-33		12
	06-36		6
H151399	06-09		13
	06-12		16
	06-17		21
H169920	03-02		10
H32961	08-06		51
H373779	08-06		42
	09-23		8
H407767	06-33		26
H434289	09-58		15
	09-59		30
H434900	08-01		24
H435770	06-34		20
	06-37		20
H435776	06-35		37
H435814	09-38		8
H436053	06-34		17
	06-37		17
H436054	06-34		18
	06-37		18
H436065	06-34		6
	06-37		6
H436704	06-35		3
	06-38		28
H436887	09-17		17
	09-19		1
H436914	09-16		5
	09-19		5
H437190	06-35		35
H438321	06-34		5
	06-37		3
H439276	09-28		4
H673773	06-34		
	06-37		
K608432	06-36		12
L104616	08-09		7
L11541	02-08		5
	04-15		7
	08-08		10
	08-09		10
	08-10		4
	09-13		12
	09-23		16
	09-58		10
	09-59		29
L14781	08-06		35
	09-23		21
L17985	02-05		13
L18331	06-17		23
	07-01		8
	08-03		3
	09-59		11
L71879	04-05		18
L78786	09-04		29
N13224	06-35		19
	06-38		12
N13226	06-34		11
	06-37		11

Number	Figure	Sequence	Ref.
N13234	06-35		30
N13241	06-34		10
	06-37		10
N13242	06-34		12
	06-37		12
N13244	06-35		25
N13247	06-35		32
N13254	06-35		18
	06-38		15
N13255	06-34		8
	06-37		8
N13260	06-34		2
	06-37		2
N13262	06-35		31
N13268	06-32		
N13994	06-35		1
	06-38		8
N13999	06-35		34
N14063	06-34		7
	06-37		7
N14103	06-35		29
N14666	06-34		13
	06-37		13
N14668	06-34		15
	06-37		15
N14848	06-33		
	06-36		
NSS	02-35		4
	02-39		5
	03-09		5
	04-16		1
	04-16		2
	04-16		3
	04-16		4
	04-16		5
	04-16		6
	04-16		7
	04-16		8
	04-16		9
	04-17		1
	04-17		2
	04-17		3
	04-17		4
	04-17		5
	04-17		6
	04-17		7
	04-17		8
	04-17		9
	04-20		4
	04-21		4
	04-32		5
	06-26		10
	06-26		11
	06-26		8
	06-26		9
	06-28		3
	06-28		4
	06-28		5
	06-28		6
	06-28		7
	06-28		8
	06-28		9
	06-32		12
	06-32		7
	06-33		29
	06-33		5
	06-33		7
	06-34		28
	06-35		10
	06-35		14
	06-35		15
	06-35		22
	06-35		6
	06-36		2
	06-36		4
	06-37		28
	06-38		16
	06-38		17
NSS	06-38		21
	06-38		25
	06-38		27
	06-38		9
	06-40		1
	06-40		2
	06-40		3
	06-40		4
	06-40		5
	06-40		6
	06-40		7
	06-41		1
	06-41		2
	06-41		3
	06-41		4
	06-41		5
	06-41		7
	06-48		1
	06-48		2
	06-48		3
	06-48		4
	06-48		5
	06-48		7
	06-53		1
	06-54		2
	06-54		3
	06-54		4
	06-54		5
	06-54		6
	06-54		7
	06-54		8
	06-55		2
	06-55		3
	06-55		4
	06-55		5
	06-55		6
	06-55		7
	06-55		8
	06-56		15
	06-56		16
	06-57		12
	06-57		2
	06-57		7
	06-58		1
	06-58		10
	06-58		11
	06-58		12
	06-58		13
	06-58		14
	06-58		15
	06-58		16
	06-58		2
	06-58		3
	06-58		4
	06-58		5
	06-58		6
	06-58		7
	06-58		8
	06-58		9
	06-59		15
	06-59		16
	06-60		14
	06-60		19
	06-60		5
	06-60		9
	06-61		1
	06-61		10
	06-61		11
	06-61		12
	06-61		13
	06-61		14
	06-61		15
	06-61		16
	06-61		17
	06-61		18
	06-61		2
	06-61		3
	06-61		4

Number	Figure	Sequence	Ref.	Number	Figure	Sequence	Ref.
NSS	06-61		5	NSS	08-31		8
	06-61		6		08-31		9
	06-61		7		08-32		1
	06-61		8		08-32		2
	06-61		9		08-32		3
	06-63		1		08-32		4
	06-64		2		08-32		5
	08-24		1		08-32		6
	08-24		2		08-32		7
	08-24		3		08-32		8
	08-24		4		08-33		1
	08-24		5		08-33		2
	08-24		6		08-33		3
	08-24		7		08-33		4
	08-24		8		08-33		5
	08-25		1		08-33		6
	08-25		10		08-33		7
	08-25		11		08-33		8
	08-25		12		08-34		1
	08-25		13		08-34		2
	08-25		14		08-34		3
	08-25		15		08-34		4
	08-25		16		08-34		5
	08-25		2		08-34		6
	08-25		3		08-34		7
	08-25		4		08-34		8
	08-25		5		08-34		9
	08-25		6		08-35		1
	08-25		7		08-35		2
	08-25		8		08-35		3
	08-25		9		08-35		4
	08-27		2		08-35		5
	08-27		3		08-35		6
	08-27		4		08-35		7
	08-27		5		08-36		1
	08-27		6		08-36		2
	08-27		7		08-36		3
	08-27		8		08-36		4
	08-27		9		08-36		5
	08-28		2		08-37		1
	08-28		3		08-37		2
	08-28		4		08-37		3
	08-28		5		08-37		4
	08-28		6		08-37		5
	08-29		2		08-37		6
	08-29		3		08-37		7
	08-29		4		08-38		1
	08-29		5		08-38		2
	08-29		6		08-38		4
	08-29		7		08-38		5
	08-29		8		08-38		6
	08-30		10		08-38		7
	08-30		11		08-39		1
	08-30		13		08-39		2
	08-30		14		08-39		4
	08-30		16		08-39		5
	08-30		17		08-39		6
	08-30		18		08-39		7
	08-30		2		08-40		1
	08-30		3		08-40		10
	08-30		4		08-40		11
	08-30		6		08-40		12
	08-30		7		08-40		13
	08-30		8		08-40		14
	08-31		1		08-40		15
	08-31		10		08-40		16
	08-31		11		08-40		17
	08-31		12		08-40		18
	08-31		13		08-40		19
	08-31		14		08-40		2
	08-31		15		08-40		3
	08-31		16		08-40		4
	08-31		2		08-40		5
	08-31		3		08-40		6
	08-31		4		08-40		7
	08-31		5		08-40		8
	08-31		6		08-40		9
	08-31		7		09-01		1

Number	Figure	Sequence	Ref.
NSS	09-07		3
	09-07		3
	09-07		3
	09-07		3
	09-07		3
	09-08		6
	09-08		6
	09-12		4
	09-12		8
	09-13		19
	09-13		20
	09-13		24
	09-13		25
	09-23		12
	09-31		3
	09-31		4
	09-36		15
	09-36		18
	09-36		27
	09-36		3
	09-36		31
	09-38		21
	09-50		1
	09-50		2
	09-50		3
	09-50		4
	09-50		5
	09-50		6
	09-50		8
	09-50		9
	09-53		1
	09-53		10
	09-53		11
	09-53		12
	09-53		3
	09-53		4
	09-53		6
	09-53		7
	09-53		8
	09-53		9
	09-55		13
	09-55		8
	09-60		12
	09-60		13
	09-60		19
	09-60		26
	09-60		3
	09-60		31
	09-60		34
	09-60		38
	09-61		14
	09-61		17
	09-61		18
	09-61		19
	09-61		26
	09-61		32
	09-61		34
	09-61		35
	09-61		39
	09-61		4
	09-61		42
	09-61		46
	09-61		52
	09-62		3
	09-62		4
	09-62		5
	09-62		6
	09-65		1
	09-65		5
	09-65		6
	09-65		7
P24576	06-10		16
R14771	03-02		13
R24703	08-02		11
R32216	06-64		7
REF	02-06		11
	02-07		20
	02-19		12
REF	02-27		6
	02-29		5
	02-29		6
	02-37		10
	02-37		7
	02-37		8
	02-37		9
	02-40		3
	02-41		5
	03-04		5
	03-06		5
	04-18		1
	04-19		1
	06-04		
	06-05		
	06-09		4
	06-09		50
	06-10		3
	06-12		25
	06-12		7
	06-17		7
	08-10		
	08-11		1
	08-12		5
	08-16		1
	08-16		18
	09-06		
	09-07		
	09-07		
	09-08		
	09-16		1
	09-16		1
	09-17		1
	09-18		1
	09-18		18
	09-18		18A
	09-19		18
	09-19		18A
	09-30		1
	09-35		2
	09-36		1
	09-38		22
	09-42		10
	09-55		7
	09-57		1
	09-58		18
	09-58		4
	09-59		1
	09-59		9
	09-71		
	09-71		
	09-71		
	09-72		
	09-72		
	09-72		
	09-73		
	09-73		
	09-73		
	09-74		
	09-74		
	09-74		
	09-75		
	09-75		
	09-75		
S99877	06-33		3
	06-36		16
V38371	06-33		28
ZPX24210	06-63		