RUTHZIL TRATOR COMERCIAL DE PEÇAS LTDA 11 97083-6812 ROLANDO CITRANGULO

2004

Service Manual

JCB 444 Mechanical Engine

Section 1 - General Information

Section 2 - Care and Safety

Section 3 - Routine Maintenance

Section 4 - Systems Description

Section 5 - Fault Finding

Section 6 - Test Procedures

Section 7 - Fuel System

Section 8 - Cooling System

Section 9 - Lubrication System

Section 10 - Electrical System

Section 11 - Induction and Exhaust System

Section 12 - Base Engine

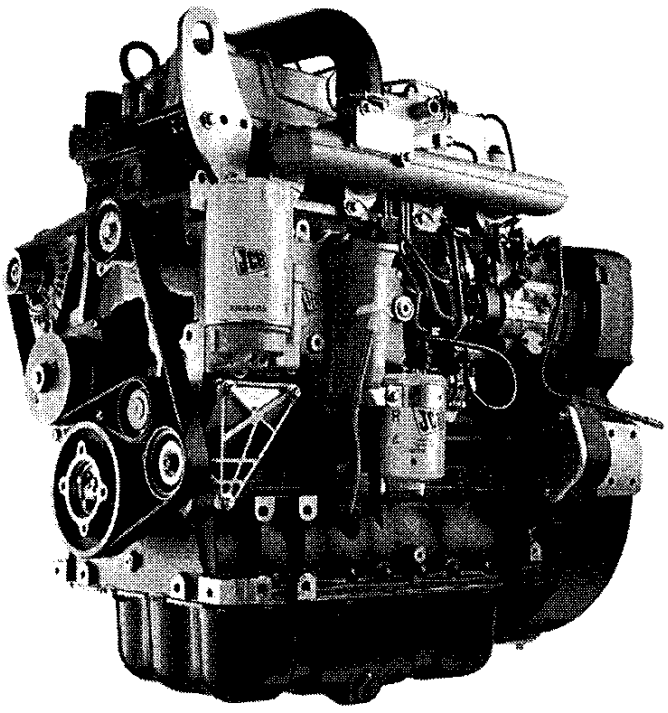

Publication No.
9806/3000-04

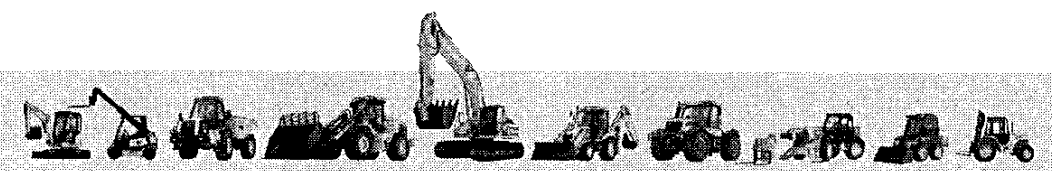

Copyright © 2004 JCB SERVICE. All rights reserved. No part of this publication may be reproduced, stored in a retrieval system, or transmitted in any form or by any other means, electronic, mechanical, photocopying or otherwise, without prior permission from JCB SERVICE.

Issued by JCB Technical Publications, JCB Aftermarket Training, Woodseat, Rocester, Staffordshire, ST14 5BW, England. Tel +44 1889 591300 Fax +44 1889 591400

World Class Customer Support

descargado de www.Manualslib.com manuales de motor de búsqueda

Notes:

descargado de www.Manualslib.com manuales de motor de búsqueda

General Information

Service Manual - JCB 444 Mechanical Engine

Section 1 - General Information

Section 2 - Care and Safety

Section 3 - Routine Maintenance

Section 4 - Systems Description

Section 5 - Fault Finding

Section 6 - Test Procedures

Section 7 - Fuel System

Section 8 - Cooling System

Section 9 - Lubrication System

Section 10 - Electrical System

Section 11 - Induction and Exhaust System

Section 12 - Base Engine

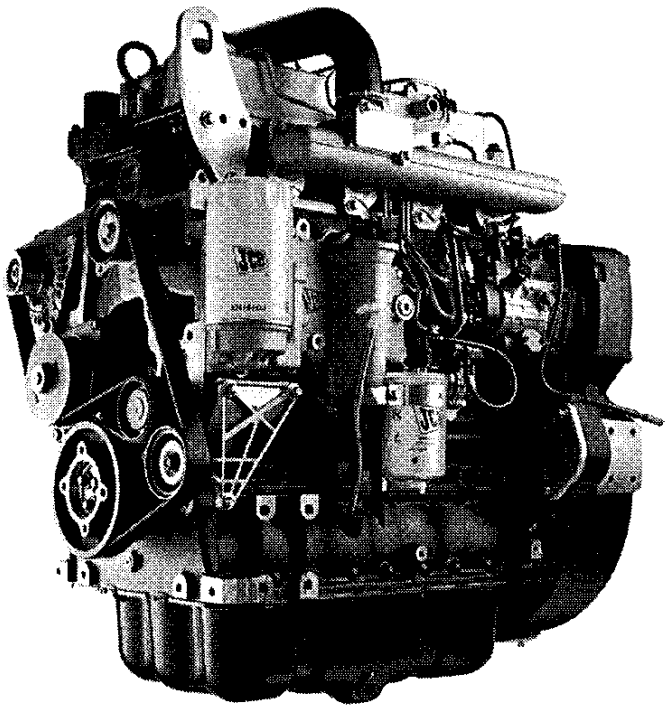

Publication No.
9806/3000-04

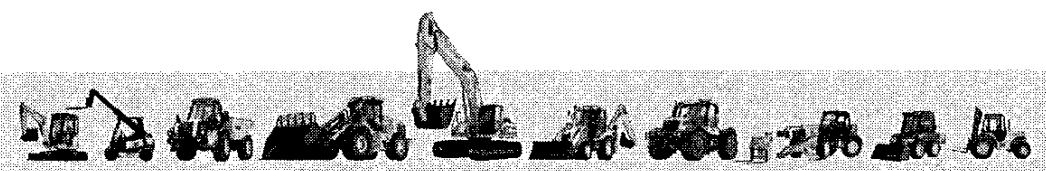

Copyright © 2004 JCB SERVICE. All rights reserved. No part of this publication may be reproduced, stored in a retrieval system, or transmitted in any form or by any other means, electronic, mechanical, photocopying or otherwise, without prior permission from JCB SERVICE.

Issued by JCB Technical Publications, JCB Aftermarket Training, Woodseat, Rocester, Staffordshire, ST14 5BW, England. Tel +44 1889 591300 Fax +44 1889 591400

World Class Customer Support

descargado de www.Manualslib.com manuales de motor de búsqueda

Notes:

descargado de www.Manualslib.com manuales de motor de búsqueda

Contents Page No.

Introduction
About this Manual ..... 1 - 1
Using the Service Manual ..... 1 - 1
Section Numbering ..... 1 - 1
Left Side, Right Side ..... 1 - 1
Units of Measurement ..... 1 - 1
Machine Related Data ..... 1 - 2
Acronyms and Abbreviations ..... 1 - 3

Identifying the Engine
Engine Identification Plate ..... 1 - 4
Engine Labels ..... 1 - 4
Component Labels ..... 1 - 4
Engine Identification Number Explanation ..... 1 - 5
Engine Component Identification ..... 1 - 6

Technical Data
Basic Engine Data ..... 1 - 12
Engine Specifications ..... 1 - 12
Engine Block & Bedplate Data ..... 1 - 14
Cylinder Head Data ..... 1 - 15
Inlet and Exhaust Valve Data ..... 1 - 16
Rocker Levers, Rocker Shaft and Tappets Data ..... 1 - 18
Pistons and Connecting Rods Data ..... 1 - 19
Crankshaft Data ..... 1 - 20
Camshaft Data ..... 1 - 21
Fuel System Data ..... 1 - 22
Acceptable and Unacceptable Fuels ..... 1 - 22
Fuel Types ..... 1 - 24
Usage and Effects of Fuels ..... 1 - 25
Sulphur Content ..... 1 - 26
Effects of Fuel Contaminates ..... 1 - 27
Lubrication System Data ..... 1 - 28
Cooling System Data ..... 1 - 29
Electrical Equipment Data ..... 1 - 30

Torque Settings
Zinc Plated Fasteners and Dacromet Fasteners ..... 1 - 32
Introduction ..... 1 - 32
Bolts and Screws ..... 1 - 32
Hydraulic Connections ..... 1 - 36
'O' Ring Face Seal System ..... 1 - 36
'Torque Stop' Hose System ..... 1 - 39
Torque + Angle Explanation ..... 1 - 40
Torque + Angle Tightening Procedure ..... 1 - 41
Engine Torque Figures ..... 1 - 42

Lubricants and Capacities
Engine Lubricating Oil ..... 1 - 57
Recommended Oils ..... 1 - 57
Engine Oil Capacity ..... 1 - 57
Coolant Mixtures ..... 1 - 58

Service Aids
Sealing, Retaining and Care Compounds ..... 1 - 59

descargado de www.Manualslib.com manuales de motor de búsqueda

Contents Page No.

Service Tools
General Engine Tools ..... 1 - 60
Specialist Engine Tools ..... 1 - 62
Service Tool Drawings ..... 1 - 67
892/01146 - Core Plug Fitting Tool ..... 1 - 67
892/01147 - Crankshaft Turning Tool ..... 1 - 68
892/01148 - Timing Pin ..... 1 - 69
892/01149 - Sump Sealant Template ..... 1 - 70
892/01150 - Oil Sump Location Dowel ..... 1 - 71
892/01151 - Injector Sleeve Removal Tool ..... 1 - 72
892/01152 - Valve Stem Seal Fitting Tool ..... 1 - 73
892/01154 - FIP Cover Removal Tool ..... 1 - 74
892/01155 - FIP Gear Removal Tool ..... 1 - 75
892/01157 - Crankshaft Front Seal Fitting Tool ..... 1 - 76
892/01156 - Crankshaft Rear Seal Fitting Tool ..... 1 - 77
892/01158 - Crankshaft Rear Seal Alignment Tool ..... 1 - 78
892/01159 - Injector Seal Fitting Tool ..... 1 - 78
892/01168 - Dummy Injector ..... 1 - 79
892/01169 - Top Dead Centre (TDC) Setting Tool ..... 1 - 80
Engine Mounting Frame ..... 1 - 81

Service Parts and Repair Kits
Engine Repair Parts and Kits Identification ..... 1 - 82

Engine Lifting
Lifting Information ..... 1 - 98

Operating Procedures
Starting the Engine ..... 1 - 99
Pre-Start Notes ..... 1 - 99
Start Procedure ..... 1 - 100
Engine Checks After Start-up ..... 1 - 101
Engine Running-in Procedure ..... 1 - 102
Stopping the Engine ..... 1 - 103

1 - ii

descargado de www.Manualslib.com manuales de motor de búsqueda

Introduction

About this Manual

Using the Service Manual

This publication is designed for the benefit of JCB Distributor Service Engineers who are receiving, or have received, training by JCB Technical Training Department.

These personnel should have a sound knowledge of workshop practice, safety procedures, and general techniques associated with the maintenance and repair of engines.

Renewal of oil seals, gaskets, etc., and any component showing obvious signs of wear or damage is expected as a matter of course. It is expected that components will be cleaned and lubricated where appropriate, and that any opened hose or pipe connections will be blanked to prevent excessive loss of hydraulic fluid, engine oil and ingress of dirt. Finally, please remember above all else **SAFETY MUST COME FIRST!**

The manufacturer's policy is one of continuous improvement. The right to change the specification of the engine without notice is reserved. No responsibility will be accepted for discrepancies which may occur between the specifications of the engine and the descriptions contained in this publication.

Section Numbering

The manual is compiled in sections, the first three are numbered and contain information as follows:

1 **General Information** includes torque settings and service tools.

2 **Care & Safety** includes warnings and cautions pertinent to aspects of workshop procedures etc.

3 **Routine Maintenance**includes service schedules and recommended lubricants.

The remaining sections deal with Descriptions, Fault Finding, Dismantling, Overhaul etc. of specific components, for example:

4 **Systems Descriptions**

5 **Fault Finding** ...etc.

Left Side, Right Side

References to the `left' side and the `right' side of the engine are when viewed from the flywheel end of the engine, as shown at **1A**.

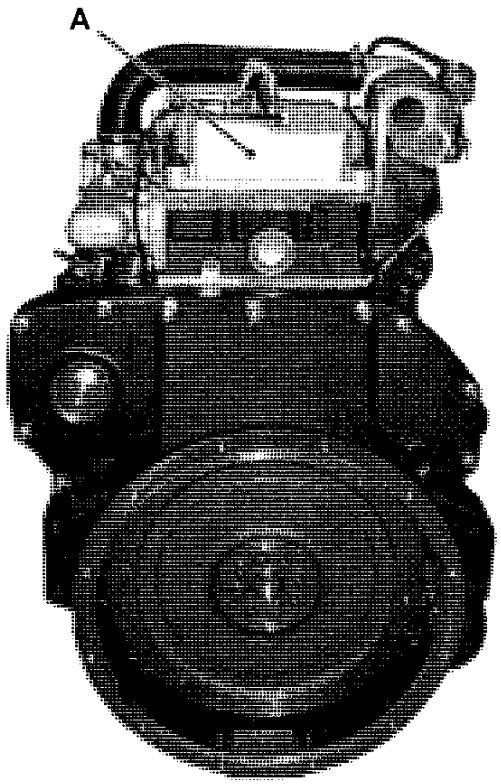

Fig 1.

Units of Measurement

In this manual, the S.I. system of units is used. For example, liquid capacities are given in litres. The imperial units follow in parenthesis () e.g. 28 litres (6 UK gal).

descargado de www.Manualslib.com manuales de motor de búsqueda

Machine Related Data

The JCB 444 Engine can be fitted to a variety of constructions and agricultural machines. The scope of this publication is limited to the engine, but references to a typical machine installation will be made. Tasks and information specific to a machine installation will be listed in the relevant machine Service Manual, for example engine removal and replacement procedures.

descargado de www.Manualslib.com manuales de motor de búsqueda

Acronyms and Abbreviations

Some of the following acronyms and abbreviations are used in this service manual. The remainder are used in the automotive industry and are repeated for reference only.

°C	Celsius
°F	Fahrenheit
A/R	As Required
API	American Petroleum Institute
BBDC	Before Bottom Dead Centre
BDC	Bottom Dead Centre
BSFC	Brake Specific Fuel Consumption
BTDC	Before Top Dead Centre
CCV	Crankcase Vent
CID	Cubic inch Displacement
CSA	Cold Start Advance
CSAS	Cold Start Advance Solenoid
cST	Centistokes
ECM	Electronic Control Module
ECS	Emission Control System
EPA	Environmental Protection Agency
ESOS	Electric Shut-Off Solenoid or Engine Shut-Off Solenoid
FAME	Fatty Acid Methyl Esters
FEAD	Front End Accessory Drive
FIE	Fuel Injection Equipment
FIP	Fuel Injection Pump
Hg	Mercury
HP	Horse Power
I/D	Inside Diameter
kg	Kilogram
KPH	Kilometres per hour
Kw	Kilowatt
LH	Left Hand
ltr	Litre
mm	Millimetre
MPH	Miles per Hour
NA	Naturally Aspirated
N/A	Not Applicable/Not Available
Nm	Newton Metre
NSP	Non Serviced Part
O/D	Outside Diameter
OEM	Original Equipment Manufacturer
PPM	Parts per Million
PSI	Pounds per square Inch
PTO	Power Take Off
RH	Right Hand
RME	Rapeseed Methyl Ester
RPM	Revolutions per Minute
SAE	Society of Automotive Engineers
SME	Sunflower Methyl Ester
SOME	Soyabean Methyl Ester
STD	Standard
TBA	To be Advised
TC	Turbocharged
TCA	Turbocharged Aftercooled
TDC	Top Dead Centre
TI	Technical Information
VOME	Vegetable Oil Methyl Esters

descargado de www.Manualslib.com manuales de motor de búsqueda

Identifying the Engine

Engine Identification Plate

Engine Labels

Each JCB 444 Engine has a unique identification number stamped onto the main engine block, as shown at **2A**. Refer to ⇨ *Engine Identification Number Explanation (1-5)* for a full detailed description of the number.

In addition to the identification number, there is an emisssions legislation label **2B**.

Component Labels

In addition to the engine labels, some of the machine engine components will also have a label attached, or a part number etched into the casting, these include:

- the starter motor
- the alternator
- the fuel injection pump
- engine bedplate
- engine block
- cylinder head
- Turbo charger

In some instances, it may be necessary to quote the information on these labels, for instance if there is a parts query, or a warranty claim. Make a note of these numbers.

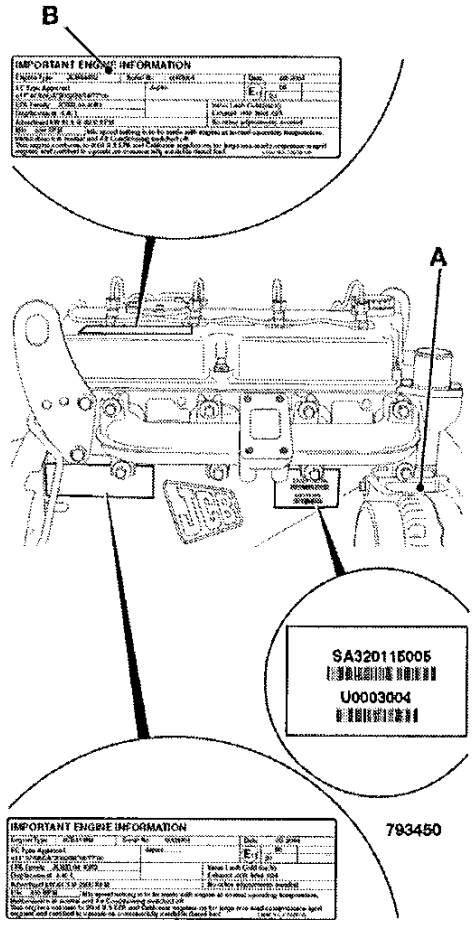

Fig 2.

descargado de www.Manualslib.com manuales de motor de búsqueda

Engine Identification Plate

Engine Identification Number Explanation

The full engine number is stamped on the emissions label and the serial number is stamped on the engine block. ⇨ *Fig 2. (1-4)*.

An explanation of the full engine number is detailed below. ⇨ *Fig 4. (1-5)*.

If you need parts or service information for your engine, you must quote the complete engine number.

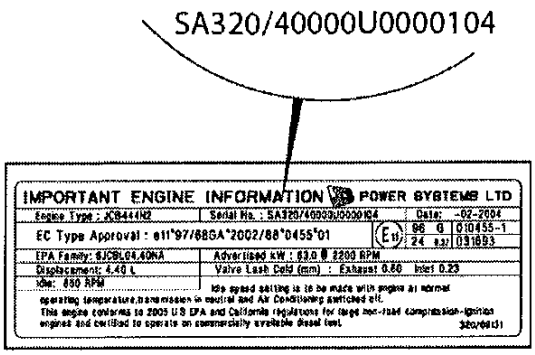

793460

Fig 3.

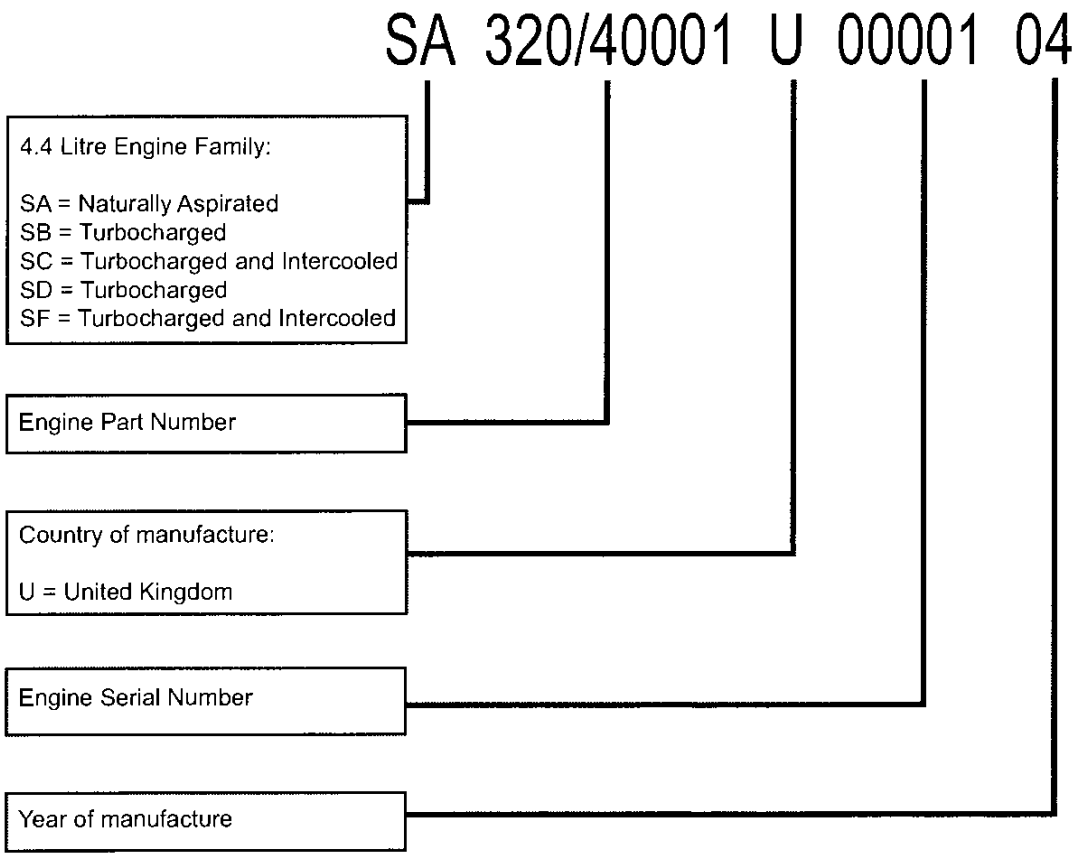

Fig 4.

descargado de www.Manualslib.com manuales de motor de búsqueda

Engine Component Identification

Table 1. Engine - As viewed on the left hand side.

⇒ *Fig 5. (1-7)*

1	Rocker cover	12	Fuel filter
2	Fuel injectors and high pressure fuel pipes	13	Lubrication oil filler cap
3	Lubrication oil filler cap	14	Lubrication oil filter
4	Timing gear case	15	Lubrication oil cooler housing
5	Flywheel housing	16	Lubrication oil dip stick
6	Bed plate	17	Low duty PTO (blanking cover if no device is fitted)
7	Lubrication oil pan (sump)	18	Water temperature sender (cold start)
8	Engine lifting eye	19	Low pressure fuel line (to tank)
9	Air Inlet manifold	20	Oil drain plug (sump)
10	Fuel injection pump	21	Oil pressure switch
11	Fuel lift pump	22	Inlet manifold induction heater (if fitted)

descargado de www.Manualslib.com manuales de motor de búsqueda

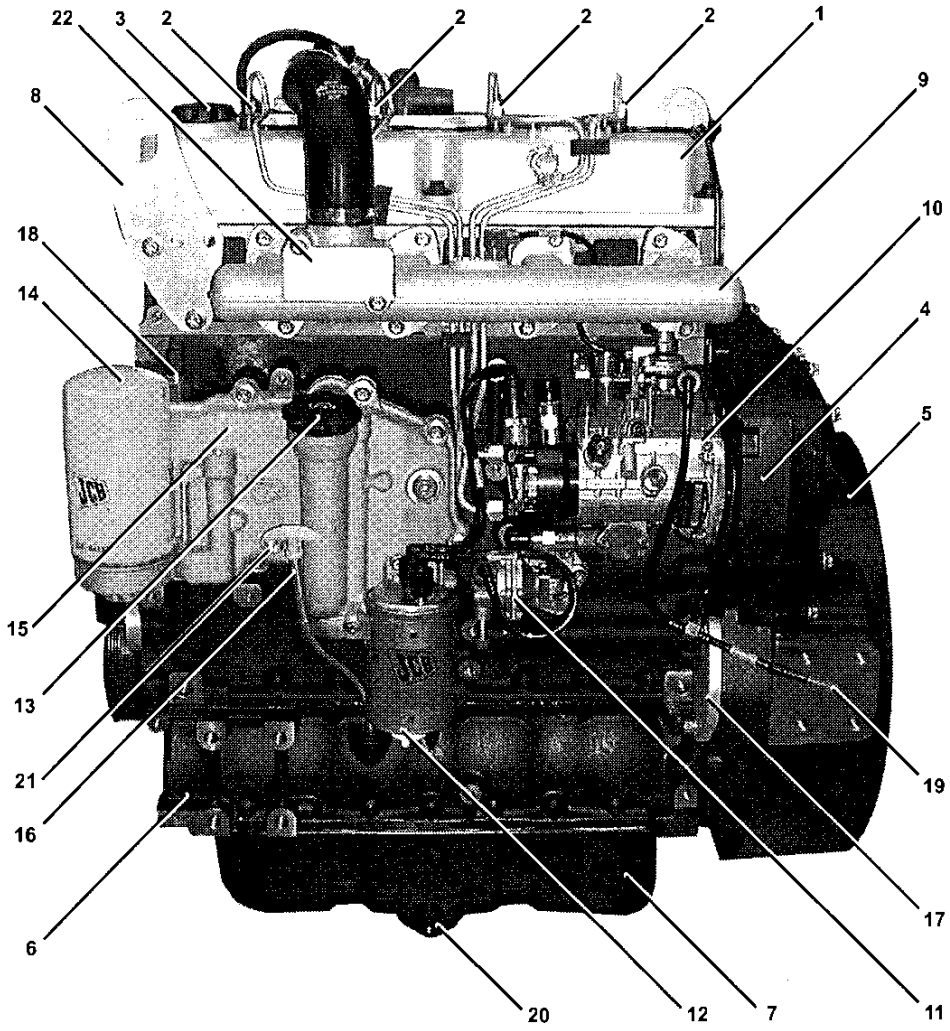

Fig 5. SB Type engine shown

descargado de www.Manualslib.com manuales de motor de búsqueda

Table 2. Engine - As viewed on the right hand side

⇒ *Fig 6. (1-9)*

1	Rocker cover	11	Exhaust manifold
2	Breather chamber inspection cover	12	Alternator and drive pulley assembly (belt not fitted)
3	Cylinder block	13	Coolant pump drive pulley (belt not fitted)
4	Timing gear case	14	Coolant pump housing (cylinder block)
5	Flywheel housing	15	Coolant inlet/radiator hose connector
6	Bed plate	16	Heavy duty PTO (blanking cover if no device is fitted)
7	Lubrication oil pan (sump)	17	Starter motor assembly
8	Lifting eye	18	Turbocharger oil drain line (turbocharged engine only)
9	Turbocharger (turbocharged engine only)	19	Turbocharger oil feed line (turbocharged engine only)
10	Turbocharger waste gate actuator assembly	20	Oil drain plug (sump)

descargado de www.Manualslib.com manuales de motor de búsqueda

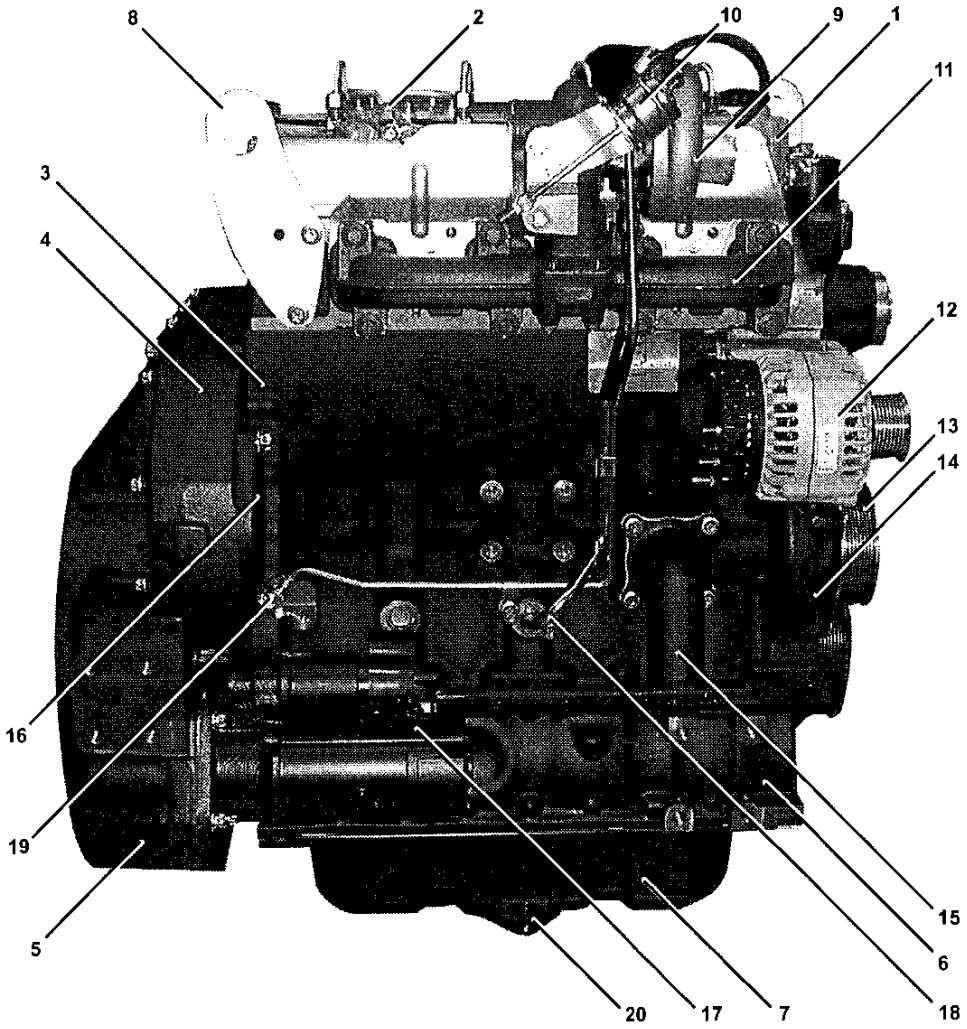

Fig 6. SB Type engine shown

descargado de www.Manualslib.com manuales de motor de búsqueda

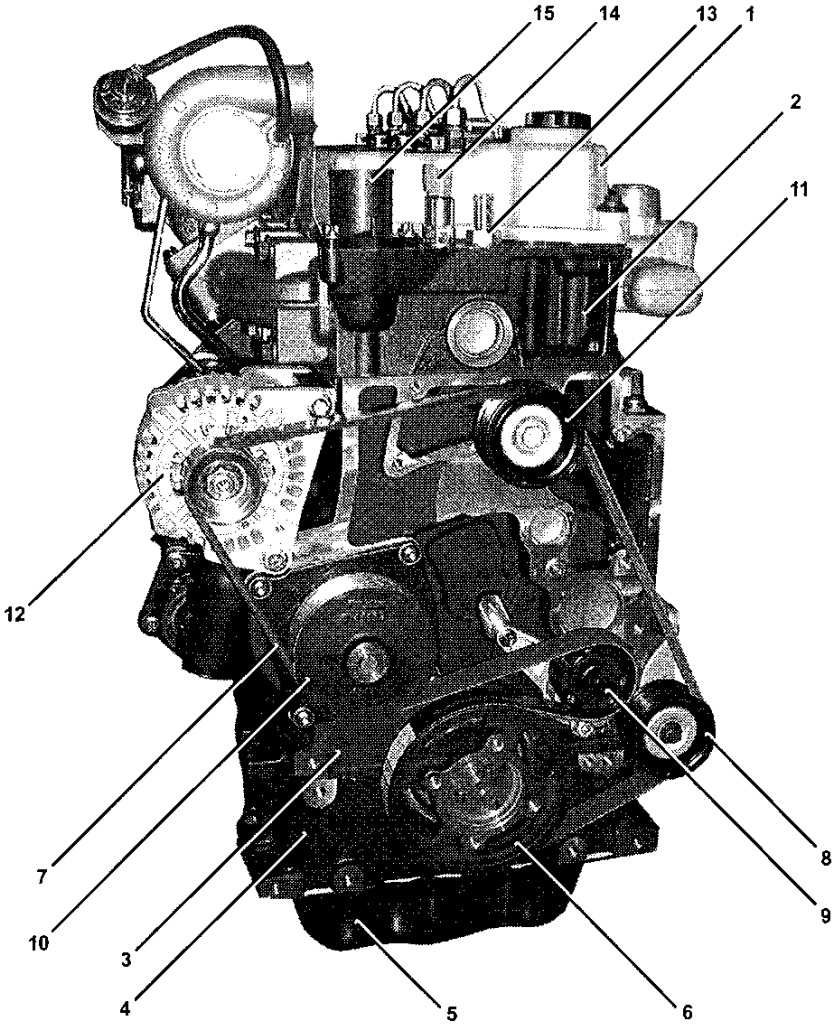

Fig 7. SB Type engine shown

Table 3. Engine - As viewed on the crankshaft pulley (front) end

⇒ Fig 7. (1-10)

1	Rocker cover	9	Drive belt tensioner and pulley
2	Cylinder head	10	Coolant pump and drive pulley assembly
3	Cylinder block	11	Idler pulley
4	Bed plate	12	Alternator and drive pulley assembly
5	Lubrication oil pan (sump)	13	Cab heater water hose connector
6	Crankshaft pulley	14	Coolant temperature sender
7	Front end accessory drive belt	15	Coolant thermostat housing/radiator hose connector
8	Idler pulley		

descargado de www.Manualslib.com manuales de motor de búsqueda

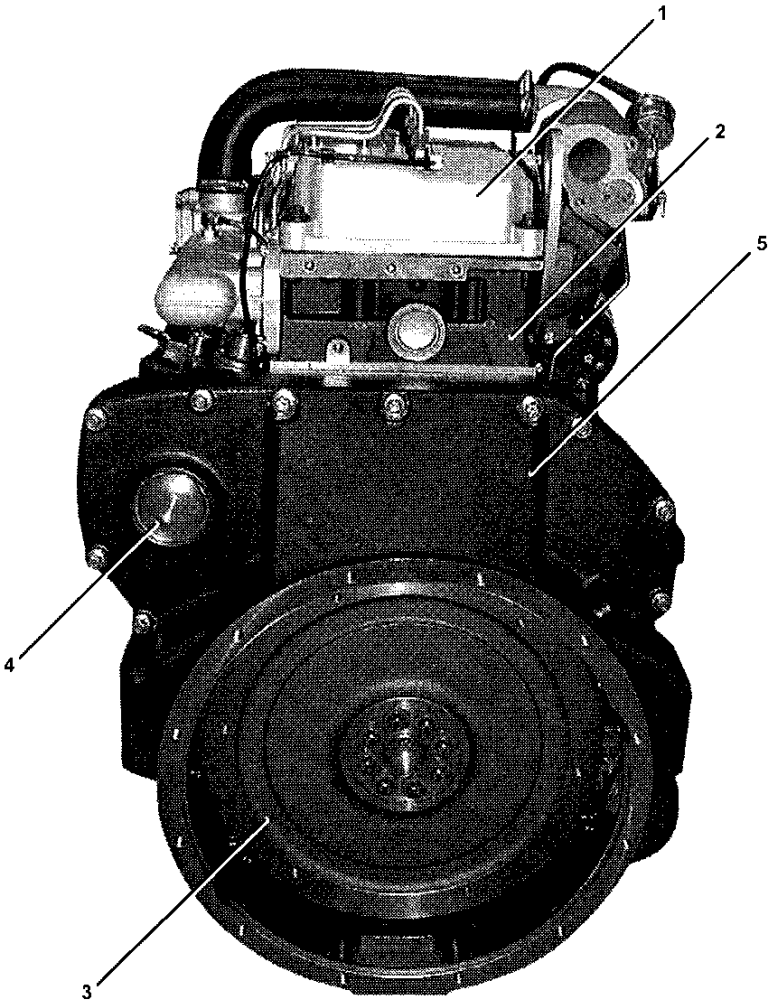

Fig 8. SB Type engine shown

Table 4. Engine - As viewed on the flywheel (rear) end

⇨ *Fig 8. (1-11)*

1	Rocker cover	4	Fuel injection pump drive gear cover
2	Cylinder head	5	Flywheel housing
3	Flywheel		

descargado de www.Manualslib.com manuales de motor de búsqueda

Technical Data

Basic Engine Data

Engine Specifications

Engine Type:	
- SA	Naturally Aspirated
- SB	Turbocharged
- SC	Turbocharged with Intercooler
- SD	Turbocharged
- SF	Turbocharged with Intercooler
Rated speed	2200 rpm
Weight (Dry):	
- SA	472 kg (1040 lb)
- SB, SC, SD, SF	477 kg (1052 lb)
Number of cylinders	4
Nominal bore size	103 mm (4.055 in)
Stroke	132 mm (5.16 in)
Cylinder arrangement	In line
Combustion Cycle	4-stroke
Firing order	1-3-4-2
Displacement	4.40 litres
Compression ratio	
- SA	18.6 : 1
- SB	18.3 : 1
- SC	17.5 : 1
- SD, SF	17.2 : 1
Engine Compression	see Note (1)
Direction of rotation (viewed from front {crankshaft pulley} end)	Clockwise
Valves	4 per cylinder
Valve tip clearances (measured cold):	
- SA, SB, SC	Inlet: 0.19 to 0.27 mm (0.007 to 0.011 in)
	Exhaust: 0.56 to 0.64 mm (0.022 to 0.025 in)
- SD, SF	Inlet: 0.35 mm (0.014 in)
	Exhaust: 0.56 to 0.64 mm (0.022 to 0.025 in)
Lubricating oil pressure (2)	4.0 to 4.8 bar (58 to 70 lb in^2)
Combustion system	Direct Injection

descargado de www.Manualslib.com manuales de motor de búsqueda

Fuel injection pump	Rotary Mechanical

(1) Compression variance between each cylinder should be no greater than 3.5 bar (50 lb in2)
(2) Engine at normal operating temperature and maximum revs.

descargado de www.Manualslib.com manuales de motor de búsqueda

Engine Block & Bedplate Data

Cylinder bore (1)	103.000 to 103.020 mm (4.055 to 4.046 in)
Main bearing bolts torque (2)	
- first stage	50 Nm (37 lbf ft)
- second stage	115 Nm (85 lbf ft)
- final stage	turn a further 180°
Surface finish for cylinder head joint	Rz < 15um; Rmax < 20um
Diameter of first oversize bore	103.500 to 103.520 mm (4.074 to 4.076 in)
Diameter of second oversize bore	104.00 to 104.020 mm (4.094 to 4.952 in)
Main bearing bore (without bearings)	
- numbers 1 to 4	92.000 to 92.020 mm (3.622 to 3.623 in)
- number 5	105.000 to 105.020 mm (4.134 to 4.135 in)
Main bearing bore (with bearings)	
- numbers 1 to 4	88.047 to 88.090 mm (3.466 to 3.468 in)
- number 5	100.047 to 100.090 mm (3.939 to 3.941 in)
Camshaft bore	
- numbers 1 to 4	60.040 to 60.070 mm (2.364 to 2.365 in)
- number 5 (bush) (3)	60.290 to 60.32 mm (2.374 to 2.375 in)
Permissible wave profile	wt<10m (2.5 distance)

(1) Nominal diameter to be measured 63mm below head face.
(2) Torque information MUST be used in conjunction with recommended procedures contained in this manual. Failure to use the appropriate and correct removal, replacement, dismantle and assembly procedures may result in an engine failure in service. Refer also to the procedures for the correct bolt tightening sequence.
(3) Bush no longer fitted from January 2008.

descargado de www.Manualslib.com manuales de motor de búsqueda

Cylinder Head Data

Cylinder head distortion (maximum permissible)	
- end to end	0.05 mm (0.002 in)
- side to side	0.03 mm (0.0012 in)
Valve recess depth	
- Inlet	0.85 mm (0.033 in)
- Exhaust	0.85 mm (0.033 in)
Valve seat angle	
- inlet	120 ° (inclusive)
- exhaust	90 ° (inclusive)
Cylinder head bolts torque (1)	
- first stage	40 Nm (30 lbf ft)
- second stage	75 Nm (56 lbf ft)
- third stage	repeat 75 Nm
- fourth stage	torque angle + 90 °
- final stage	torque angle + 180°
Surface finish for cylinder head joint	Rz < 15um; Rmax < 20um
Permissible wave profile	wt < 10um 2.5 distance

(1) Torque information MUST be used in conjunction with recommended procedures contained in this manual. Failure to use the appropriate and correct removal, replacement, dismantle and assembly procedures may result in an engine failure in service. Refer also to the procedures for the correct bolt tightening sequence.

descargado de www.Manualslib.com manuales de motor de búsqueda

Inlet and Exhaust Valve Data

Max lift inlet	
- SA, SB, SC	9.37 mm @ 101° atdc
- SD, SF	9.64 mm @ 101° atdc
Max lift exhaust	
- SA	9.42 mm @ 110° btdc
- SB, SC	9.42 mm @ 115° btdc
- SD, SF	9.84 mm @ 115° btdc
Inlet opens (top of ramp)	
- SA, SB, SC	10° btdc
- SD, SF	6° btdc
Inlet closes	
- SA, SB, SC	32° abdc
- SD, SF	28° abdc
Exhaust opens	
- SA	50° bbdc
- SB, SC	60° bbdc
- SD, SF	41° bbdc
Exhaust closes	
- SA, SB, SC	10° atdc
- SD, SF	9° atdc
Valve stem diameter	
- SA, SB, SC	Inlet: 6.935 +/-0.0075 mm (0.273 +/-0.0003 in)
	Exhaust: 6.975 +/-0.0075 mm (0.275 +/-0.0003 in)
- SD, SF	Inlet: 6.928 to 6.943 mm (0.2727 to 0.2733 in)
	Exhaust: 6.918 to 6.933 mm (0.2724 to 0.2729 in)
Valve spring free length	40.18 mm (1.581 in)
Valve guide bore diameter	
- min	6.958 mm (0.2739 in)
- max	6.968 mm (0.2743 in)
Valve face angle	
- inlet	60.5 °
- exhaust	45.17 °
Valve length	131.9 to 132.4 mm (5.193 to 5.213 in)
Valve sealing	stem seal with sealing washer
Valve head depth (below cylinder head surface)	
- inlet	0.89 to 1.39 mm (0.035 to 0.055 in)

descargado de www.Manualslib.com manuales de motor de búsqueda

- exhaust	0.95 to 1.45 mm (0.037 to 0.057 in)
Valve rim thickness	2.98 to 3.38 mm (0.117 to 0.133 in)

descargado de www.Manualslib.com manuales de motor de búsqueda

Rocker Levers, Rocker Shaft and Tappets Data

Valve tip clearances (measured cold):	
- SA, SB, SC	Inlet: 0.19 to 0.27 mm (0.007 to 0.011 in)
	Exhaust: 0.56 to 0.64 mm (0.022 to 0.025 in)
- SD, SF	Inlet: 0.35 mm (0.014 in)
	Exhaust: 0.56 to 0.64 mm (0.022 to 0.025 in)
Rocker lever bore diameter	
- min	26.046 mm (1.025 in)
- max	26.129 mm (1.029 in)
Rocker shaft diameter	
- min	26.00 mm (1.0236 in)
- max	26.021 mm (1.0244 in)
Tappets stem diameter	
- min	19.987 mm (0.787 in)
- max	19.975 mm (0.786 in)
Tappet bore diameter	
- min	20.00 mm (0.7874 in)
- max	20.021 mm (0.7882 in)
Tappet height (maximum)	55.25 mm (0.0218 in)

descargado de www.Manualslib.com manuales de motor de búsqueda

Pistons and Connecting Rods Data

Gudgeon pin bore diameter	
- min	40.008 mm (0.015751 in)
- max	40.013 mm (0.015753 in)
Piston ring clearance	
- top ring	keystone ring
- middle ring	0.11 to 0.07 mm (0.0043 to 0.0027 in)
- bottom (oil) ring	0.09 to 0.05 mm (0.0035 to 0.0019 in)
Piston ring gap	
- top ring	0.3 to 0.5 mm (0.118 to 0.019 in)
- middle ring	0.55 to 0.8 mm (0.0216 to 0.0314 in)
- bottom (oil) ring	0.25 to 0.50 mm (0.0098 to 0.0196 in)
Piston height above cylinder block (cold)	0.0375 to 0.3385 mm (0.0014 to 0.013 in)
Piston groove width	
- top ring	3.108 to 3.133 mm (0.122 to 0.123 in)
- middle ring	2.47 to 2.67 mm (0.972 to 0.105 in)
- bottom (oil) ring	4.04 to 4.06 mm (0.1590 to 0.1598 in)
Connecting rod type (1)	Split fracture
Connecting rod bore diameter	77.00 to 77.01 mm (3.0314 to 3.0318 in)
Connecting rod side clearance	
- min	0.05 mm (0.0019 in)
- max	0.40 mm (0.0157 in)
Big end bearings:	
- width	32.5 to 33.00 mm (1.279 to 1.299 in)
- thickness (at centre)	1.990 to 1.981 mm (0.0783 to 0.0779 in)
Small end bearings:	
- inside diameter	40.034 to 40.020 mm (1.5761 to 1.5755 in)

(1) Split fracture type connecting rods MUST NOT be dot punched, or etched in any way during disassembly - refer to relevant service procedures.

descargado de www.Manualslib.com manuales de motor de búsqueda

Crankshaft Data

Main bearing journal diameter (x4)	
- min	87.98 mm (3.460 in)
- max	88.00 mm (3.464 in)
Main rear bearing journal diameter (x 1)	
- min	99.98 mm (3.936 in)
- max	100.00 mm (3.937 in)
Connecting rod bearing journal diameter	
- min	72.98 mm (2.873 in)
- max	73.00 mm (0.2755 in)
Maximum wear and ovality on journals	TBA mm
Crankshaft induction hardness	55 HRc min on surface
Thrust washer width	
- min	2.44 mm (0.096 in)
- max	2.50 mm (0.787 in)
Crankshaft end float	
- min	0.05 mm (0.002 in)
- max	0.28 mm (0.011 in)

descargado de www.Manualslib.com manuales de motor de búsqueda

Camshaft Data

Camshaft journal diameter	
- 4 off	59.99 to 59.97 mm (2.362 to 2.361 in)
- 1 off	60.25 to 60.22 mm (2.372 to 2.370 in)
Camshaft lobe wear limits	
SA, SB, SC	Inlet: 7.23 +/-0.025 mm (0.285 +/-0.001 in)
	Exhaust: 7.269 +/-0.025 mm (0.286 +/-0.001 in)
SD, SF	Inlet: 7.385 to 7.435 mm (0.291 to 0.293 in)
	Exhaust: 7.545 to 7.595 mm (0.297 to 0.299 in)
Camshaft bush diameter (1)	60.32 to 60.29 mm (2.375 to 2.374 in)
Camshaft Gear (2)	104 teeth

(1) Bush no longer fitted from January 2008.
(2) The camshaft gear is not available as a separate service item. The gear must be heated onto the camshaft in the correct timed position. Specialist fixtures are used during the production process to achieve the correct timing.

descargado de www.Manualslib.com manuales de motor de búsqueda

Fuel System Data

Acceptable and Unacceptable Fuels

Important: *No warranty liability whatsoever will be accepted for failure of fuel injection equipment where the failure is attributed to the quality and grade of the fuel used.*

Fuel Specification	Applicable Engines	Service Requirements
EN590 Diesel fuel types - Auto/C0/C1/C2/ C3/C4	All Dieselmax engines.	Obey the usual routine maintenence schedules and procedures
BS2869 Class A2		
ASTM D975-91 Class 2, US DF1, US DF2, US DFA		
JIS K2204 (1992) Grades 1, 2, 3 and Special Grade 3		
ASTM D975-91 Class 1DA	All Dieselmax engines. **Engines operated with these fuels may have a reduced service life**	Obey the usual routine maintenence schedules and procedures. **Fuel additives are recommended for use with low sulphur fuels** ⇨ *Additives (1-23)*
MIL T38219 XF63		
NATO F63		
French EN590 (RME5) with 5% maximum		
AVCAT FSII, NATO F44, JP5, MIL T5624, DERD 2452, AVTOR	All Dieselmax engines. **Engines operated with these fuels will have a reduced service life**	Obey the usual routine maintenence schedules and procedures. **Fuel additives MUST be used** ⇨ *Additives (1-23)*
NATO F35, JET A1, DEF STAN 91-91, DERD 2494, JP7		
AVCAT, NATO F43 (obsolete), JP5 without additives		
JET A (ASTM D1655)		
ASTM D3699 Kerosene		
B20 Biodiesel - RME content blended with mineral derived diesel (20% maximum) - ASTM D6751, DIN 51606, ISO 14214	**Dieselmax engines manufactured from 2007 on ONLY**(1)	**YOU MUST obey special routine maintenance schedules and procedures.** ⇨ *Service Requirements for use of B20 Biodiesel (1-23)*
AVTAG (obsolete)	**These fuels are NOT ACCEPTABLE with or without additives. Engines MUST NOT be operated with these fuels**	
AVTAG FSII (obsolete), NATO F40, JP4, DERD 2454		
JET B (ASTM D1655)		
BS MA100		
JIS K2203 No.2		
Unmodified vegetable oils		

(1) The year of manufacture is part of the engine serial number. Refer to Identifying the Engine.

descargado de www.Manualslib.com manuales de motor de búsqueda

Additives

The additives listed below are advertised as being suitable for bringing the lubricity levels of kerosene/low sulphur fuels up to those of diesel fuels. They must be used as specified by your fuel supplier who will understand the concentration level necessary.

- Elf 2S 1750. Dosage 1000-1500 ppm (0.1 - 0.15%), specifically for Indian Superior Kerosene (SKO) but may be applicable to other fuels.
- Lubrizol 539N. Dosage (on Swedish low sulphur fuel) 250 ppm.
- Paradyne 7505 (from Infineum). Dosage 500 ppm (0.05%).

Note: *These products are given as examples only. The information is derived from the manufacturers data. The products are not recommended or endorsed by JCB.*

Service Requirements for use of B20 Biodiesel

- The engine oil must be a grade CH4 as minimum specification.
- Do not leave unused B20 biodiesel in the fuel tank for extended periods (top up each day).
- Make sure that 1 in 5 fuel tank fills use standard diesel to EN590 specification, this will help to prevent 'gumming'.
- Make sure regular oil sampling is completed (look for excessive unburnt fuel content, water or wear particles.
- Change the engine oil and filter more frequently (as a minimum half the recommended intervals), or as indicated by oil sampling.
- Change the fuel filters more frequently (as a minimum half the recommended intervals), or if there are engine performance related issues.
- Make sure the fuel is stored correctly, care must be taken to make sure no water enters the machine fuel tank (or the storage tank). Water will encourage mico-bacterial growth.
- Make sure that the fuel pre-filter is drained DAILY (not every week as currently advised).
- Only JCB ENGINES built after Jan. 2007 are applicable (i.e. engines with 07 on the end of their serial number and factory filled with CH4 oil) - this is not approved with other manufacturers.
- Use heater kits in low ambient temperature territories.
- The biodiesel must meet the following standards: ASTM D6751, DIN 51606, ISO 14214

Note: *If necessary use a test kit to confirm the fuel specification. Testing kits are available (not from JCB currently), use the internet as a source for the kits.*

Note: *If performance related issues are to be reported to JCB Service, and the engine has been run on biodiesel, then the fuel system must be filled with standard diesel (at least 2 x tank fills) to EN590 specification and relevant stall speeds recorded prior to making the report.*

Warranty

JCB have shown a commitment to support the enviroment by approving the use of biodiesel blended fuels.

Using a B20 blend of biodiesel requires caution and additional servicing of the engine is required. ⇨ ***Service Requirements for use of B20 Biodiesel (🗋 1-23)***

Failure to follow the additional recommended service requirements may lead to a warranty claim being declined.

Failures resulting by the incorrect use of biodiesels or other fuel additives are not defects of the JCB Dieselmax engine workmanship and therefore will not be supported by JCB Warranty.

descargado de www.Manualslib.com manuales de motor de búsqueda

Fuel Types

Note: *The information that follows does not indicate types of fuel that are acceptable or unacceptable.* ⇒ ***Acceptable and Unacceptable Fuels (1-22)***.

Any fuel purchased for operation of the JCB Dieselmax engine must be purchased from reputable oil producers/ outlets and stored in accordance with the manufacturers recommendations. ⇒ ***Effects of Fuel Contaminates (1-27)***

1 Diesel - mineral derived, hydrocarbon fuels to European standard EN590 or equivalent.

2 Low Sulphur Diesel - mineral derived, hydrocarbon fuels to EN590 or equivalent. This fuel has totally replaced automotive (road use) diesel in the European Union since October 1996 and has sulphur limited to a maximum of 0.05% by weight.

3 Ultra Low Sulphur Diesel - Reformulated mineral derived, hydrocarbon fuels to EN590 or equivalent. Now widely available in the UK, mainland Europe and some parts of the USA. Sulphur limited to a maximum of 0.005% by weight or lower. ⇒ ***Sulphur Content (1-26)***

4 Vegetable Oil -unmodified. Certain pure vegetable oils (sunflower oil, rapeseed oil etc.)

5 Biodiesel - chemically modified vegetable oil. By chemically modifying vegetable oils, methyl esters of that oil are produced. These are collectively known as "Fatty Acid Methyl Esters" (FAME) or "Vegetable Oil Methyl Esters" (VOME).

Note: *Refer also to additional information.* ⇒ ***Usage and Effects of Fuels (1-25)***.

descargado de www.Manualslib.com manuales de motor de búsqueda

Usage and Effects of Fuels

Note: *The information that follows does not indicate types of fuel that are acceptable or unacceptable.* ⇨ ***Acceptable and Unacceptable Fuels (1-22)***.

1 Low Sulphur Diesel

In its basic form because of the process of reducing sulphur by removal of sulphur containing compounds (which contribute to mechanical lubrication) an increase in the wear rate of the fuel injection equipment could occur. In view of this, the major fuel producers add suitable lubricity improvers to enable the FIE to run satisfactorily, with no acceleration in wear rate. They must ensure that the lubricity improvers do not themselves create residual deposits that could block the fuel system e.g. filter, injectors etc.

In addition to the lubrication effect there can also be a further reduction in the aromatic content of the fuel which can lead to shrinking/cracking of traditionally nitrile rubber seals throughout the fuel injection equipment that has previously been exposed to higher sulphur level fuels. The major fuel producers tend to maintain the total aromatic content to an acceptable level (15% by volume).

2 Ultra Low Sulphur Diesel

Also known as `city diesel'. Available throughout the UK and some parts of Europe since March 1999. This fuel has a maximum sulphur content of 0.005% by weight and a further reduction in the natural lubricity and aromatic content than experienced with low sulphur diesel. Major oil producers will add lubrication improvers and also maintain the total aromatic content to an acceptable level.

3 Unmodified Vegetable Oils

Burned in diesel engines neat or used as an extender to mineral derived fuel. When these are subjected to heat in the fuel injection system they form sticky deposits that can be found inside the fuel pump and a hard lacquer in the injectors where exposure to even higher temperatures takes place.

4 Chemically Modified Vegetable Oils (FAME/VOME)

These fuels have been derived from a wide range of vegetable oils and animal fats, resulting in better stability, viscosity and cetane number than those produced from unmodified vegetable oils, but it is recognised that there are potential problems associated with the finished fuel characteristics. These oils are less stable than mineral oil derived fuels when stored and they will readily degrade producing fatty acids, methanol and water, none of which are desirable in the FIE. These effects are known to be accelerated when the fuel is stored in the presence of air and water together.

An extract `common statement' from the FIE manufactures specifies that "The fuel injection equipment manufacturers can accept no liability whatsoever for failure attributable to operating their products with fuels for which the products were not designed, and no warranties or representations are made as to the possible effects of running these products with such fuels".

The three most common Fame types are RME - Rapeseed methyl ester (preferred crop in Europe), SME - Soyabean methyl ester (preferred crop in USA). Less common FAME's can be derived from animal fats (e.g. modified beef extracts) and reclaimed cooking oils.

5 B20 Biodiesel

Biodiesel refers to pure fuel before it is blended with diesel fuel ⇨ ***Chemically Modified Vegetable Oils (FAME/VOME) (1-25)***. When biodiesel is blended with diesel fuel it is referred to as B5, B20 etc, where the number indicates the percentage of biodiesel in the fuel, for example B5 contains 5% biodiesel.

Biodiesel has different characteristics than mineral based fuels in that it is able to mix with water and therefore will have a high water retention capacity - this could lead to seals swelling, fuel system corrosion and seal damage.

Biodiesels will `cloud' at higher temperatures than mineral based fuels. To explain Cloud Point - the lowest temperature at which fluid can flow and performs its functions is referred to as Pour Point. Just prior to reaching its Pour Point the diesel fluid becomes `cloudy' due to crystallization of waxy constituents - this is know as Cloud Point. Using diesel at temperature below its cloud point can result

descargado de www.Manualslib.com manuales de motor de búsqueda

in filter clogging. To prevent this happening pre-heating will be required.

Using B20 biodiesel can result in unburnt fuels accumulating in the engine oil, ultimately this can affect the engine oil efficiency and lead to engine damage (with standard diesel any unburnt fuel evaporates off the lubricating oil).Biodiesels must be stored to exclude water absorption and oxidation.

The natural properties of biodiesel make it a good medium for micro bacterial growth, these microbes can cause fuel system corrosion and early fuel filter blocking. It will be necessary to consult and seek advice from your fuel supplier, the effectiveness of conventional antibacterial additives when used in biodiesel is still being investigated in the fuel industry.A high percentage biodiesel mixture (>20%) can lead to fuel gelling and filter blocking in low temperature operation, it may also effect the power and performance of the engine.

To minimise the risk of engine damage when using a B20 mix, there are additional service requirements. ⇒ *Service Requirements for use of B20 Biodiesel (1-23)*

If the recommended actions are not taken there may be the following consequences:- low temperature filter clogging- injectors lacquering / sticking-deterioration of seals and rubber hoses- corrosion of metal parts in the fuel system- engine performance problemsThese risks will be increased if the fuel has been poorly stored, that is deteriorated through oxidation and / or water absorption.

Sulphur Content

High sulphur content can cause engine wear. (High sulphur fuel is not normally found in North America, Europe or Australia.) If you have to use high sulphur fuel you must change the engine oil more frequently. ⇒ *Table 5. Sulphur Content (1-26)*.

Low sulphur fuels must have the appropriate fuel lubricity additives, these lubricity improvers must not create residual deposits that block the fuel system, e.g. injectors, filters etc. Contact your fuel Supplier.

⚠ CAUTION

A combination of water and sulphur will have a corrosive chemical effect on fuel injection equipment. It is essential that water is eradicated from the fuel system when high sulphur fuels are used.

ENG-3-2

Table 5. Sulphur Content

Percentage of sulphur in the fuel (%)	Oil Change Interval
Less than 0.5	Normal
0.5 to 1.0	0.75 of normal
More than 1.0	0.50 of normal

descargado de www.Manualslib.com manuales de motor de búsqueda

Effects of Fuel Contaminates

The effect of dirt, water and other contaminants in diesel can be disastrous for injection equipment:

- Dirt - A severely damaging contaminant. Finely machined and mated surfaces such as delivery valves and distributor rotors are susceptible to the abrasive nature of dirt particles - increased wear will almost inevitably lead to greater leakage, uneven running and poor fuel delivery.
- Water - water can enter fuel through poor storage or careless handling, and will almost inevitably condense in fuel tanks. The smallest amounts of water can result in effects that are just as disastrous to the fuel injection pump as dirt, causing rapid wear, corrosion and in severe cases, even seizure. It is vitally important that water is prevented from reaching the fuel injection equipment. The filter/water trap must be drained regularly.
- Wax - Wax is precipitated from diesel when the ambient temperature falls below that of the fuel's cloud point, causing a restriction in fuel flow resulting in rough engine running. Special winter fuels may be available for engine operation at temperatures below 0°C (32°F). These fuels have a lower viscosity and limit wax formation.

descargado de www.Manualslib.com manuales de motor de búsqueda

Lubrication System Data

Filter type	Screw-on canister (with drain facility)
Pressure to open by-pass valve	1.6 bar (23 lb/in²)
Oil pressure relief valve setting	4.5 bar (65 lb/in²)
Oil pressure switch setting	0.6 bar falling (9 lb/in²)
Oil pump (1)	Integral unit with relief valve

(1) The oil pump is a non-serviceable part.

descargado de www.Manualslib.com manuales de motor de búsqueda

Cooling System Data

Radiator cap pressure setting	1 bar (14.5 lb/in²)
Thermostat	Wax element with by-pass blanking
Thermostat operating temperature:	
- nominal temperature	88°C (190°F)
- start to open temperature	86 - 90°C (187 - 194°F)
- full open temperature	102°C (216°F)
- travel (fully open)	9 mm (0.354 in.)
Fan belt type	Front end accessory drive (FEAD)
Fan belt (FEAD) adjustment	Automatic belt tensioner
Fan belt (FEAD) type	Multigroove belt
Coolant Temperature Switch/Sender range	see ⇨ *Electrical Equipment Data (1-30)*
Water pump (1)	Bolt on, belt driven unit

(1) The water pump is a non-serviceable part.

descargado de www.Manualslib.com manuales de motor de búsqueda

Electrical Equipment Data

Alternator	
Make	Iskra - AAK
Rating	
- option 1	14V, 95 Amp
- option 2	28V, 55 Amp
Cooling	Internal Fan
W-terminal	For engine speed indication
Alternator speed	2.8 x engine speed
Starter Motor (1)	
Make	Iskra - AZF 45
Rating	
- option 1	12V, 4.2 kW
- option 2	24V, 4.2 kW
Operating range	-30 to +120°C (-22 to 248°F)
Number of pinion teeth	11

(1) Never operate the starter motor longer than 20 seconds. Allow at least 2 minutes for cooling and battery recovery before operating again. Overheating caused by excessive operation will seriously damage the starter motor.

descargado de www.Manualslib.com manuales de motor de búsqueda

Switches	
Cold start advance switch	
- set temperature	55°C rising (131°F)
- switch mode	Normally closed
- tightening torque	16 Nm max (12 lb ft)
- thread diameter	M12 x 1.5
Coolant temperature switch/sender	Dual function switch/sender
- set temperature (switch)	112°C +/-3°C (234 +/-5.4°F)
- mode (switch)	Normally open
- tightening torque	16 Nm max (12 lb ft)
- thread diameter	M12 x 1.5
- Temperature v resistance table	
Temperature °C (°F)	Resistance - Ohms +/- 10%
25 (77)	500
50 (122)	197.4
100 (212)	41.9
110 (230)	32

Oil pressure switch	
- set pressure	0.6 bar falling (9 lb/in²)
- switch mode	Normally closed
- max pressure	27.5 bar (398 lb/in²)
- max working pressure	13.8 bar (200 lb/in²)
- tightening torque	16 Nm max (12 lb ft)
- thread diameter	M10 x 1.5

descargado de www.Manualslib.com manuales de motor de búsqueda

Torque Settings

Zinc Plated Fasteners and Dacromet Fasteners

T11-002

Introduction

Some external fasteners on JCB machines are manufactured using an improved type of corrosion resistant finish. This type of finish is called Dacromet and replaces the original Zinc and Yellow Plating used on earlier machines.

The two types of fasteners can be readily identified by colour and part number suffix. ⇨ *Table 6. Fastener Types (1-32)*.

Table 6. Fastener Types

Fastener Type	Colour	Part No. Suffix
Zinc and Yellow	Golden finish	'Z' (e.g. 1315/3712Z)
Dacromet	Mottled silver finish	'D' (e.g. 1315/3712D)

Note: *As the Dacromet fasteners have a lower torque setting than the Zinc and Yellow fasteners, the torque figures used must be relevant to the type of fastener.*

Note: *A Dacromet bolt should not be used in conjunction with a Zinc or Yellow plated nut, as this could change the torque characteristics of the torque setting further. For the same reason, a Dacromet nut should not be used with a Zinc or Yellow plated bolt.*

Note: *All bolts used on JCB machines are high tensile and must not be replaced by bolts of a lesser tensile specification.*

Note: *Dacromet bolts, due to their high corrosion resistance are used in areas where rust could occur. Dacromet bolts are only used for external applications. They are not used in applications such as gearbox or engine joint seams or internal applications.*

Bolts and Screws

Use the following torque setting tables only where no torque setting is specified in the text.

Note: *Dacromet fasteners are lubricated as part of the plating process, do not lubricate.*

Torque settings are given for the following conditions:

Condition 1

- Un-lubricated fasteners
- Zinc fasteners
- Yellow plated fasteners

Condition 2

- Zinc flake (Dacromet) fasteners
- Lubricated zinc and yellow plated fasteners
- Where there is a natural lubrication. For example, cast iron components

Verbus Ripp Bolts

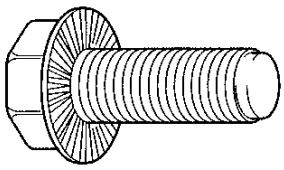

Fig 9.

Torque settings for these bolts are determined by the application. Refer to the relevant procedure for the required settings.

descargado de www.Manualslib.com manuales de motor de búsqueda

Zinc Plated Fasteners and Dacromet Fasteners

Table 7. Torque Settings - UNF Grade 'S' Fasteners

Bolt Size		Hexagon (A/F)	Condition 1			Condition 2		
in.	mm	in.	Nm	kgf m	lbf ft	Nm	kgf m	lbf ft
1/4	6.3	7/16	11.2	1.1	8.3	10.0	1.0	7.4
5/16	7.9	1/2	22.3	2.3	16.4	20.0	2.0	14.7
3/8	9.5	9/16	40.0	4.1	29.5	36.0	3.7	26.5
7/16	11.1	5/8	64.0	6.5	47.2	57.0	5.8	42.0
1/2	12.7	3/4	98.00	10.0	72.3	88.0	9.0	64.9
9/16	14.3	13/16	140.0	14.3	103.2	126.0	12.8	92.9
5/8	15.9	15/16	196.0	20.0	144.6	177.0	18.0	130.5
3/4	19.0	1 1/8	343.0	35.0	253.0	309.0	31.5	227.9
7/8	22.2	1 15/16	547.0	55.8	403.4	492.0	50.2	362.9
1	25.4	1 1/2	814.0	83.0	600.4	732.0	74.6	539.9
1 1/8	31.7	1 7/8	1181.0	120.4	871.1	1063.0	108.4	784.0
1 1/4	38.1	2 1/4	1646.0	167.8	1214.0	1481.0	151.0	1092.3

Table 8. Torque Settings - Metric Grade 8.8 Fasteners

Bolt Size		Hexagon (A/F)	Condition 1			Condition 2		
ISO Metric Thread	mm	mm	Nm	kgf m	lbf ft	Nm	kgf m	lbf ft
M5	5	8	5.8	0.6	4.3	5.2	0.5	3.8
M6	6	10	9.9	1.0	7.3	9.0	0.9	6.6
M8	8	13	24.0	2.4	17.7	22.0	2.2	16.2
M10	10	17	47.0	4.8	34.7	43.0	4.4	31.7
M12	12	19	83.0	8.5	61.2	74.0	7.5	54.6
M16	16	24	205.0	20.9	151.2	184.0	18.8	135.7
M20	20	30	400.0	40.8	295.0	360.0	36.7	265.5
M24	24	36	690.0	70.4	508.9	621.0	63.3	458.0
M30	30	46	1372.0	139.9	1011.9	1235.0	125.9	910.9
M36	36	55	2399.0	244.6	1769.4	2159.0	220.0	1592.4

descargado de www.Manualslib.com manuales de motor de búsqueda

Zinc Plated Fasteners and Dacromet Fasteners

Table 9. Metric Grade 10.9 Fasteners

Bolt Size		Hexagon (A/F)	Condition 1			Condition 2		
ISO Metric Thread	mm	mm	Nm	kgf m	lbf ft	Nm	kgf m	lbf ft
M5	5	8	8.1	0.8	6.0	7.3	0.7	5.4
M6	6	10	13.9	1.4	10.2	12.5	1.3	9.2
M8	8	13	34.0	3.5	25.0	30.0	3.0	22.1
M10	10	17	67.0	6.8	49.4	60.0	6.1	44.2
M12	12	19	116.0	11.8	85.5	104.0	10.6	76.7
M16	16	24	288.0	29.4	212.4	259.0	26.4	191.0
M20	20	30	562.0	57.3	414.5	506.0	51.6	373.2
M24	24	36	971.0	99.0	716.9	874.0	89.1	644.6
M30	30	46	1930.0	196.8	1423.5	1737.0	177.1	1281.1
M36	36	55	3374.0	344.0	2488.5	3036.0	309.6	2239.2

Table 10. Metric Grade 12.9 Fasteners

Bolt Size		Hexagon (A/F)	Condition 1			Condition 2		
ISO Metric Thread	mm	mm	Nm	kgf m	lbf ft	Nm	kgf m	lbf ft
M5	5	8	9.8	1.0	7.2	8.8	0.9	6.5
M6	6	10	16.6	1.7	12.2	15.0	1.5	11.1
M8	8	13	40.0	4.1	29.5	36.0	3.7	26.5
M10	10	17	80.0	8.1	59.0	72.0	7.3	53.1
M12	12	19	139.0	14.2	102.5	125.0	12.7	92.2
M16	16	24	345.0	35.2	254.4	311.0	31.7	229.4
M20	20	30	674.0	68.7	497.1	607.0	61.9	447.7
M24	24	36	1165.0	118.8	859.2	1048.0	106.9	773.0
M30	30	46	2316.0	236.2	1708.2	2084.0	212.5	1537.1
M36	36	55	4049.0	412.9	2986.4	3644.0	371.6	2687.7

descargado de www.Manualslib.com manuales de motor de búsqueda

Table 11. Torque Settings - Rivet Nut Bolts/Screws

Bolt Size				
ISO Metric Thread	mm	Nm	kgf m	lbf ft
M3	3	1.2	0.1	0.9
M4	4	3.0	0.3	2.0
M5	5	6.0	0.6	4.5
M6	6	10.0	1.0	7.5
M8	8	24.0	2.5	18.0
M10	10	48.0	4.9	35.5
M12	12	82.0	8.4	60.5

Table 12. Torque Settings - Internal Hexagon Headed Cap Screws (Zinc)

Bolt Size			
ISO Metric Thread	Nm	kgf m	lbf ft
M3	2.0	0.2	1.5
M4	6.0	0.6	4.5
M5	11.0	1.1	8.0
M6	19.0	1.9	14.0
M8	46.0	4.7	34.0
M10	91.0	9.3	67.0
M12	159.0	16.2	117.0
M16	395.0	40.0	292.0
M18	550.0	56.0	406.0
M20	770.0	79.0	568.0
M24	1332.0	136.0	983.0

descargado de www.Manualslib.com manuales de motor de búsqueda

Hydraulic Connections

T11-003

'O' Ring Face Seal System

Adaptors Screwed into Valve Blocks

Adaptor screwed into valve blocks, seal onto an 'O' ring which is compressed into a 45° seat machined into the face of the tapped port.

Table 13. Torque Settings - BSP Adaptors

BSP Adaptor Size	Hexagon (A/F)			
in.	mm	Nm	kgf m	lbf ft
1/4	19.0	18.0	1.8	13.0
3/8	22.0	31.0	3.2	23.0
1/2	27.0	49.0	5.0	36.0
5/8	30.0	60.0	6.1	44.0
3/4	32.0	81.0	8.2	60.0
1	38.0	129.0	13.1	95.0
1 1/4	50.0	206.0	21.0	152.0

Table 14. Torque Settings - SAE Connections

SAE Tube Size	SAE Port Thread Size	Hexagon (A/F)			
		mm	Nm	kgf m	lbf ft
4	7/16 - 20	15.9	20.0 - 28.0	2.0 - 2.8	16.5 - 18.5
6	9/16 - 18	19.1	46.0 - 54.0	4.7 - 5.5	34.0 - 40.0
8	3/4 - 16	22.2	95.0 - 105.0	9.7 - 10.7	69.0 - 77.0
10	7/8 - 14	27.0	130.0 - 140.0	13.2 - 14.3	96.0 - 104.0
12	1 1/16 - 12	31.8	190.0 - 210.0	19.4 - 21.4	141.0 - 155.0
16	1 5/16 - 12	38.1	290.0 - 310.0	29.6 - 31.6	216.0 - 230.0
20	1 5/8	47.6	280.0 - 380.0	28.5 - 38.7	210.0 - 280.0

descargado de www.Manualslib.com manuales de motor de búsqueda

Hoses Screwed into Adaptors

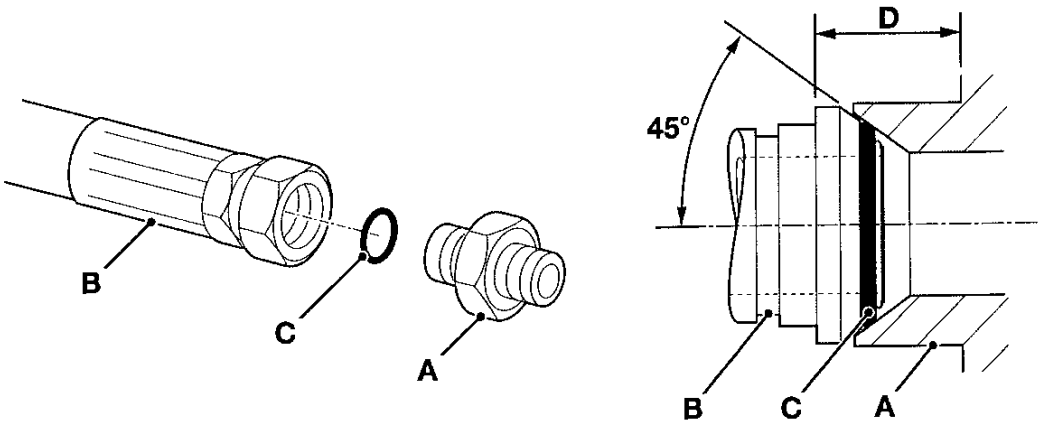

Fig 10.

Hoses **10-B** screwed into adaptors **10-A** seal onto an 'O' ring **10-C** which is compressed into a 45° seat machined into the face of the adaptor port.

Note: *Dimension* ***10-D*** *will vary depending upon the torque applied.*

Table 15. BSP Hose - Torque Settings

BSP Hose Size	Hexagon (A/F)			
in.	mm	Nm	kgf m	lbf ft
1/8	14.0	14.0 - 16.00	1.4 - 1.6	10.3 - 11.8
1/4	19.0	24.0 - 27.0	2.4 - 2.7	17.7 - 19.9
3/8	22.0	33.0 - 40.0	3.4 - 4.1	24.3 - 29.5
1/2	27.0	44.0 - 50.0	4.5 - 5.1	32.4 - 36.9
5/8	30.0	58.0 - 65.0	5.9 - 6.6	42.8 - 47.9
3/4	32.0	84.0 - 92.0	8.6 - 9.4	61.9 - 67.8
1	38.0	115.0 - 126.0	11.7 - 12.8	84.8 - 92.9
1 1/4	50.0	189.0 - 200.0	19.3 - 20.4	139.4 - 147.5
1 1/2	55.0	244.0 - 260.0	24.9 - 26.5	180.0 - 191.8

descargado de www.Manualslib.com manuales de motor de búsqueda

Adaptors into Component Connections with Bonded Washers

Table 16. BSP Adaptors with Bonded Washers - Torque Settings

BSP Size			
in.	Nm	kgf m	lbf ft
1/8	20.0	2.1	15.0
1/4	34.0	3.4	25.0
3/8	75.0	7.6	55.0
1/2	102.0	10.3	75.0
5/8	122.0	12.4	90.0
3/4	183.0	18.7	135.0
1	203.0	20.7	150.0
1 1/4	305.0	31.0	225.0
1 1/2	305.0	31.0	225.0

descargado de www.Manualslib.com manuales de motor de búsqueda

'Torque Stop' Hose System

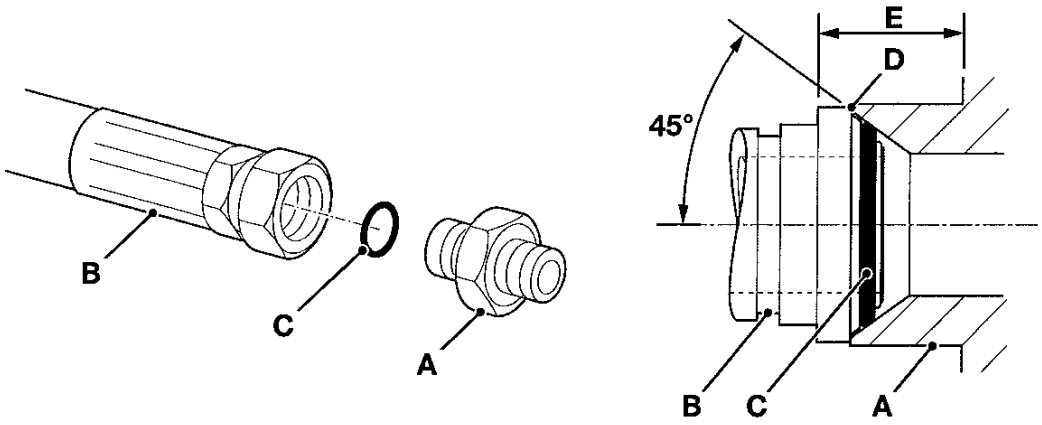

Fig 11.

`Torque Stop' Hoses **11-B** screwed into adaptors **11-A** seal onto an 'O' ring **11-C** which is compressed into a 45° seat machined in the face of the adaptor port. To prevent the 'O' ring being damages as a result of over tightening, 'Torque Stop' Hoses have an additional shoulder **11-D**, which acts as a physical stop.

Note: *Minimum dimension **11-E** fixed by shoulder **11-D**.*

Table 17. BSP `Torque Stop' Hose - Torque Settings

BSP Hose Size	Hexagon (A/F)			
in.	mm	Nm	kgf m	lbf ft
1/8	14.0	14.0	1.4	10.0
1/4	19.0	27.0	2.7	20.0
3/8	22.0	40.0	4.1	30.0
1/2	27.0	55.0	5.6	40.0
5/8	30.0	65.0	6.6	48.0
3/4	32.0	95.0	9.7	70.0
1	38.0	120.0	12.2	89.0
1 1/4	50.0	189.0	19.3	140.0
1 1/2	55.0	244.0	24.9	180.0

descargado de www.Manualslib.com manuales de motor de búsqueda

Torque + Angle Explanation

Insufficient preload of a bolted joint can cause major problems, such as cylinder head warp, leaking gasket joints etc. There are several methods of achieving an accurate preload of a bolted joint, the two main methods used on the JCB 444 engine are:

1) Torque Control Tightening

2) Angle Control Tightening

1 Torque Control Tightening

Using a torque meter to control the torque is the most popular means of controlling preload, and in the majority of instances this method is adequate. It should be noted that with this process, the majority of the torque is used to overcome friction, therefore slight variations in the frictional conditions can lead to large changes in the bolt preload.

2 Angle Control Tightening

Where a more precise preload is required, the `torque + angle' tightening method is used. The bolt is tightened to a predetermined torque (this may be done in stages), and then as a final sequence, the bolt is tightened to a predetermined angle - this method of tightening the bolts results in a smaller variation in the final preload.

It is critical that the predetermined tightening angle is accurately achieved, failure to tighten accurately to the specified angle could result in the bolt preload being incorrect - this will lead to eventual failures. It is good practice to replace all bolts that have been tightened using the torque + angle procedure.

descargado de www.Manualslib.com manuales de motor de búsqueda

Torque + Angle Tightening Procedure

The following example explains the recommended torque + angle procedure. A torque angle gauge should be used for accuracy, but as a visual check, the bolts can be match marked as described below.

1 Tighten the bolt to the specified torque (specified torque values will be detailed in the relevant sections).

2 Mark a line across the centre of the bolt, and a second line on the part to be clamped - the two lines should be aligned, as shown at **A**.

3 Mark a third line at the specified torque angle - in this instance the additional torque angle is 90°. This line must be marked the specified angle in a clockwise direction (to further tighten the bolt), as shown at **B**.

4 In some instances, angle torque tightening can be specified in two stages, for instance in this example, the first angle quoted is 90° (shown at **B**), and then a second angle of 180°. The additional 180° angle is from the LAST tightened position - as shown at **C**.

5 Tighten the bolt so that the line on the bolt aligns with the angle(s) marked on the item to be clamped - remember, to ensure complete accuracy an angle gauge should be used.

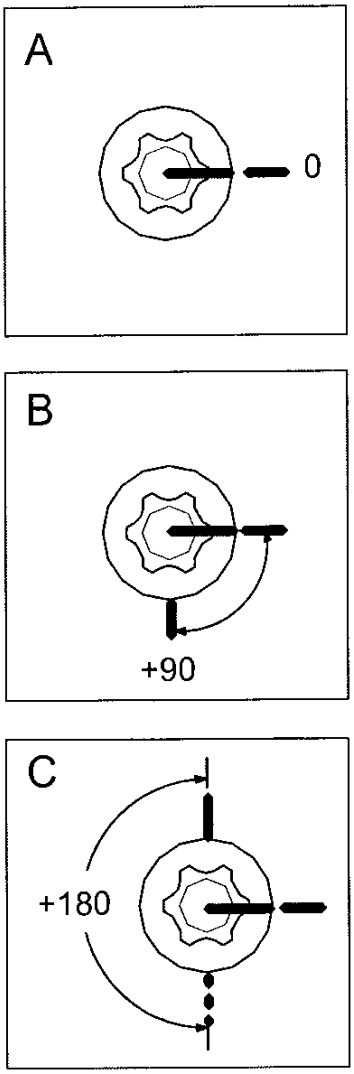

Fig 12.

descargado de www.Manualslib.com manuales de motor de búsqueda

Engine Torque Figures

This section details all the torque figures to be used on the JCB 444 Engine. Some of the torques MUST be used in conjunction with the recommended procedures contained in this manual, for instance if the torques need to be applied in a specific sequence. For convenience, the list below is arranged in alphabetical order to help you quickly locate the item.

Item

⇨ *Table 20. Bedplate Bolts (1-43)*
⇨ *Table 43. Cold Start Advance Switch (1-52)*
⇨ *Table 18. Cylinder Head Bolts (1-43)*
⇨ *Table 45. Exhaust Manifold Bolts (1-53)*
⇨ *Table 29. Fan Belt Tensioner Bolts (1-47)*
⇨ *Table 27. Flywheel Housing Bolts (1-46)*
⇨ *Table 26. Flywheel Hub to Crank Bolts (1-46)*
⇨ *Table 50. Flywheel to Crankshaft Hub Bolts (1-55)*
⇨ *Table 51. Front Pulley to Crankshaft Bolts (1-55)*
⇨ *Table 37. Fuel Injection Pump Cap (1-50)*
⇨ *Table 44. Fuel Lift Pump Bolts (1-53)*
⇨ *Table 21. Fuel Pump Retaining Nuts (1-44)*
⇨ *Table 22. Gear Case to Cylinder Bolts (1-44)*
⇨ *Table 47. High Pressure Fuel Pipes (1-54)*
⇨ *Table 24. Idler Blanking Plug (1-45)*
⇨ *Table 25. Idler Gear Hub Assembly Bolts (1-46)*
⇨ *Table 32. Injection Pump Gear Nut (1-48)*
⇨ *Table 31. Injection Pump Lock Pin (1-48)*
⇨ *Table 34. Injector Clamp Bolts (1-49)*
⇨ *Table 19. Injector Sleeve (1-43)*
⇨ *Table 46. Inlet Manifold Bolts (1-53)*
⇨ *Table 52. Lifting Bracket Bolts (1-55)*
⇨ *Table 36. Oil Cooler To Cylinder Block (1-49)*
⇨ *Table 23. Oil Pump Bolts (1-45)*
⇨ *Table 30. Oil Sump Retaining Bolts (1-47)*
⇨ *Table 28. Piston Conrod End Cap Bolts (1-47)*
⇨ *Table 49. Power Take Off (PTO) Pump Bolts (1-54)*
⇨ *Table 35. Rocker Cover Bolts (1-49)*

Item

⇨ *Table 33. Rocker Shaft Bolts (1-48)*
⇨ *Table 53. Starter Motor Bolts (1-56)*
⇨ *Table 38. Thermostat Housing Bolts (1-50)*
⇨ *Table 48. Turbo Charger to Exhaust Manifold Nuts (1-54)*
⇨ *Table 40. Water Heater Outlet Connector (1-51)*
⇨ *Table 39. Water Inlet Connector Bolts (1-50)*
⇨ *Table 41. Water Pump Bolts (1-51)*
⇨ *Table 42. Water Temperature Sender/Switch (1-52)*

descargado de www.Manualslib.com manuales de motor de búsqueda

Table 18. Cylinder Head Bolts

Item	Nm	lbf ft	Angle
Cylinder head to block bolts(1) x 12			
- first stage torque	40	30	-
- second stage torque	75	56	-
- third stage torque	75	56	-
- fourth stage torque	-	-	+ 90°
- final stage torque	-	-	+ 180°

Note(1): Torque information MUST be used in conjunction with recommended procedures contained in this manual.

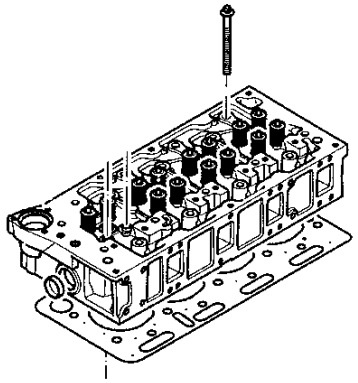

Fig 13.

Table 19. Injector Sleeve

Item	Nm	lbf ft	Angle
Injector Sleeve	36-42	27-31	-

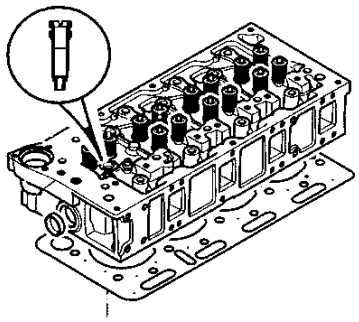

Fig 14.

Table 20. Bedplate Bolts

Item	Nm	lbf ft	Angle
Bedplate to block(1)			
Bolts A - initial snug torque	50	37	-
Bolts B	24	18	-
Bolts A - second stage	115	85	-
Bolts A - final stage angle torque	-	-	+ 180°

Note(1): Torque information MUST be used in conjunction with recommended procedures contained in this manual.

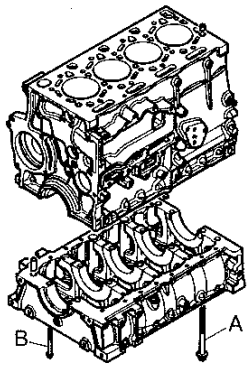

Fig 15.

descargado de www.Manualslib.com manuales de motor de búsqueda

Table 21. Fuel Pump Retaining Nuts

Item	Nm	lbf ft	Angle
Fuel pump retaining nuts	22-26	16-19	-

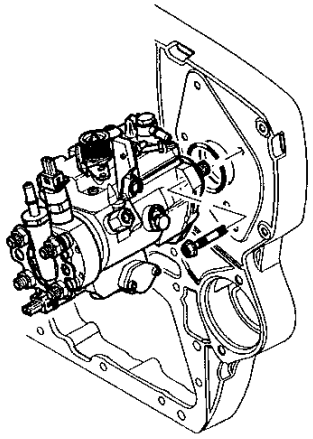

Fig 16.

Table 22. Gear Case to Cylinder Bolts

Item	Nm	lbf ft	Angle
Gear case to cylinder block bolts	31-35	23-26	-

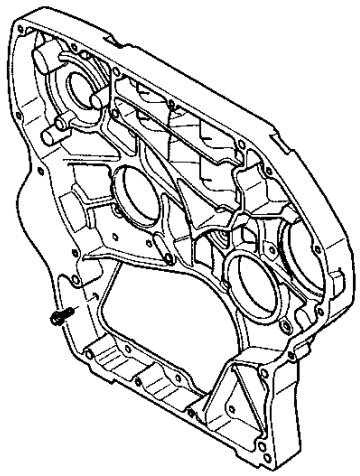

Fig 17.

descargado de www.Manualslib.com manuales de motor de búsqueda

Table 23. Oil Pump Bolts

Item	Nm	lbf ft	Angle
Oil pump bolts	22-26	16-19	-

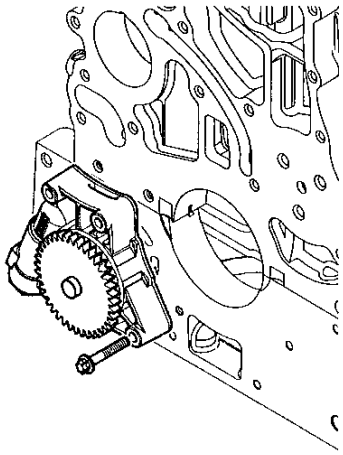

Fig 18.

Table 24. Idler Blanking Plug

Item	Nm	lbf ft	Angle
Idler blanking plug	17-19	13-14	-

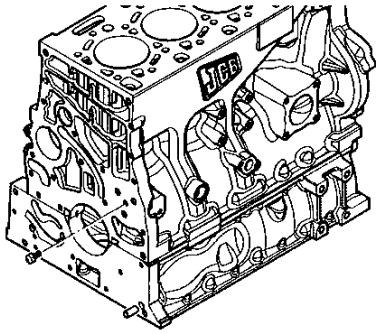

Fig 19.

descargado de www.Manualslib.com manuales de motor de búsqueda

Table 25. Idler Gear Hub Assembly Bolts

Item	Nm	lbf ft	Angle
Idler gear hub assembly bolts	60-70	44-52	-

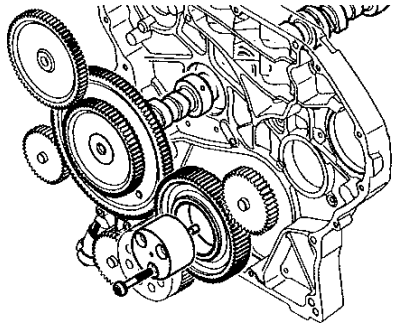

Fig 20.

Table 26. Flywheel Hub to Crank Bolts

Item	Nm	lbf ft	Angle
Flywheel hub to crank gear bolts	43-51	32-38	-

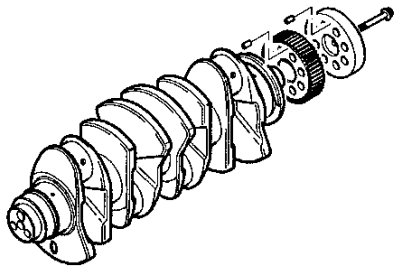

Fig 21.

Table 27. Flywheel Housing Bolts

Item	Nm	lbf ft	Angle
Flywheel housing to gearcase bolts			
- M10 bolts (x 6)	43-51	32-38	-
- M8 bolts (x 12)	22-26	16-19	-

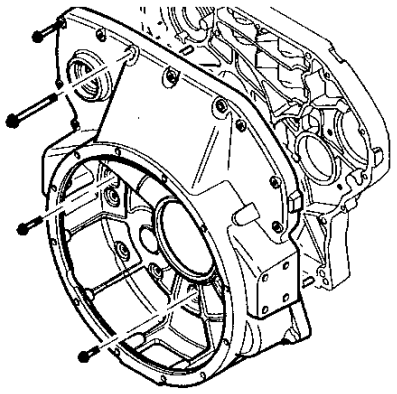

Fig 22.

descargado de www.Manualslib.com manuales de motor de búsqueda

Table 28. Piston Conrod End Cap Bolts

Item	Nm	lbf ft	Angle
Piston conrod end cap bolts(1)			
- first stage torque	35	26	-
- second stage torque	65	48	-
- third stage angle torque			+ 90°

Note(1): Torque information MUST be used in conjunction with recommended procedures contained in this manual.

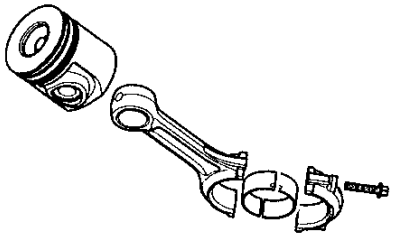

Fig 23.

Table 29. Fan Belt Tensioner Bolts

Item	Nm	lbf ft	Angle
Fan belt tensioner retaining bolts	22-26	16-19	-

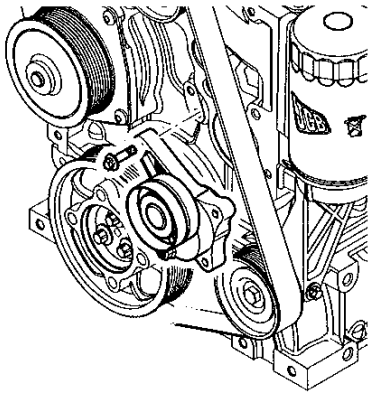

Fig 24.

Table 30. Oil Sump Retaining Bolts

Item	Nm	lbf ft	Angle
Oil sump retaining bolts **A**	22-26	16-19	-
Oil sump plug **B**	40-60	30-44	-

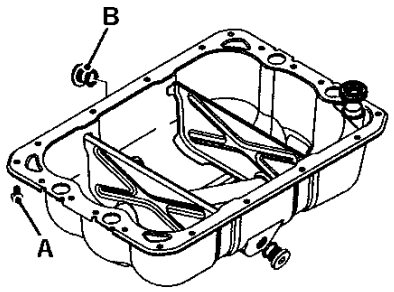

Fig 25.

descargado de www.Manualslib.com manuales de motor de búsqueda

Table 31. Injection Pump Lock Pin

Item	Nm	lbf ft	Angle
Injection pump lock pin	12	9	-

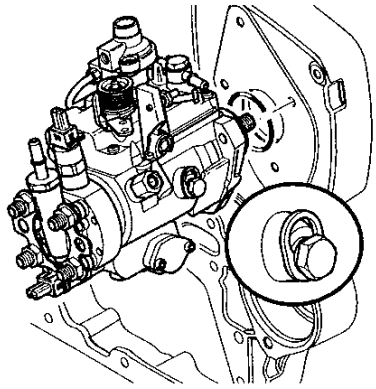

Fig 26.

Table 32. Injection Pump Gear Nut

Item	Nm	lbf ft	Angle
Injection pump gear retaining nut(1)			
- first stage torque	25	18.5	-
- second stage torque	90	67	-

Note(1): Torque information MUST be used in conjunction with recommended procedures contained in this manual.

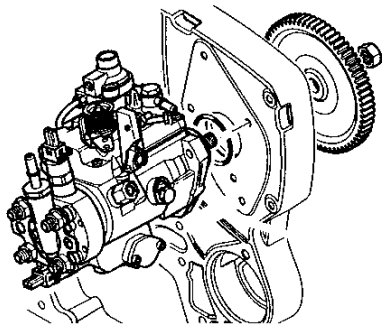

Fig 27.

Table 33. Rocker Shaft Bolts

Item	Nm	lbf ft	Angle
Rocker shaft to cylinder head bolts **A**	22-26	16-19	-

Note: The valve lash adjusting screw **B** must have a minimum turning torque of 12Nm. If the turning torque is less than 12Nm, then a new adjusting screw must be fitted.

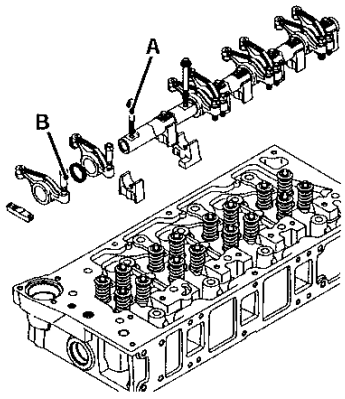

Fig 28.

descargado de www.Manualslib.com manuales de motor de búsqueda

Table 34. Injector Clamp Bolts

Item	Nm	lbf ft	Angle
Injector clamp bolts	22-26	16-19	-

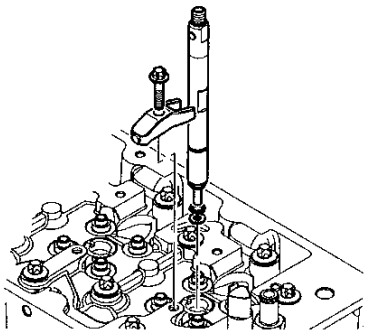

Fig 29.

Table 35. Rocker Cover Bolts

Item	Nm	lbf ft	Angle
Rocker cover retaining bolts	20-24	16-19	-

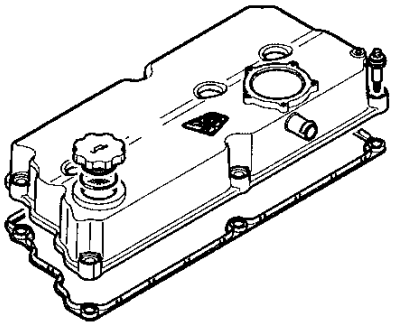

Fig 30.

Table 36. Oil Cooler To Cylinder Block

Item	Nm	lbf ft	Angle
Oil cooler housing to cylinder block bolts **A**	22-26	16-19	-
Oil cooler matrix to oil cooler housing bolts **B**	21-25	15-18	-
Oil filter drain plug **C**	35-40	26-29	-

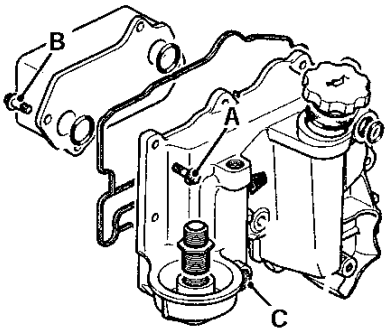

Fig 31.

descargado de www.Manualslib.com manuales de motor de búsqueda

Table 37. Fuel Injection Pump Cap

Item	Nm	lbf ft	Angle
FIP tamper-proof cap	65-75	48-56	-

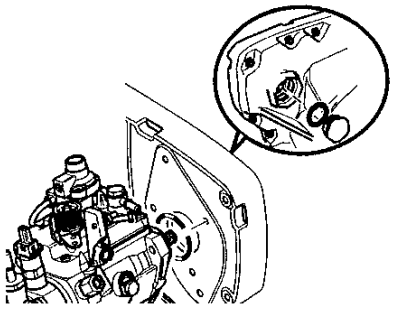

Fig 32.

Table 38. Thermostat Housing Bolts

Item	Nm	lbf ft	Angle
Thermostat housing retaining bolts	22-26	16-19	-

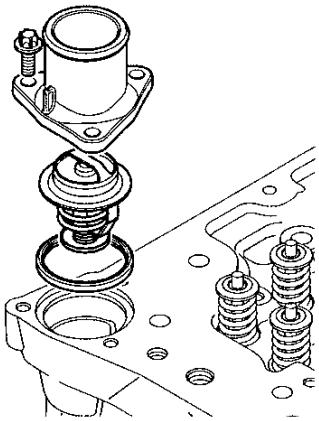

Fig 33.

Table 39. Water Inlet Connector Bolts

Item	Nm	lbf ft	Angle
Water inlet connector retaining bolts	22-26	16-19	-

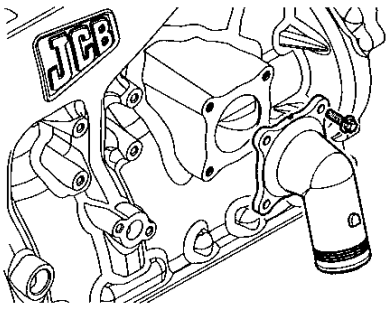

Fig 34.

descargado de www.Manualslib.com manuales de motor de búsqueda

Table 40. Water Heater Outlet Connector

Item	Nm	lbf ft	Angle
Water heater outlet connector	25-30	19-22	-

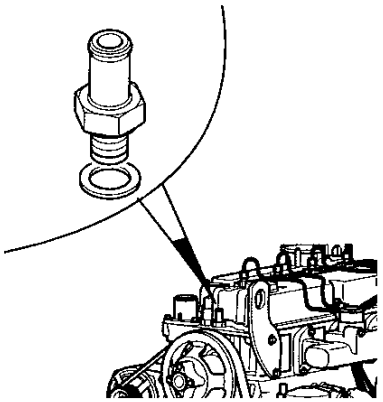

Fig 35.

Table 41. Water Pump Bolts

Item	Nm	lbf ft	Angle
Water pump retaining bolts	22-26	16-19	-

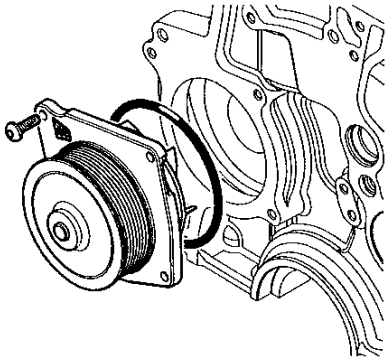

Fig 36.

descargado de www.Manualslib.com manuales de motor de búsqueda

Table 42. Water Temperature Sender/Switch

Item	Nm	lbf ft	Angle
Water temperature sender/switch	16	12	-

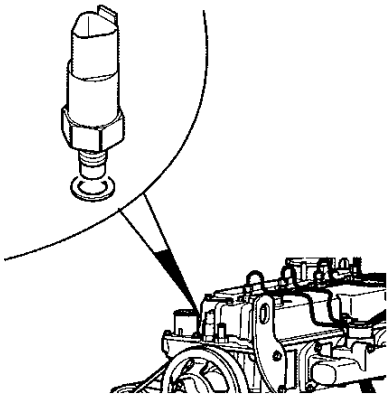

Fig 37.

Table 43. Cold Start Advance Switch

Item	Nm	lbf ft	Angle
Cold start advance switch	16	12	-

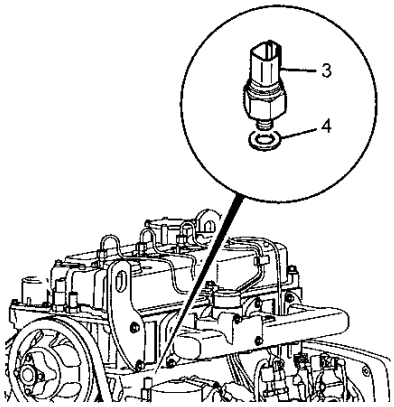

Fig 38.

descargado de www.Manualslib.com manuales de motor de búsqueda

Table 44. Fuel Lift Pump Bolts

Item	Nm	lbf ft	Angle
Fuel lift pump retaining bolts	22-26	16-19	-

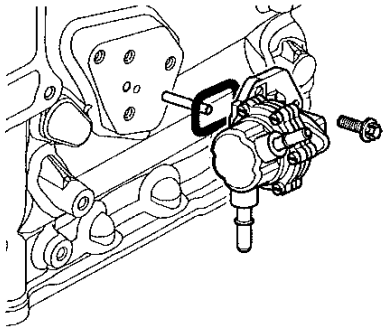

Fig 39.

Table 45. Exhaust Manifold Bolts

Item	Nm	lbf ft	Angle
Exhaust manifold retaining bolts			
- first stage	25	19	-
- final stage angle torque			+ 90°

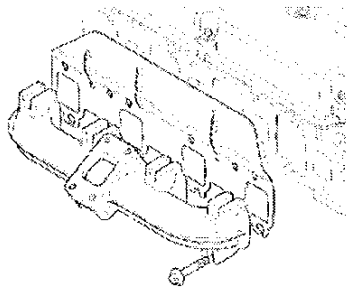

Fig 40.

Table 46. Inlet Manifold Bolts

Item	Nm	lbf ft	Angle
Inlet manifold retaining bolts	22-26	16-19	-

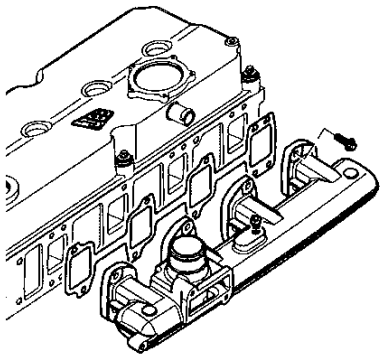

Fig 41.

descargado de www.Manualslib.com manuales de motor de búsqueda

Table 47. High Pressure Fuel Pipes

Item	Nm	lbf ft	Angle
High pressure fuel pipes	25-29	19-22	-

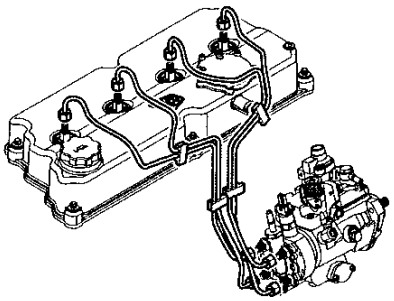

Fig 42.

Table 48. Turbo Charger to Exhaust Manifold Nuts

Item	Nm	lbf ft	Angle
Turbo charger to exhaust manifold retaining nuts	22-26	16-19	-

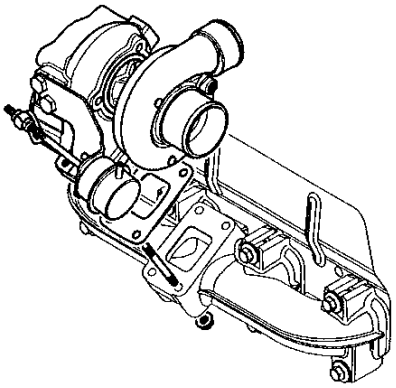

Fig 43.

Table 49. Power Take Off (PTO) Pump Bolts

Item	Nm	lbf ft	Angle
Power take off (PTO) pump bolts			
- SAE `A' - M10 bolts	43-51	32-38	-
- SAE `B' - M12 bolts	73-89	54-66	-

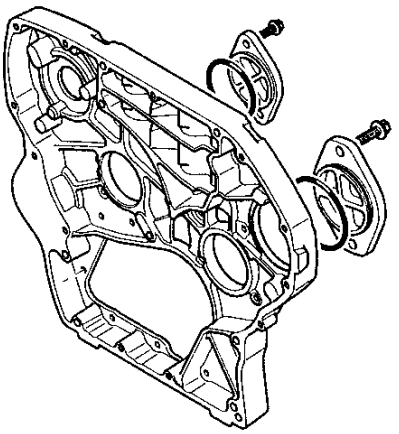

Fig 44.

descargado de www.Manualslib.com manuales de motor de búsqueda

Table 50. Flywheel to Crankshaft Hub Bolts

Item	Nm	lbf ft	Angle
Flywheel to crankshaft hub retaining bolts(1)			
- first stage torque	40	30	-
- second stage torque	120	89	-
- final stage angle torque	-	-	+ 120°

Note(1): Torque information MUST be used in conjunction with recommended procedures contained in this manual.

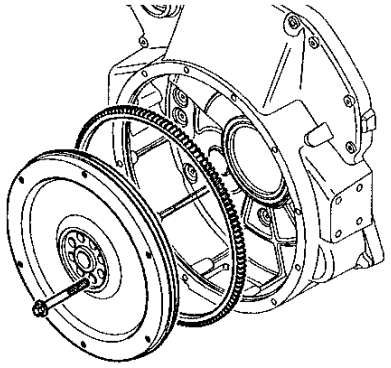

Fig 45.

Table 51. Front Pulley to Crankshaft Bolts

Item	Nm	lbf ft	Angle
Front pulley to crankshaft retaining bolts(1)			
- first stage torque	30	22	-
- second stage torque	75	56	-
- final stage angle torque	-	-	+ 180°

Note(1): Torque information MUST be used in conjunction with recommended procedures contained in this manual.

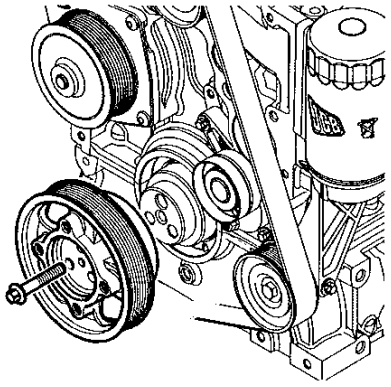

Fig 46.

Table 52. Lifting Bracket Bolts

Item	Nm	lbf ft	Angle
Lifting bracket retaining bolts	43-51	32-38	-

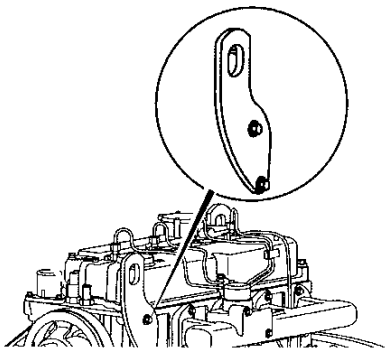

Fig 47.

descargado de www.Manualslib.com manuales de motor de búsqueda

Table 53. Starter Motor Bolts

Item	Nm	lbf ft	Angle
Starter motor retaining bolts	43-51	32-38	-

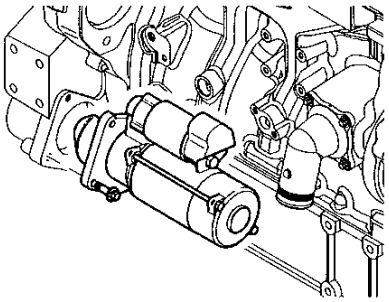

Fig 48.

descargado de www.Manualslib.com manuales de motor de búsqueda

Lubricants and Capacities

Engine Lubricating Oil

New engines DO NOT require a running-in period. The engine/machine should be used in a normal work cycle immediately, glazing of the piston cylinder bores, resulting in excessive oil consumption, could occur if the engine is gently run-in. Under no circumstances should the engine be allowed to idle for extended periods; (e.g. warming up without load).

A minimum API CF4 grade oil must be used. Superior grade oils may be more appropriate for heavy duty applications (such as sustained high loads and operation at elevated temperatures).

The choice of lubricant viscosity should be made based on the lowest ambient temperature at which the machine will be started and the maximum ambient temperature at which it will operate.

The following table provides guidance as to the temperature range that can be accommodated by standard oil viscosities and can be used to select an appropriate grade. ⇒ *Table 54. (1-57)*.

Table 54.

Oil Viscosity	Minimum Temperature °C (°F)	Maximum Temperature °C (°F)
SAE 0W30	- 40 (-40)	+ 30 (86)
SAE 0W20	- 40 (-40)	+ 10 (50)
SAE 5W20	- 30 (-22)	+ 10 (50)
SAE 5W40	- 30 (-22)	+ 40 (104)
SAE 10W30	- 20 (-4)	+ 40 (104)
SAE 15W40	- 15 (-5)	+ 50 (122)

Recommended Oils

Table 55.

Engine Oil	Specification
JCB High Performance(1)	ACEA E2:B2:A2, API CF4/SG(1)
JCB Extreme Performance	ACEA E5/B3/A3, API CH-4/SJ

(1) Not suitable for generator set applications.

Engine Oil Capacity

Choose the grade of oil to suit the temperature range as detailed. ⇒ *Table 54. (1-57)*. The engine oil capacity, including filter and clean sump is 12 litres MIN and 15 litres MAX mark on the dipstick.

Table 56.

Item	Capacity litres (UK Gal)	
	Minimum	Maximum
Engine	12 (2.6)	15 (3.3)

descargado de www.Manualslib.com manuales de motor de búsqueda

Coolant Mixtures

⚠ WARNING

Antifreeze can be harmful. Obey the manufacturer's instructions when handling full strength or diluted antifreeze.

7-3-4-4_1

The protection provided by JCB Four Seasons Antifreeze and Summer Coolant is shown below. If any other anti-freeze is used, refer to the manufacturer's instructions and ensure that a corrosion inhibitor is included. DO NOT use solutions of more than 60% or less than 50% or damage to the cooling system will occur.

55% Solution - Maintains circulation down to -36 deg C (-33 deg F), protects against damage down to -41 deg C (-42 deg F)

The strength of the anti-freeze solution must be checked at least once a year, preferably at the beginning of the cold period. It is an advantage to leave the anti-freeze in all the year round as it gives continued protection against corrosion. Always renew the anti-freeze every two years. A 50% anti-freeze mixture must be used even if frost protection is not needed. This gives protection against corrosion and raises the coolant's boiling point.

It should be noted that serious damage to the cooling system can occur if corrosion inhibitors are not used.

descargado de www.Manualslib.com manuales de motor de búsqueda

Service Aids

Sealing, Retaining and Care Compounds

Part Number	Description and Application
4102/3800	RTV silicone sealant - oil pan to bedplate
320/00831	Anaerobic sealant - bedplate to block
	Anaerobic sealant - gear case to block
	Anaerobic sealant - flywheel housing to gear case
320/00829	Rubber lubricant Gel - injector Sleeve O-ring
	Rubber lubricant Gel - rear crankshaft oil seal
	Rubber lubricant Gel - front crankshaft oil seal
320/00812	Anaerobic Adhesive - all core plugs
4102/3500	Anaerobic retaining adhesive - injector sleeve threads
4104/1557	Cleaner and degreaser - for degreasing components prior to use of anaerobic sealant.
4104/2900	Degreaser
4104/3200	Gasket remover

descargado de www.Manualslib.com manuales de motor de búsqueda

Service Tools

General Engine Tools

The following `general' service tools are recommended to perform safe and correct engine repair procedures.

When applicable, the JCB part number will be shown immediately below the tool title.

If there is no part number, the tool is not available from JCB Service. In this instance, the tool can be purchased from any good tool store.

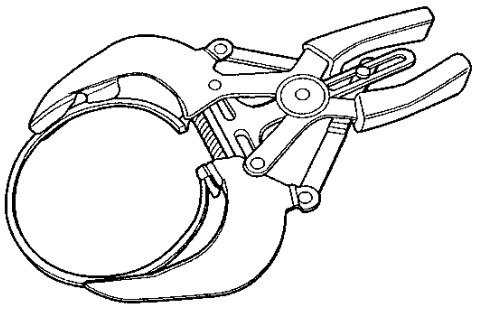

Fig 49. Piston Ring Expander Tool

Use to install piston rings on to the piston. Ensures the rings are fitted without damage or distortion.

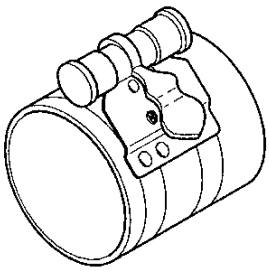

Fig 50. Piston Ring Compressor Tool

Use to compress the piston rings in preparation for fitting the piston assembly into the cylinder bore.

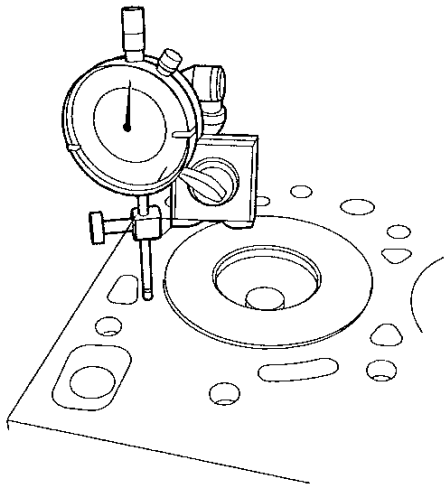

Fig 51. Dial Test Indicator

Use in a number of applications where it is necessary to measure accurate dimensions.

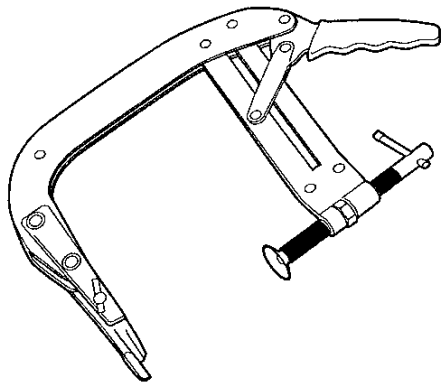

Fig 52. Valve Spring Compressor Tool

Use to install and remove valve spring collets.

descargado de www.Manualslib.com manuales de motor de búsqueda

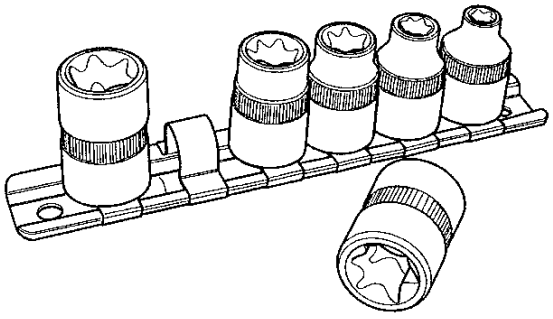

Fig 53. Star Drive (Torx®) Heavy Duty Set

Use to loosen and tighten all star drive fasteners. Use in conjunction with a good quality, calibrated torque wrench.

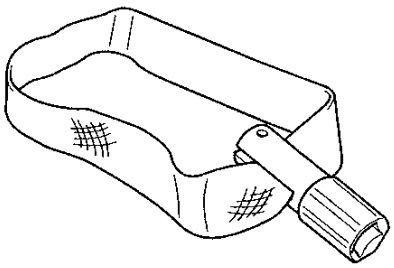

Fig 54. 892/00292 Oil Filter Wrench

Use to install or remove spin-on filter canister.

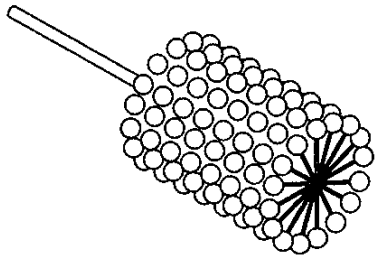

Fig 55. 892/00041 Bore De-Glazing Tool

De-glazing tool for cylinder bores (to assist bedding-in of new piston rings).

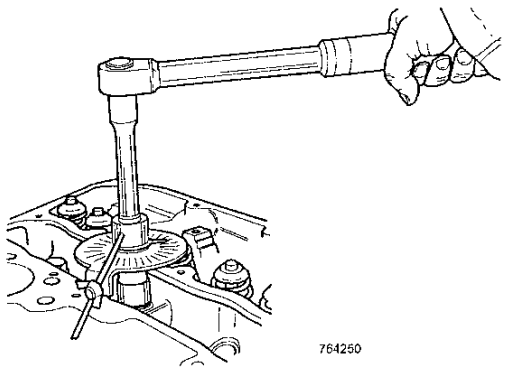

Fig 56. Torque + Angle Tool

Use to accurately torque bolts. The torque + angle method is used extensively on the JCB 444 Engine.

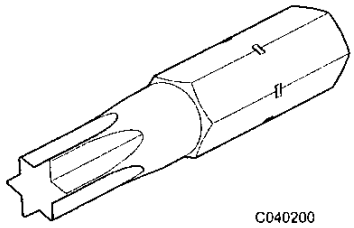

Fig 57. Star Drive (Torx®) Heavy Duty Socket Bit (T40 size)

Use to loosen and tighten the coolant pump retaining bolts.Use in conjunction with a good quality, calibrated torque wrench.

descargado de www.Manualslib.com manuales de motor de búsqueda

Specialist Engine Tools

The following 'specialist' service tools are required to perform safe and correct engine repair procedures.

The tools can be ordered using the tool part number detailed.

For reference, a copy of the tool drawings is included in section 10. If the tools are to be made locally, the correct grade of material must be used.

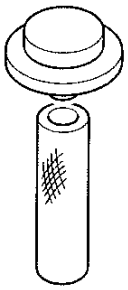

Fig 58. 892/01146 Cylinder Block Core Plug Fitting Tool

Use to correctly fit cylinder block core plugs. Tool includes handle and different size cups to suit various size core plugs.

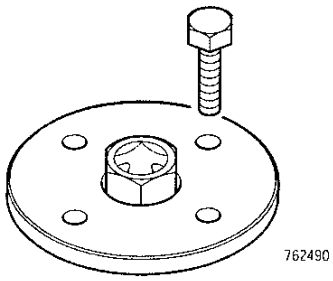

Fig 59. 892/01147 Crankshaft Turning Tool

Use to manually turn the crankshaft, for instance when setting top dead centre (TDC). 4 x mounting holes to suit crankshaft pulley.

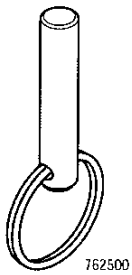

Fig 60. 892/01148 Timing Pin (Crankshaft)

Use to correctly align the crankshaft at top dead centre (TDC).

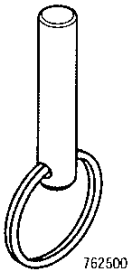

Fig 61. 892/01148 Timing Pin (Camshaft)

Use to align the camshaft in the correct timed position when removing/fitting the fuel injection pump.

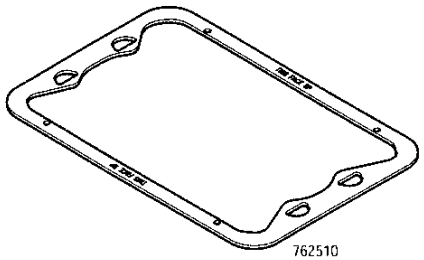

Fig 62. 892/01149 Template For Application Of Oil Sump Sealant

Use to ensure correct sealant application.

Note: *Correct positioning of the sealant is critical to prevent leaks.*

descargado de www.Manualslib.com manuales de motor de búsqueda

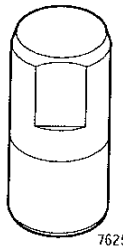

Fig 63. 892/01150 Oil Sump Location Dowels (2 off required)

Use to correctly align the sump, prevent sump movement during fitting.

Note: *Correct positioning of the sump is critical to ensure a good joint and prevent leaks.*

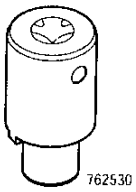

Fig 64. 892/01151 Injector Sleeve Fitting/Removing Tool

Use to fit and remove the injector sleeves. The sleeves are pre-fitted on cylinder head assemblies.

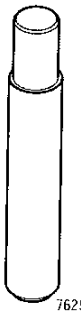

Fig 65. 892/01152 Valve Stem Seals Fitting Tool

Use to ensure positive engagement of the valve stem seals.

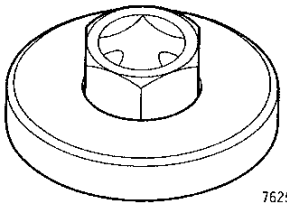

Fig 66. 892/01154 Fuel Injection Pump, Tool For Removing The Tamper-proof Cover

Use to gain access to the FIP gear retaining locknut. The tool is used to remove the tamper proof cover.

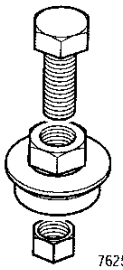

Fig 67. 892/01155 Fuel Injection Pump Gear Removal Tool

Use to remove the gear from the fuel injection pump shaft.

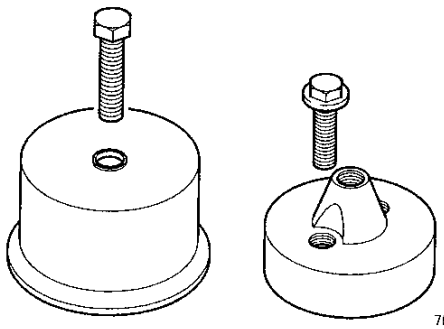

Fig 68. 892/01157 Crankshaft Front Oil Seal Fitting Tool

Use to correctly fit the crankshaft front oil seal.

descargado de www.Manualslib.com manuales de motor de búsqueda

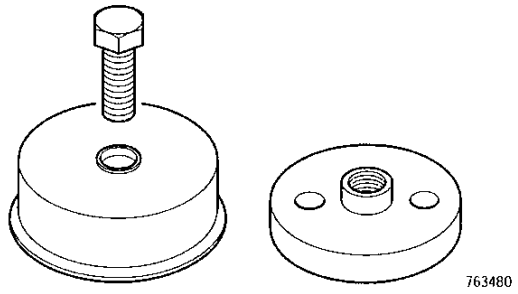

Fig 69. 892/01156 Crankshaft Rear Oil Seal Fitting Tool

Use to correctly fit the crankshaft rear oil seal.

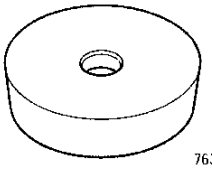

Fig 70. 892/01158 Crankshaft Rear Oil Seal Alignment Tool

Use to position the crankshaft rear oil seal before using fitting tool 892/01156. This tool must be used to position the seal, otherwise the lip of the seal may be `inverted' during the fitting process - leading to potential oil leak.

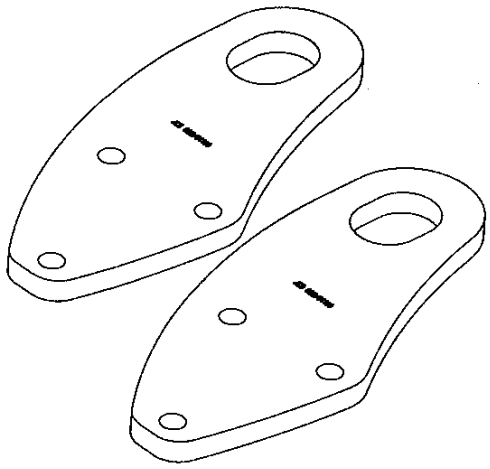

Fig 71. 892/01160 (x 2) Lifting Brackets

Use to safely lift and lower the engine, lifting brackets are purposed designed.

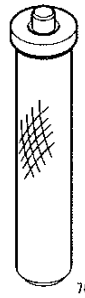

Fig 72. 892/01159 Rocker Cover Injector Seals Fitting Tool

Use to correctly set and fit the rocker cover injector seals.

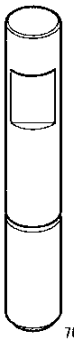

Fig 73. 892/01168 Dummy Injector

Use in place of the injector to check engine compression. End drilled and tapped 1/8-28BSP to accept universal adaptor fitting.

descargado de www.Manualslib.com manuales de motor de búsqueda

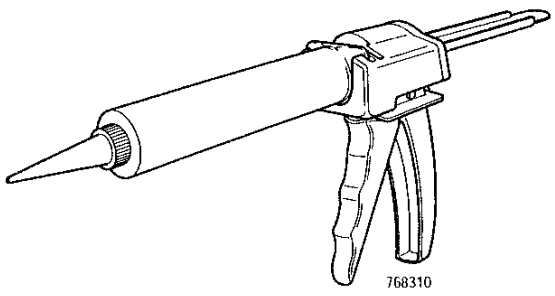

Fig 74. 892/01173 Sealant Applicator

Use to apply the anaerobic and silicone sealant evenly and correctly.

Note: *For reference use the following sealant bead sizes: 1.5 mm bead for anaerobic sealant, 4.0 mm bead for silicone sealant .*

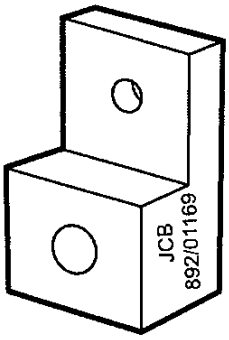

Fig 75. 892/01169 Top Dead Centre (TDC) Setting Tool

Use to correctly set the No. 1 piston to TDC (firing) when removing and replacing the fuel injection pump.

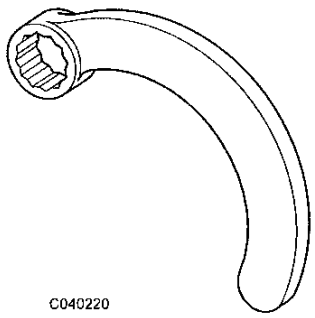

Fig 76. 892/01179 `C' Shaped Ring Spanner

Use to access the inner mounting nut of the fuel injection pump.

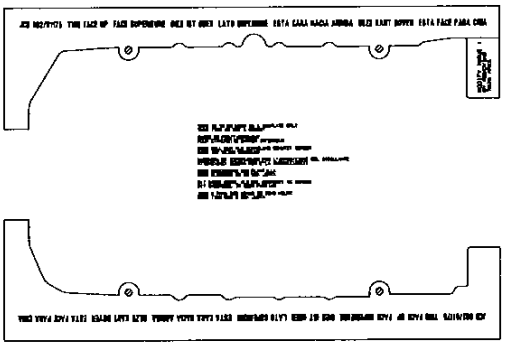

Fig 77. 892/01175 Template For Application Of Bedplate To Engine Block Anaerobic Sealant

Use to ensure correct sealant application.

Note: *Correct positioning of the sealant is critical to ensure joint integrity.*

descargado de www.Manualslib.com manuales de motor de búsqueda

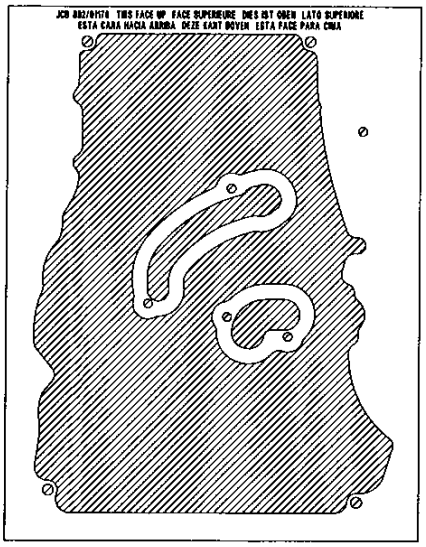

Fig 78. 892/01176 Template For Application Of Gear Case To Engine Block Anaerobic Sealant

Use to ensure correct sealant application.

Note: *Correct positioning of the sealant is critical to ensure joint integrity.*

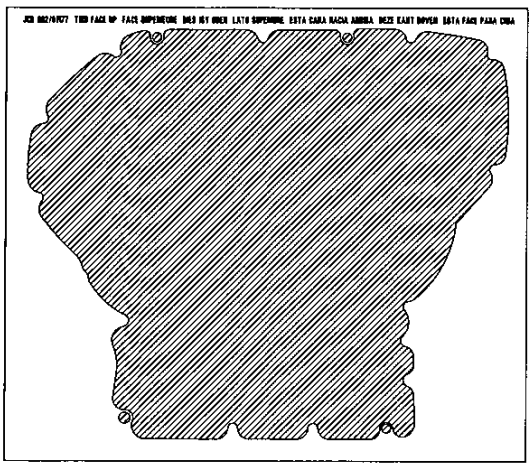

Fig 79. 892/01176 Template For Application Of Flywheel Housing To Gear Case Anaerobic Sealant

Use to ensure correct sealant application.

Note: *Correct positioning of the sealant is critical to ensure joint integrity.*

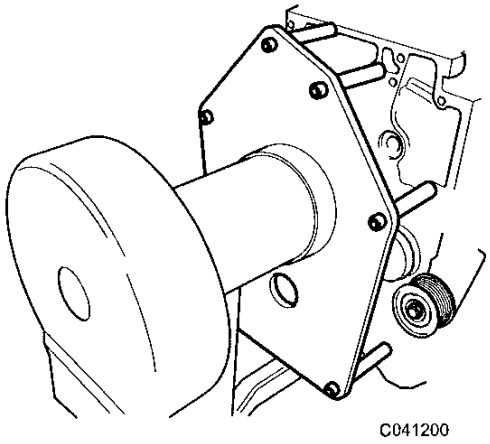

Fig 80. Engine Mounting Frame

For use with a suitable engine stand. Manufacture locally. ⇒ *Service Tool Drawings (1-67)*

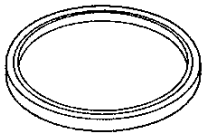

Fig 81. 892/01259 Crankshaft Rear Oil Seal Spacer Ring

For use with specific engine builds only - See parts catalogue.

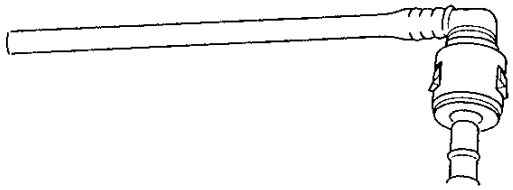

Fig 82. 320/07182 Fuel Return Line Tubing (Clear)

For diagnosing air ingress into the fuel system.

descargado de www.Manualslib.com manuales de motor de búsqueda

Service Tool Drawings

892/01146 - Core Plug Fitting Tool

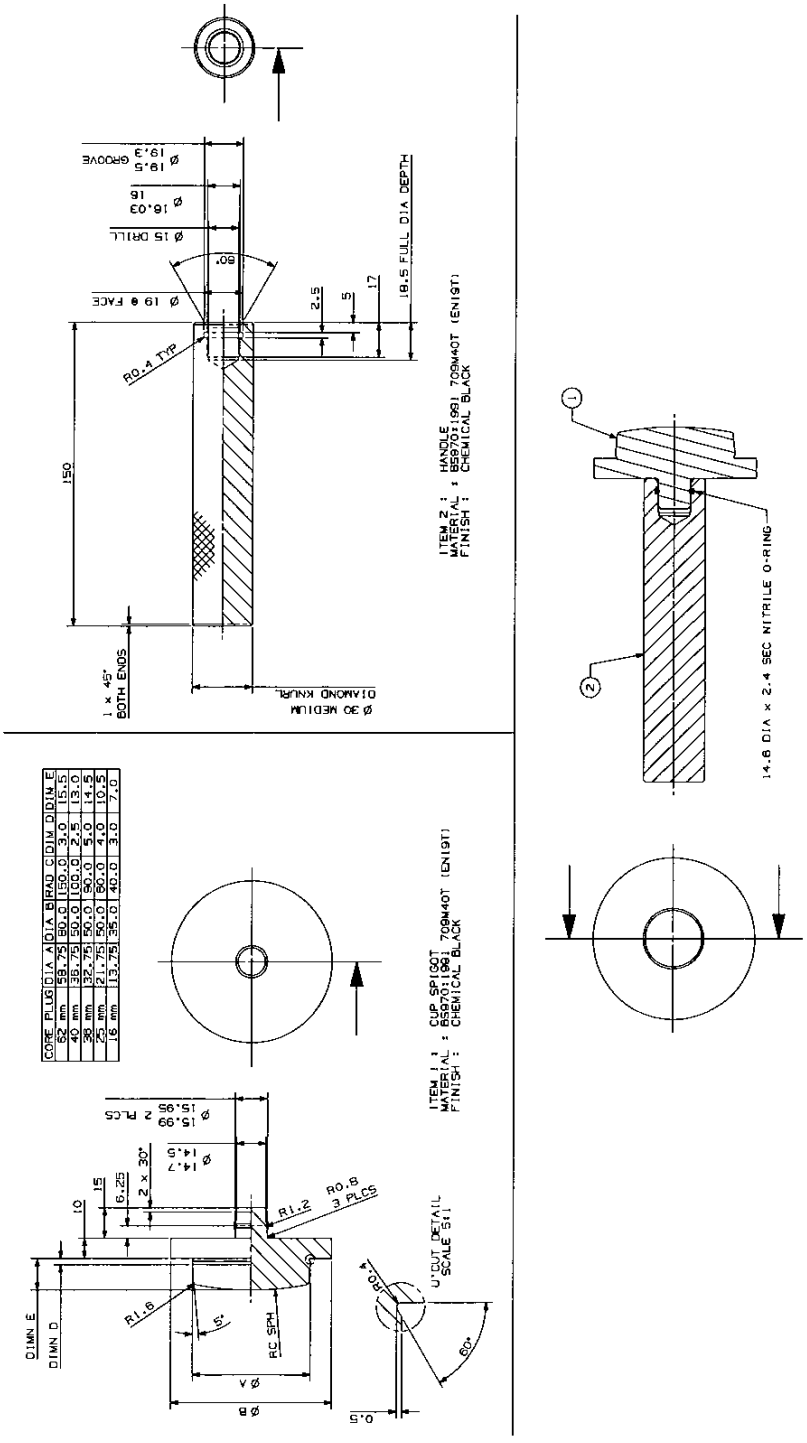

Fig 83.

descargado de www.Manualslib.com manuales de motor de búsqueda

892/01147 - Crankshaft Turning Tool

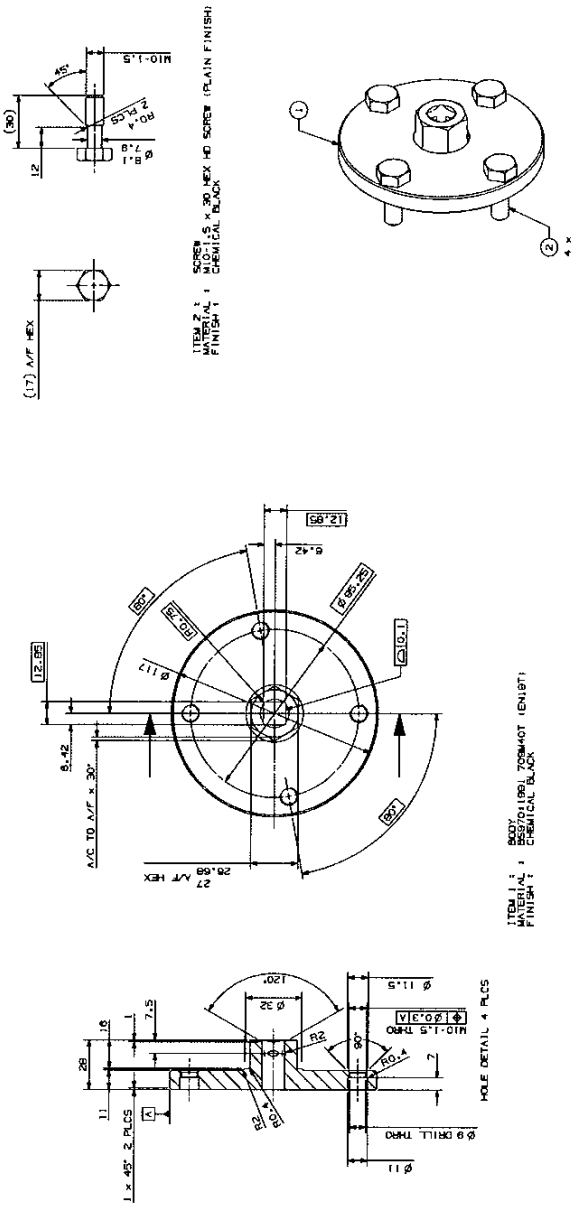

Fig 84.

descargado de www.Manualslib.com manuales de motor de búsqueda

892/01148 - Timing Pin

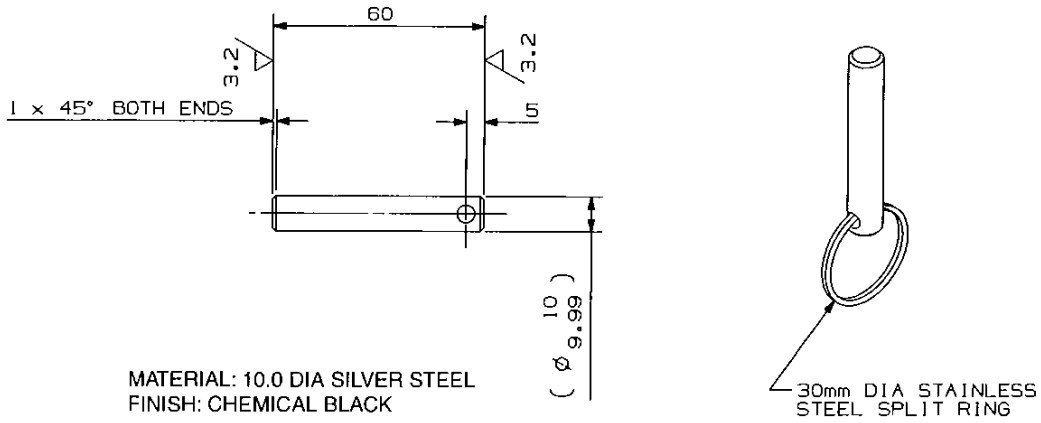

Fig 85.

descargado de www.Manualslib.com manuales de motor de búsqueda

892/01149 - Sump Sealant Template

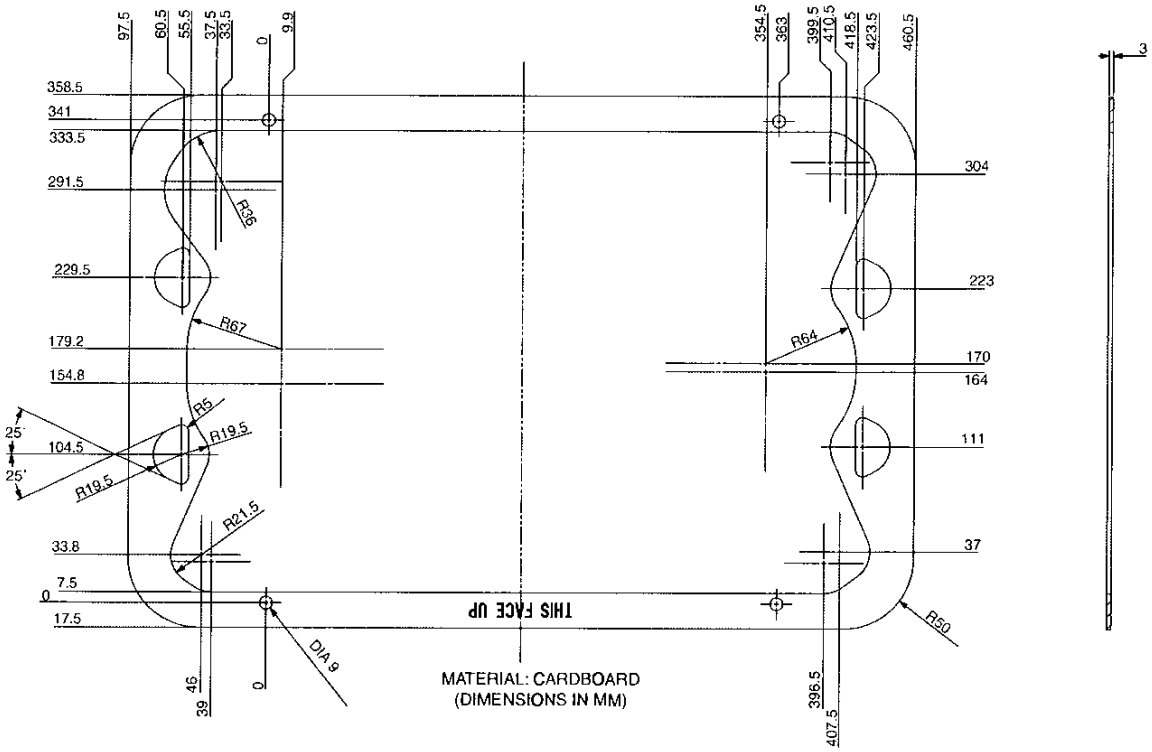

Fig 86.

descargado de www.Manualslib.com manuales de motor de búsqueda

892/01150 - Oil Sump Location Dowel

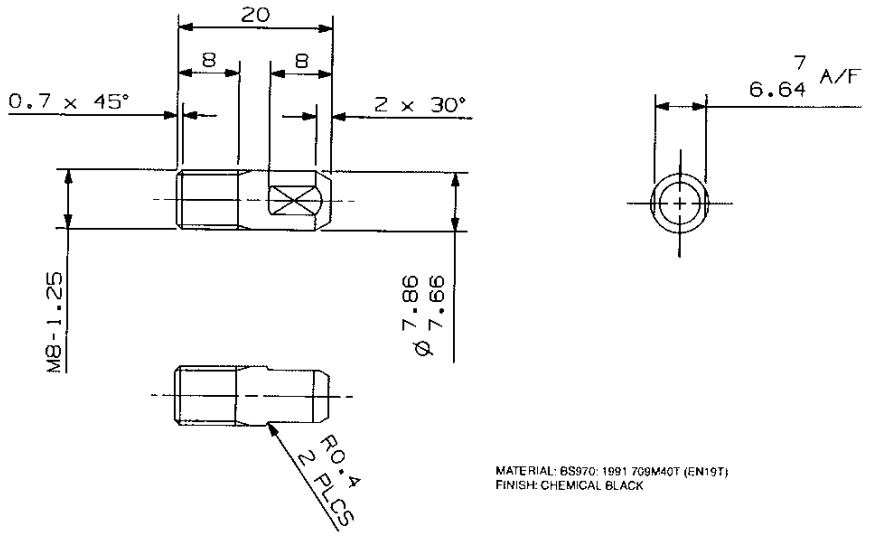

Fig 87.

descargado de www.Manualslib.com manuales de motor de búsqueda

892/01151 - Injector Sleeve Removal Tool

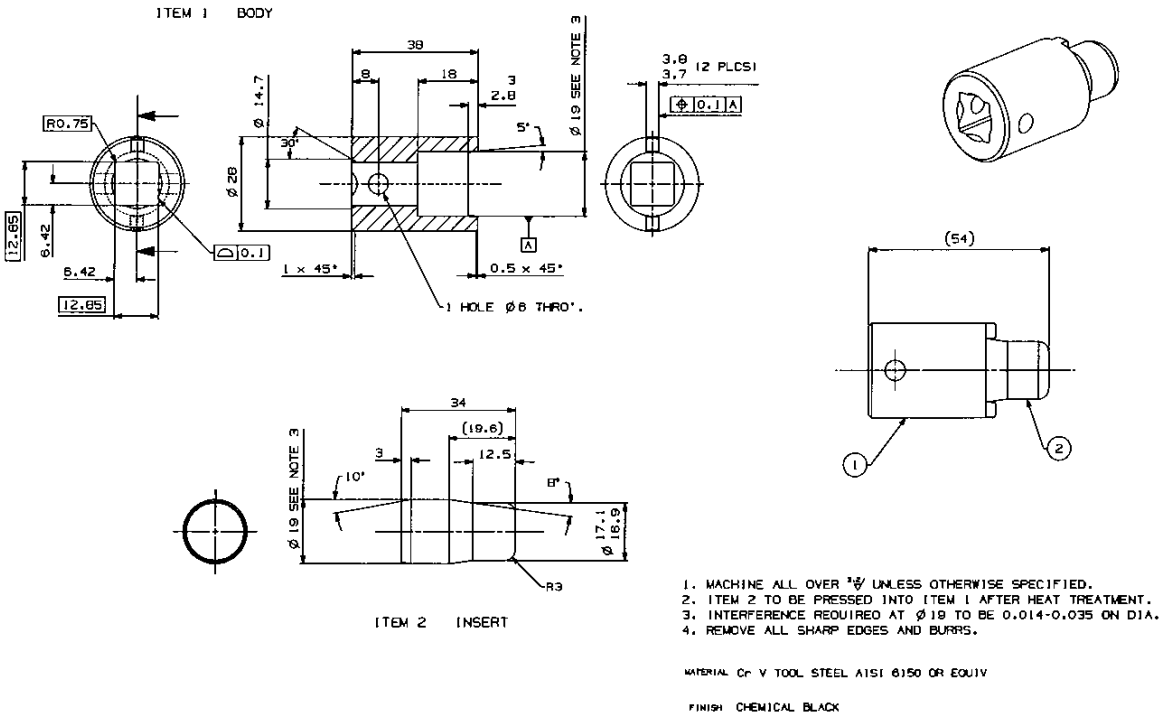

1. MACHINE ALL OVER $\sqrt{}$ UNLESS OTHERWISE SPECIFIED.
2. ITEM 2 TO BE PRESSED INTO ITEM 1 AFTER HEAT TREATMENT.
3. INTERFERENCE REQUIREO AT Ø 19 TO BE 0.014-0.035 ON DIA.
4. REMOVE ALL SHARP EDGES AND BURRS.

MATERIAL Cr V TOOL STEEL AISI 6150 OR EQUIV

FINISH CHEMICAL BLACK

Fig 88.

descargado de www.Manualslib.com manuales de motor de búsqueda

892/01152 - Valve Stem Seal Fitting Tool

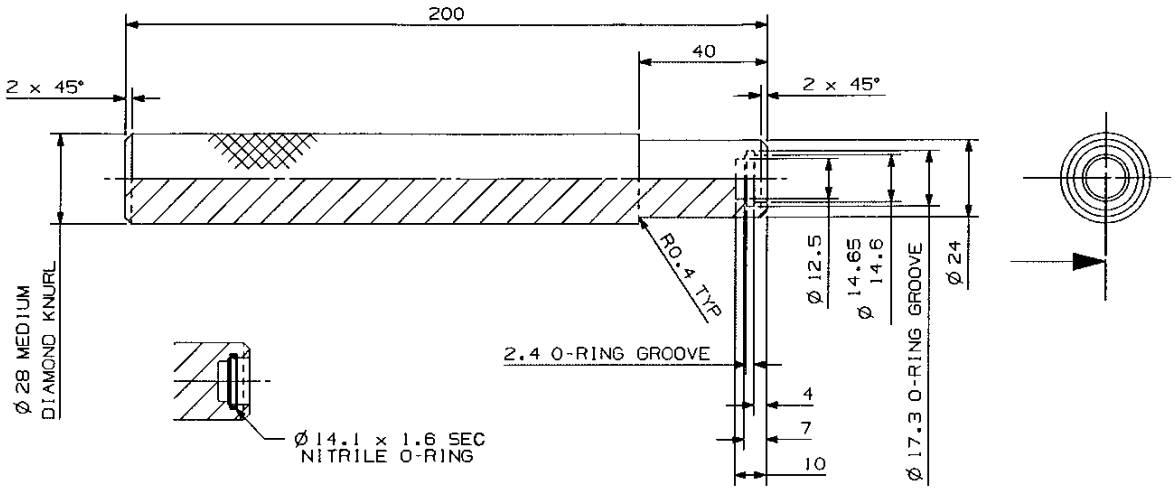

MATERIAL BS970:1991 709M40T (EN19T)

FINISH CHEMICAL BLACK

Fig 89.

descargado de www.Manualslib.com manuales de motor de búsqueda

892/01154 - FIP Cover Removal Tool

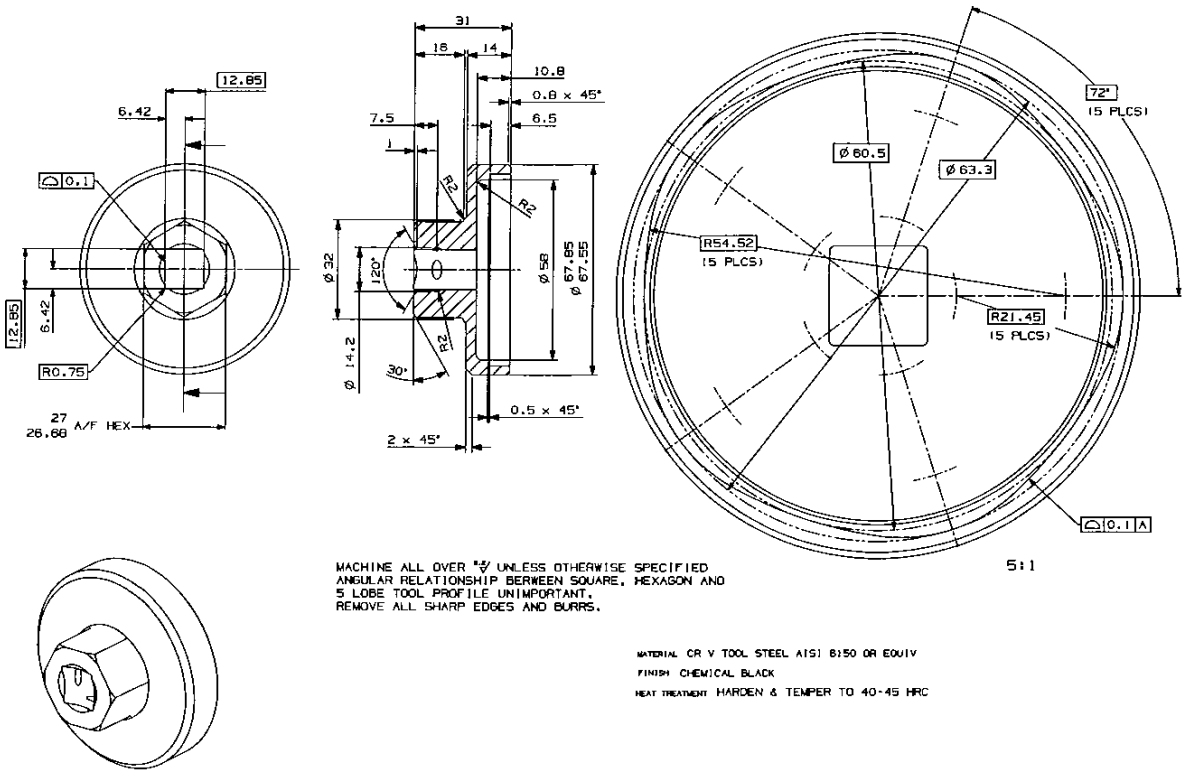

Fig 90.

descargado de www.Manualslib.com manuales de motor de búsqueda

892/01155 - FIP Gear Removal Tool

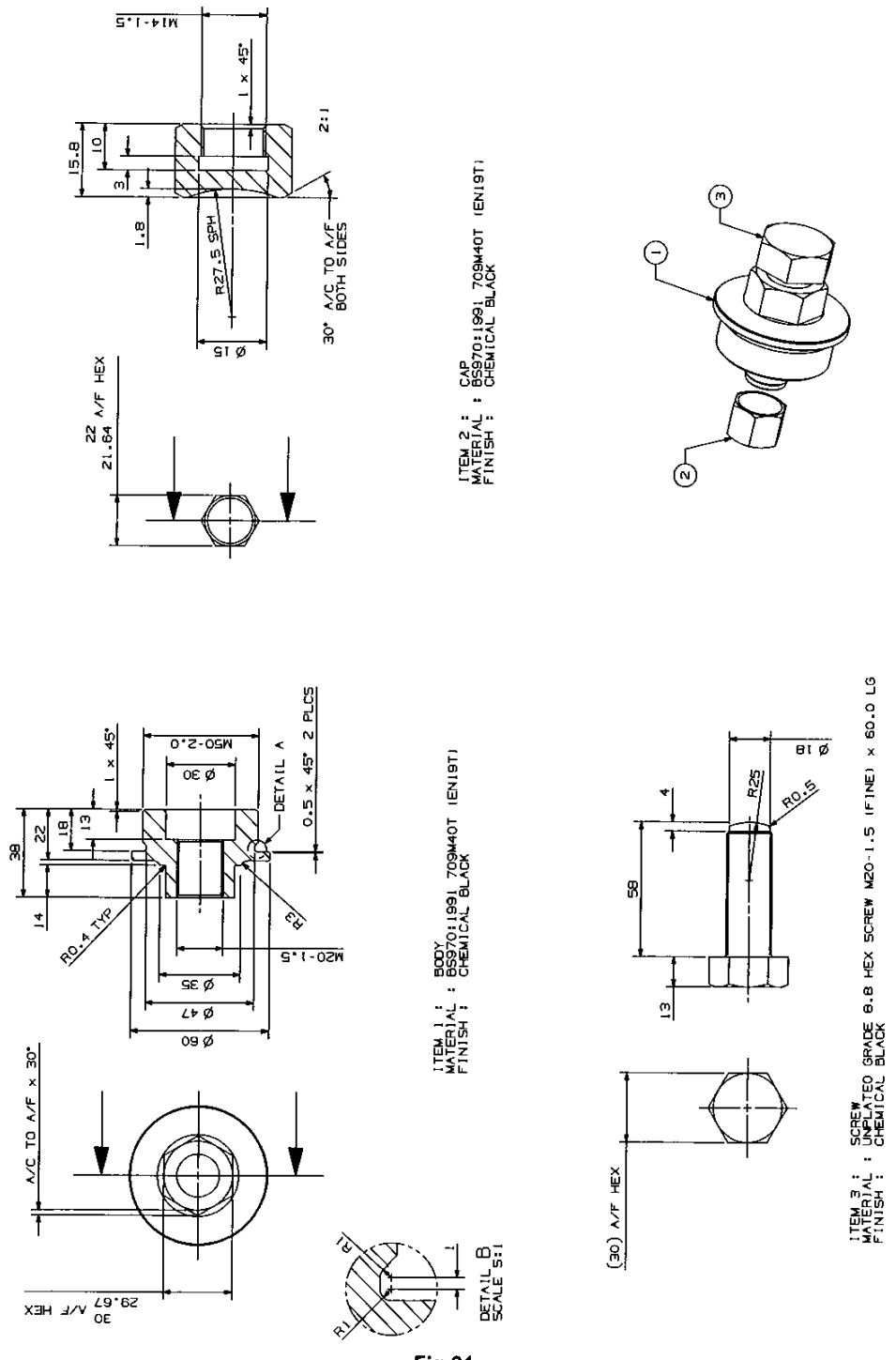

Fig 91.

descargado de www.Manualslib.com manuales de motor de búsqueda

892/01157 - Crankshaft Front Seal Fitting Tool

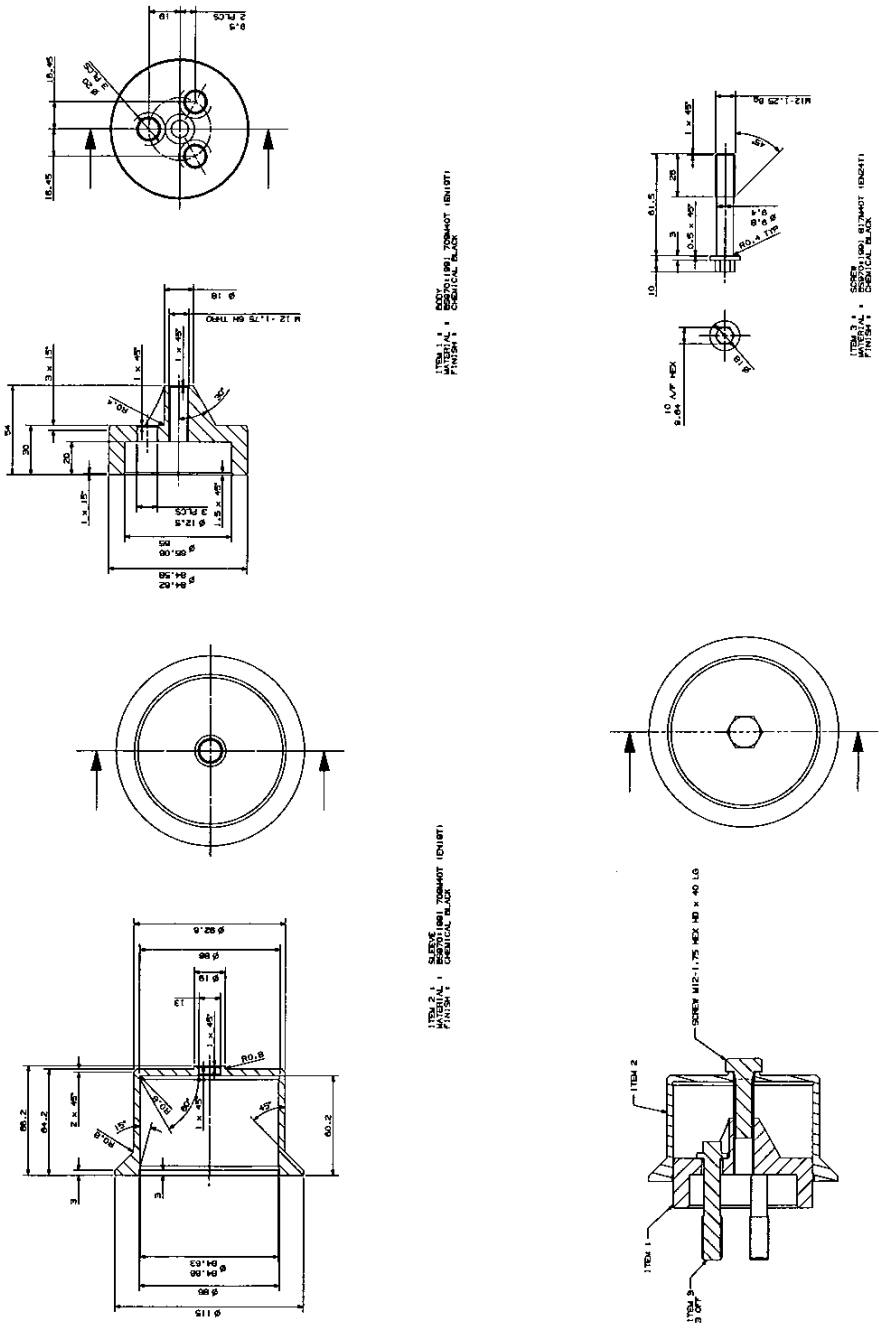

Fig 92.

descargado de www.Manualslib.com manuales de motor de búsqueda

892/01156 - Crankshaft Rear Seal Fitting Tool

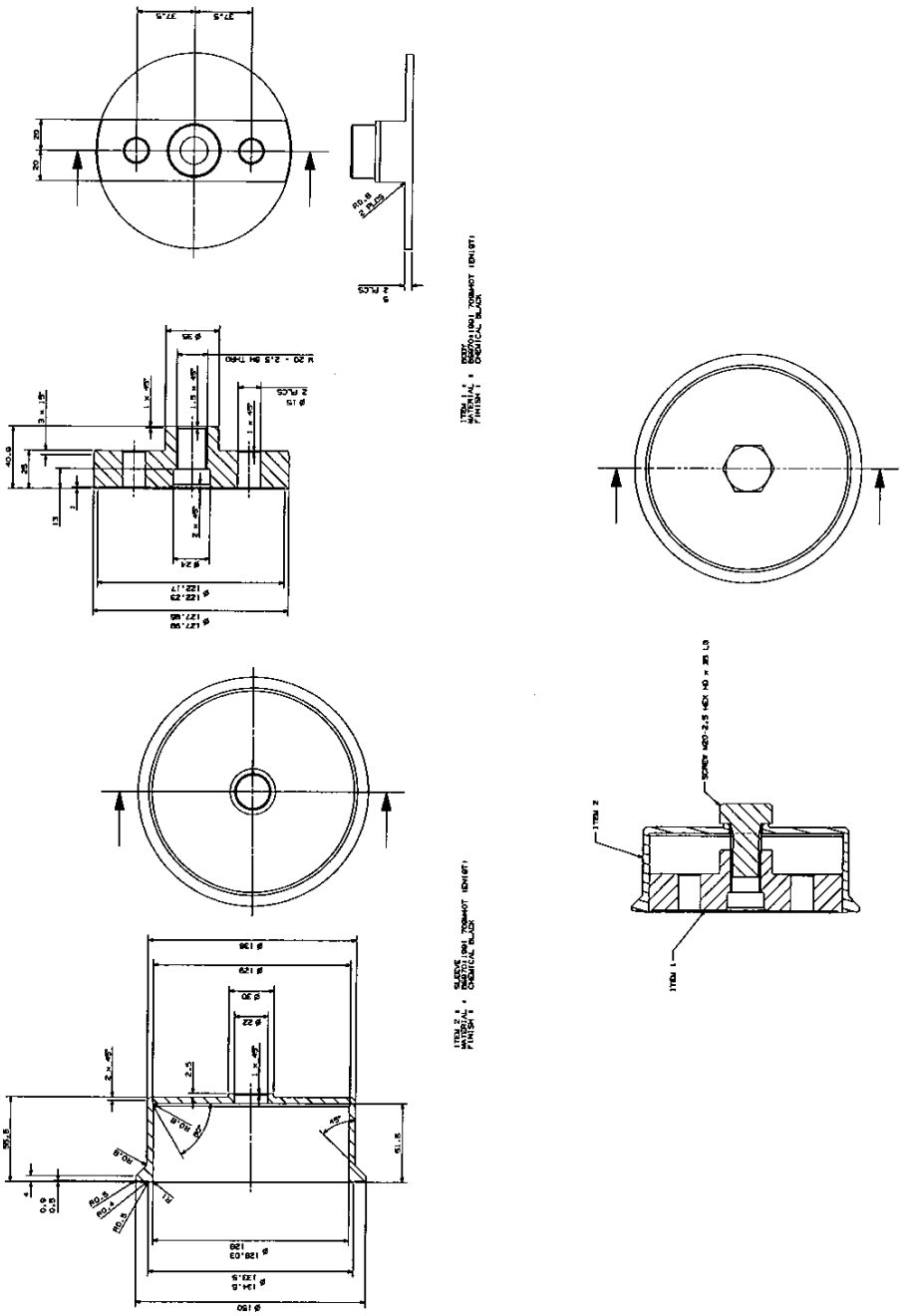

Fig 93.

descargado de www.Manualslib.com manuales de motor de búsqueda

892/01158 - Crankshaft Rear Seal Alignment Tool

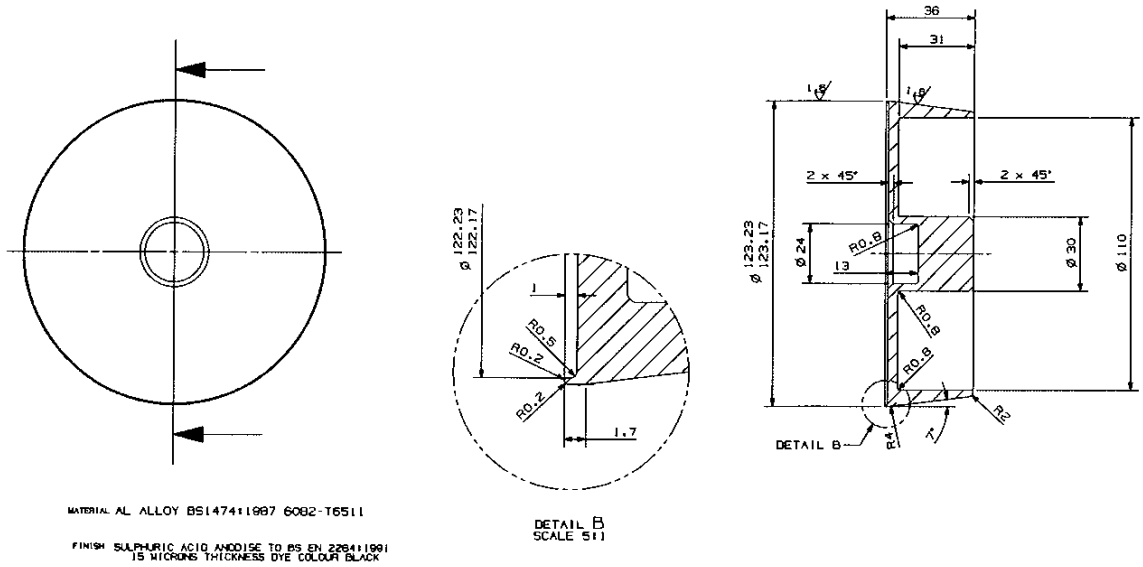

Fig 94.

892/01159 - Injector Seal Fitting Tool

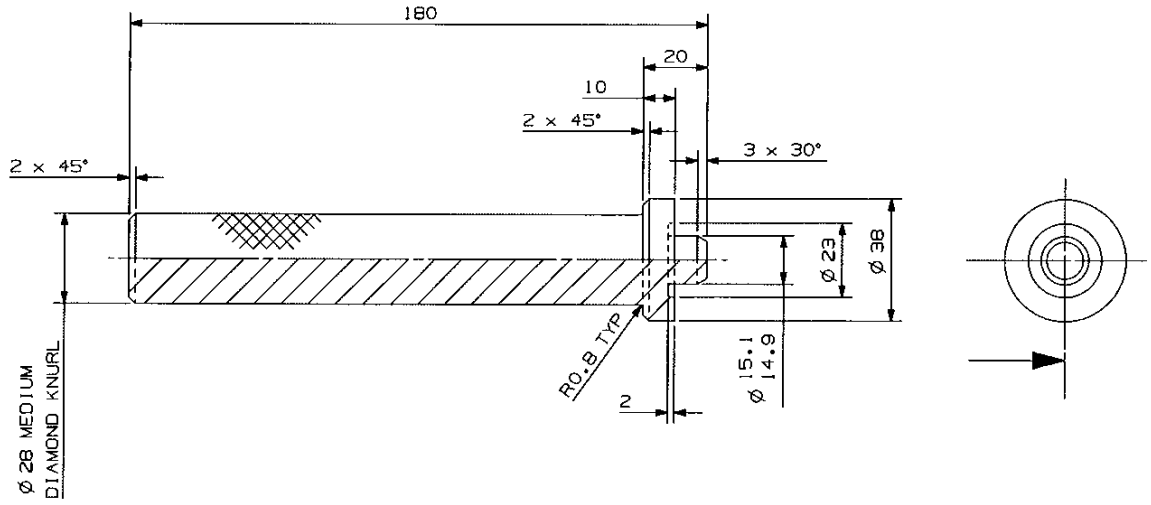

MATERIAL BS970:1991 709M40T (EN19T)

FINISH CHEMICAL BLACK

Fig 95.

descargado de www.Manualslib.com manuales de motor de búsqueda

892/01168 - Dummy Injector

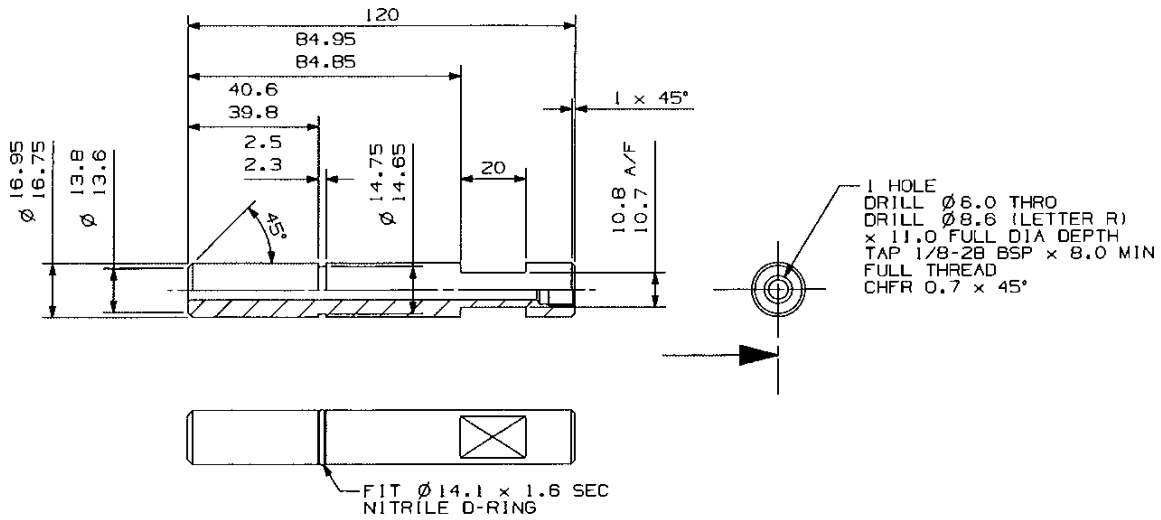

Fig 96.

descargado de www.Manualslib.com manuales de motor de búsqueda

892/01169 - Top Dead Centre (TDC) Setting Tool

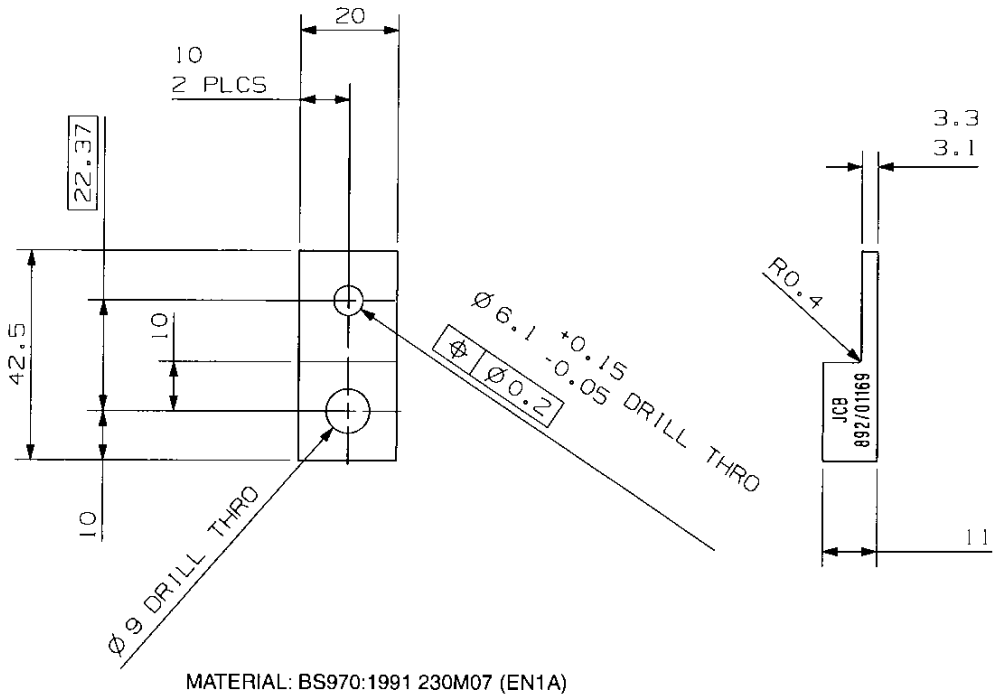

MATERIAL: BS970:1991 230M07 (EN1A)

Fig 97.

descargado de www.Manualslib.com manuales de motor de búsqueda

Engine Mounting Frame

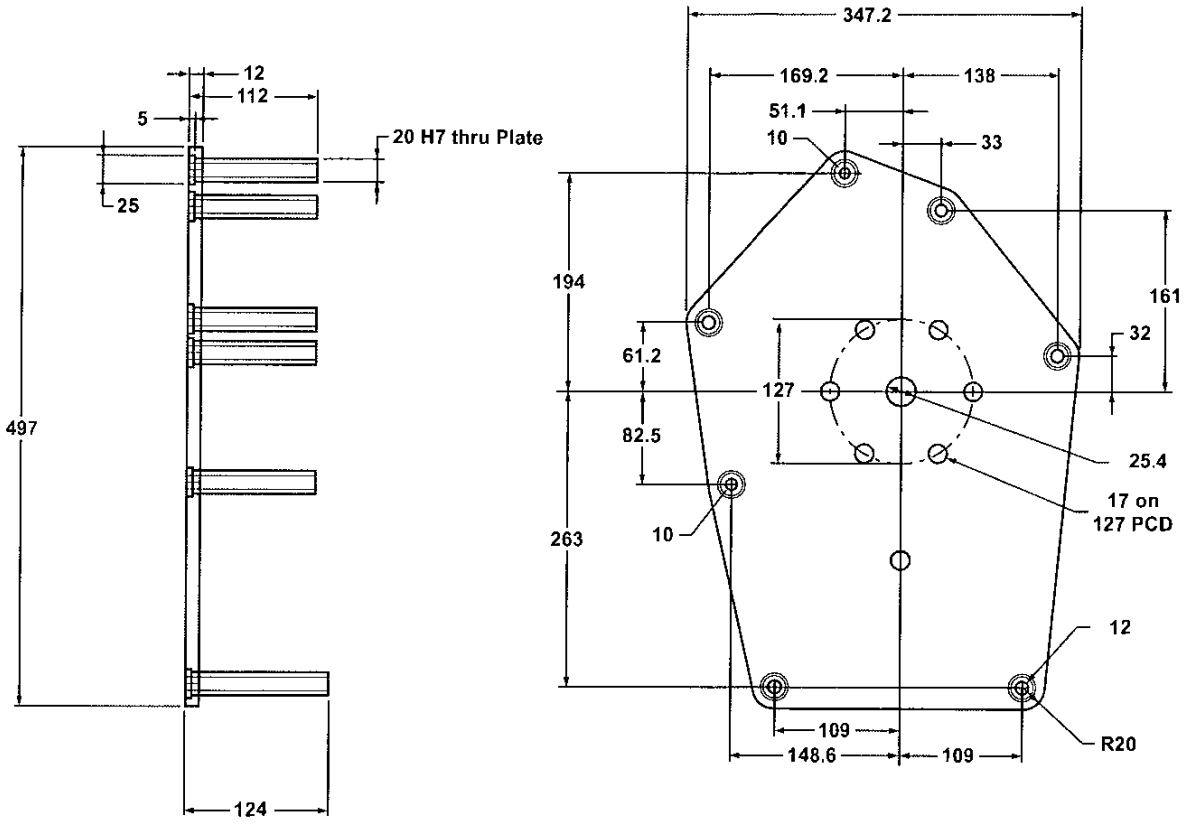

Fig 98.

descargado de www.Manualslib.com manuales de motor de búsqueda

Service Parts and Repair Kits

Engine Repair Parts and Kits Identification

⇨ *Engine Repair Parts and Kits Identification (1-82)* detail the repair parts and kits available from JCB Service. When applicable, the removal and replacement, or dismantling and assembly procedures contained in this manual will make a reference to the parts and kits on these pages.

For instance, ***Rocker Cover - Removal and Replacement - Section 12*** details the rocker cover removal and replacement procedure. On this page, there is a sub-heading termed `**Service Parts'**, listed under this heading are items available as replacement parts. The items are identified exactly as listed in the following pages, eg, item 1 - Rocker Cover Gasket Kit, item 1.1 - Rocker Cover Gasket, etc.

The kits are identified for your reference, when applicable a complete kit can be ordered, or the individual parts. Refer to the engine parts catalogue for the relevent part numbers.

For convenience, the kit titles and page cross references are identified as follows.

Item	Page
Rocker Cover Gasket Kit	⇨ *(1-83)*
Crankshaft Assembly Kit	⇨ *(1-83)*
Piston Kit (NA)	⇨ *(1-84)*
Piston Kit (TC)	⇨ *(1-84)*
Piston Kit (TCA)	⇨ *(1-85)*
Top Gasket Kit (NA)	⇨ *(1-86)*
Top Gasket Kit (TC/TCA)	⇨ *(1-87)*
Bottom Gasket Kit	⇨ *(1-88)*
Oil Pan (sump) Sealant Kit	⇨ *(1-88)*
Cylinder Head Kit(NA/TC)	⇨ *(1-89)*
Cylinder Head Kit (TCA)	⇨ *(1-89)*
Cylinder Head Gasket Kit (+0.25)	⇨ *(1-90)*
Cylinder Head Gasket Kit (+0.50)	⇨ *(1-90)*
Main Bearing Kit (Std)	⇨ *(1-91)*
Thrust Washer Kit (Std)	⇨ *(1-91)*
Big End Bearing Kit (Std)	⇨ *(1-92)*
Engine Overhaul Kit (NA)	⇨ *(1-93)*
Engine Overhaul Kit (TC)	⇨ *(1-94)*
Engine Overhaul Kit (TCA)	⇨ *(1-95)*
Starter Motor Kit	⇨ *(1-96)*
Alternator Kit	⇨ *(1-97)*

descargado de www.Manualslib.com manuales de motor de búsqueda

Item	Description	Qty
1	Rocker cover gasket kit	1
1.1	Rocker cover seal	1
1.2	Injector seal	4
1.3	Injector cap	4
1.4	Fuel pipe cap	8
1.5	O-ring leak-off rail	4
1.6	O-ring oil filler cap	1

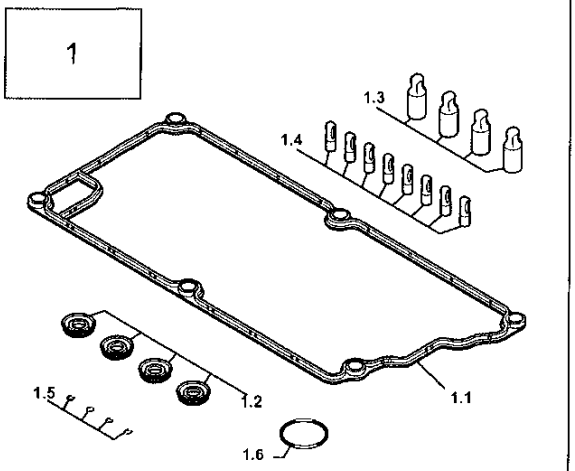

Fig 99.

Item	Description	Qty
2	Crankshaft assy kit	1
2.1	Crankshaft - machining	1
2.2	Crankshaft gear assy - HCR	1
2.3	Hub - flywheel	1
2.4	Zero leak plug	1
2.5	Screw	1
14	Main bearing kit std	1
15	Thrust washer kit std	1

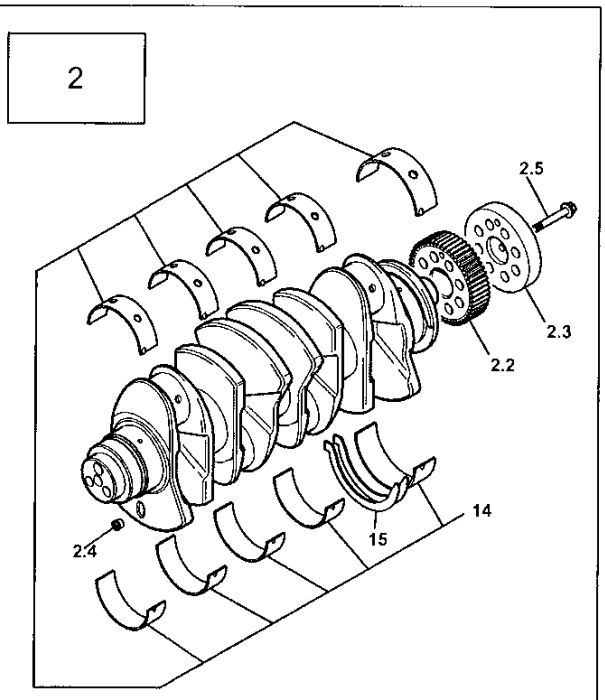

Fig 100.

descargado de www.Manualslib.com manuales de motor de búsqueda

Item	Description	Qty
3	Piston kit NA	1
3.1	Piston assy NA (NSP)	1
3.2	Piston ring kit std	1
3.3	Retainer - piston pin	1

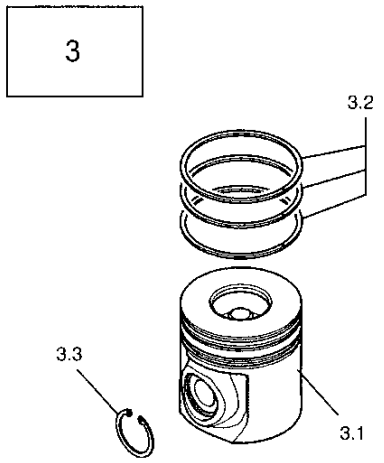

Fig 101.

Item	Description	Qty
4	Piston kit TC	1
4.1	Piston assy TC (NSP)	1
4.2	Piston ring kit std	1
4.3	Retainer - piston pin	1

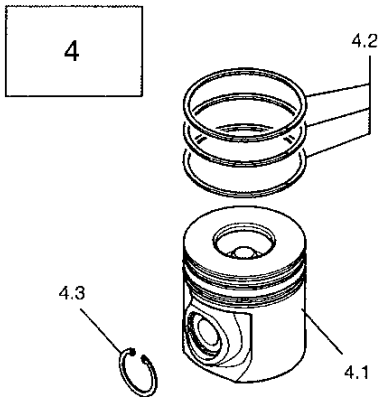

Fig 102.

descargado de www.Manualslib.com manuales de motor de búsqueda

Item	Description	Qty
5	Piston kit TCA	1
5.1	Piston assy TCA (NSP)	1
5.2	Piston ring kit std	1
5.3	Retainer - piston pin	1

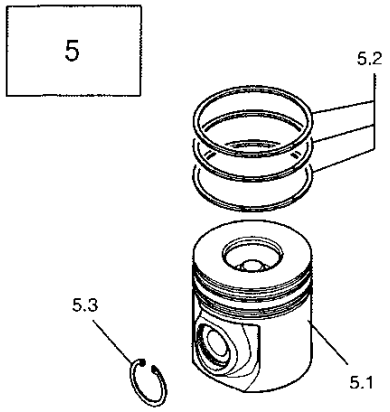

Fig 103.

descargado de www.Manualslib.com manuales de motor de búsqueda

Item	Description	Qty
6	Top gasket kit NA	1
6.1	Cylinder head gasket	1
6.2	Valve stem seal	16
6.3	Thermostat hsg c-seal	1
6.4	Gasket inlet manifold	1
6.5	Gasket exhaust manifold NA	1
6.6	Intake heater gasket	1
6.7	Cooler cover gasket	1
6.8	Gasket - water inlet pipe	1
6.9	Washer - fuel injector	4
6.10	Seal - fuel injector	4
6.11	O-ring - plugs, oil cooler housing	2
6.12	O-ring - oil cooler matrix	2
6.13	O-ring - fuel lift pump	1
6.14	Bonded seal - oil pressure sender, cold start switch	2
6.15	Bonded seal - temperature sender switch	1
6.16	Bonded seal - water outlet connector	1
1.1	Rocker cover seal	1
1.2	Injector seal	4
1.3	Injector cap	4
1.4	Fuel pipe cap	8
1.5	O-ring leak-off rail	4
1.6	O-ring filler cap	1

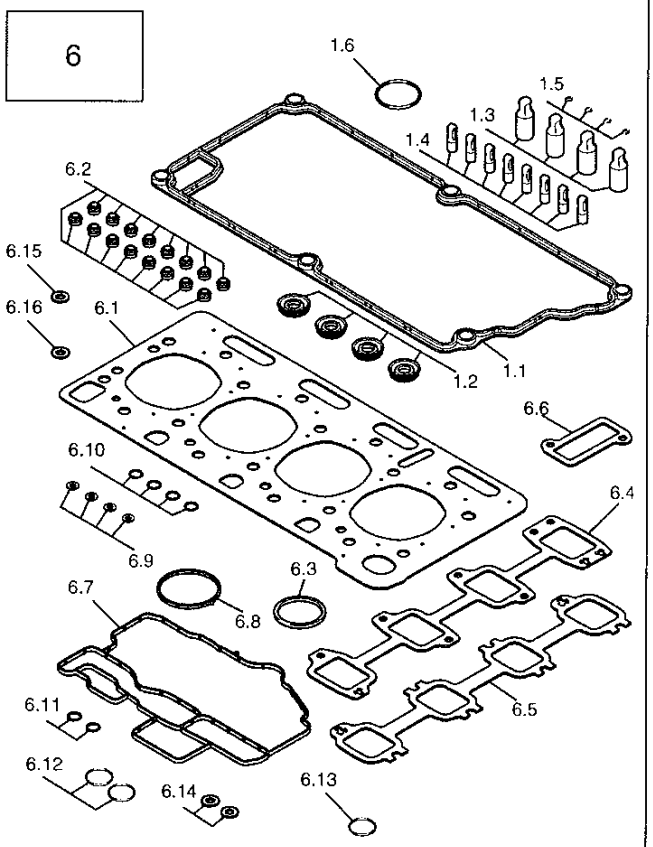

Fig 104.

descargado de www.Manualslib.com manuales de motor de búsqueda

Item	Description	Qty
7	Top gasket kit TC/TCA	1
7.1	Gasket / heat-shield	1
7.2	Gasket t/c to manifold	1
7.3	Copper washer	4
7.4	O-ring	1
7.5	Sealing washer - oil drain	1
1.1	Rocker cover seal	1
1.2	Injector seal	4
1.3	Injector cap	4
1.4	Fuel pipe cap	8
1.5	O-ring leak-off rail	4
1.6	O-ring - filler cap	1
6.1	Piston assy TCA (NSP)	1
6.2	Piston ring kit std	16
6.3	Retainer - piston pin	1
6.4	Gasket inlet manifold	1
6.5	Gasket exhaust manifold NA	1
6.6	Intake heater gasket	1
6.7	Cooler cover gasket	1
6.8	Gasket - water inlet pipe	1
6.9	Washer - fuel injector	4
6.10	Seal - fuel injector	4
6.11	O-ring - plugs, oil cooler housing	2
6.12	O-ring - oil cooler matrix	2
6.13	O-ring - fuel lift pump	1
6.14	Bonded seal - oil pressure sender, cold start switch	2
6.15	Bonded seal - temperature sender switch	1
6.16	Bonded seal - water outlet connector	1

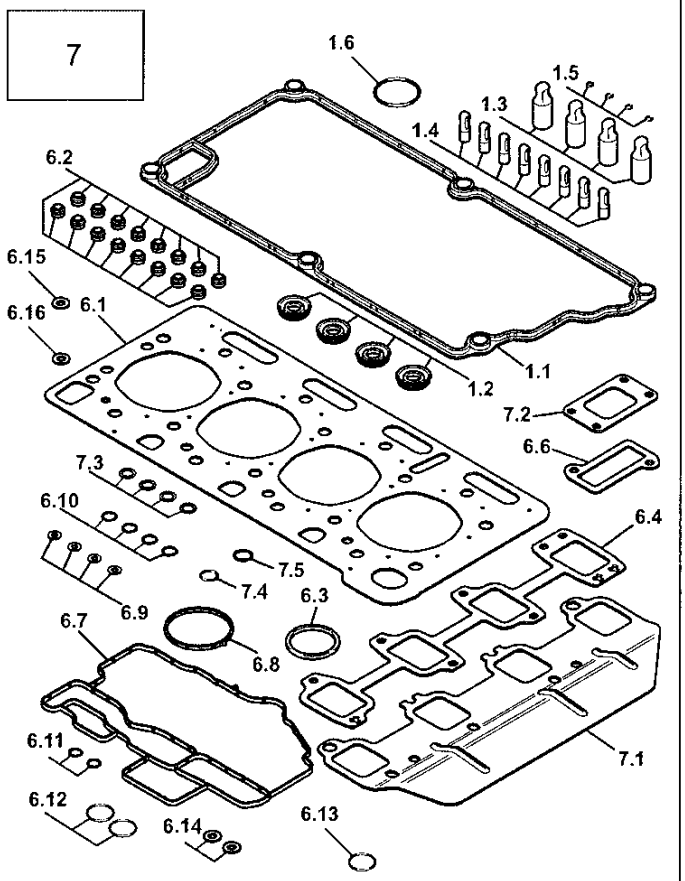

Fig 105.

descargado de www.Manualslib.com manuales de motor de búsqueda

Item	Description	Qty
8	Bottom gasket kit	1
8.1	Water pump gasket	1
8.2	Oil seal front	1
8.3	Oil seal rear	1
8.4	Oil pan sealant	1
8.5	Sealant template oil pan	1
8.6	Sealant	1
8.7	Oil drain plug o-ring	2
8.8	Gasket t/c oil drain	1
8.9	O-ring	1
8.10	Seal FIP	1
8.11	O-ring	1
8.12	O-ring	1
8.13	Seal - oil pick up	1

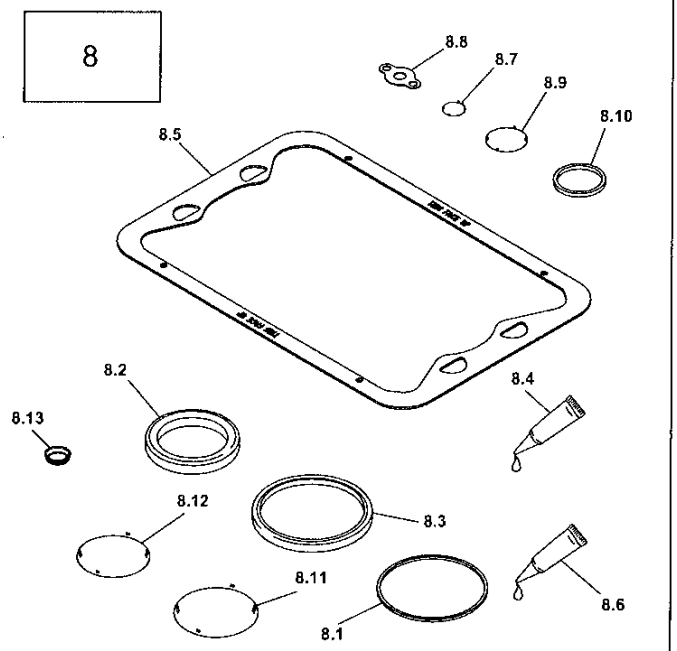

Fig 106.

Item	Description	Qty
9.0	Oil pan sealant kit	1
8.4	Oil pan sealant	1
8.5	Sealant template oil pan	1
8.7	O-ring - drain plug	1
8.13	Seal - oil pick up	1

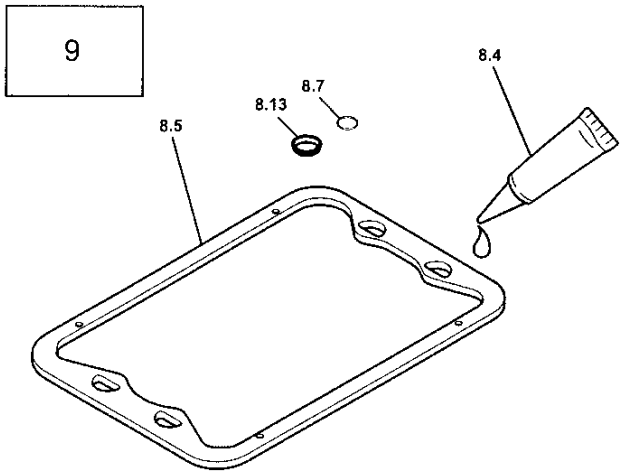

Fig 107.

descargado de www.Manualslib.com manuales de motor de búsqueda

Item	Description	Qty
10	Cylinder head Kit NA/TC	1
10.1	Cylinder Head Machining(1)	1
10.2	GA Valves Inlet	8
10.3	GA Valves Exhaust	8

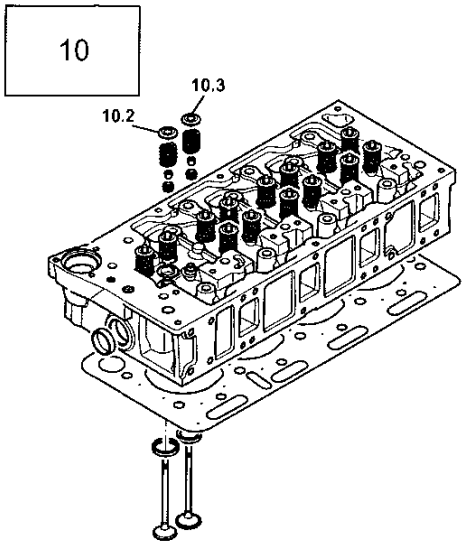

Fig 108.

(1) Refer to Technical Data, Section 1, for machining information and tolerances.

Item	Description	Qty
11	Cylinder head Kit TCA	1
11.1	Cylinder Head Machining(1)	1
10.2	GA Valves Inlet	8
10.3	GA Valves Exhaust	8

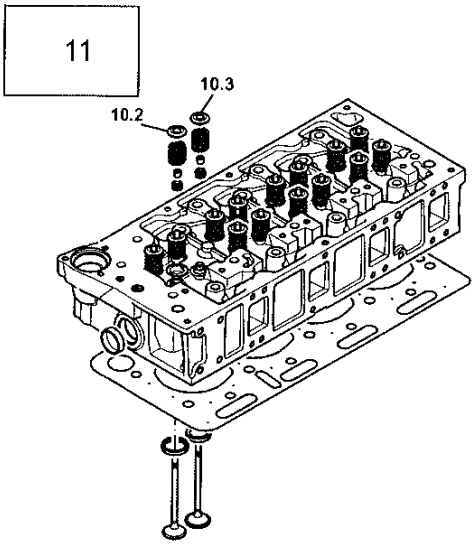

Fig 109.

(1) Refer to Technical Data, Section 1, for machining information and tolerances.

descargado de www.Manualslib.com manuales de motor de búsqueda

Item	Description	Qty
12	Cylinder head gasket kit +0.25	1
12.1	Cylinder head gasket +0.25	1

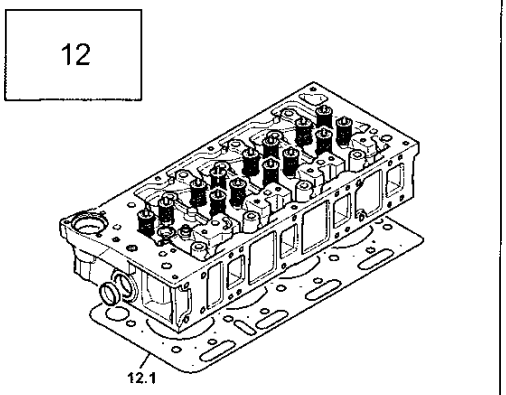

Fig 110.

Item	Description	Qty
13	Cylinder head gasket kit +0.50	1
13.1	Cylinder head gasket +0.50	1

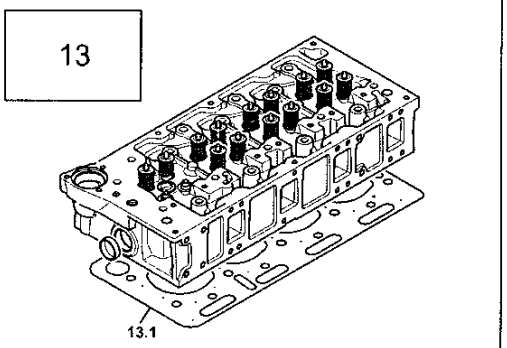

Fig 111.

descargado de www.Manualslib.com manuales de motor de búsqueda

Item	Description	Qty
14	Main bearing kit std	1
14.1	Bearing - Main Upper std(1)	4
14.2	Bearing - Main Lower std(1)	4
14.3	Bearing - Main Upper Rear std(1)	1
14.4	Bearing - Main Lower Rear std(1)	1

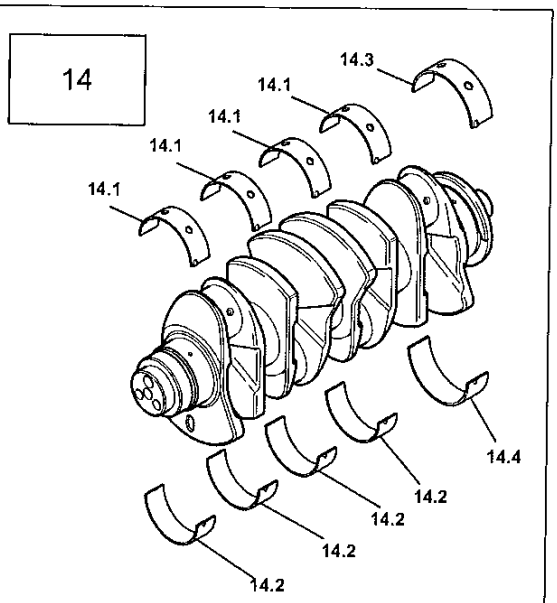

Fig 112.

(1) Items not available separately, part of kit item 14.

Item	Description	Qty
15	Thrust washer kit std	1
15.1	Bearing - Main Thrust Washer	2

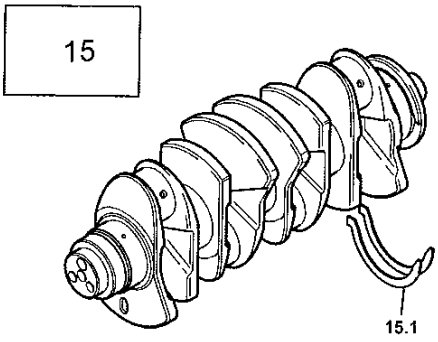

Fig 113.

descargado de www.Manualslib.com manuales de motor de búsqueda

Item	Description	Qty
16	Big-end bearing kit std	1
16.1	Bearing - Big-end std	8

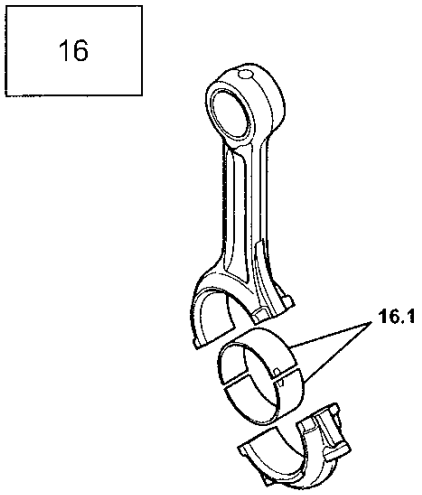

Fig 114.

descargado de www.Manualslib.com manuales de motor de búsqueda

Item	Description	Qty
17	Engine overhaul kit NA std	1
17.1	Bolt - M8 x 57 Con. Rod	8
3	Piston kit NA	4
6	Top gasket kit	1
8	Bottom gasket kit	1

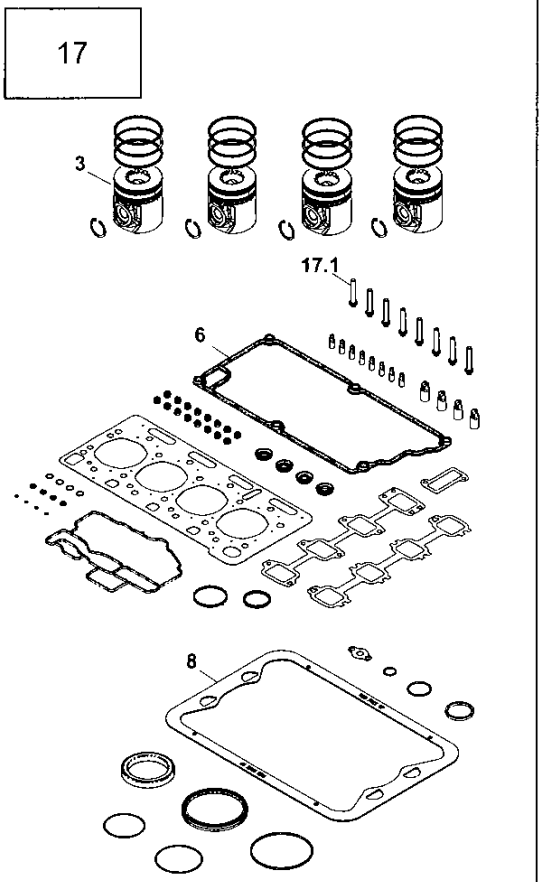

Fig 115.

descargado de www.Manualslib.com manuales de motor de búsqueda

Item	Description	Qty
18	Engine overhaul kit TC std	1
17.1	Bolt - M8 x 57 Con. Rod	8
4	Piston kit TC	4
6	Top gasket kit	1
8	Bottom gasket kit	1

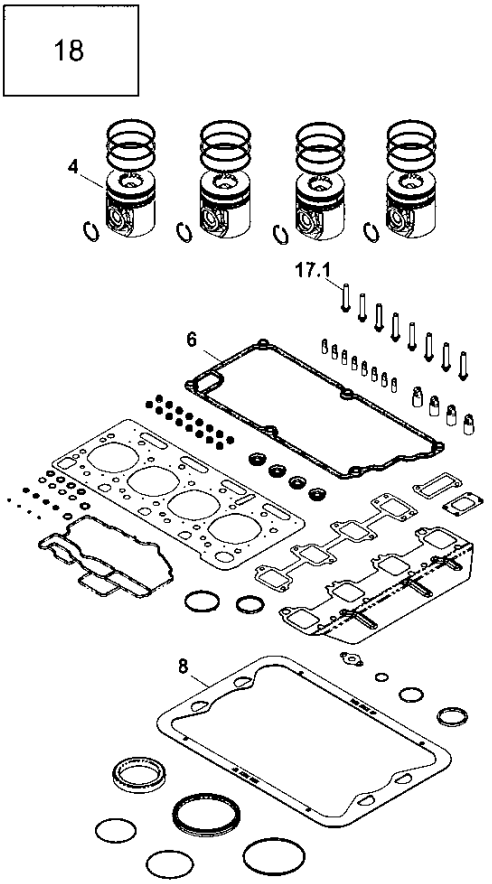

Fig 116.

descargado de www.Manualslib.com manuales de motor de búsqueda

Item	Description	Qty
19	Engine overhaul kit TCA std	1
17.1	Bolt - M8 x 57 Con. Rod	8
5	Piston kit TCA	4
6	Top gasket kit	1
8	Bottom gasket kit	1

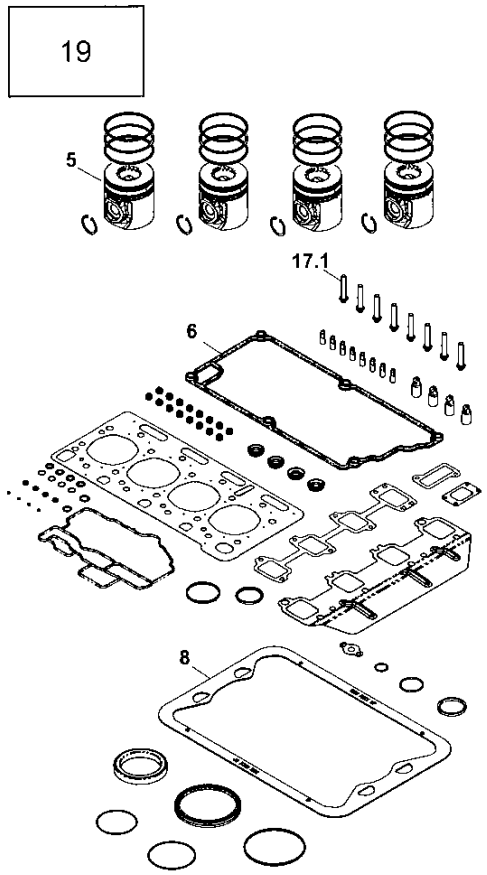

Fig 117.

descargado de www.Manualslib.com manuales de motor de búsqueda

Item	Description	Qty
50	Starter motor kit	1
50.1	Starter solenoid	1
50.2	Sundry parts kit (bolts, o-ring)	1
50.3	Brush holder assembly	1
50.4	Brush kit	1

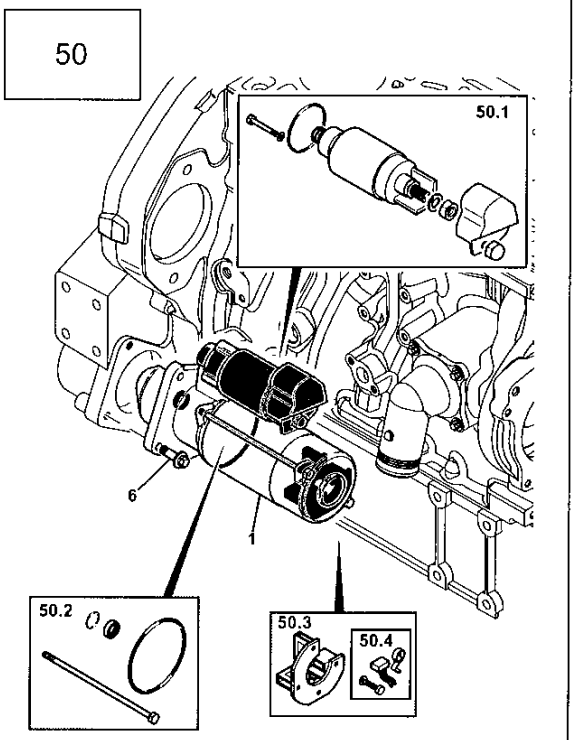

Fig 118.

descargado de www.Manualslib.com manuales de motor de búsqueda

Item	Description	Qty
60	Alternator kit	1
60.1	Thru bolt kit	1
60.2	Pulley	1
60.3	Nut and spacer	1
60.4	Regulator and brush box assembly	1

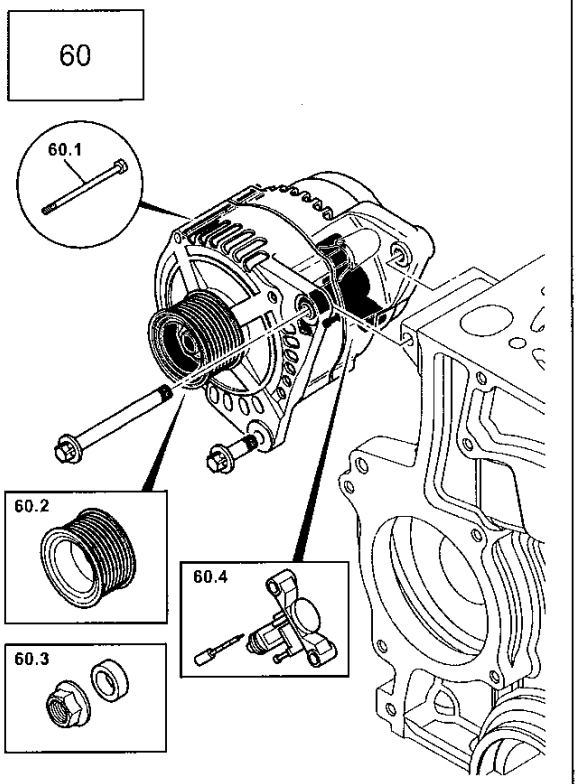

Fig 119.

descargado de www.Manualslib.com manuales de motor de búsqueda

Engine Lifting

Lifting Information

Refer to the ***Technical Data*** section for the various engine weights.

The lifting equipment used must be an approved type and capable of lifting the engine safely. The recommended lifting equipment is shown at **120-B**.

Never attempt to manually lift heavy components such as the cylinder head, crankshaft etc on your own. Always use lifting equipment, or obtain the help of an assistant.

Inspect the lifting brackets **120-A** for signs of damage. The brackets must be correctly torqued to the engine block, the correct torque figure for the bracket retaining bolts is 43-51Nm.

Make sure the lifting equipment does not damage any of the engine dressing and the rocker cover.

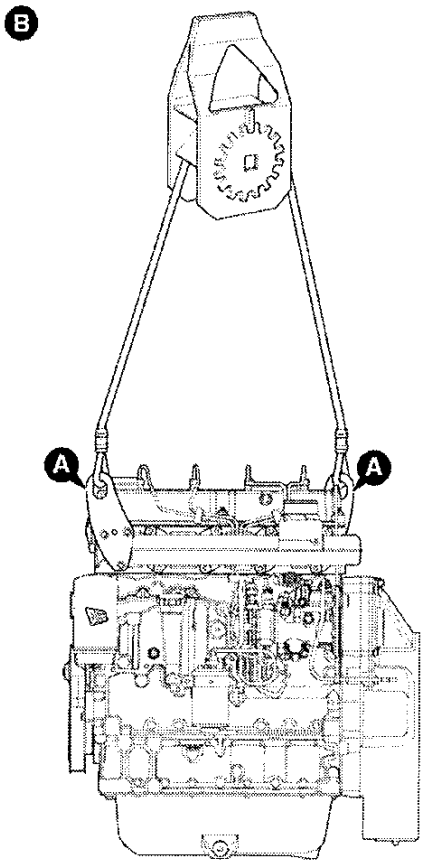

Fig 120.

descargado de www.Manualslib.com manuales de motor de búsqueda

Operating Procedures

Starting the Engine

Pre-Start Notes

⚠ WARNING

On turbo-charged machines, do not keep the accelerator pedal fully depressed when the engine has started. Do not race the engine until the oil pressure low light has gone out. Racing the engine too soon could damage the turbo-charger due to insufficient lubrication.

16-2-4-1

Several factors will influence the starting performance of the engine, these include:

- The ambient temperatures
- The condition of the battery
- The viscosity of the engine oil
- The condition of the starter motor

The engine does not require any cold starting aids for temperatures down to -18°C.

If the engine is operating in temperatures below -18°C, then a pre-heater is available. The heater fits in the inlet manifold as shown, and is linked into the machine's electrical system.

In severe cold climate conditions, a block heater can be installed.

Make sure that all the necessary machine pre-start checks have been completed, these will include:

- engine oil level
- engine coolant level
- battery connections
- fuel tank has sufficient fuel
- fuel pre-filters drained
- the machine is safe and ready to start

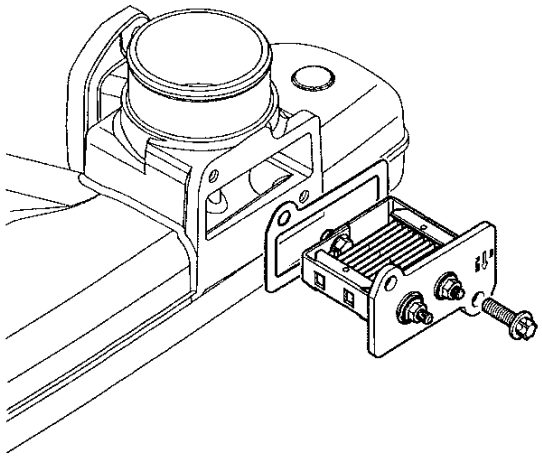

Fig 121.

descargado de www.Manualslib.com manuales de motor de búsqueda

Start Procedure

1 Make sure that all machine controls are in the `neutral' position.

2 If a pre-heater is fitted, turn the starter key **A** to the to the pre-heat position **II**. If applicable to your equipment, the warning light on the instrument cluster will extinguish when pre-heat is complete.

⚠ CAUTION

Do not operate the starter motor for more than 20 seconds at one time. Let the starter motor cool for at least 2 minutes.

0124

3 Turn the starter key to the starter engage position **III** and hold it there until the engine starts. Do not operate the starter for more than 20 seconds.

***Note:** If the engine does not start at the first attempt, return the key to the off **(O)** position and allow the starter to cool for a few minutes and then repeat steps **2** and **3**.*

4 As soon as the engine starts, release the key which will return to the run position.

5 ⇨ *Engine Checks After Start-up (1-101)*.

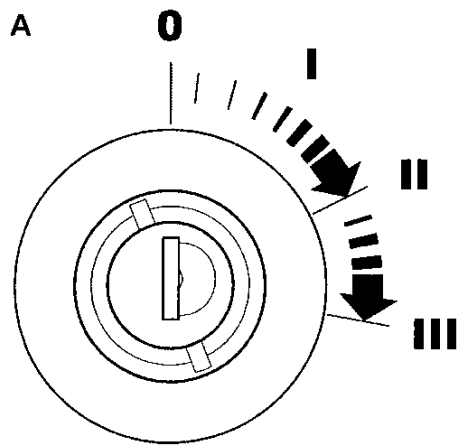

Fig 122.

descargado de www.Manualslib.com manuales de motor de búsqueda

Engine Checks After Start-up

⚠ WARNING

On turbo-charged machines, do not keep the accelerator pedal fully depressed when the engine has started. Do not race the engine until the oil pressure low light has gone out. Racing the engine too soon could damage the turbo-charger due to insufficient lubrication.

16-2-4-1

⚠ WARNING

Stop the engine and investigate the cause if any of the following conditions occur:

1 **The warning lights fail to go off when the engine has been started.**

2 **The alarm is still sounding when the engine has been started.**

3 **The warning lights illuminate and the alarm sounds when the engine is running.**

16-2-4-2

Check the following items after the engine has been started.

1 Make sure that all the engine instrumentation warning lights have extinguished.

2 Do not over accelerate the engine until the 'oil pressure low' warning light has extinguished.

3 If any warning indicator fails to extinguish, or if they illuminate while the engine is running, make the machine safe, stop the engine and investigate the cause.

4 Listen for engine noise, any abnormal noise must be investigated to determine the cause.

5 Check the exhaust smoke colour, generally after the engine has reached operating temperature, the exhaust colour should be as detailed:

- colourless or light blue - normal
- black - abnormal
- white - abnormal

6 Check for any lubricating oil leakage, particularly around joints and connectors.

7 Check the fuel injection pump circuit for leakage, including fuel lines, fuel filter(s) and injection pump.

8 Check the coolant system for signs of leakage, particularly around the radiator and hose connections.

descargado de www.Manualslib.com manuales de motor de búsqueda

Engine Running-in Procedure

New engines DO NOT require a running-in period. The engine/machine should be used in a normal work cycle immediately.

Glazing of the piston cylinder bores, resulting in excessive oil consumption, could occur if engine duty is too light from new.

Under no circumstances should the engine be allowed to idle for extended periods; (e.g. warming up without load).

A minimum API CF4 grade oil must be used. Superior grade oils may be more appropriate for heavy duty applications (such as sustained high loads and operation at elevated temperatures).

Refer also to ***Lubricants and Capacities, Section 1.***

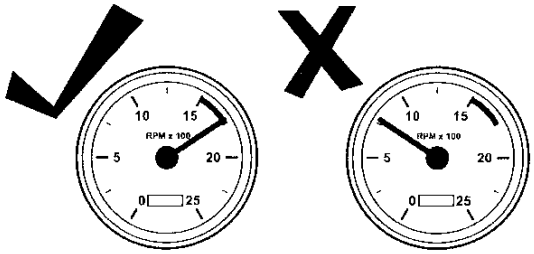

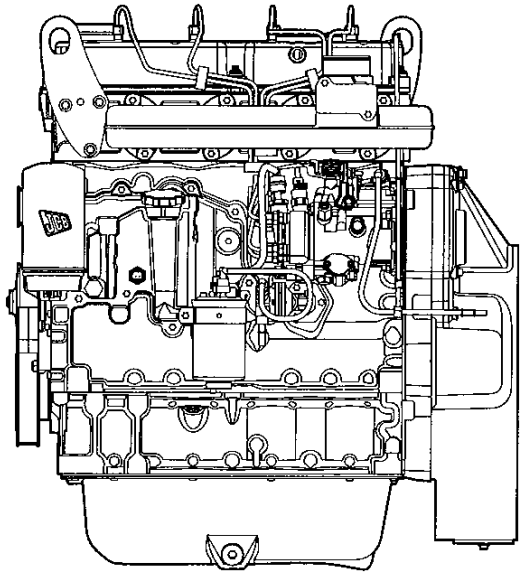

Fig 123.

descargado de www.Manualslib.com manuales de motor de búsqueda

Stopping the Engine

1 Make sure that all machine controls are in the 'neutral' position.

⚠ CAUTION

Allow turbocharged engines to run at approximately 1000 rpm and reduced load for 2 to 3 minutes before shut down. This will allow the turbocharger to cool. Failure to follow this procedure could result in turbocharger damage.

ENG-1-6

2 It is recommended that turbocharged engines are run at 1000 RPM (approximately) and reduced load for 2 - 3 minutes before shut down. This will allow the turbocharger to cool and return to idle speed while engine oil pressure is still available for lubrication.

3 Turn the starter key to the OFF (**O**) position, as shown at **A**.

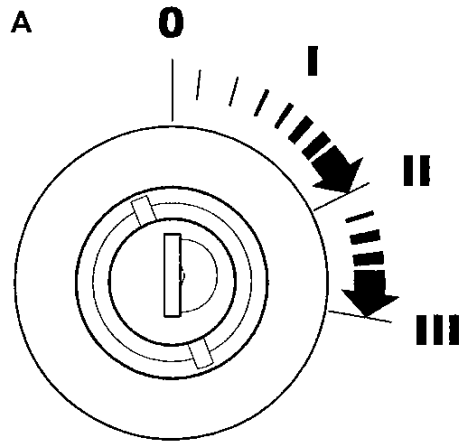

Fig 124.

descargado de www.Manualslib.com manuales de motor de búsqueda

Page left intentionally blank

descargado de www.Manualslib.com manuales de motor de búsqueda

Care and Safety

Service Manual - JCB 444 Engine

Section 1 - General Information
Section 2 - Care and Safety
Section 3 - Routine Maintenance
Section 4 - Systems Description
Section 5 - Fault Finding
Section 6 - Test Procedures
Section 7 - Fuel System
Section 8 - Cooling System
Section 9 - Lubrication System
Section 10 - Electrical System
Section 11 - Induction and Exhaust System
Section 12 - Base Engine

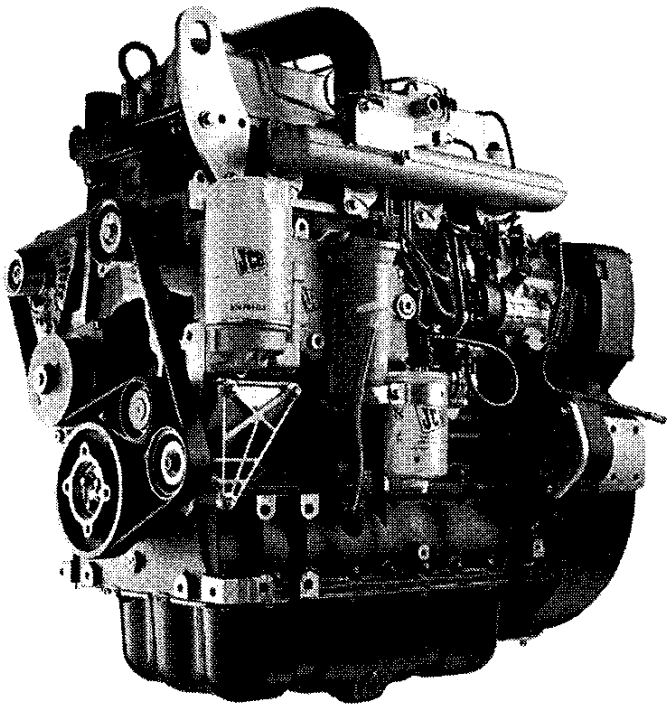

Publication No.
9806/3000-02

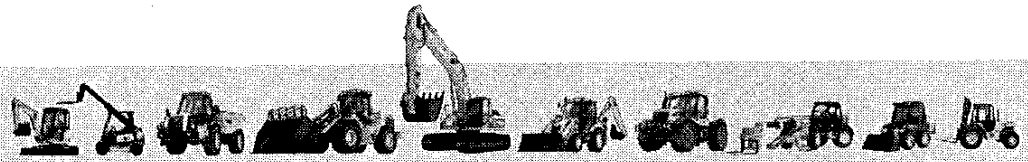

Copyright © 2004 JCB SERVICE. All rights reserved. No part of this publication may be reproduced, stored in a retrieval system, or transmitted in any form or by any other means, electronic, mechanical, photocopying or otherwise, without prior permission from JCB SERVICE.

Issued by JCB Technical Publications. JCB Aftermarket Training, Woodseat, Rocester, Staffordshire, ST14 5BW, England. Tel +44 1889 591300 Fax +44 1889 591400

World Class Customer Support

descargado de www.Manualslib.com manuales de motor de búsqueda

Page left intentionally blank

descargado de www.Manualslib.com manuales de motor de búsqueda

Contents **Page No.**

Safety Notices
Introduction ..... 2 - 1
Safety Checklist ..... 2 - 2
General Safety ..... 2 - 2
Operating Safety ..... 2 - 3
Maintenance Safety ..... 2 - 4

descargado de www.Manualslib.com manuales de motor de búsqueda

Contents Page No.

2 - ii

descargado de www.Manualslib.com manuales de motor de búsqueda

Safety Notices

Introduction

In this publication and on the machine, there are safety notices. Each notice starts with a signal word. The signal word meanings are given below.

⚠ DANGER

Denotes an extreme hazard exists. If proper precautions are not taken, it is highly probable that the operator (or others) could be killed or seriously injured.

INT-1-2-1

⚠ WARNING

Denotes a hazard exists. If proper precautions are not taken, the operator (or others) could be killed or seriously injured.

INT-1-2-2

⚠ CAUTION

Denotes a reminder of safety practices. Failure to follow these safety practices could result in injury to the operator (or others) and possible damage to the machine.

INT-1-2-3

descargado de www.Manualslib.com manuales de motor de búsqueda

Safety Checklist

General Safety

Introduction

All machinery, whether mobile or static can be hazardous. When equipment is correctly operated and properly maintained it can be safe to work with. But when it is carelessly operated or poorly maintained it can become a danger.

Do not work with any equipment until you are sure that it is serviceable, that you know how to control it and be aware of all relevant safety requirements.

If the equipment covered by this manual forms part of a larger product (e.g. a vehicle) be sure to observe the safety requirements which relate to the product as a whole, as well as those given in this manual.

On this and the following pages and throughout this manual, you will find safety messages. Please read and understand these safety messages before using and working on the equipment covered in this manual.

Make sure you also read and understand all other safety messages contained in operator handbooks and service manuals concerned with the product of which this equipment form part.

RememberBE CAREFULBE ALERTBE SAFE

General Safety Checklist

The following safety checklist is intended to help remind you of safety procedures and practices.

SAFETY IS YOUR RESPONSIBILITY.

You must also refer to local regulations in the country your equipment is being used in. Some of the information may be repeated in the following warnings and cautions pages and in the main text.

- Do not change the application or specification of the engine.
- Install the engine in accordance with recommendations made in the Engine Installation Manual.
- Do not work under a raised vehicle unless properly supported with axle stands or similar equipment.
- Do not lift heavy objects on your own, use lifting equipment or obtain the help of an assistant.
- Do not smoke when adding fuel to the tank or working in the engine bay area.
- Always clean up spilt fluids, dispose of fluids, contaminated material etc in accordance with local regulations. Do not pollute drains or the ground.
- Use the right tools for the job.
- Always make the equipment safe before completing any maintenance tasks, for instance disconnect the battery so that the engine can not be started.
- Allow engine components to cool before attempting any maintenance tasks, components such as the exhaust can become extremely hot.
- Do not adjust the engine, or add fuel, oil whilst it is running unless procedures in this manual instruct you to do so.
- Do not siphon fluids by mouth.
- Operate the engine in well ventilated areas, if using indoors then a purpose designed exhaust fume extraction unit may be needed.
- Keep other people at a safe distance when operating the engine or equipment.
- Do not operate an engine if the safety guard (when applicable) has been removed.
- Vapours from solvents, thinners and adhesives can be high flammable. In addition to fire risk, they can be toxic and in certain conditions cause

descargado de www.Manualslib.com manuales de motor de búsqueda

unconsciousness, or death if inhaled. Use these items in well ventilated areas.

- Seek medical advice immediately if your skin contacts high pressure fuel.
- Make sure the engine is operated by one person correctly positioned at the controls.
- Do not operate the engine at high speeds with no load applied.
- Make sure you have adequate fire fighting equipment in your workshop, repair area. Contact your local fire prevention officer for advice.
- Turbocharger impeller blades operate at extremely high revolutions and the turbocharger unit becomes very hot. Allow the unit to cool before completing any maintenance. Keep tools and objects away from the impeller when the unit is operating.
- Use only JCB recommended parts. These parts have been designed to give the engine its optimum performance. Using spurious parts may affect the integrity of the engine.

⚠ WARNING

Decals

Decals on the machine warn you of particular hazards. You can be injured if you do not obey the decal safety instructions.

Each decal is attached close to a part of the machine where there is a possible hazard. Make sure replacement parts include warning decals where necessary.

Keep all decals clean and readable. Replace lost or damaged decals. Each decal has a part number printed on it, use this number to order a new decal from your JCB distributor.

INT-3-3-3_1

⚠ WARNING

Care and Alertness

All the time you are working with or on the machine, take care and stay alert. Always be careful. Always be alert for hazards.

INT-1-3-5

⚠ WARNING

Clothing

You can be injured if you do not wear the proper clothing. Loose clothing can get caught in the machinery. Wear protective clothing to suit the job. Examples of protective clothing are: a hard hat, safety shoes, safety glasses, a well fitting overall, ear-protectors and industrial gloves. Keep cuffs fastened. Do not wear a necktie or scarf. Keep long hair restrained.

INT-1-3-6

⚠ WARNING

Raised Attachments

Raised attachments can fall and injure you. Do not walk or work under raised attachments unless they are safely blocked.

INT-1-3-8

⚠ WARNING

Lifting Equipment

You can be injured if you use faulty lifting equipment. Make sure that lifting equipment is in good condition. Make sure that lifting tackle complies with all local regulations and is suitable for the job. Make sure that lifting equipment is strong enough for the job.

INT-1-3-7

Operating Safety

⚠ WARNING

Machine Condition

A defective machine can injure you or others. Do not operate a machine which is defective or has missing parts. Make sure the maintenance procedures in this manual are completed before using the machine.

INT-2-1-2_2

⚠ WARNING

Machine Limits

Operating the machine beyond its design limits can damage the machine, it can also be dangerous. Do not operate the machine outside its limits. Do not try to upgrade the machine performance with unapproved modifications.

INT-2-1-4

descargado de www.Manualslib.com manuales de motor de búsqueda

⚠ WARNING

Engine/Steering Failure

If the engine or steering fails, stop the machine as quickly as possible. Do not operate the machine until the fault has been corrected.

INT-2-1-5

⚠ WARNING

The engine has exposed rotating parts. Switch OFF the engine before working in the engine compartment. Do not use the machine with the engine cover open.

5-2-6-5

⚠ WARNING

Exhaust Gases

Breathing the machine exhaust gases can harm and possibly kill you. Do not operate the machine in closed spaces without making sure there is good ventilation. If possible, fit an exhaust extension. If you begin to feel drowsy, stop the machine at once and get into fresh air.

INT-2-1-10_2

⚠ WARNING

Communications

Bad communications can cause accidents. Keep people around you informed of what you will be doing. If you will be working with other people, make sure any hand signals that may be used are understood by everybody. Work sites can be noisy, do not rely on spoken commands.

INT-2-2-3

⚠ DANGER

Sparks

Explosions and fire can be caused by sparks from the exhaust or the electrical system. Do not use the machine in closed areas where there is flammable material, vapour or dust.

INT-2-2-10

⚠ WARNING

Alcohol and Drugs

It is extremely dangerous to operate machinery when under the influence of alcohol or drugs. Do not consume alcoholic drinks or take drugs before or while operating the machine or attachments. Be aware of medicines which can cause drowsiness.

INT-1-3-9_2

⚠ WARNING

On turbo-charged machines, do not keep the accelerator pedal fully depressed when the engine has started. Do not race the engine until the oil pressure low light has gone out. Racing the engine too soon could damage the turbo-charger due to insufficient lubrication.

16-2-4-1

Maintenance Safety

⚠ WARNING

Repairs

If your machine does not function correctly in any way, get it repaired straight away. Neglect of necessary repairs could result in an accident or affect your health. Do not try to do repairs or any other type of maintenance work you do not understand. To avoid injury and/or damage get the work done by a specialist engineer.

GEN-1-5_2

⚠ WARNING

Machine Modifications

This machine is manufactured in compliance with legislative and other requirements. It should not be altered in any way which could affect or invalidate any of these requirements. For advice consult your JCB Distributor.

INT-1-3-10_2

⚠ WARNING

Metal Splinters

You can be injured by flying metal splinters when driving metal pins in or out. Use a soft faced hammer or copper pin to remove and fit metal pins. Always wear safety glasses.

INT-3-1-3_2

descargado de www.Manualslib.com manuales de motor de búsqueda

⚠ WARNING

Electrical Circuits

Understand the electrical circuit before connecting or disconnecting an electrical component. A wrong connection can cause injury and/or damage.

INT-3-1-4

⚠ WARNING

Communications

Bad communications can cause accidents. If two or more people are working on the machine, make sure each is aware of what the others are doing. Before starting the engine make sure the others are clear of the danger areas; examples of danger areas are: the rotating blades and belt on the engine, the attachments and linkages, and anywhere beneath or behind the machine. People can be killed or injured if these precautions are not taken.

INT-3-1-5

⚠ WARNING

Petrol

Do not use petrol in this machine. Do not mix petrol with the diesel fuel; in storage tanks the petrol will rise to the top and form flammable vapours.

INT-3-1-6

⚠ WARNING

If you try to charge a frozen battery, or jump start and run the engine, the battery could explode. Do not use a battery if its electrolyte is frozen. To prevent the battery electrolyte from freezing, keep the battery at full charge.

0125

⚠ WARNING

Battery Gases

Batteries give off explosive gases. Keep flames and sparks away from the battery. Do not smoke close to the battery. Make sure there is good ventilation in closed areas where batteries are being used or charged. Do not check the battery charge by shorting the terminals with metal; use a hydrometer or voltmeter.

INT-3-1-8

⚠ WARNING

Battery Terminals

The machine is negatively earthed. Always connect the negative pole of the battery to earth.

When connecting the battery, connect the earth (-) lead last.

When disconnecting the battery, disconnect the earth (-) lead first.

INT-3-1-9

⚠ WARNING

Diesel Fuel

Diesel fuel is flammable; keep naked flames away from the fuel system. Do not smoke while refuelling or working on the fuel system. Do not refuel with the engine running. There could be a fire and injury if you do not follow these precautions.

INT-3-2-2_1

⚠ WARNING

Oil

Oil is toxic. If you swallow any oil, do not induce vomiting, seek medical advice. Used engine oil contains harmful contaminants which can cause skin cancer. Do not handle used engine oil more than necessary. Always use barrier cream or wear gloves to prevent skin contact. Wash skin contaminated with oil thoroughly in warm soapy water. Do not use petrol, diesel fuel or paraffin to clean your skin.

INT-3-2-3

⚠ WARNING

Soft Ground

A machine can sink into soft ground. Never work under a machine on soft ground.

INT-3-2-4

⚠ WARNING

Hot Coolant

The cooling system is pressurised when the engine is hot. Hot coolant can spray out when you remove the filler cap. Let the system cool before removing the filler cap. To remove the cap; turn it to the first notch and let the system pressure escape, then remove the cap.

INT-3-2-9_1

descargado de www.Manualslib.com manuales de motor de búsqueda

⚠ WARNING

Always wear safety glasses when dismantling assemblies containing components under pressure from springs. This will protect against eye injury from components accidentally flying out.

GEN-6-2

⚠ CAUTION

Cleaning

Cleaning metal parts with incorrect solvents can cause corrosion. Use only recommended cleaning agents and solvents.

INT-3-2-11

⚠ CAUTION

'O' rings, Seals and Gaskets

Badly fitted, damaged or rotted 'O' rings, seals and gaskets can cause leakages and possible accidents. Renew whenever disturbed unless otherwise instructed. Do not use Triochloroethane or paint thinners near 'O' rings and seals.

INT-3-2-12

⚠ WARNING

Fires

If your machine is equipped with a fire extinguisher, make sure it is checked regularly. Keep it in the correct machine location until you need to use it.

Do not use water to put out a machine fire, you could spread an oil fire or get a shock from an electrical fire. Use carbon dioxide, dry chemical or foam extinguishers. Contact your nearest fire department as quickly as possible. Firefighters should use self-contained breathing apparatus.

INT-3-2-7_2

⚠ WARNING

To avoid burning, wear protective gloves when handling hot components. To protect your eyes, wear goggles when using a wire brush to clean components.

HYD-1-3

⚠ WARNING

Jacking

A machine can roll off jacks and crush you unless the wheels have been blocked. Always block the wheels at the opposite end of the machine that is to be jacked. Do not work underneath a machine supported only by jacks. Always support a jacked-up machine on axle stands before working underneath it.

INT-3-2-8

⚠ WARNING

Make the machine safe before working underneath it. Park the machine on level ground, lower the attachments to the ground. Apply the park brake, put the transmission in neutral and stop the engine. Block both sides of all four wheels.

Disconnect the battery, to prevent the engine being started while you are beneath the machine.

GEN-4-1_1

⚠ WARNING

A raised and badly supported machine can fall on you. Position the machine on a firm, level surface before raising one end. Ensure the other end is securely chocked. Do not rely solely on the machine hydraulics or jacks to support the machine when working under it.

Disconnect the battery, to prevent the engine being started while you are beneath the machine.

GEN-1-1

descargado de www.Manualslib.com manuales de motor de búsqueda

⚠ WARNING

Certain seals and gaskets (e.g. crankshaft oil seal) on JCB machines contain fluoroelastomeric materials such as Viton, Fluorel and Technoflon. Fluoroelastomeric materials subjected to high temperatures can produce highly corrosive hydrofluoric acid. THIS ACID CAN SEVERELY BURN.

New fluoroelastomeric components at ambient temperature require no special safety precautions.

Used fluoroelastomeric components whose temperatures have not exceeded 300°C (572°F) require no special safety precautions. If evidence of decomposition (e.g. charring) is found, refer to the next paragraph for safety instructions DO NOT TOUCH COMPONENT OR SURROUNDING AREA.

Used fluoroelastomeric components subjected to temperatures greater than 300°C (572°F) (e.g. engine fire) must be treated using the following safety procedure. Make sure that heavy duty gloves and special safety glasses are worn:

1 Thoroughly wash contaminated area with 10% calcium hydroxide or other suitable alkali solution, if necessary use wire wool to remove burnt remains.

2 Thoroughly wash contaminated area with detergent and water.

3 Contain all removed material, gloves etc. used in this operation in sealed plastic bags and dispose of in accordance with Local Authority Regulations.

DO NOT BURN FLUOROELASTOMERIC MATERIALS.

INT-3-3-5_3

⚠ CAUTION

Damaged or spent batteries and any residue from fires or spillage should be put in a closed acid proof receptacle and must be disposed of in accordance with local environmental waste regulations.

INT-3-1-12

⚠ CAUTION

Do not disconnect the battery while the engine is running, otherwise the electrical circuits may be damaged.

INT-3-1-14

⚠ DANGER

Electrolyte

Battery electrolyte is toxic and corrosive. Do not breathe the gases given off by the battery. Keep the electrolyte away from your clothes, skin, mouth and eyes. Wear safety glasses.

INT-3-2-1_3

⚠ WARNING

Compressed air is dangerous. Wear suitable eye protection and gloves. Never point a compressed air jet at yourself or others.

0147_1

⚠ WARNING

Machinery utilizing the engine must be correctly parked and prepared, for example safety strut fitted, prior to completing maintenance tasks on the engine.

Maintenance must be completed by suitably qualified personnel.

You or others could be killed or seriously injured if the machine is not correctly prepared and maintained.

ENG-1-5

⚠ CAUTION

Do not allow dirt to enter the fuel system. Before disconnecting any part of the fuel system, thoroughly clean around the connection. When a component has been disconnected, for example a fuel pipe, always fit protective caps and plugs to prevent dirt ingress.

Failure to follow these instruction will lead to dirt entering the fuel system. Dirt in the fuel system will seriously damage the fuel injection equipment and could be expensive to repair.

ENG-1-7

descargado de www.Manualslib.com manuales de motor de búsqueda

⚠ CAUTION

It is illegal to pollute drains, sewers or the ground. Clean up all spilt fluids and/or lubricants.

Used fluids and/or lubricants, filters and contaminated materials must be disposed of in accordance with local regulations. Use authorised waste disposal sites.

INT-3-2-14

descargado de www.Manualslib.com manuales de motor de búsqueda