444J UTILITY LOADER

(S.N. -611274)

RUTHZIL TRATOR COMERCIAL DE PEÇAS LTDA 11 97083-6812 ROLANDO CITRANGULO

ABRIL 2007

JOHN DEERE

PARTS CATALOG

444J UTILITY LOADER
(S.N. -611274)

PC9338 (Apr-07) English

Worldwide Construction and Forestry Division
Worldwide Edition
Litho In U.S.A. (Revised)
COPYRIGHT © 2007
DEERE & COMPANY
Moline, Illinois
All rights reserved

INTRODUCTION AND CUSTOMER INFORMATION

T194006A -UN-13NOV03



LEFT SIDE VIEW OF JOHN DEERE 444J LOADER
(MANUFACTURED 2004-2007)

TO THE CUSTOMER

THE PART NUMBERS IN THIS PARTS CATALOG WERE CORRECT AT THE TIME YOUR CATALOG WAS PUBLISHED. IT IS OUR POLICY TO CONSTANTLY IMPROVE OUR MACHINES, AND THEREFORE, PART NUMBERS MAY CHANGE. WHEN ORDERING PARTS, VERIFY PART NUMBERS THROUGH YOUR DEALER.

(SPECIFICATIONS AND DESIGN SUBJECT TO CHANGE WITHOUT NOTICE)

SERIAL NUMBER LOCATION

EACH 444J LOADER HAS SIX SERIAL NUMBER PLATES: ONE FOR THE PRODUCT IDENTIFICATION NUMBER, ONE FOR THE TRANSMISSION, ONE FOR THE HYDRAULIC PUMP, ONE FOR THE ENGINE SERIAL NUMBER, ONE FOR EACH AXLE, AND ONE FOR THE CONTROL VALVE.

THE PRODUCT IDENTIFICATION NUMBER PLATE IS LOCATED ON THE LEFT SIDE OF THE ENGINE FRAME NEAR THE TRANSMISSION OIL FILL.

THE TRANSMISSION SERIAL NUMBER PLATE IS LOCATED ON THE LOWER RIGHT REAR OF THE TRANSMISSION CASE.

THE HYDRAULIC PUMP SERIAL NUMBER PLATE IS LOCATED ON THE LOWER LEFT OF THE HYDRAULIC PUMP.

THE ENGINE SERIAL NUMBER PLATE IS LOCATED ON THE LEFT SIDE OF THE ENGINE NEAR THE WATER SEPERATOR.

THE AXLE SERIAL NUMBER PLATES ARE LOCATED ON THE INPUT SIDE OF EACH DIFFERENTIAL CASE.

THE CONTROL VALVE SERIAL NUMBER PLATE IS LOCATED ON THE REAR CENTER OF THE CONTROL VALVE.

LEFT, RIGHT, FRONT, AND REAR OF THE LOADER ARE REFERENCED BY FACING THE DIRECTION OF LOADER FORWARD TRAVEL.

WHENEVER SERIAL NUMBERS ARE REQUIRED ON WARRANTY CLAIMS OR CORRESPONDENCE PERTAINING TO THIS PRODUCT, IT IS EXTREMELY IMPORTANT THAT ALL CHARACTERS BE FURNISHED. THIS POINT CANNOT BE EMPHASIZED ENOUGH.

PRODUCT IDENTIFICATION NUMBER PLATE

TP16004 -UN-01JAN94

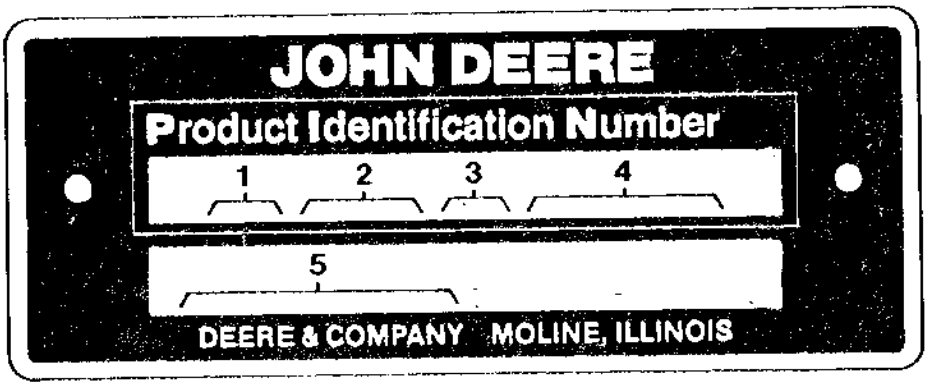

TP16004

1. DESIGNATES LOADER MANUFACTURER	DW - JOHN DEERE DAVENPORT WORKS
2. DESIGNATES LOADER MODEL	444J
3. DESIGNATES LOADER CONFIGURATION	Z WITH ZBAR H WITH HIGH LIFT T WITH TOOL CARRIER
4. DESIGNATES LOADER SERIAL NUMBER	XXXXXX
5. DESIGNATES UNIT TYPE	LOADER

ENGINE SERIAL NUMBER PLATE

T134833 -UN-23OCT00



T134833

FIRST LINE	DEFINES
PE - JOHN DEERE TORREON	DESIGNATES ENGINE MANUFACTURER.
4	DESIGNATES NUMBER OF CYLINDERS.
4.5	DESIGNATES LITER DISPLACEMENT.
H - TURBOCHARGED DIESEL WITH INTERCOOLER	DESIGNATES TYPE OF AIR INTAKE SYSTEM
XXXXXX	DESIGNATES ENGINE SERIAL NUMBER.
SECOND LINE	**APPLICATION**
PE4045HDW52	444J LOADER

SERIAL NUMBER LISTING INFORMATION

SERIAL NUMBER INFORMATION IS LISTED TO SHOW ON WHICH MACHINES EACH PART CAN BE USED; FOR EXAMPLE:

-	THE PART CAN BE USED ON ALL MACHINES.
XXXXXX-	THE PART CAN BE USED ON ALL MACHINES BEGINNING WITH THE SERIAL NUMBER LISTED.
-XXXXXX	THE PART CAN BE USED ON ALL MACHINES UP TO AND INCLUDING THE SERIAL NUMBER LISTED.
XXXXXX-XXXXXX	THE PART CAN BE USED ON ALL MACHINES BETWEEN AND INCLUDING THE SERIAL NUMBERS LISTED.

WHEN XXXXXX'S ARE LISTED IN PLACE OF A SERIAL NUMBER, A SERIAL NUMBER CHANGE WAS MADE BUT THE EXACT SERIAL NUMBER WAS NOT AVAILABLE WHEN THE CATALOG WAS PRODUCED.

DIRECTION ARROW

ARROWS ARE USED WITH ILLUSTRATIONS TO INDICATE THE FRONT OF THE UNIT. "RIGHT-HAND" AND "LEFT-HAND" SIDES ARE DETERMINED BY FACING IN THE DIRECTION OF MACHINE FORWARD TRAVEL.

BOX-ENCLOSED ILLUSTRATIONS

A KEY NUMBER, SHOWN IN THE PARTS LIST, IS ASSIGNED TO A BOX ENCLOSING ALL PARTS SOLD AS A SERVICE ASSEMBLY.

COMPLETE GOODS LISTINGS

COMPLETE GOODS ARE LISTED IN BOLD FACE TYPE. ORDER SEPARATELY. DO NOT INCLUDE ON REPLACEMENT PARTS ORDER.

SI UNITS OF MEASURE

METRIC DIMENSIONS ARE GIVEN, WHERE APPLICABLE, THROUGHOUT THIS PARTS CATALOG.

REMARKS AND ABBREVIATIONS

THE FOLLOWING REMARKS AND ABBREVIATIONS MAY APPEAR THROUGHOUT THE PARTS CATALOG. REFER TO THE FOLLOWING CHART FOR TRANSLATIONS TO LANGUAGES OTHER THAN ENGLISH

REMARKS AND ABBREVIATIONS

TX1007193 -UN-04MAY06

PHRASE	ENGLISH	FRANCAIS	DEUTSCH	ITALIANO	ESPANOL	SVENSKA
ALSO ORDER, ORD W/	Also order	Commander aussi	Ebenso bestellen	Ordinare anche	Pedir también	Beställ även
AMP	Ampere	Ampère	Ampere	Ampere	Amperio	Ampere
APPL, APPL ONLY	This application only	Uniquement pour cette utilisation	Nur für diese Anwendung	Solo per questa applicazione	Solo para este propósito	Endast för denna användning
AR	As required	Selon le besoin	Nach Bedarf	Secondo necessità	Según necesidad	Vid behov
ASSY	Complete assembly	Ensemble complet	Kompl.-Zusammenbau	Gruppo completo	Montaje completo	Komplett montering
CA, CONVENIENCE ASSY	Convenience assembly	Ensemble convenance	Komfort-Zusammenbau	Montaggio pratico	Montaje de conveniencia	Lämplig montering
CCW	Counter-clockwise	Sens anti-horaire	Gegen Uhrzeigersinn	Senso antiorario	A la izquierda	Moturs
COMPLETE	Complete	Complet	Vollständig	Completo	Completo	Fullständig
COMPLETE GOODS	Complete goods	Compléter marchandises	Vollst. Waren	Merci complete	Mercancías completas	Kompletta varor
CTL CUT TO LENGTH	Cut to length	Couper à la longueur	Auf Länge zurechtschneiden	Tagliare alla lunghezza	Corte a la longitud	Skära till längd
CW	Clockwise	Sens horaire	Im Uhrzeigersinn	In senso orario	A la derecha	Medurs
FOR	For	Pour	Für	Per	Para	För
FRONT	Front	Avant	Vorn	Anteriore	Frente	Fram
GAS	Gasoline	Essence	Benzin	Benzina	Gasolina	Bensin
HP	Horsepower	Puissance en cv	Leistung	Potenza	Potencia	Hästkraft
HFWD	Hydraulic Front-wheel Drive	Traction Avant Hydraulique	Hydraulischer Vorderradantrieb	Trazione Anteriore Idraulica	Traccion Delantera Hidraulica	Hydraulisk Framhjulsdrift
HS, HEAD MARKED	High strength, head marked	Haute résistance, tête marquée	Hochfest, vorn gekennzeichnet	Contrassegnato in testa, ad alta resistenza	Alta fuerza, marca en cabeza	Hög styrka, huvudmärkt
ID	Inside diameter	Diamétre intérieur	Innendurch-messer	Diametro interno	Diá. interior	Innerdiameter
INCH	Inch	Pouce	In.	Pollice	Pulg.	Tum
INCL KEYS	Includes keys...	Comprend les positions...	Einschließlich Schlüssel...	Include le chiavette...	Incluye posiciones...	Inklusive nycklar...
INCL, INCLUDES	Includes...	Comprend...	Enthält...	Include...	Incluye...	Inkluderar...
INCLUDES PARTS/ ITEMS MARKED	Includes parts/items marked...	Comprend les pièces/articles marqués...	Enthält gekennzeichnete Teile/Pos. ...	Include i pezzi e gli elementi contrassegnati...	Incluye piezas marcadas...	Inkluderar markerade delar/artiklar...
INNER	Inner	Intérieur	Innerer	Interno	Interno	Inre, invändig
KIT	Kit	Kit	Kit	Kit	Juego	Sats
L	Number of links	Nombre de maillons	Anzahl der Glieder	Numero di maglie	Nº de eslabones	Antal länkar
LGTH	Length	Longueur	Länge	Lunghezza	Longitud	Längd
LGP	Low Ground Pressure	Faible Pression Au Sol	Niederer Bodendruck	Bassa Pressione Sul Suelo	Baja Presion Sobre El Suelo	Laagt Marktryck
LH	Left-hand	Gauche	Links	Sinistra	Izquierda	Vänster
LT	Long Track	Chenille Longue	Mit Langem Laufwerk	Cingolo Lungo	Cadena Largo	Laangt Larvband
LOW, LOWER	Lower	Inférieur	Unterer	Inferiore	Inferior	Nedre
MAKE FROM, MF	Make from	Faireavec	Herstellen von	Fabbricare da	Hacer de	Tillverka av
MARKED	Marked	Marqué	Markiert	Contrassegnato	Marcado	Märkt

TX1007193

REMARKS AND ABBREVIATIONS

TX1007195 -UN-04MAY06

PHRASE	ENGLISH	FRANCAIS	DEUTSCH	ITALIANO	ESPANOL	SVENSKA
MATCHED SET	Matched set	Ensemble assorti	Passender Satz	Set abbinato	Sistema emparejado	Anpassad sats
MFWD	Mechanical Front-Wheel Drive	Pont Avant	Allradantrieb	Ruota Motrice Meccanica Anteriore	Traccion Delantera Mecanica	Mekanisk Framhjulsdrift
NA, NOT USED THIS APPL	Not used this application	Ne sert pas pour cette application	In dieser Anwendung nicht benutzt	Non usato in questa applicazione	No se usa en esta aplicación	Ej använd i detta sammanhang
NLA	No longer available	Epuisé	Nicht mehr lieferbar	Non più disponibile	Descontinuado	Ej längre tillgänglig
NSEP	Not supplied separately	Non livré séparément	Nicht einzeln lieferbar	Non fornito separatamente	No se suministra por separado	Kan ej erhållas separat
OD	Outside diameter	Diamètre extérieur	Außendurch-messer	Diametro esterno	Diá. exterior	Ytterdiameter
OPTIONAL	Optional	En option	Wahlweise	Opzionale	Opcional	Valfri
OR	Or	Ou	Oder	Oppure	O	Eller
ORD, ORDER	Order	Commander	Bestellen	Ordinare	Pídase	Order
OS	Oversize	Sur-dimension	Übergröße	Maggiorato	Sobretamaño	Överdimension
OUTER	Outer	Externe	Äußerer	Esterno	Externo	Yttre, utvändig
PKG, PACKG	Package, Packet of	Emballage, paquet de	Verpackung, verpackt mit	In confezione da	Paquete de	I sats; paket
PTO	Power Take Off	Prise De Force	Zapfwelle	Presa Di Forza	Toma De Fuerza	Kraftuttag
RATIO	Ratio	Rapport	Übersetzungs-verhältnis	Rapporto	Índice	Förhållande
REAR	Rear	Arrière	Hinten	Posteriore	Trasero	Bak; bakre
REMAN	Remanufactured	Echange Standard	Generalveberholt	Refatto	Refabricador por	Renoverad
REPL	Replaces	Remplace	Ersetzt	Sostituisce	Sustituye	Ersätter
RH	Right-hand	Droit	Rechts	Destra	Derecha	Höger
SN	Serial number	Numéro de série	Seriennummer	Numero di serie	Nº de serie	Serienummer
STD	Standard	Standard	Standard	Standard	Normal	Standard
SUB	Replaced by	Remplacé par	Ersetzt durch	Sostituito da	Sustituido por	Ersatt med
SUB COMPONENTS	Substitute components (of the kit or assy)	Substituer les composants (du kit ou de l'ensemble)	Komponenten ersetzen (des Kits oder der Baugruppe)	Sostituire i componenti (del kito del gruppo)	Sustituir los componentes	Ersätta komponenterna (i satsen eller monteringen)
SUB FOR	Subsitutes for	Remplace	Ersatz für	Sostituisce	Sustitución para	Ersätter
TEETH, Z	Number of gear teeth	Nombre de dents d'engrenages	Zahl der Zahnradzähne	Numero di denti dell'ingranaggio	Nº de dientes de engranaje	Antal redskapständer
TK	Thickness	Épaisseur	Stärke	Spessore	Espesor	Tjocklek
UP, UPPER	Upper	Supérieur	Oberer	Superiore	Superior	Övre
US	Undersize	Sous-dimension	Untergröße	Minorato	Subtamaño	Underdimension
USE WITH	Use with	À utiliser avec	Verwenden mit	Usare con	Usar con	Använd med
USE UNTIL EXHAUSTED	Use until exhausted	Utilisation jusqu'à épuisé	Verwenden, bis erschöpft	Usare fino all'esaurimento	Usar hasta agotar	Använda till uttömd
W/	With	Avec	Mit	Con	Con	Med; inklusive
W/O	Without	Sans	Ohne	Senza	Sin	Utan; exklusive
WHOLE GOODS	Whole goods	Marchandises entières	Vollständige Waren	Merci intere	Mercancías enteras	Hela varor
XLT	Extra Long Track	Chenille Extra Longue	Mit Extra Langem Laufwerk	Cingolo Extra Lungo	Cadena Extra Larga	Extra Laangt Larvband
VEC	Vehicle Electronic Controller	Controleur Elektronisches Du Vehicule	Elektronisches Steuergeraet Des Fahrzeugs	Unità Di Comando Elettronica Del Veicolo	Unidad de Control Electronico del Vehiculo	Elektronisk Fordonsstyrenhet
VLC	Vehicle Load Center	Coffret De Repartition Du Vehicule	Verteilerstation Des Fahrzeugs	Centro Di Carico Del Veicolo	Centro De Cargas Del Vehiculo	Fordonets Elcentral

TX1007195

ALPHABETICAL INDEX

PAGE

A

A/C AND HEATER BLOWER SWITCH....1674-11
A/C AND HEATER BLOWER WIRING HARNESS....1674-11
A/C AND HEATER THERMOSTAT SWITCH....1830-4
A/C BLOWER MOTOR AND SWITCH....1830-4
A/C BRACKET....1830-12
A/C COMPRESSOR....1830-12
A/C CONDENSER....1830-14
A/C DELETE COVER....1830-10
A/C DUCTS....1830-11
ABSORBTION, SOUND....1913-6
ACCESS PANEL....1810-2
ACCESS PLATFORM AND STEPS....1822-2
ACCUMULATOR....2160-9A
ACCUMULATOR, BRAKE....1060-6
ACCUMULATOR, BRAKE....1060-7A
ACCUMULATOR, RIDE CONTROL (S.N. -594432)....3160-92
ACCUMULATOR, RIDE CONTROL (S.N. 594433-)....3160-94
ACTUATOR....0210-38
ACTUATOR, RETURN-TO-DIG (FOR USE WITH TOOL CARRIER)....3166-6
ACTUATOR, RETURN-TO-DIG (NOT FOR USE WITH TOOL CARRIER)....3166-2
ADAPTER, ENGINE OIL COOLER....0419-2
ADAPTER, OIL PRESSURE SENSOR....1674-14
ADAPTER, THIRD FUNCTION CONNECTION (FOR USE WITH TC)....3160-68
ADDITION OF AUXILIARY JOYSTICK TO JOYSTICK CONTROLL KIT....3160-88
ADDITION OF AUXILIARY JOYSTICK TO TOOL CARRIER JOYSTICK CONTROLLER KIT....3160-88
ADDITION OF AUXILIARY TO JOYSTICK CONTROLLER KIT....3160-84
ADDITION OF AUXILIARY TO TOOL CARRIER JOYSTICK CONTROLLER KIT....3160-84
ADDITION OF AUXILIARY TO TOOL CARRIER TWO LEVER CONTROLLER KIT....3160-76
ADDITION OF AUXILIARY TO TWO LEVER CONTROLLER KIT....3160-76
AIR CLEANER....0520-2
AIR CLEANER FILTER....0520-2
AIR CLEANER HOSE....0520-2
AIR CLEANER SENSOR....0520-2
AIR COOLER, CHARGE....0510-2
AIR COOLER, CHARGE....0510-4
AIR COOLER, CHARGE....0510-5A
AIR COOLER, CHARGE....0510-6
AIR FILTER RESTRICTION INDICATOR SENSOR....0520-2
AIR HEATER, ENGINE....0505-4
AIR INTAKE, ENGINE....0414-2
AIR PRECLEANER KIT....0520-4
ALARM AND CAB MONITOR....1674-10
ALARM, BACKUP....1810-36
ALTERNATOR (55 AMP)....1672-2
ALTERNATOR (80 AMP)....1672-6
ALTERNATOR BRACKET, UPPER....0423-2
ALTERNATOR CAPACITOR (55 AMP)....1672-2
ALTERNATOR CAPACITOR (80 AMP)....1672-6
ALTERNATOR DRIVE BELT (55 AMP)....1672-2
ALTERNATOR DRIVE BELT (80 AMP)....1672-6
ALTERNATOR MOUNTING BRACKETS (55 AMP)....1672-2
ALTERNATOR MOUNTING BRACKETS (80 AMP)....1672-6
ALTERNATOR REAR COVER (55 AMP)....1672-4
ALTERNATOR REAR COVER (80 AMP)....1672-8

PAGE

ANTENNA, RADIO (SER. NO. -590067)....2001-6
ANTENNA, RADIO (SERIAL NO.600741-)....2001-7C
ANTENNA, RADIO (SER.NO. 590068-600740)....2001-7A
ANTI-SKID MAT, COUNTERWEIGHT....1749-2
ARM REST....1821-2
ARM REST, RIGHT....1821-6
ARM, ROCKER....0402-3
ARM, WIPER (FRONT)....1810-26
ARTICULATION PINS....1740-2
ARTICULATION PINS....1740-3A
ASH TRAY....1810-41
ASSEMBLY, U-JOINT....3160-82
ATTACHMENT COUPLER (HI-VIS LINKAGE) (POWERLLEL)....3104-10
ATTACHMENT COUPLER CYLINDER (POWERLLEL LINKAGE)....3104-8
ATTACHMENT COUPLER CYLINDER (Z-BAR LINKAGE)....3104-6
ATTACHMENT COUPLER HYDRAULIC CYLINDER (POWERLLEL AND Z-BAR LINKAGE)....3104-14
ATTACHMENT COUPLER HYDRAULIC CYLINDER (POWERLLEL AND Z-BAR LINKAGE)....3104-16
ATTACHMENT COUPLER, TOOL CARRIER....3104-2
ATTACHMENT COUPLER, Z-BAR LINKAGE....3104-6
ATTACHMENT HI-VIS COUPLER HYDRAULIC CYLINDER (POWERLLEL AND Z-BAR LINKAGE)....3104-18
ATTACHMENT LINKAGE, COUPLER, HI-VIS (Z-BAR)....3104-12
AUXILIARY CONTROLLER DETENT KIT....3160-78
AUXILIARY HYDRAULICS, FOURTH FUNCTION (FOR USE WITH POWERLLEL LINKAGE)....3160-62
AUXILIARY HYDRAULICS, FOURTH FUNCTION (FOR USE WITH TC)....3160-70
AUXILIARY HYDRAULICS, FOURTH FUNCTION (Z-BAR LINKAGE) (S.N. -594432)....3160-54
AUXILIARY HYDRAULICS, FOURTH FUNCTION (Z-BAR LINKAGE) (S.N. 594433-)....3160-56
AUXILIARY HYDRAULICS, THIRD FUNCTION (FOR USE WITH POWERLLEL LINKAGE)....3160-62
AUXILIARY HYDRAULICS, THIRD FUNCTION (FOR USE WITH TC)....3160-68
AUXILIARY HYDRAULICS, THIRD FUNCTION (POWERLELL LINKAGE) (BOOM TO COUPLER)....3163-6
AUXILIARY HYDRAULICS, THIRD FUNCTION (Z-BAR LINKAGE) (S.N. -594432)....3160-52
AUXILIARY HYDRAULICS, THIRD FUNCTION (Z-BAR LINKAGE) (S.N. 594433-)....3160-56
AUXILIARY HYDRAULICS, THIRD FUNCTION (Z-BAR LINKAGE) (BOOM TO COUPLER)....3163-4
AUXILIARY JOYSTICK PILOT CONTROLLER COMPONENTS....3160-90
AUXILIARY JOYSTICK PILOT CONTROLLER REPAIR KIT....3160-90
AUXILIARY SINGLE LEVER CONTROLLER COMPONENTS....3160-78
AUXILIARY SINGLE LEVER CONTROLLER REPAIR KIT....3160-78
AUXILIARY VALVE SECTION LOADER CONTROL VALVE (S.N. -594432)....3160-38
AUXILIARY VALVE SECTION LOADER CONTROL VALVE (S.N. 594433-)....3160-40
AUXILIARY VALVE SECTION COMPONENTS LOADER CONTROL VALVE (S.N. -594432)....3160-38

ALPHABETICAL INDEX - CONTINUED

PAGE

AUXILIARY VALVE SECTION COMPONENTS LOADER CONTROL VALVE (S.N. 594433-) 3160-40
AXLE ASSEMBLY, FRONT 0210-30
AXLE ASSEMBLY, REAR 0210-32
AXLE BREATHER EXTENSION KIT 0260-18
AXLE CENTER SERVICE KITS 0210-24
AXLE COOLER, HOSES AND FITTINGS (FACTORY INSTALLED AXLE COOLER) 0260-8
AXLE COOLER, HOSES AND FITTINGS (FACTORY INSTALLED AXLE COOLER) 0260-9A
AXLE DISCONNECT 0260-14
AXLE DISCONNECT LINE 0260-16
AXLE DISCONNECT VALVE COMPONENTS 3160-97
AXLE DRIVE SHAFTS 0325-2
AXLE DRIVE SHAFTS 0325-4
AXLE HOUSING 0210-42
AXLE HOUSING, FRONT 0210-18
AXLE HOUSING, REAR 0210-20
AXLE INPUT DISCONNECT 0260-14
AXLE INPUT YOKE 0210-3
AXLE MOUNTING BOLTS AND SUPPORT, REAR 0242-2
AXLE MOUNTING BOLTS AND SUPPORT, REAR 0242-3A
AXLE OIL CIRCULATION HOSES 0260-10
AXLE OIL CIRCULATION PUMP AND MOTOR 0260-6
AXLE OIL COOLER (FACTORY INSTALLED AXLE COOLER) 0260-8
AXLE OIL COOLER (FACTORY INSTALLED AXLE COOLER) 0260-9A
AXLE OIL COOLER HYDRAULIC HOSES (FACTORY INSTALLED AXLE COOLER) 0260-8
AXLE OIL COOLER HYDRAULIC HOSES (FACTORY INSTALLED AXLE COOLER) 0260-9A
AXLE SHAFT, FRONT 0210-18
AXLE SHAFT, REAR 0210-20
AXLE STOP BLOCK (EIGHT DEGREE) 0242-4
AXLE STOP BLOCK (EIGHT DEGREE) 0242-5A
AXLE STOP BLOCK (TEN DEGREE) 0242-6
AXLE-SHAFT 0210-42
AXLE-SHAFT 0210-48
AXLE, FRONT 0210-2
AXLE, REAR 0210-2

B

BACK PLATE, CAB 1810-18
BACKREST CUSHION 1821-2
BACKUP ALARM 1810-36
BAFFLE SOUND, ABSORBER 1913-6
BALANCER SHAFT, ENGINE 0415-2
BAR, FRAME LOCK 1913-2
BARREL ASSEMBLY, COUPLER CYLINDER (POWERLLEL AND Z-BAR LINKAGE) 3104-14
BARREL ASSEMBLY, COUPLER CYLINDER (POWERLLEL AND Z-BAR LINKAGE) 3104-16
BARREL ASSEMBLY, HI-VIS COUPLER CYLINDER (POWERLLEL AND Z-BAR LINKAGE) 3104-18
BARREL, BOOM CYLINDER (FOR USE WITH POWERLLEL LINKAGE) 3165-18
BARREL, BOOM CYLINDER (FOR USE WITH TC) 3165-12
BARREL, TILT CYLINDER (FOR USE WITH TC) 3165-14
BASE SEAT 1810-18
BASE, OIL FILTER, ENGINE 0407-5
BASE, SEAT 1810-20
BATTERY (625 CCA) 1671-2
BATTERY (950 CCA) 1671-2
BATTERY CABLES 1671-2
BATTERY COVERS 1913-4
BATTERY DISCONNECT 1671-2
BATTERY DISCONNECT SWITCH 1671-2
BEARING 0210-34
BEARING 0210-36
BEARING, DRIVELINE/PARKING BRAKE 1060-12
BEARING, DRIVELINE/PARKING BRAKE 1060-14
BEARINGS 0210-44
BEARINGS, CONNECTING ROD 0403-2
BEARINGS, CRANKSHAFT 0401-2
BEARINGS, TRANSMISSION INPUT SHAFT 0350-6
BELT TENSIONER (55 AMP) 1672-2
BELT TENSIONER (80 AMP) 1672-6
BELT TENSIONER, ENGINE 0429-2
BELT, ALTERNATOR DRIVE (55 AMP) 1672-2
BELT, ALTERNATOR DRIVE (80 AMP) 1672-6
BELT, HARSH ENVIRONMENT ALTERNATOR 1672-10
BLADE, WIPER 1810-28
BLADE, WIPER (FRONT) 1810-26
BLOCK HEATER 0505-6
BLOCK, AXLE STOP (EIGHT DEGREE) 0242-4
BLOCK, AXLE STOP (EIGHT DEGREE) 0242-5A
BLOCK, AXLE STOP (TEN DEGREE) 0242-6
BLOCK, CYLINDER 0404-2
BLOCK, SHORT 0450-2
BLOWER MOTOR AND SWITCH, HEATER 1830-8
BLOWER MOTOR AND SWITCH, HEATER AND A/C 1830-4
BLOWER SWITCH, A/C AND HEATER 1674-11
BOOM CYLINDER (FOR USE WITH POWERLLEL LINKAGE) 3165-18
BOOM CYLINDER (FOR USE WITH TC) 3165-12
BOOM CYLINDER (Z-BAR LINKAGE)(S.N. -595722) 3165-4
BOOM CYLINDER (Z-BAR LINKAGE)(S.N. 595723-) 3165-6
BOOM CYLINDER BORE SEAL KIT (Z-BAR LINKAGE)(S.N. 595723-) 3165-6
BOOM CYLINDER HYDRAULIC FITTINGS 3165-2
BOOM CYLINDER HYDRAULICS (FOR USE WIH POWERLLEL LINKAGE) 3160-60
BOOM CYLINDER HYDRAULICS (S.N. -594432) (FOR USE WITH Z-BAR LINKAGE) 3160-48
BOOM CYLINDER HYDRAULICS (S.N. 594433-) (FOR USE WITH Z-BAR LINKAGE) 3160-50
BOOM CYLINDER HYDRAULICS TO LOADER CONTR OL VALVE (FOR USE WITH TC) 3160-66
BOOM CYLINDER LOCK 3140-24
BOOM CYLINDER PIN, LOADER FRAME (POWERLLEL LINKAGE) 3140-6
BOOM CYLINDER PIN, LOADER FRAME (POWERLLEL LINKAGE) 3140-7A
BOOM CYLINDER PIN, LOADER FRAME (TOOL CARRIER) 3140-4
BOOM CYLINDER PIN, LOADER FRAME (Z-BAR LINKAGE) 3140-2
BOOM CYLINDER PIN, LOADER FRAME (Z-BAR LINKAGE) 3140-3A
BOOM CYLINDER PINS AND FITTINGS 3165-2
BOOM CYLINDER PINS AND FITTINGS, POWERLLEL LINKAGE 3165-16
BOOM CYLINDER PINS AND FITTINGS, TOOL CARRIER 3165-10

ALPHABETICAL INDEX - CONTINUED

PAGE

BOOM CYLINDER ROD (Z-BAR LINKAGE)(S.N. -595722) 3165-4
BOOM CYLINDER ROD (Z-BAR LINKAGE)(S.N. 595723-) 3165-6
BOOM CYLINDER ROD SEAL KIT (Z-BAR LINKAGE)(S.N. -595722) 3165-4
BOOM CYLINDER ROD SEAL KIT (Z-BAR LINKAGE)(S.N. 595723-) 3165-6
BOOM KICKOUT SENSOR (FOR USE WITH TOOL CARRIER) 3166-8
BOOM KICKOUT/RETURN TO CARRY (FOR USE WITH TOOL CARRIER) 3166-8
BOOM KICKOUT/RETURN TO CARRY, LOADER (POWERLLEL LINKAGE)....3166-12
BOOM KICKOUT/RETURN TO CARRY, LOADER (Z-BAR LINKAGE)....3166-4
BOOM LINKAGE, LOADER....3140-16
BOOM LINKAGE, POWERLLEL....3140-20
BOOM LINKAGE, TOOL CARRIER....3140-18
BOOM PIVOT PIN (POWERLLEL LINKAGE)....3140-6
BOOM PIVOT PIN (POWERLLEL LINKAGE)....3140-7A
BOOM PIVOT PIN (Z-BAR LINKAGE)....3140-2
BOOM PIVOT PIN (Z-BAR LINKAGE)....3140-3A
BOOM PIVOT PIN (TOOL CARRIER) 3140-4
BOOM SECTION VALVE LOADER CONTROL VALVE (S.N. -594432)....3160-34
BOOM SECTION VALVE LOADER CONTROL VALVE (S.N. 594433-)....3160-36
BOOM TO COUPLER PIN DISCONNECT HOSES (POWERLLEL LINKAGE)....3160-124
BOOM TO COUPLER PIN DISCONNECT HOSES (Z-BAR LINKAGE)....3160-116
BOOM TO COUPLER THIRD FUNCTION HYDRAULIC HOSES (Z-BAR LINKAGE) 3163-4
BOOM TO COUPLER THIRD FUNCTION HYDRAULIC HOSES (POWERLLEL LINKAGE) 3163-6
BOOM, LOADER 3140-8
BOOM, POWERLLEL LINKAGE....3140-12
BOOM, TOOL CARRIER 3140-10
BOOT 3160-82
BOOT, TWO LEVER PILOT CONTROLLER....3160-74
BORE KIT, BOOM CYLINDER (FOR USE WITH POWERLLEL LINKAGE) 3165-18
BORE KIT, BOOM CYLINDER (FOR USE WITH TC) 3165-12
BORE KIT, BUCKET CYLINDER....3165-8
BORE KIT, BUCKET CYLINDER....3165-20
BORE KIT, BUCKET CYLINDER (Z-BAR LINKAGE)(S.N. -595722) 3165-4
BORE KIT, TILT CYLINDER (FOR USE WITH TC) 3165-14
BORE SEAL KIT, BOOM CYLINDER (Z-BAR LINKAGE)(S.N. 595723-) 3165-6
BORE SEAL KIT, COUPLER CYLINDER (POWERLLEL AND Z-BAR LINKAGE) 3104-14
BORE SEAL KIT, COUPLER CYLINDER (POWERLLEL AND Z-BAR LINKAGE) 3104-16
BORE SEAL KIT, HI-VIS COUPLER CYLINDER (POWERLLEL AND Z-BAR LINKAGE) 3104-18
BOTTOM GAURD, ABSORBER 1913-6
BOTTOM GUARD, FRONT....1746-4
BOTTOM GUARD, FRONT.... 1746-5A
BOTTOM GUARD, FUEL TANK....1746-2

PAGE

BOTTOM GUARD, TRANSMISSION 1746-4
BOTTOM GUARD, TRANSMISSION 1746-5A
BRACK DISK.... 0210-46
BRACK PISTON.... 0210-46
BRACKET EXTENSIONS, FRONT FENDER (TOOL CARRIER) 1927-10
BRACKET, A/C.... 1830-12
BRACKET, BRAKE PEDAL.... 1060-2
BRACKET, BRAKE PEDAL....1060-3A
BRACKET, FIRE EXTINGUISHER.... 1810-18
BRACKET, FIRE EXTINGUISHER.... 1810-20
BRACKET, LICENSE PLATE 1673-8
BRACKET, MUFFLER.... 0530-2
BRACKET, STEERING VALVE 1810-50
BRACKET, UPPER ALTERNATOR 0423-2
BRACKETS, ENGINE MOUNTING.... 0540-2
BRACKETS, SEAT 1821-2
BRACKETS, TRANSMISSION MOUNTING 0342-2
BRACKETS, TRANSMISSION MOUNTING 0342-3A
BRACKETS, WIPER MOUNTING.... 1810-30
BRAKE ACCUMULATOR.... 1060-6
BRAKE ACCUMULATOR....1060-7A
BRAKE CLUTCH 0210-46
BRAKE HOUSING 0210-44
BRAKE LINES.... 1060-10
BRAKE LINES....1060-11A
BRAKE PEDAL 1060-2
BRAKE PEDAL....1060-3A
BRAKE PEDAL BRACKET 1060-2
BRAKE PEDAL BRACKET 1060-3A
BRAKE PIPE.... 0210-50
BRAKE PIPE.... 0210-52
BRAKE PLATE 0210-46
BRAKE RETAINER 0210-46
BRAKE SYSTEM, DUAL.... 0210-26
BRAKE VALVE 1060-2
BRAKE VALVE....1060-3A
BRAKE VALVE FITTINGS.... 1060-2
BRAKE VALVE FITTINGS....1060-3A
BRAKE VALVE HYDRAULICS 1060-10
BRAKE VALVE HYDRAULICS 1060-11A
BRAKE VALVE SWITCH.... 1060-2
BRAKE VALVE SWITCH....1060-3A
BRAKE, PARKING 1060-12
BRAKE, PARKING 1060-14
BRAKELINE.... 0210-50
BRAKELINE.... 0210-52
BREATHER, FRONT AXLE.... 0210-30
BREATHER, REAR AXLE.... 0210-32
BUCKET CONVERSION PIVOT PLATE (HI-VIS LINKAGE) 3104-22
BUCKET CONVERSION PIVOT PLATE (POWERLLEL LINKAGE).... 3104-20
BUCKET CUTTING EDGE 3102-2
BUCKET CUTTING EDGE 3102-10
BUCKET CUTTING EDGE (ATTACHMENT COUPLER) 3102-4
BUCKET CYLINDER 3165-8
BUCKET CYLINDER 3165-20
BUCKET CYLINDER BORE KIT.... 3165-8
BUCKET CYLINDER BORE KIT.... 3165-20
BUCKET CYLINDER BORE KIT (Z-BAR LINKAGE)(S.N. -595722) 3165-4
BUCKET CYLINDER HYDRAULIC FITTINGS 3165-2
BUCKET CYLINDER HYDRAULICS TO LOADER CONTROL VALVE (POWERLLEL LINKAGE) 3160-60
BUCKET CYLINDER HYDRAULICS TO LOADER CONTROL VALVE(FOR USE WITH TC).... 3160-66

ALPHABETICAL INDEX - CONTINUED

PAGE

BUCKET CYLINDER HYDRAULICS(S.N. -594432) (FOR USE WITH Z-BAR LINKAGE)....3160-48
BUCKET CYLINDER HYDRAULICS(S.N. 594433-) (FOR USE WITH Z-BAR LINKAGE)....3160-50
BUCKET CYLINDER PIN, LOADER FRAME (POWERLLEL LINKAGE)....3140-6
BUCKET CYLINDER PIN, LOADER FRAME (POWERLLEL LINKAGE)....3140-7A
BUCKET CYLINDER PIN, LOADER FRAME (Z-BAR LINKAGE)....3140-2
BUCKET CYLINDER PIN, LOADER FRAME (Z-BAR LINKAGE)....3140-3A
BUCKET CYLINDER PINS AND FITTINGS....3165-2
BUCKET CYLINDER ROD....3165-8
BUCKET CYLINDER ROD....3165-20
BUCKET CYLINDER ROD SEAL KIT....3165-8
BUCKET CYLINDER ROD SEAL KIT....3165-20
BUCKET EDGE....3102-10
BUCKET EDGE (JAGZ)....3102-12
BUCKET LINKAGE....3140-16
BUCKET LINKAGE (POWERLLEL LINKAGE)....3140-20
BUCKET SECTION VALVE LOADER CONTROL VALVE (S.N. -594432)....3160-30
BUCKET SECTION VALVE LOADER CONTROL VALVE (S.N. 594433-)....3160-32
BUCKET TEETH, LOADER....3102-8
BUCKET VALVE SECTION LOADER CONTROL VALVE (S.N. -594432)....3160-30
BUCKET VALVE SECTION LOADER CONTROL VALVE (S.N. 594433-)....3160-32
BUCKET, LOADER (ATTACHMENT COUPLER)....3102-4
BUCKET, LOADER (HI-VIS COUPLER)....3102-6
BUCKETS, LOADER....3102-2
BUMPER, BUTTON....1910-4
BUSHING, HI-VIS LINKAGE ATTACHMENT COUPLER (POWERLLEL)....3104-10
BUSHING, HI-VIS LINKAGE ATTACHMENT COUPLER (Z-BAR)....3104-12
BUSHING, LOADER BOOM....3140-8
BUSHINGS, POWERLLEL LINKAGE BOOM....3140-12
BUTTON BUMPER....1910-4
BYPASS VALVE LINES, TRANSMISSION....0360-4
BYPASS VALVE, ENGINE OIL....0404-2
BYPASS VALVE, OIL FILTER....0407-5

C

CAB....1810-2
CAB BACK PLATE....1810-18
CAB CONTROL UNIT HOUSING....1674-6
CAB DOOR....1810-6
CAB DOOR HOLD OPEN LATCH....1810-2
CAB FLOOR....1810-18
CAB FLOOR MAT....1810-46
CAB FRAME....1810-2
CAB GLASS....1810-4
CAB LABELS AND DECALS....1322-4
CAB LEFT SIDE CONSOLE COVER....1810-42
CAB MONITOR AND ALARM....1674-10
CAB MONITOR CONSOLE....1810-8
CAB MONITOR HOUSING....1810-8
CAB MOUNTS....1810-22
CAB PEDESTAL....1810-12
CAB ROOF, PLASTIC....1810-34
CAB SHIELDS....1810-32
CAB WIRING HARNESS....1674-6
CAB WIRING HARNESS....1674-7A
CABLE, HEATER CONTROL....1830-2
CABLE, HEATER CONTROL....1830-6
CABLE, HI-VIS COUPLER HYDRAULIC HOSES....3163-2
CABLES, BATTERY....1671-2
CAMSHAFT....0402-1
CAMSHAFT FOLLOWERS....0402-3
CANOPY....1810-16
CANOPY FLOOR....1810-20
CANOPY FLOOR MAT....1810-46
CANOPY FRAME....1810-16
CANOPY HEADLINER....1810-16
CANOPY LABELS AND DECALS....1322-10
CANOPY MONITOR CONSOLE....1810-10
CANOPY MONITOR HOUSING....1810-10
CANOPY PEDESTAL....1810-12
CANOPY REAR WINDOW....1810-16
CANOPY ROOF, PLASTIC....1810-34
CANOPY ROPS....1810-16
CAP, ENGINE OIL FILLER....0407-1
CAP, MAIN BEARING....0404-2
CAP, RADIATOR....0510-2
CAP, RADIATOR....0510-4
CAP, RADIATOR....0510-5A
CAP, RADIATOR....0510-6
CAP, WINDOW WASHER....1810-24
CAP,FUEL TANK....0560-2
CAP,HYDRAULIC OIL RESERVOIR FILLER....2160-6
CAP,HYDRAULIC OIL RESERVOIR FILLER....2160-7A
CAPACITOR, ALTERNATOR (55 AMP)....1672-2
CAPACITOR, ALTERNATOR (80 AMP)....1672-6
CARRIER, FINAL DRIVE PLANET PINION....0210-22
CARRIER, PLANET PINION 1000 SERIES....0210-23
CASE, FRONT DIFFERENTIAL (WITH DIFFERENTIAL LOCK)....0210-6
CASE, FRONT DIFFERENTIAL (WITH STANDARD DIFFERENTIAL)....0210-10
CASE, REAR DIFFERENTIAL (WITH DIFFERENTIAL LOCK)....0210-8
CASE, REAR DIFFERENTIAL (WITH STANDARD DIFFERENTIAL)....0210-12
CASSETTE PLAYER (SER. NO. -590067)....2001-6
CASSETTE PLAYER (SERIAL NO.600741-)....2001-7C
CASSETTE PLAYER (SER.NO. 590068-600740)....2001-7A
CD PLAYER (SER. NO. -590067)....2001-6
CD PLAYER (SER.NO. 590068-600740)....2001-7A
CD PLAYER (SERIAL NO.600741-)....2001-7C
CHARGE AIR COOLER....0510-2
CHARGE AIR COOLER....0510-4
CHARGE AIR COOLER....0510-5A
CHARGE AIR COOLER....0510-6
CIRCULATION PUMP AND MOTOR, AXLE OIL....0260-6
CLAMP, HI LIFT BOOM TO COUPLER, THIRD FUNCTION HYD HOSES (Z-BAR LINKAGE)....3163-4
CLAMP, HI-VIS COUPLER HYDRAULIC HOSES....3163-2
CLANGE-COVER....0210-44
CLEANER,AIR....0520-2
CLOSE MOUNTED STEPS....1822-4
CLUTCH....0210-38
CLUTCH ASSEMBLY (FIRST GEAR)....0350-30
CLUTCH ASSEMBLY (HIGH RANGE)....0350-36
CLUTCH ASSEMBLY (SECOND GEAR)....0350-32
CLUTCH ASSEMBLY (THIRD GEAR)....0350-34
CLUTCH ASSEMBLY DRIVESHAFT (FIRST GEAR)....0350-30

ALPHABETICAL INDEX - CONTINUED

PAGE

CLUTCH ASSEMBLY DRIVESHAFT (HIGH RANGE).....0350-36
CLUTCH ASSEMBLY DRIVESHAFT (SECOND GEAR).....0350-32
CLUTCH ASSEMBLY DRIVESHAFT (THIRD GEAR) 0350-34
CLUTCH ASSEMBLY DRUM (FIRST GEAR) 0350-30
CLUTCH ASSEMBLY DRUM (HIGH RANGE).....0350-36
CLUTCH ASSEMBLY DRUM (SECOND GEAR) 0350-32
CLUTCH ASSEMBLY DRUM (THIRD GEAR) 0350-34
CLUTCH ASSEMBLY, FORWARD.....0350-26
CLUTCH ASSEMBLY, REVERSE.....0350-28
CLUTCH, STARTING MOTOR.....0422-2
COAT HOOK.....1810-40
COLD WEATHER STARTING AID.....0505-2
COLD WEATHER STARTING AID SWITCH.....0505-2
COLUMN, LOWER STEERING.....1810-50
COLUMN, STEERING.....1810-48
COMPARTMENT, LOAD CENTER 1674-6
COMPARTMENT, LOAD CENTER 1674-7A
COMPONENTS, AUXILIARY JOYSTICK PILOT CONTROLLER.....3160-90
COMPONENTS, AUXILIARY VALVE SECTION LOADER CONTROL VALVE (S.N. -594432).....3160-38
COMPONENTS, AUXILIARY VALVE SECTION LOADER CONTROL VALVE (S.N. 594433-).....3160-40
COMPONENTS, HVAC MODULE 1830-4
COMPONENTS, SINGLE AND DUAL AUXILIARY CONTROLLER.....3160-78
COMPONENTS, VALVE, PIN AND AXLE DISCON.....3160-97
COMPONENTS,HYDRAULIC OIL PRESSURE REGULATOR VALVE.....2160-10
COMPRESSOR, A/C 1830-12
CONDENSER, A/C 1830-14
CONDITIONER, ENGINE COOLANT.....1369-4
CONNECTING ROD 0403-2
CONNECTING ROD BEARINGS 0403-2
CONSOLE CAB 1810-54
CONSOLE COVER, CAB LEFT SIDE 1810-42
CONSOLE, CAB MONITOR 1810-8
CONSOLE, CANOPY MONITOR 1810-10
CONSOLE, CUPHOLDER.....1810-54
CONTOLLER, AUXILIARY SINGLE LEVER.....3160-78
CONTROL UNIT HOUSING, CAB 1674-6
CONTROL UNIT, ENGINE.....1674-6
CONTROL UNIT, TRANSMISSION 1674-6
CONTROL UNIT, TRANSMISSION 1674-7A
CONTROL VALVE LOAD SENSE HYDRAULIC HOSE (FOR USE WITH TC) 3160-66
CONTROL VALVE MANIFOLD, TRANSMISSION.....0350-16
CONTROL VALVE STUD ASSEMBLY, LOADER (2-SPOOL) (S.N. 594433-).....3160-4
CONTROL VALVE STUD ASSEMBLY, LOADER (3-SPOOL) (S.N. 594433-).....3160-10
CONTROL VALVE STUD ASSEMBLY, LOADER (4-SPOOL) (S.N. 594433-).....3160-16
CONTROL VALVE TIE BOLTS, LOADER (2-SPOOL) (S.N. 594433-).....3160-4
CONTROL VALVE TIE BOLTS, LOADER (3-SPOOL) (S.N. 594433-).....3160-10
CONTROL VALVE TIE BOLTS, LOADER (4-SPOOL) (S.N. 594433-).....3160-16
CONTROL VALVE, COVER, ABSORBER.....1913-6
CONTROL VALVE, LOADER (2-SPOOL) (S.N. -594432).....3160-2
CONTROL VALVE, LOADER (2-SPOOL) (S.N. 594433-).....3160-4
CONTROL VALVE, LOADER (2-SPOOL) TOOL CARRIER.....3160-6

PAGE

CONTROL VALVE, LOADER (3-SPOOL) (S.N. -594432) 3160-8
CONTROL VALVE, LOADER (3-SPOOL) (S.N. 594433-) 3160-10
CONTROL VALVE, LOADER (3-SPOOL) TOOL CARRIER..... 3160-12
CONTROL VALVE, LOADER (4-SPOOL) (S.N. -594432) 3160-14
CONTROL VALVE, LOADER (4-SPOOL) (S.N. 594433-) 3160-16
CONTROL VALVE, LOADER (4-SPOOL) TOOL CARRIER..... 3160-18
CONTROL VALVE, RIDE (S.N. -594432) 3160-92
CONTROL VALVE, RIDE (S.N. 594433-) 3160-94
CONTROL VALVE, TRANSMISSION 0350-18
CONTROL, TEMPERATURE..... 1830-2
CONTROL, TEMPERATURE..... 1830-6
CONTROL,RADIO REMOTE (SER. NO. -590067) 2001-6
CONTROL,RADIO REMOTE (SER.NO. 590068-600740) 2001-7A
CONTROL,RADIO REMOTE (SERIAL NO.600741-) 2001-7C
CONTROLLER, AUXILIARY JOYSTICK PILOT..... 3160-90
CONTROLLER, JOYSTICK PILOT 3160-82
CONTROLLER, TWO LEVER PILOT 3160-74
CONVERSION BUCKET PIVOT PLATE (HI-VIS LINKAGE) 3104-22
CONVERSION BUCKET PIVOT PLATE (POWERLLEL LINKAGE)..... 3104-20
CONVERSION KIT, JOYSTICK FNR 3160-86
CONVERTER (10 AMP) (24 VOLT TO 12 VOLT)..... 1674-13
CONVERTER (5 AMP) (24 VOLT TO 12 VOLT)..... 1674-12
CONVERTER AND POWER PLUG (10 AMP) (24 VOLT TO 12 VOLT)..... 1674-13
CONVERTER AND POWER PLUG (5 AMP) (24 VOLT TO 12 VOLT)..... 1674-12
CONVERTER PRESSURE RELIEF VALVE 0350-22
CONVERTER, TORQUE..... 0350-4
COOLANT CONDITIONER, ENGINE..... 1369-4
COOLANT HEATER, ENGINE..... 0505-6
COOLANT RECOVERY TANK..... 0510-2
COOLANT RECOVERY TANK..... 0510-4
COOLANT RECOVERY TANK.....0510-5A
COOLANT RECOVERY TANK..... 0510-6
COOLANT TEMPERATURE SENSOR..... 1674-14
COOLER, AXLE (FACTORY INSTALLED AXLE COOLER) 0260-8
COOLER, AXLE (FACTORY INSTALLED AXLE COOLER) 0260-9A
COOLER, CHARGE AIR..... 0510-2
COOLER, CHARGE AIR..... 0510-4
COOLER, CHARGE AIR.....0510-5A
COOLER, CHARGE AIR..... 0510-6
COOLER, ENGINE OIL 0419-2
COOLER, HYDRAULIC OIL..... 0510-2
COOLER, HYDRAULIC OIL..... 0510-4
COOLER, HYDRAULIC OIL.....0510-5A
COOLER, HYDRAULIC OIL..... 0510-6
COOLER, TRANSMISSION OIL..... 0510-2
COOLER, TRANSMISSION OIL..... 0510-4
COOLER, TRANSMISSION OIL.....0510-5A
COOLER, TRANSMISSION OIL..... 0510-6

ALPHABETICAL INDEX - CONTINUED

PAGE

COOLING SYSTEM ACCESS PANELS 1910-6
COUNTERWEIGHT, LINKAGE COUPLER....1520-2
COUNTERWEIGHT, LINKAGE COUPLER.... 1520-3A
COUNTERWEIGHT, MAIN 1749-2
COUPLER HYDRAULIC CYLINDER, ATTACHMENT (POWERLLEL AND Z-BAR LINKAGE) 3104-14
COUPLER HYDRAULIC CYLINDER, ATTACHMENT (POWERLLEL AND Z-BAR LINKAGE) 3104-16
COUPLER, ATTACHMENT (Z-BAR LINKAGE)....3104-6
COUPLER, POWERLLEL LINKAGE 3104-8
COUPLER, TOOL CARRIER ATTACHMENT 3104-2
COVER, A/C DELETE 1830-10
COVER, CAB LEFT SIDE CONSOLE 1810-42
COVER, CONSOLE SWITCH....1810-54
COVER, DRIVE DAMPER 0350-38
COVER, FRESH AIR HOUSING 1810-44
COVER, GEARBOX HOUSING....0350-8
COVER, HI-VIS LINKAGE ATTACHMENT COUPLER (POWERLLEL) 3104-10
COVER, HI-VIS LINKAGE ATTACHMENT COUPLER (Z-BAR) 3104-12
COVER, REAR, ALTERNATOR (55 AMP) 1672-4
COVER, REAR, ALTERNATOR (80 AMP) 1672-8
COVER, ROCKER ARM 0409-1
COVER, STEERING COLUMN 1810-52
COVER, THERMOSTAT....0418-2
COVER, TIMING GEAR....0417-2
COVER, TORQUE CONVERTER....0350-4
COVER, TRANSMISSION 0350-13
COVER, TRANSMISSION 0350-13A
COVER, TRANSMISSION HOUSING 0350-8
COVER, VANDAL 1810-20
COVERS, BATTERY 1913-4
CRANKSHAFT AND BEARINGS 0401-2
CRANKSHAFT LOWER IDLER GEAR....0417-2
CRANKSHAFT PULLEY....0429-1
CRANKSHAFT UPPER IDLER GEAR 0402-2
CROSS SHAFT....0210-38
CROSS SHAFT....0210-40
CUPHOLDER CONSOLE....1810-54
CUSHION, BACKREST 1821-2
CUSHION, SEAT 1821-2
CUSHIONS, STEERING, ENGINE FRAME 1740-4
CUTTING EDGE....3102-10
CUTTING EDGE (JAGZ) 3102-12
CUTTING EDGE, LOADER BUCKET....3102-2
CUTTING EDGE, LOADER BUCKET....3102-10
CUTTING EDGE,BUCKET 3102-2
CUTTING EDGE,BUCKET (ATTACHMENT COUPLER) 3102-4
CYLINDER BLOCK....0404-2
CYLINDER HEAD....0409-2
CYLINDER HEAD GASKET 0409-2
CYLINDER LINER 0403-2
CYLINDER LOCK, BOOM 3140-24
CYLINDER-FITTING ROCK GUARD 1746-6
CYLINDER, ATTACHMENT COUPLER (POWERLLEL AND Z-BAR LINKAGE) 3104-14
CYLINDER, ATTACHMENT COUPLER (POWERLLEL AND Z-BAR LINKAGE) 3104-16
CYLINDER, ATTACHMENT COUPLER (POWERLLEL LINKAGE)....3104-8
CYLINDER, ATTACHMENT COUPLER (Z-BAR LINKAGE)....3104-6
CYLINDER, ATTACHMENT HI-VIS COUPLER (POWERLLEL AND Z-BAR LINKAGE) 3104-18

PAGE

CYLINDER, BOOM (FOR USE WITH POWERLLEL LINKAGE)..... 3165-18
CYLINDER, BOOM (FOR USE WITH TC) 3165-12
CYLINDER, BOOM (Z-BAR LINKAGE)(S.N. -595722) 3165-4
CYLINDER, BOOM (Z-BAR LINKAGE)(S.N. 595723-) 3165-6
CYLINDER, BUCKET 3165-8
CYLINDER, BUCKET 3165-20
CYLINDER, HI-VIS LINKAGE ATTACHMENT COUPLER (POWERLLEL)..... 3104-10
CYLINDER, HI-VIS LINKAGE ATTACHMENT COUPLER (Z-BAR)..... 3104-12
CYLINDER, POWERLLEL LINKAGE COUPLER 3104-8
CYLINDER, STEERING..... 0960-10
CYLINDER, TILT (FOR USE WITH TC) 3165-14
CYLINDER, TOOL CARRIER ATTACHMENT COUPLER 3104-4
CYLINDER, Z-BAR ATTACHMENT COUPLER 3104-6

D

DAMPER, DRIVE AND COVER..... 0350-38
DASH MODULE WIRING WITH JOYSTICK..... 1674-9
DECALS AND LABELS (CANOPY)..... 1322-10
DECALS AND LABELS (FRENCH) 1322-6
DECALS AND LABELS (SPANISH)..... 1322-8
DECALS AND LABELS, CAB 1322-4
DECALS AND TRADEMARKS (ENGLISH)..... 1322-2
DETENT KIT, AUXILIARY CONTROLLER..... 3160-78
DIFFERENTIAL BEARING 0210-38
DIFFERENTIAL BEARING 0210-40
DIFFERENTIAL CASE, FRONT (WITH DIFFERENTIAL LOCK)..... 0210-6
DIFFERENTIAL CASE, FRONT (WITH STANDARD DIFFERENTIAL) 0210-10
DIFFERENTIAL CASE, REAR (WITH DIFFERENTIAL LOCK)..... 0210-8
DIFFERENTIAL CASE, REAR (WITH STANDARD DIFFERENTIAL) 0210-12
DIFFERENTIAL DRIVE SHAFTS 0325-2
DIFFERENTIAL DRIVE SHAFTS 0325-4
DIFFERENTIAL LOCK LINE, FRONT..... 0260-2
DIFFERENTIAL LOCK LINE, FRONT..... 0260-3A
DIFFERENTIAL LOCK LINES, FRONT AND REAR..... 0260-4
DIFFERENTIAL LOCK LINES, FRONT AND REAR..... 0260-5A
DIFFERENTIAL LOCK SWITCH..... 0260-19
DIFFERENTIAL PINION 0210-38
DIFFERENTIAL PINION 0210-40
DIFFERENTIAL SUPPORTS AND LUBE LINES..... 0242-2
DIFFERENTIAL SUPPORTS AND LUBE LINES..... 0242-3A
DIFFERENTIAL, HYDRAULIC ACTUATED 0210-14
DIFFERENTIAL, STANDARD 0210-16
DIODES, VEC 1674-16
DIPSTICK..... 0210-50
DIPSTICK..... 0210-52
DIPSTICK, ENGINE OIL..... 0407-3
DISCONNECT VALVE COMPONENTS,PIN AND AXLE..... 3160-97
DISCONNECT VALVE, AXLE AND PIN (S.N. 594433-)..... 3160-108
DISCONNECT, AXLE INPUT..... 0260-14
DISCONNECT, BATTERY..... 1671-2
DOMELIGHT AND HEADLINER..... 1810-14
DOMELIGHT SWITCH, DOOR ACTIVATED 1673-5

ALPHABETICAL INDEX - CONTINUED

PAGE

DOOR 1810-6
DOOR ACTIVATED DOMELIGHT SWITCH 1673-5
DOOR GLASS 1810-6
DOOR LATCH, BATTERY COVERS....1913-4
DOOR, ACCESS....1810-2
DOOR, BATTERY COVERS 1913-4
DOOR, ENGINE SERVICE....1910-4
DRAIN KIT, ENVIRONMENTAL 1369-2
DRAIN KIT, ENVIRONMENTAL 1369-3A
DRAIN PLUG, TRANSMISSION....0350-8
DRAIN VALVE, ENGINE OIL 0407-2
DRIP RAIL 1810-17A
DRIVE BELT TENSIONER 0429-2
DRIVE DAMPER AND COVER....0350-38
DRIVE HI-BEAM LAMP
(SN -603831)....1673-2
DRIVE HI-BEAM LAMP
(SN 603832-).... 1673-3A
DRIVE SHAFTS, AXLE DIFFERENTIALS....0325-2
DRIVE SHAFTS, AXLE DIFFERENTIALS....0325-4
DRIVE SHAFTS, TRANSMISSION....0325-2
DRIVE SHAFTS, TRANSMISSION....0325-4
DRIVELINE BEARING/PARKING BRAKE....1060-12
DRIVELINE BEARING/PARKING BRAKE....1060-14
DRIVESHAFT, CLUTCH ASSEMBLY (FIRST GEAR) 0350-30
DRIVESHAFT, CLUTCH ASSEMBLY (HIGH RANGE) 0350-36
DRIVESHAFT, CLUTCH ASSEMBLY (THIRD GEAR)....0350-34
DRIVESHAFT, CLUTCH ASSEMBLY, SECOND GEAR 0350-32
DRIVESHAFT, FORWARD CLUTCH ASSEMBLY 0350-26
DRIVESHAFT, REVERSE CLUTCH ASSEMBLY 0350-28
DRUM, CLUTCH ASSEMBLY (FIRST GEAR)....0350-30
DRUM, CLUTCH ASSEMBLY (HIGH RANGE)....0350-36
DRUM, CLUTCH ASSEMBLY (SECOND GEAR)....0350-32
DRUM, CLUTCH ASSEMBLY (THIRD GEAR) 0350-34
DRUM, FORWARD CLUTCH ASSEMBLY....0350-26
DRUM, REVERSE CLUTCH ASSEMBLY....0350-28
DUAL BRAKE SYSTEM....0210-26
DUAL JOYSTICK PILOT CONTROLLER AND
HYDRAULIC HOSES 3160-88
DUCT, FRESH AIR 1830-2
DUCT, FRESH AIR 1830-6
DUCTS, HEATER AND A/C....1830-11

E

EDGE, BUCKET (JAGZ)....3102-12
EDGE, BUCKET CUTTING 3102-10
EDGE, CUTTING (JAGZ) 3102-12
ELECTRIC FIFTH FUNCTION 3160-28
ELECTRICAL CENTER, VEHICLE....1674-16
ELEMENT, A/C FILTER 1830-2
ELEMENT, ENGINE OIL FILTER....0407-5
ELEMENT, FINAL FUEL FILTER....0420-2
ELEMENT, TRANSMISSION OIL FILTER 0350-2
EMBLEM, SLOW MOVING VEHICLE....1810-37
EMBLEM, SMV....1810-37
ENGINE AIR HEATER 0505-4
ENGINE AIR HEATER FUSE HOLDER....0505-4
ENGINE AIR HEATER RELAY....0505-4
ENGINE AIR HEATER WIRE HARNESS 0505-4
ENGINE AIR PLENUM 1910-4
ENGINE BALANCER SHAFT 0415-2
ENGINE BLOCK 0404-2
ENGINE COMPARTMENT STEP 1822-6
ENGINE CONTROL UNIT 1674-6
ENGINE COOLANT HEATER....0505-6

PAGE

ENGINE COOLANT TEMPERATURE AND OIL
PRESSURE SENSORS 1674-14
ENGINE COOLANT TEMPERATURE SENSOR 1674-14
ENGINE FAN....0510-7A
ENGINE FAN DRIVE HYDRAULIC MOTOR.... 0510-8
ENGINE FAN DRIVE HYDRAULIC MOTOR....0510-9A
ENGINE FAN DRIVE HYDRAULIC PUMP.... 0510-8
ENGINE FAN DRIVE HYDRAULIC PUMP....0510-9A
ENGINE FRAME.... 1740-2
ENGINE FRAME....1740-3A
ENGINE FRAME PIN.... 1740-2
ENGINE FRAME PIN....1740-3A
ENGINE FRAME STEERING CUSHIONS 1740-4
ENGINE FRAME WIRING HARNESS 1674-2
ENGINE FRAME WIRING HARNESS 1674-3A
ENGINE FRAME WIRING HARNESS
(FOR USE WITH POWERLLEL LINKAGE)....1674-3C
ENGINE FRAME WIRING HARNESS
(FOR USE WITH POWERLLEL LINKAGE).... 1674-4
ENGINE FRONT PLATE 0402-2
ENGINE GASKET SET, OVERHAUL/TUNE-UP -
5510N.... 0452-2
ENGINE MOUNTING BRACKETS.... 0540-2
ENGINE OIL BYPASS VALVE.... 0404-2
ENGINE OIL COOLER 0419-2
ENGINE OIL DIPSTICK.... 0407-3
ENGINE OIL FILLER 0407-1
ENGINE OIL FILTER & HEADER 0407-5
ENGINE OIL PAN.... 0407-2
ENGINE OIL PRESSURE REGULATING VALVE 0404-2
ENGINE OIL PRESSURE SENSOR.... 1674-14
ENGINE OIL PUMP 0407-4
ENGINE OIL PUMP INTAKE.... 0407-4
ENGINE OVERHAUL KIT (750J) 0450-4
ENGINE PISTON 0403-2
ENGINE SHORT BLOCK.... 0450-2
ENGINE SIDE SHIELD LATCH.... 1910-4
ENGINE SIDE SHIELD PLATE 1910-4
ENGINE SIDE SHIELDS.... 1910-4
ENGINE SPEED CONTROL PEDAL 0515-2
ENGINE SPEED CONTROL SENSOR.... 0515-2
ENGINE SPEED SENSOR 0578-2
ENGINE SPEED SENSOR WHEEL 0401-2
ENGINE VENTILATING SYSTEM 0408-2
ENVIRONMENTAL DRAIN KIT 1369-2
ENVIRONMENTAL DRAIN KIT 1369-3A
ETHER STARTING AID 0505-2
EXHAUST MANIFOLD.... 0410-2
EXHAUST PIPE 0530-2
EXHAUST VALVE 0409-2
EXTENSION KIT, AXLE BREATHER.... 0260-18
EXTENSION KIT, PARKING BRAKE 0260-18
EXTENSIONS, BRACKET, FRONT FENDER
(TOOL CARRIER) 1927-10
EXTERNAL OIL LINES, TRANSMISSION.... 0360-4
EXTIGUISHER, FIRE.... 1810-20
EXTINGUISHER, FIRE 1810-18

F

FAN DOOR....0510-7A
FAN DRIVE HYDRAULIC HOSES 0510-8
FAN DRIVE HYDRAULIC HOSES 0510-9A
FAN DRIVE HYDRAULIC PUMP 0510-8
FAN DRIVE HYDRAULIC PUMP 0510-9A
FAN DRIVE MOTOR 0510-8

ALPHABETICAL INDEX - CONTINUED

PAGE

FAN DRIVE MOTOR 0510-9A
FAN DRIVE, REVERSE, HYDRAULIC PUMP 0510-10
FAN DRIVE, REVERSE, HYDRAULIC PUMP 0510-11A
FAN DRIVE, REVERSE, MOTOR 0510-10
FAN DRIVE, REVERSE, MOTOR 0510-11A
FAN GUARD 0510-7A
FAN GUARD LATCH 0510-7A
FAN HOUSING 0510-7A
FAN HUB 0510-7A
FAN PEDESTAL 0510-7A
FAN SHROUD 0510-7A
FAN, ENGINE 0510-7A
FENDER BRACKET EXTENSIONS
(TOOL CARRIER) 1927-10
FENDERS, FRONT 1927-2
FENDERS, FRONT
FULL COVERAGE 1927-6
FENDERS, REAR 1927-4
FENDERS, REAR
FULL COVERAGE 1927-8
FENDERS, REAR (W/LATCH)
FULL COVERAGE 1927-9A
FIELD 3160-87
FIELD KIT 3160-87
FIELD KIT, PIN DISCONNECT
(Z-BAR LINKAGE)(S.N. -594432) 3160-112
FIELD KIT, PIN DISCONNECT
(Z-BAR LINKAGE)(S.N. 594433-) 3160-114
FIFTH FUNCTION VALVE SECTION
(SER. NO. - 594432) 3160-46
FIFTH FUNCTION VALVE SECTION
(SER. NO. 594433 -) 3160-47A
FIFTH FUNTION KIT 3160-28
FILL TUBE, TRANSMISSION 0360-2
FILLER NECK, ENGINE OIL 0407-1
FILTER ELEMENT, TRANSMISSION OIL 0350-2
FILTER HEAD, TRANSMISSION OIL 0350-2
FILTER RESTRICTION SWITCH, TRANSMISSION
OIL 0350-16
FILTER, ENGINE OIL 0407-5
FILTER, FRESH AIR 1830-2
FILTER, FRESH AIR 1830-6
FILTER, FUEL 0420-2
FILTER, FUEL, PRIMARY 0560-2
FILTER, HVAC RECIRCULATION 1830-4
FILTER, HVAC RECIRCULATION 1830-8
FILTER, HYDRAULIC OIL 2160-6
FILTER, HYDRAULIC OIL 2160-7A
FILTER, PRIMARY FUEL 0560-2
FILTER, TRANSMISSION OIL 0350-2
FILTER,AIR CLEANER 0520-2
FILTER,FINAL FUEL 0420-2
FINAL DRIVE SHAFT 0210-22
FINAL DRIVE SHAFT 1000 SERIES 0210-23
FINAL FUEL FILTER 0420-2
FIRE EXTINGUISHER AND BRACKET 1810-18
FIRE EXTINGUISHER AND BRACKET 1810-20
FIRST GEAR CLUTCH ASSEMBLY 0350-30
FITTINGS, DUAL JOYSTICK PILOT CONTROLLER 3160-88
FITTINGS, HEATER 1830-16
FITTINGS, HI-VIS COUPLER HYDRAULIC HOSES 3163-2
FITTINGS, HYDRAULIC, BOOM CYLINDER 3165-2
FITTINGS, HYDRAULIC, BUCKET CYLINDER 3165-2
FITTINGS, JOYSTICK PILOT CONTROLLER 3160-80
FITTINGS, JOYSTICK PILOT CONTROLLER WITH
AUXILARY 3160-84

PAGE

FITTINGS, POWERLLEL LINKAGE
BOOM CYLINDER 3165-16
FITTINGS, POWERLLEL LINKAGE
TILT CYLINDER 3165-16
FITTINGS, PRESSURE REGULATOR VALVE 2160-8
FITTINGS, PRESSURE REGULATOR VALVE 2160-9A
FITTINGS, STEERING COMPENSATOR VALVE
(SERIAL NO. 601560 -) 0960-3A
FITTINGS, STEERING CYLINDER 0960-8
FITTINGS, STEERING VALVE
(SERIAL NO. 601560 -) 0960-2
FITTINGS, TOOL CARRIER BOOM CYLINDER 3165-10
FITTINGS, TOOL CARRIER TILT CYLINDER 3165-10
FITTINGS, TRANSMISSION 0350-2
FITTINGS, TWO LEVER PILOT CONTROLLER 3160-72
FITTINGS, TWO LEVER PILOT CONTROLLER
WITH AUXILARY 3160-76
FLOOR MAT,CAB 1810-46
FLOOR MAT,CANOPY 1810-46
FLOOR, CAB 1810-18
FLOOR, CANOPY 1810-20
FLUID, STARTING AID 0505-2
FLYWHEEL 0433-1
FLYWHEEL HOUSING 0433-2
FNR CONVERSION KIT 3160-86
FNR CONVERSION KIT 3160-87
FOLLOWERS, CAMSHAFT 0402-3
FORKS, GUARD 3103-6
FORKS, PALLET 3103-2
FORKS, PALLET (HI-VIS) 3103-4
FORWARD CLUTCH ASSEMBLY 0350-26
FORWARD CLUTCH ASSEMBLY DRIVESHAFT 0350-26
FORWARD CLUTCH ASSEMBLY DRUM 0350-26
FOUR PINION HYDRAULIC DIFFERENTIAL 0210-14
FOUR SPOOL CONTROL VALVE
(S.N. -594432) 3160-14
FOUR SPOOL CONTROL VALVE, LOADER
(S.N. 594433-) 3160-16
FOUR SPOOL CONTROL VALVE, LOADER
TOOL CARRIER 3160-18
FOUR SPOOL LOADER CONTROL VALVE
(S.N. -594432) 3160-14
FOUR SPOOL LOADER CONTROL VALVE
(S.N. 594433-) 3160-16
FOUR SPOOL LOADER CONTROL VALVE,
TOOL CARRIER 3160-18
FOUR SPOOL TOOL CARRIER CONTROL VALVE 3160-18
FOUR SPOOL VALVE, LOADER CONTROL
(S.N. 594433-) 3160-16
FOUR SPOOL VALVE, LOADER CONTROL
TOOL CARRIER 3160-18
FOURTH FUNCTION AUXILIARY HYDRAULICS
(FOR USE WITH POWERLLEL LINKAGE) 3160-62
FOURTH FUNCTION AUXILIARY HYDRAULICS
(FOR USE WITH TC) 3160-70
FOURTH FUNCTION AUXILIARY HYDRAULICS
(Z-BAR LINKAGE) (S.N. -594432) 3160-54
FOURTH FUNCTION AUXILIARY HYDRAULICS
(Z-BAR LINKAGE) (S.N. 594433-) 3160-56
FRAME LOCK BAR 1913-2
FRAME, CAB 1810-2
FRAME, CANOPY 1810-16
FRAME, ENGINE 1740-2
FRAME, ENGINE 1740-3A
FRAME, GUARD 3103-6
FRAME, LOADER
(POWERLLEL LINKAGE) 3140-6

ALPHABETICAL INDEX - CONTINUED

PAGE

FRAME, LOADER (POWERLLEL LINKAGE) ... 3140-7A
FRAME, LOADER (Z-BAR LINKAGE) ... 3140-2
FRAME, LOADER (Z-BAR LINKAGE) ... 3140-3A
FRAME, PALLET FORK ... 3103-2
FRAME, PALLET FORK (HI-VIS) ... 3103-4
FRAME, TOOL CARRIER ... 3140-4
FRENCH LABELS AND DECALS ... 1322-6
FRESH AIR DUCT ... 1830-2
FRESH AIR DUCT ... 1830-6
FRESH AIR FILTER ... 1830-2
FRESH AIR FILTER ... 1830-6
FRESH AIR FILTER ELEMENT ... 1830-2
FRESH AIR FILTER ELEMENT ... 1830-6
FRESH AIR HOUSING COVER ... 1810-44
FRONT AND REAR CAB MOUNTS ... 1810-22
FRONT AND REAR WINDOW WASHER ... 1810-24
FRONT AND REAR WORK LAMP ... 1673-4
FRONT AXLE ... 0210-2
FRONT AXLE ASSEMBLY ... 0210-30
FRONT AXLE ASSEMBLY BREATHER ... 0210-30
FRONT AXLE CAPSCREWS (POWERLLEL LINKAGE) ... 3140-6
FRONT AXLE CAPSCREWS (POWERLLEL LINKAGE) ... 3140-7A
FRONT AXLE CAPSCREWS (TOOL CARRIER) ... 3140-4
FRONT AXLE CAPSCREWS (Z-BAR LINKAGE) ... 3140-2
FRONT AXLE CAPSCREWS (Z-BAR LINKAGE) ... 3140-3A
FRONT AXLE DISCONNECT ... 0260-14
FRONT AXLE HOUSING ... 0210-18
FRONT AXLE MOUNTING (POWERLLEL LINKAGE) ... 3140-6
FRONT AXLE MOUNTING (POWERLLEL LINKAGE) ... 3140-7A
FRONT AXLE MOUNTING (Z-BAR LINKAGE) ... 3140-2
FRONT AXLE MOUNTING (Z-BAR LINKAGE) ... 3140-3A
FRONT AXLE SHAFT ... 0210-18
FRONT BOTTOM GUARD ... 1746-4
FRONT BOTTOM GUARD ... 1746-5A
FRONT CONSOLE WIRING HARNESS ... 1674-8
FRONT CONSOLE WIRING HARNESS ... 1674-9
FRONT DASH MODULE WIRING ... 1674-8
FRONT DIFFERENTIAL CASE ... 0210-34
FRONT DIFFERENTIAL CASE (WITH DIFFERENTIAL LOCK) ... 0210-6
FRONT DIFFERENTIAL CASE (WITH STANDARD DIFFERENTIAL) ... 0210-10
FRONT DIFFERENTIAL HOUSING (WITH DIFFERENTIAL LOCK) ... 0210-6
FRONT DIFFERENTIAL HOUSING (WITH STANDARD DIFFERENTIAL) ... 0210-10
FRONT DIFFERENTIAL LOCK LINE ... 0260-2
FRONT DIFFERENTIAL LOCK LINE ... 0260-3A
FRONT DIFFERENTIAL LOCK LINE ... 0260-4
FRONT DIFFERENTIAL LOCK LINE ... 0260-5A
FRONT FENDER BRACKET EXTENSIONS (TOOL CARRIER) ... 1927-10
FRONT FENDERS ... 1927-2
FRONT FENDERS FULL COVERAGE ... 1927-6

PAGE

FRONT LIGHT (SN -603831) ... 1673-2
FRONT LIGHT (SN 603832-) ... 1673-3A
FRONT PLATE, ENGINE ... 0402-2
FRONT SEAL ... 0417-2
FRONT TURN AND MARKER LIGHT (SN -603831) ... 1673-2
FRONT TURN AND MARKER LIGHT (SN 603832-) ... 1673-3A
FRONT WINDSHIELD WIPER ... 1810-26
FUEL FILTER HEATER KIT ... 0420-4
FUEL FILTER, FINAL, AND LINES ... 0420-2
FUEL FILTER, PRIMARY ... 0560-2
FUEL HOSES ... 0560-2
FUEL INJECTION LINES ... 0413-2
FUEL INJECTION PUMP ... 0413-2
FUEL INJECTOR REPAIR KIT ... 0413-2
FUEL TANK ... 0560-2
FUEL TANK BOTTOM GUARD ... 1746-2
FUEL TANK CAP ... 0560-2
FUEL TANK FILLER HOSE ... 0560-2
FUEL TANK SENDER ... 0560-2
FUEL TRANSFER PUMP ... 0421-1
FUSE HOLDER, ENGINE AIR HEATER ... 0505-4
FUSES, VEC ... 1674-16

G

GASKET SET, OVERHAUL/TUNE-UP - 5510N ... 0452-2
GASKET, CYLINDER HEAD ... 0409-2
GASKET, EXHAUST MANIFOLD ... 0410-2
GASKET, OIL FILTER HOUSING ... 0407-5
GASKET, TRANSMISSION ... 0350-13
GASKET, TURBOCHARGER ... 0416-2
GEAR SET ... 0210-34
GEAR SET ... 0210-36
GEAR SHIFT SYSTEM ... 0350-16
GEAR, CAMSHAFT ... 0402-1
GEAR, CRANKSHAFT ... 0401-2
GEAR, CRANKSHAFT LOWER IDLER ... 0417-2
GEAR, CRANKSHAFT UPPER IDLER ... 0402-2
GEAR, ENGINE BALANCER SHAFT ... 0415-2
GEAR, ENGINE OIL PUMP ... 0407-4
GEAR, FINAL DRIVE PLANET PINION ... 0210-22
GEAR, FUEL INJECTION PUMP ... 0413-2
GEAR, TRANSMISSION INPUT ... 0350-6
GEARBOX HOUSING ... 0350-8
GEARBOX HOUSING COVER ... 0350-8
GEARBOX HOUSING OUTPUT SHAFT AND YOKE ... 0350-20
GLASS ... 1810-4
GUARD FORKS ... 3103-6
GUARD, BOTTOM, FUEL TANK ... 1746-2
GUARD, FAN ... 0510-7A
GUARD, FRONT BOTTOM ... 1746-4
GUARD, FRONT BOTTOM ... 1746-5A
GUARD, LOADER BUCKET ... 3102-2
GUARD, REAR FULL COVERAGE FENDER ... 1927-9A
GUARD, ROCK, CYLINDER-FITTING ... 1746-6
GUARD, TRANSMISSION BOTTOM ... 1746-4
GUARD, TRANSMISSION BOTTOM ... 1746-5A
GUARDS, TRANSMISSION ... 1913-3
GUIDE ASSEMBLY ... 3160-82

ALPHABETICAL INDEX - CONTINUED

PAGE

H

HALF-SHAFT....0210-42
HALF-SHAFT....0210-48
HANDLE, PILOT CONTROLLER....3160-82
HANDLE, REAR PLASTIC....1910-6
HANDLE, TWO LEVER PILOT CONTROLLER....3160-74
HANDLE,REAR FULL COVERAGE FENDER....1927-9A
HARNESS, MAIN WIRING....1674-2
HARNESS, MAIN WIRING....1674-3A
HARNESS, MAIN WIRING (FOR USE WITH POWERLLEL LINKAGE)....1674-3C
HARNESS, MAIN WIRING (FOR USE WITH POWERLLEL LINKAGE)....1674-4
HARNESS, RETURN TO DIG....1674-15
HARSH ENVIRONMENT ALTERNATOR (100 AMP)....1672-10
HARSH ENVIRONMENT ALTERNATOR BELT (100 AMP)....1672-10
HEAD, CYLINDER....0409-2
HEADER, ENGINE OIL FILTER....0407-5
HEADER, PRIMARY FUEL FILTER....0560-2
HEADLINER AND DOMELIGHT....1810-14
HEADLINER, CANOPY....1810-16
HEADREST....1821-2
HEATER AND A/C BLOWER SWITCH....1674-11
HEATER AND A/C BLOWER WIRING HARNESS....1674-11
HEATER BLOWER MOTOR AND SWITCH....1830-4
HEATER BLOWER MOTOR AND SWITCH....1830-8
HEATER CONTROL CABLE....1830-2
HEATER CONTROL CABLE....1830-6
HEATER DUCTS....1830-11
HEATER FITTINGS....1830-16
HEATER HOSES....1830-16
HEATER KIT, FUEL FILTER....0420-4
HEATER THERMOSTAT SWITCH....1830-8
HEATER, ENGINE AIR....0505-4
HEATER, ENGINE COOLANT....0505-6
HEATING AND A/C LOUVERS....1810-8
HEATING AND AIR CONDITIONING OUTLET DUCT....1830-11
HI-VIS COUPLER BUCKET....3102-6
HI-VIS COUPLER HYDRAULIC CYLINDER, ATTACHMENT (POWERLLEL AND Z-BAR LINKAGE)....3104-18
HI-VIS LINKAGE ATTACHMENT COUPLER (POWERLLEL)....3104-10
HI-VIS LINKAGE ATTACHMENT COUPLER (Z-BAR)....3104-12
HI-VIS LINKAGE CONVERSION BUCKET PIVOT PLATE....3104-22
HI-VIS LINKAGE COUPLER (POWERLLEL)....3104-10
HI-VIS LINKAGE COUPLER (Z-BAR)....3104-12
HIGH LIFT LOADER BOOM....3140-8
HIGH LIFT LOADER BOOM LINKAGE....3140-16
HIGH LIFT TWO SPOOL LOADER CONTROL VALVE (S.N. -594432)....3160-2
HIGH LIFT TWO SPOOL LOADER CONTROL VALVE (S.N. 594433-)....3160-4
HIGH RANGE CLUTCH ASSEMBLY....0350-36
HINGE, REAR FULL COVERAGE FENDER....1927-9A
HITCH ASSEMBLY....1520-2
HITCH ASSEMBLY....1520-3A
HITCH ASSEMBLY WITH 8" PROTECTION BUMPER....1520-2
HITCH ASSEMBLY WITH 8" PROTECTION BUMPER....1520-3A
HOOD....1910-2
HOOD, ABSORBER....1913-6
HOOK, COAT....1810-40
HOOKS, LIFT....1330-2
HORN....1810-35
HORN SWITCH....1810-48
HOSE, A/C....1830-12
HOSE, BRAKE ACCUMULATOR....1060-6
HOSE, BRAKE ACCUMULATOR....1060-7A
HOSE, ENGINE VENTILATING....0408-2
HOSE, FRONT DIFFERENTIAL LOCK....0260-2
HOSE, FRONT DIFFERENTIAL LOCK....0260-3A
HOSE, FUEL TANK FILLER....0560-2
HOSE, HYDRAULIC (CONTROL VALVE LOAD SENSE) (FOR USE WITH TC)....3160-66
HOSE, HYDRAULIC (CONTROL VALVE TO BOOM CYLINDER) (FOR USE WITH TC)....3160-66
HOSE, HYDRAULIC (CONTROL VALVE TO BOOM CYLINDER) (POWERLLEL LINKAGE)....3160-60
HOSE, HYDRAULIC (CONTROL VALVE TO BUCKET CYLINDER) (POWERLLEL LINKAGE)....3160-60
HOSE, HYDRAULIC, THIRD FUNCTION (Z-BAR LINKAGE) (BOOM TO COUPLER)....3163-4
HOSE, HYDRAULIC, THIRD FUNCTION (Z-BAR LINKAGE) (HI LIFT BOOM TO COUPLER)....3163-4
HOSE, RADIATOR....0510-2
HOSE, RADIATOR....0510-4
HOSE, RADIATOR....0510-5A
HOSE, RADIATOR....0510-6
HOSE,AIR CLEANER....0520-2
HOSE,HYDRAULIC (CONTROL VALVE TO BUCKET CYLINDER) (FOR USE WITH TC)....3160-66
HOSE,STEERING CYLINDER HYDRAULIC....0960-6
HOSE,STEERING CYLINDER HYDRAULIC....0960-7A
HOSES AND FITTINGS, AXLE CIRCULATION....0260-10
HOSES AND FITTINGS, AXLE COOLING....0260-10
HOSES, DUAL JOYSTICK PILOT CONTROLLER....3160-88
HOSES, ENVIRONMENTAL DRAIN....1369-2
HOSES, ENVIRONMENTAL DRAIN....1369-3A
HOSES, FRONT AND REAR DIFFERENTIAL LOCK....0260-4
HOSES, FRONT AND REAR DIFFERENTIAL LOCK....0260-5A
HOSES, FUEL....0560-2
HOSES, HEATER....1830-16
HOSES, HI-VIS COUPLER HYDRAULIC HOSES....3163-2
HOSES, HYDRAULIC FAN DRIVE....0510-8
HOSES, HYDRAULIC FAN DRIVE....0510-9A
HOSES, HYDRAULIC PIN DISCONNECT AND AXLE DISONNECT VALVE (S.N. -594432)....3160-104
HOSES, HYDRAULIC PIN DISCONNECT AND AXLE DISONNECT VALVE (S.N. 594433-)....3160-108
HOSES, HYDRAULIC, FOURTH FUNCTION (Z-BAR LINKAGE) (S.N. -594432)....3160-54
HOSES, HYDRAULIC, FOURTH FUNCTION (Z-BAR LINKAGE) (S.N. 594433-)....3160-56
HOSES, HYDRAULIC, FOURTH FUNCTION AUXILIARY HYDRAULICS (FOR USE WITH TC)....3160-70
HOSES, HYDRAULIC, PIN DISCONNECT (FOR USE WITH POWERLLEL LINKAGE)....3160-122
HOSES, HYDRAULIC, PIN DISCONNECT (FOR USE WITH TC)....3160-110
HOSES, HYDRAULIC, PIN DISCONNECT (Z-BAR LINKAGE)(S.N. -594432)....3160-112
HOSES, HYDRAULIC, PIN DISCONNECT (Z-BAR LINKAGE)(S.N. 594433-)....3160-114
HOSES, HYDRAULIC, THIRD FUNCTION (FOR USE WITH TC)....3160-68
HOSES, HYDRAULIC, THIRD FUNCTION (POWERLLEL LINKAGE) (BOOM TO COUPLER)....3163-6
HOSES, HYDRAULIC, THIRD FUNCTION (Z-BAR LINKAGE) (S.N. -594432)....3160-52
HOSES, HYDRAULIC, THIRD FUNCTION (Z-BAR LINKAGE) (S.N. 594433-)....3160-56

ALPHABETICAL INDEX - CONTINUED

PAGE

HOSES, JOYSTICK PILOT CONTROLLER 3160-80
HOSES, JOYSTICK PILOT CONTROLLER WITH AUXILARY 3160-84
HOSES, LUBRICATION, STEERING CYLINDER 0960-8
HOSES, MAIN HYDRAULIC 2160-12
HOSES, MAIN HYDRAULIC 2160-14
HOSES, PIN DISCONNECT HYDRAULIC (BOOM TO COUPLER)(POWERLLEL LINKAGE) 3160-124
HOSES, PIN DISCONNECT HYDRAULIC (BOOM TO COUPLER)(Z-BAR LINKAGE) 3160-116
HOSES, RIDE CONTROL (S.N. -594432) 3160-92
HOSES, RIDE CONTROL (S.N. 594433-) 3160-94
HOSES, TURBOCHARGER 0416-2
HOSES, TWO LEVER PILOT CONTROLLER 3160-72
HOSES, TWO LEVER PILOT CONTROLLER WITH AUXILARY 3160-76
HOSES,BOOM AND BUCKET CYLINDER HYDRAULIC (Z-BAR LINKAGE) (S.N. -594432) 3160-48
HOSES,BOOM AND BUCKET CYLINDER HYDRAULIC (Z-BAR LINKAGE) (S.N. 594433-) 3160-50
HOUSING 0210-48
HOUSING, CAB CONTROL UNIT 1674-6
HOUSING, CAB MONITOR 1810-8
HOUSING, CANOPY MONITOR 1810-10
HOUSING, ENGINE OIL PUMP 0407-4
HOUSING, FAN 0510-7A
HOUSING, FLYWHEEL 0433-2
HOUSING, FRONT AXLE 0210-18
HOUSING, FRONT AXLE DISCONNECT 0260-14
HOUSING, FRONT DIFFERENTIAL (WITH DIFFERENTIAL LOCK) 0210-6
HOUSING, FRONT DIFFERENTIAL (WITH STANDARD DIFFERENTIAL) 0210-10
HOUSING, GEARBOX 0350-8
HOUSING, HVAC 1830-4
HOUSING, HVAC 1830-8
HOUSING, REAR AXLE 0210-20
HOUSING, REAR DIFFERENTIAL (WITH DIFFERENTIAL LOCK) 0210-8
HOUSING, REAR DIFFERENTIAL (WITH STANDARD DIFFERENTIAL) 0210-12
HOUSING, TORQUE CONVERTER 0350-4
HOUSING, TRANSMISSION 0350-8
HUB, ENGINE FAN 0510-7A
HVAC HOUSING 1830-4
HVAC HOUSING 1830-8
HVAC MODULE COMPONENTS 1830-4
HVAC RECIRCULATION FILTER 1830-4
HVAC RECIRCULATION FILTER 1830-8
HVAC WIRING 1674-11
HYDRAULIC ACTUATED DIFFERENTIAL 0210-14
HYDRAULIC CYLINDER, ATTACHMENT COUPLER (POWERLLEL AND Z-BAR LINKAGE) 3104-14
HYDRAULIC CYLINDER, ATTACHMENT COUPLER (POWERLLEL AND Z-BAR LINKAGE) 3104-16
HYDRAULIC CYLINDER, ATTACHMENT HI-VIS COUPLER (POWERLLEL AND Z-BAR LINKAGE) 3104-18
HYDRAULIC CYLINDER, HI-VIS LINKAGE ATTACHMENT COUPLER (POWERLLEL) 3104-10
HYDRAULIC CYLINDER, HI-VIS LINKAGE ATTACHMENT COUPLER (Z-BAR) 3104-12
HYDRAULIC DIFFERENTIAL, FOUR PINION 0210-14
HYDRAULIC HOSES, AXLE COOLER (FACTORY INSTALLED AXLE COOLER) 0260-8

PAGE

HYDRAULIC HOSES, AXLE COOLER (FACTORY INSTALLED AXLE COOLER) 0260-9A
HYDRAULIC HOSES, FAN DRIVE 0510-8
HYDRAULIC HOSES, FAN DRIVE 0510-9A
HYDRAULIC HOSES, HI-VIS COUPLER 3163-2
HYDRAULIC HOSES, MAIN 2160-12
HYDRAULIC HOSES, MAIN 2160-14
HYDRAULIC HOSES, PIN DISCONNECT (BOOM TO COUPLER)(POWERLLEL LINKAGE) 3160-124
HYDRAULIC HOSES, PIN DISCONNECT (BOOM TO COUPLER)(Z-BAR LINKAGE) 3160-116
HYDRAULIC HOSES, REVERSE FAN DRIVE 0510-10
HYDRAULIC HOSES, REVERSE FAN DRIVE 0510-11A
HYDRAULIC HOSES, RIDE CONTROL (S.N. -594432) 3160-92
HYDRAULIC HOSES, RIDE CONTROL (S.N. 594433-) 3160-94
HYDRAULIC HOSES, THIRD FUNCTION BOOM TO COUPLER (POWERLLEL LINKAGE) 3163-6
HYDRAULIC HOSES, THIRD FUNCTION BOOM TO COUPLER, (Z-BAR LINKAGE) 3163-4
HYDRAULIC LINES, MAIN 2160-12
HYDRAULIC LINES, MAIN 2160-14
HYDRAULIC LINES, PARK BRAKE SOLENOID VALVE 1060-8
HYDRAULIC OIL COOLER 0510-2
HYDRAULIC OIL COOLER 0510-4
HYDRAULIC OIL COOLER 0510-5A
HYDRAULIC OIL COOLER 0510-6
HYDRAULIC OIL FILTER 2160-6
HYDRAULIC OIL FILTER 2160-7A
HYDRAULIC OIL LEVEL GAUGE 2160-6
HYDRAULIC OIL LEVEL GAUGE 2160-7A
HYDRAULIC OIL PRESSURE REGULATOR VALVE 2160-10
HYDRAULIC OIL RESERVOIR 2160-6
HYDRAULIC OIL RESERVOIR 2160-7A
HYDRAULIC OIL RESERVOIR FILLER CAP 2160-6
HYDRAULIC OIL RESERVOIR FILLER CAP 2160-7A
HYDRAULIC OIL TEMPERATURE SENSOR 2160-6
HYDRAULIC OIL TEMPERATURE SENSOR 2160-7A
HYDRAULIC PUMP. STEERING 2160-2
HYDRAULIC PUMP, FAN DRIVE 0510-8
HYDRAULIC PUMP, FAN DRIVE 0510-9A
HYDRAULIC PUMP, LOADER 2160-2
HYDRAULIC PUMP, LOADER AND STEERING 2160-2
HYDRAULIC PUMP, REVERSE FAN DRIVE 0510-10
HYDRAULIC PUMP, REVERSE FAN DRIVE 0510-11A
HYDRAULICS, BOOM CYLINDER (FOR USE WITH POWERLLEL LINKAGE) 3160-60
HYDRAULICS, BOOM CYLINDER (S.N. -594432) (FOR USE WITH Z-BAR LINKAGE) 3160-48
HYDRAULICS, BOOM CYLINDER (S.N. 594433-) (FOR USE WITH Z-BAR LINKAGE) 3160-50
HYDRAULICS, BRAKE VALVE 1060-10
HYDRAULICS, BRAKE VALVE 1060-11A
HYDRAULICS, BUCKET CYLINDER TO LOADER CONTROL VALVE(FOR USE WITH TC) 3160-66
HYDRAULICS, FOURTH FUNCTION (Z-BAR LINKAGE) (S.N. -594432) 3160-54
HYDRAULICS, THIRD FUNCTION (Z-BAR LINKAGE) (S.N. -594432) 3160-52
HYDRAULICS,BUCKET CYLINDER(S.N. -594432) (FOR USE WITH Z-BAR LINKAGE) 3160-48
HYDRAULICS,BUCKET CYLINDER(S.N. 594433-) (FOR USE WITH Z-BAR LINKAGE) 3160-50

ALPHABETICAL INDEX - CONTINUED

PAGE

I

IDLER GEAR, LOWER (ENGINE) 0417-2
IDLER GEAR, UPPER (ENGINE)....0402-2
IGNITION SWITCH....1674-6
INJECTION PUMP ACCESS COVER 0417-2
INJECTORS, REMANUFACTURED 0413-2
INLET SECTION VALVE WITH RELIEF VALVE LOADER CONTROL VALVE (S.N. -594432)....3160-20
INLET SECTION VALVE WITH RELIEF VALVE LOADER CONTROL VALVE (S.N. 594433-)....3160-22
INLET, WATER PUMP 0417-5
INPUT GEAR, TRANSMISSION....0350-6
INPUT SHAFT, TORQUE CONVERTER 0350-4
INPUT SHAFT, TRANSMISSION 0350-6
INPUT YOKE....0210-3
INPUT YOKE....0210-34
INPUT YOKE....0210-36
INPUT YOKE, TORQUE CONVERTER SHAFT 0350-4
INSERT, ENGINE VALVE SEAT....0409-2
INSIDE REAR VIEW MIRROR 1810-39A
INTAKE VALVE....0409-2
INTAKE, AIR (ENGINE) 0414-2
INTAKE, ENGINE OIL PUMP 0407-4

J

JAGZ CUTTING EDGE....3102-12
JAGZ LOADER BUCKET CUTTING EDGE....3102-12
JOYSTICK FNR CONVERSION KIT....3160-86
JOYSTICK FNR CONVERSION KIT....3160-87
JOYSTICK LABEL 3160-87
JOYSTICK PILOT CONTROLLER....3160-80
JOYSTICK PILOT CONTROLLER....3160-82
JOYSTICK PILOT CONTROLLER WITH AUXILARY 3160-84
JOYSTICK TO TWO LEVER CONVERSION KIT 3160-72
JOYSTICK WITH AUX. TO TWO LEVER WITH AUX. CONVERSION KIT 3160-76

K

KEY, IGNITION 1674-6
KICKDOWN SWITCH, TWO LEVER PILOT CONTROLLER....3160-74
KICKOUT, BOOM (FOR USE WITH TOOL CARRIER) 3166-8
KICKOUT,LOADER BOOM (POWERLLEL LINKAGE)....3166-12
KICKOUT,LOADER BOOM (Z-BAR LINKAGE)....3166-4
KIT, ADDITION OF AUXILIARY JOYSTICK TO JOYSTICK CONTROLLER....3160-88
KIT, ADDITION OF AUXILIARY JOYSTICK TO TOOL CARRIER JOYSTICK CONTROLLER....3160-88
KIT, ADDITION OF AUXILIARY TO JOYSTICK CONTROLLER....3160-84
KIT, ADDITION OF AUXILIARY TO TOOL CARRIER JOYSTICK CONTROLLER 3160-84
KIT, ADDITION OF AUXILIARY TO TOOL CARRIER TWO LEVER CONTROLLER....3160-76
KIT, ADDITION OF AUXILIARY TO TWO LEVER CONTROLLER....3160-76
KIT, AUXILIARY JOYSTICK PILOT CONTROLLER REPAIR 3160-90

PAGE

KIT, AUXILIARY SINGLE LEVER CONTROLLER REPAIR.... 3160-78
KIT, AXLE BREATHER.... 0260-18
KIT, BOOM CYLINDER BORE (FOR USE WITH POWERLLEL LINKAGE).... 3165-18
KIT, BOOM CYLINDER BORE (FOR USE WITH TC) 3165-12
KIT, BOOM CYLINDER BORE (FOR USE WITH TC) 3165-14
KIT, BOOM CYLINDER BORE SEAL KIT (Z-BAR LINKAGE)(S.N. 595723-) 3165-6
KIT, BOOM CYLINDER ROD SEAL (FOR USE WITH POWERLLEL LINKAGE).... 3165-18
KIT, BOOM CYLINDER ROD SEAL (FOR USE WITH TC) 3165-12
KIT, BOOM CYLINDER ROD SEAL (FOR USE WITH TC) 3165-14
KIT, BOOM CYLINDER ROD SEAL (Z-BAR LINKAGE)(S.N. -595722) 3165-4
KIT, BOOM CYLINDER ROD SEAL (Z-BAR LINKAGE)(S.N. 595723-) 3165-6
KIT, BOOM TO COUPLER, THIRD FUNCTION HYD HOSES (Z-BAR LINKAGE) 3163-4
KIT, BUCKET CYLINDER BORE 3165-8
KIT, BUCKET CYLINDER BORE 3165-20
KIT, BUCKET CYLINDER BORE (Z-BAR LINKAGE)(S.N. -595722) 3165-4
KIT, BUCKET CYLINDER ROD SEAL 3165-8
KIT, BUCKET CYLINDER ROD SEAL 3165-20
KIT, CYLINDER LINER AND PISTON 0403-2
KIT, CYLINDER LINER O-RING 0403-2
KIT, ENGINE AIR HEATER 0505-4
KIT, ENGINE COOLANT HEATER.... 0505-6
KIT, ENGINE OVERHAUL (750J).... 0450-4
KIT, ENVIRONMENTAL DRAIN 1369-2
KIT, ENVIRONMENTAL DRAIN 1369-3A
KIT, FIFTH VALVE (SER. NO. 594433 -) 3160-47A
KIT, FIFTH VALVE SECTION (SER. NO. - 594432) 3160-46
KIT, FITTING, QUICK-DISCONNECT (FOR USE WITH POWERLLEL LINKAGE).... 3160-62
KIT, FUEL FILTER SEAL.... 0420-2
KIT, FUEL INJECTOR REPAIR 0413-2
KIT, HI LIFT BOOM TO COUPLER, THIRD FUNCTION HYD HOSES (Z-BAR LINKAGE) 3163-4
KIT, JOYSTICK TO TWO LEVER CONVERSION.... 3160-72
KIT, JOYSTICK WITH AUX. TO TWO LEVER WITH AUX. CONVERSION 3160-76
KIT, OUTLET VALVE SECTION LOADER CONTROL VALVE (S.N. -594432) 3160-42
KIT, OUTLET VALVE SECTION LOADER CONTROL VALVE (S.N. 594433-) 3160-44
KIT, PARKING BRAKE BREATHER.... 0260-18
KIT, PIN DISCONNECT (Z-BAR LINKAGE)(S.N. -594432) 3160-112
KIT, PIN DISCONNECT (Z-BAR LINKAGE)(S.N. 594433-) 3160-114
KIT, REAR PLATFORM.... 1927-4
KIT, REVERSE FAN DRIVE 0510-10
KIT, REVERSE FAN DRIVE 0510-11A
KIT, SECONDARY STEERING 0930-4
KIT, STEERING COMPENSATOR VALVE SEAL (SERIAL NO. 601560 -) 0960-3A
KIT, STEERING CYLINDER BORE SEAL 0960-10
KIT, STEERING CYLINDER ROD SEAL 0960-10

ALPHABETICAL INDEX - CONTINUED

PAGE

KIT, STEERING VALVE SEAL (SERIAL NO. 601560 -) 0960-2
KIT, TWO LEVER TO JOYSTICK CONVERSION 3160-80
KIT, TWO LEVER WITH AUX. TO JOYSTICK WITH AUX. CONVERSION 3160-84
KIT, WATER PUMP REPAIR 0417-2
KIT, WHEEL SPACER 0110-2B
KIT, WHEEL SPACER 0110-4
KIT, WHEEL SPACER 0110-6
KIT, WHEEL SPACER 0110-8
KITS, AXLE CENTER SERVICE 0210-24
KITS, HI-VIS COUPLER HYDRAULIC HOSES 3163-2

L

LABEL AND DECALS (CANOPY) 1322-10
LABELS AND DECALS (FRENCH) 1322-6
LABELS AND DECALS (SPANISH) 1322-8
LABELS AND DECALS, CAB 1322-4
LABELS AND TRADEMARKS (ENGLISH) 1322-2
LAMP, HI-BEAM, DRIVE (SN -603831) 1673-2
LAMP, HI-BEAM, DRIVE (SN 603832-) 1673-3A
LAMP, LICENSE PLATE 1673-8
LAMP, STOP 1673-6
LAMP, TAIL 1673-6
LAMP, TURN 1673-6
LATCH, BATTERY COVERS DOOR 1913-4
LATCH, DOOR 1810-6
LATCH, ENGINE SIDE SHIELD 1910-4
LATCH, FAN GUARD 0510-7A
LATCH, HOOD 1910-2
LATCH, REAR FULL COVERAGE FENDER 1927-9A
LATCH,CAB DOOR HOLD-OPEN 1810-2
LEVER 0210-38
LICENSE PLATE BRACKET AND LIGHT 1673-8
LICENSE PLATE LAMP 1673-8
LICENSE PLATE LIGHT 1673-8
LICENSE PLATE LIGHT 1674-2
LICENSE PLATE LIGHT 1674-3A
LICENSE PLATE LIGHT (FOR USE WITH POWERLLEL LINKAGE) 1674-3C
LICENSE PLATE LIGHT (FOR USE WITH POWERLLEL LINKAGE) 1674-4
LIFT HOOKS 1330-2
LIFT STRAPS, ENGINE 0404-4
LIGHT, FRONT (SN -603831) 1673-2
LIGHT, FRONT (SN 603832-) 1673-3A
LIGHT, LICENSE PLATE 1673-8
LIGHT, STOP 1673-6
LIGHT, TURN 1673-6
LIGHT, TURN AND MARKER (SN -603831) 1673-2
LIGHT, TURN AND MARKER (SN 603832-) 1673-3A
LINE, AXLE DISCONNECT 0260-16
LINE, FRONT DIFFERENTIAL LOCK 0260-2
LINE, FRONT DIFFERENTIAL LOCK 0260-3A
LINE, HYDRAULIC, (CONTROL VALVE TO BUCKET CYLINDER) (FOR USE WITH TC) 3160-66
LINE, HYDRAULIC, (CONTROL VALVE TO BOOM CYLINDER) (FOR USE WITH TC) 3160-66
LINER, CYLINDER 0403-2

PAGE

LINES, BRAKE 1060-10
LINES, BRAKE 1060-11A
LINES, FINAL FUEL FILTER 0420-2
LINES, FOURTH FUNCTION HYDRAULIC (Z-BAR LINKAGE) (S.N. -594432) 3160-54
LINES, FRONT AND REAR DIFFERENTIAL LOCK 0260-4
LINES, FRONT AND REAR DIFFERENTIAL LOCK 0260-5A
LINES, FUEL INJECTION 0413-2
LINES, HYDRAULIC, PIN DISCONNECT (BOOM TO COUPLER)(POWERLLEL LINKAGE) 3160-124
LINES, HYDRAULIC, PIN DISCONNECT (BOOM TO COUPLER)(Z-BAR LINKAGE) 3160-116
LINES, HYDRAULIC, PIN DISCONNECT (FOR USE WITH POWERLLEL LINKAGE) 3160-122
LINES, HYDRAULIC, PIN DISCONNECT (FOR USE WITH TC) 3160-110
LINES, HYDRAULIC, PIN DISCONNECT (Z-BAR LINKAGE)(S.N. -594432) 3160-112
LINES, HYDRAULIC, PIN DISCONNECT (Z-BAR LINKAGE)(S.N. 594433-) 3160-114
LINES, JOYSTICK PILOT CONTROLLER 3160-80
LINES, JOYSTICK PILOT CONTROLLER WITH AUXILARY 3160-84
LINES, MAIN HYDRAULIC 2160-12
LINES, MAIN HYDRAULIC 2160-14
LINES, THIRD FUNCTION HYDRAULIC (Z-BAR LINKAGE) (S.N. -594432) 3160-52
LINES, TRANSMISSION EXTERNAL OIL 0360-4
LINES, TRANSMISSION INTERNAL OIL 0350-14
LINES, TURBOCHARGER OIL 0416-2
LINES, TWO LEVER PILOT CONTROLLER WITH AUXILARY 3160-76
LINKAGE COUPLER COUNTERWEIGHT 1520-2
LINKAGE COUPLER COUNTERWEIGHT 1520-3A
LINKAGE COUPLER, HI-VIS (POWERLLEL) 3104-10
LINKAGE COUPLER, HI-VIS (Z-BAR) 3104-12
LINKAGE COUPLER, POWERLLEL LINKAGE 3104-8
LINKAGE, BUCKET 3140-16
LINKAGE, BUCKET (POWERLLEL LINKAGE) 3140-20
LINKAGE, LOADER BOOM 3140-16
LINKAGE, POWERLLEL 3140-20
LINKAGE, STEERING COLUMN 1810-48
LINKAGE, TOOL CARRIER BOOM 3140-18
LOAD CENTER COMPARTMENT 1674-6
LOAD CENTER COMPARTMENT 1674-7A
LOAD CENTER WIRING HARNESS 1674-6
LOAD CENTER WIRING HARNESS 1674-7A
LOAD SENSE RELIEF VALVE LOADER CONTROL VALVE (S.N. -594432) 3160-42
LOADER ATTACHMENT COUPLER (Z-BAR LINKAGE) 3104-6
LOADER ATTACHMENT COUPLER BUCKET 3102-4
LOADER BOOM 3140-8
LOADER BOOM BUSHING 3140-8
LOADER BOOM KICKOUT SENSOR (POWERLLEL LINKAGE) 3166-12
LOADER BOOM KICKOUT SENSOR (Z-BAR LINKAGE) 3166-4
LOADER BOOM KICKOUT/RETURN TO CARRY (POWERLLEL LINKAGE) 3166-12
LOADER BOOM KICKOUT/RETURN TO CARRY (Z-BAR LINKAGE) 3166-4
LOADER BOOM LINKAGE 3140-16
LOADER BOOM LINKAGE (POWERLLEL LINKAGE) 3140-20

ALPHABETICAL INDEX - CONTINUED

PAGE

LOADER BOOM LINKAGE, HIGH LIFT 3140-16
LOADER BOOM PIN 3140-8
LOADER BOOM POWERLLEL LINKAGE 3140-20
LOADER BOOM, HIGH LIFT 3140-8
LOADER BUCKET (ATTACHMENT COUPLER) 3102-4
LOADER BUCKET (HI-VIS COUPLER) 3102-6
LOADER BUCKET CUTTING EDGE 3102-2
LOADER BUCKET CUTTING EDGE 3102-10
LOADER BUCKET CUTTING EDGE (JAGZ) 3102-12
LOADER BUCKET GUARD 3102-2
LOADER BUCKET PINS 3102-2
LOADER BUCKET TEETH 3102-8
LOADER BUCKETS 3102-2
LOADER CONTROL VALVE (2-SPOOL) (S.N. -594432) 3160-2
LOADER CONTROL VALVE (2-SPOOL) (S.N. 594433-) 3160-4
LOADER CONTROL VALVE (2-SPOOL) TOOL CARRIER 3160-6
LOADER CONTROL VALVE (3-SPOOL) (S.N. -594432) 3160-8
LOADER CONTROL VALVE (3-SPOOL) (S.N. 594433-) 3160-10
LOADER CONTROL VALVE (3-SPOOL) TOOL CARRIER 3160-12
LOADER CONTROL VALVE (4-SPOOL) (S.N. -594432) 3160-14
LOADER CONTROL VALVE (4-SPOOL) (S.N. 594433-) 3160-16
LOADER CONTROL VALVE (4-SPOOL) TOOL CARRIER 3160-18
LOADER CONTROL VALVE STUD ASSEMBLY (S.N. -594432) 3160-20
LOADER CONTROL VALVE STUD ASSEMBLY (2-SPOOL) (S.N. 594433-) 3160-4
LOADER CONTROL VALVE STUD ASSEMBLY (3-SPOOL) (S.N. 594433-) 3160-10
LOADER CONTROL VALVE STUD ASSEMBLY (4-SPOOL) (S.N. 594433-) 3160-16
LOADER CONTROL VALVE TIE BOLTS (2-SPOOL) (S.N. 594433-) 3160-4
LOADER CONTROL VALVE TIE BOLTS (3-SPOOL) (S.N. 594433-) 3160-10
LOADER CONTROL VALVE TIE BOLTS (4-SPOOL) (S.N. 594433-) 3160-16
LOADER CONTROL VALVE TO BOOM CYLINDER HYDRAULICS (POWERLLEL LINKAGE) 3160-60
LOADER CONTROL VALVE TO BUCKET CYLINDER HYDRAULICS(FOR USE WITH TC) 3160-66
LOADER FRAME (POWERLLEL LINKAGE) 3140-6
LOADER FRAME (POWERLLEL LINKAGE) 3140-7A
LOADER FRAME (Z-BAR LINKAGE) 3140-2
LOADER FRAME (Z-BAR LINKAGE) 3140-3A
LOADER FRAME BOOM CYLINDER PIN (POWERLLEL LINKAGE) 3140-6
LOADER FRAME BOOM CYLINDER PIN (POWERLLEL LINKAGE) 3140-7A
LOADER FRAME BOOM CYLINDER PIN (Z-BAR LINKAGE) 3140-2
LOADER FRAME BOOM CYLINDER PIN (Z-BAR LINKAGE) 3140-3A
LOADER FRAME BUCKET CYLINDER PIN (POWERLLEL LINKAGE) 3140-6

PAGE

LOADER FRAME BUCKET CYLINDER PIN (POWERLLEL LINKAGE) 3140-7A
LOADER FRAME BUCKET CYLINDER PIN (Z-BAR LINKAGE) 3140-2
LOADER FRAME BUCKET CYLINDER PIN (Z-BAR LINKAGE) 3140-3A
LOADER FRAME WIRING HARNESS 1674-2
LOADER FRAME WIRING HARNESS 1674-3A
LOADER FRAME WIRING HARNESS (FOR USE WITH POWERLLEL LINKAGE) 1674-3C
LOADER FRAME WIRING HARNESS (FOR USE WITH POWERLLEL LINKAGE) 1674-4
LOADER LINKAGE 3140-16
LOADER LINKAGE (POWERLLEL LINKAGE) 3140-20
LOADER SHANKS 3102-8
LOCK BAR, FRAME 1913-2
LOCK LINE, FRONT DIFFERENTIAL 0260-2
LOCK LINE, FRONT DIFFERENTIAL 0260-3A
LOCK LINES, FRONT AND REAR DIFFERENTIAL 0260-4
LOCK LINES, FRONT AND REAR DIFFERENTIAL 0260-5A
LOCK MECHANISM, GUARD FORK 3103-6
LOCK MECHANISM, PALLET FORK (HI-VIS) 3103-4
LOCK, BOOM CYLINDER 3140-24
LOUVERS, HEATING AND A/C 1810-8
LOUVERS, VENTILATION 1810-8
LOWER STEERING COLUMN 1810-50
LUBRICATION LINES, DIFFERENTIAL SUPPORTS 0242-2
LUBRICATION LINES, DIFFERENTIAL SUPPORTS 0242-3A

M

MAIN BEARING CAP 0404-2
MAIN BEARINGS 0401-2
MAIN COUNTERWEIGHT 1749-2
MAIN HYDRAULIC HOSES 2160-12
MAIN HYDRAULIC HOSES 2160-14
MAIN HYDRAULIC LINES 2160-12
MAIN HYDRAULIC LINES 2160-14
MAIN WIRING HARNESS 1674-2
MAIN WIRING HARNESS 1674-3A
MAIN WIRING HARNESS (FOR USE WITH POWERLLEL LINKAGE) 1674-3C
MAIN WIRING HARNESS (FOR USE WITH POWERLLEL LINKAGE) 1674-4
MANIFOLD, AIR INTAKE 0414-2
MANIFOLD, EXHAUST 0410-2
MANIFOLD, TRANSMISSION CONTROL VALVE 0350-16
MAT, ANTI-SKID, COUNTERWEIGHT 1749-2
MINIMUM PRESSURE VALVE, TRANSMISSION 0350-22
MIRROR, OUTSIDE 1810-38
MIRROR, REAR VIEW, INSIDE 1810-39A
MODULE, HVAC 1830-4
MODULE, HVAC 1830-8
MONITOR CONSOLE, CAB 1810-8
MONITOR CONS0LE, CANOPY 1810-10
MONITOR HOUSING, CANOPY 1810-10
MOTOR AND SWITCH, HEATER 1830-8
MOTOR AND SWITCH, HEATER AND A/C BLOWER 1830-4
MOTOR, AXLE CIRCULATION 0260-6
MOTOR, REVERSE FAN DRIVE 0510-10
MOTOR, REVERSE FAN DRIVE 0510-11A
MOTOR, STARTING 0422-2
MOTOR,FAN DRIVE 0510-8
MOTOR,FAN DRIVE 0510-9A
MOUNT, FAN DRIVE MOTOR 0510-7A

ALPHABETICAL INDEX - CONTINUED

PAGE

MOUNTING BOLTS AND SUPPORT, REAR AXLE 0242-2
MOUNTING BOLTS AND SUPPORT, REAR AXLE 0242-3A
MOUNTING BRACKETS, ALTERNATOR (55 AMP)....1672-2
MOUNTING BRACKETS, ALTERNATOR (80 AMP)....1672-6
MOUNTING BRACKETS, ENGINE 0540-2
MOUNTING BRACKETS, HARSH ENVIRONMENT ALTERNATOR 1672-10
MOUNTING BRACKETS, TRANSMISSION....0342-2
MOUNTING BRACKETS, TRANSMISSION.... 0342-3A
MOUNTING CAPSCREWS, FRONT AXLE (TOOL CARRIER) 3140-4
MOUNTING, FRONT AXLE (POWERLLEL LINKAGE)....3140-6
MOUNTING, FRONT AXLE (POWERLLEL LINKAGE).... 3140-7A
MOUNTING, FRONT AXLE (Z-BAR LINKAGE)....3140-2
MOUNTING, FRONT AXLE (Z-BAR LINKAGE).... 3140-3A
MOUNTS, CAB 1810-22
MOUNTS, ENGINE....0540-2
MOUNTS, TRANSMISSION 0342-2
MOUNTS, TRANSMISSION 0342-3A
MUFFLER 0530-2
MUFFLER BRACKET 0530-2

N

NOZZLE, FUEL INJECTION....0413-2
NOZZLE, FUEL INJECTOR REPAIR KIT 0413-2

O

O'RINGS, HI-VIS COUPLER HYDRAULIC HOSES....3163-2
OIL COOLER, AXLE (FACTORY INSTALLED AXLE COOLER) 0260-8
OIL COOLER, AXLE (FACTORY INSTALLED AXLE COOLER) 0260-9A
OIL COOLER, ENGINE 0419-2
OIL COOLER, HYDRAULIC 0510-2
OIL COOLER, HYDRAULIC 0510-4
OIL COOLER, HYDRAULIC 0510-5A
OIL COOLER, HYDRAULIC 0510-6
OIL COOLER, TRANSMISSION....0510-2
OIL COOLER, TRANSMISSION....0510-4
OIL COOLER, TRANSMISSION.... 0510-5A
OIL COOLER, TRANSMISSION....0510-6
OIL DIPSTICK, ENGINE....0407-3
OIL DRAIN VALVE, ENGINE 0407-2
OIL FILL, TRANSMISSION....0360-2
OIL FILLER, ENGINE 0407-1
OIL FILTER & BASE, ENGINE 0407-5
OIL FILTER BYPASS VALVE 0407-5
OIL FILTER ELEMENT, TRANSMISSION 0350-2
OIL FILTER HEAD, TRANSMISSION 0350-2
OIL FILTER RESTRICTION INDICATOR SWITCH, TRANSMISSION....0350-16
OIL FILTER, TRANSMISSION....0350-2
OIL LINES, TRANSMISSION EXTERNAL....0360-4
OIL LINES, TRANSMISSION INTERNAL....0350-14
OIL LINES, TRANSMISSION THERMAL BYPASS VALVE 0360-4
OIL PAN, ENGINE 0407-2
OIL PRESSURE REGULATING VALVE, ENGINE....0404-2
OIL PRESSURE SENSOR 1674-14

PAGE

OIL PUMP, ENGINE.... 0407-4
OIL PUMP, TRANSMISSION 0350-12
OIL SEAL KIT, FRONT.... 0417-4
ONE-PIECE WHEEL RIM (25 X 14) (ONE PIECE).... 0110-2
OPERATOR STATION FRONT PEDESTAL 1810-12
ORIFICE, PISTON COOLING.... 0404-2
OSCILLATING DIFFERENTIAL SUPPORT 0242-2
OSCILLATING DIFFERENTIAL SUPPORT 0242-3A
OUTLET SECTION LOADER CONTROL VALVE (S.N. -594432).... 3160-42
OUTLET SECTION LOADER CONTROL VALVE (S.N. 594433-).... 3160-44
OUTLET SECTION COMPONENTS LOADER CONTROL VALVE (S.N. -594432).... 3160-42
OUTLET SECTION COMPONENTS LOADER CONTROL VALVE (S.N. 594433-).... 3160-44
OUTLET SECTION SEAL KIT LOADER CONTROL VALVE (S.N. -594432).... 3160-42
OUTLET SECTION SEAL KIT LOADER CONTROL VALVE (S.N. 594433-).... 3160-44
OUTPUT SEAL 0210-44
OUTSIDE MIRROR.... 1810-38
OVERHAUL GASKET SET - 5510N 0452-2
OVERHAUL KIT, ENGINE (750J).... 0450-4

P

PALLET FORK ASSEMBLY 3103-2
PALLET FORK FRAME.... 3103-2
PALLET FORKS.... 3103-2
PALLET FORKS (HI-VIS).... 3103-4
PAN, ENGINE OIL.... 0407-2
PARK BRAKE.... 1060-12
PARK BRAKE.... 1060-14
PARK BRAKE PRESSURE RELIEF SWITCH 1060-5A
PARK BRAKE SOLENOID VALVE 1060-4
PARK BRAKE SOLENOID VALVE 1060-5A
PARK BRAKE SOLENOID VALVE HYDRAULIC LINES 1060-8
PARKING BRAKE BREATHER EXTENSION KIT.... 0260-18
PARKING BRAKE SWITCH 1674-8
PARKING BRAKE SWITCH 1674-9
PARKING BRAKE/DRIVELINE BEARING 1060-12
PARKING BRAKE/DRIVELINE BEARING 1060-14
PEDAL, BRAKE 1060-2
PEDAL, BRAKE 1060-3A
PEDAL,ENGINE SPEED CONTROL.... 0515-2
PEDESTAL, CAB 1810-12
PEDESTAL, CANOPY.... 1810-12
PEDESTAL, FAN.... 0510-7A
PEDESTAL, OPERATOR STATION FRONT 1810-12
PILOT CONTROLLER HANDLE.... 3160-82
PILOT CONTROLLER WITH AUXILARY, JOYSTICK.... 3160-84
PILOT CONTROLLER, DUAL JOYSTICK.... 3160-88
PILOT CONTROLLER, JOYSTICK.... 3160-80
PILOT CONTROLLER, TWO LEVER 3160-72
PILOT CONTROLLER, TWO LEVER WITH AUXILARY.... 3160-76
PILOT LINES, JOYSTICK PILOT CONTROLLER.... 3160-80
PILOT LINES, JOYSTICK PILOT CONTROLLER WITH AUXILARY.... 3160-84
PILOT LINES, TWO LEVER PILOT CONTROLLER.... 3160-72
PILOT LINES, TWO LEVER PILOT CONTROLLER WITH AUXILARY.... 3160-76

ALPHABETICAL INDEX - CONTINUED

PAGE

PIN AND AXLE DISCONNECT VALVE AND HYDRAULIC HOSES (S.N. -594432)....3160-104
PIN AND AXLE DISCONNECT VALVE AND HYDRAULIC HOSES (S.N. 594433-)....3160-108
PIN AND AXLE DISCONNECT VALVE COMPONENTS....3160-97
PIN DISCONNECT HYDRAULIC HOSES (BOOM TO COUPLER)(POWERLLEL LINKAGE)....3160-124
PIN DISCONNECT HYDRAULIC HOSES (BOOM TO COUPLER)(Z-BAR LINKAGE)....3160-116
PIN DISCONNECT HYDRAULIC LINES (FOR USE WITH POWERLLEL LINKAGE)....3160-122
PIN DISCONNECT HYDRAULIC LINES (FOR USE WITH TC)....3160-110
PIN DISCONNECT HYDRAULIC LINES (Z-BAR LINKAGE)(S.N. -594432)....3160-112
PIN DISCONNECT HYDRAULIC LINES (Z-BAR LINKAGE)(S.N. 594433-)....3160-114
PIN DISCONNECT KIT (FOR POWERLLEL LINKAGE)....3160-122
PIN DISCONNECT VALVE COMPONENTS....3160-97
PIN, BOOM CYLINDER, LOADER FRAME (TOOL CARRIER)....3140-4
PIN, BOOM PIVOT (POWERLLEL LINKAGE)....3140-6
PIN, BOOM PIVOT (POWERLLEL LINKAGE)....3140-7A
PIN, BOOM PIVOT (Z-BAR LINKAGE)....3140-2
PIN, BOOM PIVOT (Z-BAR LINKAGE)....3140-3A
PIN, BOOM PIVOT (TOOL CARRIER)....3140-4
PIN, HI-VIS LINKAGE ATTACHMENT COUPLER (POWERLLEL)....3104-10
PIN, HI-VIS LINKAGE ATTACHMENT COUPLER (Z-BAR)....3104-12
PIN, HITCH....1520-2
PIN, HITCH....1520-3A
PIN, LOADER BOOM....3140-8
PIN, LOADER FRAME BOOM CYLINDER (POWERLLEL LINKAGE)....3140-6
PIN, LOADER FRAME BOOM CYLINDER (POWERLLEL LINKAGE)....3140-7A
PIN, LOADER FRAME BOOM CYLINDER (Z-BAR LINKAGE)....3140-2
PIN, LOADER FRAME BOOM CYLINDER (Z-BAR LINKAGE)....3140-3A
PIN, LOADER FRAME BUCKET CYLINDER (POWERLLEL LINKAGE)....3140-6
PIN, LOADER FRAME BUCKET CYLINDER (POWERLLEL LINKAGE)....3140-7A
PIN, LOADER FRAME BUCKET CYLINDER (Z-BAR LINKAGE)....3140-2
PIN, LOADER FRAME BUCKET CYLINDER (Z-BAR LINKAGE)....3140-3A
PIN, STEERING CYLINDER (TOOL CARRIER)....3140-4
PIN, TOOL CARRIER FRAME PIVOT....3140-4
PIN,ENGINE FRAME....1740-2
PIN,ENGINE FRAME....1740-3A
PIN,STEERING CYLINDER (POWERLLEL LINKAGE)....3140-6
PIN,STEERING CYLINDER (POWERLLEL LINKAGE)....3140-7A
PIN,STEERING CYLINDER (Z-BAR LINKAGE)....3140-2
PIN,STEERING CYLINDER (Z-BAR LINKAGE)....3140-3A
PINION....0210-34

PAGE

PINION....0210-36
PINION CARRIER, FINAL DRIVE PLANET....0210-22
PINS, ARTICULATION....1740-2
PINS, ARTICULATION....1740-3A
PINS, BUCKET AND BOOM CYLINDERS....3165-2
PINS, LOADER BUCKET....3102-2
PINS, POWERLLEL LINKAGE BOOM CYLINDER....3165-16
PINS, POWERLLEL LINKAGE TILT CYLINDER....3165-16
PINS, STEERING CYLINDERS....1740-2
PINS, STEERING CYLINDERS....1740-3A
PINS, TOOL CARRIER BOOM CYLINDER....3165-10
PINS, TOOL CARRIER TILT CYLINDER....3165-10
PIPE, EXHAUST....0530-2
PISTON COOLING ORIFICE....0404-2
PISTON RINGS....0403-2
PISTON, ENGINE....0403-2
PIVOT PIN, BOOM (POWERLLEL LINKAGE)....3140-6
PIVOT PIN, BOOM (POWERLLEL LINKAGE)....3140-7A
PIVOT PIN, BOOM (Z-BAR LINKAGE)....3140-2
PIVOT PIN, BOOM (Z-BAR LINKAGE)....3140-3A
PIVOT PIN, BOOM (TOOL CARRIER)....3140-4
PIVOT PIN, LOADER FRAME (POWERLLEL LINKAGE)....3140-6
PIVOT PIN, LOADER FRAME (POWERLLEL LINKAGE)....3140-7A
PIVOT PIN, LOADER FRAME (Z-BAR LINKAGE)....3140-2
PIVOT PIN, LOADER FRAME (Z-BAR LINKAGE)....3140-3A
PIVOT PIN, TOOL CARRIER FRAME....3140-4
PIVOT PLATE, HI-VIS LINKAGE BUCKET CONVERSION....3104-22
PIVOT PLATE, POWERLLEL LINKAGE BUCKET CONVERSION....3104-20
PLANET PINION CARRIER....0210-44
PLANET PINION CARRIER 1000 SERIES....0210-23
PLANET PINION CARRIER, FINAL DRIVE....0210-22
PLANET PINION GEAR, FINAL DRIVE....0210-22
PLANETARY FINAL DRIVE....0210-22
PLASTIC HANDLE, REAR....1910-6
PLATE, CONVERSION BUCKET PIVOT (HI-VIS LINKAGE)....3104-22
PLATE, CONVERSION BUCKET PIVOT (POWERLLEL LINKAGE)....3104-20
PLATE, DUAL JOYSTICK PILOT CONTROLLER....3160-88
PLATE, ENGINE FRONT....0402-2
PLATE, ENGINE SIDE SHIELD....1910-4
PLATE, JOYSTICK PILOT CONTROLLER....3160-80
PLATE, JOYSTICK PILOT CONTROLLER WITH AUXILARY....3160-84
PLATE, TWO LEVER PILOT CONTROLLER....3160-72
PLATE, TWO LEVER PILOT CONTROLLER WITH AUXILARY....3160-76
PLATFORM, ACCESS....1822-2
PLATFORM, REAR....1927-4
PLENUM, ENGINE AIR....1910-4
PLUG, TRANSMISSION DRAIN....0350-8
PLUMBING, AXLE COOLING....0260-10
PLUMBING, AXLE DISCONNECT....0260-16
PLUMBING, RIDE CONTROL (S.N. -594432)....3160-92
PLUMBING, RIDE CONTROL (S.N. 594433-)....3160-94

ALPHABETICAL INDEX - CONTINUED

PAGE

POTENTIOMETER, RETURN-TO-DIG (FOR USE WITH POWERLLEL LINKAGE)....3166-10
POWER PLUG AND CONVERTER (10 AMP) (24 VOLT TO 12 VOLT) 1674-13
POWER PLUG AND CONVERTER (5 AMP) (24 VOLT TO 12 VOLT) 1674-12
POWER TAKE-OFF 0350-24
POWER TAKE-OFF SHAFT 0350-24
POWERLLEL LINKAGE....3140-20
POWERLLEL LINKAGE BOOM....3140-12
POWERLLEL LINKAGE BOOM CYLINDER PINS AND FITTINGS....3165-16
POWERLLEL LINKAGE CONVERSION BUCKET PIVOT PLATE....3104-20
POWERLLEL LINKAGE COUPLER 3104-8
POWERLLEL LINKAGE CYLINDER PINS AND FITTINGS....3165-16
PRECLEANER, AIR, KIT 0520-4
PRESSURE REDUCING VALVE, COMPONENTS 2160-10
PRESSURE REGULATOR VALVE FITTINGS 2160-8
PRESSURE REGULATOR VALVE FITTINGS 2160-9A
PRESSURE REGULATOR VALVE, HYDRAULIC OIL 2160-10
PRESSURE RELIEF VALVE, TORQUE CONVERTER 0350-22
PRESSURE VALVE, TRANSMISSION 0350-22
PRIMARY FUEL FILTER....0560-2
PRV FITTINGS 2160-8
PRV FITTINGS 2160-9A
PRV VALVE COMPONENTS 2160-10
PULLEY AND CLUTCH KIT, A/C 1830-12
PULLEY, CRANKSHAFT 0429-1
PULLEY, TENSIONER....0429-2
PULLEY, WATER PUMP 0417-5
PUMP AND MOTOR, AXLE OIL CIRCULATION 0260-6
PUMP, AXLE OIL CIRCULATION 0260-6
PUMP, ENGINE OIL....0407-4
PUMP, FUEL INJECTION 0413-2
PUMP, FUEL TRANSFER....0421-1
PUMP, HYDRAULIC, FAN DRIVE....0510-8
PUMP, HYDRAULIC, FAN DRIVE 0510-9A
PUMP, HYDRAULIC, LOADER 2160-2
PUMP, HYDRAULIC, REVERSE FAN DRIVE....0510-10
PUMP, HYDRAULIC, REVERSE FAN DRIVE.... 0510-11A
PUMP, HYDRAULIC, STEERING 2160-2
PUMP, TRANSMISSION OIL 0350-12
PUMP, WATER....0417-2
PUMP, WINDOW WASHER....1810-24
PUMP,SECONDARY STEERING 0930-2
PUMP,SECONDARY STEERING 0930-4
PUSH PIN ASSEMBLY 3160-82
PUSH ROD, FUEL TRANSFER PUMP 0421-1
PUSH ROD, ROCKER ARM 0402-3

Q

QUICK-DISCONNECT FITTING KIT (FOR USE WITH POWERLLEL LINKAGE) 3160-62

R

RADIATOR....0510-2
RADIATOR....0510-4
RADIATOR 0510-5A
RADIATOR....0510-6
RADIATOR CAP....0510-2
RADIATOR CAP....0510-4

PAGE

RADIATOR CAP.... 0510-5A
RADIATOR CAP.... 0510-6
RADIATOR HOSE.... 0510-2
RADIATOR HOSE.... 0510-4
RADIATOR HOSE.... 0510-5A
RADIATOR HOSE.... 0510-6
RADIO (SER. NO. -590067).... 2001-6
RADIO (SER.NO. 590068-600740)....2001-7A
RADIO (SERIAL NO.600741-) 2001-7C
RADIO ANTENNA (SER. NO. -590067) 2001-6
RADIO ANTENNA (SER.NO. 590068-600740) 2001-7A
RADIO ANTENNA (SERIAL NO.600741-) 2001-7C
RADIO REMOTE CONTROL (SER. NO. -590067) 2001-6
RADIO REMOTE CONTROL (SER.NO. 590068-600740) 2001-7A
RADIO REMOTE CONTROL (SERIAL NO.600741-) 2001-7C
RADIO SPEAKER (SER. NO. -590067) 2001-6
RADIO SPEAKER (SERIAL NO.600741-) 2001-7C
RADIO SPEAKER (SER.NO. 590068-600740)....2001-7A
RAIL, DRIP....1810-17A
REAR AXLE 0210-2
REAR AXLE ASSEMBLY 0210-32
REAR AXLE ASSEMBLYBREATHER 0210-32
REAR AXLE HOUSING 0210-20
REAR AXLE MOUNTING BOLTS AND SUPPORT 0242-2
REAR AXLE MOUNTING BOLTS AND SUPPORT 0242-3A
REAR AXLE SHAFT 0210-20
REAR COVER, ALTERNATOR (55 AMP) 1672-4
REAR COVER, ALTERNATOR (80 AMP) 1672-8
REAR DIFFERENTIAL CASE.... 0210-36
REAR DIFFERENTIAL CASE (WITH DIFFERENTIAL LOCK).... 0210-8
REAR DIFFERENTIAL CASE (WITH STANDARD DIFFERENTIAL) 0210-12
REAR DIFFERENTIAL HOUSING (WITH DIFFERENTIAL LOCK).... 0210-8
REAR DIFFERENTIAL HOUSING (WITH STANDARD DIFFERENTIAL) 0210-12
REAR DIFFERENTIAL LOCK LINE.... 0260-4
REAR DIFFERENTIAL LOCK LINE....0260-5A
REAR FENDERS 1927-4
REAR FENDERS FULL COVERAGE.... 1927-8
REAR FENDERS (W/LATCH) FULL COVERAGE....1927-9A
REAR FRAME WIRING HARNESS.... 1674-2
REAR FRAME WIRING HARNESS....1674-3A
REAR FRAME WIRING HARNESS (FOR USE WITH POWERLLEL LINKAGE)....1674-3C
REAR FRAME WIRING HARNESS (FOR USE WITH POWERLLEL LINKAGE).... 1674-4
REAR PLASTIC HANDLE.... 1910-6
REAR PLATFORM.... 1927-4
REAR SEAL, ENGINE 0401-2
REAR STEP.... 1822-6
REAR WINDOW RETAINERS 1810-16
REAR WINDOW, CANOPY.... 1810-16
REAR WINDSHIELD WIPER.... 1810-28
RECIEVER-DRIER 1830-14
RECIRCULATION FILTER, HVAC.... 1830-4
RECIRCULATION FILTER, HVAC.... 1830-8
REDUCING VALVE, COMPONENTS 2160-10
REGULATING VALVE 3160-82

ALPHABETICAL INDEX - CONTINUED

PAGE

REGULATOR, VOLTAGE (55 AMP) 1672-2
REGULATOR, VOLTAGE (80 AMP) 1672-6
RELAY, ENGINE AIR HEATER 0505-4
RELAYS, VEC 1674-16
RELIEF VALVE, LOAD SENSE
LOADER CONTROL VALVE (S.N. -594432) 3160-42
RELIEF VALVE, REVERSE FAN DRIVE 0510-12
RELIEF VALVE, TORQUE CONVERTER PRESSURE 0350-22
RELIEF VALVE, VALVE INLET SECTION
LOADER CONTROL VALVE (S.N. -594432) 3160-20
RELIEF VALVE, VALVE INLET SECTION
LOADER CONTROL VALVE (S.N. 594433-) 3160-22
REMANUFACTURED FUEL INJECTORS 0413-2
RESERVOIR, HYDRAULIC OIL 2160-6
RESERVOIR, HYDRAULIC OIL 2160-7A
REST, RIGHT ARM 1821-6
RESTRICTION INDICATOR SENSOR, AIR FILTER 0520-2
RESTRICTION INDICATOR SWITCH,
TRANSMISSION OIL FILTER 0350-16
RESTRICTION SWITCH, HYDRAULIC RETURN 2160-6
RESTRICTION SWITCH, HYDRAULIC RETURN 2160-7A
RETAINERS, REAR WINDOW 1810-16
RETURN TO CARRY SENSOR (FOR USE WITH
TOOL CARRIER) 3166-8
RETURN TO CARRY SENSOR, LOADER
(POWERLLEL LINKAGE) 3166-12
RETURN TO CARRY SENSOR, LOADER
(Z-BAR LINKAGE) 3166-4
RETURN TO DIG HARNESS 1674-15
RETURN-TO-DIG ACTUATOR (FOR USE WITH
TOOL CARRIER) 3166-6
RETURN-TO-DIG ACTUATOR (NOT FOR USE WITH
TOOL CARRIER) 3166-2
RETURN-TO-DIG POTENTIOMETER (FOR USE
WITH POWERLLEL LINKAGE) 3166-10
RETURN-TO-DIG SENSOR (FOR USE WITH
POWERLLEL LINKAGE) 3166-10
RETURN-TO-DIG SENSOR (FOR USE WITH
TOOL CARRIER) 3166-6
RETURN-TO-DIG SENSOR (NOT FOR USE WITH
TOOL CARRIER) 3166-2
REVERSE CLUTCH ASSEMBLY 0350-28
REVERSE CLUTCH ASSEMBLY DRIVESHAFT 0350-28
REVERSE CLUTCH ASSEMBLY DRUM 0350-28
REVERSE FAN DRIVE HYDRAULIC HOSES 0510-10
REVERSE FAN DRIVE HYDRAULIC HOSES 0510-11A
REVERSE FAN DRIVE KIT 0510-10
REVERSE FAN DRIVE KIT 0510-11A
REVERSE FAN DRIVE RELIEF VALVE 0510-12
REVERSE FAN DRIVE SOLENOID VALVE 0510-12
RIDE CONTROL AND HYDRAULIC HOSES
(S.N. -594432) 3160-92
RIDE CONTROL AND HYDRAULIC HOSES
(S.N. 594433-) 3160-94
RIDE CONTROL SOLENOID VALVE 3160-96
RIDE CONTROL VALVE 3160-96
RIM ASSEMBLY, WHEEL (THREE PIECE)
(25 X 14) (25 X 17) 0110-3
RIM, WHEEL (25 X 14)
(ONE PIECE) 0110-2
RINGS, PISTON 0403-2
ROCK GUARD, CYLINDER-FITTING 1746-6
ROCKER ARM COVER 0409-1
ROCKER ARM SHAFT 0402-3
ROCKER ARMS 0402-3
ROD SEAL KIT, BOOM CYLINDER
(FOR USE WITH POWERLLEL LINKAGE) 3165-18

PAGE

ROD SEAL KIT, BOOM CYLINDER
(FOR USE WITH TC) 3165-12
ROD SEAL KIT, BOOM CYLINDER
(FOR USE WITH TC) 3165-14
ROD SEAL KIT, BOOM CYLINDER
(Z-BAR LINKAGE)(S.N. -595722) 3165-4
ROD SEAL KIT, BOOM CYLINDER
(Z-BAR LINKAGE)(S.N. 595723-) 3165-6
ROD SEAL KIT, BUCKET CYLINDER 3165-8
ROD SEAL KIT, BUCKET CYLINDER 3165-20
ROD SEAL KIT, COUPLER CYLINDER
(POWERLLEL AND Z-BAR LINKAGE) 3104-14
ROD SEAL KIT, COUPLER CYLINDER
(POWERLLEL AND Z-BAR LINKAGE) 3104-16
ROD SEAL KIT, HI-VIS COUPLER CYLINDER
(POWERLLEL AND Z-BAR LINKAGE) 3104-18
ROD, BOOM CYLINDER
(FOR USE WITH POWERLLEL LINKAGE) 3165-18
ROD, BOOM CYLINDER
(FOR USE WITH TC) 3165-12
ROD, BOOM CYLINDER
(Z-BAR LINKAGE)(S.N. -595722) 3165-4
ROD, BOOM CYLINDER
(Z-BAR LINKAGE)(S.N. 595723-) 3165-6
ROD, BUCKET CYLINDER 3165-8
ROD, BUCKET CYLINDER 3165-20
ROD, CONNECTING 0403-2
ROD, PUSH 0402-3
ROD, TILT CYLINDER
(FOR USE WITH TC) 3165-14
ROOF PLASTIC 1810-34
ROPS 1810-2
ROPS, CANOPY 1810-16
ROTATOR, ENGINE VALVE 0409-2

S

SEAL KIT, ATTACHMENT COUPLER CYLINDER
(POWERLLEL AND Z-BAR LINKAGE) 3104-14
SEAL KIT, ATTACHMENT COUPLER CYLINDER
(POWERLLEL AND Z-BAR LINKAGE) 3104-16
SEAL KIT, ATTACHMENT HI-VIS COUPLER
CYLINDER (POWERLLEL AND Z-BAR LINKAGE) 3104-18
SEAL KIT, FAN DRIVE PUMP 0510-8
SEAL KIT, FAN DRIVE PUMP 0510-9A
SEAL KIT, OUTLET VALVE SECTION
LOADER CONTROL VALVE (S.N. -594432) 3160-42
SEAL KIT, OUTLET VALVE SECTION
LOADER CONTROL VALVE (S.N. 594433-) 3160-44
SEAL KIT, OVERHAUL/TUNE-UP - 5510N 0452-2
SEAL, CRANKSHAFT 0401-2
SEAL, FRONT ENGINE 0417-2
SEAL, ISOLATOR 1913-6
SEAL, REAR 0401-2
SEAL, SOUND ABSORBER 1913-6
SEALED SWITCH MODULE 1674-6
SEALS, HI-VIS COUPLER HYDRAULIC HOSES 3163-2
SEAT BASE 1810-18
SEAT BASE 1810-20
SEAT BRACKETS 1821-2
SEAT CUSHION 1821-2
SEAT DECK 1810-18
SEAT DECK 1810-20
SEAT SUSPENSION 1821-2
SEAT SUSPENSION
(AIR SUSPENSION) 1821-4

ALPHABETICAL INDEX - CONTINUED

PAGE

SEAT, RIGHT ARM REST....1821-6
SEAT, SUSPENSION (AIR SUSPENSION)....1821-4
SECOND GEAR CLUTCH ASSEMBLY....0350-32
SECONDARY STEERING....0930-2
SECONDARY STEERING....0930-4
SECONDARY STEERING PUMP....0930-2
SECONDARY STEERING PUMP....0930-4
SECONDARY STEERING SWITCH....0930-2
SECONDARY STEERING SWITCH....0930-4
SECONDARY STEERING WIRE HARNESS....0930-2
SECONDARY STEERING WIRE HARNESS....0930-4
SECTION, AUXILIARY LOADER CONTROL VALVE (S.N. -594432)....3160-38
SECTION, AUXILIARY LOADER CONTROL VALVE (S.N. 594433-)....3160-40
SECTION, VALVE, BOOM LOADER CONTROL VALVE (S.N. -594432)....3160-34
SECTION, VALVE, BOOM LOADER CONTROL VALVE (S.N. 594433-)....3160-36
SECTION, VALVE, BUCKET LOADER CONTROL VALVE (S.N. -594432)....3160-30
SECTION, VALVE, BUCKET LOADER CONTROL VALVE (S.N. 594433-)....3160-32
SECTION, VALVE, FIFTH (SER. NO. - 594432)....3160-46
SECTION, VALVE, FIFTH (SER. NO. 594433 -)....3160-47A
SECTION, VALVE, INLET, WITH RELIEF VALVE LOADER CONTROL VALVE (S.N. -594432)....3160-20
SECTION, VALVE, INLET, WITH RELIEF VALVE LOADER CONTROL VALVE (S.N. 594433-)....3160-22
SEDIMENT BOWL, FUEL FILTER....0420-2
SENDER,FUEL TANK....0560-2
SENSOR, AIR FILTER RESTRICTION INDICATOR....0520-2
SENSOR, AIR TEMPERATURE....0578-2
SENSOR, BOOM KICKOUT (FOR USE WITH TOOL CARRIER)....3166-8
SENSOR, ENGINE COOLANT TEMPERATURE....1674-14
SENSOR, ENGINE HEAD TEMPERATURE....0578-2
SENSOR, ENGINE OIL PRESSURE....1674-14
SENSOR, ENGINE SPEED....0578-2
SENSOR, ENGINE WATER TEMPERATURE....0578-2
SENSOR, LOADER BOOM KICKOUT (POWERLLEL LINKAGE)....3166-12
SENSOR, LOADER BOOM KICKOUT (Z-BAR LINKAGE)....3166-4
SENSOR, RETURN TO CARRY (FOR USE WITH TOOL CARRIER)....3166-8
SENSOR, RETURN TO CARRY, LOADER (POWERLLEL LINKAGE)....3166-12
SENSOR, RETURN TO CARRY, LOADER (Z-BAR LINKAGE)....3166-4
SENSOR, RETURN-TO-DIG (FOR USE WITH POWERLLEL LINKAGE)....3166-10
SENSOR, RETURN-TO-DIG (FOR USE WITH TOOL CARRIER)....3166-6
SENSOR, RETURN-TO-DIG (NOT FOR USE WITH TOOL CARRIER)....3166-2
SENSOR, TACHOMETER DRIVE....0578-2
SENSOR, TRANSMISSION SPEED....0350-10
SENSOR, TRANSMISSION TEMPERATURE....0350-18
SENSOR,ENGINE SPEED CONTROL....0515-2
SENSOR,HYDRAULIC OIL TEMPERATURE....2160-6
SENSOR,HYDRAULIC OIL TEMPERATURE....2160-7A
SEPERATOR PLATE....0210-46
SERVICE DOOR, ABSORBER....1913-6

PAGE

SERVICE DOOR, ENGINE....1910-4
SERVICE KITS, AXLE CENTER....0210-24
SHAFT AND SPIRAL BEVEL GEAR, FRONT 1000 SERIES....0210-4
SHAFT AND SPIRAL BEVEL GEAR, REAR 1000 S ERIES....0210-5
SHAFT AXLE DIFFERENTIALS....0325-2
SHAFT AXLE DIFFERENTIALS....0325-4
SHAFT YOKE, TRANSMISSION OUTPUT....0350-20
SHAFT, ENGINE BALANCER....0415-2
SHAFT, FINAL DRIVE....0210-22
SHAFT, FINAL DRIVE 1000 SERIES....0210-23
SHAFT, FRONT AXLE....0210-18
SHAFT, POWER TAKE-OFF....0350-24
SHAFT, REAR AXLE....0210-20
SHAFT, ROCKER ARM....0402-3
SHAFT, TORQUE CONVERTER....0350-4
SHAFT, TRANSMISSION DRIVE....0325-2
SHAFT, TRANSMISSION DRIVE....0325-4
SHAFT, TRANSMISSION INPUT....0350-6
SHAFT, TRANSMISSION OUTPUT....0350-20
SHANKS, LOADER....3102-8
SHIELDS, CAB....1810-32
SHIELDS, TRANSMISSION....1913-3
SHIFTER ASSEMBLY....1674-8
SHIFTER ASSEMBLY TO JOYSTICK FNR CONVERSION KIT....3160-86
SHORT BLOCK, ENGINE....0450-2
SHROUD, FAN....0510-7A
SIDE COUNTERWEIGHT....1749-2
SIDE GEAR....0210-38
SIDE GEAR....0210-40
SIDE SHIELD STRIKER BAR....1910-6
SIDE SHIELDS, COOLING....1910-6
SIDE SHIELDS, ENGINE....1910-4
SIGHT GAUGE, TRANSMISSION....0360-2
SINGLE AND DUAL AUXILIARY CONTROLLER COMPONENTS....3160-78
SLOW MOVING VEHICLE EMBLEM....1810-37
SMV EMBLEM....1810-37
SOLENOID ASSEMBLY....3160-82
SOLENOID VALVE, PARK BRAKE....1060-4
SOLENOID VALVE, PARK BRAKE....1060-5A
SOLENOID VALVE, REVERSE FAN DRIVE....0510-12
SOLENOID VALVE, RIDE CONTROL....3160-96
SOLENOID, STARTING MOTOR....0422-2
SOLENOID, TWO LEVER PILOT CONTROLLER....3160-74
SOUND ABSORBTION....1913-6
SPACER, WHEEL....0110-2B
SPACER, WHEEL....0110-4
SPACER, WHEEL....0110-6
SPACER, WHEEL....0110-8
SPACERS, HI-VIS LINKAGE ATTACHMENT COUPLER (POWERLLEL)....3104-10
SPACERS, HI-VIS LINKAGE ATTACHMENT COUPLER (Z-BAR)....3104-12
SPANISH LABELS AND DECALS....1322-8
SPEAKER, RADIO (SER. NO. -590067)....2001-6
SPEAKER, RADIO (SERIAL NO.600741-)....2001-7C
SPEAKER, RADIO (SER.NO. 590068-600740)....2001-7A
SPEED SENSOR, TRANSMISSION....0350-10
SPIDER GEAR....0210-38
SPIDER GEAR....0210-40
SPIRAL BEVEL GEAR AND SHAFT, FRONT 1000 SERIES....0210-4

ALPHABETICAL INDEX - CONTINUED

PAGE

SPIRAL BEVEL GEAR AND SHAFT, REAR 1000 S ERIES....0210-5
SPLIT WHEEL RIM ASSEMBLY (THREE PIECE) (25 X 14) (25 X 17)....0110-3
SPRIAL BEVEL....0210-34
SPRIAL BEVEL....0210-36
SPRING, ENGINE VALVE....0409-2
STANDARD DIFFERENTIAL....0210-16
STARING AID, COLD WEATHER....0505-2
STARTER IGNITION SWITCH (CAB)....1674-6
STARTING AID FLUID....0505-2
STARTING AID, ETHER....0505-2
STARTING MOTOR....0422-2
STATOR KIT, A/C....1830-12
STEERING COLUMN....1810-48
STEERING COLUMN CLAMP AND COVER....1674-9
STEERING COLUMN COVER....1810-52
STEERING COLUMN LINKAGE....1810-48
STEERING COLUMN, LOWER....1810-50
STEERING COMPENSATOR VALVE (SERIAL NO. 601560 -)....0960-3A
STEERING COMPENSATOR VALVE FITTINGS (SERIAL NO. 601560 -)....0960-3A
STEERING COMPENSATOR VALVE SEAL KIT (SERIAL NO. 601560 -)....0960-3A
STEERING CUSHIONS....1740-4
STEERING CYLINDER....0960-10
STEERING CYLINDER BORE KIT....0960-10
STEERING CYLINDER FITTINGS....0960-8
STEERING CYLINDER HYDRAULIC HOSE....0960-6
STEERING CYLINDER HYDRAULIC HOSE....0960-7A
STEERING CYLINDER PIN (POWERLLEL LINKAGE)....3140-6
STEERING CYLINDER PIN (POWERLLEL LINKAGE)....3140-7A
STEERING CYLINDER PIN (Z-BAR LINKAGE)....3140-2
STEERING CYLINDER PIN (Z-BAR LINKAGE)....3140-3A
STEERING CYLINDER PIN (TOOL CARRIER)....3140-4
STEERING CYLINDER PINS....1740-2
STEERING CYLINDER PINS....1740-3A
STEERING CYLINDER ROD SEAL KIT....0960-10
STEERING HOSES....0960-6
STEERING HOSES....0960-7A
STEERING VALVE (SERIAL NO. 601560 -)....0960-2
STEERING VALVE BRACKET....1810-50
STEERING VALVE FITTINGS (SERIAL NO. 601560 -)....0960-2
STEERING VALVE SEAL KIT (SERIAL NO. 601560 -)....0960-2
STEERING WHEEL....1810-48
STEERING, SECONDARY....0930-2
STEERING, SECONDARY....0930-4
STEP, ENGINE COMPARTMENT....1822-6
STEP, REAR....1822-6
STEPS....1822-2
STEPS,CLOSE MOUNTED....1822-4
STOP BLOCK, AXLE (EIGHT DEGREE)....0242-4
STOP BLOCK, AXLE (EIGHT DEGREE)....0242-5A
STOP BLOCK, AXLE (TEN DEGREE)....0242-6
STOP LAMP....1673-6
STOP LIGHT....1673-6
STRAP, ENGINE LIFT....0404-4
STRIKER BAR, SIDE SHIELD....1910-6

PAGE

STUD ASSEMBLY, LOADER CONTROL VALVE (S.N. -594432)....3160-20
STUD ASSEMBLY, LOADER CONTROL VALVE (2-SPOOL) (S.N. 594433-)....3160-4
STUD ASSEMBLY, LOADER CONTROL VALVE (3-SPOOL) (S.N. 594433-)....3160-10
STUD ASSEMBLY, LOADER CONTROL VALVE (4-SPOOL) (S.N. 594433-)....3160-16
SUN VISOR....1810-47
SUN-GEAR....0210-44
SUPPORT AND MOUNTING BOLTS, REAR AXLE....0242-2
SUPPORT AND MOUNTING BOLTS, REAR AXLE....0242-3A
SUPPORTS, REAR DIFFERERNTIAL....0242-2
SUPPORTS, REAR DIFFERERNTIAL....0242-3A
SURGE TANK....0510-2
SURGE TANK....0510-4
SURGE TANK....0510-5A
SURGE TANK....0510-6
SUSPENSION SEAT (AIR SUSPENSION)....1821-4
SUSPENSION, SEAT....1821-2
SWITCH COVER CONSOLE....1810-54
SWITCH INTERFACE, CONTROL PANEL....1674-6
SWITCH PARKING BRAKE....1674-8
SWITCH WIPER....1810-30
SWITCH, A/C AND HEATER BLOWER....1674-11
SWITCH, A/C AND HEATER THERMOSTAT....1830-4
SWITCH, BATTERY DISCONNECT....1671-2
SWITCH, BRAKE VALVE....1060-2
SWITCH, BRAKE VALVE....1060-3A
SWITCH, COLD WEATHER STARTING AID....0505-2
SWITCH, DIFFERENTIAL LOCK....0260-19
SWITCH, DOMELIGHT, DOOR ACTIVATED....1673-5
SWITCH, HEATER AND A/C BLOWER MOTOR....1830-4
SWITCH, HEATER BLOWER MOTOR....1830-8
SWITCH, HEATER THERMOSTAT....1830-8
SWITCH, HORN....1810-48
SWITCH, IGNITION....1674-6
SWITCH, KICKDOWN, TWO LEVER PILOT CONTROLLER....3160-74
SWITCH, PARKING BRAKE....1674-9
SWITCH, SECONDARY STEERING....0930-2
SWITCH, SECONDARY STEERING....0930-4
SWITCH, TRANSMISSION OIL FILTER RESTRICTION INDICATOR....0350-16

T

TACHOMETER DRIVE SENSOR....0578-2
TANK, COOLANT RECOVERY....0510-2
TANK, COOLANT RECOVERY....0510-4
TANK, COOLANT RECOVERY....0510-5A
TANK, COOLANT RECOVERY....0510-6
TANK, WINDOW WASHER....1810-24
TANK,FUEL....0560-2
TEETH, LOADER BUCKET....3102-8
TEMPERATURE CONTROL....1830-2
TEMPERATURE CONTROL....1830-6
TEMPERATURE SENSOR, ENGINE HEAD....0578-2
TEMPERATURE SENSOR, HYDRAULIC OIL....2160-6
TEMPERATURE SENSOR, HYDRAULIC OIL....2160-7A
TEMPERATURE SENSOR, TRANSMISSION....0350-18
TENSIONER PULLEY....0429-2
TENSIONER, BELT (55 AMP)....1672-2
TENSIONER, BELT (80 AMP)....1672-6
TENSIONER, DRIVE BELT....0429-2

ALPHABETICAL INDEX - CONTINUED

PAGE

THERMAL BYPASS VALVE LINES, TRANSMISSION 0360-4
THERMAL BYPASS VALVE, TRANSMISSION.....0360-4
THERMOSTAT 0418-2
THERMOSTAT COVER.....0418-2
THERMOSTAT COVER TUBE 0418-2
THERMOSTAT, A/C AND HEATER SWITCH.....1830-4
THERMOSTAT, HEATER SWITCH 1830-8
THIRD FUNCTION AUXILIARY HYDRAULICS
(FOR USE WITH POWERLLEL LINKAGE) 3160-62
THIRD FUNCTION AUXILIARY HYDRAULICS
(FOR USE WITH TC) 3160-68
THIRD FUNCTION AUXILIARY HYDRAULICS
(POWERLLEL LINKAGE) (BOOM TO COUPLER) 3163-6
THIRD FUNCTION AUXILIARY HYDRAULICS
(Z-BAR LINKAGE) (S.N. -594432) 3160-52
THIRD FUNCTION AUXILIARY HYDRAULICS
(Z-BAR LINKAGE) (S.N. 594433-) 3160-56
THIRD FUNCTION AUXILIARY HYDRAULICS (Z-
BAR LINKAGE) (BOOM TO COUPLER).....3163-4
THIRD FUNCTION BOOM TO COUPLER
PLUMBING (Z-BAR LINKAGE).....3163-4
THIRD FUNCTION BOOM TO COUPLER PLUMBING
(POWERLLEL LINKAGE).....3163-6
THIRD GEAR CLUTCH ASSEMBLY 0350-34
THREE SPOOL CONTROL VALVE, LOADER
(S.N. -594432).....3160-8
THREE SPOOL CONTROL VALVE, LOADER
(S.N. 594433-).....3160-10
THREE SPOOL CONTROL VALVE, LOADER
TOOL CARRIER.....3160-12
THREE SPOOL LOADER CONTROL VALVE
(S.N. -594432).....3160-8
THREE SPOOL LOADER CONTROL VALVE
(S.N. 594433-).....3160-10
THREE SPOOL LOADER CONTROL VALVE,
TOOL CARRIER.....3160-12
THREE SPOOL TOOL CARRIER CONTROL VALVE 3160-12
THREE SPOOL VALVE, LOADER CONTROL
(S.N. -594432).....3160-8
THREE SPOOL VALVE, LOADER CONTROL
(S.N. 594433-).....3160-10
THREE SPOOL VALVE, LOADER CONTROL
TOOL CARRIER.....3160-12
THRUST WASHER 0210-38
THRUST WASHER 0210-40
TIE BOLTS, LOADER CONTROL VALVE
(2-SPOOL) (S.N. 594433-).....3160-4
TIE BOLTS, LOADER CONTROL VALVE
(3-SPOOL) (S.N. 594433-).....3160-10
TIE BOLTS, LOADER CONTROL VALVE
(4-SPOOL) (S.N. 594433-).....3160-16
TILT CYLINDER
(FOR USE WITH TC) 3165-14
TILT CYLINDER PINS AND FITTINGS,
POWERLLEL LINKAGE.....3165-16
TILT CYLINDER PINS AND FITTINGS,
TOOL CARRIER.....3165-10
TIMING GEAR COVER.....0417-2
TIMING GEAR COVER SERVICE KIT 0417-4
TIRE VALVE STEM (THREE PIECE)
(25 X 14) (25 X 17).....0110-3
TIRE VALVE STEM (25 X 14)
(ONE PIECE) 0110-2
TOOL CARRIER ATTACHMENT COUPLER 3104-2
TOOL CARRIER ATTACHMENT COUPLER CYLINDER 3104-4
TOOL CARRIER BOOM 3140-10

PAGE

TOOL CARRIER BOOM CYLINDER PINS AND
FITTINGS 3165-10
TOOL CARRIER BOOM LINKAGE..... 3140-18
TOOL CARRIER FOUR SPOOL CONTROL VALVE 3160-18
TOOL CARRIER FRAME..... 3140-4
TOOL CARRIER FRAME PIVOT PIN 3140-4
TOOL CARRIER LINKAGE..... 3140-18
TOOL CARRIER THREE SPOOL CONTROL VALVE 3160-12
TOOL CARRIER TILT CYLINDER PINS AND
FITTINGS 3165-10
TOOL CARRIER TWO SPOOL CONTROL VALVE 3160-6
TORQUE CONVERTER..... 0350-4
TORQUE CONVERTER COVER..... 0350-4
TORQUE CONVERTER DRIVE SHAFT..... 0350-4
TORQUE CONVERTER HOUSING..... 0350-4
TORSIONAL DRIVE DAMPER AND COVER 0350-38
TRADEMARKS AND LABELS (ENGLISH)..... 1322-2
TRANS. COVER, LEFT, ABSORBER 1913-6
TRANS. COVER, RIGHT, ABSORBER..... 1913-6
TRANSFER PUMP, FUEL..... 0421-1
TRANSMISSION..... 0350-2
TRANSMISSION BOTTOM GUARD..... 1746-4
TRANSMISSION BOTTOM GUARD..... 1746-5A
TRANSMISSION CONTROL UNIT 1674-6
TRANSMISSION CONTROL UNIT 1674-7A
TRANSMISSION CONTROL VALVE 0350-18
TRANSMISSION CONTROL VALVE MANIFOLD..... 0350-16
TRANSMISSION COVER 0350-13
TRANSMISSION COVER 0350-13A
TRANSMISSION DRAIN PLUG..... 0350-8
TRANSMISSION DRIVE SHAFTS..... 0325-2
TRANSMISSION DRIVE SHAFTS..... 0325-4
TRANSMISSION EXTERNAL OIL LINES..... 0360-4
TRANSMISSION FITTINGS 0350-2
TRANSMISSION GASKET 0350-13
TRANSMISSION GUARDS..... 1913-3
TRANSMISSION HOUSING 0350-8
TRANSMISSION INPUT GEAR..... 0350-6
TRANSMISSION INPUT SHAFT 0350-6
TRANSMISSION INTERNAL OIL LINES..... 0350-14
TRANSMISSION LINES, THERMAL BYPASS VALVE 0360-4
TRANSMISSION MINIMUM PRESSURE VALVE..... 0350-22
TRANSMISSION MOUNTING BRACKETS..... 0342-2
TRANSMISSION MOUNTING BRACKETS..... 0342-3A
TRANSMISSION OIL COOLER..... 0510-2
TRANSMISSION OIL COOLER..... 0510-4
TRANSMISSION OIL COOLER..... 0510-5A
TRANSMISSION OIL COOLER..... 0510-6
TRANSMISSION OIL FILL..... 0360-2
TRANSMISSION OIL FILTER 0350-2
TRANSMISSION OIL FILTER ELEMENT 0350-2
TRANSMISSION OIL FILTER HEAD..... 0350-2
TRANSMISSION OIL FILTER RESTRICTION
INDICATOR SWITCH 0350-16
TRANSMISSION OIL LINES, INTERNAL..... 0350-14
TRANSMISSION OIL PUMP..... 0350-12
TRANSMISSION OUTPUT SHAFT AND YOKE..... 0350-20
TRANSMISSION SHIELDS 1913-3
TRANSMISSION SIGHT GAUGE 0360-2
TRANSMISSION SPEED SENSOR 0350-10
TRANSMISSION TEMPERATURE SENSOR..... 0350-18
TRANSMISSION THERMAL BYPASS VALVE..... 0360-4
TRANSMISSION WIRING HARNESS 1674-2
TRANSMISSION WIRING HARNESS 1674-3A
TRANSMISSION WIRING HARNESS
(FOR USE WITH POWERLLEL LINKAGE)..... 1674-3C

ALPHABETICAL INDEX - CONTINUED

PAGE

TRANSMISSION WIRING HARNESS
(FOR USE WITH POWERLLEL LINKAGE) 1674-4
TRAY, ASH....1810-41
TUBE, THERMOSTAT COVER....0418-2
TUBE, TRANSMISSION OIL FILL....0360-2
TUNE-UP GASKET SET - 5510N....0452-2
TURBOCHARGER AND OIL LINES....0416-2
TURN AND MARKER LIGHT
(SN -603831)....1673-2
TURN AND MARKER LIGHT
(SN 603832-)....1673-3A
TURN LAMP....1673-6
TURN LIGHT....1673-6
TWO LEVER PILOT CONTROLLER....3160-72
TWO LEVER PILOT CONTROLLER....3160-74
TWO LEVER PILOT CONTROLLER BOOT....3160-74
TWO LEVER PILOT CONTROLLER COMPONENTS....3160-74
TWO LEVER PILOT CONTROLLER SOLENOID....3160-74
TWO LEVER PILOT CONTROLLER WITH AUXILARY....3160-76
TWO LEVER TO JOYSTICK CONVERSION KIT....3160-80
TWO LEVER WITH AUX. TO JOYSTICK WITH
AUX. CONVERSION KIT....3160-84
TWO SPOOL CONTROL VALVE, LOADER
(S.N. -594432)....3160-2
TWO SPOOL CONTROL VALVE, LOADER
(S.N. 594433-)....3160-4
TWO SPOOL CONTROL VALVE, LOADER
TOOL CARRIER....3160-6
TWO SPOOL LOADER CONTROL VALVE
(S.N. -594432)....3160-2
TWO SPOOL LOADER CONTROL VALVE
(S.N. 594433-)....3160-4
TWO SPOOL LOADER CONTROL VALVE,
TOOL CARRIER....3160-6
TWO SPOOL TOOL CARRIER CONTROL VALVE....3160-6
TWO SPOOL VALVE, LOADER CONTROL
(S.N. -594432)....3160-2
TWO SPOOL VALVE, LOADER CONTROL
(S.N. 594433-)....3160-4
TWO SPOOL VALVE, LOADER CONTROL
TOOL CARRIER....3160-6

U

U-JOINT ASSEMBLY....3160-82
UPPER ALTERNATOR BRACKET....0423-2
UPPER DOOR, ABSORBER....1913-6

V

VALVE COMPONENTS, AUXILIARY SECTION
LOADER CONTROL VALVE (S.N. -594432)....3160-38
VALVE COMPONENTS, AUXILIARY SECTION
LOADER CONTROL VALVE (S.N. 594433-)....3160-40
VALVE COMPONENTS, PIN DISCONNECT....3160-97
VALVE COMPONENTS,PIN AND AXLE DISCONNECT....3160-97
VALVE COVER, ENGINE....0409-1
VALVE LINES, TRANSMISSION THERMAL BYPASS....0360-4
VALVE MANIFOLD, TRANSMISSION CONTROL....0350-16
VALVE SECTION, BUCKET
LOADER CONTROL VALVE (S.N. -594432)....3160-30
VALVE SECTION, BUCKET
LOADER CONTROL VALVE (S.N. 594433-)....3160-32
VALVE STEM, TIRE (THREE PIECE)
(25 X 14) (25 X 17)....0110-3

PAGE

VALVE STEM, TIRE (25 X 14)
(ONE PIECE)....0110-2
VALVE, AUXILIARY
LOADER CONTROL VALVE (S.N. -594432)....3160-38
VALVE, AUXILIARY
LOADER CONTROL VALVE (S.N. 594433-)....3160-40
VALVE, BOOM SECTION
LOADER CONTROL VALVE (S.N. -594432)....3160-34
VALVE, BOOM SECTION
LOADER CONTROL VALVE (S.N. 594433-)....3160-36
VALVE, BRAKE....1060-2
VALVE, BRAKE....1060-3A
VALVE, BRAKE, HYDRAULICS....1060-10
VALVE, BRAKE, HYDRAULICS....1060-11A
VALVE, BUCKET SECTION
LOADER CONTROL VALVE (S.N. -594432)....3160-30
VALVE, BUCKET SECTION
LOADER CONTROL VALVE (S.N. 594433-)....3160-32
VALVE, ENGINE OIL BYPASS....0404-2
VALVE, ENGINE OIL DRAIN....0407-2
VALVE, ENGINE OIL PRESSURE REGULATING....0404-2
VALVE, EXHAUST....0409-2
VALVE, FIFTH FUNCTION
(SER. NO. - 594432)....3160-46
VALVE, FIFTH FUNCTION
(SER. NO. 594433 -)....3160-47A
VALVE, INLET SECTION WITH RELIEF VALVE
LOADER CONTROL VALVE (S.N. -594432)....3160-20
VALVE, INLET SECTION WITH RELIEF VALVE
LOADER CONTROL VALVE (S.N. 594433-)....3160-22
VALVE, INTAKE....0409-2
VALVE, LOADER CONTROL (2-SPOOL)
(S.N. -594432)....3160-2
VALVE, LOADER CONTROL (2-SPOOL)
(S.N. 594433-)....3160-4
VALVE, LOADER CONTROL (2-SPOOL)
TOOL CARRIER....3160-6
VALVE, LOADER CONTROL (3-SPOOL)
(S.N. -594432)....3160-8
VALVE, LOADER CONTROL (3-SPOOL)
(S.N. 594433-)....3160-10
VALVE, LOADER CONTROL (3-SPOOL)
TOOL CARRIER....3160-12
VALVE, LOADER CONTROL (4-SPOOL)
(S.N. -594432)....3160-14
VALVE, LOADER CONTROL (4-SPOOL)
(S.N. 594433-)....3160-16
VALVE, LOADER CONTROL (4-SPOOL)
TOOL CARRIER....3160-18
VALVE, OIL FILTER BYPASS....0407-5
VALVE, PIN AND AXLE DISCONNECT....3160-97
VALVE, PIN AND AXLE DISCONNECT
(S.N. 594433-)....3160-108
VALVE, PRESSURE REGULATOR FITTINGS....2160-8
VALVE, PRESSURE REGULATOR FITTINGS....2160-9A
VALVE, REGULATING....3160-82
VALVE, REVERSE FAN DRIVE, RELIEF....0510-12
VALVE, REVERSE FAN DRIVE, SOLENOID....0510-12
VALVE, RIDE CONTROL....3160-96
VALVE, SOLENOID, PARK BRAKE....1060-4
VALVE, SOLENOID, PARK BRAKE....1060-5A
VALVE, STEERING
(SERIAL NO. 601560 -)....0960-2
VALVE, STEERING COMPENSATOR
(SERIAL NO. 601560 -)....0960-3A
VALVE, STEERING COMPENSATOR, KIT
(SERIAL NO. 601560 -)....0960-3A

ALPHABETICAL INDEX - CONTINUED

PAGE

VALVE, STEERING, BRACKET....1810-50
VALVE, STEERING, KIT
(SERIAL NO. 601560 -)....0960-2
VALVE, TORQUE CONVERTER PRESSURE RELIEF....0350-22
VALVE, TRANSMISSION CONTROL....0350-18
VALVE, TRANSMISSION MINIMUM PRESSURE....0350-22
VALVE, TRANSMISSION THERMAL BYPASS....0360-4
VALVES, ENVIRONMENTAL DRAIN....1369-2
VALVES, ENVIRONMENTAL DRAIN....1369-3A
VANDAL COVER....1810-20
VEHICLE ELECTRICAL CENTER....1674-16
VENTILATING SYSTEM, ENGINE....0408-2
VENTILATION, LOUVERS....1810-8
VISOR, SUN....1810-47
VOLTAGE REGULATOR (55 AMP)....1672-2
VOLTAGE REGULATOR (80 AMP)....1672-6

W

WATER PUMP....0417-2
WATER PUMP INLET....0417-5
WATER PUMP INSERT KIT....0417-4
WATER PUMP PULLEY....0417-5
WATER TEMPERATURE SENSOR....0578-2
WEIGHT, ENGINE BALANCER SHAFT....0415-2
WHEEL RIM (25 X 14)
(ONE PIECE)....0110-2
WHEEL RIM ASSSEMBLY (THREE PIECE)
(25 X 14) (25 X 17)....0110-3
WHEEL SPACER....0110-2B
WHEEL SPACER....0110-4
WHEEL SPACER....0110-6
WHEEL SPACER....0110-8
WHEEL, ENGINE SPEED SENSOR....0401-2
WHEEL, STEERING....1810-48
WINDOW WASHER CAP....1810-24
WINDOW WASHER PUMP....1810-24
WINDOW WASHER TANK....1810-24
WINDOW WASHER, FRONT AND REAR....1810-24
WINDOW, CANOPY REAR....1810-16
WINDOWS....1810-4
WINDSHIELD WIPER
(FRONT)....1810-26
WINDSHIELD WIPER, REAR....1810-28
WIPER ARM
(FRONT)....1810-26
WIPER BLADE....1810-28
WIPER BLADE
(FRONT)....1810-26
WIPER MOUNTING BRACKETS....1810-30
WIPER SWITCH....1810-30
WIRE HARNESS, ENGINE AIR HEATER....0505-4
WIRE HARNESS,SECONDARY STEERING....0930-2
WIRE HARNESS,SECONDARY STEERING....0930-4
WIRING HARNESS, CAB....1674-6
WIRING HARNESS, CAB....1674-7A
WIRING HARNESS, ENGINE....1674-2
WIRING HARNESS, ENGINE....1674-3A
WIRING HARNESS, ENGINE
(FOR USE WITH POWERLLEL LINKAGE)....1674-3C
WIRING HARNESS, ENGINE
(FOR USE WITH POWERLLEL LINKAGE)....1674-4
WIRING HARNESS, ENGINE FRAME....1674-2
WIRING HARNESS, ENGINE FRAME....1674-3A
WIRING HARNESS, ENGINE FRAME
(FOR USE WITH POWERLLEL LINKAGE)....1674-3C
WIRING HARNESS, ENGINE FRAME
(FOR USE WITH POWERLLEL LINKAGE)....1674-4
WIRING HARNESS, FRONT CONSOLE....1674-8
WIRING HARNESS, FRONT CONSOLE....1674-9
WIRING HARNESS, LOAD CENTER....1674-6
WIRING HARNESS, LOAD CENTER....1674-7A
WIRING HARNESS, LOADER FRAME....1674-2
WIRING HARNESS, LOADER FRAME....1674-3A
WIRING HARNESS, LOADER FRAME
(FOR USE WITH POWERLLEL LINKAGE)....1674-3C
WIRING HARNESS, LOADER FRAME
(FOR USE WITH POWERLLEL LINKAGE)....1674-4
WIRING HARNESS, MAIN....1674-2
WIRING HARNESS, MAIN....1674-3A
WIRING HARNESS, MAIN
(FOR USE WITH POWERLLEL LINKAGE)....1674-3C
WIRING HARNESS, MAIN
(FOR USE WITH POWERLLEL LINKAGE)....1674-4
WIRING HARNESS, REAR FRAME....1674-2
WIRING HARNESS, REAR FRAME....1674-3A
WIRING HARNESS, REAR FRAME
(FOR USE WITH POWERLLEL LINKAGE)....1674-3C
WIRING HARNESS, REAR FRAME
(FOR USE WITH POWERLLEL LINKAGE)....1674-4
WIRING HARNESS, TRANSMISSION....1674-2
WIRING HARNESS, TRANSMISSION....1674-3A
WIRING HARNESS, TRANSMISSION
(FOR USE WITH POWERLLEL LINKAGE)....1674-3C
WIRING HARNESS, TRANSMISSION
(FOR USE WITH POWERLLEL LINKAGE)....1674-4
WIRING, A/C AND HEATER BLOWER....1674-11
WIRING, FRONT DASH MODULE....1674-8
WIRING, HVAC....1674-11
WORK LAMP, FRONT AND REAR....1673-4
WRIST ARM REST, RIGHT....1821-6

Y

YOKE, INPUT....0210-3
YOKE, TORQUE CONVERTER INPUT SHAFT....0350-4
YOKE, TRANSMISSION OUTPUT SHAFT....0350-20

Z

Z-BAR LINKAGE ATTACHMENT COUPLER....3104-6

MEMORANDA
MEMORANDA
MEMORANDA

WHEEL RIM ASSEMBLY (ONE PIECE) (25 X 14) (SN -604689)
JANTE DE ROUE (MONOBLOC) (25 X 14) (SN -604689)
CONJUNTO DE ARO DE RUEDA (UNA PIEZA) (25 X 14) (SN -604689)

T193565 -UN-18AUG03

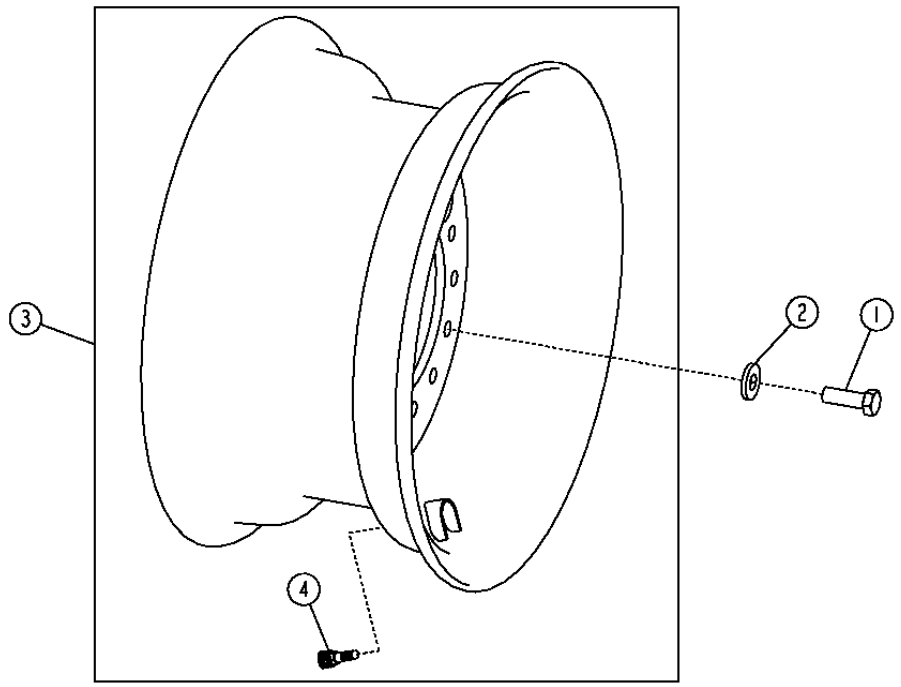

KEY	PART NO.	PART NAME	QTY.	SERIAL NO.	REMARKS
1	19M8224	CAP SCREW	14		M20 X 60
2	T151797	WASHER	14		
3	AT304412	RIM AND WHEEL CENTER	1		(635MM X 356MM) (17.5 INCH WIDE TIRE)
4	AT25226	TIRE VALVE STEM	1		

MEMORANDA
MEMORANDA
MEMORANDA

WHEEL RIM ASSEMBLY (ONE PIECE) (17.5 X 25) (SN 604690-)
JANTE DE ROUE (MONOBLOC) (17.5 X 25) (SN 604690-)
CONJUNTO DE ARO DE RUEDA (UNA PIEZA) (17.5 X 25) (SN 604690-)

TX1003280 -UN-01FEB06

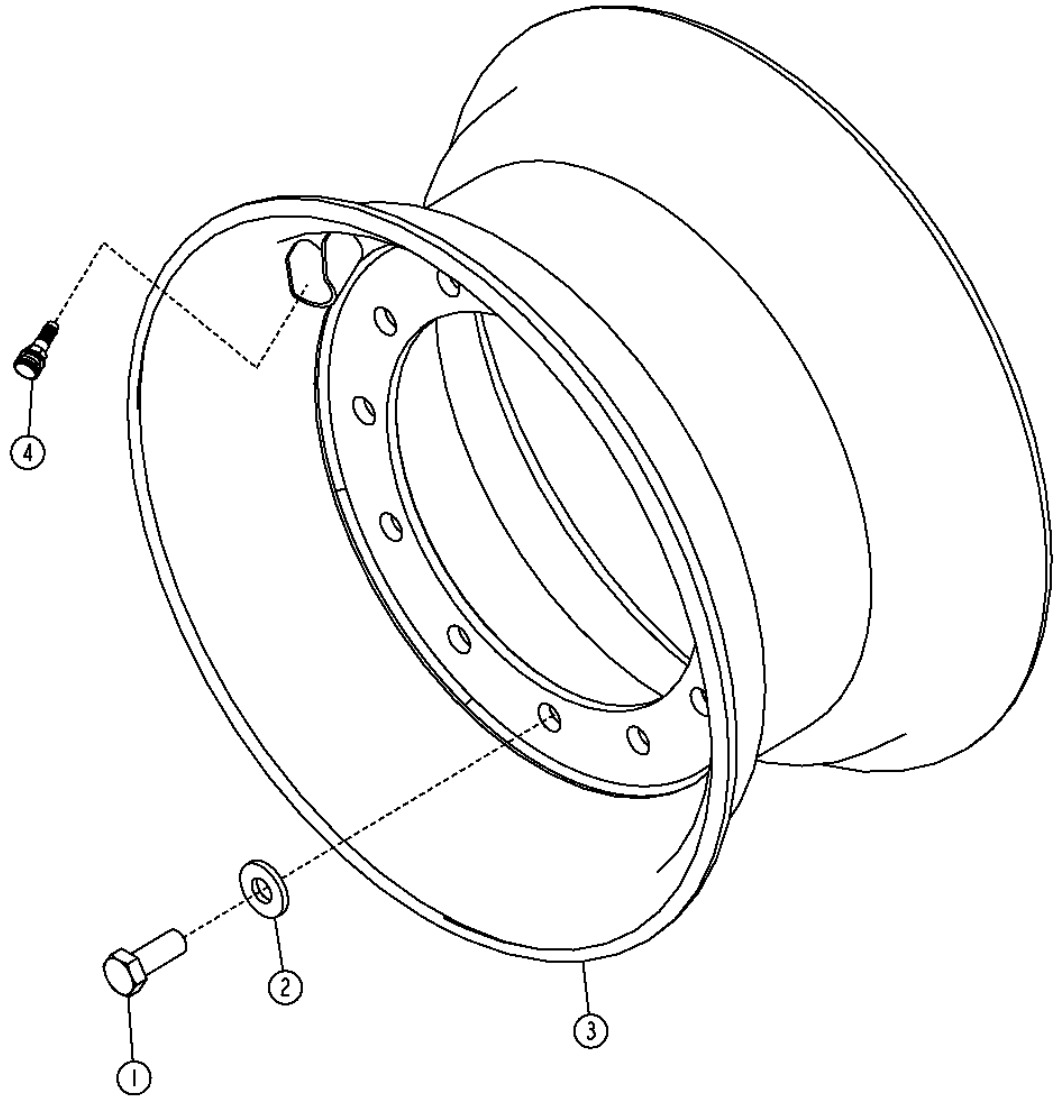

TX1003280

WHEEL RIM ASSEMBLY (ONE PIECE) (17.5 X 25) (SN 604690-)
JANTE DE ROUE (MONOBLOC) (17.5 X 25) (SN 604690-)
CONJUNTO DE ARO DE RUEDA (UNA PIEZA) (17.5 X 25) (SN 604690-)

KEY	PART NO.	PART NAME	QTY.	SERIAL NO.	REMARKS
1	19M9379	SCREW	48		M22 X 55
2	A11667	WASHER	48		23.012 X 50.800 X 6 MM
3	AT315346	RIM AND WHEEL CENTER	4		635 MM
4	AT25226	TIRE VALVE STEM	1		

MEMORANDA
MEMORANDA
MEMORANDA

WHEEL RIM ASSEMBLY (THREE PIECE) (25 X 14) (25 X 17) (SN -604689)
JANTE DE ROUE (TROIS PIECES) (25 X 14) (25 X 17) (SN -604689)
CONJUNTO DE ARO DE RUEDA (TRES PIEZAS) (25 X 14) (25 X 17) (SN -604689)

T193567 -UN-18AUG03

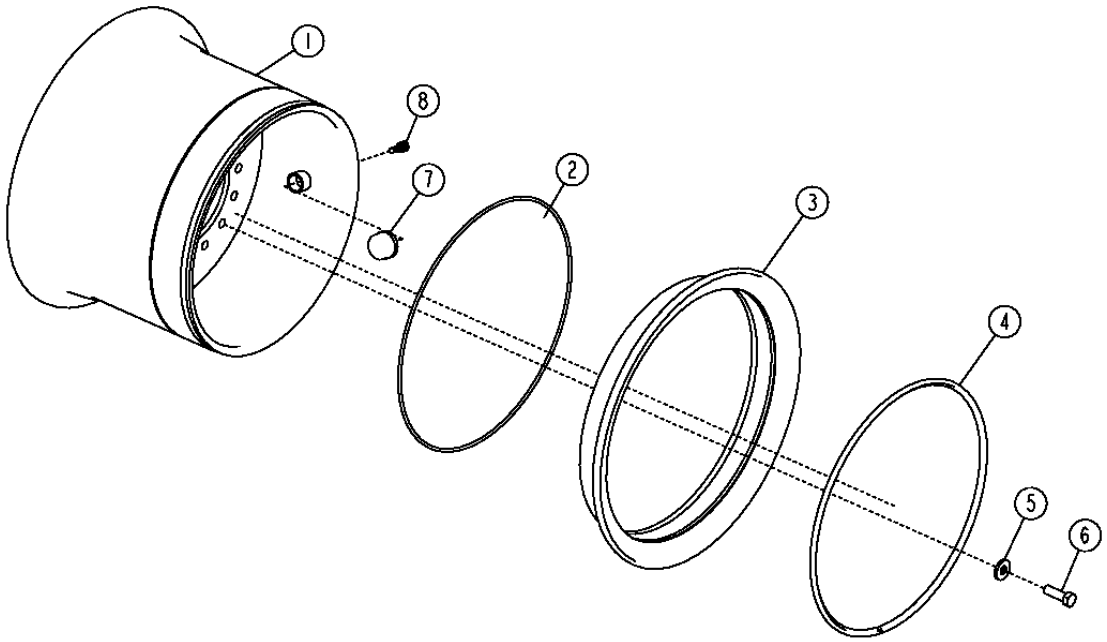

T193567

KEY	PART NO.	PART NAME	QTY.	SERIAL NO.	REMARKS
1	AT304415	RIM AND WHEEL CENTER	1		(635 MM X 356 MM) (25 X 14 RIM) (17.5 INCH WIDE TIRE)
	AT304418	WHEEL	1	-595865	(635 MM X 432 MM) (25 X 17 RIM) (20.5 INCH WIDE TIRE)
	AT317299	WHEEL	1	595866-	(635 MM X 432 MM) (25 X 17 RIM) (20.5 INCH WIDE TIRE)
2	T59933	O-RING	1		23-1/4" X 0.260"
3	T27193	WHEEL RING	1		(635 MM X 356 MM) (25 X 14 RIM) (17.5 INCH WIDE TIRE)
	T27532	WHEEL RING	1	-595865	(635 MM X 432 MM) (25 X 17 RIM) (20.5 INCH WIDE TIRE)
	T212453	WHEEL RING	1	595866-	(635 MM X 432 MM) (25 X 17 RIM) (20.5 INCH WIDE TIRE)
4	T27194	WHEEL RING	1	-595865	
	T212452	WHEEL RING	1	595866-	
5	T151797	WASHER	14		
6	19M8224	CAP SCREW	14		M20 X 60
7	15H710	FITTING	1		1-1/2"
8	AT25226	TIRE VALVE STEM	1		

WHEEL RIM ASSEMBLY (THREE PIECE) (17.5 X 25) (SN 604690-)
JANTE DE ROUE (TROIS PIECES) (17.5 X 25) (SN 604690-)
CONJUNTO DE ARO DE RUEDA (TRES PIEZAS) (17.5 X 25) (SN 604690-)

TX1003281 -UN-06FEB06

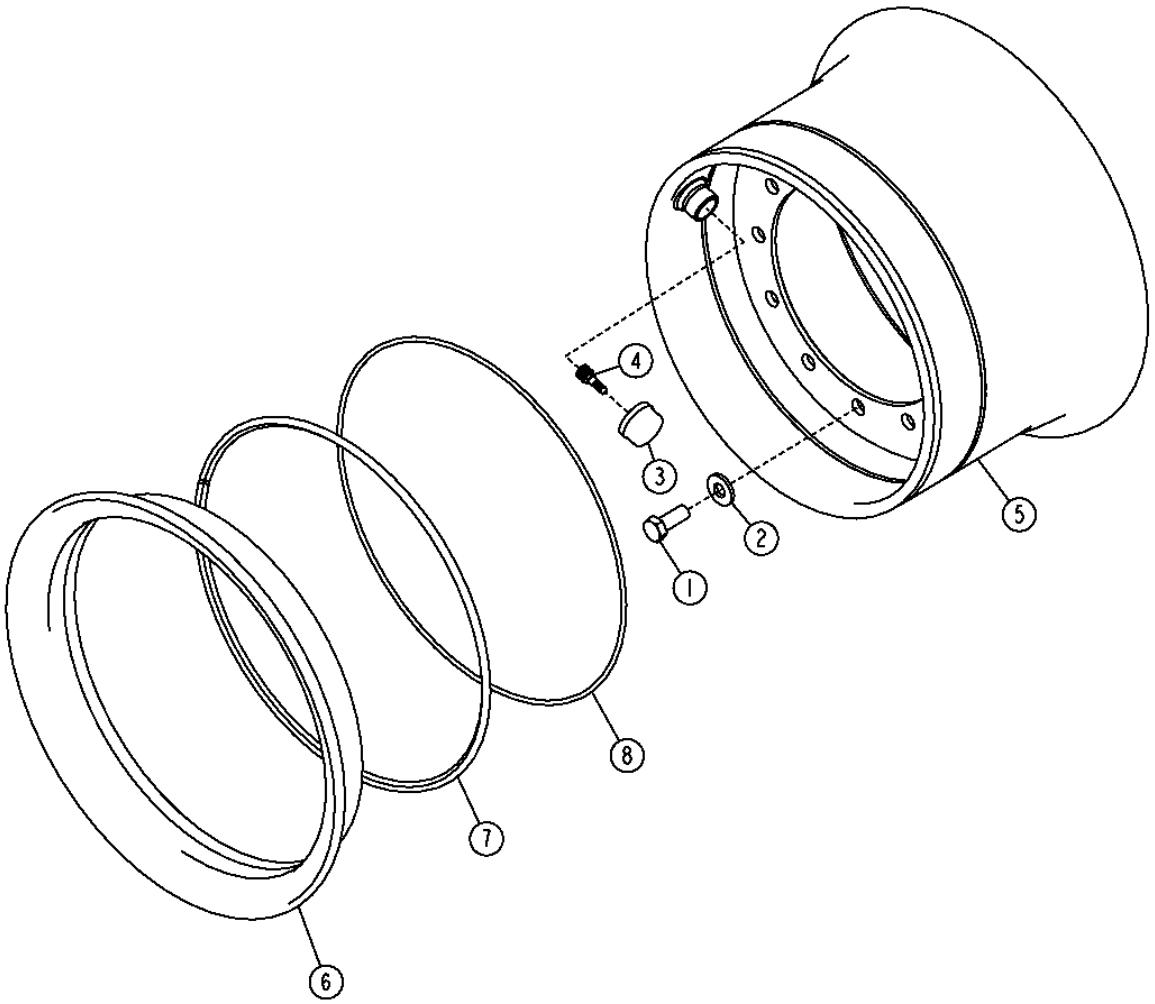

TX1003281

WHEEL RIM ASSEMBLY (THREE PIECE) (17.5 X 25) (SN 604690-)
JANTE DE ROUE (TRÒIS PIECES) (17.5 X 25) (SN 604690-)
CONJUNTO DE ARO DE RUEDA (TRES PIEZAS) (17.5 X 25) (SN 604690-)

KEY	*PART NO.*	*PART NAME*	*QTY.*	*SERIAL NO.*	*REMARKS*
1	19M9379	SCREW	48		M22 X 55
2	A11667	WASHER	48		23.012 X 50.800 X 6 MM
3	15H710	FITTING	1		38.100 MM
4	AT25226	TIRE VALVE STEM	1		
5	AT315355	RIM AND WHEEL CENTER	1		635 MM
6	T211557	WHEEL RING	1		
7	T212452	WHEEL RING	1		
8	T59933	O-RING	1		590.550 X 6.604 MM

WHEEL RIM ASSEMBLY (THREE PIECE) (20.5 X 25) (SN 604690-)
JANTE DE ROUE (TROIS PIECES) (20.5 X 25) (SN 604690-)
CONJUNTO DE ARO DE RUEDA (TRES PIEZAS) (20.5 X 25) (SN 604690-)

TX1003282 -UN-03FEB06

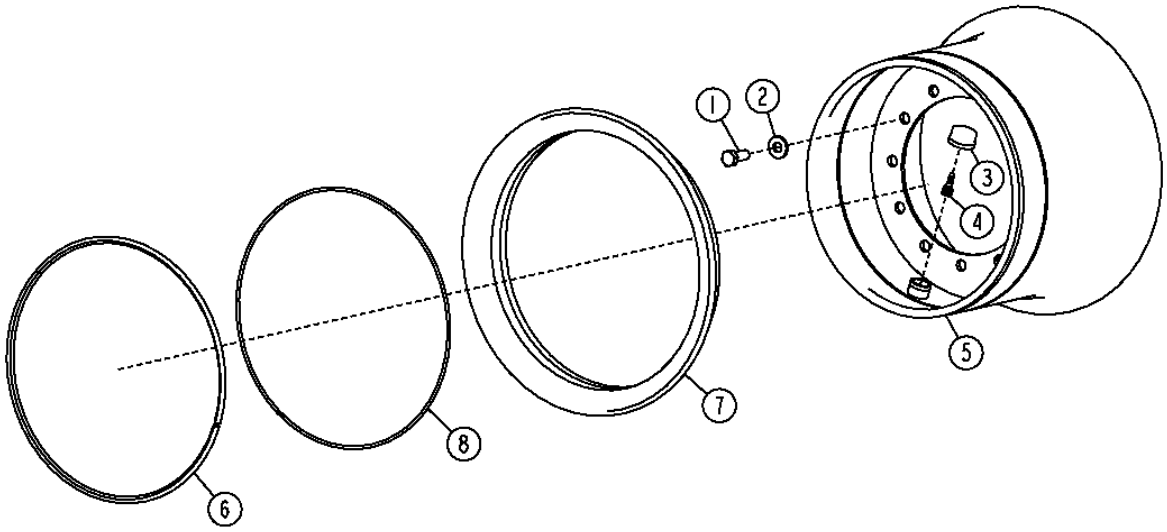

TX1003282

WHEEL RIM ASSEMBLY (THREE PIECE) (20.5 X 25) (SN 604690-)
JANTE DE ROUE (TRÒIS PIECES) (20.5 X 25) (SN 604690-)
CONJUNTO DE ARO DE RUEDA (TRES PIEZAS) (20.5 X 25) (SN 604690-)

KEY	*PART NO.*	*PART NAME*	*QTY.*	*SERIAL NO.*	*REMARKS*
1	19M9379	SCREW	48		M22 X 55
2	A11667	WASHER	48		23.012 X 50.800 X 6 MM
3	15H710	FITTING	1		38.100 MM
4	AT25226	TIRE VALVE STEM	1		
5	AT315360	WHEEL	1		635 MM
6	T212452	WHEEL RING	1		
7	T212453	WHEEL RING	1		
8	T59933	O-RING	1		590.550 X 6.604 MM

WHEEL SPACER
ECARTEUR DE ROUE
ESPACIADOR DE LA RUEDA

TP60706 -UN-06APR99

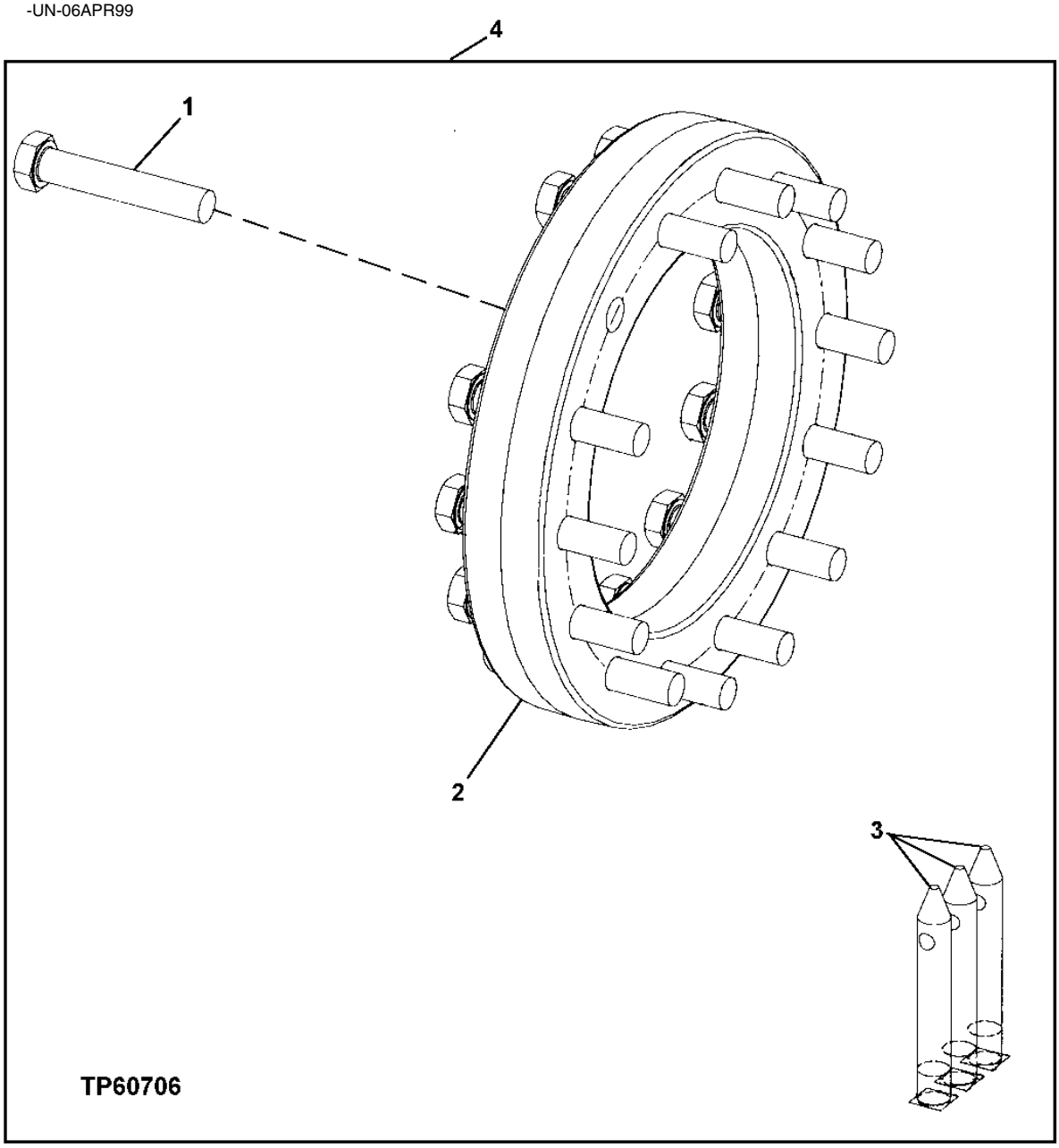

WHEEL SPACER
ECARTEUR DE ROUE
ESPACIADOR DE LA RUEDA

KEY	PART NO.	PART NAME	QTY.	SERIAL NO.	REMARKS
1	19M7969	CAP SCREW	56		M20 X 110
2	T66862	SPACER	4		
3	T176455	STUD	3		
4	.....	KIT	1		WHEEL SPACER (WHOLEGOODS) (AT220872 NLA) (SUB COMPONENTS)

AXLES (SN -604689)
ESSIEUX (SN -604689)
EJES (SN -604689)

RE029885 -UN-14AUG98

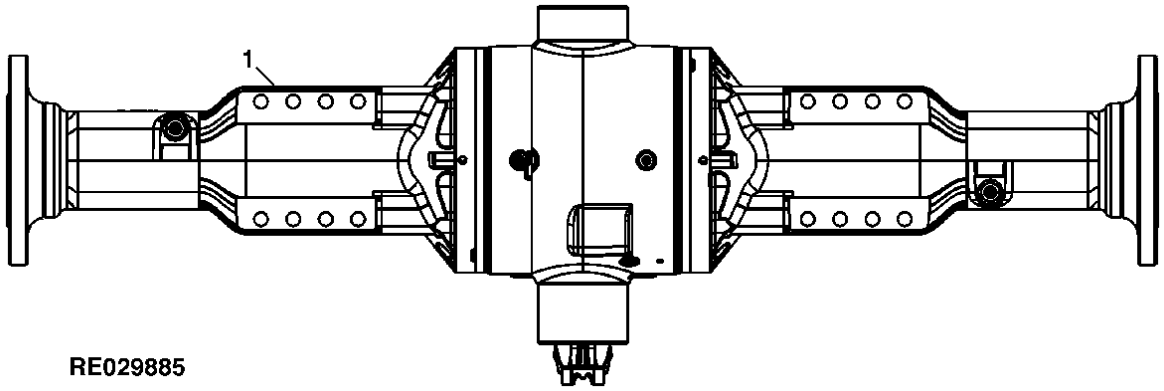

KEY	PART NO.	PART NAME	QTY.	SERIAL NO.	REMARKS
1	RE164379	AXLE WITH DIFFERENTIAL	1		(HYD. DIFF-LOCK) (FRONT) (CONVENIENCE ASSEMBLY)
	RE164382	**AXLE WITH DIFFERENTIAL**	**1**		**(HYD. DIFF-LOCK) (REAR) (CONVENIENCE ASSEMBLY)**
	.....	AXLE WITH DIFFERENTIAL	1		(RE164378 NLA) (STANDARD DIFF.) (FRONT) (CONVENIENCE ASSEMBLY)
	RE164381	**AXLE WITH DIFFERENTIAL**	**1**		**(STANDARD DIFF.) (REAR) (CONVENIENCE ASSEMBLY)**

INPUT YOKE (RE67134) (SN -604489)
CHAPE D'ENTREE (RE67134) (SN -604489)
HORQUILLA DE ENTRADA (RE67134) (SN -604489)

TX1006380 -UN-24APR06

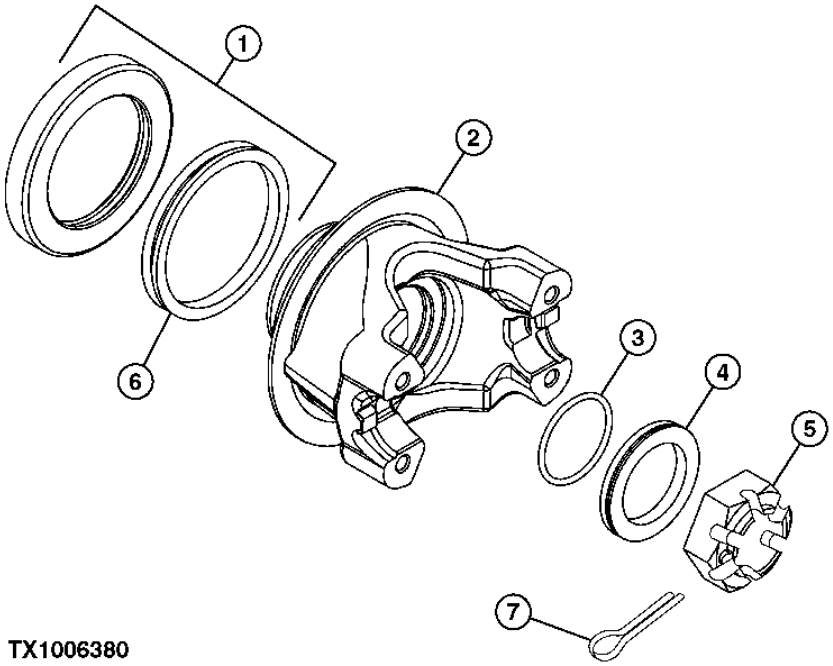

TX1006380

KEY	PART NO.	PART NAME	QTY.	SERIAL NO.	REMARKS
1	RE45312	SEAL KIT	1		
	AT314206	SEAL	1		(FOR HARSH ENVIRONMENT)
2	RE66980	YOKE	1		
3	U10289	O-RING	1		
4	R48733	WASHER	AR		1.600" X 2-1/4" X 1/4" (6.35 MM)
	R48734	WASHER	AR		1.600" X 2-1/4" X 0.248" (6.299 MM)
	R48735	WASHER	AR		1.600" X 2-1/4" X 0.245" (6.223 MM)
5	R48776	NUT	1		(SUB FOR R137063 OR R151933)
6	R89581	SEAL	1		
7	11M7032	COTTER PIN	1		5 X 50 MM

FRONT SPIRAL BEVEL INPUT PINION AND RING GEAR SET (SN -604489) (RE67132)
PIGNON D'ENTREE CONIQUE HELICOIDAL AVANT ET TRAIN DE COURONNES (SN -604489)(RE67132)
JUEGO CORONA DENTADA Y PINON CONICO ENTRADA DIENTES HELICOIDALES DELANTERO (SN -604489) (RE67132)

RXP021881 -UN-08JAN97

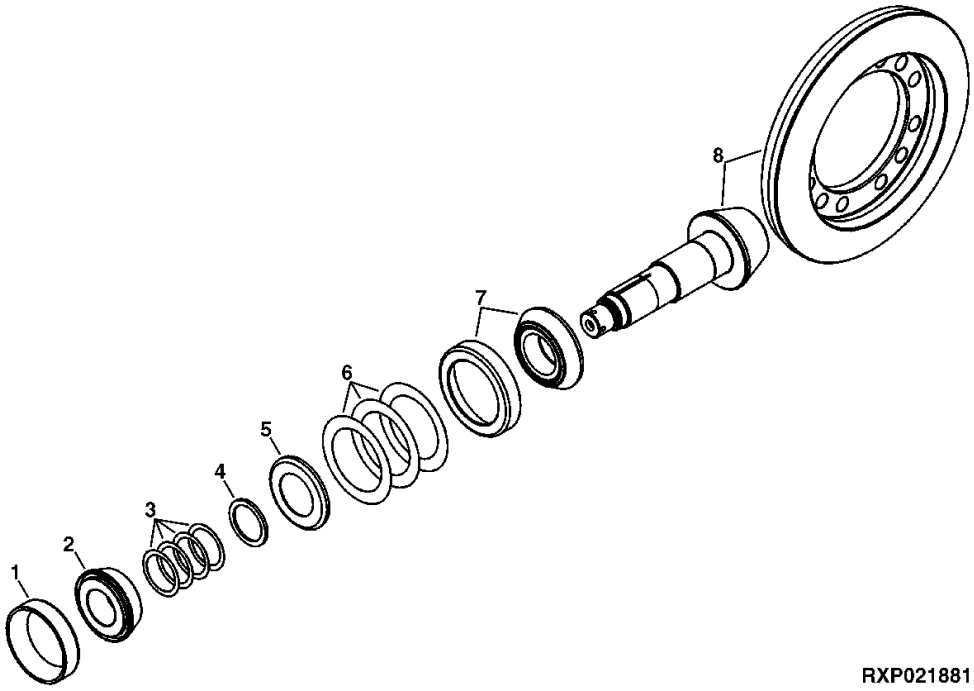

RXP021881

KEY	PART NO.	PART NAME	QTY.	SERIAL NO.	REMARKS
1	JD8240	BEARING CUP	1		
2	JD8974	BEARING CONE	1		
3	R45197	SHIM	2		0.178 MM (0.007 INCHES)
	R45198	SHIM	2		0.254 MM (0.010 INCHES)
	R45199	SHIM	3		0.305 MM (0.012 INCHES)
	R45200	SHIM	2		0.381 MM (0.015 INCHES)
4	R135535	SPACER	1		(USE IF AVAILABLE) (SUB R163333)
	R163333	SPACER	1		
5	R131896	SLEEVE	1	-573566	
	R163180	SLEEVE	1	573567-	
6	R134404	SHIM	2	-573566	0.076 MM (0.003 INCHES)
	R163181	SHIM	3	573567-	0.076 MM (0.003 INCHES)
	R134405	SHIM	2	-573566	0.127 MM (0.005 INCHES)
	R163182	SHIM	3	573567-	0.127 MM (0.005 INCHES)
	R134406	SHIM	2	-573566	0.254 MM (0.010 INCHES)
	R163183	SHIM	3	573567-	0.254 MM (0.010 INCHES)
7	RE63575	TAPERED ROLLER BEARING	1	-573566	
	RE163170	BEARING	1	573567-	
8	RE65217	BEVEL GEAR DRIVE	1	-573566	LH ASSY, (MARKED R129674 AND R129675)
	RE163554	BEVEL GEAR DRIVE	1	573567-	LH ASSY, (MARKED R163556 AND R129675)

REAR SPIRAL BEVEL INPUT PINION AND RING GEAR SET (SN -604489) (RE67133)
JEU DE COURONNES ET DE PIGNONS D'ENTREE CONIQUES HELICOIDAUX ARRIERE (SN -604489) (RE67133)
JUEGO DE CORONA DENTADA Y PINON DE ENTRADA DE DIENTES HELICOIDALES TRASEROS(SN -604489) (RE67133)

RXP021881 -UN-08JAN97

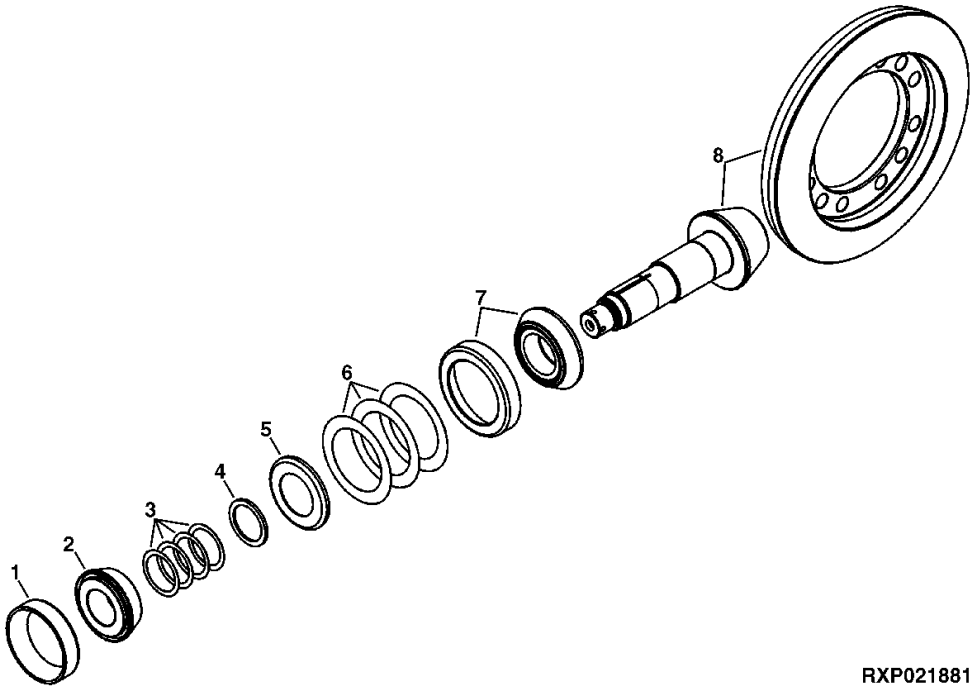

RXP021881

KEY	*PART NO.*	*PART NAME*	*QTY.*	*SERIAL NO.*	*REMARKS*
1	JD8240	BEARING CUP	1		
2	JD8974	BEARING CONE	1		
3	R45197	SHIM	2		0.178 MM (0.007 INCHES)
	R45198	SHIM	2		0.254 MM (0.010 INCHES)
	R45199	SHIM	3		0.305 MM (0.012 INCHES)
	R45200	SHIM	2		0.381 MM (0.015 INCHES)
4	R135535	SPACER	1		(USE IF AVAILABLE) (SUB R163333)
	R163333	SPACER	1		
5	R131896	SLEEVE	1	-573566	
	R163180	SLEEVE	1	573567-	
6	R134404	SHIM	2	-573566	0.076 MM (0.003 INCHES)
	R163181	SHIM	3	573567-	0.076 MM (0.003 INCHES)
	R134405	SHIM	2	-573566	0.127 MM (0.005 INCHES)
	R163182	SHIM	3	573567-	0.127 MM (0.005 INCHES)
	R134406	SHIM	2	-573566	0.254 MM (0.010 INCHES)
	R163183	SHIM	3	573567-	0.254 MM (0.010 INCHES)
7	RE63575	TAPERED ROLLER BEARING	1	-573566	(USE WITH RE65216)
	RE163170	ROLLER BEARING	1	573567-	(USE WITH RE163555)
8	RE65216	BEVEL GEAR DRIVE	1	-573566	RH ASSY, (MARKED R129672 AND R129673) (USE WITH RE63575)
	RE163555	BEVEL GEAR DRIVE	1	573567-	RH ASSY, (MARKED R129672 AND R163557) (USE WITH RE163170)

FRONT DIFFERENTIAL CASE (WITH DIFFERENTIAL LOCK) (SN -604489) (RE66658)
BOITE DE DIFFERENTIEL AVANT (AVEC BLOCAGE DE DIFFERENTIEL) (SN -604489) (RE66658)
CAJA DEL DIFERENCIAL DELANTERO (CON TRABA DEL DIFERENCIAL) (SN -604489) (RE66658)

YZ3914A -UN-16JUL04

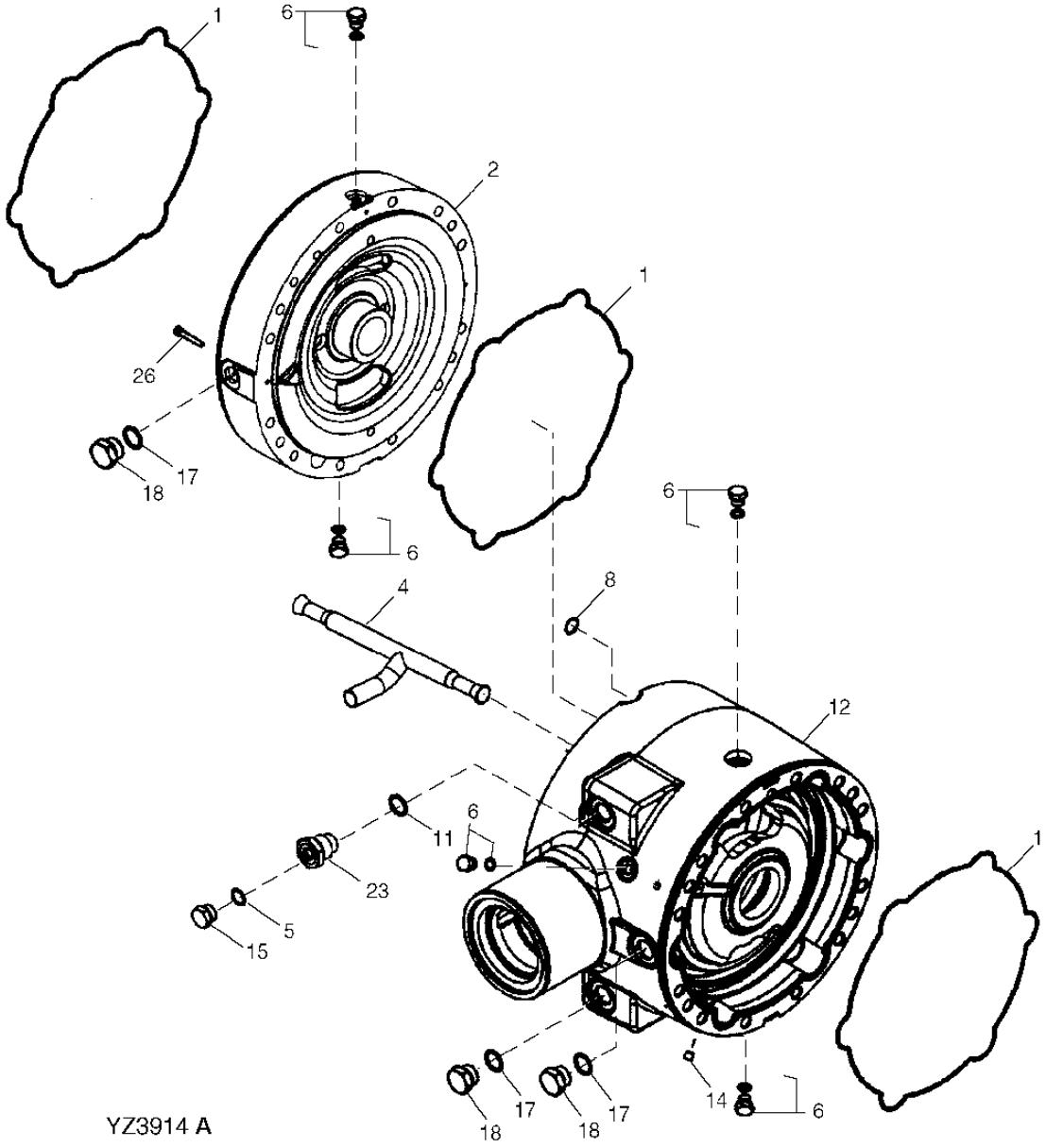

FRONT DIFFERENTIAL CASE (WITH DIFFERENTIAL LOCK) (SN -604489)
BOITE DE DIFFERENTIEL AVANT (AVEC BLOCAGE DE DIFFERENTIEL) (SN -604489)
CAJA DEL DIFERENCIAL DELANTERO (CON TRABA DEL DIFERENCIAL) (SN -604489)

KEY	*PART NO.*	*PART NAME*	*QTY.*	*SERIAL NO.*	*REMARKS*
1	R131797	O-RING	3		
2	R129888	COVER	1		
4	R159661	TEE FITTING	1		
5	R26286	O-RING	1		
6	RE46684	FITTING PLUG	5		
8	T44604	O-RING	1		
11	F3171R	O-RING	1		
12	RE164129	CASE	1		(MARKED R163505) (INCLUDES (2) 400R AND 405R)
14	15H558	PIPE PLUG	1		
15	R27094	DRAIN PLUG	1		
17	F3171	O-RING	3		
18	R27175	DRAIN PLUG	1		(SUB FOR R116801)
23	R160699	BUSHING	1		
26	19M8513	SCREW	2		

REAR DIFFERENTIAL CASE (WITH DIFFERENTIAL LOCK) (SN -604489) (RE66659)
BOITE DE DIFFERENTIEL ARRIERE (AVEC BLOCAGE DE DIFFERENTIEL) (SN -604489) (RE66659)
CAJA DEL DIFERENCIAL TRASERO (CON TRABA DEL DIFERENCIAL) (SN -604489) (RE66659)

YZ3912B -UN-07FEB06

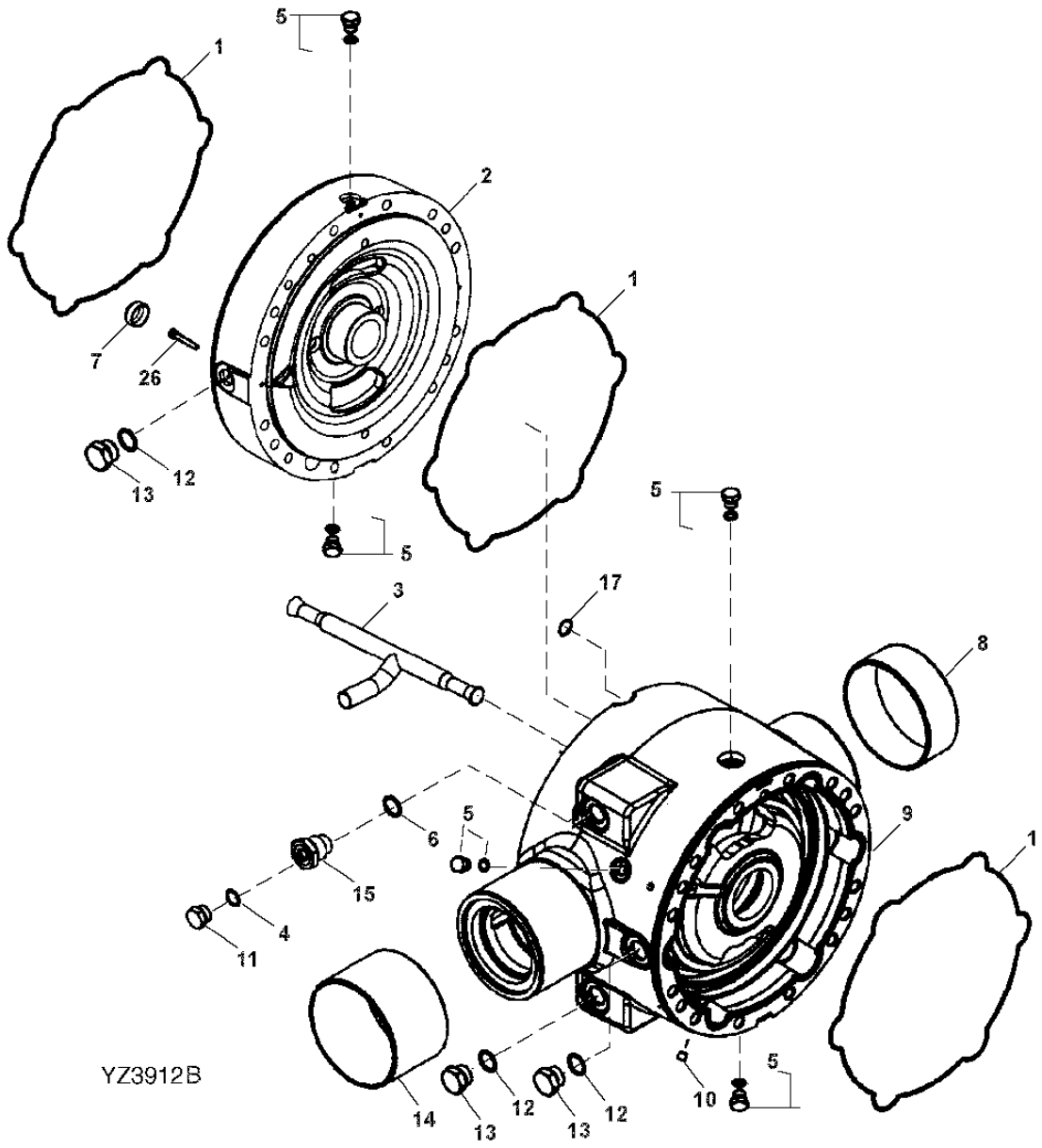

REAR DIFFERENTIAL CASE (WITH DIFFERENTIAL LOCK) (SN -604489)
BOITE DE DIFFERENTIEL ARRIERE (AVEC BLOCAGE DE DIFFERENTIEL) (SN -604489)
CAJA DEL DIFERENCIAL TRASERO (CON TRABA DEL DIFERENCIAL) (SN -604489)

KEY	PART NO.	PART NAME	QTY.	SERIAL NO.	REMARKS
1	R131797	O-RING	3		
2	R129888	COVER	1		
3	R159661	TEE FITTING	1		
4	R26286	O-RING	1		
5	RE46684	FITTING PLUG	5		
6	F3171R	O-RING	1		
7	R160155	PLUG	6		
8	R132113	SLEEVE	1		
9	RE164128	CASE	1		(MARKED RE164128) (INCLUDES R132113, R160831, (2) 400R AND 405R) (WITH BALLS AND SLEEVES)
10	15H558	PIPE PLUG	1		
11	R27094	DRAIN PLUG	1		
12	F3171R	O-RING	3		
13	R27175	DRAIN PLUG	1		(SUB FOR R116801)
14	R160831	SLEEVE	1		(SUB FOR R132114)
15	R160699	BUSHING	1		
16	19M8513	SCREW	2		
17	T44604	O-RING	1		

FRONT DIFFERENTIAL CASE (WITH STD DIFFERENTIAL) (SN -604489) (RE66660) (FOR RE164378 NLA)
BOITE DE DIFFERENTIEL AVANT (AVEC DIFFERENTIEL STD) (SN -604489) (RE66660) (FOR RE164378 NLA)
CAJA DEL DIFERENCIAL DELANTERO (CON DIFERENCIAL STD) (SN -604489) (RE66660) (FOR RE164378 NLA)

YZ3915 -UN-22JAN03

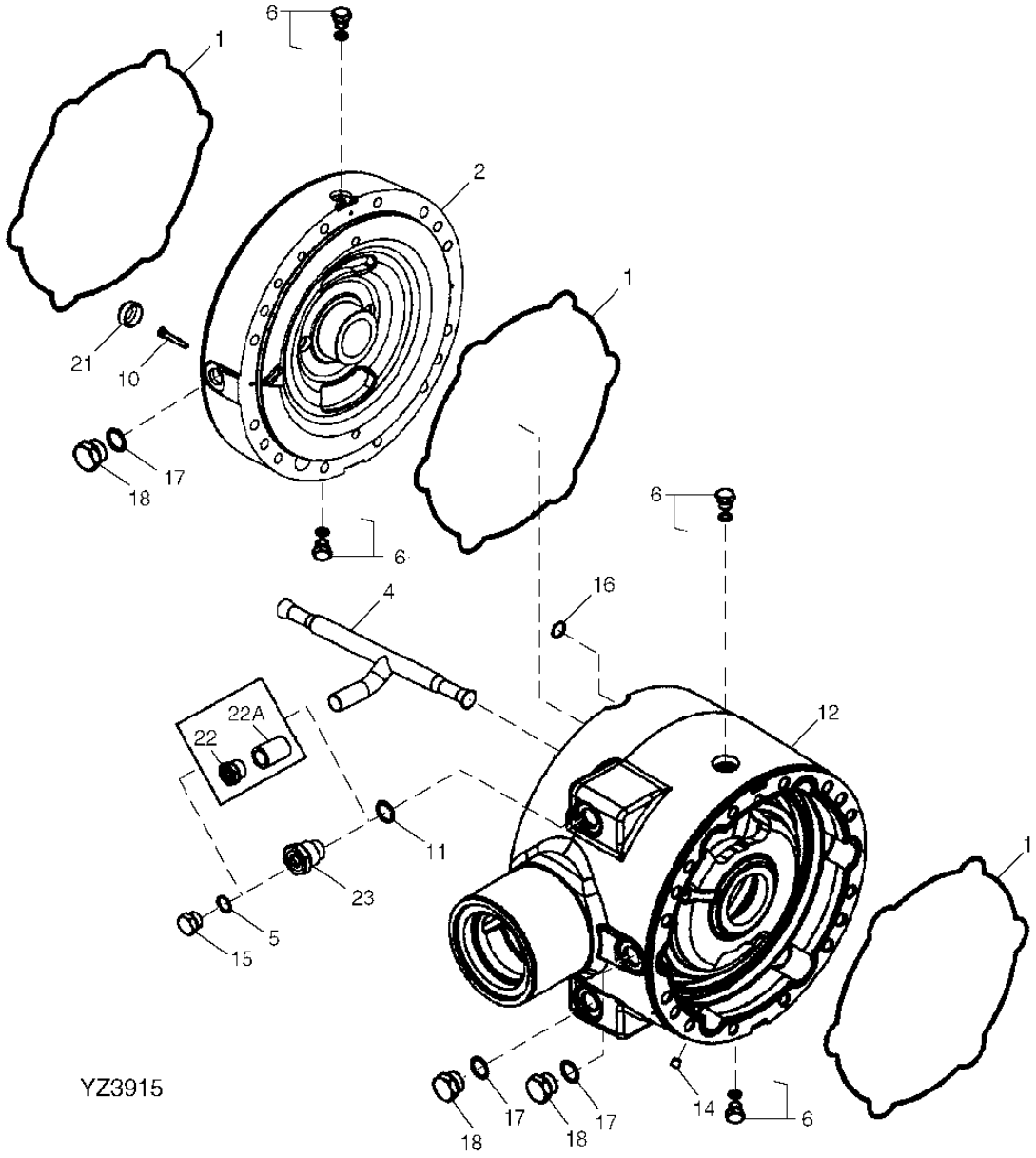

FRONT DIFFERENTIAL CASE (WITH STD DIFFERENTIAL) (SN -604489) (RE66660)(FOR RE164378 NLA)
BOITE DE DIFFERENTIEL AVANT (AVEC DIFFERENTIEL STD) (SN -604489)(RE66660) (FOR RE164378 NLA)
CAJA DEL DIFERENCIAL DELANTERO (CON DIFERENCIAL STD) (SN -604489) (RE66660)(FOR RE164378 NLA)

KEY	PART NO.	PART NAME	QTY.	SERIAL NO.	REMARKS
1	R131797	O-RING	3		
2	R129888	COVER	1		
4	R159661	TEE FITTING	1		
5	R26286	O-RING	1		
6	RE46684	FITTING PLUG	4		
10	19M8513	SCREW	2		
11	F3171R	O-RING	1		
12	R163507	CASE	1		
14	15H558	PIPE PLUG	1		
15	R27094	DRAIN PLUG	1		
16	T44604	O-RING	1		
17	F3171R	O-RING	3		
18	R116801	PIPE PLUG	3		
21	R160155	PLUG	6		
22	R160154	ADAPTER FITTING	1		(SUB R160699)
22A	R159759	SLEEVE	1		(SUB R160699)
23	R160699	BUSHING	1		

REAR DIFFERENTIAL CASE (WITH STD DIFFERENTIAL) (SN -604489) (RE66661)
BOITE DE DIFFERENTIEL ARRIERE (AVEC DIFFERENTIEL STD) (SN -604489) (RE66661)
CAJA DEL DIFERENCIAL TRASERO (CON DIFERENCIAL STD) (SN -604489) (RE66661)

YZ3917A -UN-30SEP04

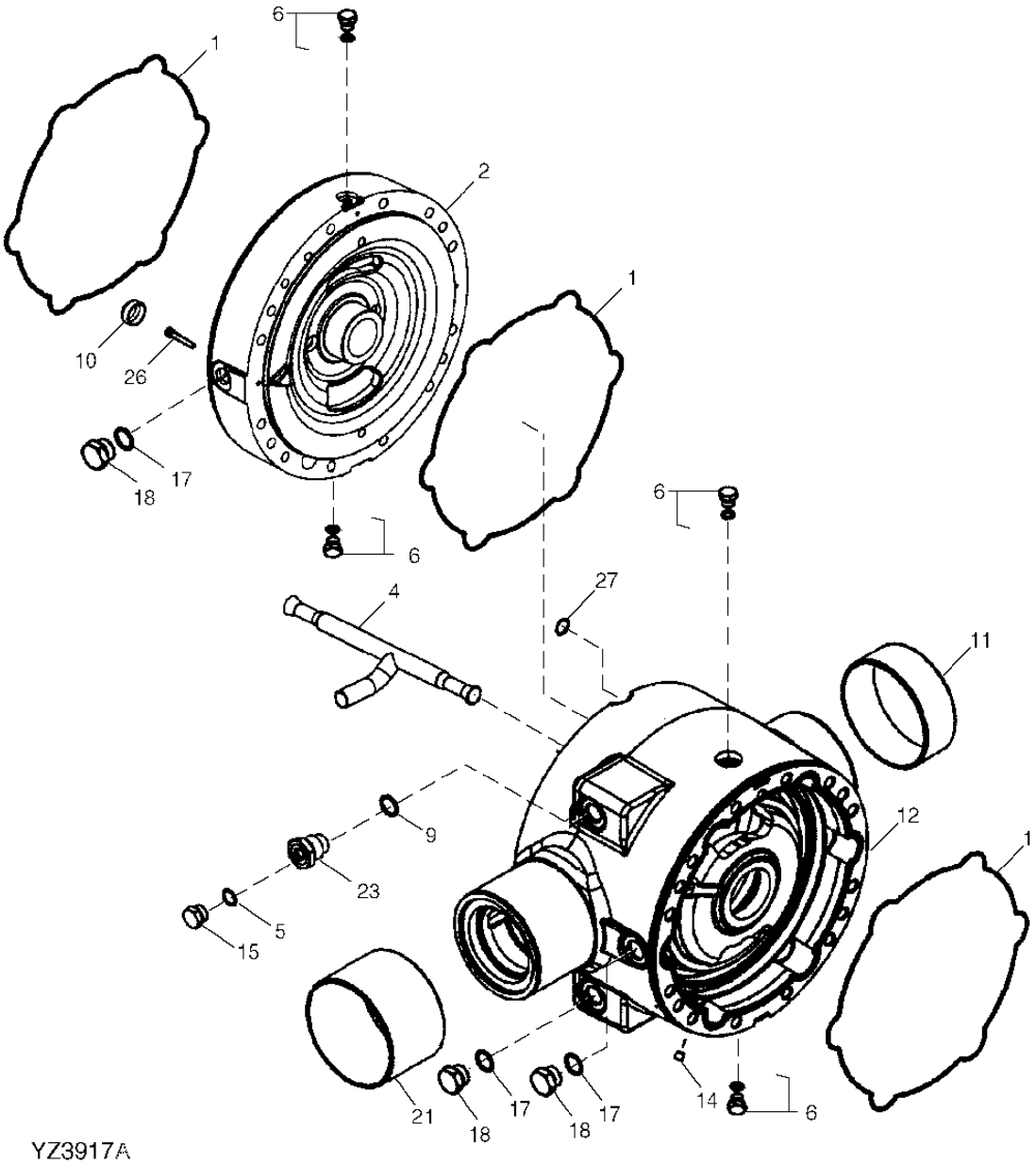

REAR DIFFERENTIAL CASE (WITH STD DIFFERENTIAL) (SN -604489) (RE66661)
BOITE DE DIFFERENTIEL ARRIERE (AVEC DIFFERENTIEL STD) (SN -604489) (RE66661)
CAJA DEL DIFERENCIAL TRASERO (CON DIFERENCIAL STD) (SN -604489) (RE66661)

KEY	PART NO.	PART NAME	QTY.	SERIAL NO.	REMARKS
1	R131797	O-RING	3		
2	R129888	COVER	1		
4	R159661	TEE FITTING	1		
5	R26286	O-RING	1		
6	RE46684	FITTING PLUG	4		
9	F3171R	O-RING	1		
10	R160155	PLUG	6		
11	R132113	SLEEVE	1		
12	RE164130	CASE	1		(WITH SLEEVES) (MARKED R163506) (INCLUDES R132113 AND R160831)
14	15H558	PIPE PLUG	1		
15	R27094	DRAIN PLUG	1		
17	F3171	O-RING	3		
18	R27175	DRAIN PLUG	1		(SUB FOR R116801)
21	R160831	SLEEVE	1		
23	R160699	BUSHING	1		BUSHING
26	19M8513	SCREW	2		
27	T44604	O-RING	1		

FOUR PINION HYDRAULIC ACTUATED DIFFERENTIAL (SN -604689) (RE66657)
DIFFERENTIEL HYDRAULIQUE QUATRE PIGNONS (SN -604689) (RE66657)
DIFERENCIAL ACCIONADO HIDRAULICAMENTE POR CUATRO PINONES (SN -604689) (RE66657)

YZ3913 -UN-23JAN03

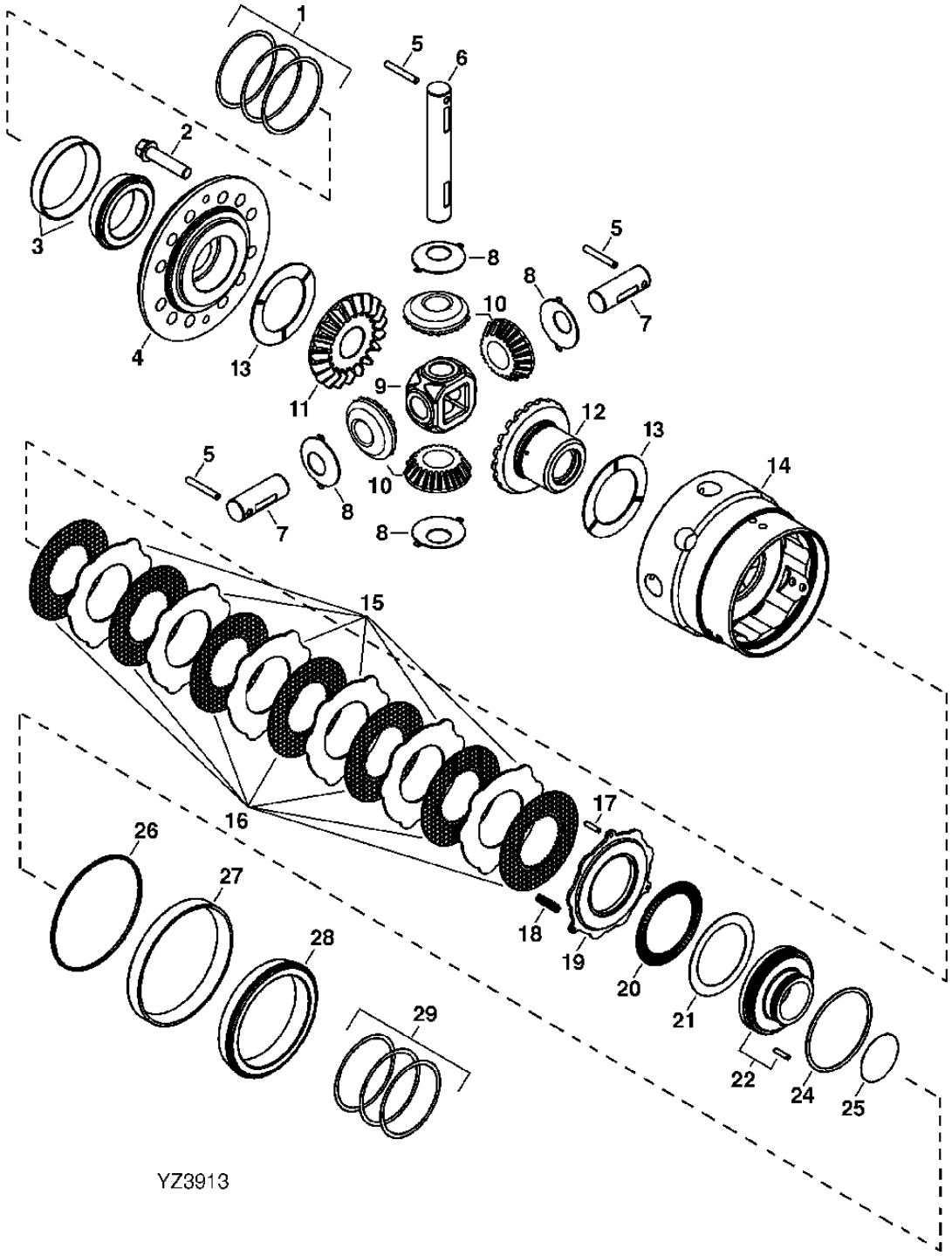

FOUR PINION HYDRAULIC ACTUATED DIFFERENTIAL (SN -604689) (RE66657)
DIFFERENTIEL HYDRAULIQUE QUATRE PIGNONS (SN -604689) (RE66657)
DIFERENCIAL ACCIONADO HIDRAULICAMENTE POR CUATRO PINONES (SN -604689) (RE66657)

KEY	PART NO.	PART NAME	QTY.	SERIAL NO.	REMARKS
1	T34354	SHIM	3		0.051 MM
	T34355	SHIM	3		0.127 MM
	T34356	SHIM	4		0.254 MM
2	R134183	CAP SCREW	12		
3	RE70080	TAPERED ROLLER BEARING	1		
4	R130000	COVER	1		
5	R57254	NEEDLE ROLLER	3		
6	R130059	PINION SHAFT	1		
7	R131172	PINION SHAFT	2		
8	R67811	THRUST WASHER	4		
9	R131270	HUB	2		
10	R134713	PINION	4		
11	R130001	BEVEL GEAR	1		
12	R130002	BEVEL GEAR	1		
13	R99466	THRUST WASHER	2		
14	R129999	HOUSING	1		
15	R131169	CLUTCH PLATE	6		
16	RE66539	DISK	7		
17	34H297	SPRING PIN	3		
18	R135529	SPRING	3		
19	R131170	CLUTCH PLATE	1		
20	RE68627	NEEDLE BEARING	1		
21	R132519	THRUST WASHER	1		
22	R129998	PISTON	1		(SUB FOR RE166219)
	R109082	NEEDLE ROLLER	1		
24	R131269	O-RING	1		
25	R131268	O-RING	1		
26	R132617	SPACER	1		
27	R132619	BEARING CUP	1		
28	R132620	BEARING CONE	1		
29	R131719	SHIM	2		
	R131720	SHIM	2		
	R131721	SHIM	3		

THIS PARTS LISTING IS CONTINUED

STANDARD DIFFERENTIAL (SN -604689) (RE66655)
DIFFERENTIEL STANDARD (SN -604689) (RE66655)
DIFERENCIAL ESTANDAR (SN -604689) (RE66655)

RXP021975 -UN-10APR97

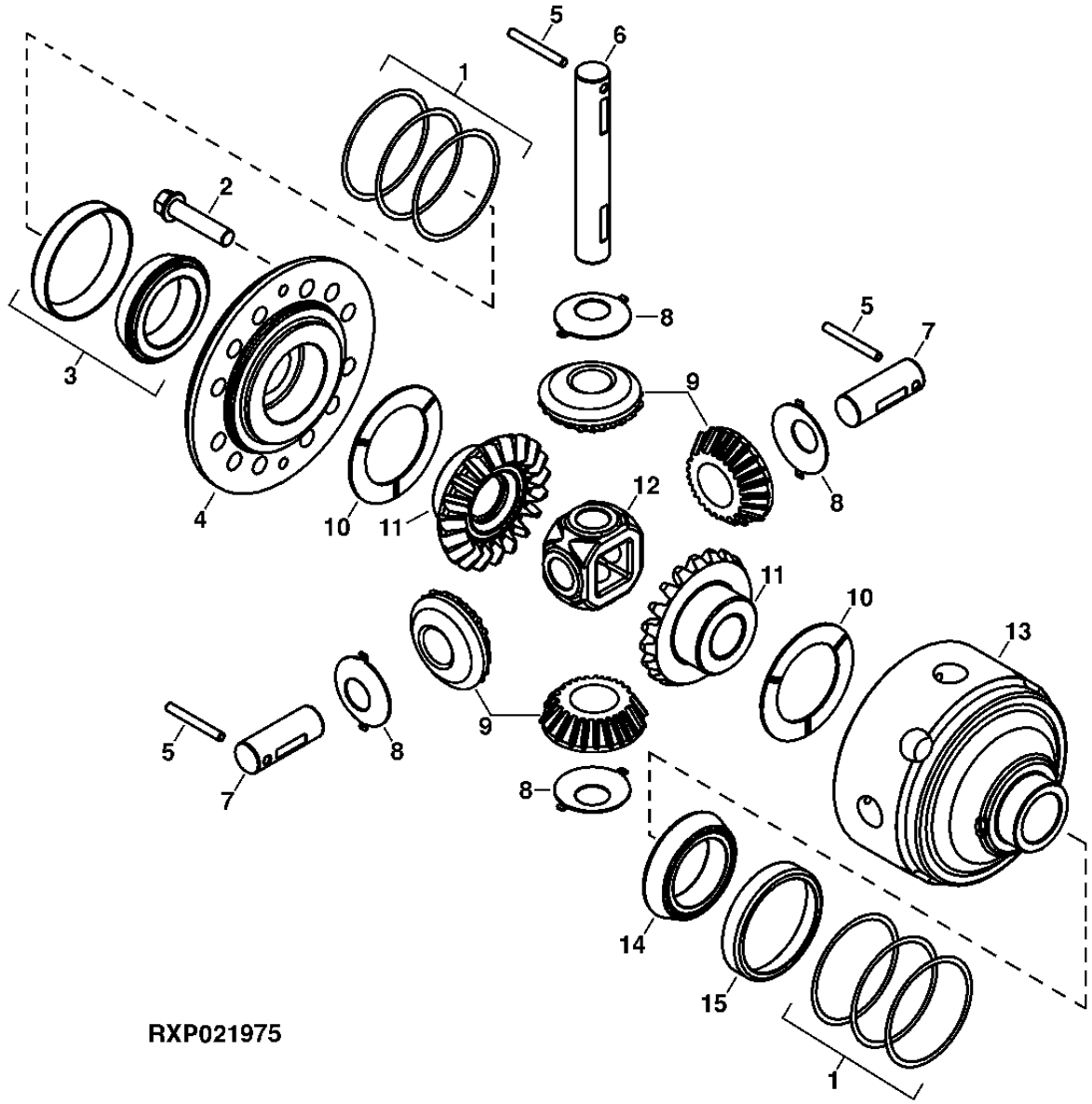

RXP021975

STANDARD DIFFERENTIAL (SN -604689) (RE66655)
DIFFERENTIEL STANDARD (SN -604689) (RE66655)
DIFERENCIAL ESTANDAR (SN -604689) (RE66655)

KEY	PART NO.	PART NAME	QTY.	SERIAL NO.	REMARKS
1	T34534	CORNER	6		
	T34355	SHIM	6		
	T34356	SHIM	7		
2	R134183	CAP SCREW	12		
3	RE70080	TAPERED ROLLER BEARING	1		
4	R132194	COVER	1		
5	R62129	NEEDLE ROLLER	3		
6	R130059	PINION SHAFT	1		
7	R131172	PINION SHAFT	2		
8	R67811	THRUST WASHER	4		
9	R134713	PINION	4		
10	R99466	THRUST WASHER	2		
11	R132195	BEVEL GEAR	2		
12	R131270	HUB	1		
13	R132193	HOUSING	1		
14	R120461	BEARING CONE	1		(SUB FOR JD8164)
15	JD8210	BEARING CUP	1		

FRONT AXLE HOUSING AND SHAFT (SN -604689) (RE67141)
CARTER ET ARBRE D'ESSIEU DE PONT AVANT (SN -604689) (RE67141)
EJE Y CAJA DEL PUENTE DELANTERO (SN -604689) (RE67141)

RE67141 -UN-22JUL04

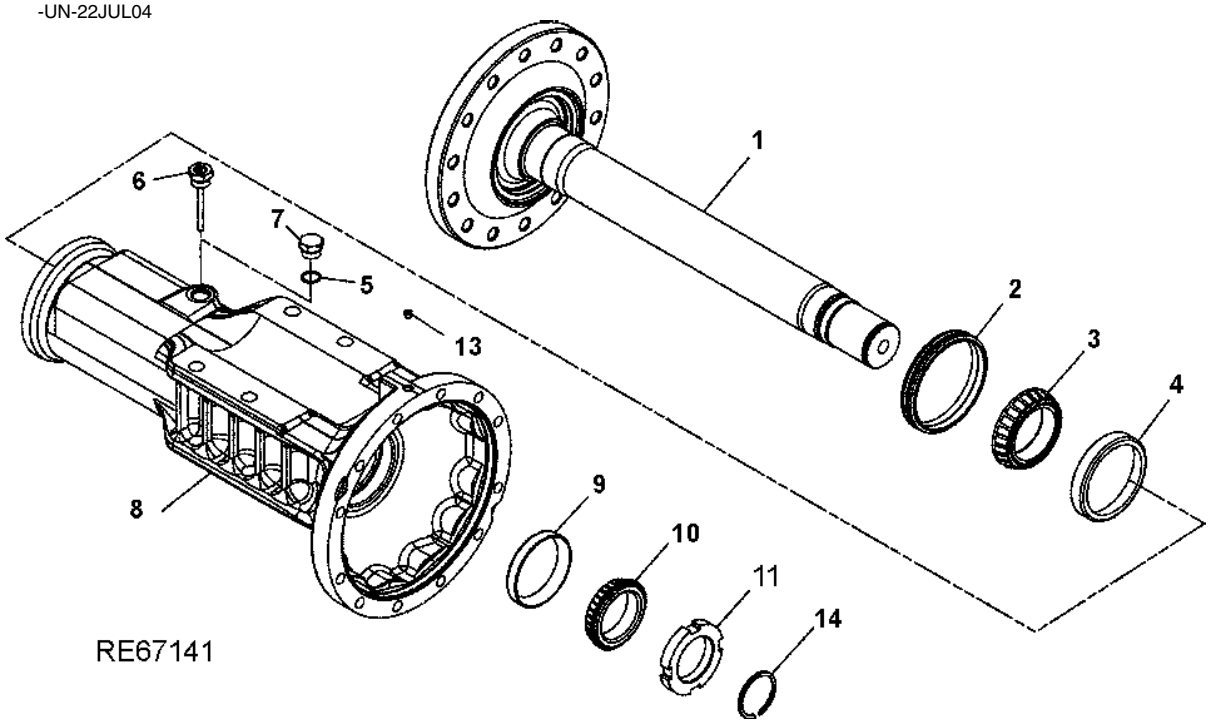

FRONT AXLE HOUSING AND SHAFT (SN -604689) (RE67141)
CARTER ET ARBRE D'ESSIEU DE PONT AVANT (SN -604689) (RE67141)
EJE Y CAJA DEL PUENTE DELANTERO (SN -604689) (RE67141)

KEY	*PART NO.*	*PART NAME*	*QTY.*	*SERIAL NO.*	*REMARKS*
1	YZ120482	HALF AXLE	2		(SUB FOR R151390)
2	YZ121201	SEAL	2		(SUB FOR YZ120452) (FACE SEAL)
3	JD8191	BEARING CONE	2		
4	JD8214	BEARING CUP	2		
5	F3171R	O-RING	1		
6	RE160140	DIPSTICK	1		
7	R27175	DRAIN PLUG	1		(SUB FOR R116801)
8	R132623	HOUSING	2		
9	JD8259	BEARING CUP	2		
10	JD8954	BEARING CONE	2		
11	R129889	NUT	1		
13	15H558	PIPE PLUG	1		
14	R26246	SNAP RING	2		

REAR AXLE HOUSING AND SHAFT (SN -604689) (RE67142)
CARTER ET ARBRE D'ESSIEU DE PONT ARRIERE (SN -604689) (RE67142)
EJE Y CAJA DEL PUENTE TRASERO (SN -604689) (RE67142)

RE67142 -UN-23JUL04

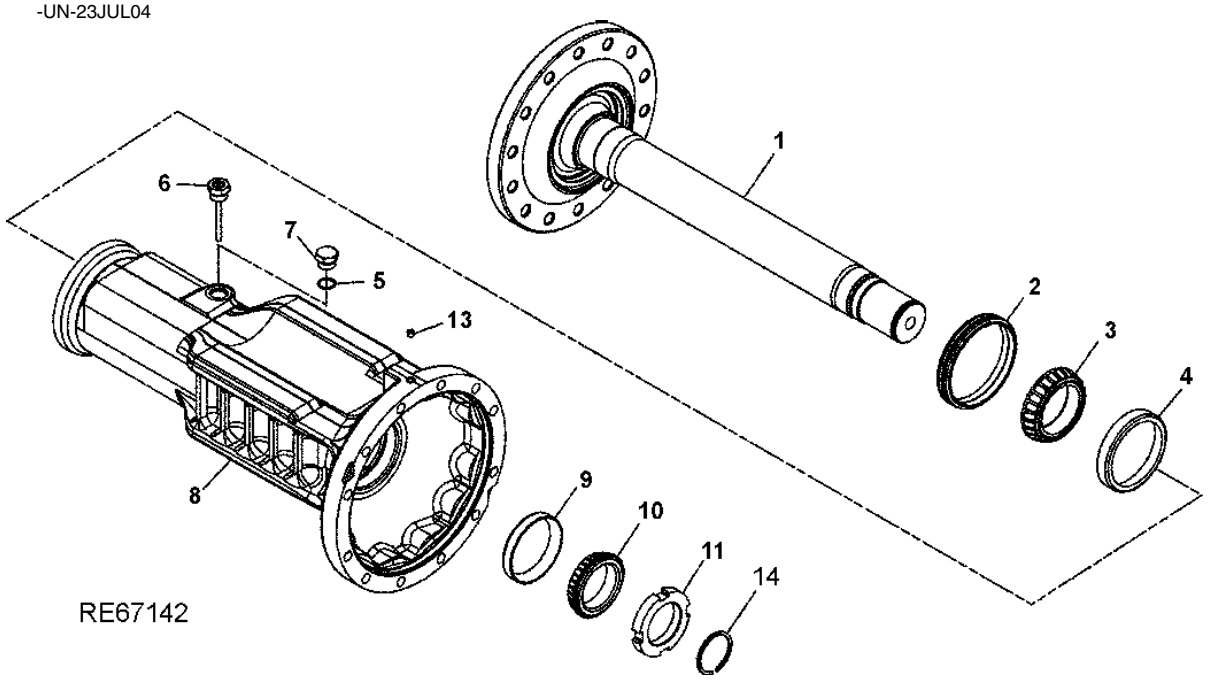

REAR AXLE HOUSING AND SHAFT (SN -604689) (RE67142)
CARTER ET ARBRE D'ESSIEU DE PONT ARRIERE (SN -604689) (RE67142)
EJE Y CAJA DEL PUENTE TRASERO (SN -604689) (RE67142)

KEY	PART NO.	PART NAME	QTY.	SERIAL NO.	REMARKS
1	YZ120482	HALF AXLE	2		(SUB FOR R151390)
2	YZ121201	SEAL	2		(SUB FOR YZ120452) (FACE SEAL)
3	JD8191	BEARING CONE	2		
4	JD8214	BEARING CUP	2		
5	F3171R	O-RING	1		
6	RE160140	DIPSTICK	1		
7	R27175	DRAIN PLUG	1		(SUB FOR R116801)
8	R133309	HOUSING	2		
9	JD8259	BEARING CUP	2		
10	JD8954	BEARING CONE	2		
11	R129889	NUT	2		
13	15H558	PIPE PLUG	1		
14	R26246	SNAP RING	2		

PLANETARY FINAL DRIVE (SN -604689) (RE66662)
REDUCTION FINALE A PLANETAIRE (SN -604689) (RE66662)
MANDO FINAL PLANETARIO (SN -604689) (RE66662)

YZ3916A -UN-03AUG04

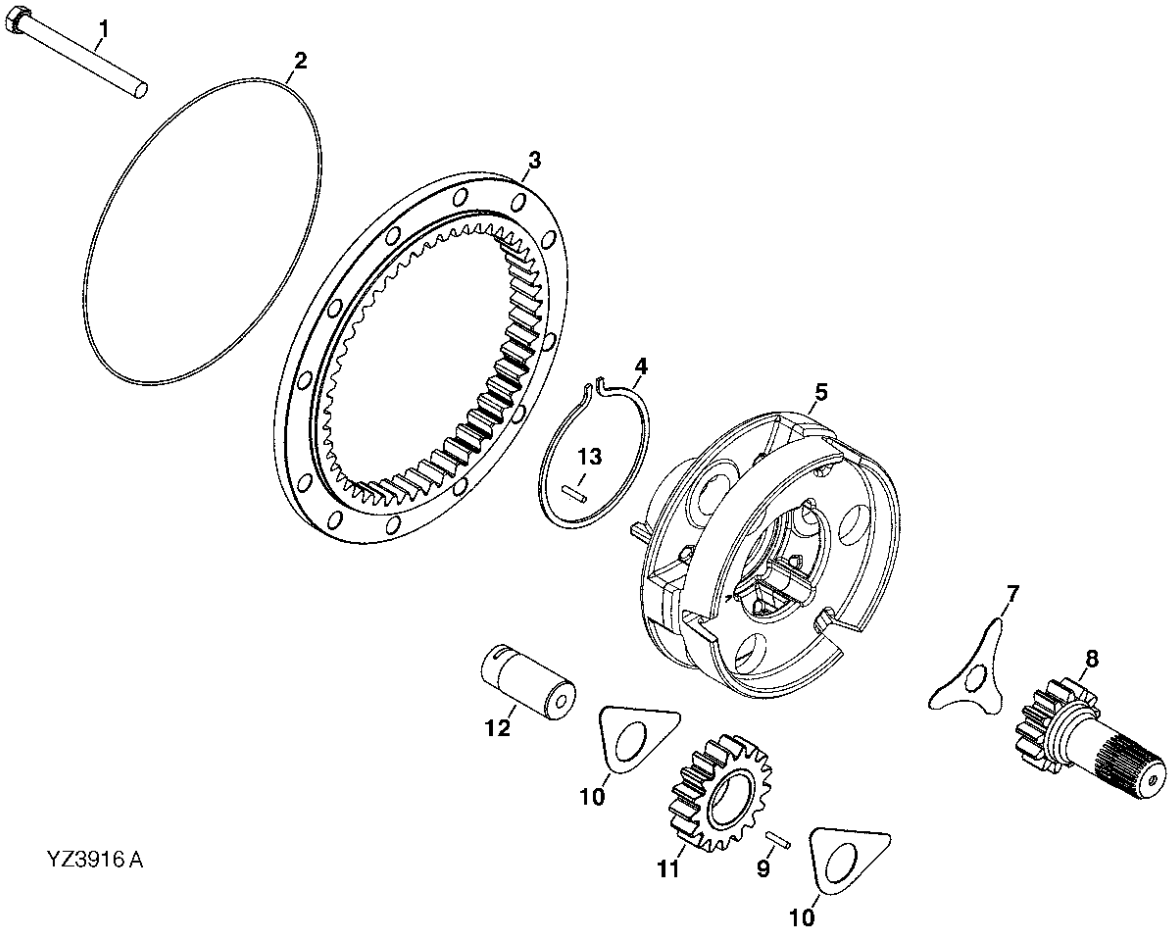

YZ3916 A

PLANETARY FINAL DRIVE (SN -604689)
REDUCTION FINALE A PLANETAIRE (SN -604689)
MANDO FINAL PLANETARIO (SN -604689)

KEY	PART NO.	PART NAME	QTY.	SERIAL NO.	REMARKS
1	19M8019	CAP SCREW	12		M16 X 160, (COVER SIDE)
	19M7720	CAP SCREW	12		M16 X 80, (OPPOSITE SIDE)
2	T39741	RING	2		
3	R129666	GEAR	2		
4	R38066	SNAP RING	2		
5	R151576	PLANET PINION CARRIER	2		(SUB R134334) (ALSO ORDER YZ120909)
7	R93172	LOCK PLATE	2		
8	R129664	PINION SHAFT	2		
9	R133259	SPRING LOCKING PIN	156		
10	R129776	THRUST WASHER	12		
11	R129665	PLANET PINION	6		
12	R129777	PINION SHAFT	6		
13	YZ120909	SPRING PIN	2		(SUB FOR 34H348)

THIS PARTS LISTING IS CONTINUED

AXLE CENTER SERVICE KITS (SN -604689)
KITS D'ENTRETIEN DE CENTRE D'ESSIEU (SN -604689)
JUEGOS DE SERVICIO CENTRAL DE PUENTE (SN -604689)

T141253A -UN-17JUL03

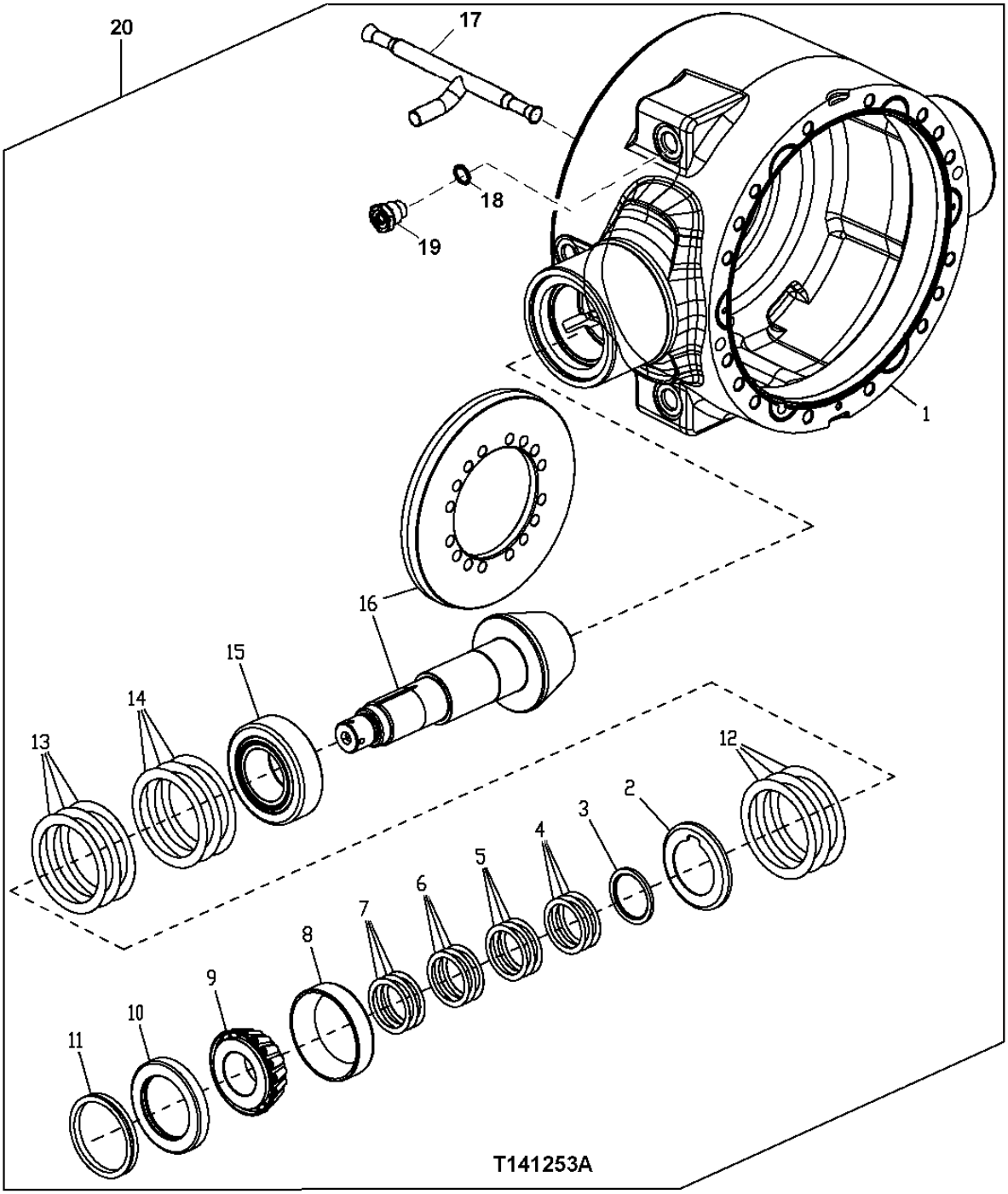

AXLE CENTER SERVICE KITS (SN -604689)
KITS D'ENTRETIEN DE CENTRE D'ESSIEU (SN -604689)
JUEGOS DE SERVICIO CENTRAL DE PUENTE (SN -604689)

KEY	PART NO.	PART NAME	QTY.	SERIAL NO.	REMARKS
1	RE164128	CASE	1		DIFF. LOCK (REAR)
	RE164129	CASE	1		DIFF. LOCK (FRONT)
	RE164130	CASE	1		STD (REAR)
	R163507	CASE	1		STD (FRONT)
2	R163180	SHIELD	1		
3	R163333	SPACER	1		
4	R45197	SHIM	3		0.178 MM (0.007 INCHES)
5	R45198	SHIM	3		0.254 MM (0.010 INCHES)
6	R45199	SHIM	3		0.305 MM (0.012 INCHES)
7	R45200	SHIM	3		0.381 MM (0.015 INCHES)
8	JD8240	BEARING CUP	1		
9	JD8974	BEARING CONE	1		
10	RE45312	SEAL KIT	1		
	AT314206	SEAL	1		(FOR HARSH ENVIRONMENT)
11	R89581	SEAL	1		
12	R163182	SHIM	3		0.127 MM (0.005 INCHES)
13	R163183	SHIM	3		0.254 MM (0.010 INCHES)
14	R163181	SHIM	3		0.076 MM (0.003 INCHES)
15	RE163170	BEARING	1		
16	RE163555	BEVEL GEAR DRIVE	1		(REAR)
	RE163554	BEVEL GEAR DRIVE	1		(FRONT)
17	R159661	TEE FITTING	1		
18	F3171R	O-RING	1		
19	R160699	BUSHING	1		
20	RE164441	CASE	1		DIFF. LOCK (REAR)
	RE164442	CASE	1		DIFF. LOCK (FRONT)
	RE164443	CASE	1		STD (REAR)
	RE164444	CASE	1		STD (FRONT)

DUAL BRAKE SYSTEM (SN -604689) (RE66654)
FREIN A DOUBLE CIRCUIT (SN -604689) (RE66654)
SISTEMA DE FRENOS DOBLE (SN -604689) (RE66654)

TX1006379 -UN-24APR06

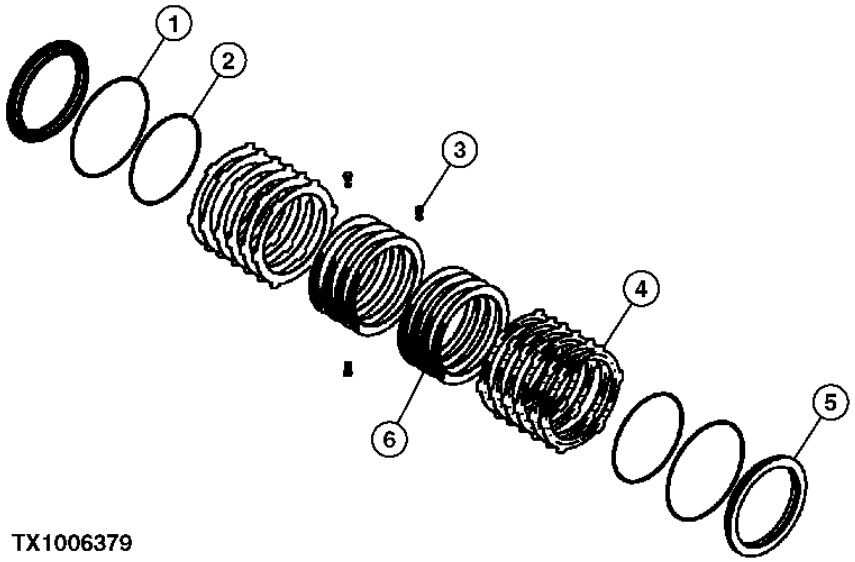

TX1006379

KEY	PART NO.	PART NAME	QTY.	AXLE SERIAL NO.	REMARKS
1	R157151	SEAL	2		
2	R157152	SEAL	2		
3	R131741	PISTON	2		
4	RE159197	DISK WITH INNER SPLINE	8		
5	R161861	PLATE	12		

THIS PARTS LISTING IS CONTINUED

MEMORANDA
MEMORANDA
MEMORANDA

FRONT AXLE (SN 604690-)
ESSIEU AVANT (SN 604690-)
EJE DELANTERO (SN 604690-)

TX1004237 -UN-23MAR06

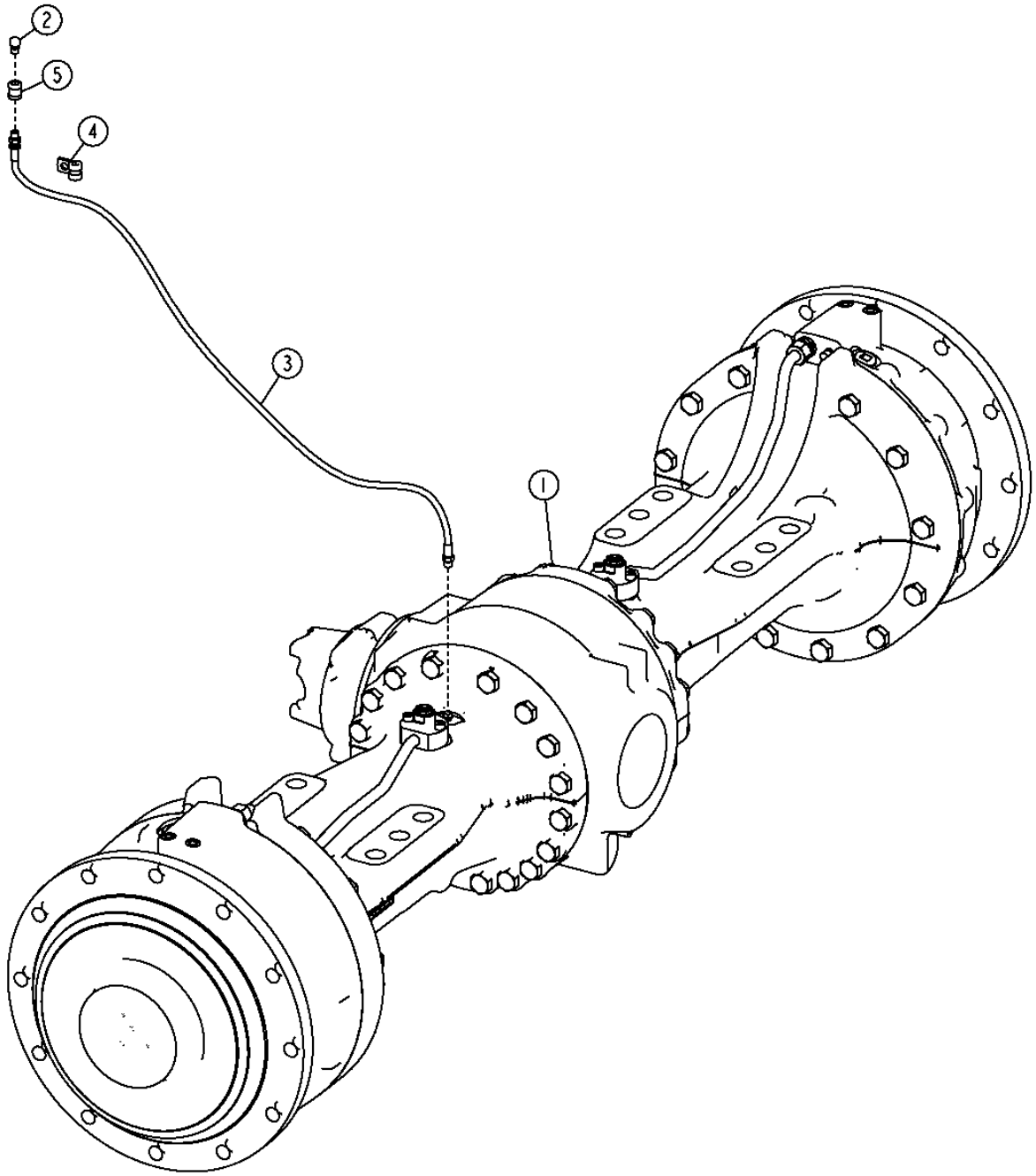

TX1004237

FRONT AXLE (SN 604690-)
ESSIEU AVANT (SN 604690-)
EJE DELANTERO (SN 604690-)

KEY	PART NO.	PART NAME	QTY.	SERIAL NO.	REMARKS
1	AT314705	FRONT AXLE	1		(STD) (REMAN)
2	AL32877	VENT	1		
3	AT207022	HYDRAULIC HOSE	1		
4	T78974	CLAMP	1		
5	15H84	COUPLING	1		

REAR AXLE (SN 604690-)
ESSIEU ARRIERE (SN 604690-)
EJE TRASERO (SN 604690-)

TX1004236 -UN-23MAR06

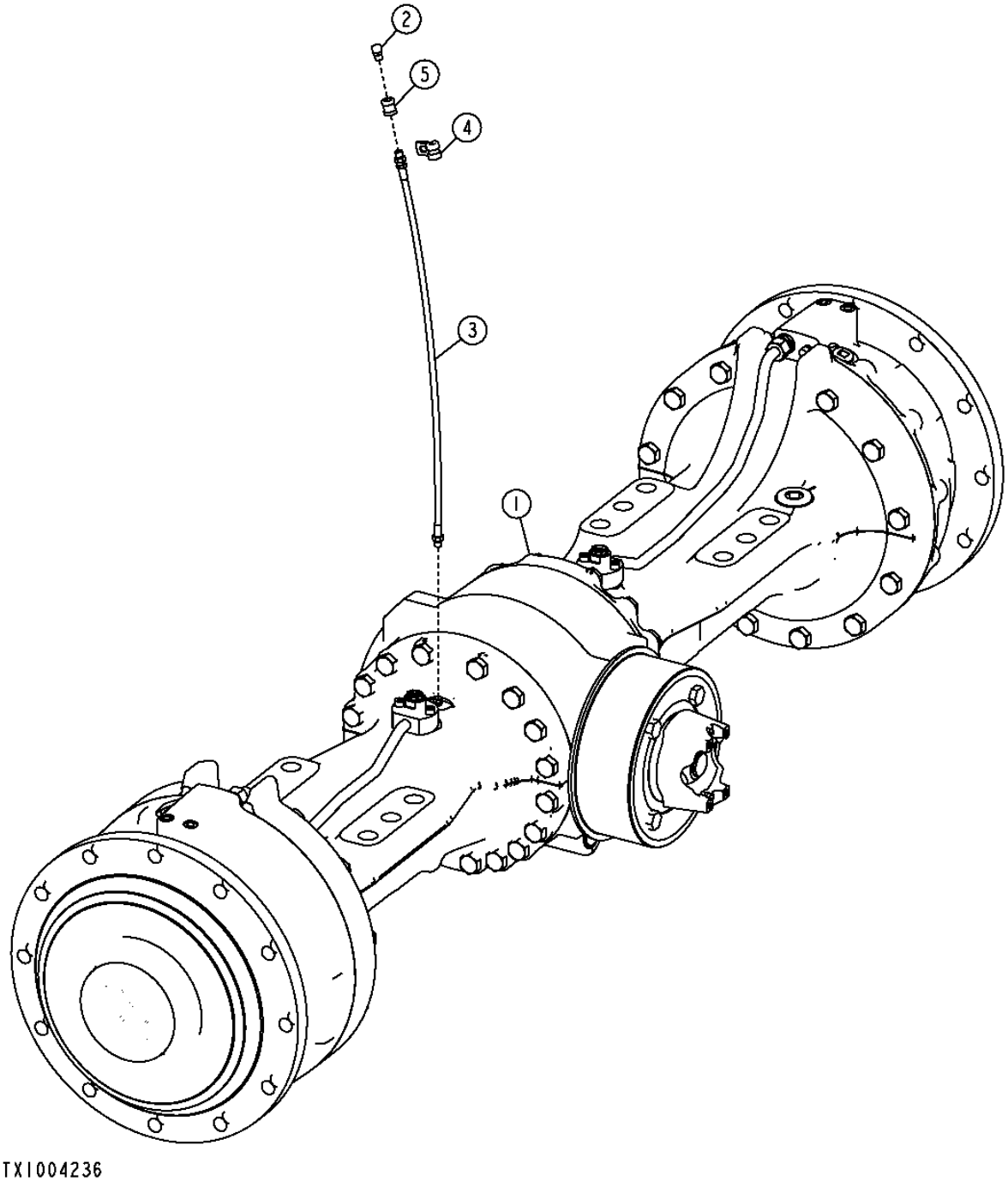

REAR AXLE (SN 604690-)
ESSIEU ARRIERE (SN 604690-)
EJE TRASERO (SN 604690-)

KEY	*PART NO.*	*PART NAME*	*QTY.*	*SERIAL NO.*	*REMARKS*
1	AT314708	REAR AXLE	1		(STD)
	AT314710	**REAR AXLE**	**1**		**(HYD.)**
2	AL32877	VENT	1		
3	AT207022	HYDRAULIC HOSE	1		1/8" X 900 MM X 1/8"
4	T78974	CLAMP	1		
5	15H84	COUPLING	1		3.175 MM

FRONT AXLE INPUT HOUSING, YOKE AND SPIRAL BEVEL GEAR SET (SN 604690-)
CARTER D'ENTREE D'ESSIEU DE PONT AVANT, CHAPE ET TRAIN PIGNONS CONIQUES HELICOIDAUX (SN 604690-)
CAJA ENTRADA EJE DELANTERO, JUEGO ENGRANAJES CONICOS DIENTES HELICOIDALES YHORQUILLA (SN 604690-)

TX1004812 -UN-24MAR06

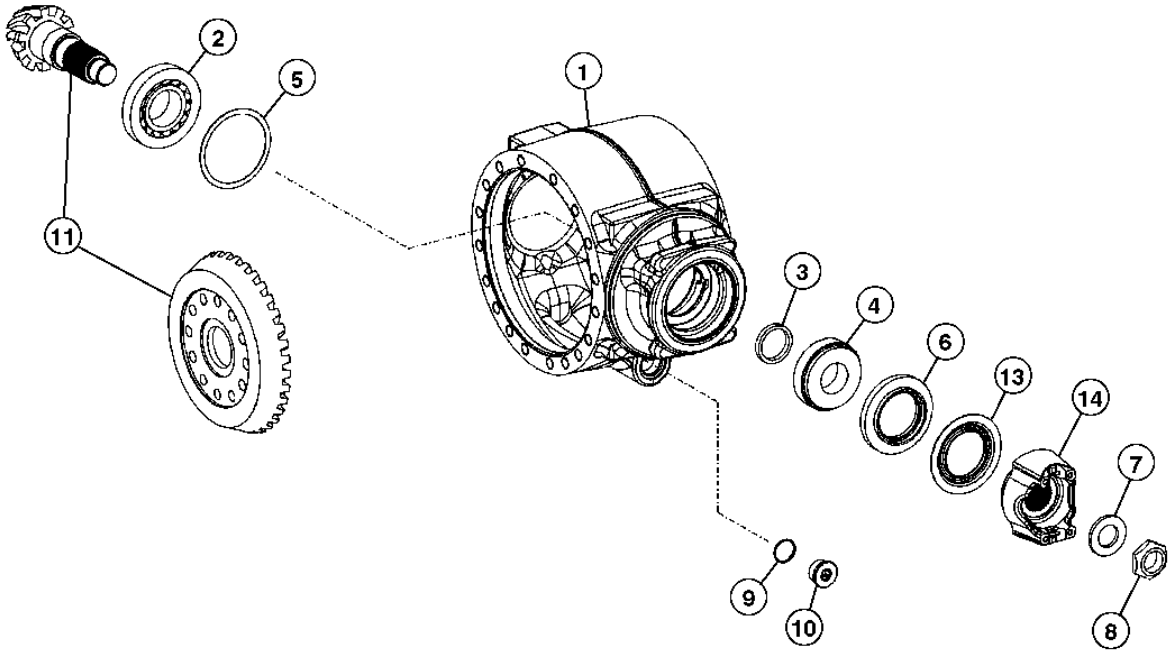

TX1004812

FRONT AXLE INPUT HOUSING, YOKE AND SPIRAL BEVEL GEAR SET (SN 604690-)
CARTER D'ENTREE D'ESSIEU DE PONT AVANT, CHAPE ET TRAIN PIGNONS CONIQUES HELICOIDAUX (SN 604690-)
CAJA ENTRADA EJE DELANTERO, JUEGO ENGRANAJES CONICOS DIENTES HELICOIDALES YHORQUILLA (SN 604690-)

KEY	PART NO.	PART NAME	QTY.	SERIAL NO.	REMARKS
1	T219314	HOUSING	1		
2	AT184277	CYLINDRICAL ROLLER BEARING	1		
3	AT253073	SPACER	1		(8.3 INCHES)
	AT253072	SPACER	1		(8.4 INCHES)
	AT253071	SPACER	1		(8.5 INCHES)
	AT253070	SPACER	1		(8.6 INCHES)
	AT253069	SPACER	1		(8.7 INCHES)
	AT253067	SPACER	1		(8.8 INCHES)
	AT253076	SPACER	1		(8.9 INCHES)
	TTZF160210	SPACER	1		(9.1 INCHES)
	TTZF160211	SPACER	1		(9.2 INCHES)
	TTZF160212	SPACER	1		(9.3 INCHES)
	TTZF160213	SPACER	1		(9.4 INCHES)
4	AT184279	CYLINDRICAL ROLLER BEARING	1		
5	T164847	SHIM	1		(0.7 INCHES)
	T164848	SHIM	1		(0.8 INCHES)
	T164849	SHIM	1		(0.9 INCHES)
	T164850	SHIM	1		(1.0 INCHES)
	T164860	SHIM	1		(1.1 INCHES)
	T164851	SHIM	1		(1.2 INCHES)
	T164852	SHIM	1		(1.3 INCHES)
	T164853	SHIM	1		(1.4 INCHES)
	T164854	SHIM	1		(1.5 INCHES)
	T164855	SHIM	1		(1.6 INCHES)
	T164856	SHIM	1		(1.7 INCHES)
	T164857	SHIM	1		(1.8 INCHES)
	T164858	SHIM	1		(1.9 INCHES)
	T164859	SHIM	1		(2.0 INCHES)
6	AT259765	SEAL	1		
7	T164872	WASHER	1		
8	T164873	NUT	1		
9	Z77164	O-RING	1		(SUB FOR AT321403)
10	AT327281	PLUG	1		
11	AT329870	BEVEL GEAR DRIVE	1		
13	AT253115	DUST SHIELD	1		
14	T219319	FLANGE	1		

REAR AXLE INPUT HOUSING, YOKE AND SPIRAL BEVEL GEAR SET (SN 604690-)
CARTER D'ENTREE D'ESSIEU DE PONT ARRIERE, CHAPE ET TRAIN PIGNONS CONIQUES HELICOIDAUX (SN 604690-)
CAJA ENTRADA EJE TRASERO, JUEGO ENGRANAJES CONICOS DIENTES HELICOIDALES Y HORQUILLA (SN 604690-)

TX1002896 -UN-07FEB06

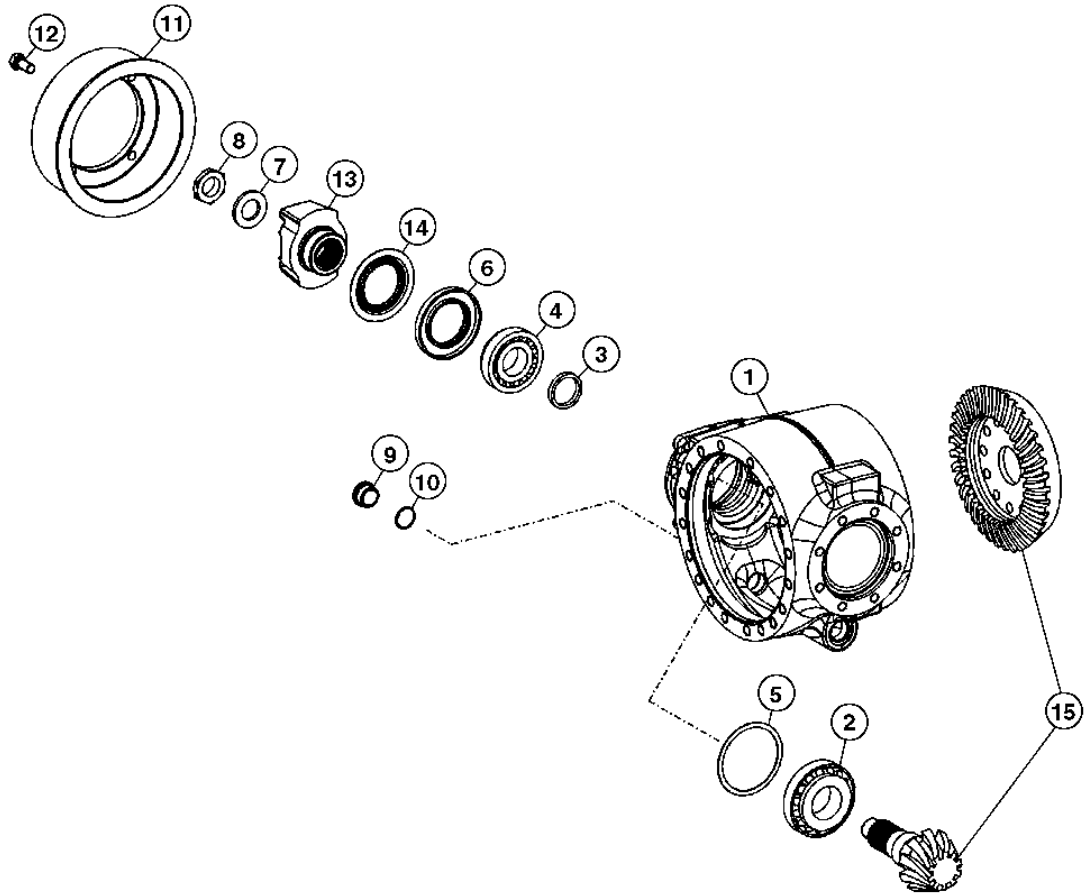

TX1002896

REAR AXLE INPUT HOUSING, YOKE AND SPIRAL BEVEL GEAR SET (SN 604690-)
CARTER D'ENTREE D'ESSIEU DE PONT ARRIERE, CHAPE ET TRAIN PIGNONS CONIQUES HELICOIDAUX (SN 604690-)
CAJA ENTRADA EJE TRASERO, JUEGO ENGRANAJES CONICOS DIENTES HELICOIDALES Y HORQUILLA (SN 604690-)

KEY	PART NO.	PART NAME	QTY.	SERIAL NO.	REMARKS
1	T223049	HOUSING	1		
2	AT184277	CYLINDRICAL ROLLER BEARING	1		
3	AT253067	SPACER	1		(8.8 INCHES)
	AT253069	SPACER	1		(8.7 INCHES)
	AT253070	SPACER	1		(8.6 INCHES)
	AT253071	SPACER	1		(8.5 INCHES)
	AT253072	SPACER	1		(8.4 INCHES)
	AT253073	SPACER	1		(8.3 INCHES)
	AT253076	SPACER	1		(8.9 INCHES)
	TTZF160210	SPACER	1		(9.1 INCHES)
	TTZF160211	SPACER	1		(9.2 INCHES)
	TTZF160212	SPACER	1		(9.3 INCHES)
	TTZF160213	SPACER	1		(9.4 INCHES)
4	AT184279	CYLINDRICAL ROLLER BEARING	1		
5	T164847	SHIM	1		(0.7 INCHES)
	T164848	SHIM	1		(0.8 INCHES)
	T164849	SHIM	1		(0.9 INCHES)
	T164850	SHIM	1		(1.0 INCHES)
	T164851	SHIM	1		(1.2 INCHES)
	T164852	SHIM	1		(1.3 INCHES)
	T164853	SHIM	1		(1.4 INCHES)
	T164854	SHIM	1		(1.5 INCHES)
	T164855	SHIM	1		(1.6 INCHES)
	T164856	SHIM	1		(1.7 INCHES)
	T164857	SHIM	1		(1.8 INCHES)
	T164858	SHIM	1		(1.9 INCHES)
	T164859	SHIM	1		(2.0 INCHES)
	T164860	SHIM	1		(1.1 INCHES)
6	AT259765	SEAL	1		
7	T164872	WASHER	1		
8	T164873	NUT	1		
9	AT327281	PLUG	1		
10	Z77164	O-RING	1		(SUB FOR AT321403)
11	AT329921	BEVEL GEAR DRIVE	1		
12	19M8035	CAP SCREW	1		
13	T219319	FLANGE	1		
14	AT253115	DUST SHIELD	1		
15	AT329870	BEVEL GEAR DRIVE	1		

HYDRAULIC ACTUATED DIFFERENTIAL CARRIER ASSEMBLY (SN 604690-)
CARTER DE DIFFERENTIEL HYDRAULIQUE (SN 604690-)
CONJUNTO SUPERIOR DEL DIFERENCIAL ACCIONADO HIDRAULICAMENTE (SN 604690-)

TX1002888 -UN-23FEB06

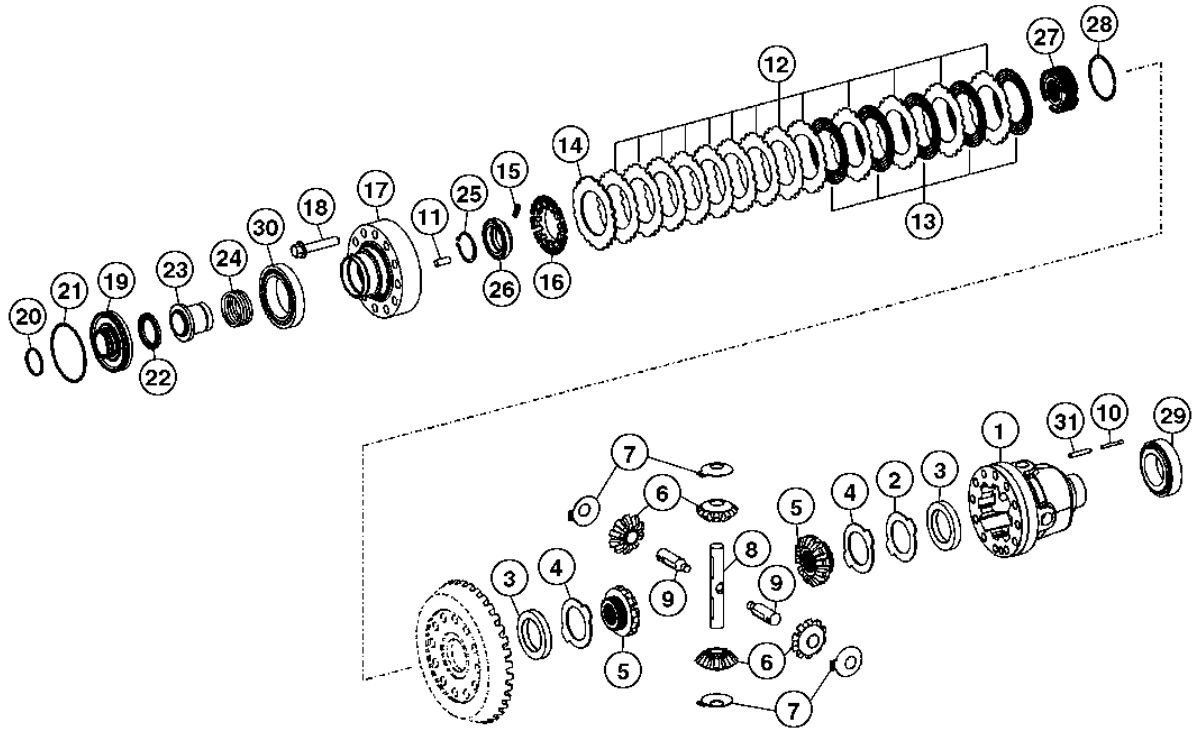

TX1002888

HYDRAULIC ACTUATED DIFFERENTIAL CARRIER ASSEMBLY (SN 604690-)
CARTER DE DIFFERENTIEL HYDRAULIQUE (SN 604690-)
CONJUNTO SUPERIOR DEL DIFERENCIAL ACCIONADO HIDRAULICAMENTE (SN 604690-)

KEY	PART NO.	PART NAME	QTY.	SERIAL NO.	REMARKS
1	T219322	HOUSING	1		
2	T219323	CLUTCH PLATE	1		
3	T219325	SPACER	2		
4	T219330	CLUTCH PLATE	2		
5	T219333	PINION	2		
6	T219334	BEVEL GEAR	4		
7	T219340	THRUST WASHER	4		
8	T219343	PINION SHAFT	1		
9	T219344	PINION SHAFT	2		
10	34M7044	SPRING PIN	2		6 X 50 MM, (SUB FOR AT259571, THIS APPLICATION)
11	T219345	PIN	6		
12	T219346	DISK WITH OUTER SPLINE	11		(1.2 INCHES)
	T219358	DISK WITH OUTER SPLINE	11		(1.3 INCHES)
	T219360	DISK WITH OUTER SPLINE	11		(1.4 INCHES)
13	AT184334	DISK WITH INNER SPLINE	7		
14	T219363	DISK WITH OUTER SPLINE	1		
15	T164938	LEVER	12		
16	T164970	RETAINER	1		
17	T219364	COVER	1		
18	T219365	SELF-LOCKING SCREW	12		
19	T219366	PISTON	1		
20	T116867	O-RING	1		
21	AT321454	O-RING	1		
22	AT184309	NEEDLE BEARING	1		
23	T219367	ACTUATOR	1		
24	T164980	COMPRESSION SPRING	1		
25	T159519	SNAP RING	1		
26	T219371	ACTUATOR	1		
27	T219373	HUB	1		
28	AT258957	SNAP RING	1		
29	AT327285	TAPERED ROLLER BEARING	1		
30	AT184284	TAPERED ROLLER BEARING	1		
31	34M7049	SPRING PIN	1		8 X 50 MM

STANDARD DIFFERENTIAL CARRIER ASSEMBLY (SN 604690-)
CARTER DE DIFFERENTIEL STANDARD (SN 604690-)
CONJUNTO DE PORTADOR DIFERENCIAL ESTANDAR (SN 604690-)

TX1002895 -UN-07FEB06

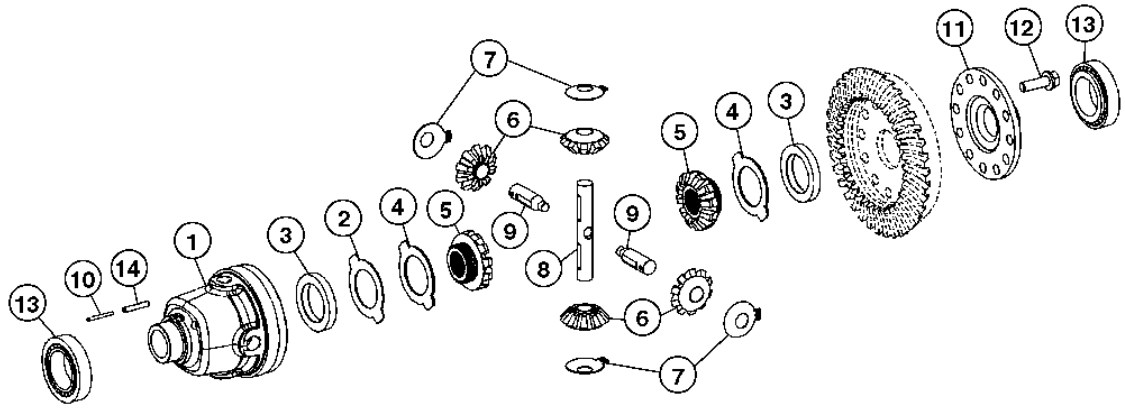

TX1002895

STANDARD DIFFERENTIAL CARRIER ASSEMBLY (SN 604690-)
CARTER DE DIFFERENTIEL STANDARD (SN 604690-)
CONJUNTO DE PORTADOR DIFERENCIAL ESTANDAR (SN 604690-)

KEY	*PART NO.*	*PART NAME*	*QTY.*	*SERIAL NO.*	*REMARKS*
1	T219322	HOUSING	1		
2	T219323	CLUTCH PLATE	1		
3	T219325	SPACER	2		
4	T219330	CLUTCH PLATE	2		
5	T219333	PINION	2		
6	T219334	BEVEL GEAR	4		
7	T219340	THRUST WASHER	4		
8	T219343	PINION SHAFT	1		
9	T219344	PINION SHAFT	2		
10	34M7044	SPRING PIN	2		6 X 50 MM, (SUB FOR AT259571, THIS APPLICATION)
11	T219467	COVER	1		
12	AT255575	BOLT	12		
13	AT327285	TAPERED ROLLER BEARING	2		
14	34M7049	SPRING PIN	1		8 X 50 MM

AXLE HOUSING (SN 604690-)
CARTER D'ESSIEU (SN 604690-)
CAJA DEL EJE (SN 604690-)

TX1002889 -UN-07FEB06

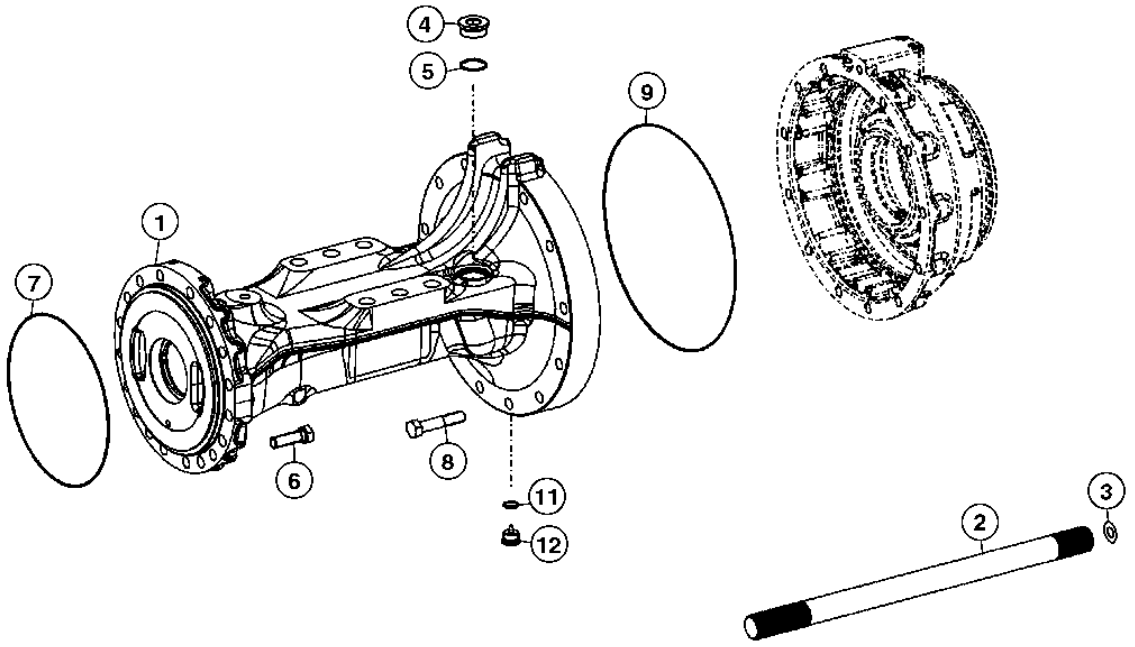

TX1002889

AXLE HOUSING (SN 604690-)
CARTER D'ESSIEU (SN 604690-)
CAJA DEL EJE (SN 604690-)

KEY	PART NO.	PART NAME	QTY.	SERIAL NO.	REMARKS
1	T219378	HOUSING	1		
2	T219379	HALF AXLE	1		
3	T219380	THRUST WASHER	1		(0.2 INCHES)
	T219381	THRUST WASHER	1		(0.4 INCHES)
	T219382	THRUST WASHER	1		(1.0 INCHES)
	T219383	THRUST WASHER	1		(1.5 INCHES)
4	15M7030	PIPE PLUG	1		
5	Z77164	O-RING	1		(SUB FOR AT321403)
6	CQ27992	MASTER TRACK BOLT	18		
7	T159362	O-RING	1		
8	T219471	CAP SCREW	12		
9	F436044	O-RING	1		
11	T197836	O-RING	1		
12	R79496	FITTING PLUG	1		

PLANETARY FINAL DRIVE (SN 604690-)
REDUCTION FINALE A PLANETAIRE (SN 604690-)
MANDO FINAL PLANETARIO (SN 604690-)

TX1002890 -UN-10MAY06

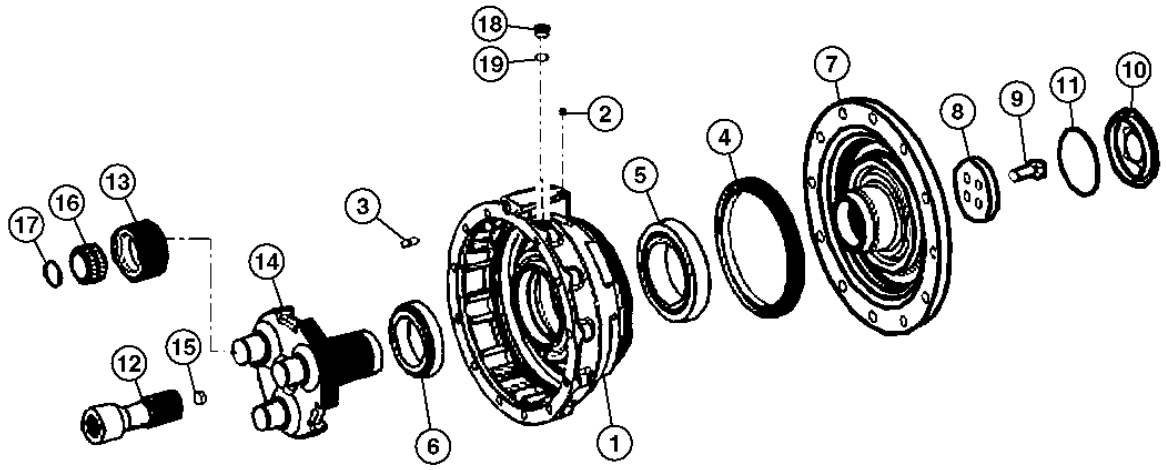

TX1002890

PLANETARY FINAL DRIVE (SN 604690-)
REDUCTION FINALE A PLANETAIRE (SN 604690-)
MANDO FINAL PLANETARIO (SN 604690-)

KEY	PART NO.	PART NAME	QTY.	SERIAL NO.	REMARKS
1	T219432	HOUSING	1		
2	T182775	PLUG	2		
3	F436022	VENT	1		(SUB FOR AT321411)
	.....	CAP	1		(AT321412 NSEP)
4	AT327389	SEALING RING	1		
5	F437196	TAPERED ROLLER BEARING	1		
6	AT327338	TAPERED ROLLER BEARING	1		
7	T219438	SPINDLE	1		
8	T222891	PLATE	1		
9	T222893	SELF-LOCKING SCREW	4		
10	F436124	COVER	1		
11	T174529	O-RING	1		
12	T219442	SUN GEAR	1		
13	T219443	PLANET PINION	3		
14	T219444	PLANET PINION CARRIER	1		
15	R79132	PIN	1		
16	AT327392	CYLINDRICAL ROLLER BEARING	3		
17	T219445	SNAP RING	3		
18	F436023	PLUG	1		
19	T197836	O-RING	1		

SERVICE BRAKE ASSEMBLY (SN 604690-)
FREIN DE SERVICE (SN 604690-)
CONJUNTO DE FRENOS DE SERVICIO (SN 604690-)

TX1002891 -UN-07FEB06

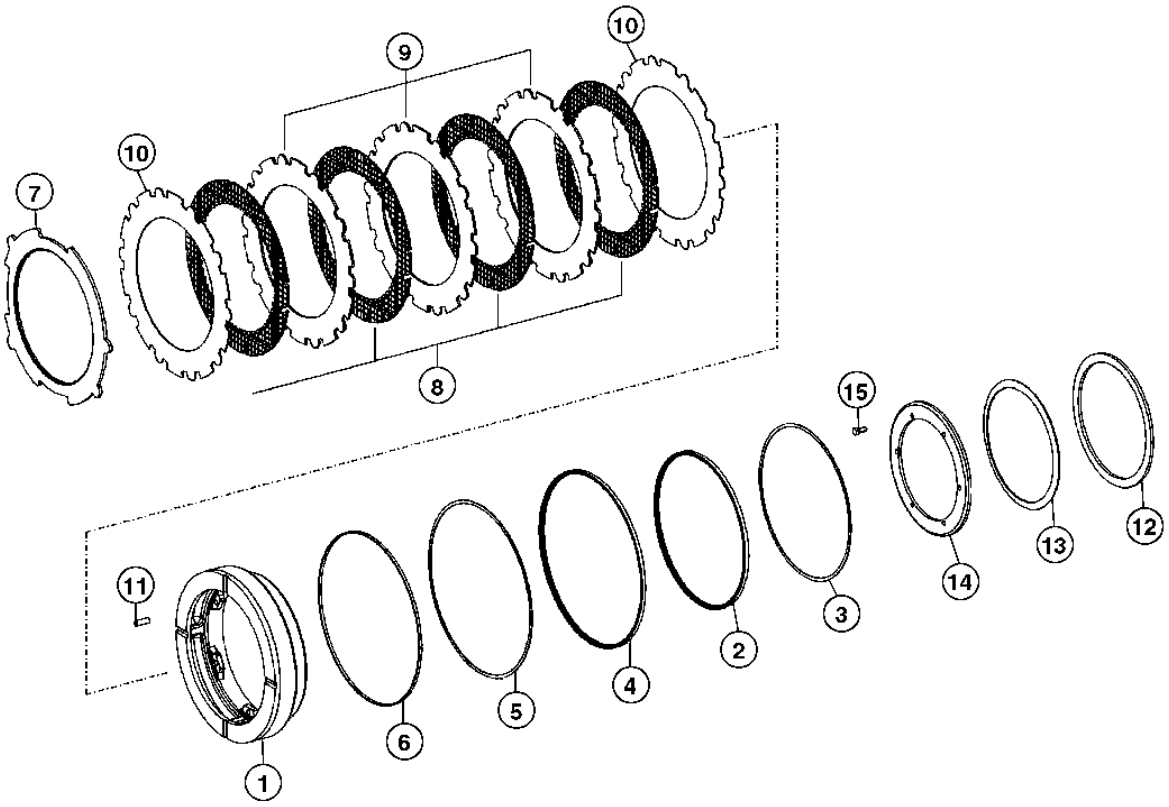

TX1002891

SERVICE BRAKE ASSEMBLY (SN 604690-)
FREIN DE SERVICE (SN 604690-)
CONJUNTO DE FRENOS DE SERVICIO (SN 604690-)

KEY	PART NO.	PART NAME	QTY.	SERIAL NO.	REMARKS
1	T219446	PISTON	1		
2	T219447	SEAL	1		
3	F437183	RING	1		
4	T222983	O-RING	1		
5	F437184	RING	1		
6	F437154	RING	1		
7	T219449	CLUTCH PLATE	4		
8	AT327393	DISK WITH INNER SPLINE	3		
9	F437220	CLUTCH DISK	2		
10	F437223	CLUTCH DISK	2		
11	T219452	PIN	6		
12	T219453	WASHER	1		
13	T219462	DISK SPRING	1		
14	T219463	COVER	1		
15	19M7881	SCREW	6		M8 X 20, (SUB FOR T219464)

AXLE HOUSING HYDRAULIC LOCKING DIFFERENTIAL (SN 604690-)
DIFFERENTIEL A BLOCAGE HYDRAULIQUE DE CARTER D'ESSIEU (SN 604690-)
DIFERENCIAL DE BLOQUEO HIDRAULICO DE LA CAJA DEL PUENTE (SN 604690-)

TX1002893 -UN-07FEB06

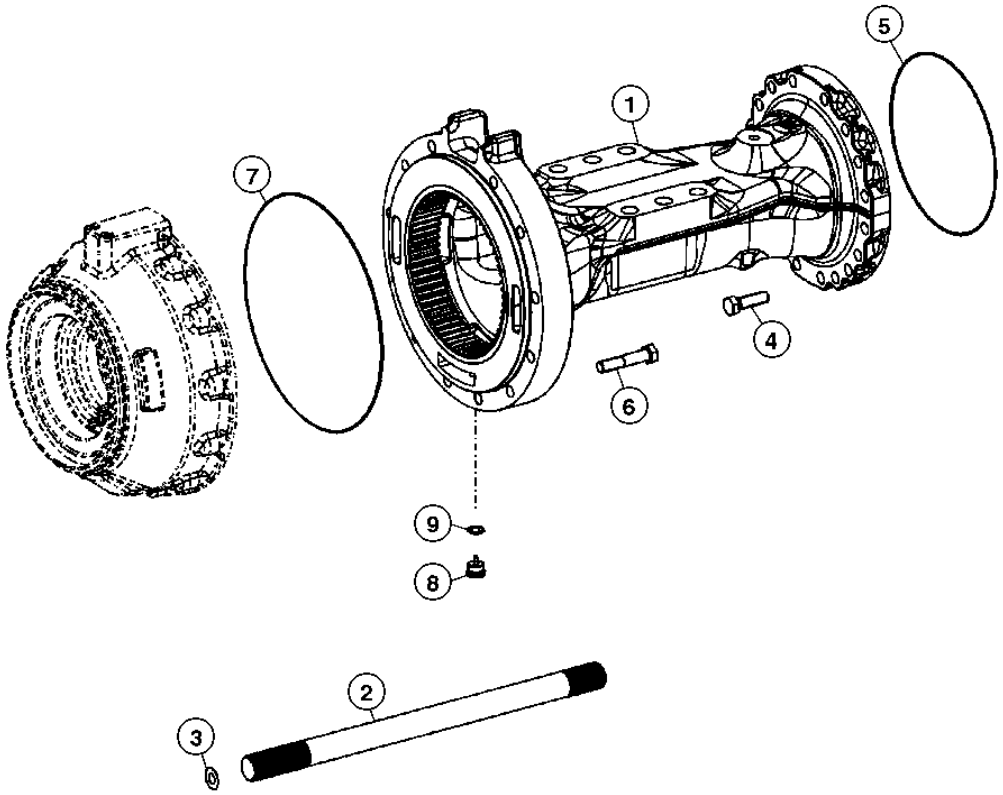

TX1002893

AXLE HOUSING HYDRAULIC LOCKING DIFFERENTIAL (SN 604690-)
DIFFERENTIEL A BLOCAGE HYDRAULIQUE DE CARTER D'ESSIEU (SN 604690-)
DIFERENCIAL DE BLOQUEO HIDRAULICO DE LA CAJA DEL PUENTE (SN 604690-)

KEY	*PART NO.*	*PART NAME*	*QTY.*	*SERIAL NO.*	*REMARKS*
1	T219465	HOUSING	1		
2	T219379	HALF AXLE	1		
3	T219380	THRUST WASHER	1		(0.2 INCHES)
	T219381	THRUST WASHER	1		(0.4 INCHES)
	T219382	THRUST WASHER	1		(1.0 INCHES)
	T219383	THRUST WASHER	1		(1.5 INCHES)
4	CQ27992	MASTER TRACK BOLT	18		
5	T159362	O-RING	1		
6	T219471	CAP SCREW	12		
7	F436044	O-RING	1		
8	R79496	FITTING PLUG	1		
9	T197836	O-RING	1		

AXLE BRAKE TUBE ASSEMBLY (SN 604690-)
ENSEMBLE DE TUBE DE FREIN D'ESSIEU (SN 604690-)
CONJUNTO DEL TUBO DEL FRENO DE EJE (SN 604690-)

TX1002894 -UN-07FEB06

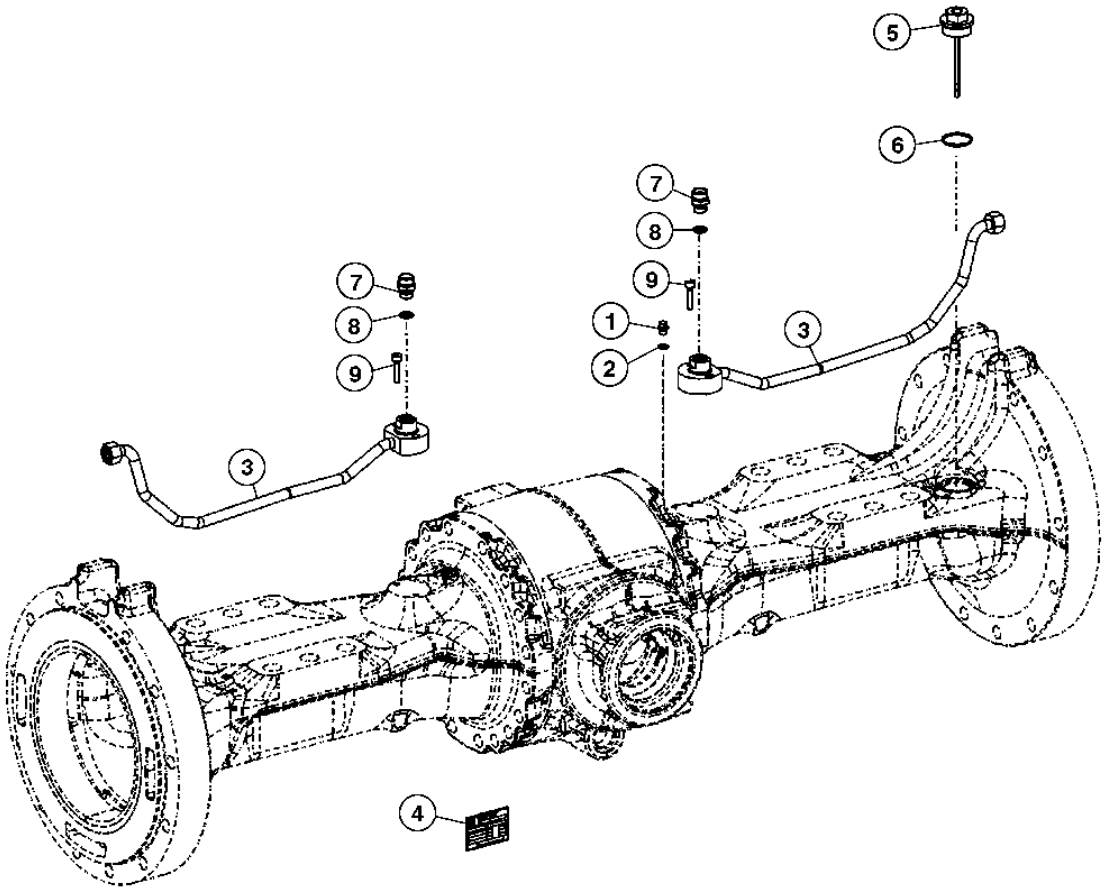

TX1002894

AXLE BRAKE TUBE ASSEMBLY (SN 604690-)
ENSEMBLE DE TUBE DE FREIN D'ESSIEU (SN 604690-)
CONJUNTO DEL TUBO DEL FRENO DE EJE (SN 604690-)

KEY	*PART NO.*	*PART NAME*	*QTY.*	*SERIAL NO.*	*REMARKS*
1	15M2714	DRAIN PLUG	1		(SUB FOR T219472)
2	51M7014	SEALING RING	1		(SUB FOR T219473)
3	AT330028	BRAKE LINE	1		
4	.....	PLATE	1		
5	AT327399	DIPSTICK	1		
6	AT321462	O-RING	1		
7	19M8274	SCREW	1		M8 X 35
8	AT332564	O-RING	1		
9	AT332563	SOCKET	1		

REAR AXLE BRAKE TUBE ASSEMBLY (SN 604690-)
ENSEMBLE DE TUBE DE FREIN D'ESSIEU ARRIERE (SN 604690-)
CONJUNTO DEL TUBO DEL FRENO DE EJE TRASERO (SN 604690-)

TX1002897 -UN-07FEB06

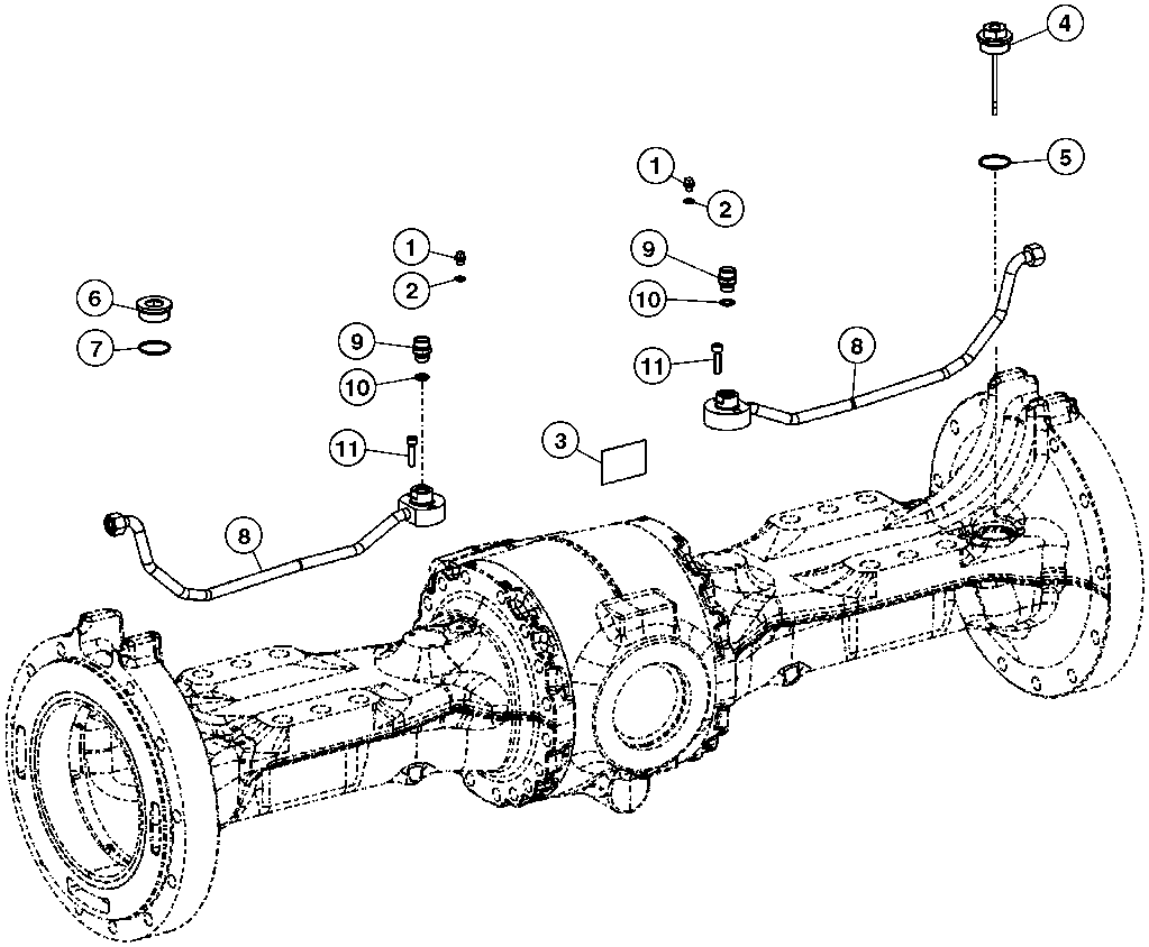

TX1002897

REAR AXLE BRAKE TUBE ASSEMBLY (SN 604690-)
ENSEMBLE DE TUBE DE FREIN D'ESSIEU ARRIERE (SN 604690-)
CONJUNTO DEL TUBO DEL FRENO DE EJE TRASERO (SN 604690-)

KEY	*PART NO.*	*PART NAME*	*QTY.*	*SERIAL NO.*	*REMARKS*
1	15M2714	DRAIN PLUG	2		(SUB FOR T219472)
2	51M7014	SEALING RING	2		(SUB FOR T219473)
3	.....	PLATE	1		
4	AT327399	DIPSTICK	1		
5	AT321462	O-RING	1		
6	T197853	DRAIN PLUG	1		
7	AT321462	O-RING	1		
8	AT330028	BRAKE LINE	1		
9	AT332563	SOCKET	1		
10	AT332564	O-RING	1		
11	19M8274	SCREW	1		M8 X 35

REAR AXLE MOUNTING (SN -604689)
MONTAGE DE L'ESSIEU ARRIÈRE (SN -604689)
MONTAJE DEL EJE TRASERO (SN -604689)

TP60253 -UN-18MAR98

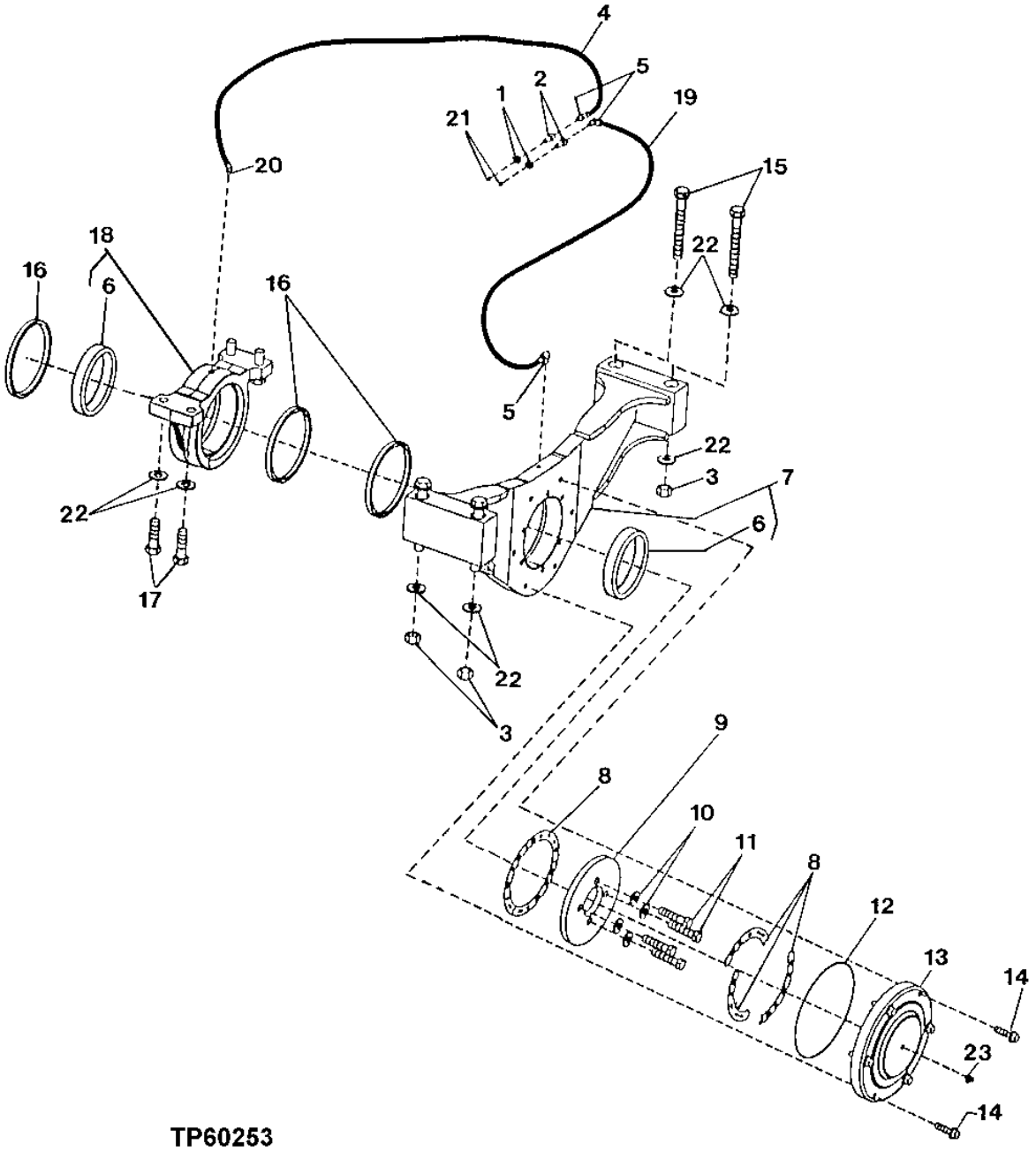

TP60253

REAR AXLE MOUNTING (SN -604689)
MONTAGE DE L'ESSIEU ARRIÈRE (SN -604689)
MONTAJE DEL EJE TRASERO (SN -604689)

KEY	PART NO.	PART NAME	QTY.	SERIAL NO.	REMARKS
1	E12379	NUT	2		3.175 MM
2	R36311	FITTING	2		
3	14M7277	NUT	4		M20
4	AT207022	HYDRAULIC HOSE	1		
5	T56112	ELBOW FITTING	3		
6	T167837	BUSHING	2		
7	AT221583	REAR AXLE SUPPORT	1		
8	T167924	THRUST BEARING	6		
9	T157055	DISK	1		
10	24M7241	WASHER	4		17 X 34 X 4 MM
11	19M7719	CAP SCREW	4		M16 X 70
12	T169329	O-RING	1		
13	T157056	COVER	1		
14	19M7813	SCREW	6		M12 X 45
15	19M8503	CAP SCREW	4		M20 X 160
16	AT206794	SEAL	3		
17	19M8639	CAP SCREW	4		M20 X 70, (SUB FOR 19M8638)
18	AT210606	REAR AXLE SUPPORT	1		
19	AT207023	HYDRAULIC HOSE	1		
20	M45937	ELBOW FITTING	1		
21	JD7797	LUBRICATION FITTING	2		(SUB FOR JD7842, THIS APPLICATION)
22	24M7242	WASHER	12		21.400 X 42 X 5 MM
23	JD7781	LUBRICATION FITTING	1		

REAR AXLE MOUNTING (SN 604690-)
MONTAGE DE L'ESSIEU ARRIÈRE (SN 604690-)
MONTAJE DEL EJE TRASERO (SN 604690-)

TX1003272 -UN-02FEB06

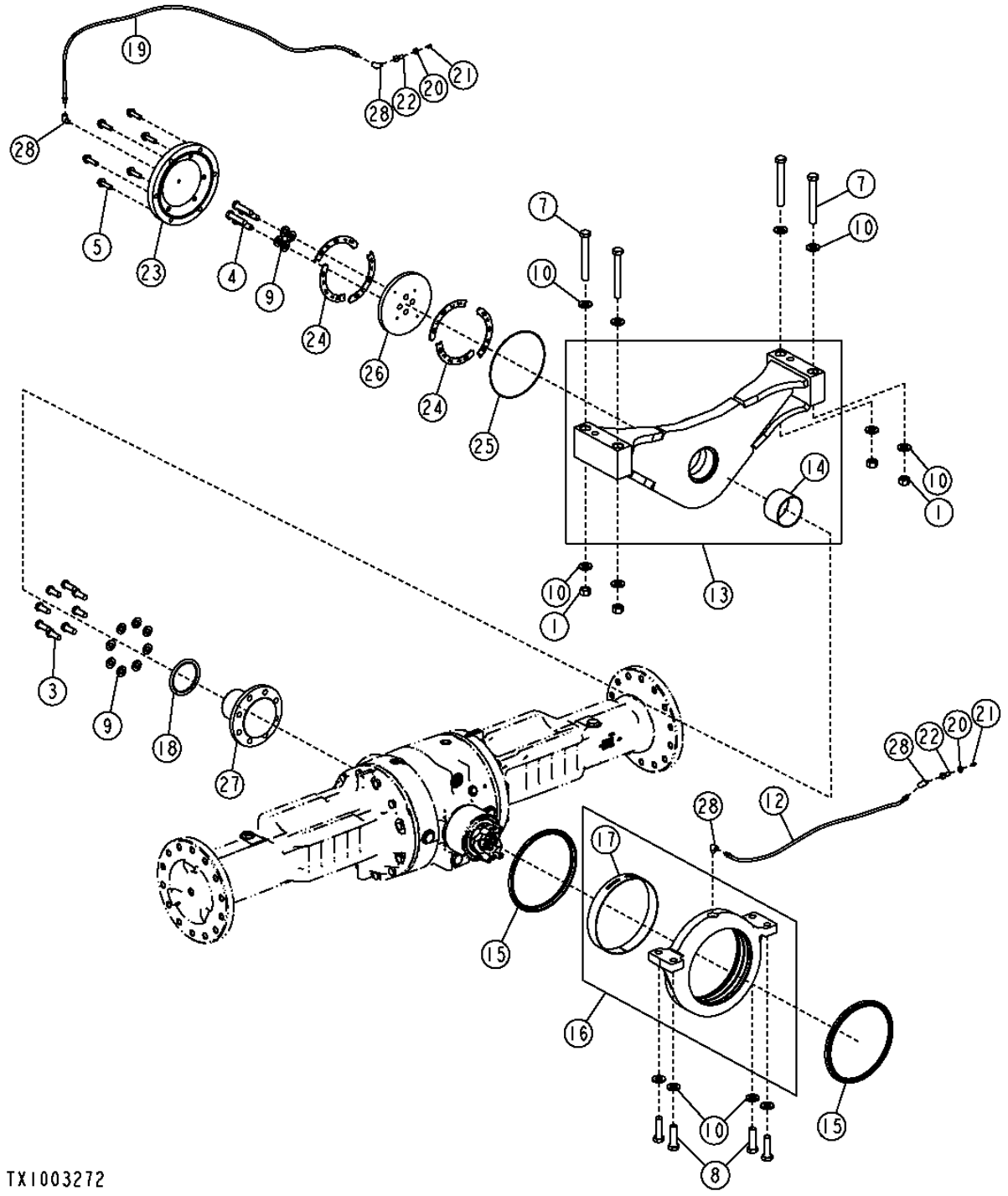

REAR AXLE MOUNTING (SN 604690-)
MONTAGE DE L'ESSIEU ARRIÈRE (SN 604690-)
MONTAJE DEL EJE TRASERO (SN 604690-)

KEY	*PART NO.*	*PART NAME*	*QTY.*	*SERIAL NO.*	*REMARKS*
1	14M7277	NUT	4		M20
3	19M7488	CAP SCREW	8		M16 X 40
4	19M7719	CAP SCREW	4		M16 X 70
5	19M7813	SCREW	6		M12 X 45
7	19M8503	CAP SCREW	4		M20 X 160
8	19M8639	CAP SCREW	4		M20 X 70
9	24M7241	WASHER	12		17 X 34 X 4 MM
10	24M7242	WASHER	12		21.400 X 42 X 5 MM
12	AT207022	HYDRAULIC HOSE	1		1/8" X 900 MM X 1/8"
13	AT314290	REAR AXLE SUPPORT	1		
14	T212855	BUSHING	1		
15	AT320421	SEAL	2		
16	AT323885	BEARING WITH HOUSING	1		
17	T211608	BUSHING	1		
18	AT49859	SEAL	1		
19	AT53541	HYDRAULIC HOSE	1		1/8" X 1 490 MM X 1/8"
20	E12379	NUT	2		3.175 MM
21	JD7797	LUBRICATION FITTING	2		
22	R36311	FITTING	2		
23	T157056	COVER	1		
24	T167924	THRUST BEARING	6		
25	T169329	O-RING	1		228.270 X 2.620 MM
26	T208791	DISK	1		
27	T211662	TRUNNION	1		
28	T56112	ELBOW FITTING	4		3.175 MM

AXLE STOP (8 DEGREE) (SN -604689)
BUTEE D'ESSIEU (8 DEGRES) (SN -604689)
TOPE DEL EJE (8 GRADOS) (SN -604689)

T195144 -UN-24OCT03

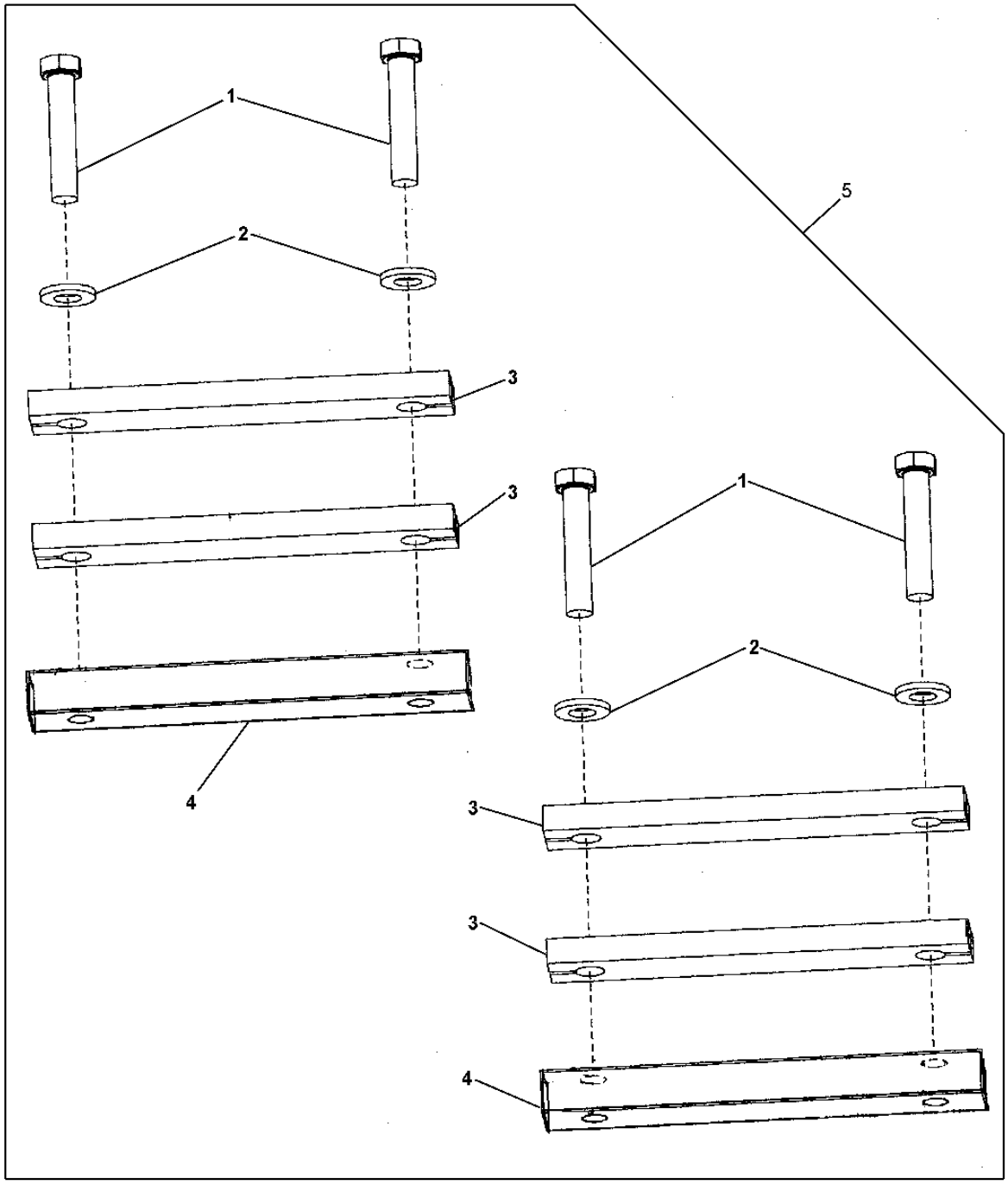

T195144

AXLE STOP (8 DEGREE) (SN -604689)
BUTEE D'ESSIEU (8 DEGRES) (SN -604689)
TOPE DEL EJE (8 GRADOS) (SN -604689)

KEY	*PART NO.*	*PART NAME*	*QTY.*	*SERIAL NO.*	*REMARKS*
1	19M7720	CAP SCREW	4		M16 X 80
2	24M7241	WASHER	4		17 X 34 X 4 MM
3	T167862	STRAP	4		(OSCILLATION STOP)
4	T157315	STRAP	2		(TAPPED)
5	**AT307595**	**KIT**	**1**		**AXLE STOP (WHOLEGOODS)**

AXLE STOP (8 DEGREE) (SN 604690-)
BUTEE D'ESSIEU (8 DEGRES) (SN -604689)
TOPE DEL EJE (8 GRADOS) (SN -604689)

TX1003710 -UN-10FEB06

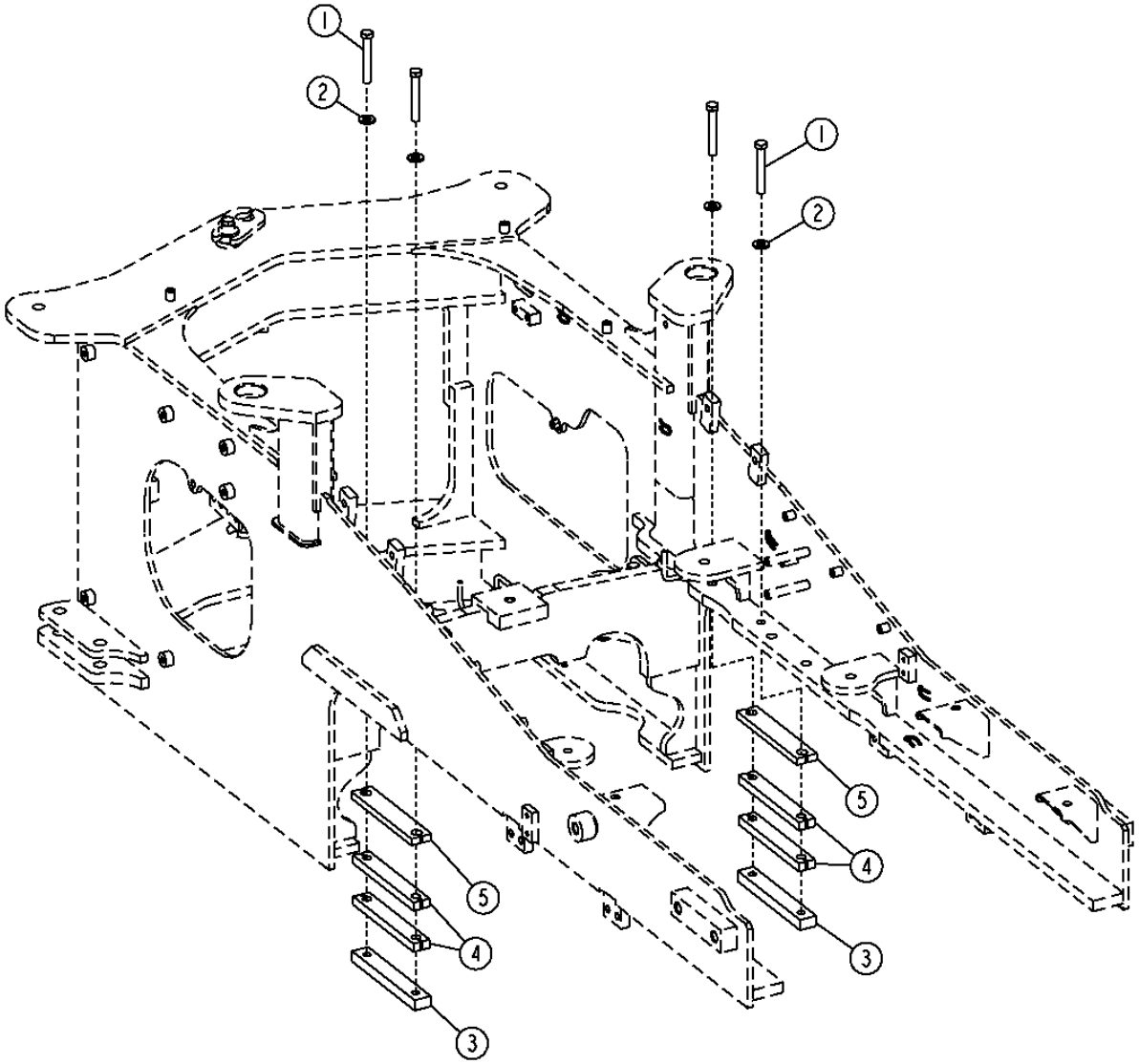

TX1003710

THIS PARTS LISTING IS CONTINUED

AXLE STOP (8 DEGREE) (SN 604690-)
BUTEE D'ESSIEU (8 DEGRES) (SN -604689)
TOPE DEL EJE (8 GRADOS) (SN -604689)

KEY	PART NO.	PART NAME	QTY.	SERIAL NO.	REMARKS
1	19M7884	CAP SCREW	4		M16 X 110
2	24M7241	WASHER	4		17 X 34 X 4 MM
3	T157315	STRAP	2		
4	T168247	STRAP	4		
5	T223785	STRAP	2		

AXLE STOP (10 DEGREE)
BUTEE D'ESSIEU (10 DEGRES)
TOPE DEL EJE (10 GRADOS)

T192385 -UN-20JUN03

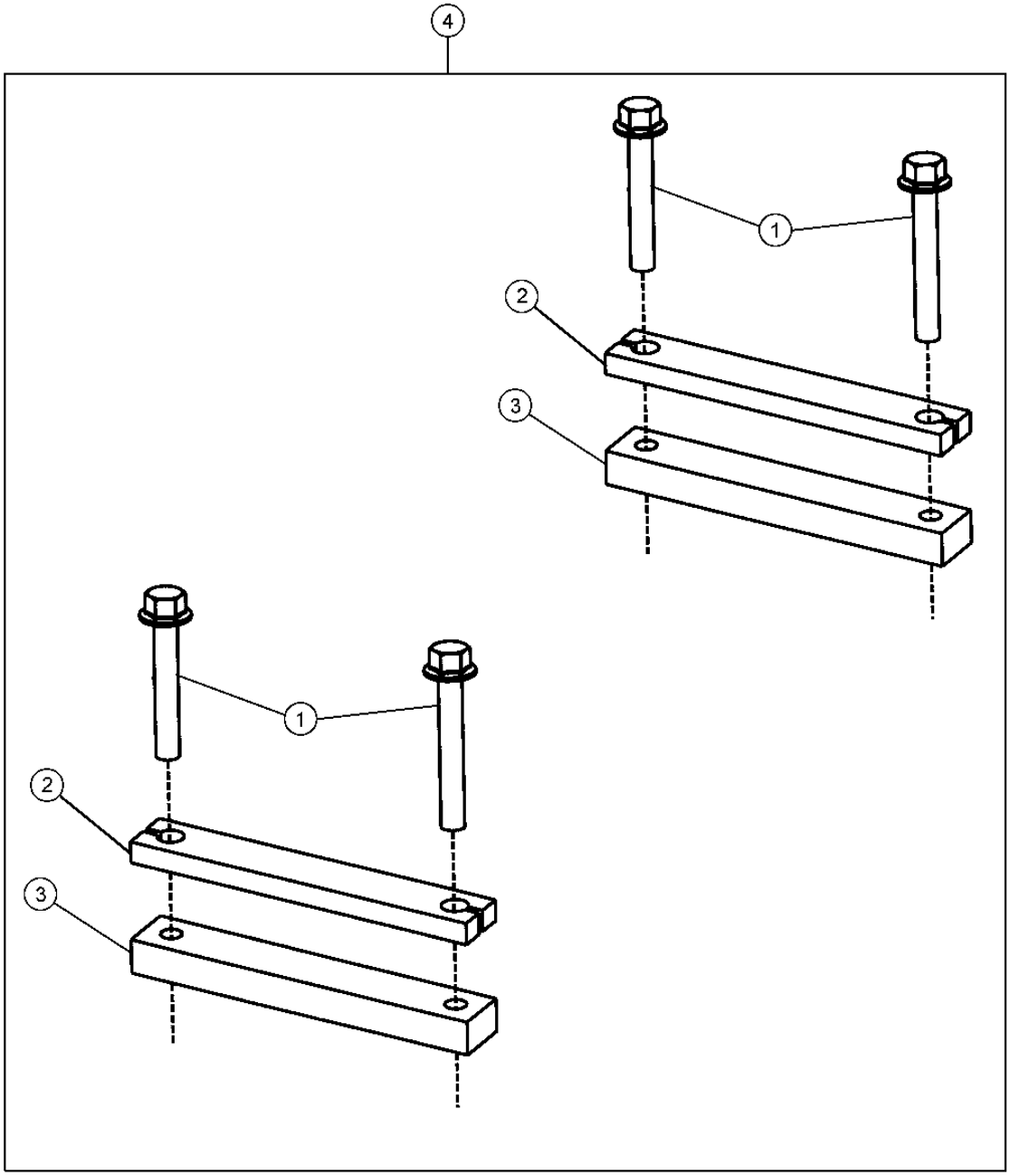

T192385

AXLE STOP (10 DEGREE)
BUTEE D'ESSIEU (10 DEGRES)
TOPE DEL EJE (10 GRADOS)

KEY	PART NO.	PART NAME	QTY.	SERIAL NO.	REMARKS
1	19M7825	SCREW	4		M16 X 65
2	T167862	STRAP	2		
3	T157315	STRAP	2		
4	**AT203239**	**KIT**	**1**		**AXLE STOP (WHOLEGOODS)**

FRONT DIFFERENTIAL LOCK LINE (SN -604689)
CONDUITE DE BLOCAGE DE DIFFERENTIEL AVANT (SN -604689)
LINEA DE BLOQUEO DEL DIFERENCIAL DELANTERO (SN -604689)

T193425 -UN-09SEP03

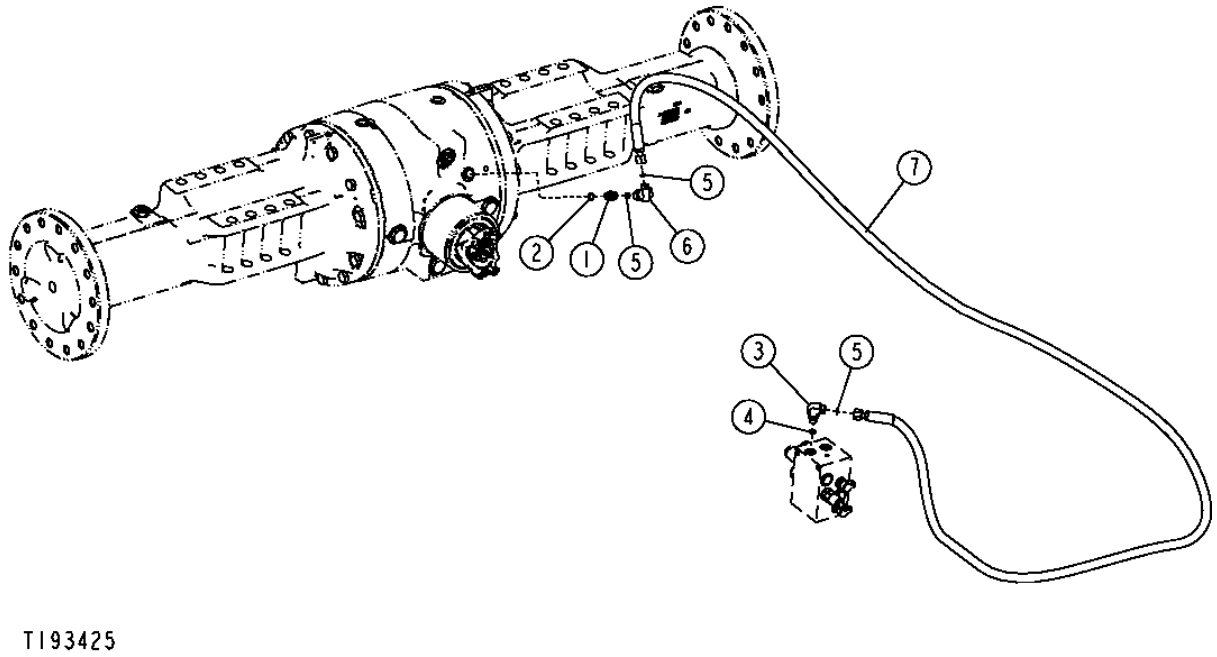

T193425

FRONT DIFFERENTIAL LOCK LINE (SN -604689)
CONDUITE DE BLOCAGE DE DIFFERENTIEL AVANT (SN -604689)
LINEA DE BLOQUEO DEL DIFERENCIAL DELANTERO (SN -604689)

KEY	*PART NO.*	*PART NAME*	*QTY.*	*SERIAL NO.*	*REMARKS*
1	38H5002	ADAPTER FITTING	1		
2	51M7041	O-RING	1		
3	38H1004	ELBOW FITTING	1		
4	R26448	O-RING	1		
5	T77613	O-RING	3		
6	38H1094	ELBOW FITTING	1		
7	AT304143	HYDRAULIC HOSE - FABRICATE	1		

FRONT DIFFERENTIAL LOCK LINE (S.N. 604690-)
CONDUITE DE BLOCAGE DE DIFFERENTIEL AVANT (S.N. 604690-)
LINEA DE BLOQUEO DEL DIFERENCIAL DELANTERO (S.N. 604690-)

TX1005237 -UN-24MAR06

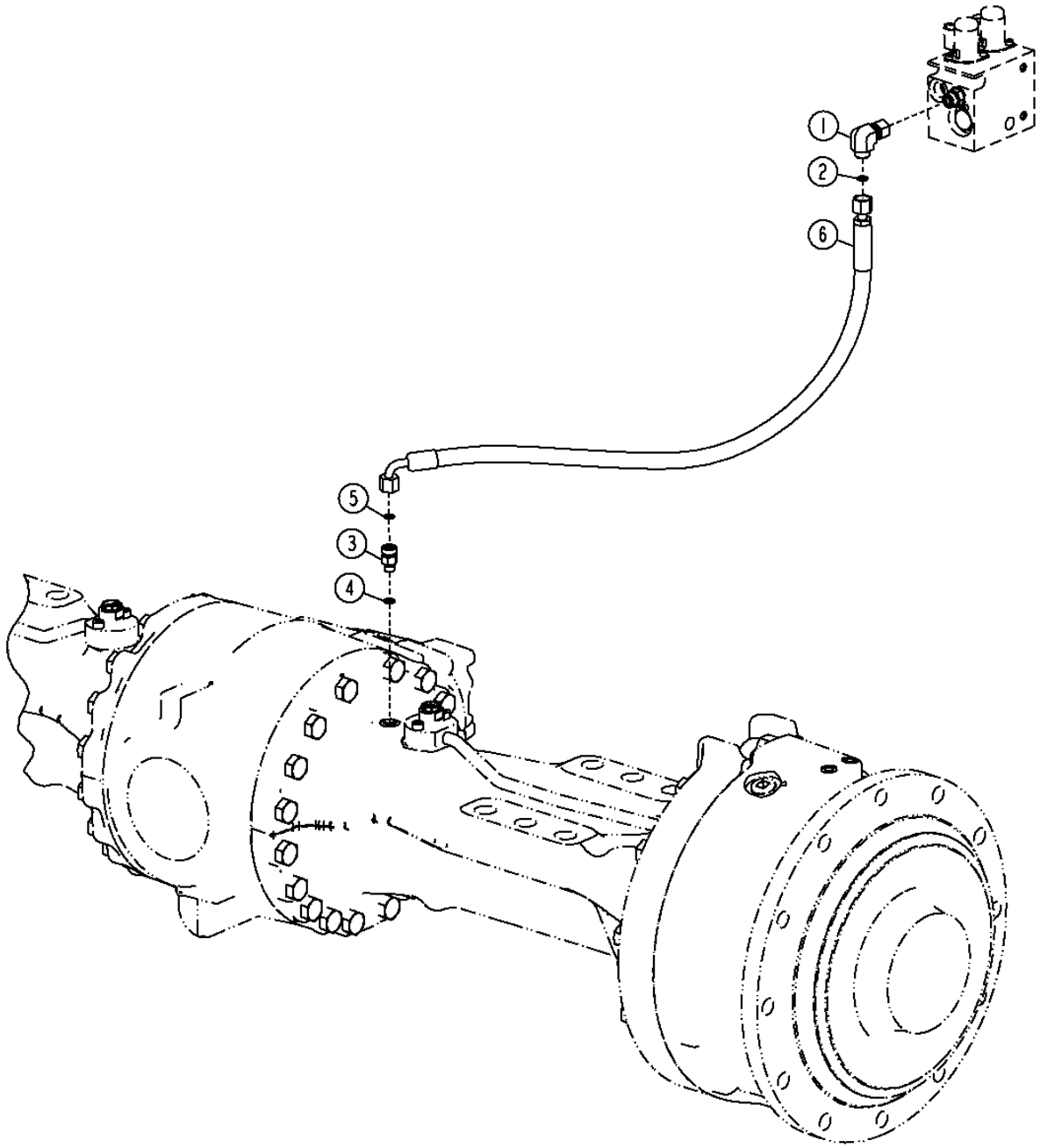

TX1005237

AXLES, DIFFERENTIAL AND SUSPENSION SYSTEM HYDRAULICS 0260

FRONT DIFFERENTIAL LOCK LINE (S.N. 604690-)
CONDUITE DE BLOCAGE DE DIFFERENTIEL AVANT (S.N. 604690-)
LINEA DE BLOQUEO DEL DIFERENCIAL DELANTERO (S.N. 604690-)

KEY	*PART NO.*	*PART NAME*	*QTY.*	*SERIAL NO.*	*REMARKS*
1	38H1094	ELBOW FITTING	1		
2	T77613	O-RING	1		
3	38H5022	ELBOW FITTING	1		(SUB FOR 38H5008)
4	51M7040	O-RING	1		
5	T77613	O-RING	1		
6	AT334074	HYDRAULIC HOSE - FABRICATE	1		(SUB FOR AT320188)

FRONT AND REAR DIFFERENTIAL LOCK LINES (S.N. -604689)
CONDUITES DE BLOCAGE DE DIFFERENTIEL AVANT ET ARRIERE (S.N. -604689)
LINEAS DE BLOQUEO DEL DIFERENCIAL TRASERO Y DELANTERO (S.N. -604689)

TX1006378 -UN-24APR06

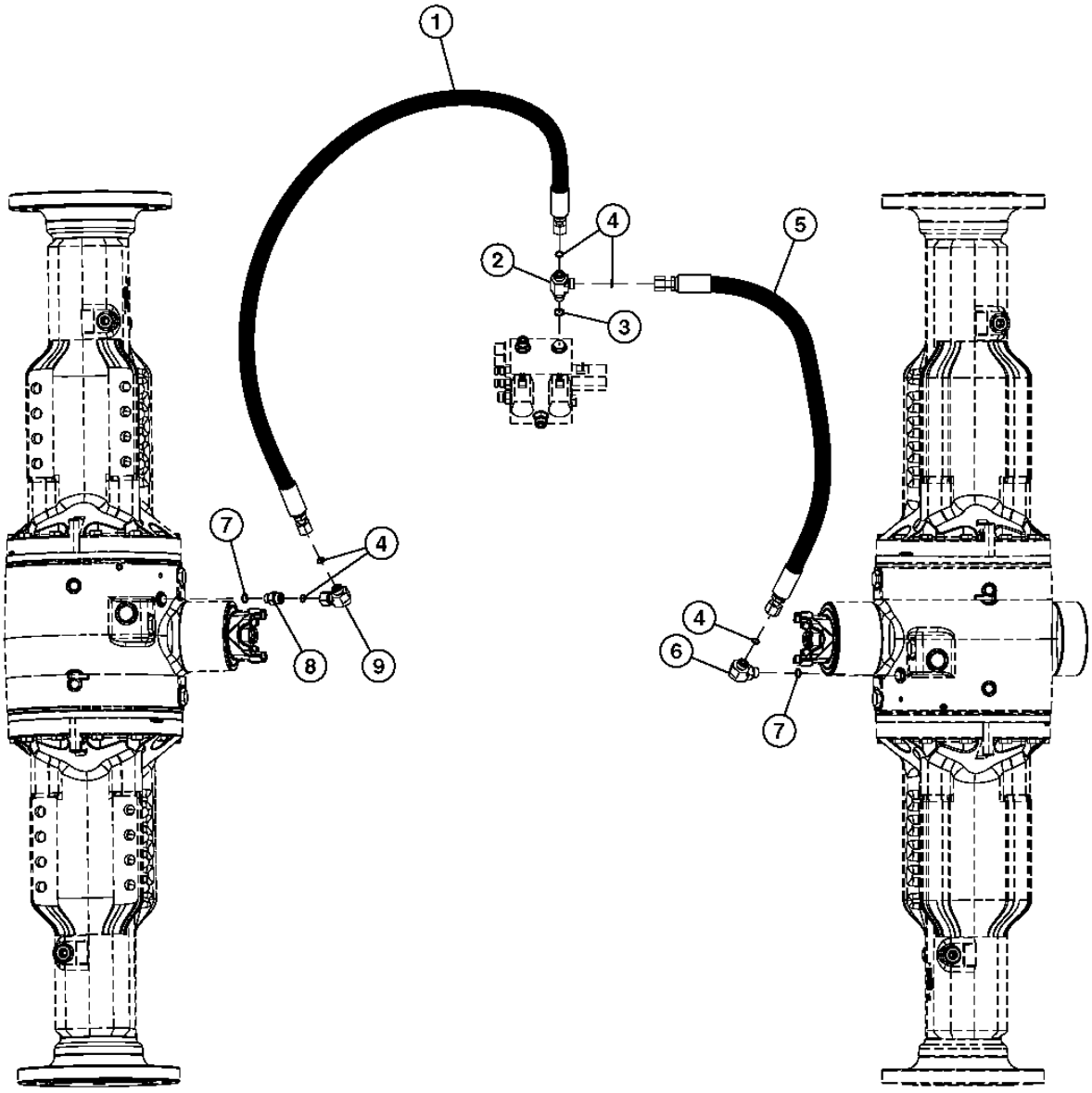

TX1006378

AXLES, DIFFERENTIAL AND SUSPENSION SYSTEM HYDRAULICS 0260

FRONT AND REAR DIFFERENTIAL LOCK LINES (S.N. -604689)
CONDUITES DE BLOCAGE DE DIFFERENTIEL AVANT ET ARRIERE (S.N. -604689)
LINEAS DE BLOQUEO DEL DIFERENCIAL TRASERO Y DELANTERO (S.N. -604689)

KEY	*PART NO.*	*PART NAME*	*QTY.*	*SERIAL NO.*	*REMARKS*
1	AT304143	HYDRAULIC HOSE - FABRICATE	1		
2	38H1023	TEE FITTING	1		
3	R26448	O-RING	1		
4	T77613	O-RING	5		
5	AT222163	HYDRAULIC HOSE - FABRICATE	1		(SUB FOR AT304263 OR AT305561)
6	38H5016	ELBOW FITTING	1		
7	51M7041	O-RING	2		
8	38H5002	ADAPTER FITTING	1		
9	38H1094	ELBOW FITTING	1		

REAR DIFFERENTIAL LOCK LINES (S.N. 604690-)
CONDUITES VERROUILLAGE DIFFERENTIEL AVANT (S.N. 604690-)
LINEAS DE TRABA DEL DIFERENCIAL TRASERA (S.N. 604690-)

TX1003286 -UN-03FEB06

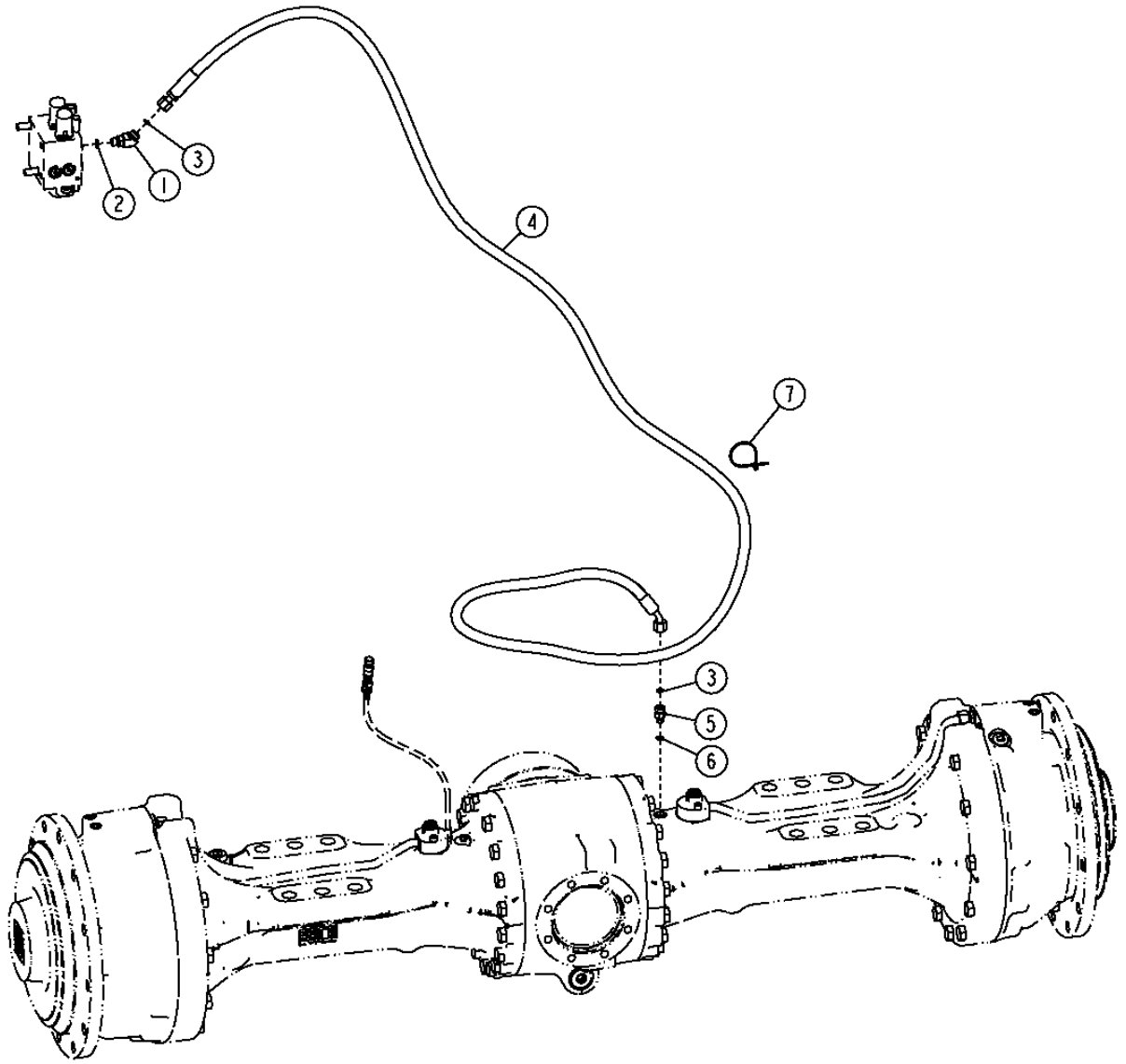

TX1003286

REAR DIFFERENTIAL LOCK LINES (S.N. 604690-)
CONDUITES VERROUILLAGE DIFFERENTIEL AVANT (S.N. 604690-)
LINEAS DE BLOQUEO DEL DIFERENCIAL TRASERO (S.N. 604690-)

KEY	PART NO.	PART NAME	QTY.	SERIAL NO.	REMARKS
1	38H1045	ELBOW FITTING	1		
2	R26448	O-RING	1		
3	T77613	O-RING	2		
4	AT315755	HYDRAULIC HOSE - FABRICATE	1		
5	38H5008	ADAPTER FITTING	1		
6	51M7040	O-RING	1		
7	R44302	TIE BAND	1		

AXLE OIL CIRCULATION PUMP AND MOTOR
POMPE ET MOTEUR DE CIRCULATION D'HUILE D'ESSIEU
MOTOR Y BOMBA DE CIRCULACION DE ACEITE DEL EJE

T210080 -UN-14APR05

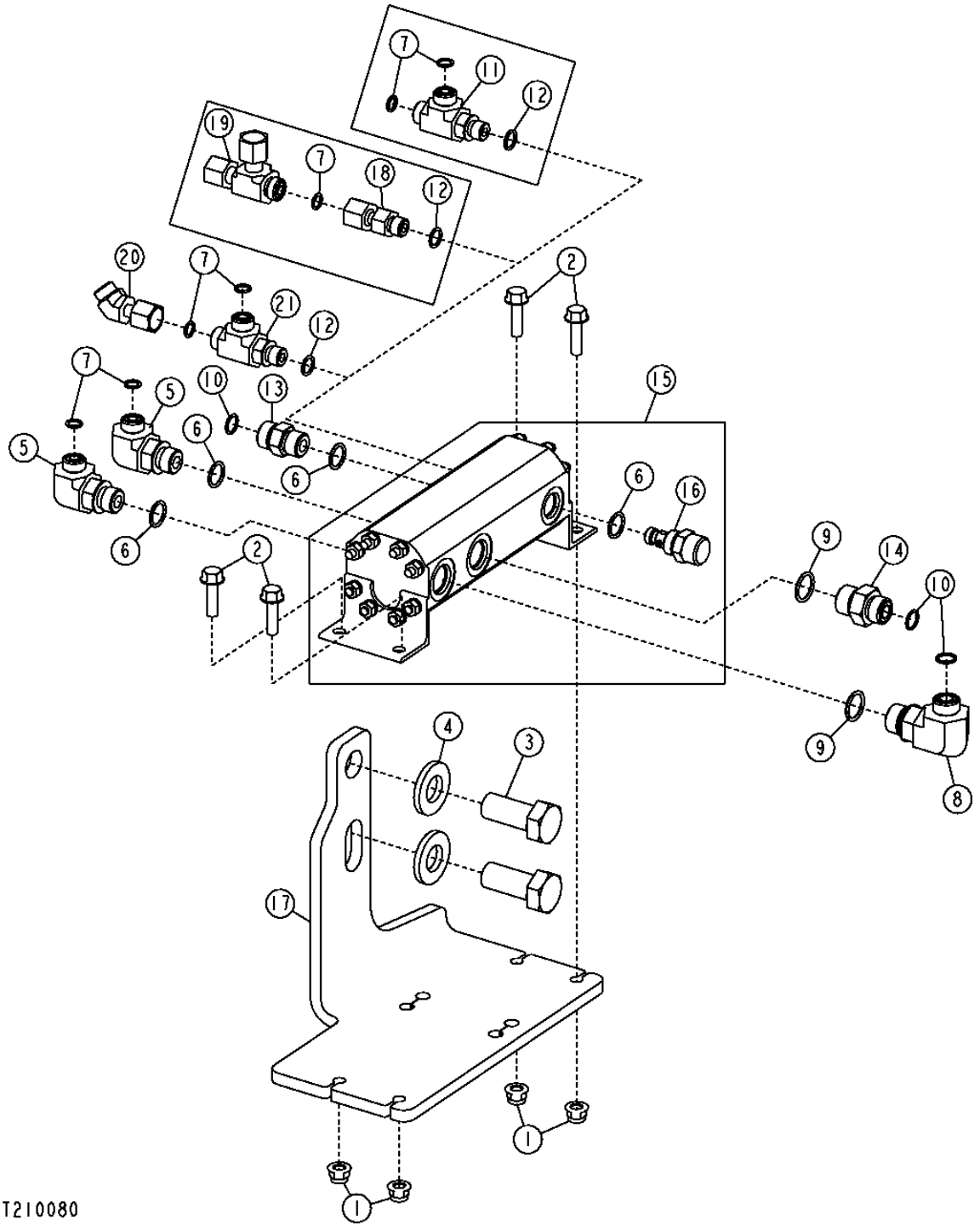

THIS PARTS LISTING IS CONTINUED

AXLE OIL CIRCULATION PUMP AND MOTOR
POMPE ET MOTEUR DE CIRCULATION D'HUILE D'ESSIEU
MOTOR Y BOMBA DE CIRCULACION DE ACEITE DEL EJE

KEY	*PART NO.*	*PART NAME*	*QTY.*	*SERIAL NO.*	*REMARKS*
1	14M7396	LOCK NUT	4		M8
2	19M7868	SCREW	4		M8 X 30
3	19M7950	CAP SCREW	2		M20 X 45
4	24M7242	WASHER	2		21.400 X 42 X 5 MM
5	38H1010	ELBOW FITTING	2		
6	R26375	O-RING	4		
7	T77613	O-RING	4		
8	38H1012	ELBOW FITTING	1		
9	R26906	O-RING	2		
10	T77857	O-RING	3		
11	38H1023	TEE FITTING	1	-594432	
12	R26448	O-RING	1		
13	38H1161	ADAPTER FITTING	1		
14	38H1174	ADAPTER FITTING	1		
15	AT220832	PUMP	1		
16	AT223728	VALVE	1		
	AT223805	SEAL KIT	1		
17	T197061	BRACKET	1		
18	38H1067	ADAPTER FITTING	1	594433-596166	
19	AT219792	TEE FITTING	1	594433-596166	
20	62H1052	ELBOW FITTING	1	596167-	
21	38H1023	TEE FITTING	1	596167-	

AXLE CIRCULATION HOSES WITH FACTORY INSTALLED AXLE COOLERS (S.N. -604689)
FLEXIBLES DE CIRCULATION D'ESSIEU AVEC REFROIDISSEURS D'ESSIEU INSTALLES EN USINE (S.N. -604689)
MANGUERAS CIRCULACION PUENTE CON ENFRIADORES PUENTE INSTALADOS EN LA FABRICA (S.N. -604689)

TX1002921 -UN-23FEB06

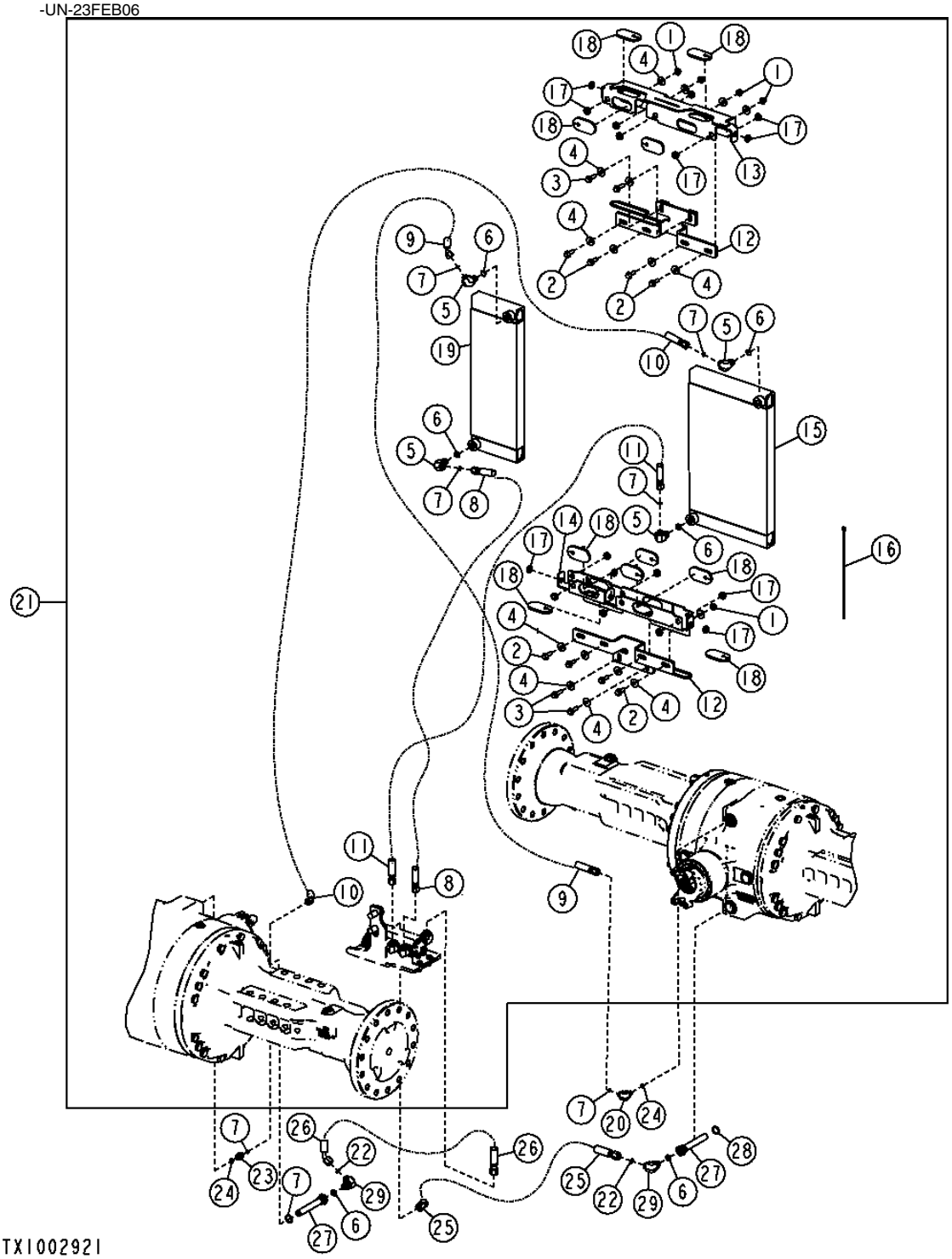

AXLE CIRCULATION HOSES WITH FACTORY INSTALLED AXLE COOLERS (S.N. -064689)
FLEXIBLES DE CIRCULATION D'ESSIEU AVEC REFROIDISSEURS D'ESSIEU INSTALLES EN USINE (S.N. -604689)
MANGUERAS CIRCULACION PUENTE CON ENFRIADORES PUENTE INSTALADOS EN LA FABRICA (S.N. -604689)

KEY	*PART NO.*	*PART NAME*	*QTY.*	*SERIAL NO.*	*REMARKS*
1	14M7296	FLANGE NUT	8		M10
2	19M7786	SCREW	8		M10 X 30
3	19M7835	SCREW	4		M10 X 35
4	24M7296	WASHER	20		10.500 X 30 X 2.500 MM
5	38H1010	ELBOW FITTING	4		
6	R26375	O-RING	6		
7	T77613	O-RING	6		
8	AT228857	HYDRAULIC HOSE - FABRICATE	1		11/16" X 163-1/2" X 11/16"
9	AT228858	HYDRAULIC HOSE - FABRICATE	1		11/16" X 122" X 11/16"
10	AT228859	HYDRAULIC HOSE - FABRICATE	1		11/16" X 228-1/4" X 11/16"
11	AT228860	HYDRAULIC HOSE - FABRICATE	1		11/16" X 157-1/2" X 11/16"
12	AT305165	BRACKET	2		
13	AT306489	BRACKET	1		
14	AT306496	BRACKET	1		
15	AT228457	OIL COOLER	1		
	AT307617	OIL COOLER	1		(HARSH ENVIRONMENT)
16	H77698	TIE BAND	4		
17	T162238	GROMMET	22		
18	T201546	GROMMET	12		
19	AT228457	OIL COOLER	1		
	AT307617	OIL COOLER	1		(HARSH ENVIRONMENT)
20	38H1430	ELBOW FITTING	1		
21	**AT228284**	**FIELD INSTALLATION KIT**	**2**		
22	T77857	O-RING	2		
23	38H1170	ADAPTER FITTING	1		
24	R26286	O-RING	2		
25	AT220733	HYDRAULIC HOSE - FABRICATE	1		1" X 22" X 1-3/16"
26	AT220729	HYDRAULIC HOSE - FABRICATE	1		13/16" X 120" X 1-3/16"
27	AT220925	OIL FILTER	2		
28	U12547	O-RING	2		
29	38H1005	ELBOW FITTING	2		

AXLE CIRCULATION HOSES WITH FACTORY INSTALLED AXLE COOLERS (S.N. 604690-)
FLEXIBLES DE CIRCULATION D'ESSIEU AVEC REFROIDISSEURS D'ESSIEU INSTALLES EN USINE (S.N. 604690-)
MANGUERAS CIRCULACION PUENTE CON ENFRIADORES PUENTE INSTALADOS EN LA FABRICA (S.N. 604690-)

TX1008870 -UN-14JUN06

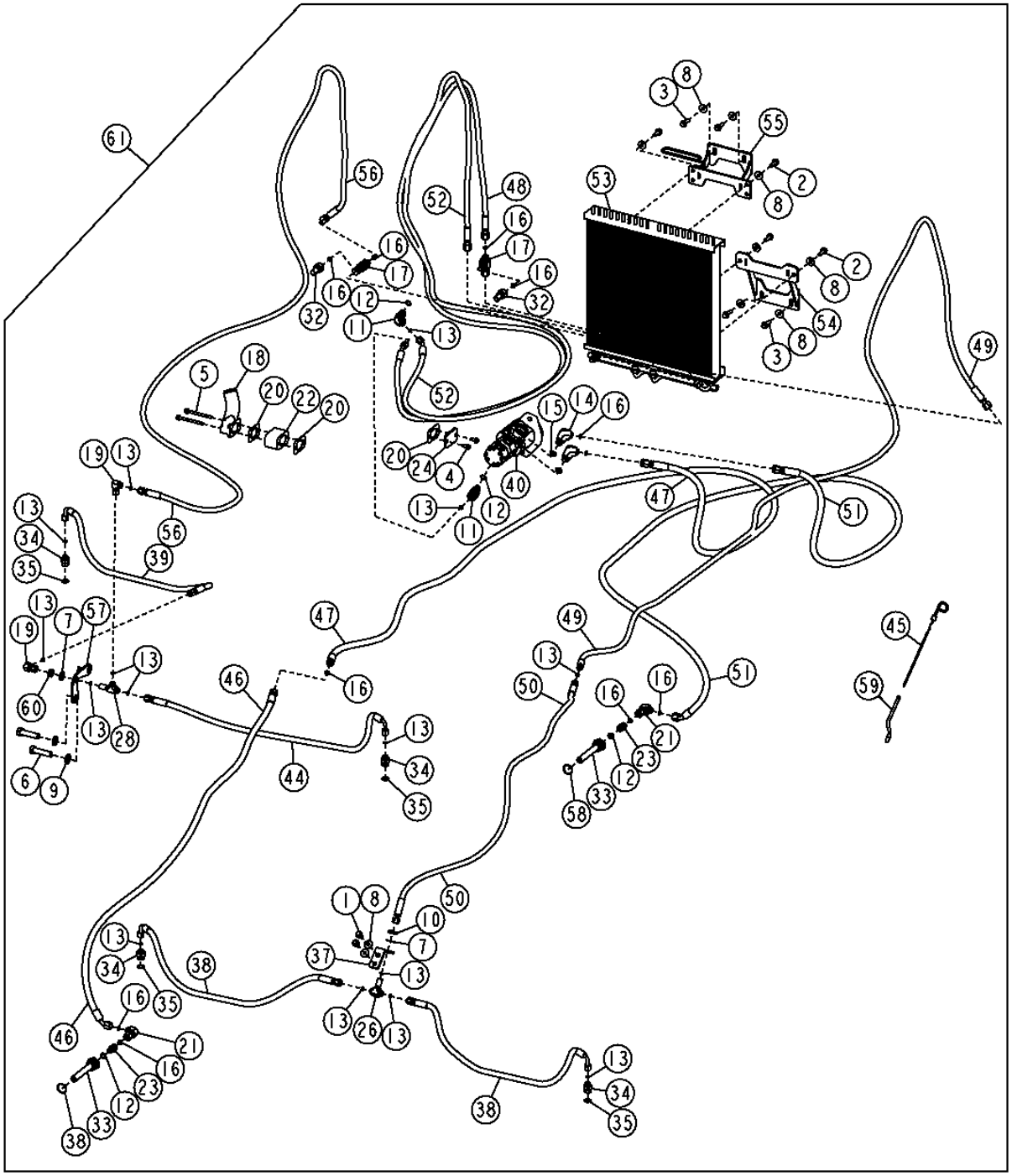

TX1008870

AXLES, DIFFERENTIAL AND SUSPENSION SYSTEM HYDRAULICS 0260

AXLE CIRCULATION HOSES WITH FACTORY INSTALLED AXLE COOLERS (S.N. 604690-)
FLEXIBLES DE CIRCULATION D'ESSIEU AVEC REFROIDISSEURS D'ESSIEU INSTALLES EN USINE (S.N. 604690-)
MANGUERAS CIRCULACION PUENTE CON ENFRIADORES PUENTE INSTALADOS EN LA FABRICA (S.N. 604690-)

KEY	PART NO.	PART NAME	QTY.	SERIAL NO.	REMARKS
1	19M7785	SCREW	2		M10 X 25
2	19M7786	SCREW	4		M10 X 30
3	19M7835	SCREW	12		M10 X 35
4	19M7866	SCREW	2		M8 X 20
5	19M7873	SCREW	2		M8 X 110
6	19M8857	CAP SCREW	2		M18 X 70
7	24H1391	WASHER	2		19.837 X 33.325 X 1.524 MM, (USE WITH POWERLLEL™ LINKAGE)
	24M7239	WASHER	1		10.700 X 21 X 2.500 MM, (USE WITH Z-BAR LINKAGE)
8	24M7296	WASHER	10		10.500 X 30 X 2.500 MM
9	24M7361	WASHER	2		19 X 34 X 3 MM
10	38H5091	NUT	1		17.463 MM
11	.....	ADAPTER FITTING	1	-611902	(SUB FOR 38H1010) (ORDER (2) 38H1568)
	38H1568	ELBOW FITTING	2	611903-	
12	R26375	O-RING	3		16.358 X 2.210 MM
13	T77613	O-RING	2		9.246 X 1.778 MM
14	.....	ADAPTER FITTING	1	-611902	(SUB FOR 38H1012) (ORDER (2) 38H1583)
	38H1583	ADAPTER FITTING	2	611903-	
15	R26906	O-RING	2		19.177 X 2.464 MM
16	T77857	O-RING	6		12.421 X 1.778 MM
17	38H1031	TEE FITTING	1		
18	R123558	FILLER NECK	1		
19	38H1094	ELBOW FITTING	1		
20	R136495	GASKET	1		
21	38H1095	ELBOW FITTING	1		
22	R136514	SPACER	1		
23	38H1161	ADAPTER FITTING	1		
24	R116296	COVER	1		
26	38H1291	TEE FITTING	1		
28	38H1503	TEE FITTING	1		
32	AT312932	FITTING	2		
33	AT318157	OIL FILTER	2		
34	T213505	FITTING	1		
35	R82198	O-RING	1		21 X 2 MM, (SUB FOR T215197)
37	AT318300	PLATE	1		
38	AT318377	HYDRAULIC HOSE - FABRICATE	2		11/16" X 1 000 MM X 11/16"
39	AT318569	HYDRAULIC HOSE - FABRICATE	1		11/16" X 950 MM X 11/16"
40	.....	OIL PUMP	1	-611902	(AT318940 NLA) (ORDER AT338291) (ALSO ORDER (2) 38H1583, (2) R26906, (2) T77857 AND (2) 38H1568, (2) R26375, (2) T77613)
	AT338291	OIL PUMP	1	611903-	(ALSO ORDER (2) 38H1583, (2) R26906, (2) T77857 AND (2) 38H1568, (2) R26375, (2) T77613)
	R134465	GASKET	1		
44	AT320846	HYDRAULIC HOSE - FABRICATE	1		11/16" X 1 150 MM X 11/16"
45	AT329269	DIPSTICK	1		
46	AT332605	HYDRAULIC HOSE - FABRICATE	1		
47	AT332606	HYDRAULIC HOSE - FABRICATE	1		
48	AT334639	HYDRAULIC HOSE - FABRICATE	1		11/16" X 3 950 MM X 13/16", (SUB FOR AT333458)
49	AT332602	HYDRAULIC HOSE - FABRICATE	1		
50	AT332601	HYDRAULIC HOSE - FABRICATE	1		11/16" X 2 175 MM X 11/16"
51	AT330267	HYDRAULIC HOSE - FABRICATE	1		13/16" X 3 700 MM X 13/16"
52	AT333459	HYDRAULIC HOSE - FABRICATE	1		11/16" X 3 950 MM X 13/16"
53	AT330592	OIL COOLER	1		
54	AT330606	BRACKET	1		
55	AT330678	BRACKET	1		
56	AT334170	HYDRAULIC HOSE - FABRICATE	1		11/16" X 4 000 MM X 13/16", (SUB FOR AT330753)
57	T214468	PLATE	1		
58	L156164	O-RING	2		33 X 2.200 MM, (SUB FOR T215423)
59	T222510	DIPSTICK TUBE	1		
60	T81029	NUT	1		17.475 MM
61	**AT332622**	**FIELD INSTALLATION KIT**	**1**		

AXLE OIL CIRCULATION HOSES
FLEXIBLES DE CIRUCLATION D'HUILE D'ESSIEU
MANGUERAS DE CIRCULACION DE ACEITE DEL PUENTE

T196091 -UN-11NOV03

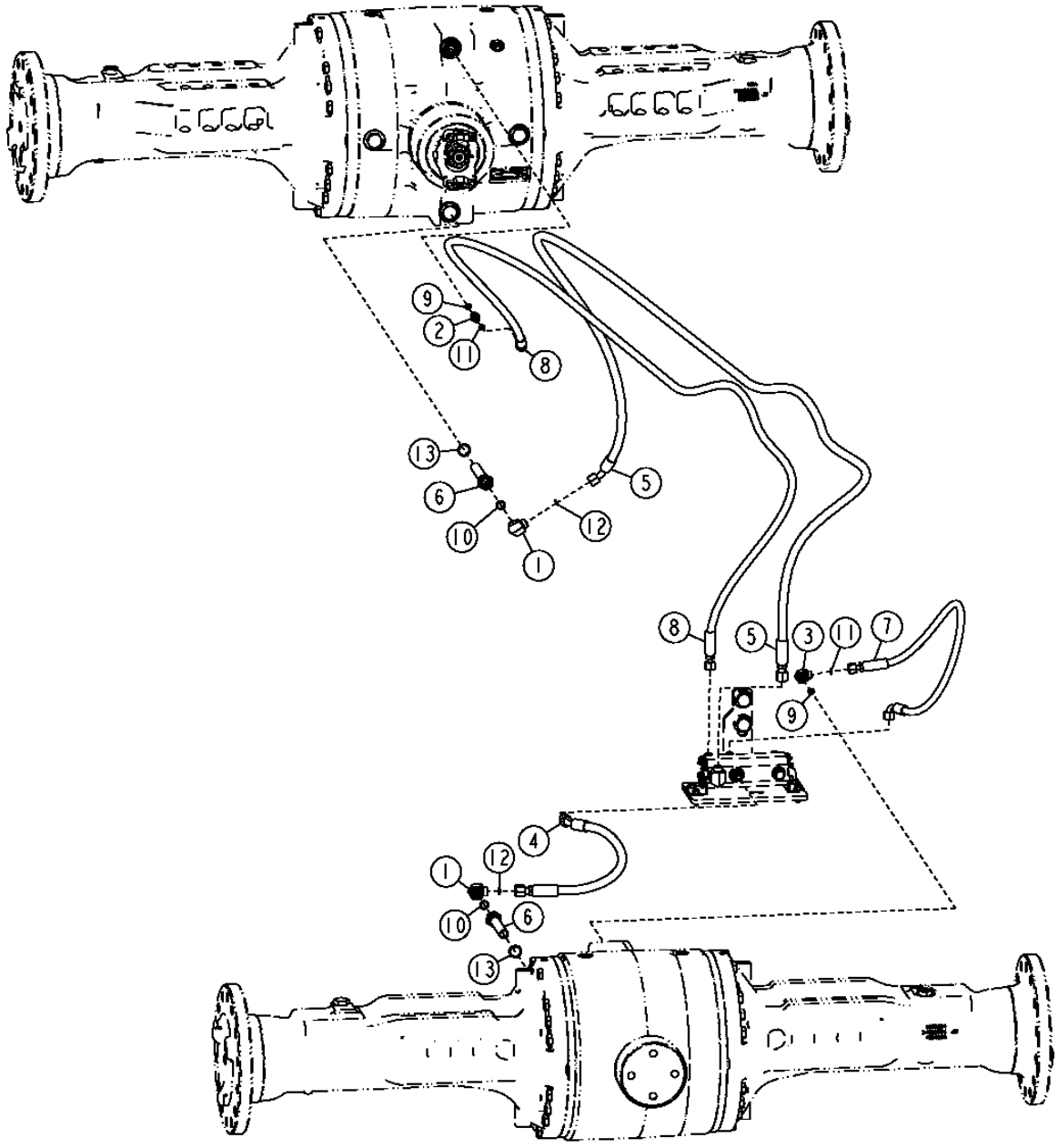

T196091

AXLE OIL CIRCULATION HOSES
FLEXIBLES DE CIRUCLATION D'HUILE D'ESSIEU
MANGUERAS DE CIRCULACION DE ACEITE DEL PUENTE

KEY	*PART NO.*	*PART NAME*	*QTY.*	*SERIAL NO.*	*REMARKS*
1	38H1005	ELBOW FITTING	2		
2	38H1170	ADAPTER FITTING	1		
3	38H1430	ELBOW FITTING	1		
4	AT220733	HYDRAULIC HOSE - FABRICATE	1		
5	AT220729	HYDRAULIC HOSE - FABRICATE	1		
6	AT220925	OIL FILTER	2		
7	AT227603	HYDRAULIC HOSE - FABRICATE	1		
8	AT227604	HYDRAULIC HOSE - FABRICATE	1		
9	R26286	O-RING	2		
10	R26375	O-RING	2		
11	T77613	O-RING	2		
12	T77857	O-RING	2		
13	U12547	O-RING	2		

FRONT AXLE DISCONNECT
DECONNEXION D'ESSIEU DE PONT AVANT
DESCONEXION DEL PUENTE DELANTERO

T195256 -UN-13OCT03

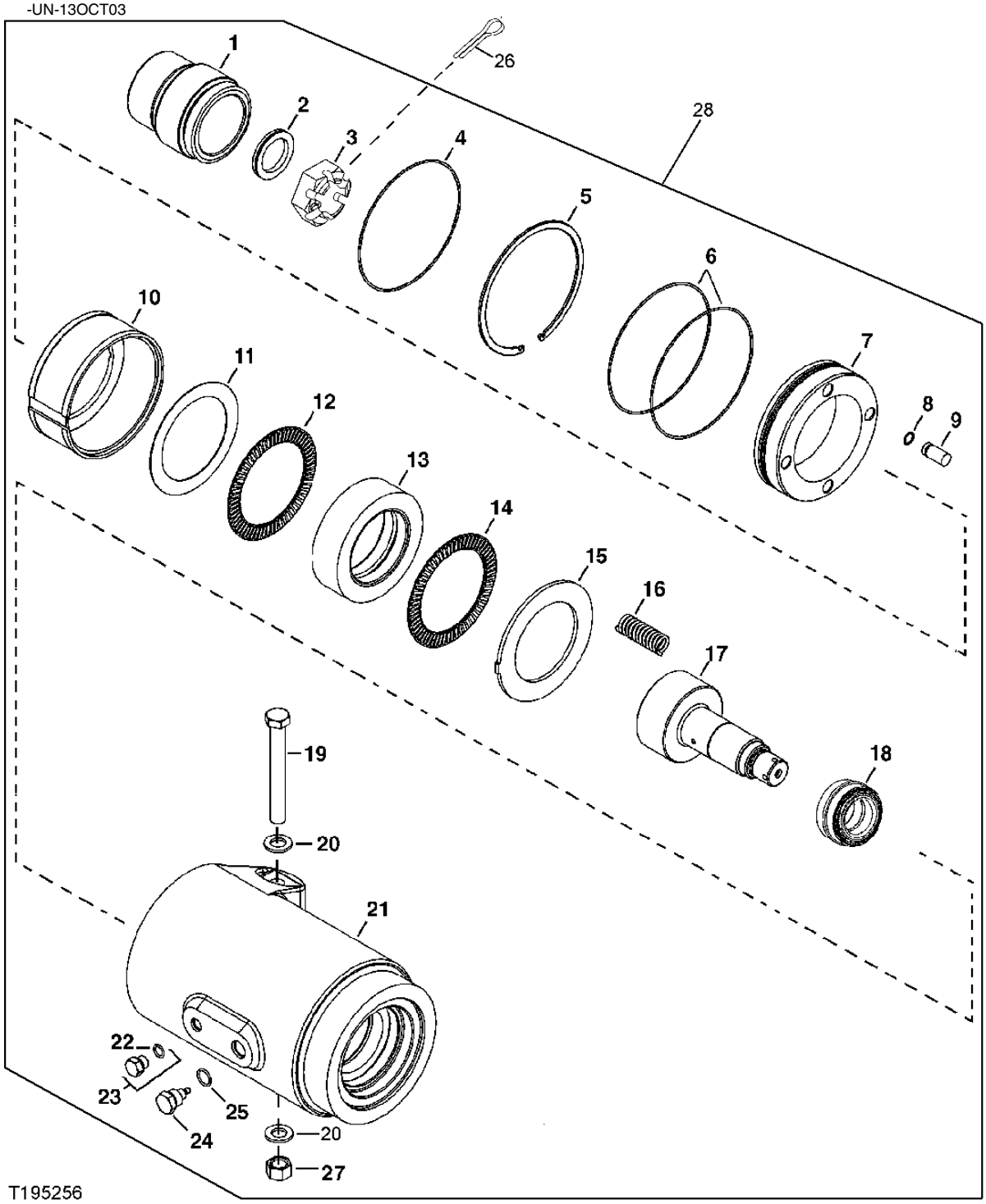

FRONT AXLE DISCONNECT
DECONNEXION D'ESSIEU DE PONT AVANT
DESCONEXION DEL PUENTE DELANTERO

KEY	PART NO.	PART NAME	QTY.	AXLE SERIAL NO.	REMARKS
1	R134673	YOKE	1		
2	R48734	WASHER	1		
3	R151933	NUT	1		
4	T56238	O-RING	1		
5	R135298	RING	1		
6	R136314	O-RING	2		
7	R134674	SLEEVE	1		
8	R135118	SEAL	4		
9	R135805	PIN	4		
10	R134675	PISTON	1		
11	R132520	THRUST WASHER	1		
12	RE68725	NEEDLE BEARING	1		
13	R134677	SHIFT COLLAR	1		
14	RE68725	NEEDLE BEARING	1		
15	R134676	PLATE	1		
16	R38185	SPRING	4		
17	R134672	UNIVERSAL DRIVESHAFT	1		
18	AU42978	TAPERED ROLLER BEARING	1		
19	19M7732	CAP SCREW	1		M16 X 130
20	24M7338	WASHER	2		17 X 30 X 3 MM
21	R134671	HOUSING	1		
22	51M7041	O-RING	1		
23	RE46684	FITTING PLUG	1		
24	R36943	FITTING	1		
25	R26375	O-RING	1		
26	11M7032	COTTER PIN	1		
27	14M7276	NUT	1		M16
28	RE67138	AXLE	1		

AXLE DISCONNECT PLUMBING
TUYAUTERIE DECONNEXION ESSIEU
TUBERIA DE DESCONEXION DE PUENTE

T202198 -UN-11AUG04

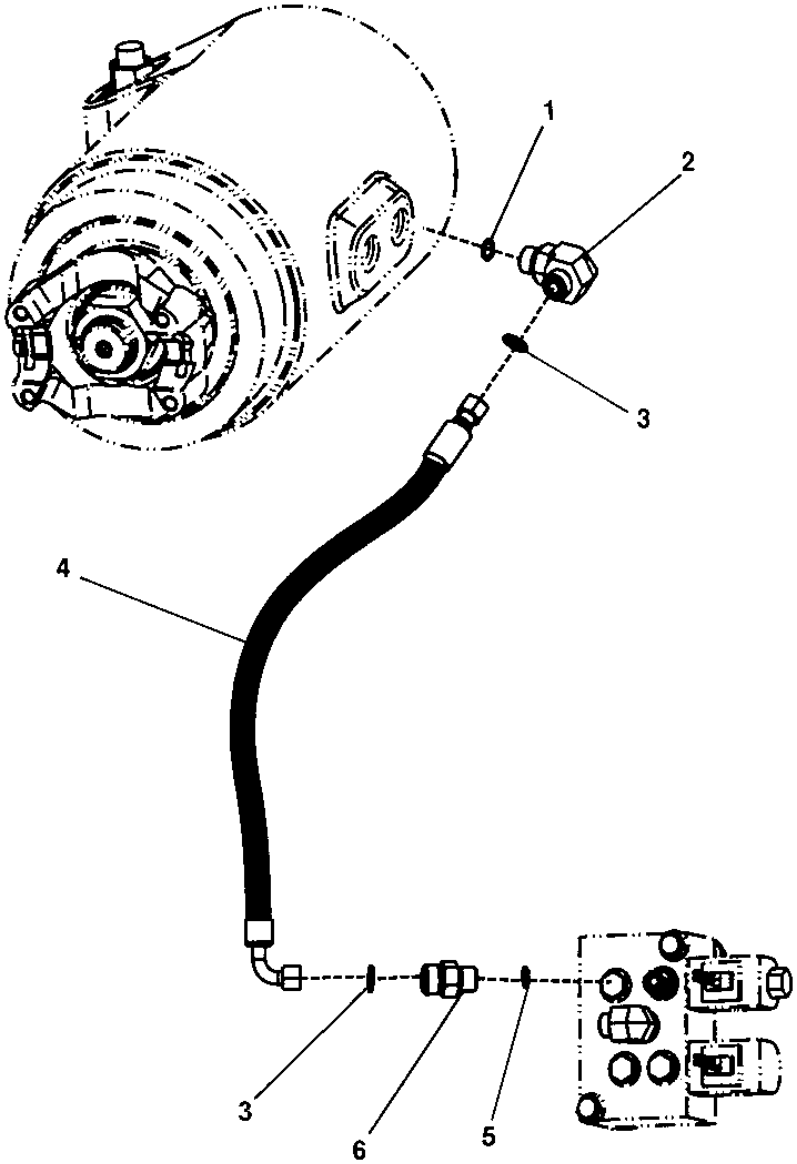

T202198

AXLE DISCONNECT PLUMBING
TUYAUTERIE DECONNEXION ESSIEU
TUBERIA DE DESCONEXION DE PUENTE

KEY	PART NO.	PART NAME	QTY.	SERIAL NO.	REMARKS
1	51M7041	O-RING	1		
2	38H5016	ELBOW FITTING	1		
3	T77613	O-RING	2		
4	AT167553	HYDRAULIC HOSE - FABRICATE	1		
5	R26448	O-RING	1		
6	38H1160	ADAPTER FITTING	1		

AXLE AND PARKING BRAKE BREATHER EXTENSION KIT
KIT D'EXTENSION DE RENIFLARD DE FREIN D'ESSIEU ET DE STAIONNEMENT
JUEGO DE EXTENSION DE RESPIRADERO DEL FRENO DE ESTACIONAMIENTO Y EJE

TX1006275 -UN-27APR06

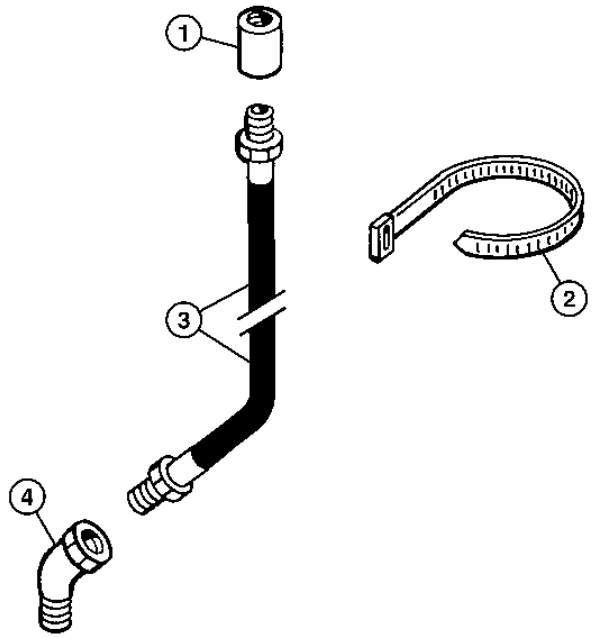

TX1006275

KEY	*PART NO.*	*PART NAME*	*QTY.*	*SERIAL NO.*	*REMARKS*
1	15H84	COUPLING	3		3.175 MM
2	H77698	TIE BAND	9		
3	AT207023	HYDRAULIC HOSE	3		
4	M45937	ELBOW FITTING	3		

DIFFERENTIAL LOCK SWITCH
INTERRUPTEUR DE BLOCAGE DU DIFFERENTIEL
INTERRUPTOR DE TRABA DEL DIFERENCIAL

TP48545 -UN-07NOV96

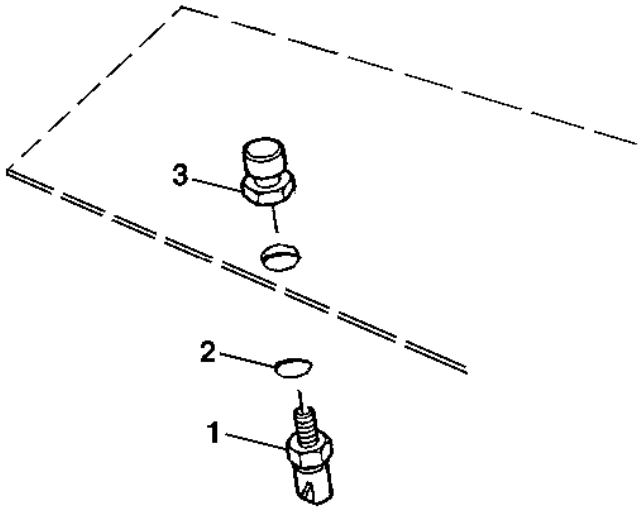

TP48545

KEY	*PART NO.*	*PART NAME*	*QTY.*	*SERIAL NO.*	*REMARKS*
1	RE46534	SWITCH	1		
2	51M7042	O-RING	1		13.300 X 2.200 MM
3	RE43637	ACTUATOR	1		

DRIVE SHAFTS (S.N. -604689)
ARBRES ENTRAINEMENT (S.N. -604689)
EJES IMPULSORES (S.N. -604689)

T196030 -UN-01NOV03

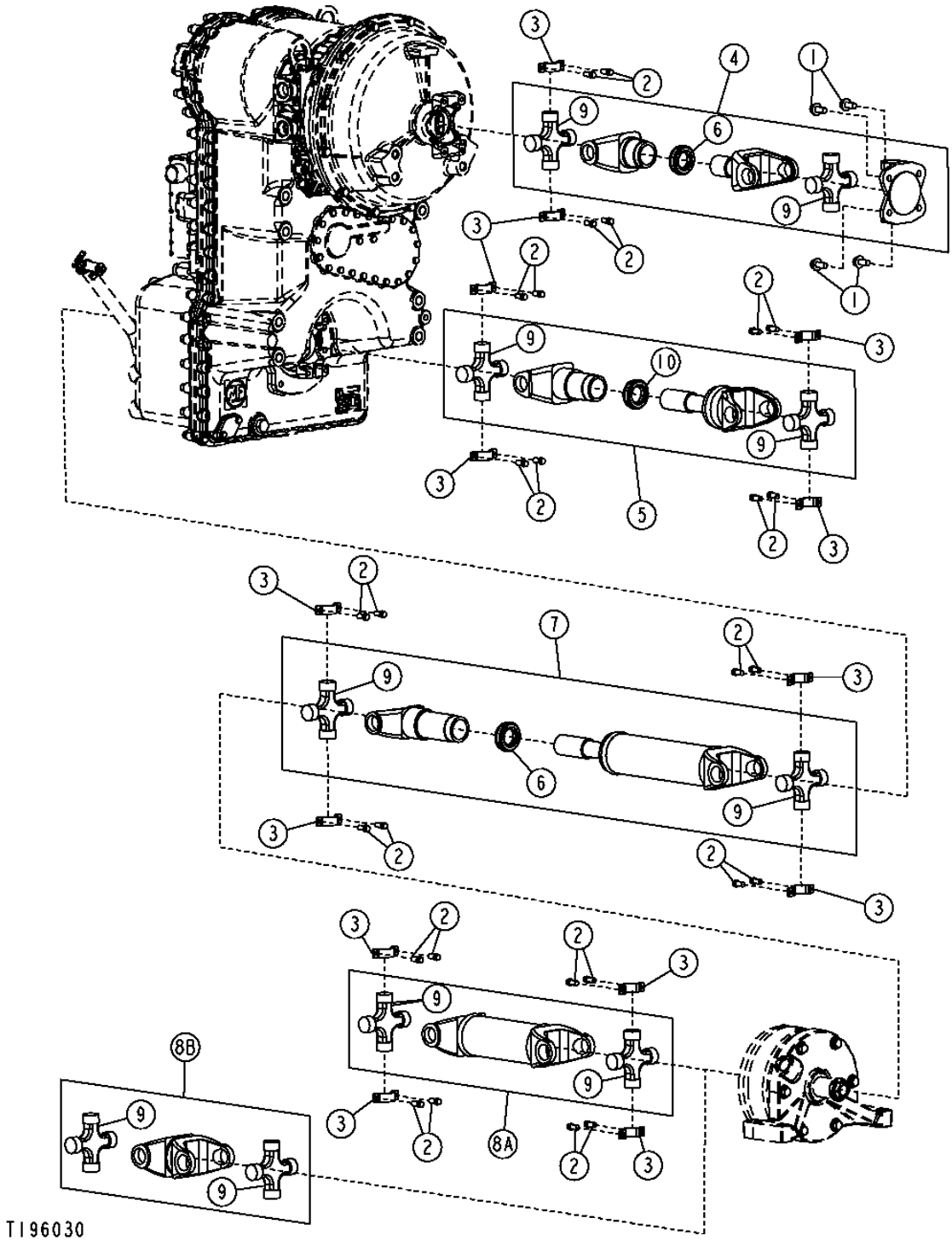

THIS PARTS LISTING IS CONTINUED

DRIVE SHAFTS (S.N. -604689)
ARBRES ENTRAINEMENT (S.N. -604689)
EJES IMPULSORES (S.N. -604689)

KEY	PART NO.	PART NAME	QTY.	SERIAL NO.	REMARKS
1	19M7789	SCREW	4		M12 X 30
2	T113128	SCREW	28		
3	T203450	HALF CLAMP	14		
4	AT209661	DRIVE SHAFT	1		(ENGINE TO TRANSMISSION)
5	AT208403	UNIVERSAL DRIVESHAFT	1		(TRANSMISSION TO REAR AXLE)
6	AT210101	CAP	2		
7	AT224190	UNIVERSAL DRIVESHAFT	1		(TRANSMISSION TO PARKING BRAKE)
8A	AT224189	UNIVERSAL DRIVESHAFT	1		(PARKING BRAKE TO FRONT AXLE) (WITHOUT FRONT AXLE DISCONNECT)
8B	AT210066	DRIVE SHAFT	1		(PARKING BRAKE TO FRONT AXLE) (WITH FRONT AXLE DISCONNECT)
9	AT206861	UNIVERSAL JOINT	8		
10	AT210100	CAP	1		

DRIVE SHAFTS (S.N. 604690-)
ARBRES ENTRAINEMENT (S.N. 604690-)
EJES IMPULSORES (S.N. 604690-)

TX1003308 -UN-09FEB06

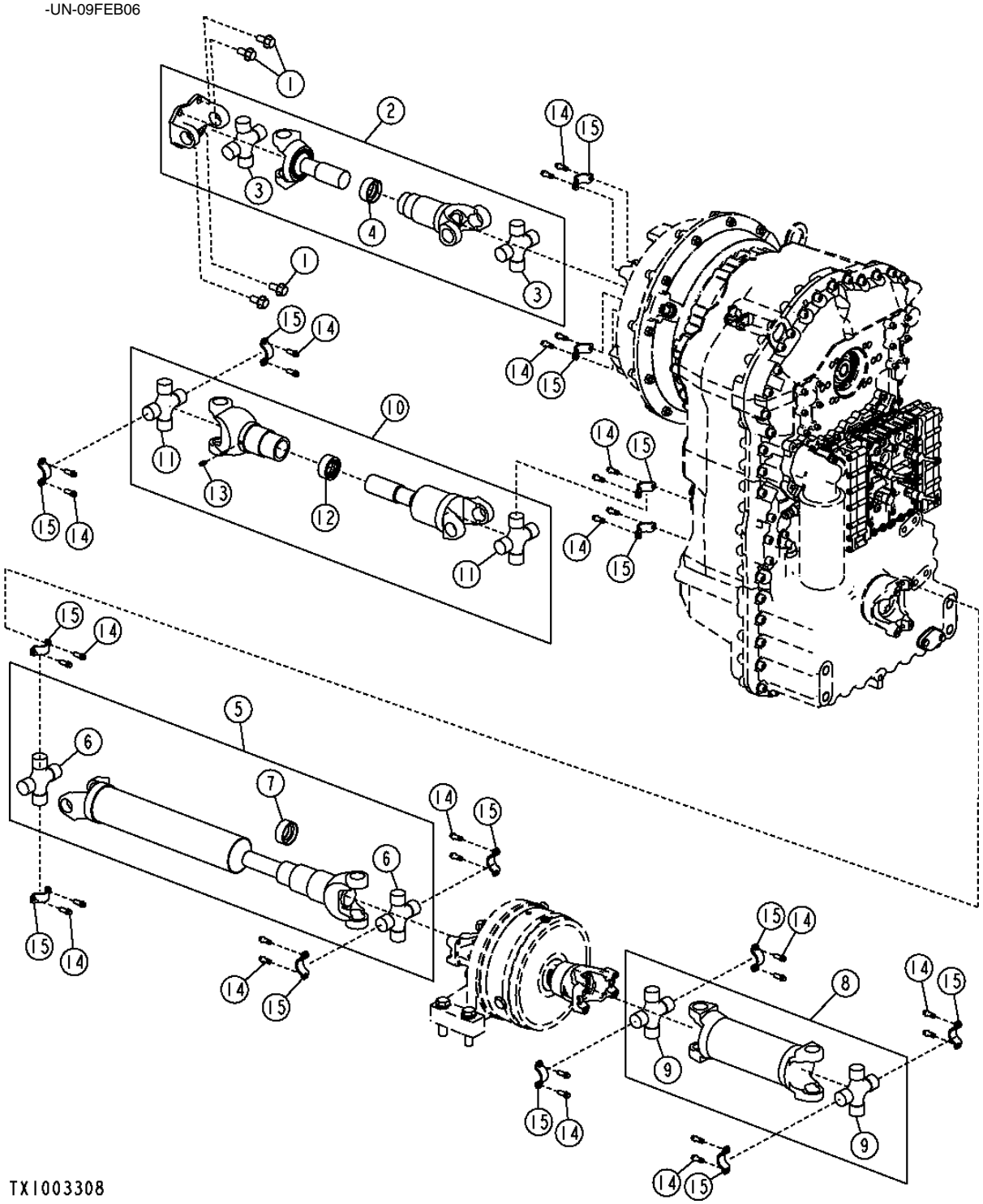

THIS PARTS LISTING IS CONTINUED

DRIVE SHAFTS (S.N. 604690-)
ARBRES ENTRAINEMENT (S.N. 604690-)
EJES IMPULSORES (S.N. 604690-)

KEY	*PART NO.*	*PART NAME*	*QTY.*	*SERIAL NO.*	*REMARKS*
1	19M7788	SCREW	4		M12 X 25
2	AT209661	DRIVE SHAFT	1		
3	AT206861	UNIVERSAL JOINT	2		
4	AT210101	CAP	1		
5	AT224190	UNIVERSAL DRIVESHAFT	1		
6	AT206861	UNIVERSAL JOINT	2		
7	AT210101	CAP	1		
8	AT316360	UNIVERSAL DRIVESHAFT	1		
9	AT206861	UNIVERSAL JOINT	2		
10	AT316361	UNIVERSAL DRIVESHAFT	1		
11	AT206861	UNIVERSAL JOINT	2		
12	AT210100	CAP	1		
13	JD7797	LUBRICATION FITTING	1		
14	T113128	SCREW	28		5/16" X 3/4"
15	T203450	HALF CLAMP	14		

TRANSMISSION MOUNTING BRACKETS (S.N. -604689)
SUPPORTS DE MONTAGE DE TRANSMISSION (S.N. -604689)
ESCUADRAS DE MONTAJE DE TRANSMISION (S.N. -604689)

TP60265 -UN-26MAR98

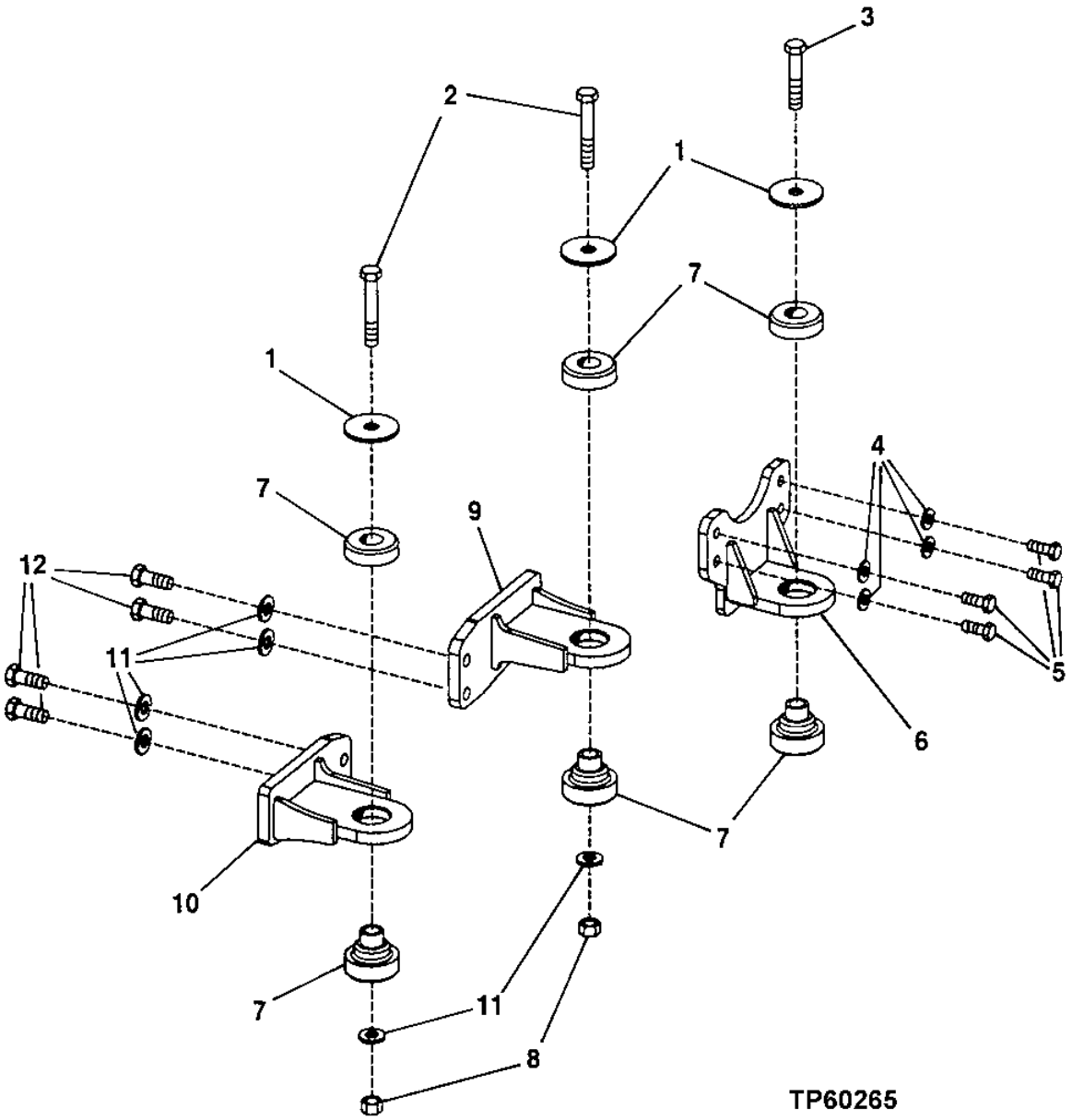

TRANSMISSION MOUNTING BRACKETS (S.N. -604689)
SUPPORTS DE MONTAGE DE TRANSMISSION (S.N. -604689)
ESCUADRAS DE MONTAJE DE TRANSMISION (S.N. -604689)

KEY	*PART NO.*	*PART NAME*	*QTY.*	*SERIAL NO.*	*REMARKS*
1	T42977	WASHER	3		23.012 X 88.900 X 6 MM
2	19M7883	SCREW	2		M20 X 120
3	19M7963	CAP SCREW	1		M20 X 100
4	24M7241	WASHER	4		17 X 34 X 4 MM
5	19M7488	CAP SCREW	4		M16 X 40
6	AT209221	SUPPORT	1		
7	AT165288	ISOLATOR	3		
8	14M7277	NUT	2		M20
9	AT209997	SUPPORT	1		
10	AT209996	SUPPORT	1		
11	24M7242	WASHER	6		21.400 X 42 X 5 MM
12	19M7487	CAP SCREW	4		M20 X 50, (SUB FOR 19M7597)

TRANSMISSION MOUNTING BRACKETS (S.N. 604690-)
SUPPORTS DE MONTAGE DE TRANSMISSION (S.N. 604690-)
ESCUADRAS DE MONTAJE DE TRANSMISION (S.N. 604690-)

TX1003336 -UN-17FEB06

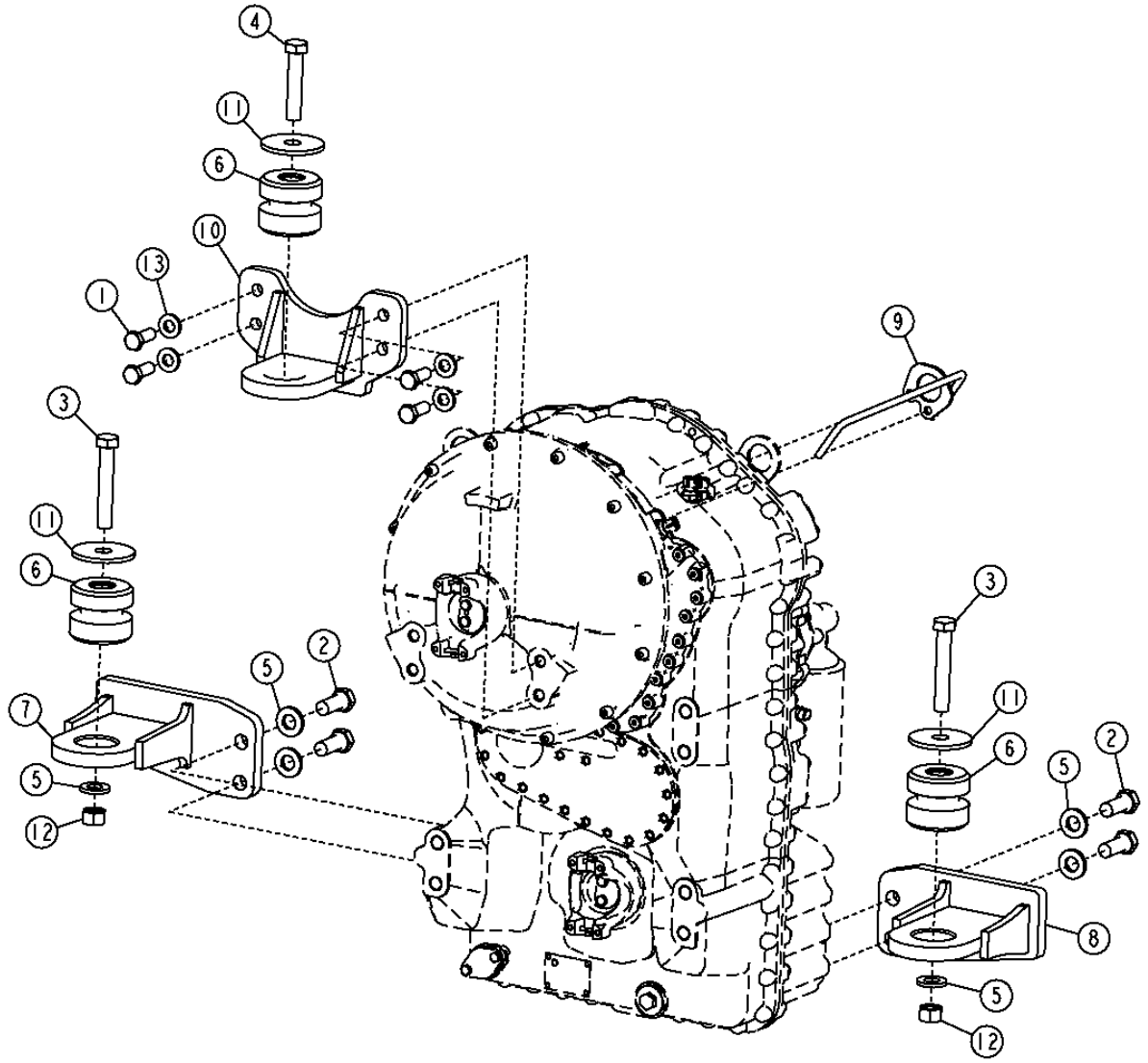

TX1003336

THIS PARTS LISTING IS CONTINUED

TRANSMISSION MOUNTING BRACKETS (S.N. 604690-)
SUPPORTS DE MONTAGE DE TRANSMISSION (S.N. 604690-)
ESCUADRAS DE MONTAJE DE TRANSMISION (S.N. 604690-)

KEY	*PART NO.*	*PART NAME*	*QTY.*	*SERIAL NO.*	*REMARKS*
1	19M7488	CAP SCREW	4		M16 X 40
2	19M7487	CAP SCREW	4		M20 X 50, (SUB FOR (4) 19M7597)
3	19M7883	SCREW	2		M20 X 120
4	19M7963	CAP SCREW	1		M20 X 100
5	24M7242	WASHER	6		21.400 X 42 X 5 MM
6	AT165288	ISOLATOR	3		
7	AT209996	SUPPORT	1		
8	AT209997	SUPPORT	1		
9	AT222049	GUIDE	1		
10	AT317945	SUPPORT	1		
11	T42977	WASHER	3		23.012 X 88.900 X 6 MM
12	14M7277	NUT	2		M20
13	24M7241	WASHER	4		17 X 34 X 4 MM

TRANSMISSION
TRANSMISSION
TRANSMISION

T192819 -UN-10JUL03

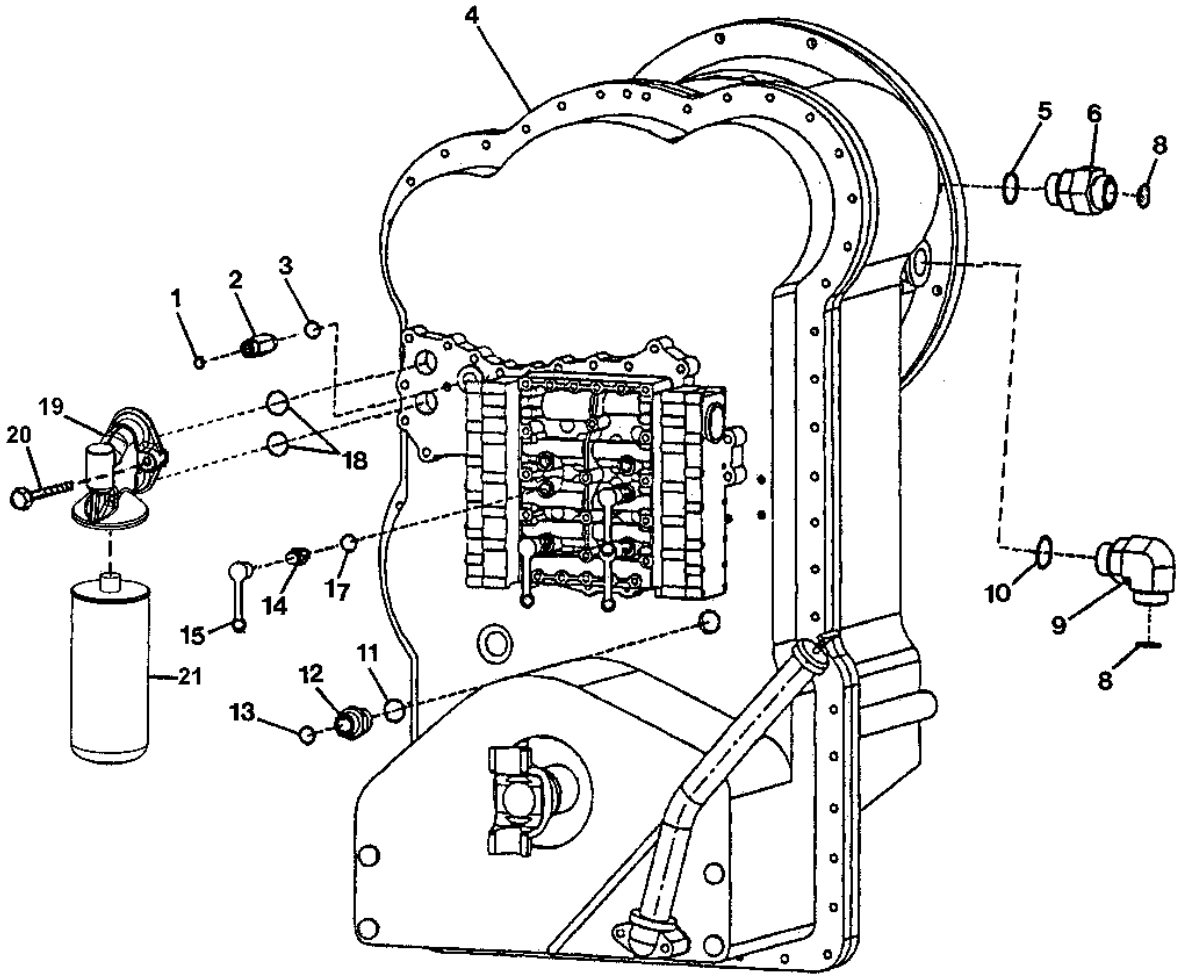

T192819

TRANSMISSION
TRANSMISSION
TRANSMISION

KEY	PART NO.	PART NAME	QTY.	TRANSMISSION SERIAL NO.	REMARKS
1	T77613	O-RING	1		
2	38H5178	ADAPTER FITTING	1		
3	51M7042	O-RING	1		13.300 X 2.200 MM
4	AT305659	TRANSMISSION	1		(REMAN) (SUB FOR AT227780)
5	R29936	O-RING	1		
6	38H1164	ADAPTER FITTING	1		
8	T76938	O-RING	2		
9	38H1037	ELBOW FITTING	1		
10	51M7048	O-RING	1		
11	T24210	O-RING	1		
12	T172732	ADAPTER FITTING	1		
13	T77932	O-RING	1		
14	AT202955	DIAGNOSTIC COUPLING	4		(INCLUDES 51M7039)
15	R77175	COVER	4		
17	51M7039	O-RING	4		8.100 X 1.600 MM
18	T172318	O-RING	2		
19	T177997	FILTER HEAD	1		
20	T173819	CAP SCREW	2		
21	AT336140	OIL FILTER	1		(SUB FOR AT222005)

TORQUE CONVERTER
CONVERTISSEUR DE COUPLE
CONVERTIDOR DE PAR

T192713 -UN-11JUL03

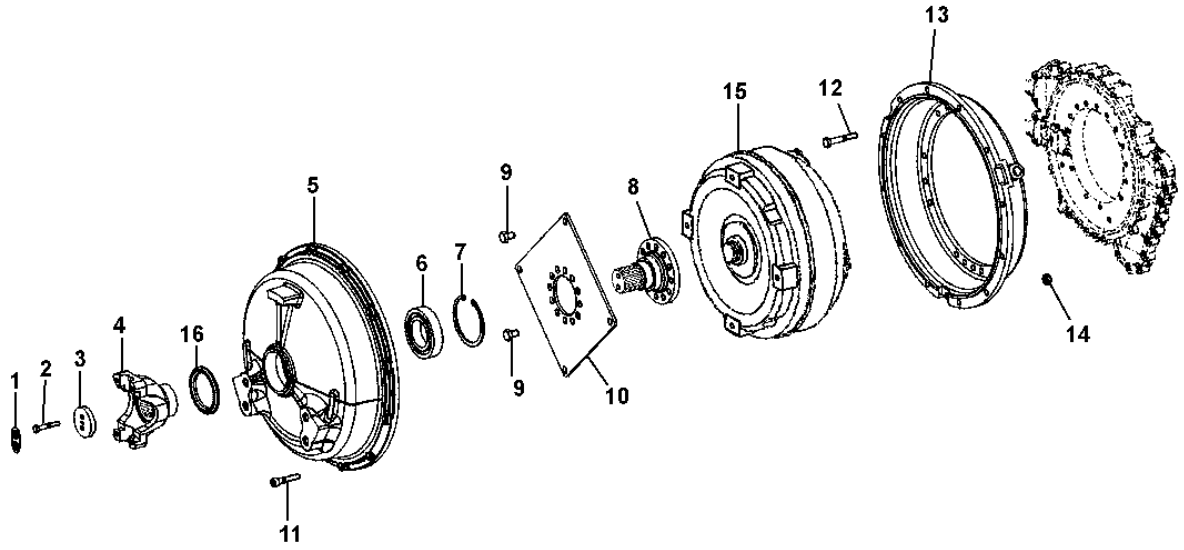

T192713

TORQUE CONVERTER
CONVERTISSEUR DE COUPLE
CONVERTIDOR DE PAR

KEY	PART NO.	PART NAME	QTY.	TRANSMISSION SERIAL NO.	REMARKS
1	T116613	WASHER	1		
2	19M8397	CAP SCREW	2		M8 X 50
3	T116516	SPACER	1		
4	T179944	UNIVERSAL JOINT YOKE	1		
5	T195240	HOUSING	1		
6	T195242	BALL BEARING	1		
7	T195243	SNAP RING	1		
8	T195241	UNIVERSAL DRIVESHAFT	1		
9	19M8017	CAP SCREW	16		M12 X 20
10	T172812	DIAPHRAGM	1		
11	19M7179	CAP SCREW	12		M10 X 50
12	19M7742	CAP SCREW	18		M10 X 65
13	T179276	HOUSING	1		
14	14M7274	NUT	12		M10
15	AT228318	TORQUE CONVERTER	1		(REMAN) (SUB FOR AT228317)
16	T196792	SCREEN	1		

TRANSMISSION INPUT SHAFT
ARBRE D'ENTREE DE TRANSMISSION
EJE DE ENTRADA DE LA TRANSMISION

T192712 -UN-11JUL03

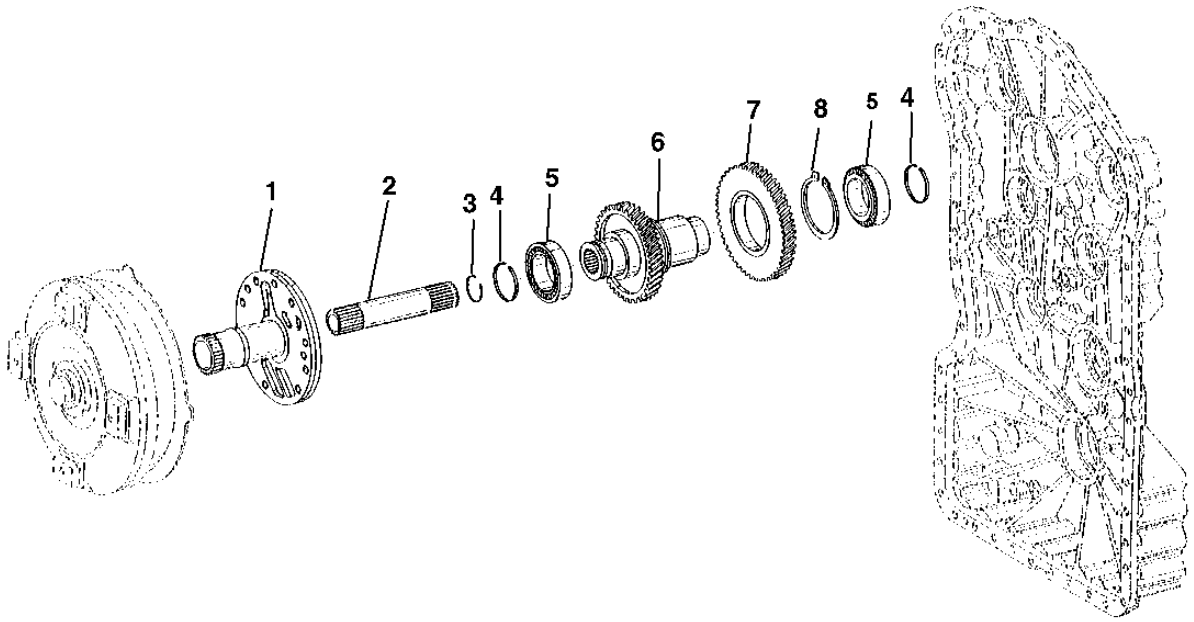

T192712

TRANSMISSION INPUT SHAFT
ARBRE D'ENTREE DE TRANSMISSION
EJE DE ENTRADA DE LA TRANSMISION

KEY	PART NO.	PART NAME	QTY.	TRANSMISSION SERIAL NO.	REMARKS
1	T195207	UNIVERSAL DRIVESHAFT	1		
2	T171114	PINION SHAFT	1		
3	T171178	SNAP RING	1		
4	T181535	PISTON RING	2		
5	T171126	BEARING	2		IMPORTANT-HIGH TOLERANCE BEARING REQUIRED IN THIS LOCATION. USE ONLY JOHN DEERE PARTS SOURCED BEARINGS.
6	T172796	UNIVERSAL DRIVESHAFT	1		
7	T171115	GEAR	1		
8	40M7220	SNAP RING	1		

TRANSMISSION HOUSING
CARTER DE TRANSMISSION
CAJA DE LA TRANSMISION

T193498 -UN-21AUG03

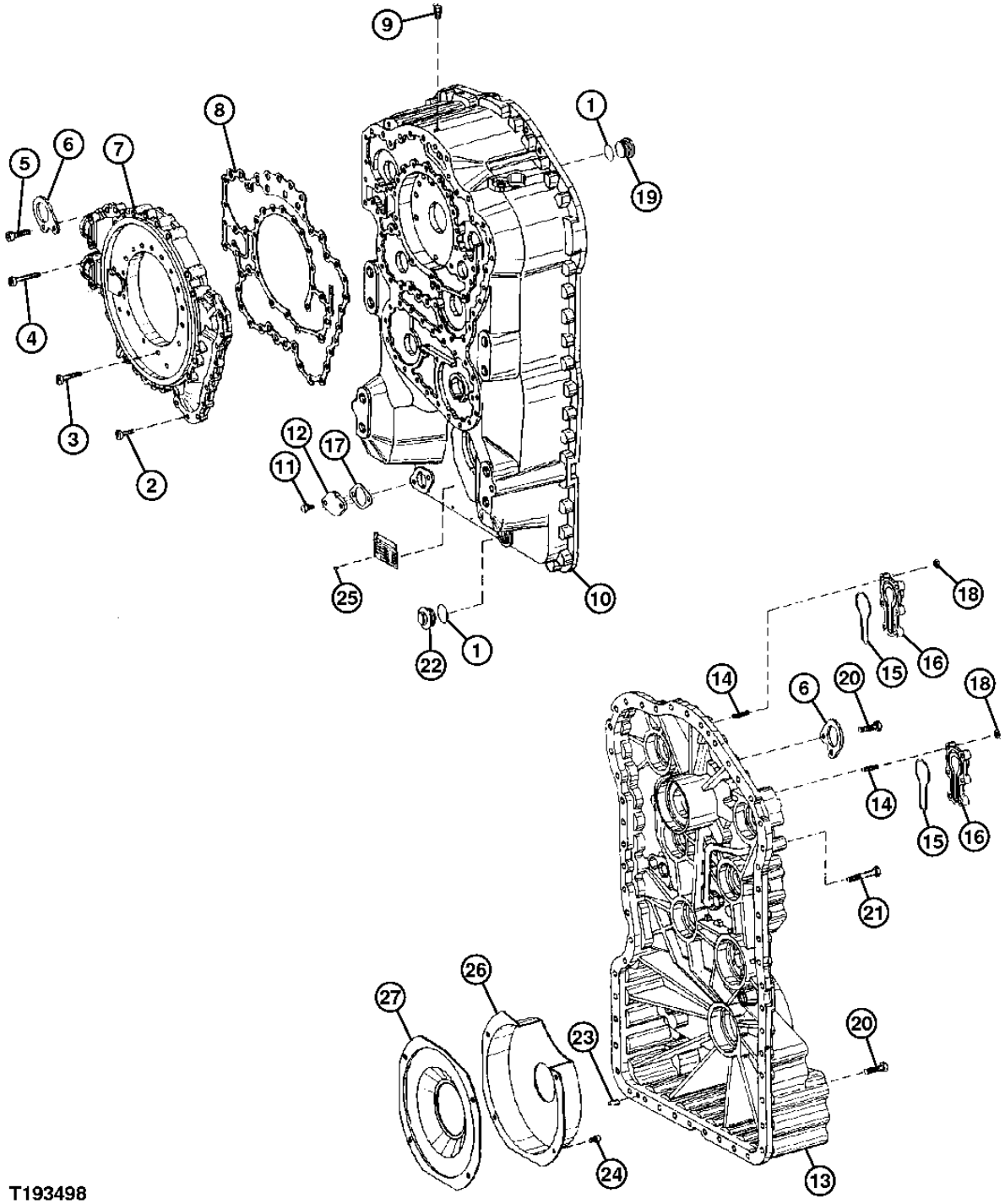

T193498

TRANSMISSION HOUSING
CARTER DE TRANSMISSION
CAJA DE LA TRANSMISION

KEY	PART NO.	PART NAME	QTY.	TRANSMISSION SERIAL NO.	REMARKS
1	T174107	O-RING	2		
2	T161208	CAP SCREW	15		
3	19M2972	CAP SCREW	21		M8 X 45
4	T173819	CAP SCREW	4		
5	19M8338	SCREW	2		M10 X 40
6	T171112	PLATE	2		
7	T173063	MANIFOLD	1		
8	T172795	GASKET	1		
9	T116918	BREATHER	1		
10	T197458	TRANSMISSION CASE	1		
11	19M7284	CAP SCREW	2		M8 X 18
12	T144370	PLATE	1		
13	T179673	HOUSING	1		
14	T180884	STUD	12		
15	T174238	O-RING	2		
16	T171111	COVER	2		
17	T116604	GASKET	1		
18	14M7298	FLANGE NUT	12		M8
19	T173216	PLUG	1		
20	19M8338	SCREW	44		M10 X 40
21	19M8340	SCREW	7		M10 X 65
22	T172094	DRAIN PLUG	1		
23	T179691	PIN	2		
24	19M7964	CAP SCREW	4		M8 X 12
25	25M7021	GROOVE PIN	4		3 X 5 MM
26	T171958	COVER	1		
27	T171957	COVER	1		

TRANSMISSION SPEED SENSOR
CAPTEUR DE VITESSE DE TRANSMISSION
SENSOR DE VELOCIDAD DE LA TRANSMISION

T193503 -UN-18AUG03

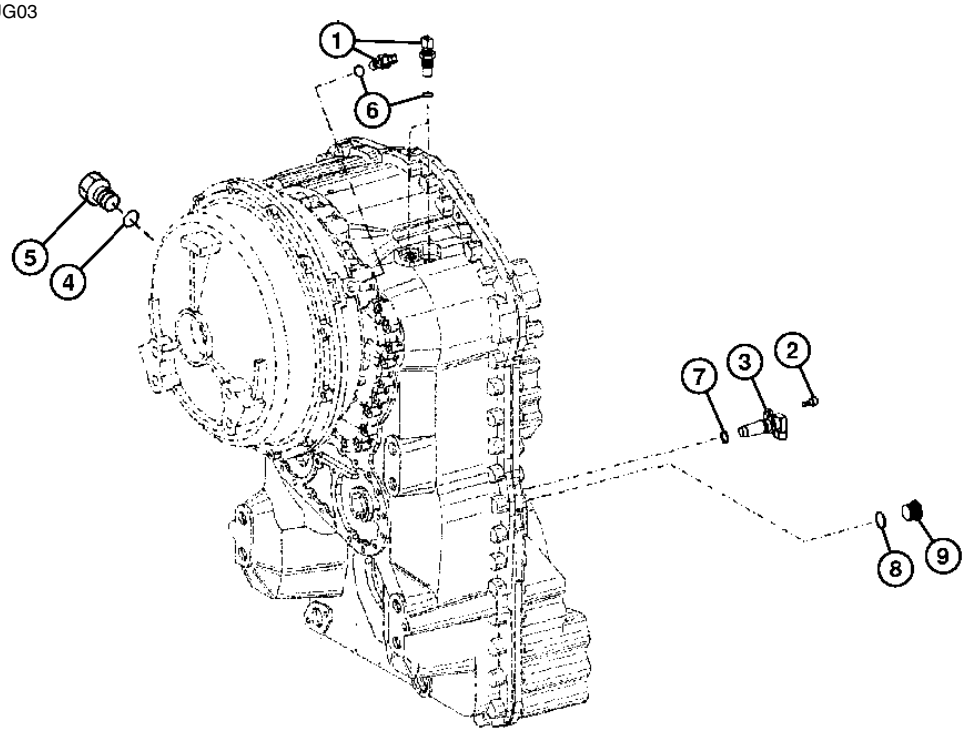

T193503

TRANSMISSION SPEED SENSOR
CAPTEUR DE VITESSE DE TRANSMISSION
SENSOR DE VELOCIDAD DE LA TRANSMISION

KEY	PART NO.	PART NAME	QTY.	TRANSMISSION SERIAL NO.	REMARKS
1	AT210773	SENSOR	3		
2	19M7932	CAP SCREW	1		M8 X 16
3	T179510	SENSOR	1		
4	T176796	O-RING	1		
5	T175750	PLUG	1		
6	R104558	O-RING	3		
7	R73599	O-RING	1		
8	T174236	O-RING	1		
9	T173217	FITTING PLUG	1		

TRANSMISSION OIL PUMP
POMPE A HUILE DE BOITE
BOMBA DE ACEITE DE LA TRANSMISION

T193485 -UN-14AUG03

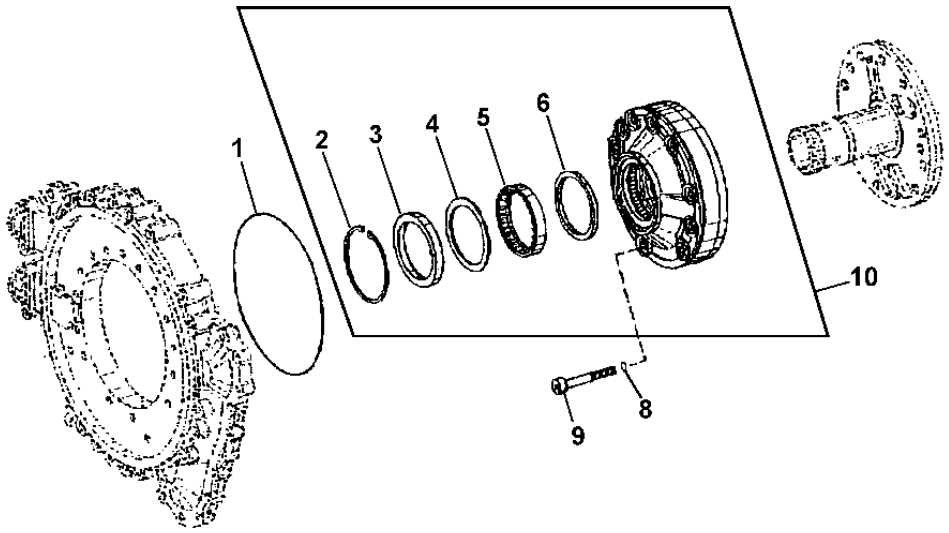

T193485

KEY	PART NO.	PART NAME	QTY.	TRANSMISSION SERIAL NO.	REMARKS
1	L40273	O-RING	1		
2	T173400	SNAP RING	1		
3	T173399	SEAL	1		
4	T173397	THRUST WASHER	1		
5	T173398	BEARING	1		
6	T173396	RING	1		
8	T174239	O-RING	10		
9	T207759	BOLT	10		
10	AT334451	FLOW CONTROL HYD. VALVE	1		(SUB FOR AT223279)

TRANSMISSION COVER AND GASKET (S.N. -604689)
COUVERCLE ET JONT DE TRANSMISSION (S.N. -604689)
EMPAQUETADURA Y CUBIERTA DE LA TRANSMISION (S.N. -604689)

TP55579 -UN-14JUL97

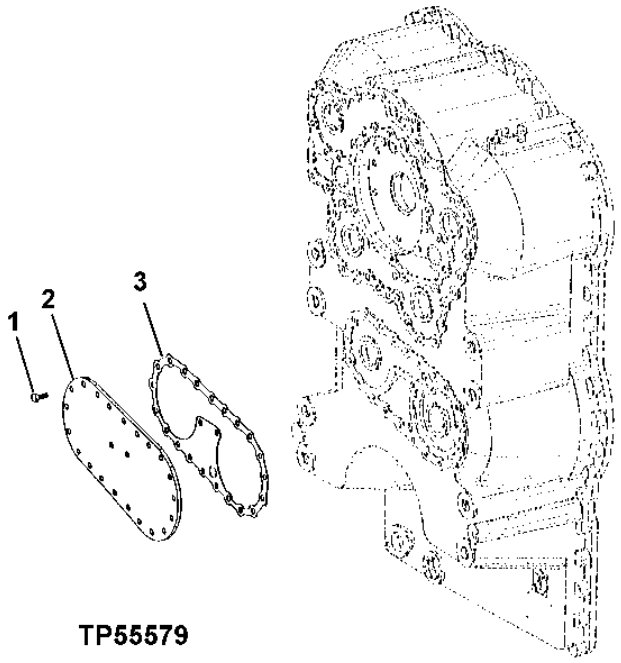

TP55579

KEY	PART NO.	PART NAME	QTY.	TRANSMISSION SERIAL NO.	REMARKS
1	19M7284	CAP SCREW	23		M8 X 18
2	T172814	COVER	1		
3	T181474	GASKET	1		

TRANSMISSION COVER (S.N. 604690-)
COUVERCLE DE TRANSMISSION (S.N. 604690-)
CUBIERTA DE LA TRANSMISION (S.N. 604690-)

TX1004046 -UN-23FEB06

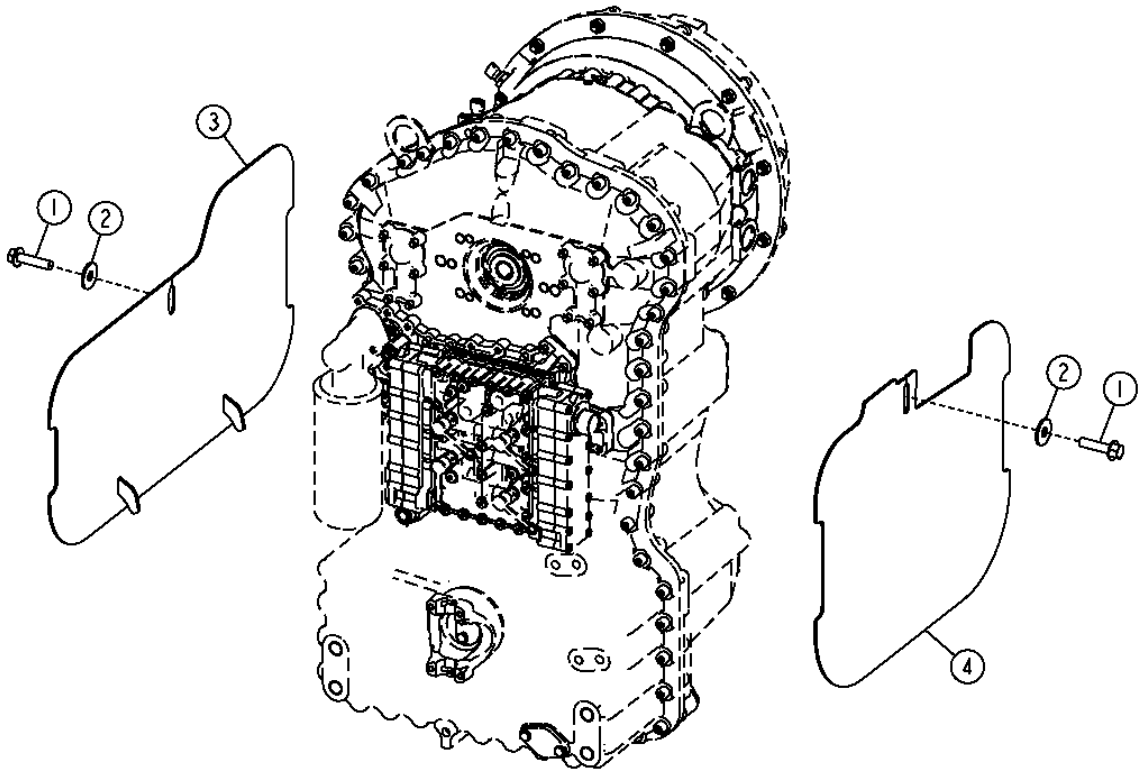

TX1004046

TRANSMISSION COVER (S.N. 604690-)
COUVERCLE DE TRANSMISSION (S.N. 604690-)
CUBIERTA DE LA TRANSMISION (S.N. 604690-)

KEY	PART NO.	PART NAME	QTY.	TRANSMISSION SERIAL NO.	REMARKS
1	19M7814	SCREW	2		M12 X 50
2	24M7180	WASHER	2		13 X 37 X 3 MM
3	AT227073	COVER	1		
4	AT323687	COVER	1		

TRANSMISSION INTERNAL OIL LINES
CONDUITES D'HUILE INTERNES DE TRANSMISSION
LINEAS INTERNAS DE ACEITE DE LA TRANSMISION

T193492 -UN-21AUG03

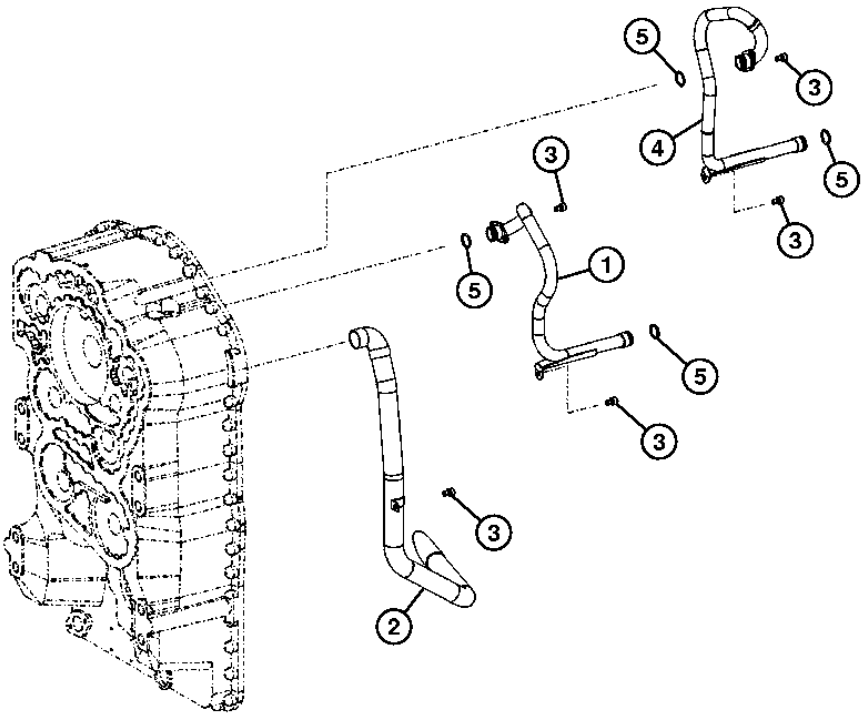

T193492

TRANSMISSION INTERNAL OIL LINES
CONDUITES D'HUILE INTERNES DE TRANSMISSION
LINEAS INTERNAS DE ACEITE DE LA TRANSMISION

KEY	PART NO.	PART NAME	QTY.	TRANSMISSION SERIAL NO.	REMARKS
1	T197459	LINE	1		
2	T172791	TUBE	1		
3	19M7964	CAP SCREW	7		M8 X 12
4	T197460	LINE	1		
5	T174234	O-RING	4		

TRANSMISSION CONTROL VALVE MANIFOLD
COLLECTEUR DE DISTRIBUTEUR DE TRANSMISSION
COLECTOR DE LA VALVULA DE CONTROL DE TRANSMISION

T193514 -UN-21AUG03

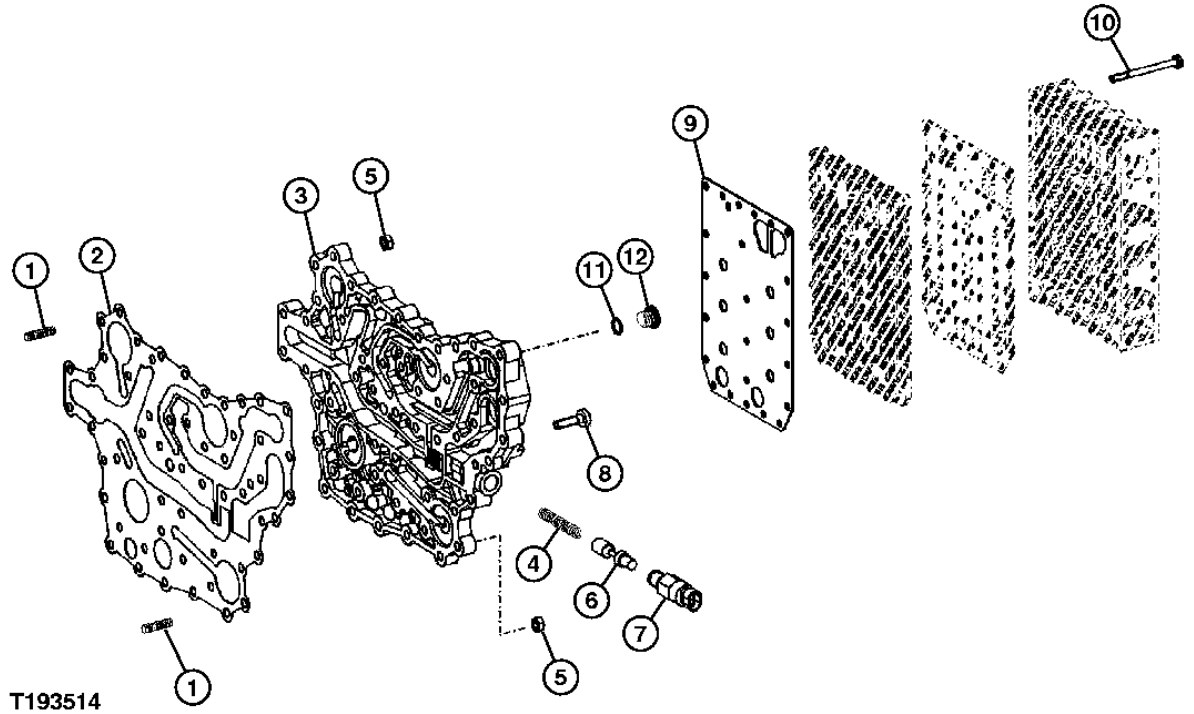

TRANSMISSION CONTROL VALVE MANIFOLD
COLLECTEUR DE DISTRIBUTEUR DE TRANSMISSION
COLECTOR DE LA VALVULA DE CONTROL DE TRANSMISION

KEY	PART NO.	PART NAME	QTY.	TRANSMISSION SERIAL NO.	REMARKS
1	T180884	STUD	14		
2	T203554	GASKET	1		
3	T203555	PLATE	1		
4	T177979	SPRING	1		
5	14M7298	FLANGE NUT	14		M8
6	T203742	VALVE SPOOL	1		
7	T173873	PRESSURE SWITCH	1		(TRANSMISSION OIL FILTER RESTRICTION INDICATOR)
8	T161208	CAP SCREW	37		
9	T174393	PLATE	1		(SUB FOR T195274) (ALSO ORDER T173870 AND T174394)
10	T173123	CAP SCREW	23		(SUB FOR T195055)
11	T74552	O-RING	1		
12	T122803	FITTING PLUG	1		

TRANSMISSION CONTROL VALVE
ENTRE SOUPAPE DE FREIN ET DISTRIBUTEUR DE TRANSMISSION
VALVULA DE FRENO A VALVULA DE CONTROL DE TRANSMISION

T192815 -UN-28JUL03

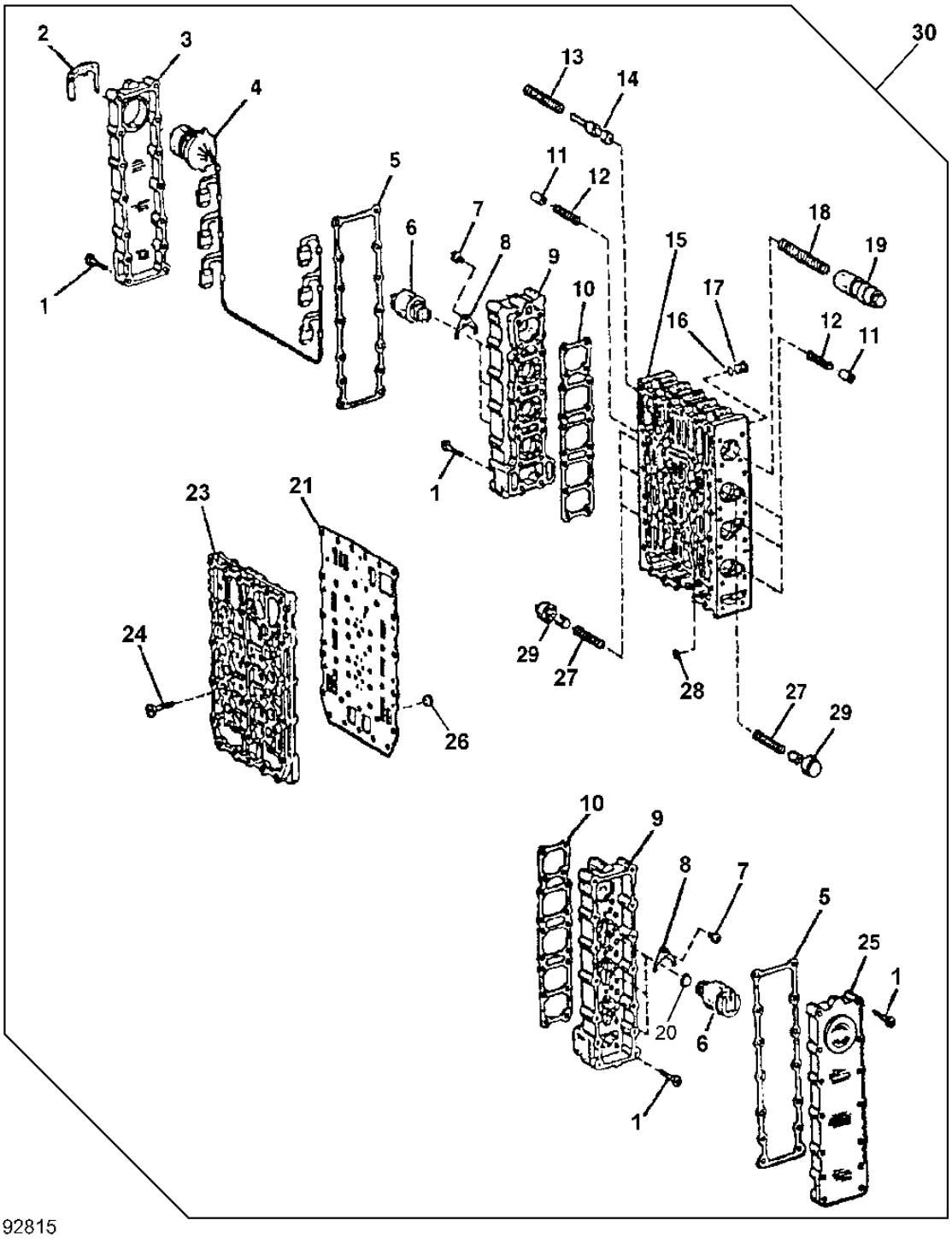

T192815

TRANSMISSION CONTROL VALVE
ENTRE SOUPAPE DE FREIN ET DISTRIBUTEUR DE TRANSMISSION
VALVULA DE FRENO A VALVULA DE CONTROL DE TRANSMISION

KEY	PART NO.	PART NAME	QTY.	TRANSMISSION SERIAL NO.	REMARKS
1	T173131	CAP SCREW	64		
2	T161207	CLAMP	1		
3	T173138	COVER	1		
4	T179721	WIRING HARNESS	1		(INCLUDES TRANSMISSION TEMPERATURE SENSOR)
5	T182254	GASKET	2		
6	T169607	SOLENOID VALVE	6		
7	19M7600	SCREW	6		M5 X 12, (SUB FOR T159602)
8	T144486	PLATE	6		
9	T177221	HOUSING	2		
10	T182196	GASKET	2		
11	T169766	PIN FASTENER	6		
12	T169712	COMPRESSION SPRING	6		
13	T173126	COMPRESSION SPRING	1		
14	T173125	PISTON	1		
15	T177219	FLOW CONTROL HYD. VALVE	1		
16	T116416	O-RING	8		
17	T175862	PLUG	8		
18	T173128	COMPRESSION SPRING	1		
19	T205369	PISTON	1		
20	T170196	O-RING	6		
21	T179532	PLATE	1		(SUB FOR T195052) (ALSO ORDER T179531 AND T179533)
23	T203767	PLATE	1		
24	T195275	CAP SCREW	18		
25	T173139	COVER	1		
26	T174396	SCREEN	6		
27	T169711	COMPRESSION SPRING	6		
28	T169707	ORIFICE	6		
29	T173511	PISTON	6		
30	AT220039	HYD ACTUATED CONTROL VALVE	1		

TRANSMISSION OUTPUT SHAFT
ARBRE DE SORTIE DE TRANSMISSION
EJE DE SALIDA DE LA TRANSMISION

TP62705 -UN-23NOV99

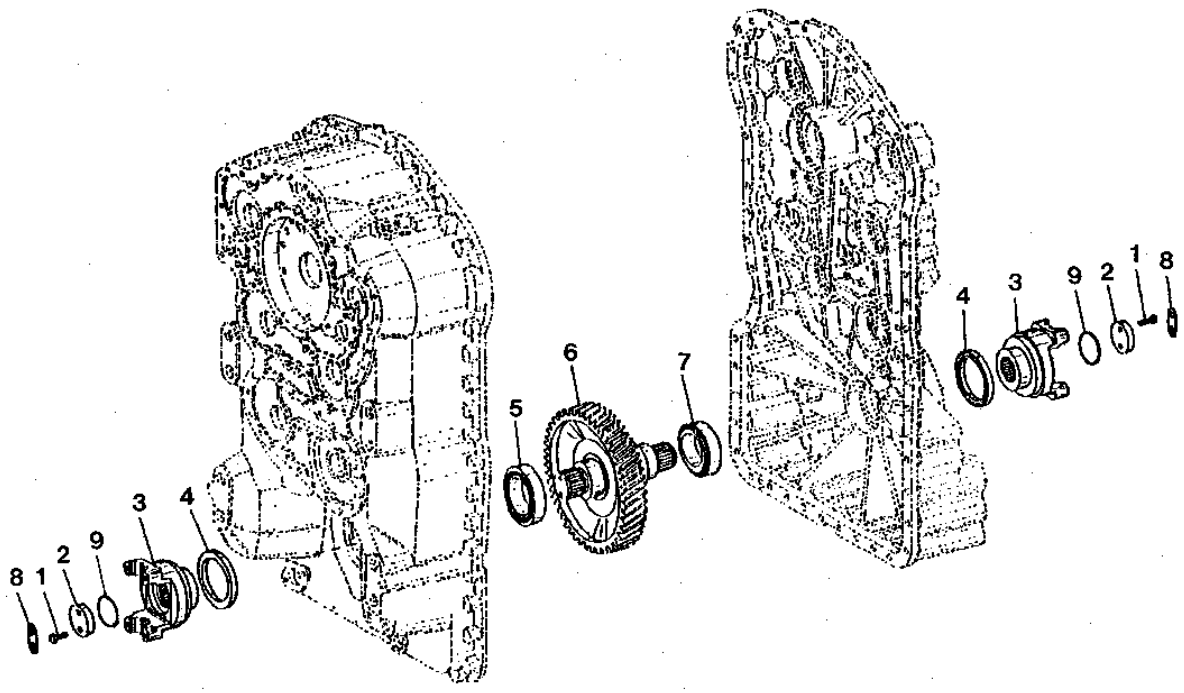

TP62705

TRANSMISSION OUTPUT SHAFT
ARBRE DE SORTIE DE TRANSMISSION
EJE DE SALIDA DE LA TRANSMISION

KEY	PART NO.	PART NAME	QTY.	TRANSMISSION SERIAL NO.	REMARKS
1	19M7407	CAP SCREW	4		M8 X 25
2	T116460	SPACER	2		
3	T172350	YOKE WITH SHAFT	2		
4	T141386	SEAL	2		
5	T171126	BEARING	1		IMPORTANT-HIGH TOLERANCE BEARING REQUIRED IN THIS LOCATION. DO NOT SUBSTITUTE STANDARD BEARING.
6	T171181	PINION SHAFT	1		
7	T171126	BEARING	1		IMPORTANT-HIGH TOLERANCE BEARING REQUIRED IN THIS LOCATION. DO NOT SUBSTITUTE STANDARD BEARING.
8	T116481	WASHER	2		TAB
9	T123707	O-RING	2		

TORQUE CONVERTER PRESSURE RELIEF VALVE AND TRANSMISSION MINIMUM PRESSURE VALVE
CLAPET DE DECHARGE DE CONVERTISSEUR DE COUPLE ET SOUPAPE DE PRESSION MINIMALE DE TRANSMISSION
VALVULA ALIVIO PRESION DEL CONVERTIDOR DE PAR Y VALVULA DE PRESION MINIMA DE LA TRANSMISION

T155456 -UN-03JUN02

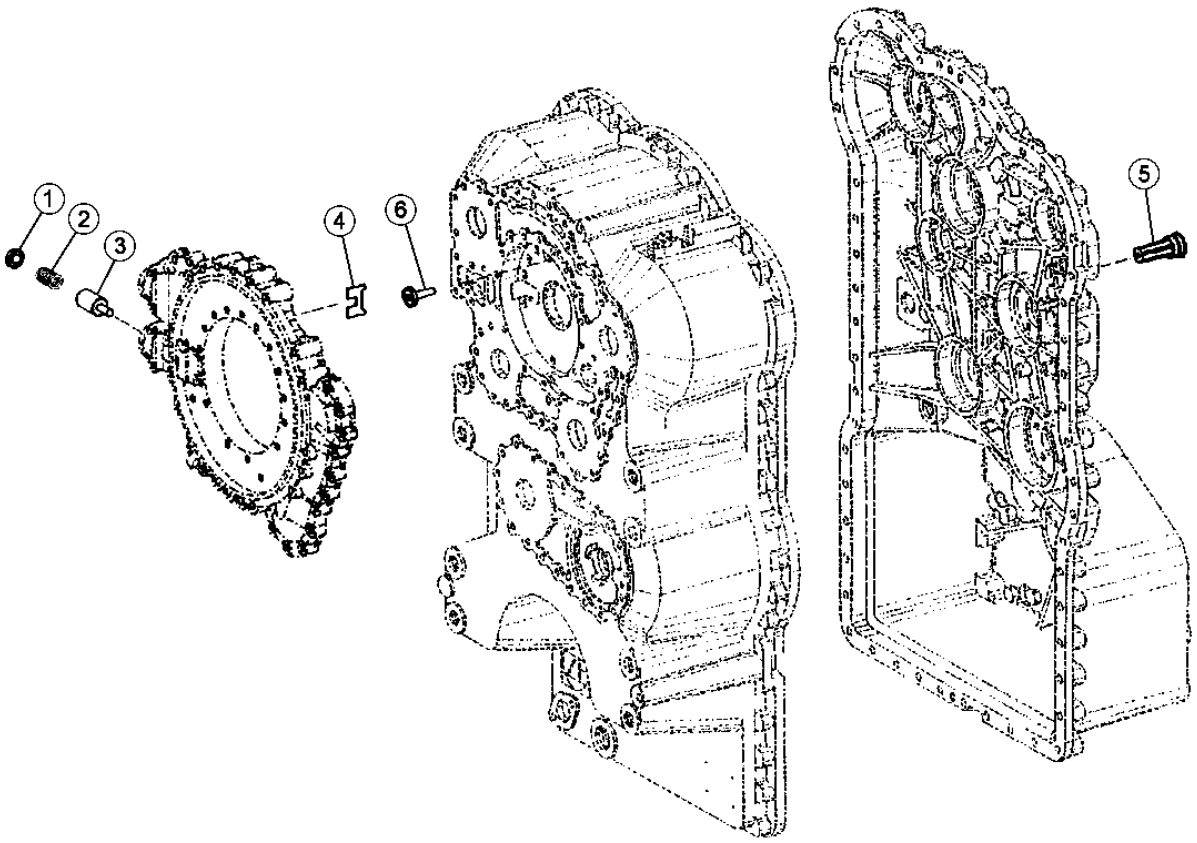

T155456

TORQUE CONVERTER PRESSURE RELIEF VALVE AND TRANSMISSION MINIMUM PRESSURE VALVE
CLAPET DE DECHARGE DE CONVERTISSEUR DE COUPLE ET SOUPAPE DE PRESSION MINIMALE DE TRANSMISSION
VALVULA ALIVIO PRESION DEL CONVERTIDOR DE PAR Y VALVULA DE PRESION MINIMA DE LA TRANSMISION

KEY	*PART NO.*	*PART NAME*	*QTY.*	*TRANSMISSION SERIAL NO.*	*REMARKS*
1	T173145	PLATE	1		
2	T176528	COMPRESSION SPRING	1		
3	T176527	PISTON	1		
4	T173146	WASHER	1		
5	T176526	FLOW CONTROL HYD. VALVE	1		
6	T195270	PRESSURE RELIEF VALVE	1		

POWER TAKEOFF
PRISE DE FORCE
TOMA DE FUERZA

TP60302 -UN-08APR98

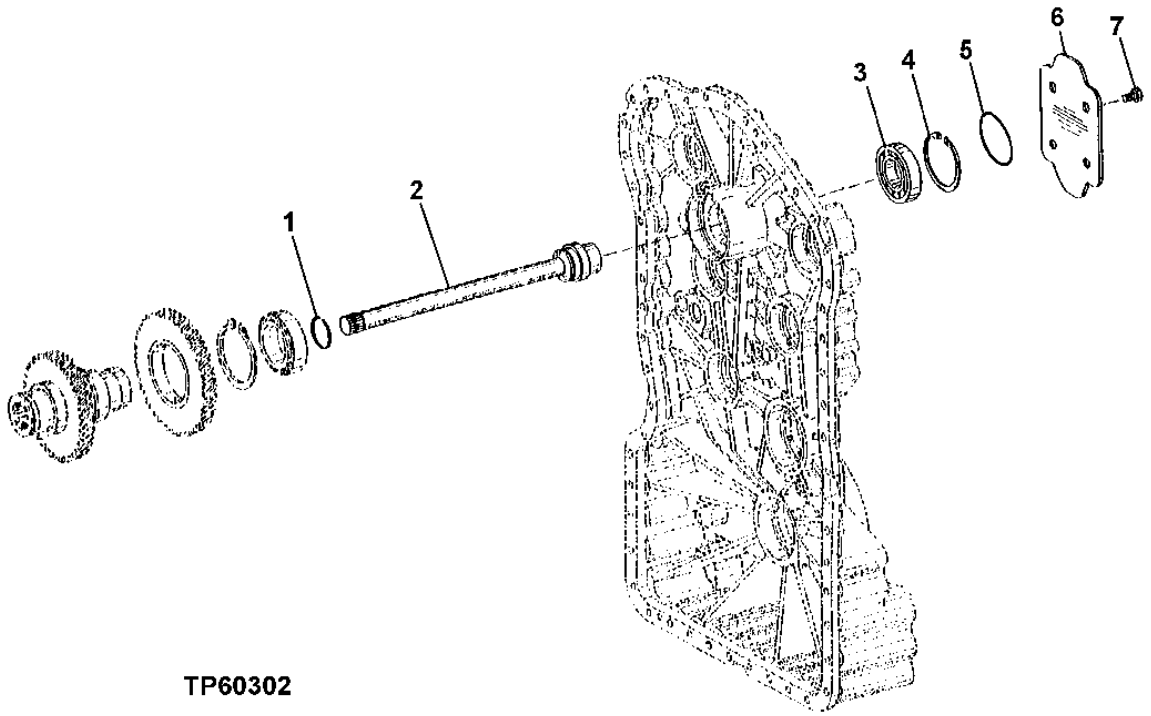

TP60302

POWER TAKEOFF
PRISE DE FORCE
TOMA DE FUERZA

KEY	PART NO.	PART NAME	QTY.	TRANSMISSION SERIAL NO.	REMARKS
1	T172118	PISTON RING	1		
2	T172815	UNIVERSAL DRIVESHAFT	1		
3	T171140	BALL BEARING	1		
4	40M1872	SNAP RING	1		
5	T169035	RING	1		
6	.....	PLATE	1		(T175711 NO LONGER USED)
7	.....	CAP SCREW	4		(T174407 NO LONGER USED)

FORWARD CLUTCH ASSEMBLY
EMBRAYAGE DE MARCHE AVANT
CONJUNTO DE EMBRAGUE DE AVANCE

TP62880 -UN-23AUG00

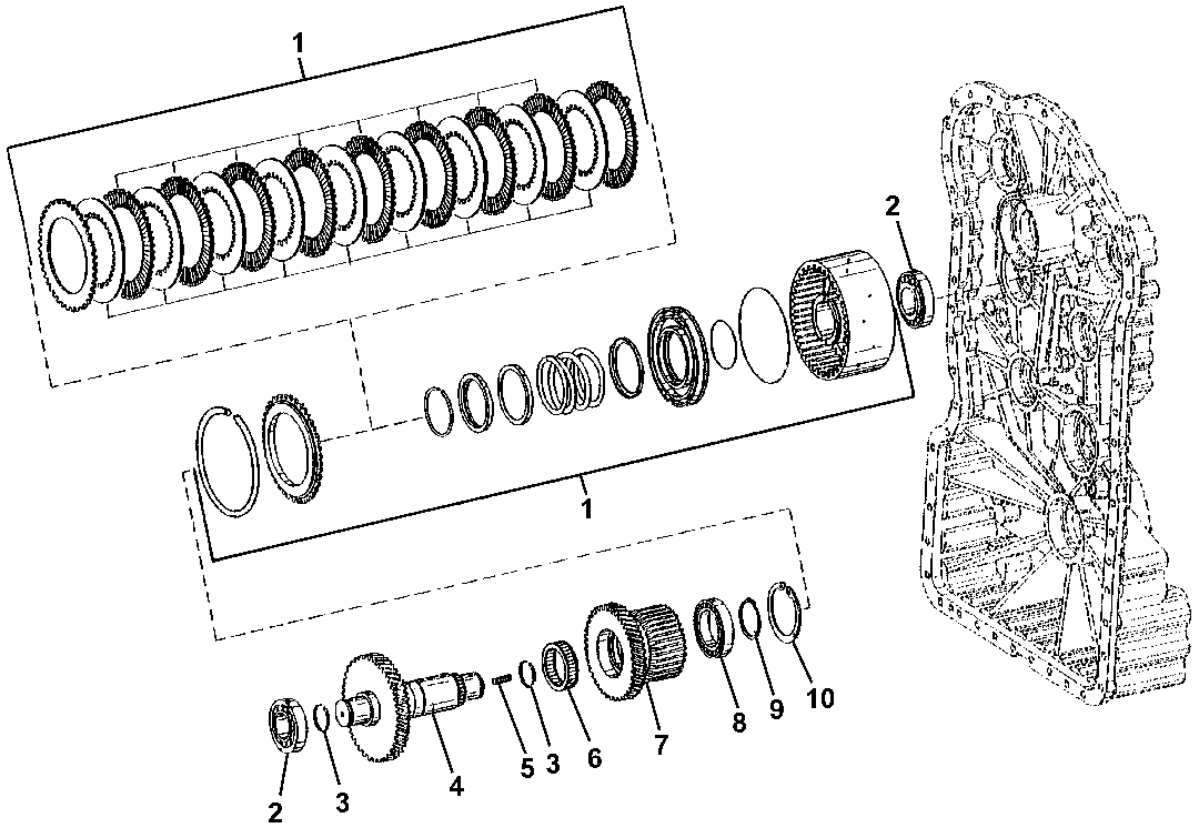

TP62880

FORWARD CLUTCH ASSEMBLY
EMBRAYAGE DE MARCHE AVANT
CONJUNTO DE EMBRAGUE DE AVANCE

KEY	PART NO.	PART NAME	QTY.	TRANSMISSION SERIAL NO.	REMARKS
1	AT223241	CLUTCH	1		
2	T171156	BEARING	2		IMPORTANT-HIGH TOLERANCE BEARING REQUIRED IN THIS LOCATION. DO NOT SUBSTITUTE STANDARD BEARING.
3	T172115	PISTON RING	2		
4	T171217	PINION SHAFT	1		
5	T171153	STUD	1		
6	T172302	NEEDLE BEARING	1		
7	T172817	GEAR	1		
8	T197553	BALL BEARING	1		
9	T159519	SNAP RING	1		
10	40M7060	SNAP RING	1		

REVERSE CLUTCH ASSEMBLY
INTERRUPTEUR DE RETOUR EN POSITION DE CREUSEMENT
INTERRUPTOR DE RETORNO A EXCAVACION

TP62881 -UN-23AUG00

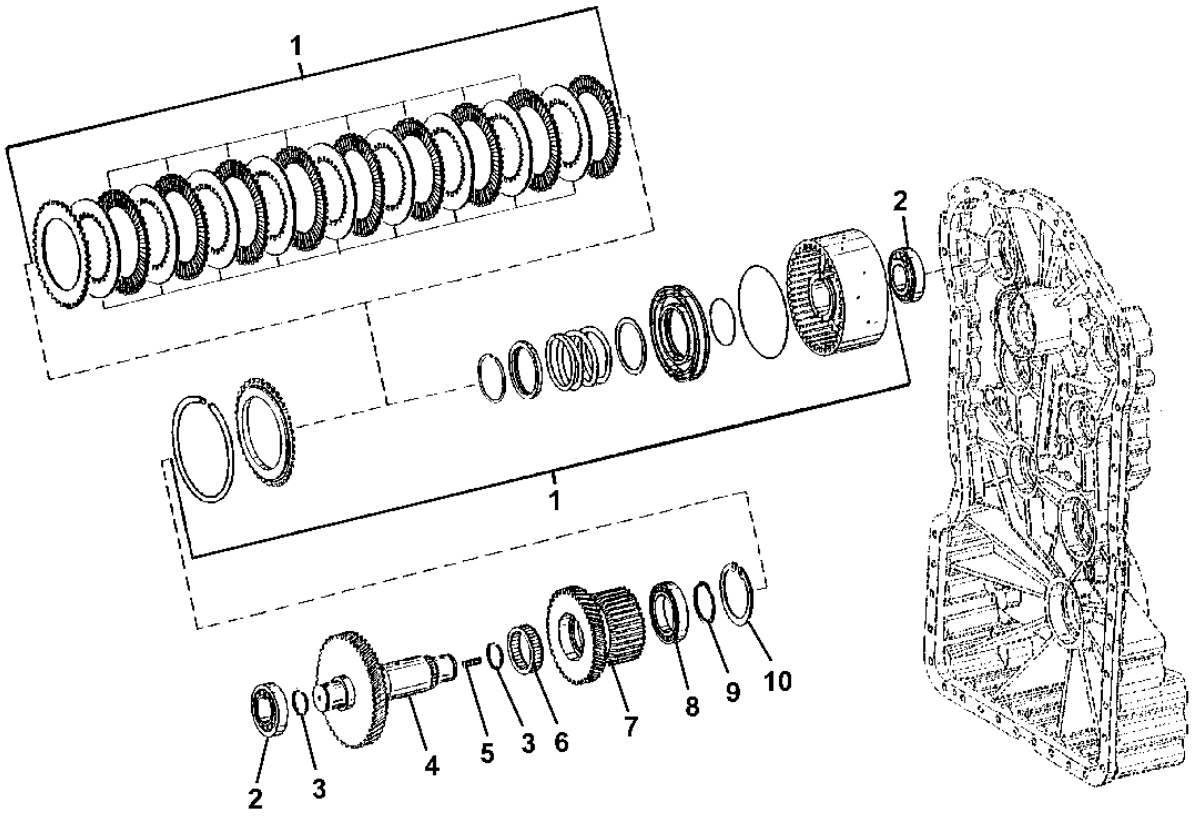

TP62881

REVERSE CLUTCH ASSEMBLY
INTERRUPTEUR DE RETOUR EN POSITION DE CREUSEMENT
INTERRUPTOR DE RETORNO A EXCAVACION

KEY	*PART NO.*	*PART NAME*	*QTY.*	*TRANSMISSION SERIAL NO.*	*REMARKS*
1	AT223241	CLUTCH	1		
2	T171156	BEARING	2		IMPORTANT-HIGH TOLERANCE BEARING REQUIRED IN THIS LOCATION. DO NOT SUBSTITUTE STANDARD BEARING.
3	T172115	PISTON RING	2		
4	T171224	PINION SHAFT	1		
5	T171153	STUD	1		
6	T172302	NEEDLE BEARING	1		
7	T172817	GEAR	1		
8	T197553	BALL BEARING	1		
9	T159519	SNAP RING	1		
10	40M7060	SNAP RING	1		

FIRST GEAR CLUTCH ASSEMBLY
EMBRAYAGE DE PREMIERE VITESSE
CONJUNTO DE EMBRAGUE DE PRIMERA MARCHA

TP62874 -UN-23AUG00

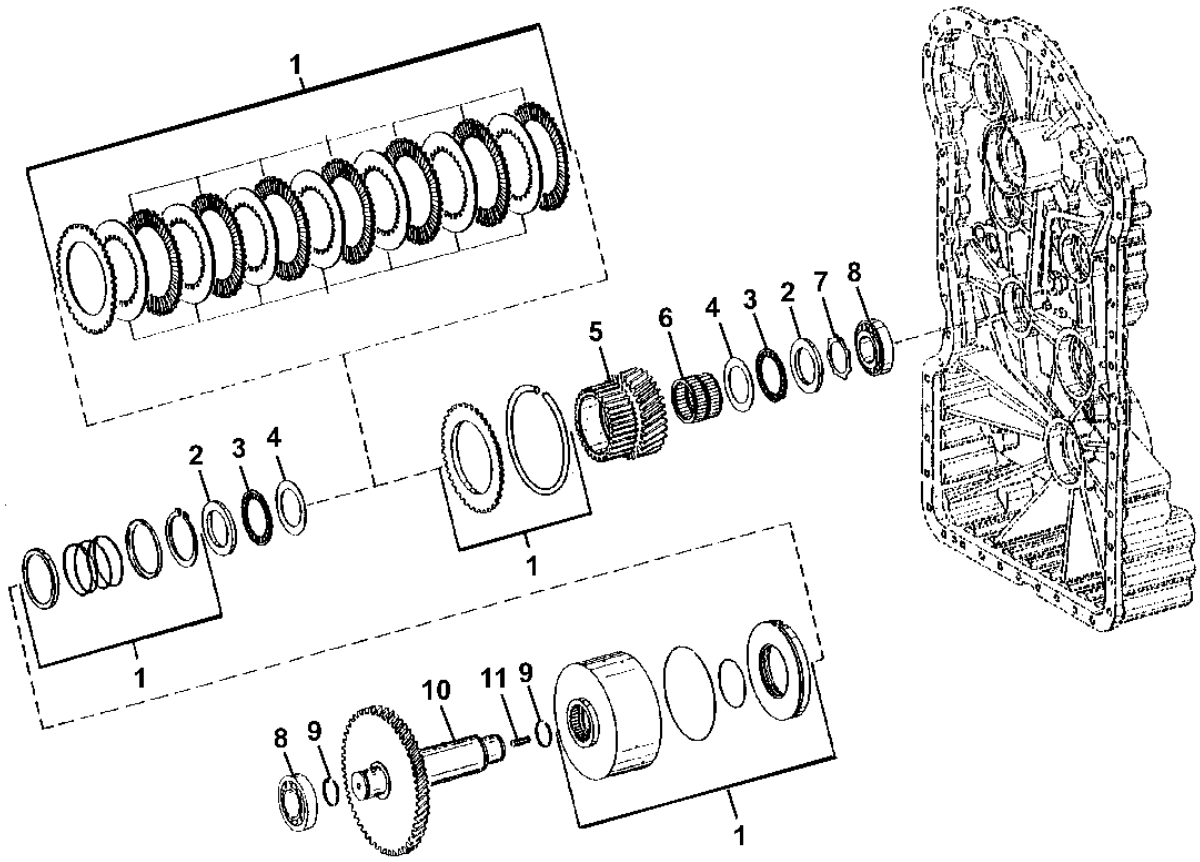

TP62874

FIRST GEAR CLUTCH ASSEMBLY
EMBRAYAGE DE PREMIERE VITESSE
CONJUNTO DE EMBRAGUE DE PRIMERA MARCHA

KEY	PART NO.	PART NAME	QTY.	TRANSMISSION SERIAL NO.	REMARKS
1	AT223238	CLUTCH	1		
2	T172104	DISK	2		
3	T172129	THRUST BEARING	2		
4	T172130	THRUST WASHER	2		
5	T195260	GEAR	1		(SUB FOR T172132)
6	T179594	NEEDLE BEARING	1		
7	T173036	SNAP RING	1		
8	T171156	BEARING	2		IMPORTANT-HIGH TOLERANCE BEARING REQUIRED IN THIS LOCATION. DO NOT SUBSTITUTE STANDARD BEARING.
9	T172115	PISTON RING	2		
10	T172816	UNIVERSAL DRIVESHAFT	1		
11	T171153	STUD	1		

SECOND GEAR CLUTCH ASSEMBLY
EMBRAYAGE DE SECONDE VITESSE
CONJUNTO DE EMBRAGUE DE SEGUNDA MARCHA

TP62875 -UN-23AUG00

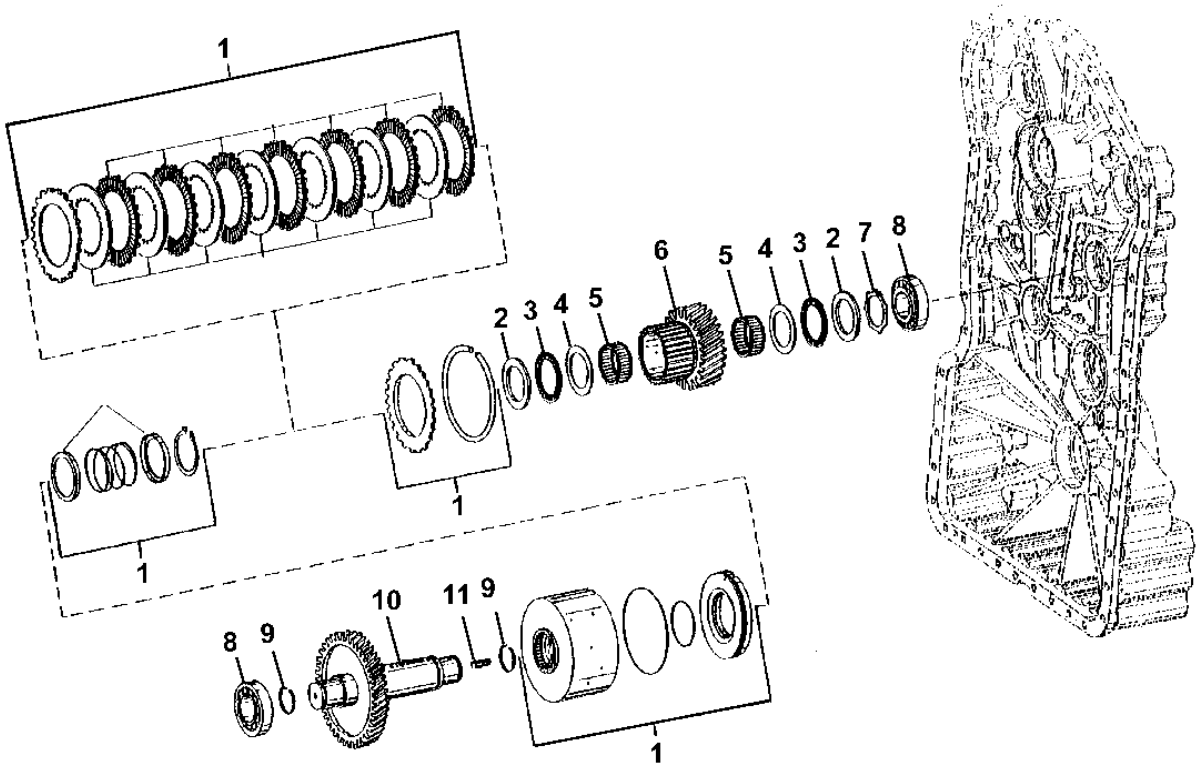

TP62875

SECOND GEAR CLUTCH ASSEMBLY
EMBRAYAGE DE SECONDE VITESSE
CONJUNTO DE EMBRAGUE DE SEGUNDA MARCHA

KEY	PART NO.	PART NAME	QTY.	TRANSMISSION SERIAL NO.	REMARKS
1	AT223239	CLUTCH	1		
2	T172136	DISK	2		
3	AT179498	NEEDLE BEARING	2		
4	T172138	THRUST WASHER	2		
5	T172139	NEEDLE BEARING	2		
6	T180459	GEAR	1		(SUB FOR T179669)
7	T173038	SNAP RING	1		
8	T171156	BEARING	2		IMPORTANT-HIGH TOLERANCE BEARING REQUIRED IN THIS LOCATION. DO NOT SUBSTITUTE STANDARD BEARING.
9	T172115	PISTON RING	2		
10	T171206	UNIVERSAL DRIVESHAFT	1		
11	T171153	STUD	1		

THIRD GEAR CLUTCH ASSEMBLY
EMBRAYAGE DE TROISIEME VITESSE
CONJUNTO DE EMBRAGUE DE TERCERA MARCHA

TP62876 -UN-23AUG00

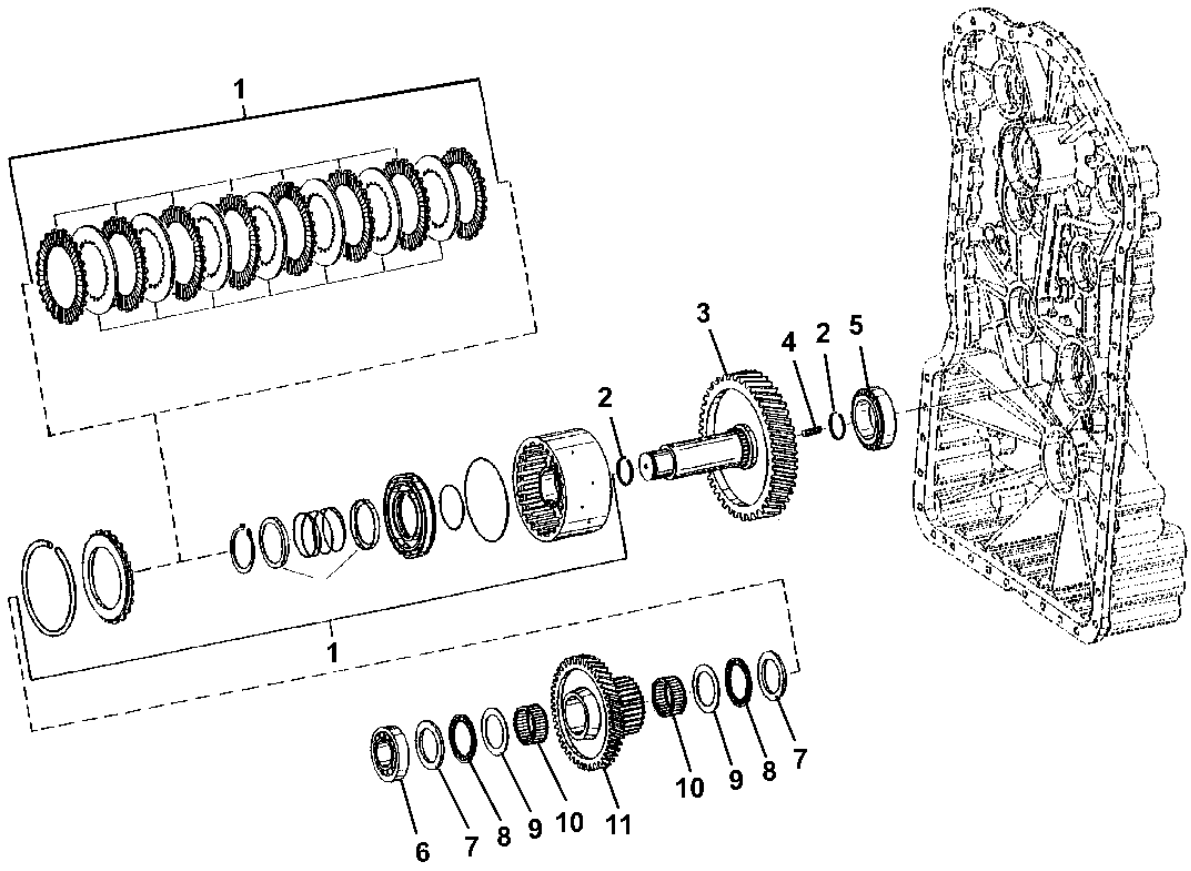

TP62876

THIRD GEAR CLUTCH ASSEMBLY
EMBRAYAGE DE TROISIEME VITESSE
CONJUNTO DE EMBRAGUE DE TERCERA MARCHA

KEY	PART NO.	PART NAME	QTY.	TRANSMISSION SERIAL NO.	REMARKS
1	AT223239	CLUTCH	1		
2	T172115	PISTON RING	2		
3	T171212	PINION SHAFT	1		
4	T171153	STUD	1		
5	T171126	BEARING	1		IMPORTANT-HIGH TOLERANCE BEARING REQUIRED IN THIS LOCATION. DO NOT SUBSTITUTE STANDARD BEARING.
6	T171156	BEARING	1		IMPORTANT-HIGH TOLERANCE BEARING REQUIRED IN THIS LOCATION. DO NOT SUBSTITUTE STANDARD BEARING.
7	T172136	DISK	2		
8	AT179498	NEEDLE BEARING	2		
9	T172138	THRUST WASHER	2		
10	T172139	NEEDLE BEARING	2		
11	T172275	GEAR	1		

HIGH RANGE CLUTCH ASSEMBLY
EMBRAYAGE GAMME HAUTE
CONJUNTO DE EMBRAGUE DE GAMA ALTA

TP62879 -UN-23AUG00

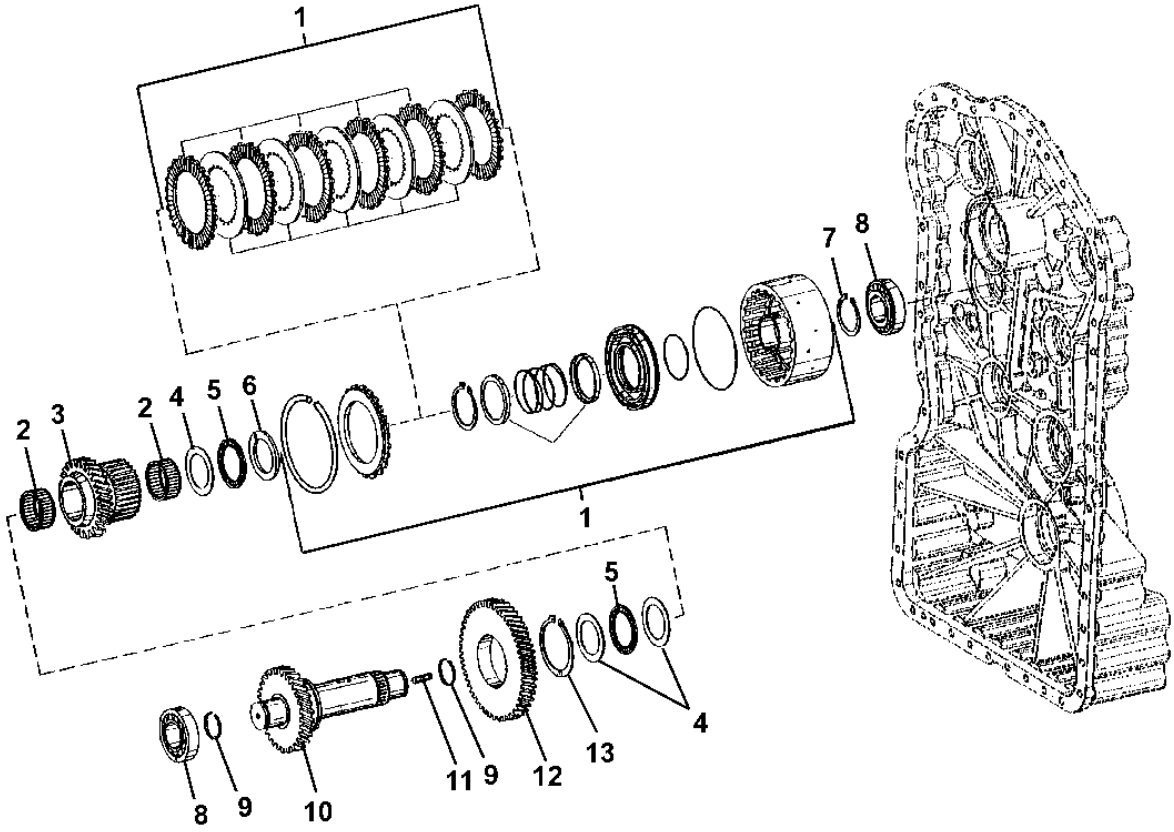

TP62879

HIGH RANGE CLUTCH ASSEMBLY
EMBRAYAGE GAMME HAUTE
CONJUNTO DE EMBRAGUE DE GAMA ALTA

KEY	PART NO.	PART NAME	QTY.	TRANSMISSION SERIAL NO.	REMARKS
1	AT331638	CLUTCH	1		(SUB FOR AT223240)
2	T172139	NEEDLE BEARING	2		
3	T172276	IDLER	1		
4	T172138	THRUST WASHER	3		
5	AT179498	NEEDLE BEARING	2		
6	T172136	DISK	1		
7	L110729	SNAP RING	1		
8	T171156	BEARING	2		IMPORTANT-HIGH TOLERANCE BEARING REQUIRED IN THIS LOCATION. DO NOT SUBSTITUTE STANDARD BEARING.
9	T172115	PISTON RING	2		
10	T171213	PINION SHAFT	1		
11	T171153	STUD	1		
12	T171216	GEAR	1		
13	40M7150	SNAP RING	1		

DRIVE DAMPER AND COVER
AMORTISSEUR ET COUVERCLE D'ENTRAINEMENT
CUBIERTA Y AMORTIGUADOR DE LINEA DE MANDO

TP62719 -UN-05JAN00

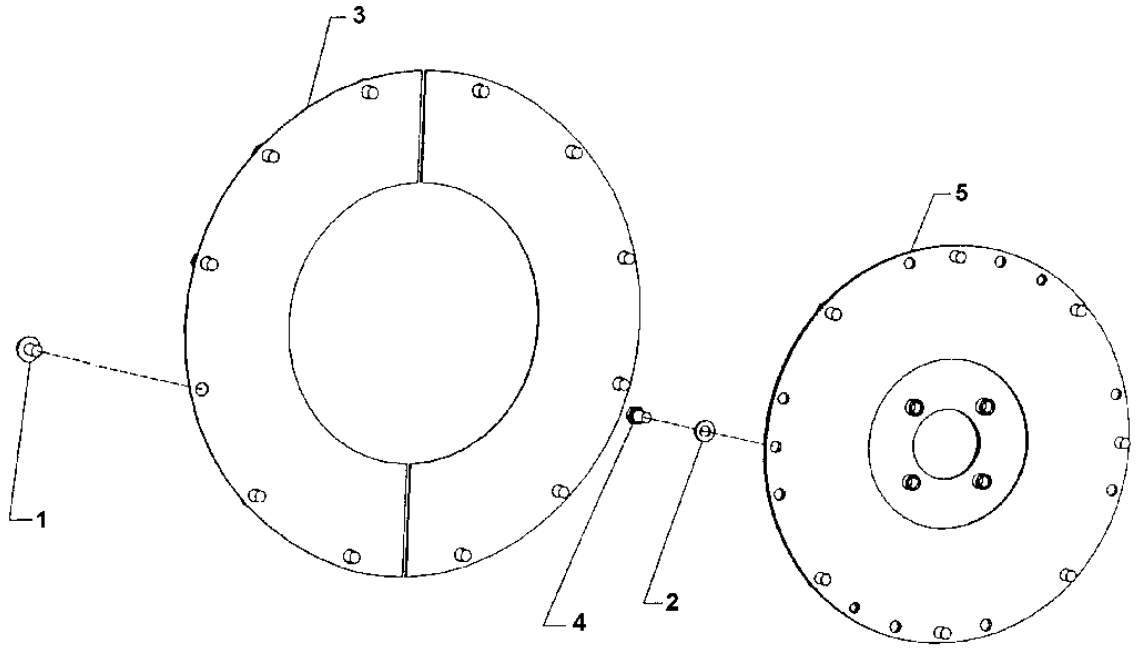

TP62719

DRIVE DAMPER AND COVER
AMORTISSEUR ET COUVERCLE D'ENTRAINEMENT
CUBIERTA Y AMORTIGUADOR DE LINEA DE MANDO

KEY	*PART NO.*	*PART NAME*	*QTY.*	*SERIAL NO.*	*REMARKS*
1	19M7784	SCREW	12		M10 X 20, (SUB FOR 19M7783)
2	24H1864	WASHER	8		13/32" X 3/4" X 7/64"
3	T101731	COVER	2		
4	19H1648	CAP SCREW	8		9.525 X 19.050 MM
5	AT308993	TORSIONAL DAMPER	1		(SUB FOR AT206784)

TRANSMISSION OIL FILL
REMPLISSAGE D'HUILE DE TRANSMISSION
LLENADO DE ACEITE DE LA TRANSMISION

T193211 -UN-21JUL03

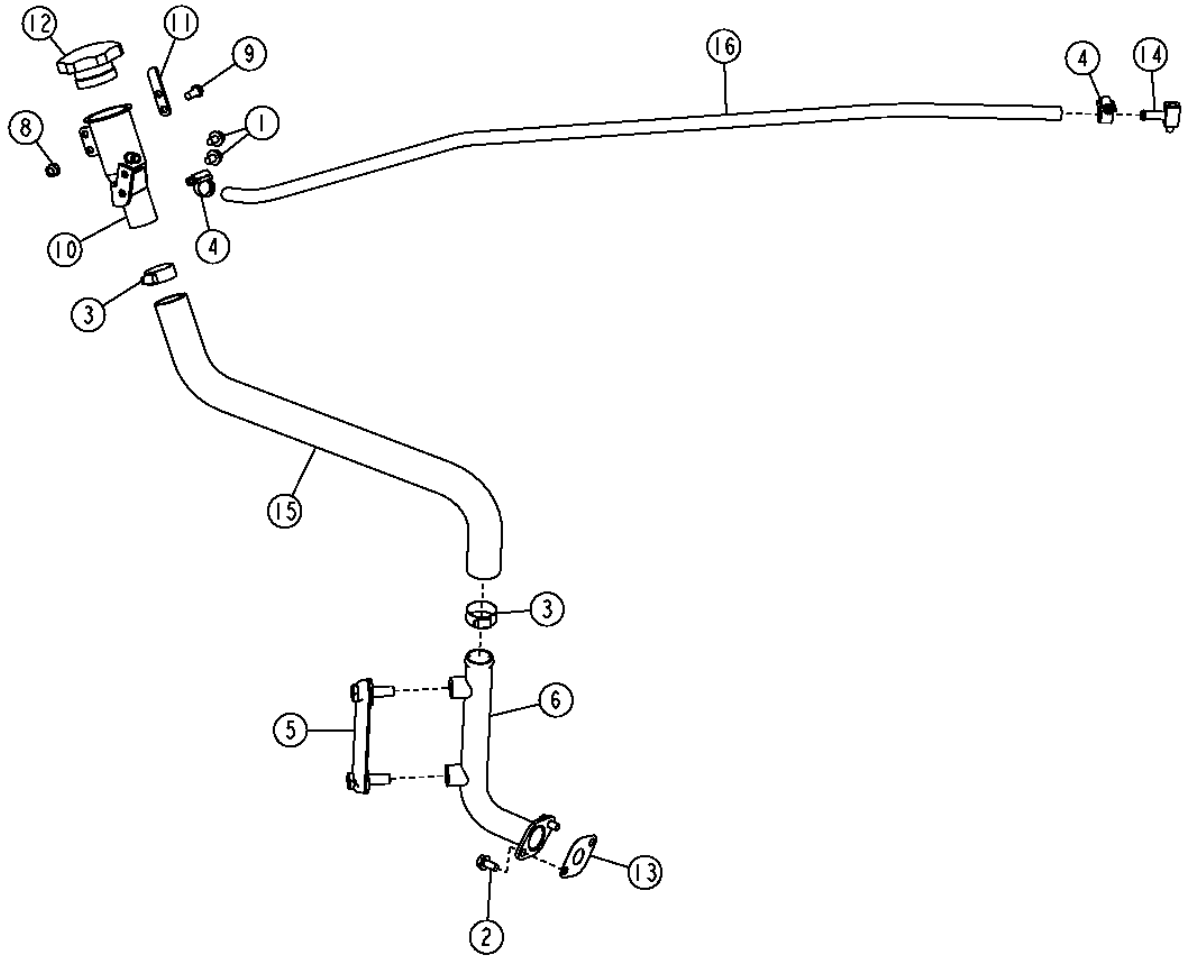

T193211

TRANSMISSION OIL FILL
REMPLISSAGE D'HUILE DE TRANSMISSION
LLENADO DE ACEITE DE LA TRANSMISION

KEY	PART NO.	PART NAME	QTY.	SERIAL NO.	REMARKS
1	19M7864	SCREW	2		
2	19M7865	SCREW	2	-XXXXXX	M8 X 16
	19M7867	SCREW	2	XXXXXX-	M8 X 25
3	AR21839	CLAMP	2		
4	AR21836	CLAMP	2		
5	AT227279	LEVEL GAUGE	1		
6	.....	TUBE	1	-XXXXXX	(ORDER AT324881, R105415 AND (2) 19M7867) (AT315021 OR AT227651 NLA)
	AT324881	TUBE	1	XXXXXX-	
8	14M7426	LOCK NUT	1		
9	19M7162	CAP SCREW	1		
10	AT227248	FILLER NECK	1		
11	T196464	STRAP	1		
12	RE500250	FILLER CAP	1		
13	T116604	GASKET	1	-XXXXXX	
	R105415	O-RING	1	XXXXXX-	NOT ILLUSTRATED CORRECTLY
14	T196587	TEE FITTING	1		
15	T201143	HOSE	1		
16	M87571	BULK HOSE	1		

TRANSMISSION OIL LINES AND THERMAL BYPASS VALVE
CONDUITES D'HUILE DE TRANSMISSION ET VANNE DE DERIVATION THERMIQUE
LINEAS DE ACEITE DE LA TRANSMISION Y VALVULA DERIVADORA TERMICA

TX1006276 -UN-27APR06

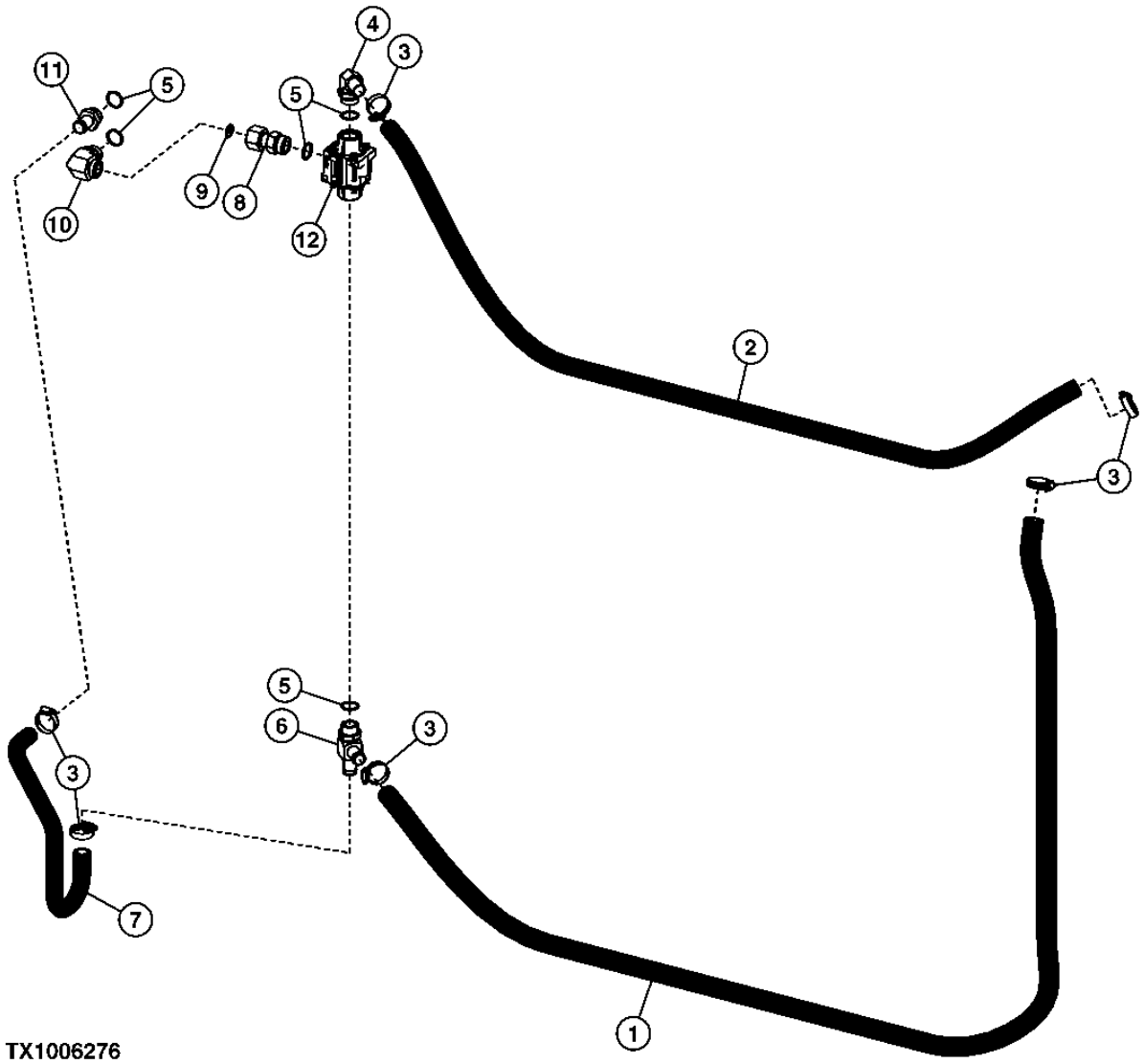

TX1006276

TRANSMISSION OIL LINES AND THERMAL BYPASS VALVE
CONDUITES D'HUILE DE TRANSMISSION ET VANNE DE DERIVATION THERMIQUE
LINEAS DE ACEITE DE LA TRANSMISION Y VALVULA DERIVADORA TERMICA

KEY	*PART NO.*	*PART NAME*	*QTY.*	*SERIAL NO.*	*REMARKS*
1	T197128	HYDRAULIC HOSE - FABRICATE	1		
2	T197129	HYDRAULIC HOSE - FABRICATE	1		
3	AR21839	CLAMP	6		
4	AH75162	FITTING	1		
5	R29936	O-RING	5		
6	AT223584	FITTING	1		
7	T180529	HOSE	1		
8	38H1071	ADAPTER FITTING	1		
9	T76938	O-RING	1		
10	38H1037	ELBOW FITTING	1		
11	T29747	HOSE FITTING	1		
12	AT325611	CONTROL VALVE	1		(SUB FOR AT225189, AT129526)

CRANKSHAFT AND BEARINGS
VILEBREQUIN ET ROULEMENTS
CIGUENAL Y COJINETES

RGP9614 -UN-07MAY03

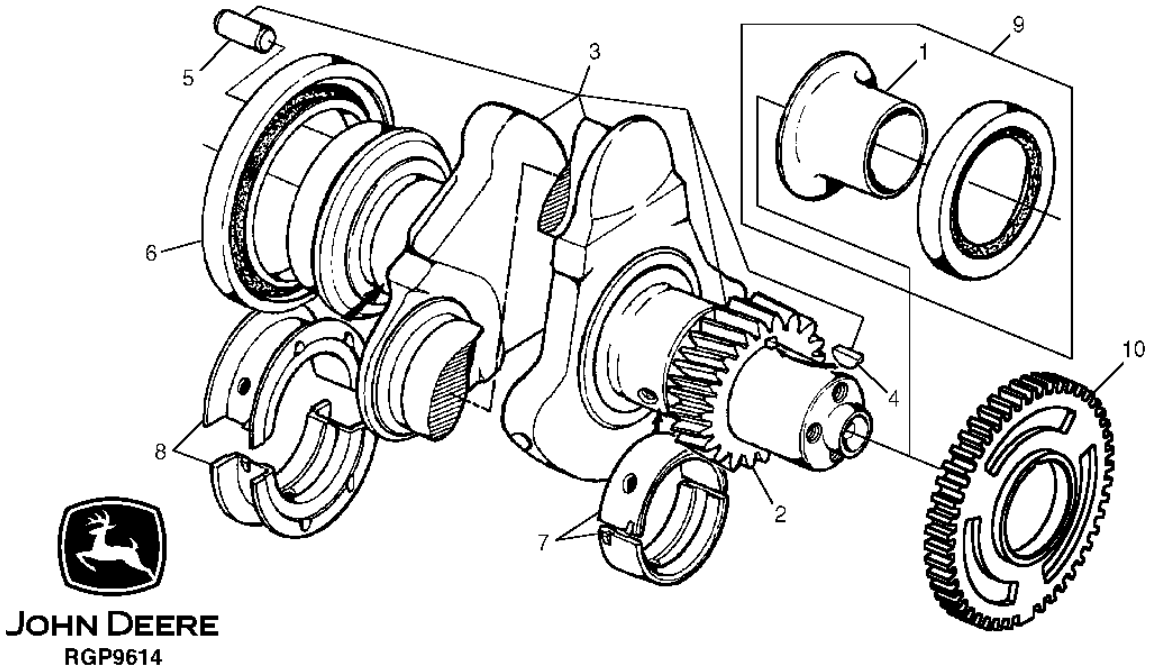

JOHN DEERE
RGP9614

KEY	PART NO.	PART NAME	QTY.	ENGINE SERIAL NO.	REMARKS
1	RE59811	SLEEVE	1		
2	R120631	GEAR	1		Z=30
3	RE504638	CRANKSHAFT	1		(MARKED R113596)
4	R505609	SHAFT KEY	1		
5	R48685	DOWEL PIN	1		
6	RE44574	SEAL	1		REAR
7	RE65165	BEARING KIT	6		STD, (KIT R123561 AND R123562)
	RE65911	BEARING	AR		0.254 MM (.010") UNDERSIZE, (KIT R130576 AND R130577)
8	RE65168	BEARING KIT	1		STD, (KIT R123563 AND R123564)
	RE65912	THRUST BEARING	AR		0.254 MM (.010") UNDERSIZE, (KIT R130574 AND R130575)
9	RE516340	KIT	1		FRONT, (MARKED RE52346 OR RE505515) (SUB FOR RE59810)
10	R501489	WHEEL SPEED SENSOR	1		TIMING

CAMSHAFT
ARBRE A CAMES
ARBOL DE LEVAS

RGP10129 -UN-11NOV03

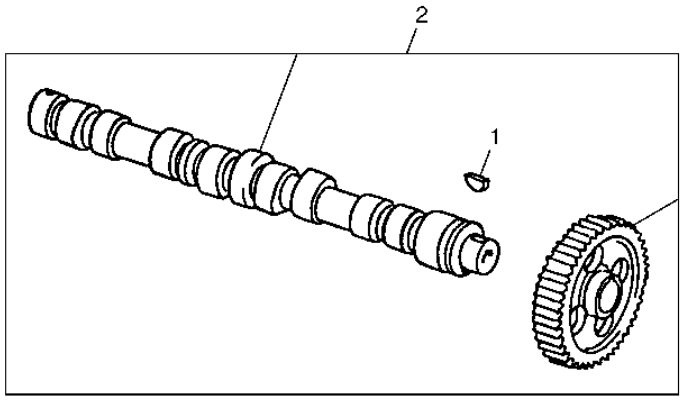

JOHN DEERE
RGP10129

KEY	PART NO.	PART NAME	QTY.	ENGINE SERIAL NO.	REMARKS
1	R133303	SHAFT KEY	1		
2	RE507595	CAMSHAFT	1		(MARKED R504534)

FRONT PLATE AND CRANKSHAFT IDLER GEARS
PLAQUE AVANT ET PIGNONS FOUS DE VILEBREQUIN
ENGRANAJES INTERMEDIOS DE CIGUENAL Y PLACA DELANTERA

RGP9955 -UN-20AUG03

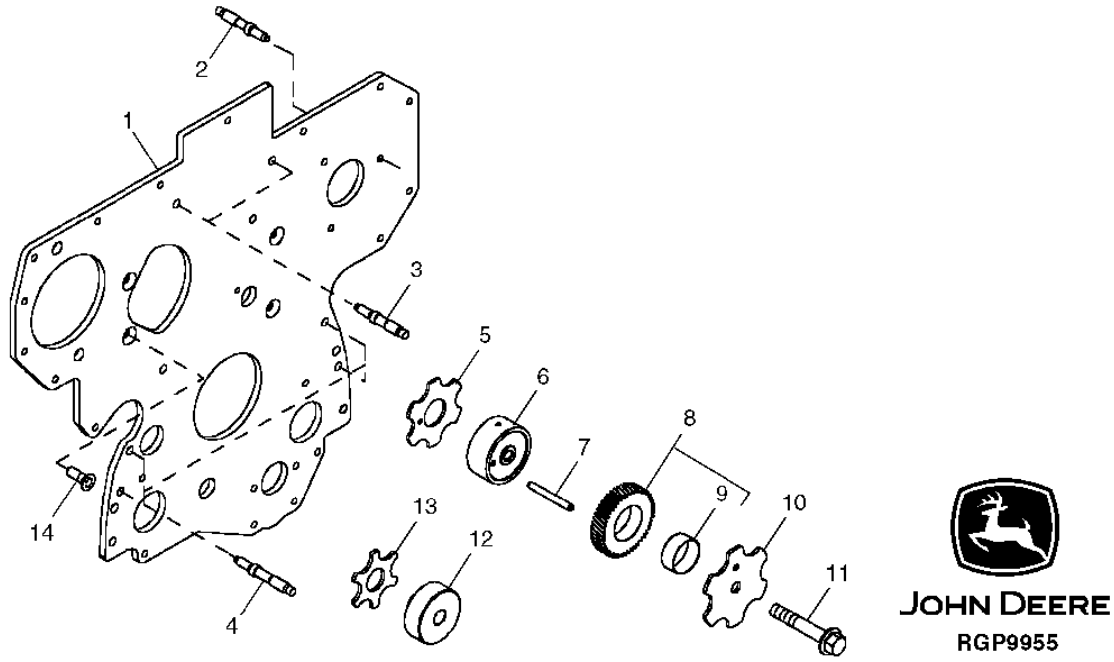

KEY	PART NO.	PART NAME	QTY.	ENGINE SERIAL NO.	REMARKS
1	R134526	PLATE	1		
2	R116386	STUD	3		
3	R134518	STUD	2		
4	R123584	STUD	4		
5	R123174	THRUST WASHER	1		
6	R120641	SHAFT	1		UPPER, (USE WITH 34H288)
7	34H288	SPRING PIN	1		3/16" X 1-3/4"
8	RE508932	GEAR	1		UPPER IDLER, (MARKED R505121)
9	.....	BUSHING	1		(ORDER RE508932)
10	R131206	THRUST WASHER	1		
11	19M8997	SCREW	1		M10 X 65
12	R114194	SHAFT	1		LOWER
13	R101225	THRUST WASHER	1		
14	R136475	SCREW	4		

ROCKER ARM SHAFT, PUSH RODS AND ROCKER ARMS
ARBRE DE CULBUTEUR, TIGES DE CULBUTEUR ET CULBUTEURS
EJE DE BALANCINES, VARILLAS DE EMPUJE Y BALANCINES

TP49263 -UN-20JUN95

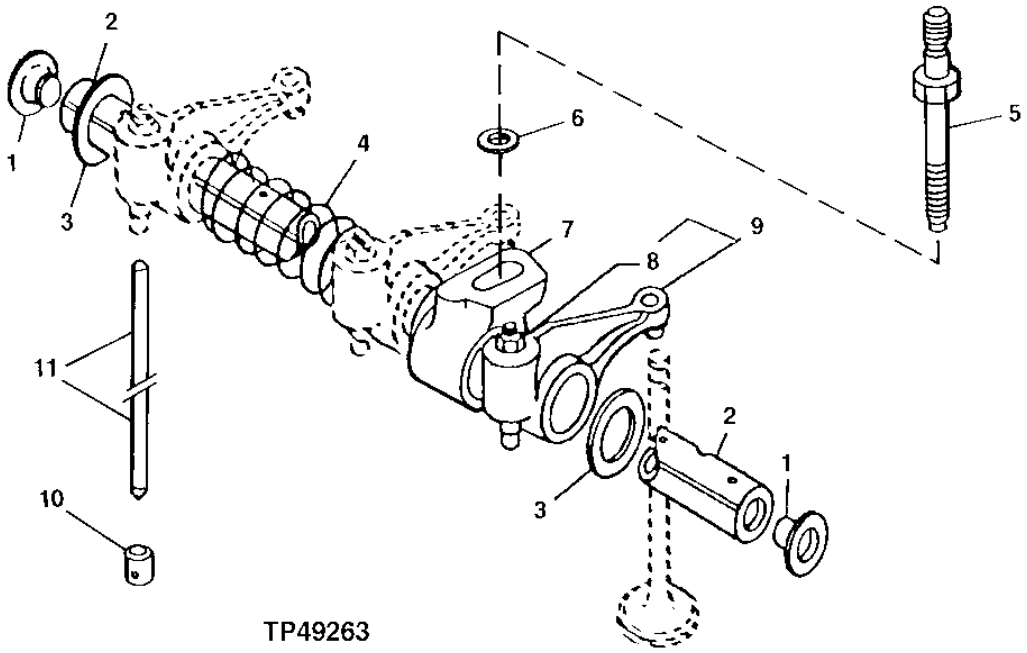

TP49263

KEY	PART NO.	PART NAME	QTY.	ENGINE SERIAL NO.	REMARKS
1	R54565	PLUG	2		
2	R123513	ROCKER ARM SHAFT	1		
3	T20316	WASHER	2		
4	T20314	SPRING	3		
5	R123271	STUD	4		
6	24M7346	WASHER	4		11 X 20 X 2 MM
7	R123161	SUPPORT	4		
8	14M7148	NUT	1		M10
9	RE508317	ROCKER ARM	8		
10	R123565	CAM FOLLOWER	8		
11	R107731	PUSH ROD	8		

PISTON, CYLINDER LINER, CONNECTING ROD AND BEARINGS
PISTON, CHEMISE DE CYLINDRE, BIELLE ET ROULEMENTS
EMBOLO, CAMISA DE CILINDRO, BIELA Y COJINETES

TP49283 -UN-17JUL95

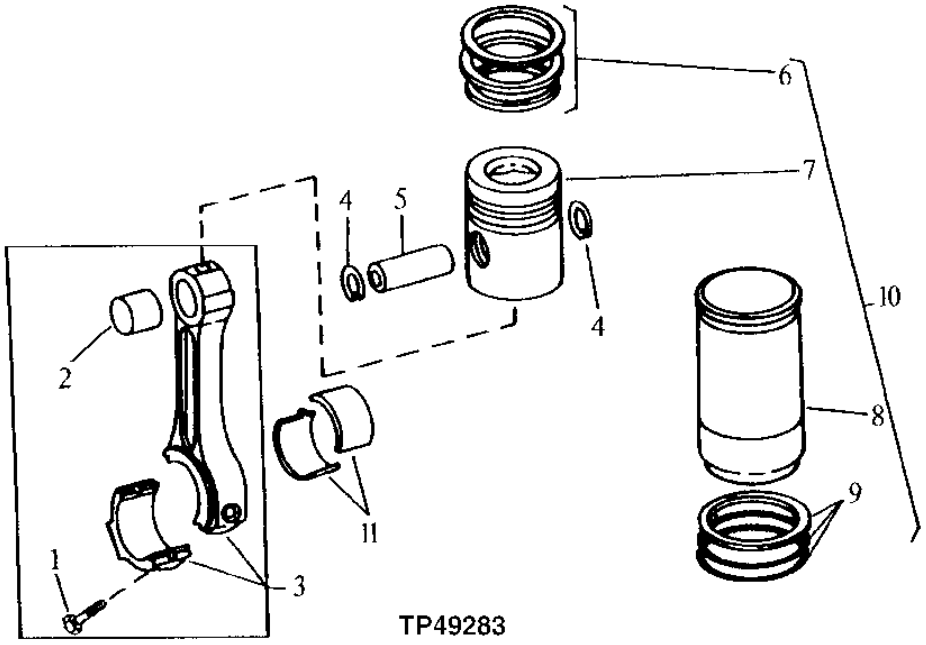

TP49283

KEY	PART NO.	PART NAME	QTY.	ENGINE SERIAL NO.	REMARKS
1	R501124	SCREW	8		
2	R114082	BUSHING	4		
3	RE500608	CONNECTING ROD	4		(MARKED R500335)
	SE501094	CONNECTING ROD	4		(REMANUFACTURED FOR RE500608) (CALL 1-888-697-3626)
4	R54114	SNAP RING	8		
5	R123177	PISTON PIN	4		
6	RE507852	PISTON RING KIT	4		
7	.....	PISTON	4		(ORDER RE507850 OR RE507920)
8	.....	CYLINDER LINER	4		(ORDER RE507850 OR RE507920)
9	AR65507	O-RING KIT	4		CYLINDER LINER
10	RE507850	PISTON-LINER KIT	4		(PISTON MARKED RE509540 OR RE507609)
11	RE65908	BEARING	4		STANDARD
	RE65909	BEARING	4		0.254 MM (.010") UNDERSIZE

MEMORANDA
MEMORANDA
MEMORANDA

CYLINDER BLOCK AND MAIN BEARING CAP
BLOC-CYLINDRES ET CHAPEAU DE PALIER
BLOQUE DE CILINDROS Y TAPA DE COJINETE DE BANCADA

RGP10128 -UN-11NOV03

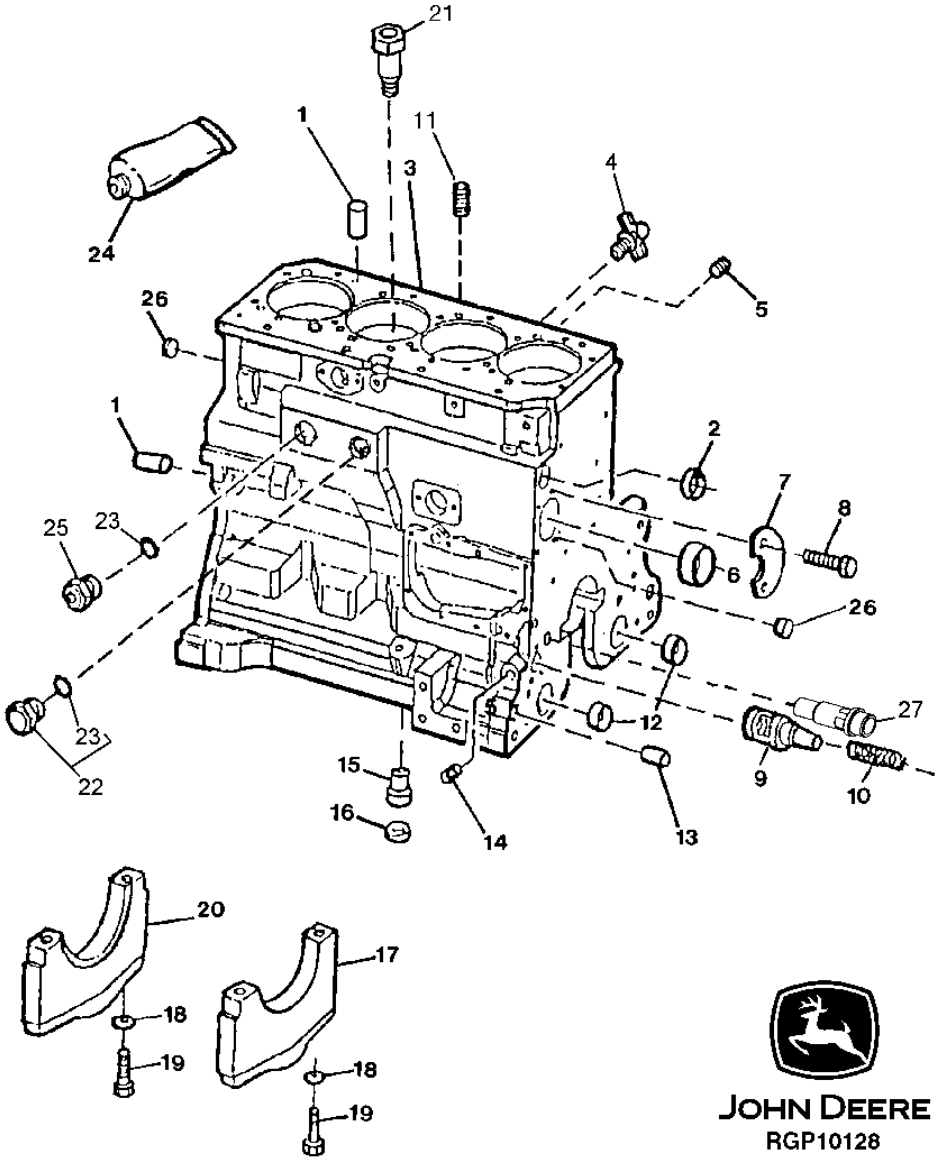

CYLINDER BLOCK AND MAIN BEARING CAP
BLOC-CYLINDRES ET CHAPEAU DE PALIER
BLOQUE DE CILINDROS Y TAPA DE COJINETE DE BANCADA

KEY	PART NO.	PART NAME	QTY.	ENGINE SERIAL NO.	REMARKS
1	R48685	DOWEL PIN	4		
2	R116466	PLUG	1		
3	.....	CYLINDER BLOCK	1		(ORDER RE520023)
4	AT13740	DRAIN VALVE	1		
5	R104592	PIPE PLUG	5		
6	R119874	BUSHING	1		CAMSHAFT
7	R132518	PLATE	1		
8	19M8999	SCREW	2		M8 X 25
9	R121043	VALVE	1		ENGINE OIL BYPASS
10	R111137	SPRING	1		
11	RE57836	PIPE PLUG	AR		1/2", (SUB FOR 15H624)
12	R115299	BUSHING	6		BALANCER SHAFT
13	R26650	DOWEL PIN	2		
14	15H623	PIPE PLUG	1		3/8"
15	R115390	BUSHING	1		
16	R75892	O-RING	1		
17	R114241	BEARING CAP	4		
18	T20168	WASHER	10		
19	T23474	CAP SCREW	10		
20	R132186	BEARING CAP	1		
21	R131182	ORIFICE	4		
22	RE508185	FITTING	1		
23	U13639	O-RING	2		
24	PM38655	SEALANT	1		(TUBE OF LIQUID GASKET) (SUB FOR TY6304)
25	R123616	PLUG	1		
26	T18891	PLUG	2		
27	RE505501	BLEED VALVE	1		OIL PRESSURE REGULATING

LIFT STRAPS
ECLISSES D'APAREIL DE LEVAGE
TIRAS DE ELEVADOR

RGP7560 -UN-26JUN01

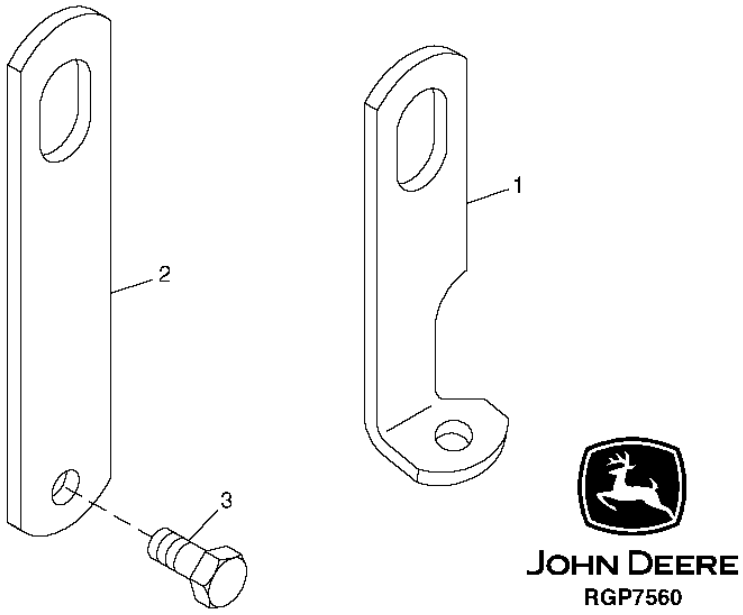

KEY	PART NO.	PART NAME	QTY.	ENGINE SERIAL NO.	REMARKS
1	.....	STRAP	1		(R502175 NLA) (FRONT)
2	R502329	STRAP	1		(REAR)
3	19M7788	SCREW	2		M12 X 25

OIL FILLER NECK (RH SIDE) AND COVER (LH SIDE)
GOULOT REMPLISSAGE HUILE DROIT ET COUVERCLE GAUCHE
CUELLO DE LLENADO DE ACEITE (DER) Y CUBIERTA (IZQ)

CDP45012 -UN-16OCT01

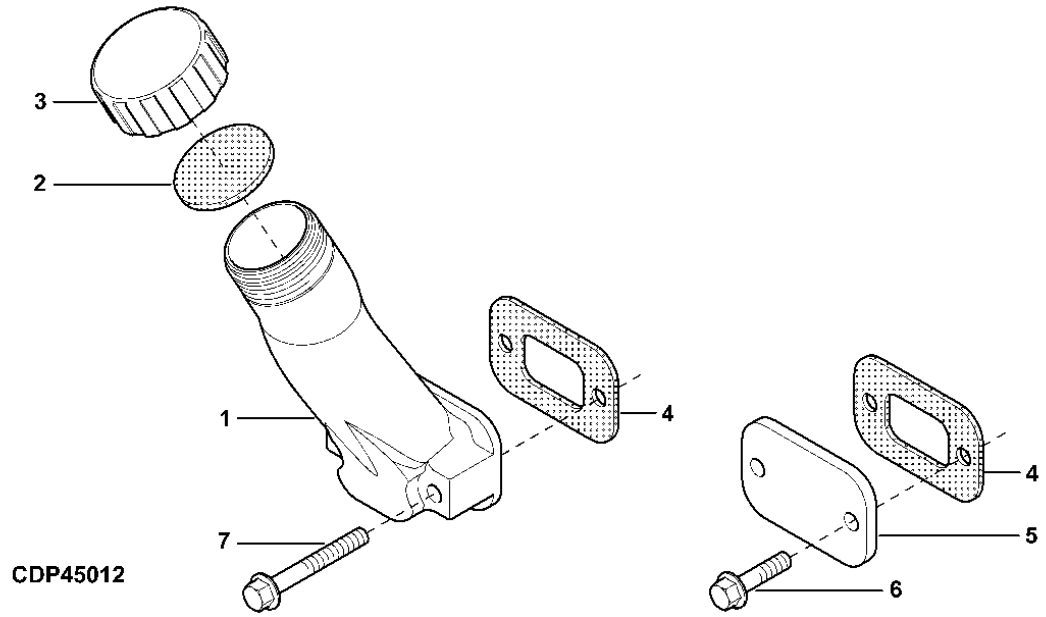

KEY	PART NO.	PART NAME	QTY.	ENGINE SERIAL NO.	REMARKS
1	R123558	FILLER NECK	1		RH
2	R80135	GASKET	1		
3	R80136	FILLER CAP	1		
4	R136495	GASKET	2		
5	R116296	COVER	1		LH
6	RE67238	SCREW	2		M8 X 20
7	RE67240	SCREW	2		M8 X 50

OIL PAN
CARTER D'HUILE
CARTER DE ACEITE

RGP10127 -UN-11NOV03

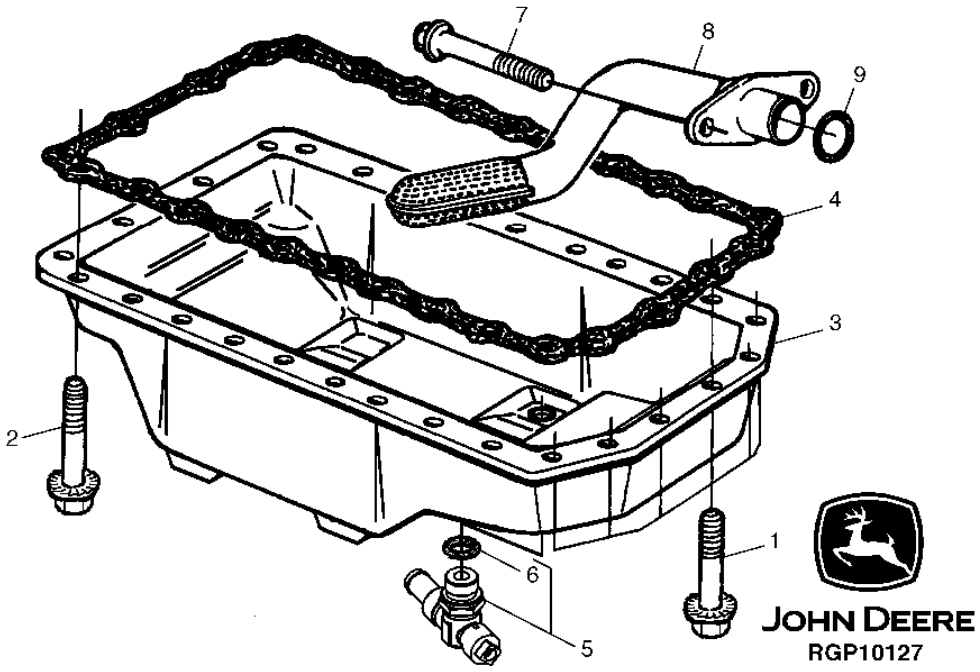

KEY	PART NO.	PART NAME	QTY.	ENGINE SERIAL NO.	REMARKS
1	19M7866	SCREW	6		M8 X 20, (SUB FOR 19M8062)
2	19M8163	BOLT	22		M8 X 16
3	RE505899	OIL PAN	1		
4	R522030	GASKET	1		(SUB FOR R123352)
5	RE507950	DRAIN VALVE	1		
6	51M7045	O-RING	1		
7	19M8986	SCREW	2		M8 X 100
8	RE57619	OIL PUMP INTAKE	1		
9	R61871	O-RING	1		

DIPSTICK
JAUGE DE NIVEAU
VARILLA DE MEDICION

RGP6190 -UN-17MAR00

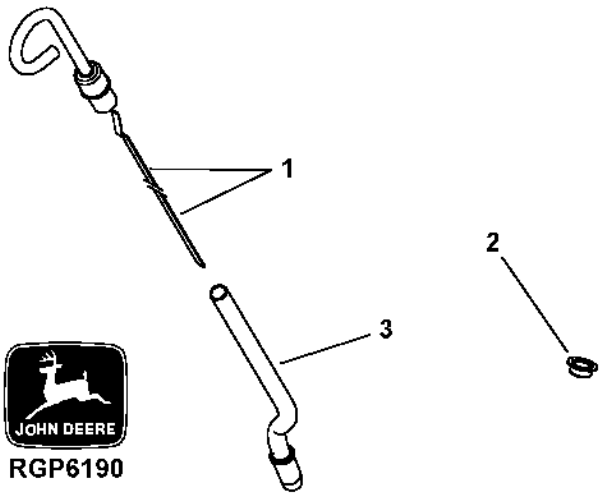

KEY	PART NO.	PART NAME	QTY.	ENGINE SERIAL NO.	REMARKS
1	RE69243	DIPSTICK	1		
2	R502725	PLUG	1		
3	R502604	DIPSTICK TUBE	1		

ENGINE OIL PUMP
POMPE A HUILE MOTEUR
BOMBA DE ACEITE DEL MOTOR

TX1004798 -UN-22MAR06

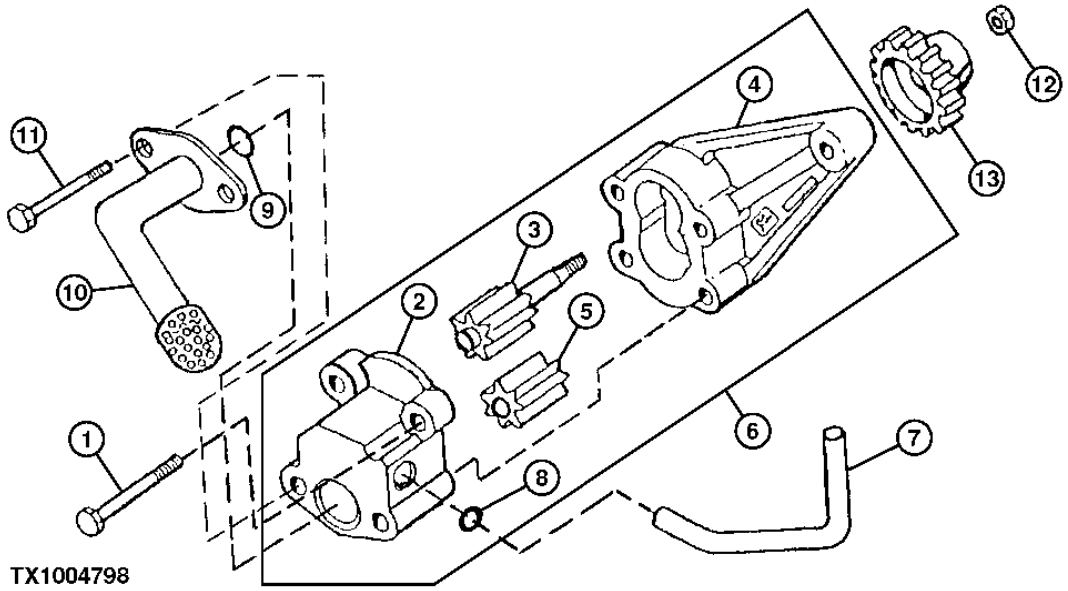

KEY	PART NO.	PART NAME	QTY.	ENGINE SERIAL NO.	REMARKS
1	19M8987	SCREW	2		M8 X 65
2	.....	COVER	1		(ORDER RE504914)
3	.....	GEAR	1		(ORDER RE504914)
4	.....	HOUSING	1		(ORDER RE504914)
5	.....	GEAR	1		(ORDER RE504914)
6	RE504914	OIL PUMP	1		(MARKED R502687)
7	R121376	TUBE	1		
8	R97185	O-RING	1		
9	R61871	O-RING	1		
10	RE57619	OIL PUMP INTAKE	1		
11	19M8986	SCREW	2		M8 X 100
12	14M7066	NUT	1		M12
13	R120638	GEAR	1		Z=30

OIL FILTER
FILTRE A HUILE
FILTRO DE ACEITE

RGP8909 -UN-24OCT02

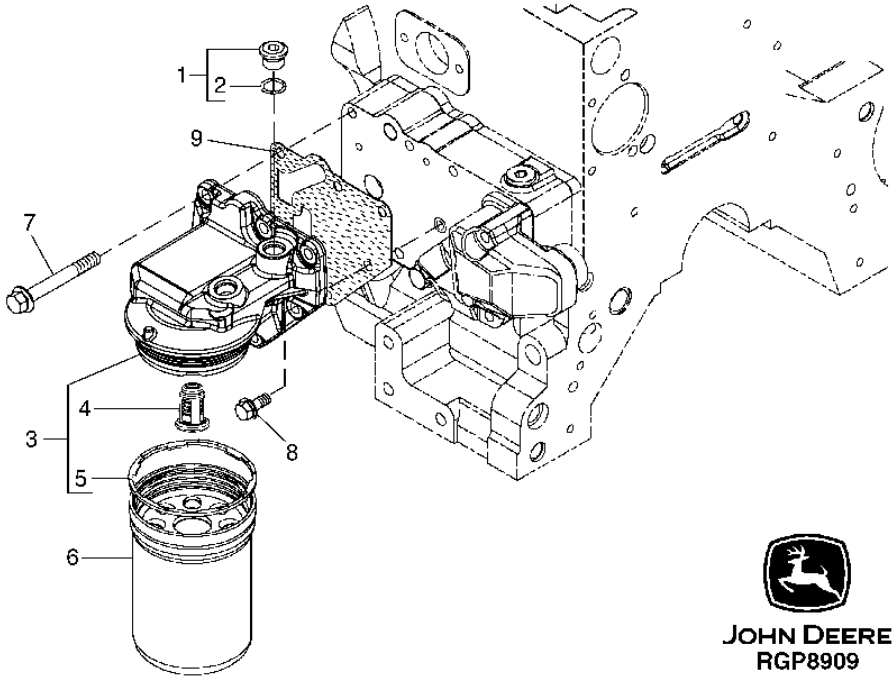

KEY	PART NO.	PART NAME	QTY.	ENGINE SERIAL NO.	REMARKS
1	RE52242	DRAIN PLUG	2		M16 X 1.5
2	51M7042	O-RING	1		13.300 X 2.200 MM
3	RE504562	FILTER HEAD	1		(MARKED R502338)
4	RE504543	VALVE	1		
5	R502513	SEAL	1		
6	RE504836	OIL FILTER	1		(ALSO ORDER R502513)
7	19M7802	SCREW	5		M8 X 65
8	RE67238	SCREW	1		M22 X 1.5
9	R501484	GASKET	1		

ENGINE VENTILATING SYSTEM
SYSTEME DE VENTILATION DU MOTEUR
SISTEMA DE VENTILACION DEL MOTOR

RGP10130 -UN-11NOV03

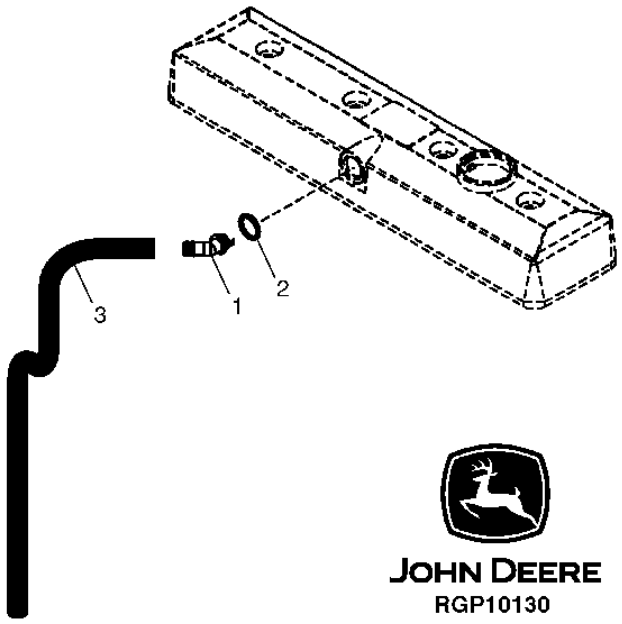

KEY	*PART NO.*	*PART NAME*	*QTY.*	*ENGINE SERIAL NO.*	*REMARKS*
1	R123586	ELBOW FITTING	1		
2	R72328	O-RING	1		
3	TY22505	HOSE	AR		1100 MM (43.3") (CUT TO LENGTH)

ROCKER ARM COVER
COUVERCLE DE CULBUTEURS
TAPA DE BALANCINES

RGP9330 -UN-29JAN03

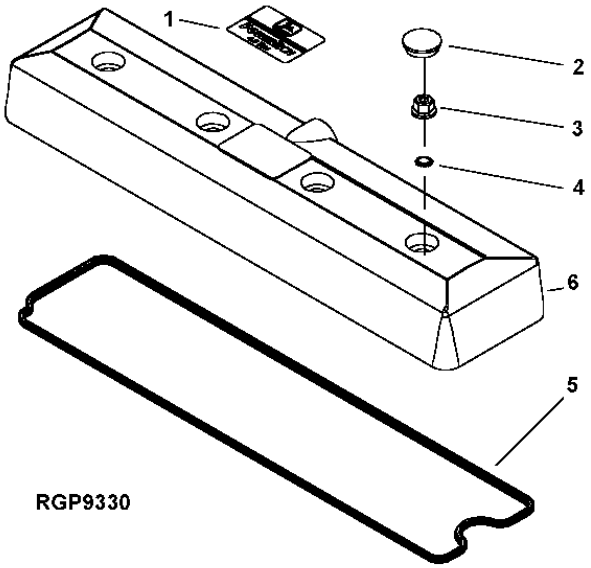

KEY	PART NO.	PART NAME	QTY.	ENGINE SERIAL NO.	REMARKS
1	R116324	MEDALLION	1		
2	H23125	PLUG	4		
3	R123574	NUT	4		
4	R123575	O-RING	4		
5	R123542	GASKET	1		
	RE520539	GASKET KIT	1		OPTIONAL HIGH TEMPERATURE
6	RE502969	VALVE COVER	1		

CYLINDER HEAD, HEAD GASKET AND VALVES
CULASSE, JOINT DE CULASSE ET SOUPAPES
CULATA, EMPAQUETADURA DE CULATA Y VALVULAS

TP80018 -UN-22OCT98

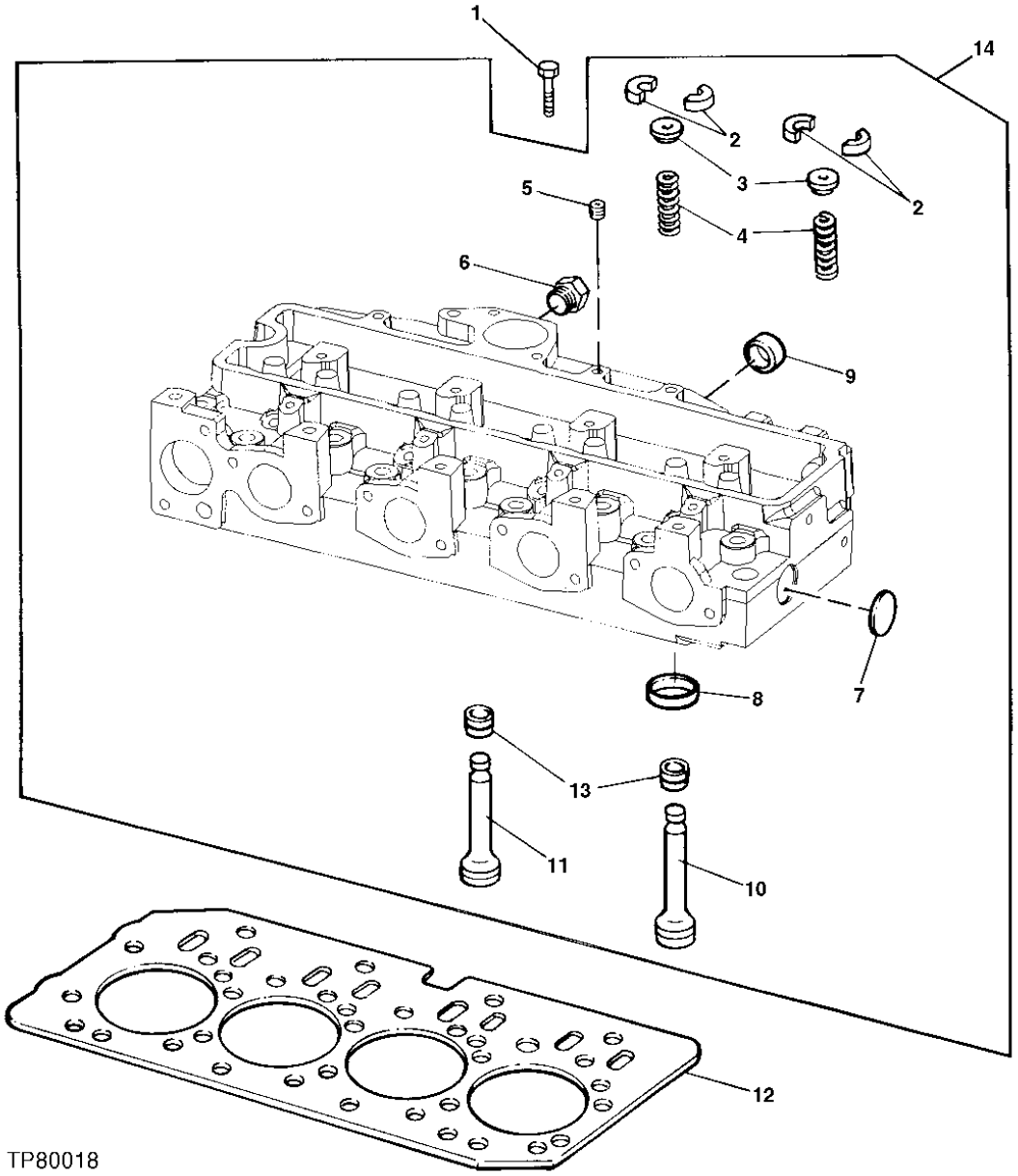

TP80018

CYLINDER HEAD, HEAD GASKET AND VALVES
CULASSE, JOINT DE CULASSE ET SOUPAPES
CULATA, EMPAQUETADURA DE CULATA Y VALVULAS

KEY	*PART NO.*	*PART NAME*	*QTY.*	*ENGINE SERIAL NO.*	*REMARKS*
1	R85363	CAP SCREW	18		
2	R91889	RETAINER	16		
3	RE60005	ROTATOR	8		
4	R26125	SPRING	8		
5	R104592	PIPE PLUG	1		
6	T58477	FITTING	1		
	R26906	O-RING	1		
7	CD16284	PLUG	1		
8	R98063	VALVE SEAT INSERT	4		STANDARD SIZE INTAKE
	R98335	VALVE SEAT INSERT	4		OVERSIZE INTAKE
	R85687	VALVE SEAT INSERT	4		STANDARD SIZE EXHAUST
	R93910	VALVE SEAT INSERT	4		OVERSIZE EXHAUST
9	R43409	PLUG	2		
10	R90692	EXHAUST VALVE	4		
11	R98062	INTAKE VALVE	4		
12	R116515	ENGINE CYLINDER HEAD GASKET	1		
13	RE31617	SEAL	8		
14	RE57234	CYLINDER HEAD	1		(MARKED R121402)

EXHAUST MANIFOLD
COLLECTEUR D'ECHAPPEMENT
COLECTOR DE ESCAPE

RGP6145 -UN-20MAR00

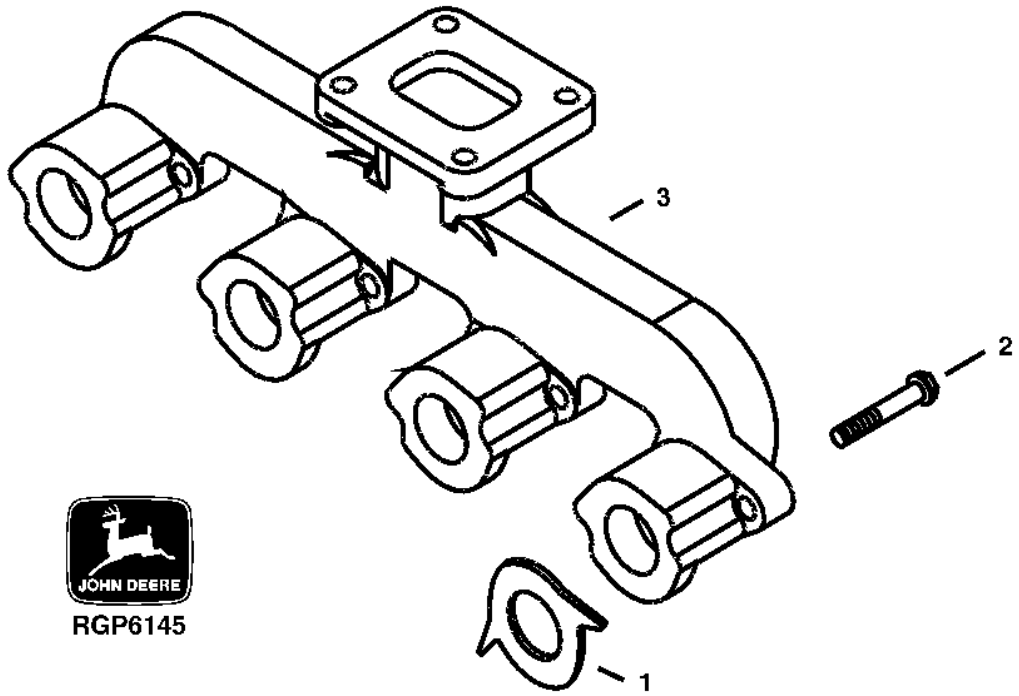

KEY	PART NO.	PART NAME	QTY.	ENGINE SERIAL NO.	REMARKS
1	R90658	GASKET	4		
2	19M7810	SCREW	8		M10 X 80
3	R132260	EXHAUST MANIFOLD	1		

MEMORANDA
MEMORANDA
MEMORANDA

FUEL INJECTION SYSTEM
CIRCUIT D'INJECTION DE CARBURANT
SISTEMA DE INYECCION DE COMBUSTIBLE

RGP10125 -UN-11NOV03

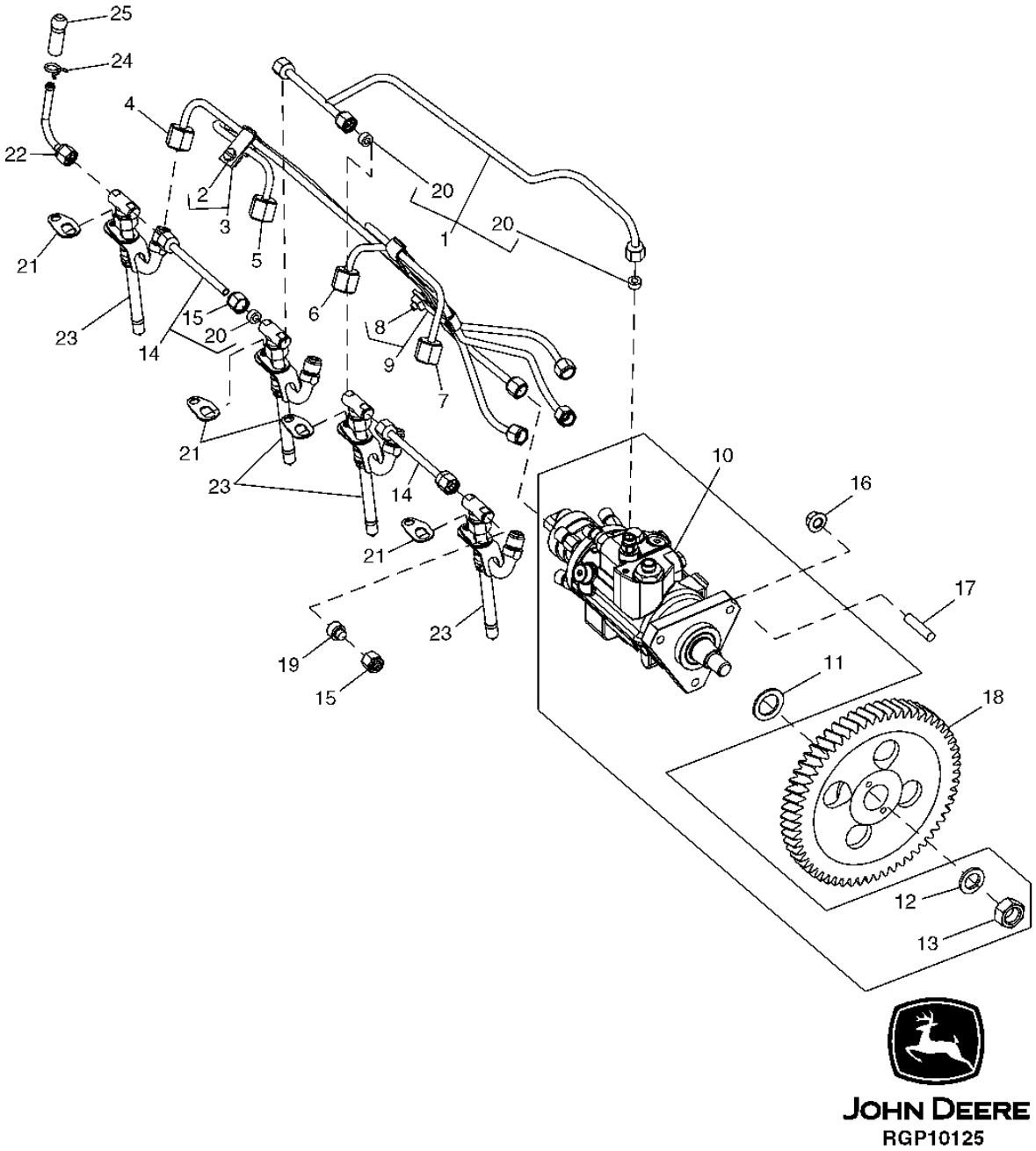

FUEL INJECTION SYSTEM
CIRCUIT D'INJECTION DE CARBURANT
SISTEMA DE INYECCION DE COMBUSTIBLE

KEY	PART NO.	PART NAME	QTY.	ENGINE SERIAL NO.	REMARKS
1	RE507598	FUEL LINE	1		LEAK-OFF
2	19M7923	CAP SCREW	2		M6 X 12
3	RE19797	CLAMP	2		
4	RE507649	FUEL LINE	1		NO.4
5	RE507648	FUEL LINE	1		NO.3
6	RE507647	FUEL LINE	1		NO.2
7	RE507646	FUEL LINE	1		NO.1
8	19M7923	CAP SCREW	1		M6 X 12
9	RE19799	CLAMP	1		
10	RE518086	FUEL INJECTION PUMP	1		
	RE521822	KIT	1		TEMP SENSOR
	RE521823	KIT	1		PRESS REG & FUEL INLET
	RE521824	KIT	1		TIMING PIN HOLE
	RE521825	KIT	1		TRNS PUMP SCREW & VENT
	RE522109	KIT	1		SOLENOID CONNECTOR ASSY
	SE501234	FUEL INJECTION PUMP	1		(REMANUFACTURED FOR RE518086)
11	R502076	O-RING	1		
12	R132874	WASHER	1		
13	R91360	NUT	1		
14	RE68748	TUBE	2		
15	R123593	TUBE NUT	6		
16	14M7298	FLANGE NUT	3		M8
17	R116386	STUD	3		
18	R505472	GEAR	1		
19	AR85519	PLUG	1		
20	R51936	SEALING WASHER	7		
21	RE508716	CLAMP	4		
22	AR104650	FUEL LINE	1		
23	RE507766	INJECTION NOZZLE	4		
	SE500830	INJECTION NOZZLE	1		REMANUFACTURED (PKG OF 4)
	SE501103	NOZZLE	AR		REMANUFACTURED (PKG OF 1)
	RE531116	KIT	1		
24	T13254	CLAMP	1		
25	K1011176	SLEEVE	1		

AIR INLET
ARRIVEE D'AIR
ENTRADA DE AIRE

RGP10089 -UN-28AUG03

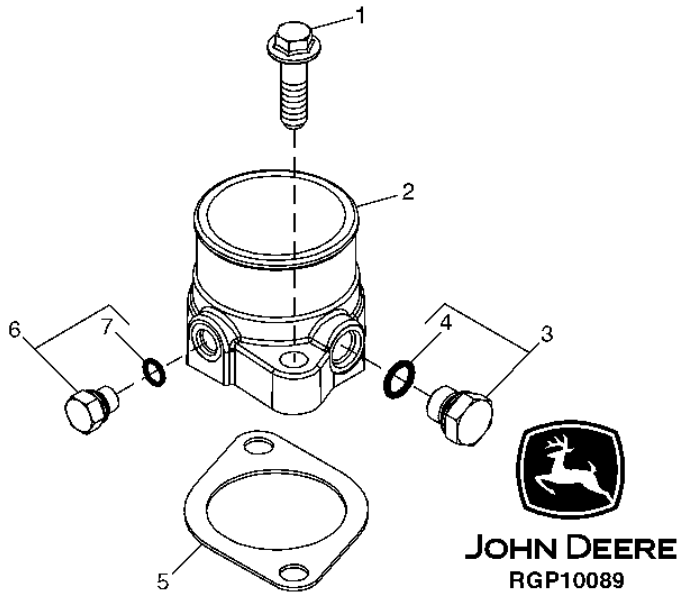

KEY	PART NO.	PART NAME	QTY.	ENGINE SERIAL NO.	REMARKS
1	R500394	SCREW	2		
2	R504694	INTAKE MANIFOLD	1		
3	RE60071	FITTING	1		
4	51M7039	O-RING	1		
5	R81275	GASKET	1		
6	RE46684	FITTING PLUG	NA		
7	51M7041	O-RING	1		

MEMORANDA
MEMORANDA
MEMORANDA

ENGINE BALANCER SHAFT
ARBRE DE BALANCIER DE MOTEUR
EJE DEL EQUILIBRADOR DEL MOTOR

T153911 -UN-11APR02

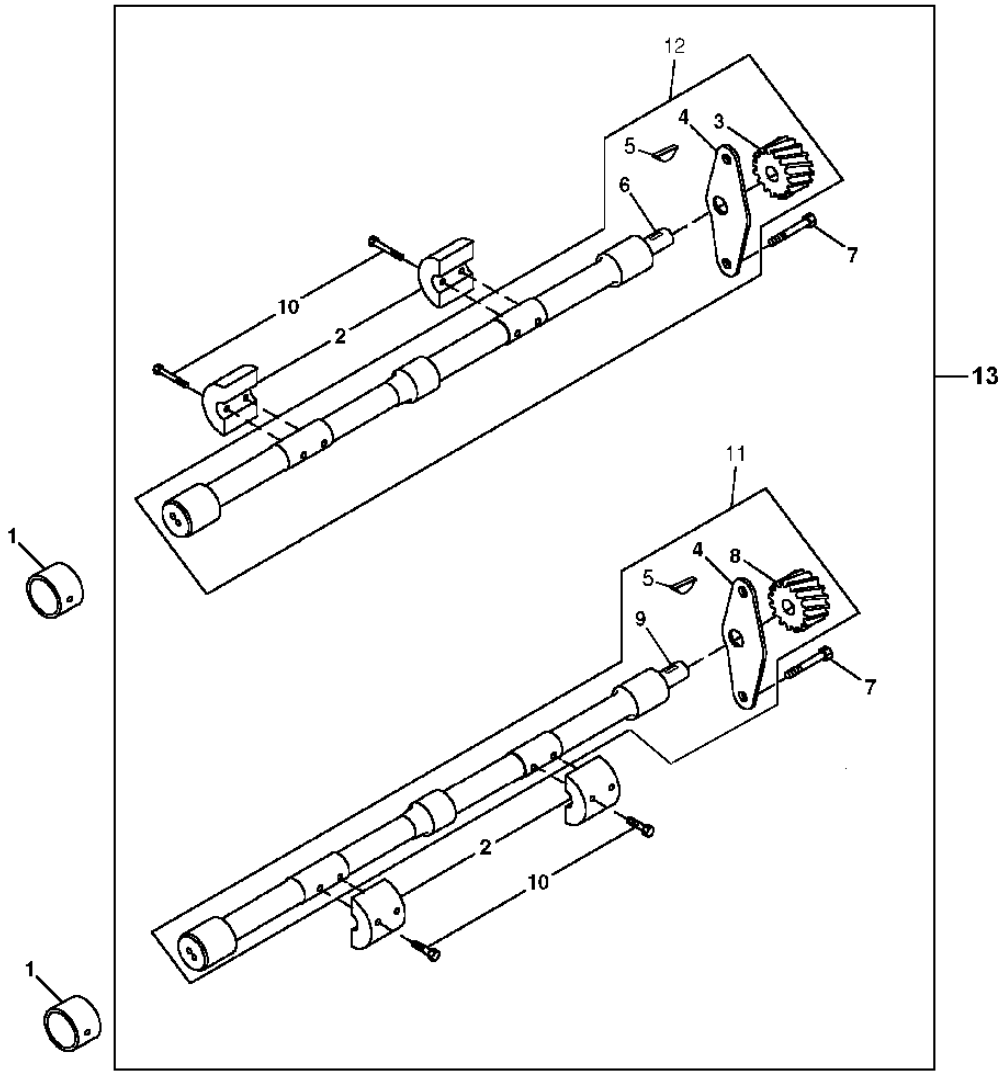

T153911

ENGINE BALANCER SHAFT
ARBRE DE BALANCIER DE MOTEUR
EJE DEL EQUILIBRADOR DEL MOTOR

KEY	*PART NO.*	*PART NAME*	*QTY.*	*ENGINE SERIAL NO.*	*REMARKS*
1	R115299	BUSHING	6		
2	R500650	WEIGHT	4		HEAVY DUTY
3	.....	GEAR	1		Z=15, (ORDER RE500449)
4	.....	PLATE	2		(ORDER RE500448 OR RE500449)
5	R133303	SHAFT KEY	2		
6	.....	BALANCER SHAFT	1		LH, (MARKED R500266) (ORDER RE500449)
7	19M8998	SCREW	4		M8 X 12
8	.....	GEAR	1		Z=15, (ORDER RE500448)
9	.....	BALANCER SHAFT	1		RH, (MARKED R500668) (ORDER RE500448)
10	19M8882	SCREW	8		M8 X 40
11	RE500448	BALANCER SHAFT	1		RH
12	RE500449	BALANCER SHAFT	1		LH
13	RE504742	GATHERING NUMBER	1		

TURBOCHARGER AND OIL LINES
TURBOCOMPRESSEUR ET CONDUITES D'HUILE
TURBOALIMENTADOR Y LINEAS DE ACEITE

RGP10132 -UN-12NOV03

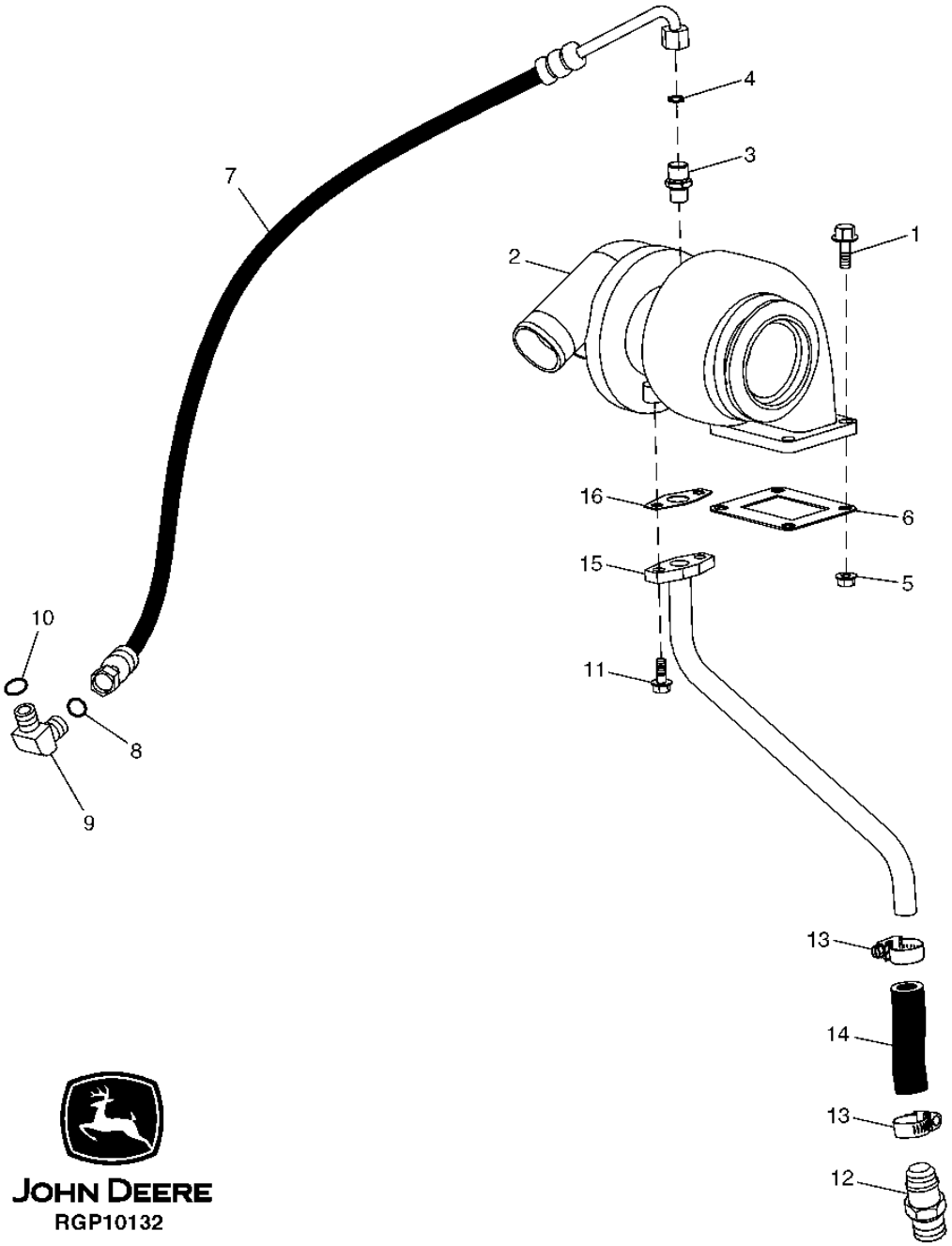

TURBOCHARGER AND OIL LINES
TURBOCOMPRESSEUR ET CONDUITES D'HUILE
TURBOALIMENTADOR Y LINEAS DE ACEITE

KEY	*PART NO.*	*PART NAME*	*QTY.*	*ENGINE SERIAL NO.*	*REMARKS*
1	19M8162	SCREW	4		M10 X 40
2	RE515977	TURBOCHARGER	1		(MARKED RE517786)
3	M87733	ADAPTER FITTING	1		
4	R63548	O-RING	1		
5	14M7296	FLANGE NUT	4		M10
6	R92097	GASKET	1		
7	RE503211	HYDRAULIC HOSE	1		
8	51M7042	O-RING	1		
9	38H5035	ELBOW FITTING	1		
10	T77613	O-RING	1		
11	19M7862	SCREW	2		M6 X 20
12	RE54885	HOSE FITTING	1		
13	RE65978	CLAMP	2		
14	R120013	HOSE	1		(CUT TO LENGTH)
15	RE509570	OIL LINE	1		
16	R503891	GASKET	1		

TIMING GEAR COVER AND WATER PUMP
CARTER DE DISTRIBUTION ET POMPE A EAU
CUBIERTA DE ENGRANAJES DE DISTRIBUCION Y BOMBA DE AGUA

RGP8338 -UN-07DEC01

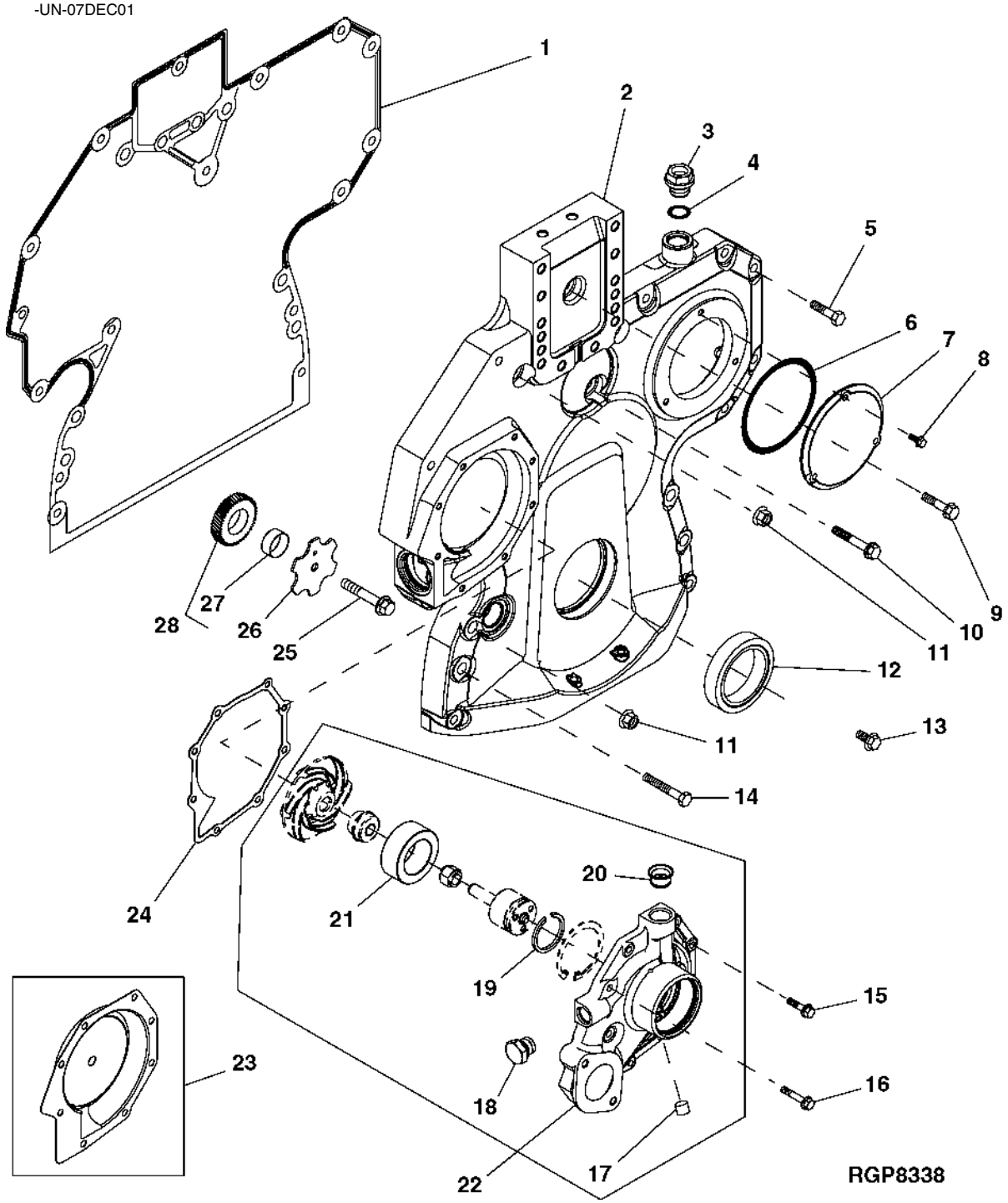

THIS PARTS LISTING IS CONTINUED

TIMING GEAR COVER AND WATER PUMP
CARTER DE DISTRIBUTION ET POMPE A EAU
CUBIERTA DE ENGRANAJES DE DISTRIBUCION Y BOMBA DE AGUA

KEY	PART NO.	PART NAME	QTY.	ENGINE SERIAL NO.	REMARKS
1	R136515	GASKET	1	-XXXXXX	(USE WITH R504724)
	R520131	GASKET	1	XXXXXX-	(USE WITH R520129)
2	R504724	COVER	1	-XXXXXX	(SUB RE515978, R520129 AND R520131) (USE WITH R136515)
	R520129	COVER	1	XXXXXX-	(USE WITH R520131)
3	RE517370	FITTING	1		
4	51M7044	O-RING	1		
5	19M8317	SCREW	10		M8 X 40
6	R121424	O-RING	1		
7	R121411	COVER	1		
8	19M7775	SCREW	3		M6 X 16
9	19M8291	SCREW	1		M8 X 35
10	RE67239	SCREW	1		M8 X 45
11	14M7296	FLANGE NUT	6		M10
12	RE516340	KIT	1		(MARKED RE52346 OR RE505515) (SUB FOR RE59810)
13	19M7801	SCREW	1		M8 X 60
14	19M7979	SCREW	2		M8 X 55
15	19M7863	SCREW	5		M6 X 25
16	19M7796	SCREW	3		M6 X 30
17	R100369	FILTER	2		
18	RE46685	FITTING PLUG	2		(INCLUDES 51M7043)
	51M7043	O-RING	2		
19	A364R	SNAP RING	1		
20	R123226	GASKET	1		
21	.....	BALL BEARING	1		(ORDER RE71240)
22	RE505981	WATER PUMP	1		(MARKED R503509)
	RE71240	KIT	1		WATER PUMP REPAIR
23	RE508566	INSERT	1		
24	R123417	GASKET	1		
25	19M8966	SCREW	1		M10 X 50
26	R131283	THRUST WASHER	1		
27	R114193	BUSHING	1		
28	RE56369	GEAR	1		
..	RE506380	COVER	1		(A)

(A) CONTAINS WATER PUMP, TIMING GEAR COVER, SEALS AND HARDWARE
(A) CONTIENT POMPE A EAU, CARTER DE DISTRIBUTION, JOINTS ET BOULONNERIE
(A) CONTIENE BOMBA DE AGUA, CUBIERTA ENGRANAJE DISTRIBUCION, SELLOS Y TORNILLERIA

TIMING GEAR COVER SERVICE KIT
KIT ENTRETIEN CARTER DE DISTRIBUTION
JUEGO DE SERVICIO DE CUBIERTA DE ENGRANAJES DE DISTRIBUCION

RGP8516 -UN-23JAN02

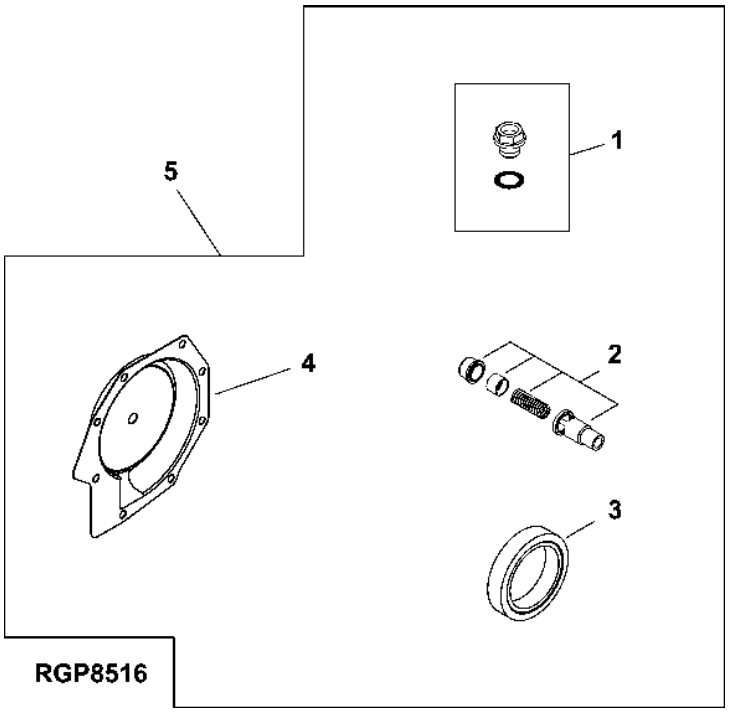

KEY	PART NO.	PART NAME	QTY.	ENGINE SERIAL NO.	REMARKS
1	RE517370	FITTING	1		
2	RE505501	BLEED VALVE	1		
3	RE516340	KIT	1		(MARKED RE52346 OR RE505515) (SUB FOR RE59810)
4	RE508566	INSERT	1		
5	RE515978	KIT	1		

WATER PUMP INLET AND PULLEY
ENTREE DE POMPE A EAU ET POULIE
ENTRADA DE BOMBA DE AGUA Y POLEA

TP80015 -UN-19OCT98

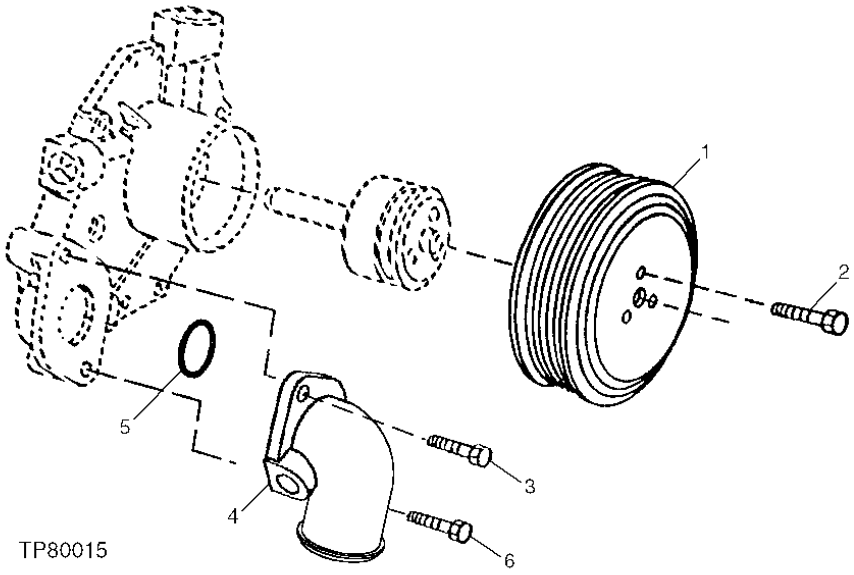

KEY	PART NO.	PART NAME	QTY.	ENGINE SERIAL NO.	REMARKS
1	R121038	PULLEY	1		
2	19M7774	SCREW	3		M6 X 12
3	19M7867	SCREW	1		M8 X 25
4	R121635	ELBOW FITTING	1		
5	R89944	O-RING	1		
6	19M7802	SCREW	1		M8 X 65

THERMOSTAT AND THERMOSTAT COVER
THERMOSTAT ET COUVERCLE DE THERMOSTAT
TERMOSTATO Y CUBIERTA DEL TERMOSTATO

RGP9956 -UN-28AUG03

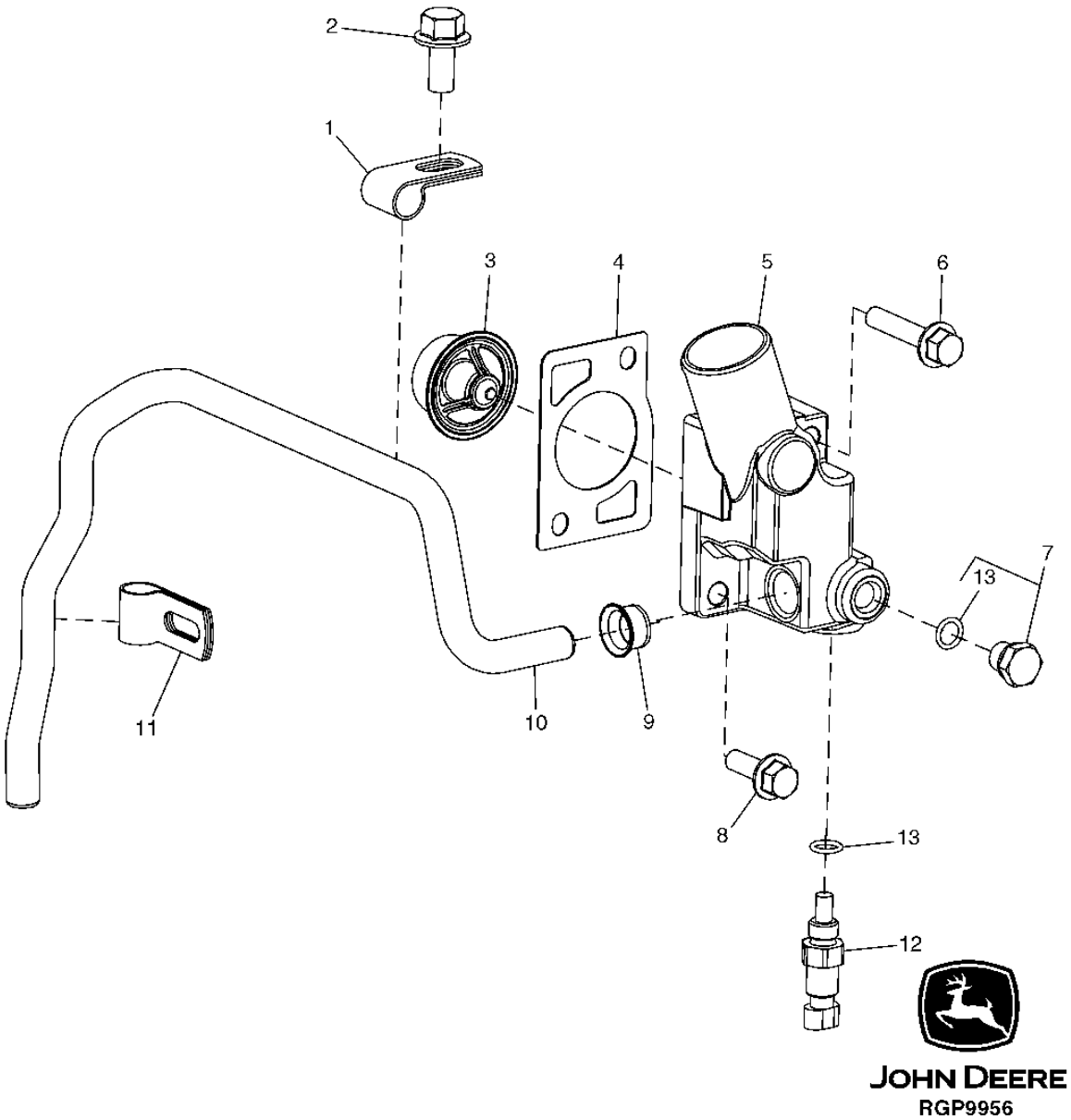

THERMOSTAT AND THERMOSTAT COVER
THERMOSTAT ET COUVERCLE DE THERMOSTAT
TERMOSTATO Y CUBIERTA DEL TERMOSTATO

KEY	PART NO.	PART NAME	QTY.	ENGINE SERIAL NO.	REMARKS
1	R123323	CLAMP	1		
2	19M7788	SCREW	1		M12 X 25
3	RE522076	THERMOSTAT	1		
4	R502814	GASKET	1		
5	R131016	COVER	1		
6	19M8292	SCREW	1		M10 X 50
7	RE46684	FITTING PLUG	1		
8	19M7786	SCREW	1		M10 X 30
9	R123226	GASKET	1		
10	R501144	TUBE	1		
11	R123324	CLAMP	1		
12	RE52722	COOLANT TEMPERATURE SENSOR	1		
13	51M7041	O-RING	2		

ENGINE OIL COOLER AND ADAPTER
REFROIDISSEUR D'HUILE MOTEUR ET ADAPTATEUR
ENFRIADOR DE ACEITE DEL MOTOR Y ADAPTADOR

RGP8862 -UN-15JUL02

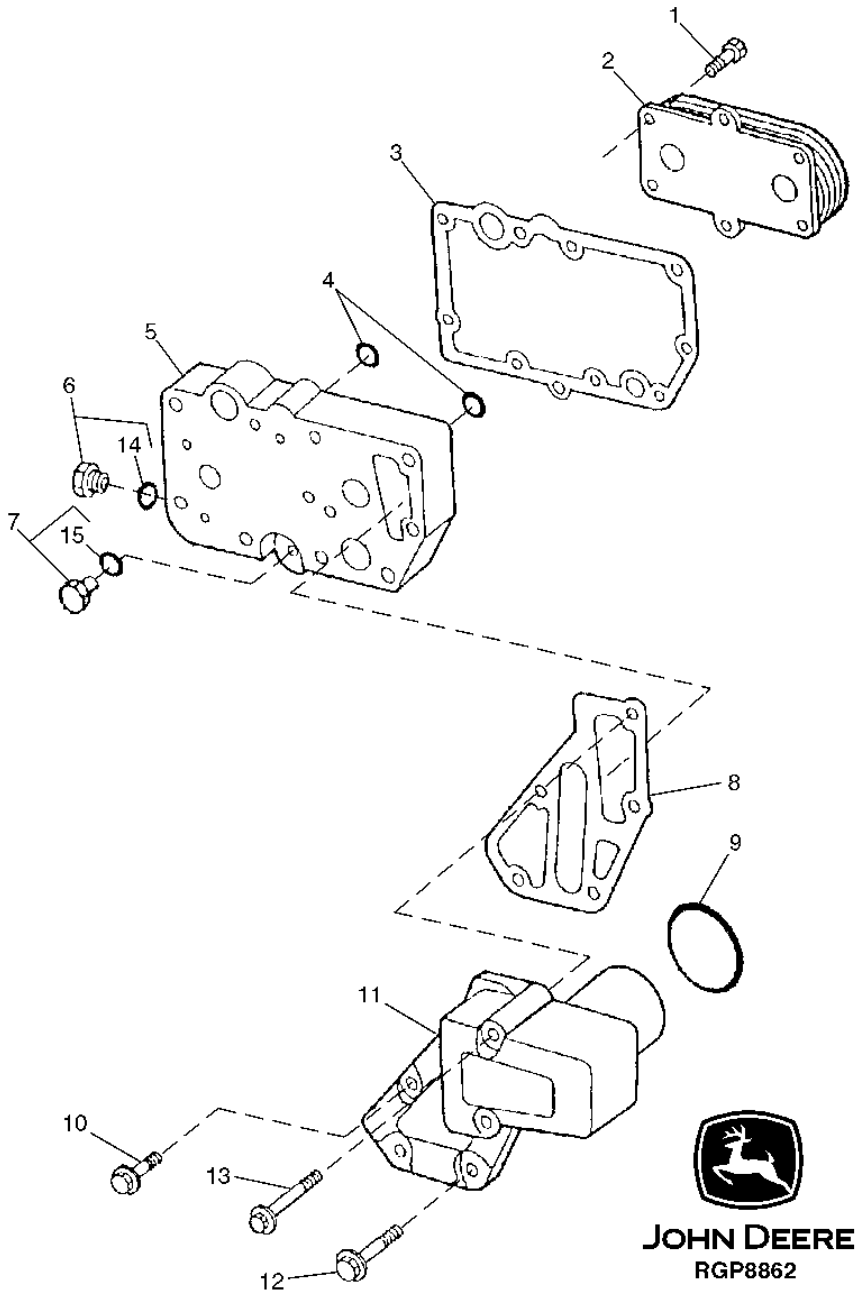

ENGINE OIL COOLER AND ADAPTER
REFROIDISSEUR D'HUILE MOTEUR ET ADAPTATEUR
ENFRIADOR DE ACEITE DEL MOTOR Y ADAPTADOR

KEY	*PART NO.*	*PART NAME*	*QTY.*	*ENGINE SERIAL NO.*	*REMARKS*
1	RE67231	SCREW	6		M6 X 16, (WITH PRE-APPLIED SEALANT)
2	RE56690	OIL COOLER	1		(7 PLATE)
	RE522821	OIL COOLER	1		(INCLUDES RE56690, (6) RE67231, R123471 AND (2) T122075)
3	R123501	GASKET	1		
4	T122075	O-RING	2		
5	R123471	HOUSING	1		
6	RE46685	FITTING PLUG	1		
7	RE46686	FITTING PLUG	1		
8	R501428	GASKET	1		
9	R504734	O-RING	1		
10	19M7802	SCREW	2		M8 X 65
11	R502811	ADAPTER FITTING	1		
12	19M7970	SCREW	2		M8 X 100
13	RE67238	SCREW	1		M8 X 20, (WITH PRE-APPLIED SEALANT)
14	51M7043	O-RING	1		
15	51M7040	O-RING	1		
..	RE522820	OIL COOLER	1		COMPLETE SERVICE UNIT

FINAL FUEL FILTER AND LINES
FILTRE A CARBURANT FINAL ET CONDUITES
FILTRO FINAL DE COMBUSTIBLE Y LINEAS

RGP10126 -UN-11NOV03

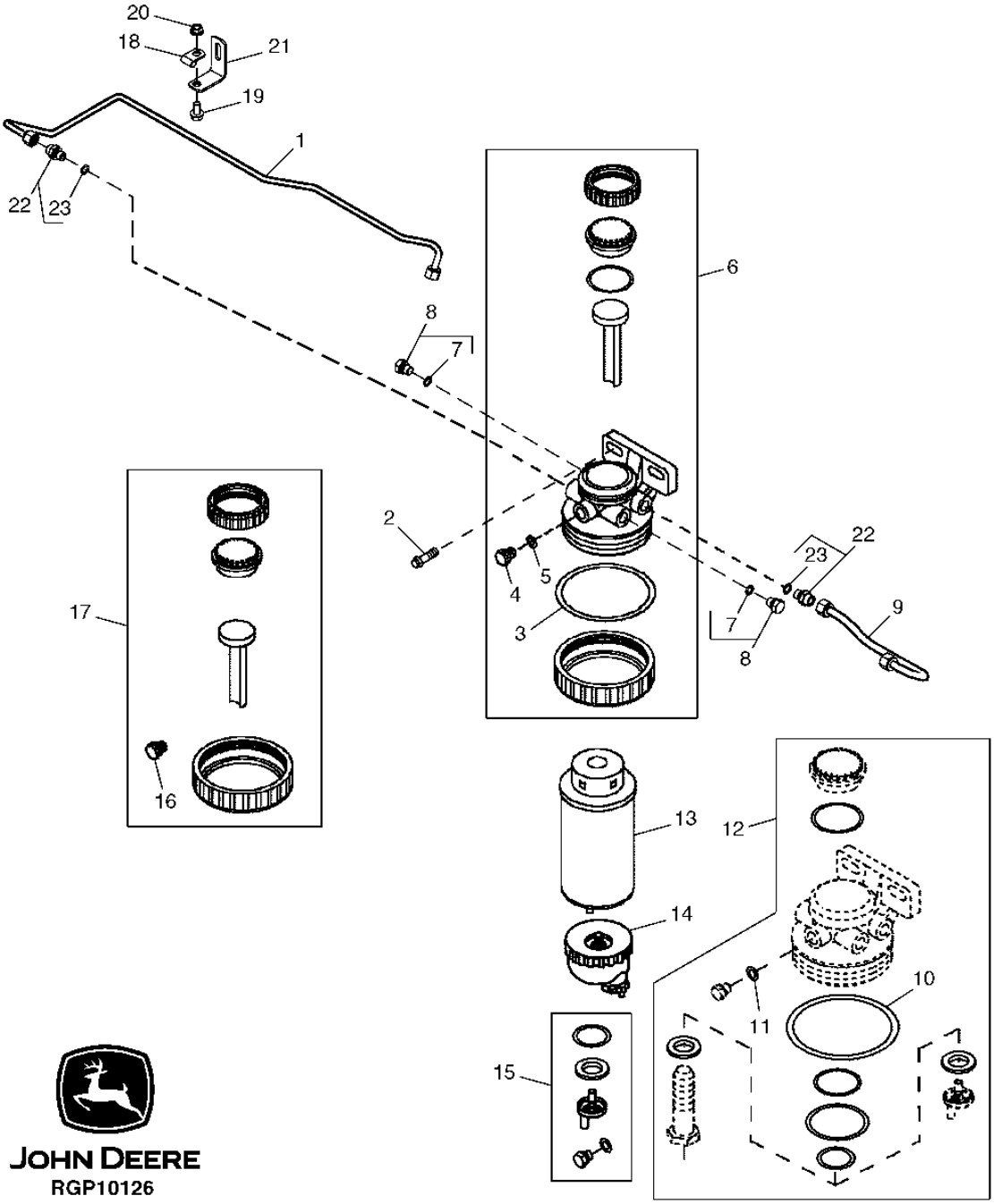

FINAL FUEL FILTER AND LINES
FILTRE A CARBURANT FINAL ET CONDUITES
FILTRO FINAL DE COMBUSTIBLE Y LINEAS

KEY	PART NO.	PART NAME	QTY.	ENGINE SERIAL NO.	REMARKS
1	RE507597	FUEL LINE	1		
2	19M7784	SCREW	2		M10 X 20
3	R113565	O-RING	1		
4	R113563	DRAIN PLUG	1		
5	R113562	O-RING	1		
6	RE509794	FILTER HEAD	1		
7	51M7040	O-RING	1		9.300 X 2.200 MM
8	RE46686	FITTING PLUG	2		M12 X 1.5
9	RE60037	FUEL LINE	1		
10	R113565	O-RING	1		
11	R113562	O-RING	1		
12	RE516553	SEAL KIT	1		SEAL
	RE516512	O-RING KIT	1		O-RING WITHOUT HAND PRIMER (PKG 10)
13	RE509031	FILTER ELEMENT	1	-XXXXXX	FINAL 4.3" (109.2 MM) (SUB RE509032, THIS APPLICATION)
	RE509032	FILTER ELEMENT	1	XXXXXX-	FINAL 6.0" (152.4 MM) (SUB FOR RE509031, THIS APPLICATION) (ALSO ORDER R113565)
14	RE51650	SEDIMENT BOWL	1		
15	RE60854	DRAIN VALVE	1		VALVE
16	R113563	DRAIN PLUG	1		
17	RE526834	SEAL KIT	1		(SUB FOR RE51649)
18	T14050	CLAMP	1		
19	19M7865	SCREW	1		M8 X 16
20	14M7298	FLANGE NUT	1		M8
21	R116116	BRACKET	1		
22	RE60029	ADAPTER FITTING	2		M12X1.5 X 9/16"-24UNF
23	51M7040	O-RING	1		9.300 X 2.200 MM

FUEL FILTER HEATER KIT
KIT CHAUFFAGE FITLRE A CARBURANT
JUEGO DE CALEFACTOR DEL FILTRO DE COMBUSTIBLE

RGP6313 -UN-15MAY00

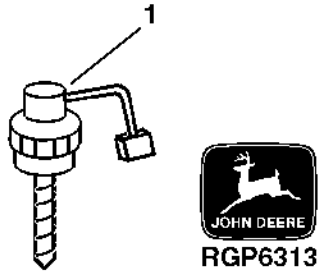

KEY	*PART NO.*	*PART NAME*	*QTY.*	*SERIAL NO.*	*REMARKS*
1	RE504134	KIT	1		(24 VOLT TOP LOAD HEATER)

FUEL TRANSFER PUMP
POMPE DE TRANSFERT DE CARBURANT
BOMBA DE TRANSFERENCIA DE COMBUSTIBLE

RGP8271 -UN-05NOV01

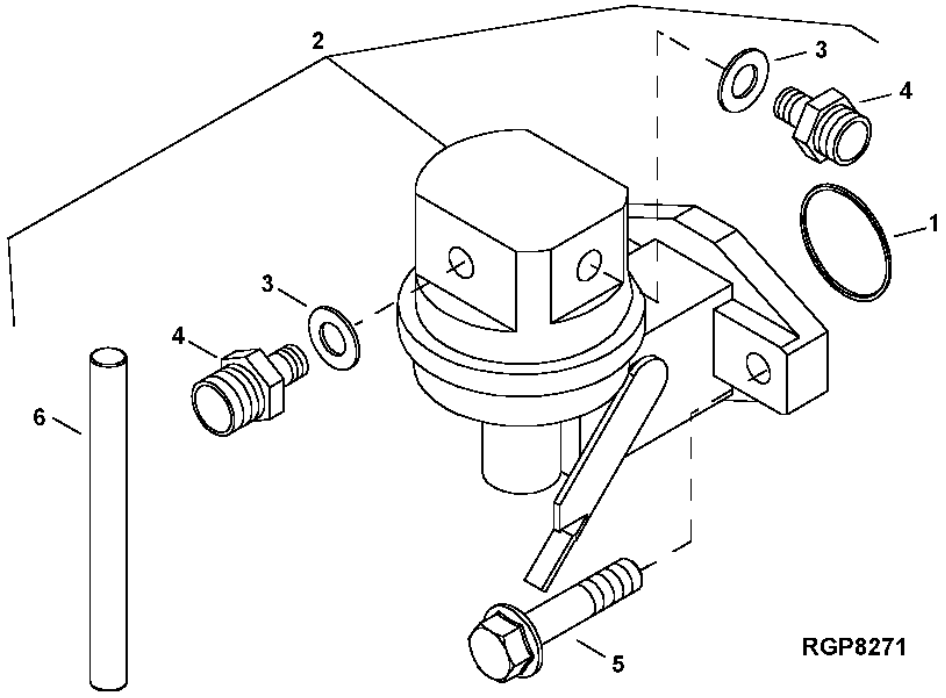

KEY	PART NO.	PART NAME	QTY.	ENGINE SERIAL NO.	REMARKS
1	R123273	O-RING	1		
2	RE66153	FUEL PUMP	1		
3	R500271	O-RING	2		
4	R500270	FITTING	2		
5	RE504233	CAP SCREW	2		
6	R133405	PIN	1		

STARTER MOTOR
DEMARREUR
ARRANCADOR

TP50833 -UN-15APR99

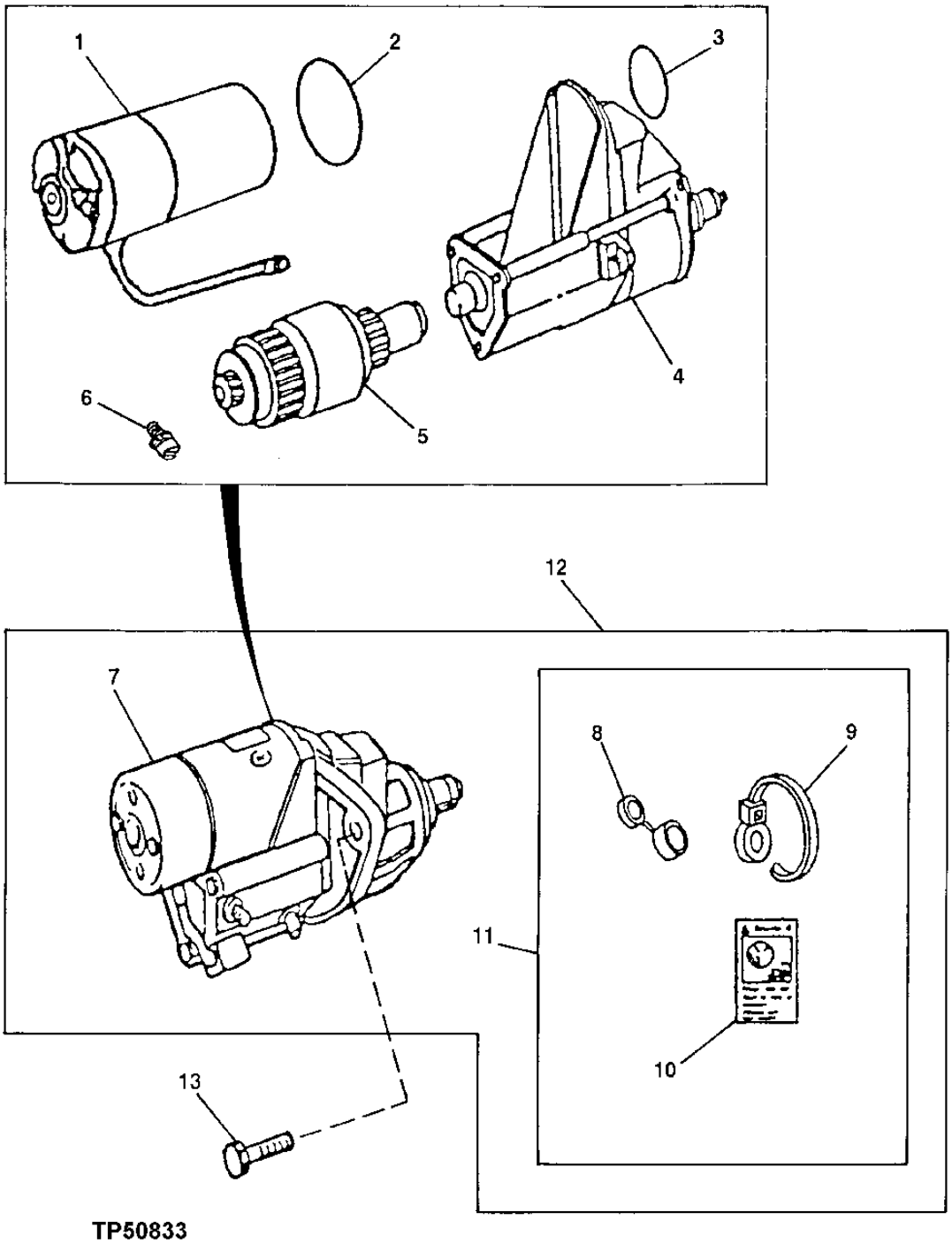

TP50833

STARTER MOTOR
DEMARREUR
ARRANCADOR

KEY	PART NO.	PART NAME	QTY.	ENGINE SERIAL NO.	REMARKS
1	.....	MOTOR	1		(ORDER RE501150)
2	R135509	SEAL	1		
3	R135510	O-RING	1		
4	RE70678	SWITCH	1		
5	RE70682	CLUTCH	1		
6	RE71256	SCREW WITH WASHER	1		M5 X .8
7	.....	STARTER MOTOR	1		(MARKED RE501060) (ORDER RE501150)
8	.....	COVER	1		(ORDER RE70756)
9	R96703	TIE BAND	1		
10	T146102	LABEL	1		
11	RE70756	KIT	1		
12	RE501150	STARTER MOTOR KIT	1		(INCLUDES R136052, 14M7299 AND 24M7047)
13	19M7786	SCREW	3		M10 X 30

UPPER ALTERNATOR BRACKET
SUPPORT SUPERIEUR ALTERNATEUR
ESCUADRA SUPERIOR DEL ALTERNADOR

RGP10131 -UN-12NOV03

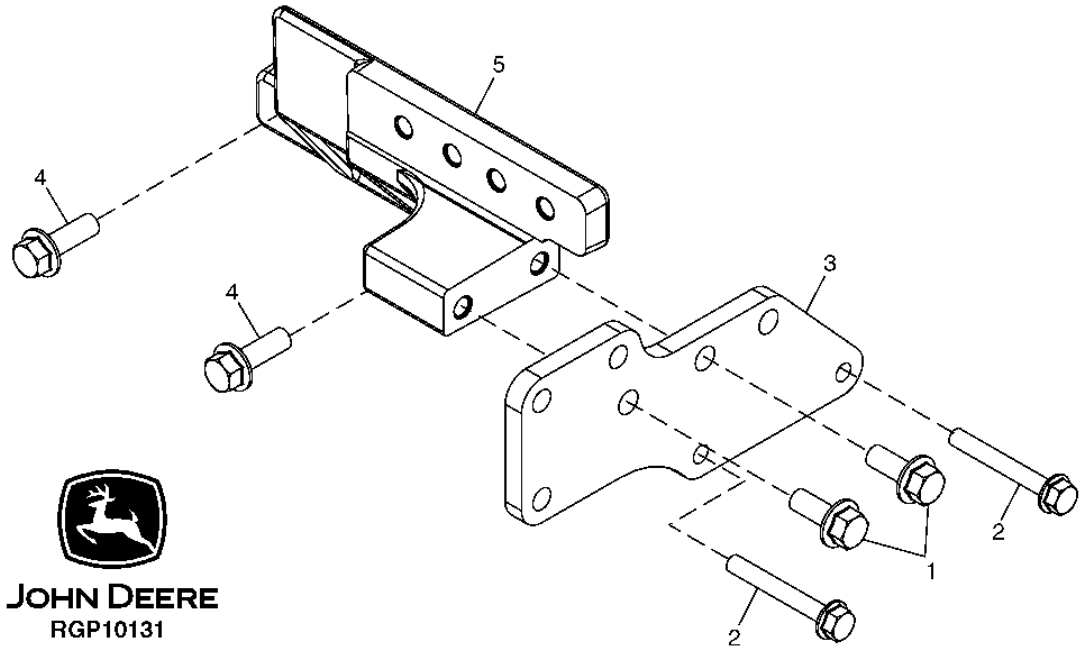

KEY	PART NO.	PART NAME	QTY.	ENGINE SERIAL NO.	REMARKS
1	19M7801	SCREW	2		M8 X 60
2	19M7785	SCREW	2		M10 X 25
3	R132913	SUPPORT	1		
4	19M7786	SCREW	2		M10 X 30
5	T179469	SUPPORT	1		

CRANKSHAFT PULLEY
POULIE DE VILEBREQUIN
POLEA DEL CIGUENAL

TP62091 -UN-07JUN99

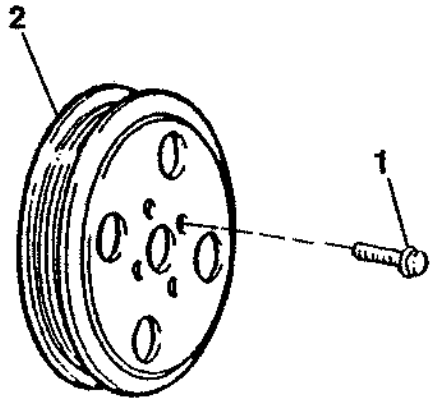

TP62091

KEY	PART NO.	PART NAME	QTY.	ENGINE SERIAL NO.	REMARKS
1	R121897	BOLT	4		
2	R500196	PULLEY	1		

AUTOMATIC BELT TENSIONER
TENDEUR COURROIE AUTOMATIQUE
TENSOR DE CORREA AUTOMATICO

RGP10123 -UN-06NOV03

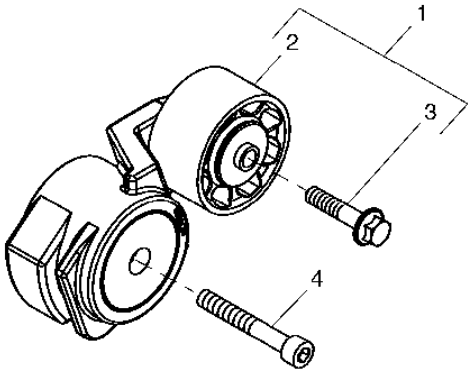

JOHN DEERE
RGP10123

KEY	PART NO.	PART NAME	QTY.	ENGINE SERIAL NO.	REMARKS
1	RE70536	PULLEY	1		
2	RE505264	PULLEY	1		
3	R503813	BOLT	1		LH THREAD
4	19M8131	SCREW	1		M10 X 70

FLYWHEEL
VOLANT-MOTEUR
VOLANTE

TP49563 -UN-17FEB97

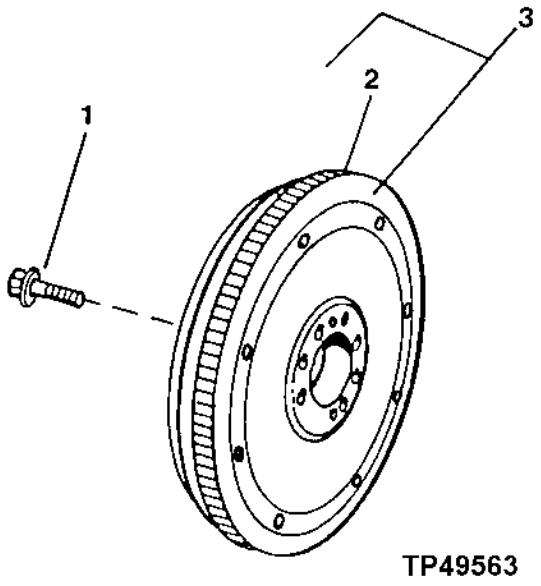

TP49563

KEY	PART NO.	PART NAME	QTY.	ENGINE SERIAL NO.	REMARKS
1	R135918	BOLT	4		
2	R28811	RING GEAR	1		
3	RE500398	FLYWHEEL	1		(MARKED R500219)

FLYWHEEL HOUSING
CARTER DE VOLANT-MOTEUR
CAJA DEL VOLANTE

RGP9634 -UN-15JUL03

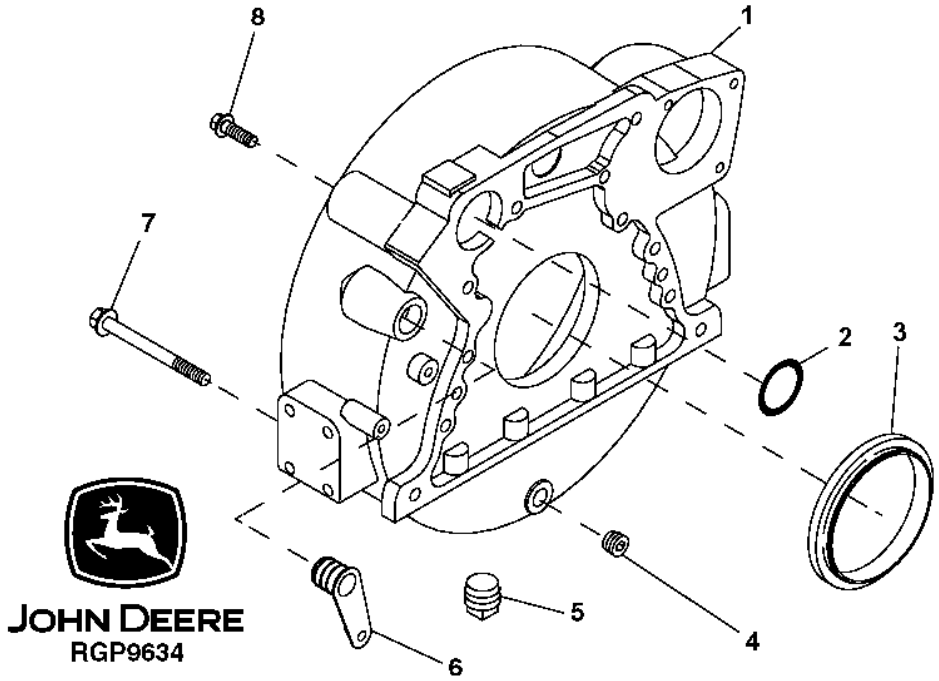

KEY	PART NO.	PART NAME	QTY.	ENGINE SERIAL NO.	REMARKS
1	R503450	HOUSING	1		(ALSO ORDER R61467)
2	R61467	O-RING	1		
3	RE44574	SEAL	1		
4	RE57836	PIPE PLUG	1		1/2", (SUB FOR 15H624)
5	15H562	PIPE PLUG	1		1"
6	R131769	PLUG	1		
7	19M8306	SCREW	4		M12 X 50
8	R135918	BOLT	8		

MEMORANDA
MEMORANDA
MEMORANDA

SHORT BLOCK ASSEMBLY
BLOC COURT
BLOQUE CORTO

CDP45457 -UN-07JAN03

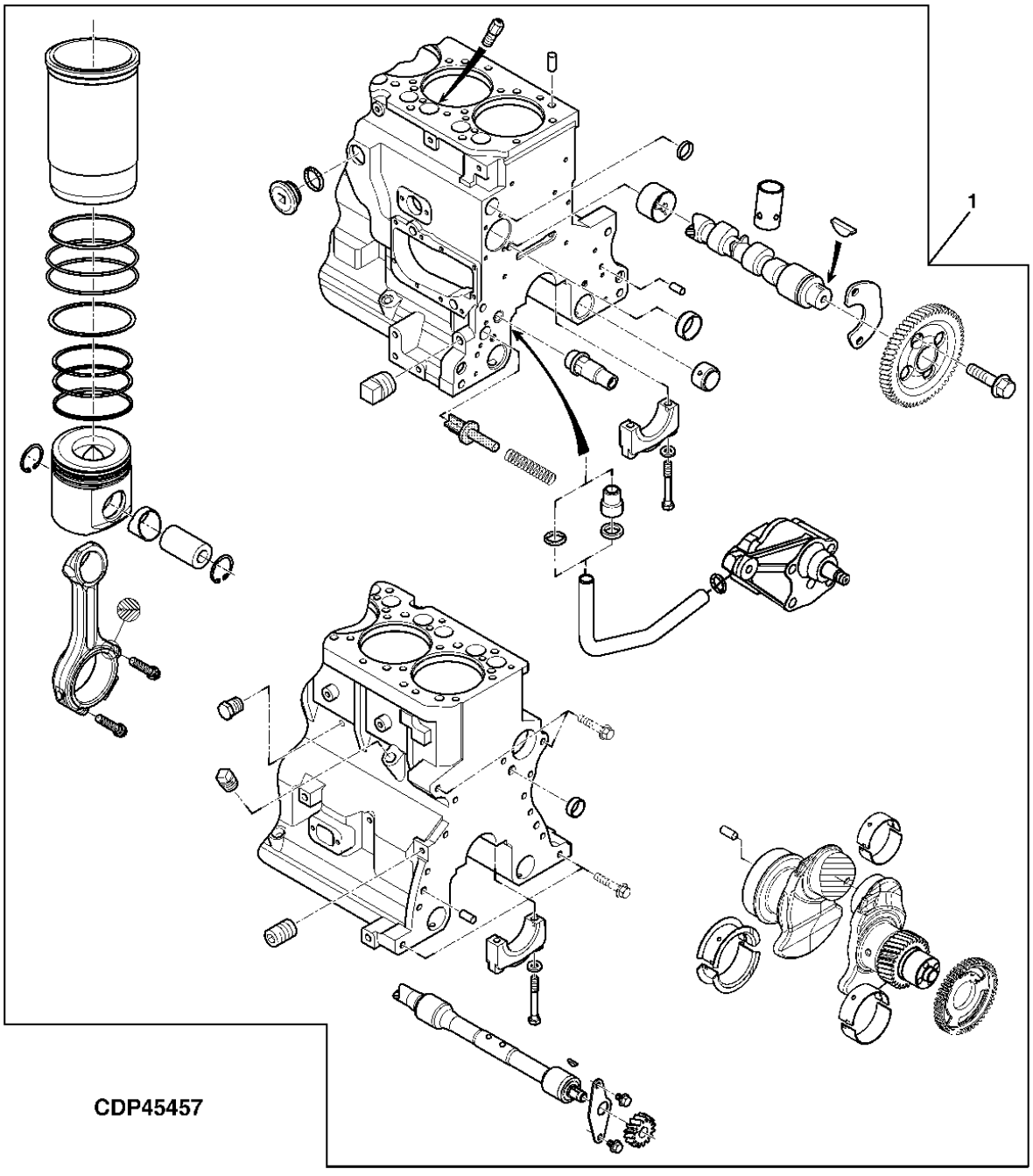

SHORT BLOCK ASSEMBLY
BLOC COURT
BLOQUE CORTO

KEY	*PART NO.*	*PART NAME*	*QTY.*	*ENGINE SERIAL NO.*	*REMARKS*
1	RE520023	SHORT BLOCK ASSEMBLY	1		(PISTON MARKED RE509540 OR RE507609)
..	SE501072	COMPLETE BLOCK ASSEMBLY	1		(REMANUFACTURED)

OVERHAUL KIT
JEU DE REMISE EN ETAT
JUEGO DE RECONSTRUCCION

TP28491 -UN-01JAN94

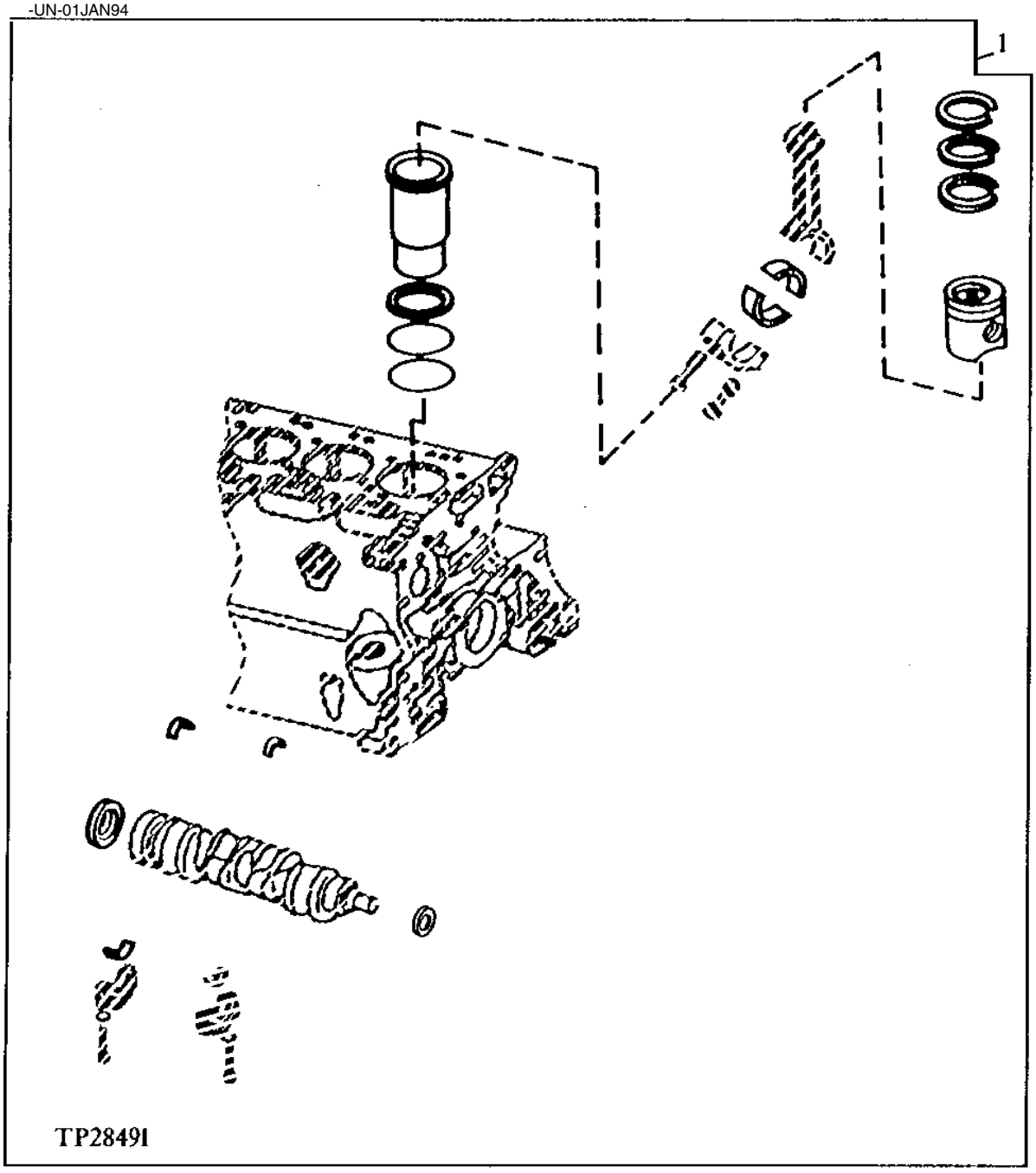

OVERHAUL KIT
JEU DE REMISE EN ETAT
JUEGO DE RECONSTRUCCION

KEY	*PART NO.*	*PART NAME*	*QTY.*	*ENGINE SERIAL NO.*	*REMARKS*
1	RE526971	ENGINE OVERHAUL KIT	1		(PISTON MARKED RE509540 OR RE507609)

ENGINE GASKET SETS
JEU DE JOINT DU MOTEUR
JUEGO DE JUNTA DEL MOTOR

RGP10182 -UN-05MAR04

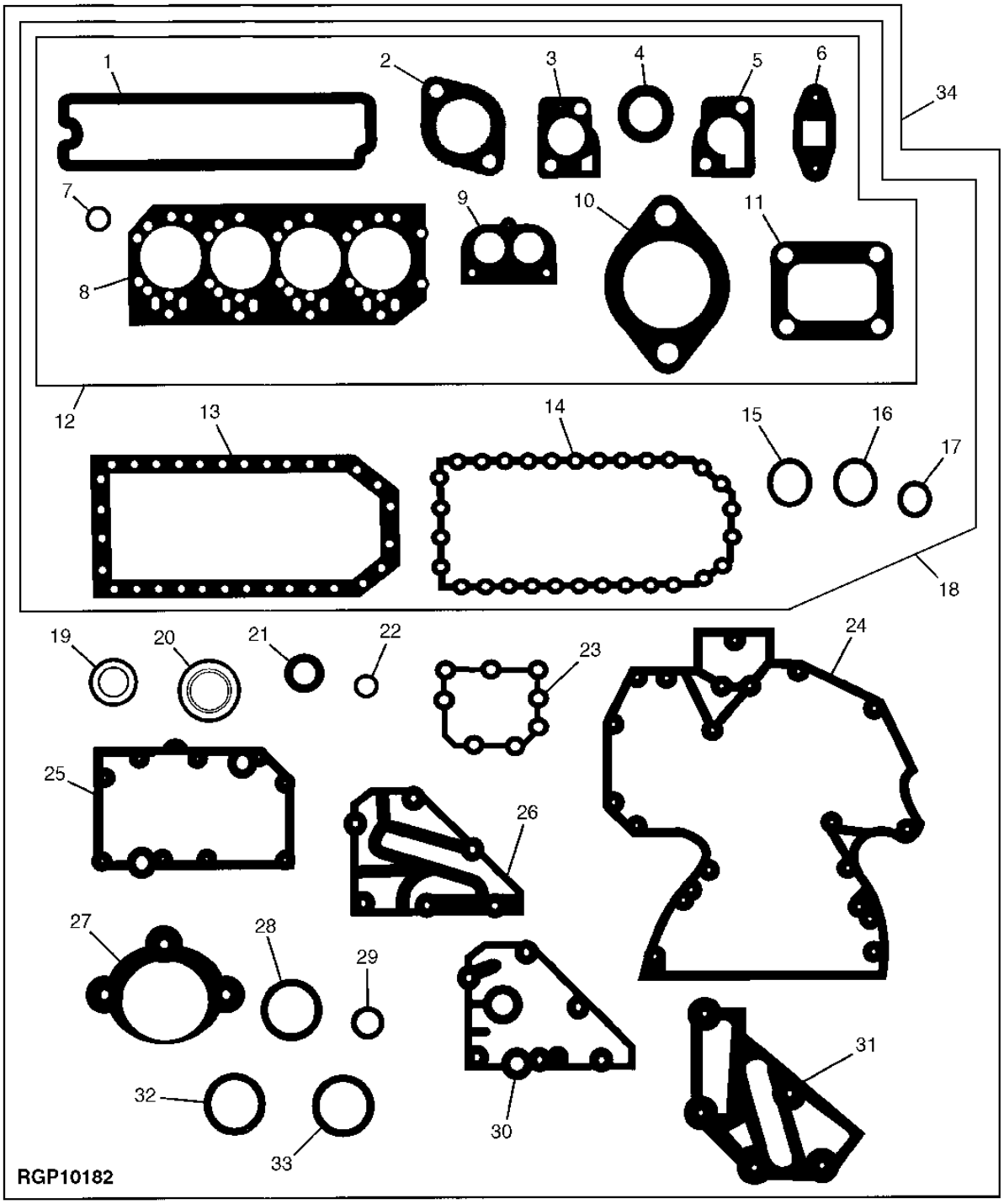

ENGINE GASKET SETS
JEU DE JOINT DU MOTEUR
JUEGO DE EMPAQUETADURA DEL MOTOR

KEY	PART NO.	PART NAME	QTY.	ENGINE SERIAL NO.	REMARKS
1	R123542	GASKET	1		
	RE520539	GASKET KIT	1		HIGH TEMPERATURE (OPTIONAL)
2	R521439	GASKET	4		(SUB FOR R90658)
3	R502814	GASKET	1		(SUB FOR R135896)
4	R123226	GASKET	2		
5	R123345	GASKET	1		
6	R123570	GASKET	1		
7	R123575	O-RING	4		
8	R116515	ENGINE CYLINDER HEAD GASKET	1		
9	R501373	GASKET	1		(SUB FOR R54638)
10	R81275	GASKET	1		
11	R92097	GASKET	1		(ORDER R90737) APPL
12	RE526670	GASKET KIT	1		CYLINDER HEAD REMOVAL, (SUB FOR RE66082)
13	R123353	GASKET	1		
14	R123352	GASKET	1		NLA, (ORDER R522030)
15	R75892	O-RING	1		
16	R97185	O-RING	1		
17	R61871	O-RING	1		
18	RE526671	GASKET KIT	1		IN CHASSIS OVERHAUL, (ALSO ORDER DD15664) (SUB FOR RE66084)
19	A4827R	WASHER	1		
20	RE44574	SEAL	1		
21	RE516340	KIT	1		(SUB FOR RE59810)
22	R123273	O-RING	1		
23	R123417	GASKET	1		
24	R136516	GASKET	1		
	R136515	GASKET	1		APPL
25	R123501	GASKET	1		
26	R502864	GASKET	1		(SUB FOR R123504)
27	R53108	GASKET	1		
28	R72328	O-RING	4		
29	R89944	O-RING	1		
30	R123525	GASKET	1		
31	R501428	GASKET	1		(SUB FOR R123502)
32	R61105	O-RING	2		
33	T122075	O-RING	2		
34	RE527042	GASKET KIT	1		COMPLETE MAJOR OVERHAUL, (ALSO ORDER DD15664) (SUB FOR RE66086 AND RE501455)

ETHER STARTING AID
AIDE AU DEMARRAGE ETHER
FLUIDO AUXILIAR DE ARRANQUE

TX1008855 -UN-14JUN06

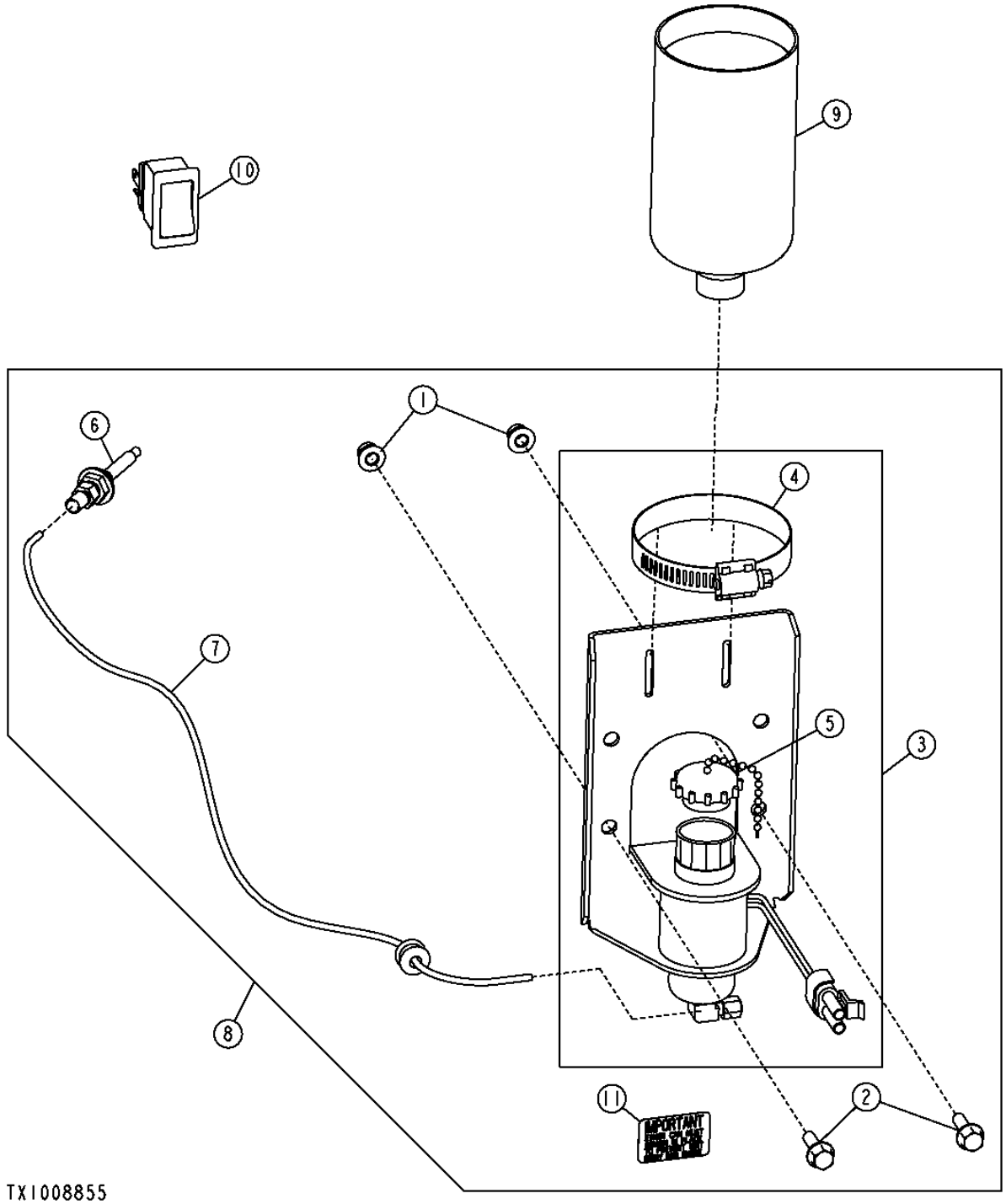

ETHER STARTING AID
AIDE AU DEMARRAGE ETHER
FLUIDO AUXILIAR DE ARRANQUE

KEY	*PART NO.*	*PART NAME*	*QTY.*	*SERIAL NO.*	*REMARKS*
1	14M7397	LOCK NUT	2		M6
2	19M7862	SCREW	2		M6 X 20
3	AT170759	SOLENOID	1		
4	AR21999	HOSE CLAMP	1		
5	AT171539	CAP (HAT)	1		
6	AT183222	NOZZLE	1		
7	T78593	TUBE	1		
	R27583	GROMMET	1		
8	**AT227576**	**FIELD INSTALLATION KIT**	**1**		**(ETHER START AID)**
9	AT171162	STARTING FLUID	1		
10	AT202842	TOGGLE/ROCKER SWITCH	1		
11	T42170	LABEL	1		

ENGINE AIR HEATER
CHAUFFAGE D'AIR DU MOTEUR
CALEFACTOR DE AIRE DEL MOTOR

T202143 -UN-10AUG04

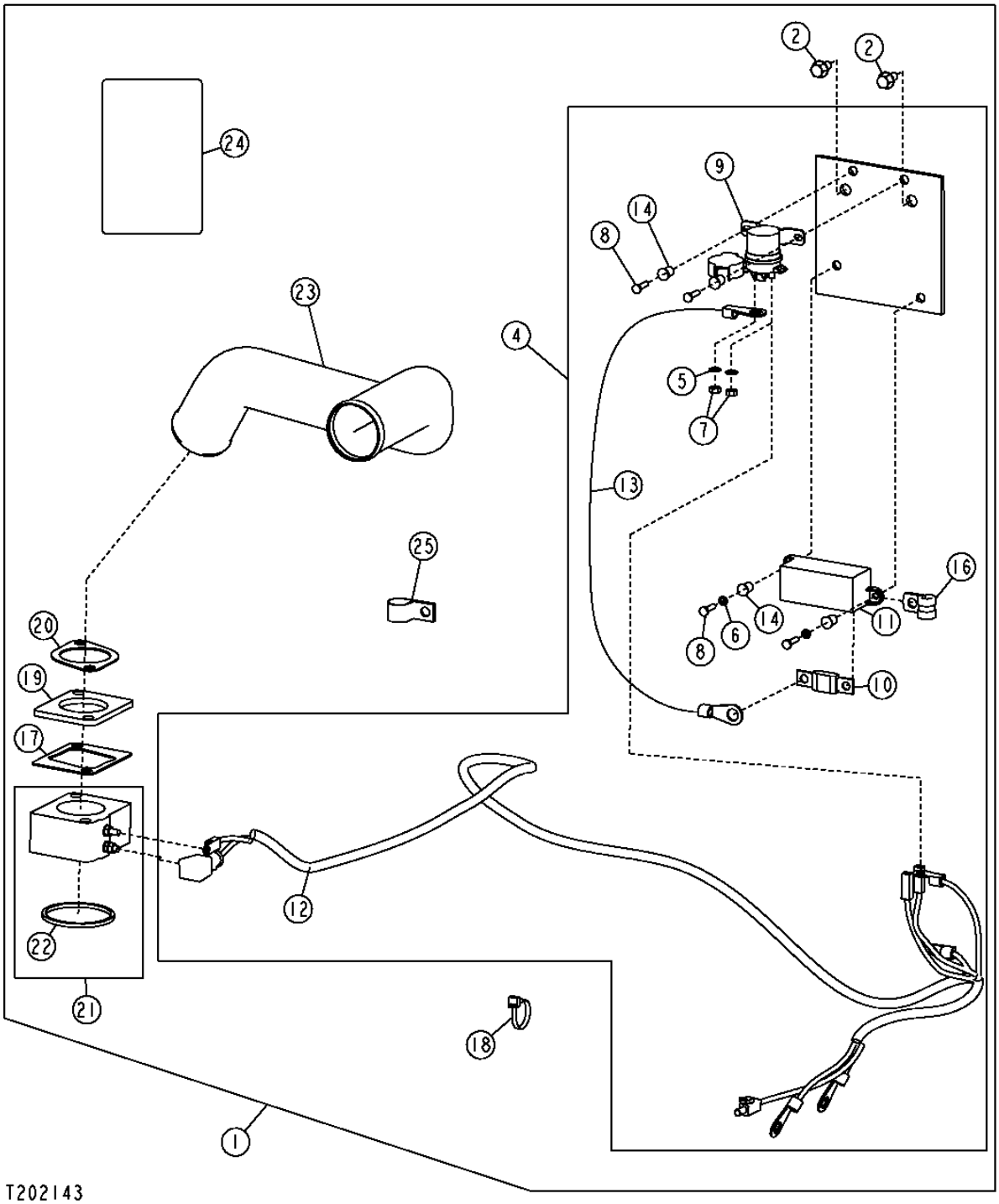

ENGINE AIR HEATER
CHAUFFAGE D'AIR DU MOTEUR
CALEFACTOR DE AIRE DEL MOTOR

KEY	*PART NO.*	*PART NAME*	*QTY.*	*SERIAL NO.*	*REMARKS*
1	AT307701	KIT	1		(WHOLEGOODS) (ENGINE AIR HEATER)
2	19M7865	SCREW	2		M8 X 16
3	19M8977	SCREW	2		M10 X 85
4	AT302845	WIRING HARNESS	1		
5	12H297	LOCK WASHER	2		
6	12M7064	LOCK WASHER	2		
7	14M7272	NUT	2		M6
8	21M7022	SCREW	4		M5 X 20
9	AT145341	RELAY	1		
10	AT203566	FUSE	1		
11	AT206818	FUSE HOLDER	1		
12	AT302829	WIRING HARNESS	1		
13	AT304334	WIRING HARNESS	1		
14	T103238	NUT	4		
16	T75276	CLAMP	1		
17	R133893	GASKET	1		
18	R44302	TIE BAND	2		
19	R504507	PLATE	1		
20	R81275	GASKET	1		
21	RE502669	HEATER	1		
22	R501459	O-RING	1		
23	T196750	TUBE	1		
24	T208085	SAFETY SIGN	1		(ENGINE AIR HEATER START / STOP) (SUB FOR T196474)
25	T78787	CLAMP	AR		

ENGINE COOLANT HEATER
CHAUFFE-BLOC MOTEUR
CALEFACTOR DE REFRIGERANTE DE MOTOR

T194389 -UN-05SEP03

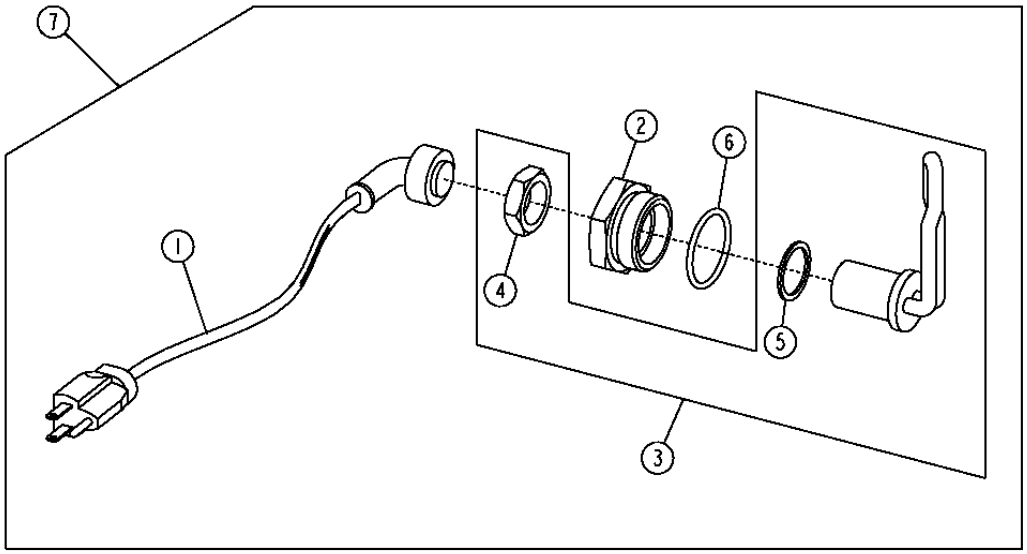

T194389

KEY	PART NO.	PART NAME	QTY.	ENGINE SERIAL NO.	REMARKS
1	AR50411	WIRING LEAD	1		
2	R54123	ADAPTER FITTING	1		
3	RE524676	HEATING ELEMENT	1		(SUB FOR RE504122)
4	.....	NUT	1		
5	R47693	GASKET	1		
6	U13639	O-RING	1		1.475" X 0.118"
7	**RE227949**	**COOLANT HEATER**	**1**		**(WHOLEGOODS) (SUB FOR AR62492)**

MEMORANDA
MEMORANDA
MEMORANDA

COOLING SYSTEM (S.N. -604689)
CIRCUIT DE REFROIDISSEMENT (SN -604689)
SISTEMA DE ENFRIAMIENTO (SN -604689)

T203738 -UN-07OCT04

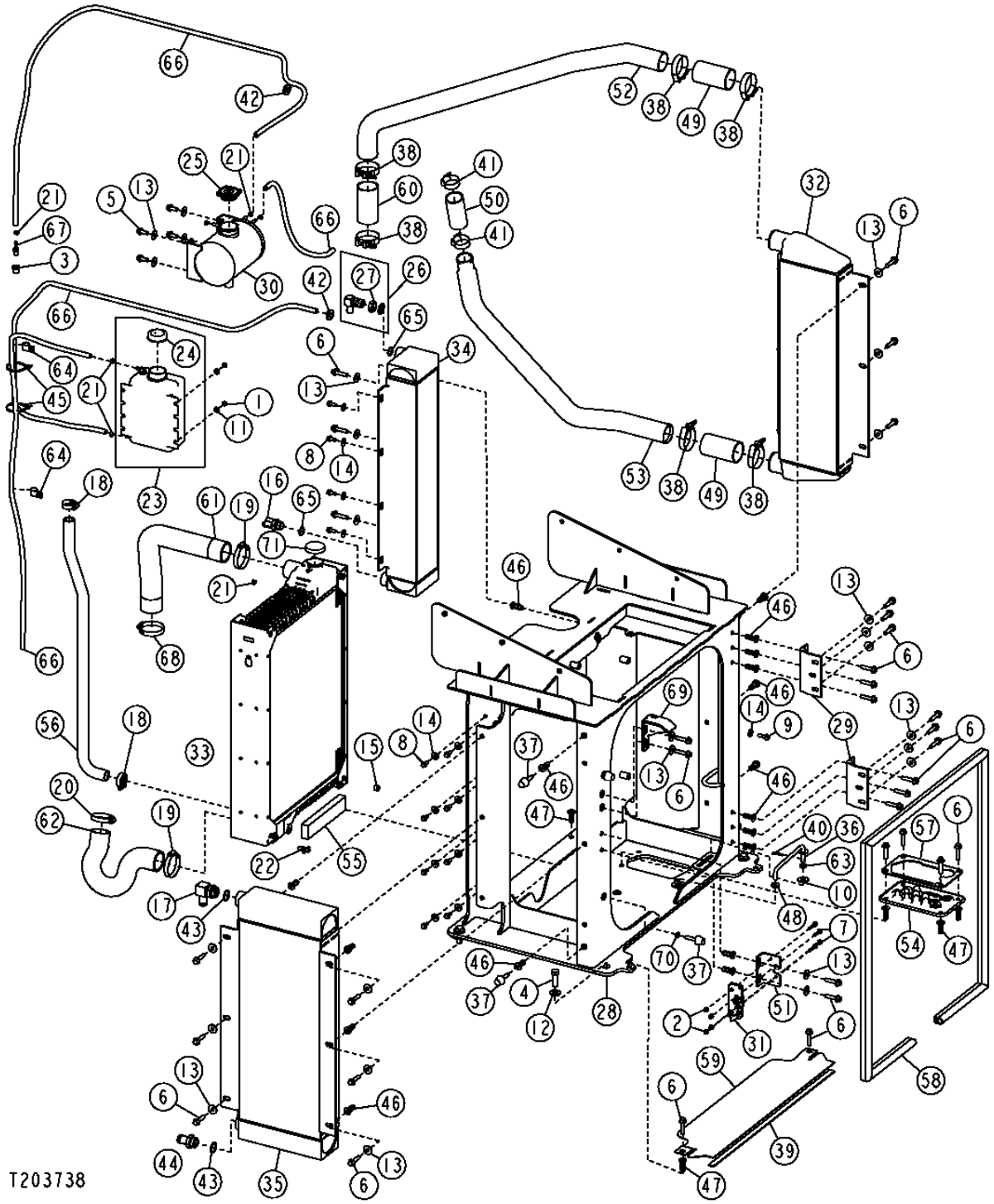

THIS PARTS LISTING IS CONTINUED

COOLING SYSTEM (S.N. -604689)
CIRCUIT DE REFROIDISSEMENT (SN -604689)
SISTEMA DE ENFRIAMIENTO (SN -604689)

KEY	PART NO.	PART NAME	QTY.	SERIAL NO.	REMARKS
1	14M7303	FLANGE NUT	4		M6
2	14M7397	LOCK NUT	4		M6
3	15H625	PIPE BUSHING	1		1/4"
4	19M7489	CAP SCREW	4		M16 X 45
5	19M7785	SCREW	4		M10 X 25
6	19M7805	SCREW	37		M10 X 45
7	19M7833	SCREW	4		M6 X 35
8	19M7866	SCREW	12		M8 X 20
9	19M7868	SCREW	2		M8 X 30
10	24H1330	WASHER	1		11.913 X 34.925 X 2.769 MM
11	24M7139	WASHER	4		6.400 X 18 X 1.600 MM
12	24M7241	WASHER	4		17 X 34 X 4 MM
13	24M7296	WASHER	29		10.500 X 30 X 2.500 MM
14	24M7298	WASHER	13		8.400 X 25 X 2 MM
15	28H862	SPACER	2		0.423" X 0.675" X 7/16"
16	AH75159	FITTING	1		
17	AH75162	FITTING	1		
18	AR21839	CLAMP	2		
19	AH170895	CLAMP	2		(SUB FOR AR21999)
20	RE56098	CLAMP	2		(SUB FOR RE52034)
21	TY22462	CLAMP	7		(SUB FOR AR48236)
22	AT13740	DRAIN VALVE	1		
23	AT166459	TANK	1		
24	AT106413	CAP	1		
25	RE24391	FILLER CAP	1		(SUB FOR RE167464)
26	AT21574	FITTING	1		
27	R27390	NUT	1		
28	AT324668	FRAME	1		(SUB FOR AT226128)
29	AT226573	HINGE	2		
30	AT228224	TANK	1		
31	AT307911	LATCH	1		
32	AT304250	AIR COOLER	1		(CHARGE AIR COOLER)
	AT307613	HEAT SINK	1		(HARSH ENVIRONMENT) (CHARGE AIR COOLER)
33	AT226131	RADIATOR	1		
	AT307605	RADIATOR	1		(HARSH ENVIRONMENT)
34	AT226130	OIL COOLER	1		(HYDRAULIC)
	AT307607	OIL COOLER	1		(HARSH ENVIRONMENT) (HYDRAULIC OIL)
35	AT226276	OIL COOLER	1		(TRANSMISSION)
	AT307606	OIL COOLER	1		(HARSH ENVIRONMENT) (TRANSMISSION OIL)

THIS PARTS LISTING IS CONTINUED

COOLING SYSTEM (S.N. -604689)(CONTINUED)
CIRCUIT DE REFROIDISSEMENT (SN -604689) (SUITE)
SISTEMA DE ENFRIAMIENTO (SN -604689) (CONTINUACION)

T203738 -UN-07OCT04

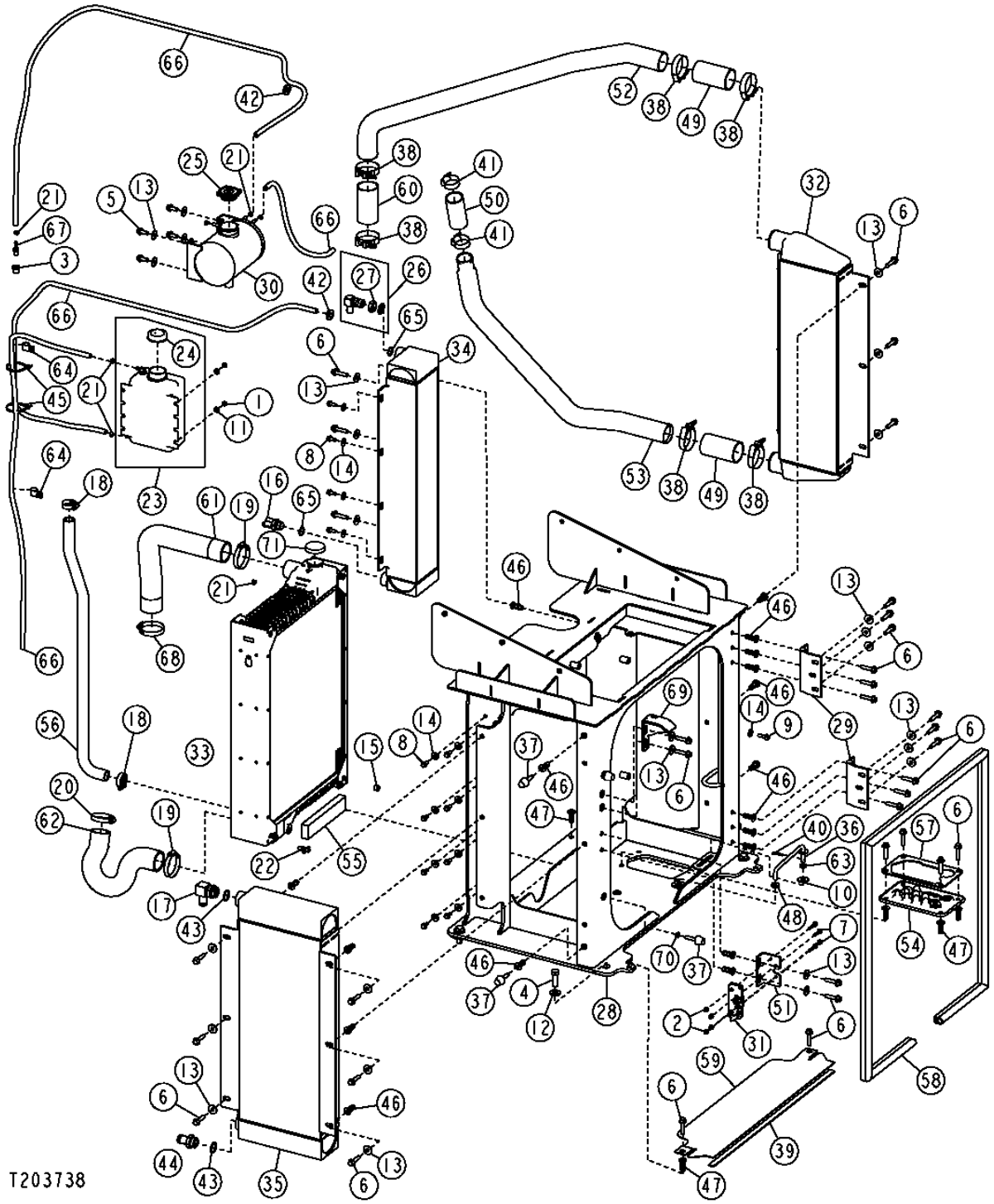

COOLING SYSTEM (S.N. -604689) (CONTINUED)
CIRCUIT DE REFROIDISSEMENT (SN -604689) (SUITE)
SISTEMA DE ENFRIAMIENTO (SN -604689) (CONTINUACION)

KEY	PART NO.	PART NAME	QTY.	SERIAL NO.	REMARKS
36	AT305673	ROD	1		
37	AT306690	BUMPER	6		
38	AH170895	CLAMP	6		(SUB FOR AT37693)
39	T66419	ISOLATOR	1		(CUT TO LENGTH) 27 INCHES (685.8 MM)
40	J16931	PIN	1		
41	R110531	CLAMP	2		
42	RE56098	CLAMP	2		(SUB FOR R110531)
43	R29936	O-RING	2		
44	T29747	HOSE FITTING	1		
45	R44302	TIE BAND	3		
46	T148410	NUT	31		
47	T148411	NUT	10		
48	T162238	GROMMET	1		
49	T181778	HOSE	2		
50	T181953	HOSE	1		
51	T182554	BRACKET	1		
52	T202957	TUBE	1		
53	T197298	TUBE	1		
54	T197427	GROMMET	1		
55	T197574	ISOLATOR	2		
56	T200475	RADIATOR HOSE	1		
57	T201589	SEALING RING	1		
58	T202637	ISOLATOR	1		
59	T203130	SHIELD	1		
60	T198039	HOSE	1		
61	T196067	RADIATOR HOSE	1		(UPPER)
62	T196068	RADIATOR HOSE	1		(LOWER)
63	T27260	WASHER	1		
64	T74416	CLAMP	2		
65	U12547	O-RING	2		
66	.....	BULK HOSE	4		(CUT TO LENGTH) (MAKE FROM TY22324)
67	R43583	FITTING	1		
69	T226561	PLATE	1		(SUB FOR AT307806)
70	14M7152	NUT	6		
71	AT182802	FILLER CAP	1		

COOLING SYSTEM (S.N. 604690-)
CIRCUIT DE REFROIDISSEMENT (SN 604690-)
SISTEMA DE ENFRIAMIENTO (SN 604690-)

TX1004896 -UN-22MAR06

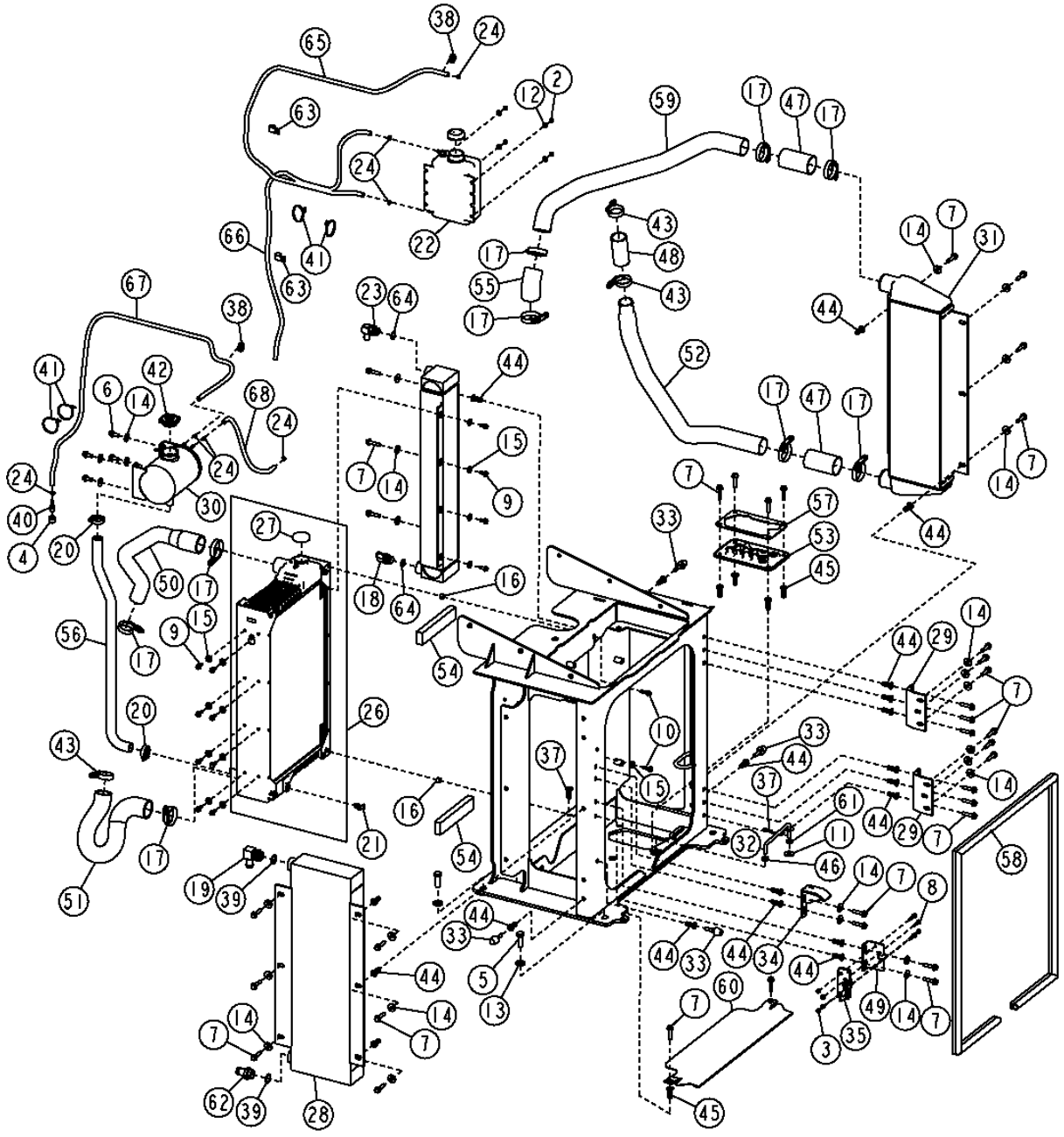

TX1004896

COOLING SYSTEM (S.N. 604690-)
CIRCUIT DE REFROIDISSEMENT (SN 604690-)
SISTEMA DE ENFRIAMIENTO (SN 604690-)

KEY	PART NO.	PART NAME	QTY.	SERIAL NO.	REMARKS
1	14M7152	NUT	6		M10
2	14M7303	FLANGE NUT	4		M6
3	14M7397	LOCK NUT	4		M6
4	15H625	PIPE BUSHING	1		6.350 MM
5	19M7489	CAP SCREW	4		M16 X 45
6	19M7785	SCREW	4		M10 X 25
7	19M7805	SCREW	37		M10 X 45
8	19M7833	SCREW	4		M6 X 35
9	19M7866	SCREW	12		M8 X 20
10	19M7868	SCREW	2		M8 X 30
11	24H1330	WASHER	1		11.913 X 34.925 X 2.769 MM
12	24M7139	WASHER	4		6.400 X 18 X 1.600 MM
13	24M7241	WASHER	4		17 X 34 X 4 MM
14	24M7296	WASHER	29		10.500 X 30 X 2.500 MM
15	24M7298	WASHER	13		8.400 X 25 X 2 MM
16	28H862	SPACER	2		10.744 X 17.145 X 11.125 MM
17	AH170895	CLAMP	8		
18	AH75159	FITTING	1		
19	AH75162	FITTING	1		
20	AR21839	CLAMP	2		
21	AT13740	DRAIN VALVE	1		
22	AT166459	TANK	1		
23	AT21574	FITTING	1		
24	AR48236	CLAMP	7		
25	AT226130	OIL COOLER	1		
26	AT226131	RADIATOR	1		
27	AT182802	FILLER CAP	1		
28	AT226276	OIL COOLER	1		
29	AT226573	HINGE	2		
30	AT228224	TANK	1		
31	AT304250	AIR COOLER	1		
32	AT305673	ROD	1		
33	AT306690	BUMPER	6		
34	T226561	PLATE	1		(SUB FOR AT307806)
35	AT307911	LATCH	1		

THIS PARTS LISTING IS CONTINUED

COOLING SYSTEM (S.N. 604690-) (CONTINUED)
CIRCUIT DE REFROIDISSEMENT (SN 604690-) (SUITE)
SISTEMA DE ENFRIAMIENTO (SN 604690-) (CONTINUACION)

TX1004896 -UN-22MAR06

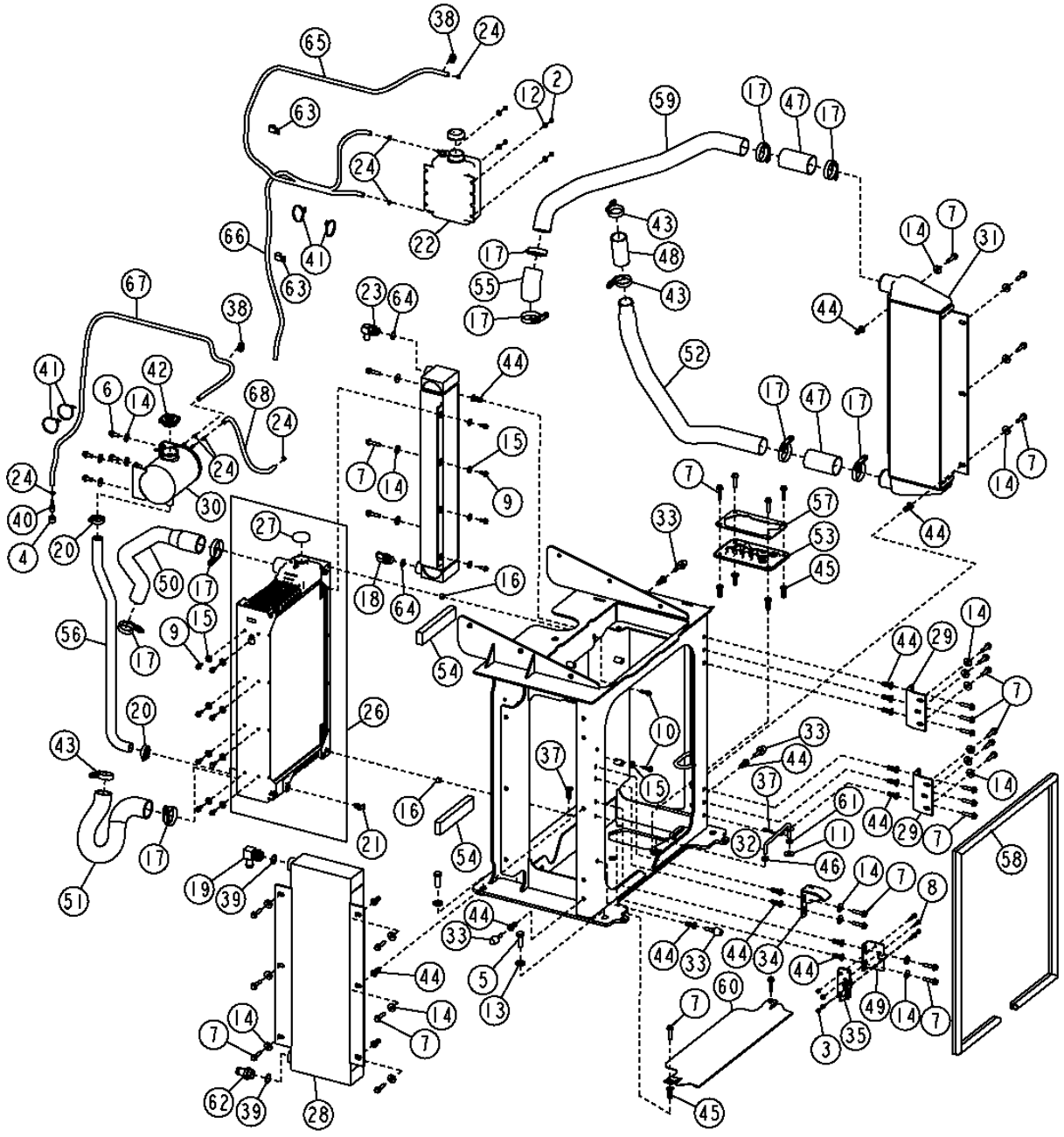

COOLING SYSTEM (S.N. 604690-) (CONTINUED)
CIRCUIT DE REFROIDISSEMENT (SN 604690-) (SUITE)
SISTEMA DE ENFRIAMIENTO (SN 604690-) (CONTINUACION)

KEY	PART NO.	PART NAME	QTY.	SERIAL NO.	REMARKS
37	J16931	PIN	1		
38	R115350	GROMMET	2		
39	R29936	O-RING	2		29.743 X 2.946 MM
40	R43583	FITTING	1		
41	R44302	TIE BAND	3		
42	RE24391	FILLER CAP	1		
43	RE56098	CLAMP	4		
44	T148410	NUT	31		M10
45	T148411	NUT	10		M10
46	T162238	GROMMET	1		
47	T181778	HOSE	2		
48	T181953	HOSE	1		
49	T182554	BRACKET	1		
50	T196067	RADIATOR HOSE	1		
51	T196068	RADIATOR HOSE	1		
52	T197298	TUBE	1		
53	T197427	GROMMET	1		
54	T197574	ISOLATOR	2		250 MM
55	T198039	HOSE	1		
56	T200475	RADIATOR HOSE	1		
57	T201589	SEALING RING	1		
58	T202637	ISOLATOR	1		
59	T202957	TUBE	1		
60	T203130	SHIELD	1		
61	T27260	WASHER	1		10.922 X 21.336 X 4.572 MM
62	T29747	HOSE FITTING	1		
63	T74416	CLAMP	2		
64	U12547	O-RING	2		23.470 X 2.946 MM
65	TY22324	BULK HOSE	1		(CUT TO LENGTH) 5.9 FT. (1.80 M)
66	TY22324	BULK HOSE	1		(CUT TO LENGTH) 3.4 FT. (1.04 M)
67	TY22324	BULK HOSE	1		(CUT TO LENGTH) 6.7 FT. (2.04 M)
68	TY22324	BULK HOSE	1		(CUT TO LENGTH) 24 INCHES (609.6 MM)

THIS PARTS LISTING IS CONTINUED

DOOR WITH FAN AND FAN GUARD
PORTIERE AVEC VENTILATEUR ET PROTECTION VENTILATEUR
PUERTA CON VENTILADOR Y PROTECTOR DEL VENTILADOR

T210121 -UN-14APR05

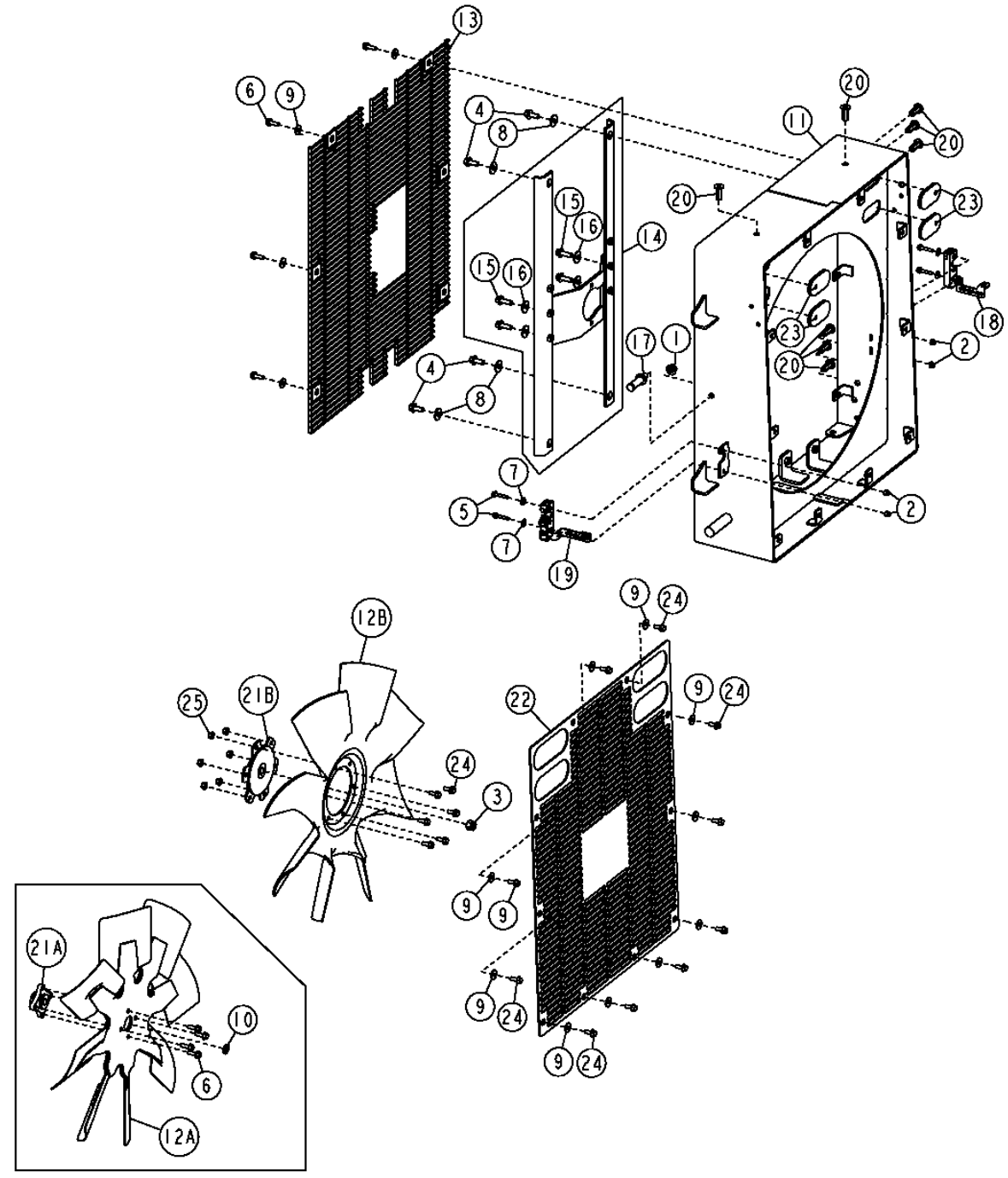

T210121

DOOR WITH FAN AND FAN GUARD
PORTIERE AVEC VENTILATEUR ET PROTECTION VENTILATEUR
PUERTA CON VENTILADOR Y PROTECTOR DEL VENTILADOR

KEY	PART NO.	PART NAME	QTY.	SERIAL NO.	REMARKS
1	14M7299	FLANGE NUT	1		M12
2	14M7397	LOCK NUT	4		M6
3	14M7540	LOCK NUT	1		M14
4	19M7785	SCREW	4		M10 X 25
5	19M7833	SCREW	4		M6 X 35
6	19M7867	SCREW	10	-595680	M8 X 25
	19M7867	SCREW	6	595681-	
7	24M7139	WASHER	4		6.400 X 18 X 1.600 MM
8	24M7296	WASHER	4		10.500 X 30 X 2.500 MM
9	24M7298	WASHER	16		8.400 X 25 X 2 MM
10	24M7427	WASHER	1	-595680	15 X 24 X 2.500 MM
11	AT226168	FRAME	1		
12A	AT226170	FAN	1	-595680	
12B	AT311287	FAN	1	595681-	
13	AT227579	GUARD	1		
14	AT228206	FRAME	1	-595680	
	AT313598	FRAME	1	595681-	
15	19M7786	SCREW	4		M10 X 30
16	24M7296	WASHER	4		10.500 X 30 X 2.500 MM
17	AT301711	STRIKER	1		
18	AT306930	LATCH	1		
19	AT306931	LATCH	1		
20	T148409	NUT	8		
21A	T182462	HUB	1	-595680	
21B	AT210712	HUB	1	595681-	
22	T195424	GUARD	1		
23	T201546	GROMMET	4		
24	19M7866	SCREW	10	-595680	M8 X 20
	19M7866	SCREW	16	595681-	
25	14M7298	FLANGE NUT	6	595681-	

FAN DRIVE HYDRAULIC PUMP, MOTOR AND HOSES (S.N. -604689)
POMPE, MOTEUR ET FLEXIBLES HYDRAULIQUES COMMANDE VENTILATEUR (SN -604689)
BOMBA HIDRAULICA DE MANDO DEL VENTILADOR, MOTOR Y MANGUERAS (SN -604689)

T200309 -UN-26MAY04

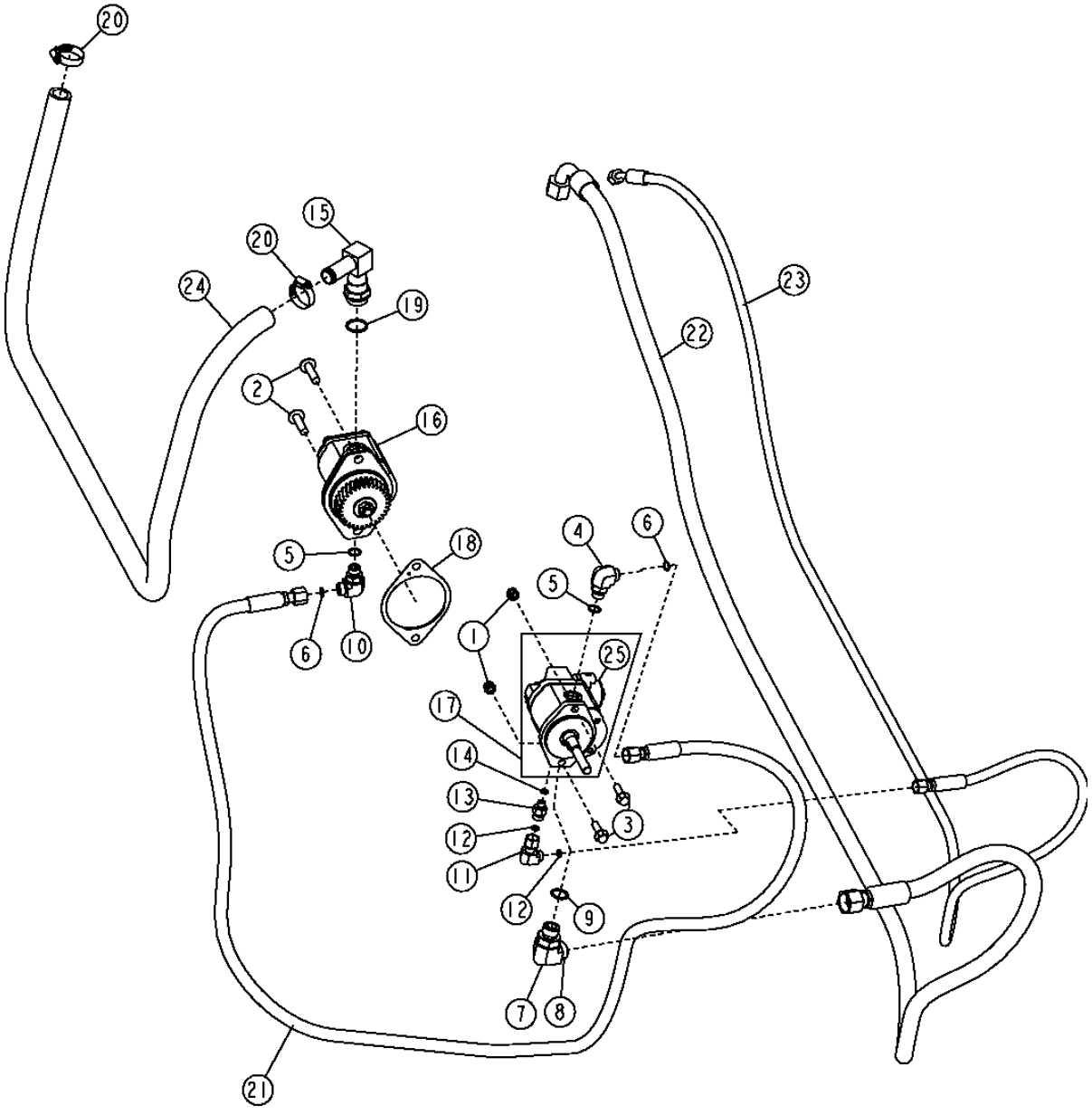

T200309

FAN DRIVE HYDRAULIC PUMP, MOTOR AND HOSES (S.N. -604689)
POMPE, MOTEUR ET FLEXIBLES HYDRAULIQUES COMMANDE VENTILATEUR (SN -604689)
BOMBA HIDRAULICA DE MANDO DEL VENTILADOR, MOTOR Y MANGUERAS (SN -604689)

KEY	*PART NO.*	*PART NAME*	*QTY.*	*SERIAL NO.*	*REMARKS*
1	14M7517	LOCK NUT	2		M10
2	19M7813	SCREW	2		M12 X 45
3	19M7835	SCREW	2		M10 X 35
4	38H1005	ELBOW FITTING	1		
5	R26375	O-RING	2		
6	T77857	O-RING	2		
7	38H1007	ELBOW FITTING	1		
8	T77858	O-RING	1		
9	U12547	O-RING	1		
10	38H1005	ELBOW FITTING	1		
11	38H1094	ELBOW FITTING	1		
12	T77613	O-RING	2		
13	38H1160	ADAPTER FITTING	1		
14	R28782	O-RING	1		
15	AH96708	ELBOW FITTING	1		
16	AT227016	HYDRAULIC PUMP	1		
	AT224424	SEAL KIT	1		
17	AT227017	HYDRAULIC MOTOR	1		
	AT224864	SEAL KIT	1		(NOT ILLUSTRATED)
18	R522690	GASKET	1		(SUB FOR R134465)
19	R29936	O-RING	1		
20	AR21839	CLAMP	2		
21	AT310542	HYDRAULIC HOSE - FABRICATE	1		
22	AT314987	HYDRAULIC HOSE - FABRICATE	1		(SUB FOR AT228100)
23	AT334187	HYDRAULIC HOSE - FABRICATE	1		(SUB FOR AT228101 AND AT314988)
24	T208097	HYDRAULIC HOSE - FABRICATE	1		(SUB FOR T197048)
25	AT227507	PRESSURE RELIEF VALVE	1		

FAN DRIVE HYDRAULIC PUMP, MOTOR AND HOSES (S.N. 604690-)
POMPE, MOTEUR ET FLEXIBLES HYDRAULIQUES COMMANDE VENTILATEUR (SN 604690-)
BOMBA HIDRAULICA DE MANDO DEL VENTILADOR, MOTOR Y MANGUERAS (SN 604690-)

TX1003818 -UN-21FEB06

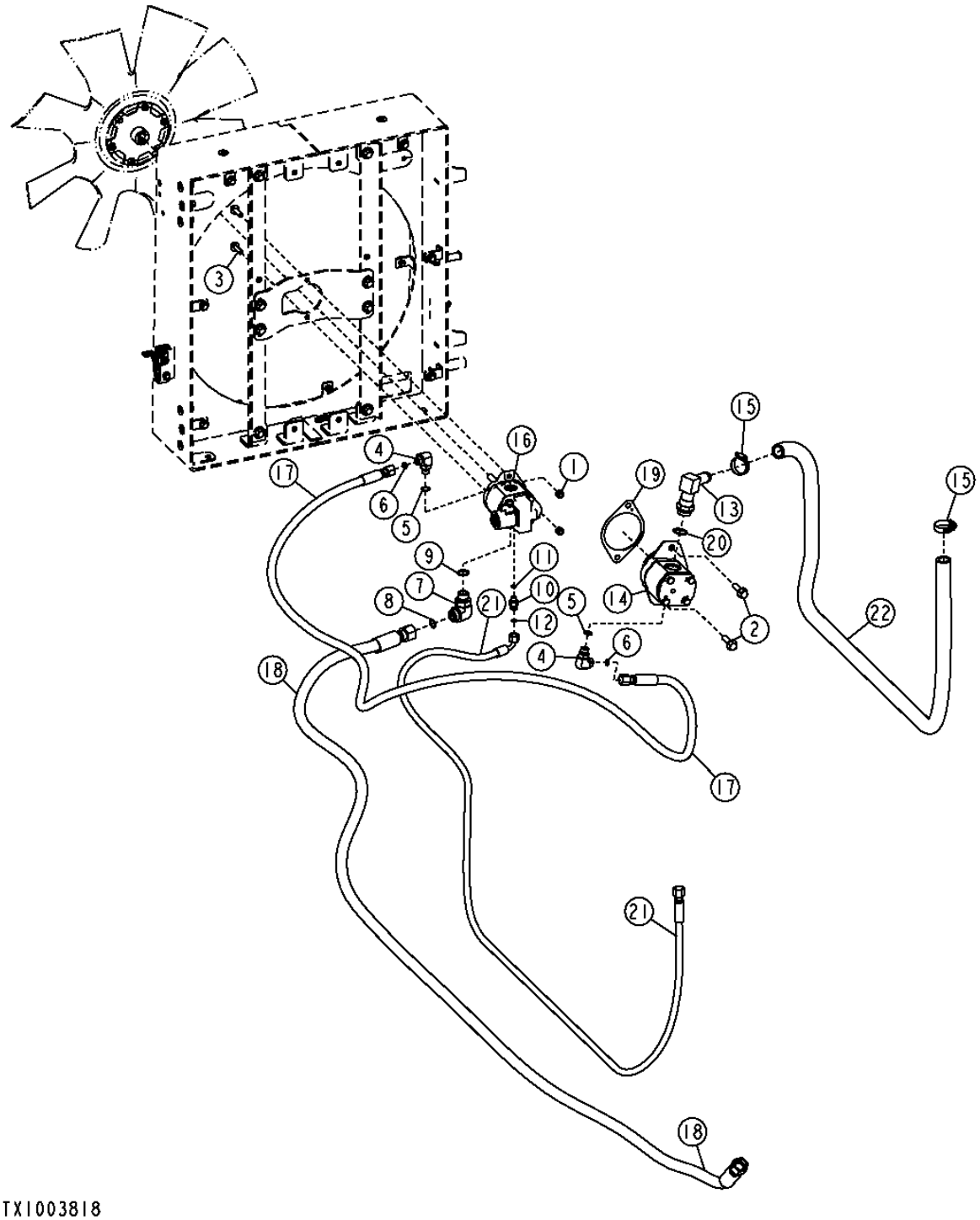

THIS PARTS LISTING IS CONTINUED

FAN DRIVE HYDRAULIC PUMP, MOTOR AND HOSES (S.N. 604690-)
POMPE, MOTEUR ET FLEXIBLES HYDRAULIQUES COMMANDE VENTILATEUR (SN 604690-)
BOMBA HIDRAULICA DE MANDO DEL VENTILADOR, MOTOR Y MANGUERAS (SN 604690-)

KEY	*PART NO.*	*PART NAME*	*QTY.*	*SERIAL NO.*	*REMARKS*
1	14M7517	LOCK NUT	2		M10
2	19M7813	SCREW	2		M12 X 45
3	19M7835	SCREW	2		M10 X 35
4	38H1005	ELBOW FITTING	2		
5	R26375	O-RING	2		16.358 X 2.210 MM
6	T77857	O-RING	2		12.421 X 1.778 MM
7	38H1007	ELBOW FITTING	1		
8	T77858	O-RING	1		18.771 X 1.778 MM
9	U12547	O-RING	1		23.470 X 2.946 MM
10	38H1094	ELBOW FITTING	1		(SUB FOR 38H1160)
11	R28782	O-RING	1		8.915 X 1.829 MM
12	T77613	O-RING	1		9.246 X 1.778 MM
13	AH96708	ELBOW FITTING	1		
14	AT227016	HYDRAULIC PUMP	1		
15	AR21839	CLAMP	2		
16	AT227017	HYDRAULIC MOTOR	1		
17	AT310542	HYDRAULIC HOSE - FABRICATE	1		13/16" X 2 700 MM X 13/16"
18	AT314987	HYDRAULIC HOSE - FABRICATE	1		13/16" X 3 275 MM X 13/16"
19	R134465	GASKET	1		
20	R29936	O-RING	1		29.743 X 2.946 MM
21	AT334187	HYDRAULIC HOSE - FABRICATE	1		11/16" X 2 775 MM X 13/16", (SUB FOR AT319046)
22	T208097	HYDRAULIC HOSE - FABRICATE	1		

REVERSE FAN DRIVE HYDRAULIC PUMP, MOTOR AND HOSES (S.N. -604689)
POMPE, MOTEUR ET FLEXIBLES HYDRAULIQUES COMMANDE INVERSION SENS VENTILATEUR (SN -604689)
BOMBA HIDRAULICA DE MANDO DE RETROCESO DEL VENTILADOR, MOTOR Y MANGUERAS (SN -604689)

T197913 -UN-24FEB04

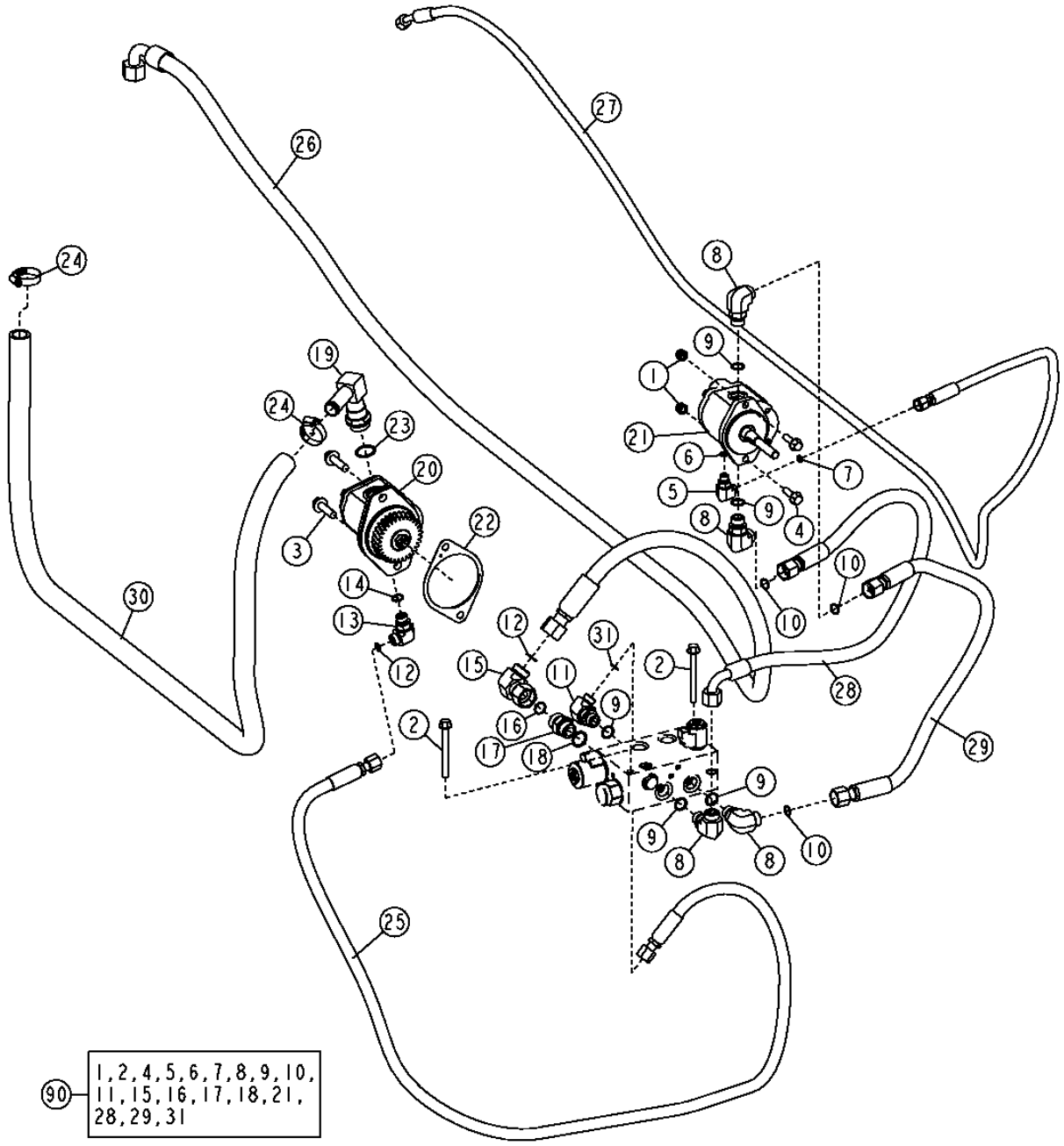

TI97913

REVERSE FAN DRIVE HYDRAULIC PUMP, MOTOR AND HOSES (S.N. -604689)
POMPE, MOTEUR ET FLEXIBLES HYDRAULIQUES COMMANDE INVERSION SENS VENTILATEUR (SN -604689)
BOMBA HIDRAULICA DE MANDO DE RETROCESO DEL VENTILADOR, MOTOR Y MANGUERAS (SN -604689)

KEY	*PART NO.*	*PART NAME*	*QTY.*	*SERIAL NO.*	*REMARKS*
1	14M7517	LOCK NUT	2		M10
2	19M7812	SCREW	2		M10 X 100
3	19M7813	SCREW	2		M12 X 45
4	19M7835	SCREW	2		M10 X 35
5	38H1004	ELBOW FITTING	1		
6	R26448	O-RING	1		11.887 X 1.981 MM
7	T77613	O-RING	1		9.246 X 1.778 MM
8	38H1006	ELBOW FITTING	4		
9	R26906	O-RING	5		19.177 X 2.464 MM
10	T77613	O-RING	4		9.246 X 1.778 MM
11	38H1012	ELBOW FITTING	1		
12	T77857	O-RING	2		
13	38H1005	ELBOW FITTING	1		
14	R26375	O-RING	1		
15	38H1097	ELBOW FITTING	1		
16	T77858	O-RING	1		
17	38H1163	ADAPTER FITTING	1		
18	U12547	O-RING	1		
19	AH96708	ELBOW FITTING	1		
20	AT227016	HYDRAULIC PUMP	1		
	AT224424	SEAL KIT	1		
21	AT227024	HYDRAULIC MOTOR	1		
	AT317353	SEAL KIT	1		
22	R134465	GASKET	1		
23	R29936	O-RING	1		
24	AR21839	CLAMP	1		
25	AT310542	HYDRAULIC HOSE - FABRICATE	1		
26	AT314987	HYDRAULIC HOSE - FABRICATE	1		(SUB FOR AT228100)
27	AT334187	HYDRAULIC HOSE - FABRICATE	1		(SUB FOR AT228101 AND AT314988)
28	AT228112	HYDRAULIC HOSE - FABRICATE	1		
29	AT304406	HYDRAULIC HOSE - FABRICATE	1		
30	T208097	HOSE	1		(SUB FOR T197048)
31	T77857	O-RING	1		
90	**AT332604**	**FIELD INSTALLATION KIT**	**1**		**(WHOLE GOODS)(REVERSE FAN DRIVE) (INCLUDES REVERSE FAN DRIVE SOLENOID VALVE, COMPONENTS LISTED ON SEPARATE PAGE) (SUB FOR AT228137)**

REVERSE FAN DRIVE HYDRAULIC PUMP, MOTOR AND HOSES (S.N. 604690-)
POMPE, MOTEUR ET FLEXIBLES HYDRAULIQUES COMMANDE INVERSION SENS VENTILATEUR(SN 604690-)
BOMBA HIDRAULICA DE MANDO DE RETROCESO DEL VENTILADOR, MOTOR Y MANGUERAS (SN 604690-)

TX1017772 -UN-

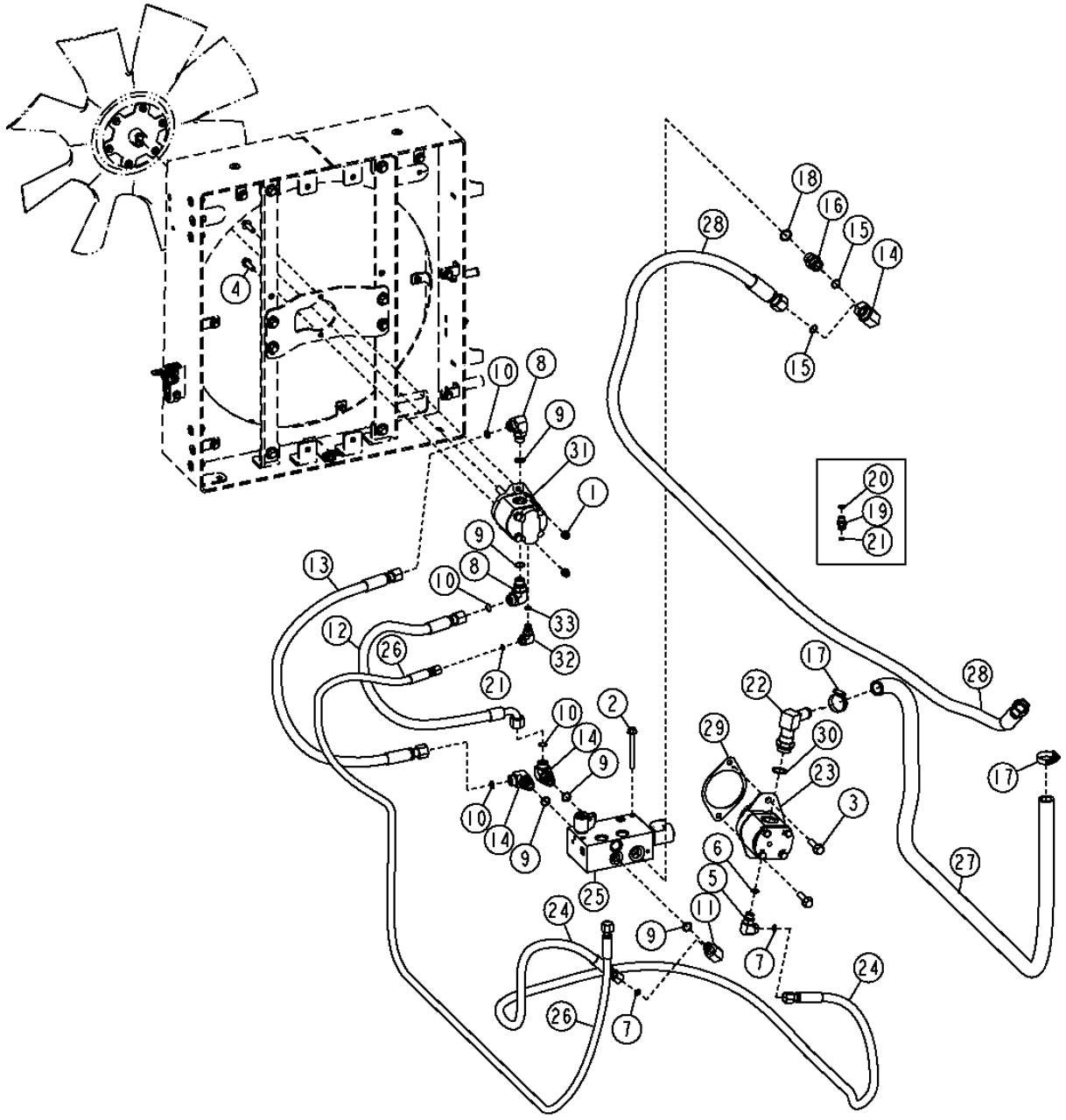

REVERSE FAN DRIVE HYDRAULIC PUMP, MOTOR AND HOSES (S.N. 604690-)
POMPE, MOTEUR ET FLEXIBLES HYDRAULIQUES COMMANDE INVERSION SENS VENTILATEUR(SN 604690-)
BOMBA HIDRAULICA DE MANDO DE RETROCESO DEL VENTILADOR, MOTOR Y MANGUERAS (SN 604690-)

KEY	*PART NO.*	*PART NAME*	*QTY.*	*SERIAL NO.*	*REMARKS*
1	14M7517	LOCK NUT	2		M10
2	19M7812	SCREW	2		M10 X 100
3	19M7813	SCREW	2		M12 X 45
4	19M7835	SCREW	2		M10 X 35
5	38H1005	ELBOW FITTING	1		
6	R26375	O-RING	1		16.358 X 2.210 MM
7	T77932	O-RING	2		15.596 X 1.778 MM
8	38H1006	ELBOW FITTING	4		
9	R26906	O-RING	5		19.177 X 2.464 MM
10	T77932	O-RING	4		15.596 X 1.778 MM
11	38H1012	ELBOW FITTING	1		
12	AT228112	HYDRAULIC HOSE - FABRICATE	1		1" X 1 050 MM X 1"
13	AT304406	HYDRAULIC HOSE - FABRICATE	1		1" X 1 050 MM X 1"
14	38H1097	ELBOW FITTING	1		
15	T77858	O-RING	2		18.771 X 1.778 MM
16	38H1163	ADAPTER FITTING	1		
17	AR21839	CLAMP	2		
18	U12547	O-RING	1		23.470 X 2.946 MM
19	38H1160	ADAPTER FITTING	1	-608219	
20	R28782	O-RING	1	-608219	8.915 X 1.829 MM
21	T77613	O-RING	1		9.246 X 1.778 MM
22	AH96708	ELBOW FITTING	1		
23	AT227016	HYDRAULIC PUMP	1		
24	AT310542	HYDRAULIC HOSE - FABRICATE	1		13/16" X 2 700 MM X 13/16"
25	AT227021	SOLENOID VALVE	1		
26	.....	HYDRAULIC HOSE - FABRICATE	1	-608219	(SUB AT334187, R26448 AND 38H1004) (AT319046 NLA)
	AT334187	HYDRAULIC HOSE - FABRICATE	1	608220-	
27	T208097	HYDRAULIC HOSE - FABRICATE	1		
28	AT314987	HYDRAULIC HOSE - FABRICATE	1		13/16" X 3 275 MM X 13/16"
29	R134465	GASKET	1		
30	R29936	O-RING	1		29.743 X 2.946 MM
31	AT227024	HYDRAULIC MOTOR	1		
32	38H1004	ELBOW FITTING	1	608220-	
33	R26448	O-RING	1	608220-	

REVERSE FAN DRIVE SOLENOID VALVE
ELECTROVANNE DE COMMANDE D'INVERSION DE SENS DU VENTILATEUR
VALVULA DE SOLENOIDE DE MANDO DE RETROCESO DEL VENTILADOR

T157977 -UN-29JUL02

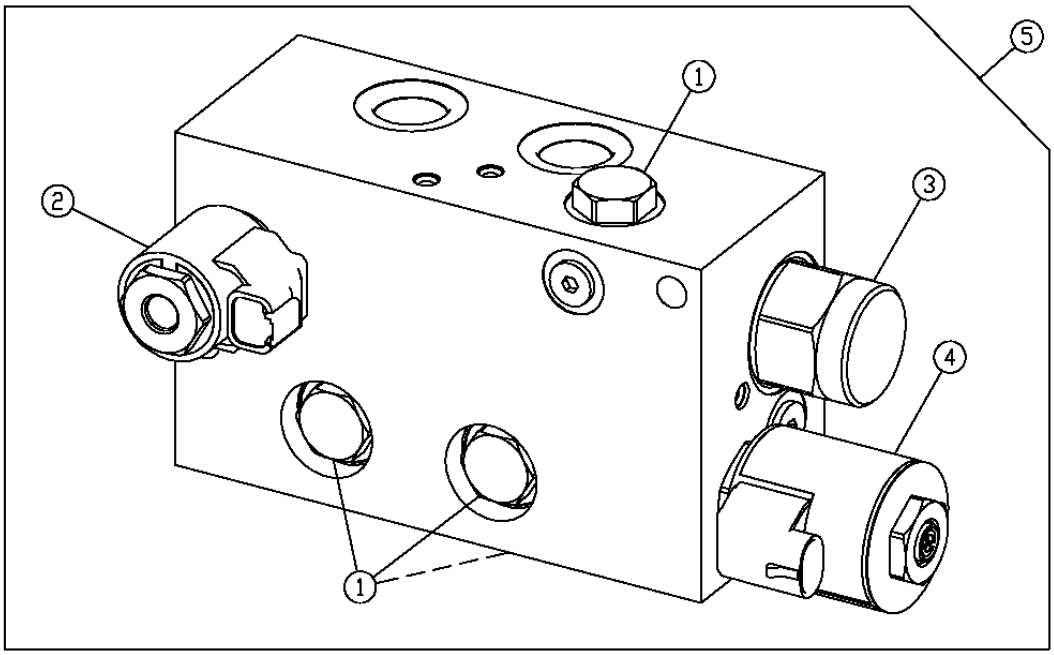

T157977

KEY	PART NO.	PART NAME	QTY.	SERIAL NO.	REMARKS
1	AT224570	CHECK VALVE	4		
	AT224862	SEAL KIT	1		
2	AT224866	SOLENOID VALVE	1		
	AT224706	SEAL KIT	1		
	AT224865	SOLENOID VALVE COIL	1		
	T181306	NUT	1		
3	AT226109	SOLENOID HYDRAULIC VALVE	1		
	AT226110	SEAL KIT	1		
4	AT227507	PRESSURE RELIEF VALVE	1		
5	AT227021	SOLENOID VALVE	1		

MEMORANDA
MEMORANDA
MEMORANDA

ENGINE SPEED CONTROL PEDAL
PEDALE COMMANDE REGIME MOTEUR
PEDAL DE CONTROL DE VELOCIDAD DEL MOTOR

T195683 -UN-23OCT03

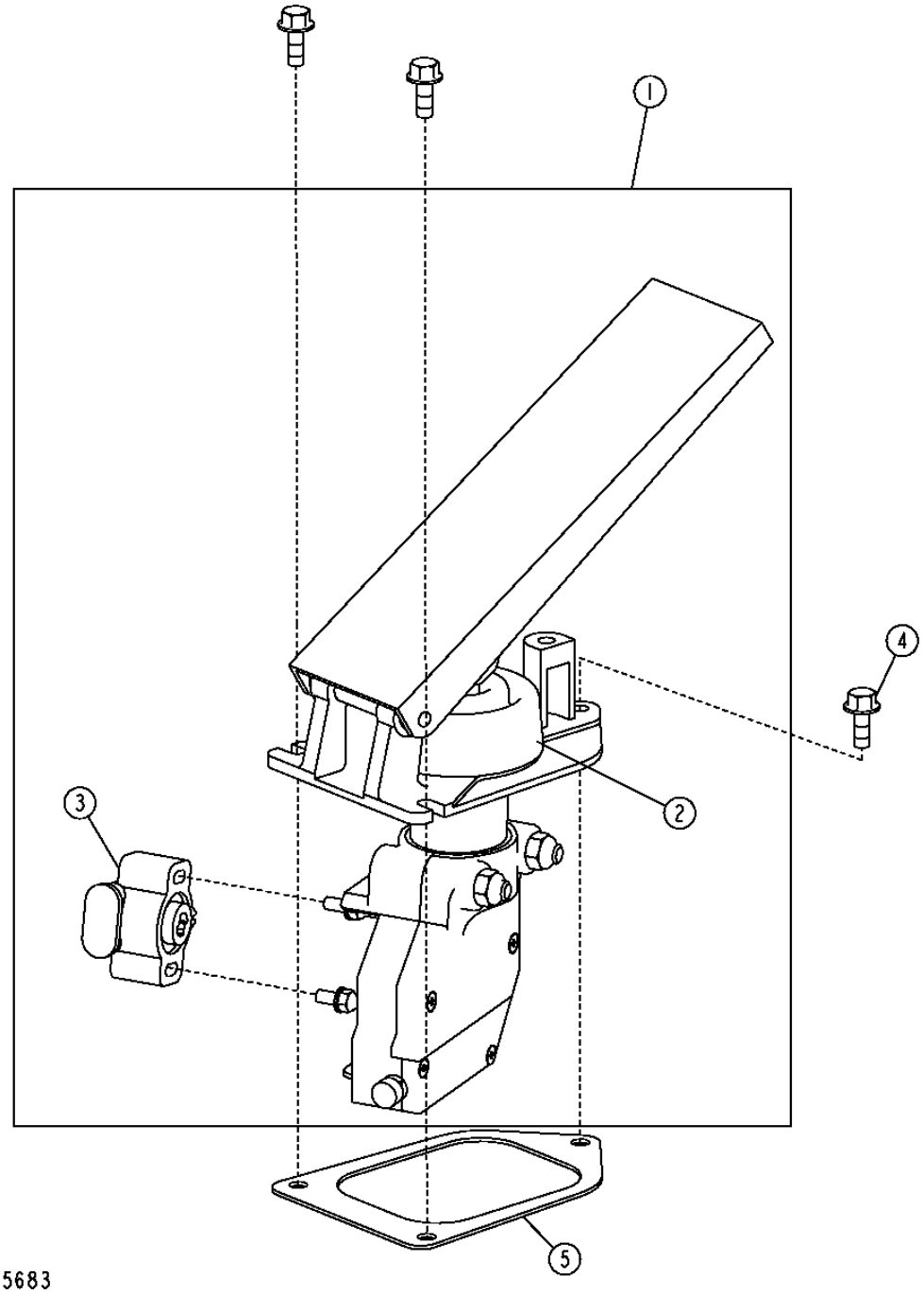

ENGINE SPEED CONTROL PEDAL
PEDALE COMMANDE REGIME MOTEUR
PEDAL DE CONTROL DE VELOCIDAD DEL MOTOR

KEY	*PART NO.*	*PART NAME*	*QTY.*	*SERIAL NO.*	*REMARKS*
1	AT323306	ACCELERATOR	1		(SUB FOR AT306702)
2	T174634	BOOT	1		
3	AT323307	SENSOR	1		(SUB FOR AT306703)
4	M113243	SCREW	3		
5	T172927	GASKET	1		

AIR CLEANER, AIR CLEANER FILTERS AND AIR CLEANER HOSE
FILTRE A AIR, FLEXIBLES DE FILTRE A AIR ET ELEMENTS DE FILTRE A AIR
FILTRO DE AIRE, MANGUERAS Y ELEMENTOS DEL FILTRO DE AIRE

T193504 -UN-19AUG03

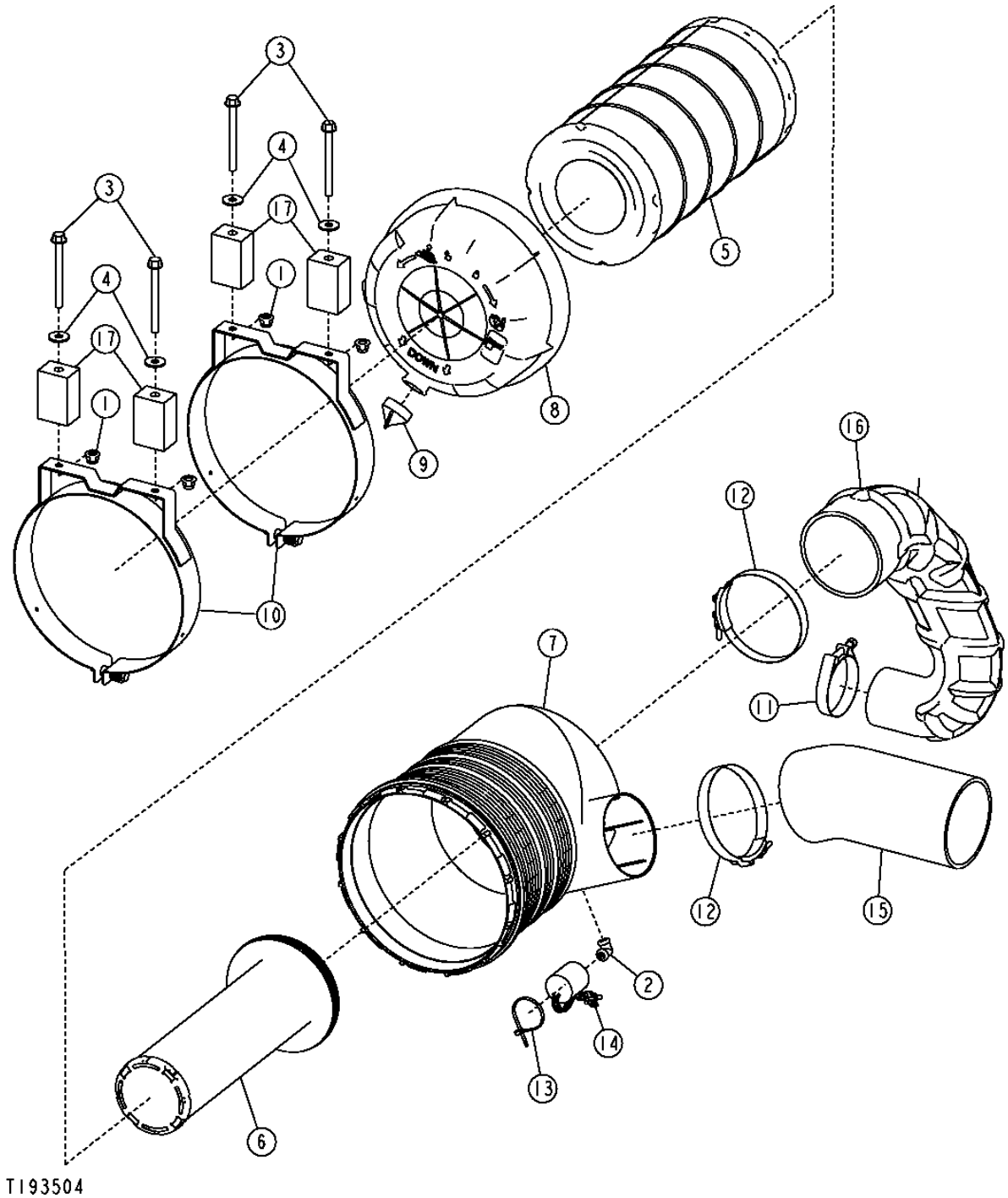

AIR CLEANER, AIR CLEANER FILTERS AND AIR CLEANER HOSE
FILTRE A AIR, FLEXIBLES DE FILTRE A AIR ET ELEMENTS DE FILTRE A AIR
FILTRO DE AIRE, MANGUERAS Y ELEMENTOS DEL FILTRO DE AIRE

KEY	*PART NO.*	*PART NAME*	*QTY.*	*SERIAL NO.*	*REMARKS*
1	14M7400	LOCK NUT	4		
2	T219672	ELBOW FITTING	1		1/8", (SUB FOR 15H95)
3	19M7805	SCREW	4		M10 X 45
4	24M7296	WASHER	4		10.500 X 30 X 2.500 MM
5	AT300487	FILTER ELEMENT	1		
6	AT314583	FILTER ELEMENT	1		(SUB FOR AT300488)
7	.....	HOUSING	1	-593740	(SUB AT314356) (SUB FOR AT300493)
	.....	HOUSING	1	593741-604689	(SUB AT329958) (SUB FOR AT314356)
	AT329958	HOUSING	1	604690-	
8	.....	COVER	1	-593740	(SUB T210777) (SUB FOR T200278)
	.....	COVER	1	593741-604689	(SUB T223372) (SUB FOR T210777)
	T223372	COVER	1	604690-	
9	M89679	EJECTOR	1		(SUB FOR T200280)
10	AT300489	CLAMP	2		
11	AT37476	HOSE CLAMP	1		
12	AT53439	HOSE CLAMP	2		
13	R44302	TIE BAND	1		
14	RE68255	SENSOR	1		(AMBIENT)
15	T200282	HOSE	1		
16	T200284	HOSE	1		
17	T200287	SPACER	4		

AIR PRECLEANER KIT
JEU DE PREFILTRO DE AIRE
JUEGO DEL PREFILTRO DE AIRE

T193530 -UN-18AUG03

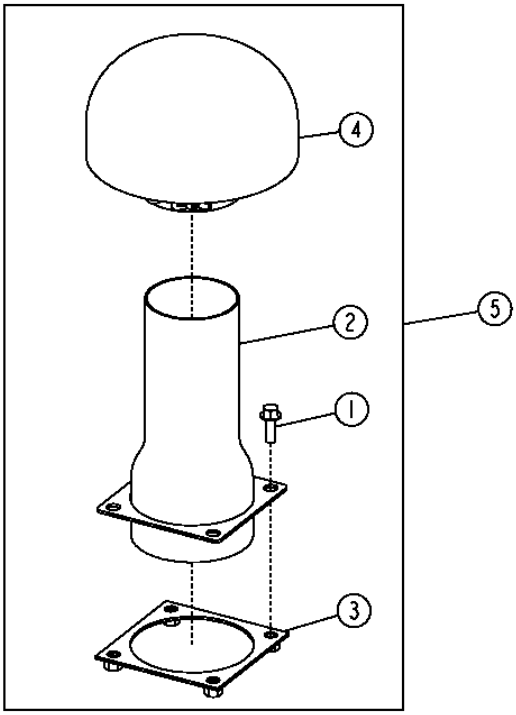

T193530

AIR PRECLEANER KIT
JEU DE PREFILTRO DE AIRE
JUEGO DEL PREFILTRO DE AIRE

KEY	*PART NO.*	*PART NAME*	*QTY.*	*SERIAL NO.*	*REMARKS*
1	19M7786	SCREW	4		M10 X 30
2	AT227816	PIPE	1		
3	AT227835	PLATE	1		
4	TY24861	PRECLEANER	1		
5	**AT306688**	**KIT**	**1**		**(AIR PRECLEANER)**

MUFFLER AND EXHAUST PIPE
SILENCIEUX ET TUYAU D'ECHAPPEMENT
SILENCIADOR Y TUBO DE ESCAPE

T193507 -UN-19AUG03

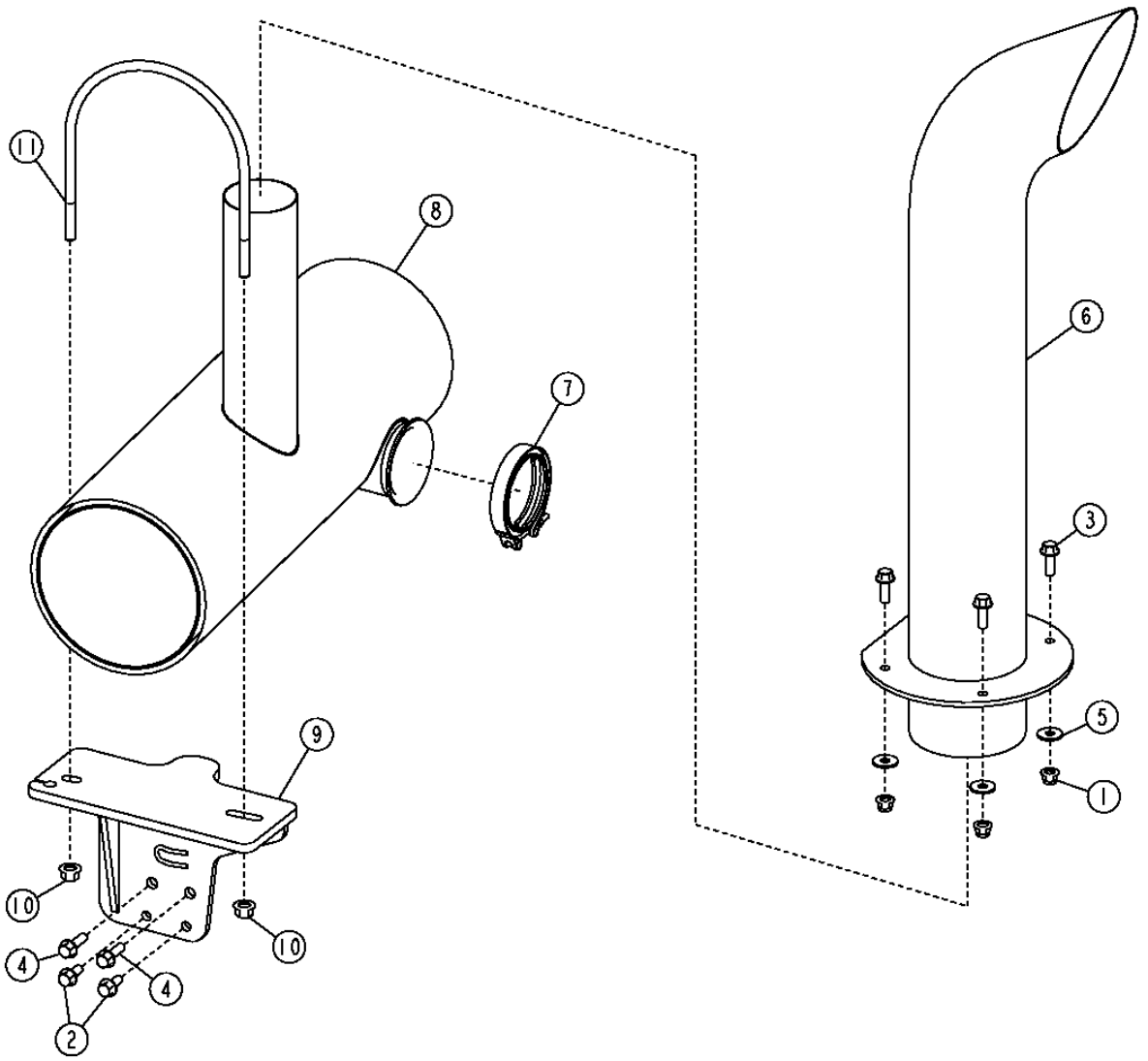

T193507

MUFFLER AND EXHAUST PIPE
SILENCIEUX ET TUYAU D'ECHAPPEMENT
SILENCIADOR Y TUBO DE ESCAPE

KEY	*PART NO.*	*PART NAME*	*QTY.*	*SERIAL NO.*	*REMARKS*
1	14M7400	LOCK NUT	4		M10
2	19M7785	SCREW	2		M10 X 25
3	19M7786	SCREW	4		M10 X 30
4	19M7835	SCREW	2		M10 X 35
5	24M7296	WASHER	4		10.500 X 30 X 2.500 MM
6	AT320673	EXHAUST PIPE	1	-597825	(BLACK)
	AT320673	EXHAUST PIPE	1	597826-	
	AT220440	EXHAUST PIPE	1	-598909	(CHROME)
	AT320674	EXHAUST PIPE	1	598910-	
7	AT222597	CLAMP	1		(SUB FOR RE166242)
8	AT307928	MUFFLER	1		(SUB FOR AT227532)
9	AT228882	BRACKET	1		
10	E80242	LOCK NUT	2		
11	T201869	U-BOLT	1		

ENGINE MOUNTING BRACKETS
SUPPORTS DE MONTAGE DU MOTEUR
ESCUADRAS DE MONTAJE DEL MOTOR

T193506 -UN-19AUG03

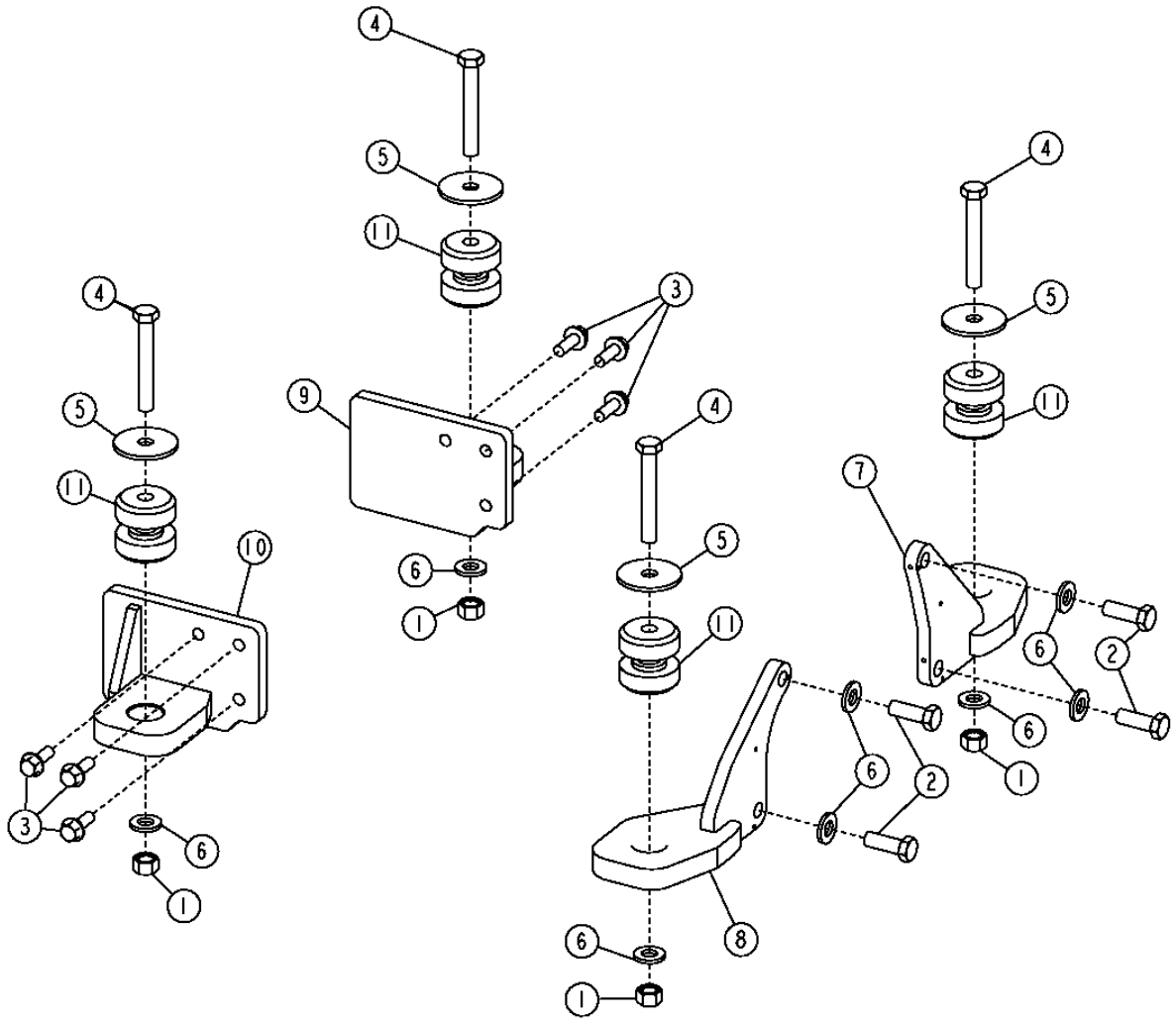

T193506

ENGINE MOUNTING BRACKETS
SUPPORTS DE MONTAGE DU MOTEUR
ESCUADRAS DE MONTAJE DEL MOTOR

KEY	*PART NO.*	*PART NAME*	*QTY.*	*SERIAL NO.*	*REMARKS*
1	14M7296	FLANGE NUT	4		M10
2	19M7489	CAP SCREW	4		M16 X 45
3	19M7790	SCREW	6		M12 X 35
4	19M7884	CAP SCREW	4		M16 X 110
5	24H1852	WASHER	4		21/32" X 2-3/4" X 0.180"
6	24M7241	WASHER	8		17 X 34 X 4 MM
7	AT227703	SUPPORT	1		
8	AT227706	SUPPORT	1		
9	AT227707	SUPPORT	1		
10	AT227708	SUPPORT	1		
11	AT227709	ISOLATOR	4		

FUEL TANK, PRIMARY FUEL FILTER, AND HOSES
RESERVOIR CARBURANT, FILTRE CARBURANT PRIMAIRE ET FLEXIBLES
TANQUE DE COMBUSTIBLE, FILTRO DE COMBUSTIBLE PRIMARIO Y MANGUERAS

T215707 -UN-10OCT05

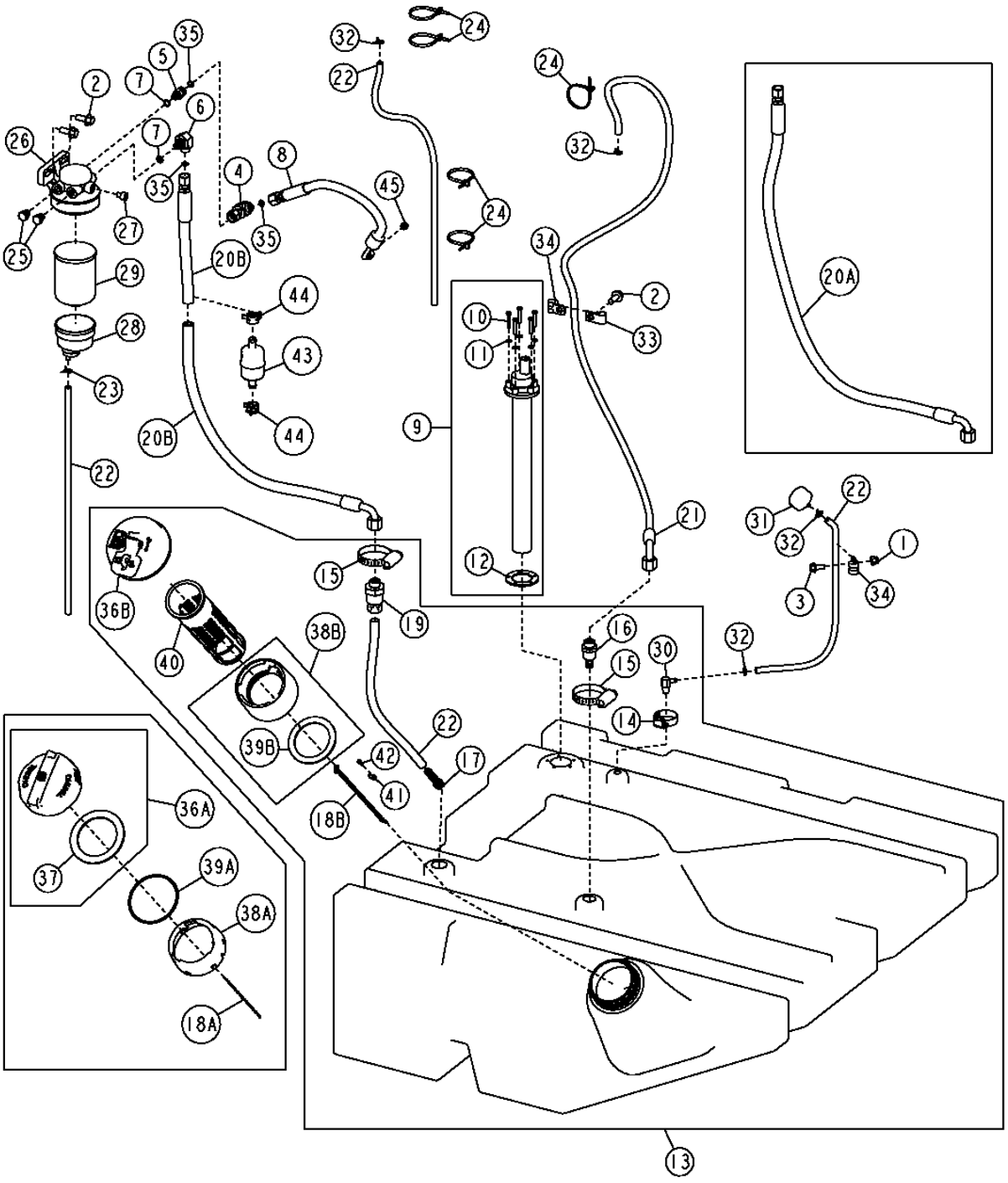

FUEL TANK, PRIMARY FUEL FILTER, AND HOSES
RESERVOIR CARBURANT, FILTRE CARBURANT PRIMAIRE ET FLEXIBLES
TANQUE DE COMBUSTIBLE, FILTRO DE COMBUSTIBLE PRIMARIO Y MANGUERAS

KEY	PART NO.	PART NAME	QTY.	SERIAL NO.	REMARKS
1	14M7396	LOCK NUT	1		M8
2	19M7785	SCREW	3		M10 X 25
3	19M7866	SCREW	1		M8 X 20
4	38H1094	ELBOW FITTING	1		
5	38H5008	ADAPTER FITTING	1		
6	38H5022	ELBOW FITTING	1		
7	51M7040	O-RING	2		
8	AT312325	HYDRAULIC HOSE - FABRICATE	1		(SUB FOR AT219835)
	R74012	SEALING WASHER	1		7.140 X 12.300 X 6.400 MM, (SEAL FOR PRIMARY FUEL FILTER END)
9	AT226394	FUEL SENDER	1		
10	19M7317	SCREW	5		M5 X 30
11	24M7027	WASHER	5		5.300 X 10 X 1 MM
12	T196733	GASKET	1		
13	.....	FUEL TANK	1	-594411	(SUB AT316141)
	AT316141	FUEL TANK	1	594412-	
14	AR21839	CLAMP	1		
15	TY22470	CLAMP	2		(SUB FOR AR21840)
16	R193666	FITTING	1		
17	R194311	COMPRESSION SPRING	1		
18A	RE158953	CHAIN LINK	1	-594411	
18B	AH159448	LINK CHAIN	1	594412-	
19	RE194040	FITTING	1		
20A	.....	HOSE	1	-598948	(ORDER AT323719, AT223493 AND (2) R184863) (AT227817 NLA)
20B	AT323719	HOSE	1	598949-	
21	AT227821	HYDRAULIC HOSE - FABRICATE	1		
22	.....	BULK HOSE	1		(CUT TO LENGTH) (MAKE FROM T79477)
23	PT9412	HOSE CLAMP	1		
24	R44302	TIE BAND	2		
25	RE46686	FITTING PLUG	2		
26	RE508847	FILTER HEAD	1		
27	RE51649	SEAL KIT	1		
28	RE51650	SEDIMENT BOWL	1		
29	RE517180	FUEL FILTER	1		
30	RE179976	CHECK VALVE	1		
31	RE52504	BREATHER	1		
32	T13254	CLAMP	4		
33	T75197	CLAMP	1		
34	T75276	CLAMP	2		
35	T77613	O-RING	3		
36A	RE224279	FILLER CAP	1	-594411	
36B	RE234193	FILLER CAP	1	594412-	(SUB FOR AH165080)
37	R224278	GASKET	1		
38A	R116933	FUNNEL	1	-594411	
38B	AH165079	ADAPTER FITTING	1	594412-	
39A	R120233	O-RING	1	-594411	
39B	H172014	GASKET	1	594412-	
40	AH162914	STRAINER	1	594412-	
41	H174831	ANCHOR	1	594412-	
42	T164203	SCREW	1	594412-	
43	AT223493	FUEL FILTER	1		
44	R184863	HOSE CLAMP	2		
45	R74012	SEALING WASHER	1		7.140 X 12.300 X 6.400 MM
..	RE516512	O-RING KIT	1		(FUEL FILTER HEADER CAP)(WITHOUT HAND PRIMER)(CONTAINS 10 O-RINGS)
..	RE516553	SEAL KIT	1		(FUEL FILTER SEAL KIT)

ENGINE SENSORS
CAPTEURS DU MOTEUR
SENSORES DEL MOTOR

CDP45110 -UN-18DEC01

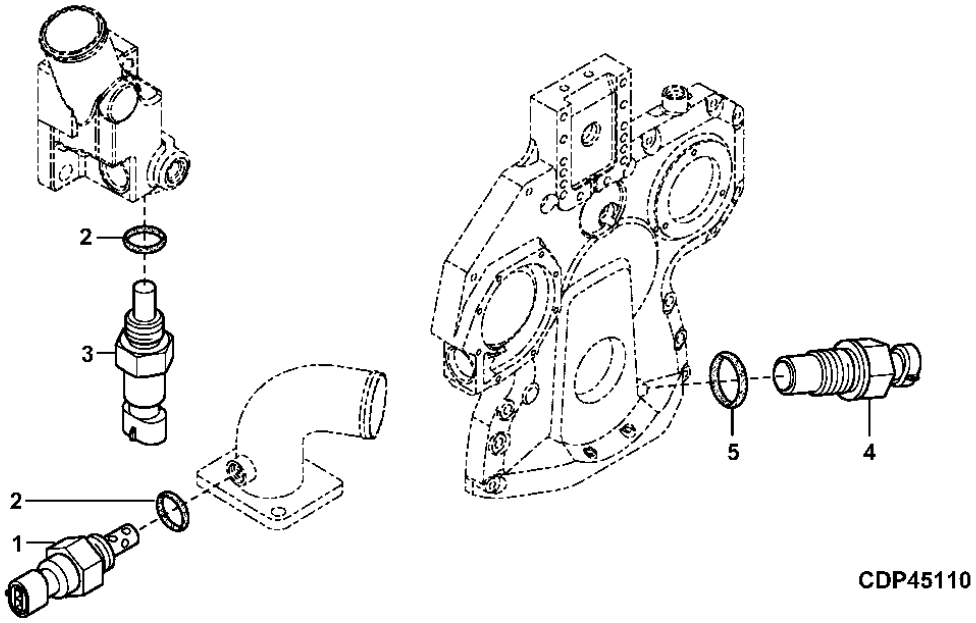

KEY	*PART NO.*	*PART NAME*	*QTY.*	*ENGINE SERIAL NO.*	*REMARKS*
1	RE61812	SENSOR	1		AIR TEMPERATURE, (ALSO ORDER 51M7041)
2	51M7041	O-RING	2		
3	RE52722	COOLANT TEMPERATURE SENSOR	1		WATER TEMPERATURE, (ALSO ORDER 51M7041)
4	RE519144	SENSOR	1		(ALSO ORDER 51M7044) (CRANKSHAFT POSITION SENSOR)
5	51M7044	O-RING	1		

MEMORANDA
MEMORANDA
MEMORANDA

SECONDARY STEERING (S.N. -604689)
DIRECTION AUXILIAIRE (SN -604689)
DIRECCION AUXILIAR (SN -604689)

T194005 -UN-25SEP03

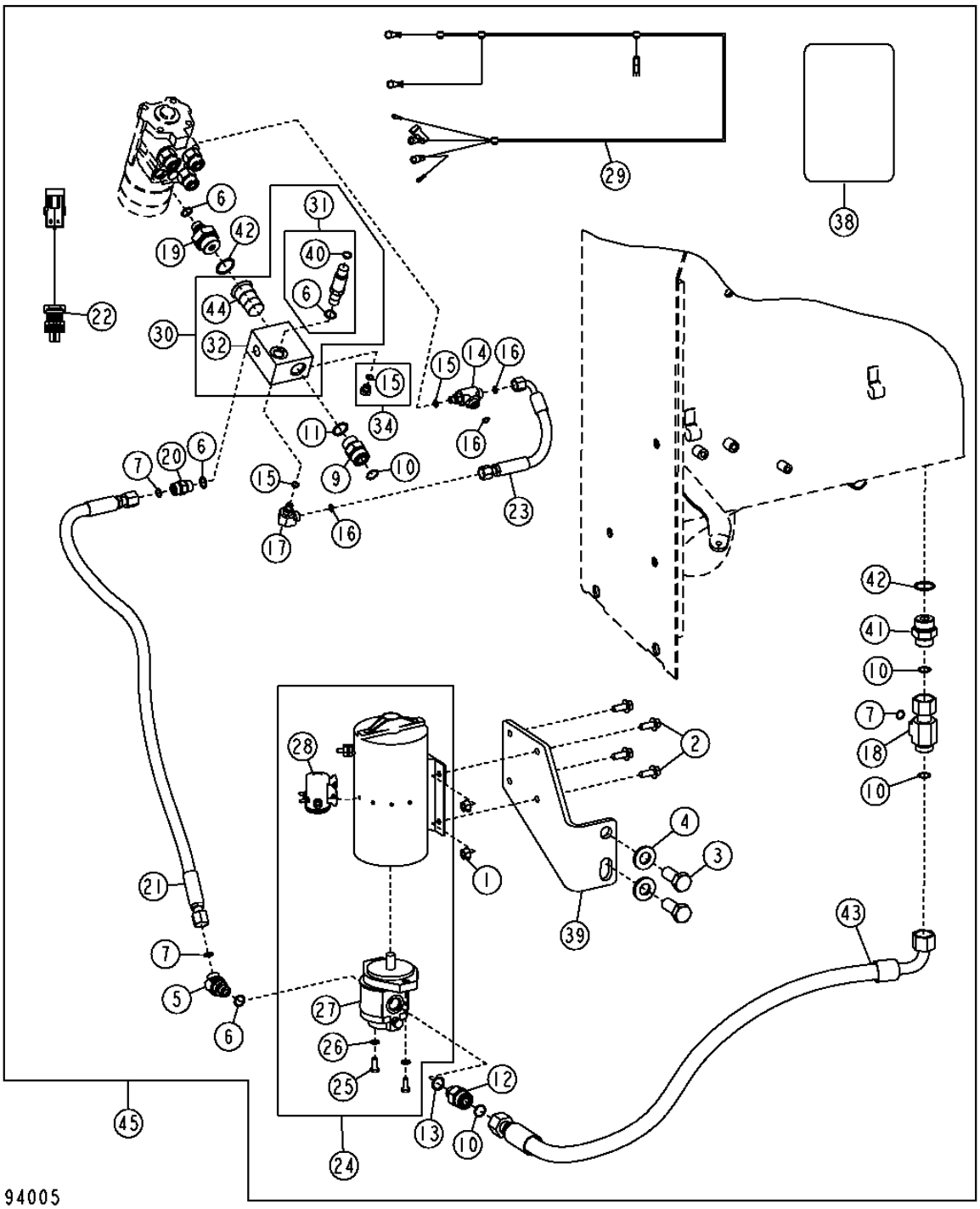

SECONDARY STEERING (S.N. -604689)
DIRECTION AUXILIAIRE (SN -604689)
DIRECCION AUXILIAR (SN -604689)

KEY	PART NO.	PART NAME	QTY.	SERIAL NO.	REMARKS
1	14M7296	FLANGE NUT	4		M10
2	19M7785	SCREW	4		M10 X 25
3	19M7950	CAP SCREW	2		M20 X 45
4	24M7242	WASHER	2		21.400 X 42 X 5 MM
5	38H1046	ELBOW FITTING	1		
6	R26375	O-RING	4		
7	T77857	O-RING	3		
9	38H1163	ADAPTER FITTING	1		
10	T77858	O-RING	4		
11	U12547	O-RING	1		
12	38H1193	ADAPTER FITTING	1		
13	R26906	O-RING	1		
14	38H1434	TEE FITTING	1		
15	R28782	O-RING	3		
16	T77613	O-RING	3		
17	38H1435	ELBOW FITTING	1		45 DEGREE
18	38H1532	TEE FITTING	1		
19	AT116114	ADAPTER FITTING	1		
20	AT141527	CHECK VALVE	1		
21	AT175781	HYDRAULIC HOSE - FABRICATE	1		
22	AT203492	WIRING HARNESS	1		
23	AT208725	HYDRAULIC HOSE - FABRICATE	1		
24	AT209537	PUMP	1		
25	19H1900	CAP SCREW	2		5/16" X 3/4"
26	24M7095	WASHER	2		0.331" X 0.591" X 0.063"
27	AT210092	PUMP	1		
28	AT210093	SOLENOID	1		
29	AT210155	WIRING HARNESS	1		
30	AT210207	SWITCH	1		
31	AT210399	SWITCH	1		
32	T173324	JUNCTION BLOCK	1		
34	AT223648	FITTING	1		
38	T146443	SAFETY SIGN	1		
39	T173579	BRACKET	1		
40	R26448	O-RING	1		
41	38H1194	ADAPTER FITTING	1		
42	R29936	O-RING	2		
43	AT203180	HYDRAULIC HOSE - FABRICATE	1		
44	AT116373	CHECK VALVE	1		
45	AT306464	KIT	1		(SECONDARY STEERING)

SECONDARY STEERING (S.N. 604690-)
DIRECTION AUXILIAIRE (S.N. 604690-)
DIRECCION AUXILIAR (S.N. 604690-)

TX1013158 -UN-27OCT06

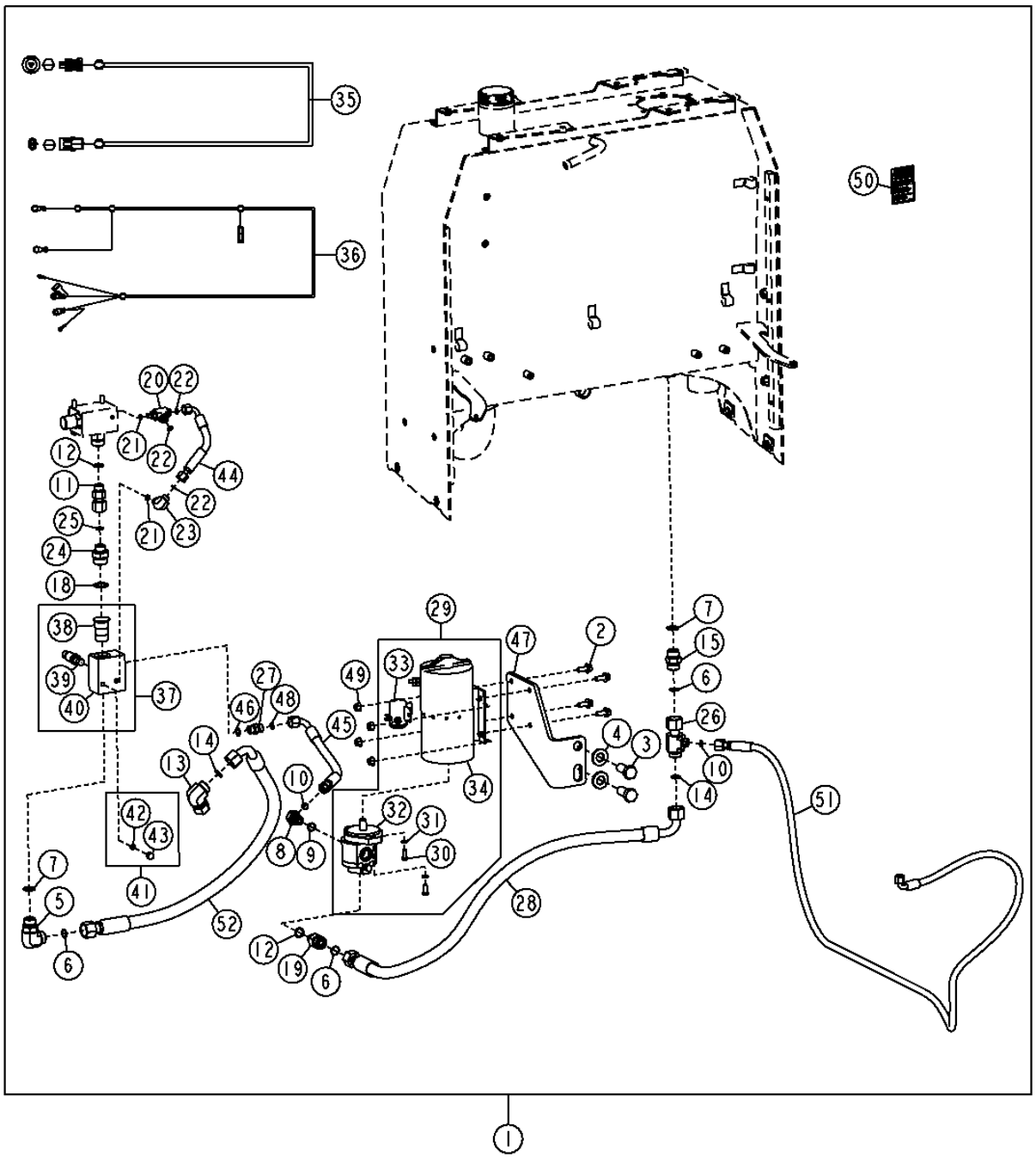

SECONDARY STEERING (S.N. 604690-)
DIRECTION AUXILIAIRE (S.N. 604690-)
DIRECCION AUXILIAR (S.N. 604690-)

KEY	PART NO.	PART NAME	QTY.	SERIAL NO.	REMARKS
1	AT331091	FIELD INSTALLATION KIT	1		
2	19M7785	SCREW	4		M10 X 25
3	19M7950	CAP SCREW	2		M20 X 45
4	24M7242	WASHER	2		21.400 X 42 X 5 MM
5	38H1007	ELBOW FITTING	1		
6	T77858	O-RING	1		18.771 X 1.778 MM
7	U12547	O-RING	1		23.470 X 2.946 MM
8	38H1046	ELBOW FITTING	1		
9	R26375	O-RING	1		16.358 X 2.210 MM
10	T77857	O-RING	1		12.421 X 1.778 MM
11	38H1069	FITTING	1		
12	R26906	O-RING	1		19.177 X 2.464 MM
13	38H1097	ELBOW FITTING	1		
14	T77858	O-RING	1		18.771 X 1.778 MM
15	38H1163	ADAPTER FITTING	1		
19	38H1193	ADAPTER FITTING	1		
20	38H1434	TEE FITTING	1		
21	R28782	O-RING	1		8.915 X 1.829 MM
22	T77613	O-RING	2		9.246 X 1.778 MM
23	38H1435	ELBOW FITTING	2		
24	38H1447	ADAPTER FITTING	1		
25	T77932	O-RING	1		15.596 X 1.778 MM
26	38H1532	TEE FITTING	1		
27	AT141527	CHECK VALVE	1		
28	AT203180	HYDRAULIC HOSE - FABRICATE	1		
29	AT209537	PUMP	1		
30	19H1900	CAP SCREW	2		
31	24M7095	WASHER	2		
32	AT210092	PUMP	1		
33	AT210093	SOLENOID	1		
34	AT210094	MOTOR	1		
35	AT210056	WIRING HARNESS	1		
36	AT210155	WIRING HARNESS	1		
37	AT210207	SWITCH	1		
38	AT116373	CHECK VALVE	1		
39	AT210399	SWITCH	1		
40	T173324	JUNCTION BLOCK	1		
41	AT223648	FITTING	1		
42	R28782	O-RING	1		
43	R51031	FITTING	1		
44	AT330041	HYDRAULIC HOSE - FABRICATE	1		
45	AT330697	HYDRAULIC HOSE - FABRICATE	1		
46	R26375	O-RING	1		
47	T173579	BRACKET	1		
48	T77857	O-RING	1		
49	14M7296	FLANGE NUT	4		
50	T146443	SAFETY SIGN	1		
51	AT319046	HYDRAULIC HOSE - FABRICATE	1		
52	AT226808	HYDRAULIC HOSE - FABRICATE	1		

STEERING VALVE AND FITTINGS (SERIAL NO. 601560 -)
VERIN ET RACCORDS DE DIRECTION (SN 601560-)
ADAPTADORES Y VALVULA DE LA DIRECCION (SN 601560-)

TX1002545 -UN-18JAN06

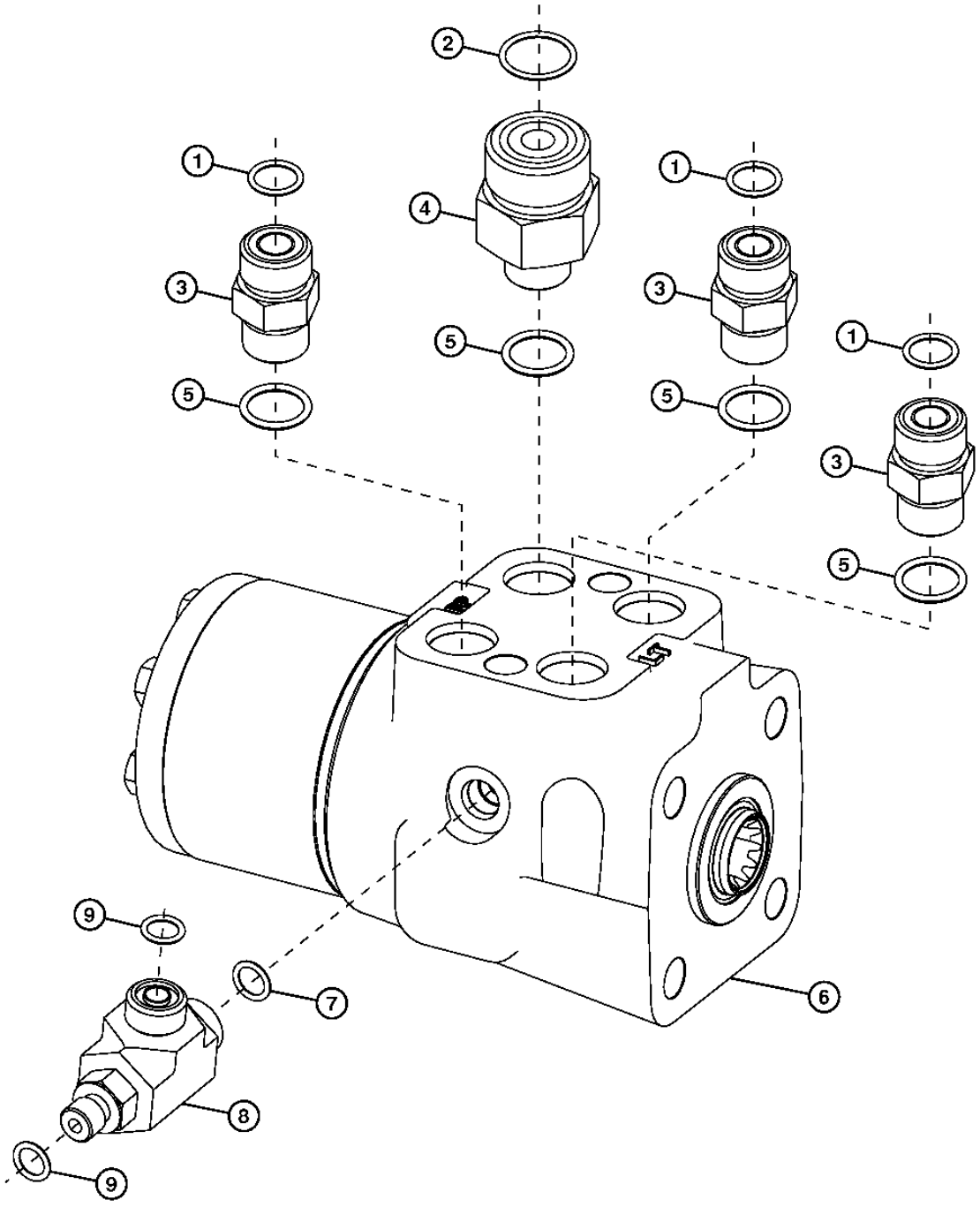

TX1002545

STEERING VALVE AND FITTINGS (SN 601560-)
VERIN ET RACCORDS DE DIRECTION (SN 601560-)
ADAPTADORES Y VALVULA DE LA DIRECCION (SN 601560-)

KEY	*PART NO.*	*PART NAME*	*QTY.*	*SERIAL NO.*	*REMARKS*
1	T77857	O-RING	3		
2	T77858	O-RING	1		
3	38H1161	ADAPTER FITTING	3		
4	38H1178	ADAPTER FITTING	1		
5	R26375	O-RING	4		
6	AT309159	FLOW CONTROL HYD. VALVE	1	-601558	
	AT320570	FLOW CONTROL HYD. VALVE	1	601559-604689	
	AT323287	VALVE	1	604690-	(STEERING) (SUB FOR AT323285)
7	R28782	O-RING	1		
8	38H1434	TEE FITTING	1		
9	T77613	O-RING	2		
..	AT316249	SEAL KIT	1		(STEERING VALVE SEAL KIT) (NOT ILLUSTRATED)

STEERING COMPENSATOR VALVE (S.N. 604690-)
SOUPAPE DE COMPENSATION DE DIRECTION (S.N. 604690-)
VALVULA DEL COMPENSADOR DE LA DIRECCION (S.N. 604690-)

TX1008272 -UN-05JUN06

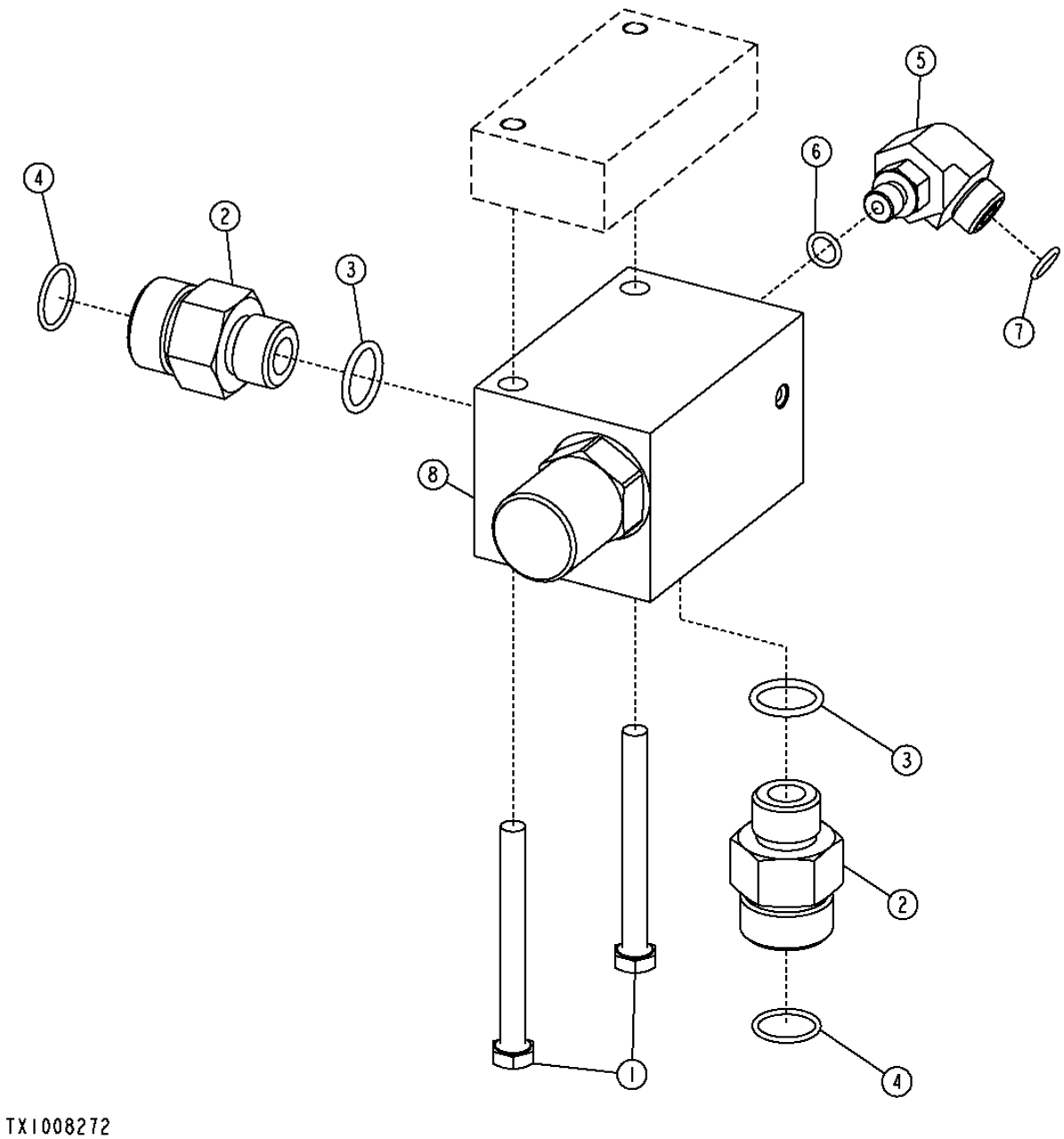

STEERING COMPENSATOR VALVE (S.N. 604690-)
SOUPAPE DE COMPENSATION DE DIRECTION (S.N. 604690-)
VALVULA DEL COMPENSADOR DE LA DIRECCION (S.N. 604690-)

KEY	*PART NO.*	*PART NAME*	*QTY.*	*SERIAL NO.*	*REMARKS*
1	19M8039	SCREW	2		M8 X 80, (SUB FOR 19M8504)
2	38H1193	ADAPTER FITTING	2		
3	R26906	O-RING	2		19.177 X 2.464 MM
4	T77858	O-RING	2		18.771 X 1.778 MM
5	38H1435	ELBOW FITTING	1		
6	R28782	O-RING	1		8.915 X 1.829 MM
7	T77613	O-RING	1		9.246 X 1.778 MM
8	AT323286	VALVE	1		
	AT323845	SEAL KIT	1		

STEERING CYLINDER HYDRAULIC HOSES (S.N. -604689)
FLEXIBLES HYDRAULIQUES DE VERIN DE DIRECTION (S.N. -604689)
MANGUERAS HIDRAULICAS DE CILINDROS DE LA DIRECCION (S.N. -604689)

T194388 -UN-27AUG03

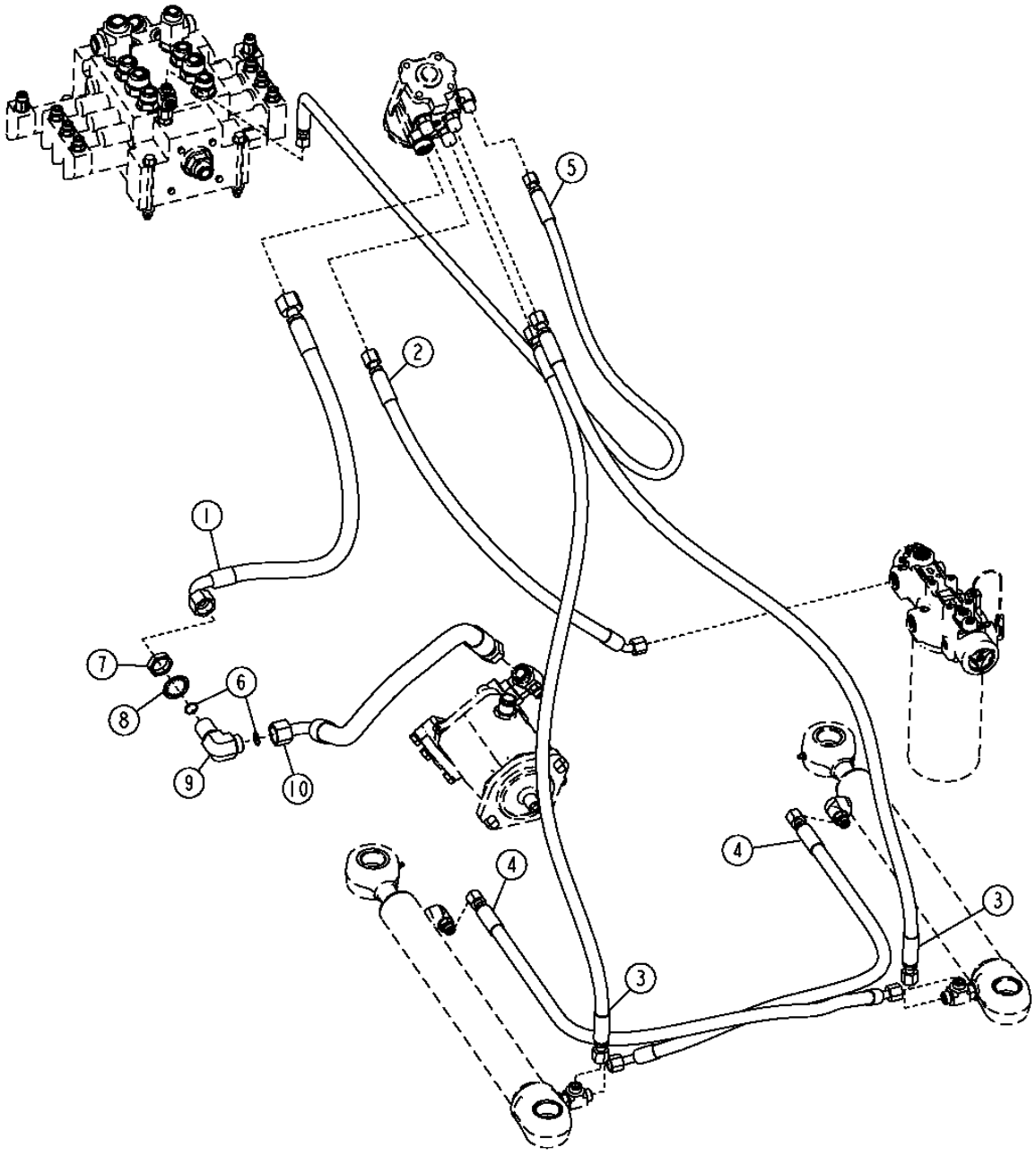

T194388

THIS PARTS LISTING IS CONTINUED

STEERING CYLINDER HYDRAULIC HOSES (S.N. -604689)
FLEXIBLES HYDRAULIQUES DE VERIN DE DIRECTION (S.N. -604689)
MANGUERAS HIDRAULICAS DE CILINDROS DE LA DIRECCION (S.N. -604689)

KEY	*PART NO.*	*PART NAME*	*QTY.*	*SERIAL NO.*	*REMARKS*
1	AT225275	HYDRAULIC HOSE - FABRICATE	1		1-3/16" X 875 MM (34-1/2") X 1-3/16"
2	AT303273	HYDRAULIC HOSE - FABRICATE	1		
3	AT222561	HYDRAULIC HOSE - FABRICATE	2		
4	AT334083	HYDRAULIC HOSE - FABRICATE	2		11/16" X 1 240 MM (48-3/4") X 13/16", (SUB FOR AT207072)
5	AT170234	HYDRAULIC HOSE - FABRICATE	1	-594432	11/16" X 2 819 MM (111") X 11/16"
	AT314734	HYDRAULIC HOSE - FABRICATE	1	594433-	
6	T77858	O-RING	2		
7	T78707	NUT	1		30.175 MM
8	T174275	LOCK WASHER	1		
9	38H1324	ELBOW FITTING	1		
10	AT226808	HYDRAULIC HOSE - FABRICATE	1		

STEERING CYLINDER HYDRAULIC HOSES (S.N. 604690-)
FLEXIBLES HYDRAULIQUES DE VERIN DE DIRECTION (S.N. 604690-)
MANGUERAS HIDRAULICAS DE CILINDROS DE LA DIRECCION (S.N. 604690-)

TX1003814 -UN-21FEB06

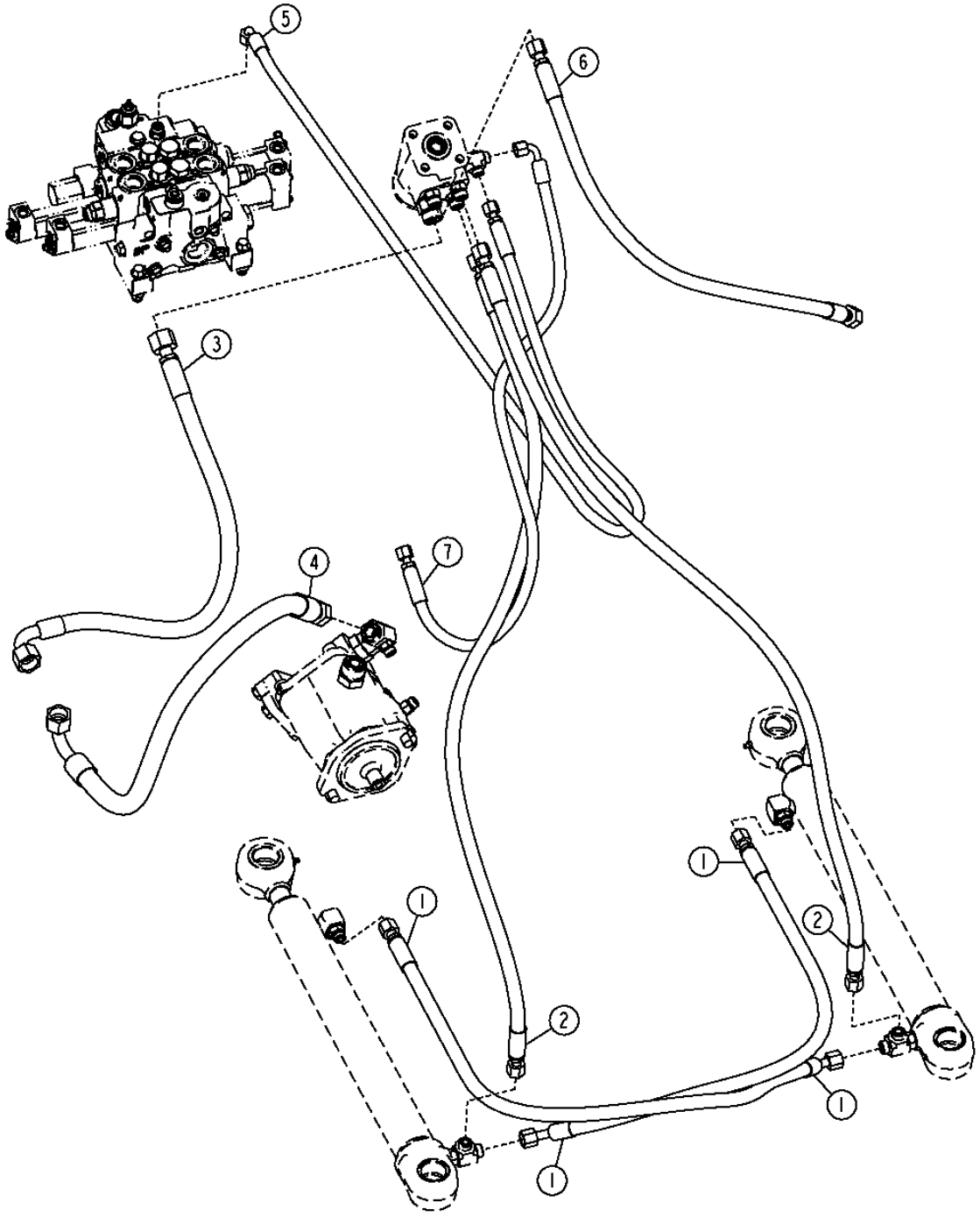

STEERING CYLINDER HYDRAULIC HOSES (S.N. 604690-)
FLEXIBLES HYDRAULIQUES DE VERIN DE DIRECTION (S.N. 604690-)
MANGUERAS HIDRAULICAS DE CILINDROS DE LA DIRECCION (S.N. 604690-)

KEY	*PART NO.*	*PART NAME*	*QTY.*	*SERIAL NO.*	*REMARKS*
1	AT334083	HYDRAULIC HOSE - FABRICATE	2		11/16" X 1 240 MM X 13/16", (SUB FOR AT207072)
2	AT222561	HYDRAULIC HOSE - FABRICATE	2		13/16" X 1 500 MM X 13/16"
3	AT225275	HYDRAULIC HOSE - FABRICATE	1		1-3/16" X 875 MM X 1-3/16"
4	AT226808	HYDRAULIC HOSE - FABRICATE	1		1-3/16" X 851 MM X 1-3/16"
5	AT314734	HYDRAULIC HOSE - FABRICATE	1		9/16" X 2 000 MM X 9/16"
6	AT319053	HYDRAULIC HOSE - FABRICATE	1		13/16" X 925 MM X 1"
7	AT325889	HYDRAULIC HOSE - FABRICATE	1		11/16" X 1 082 MM X 11/16"

STEERING CYLINDER FITTINGS AND LUBRICATION HOSES
RACCORDS ET FLEXIBLES DE GRAISSAGE DU VERIN DE DIRECTION
ADAPTADORES DEL CILINDRO DE LA DIRECCION Y MANGUERAS DE LUBRICACION

TX1006376 -UN-24APR06

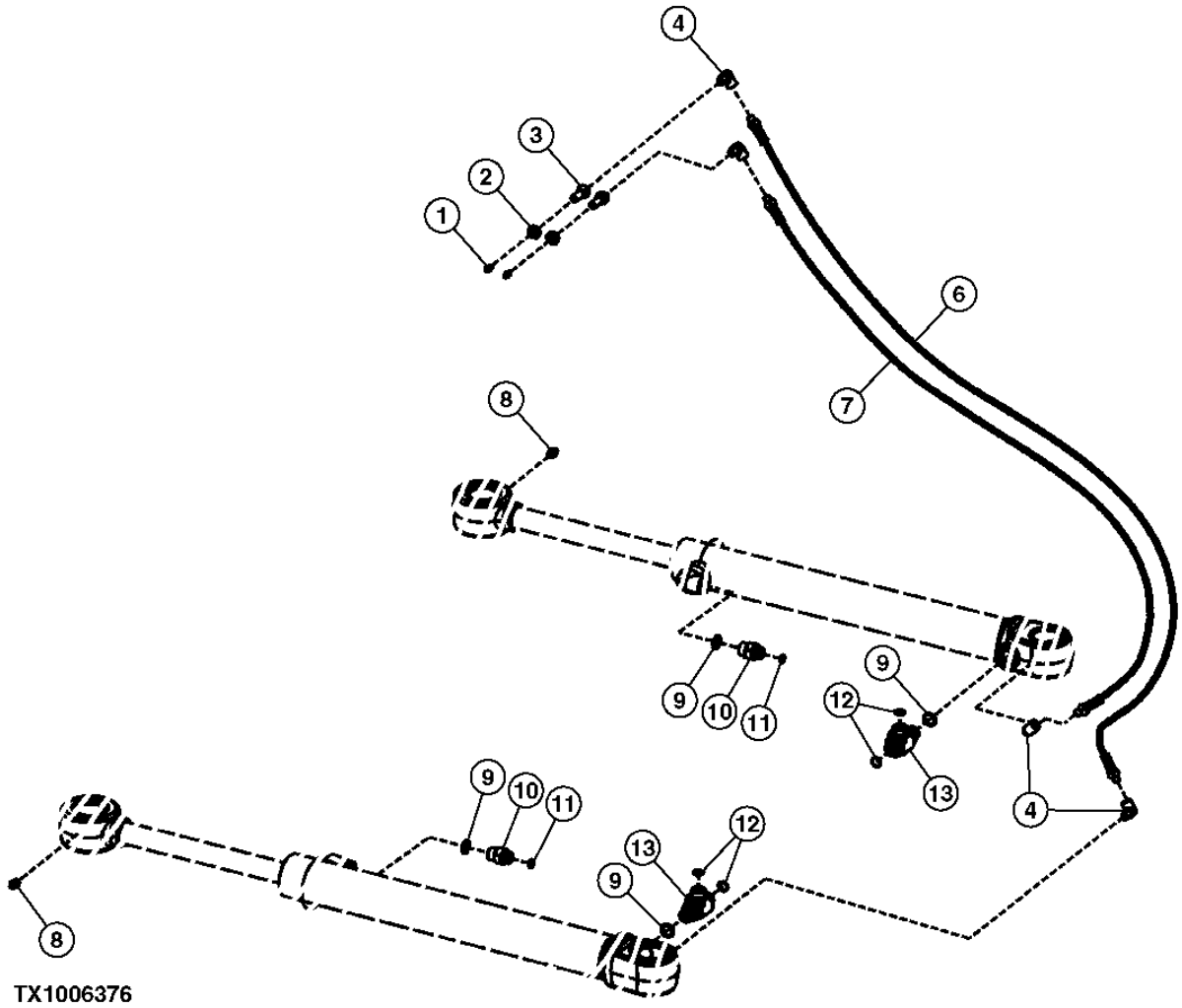

STEERING CYLINDER FITTINGS AND LUBRICATION HOSES
RACCORDS ET FLEXIBLES DE GRAISSAGE DU VERIN DE DIRECTION
ADAPTADORES DEL CILINDRO DE LA DIRECCION Y MANGUERAS DE LUBRICACION

KEY	*PART NO.*	*PART NAME*	*QTY.*	*SERIAL NO.*	*REMARKS*
1	JD7797	LUBRICATION FITTING	2		(SUB FOR JD7842, THIS APPLICATION)
2	E12379	NUT	2		
3	R36311	FITTING	2		
4	T56112	ELBOW FITTING	4		
5	H77698	TIE BAND	1		
6	AT207022	HYDRAULIC HOSE	1		
7	AT207023	HYDRAULIC HOSE	1		
8	JD7759	LUBRICATION FITTING	2		
9	R26375	O-RING	4		
10	38H1171	ADAPTER FITTING	2		
11	T77613	O-RING	2		
12	T77857	O-RING	4		
13	38H1024	TEE FITTING	2		

STEERING CYLINDER
VERIN DE DIRECTION
CILINDRO DE LA DIRECCION

T194750 -UN-10NOV03

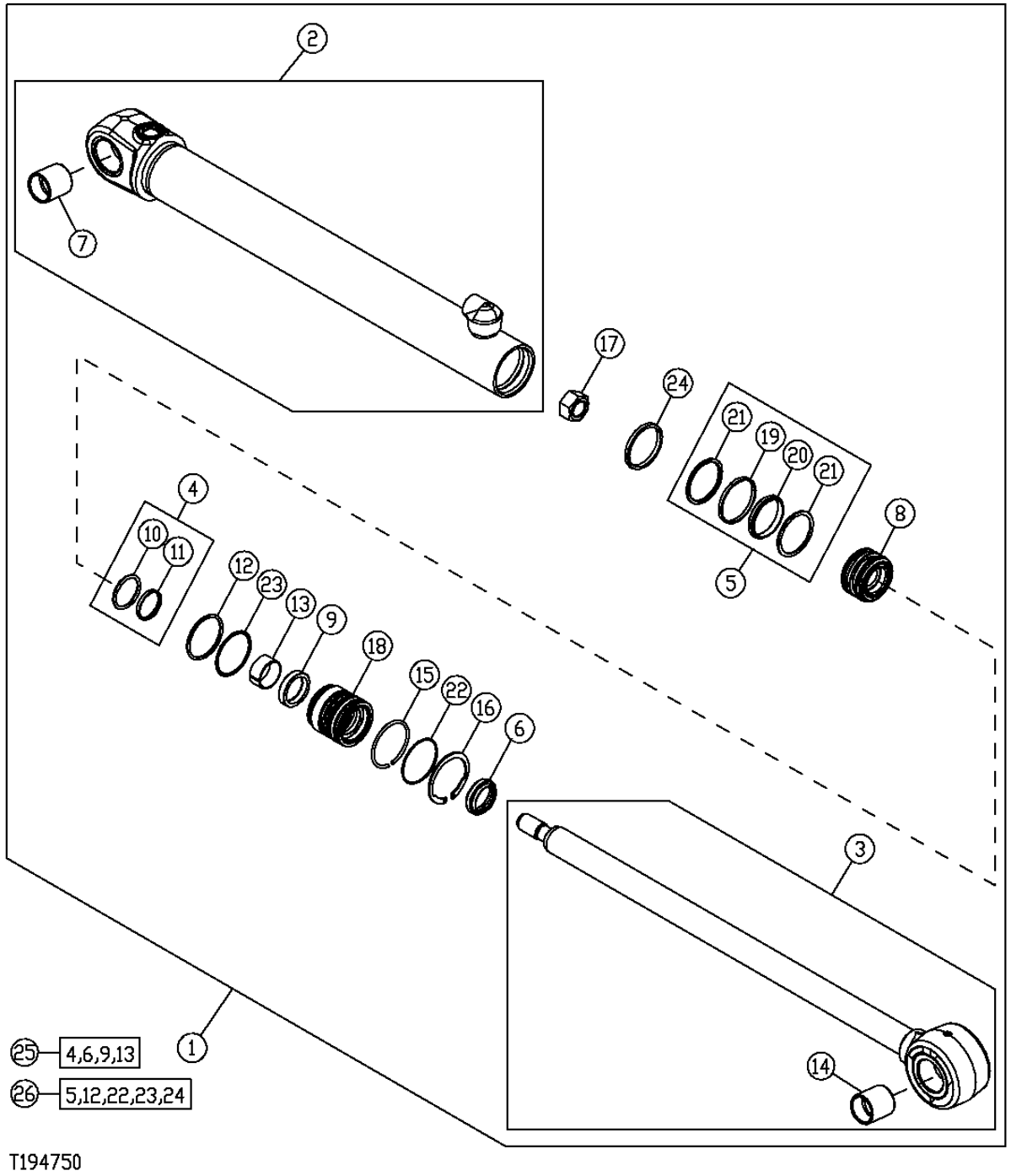

STEERING CYLINDER
VERIN DE DIRECTION
CILINDRO DE LA DIRECCION

KEY	PART NO.	PART NAME	QTY.	SERIAL NO.	REMARKS
1	AH205056	HYDRAULIC CYLINDER	1		(SUB FOR AH216366 AND AH160119)
2	AH216367	HYDRAULIC CYLINDER BARREL	1		(SUB FOR AH147737)
3	AH147739	HYDRAULIC CYLINDER ROD	1		
4	AH147976	SEAL	1		
5	AH148358	SEAL	1		
6	AH150452	SEAL	1		
7	H143405	BUSHING	1		
8	H154126	PISTON	1		
9	H154514	SEAL	1		
10	.....	SEAL	1		(SUB AH147976)
11	.....	SEAL	1		(SUB AH147976)
12	H155964	O-RING	1		
13	H156058	WEAR RING	1		
14	H158192	BUSHING	1		
15	H164204	SNAP RING	1		
16	H164205	SNAP RING	1		
17	H170535	NUT	1		
18	H171332	HYDR. CYLINDER ROD GUIDE	1		
19	.....	SEAL	1		(SUB AH148358)
20	.....	SEAL	1		(SUB AH148358)
21	.....	SEAL	2		(SUB AH148358)
22	M44162	O-RING	1		
23	R78393	BACK-UP RING	1		
24	R87881	WEAR RING	1		
25	AH161589	HYDRAULIC CYLINDER KIT	1		(ROD SEAL KIT)
26	AH161591	HYDRAULIC CYLINDER KIT	1		(BORE KIT)

BRAKE VALVE, PEDALS AND LINKAGE (S.N. -604689)
SOUPAPE, PEDALES ET TRINGLERIE DE FREIN (S.N. -604689)
VALVULA DE FRENOS, PEDALES Y VARILLAJE (S.N. -604689)

TX1006037 -UN-21APR06

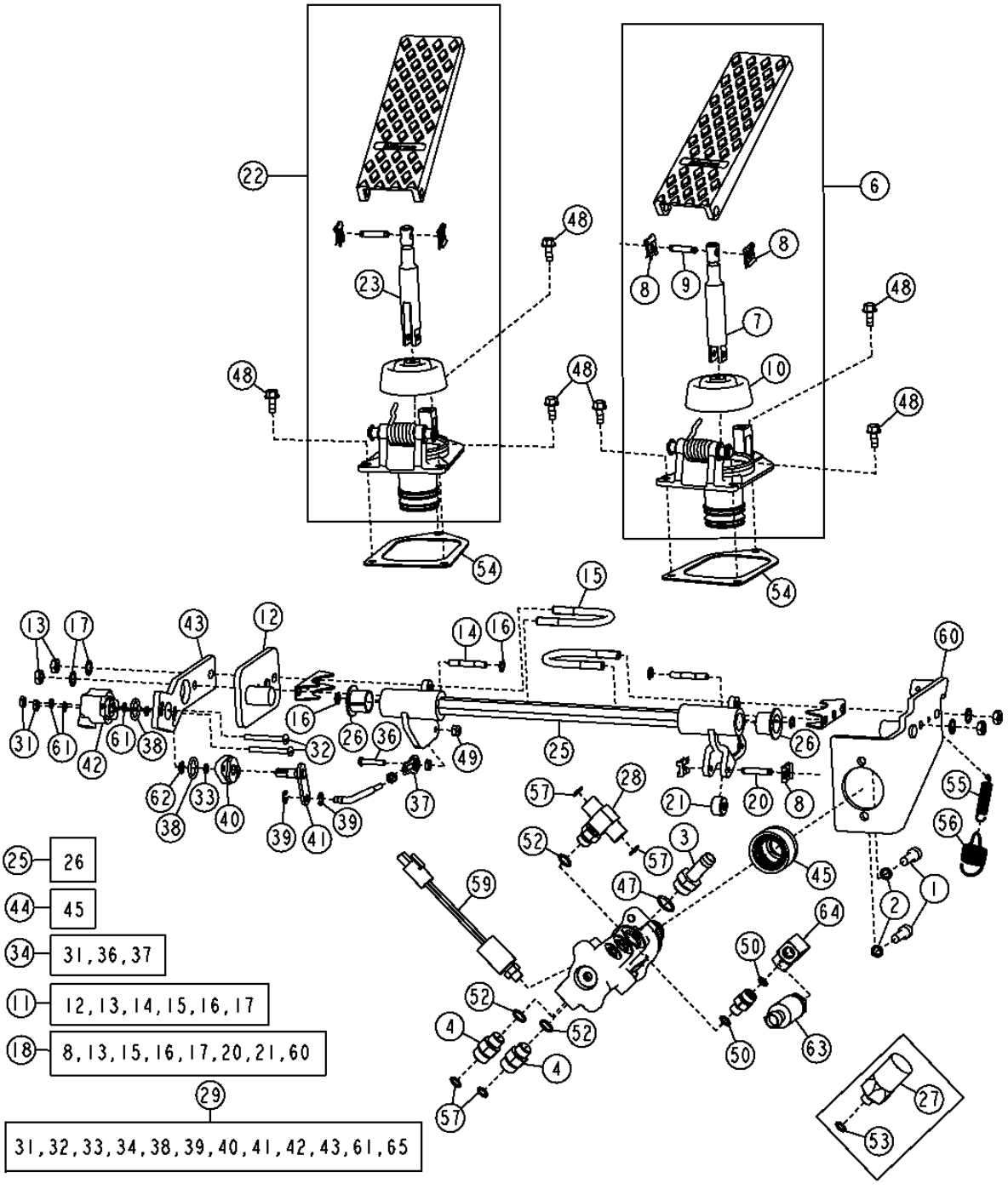

BRAKE VALVE, PEDALS AND LINKAGE (S.N. -604689)
SOUPAPE, PEDALES ET TRINGLERIE DE FREIN (S.N. -604689)
VALVULA DE FRENOS, PEDALES Y VARILLAJE (S.N. -604689)

KEY	PART NO.	PART NAME	QTY.	SERIAL NO.	REMARKS
1	19M7657	SCREW	2		
2	24M7313	WASHER	2		
3	T38282	HOSE FITTING	1		
4	AT181313	CHECK VALVE	2		
6	AT203457	PEDAL	1		(RIGHT)
7	AT208088	PUSH ROD	1		
8	T157212	CLIP	6		
9	T157258	PIN	2		
10	T174634	BOOT	2		
11	AT208085	KIT	1		(LEFT PEDAL BRACKET)
12	AT314267	SUPPORT	1		(SUB FOR AT208167)
13	R53317	LOCK NUT	4		
14	T157211	PIN	2		
15	T157220	CLAMP	2		
16	T170180	SNAP RING	4		
17	T170181	LOCK WASHER	4		
18	AT208086	HOSE KIT	1		(RIGHT PEDAL BRACKET)
20	T157257	PIN	1		
21	T175236	ROLLER	1		
22	AT208087	PEDAL	1		(LEFT)
23	AT208163	PUSH ROD	1		
25	AT208089	ROCKER ARM	1		
26	T157223	BEARING	2		
27	AT206721	SWITCH	1	-600914	(STD)
	AT222371	SWITCH	1	-600914	(HARSH ENVIRONMENT)
28	AT207529	CHECK VALVE	1		
29	AT210291	CLUTCH KIT	1		(CLUTCH CUTOFF)
31	14H631	NUT	2		4.826 MM
32	21H1390	SCREW	2		
33	A4365R	O-RING	1		6.071 X 1.778 MM
34	AT210877	LINKAGE	1		
35	14H631	NUT	1		4.826 MM
36	21H985	SCREW	1		
37	AH108055	LINK END	1		
38	P48347	O-RING	2		
39	R72654	SNAP RING	2		
40	R86457	SUPPORT	1		
41	RE24468	SHAFT	1		
42	RE261356	SENSOR	1		(SUB FOR RE35704 OR RE69297)
43	T172274	SUPPORT	1		
44	AT331208	FLOW CONTROL HYD. VALVE	1		(SUB FOR AT210229)
45	AT207948	SEAL KIT	1		
46	AT207947	SEAL	1		
47	R26375	O-RING	1		
48	M113243	SCREW	6		
49	N203905	LOCK NUT	1		
50	R26287	O-RING	1		
51	R26375	O-RING	1		
52	R26448	O-RING	3		
53	R28782	O-RING	1	-600914	
54	T172927	GASKET	2		
55	T176108	SPRING	1		
56	T176111	SPRING	1		
57	T77613	O-RING	4		
59	AT223535	PRESSURE SWITCH	1		(STD)
	AT222372	SWITCH	1		(HARSH ENVIRONMENT)
60	AT314266	SUPPORT	1		(SUB FOR AT208166)
61	12M7060	WASHER	4		5.300 MM, (SUB FOR 12H295)
62	R72653	SNAP RING	1		
63	38H1159	ADAPTER FITTING	1	600915-	
64	AT322982	TRANSDUCER	1	600915-	
65	AT326970	FITTING	1	600915-	

BRAKE VALVE, PEDALS AND LINKAGE (S.N. 604690-)
SOUPAPE, PEDALES ET TRINGLERIE DE FREIN (S.N. 604690-)
VALVULA DE FRENOS, PEDALES Y VARILLAJE (S.N. 604690-)

TX1009051 -UN-14JUN06

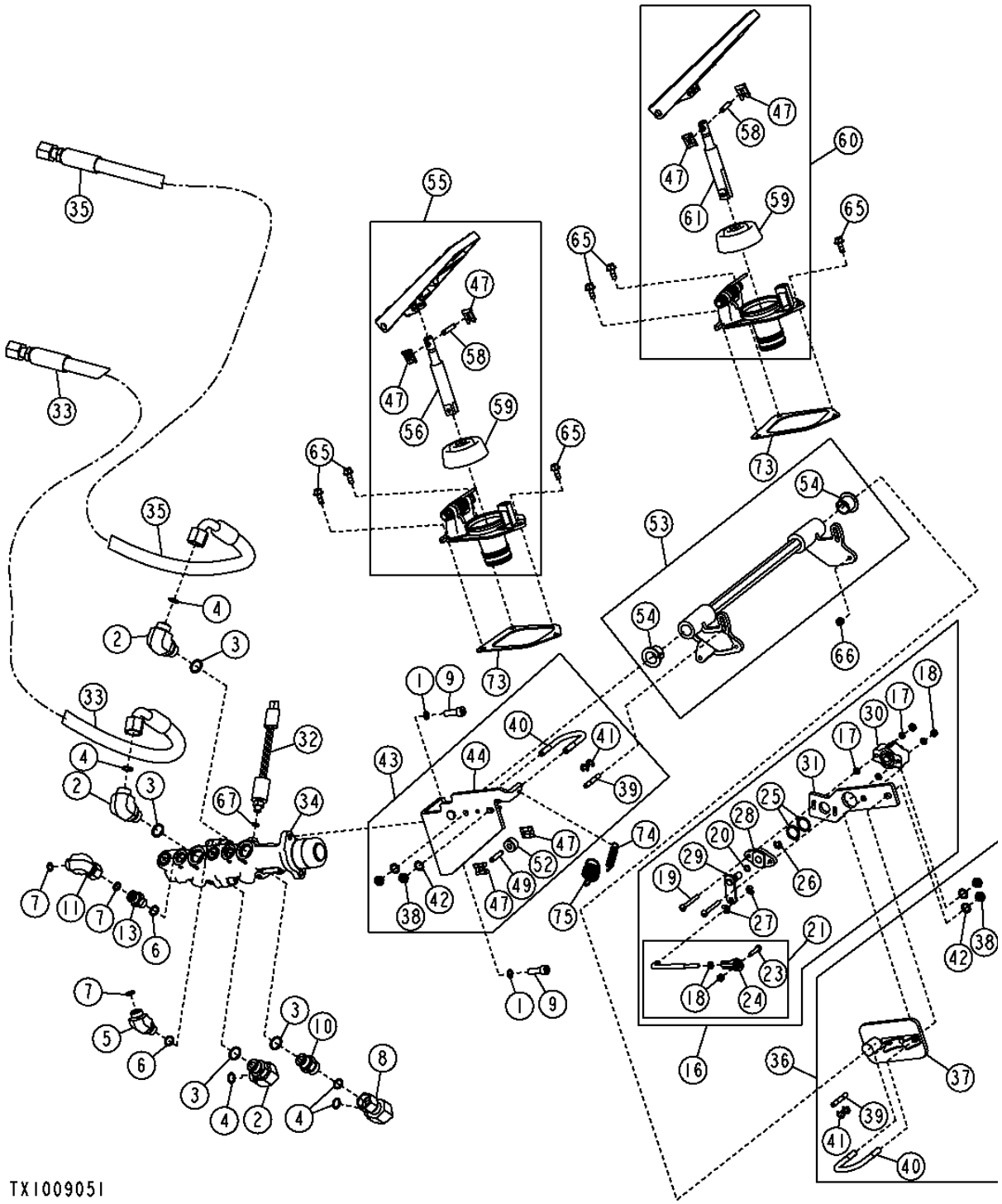

BRAKE VALVE, PEDALS AND LINKAGE (S.N. 604690-)
SOUPAPE, PEDALES ET TRINGLERIE DE FREIN (S.N. 604690-)
VALVULA DE FRENOS, PEDALES Y VARILLAJE (S.N. 604690-)

KEY	PART NO.	PART NAME	QTY.	SERIAL NO.	REMARKS
1	24M7313	WASHER	2		8.100 X 12 X 1.200 MM
2	38H1005	ELBOW FITTING	2		
3	R26375	O-RING	4		16.358 X 2.210 MM
4	T77857	O-RING	4		12.421 X 1.778 MM
5	38H1045	ELBOW FITTING	1		
6	R26448	O-RING	4		11.887 X 1.981 MM
7	T77613	O-RING	3		9.246 X 1.778 MM
8	38H1095	ELBOW FITTING	1		(SUB FOR 38H1046)
9	19M7657	SCREW	2		M8 X 25
10	38H1161	ADAPTER FITTING	1		
11	38H1094	ELBOW FITTING	1		
13	38H1160	ADAPTER FITTING	1		
16	AT210291	CLUTCH KIT	1		
17	12H295	LOCK WASHER	4		4.826 MM
18	14H631	NUT	4		4.826 MM
19	21H1390	SCREW	2		4.826 X 44.450 MM
20	A4365R	O-RING	1		6.071 X 1.778 MM
21	AT210877	LINKAGE	1		
23	21H985	SCREW	1		4.826 X 25.400 MM
24	AH108055	LINK END	1		
25	P48347	O-RING	2		17.120 X 2.616 MM
26	R72653	SNAP RING	1		
27	R72654	SNAP RING	4		
28	R86457	SUPPORT	1		
29	RE24468	SHAFT	1		
30	RE261356	SENSOR	1		(SUB FOR RE35704 OR RE69297)
31	T172274	SUPPORT	1		
32	AT223535	PRESSURE SWITCH	1		
33	AT317986	HYDRAULIC HOSE - FABRICATE	1		13/16" X 1 397 MM X 13/16"
34	AT318087	FLOW CONTROL HYD. VALVE	1		
35	AT320794	HYDRAULIC HOSE - FABRICATE	1		13/16" X 1 524 MM X 13/16"
36	AT208085	KIT	1		
37	AT314267	SUPPORT	1		
38	R53317	LOCK NUT	4		7.925 MM
39	T157211	PIN	2		
40	T157220	CLAMP	2		
41	T170180	SNAP RING	4		
42	T170181	LOCK WASHER	4		
43	AT208086	HOSE KIT	1		
44	AT314266	SUPPORT	1		
47	T157212	CLIP	6		
49	T157257	PIN	1		
52	T157236	HOSE	1		
53	AT208089	ROCKER ARM	1		
54	T157223	BEARING	2		
55	AT323790	PEDAL	1		
56	AT208088	PUSH ROD	1		
58	T157258	PIN	2		
59	T174634	BOOT	2		
60	AT323792	PEDAL	1		
61	AT208163	PUSH ROD	1		
65	M113243	SCREW	6		M6 X 16
66	N203905	LOCK NUT	1		4.826 MM
67	R26287	O-RING	2		7.645 X 1.626 MM
69	R27218	FITTING PLUG	2		
70	R28782	O-RING	2		8.915 X 1.829 MM
71	R51031	FITTING	2		
73	T172927	GASKET	2		
74	T176108	SPRING	1		
75	T176111	SPRING	1		

PARK BRAKE SOLENOID VALVE (S.N. -604689)
ELECTROVANNE DE FREIN DE STATIONNEMENT (S.N. -604689)
VALVULA DE SOLENOIDE DE FRENO DE ESTACIONAMIENTO (S.N. -604689)

T196520 -UN-26NOV03

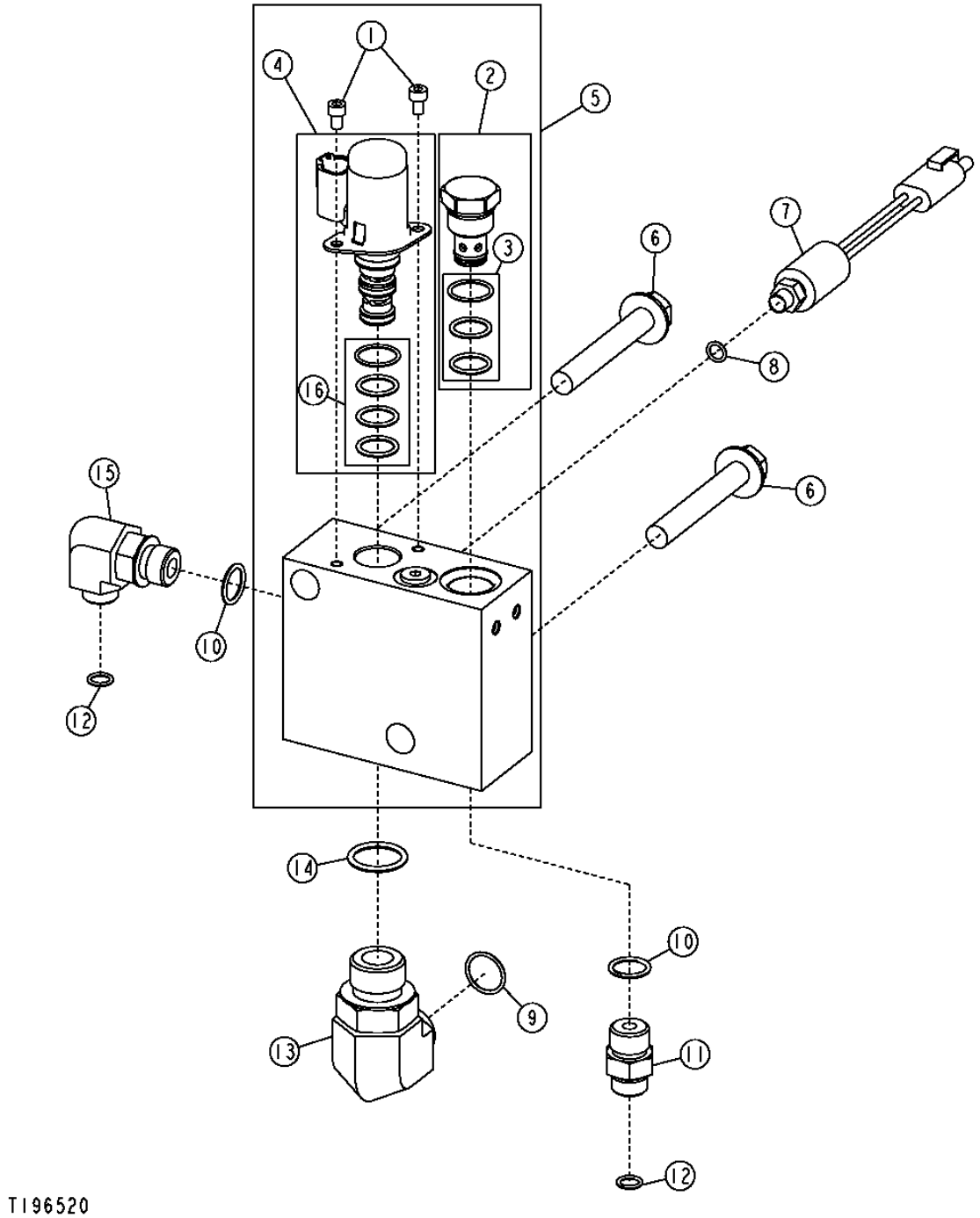

PARK BRAKE SOLENOID VALVE (S.N. -604689)
ELECTROVANNE DE FREIN DE STATIONNEMENT (S.N. -604689)
VALVULA DE SOLENOIDE DE FRENO DE ESTACIONAMIENTO (S.N. -604689)

KEY	*PART NO.*	*PART NAME*	*QTY.*	*SERIAL NO.*	*REMARKS*
1	19M9150	SCREW	2		
2	AT224863	CHECK VALVE	1		
3	AT224864	SEAL KIT	1		
4	AT224576	SOLENOID VALVE	1		
5	AT224497	FLOW CONTROL HYD. VALVE	1		
6	19M7818	SCREW	2		
7	AT223538	PRESSURE SWITCH	1		(STD)
	AT222367	SWITCH	1		(HARSH ENVIRONMENT)
8	R26287	O-RING	1		
9	T77858	O-RING	1		
10	R26375	O-RING	2		
11	38H1171	ADAPTER FITTING	1		
12	T77613	O-RING	2		
13	38H1404	ELBOW FITTING	1		
14	U12547	O-RING	1		
15	38H1010	ELBOW FITTING	1		
16	AT224873	SEAL KIT	1		

PARK BRAKE SOLENOID VALVE (S.N. 604690-)
ELECTROVANNE DE FREIN DE STATIONNEMENT (S.N. 604690-)
VALVULA DE SOLENOIDE DE FRENO DE ESTACIONAMIENTO (S.N. 604690-)

TX1003487 -UN-09FEB06

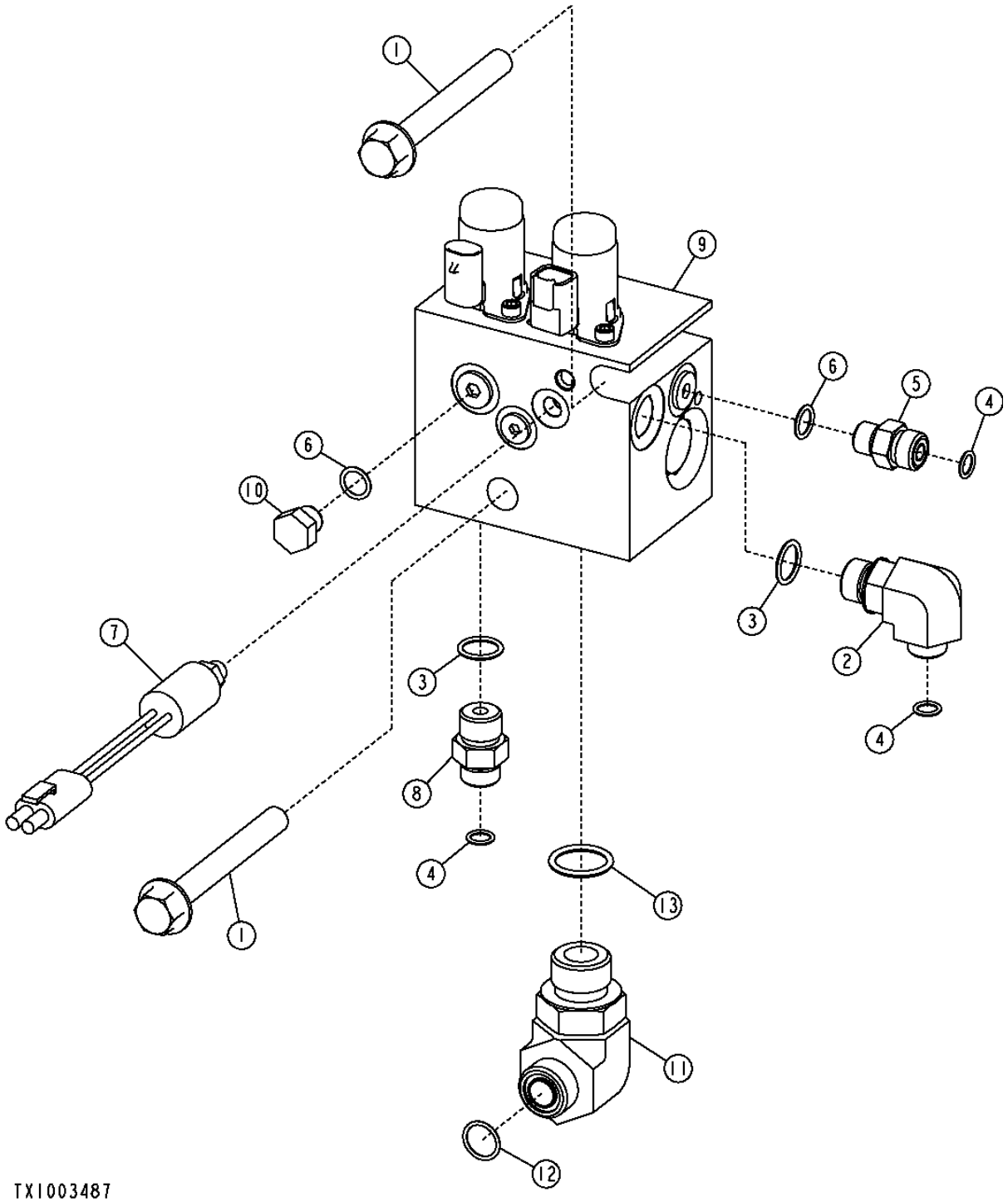

PARK BRAKE SOLENOID VALVE (S.N. 604690-)
ELECTROVANNE DE FREIN DE STATIONNEMENT (S.N. 604690-)
VALVULA DE SOLENOIDE DE FRENO DE ESTACIONAMIENTO (S.N. 604690-)

KEY	*PART NO.*	*PART NAME*	*QTY.*	*SERIAL NO.*	*REMARKS*
1	19M7820	SCREW	2		M12 X 100
2	38H1010	ELBOW FITTING	1		
3	R26375	O-RING	2		16.358 X 2.210 MM
4	T77613	O-RING	3		9.246 X 1.778 MM
5	38H1160	ADAPTER FITTING	1		
6	R26448	O-RING	2		11.887 X 1.981 MM
7	AT223538	PRESSURE SWITCH	1		
8	38H1171	ADAPTER FITTING	1		
9	AT315072	VALVE	1		
10	R27218	FITTING PLUG	1		
11	38H1404	ELBOW FITTING	1		
12	T77932	O-RING	1		15.596 X 1.778 MM
13	U12547	O-RING	1		23.470 X 2.946 MM

BRAKE ACCUMULATOR (S.N. -604689)
ACCUMULATEUR DE FREIN (S.N. -604689)
ACUMULADOR DE FRENO (S.N. -604689)

T194621 -UN-23SEP03

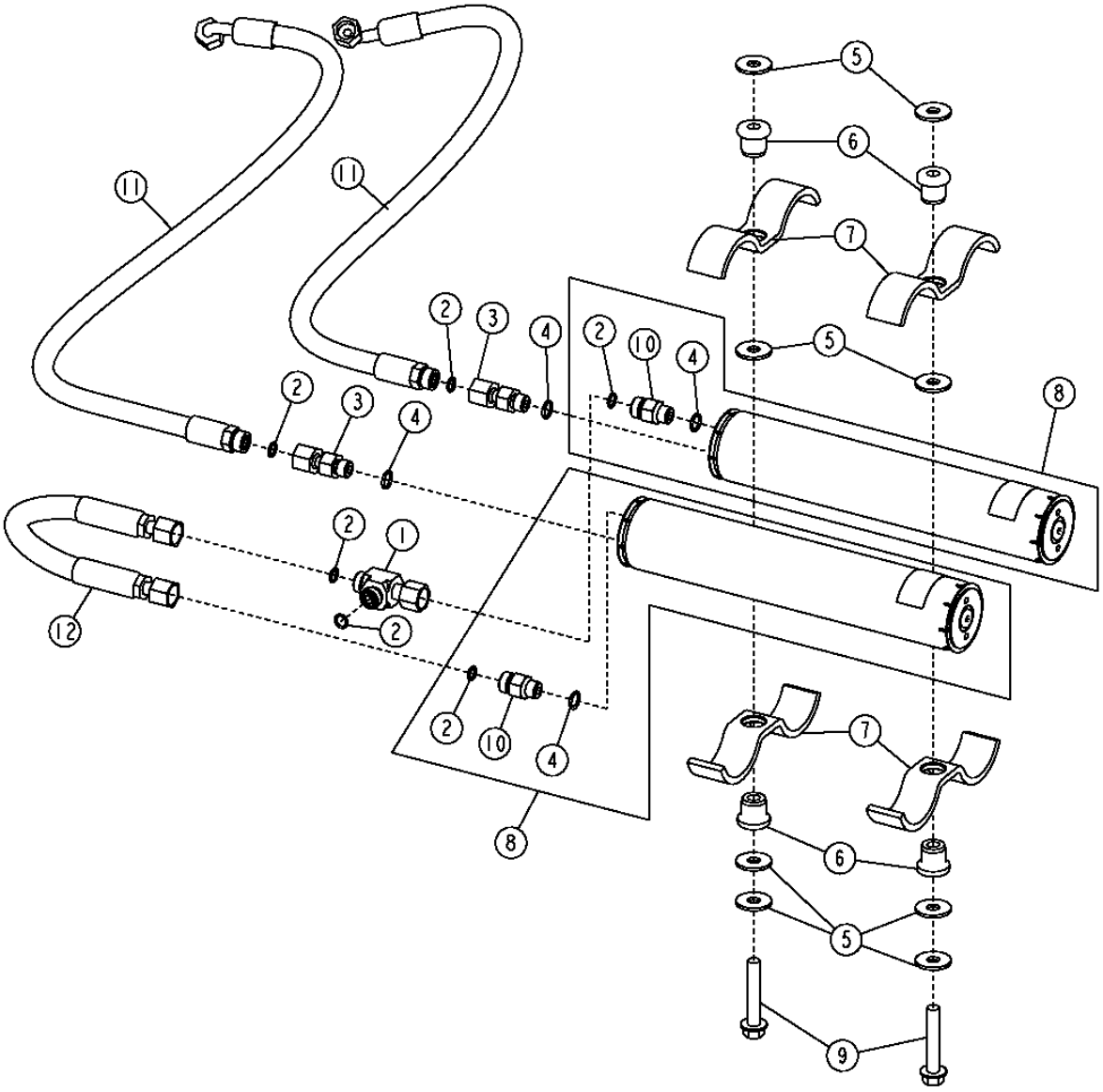

T194621

BRAKE ACCUMULATOR (S.N. -604689)
ACCUMULATEUR DE FREIN (S.N. -604689)
ACUMULADOR DE FRENO (S.N. -604689)

KEY	*PART NO.*	*PART NAME*	*QTY.*	*SERIAL NO.*	*REMARKS*
1	38H1030	TEE FITTING	1		
2	T77613	O-RING	6		
3	38H1067	ADAPTER FITTING	2		
4	R26448	O-RING	4		
5	24M7296	WASHER	8		10.500 X 30 X 2.500 MM
6	AT116162	ISOLATOR	4		
7	T168393	CLAMP	4		
8	AT224430	HYDRAULIC ACCUMULATOR	2		
9	19M7807	SCREW	2		M10 X 60
10	AT225573	CHECK VALVE	2		
11	AT222414	HYDRAULIC HOSE - FABRICATE	2		
12	AT223768	HYDRAULIC HOSE - FABRICATE	1		

BRAKE ACCUMULATOR (S.N. 604690-)
ACCUMULATEUR DE FREIN (S.N. 604690-)
ACUMULADOR DE FRENO (S.N. 604690-)

TX1002924 -UN-25JAN06

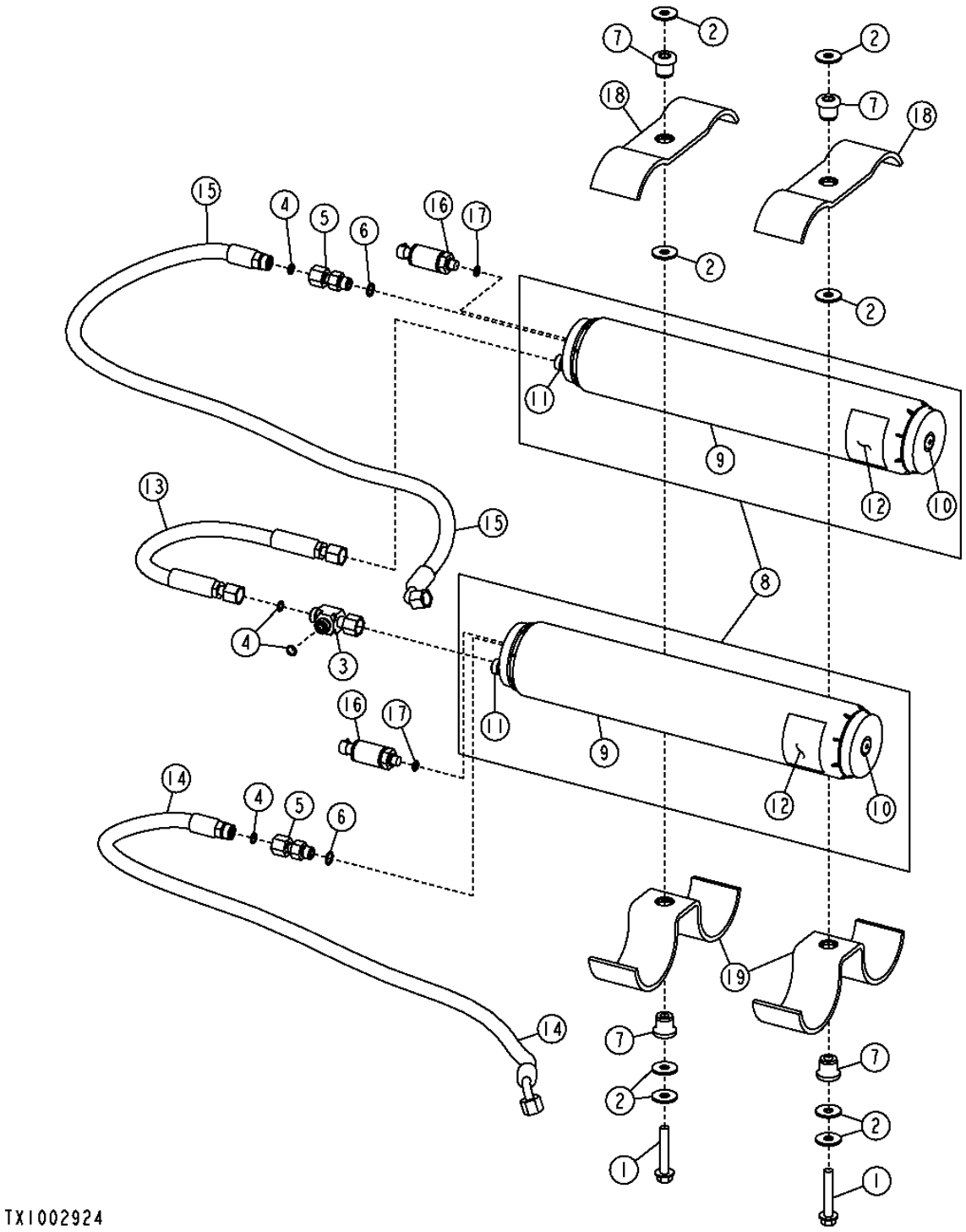

BRAKE ACCUMULATOR (S.N. 604690-)
ACCUMULATEUR DE FREIN (S.N. 604690-)
ACUMULADOR DE FRENO (S.N. 604690-)

KEY	*PART NO.*	*PART NAME*	*QTY.*	*SERIAL NO.*	*REMARKS*
1	19M7807	SCREW	2		M10 X 60
2	24M7296	WASHER	8		10.500 X 30 X 2.500 MM
3	38H1030	TEE FITTING	1		
4	T77613	O-RING	2		9.246 X 1.778 MM
5	38H1067	ADAPTER FITTING	2		
6	R26448	O-RING	2		11.887 X 1.981 MM
7	AT116162	ISOLATOR	4		
8	AT325450	KIT	1		
9	AT325538	HYDRAULIC ACCUMULATOR	1		
10	AT196760	KIT	1		
11	AT225573	CHECK VALVE	1		
12	T180944	LABEL	1		
13	AT320361	HYDRAULIC HOSE - FABRICATE	1		11/16" X 457 MM X 11/16"
14	AT320362	HYDRAULIC HOSE - FABRICATE	1		11/16" X 1 194 MM X 11/16"
15	AT320642	HYDRAULIC HOSE - FABRICATE	1		11/16" X 1 295 MM X 11/16"
16	AT322982	TRANSDUCER	2		
17	R28782	O-RING	1		8.915 X 1.829 MM
18	T214838	HALF CLAMP	2		
19	T214839	HALF CLAMP	2		

PARK BRAKE SOLENOID VALVE HYDRAULIC LINES
CONDUITES HYDRAULIQUES DE L'ELECTROVANNE DU FREIN DE STATIONNEMENT
LINEAS HIDRAULICAS DE LA VALVULA DE SOLENOIDE DEL FRENO DE ESTACIONAMIENTO

TX1006283 -UN-27APR06

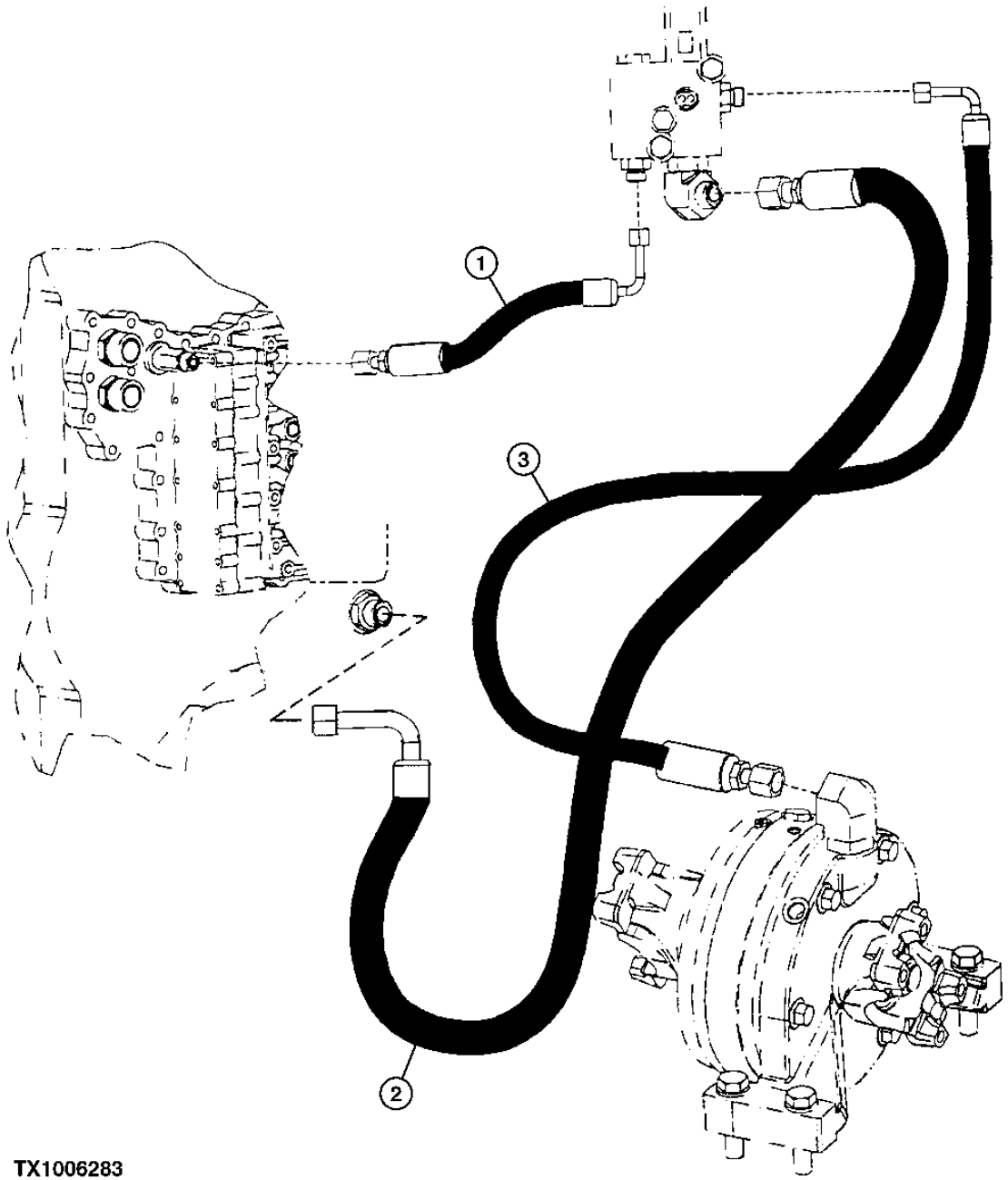

TX1006283

PARK BRAKE SOLENOID VALVE HYDRAULIC LINES
CONDUITES HYDRAULIQUES DE L'ELECTROVANNE DU FREIN DE STATIONNEMENT
LINEAS HIDRAULICAS DE LA VALVULA DE SOLENOIDE DEL FRENO DE ESTACIONAMIENTO

KEY	*PART NO.*	*PART NAME*	*QTY.*	*SERIAL NO.*	*REMARKS*
1	AT209907	HYDRAULIC HOSE - FABRICATE	1		
2	AT208015	HYDRAULIC HOSE - FABRICATE	1		
3	AT167553	HYDRAULIC HOSE - FABRICATE	1		

BRAKE VALVE HYDRAULICS (S.N. -604689)
CIRCUIT HYDRAULIQUE SOUPAPE FREIN (S.N. -604689)
SISTEMA HIDRAULICO DE LA VALVULA DE FRENOS (S.N. -604689)

T203905 -UN-06OCT04

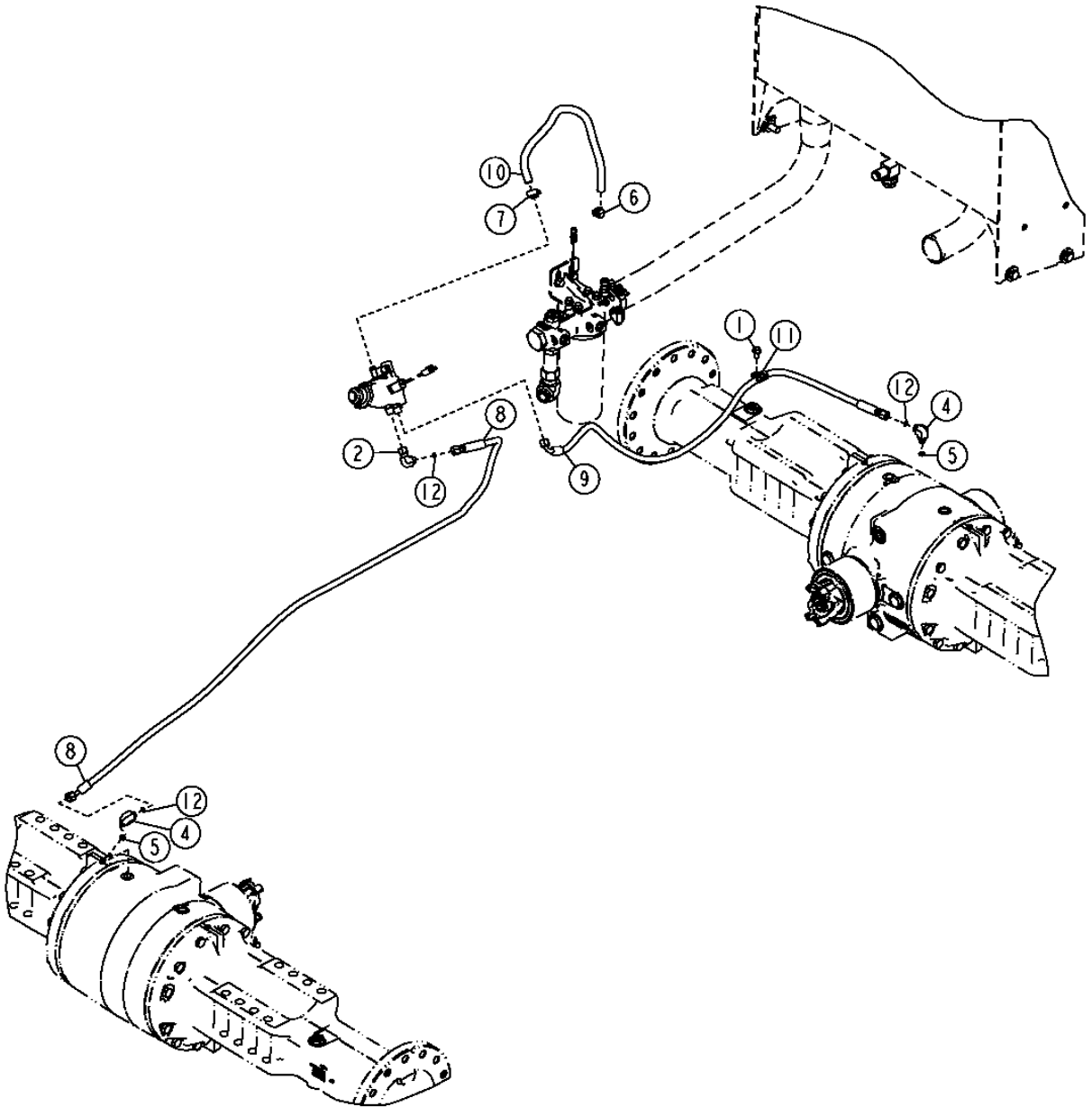

T203905

BRAKE VALVE HYDRAULICS (S.N. -604689)
CIRCUIT HYDRAULIQUE SOUPAPE FREIN (S.N. -604689)
SISTEMA HIDRAULICO DE LA VALVULA DE FRENOS (S.N. -604689)

KEY	*PART NO.*	*PART NAME*	*QTY.*	*SERIAL NO.*	*REMARKS*
1	19M7784	SCREW	1		
2	38H1094	ELBOW FITTING	1		
4	38H5016	ELBOW FITTING	2		
5	51M7041	O-RING	2		
6	AR21836	CLAMP	1		
7	AR21837	CLAMP	1		
8	AT223949	HYDRAULIC HOSE - FABRICATE	1		
9	AT79576	HYDRAULIC HOSE - FABRICATE	1		
10	T168383	HYDRAULIC HOSE - FABRICATE	1		
11	T76252	CLAMP	1		
12	T77613	O-RING	3		

BRAKE VALVE HYDRAULICS (S.N. 604690-)
CIRCUIT HYDRAULIQUE SOUPAPE FREIN (S.N. 604690-)
SISTEMA HIDRAULICO DE LA VALVULA DE FRENOS (S.N. 604690-)

TX1002923 -UN-25JAN06

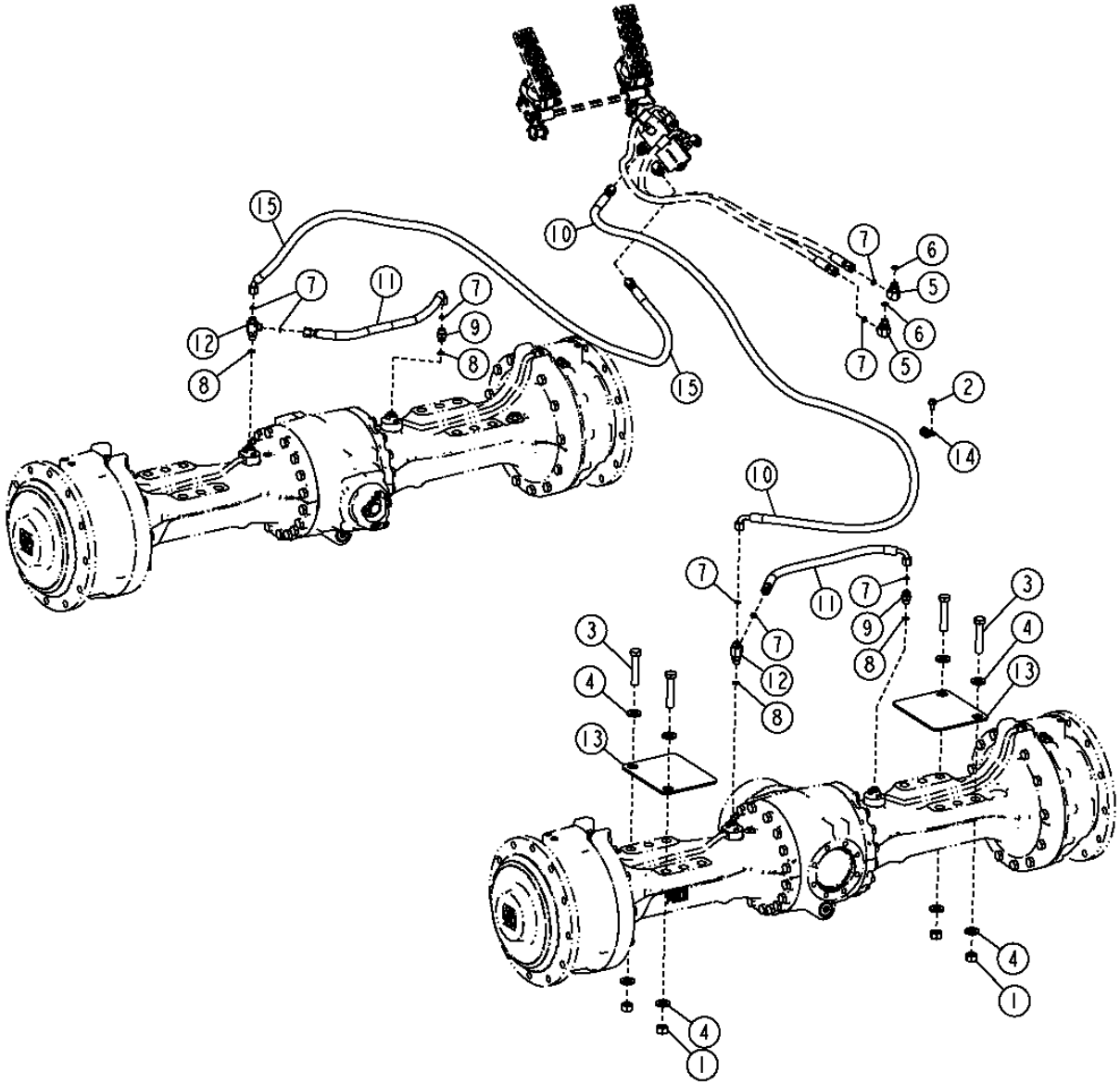

TX1002923

BRAKE VALVE HYDRAULICS (S.N. 604690-)
CIRCUIT HYDRAULIQUE SOUPAPE FREIN (S.N. 604690-)
SISTEMA HIDRAULICO DE LA VALVULA DE FRENOS (S.N. 604690-)

KEY	PART NO.	PART NAME	QTY.	SERIAL NO.	REMARKS
1	14M7277	NUT	4		M20
2	19M7784	SCREW	1		M10 X 20
3	19M7963	CAP SCREW	4		M20 X 100
4	24M7242	WASHER	8		21.400 X 42 X 5 MM
5	38H1010	ELBOW FITTING	2		(SUB FOR (2) 38H1005)
6	R26375	O-RING	2		16.358 X 2.210 MM
7	T77857	O-RING	7		12.421 X 1.778 MM
8	51M7043	O-RING	4		15.300 X 2.200 MM
9	38H5003	ADAPTER FITTING	2		
10	AT329702	HYDRAULIC HOSE - FABRICATE	1		13/16" X 2 400 MM X 13/16"
11	AT329703	HYDRAULIC HOSE - FABRICATE	2		13/16" X 600 MM X 13/16"
12	38H5029	TEE FITTING	2		
13	T214396	PLATE	2		
14	T76252	CLAMP	1		
15	AT343463	HYDRAULIC HOSE - FABRICATE	1		11/16" X 2 300 MM X 13/16", (AT329701 NLA)

DRIVELINE BEARING AND PARKING BRAKE (S.N. -604689)
PALIER LIGNE ET FREIN STATIONNEMENT COMMANDE (S.N. -604689)
COJINETE DE LINEA DE MANDO Y FRENO DE ESTACIONAMIENTO (S.N. -604689)

T192676 -UN-

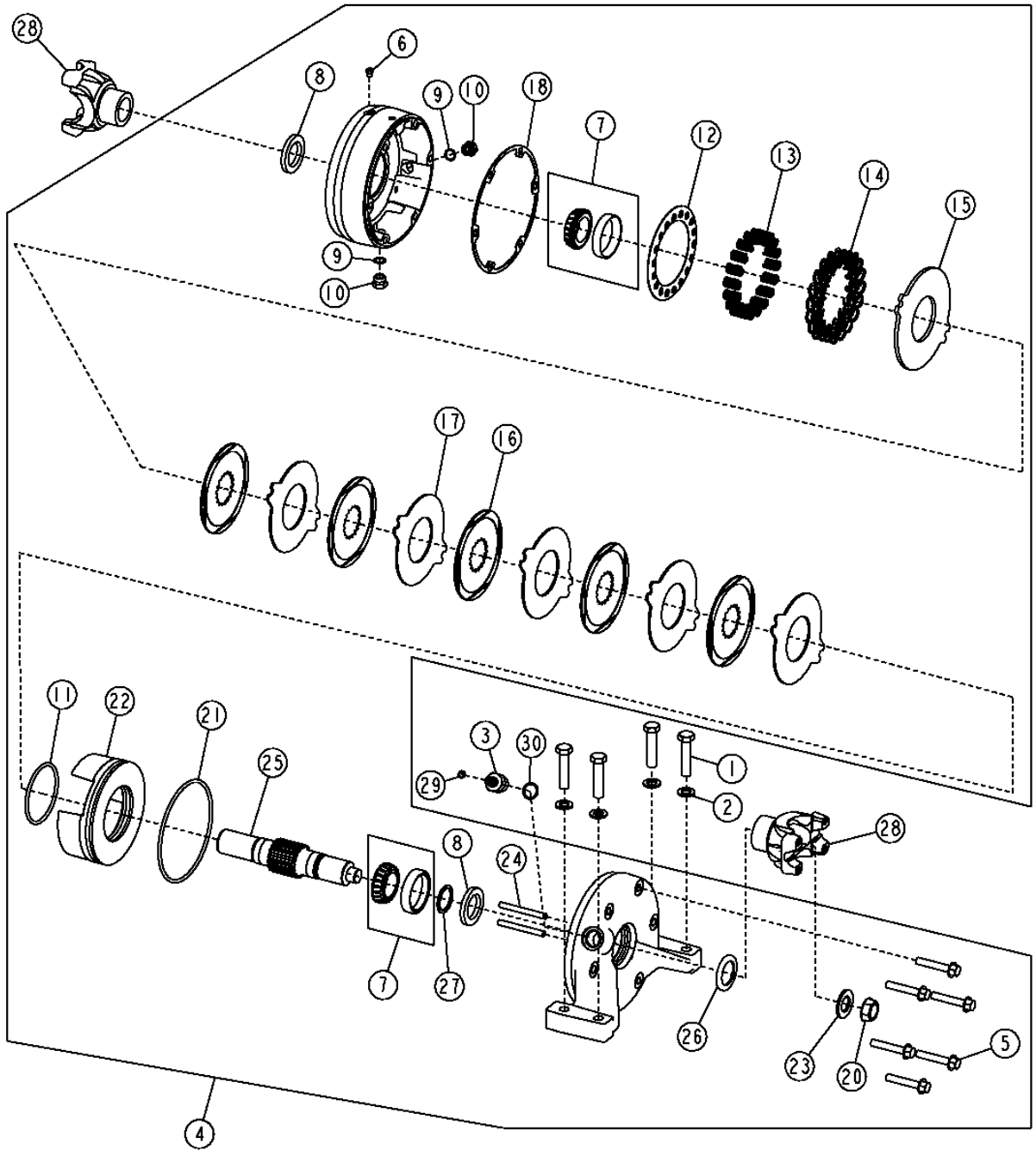

T192676

DRIVELINE BEARING AND PARKING BRAKE (S.N. -604689)
PALIER LIGNE ET FREIN STATIONNEMENT COMMANDE (S.N. -604689)
COJINETE DE LINEA DE MANDO Y FRENO DE ESTACIONAMIENTO (S.N. -604689)

KEY	PART NO.	PART NAME	QTY.	SERIAL NO.	REMARKS
1	19M7719	CAP SCREW	4		
2	24M7338	WASHER	4		LIP
3	38H1338	ADAPTER FITTING	1		FACE
4	AT203534	BRAKE	1		
5	19M7817	SCREW	6		
6	AT208411	PRESSURE RELIEF VALVE	1		
7	AT209496	BEARING	2		
8	AT225727	SEAL	2		
9	R26375	O-RING	2		
10	R39112	FITTING	2		
11	R74657	O-RING	1		
12	T169103	RETAINER	1		
13	T169104	COMPRESSION SPRING	18		
14	T169105	COMPRESSION SPRING	18		
15	T169107	BRAKE DISK	1		
16	T169108	BRAKE DISK	5		
17	T169109	BRAKE DISK	5		
18	T169110	GASKET	1		
20	T169113	NUT	1		
21	T169116	O-RING	1		
22	T169112	PISTON	1		
23	T172856	WASHER	1		
24	T169102	PIN	2		ASSY
25	T169106	SHAFT	1		
26	T173593	WASHER	1		
27	U12167	SNAP RING	1		
28	T172767	YOKE WITH SHAFT	2		
29	T77613	O-RING	1		
30	U12547	O-RING	1		
31	11M7025	COTTER PIN	1		4 X 63 MM

DRIVELINE BEARING AND PARKING BRAKE (S.N. 604690-)
PALIER LIGNE ET FREIN STATIONNEMENT COMMANDE (S.N. 604690-)
COJINETE DE LINEA DE MANDO Y FRENO DE ESTACIONAMIENTO (S.N. 604690-)

TX1003309 -UN-06FEB06

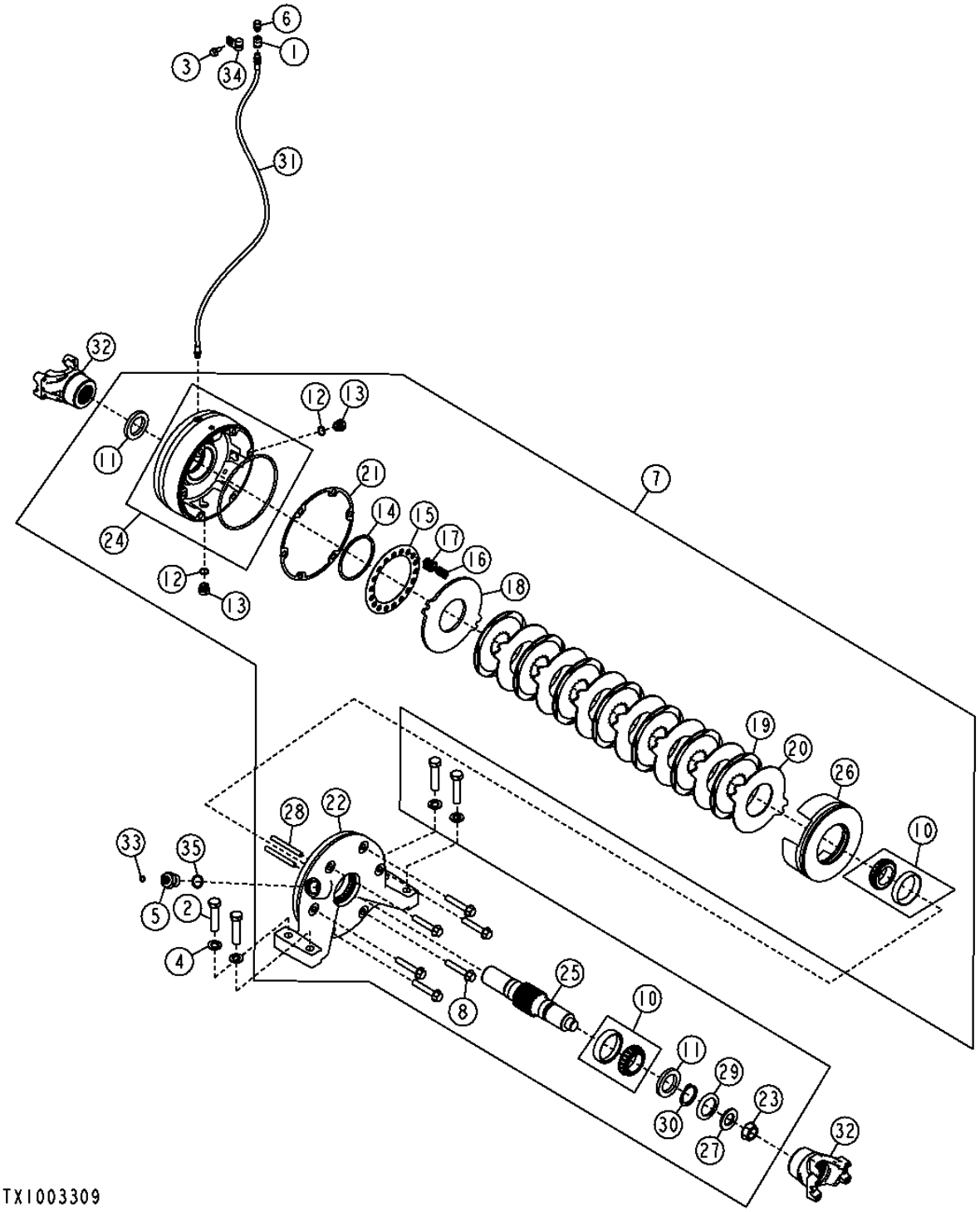

DRIVELINE BEARING AND PARKING BRAKE (S.N. 604690-)
PALIER LIGNE ET FREIN STATIONNEMENT COMMANDE (S.N. 604690-)
COJINETE DE LINEA DE MANDO Y FRENO DE ESTACIONAMIENTO (S.N. 604690-)

KEY	PART NO.	PART NAME	QTY.	SERIAL NO.	REMARKS
1	15H84	COUPLING	1		3.175 MM
2	19M7719	CAP SCREW	4		M16 X 70
3	19M7865	SCREW	1		M8 X 16
4	24M7338	WASHER	4		17 X 30 X 3 MM
5	38H1338	ADAPTER FITTING	1		
6	AL32877	VENT	1		
7	AT203533	BRAKE	1		
8	19M7817	SCREW	6		M12 X 70
10	AT209496	BEARING	2		
11	AT225727	SEAL	2		
12	R26375	O-RING	2		16.358 X 2.210 MM
13	R39112	FITTING	2		
14	R74657	O-RING	1		100.965 X 5.334 MM
15	T169103	RETAINER	1		
16	T169104	COMPRESSION SPRING	18		
17	T169105	COMPRESSION SPRING	18		
18	T169107	BRAKE DISK	1		
19	T169108	BRAKE DISK	7		
20	T169109	BRAKE DISK	7		
21	T169110	GASKET	1		
22	T169111	PLATE	1		
23	T169113	NUT	1		
24	T169116	O-RING	1		177.165 X 5.207 MM
25	T226802	UNIVERSAL DRIVESHAFT	1		(SUB FOR T169281)
26	T169290	PISTON	1		
27	T172856	WASHER	1		29.337 X 51.562 X 4.496 MM
28	T173230	PIN	2		
29	T173593	WASHER	1		
30	U12167	SNAP RING	1		
31	AT207022	HYDRAULIC HOSE	1		1/8" X 900 MM X 1/8"
32	T225467	UNIVERSAL JOINT YOKE	2		(SUB FOR T213549)
33	T77613	O-RING	1		9.246 X 1.778 MM
34	T78974	CLAMP	1		
35	U12547	O-RING	1		23.470 X 2.946 MM

DECALS AND TRADEMARKS (ENGLISH)
AUTOCOLLANTS ET MARQUES COMMERCIALES (ANGLAIS)
CALCOMANIAS Y MARCAS REGISTRADAS (INGLES)

T204746 -UN-23NOV04

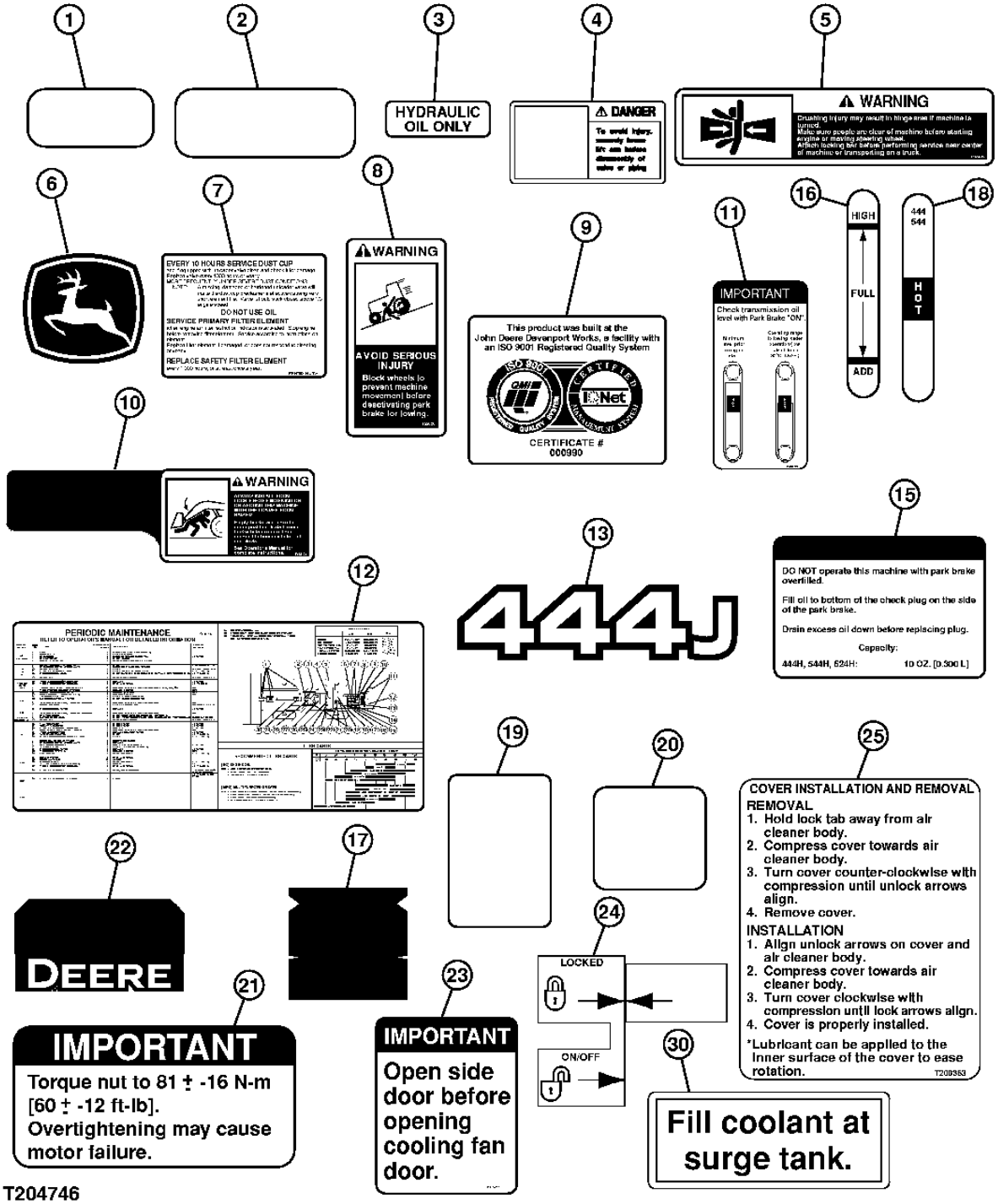

T204746

TRADEMARKS AND LABELS (ENGLISH)
AUTOCOLLANTS ET MARQUES COMMERCIALES (ANGLAIS)
CALCOMANIAS Y MARCAS REGISTRADAS (INGLES)

KEY	PART NO.	PART NAME	QTY.	SERIAL NO.	REMARKS
1	H21259	MAT	3		(ANTI-SKID)
2	JD5902	REFLECTOR	2		(RED)
3	T218566	LABEL	1		(SUB FOR T101942) (HYDRAULIC OIL LEVEL)
4	T146175	SAFETY SIGN	1		(DANGER - CRUSHING BOOM)
5	T146436	SAFETY SIGN	2		(WARNING - CRUSHING ARTICULATION)
6	JD5749	LABEL	1		(LEAPING DEER)
7	T146605	LABEL	1		(AIR CLEANER)
8	T159028	LABEL	1		(WARNING - PARK BRAKE)
9	T175744	LABEL	1		(ISO CERTIFICATION)
10	T182191	LABEL	2		(WARNING - BOOM LOCK)
11	T200055	LABEL	1		(TRANSMISSION OIL CHECK)
12	T225025	LABEL	1		(SUB FOR T201074) (PERIODIC MAINTENANCE)
13	T200010	LABEL	2		
15	T207741	LABEL	1		(SUB FOR T195710) (IMPORTANT - PARK BRAKE OVERFILL)
16	T197300	LABEL	1		(HYDRAULIC RESERVOIR SIGHT GAUGE)
17	T203748	LABEL	2		BLACK, BLANK
18	T200058	LABEL	1		(TRANSMISSION SIGHT GAUGE)
19	JD5906	REFLECTOR	2		(AMBER)
20	T153680	LABEL	2		(TIE DOWN)
21	T175135	LABEL	1		(WARNING - FAN HUB)
22	T203694	LABEL	2		(DEERE)
23	T205211	LABEL	1		(IMPORTANT)
24	.....	LABEL	1		(SUB FOR T208362) (AIR CLEANER)
25	.....	LABEL	1		(SUB FOR T208363) (AIR CLEANER)
26	T225397	LABEL	1		(SUB FOR T217412) (AXLE OIL LEVEL) (NOT ILLUSTRATED) (BLANK)
30	T208695	LABEL	1		(FILL COOLANT AT SURGE TANK)

CAB LABELS AND DECALS
ETIQUETTES ET AUTOCOLLANTS CABINE
ETIQUETAS Y CALCOMANIAS DE LA CABINA

T194856 -UN-15OCT03

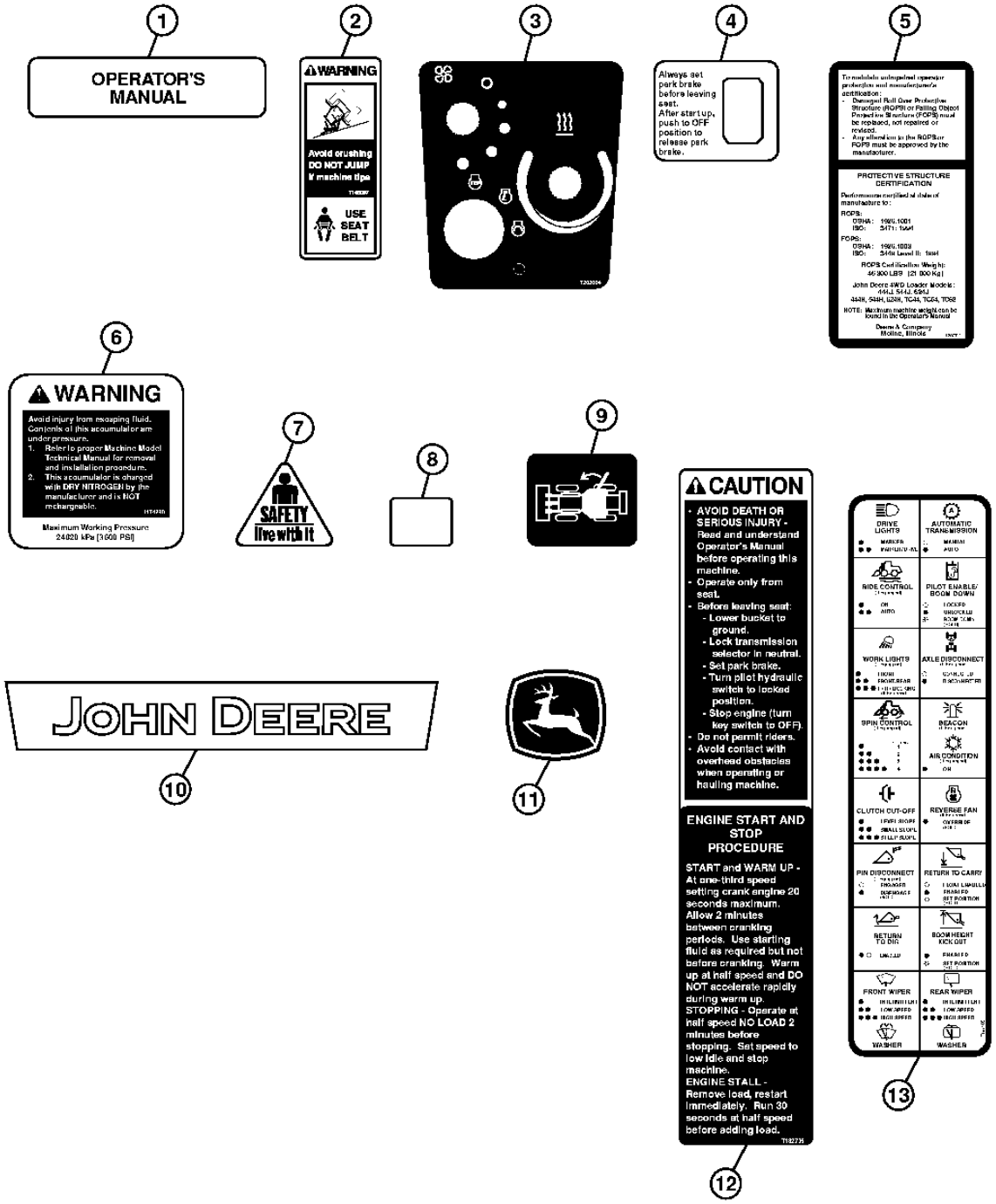

T194856

CAB LABELS AND DECALS
ETIQUETTES ET AUTOCOLLANTS CABINE
ETIQUETAS Y CALCOMANIAS DE LA CABINA

KEY	*PART NO.*	*PART NAME*	*QTY.*	*SERIAL NO.*	*REMARKS*
1	T148083	LABEL	1		(OPERATOR'S MANUAL)
2	T146097	LABEL	1		(WARNING - SEAT BELT)
3	T202884	LABEL	1		(KEY START/HVAC PANEL)
4	T171228	LABEL	1		(PARK BRAKE SWITCH)
5	T200712	LABEL	1		(ROPS /FOPS CERTIFICATION)
6	T174298	LABEL	2	-598673	(WARNING - BRAKE ACCUMULATOR)
	T215155	LABEL	2	598674-	(WARNING - ACCUMULATOR)
7	H138955	LABEL	2		(SAFETY)
8	T171223	LABEL	1		(DOOR RELEASE) (LH)
9	T174735	LABEL	1		(DOOR RELEASE) (RH)
10	T215208	LABEL	1		(SUB FOR T182183) (JOHN DEERE)
11	JD5822	LABEL	2		(LEAPING DEER)
12	T182795	SAFETY SIGN	1		(CAUTION - ENGINE START/STOP)
13	T197186	LABEL	1		(CONSOLE FUNCTION IDENTIFICATION)

DECALS AND LABELS (FRENCH)
AUTOCOLLANTS (FRANCAIS)
CALCOMANIAS (FRANCES)

T201655 -UN-14JUL04

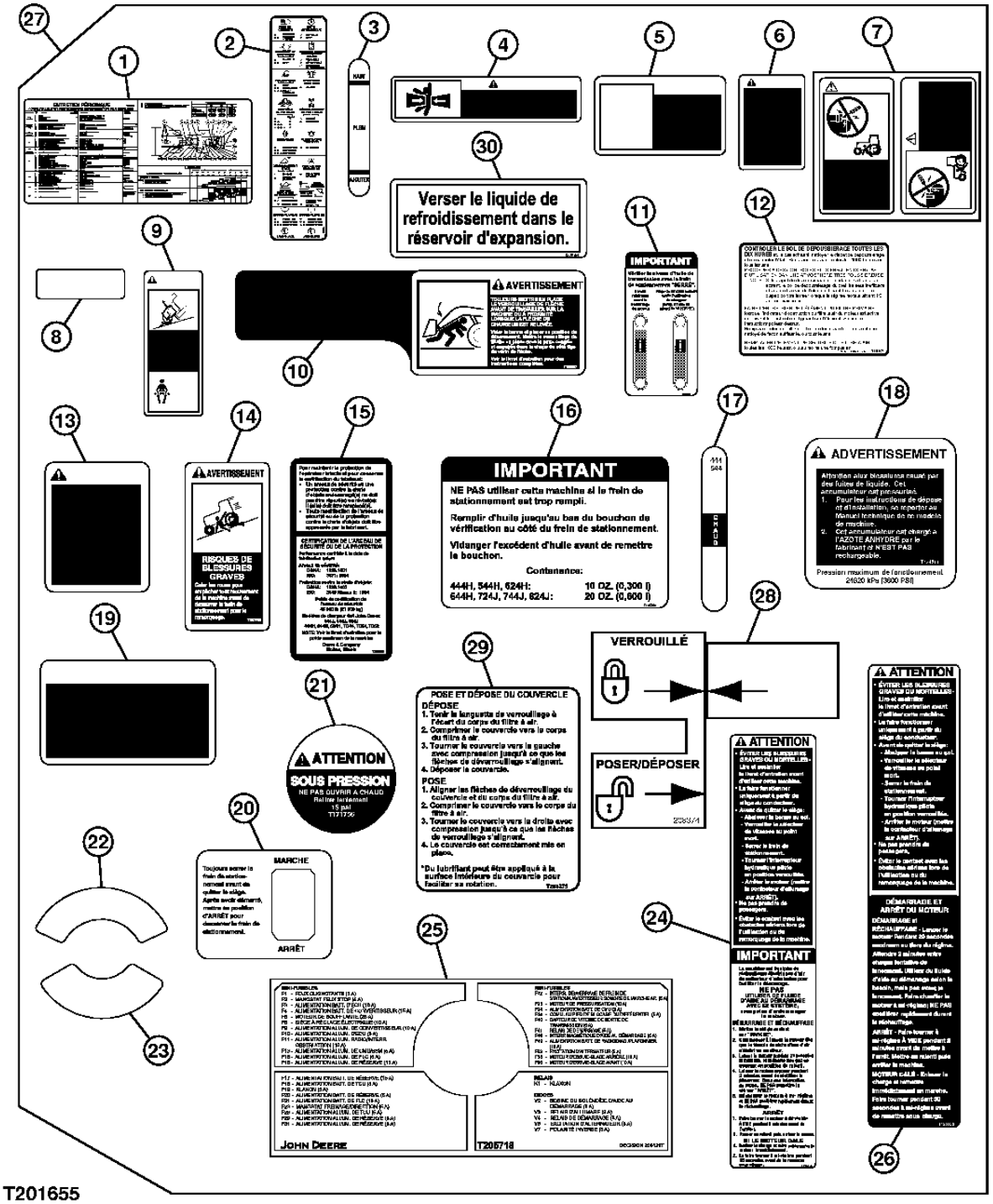

DECALS AND LABELS (FRENCH)
AUTOCOLLANTS (FRANCAIS)
CALCOMANIAS (FRANCES)

KEY	PART NO.	PART NAME	QTY.	SERIAL NO.	REMARKS
1	T225026	LABEL	1		(SUB FOR T201076) (PERIODIC MAINTENANCE)
2	T200791	LABEL	1		(CONSOLE FUNCTION IDENTIFICATION)
3	T197323	LABEL	1		(HYDRAULIC RESERVOIR SIGHT GAUGE)
4	T146496	SAFETY SIGN	2		(WARNING - CRUSHING ARTICULATION)
5	T146178	SAFETY SIGN	1		(DANGER - CRUSHING BOOM)
6	T146494	SAFETY SIGN	1		(CAUTION - SECONDARY STEERING)
7	T146104	SAFETY SIGN	1		(DANGER - BYPASS START)
8	T218568	LABEL	1		(SUB FOR T102618) (HYDRAULIC OIL LEVEL)
9	T146099	SAFETY SIGN	1		(WARNING - SEAT BELT)
10	T195857	LABEL	2		(WARNING - BOOM LOCK)
11	T200056	LABEL	1		(TRANSMISSION OIL CHECK)
12	T146607	LABEL	1		(AIR CLEANER)
13	T146908	SAFETY SIGN	2		(WARNING - ACCUMULATOR)
14	T160762	LABEL	1		(WARNING - PARK BRAKE)
15	T200786	LABEL	1		(ROPS /FOPS CERTIFICATION)
16	T207750	LABEL	1		(SUB FOR T195759) (IMPORTANT - PARK BRAKE OVERFILL)
17	T200059	LABEL	1		(TRANSMISSION SIGHT GAUGE)
18	T174300	LABEL	2		(WARNING - BRAKE ACCUMULATOR)
19	T146495	SAFETY SIGN	2		(CAUTION - BATTERIES)
20	T171750	LABEL	1		(PARK BRAKE SWITCH)
21	T171756	LABEL	1		(CAUTION (PRESSURIZED) (RADIATOR CAP))
22	T63224	LABEL	1		(BATTERY DISCONNECT)
23	CD12569	LABEL	1		(OIL FILTER ELEMENT)
24	T208087	SAFETY SIGN	1		(SUB FOR T196476) (CAUTION (ENGINE START/STOP))
25	T205718	LABEL	1		(VEC)
26	T195558	LABEL	1		(CAUTION (ENGINE START/STOP))
27	.....	LABEL KIT	1		(AT301050 NLA) (IMPORTANT: ALSO ORDER TRANSLATED OPERATOR'S MANUAL)
28	T208374	LABEL	1		(AIR CLEANER)
29	T208375	LABEL	1		(AIR CLEANER)
30	T208794	LABEL	1		(FILL COOLANT AT SURGE TANK)

DECALS AND LABELS (SPANISH)
AUTOCOLLANTS (ESPAGNOL)
CALCOMANIAS (ESPANOL)

T201656 -UN-14JUL04

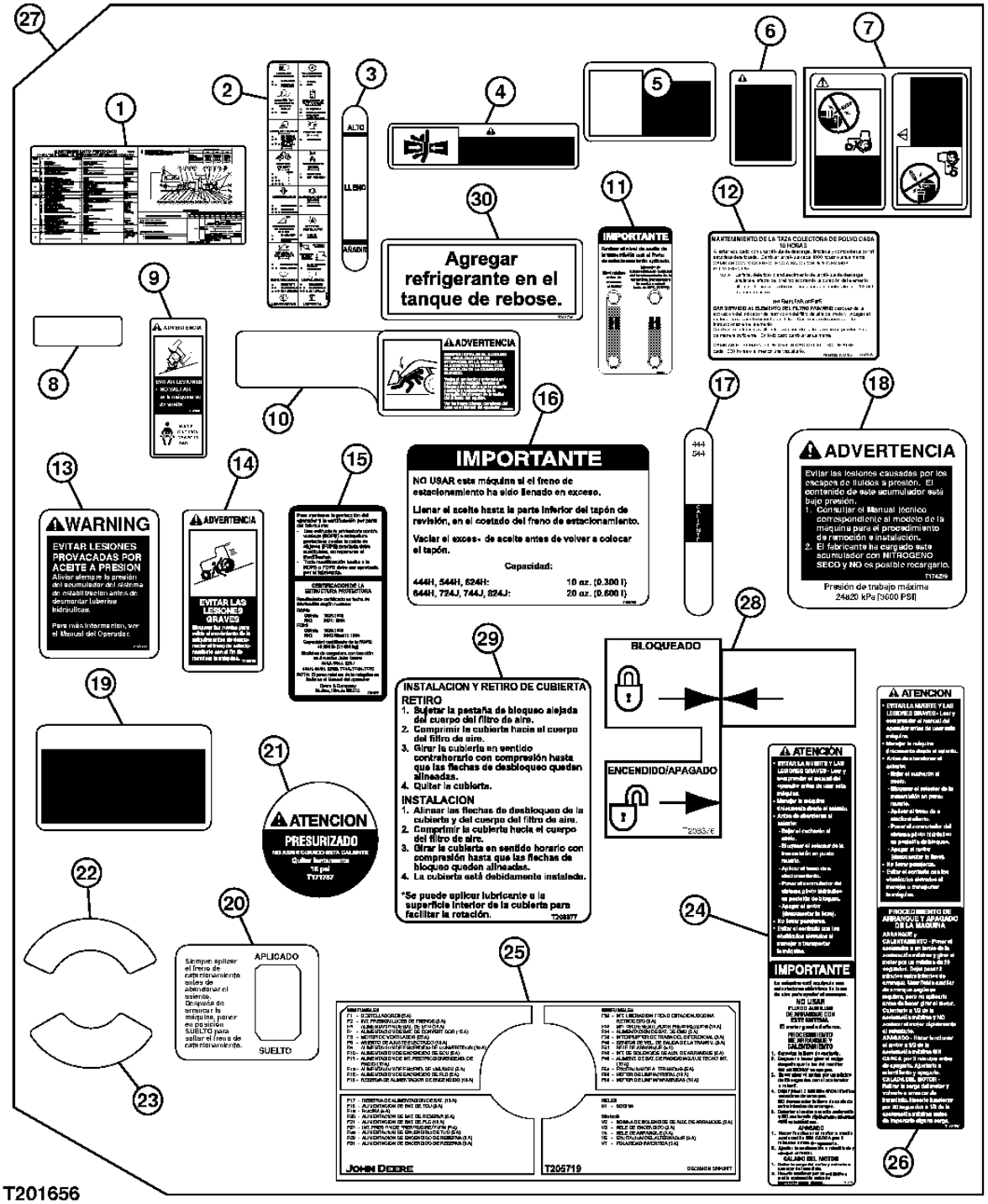

T201656

DECALS AND LABELS (SPANISH)
AUTOCOLLANTS (ESPAGNOL)
CALCOMANIAS (ESPANOL)

KEY	PART NO.	PART NAME	QTY.	SERIAL NO.	REMARKS
1	T225027	LABEL	1		(SUB FOR T201075) (PERIODIC MAINTENANCE)
2	T200818	LABEL	1		(CONSOLE FUNCTION IDENTIFICATION)
3	T197324	LABEL	1		(HYDRAULIC RESERVOIR SIGHT GAUGE)
4	T146504	SAFETY SIGN	1		(WARNING - CRUSHING ARTICULATION)
5	T146180	SAFETY SIGN	1		(DANGER - CRUSHING BOOM)
6	T146502	SAFETY SIGN	1		(CAUTION - SECONDARY STEERING)
7	T146106	SAFETY SIGN	1		(DANGER - BYPASS START)
8	T218567	LABEL	1		(SUB FOR T102620) (HYDRAULIC OIL LEVEL)
9	T146098	SAFETY SIGN	1		(WARNING - SEAT BELT)
10	T195858	LABEL	1		(WARNING - BOOM LOCK)
11	T200057	LABEL	1		(TRANSMISSION OIL CHECK)
12	T146606	LABEL	1		(AIR CLEANER)
13	T146911	LABEL	1		(WARNING - ACCUMULATOR)
14	T160769	SAFETY SIGN	1		(WARNING - PARK BRAKE)
15	T200814	LABEL	1		(ROPS /FOPS CERTIFICATION)
16	T207751	LABEL	1		(SUB FOR T195760) (IMPORTANT - PARK BRAKE OVERFILL)
17	T200060	LABEL	1		(TRANSMISSION SIGHT GAUGE)
18	T174299	LABEL	1		(WARNING - BRAKE ACCUMULATOR)
19	T146503	SAFETY SIGN	2		(CAUTION - BATTERIES)
20	T171751	LABEL	1		(PARK BRAKE SWITCH)
21	T171757	LABEL	1		(CAUTION (PRESSURIZED) (RADIATOR CAP))
22	T63225	LABEL	1		(BATTERY DISCONNECT)
23	T64217	LABEL	1		(OIL FILTER ELEMENT)
24	T208086	SAFETY SIGN	1		(SUB FOR T196475) (CAUTION (ENGINE START/STOP))
25	T205719	LABEL	1		(VEC)
26	T195559	LABEL	1		(CAUTION (ENGINE START/STOP))
27	.....	LABEL KIT	1		(AT301092 NLA) (IMPORTANT: ALSO ORDER TRANSLATED OPERATOR'S MANUAL)
28	T208376	LABEL	1		(AIR CLEANER)
29	T208377	LABEL	1		(AIR CLEANER)
30	T208795	LABEL	1		(FILL COOLANT AT SURGE TANK)

CANOPY LABELS AND DECALS
ETIQUETTES ET AUTOCOLLANTS EVENT
ETIQUETAS Y CALCOMANIAS DEL DOSEL

T194879 -UN-15OCT03

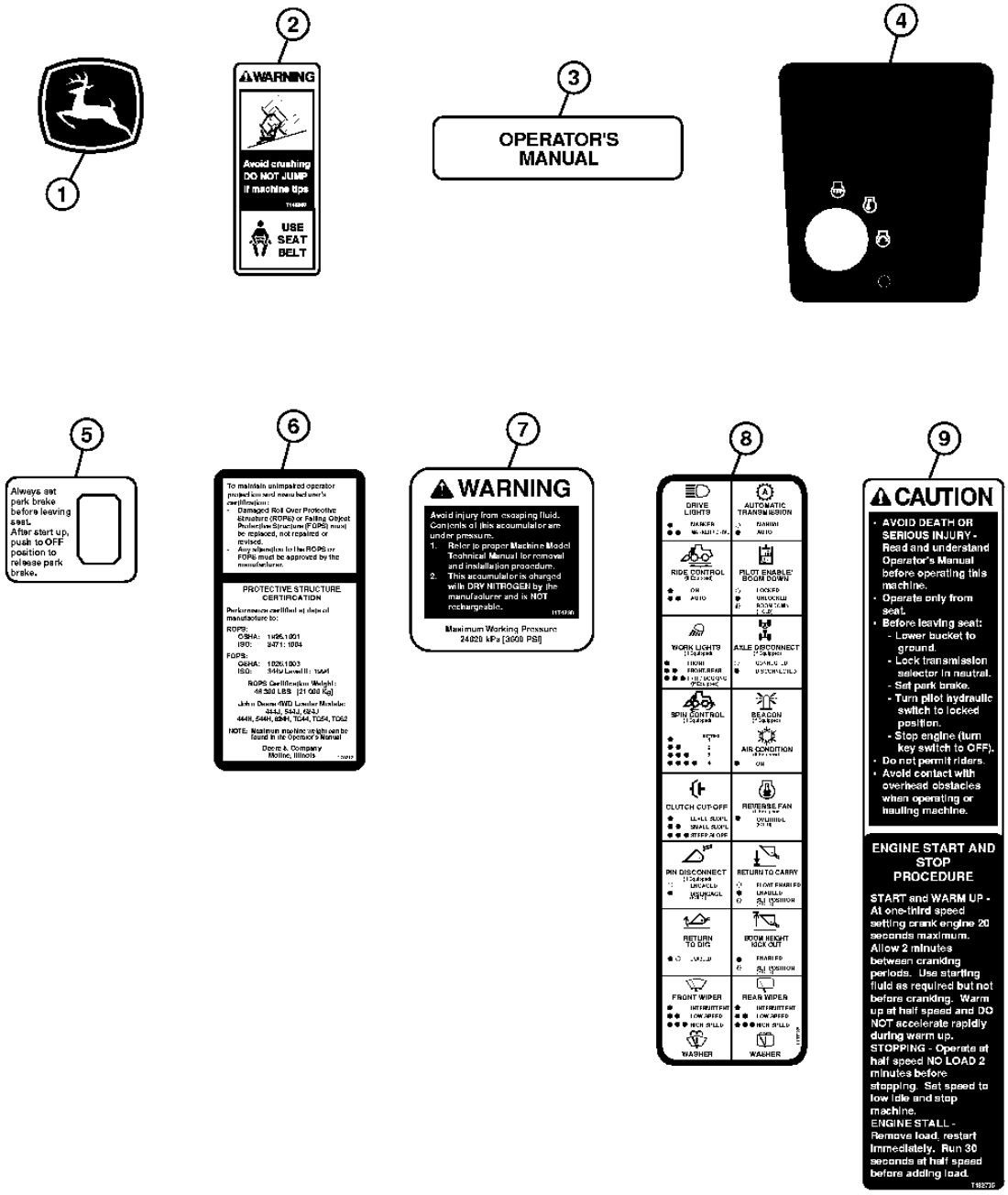

T194879

CANOPY LABELS AND DECALS
ETIQUETTES ET AUTOCOLLANTS EVENT
ETIQUETAS Y CALCOMANIAS DEL DOSEL

KEY	*PART NO.*	*PART NAME*	*QTY.*	*SERIAL NO.*	*REMARKS*
1	JD5822	LABEL	2		(LEAPING DEER)
2	T146097	LABEL	1		(WARNING - SEAT BELT)
3	T148083	LABEL	1		(OPERATOR'S MANUAL)
4	T203671	LABEL	1		(KEY START)
5	T171228	LABEL	1		(PARK BRAKE SWITCH)
6	T200712	LABEL	1		(ROPS /FOPS CERTIFICATION)
7	T215155	LABEL	2		(SUB FOR T174298) (WARNING - ACCUMULATOR)
8	T197186	LABEL	1		(CONSOLE FUNCTION IDENTIFICATION)
9	T182795	SAFETY SIGN	1		(CAUTION - ENGINE START/STOP)

LIFT HOOKS
CROCHETS RELEVAGE
GANCHOS DE LEVANTE

TX1006284 -UN-27APR06

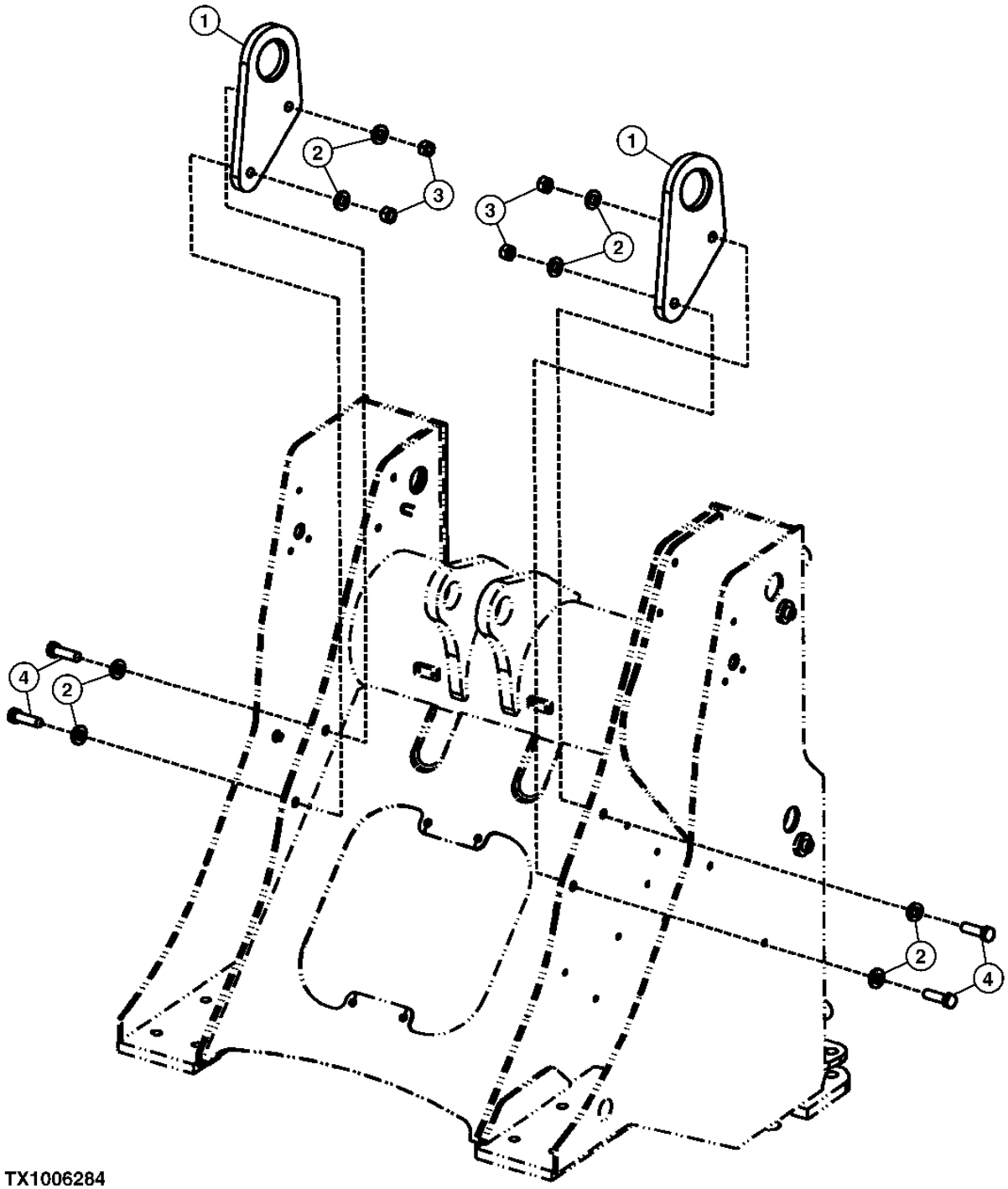

TX1006284

LIFT HOOKS
CROCHETS RELEVAGE
GANCHOS DE LEVANTE

KEY	PART NO.	PART NAME	QTY.	SERIAL NO.	REMARKS
1	T156995	PLATE	2		
2	24M7242	WASHER	8		21.400 X 42 X 5 MM
3	14M7277	NUT	4		M20
4	19M8639	CAP SCREW	4		M20 X 70
5	T173591	BUMPER	2		(NOT ILLUSTRATED) (TO PROTECT ENGINE PANEL FROM HOOK)

ENVIRONMENTAL DRAIN KIT (S.N. -604689)
ENSEMBLE DE VIDANGE ECOLOGIQUE (S.N. -604689)
CONJUNTO DE VACIADO AMBIENTAL (S.N. -604689)

T202090 -UN-10AUG04

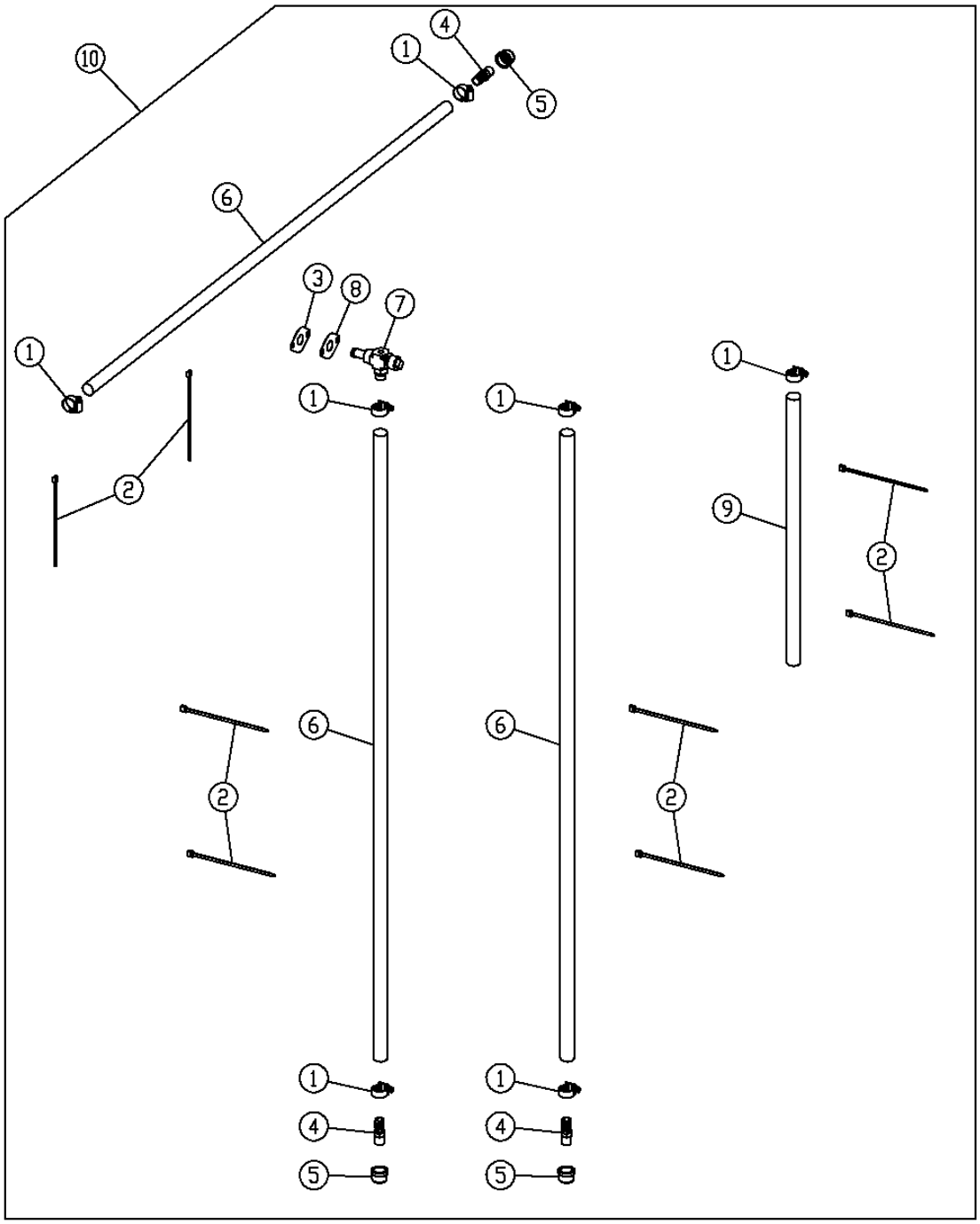

T202090

ENVIRONMENTAL DRAIN KIT (S.N. -604689)
ENSEMBLE DE VIDANGE ECOLOGIQUE (S.N. -604689)
CONJUNTO DE VACIADO AMBIENTAL (S.N. -604689)

KEY	*PART NO.*	*PART NAME*	*QTY.*	*SERIAL NO.*	*REMARKS*
1	AR21837	CLAMP	7		
2	R44302	TIE BAND	8		
3	T116604	GASKET	1		
4	H23196	FITTING	3		
5	15H3	FITTING	3		
6	.....	BULK HOSE	1		(MAKE FROM T60811) (CUT TO LENGTH)
7	RE507950	DRAIN VALVE	1		
8	T216182	ADAPTER FITTING	1		(ALSO ORDER T116604) (SUB FOR T196749)
9	.....	BULK HOSE	1		(MAKE FROM M87571) (CUT TO LENGTH)
10	**AT210490**	**KIT**	**1**		**(WHOLEGOODS)**

ENVIRONMENTAL DRAIN (S.N. 604690-)
ENSEMBLE DE VINDANGE ECOLOGIQUE (S.N. 604690-)
CONJUNTO DE VACIADO AMBIENTAL (S.N. 604690-)

TX1004866 -UN-17MAR06

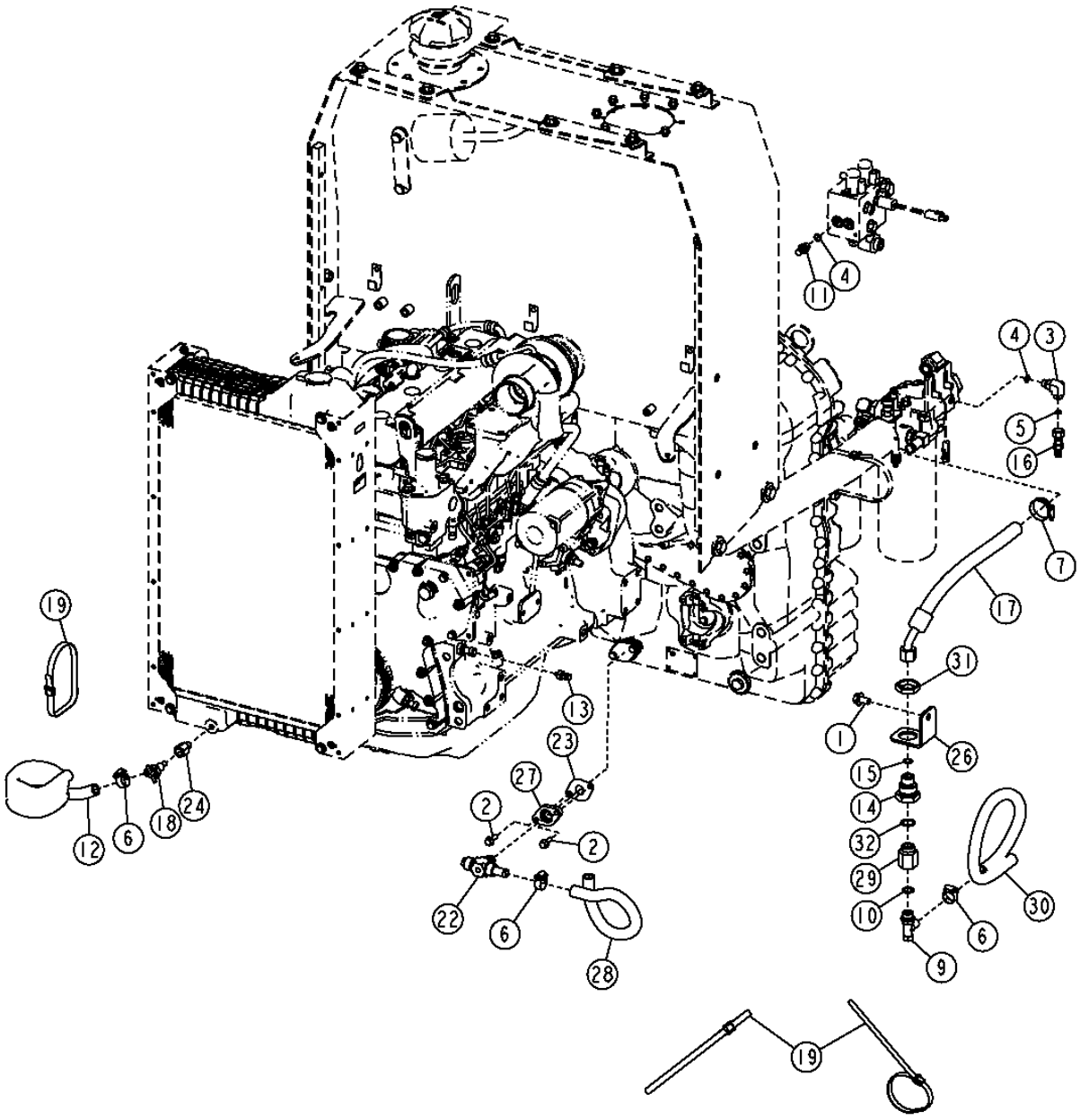

THIS PARTS LISTING IS CONTINUED

ENVIRONMENTAL DRAIN (S.N. 604690-)
ENSEMBLE DE VINDANGE ECOLOGIQUE (S.N. 604690-)
CONJUNTO DE VACIADO AMBIENTAL (S.N. 604690-)

KEY	PART NO.	PART NAME	QTY.	SERIAL NO.	REMARKS
1	19M7787	SCREW	1		M12 X 20
2	19M7867	SCREW	2		M8 X 25
3	38H1004	ELBOW FITTING	1		
4	R26448	O-RING	3		11.887 X 1.981 MM
5	T77613	O-RING	1		9.246 X 1.778 MM
6	AR21837	CLAMP	3		
7	AR21839	CLAMP	1		
9	AT152180	DRAIN VALVE	1		
10	R26906	O-RING	1		19.177 X 2.464 MM
11	AT306111	FITTING	1		
12	T60811	BULK HOSE	1		(CUT TO LENGTH, 4.8 FT)
13	AT306133	FITTING	1		
14	T210470	FITTING	1		
15	T77932	O-RING	1		15.596 X 1.778 MM
16	AT320593	FITTING	1		
17	AT324443	HYDRAULIC HOSE - FABRICATE	1		(CTL)
18	AT35831	DRAIN VALVE	1		
19	N189220	TIE BAND	3		
21	R27218	FITTING PLUG	1		
22	RE507950	DRAIN VALVE	1		
23	T116604	GASKET	1		
24	T15385	ADAPTER FITTING	1		9.525 MM
25	T203776	PLUG	1		
26	T214661	ANGLE	1		
27	T216182	ADAPTER FITTING	1		(ALSO ORDER T116604)
28	T29384	HOSE	1		
29	T33309	FITTING	1		
30	T64688	HOSE	1		
31	T78715	NUT	1		36.525 MM
32	U12547	O-RING	1		23.470 X 2.946 MM

ENGINE COOLANT CONDITIONER
CONDITIONNEUR DE LIQUIDE DE REFROIDISSEMENT DU MOTEUR
CONDICIONADOR DEL REFRIGERANTE DEL MOTOR

RGP9624 -UN-26JUN03



KEY	PART NO.	PART NAME	QTY.	ENGINE SERIAL NO.	REMARKS
1	TY16004	ENGINE COOLANT CONDITIONER	1		16 OZ.
2	TY16005	ENGINE COOLANT CONDITIONER	1		0.5 GAL.

MEMORANDA
MEMORANDA
MEMORANDA

HITCH ASSEMBLY (S.N. -604689)
ATTELAGE (S.N. -604689)
CONJUNTO DE ENGANCHE (S.N. -604689)

T203507 -UN-29SEP04

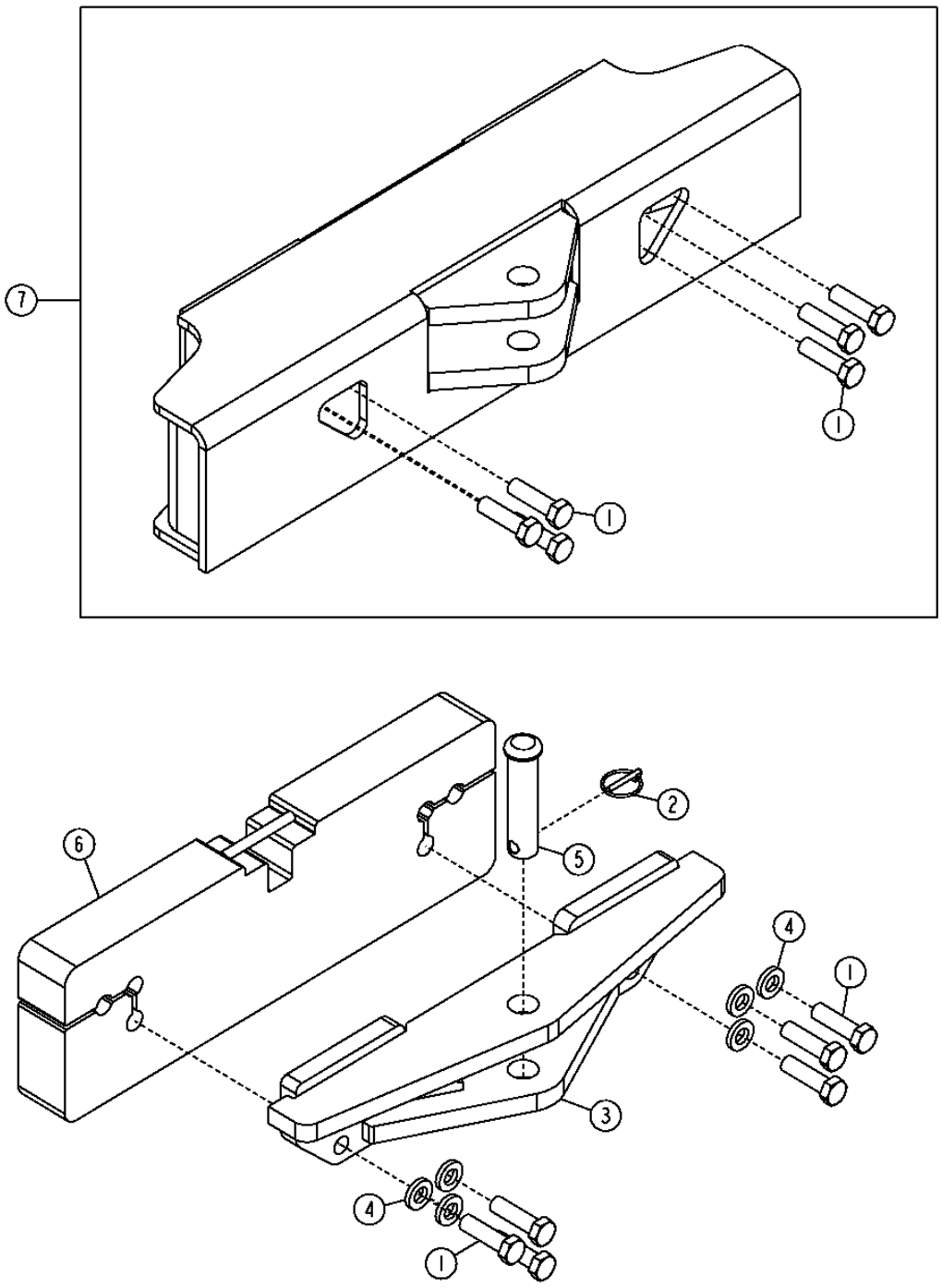

HITCH ASSEMBLY (S.N. -604689)
ATTELAGE (S.N. -604689)
CONJUNTO DE ENGANCHE (S.N. -604689)

KEY	*PART NO.*	*PART NAME*	*QTY.*	*SERIAL NO.*	*REMARKS*
1	19M8639	CAP SCREW	6		M20 X 70
	19M7921	CAP SCREW	6		M20 X 150, (USE WITH 3" COUNTERWEIGHT)
2	AA21292	QUICK LOCK PIN	1		
3	AT227738	DRAWBAR	1		
4	24M7242	WASHER	6		21.400 X 42 X 5 MM
5	T23914	PIN	1		
6	AT315002	COUNTERWEIGHT	1		(3")
7	**AT317731**	**DRAWBAR**	**1**		**(WHOLEGOODS) (FOR USE WITH Z-BAR) (HITCH WITH 8" REAR PROTECTION BUMPER)**
	.....	DRAWBAR	1		(NLA) (SUB FOR AT317789) (WHOLEGOODS) (FOR USE WITH POWERLLEL™ LINKAGE) (HITCH WITH 8" REAR PROTECTION BUMPER)

HITCH ASSEMBLY (S.N. 604690-)
ATTELAGE (S.N. 604690-)
CONJUNTO DE ENGANCHE (S.N. 604690-)

TX1003965 -UN-21FEB06

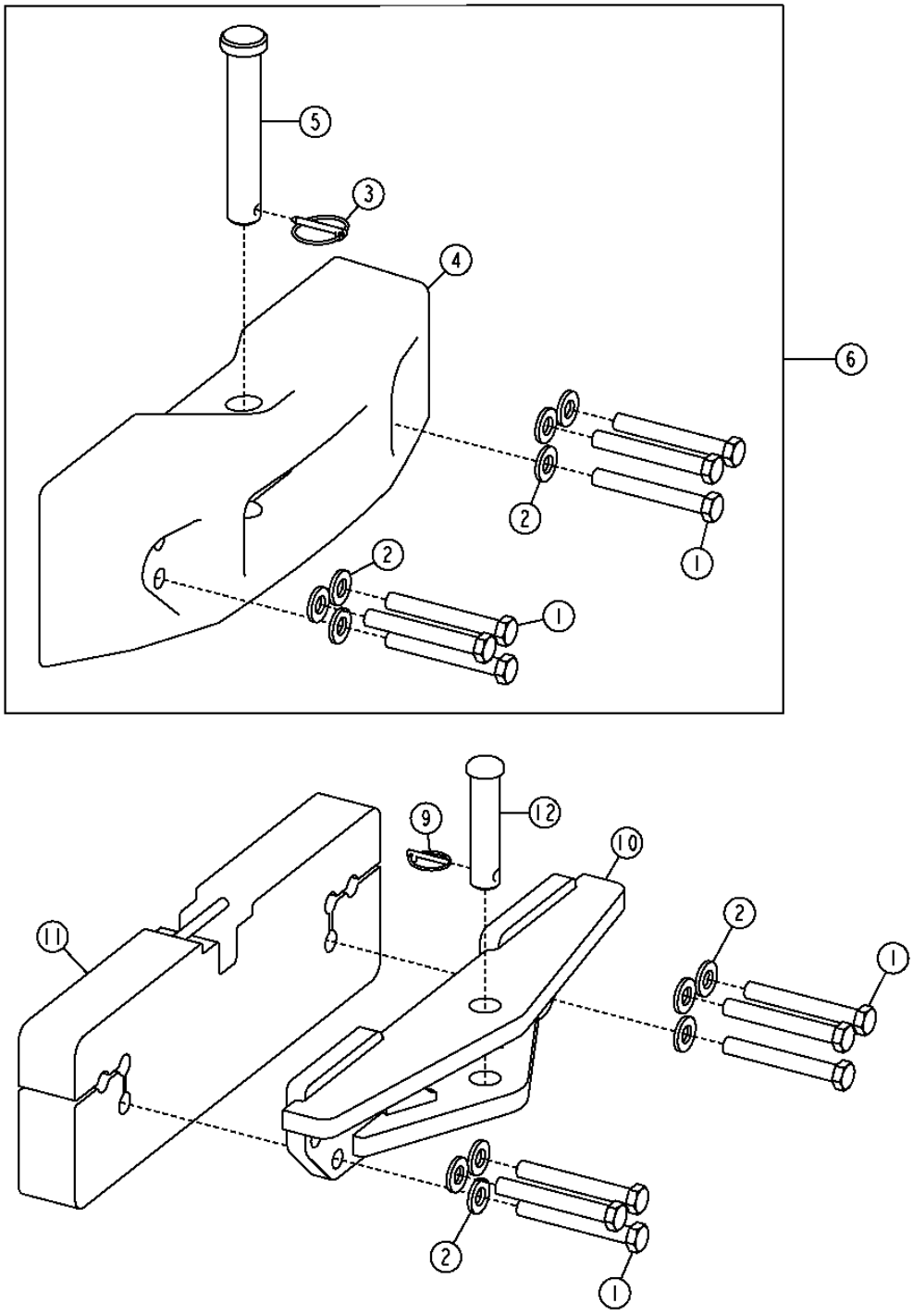

TX1003965

HITCH ASSEMBLY (S.N. 604690-)
ATTELAGE (S.N. 604690-)
CONJUNTO DE ENGANCHE (S.N. 604690-)

KEY	PART NO.	PART NAME	QTY.	SERIAL NO.	REMARKS
1	19M7921	CAP SCREW	12		M20 X 150
2	24M7242	WASHER	12		21.400 X 42 X 5 MM
3	AR83396	QUICK LOCK PIN	1		
4	T215611	HITCH	1		
5	T224369	PIN FASTENER	1		38.100 X 225.200 MM
6	**AT324507**	**FIELD INSTALLATION KIT**	**1**		**(WHOLEGOODS)**
9	AA21292	QUICK LOCK PIN	1		
10	AT227738	DRAWBAR	1		
11	AT315002	COUNTERWEIGHT	1		
12	T23914	PIN	1		34.798 X 148.844 MM

BATTERIES, BATTERY CABLES, AND BATTERY CLAMPS
BATTERIES, FILS DE BATTERIE ET COSSES DE BATTERIE
BATERIAS, CABLES DE LA BATERIA Y ABRAZADERAS DE LA BATERIA

T193752 -UN-31OCT03

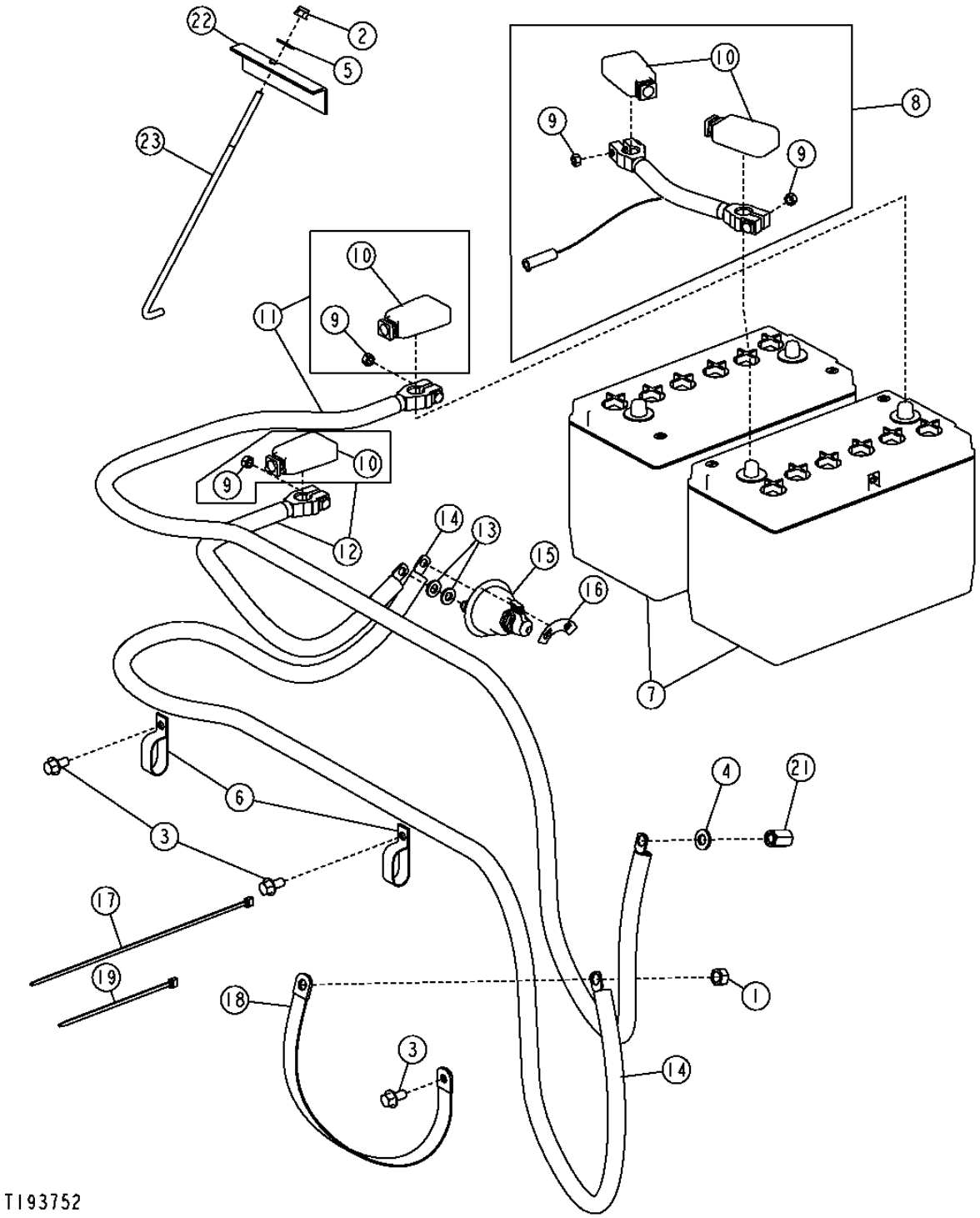

THIS PARTS LISTING IS CONTINUED

BATTERIES, BATTERY CABLES, AND BATTERY CLAMPS
BATTERIES, FILS DE BATTERIE ET COSSES DE BATTERIE
BATERIAS, CABLES DE LA BATERIA Y ABRAZADERAS DE LA BATERIA

KEY	*PART NO.*	*PART NAME*	*QTY.*	*SERIAL NO.*	*REMARKS*
1	14H1040	NUT	1		1/2"
2	14M7396	LOCK NUT	1		M8
3	19M7784	SCREW	3		M10 X 20
4	24M7240	WASHER	1		13 X 25 X 3 MM
5	24M7298	WASHER	1		8.400 X 25 X 2 MM
6	AH77869	CLIP	2		
7	TY21741	DRY CHARGED BATTERY	2		(625 CCA)
	TY6128	DRY CHARGED BATTERY	2		(950 CCA)
8	AT228312	BATTERY CABLE	1		
9	14H785	NUT	4		5/16"
10	T107117	COVER	1		
11	AT228313	BATTERY CABLE	1		
12	AT228407	BATTERY CABLE	1		
13	24M7239	WASHER	2		10.700 X 21 X 2.500 MM
14	AT228311	BATTERY CABLE	1		
15	AT41188	SWITCH	1		
16	T42199	LABEL	1		
17	H77698	TIE BAND	3		
18	R36545	GROUND CABLE	1		
19	R44302	TIE BAND	1		
20	T134104	COVER	1		(NOT ILLUSTRATED)
21	T174530	NUT	1		
22	T197467	ANGLE	1		
23	T79471	HOOK BOLT	1		

ALTERNATOR, MOUNTING BRACKETS, BELT AND BELT TENSIONER (55 AMP)
ALTERNATEUR, SUPPORT MONTAGE, COURROIE ET TENDEUR DE COURROIE (55 AMP)
ALTERNADOR, ESCUADRA DE MONTAJE, CORREA Y TENSOR DE CORREA (55 AMP)

T193929 -UN-04SEP03

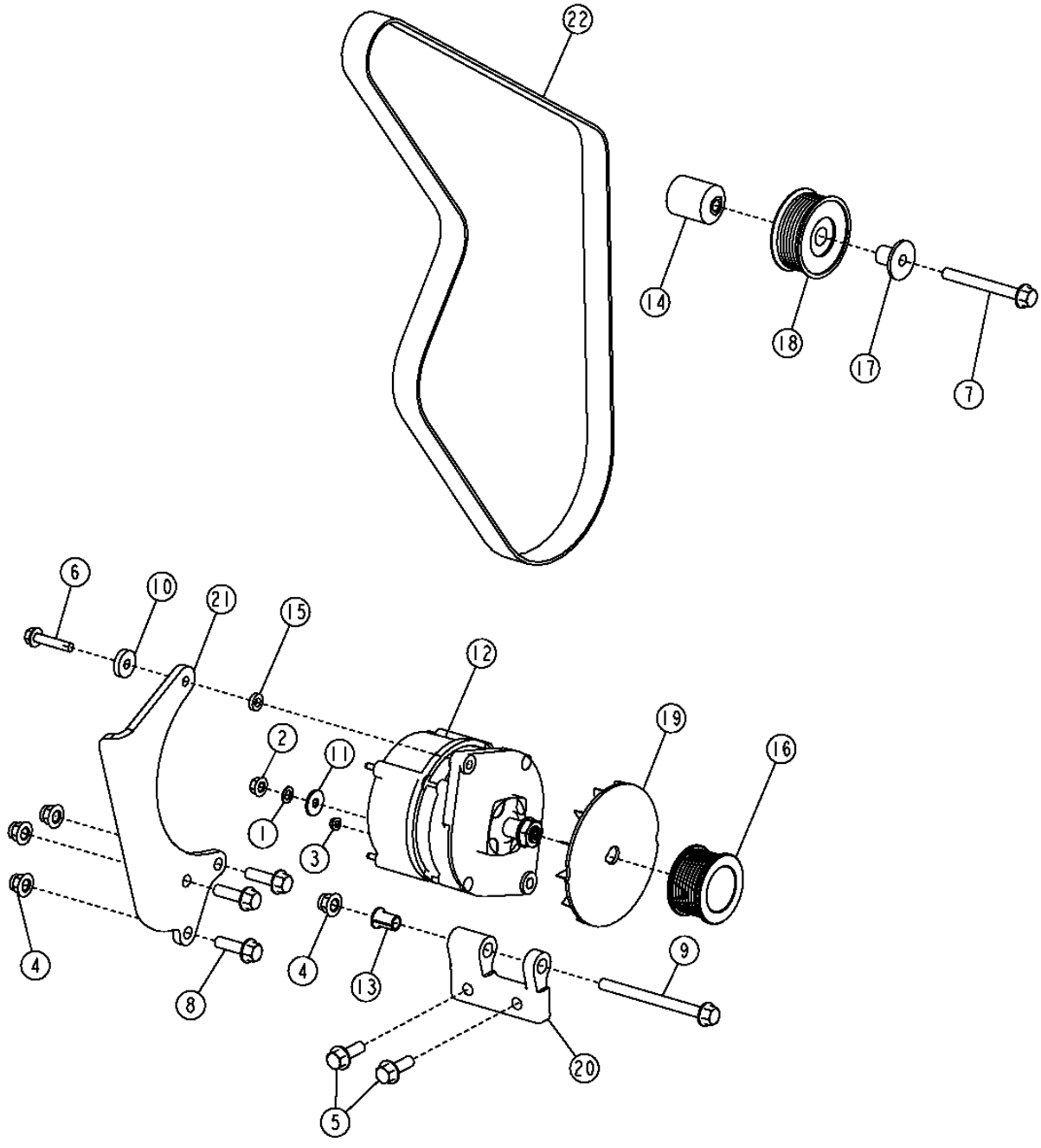

ALTERNATOR, REGULATOR AND CHARGING SYSTEM WIRING 1672

ALTERNATOR, MOUNTING BRACKETS, BELT AND BELT TENSIONER (55 AMP)
ALTERNATEUR, SUPPORT MONTAGE, COURROIE ET TENDEUR DE COURROIE (55 AMP)
ALTERNADOR, ESCUADRA DE MONTAJE, CORREA Y TENSOR DE CORREA (55 AMP)

KEY	*PART NO.*	*PART NAME*	*QTY.*	*SERIAL NO.*	*REMARKS*
1	12M7032	LOCK WASHER	1		8.400 MM
2	14M7298	FLANGE NUT	1		M8
3	14M7375	FLANGE NUT	1		M5
4	14M7400	LOCK NUT	4		M10
5	19M7786	SCREW	2		M10 X 30
6	19M7798	SCREW	1		M8 X 40
7	19M7811	SCREW	1		M10 X 90
8	19M7835	SCREW	3		M10 X 35
9	19M7944	SCREW	1		M10 X 120
10	24H1621	WASHER	1		11/32" X 1" X 0.220"
11	24M7207	WASHER	1		8.400 X 24 X 2 MM
12	TY26045	ALTERNATOR	1		(REMAN) (55 AMP) (INCLUDES AT163156 AND H144095) (SUB FOR AT228217 AND TY6798)
	AT163156	REGULATOR	1		
	H144095	CAPACITOR	1		
	SE501362	ALTERNATOR	1		(REMANUFACTURED FOR TY26045)
13	R100377	BUSHING	1		
14	R133643	SPACER	1		
15	R48808	WASHER	1		
16	R501486	PULLEY	1		
17	R502079	SLEEVE	1		
18	AT211041	IDLER	1		(W/O AC)
	RE505264	PULLEY	1		(W/ AC)
19	T158584	FAN	1		
20	T179468	BRACKET	1		
21	T195239	STRAP	1		
22	T197521	V-BELT	1		(W/O AC)
	T197520	V-BELT	1		(W/ AC)

ALTERNATOR REAR COVER (55 AMP)
COUVERCLE ARRIERE ALTERNATEUR (55 AMP)
CUBIERTA TRASERA DEL ALTERNADOR (55 AMP)

TX1006285 -UN-27APR06

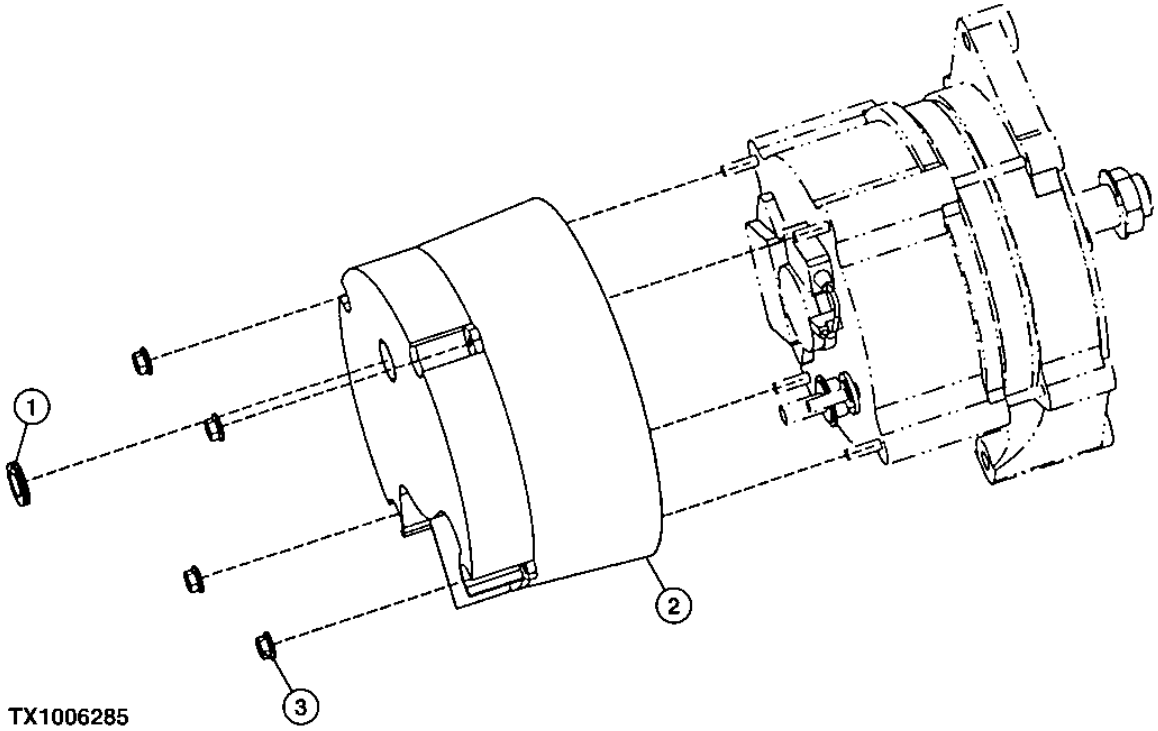

ALTERNATOR REAR COVER (55 AMP)
COUVERCLE ARRIERE ALTERNATEUR (55 AMP)
CUBIERTA TRASERA DEL ALTERNADOR (55 AMP)

KEY	*PART NO.*	*PART NAME*	*QTY.*	*SERIAL NO.*	*REMARKS*
1	R27180	GROMMET	1		
2	AH138291	SCREEN	1		(SUB FOR AT207952)
3	14M7375	FLANGE NUT	4		M5

ALTERNATOR, MOUNTING BRACKETS, BELT AND BELT TENSIONER (80 AMP)
ALTERNATEUR, SUPPORTS MONTAGE, COURROIE ET TENDEUR DE COURROIE (80 AMP)
ALTERNADOR, ESCUADRAS DE MONTAJE, CORREA Y TENSOR DE CORREA (80 AMP)

TX1004660 -UN-14MAR06

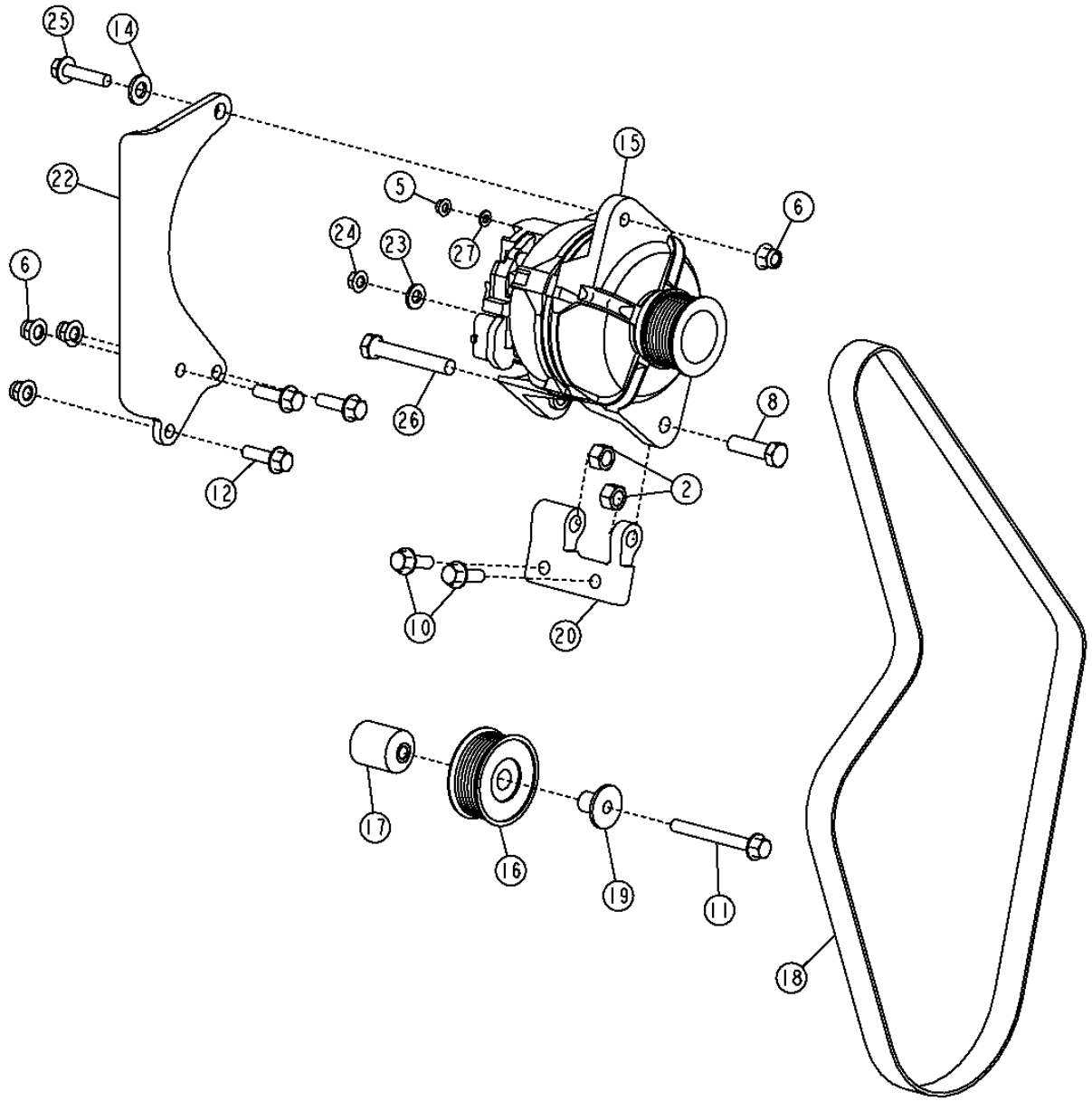

TX1004660

ALTERNATOR, REGULATOR AND CHARGING SYSTEM WIRING 1672

ALTERNATOR, MOUNTING BRACKETS, BELT AND BELT TENSIONER (80 AMP)
ALTERNATEUR, SUPPORTS MONTAGE, COURROIE ET TENDEUR DE COURROIE (80 AMP)
ALTERNADOR, ESCUADRAS DE MONTAJE, CORREA Y TENSOR DE CORREA (80 AMP)

KEY	PART NO.	PART NAME	QTY.	SERIAL NO.	REMARKS
1	12H325	LOCK WASHER	1		7/16"
2	14H1040	NUT	2	-XXXXXX	1/2"
	14H1040	NUT	1	XXXXXX-	1/2"
	14M7401	LOCK NUT	1	XXXXXX-	M12
3	14H849	NUT	1		7/16"
4	14M7100	NUT	1		M4
5	14M7303	FLANGE NUT	1		M6
6	14M7400	LOCK NUT	3		M10
7	19H1820	CAP SCREW	1		1/2" X 3"
8	19H2473	CAP SCREW	1		1/2" X 1-3/4"
9	19H3385	CAP SCREW	1		1/2" X 1-1/8"
10	19M7786	SCREW	2		M10 X 30
11	19M7811	SCREW	1		M10 X 90
12	19M7835	SCREW	3		M10 X 35
13	24M7146	WASHER	2		4.300 X 12 X 1 MM
14	24M7240	WASHER	1		13 X 25 X 3 MM
15	TY25955	ALTERNATOR	1	-600154	(REMAN) (SUB FOR AT208541 OR TY6794)
	AT303320	ALTERNATOR	1	600155-	
	SE501346	ALTERNATOR	1		(REMANUFACTURED FOR TY25953)
	SE501438	STARTER MOTOR	1		(REMANUFACTURED FPR TY25955)
16	AT211041	IDLER	1		(W/O AC)
	RE505264	PULLEY	1		(W/ AC)
17	R133643	SPACER	1		
18	R500384	V-BELT	1		(W/O AC)
	T195188	V-BELT	1		(W/ AC)
19	R502079	SLEEVE	1		
20	T179468	BRACKET	1		
21	T181325	PULLEY	1		
22	T195244	STRAP	1		
23	24M7239	WASHER	1	600155-	
24	14M7298	FLANGE NUT	3	600155-	
25	19M7805	SCREW	9	600155-	
26	19H3520	CAP SCREW	1	600155-XXXXXX	
	19M8122	CAP SCREW	1	XXXXXX-	M12 X 85
27	24M7239	WASHER	1		

ALTERNATOR REAR COVER (80 AMP)
COUVERCLE ARRIERE ALTERNATEUR (80 AMP)
CUBIERTA TRASERA DEL ALTERNADOR (80 AMP)

TP60231 -UN-11MAR98

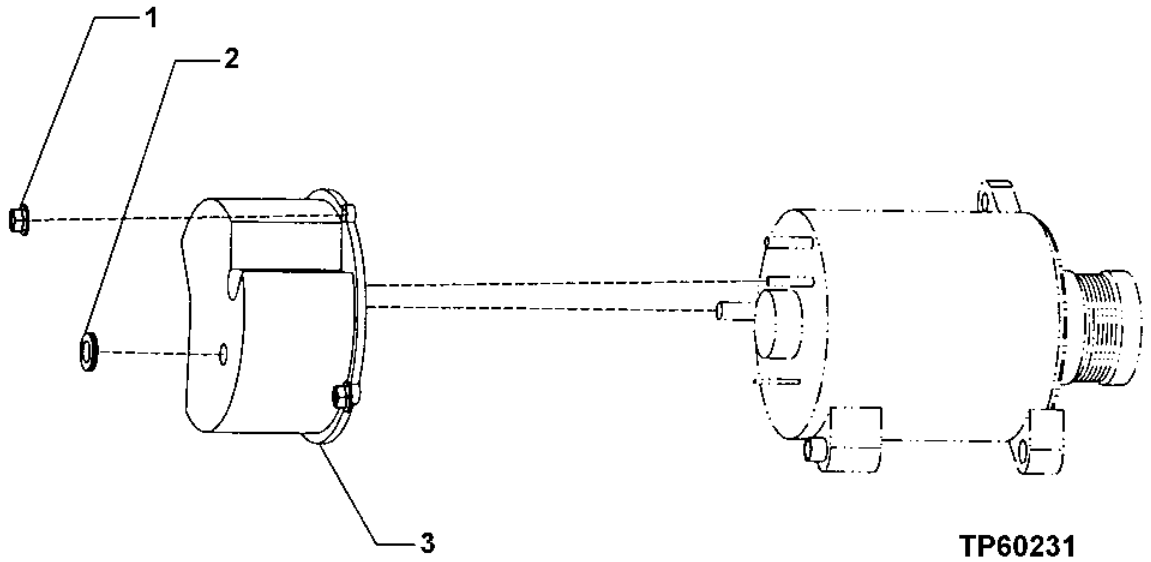

TP60231

ALTERNATOR REAR COVER (80 AMP)
COUVERCLE ARRIERE ALTERNATEUR (80 AMP)
CUBIERTA TRASERA DEL ALTERNADOR (80 AMP)

KEY	*PART NO.*	*PART NAME*	*QTY.*	*SERIAL NO.*	*REMARKS*
1	14M7375	FLANGE NUT	4		M5
2	R27180	GROMMET	1		
3	AT160704	SCREEN	1		

HARSH ENVIRONMENT ALTERNATOR, MOUNTING BRACKETS AND BELT (100 AMP)
SUPPORTS ET COURROIE MONTAGE ALTERNATEUR ENVIRONNEMENT DIFFICILE (100 AMP)
ALTERNADOR DE AMBIENTE CORROSIVO, ESCUADRAS DE MONTAJE Y CORREA (100 AMP)

T194442 -UN-02SEP03

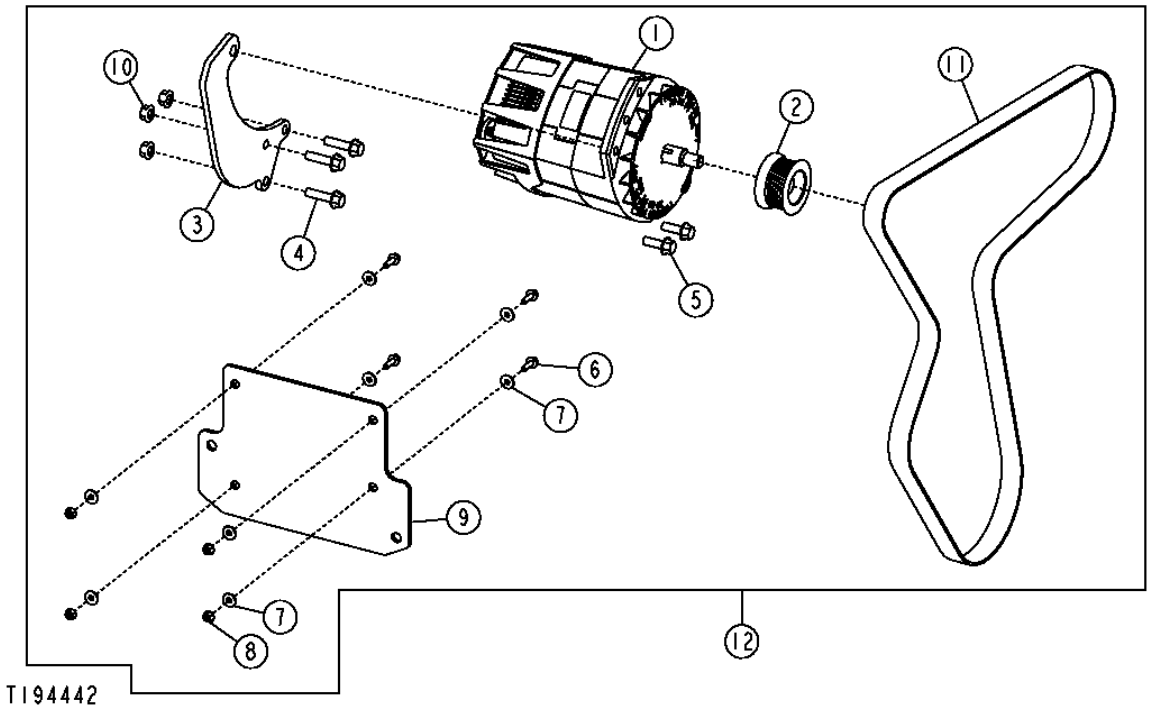

HARSH ENVIRONMENT ALTERNATOR, MOUNTING BRACKETS AND BELT (100 AMP)
SUPPORTS ET COURROIE MONTAGE ALTERNATEUR ENVIRONNEMENT DIFFICILE (100 AMP)
ALTERNADOR DE AMBIENTE CORROSIVO, ESCUADRAS DE MONTAJE Y CORREA (100 AMP)

KEY	*PART NO.*	*PART NAME*	*QTY.*	*SERIAL NO.*	*REMARKS*
1	AT226924	ALTERNATOR	1		
2	R128859	PULLEY	1		
3	T205944	STRAP	1		
4	19M7804	SCREW	3		M10 X 40
5	19M7786	SCREW	2		M10 X 30
6	19M7862	SCREW	4		M6 X 20
7	24M7139	WASHER	8		6.400 X 18 X 1.600 MM (0.252" X 0.709" X 0.063")
8	14M7303	FLANGE NUT	4		M6
9	T195893	PLATE	1		
10	14M7296	FLANGE NUT	3		M10
11	T186776	V-BELT	1		(W/O A/C)
	T208891	V-BELT	1		(W/ AC)
12	AT307483	ALTERNATOR	1		(HARSH ENVIRONMENT) (W/O A/C)
	AT307484	ALTERNATOR	1		(HARSH ENVIRONMENT) (W/ AC)

FRONT LIGHTS AND BRACKETS (SN -603831)
FEUX ET SUPPORTS AVANT (SN -603831)
ESCUADRAS Y LUCES DELANTERAS (SN -603831)

T217156 -UN-25JAN06

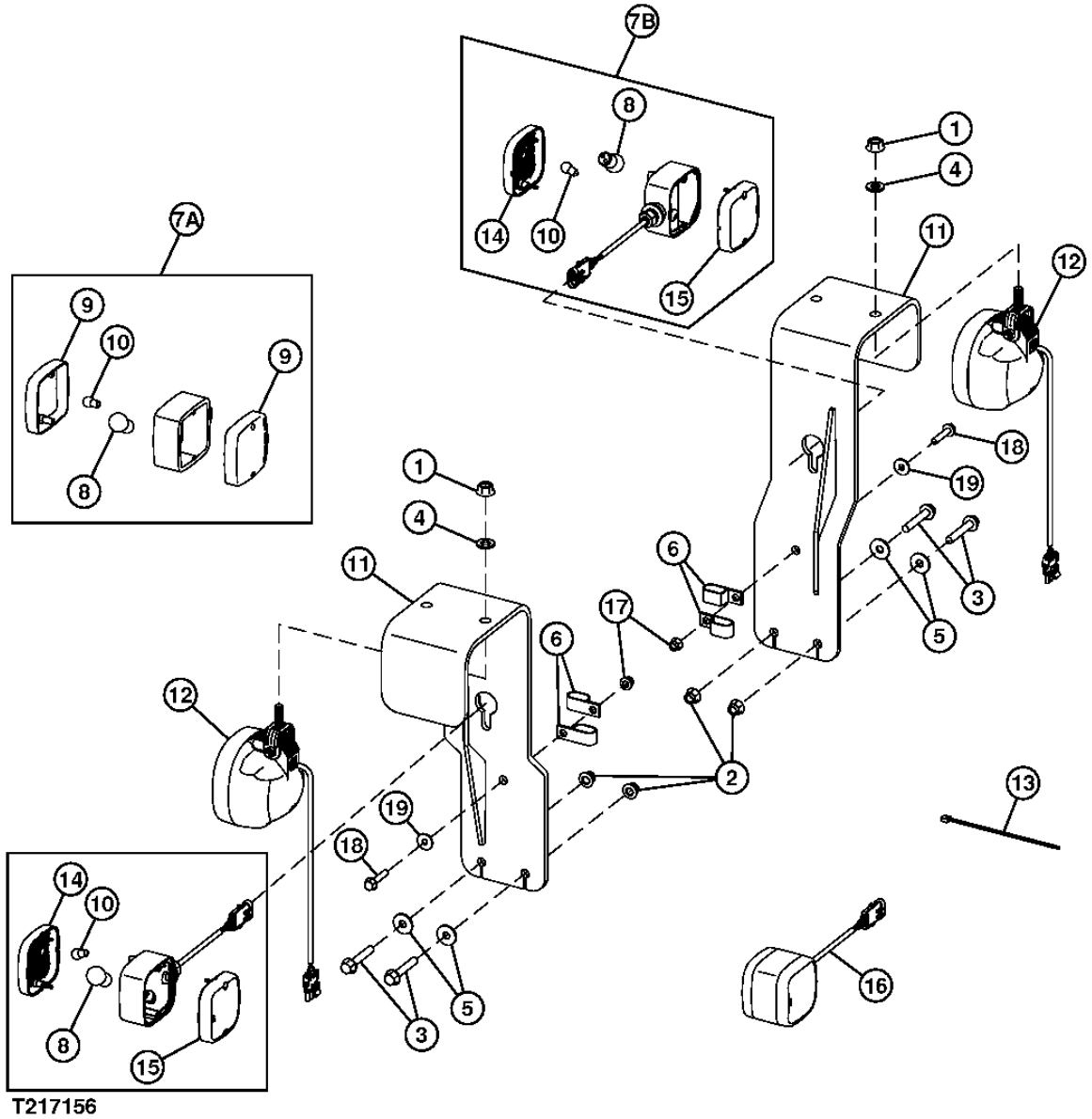

T217156

FRONT LIGHTS AND BRACKETS (SN -603831)
FEUX ET SUPPORTS AVANT (SN -603831)
ESCUADRAS Y LUCES DELANTERAS (SN -603831)

KEY	PART NO.	PART NAME	QTY.	SERIAL NO.	REMARKS
1	14M7299	FLANGE NUT	2		M12
2	14M7400	LOCK NUT	AR	-XXXXXX	M10
3	19M7807	SCREW	AR	-XXXXXX	M10 X 60
	19M7804	SCREW	4	XXXXXX-	
4	24M7240	WASHER	2		13 X 25 X 3 MM
5	24M7296	WASHER	AR	-XXXXXX	10.500 X 30 X 2.500 MM
6	AH97280	CLIP	4		
7A	.....	LAMP	2	-597322	(SUB AT309550) (AT206878 NLA) (INCANDESCENT)
	AT222365	TURN SIGNAL LAMP	2		(HARSH ENVIRONMENT)
7B	AT309550	LAMP	2	597323-	(INCANDESCENT)
8	AT210333	BULB	1		
9	.....	LENS	2	-597322	(SUB AT309550) (T176372 NLA)
10	U44537	BULB	1		
11	AT210246	SUPPORT	2		
12	AT324484	SIDE LIGHT	2		(STD) (AT227260 NLA)
	AT135758	BULB	2		
	AT225086	LAMP	2		(HARSH ENVIRONMENT)
13	R44302	TIE BAND	5		
14	T208364	LENS	1	597323-	
15	T208365	LENS	1	597323-	
16	AT307090	LAMP	1		(LED)
17	14M7396	LOCK NUT	2	597323-	M8
18	19M7798	SCREW	2	597323-	M8 X 40
19	24M7298	WASHER	2	597323-	8.400 X 25 X 2 MM

FRONT LIGHTS AND BRACKETS (SN 603832-)
FEUX ET SUPPORTS AVANT (SN 603832-)
ESCUADRAS Y LUCES DELANTERAS (SN 603831-)

TX1007141 -UN-03MAY06

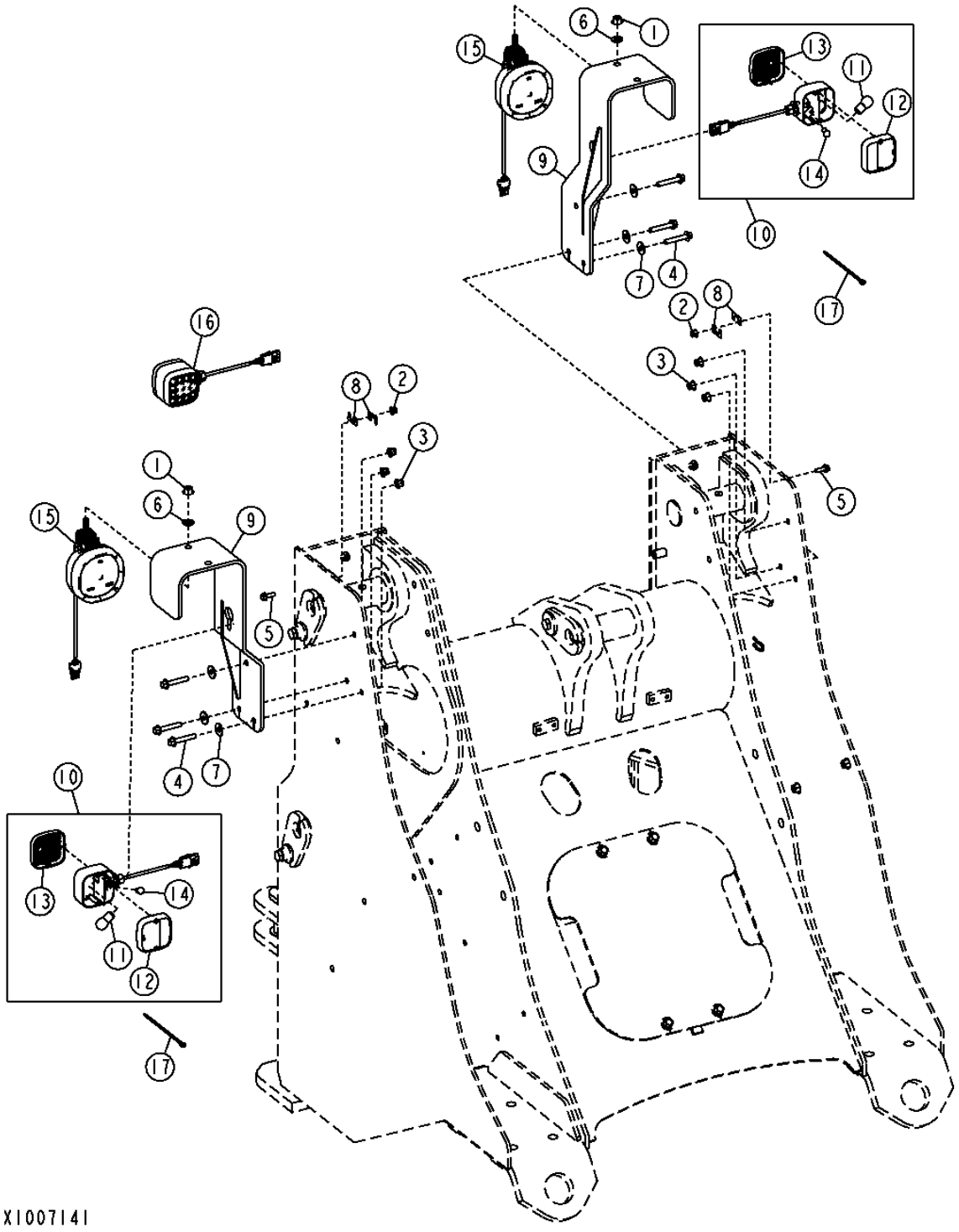

THIS PARTS LISTING IS CONTINUED

FRONT LIGHTS AND BRACKETS (SN 603832-)
FEUX ET SUPPORTS AVANT (SN 603832-)
ESCUADRAS Y LUCES DELANTERAS (SN 603832-)

KEY	*PART NO.*	*PART NAME*	*QTY.*	*SERIAL NO.*	*REMARKS*
1	14M7299	FLANGE NUT	2		M12
2	14M7396	LOCK NUT	2		M8
3	14M7400	LOCK NUT	6		M10
4	19M7807	SCREW	6		M10 X 60
5	19M7867	SCREW	2		M8 X 25
6	24M7240	WASHER	2		13 X 25 X 3 MM
7	24M7296	WASHER	6		10.500 X 30 X 2.500 MM
8	57M8736	ELEC. CONNECTOR ACCESSORY	4		(57M8998 NLA)
9	AT210246	SUPPORT	2		
10	AT309550	LAMP	2		(TURN SIGNAL)
11	AT210333	BULB	1		
12	T208364	LENS	1		
13	T208365	LENS	1		
14	U44537	BULB	1		
15	AT324484	SIDE LIGHT	2		
	AT135758	BULB	1		
16	AT307090	LAMP	1		(LED TURN SIGNAL)
17	R44302	TIE BAND	2		

FRONT AND REAR WORK LAMP
PROJECTEUR TRAVAIL AVANT ET ARRIERE
LUZ DE TRABAJO TRASERA Y DELANTERA

TP62820 -UN-08JUN00

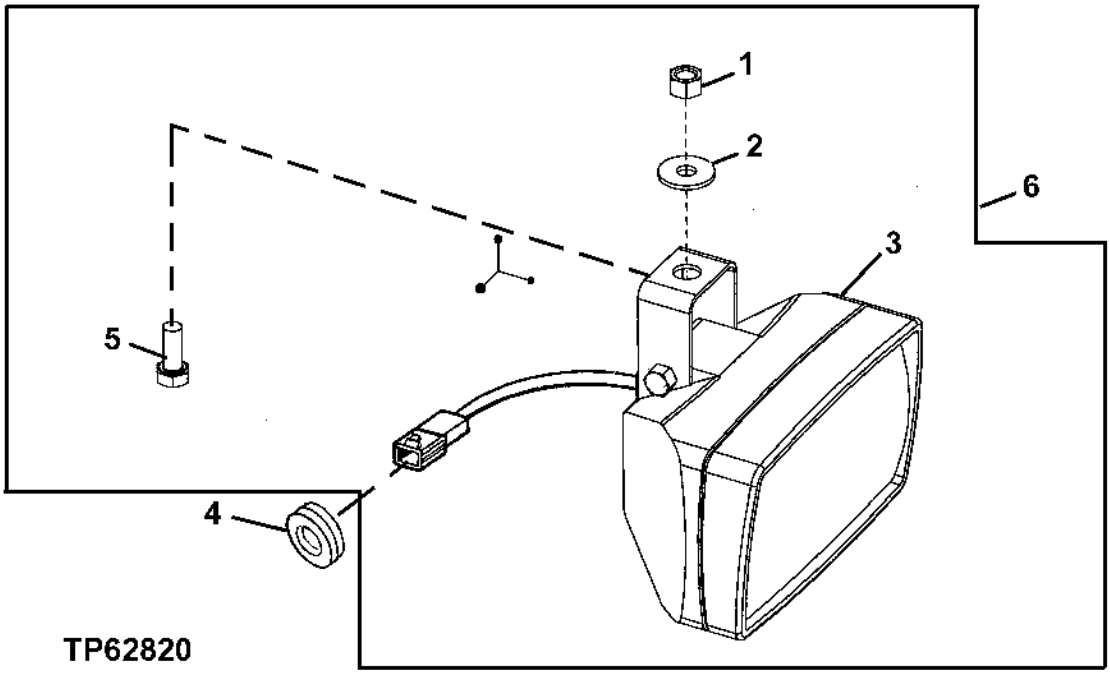

KEY	PART NO.	PART NAME	QTY.	SERIAL NO.	REMARKS
1	14M7166	LOCK NUT	1		M8
2	24M7207	WASHER	1		8.400 X 24 X 2 MM
3	.....	LAMP	1		(SUB AT208435)
	AT135758	BULB	1		(NOT ILLUSTRATED)
4	H81678	GROMMET	1		
5	19M7139	CAP SCREW	1		M8 X 20
6	AT208435	LAMP	1	-600971	(STD)
	AT305931	FLOODLAMP	1	600972-	(STD)
	AT226338	FLOODLAMP	1		(HARSH ENVIRONMENT)

DOOR-ACTIVATED DOMELIGHT SWITCH
NTERRUPTEUR PLAFONNIER ACTIVE PAR OUVERTURE PORTE
INTERRUPTOR DE LA LUZ DE TECHO ACTIVADO CON LA PUERTA

T192974 -UN-13AUG03

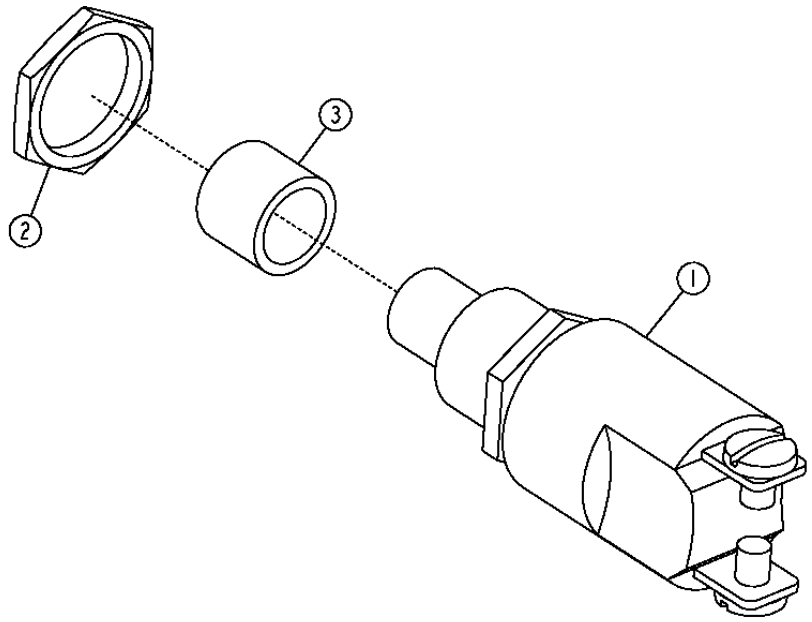

T192974

KEY	PART NO.	PART NAME	QTY.	SERIAL NO.	REMARKS
1	RE51234	PUSH SWITCH	1		(CAB ONLY)
2	R44097	NUT	1		
3	T182914	CAP	1		(DOME SWITCH)

STOP, TURN AND TAIL LIGHTS
FEUX DE STOP, CLIGNOTANTS ET FEUX ARRIERE
LUZ DE PARE, VIRAJE Y COLA

TX1006286 -UN-27APR06

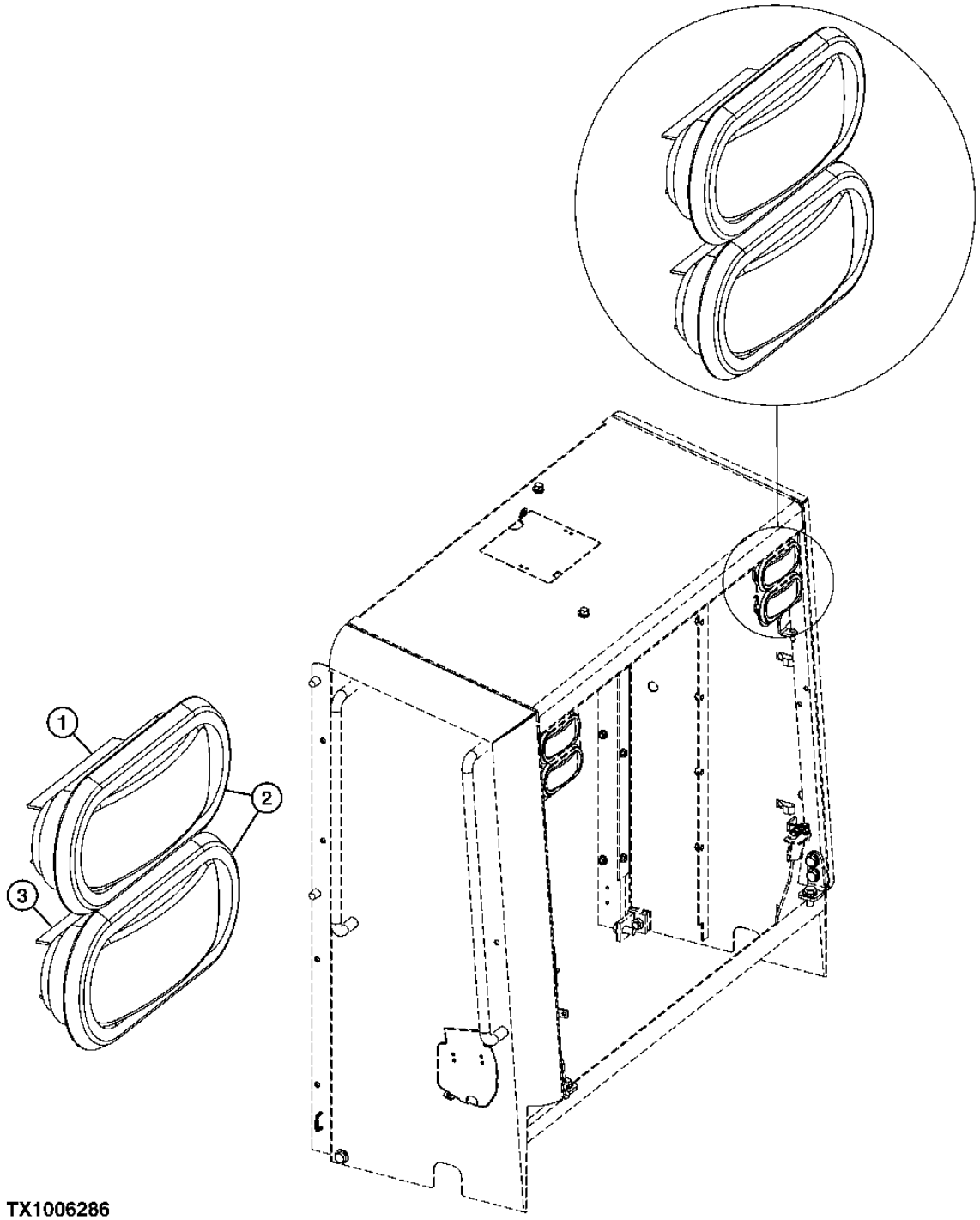

TX1006286

STOP, TURN AND TAIL LIGHTS
FEUX DE STOP, CLIGNOTANTS ET FEUX ARRIERE
LUZ DE PARE, VIRAJE Y COLA

KEY	*PART NO.*	*PART NAME*	*QTY.*	*SERIAL NO.*	*REMARKS*
1	T178947	TURN SIGNAL LAMP	2		STD (AMBER)
	T180074	TURN SIGNAL LAMP	2		HEAVY-DUTY (AMBER)
2	T178948	RETAINER	4		
3	T178946	TAIL LAMP	2		STD (RED)
	T180075	TAIL LAMP	2		HEAVY-DUTY (RED)
4	AT223807	WIRING HARNESS	2		LED JUMPER (USE WITH HEAVY DUTY) (NOT ILLUSTRATED)

LICENSE PLATE BRACKET AND LIGHT
SUPPORT ET ECLAIRAGE PLAQUE MINERALOGIQUE
ESUADRA Y LUZ DE MATRICULA

T193972 -UN-13NOV03

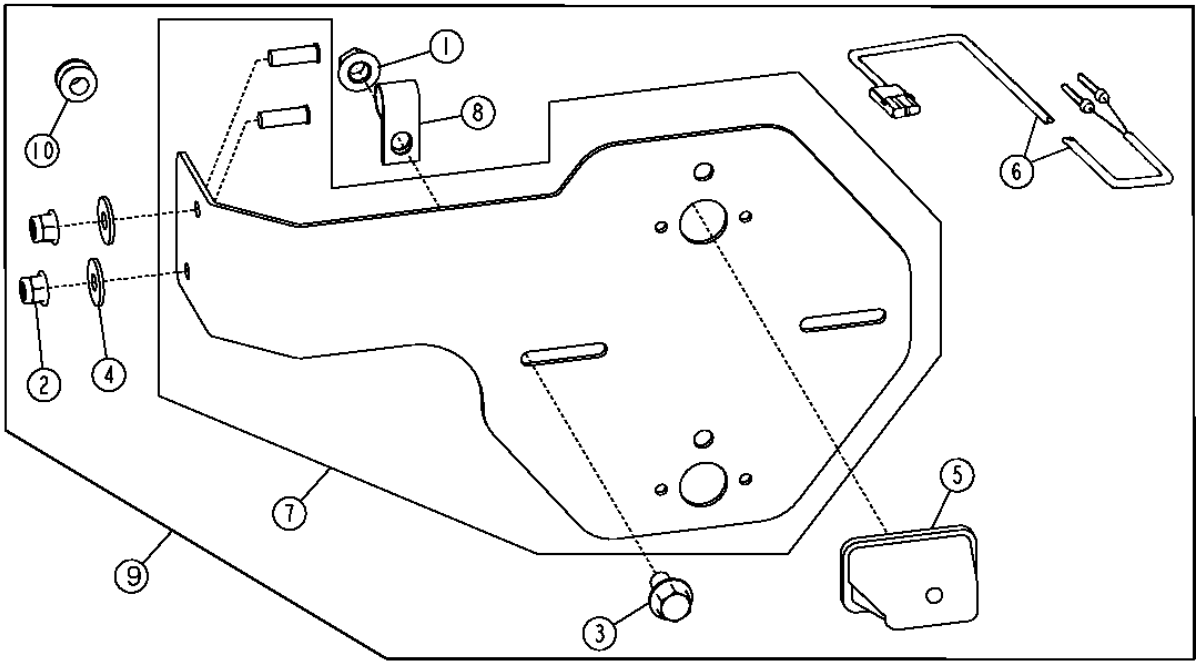

T193972

LICENSE PLATE BRACKET AND LIGHT
SUPPORT ET ECLAIRAGE PLAQUE MINERALOGIQUE
ESCUADRA Y LUZ DE MATRICULA

KEY	*PART NO.*	*PART NAME*	*QTY.*	*SERIAL NO.*	*REMARKS*
1	14M7296	FLANGE NUT	1		M10
2	14M7396	LOCK NUT	2		M8
3	19M7784	SCREW	1		M10 X 20
4	24M7298	WASHER	2		8.400 X 25 X 2 MM
5	AT202789	LAMP	1		(INCLUDES AT173354)
	AT173354	BULB	1		(NOT ILLUSTRATED)
6	AT203137	WIRING HARNESS	1		
7	AT301914	BRACKET	1		
8	T75197	CLAMP	1		
9	AT228289	KIT	1		
10	T70154	GROMMET	1		

MAIN WIRING HARNESS (S.N. -604689)
FAISCEAU CABLAGE PRINCIPAL (S.N. -604689)
ARNES DE ALAMBRADO PRINCIPAL (S.N. -604689)

TX1021961 -UN-

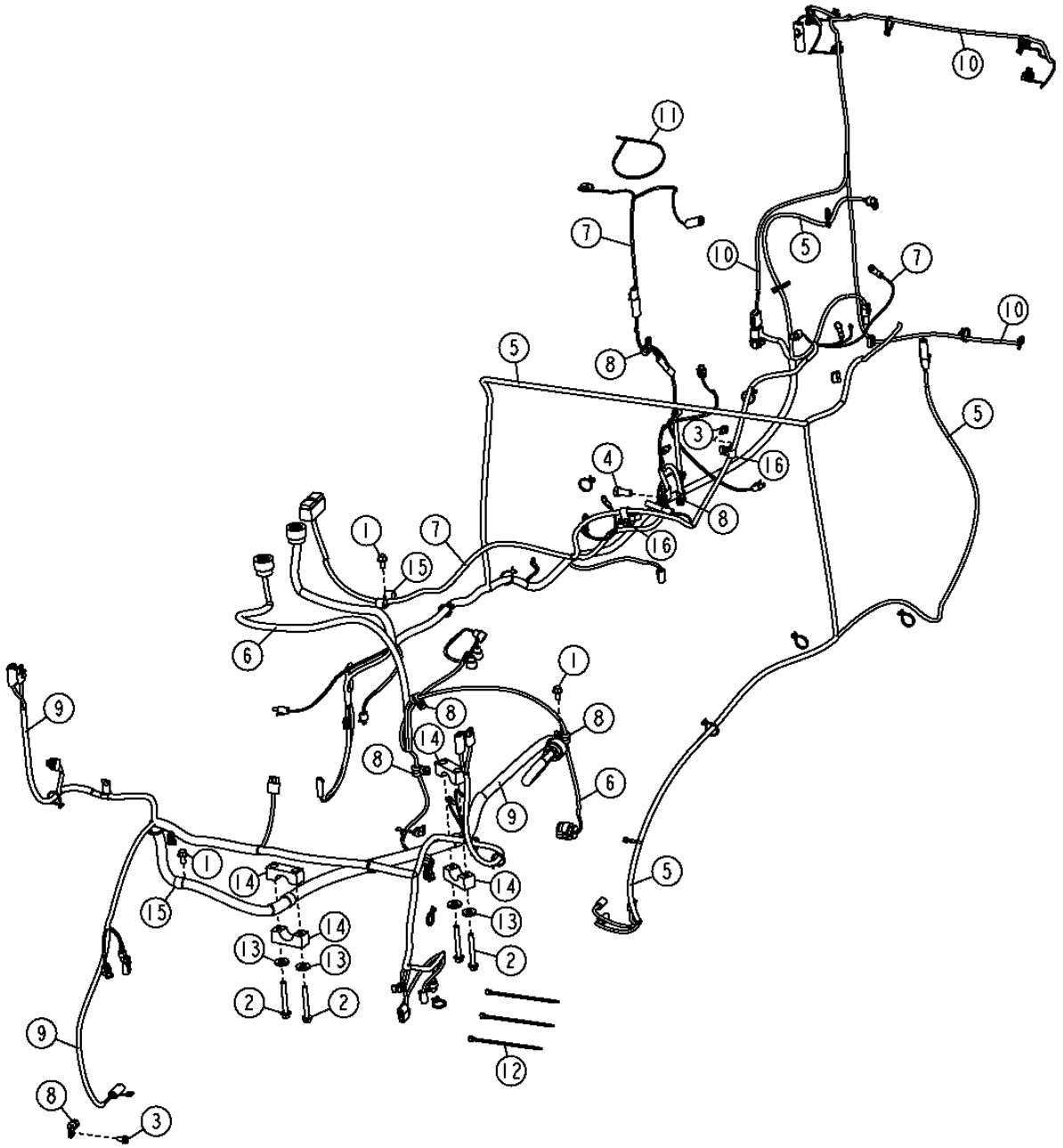

THIS PARTS LISTING IS CONTINUED

MAIN WIRING HARNESS (S.N. -604689)
FAISCEAU CABLAGE PRINCIPAL (S.N. -604689)
ARNES DE ALAMBRADO PRINCIPAL (S.N. -604689)

KEY	PART NO.	PART NAME	QTY.	SERIAL NO.	REMARKS
1	19M7784	SCREW	3		M10 X 20
2	19M7810	SCREW	4		M10 X 80
3	19M7865	SCREW	2		M8 X 16
4	19M7877	CAP SCREW	1		M14 X 30
5	AT227139	WIRING HARNESS	1		(ENGINE FRAME HARNESS)
	AT306736	WIRING HARNESS	1		(ENGINE FRAME HARNESS) (HARSH ENVIRONMENT)
6	AT301026	WIRING HARNESS	1		(TRANSMISSION HARNESS)
	AT308672	WIRING HARNESS	1		(TRANSMISSION HARNESS) (HARSH ENVIRONMENT)
7	AT315406	WIRING HARNESS	1		(SUB FOR AT227137) (ENGINE HARNESS)
	AT315412	WIRING HARNESS	1		(SUB FOR AT308671) (ENGINE HARNESS) (HARSH ENVIRONMENT)
8	T75276	CLAMP	6		
9	AT227138	WIRING HARNESS	1	-600916	(LOADER FRAME HARNESS)
	AT320922	WIRING HARNESS	1	600917-	(LOADER FRAME HARNESS)
	AT307221	WIRING HARNESS	1		(LOADER FRAME HARNESS FOR TOOL CARRIER)
	AT306641	WIRING HARNESS	1		(LOADER FRAME HARNESS) (HARSH ENVIRONMENT)
10	AT322892	WIRING HARNESS	1		(SUB FOR AT228167) (REAR FRAME HARNESS)
	AT307333	WIRING HARNESS	1		(REAR FRAME HARNESS) (HARSH ENVIRONMENT)
11	H77698	TIE BAND	1		
12	R44302	TIE BAND	23		
13	T29342	WASHER	4		13.487 X 31.750 X 4.572 MM
14	T67995	CLAMP	4		
15	T74416	CLAMP	4		
16	T75197	CLAMP	2		

MAIN WIRING HARNESS (S.N. 604690-)
FAISCEAU CABLAGE PRINCIPAL (S.N. 604690-)
ARNES DE ALAMBRADO PRINCIPAL (S.N. 604690-)

TX1021669 -UN-

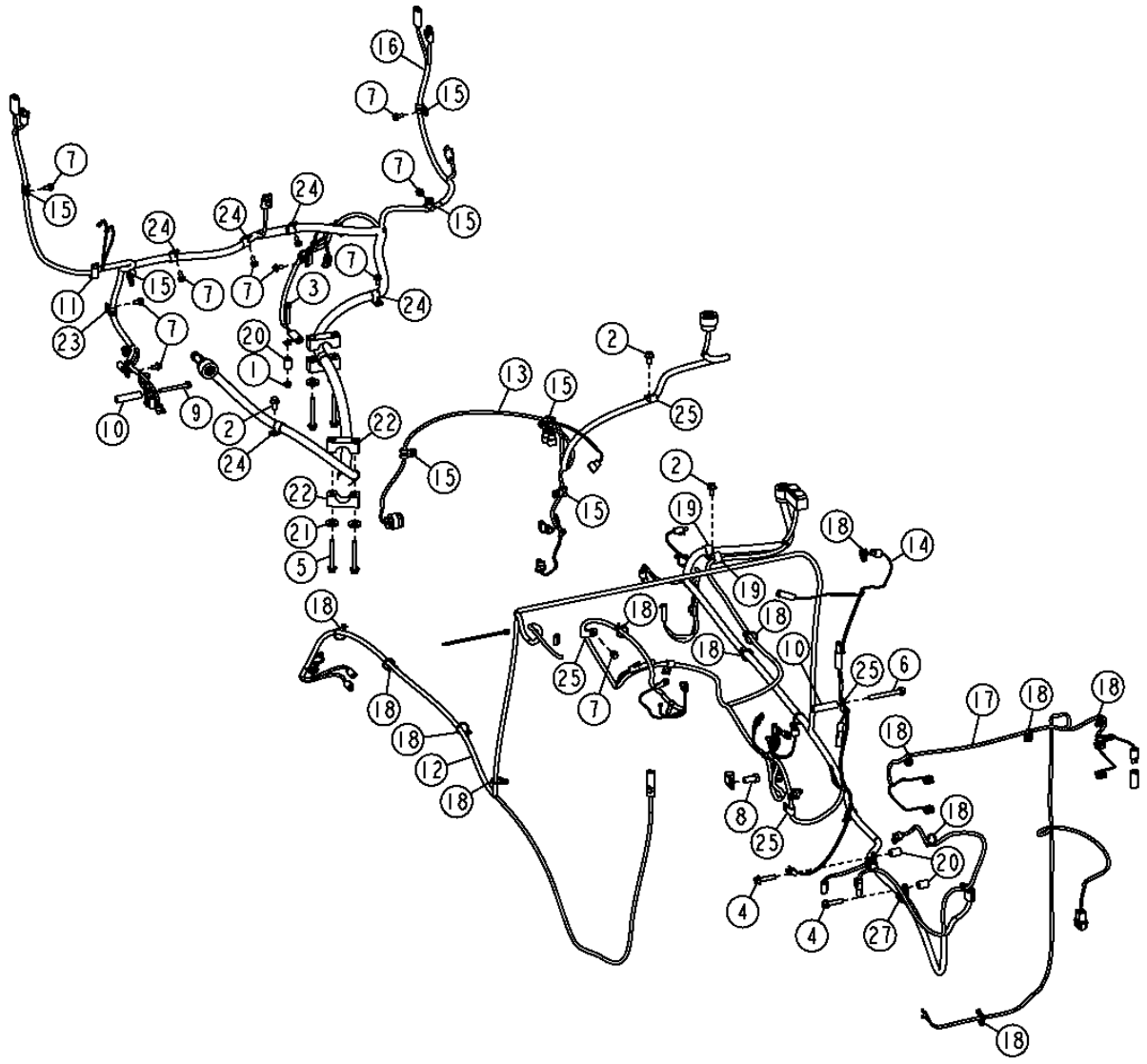

TX1021669

THIS PARTS LISTING IS CONTINUED

MAIN WIRING HARNESS (S.N. 604690-)
FAISCEAU CABLAGE PRINCIPAL (S.N. 604690-)
ARNES DE ALAMBRADO PRINCIPAL (S.N. 604690-)

KEY	PART NO.	PART NAME	QTY.	SERIAL NO.	REMARKS
1	14M7298	FLANGE NUT	1		M8
2	19M7784	SCREW	3		M10 X 20
3	19M7800	SCREW	1		M8 X 50
4	19M7805	SCREW	2		M10 X 45
5	19M7810	SCREW	4		M10 X 80
6	19M7811	SCREW	1		M10 X 90
7	19M7865	SCREW	12		M8 X 16
8	19M7877	CAP SCREW	1		M14 X 30
9	19M8039	SCREW	1		M8 X 80
10	28H3399	SPACER	2		12.522 X 17.145 X 69.850 MM
11	AH89557	CLIP	1		
12	AT227139	WIRING HARNESS	1		(ENGINE FRAME HARNESS)
	AT306736	WIRING HARNESS	1		(ENGINE FRAME HARNESS) (HARSH ENVIRONMENT)
13	AT301026	WIRING HARNESS	1		(TRANSMISSION HARNESS)
	AT308672	WIRING HARNESS	1		(TRANSMISSION HARNESS) (HARSH ENVIRONMENT)
14	AT315406	WIRING HARNESS	1		(SUB FOR AT227137) (ENGINE HARNESS)
	AT315412	WIRING HARNESS	1		(SUB FOR AT308671) (ENGINE HARNESS) (HARSH ENVIRONMENT)
15	T75276	CLAMP	8		
16	AT320922	WIRING HARNESS	1		(LOADER FRAME HARNESS)
	AT306641	WIRING HARNESS	1		(LOADER FRAME HARNESS) (HARSH ENVIRONMENT)
17	AT322892	WIRING HARNESS	1		(REAR FRAME HARNESS)
	AT307333	WIRING HARNESS	1		(REAR FRAME HARNESS) (HARSH ENVIRONMENT)
18	R44302	TIE BAND	27		
19	T102934	CLAMP	2		
20	T147891	BUSHING	3		
21	T29342	WASHER	4		13.487 X 31.750 X 4.572 MM
22	T67995	CLAMP	4		
23	T74412	CLAMP	3		
24	T74416	CLAMP	5		
25	T75197	CLAMP	5		
27	T76252	CLAMP	2		

MAIN WIRING HARNESS (FOR USE WITH POWERLLEL™ LINKAGE) (S.N.-604689)
FAISCEAU PRINCIPAL DE FILS (UTILISE AVEC UTILISER AVEC TRINGLERIE POWERLLEL™) (S.N.-604689)
ARNES DE CABLEADO PRINCIPAL (USA CON VARILLAJE POWERLLEL™) (S.N.-604689)

T202071 -UN-17AUG04

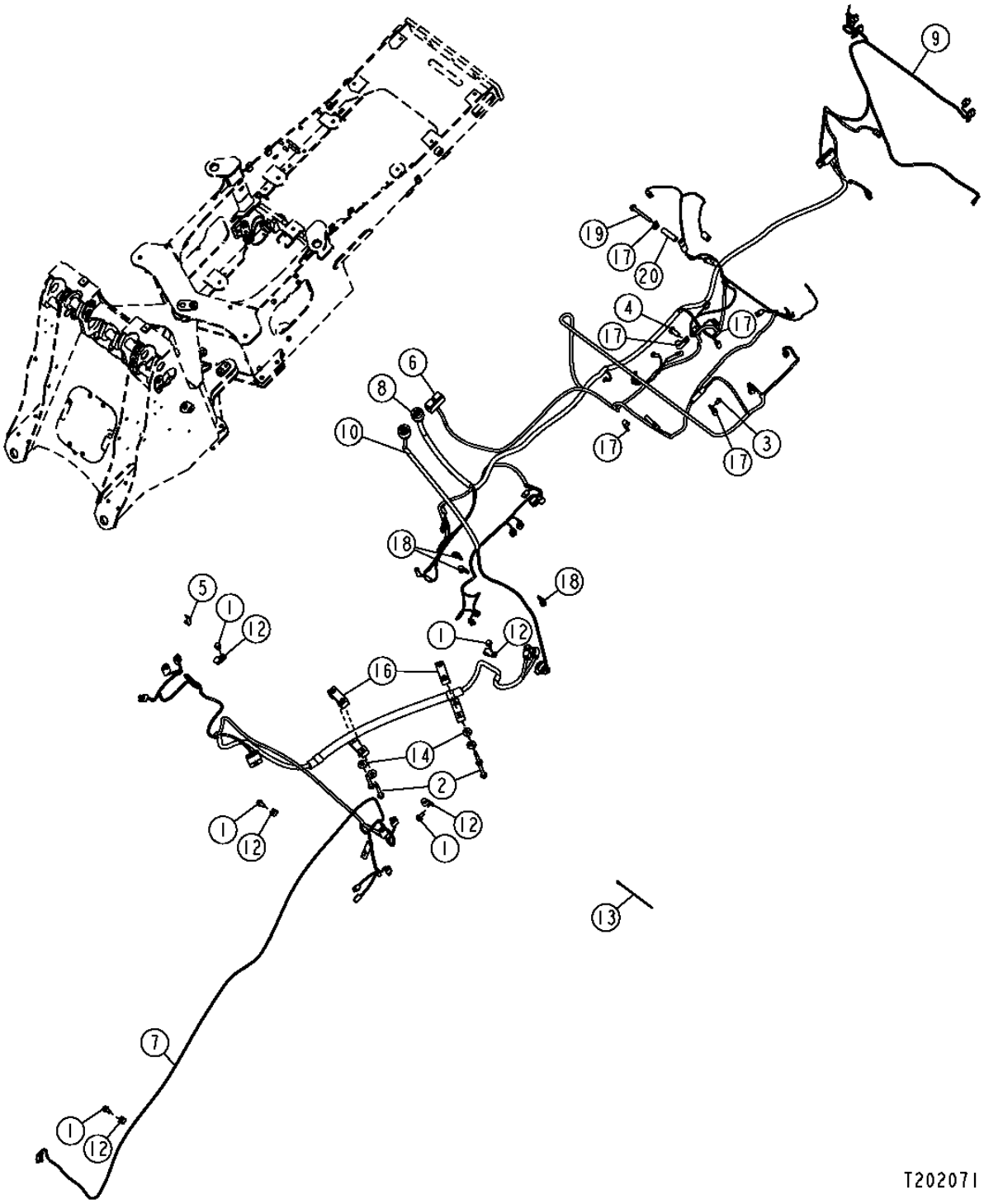

MAIN WIRING HARNESS (FOR USE WITH POWERLLEL™ LINKAGE) (S.N.-604689)
FAISCEAU PRINCIPAL DE FILS (UTILISE AVEC UTILISER AVEC TRINGLERIE POWERLLEL™) (S.N.-604689)
ARNES DE CABLEADO PRINCIPAL (USA CON VARILLAJE POWERLLEL™) (S.N.-604689)

KEY	PART NO.	PART NAME	QTY.	SERIAL NO.	REMARKS
1	19M7784	SCREW	5		M10 X 20
2	19M7810	SCREW	4		M10 X 80
3	19M7865	SCREW	1		M8 X 16
4	19M7877	CAP SCREW	1		M14 X 30
5	AH89557	CLIP	1		
6	AT227137	WIRING HARNESS	1		(ENGINE HARNESS)
7	AT302089	WIRING HARNESS	1	-600916	(LOADER FRAME HARNESS)
	AT318329	WIRING HARNESS	1	600917-	(LOADER FRAME HARNESS)
8	AT227139	WIRING HARNESS	1		(ENGINE FRAME HARNESS)
9	AT322892	WIRING HARNESS	1		(SUB FOR AT228167) (REAR FRAME HARNESS)
10	AT301026	WIRING HARNESS	1		(TRANSMISSION HARNESS)
12	T74416	CLAMP	7		(SUB FOR N191985, THIS APPLICATION)
13	R44302	TIE BAND	26		
14	T29342	WASHER	4		13.487 X 31.750 X 4.572 MM
16	T67995	CLAMP	4		
17	T75197	CLAMP	4		
18	T75276	CLAMP	3		
19	19M7811	SCREW	1		M10 X 90
20	28H3399	SPACER	1		12.522 X 17.145 X 69.850 MM

MAIN WIRING HARNESS (FOR USE WITH POWERLLEL™ LINKAGE) (S.N.604690-)
FAISCEAU PRINCIPAL DE FILS (UTILISE AVEC UTILISER AVEC TRINGLERIE POWERLLEL™) (S.N.604690-)
ARNES DE CABLEADO PRINCIPAL (USA CON VARILLAJE POWERLLEL™) (S.N.604690-)

TX1004810 -UN-

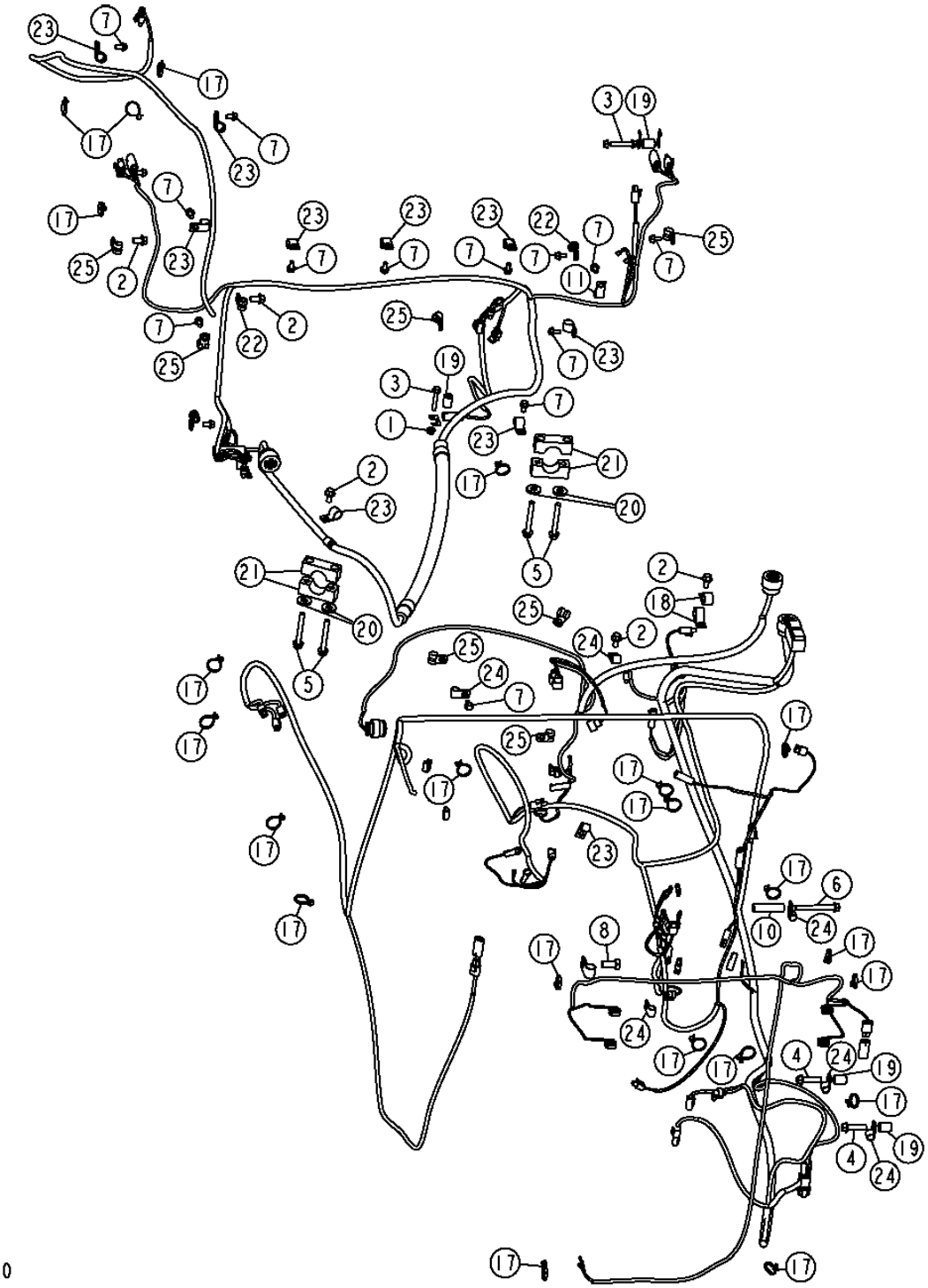

MAIN WIRING HARNESS (FOR USE WITH POWERLLEL™ LINKAGE) (S.N.604690-)
FAISCEAU PRINCIPAL DE FILS (UTILISE AVEC UTILISER AVEC TRINGLERIE POWERLLEL™) (S.N.604690-)
ARNES DE CABLEADO PRINCIPAL (USA CON VARILLAJE POWERLLEL™) (S.N.604690-)

KEY	PART NO.	PART NAME	QTY.	SERIAL NO.	REMARKS
1	14M7298	FLANGE NUT	3		M8
2	19M7784	SCREW	5		M10 X 20
3	19M7800	SCREW	3		M8 X 50
4	19M7805	SCREW	2		M10 X 45
5	19M7810	SCREW	4		M10 X 80
6	19M7811	SCREW	1		M10 X 90
7	19M7865	SCREW	15		M8 X 16
8	19M7877	CAP SCREW	1		M14 X 30
9	19M8039	SCREW	1		M8 X 80
10	28H3399	SPACER	5		
11	AH89557	CLIP	1		
12	AT227139	WIRING HARNESS	1		(ENGINE FRAME HARNESS)
13	AT301026	WIRING HARNESS	1		(TRANSMISSION HARNESS)
14	AT315406	WIRING HARNESS	1		(ENGINE HARNESS)
15	AT318329	WIRING HARNESS	1		(LOADER FRAME HARNESS)
16	AT322892	WIRING HARNESS	1		(REAR FRAME HARNESS)
17	R44302	TIE BAND	29		
18	T102934	CLAMP	2		
19	T147891	BUSHING	5		
20	T29342	WASHER	4		13.487 X 31.750 X 4.572 MM
21	T67995	CLAMP	4		
22	T74412	CLAMP	3		
23	T74416	CLAMP	9		
24	T75197	CLAMP	7		
25	T75276	CLAMP	7		

CAB WIRING HARNESS (S.N. -604689)
FAISCEAU DE CABINE (S.N. -604689)
ARNES DE CABINA (S.N. -604689)

TX1007143 -UN-14JUN06

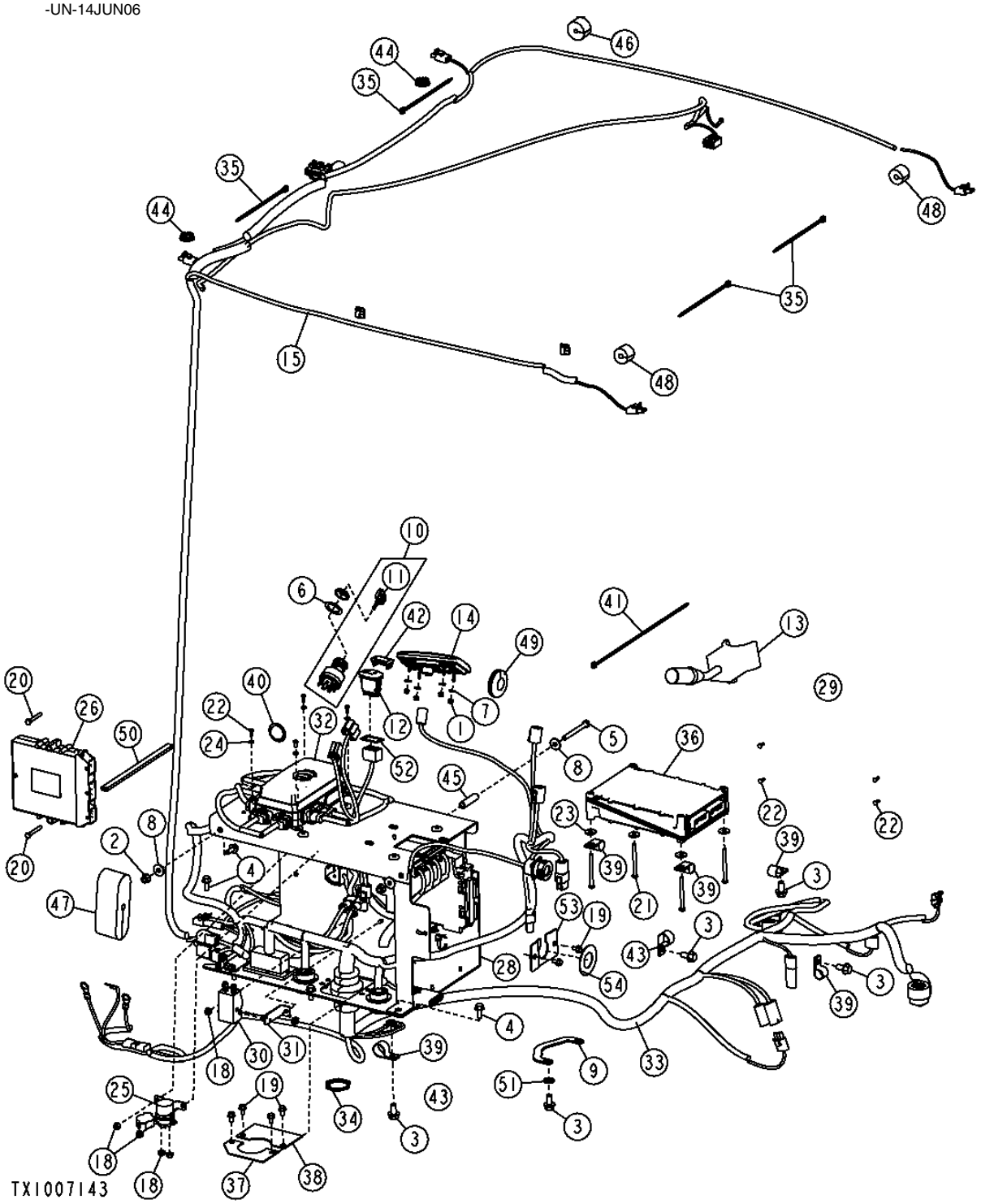

CAB WIRING HARNESS (S.N. -604689)
FAISCEAU DE CABINE (S.N. -604689)
ARNES DE CABINA (S.N. -604689)

KEY	PART NO.	PART NAME	QTY.	SERIAL NO.	REMARKS
1	14M7360	LOCK NUT	4		M5
2	14M7396	LOCK NUT	2		M8
3	19M7784	SCREW	5		M10 X 20
4	19M7866	SCREW	6		M8 X 20
5	19M8504	CAP SCREW	1		M8 X 80
6	24H1441	WASHER	1		1-1/64" X 1-1/2" X 0.048"
7	24M7054	WASHER	4		6.400 X 12 X 1.600 MM
8	24M7298	WASHER	3		8.400 X 25 X 2 MM
9	AP22660	GROUND CABLE	1		215.900 MM
10	AT195301	SWITCH	1		
11	AT195302	KEY	1		
12	AT202786	SWITCH	1	-593630	(FOUR WAY FLASHER SWITCH (ROCKER))
	AT304026	SWITCH	1	593631-	(FOUR WAY FLASHER SWITCH (ROCKER))
13	AT210334	SWITCH	1		
14	AT312110	PUSH SWITCH	1		(SUB FOR AT310056)
15	AT300676	WIRING HARNESS	1		(CAB ROOF)
	AT308673	WIRING HARNESS	1		(CAB ROOF) (HARSH ENVIRONMENT)
18	14M7303	FLANGE NUT	4		M6
19	19M7774	SCREW	4		M6 X 12
20	19M8538	CAP SCREW	2		M6 X 45
21	21M7250	SCREW	4		M4 X 12
22	21M7250	SCREW	6		M4 X 12
23	24M7100	WASHER	4		6.600 X 22 X 2 MM
25	AT145341	RELAY	1		
26	AT314374	VEHICLE CONTROLLER	1		(FLC CONTROLLER) (SUB FOR AT311902, AT226495)
27	R44342	NUT	1		
28	T196129	BRACKET	1		
	T207717	BRACKET	1		(HARSH ENVIRONMENT)
29	AT336601	TRANSMISSION CONTROLLER	1		(SUB FOR AT311905, AT300098 AND AT316303)
30	AT300537	RELAY	1		
31	T200363	ANGLE	2		
33	AT302954	WIRING HARNESS	1	-593630	(LOAD CENTER)
	AT314322	WIRING HARNESS	1	593631-597641	(LOAD CENTER)
	AT314322	WIRING HARNESS	1	597642-	(ALSO ORDER AT301498 AND 24H1500) (LOAD CENTER)
	AT310020	WIRING HARNESS	1		(HARSH ENVIRONMENT)
34	57M8035	NUT	2		
35	R44302	TIE BAND	5		
36	RE532629	ENGINE CONTROLLER	1		(SUB FOR RE519775 AND RE522529)
37	T181604	PLATE	1		
38	T181605	PLATE	1		
39	T74416	CLAMP	3		
40	T206624	PLUG	2		(SUB FOR GX20510, THIS APPLICATION)
41	H77698	TIE BAND	3		
42	M115279	PLUG	1		
43	T102934	CLAMP	2		
44	T152230	PLUG	2		
45	T167775	BUSHING	1		
46	T182861	ISOLATOR	1		
47	T182862	PLUG	1		
48	T182871	ISOLATOR	2		
49	T46876	GROMMET	1		
50	.....	SEALING TRIM	1		(MAKE FROM T180533) (CUT TO 9.76 INCH)
51	24M7239	WASHER	1		
52	T211678	SEAL	1	593631-	
53	AT301498	PLATE	1		
54	24H1500	WASHER	1		

CAB WIRING HARNESS (S.N. 604690-)
FAISCEAU DE CABINE (S.N. 604690-)
ARNES DE CABINA (S.N. 604690-)

TX1004897 -UN-24MAR06

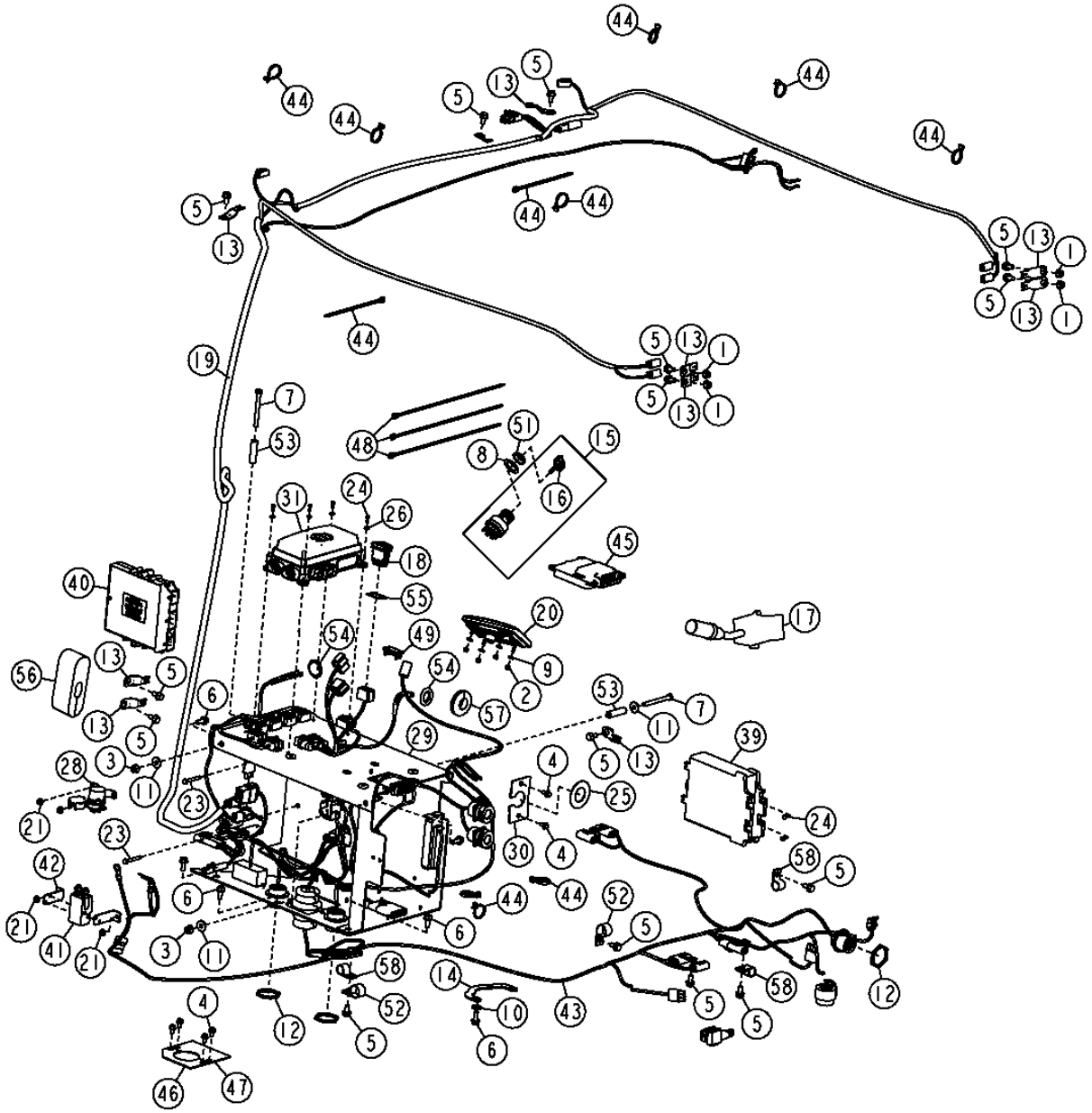

TX1004897

CAB WIRING HARNESS (S.N. 604690-)
FAISCEAU DE CABINE (S.N. 604690-)
ARNES DE CABINA (S.N. 604690-)

KEY	PART NO.	PART NAME	QTY.	SERIAL NO.	REMARKS
1	14M7298	FLANGE NUT	4		M8
2	14M7360	LOCK NUT	4		M5
3	14M7396	LOCK NUT	2		M8
4	19M7774	SCREW	6		M6 X 12
5	19M7865	SCREW	15		M8 X 16
6	19M7866	SCREW	7		M8 X 20
7	19M8504	CAP SCREW	2		M8 X 80
8	24H1441	WASHER	1		25.806 X 38.100 X 1.219 MM
9	24M7054	WASHER	4		6.400 X 12 X 1.600 MM
10	24M7239	WASHER	1		10.700 X 21 X 2.500 MM
11	24M7298	WASHER	1		8.400 X 25 X 2 MM
12	57M8035	NUT	3		
13	57M8736	ELEC. CONNECTOR ACCESSORY	1		
14	AP22660	GROUND CABLE	1		215.900 MM
15	AT195301	SWITCH	1		
16	AT195302	KEY	1		
17	AT210334	SWITCH	1		
18	AT304026	SWITCH	1		
19	AT311938	WIRING HARNESS	1		
20	AT320724	PUSH SWITCH	1		
21	14M7303	FLANGE NUT	6		M6
23	19M8538	CAP SCREW	2		M6 X 45
24	21M7250	SCREW	1		M4 X 12
25	24H1500	WASHER	1		32.537 X 63.500 X 1.524 MM
26	24M7027	WASHER	4		5.300 X 10 X 1 MM
28	AT145341	RELAY	1		
29	AT227263	HOUSING	1		
30	AT301498	PLATE	1		
31	AT311903	VEHICLE CONTROLLER	1		
39	AT336601	TRANSMISSION CONTROLLER	1		(SUB FOR AT311905)
40	AT314374	VEHICLE CONTROLLER	1		
41	AT317063	RELAY	1		
42	T200363	ANGLE	2		
43	AT329973	WIRING HARNESS	1		
44	R44302	TIE BAND	10		
45	RE532629	ENGINE CONTROLLER	1		(SUB FOR RE522529)
46	T181604	PLATE	1		
47	T181605	PLATE	1		
48	H77698	TIE BAND	3		
49	M115279	PLUG	1		
51	R44342	NUT	1		25.400 MM
52	T102934	CLAMP	2		
53	T167775	BUSHING	2		9.220 X 13.700 X 50.500 MM
54	T206624	PLUG	2		
55	T211678	SEAL	1		
56	T224069	PLUG	1		
57	T46876	GROMMET	1		
58	T74416	CLAMP	3		

FRONT DASH MODULE WIRING AND SHIFTER ASSEMBLY
CABLAGE MODULE TABLEAU BORD AVANT ET LEVIER VITESSES
CONJUNTO DE ALAMBRADO DEL MODULO DEL TABLERO DELANTERO Y CONJUNTO DE CAMBIOS

TX1006288 -UN-27APR06

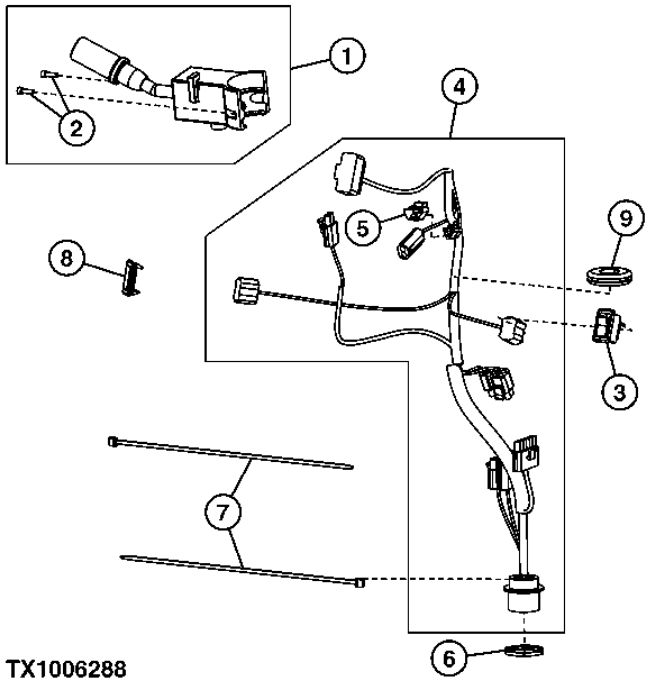

TX1006288

KEY	PART NO.	PART NAME	QTY.	SERIAL NO.	REMARKS
1	AT176801	SWITCH	1		(ALSO ORDER (2) 19M8581)
2	19M8581	SCREW	2		M5 X 20, (SUB FOR 19M8146)
3	AT208630	SWITCH	1		
4	AT227134	WIRING HARNESS	1		
5	57M8131	ELEC. CONNECTOR TERMINAL	1		
6	57M8035	NUT	1		(SUB FOR E73240)
7	H77698	TIE BAND	2		
8	M115279	PLUG	1		
9	T46876	GROMMET	1		

DASH MODULE WIRING WITH JOYSTICK GEAR SELECTION
CABLAGE MODULE TABLEAU BORD AVEC SELECTION VITESSE MANCHE A BALAI
ALAMBRADO DEL MODULO DE TABLERO CON SELECCION DE ENGRANAJES DE LA PALANCA DE CONTROL

T212821 -UN-15AUG05

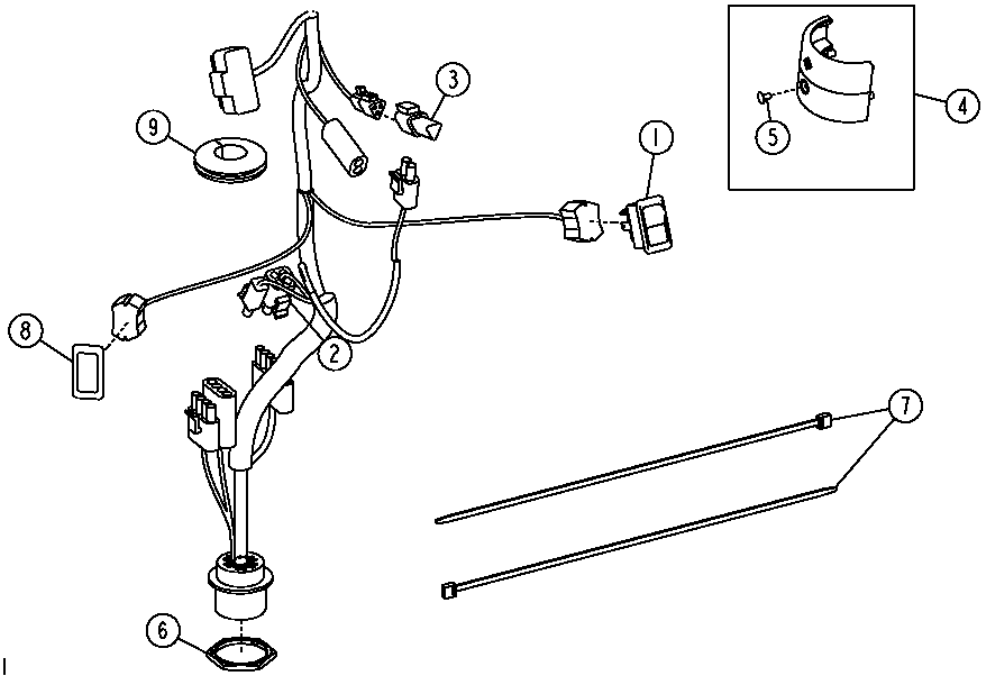

KEY	PART NO.	PART NAME	QTY.	SERIAL NO.	REMARKS
1	AT208630	SWITCH	1		(PARK BRAKE)
2	AT227134	WIRING HARNESS	1		(FRONT CONSOLE)
3	57M8131	ELEC. CONNECTOR TERMINAL	1		
4	AT300921	KIT	1		(STEERING COLUMN CLAMP & COVER)
5	21M7258	SCREW	1		M4 X 8
6	57M8035	NUT	1		(SUB FOR E73240)
7	H77698	TIE BAND	2		
8	M115279	PLUG	1		
9	T46876	GROMMET	1		

CAB MONITOR AND ALARM
MONINTEUR ET ALARME CABINE
MONITOR Y ALARMA DE LA CABINA

T193991 -UN-21AUG03

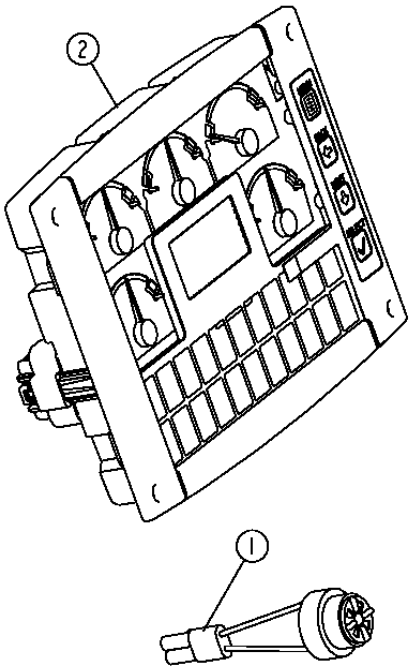

KEY	*PART NO.*	*PART NAME*	*QTY.*	*SERIAL NO.*	*REMARKS*
1	AT160480	ALARM SYSTEM	1		
2	AT312178	MONITOR	1		(SUB FOR AT313501, AT226944)

HVAC WIRING
CABLAGE CHAUFFAGE, VENTILATION ET CLIMATISATION
ALAMBRADO DE CLIMATIZACION

T193988 -UN-18AUG03

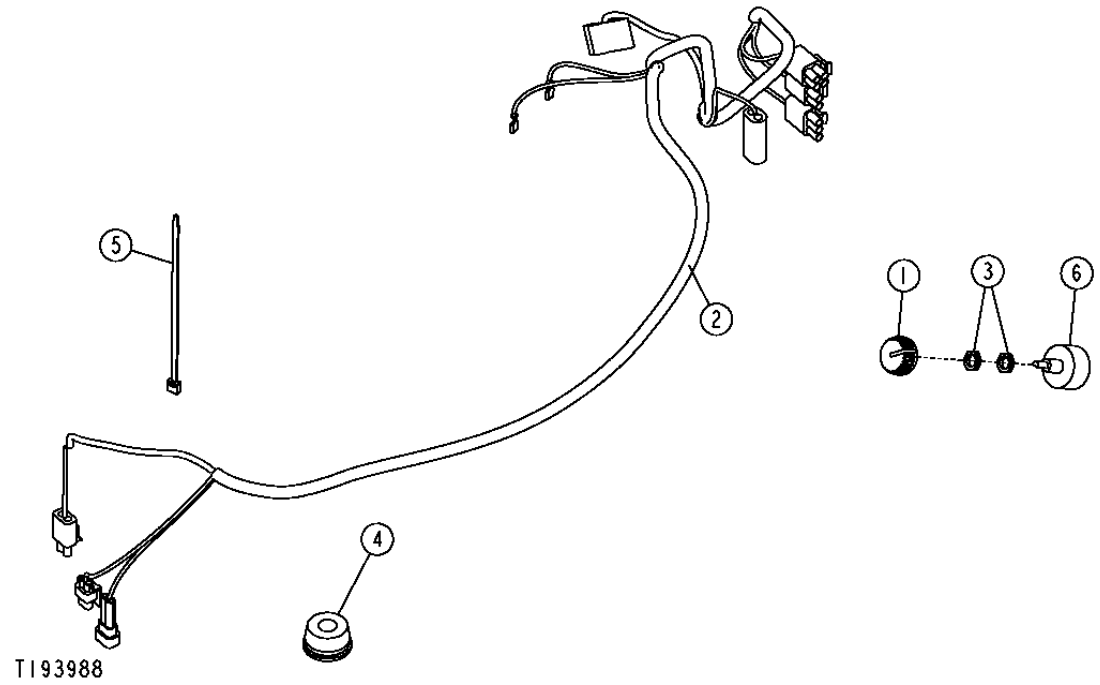

KEY	PART NO.	PART NAME	QTY.	SERIAL NO.	REMARKS
1	AL76568	KNOB	1		
2	AT202934	WIRING HARNESS	1		
3	R44165	LOCK NUT	2		
4	T182870	ISOLATOR	1		(SUB FOR N119177)
5	R44302	TIE BAND	1		
6	RE43497	SWITCH	1		

CONVERTER (5 AMP) (24 VOLT TO 12 VOLT)
CONVERTISSEUR (5 AMP) (24 VOLT A 12 VOLTS)
CONVERTIDOR (5 AMP) (24 V A 12 V)

T193986 -UN-22AUG03

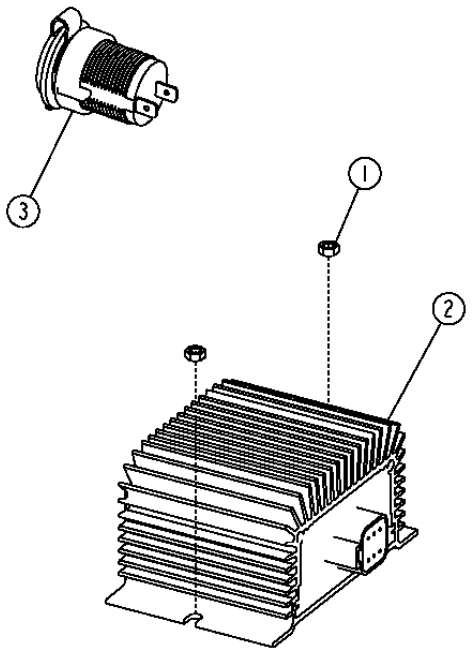

KEY	PART NO.	PART NAME	QTY.	SERIAL NO.	REMARKS
1	14M7100	NUT	2		M4
2	AT224893	CONVERTER	1		
3	GY20126	SOCKET OUTLET	1		

CONVERTER (10 AMP) (24 VOLT TO 12 VOLT)
CONVERTISSEUR (10 AMP) (24 VOLT A 12 VOLTS)
CONVERTIDOR (10 AMP) (24 V A 12 V)

T193985 -UN-22AUG03

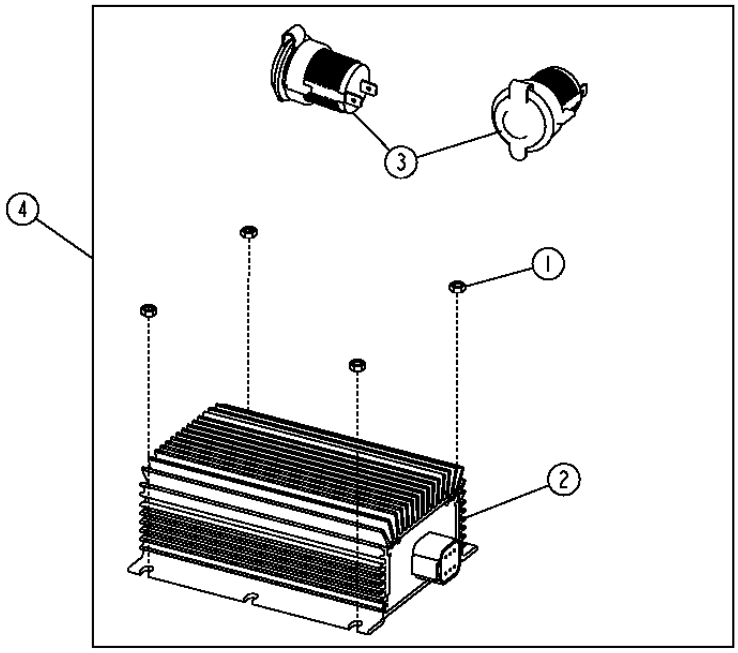

T193985

KEY	*PART NO.*	*PART NAME*	*QTY.*	*SERIAL NO.*	*REMARKS*
1	14M7100	NUT	4		M4
2	AT224894	CONVERTER	1		
3	GY20126	SOCKET OUTLET	2		POWER PLUG
4	**AT306828**	**KIT**	**1**		**(WHOLEGOODS)**

ENGINE COOLANT TEMPERATURE AND OIL PRESSURE SENSORS
CAPTEURS TEMPERATURE LIQUIDE REFROIDISSEMENT ET PRESSION HUILE MOTEUR
SENSORES DE PRESION DE ACEITE Y TEMPERATURA DEL REFRIGERANTE DEL MOTOR

T194523 -UN-04SEP03

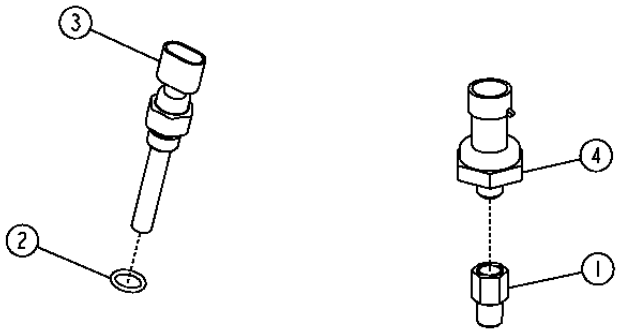

T194523

KEY	*PART NO.*	*PART NAME*	*QTY.*	*SERIAL NO.*	*REMARKS*
1	P40098	ADAPTER FITTING	1		
2	R26286	O-RING	1		
3	RE151433	COOLANT TEMPERATURE SENSOR	1		
4	RE167207	PRESSURE SENSOR	1		(OIL PRESSURE SENSOR)

RETURN TO DIG HARNESS
FAISCEAU DE RETOUR EN POSITION DE CREUSEMENT
ARNES DE RETORNO PARA EXCAVAR

T200874 -UN-10JUN04

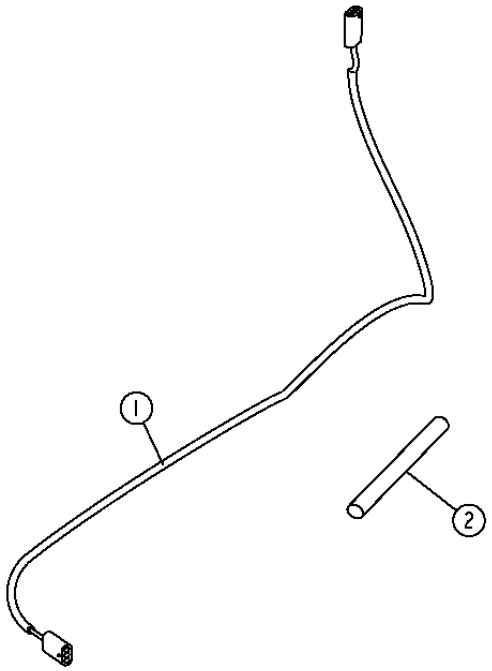

T200874

KEY	PART NO.	PART NAME	QTY.	SERIAL NO.	REMARKS
1	AT202827	WIRING HARNESS	1		
	AT221628	WIRING HARNESS	1		(HARSH ENVIRONMENT)
	AT208024	STAND-OFF	1		(USE WITH TOOL CARRIER)
	AT303807	WIRING HARNESS	1		(USE WITH TOOL CARRIER)
2	.....	BULK HOSE	1		(CUT TO LENGTH) (MAKE FROM T148181)

VEHICLE ELECTRICAL CENTER (VEC)
CENTRE ELECTRIQUE DU VEHICULE (VEC)
CENTRO ELECTRICO DEL VEHICULO (VEC)

T209740 -UN-01APR05

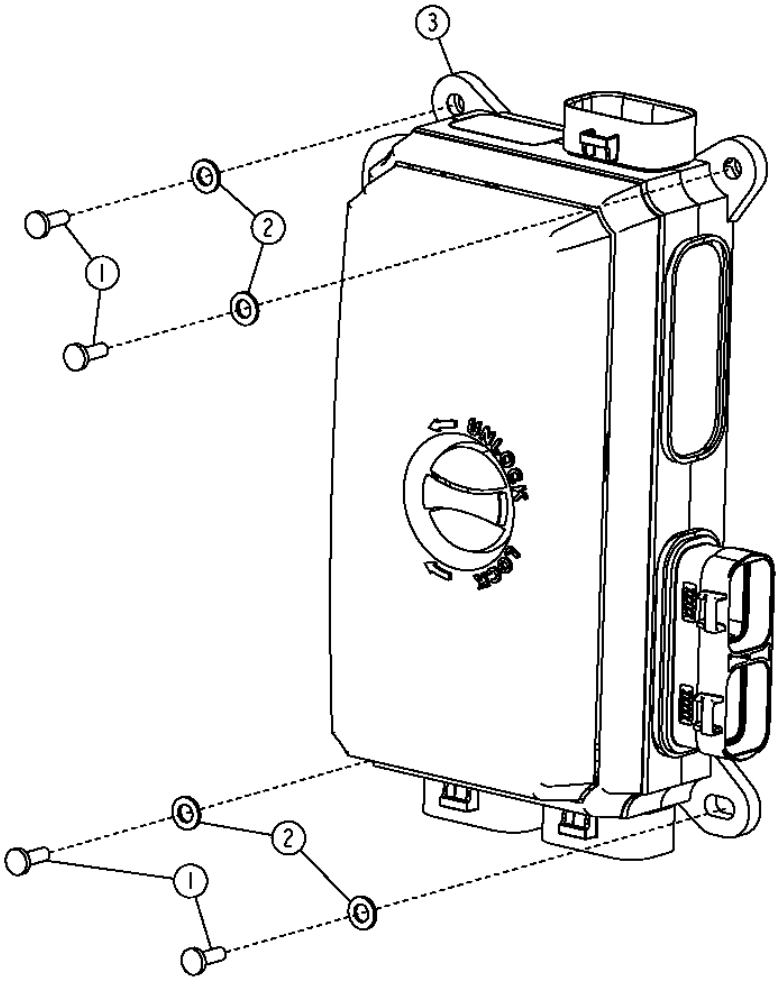

T209740

VEHICLE ELECTRICAL CENTER (VEC)
CENTRE ELECTRIQUE DU VEHICULE (VEC)
CENTRO ELECTRICO DEL VEHICULO (VEC)

KEY	*PART NO.*	*PART NAME*	*QTY.*	*SERIAL NO.*	*REMARKS*
1	21M7250	SCREW	4		M4 X 12
2	24M7087	WASHER	4		5.500 X 10 X 1 MM
3	.....	VEHICLE CONTROLLER	1	-600914	(AT301777 NLA) (INCLUDES ALL FUSES, DIODES, AND RELAYS)
	AT311903	VEHICLE CONTROLLER	1	600915-	(INCLUDES ALL FUSES, DIODES, AND RELAYS)
4	57M7688	FUSE	18		(NOT ILLUSTRATED) (5 AMP)
5	57M7689	FUSE	10		(NOT ILLUSTRATED) (10AMP)
6	57M7690	FUSE	3		(NOT ILLUSTRATED) (15AMP)
7	57M8623	FUSE	1		(NOT ILLUSTRATED) (25AMP)
8	57M8640	DIODE	5		(NOT ILLUSTRATED)
9	AT305389	RELAY	1		(NOT ILLUSTRATED) (24 VOLT)

ENGINE FRAME (S.N. -604689)
CHASSIS DE MOTEUR (S.N. -604689)
BASTIDOR DEL MOTOR (S.N. -604689)

T212660 -UN-15AUG05

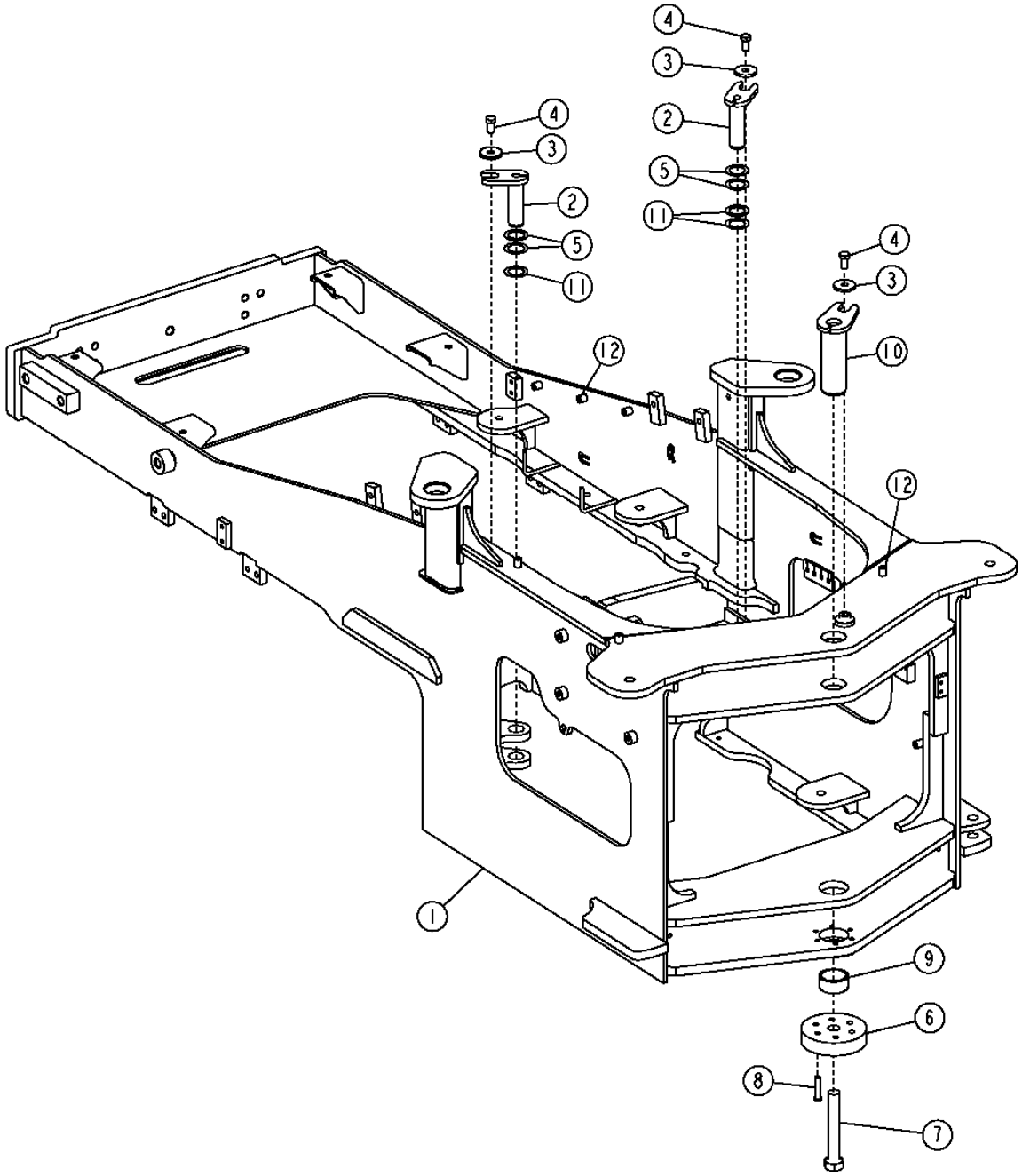

T212660

ENGINE FRAME (S.N. -604689)
CHASSIS DE MOTEUR (S.N. -604689)
BASTIDOR DEL MOTOR (S.N. -604689)

KEY	PART NO.	PART NAME	QTY.	SERIAL NO.	REMARKS
1	AT226406	FRAME	1		(CONVENIENCE ASSY)
2	AT133204	PIN FASTENER	2		
3	T176064	BUSHING	3		(SUB FOR T146246)
4	19M7488	CAP SCREW	3		M16 X 40, (SUB FOR 19M8029)
5	24H1556	WASHER	4		1-41/64" X 2-3/8" X 0.048"
6	T182446	COVER	1		
7	19M9190	CAP SCREW	1		M30 X 200
8	19M7363	CAP SCREW	6		M12 X 60
9	T182265	BUSHING	1		
10	AT206751	PIN	1		
11	24H1558	WASHER	3		1-41/64" X 2-3/8" X 0.075"
12	T72414	BUSHING	13		

ENGINE FRAME (S.N. 604690-)
CHASSIS DE MOTEUR (S.N. 604690-)
BASTIDOR DEL MOTOR (S.N. 604690-)

TX1013514 -UN-25OCT06

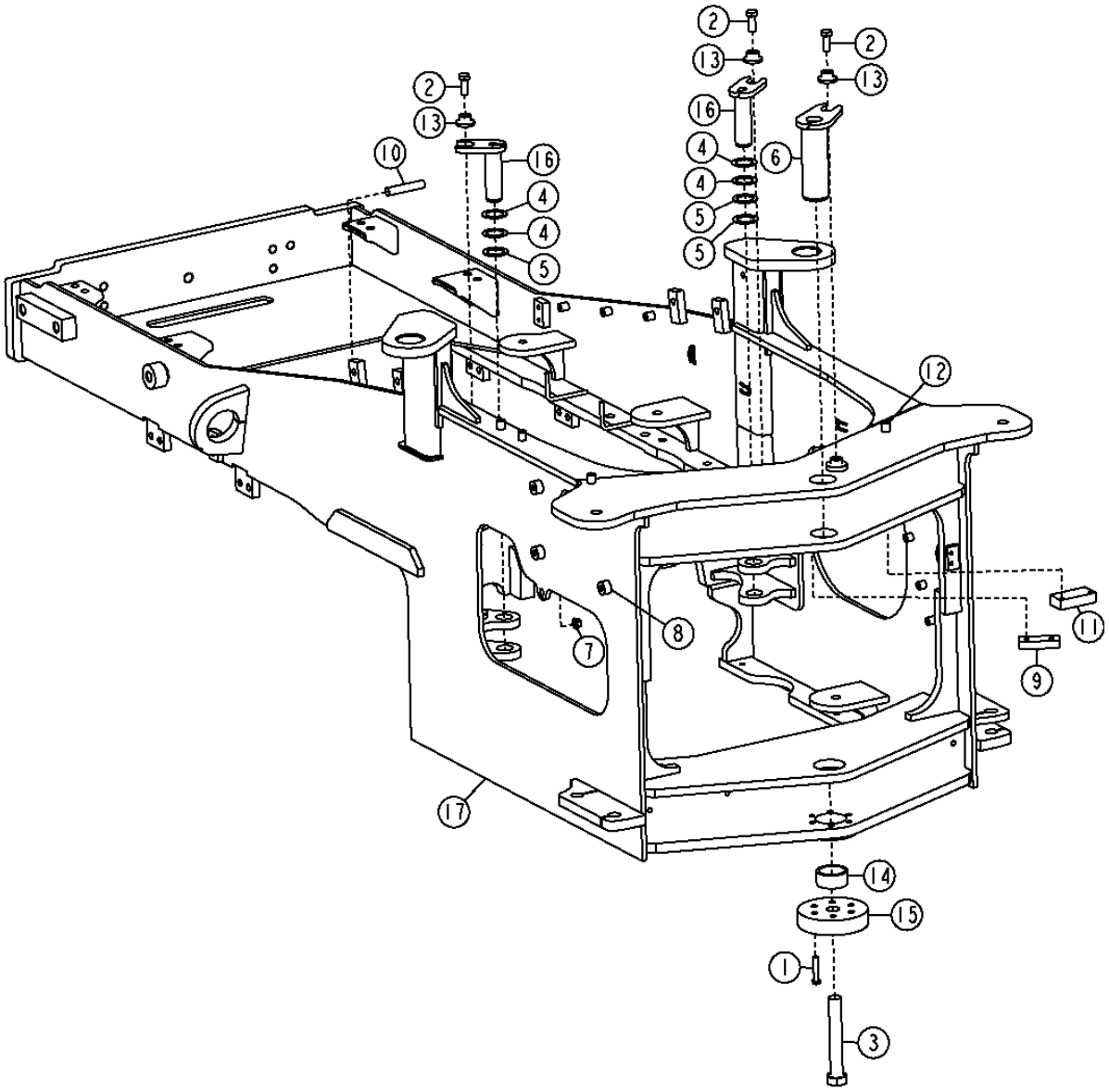

TX1013514

ENGINE FRAME (S.N. 604690-)
CHASSIS DE MOTEUR (S.N. 604690-)
BASTIDOR DEL MOTOR (S.N. 604690-)

KEY	PART NO.	PART NAME	QTY.	SERIAL NO.	REMARKS
1	19M7363	CAP SCREW	6		M12 X 60
2	19M7488	CAP SCREW	3		M16 X 40
3	19M9190	CAP SCREW	1		M30 X 200
4	24H1556	WASHER	4		41.681 X 60.325 X 1.219 MM
5	24H1558	WASHER	3		41.681 X 60.325 X 1.905 MM
6	AT206751	PIN	1		
7	14M7443	FLANGE NUT	2		M12
8	T125546	BUSHING	11		
9	T133290	STRAP	1		
10	T195605	BOSS	2		
11	T203047	STRAP	2		
12	T72414	BUSHING	14		
13	T176064	BUSHING	3		16.300 X 28.600 X 21.900 MM
14	T182265	BUSHING	1		63.623 X 74.160 X 34.500 MM
15	T182446	COVER	1		
16	AT203570	PIN	2		
17	**AT315414**	**FRAME**	**1**		**(CONVENIENCE ASSY)**

ENGINE FRAME STEERING CUSHIONS
COUSSINS DIRECTION BATI MOTEUR
AMORTIGUADORES DE LA DIRECCION DEL BASTIDOR DEL MOTOR

TX1006290 -UN-24APR06

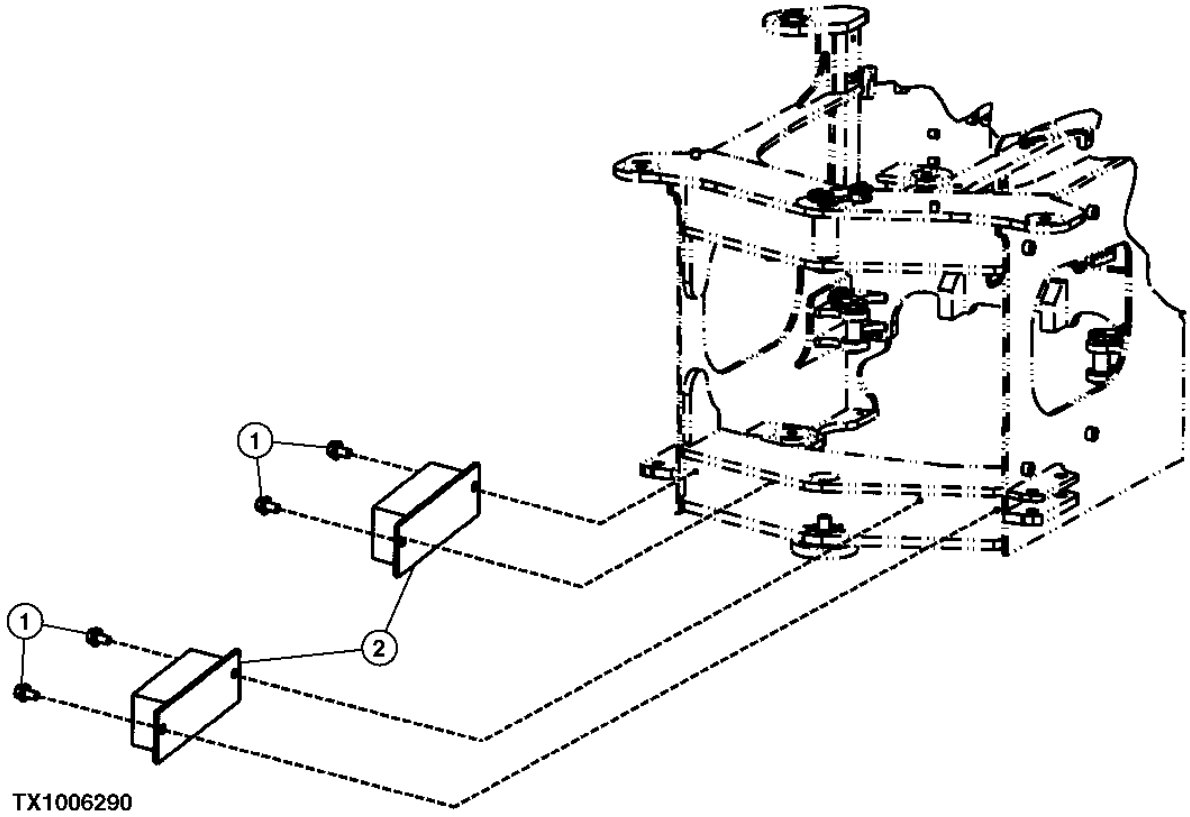

ENGINE FRAME STEERING CUSHIONS
COUSSINS DIRECTION BATI MOTEUR
AMORTIGUADORES DE LA DIRECCION DEL BASTIDOR DEL MOTOR

KEY	*PART NO.*	*PART NAME*	*QTY.*	*SERIAL NO.*	*REMARKS*
1	19M7788	SCREW	4		M12 X 25
2	AT143577	BUMPER	2		

FUEL TANK BOTTOM GUARD
PROTECTION INFERIEURE RESERVOIR CARBURANT
PROTECTUER DEL TANQUE DE COMBUSTIBLE INFERIOR

T193526 -UN-27AUG03

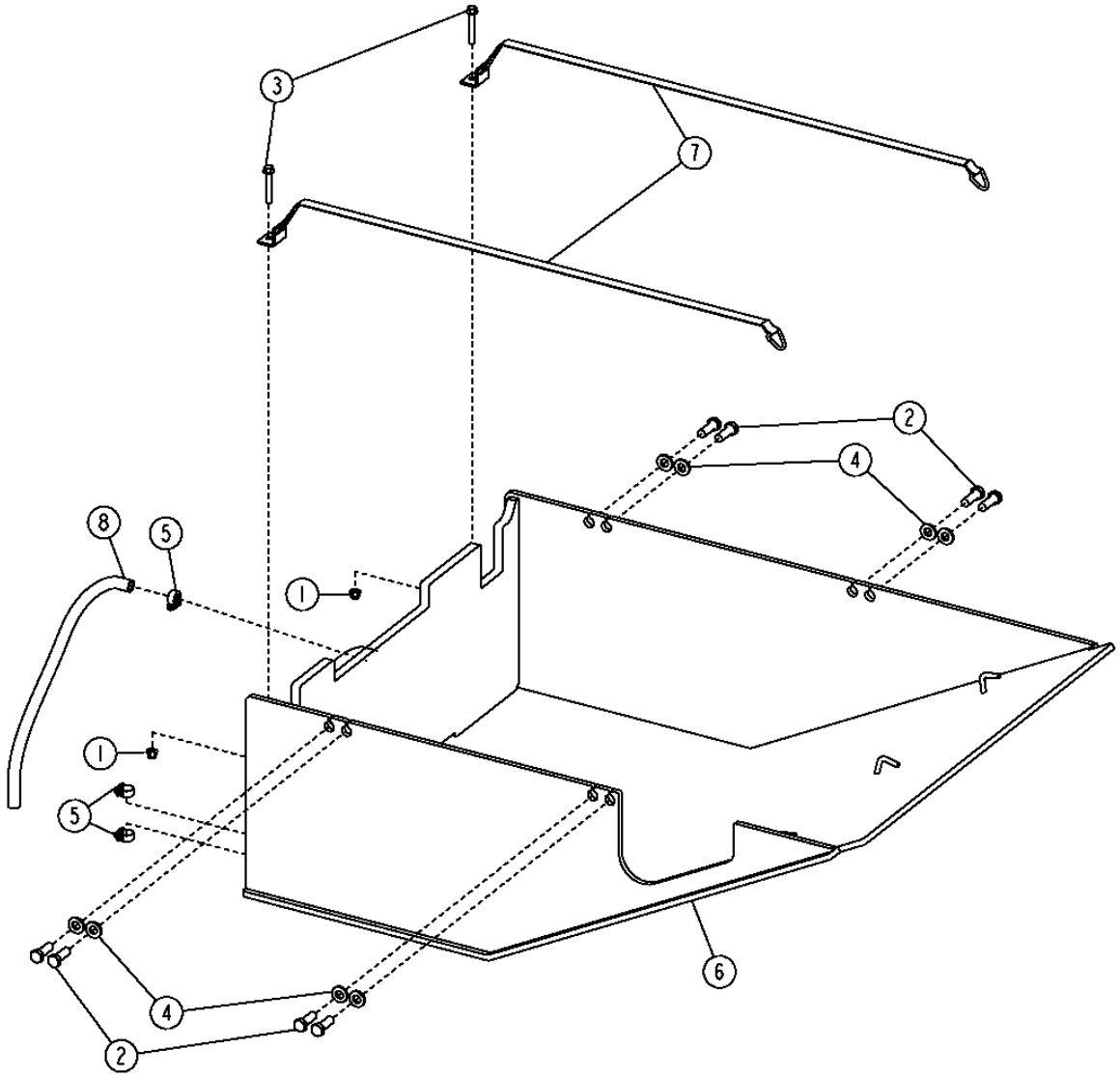

T193526

FUEL TANK BOTTOM GUARD
PROTECTION INFERIEURE RESERVOIR CARBURANT
PROTECTOR DEL TANQUE DE COMBUSTIBLE INFERIOR

KEY	PART NO.	PART NAME	QTY.	SERIAL NO.	REMARKS
1	14M7400	LOCK NUT	2		M10
2	19M7489	CAP SCREW	8		M16 X 45
3	19M8114	SCREW	2		M10 X 70
4	24M7241	WASHER	8		17 X 34 X 4 MM
5	AR21837	CLAMP	3		
6	.....	GUARD	1	-596681	(SUB AT318373 AND AT318494) (AT226894 NLA)
	AT318494	GUARD	1	596682-	
7	.....	STRAP	2	-596681	(SUB AT318373 AND AT318494) (AT226895 NLA)
	AT318373	STRAP	2	596682-	
8	.....	BULK HOSE	1		(MAKE FROM T60811) (CUT TO LENGTH, 3.5 FT)

TRANSMISSION BOTTOM GUARD AND FRONT BOTTOM GUARD (S.N. -604689)
PROTECTION INFERIEURE DE TRANSMISSION ET PROTECTION INFERIEURE AVANT (S.N. -604689)
PROTECTOR INFERIOR DE LA TRANSMISION Y PROTECTOR INFERIOR DELANTERO (S.N. -604689)

T196906 -UN-18DEC03

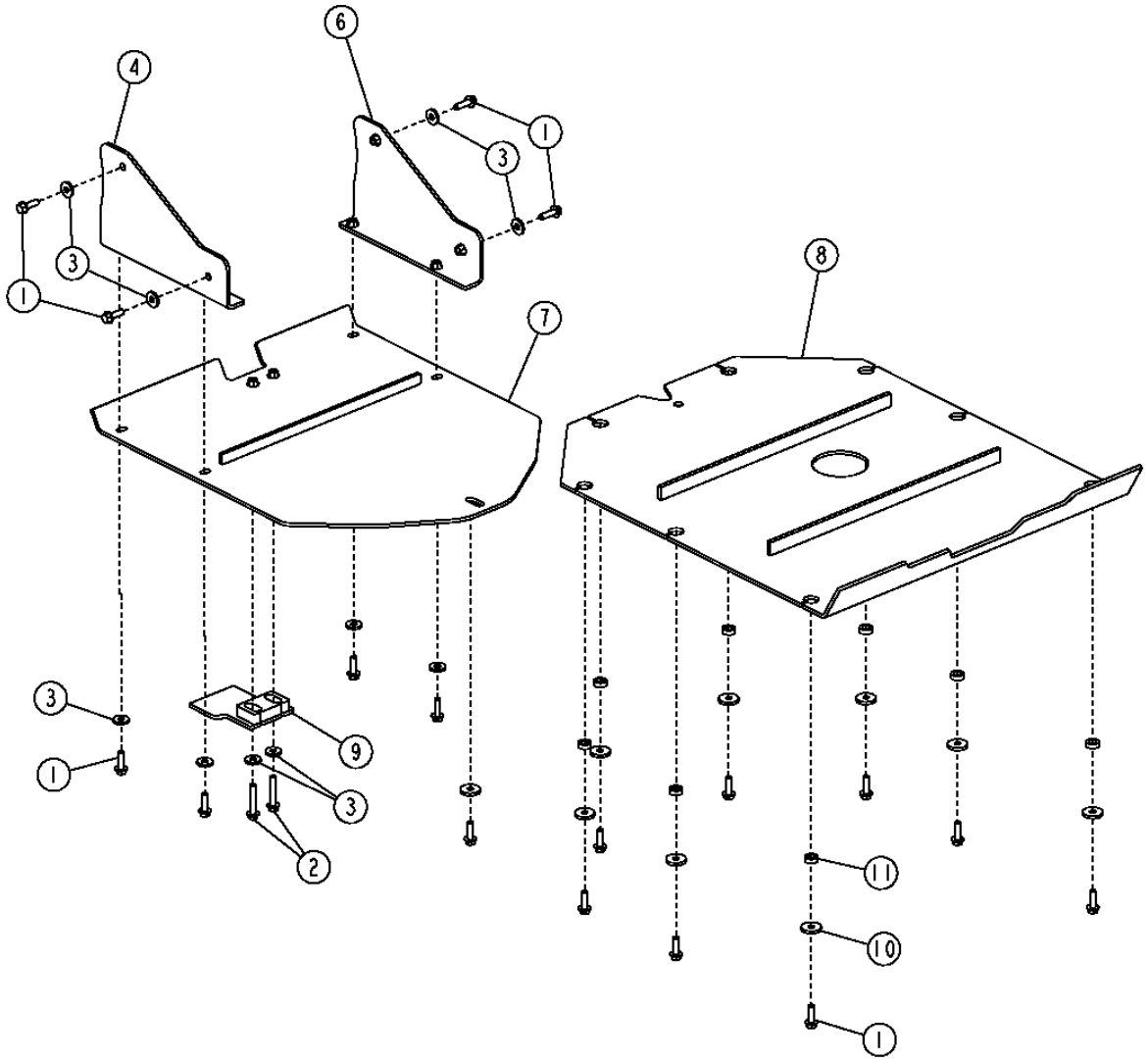

T196906

TRANSMISSION BOTTOM GUARD AND FRONT BOTTOM GUARD (S.N. -604689)
PROTECTION INFERIEURE DE TRANSMISSION ET PROTECTION INFERIEURE AVANT (S.N. -604689)
PROTECTOR INFERIOR DE LA TRANSMISION Y PROTECTOR INFERIOR DELANTERO (S.N. -604689)

KEY	PART NO.	PART NAME	QTY.	SERIAL NO.	REMARKS
1	19M7791	BOLT	17		M12 X 40
2	19M7791	BOLT	2		M12 X 40
3	24M7226	WASHER	10		13 X 35 X 5 MM
4	AT207432	SUPPORT	1		(LH)
5	14M7443	FLANGE NUT	10		M12
6	AT207433	SUPPORT	1		(RH)
7	AT206895	GUARD	1		(FRONT)
8	AT206894	GUARD	1		(TRANSMISSION)
9	T177256	GUARD	1		(EXTENSION)
10	T20217	WASHER	9		12.954 X 43.942 X 6.350 MM
11	T197569	BUSHING	8		

TRANSMISSION BOTTOM GUARD AND FRONT BOTTOM GUARD (S.N. 604690-)
PROTECTION INFERIEURE DE TRANSMISSION ET PROTECTION INFERIEURE AVANT (S.N. 604690-)
PROTECTOR INFERIOR DE LA TRANSMISION Y PROTECTOR INFERIOR DELANTERO (S.N. 604690-)

TX1003807 -UN-21FEB06

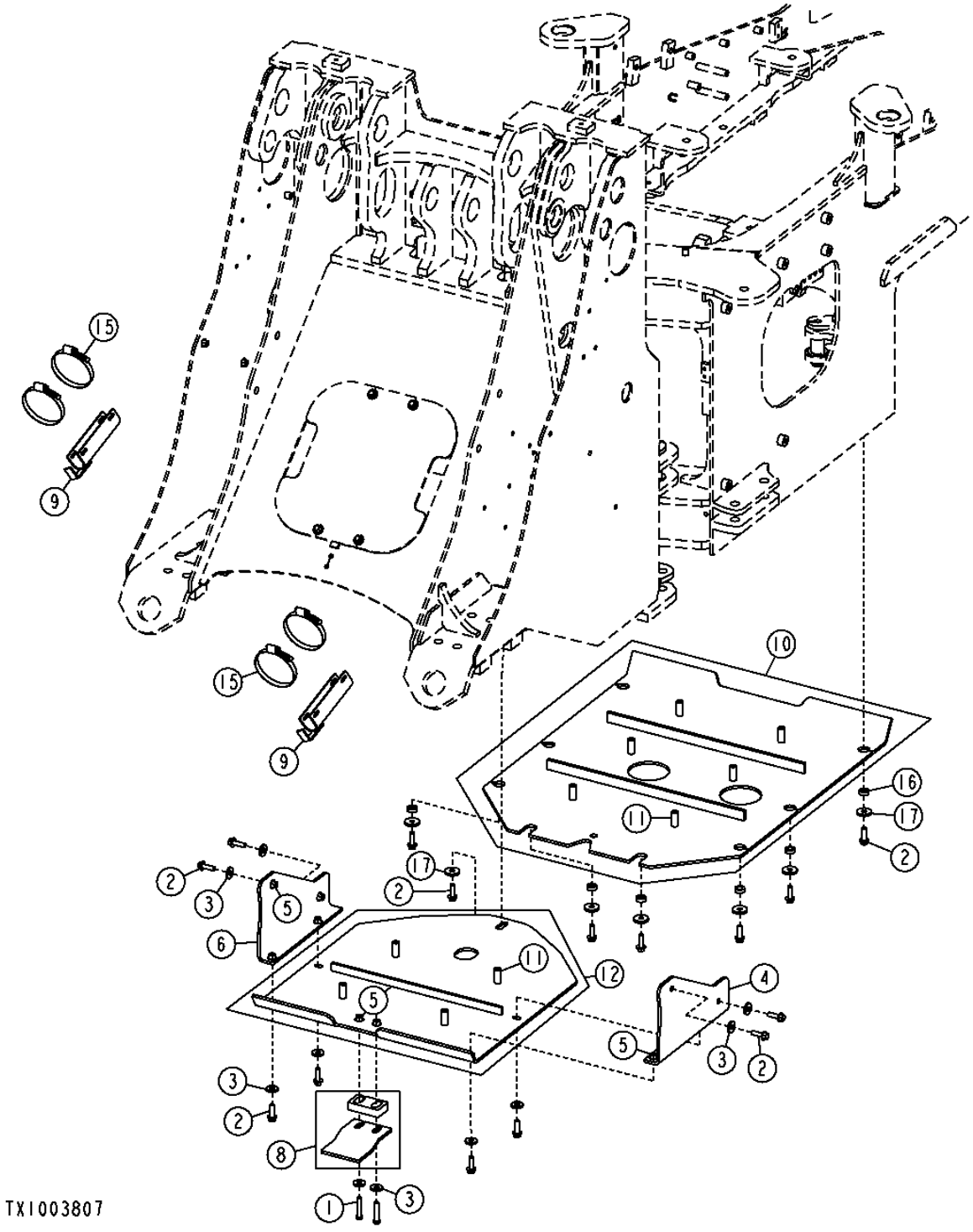

THIS PARTS LISTING IS CONTINUED

TRANSMISSION BOTTOM GUARD AND FRONT BOTTOM GUARD (S.N. 604690-)
PROTECTION INFERIEURE DE TRANSMISSION ET PROTECTION INFERIEURE AVANT (S.N. 604690-)
PROTECTOR INFERIOR DE LA TRANSMISION Y PROTECTOR INFERIOR DELANTERO (S.N. 604690-)

KEY	PART NO.	PART NAME	QTY.	SERIAL NO.	REMARKS
1	19M7817	SCREW	2		M12 X 70, (SUB FOR 19M7363, THIS APPLICATION)
2	19M7791	BOLT	17		M12 X 40
3	24M7180	WASHER	10		13 X 37 X 3 MM, (SUB FOR 24M7226, THIS APPLICATION)
4	AT207432	SUPPORT	1		
5	14M7443	FLANGE NUT	10		M12
6	AT207433	SUPPORT	1		
8	AT221332	GUARD	1		
9	AT222011	COVER	2		(FOR Z-BAR ONLY)
10	AT317099	GUARD	1		
11	.....	BUSHING	10		(SUB FOR T157318)
12	AT317132	GUARD	1		
15	RE40281	CLAMP	4		
16	T197569	BUSHING	8		16.300 X 28.500 X 10.300 MM
17	H140469	LOCK WASHER	9		12.954 X 43.942 X 6.350 MM

CYLINDER-FITTING ROCK GUARDS
PARE-PIERRES RACCORD CYLINDRE
PROTECTORES CONTRA ROCAS ADAPTADOR, CILINDRO

TX1006375 -UN-24APR06

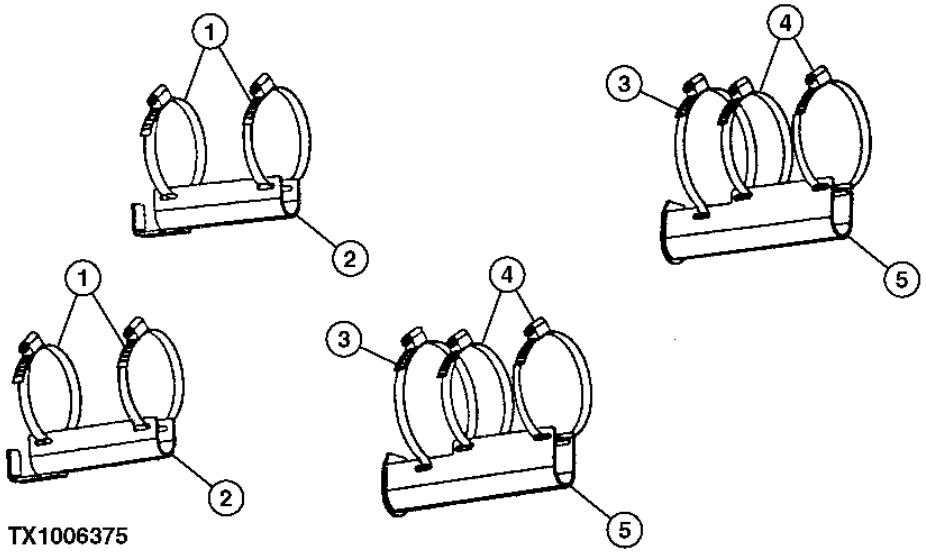

TX1006375

KEY	PART NO.	PART NAME	QTY.	SERIAL NO.	REMARKS
1	RE40281	CLAMP	4		
2	AT222011	COVER	2		(FOR Z-BAR ONLY)
3	TY22494	HOSE CLAMP	2		TOOL CARRIER
4	AR85327	CLAMP	4		TOOL CARRIER
5	AT222012	COVER	2		TOOL CARRIER

MEMORANDA
MEMORANDA
MEMORANDA

MAIN COUNTERWEIGHT
CONTREPOIDS PRINCIPAL
CONTRAPESO PRICIPAL

TX1014643 -UN-

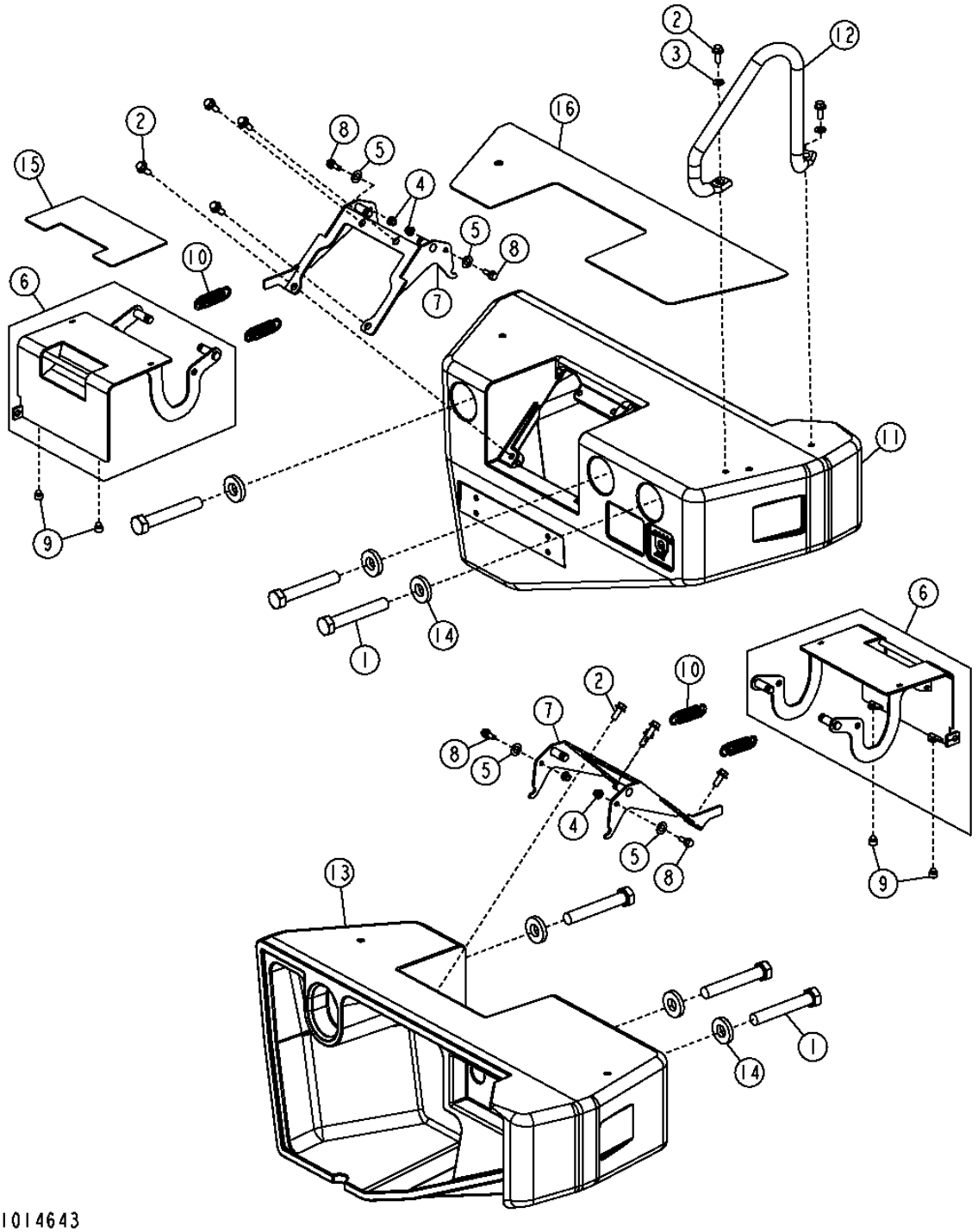

MAIN COUNTERWEIGHT
CONTREPOIDS PRINCIPAL
CONTRAPESO PRINCIPAL

KEY	PART NO.	PART NAME	QTY.	SERIAL NO.	REMARKS
1	19M7781	CAP SCREW	6		M24 X 150
2	19M7785	SCREW	6		M10 X 25
3	24M7239	WASHER	6		10.700 X 21 X 2.500 MM
4	14M7396	LOCK NUT	2		M8
5	24H1849	WASHER	2		17/32" X 1" X 0.036"
6	AT228414	DOOR	1		
7	AT228426	COVER	1		
8	H169568	SCREW	2		
9	T175361	GROMMET	2		
10	T203290	EXTENSION SPRING	2		
11	T195982	COUNTERWEIGHT	1		
12	T197440	HANDLE	1		
13	T204109	COUNTERWEIGHT	1		
14	T152076	WASHER	6		
15	T198179	MAT	1		
16	T198178	MAT	1		

CAB
CABINE
CABINA

T193727 -UN-16OCT03

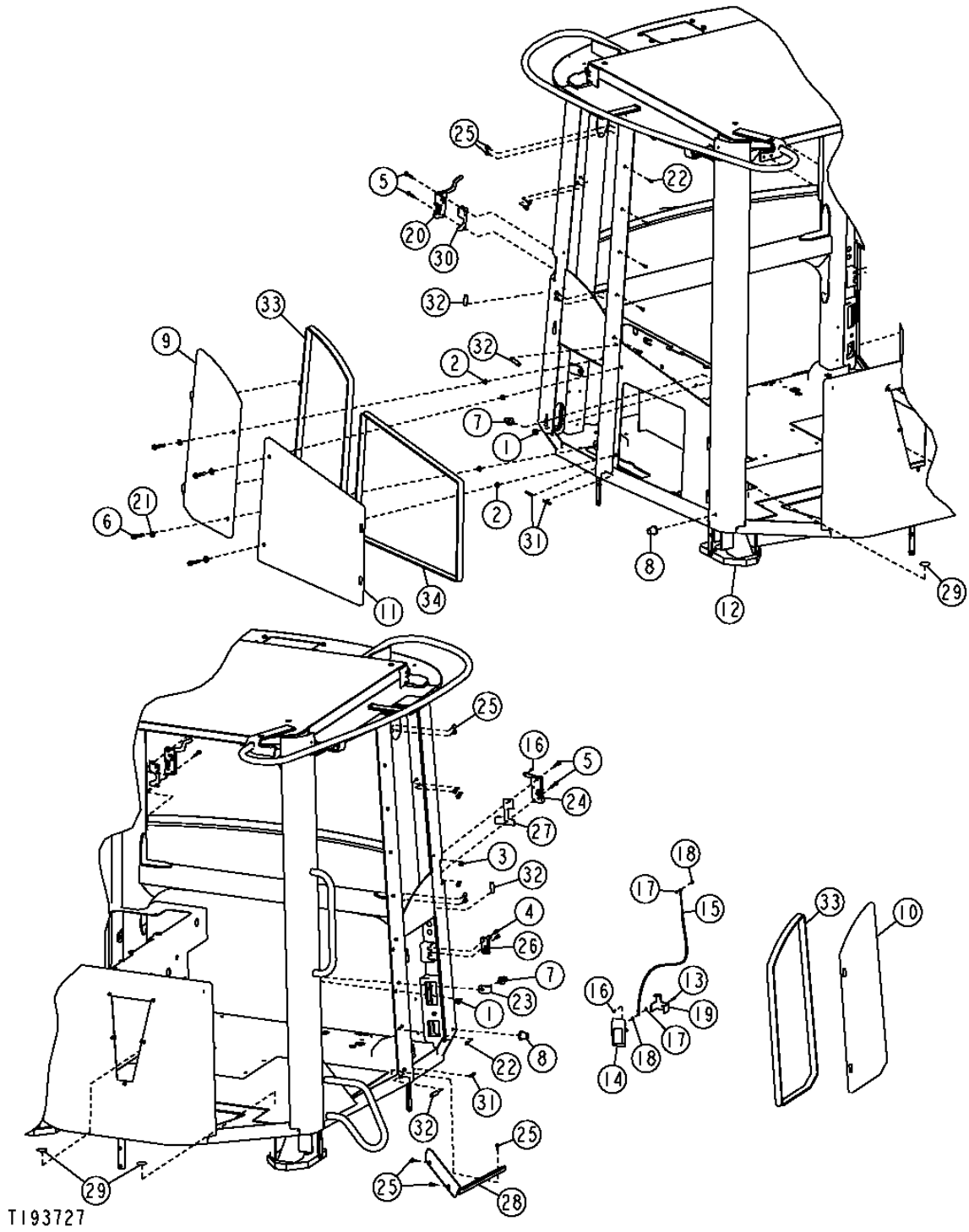

CAB
CABINE
CABINA

KEY	PART NO.	PART NAME	QTY.	SERIAL NO.	REMARKS
1	14H813	NUT	2		7/16"
2	14M7298	FLANGE NUT	4		M8
3	14M7397	LOCK NUT	4		M6
4	19H1948	CAP SCREW	2		1/4" X 3/4"
5	19M7797	SCREW	4		M6 X 40
6	19M8318	SCREW	4		M8 X 45
7	AR91896	STRIKER	2		
8	AT211296	BUMPER	2		
9	AT224989	DOOR	1		
10	AT224990	DOOR	1		
11	AT224991	DOOR	1		
12	AT332126	ROPS	1		(AT315446 NLA) (SUB FOR AT226372)
13	19H3370	CAP SCREW	1		0.190" X 5/8"
14	AT227544	LATCH	1		
15	AT227545	PUSH PULL CABLE	1		
16	T178113	CLIP	2	-600445	(SUB L985T AND 11M7093, THIS APPLICATION)
	11M7093	COTTER PIN	2	600446-	
17	T178112	PIN FASTENER	2	-600445	(SUB L985T AND 11M7093, THIS APPLICATION)
	L985T	PIN FASTENER	2	600446-	
18	T178114	SPACER	2		
19	T196309	BRACKET	1		
20	AT315290	LATCH	1		(AT303411 NLA)
21	H110232	WASHER	4		0.406" X 0.890" X 0.059"
22	M114063	SCREW	15		M6 X 16
23	T135583	GUARD	1		
24	AT310702	LATCH	1		(T167504 NLA)
25	TCU14336	SCREW	15		
26	T167658	LATCH	1		
27	T177505	BRACKET	1		
28	T180930	RETAINER	1		
29	T186793	LABEL	3		
30	T201708	PLATE	1		
31	T203614	ISOLATOR	3		
32	T203615	ISOLATOR	4		
33	.....	ISOLATOR	1		(MAKE FROM AT305130) (CUT TO LENGTH, 75.5 IN.(1918 MM))
34	AT305130	ISOLATOR	1		

CAB GLASS
GLACE CABINE
VIDRIO DE LA CABINA

T193725 -UN-30SEP03

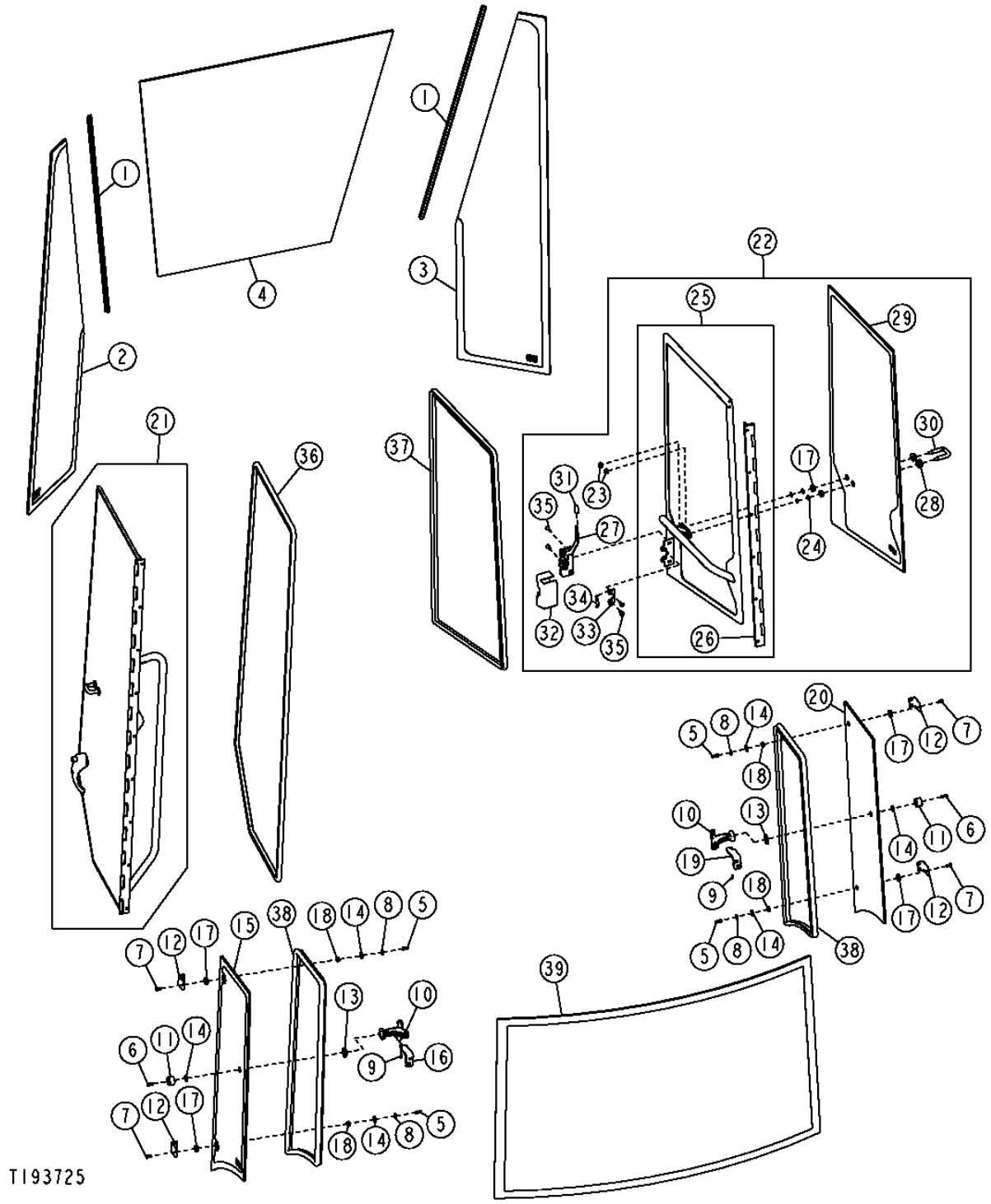

THIS PARTS LISTING IS CONTINUED

CAB GLASS
GLACE CABINE
VIDRIO DE LA CABINA

KEY	PART NO.	PART NAME	QTY.	SERIAL NO.	REMARKS
1	T182903	SEAL	2		
2	T182927	WINDOWPANE	1		
3	T182928	WINDOWPANE	1		
4	T196237	WINDSHIELD	1		
5	14M7376	LOCK NUT	4		M6
6	19M7768	SCREW	2		M6 X 16
7	19M8648	SCREW	4		M6 X 16
8	24M7251	WASHER	4		6.400 X 18 X 1.600 MM
9	34H275	SPRING PIN	2		3/16" X 1/2"
10	AT226000	LATCH	2		
11	T184135	BUMPER	2		(SUB FOR T101090)
12	T167594	ANGLE	4		
	T167593	SCREW	8		(NOT ILLUSTRATED) (HINGE TO CAB FRAME)
13	T167659	WASHER	2		
14	T167683	WASHER	6		
15	T178221	WINDOWPANE	1		
16	T230640	BRACKET	1		(SUB FOR T178534)
17	T182899	WASHER	6		
18	T182902	BUSHING	4		
19	T230639	BRACKET	1		(SUB FOR T177827)
20	T178220	WINDOWPANE	1		
21	AT224994	DOOR	1		
22	AT226151	WINDOW	1		
23	14M7424	FLANGE NUT	2		M8
24	24M7362	WASHER	2		8.400 X 16 X 1.600 MM
25	AT226152	DOOR	1		
26	T167505	HINGE	1		
27	AT226176	LATCH	1		
28	T167514	GROMMET	2		
29	T167527	WINDOWPANE	1		
30	T167546	STRIKER	1		
31	T167630	GRIP	1		
32	T182695	COVER	1		
33	T197455	BRACKET	1		
34	T197456	EXTENSION SPRING	1		
35	TCU14336	SCREW	4		M6 X 16
36	AT305126	ISOLATOR	1		
37	.....	ISOLATOR	1		(MAKE FROM AT305126) (CUT TO 120 IN.(3048 MM))
38	.....	ISOLATOR	1		(MAKE FROM AT305126) (CUT TO 86 IN.(2184 MM))
39	T167519	WINDOW	1		

CAB DOOR
PORTE DE CABINE
PUERTA DE CABINA

TX1021618 -UN-

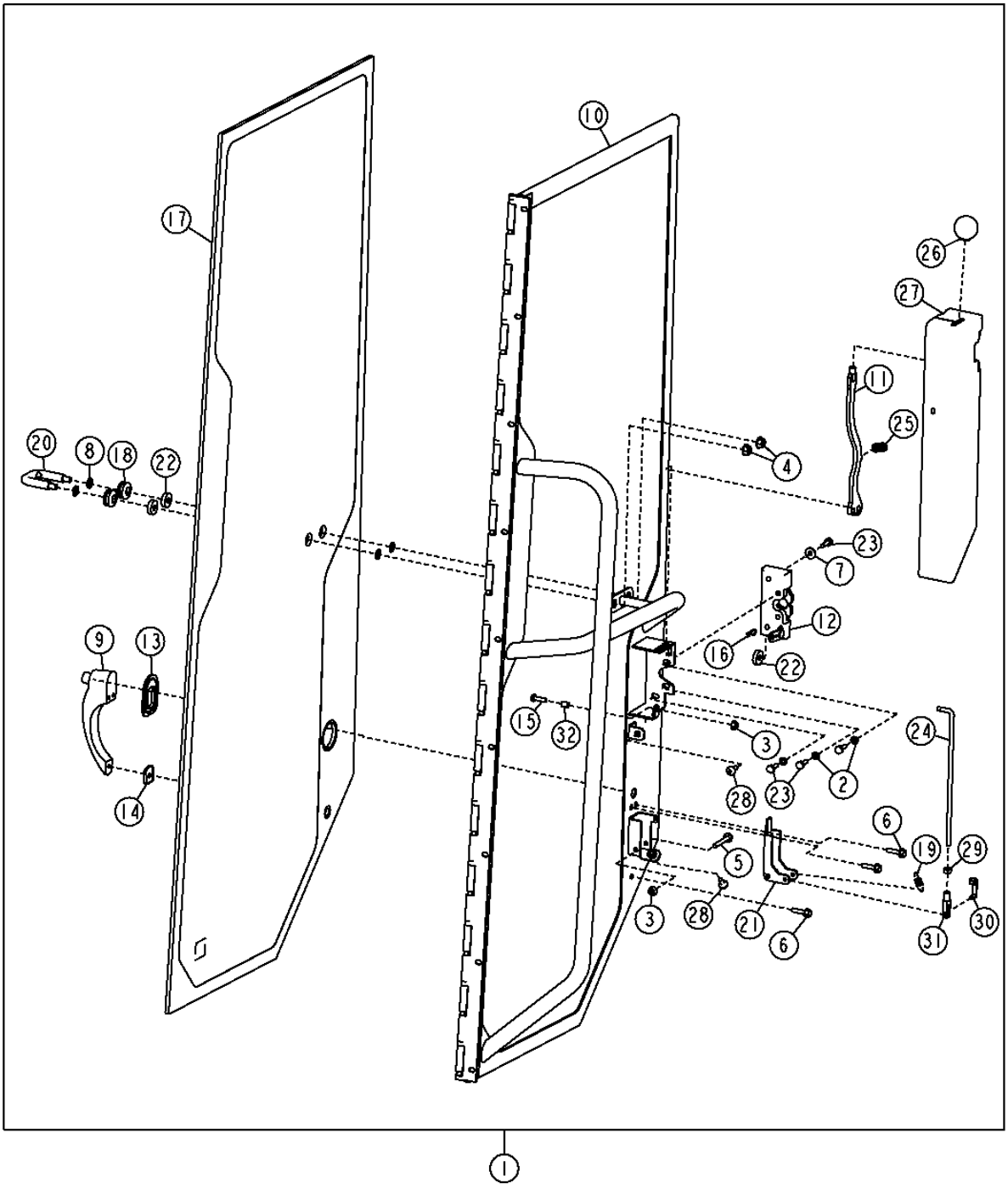

TX1021618

CAB DOOR
PORTE DE CABINE
PUERTA DE CABINA

KEY	PART NO.	PART NAME	QTY.	SERIAL NO.	REMARKS
1	AT224994	DOOR	1		
2	12M7006	LOCK WASHER	3		6 MM
3	14M7303	FLANGE NUT	2		M6
4	14M7424	FLANGE NUT	2		M8
5	19M7834	SCREW	1		M6 X 45
6	19M7863	SCREW	3		M6 X 25
7	24M7251	WASHER	1		6.400 X 18 X 1.600 MM
8	24M7362	WASHER	2		8.400 X 16 X 1.600 MM
9	AH121227	HANDLE	1		
10	AT224995	DOOR	1		
11	AT303493	CONTROL LEVER	1		
12	AT83105	LATCH	1		
13	H126081	BEZEL	1		
14	H126082	BEZEL	1		
15	19M7077	CAP SCREW	1		M6 X 20
16	H132922	COTTER PIN	2	-XXXXXX	
	H132922	COTTER PIN	1	XXXXXX-	
17	T167508	WINDOWPANE	1		
18	T167514	GROMMET	2		
19	T229977	SPRING	1		(SUB FOR T167530)
20	T167546	STRIKER	1		
21	T228106	ARM	1		(SUB FOR T167618)
22	T182899	WASHER	3		
23	T182963	SCREW	4		
24	T228104	PIN FASTENER	1		(SUB FOR T182967)
25	H95874	SPRING	1		
26	T182969	KNOB	1		
27	T182972	COVER	1		
28	TCU14336	SCREW	2		
29	14H786	NUT	1		6.350 MM
30	T160020	PIN	1		
31	T213444	CLEVIS	1		
32	T213560	BUSHING	1		

CAB MONITOR CONSOLE
CONSOLE MONITEUR CABINE
CONSOLA DE MONITOR DE CABINA

T193669 -UN-24OCT03

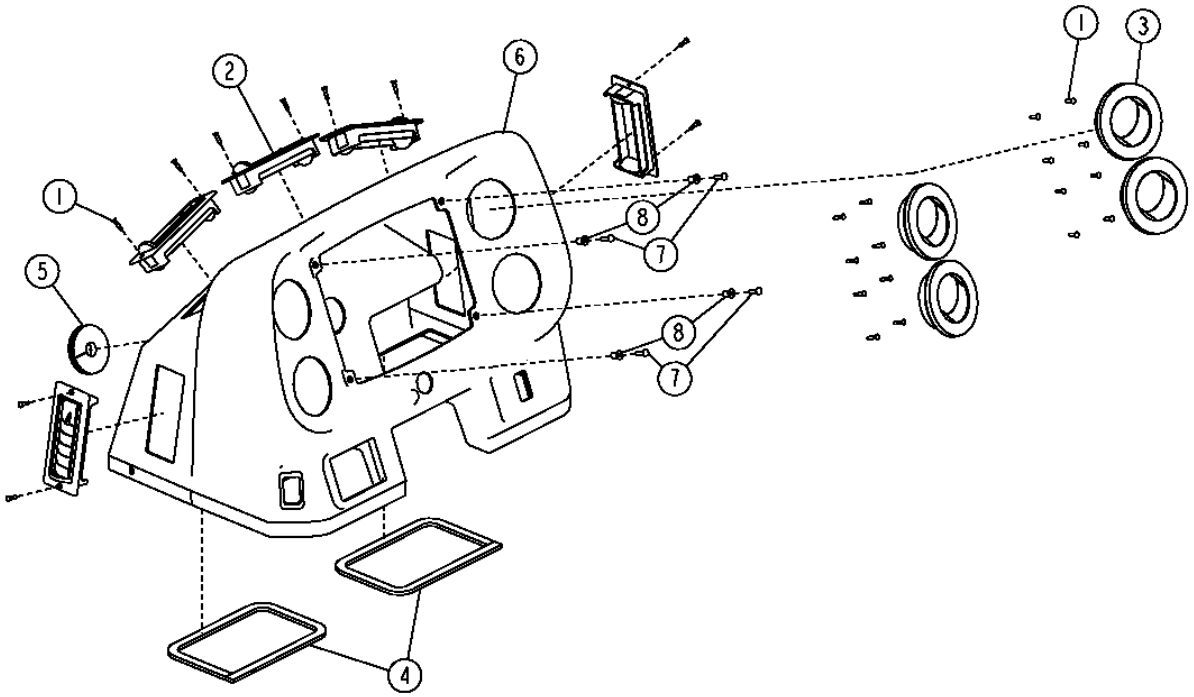

T193669

CAB MONITOR CONSOLE
CONSOLE MONITEUR CABINE
CONSOLA DE MONITOR DE CABINA

KEY	PART NO.	PART NAME	QTY.	SERIAL NO.	REMARKS
1	37M7333	SCREW	26		
2	AT227668	LOUVER	5		
3	AT227669	LOUVER	4		
4	.....	SEAL	1		(MAKE FROM H81330) (CTL)
5	R117845	GROMMET	1		
6	T196471	CONSOLE	1		
7	T82791	SCREW	4		
8	T82792	NUT	4		

CANOPY MONITOR CONSOLE
CONSOLE MONITEUR EVENT
CONSOLA DEL MONITOR DEL DOSEL

T193739 -UN-19AUG03

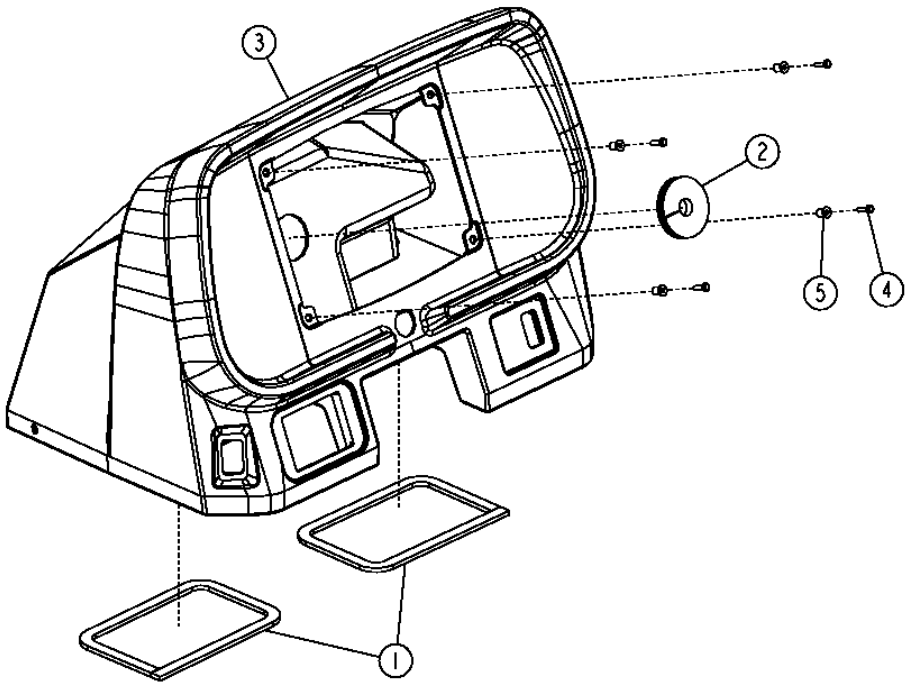

CANOPY MONITOR CONSOLE
CONSOLE MONITEUR EVENT
CONSOLA DEL MONITOR DEL DOSEL

KEY	PART NO.	PART NAME	QTY.	SERIAL NO.	REMARKS
1	.....	SEAL	2		(MAKE FROM H81330) (CTL)
2	R117845	GROMMET	1		
3	T196621	CONSOLE	1		
4	T82791	SCREW	4		
5	T82792	NUT	4		

OPERATOR STATION FRONT PEDESTAL
SOCLE AVANT DE POSTE DE CONDUITE
PEDESTAL DELANTERO DEL PUESTO DEL OPERADOR

T193670 -UN-20AUG03

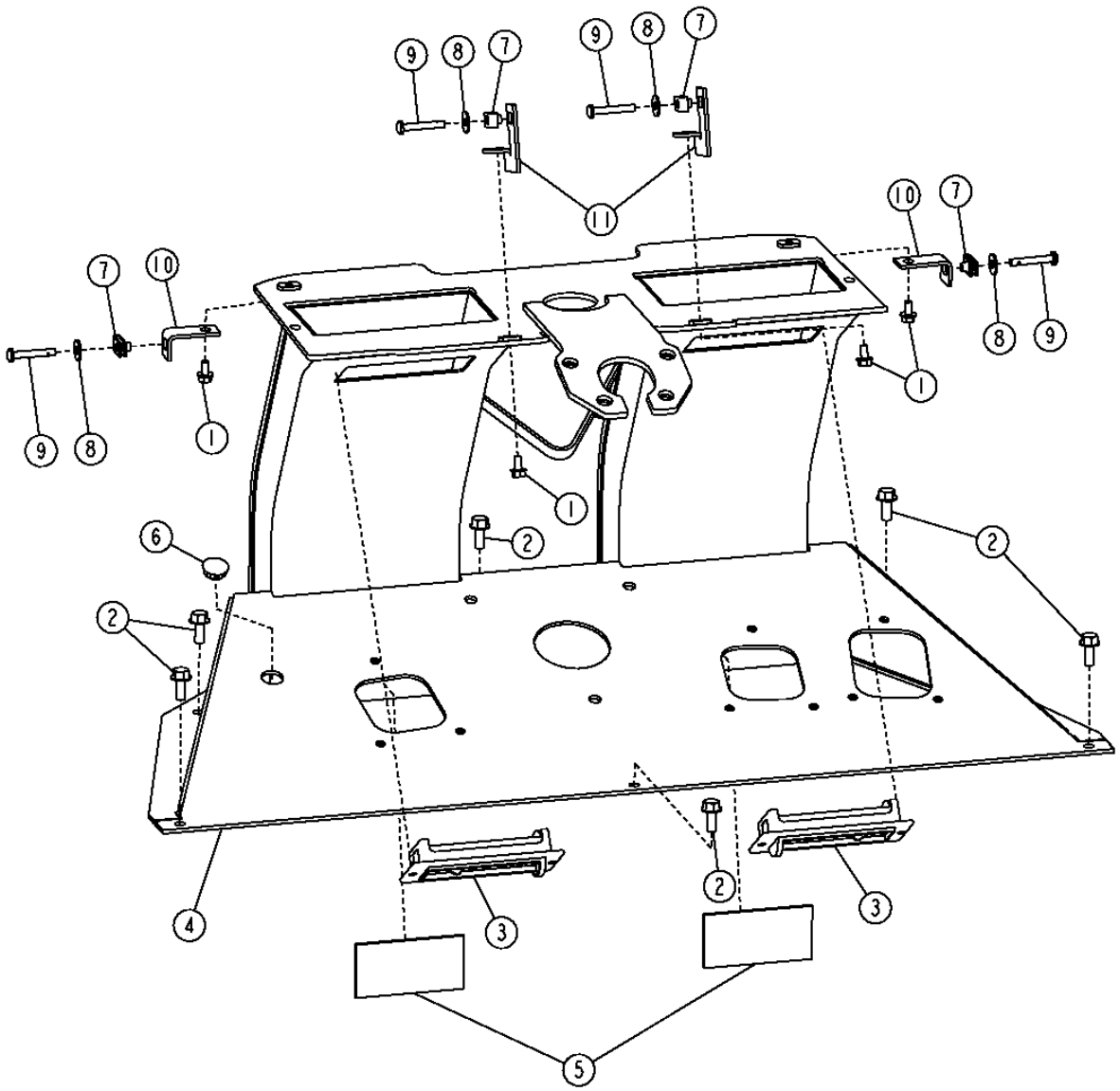

OPERATOR STATION FRONT PEDESTAL
SOCLE AVANT DE POSTE DE CONDUITE
PEDESTAL DELANTERO DEL PUESTO DEL OPERADOR

KEY	*PART NO.*	*PART NAME*	*QTY.*	*SERIAL NO.*	*REMARKS*
1	19M7774	SCREW	4		M6 X 12
2	19M7866	SCREW	6		M8 X 20
3	AT227668	LOUVER	2		
4	AT227965	PEDESTAL	1		
5	T66418	ISOLATOR	1		
6	H34597	PLUG	1		
7	M84972	NUT	4		
8	24H1821	WASHER	4		
9	T134874	SELF-LOCKING SCREW	4		(SUB FOR 21M7403)
10	T196711	ANGLE	2		(BACK)
11	T196712	BRACKET	2		(FRONT)

HEADLINER AND DOMELIGHT
REVETEMENT DE TOIT ET PLAFONNIER
LUZ DE TECHO Y FORRO

T193652 -UN-08SEP03

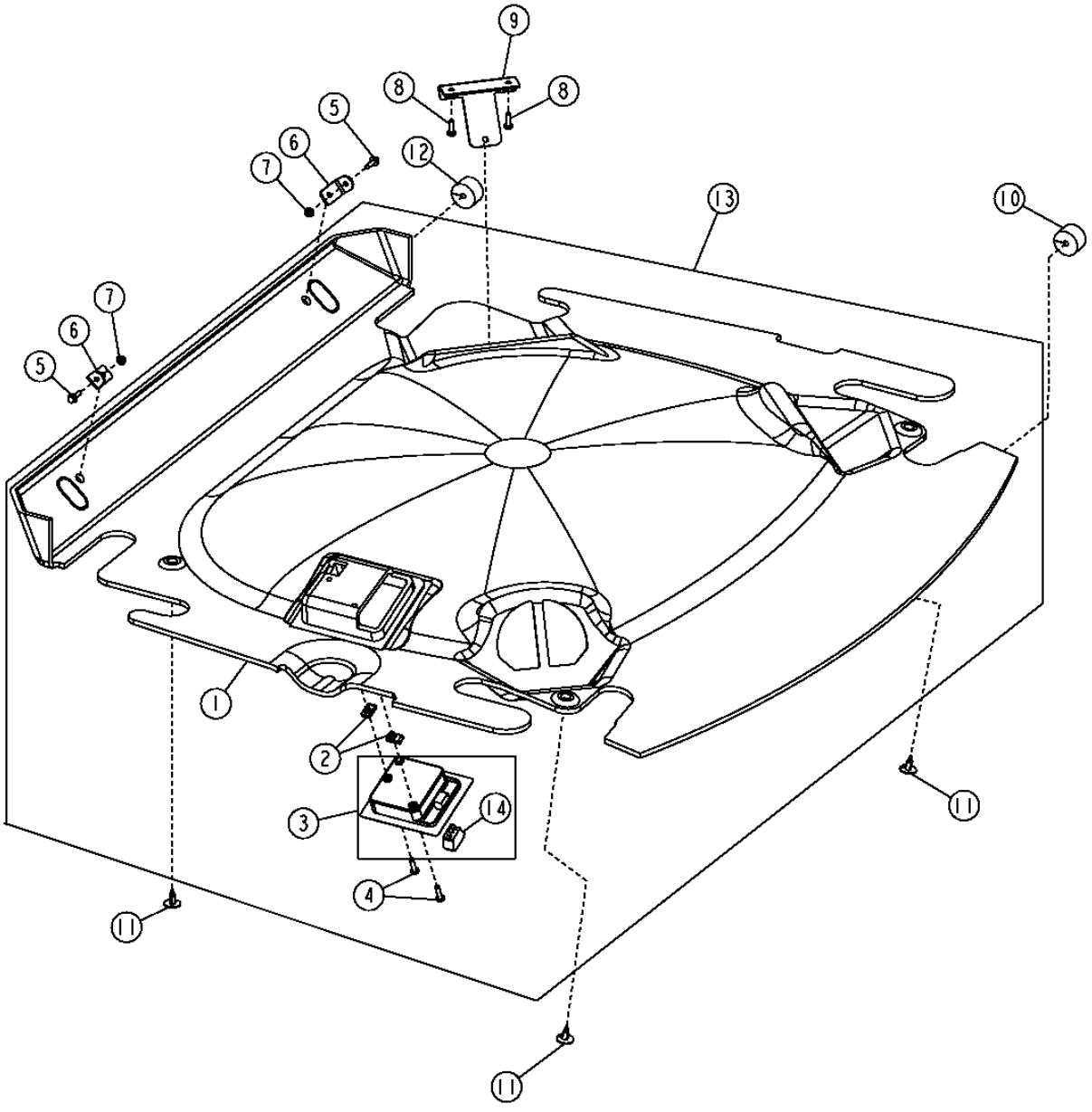

HEADLINER AND DOMELIGHT
REVETEMENT DE TOIT ET PLAFONNIER
LUZ DE TECHO Y FORRO

KEY	PART NO.	PART NAME	QTY.	SERIAL NO.	REMARKS
1	T181908	HEADLINER	1		(W/O RADIO)
	T181520	HEADLINER	1		(W/ RADIO)
2	M84972	NUT	2		
3	AT224923	LAMP	1		INCLUDES BULB AND LENS
	AT173355	BULB	1		
4	T134895	SELF-LOCKING SCREW	2		(SUB FOR 21M7310)
5	19M7862	SCREW	2		M6 X 20
6	T181050	ANGLE	2		
7	14M7303	FLANGE NUT	2		M6
8	19H1948	CAP SCREW	2		1/4" X 3/4"
9	T180418	STRAP	1		(W/O RADIO)
10	T182870	ISOLATOR	1		(W/O RADIO) (SUB FOR T182861)
	T182870	ISOLATOR	1		(W/ RADIO)
11	T184892	RETAINER	4		
12	T182870	ISOLATOR	1		(W/O RADIO) (SUB FOR T182861)
	T65643	GROMMET	1		(W/ RADIO) (SUB FOR T182871, THIS APPLICATION)
13	AT224234	HEADLINER	1		(W/O RADIO)
	AT224233	HEADLINER	1		(W/ RADIO)
14	RE48838	TOGGLE/ROCKER SWITCH	1		

CANOPY, REAR WINDOW, AND HEADLINER
AUVENT, GLACE ARRIERE ET REVETEMENT DE TOIT
DOSEL, FORRO Y VENTANA TRASERA

T193850 -UN-09SEP03

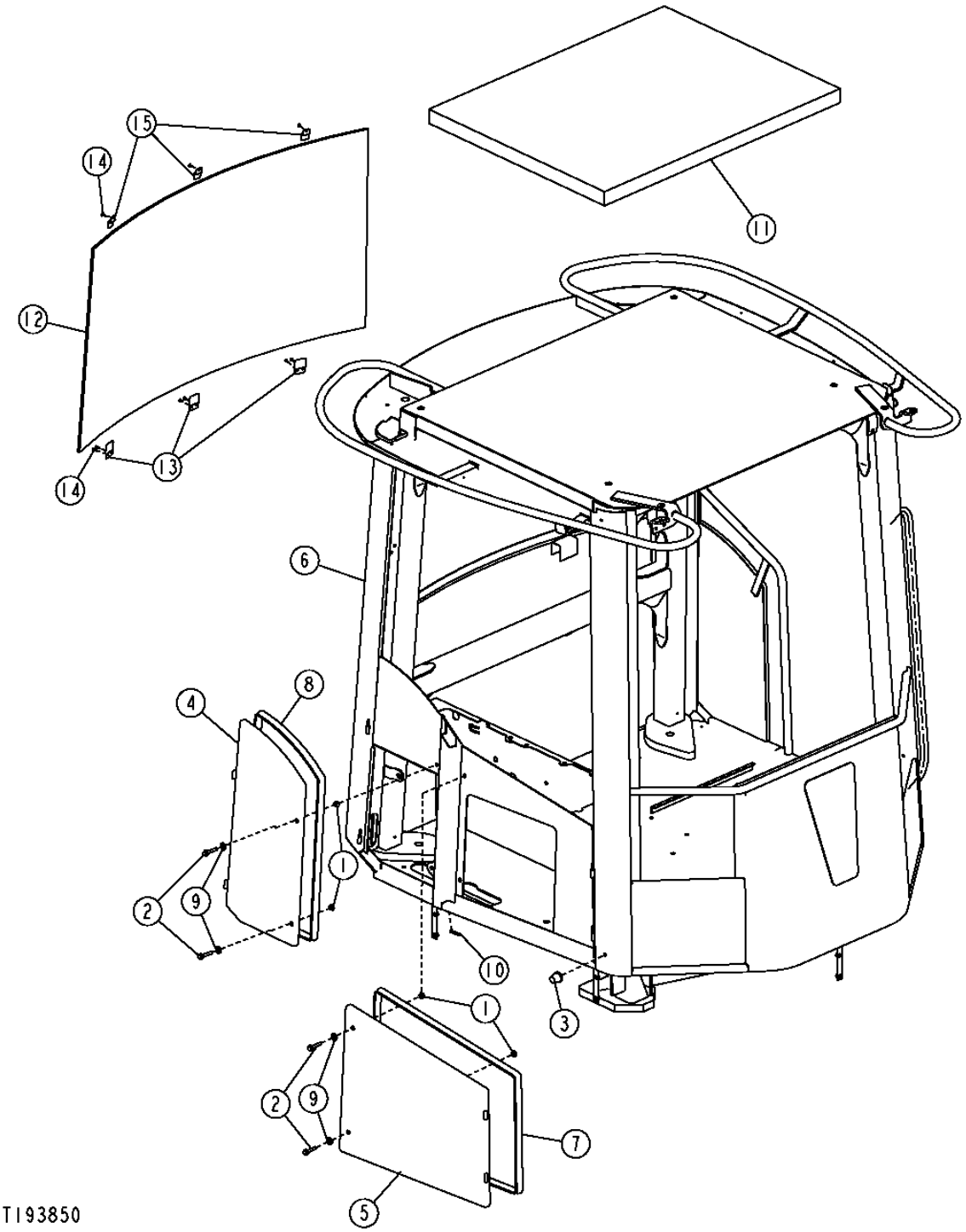

CANOPY, REAR WINDOW, AND HEADLINER
AUVENT, GLACE ARRIERE ET REVETEMENT DE TOIT
DOSEL, FORRO Y VENTANA TRASERA

KEY	PART NO.	PART NAME	QTY.	SERIAL NO.	REMARKS
1	14M7298	FLANGE NUT	4		M8
2	19M8318	SCREW	4		M8 X 45
3	AT211296	BUMPER	1		
4	AT224989	DOOR	1		
5	AT224991	DOOR	1		
6	AT332127	ROPS	1		(AT226377 NLA)
7	AT305130	ISOLATOR	1		
8	.....	ISOLATOR	1		(MAKE FROM AT305130) (CUT TO LENGTH) (75.5 IN.(1918MM))
9	H110232	WASHER	4		0.406" X 0.890" X 0.059"
10	T203614	ISOLATOR	2		(1/4" CORD) (CUT TO LENGTH) (1 9/16 IN. (40 MM))
11	T180921	HEADLINER	1		
12	T167519	WINDOW	1		
13	T182952	RETAINER	3		
14	AT44188	RIVET	9		
15	T182925	RETAINER	3		

DRIP RAIL
GOUTTIERE
RIEL DE VACIADO

TP62704 -UN-23NOV99

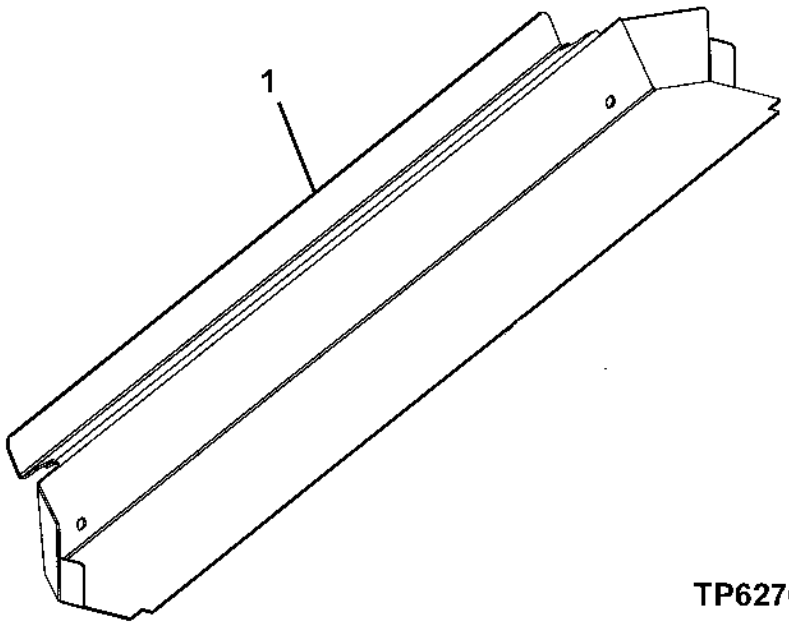

KEY	PART NO.	PART NAME	QTY.	SERIAL NO.	REMARKS
1	AT325643	RAIL	1		(SUB FOR AT224933)

MEMORANDA
MEMORANDA
MEMORANDA

CAB TRIM, SEAT BASE AND FIRE EXTINGUISHER
GARNITURE CABINE, BASE SIEGE ET EXTINCTEUR
PIEZAS DE ADORNO DE LA CABINA, BASE DEL ASIENOT Y EXTINGUIDOR DE INCENDIOS

T193870 -UN-22SEP03

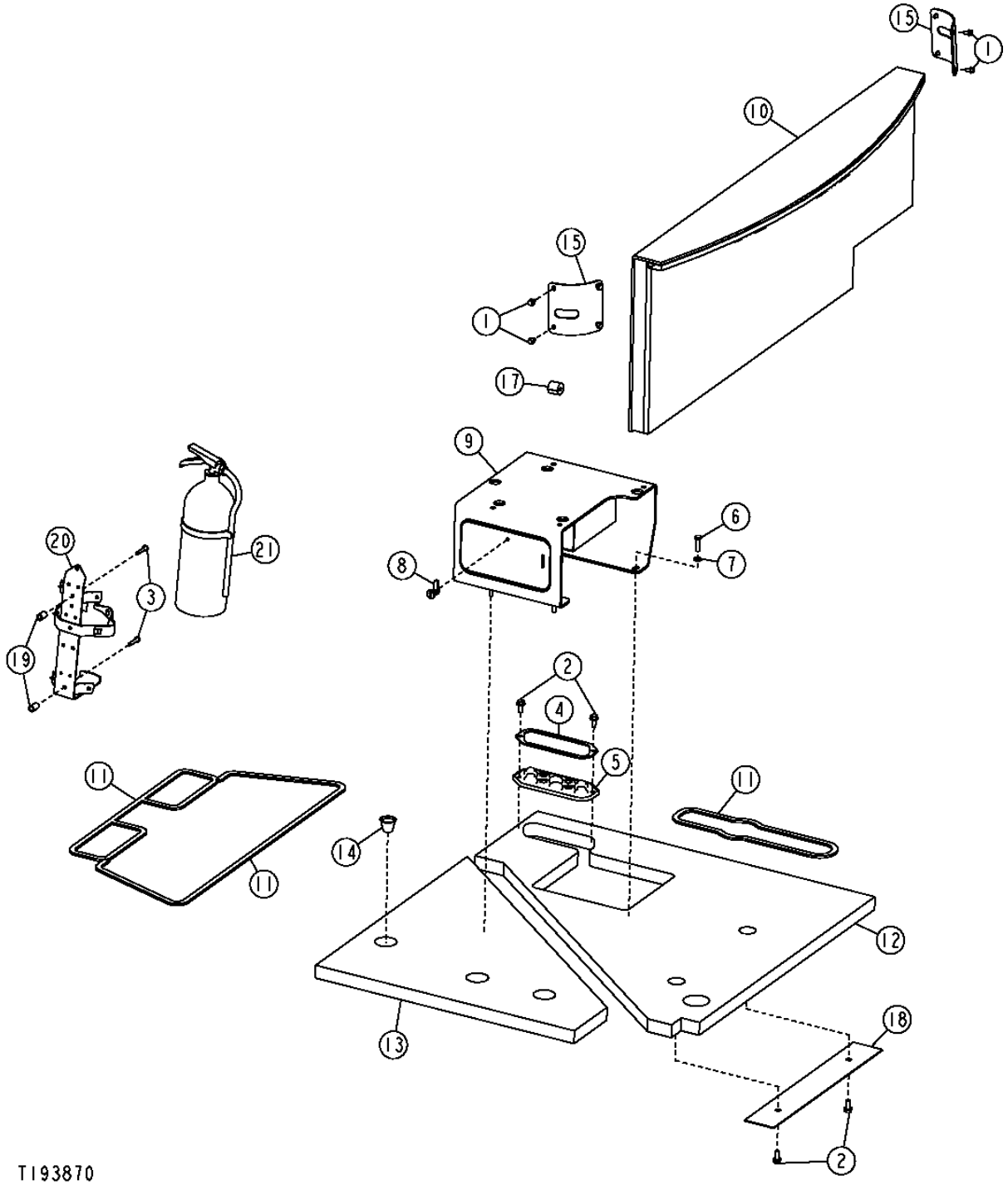

CAB TRIM, SEAT BASE AND FIRE EXTINGUISHER
GARNITURE CABINE, BASE SIEGE ET EXTINCTEUR
PIEZAS DE ADORNO DE LA CABINA, BASE DEL ASIENOT Y EXTINGUIDOR DE INCENDIOS

KEY	*PART NO.*	*PART NAME*	*QTY.*	*SERIAL NO.*	*REMARKS*
1	19M7774	SCREW	8		M6 X 12
2	19M7866	SCREW	4		M8 X 20
3	21M7247	SCREW	2		M6 X 35
4	T172991	PLATE	1		
5	T172992	GROMMET	1		
6	19M7868	SCREW	5		M8 X 30, (SUB FOR 19M7513)
7	24M7238	WASHER	5		8.700 X 17 X 2 MM
8	AT151931	LATCH	1		
9	AT224235	FLOOR	1		
10	AT225706	PAD	1		
11	.....	SEAL	12		(MAKE FROM H81330) (CTL)
12	T167770	ISOLATOR	1		
13	T209094	ISOLATOR	1		(SUB FOR T167771)
14	T180408	PLUG	1		
15	T205472	COVER	2		
17	T182860	ISOLATOR	1		
18	T182906	PLATE	1		
19	28H3423	BUSHING	2		0.364" X 0.540" X 7/8"
20	AT189390	BRACKET	1		
21	AT189487	FIRE EXTINGUISHER	1		

CANOPY TRIM, SEAT BASE AND FIRE EXTINGUISHER
GARNITURE AUVENT, BASE SIEGE ET EXTINCTEUR
ADORNO DEL DOSEL, BASE DEL ASIENTO Y EXTINGUIDOR DE INCENDIOS

TX1008150 -UN-24MAY06

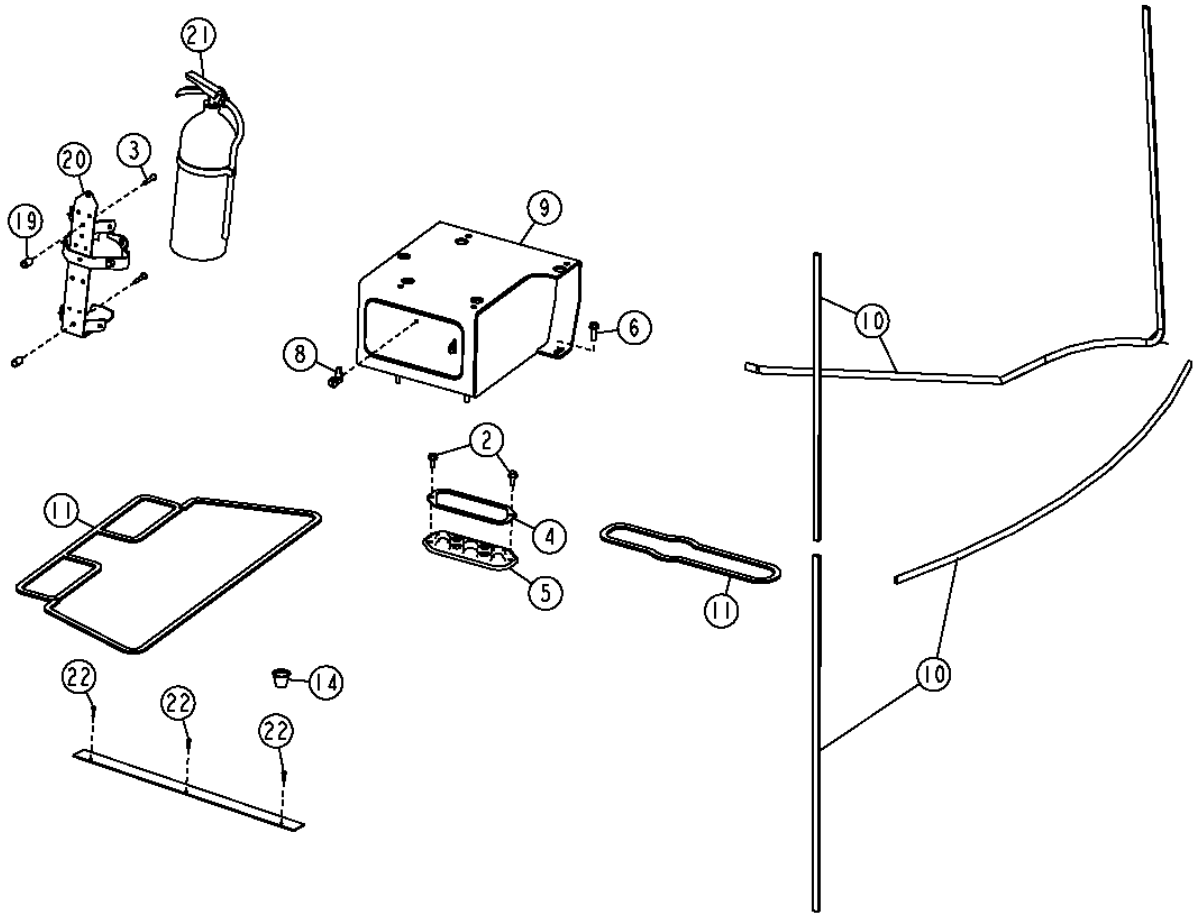

TX1008150

CANOPY TRIM, SEAT BASE AND FIRE EXTINGUISHER
GARNITURE AUVENT, BASE SIEGE ET EXTINCTEUR
ADORNO DEL DOSEL, BASE DEL ASIENTO Y EXTINGUIDOR DE INCENDIOS

KEY	PART NO.	PART NAME	QTY.	SERIAL NO.	REMARKS
2	19M7866	SCREW	2		M8 X 20
3	21M7247	SCREW	2		M6 X 35
4	T172991	PLATE	1		
5	T172992	GROMMET	1		
6	19M7868	SCREW	5		M8 X 30, (SUB FOR 19M7513)
8	AT151931	LATCH	1		
9	AT224237	FLOOR	1		
10	T180533	SEALING TRIM	1		
11	.....	SEAL	12		(MAKE FROM H81330) (CTL)
14	T180408	PLUG	1		
19	28H3423	BUSHING	2		0.364" X 0.540" X 7/8"
20	AT189390	BRACKET	1		
21	AT189487	FIRE EXTINGUISHER	1		
22	T182888	SCREW	3		

FRONT AND REAR CAB MOUNTS
MONTAGES CABINE AVANT ET ARRIERE
SOPORTES DE LA CABINA TRASERO Y DELANTERO

TX1006293 -UN-24APR06

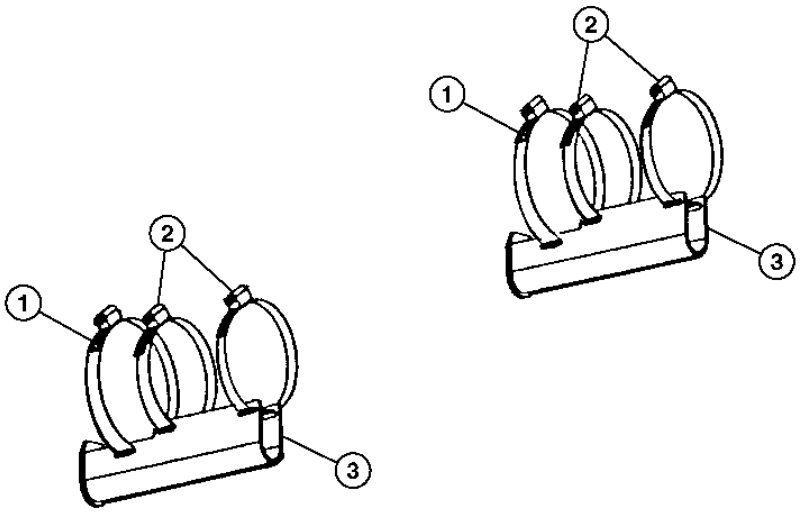

TX1006293

FRONT AND REAR CAB MOUNTS
MONTAGES CABINE AVANT ET ARRIERE
SOPORTES DE LA CABINA TRASERO Y DELANTERO

KEY	*PART NO.*	*PART NAME*	*QTY.*	*SERIAL NO.*	*REMARKS*
1	14M7278	NUT	2		M24
2	24M7243	WASHER	6		25.400 X 50 X 6 MM
3	T153535	WASHER	4		
4	AT170005	ISOLATOR	4		
5	19M7781	CAP SCREW	2		M24 X 150
6	19M7903	CAP SCREW	2		M24 X 120

WINDOW WASHER AND HOSES
LAVEUR DE GLACE ET FLEXIBLES
MANGUERAS Y LAVAPARABRISAS

T193102 -UN-22AUG03

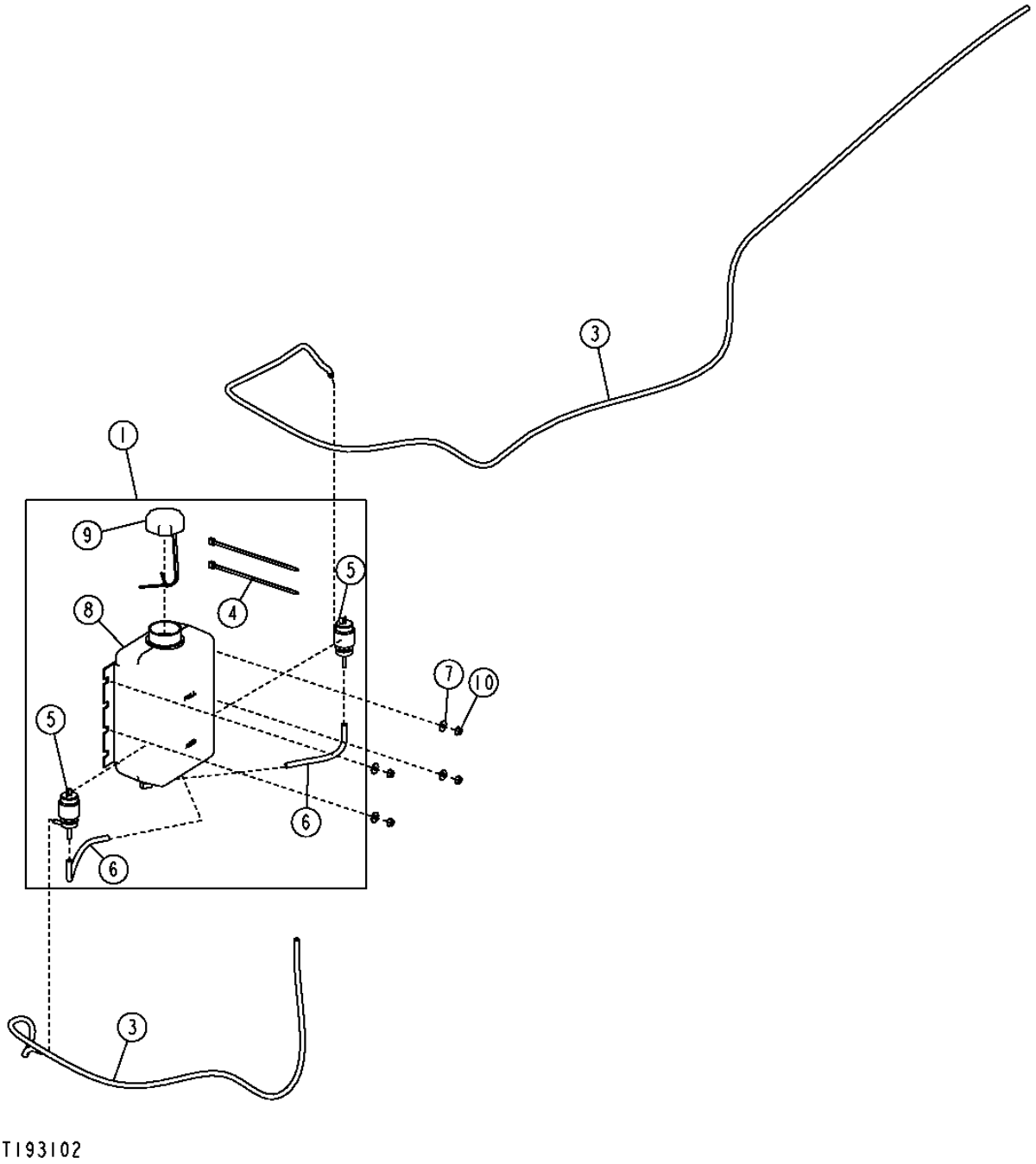

WINDOW WASHER AND HOSES
LAVEUR DE GLACE ET FLEXIBLES
MANGUERAS Y LAVAPARABRISAS

KEY	*PART NO.*	*PART NAME*	*QTY.*	*SERIAL NO.*	*REMARKS*
1	AT209947	TANK	1		
3	.....	HOSE	AR		(CUT TO LENGTH) (MAKE FROM R120653)
4	R44302	TIE BAND	2		
5	AT106365	PUMP	2		
6	.....	HOSE	AR		(CUT TO LENGTH) (MAKE FROM R120653) (SUB FOR R54445 AND R104595)
7	24M7139	WASHER	4		6.400 X 18 X 1.600 MM, TO BOSSES ON ACCESS DOOR
8	T147618	TANK	1		
9	AT173193	CAP	1		
10	14M7303	FLANGE NUT	4		

FRONT WINDSHIELD WIPER
ESSUIE-GLACES AVANT
LIMPIAPARABRISAS FRONTAL

T188479 -UN-25MAR03

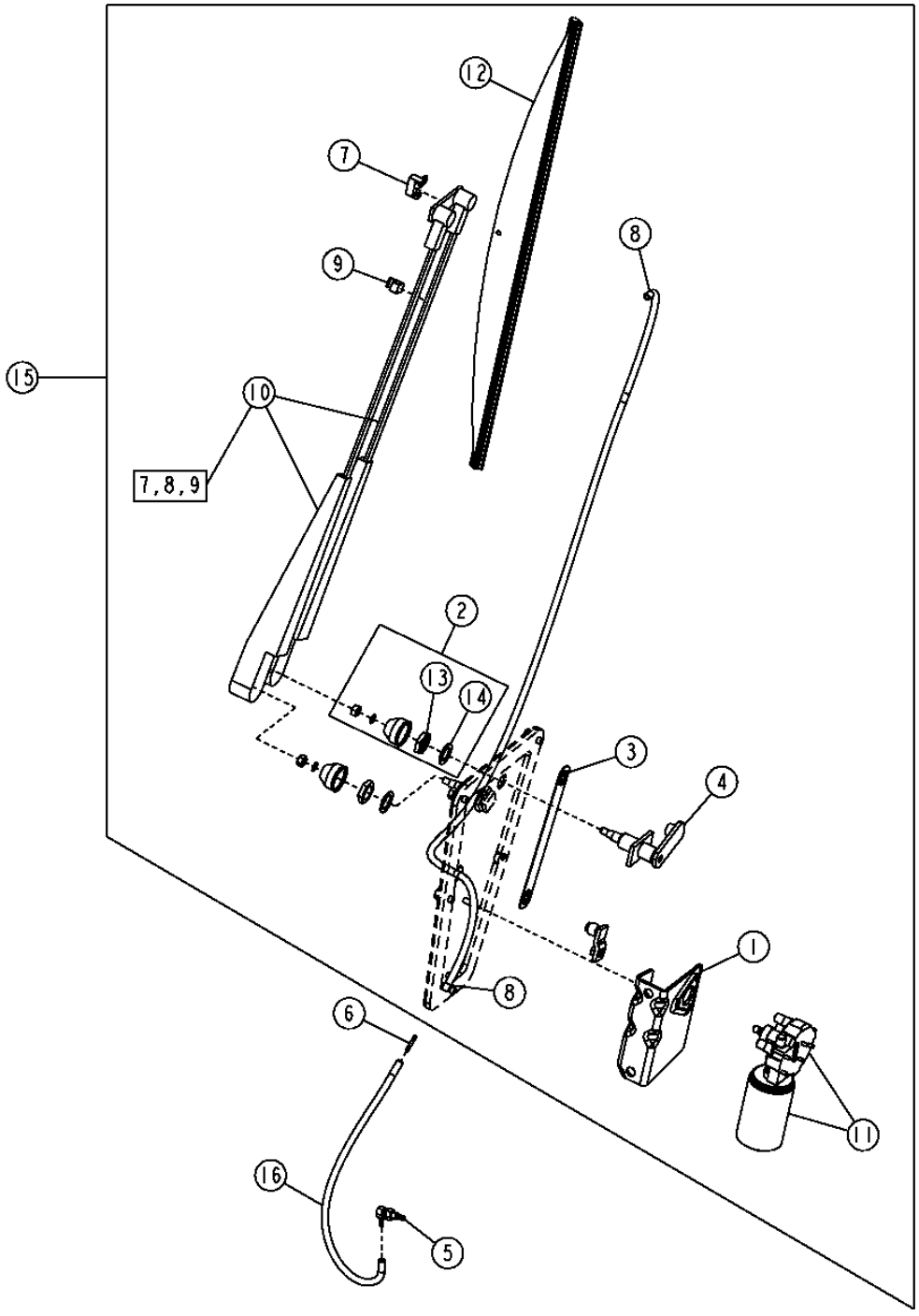

FRONT WINDSHIELD WIPER
ESSUIE-GLACES AVANT
LIMPIAPARABRISAS FRONTAL

KEY	PART NO.	PART NAME	QTY.	SERIAL NO.	REMARKS
1	RE16879	BRACKET	1		
2	RE40049	KIT	2		
3	T172652	LINK	1		
4	T202343	PIVOT	1		
5	AT116970	ELBOW FITTING	1		
6	T182919	FITTING	1		
7	AT137920	WINDSHIELD WASHER	1		
8	R54445	HOSE	1		
9	AT137921	CLIP	1		
10	AT209909	WIPER ARM	1		
11	AT324687	WIPER MOTOR	1	-604818	(ALSO ORDER (2) 19M7774) (SUB FOR AT209908)
	AT324687	WIPER MOTOR	1	604819-	
12	AT324681	WIPER BLADE	1		(SUB FOR AT138215)
13	AT138180	NUT	2		
14	R63667	WASHER	2		
15	AT202726	WINDSHIELD WIPER	1		
16	.....	HYDRAULIC HOSE - FABRICATE	1		(MAKE FROM R120653) (CUT TO LENGTH, 15 IN.)

REAR WINDSHIELD WIPER
ESSUIE-GLACE ARRIERE
LIMPIADOR DE PARABRISAS TRASERO

T193133 -UN-18NOV03

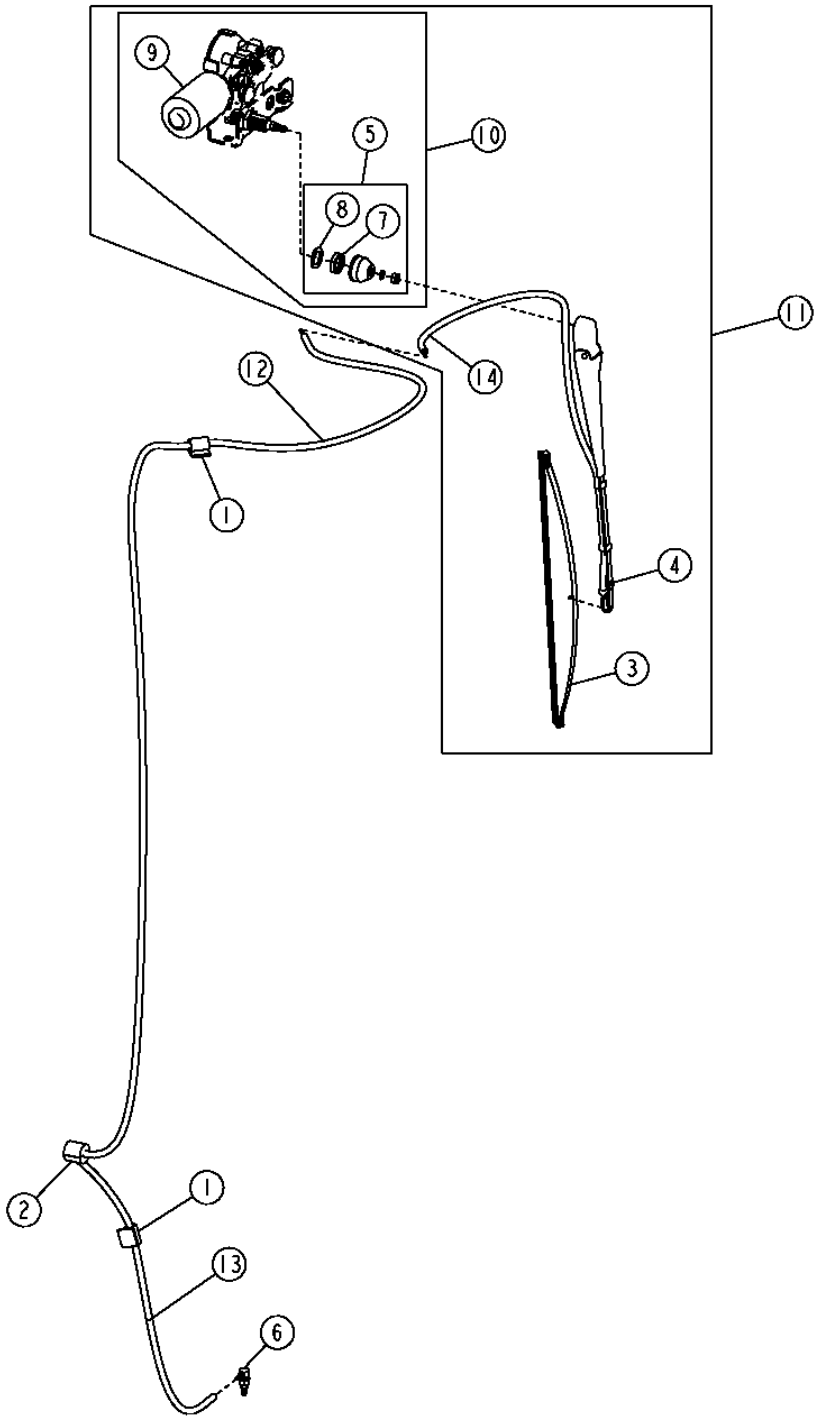

T193133

REAR WINDSHIELD WIPER
ESSUIE-GLACE ARRIERE
LIMPIADOR DE PARABRISAS TRASERO

KEY	PART NO.	PART NAME	QTY.	SERIAL NO.	REMARKS
1	T182909	CLIP	2		
2	T182860	ISOLATOR	1		
3	AL153660	WIPER BLADE	1		(SUB FOR AT209912) (INCLUDES HOSE R120653)
4	AT209910	WIPER ARM	1	-867756	
	AT304633	WIPER ARM	1	867757-	
5	RE40049	KIT	1		(HARDWARE KIT)
6	AT116970	ELBOW FITTING	1		
7	AT138180	NUT	1		
8	R63667	WASHER	1		
9	AT324687	WIPER MOTOR	1	-604818	(ALSO ORDER (2) 19M7774) (SUB FOR AT209908)
	AT324687	WIPER MOTOR	1	604819-	
10	AT224217	WIPER MOTOR	1	-867756	
	AT324849	WIPER MOTOR	1	867757-	
11	.....	MOTOR	1		(AT202784 NLA) (FURNISH COMPONENTS)
12	T182919	FITTING	1		
13	.....	HYDRAULIC HOSE - FABRICATE	1		(MAKE FROM R120653) (CUT TO LENGTH 96 IN.)
14	R54445	HOSE	1		

WIPER MOUNTING BRACKETS
SUPPORTS MONTAGE ESSUIE-GLACE
ESCUADRAS DE MONTAJE DEL LIMPIAPARABRISAS

T193134 -UN-01AUG03

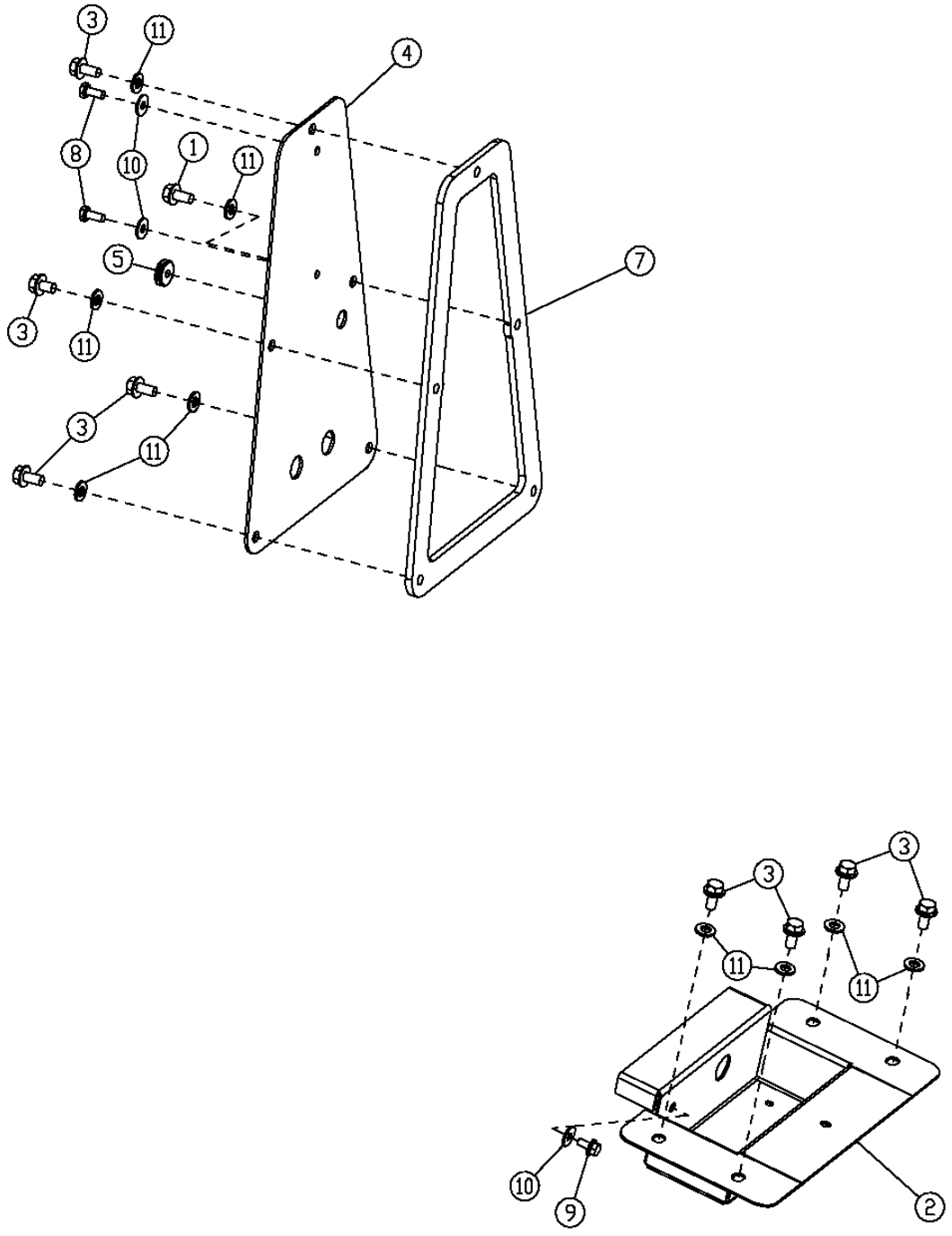

T193134

WIPER MOUNTING BRACKETS
SUPPORTS MONTAGE ESSUIE-GLACE
ESCUADRAS DE MONTAJE DEL LIMPIAPARABRISAS

KEY	*PART NO.*	*PART NAME*	*QTY.*	*SERIAL NO.*	*REMARKS*
1	19M7865	SCREW	1		M8 X 16
2	T181412	TRAY	1		REAR WIPER MOUNTING BRACKET
3	19M7865	SCREW	8		M8 X 16
4	T181413	PLATE	1		
5	T182874	GROMMET	1		
7	T167754	SEAL	1		
8	19M7775	SCREW	2		(SUB FOR 19H3138, THIS APPLICATION)
9	19M7774	SCREW	1		M6 X 12
10	24M7139	WASHER	3		6.400 X 18 X 1.600 MM
11	24M7238	WASHER	9		

CAB SHIELDS
PROTECTIONS CABINE
ESCUDOS DE LA CABINA

TP60306 -UN-08APR98

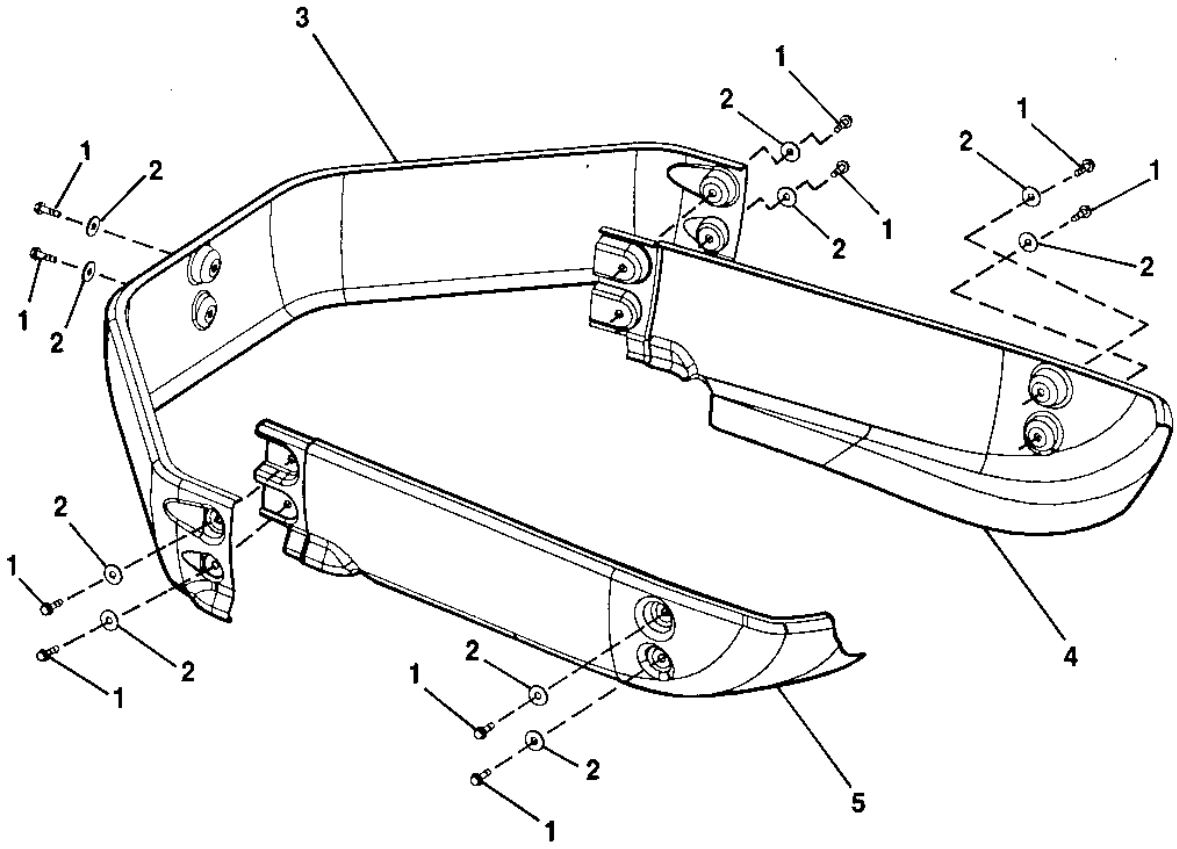

TP60306

CAB SHIELDS
PROTECTIONS CABINE
ESCUDOS DE LA CABINA

KEY	*PART NO.*	*PART NAME*	*QTY.*	*SERIAL NO.*	*REMARKS*
1	19M7868	SCREW	10		
2	24M7296	WASHER	10		10.500 X 30 X 2.500 MM
3	T175015	SHIELD	10		
4	T174886	SHIELD	1		(RH) (GRAY)
5	T174887	SHIELD	1		(LH) (GRAY)

ROOF
TOIT
TECHO

T193660 -UN-19AUG03

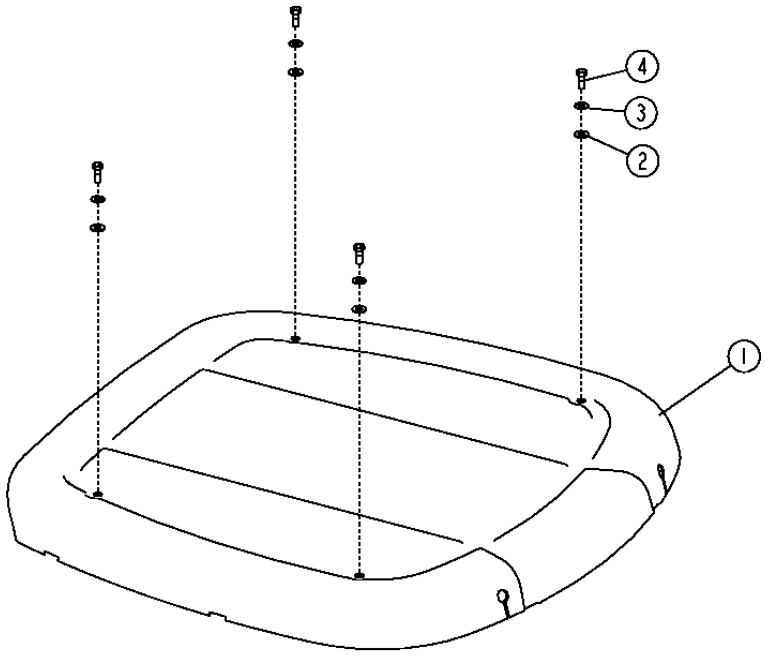

T193660

KEY	PART NO.	PART NAME	QTY.	SERIAL NO.	REMARKS
1	AT226578	ROOF	1		
	AT227013	ROOF	1		(PAINTABLE)
2	T167659	WASHER	4		
3	24H1368	WASHER	4		
4	T182920	CAP SCREW	4		

HORN
KLAXON
BOCINA

TP60387 -UN-13MAY98

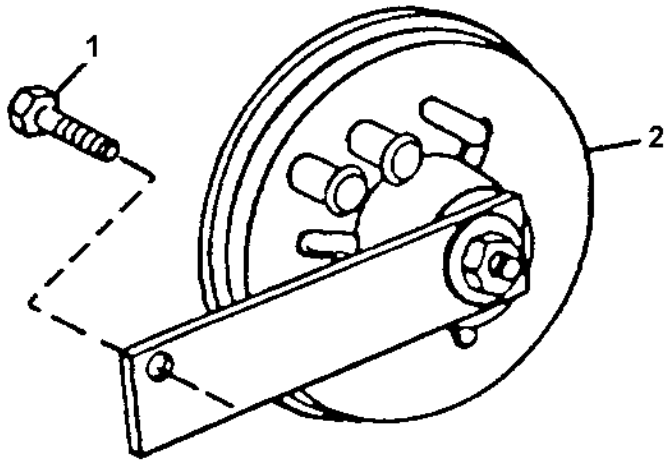

TP60387

KEY	PART NO.	PART NAME	QTY.	SERIAL NO.	REMARKS
1	19M7864	SCREW	1	-XXXXXX	M8 X 12
	19M7864	SCREW	1	XXXXXX-	
2	AT226282	HORN	1		LOW NOTE

BACKUP ALARM
AVERTISSEUR SONORE DE MARCHE ARRIERE
BOCINA DE RETROCESO

T193992 -UN-18AUG03

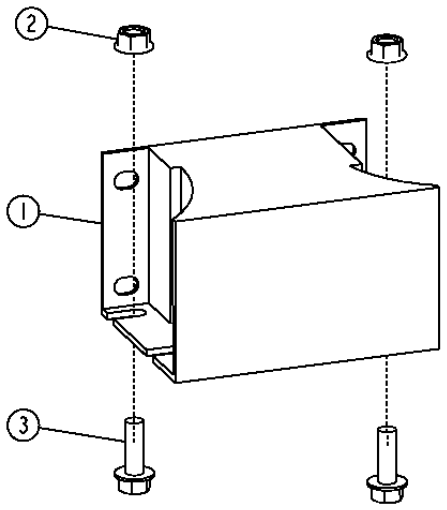

T193992

KEY	PART NO.	PART NAME	QTY.	SERIAL NO.	REMARKS
1	AT120461	TRAVEL WARNING ALARM	1		
2	14M7298	FLANGE NUT	2		M8
3	19M7867	SCREW	2		M8 X 25

SLOW MOVING VEHICLE EMBLEM
SIGNAL DE VEHICULE LENT
ETIQUETA DE VEHICULO DE MOVIMIENTO LENTO

T194002 -UN-20AUG03

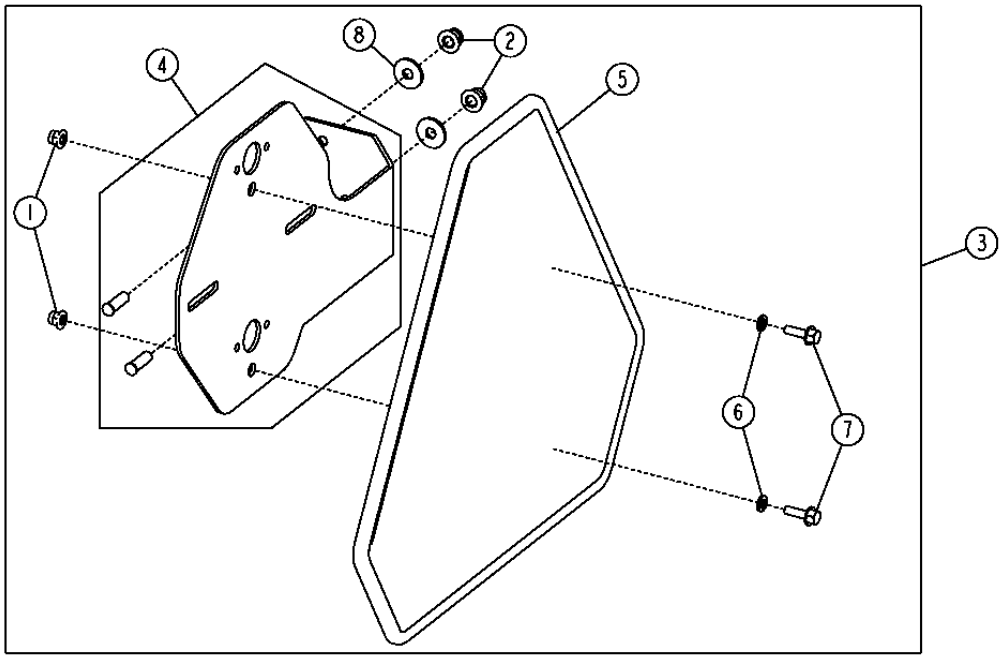

T194002

KEY	PART NO.	PART NAME	QTY.	SERIAL NO.	REMARKS
1	14M7397	LOCK NUT	2		M6
2	14M7396	LOCK NUT	2		M8
3	**AT301913**	**KIT**	**1**		**(WHOLEGOODS)**
4	AT301914	BRACKET	1		
5	JD5929	SMV EMBLEM	1		
6	24M7088	WASHER	2		6.600 X 12 X 1.600 MM
7	19M7862	SCREW	2		M6 X 20
8	24M7298	WASHER	2		8.400 X 25 X 2 MM

OUTSIDE MIRROR FOR CAB OR CANOPY
RETROVISEUR EXTERIEUR POUR CABINE ET AUVENT
ESPEJO RETROVISOR EXTERIOR PARA CABINA O DOSEL

T192728 -UN-18AUG03

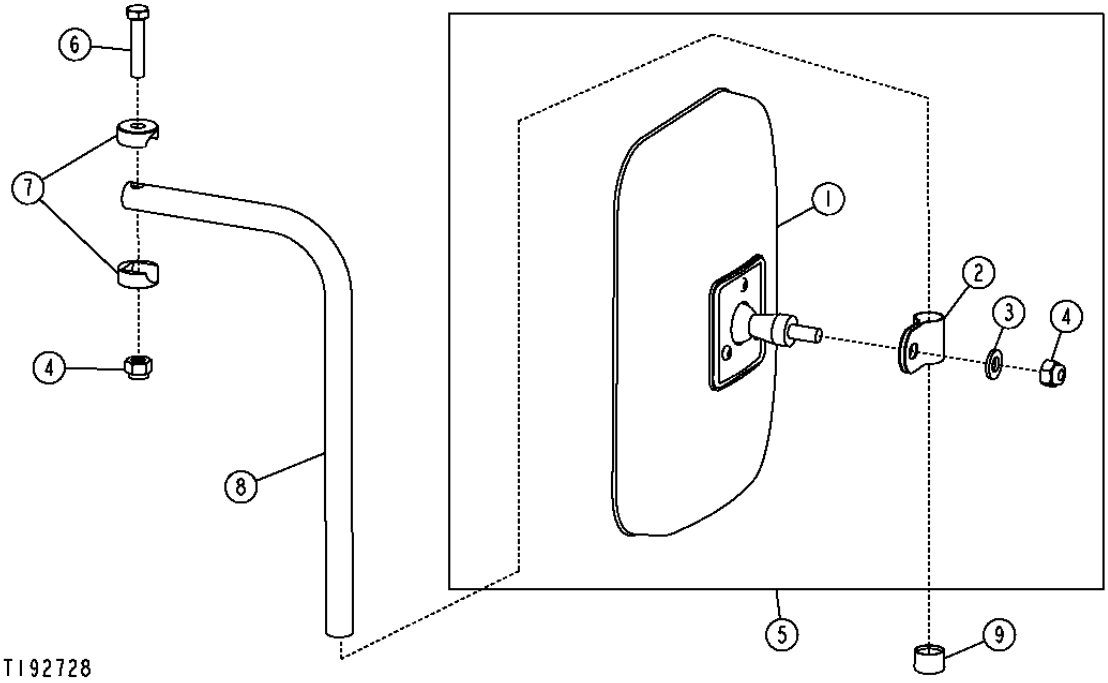

KEY	PART NO.	PART NAME	QTY.	SERIAL NO.	REMARKS
1	AT157226	REAR VIEW MIRROR	1		
2	T119564	CLAMP	1		
3	24M7239	WASHER	1		10.700 X 21 X 2.500 MM
4	T11234	LOCK NUT	2		
5	AT103919	REAR VIEW MIRROR	1		
6	19H2791	CAP SCREW	1		3/8" X 1-3/4"
7	T115030	HALF CLAMP	2		
8	T115031	RIB	1		
9	T128437	CAP	1		

MEMORANDA
MEMORANDA
MEMORANDA

INSIDE REAR VIEW MIRROR
INTERIEUR RETROVISEUR ARRIERE
ESPEJO RETROVISOR INTERIOR

TX1006817 -UN-27APR06

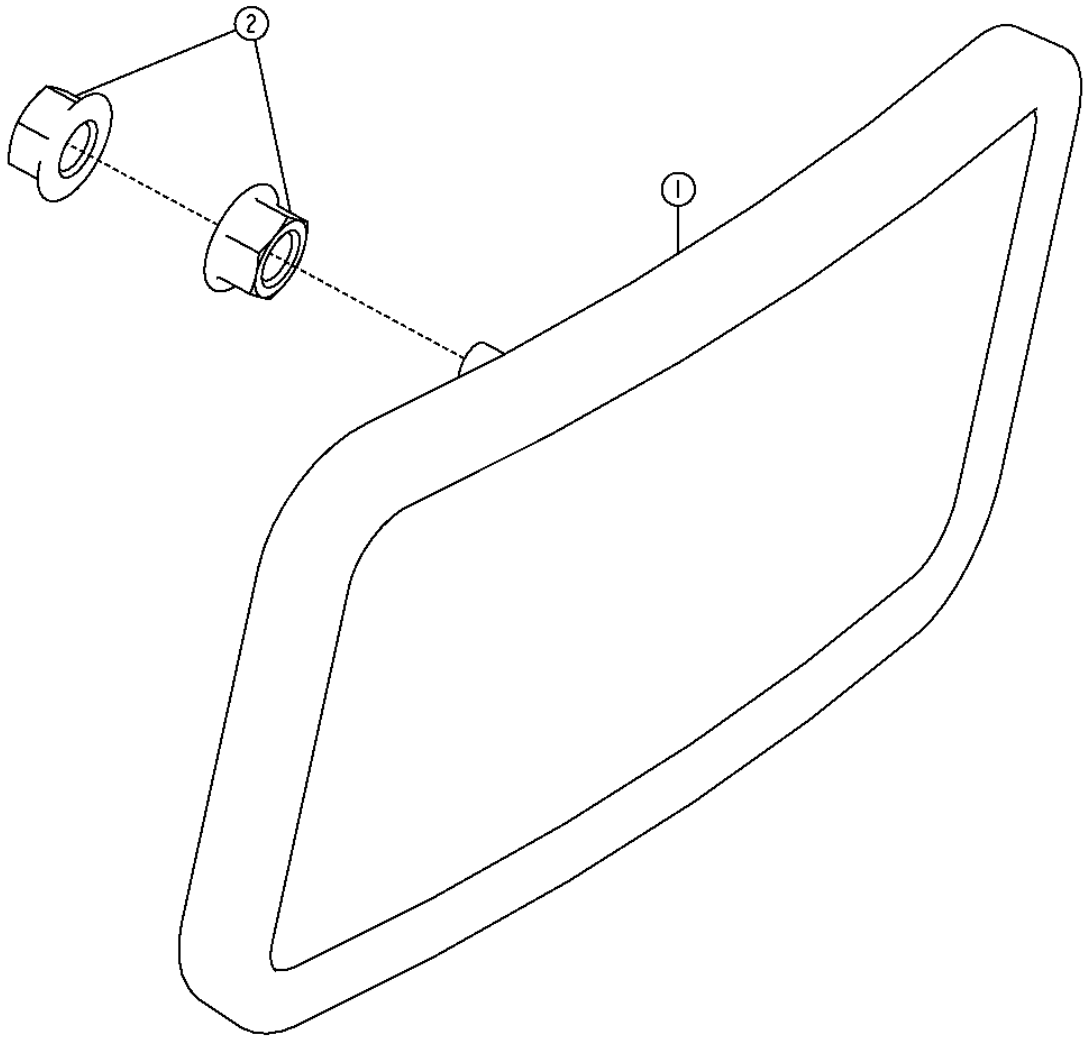

TX1006817

THIS PARTS LISTING IS CONTINUED

INSIDE REAR VIEW MIRROR
INTERIEUR RETROVISEUR ARRIERE
ESPEJO RETORVISOR INTERIOR

KEY	*PART NO.*	*PART NAME*	*QTY.*	*SERIAL NO.*	*REMARKS*
1	AT196427	REAR VIEW MIRROR	1		
2	14M7298	FLANGE NUT	2		M8

COAT HOOK
PATERE
GANCHO PARA ABRIGO

TP60658 -UN-08MAR99

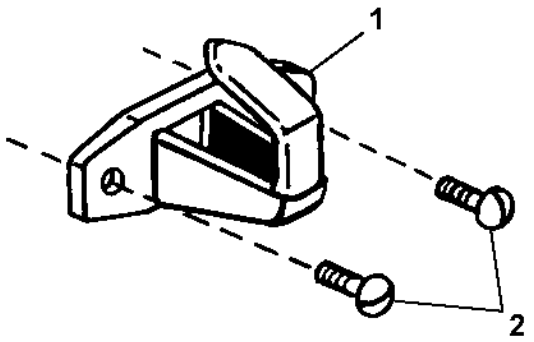

TP60658

KEY	*PART NO.*	*PART NAME*	*QTY.*	*SERIAL NO.*	*REMARKS*
1	L102023	HOOK	1		
2	21M7305	SCREW	2		M6 X 12

ASHTRAY
CENDRIER
CENICERO

T193027 -UN-06AUG03

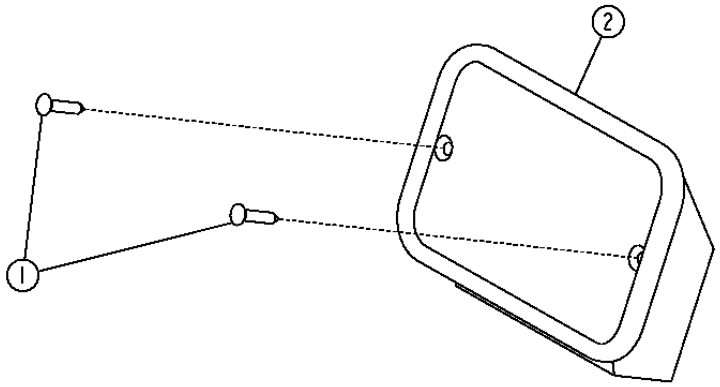

T193027

KEY	PART NO.	PART NAME	QTY.	SERIAL NO.	REMARKS
1	37M7333	SCREW	2		
2	AT59892	ASHTRAY	1		

CAB LEFT SIDE CONSOLE COVER
COUVERCLE CONSOLE GAUCHE CABINE
CUBIERTA DE CONSOLA DE LADO IZQUIERDO DE CABINA

T192999 -UN-20AUG03

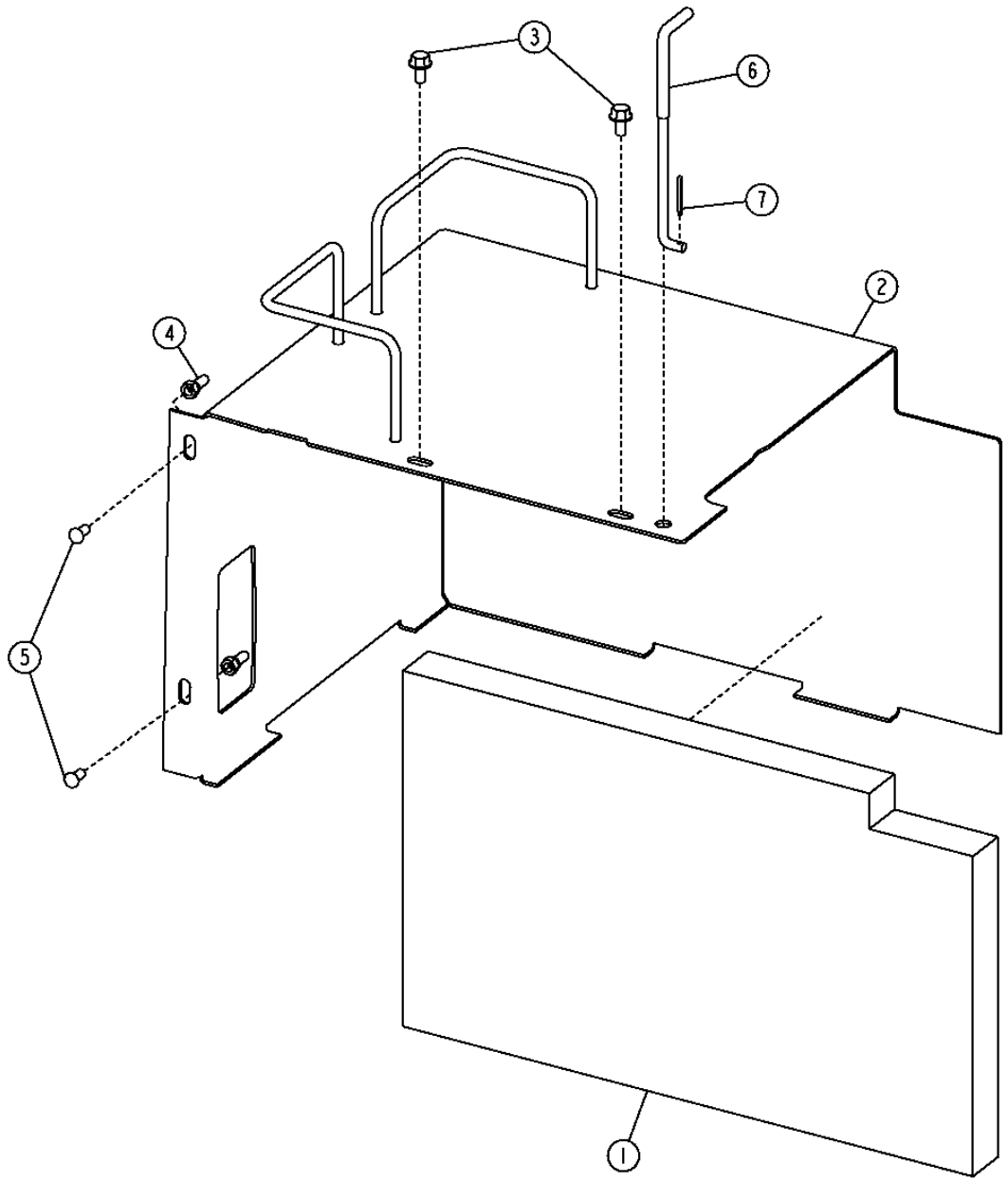

T192999

CAB LEFT SIDE CONSOLE COVER
COUVERCLE CONSOLE GAUCHE CABINE
CUBIERTA DE CONSOLA DE LADO IZQUIERDO DE CABINA

KEY	*PART NO.*	*PART NAME*	*QTY.*	*SERIAL NO.*	*REMARKS*
1	T171849	ISOLATOR	1		
2	AT227549	COVER	1		
3	19M7774	SCREW	2		M6 X 12
4	14M7376	LOCK NUT	2		M6
5	T167593	SCREW	2		
6	T167764	ROD	1		
7	11M7081	COTTER PIN	1		2.500 X 20 MM

FRESH AIR HOUSING COVER
COUVERCLE BATI FILTRE AIR FRAIS
CUBIERTA DE CAJA DE AIRE FRESCO

TP60556 -UN-01DEC98

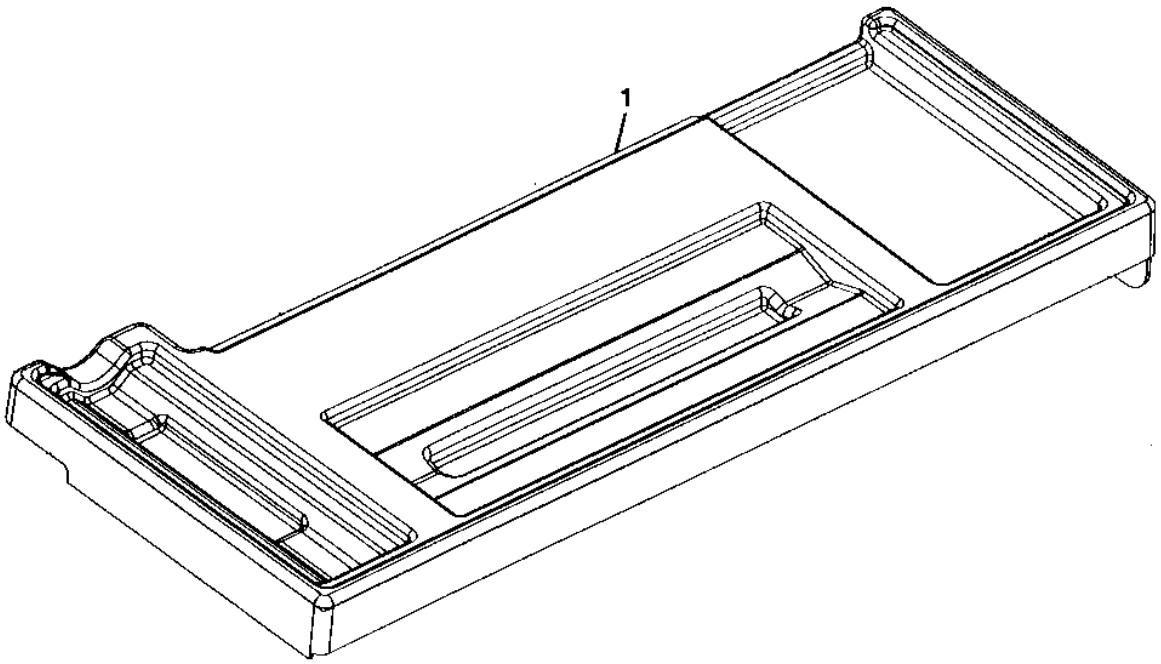

TP60556

FRESH AIR HOUSING COVER
COUVERCLE BATI FILTRE AIR FRAIS
CUBIERTA DE CAJA DE AIRE FRESCO

KEY	*PART NO.*	*PART NAME*	*QTY.*	*SERIAL NO.*	*REMARKS*
1	AT222402	COVER	1		

CAB AND CANOPY FLOOR MAT
CABINE ET TAPIS PLANCHER AUVENT
FELPUDO DE CABINA Y DOSEL

TP55529 -UN-13MAY97

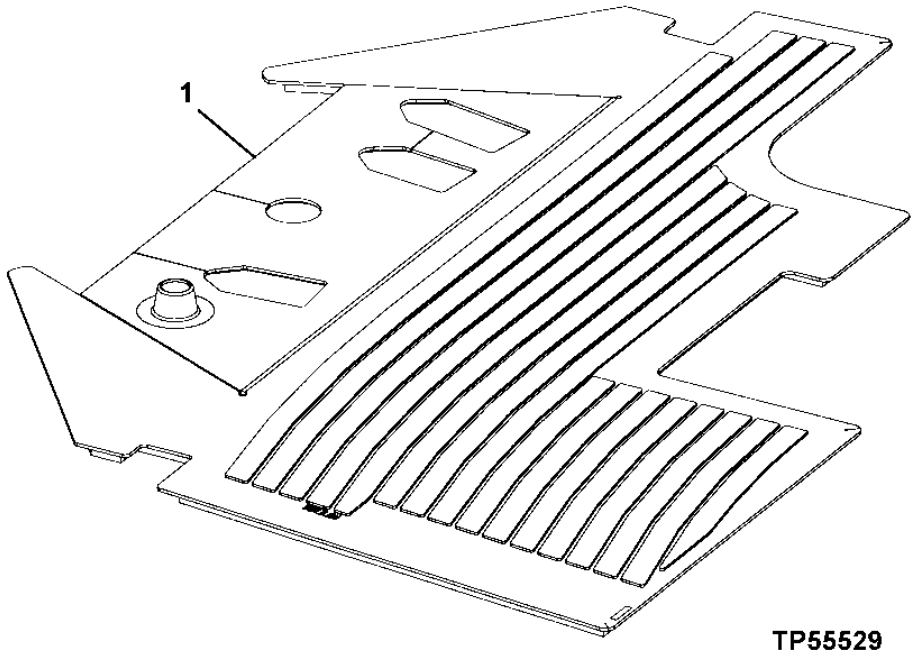

TP55529

KEY	PART NO.	PART NAME	QTY.	SERIAL NO.	REMARKS
1	AT207144	MAT	1		

SUN VISOR
PARE-SOLEIL
PARASOL

T141042 -UN-09APR01

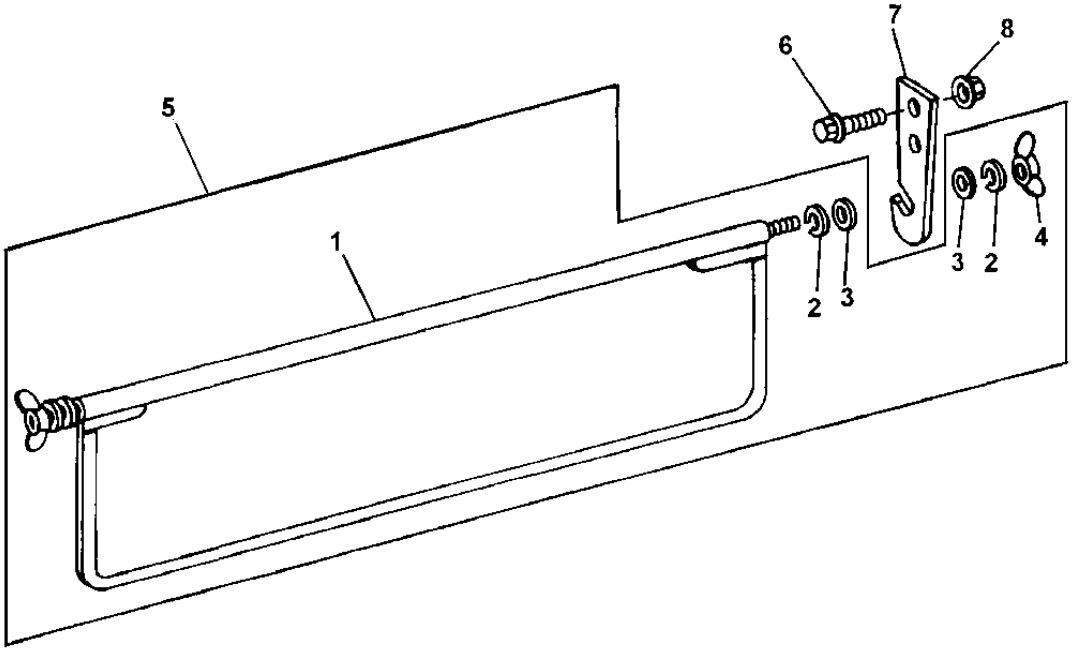

T141042

KEY	PART NO.	PART NAME	QTY.	SERIAL NO.	REMARKS
1	.....	SUN VISOR	1		(SUB AT336621)
2	24H1285	WASHER	4		17/64" X 7/16" X 0.065"
3	N218377	WASHER	4		
4	M47887	WING NUT	2		6.350 MM
5	AT336621	SUN VISOR	1		(SUB FOR AT217448)
6	19M7862	SCREW	2		M6 X 20
7	T181797	BRACKET	2		
8	14M7303	FLANGE NUT	2		M6

STEERING WHEEL, COLUMN AND LINKAGE
VOLANT, COLONNE ET TRINGLERIE
VOLANTE, COLUMNA Y VARILLAJE

T195299 -UN-21OCT03

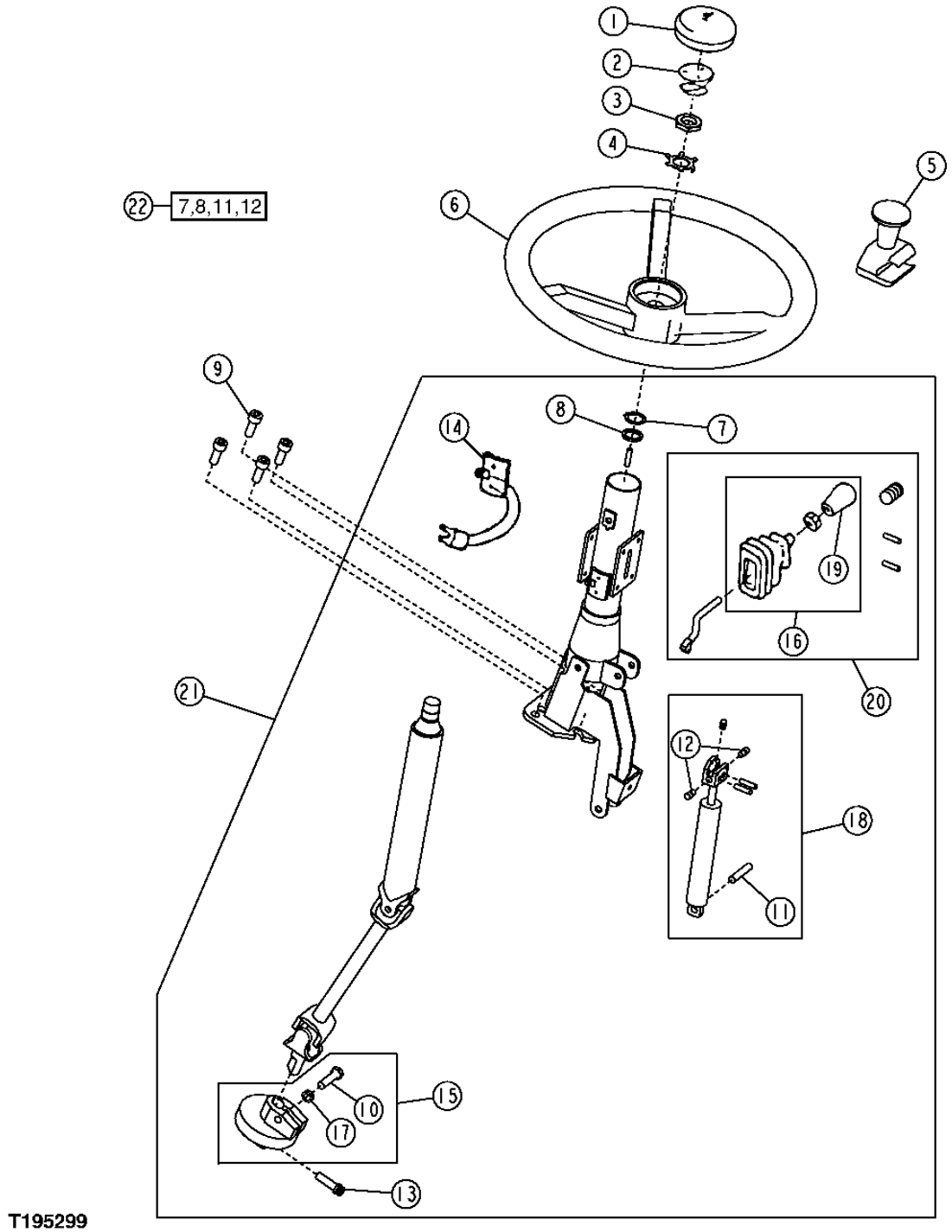

T195299

STEERING WHEEL, COLUMN AND LINKAGE
VOLANT, COLONNE ET TRINGLERIE
VOLANTE, COLUMNA Y VARILLAJE

KEY	PART NO.	PART NAME	QTY.	SERIAL NO.	REMARKS
1	T154131	COVER	1		
2	AT222153	SWITCH	1		
3	T13630	NUT	1		
4	T17148	LOCK WASHER	1		
5	AT169849	KNOB	1		
6	AT139694	STEERING WHEEL	1		
7	.....	SNAP RING	1		
8	.....	SEALING WASHER	1		
9	19M8328	SCREW	4		M10 X 25
10	19H2544	CAP SCREW	1		
11	.....	DOWEL PIN	1		
12	.....	SCREW	2		
13	T39049	SCREW	1		
14	AT162719	BRUSH SET	1		
15	AT220226	KIT	1		ISOLATOR
16	AT191487	KIT	1		KNOB
17	.....	WASHER	1		
18	AT160662	KIT	1		GAS CYLINDER ASSEMBLY
19	AT220223	KIT	1		KNOB
20	AT220224	KIT	1		TILT LEVER
21	AT300524	STEERING COLUMN	1		
22	RE56109	KIT	1		STEERING COLUMN

LOWER STEERING COLUMN
COLONNE DIRECTION INFERIEURE
COLUMNA INFERIOR DE LA DIRECCION

T212760 -UN-19JUL05

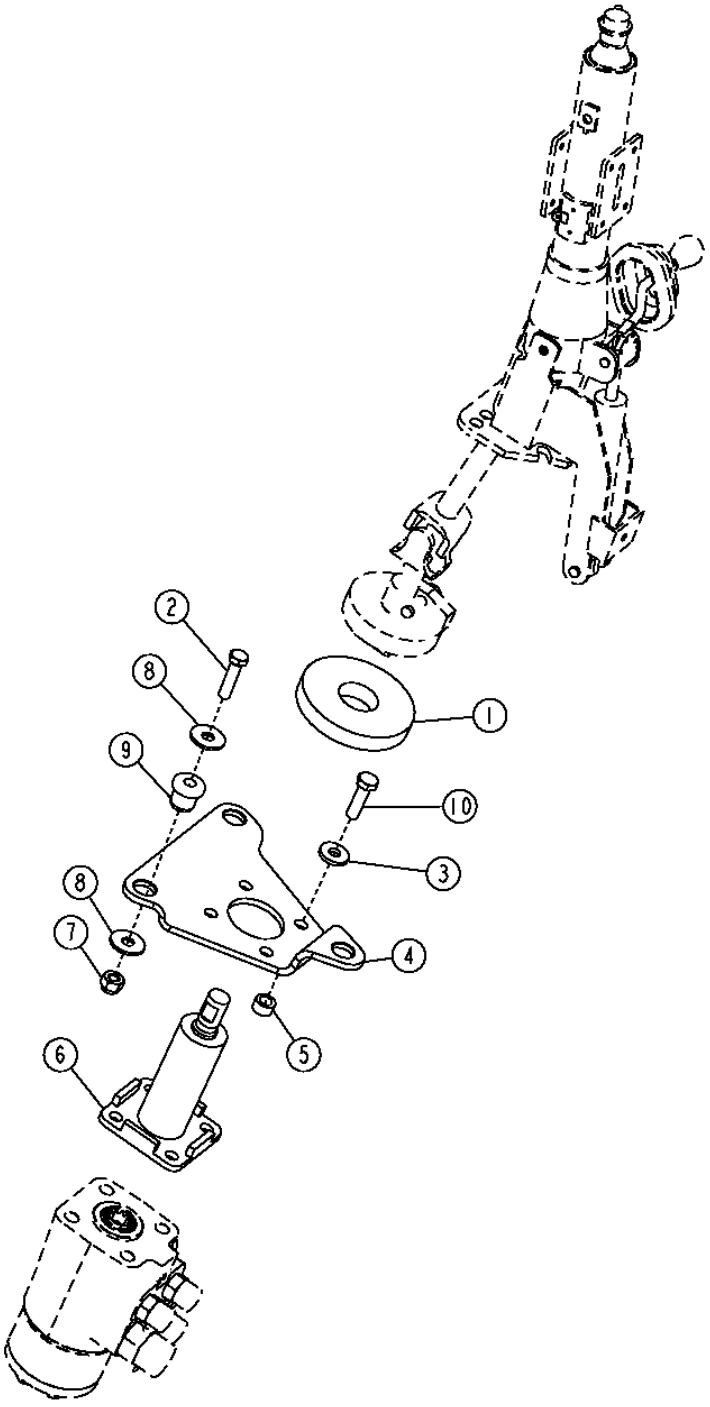

T212760

LOWER STEERING COLUMN
COLONNE DIRECTION INFERIEURE
COLUMNA INFERIOR DE LA DIRECCION

KEY	*PART NO.*	*PART NAME*	*QTY.*	*SERIAL NO.*	*REMARKS*
1	T131980	ISOLATOR	1		
2	19H2633	CAP SCREW	3		
3	24H1308	WASHER	4		13/32" X 1" X 0.134"
4	T168276	BRACKET	1		TO CAB FLOOR
5	28H860	WASHER	4		0.423" X 0.675" X 3/8"
6	AT156896	STEERING COLUMN	1		LOWER
7	14M7400	LOCK NUT	3		M10
8	24M7296	WASHER	6		10.500 X 30 X 2.500 MM
9	AT116162	ISOLATOR	3		
10	19M7550	CAP SCREW	4		

STEERING COLUMN COVERS
COUVERCLE DE COLONNE DE DIRECTION
CUBIERTA DE LA COLUMNA DE DIRECCION

TP60362 -UN-27APR98

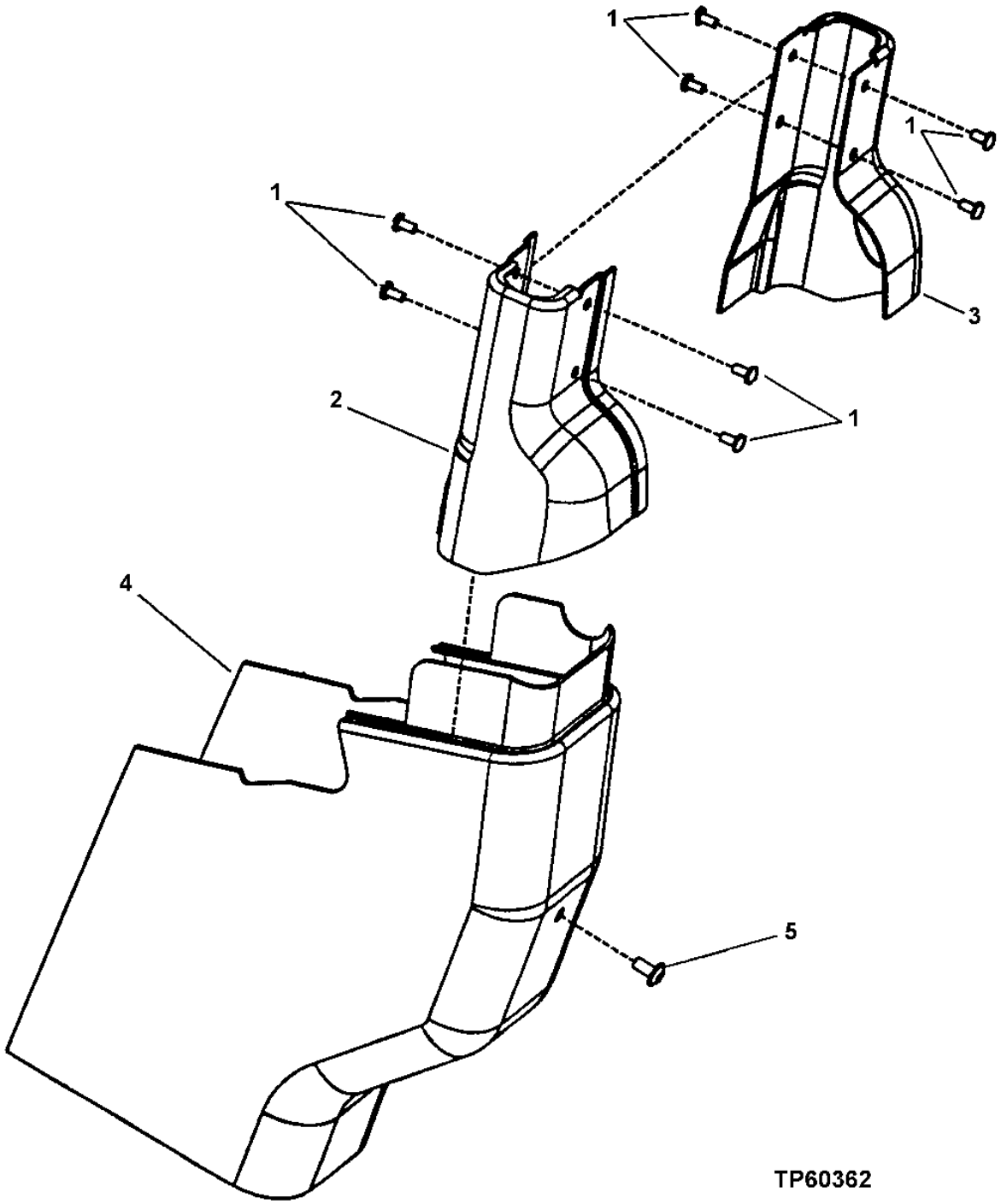

STEERING COLUMN COVERS
COUVERCLE DE COLONNE DE DIRECTION
CUBIERTA DE LA COLUMNA DE DIRECCION

KEY	*PART NO.*	*PART NAME*	*QTY.*	*SERIAL NO.*	*REMARKS*
1	21M7305	SCREW	8		M6 X 12
2	T173100	COVER	1		UPPER
	T211353	COVER	1		(FOR USE WITH JOYSTICK MOUNTED FNR)
3	T173099	COVER	1		UPPER
4	T156784	COVER	1		LOWER
5	19M8675	SCREW	1		M8 X 16

RIGHT HAND CAB CONSOLE
CONSOLE CABINE DROITE
CONSOLA DE LA CABINA DEL LADO DERECHO

T216042 -UN-25OCT05

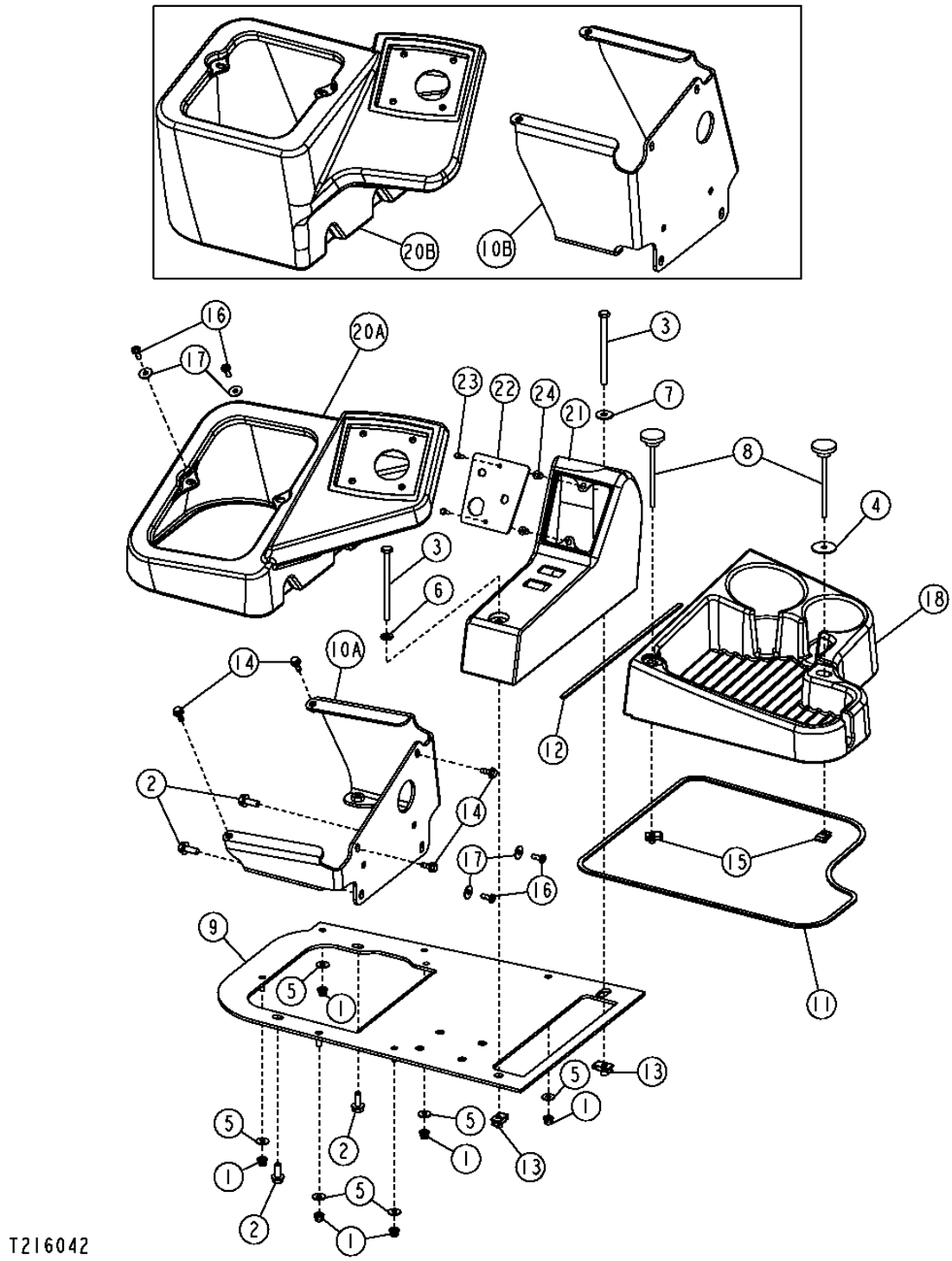

RIGHT HAND CAB CONSOLE
CONSOLE CABINE DROITE
CONSOLA DE LA CABINA DEL LADO DERECHO

KEY	PART NO.	PART NAME	QTY.	SERIAL NO.	REMARKS
1	14M7165	LOCK NUT	6		M6
2	19M7866	SCREW	4		M8 X 20
3	19M7997	CAP SCREW	2		M8 X 110
4	24H1695	WASHER	1		9/32" X 1-3/8" X 0.065"
5	24M7139	WASHER	6		6.400 X 18 X 1.600 MM
6	24M7238	WASHER	1		8.700 X 17 X 2 MM
7	24M7298	WASHER	1		8.400 X 25 X 2 MM
8	AT226334	KNOB	2		
9	AT310413	PLATE	1		(SUB FOR AT228253)
10A	AT310414	BRACKET	1		(SHORT) (SUB FOR AT300441)
10B	AT310412	BRACKET	1		(TALL) (SUB FOR AT227794)
11	T180533	SEALING TRIM	1		
12	.....	ISOLATOR	1		(MAKE FROM T207925) (CUT TO LENGTH, 4.25 FT.)
13	H156360	NUT	2		
14	M113243	SCREW	4		
15	M84972	NUT	2		
16	T133674	SELF-LOCKING SCREW	4		(SUB FOR 21M7292)
17	24H1821	WASHER	4		
18	T182612	COVER	1		
20A	T200267	COVER	1		(SHORT)
20B	T196622	COVER	1		(TALL)
21	T202883	CONSOLE	1		
22	T203128	PLATE	1		
23	T82791	SCREW	2		
24	T82792	NUT	2		

SEAT AND SEAT SUSPENSION
SIEGE ET SUSPENSION DE SIEGE
ASIENTO Y SUSPENSION DEL ASIENTO

T195239 -UN-21OCT03

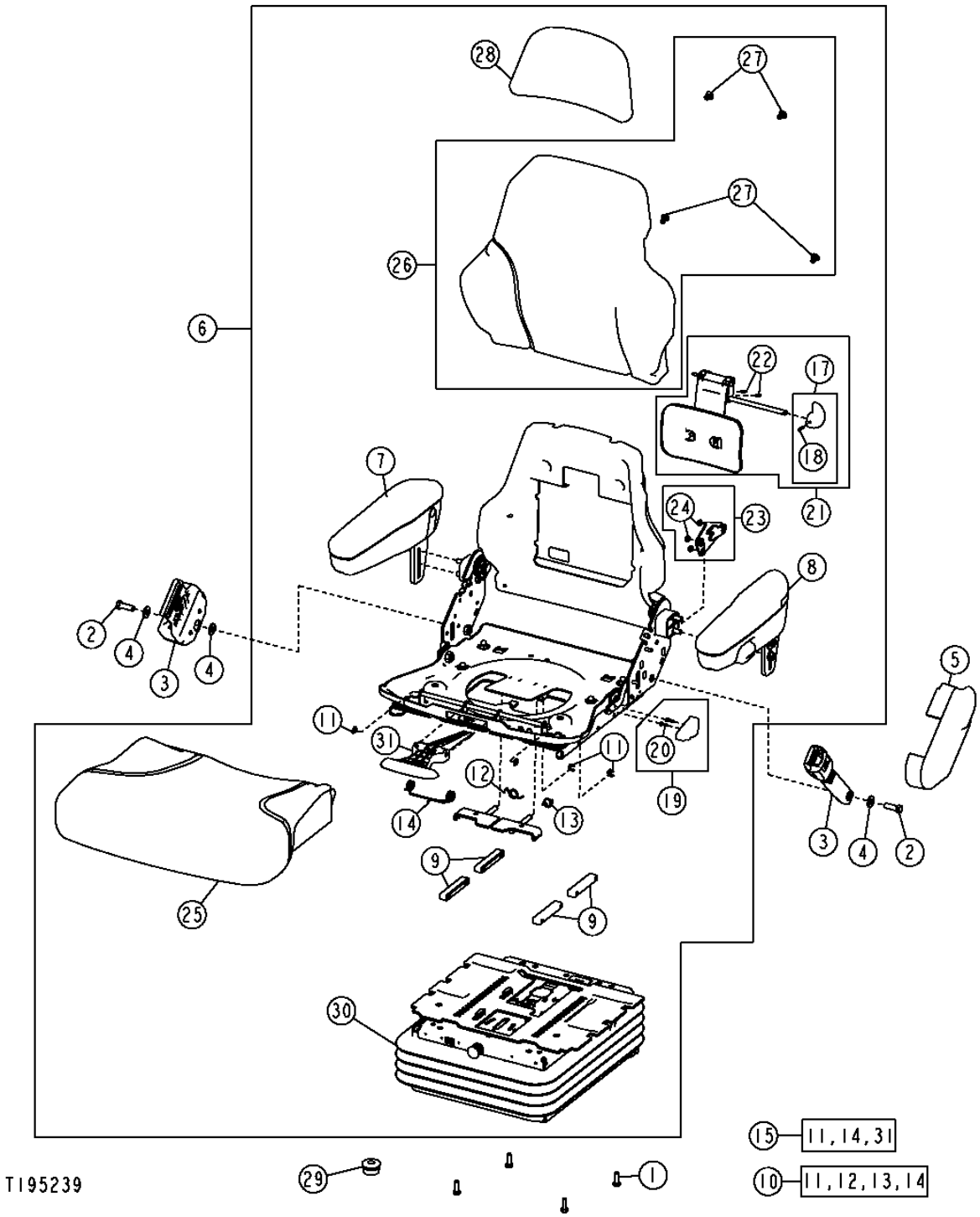

SEAT AND SEAT SUSPENSION
SIEGE ET SUSPENSION DE SIEGE
ASIENTO Y SUSPENSION DEL ASIENTO

KEY	PART NO.	PART NAME	QTY.	SERIAL NO.	REMARKS
1	19M7866	SCREW	4		
2	19H3569	CAP SCREW	2		
3	AT308199	SEAT BELT	1		
4	T105740	WASHER	4		
5	T163962	COVER	1		
6	AT307474	SEAT	1	-592825	GRAY VINYL
	AT311919	SEAT	1	592826-	GRAY VINYL
	AT224248	SEAT	1	-592825	GRAY CLOTH
	AT310435	SEAT	1	592826-	GRAY CLOTH
7	AT195441	ARMREST KIT	1		(R.H.)
	AT315715	PAD	1		
8	AT195442	ARMREST KIT	1		(L.H.)
	AT315761	PAD	1		
9	AT209020	KIT	1		SLIDE PUCK KIT
10	AT209021	KIT	1		SLIDE SPRING KIT
11	R72655	SNAP RING	4		
12	T163334	SPRING	1		
13	T163335	SPRING	1		
14	T163336	TORSION SPRING	1		
15	AT209022	HOSE KIT	1		SLIDE CONTROL KIT
17	AT209024	KIT	1		LUMBAR KNOB KIT
18	34H262	SPRING PIN	1		
19	AT209025	KIT	1		RECLINER KNOB KIT
20	37H121	SCREW	1		
21	AT209026	KIT	1		LUMBAR SERVICE KIT
22	34H387	SPRING PIN	2		
23	AT209225	KIT	1		RECLINER SERVICE KIT (INCLUDES RECLINER KNOB KIT AND TORSION SPRING)
24	M453T	LOCK NUT	3		
25	AT221015	SEAT	1		GRAY VINYL
	AT308795	CUSHION	1		(SUB FOR AT221019) GRAY CLOTH
26	AT221016	PAD	1		GRAY VINYL
	AT308796	CUSHION	1		(SUB FOR AT221020) GRAY CLOTH
27	T171686	CLIP	4		
28	AT221017	CUSHION	1		GRAY VINYL
	AT308797	CUSHION	1		(SUB FOR AT221021) GRAY CLOTH
29	T182870	ISOLATOR	1		(SUB FOR N119177)
30	AT208531	SEAT SUSPENSION	1	-592825	
	AT311918	SEAT SUSPENSION	1	592826-	
31	.....	CONTROL	1		

SEAT SUSPENSION
SUSPENSION DE SIEGE
SUSPENSION DEL ASIENTO

T195125 -UN-25SEP03

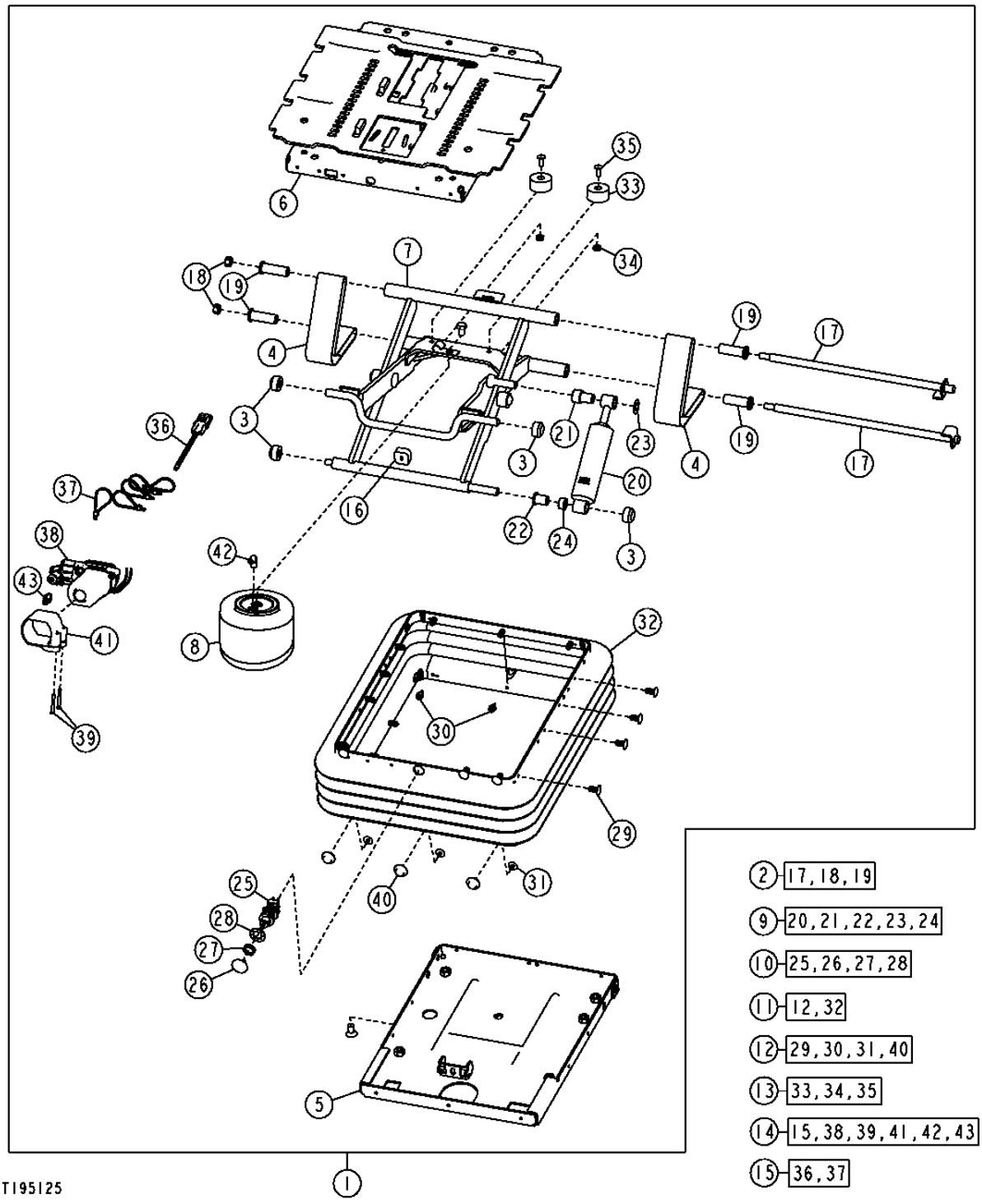

SEAT SUSPENSION
SUSPENSION DE SIEGE
SUSPENSION DEL ASIENTO

KEY	PART NO.	PART NAME	QTY.	SERIAL NO.	REMARKS
1	AT208531	SEAT SUSPENSION	1	-592825	
	AT311918	SEAT SUSPENSION	1	592826-	
2	AT173313	SHAFT	1		
3	AT173314	SEAT BEARING ROLLER KIT	1		
4	AT173315	KIT	1		TETHER BELT SERVICE KIT
5	AT208483	HOUSING	1		
6	AT208484	HOUSING	1	-592825	
	AT313399	HOUSING	1	592826-	
7	AT208485	ARM	1		
8	AT208486	ABSORBER	1		(AIR BLADDER SPRING)
9	AT208487	KIT	1		SUSPENSION SHOCK SERVICE KIT
10	AT208490	SELECTIVE CONTROL VALVE	1		
11	AT208491	KIT	1		(INCLUDES AT173321) BOOT SERVICE KIT
12	AT173321	SEAT SUSPENSION BOOT KIT	1		
13	AT209469	KIT	1		BUMPER SERVICE KIT
14	AT226676	COMPRESSOR	1		
15	AT208488	WIRING HARNESS	1		
16	T55224	BUMPER	1		
17	.....	SHAFT	2		(SUB AT173313)
18	.....	LOCK NUT	2		(SUB AT173313)
19	.....	BUSHING	4		(SUB AT173313)
20	.....	SHOCK ABSORBER	1		(SUB AT208487)
21	.....	BEARING	1		(SUB AT208487)
22	.....	ECCENTRIC LOCKING COLLAR	1		(SUB AT208487)
23	.....	PUSH NUT	1		(SUB AT208487)
24	.....	SPACER	1		(SUB AT208487)
25	.....	HYD ACTUATED CONTROL VALVE	1		(SUB AT208490)
26	.....	KNOB	1		(SUB AT208490)
27	.....	NUT	1		(SUB AT208490)
28	.....	LOCK WASHER	1		(SUB AT208490)
29	.....	CLIP	23		(SUB AT173321)
30	.....	RIVET	3		(SUB AT173321)
31	.....	RIVET	3		(SUB AT173321)
32	.....	BOOT	1		(SUB AT208491)
33	.....	BUMPER	2		(SUB AT209469)
34	.....	LOCK NUT	2		(SUB AT209469)
35	.....	SCREW	2		(SUB AT209469)
36	.....	WIRING HARNESS	1		(SUB AT208488)
37	.....	TIE BAND	4		(SUB AT208488)
38	.....	COMPRESSOR	1		(SUB AT226676)
39	.....	SPRING PIN	2		(SUB AT226676)
40	.....	RIVET	6		(SUB AT173321)
41	.....	CLAMP	1		(SUB AT226676)
42	.....	PIPE ELBOW	1		(SUB AT226676)
43	.....	TAB CONNECTOR BODY	1		(SUB AT226676)

RIGHT ARM REST
ACCOUDOIR DROIT
APOYABRAZOS DERECHO

T212897 -UN-26JUL05

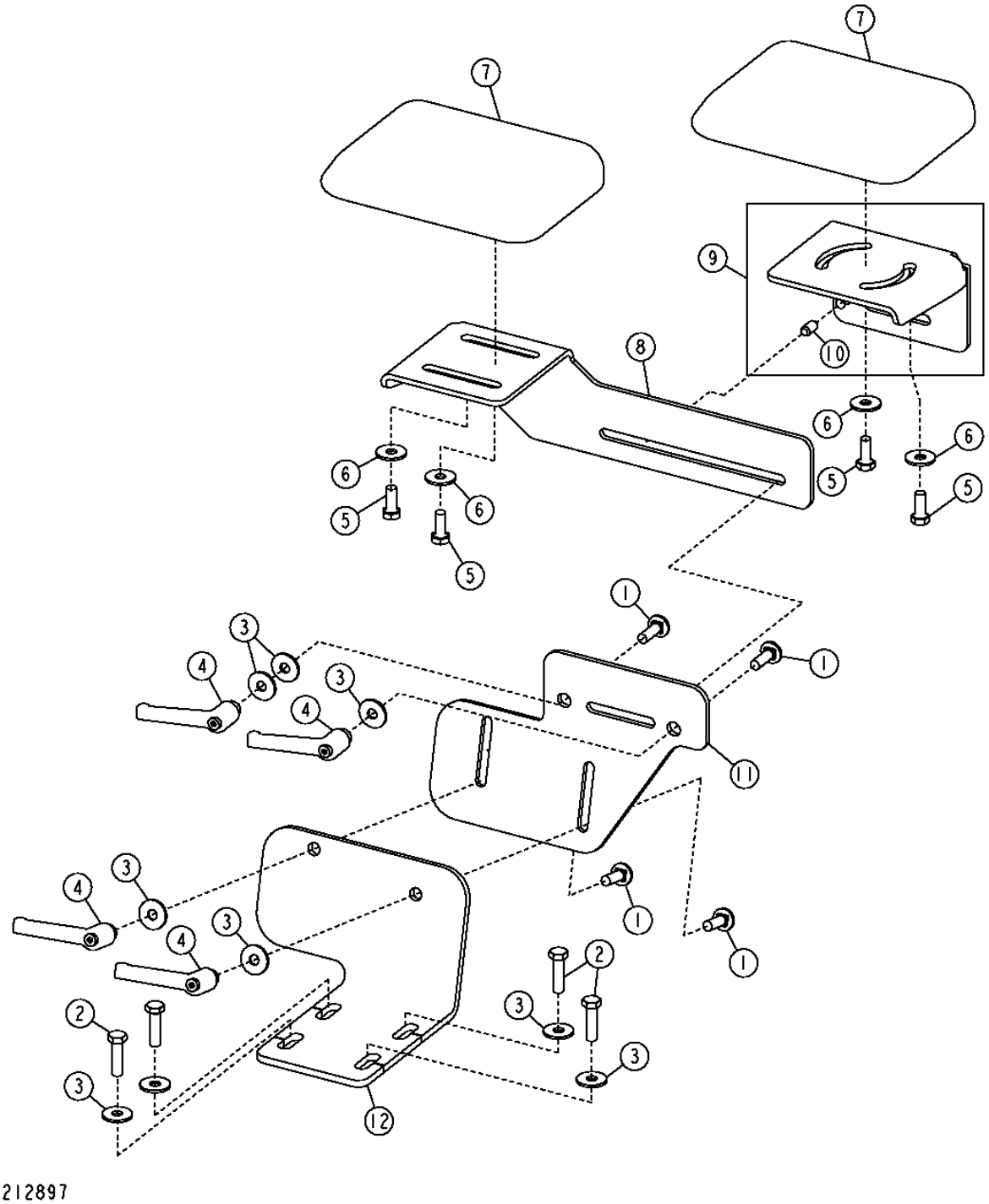

THIS PARTS LISTING IS CONTINUED

RIGHT ARM REST
ACCOUDOIR DROIT
APOYABRAZOS DERECHO

KEY	PART NO.	PART NAME	QTY.	SERIAL NO.	REMARKS
1	03M7185	BOLT	4		M8 X 25
2	19M7868	SCREW	4		M8 X 30, (SUB FOR 19M7513)
3	24M7298	WASHER	9		8.400 X 25 X 2 MM
4	AT227063	LEVER	4		
5	19M7866	SCREW	4		M8 X 20, (SUB FOR 19M7881)
6	24M7298	WASHER	4		8.400 X 25 X 2 MM
7	AT327621	CUSHION	2		(SUB FOR AT171679)
8	T200161	SUPPORT	1		
9	AT300115	BRACKET	1		
10	44M7027	PIN	1		
11	T209601	SUPPORT	1		(SINGLE LEVER CONTROLLER)
	T200158	SUPPORT	1		(TWO LEVER CONTROLLER)
12	T209602	SUPPORT	1		(SINGLE LEVER CONTROLLER)
	T200159	SUPPORT	1		(TWO LEVER CONTROLLER)

ACCESS PLATFORM AND STEPS
PLATE-FORME ACCES ET MARCHES
PLATAFORMA DE ACCESO Y PELDANOS

T151369 -UN-14FEB02

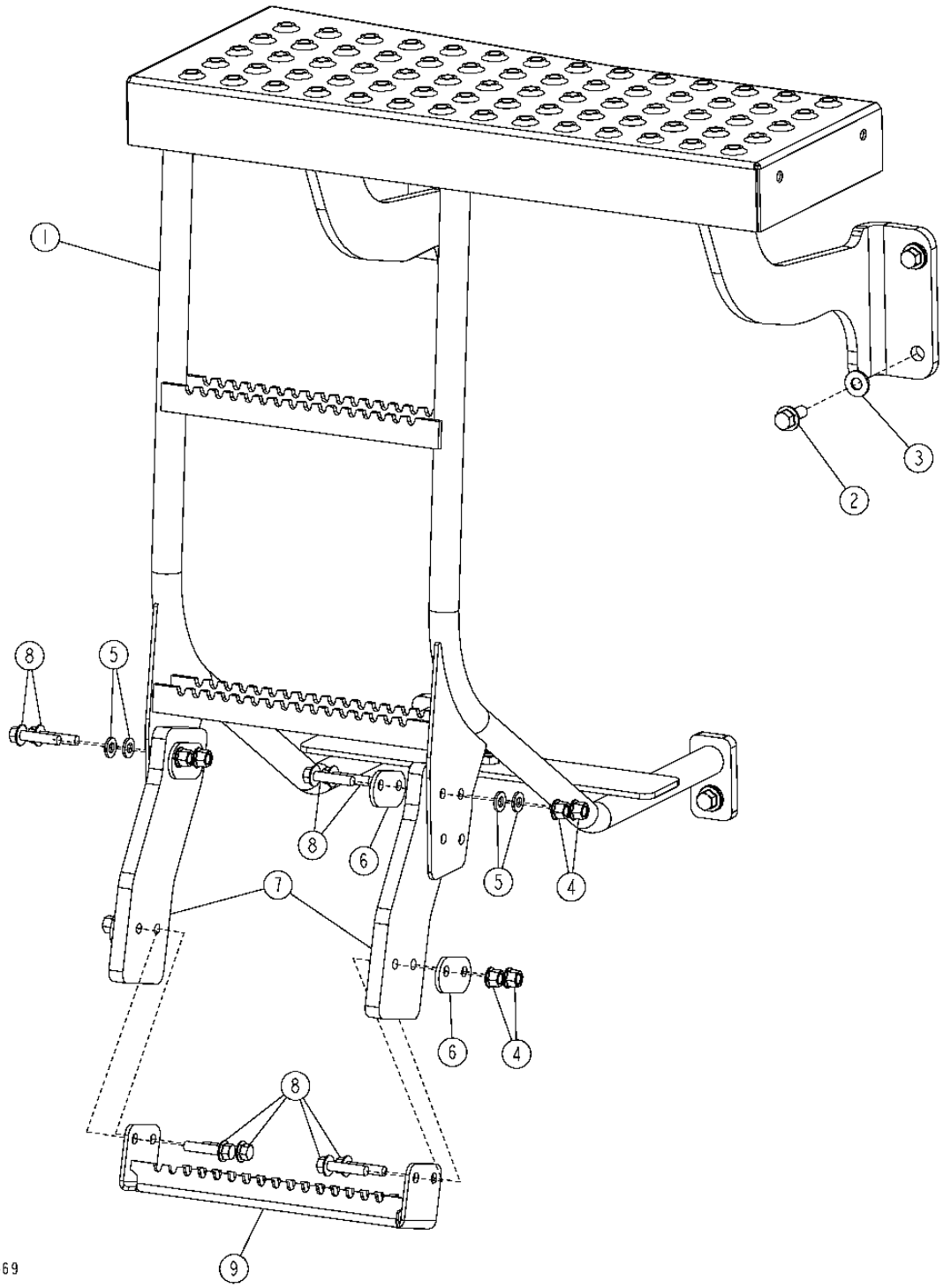

ACCESS PLATFORM AND STEPS
PLATE-FORME ACCES ET MARCHES
PLATAFORMA DE ACCESO Y PELDANOS

KEY	PART NO.	PART NAME	QTY.	SERIAL NO.	REMARKS
1	AT223989	PLATFORM	1	-598479	
	AT323672	PLATFORM	1	598480-	
2	19M7789	SCREW	5		M12 X 30
3	T178063	WASHER	5		
4	14M7400	LOCK NUT	8		
5	24M7239	WASHER	4		
6	T173779	STRAP	4		
7	T177503	STRAP	2		
8	19M7805	SCREW	8		
9	T176870	STEP	1		

CLOSE MOUNTED STEPS
MARCHES RAPPROCHEES
PELDANOS DE MONTAJE ESTRECHO

TP62532 -UN-04MAY99

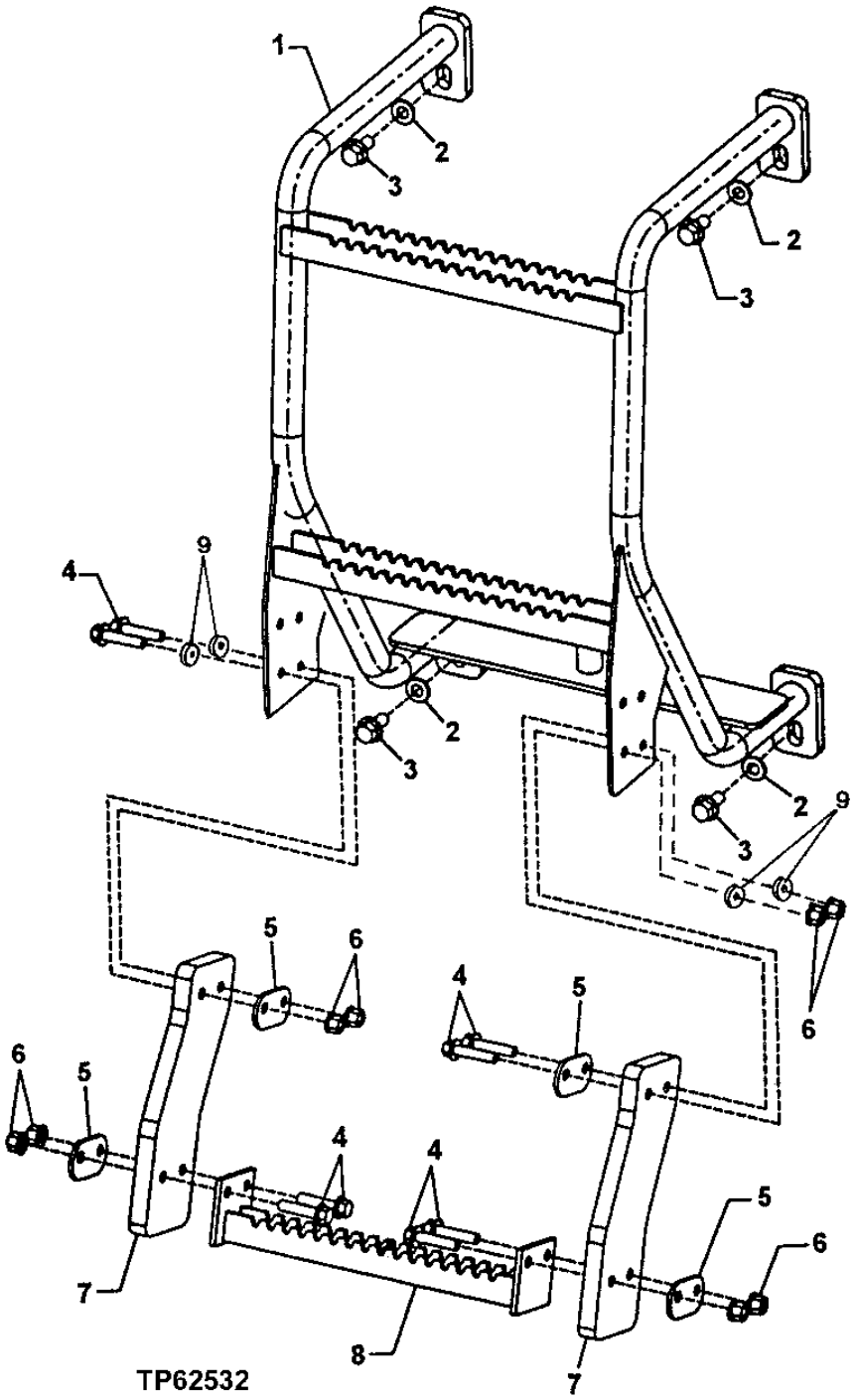

CLOSE MOUNTED STEPS
MARCHES RAPPROCHEES
PELDANOS DE MONTAJE ESTRECHO

KEY	PART NO.	PART NAME	QTY.	SERIAL NO.	REMARKS
1	AT209698	STEP	1		
2	T178063	WASHER	4		
3	19M7789	SCREW	4		M12 X 30
4	19M7805	SCREW	8		M10 X 45
5	T173779	STRAP	4		
6	14M7400	LOCK NUT	8		M10
7	T177503	STRAP	2		
8	T176870	STEP	1		
9	24M7239	WASHER	4		10.700 X 21 X 2.500 MM

ENGINE COMPARTMENT STEP
MARCHE DE COMPARTIMENT MOTEUR
PELDANO DEL COMPARTIMIENTO DEL MOTOR

TX1017822 -UN-

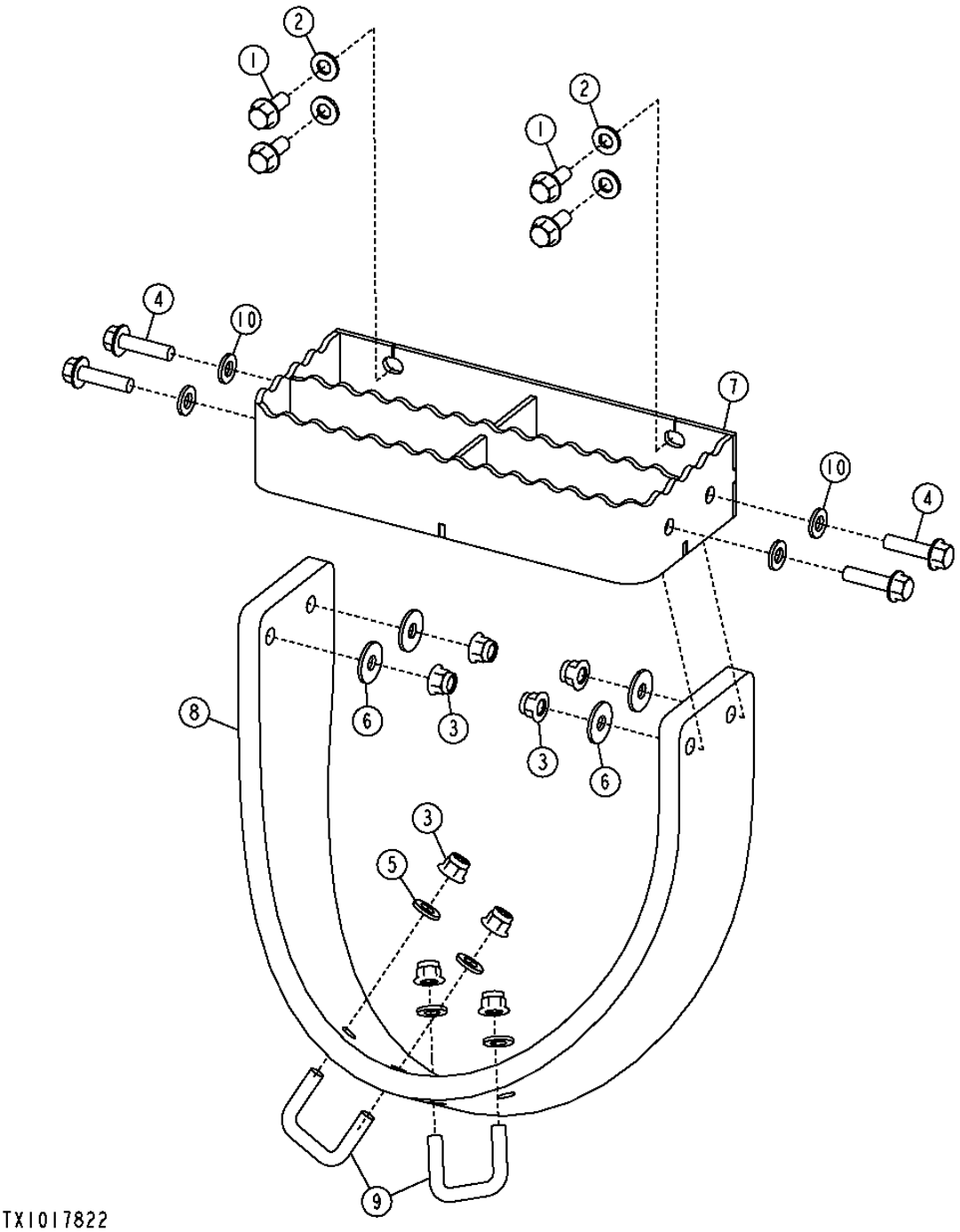

THIS PARTS LISTING IS CONTINUED

ENGINE COMPARTMENT STEP
MARCHE DE COMPARTIMENT MOTEUR
PELDANO DEL COMPARTIMIENTO DEL MOTOR

KEY	PART NO.	PART NAME	QTY.	SERIAL NO.	REMARKS
1	19M7785	SCREW	4		M10 X 25
2	24M7239	WASHER	4	-XXXXXX	10.700 X 21 X 2.500 MM
3	14M7400	LOCK NUT	8		M10
4	19M7806	SCREW	4	-XXXXXX	M10 X 50
	19M7804	SCREW	4	XXXXXX-	M10 X 40
5	24M7239	WASHER	4		10.700 X 21 X 2.500 MM
6	24M7296	WASHER	4		10.500 X 30 X 2.500 MM
7	AT228809	STEP	1		
8	T217427	STRAP	1		(SUB FOR T197442)
9	W29909	U-BOLT	2		
10	24M7239	WASHER	2	-XXXXXX	

HVAC MODULE
MODULE CHAUFFAGE, VENTILATION ET CLIMATISATION
MODULO DE CLIMATIZACION

T193582 -UN-21AUG03

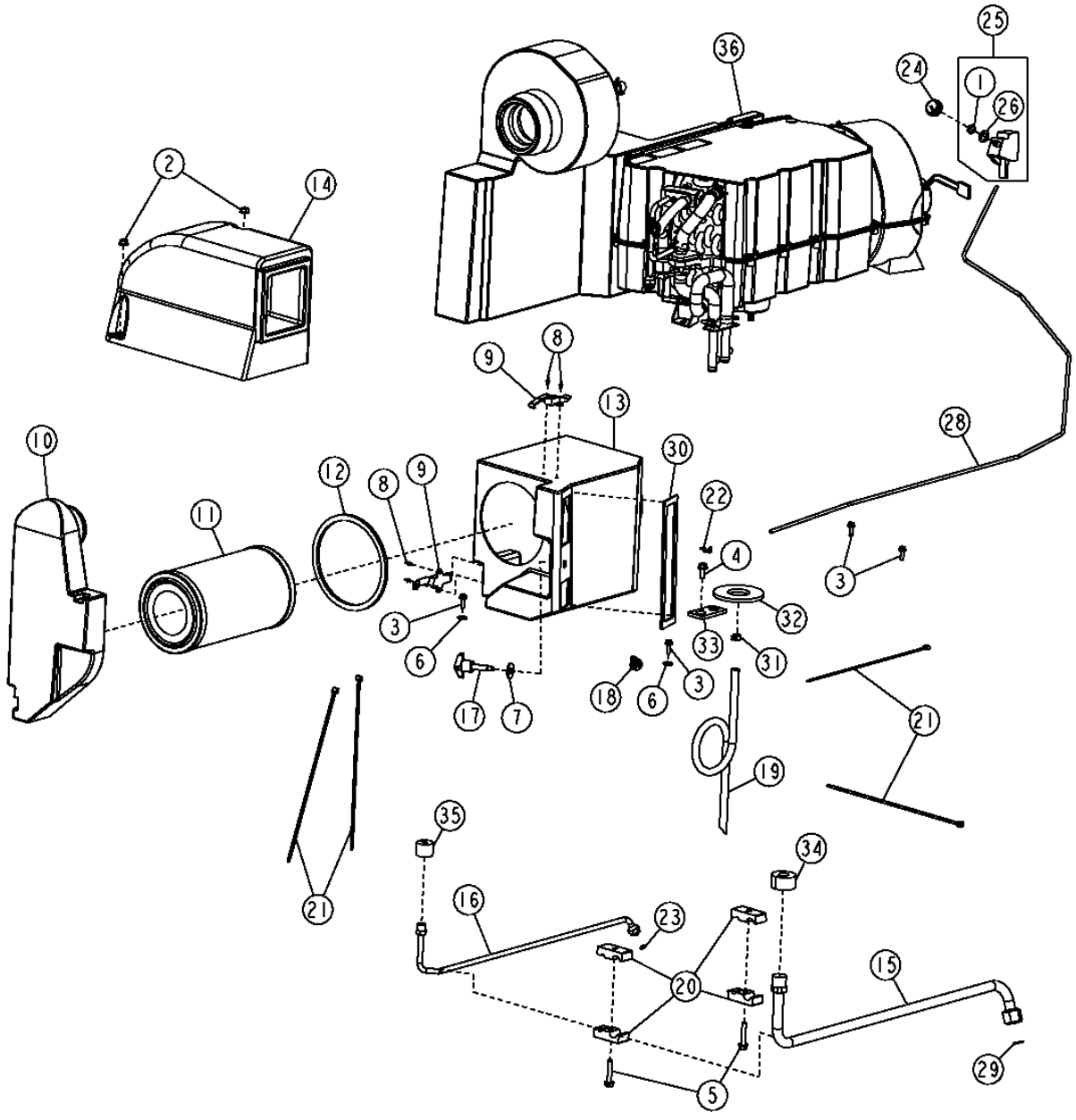

HVAC MODULE
MODULE CHAUFFAGE, VENTILATION ET CLIMATISATION
MODULO DE CLIMATIZACION

KEY	PART NO.	PART NAME	QTY.	SERIAL NO.	REMARKS
1	R203687	NUT	1		
2	14M7298	FLANGE NUT	2		M8
3	19M7862	SCREW	4		M6 X 20
4	19M7866	SCREW	3		M8 X 20
5	19M8318	SCREW	2		M8 X 45
6	24M7139	WASHER	2		6.400 X 18 X 1.600 MM
7	24M7296	WASHER	1		10.500 X 30 X 2.500 MM
8	H86981	RIVET	4		
9	R121465	LATCH	2		
10	T167945	AIR DUCT	1		
11	T168220	AIR FILTER	1		
	AT321942	ACTIVATED CARBON AIR FILTER	1		(ODOR REDUCING ACTIVATED CARBON FILTER)
12	T170053	SEAL	1		
13	T171459	AIR DUCT	1		
14	AT209668	AIR DUCT	1		
15	AT210561	LINE	1		(SUB FOR AT306912 AND AT310782)
16	AT306913	TUBE	1		
17	AT220953	KNOB	1		
18	AT226249	JUMPER	1		
19	Z59685	HOSE	1		(SUB FOR B14604) 114.3MM (4.5')
20	H114865	CLAMP	4		
21	H77698	TIE BAND	4		
22	L57881	CLIP	1		
23	R10093	O-RING	1		
24	AL76568	KNOB	1		
25	RE46742	CONTROL	1		
26	12H292	LOCK WASHER	1		1/2"
27	14H934	NUT	1		7/16"
28	RE58614	PUSH PULL CABLE	1		
29	T143169	O-RING	1		
30	T167676	SEAL	1		
31	T174427	CLAMP	1		
32	T182852	SEALING WASHER	1		
33	T182858	GASKET	1		
34	T182870	ISOLATOR	1		
35	T182871	ISOLATOR	1		
36	T182906	PLATE	1		

HVAC MODULE COMPONENTS
COMPOSANTS MODULE CHAUFFAGE, VENTILATION ET CLIMATISATION
COMPONENTES DEL MODULO DE CLIMATIZACION

TX1008275 -UN-14JUN06

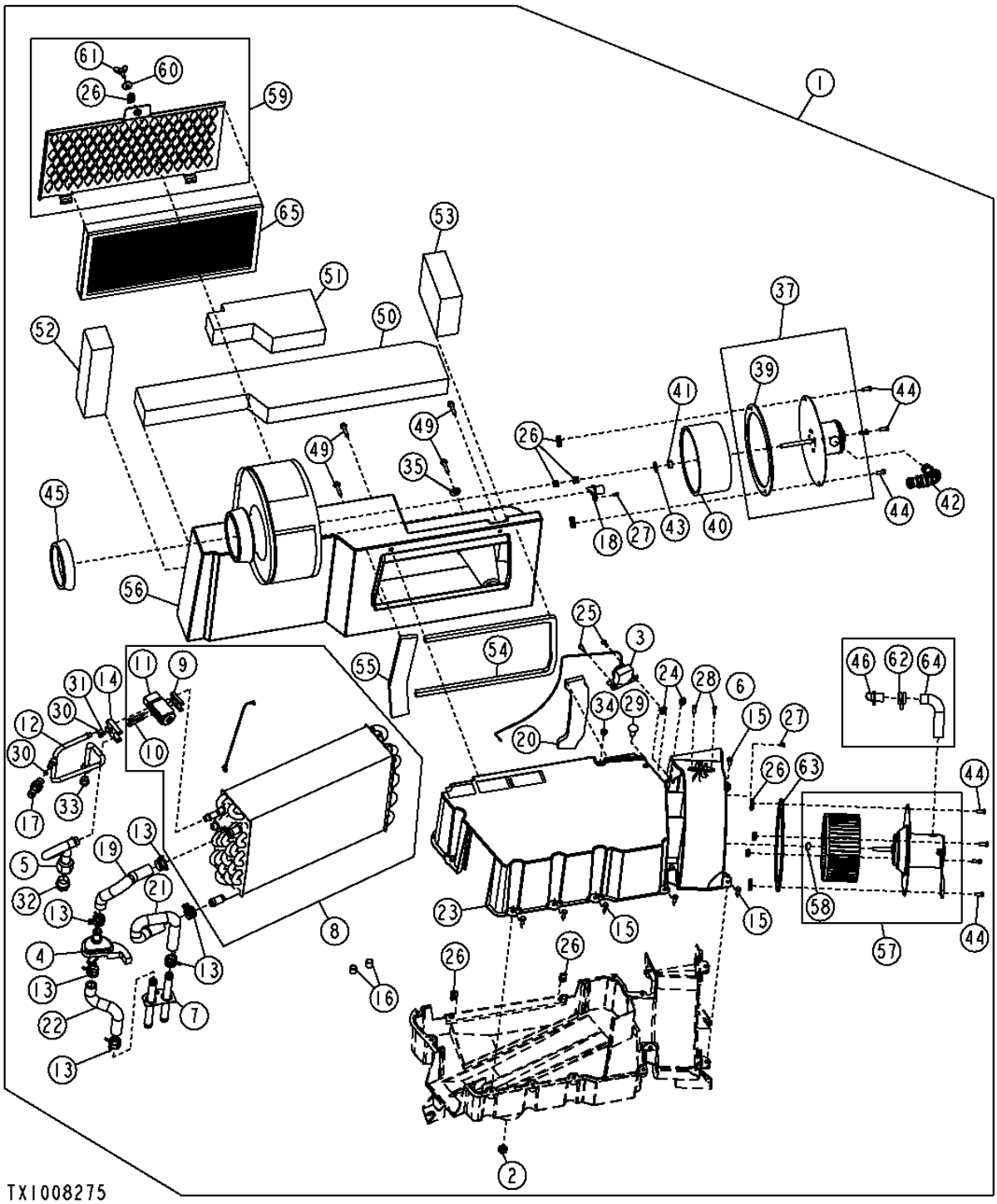

THIS PARTS LISTING IS CONTINUED

HVAC MODULE COMPONENTS
COMPOSANTS MODULE CHAUFFAGE, VENTILATION ET CLIMATISATION
COMPONENTES DEL MODULO DE CLIMATIZACION

KEY	PART NO.	PART NAME	QTY.	SERIAL NO.	REMARKS
1	AT329722	MODULE	1		(SUB FOR AT223531)
2	14H934	NUT	1		
3	RE198074	TEMPERATURE SWITCH	1		(SUB FOR AH144020)
4	AT193500	HAND OPERATED VALVE	1		
5	AT210086	STRUCTURAL TUBING	1		
6	.....	RESISTOR	1		(AT307197 NLA) (SUB AT318987)
7	AT219778	HOSE	1		
8	AT329723	HEAT EXCHANGER	1		(SUB FOR AT225899)
9	L77943	PLATE	1		
10	PT11778	BOLT	2		(SUB FOR M67176)
11	RE174764	VALVE	1		
12	AT226309	TUBE	1		
13	R117721	CLAMP	6		
14	R125223	PLATE	1		
15	R129110	SCREW	12		
16	R50770	CAP	2		
17	RE157329	SWITCH	1		
18	RE36133	TUBE	1		
19	T170133	HOSE	1		
20	T59937	ISOLATOR	1		
21	T172933	HOSE	1		
22	T172934	HOSE	1		
23	T174109	HOUSING	1		
24	T178115	CLEVIS	2		
25	T178116	CAP SCREW	2		
26	T178117	CLEVIS	13		
27	T178118	CAP SCREW	1		
28	T178119	CAP SCREW	2		
29	T178120	RIVET	1		
30	T178123	O-RING	2		
31	T178124	SCREW	1		
32	T178125	PLUG	1		
33	T178126	PLUG	1		
34	T178971	GROMMET	1		
35	24H1122	WASHER	1		
37	AT225451	BLOWER MOTOR	1		
38	R117721	CLAMP	1		
39	R121664	SEAL	1		
40	R121666	IMPELLER	1		
41	R97332	CLIP	1		
42	R97336	HOSE	1	-592249	
	T165169	HOSE	1	592250-	
43	T178127	PUSH NUT	1		
44	T178251	CAP SCREW	8		
45	R119171	SEAL	1		
46	RE36133	TUBE	1	-592249	
49	T178130	BOLT	4		
50	T178131	ISOLATOR	1		
51	T178132	ISOLATOR	1		
52	T178133	ISOLATOR	1		
53	T178134	ISOLATOR	1		
54	T178135	ISOLATOR	1		
55	T178136	ISOLATOR	1		
56	T180929	AIR PLENUM	1		
57	.....	KIT	1	-592249	(SUB AT313282) BLOWER SERVICE KIT (AT224930 NLA)
	AT313282	KIT	1	592250-	
58	R97332	CLIP	1		
59	AT305405	COVER	1		
60	24M7100	WASHER	1		
61	T181524	WING SCREW	1		
62	R117721	CLAMP	1	-592249	
63	R121664	SEAL	1		
64	R97336	HOSE	1	-592249	
65	T156471	AIR FILTER	1		
67	R33259	O-RING	1		

HVAC MODULE (HEATER ONLY)
MODULE CHAUFFAGE, VENTILATION ET CLIMATISATION (CHAUFFAGE SEULEMENT)
MODULO DE CLIMATIZACION (SOLO CALEFACTOR)

T193662 -UN-09SEP03

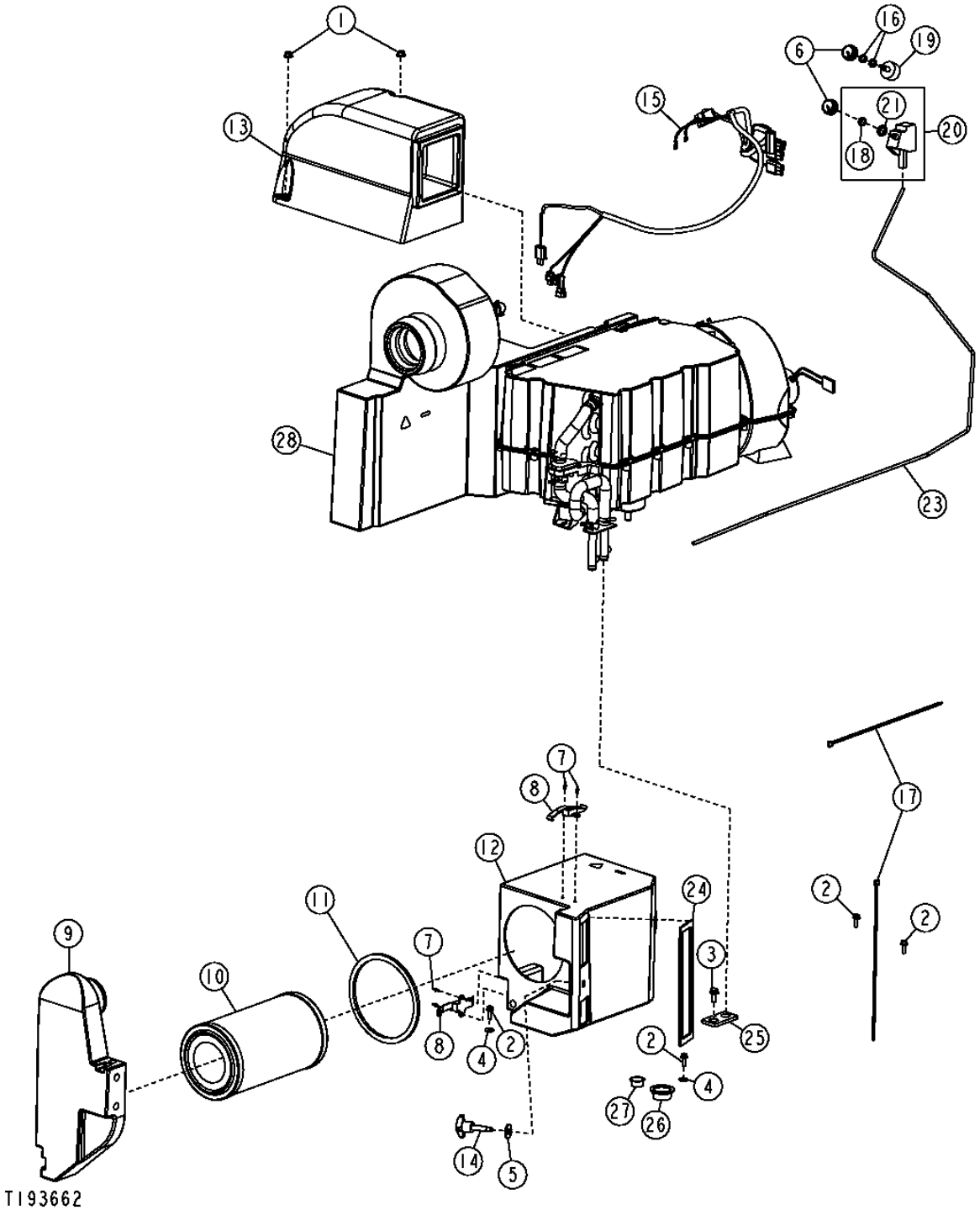

HVAC MODULE (HEATER ONLY)
MODULE CHAUFFAGE, VENTILATION ET CLIMATISATION (CHAUFFAGE SEULEMENT)
MODULO DE CLIMATIZACION (SOLO CALEFACTOR)

KEY	PART NO.	PART NAME	QTY.	SERIAL NO.	REMARKS
1	14M7298	FLANGE NUT	2		M8
2	19M7862	SCREW	4		M6 X 20
3	19M7866	SCREW	1		M8 X 20
4	24M7139	WASHER	2		6.400 X 18 X 1.600 MM
5	24M7296	WASHER	1		10.500 X 30 X 2.500 MM
6	AL76568	KNOB	2		
7	H86981	RIVET	4		
8	R121465	LATCH	2		
9	T167945	AIR DUCT	1		
10	T168220	AIR FILTER	1		
	AT321942	ACTIVATED CARBON AIR FILTER	1		(ODOR REDUCING ACTIVATED CARBON FILTER)
11	T170053	SEAL	1		
12	T171459	AIR DUCT	1		
13	AT209668	AIR DUCT	1		
14	AT220953	KNOB	1		
15	AT202934	WIRING HARNESS	1		
16	R44165	LOCK NUT	2		
17	H77698	TIE BAND	1		
18	R203687	NUT	1		
19	RE43497	SWITCH	1		
20	RE46742	CONTROL	1		
21	12H292	LOCK WASHER	1		1/2"
22	14H934	NUT	1		7/16"
23	RE58614	PUSH PULL CABLE	1		
24	T167676	SEAL	1		
25	T182858	GASKET	1		
26	T182876	PLUG	1		
27	T182877	PLUG	1		

HVAC MODULE COMPONENTS (HEATER ONLY)
COMPOSANTS MODULE CHAUFFAGE, VENTILATION ET CLIMATISATION (CHAUFFAGE SEULEMENT)
COMPONENTES DEL MODULO DE CLIMATIZACION (SOLO CALEFACTOR)

T212762 -UN-25JUL05

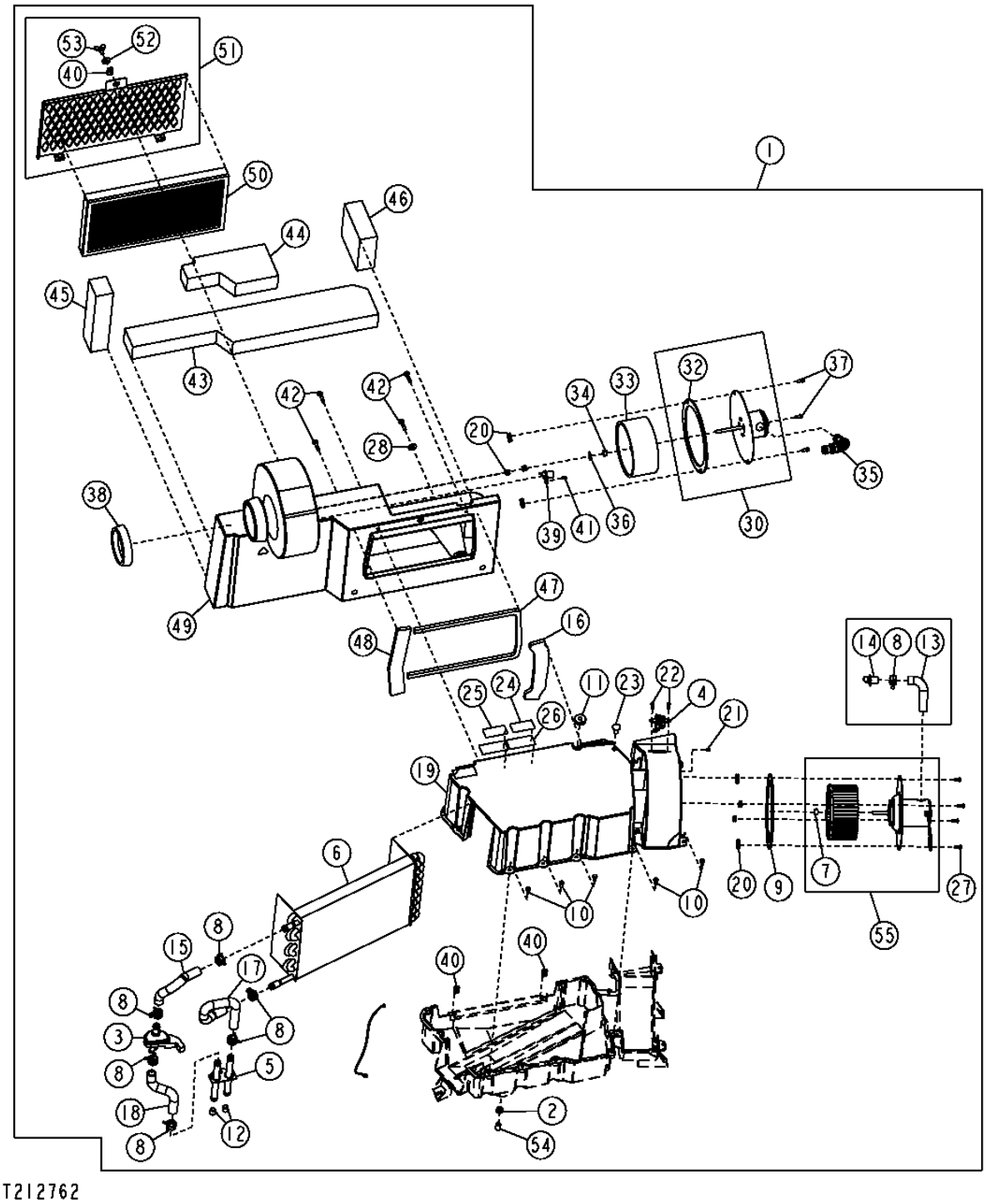

HVAC MODULE COMPONENTS (HEATER ONLY)
COMPOSANTS MODULE CHAUFFAGE, VENTILATION ET CLIMATISATION (CHAUFFAGE SEULEMENT)
COMPONENTES DEL MODULO DE CLIMATIZACION (SOLO CALEFACTOR)

KEY	PART NO.	PART NAME	QTY.	SERIAL NO.	REMARKS
1	AT329720	HEATER	1		(SUB FOR AT221452)
2	14H934	NUT	1	-603835	7/16"
3	AT193500	HAND OPERATED VALVE	1		
4	.....	RESISTOR	1		(AT307197 NLA) (SUB AT318987)
5	AT219778	HOSE	1		
6	AT329721	HEATER	1		(SUB FOR AT222210)
7	R97332	CLIP	1		
8	R117721	CLAMP	7	-592249	
	R117721	CLAMP	6	592250-	
9	R121664	SEAL	1		
10	R129110	SCREW	12		
11	R41440	GROMMET	1		
12	R50770	CAP	2		
13	R97336	HOSE	1	-592249	
14	RE36133	TUBE	1	-592249	
15	T170133	HOSE	1		
16	T59937	ISOLATOR	1		
17	T172933	HOSE	1		
18	T172934	HOSE	1		
19	T174109	HOUSING	1		
20	T178117	CLEVIS	8		
21	T178118	CAP SCREW	1		
22	T178119	CAP SCREW	2		
23	T178120	RIVET	1		
24	T178248	LABEL	1		
25	T178249	LABEL	1		
26	T178250	LABEL	2		
27	T178251	CAP SCREW	4		
28	24H1122	WASHER	1		3/8" X 7/8" X 0.083"
30	AT225451	BLOWER MOTOR	1		
31	R117721	CLAMP	1	-592249	
32	R121664	SEAL	1		
33	R121666	IMPELLER	1		
34	R97332	CLIP	1		
35	R97336	HOSE	1	-592249	
	T165169	HOSE	1	592250-	
36	T178127	PUSH NUT	1		
37	T178251	CAP SCREW	1		
38	R119171	SEAL	1		
39	RE36133	TUBE	1		
40	T178117	CLEVIS	5		
41	T178118	CAP SCREW	1		
42	T178130	BOLT	4		
43	T178131	ISOLATOR	1		
44	T178132	ISOLATOR	1		
45	T178133	ISOLATOR	1		
46	T178134	ISOLATOR	1		
47	T178135	ISOLATOR	1		
48	T178136	ISOLATOR	1		
49	T180929	AIR PLENUM	1		
50	T156471	AIR FILTER	1		
51	AT305405	COVER	1		
52	24M7100	WASHER	1		
53	T181524	WING SCREW	1		
54	T178252	CAP	1	-603836	
55	.....	KIT	1	-592249	(SUB AT313282) BLOWER SERVICE KIT (AT224930 NLA)
	AT313282	KIT	1	592250-	

AIR CONDITIONING DELETE COVER
SUPPRIMER COUVERCLE CLIMATISEUR
CUBIERTA ELIMINACION DE ACONDICIONADOR DE AIRE

T197232 -UN-07JAN04

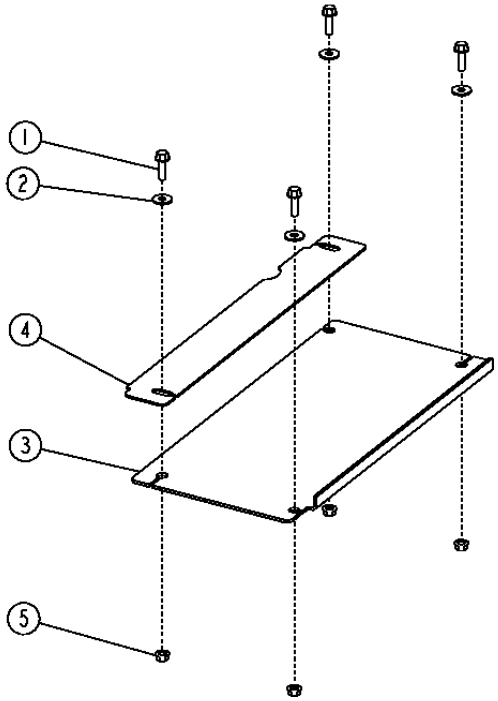

KEY	PART NO.	PART NAME	QTY.	SERIAL NO.	REMARKS
1	19M7786	SCREW	4		M10 X 30
2	24M7296	WASHER	4		10.500 X 30 X 2.500 MM
3	T196698	COVER	1		
4	T200820	COVER	1		
5	14M7296	FLANGE NUT	4		M10

HEATING AND AIR CONDITIONING OUTLET DUCTS
CONDUITS SORTIE CHAUFFAGE ET CLIMATISATION
REGISTROS DE SALIDA DEL CALEFACTOR Y ACONDICIONADOR DE AIRE

TP62831 -UN-29JUN00

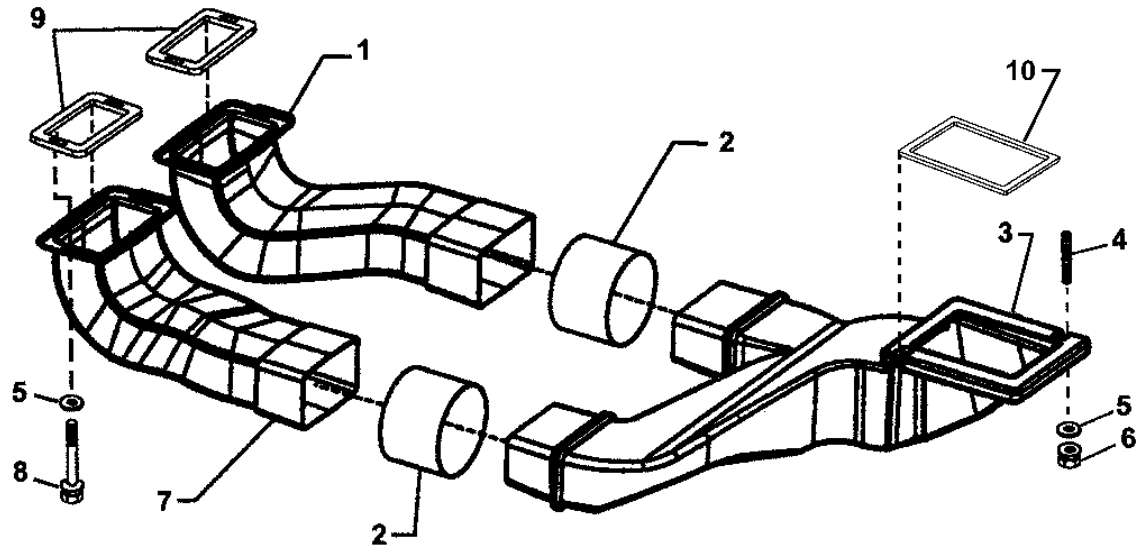

TP62831

KEY	*PART NO.*	*PART NAME*	*QTY.*	*SERIAL NO.*	*REMARKS*
1	T173768	AIR DUCT	1		RH
2	T171082	SEAL	2		
3	T207669	AIR DUCT	1		(SUB FOR T175855)
4	T167759	STUD	2		
5	24M7298	WASHER	6		8.400 X 25 X 2 MM
6	14M7298	FLANGE NUT	2		M8
7	T156256	AIR DUCT	1		LH
8	19M7800	SCREW	4		M8 X 50
9	T182872	SEAL	2		
10	.....	SEAL	1		(MAKE FROM H81330) (SUB FOR T167679) (CTL)

AIR CONDITIONING COMPRESSOR
COMPRESSEUR DE CLIMATISATION
COMPRESOR DEL ACONDICIONADOR DE AIRE

TX1002413 -UN-12JAN06

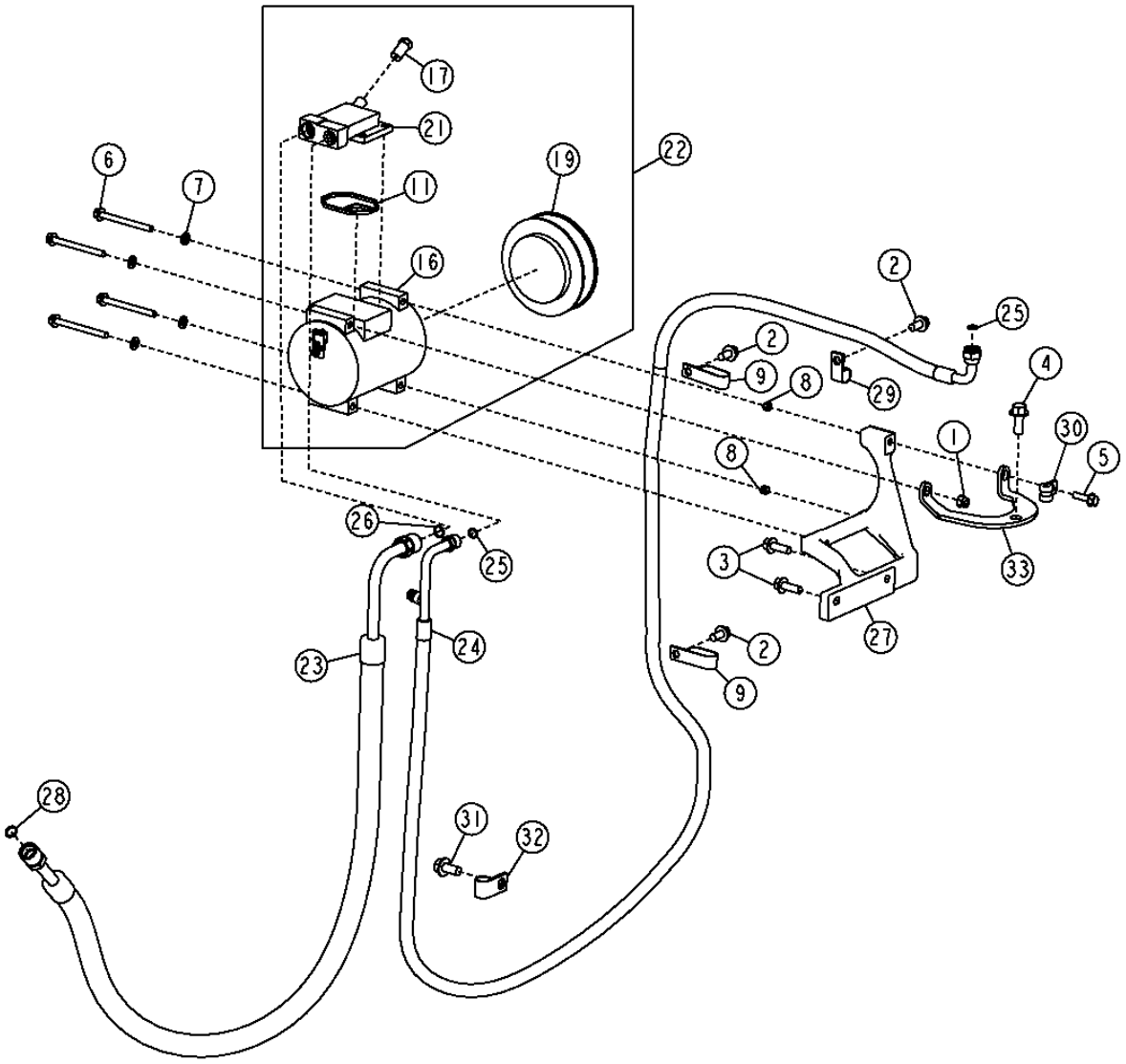

TX1002413

AIR CONDITIONING COMPRESSOR
COMPRESSEUR DE CLIMATISATION
COMPRESOR DEL ACONDICIONADOR DE AIRE

KEY	PART NO.	PART NAME	QTY.	SERIAL NO.	REMARKS
1	14M7396	LOCK NUT	1		M8
2	19M7784	SCREW	3		M10 X 20
3	19M7786	SCREW	2		M10 X 30
4	19M7789	SCREW	1		M12 X 30
5	19M7868	SCREW	1		M8 X 30
6	19M7913	SCREW	4		M8 X 90
7	24M7238	WASHER	4		8.700 X 17 X 2 MM
8	34M7189	SPRING PIN	2		11 X 8 MM
9	R56171	CLIP	2		(SUB FOR AH97280)
11	R115742	SEAL	1		
16	RE52454	COMPRESSOR	1		
17	RE52506	FLOW CONTROL HYD. VALVE	1		
19	RE52508	KIT	1		(INCLUDES AT163872 AND R115743)
21	RE55423	MANIFOLD	1		
22	AT226273	COMPRESSOR	1		
	R78057	ELEC. CONNECTOR TERMINAL	2		(NOT ILLUSTRATED) (CONTACT SLEEVE)
	R78059	ELEC. CONNECTOR SEAL	2		(NOT ILLUSTRATED) (WIRE)
	RE12363	ELECTRICAL CONNECTOR ASSY	1		(NOT ILLUSTRATED) (TWO-WAY TOWER CONNECTOR)
	RE52507	KIT	1		(NOT ILLUSTRATED) (PULLEY AND CLUTCH)
	RE52509	SEAL KIT	1		(NOT ILLUSTRATED) (SHAFT SEAL)
23	AT227754	REFRIGERANT HOSE	1		
24	AT227755	REFRIGERANT HOSE	1		
25	R113050	O-RING	1		
26	R33259	O-RING	2		
27	R504192	BRACKET	1		
28	R113050	O-RING	1		(SUB FOR T143169)
29	T74416	CLAMP	1		(SUB FOR T76252)
30	T78974	CLAMP	1		
31	T64784	CLIP	1		
32	19M7788	SCREW	1		M12 X 25
33	R504191	BRACKET	1		

AIR CONDITIONING CONDENSER
CONDENSEUR DE CLIMATISATION
CONDENSADOR DE ACONDICIONADOR DE AIRE

TX1002412 -UN-12JAN06

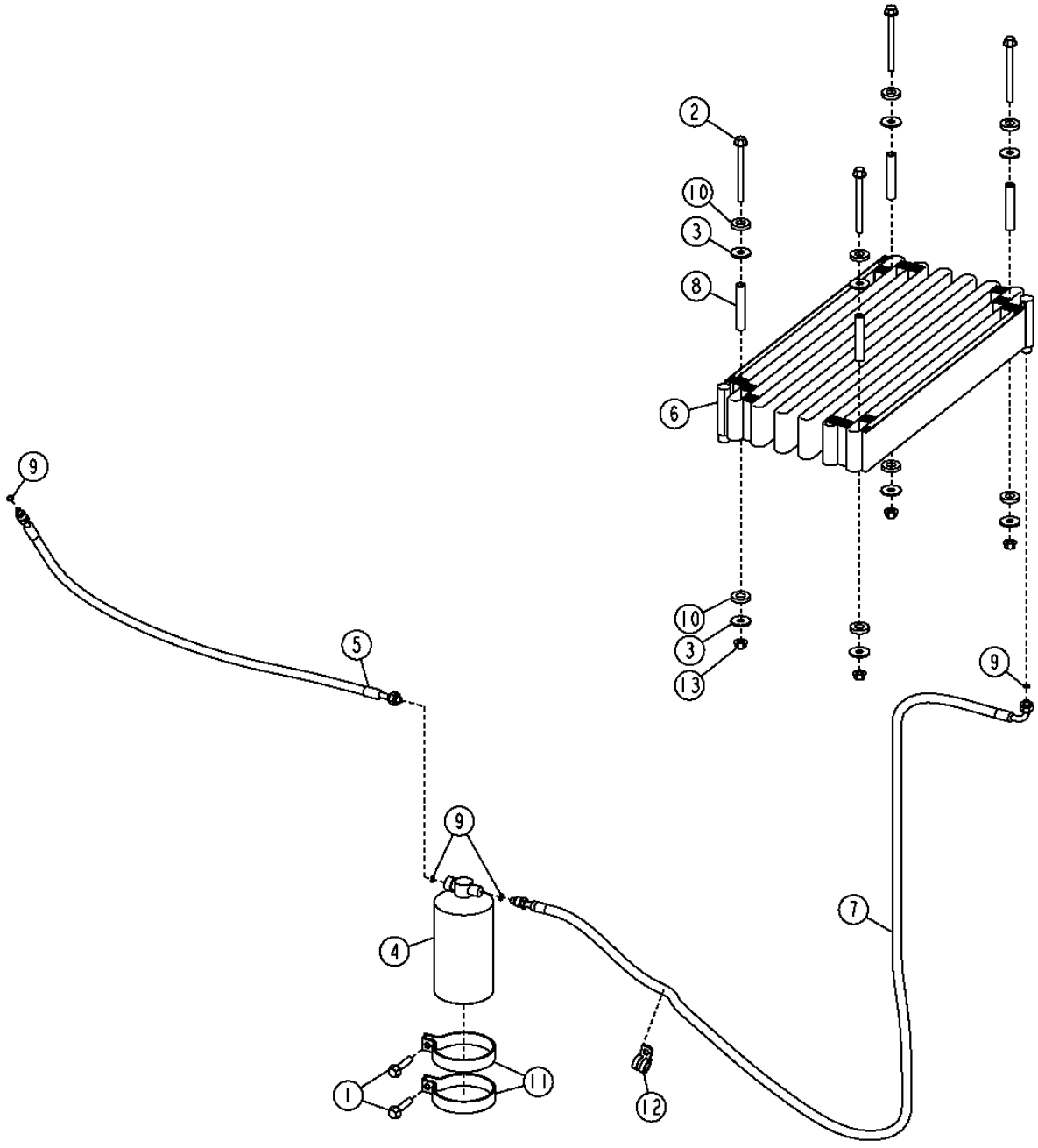

TX1002412

AIR CONDITIONING CONDENSER
CONDENSEUR DE CLIMATISATION
CONDENSADOR DE ACONDICIONADOR DE AIRE

KEY	*PART NO.*	*PART NAME*	*QTY.*	*SERIAL NO.*	*REMARKS*
1	19M7806	SCREW	2		M10 X 50
2	19M7836	SCREW	4		M10 X 110
3	24M7101	WASHER	8		11 X 34 X 3 MM
4	AT162848	RECEIVER-DRYER	1		
5	AT208776	HOSE	1		
6	AT228240	VAPOR CONDENSER	1		
	AT307612	HEAT EXCHANGER	1		(HARSH ENVIRONMENT)
7	AT280631	REFRIGERANT HOSE	1		
8	N117290	SPACER	4		
9	R10093	O-RING	4		
10	T158424	WASHER	8		
11	T190513	CLAMP	2		
12	T76252	CLAMP	1		
13	14M7296	FLANGE NUT	4		M10

HEATER HOSES AND FITTINGS
FLEXIBLES ET RACCORDS CHAUFFAGE
MANGUERAS Y ADAPTADORES DEL CALEFACTOR

T196750 -UN-18DEC03

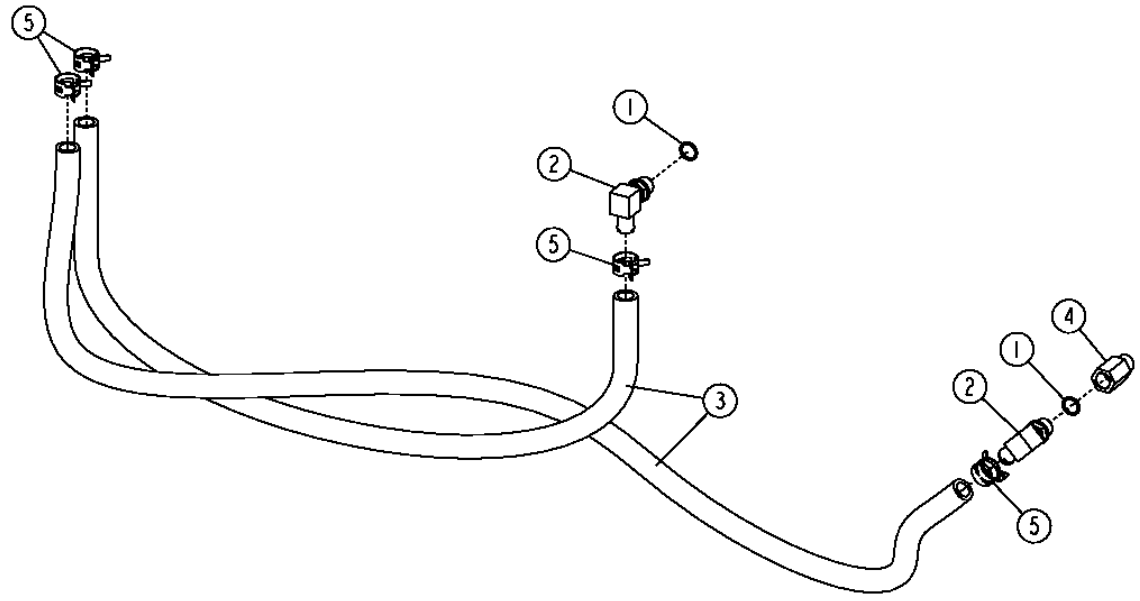

T196750

HEATER HOSES AND FITTINGS
FLEXIBLES ET RACCORDS CHAUFFAGE
MANGUERAS Y ADAPTADORES DEL CALEFACTOR

KEY	PART NO.	PART NAME	QTY.	SERIAL NO.	REMARKS
1	51M7043	O-RING	2		15.300 X 2.200 MM
2	AT174697	ELBOW FITTING	2		
3	.....	BULK HOSE	1		(MAKE FROM TY22328) (CTL)
4	RE520229	ADAPTER FITTING	1		(SUB FOR RE68908)
5	T184924	HOSE CLAMP	4		

HOOD
CAPOT
CAPO

T201646 -UN-02AUG04

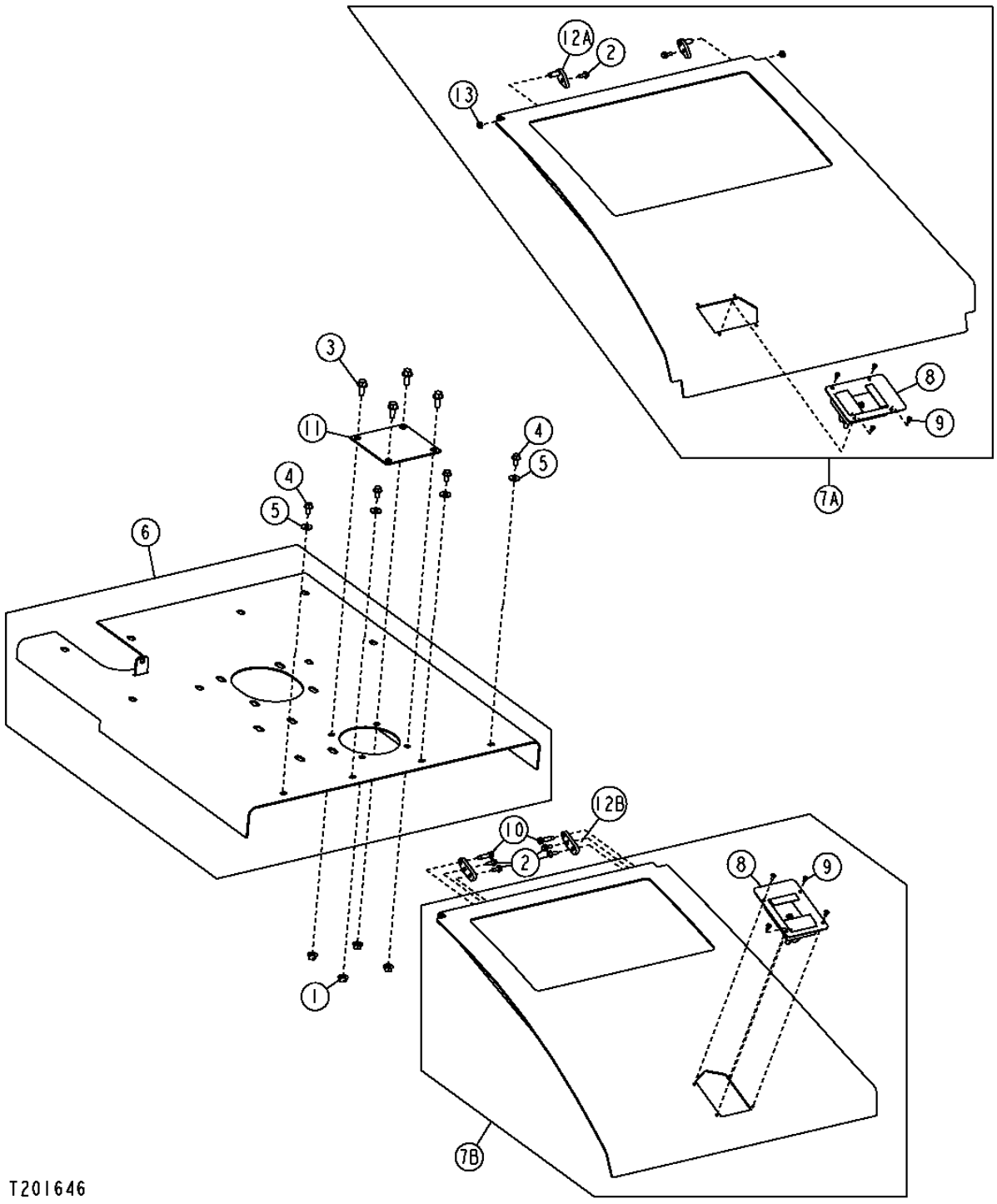

HOOD
CAPOT
CAPO

KEY	PART NO.	PART NAME	QTY.	SERIAL NO.	REMARKS
1	14M7296	FLANGE NUT	4		M10
2	19M7775	SCREW	2	-XXXXXX	M6 X 16
	19M7775	SCREW	4	XXXXXX-	M6 X 16
3	19M7785	SCREW	4		M10 X 25
4	19M7865	SCREW	4		M8 X 16
5	24M7298	WASHER	4		8.400 X 25 X 2 MM, (SUB FOR (4) 24M7207)
6	AT327515	HOOD	1		(SUB FOR AT226841)
7A	.....	HOOD	1	-XXXXXX	(SUB AT310761) (ALSO ORDER AT310759, AT310760, T208352, T208039 AND T208317) (AT228843 NLA)
7B	AT310761	HOOD	1	XXXXXX-	
8	AT221696	LATCH	1		
9	H85233	RIVET	4		
10	R187539	SCREW	2		
11	T198109	REINFORCEMENT	1		
12A	AT304375	PIN	2	-XXXXXX	
12B	T208317	PLATE	2	XXXXXX-	
13	M148224	WASHER	2		

ENGINE SIDE SHIELDS
PANNEAUX LATERAUX DE MOTEUR
ESCUDOS LATERALES DEL MOTOR

T202405 -UN-23AUG04

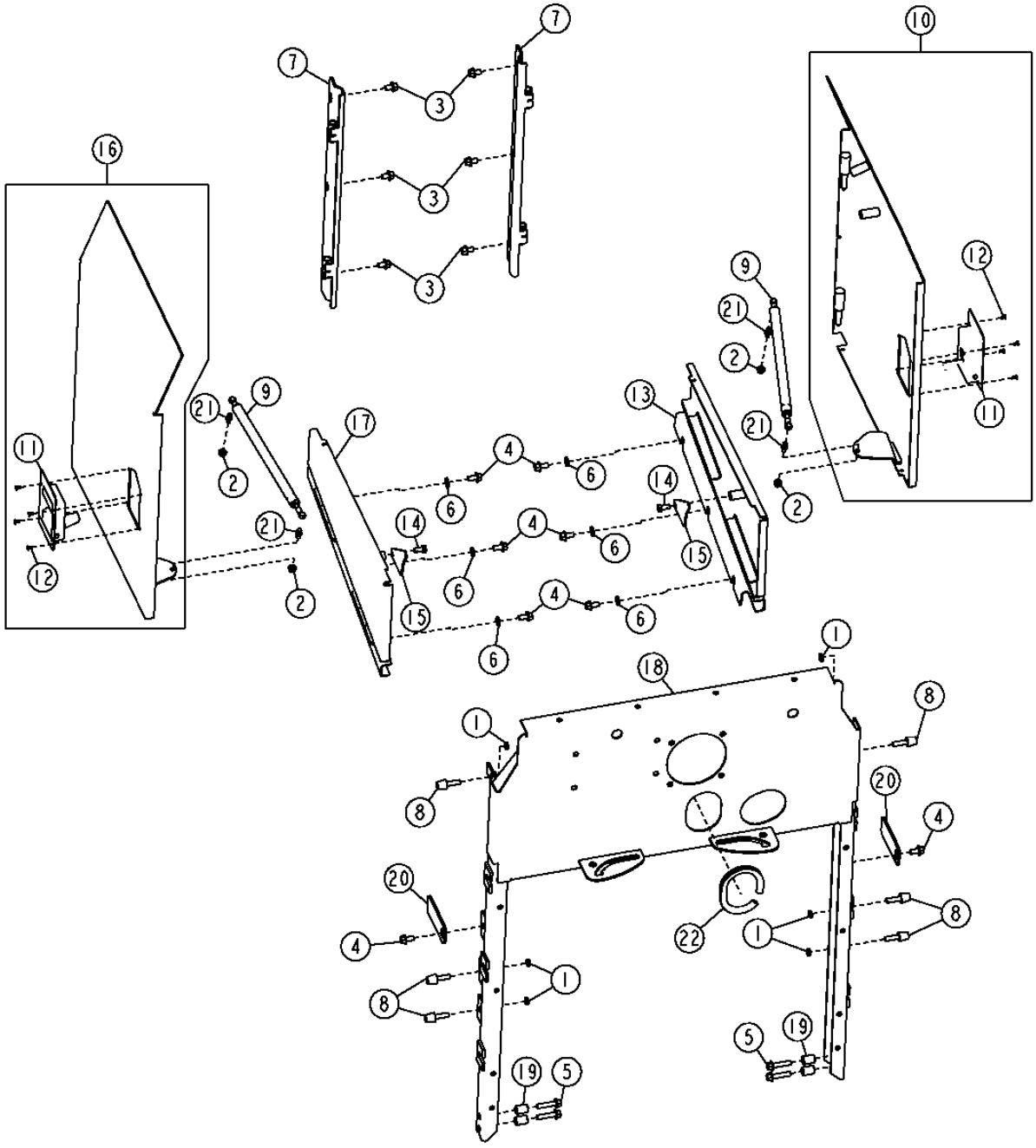

THIS PARTS LISTING IS CONTINUED

ENGINE SIDE SHIELDS
PANNEAUX LATERAUX DE MOTEUR
ESCUDOS LATERALES DEL MOTOR

KEY	PART NO.	PART NAME	QTY.	SERIAL NO.	REMARKS
1	14M7152	NUT	6		M10
2	14M7298	FLANGE NUT	4		M8
3	19M7784	SCREW	6		M10 X 20, (SUB FOR 19M7783)
4	19M7784	SCREW	8		M10 X 20
5	19M7805	SCREW	4		M10 X 45
6	24M7239	WASHER	6		10.700 X 21 X 2.500 MM
7	AT208159	HINGE	2		
8	AT219974	BUMPER	6		
9	AT226229	CYLINDER	2		
	T182758	CLIP	4		(NOT ILLUSTRATED) (DOOR CYLINDER)
10	AT327533	DOOR	1		(SUB FOR AT228433)
11	AT221696	LATCH	2		(SUB FOR AT280208)
12	H85233	RIVET	8		
13	AT327489	DOOR	1		(SUB FOR AT228549)
14	T105891	CAP SCREW	2		
15	T168119	PLATE	2		
16	AT327534	DOOR	1		(SUB FOR AT228436)
17	AT327490	DOOR	1		(SUB FOR AT228550)
18	AT320326	ISOLATOR	1		(SUB FOR AT228834)
19	T147891	BUSHING	4		
20	T168135	STRAP	2		
21	T177909	BALL STUD	4		
22	.....	MOLDING	1		(MAKE FROM T61861) (BULK MATERIAL) (CTL)

REAR SIDE PANELS
PANNEAUX LATERAUX ARRIERE
PANELES LATERALES TRASEROS

T205109 -UN-11JAN05

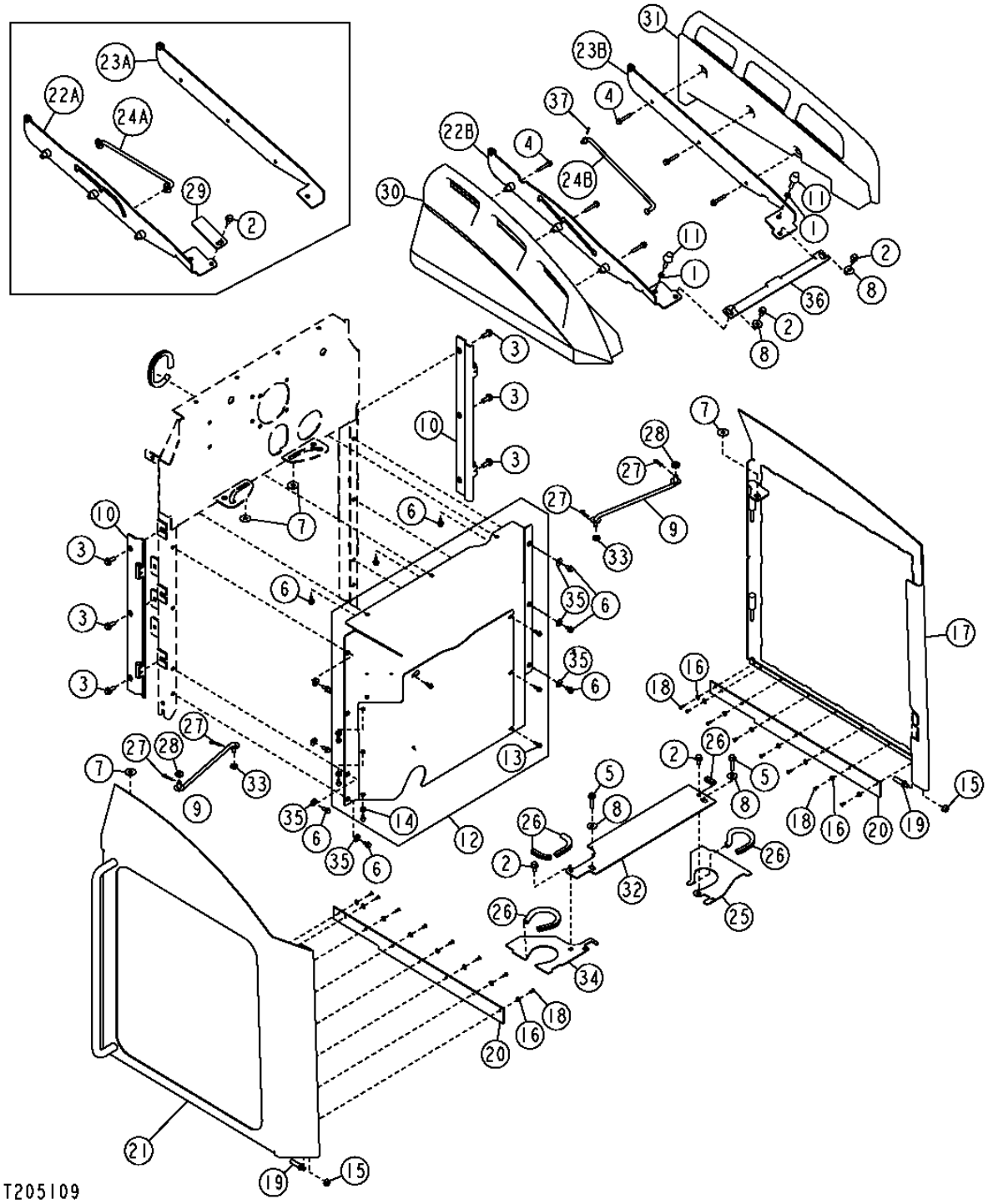

REAR SIDE PANELS
PANNEAUX LATERAUX ARRIERE
PANELES LATERALES TRASEROS

KEY	PART NO.	PART NAME	QTY.	SERIAL NO.	REMARKS
1	14M7152	NUT	2		M10
2	19M7784	SCREW	4		M10 X 20
3	19M7785	SCREW	6		M10 X 25
4	19M7800	SCREW	6		M8 X 50
5	19M7805	SCREW	2		M10 X 45
6	19M7865	SCREW	10		M8 X 16
7	24H1330	WASHER	4		15/32" X 1-3/8" X 7/64"
8	24M7296	WASHER	4		10.500 X 30 X 2.500 MM
9	AT312053	ROD	2		(SUB FOR AT179840)
10	AT208159	HINGE	2		
11	AT306690	BUMPER	2		
12	AT320322	ISOLATOR	1		(SUB FOR AT226150)
13	19M7862	SCREW	7		M6 X 20
14	24M7139	WASHER	3		
15	14M7296	FLANGE NUT	2		M10
16	24M7138	WASHER	NA		
17	AT327519	DOOR	1		(SUB FOR AT228416)
18	M68628	RIVET	16		
19	T201880	STUD	2		
20	T204624	FLAP	2		
21	AT327518	DOOR	1		(SUB FOR AT228408)
22A	AT228158	BRACKET	1	-XXXXXX	
22B	AT310759	BRACKET	1	XXXXXX-	(USE WITH AT310761)
23A	AT228405	BRACKET	1	-XXXXXX	
23B	AT310760	BRACKET	1	XXXXXX-	(USE WITH AT310761)
24A	AT228748	ROD	1	-XXXXXX	
24B	T208352	ROD	1	XXXXXX-	(USE WITH AT310761)
25	AT303636	ISOLATOR	1		
26	.....	BULK HOSE	1		(MAKE FROM T58056) (CTL) 762MM (2.5')
27	J16931	PIN	4		
28	T162238	GROMMET	2		
29	T168135	STRAP	3	-XXXXXX	
	T168135	STRAP	2	XXXXXX-	
30	T197100	HANDLE	1		
31	T197575	HANDLE	1		
32	T202067	PLATE	1		
33	T27260	WASHER	2		
34	AT303014	ISOLATOR	1		
35	24M7298	WASHER	7		8.400 X 25 X 2 MM
36	T208039	BRACKET	1	XXXXXX-	(USE WITH AT310761)
37	11M7059	COTTER PIN	1		

FRAME LOCKING BAR
BARRE VERROUILLAGE BATI
BARRA DE BLOQUEO DEL CHASIS

T193217 -UN-06AUG03

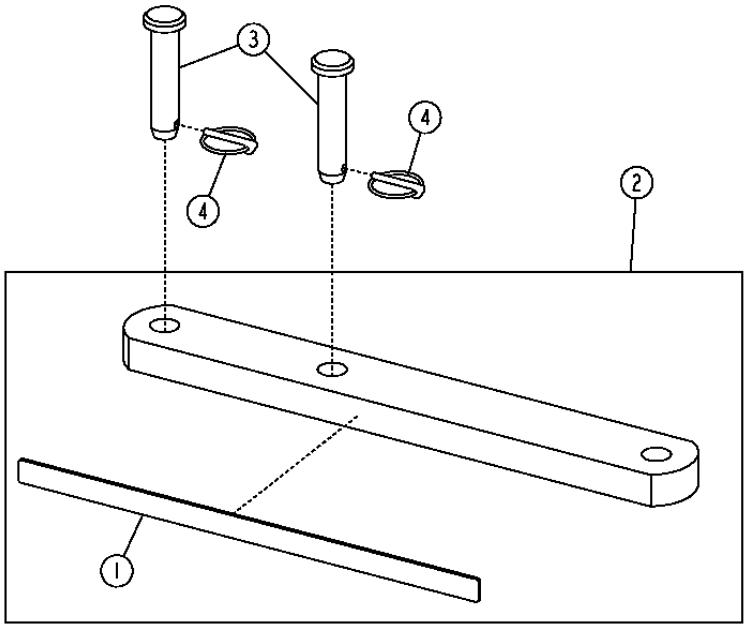

T193217

KEY	PART NO.	PART NAME	QTY.	SERIAL NO.	REMARKS
1	T182192	SAFETY SIGN	2		
2	AT226155	BAR	1		
3	R53296	PIN FASTENER	2		
4	AA21292	QUICK LOCK PIN	2		

TRANSMISSION SHIELDS
PROTECTIONS DE TRANSMISSION
ESCUDOS DE LA TRANSMISION

T193759 -UN-31OCT03

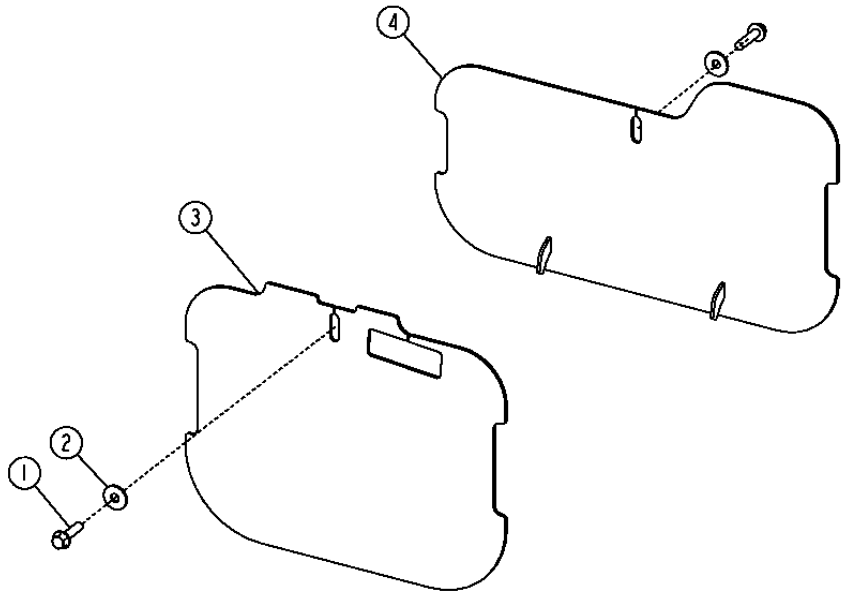

T193759

KEY	PART NO.	PART NAME	QTY.	SERIAL NO.	REMARKS
1	19M7791	BOLT	2	-XXXXXX	M12 X 40, (SUB FOR (2) 19M7814)
	19M7814	SCREW	2	XXXXXX-	M12 X 50
2	24M7180	WASHER	2		13 X 37 X 3 MM
3	.....	COVER	1	-XXXXXX	LH, (ORDER AT323687) (AT300081 NLA)
	AT323687	COVER	1	XXXXXX-	LH
4	AT227073	COVER	1		RH

BATTERY COVERS
COUVERCLES DE BATTERIES
CUBIERTAS DE LA BATERIA

T196507 -UN-20NOV03

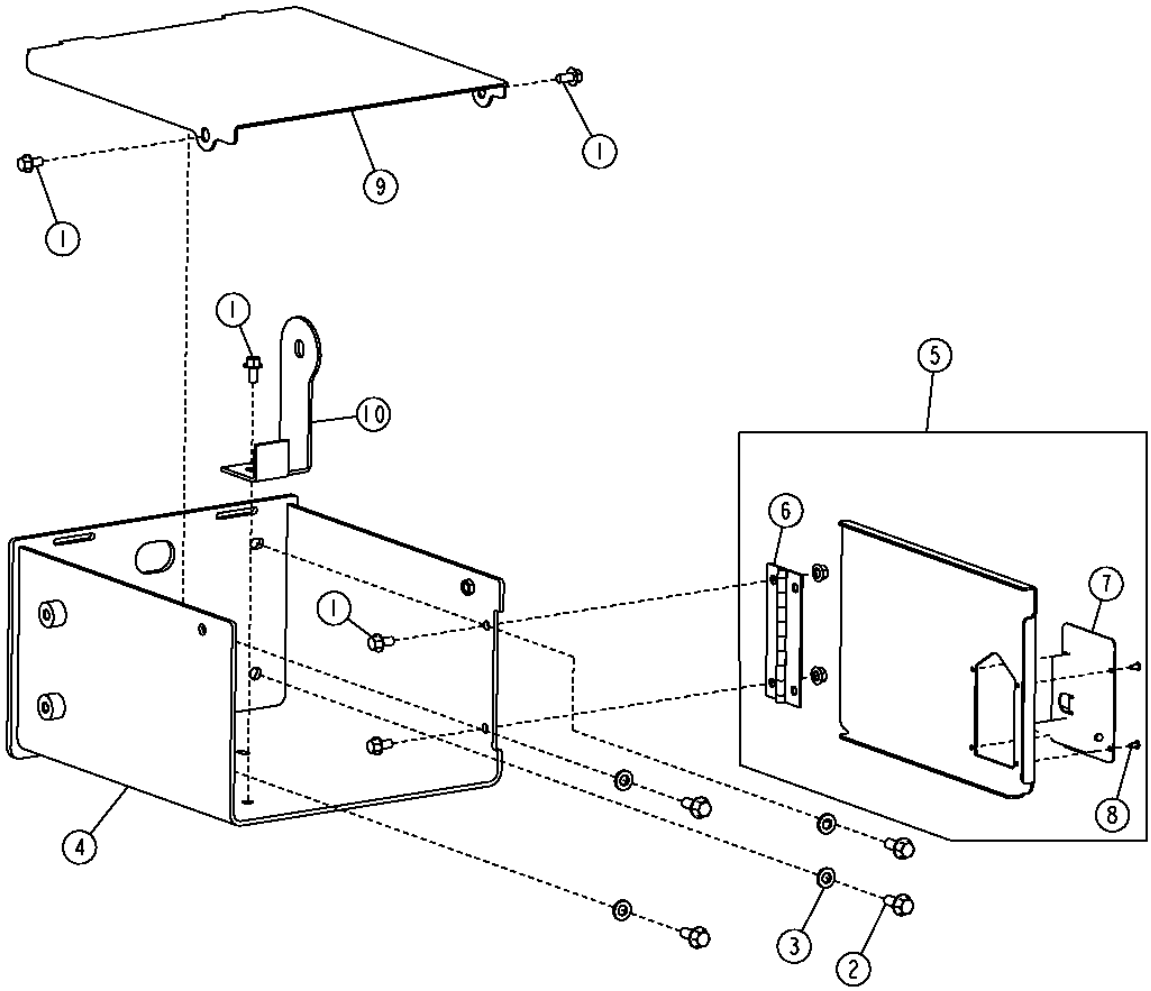

T196507

BATTERY COVERS
COUVERCLES DE BATTERIES
CUBIERTAS DE LA BATERIA

KEY	PART NO.	PART NAME	QTY.	SERIAL NO.	REMARKS
1	19M7784	SCREW	5		M10 X 20
2	19M7788	SCREW	4		M12 X 25
3	24M7240	WASHER	4		13 X 25 X 3 MM
4	AT226791	BATTERY BOX	1		
5	AT327535	DOOR	1		(SUB FOR AT228623)
6	AT162114	HINGE	1		
7	AT221696	LATCH	1		(SUB FOR AT280208)
8	H85233	RIVET	4		
9	T195708	COVER	1		
10	T197667	BRACKET	1		

SOUND ABSORPTION
ABSORPTION ACOUSTIQUE
ABSORCION DE SONIDO

TX1007425 -UN-09MAY06

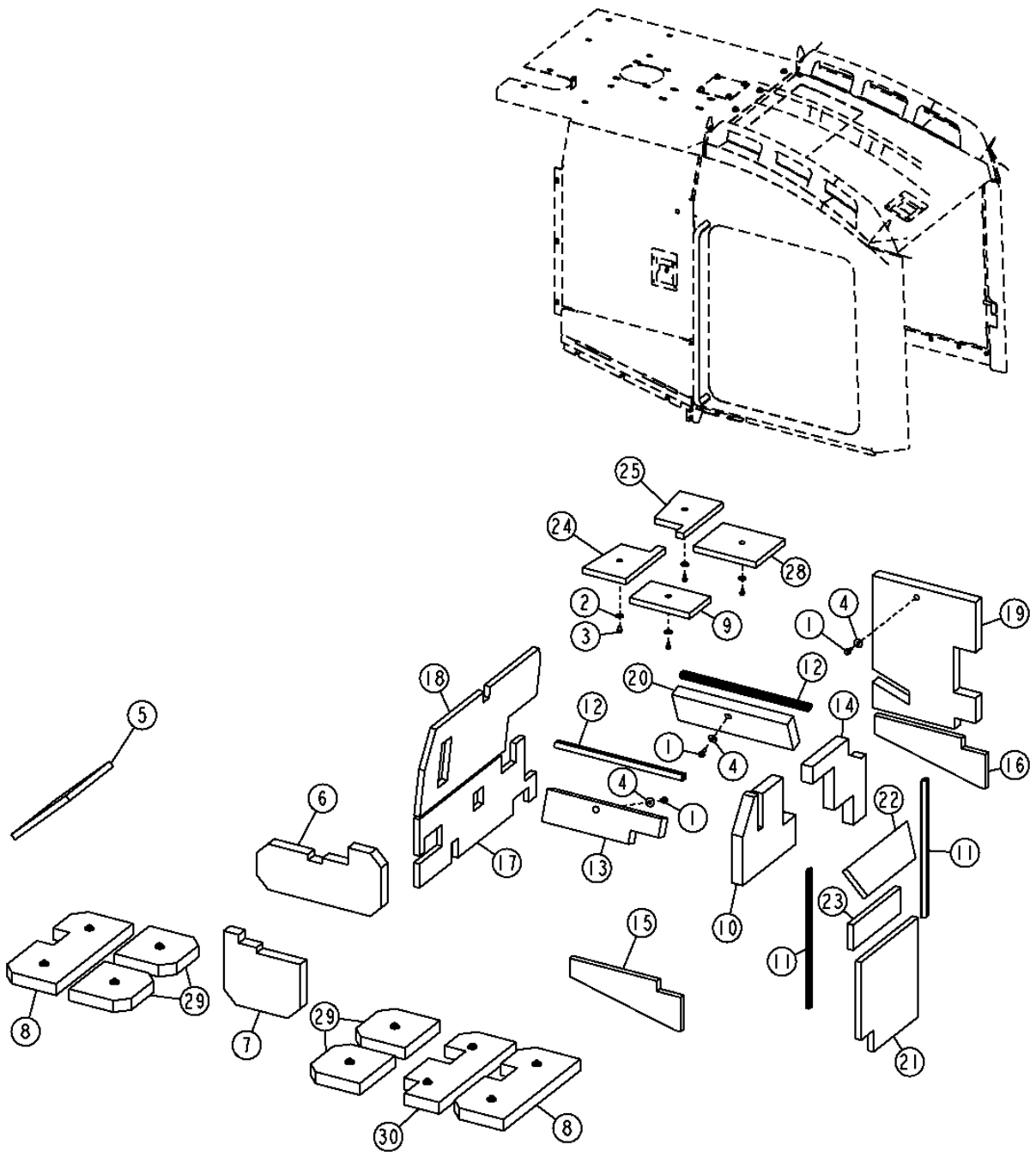

THIS PARTS LISTING IS CONTINUED

SOUND ABSORPTION
ABSORPTION ACOUSTIQUE
ABSORCION DE SONIDO

KEY	PART NO.	PART NAME	QTY.	SERIAL NO.	REMARKS
1	19M7785	SCREW	13		M10 X 25
2	24M7024	WASHER	4		9 X 28 X 3 MM
3	19M7865	SCREW	4		M8 X 16
4	24M7101	WASHER	13		11 X 34 X 3 MM
5	T206155	ISOLATOR	1		(CONTROL VALVE COVER)
6	T206157	ISOLATOR	1		(RIGHT TRANS. COVER)
7	T206158	ISOLATOR	1		(LEFT TRANS. COVER)
8	T206159	ISOLATOR	5	-604689	(BOTTOM GUARD)
	T206159	ISOLATOR	2	604690-	
9	T206164	ISOLATOR	1		(HOOD)
10	T206301	ISOLATOR	1		
11	T206368	ISOLATOR	2		
12	T206590	ISOLATOR	2		(ISOLATOR)
13	T206596	ISOLATOR	1		(UPPER DOOR)
14	T206623	ISOLATOR	1		
15	T206632	ISOLATOR	1		(LEFT SERVICE DOOR)
16	T206633	ISOLATOR	1		(RIGHT SERVICE DOOR)
17	T210379	ISOLATOR	1		
18	T210380	ISOLATOR	1		
19	T210387	ISOLATOR	1		(RIGHT DOOR)
20	T210393	ISOLATOR	1		(RIGHT DOOR)
21	T210398	ISOLATOR	1		
22	T210399	ISOLATOR	1		
23	T210400	ISOLATOR	1		
24	T210424	ISOLATOR	1		(HOOD)
25	T210425	ISOLATOR	1		(HOOD)
28	T210426	ISOLATOR	1		
29	T217507	ISOLATOR	4	604690-	
30	T217198	ISOLATOR	1	604690-	

FRONT FENDERS
AILES AVANT
GUARDABARROS DELANTERO

T198059 -UN-09MAR04

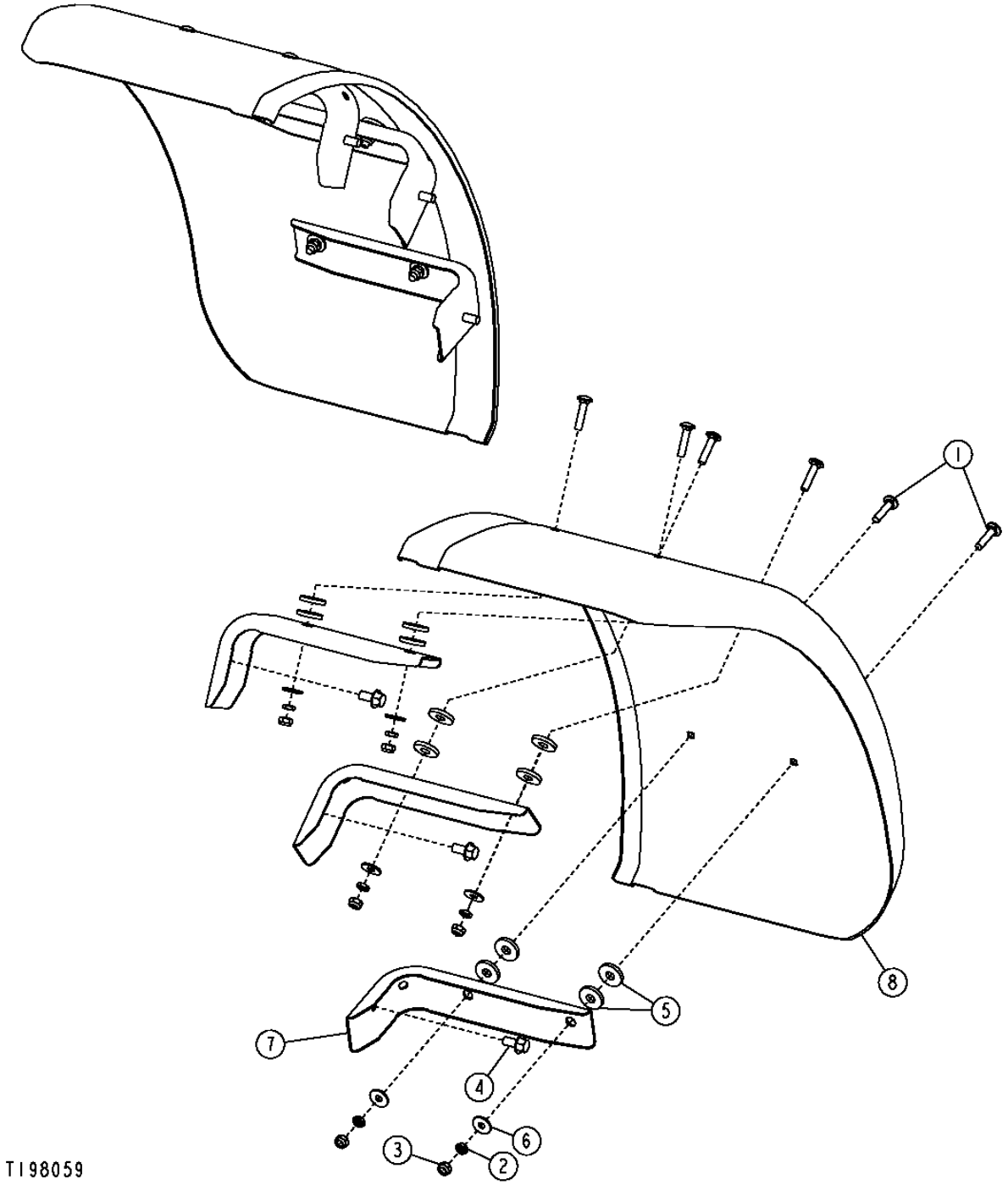

FRONT FENDERS
AILES AVANT
GUARDABARROS DELANTERO

KEY	PART NO.	PART NAME	QTY.	SERIAL NO.	REMARKS
1	03M7195	BOLT	12		M10 X 45
2	14M7152	NUT	12		M10
3	14M7167	LOCK NUT	12		M10
4	19M7788	SCREW	6		M12 X 25
5	T22381	WASHER	24		
6	24M7296	WASHER	12		10.500 X 30 X 2.500 MM
7	T178368	SUPPORT	6		
8	T205471	FENDER	2		

RIGHT AND LEFT REAR PLATFORMS
PLATE-FORMES ARRIERE DROITE ET GAUCHE
PLATAFORMAS TRASERA IZQUIERDA Y DERECHA

TX1017454 -UN-17JAN07

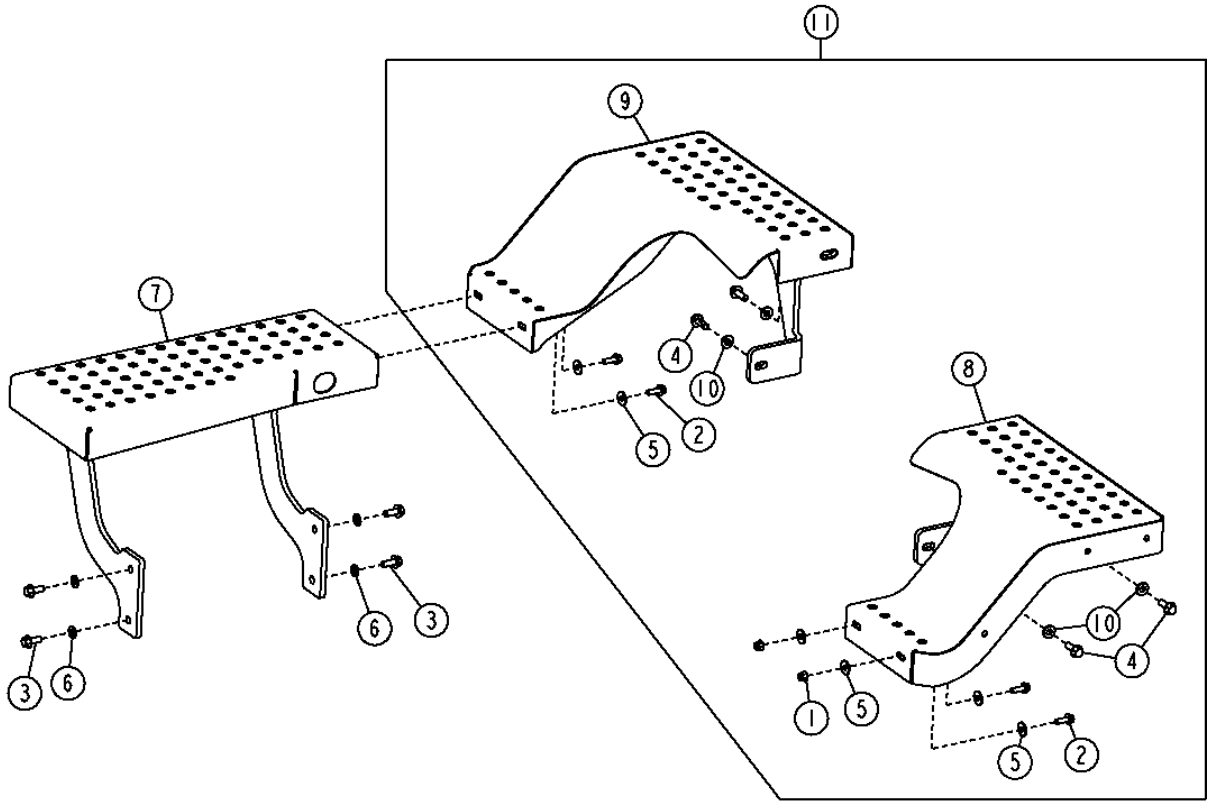

TX1017454

RIGHT AND LEFT REAR PLATFORMS
PLATE-FORMES ARRIERE DROITE ET GAUCHE
PLATAFORMAS TRASERA IZQUIERDA Y DERECHA

KEY	*PART NO.*	*PART NAME*	*QTY.*	*SERIAL NO.*	*REMARKS*
1	14M7400	LOCK NUT	4		M10
2	19M7786	SCREW	4		M10 X 30
3	19M7789	SCREW	4		M12 X 30
4	19M7790	SCREW	4		M12 X 35
5	24M7180	WASHER	8		13 X 37 X 3 MM
6	24M7240	WASHER	4		13 X 25 X 3 MM
7	AT327499	PLATFORM	1		(SUB FOR AT226789)
8	AT327502	FENDER	1		(SUB FOR AT306454 OR AT225159)
9	AT327503	FENDER	1		(SUB FOR AT306455 OR AT225160)
10	T178063	WASHER	4		
11	AT303755	FENDER	1		MATCHED SET

FULL COVERAGE FRONT FENDERS
AILES AVANT PLEINE COUVERTURE
GUARDABARROS DELANTEROS DE COBERTURA TOTAL

T202289 -UN-19AUG04

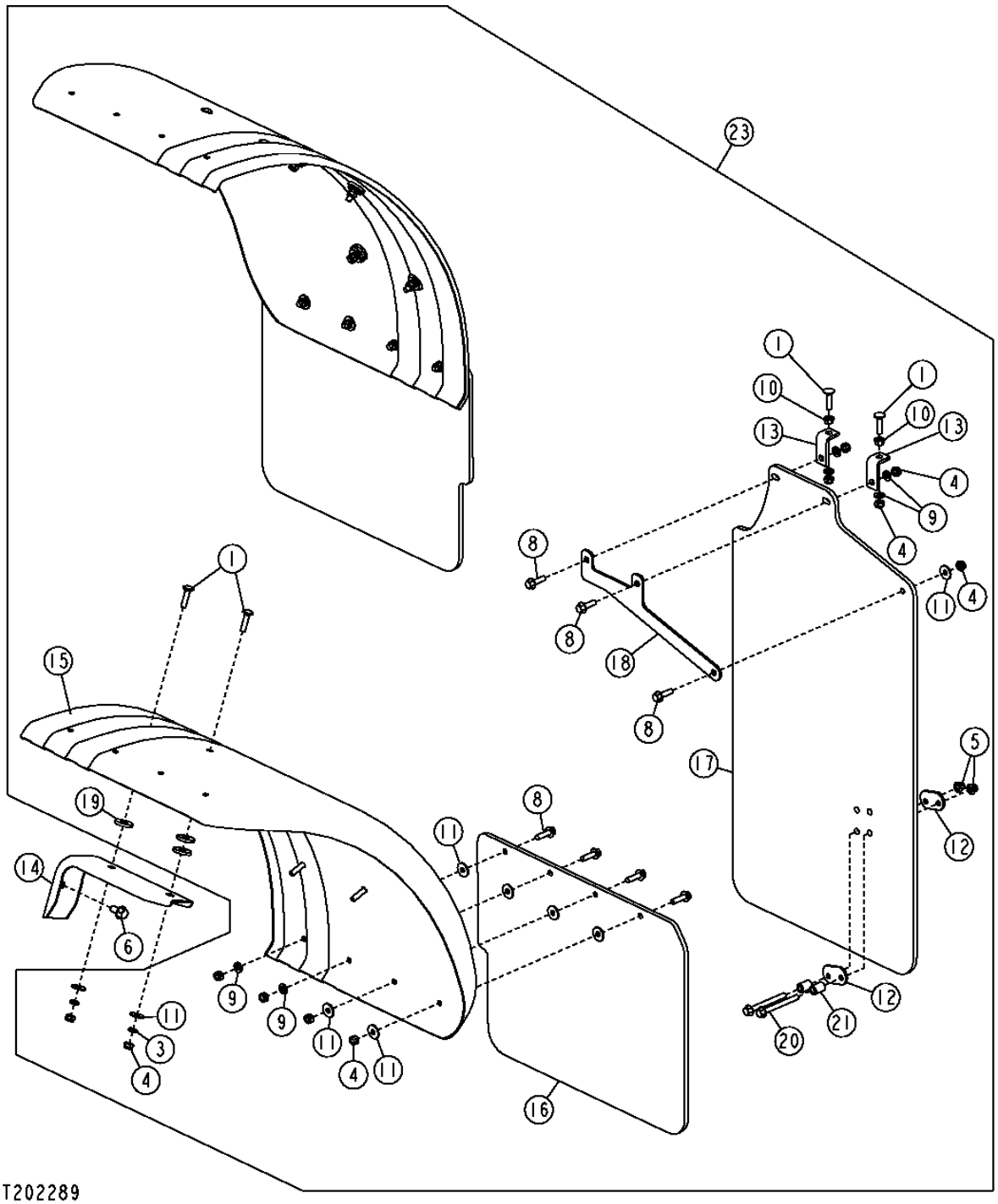

FULL COVERAGE FRONT FENDERS
AILES AVANT PLEINE COUVERTURE
GUARDABARROS DELANTEROS DE COBERTURA TOTAL

KEY	*PART NO.*	*PART NAME*	*QTY.*	*SERIAL NO.*	*REMARKS*
1	03M7195	BOLT	14		M10 X 45
3	14M7152	NUT	12		M10
4	14M7400	LOCK NUT	25		M10, (SUB FOR 14M7167, THIS APPLICATION)
5	14M7400	LOCK NUT	2		M10
6	19M7788	SCREW	6		M12 X 25
8	19M7835	SCREW	11		M10 X 35
9	24M7239	WASHER	8		10.700 X 21 X 2.500 MM
10	14M7296	FLANGE NUT	2		M10
11	24M7296	WASHER	25		10.500 X 30 X 2.500 MM
12	T173779	STRAP	2		
13	T176357	ANGLE	2		
14	T178368	SUPPORT	6		
15	T205533	FENDER	2		
16	T205534	SPLASH GUARDS	2		
17	T204701	SPLASH GUARDS	1		
18	T204744	PLATE	1		
19	T22381	WASHER	18		
20	19M7812	SCREW	2		M10 X 100
21	T147891	BUSHING	2		
23	**AT311824**	**KIT**	**1**		**(WHOLE GOODS) (FIELD KIT)**

FULL COVERAGE REAR FENDERS (W/O LATCH)
AILES ARRIERE PLEINE COUVERTURE (W/O VERROUILLAGE)
GUARDABARROS TRASEROS DE COBERTURA TOTAL (W/O PESTILLO)

T198846 -UN-29APR04

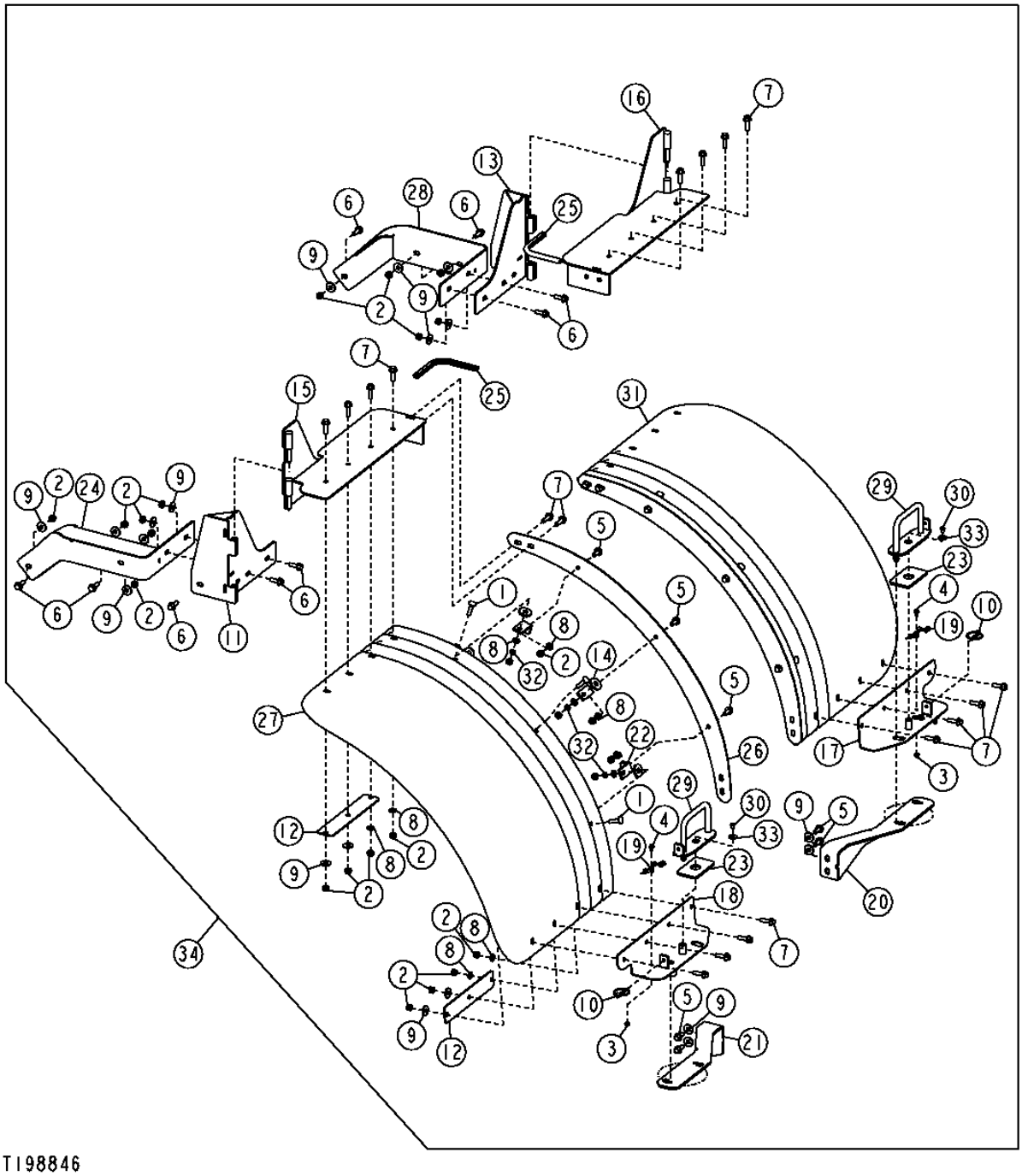

FULL COVERAGE REAR FENDERS (W/O LATCH)
AILES ARRIERE PLEINE COUVERTURE (W/O VERROUILLAGE)
GUARDABARROS TRASEROS DE COBERTURA TOTAL (W/O PESTILLO)

KEY	PART NO.	PART NAME	QTY.	SERIAL NO.	REMARKS
1	03M7195	BOLT	4		M10 X 45
2	14M7167	LOCK NUT	40		M10
3	14M7303	FLANGE NUT	2		M6
4	19M7774	SCREW	2		M6 X 12
5	19M7785	SCREW	8		M10 X 25
6	19M7786	SCREW	12		M10 X 30
7	19M7835	SCREW	20		M10 X 35
8	24M7239	WASHER	16		10.700 X 21 X 2.500 MM
9	24M7296	WASHER	28		10.500 X 30 X 2.500 MM
10	AA21292	QUICK LOCK PIN	2		
11	AT301819	HINGE	1		
12	T204644	PLATE	4		
13	AT301820	HINGE	1		
14	T22381	WASHER	4		
15	AT307171	HINGE	1		
16	AT307172	HINGE	1		
17	AT307173	BRACKET	1		
18	AT307174	BRACKET	1		
19	AT305830	CABLE	2		
20	AT306099	SUPPORT	1		
21	AT306227	SUPPORT	1		
22	T176357	ANGLE	4		
23	T207650	PAD	2		
24	AT309249	BRACKET	1		
25	.....	ISOLATOR	1		(MAKE FROM T58056) (BULK MATERIAL) (CTL)
26	T205537	PLATE	2		
27	T206024	FENDER	1		
28	AT309530	BRACKET	1		
29	AT308784	HANDLE	2		
30	R131664	CAP SCREW	2		
31	T205542	FENDER	1		
32	14M7152	NUT	4		M10
33	24M7298	WASHER	2		8.400 X 25 X 2 MM
34	.....	FIELD INSTALLATION KIT	1		(WHOLE GOODS) (SUB AT312132) FULL COVERAGE REAR FENDERS

FULL COVERAGE REAR FENDERS (W/LATCH)
GUARDABARROS TRASEROS DE COBERTURA TOTAL (W/VERROUILLAGE)
AILES ARRIERE PLEINE COUVERTURE (W/PESTILLO)

TX1017443 -UN-17JAN07

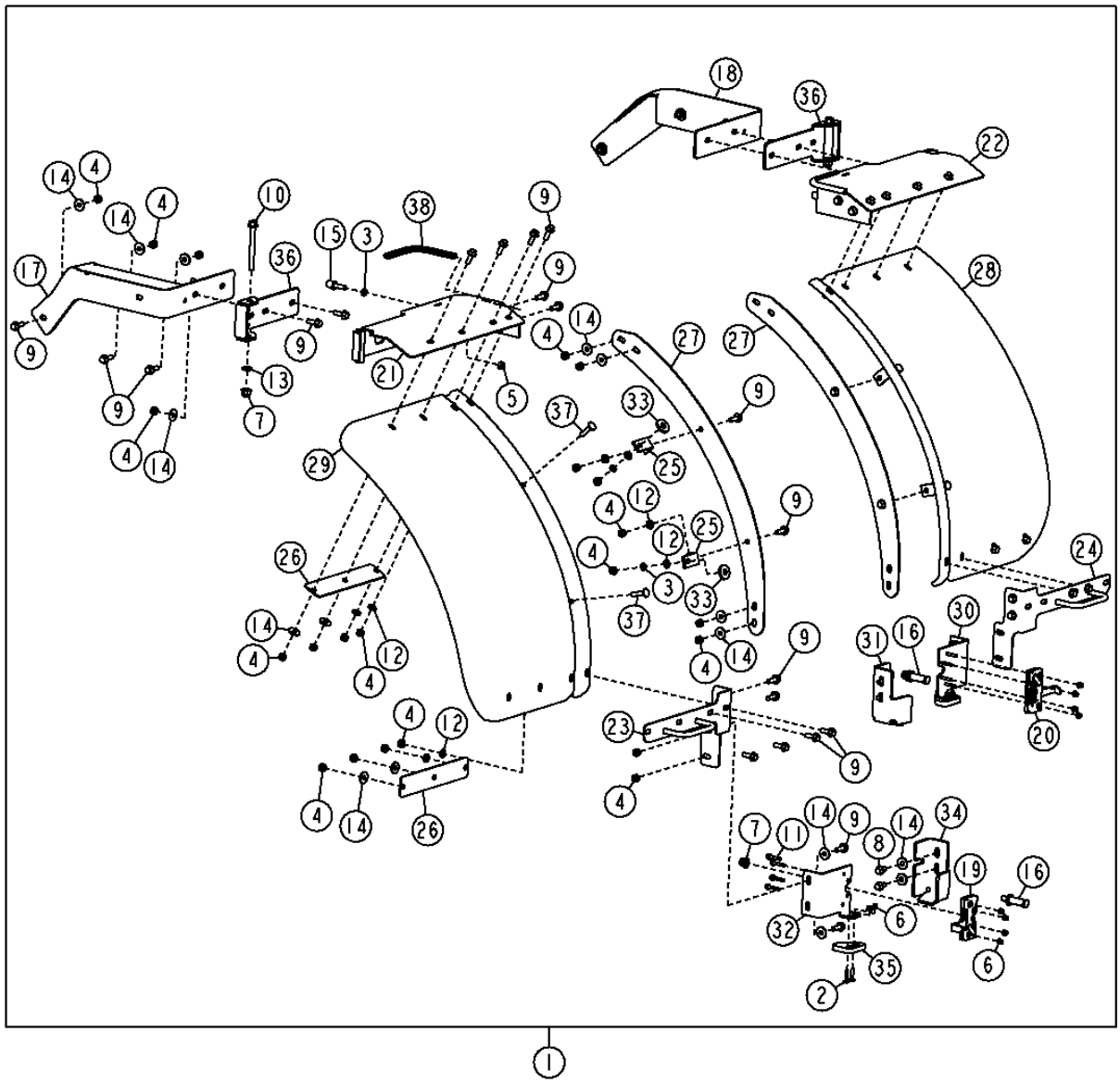

TX1017443

FULL COVERAGE REAR FENDERS (W/LATCH)
GUARDABARROS TRASEROS DE COBERTURA TOTAL (W/VERROUILLAGE)
AILES ARRIERE PLEINE COUVERTURE (W/PESTILLO)

KEY	PART NO.	PART NAME	QTY.	SERIAL NO.	REMARKS
1	AT312132	FIELD INSTALLATION KIT	1		(WHOLEGOODS) FULL COVERAGE REAR FENDER
2	03M7290	BOLT	4		M6 X 30
3	14M7152	NUT	6		M10
4	14M7167	LOCK NUT	46		M10
5	14M7274	NUT	2		M10
6	14M7397	LOCK NUT	12		M6
7	14M7401	LOCK NUT	4		M12
8	19M7784	SCREW	4		M10 X 20
9	19M7786	SCREW	42		M10 X 30
10	19M7821	SCREW	2		M12 X 120
11	19M7833	SCREW	8		M6 X 35
12	24M7239	WASHER	16		10.700 X 21 X 2.500 MM
13	24M7240	WASHER	2		13 X 25 X 3 MM
14	24M7296	WASHER	34		10.500 X 30 X 2.500 MM
15	AT219974	BUMPER	2		
16	AT301711	STRIKER	2		
17	AT309249	BRACKET	1		
18	AT309530	BRACKET	1		
19	AT322382	LATCH	1		
20	AT322383	LATCH	1		
21	AT330331	HINGE	1		
22	AT330332	HINGE	1		
23	AT330473	BRACKET	1		
24	AT330474	BRACKET	1		
25	T176357	ANGLE	4		
26	T204644	PLATE	4		
27	T205537	PLATE	2		
28	T205542	FENDER	1		
29	T206024	FENDER	1		
30	T221130	BRACKET	1		
31	T221186	BRACKET	1		
32	T223717	BRACKET	1		
33	T22381	WASHER	4		
34	T224462	BRACKET	1		
35	T224498	PAD	2		
36	T224529	BRACKET	2		
37	03M7195	BOLT	4		
38	.....	GUARD	2		(CTL, 1'(.3M)) (MAKE FROM T58056)

FENDER BRACKET EXTENSIONS (TOOL CARRIER)
EXTENSIONS SUPPORT AILE (PORTE-OUTILS)
EXTENSIONES DE ESCUADRA DEL GUARDABARROS (PORTAHERRAMIENTAS)

T202125 -UN-10AUG04

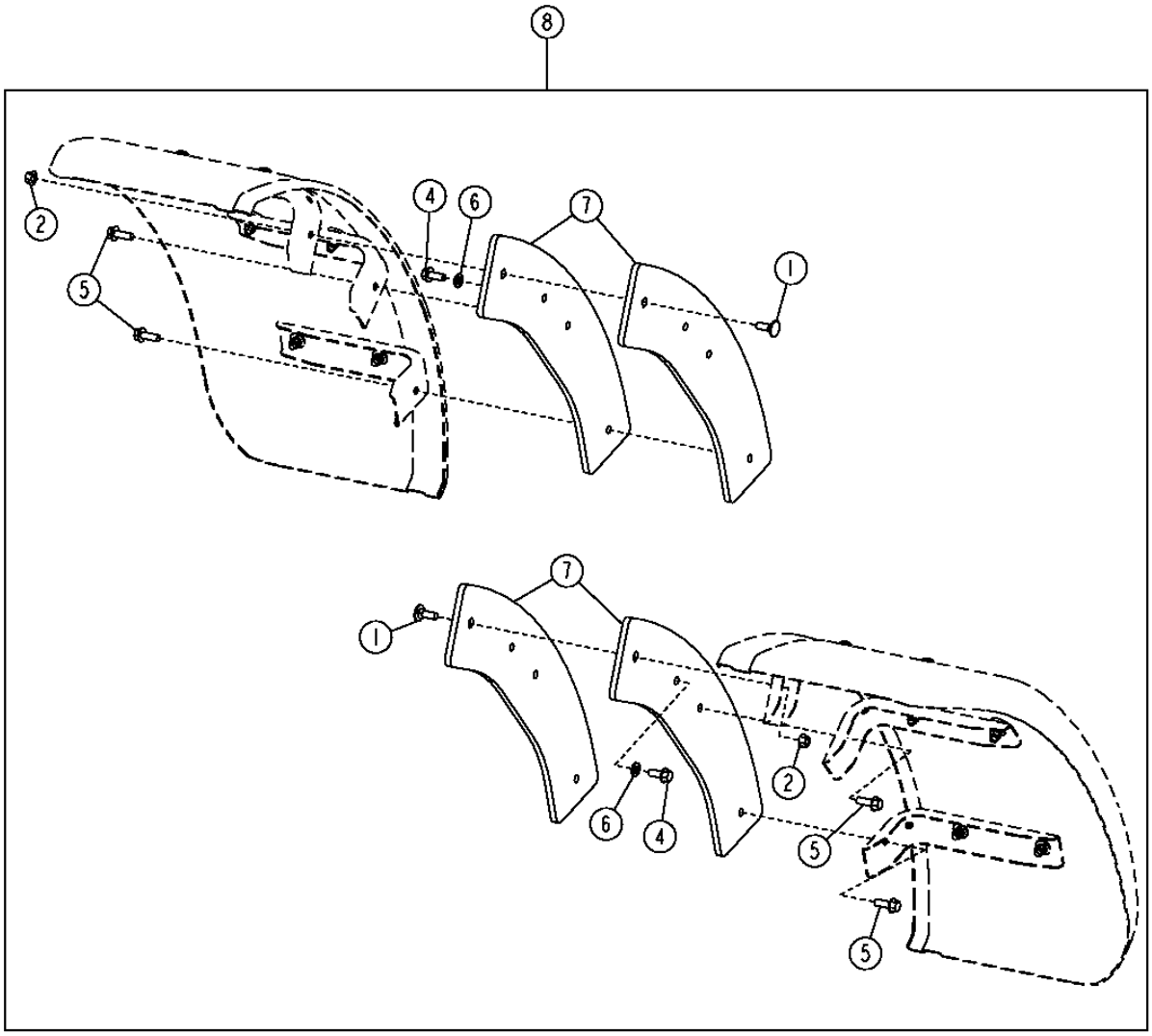

T202125

FENDER BRACKET EXTENSIONS (TOOL CARRIER)
EXTENSIONS SUPPORT AILE (PORTE-OUTILS)
EXTENSIONES DE ESCUADRA DEL GUARDABARROS (PORTAHERRAMIENTAS)

KEY	*PART NO.*	*PART NAME*	*QTY.*	*SERIAL NO.*	*REMARKS*
1	03M7083	BOLT	2		M12 X 35
2	14M7299	FLANGE NUT	2		M12
4	19M7789	SCREW	2		M12 X 30
5	19M7790	SCREW	4		M12 X 35
6	24M7240	WASHER	2		13 X 25 X 3 MM
7	T206642	PLATE	2		
8	.....	BRACKET	1		(AT310495 NLA) (FURNISH COMPONENTS)

RADIO, RADIO SPEAKERS AND ANTENNA (S.N. -590067)
RADIO, HAUTS-PARLEURS ET ANTENNE (S.N. -590067)
RADIO, ALTAVOCES DEL RADIO Y ANTENA (S.N. -590067)

T192643 -UN-01JUL03

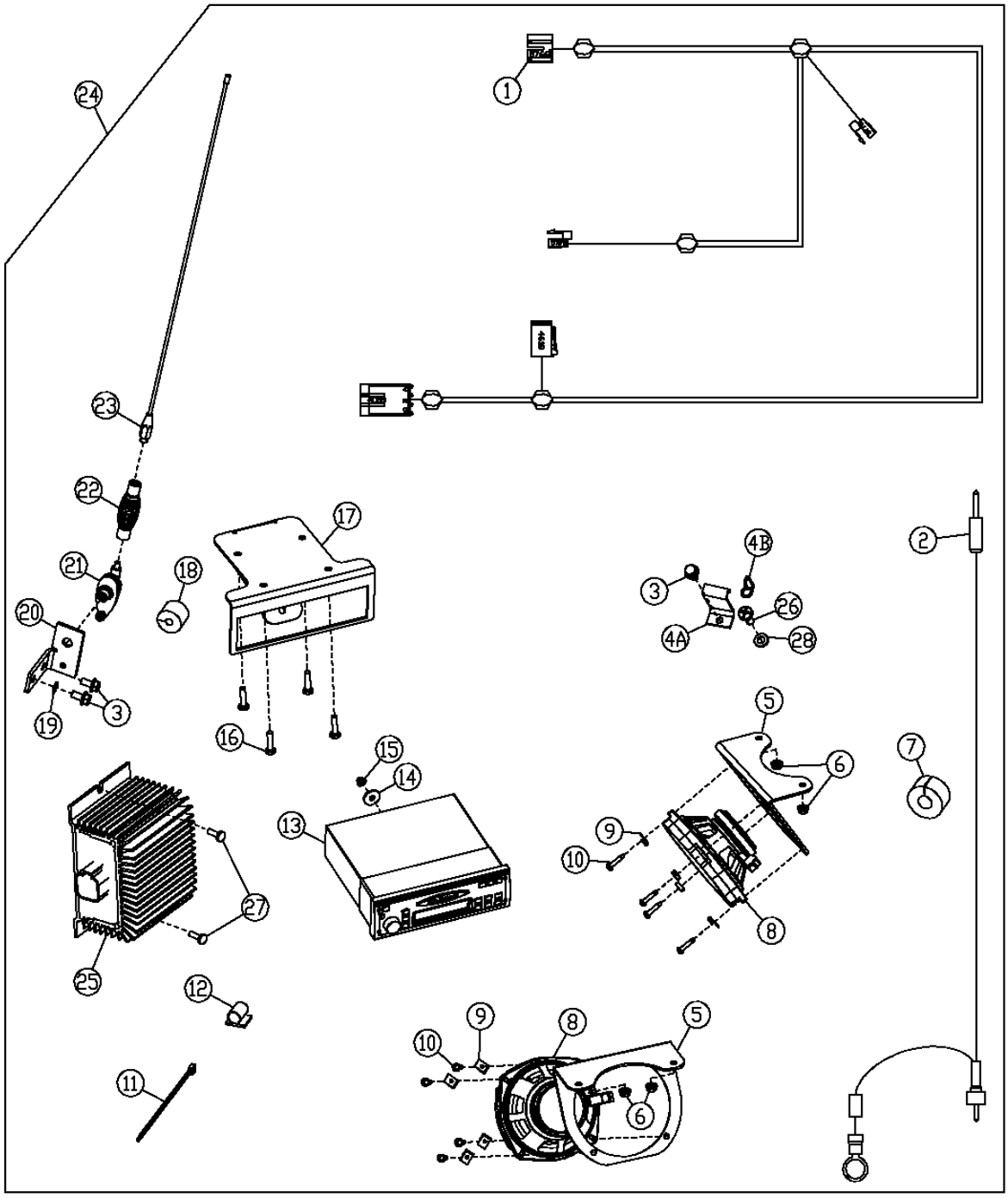

T192643

RADIO, RADIO SPEAKERS AND ANTENNA (S.N. -590067)
RADIO, HAUTS-PARLEURS ET ANTENNE (S.N. -590067)
RADIO, ALTAVOCES DEL RADIO Y ANTENA (S.N. -590067)

KEY	PART NO.	PART NAME	QTY.	SERIAL NO.	REMARKS
1	AT223870	RADIO SPEAKER WRG HARNESS	1		
2	AT223897	CABLE	1		
3	19M7865	SCREW	3		M8 X 16
4A	T180573	BRACKET	1		(USE WITH 19M7865)
4B	R126033	HOOK	1		(USE WITH T133674 AND 24M7054)
5	T180338	BRACKET	2		
6	14M7303	FLANGE NUT	4		M6
7	T182870	ISOLATOR	1		
8	AT188759	SPEAKER	2		
9	R53528	NUT	8		
10	T182888	SCREW	8		(SUB FOR 37M7070)
11	R44302	TIE BAND	1		
12	T182909	CLIP	3		
13	AT192957	RADIO	1		WITH CASSETTE, (SUB RE190140)
	RE190139	RADIO	1		(SUB FOR AT192956)
	RE190140	RADIO	1		WITH CASETTE, (SUB FOR AT192957)
	.....	RADIO	1		WITH COMPACT DISC, (SUB RE227953) (SUB FOR AT192958) (RE190141 NLA)
14	24M7100	WASHER	1		6.600 X 22 X 2 MM
15	14M7375	FLANGE NUT	1		M5
16	19H1948	CAP SCREW	4		6.350 X 19.050 MM
17	T180420	BRACKET	1		
18	T182871	ISOLATOR	1		
19	12M7032	LOCK WASHER	1		8.400 MM
20	T180487	BRACKET	1		
21	RE168454	BASE	1		ANTENNA
22	RE61651	SPRING	1		
23	AR104516	ANTENNA	1		
24	**AT306829**	**KIT**	**1**		**WHOLE GOODS**
	AT306830	**KIT**	**1**		**WHOLE GOODS WITH CASSETTE**
	AT306831	**KIT**	**1**		**WHOLE GOODS WITH COMPACT DISC**
25	AT224893	CONVERTER	1		
26	T133674	SELF-LOCKING SCREW	1		(SUB FOR 21M7292)
27	21M7250	SCREW	2		
28	24M7054	WASHER	1		
29	R76695	NUT	1		(NOT ILLUSTRATED)

RADIO, RADIO SPEAKERS AND ANTENNA (S.N. 590068-600740)
RADIO, HAUTS-PARLEURS ET ANTENNE (S.N. 590068-600740)
RADIO, ALTAVOCES DEL RADIO Y ANTENA (S.N. 590068-600740)

T193559 -UN-14AUG03

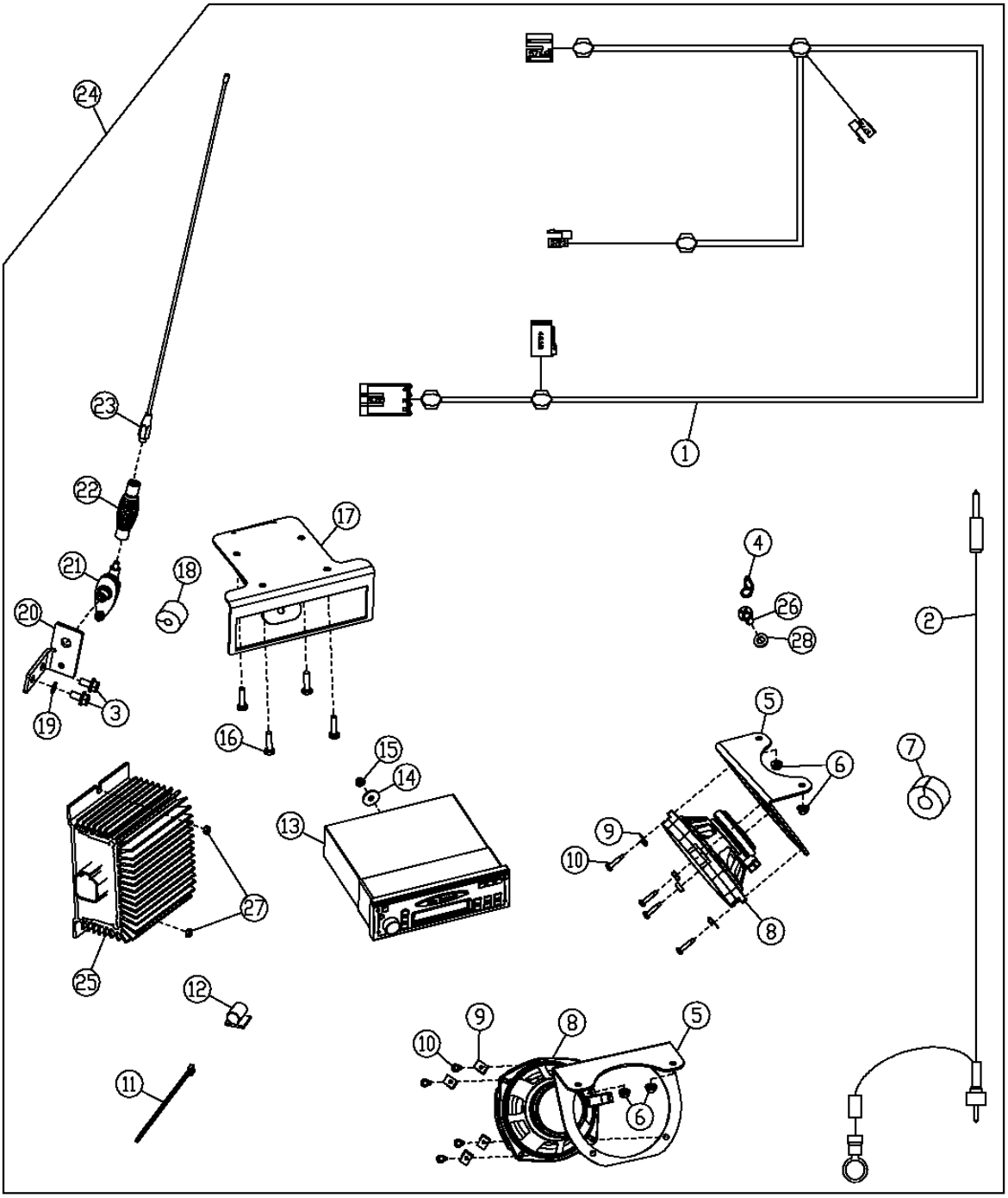

RADIO, RADIO SPEAKERS AND ANTENNA (S.N. 590068-600740)
RADIO, HAUTS-PARLEURS ET ANTENNE (S.N. 590068-600740)
RADIO, ALTAVOCES DEL RADIO Y ANTENA (S.N. 590068-600740)

KEY	PART NO.	PART NAME	QTY.	SERIAL NO.	REMARKS
1	AT223870	RADIO SPEAKER WRG HARNESS	1		
2	AT223897	CABLE	1		
3	19M7865	SCREW	2		M8 X 16
4	R126033	HOOK	1		
5	T180338	BRACKET	2		
6	14M7303	FLANGE NUT	4		M6
7	T182870	ISOLATOR	1		
8	AT188759	SPEAKER	2		
9	R53528	NUT	8		
10	37M7070	SCREW	8		
11	R44302	TIE BAND	1		
12	.....	CLIP	3		
13	RE190139	RADIO	1		
	RE190140	RADIO	1		WITH CASSETTE
	.....	RADIO	1		WITH COMPACT DISC, (SUB RE227953) (RE190141 NLA)
14	24M7100	WASHER	1		6.600 X 22 X 2 MM
15	14M7375	FLANGE NUT	1		
16	19H1948	CAP SCREW	4		6.350 X 19.050 MM
17	T180420	BRACKET	1		
18	T182871	ISOLATOR	1		
19	12M7032	LOCK WASHER	1		8.400 MM
20	T180487	BRACKET	1		
21	RE168454	BASE	1		ANTENNA
22	RE61651	SPRING	1		
23	AR104516	ANTENNA	1		
24	**AT306829**	**KIT**	**1**		**WHOLE GOODS WITH WEATHERBAND**
	AT306830	**KIT**	**1**		**WHOLE GOODS WITH CASSETTE**
	AT306831	**KIT**	**1**		**WHOLE GOODS WITH COMPACT DISC**
25	AT224893	CONVERTER	1		
26	T133674	SELF-LOCKING SCREW	1		(SUB FOR 21M7292)
27	14M7100	NUT	2		
28	24M7054	WASHER	1		

RADIO, RADIO SPEAKERS AND ANTENNA (S.N. 600741-)
RADIO, HAUTS-PARLEURS ET ANTENNE (S.N. 600741-)
RADIO, ALTAVOCES DEL RADIO Y ANTENA (S.N. 600741-)

T213273 -UN-31AUG05

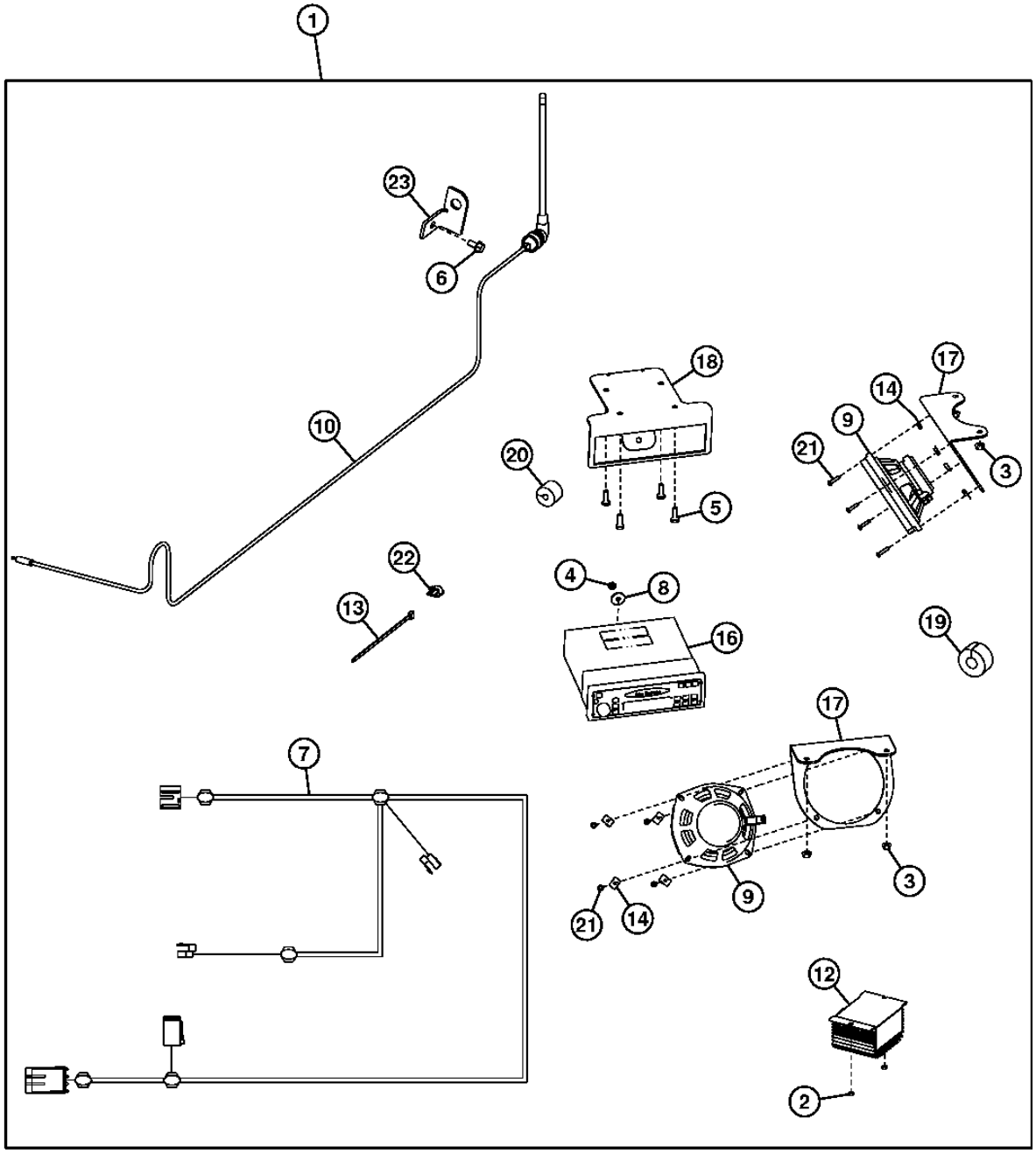

T213273

RADIO, RADIO SPEAKERS AND ANTENNA (S.N. 600741-)
RADIO, HAUTS-PARLEURS ET ANTENNE (S.N. 600741-)
RADIO, ALTAVOCES DEL RADIO Y ANTENA (S.N. 600741-)

KEY	*PART NO.*	*PART NAME*	*QTY.*	*SERIAL NO.*	*REMARKS*
1	AT306829	FIELD INSTALLATION KIT	1		AM/FM/WB, (WHOLE GOODS)
	AT306830	**FIELD INSTALLATION KIT**	**1**		**AM/FM/WB W/CASSETTE, (WHOLE GOODS)**
	AT306831	**FIELD INSTALLATION KIT**	**1**		**AM/FM W/CD, (WHOLE GOODS)**
2	14M7100	NUT	2		M4
3	14M7303	FLANGE NUT	4		M6
4	14M7375	FLANGE NUT	1		M5
5	19H1948	CAP SCREW	4		1/4" X 3/4"
6	19M7865	SCREW	1		M8 X 16
7	AT223870	RADIO SPEAKER WRG HARNESS	1		
8	24M7100	WASHER	1		6.600 X 22 X 2 MM
9	AT188759	SPEAKER	2		
10	AT199388	ANTENNA	1		
12	AT224893	CONVERTER	1		
13	R44302	TIE BAND	1		
14	R53528	NUT	8		
16	RE190139	RADIO	1		AM/FM/WB
	RE190140	RADIO	1		AM/FM/WB W/CASSETTE
	RE227953	RADIO	1		AM/FM W/CD
17	T180338	BRACKET	2		
18	T180420	BRACKET	1		
19	T182870	ISOLATOR	1		
20	T182871	ISOLATOR	1		
21	T182888	SCREW	8		
22	T182909	CLIP	6		
23	T204635	BRACKET	1		

HYDRAULIC PUMP
POMPE HYDRAULIQUE
BOMBA HIDRAULICA

T209835 -UN-01APR05

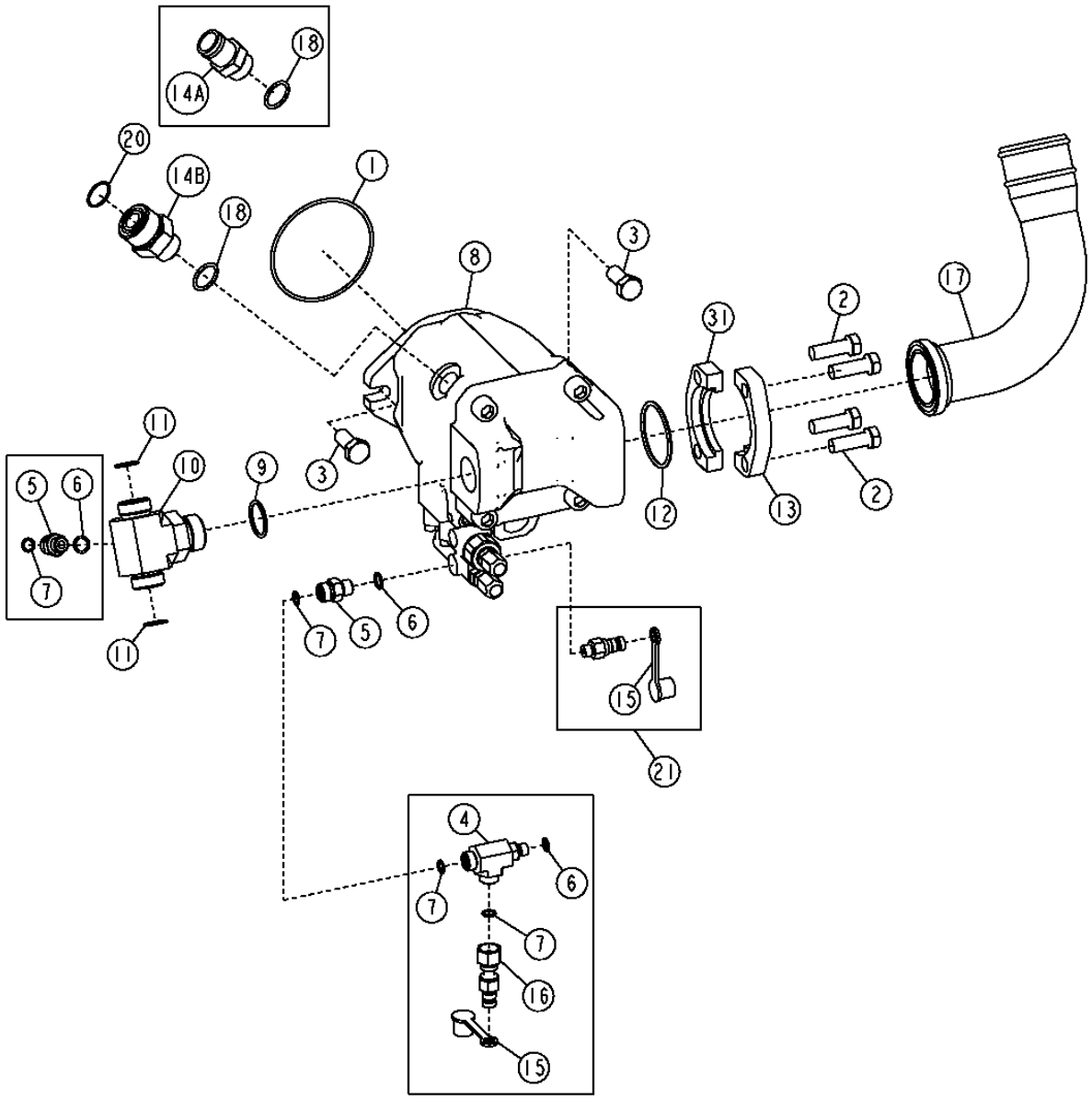

T209835

HYDRAULIC PUMP
POMPE HYDRAULIQUE
BOMBA HIDRAULICA

KEY	PART NO.	PART NAME	QTY.	SERIAL NO.	REMARKS
1	R500318	O-RING	1		(SUB FOR F37030242)
2	19H2993	CAP SCREW	4		1/2" X 1-1/2"
3	19M7877	CAP SCREW	2		M14 X 30
4	38H1434	TEE FITTING	1	-598233	
5	38H1309	ADAPTER FITTING	1	598234-	
6	R26448	O-RING	2		
7	T77613	O-RING	5		
8	AT227702	HYDRAULIC PUMP	1		
	AT302143	SEAL KIT	1		
	T201525	SEAL	1		(SEAL RING FOR ADJUSTMENT CARTRIDGES)
	AT302144	SPOOL VALVE	1		(PUMP CONTROL)
	AT306219	SEAL KIT	1		(PUMP CONTROL VALVE)
	T201521	GASKET	1		(CONTROL VALVE SEAL PLATE)
9	R29936	O-RING	1		
10	T202174	TEE FITTING	1	-594432	
	38H1055	TEE FITTING	1	594433-	
11	T77858	O-RING	2		
12	F1870R	O-RING	1		
13	R37023	FLANGE FITTING	2		
14A	R44852	FITTING	1	-598233	
14B	38H1179	ADAPTER FITTING	1	598234-	
15	R77175	COVER	1		
16	RE60701	DIAGNOSTIC COUPLING	1	-598233	
17	T197059	TUBE	1		
18	U12547	O-RING	1		
20	T76938	O-RING	1	598234-	
21	AT180119	FITTING	1	598234-	(INCLUDES R28782)

HYDRAULIC OIL RESERVOIR (SN -604689)
RESERVOIR HUILE HYDRAULIQUE (SN -604689)
DEPOSITO DE ACEITE HIDRAULICO (SN -604689)

T204151 -UN-05NOV04

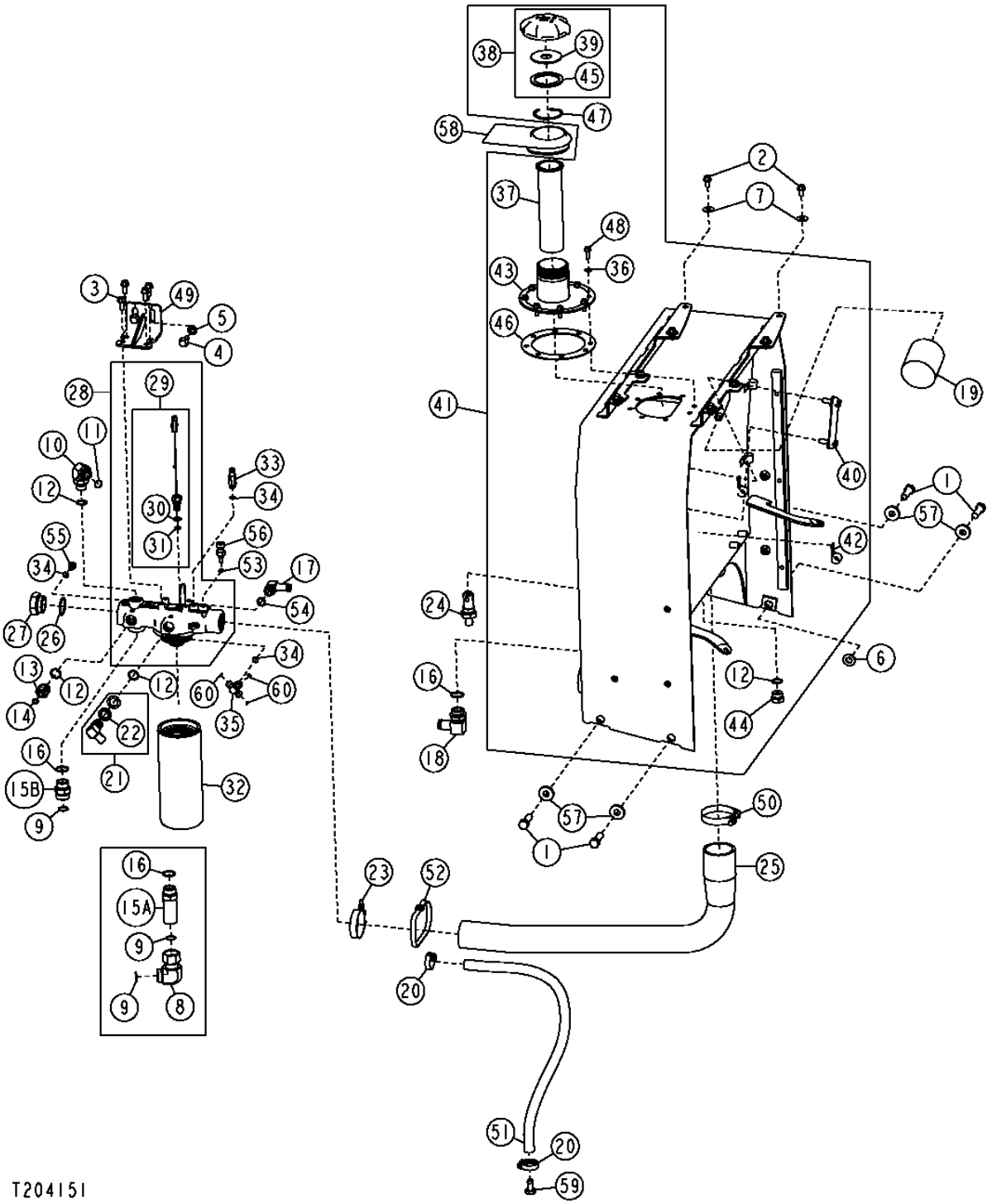

HYDRAULIC OIL RESERVOIR (SN -604689)
RESERVOIR HUILE HYDRAULIQUE (SN -604689)
DEPOSITO DE ACEITE HIDRAULICO (SN -604689)

KEY	PART NO.	PART NAME	QTY.	SERIAL NO.	REMARKS
1	19M7409	CAP SCREW	4		M16 X 50
2	19M7784	SCREW	8		M10 X 20
3	19M7785	SCREW	4		M10 X 25
4	19M7788	SCREW	2		M12 X 25
5	24M7240	WASHER	2		13 X 25 X 3 MM
6	24M7241	WASHER	2		17 X 34 X 4 MM
7	24M7296	WASHER	8		10.500 X 30 X 2.500 MM
8	38H1098	ELBOW FITTING	1	-594432	
9	T76938	O-RING	2	-594432	
	T76938	O-RING	1	594433-	
10	38H1007	ELBOW FITTING	1		
11	T77858	O-RING	1		
12	U12547	O-RING	4		
13	38H1175	ADAPTER FITTING	1		
14	T77857	O-RING	1		
15A	38H1216	ADAPTER FITTING	1	-594432	
15B	38H1164	ADAPTER FITTING	1	594433-	
16	R29936	O-RING	2		
17	AH64349	HOSE FITTING	1		
18	AH75162	FITTING	1		
19	AM39653	OIL FILTER	1		
20	AR21839	CLAMP	2		
21	AT21574	FITTING	1		
22	R27390	NUT	1		
23	AH170895	CLAMP	1		(SUB FOR AH170895)
24	AT221897	CHECK VALVE	1		
25	AT223658	HOSE	1		
26	R26773	O-RING	1		
27	T181201	FITTING	1		
28	AT224797	FILTER HEAD	1		
29	AT307045	PRESSURE SWITCH	1		(SUB FOR AT280924)
30	R26375	O-RING	1		
31	P46051	O-RING	1		
32	AT310905	OIL FILTER	1		(SUB FOR AT228474)
33	M72389	ADAPTER FITTING	1		
34	R26448	O-RING	3		
35	AT224266	TEE FITTING	1		
36	24H1136	WASHER	8		11/32" X 11/16" X 0.065"
37	AT161638	STRAINER	1		
38	AT177950	FILLER CAP	1		
39	H148166	WASHER	1		
40	AT227279	LEVEL GAUGE	1		
41	AT227491	HYDRAULIC RESERVOIR	1		
42	.....	CLAMP	5		
43	AT227644	HOUSING	1		
44	R27175	DRAIN PLUG	1		
45	T103461	SEALING WASHER	1		
46	T205033	GASKET	1		
47	T39155	SNAP RING	1		
48	T81403	SCREW	8		
49	AT228747	BRACKET	1		
50	RE52702	CLAMP	1		(SUB FOR RE52702)
51	.....	BULK HOSE	1		(MAKE FROM T148181) (CTL) 975.36MM (3.2')
52	N189220	TIE BAND	1		
53	R26286	O-RING	1		
54	R26906	O-RING	1		
55	R27218	FITTING PLUG	1		
56	RE38310	SENSOR	1		
57	T119912	WASHER	4		
58	T196312	BOOT	1		
59	T203776	PLUG	1		
60	T77613	O-RING	3		

HYDRAULIC OIL RESERVOIR (S.N. 604690-)
RESERVOIR HUILE HYDRAULIQUE (S.N. 604690-)
DEPOSITO DE ACEITE HIDRAULICO (S.N. 604690-)

TX1003340 -UN-24FEB06

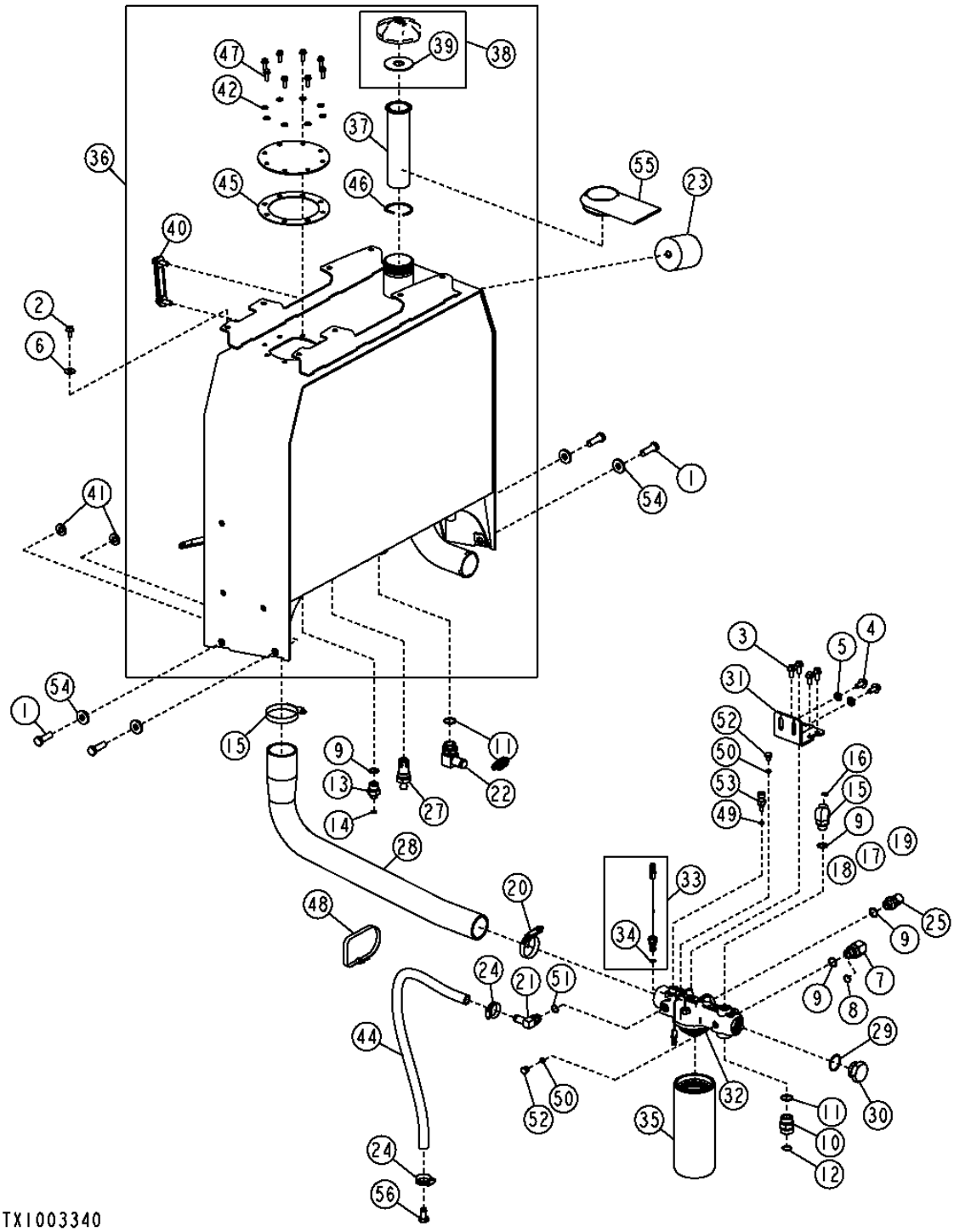

THIS PARTS LISTING IS CONTINUED

HYDRAULIC OIL RESERVOIR (S.N. 604690-)
RESERVOIR HUILE HYDRAULIQUE (S.N. 604690-)
DEPOSITO DE ACEITE HIDRAULICO (S.N. 604690-)

KEY	PART NO.	PART NAME	QTY.	SERIAL NO.	REMARKS
1	19M7409	CAP SCREW	4		M16 X 50
2	19M7784	SCREW	8		M10 X 20
3	19M7785	SCREW	4		M10 X 25
4	19M7788	SCREW	2		M12 X 25
5	24M7240	WASHER	2		13 X 25 X 3 MM
6	24M7296	WASHER	8		10.500 X 30 X 2.500 MM
7	38H1007	ELBOW FITTING	1		
8	T77858	O-RING	1		18.771 X 1.778 MM
9	U12547	O-RING	4		23.470 X 2.946 MM
10	38H1164	ADAPTER FITTING	1		
11	R29936	O-RING	2		29.743 X 2.946 MM
12	T76938	O-RING	1		23.520 X 1.778 MM
13	38H1175	ADAPTER FITTING	1		
14	T77857	O-RING	1		12.421 X 1.778 MM
15	38H1577	ELBOW FITTING	1		
16	T77932	O-RING	1		15.596 X 1.778 MM
17	38H1591	TEE FITTING	1		
18	R26448	O-RING	1		11.887 X 1.981 MM
19	T77613	O-RING	2		9.246 X 1.778 MM
20	AH170895	CLAMP	1		
21	AH64349	HOSE FITTING	1		
22	AH75162	FITTING	1		
23	AM39653	OIL FILTER	1		
24	AR21839	CLAMP	2		
25	AT21574	FITTING	1		
27	AT221897	CHECK VALVE	1		
28	AT223658	HOSE	1		
29	R26773	O-RING	1		43.688 X 2.997 MM
30	T181201	FITTING	1		
31	AT228747	BRACKET	1		
32	AT224797	FILTER HEAD	1		
33	AT307045	PRESSURE SWITCH	1		
34	P46051	O-RING	1		10.770 X 2.616 MM
35	AT310905	OIL FILTER	1		
36	AT329811	HYDRAULIC RESERVOIR	1		
37	AT161638	STRAINER	1		
38	AT177950	FILLER CAP	1		
39	H148166	WASHER	1		29 X 85 X 3.175 MM
40	AT227279	LEVEL GAUGE	1		
41	24M7241	WASHER	2		17 X 34 X 4 MM
42	24H1136	WASHER	8		8.738 X 17.475 X 1.651 MM
44	.....	BULK HOSE	1		(MAKE FROM X831-12) (CTL)
45	T106595	GASKET	1		
46	T39155	SNAP RING	1		
47	T81403	SCREW	8		M8 X 25
48	N189220	TIE BAND	1		
49	R26286	O-RING	1		10.516 X 1.829 MM
50	R26448	O-RING	2		11.887 X 1.981 MM
51	R26906	O-RING	1		19.177 X 2.464 MM
52	R27218	FITTING PLUG	2		
53	RE38310	SENSOR	1		
54	T119912	WASHER	4		16.660 X 41.148 X 6 MM
55	T196312	BOOT	1		
56	T203776	PLUG	1		

PRESSURE REGULATOR VALVE FITTINGS (S.N. -604689)
RACCORDS REGULATEUR PRESSION (S.N. -604689)
ADAPTADORES DE LA VALVULA REGULADORA DE PRESION (S.N. -604689)

T195341 -UN-

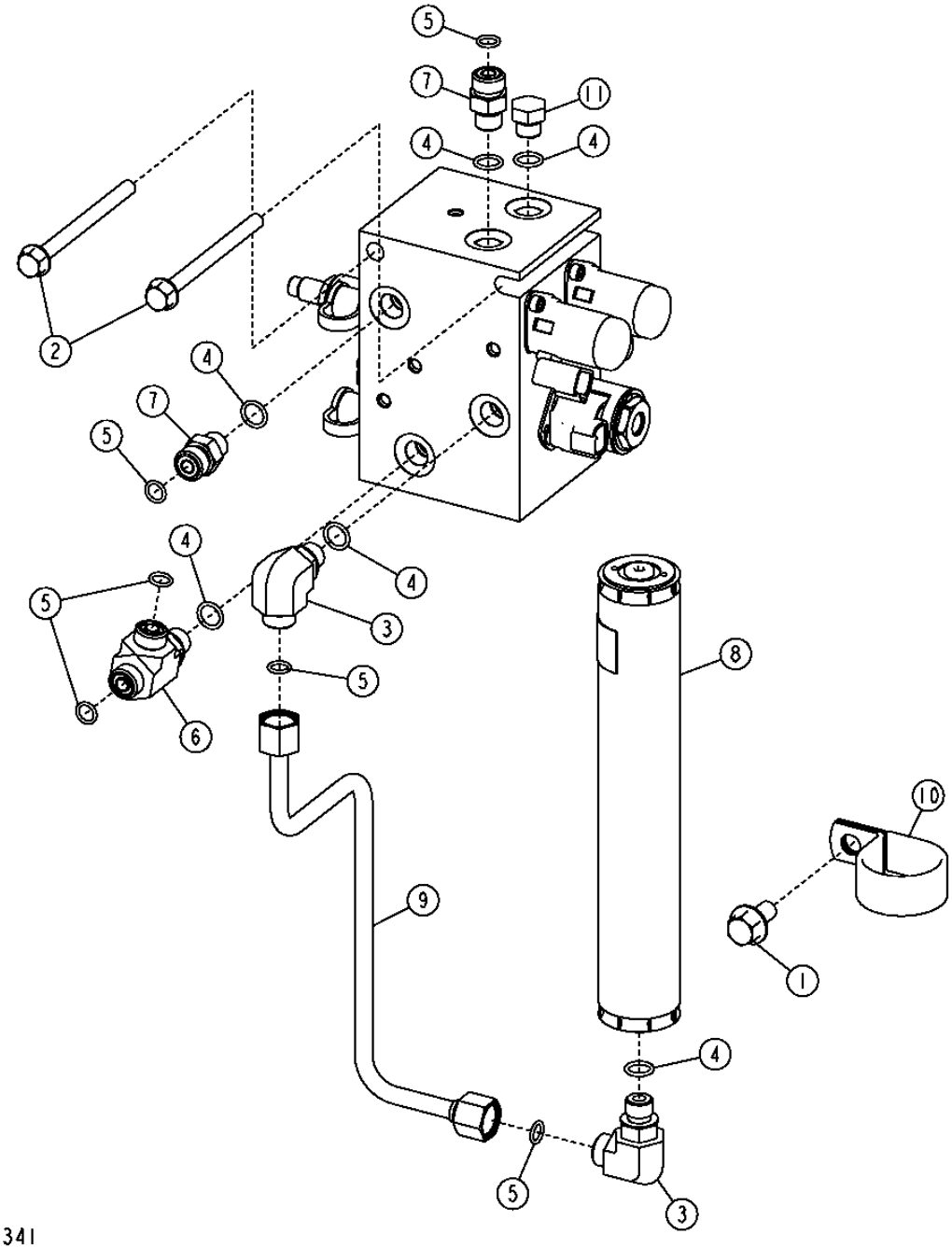

THIS PARTS LISTING IS CONTINUED

PRESSURE REGULATOR VALVE FITTINGS (S.N. -604689)
RACCORDS REGULATEUR PRESSION (S.N. -604689)
ADAPTADORES DE LA VALVULA REGULADORA DE PRESION (S.N. -604689)

KEY	*PART NO.*	*PART NAME*	*QTY.*	*SERIAL NO.*	*REMARKS*
1	19M7804	SCREW	1		M10 X 40
2	19M8039	SCREW	2		M8 X 80
3	38H1004	ELBOW FITTING	2		
4	R26448	O-RING	6		
5	T77613	O-RING	7		
6	38H1023	TEE FITTING	1		
7	38H1160	ADAPTER FITTING	2		
8	AT225574	HYDRAULIC ACCUMULATOR	1		
9	AT304225	OIL LINE	1		
10	N205415	CLAMP	2		
11	R27218	FITTING PLUG	1		

PRESSURE REGULATOR VALVE FITTINGS (S.N. 604690-)
RACCORDS REGULATEUR PRESSION (S.N. 604690-)
ADAPTADORES DE LA VALVULA REGULADORA DE PRESION (S.N. 604690-)

TX1017762 -UN-

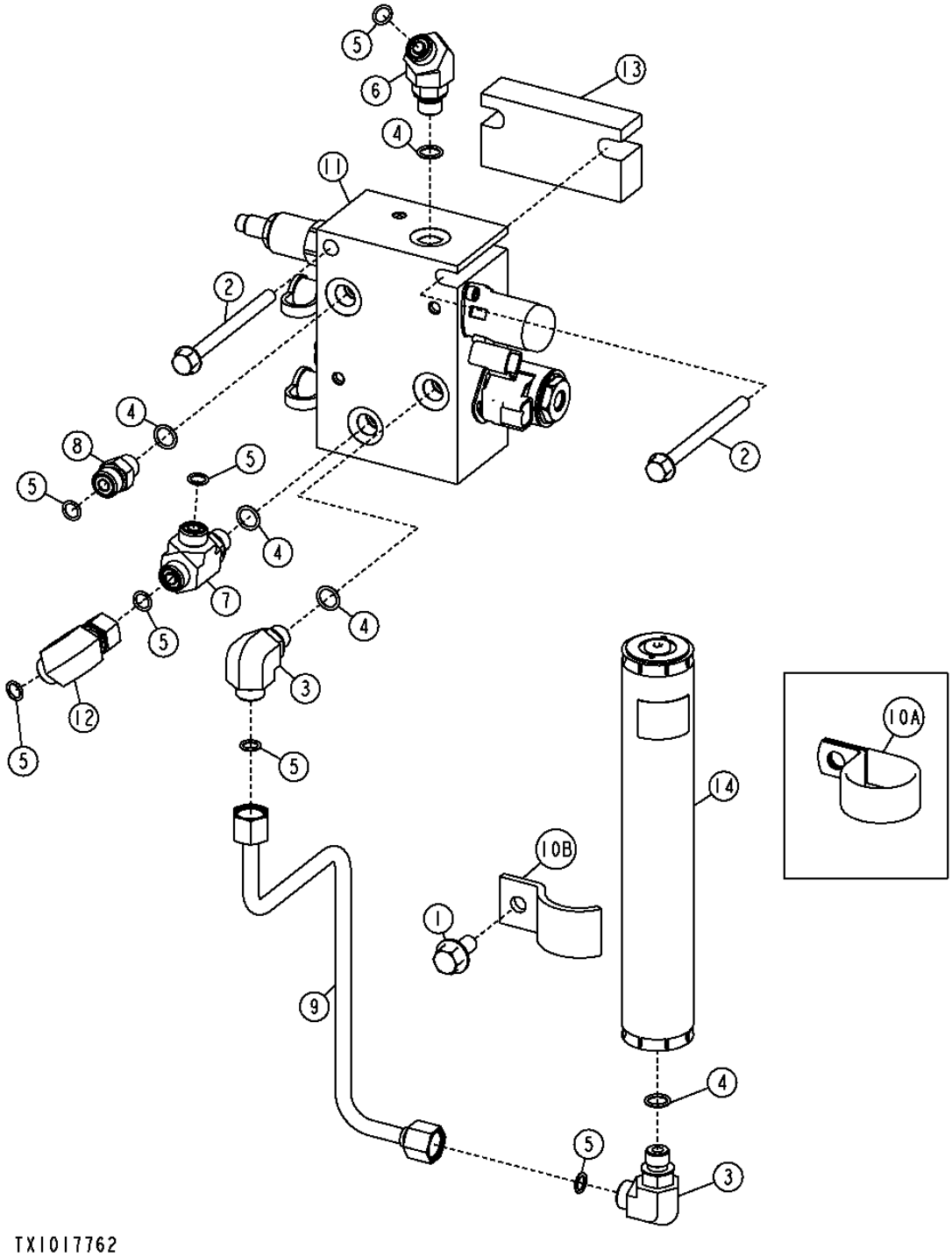

PRESSURE REGULATOR VALVE FITTINGS (S.N. 604690-)
RACCORDS REGULATEUR PRESSION (S.N. 604690-)
ADAPTADORES DE LA VALVULA REGULADORA DE PRESION (S.N. 604690-)

KEY	*PART NO.*	*PART NAME*	*QTY.*	*SERIAL NO.*	*REMARKS*
1	19M7804	SCREW	1	-608219	M10 X 40
	19M7784	SCREW	1	608220-	M10 X 20
2	19M8039	SCREW	2	-608219	M8 X 80
	19M7970	SCREW	2	608220-	M8 X 100
3	38H1004	ELBOW FITTING	2		
4	R26448	O-RING	5		
5	T77613	O-RING	7		
6	38H1045	ELBOW FITTING	1		
7	38H1023	TEE FITTING	2		
8	38H1160	ADAPTER FITTING	1		
9	AT304225	OIL LINE	1	-608219	
	AT334387	OIL LINE	1	608220-	
10A	N205415	CLAMP	1	-608219	
10B	R68904	CLAMP	1	608220-	
11	AT315118	VALVE	1		
12	38H1094	ELBOW FITTING	1	608220-	
13	T225868	STRAP	1	608220-	
14	AT225574	HYDRAULIC ACCUMULATOR	1		

PRESSURE REGULATOR VALVE COMPONENTS
COMPOSANTS DU REGULATEUR DE PRESSION
COMPONENTES DE LA VALVULA REGULADORA DE PRESION

T196513 -UN-20NOV03

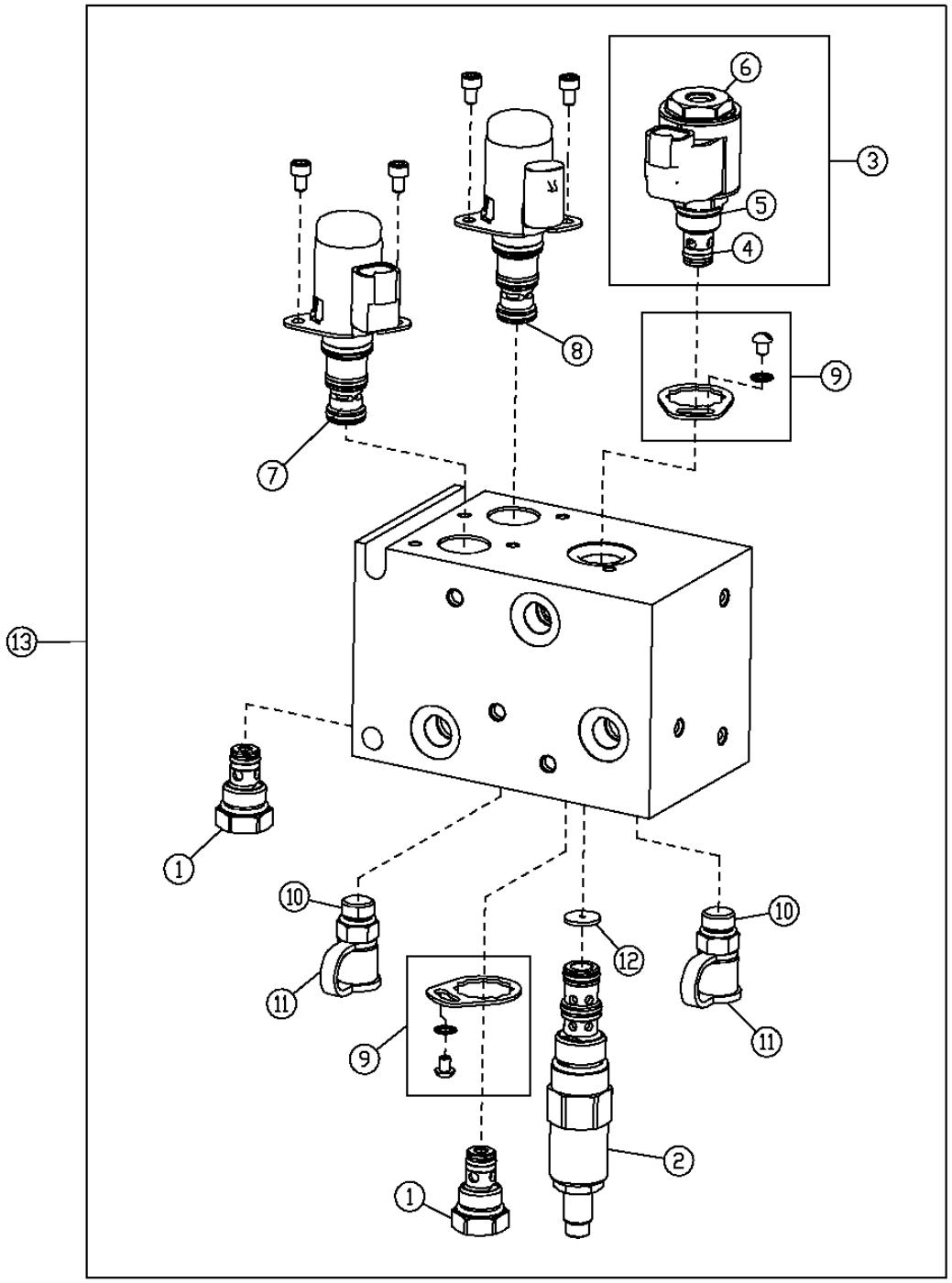

T196513

PRESSURE REGULATOR VALVE COMPONENTS
COMPOSANTS DU REGULATEUR DE PRESSION
COMPONENTES DE LA VALVULA REGULADORA DE PRESION

KEY	*PART NO.*	*PART NAME*	*QTY.*	*SERIAL NO.*	*REMARKS*
1	AT224570	CHECK VALVE	2		
	AT224862	SEAL KIT	1		
2	AT313708	OIL PRESSURE REG. VALVE	1		(SUB FOR AT307314)
	AT196943	SEAL KIT	1		
3	AT309494	SOLENOID VALVE	1		
4	AT307315	SOLENOID VALVE	1		
5	AT333811	SOLENOID VALVE COIL	1		
6	T225291	NUT	1		
7	AT307302	FLOW CONTROL HYD. VALVE	1		(PILOT)
	AT224873	SEAL KIT	1		
8	AT307301	FLOW CONTROL HYD. VALVE	1		(DIFFERENTIAL)
	AT224873	SEAL KIT	1		
9	AT307304	KIT	2		
10	AH125760	HYD. QUICK-CONNECT COUPLER	2		
11	R77175	COVER	2		
12	T205670	ORIFICE	1		
13	AT325316	HYD ACTUATED CONTROL VALVE	1		(SUB FOR AT228138)

MAIN HYDRAULIC LINES (SN -604689)
CONDUITES HYDRAULIQUES PRINCIPALES (SN -604689)
LINEAS HIDRAULICAS PRINCIPALES (SN -604689)

T209842 -UN-30MAR05

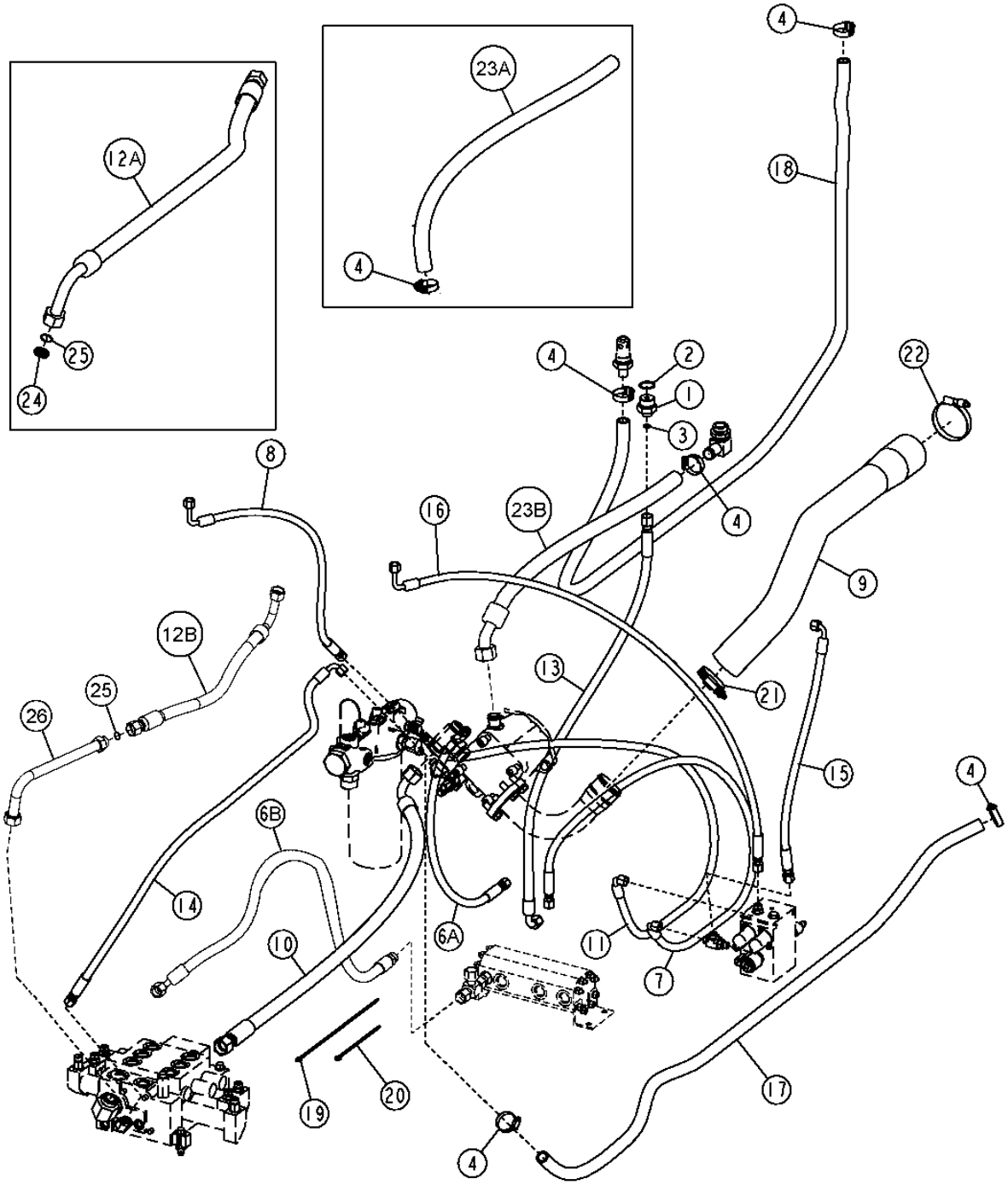

T209842

MAIN HYDRAULIC LINES (SN -604689)
CONDUITES HYDRAULIQUES PRINCIPALES (SN -604689)
LINEAS HIDRAULICAS PRINCIPALES (SN -604689)

KEY	PART NO.	PART NAME	QTY.	SERIAL NO.	REMARKS
1	38H1176	ADAPTER FITTING	1		
2	R29936	O-RING	1		
3	T77857	O-RING	1		
4	AR21839	CLAMP	4	-598233	
	AR21839	CLAMP	3	598234-	
5	AR21839	CLAMP	2		
6A	AT210667	HYDRAULIC HOSE - FABRICATE	1	-594432	
6B	AT314847	HYDRAULIC HOSE - FABRICATE	1	594433-596166	
	AT318345	HYDRAULIC HOSE - FABRICATE	1	596167-	
7	AT222163	HYDRAULIC HOSE - FABRICATE	1	-594432	
	AT314844	HYDRAULIC HOSE - FABRICATE	1	594433-596166	
	AT222163	HYDRAULIC HOSE - FABRICATE	1	596167-	
8	AT226614	HYDRAULIC HOSE - FABRICATE	1		
9	AT228155	HOSE	1		
10	AT310754	HYDRAULIC HOSE - FABRICATE	1	-594432	(SUB FOR AT303128)
	AT314638	HYDRAULIC HOSE - FABRICATE	1	594433-	
11	AT158098	HYDRAULIC HOSE - FABRICATE	1		(SUB FOR AT304125)
12A	AT304128	HYDRAULIC HOSE - FABRICATE	1	-594432	
12B	AT308119	HYDRAULIC HOSE - FABRICATE	1	594433-	
13	AT223815	HYDRAULIC HOSE - FABRICATE	1		
14	AT304346	HYDRAULIC HOSE - FABRICATE	1		
15	AT310561	HYDRAULIC HOSE - FABRICATE	1		(SUB FOR AT304897)
16	AT304899	HYDRAULIC HOSE - FABRICATE	1		
17	.....	BULK HOSE	1		(MAKE FROM T148181) CTL
18	.....	BULK HOSE	1		(MAKE FROM T148181) CTL
19	H77698	TIE BAND	8		
20	R44302	TIE BAND	2		
21	AH170895	CLAMP	1		
22	RE52702	CLAMP	1		
23A	T182114	HYDRAULIC HOSE - FABRICATE	1	-598233	
23B	AT223173	HYDRAULIC HOSE - FABRICATE	1	598234-	
24	T201843	ORIFICE	1	-594433	
25	T76938	O-RING	1		
26	AT307934	OIL LINE	1	594433-	

MAIN HYDRAULIC LINES (S.N. 604690-)
CONDUITES HYDRAULIQUES PRINCIPALES (S.N. 604690-)
LINEAS HIDRAULICAS PRINCIPALES (S.N. 604690-)

TX1003283 -UN-04FEB06

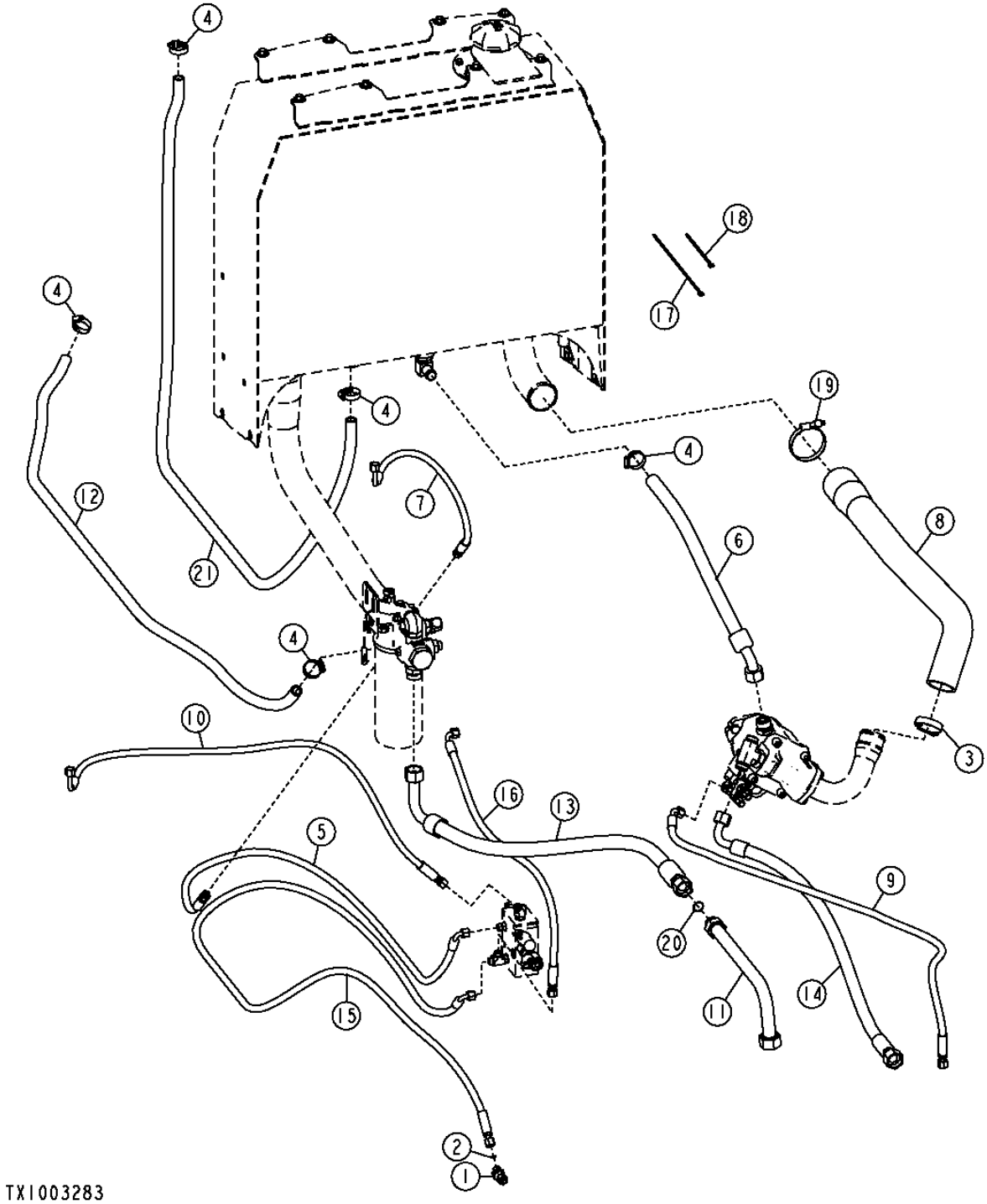

MAIN HYDRAULIC LINES (SN 604690-)
CONDUITES HYDRAULIQUES PRINCIPALES (SN 604690-)
LINEAS HIDRAULICAS PRINCIPALES (SN 604690-)

KEY	*PART NO.*	*PART NAME*	*QTY.*	*SERIAL NO.*	*REMARKS*
1	38H1621	ADAPTER FITTING	1		
2	T77613	O-RING	1		
3	AH170895	CLAMP	1		
4	AR21839	CLAMP	5		
5	AT158098	HYDRAULIC HOSE - FABRICATE	1		
6	AT223173	HYDRAULIC HOSE - FABRICATE	1		
7	AT226614	HYDRAULIC HOSE - FABRICATE	1		
8	AT228155	HOSE	1		
9	AT304346	HYDRAULIC HOSE - FABRICATE	1		
10	AT304899	HYDRAULIC HOSE - FABRICATE	1		
11	AT307934	OIL LINE	1		
12	.....	BULK HOSE	1		(MAKE FROM X831-12) (CTL)
13	AT308119	HYDRAULIC HOSE - FABRICATE	1		
14	AT314638	HYDRAULIC HOSE - FABRICATE	1		
15	.....	HYDRAULIC HOSE - FABRICATE	1		(SUB AT334302, 38H1094 AND T77613) (AT315145 NLA)
16	AT310561	HYDRAULIC HOSE - FABRICATE	1		(SUB FOR AT320750)
17	H77698	TIE BAND	8		
18	R44302	TIE BAND	2		
19	RE52702	CLAMP	1		
20	T76938	O-RING	1		
21	.....	BULK HOSE	1		(MAKE FROM X831-12) (CTL)

LOADER BUCKET, CUTTING EDGE, SPILLGUARD AND BUCKET PINS
BENNE DE CHARGEUR, TRANCHANT, PROTECTION CONTRE DEVERSEMENT ET AXES BENNE
CUCHARON DE CARGADORA, BORDE CORTANTE, PROTECTOR CONTRA SALPICADURAS Y PASADORES CUCHARON

T201455 -UN-07JUL04

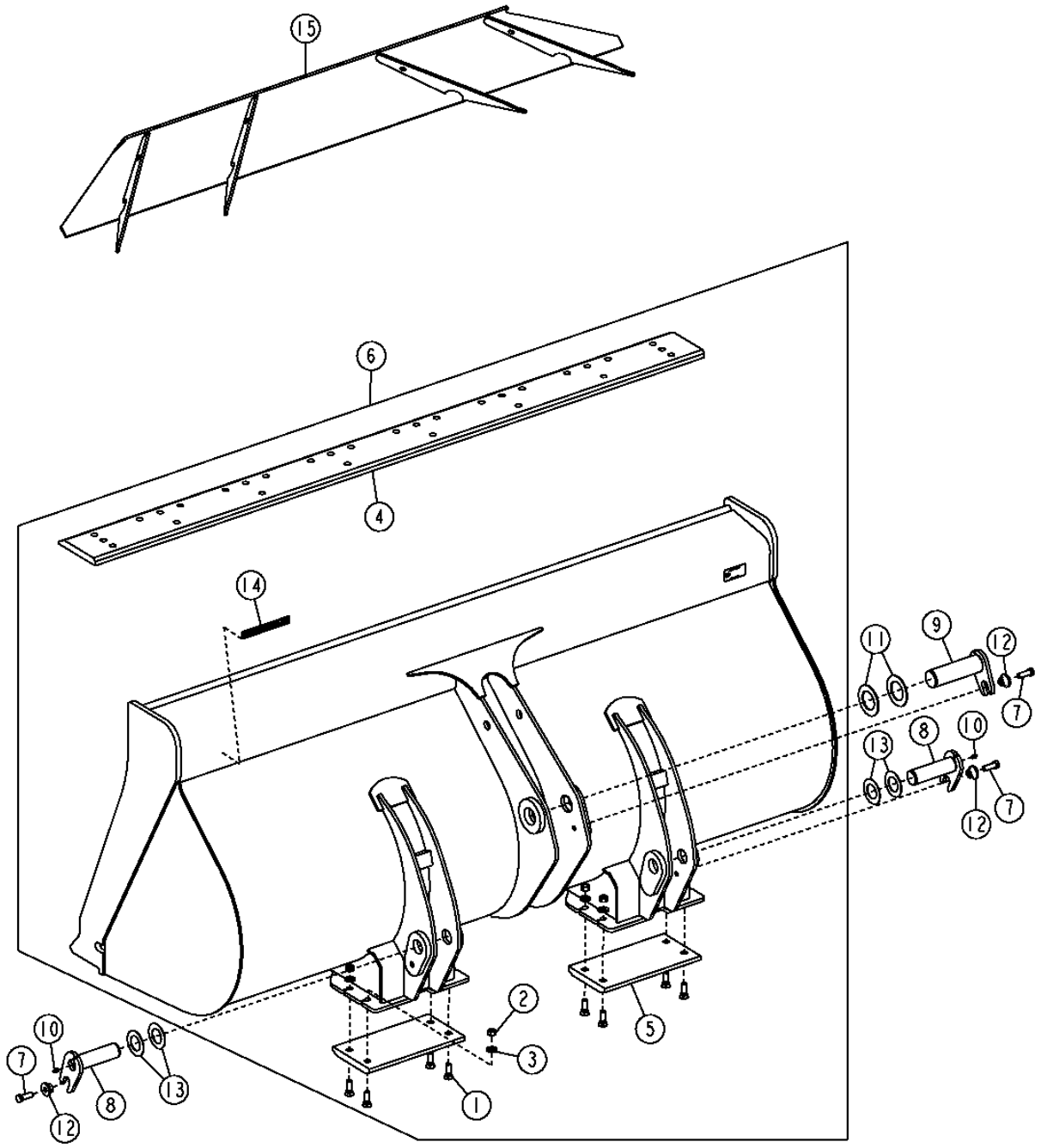

T201455

BUCKET (INCLUDING TEETH) 3102

LOADER BUCKET, CUTTING EDGE, SPILLGUARD AND BUCKET PINS
BENNE DE CHARGEUR, TRANCHANT, PROTECTION CONTRE DEVERSEMENT ET AXES BENNE
CUCHARON DE CARGADORA, BORDE CORTANTE, PROTECTOR CONTRA SALPICADURAS Y PASADORES CUCHARON

KEY	*PART NO.*	*PART NAME*	*QTY.*	*SERIAL NO.*	*REMARKS*
1	10H1040	BOLT	8		5/8" X 2"
2	14H1039	NUT	8		5/8"
3	24M7241	WASHER	8		17 X 34 X 4 MM
4	T157282	CUTTING EDGE	1		
	T169142	CUTTING EDGE	1		(FOR USE WITH JAGZ™ CUTTING EDGES)
5	T156599	SHOE	2		
6	.....	LOADER BUCKET	1		(AT301993 NLA) (CONVENIENCE ASSY) (2.0 YD Z-BAR LINKAGE BUCKET) 2550MM (100.39") CUTTING EDGE WIDTH
	AT301994	**LOADER BUCKET**	**1**		**(CONVENIENCE ASSY) (2.5 YD Z-BAR LINKAGE BUCKET) 2550MM (100.39") CUTTING EDGE WIDTH**
	.....	LOADER BUCKET	1		(AT301988 NLA) (CONVENIENCE ASSY) (2.5 YD Z-BAR LINKAGE BUCKET W/JAGZ™) 2550MM (100.39") CUTTING EDGE WIDTH
	.....	LOADER BUCKET	1		(AT301989 NLA) (CONVENIENCE ASSY) (2.0 YD POWERLLEL™ LINKAGE BUCKET) 2550MM (100.36") CUTTING EDGE WIDTH
	AT301990	**LOADER BUCKET**	**1**		**(CONVENIENCE ASSY) (2.5 YD POWERLLEL™ LINKAGE BUCKET) 2550MM (100.39") CUTTING EDGE WIDTH**
	.....	LOADER BUCKET	1		(AT314664 NLA) (CONVENIENCE ASSY) (2.5 YD POWERLLEL™ LINKAGE BUCKET W/JAGZ™) 2550MM (100.39") CUTTING EDGE WIDTH
7	19M7489	CAP SCREW	3		M16 X 45
8	AT308023	PIN FASTENER	2		
9	AT308030	PIN	1		(FOR USE WITH Z-BAR LINKAGE)
	AT308028	PIN FASTENER	1		(FOR USE WITH POWERLLEL™ LINKAGE)
10	JD7759	LUBRICATION FITTING	2		
11	T102171	WASHER	2		(FOR USE WITH Z-BAR LINKAGE)
	24H1240	WASHER	2		(FOR USE WITH POWERLLEL™ LINKAGE)
12	T176064	BUSHING	3		
13	T63795	WASHER	4		
14	T213143	LABEL	1		(SUB FOR KV22121) "WORKSITE PRO™"
15	**AT203247**	**PLATE**	**1**		**(FIELD INSTALLATION KIT) (SPILLGUARD)**

LOADER ATTACHMENT COUPLER BUCKET
BENNE ACCOUPLEMENT ACCESSOIRE CHARGEUR
CUCHARON DEL ACOPLADOR DE SUJECION DE LA CARGADORA

T201457 -UN-07JUL04

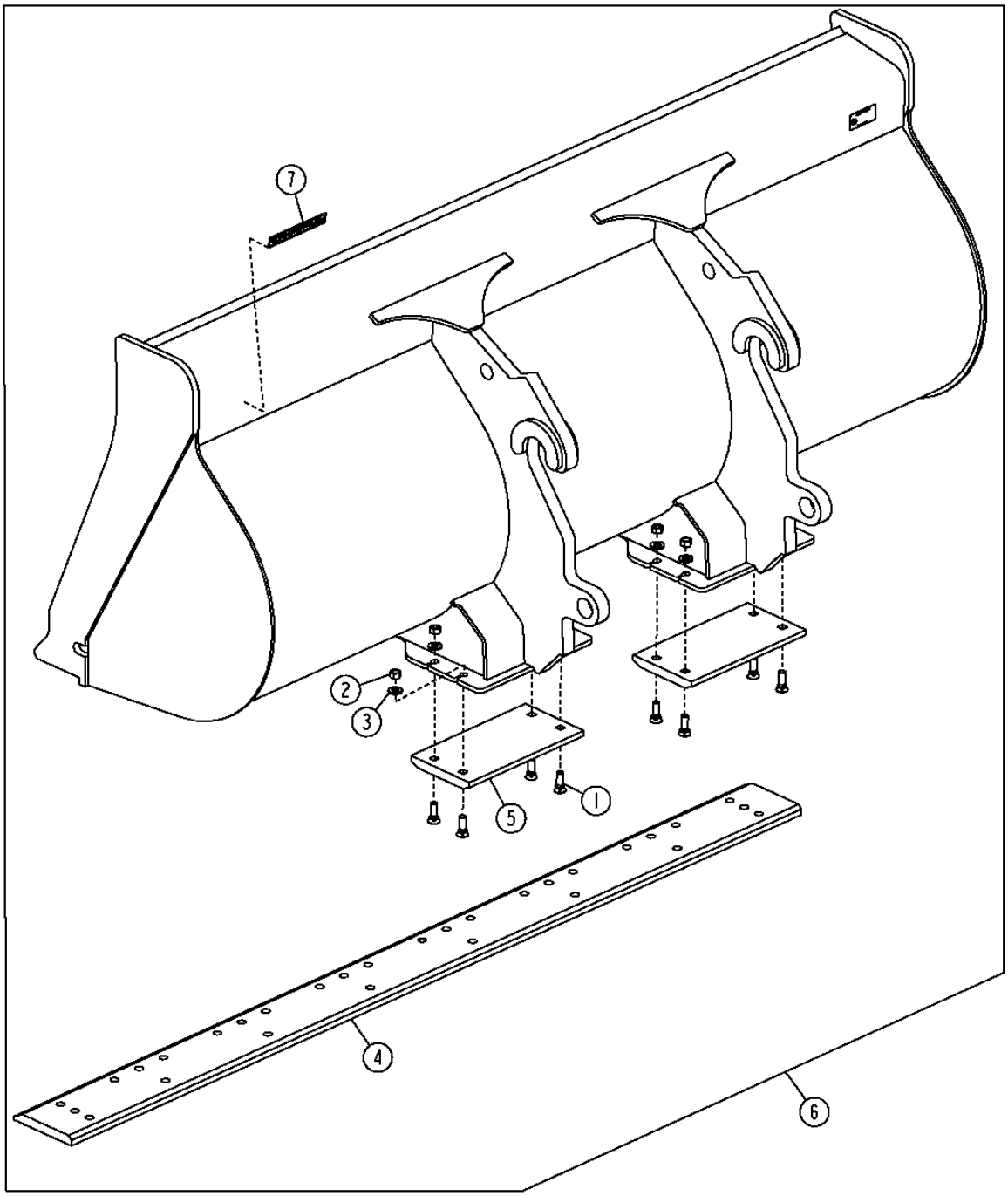

T201457

LOADER ATTACHMENT COUPLER BUCKET
BENNE ACCOUPLEMENT ACCESSOIRE CHARGEUR
CUCHARON DEL ACOPLADOR DE SUJECION DE LA CARGADORA

KEY	*PART NO.*	*PART NAME*	*QTY.*	*SERIAL NO.*	*REMARKS*
1	09H1587	BOLT	8		5/8" X 2"
2	14H1039	NUT	8		5/8"
3	24M7241	WASHER	8		17 X 34 X 4 MM
4	T157282	CUTTING EDGE	1		
5	T156599	SHOE	2		
6	**AT301991**	**LOADER BUCKET**	**1**		**(CONVENIENCE ASSY) (2.0 YARD BUCKET) 2550MM (100.39") CUTTING EDGE WIDTH**
	AT301992	**LOADER BUCKET**	**1**		**(CONVENIENCE ASSY) (2.5 YARD BUCKET) 2550MM (100.39") CUTTING EDGE WIDTH**
7	T213143	LABEL	1		(SUB FOR KV22121) "WORKSITE PRO™"

HI-VIS COUPLER BUCKET
BENNE COUPLEUR HI-VIS
CUCHARON DEL ACOPLADOR DE HI-VIS

TX1003202 -UN-31JAN06

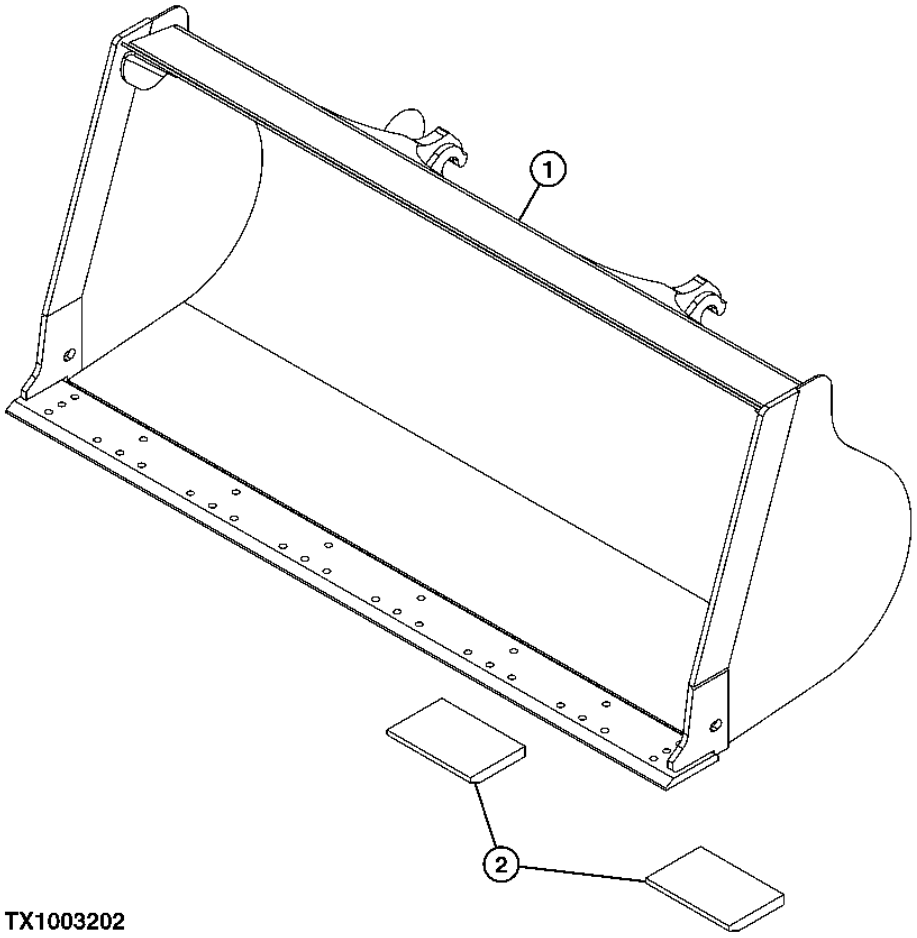

TX1003202

THIS PARTS LISTING IS CONTINUED

HI-VIS COUPLER BUCKET
BENNE COUPLEUR HI-VIS
CUCHARON DEL ACOPLADOR DE HI-VIS

KEY	*PART NO.*	*PART NAME*	*QTY.*	*SERIAL NO.*	*REMARKS*
1	AT326790	LOADER BUCKET	1		(2.5 YARD BUCKET) (CONVENIENCE ASSY)
	AT326791	**LOADER BUCKET**	**1**		**(2.0 YARD BUCKET) (CONVENIENCE ASSY)**
2	T217625	SKID PLATE	2		

LOADER BUCKET TEETH AND SHANKS
DENTS ET PORT-DENTS DE BENNE DE CHARGEUR
DIENTES Y VASTAGOS DEL CUCHARON DE LA CARGADORA

T192445 -UN-30JUN03

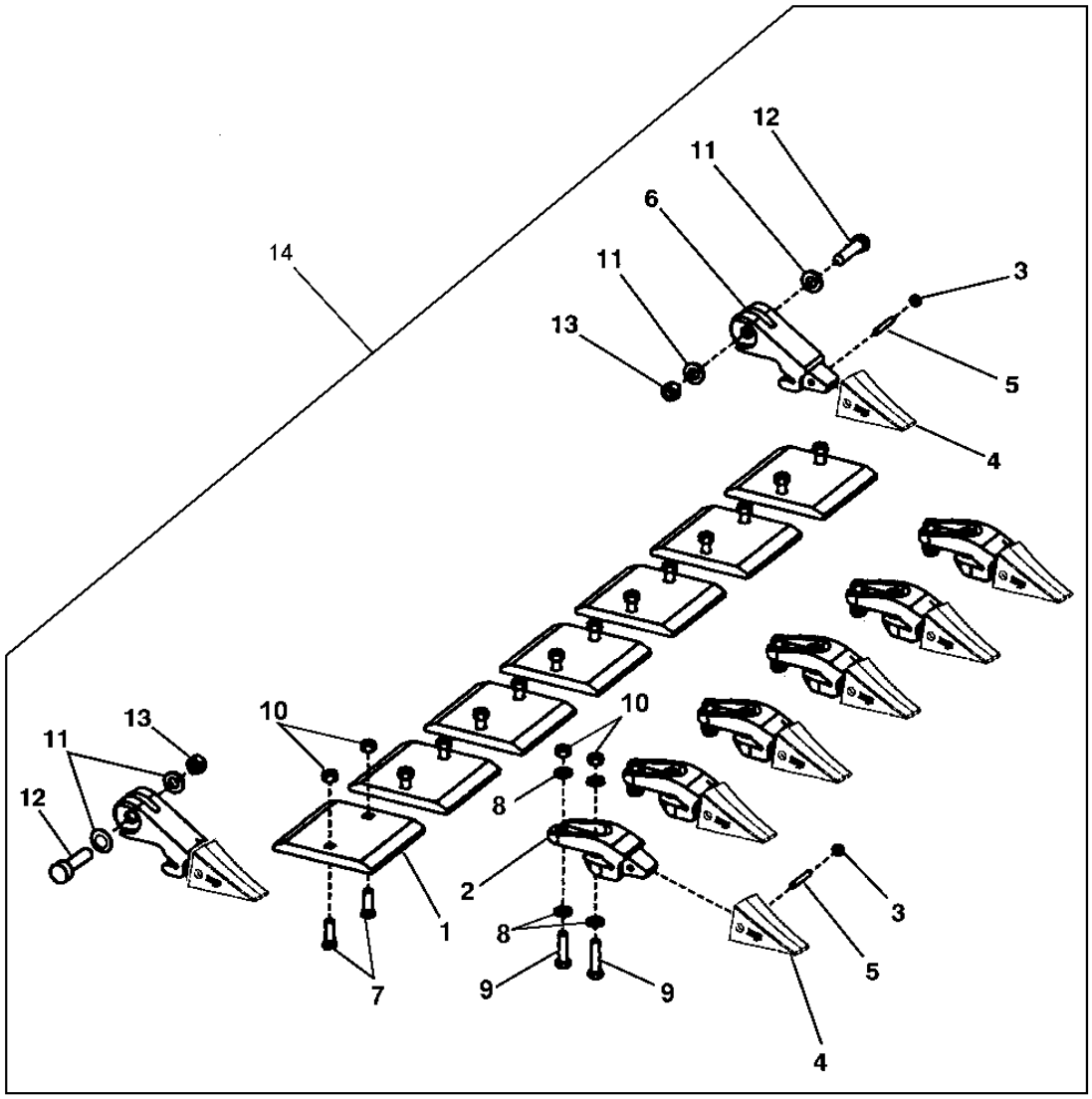

T192445

LOADER BUCKET TEETH AND SHANKS
DENTS ET PORT-DENTS DE BENNE DE CHARGEUR
DIENTES Y VASTAGOS DEL CUCHARON DE LA CARGADORA

KEY	*PART NO.*	*PART NAME*	*QTY.*	*SERIAL NO.*	*REMARKS*
1	T157306	CUTTING EDGE	7		
2	T25CA	BUCKET TOOTH ADAPTER	6		
3	T3G9609	WASHER	8		
4	TF1U3252L	TOOTH	8		(25 SERIES FANGGS™ LOADER)
5	T9J2258	PIN FASTENER	8		
6	T25EA	BUCKET TOOTH ADAPTER	2		
7	T146934	BOLT	14		
8	24M7242	WASHER	24		
9	19H3167	CAP SCREW	12		3/4" X 3-1/4"
10	14H1058	NUT	26		3/4"
11	24M7243	WASHER	4		25.400 X 50 X 6 MM
12	19M7889	CAP SCREW	2		M24 X 80
13	14M7278	NUT	2		M24
14	**AT208834**	**CUTTING EDGE**	**1**		

AUXILIARY CUTTING EDGE
TRANCHANT AUXILIAIRE
BORDE CORTANTE AUXILIAR

TP55659 -UN-15SEP97

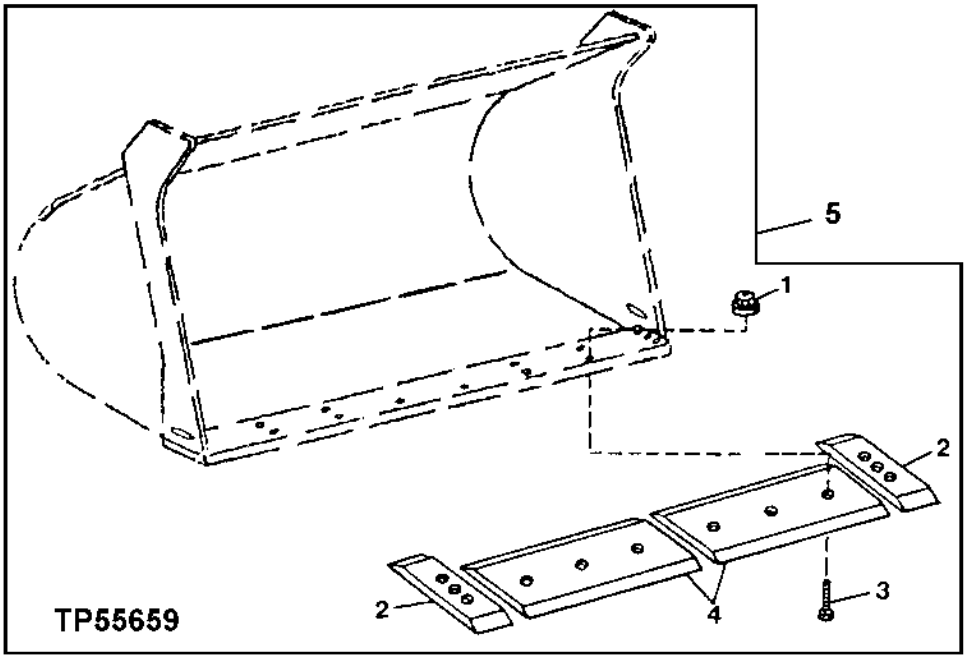

KEY	PART NO.	PART NAME	QTY.	SERIAL NO.	REMARKS
1	14H1058	NUT	12		3/4"
2	T146672	CUTTING EDGE	2		
3	T146934	BOLT	12		
4	T157311	CUTTING EDGE	2		
5	**AT208833**	**CUTTING EDGE**	**1**		**(WHOLE GOODS)**

MEMORANDA
MEMORANDA
MEMORANDA

JAGZ™ LOADER BUCKET CUTTING EDGES
TRANCHANTS BENNE CHARGEUR JAGZ™
BORDES CORTANTES DE CUCHARON DE CARGADORA JAGZ™

T189247 -UN-04APR03

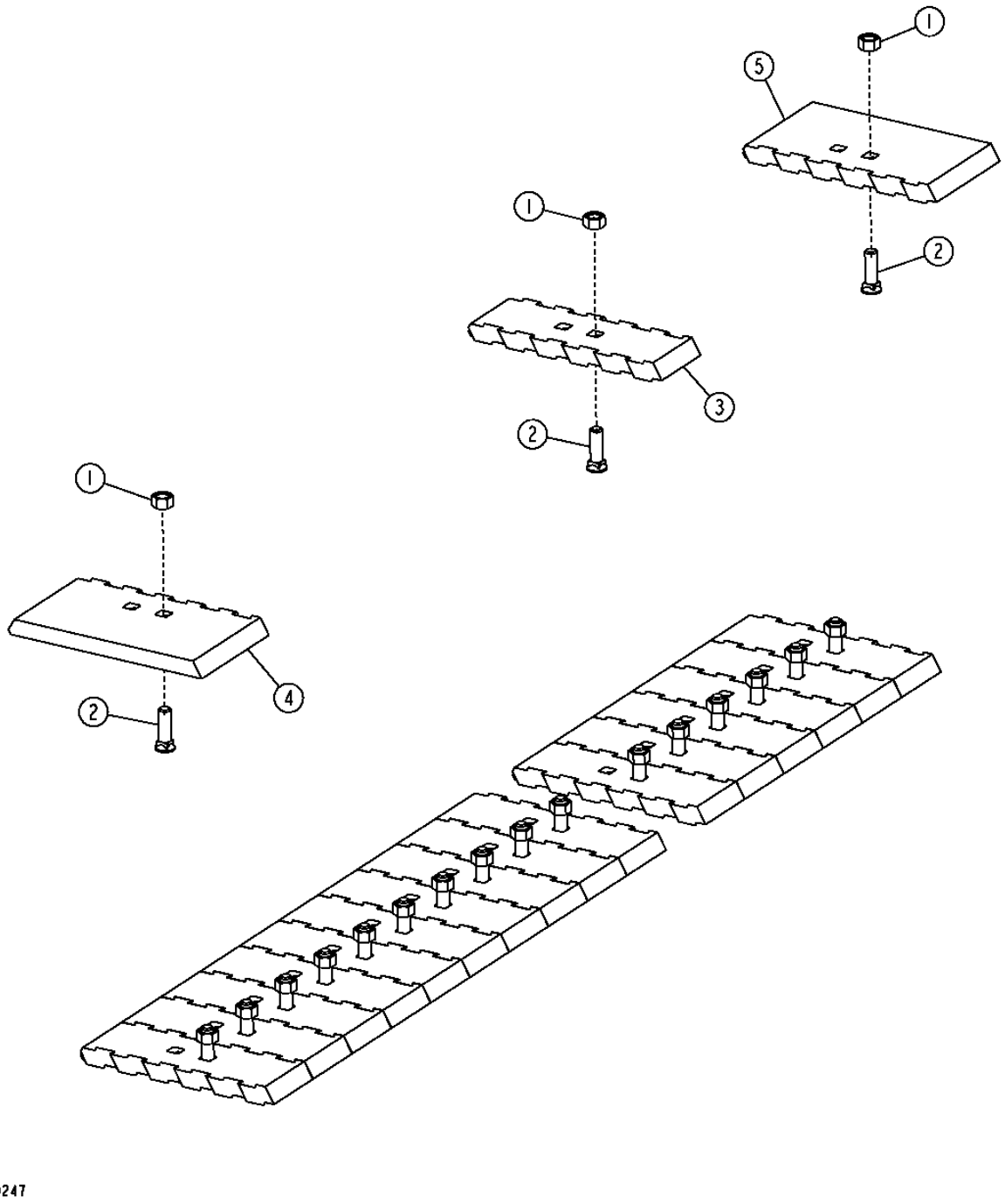

JAGZ™ LOADER BUCKET CUTTING EDGES
TRANCHANTS BENNE CHARGEUR JAGZ™
BORDES CORTANTES DE CUCHARON DE CARGADORA JAGZ™

KEY	PART NO.	PART NAME	QTY.	SERIAL NO.	REMARKS
1	14H1048	NUT	16		
2	T146933	BOLT	16		
3	T825110	CUTTING EDGE	14		CENTER
4	T825115	CUTTING EDGE	1		RH
5	T825116	CUTTING EDGE	1		LH

PALLET FORKS
FOURCHES A PALETTES
HORQUILLAS PARA TARIMAS

TX1007110 -UN-01MAY06

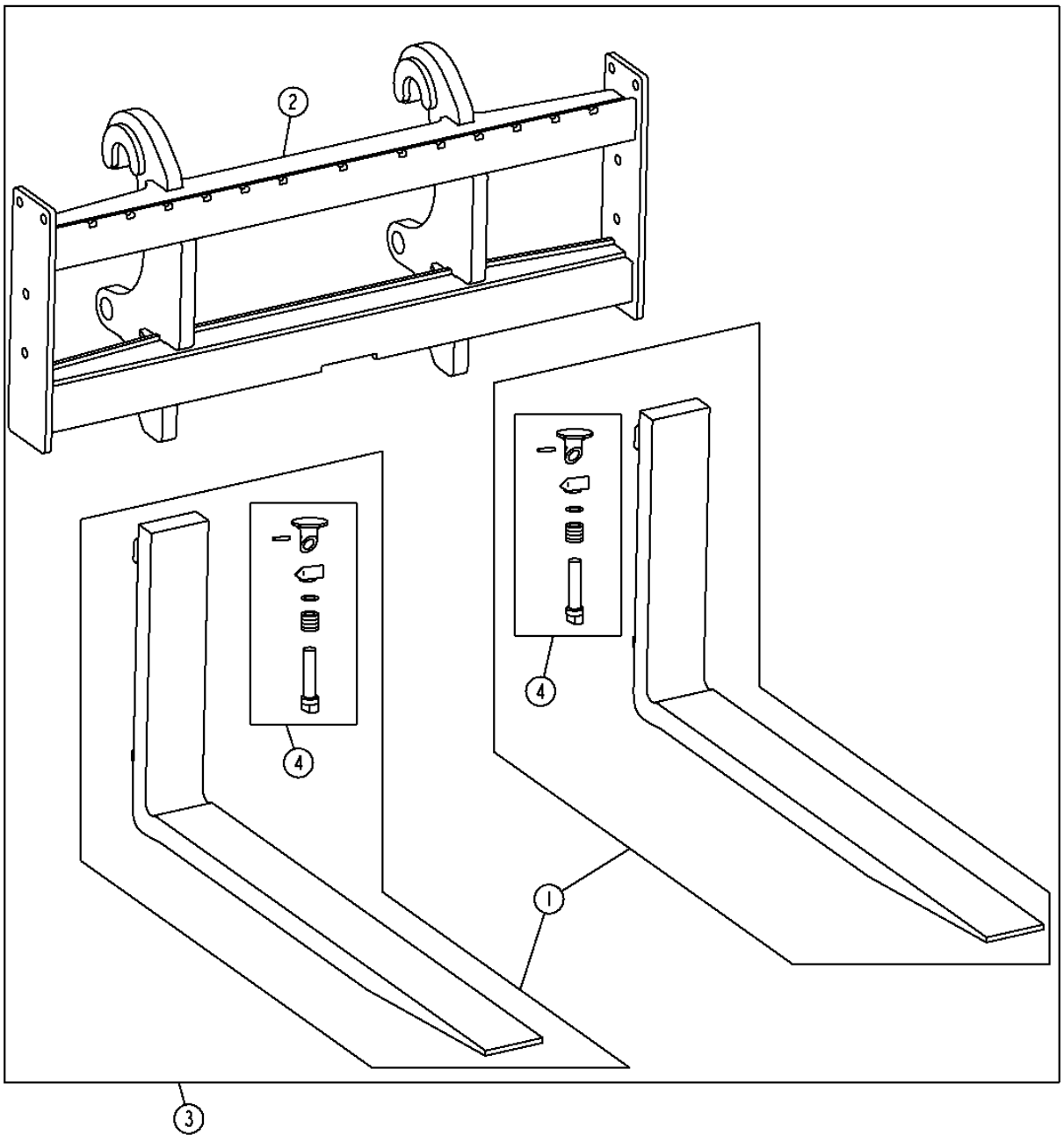

PALLET FORKS
FOURCHES A PALETTES
HORQUILLAS PARA TARIMAS

KEY	*PART NO.*	*PART NAME*	*QTY.*	*SERIAL NO.*	*REMARKS*
1	AT308065	FORK	2		(CA) 1219.2MM (48")
	AT308066	FORK	2		(CA) 1524MM (60")
2	**AT310060**	**FRAME**	**1**		**(CONVENIENCE ASSEMBLY)**
3	**AT300238**	**FORK**	**1**		**(WHOLE GOODS,1219.2MM (48")**
	AT300237	**FORK**	**1**		**(WHOLE GOODS) 1524MM (60")**
4	AT332401	KIT	2		(USE WITH CASCADE FORKS)
	AT332401	KIT	2		(USE WITH NON CASCADE FORKS)

HI-VIS PALLET FORKS
FOURCHE A PALETTES HI-VIS
HORQUILLAS PARA TARIMAS DE HI-VIS

TX1017227 -UN-08JAN07

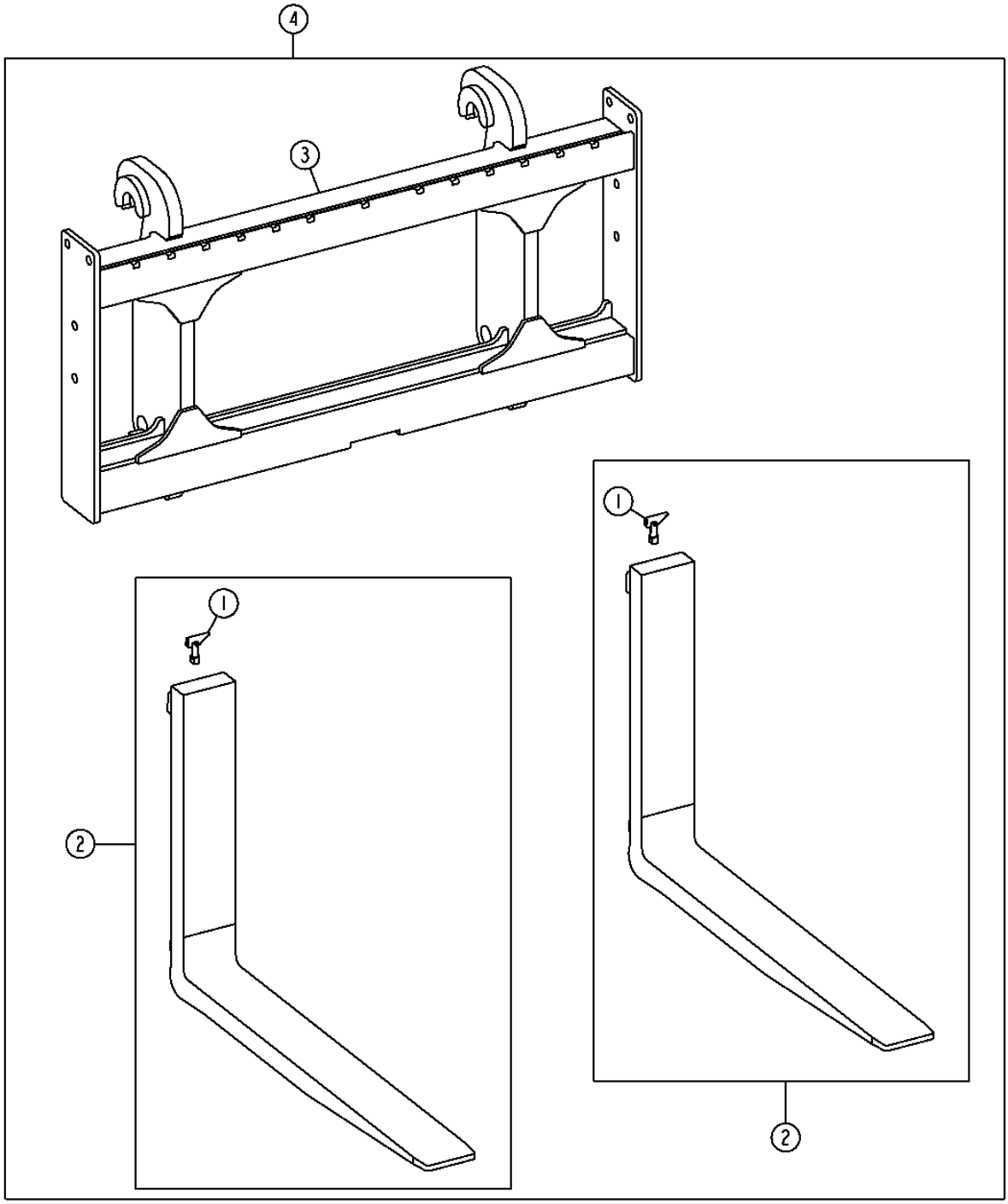

THIS PARTS LISTING IS CONTINUED

HI-VIS PALLET FORKS
FOURCHE A PALETTES HI-VIS
HORQUILLAS PARA TARIMAS DE HI-VIS

KEY	PART NO.	PART NAME	QTY.	SERIAL NO.	REMARKS
1	AT308067	LOCK	2		
2	**AT326640**	**TINE**	**2**		**(CONVENIENCE ASSY) 1219.2MM (48")**
	AT326190	**TINE**	**2**		**(CONVENIENCE ASSY) 1524MM (60")**
3	**AT326184**	**FRAME**	**1**		**(CONVENIENCE ASSY) 1524MM (60")**
	AT326203	**FRAME**	**1**		**(CONVENIENCE ASSY) 2286MM (90")**
4	**AT326792**	**FRAME**	**1**		**1524MM (60") FRAME WITH 1524MM (60") TINES (CONVENIENCE ASSY)**
	AT326793	**FRAME**	**1**		**1524MM (60") FRAME WITH 1219.2MM (48") TINES (CA)**
	AT326794	**FRAME**	**1**		**2286MM (90") FRAME WITH 1524MM (60") TINES (CA)**
	AT326795	**FRAME**	**1**		**2286MM (90") FRAME WITH 1219.2MM (48") TINES (CA)**

FORK FRAME GUARD
GARDE DE BATI FOURCHE
PROTECTOR DEL BASTIDOR DE HORQUILLA

TX1006179 -UN-11APR06

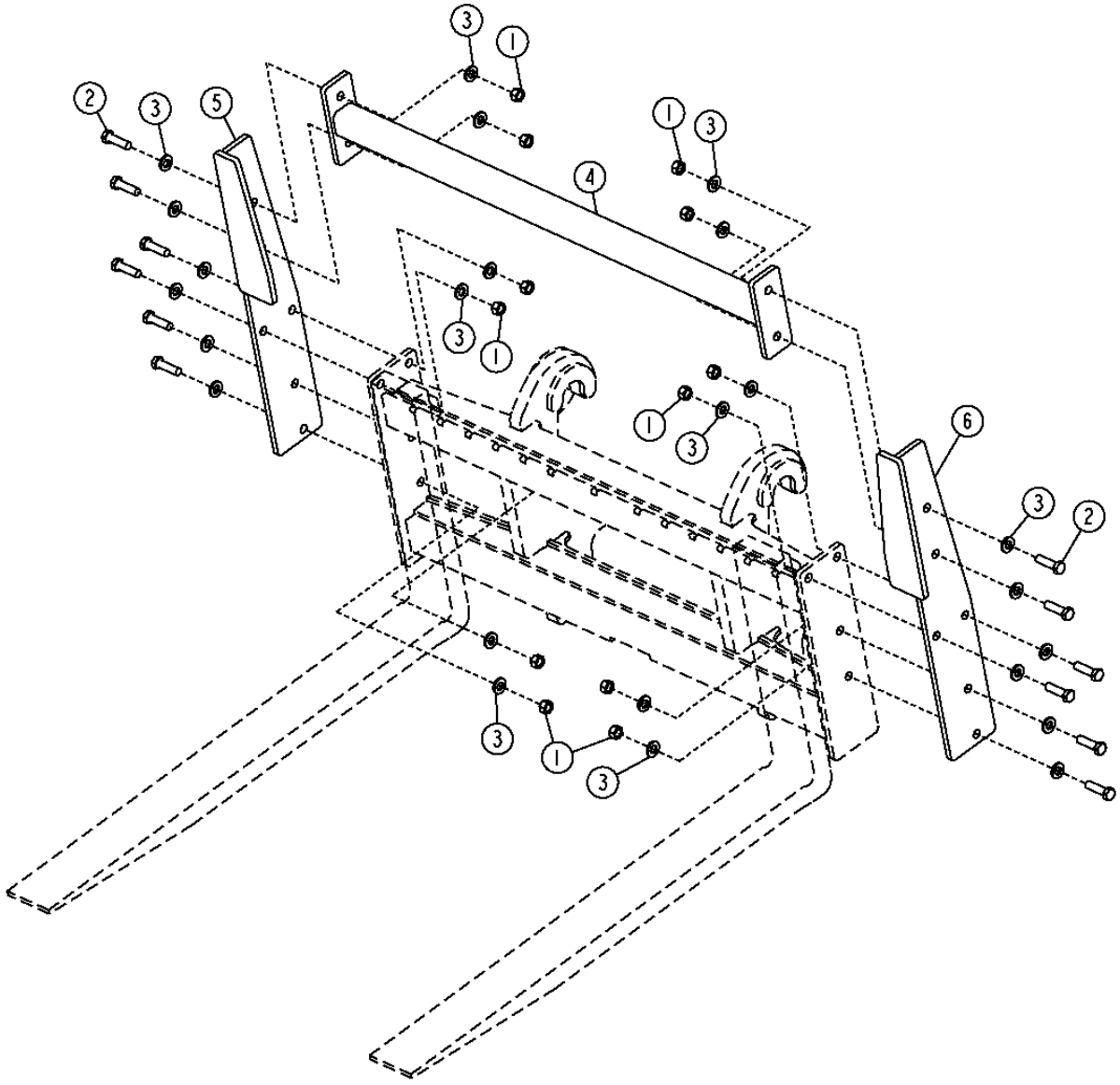

THIS PARTS LISTING IS CONTINUED

FORK FRAME GUARD
GARDE DE BATI FOURCHE
PROTECTOR DEL BASTIDOR DE HORQUILLA

KEY	PART NO.	PART NAME	QTY.	SERIAL NO.	REMARKS
1	14M7277	NUT	12		M20
2	19M8639	CAP SCREW	12		M20 X 70
3	24M7242	WASHER	24		21.400 X 42 X 5 MM
4	AT323120	BRACKET	1		(60 INCH ASSY)
	AT323337	BRACKET	1		(90 INCH ASSY)
5	AT323318	PLATE	1		
6	AT323319	PLATE	1		

TOOL CARRIER ATTACHMENT COUPLER
COUPLEUR ACCESSOIRES PORTE-OUTILS
ACOPLADOR DE SUJECION DEL PORTAHERRAMIENTAS

T194434 -UN-31OCT03

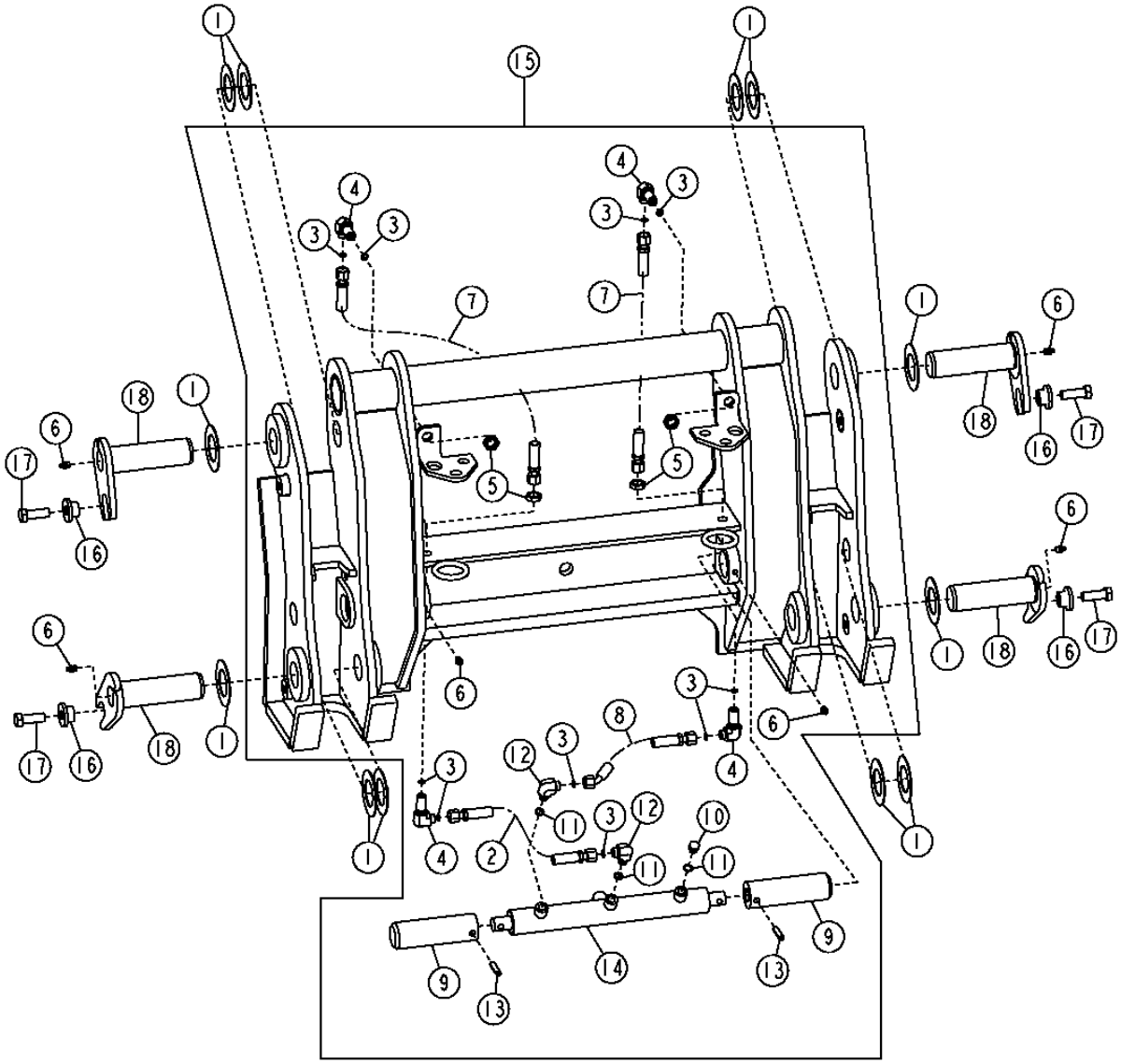

T194434

TOOL CARRIER ATTACHMENT COUPLER
COUPLEUR ACCESSOIRES PORTE-OUTILS
ACOPLADOR DE SUJECION DEL PORTAHERRAMIENTAS

KEY	*PART NO.*	*PART NAME*	*QTY.*	*SERIAL NO.*	*REMARKS*
1	T63795	WASHER	16		
2	AT220059	HYDRAULIC HOSE - FABRICATE	1		
3	T77613	O-RING	10		
4	38H1393	ELBOW FITTING	4		90°
5	T81029	NUT	4		
6	JD7759	LUBRICATION FITTING	6		
7	AT220060	HYDRAULIC HOSE - FABRICATE	2		LH AND RH
8	AT220058	HYDRAULIC HOSE - FABRICATE	1		LH
9	T171552	PIN	2		
10	R27218	FITTING PLUG	1		
11	R26448	O-RING	3		
12	38H1004	ELBOW FITTING	2		90°
13	34H353	SPRING PIN	2		3/8" X 1-3/4"
14	AT209163	CYLINDER	1		(COMPONENTS LISTED ON SEPARATE PAGE)
15	AT209161	QUICK COUPLER	1		
16	T176064	BUSHING	4		
17	19M7489	CAP SCREW	4		M16 X 45
18	AT203559	PIN	4		

TOOL CARRIER ATTACHMENT COUPLER HYDRAULIC CYLINDER
VERIN HYDRAULIQUE COUPLEUR ACCESSOIRE PORTE-OUTILS
CILINDRO HIDRAULICO DEL ACOPLADOR DE SUJECION DEL PORTAHERRAMIENTAS

TX1006296 -UN-24APR06

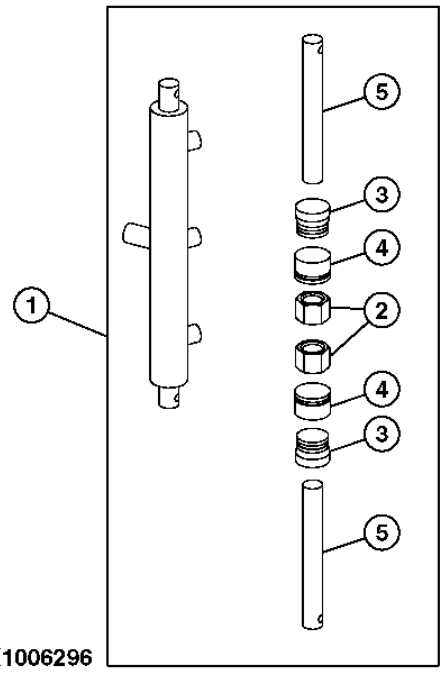

TX1006296

KEY	PART NO.	PART NAME	QTY.	SERIAL NO.	REMARKS
1	AT209163	CYLINDER	1		
2	T175222	NUT	2		
3	T175223	HYDR. CYLINDER ROD GUIDE	2		
4	T175224	PISTON REPLACEMENT KIT	2		
5	T175225	ROD	2		

MEMORANDA
MEMORANDA
MEMORANDA

Z-BAR LINKAGE ATTACHMENT COUPLER
COUPLEUR ACCESSOIRE TRINGLERIE CINEMATIQUE EN Z
ACOPLADOR DE SUJECION DE VARILLAJE DE BARRA EN Z

T207815 -UN-11MAR05

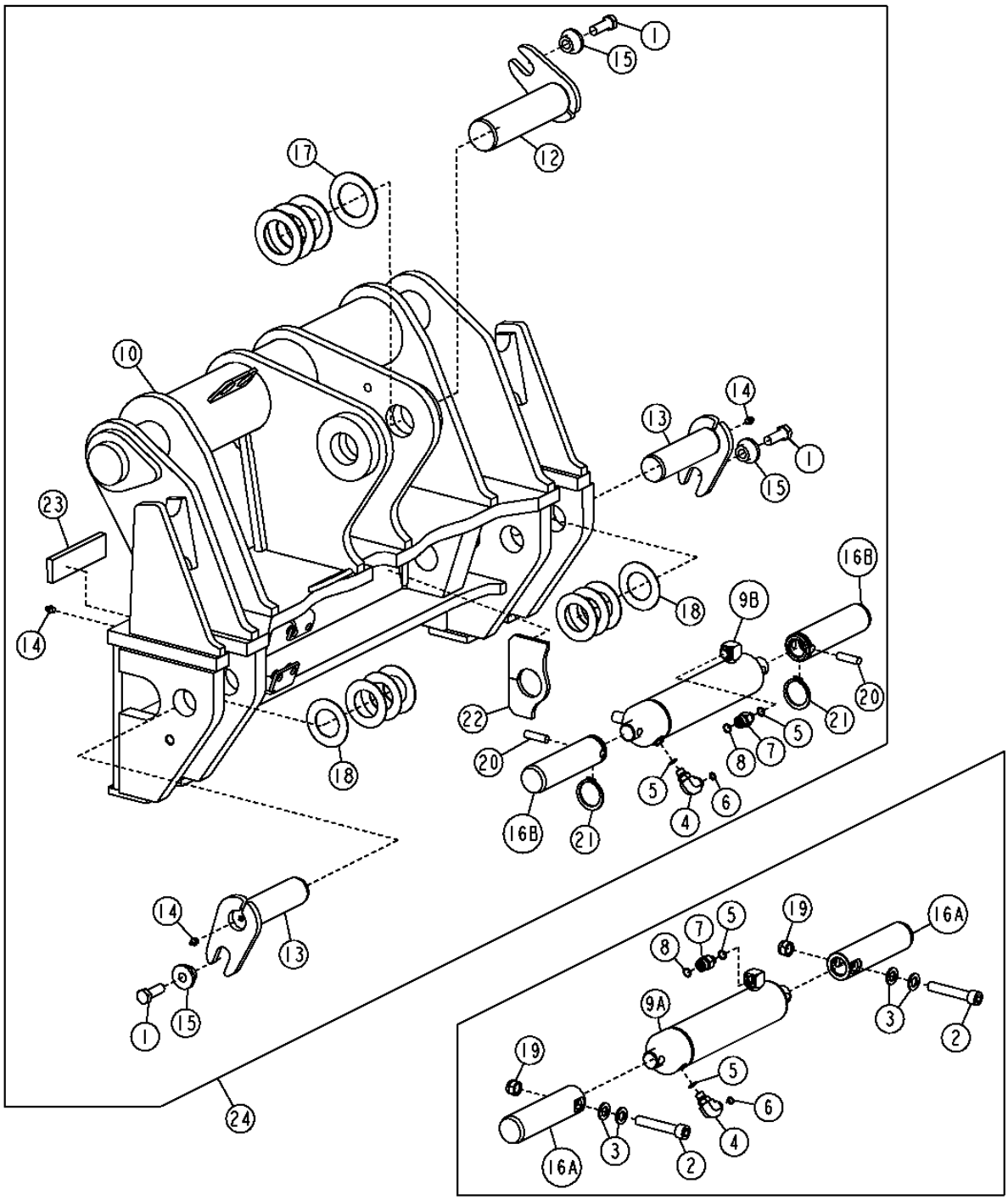

Z-BAR LINKAGE ATTACHMENT COUPLER
COUPLEUR ACCESSOIRE TRINGLERIE CINEMATIQUE EN Z
ACOPLADOR DE SUJECION DE VARILLAJE DE BARRA EN Z

KEY	*PART NO.*	*PART NAME*	*QTY.*	*SERIAL NO.*	*REMARKS*
1	19M7489	CAP SCREW	3		M16 X 45
2	19M8342	SCREW	2		M16 X 90
3	24M7338	WASHER	6		17 X 30 X 3 MM
4	38H1004	ELBOW FITTING	1		
5	R26448	O-RING	2		
6	T77613	O-RING	1		
7	38H1173	ADAPTER FITTING	1		
8	T77857	O-RING	1		
9A	AH212349	HYDRAULIC CYLINDER	1		COMPONENTS LISTED ON ANOTHER PAGE
9B	AH217541	HYDRAULIC CYLINDER	1		COMPONENTS LISTED ON ANOTHER PAGE
10	.....	QUICK COUPLER	1		(ORDER AT311386) (AT300956 NLA)
	.....	QUICK COUPLER	1	-609732	(AT317966 NLA) (SUB AT336444) (USE WITH AH217541)
	AT336444	QUICK COUPLER	1	609733-	(CA) (ALSO ORDER (2) T227405, AH223400, (2) T61226, (2) H89151, (4) 19M8011, (4) 24M7240, (2) 38H1160, T227409) (ALSO ORDER AT336884 OR AT336885) (AT336884 WITH STANDARD LIFT) (AT336885 WIHT HIGH LIFT)
12	AT308022	PIN	1		
13	AT308023	PIN FASTENER	2		
14	JD7759	LUBRICATION FITTING	4		
15	T176064	BUSHING	3		
16A	T209423	PIN FASTENER	2		(SUB FOR T200758)
16B	T213442	PIN FASTENER	2		
17	T102171	WASHER	4		(SUB FOR T54474)
18	T63795	WASHER	8		
19	14M7328	LOCK NUT	2		M16
20	H89151	DOWEL PIN	2		
21	T61226	SNAP RING	2		
22	T214141	PLATE	1		
23	T213441	PLATE	1		
24	**AT311386**	**QUICK COUPLER**	**1**		**(WHOLE GOODS) (Z-BAR FIELD KIT)**

POWERLLEL™ LINKAGE ATTACHMENT COUPLER
COUPLEUR ACCESSOIRE TRINGLERIE POWERLLEL™
ACOPLADOR DE SUJECION DE VARILLAJE POWERLLEL™

T207799 -UN-11MAR05

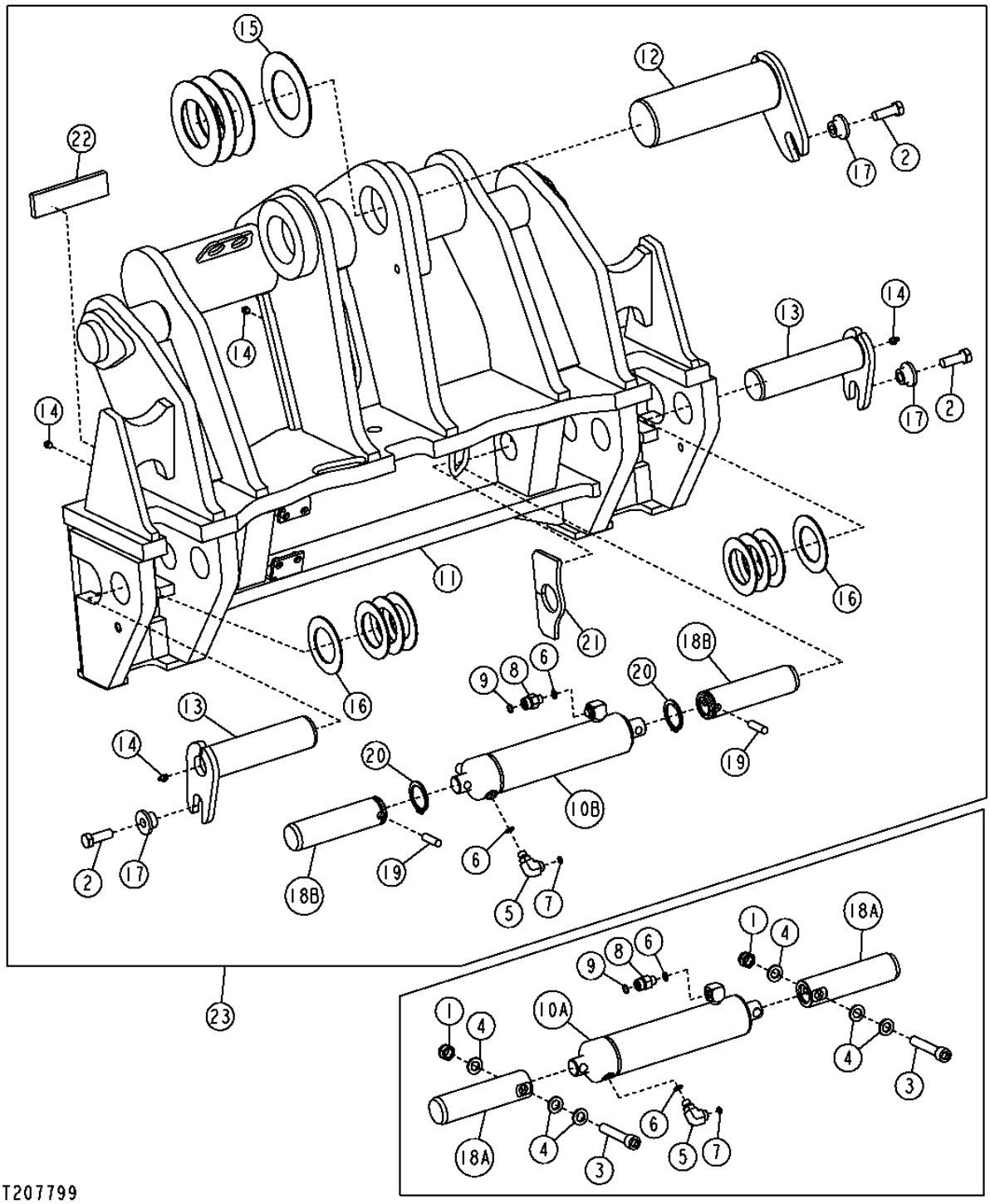

T207799

POWERLLEL™ LINKAGE ATTACHMENT COUPLER
COUPLEUR ACCESSOIRE TRINGLERIE POWERLLEL™
ACOPLADOR DE SUJECION DE VARILLAJE POWERLLEL™

KEY	*PART NO.*	*PART NAME*	*QTY.*	*SERIAL NO.*	*REMARKS*
1	14M7328	LOCK NUT	2		M16
2	19M7489	CAP SCREW	3		M16 X 45
3	19M8342	SCREW	2		M16 X 90
4	24M7338	WASHER	6		17 X 30 X 3 MM
5	38H1004	ELBOW FITTING	1		
6	R26448	O-RING	2		
7	T77613	O-RING	1		
8	38H1173	ADAPTER FITTING	1		
9	T77857	O-RING	1		
10A	AH212349	HYDRAULIC CYLINDER	1		COMPONENTS LISTED ON ANOTHER PAGE
10B	AH217541	HYDRAULIC CYLINDER	1		COMPONENTS LISTED ON ANOTHER PAGE
11	.....	QUICK COUPLER	1		(ORDER AT320676) (AT300807 NLA)
	.....	QUICK COUPLER	1	-609734	(AT317964 NLA) (SUB AT336442) (USE WITH AH217541)
	AT336442	QUICK COUPLER	1	609735-	(CA) (ALSO ORDER (2) T227405, AH223400, (2) T61226, (2) H89151, (4) 19M8011, (4) 24M7240, (2) 38H1160, T227409 AND AT336884)
12	AT300809	PIN FASTENER	1		
13	AT308023	PIN FASTENER	2		
14	JD7759	LUBRICATION FITTING	4		
15	24H1240	WASHER	4		76.987 X 114.300 X 2.667 MM
16	T63795	WASHER	8		51.587 X 88.900 X 1.524 MM
17	T176064	BUSHING	3		
18A	T209423	PIN FASTENER	2		
18B	T213442	PIN FASTENER	2		
19	H89151	DOWEL PIN	2		
20	T61226	SNAP RING	2		
21	T214141	PLATE	1		
22	T213441	PLATE	1		
23	**AT320676**	**QUICK COUPLER**	**1**		**WHOLE GOODS**

HI-VIS COUPLER POWERLLEL™ LINKAGE ATTACHMENT
ACCESSOIRE TRINGLERIE POWERLLEL™ COUPLEUR HI-VIS
SUJECION DE VARILLAJE POWERLLEL™ DEL ACOPLADOR DE ALTA VISCOSIDAD

T217535 -UN-23JAN06

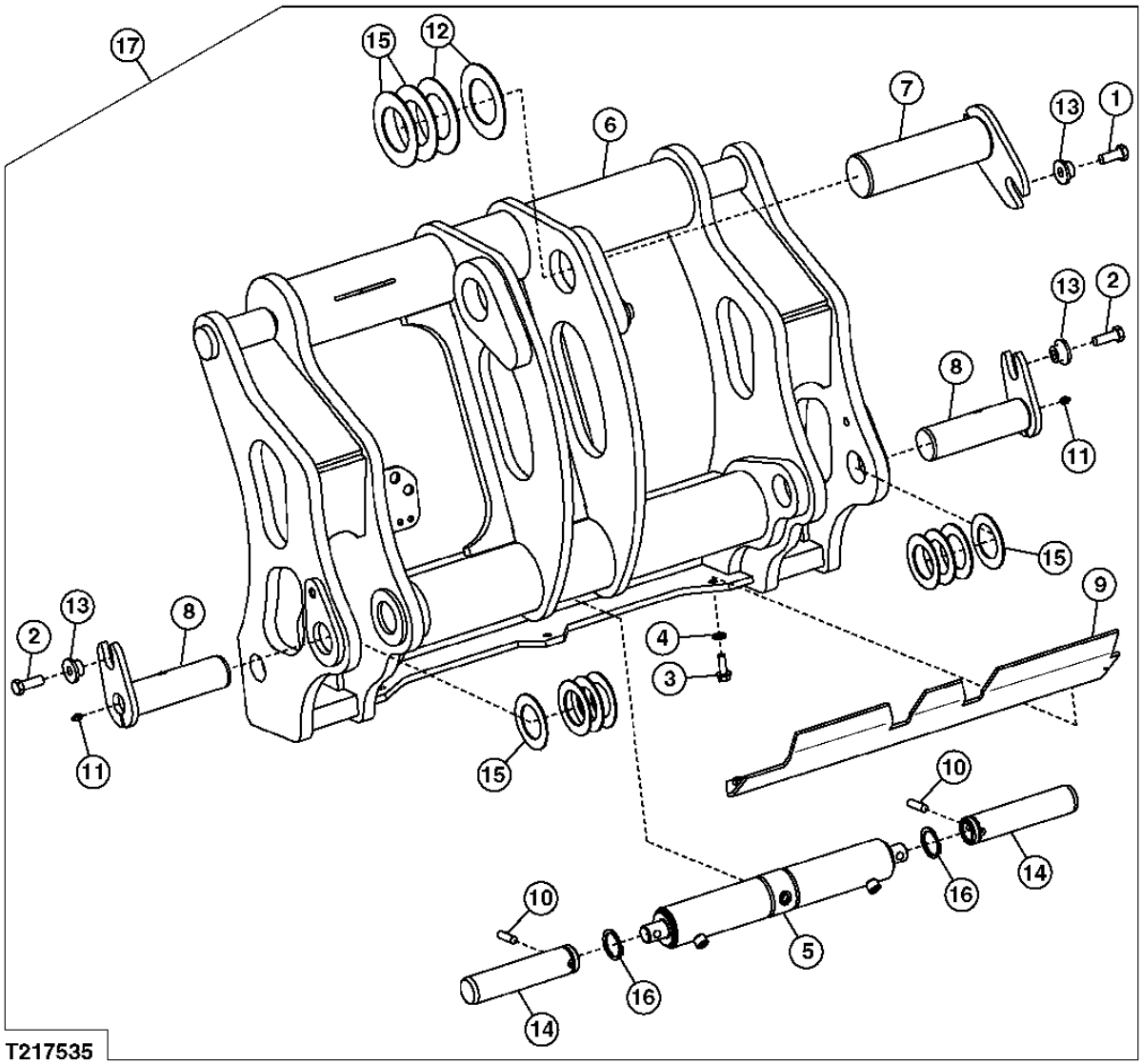

HI-VIS COUPLER POWERLLEL™ LINKAGE ATTACHMENT
ACCESSOIRE TRINGLERIE POWERLLEL™ COUPLEUR HI-VIS
SUJECION DE VARILLAJE POWERLLEL™ DEL ACOPLADOR DE ALTA VISCOSIDAD

KEY	*PART NO.*	*PART NAME*	*QTY.*	*SERIAL NO.*	*REMARKS*
1	19M7488	CAP SCREW	1		M16 X 40
2	19M7489	CAP SCREW	2		M16 X 45
3	19M7790	SCREW	3		M12 X 35
4	24M7240	WASHER	3		13 X 25 X 3 MM
5	AH222122	HYDRAULIC CYLINDER	1		
6	AT320227	QUICK COUPLER	1		
7	AT324087	PIN FASTENER	1		
8	AT320228	PIN FASTENER	1		
9	AT324184	COVER	1		
10	H89151	DOWEL PIN	2		
11	JD7759	LUBRICATION FITTING	2		
12	24H1240	WASHER	2		3-1/32" X 4-1/2" X 0.105"
13	T176064	BUSHING	3		
14	T214207	PIN FASTENER	2		
15	T63795	WASHER	10		
16	T61226	SNAP RING	2		
17	**AT326782**	**KIT**	**1**		**(WHOLE GOODS)**

HI-VIS COUPLER Z-BAR LINKAGE ATTACHMENT
ACCESSOIRE TRINGLERIE CINEMATIQUE EN Z COUPLEUR HI-VIS
SUJECION DEL VARILLAJE DE BARRA EN Z DEL ACOPLADOR DE HI-VIS

T217536 -UN-23JAN06

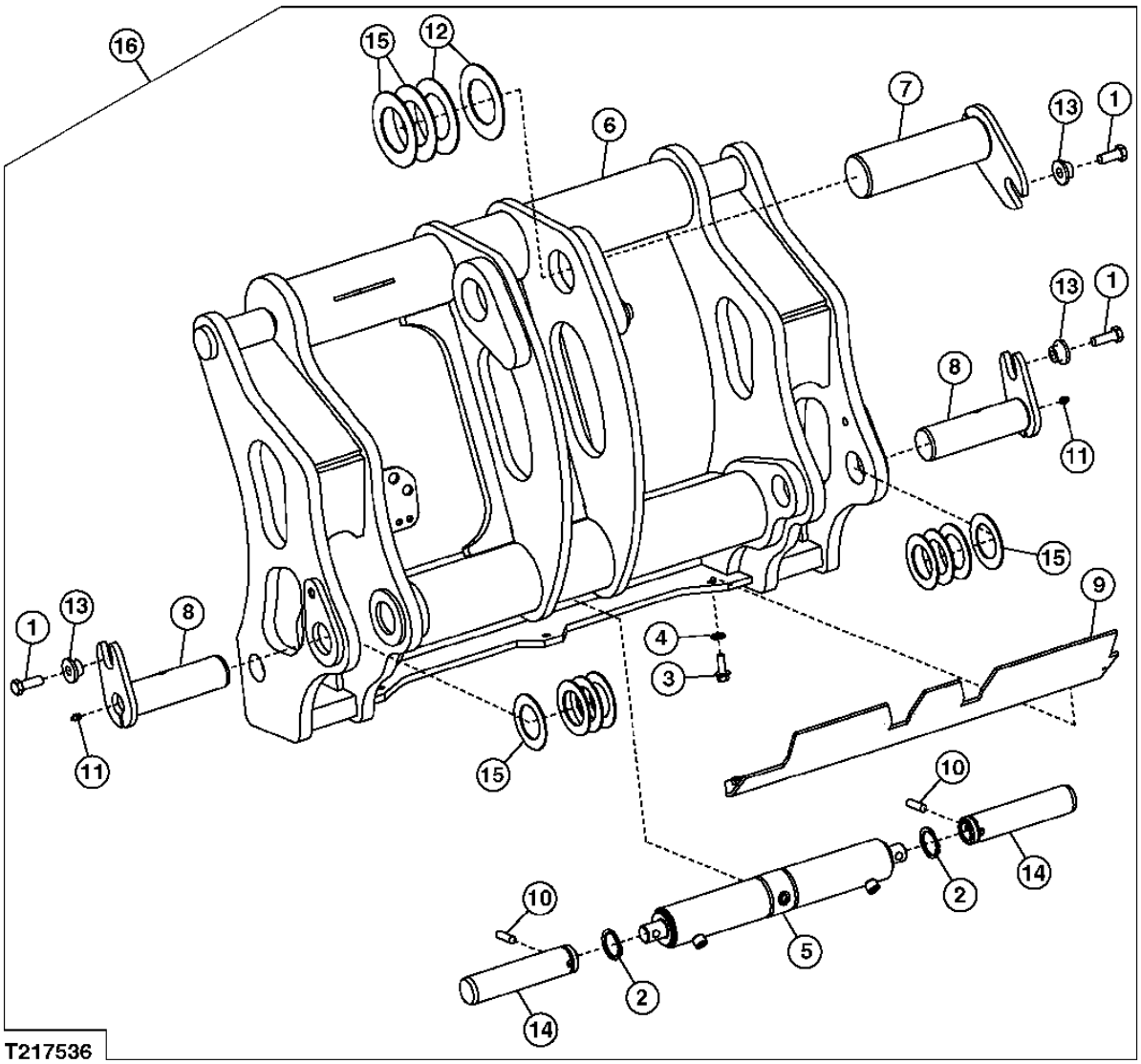

HI-VIS COUPLER Z-BAR LINKAGE ATTACHMENT
ACCESSOIRE TRINGLERIE CINEMATIQUE EN Z COUPLEUR HI-VIS
SUJECION DEL VARILLAJE DE BARRA EN Z DEL ACOPLADOR DE HI-VIS

KEY	*PART NO.*	*PART NAME*	*QTY.*	*SERIAL NO.*	*REMARKS*
1	19M7489	CAP SCREW	3		M16 X 45
2	T61226	SNAP RING	2		
3	19M7790	SCREW	3		M12 X 35
4	24M7240	WASHER	3		13 X 25 X 3 MM
5	AH222122	HYDRAULIC CYLINDER	1		
6	AT322725	QUICK COUPLER	1		
7	AT320228	PIN FASTENER	1		
8	AT320228	PIN FASTENER	1		
9	AT324271	COVER	1		
10	H89151	DOWEL PIN	2		
11	JD7759	LUBRICATION FITTING	2		
12	T102171	WASHER	2		(SUB FOR T54474)
13	T176064	BUSHING	3		
14	T214207	PIN FASTENER	2		
15	T63795	WASHER	10		
16	**AT326783**	**KIT**	**1**		**(WHOLE GOODS)**

ATTACHMENT COUPLER HYDRAULIC CYLINDER (BOLT-ON PINS)
VERIN HYDRAULIQUE ACCOUPLEMENT ACCESSOIRE (AXES BOULONNES)
CILINDRO HIDRAULICO DEL ACOPLADOR DE SUJECION (PASADORES EMPERNADOS)

T202516 -UN-31AUG04

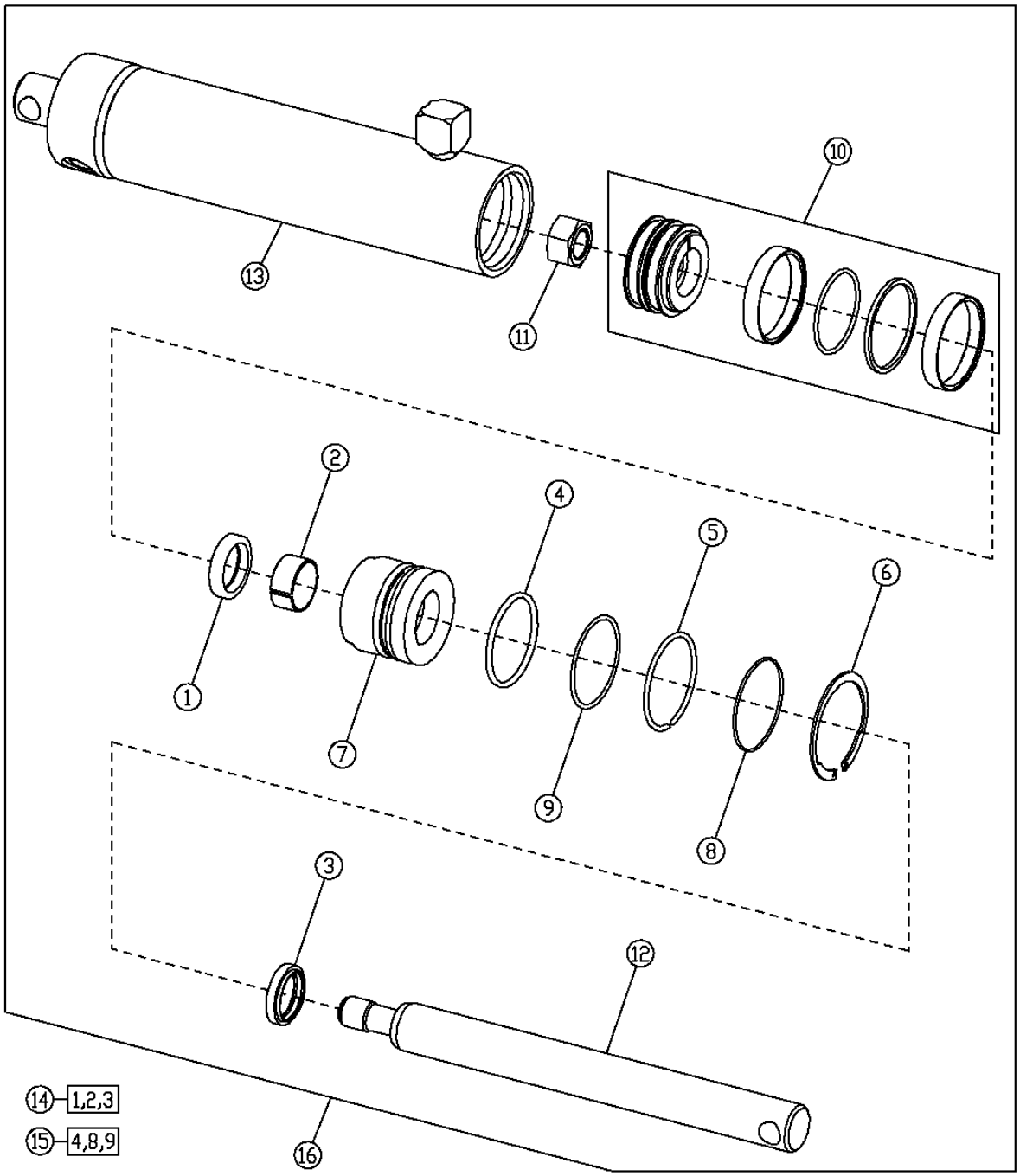

ATTACHMENT COUPLER HYDRAULIC CYLINDER (BOLT-ON PINS)
VERIN HYDRAULIQUE ACCOUPLEMENT ACCESSOIRE (AXES BOULONNES)
CILINDRO HIDRAULICO DEL ACOPLADOR DE SUJECION (PASADORES EMPERNADOS)

KEY	PART NO.	PART NAME	QTY.	SERIAL NO.	REMARKS
1	H154514	SEAL	1		
2	H156058	WEAR RING	1		
3	H156586	SEAL	1		
4	R93633	O-RING	1		
5	H164982	SNAP RING	1		
6	H165169	SNAP RING	1		
7	H171334	HYDR. CYLINDER ROD GUIDE	1		
8	N260556	O-RING	1		
9	U13461	BACK-UP RING	1		
10	AH142159	PISTON	1		
11	H170535	NUT	1		
12	H206836	ROD	1		
13	AH212350	HYDRAULIC CYLINDER BARREL	1		
14	AH148823	KIT	1		(ROD SEAL)
15	AH212088	HYDRAULIC CYLINDER KIT	1		(BORE SEAL)
16	AH212349	HYDRAULIC CYLINDER	1		

ATTACHMENT COUPLER HYDRAULIC CYLINDER (CLIP-ON PINS)
VERIN HYDRAULIQUE ACCOUPLEMENT ACCESSOIRE (AXES VERROUILLABLES)
CILINDRO HIDRAULICO DEL ACOPLADOR DE SUJECION (PASADORES CON PRESILLA)

T207802 -UN-21FEB05

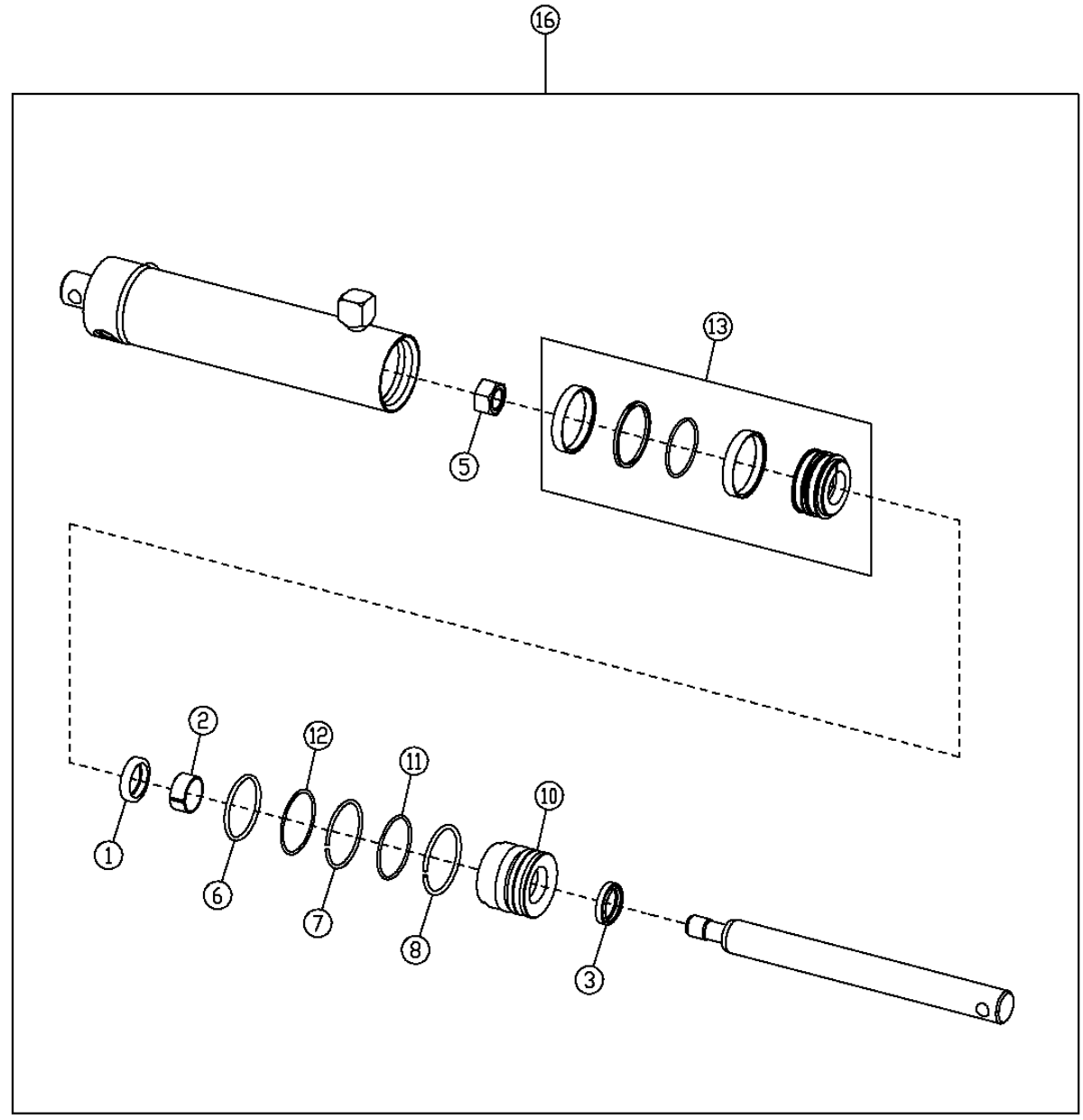

14	11,12
15	1,2,3

T207802

ATTACHMENT COUPLER HYDRAULIC CYLINDER (CLIP-ON PINS)
VERIN HYDRAULIQUE ACCOUPLEMENT ACCESSOIRE (AXES VERROUILLABLES)
CILINDRO HIDRAULICO DEL ACOPLADOR DE SUJECION (PASADORES CON PRESILLA)

KEY	*PART NO.*	*PART NAME*	*QTY.*	*SERIAL NO.*	*REMARKS*
1	H154514	SEAL	1		
2	H156058	WEAR RING	1		
3	H156586	SEAL	1		
5	H170535	NUT	1		
6	R93633	O-RING	1		
7	H164982	SNAP RING	1		
8	H211156	SNAP RING	1		
10	H210874	HYDR. CYLINDER ROD GUIDE	1		
11	H63262	O-RING	1		
12	U13461	BACK-UP RING	1		
13	AH142159	PISTON	1		
14	AH212088	HYDRAULIC CYLINDER KIT	1		(BORE SEAL)
15	AH148823	KIT	1		(ROD SEAL)
16	AH217541	HYDRAULIC CYLINDER	1		

ATTACHMENT HI-VIS COUPLER HYDRAULIC CYLINDER
VERIN HYDRAULIQUE ACCOUPLEMENT ACCESSOIRE HI-VIS
SUJECION DEL CILINDRO HIDRAULICO DEL ACOPLADOR DE HI-VIS

T217558 -UN-30JAN06

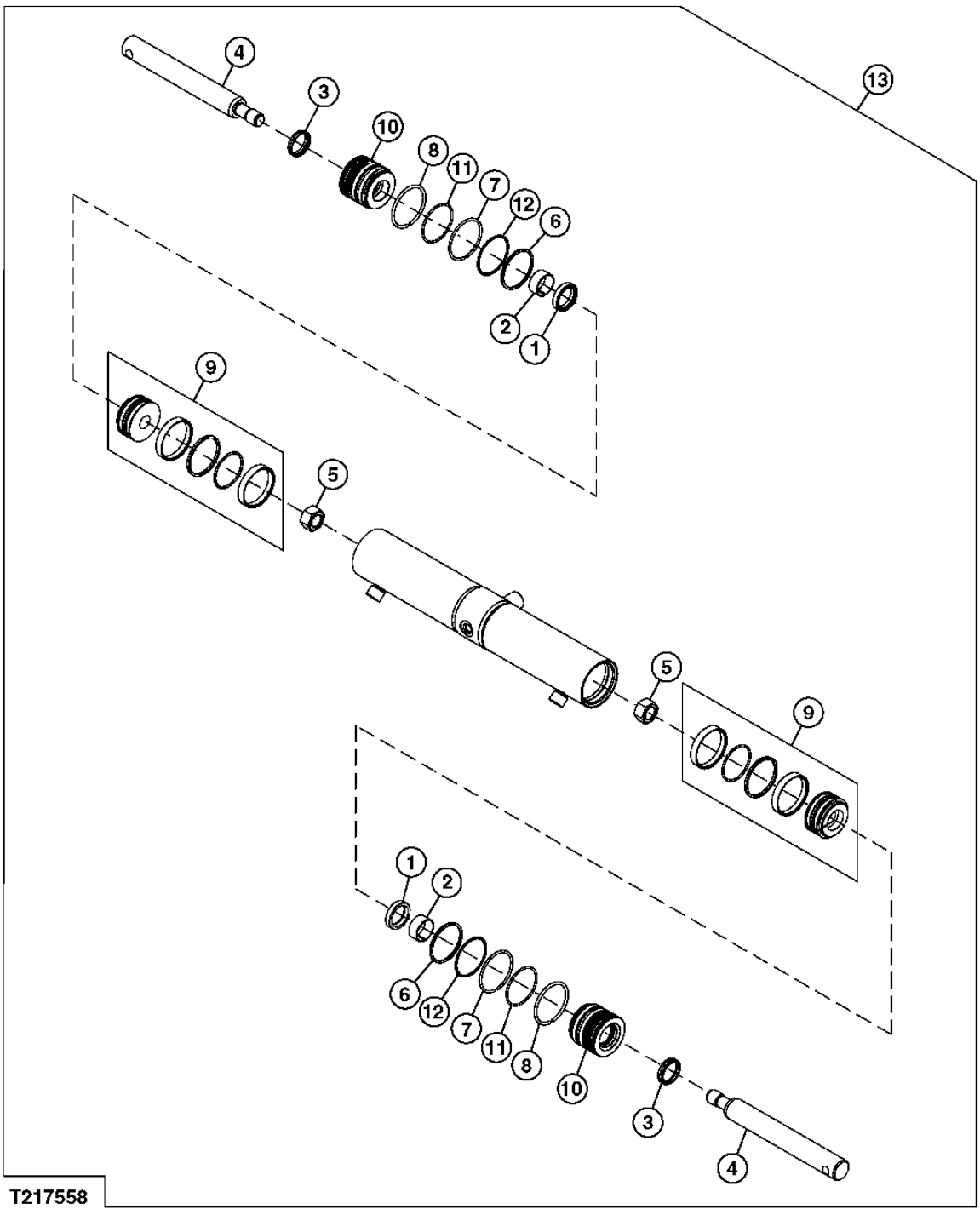

ATTACHMENT HI-VIS COUPLER HYDRAULIC CYLINDER
VERIN HYDRAULIQUE ACCOUPLEMENT ACCESSOIRE HI-VIS
SUJECION DEL CILINDRO HIDRAULICO DEL ACOPLADOR DE HI-VIS

KEY	*PART NO.*	*PART NAME*	*QTY.*	*SERIAL NO.*	*REMARKS*
1	H154514	SEAL	2		
2	H156058	WEAR RING	2		
3	H156586	SEAL	2		
4	H219217	ROD	2		
5	H170535	NUT	2		
6	R93633	O-RING	2		
7	H164982	SNAP RING	2		
8	H211156	SNAP RING	2		
9	AH142159	PISTON	2		
10	H210874	HYDR. CYLINDER ROD GUIDE	2		
11	H63262	O-RING	2		
12	U13461	BACK-UP RING	2		
13	AH222122	HYDRAULIC CYLINDER	1		

CONVERSION BUCKET PIVOT PLATE
PLAQUE PIVOT BENNE CONVERSION
PLACA DE PIVOTE DEL CUCHARON DE CONVERSION

T202690 -UN-01SEP04

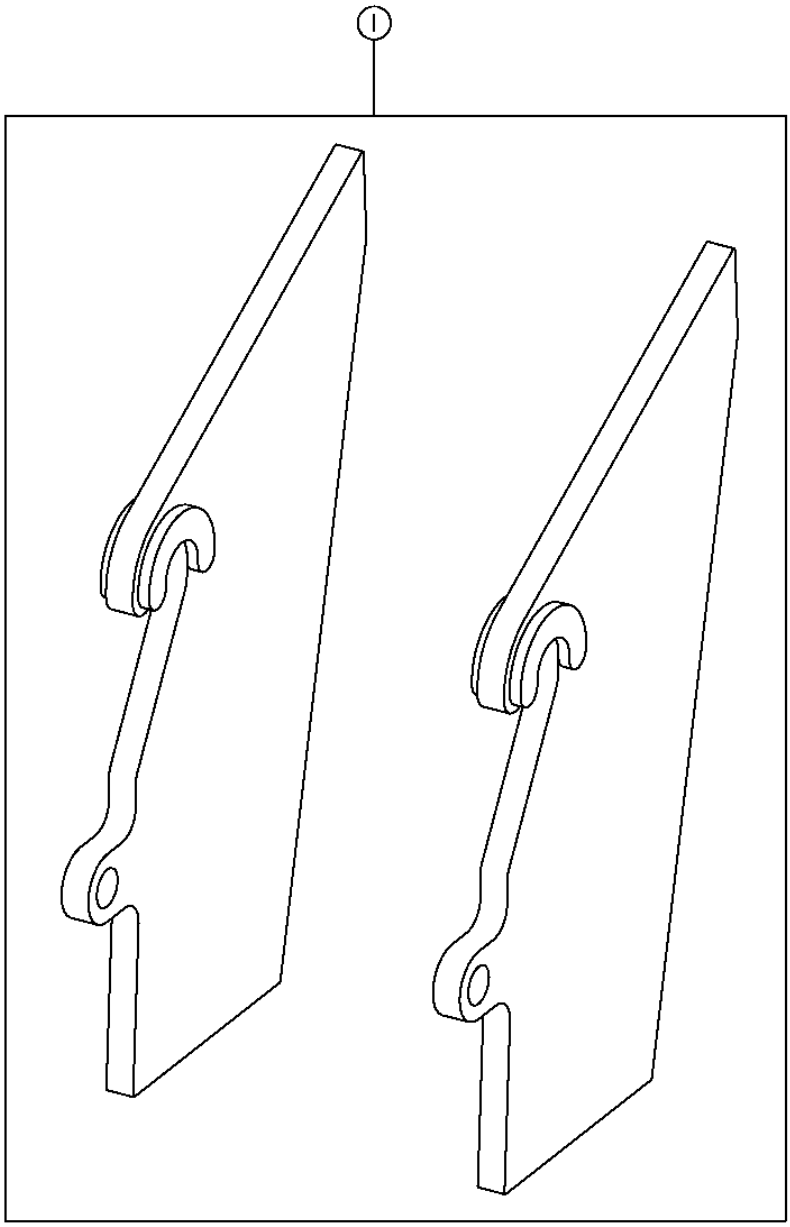

T202690

CONVERSION BUCKET PIVOT PLATE
PLAQUE PIVOT BENNE CONVERSION
PLACA DE PIVOTE DEL CUCHARON DE CONVERSION

KEY	*PART NO.*	*PART NAME*	*QTY.*	*SERIAL NO.*	*REMARKS*
1	AT315871	PLATE	1		(WHOLE GOODS)

HI-VIS PIVOT COUPLER BLANKS
FLANS COUPLEUR PIVOT HI-VIS
BANCOS DEL ACOPLADOR DE PIVOTE DE HI-VIS

T217557 -UN-24JAN06

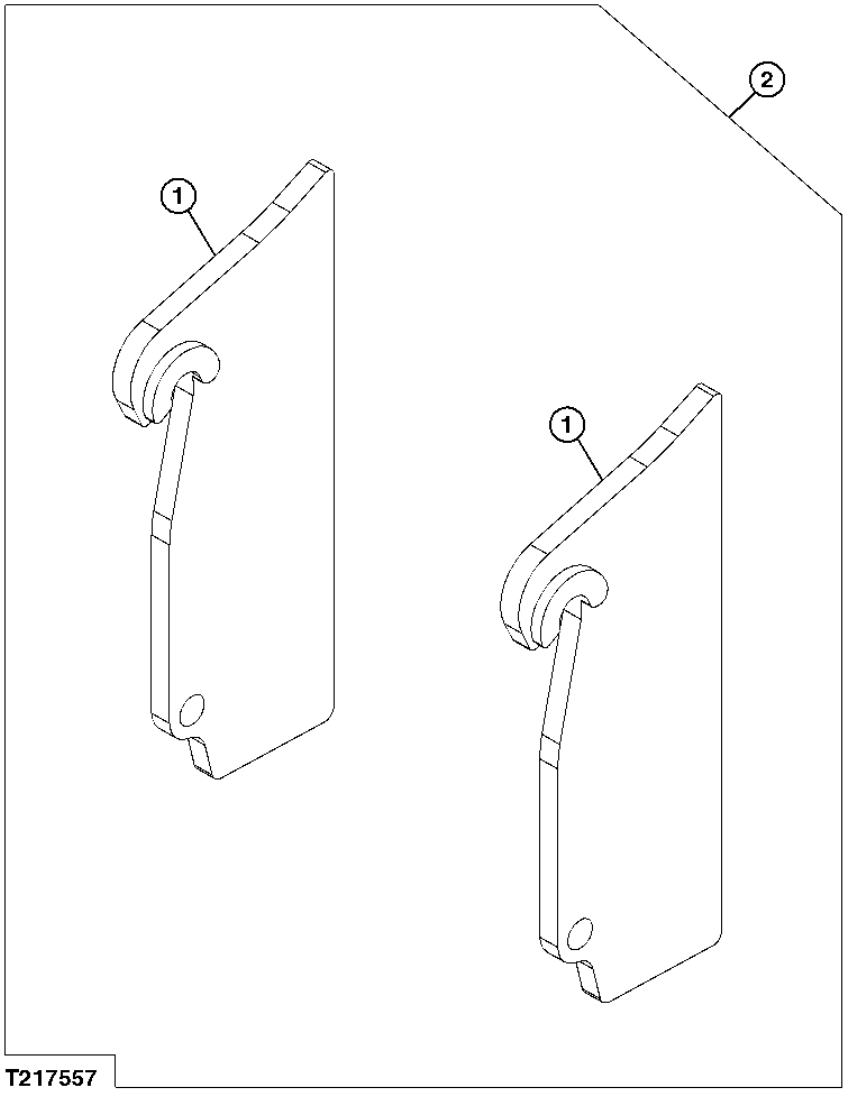

HI-VIS PIVOT COUPLER BLANKS
FLANS COUPLEUR PIVOT HI-VIS
BANCOS DEL ACOPLADOR DE PIVOTE DE HI-VIS

KEY	*PART NO.*	*PART NAME*	*QTY.*	*SERIAL NO.*	*REMARKS*
1	AT329819	FRAME	2		(WHOLE GOODS)
2	**AT330639**	**PLATE**	**1**		**(WHOLE GOODS)**

LOADER FRAME (S.N. -604689)
BATI DE CHARGEUR (S.N. -604689)
BASTIDOR DE CARGADORA (S.N. -604689)

TX1008744 -UN-16JUN06

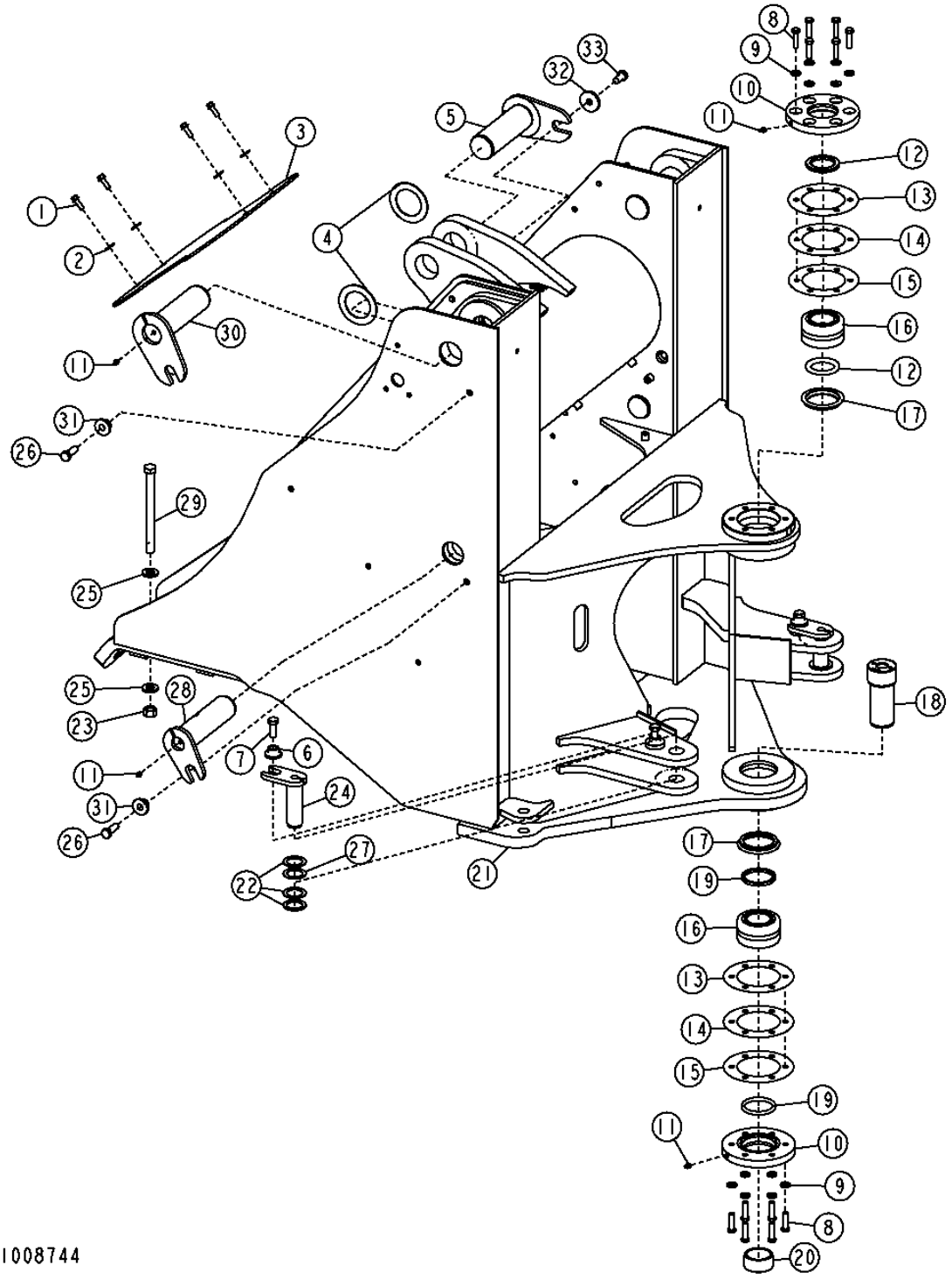

THIS PARTS LISTING IS CONTINUED

LOADER FRAME (S.N. -604689)
BATI DE CHARGEUR (S.N. -604689)
BASTIDOR DE CARGADORA (S.N. -604689)

KEY	PART NO.	PART NAME	QTY.	SERIAL NO.	REMARKS
1	19M7786	SCREW	4		M10 X 30
2	24M7296	WASHER	4		10.500 X 30 X 2.500 MM
3	T157234	COVER	1		
4	T102171	WASHER	3		
5	AT207505	PIN	1		(BUCKET CYLINDER)
6	T176064	BUSHING	3		(SUB FOR T146246)
7	19M7488	CAP SCREW	3		M16 X 40, (SUB FOR 19M8029)
8	19M7496	CAP SCREW	12		M12 X 45
9	24M7240	WASHER	12		13 X 25 X 3 MM
10	T200888	COVER	2		
11	JD7759	LUBRICATION FITTING	6		
12	T157029	SEAL	2		
13	T130057	SHIM	4		0.508MM(0.020")
14	T130058	SHIM	2		0.254MM(0.010")
15	T130059	SHIM	2		0.127MM(0.005")
16	AT203483	BEARING	2		
17	T157030	SPACER	2		
18	T182571	PIN	1		
19	T60752	SEAL	2		
20	T182265	BUSHING	1		
21	**AT203418**	**FRAME**	**1**		**(CA)**
22	24H1558	WASHER	6		1-41/64" X 2-3/8" X 0.075"
23	14M7277	NUT	8		M20, (FRONT AXLE TO FRAME)
24	AT203570	PIN	2		(STEERING CYLINDER)
25	24M7242	WASHER	16		21.400 X 42 X 5 MM, (FRONT AXLE TO FRAME)
26	19M8029	CAP SCREW	4		M16 X 30
27	24H1556	WASHER	2		1-41/64" X 2-3/8" X 0.048"
28	AT203523	PIN	2		(BOOM CYLINDER)
29	19M7779	CAP SCREW	8		M20 X 240, (FRONT AXLE TO FRAME)
30	AT318926	PIN	2		(SUB FOR AT203567) (BOOM PIVOT)
31	T146246	WASHER	4		
32	T146246	WASHER	1		
33	19M8029	CAP SCREW	1		M16 X 30

LOADER FRAME (S.N. 604690-)
BATI DE CHARGEUR (S.N. 604690-)
BASTIDOR DE CARGADORA (S.N. 604690-)

TX1003810 -UN-17FEB06

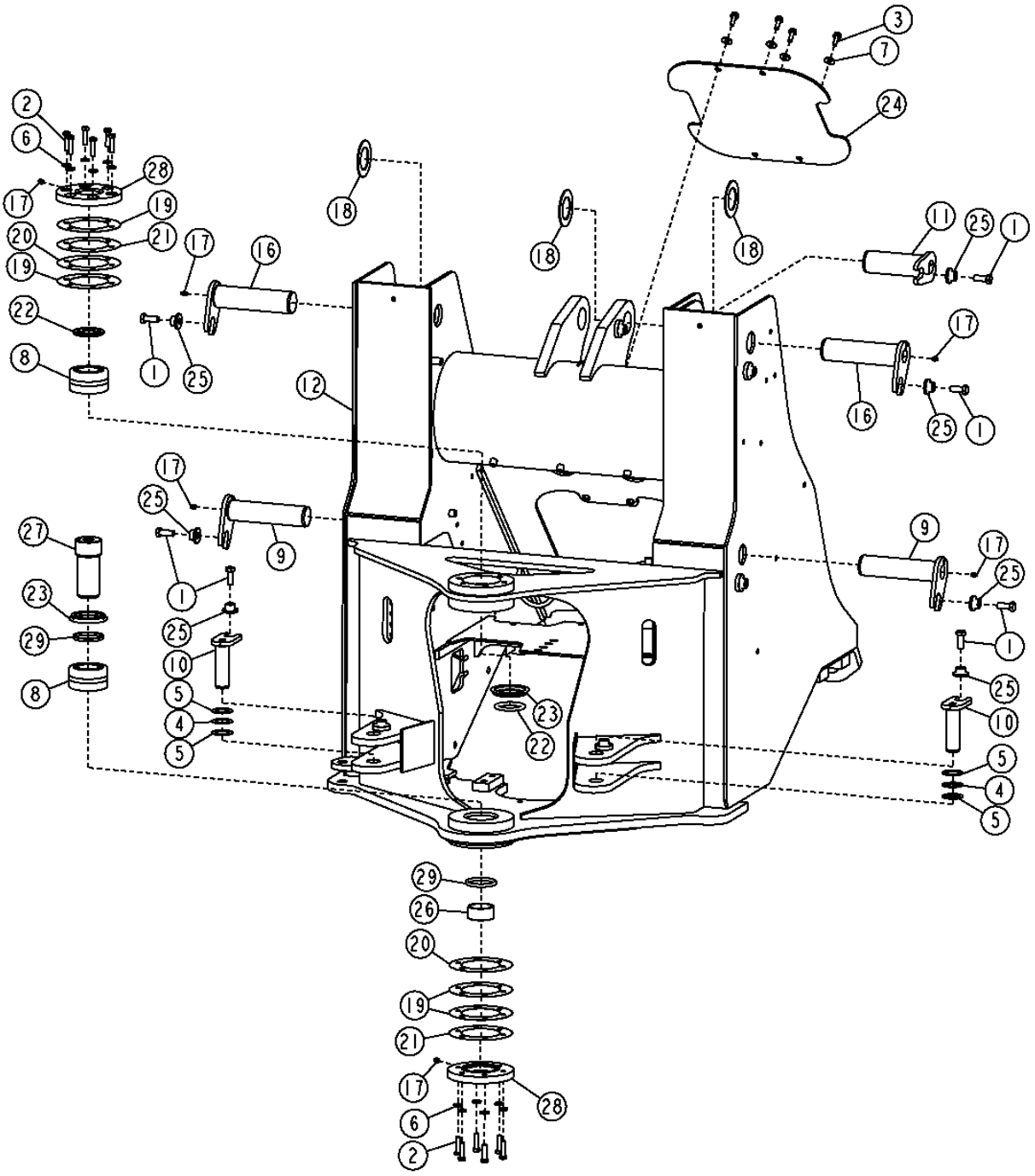

LOADER FRAME (S.N. 604690-)
BATI DE CHARGEUR (S.N. 604690-)
BASTIDOR DE CARGADORA (S.N. 604690-)

KEY	PART NO.	PART NAME	QTY.	SERIAL NO.	REMARKS
1	19M7488	CAP SCREW	7		M16 X 40
2	19M7496	CAP SCREW	12		M12 X 45
3	19M7786	SCREW	4		M10 X 30
4	24H1556	WASHER	2		41.681 X 60.325 X 1.219 MM
5	24H1558	WASHER	4		41.681 X 60.325 X 1.905 MM
6	24M7240	WASHER	12		13 X 25 X 3 MM
7	24M7296	WASHER	4		10.500 X 30 X 2.500 MM
8	AT203483	BEARING	2		
9	AT203523	PIN	2		
10	AT203570	PIN	2		
11	AT207505	PIN	1		
12	**AT318280**	**FRAME**	**1**		**(CA)**
16	AT318926	PIN FASTENER	2		
17	JD7759	LUBRICATION FITTING	6		
18	T102171	WASHER	3		66.500 X 108 X 3 MM
19	T130057	SHIM	4		0.508 MM
20	T130059	SHIM	2		0.127 MM
21	T130059	SHIM	2		0.127 MM
22	T157029	SEAL	2		
23	T157030	SPACER	2		
24	T157234	COVER	1		
25	T176064	BUSHING	7		16.300 X 28.600 X 21.900 MM
26	T182265	BUSHING	1		63.623 X 74.160 X 34.500 MM
27	T182571	PIN	1		
28	T200888	COVER	2		
29	T60752	SEAL	2		

TOOL CARRIER FRAME
BATI PORTE OUTILS
BASTIDOR DEL PORTAHERRAMIENTAS

T196652 -UN-26NOV03

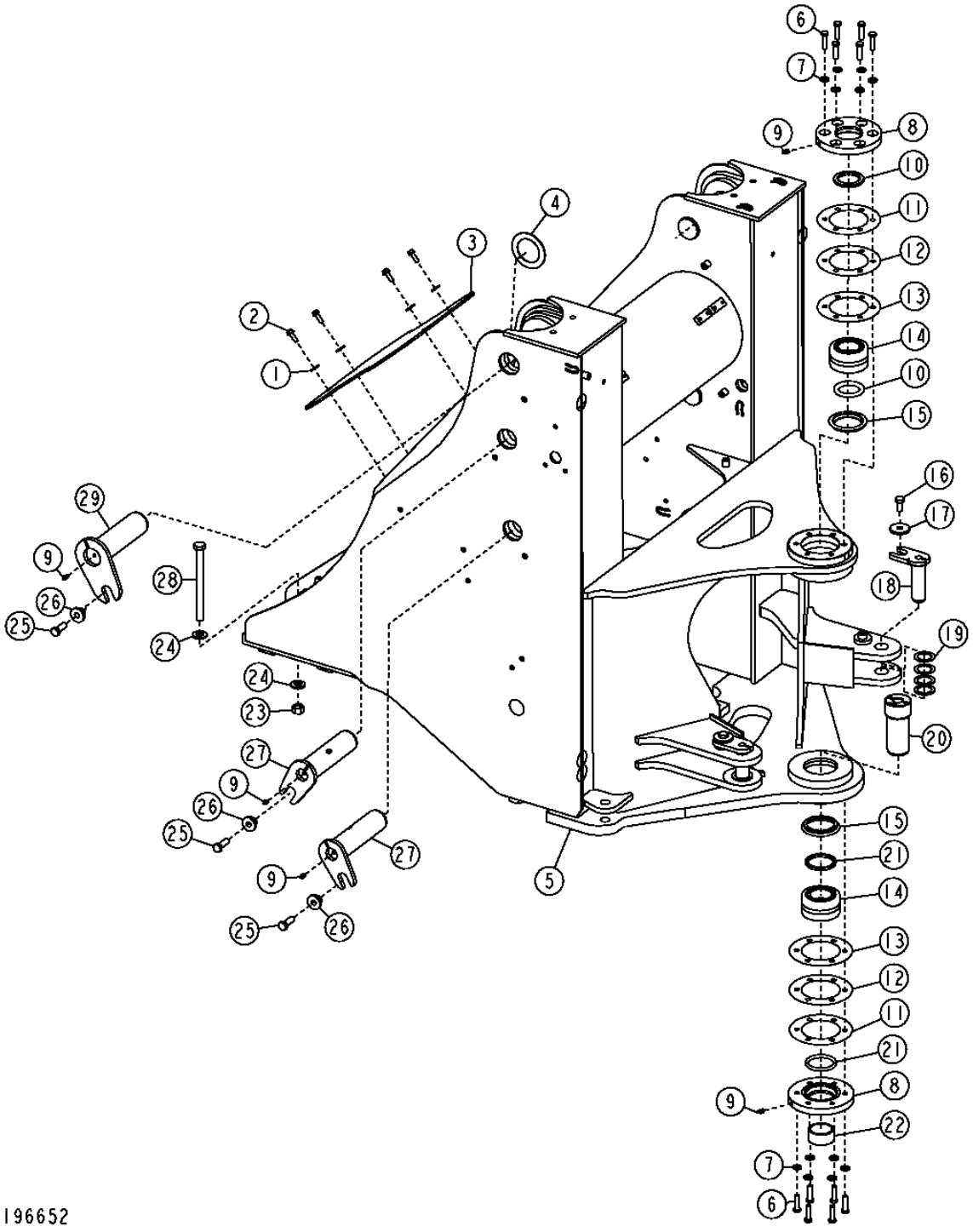

THIS PARTS LISTING IS CONTINUED

TOOL CARRIER FRAME
BATI PORTE OUTILS
BASTIDOR DEL PORTAHERRAMIENTAS

KEY	PART NO.	PART NAME	QTY.	SERIAL NO.	REMARKS
1	24M7296	WASHER	4		10.500 X 30 X 2.500 MM
2	19M7786	SCREW	4		M10 X 30
3	T157234	COVER	1		
4	T102171	WASHER	2		
5	.....	FRAME	1		(AT207200 NLA)
6	19M7496	CAP SCREW	12		M12 X 45
7	24M7240	WASHER	12		13 X 25 X 3 MM
8	T200888	COVER	2		
9	JD7759	LUBRICATION FITTING	8		
10	T157029	SEAL	2		0.127MM(0.005")
11	T130059	SHIM	2		0.127MM(0.005")
12	T130058	SHIM	2		0.254MM(0.010")
13	T130057	SHIM	4		0.508MM(0.020")
14	AT203483	BEARING	2		
15	T157030	SPACER	2		
16	19M8029	CAP SCREW	2		M16 X 30
17	T146246	WASHER	2		
18	AT203570	PIN	2		(STEERING CYLINDER)
19	24H1558	WASHER	4		1-41/64" X 2-3/8" X 0.075"
	24H1556	WASHER	2		1-41/64" X 2-3/8" X 0.048"
20	T182571	PIN	1		
21	T60752	SEAL	2		
22	T182265	BUSHING	1		
23	14M7277	NUT	8		M20
24	24M7242	WASHER	16		21.400 X 42 X 5 MM
25	19M8029	CAP SCREW	6		M16 X 30
26	T146246	WASHER	6		
27	AT203523	PIN	4		
28	19M7779	CAP SCREW	8		M20 X 240
29	AT318926	PIN	2		(SUB FOR AT203567) (BOOM PIVOT)

POWERLLEL™ LINKAGE FRAME (S.N. -604689)
BATI TRINGLERIE POWERLLEL™ (S.N. -604689)
BASTIDOR DE VARILLAJE POWERLLEL™ (S.N. -604689)

TX1008728 -UN-14JUN06

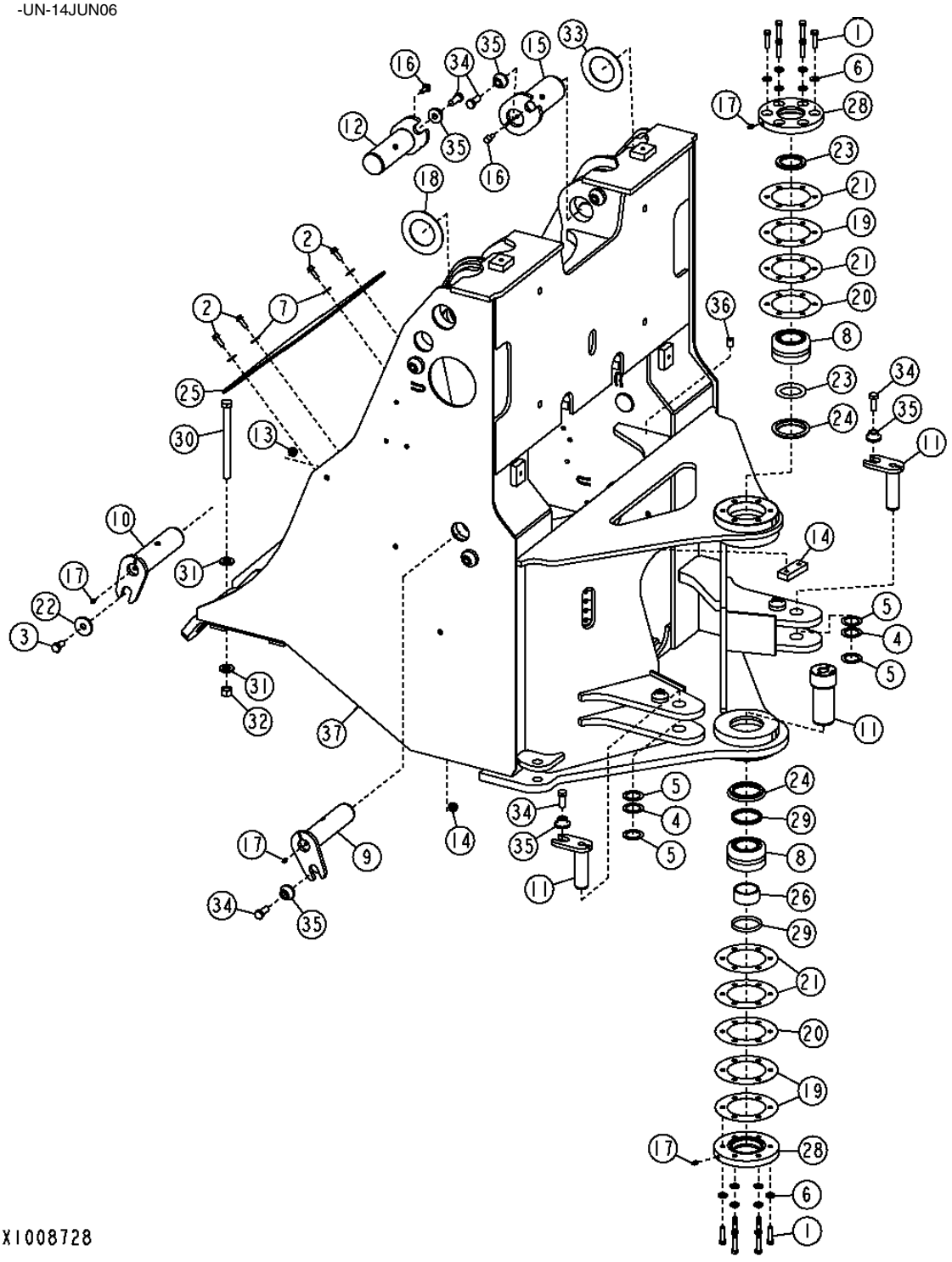

POWERLLEL™ LINKAGE FRAME (S.N. -604689)
BATI TRINGLERIE POWERLLEL™ (S.N. -604689)
BASTIDOR DE VARILLAJE POWERLLEL™ (S.N. -604689)

KEY	*PART NO.*	*PART NAME*	*QTY.*	*SERIAL NO.*	*REMARKS*
1	19M7496	CAP SCREW	12		M12 X 45
2	19M7786	SCREW	4		M10 X 30
3	19M8029	CAP SCREW	3		M16 X 30
4	24H1556	WASHER	2		1-41/64" X 2-3/8" X 0.048"
5	24H1558	WASHER	4		1-41/64" X 2-3/8" X 0.075"
6	24M7240	WASHER	12		13 X 25 X 3 MM
7	24M7296	WASHER	4		10.500 X 30 X 2.500 MM
8	AT203483	BEARING	2		
9	AT203523	PIN	2		(BOOM CYLINDER PIN)
10	AT318926	PIN	2		(SUB FOR AT203567) (BOOM PIVOT PIN)
11	AT203570	PIN	2		(STEERING CYLINDER PIN)
12	AT227600	PIN	1		(BUCKET CYLINDER PIN)
13	14M7443	FLANGE NUT	8		M12
14	T133290	STRAP	1		
15	AT307716	PIN	2		(LEVELING LINK PIVOT PIN)
16	E53801	ELBOW FITTING	3		3.175 MM (1/8")
17	JD7759	LUBRICATION FITTING	6		
18	T102171	WASHER	2		66.500 X 108 X 3 MM
19	T130057	SHIM	4		0.020"
20	T130058	SHIM	2		0.010"
21	T130059	SHIM	4		0.005"
22	T146246	WASHER	3		17 X 57.100 X 6.500 MM
23	T157029	SEAL	2		
24	T157030	SPACER	2		
25	T157234	COVER	1		
26	T182265	BUSHING	1		
27	T182571	PIN	1		
28	T200888	COVER	2		
29	T60752	SEAL	2		
30	19M7779	CAP SCREW	8		M20 X 240
31	24M7242	WASHER	16		21.400 X 42 X 5 MM
32	14M7277	NUT	8		M20
33	T171734	WASHER	2		
34	19M7488	CAP SCREW	6		M16 X 40
35	T176064	BUSHING	6		16.300 X 28.600 X 21.900 MM
36	T72414	BUSHING	2		
37	**AT305217**	**FRAME**	**1**		**(WHOLE GOODS)**

POWERLLEL™ LINKAGE FRAME (S.N. 604690-)
BATI TRINGLERIE POWERLLEL™ (S.N. 604690-)
BASTIDOR DE VARILLAJE POWERLLEL™ (S.N. 604690-)

TX1008902 -UN-14JUN06

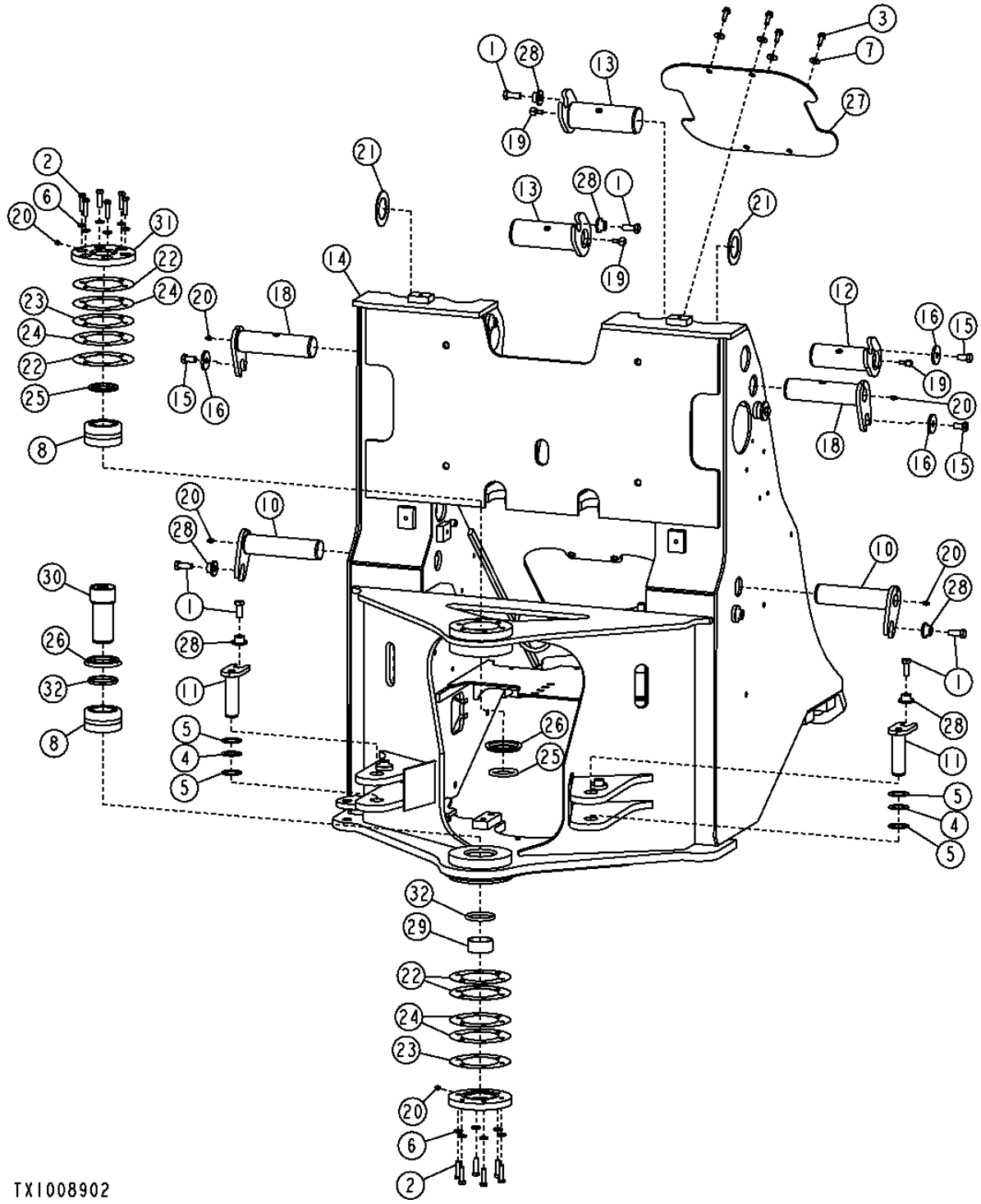

POWERLLEL™ LINKAGE FRAME (S.N. 604690-)
BATI TRINGLERIE POWERLLEL™ (S.N. 604690-)
BASTIDOR DE VARILLAJE POWERLLEL™ (S.N. 604690-)

KEY	*PART NO.*	*PART NAME*	*QTY.*	*SERIAL NO.*	*REMARKS*
1	19M7488	CAP SCREW	6		M16 X 40
2	19M7496	CAP SCREW	12		M12 X 45
3	19M7786	SCREW	4		M10 X 30
4	24H1556	WASHER	2		41.681 X 60.325 X 1.219 MM
5	24H1558	WASHER	4		41.681 X 60.325 X 1.905 MM
6	24M7240	WASHER	12		13 X 25 X 3 MM
7	24M7296	WASHER	4		10.500 X 30 X 2.500 MM
8	AT203483	BEARING	2		
10	AT203523	PIN	2		
11	AT203570	PIN	2		
12	AT227600	PIN	1		
13	AT307716	PIN	2		
14	**AT318491**	**FRAME**	**1**		
15	19M8029	CAP SCREW	3		
16	T146246	WASHER	3		17 X 57.100 X 6.500 MM
18	AT318926	PIN FASTENER	2		
19	E53801	ELBOW FITTING	3		3.175 MM
20	JD7759	LUBRICATION FITTING	6		
21	T102717	KNOB	2		
22	T130057	SHIM	4		0.508 MM
23	T130058	SHIM	2		0.254 MM
24	T130059	SHIM	4		0.127 MM
25	T157029	SEAL	2		
26	T157030	SPACER	2		
27	T157234	COVER	1		
28	T176064	BUSHING	6		16.300 X 28.600 X 21.900 MM
29	T182265	BUSHING	1		63.623 X 74.160 X 34.500 MM
30	T182265	BUSHING	1		63.623 X 74.160 X 34.500 MM
31	T200888	COVER	2		
32	T60752	SEAL	2		

LOADER BOOM
FLECHE CHARGEUR
AGUILON DE LA CARGADORA

TX1006462 -UN-21APR06

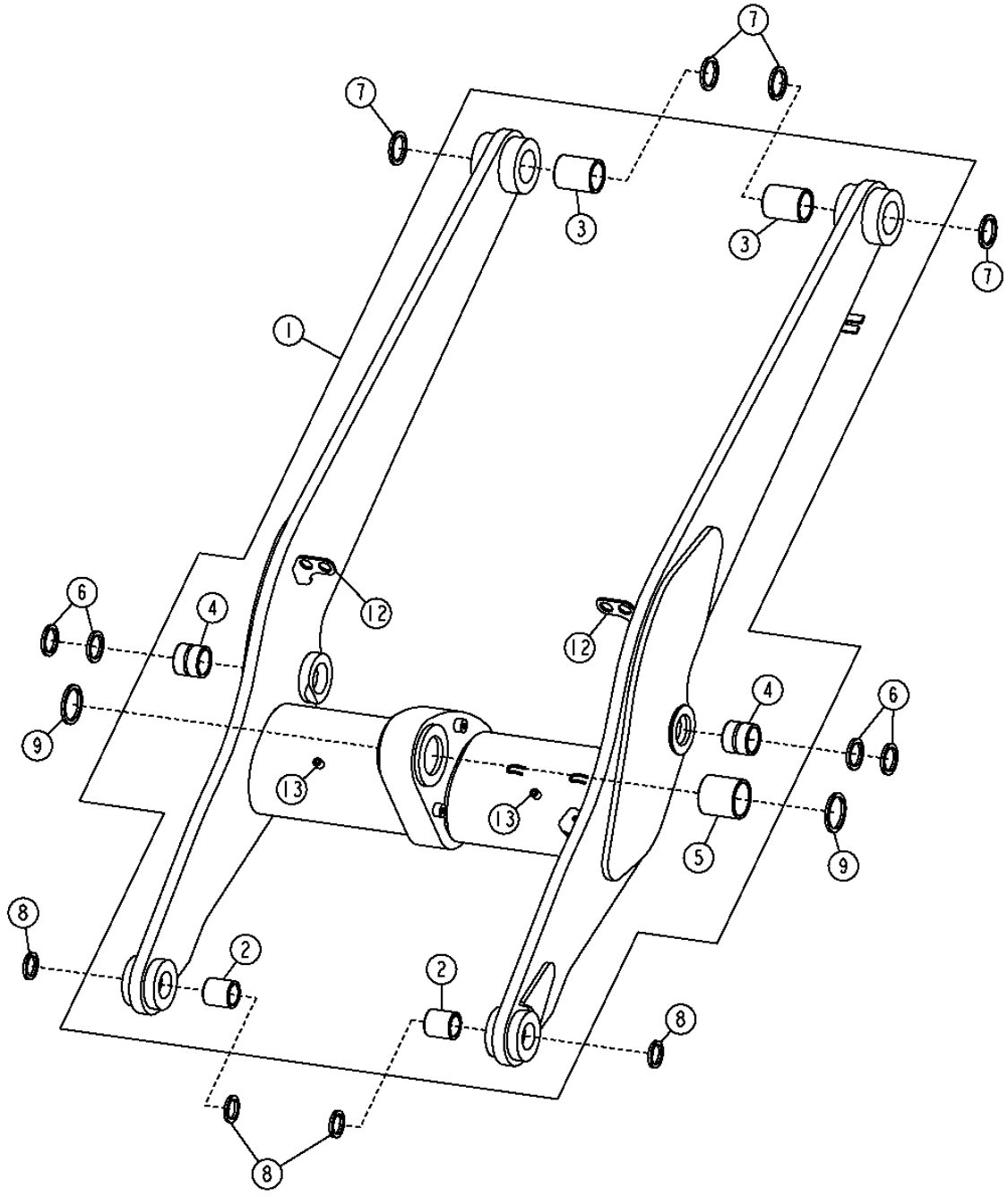

LOADER BOOM
FLECHE CHARGEUR
AGUILON DE LA CARGADORA

KEY	PART NO.	PART NAME	QTY.	SERIAL NO.	REMARKS
1	T171734	WASHER	AR		
2	AT207507	PIN	1		
3	T176064	BUSHING	1		(SUB FOR T146246)
4	19M7488	CAP SCREW	1		M16 X 40, (SUB FOR 19M8029)
5	T102136	SEAL	4		
6	**AT308992**	**LOADER BOOM**	**1**		**(INCLUDES (2) T157248, (2) T157250 AND (2) T157251) (CA)**
	AT309021	**LOADER BOOM**	**1**		**(INCLUDES (2) T157248, (2) T157250 AND (2) T157251) (CA) (HIGH LIFT)**
	T210796	LABEL	2		(SUB FOR (2) T179464) (NOT ILLUSTRATED) (HIGH LIFT)
7	T102135	SEAL	4		
8	T102205	SEAL	4		
9	T157248	BUSHING	2		
10	T157250	BUSHING	2		
11	T157251	BUSHING	2		
12	T210447	PLATE	1	602852-	
13	T72414	BUSHING	1	602852-	

TOOL CARRIER BOOM
FLECHE PORTE OUTILS
AGUILON DEL PORTAHERRAMIENTAS

TP60318 -UN-04APR98

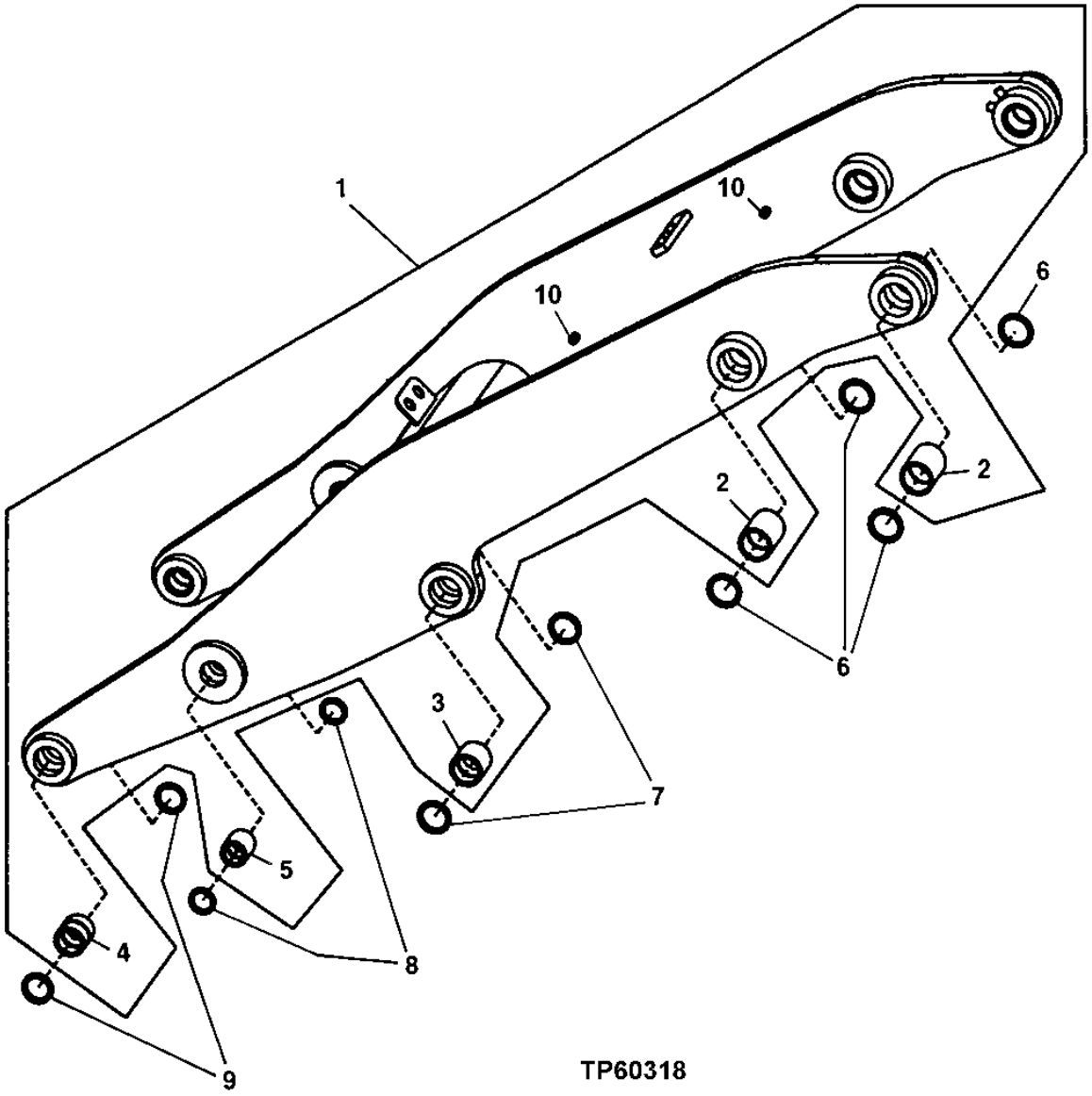

TP60318

TOOL CARRIER BOOM
FLECHE PORTE OUTILS
AGUILON DEL PORTAHERRAMIENTAS

KEY	PART NO.	PART NAME	QTY.	SERIAL NO.	REMARKS
1	AT308392	LOADER BOOM	1		(CA)(TOOL CARRIER BOOM) (SUB FOR AT206817)
2	T157251	BUSHING	4		
3	T157250	BUSHING	2		
4	T157248	BUSHING	2		
5	T157248	BUSHING	2		
6	T102136	SEAL	8		
7	T102135	SEAL	4		
8	T102205	SEAL	4		
9	T102205	SEAL	4		
10	T72414	BUSHING	6		

POWERLLEL™ LINKAGE BOOM
FLECHE TRINGLERIE POWERLLEL™
AGUILON DE VARILLAJE POWERLLEL™

T201789 -UN-22JUL04

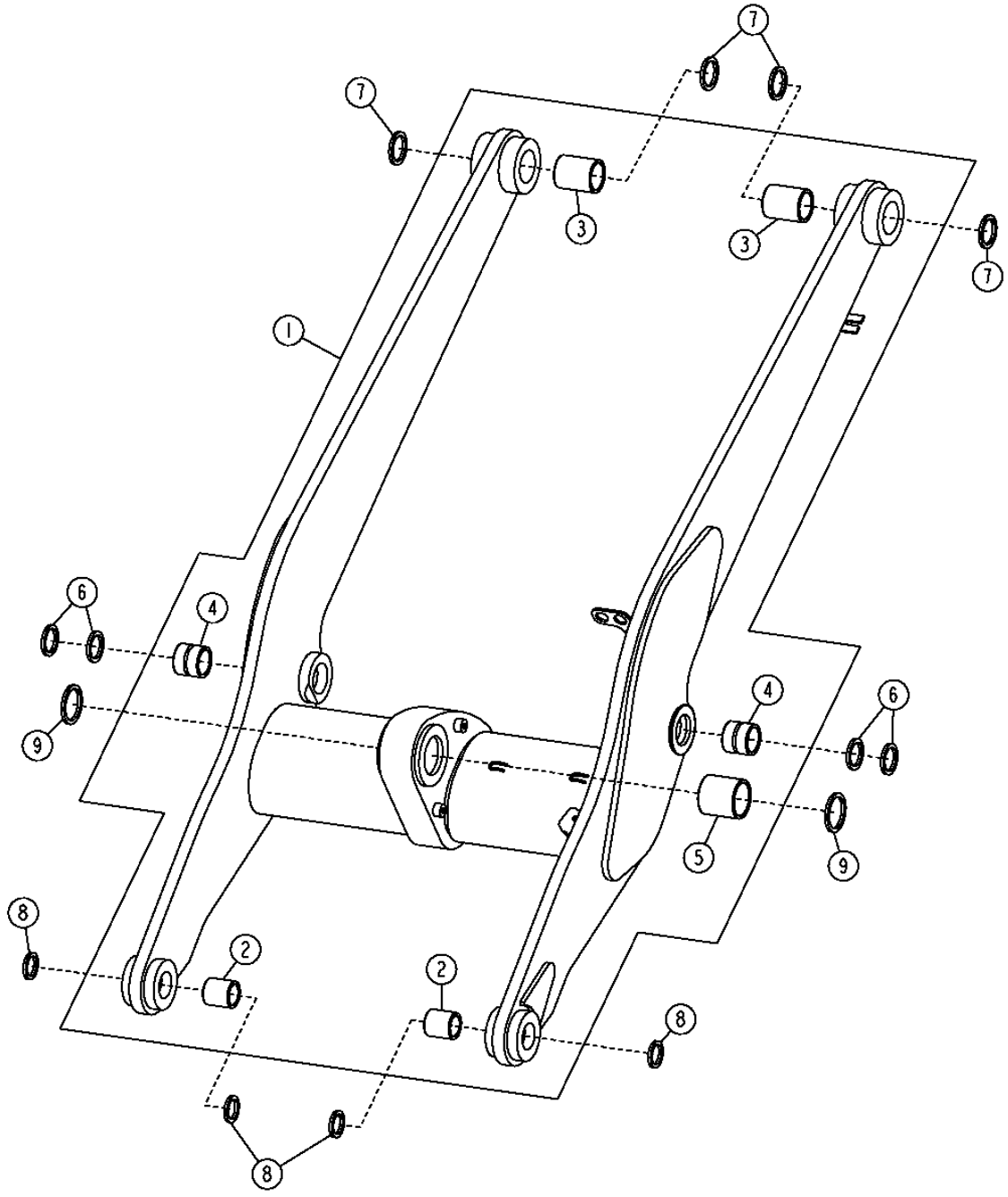

POWERLLEL™ LINKAGE BOOM
FLECHE TRINGLERIE POWERLLEL™
AGUILON DE VARILLAJE POWERLLEL™

KEY	PART NO.	PART NAME	QTY.	SERIAL NO.	REMARKS
1	AT300884	LOADER BOOM	1		(CA)
2	T157248	BUSHING	2		
3	T157251	BUSHING	2		
4	T205219	BUSHING	2		
5	T211839	BUSHING	1		
6	T102135	SEAL	4		
7	T102136	SEAL	4		
8	T102205	SEAL	4		
9	T102137	SEAL	2		

LOADER LINKAGE
TRINGLERIE CHARGEUR
VARILLAJE DE LA CARGADORA

TP60511 -UN-24SEP98

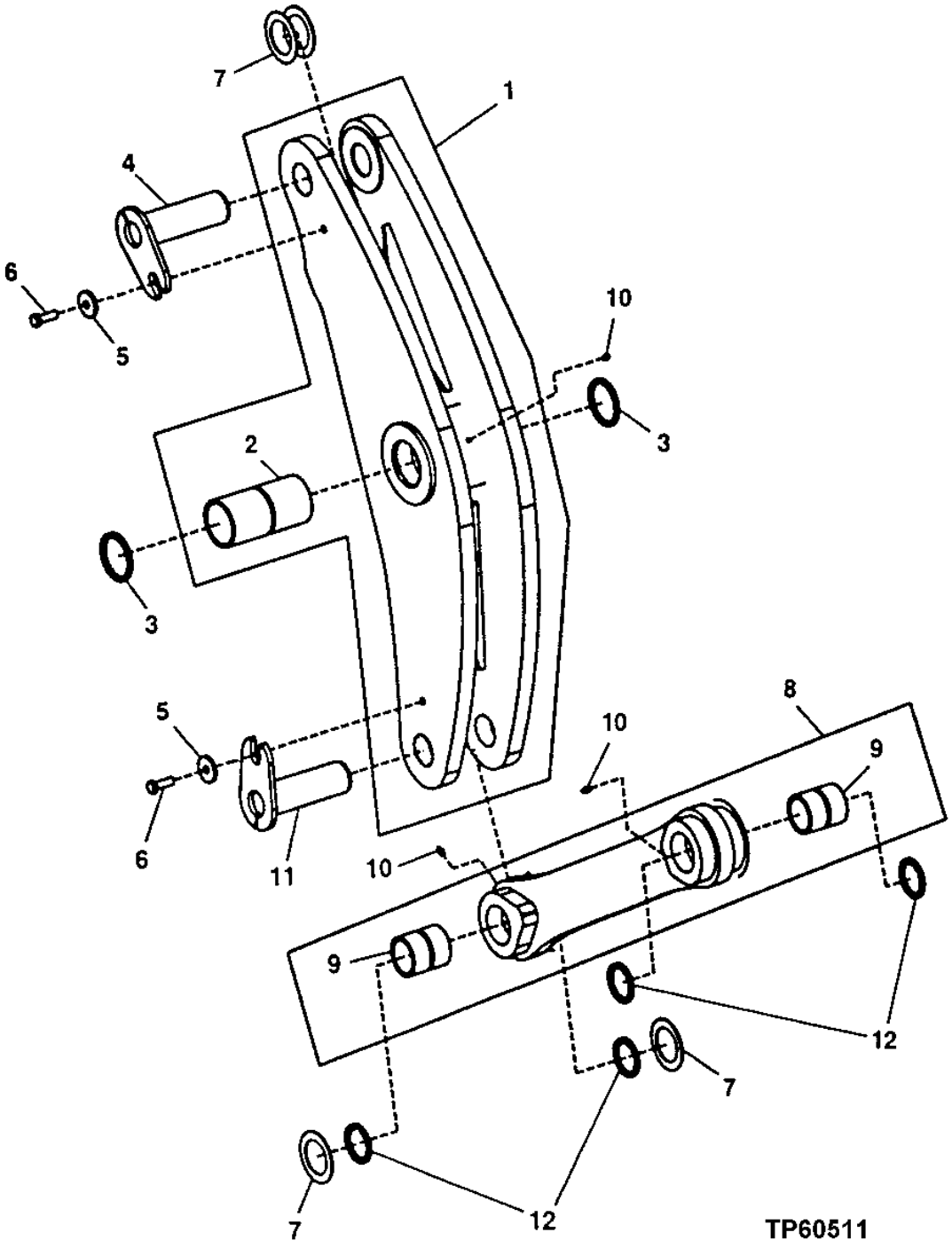

LOADER LINKAGE
TRINGLERIE CHARGEUR
VARILLAJE DE LA CARGADORA

KEY	PART NO.	PART NAME	QTY.	SERIAL NO.	REMARKS
1	AT307533	BELLCRANK	1		
2	T168641	BUSHING	1		
3	T102137	SEAL	2		
4	AT207504	PIN	1		
5	T176064	BUSHING	2		
6	19M7489	CAP SCREW	2		M16 X 45
7	T102171	WASHER	4		
8	AT307532	LINK	1		
	AT311742	LINK	1		(SUB FOR AT307516) (HIGH LIFT)
9	T157077	BUSHING	2		
10	JD7759	LUBRICATION FITTING	3		
11	AT207505	PIN	1		
12	T102135	SEAL	4		

TOOL CARRIER LINKAGE
TRINGLERIE PORTE OUTILS
VARILLAJE DEL PORTAHERRAMIENTAS

TP60429 -UN-30JUN98

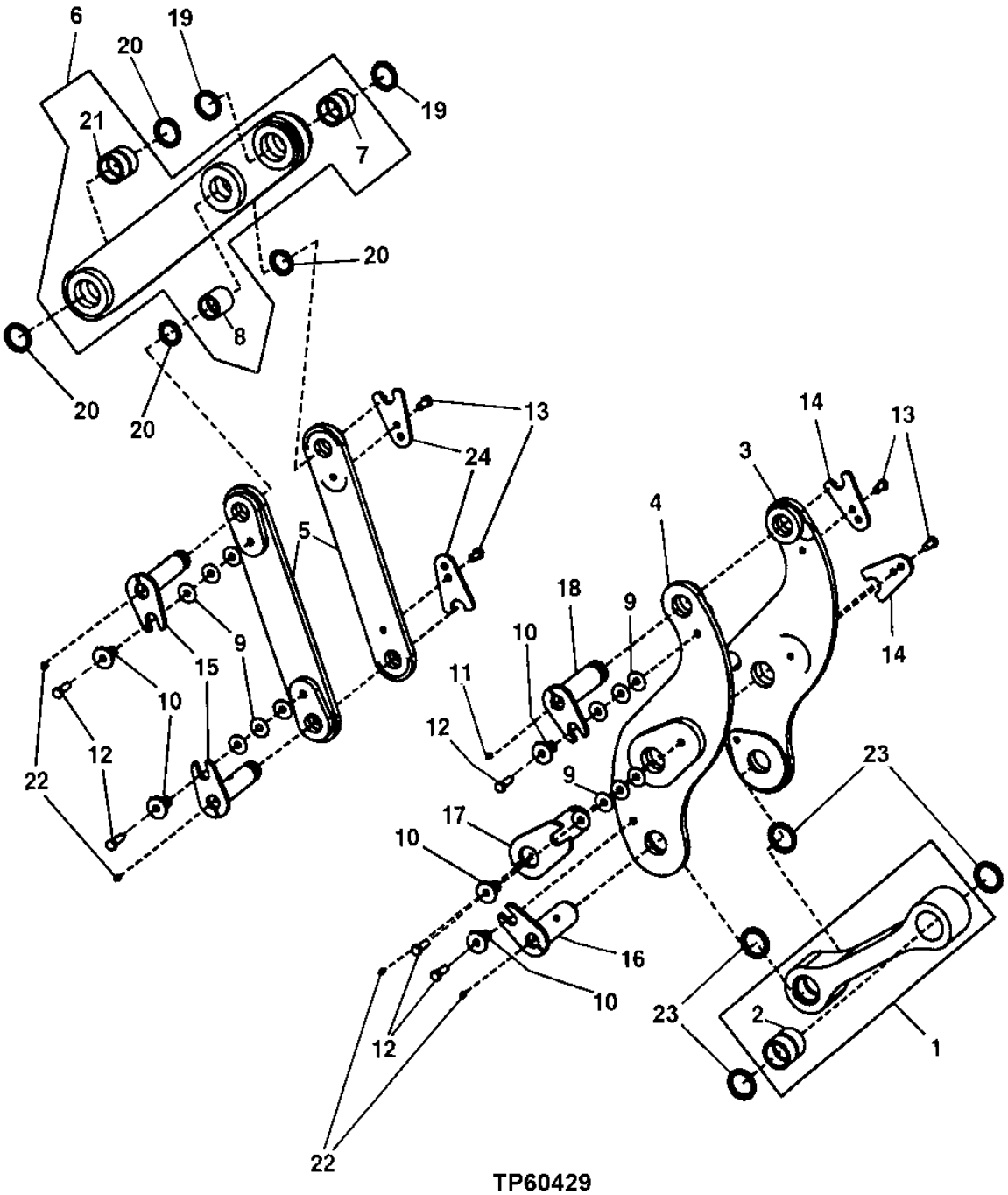

TP60429

TOOL CARRIER LINKAGE
TRINGLERIE PORTE OUTILS
VARILLAJE DEL PORTAHERRAMIENTAS

KEY	PART NO.	PART NAME	QTY.	SERIAL NO.	REMARKS
1	AT307504	LINK	2		
2	T157250	BUSHING	4		
3	AT307506	BELLCRANK	2		
4	AT307505	BELLCRANK	2		
5	AT307507	LINK	4		
6	AT307508	LINK	2		
7	T157250	BUSHING	2		
8	T157248	BUSHING	2		
9	24H1626	WASHER	14		21/32" X 2" X 0.060"
10	T176064	BUSHING	10		
11	JD7759	LUBRICATION FITTING	2		
12	19M7489	CAP SCREW	10		M16 X 45
13	19M8029	CAP SCREW	8		M16 X 30
14	T119549	RETAINER	8		
15	AT206828	PIN	4		
16	AT206825	PIN	2		
17	AT209476	PIN	2		
18	AT203562	PIN	2		
19	T102135	SEAL	4		
20	T102205	SEAL	8		
21	T157248	BUSHING	2		
22	JD7759	LUBRICATION FITTING	8		
23	T102135	SEAL	8		
24	T119549	RETAINER	4		(SUB FOR T175863)

POWERLLEL™ LINKAGE
TRINGLERIE POWERLLEL™
VARILLAJE POWERLLEL™

T208983 -UN-25FEB05

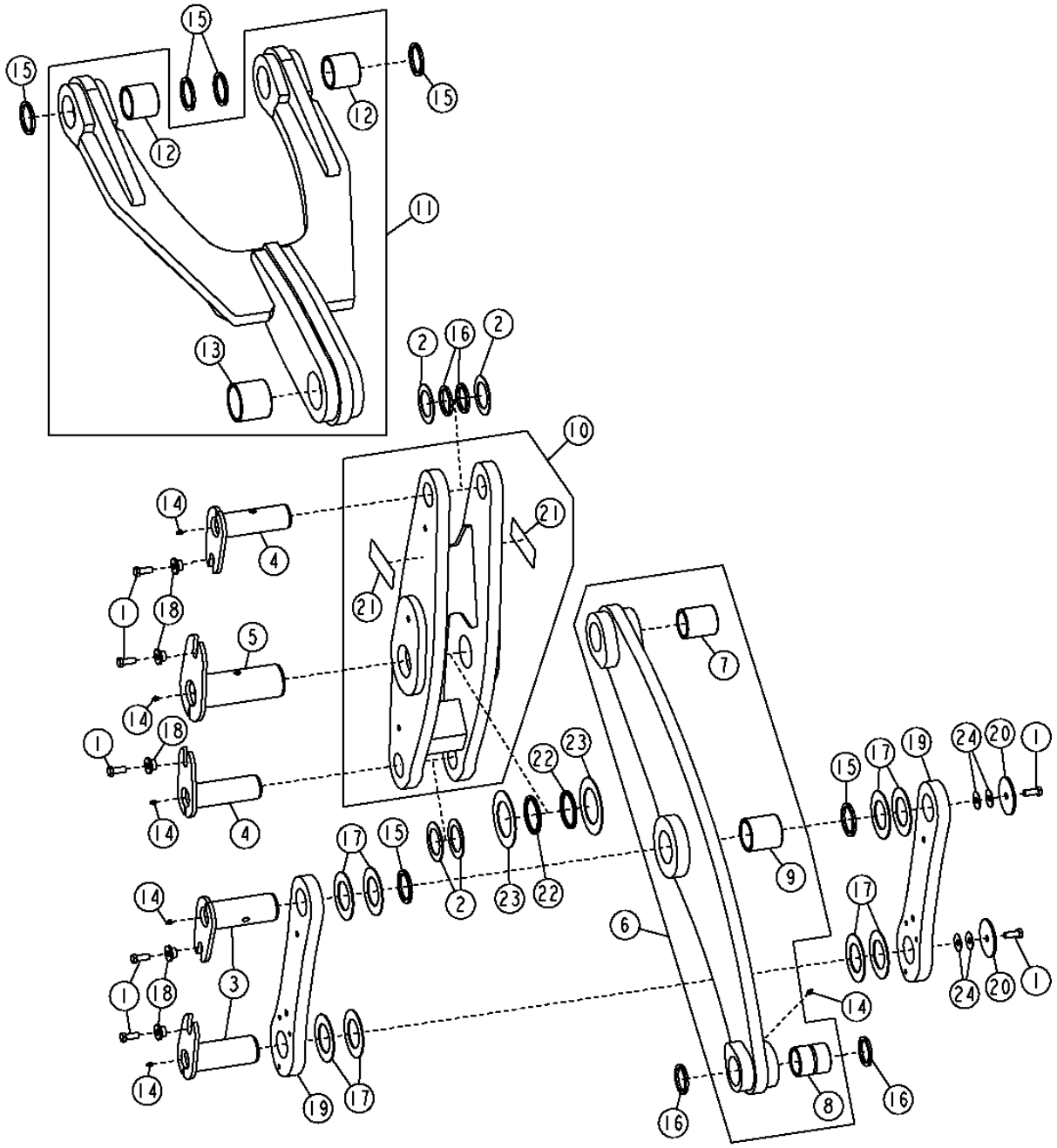

T208983

POWERLLEL™ LINKAGE
TRINGLERIE POWERLLEL™
VARILLAJE POWERLLEL™

KEY	PART NO.	PART NAME	QTY.	SERIAL NO.	REMARKS
1	19M7488	CAP SCREW	7		M16 X 40
2	24H1240	WASHER	4		3-1/32" X 4-1/2" X 0.105"
3	AT227765	PIN	2		
4	AT227767	PIN FASTENER	2		
5	AT227768	PIN	1		
6	AT300890	LINK	1		
7	T200581	BUSHING	1		
8	T205483	BUSHING	1		
9	T211839	BUSHING	1		
10	**AT317060**	**BELLCRANK**	**1**		**(CA)**
11	AT304831	LINK	1		
12	T203452	BUSHING	2		
13	T203453	BUSHING	1		
14	JD7759	LUBRICATION FITTING	6		
15	T102137	SEAL	6		
16	T102206	SEAL	4		
17	T171734	WASHER	8		3.327" X 5.512" X 0.128"
18	T176064	BUSHING	5		
19	T200254	PLATE	2		
20	T206578	PLATE	2		
21	T211390	SAFETY SIGN	2		
22	T211836	SEAL	2		
23	T54188	THRUST WASHER	2		
24	24H1626	WASHER	4		21/32" X 2" X 0.060"

BOOM CYLINDER LOCK
VERROUILLAGE DE VERIN DE FLECHE
BLOQUEO DEL CILINDRO DEL AGUILON

T192743 -UN-10JUL03

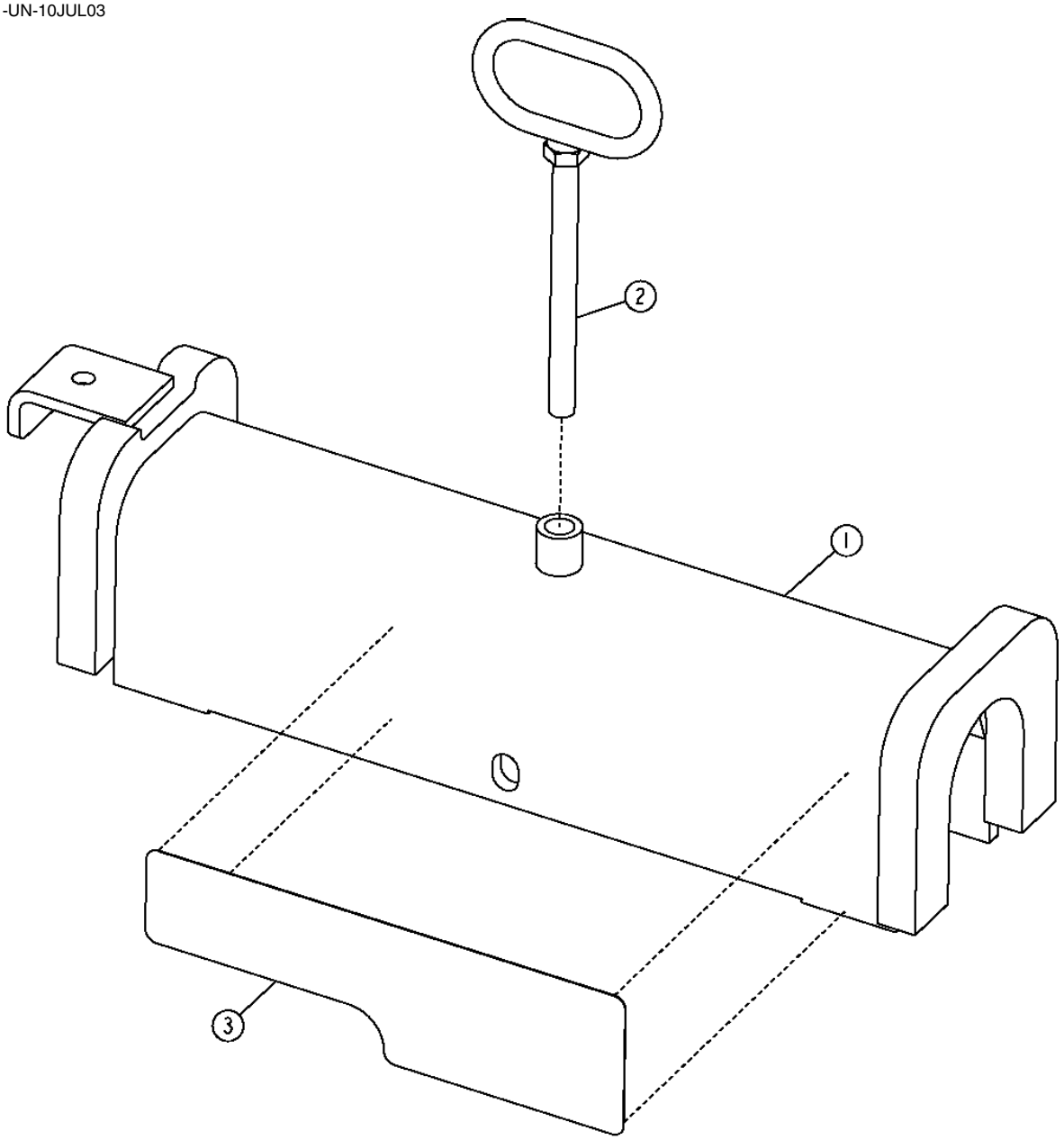

T192743

BOOM CYLINDER LOCK
VERROUILLAGE DE VERIN DE FLECHE
BLOQUEO DEL CILINDRO DEL AGUILON

KEY	PART NO.	PART NAME	QTY.	SERIAL NO.	REMARKS
1	AT225826	LOCK	1		
2	AT207287	HANDLE	1		
3	T182191	LABEL	2		

TWO SPOOL LOADER CONTROL VALVE (S.N. -594432)
DISTRIBUTEUR CHARGEUR DEUX TIROIRS (S.N. -594432)
VALVULA DE CONTROL DE LA CARGADORA DE DOS CARRETES (S.N. -594432)

T194439 -UN-02SEP03

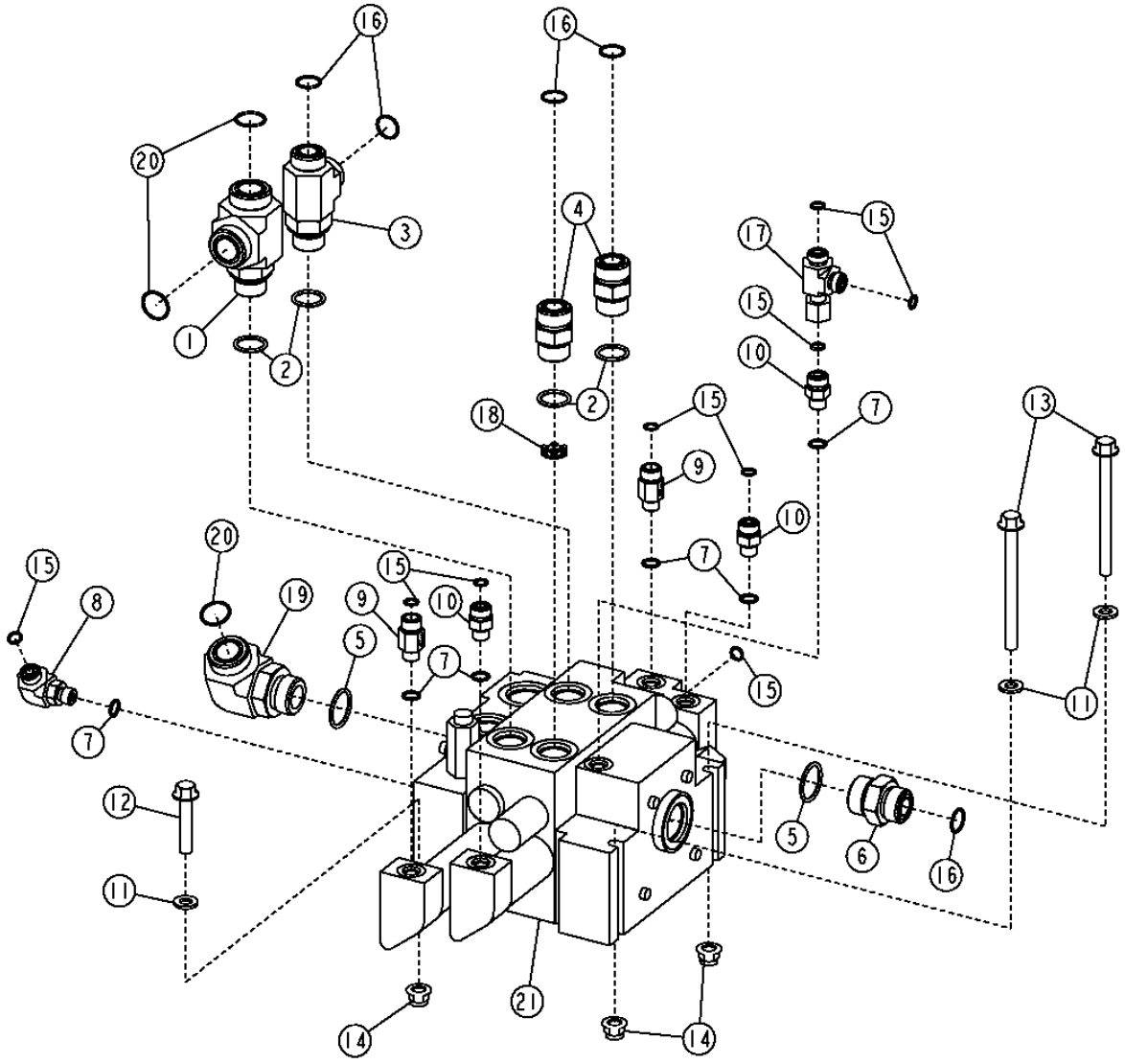

TWO SPOOL LOADER CONTROL VALVE (S.N. -594432)
DISTRIBUTEUR CHARGEUR DEUX TIROIRS (S.N. -594432)
VALVULA DE CONTROL DE LA CARGADORA DE DOS CARRETES (S.N. -594432)

KEY	PART NO.	PART NAME	QTY.	SERIAL NO.	REMARKS
1	38H1572	TEE FITTING	1		
2	U12547	O-RING	4		
3	38H1026	TEE FITTING	1		
4	38H1163	ADAPTER FITTING	2		
5	R29936	O-RING	2		
6	38H1194	ADAPTER FITTING	1		
7	R26448	O-RING	6		
8	38H1004	ELBOW FITTING	1		
9	AT220096	CHECK VALVE	2		
10	38H1160	ADAPTER FITTING	3		
11	24M7239	WASHER	3		10.700 X 21 X 2.500 MM
12	19M8528	SCREW	1		M10 X 55
13	19M7944	SCREW	2		M10 X 120
14	14M7400	LOCK NUT	3		M10
15	T77613	O-RING	9		
16	T77858	O-RING	5		
17	38H1030	TEE FITTING	1		
18	T176944	ORIFICE	1		
19	38H1037	ELBOW FITTING	1		
20	T76938	O-RING	3		
21	AT225784	SPOOL VALVE	1		
	AT225790	SPOOL VALVE	1		(FOR HIGH LIFT MODELS ONLY)

TWO SPOOL LOADER CONTROL VALVE (S.N. 594433-)
DISTRIBUTEUR CHARGEUR DEUX TIROIRS (S.N. 594433-)
VALVULA DE CONTROL DE LA CARGADORA DE DOS CARRETES (S.N. 594433-)

T201818 -UN-09AUG04

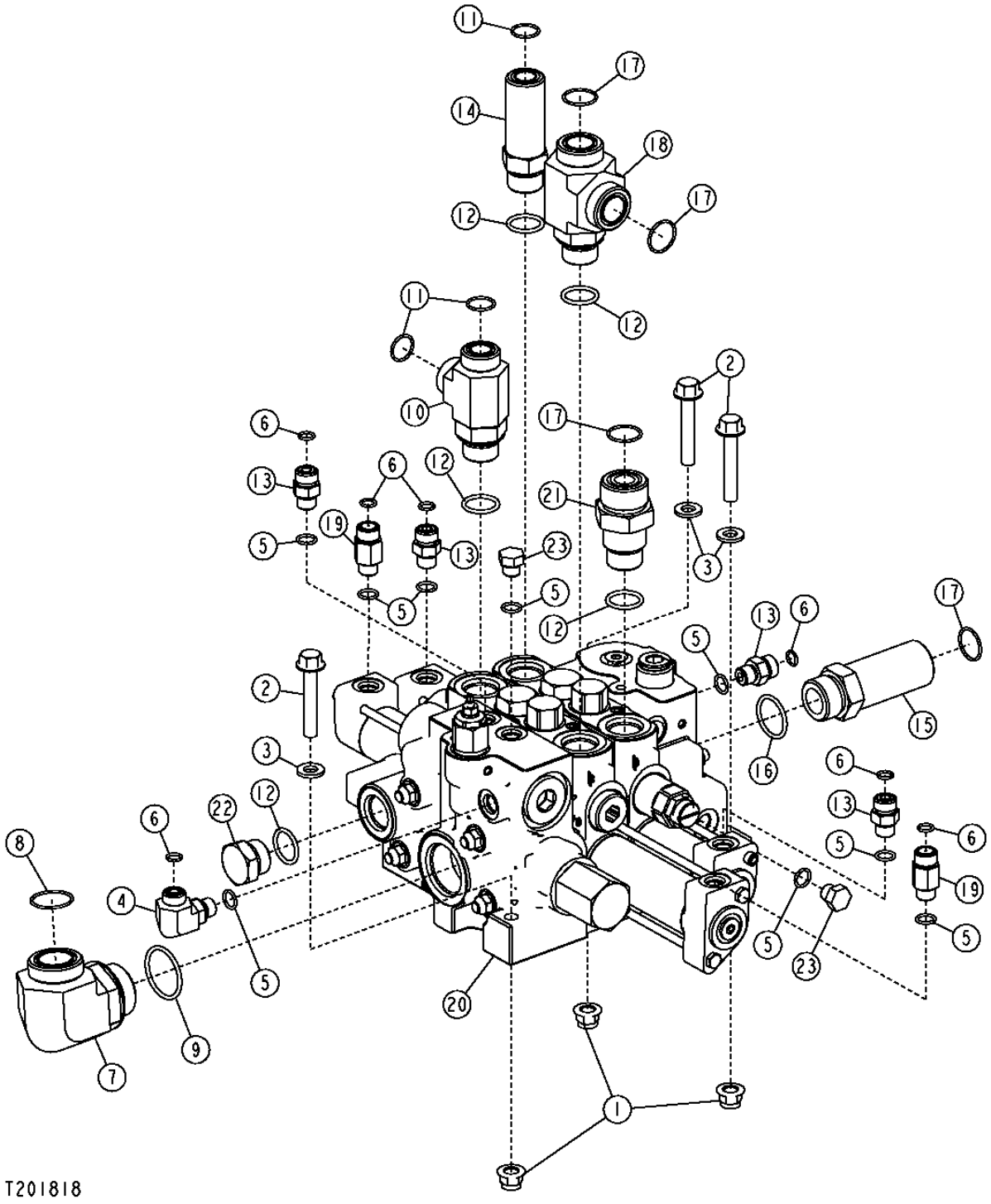

TWO SPOOL LOADER CONTROL VALVE (S.N. 594433-)
DISTRIBUTEUR CHARGEUR DEUX TIROIRS (S.N. 594433-)
VALVULA DE CONTROL DE LA CARGADORA DE DOS CARRETES (S.N. 594433-)

KEY	PART NO.	PART NAME	QTY.	SERIAL NO.	REMARKS
1	14M7400	LOCK NUT	3		M10
2	19M7807	SCREW	3		M10 X 60
3	24M7239	WASHER	3		10.700 X 21 X 2.500 MM
4	38H1004	ELBOW FITTING	1		
5	R26448	O-RING	6		0.468" X 5/64"
6	T77613	O-RING	4		0.364" X 0.070"
7	38H1004	ELBOW FITTING	1		
8	T78612	O-RING	1		1.176" X 0.070"
9	U13639	O-RING	1		1.475" X 0.118"
10	38H1026	TEE FITTING	1		
11	T77858	O-RING	3		0.739" X 0.070"
12	U12547	O-RING	5		
13	38H1160	ADAPTER FITTING	1		
14	38H1215	ADAPTER FITTING	1		
15	38H1216	ADAPTER FITTING	1		
16	R29936	O-RING	1		1.171" X 0.116"
17	T76938	O-RING	4		0.926" X 0.070"
18	38H1572	TEE FITTING	1		
19	AT220096	CHECK VALVE	2		
20	AT308386	HYD ACTUATED CONTROL VALVE	1		
	AT316046	HYD ACTUATED CONTROL VALVE	1		(FOR HIGH LIFT MODELS ONLY)
21	T210479	FITTING	1		
22	R27175	DRAIN PLUG	4		
23	R27218	FITTING PLUG	2		
..	AT314048	ROD	1		(TWO SPOOL STUD ASSEMBLY) (NOT ILLUSTRATED)

TWO SPOOL TOOL CARRIER CONTROL VALVE
DISTRIBUTEUR PORTE OUTILS DEUX TIROIRS
VALVULA DE CONTROL DEL PORTAHERRAMIENTAS DE DOS CARRETES

T194440 -UN-02SEP03

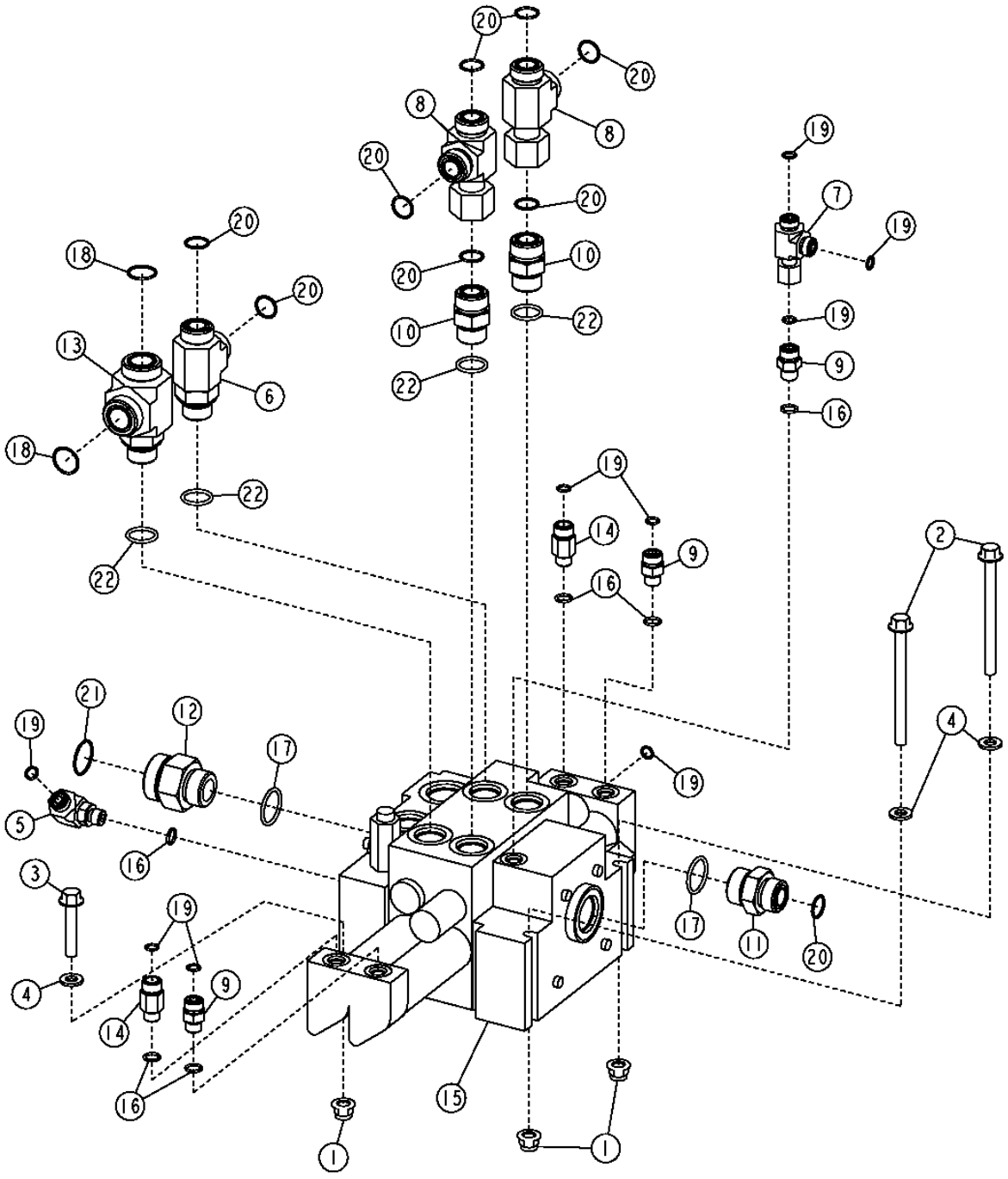

T194440

TWO SPOOL TOOL CARRIER CONTROL VALVE
DISTRIBUTEUR PORTE OUTILS DEUX TIROIRS
VALVULA DE CONTROL DEL PORTAHERRAMIENTAS DE DOS CARRETES

KEY	PART NO.	PART NAME	QTY.	SERIAL NO.	REMARKS
1	14M7400	LOCK NUT	3		M10
2	19M7944	SCREW	2		M10 X 120
3	19M8528	SCREW	1		M10 X 55
4	24M7239	WASHER	3		10.700 X 21 X 2.500 MM
5	38H1004	ELBOW FITTING	1		
6	38H1026	TEE FITTING	1		
7	38H1030	TEE FITTING	1		
8	38H1033	TEE FITTING	2		
9	38H1160	ADAPTER FITTING	3		
10	38H1163	ADAPTER FITTING	2		
11	38H1194	ADAPTER FITTING	1		
12	38H1196	ADAPTER FITTING	1		
13	38H1572	TEE FITTING	1		
14	AT220096	CHECK VALVE	2		
15	AT225787	SPOOL VALVE	1		
16	R26448	O-RING	6		
17	R29936	O-RING	2		
18	T76938	O-RING	2		
19	T77613	O-RING	9		
20	T77858	O-RING	9		
21	T78612	O-RING	1		
22	U12547	O-RING	4		

THREE SPOOL LOADER CONTROL VALVE (S.N. -594432)
DISTRIBUTEUR CHARGEUR TROIS TIROIRS (S.N. -594432)
VALVULA DE CONTROL DE LA CARGADORA DE TRES CARRETES (S.N. -594432)

T191335 -UN-24JUN03

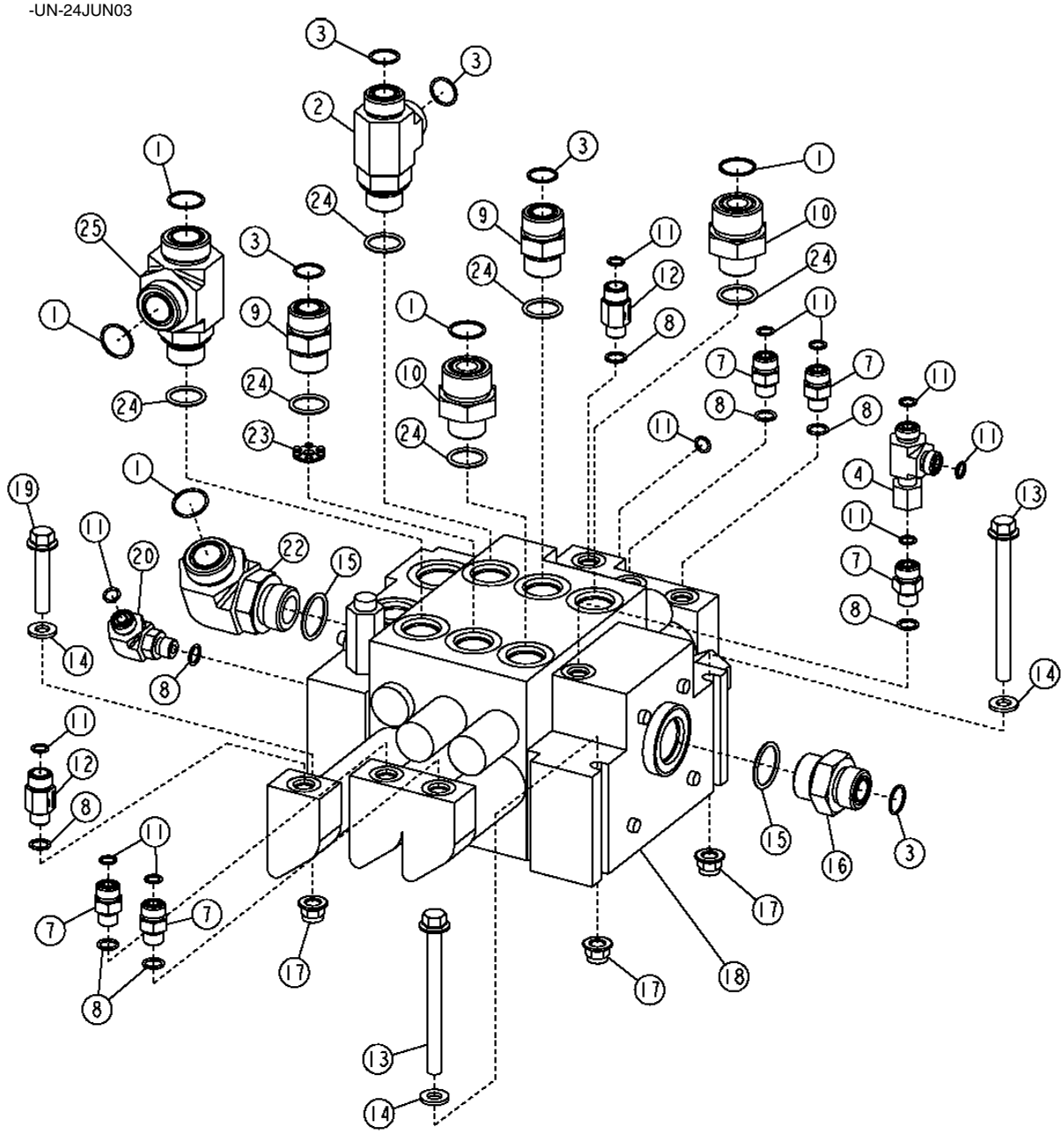

T191335

THREE SPOOL LOADER CONTROL VALVE (S.N. -594432)
DISTRIBUTEUR CHARGEUR TROIS TIROIRS (S.N. -594432)
VALVULA DE CONTROL DE LA CARGADORA DE TRES CARRETES (S.N. -594432)

KEY	PART NO.	PART NAME	QTY.	SERIAL NO.	REMARKS
1	T76938	O-RING	5		
2	38H1026	TEE FITTING	1		
3	T77858	O-RING	5		
4	38H1030	TEE FITTING	1		
7	38H1160	ADAPTER FITTING	5		
8	R26448	O-RING	8		
9	38H1163	ADAPTER FITTING	2		
10	38H1179	ADAPTER FITTING	2		
11	T77613	O-RING	11		
12	AT220096	CHECK VALVE	2		
13	19M7944	SCREW	2		M10 X 120
14	24M7239	WASHER	3		10.700 X 21 X 2.500 MM
15	R29936	O-RING	2		
16	38H1194	ADAPTER FITTING	1		
17	14M7400	LOCK NUT	3		M10
18	AT225785	SPOOL VALVE	1		
	AT225791	SPOOL VALVE	1		(FOR HIGH LIFT MODELS ONLY)
19	19M8528	SCREW	1		M10 X 55
20	38H1004	ELBOW FITTING	1		
22	38H1037	ELBOW FITTING	1		
23	T176944	ORIFICE	1		
24	U12547	O-RING	6		
25	38H1572	TEE FITTING	1		

THREE SPOOL LOADER CONTROL VALVE (S.N. 594433-)
DISTRIBUTEUR CHARGEUR TROIS TIROIRS (S.N. 594433-)
VALVULA DE CONTROL DE LA CARGADORA DE TRES CARRETES (S.N. 594433-)

T201862 -UN-11AUG04

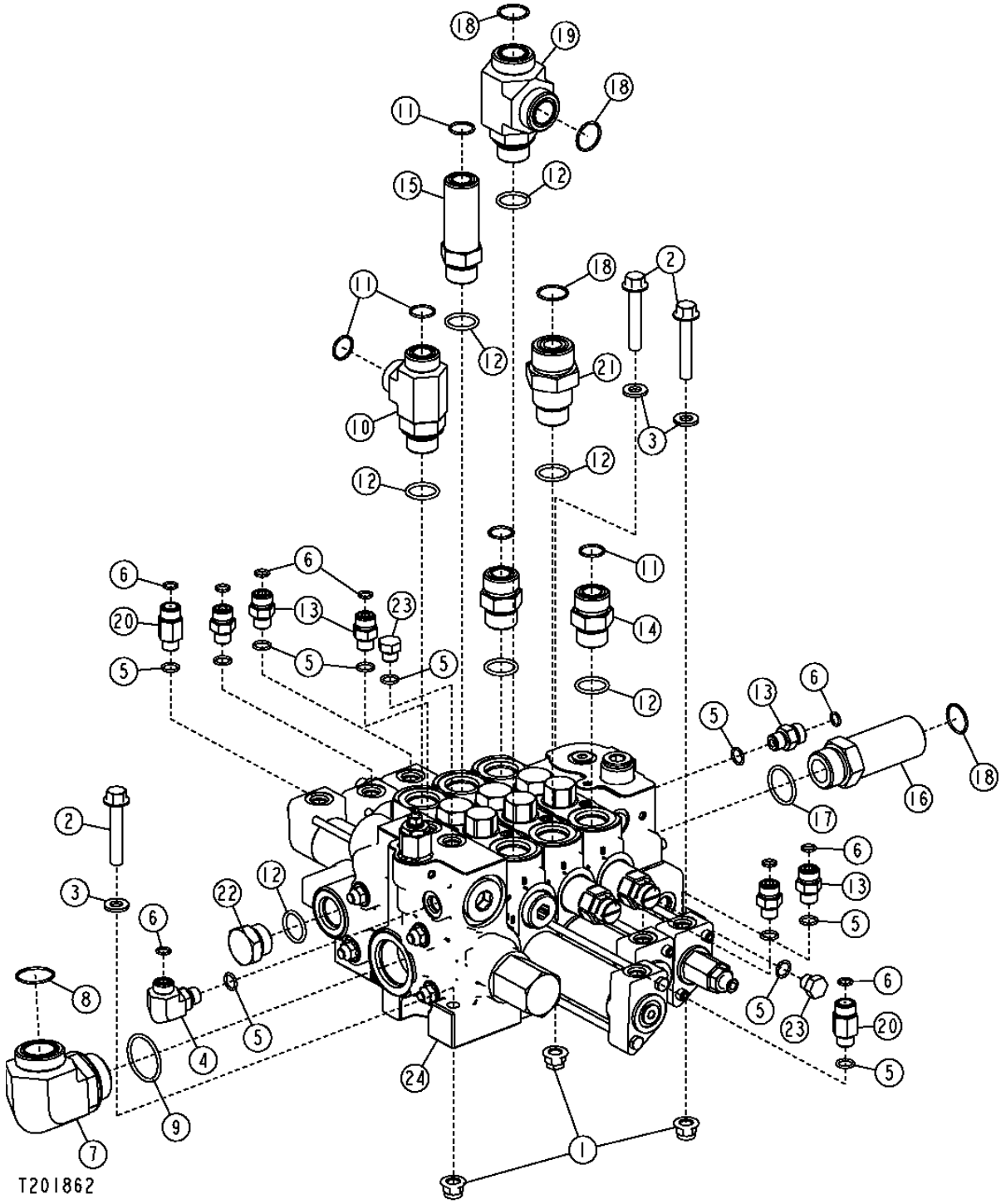

THREE SPOOL LOADER CONTROL VALVE (S.N. 594433-)
DISTRIBUTEUR CHARGEUR TROIS TIROIRS (S.N. 594433-)
VALVULA DE CONTROL DE LA CARGADORA DE TRES CARRETES (S.N. 594433-)

KEY	*PART NO.*	*PART NAME*	*QTY.*	*SERIAL NO.*	*REMARKS*
1	14M7400	LOCK NUT	3		M10
2	19M7807	SCREW	3		M10 X 60
3	24M7239	WASHER	3		10.700 X 21 X 2.500 MM
4	38H1004	ELBOW FITTING	1		
5	R26448	O-RING	6		0.468" X 5/64"
6	T77613	O-RING	4		
7	38H1008	ELBOW FITTING	1		
8	T78612	O-RING	1		
9	U13639	O-RING	1		
10	38H1026	TEE FITTING	1		
11	T77858	O-RING	3		
12	U12547	O-RING	6		
13	38H1160	ADAPTER FITTING	1		
14	38H1163	ADAPTER FITTING	1		
15	38H1215	ADAPTER FITTING	1		
16	38H1216	ADAPTER FITTING	1		
17	R29936	O-RING	1		
18	T76938	O-RING	4		
19	38H1572	TEE FITTING	1		
20	AT220096	CHECK VALVE	2		
21	T210479	FITTING	1		
22	R27175	DRAIN PLUG	1		
23	R27218	FITTING PLUG	2		
24	AT308388	HYD ACTUATED CONTROL VALVE	1		
	AT316047	HYD ACTUATED CONTROL VALVE	1		(FOR HIGH LIFT MODELS ONLY)
..	AT105438	ROD	1		(THREE SPOOL STUD ASSEMBLY) (NOT ILLUSTRATED)

THREE SPOOL TOOL CARRIER CONTROL VALVE
DISTRIBUTEUR PORTE-OUTILS TROIS TIROIRS
VALVULA DE CONTROL DEL PORTAHERRAMIENTAS DE TRES CARRETES

T194453 -UN-03SEP03

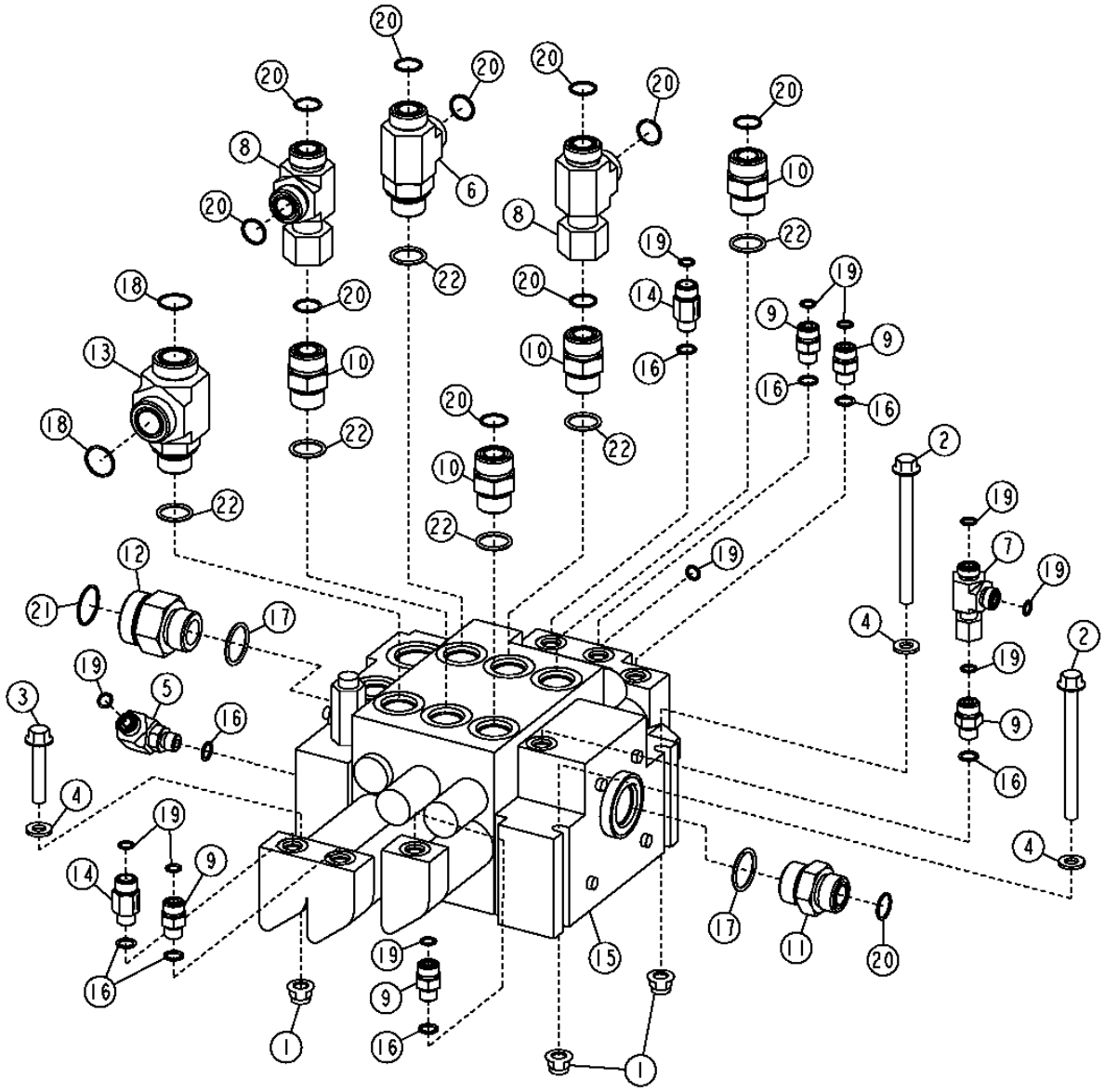

T194453

THREE SPOOL TOOL CARRIER CONTROL VALVE
DISTRIBUTEUR PORTE OUTILS TROIS TIROIRS
VALVULA DE CONTROL DEL PORTAHERRAMIENTAS DE TRES CARRETES

KEY	PART NO.	PART NAME	QTY.	SERIAL NO.	REMARKS
1	14M7400	LOCK NUT	3		M10
2	19M7944	SCREW	2		M10 X 120
3	19M8528	SCREW	1		M10 X 55
4	24M7239	WASHER	3		10.700 X 21 X 2.500 MM
5	38H1004	ELBOW FITTING	1		
6	38H1026	TEE FITTING	1		
7	38H1030	TEE FITTING	1		
8	38H1033	TEE FITTING	2		
9	38H1160	ADAPTER FITTING	5		
10	38H1163	ADAPTER FITTING	4		
11	38H1194	ADAPTER FITTING	1		
12	38H1196	ADAPTER FITTING	1		
13	38H1572	TEE FITTING	1		
14	AT220096	CHECK VALVE	2		
15	AT225788	HYD ACTUATED CONTROL VALVE	1		
16	R26448	O-RING	8		
17	R29936	O-RING	2		
18	T76938	O-RING	2		
19	T77613	O-RING	11		
20	T77858	O-RING	11		
21	T78612	O-RING	1		
22	U12547	O-RING	6		

FOUR SPOOL LOADER CONTROL VALVE (S.N. -594332)
DISTRIBUTEUR CHARGEUR QUATRE TIROIRS (S.N. -594332)
VALVULA DE CONTROL DE LA CARGADORA DE CUATRO CARRETES (S.N. -594332)

T194464 -UN-02SEP03

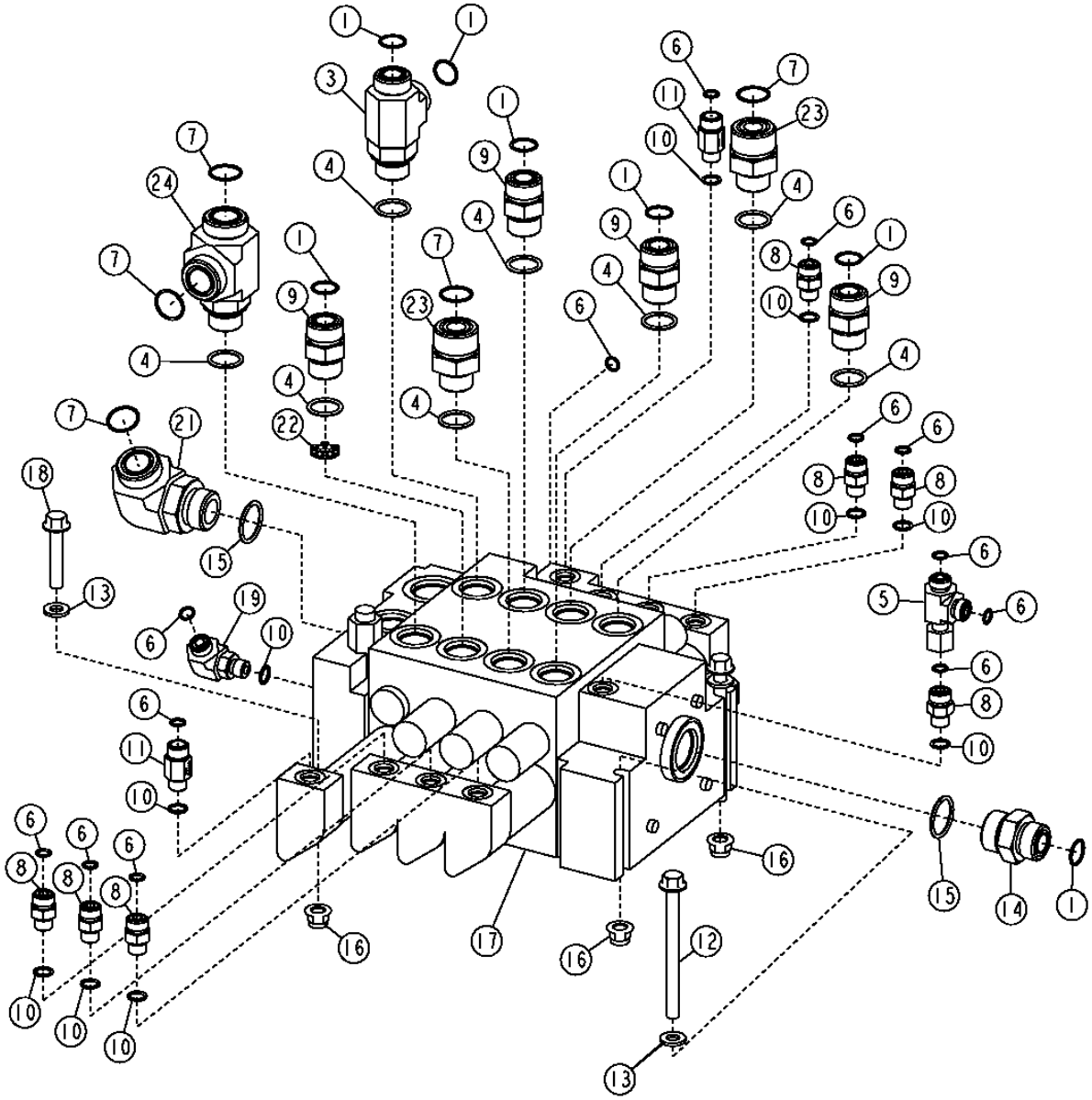

FOUR SPOOL LOADER CONTROL VALVE (S.N. -594332)
DISTRIBUTEUR CHARGEUR QUATRE TIROIRS (S.N. -594332)
VALVULA DE CONTROL DE LA CARGADORA DE CUATRO CARRETES (S.N. -594332)

KEY	PART NO.	PART NAME	QTY.	SERIAL NO.	REMARKS
1	T77858	O-RING	7		
3	38H1026	TEE FITTING	1		
4	U12547	O-RING	8		
5	38H1030	TEE FITTING	1		
6	T77613	O-RING	13		
7	T76938	O-RING	5		
8	38H1160	ADAPTER FITTING	7		
9	38H1163	ADAPTER FITTING	4		
10	R26448	O-RING	10		
11	AT220096	CHECK VALVE	2		
12	19M7944	SCREW	2		M10 X 120
13	24M7239	WASHER	3		10.700 X 21 X 2.500 MM
14	38H1194	ADAPTER FITTING	1		
15	R29936	O-RING	2		
16	14M7400	LOCK NUT	3		M10
17	AT225786	SPOOL VALVE	1		
18	19M8528	SCREW	1		M10 X 55
19	38H1004	ELBOW FITTING	1		
21	38H1037	ELBOW FITTING	1		
22	T176944	ORIFICE	1		
23	38H1179	ADAPTER FITTING	2		
24	38H1572	TEE FITTING	1		

FOUR SPOOL LOADER CONTROL VALVE (S.N. 594333-)
DISTRIBUTEUR CHARGEUR QUATRE TIROIRS (S.N. 594333-)
VALVULA DE CONTROL DE LA CARGADORA DE CUATRO CARRETES (S.N. 594333-)

T201863 -UN-09AUG04

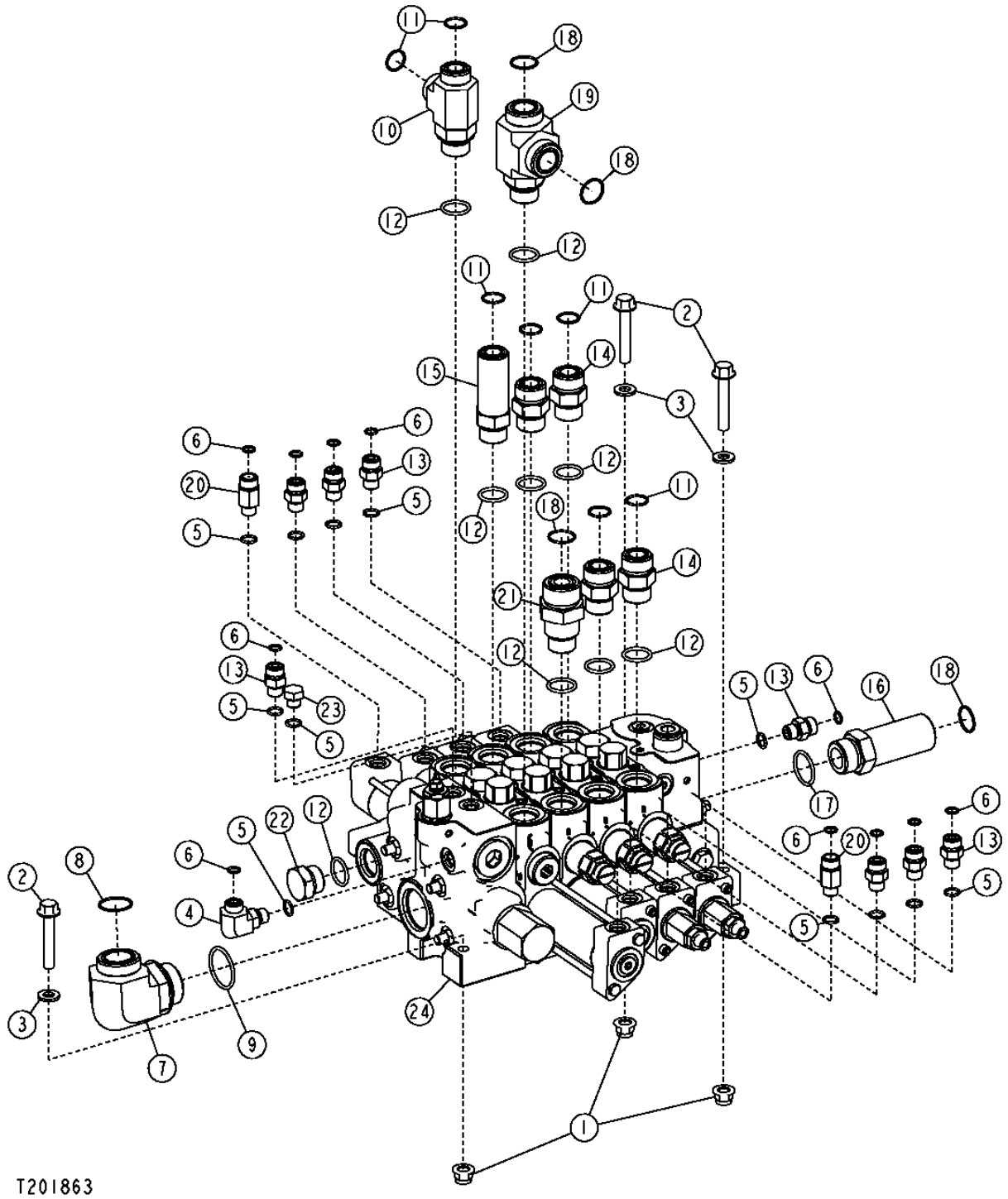

FOUR SPOOL LOADER CONTROL VALVE (S.N. 594333-)
DISTRIBUTEUR CHARGEUR QUATRE TIROIRS (S.N. 594333-)
VALVULA DE CONTROL DE LA CARGADORA DE CUATRO CARRETES (S.N. 594333-)

KEY	PART NO.	PART NAME	QTY.	SERIAL NO.	REMARKS
1	14M7400	LOCK NUT	3		M10
2	19M7807	SCREW	3		M10 X 60
3	24M7239	WASHER	3		10.700 X 21 X 2.500 MM
4	38H1004	ELBOW FITTING	1		
5	R26448	O-RING	6		0.468" X 5/64"
6	T77613	O-RING	4		0.364" X 0.070"
7	38H1008	ELBOW FITTING	1		
8	T78612	O-RING	1		1.176" X 0.070"
9	U13639	O-RING	1		1.475" X 0.118"
10	38H1026	TEE FITTING	1		
11	T77858	O-RING	4		
12	U12547	O-RING	6		
13	38H1160	ADAPTER FITTING	1		
14	38H1163	ADAPTER FITTING	1		
15	38H1215	ADAPTER FITTING	1		
16	38H1216	ADAPTER FITTING	1		
17	R29936	O-RING	1		
18	T76938	O-RING	3		
19	38H1572	TEE FITTING	1		
20	AT220096	CHECK VALVE	2		
21	T210479	FITTING	1		
22	R27175	DRAIN PLUG	1		
23	R27218	FITTING PLUG	1		
24	AT308389	HYD ACTUATED CONTROL VALVE	1		
..	AT314026	ROD	1		(FOUR SPOOL STUD ASSEMBLY) (NOT ILLUSTRATED)

FOUR SPOOL TOOL CARRIER CONTROL VALVE
DISTRIBUTEUR CHARGEUR QUATRE TIROIRS
VALVULA DE CONTROL DE LA CARGADORA DE CUATRO CARRETES

T194465 -UN-04SEP03

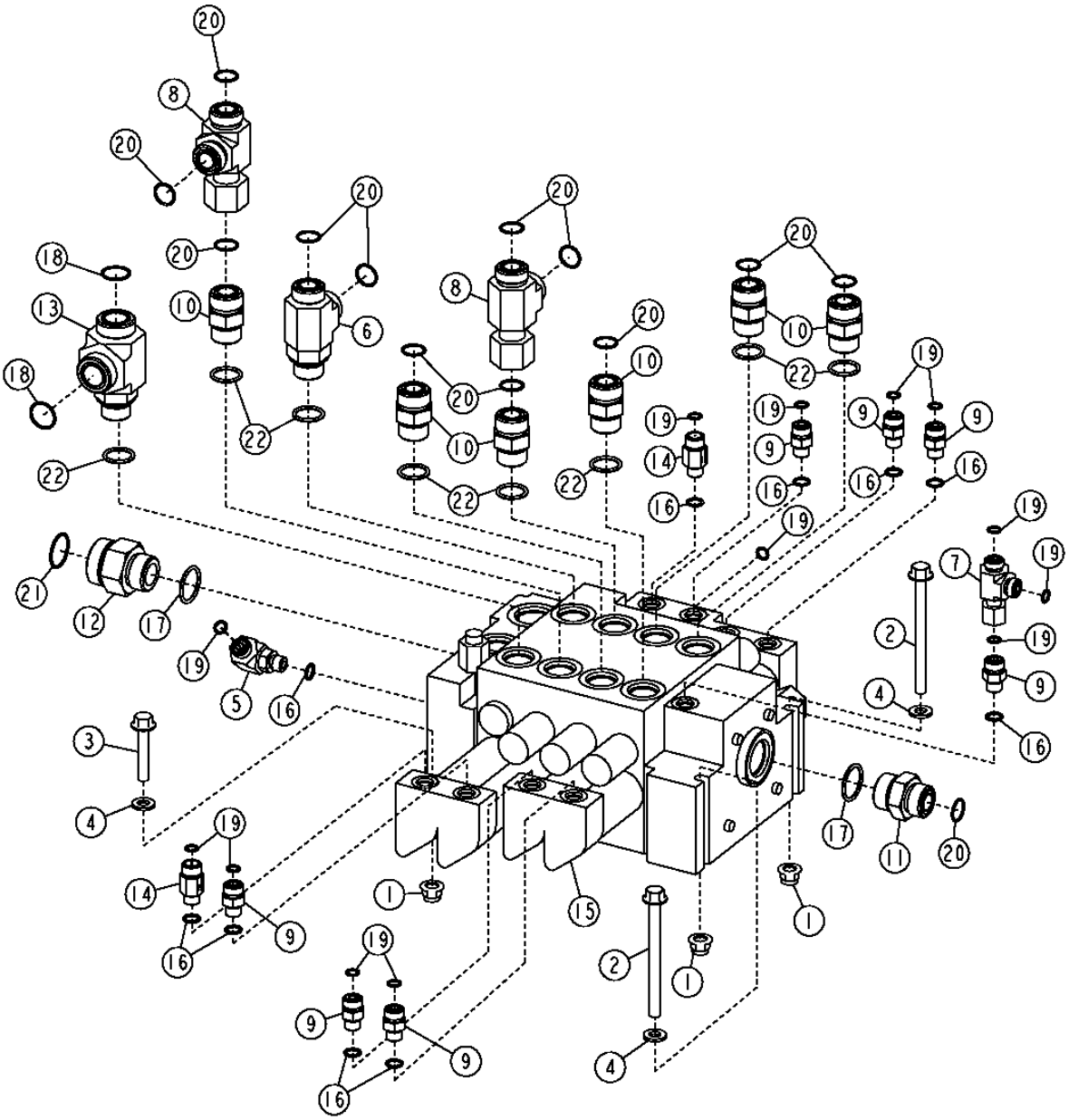

T194465

FOUR SPOOL TOOL CARRIER CONTROL VALVE
DISTRIBUTEUR CHARGEUR QUATRE TIROIRS
VALVULA DE CONTROL DE LA CARGADORA DE CUATRO CARRETES

KEY	PART NO.	PART NAME	QTY.	SERIAL NO.	REMARKS
1	14M7400	LOCK NUT	3		M10
2	19M7944	SCREW	2		M10 X 120
3	19M8528	SCREW	1		M10 X 55
4	24M7239	WASHER	3		10.700 X 21 X 2.500 MM
5	38H1004	ELBOW FITTING	1		
6	38H1026	TEE FITTING	1		
7	38H1030	TEE FITTING	1		
8	38H1033	TEE FITTING	2		
9	38H1160	ADAPTER FITTING	7		
10	38H1163	ADAPTER FITTING	6		
11	38H1194	ADAPTER FITTING	1		
12	38H1196	ADAPTER FITTING	1		
13	38H1572	TEE FITTING	1		
14	AT220096	CHECK VALVE	2		
15	AT225789	SPOOL VALVE	1		
16	R26448	O-RING	10		
17	R29936	O-RING	2		
18	T76938	O-RING	2		
19	T77613	O-RING	13		
20	T77858	O-RING	13		
21	T78612	O-RING	1		
22	U12547	O-RING	8		

INLET VALVE SECTION WITH RELIEF VALVE (S.N. -594432)
SECTION DISTRIBUTEUR ENTREE AVEC CLAPET DECHARGE (S.N. -594432)
SECCION DE VALVULA DE ENTRADA CON VALVULA DE ALIVIO (S.N. -594432)

T195338 -UN-21OCT03

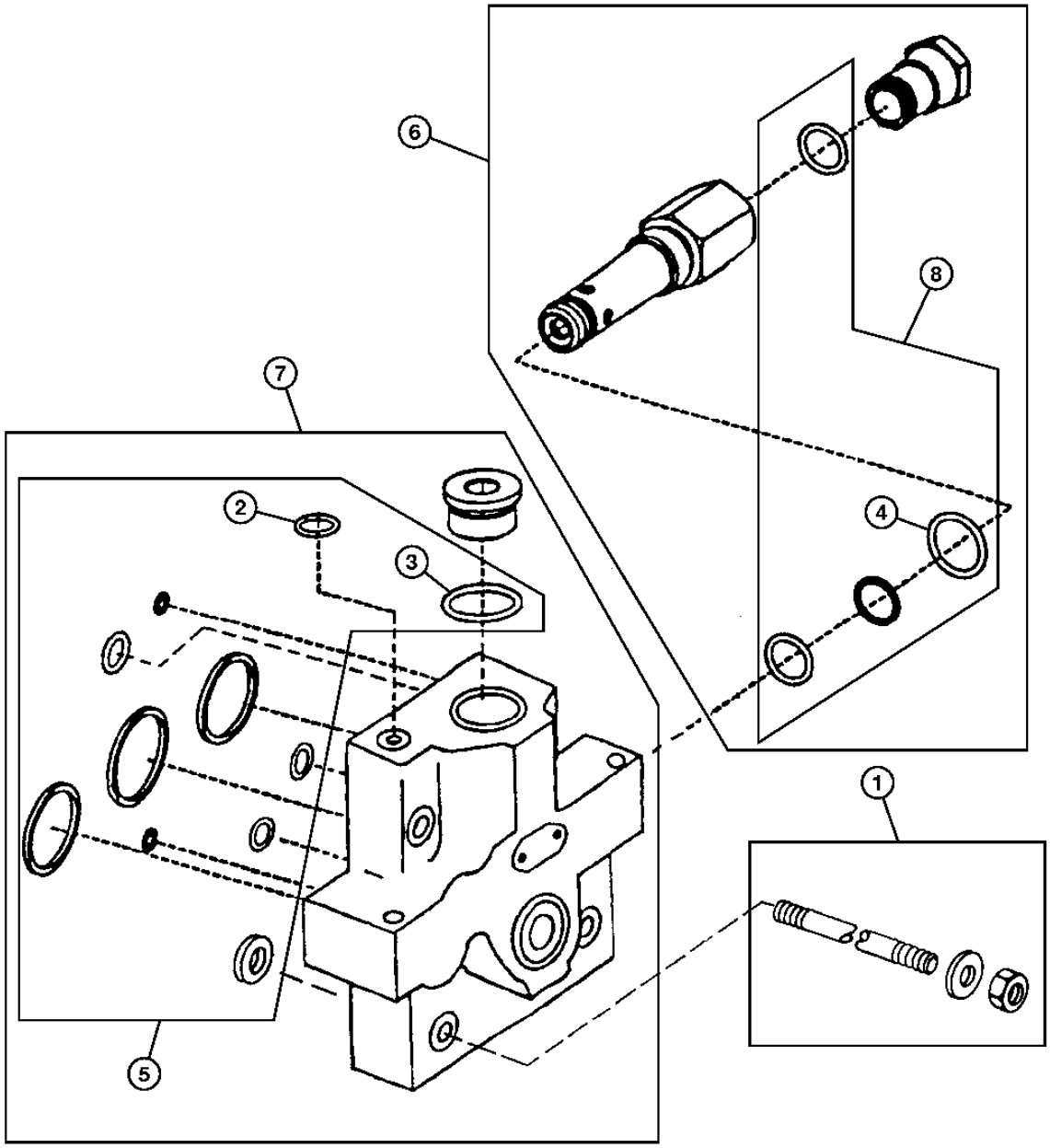

T195338

INLET VALVE SECTION WITH RELIEF VALVE (S.N. -594432)
SECTION DISTRIBUTEUR ENTREE AVEC CLAPET DECHARGE (S.N. -594432)
SECCION DE VALVULA DE ENTRADA CON VALVULA DE ALIVIO (S.N. -594432)

KEY	*PART NO.*	*PART NAME*	*QTY.*	*SERIAL NO.*	*REMARKS*
1	T161584	ROD	4		(TWO SPOOL VALVE)
	AT209751	ROD	4		(THREE SPOOL VALVE)
	AT105438	ROD	4		(SUB FOR AT209749) (FOUR SPOOL VALVE)
2	R26448	O-RING	1		
3	R29936	O-RING	1		
4	U12547	O-RING	1		
5	AT179936	SEAL KIT	1		(INLET SECTION SEAL KIT)
6	AT209811	PRESSURE RELIEF VALVE	1		
7	AT209823	MANIFOLD	1		INLET SECTION
8	AT169157	SEAL KIT	1		(INCLUDES U12547) MAIN RELIEF VALVE SEAL KIT

INLET VALVE SECTION WITH RELIEF VALVE (S.N. 594333-)
SECTION DISTRIBUTEUR ENTREE AVEC CLAPET DECHARGE (S.N. 594333-)
SECCION DE VALVULA DE ENTRADA CON VALVULA DE ALIVIO (S.N. 594333-)

T202329 -UN-26AUG04

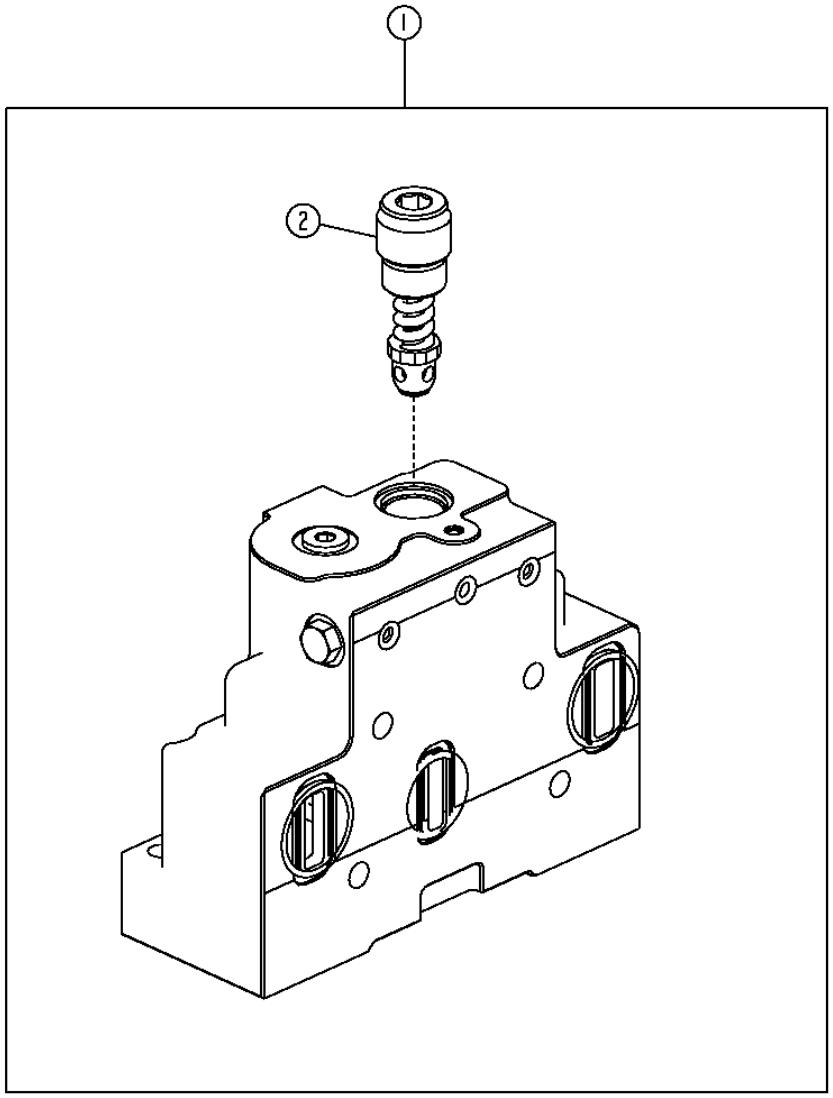

T202329

INLET VALVE SECTION WITH RELIEF VALVE (S.N. 594333-)
SECTION DISTRIBUTEUR ENTREE AVEC CLAPET DECHARGE (S.N. 594333-)
SECCION DE VALVULA DE ENTRADA CON VALVULA DE ALIVIO (S.N. 594333-)

KEY	*PART NO.*	*PART NAME*	*QTY.*	*SERIAL NO.*	*REMARKS*
1	AT314008	VALVE	1		
	AT314017	SEAL KIT	1		(INLET SECTION AND INTERFACE SEAL KIT)
2	AT314015	PRESSURE RELIEF VALVE	1		
3	AT314016	ORIFICE	1		(NOT ILLUSTRATED)

ELECTRIC FIFTH FUNCTION
CINQUIEME FONCTION ELECTRIQUE
QUINTA FUNCION ELECTRICA

T213117A -UN-11AUG05

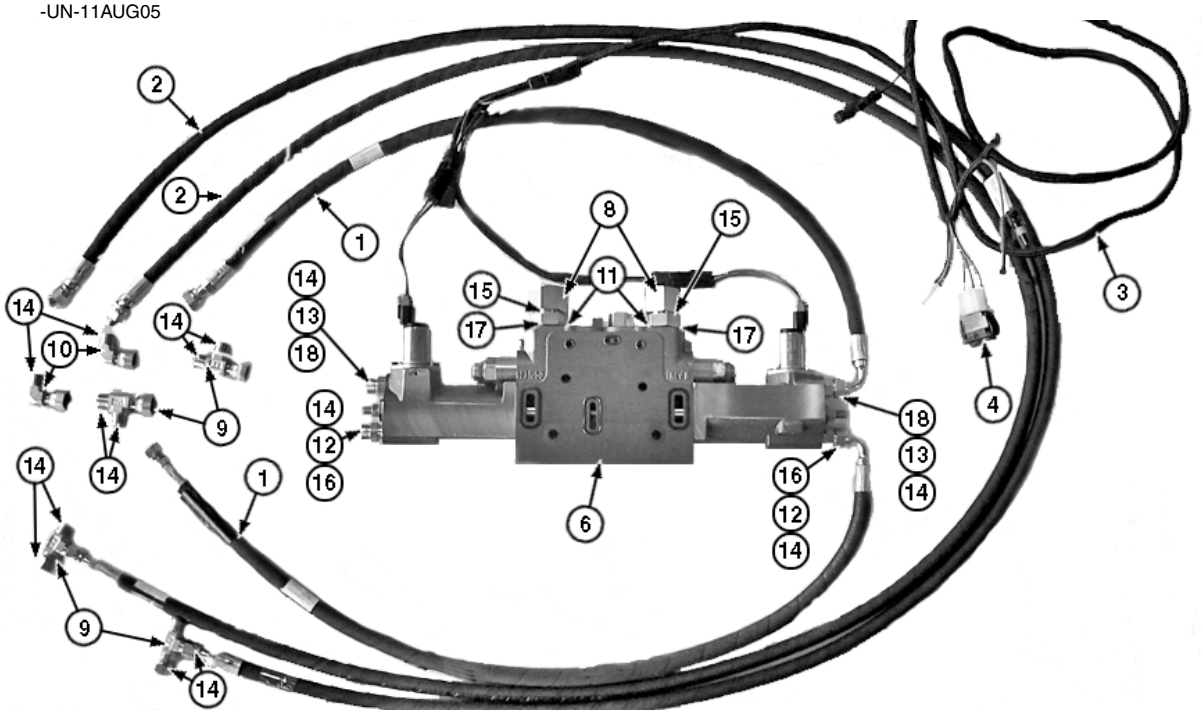

ELECTRIC FIFTH FUNCTION
CINQUIEME FONCTION ELECTRIQUE
QUINTA FUNCION ELECTRICA

KEY	*PART NO.*	*PART NAME*	*QTY.*	*SERIAL NO.*	*REMARKS*
1	AT166149	HYDRAULIC HOSE - FABRICATE	2		
2	AT207096	HYDRAULIC HOSE - FABRICATE	2		
3	AT211219	WIRING HARNESS	1		
4	AT219757	TOGGLE/ROCKER SWITCH	1		
	AT220526	SWITCH	1		
5	AT314013	SEAL KIT	1		(NOT ILLUSTRATED)
6	AT316315	SOLENOID VALVE	1		
7	AT318915	HYDRAULIC HOSE - FABRICATE	1		(NOT ILLUSTRATED)
8	38H1418	FITTING	2		
9	38H1030	TEE FITTING	4		
10	38H1094	ELBOW FITTING	2		
11	38H1163	ADAPTER FITTING	2		
12	38H1309	ADAPTER FITTING	2		
13	38H1160	ADAPTER FITTING	2		
14	T77613	O-RING	14		
15	T77858	O-RING	2		
16	R26448	O-RING	2		
17	U12547	O-RING	2		
18	R28782	O-RING	2		

BUCKET VALVE SECTION (S.N. -594432)
SECTION VERIN BENNE (S.N. -594432)
SECCION DE LA VALVULA DEL CUCHARON (S.N. -594432)

T194574 -UN-16OCT03

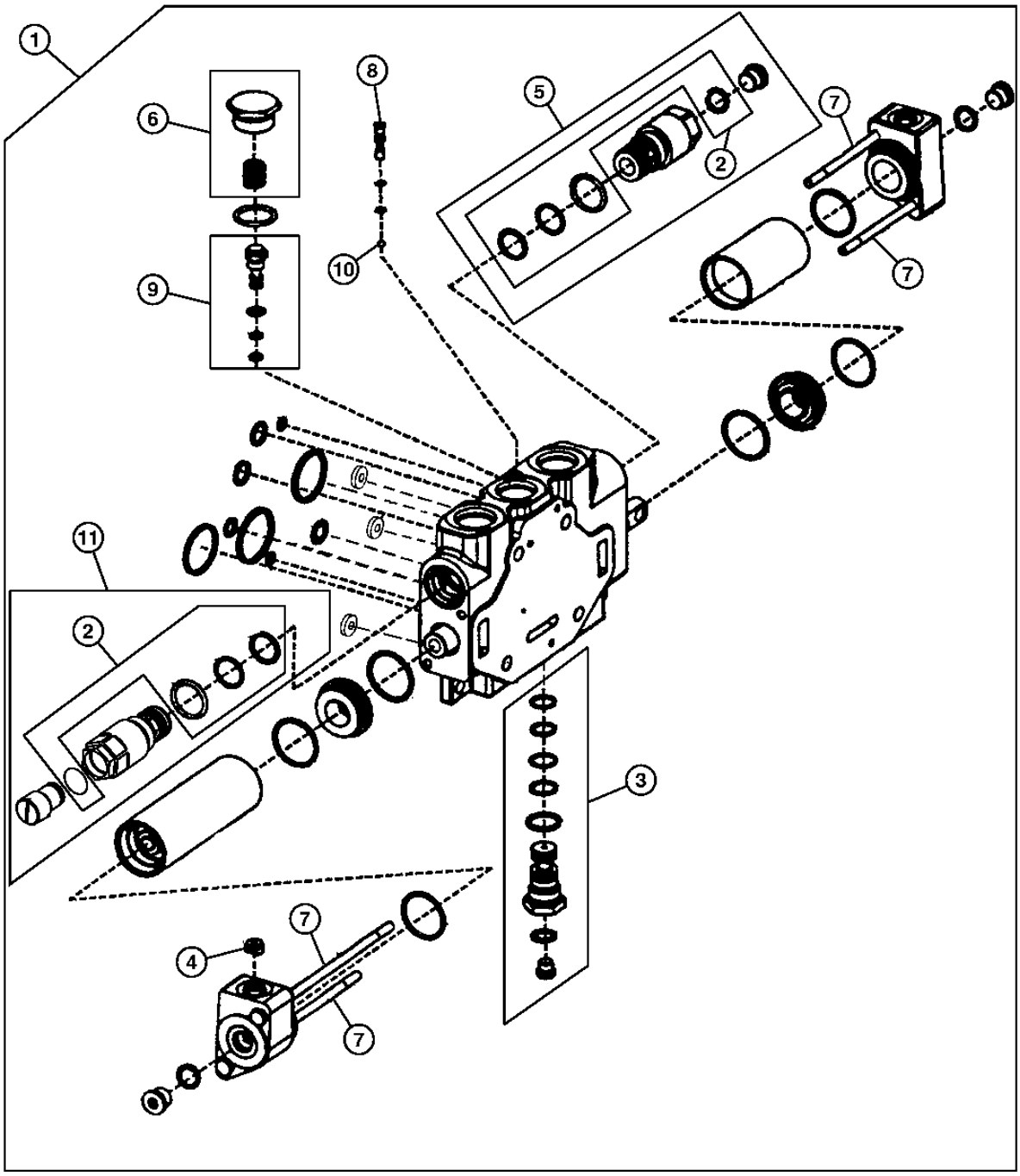

T194574

BUCKET VALVE SECTION (S.N. -594432)
SECTION VERIN BENNE (S.N. -594432)
SECCION DE LA VALVULA DEL CUCHARON (S.N. -594432)

KEY	PART NO.	PART NAME	QTY.	SERIAL NO.	REMARKS
1	AT221094	SPOOL VALVE	1		
	AT222964	SPOOL VALVE	1		(FOR USE WITH TOOL CARRIER ONLY)
	AT179941	SEAL KIT	1		(WORK SECTION SEAL KIT)
	AT211574	SEAL KIT	1		(INTERFACE SEAL KIT)
2	AT209748	SEAL KIT	2		(RELIEF VALVE SEAL KIT)
3	AT209758	CHECK VALVE	1		
4	T169955	ORIFICE	1		
5	AT209750	PRESSURE RELIEF VALVE	1		
6	AT220830	HOSE KIT	1		(SPRING AND PLUG KIT)
7	19H3724	SCREW	4		
8	T172562	CHECK VALVE	1		
9	AT220828	COMPENSATOR	1		
10	A4742R	BALL	1		
11	AT211547	PRESSURE RELIEF VALVE	1		(FOR USE WITH TOOL CARRIER ONLY)(SUB AT209750 FOR NON TOOL CARRIER VALVE)

BUCKET VALVE SECTION (S.N. 594433-)
SECTION VERIN BENNE (S.N. 594433-)
SECCION DE LA VALVULA DEL CUCHARON (S.N. 594433-)

T202330 -UN-26AUG04

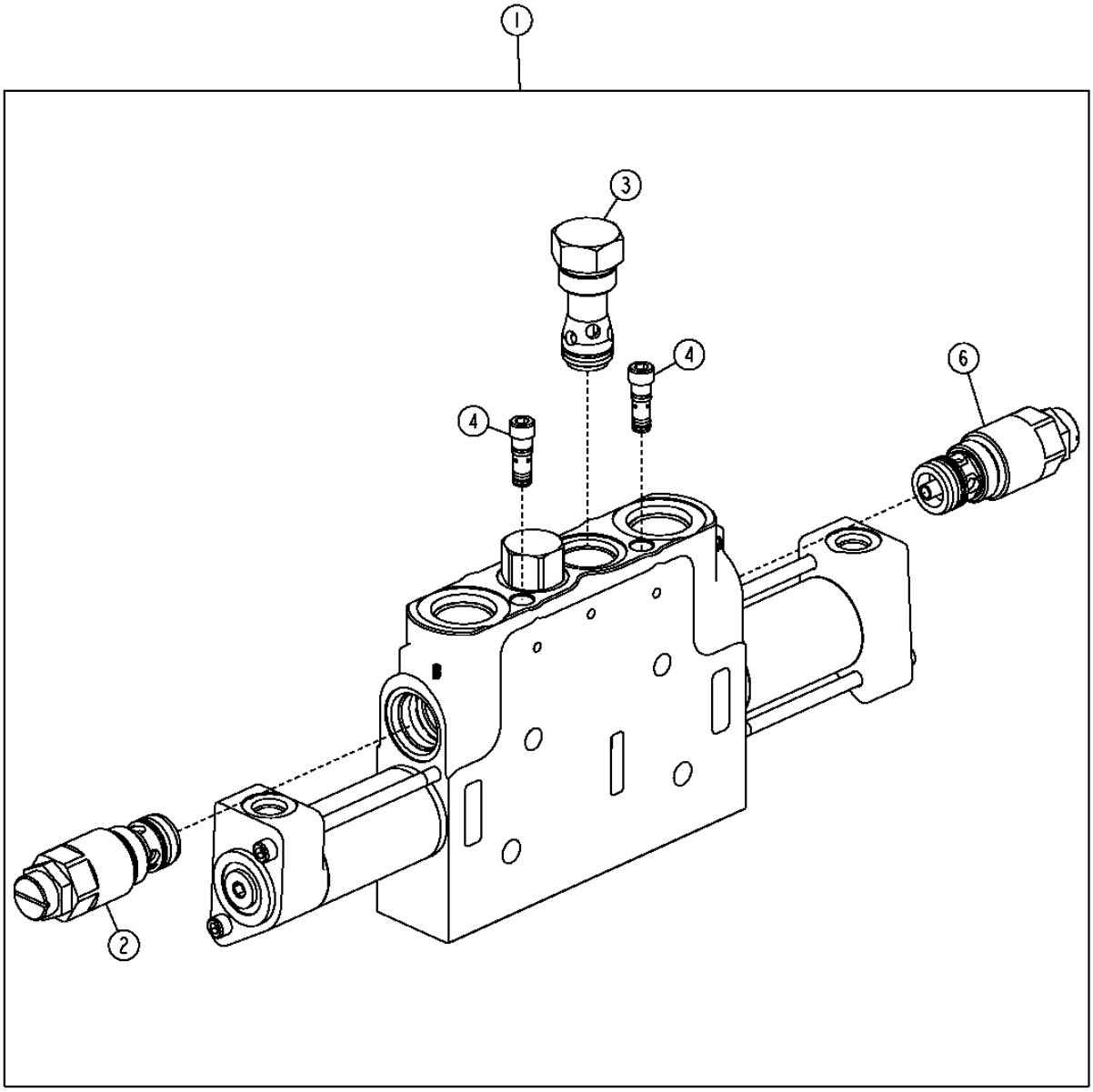

T202330

BUCKET VALVE SECTION (S.N. 594433-)
SECTION VERIN BENNE (S.N. 594433-)
SECCION DE LA VALVULA DEL CUCHARON (S.N. 594433-)

KEY	*PART NO.*	*PART NAME*	*QTY.*	*SERIAL NO.*	*REMARKS*
1	AT314009	VALVE	1		
	AT314013	SEAL KIT	1		(WORK SECTION AND INTERFACE SEAL KIT)
2	AT314010	BALL COCK VALVE	1		
3	AT314011	VALVE	1		
4	AT314012	VALVE	2		
6	AT315331	PRESSURE RELIEF VALVE	1		
..	AT314014	HYDRAULIC CYLINDER CAP	1		(PILOT END CAP SEAL KIT)

BOOM VALVE SECTION (S.N. -594432)
SECTION VERIN FLECHE (S.N. -594432)
SECCION DE LA VALVULA DEL AGUILON (S.N. -594432)

T195459 -UN-13OCT03

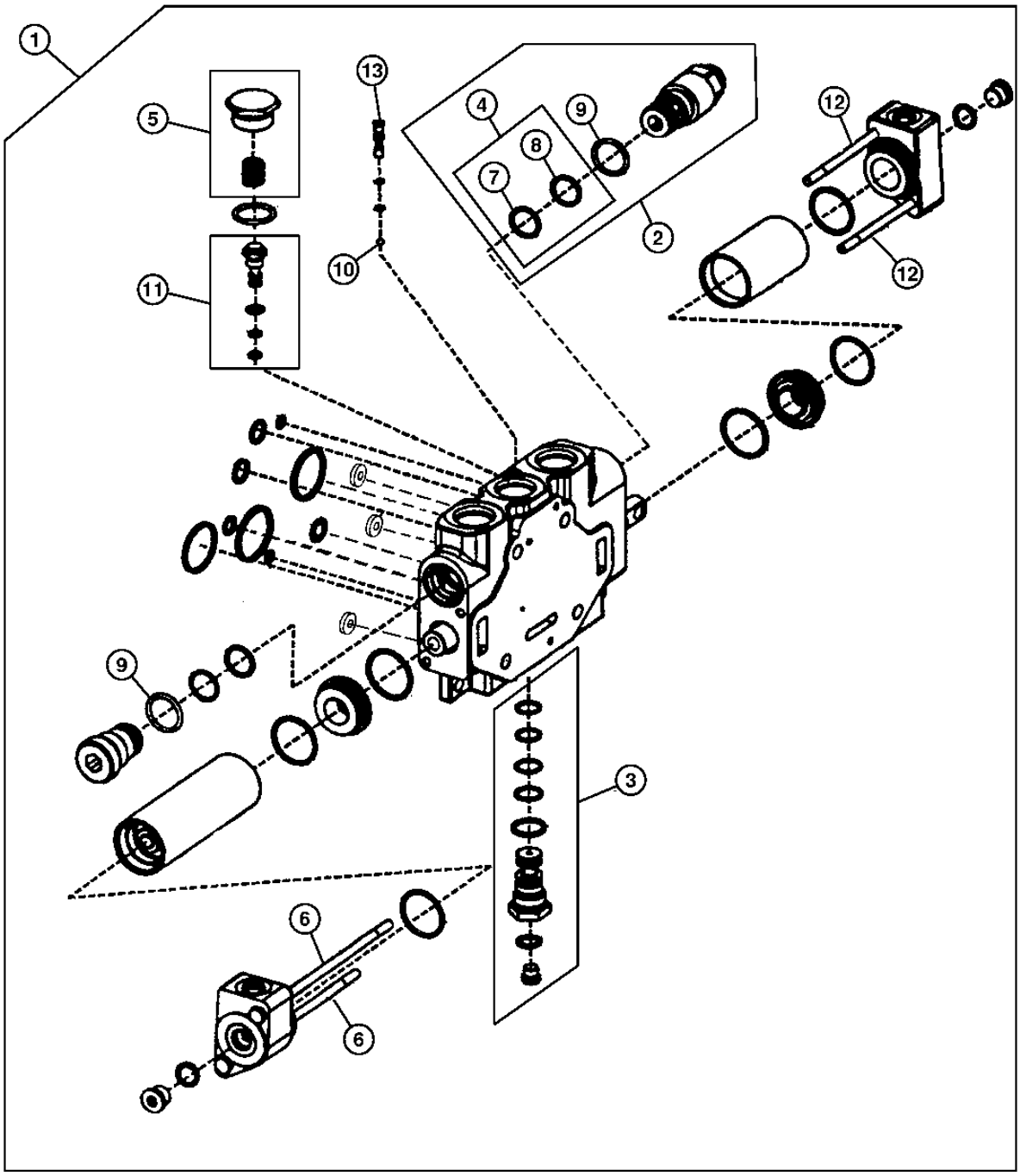

T195459

BOOM VALVE SECTION (S.N. -594432)
SECTION VERIN FLECHE (S.N. -594432)
SECCION DE LA VALVULA DEL AGUILON (S.N. -594432)

KEY	PART NO.	PART NAME	QTY.	SERIAL NO.	REMARKS
1	AT224135	SPOOL VALVE	1		
	AT179941	SEAL KIT	1		(WORK SECTION SEAL KIT)
	AT211574	SEAL KIT	1		(INTERFACE SEAL KIT)
2	AT221506	HYD ACTUATED CONTROL VALVE	1		
3	AT209758	CHECK VALVE	1		
4	AT170991	O-RING KIT	1		(RELIEF EXTERNAL SEAL KIT)
	U12547	O-RING	1		(INCLUDED IN AT170991 KIT)
5	AT220830	HOSE KIT	1		(SPRING AND PLUG KIT)
6	.....	CAP SCREW	2		(SUB 19H3724)
7	AT124574	O-RING	1		
8	T154187	BACK-UP RING	1		
9	U12547	O-RING	2		
10	A4742R	BALL	1		
11	AT220826	COMPENSATOR	1		
12	T171072	CAP SCREW	2		(SUB FOR 19H3724)
13	T172562	CHECK VALVE	1		

BOOM VALVE SECTION (S.N. 594433-)
SECTION VERIN FLECHE (S.N. 594433-)
SECCION DE LA VALVULA DEL AGUILON (S.N. 594433-)

T202331 -UN-26AUG04

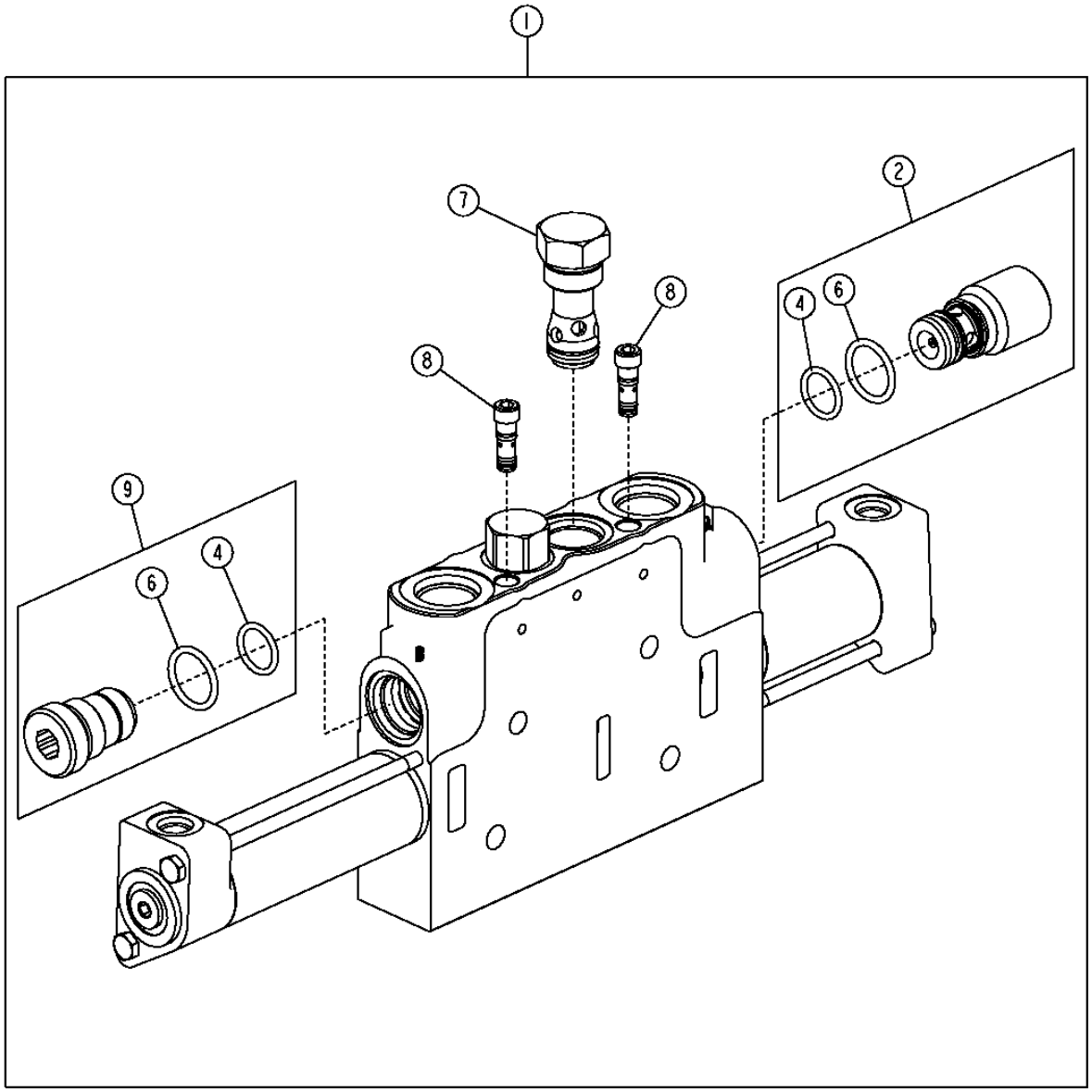

T202331

BOOM VALVE SECTION (S.N. 594433-)
SECTION VERIN FLECHE (S.N. 594433-)
SECCION DE LA VALVULA DEL AGUILON (S.N. 594433-)

KEY	*PART NO.*	*PART NAME*	*QTY.*	*SERIAL NO.*	*REMARKS*
1	AT314018	VALVE	1		
	AT314013	SEAL KIT	1		(WORK SECTION AND INTERFACE SEAL KIT)
2	AT104051	POPPET	1		
	AT103440	KIT	1		(ANTI-CAVITY VALVE SEAL KIT)
4	AT124574	O-RING	1		
6	U12547	O-RING	2		
7	AT314011	VALVE	1		
8	AT314012	VALVE	1		
9	AT314019	VALVE	2		
..	AT314020	HYDRAULIC CYLINDER CAP	1		(PILOT END CAP SEAL KIT)

AUXILIARY VALVE SECTION (S.N. -594432)
SECTION DISTRIBUTEUR AUXILIAIRE (S.N. -594432)
SECCION DE VALVULA AUXILIAR (S.N. -594432)

T195465 -UN-16OCT03

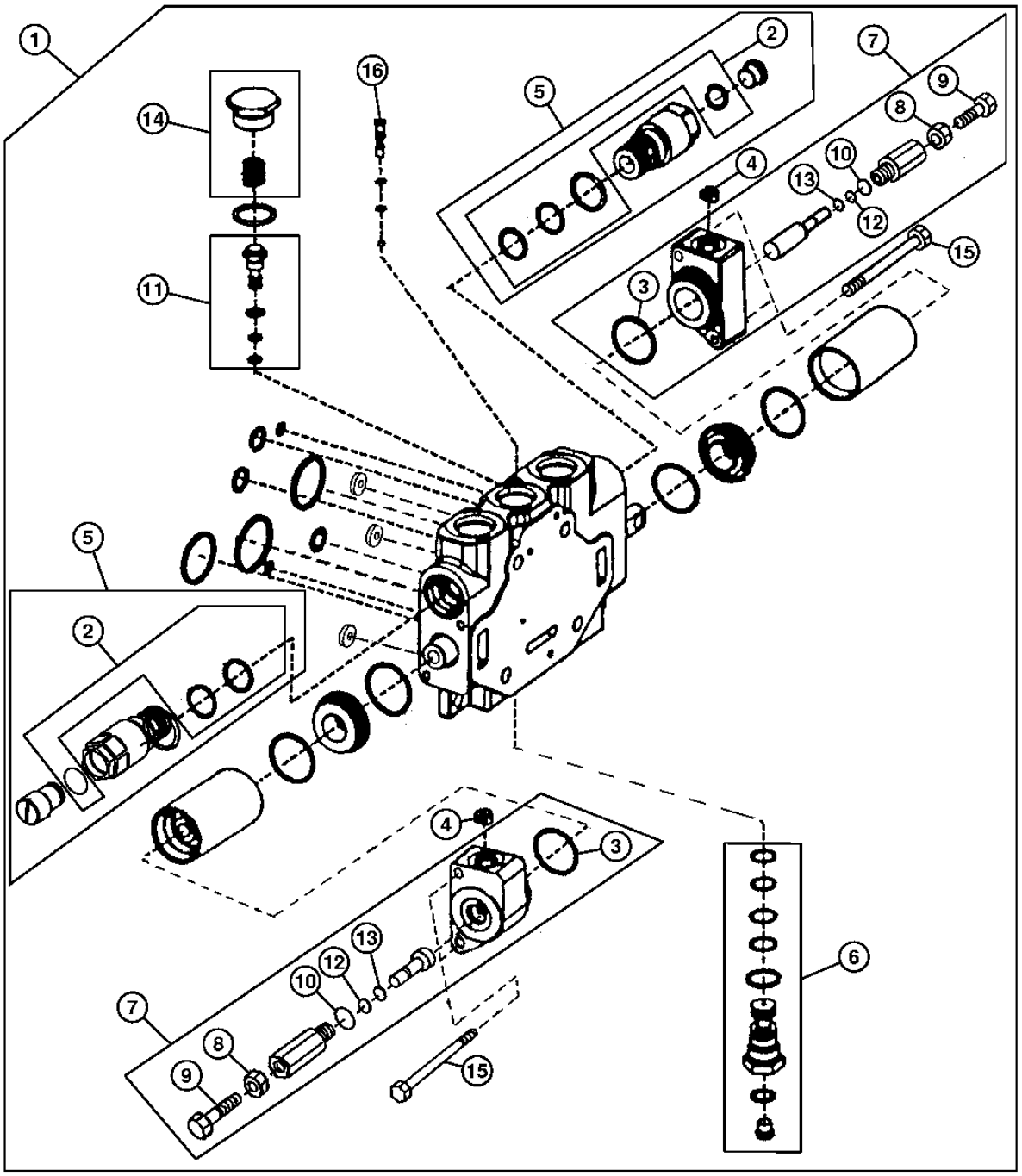

T195465

AUXILIARY VALVE SECTION (S.N. -594432)
SECTION DISTRIBUTEUR AUXILIAIRE (S.N. -594432)
SECCION DE VALVULA AUXILIAR (S.N. -594432)

KEY	*PART NO.*	*PART NAME*	*QTY.*	*SERIAL NO.*	*REMARKS*
1	AT220173	HYD ACTUATED CONTROL VALVE	1		
	AT179941	SEAL KIT	1		(WORK SECTION SEAL KIT)
2	AT209748	SEAL KIT	2		(RELIEF VALVE SEAL KIT)
3	H84318	O-RING	2		
4	T169955	ORIFICE	2		
5	AT209750	PRESSURE RELIEF VALVE	2		
6	AT209758	CHECK VALVE	1		
7	AT220035	HOSE KIT	1		
8	14H856	NUT	2		1/2"
9	22H1022	SET SCREW	2		1/2" X 1-1/2"
10	R26906	O-RING	2		
11	AT220826	COMPENSATOR	1		
12	R61463	BACK-UP RING	2		
13	T77814	O-RING	2		
14	AT220830	HOSE KIT	1		
15	19H3724	SCREW	8		
16	T172562	CHECK VALVE	1		

AUXILIARY VALVE SECTION (S.N. 594433-)
SECTION DISTRIBUTEUR AUXILIAIRE (S.N. 594433-)
SECCION DE VALVULA AUXILIAR (S.N. 594433-)

T202332 -UN-26AUG04

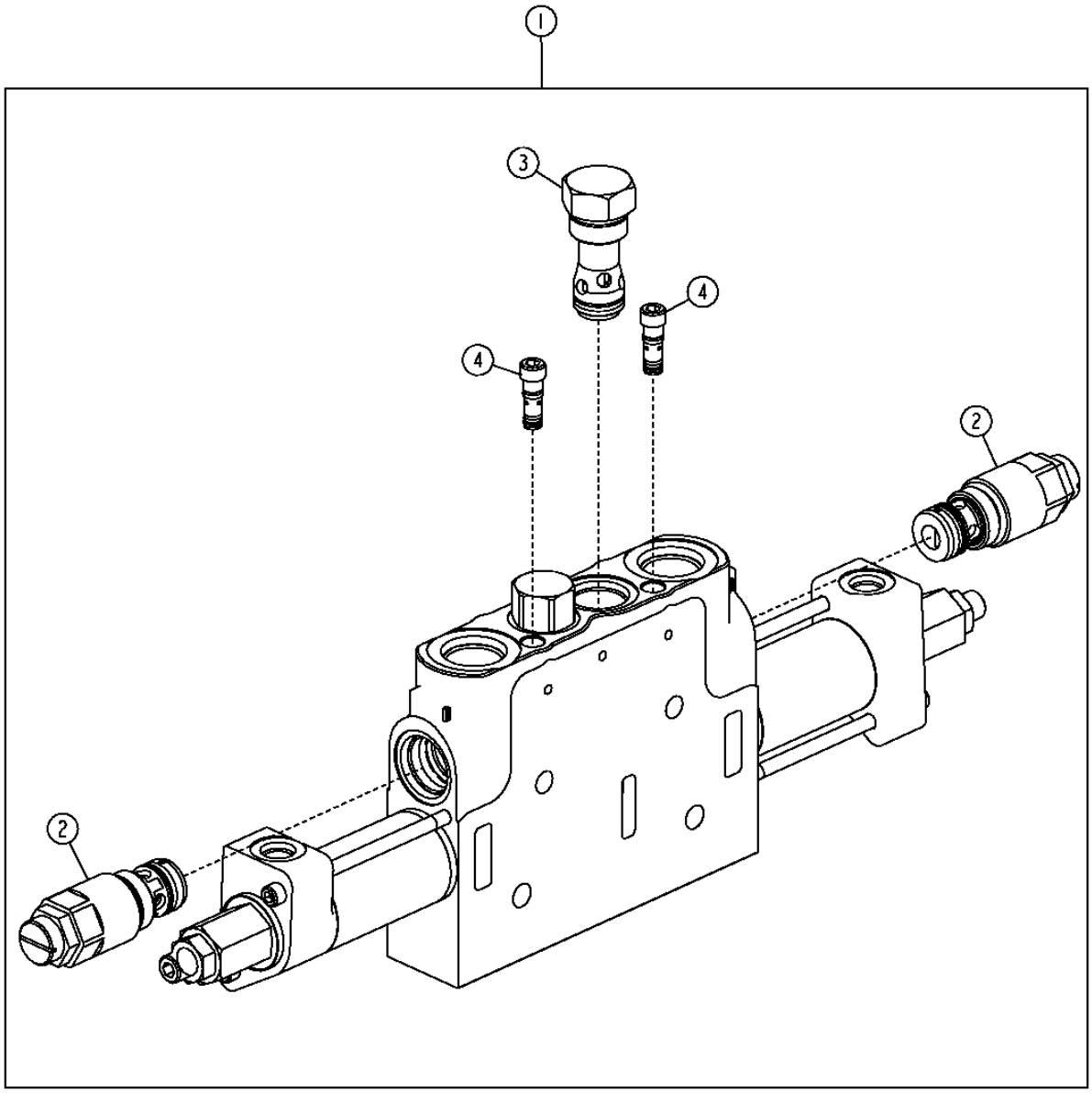

T202332

AUXILIARY VALVE SECTION (S.N. 594433-)
SECTION DISTRIBUTEUR AUXILIAIRE (S.N. 594433-)
SECCION DE VALVULA AUXILIAR (S.N. 594433-)

KEY	*PART NO.*	*PART NAME*	*QTY.*	*SERIAL NO.*	*REMARKS*
1	AT314046	VALVE	1		
	AT314013	SEAL KIT	1		(WORK SECTION AND INTERFACE SEAL KIT)
2	AT209750	PRESSURE RELIEF VALVE	2		
	AT209748	SEAL KIT	2		(RELIEF VALVE SEAL KIT)
3	AT314011	VALVE	1		
4	AT314012	VALVE	2		
..	AT314021	HYDRAULIC CYLINDER CAP	1		(PILOT CONTROL END CAP SEAL KIT) (NOT ILLUSTRATED)

OUTLET VALVE SECTION (S.N. -594432)
SECTION SOUPAPE SORTIE (S.N. -594432)
SECCION DE VALVULA DE SALIDA (S.N. -594432)

T195466 -UN-13OCT03

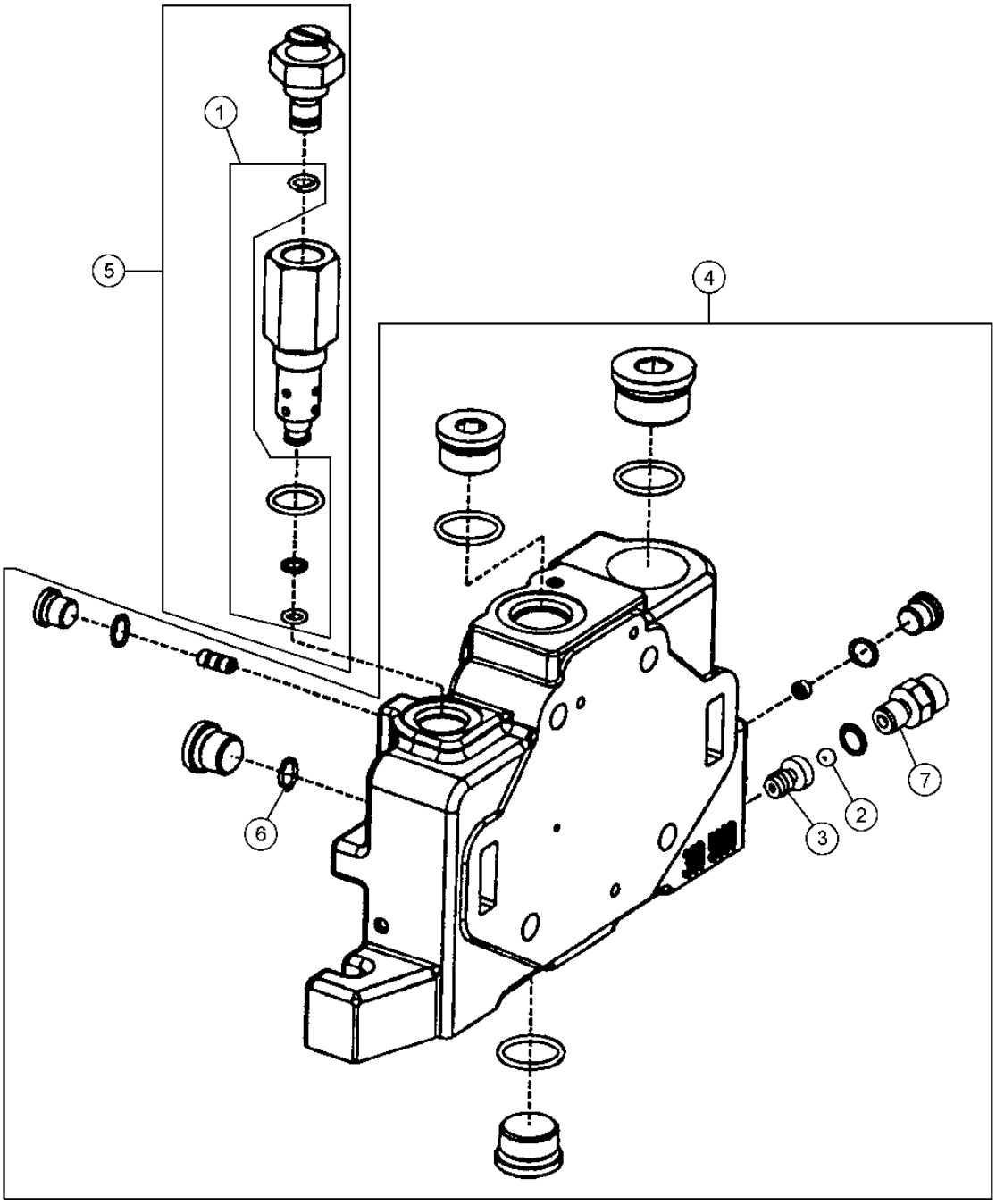

T195466

OUTLET VALVE SECTION (S.N. -594432)
SECTION SOUPAPE SORTIE (S.N. -594432)
SECCION DE VALVULA DE SALIDA (S.N. -594432)

KEY	*PART NO.*	*PART NAME*	*QTY.*	*SERIAL NO.*	*REMARKS*
1	AT179935	SEAL KIT	1		(LOAD SENSE RELIEF VALVE SEAL KIT)
2	JD38714	BALL	1		
3	T172579	CHECK VALVE	1		
4	AT225798	ORIFICE	1		(OUTLET SECTION)
	AT179934	SEAL KIT	1		(OUTLET SECTION SEAL KIT)
5	AT225800	FLOW CONTROL HYD. VALVE	1		(LOAD SENSE RELIEF VALVE)
6	R26448	O-RING	1		
7	T172712	FITTING	1		

OUTLET VALVE SECTION (S.N. 594433-)
SECTION SOUPAPE SORTIE (S.N. 594433-)
SECCION DE VALVULA DE SALIDA (S.N. 594433-)

T202333 -UN-26AUG04

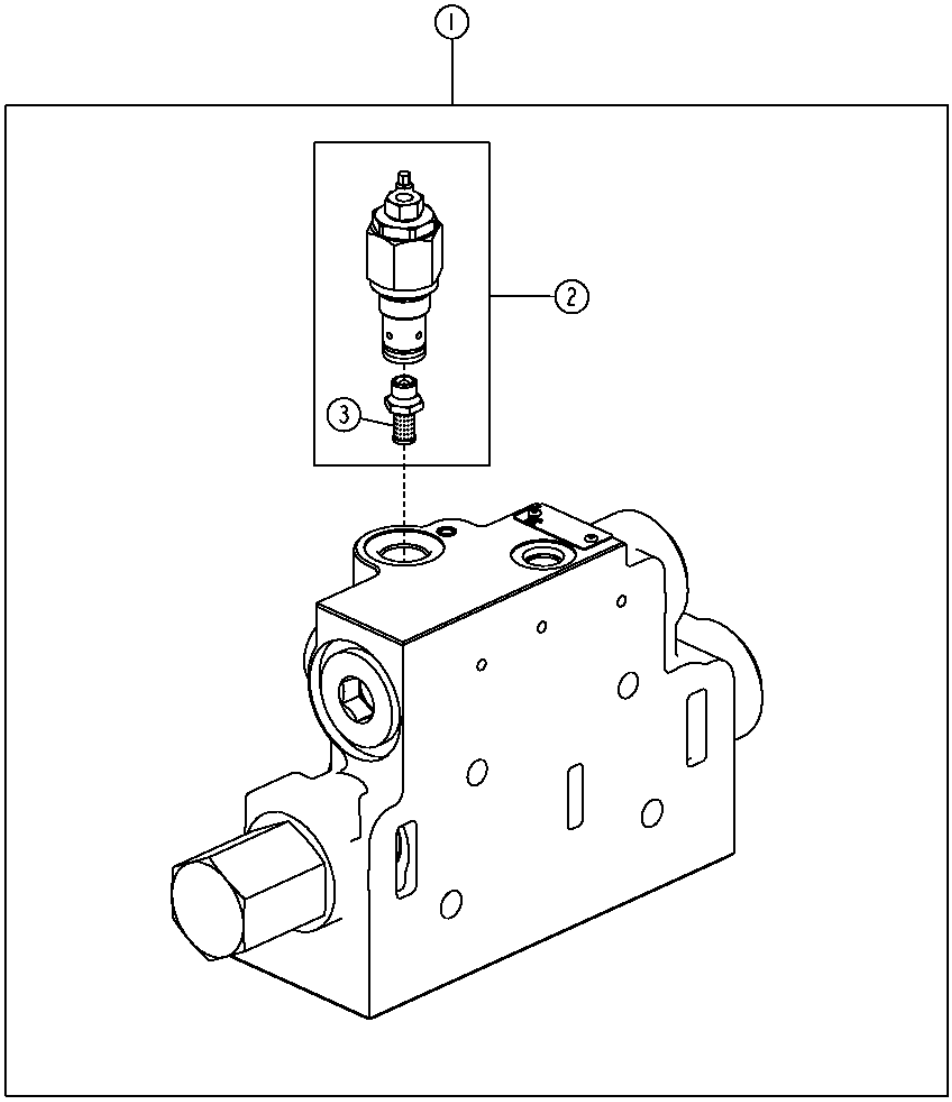

T202333

OUTLET VALVE SECTION (S.N. 594433-)
SECTION SOUPAPE SORTIE (S.N. 594433-)
SECCION DE VALVULA DE SALIDA (S.N. 594433-)

KEY	*PART NO.*	*PART NAME*	*QTY.*	*SERIAL NO.*	*REMARKS*
1	AT314022	FLOW CONTROL HYD. VALVE	1		
	AT314057	SEAL KIT	1		(OUTLET SECTION AND INTERFACE SEAL KIT)
2	AT332694	PRESSURE RELIEF VALVE	1		(SUB FOR AT314023)
3	AT314025	SCREEN	1		

FIFTH FUNCTION VALVE SECTION (SER. NO. - 594432)
SECTION SOUPAPE CINQUIEME FONCTION (SER. NO. - 594432)
SECCION DE VALVULA DE QUINTA FUNCION (SER. NO. - 594432)

TP62889 -UN-31AUG00

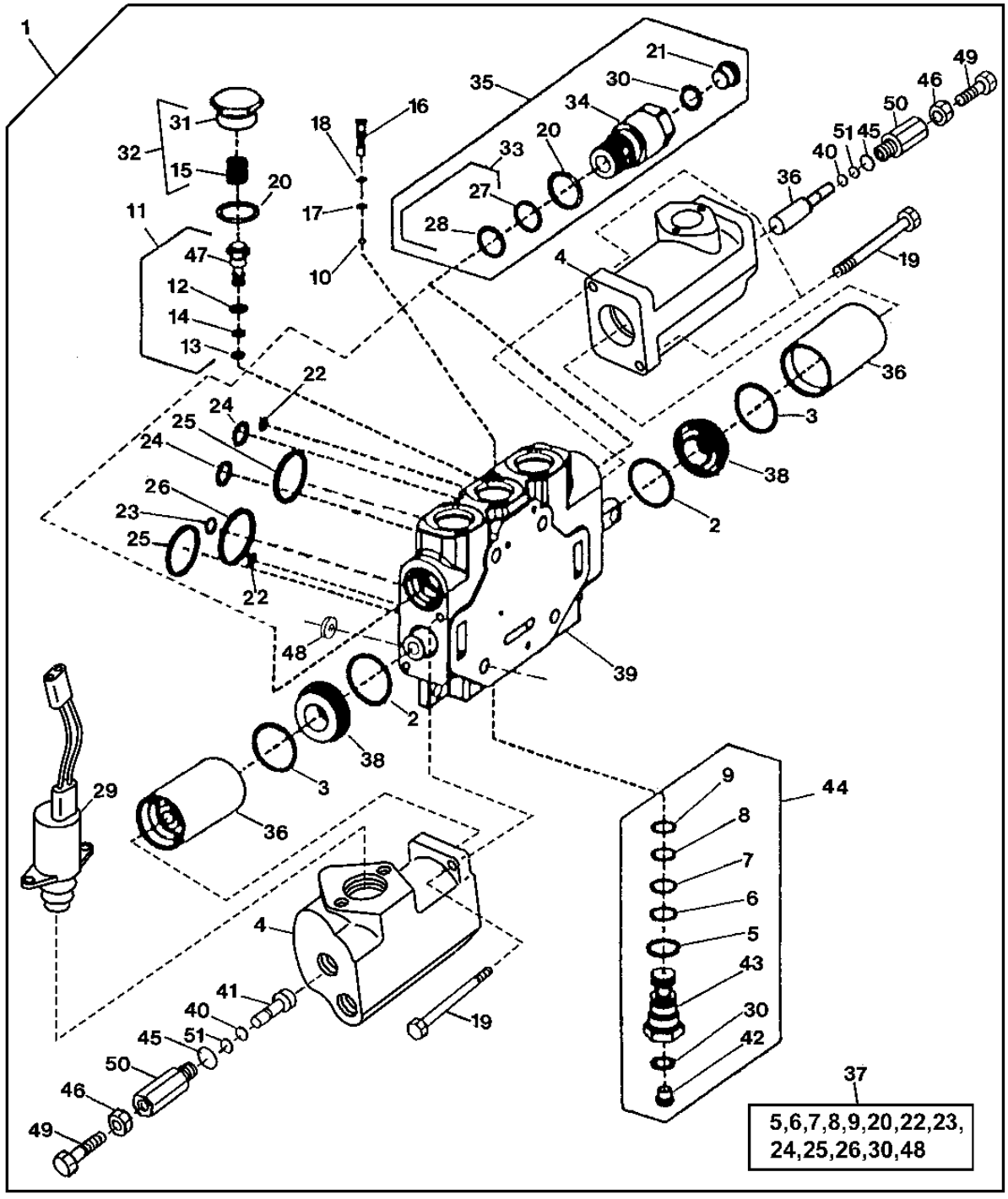

TP62889

FIFTH FUNCTION VALVE SECTION (SER. NO. - 594432)
SECTION SOUPAPE CINQUIEME FONCTION (SER. NO. - 594432)
SECCION DE VALVULA DE QUINTA FUNCION (SER. NO. - 594432)

KEY	PART NO.	PART NAME	QTY.	SERIAL NO.	REMARKS
1	AT307771	FLOW CONTROL HYD. VALVE	1		(WHOLE GOODS) (FIFTH SECTION) (CONTAINS ALL COMPONENTS NECESSARY TO ADD FIFTH AUXILIARY FUNCTION)
2	M4125T	O-RING	2		
3	H84318	O-RING	2		
4	.....	CAP	2		(END)
5	.....	O-RING	1		
6	.....	BACK-UP RING	1		
7	.....	O-RING	1		
8	.....	O-RING	1		
9	.....	BACK-UP RING	1		
10	A4742R	BALL	1		
11	AT220827	COMPENSATOR	1		
12	.....	O-RING	1		
13	.....	O-RING	1		
14	.....	BACK-UP RING	1		
15	.....	SPRING	1		
16	T172562	CHECK VALVE	1		
17	.....	O-RING	1		
18	.....	BACK-UP RING	1		
19	19H3724	SCREW	4		1/4" X 4-1/2"
20	U12547	O-RING	2		
21	.....	PLUG	1		
22	U40962	O-RING	2		
23	.....	O-RING	1		
24	AT216573	O-RING	2		
25	T103465	SEAL	2		
26	AT216571	O-RING	1		
27	.....	BACK-UP RING	2		(SUB AT209750)
28	AT124574	O-RING	2		
29	AT224850	SOLENOID	2		(INCLUDES WIRING HARNESS, AT326581)
30	R26287	O-RING	2		
31	.....	PLUG	1		
32	AT220831	HOSE KIT	1		
33	AT170991	O-RING KIT	2		
	U12547	O-RING	1		(INCLUDED IN AT170991 KIT)
34	.....	VALVE	1		
35	AT209750	PRESSURE RELIEF VALVE	2		
36	.....	PLUNGER	2		
	.....	BUSHING	2		
37	AT179941	SEAL KIT	AR		(SEAL FOR ONE SECTION JOINT)
38	.....	STRUCTURAL TUBING	2		
39	.....	HOUSING	1		(SUB AT316315) (AT219753 NLA)
40	T77814	O-RING	2		
41	.....	PLUNGER	2		
42	.....	PLUG	1		(SUB AT210686)
43	.....	SPOOL	1		(SUB AT210686)
44	AT210686	CHECK VALVE	1		
45	R26906	O-RING	2		
46	14H856	NUT	2		1/2"
47	.....	COMPENSATOR	4		
48	.....	SHIM	1		(ONE SHIM ON EACH TIE-BOLT)
49	22H1022	SET SCREW	2		
50	.....	RELIEF VALVE	2		(SUB AT220035)
51	R61463	BACK-UP RING	2		
53	AT325146	STUD	4		(TIE BOLT)
54	.....	MFWD SOLENOID WRG HARNESS	2	-594432	(SUB AT326581) (AT300858 NLA)
	AT326581	MFWD SOLENOID WRG HARNESS	2	594433-	

FIFTH FUNCTION VALVE SECTION (SER. NO. 594433 -)
SECTION SOUPAPE CINQUIEME FONCTION (SER. NO. 594433 -)
SECCION DE VALVULA DE QUINTA FUNCION (SER. NO. 594433 -)

T212663 -UN-11JUL05

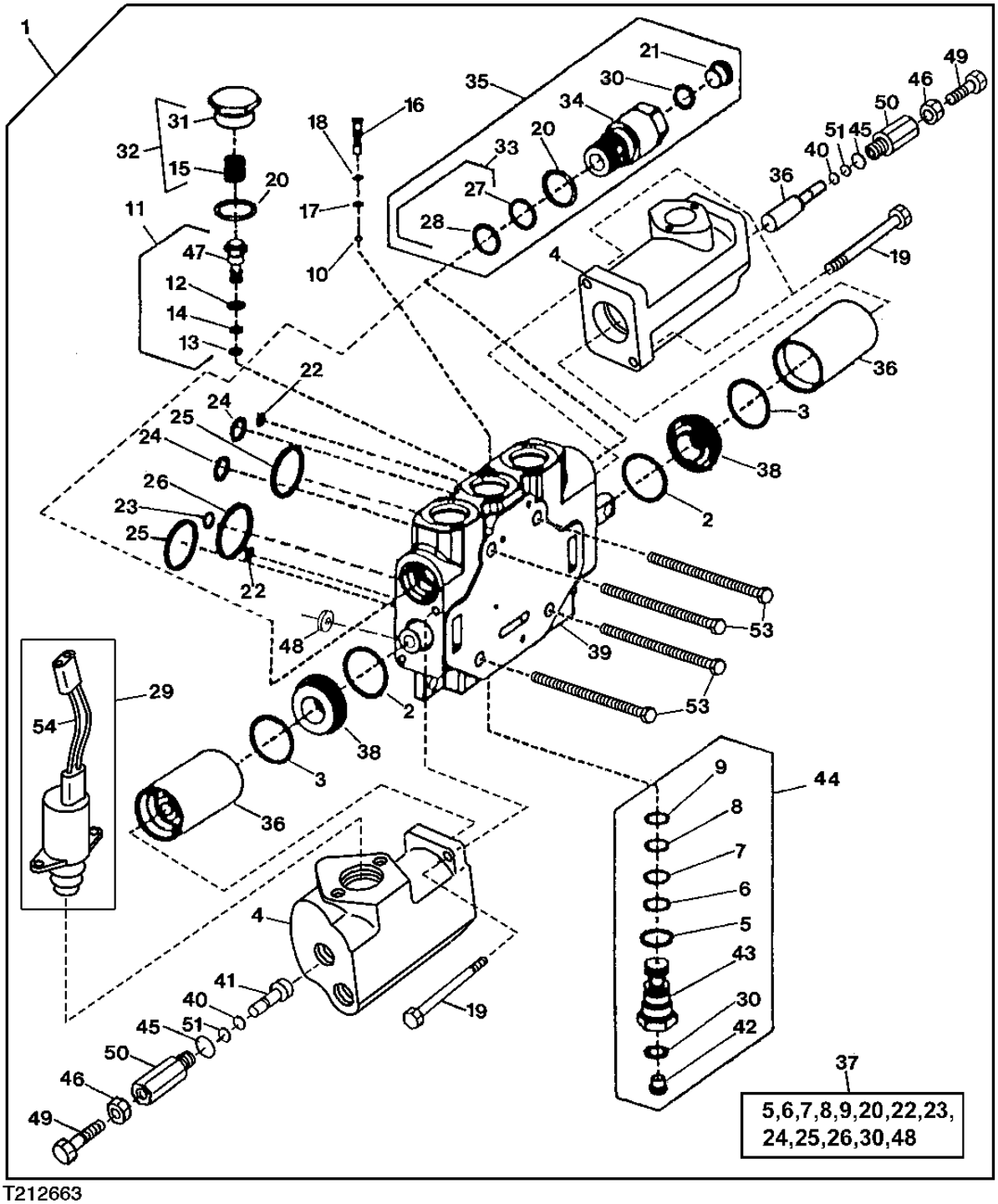

T212663

FIFTH FUNCTION VALVE SECTION (SER. NO. 594433 -)
SECTION SOUPAPE CINQUIEME FONCTION (SER. NO. 594433 -)
SECCION DE VALVULA DE QUINTA FUNCION (SER. NO. 594433 -)

KEY	PART NO.	PART NAME	QTY.	SERIAL NO.	REMARKS
1	AT307771	FLOW CONTROL HYD. VALVE	1		(WHOLE GOODS) (FIFTH SECTION) (CONTAINS ALL COMPONENTS NECESSARY TO ADD FIFTH AUXILIARY FUNCTION)
2	M4125T	O-RING	2		
3	H84318	O-RING	2		
4	.....	CAP	2		(END)
5	.....	O-RING	1		
6	.....	BACK-UP RING	1		
7	.....	O-RING	1		
8	.....	O-RING	1		
9	.....	BACK-UP RING	1		
10	A4742R	BALL	1		
11	AT220827	COMPENSATOR	1		
12	.....	O-RING	1		
13	.....	O-RING	1		
14	.....	BACK-UP RING	1		
15	.....	SPRING	1		
16	T172562	CHECK VALVE	1		
17	.....	O-RING	1		
18	.....	BACK-UP RING	1		
19	19H3724	SCREW	4		1/4" X 4-1/2"
20	U12547	O-RING	2		
21	.....	PLUG	1		
22	U40962	O-RING	2		
23	.....	O-RING	1		
24	AT216573	O-RING	2		
25	T103465	SEAL	2		
26	AT216571	O-RING	1		
27	.....	BACK-UP RING	2		(SUB AT209750)
28	AT124574	O-RING	2		
29	AT224850	SOLENOID	2		(INCLUDES WIRING HARNESS, AT326581)
30	R26287	O-RING	2		
31	.....	PLUG	1		
32	AT220831	HOSE KIT	1		
33	AT170991	O-RING KIT	2		
	U12547	O-RING	1		(INCLUDED IN AT170991 KIT)
34	.....	VALVE	1		
35	AT209750	PRESSURE RELIEF VALVE	2		
36	.....	PLUNGER	2		
	.....	BUSHING	2		
37	AT179941	SEAL KIT	AR		(SEAL FOR ONE SECTION JOINT)
38	.....	STRUCTURAL TUBING	2		
39	AT316315	SOLENOID VALVE	1		
40	T77814	O-RING	2		
41	.....	PLUNGER	2		
42	.....	PLUG	1		(SUB FOR AT210686)
43	.....	SPOOL	1		(SUB FOR AT210686)
44	AT210686	CHECK VALVE	1		
45	R26906	O-RING	2		
46	14H856	NUT	2		1/2"
47	.....	COMPENSATOR	4		
48	.....	SHIM	1		(ONE SHIM ON EACH TIE-BOLT)
49	22H1022	SET SCREW	2		
50	.....	RELIEF VALVE	2		(SUB AT220035)
51	R61463	BACK-UP RING	2		
53	AT325146	STUD	4		(TIE BOLT)
54	AT326581	MFWD SOLENOID WRG HARNESS	2		

BOOM AND BUCKET CYLINDER HYDRAULICS (WITH Z-BAR LINKAGE) (SN -594432)
CIRCUIT HYDRAULIQUE VERIN FLECHE ET BENNE (AVEC TRINGLERIE CINEMATIQUE EN Z) (SN -594432)
SISTEMA HIDRAULICO DEL CILINDRO DEL CUCHARON Y AGUILON (CON VARILLAJE DE BARRA EN Z) (SN -594432)

T194779 -UN-24OCT03

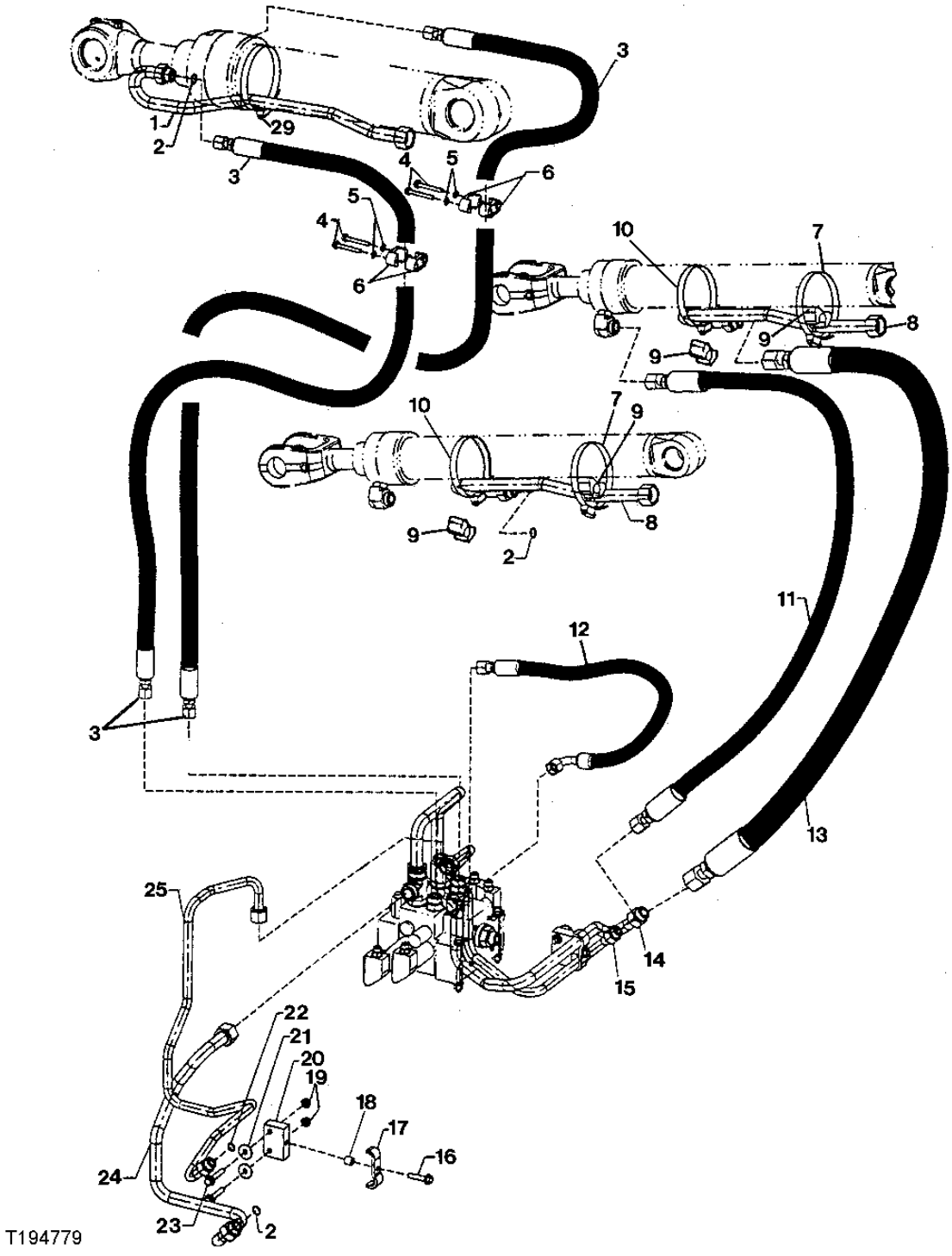

T194779

BOOM AND BUCKET CYLINDER HYDRAULICS (WITH Z-BAR LINKAGE) (SN -594432)
CIRCUIT HYDRAULIQUE VERIN FLECHE ET BENNE (AVEC TRINGLERIE CINEMATIQUE EN Z) (SN -594432)
SISTEMA HIDRAULICO DEL CILINDRO DEL CUCHARON Y AGUILON (CON VARILLAJE DE BARRA EN Z) (SN -594432)

KEY	*PART NO.*	*PART NAME*	*QTY.*	*SERIAL NO.*	*REMARKS*
1	AT224157	OIL LINE	1		
2	T77858	O-RING	5		
3	AT228194	HYDRAULIC HOSE - FABRICATE	2		
4	19M7801	SCREW	4		M8 X 60
5	24M7238	WASHER	4		8.700 X 17 X 2 MM
6	T147188	CLAMP	4		
7	RE40281	CLAMP	2		
8	AT206698	OIL LINE	2		
9	T105773	GUIDE	4		
10	RE40281	CLAMP	2		
11	AT209524	HYDRAULIC HOSE - FABRICATE	2		
12	AT167553	HYDRAULIC HOSE - FABRICATE	1		
13	AT228195	HYDRAULIC HOSE - FABRICATE	2		
14	AT210688	OIL LINE	1		
15	AT210690	OIL LINE	1		
16	19M7805	SCREW	2		M10 X 45
17	T167921	CLAMP	2		
18	28H3381	SPACER	2		
19	14M7296	FLANGE NUT	4		M10
20	AT224665	BRACKET	2		
21	24M7296	WASHER	4		(SUB FOR T148712)
22	T77932	O-RING	2		
23	19M7835	SCREW	4		
24	AT210689	OIL LINE	1		
25	AT210691	OIL LINE	1		
29	AR85327	CLAMP	1		

BOOM AND BUCKET CYLINDER HYDRAULICS (WITH Z-BAR LINKAGE) (SN 594433-)
CIRCUIT HYDRAULIQUE VERIN FLECHE ET BENNE (AVEC TRINGLERIE CINEMATIQUE EN Z) (SN 594433-)
SISTEMA HIDRAULICO DEL CILINDRO DEL CUCHARON Y AGUILON (CON VARILLAJE DE BARRA EN Z) (SN 594433-)

T208709 -UN-25FEB05

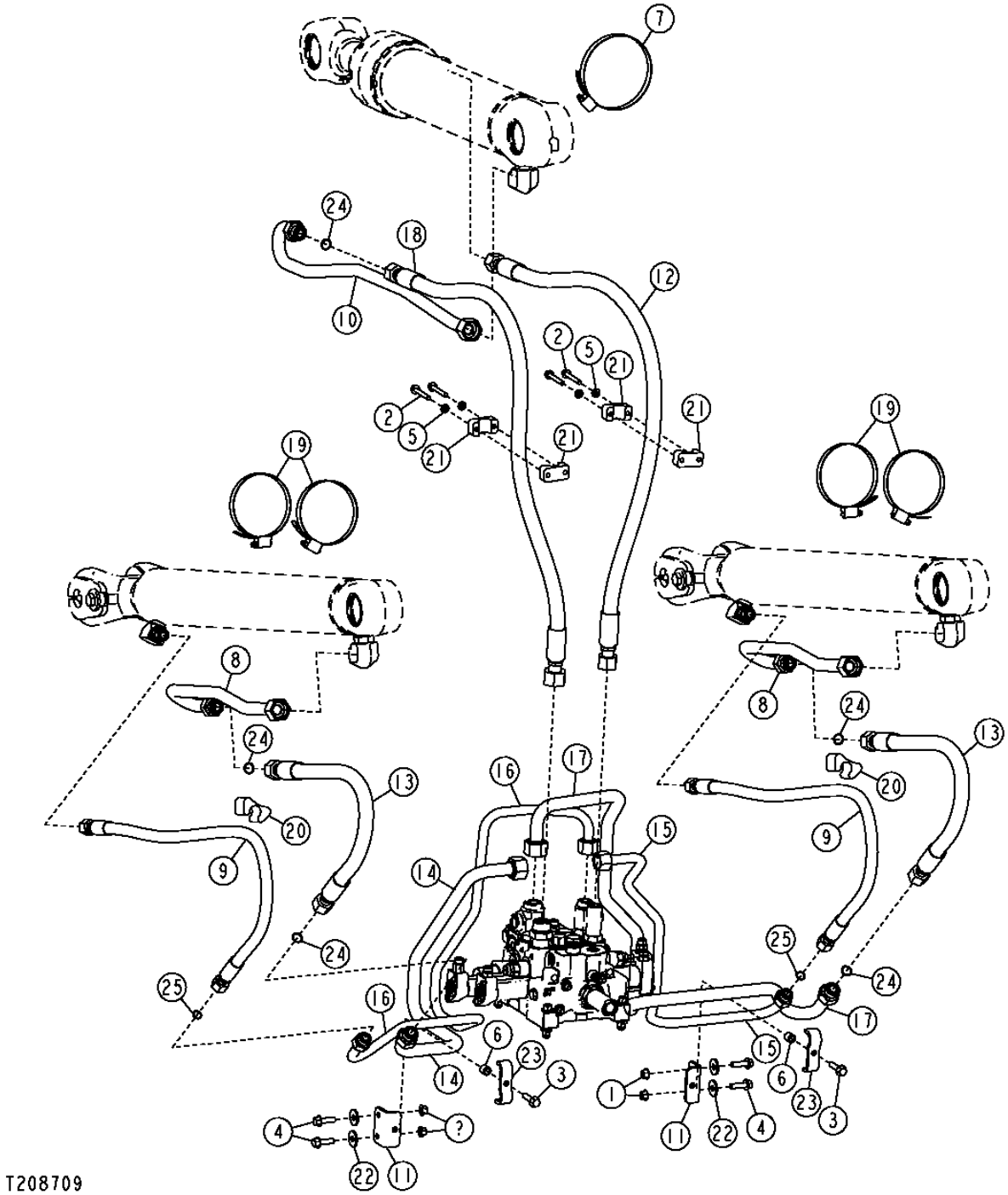

THIS PARTS LISTING IS CONTINUED

BOOM AND BUCKET CYLINDER HYDRAULICS (WITH Z-BAR LINKAGE) (SN 594433-)
CIRCUIT HYDRAULIQUE VERIN FLECHE ET BENNE (AVEC TRINGLERIE CINEMATIQUE EN Z) (SN 594433-)
SISTEMA HIDRAULICO DEL CILINDRO DEL CUCHARON Y AGUILON (CON VARILLAJE DE BARRA EN Z) (SN 594433-)

KEY	*PART NO.*	*PART NAME*	*QTY.*	*SERIAL NO.*	*REMARKS*
1	14M7296	FLANGE NUT	4		M10
2	19M7801	SCREW	4	-XXXXXX	M8 X 60
	19M7979	SCREW	4	XXXXXX-	M8 X 55
3	19M7805	SCREW	2		M10 X 45
4	19M7835	SCREW	4		M10 X 35
5	24M7238	WASHER	4	-XXXXXX	8.700 X 17 X 2 MM
6	28H3381	SPACER	2		
7	TY22493	HOSE CLAMP	1		
8	AT206698	OIL LINE	2		
9	AT209524	HYDRAULIC HOSE - FABRICATE	2		
10	AT224157	OIL LINE	1		
11	AT224665	BRACKET	2		
12	AT228194	HYDRAULIC HOSE - FABRICATE	1		
13	AT228195	HYDRAULIC HOSE - FABRICATE	2		
14	AT305111	OIL LINE	1		
15	AT305112	OIL LINE	1		
16	AT305113	OIL LINE	1		
17	AT305114	OIL LINE	1		
18	AT314944	HYDRAULIC HOSE - FABRICATE	1		
19	RE40281	CLAMP	4		
20	T105773	GUIDE	2		
21	T147188	CLAMP	4		
22	24M7296	WASHER	4		(SUB FOR T148712)
23	T167921	CLAMP	2		
24	T77858	O-RING	5		
25	T77932	O-RING	2		

THIRD FUNCTION AUXILIARY HYDRAULICS (WITH Z-BAR LINKAGE) (SN -594432)
CIRCUIT HYDRAULIQUE AUXILIAIRE TROISIEME FONCTION (AVEC TRINGLERIE CINEMATIQUE EN Z) (SN -594432)
SISTEMA HIDRAULICO AUXILIAR DE TERCERA FUNCION (CON VARILLAJE DE BARRA EN Z) (SN -594432)

T194789 -UN-24OCT03

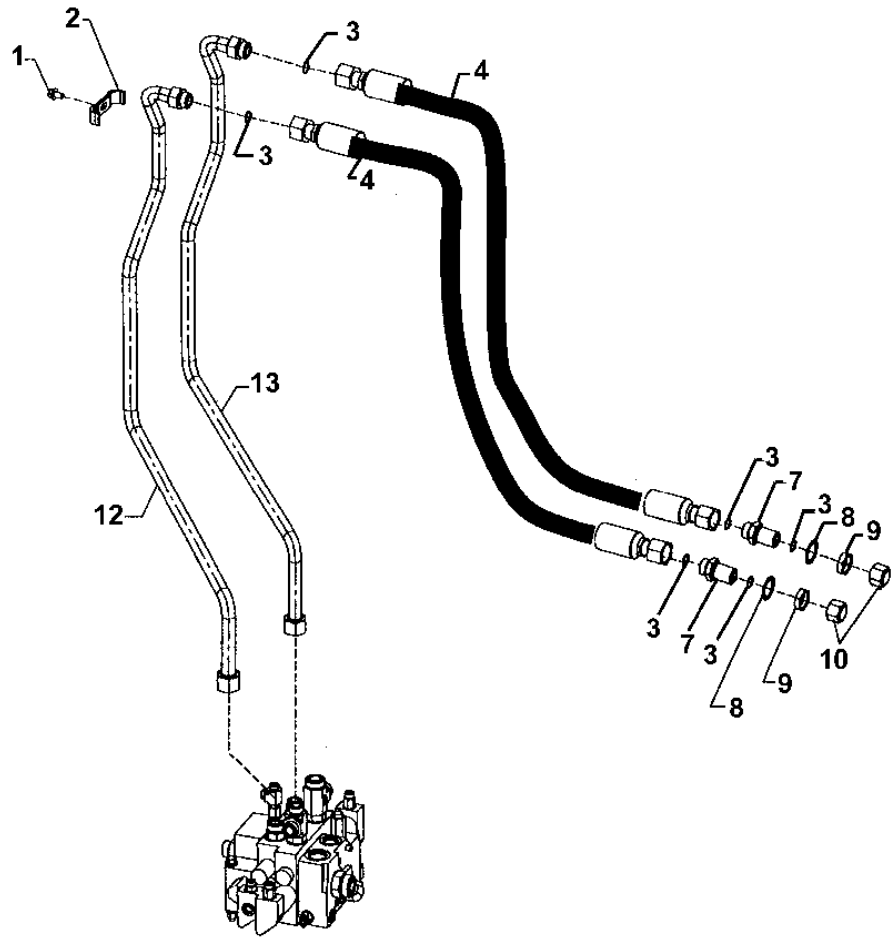

T194789

THIRD FUNCTION AUXILIARY HYDRAULICS (WITH Z-BAR LINKAGE) (SN -594432)
CIRCUIT HYDRAULIQUE AUXILIAIRE TROISIEME FONCTION (AVEC TRINGLERIE CINEMATIQUE EN Z) (SN -594432)
SISTEMA HIDRAULICO AUXILIAR DE TERCERA FUNCION (CON VARILLAJE DE BARRA EN Z) (SN -594432)

KEY	*PART NO.*	*PART NAME*	*QTY.*	*SERIAL NO.*	*REMARKS*
1	19M7784	SCREW	1		M10 X 20, (SUB FOR 19M7783)
2	T167979	CLAMP	1		
3	T77858	O-RING	6		
4	AT191285	HYDRAULIC HOSE - FABRICATE	2		1-3/16" X 1 295 MM (51") X 1-3/16"
7	38H1276	ADAPTER FITTING	2		
8	T174275	LOCK WASHER	2		
9	T78707	NUT	2		
10	38H1418	FITTING	2		
12	AT211364	OIL LINE	1		
13	AT211363	OIL LINE	1		

FOURTH FUNCTION AUXILIARY HYDRAULICS (WITH Z-BAR LINKAGE) (SN -594432)
CIRCUIT HYDRAULIQUE AUXILIAIRE 4EME FONCTION (AVEC TRINGLERIE CINEMATIQUE EN Z) (SN -594432)
SISTEMA HIDRAULICO AUXILIAR DE CUARTA FUNCIÓN (CON VARILLAJE DE BARRA EN Z) (SN -594432)

T194791 -UN-24OCT03

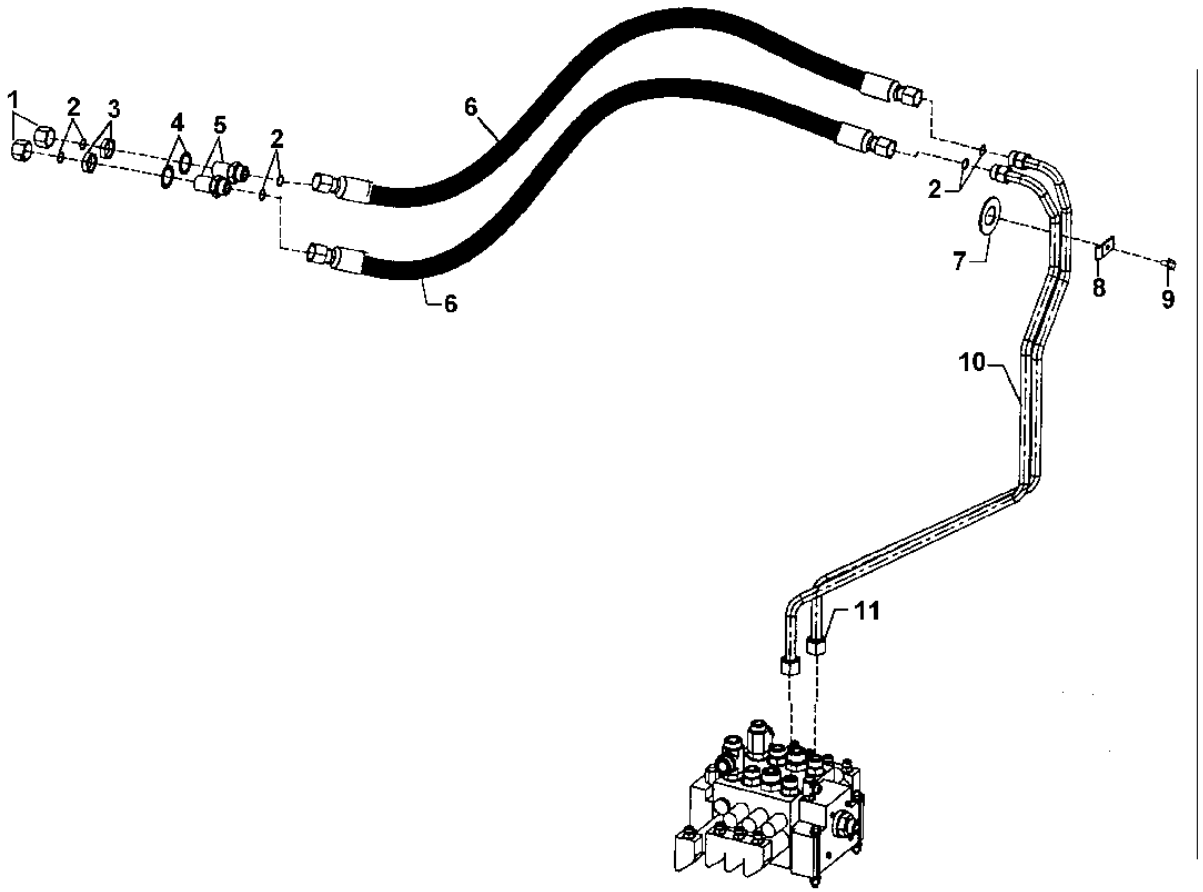

T194791

FOURTH FUNCTION AUXILIARY HYDRAULICS (WITH Z-BAR LINKAGE) (SN -594432)
CIRCUIT HYDRAULIQUE AUXILIAIRE 4EME FONCTION (AVEC TRINGLERIE CINEMATIQUE EN Z) (SN -594432)
SISTEMA HIDRAULICO AUXILIAR DE CUARTA FUNCION (CON VARILLAJE DE BARRA EN Z) (SN -594432)

KEY	*PART NO.*	*PART NAME*	*QTY.*	*SERIAL NO.*	*REMARKS*
1	38H1418	FITTING	4		
2	T77858	O-RING	17		
3	T78707	NUT	4		
4	T174275	LOCK WASHER	4		
5	38H1276	ADAPTER FITTING	4		
6	AT191285	HYDRAULIC HOSE - FABRICATE	4		(SUB FOR AT166041)
7	24H1545	WASHER	1		1-9/16" X 3" X 0.149"
8	T176474	CLAMP	1		
9	19M7784	SCREW	2		M10 X 20, (SUB FOR 19M7783)
10	AT211365	OIL LINE	1		
11	AT211366	OIL LINE	1		

THIRD AND FOURTH FUNCTION AUXILIARY HYDRAULICS (WITH Z-BAR LINKAGE) (SN 594433-)
CIRCUIT HYD. AUXILIAIRE DE 3EME ET 4EME FONCTION (W/TRINGLERIE CINEMATIQUE EN Z (SN 594433-)
SISTEMA HIDR. AUX. DE TERCERA Y CUARTA FUNCION (W/VARILLAJE DE BARRA EN Z) (SN 594433-)

T208710 -UN-25FEB05

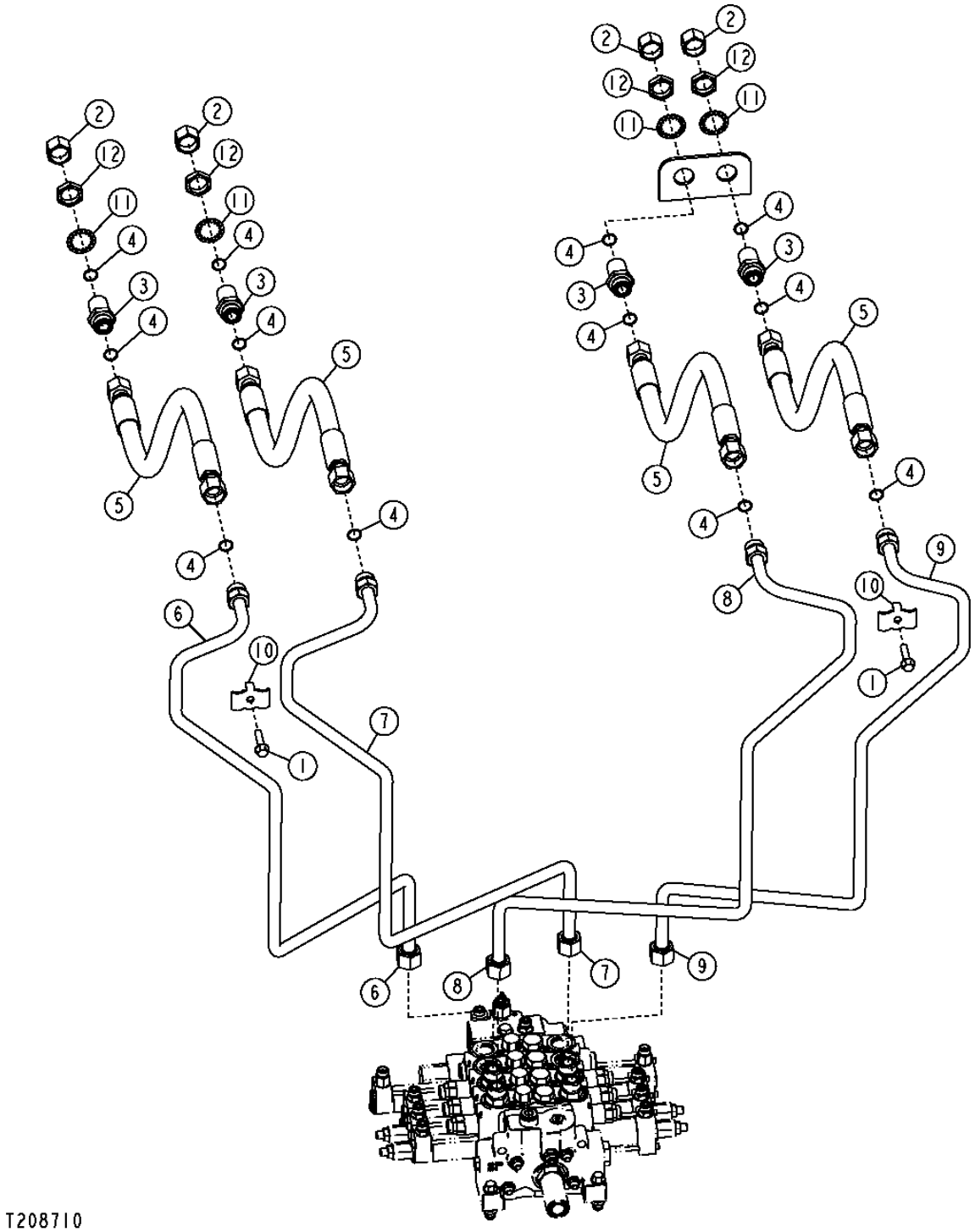

THIRD AND FOURTH FUNCTION AUXILIARY HYDRAULICS (WITH Z-BAR LINKAGE) (SN 594433-)
CIRCUIT HYDR. AUXILIAIRE DE 3EME ET 4EME FONCTION (W/TRINGLERIE CINEMATIQUE EN Z) (SN 594433-)
SISTEMA HIDR. AUX. DE TERCERA Y CUARTA FUNCION (W/VARILLAJE DE BARRA EN Z) (SN 594433-)

KEY	*PART NO.*	*PART NAME*	*QTY.*	*SERIAL NO.*	*REMARKS*
1	19M7805	SCREW	2		M10 X 45
2	38H1418	FITTING	4		
3	38H1276	ADAPTER FITTING	4		
4	T77858	O-RING	12		
5	AT191285	HYDRAULIC HOSE - FABRICATE	4		
6	AT315134	OIL LINE	1		
7	AT315135	OIL LINE	1		
8	AT315136	OIL LINE	1		
9	AT315137	OIL LINE	1		
10	T160549	CLAMP	2		
11	T174275	LOCK WASHER	4		
12	T78707	NUT	4		

CONTROL VALVE TO BOOM AND BUCKET CYLINDER HYDRAULICS (WITH POWERLLEL™ LINKAGE)
CIRCUIT HYDRAULIQUE DISTRIBUTEUR A VERIN FLECHE ET BENNE (AVEC TRINGLERIE POWERLLEL™)
VALVULA DE CONTROL A AGUILON Y SISTEMA HIDR. DEL CILINDRO DE CUCHARON (CON VARILLAJE POWERLLEL™)

T202089 -UN-10AUG04

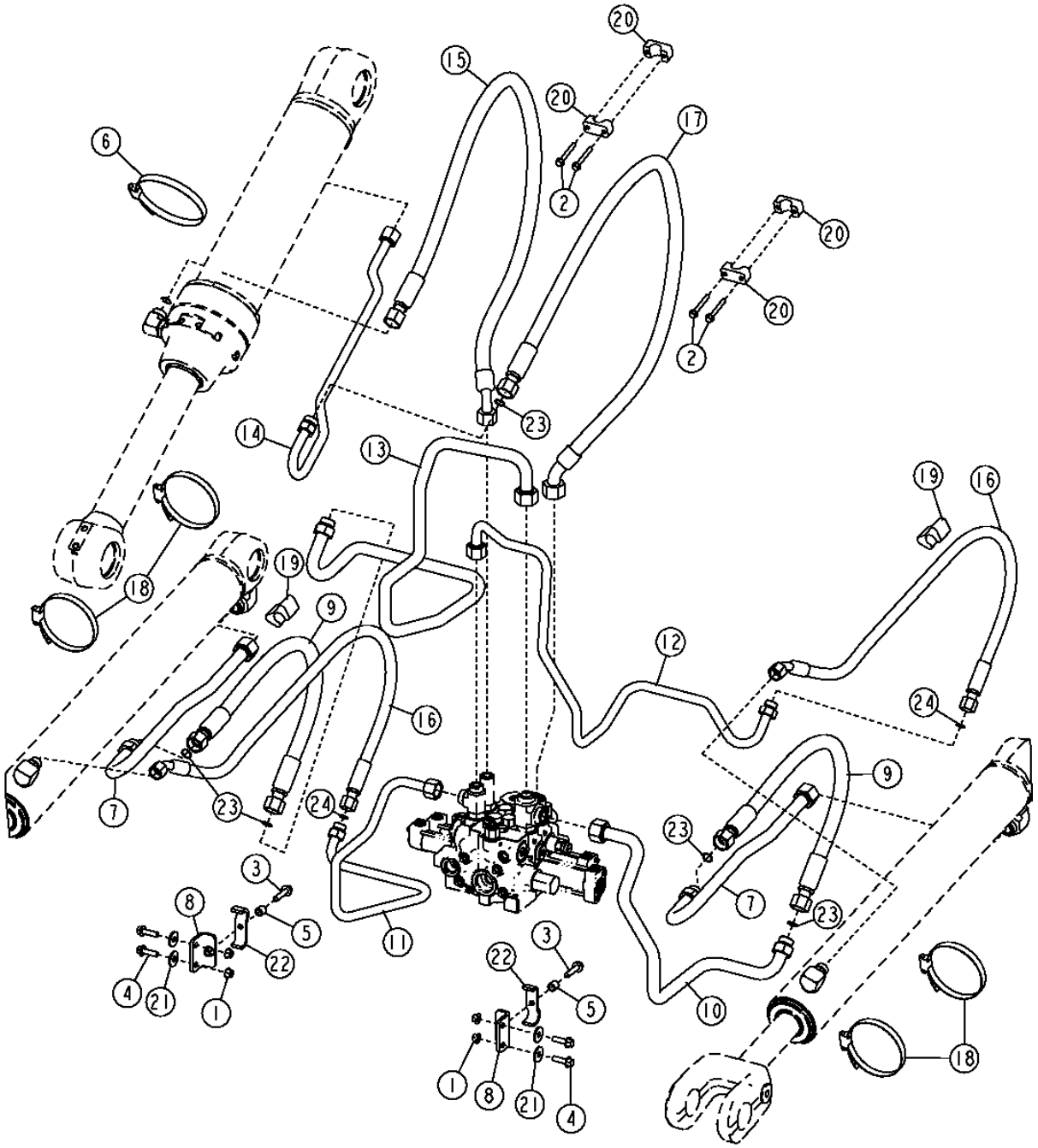

THIS PARTS LISTING IS CONTINUED

CONTROL VALVE TO BOOM AND BUCKET CYLINDER HYDRAULICS (WITH POWERLLEL™ LINKAGE)
CIRCUIT HYDRAULIQUE DISTRIBUTEUR A VERIN FLECHE ET BENNE (AVEC TRINGLERIE POWERLLEL™)
VALVULA DE CONTROL A AGUILON Y SISTEMA HIDR. DEL CILINDRO DE CUCHARON (CON VARILLAJE POWERLLEL™)

KEY	*PART NO.*	*PART NAME*	*QTY.*	*SERIAL NO.*	*REMARKS*
1	14M7296	FLANGE NUT	4		M10
2	19M7801	SCREW	4		M8 X 60
3	19M7805	SCREW	2		M10 X 45
4	19M7835	SCREW	4		M10 X 35
5	28H3381	SPACER	2		0.493" X 0.675" X 5/8"
6	TY22493	HOSE CLAMP	1		
7	AT206698	OIL LINE	2		
8	AT224665	BRACKET	2		
9	AT228195	HYDRAULIC HOSE - FABRICATE	2		
10	AT305111	OIL LINE	1		
11	AT305112	OIL LINE	1		
12	AT305113	OIL LINE	1		
13	AT305114	OIL LINE	1		
14	AT305329	OIL LINE	1		
15	AT314043	HYDRAULIC HOSE - FABRICATE	1		13/16" X 61-1/4" X 13/16"
16	AT314674	HYDRAULIC HOSE - FABRICATE	2		1" X 56-1/2" X 1"
17	AT314676	HYDRAULIC HOSE - FABRICATE	1		13/16" X 62-1/2" X 1"
18	RE40281	CLAMP	4		
19	T105773	GUIDE	2		
20	T147188	CLAMP	4		
21	24M7296	WASHER	4		0.413" X 1.181" X 0.098", (SUB FOR T148712)
22	T167921	CLAMP	2		
23	T77858	O-RING	5		
24	T77932	O-RING	2		

THIRD AND FOURTH FUNCTION AUXILIARY HYDRAULICS (WITH POWERLLEL™ LINKAGE)
CIRCUIT HYDRAULIQUE AUXILIAIRE DE 3EME ET 4EME FONCTION (AVEC TRINGLERIE POWERLLEL™
SISTEMA HIDRAULICO AUXILIAR DE TERCERA Y CUARTA FUNCION (CON VARILLAJE POWERLLEL™)

T208703 -UN-25FEB05

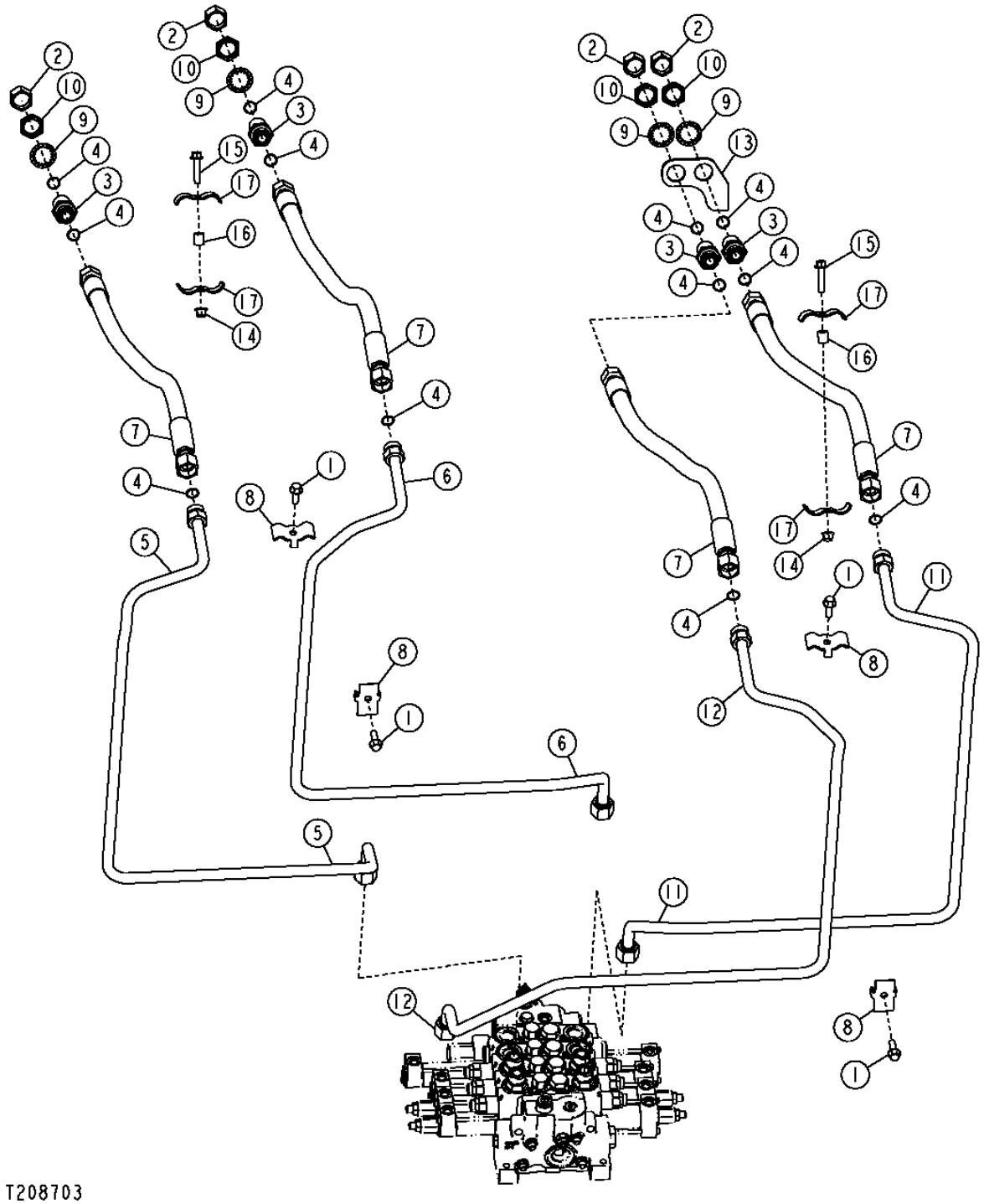

THIRD AND FOURTH FUNCTION AUXILIARY HYDRAULICS (WITH POWERLLEL™ LINKAGE)
CIRCUIT HYDRAULIQUE AUXILIAIRE DE 3EME ET 4EME FONCTION (AVEC TRINGLERIE POWERLLEL™)
SISTEMA HIDRAULICO AUXILIAR DE TERCERA Y CUARTA FUNCION (CON VARILLAJE POWERLLEL™)

KEY	*PART NO.*	*PART NAME*	*QTY.*	*SERIAL NO.*	*REMARKS*
1	19M7786	SCREW	4		M10 X 30
2	38H1418	FITTING	4		
3	38H1276	ADAPTER FITTING	4		
4	T77858	O-RING	12		
5	.....	OIL LINE	1	-598386	(SUB AT322527 AND AT322541) (ALSO ORDER AT323713) (AT306392 NLA)
	AT322527	OIL LINE	1	598387-	
6	.....	OIL LINE	1	-598386	(SUB AT322527 AND AT322541) (ALSO ORDER AT323713) (AT306453 NLA)
	AT322541	OIL LINE	1	598387-	
7	AT313424	HYDRAULIC HOSE - FABRICATE	4		
8	T215434	CLAMP	4		(SUB FOR KV22609)
9	T174275	LOCK WASHER	4		
10	T78707	NUT	4		
11	.....	OIL LINE	1	-598386	(SUB AT322559 AND AT322567) (ALSO ORDER AT323713) (AT314578 NLA)
	AT322559	OIL LINE	1	598387-	
12	.....	OIL LINE	1	-598386	(SUB AT322559 AND AT322567) (ALSO ORDER AT323713) (AT314579 NLA)
	AT322567	OIL LINE	1	598387-	
13	T210447	PLATE	1		
14	14M7400	LOCK NUT	2		
15	19M7805	SCREW	2		
16	28H3383	BUSHING	2		
17	U46753	HOSE CLAMP	4		
..	**AT323713**	**KIT**	**1**		**(WHOLEGOODS) (NOT ILLUSTRATED)**

CONTROL VALVE TO BUCKET AND BOOM CYLINDER HYDRAULICS (WITH TOOL CARRIER)
CIRCUIT HYDRAULIQUE DISTRIBUTEUR A VERIN BENNE ET FLECHE (AVEC PORTE-OUTILS)
VALVULA DE CONTROL A CUCHARON Y SISTEMA HIDRAULICO DEL CILINDRO DE AGUILON (CON PORTAHERRAMIENTAS)

T194770 -UN-24OCT03

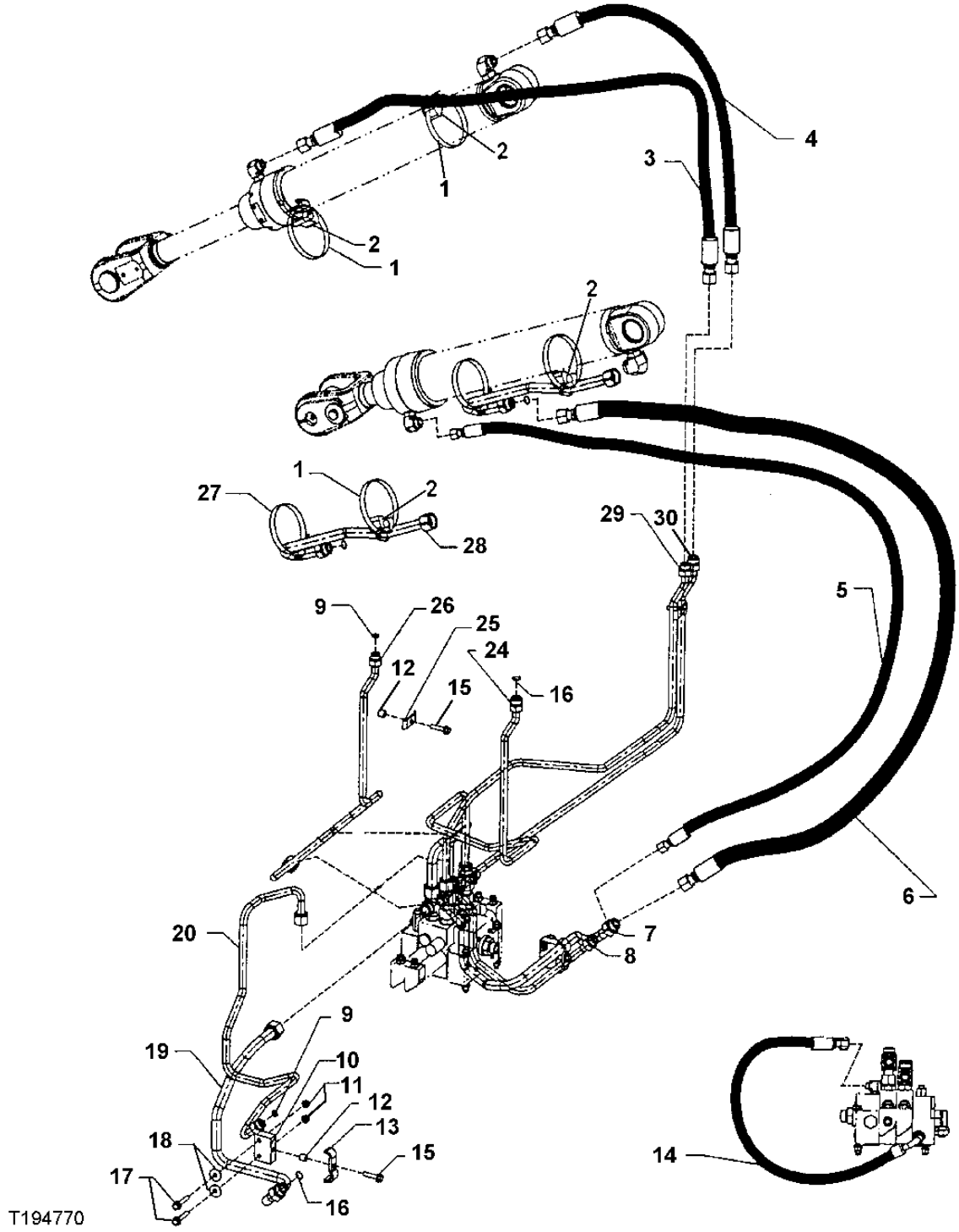

CONTROL VALVE TO BUCKET AND BOOM CYLINDER HYDRAULICS (WITH TOOL CARRIER)
CIRCUIT HYDRAULIQUE DISTRIBUTEUR A VERIN BENNE ET FLECHE (AVEC PORTE-OUTILS)
VALVULA DE CONTROL A CUCHARON Y SISTEMA HIDRAULICO DEL CILINDRO DE AGUILON (CON PORTAHERRAMIENTAS)

KEY	PART NO.	PART NAME	QTY.	SERIAL NO.	REMARKS
1	AR85327	CLAMP	4		
2	T105773	GUIDE	4		
3	AT227537	HYDRAULIC HOSE - FABRICATE	2		
4	AT227536	HYDRAULIC HOSE - FABRICATE	2		
5	AT306597	HYDRAULIC HOSE - FABRICATE	2		
6	AT227534	HYDRAULIC HOSE - FABRICATE	2		
7	AT210688	OIL LINE	1		
8	AT210690	OIL LINE	1		
9	T77932	O-RING	4		
10	AT224665	BRACKET	2		
11	14M7296	FLANGE NUT	4		M10
12	28H3381	SPACER	4		0.493" X 0.675" X 5/8"
13	T167921	CLAMP	2		
14	AT167553	HYDRAULIC HOSE - FABRICATE	1		
15	19M7805	SCREW	4		M10 X 45
16	T77858	O-RING	6		
17	19M7835	SCREW	4		
18	24M7296	WASHER	4		(SUB FOR T148712)
19	AT210689	OIL LINE	1		
20	AT210691	OIL LINE	1		
24	AT220900	OIL LINE	1		
25	T176474	CLAMP	2		
26	AT219925	OIL LINE	1		
27	AR85327	CLAMP	2		
28	AT206698	OIL LINE	2		
29	AT220901	OIL LINE	1		
30	AT225575	OIL LINE	1		

THIRD FUNCTION AUXILIARY HYDRAULICS (WITH TOOL CARRIER)
CIRCUIT HYDRAULIQUE AUXILIAIRE TROISIEME FONCTION (AVEC PORTE-OUTILS)
SISTEMA HIDRAULICO AUXILIAR DE TERCERA FUNCION (CON PORTAHERRAMIENTAS)

T194781 -UN-24OCT03

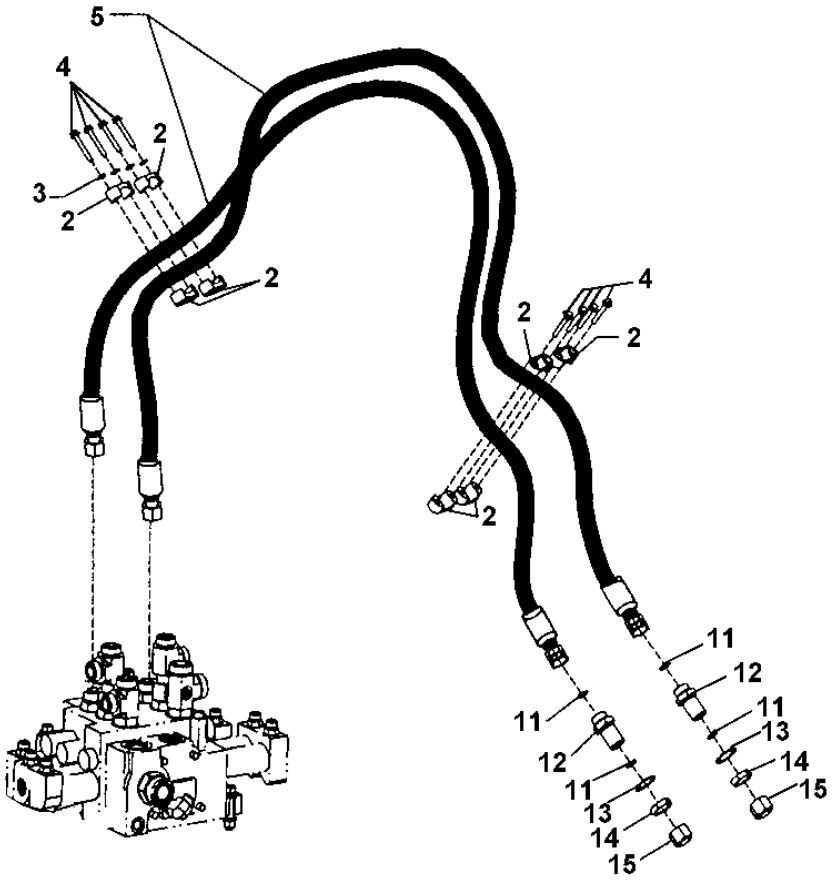

T194781

THIRD FUNCTION AUXILIARY HYDRAULICS (WITH TOOL CARRIER)
CIRCUIT HYDRAULIQUE AUXILIAIRE TROISIEME FONCTION (AVEC PORTE-OUTILS)
SISTEMA HIDRAULICO AUXILIAR DE TERCERA FUNCION (CON PORTAHERRAMIENTAS)

KEY	*PART NO.*	*PART NAME*	*QTY.*	*SERIAL NO.*	*REMARKS*
2	T147188	CLAMP	8		
3	24M7238	WASHER	4		8.700 X 17 X 2 MM
4	19M7801	SCREW	8		M8 X 60
5	AT182270	HYDRAULIC HOSE - FABRICATE	2		
11	T77858	O-RING	6		
12	38H1276	ADAPTER FITTING	2		
13	T174275	LOCK WASHER	2		
14	T78707	NUT	2		
15	38H1418	FITTING	2		

FOURTH FUNCTION AUXILIARY HYDRAULICS (WITH TOOL CARRIER)
CIRCUIT HYDRAULIQUE AUXILIAIRE 4EME FONCTION (AVEC PORTE-OUTILS)
SISTEMA HIDRAULICO AUXILIAR DE CUARTA FUNCION (CON PORTAHERRAMIENTAS)

T194790 -UN-24OCT03

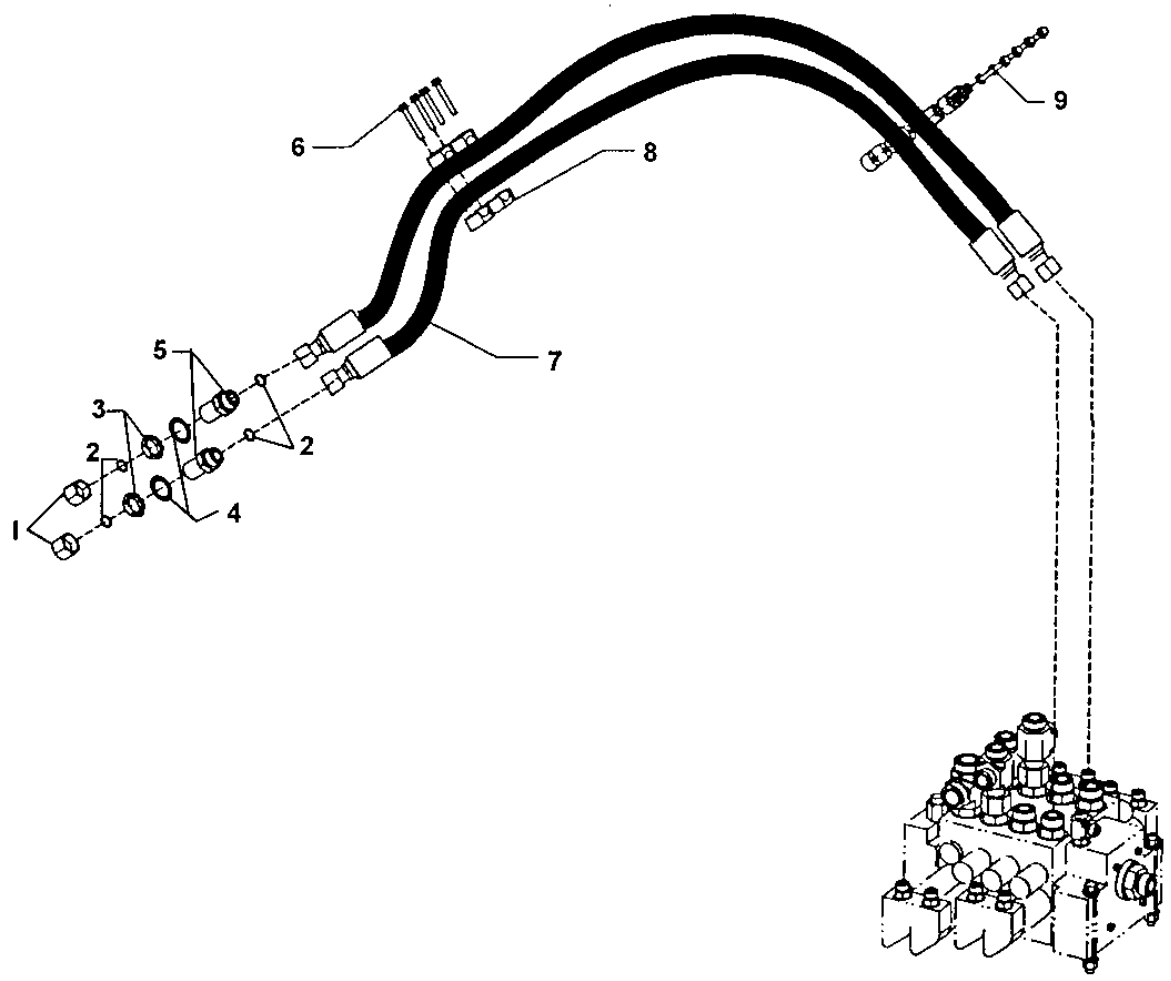

T194790

FOURTH FUNCTION AUXILIARY HYDRAULICS (WITH TOOL CARRIER)
CIRCUIT HYDRAULIQUE AUXILIAIRE 4EME FONCTION (AVEC PORTE-OUTILS)
SISTEMA HIDRAULICO AUXILIAR DE CUARTA FUNCION (CON PORTAHERRAMIENTAS)

KEY	*PART NO.*	*PART NAME*	*QTY.*	*SERIAL NO.*	*REMARKS*
1	38H1418	FITTING	4		
2	T77858	O-RING	14		
3	T78707	NUT	4		
4	T174275	LOCK WASHER	4		
5	38H1276	ADAPTER FITTING	4		
6	19M7801	SCREW	16		M8 X 60
7	AT182270	HYDRAULIC HOSE - FABRICATE	4		
8	T147188	CLAMP	16		
9	24M7238	WASHER	8		8.700 X 17 X 2 MM

TWO LEVER PILOT CONTROLLER
CONTROLEUR PILOTE DEUX LEVIERS
CONTROLADOR PILOTO DE DOS PALANCAS

TX1017447 -UN-19JAN07

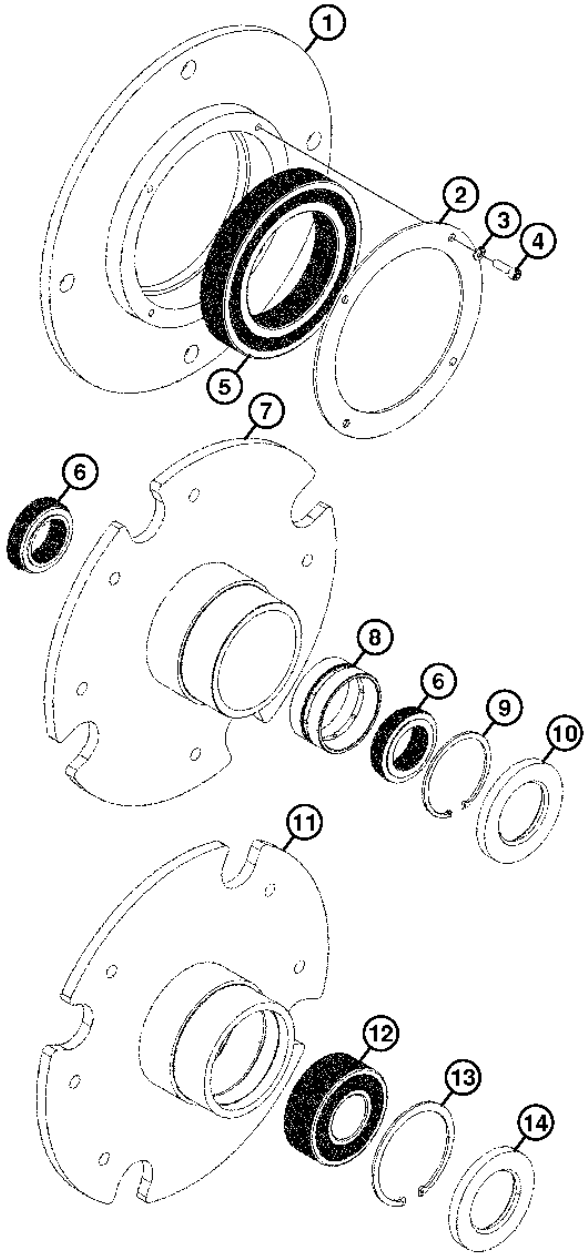

TX1017447

TWO LEVER PILOT CONTROLLER
CONTROLEUR PILOTE DEUX LEVIERS
CONTROLADOR PILOTO DE DOS PALANCAS

KEY	*PART NO.*	*PART NAME*	*QTY.*	*SERIAL NO.*	*REMARKS*
1	14M7397	LOCK NUT	4		M6
2	38H1160	ADAPTER FITTING	2		
3	R26448	O-RING	2		
4	T77613	O-RING	2		
5	63H1001	FITTING	4		
6	R26448	O-RING	4		
7	AT225425	HYDR./PILOT CONTROL VALVE	1		(COMPONENTS ON SEPERATE PAGE)
8	AT226454	HYDRAULIC HOSE - FABRICATE	2		
9	T77613	O-RING	2		
10	AT300936	PLATE	1		
11	T200729	LABEL	1		(FINGERTIP CONTROLS)
12	T81029	NUT	2		
13	14M7400	LOCK NUT	2		M10
14	19M7784	SCREW	2		M10 X 20
15	19M7806	SCREW	2		M10 X 50
16	24M7239	WASHER	2		10.700 X 21 X 2.500 MM
17	TY22493	HOSE CLAMP	1		(SUB FOR AR89602)
18	AT226615	HYDRAULIC HOSE - FABRICATE	4		
19	H77698	TIE BAND	6		
20	N189220	TIE BAND	4		
21	T154342	RETAINER	1		
22	T157443	ANGLE	1		
50	**AT305687**	**MOUNTING PARTS**	**1**		**(WHOLE GOODS) (JOYSTICK TO TWO LEVER CONVERSION KIT)**

TWO LEVER PILOT CONTROLLER COMPONENTS
COMPOSANTS DE CONTROLEUR PILOTE DEUX LEVIERS
COMPONENTES DEL CONTROLADOR PILOTO DE DOS PALANCAS

TX1003910 -UN-23FEB06

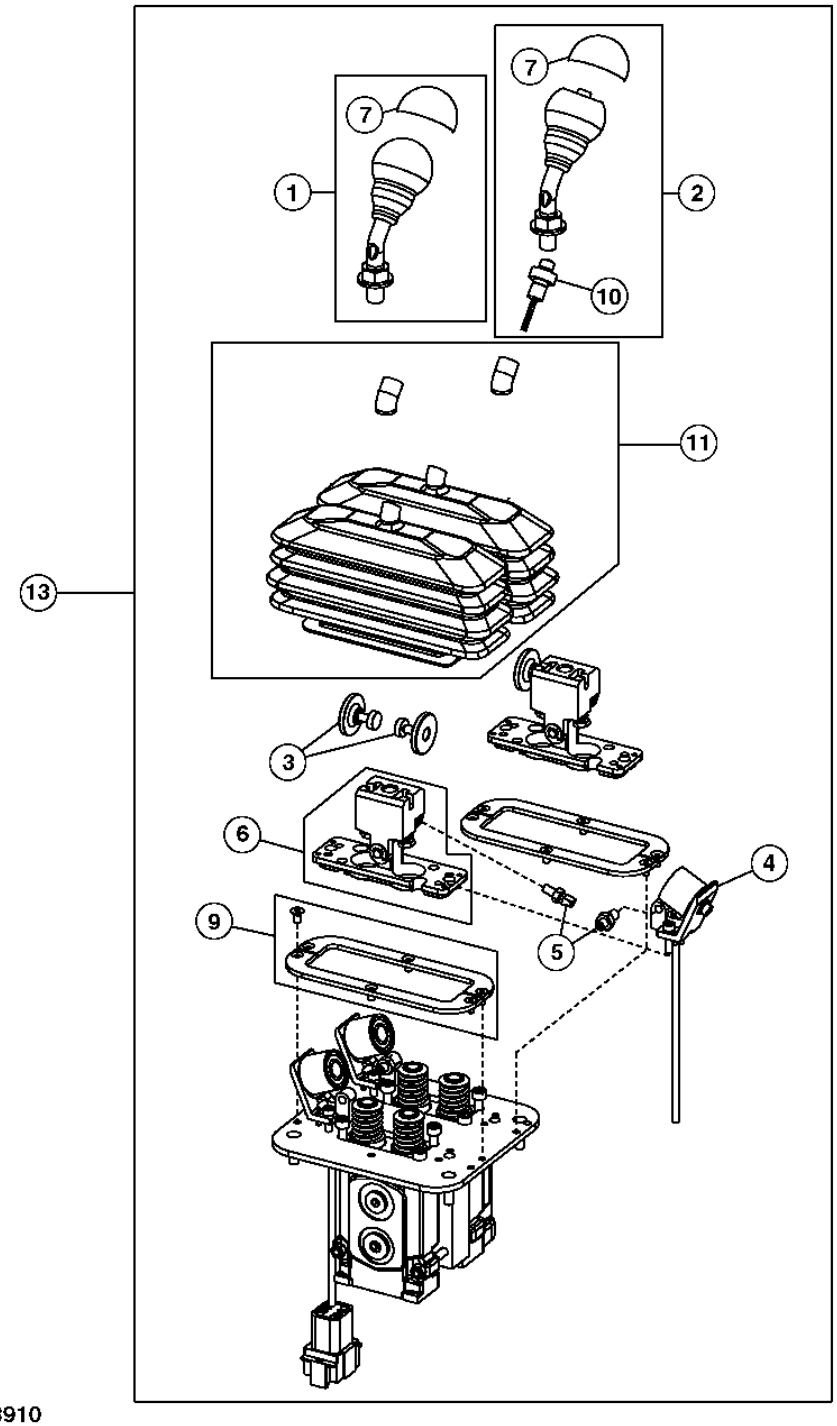

TX1003910

TWO LEVER PILOT CONTROLLER COMPONENTS
COMPOSANTS DE CONTROLEUR PILOTE DEUX LEVIERS
COMPONENTES DEL CONTROLADOR PILOTO DE DOS PALANCAS

KEY	*PART NO.*	*PART NAME*	*QTY.*	*SERIAL NO.*	*REMARKS*
1	AT227925	LEVER	1		
2	AT227926	LEVER	1		(FOR USE WITH KICKDOWN SWITCH)
3	AT227928	ARMATURE	2		
4	AT227927	SOLENOID	2		
5	AT227929	HYDR./PILOT CONTROL VALVE	4		
6	AT227930	PLATE	2		
7	AT318123	BOOT	2		(KNOB BOOT)
9	AT227933	PLATE	2		
10	AT226119	SWITCH	1		(KICKDOWN)
11	AT303619	KIT	1		(BOOT ASSEMBLY)
13	AT225425	HYDR./PILOT CONTROL VALVE	1		

TWO LEVER PILOT CONTROLLER WITH AUXILARY
CONTROLEUR PILOTE DEUX LEVIERS AVEC AUXILIAIRE
CONTROLADOR PILOTO DE DOS PALANCAS CON MANDO AUXILIAR

T194478 -UN-16SEP03

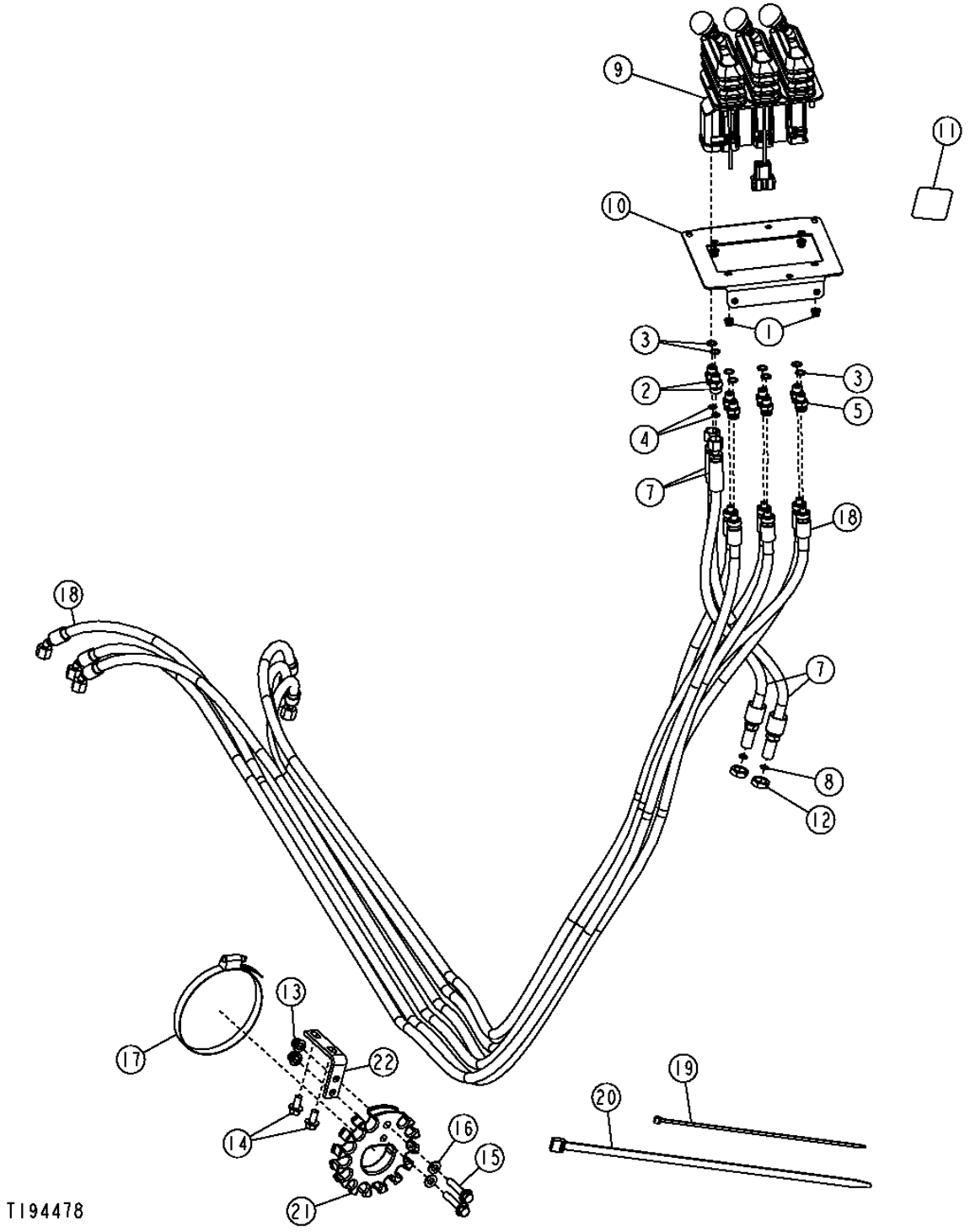

TWO LEVER PILOT CONTROLLER WITH AUXILARY
CONTROLEUR PILOTE DEUX LEVIERS AVEC AUXILIAIRE
CONTROLADOR PILOTO DE DOS PALANCAS CON MANDO AUXILIAR

KEY	*PART NO.*	*PART NAME*	*QTY.*	*SERIAL NO.*	*REMARKS*
1	14M7397	LOCK NUT	4		M6
2	38H1160	ADAPTER FITTING	2		
3	R26448	O-RING	8		
4	T77613	O-RING	2		
5	63H1001	FITTING	6		
7	AT226454	HYDRAULIC HOSE - FABRICATE	1		
8	T77613	O-RING	2		
9	AT300154	HYDR./PILOT CONTROL VALVE	1		(COMPONENTS ON SEPERATE PAGE)
10	AT300156	PLATE	1		
11	T200729	LABEL	1		(FINGERTIP CONTROLS)
12	T81029	NUT	2		
13	14M7400	LOCK NUT	2		M10
14	19M7784	SCREW	2		M10 X 20
15	19M7806	SCREW	2		M10 X 50
16	24M7239	WASHER	2		10.700 X 21 X 2.500 MM
17	TY22493	HOSE CLAMP	1		(SUB FOR AR89602)
18	AT226615	HYDRAULIC HOSE - FABRICATE	6		
19	H77698	TIE BAND	6		
20	N189220	TIE BAND	4		
21	T154342	RETAINER	1		
22	T157443	ANGLE	1		
..	**AT305692**	**FIELD INSTALLATION KIT**	**1**		**(WHOLE GOODS) (JOYSTICK WITH AUX. TO TWO LEVER WITH AUX. CONVERSION KIT)**
..	**AT307584**	**CONTROL LEVER**	**1**		**(WHOLE GOODS) (ADDITION OF AUXILIARY TO TOOL CARRIER TWO LEVER CONTROLLER KIT)**
..	**AT307436**	**CONTROL LEVER**	**1**	**-594432**	**(WHOLE GOODS) (ADDITION OF AUXILIARY TO TWO LEVER CONTROLLER KIT)**
..	**AT316537**	**CONTROL LEVER**	**1**	**594433-**	**(WHOLE GOODS) (ADDITION OF AUXILIARY TO TWO LEVER CONTROLLER KIT)**
..	**AT314815**	**CONTROL LEVER**	**1**	**594433-**	**(WHOLE GOODS) (ADDITION OF AUXILIARY TO POWERLLEL LINKAGE TWO LEVER CONTROLLER KIT)**

SINGLE AND DUAL AUXILIARY CONTROLLER COMPONENTS
COMPOSANTS CONTROLEUR AUXILIAIRE SIMPLE ET DOUBLE
COMPONENTES DE UNIDAD DE CONTROL AUXILIAR SIMPLE Y DOBLE

T212876 -UN-19JUL05

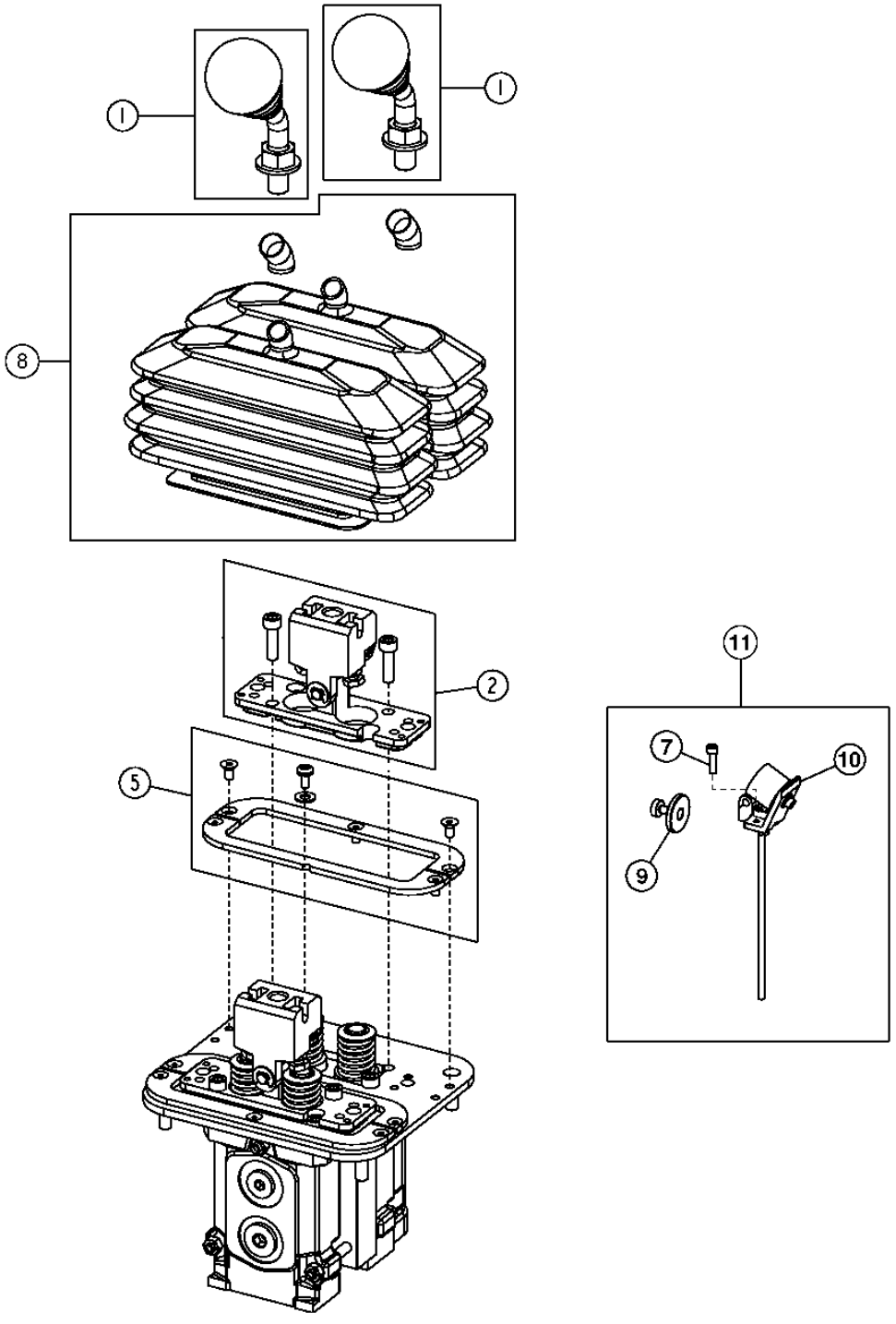

T212876

SINGLE AND DUAL AUXILIARY CONTROLLER COMPONENTS
COMPOSANTS CONTROLEUR AUXILIAIRE SIMPLE ET DOUBLE
COMPONENTES DE UNIDAD DE CONTROL AUXILIAR SIMPLE Y DOBLE

KEY	*PART NO.*	*PART NAME*	*QTY.*	*SERIAL NO.*	*REMARKS*
1	AT227925	LEVER	1		(WITHOUT SWITCH)
	AT227926	LEVER	1		(WITH SWITCH)
2	AT227930	PLATE	1		
3	AT226119	SWITCH	1		(KICKDOWN) (NOT ILLUSTRATED)
5	AT227933	PLATE	1		
7	AT325612	BOLT	2		
8	AT303619	KIT	1		BOOT ASSEMBLY
9	AT227928	ARMATURE	1		
10	AT227927	SOLENOID	1		
11	.....	KIT	1		AUXILIARY CONTROLLER DETENT KIT (AT227957 NLA) (FURNISH AT305603)
..	**AT305603**	**FIELD INSTALLATION KIT**	**1**		**(ADD DETENTS TO AUXILIARY KIT) (INCLUDES AT227927, AT227928, (2) AT325612)**

JOYSTICK PILOT CONTROLLER
CONTROLEUR PILOTE MANCHE A BALAI
UNIDAD DE CONTROL PILOTO DE PALANCA

TX1008131 -UN-19MAY06

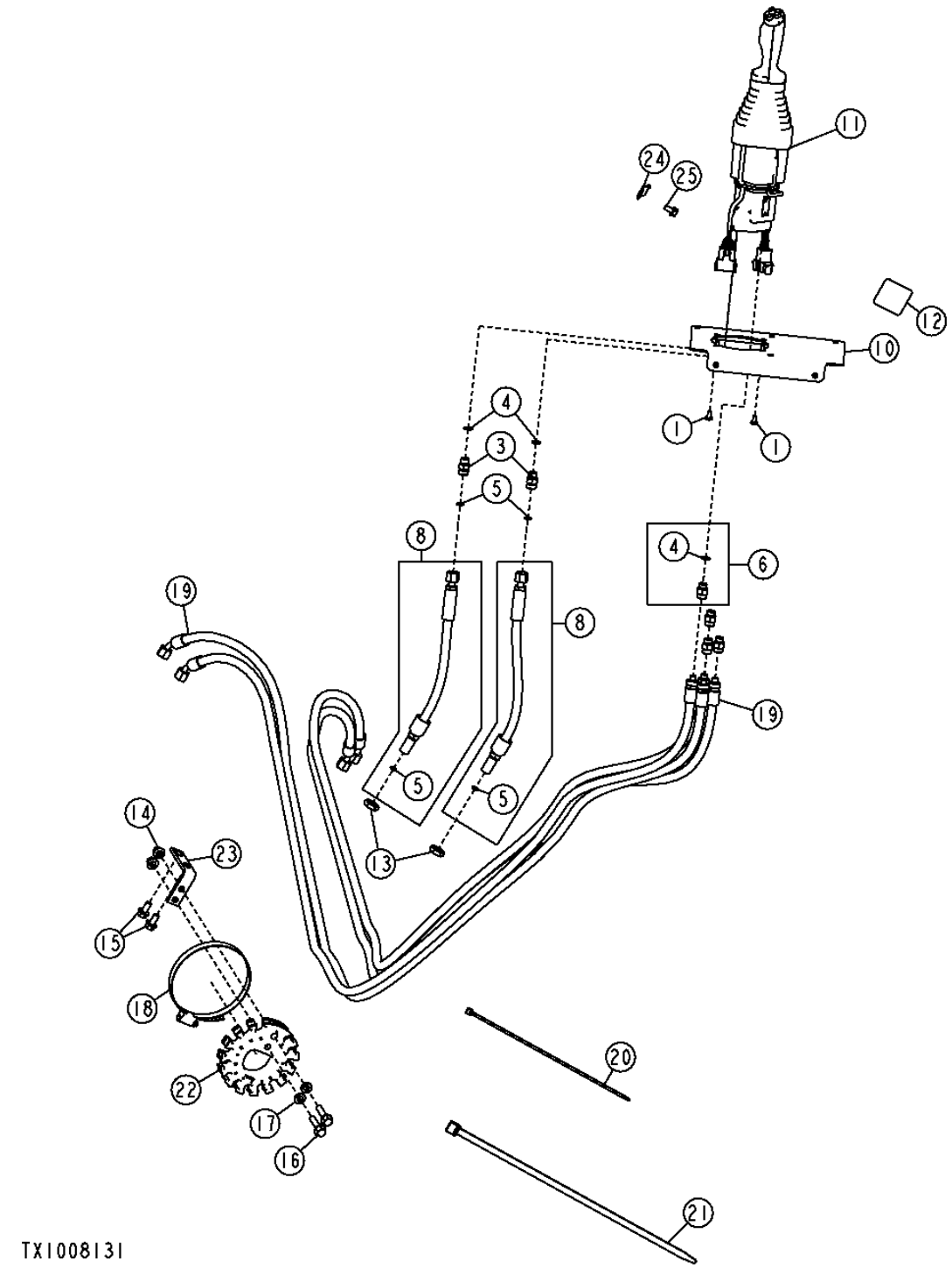

JOYSTICK PILOT CONTROLLER
CONTROLEUR PILOTE MANCHE A BALAI
UNIDAD DE CONTROL PILOTO DE PALANCA

KEY	PART NO.	PART NAME	QTY.	SERIAL NO.	REMARKS
1	21M7285	SCREW	4		M6 X 12
3	38H1160	ADAPTER FITTING	2		
4	R26448	O-RING	6		
5	T77613	O-RING	4		
6	63H1001	FITTING	4		
8	AT228703	HYDRAULIC HOSE - FABRICATE	2		
10	AT300662	PLATE	1		
11	AT315847	HYDR./PILOT CONTROL VALVE	1		(SUB FOR AT301458) (W/O FNR)
	AT315846	HYDR./PILOT CONTROL VALVE	1		(SUB FOR AT300664) (W/ FNR)
	AT309843	WIRING HARNESS	1	-600915	(KICKDOWN HARNESS FOR CONTROLLER WITHOUT FNR) (NOT ILLUSTRATED)
12	T203670	LABEL	1		(W/O FNR)
	T197182	LABEL	1		(W/ FNR)
13	T81029	NUT	2		
14	14M7400	LOCK NUT	2		M10
15	19M7784	SCREW	2		M10 X 20
16	19M7806	SCREW	2		M10 X 50
17	24M7239	WASHER	2		10.700 X 21 X 2.500 MM
18	TY22493	HOSE CLAMP	1		(SUB FOR AR89602)
19	AT226615	HYDRAULIC HOSE - FABRICATE	4		
20	H77698	TIE BAND	6		
21	N189220	TIE BAND	4		
22	T154342	RETAINER	1		
23	T157443	ANGLE	1		
24	57M8736	ELEC. CONNECTOR ACCESSORY	1		
25	19M7865	SCREW	1		M8 X 16
..	**AT305690**	**FIELD INSTALLATION KIT**	**1**		**(TWO LEVER TO JOYSTICK CONVERSION KIT) (W/ FNR)**
..	.....	FIELD INSTALLATION KIT	1		(AT311817 NLA) (TWO LEVER TO JOYSTICK CONVERSION KIT) (W/O FNR)

JOYSTICK PILOT CONTROLLER COMPONENTS
COMPOSANTS CONTROLEUR PILOTE MANCHE A BALAI
COMPONENTES DE UNIDAD DE CONTROL PILOTO DE PALANCA

T196147 -UN-13NOV03

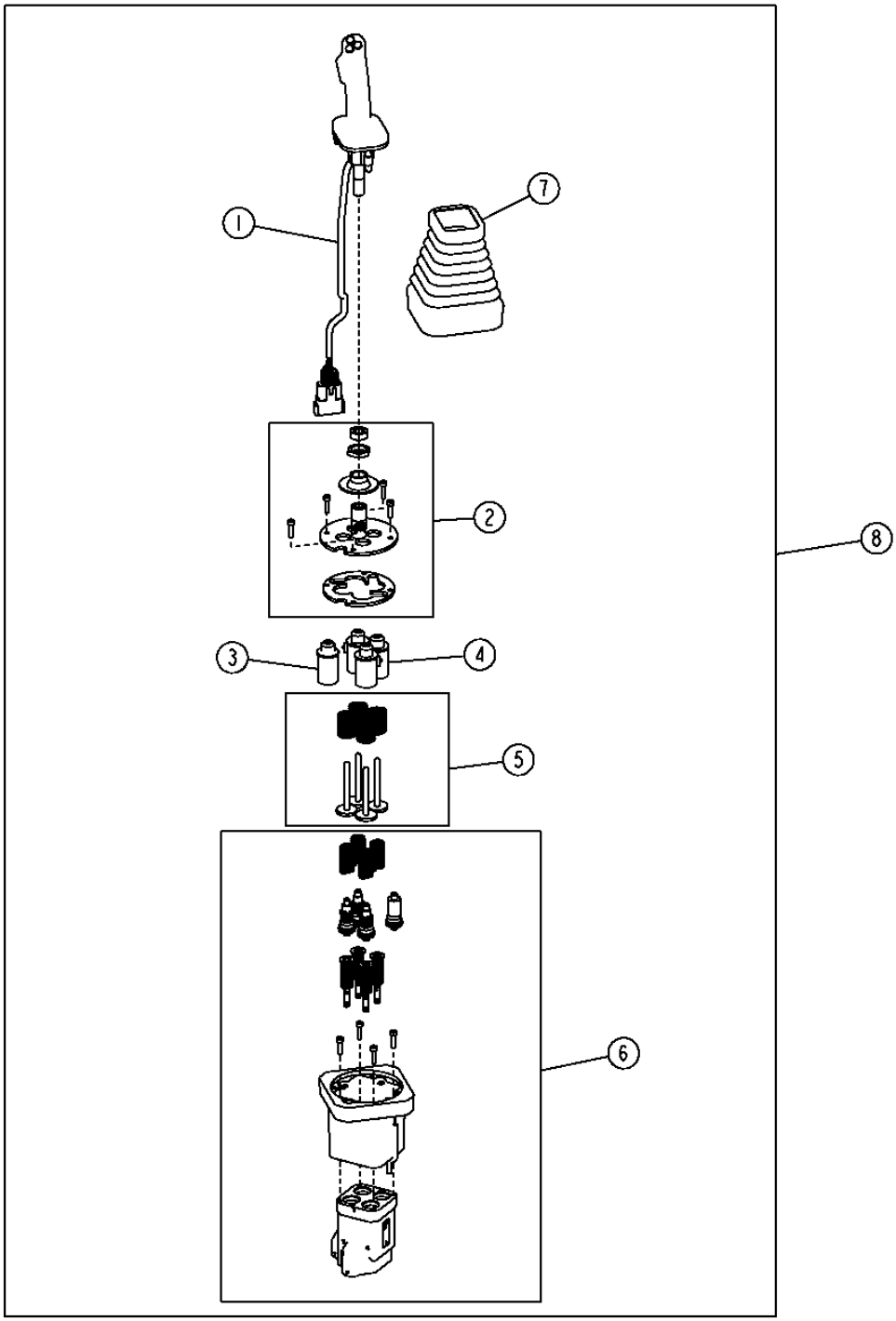

T196147

JOYSTICK PILOT CONTROLLER COMPONENTS
COMPOSANTS CONTROLEUR PILOTE MANCHE A BALAI
COMPONENTES DE UNIDAD DE CONTROL PILOTO DE PALANCA

KEY	*PART NO.*	*PART NAME*	*QTY.*	*SERIAL NO.*	*REMARKS*
1	AT315458	HANDLE	1		(SUB FOR AT302032) (W/O FNR)
	AT315459	HANDLE	1		(SUB FOR AT302031) (W/ FNR)
2	AT307636	UNIVERSAL JOINT	1		
3	AT307638	GUIDE	1		
4	AT307637	SOLENOID	3		(THREE USES - ORDER AS REQUIRED)
5	AT307640	PIN	1		
6	AT307641	OIL PRESSURE REG. VALVE	1		
7	T205941	BOOT	1		
8	AT315847	HYDR./PILOT CONTROL VALVE	1		(SUB FOR AT301458) (W/O FNR)
	AT315846	HYDR./PILOT CONTROL VALVE	1		(SUB FOR AT300664) (W/ FNR)
9	AT309843	WIRING HARNESS	1	-600915	(KICKDOWN HARNESS FOR CONTROLLER WITHOUT FNR) (NOT ILLUSTRATED)

JOYSTICK PILOT CONTROLLER WITH AUXILARY
CONTROLEUR PILOTE MANCHE BALAI AVEC AUXILIAIRE
UNIDAD DE CONTROL PILOTO DE LA PALANCA CON MANDO AUXILIAR

T194486 -UN-22SEP03

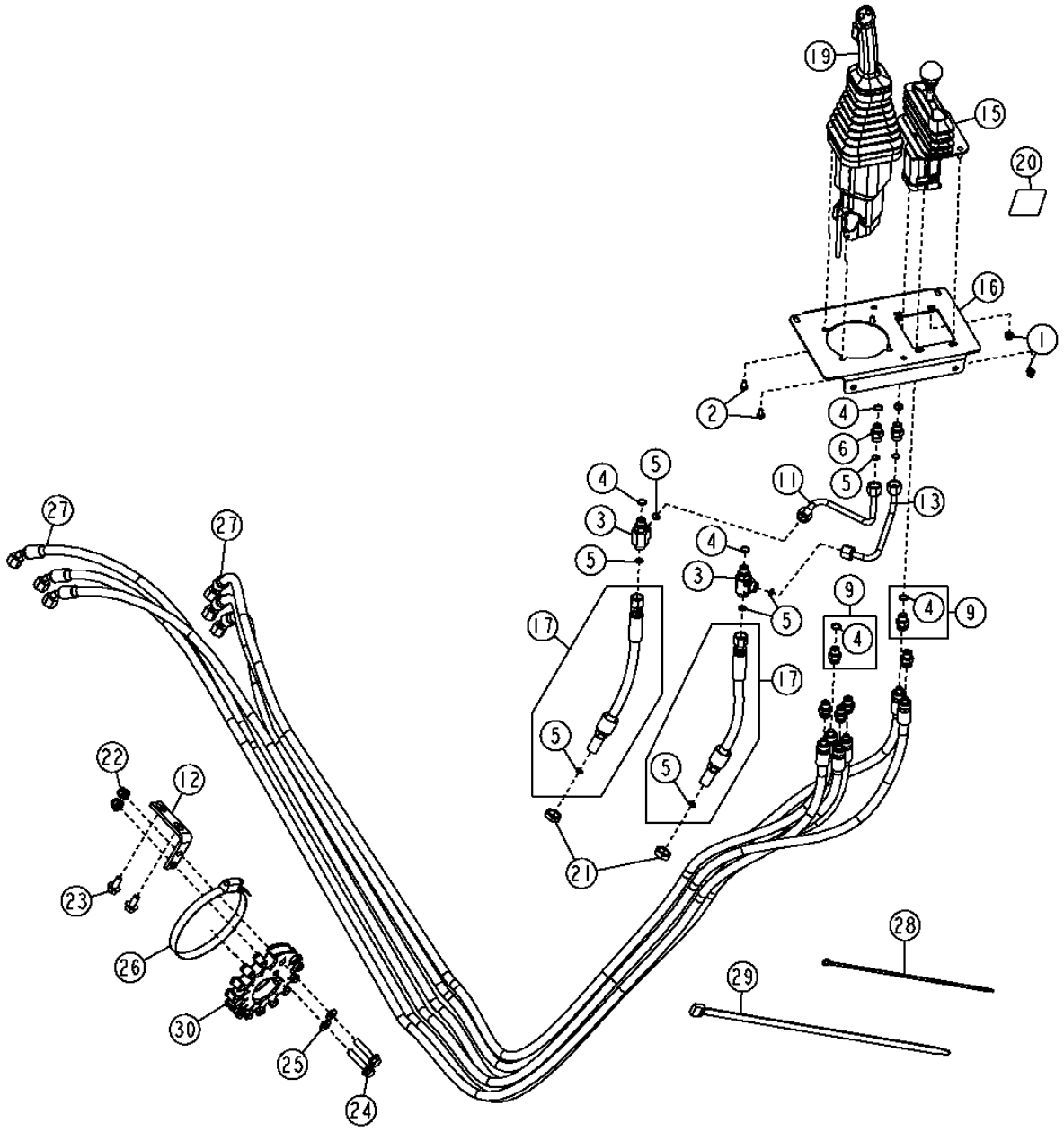

JOYSTICK PILOT CONTROLLER WITH AUXILARY
CONTROLEUR PILOTE MANCHE BALAI AVEC AUXILIAIRE
UNIDAD DE CONTROL PILOTO DE LA PALANCA CON MANDO AUXILIAR

KEY	*PART NO.*	*PART NAME*	*QTY.*	*SERIAL NO.*	*REMARKS*
1	14M7397	LOCK NUT	4		M6
2	21M7285	SCREW	4		M6 X 12
3	38H1023	TEE FITTING	2		
4	R26448	O-RING	10		
5	T77613	O-RING	8		
6	38H1160	ADAPTER FITTING	2		
9	63H1001	FITTING	6		
11	AT226132	OIL LINE	1		
12	T157443	ANGLE	1		
13	AT226133	OIL LINE	1		
15	AT228250	HYDR./PILOT CONTROL VALVE	1		
16	AT228261	PLATE	1		
17	AT228703	HYDRAULIC HOSE - FABRICATE	2		
19	AT315847	HYDR./PILOT CONTROL VALVE	1		(SUB FOR AT301458) (W/O FNR)
	AT315846	HYDR./PILOT CONTROL VALVE	1		(SUB FOR AT300664) (W/ FNR)
20	T203670	LABEL	1		(W/O FNR)
	T197182	LABEL	1		(W/ FNR)
21	T81029	NUT	2		
22	14M7400	LOCK NUT	2		M10
23	19M7784	SCREW	2		M10 X 20
24	19M7806	SCREW	2		M10 X 50
25	24M7239	WASHER	2		10.700 X 21 X 2.500 MM
26	TY22493	HOSE CLAMP	1		(SUB FOR AR89602)
27	AT226615	HYDRAULIC HOSE - FABRICATE	6		
28	H77698	TIE BAND	6		
29	N189220	TIE BAND	4		
30	T154342	RETAINER	1		
31	AT309843	WIRING HARNESS	1	-600915	(KICKDOWN HARNESS FOR CONTROLLER WITHOUT FNR) (NOT ILLUSTRATED)
..	**AT305693**	**FIELD INSTALLATION KIT**	**1**		**(WHOLE GOODS) (TWO LEVER WITH AUX. TO JOYSTICK WITH AUX. CONVERSION KIT WITH FNR)**
..	.....	FIELD INSTALLATION KIT	1		(WHOLE GOODS) (AT311818 NLA) (TWO LEVER WITH AUX. TO JOYSTICK WITH AUX. CONVERSION KIT WITH_OUT FNR)
..	**AT307006**	**CONTROL LEVER**	**1**	**-594432**	**(WHOLE GOODS) (ADDITION OF AUXILIARY TO JOYSTICK CONTROLLER KIT)**
..	**AT316507**	**CONTROL LEVER**	**1**	**594433-**	**(WHOLE GOODS) (ADDITION OF AUXILIARY TO JOYSTICK CONTROLLER KIT)**
..	**AT314620**	**CONTROL LEVER**	**1**	**594433-**	**(WHOLE GOODS) (ADDITION OF AUXILIARY TO POWERLLEL LINKAGE JOYSTICK CONTROLLER KIT)**
..	**AT307655**	**CONTROL LEVER**	**1**		**(WHOLE GOODS) (ADDITION OF AUXILIARY TO TOOL CARRIER JOYSTICK CONTROLLER KIT)**

JOYSTICK FNR CONVERSION KIT
KIT CONVERSION SENS MARCHE MANCHE A BALAI
JUEGO DE CONVERSION DEL SELECTOR DE SENTIDO DE MARCHA DE PALANCA

T199696 -UN-05MAY04

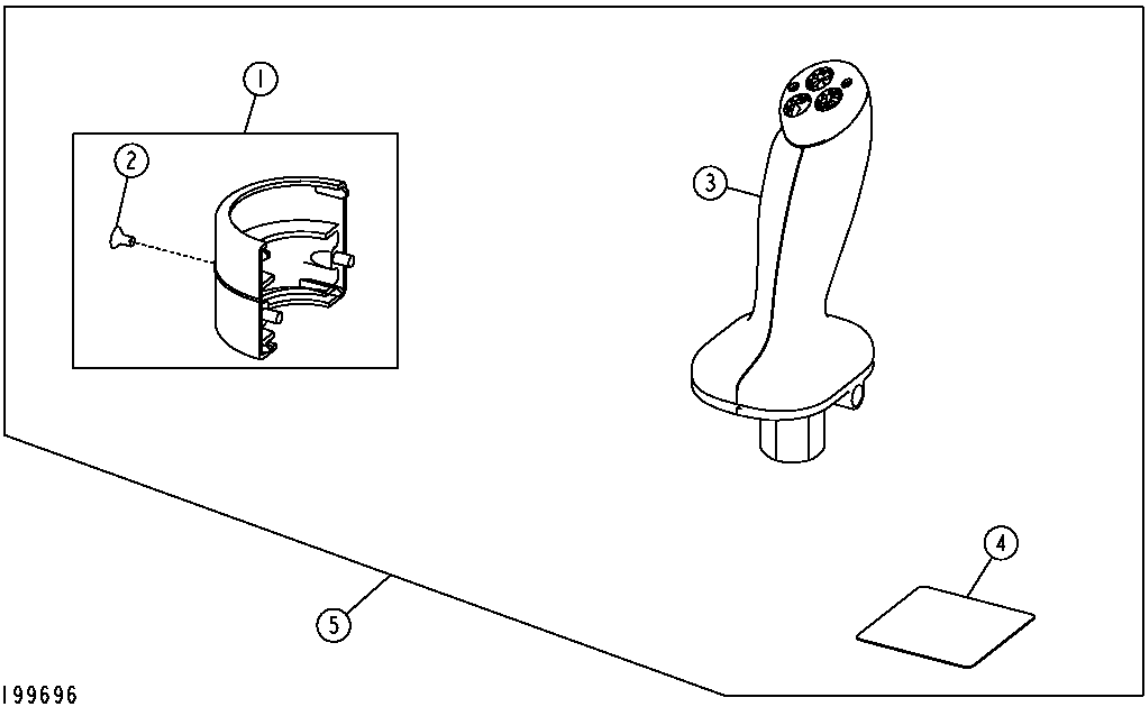

JOYSTICK FNR CONVERSION KIT
KIT CONVERSION SENS MARCHE MANCHE A BALAI
JUEGO DE CONVERSION DEL SELECTOR DE SENTIDO DE MARCHA DE PALANCA

KEY	*PART NO.*	*PART NAME*	*QTY.*	*SERIAL NO.*	*REMARKS*
1	AT300921	CLAMP	1		
2	21M7258	SCREW	1		
3	AT315459	HANDLE	1		(SUB FOR AT302031)
4	T197182	LABEL	1		
5	AT313087	FIELD INSTALLATION KIT	1		

DUAL JOYSTICK PILOT CONTROLLER
CONTROLEUR PILOTE MANCHE A BALAI DOUBLE
UNIDAD DE CONTROL PILOTO CON PALANCA DOBLE

T194488 -UN-19SEP03

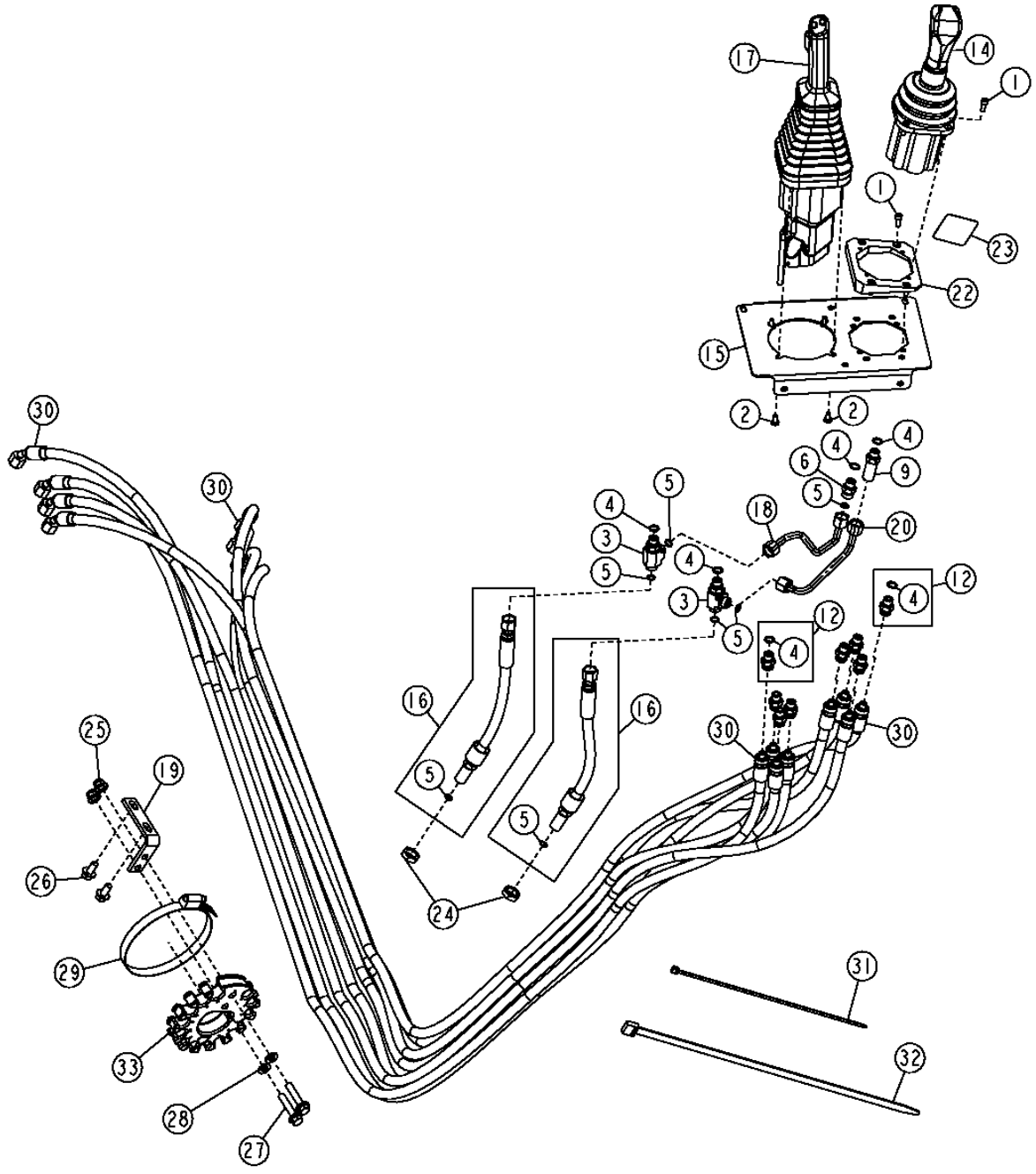

THIS PARTS LISTING IS CONTINUED

DUAL JOYSTICK PILOT CONTROLLER
CONTROLEUR PILOTE MANCHE A BALAI DOUBLE
UNIDAD DE CONTROL PILOTO CON PALANCA DOBLE

KEY	*PART NO.*	*PART NAME*	*QTY.*	*SERIAL NO.*	*REMARKS*
1	19M8553	SCREW	8		M6 X 16
2	21M7285	SCREW	4		M6 X 12
3	38H1023	TEE FITTING	2		
4	R26448	O-RING	12		
5	T77613	O-RING	8		
6	38H1160	ADAPTER FITTING	1		
9	38H1212	ADAPTER FITTING	1		
12	63H1001	FITTING	8		
14	AT208760	ELECTRONIC CONTROL UNIT	1		(COMPONENTS ON SEPERATE PAGE)
15	AT228260	PLATE	1		
16	AT228703	HYDRAULIC HOSE - FABRICATE	2		
17	AT315847	HYDR./PILOT CONTROL VALVE	1		(SUB FOR AT301458) (W/O FNR) (COMPONENTS ON SEPERATE PAGE)
	AT315846	HYDR./PILOT CONTROL VALVE	1		(SUB FOR AT300664) (W/ FNR) (COMPONENTS ON SEPERATE PAGE)
18	AT304880	OIL LINE	1		
19	T157443	ANGLE	1		
20	AT304881	OIL LINE	1		
22	T201887	SPACER	1		
23	T203670	LABEL	1		(W/O FNR)
	T197182	LABEL	1		(W/ FNR)
24	T81029	NUT	2		
25	14M7400	LOCK NUT	2		M10
26	19M7784	SCREW	2		M10 X 20
27	19M7806	SCREW	2		M10 X 50
28	24M7239	WASHER	2		10.700 X 21 X 2.500 MM
29	TY22493	HOSE CLAMP	1		(SUB FOR AR89602)
30	AT226615	HYDRAULIC HOSE - FABRICATE	8		
31	H77698	TIE BAND	6		
32	N189220	TIE BAND	4		
33	T154342	RETAINER	1		
34	AT309843	WIRING HARNESS	1	-600915	(KICKDOWN HARNESS FOR CONTROLLER WITHOUT FNR) (NOT ILLUSTRATED)
..	**AT307449**	**CONTROL LEVER**	**1**	**-594432**	**(WHOLE GOODS) (ADDITION OF AUXILIARY JOYSTICK TO JOYSTICK CONTROLLER KIT)**
..	**AT316518**	**CONTROL LEVER**	**1**	**594433-**	**(WHOLE GOODS) (ADDITION OF AUXILIARY JOYSTICK TO JOYSTICK CONTROLLER KIT)**
..	**AT314763**	**CONTROL LEVER**	**1**	**594433-**	**(WHOLE GOODS) (ADDITION OF AUXILIARY JOYSTICK TO POWERLLEL LINKAGE JOYSTICK CONTROLLER KIT)**
..	**AT307620**	**CONTROL LEVER**	**1**		**(WHOLE GOODS) (ADDITION OF AUXILIARY JOYSTICK TO TOOL CARRIER JOYSTICK CONTROLLER KIT)**

AUXILIARY JOYSTICK PILOT CONTROLLER COMPONENTS
COMPOSANTS CONTROLEUR PILOTE MANCHE BALAI AUXILIAIRE
COMPONENTES DE LA UNIDAD DE CONTROL PILOTO DE LA PALANCA AUXILIAR

TX1006297 -UN-24APR06

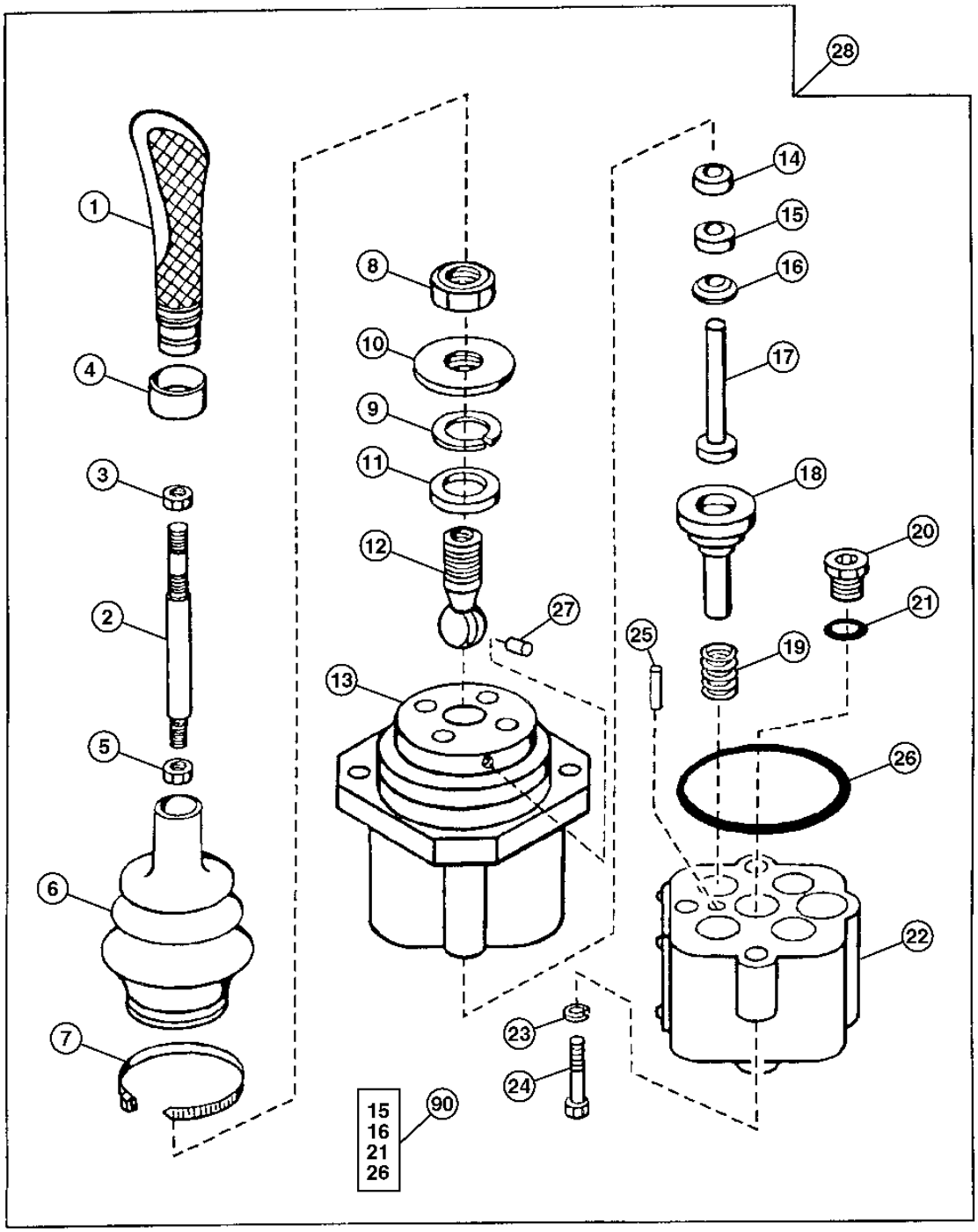

TX1006297

AUXILIARY JOYSTICK PILOT CONTROLLER COMPONENTS
COMPOSANTS CONTROLEUR PILOTE MANCHE BALAI AUXILIAIRE
COMPONENTES DE LA UNIDAD DE CONTROL PILOTO DE LA PALANCA AUXILIAR

KEY	*PART NO.*	*PART NAME*	*QTY.*	*SERIAL NO.*	*REMARKS*
1	AT172629	GRIP	1		(ALSO ORDER H77698 AND AT208911)
2	AT210145	LEVER	1		
3	T170269	NUT	1		
4	AT208911	RETAINER	1		
5	T172986	NUT	1		
6	T172988	BOOT	1		
7	H77698	TIE BAND	1		
8	T172985	NUT	1		
9	T172987	SNAP RING	1		
10	.....	PLATE	1		(AT119017 NLA)
11	.....	RETAINER	1		(AT119378 NLA)
12	.....	BALL	1		(AT119018 NLA)
13	.....	HOUSING	1		UPPER, (SUB AT208760)
14	T131617	RING	4		
15	.....	RETAINER	4		(SUB AT210247)
16	.....	SEAL	4		(SUB AT210247)
17	T102958	PLUNGER	4		
18	.....	SPOOL	4		(SUB AT208760)
19	T131624	SPRING	4		
20	AT49216	FITTING PLUG	1		
21	R26448	O-RING	1		
22	.....	HOUSING	1		LOWER, (SUB AT208760)
23	12M7133	LOCK WASHER	4		6 MM
24	19M7966	SCREW	4		M6 X 25
25	T102961	DOWEL PIN	1		
26	.....	SEAL	1		(SUB AT210247)
27	T102963	PIN FASTENER	1		ANTI-ROTATION
28	AT208760	ELECTRONIC CONTROL UNIT	1		
90	AT210247	SEAL KIT	1		

RIDE CONTROL AND HYDRAULIC HOSES (S.N. -594432)
COMMANDE DE SUSPENSION ET FLEXIBLES HYDRAULIQUES (S.N. -594432)
CONTROL DE SUSPENSION Y MANGUERAS HIDRAULICAS (S.N. -594432)

T157361 -UN-17JUL02

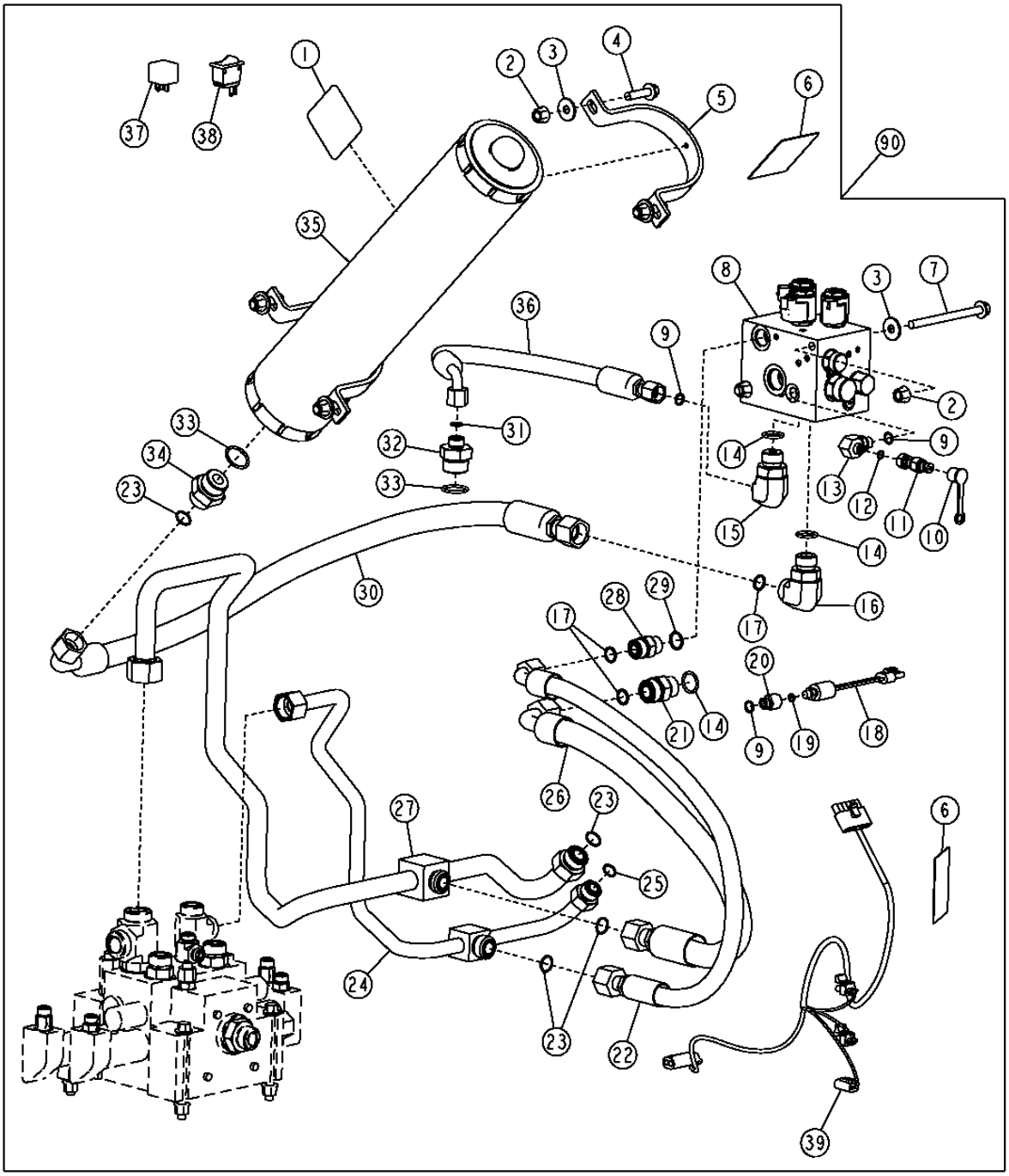

RIDE CONTROL AND HYDRAULIC HOSES (S.N. -594432)
COMMANDE DE SUSPENSION ET FLEXIBLES HYDRAULIQUES (S.N. -594432)
CONTROL DE SUSPENSION Y MANGUERAS HIDRAULICAS (S.N. -594432)

KEY	*PART NO.*	*PART NAME*	*QTY.*	*SERIAL NO.*	*REMARKS*
1	T180944	LABEL	1		(ACCUMULATOR)
2	14M7400	LOCK NUT	6		
3	24M7296	WASHER	6		
4	19M7804	SCREW	4		
5	T146490	CLAMP	2		
6	T146792	SAFETY SIGN	2		(RIDE CONTROL WARNING)
7	19M7898	SCREW	2		
8	AT332291	HYD ACTUATED CONTROL VALVE	1		(RIDE CONTROL VALVE) (SUB FOR AT224301)
9	R26448	O-RING	3		
10	R77175	COVER	5		
11	RE60700	DIAGNOSTIC COUPLING	1		
12	T77814	O-RING	1		
13	38H1009	ELBOW FITTING	1		
14	U12547	O-RING	3		
15	38H1013	ELBOW FITTING	1		
16	38H1007	ELBOW FITTING	1		
17	R26375	O-RING	3		
18	AT223535	PRESSURE SWITCH	1		(PRESSURE) (STANDARD)
	AT222372	SWITCH	1		(PRESSURE) (HARSH ENVIRONMENT)
19	R26287	O-RING	1		
20	T158047	ADAPTER FITTING	2		
21	38H1163	ADAPTER FITTING	1		
22	AT225445	HYDRAULIC HOSE - FABRICATE	1		
23	T77858	O-RING	4		
24	AT210714	OIL LINE	1		
25	T77932	O-RING	1		
26	AT226808	HYDRAULIC HOSE - FABRICATE	1		
27	AT210713	OIL LINE	1		
28	38H1162	ADAPTER FITTING	1		
29	R26906	O-RING	5		
30	AT228189	HYDRAULIC HOSE - FABRICATE	1		
31	T77857	O-RING	1		
32	38H1176	ADAPTER FITTING	1		
33	R29936	O-RING	2		
34	38H1194	ADAPTER FITTING	1		
35	AT227717	HYDRAULIC ACCUMULATOR	1		(ALSO ORDER T180944) (PRECHARGE TO 285 PSI)
	AT196760	KIT	1		(GAS VALVE REPAIR)
36	AT207010	HYDRAULIC HOSE - FABRICATE	1		
37	AT162863	RELAY	1		
38	AT220517	SWITCH	1		(RIDE CONTROL, 24V W/LIGHT)
39	AT224600	WIRING HARNESS	1	-600916	(RIDE CONTROL HARNESS)
	.....	WIRING HARNESS	1	600917-	(RIDE CONTROL HARNESS) (NO LONGER REQUIRED)
	AT225011	WIRING HARNESS	1		(RIDE CONTROL HARNESS) (HARSH ENVIRONMENT)
90	**AT220432**	**KIT**	**1**		**(WHOLEGOODS) (RIDE CONTROL)**

RIDE CONTROL AND HYDRAULIC HOSES (S.N. 594433-)
COMMANDE DE SUSPENSION ET FLEXIBLES HYDRAULIQUES (S.N. 594433-)
CONTROL DE SUSPENSION Y MANGUERAS HIDRAULICAS (S.N. 594433-)

TX1009704 -UN-12JUL06

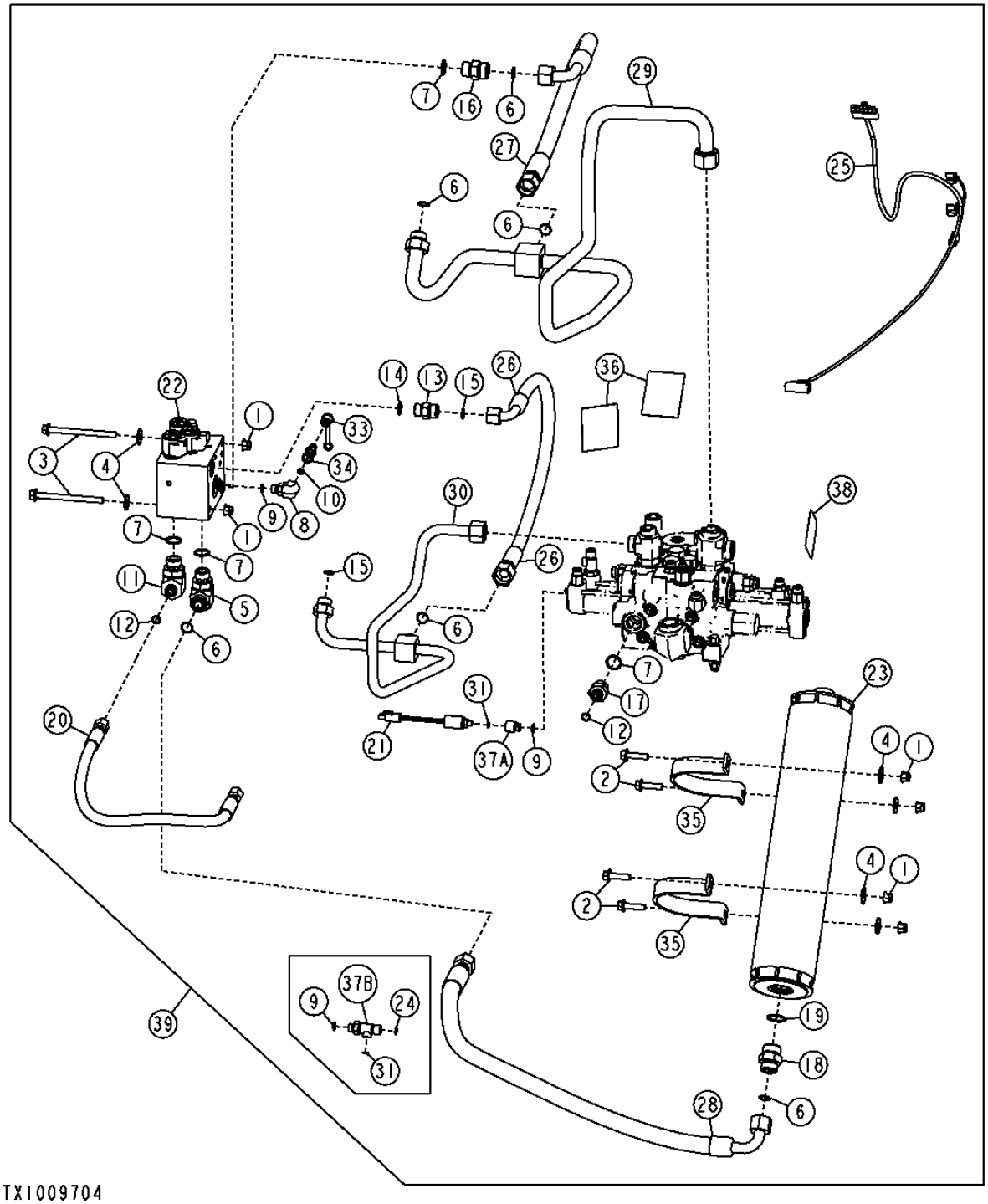

RIDE CONTROL AND HYDRAULIC HOSES (S.N. 594433-)
COMMANDE DE SUSPENSION ET FLEXIBLES HYDRAULIQUES (S.N. 594433-)
CONTROL DE SUSPENSION Y MANGUERAS HIDRAULICAS (S.N. 594433-)

KEY	PART NO.	PART NAME	QTY.	SERIAL NO.	REMARKS
1	14M7400	LOCK NUT	6		M10
2	19M7804	SCREW	4		M10 X 40
3	19M7898	SCREW	2		M10 X 130
4	24M7296	WASHER	6		10.500 X 30 X 2.500 MM
5	38H1007	ELBOW FITTING	1		
6	T77858	O-RING	6		
7	U12547	O-RING	5		
8	38H1009	ELBOW FITTING	1		
9	R26448	O-RING	2		
10	T77814	O-RING	1		
11	38H1013	ELBOW FITTING	1		
12	T77857	O-RING	2		
13	38H1162	ADAPTER FITTING	1		
14	R26906	O-RING	1		
15	T77932	O-RING	2		
16	38H1163	ADAPTER FITTING	1		
17	38H1175	ADAPTER FITTING	1		
18	38H1194	ADAPTER FITTING	1		
19	R29936	O-RING	1		
20	AT207010	HYDRAULIC HOSE - FABRICATE	1		13/16" X 711 MM X 13/16"
21	AT223535	PRESSURE SWITCH	1		
22	AT332291	HYD ACTUATED CONTROL VALVE	1		(RIDE CONTROL VALVE) (SUB FOR AT224301)
23	AT224493	HYDRAULIC ACCUMULATOR	1		
	AT196760	KIT	1		(ACCUMULATOR REPAIR KIT)
24	T77613	O-RING	1		
25	AT224600	WIRING HARNESS	1	-600916	(RIDE CONTROL HARNESS)
	.....	WIRING HARNESS	1	600917-	(RIDE CONTROL HARNESS) (NO LONGER REQUIRED)
26	AT225445	HYDRAULIC HOSE - FABRICATE	1		1-3/16" X 965 MM X 1"
27	AT226808	HYDRAULIC HOSE - FABRICATE	1		1-3/16" X 851 MM X 1-3/16"
28	AT228189	HYDRAULIC HOSE - FABRICATE	1		
29	AT301093	OIL LINE	1		
30	AT307661	OIL LINE	1		
31	R26287	O-RING	1		
33	R77175	COVER	1		
34	RE60700	DIAGNOSTIC COUPLING	1		
35	T146490	CLAMP	2		
36	T146792	SAFETY SIGN	2		
37A	T158047	ADAPTER FITTING	1		
37B	AT206815	TEE FITTING	1		(FOR MACHINES WITH HIGH LIFT)
38	T180944	LABEL	1		
39	**AT314598**	**MOUNTING PARTS**	**1**		

RIDE CONTROL VALVE
VANNE DE COMMANDE DE SUSPENSION
VALVULA DE CONTROL DE SUSPENSION

T195623 -UN-22OCT03

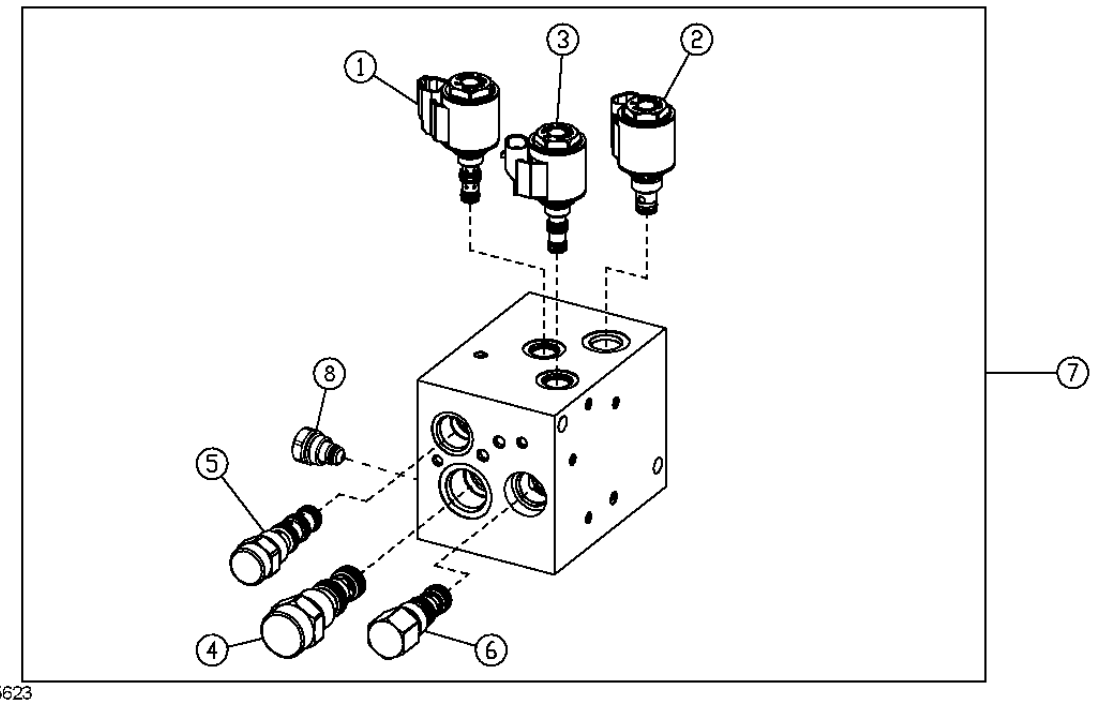

T195623

KEY	PART NO.	PART NAME	QTY.	SERIAL NO.	REMARKS
1	AT224866	SOLENOID VALVE	1		
	AT224706	SEAL KIT	1		
	AT224865	SOLENOID VALVE COIL	1		
	T181306	NUT	1		
2	AT224573	SOLENOID VALVE	1		
	AT224574	SOLENOID VALVE COIL	1		
	AT224862	SEAL KIT	1		
	T181306	NUT	1		
3	AT224705	FLOW CONTROL HYD. VALVE	1		
	AT224574	SOLENOID VALVE COIL	1		
	AT224706	SEAL KIT	1		
	T181306	NUT	1		
4	AT224867	FLOW CONTROL HYD. VALVE	1		
	AT224868	SEAL KIT	1		
5	AT225082	FLOW CONTROL HYD. VALVE	1		
	F433299	SEAL KIT	1		
6	AT225084	FLOW CONTROL HYD. VALVE	1		
	AT225085	SEAL KIT	1		
	AT316532	KIT	1		(LOCKDOWN KIT)
7	AT332291	HYD ACTUATED CONTROL VALVE	1		(RIDE CONTROL VALVE) (SUB FOR AT224301)
8	AN207183	CHECK VALVE	2		
	AN207184	SEAL KIT	1		

PIN AND AXLE DISCONNECT VALVE COMPONENTS
COMPOSANTS SOUPAPE RACCORD RAPIDE AXE ET ESSIEU
PASADOR Y COMPONENTES DE LA VALVULA DE DESCONEXION DEL EJE

T197201 -UN-07JAN04

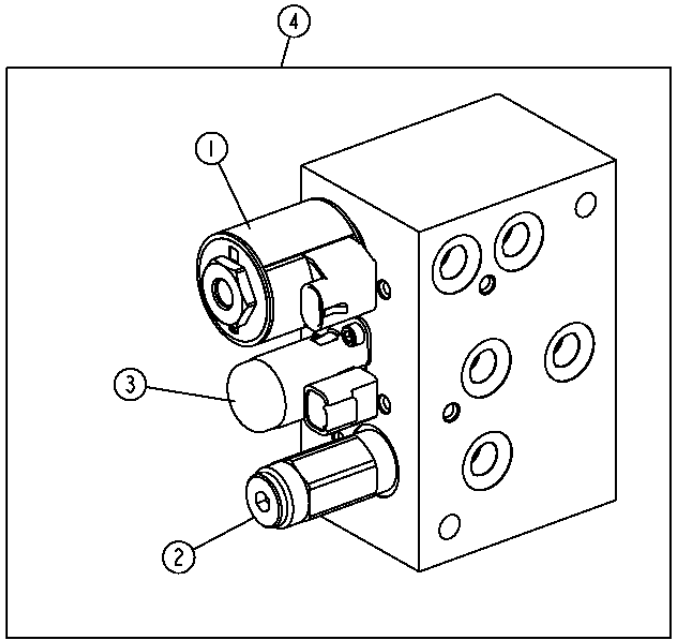

T197201

KEY	PART NO.	PART NAME	QTY.	SERIAL NO.	REMARKS
1	AT224703	SOLENOID VALVE COIL	1		
	AT226266	SOLENOID VALVE	1		
	AT225083	SEAL KIT	1		SOLENOID VALVE SEAL KIT
2	AT226265	HYDRAULIC PRESSURE VALVE	1		
	AT225085	SEAL KIT	1		PRESSURE REDUCING VALVE SEAL KIT
3	AT303799	VALVE	1		AXLE DISCONNECT CARTRIDGE
	AT224873	SEAL KIT	1		(AXLE DISCONNECT CARTRIDGE VALVE)
4	AT225529	HYD ACTUATED CONTROL VALVE	1		PIN AND AXLE DISCONNECT VALVE
	AT225530	HYD ACTUATED CONTROL VALVE	1		PIN DISCONNECT VALVE

PIN AND AXLE DISCONNECT VALVE AND HYDRAULIC HOSES (S.N. -594432)
FLEXIBLES HYDRAULIQUES ET SOUPAPE RACCORD RAPIDE AXE ET ESSIEU (S.N. -594432)
PASADOR, VALVULA DE DESCONEXION DEL EJE Y MANGUERAS HIDRAULICAS (S.N. -594432)

T198286 -UN-23MAR04

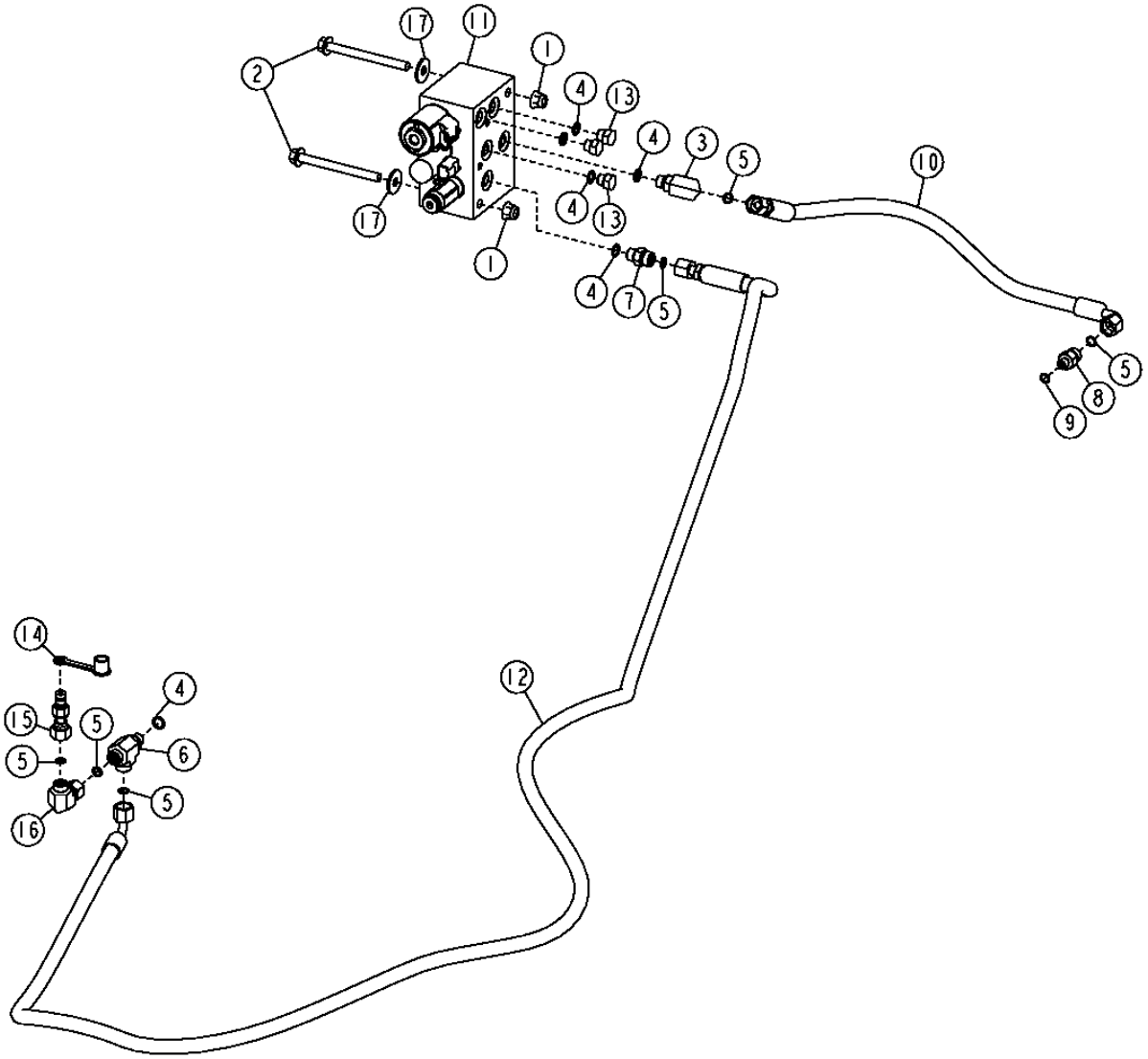

T198286

PIN AND AXLE DISCONNECT VALVE AND HYDRAULIC HOSES (S.N. -594432)
FLEXIBLES HYDRAULIQUES ET SOUPAPE RACCORD RAPIDE AXE ET ESSIEU (S.N. -594432)
PASADOR, VALVULA DE DESCONEXION DEL EJE Y MANGUERAS HIDRAULICAS (S.N. -594432)

KEY	PART NO.	PART NAME	QTY.	SERIAL NO.	REMARKS
1	14M7400	LOCK NUT	2		M10
2	19M7836	SCREW	2		M10 X 110
3	38H1004	ELBOW FITTING	1		
4	R26448	O-RING	6		
5	T77613	O-RING	6		
6	38H1023	TEE FITTING	1		
7	38H1160	ADAPTER FITTING	1		
8	38H1309	ADAPTER FITTING	1		
9	R28782	O-RING	1		
10	AT167553	HYDRAULIC HOSE - FABRICATE	1		
11	AT225529	HYD ACTUATED CONTROL VALVE	1		(COMPONENTS LISTED ON ANOTHER PAGE)
12	AT305171	HYDRAULIC HOSE - FABRICATE	1		
13	R27218	FITTING PLUG	3		
14	R77175	COVER	1		
15	RE60701	DIAGNOSTIC COUPLING	1		
16	38H1094	ELBOW FITTING	1		
17	24M7296	WASHER	2		10.500 X 30 X 2.500 MM

PIN AND AXLE DISCONNECT VALVE AND HYDRAULIC HOSES (S.N. 594433-)
FLEXIBLES HYDRAULIQUES ET SOUPAPE RACCORD RAPIDE AXE ET ESSIEU (S.N. 594433-)
PASADOR, VALVULA DE DESCONEXION DEL EJE Y MANGUERAS HIDRAULICAS (S.N. 594433-)

T202068 -UN-12AUG04

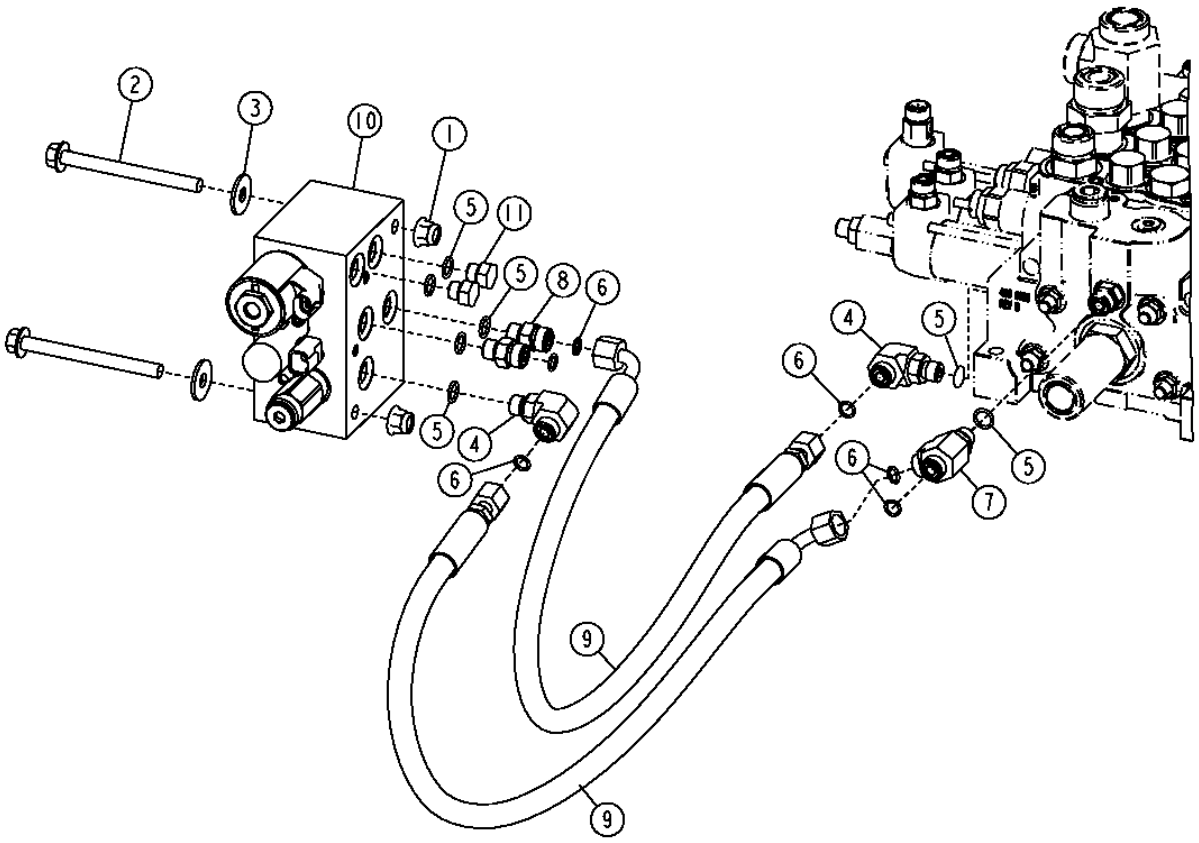

T202068

PIN AND AXLE DISCONNECT VALVE AND HYDRAULIC HOSES (S.N. 594433-)
FLEXIBLES HYDRAULIQUES ET SOUPAPE RACCORD RAPIDE AXE ET ESSIEU (S.N. 594433-)
PASADOR, VALVULA DE DESCONEXION DEL EJE Y MANGUERAS HIDRAULICAS (S.N. 594433-)

KEY	PART NO.	PART NAME	QTY.	SERIAL NO.	REMARKS
1	14M7400	LOCK NUT	2		M10
2	19M7836	SCREW	2		M10 X 110
3	24M7296	WASHER	2		10.500 X 30 X 2.500 MM
4	38H1004	ELBOW FITTING	2		
5	R26448	O-RING	9		
6	T77613	O-RING	7		
7	38H1023	TEE FITTING	1		
8	38H1160	ADAPTER FITTING	3		
9	AT167553	HYDRAULIC HOSE - FABRICATE	2		11/16" X 630 MM X 11/16"
10	AT225529	HYD ACTUATED CONTROL VALVE	1		(COMPONENTS LISTED ON ANOTHER PAGE)
11	R27218	FITTING PLUG	3		

PIN DISCONNECT HYDRAULIC LINES (FOR USE WITH TOOL CARRIER)
CONDUITES HYDRAULIQUES RACCORD RAPIDE AXE (A UTILISER AVEC PORTE-OUTILS)
LINEAS HIDRAULICAS DE DESCONEXION DEL PASADOR (USAR CON PORTAHERRAMIENTAS)

T196636 -UN-25NOV03

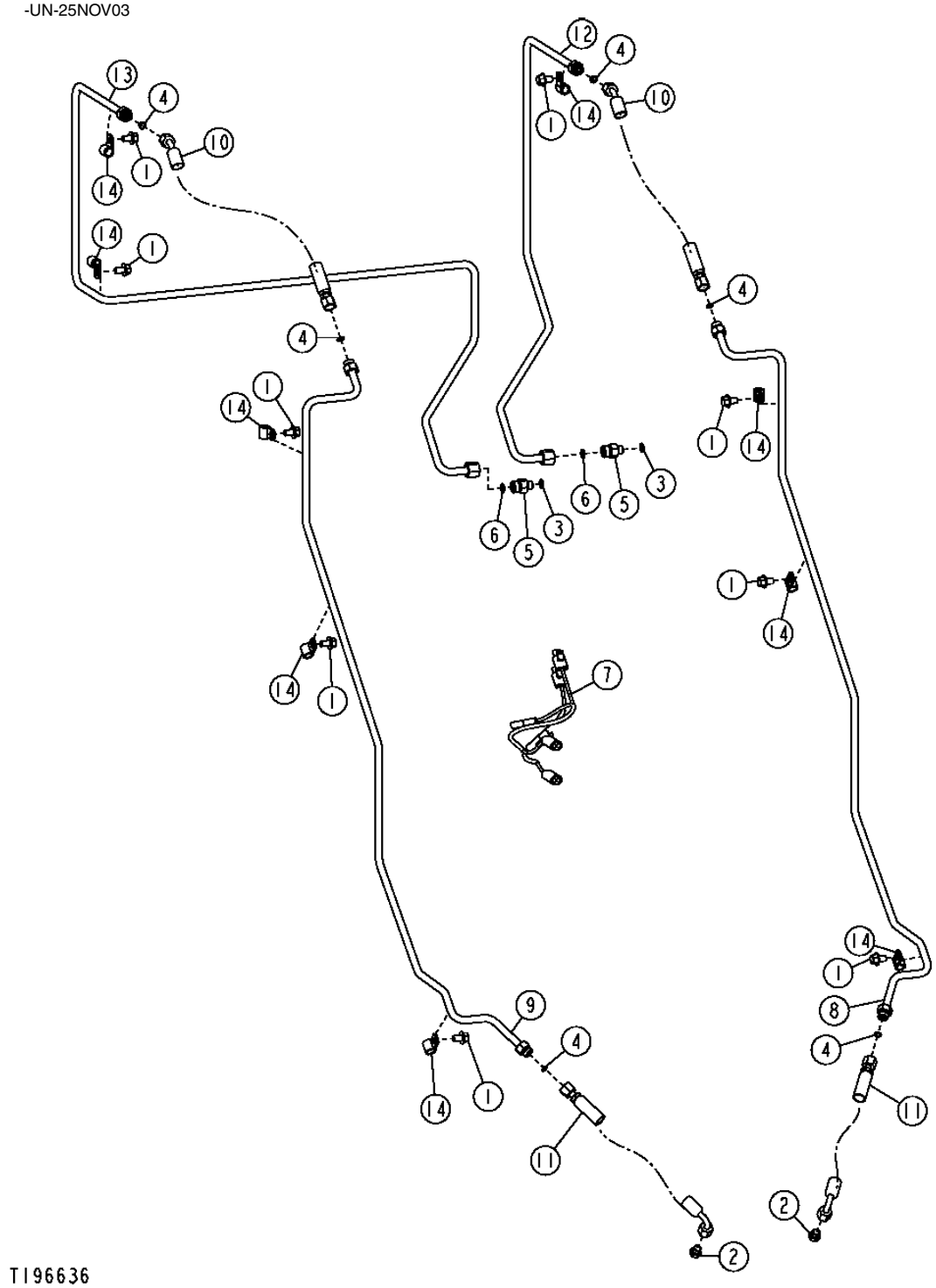

PIN DISCONNECT HYDRAULIC LINES (FOR USE WITH TOOL CARRIER)
CONDUITES HYDRAULIQUES RACCORD RAPIDE AXE (A UTILISER AVEC PORTE-OUTILS)
LINEAS HIDRAULICAS DE DESCONEXION DEL PASADOR (USAR CON PORTAHERRAMIENTAS)

KEY	PART NO.	PART NAME	QTY.	SERIAL NO.	REMARKS
1	19M7784	SCREW	9		M10 X 20, (SUB FOR 19M7783)
2	R27218	FITTING PLUG	2		
3	R26448	O-RING	2		
4	T77613	O-RING	6		
5	38H1173	ADAPTER FITTING	2		
6	T77857	O-RING	2		
7	AT202824	WIRING HARNESS	1		
8	AT207969	OIL LINE	1		
9	AT207970	OIL LINE	1		
10	AT209692	HYDRAULIC HOSE - FABRICATE	2		
11	AT210666	HYDRAULIC HOSE - FABRICATE	2		
12	AT306900	OIL LINE	1		
13	AT306905	OIL LINE	1		
14	H75541	CLAMP	9		

PIN DISCONNECT HYDRAULIC LINES (FOR USE WITH Z-BAR LINKAGE)(S.N. -594432)
CONDUITES HYDRAULIQUES RACCORD RAPIDE AXE(À UTILISER AVEC TRINGLERIE CINEMATIQUE EN Z)(S.N.-59442)
LINEAS HIDRAULICAS DE DESCONEXION DEL PASADOR (PARA USO CON VARILLAJE DE BARRA EN Z (S.N. -594432)

T198287 -UN-23MAR04

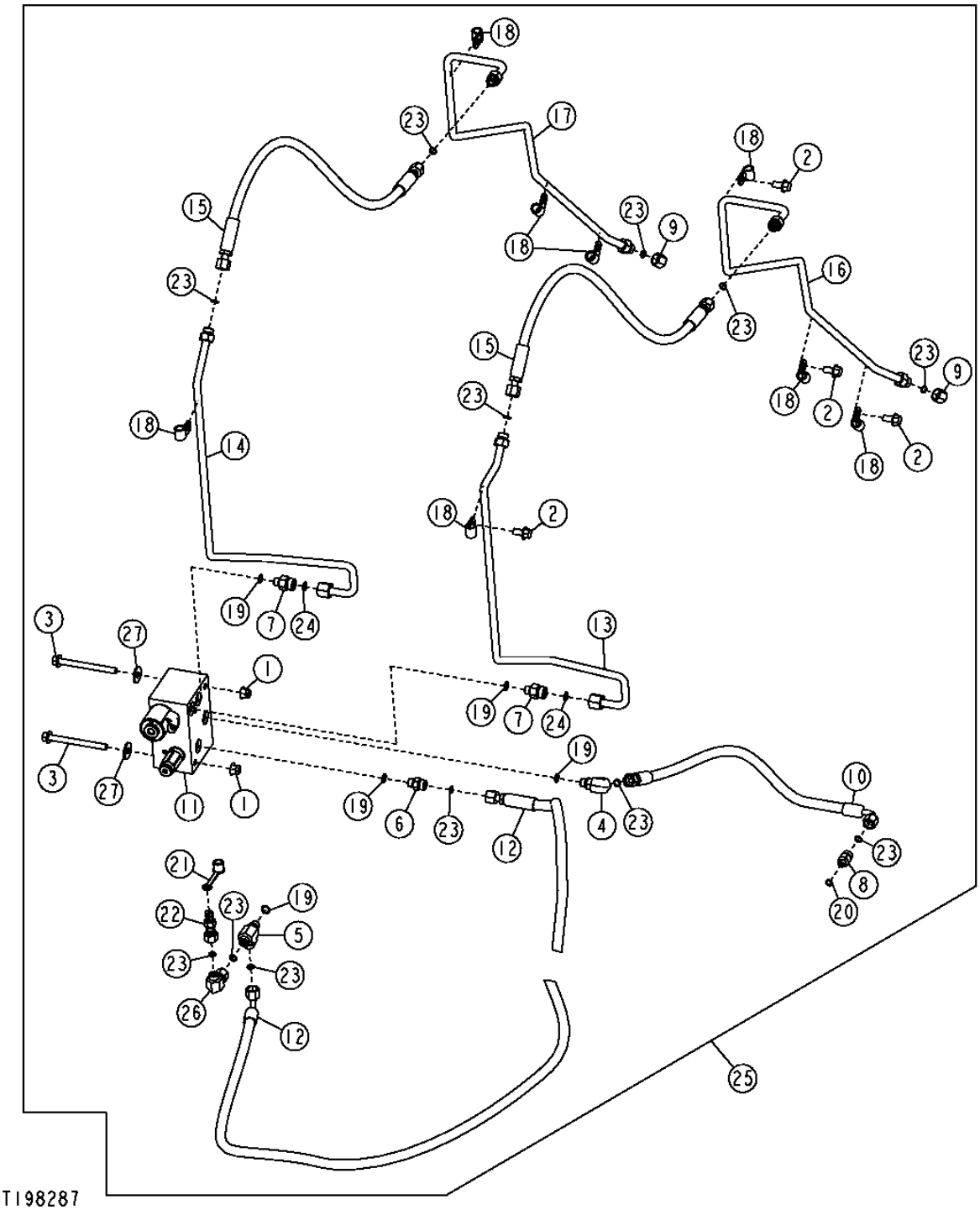

PIN DISCONNECT HYDRAULIC LINES (FOR USE WITH Z-BAR LINKAGE)(S.N. -594432)
CONDUITES HYDRAULIQUES RACCORD RAPIDE AXE(À UTILISER AVEC TRINGLERIE CINEMATIQUE EN Z)(S.N.-59442)
LINEAS HIDRAULICAS DE DESCONEXION DEL PASADOR (PARA USO CON VARILLAJE DE BARRA EN Z (S.N. -594432)

KEY	PART NO.	PART NAME	QTY.	SERIAL NO.	REMARKS
1	14M7400	LOCK NUT	2		M10
2	19M7784	SCREW	4		M10 X 20
3	19M7836	SCREW	2		M10 X 110
	24M7296	WASHER	2		10.500 X 30 X 2.500 MM
4	38H1004	ELBOW FITTING	1		
5	38H1023	TEE FITTING	1		
6	38H1160	ADAPTER FITTING	1		
7	38H1173	ADAPTER FITTING	2		
8	38H1309	ADAPTER FITTING	1		
9	38H1415	FITTING	2		
10	AT167553	HYDRAULIC HOSE - FABRICATE	1		
11	AT225530	HYD ACTUATED CONTROL VALVE	1		(COMPONENTS LISTED ON ANOTHER PAGE)
12	AT305171	HYDRAULIC HOSE - FABRICATE	1		
13	AT304269	OIL LINE	1		
14	AT304298	OIL LINE	1		
15	AT301930	HYDRAULIC HOSE - FABRICATE	2		(SUB FOR AT305900)
16	AT308780	OIL LINE	1		
17	AT308781	OIL LINE	1		
18	H75541	CLAMP	8		
19	R26448	O-RING	5		
20	R28782	O-RING	1		
21	R77175	COVER	1		
22	RE60701	DIAGNOSTIC COUPLING	1		
23	T77613	O-RING	12		
24	T77857	O-RING	2		
25	**AT307809**	**MOUNTING PARTS**	**1**		
26	38H1094	ELBOW FITTING	1		
27	24M7296	WASHER	2		10.500 X 30 X 2.500 MM

PIN DISCONNECT HYDRAULIC LINES (FOR USE WITH Z-BAR LINKAGE)(S.N 594433-)
CONDUITES HYDRAULIQUE RACCORD RAPIDE AXE(A UTILISER AVEC TRINGLERIE CINEMATIQUE EN Z)(S.N.594433-)
LINEAS HIDRAULICAS DE DESCONEXION DEL PASADOR (PARA USO CON VARILLAJE DE BARRA EN Z)(S.N 594433-)

T209416 -UN-16MAR05

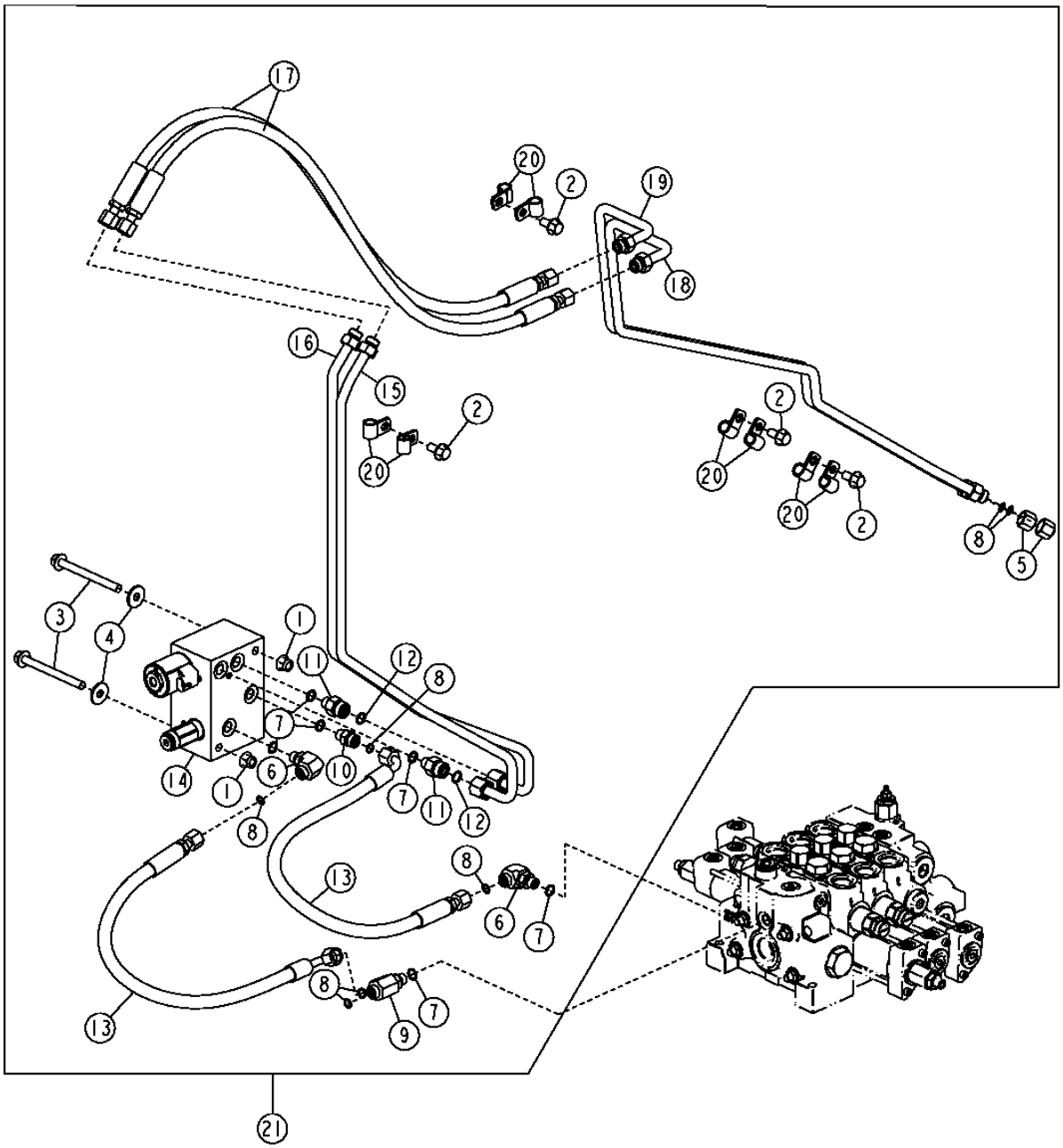

PIN DISCONNECT HYDRAULIC LINES (FOR USE WITH Z-BAR LINKAGE)(S.N 594433-)
CONDUITES HYDRAULIQUE RACCORD RAPIDE AXE(A UTILISER AVEC TRINGLERIE CINEMATIQUE EN Z)(S.N 594433-)
LINEAS HIDRAULICAS DE DESCONEXION DEL PASADOR(PARA USO CON VARILLAJE DE BARRA EN Z)(S.N 594433-)

KEY	*PART NO.*	*PART NAME*	*QTY.*	*SERIAL NO.*	*REMARKS*
1	14M7400	LOCK NUT	2		M10
2	19M7784	SCREW	4		M10 X 20
3	19M7836	SCREW	2		M10 X 110
4	24M7296	WASHER	2		10.500 X 30 X 2.500 MM
5	38H1415	FITTING	2		
6	38H1004	ELBOW FITTING	2		
7	R26448	O-RING	6		
8	T77613	O-RING	11		
9	38H1023	TEE FITTING	1		
10	38H1160	ADAPTER FITTING	1		
11	38H1173	ADAPTER FITTING	2		
12	T77857	O-RING	2		
13	AT167553	HYDRAULIC HOSE - FABRICATE	2		
14	AT225530	HYD ACTUATED CONTROL VALVE	1		(COMPONENTS LISTED ON ANOTHER PAGE)
15	AT304269	OIL LINE	1		
16	AT304298	OIL LINE	1		
17	AT301930	HYDRAULIC HOSE - FABRICATE	2		(SUB FOR AT305900)
18	AT308780	OIL LINE	1		
19	AT308781	OIL LINE	1		
20	H75541	CLAMP	8		
21	**AT316769**	**MOUNTING PARTS**	**1**		

BOOM TO COUPLER PIN DISCONNECT HYDRAULIC HOSES (WITH Z-BAR LINKAGE)
FLEXIBLES HYDR. DECONNEXION FLECHE A AXE ACCOUPLEMENT (AVEC TRINGLERIE CINEMATIQUE EN Z)
AGUILON A MANGUERAS HIDR. DE DESCONEXION DEL PASADOR DEL ACOPLADOR (CON VARILLAJE DE BARRA EN Z)

TX1015098 -UN-

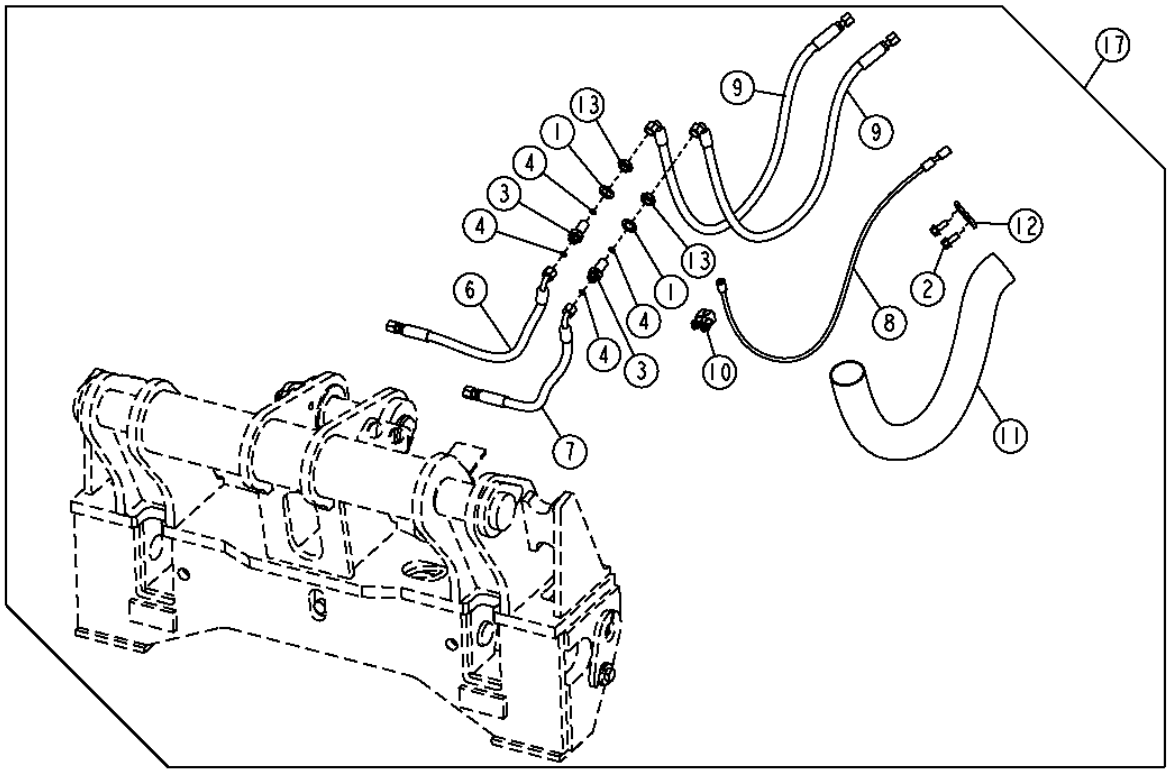

TX1015098

BOOM TO COUPLER PIN DISCONNECT HYDRAULIC HOSES (WITH Z-BAR LINKAGE)
FLEXIBLES HYD. DECONNEXION FLECHE A AXE ACCOUPLEMENT (AVEC TRINGLERIE CINEMATIQUE EN Z)
AGUILON A MANGUERAS HIDR. DE DESCONEXION DEL PASADOR DEL ACOPLADOR (CON VARILLAJE DE BARRA EN Z)

KEY	*PART NO.*	*PART NAME*	*QTY.*	*SERIAL NO.*	*REMARKS*
1	12H327	LOCK WASHER	2		3/4"
2	19M7785	SCREW	2		M10 X 25
3	38H1285	UNION FITTING	1		
4	T77613	O-RING	2		9.246 X 1.778 MM
6	AT305903	HYDRAULIC HOSE - FABRICATE	1	-609732	11/16" X 27" X 11/16"
	AT336825	HYDRAULIC HOSE - FABRICATE	1	609733-	11/16" X 18" X 11/16"
7	AT305905	HYDRAULIC HOSE - FABRICATE	1	-609732	11/16" X 33" X 11/16"
	AT336826	HYDRAULIC HOSE - FABRICATE	1	609733-	11/16" X 20-1/4" X 11/16"
8	AT305978	CABLE	1	-609732	
	AT336880	CABLE	1	609733-	
	AT309430	CABLE	1	-610446	(HIGH LIFT)
	AT336881	CABLE	1	610447-	(HIGH LIFT)
9	AT311469	HYDRAULIC HOSE - FABRICATE	2	-609732	(SUB FOR AT305902)
	AT336883	HYDRAULIC HOSE - FABRICATE	2	609733-	
	AT311468	HYDRAULIC HOSE - FABRICATE	2	-609732	11/16" X 43" X 11/16", (SUB FOR (2) AT305900) (HIGH LIFT)
	AT336882	HYDRAULIC HOSE - FABRICATE	2	609733-	11/16" X 50-1/2" X 11/16", (HIGH LIFT)
10	AT62123	CLAMP	1		
11	.....	HOSE GUARD	AR		(FURNISH PARKER PG-188) (CUT TO 30 INCHES)
	.....	HOSE GUARD	AR		(HIGH LIFT) (FURNISH PARKER PG-188) (CUT TO 45 INCHES)
12	T204315	PLATE	1		
13	T81029	NUT	2		11/16"
17	**AT317574**	**FIELD INSTALLATION KIT**	**1**	**-609732**	**(WHOLEGOODS)**
	AT336884	**FIELD INSTALLATION KIT**	**1**	**609733-**	**(WHOLEGOODS)**
	AT317589	**FIELD INSTALLATION KIT**	**1**	**-610446**	**(HIGH LIFT) (WHOLEGOODS)**
	AT336885	**FIELD INSTALLATION KIT**	**1**	**610447-**	**(HIGH LIFT) (WHOLEGOODS)**

PIN DISCONNECT HYDRAULIC LINES (FOR USE WITH POWERLLEL™LINKAGE)
CONDUITES HYDRAULIQUES RACCORD RAPIDE AXE (A UTILISER AVEC TRINGLERIE POWERLLEL™)
LINEAS HIDRAULICAS DE DESCONEXION DEL PASADOR (PARA USO CON VARILLAJE POWERLLEL™)

T204013 -UN-15OCT04

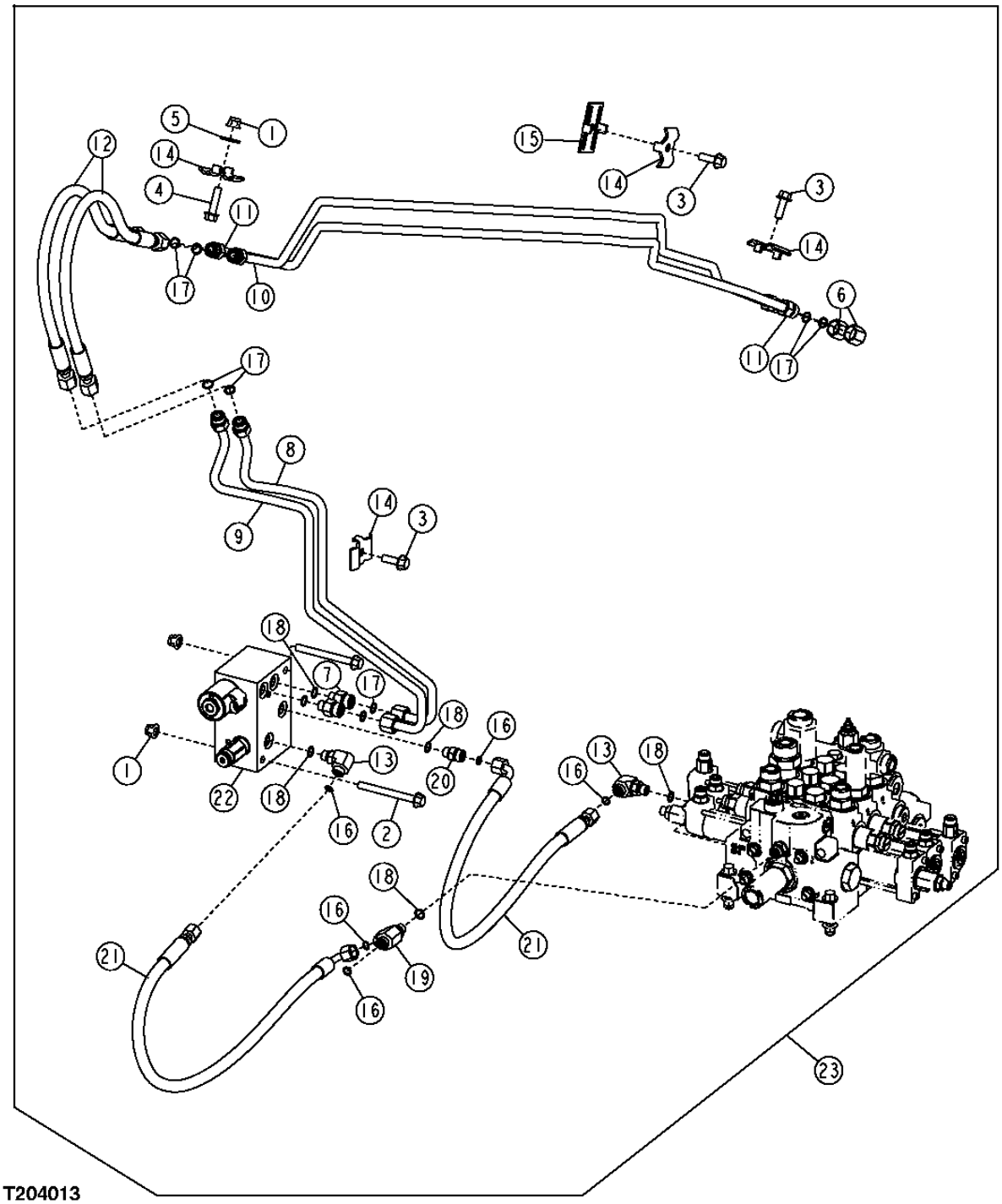

PIN DISCONNECT HYDRAULIC LINES (FOR USE WITH POWERLLEL™LINKAGE)
CONDUITES HYDRAULIQUES RACCORD RAPIDE AXE (A UTILISER AVEC TRINGLERIE POWERLLEL™)
LINEAS HIDRAULICAS DE DESCONEXION DEL PASADOR (PARA USO CON VARILLAJE POWERLLEL™)

KEY	*PART NO.*	*PART NAME*	*QTY.*	*SERIAL NO.*	*REMARKS*
1	14M7400	LOCK NUT	3		M10
2	19M7812	SCREW	2		M10 X 100, (NOT ILLUSTRATED)
3	19M7786	SCREW	3		M10 X 30
4	19M7804	SCREW	1		M10 X 40
5	24M7296	WASHER	1		10.500 X 30 X 2.500 MM
6	38H1416	FITTING	2	-609734	
	38H1415	FITTING	2	609735-	
7	38H1173	ADAPTER FITTING	2		
8	AT306654	OIL LINE	1	-609734	
	AT336721	OIL LINE	1	609735-	
9	AT306677	OIL LINE	1	-609734	
	AT336722	OIL LINE	1	609735-	
10	AT315829	OIL LINE	1	-609734	
	AT336725	OIL LINE	1	609735-	
11	AT315830	OIL LINE	1	-609734	
	AT336726	OIL LINE	1	609735-	
12	AT316021	HYDRAULIC HOSE - FABRICATE	2	-609734	
	AT168163	HYDRAULIC HOSE - FABRICATE	2	609735-	
13	38H1004	ELBOW FITTING	2		(NOT ILLUSTRATED)
14	T159950	CLAMP	4		
15	T159956	CLAMP	1		
16	T77613	O-RING	5	-609734	(NOT ILLUSTRATED)
	T77613	O-RING	11	609735-	
17	T77857	O-RING	8	-609734	
	T77857	O-RING	2	609735-	
18	R26448	O-RING	3		
19	38H1023	TEE FITTING	1		
20	38H1160	ADAPTER FITTING	1		
21	AT167553	HYDRAULIC HOSE - FABRICATE	2		
22	AT225530	HYD ACTUATED CONTROL VALVE	1		(COMPONENTS LISTED ON SEPARATE PAGE)
23	**AT314617**	**KIT**	**1**	**-609734**	**(WHOLEGOODS) (PIN DISCONNECT)**
	AT337313	**KIT**	**1**	**609735-**	**(WHOLEGOODS) (PIN DISCONNECT)**

BOOM TO COUPLER PIN DISCONNECT HYDRAULIC HOSES (WITH POWERLLEL™LINKAGE)
FLEXIBLES HYDRAULIQUES DECONNEXION FLECHE A AXE ACCOUPLEMENT (AVEC TRINGLERIE POWERLLEL™)
AGUILON A MANGUERAS HIDRAULICAS DE DESCONEXION DEL PASADOR DEL ACOPLADOR (CON VARILLAJE POWERLLEL)

TX1015098 -UN-

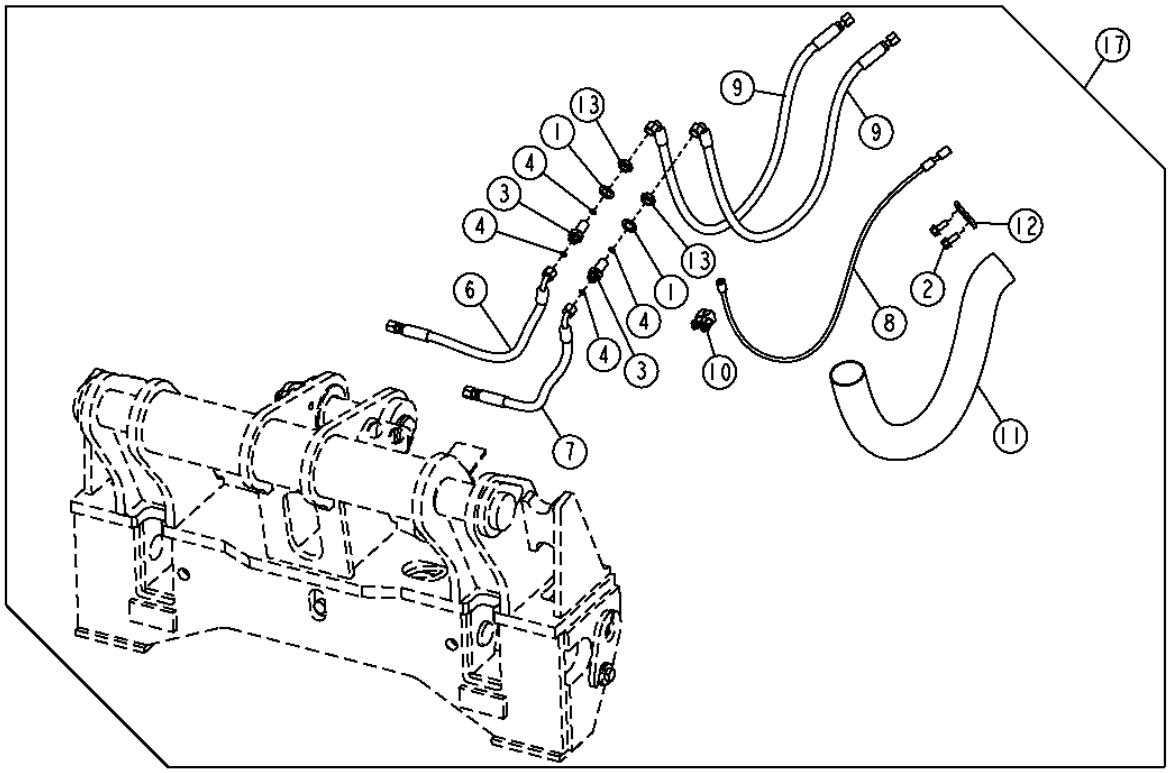

TX1015098

BOOM TO COUPLER PIN DISCONNECT HYDRAULIC HOSES (WITH POWERLLEL™LINKAGE)
FLEXIBLES HYDRAULIQUES DECONNEXION FLECHE A AXE ACCOUPLEMENT (AVEC TRINGLERIE POWERLLEL™)
AGUILON A MANGUERAS HIDRAULICAS DE DESCONEXION DEL PASADOR DEL ACOPLADOR (CON VARILLAJE POWERLLEL)

KEY	*PART NO.*	*PART NAME*	*QTY.*	*SERIAL NO.*	*REMARKS*
1	12H327	LOCK WASHER	2		3/4"
2	19M7785	SCREW	2		M10 X 25
3	38H1285	UNION FITTING	2		
4	T77613	O-RING	2		9.246 X 1.778 MM (0.364" X 0.070")
6	AT305903	HYDRAULIC HOSE - FABRICATE	1	-609734	
	AT336825	HYDRAULIC HOSE - FABRICATE	1	609735-	
7	AT305905	HYDRAULIC HOSE - FABRICATE	1	-609734	11/16" X 838 MM (33") X 11/16"
	AT336826	HYDRAULIC HOSE - FABRICATE	1	609735-	11/16" X 515 MM (20-1/4") X 11/16"
8	AT305978	CABLE	1	-609734	
	AT336880	CABLE	1	609735-	
9	AT311469	HYDRAULIC HOSE - FABRICATE	1	-609734	9/16" X 787 MM (31") X 9/16"
	AT336883	HYDRAULIC HOSE - FABRICATE	1	609735-	
10	AT62123	CLAMP	1		
11	.....	HOSE GUARD	AR		(FURNISH PARKER PG-188) (CUT TO 30 INCHES)
	.....	HOSE GUARD	AR		(HIGH LIFT) (FURNISH PARKER PG-188) (CUT TO 45 INCHES)
12	T204315	PLATE	2		
13	T81029	NUT	2		17.475 MM
17	**AT317589**	**KIT**	**1**	**-609734**	**(WHOLEGOODS)**
	AT336884	**FIELD INSTALLATION KIT**	**1**	**609735-**	**(WHOLEGOODS)**

HI-VIS COUPLER HYDRAULIC HOSES
FLEXIBLES HYDRAULIQUES COUPLEUR HI-VIS
MANGUERAS HIDRAULICAS DEL ACOPLADOR DE HI-VIS

TX1001427 -UN-24FEB06

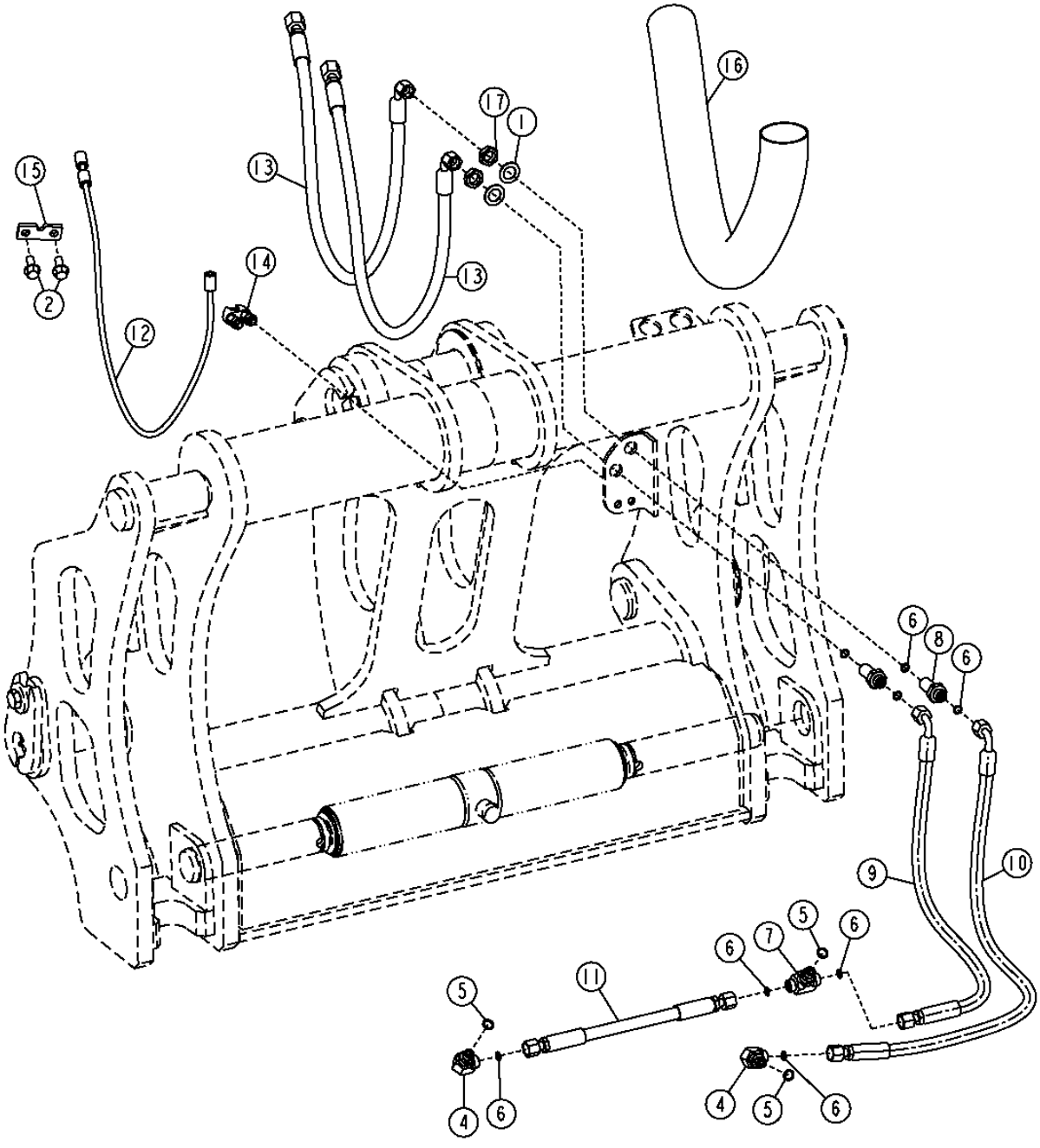

TX1001427

HI-VIS COUPLER HYDRAULIC HOSES
FLEXIBLES HYDRAULIQUES COUPLEUR HI-VIS
MANGUERAS HIDRAULICAS DEL ACOPLADOR DE HI-VIS

KEY	*PART NO.*	*PART NAME*	*QTY.*	*SERIAL NO.*	*REMARKS*
1	12H327	LOCK WASHER	2		3/4"
2	19M7785	SCREW	2		M10 X 25
4	38H1004	ELBOW FITTING	2		
5	R26448	O-RING	3		
6	T77613	O-RING	8		
7	38H1016	TEE FITTING	1		
8	38H1285	UNION FITTING	2		
9	AT323756	HYDRAULIC HOSE - FABRICATE	1		(SUB FOR AT324647)
10	AT323757	HYDRAULIC HOSE - FABRICATE	1		(SUB FOR AT324648)
11	AT323817	HYDRAULIC HOSE - FABRICATE	1		
12	AT324137	CABLE	1		(USE WITH AT330153 OR AT330154)
	AT325194	CABLE	1		(USE WITH AT330155)
13	AT327951	HYDRAULIC HOSE - FABRICATE	2		(USE WITH AT330153)
	AT324641	HYDRAULIC HOSE - FABRICATE	2		(USE WITH AT330154)
	AT325201	HYDRAULIC HOSE - FABRICATE	2		(USE WITH AT330155)
14	AT62123	CLAMP	1		
15	T204315	PLATE	1		
16	.....	HOSE GUARD	1		(T217100 NLA) (FURNISH PARKER PG-188) CUT TO 950.MM (37.4") (USE WITH AT330153 OR AT330154)
	.....	HOSE GUARD	1		(T217474 NLA) (FURNISH PARKER PG-188) CUT TO 1168.4MM (46.0") (USE WITH AT330155)
..	**AT330153**	**KIT**	**1**		**(WHOLEGOODS) USE WITH POWERLLEL™ LINKAGE, (ALSO ORDER T223487)**
..	**AT330154**	**KIT**	**1**		**(WHOLEGOODS) USE WITH Z-BAR LINKAGE, (ALSO ORDER T223487)**
..	**AT330155**	**KIT**	**1**		**(WHOLEGOODS) USE WITH HIGH LIFT Z-BAR LINKAGE, (ALSO ORDER T223487)**

THIRD FUNCTION BOOM TO COUPLER PLUMBING (FOR USE WITH Z-BAR LINKAGE)
TUYAUTERIE FLECHE TROISIEME FONCTION A COUPLEUR (A UTILISER AVEC TRINGLERIE CINEMATIQUE EN Z)
AGUILON DE TERCERA FUNCION A LA TUBERIA DEL ACOPLADOR (PARA USO CON VARILLAJE DE BARRA EN Z)

T217559 -UN-30JAN06

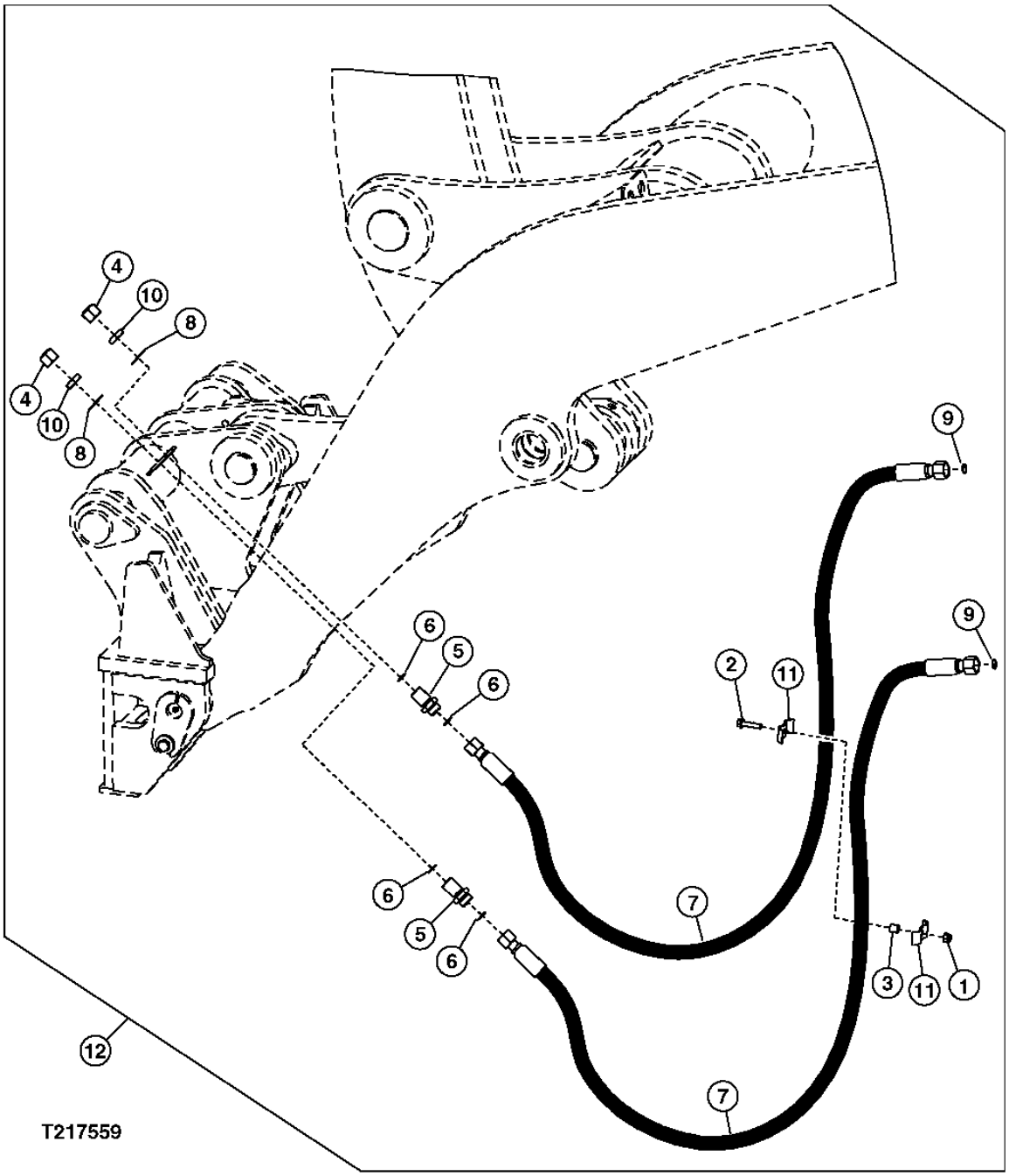

THIRD FUNCTION BOOM TO HI-VIS COUPLER PLUMBING (FOR USE WITH Z-BAR LINKAGE)
TUYAUTERIE FLECHE TROISIEME FONCTION A COUPLEUR (A UTILISER AVEC TRINGLERIE CINEMATIQUE EN Z)
AGUILON DE TERCERA FUNCION A LA TUBERIA DEL ACOPLADOR (PARA USO CON VARILLAJE DE BARRA EN Z)

KEY	*PART NO.*	*PART NAME*	*QTY.*	*SERIAL NO.*	*REMARKS*
1	14M7400	LOCK NUT	1		M10, (FOR HIGH LIFT MODELS ONLY)
2	19M7805	SCREW	1		M10 X 45, (FOR HIGH LIFT MODELS ONLY)
3	28H3383	BUSHING	1		
4	38H1418	FITTING	2		
5	38H1276	ADAPTER FITTING	2		
6	T77858	O-RING	4		
7	AT317507	HYDRAULIC HOSE - FABRICATE	2		
	AT321386	HYDRAULIC HOSE - FABRICATE	2		(FOR HIGH LIFT MODELS ONLY)
8	T174275	LOCK WASHER	2		
9	T77858	O-RING	2		
10	T78707	NUT	2		
11	U46753	HOSE CLAMP	2		(FOR HIGH LIFT MODELS ONLY)
12	**AT322222**	**MOUNTING PARTS**	**1**		**(WHOLEGOODS)**
	AT322225	**MOUNTING PARTS**	**1**		**(FOR HIGH LIFT MODELS ONLY) (WHOLEGOODS)**

THIRD FUNCTION BOOM TO COUPLER PLUMBING (FOR USE WITH POWERLLEL™ LINKAGE)
TUYAUTERIE FLECHE TROISIEME FONCTION A COUPLEUR)(A UTILISER AVEC TRINGLERIE POWERLLEL™)
AGUILON DE TERCERA FUNCION A LA TUBERIA DEL ACOPLADOR)(PARA USO CON VARILLAJE POWERLLEL™)

T217560 -UN-30JAN06

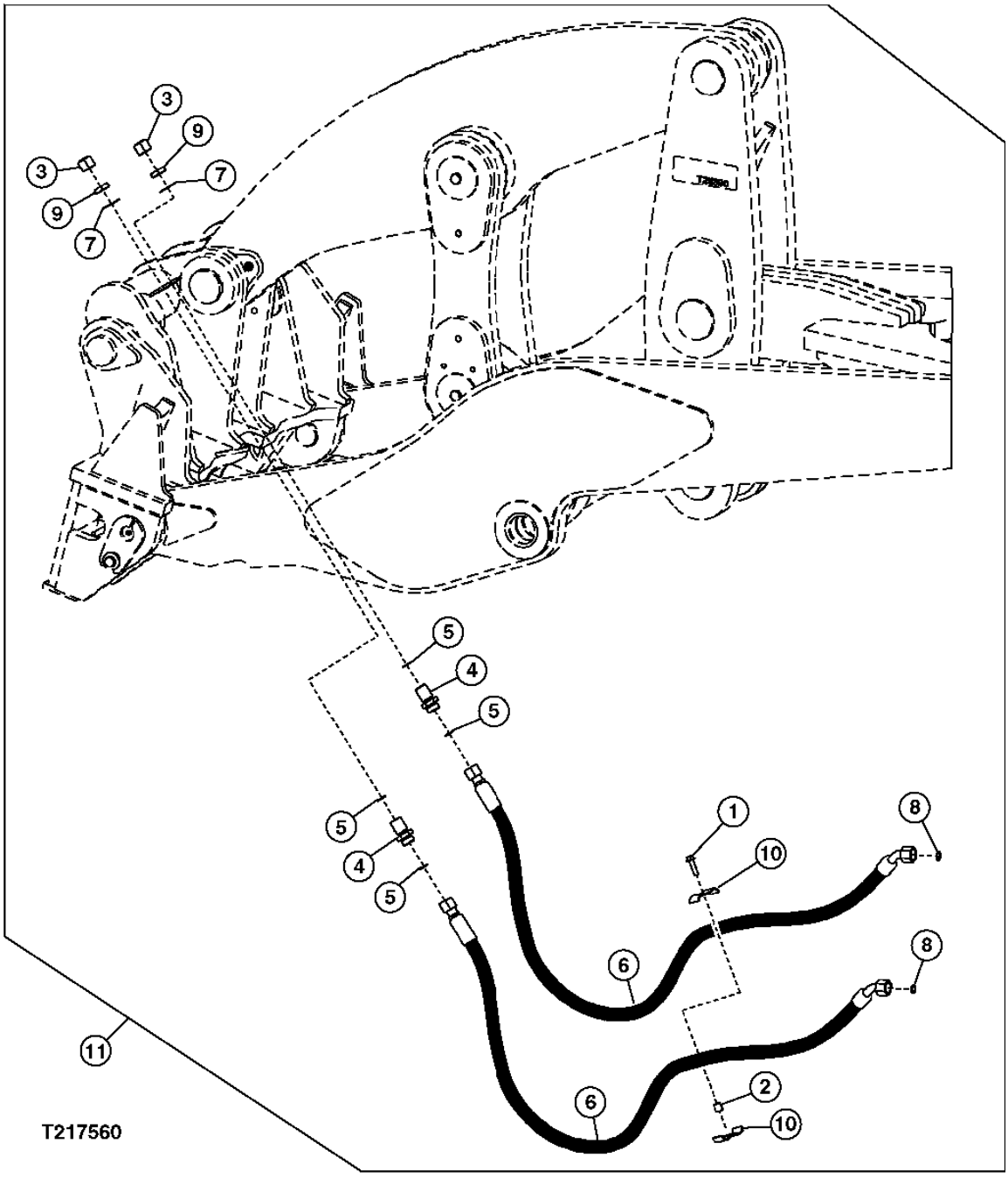

THIRD FUNCTION BOOM TO COUPLER PLUMBING (FOR USE WITH POWERLLEL™ LINKAGE)
TUYAUTERIE FLECHE TROISIEME FONCTION A COUPLEUR)(A UTILISER AVEC TRINGLERIE POWERLLEL™)
AGUILON DE TERCERA FUNCION A LA TUBERIA DEL ACOPLADOR)(PARA USO CON VARILLAJE POWERLLEL™)

KEY	*PART NO.*	*PART NAME*	*QTY.*	*SERIAL NO.*	*REMARKS*
1	19M7804	SCREW	1		M10 X 40
2	28H3383	BUSHING	1		
3	38H1418	FITTING	2		
4	38H1276	ADAPTER FITTING	2		
5	T77858	O-RING	4		
6	AT317487	HYDRAULIC HOSE - FABRICATE	2		
7	T174275	LOCK WASHER	2		
8	T77858	O-RING	2		
9	T78707	NUT	2		
10	U46753	HOSE CLAMP	2		
11	**AT322228**	**MOUNTING PARTS**	**1**		**(WHOLEGOODS)**

LOADER BUCKET AND BOOM CYLINDER PINS AND FITTINGS
AXES ET RACCORDS DE VERIN DE BENNE ET DE FLECHE DE CHARGEUR
CUCHARON DE CARGADORA Y PASADORES DEL CILINDRO DEL AGUILON Y ADAPTADORES

TX1006374 -UN-24APR06

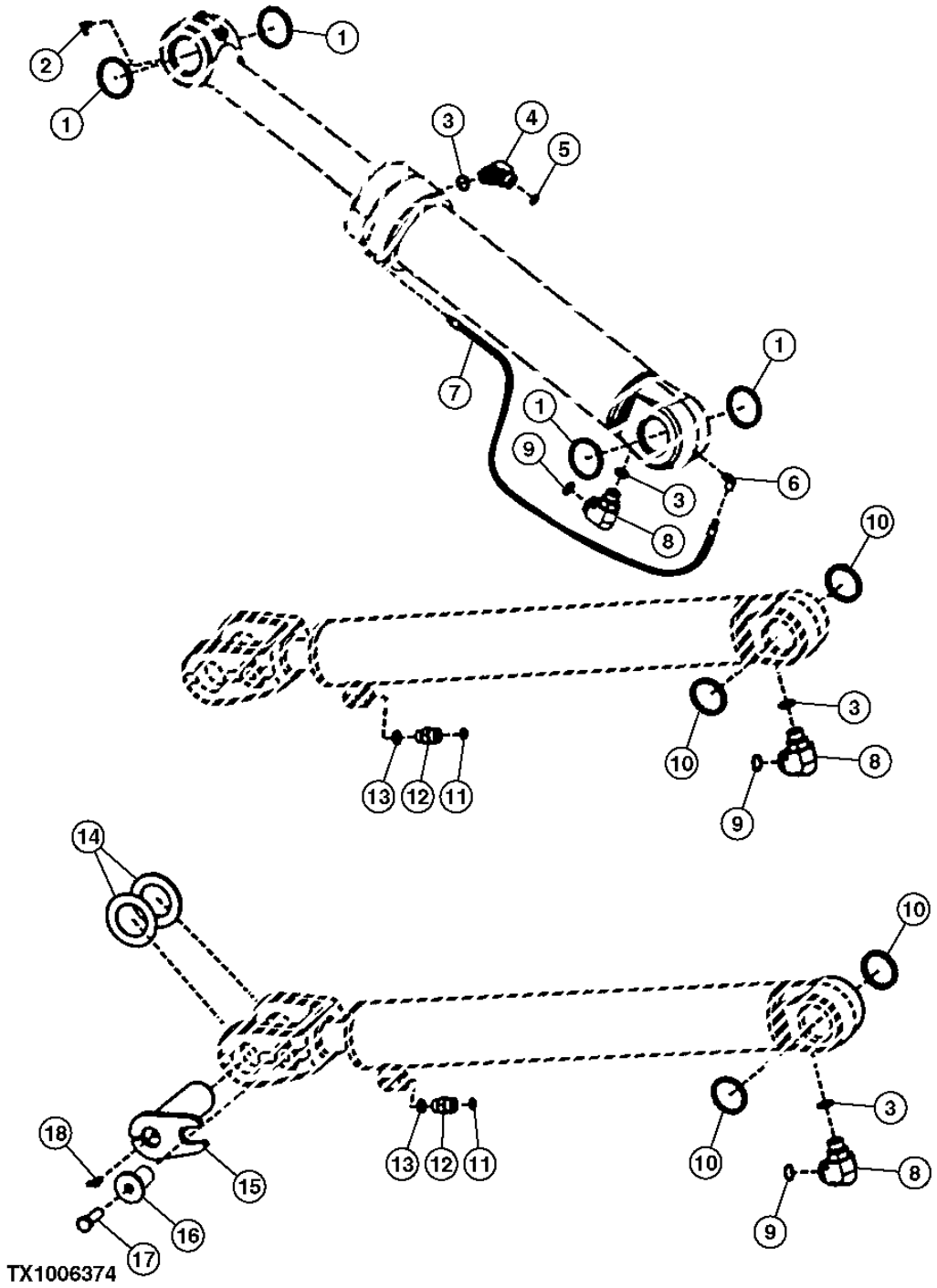

LOADER BUCKET AND BOOM CYLINDER PINS AND FITTINGS
AXES ET RACCORDS DE VERIN DE BENNE ET DE FLECHE DE CHARGEUR
CUCHARON DE CARGADORA Y PASADORES DEL CILINDRO DEL AGUILON Y ADAPTADORES

KEY	*PART NO.*	*PART NAME*	*QTY.*	*SERIAL NO.*	*REMARKS*
1	T157276	SEAL	4		
2	JD7781	LUBRICATION FITTING	1		
3	U12547	O-RING	4		
4	38H1007	ELBOW FITTING	1		
5	T77858	O-RING	1		
6	T56112	ELBOW FITTING	1		
7	AT103107	HYDRAULIC HOSE	1		
	R44302	TIE BAND	4		(NOT ILLUSTRATED)
8	38H1305	ELBOW FITTING	3		
9	T76938	O-RING	3		
10	T157275	SEAL	4		
11	T77932	O-RING	2		
12	38H1162	ADAPTER FITTING	2		
13	R26906	O-RING	2		
14	T102171	WASHER	AR		2.618" X 4.252" X 0.118"
15	AT203562	PIN	2		
16	T176064	BUSHING	2		
17	19M7489	CAP SCREW	2		M16 X 45
18	JD7763	LUBRICATION FITTING	2		

Z-BAR LINKAGE BOOM CYLINDER (S.N. -595722)
VERIN DE FLECHE A TRINGLERIE CINEMATIQUE EN Z (S.N. -595722)
CILINDRO DEL AGUILON DE VARILLAJE DE BARRA EN Z (S.N. -595722)

T195151 -UN-11NOV03

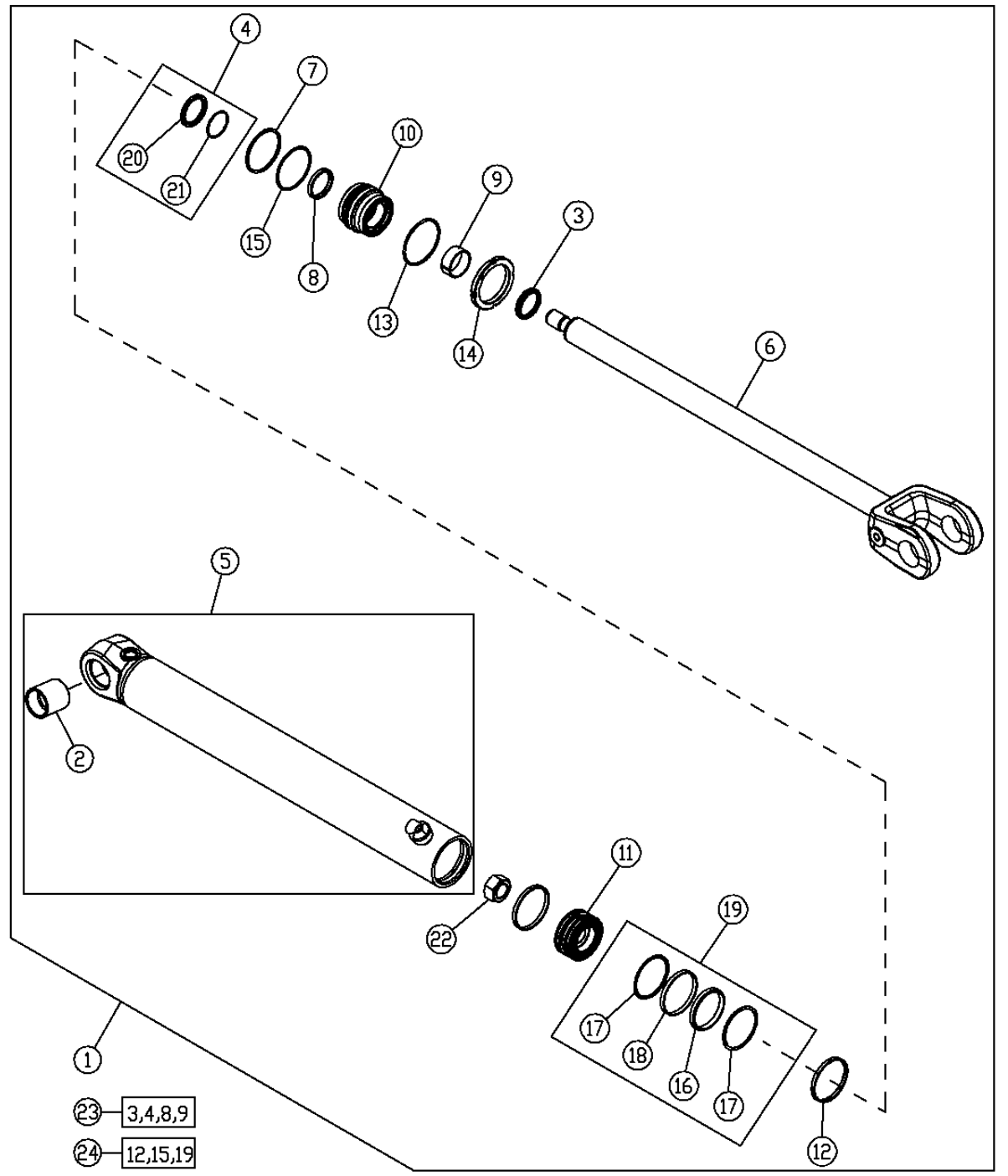

Z-BAR LINKAGE BOOM CYLINDER (S.N. -595722)
VERIN DE FLECHE A TRINGLERIE CINEMATIQUE EN Z (S.N. -595722)
CILINDRO DEL AGUILON DE VARILLAJE DE BARRA EN Z (S.N. -595722)

KEY	*PART NO.*	*PART NAME*	*QTY.*	*SERIAL NO.*	*REMARKS*
1	AH163627	HYDRAULIC CYLINDER	1		
2	H155147	BUSHING	1		
3	AH146558	SEAL	1		
4	AH146562	SEAL	1		
5	AH153712	HYDRAULIC CYLINDER BARREL	1		
6	AH153713	HYDRAULIC CYLINDER ROD	1		
7	F950R	O-RING	1		
8	H152204	SEAL	1		
9	H152795	WEAR RING	1		
10	H157427	HYDR. CYLINDER ROD GUIDE	1		
11	H169743	PISTON	1		
12	H170136	WEAR RING	1		
13	R81787	RING	1		
14	R81793	NUT	1		
15	R81862	BACK-UP RING	1		
16	.....	SEAL	1		(SUB RE20343)
17	.....	SEAL	1		(SUB RE20343)
18	.....	SEAL	1		(SUB RE20343)
19	RE20343	SEAL	1		
20	.....	SEAL	2		
21	.....	SEAL	1		(SUB AH146562)
22	H170540	LOCK NUT	1		
23	AH149814	HYDRAULIC CYLINDER KIT	1		(ROD SEAL KIT)
24	AH212101	HYDRAULIC CYLINDER KIT	1		(BORE KIT)

Z-BAR LINKAGE BOOM CYLINDER (S.N. 595723-)
VERIN DE FLECHE A TRINGLERIE CINEMATIQUE EN Z (S.N. 595723-)
CILINDRO DEL AGUILON DE VARILLAJE DE BARRA EN Z (S.N. 595723-)

T209476 -UN-15MAR05

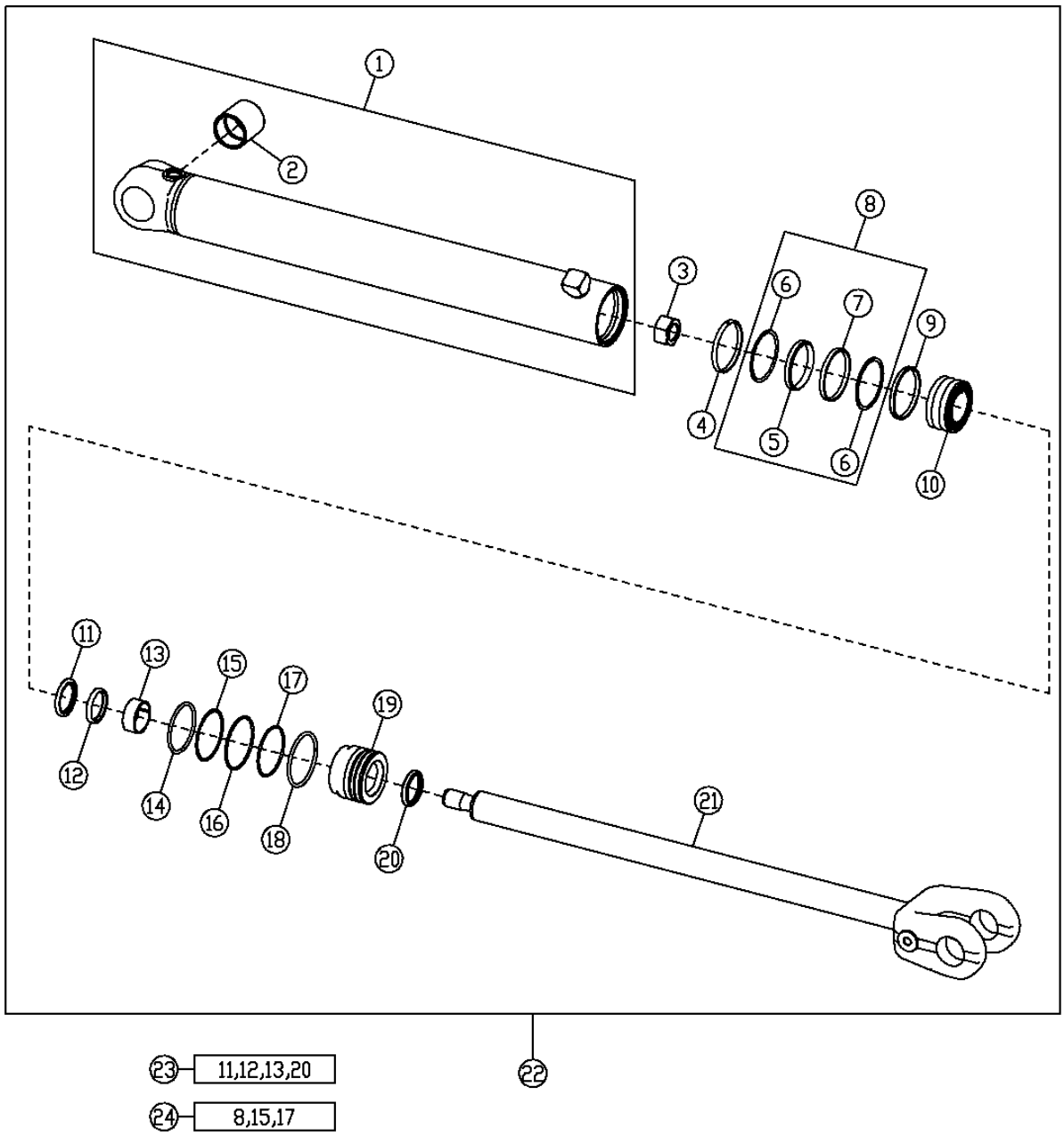

T209476

Z-BAR LINKAGE BOOM CYLINDER (S.N. 595723-)
VERIN DE FLECHE A TRINGLERIE CINEMATIQUE EN Z (S.N. 595723-)
CILINDRO DEL AGUILON DE VARILLAJE DE BARRA EN Z (S.N. 595723-)

KEY	*PART NO.*	*PART NAME*	*QTY.*	*SERIAL NO.*	*REMARKS*
1	AH216285	HYDRAULIC CYLINDER BARREL	1		
2	H155147	BUSHING	1		
3	H170540	LOCK NUT	1		
4	H170136	WEAR RING	1		
5	.....	SEAL	1		(SUB RE20343)
6	.....	BACK-UP RING	1		(SUB RE20343)
7	.....	SEAL	1		(SUB RE20343)
8	RE20343	SEAL	1		
9	H208704	SCRAPER RING	1		
10	H208706	PISTON	1		
11	AH146562	SEAL	1		
12	H152204	SEAL	1		
13	H152795	WEAR RING	1		
14	F950R	O-RING	1		
15	R81862	BACK-UP RING	1		
16	H180094	SNAP RING	1		
17	.....	O-RING	1		(SUB AH212101)
18	H180080	SNAP RING	1		
19	H210826	HYDR. CYLINDER ROD GUIDE	1		
20	AH146558	SEAL	1		
21	AH153713	HYDRAULIC CYLINDER ROD	1		
22	AH216284	HYDRAULIC CYLINDER	1		
23	AH149814	HYDRAULIC CYLINDER KIT	1		(ROD SEAL KIT)
24	AH212101	HYDRAULIC CYLINDER KIT	1		(BORE KIT)

BUCKET CYLINDER
CYLINDRE DE GODET
CILINDRO DE CUCHARON

T195152 -UN-17NOV03

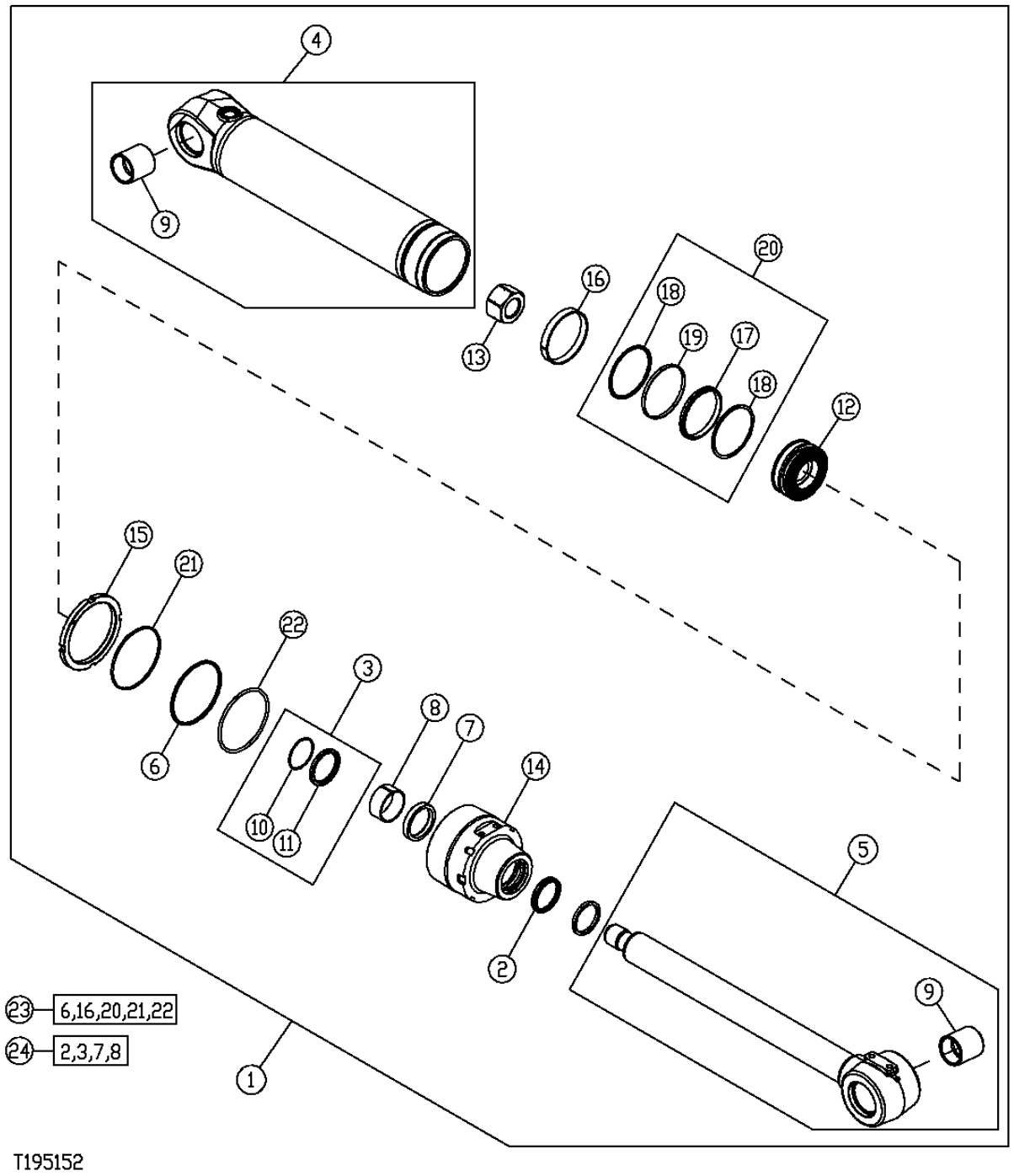

BUCKET CYLINDER
CYLINDRE DE GODET
CILINDRO DE CUCHARON

KEY	*PART NO.*	*PART NAME*	*QTY.*	*SERIAL NO.*	*REMARKS*
1	AH174752	HYDRAULIC CYLINDER	1		
2	AH146559	SEAL	1		
3	AH146563	SEAL	1		
4	AH168575	HYDRAULIC CYLINDER BARREL	1		
5	AH168577	HYDRAULIC CYLINDER ROD	1		
6	H151891	BACK-UP RING	1		
7	H152205	SEAL	1		
8	H152796	WEAR RING	1		
9	H155143	BUSHING	1		
10	.....	SEAL	1		(SUB AH146563)
11	.....	SEAL	1		(SUB AH146563)
12	H170371	PISTON	1		
13	H170372	NUT	1		
14	H179999	HYDR. CYLINDER ROD GUIDE	1		
15	H180432	NUT	1		
16	R82095	WEAR RING	1		
17	.....	SEAL	1		(SUB RE20809)
18	.....	SEAL	1		(SUB RE20809)
19	.....	SEAL	1		(SUB RE20809)
20	RE20809	SEAL	2		
21	T12275	O-RING	1		
22	T38485	O-RING	1		
23	AH212103	HYDRAULIC CYLINDER KIT	1		(BORE KIT)
24	AH149815	HYDRAULIC CYLINDER KIT	1		(ROD SEAL KIT)

TOOL CARRIER BOOM AND TILT CYLINDER PINS AND FITTINGS
FLECHE PORTE-OUTILS ET AXES ET RACCORDS VERIN INCLINAISON
AGUILON DEL PORTAHERRAMIENTAS, ADAPTADORES Y PASADORES DEL CILINDRO DE INCLINACION

TX1006299 -UN-24APR06

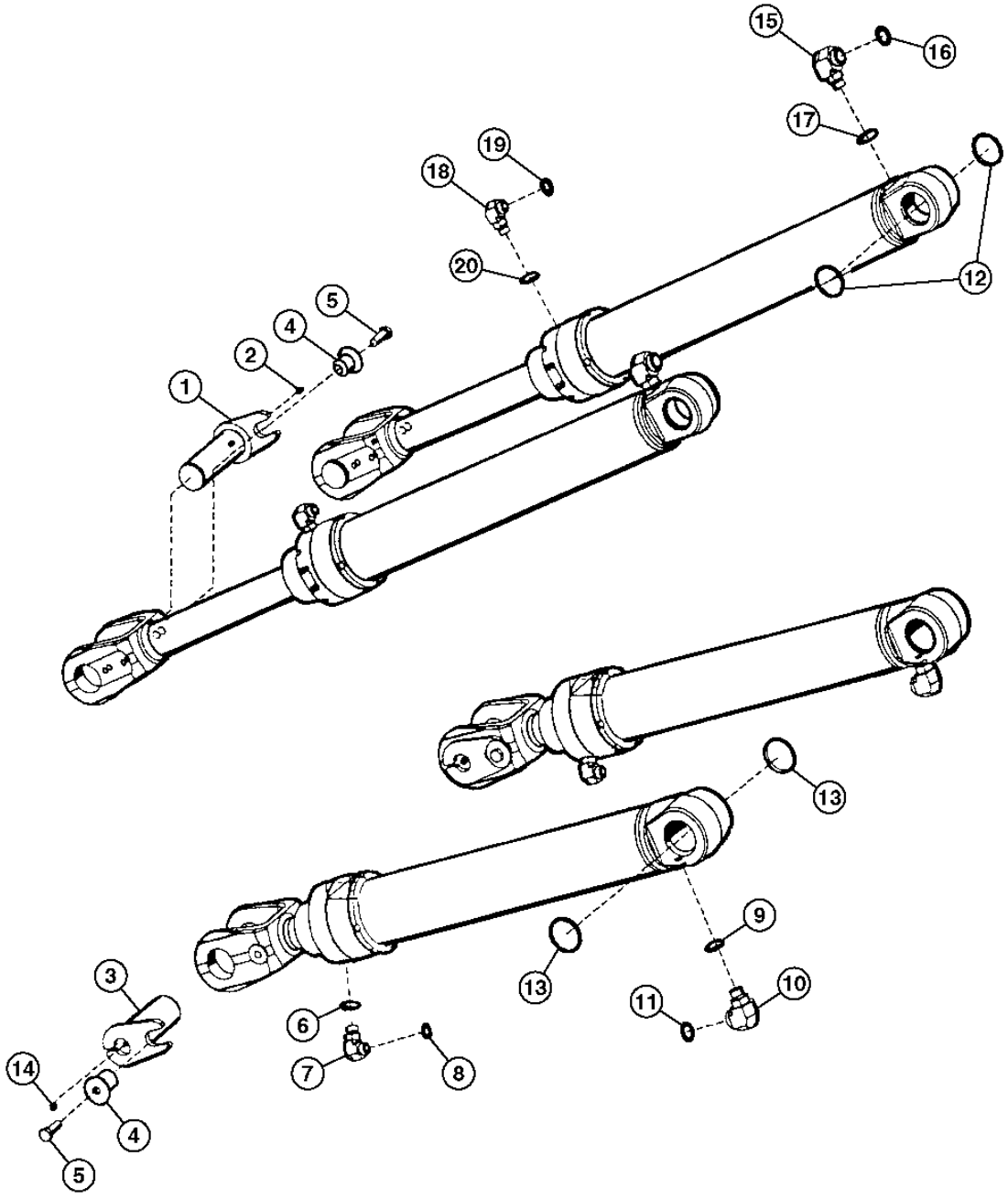

TX1006299

TOOL CARRIER BOOM AND TILT CYLINDER PINS AND FITTINGS
FLECHE PORTE-OUTILS ET AXES ET RACCORDS VERIN INCLINAISON
AGUILON DEL PORTAHERRAMIENTAS, ADAPTADORES Y PASADORES DEL CILINDRO DE INCLINACION

KEY	PART NO.	PART NAME	QTY.	SERIAL NO.	REMARKS
1	AT203562	PIN	2		
2	JD7759	LUBRICATION FITTING	2		
3	AT203562	PIN	2		
4	T176064	BUSHING	4		
5	19M7489	CAP SCREW	4		M16 X 45
6	R26906	O-RING	2		
7	38H1006	ELBOW FITTING	2		
8	T77932	O-RING	2		
9	U12547	O-RING	2		
10	38H1305	ELBOW FITTING	2		
11	T76938	O-RING	2		
12	T157275	SEAL	4		
13	T157275	SEAL	4		
14	JD7763	LUBRICATION FITTING	2		
15	38H1007	ELBOW FITTING	2		
16	T77858	O-RING	2		
17	U12547	O-RING	2		
18	38H1006	ELBOW FITTING	2		
19	T77932	O-RING	2		
20	R26906	O-RING	2		

TOOL CARRIER BOOM CYLINDER
VERIN FLECHE PORTE-OUTILS
CILINDRO DEL AGUILON DEL PORTAHERRAMIENTAS

T195788 -UN-20NOV03

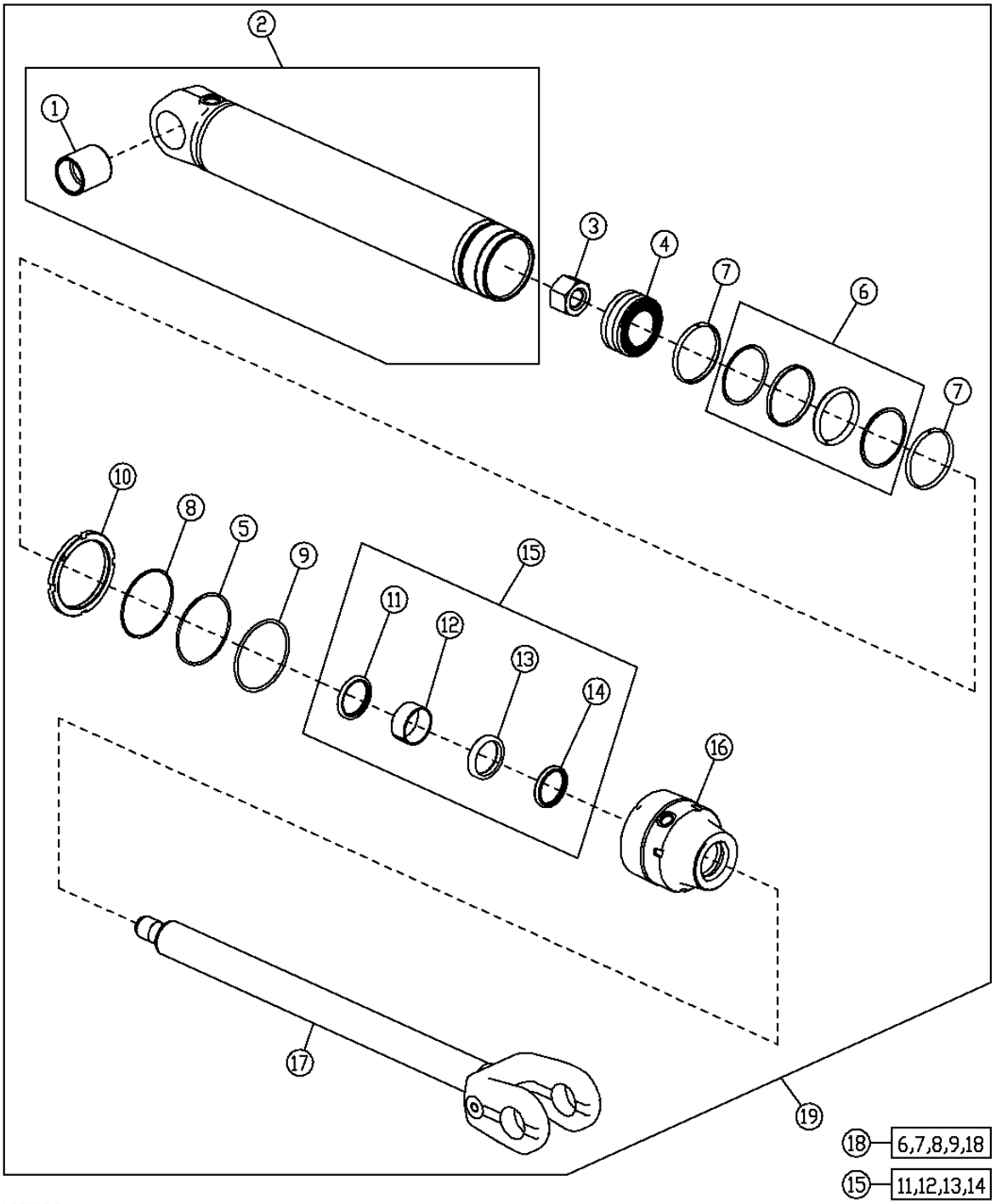

T195788

TOOL CARRIER BOOM CYLINDER
VERIN FLECHE PORTE-OUTILS
CILINDRO DEL AGUILON DEL PORTAHERRAMIENTAS

KEY	*PART NO.*	*PART NAME*	*QTY.*	*SERIAL NO.*	*REMARKS*
1	H155147	BUSHING	1		
2	AH149482	HYDRAULIC CYLINDER BARREL	1		
3	H155561	NUT	1		
4	H169744	PISTON	1		
5	H155540	BACK-UP RING	1		
6	AH138082	SEAL	1		
7	H170137	WEAR RING	2		
8	C11884	O-RING	1		
9	T41356	O-RING	1		
10	H180431	NUT	1		
11	AH146563	SEAL	1		
12	H152796	WEAR RING	1		
13	H152205	SEAL	1		
14	AH146559	SEAL	1		
15	AH149815	HYDRAULIC CYLINDER KIT	1		
16	H156929	HYDR. CYLINDER ROD GUIDE	1		
17	AH154107	ROD	1		
18	AH163670	HYDRAULIC CYLINDER KIT	1		
19	AH163628	HYDRAULIC CYLINDER	1		

TOOL CARRIER TILT CYLINDER
VERIN INCLINAISON PORTE-OUTILS
CILINDRO DEL INCLINACION DEL PORTAHERRAMIENTAS

T195789 -UN-20NOV03

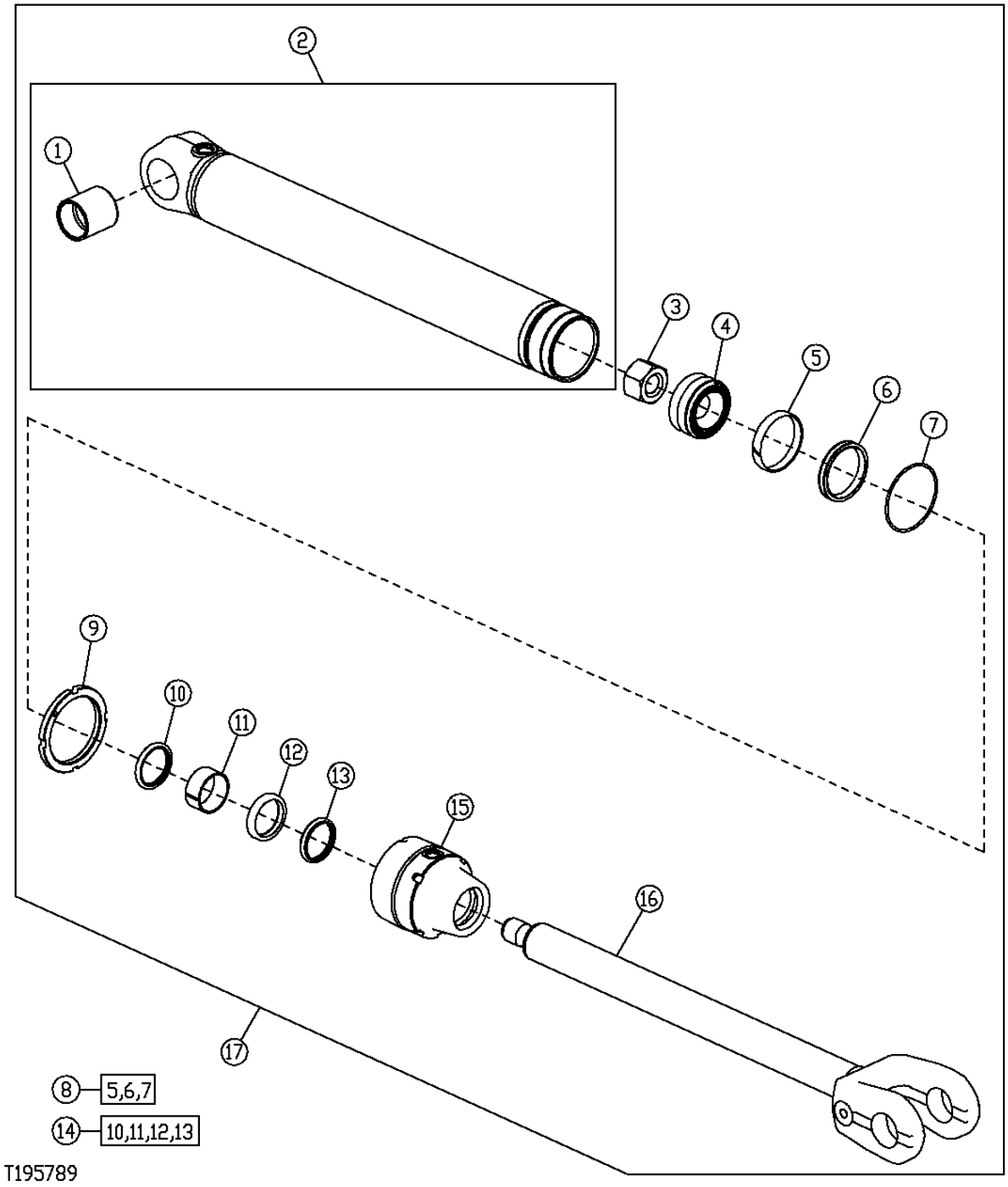

TOOL CARRIER TILT CYLINDER
VERIN INCLINAISON PORTE-OUTILS
CILINDRO DEL INCLINACION DEL PORTAHERRAMIENTAS

KEY	*PART NO.*	*PART NAME*	*QTY.*	*SERIAL NO.*	*REMARKS*
1	H155147	BUSHING	1		(BK)
2	AH152721	HYDRAULIC CYLINDER BARREL	1		
3	H155561	NUT	1		
4	H157037	PISTON	1		
5	R81775	WEAR RING	1		
6	RE20343	SEAL	1		
7	U43360	O-RING	1		
8	AH149844	KIT	1		(BORE KIT, 100 BORE)
9	H180430	NUT	1		
10	AH146563	SEAL	1		
11	H152796	WEAR RING	1		
12	H152205	SEAL	1		
13	AH146559	SEAL	1		
14	AH149815	HYDRAULIC CYLINDER KIT	1		
15	H173650	HYDR. CYLINDER ROD GUIDE	1		
16	AH152720	ROD	1		
17	AH152715	HYDRAULIC CYLINDER	1		

POWERLLEL™ LINKAGE BOOM AND TILT CYLINDER PINS AND FITTINGS
AXES ET RACCORDS VERIN INCLINAISON ET FLECHE TRINGLERIE POWERLLEL™
AGUILON DE VARILLAJE POWERLLEL™, ADAPTADORES Y PASADORES DEL CILINDRO DE INCLINACION

T202187 -UN-19AUG04

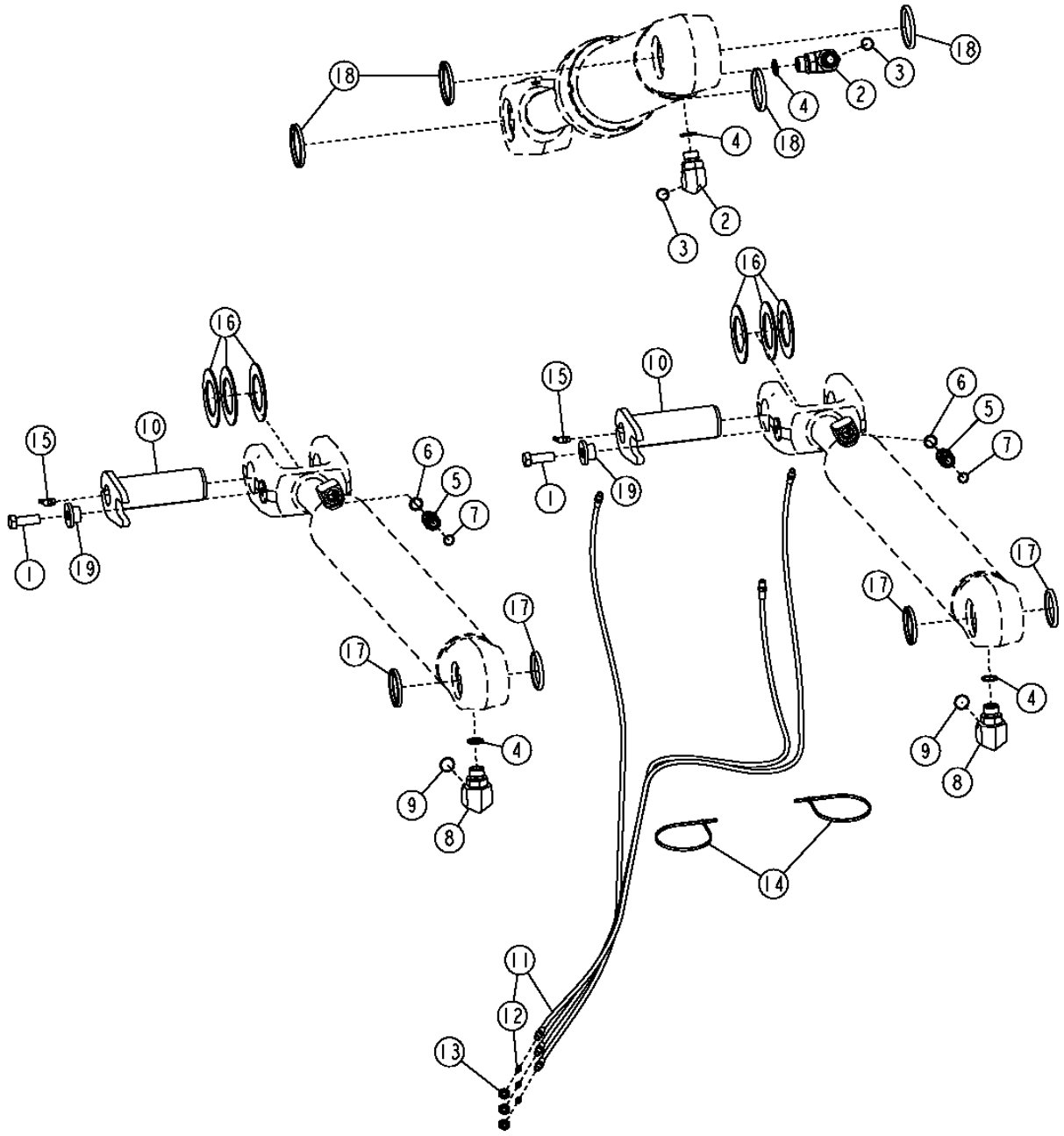

POWERLLEL™ LINKAGE BOOM AND TILT CYLINDER PINS AND FITTINGS
AXES ET RACCORDS VERIN INCLINAISON ET FLECHE TRINGLERIE POWERLLEL™
AGUILON DE VARILLAJE POWERLLEL™, ADAPTADORES Y PASADORES DEL CILINDRO DE INCLINACION

KEY	*PART NO.*	*PART NAME*	*QTY.*	*SERIAL NO.*	*REMARKS*
1	19M7489	CAP SCREW	2		M16 X 45
2	38H1007	ELBOW FITTING	2		
3	T77858	O-RING	2		
4	U12547	O-RING	4		
5	38H1162	ADAPTER FITTING	2		
6	R26906	O-RING	2		
7	T77932	O-RING	2		
8	38H1305	ELBOW FITTING	2		
9	T76938	O-RING	2		
10	AT203562	PIN	2		
11	AT307996	HYDRAULIC HOSE	3		
12	JD7797	LUBRICATION FITTING	1		
13	E12379	NUT	3		3.175 MM (1/8")
14	H77698	TIE BAND	2		
15	JD7763	LUBRICATION FITTING	2		45° X 22.606 MM LONG (0.890" LONG)
16	T102171	WASHER	6		66.500 X 108 X 3 MM
17	T157275	SEAL	4		
18	T157277	SEAL	4		
19	T176064	BUSHING	2		

POWERLLEL™ LINKAGE BOOM CYLINDER
VERIN FLECHE TRINGLERIE POWERLLEL™
CILINDRO DEL AGUILON DE VARILLAJE POWERLLEL™

T202792 -UN-04OCT04

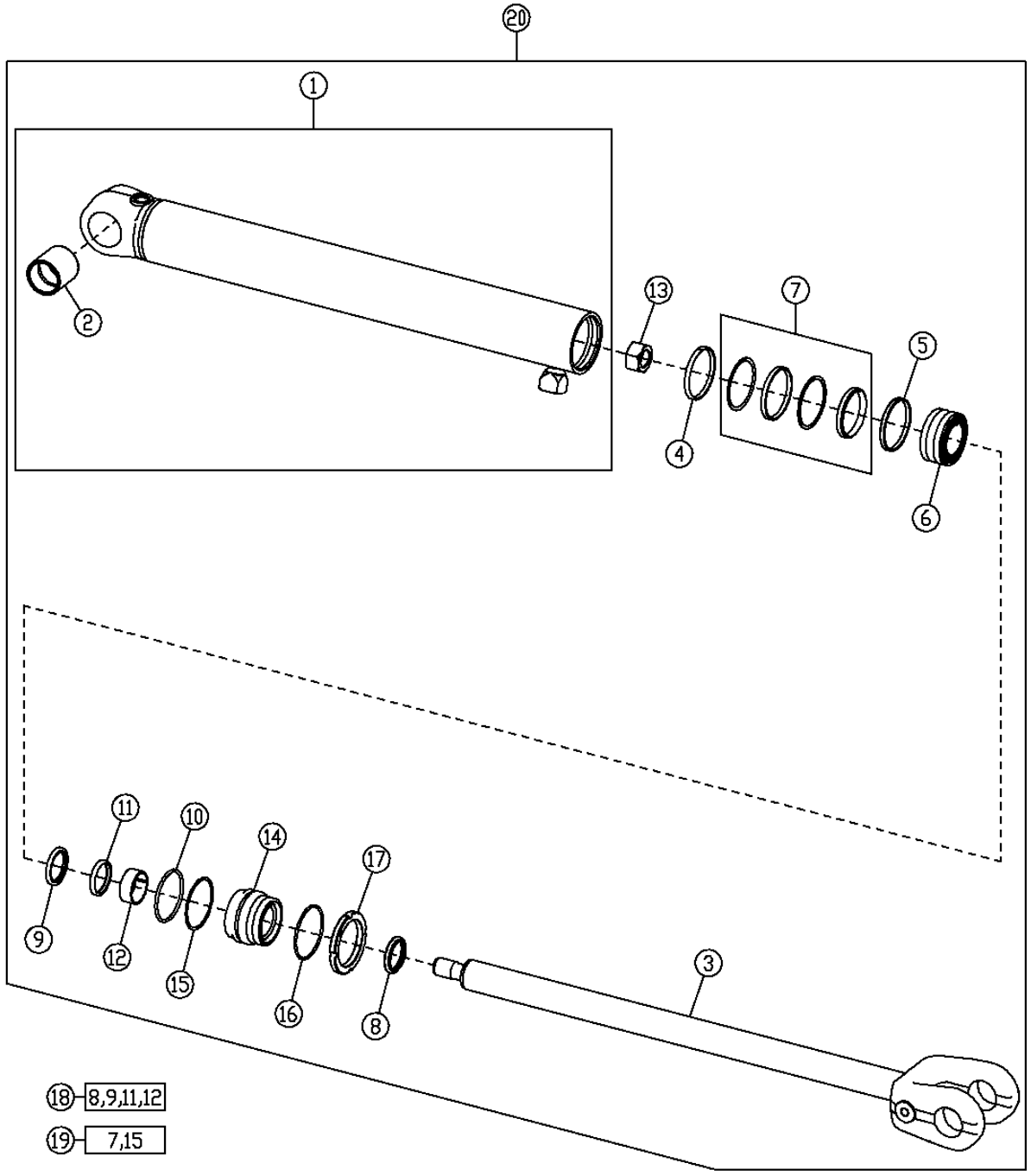

POWERLLEL™ LINKAGE BOOM CYLINDER
VERIN FLECHE TRINGLERIE POWERLLEL TMÙ
CILINDRO DEL AGUILON DE VARILLAJE POWERLLEL TMÙ

KEY	*PART NO.*	*PART NAME*	*QTY.*	*SERIAL NO.*	*REMARKS*
1	AH217008	HYDRAULIC CYLINDER BARREL	1		
2	H155147	BUSHING	1		
3	AH153713	HYDRAULIC CYLINDER ROD	1		
4	H170136	WEAR RING	1		
5	H208704	SCRAPER RING	1		
6	H208706	PISTON	1		
7	RE20343	SEAL	1		
8	AH146558	SEAL	1		
9	AH146562	SEAL	1		
10	F950R	O-RING	1		
11	H152204	SEAL	1		
12	H152795	WEAR RING	1		
13	H170540	LOCK NUT	1		
14	H157427	HYDR. CYLINDER ROD GUIDE	1		
15	R81862	BACK-UP RING	1		
16	R81787	RING	1		
17	R81793	NUT	1		
18	AH149814	HYDRAULIC CYLINDER KIT	1		(ROD SEAL KIT)
19	AH212101	HYDRAULIC CYLINDER KIT	1		(BORE SEAL KIT)
20	AH209498	HYDRAULIC CYLINDER	1		(SUB FOR AH217007)

POWERLLEL™ LINKAGE BUCKET CYLINDER
VERIN FLECHE TRINGLERIE POWERLLEL™
CILINDRO DEL AGUILON DE VARILLAJE POWERLLEL™

T202190 -UN-24AUG04

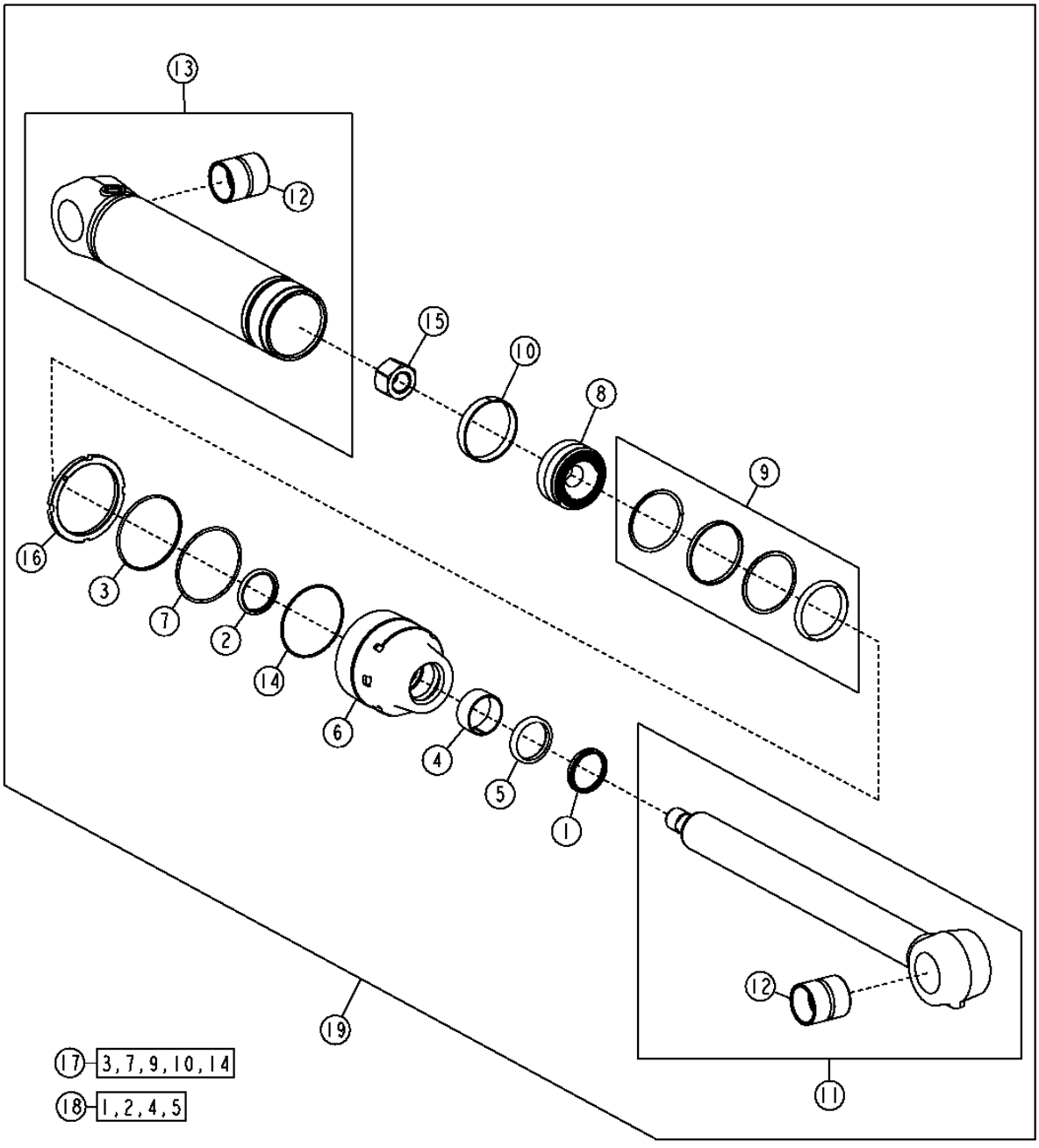

T202190

POWERLLEL™ LINKAGE BUCKET CYLINDER
VERIN FLECHE TRINGLERIE POWERLLEL™
CILINDRO DEL AGUILON DE VARILLAJE POWERLLEL™

KEY	*PART NO.*	*PART NAME*	*QTY.*	*SERIAL NO.*	*REMARKS*
1	AH153596	SEAL	1		
2	AH153597	SEAL	1		
3	H151890	BACK-UP RING	1		
4	H159071	WEAR RING	1		
5	H159072	SEAL	1		
6	H173651	HYDR. CYLINDER ROD GUIDE	1		
7	R72032	O-RING	1		
8	H159074	PISTON	1		
9	RE30162	SEAL	1		
10	R90653	WEAR RING	1		
11	AH214832	ROD	1		
12	H151537	BUSHING	1		
13	AH215465	HYDRAULIC CYLINDER BARREL	1		
14	E52687	O-RING	1		
15	H151894	NUT	1		
16	H180324	NUT	1		
17	AH149848	KIT	1		(BORE SEAL KIT)
18	AH154570	HYDRAULIC CYLINDER KIT	1		(ROD SEAL KIT)
19	AH208164	HYDRAULIC CYLINDER	1		

RETURN-TO-DIG ACTUATOR AND SENSOR (NOT FOR USE WITH TOOL CARRIER)
ACTIONNEUR ET CAPTEUR DE RETOUR EN POSITON DE CREUSEMENT (NE PAS UTILISER AVEC PORTE-OUTILS)
ACCIONADOR DE RETORNO PARA EXCAVAR Y SENSOR (NO PARA USO CON PORTAHERRAMIENTAS)

T215108 -UN-28SEP05

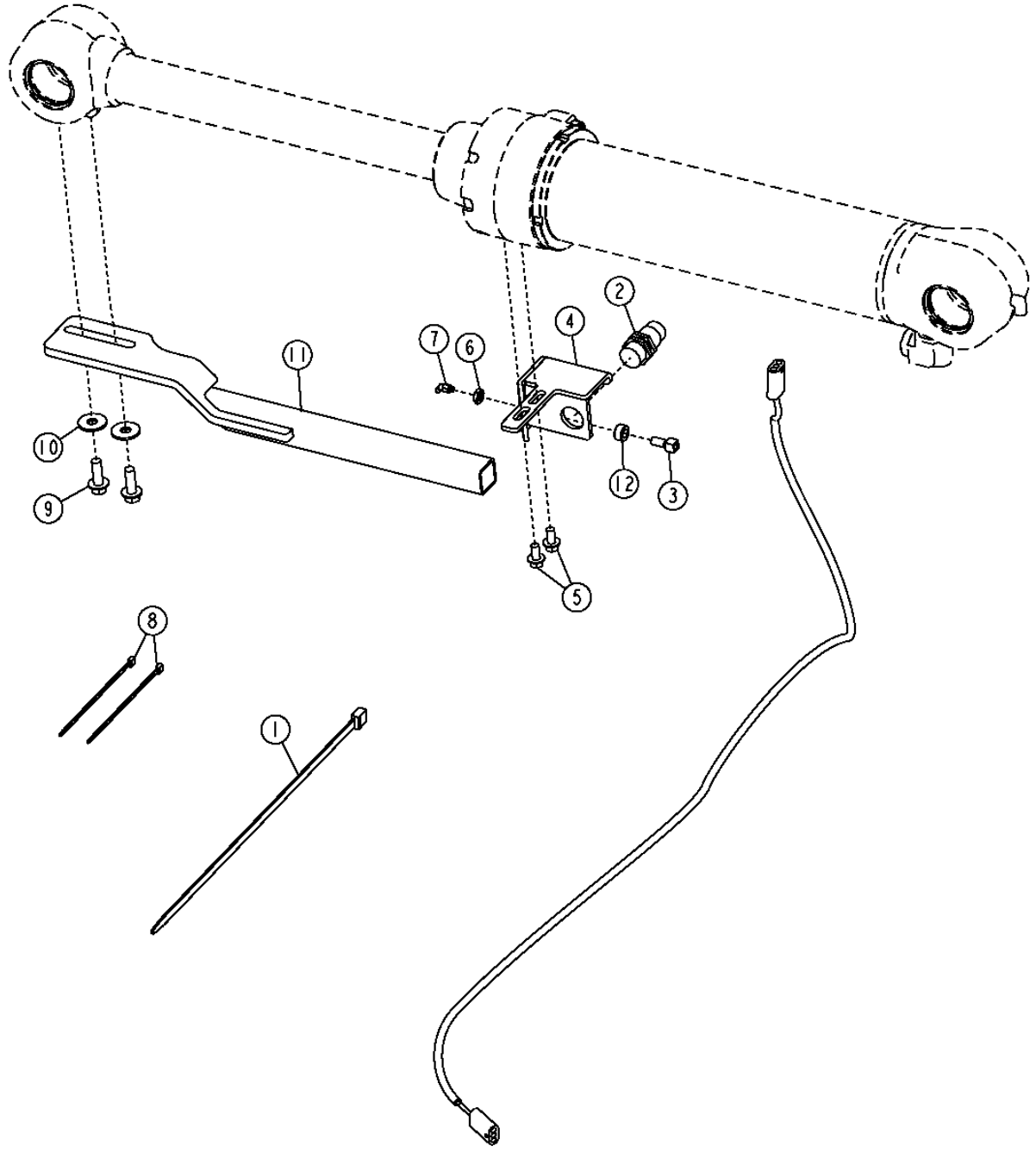

RETURN-TO-DIG ACTUATOR AND SENSOR (NOT FOR USE WITH TOOL CARRIER)
ACTIONNEUR ET CAPTEUR DE RETOUR EN POSITON DE CREUSEMENT (NE PAS UTILISER AVEC PORTE-OUTILS)
ACCIONADOR DE RETORNO PARA EXCAVAR Y SENSOR (NO PARA USO CON PORTAHERRAMIENTAS)

KEY	*PART NO.*	*PART NAME*	*QTY.*	*SERIAL NO.*	*REMARKS*
1	N189220	TIE BAND	1		
2	AT203130	SENSOR	1		(STANDARD)
	AT222366	SWITCH	1		(HARSH ENVIRONMENT)
3	R36311	FITTING	1		
4	AT220865	BRACKET	1		
5	19M7784	SCREW	2		M10 X 20
6	E12379	NUT	1		3.175 MM (1/8")
7	JD7788	LUBRICATION FITTING	1		45° X 20.574 MM LONG (0.810" LONG)
8	R44302	TIE BAND	4		
9	19M7790	SCREW	2		M12 X 35
10	24M7180	WASHER	2		13 X 37 X 3 MM (0.512" X 1.457" X 0.118")
11	AT224536	ACTUATOR	1		
12	T13976	BUSHING	1		

LOADER BOOM KICK OUT/ RETURN TO CARRY SENSOR
DESENGAGEMENT DE RELEVAGE ET CAPTEUR DE FLECHE DE CHARGEUR
SENSOR Y DESENGANCHE DEL AGUILON DE CARGADORA

T195071 -UN-05NOV03

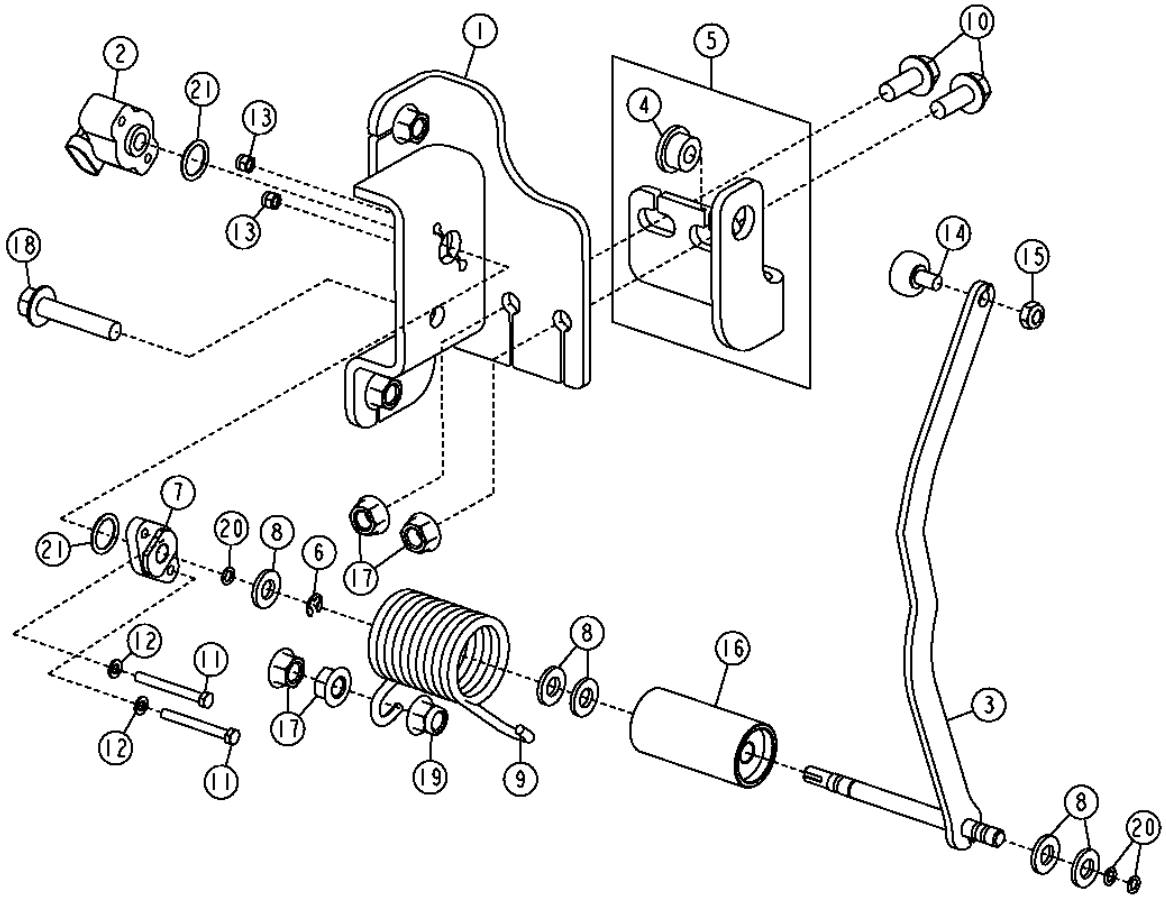

T195071

LOADER BOOM KICK OUT/ RETURN TO CARRY SENSOR
DESENGAGEMENT DE RELEVAGE ET CAPTEUR DE FLECHE DE CHARGEUR
SENSOR Y DESENGANCHE DEL AGUILON DE CARGADORA

KEY	*PART NO.*	*PART NAME*	*QTY.*	*SERIAL NO.*	*REMARKS*
1	AT227530	BRACKET	1		
2	RE261354	SENSOR	1		
3	AT332233	ACTUATOR	1		(SUB FOR AT227531)
4	T82861	BUSHING	1		
5	AT226542	BRACKET	1		
6	R72653	SNAP RING	1		
7	R86457	SUPPORT	1		
8	24M7239	WASHER	5		10.700 X 21 X 2.500 MM (0.421" X 0.827" X 0.098")
9	T195210	TORSION SPRING	1		
10	19M7785	SCREW	2		M10 X 25
11	19M8834	CAP SCREW	2		M5 X 45
12	24M7027	WASHER	2		5.300 X 10 X 1 MM (0.209" X 0.394" X 0.039")
13	14M7360	LOCK NUT	2		M5
14	AT45678	CAM FOLLOWER	1		
15	R11151	LOCK NUT	1		7.925 MM (5/16")
16	T197144	BUSHING	1		
17	14M7296	FLANGE NUT	4		M10
18	19M7806	SCREW	1		M10 X 50
19	14M7400	LOCK NUT	1		M10
20	A4365R	O-RING	3		6.071 X 1.778 MM (0.239" X 0.070")
21	P48347	O-RING	2		17.120 X 2.616 MM (0.674" X 0.103") (NOT ILLUSTRATED)

RETURN-TO-DIG ACTUATOR AND SENSOR (FOR USE WITH TOOL CARRIER)
ACTIONNEUR ET CAPTEUR DE RETOUR EN POSITON DE CREUSEMENT (A UTILISER AVEC PORTE OUTILS)
ACCIONADOR DE RETORNO PARA EXCAVAR Y SENSOR (USAR CON PORTAHERRAMIENTAS)

TP60295 -UN-02APR98

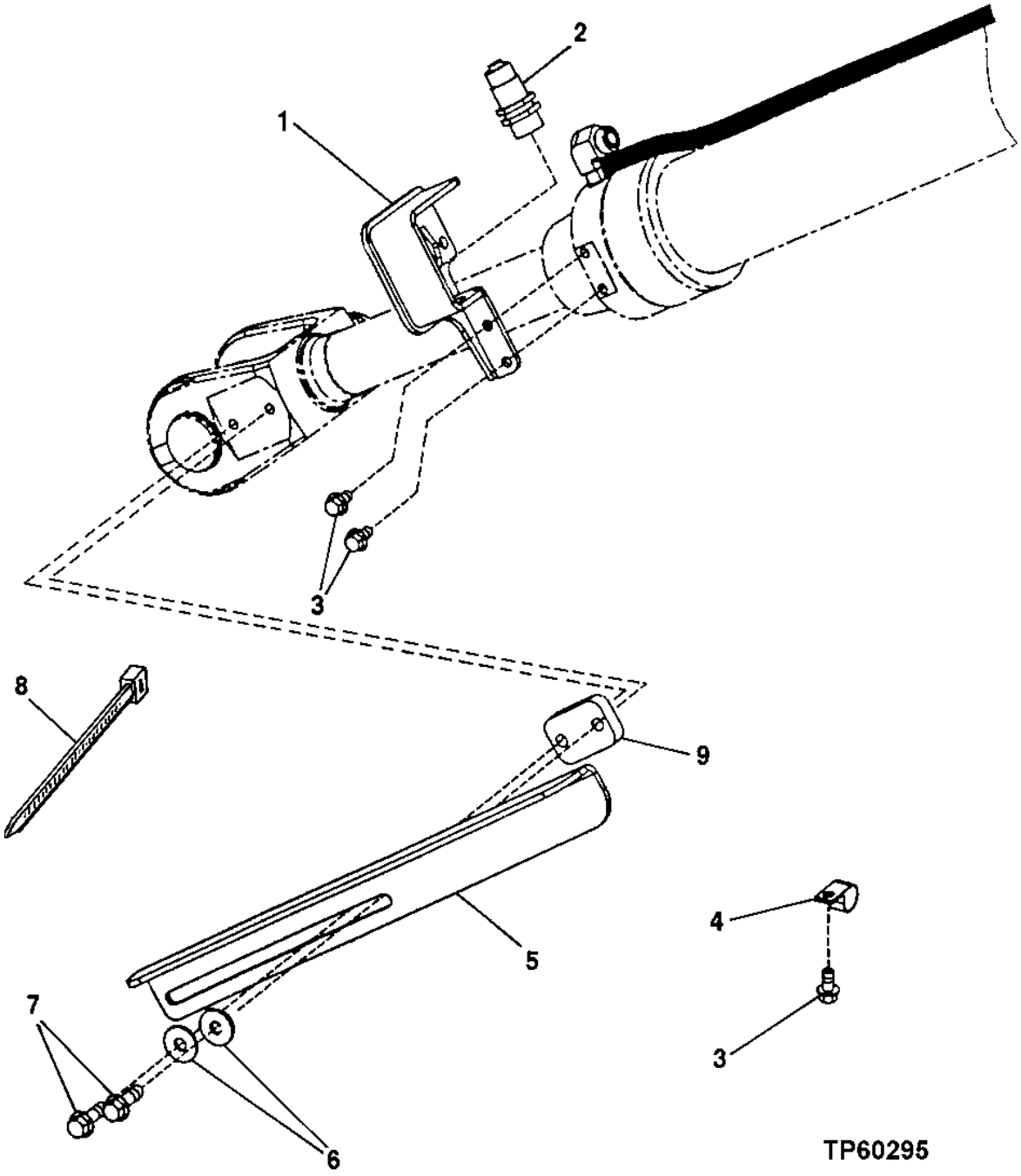

RETURN-TO-DIG ACTUATOR AND SENSOR (FOR USE WITH TOOL CARRIER)
ACTIONNEUR ET CAPTEUR DE RETOUR EN POSITON DE CREUSEMENT (A UTILISER AVEC PORTE OUTILS)
ACCIONADOR DE RETORNO PARA EXCAVAR Y SENSOR (USAR CON PORTAHERRAMIENTAS)

KEY	*PART NO.*	*PART NAME*	*QTY.*	*SERIAL NO.*	*REMARKS*
1	AT207784	BRACKET	1		
2	AT209868	SENSOR	1		(STANDARD)
	AT227909	SWITCH	1		(HARSH ENVIRONMENT)
3	19M7784	SCREW	3		M10 X 20
4	T102934	CLAMP	1		
5	T173744	ACTUATOR	1		
6	24M7180	WASHER	2		13 X 37 X 3 MM (0.512" X 1.457" X 0.118")
7	19M7791	BOLT	2		M12 X 40
8	R44302	TIE BAND	1		
9	T169507	STRAP	1		

LOADER BOOM KICKOUT/ RETURN TO CARRY SENSOR (WITH TOOL CARRIER)
CAPTEUR DESENGAGEMENT / RETOUR EN POSITION TRANSPORT FLECHE CHARGEUR (AVEC PORTE-OUTILS)
SENSOR DE DESENGANCHE DE ALTURA DEL AGUILON DE CARG./RET. A POS. DE ACARERO(CON PORTAHERRAMIENTAS)

T197491 -UN-29JAN04

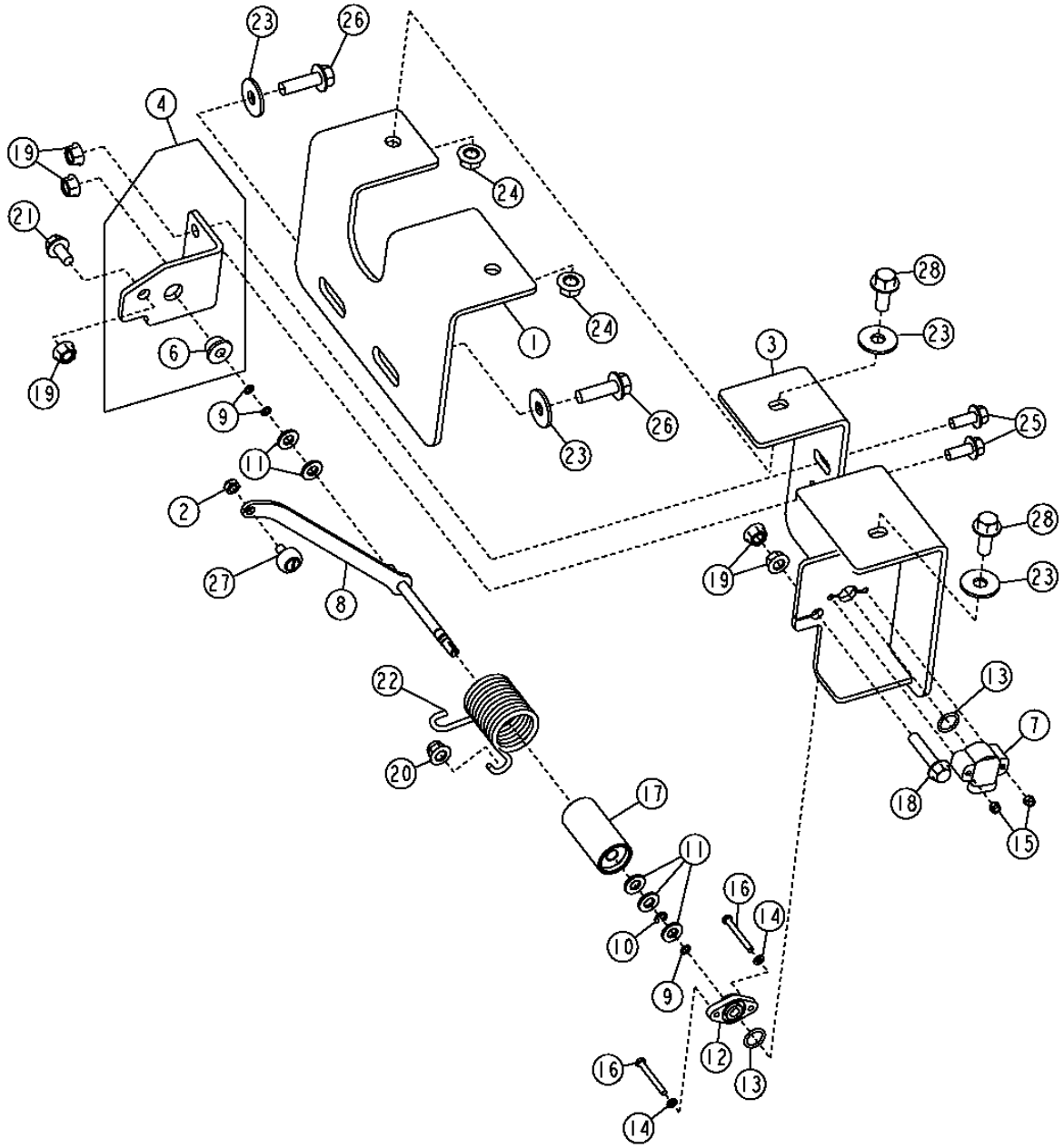

THIS PARTS LISTING IS CONTINUED

AUTOMATIC CONTROL FUNCTION 3166

LOADER BOOM KICKOUT/ RETURN TO CARRY SENSOR (WITH TOOL CARRIER)
CAPTEUR DESENGAGEMENT/RETOUR EN POSITION TRANSPORT FLECHE CHARGEUR (AVEC PORTE-OUTILS)
SENSOR DE DESENGANCHE DE ALTURA DEL AGUILON DE CARG./RET. A POS. DE ACARERO(CON PORTAHERRAMIENTAS)

KEY	*PART NO.*	*PART NAME*	*QTY.*	*SERIAL NO.*	*REMARKS*
1	T202813	BRACKET	1		
2	R11151	LOCK NUT	1		
3	AT304620	BRACKET	1		
4	AT304860	BRACKET	1		
6	T82861	BUSHING	1		
7	RE261354	SENSOR	1		(SUB FOR RE56165)
8	AT226301	ACTUATOR	1		(NOT ILLUSTRATED)
9	A4365R	O-RING	3		6.071 X 1.778 MM (0.239" X 0.070")
10	R72653	SNAP RING	1		
11	24M7239	WASHER	5		10.700 X 21 X 2.500 MM (0.421" X 0.827" X 0.098")
12	R86457	SUPPORT	1		
13	P48347	O-RING	2		17.120 X 2.616 MM (0.674" X 0.103") (NOT ILLUSTRATED)
14	24M7027	WASHER	2		5.300 X 10 X 1 MM (0.209" X 0.394" X 0.039")
15	14M7360	LOCK NUT	2		M5
16	19M8834	CAP SCREW	2		M5 X 45
17	T197144	BUSHING	1		
18	19M7806	SCREW	1		M10 X 50
19	14M7296	FLANGE NUT	5		M10
20	14M7400	LOCK NUT	1		M10
21	19M7784	SCREW	1		M10 X 20
22	T195210	TORSION SPRING	1		
23	19M7789	SCREW	2		M12 X 30
24	14M7299	FLANGE NUT	2		M12
25	19M7785	SCREW	2		M10 X 25
26	19M7791	BOLT	2		M12 X 40
27	AT45678	CAM FOLLOWER	1		
28	19M7789	SCREW	1		M12 X 30

RETURN-TO-DIG ACTUATOR AND SENSOR (FOR USE WITH POWERLLEL™LINKAGE)
ACTIONNEUR ET CAPTEUR DE RETOUR EN POSITON DE CREUSEMENT(A UTILISER AVEC TRINGLERIE POWERLLEL™)
ACCIONADOR DE RETORNO PARA EXCAVAR Y SENSOR (PARA USO CON VARILLAJE POWERLLEL™)

T205055 -UN-12JAN05

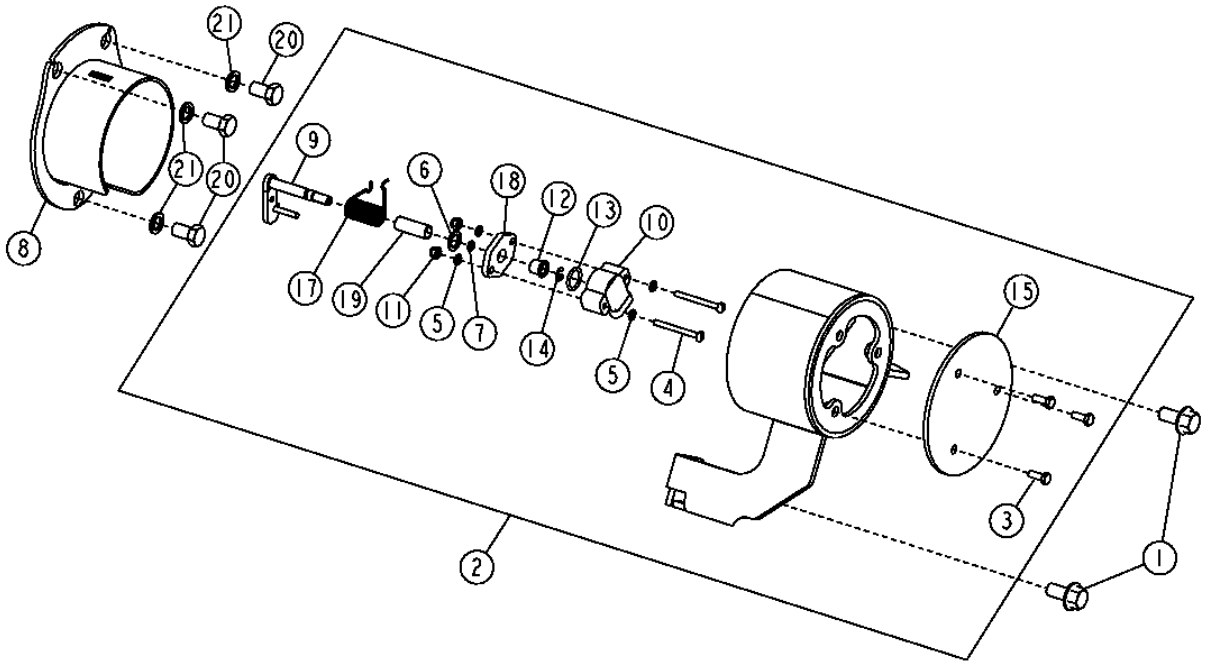

T205055

AUTOMATIC CONTROL FUNCTION 3166

RETURN-TO-DIG ACTUATOR AND SENSOR (FOR USE WITH POWERLLEL™LINKAGE)
ACTIONNEUR ET CAPTEUR DE RETOUR EN POSITON DE CREUSEMENT(A UTILISER AVEC TRINGLERIE POWERLLEL™)
ACCIONADOR DE RETORNO PARA EXCAVAR Y SENSOR (PARA USO CON VARILLAJE POWERLLEL™)

KEY	*PART NO.*	*PART NAME*	*QTY.*	*SERIAL NO.*	*REMARKS*
1	19M7788	SCREW	2		M12 X 25
2	AT312983	BRACKET	1		(STANDARD)
3	19M7560	CAP SCREW	3		M6 X 16
4	21H1383	SCREW	2		0.190" X 2"
5	24M7027	WASHER	4		5.300 X 10 X 1 MM
6	24M7386	WASHER	1		13 X 19 X 1.500 MM
7	A4365R	O-RING	1		
8	AT312989	BRACKET	1		
9	AT312996	ARM	1		
10	AT313037	POTENTIOMETER	1		
11	M135542	LOCK NUT	2		
12	M88102	BUSHING	1		
13	P48347	O-RING	1		
14	R72653	SNAP RING	1		
15	T210258	PLATE	1		
17	T211396	TORSION SPRING	1		
18	T211404	PLATE	1		
19	T211405	SPACER	1		
20	19M8017	CAP SCREW	2		M12 X 20
21	24M7240	WASHER	2		13 X 25 X 3 MM

LOADER BOOM KICKOUT/ RETURN TO CARRY SENSOR (WITH POWERLLEL™ LINKAGE)
DESENGAGEMENT DE RELEVAGE ET CAPTEUR DE FLECHE DE CHARGEUR (AVEC TRINGLERIE POWERLLEL™)
SENSOR Y DESENGANCHE DEL AGUILON DE CARGADORA (CON VARILLAJE POWERLLEL™)

T202048 -UN-10AUG04

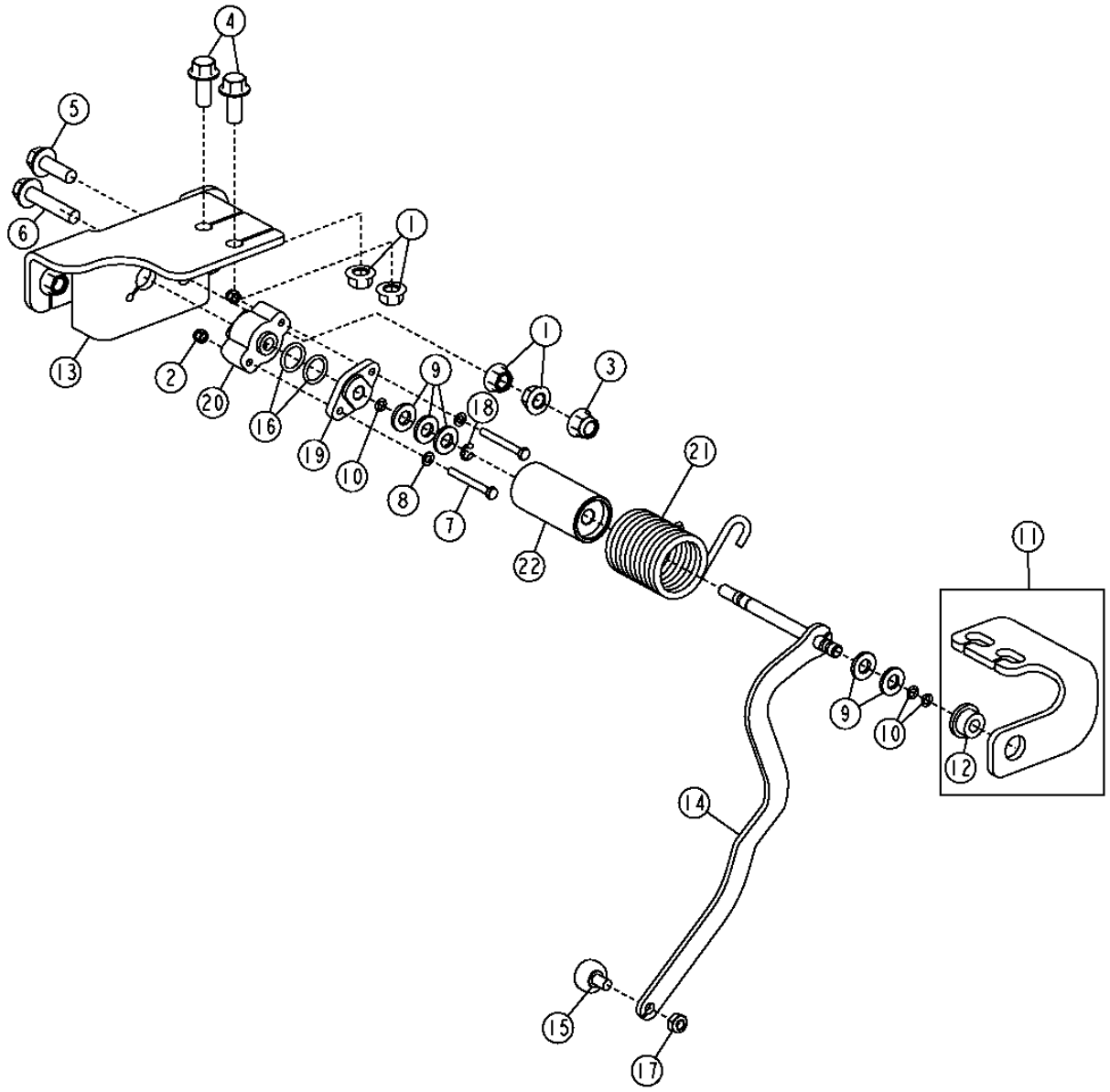

LOADER BOOM KICKOUT/ RETURN TO CARRY SENSOR (WITH POWERLLEL™ LINKAGE)
DESENGAGEMENT DE RELEVAGE ET CAPTEUR DE FLECHE DE CHARGEUR (AVEC TRINGLERIE POWERLLEL™)
SENSOR Y DESENGANCHE DEL AGUILON DE CARGADORA (CON VARILLAJE POWERLLEL™)

KEY	*PART NO.*	*PART NAME*	*QTY.*	*SERIAL NO.*	*REMARKS*
1	14M7296	FLANGE NUT	4		M10
2	14M7360	LOCK NUT	2		M5
3	14M7400	LOCK NUT	1		M10
4	19M7785	SCREW	2		M10 X 25
5	19M7786	SCREW	1		M10 X 30
6	19M7806	SCREW	1		M10 X 50
7	19M8834	CAP SCREW	2		M5 X 45
8	24M7027	WASHER	2		5.300 X 10 X 1 MM
9	24M7239	WASHER	5		10.700 X 21 X 2.500 MM
10	A4365R	O-RING	3		6.071 X 1.778 MM
11	AT226542	BRACKET	1		
12	T82861	BUSHING	1		
13	AT227530	BRACKET	1		
14	AT307950	ACTUATOR	1		
15	AT45678	CAM FOLLOWER	1		
16	P48347	O-RING	2		
17	R11151	LOCK NUT	1		
18	R72653	SNAP RING	1		
19	R86457	SUPPORT	1		
20	RE261354	SENSOR	1		(SUB FOR RE56165)
21	T195210	TORSION SPRING	1		
22	T197144	BUSHING	1		

MEMORANDA
MEMORANDA
MEMORANDA

NUMERICAL INDEX

PART NO.	KEY	PAGE
AA21292	2	1520-3
AA21292	9	1520-3B
AA21292	4	1913-2
AA21292	10	1927-9
AH108055	37	1060-3
AH108055	24	1060-3B
AH121227	9	1810-7
AH125760	10	2160-11
AH138082	6	3165-13
AH138291	2	1672-5
AH142159	10	3104-15
AH142159	13	3104-17
AH142159	9	3104-19
AH144020	3	1830-5
AH146558	3	3165-5
AH146558	20	3165-7
AH146558	8	3165-19
AH146559	2	3165-9
AH146559	14	3165-13
AH146559	13	3165-15
AH146562	4	3165-5
AH146562	21	3165-5
AH146562	11	3165-7
AH146562	9	3165-19
AH146563	3	3165-9
AH146563	10	3165-9
AH146563	11	3165-9
AH146563	11	3165-13
AH146563	10	3165-15
AH147737	2	0960-11
AH147739	3	0960-11
AH147976	4	0960-11
AH147976	10	0960-11
AH147976	11	0960-11
AH148358	5	0960-11
AH148358	19	0960-11
AH148358	20	0960-11
AH148358	21	0960-11
AH148823	14	3104-15
AH148823	15	3104-17
AH149482	2	3165-13
AH149814	23	3165-5
AH149814	23	3165-7
AH149814	18	3165-19
AH149815	24	3165-9
AH149815	15	3165-13
AH149815	14	3165-15
AH149844	8	3165-15
AH149848	17	3165-21
AH150452	6	0960-11
AH152715	17	3165-15
AH152720	16	3165-15
AH152721	2	3165-15
AH153596	1	3165-21
AH153597	2	3165-21
AH153712	5	3165-5
AH153713	6	3165-5
AH153713	21	3165-7
AH153713	3	3165-19
AH154107	17	3165-13
AH154570	18	3165-21
AH159448	18B	0560-3
AH160119	1	0960-11
AH161589	25	0960-11
AH161591	26	0960-11
AH162914	40	0560-3
AH163627	1	3165-5
AH163628	19	3165-13
AH163670	18	3165-13
AH165079	38B	0560-3
AH165080	36B	0560-3
AH168575	4	3165-9
AH168577	5	3165-9
AH170895	19	0510-3
AH170895	38	0510-5
AH170895	17	0510-5B
AH170895	23	2160-7
AH170895	20	2160-7B
AH170895	21	2160-13
AH170895	3	2160-15
AH174752	1	3165-9
AH205056	1	0960-11
AH208164	19	3165-21
AH209498	20	3165-19
AH212088	15	3104-15
AH212088	14	3104-17
AH212101	24	3165-5
AH212101	17	3165-7
AH212101	24	3165-7
AH212101	19	3165-19
AH212103	23	3165-9
AH212349	9A	3104-7
AH212349	10A	3104-9
AH212349	16	3104-15
AH212350	13	3104-15
AH214832	11	3165-21
AH215465	13	3165-21
AH216284	22	3165-7
AH216285	1	3165-7
AH216366	1	0960-11
AH216367	2	0960-11
AH217007	20	3165-19
AH217008	1	3165-19
AH217541	9B	3104-7
AH217541	10	3104-7
AH217541	10B	3104-9
AH217541	11	3104-9
AH217541	16	3104-17
AH222122	5	3104-11
AH222122	5	3104-13
AH222122	13	3104-19
AH223400	10	3104-7
AH223400	11	3104-9
AH64349	17	2160-7
AH64349	21	2160-7B
AH75159	16	0510-3
AH75159	18	0510-5B
AH75162	4	0360-5
AH75162	17	0510-3
AH75162	19	0510-5B
AH75162	18	2160-7
AH75162	22	2160-7B
AH77869	6	1671-3
AH89557	11	1674-3B
AH89557	5	1674-3D
AH89557	11	1674-5
AH96708	15	0510-9
AH96708	13	0510-9B
AH96708	19	0510-11
AH96708	22	0510-11B
AH97280	6	1673-3
AH97280	9	1830-13
AL153660	3	1810-29
AL32877	2	0210-31
AL32877	2	0210-33
AL32877	6	1060-15
AL76568	1	1674-11
AL76568	24	1830-3
AL76568	6	1830-7
AM39653	19	2160-7
AM39653	23	2160-7B
AN207183	8	3160-96
AN207184	8	3160-96
AP22660	9	1674-7
AP22660	14	1674-7B
AR104516	23	2001-7
AR104516	23	2001-7B
AR104650	22	0413-3
AR21836	4	0360-3
AR21836	6	1060-11
AR21837	7	1060-11
AR21837	1	1369-3
AR21837	6	1369-3B
AR21837	5	1746-3
AR21839	3	0360-3
AR21839	3	0360-5
AR21839	18	0510-3
AR21839	20	0510-5B
AR21839	20	0510-9
AR21839	15	0510-9B
AR21839	24	0510-11
AR21839	17	0510-11B
AR21839	14	0560-3
AR21839	7	1369-3B
AR21839	20	2160-7
AR21839	24	2160-7B
AR21839	4	2160-13
AR21839	5	2160-13
AR21839	4	2160-15
AR21840	15	0560-3
AR21999	4	0505-3
AR21999	19	0510-3
AR48236	21	0510-3
AR48236	24	0510-5B
AR50411	1	0505-6
AR62492	7	0505-6
AR65507	9	0403-2
AR83396	3	1520-3B
AR85327	4	1746-6
AR85327	29	3160-49
AR85327	1	3160-67
AR85327	27	3160-67
AR85519	19	0413-3
AR89602	17	3160-73
AR89602	17	3160-77
AR89602	18	3160-81
AR89602	26	3160-85
AR89602	29	3160-89
AR91896	7	1810-3
AT103107	7	3165-3
AT103440	2	3160-37
AT103919	5	1810-38
AT104051	2	3160-37
AT105438	..	3160-11
AT105438	1	3160-21
AT106365	5	1810-25
AT106413	24	0510-3
AT116114	19	0930-3
AT116162	6	1060-7
AT116162	7	1060-7B
AT116162	9	1810-51

NUMERICAL INDEX - CONTINUED

PART NO.	KEY	PAGE
AT116373	44	0930-3
AT116373	38	0930-5
AT116970	5	1810-27
AT116970	6	1810-29
AT119017	10	3160-91
AT119018	12	3160-91
AT119378	11	3160-91
AT120461	1	1810-36
AT124574	7	3160-35
AT124574	4	3160-37
AT124574	28	3160-47
AT124574	28	3160-47B
AT129526	12	0360-5
AT133204	2	1740-3
AT135758	12	1673-3
AT135758	15	1673-3B
AT135758	3	1673-4
AT13740	4	0404-3
AT13740	22	0510-3
AT13740	21	0510-5B
AT137920	7	1810-27
AT137921	9	1810-27
AT138180	13	1810-27
AT138180	7	1810-29
AT138215	12	1810-27
AT139694	6	1810-49
AT141527	20	0930-3
AT141527	27	0930-5
AT143577	2	1740-5
AT145341	9	0505-5
AT145341	25	1674-7
AT145341	28	1674-7B
AT151931	8	1810-19
AT151931	8	1810-21
AT152180	9	1369-3B
AT156896	6	1810-51
AT157226	1	1810-38
AT158098	11	2160-13
AT158098	5	2160-15
AT160480	1	1674-10
AT160662	18	1810-49
AT160704	3	1672-9
AT161638	37	2160-7
AT161638	37	2160-7B
AT162114	6	1913-5
AT162719	14	1810-49
AT162848	4	1830-15
AT162863	37	3160-93
AT163156	12	1672-3
AT163872	19	1830-13
AT165288	7	0342-3
AT165288	6	0342-3B
AT166041	6	3160-55
AT166149	1	3160-29
AT166459	23	0510-3
AT166459	22	0510-5B
AT167553	4	0260-17
AT167553	3	1060-9
AT167553	12	3160-49
AT167553	14	3160-67
AT167553	10	3160-105
AT167553	9	3160-109
AT167553	10	3160-113
AT167553	13	3160-115
AT167553	21	3160-123
AT168163	12	3160-123
AT169157	8	3160-21
AT169849	5	1810-49
AT170005	4	1810-23
AT170234	5	0960-7
AT170759	3	0505-3
AT170991	4	3160-35
AT170991	33	3160-47
AT170991	33	3160-47B
AT171162	9	0505-3
AT171539	5	0505-3
AT171679	7	1821-7
AT172629	1	3160-91
AT173193	9	1810-25
AT173313	2	1821-5
AT173313	17	1821-5
AT173313	18	1821-5
AT173313	19	1821-5
AT173314	3	1821-5
AT173315	4	1821-5
AT173321	11	1821-5
AT173321	12	1821-5
AT173321	29	1821-5
AT173321	30	1821-5
AT173321	31	1821-5
AT173321	40	1821-5
AT173354	5	1673-9
AT173355	3	1810-15
AT174697	2	1830-17
AT175781	21	0930-3
AT176801	1	1674-8
AT177950	38	2160-7
AT177950	38	2160-7B
AT179498	3	0350-33
AT179498	8	0350-35
AT179498	5	0350-37
AT179840	9	1910-7
AT179934	4	3160-43
AT179935	1	3160-43
AT179936	5	3160-21
AT179941	1	3160-31
AT179941	1	3160-35
AT179941	1	3160-39
AT179941	37	3160-47
AT179941	37	3160-47B
AT180119	21	2160-3
AT181313	4	1060-3
AT182270	5	3160-69
AT182270	7	3160-71
AT182802	71	0510-5
AT182802	27	0510-5B
AT183222	6	0505-3
AT184277	2	0210-35
AT184277	2	0210-37
AT184279	4	0210-35
AT184279	4	0210-37
AT184284	30	0210-39
AT184309	22	0210-39
AT184334	13	0210-39
AT188759	8	2001-7
AT188759	8	2001-7B
AT188759	9	2001-7D
AT189390	20	1810-19
AT189390	20	1810-21
AT189487	21	1810-19
AT189487	21	1810-21
AT191285	4	3160-53
AT191285	6	3160-55
AT191285	5	3160-57
AT191487	16	1810-49
AT192956	13	2001-7
AT192957	13	2001-7
AT192958	13	2001-7
AT193500	4	1830-5
AT193500	3	1830-9
AT195301	10	1674-7
AT195301	15	1674-7B
AT195302	11	1674-7
AT195302	16	1674-7B
AT195441	7	1821-3
AT195442	8	1821-3
AT196427	1	1810-39B
AT196760	10	1060-7B
AT196760	35	3160-93
AT196760	23	3160-95
AT196943	2	2160-11
AT199388	10	2001-7D
AT202726	15	1810-27
AT202784	11	1810-29
AT202786	12	1674-7
AT202789	5	1673-9
AT202824	7	3160-111
AT202827	1	1674-15
AT202842	10	0505-3
AT202934	2	1674-11
AT202934	15	1830-7
AT202955	14	0350-3
AT203130	2	3166-3
AT203137	6	1673-9
AT203180	43	0930-3
AT203180	28	0930-5
AT203239	4	0242-7
AT203247	15	3102-3
AT203418	21	3140-3
AT203457	6	1060-3
AT203483	16	3140-3
AT203483	8	3140-3B
AT203483	14	3140-5
AT203483	8	3140-7
AT203483	8	3140-7B
AT203492	22	0930-3
AT203523	28	3140-3
AT203523	9	3140-3B
AT203523	27	3140-5
AT203523	9	3140-7
AT203523	10	3140-7B
AT203533	7	1060-15
AT203534	4	1060-13
AT203559	18	3104-3
AT203562	18	3140-19
AT203562	15	3165-3
AT203562	1	3165-11
AT203562	3	3165-11
AT203562	10	3165-17
AT203566	10	0505-5
AT203567	30	3140-3
AT203567	29	3140-5
AT203567	10	3140-7
AT203570	16	1740-3B
AT203570	24	3140-3
AT203570	10	3140-3B
AT203570	18	3140-5
AT203570	11	3140-7
AT203570	11	3140-7B
AT206698	8	3160-49
AT206698	8	3160-51

NUMERICAL INDEX - CONTINUED

PART NO.	KEY	PAGE
AT206698	7	3160-61
AT206698	28	3160-67
AT206721	27	1060-3
AT206751	10	1740-3
AT206751	6	1740-3B
AT206784	5	0350-39
AT206794	16	0242-3
AT206815	37B	3160-95
AT206817	1	3140-11
AT206818	11	0505-5
AT206825	16	3140-19
AT206828	15	3140-19
AT206861	9	0325-3
AT206861	3	0325-5
AT206861	6	0325-5
AT206861	9	0325-5
AT206861	11	0325-5
AT206878	7A	1673-3
AT206894	8	1746-5
AT206895	7	1746-5
AT207010	36	3160-93
AT207010	20	3160-95
AT207022	3	0210-31
AT207022	3	0210-33
AT207022	4	0242-3
AT207022	12	0242-3B
AT207022	6	0960-9
AT207022	31	1060-15
AT207023	19	0242-3
AT207023	3	0260-18
AT207023	7	0960-9
AT207072	4	0960-7
AT207072	1	0960-7B
AT207096	2	3160-29
AT207144	1	1810-46
AT207200	5	3140-5
AT207287	2	3140-25
AT207432	4	1746-5
AT207432	4	1746-5B
AT207433	6	1746-5
AT207433	6	1746-5B
AT207504	4	3140-17
AT207505	5	3140-3
AT207505	11	3140-3B
AT207505	11	3140-17
AT207507	2	3140-9
AT207529	28	1060-3
AT207784	1	3166-7
AT207947	46	1060-3
AT207948	45	1060-3
AT207952	2	1672-5
AT207969	8	3160-111
AT207970	9	3160-111
AT208015	2	1060-9
AT208024	1	1674-15
AT208085	11	1060-3
AT208085	36	1060-3B
AT208086	18	1060-3
AT208086	43	1060-3B
AT208087	22	1060-3
AT208088	7	1060-3
AT208088	56	1060-3B
AT208089	25	1060-3
AT208089	53	1060-3B
AT208159	7	1910-5
AT208159	10	1910-7
AT208163	23	1060-3
AT208163	61	1060-3B
AT208166	60	1060-3
AT208167	12	1060-3
AT208403	5	0325-3
AT208411	6	1060-13
AT208435	3	1673-4
AT208435	6	1673-4
AT208483	5	1821-5
AT208484	6	1821-5
AT208485	7	1821-5
AT208486	8	1821-5
AT208487	9	1821-5
AT208487	20	1821-5
AT208487	21	1821-5
AT208487	22	1821-5
AT208487	23	1821-5
AT208487	24	1821-5
AT208488	15	1821-5
AT208488	36	1821-5
AT208488	37	1821-5
AT208490	10	1821-5
AT208490	25	1821-5
AT208490	26	1821-5
AT208490	27	1821-5
AT208490	28	1821-5
AT208491	11	1821-5
AT208491	32	1821-5
AT208531	30	1821-3
AT208531	1	1821-5
AT208541	15	1672-7
AT208630	3	1674-8
AT208630	1	1674-9
AT208725	23	0930-3
AT208760	14	3160-89
AT208760	13	3160-91
AT208760	18	3160-91
AT208760	22	3160-91
AT208760	28	3160-91
AT208776	5	1830-15
AT208833	5	3102-10
AT208834	14	3102-9
AT208911	1	3160-91
AT208911	4	3160-91
AT209020	9	1821-3
AT209021	10	1821-3
AT209022	15	1821-3
AT209024	17	1821-3
AT209025	19	1821-3
AT209026	21	1821-3
AT209161	15	3104-3
AT209163	14	3104-3
AT209163	1	3104-4
AT209221	6	0342-3
AT209225	23	1821-3
AT209469	13	1821-5
AT209469	33	1821-5
AT209469	34	1821-5
AT209469	35	1821-5
AT209476	17	3140-19
AT209496	7	1060-13
AT209496	10	1060-15
AT209524	11	3160-49
AT209524	9	3160-51
AT209537	24	0930-3
AT209537	29	0930-5
AT209661	4	0325-3
AT209661	2	0325-5
AT209668	14	1830-3
AT209668	13	1830-7
AT209692	10	3160-111
AT209698	1	1822-5
AT209748	2	3160-31
AT209748	2	3160-39
AT209748	2	3160-41
AT209749	1	3160-21
AT209750	5	3160-31
AT209750	5	3160-39
AT209750	2	3160-41
AT209750	27	3160-47
AT209750	35	3160-47
AT209750	27	3160-47B
AT209750	35	3160-47B
AT209751	1	3160-21
AT209758	3	3160-31
AT209758	3	3160-35
AT209758	6	3160-39
AT209811	6	3160-21
AT209823	7	3160-21
AT209868	2	3166-7
AT209907	1	1060-9
AT209908	11	1810-27
AT209908	9	1810-29
AT209909	10	1810-27
AT209910	4	1810-29
AT209912	3	1810-29
AT209947	1	1810-25
AT209996	10	0342-3
AT209996	7	0342-3B
AT209997	9	0342-3
AT209997	8	0342-3B
AT210056	35	0930-5
AT210066	8B	0325-3
AT210086	5	1830-5
AT210092	27	0930-3
AT210092	32	0930-5
AT210093	28	0930-3
AT210093	33	0930-5
AT210094	34	0930-5
AT210100	10	0325-3
AT210100	12	0325-5
AT210101	6	0325-3
AT210101	4	0325-5
AT210101	7	0325-5
AT210145	2	3160-91
AT210155	29	0930-3
AT210155	36	0930-5
AT210207	30	0930-3
AT210207	37	0930-5
AT210229	44	1060-3
AT210246	11	1673-3
AT210246	9	1673-3B
AT210247	15	3160-91
AT210247	16	3160-91
AT210247	26	3160-91
AT210247	90	3160-91
AT210291	29	1060-3
AT210291	16	1060-3B
AT210333	8	1673-3
AT210333	11	1673-3B
AT210334	13	1674-7
AT210334	17	1674-7B
AT210399	31	0930-3
AT210399	39	0930-5
AT210490	10	1369-3

NUMERICAL INDEX - CONTINUED

PART NO.	KEY	PAGE
AT210561	15	1830-3
AT210606	18	0242-3
AT210666	11	3160-111
AT210667	6A	2160-13
AT210686	42	3160-47
AT210686	43	3160-47
AT210686	44	3160-47
AT210686	42	3160-47B
AT210686	43	3160-47B
AT210686	44	3160-47B
AT210688	14	3160-49
AT210688	7	3160-67
AT210689	24	3160-49
AT210689	19	3160-67
AT210690	15	3160-49
AT210690	8	3160-67
AT210691	25	3160-49
AT210691	20	3160-67
AT210712	21B	0510-7B
AT210713	27	3160-93
AT210714	24	3160-93
AT210773	1	0350-11
AT210877	34	1060-3
AT210877	21	1060-3B
AT211041	18	1672-3
AT211041	16	1672-7
AT211219	3	3160-29
AT211296	8	1810-3
AT211296	3	1810-17
AT211363	13	3160-53
AT211364	12	3160-53
AT211365	10	3160-55
AT211366	11	3160-55
AT211547	11	3160-31
AT211574	1	3160-31
AT211574	1	3160-35
AT21574	26	0510-3
AT21574	23	0510-5B
AT21574	21	2160-7
AT21574	25	2160-7B
AT216571	26	3160-47
AT216571	26	3160-47B
AT216573	24	3160-47
AT216573	24	3160-47B
AT217448	5	1810-47
AT219753	39	3160-47
AT219757	4	3160-29
AT219778	7	1830-5
AT219778	5	1830-9
AT219792	19	0260-7
AT219835	8	0560-3
AT219925	26	3160-67
AT219974	8	1910-5
AT219974	15	1927-9B
AT220035	7	3160-39
AT220035	50	3160-47
AT220035	50	3160-47B
AT220039	30	0350-19
AT220058	8	3104-3
AT220059	2	3104-3
AT220060	7	3104-3
AT220096	9	3160-3
AT220096	19	3160-5
AT220096	14	3160-7
AT220096	12	3160-9
AT220096	20	3160-11
AT220096	14	3160-13
AT220096	11	3160-15
AT220096	20	3160-17
AT220096	14	3160-19
AT220173	1	3160-39
AT220223	19	1810-49
AT220224	20	1810-49
AT220226	15	1810-49
AT220432	90	3160-93
AT220440	6	0530-3
AT220517	38	3160-93
AT220526	4	3160-29
AT220729	26	0260-9
AT220729	5	0260-11
AT220733	25	0260-9
AT220733	4	0260-11
AT220826	11	3160-35
AT220826	11	3160-39
AT220827	11	3160-47
AT220827	11	3160-47B
AT220828	9	3160-31
AT220830	6	3160-31
AT220830	5	3160-35
AT220830	14	3160-39
AT220831	32	3160-47
AT220831	32	3160-47B
AT220832	15	0260-7
AT220865	4	3166-3
AT220900	24	3160-67
AT220901	29	3160-67
AT220925	27	0260-9
AT220925	6	0260-11
AT220953	17	1830-3
AT220953	14	1830-7
AT221015	25	1821-3
AT221016	26	1821-3
AT221017	28	1821-3
AT221019	25	1821-3
AT221020	26	1821-3
AT221021	28	1821-3
AT221094	1	3160-31
AT221332	8	1746-5B
AT221452	1	1830-9
AT221506	2	3160-35
AT221583	7	0242-3
AT221628	1	1674-15
AT221696	8	1910-3
AT221696	11	1910-5
AT221696	7	1913-5
AT221897	24	2160-7
AT221897	27	2160-7B
AT222005	21	0350-3
AT222011	9	1746-5B
AT222011	2	1746-6
AT222012	5	1746-6
AT222049	9	0342-3B
AT222153	2	1810-49
AT222163	5	0260-5
AT222163	7	2160-13
AT222210	6	1830-9
AT222365	7A	1673-3
AT222366	2	3166-3
AT222367	7	1060-5
AT222371	27	1060-3
AT222372	59	1060-3
AT222372	18	3160-93
AT222402	1	1810-45
AT222414	11	1060-7
AT222561	3	0960-7
AT222561	2	0960-7B
AT222597	7	0530-3
AT222964	1	3160-31
AT223173	23B	2160-13
AT223173	6	2160-15
AT223238	1	0350-31
AT223239	1	0350-33
AT223239	1	0350-35
AT223240	1	0350-37
AT223241	1	0350-27
AT223241	1	0350-29
AT223279	10	0350-12
AT223493	20A	0560-3
AT223493	43	0560-3
AT223531	1	1830-5
AT223535	59	1060-3
AT223535	32	1060-3B
AT223535	18	3160-93
AT223535	21	3160-95
AT223538	7	1060-5
AT223538	7	1060-5B
AT223584	6	0360-5
AT223648	34	0930-3
AT223648	41	0930-5
AT223658	25	2160-7
AT223658	28	2160-7B
AT223728	16	0260-7
AT223768	12	1060-7
AT223805	16	0260-7
AT223807	4	1673-7
AT223815	13	2160-13
AT223870	1	2001-7
AT223870	1	2001-7B
AT223870	7	2001-7D
AT223897	2	2001-7
AT223897	2	2001-7B
AT223949	8	1060-11
AT223989	1	1822-3
AT224135	1	3160-35
AT224157	1	3160-49
AT224157	10	3160-51
AT224189	8A	0325-3
AT224190	7	0325-3
AT224190	5	0325-5
AT224217	10	1810-29
AT224233	13	1810-15
AT224234	13	1810-15
AT224235	9	1810-19
AT224237	9	1810-21
AT224248	6	1821-3
AT224266	35	2160-7
AT224301	8	3160-93
AT224301	22	3160-95
AT224301	7	3160-96
AT224424	16	0510-9
AT224424	20	0510-11
AT224430	8	1060-7
AT224493	23	3160-95
AT224497	5	1060-5
AT224536	11	3166-3
AT224570	1	0510-12
AT224570	1	2160-11
AT224573	2	3160-96
AT224574	2	3160-96
AT224574	3	3160-96
AT224576	4	1060-5

NUMERICAL INDEX - CONTINUED

PART NO.	KEY	PAGE
AT224600	39	3160-93
AT224600	25	3160-95
AT224665	20	3160-49
AT224665	11	3160-51
AT224665	8	3160-61
AT224665	10	3160-67
AT224703	1	3160-97
AT224705	3	3160-96
AT224706	2	0510-12
AT224706	1	3160-96
AT224706	3	3160-96
AT224797	28	2160-7
AT224797	32	2160-7B
AT224850	29	3160-47
AT224850	29	3160-47B
AT224862	1	0510-12
AT224862	1	2160-11
AT224862	2	3160-96
AT224863	2	1060-5
AT224864	17	0510-9
AT224864	3	1060-5
AT224865	2	0510-12
AT224865	1	3160-96
AT224866	2	0510-12
AT224866	1	3160-96
AT224867	4	3160-96
AT224868	4	3160-96
AT224873	16	1060-5
AT224873	7	2160-11
AT224873	8	2160-11
AT224873	3	3160-97
AT224893	2	1674-12
AT224893	25	2001-7
AT224893	25	2001-7B
AT224893	12	2001-7D
AT224894	2	1674-13
AT224923	3	1810-15
AT224930	57	1830-5
AT224930	55	1830-9
AT224933	1	1810-17A
AT224989	9	1810-3
AT224989	4	1810-17
AT224990	10	1810-3
AT224991	11	1810-3
AT224991	5	1810-17
AT224994	21	1810-5
AT224994	1	1810-7
AT224995	10	1810-7
AT225011	39	3160-93
AT225082	5	3160-96
AT225083	1	3160-97
AT225084	6	3160-96
AT225085	6	3160-96
AT225085	2	3160-97
AT225086	12	1673-3
AT225159	8	1927-5
AT225160	9	1927-5
AT225189	12	0360-5
AT225275	1	0960-7
AT225275	3	0960-7B
AT225425	7	3160-73
AT225425	13	3160-75
AT225445	22	3160-93
AT225445	26	3160-95
AT225451	37	1830-5
AT225451	30	1830-9
AT225529	4	3160-97
AT225529	11	3160-105
AT225529	10	3160-109
AT225530	4	3160-97
AT225530	11	3160-113
AT225530	14	3160-115
AT225530	22	3160-123
AT225573	10	1060-7
AT225573	11	1060-7B
AT225574	8	2160-9
AT225574	14	2160-9B
AT225575	30	3160-67
AT225706	10	1810-19
AT225727	8	1060-13
AT225727	11	1060-15
AT225784	21	3160-3
AT225785	18	3160-9
AT225786	17	3160-15
AT225787	15	3160-7
AT225788	15	3160-13
AT225789	15	3160-19
AT225790	21	3160-3
AT225791	18	3160-9
AT225798	4	3160-43
AT225800	5	3160-43
AT225826	1	3140-25
AT225899	8	1830-5
AT226000	10	1810-5
AT226109	3	0510-12
AT226110	3	0510-12
AT226119	10	3160-75
AT226119	3	3160-79
AT226128	28	0510-3
AT226130	34	0510-3
AT226130	25	0510-5B
AT226131	33	0510-3
AT226131	26	0510-5B
AT226132	11	3160-85
AT226133	13	3160-85
AT226150	12	1910-7
AT226151	22	1810-5
AT226152	25	1810-5
AT226155	2	1913-2
AT226168	11	0510-7B
AT226170	12A	0510-7B
AT226176	27	1810-5
AT226229	9	1910-5
AT226249	18	1830-3
AT226265	2	3160-97
AT226266	1	3160-97
AT226273	22	1830-13
AT226276	35	0510-3
AT226276	28	0510-5B
AT226282	2	1810-35
AT226301	8	3166-9
AT226309	12	1830-5
AT226334	8	1810-55
AT226338	6	1673-4
AT226372	12	1810-3
AT226394	9	0560-3
AT226406	1	1740-3
AT226454	8	3160-73
AT226454	7	3160-77
AT226495	26	1674-7
AT226542	5	3166-5
AT226542	11	3166-13
AT226573	29	0510-3
AT226573	29	0510-5B
AT226578	1	1810-34
AT226614	8	2160-13
AT226614	7	2160-15
AT226615	18	3160-73
AT226615	18	3160-77
AT226615	19	3160-81
AT226615	27	3160-85
AT226615	30	3160-89
AT226676	14	1821-5
AT226676	38	1821-5
AT226676	39	1821-5
AT226676	41	1821-5
AT226676	42	1821-5
AT226676	43	1821-5
AT226789	7	1927-5
AT226791	4	1913-5
AT226808	52	0930-5
AT226808	10	0960-7
AT226808	4	0960-7B
AT226808	26	3160-93
AT226808	27	3160-95
AT226841	6	1910-3
AT226894	6	1746-3
AT226895	7	1746-3
AT226924	1	1672-11
AT226944	2	1674-10
AT227013	1	1810-34
AT227016	16	0510-9
AT227016	14	0510-9B
AT227016	20	0510-11
AT227016	23	0510-11B
AT227017	17	0510-9
AT227017	16	0510-9B
AT227021	25	0510-11B
AT227021	5	0510-12
AT227024	21	0510-11
AT227024	31	0510-11B
AT227063	4	1821-7
AT227073	3	0350-13B
AT227073	4	1913-3
AT227134	4	1674-8
AT227134	2	1674-9
AT227137	7	1674-3
AT227137	14	1674-3B
AT227137	6	1674-3D
AT227138	9	1674-3
AT227139	5	1674-3
AT227139	12	1674-3B
AT227139	8	1674-3D
AT227139	12	1674-5
AT227248	10	0360-3
AT227260	12	1673-3
AT227263	29	1674-7B
AT227279	5	0360-3
AT227279	40	2160-7
AT227279	40	2160-7B
AT227491	41	2160-7
AT227507	25	0510-9
AT227507	4	0510-12
AT227530	1	3166-5
AT227530	13	3166-13
AT227531	3	3166-5
AT227532	8	0530-3
AT227534	6	3160-67
AT227536	4	3160-67
AT227537	3	3160-67
AT227544	14	1810-3

NUMERICAL INDEX - CONTINUED

PART NO.	KEY	PAGE
AT227545	15	1810-3
AT227549	2	1810-43
AT227576	8	0505-3
AT227579	13	0510-7B
AT227600	12	3140-7
AT227600	12	3140-7B
AT227603	7	0260-11
AT227604	8	0260-11
AT227644	43	2160-7
AT227651	6	0360-3
AT227668	2	1810-9
AT227668	3	1810-13
AT227669	3	1810-9
AT227702	8	2160-3
AT227703	7	0540-3
AT227706	8	0540-3
AT227707	9	0540-3
AT227708	10	0540-3
AT227709	11	0540-3
AT227717	35	3160-93
AT227738	3	1520-3
AT227738	10	1520-3B
AT227754	23	1830-13
AT227755	24	1830-13
AT227765	3	3140-21
AT227767	4	3140-21
AT227768	5	3140-21
AT227780	4	0350-3
AT227794	10B	1810-55
AT227816	2	0520-5
AT227817	20A	0560-3
AT227821	21	0560-3
AT227835	3	0520-5
AT227909	2	3166-7
AT227925	1	3160-75
AT227925	1	3160-79
AT227926	2	3160-75
AT227926	1	3160-79
AT227927	4	3160-75
AT227927	10	3160-79
AT227927	..	3160-79
AT227928	3	3160-75
AT227928	9	3160-79
AT227928	..	3160-79
AT227929	5	3160-75
AT227930	6	3160-75
AT227930	2	3160-79
AT227933	9	3160-75
AT227933	5	3160-79
AT227957	11	3160-79
AT227965	4	1810-13
AT228100	22	0510-9
AT228100	26	0510-11
AT228101	23	0510-9
AT228101	27	0510-11
AT228112	28	0510-11
AT228112	12	0510-11B
AT228137	90	0510-11
AT228138	13	2160-11
AT228155	9	2160-13
AT228155	8	2160-15
AT228158	22A	1910-7
AT228167	10	1674-3
AT228167	9	1674-3D
AT228189	30	3160-93
AT228189	28	3160-95
AT228194	3	3160-49
AT228194	12	3160-51
AT228195	13	3160-49
AT228195	13	3160-51
AT228195	9	3160-61
AT228206	14	0510-7B
AT228217	12	1672-3
AT228224	30	0510-3
AT228224	30	0510-5B
AT228240	6	1830-15
AT228250	15	3160-85
AT228253	9	1810-55
AT228260	15	3160-89
AT228261	16	3160-85
AT228284	21	0260-9
AT228289	9	1673-9
AT228311	14	1671-3
AT228312	8	1671-3
AT228313	11	1671-3
AT228317	15	0350-5
AT228318	15	0350-5
AT228405	23A	1910-7
AT228407	12	1671-3
AT228408	21	1910-7
AT228414	6	1749-3
AT228416	17	1910-7
AT228426	7	1749-3
AT228433	10	1910-5
AT228436	16	1910-5
AT228457	15	0260-9
AT228457	19	0260-9
AT228474	32	2160-7
AT228549	13	1910-5
AT228550	17	1910-5
AT228623	5	1913-5
AT228703	8	3160-81
AT228703	17	3160-85
AT228703	16	3160-89
AT228747	49	2160-7
AT228747	31	2160-7B
AT228748	24A	1910-7
AT228809	7	1822-7
AT228834	18	1910-5
AT228843	7A	1910-3
AT228857	8	0260-9
AT228858	9	0260-9
AT228859	10	0260-9
AT228860	11	0260-9
AT228882	9	0530-3
AT25226	4	0110-2
AT25226	4	0110-2C
AT25226	8	0110-3
AT25226	4	0110-5
AT25226	4	0110-7
AT253067	3	0210-35
AT253067	3	0210-37
AT253069	3	0210-35
AT253069	3	0210-37
AT253070	3	0210-35
AT253070	3	0210-37
AT253071	3	0210-35
AT253071	3	0210-37
AT253072	3	0210-35
AT253072	3	0210-37
AT253073	3	0210-35
AT253073	3	0210-37
AT253076	3	0210-35
AT253076	3	0210-37
AT253115	13	0210-35
AT253115	14	0210-37
AT255575	12	0210-41
AT258957	28	0210-39
AT259571	10	0210-39
AT259571	10	0210-41
AT259765	6	0210-35
AT259765	6	0210-37
AT280208	11	1910-5
AT280208	7	1913-5
AT280631	7	1830-15
AT280924	29	2160-7
AT300081	3	1913-3
AT300098	29	1674-7
AT300115	9	1821-7
AT300154	9	3160-77
AT300156	10	3160-77
AT300237	3	3103-3
AT300238	3	3103-3
AT300441	10A	1810-55
AT300487	5	0520-3
AT300488	6	0520-3
AT300489	10	0520-3
AT300493	7	0520-3
AT300524	21	1810-49
AT300537	30	1674-7
AT300662	10	3160-81
AT300664	11	3160-81
AT300664	8	3160-83
AT300664	19	3160-85
AT300664	17	3160-89
AT300676	15	1674-7
AT300807	11	3104-9
AT300809	12	3104-9
AT300858	54	3160-47
AT300884	1	3140-13
AT300890	6	3140-21
AT300921	4	1674-9
AT300921	1	3160-87
AT300936	10	3160-73
AT300956	10	3104-7
AT301026	6	1674-3
AT301026	13	1674-3B
AT301026	10	1674-3D
AT301026	13	1674-5
AT301050	27	1322-7
AT301092	27	1322-9
AT301093	29	3160-95
AT301458	11	3160-81
AT301458	8	3160-83
AT301458	19	3160-85
AT301458	17	3160-89
AT301498	33	1674-7
AT301498	53	1674-7
AT301498	30	1674-7B
AT301711	17	0510-7B
AT301711	16	1927-9B
AT301819	11	1927-9
AT301820	13	1927-9
AT301913	3	1810-37
AT301914	7	1673-9
AT301914	4	1810-37
AT301930	15	3160-113
AT301930	17	3160-115
AT301988	6	3102-3
AT301989	6	3102-3
AT301990	6	3102-3

NUMERICAL INDEX - CONTINUED

PART NO.	KEY	PAGE
AT301991	6	3102-5
AT301992	6	3102-5
AT301993	6	3102-3
AT301994	6	3102-3
AT302031	1	3160-83
AT302031	3	3160-87
AT302032	1	3160-83
AT302089	7	1674-3D
AT302143	8	2160-3
AT302144	8	2160-3
AT302829	12	0505-5
AT302845	4	0505-5
AT302954	33	1674-7
AT303014	34	1910-7
AT303128	10	2160-13
AT303273	2	0960-7
AT303320	15	1672-7
AT303411	20	1810-3
AT303493	11	1810-7
AT303619	11	3160-75
AT303619	8	3160-79
AT303636	25	1910-7
AT303755	11	1927-5
AT303799	3	3160-97
AT303807	1	1674-15
AT304026	12	1674-7
AT304026	18	1674-7B
AT304125	11	2160-13
AT304128	12A	2160-13
AT304143	7	0260-3
AT304143	1	0260-5
AT304225	9	2160-9
AT304225	9	2160-9B
AT304250	32	0510-3
AT304250	31	0510-5B
AT304263	5	0260-5
AT304269	13	3160-113
AT304269	15	3160-115
AT304298	14	3160-113
AT304298	16	3160-115
AT304334	13	0505-5
AT304346	14	2160-13
AT304346	9	2160-15
AT304375	12A	1910-3
AT304406	29	0510-11
AT304406	13	0510-11B
AT304412	3	0110-2
AT304415	1	0110-3
AT304418	1	0110-3
AT304620	3	3166-9
AT304633	4	1810-29
AT304831	11	3140-21
AT304860	4	3166-9
AT304880	18	3160-89
AT304881	20	3160-89
AT304897	15	2160-13
AT304899	16	2160-13
AT304899	10	2160-15
AT305111	14	3160-51
AT305111	10	3160-61
AT305112	15	3160-51
AT305112	11	3160-61
AT305113	16	3160-51
AT305113	12	3160-61
AT305114	17	3160-51
AT305114	13	3160-61
AT305126	36	1810-5
AT305126	37	1810-5
AT305126	38	1810-5
AT305130	33	1810-3
AT305130	34	1810-3
AT305130	7	1810-17
AT305130	8	1810-17
AT305165	12	0260-9
AT305171	12	3160-105
AT305171	12	3160-113
AT305217	37	3140-7
AT305329	14	3160-61
AT305389	9	1674-17
AT305405	59	1830-5
AT305405	51	1830-9
AT305561	5	0260-5
AT305603	11	3160-79
AT305603	..	3160-79
AT305659	4	0350-3
AT305673	36	0510-5
AT305673	32	0510-5B
AT305687	50	3160-73
AT305690	..	3160-81
AT305692	..	3160-77
AT305693	..	3160-85
AT305830	19	1927-9
AT305900	15	3160-113
AT305900	17	3160-115
AT305900	9	3160-117
AT305902	9	3160-117
AT305903	6	3160-117
AT305903	6	3160-125
AT305905	7	3160-117
AT305905	7	3160-125
AT305931	6	1673-4
AT305978	8	3160-117
AT305978	8	3160-125
AT306099	20	1927-9
AT306111	11	1369-3B
AT306133	13	1369-3B
AT306219	8	2160-3
AT306227	21	1927-9
AT306392	5	3160-63
AT306453	6	3160-63
AT306454	8	1927-5
AT306455	9	1927-5
AT306464	45	0930-3
AT306489	13	0260-9
AT306496	14	0260-9
AT306597	5	3160-67
AT306641	9	1674-3
AT306641	16	1674-3B
AT306654	8	3160-123
AT306677	9	3160-123
AT306688	5	0520-5
AT306690	37	0510-5
AT306690	33	0510-5B
AT306690	11	1910-7
AT306702	1	0515-3
AT306703	3	0515-3
AT306736	5	1674-3
AT306736	12	1674-3B
AT306828	4	1674-13
AT306829	24	2001-7
AT306829	24	2001-7B
AT306829	1	2001-7D
AT306830	24	2001-7
AT306830	24	2001-7B
AT306830	1	2001-7D
AT306831	24	2001-7
AT306831	24	2001-7B
AT306831	1	2001-7D
AT306900	12	3160-111
AT306905	13	3160-111
AT306912	15	1830-3
AT306913	16	1830-3
AT306930	18	0510-7B
AT306931	19	0510-7B
AT307006	..	3160-85
AT307045	29	2160-7
AT307045	33	2160-7B
AT307090	16	1673-3
AT307090	16	1673-3B
AT307171	15	1927-9
AT307172	16	1927-9
AT307173	17	1927-9
AT307174	18	1927-9
AT307197	6	1830-5
AT307197	4	1830-9
AT307221	9	1674-3
AT307301	8	2160-11
AT307302	7	2160-11
AT307304	9	2160-11
AT307314	2	2160-11
AT307315	4	2160-11
AT307333	10	1674-3
AT307333	17	1674-3B
AT307436	..	3160-77
AT307449	..	3160-89
AT307474	6	1821-3
AT307483	12	1672-11
AT307484	12	1672-11
AT307504	1	3140-19
AT307505	4	3140-19
AT307506	3	3140-19
AT307507	5	3140-19
AT307508	6	3140-19
AT307516	8	3140-17
AT307532	8	3140-17
AT307533	1	3140-17
AT307584	..	3160-77
AT307595	5	0242-5
AT307605	33	0510-3
AT307606	35	0510-3
AT307607	34	0510-3
AT307612	6	1830-15
AT307613	32	0510-3
AT307617	15	0260-9
AT307617	19	0260-9
AT307620	..	3160-89
AT307636	2	3160-83
AT307637	4	3160-83
AT307638	3	3160-83
AT307640	5	3160-83
AT307641	6	3160-83
AT307655	..	3160-85
AT307661	30	3160-95
AT307701	1	0505-5
AT307716	15	3140-7
AT307716	13	3140-7B
AT307771	1	3160-47
AT307771	1	3160-47B
AT307806	69	0510-5
AT307806	34	0510-5B
AT307809	25	3160-113

NUMERICAL INDEX - CONTINUED

PART NO.	KEY	PAGE
AT307911	31	0510-3
AT307911	35	0510-5B
AT307928	8	0530-3
AT307934	26	2160-13
AT307934	11	2160-15
AT307950	14	3166-13
AT307996	11	3165-17
AT308022	12	3104-7
AT308023	8	3102-3
AT308023	13	3104-7
AT308023	13	3104-9
AT308028	9	3102-3
AT308030	9	3102-3
AT308065	1	3103-3
AT308066	1	3103-3
AT308067	1	3103-5
AT308119	12B	2160-13
AT308119	13	2160-15
AT308199	3	1821-3
AT308386	20	3160-5
AT308388	24	3160-11
AT308389	24	3160-17
AT308392	1	3140-11
AT308671	7	1674-3
AT308671	14	1674-3B
AT308672	6	1674-3
AT308672	13	1674-3B
AT308673	15	1674-7
AT308780	16	3160-113
AT308780	18	3160-115
AT308781	17	3160-113
AT308781	19	3160-115
AT308784	29	1927-9
AT308795	25	1821-3
AT308796	26	1821-3
AT308797	28	1821-3
AT308992	6	3140-9
AT308993	5	0350-39
AT309021	6	3140-9
AT309159	6	0960-3
AT309249	24	1927-9
AT309249	17	1927-9B
AT309430	8	3160-117
AT309494	3	2160-11
AT309530	28	1927-9
AT309530	18	1927-9B
AT309550	7A	1673-3
AT309550	7B	1673-3
AT309550	9	1673-3
AT309550	10	1673-3B
AT309843	11	3160-81
AT309843	9	3160-83
AT309843	31	3160-85
AT309843	34	3160-89
AT310020	33	1674-7
AT310056	14	1674-7
AT310060	2	3103-3
AT310412	10B	1810-55
AT310413	9	1810-55
AT310414	10A	1810-55
AT310435	6	1821-3
AT310495	8	1927-11
AT310542	21	0510-9
AT310542	17	0510-9B
AT310542	25	0510-11
AT310542	24	0510-11B
AT310561	15	2160-13
AT310561	16	2160-15
AT310702	24	1810-3
AT310754	10	2160-13
AT310759	7A	1910-3
AT310759	22B	1910-7
AT310760	7A	1910-3
AT310760	23B	1910-7
AT310761	7A	1910-3
AT310761	7B	1910-3
AT310761	22B	1910-7
AT310761	23B	1910-7
AT310761	24B	1910-7
AT310761	36	1910-7
AT310782	15	1830-3
AT310905	32	2160-7
AT310905	35	2160-7B
AT311287	12B	0510-7B
AT311386	10	3104-7
AT311386	24	3104-7
AT311468	9	3160-117
AT311469	9	3160-117
AT311469	9	3160-125
AT311742	8	3140-17
AT311817	..	3160-81
AT311818	..	3160-85
AT311824	23	1927-7
AT311902	26	1674-7
AT311903	31	1674-7B
AT311903	3	1674-17
AT311905	29	1674-7
AT311905	39	1674-7B
AT311918	30	1821-3
AT311918	1	1821-5
AT311919	6	1821-3
AT311938	19	1674-7B
AT312053	9	1910-7
AT312110	14	1674-7
AT312132	34	1927-9
AT312132	1	1927-9B
AT312178	2	1674-10
AT312325	8	0560-3
AT312932	32	0260-9B
AT312983	2	3166-11
AT312989	8	3166-11
AT312996	9	3166-11
AT313037	10	3166-11
AT313087	5	3160-87
AT313282	57	1830-5
AT313282	55	1830-9
AT313399	6	1821-5
AT313424	7	3160-63
AT313501	2	1674-10
AT313598	14	0510-7B
AT313708	2	2160-11
AT314008	1	3160-23
AT314009	1	3160-33
AT314010	2	3160-33
AT314011	3	3160-33
AT314011	7	3160-37
AT314011	3	3160-41
AT314012	4	3160-33
AT314012	8	3160-37
AT314012	4	3160-41
AT314013	5	3160-29
AT314013	1	3160-33
AT314013	1	3160-37
AT314013	1	3160-41
AT314014	..	3160-33
AT314015	2	3160-23
AT314016	3	3160-23
AT314017	1	3160-23
AT314018	1	3160-37
AT314019	9	3160-37
AT314020	..	3160-37
AT314021	..	3160-41
AT314022	1	3160-45
AT314023	2	3160-45
AT314025	3	3160-45
AT314026	..	3160-17
AT314043	15	3160-61
AT314046	1	3160-41
AT314048	..	3160-5
AT314057	1	3160-45
AT314206	1	0210-3
AT314206	10	0210-25
AT314266	60	1060-3
AT314266	44	1060-3B
AT314267	12	1060-3
AT314267	37	1060-3B
AT314290	13	0242-3B
AT314322	33	1674-7
AT314356	7	0520-3
AT314374	26	1674-7
AT314374	40	1674-7B
AT314578	11	3160-63
AT314579	12	3160-63
AT314583	6	0520-3
AT314598	39	3160-95
AT314617	23	3160-123
AT314620	..	3160-85
AT314638	10	2160-13
AT314638	14	2160-15
AT314664	6	3102-3
AT314674	16	3160-61
AT314676	17	3160-61
AT314705	1	0210-31
AT314708	1	0210-33
AT314710	1	0210-33
AT314734	5	0960-7
AT314734	5	0960-7B
AT314763	..	3160-89
AT314815	..	3160-77
AT314844	7	2160-13
AT314847	6B	2160-13
AT314944	18	3160-51
AT314987	22	0510-9
AT314987	18	0510-9B
AT314987	26	0510-11
AT314987	28	0510-11B
AT314988	23	0510-9
AT314988	27	0510-11
AT315002	6	1520-3
AT315002	11	1520-3B
AT315021	6	0360-3
AT315072	9	1060-5B
AT315118	11	2160-9B
AT315134	6	3160-57
AT315135	7	3160-57
AT315136	8	3160-57
AT315137	9	3160-57
AT315145	15	2160-15
AT315290	20	1810-3
AT315331	6	3160-33
AT315346	3	0110-2C

NUMERICAL INDEX - CONTINUED

PART NO.	KEY	PAGE
AT315355	5	0110-5
AT315360	5	0110-7
AT315406	7	1674-3
AT315406	14	1674-3B
AT315406	14	1674-5
AT315412	7	1674-3
AT315412	14	1674-3B
AT315414	17	1740-3B
AT315458	1	3160-83
AT315459	1	3160-83
AT315459	3	3160-87
AT315715	7	1821-3
AT315755	4	0260-5B
AT315761	8	1821-3
AT315829	10	3160-123
AT315830	11	3160-123
AT315846	11	3160-81
AT315846	8	3160-83
AT315846	19	3160-85
AT315846	17	3160-89
AT315847	11	3160-81
AT315847	8	3160-83
AT315847	19	3160-85
AT315847	17	3160-89
AT315871	1	3104-21
AT316021	12	3160-123
AT316046	20	3160-5
AT316047	24	3160-11
AT316141	13	0560-3
AT316249	..	0960-3
AT316303	29	1674-7
AT316315	6	3160-29
AT316315	39	3160-47
AT316315	39	3160-47B
AT316360	8	0325-5
AT316361	10	0325-5
AT316507	..	3160-85
AT316518	..	3160-89
AT316532	6	3160-96
AT316537	..	3160-77
AT316769	21	3160-115
AT317060	10	3140-21
AT317063	41	1674-7B
AT317099	10	1746-5B
AT317132	12	1746-5B
AT317299	1	0110-3
AT317353	21	0510-11
AT317487	6	3163-7
AT317507	7	3163-5
AT317574	17	3160-117
AT317589	17	3160-117
AT317589	17	3160-125
AT317731	7	1520-3
AT317789	7	1520-3
AT317945	10	0342-3B
AT317986	33	1060-3B
AT318087	34	1060-3B
AT318123	7	3160-75
AT318157	33	0260-9B
AT318280	12	3140-3B
AT318300	37	0260-9B
AT318329	7	1674-3D
AT318329	15	1674-5
AT318345	6B	2160-13
AT318373	6	1746-3
AT318373	7	1746-3
AT318377	38	0260-9B
AT318491	14	3140-7B
AT318494	6	1746-3
AT318494	7	1746-3
AT318569	39	0260-9B
AT318915	7	3160-29
AT318926	30	3140-3
AT318926	16	3140-3B
AT318926	29	3140-5
AT318926	10	3140-7
AT318926	18	3140-7B
AT318987	6	1830-5
AT318987	4	1830-9
AT319046	21	0510-9B
AT319046	26	0510-11B
AT319046	51	0930-5
AT319053	6	0960-7B
AT320188	6	0260-3B
AT320227	6	3104-11
AT320228	8	3104-11
AT320228	7	3104-13
AT320228	8	3104-13
AT320322	12	1910-7
AT320326	18	1910-5
AT320361	13	1060-7B
AT320362	14	1060-7B
AT320421	15	0242-3B
AT320570	6	0960-3
AT320593	16	1369-3B
AT320642	15	1060-7B
AT320673	6	0530-3
AT320674	6	0530-3
AT320676	11	3104-9
AT320676	23	3104-9
AT320724	20	1674-7B
AT320750	16	2160-15
AT320794	35	1060-3B
AT320846	44	0260-9B
AT320922	9	1674-3
AT320922	16	1674-3B
AT321386	7	3163-5
AT321403	9	0210-35
AT321403	10	0210-37
AT321403	5	0210-43
AT321411	3	0210-45
AT321412	3	0210-45
AT321454	21	0210-39
AT321462	6	0210-51
AT321462	5	0210-53
AT321462	7	0210-53
AT321942	11	1830-3
AT321942	10	1830-7
AT322222	12	3163-5
AT322225	12	3163-5
AT322228	11	3163-7
AT322382	19	1927-9B
AT322383	20	1927-9B
AT322527	5	3160-63
AT322527	6	3160-63
AT322541	5	3160-63
AT322541	6	3160-63
AT322559	11	3160-63
AT322559	12	3160-63
AT322567	11	3160-63
AT322567	12	3160-63
AT322725	6	3104-13
AT322892	10	1674-3
AT322892	17	1674-3B
AT322892	9	1674-3D
AT322892	16	1674-5
AT322982	64	1060-3
AT322982	16	1060-7B
AT323120	4	3103-7
AT323285	6	0960-3
AT323286	8	0960-3B
AT323287	6	0960-3
AT323306	1	0515-3
AT323307	3	0515-3
AT323318	5	3103-7
AT323319	6	3103-7
AT323337	4	3103-7
AT323672	1	1822-3
AT323687	4	0350-13B
AT323687	3	1913-3
AT323713	5	3160-63
AT323713	6	3160-63
AT323713	11	3160-63
AT323713	12	3160-63
AT323713	..	3160-63
AT323719	20A	0560-3
AT323719	20B	0560-3
AT323756	9	3163-3
AT323757	10	3163-3
AT323790	55	1060-3B
AT323792	60	1060-3B
AT323817	11	3163-3
AT323845	8	0960-3B
AT323885	16	0242-3B
AT324087	7	3104-11
AT324137	12	3163-3
AT324184	9	3104-11
AT324271	9	3104-13
AT324443	17	1369-3B
AT324484	12	1673-3
AT324484	15	1673-3B
AT324507	6	1520-3B
AT324641	13	3163-3
AT324647	9	3163-3
AT324648	10	3163-3
AT324668	28	0510-3
AT324681	12	1810-27
AT324687	11	1810-27
AT324687	9	1810-29
AT324849	10	1810-29
AT324881	6	0360-3
AT325146	53	3160-47
AT325146	53	3160-47B
AT325194	12	3163-3
AT325201	13	3163-3
AT325316	13	2160-11
AT325450	8	1060-7B
AT325538	9	1060-7B
AT325611	12	0360-5
AT325612	7	3160-79
AT325612	..	3160-79
AT325643	1	1810-17A
AT325889	7	0960-7B
AT326184	3	3103-5
AT326190	2	3103-5
AT326203	3	3103-5
AT326581	29	3160-47
AT326581	54	3160-47
AT326581	29	3160-47B
AT326581	54	3160-47B
AT326640	2	3103-5

NUMERICAL INDEX - CONTINUED

PART NO.	KEY	PAGE
AT326782	17	3104-11
AT326783	16	3104-13
AT326790	1	3102-7
AT326791	1	3102-7
AT326792	4	3103-5
AT326793	4	3103-5
AT326794	4	3103-5
AT326795	4	3103-5
AT326970	65	1060-3
AT327281	10	0210-35
AT327281	9	0210-37
AT327285	29	0210-39
AT327285	13	0210-41
AT327338	6	0210-45
AT327389	4	0210-45
AT327392	16	0210-45
AT327393	8	0210-47
AT327399	5	0210-51
AT327399	4	0210-53
AT327489	13	1910-5
AT327490	17	1910-5
AT327499	7	1927-5
AT327502	8	1927-5
AT327503	9	1927-5
AT327515	6	1910-3
AT327518	21	1910-7
AT327519	17	1910-7
AT327533	10	1910-5
AT327534	16	1910-5
AT327535	5	1913-5
AT327621	7	1821-7
AT327951	13	3163-3
AT329269	45	0260-9B
AT329702	10	1060-11B
AT329703	11	1060-11B
AT329720	1	1830-9
AT329721	6	1830-9
AT329722	1	1830-5
AT329723	8	1830-5
AT329811	36	2160-7B
AT329819	1	3104-23
AT329870	11	0210-35
AT329870	15	0210-37
AT329921	11	0210-37
AT329958	7	0520-3
AT329973	43	1674-7B
AT330028	3	0210-51
AT330028	8	0210-53
AT330041	44	0930-5
AT330153	12	3163-3
AT330153	13	3163-3
AT330153	16	3163-3
AT330153	..	3163-3
AT330154	12	3163-3
AT330154	13	3163-3
AT330154	16	3163-3
AT330154	..	3163-3
AT330155	12	3163-3
AT330155	13	3163-3
AT330155	16	3163-3
AT330155	..	3163-3
AT330267	51	0260-9B
AT330331	21	1927-9B
AT330332	22	1927-9B
AT330473	23	1927-9B
AT330474	24	1927-9B
AT330592	53	0260-9B
AT330606	54	0260-9B
AT330639	2	3104-23
AT330678	55	0260-9B
AT330697	45	0930-5
AT330753	56	0260-9B
AT331091	1	0930-5
AT331208	44	1060-3
AT331638	1	0350-37
AT332126	12	1810-3
AT332127	6	1810-17
AT332233	3	3166-5
AT332291	8	3160-93
AT332291	22	3160-95
AT332291	7	3160-96
AT332401	4	3103-3
AT332563	9	0210-51
AT332563	9	0210-53
AT332564	8	0210-51
AT332564	10	0210-53
AT332601	50	0260-9B
AT332602	49	0260-9B
AT332604	90	0510-11
AT332605	46	0260-9B
AT332606	47	0260-9B
AT332622	61	0260-9B
AT332694	2	3160-45
AT333458	48	0260-9B
AT333459	52	0260-9B
AT333811	5	2160-11
AT334074	6	0260-3B
AT334083	4	0960-7
AT334083	1	0960-7B
AT334170	56	0260-9B
AT334187	23	0510-9
AT334187	21	0510-9B
AT334187	27	0510-11
AT334187	26	0510-11B
AT334302	15	2160-15
AT334387	9	2160-9B
AT334451	10	0350-12
AT334639	48	0260-9B
AT336140	21	0350-3
AT336442	11	3104-9
AT336444	10	3104-7
AT336601	29	1674-7
AT336601	39	1674-7B
AT336621	1	1810-47
AT336621	5	1810-47
AT336721	8	3160-123
AT336722	9	3160-123
AT336725	10	3160-123
AT336726	11	3160-123
AT336825	6	3160-117
AT336825	6	3160-125
AT336826	7	3160-117
AT336826	7	3160-125
AT336880	8	3160-117
AT336880	8	3160-125
AT336881	8	3160-117
AT336882	9	3160-117
AT336883	9	3160-117
AT336883	9	3160-125
AT336884	10	3104-7
AT336884	11	3104-9
AT336884	17	3160-117
AT336884	17	3160-125
AT336885	10	3104-7
AT336885	17	3160-117
AT337313	23	3160-123
AT338291	40	0260-9B
AT343463	15	1060-11B
AT35831	18	1369-3B
AT37476	11	0520-3
AT37693	38	0510-5
AT41188	15	1671-3
AT44188	14	1810-17
AT45678	14	3166-5
AT45678	27	3166-9
AT45678	15	3166-13
AT49216	20	3160-91
AT49859	18	0242-3B
AT53439	12	0520-3
AT53541	19	0242-3B
AT59892	2	1810-41
AT62123	10	3160-117
AT62123	10	3160-125
AT62123	14	3163-3
AT79576	9	1060-11
AT83105	12	1810-7
AU42978	18	0260-15
A11667	2	0110-2C
A11667	2	0110-5
A11667	2	0110-7
A364R	19	0417-3
A4365R	33	1060-3
A4365R	20	1060-3B
A4365R	20	3166-5
A4365R	9	3166-9
A4365R	7	3166-11
A4365R	10	3166-13
A4742R	10	3160-31
A4742R	10	3160-35
A4742R	10	3160-47
A4742R	10	3160-47B
A4827R	19	0452-3
B14604	19	1830-3
CD12569	23	1322-7
CD16284	7	0409-3
CQ27992	6	0210-43
CQ27992	4	0210-49
C11884	8	3165-13
DD15664	18	0452-3
DD15664	34	0452-3
E12379	1	0242-3
E12379	20	0242-3B
E12379	2	0960-9
E12379	13	3165-17
E12379	6	3166-3
E52687	14	3165-21
E53801	16	3140-7
E53801	19	3140-7B
E73240	6	1674-8
E73240	6	1674-9
E80242	10	0530-3
F1870R	12	2160-3
F3171	17	0210-7
F3171	17	0210-13
F3171R	11	0210-7
F3171R	6	0210-9
F3171R	12	0210-9
F3171R	11	0210-11
F3171R	17	0210-11
F3171R	9	0210-13
F3171R	5	0210-19

NUMERICAL INDEX - CONTINUED

PART NO.	KEY	PAGE
F3171R	5	0210-21
F3171R	18	0210-25
F37030242	1	2160-3
F433299	5	3160-96
F436022	3	0210-45
F436023	18	0210-45
F436044	9	0210-43
F436044	7	0210-49
F436124	10	0210-45
F437154	6	0210-47
F437183	3	0210-47
F437184	5	0210-47
F437196	5	0210-45
F437220	9	0210-47
F437223	10	0210-47
F950R	7	3165-5
F950R	14	3165-7
F950R	10	3165-19
GX20510	40	1674-7
GY20126	3	1674-12
GY20126	3	1674-13
H110232	21	1810-3
H110232	9	1810-17
H114865	20	1830-3
H126081	13	1810-7
H126082	14	1810-7
H132922	16	1810-7
H138955	7	1322-5
H140469	17	1746-5B
H143405	7	0960-11
H144095	12	1672-3
H148166	39	2160-7
H148166	39	2160-7B
H151537	12	3165-21
H151890	3	3165-21
H151891	6	3165-9
H151894	15	3165-21
H152204	8	3165-5
H152204	12	3165-7
H152204	11	3165-19
H152205	7	3165-9
H152205	13	3165-13
H152205	12	3165-15
H152795	9	3165-5
H152795	13	3165-7
H152795	12	3165-19
H152796	8	3165-9
H152796	12	3165-13
H152796	11	3165-15
H154126	8	0960-11
H154514	9	0960-11
H154514	1	3104-15
H154514	1	3104-17
H154514	1	3104-19
H155143	9	3165-9
H155147	2	3165-5
H155147	2	3165-7
H155147	1	3165-13
H155147	1	3165-15
H155147	2	3165-19
H155540	5	3165-13
H155561	3	3165-13
H155561	3	3165-15
H155964	12	0960-11
H156058	13	0960-11
H156058	2	3104-15
H156058	2	3104-17
H156058	2	3104-19
H156360	13	1810-55
H156586	3	3104-15
H156586	3	3104-17
H156586	3	3104-19
H156929	16	3165-13
H157037	4	3165-15
H157427	10	3165-5
H157427	14	3165-19
H158192	14	0960-11
H159071	4	3165-21
H159072	5	3165-21
H159074	8	3165-21
H164204	15	0960-11
H164205	16	0960-11
H164982	5	3104-15
H164982	7	3104-17
H164982	7	3104-19
H165169	6	3104-15
H169568	8	1749-3
H169743	11	3165-5
H169744	4	3165-13
H170136	12	3165-5
H170136	4	3165-7
H170136	4	3165-19
H170137	7	3165-13
H170371	12	3165-9
H170372	13	3165-9
H170535	17	0960-11
H170535	11	3104-15
H170535	5	3104-17
H170535	5	3104-19
H170540	22	3165-5
H170540	3	3165-7
H170540	13	3165-19
H171332	18	0960-11
H171334	7	3104-15
H172014	39B	0560-3
H173650	15	3165-15
H173651	6	3165-21
H174831	41	0560-3
H179999	14	3165-9
H180080	18	3165-7
H180094	16	3165-7
H180324	16	3165-21
H180430	9	3165-15
H180431	10	3165-13
H180432	15	3165-9
H206836	12	3104-15
H208704	9	3165-7
H208704	5	3165-19
H208706	10	3165-7
H208706	6	3165-19
H210826	19	3165-7
H210874	10	3104-17
H210874	10	3104-19
H211156	8	3104-17
H211156	8	3104-19
H21259	1	1322-3
H219217	4	3104-19
H23125	2	0409-1
H23196	4	1369-3
H34597	6	1810-13
H63262	11	3104-17
H63262	11	3104-19
H75541	14	3160-111
H75541	18	3160-113
H75541	20	3160-115
H77698	16	0260-9
H77698	2	0260-18
H77698	5	0960-9
H77698	17	1671-3
H77698	11	1674-3
H77698	41	1674-7
H77698	48	1674-7B
H77698	7	1674-8
H77698	7	1674-9
H77698	21	1830-3
H77698	17	1830-7
H77698	19	2160-13
H77698	17	2160-15
H77698	19	3160-73
H77698	19	3160-77
H77698	20	3160-81
H77698	28	3160-85
H77698	31	3160-89
H77698	1	3160-91
H77698	7	3160-91
H77698	14	3165-17
H81330	4	1810-9
H81330	1	1810-11
H81330	11	1810-19
H81330	11	1810-21
H81330	10	1830-11
H81678	4	1673-4
H84318	3	3160-39
H84318	3	3160-47
H84318	3	3160-47B
H85233	9	1910-3
H85233	12	1910-5
H85233	8	1913-5
H86981	8	1830-3
H86981	7	1830-7
H89151	10	3104-7
H89151	20	3104-7
H89151	11	3104-9
H89151	19	3104-9
H89151	10	3104-11
H89151	10	3104-13
H95874	25	1810-7
JD38714	2	3160-43
JD5749	6	1322-3
JD5822	11	1322-5
JD5822	1	1322-11
JD5902	2	1322-3
JD5906	19	1322-3
JD5929	5	1810-37
JD7759	8	0960-9
JD7759	10	3102-3
JD7759	6	3104-3
JD7759	14	3104-7
JD7759	14	3104-9
JD7759	11	3104-11
JD7759	11	3104-13
JD7759	11	3140-3
JD7759	17	3140-3B
JD7759	9	3140-5
JD7759	17	3140-7
JD7759	20	3140-7B
JD7759	10	3140-17
JD7759	11	3140-19
JD7759	22	3140-19
JD7759	14	3140-21
JD7759	2	3165-11

NUMERICAL INDEX - CONTINUED

PART NO.	KEY	PAGE
JD7763	18	3165-3
JD7763	14	3165-11
JD7763	15	3165-17
JD7781	23	0242-3
JD7781	2	3165-3
JD7788	7	3166-3
JD7797	21	0242-3
JD7797	21	0242-3B
JD7797	13	0325-5
JD7797	1	0960-9
JD7797	12	3165-17
JD7842	21	0242-3
JD7842	1	0960-9
JD8164	14	0210-17
JD8191	3	0210-19
JD8191	3	0210-21
JD8210	15	0210-17
JD8214	4	0210-19
JD8214	4	0210-21
JD8240	1	0210-4
JD8240	1	0210-5
JD8240	8	0210-25
JD8259	9	0210-19
JD8259	9	0210-21
JD8954	10	0210-19
JD8954	10	0210-21
JD8974	2	0210-4
JD8974	2	0210-5
JD8974	9	0210-25
J16931	40	0510-5
J16931	37	0510-7
J16931	27	1910-7
KV22121	14	3102-3
KV22121	7	3102-5
KV22609	8	3160-63
K1011176	25	0413-3
L102023	1	1810-40
L110729	7	0350-37
L156164	58	0260-9B
L40273	1	0350-12
L57881	22	1830-3
L77943	9	1830-5
L985T	16	1810-3
L985T	17	1810-3
M113243	4	0515-3
M113243	48	1060-3
M113243	65	1060-3B
M113243	14	1810-55
M114063	22	1810-3
M115279	42	1674-7
M115279	49	1674-7B
M115279	8	1674-8
M115279	8	1674-9
M135542	11	3166-11
M148224	13	1910-3
M4125T	2	3160-47
M4125T	2	3160-47B
M44162	22	0960-11
M453T	24	1821-3
M45937	20	0242-3
M45937	4	0260-18
M47887	4	1810-47
M67176	10	1830-5
M68628	18	1910-7
M72389	33	2160-7
M84972	7	1810-13
M84972	2	1810-15
M84972	15	1810-55
M87571	16	0360-3
M87571	9	1369-3
M87733	3	0416-3
M88102	12	3166-11
M89679	9	0520-3
N117290	8	1830-15
N119177	4	1674-11
N119177	29	1821-3
N189220	19	1369-3B
N189220	52	2160-7
N189220	48	2160-7B
N189220	20	3160-73
N189220	20	3160-77
N189220	21	3160-81
N189220	29	3160-85
N189220	32	3160-89
N189220	1	3166-3
N191985	12	1674-3D
N203905	49	1060-3
N203905	66	1060-3B
N205415	10	2160-9
N205415	10A	2160-9B
N218377	3	1810-47
N260556	8	3104-15
PG-188	16	3163-3
PM38655	24	0404-3
PT11778	10	1830-5
PT9412	23	0560-3
P40098	1	1674-14
P46051	31	2160-7
P46051	34	2160-7B
P48347	38	1060-3
P48347	25	1060-3B
P48347	21	3166-5
P48347	13	3166-9
P48347	13	3166-11
P48347	16	3166-13
RE12363	22	1830-13
RE151433	3	1674-14
RE157329	17	1830-5
RE158953	18A	0560-3
RE159197	4	0210-26
RE160140	6	0210-19
RE160140	6	0210-21
RE163170	7	0210-4
RE163170	7	0210-5
RE163170	8	0210-5
RE163170	15	0210-25
RE163554	8	0210-4
RE163554	16	0210-25
RE163555	7	0210-5
RE163555	8	0210-5
RE163555	16	0210-25
RE164128	9	0210-9
RE164128	1	0210-25
RE164129	12	0210-7
RE164129	1	0210-25
RE164130	12	0210-13
RE164130	1	0210-25
RE164378	1	0210-2
RE164379	1	0210-2
RE164381	1	0210-2
RE164382	1	0210-2
RE164441	20	0210-25
RE164442	20	0210-25
RE164443	20	0210-25
RE164444	20	0210-25
RE166219	22	0210-15
RE166242	7	0530-3
RE167207	4	1674-14
RE167464	25	0510-3
RE168454	21	2001-7
RE168454	21	2001-7B
RE16879	1	1810-27
RE174764	11	1830-5
RE179976	30	0560-3
RE190139	13	2001-7
RE190139	13	2001-7B
RE190139	16	2001-7D
RE190140	13	2001-7
RE190140	13	2001-7B
RE190140	16	2001-7D
RE190141	13	2001-7
RE190141	13	2001-7B
RE194040	19	0560-3
RE19797	3	0413-3
RE19799	9	0413-3
RE198074	3	1830-5
RE20343	16	3165-5
RE20343	17	3165-5
RE20343	18	3165-5
RE20343	19	3165-5
RE20343	5	3165-7
RE20343	6	3165-7
RE20343	7	3165-7
RE20343	8	3165-7
RE20343	6	3165-15
RE20343	7	3165-19
RE20809	17	3165-9
RE20809	18	3165-9
RE20809	19	3165-9
RE20809	20	3165-9
RE224279	36A	0560-3
RE227949	7	0505-6
RE227953	13	2001-7
RE227953	13	2001-7B
RE227953	16	2001-7D
RE234193	36B	0560-3
RE24391	25	0510-3
RE24391	42	0510-7
RE24468	41	1060-3
RE24468	29	1060-3B
RE261354	2	3166-5
RE261354	7	3166-9
RE261354	20	3166-13
RE261356	42	1060-3
RE261356	30	1060-3B
RE30162	9	3165-21
RE31617	13	0409-3
RE35704	42	1060-3
RE35704	30	1060-3B
RE36133	18	1830-5
RE36133	46	1830-5
RE36133	14	1830-9
RE36133	39	1830-9
RE38310	56	2160-7
RE38310	53	2160-7B
RE40049	2	1810-27
RE40049	5	1810-29
RE40281	15	1746-5B
RE40281	1	1746-6
RE40281	7	3160-49
RE40281	10	3160-49

NUMERICAL INDEX - CONTINUED

PART NO.	KEY	PAGE
RE40281	19	3160-51
RE40281	18	3160-61
RE43497	6	1674-11
RE43497	19	1830-7
RE43637	3	0260-19
RE44574	6	0401-2
RE44574	3	0433-2
RE44574	20	0452-3
RE45312	1	0210-3
RE45312	10	0210-25
RE46534	1	0260-19
RE46684	6	0210-7
RE46684	5	0210-9
RE46684	6	0210-11
RE46684	6	0210-13
RE46684	23	0260-15
RE46684	6	0414-2
RE46684	7	0418-3
RE46685	18	0417-3
RE46685	6	0419-3
RE46686	7	0419-3
RE46686	8	0420-3
RE46686	25	0560-3
RE46742	25	1830-3
RE46742	20	1830-7
RE48838	14	1810-15
RE500250	12	0360-3
RE500398	3	0433-1
RE500448	4	0415-3
RE500448	8	0415-3
RE500448	9	0415-3
RE500448	11	0415-3
RE500449	3	0415-3
RE500449	4	0415-3
RE500449	6	0415-3
RE500449	12	0415-3
RE500608	3	0403-2
RE501060	7	0422-3
RE501150	1	0422-3
RE501150	7	0422-3
RE501150	12	0422-3
RE501455	34	0452-3
RE502669	21	0505-5
RE502969	6	0409-1
RE503211	7	0416-3
RE504122	3	0505-6
RE504134	1	0420-4
RE504233	5	0421-1
RE504543	4	0407-5
RE504562	3	0407-5
RE504638	3	0401-2
RE504742	13	0415-3
RE504836	6	0407-5
RE504914	2	0407-4
RE504914	3	0407-4
RE504914	4	0407-4
RE504914	5	0407-4
RE504914	6	0407-4
RE505264	2	0429-2
RE505264	18	1672-3
RE505264	16	1672-7
RE505501	27	0404-3
RE505501	2	0417-4
RE505515	9	0401-2
RE505515	12	0417-3
RE505515	3	0417-4
RE505899	3	0407-2
RE505981	22	0417-3
RE506380	..	0417-3
RE507595	2	0402-1
RE507597	1	0420-3
RE507598	1	0413-3
RE507646	7	0413-3
RE507647	6	0413-3
RE507648	5	0413-3
RE507649	4	0413-3
RE507766	23	0413-3
RE507850	7	0403-2
RE507850	8	0403-2
RE507850	10	0403-2
RE507852	6	0403-2
RE507920	7	0403-2
RE507920	8	0403-2
RE507950	5	0407-2
RE507950	7	1369-3
RE507950	22	1369-3B
RE508185	22	0404-3
RE508317	9	0402-3
RE508566	23	0417-3
RE508566	4	0417-4
RE508716	21	0413-3
RE508847	26	0560-3
RE508932	8	0402-2
RE508932	9	0402-2
RE509031	13	0420-3
RE509032	13	0420-3
RE509540	10	0403-2
RE509540	1	0450-3
RE509540	1	0450-5
RE509570	15	0416-3
RE509794	6	0420-3
RE51234	1	1673-5
RE515977	2	0416-3
RE515978	2	0417-3
RE515978	5	0417-4
RE516340	9	0401-2
RE516340	12	0417-3
RE516340	3	0417-4
RE516340	21	0452-3
RE51649	17	0420-3
RE51649	27	0560-3
RE51650	14	0420-3
RE51650	28	0560-3
RE516512	12	0420-3
RE516512	..	0560-3
RE516553	12	0420-3
RE516553	..	0560-3
RE517180	29	0560-3
RE517370	3	0417-3
RE517370	1	0417-4
RE517786	2	0416-3
RE518086	10	0413-3
RE519144	4	0578-2
RE519775	36	1674-7
RE520023	3	0404-3
RE520023	1	0450-3
RE520229	4	1830-17
RE52034	20	0510-3
RE520539	5	0409-1
RE520539	1	0452-3
RE521822	10	0413-3
RE521823	10	0413-3
RE521824	10	0413-3
RE521825	10	0413-3
RE522076	3	0418-3
RE522109	10	0413-3
RE52242	1	0407-5
RE522529	36	1674-7
RE522529	45	1674-7B
RE522820	..	0419-3
RE522821	2	0419-3
RE52346	9	0401-2
RE52346	12	0417-3
RE52346	3	0417-4
RE52454	16	1830-13
RE524676	3	0505-6
RE52504	31	0560-3
RE52506	17	1830-13
RE52507	22	1830-13
RE52508	19	1830-13
RE52509	22	1830-13
RE526670	12	0452-3
RE526671	18	0452-3
RE526834	17	0420-3
RE526971	1	0450-5
RE52702	50	2160-7
RE52702	22	2160-13
RE52702	19	2160-15
RE527042	34	0452-3
RE52722	12	0418-3
RE52722	3	0578-2
RE531116	23	0413-3
RE532629	36	1674-7
RE532629	45	1674-7B
RE54885	12	0416-3
RE55423	21	1830-13
RE56098	20	0510-3
RE56098	42	0510-5
RE56098	43	0510-7
RE56109	22	1810-49
RE56165	7	3166-9
RE56165	20	3166-13
RE56369	28	0417-3
RE56690	2	0419-3
RE57234	14	0409-3
RE57619	8	0407-2
RE57619	10	0407-4
RE57836	11	0404-3
RE57836	4	0433-2
RE58614	28	1830-3
RE58614	23	1830-7
RE59810	9	0401-2
RE59810	12	0417-3
RE59810	3	0417-4
RE59810	21	0452-3
RE59811	1	0401-2
RE60005	3	0409-3
RE60029	22	0420-3
RE60037	9	0420-3
RE60071	3	0414-2
RE60700	11	3160-93
RE60700	34	3160-95
RE60701	16	2160-3
RE60701	15	3160-105
RE60701	22	3160-113
RE60854	15	0420-3
RE61651	22	2001-7
RE61651	22	2001-7B
RE61812	1	0578-2
RE63575	7	0210-4
RE63575	7	0210-5

NUMERICAL INDEX - CONTINUED

PART NO.	KEY	PAGE
RE63575	8	0210-5
RE65165	7	0401-2
RE65168	8	0401-2
RE65216	7	0210-5
RE65216	8	0210-5
RE65217	8	0210-4
RE65908	11	0403-2
RE65909	11	0403-2
RE65911	7	0401-2
RE65912	8	0401-2
RE65978	13	0416-3
RE66082	12	0452-3
RE66084	18	0452-3
RE66086	34	0452-3
RE66153	2	0421-1
RE66539	16	0210-15
RE66980	2	0210-3
RE67138	28	0260-15
RE67231	1	0419-3
RE67231	2	0419-3
RE67238	6	0407-1
RE67238	8	0407-5
RE67238	13	0419-3
RE67239	10	0417-3
RE67240	7	0407-1
RE68255	14	0520-3
RE68627	20	0210-15
RE68725	12	0260-15
RE68725	14	0260-15
RE68748	14	0413-3
RE68908	4	1830-17
RE69243	1	0407-3
RE69297	42	1060-3
RE69297	30	1060-3B
RE70080	3	0210-15
RE70080	3	0210-17
RE70536	1	0429-2
RE70678	4	0422-3
RE70682	5	0422-3
RE70756	8	0422-3
RE70756	11	0422-3
RE71240	21	0417-3
RE71240	22	0417-3
RE71256	6	0422-3
R100369	17	0417-3
R100377	13	1672-3
R10093	23	1830-3
R10093	9	1830-15
R101225	13	0402-2
R104558	6	0350-11
R104592	5	0404-3
R104592	5	0409-3
R104595	6	1810-25
R105415	6	0360-3
R105415	13	0360-3
R107731	11	0402-3
R109082	22	0210-15
R110531	41	0510-5
R110531	42	0510-5
R111137	10	0404-3
R11151	15	3166-5
R11151	2	3166-9
R11151	17	3166-13
R113050	25	1830-13
R113050	28	1830-13
R113562	5	0420-3
R113562	11	0420-3
R113563	4	0420-3
R113563	16	0420-3
R113565	3	0420-3
R113565	10	0420-3
R113565	13	0420-3
R113596	3	0401-2
R114082	2	0403-2
R114193	27	0417-3
R114194	12	0402-2
R114241	17	0404-3
R115299	12	0404-3
R115299	1	0415-3
R115350	38	0510-7
R115390	15	0404-3
R115742	11	1830-13
R115743	19	1830-13
R116116	21	0420-3
R116296	24	0260-9B
R116296	5	0407-1
R116324	1	0409-1
R116386	2	0402-2
R116386	17	0413-3
R116466	2	0404-3
R116515	12	0409-3
R116515	8	0452-3
R116801	18	0210-7
R116801	13	0210-9
R116801	18	0210-11
R116801	18	0210-13
R116801	7	0210-19
R116801	7	0210-21
R116933	38A	0560-3
R117721	13	1830-5
R117721	38	1830-5
R117721	62	1830-5
R117721	8	1830-9
R117721	31	1830-9
R117845	5	1810-9
R117845	2	1810-11
R119171	45	1830-5
R119171	38	1830-9
R119874	6	0404-3
R120013	14	0416-3
R120233	39A	0560-3
R120461	14	0210-17
R120631	2	0401-2
R120638	13	0407-4
R120641	6	0402-2
R120653	3	1810-25
R120653	6	1810-25
R120653	16	1810-27
R120653	3	1810-29
R120653	13	1810-29
R121038	1	0417-5
R121043	9	0404-3
R121376	7	0407-4
R121402	14	0409-3
R121411	7	0417-3
R121424	6	0417-3
R121465	9	1830-3
R121465	8	1830-7
R121635	4	0417-5
R121664	39	1830-5
R121664	63	1830-5
R121664	9	1830-9
R121664	32	1830-9
R121666	40	1830-5
R121666	33	1830-9
R121897	1	0429-1
R123161	7	0402-3
R123174	5	0402-2
R123177	5	0403-2
R123226	20	0417-3
R123226	9	0418-3
R123226	4	0452-3
R123271	5	0402-3
R123273	1	0421-1
R123273	22	0452-3
R123323	1	0418-3
R123324	11	0418-3
R123345	5	0452-3
R123352	4	0407-2
R123352	14	0452-3
R123353	13	0452-3
R123417	24	0417-3
R123417	23	0452-3
R123471	2	0419-3
R123471	5	0419-3
R123501	3	0419-3
R123501	25	0452-3
R123502	31	0452-3
R123504	26	0452-3
R123513	2	0402-3
R123525	30	0452-3
R123542	5	0409-1
R123542	1	0452-3
R123558	18	0260-9B
R123558	1	0407-1
R123561	7	0401-2
R123562	7	0401-2
R123563	8	0401-2
R123564	8	0401-2
R123565	10	0402-3
R123570	6	0452-3
R123574	3	0409-1
R123575	4	0409-1
R123575	7	0452-3
R123584	4	0402-2
R123586	1	0408-2
R123593	15	0413-3
R123616	25	0404-3
R125223	14	1830-5
R126033	4B	2001-7
R126033	4	2001-7B
R128859	2	1672-11
R129110	15	1830-5
R129110	10	1830-9
R129664	8	0210-23
R129665	11	0210-23
R129666	3	0210-23
R129672	8	0210-5
R129673	8	0210-5
R129674	8	0210-4
R129675	8	0210-4
R129776	10	0210-23
R129777	12	0210-23
R129888	2	0210-7
R129888	2	0210-9
R129888	2	0210-11
R129888	2	0210-13
R129889	11	0210-19
R129889	11	0210-21
R129998	22	0210-15
R129999	14	0210-15

NUMERICAL INDEX - CONTINUED

PART NO.	KEY	PAGE
R130000	4	0210-15
R130001	11	0210-15
R130002	12	0210-15
R130059	6	0210-15
R130059	6	0210-17
R130574	8	0401-2
R130575	8	0401-2
R130576	7	0401-2
R130577	7	0401-2
R131016	5	0418-3
R131169	15	0210-15
R131170	19	0210-15
R131172	7	0210-15
R131172	7	0210-17
R131182	21	0404-3
R131206	10	0402-2
R131268	25	0210-15
R131269	24	0210-15
R131270	9	0210-15
R131270	12	0210-17
R131283	26	0417-3
R131664	30	1927-9
R131719	29	0210-15
R131720	29	0210-15
R131721	29	0210-15
R131741	3	0210-26
R131769	6	0433-2
R131797	1	0210-7
R131797	1	0210-9
R131797	1	0210-11
R131797	1	0210-13
R131896	5	0210-4
R131896	5	0210-5
R132113	8	0210-9
R132113	9	0210-9
R132113	11	0210-13
R132113	12	0210-13
R132114	14	0210-9
R132186	20	0404-3
R132193	13	0210-17
R132194	4	0210-17
R132195	11	0210-17
R132260	3	0410-2
R132518	7	0404-3
R132519	21	0210-15
R132520	11	0260-15
R132617	26	0210-15
R132619	27	0210-15
R132620	28	0210-15
R132623	8	0210-19
R132874	12	0413-3
R132913	3	0423-2
R133259	9	0210-23
R133303	1	0402-1
R133303	5	0415-3
R133309	8	0210-21
R133405	6	0421-1
R133643	14	1672-3
R133643	17	1672-7
R133893	17	0505-5
R134183	2	0210-15
R134183	2	0210-17
R134334	5	0210-23
R134404	6	0210-4
R134404	6	0210-5
R134405	6	0210-4
R134405	6	0210-5
R134406	6	0210-4
R134406	6	0210-5
R134465	40	0260-9B
R134465	18	0510-9
R134465	19	0510-9B
R134465	22	0510-11
R134465	29	0510-11B
R134518	3	0402-2
R134526	1	0402-2
R134671	21	0260-15
R134672	17	0260-15
R134673	1	0260-15
R134674	7	0260-15
R134675	10	0260-15
R134676	15	0260-15
R134677	13	0260-15
R134713	10	0210-15
R134713	9	0210-17
R135118	8	0260-15
R135298	5	0260-15
R135509	2	0422-3
R135510	3	0422-3
R135529	18	0210-15
R135535	4	0210-4
R135535	4	0210-5
R135805	9	0260-15
R135896	3	0452-3
R135918	1	0433-1
R135918	8	0433-2
R136052	12	0422-3
R136314	6	0260-15
R136475	14	0402-2
R136495	20	0260-9B
R136495	4	0407-1
R136514	22	0260-9B
R136515	1	0417-3
R136515	2	0417-3
R136515	24	0452-3
R136516	24	0452-3
R137063	5	0210-3
R151390	1	0210-19
R151390	1	0210-21
R151576	5	0210-23
R151933	5	0210-3
R151933	3	0260-15
R157151	1	0210-26
R157152	2	0210-26
R159661	4	0210-7
R159661	3	0210-9
R159661	4	0210-11
R159661	4	0210-13
R159661	17	0210-25
R159759	22A	0210-11
R160154	22	0210-11
R160155	7	0210-9
R160155	21	0210-11
R160155	10	0210-13
R160699	23	0210-7
R160699	15	0210-9
R160699	22	0210-11
R160699	22A	0210-11
R160699	23	0210-11
R160699	23	0210-13
R160699	19	0210-25
R160831	9	0210-9
R160831	14	0210-9
R160831	12	0210-13
R160831	21	0210-13
R161861	5	0210-26
R163180	5	0210-4
R163180	5	0210-5
R163180	2	0210-25
R163181	6	0210-4
R163181	6	0210-5
R163181	14	0210-25
R163182	6	0210-4
R163182	6	0210-5
R163182	12	0210-25
R163183	6	0210-4
R163183	6	0210-5
R163183	13	0210-25
R163333	4	0210-4
R163333	4	0210-5
R163333	3	0210-25
R163505	12	0210-7
R163506	12	0210-13
R163507	12	0210-11
R163507	1	0210-25
R163556	8	0210-4
R163557	8	0210-5
R184863	20A	0560-3
R184863	44	0560-3
R187539	10	1910-3
R193666	16	0560-3
R194311	17	0560-3
R203687	1	1830-3
R203687	18	1830-7
R224278	37	0560-3
R26125	4	0409-3
R26246	14	0210-19
R26246	14	0210-21
R26286	5	0210-7
R26286	4	0210-9
R26286	5	0210-11
R26286	5	0210-13
R26286	24	0260-9
R26286	9	0260-11
R26286	2	1674-14
R26286	53	2160-7
R26286	49	2160-7B
R26287	50	1060-3
R26287	67	1060-3B
R26287	8	1060-5
R26287	30	3160-47
R26287	30	3160-47B
R26287	19	3160-93
R26287	31	3160-95
R26375	6	0260-7
R26375	6	0260-9
R26375	12	0260-9B
R26375	40	0260-9B
R26375	10	0260-11
R26375	25	0260-15
R26375	5	0510-9
R26375	5	0510-9B
R26375	14	0510-11
R26375	6	0510-11B
R26375	6	0930-3
R26375	9	0930-5
R26375	46	0930-5
R26375	5	0960-3
R26375	9	0960-9
R26375	47	1060-3
R26375	51	1060-3

NUMERICAL INDEX - CONTINUED

PART NO.	KEY	PAGE
R26375	3	1060-3B
R26375	10	1060-5
R26375	3	1060-5B
R26375	6	1060-11B
R26375	9	1060-13
R26375	12	1060-15
R26375	30	2160-7
R26375	17	3160-93
R26448	4	0260-3
R26448	3	0260-5
R26448	2	0260-5B
R26448	12	0260-7
R26448	5	0260-17
R26448	6	0510-11
R26448	26	0510-11B
R26448	33	0510-11B
R26448	40	0930-3
R26448	52	1060-3
R26448	6	1060-3B
R26448	6	1060-5B
R26448	4	1060-7
R26448	6	1060-7B
R26448	4	1369-3B
R26448	6	2160-3
R26448	34	2160-7
R26448	18	2160-7B
R26448	50	2160-7B
R26448	4	2160-9
R26448	4	2160-9B
R26448	11	3104-3
R26448	5	3104-7
R26448	6	3104-9
R26448	7	3160-3
R26448	5	3160-5
R26448	16	3160-7
R26448	8	3160-9
R26448	5	3160-11
R26448	16	3160-13
R26448	10	3160-15
R26448	5	3160-17
R26448	16	3160-19
R26448	2	3160-21
R26448	16	3160-29
R26448	6	3160-43
R26448	3	3160-73
R26448	6	3160-73
R26448	3	3160-77
R26448	4	3160-81
R26448	4	3160-85
R26448	4	3160-89
R26448	21	3160-91
R26448	9	3160-93
R26448	9	3160-95
R26448	4	3160-105
R26448	5	3160-109
R26448	3	3160-111
R26448	19	3160-113
R26448	7	3160-115
R26448	18	3160-123
R26448	5	3163-3
R26650	13	0404-3
R26773	26	2160-7
R26773	29	2160-7B
R26906	9	0260-7
R26906	15	0260-9B
R26906	40	0260-9B
R26906	6	0409-3
R26906	9	0510-11
R26906	9	0510-11B
R26906	13	0930-3
R26906	12	0930-5
R26906	3	0960-3B
R26906	10	1369-3B
R26906	54	2160-7
R26906	51	2160-7B
R26906	10	3160-39
R26906	45	3160-47
R26906	45	3160-47B
R26906	29	3160-93
R26906	14	3160-95
R26906	13	3165-3
R26906	6	3165-11
R26906	20	3165-11
R26906	6	3165-17
R27094	15	0210-7
R27094	11	0210-9
R27094	15	0210-11
R27094	15	0210-13
R27175	18	0210-7
R27175	13	0210-9
R27175	18	0210-13
R27175	7	0210-19
R27175	7	0210-21
R27175	44	2160-7
R27175	22	3160-5
R27175	22	3160-11
R27175	22	3160-17
R27180	1	1672-5
R27180	2	1672-9
R27218	69	1060-3B
R27218	10	1060-5B
R27218	21	1369-3B
R27218	55	2160-7
R27218	52	2160-7B
R27218	11	2160-9
R27218	10	3104-3
R27218	23	3160-5
R27218	23	3160-11
R27218	23	3160-17
R27218	13	3160-105
R27218	11	3160-109
R27218	2	3160-111
R27390	27	0510-3
R27390	22	2160-7
R27583	7	0505-3
R28782	14	0510-9
R28782	11	0510-9B
R28782	20	0510-11B
R28782	15	0930-3
R28782	21	0930-5
R28782	42	0930-5
R28782	7	0960-3
R28782	6	0960-3B
R28782	53	1060-3
R28782	70	1060-3B
R28782	17	1060-7B
R28782	21	2160-3
R28782	18	3160-29
R28782	9	3160-105
R28782	20	3160-113
R28811	2	0433-1
R29936	5	0350-3
R29936	5	0360-5
R29936	43	0510-5
R29936	39	0510-7
R29936	19	0510-9
R29936	20	0510-9B
R29936	23	0510-11
R29936	30	0510-11B
R29936	42	0930-3
R29936	9	2160-3
R29936	16	2160-7
R29936	11	2160-7B
R29936	2	2160-13
R29936	5	3160-3
R29936	16	3160-5
R29936	17	3160-7
R29936	15	3160-9
R29936	17	3160-11
R29936	17	3160-13
R29936	15	3160-15
R29936	17	3160-17
R29936	17	3160-19
R29936	3	3160-21
R29936	33	3160-93
R29936	19	3160-95
R33259	67	1830-5
R33259	26	1830-13
R36311	2	0242-3
R36311	22	0242-3B
R36311	3	0960-9
R36311	3	3166-3
R36545	18	1671-3
R36943	24	0260-15
R37023	13	2160-3
R38066	4	0210-23
R38185	16	0260-15
R39112	10	1060-13
R39112	13	1060-15
R41440	11	1830-9
R43409	9	0409-3
R43583	67	0510-5
R43583	40	0510-7
R44097	2	1673-5
R44165	3	1674-11
R44165	16	1830-7
R44302	7	0260-5B
R44302	18	0505-5
R44302	45	0510-5
R44302	41	0510-7
R44302	13	0520-3
R44302	24	0560-3
R44302	2	1369-3
R44302	19	1671-3
R44302	13	1673-3
R44302	17	1673-3B
R44302	12	1674-3
R44302	18	1674-3B
R44302	13	1674-3D
R44302	17	1674-5
R44302	35	1674-7
R44302	44	1674-7B
R44302	5	1674-11
R44302	4	1810-25
R44302	11	2001-7
R44302	11	2001-7B
R44302	13	2001-7D
R44302	20	2160-13
R44302	18	2160-15
R44302	7	3165-3
R44302	8	3166-3

NUMERICAL INDEX - CONTINUED

PART NO.	KEY	PAGE
R44302	8	3166-7
R44342	27	1674-7
R44342	51	1674-7B
R44852	14A	2160-3
R45197	3	0210-4
R45197	3	0210-5
R45197	4	0210-25
R45198	3	0210-4
R45198	3	0210-5
R45198	5	0210-25
R45199	3	0210-4
R45199	3	0210-5
R45199	6	0210-25
R45200	3	0210-4
R45200	3	0210-5
R45200	7	0210-25
R47693	5	0505-6
R48685	5	0401-2
R48685	1	0404-3
R48733	4	0210-3
R48734	4	0210-3
R48734	2	0260-15
R48735	4	0210-3
R48776	5	0210-3
R48808	15	1672-3
R500196	2	0429-1
R500219	3	0433-1
R500266	6	0415-3
R500270	4	0421-1
R500271	3	0421-1
R500318	1	2160-3
R500335	3	0403-2
R500384	18	1672-7
R500394	1	0414-2
R500650	2	0415-3
R500668	9	0415-3
R501124	1	0403-2
R501144	10	0418-3
R501373	9	0452-3
R501428	8	0419-3
R501428	31	0452-3
R501459	22	0505-5
R501484	9	0407-5
R501486	16	1672-3
R501489	10	0401-2
R502076	11	0413-3
R502079	17	1672-3
R502079	19	1672-7
R502175	1	0404-4
R502329	2	0404-4
R502338	3	0407-5
R502513	5	0407-5
R502513	6	0407-5
R502604	3	0407-3
R502687	6	0407-4
R502725	2	0407-3
R502811	11	0419-3
R502814	4	0418-3
R502814	3	0452-3
R502864	26	0452-3
R503450	1	0433-2
R503509	22	0417-3
R503813	3	0429-2
R503891	16	0416-3
R504191	33	1830-13
R504192	27	1830-13
R504507	19	0505-5
R504534	2	0402-1
R504694	2	0414-2
R504724	1	0417-3
R504724	2	0417-3
R504734	9	0419-3
R505121	8	0402-2
R505472	18	0413-3
R505609	4	0401-2
R50770	16	1830-5
R50770	12	1830-9
R51031	43	0930-5
R51031	71	1060-3B
R51936	20	0413-3
R520129	1	0417-3
R520129	2	0417-3
R520131	1	0417-3
R520131	2	0417-3
R521439	2	0452-3
R522030	4	0407-2
R522030	14	0452-3
R522690	18	0510-9
R53108	27	0452-3
R53296	3	1913-2
R53317	13	1060-3
R53317	38	1060-3B
R53528	9	2001-7
R53528	9	2001-7B
R53528	14	2001-7D
R54114	4	0403-2
R54123	2	0505-6
R54445	6	1810-25
R54445	8	1810-27
R54445	14	1810-29
R54565	1	0402-3
R54638	9	0452-3
R56171	9	1830-13
R57254	5	0210-15
R61105	32	0452-3
R61463	12	3160-39
R61463	51	3160-47
R61463	51	3160-47B
R61467	1	0433-2
R61467	2	0433-2
R61871	9	0407-2
R61871	9	0407-4
R61871	17	0452-3
R62129	5	0210-17
R63548	4	0416-3
R63667	14	1810-27
R63667	8	1810-29
R67811	8	0210-15
R67811	8	0210-17
R68904	10B	2160-9B
R72032	7	3165-21
R72328	2	0408-2
R72328	28	0452-3
R72653	62	1060-3
R72653	26	1060-3B
R72653	6	3166-5
R72653	10	3166-9
R72653	14	3166-11
R72653	18	3166-13
R72654	39	1060-3
R72654	27	1060-3B
R72655	11	1821-3
R73599	7	0350-11
R74012	8	0560-3
R74012	45	0560-3
R74657	11	1060-13
R74657	14	1060-15
R75892	16	0404-3
R75892	15	0452-3
R76695	29	2001-7
R77175	15	0350-3
R77175	15	2160-3
R77175	11	2160-11
R77175	10	3160-93
R77175	33	3160-95
R77175	14	3160-105
R77175	21	3160-113
R78057	22	1830-13
R78059	22	1830-13
R78393	23	0960-11
R79132	15	0210-45
R79496	12	0210-43
R79496	8	0210-49
R80135	2	0407-1
R80136	3	0407-1
R81275	5	0414-2
R81275	10	0452-3
R81275	20	0505-5
R81775	5	3165-15
R81787	13	3165-5
R81787	16	3165-19
R81793	14	3165-5
R81793	17	3165-19
R81862	15	3165-5
R81862	15	3165-7
R81862	15	3165-19
R82095	16	3165-9
R82198	35	0260-9B
R85363	1	0409-3
R85687	8	0409-3
R86457	40	1060-3
R86457	28	1060-3B
R86457	7	3166-5
R86457	12	3166-9
R86457	19	3166-13
R87881	24	0960-11
R89581	6	0210-3
R89581	11	0210-25
R89944	5	0417-5
R89944	29	0452-3
R90653	10	3165-21
R90658	1	0410-2
R90658	2	0452-3
R90692	10	0409-3
R90737	11	0452-3
R91360	13	0413-3
R91889	2	0409-3
R92097	6	0416-3
R92097	11	0452-3
R93172	7	0210-23
R93633	4	3104-15
R93633	6	3104-17
R93633	6	3104-19
R93910	8	0409-3
R96703	9	0422-3
R97185	8	0407-4
R97185	16	0452-3
R97332	41	1830-5
R97332	58	1830-5
R97332	7	1830-9
R97332	34	1830-9

NUMERICAL INDEX - CONTINUED

PART NO.	KEY	PAGE
R97336	42	1830-5
R97336	64	1830-5
R97336	13	1830-9
R97336	35	1830-9
R98062	11	0409-3
R98063	8	0409-3
R98335	8	0409-3
R99466	13	0210-15
R99466	10	0210-17
SE500830	23	0413-3
SE501072	..	0450-3
SE501094	3	0403-2
SE501103	23	0413-3
SE501234	10	0413-3
SE501346	15	1672-7
SE501362	12	1672-3
SE501438	15	1672-7
TCU14336	25	1810-3
TCU14336	35	1810-5
TCU14336	28	1810-7
TF1U3252L	4	3102-9
TTZF160210	3	0210-35
TTZF160210	3	0210-37
TTZF160211	3	0210-35
TTZF160211	3	0210-37
TTZF160212	3	0210-35
TTZF160212	3	0210-37
TTZF160213	3	0210-35
TTZF160213	3	0210-37
TY16004	1	1369-4
TY16005	2	1369-4
TY21741	7	1671-3
TY22324	66	0510-5
TY22324	65	0510-7
TY22324	66	0510-7
TY22324	67	0510-7
TY22324	68	0510-7
TY22328	3	1830-17
TY22462	21	0510-3
TY22470	15	0560-3
TY22493	7	3160-51
TY22493	6	3160-61
TY22493	17	3160-73
TY22493	17	3160-77
TY22493	18	3160-81
TY22493	26	3160-85
TY22493	29	3160-89
TY22494	3	1746-6
TY22505	3	0408-2
TY24861	4	0520-5
TY25955	15	1672-7
TY26045	12	1672-3
TY6128	7	1671-3
TY6304	24	0404-3
TY6794	15	1672-7
TY6798	12	1672-3
T101090	11	1810-5
T101731	3	0350-39
T101942	3	1322-3
T102135	7	3140-9
T102135	7	3140-11
T102135	6	3140-13
T102135	12	3140-17
T102135	19	3140-19
T102135	23	3140-19
T102136	5	3140-9
T102136	6	3140-11
T102136	7	3140-13
T102137	9	3140-13
T102137	3	3140-17
T102137	15	3140-21
T102171	11	3102-3
T102171	17	3104-7
T102171	12	3104-13
T102171	4	3140-3
T102171	18	3140-3B
T102171	4	3140-5
T102171	18	3140-7
T102171	7	3140-17
T102171	14	3165-3
T102171	16	3165-17
T102205	8	3140-9
T102205	8	3140-11
T102205	9	3140-11
T102205	8	3140-13
T102205	20	3140-19
T102206	16	3140-21
T102618	8	1322-7
T102620	8	1322-9
T102717	21	3140-7B
T102934	19	1674-3B
T102934	18	1674-5
T102934	43	1674-7
T102934	52	1674-7B
T102934	4	3166-7
T102958	17	3160-91
T102961	25	3160-91
T102963	27	3160-91
T103238	14	0505-5
T103461	45	2160-7
T103465	25	3160-47
T103465	25	3160-47B
T105740	4	1821-3
T105773	9	3160-49
T105773	20	3160-51
T105773	19	3160-61
T105773	2	3160-67
T105891	14	1910-5
T106595	45	2160-7B
T107117	10	1671-3
T11234	4	1810-38
T113128	2	0325-3
T113128	14	0325-5
T115030	7	1810-38
T115031	8	1810-38
T116416	16	0350-19
T116460	2	0350-21
T116481	8	0350-21
T116516	3	0350-5
T116604	17	0350-9
T116604	13	0360-3
T116604	3	1369-3
T116604	8	1369-3
T116604	23	1369-3B
T116604	27	1369-3B
T116613	1	0350-5
T116867	20	0210-39
T116918	9	0350-9
T119549	14	3140-19
T119549	24	3140-19
T119564	2	1810-38
T119912	57	2160-7
T119912	54	2160-7B
T122075	2	0419-3
T122075	4	0419-3
T122075	33	0452-3
T12275	21	3165-9
T122803	12	0350-17
T123707	9	0350-21
T125546	8	1740-3B
T128437	9	1810-38
T130057	13	3140-3
T130057	19	3140-3B
T130057	13	3140-5
T130057	19	3140-7
T130057	22	3140-7B
T130058	14	3140-3
T130058	12	3140-5
T130058	20	3140-7
T130058	23	3140-7B
T130059	15	3140-3
T130059	20	3140-3B
T130059	21	3140-3B
T130059	11	3140-5
T130059	21	3140-7
T130059	24	3140-7B
T131617	14	3160-91
T131624	19	3160-91
T131980	1	1810-51
T13254	24	0413-3
T13254	32	0560-3
T133290	9	1740-3B
T133290	14	3140-7
T133674	16	1810-55
T133674	4B	2001-7
T133674	26	2001-7
T133674	26	2001-7B
T134104	20	1671-3
T134874	9	1810-13
T134895	4	1810-15
T135583	23	1810-3
T13630	3	1810-49
T13976	12	3166-3
T14050	18	0420-3
T141386	4	0350-21
T143169	29	1830-3
T143169	28	1830-13
T144370	12	0350-9
T144486	8	0350-19
T146097	2	1322-5
T146097	2	1322-11
T146098	9	1322-9
T146099	9	1322-7
T146102	10	0422-3
T146104	7	1322-7
T146106	7	1322-9
T146175	4	1322-3
T146178	5	1322-7
T146180	5	1322-9
T146246	3	1740-3
T146246	6	3140-3
T146246	31	3140-3
T146246	32	3140-3
T146246	17	3140-5
T146246	26	3140-5
T146246	22	3140-7
T146246	16	3140-7B
T146246	3	3140-9
T146436	5	1322-3
T146443	38	0930-3
T146443	50	0930-5

NUMERICAL INDEX - CONTINUED

PART NO.	KEY	PAGE
T146490	5	3160-93
T146490	35	3160-95
T146494	6	1322-7
T146495	19	1322-7
T146496	4	1322-7
T146502	6	1322-9
T146503	19	1322-9
T146504	4	1322-9
T146605	7	1322-3
T146606	12	1322-9
T146607	12	1322-7
T146672	2	3102-10
T146792	6	3160-93
T146792	36	3160-95
T146908	13	1322-7
T146911	13	1322-9
T146933	2	3102-13
T146934	7	3102-9
T146934	3	3102-10
T147188	6	3160-49
T147188	21	3160-51
T147188	20	3160-61
T147188	2	3160-69
T147188	8	3160-71
T147618	8	1810-25
T147891	20	1674-3B
T147891	19	1674-5
T147891	19	1910-5
T147891	21	1927-7
T148083	1	1322-5
T148083	3	1322-11
T148181	2	1674-15
T148181	51	2160-7
T148181	17	2160-13
T148181	18	2160-13
T148409	20	0510-7B
T148410	46	0510-5
T148410	44	0510-7
T148411	47	0510-5
T148411	45	0510-7
T148712	21	3160-49
T148712	22	3160-51
T148712	21	3160-61
T148712	18	3160-67
T151797	2	0110-2
T151797	5	0110-3
T152076	14	1749-3
T152230	44	1674-7
T153535	3	1810-23
T153680	20	1322-3
T15385	24	1369-3B
T154131	1	1810-49
T154187	8	3160-35
T154342	21	3160-73
T154342	21	3160-77
T154342	22	3160-81
T154342	30	3160-85
T154342	33	3160-89
T156256	7	1830-11
T156471	65	1830-5
T156471	50	1830-9
T156599	5	3102-3
T156599	5	3102-5
T156784	4	1810-53
T156995	1	1330-3
T157029	12	3140-3
T157029	22	3140-3B
T157029	10	3140-5
T157029	23	3140-7
T157029	25	3140-7B
T157030	17	3140-3
T157030	23	3140-3B
T157030	15	3140-5
T157030	24	3140-7
T157030	26	3140-7B
T157055	9	0242-3
T157056	13	0242-3
T157056	23	0242-3B
T157077	9	3140-17
T157211	14	1060-3
T157211	39	1060-3B
T157212	8	1060-3
T157212	47	1060-3B
T157220	15	1060-3
T157220	40	1060-3B
T157223	26	1060-3
T157223	54	1060-3B
T157234	3	3140-3
T157234	24	3140-3B
T157234	3	3140-5
T157234	25	3140-7
T157234	27	3140-7B
T157236	52	1060-3B
T157248	6	3140-9
T157248	9	3140-9
T157248	4	3140-11
T157248	5	3140-11
T157248	2	3140-13
T157248	8	3140-19
T157248	21	3140-19
T157250	6	3140-9
T157250	10	3140-9
T157250	3	3140-11
T157250	2	3140-19
T157250	7	3140-19
T157251	6	3140-9
T157251	11	3140-9
T157251	2	3140-11
T157251	3	3140-13
T157257	20	1060-3
T157257	49	1060-3B
T157258	9	1060-3
T157258	58	1060-3B
T157275	10	3165-3
T157275	12	3165-11
T157275	13	3165-11
T157275	17	3165-17
T157276	1	3165-3
T157277	18	3165-17
T157282	4	3102-3
T157282	4	3102-5
T157306	1	3102-9
T157311	4	3102-10
T157315	4	0242-5
T157315	3	0242-5B
T157315	3	0242-7
T157318	11	1746-5B
T157443	22	3160-73
T157443	22	3160-77
T157443	23	3160-81
T157443	12	3160-85
T157443	19	3160-89
T158047	20	3160-93
T158047	37A	3160-95
T158424	10	1830-15
T158584	19	1672-3
T159028	8	1322-3
T159362	7	0210-43
T159362	5	0210-49
T159519	25	0210-39
T159519	9	0350-27
T159519	9	0350-29
T159602	7	0350-19
T159950	14	3160-123
T159956	15	3160-123
T160020	30	1810-7
T160549	10	3160-57
T160762	14	1322-7
T160769	14	1322-9
T161207	2	0350-19
T161208	2	0350-9
T161208	8	0350-17
T161584	1	3160-21
T162238	17	0260-9
T162238	48	0510-5
T162238	46	0510-7
T162238	28	1910-7
T163334	12	1821-3
T163335	13	1821-3
T163336	14	1821-3
T163962	5	1821-3
T164203	42	0560-3
T164847	5	0210-35
T164847	5	0210-37
T164848	5	0210-35
T164848	5	0210-37
T164849	5	0210-35
T164849	5	0210-37
T164850	5	0210-35
T164850	5	0210-37
T164851	5	0210-35
T164851	5	0210-37
T164852	5	0210-35
T164852	5	0210-37
T164853	5	0210-35
T164853	5	0210-37
T164854	5	0210-35
T164854	5	0210-37
T164855	5	0210-35
T164855	5	0210-37
T164856	5	0210-35
T164856	5	0210-37
T164857	5	0210-35
T164857	5	0210-37
T164858	5	0210-35
T164858	5	0210-37
T164859	5	0210-35
T164859	5	0210-37
T164860	5	0210-35
T164860	5	0210-37
T164872	7	0210-35
T164872	7	0210-37
T164873	8	0210-35
T164873	8	0210-37
T164938	15	0210-39
T164970	16	0210-39
T164980	24	0210-39
T165169	42	1830-5
T165169	35	1830-9
T167504	24	1810-3
T167505	26	1810-5

NUMERICAL INDEX - CONTINUED

PART NO.	KEY	PAGE
T167508	17	1810-7
T167514	28	1810-5
T167514	18	1810-7
T167519	39	1810-5
T167519	12	1810-17
T167527	29	1810-5
T167530	19	1810-7
T167546	30	1810-5
T167546	20	1810-7
T167593	12	1810-5
T167593	5	1810-43
T167594	12	1810-5
T167618	21	1810-7
T167630	31	1810-5
T167658	26	1810-3
T167659	13	1810-5
T167659	2	1810-34
T167676	30	1830-3
T167676	24	1830-7
T167679	10	1830-11
T167683	14	1810-5
T167754	7	1810-31
T167759	4	1830-11
T167764	6	1810-43
T167770	12	1810-19
T167771	13	1810-19
T167775	45	1674-7
T167775	53	1674-7B
T167837	6	0242-3
T167862	3	0242-5
T167862	2	0242-7
T167921	17	3160-49
T167921	23	3160-51
T167921	22	3160-61
T167921	13	3160-67
T167924	8	0242-3
T167924	24	0242-3B
T167945	10	1830-3
T167945	9	1830-7
T167979	2	3160-53
T168119	15	1910-5
T168135	20	1910-5
T168135	29	1910-7
T168220	11	1830-3
T168220	10	1830-7
T168247	4	0242-5B
T168276	4	1810-51
T168383	10	1060-11
T168393	7	1060-7
T168641	2	3140-17
T169035	5	0350-25
T169102	24	1060-13
T169103	12	1060-13
T169103	15	1060-15
T169104	13	1060-13
T169104	16	1060-15
T169105	14	1060-13
T169105	17	1060-15
T169106	25	1060-13
T169107	15	1060-13
T169107	18	1060-15
T169108	16	1060-13
T169108	19	1060-15
T169109	17	1060-13
T169109	20	1060-15
T169110	18	1060-13
T169110	21	1060-15
T169111	22	1060-15
T169112	22	1060-13
T169113	20	1060-13
T169113	23	1060-15
T169116	21	1060-13
T169116	24	1060-15
T169142	4	3102-3
T169281	25	1060-15
T169290	26	1060-15
T169329	12	0242-3
T169329	25	0242-3B
T169507	9	3166-7
T169607	6	0350-19
T169707	28	0350-19
T169711	27	0350-19
T169712	12	0350-19
T169766	11	0350-19
T169955	4	3160-31
T169955	4	3160-39
T170053	12	1830-3
T170053	11	1830-7
T170133	19	1830-5
T170133	15	1830-9
T170180	16	1060-3
T170180	41	1060-3B
T170181	17	1060-3
T170181	42	1060-3B
T170196	20	0350-19
T170269	3	3160-91
T171072	12	3160-35
T171082	2	1830-11
T171111	16	0350-9
T171112	6	0350-9
T171114	2	0350-7
T171115	7	0350-7
T171126	5	0350-7
T171126	5	0350-21
T171126	7	0350-21
T171126	5	0350-35
T171140	3	0350-25
T171153	5	0350-27
T171153	5	0350-29
T171153	11	0350-31
T171153	11	0350-33
T171153	4	0350-35
T171153	11	0350-37
T171156	2	0350-27
T171156	2	0350-29
T171156	8	0350-31
T171156	8	0350-33
T171156	6	0350-35
T171156	8	0350-37
T171178	3	0350-7
T171181	6	0350-21
T171206	10	0350-33
T171212	3	0350-35
T171213	10	0350-37
T171216	12	0350-37
T171217	4	0350-27
T171223	8	1322-5
T171224	4	0350-29
T171228	4	1322-5
T171228	5	1322-11
T171459	13	1830-3
T171459	12	1830-7
T17148	4	1810-49
T171552	9	3104-3
T171686	27	1821-3
T171734	33	3140-7
T171734	1	3140-9
T171734	17	3140-21
T171750	20	1322-7
T171751	20	1322-9
T171756	21	1322-7
T171757	21	1322-9
T171849	1	1810-43
T171957	27	0350-9
T171958	26	0350-9
T172094	22	0350-9
T172104	2	0350-31
T172115	3	0350-27
T172115	3	0350-29
T172115	9	0350-31
T172115	9	0350-33
T172115	2	0350-35
T172115	9	0350-37
T172118	1	0350-25
T172129	3	0350-31
T172130	4	0350-31
T172132	5	0350-31
T172136	2	0350-33
T172136	7	0350-35
T172136	6	0350-37
T172138	4	0350-33
T172138	9	0350-35
T172138	4	0350-37
T172139	5	0350-33
T172139	10	0350-35
T172139	2	0350-37
T172274	43	1060-3
T172274	31	1060-3B
T172275	11	0350-35
T172276	3	0350-37
T172302	6	0350-27
T172302	6	0350-29
T172318	18	0350-3
T172350	3	0350-21
T172562	8	3160-31
T172562	13	3160-35
T172562	16	3160-39
T172562	16	3160-47
T172562	16	3160-47B
T172579	3	3160-43
T172652	3	1810-27
T172712	7	3160-43
T172732	12	0350-3
T172767	28	1060-13
T172791	2	0350-15
T172795	8	0350-9
T172796	6	0350-7
T172812	10	0350-5
T172814	2	0350-13
T172815	2	0350-25
T172816	10	0350-31
T172817	7	0350-27
T172817	7	0350-29
T172856	23	1060-13
T172856	27	1060-15
T172927	5	0515-3
T172927	54	1060-3
T172927	73	1060-3B
T172933	21	1830-5
T172933	17	1830-9
T172934	22	1830-5

NUMERICAL INDEX - CONTINUED

PART NO.	KEY	PAGE
T172934	18	1830-9
T172985	8	3160-91
T172986	5	3160-91
T172987	9	3160-91
T172988	6	3160-91
T172991	4	1810-19
T172991	4	1810-21
T172992	5	1810-19
T172992	5	1810-21
T173036	7	0350-31
T173038	7	0350-33
T173063	7	0350-9
T173099	3	1810-53
T173100	2	1810-53
T173123	10	0350-17
T173125	14	0350-19
T173126	13	0350-19
T173128	18	0350-19
T173131	1	0350-19
T173138	3	0350-19
T173139	25	0350-19
T173145	1	0350-23
T173146	4	0350-23
T173216	19	0350-9
T173217	9	0350-11
T173230	28	1060-15
T173324	32	0930-3
T173324	40	0930-5
T173396	6	0350-12
T173397	4	0350-12
T173398	5	0350-12
T173399	3	0350-12
T173400	2	0350-12
T173511	29	0350-19
T173579	39	0930-3
T173579	47	0930-5
T173591	5	1330-3
T173593	26	1060-13
T173593	29	1060-15
T173744	5	3166-7
T173768	1	1830-11
T173779	6	1822-3
T173779	5	1822-5
T173779	12	1927-7
T173819	20	0350-3
T173819	4	0350-9
T173870	9	0350-17
T173873	7	0350-17
T174107	1	0350-9
T174109	23	1830-5
T174109	19	1830-9
T174234	5	0350-15
T174236	8	0350-11
T174238	15	0350-9
T174239	8	0350-12
T174275	8	0960-7
T174275	8	3160-53
T174275	4	3160-55
T174275	11	3160-57
T174275	9	3160-63
T174275	13	3160-69
T174275	4	3160-71
T174275	8	3163-5
T174275	7	3163-7
T174298	6	1322-5
T174298	7	1322-11
T174299	18	1322-9
T174300	18	1322-7
T174393	9	0350-17
T174394	9	0350-17
T174396	26	0350-19
T174407	7	0350-25
T174427	31	1830-3
T174529	11	0210-45
T174530	21	1671-3
T174634	2	0515-3
T174634	10	1060-3
T174634	59	1060-3B
T174735	9	1322-5
T174886	4	1810-33
T174887	5	1810-33
T175015	3	1810-33
T175135	21	1322-3
T175222	2	3104-4
T175223	3	3104-4
T175224	4	3104-4
T175225	5	3104-4
T175236	21	1060-3
T175361	9	1749-3
T175711	6	0350-25
T175744	9	1322-3
T175750	5	0350-11
T175855	3	1830-11
T175862	17	0350-19
T175863	24	3140-19
T176064	3	1740-3
T176064	13	1740-3B
T176064	12	3102-3
T176064	16	3104-3
T176064	15	3104-7
T176064	17	3104-9
T176064	13	3104-11
T176064	13	3104-13
T176064	6	3140-3
T176064	25	3140-3B
T176064	35	3140-7
T176064	28	3140-7B
T176064	3	3140-9
T176064	5	3140-17
T176064	10	3140-19
T176064	18	3140-21
T176064	16	3165-3
T176064	4	3165-11
T176064	19	3165-17
T176108	55	1060-3
T176108	74	1060-3B
T176111	56	1060-3
T176111	75	1060-3B
T176357	13	1927-7
T176357	22	1927-9
T176357	25	1927-9B
T176372	9	1673-3
T176455	3	0110-9
T176474	8	3160-55
T176474	25	3160-67
T176526	5	0350-23
T176527	3	0350-23
T176528	2	0350-23
T176796	4	0350-11
T176870	9	1822-3
T176870	8	1822-5
T176944	18	3160-3
T176944	23	3160-9
T176944	22	3160-15
T177219	15	0350-19
T177221	9	0350-19
T177256	9	1746-5
T177503	7	1822-3
T177503	7	1822-5
T177505	27	1810-3
T177827	19	1810-5
T177909	21	1910-5
T177979	4	0350-17
T177997	19	0350-3
T178063	3	1822-3
T178063	2	1822-5
T178063	10	1927-5
T178112	17	1810-3
T178113	16	1810-3
T178114	18	1810-3
T178115	24	1830-5
T178116	25	1830-5
T178117	26	1830-5
T178117	20	1830-9
T178117	40	1830-9
T178118	27	1830-5
T178118	21	1830-9
T178118	41	1830-9
T178119	28	1830-5
T178119	22	1830-9
T178120	29	1830-5
T178120	23	1830-9
T178123	30	1830-5
T178124	31	1830-5
T178125	32	1830-5
T178126	33	1830-5
T178127	43	1830-5
T178127	36	1830-9
T178130	49	1830-5
T178130	42	1830-9
T178131	50	1830-5
T178131	43	1830-9
T178132	51	1830-5
T178132	44	1830-9
T178133	52	1830-5
T178133	45	1830-9
T178134	53	1830-5
T178134	46	1830-9
T178135	54	1830-5
T178135	47	1830-9
T178136	55	1830-5
T178136	48	1830-9
T178220	20	1810-5
T178221	15	1810-5
T178248	24	1830-9
T178249	25	1830-9
T178250	26	1830-9
T178251	44	1830-5
T178251	27	1830-9
T178251	37	1830-9
T178252	54	1830-9
T178368	7	1927-3
T178368	14	1927-7
T178534	16	1810-5
T178946	3	1673-7
T178947	1	1673-7
T178948	2	1673-7
T178971	34	1830-5
T179276	13	0350-5
T179464	6	3140-9
T179468	20	1672-3

NUMERICAL INDEX - CONTINUED

PART NO.	KEY	PAGE
T179468	20	1672-7
T179469	5	0423-2
T179510	3	0350-11
T179531	21	0350-19
T179532	21	0350-19
T179533	21	0350-19
T179594	6	0350-31
T179669	6	0350-33
T179673	13	0350-9
T179691	23	0350-9
T179721	4	0350-19
T179944	4	0350-5
T180074	1	1673-7
T180075	3	1673-7
T180338	5	2001-7
T180338	5	2001-7B
T180338	17	2001-7D
T180408	14	1810-19
T180408	14	1810-21
T180418	9	1810-15
T180420	17	2001-7
T180420	17	2001-7B
T180420	18	2001-7D
T180459	6	0350-33
T180487	20	2001-7
T180487	20	2001-7B
T180529	7	0360-5
T180533	50	1674-7
T180533	10	1810-21
T180533	11	1810-55
T180573	4A	2001-7
T180884	14	0350-9
T180884	1	0350-17
T180921	11	1810-17
T180929	56	1830-5
T180929	49	1830-9
T180930	28	1810-3
T180944	12	1060-7B
T180944	1	3160-93
T180944	35	3160-93
T180944	38	3160-95
T181050	6	1810-15
T181201	27	2160-7
T181201	30	2160-7B
T181306	2	0510-12
T181306	1	3160-96
T181306	2	3160-96
T181306	3	3160-96
T181325	21	1672-7
T181412	2	1810-31
T181413	4	1810-31
T181474	3	0350-13
T181520	1	1810-15
T181524	61	1830-5
T181524	53	1830-9
T181535	4	0350-7
T181604	37	1674-7
T181604	46	1674-7B
T181605	38	1674-7
T181605	47	1674-7B
T181778	49	0510-5
T181778	47	0510-7
T181797	7	1810-47
T181908	1	1810-15
T181953	50	0510-5
T181953	48	0510-7
T182114	23A	2160-13
T182183	10	1322-5
T182191	10	1322-3
T182191	3	3140-25
T182192	1	1913-2
T182196	10	0350-19
T182254	5	0350-19
T182265	9	1740-3
T182265	14	1740-3B
T182265	20	3140-3
T182265	26	3140-3B
T182265	22	3140-5
T182265	26	3140-7
T182265	29	3140-7B
T182265	30	3140-7B
T182446	6	1740-3
T182446	15	1740-3B
T182462	21A	0510-7B
T182554	51	0510-5
T182554	49	0510-7
T182571	18	3140-3
T182571	27	3140-3B
T182571	20	3140-5
T182571	27	3140-7
T182612	18	1810-55
T182695	32	1810-5
T182758	9	1910-5
T182775	2	0210-45
T182795	12	1322-5
T182795	9	1322-11
T182852	32	1830-3
T182858	33	1830-3
T182858	25	1830-7
T182860	17	1810-19
T182860	2	1810-29
T182861	46	1674-7
T182861	10	1810-15
T182861	12	1810-15
T182862	47	1674-7
T182870	4	1674-11
T182870	10	1810-15
T182870	12	1810-15
T182870	29	1821-3
T182870	34	1830-3
T182870	7	2001-7
T182870	7	2001-7B
T182870	19	2001-7D
T182871	48	1674-7
T182871	12	1810-15
T182871	35	1830-3
T182871	18	2001-7
T182871	18	2001-7B
T182871	20	2001-7D
T182872	9	1830-11
T182874	5	1810-31
T182876	26	1830-7
T182877	27	1830-7
T182888	22	1810-21
T182888	10	2001-7
T182888	21	2001-7D
T182899	17	1810-5
T182899	22	1810-7
T182902	18	1810-5
T182903	1	1810-5
T182906	18	1810-19
T182906	36	1830-3
T182909	1	1810-29
T182909	12	2001-7
T182909	22	2001-7D
T182914	3	1673-5
T182919	6	1810-27
T182919	12	1810-29
T182920	4	1810-34
T182925	15	1810-17
T182927	2	1810-5
T182928	3	1810-5
T182952	13	1810-17
T182963	23	1810-7
T182967	24	1810-7
T182969	26	1810-7
T182972	27	1810-7
T184135	11	1810-5
T184892	11	1810-15
T184924	5	1830-17
T186776	11	1672-11
T186793	29	1810-3
T18891	26	0404-3
T190513	11	1830-15
T195052	21	0350-19
T195055	10	0350-17
T195188	18	1672-7
T195207	1	0350-7
T195210	9	3166-5
T195210	22	3166-9
T195210	21	3166-13
T195239	21	1672-3
T195240	5	0350-5
T195241	8	0350-5
T195242	6	0350-5
T195243	7	0350-5
T195244	22	1672-7
T195260	5	0350-31
T195270	6	0350-23
T195274	9	0350-17
T195275	24	0350-19
T195424	22	0510-7B
T195558	26	1322-7
T195559	26	1322-9
T195605	10	1740-3B
T195708	9	1913-5
T195710	15	1322-3
T195759	16	1322-7
T195760	16	1322-9
T195857	10	1322-7
T195858	10	1322-9
T195893	9	1672-11
T195982	11	1749-3
T196067	61	0510-5
T196067	50	0510-7
T196068	62	0510-5
T196068	51	0510-7
T196129	28	1674-7
T196237	4	1810-5
T196309	19	1810-3
T196312	58	2160-7
T196312	55	2160-7B
T196464	11	0360-3
T196471	6	1810-9
T196474	24	0505-5
T196475	24	1322-9
T196476	24	1322-7
T196587	14	0360-3
T196621	3	1810-11
T196622	20B	1810-55
T196698	3	1830-10

NUMERICAL INDEX - CONTINUED

PART NO.	KEY	PAGE
T196711	10	1810-13
T196712	11	1810-13
T196733	12	0560-3
T196749	8	1369-3
T196750	23	0505-5
T196792	16	0350-5
T197048	24	0510-9
T197048	30	0510-11
T197059	17	2160-3
T197061	17	0260-7
T197100	30	1910-7
T197128	1	0360-5
T197129	2	0360-5
T197144	16	3166-5
T197144	17	3166-9
T197144	22	3166-13
T197182	12	3160-81
T197182	20	3160-85
T197182	4	3160-87
T197182	23	3160-89
T197186	13	1322-5
T197186	8	1322-11
T197298	53	0510-5
T197298	52	0510-7
T197300	16	1322-3
T197323	3	1322-7
T197324	3	1322-9
T197427	54	0510-5
T197427	53	0510-7
T197440	12	1749-3
T197442	8	1822-7
T197455	33	1810-5
T197456	34	1810-5
T197458	10	0350-9
T197459	1	0350-15
T197460	4	0350-15
T197467	22	1671-3
T197520	22	1672-3
T197521	22	1672-3
T197553	8	0350-27
T197553	8	0350-29
T197569	11	1746-5
T197569	16	1746-5B
T197574	55	0510-5
T197574	54	0510-7
T197575	31	1910-7
T197667	10	1913-5
T197836	11	0210-43
T197836	19	0210-45
T197836	9	0210-49
T197853	6	0210-53
T198039	60	0510-5
T198039	55	0510-7
T198109	11	1910-3
T198178	16	1749-3
T198179	15	1749-3
T200010	13	1322-3
T200055	11	1322-3
T200056	11	1322-7
T200057	11	1322-9
T200058	18	1322-3
T200059	17	1322-7
T200060	17	1322-9
T200158	11	1821-7
T200159	12	1821-7
T200161	8	1821-7
T200254	19	3140-21
T200267	20A	1810-55
T200278	8	0520-3
T200280	9	0520-3
T200282	15	0520-3
T200284	16	0520-3
T200287	17	0520-3
T200363	31	1674-7
T200363	42	1674-7B
T200475	56	0510-5
T200475	56	0510-7
T200581	7	3140-21
T200712	5	1322-5
T200712	6	1322-11
T200729	11	3160-73
T200729	11	3160-77
T200758	16A	3104-7
T200786	15	1322-7
T200791	2	1322-7
T200814	15	1322-9
T200818	2	1322-9
T200820	4	1830-10
T200888	10	3140-3
T200888	28	3140-3B
T200888	8	3140-5
T200888	28	3140-7
T200888	31	3140-7B
T201074	12	1322-3
T201075	1	1322-9
T201076	1	1322-7
T201143	15	0360-3
T201521	8	2160-3
T201525	8	2160-3
T201546	18	0260-9
T201546	23	0510-7B
T201589	57	0510-5
T201589	57	0510-7
T20168	18	0404-3
T201708	30	1810-3
T201843	24	2160-13
T201869	11	0530-3
T201880	19	1910-7
T201887	22	3160-89
T202067	32	1910-7
T20217	10	1746-5
T202174	10	2160-3
T202343	4	1810-27
T202637	58	0510-5
T202637	58	0510-7
T202813	1	3166-9
T202883	21	1810-55
T202884	3	1322-5
T202957	52	0510-5
T202957	59	0510-7
T203047	11	1740-3B
T203128	22	1810-55
T203130	59	0510-5
T203130	60	0510-7
T20314	4	0402-3
T20316	3	0402-3
T203290	10	1749-3
T203450	3	0325-3
T203450	15	0325-5
T203452	12	3140-21
T203453	13	3140-21
T203554	2	0350-17
T203555	3	0350-17
T203614	31	1810-3
T203614	10	1810-17
T203615	32	1810-3
T203670	12	3160-81
T203670	20	3160-85
T203670	23	3160-89
T203671	4	1322-11
T203694	22	1322-3
T203742	6	0350-17
T203748	17	1322-3
T203767	23	0350-19
T203776	25	1369-3B
T203776	59	2160-7
T203776	56	2160-7B
T204109	13	1749-3
T204315	12	3160-117
T204315	12	3160-125
T204315	15	3163-3
T204624	20	1910-7
T204635	23	2001-7D
T204644	12	1927-9
T204644	26	1927-9B
T204701	17	1927-7
T204744	18	1927-7
T205033	46	2160-7
T205211	23	1322-3
T205219	4	3140-13
T205369	19	0350-19
T205471	8	1927-3
T205472	15	1810-19
T205483	8	3140-21
T205533	15	1927-7
T205534	16	1927-7
T205537	26	1927-9
T205537	27	1927-9B
T205542	31	1927-9
T205542	28	1927-9B
T205670	12	2160-11
T205718	25	1322-7
T205719	25	1322-9
T205941	7	3160-83
T205944	3	1672-11
T206024	27	1927-9
T206024	29	1927-9B
T206155	5	1913-7
T206157	6	1913-7
T206158	7	1913-7
T206159	8	1913-7
T206164	9	1913-7
T206301	10	1913-7
T206368	11	1913-7
T206578	20	3140-21
T206590	12	1913-7
T206596	13	1913-7
T206623	14	1913-7
T206624	40	1674-7
T206624	54	1674-7B
T206632	15	1913-7
T206633	16	1913-7
T206642	7	1927-11
T207650	23	1927-9
T207669	3	1830-11
T207717	28	1674-7
T207741	15	1322-3
T207750	16	1322-7
T207751	16	1322-9
T207759	9	0350-12
T207925	12	1810-55

NUMERICAL INDEX - CONTINUED

PART NO.	KEY	PAGE
T208039	7A	1910-3
T208039	36	1910-7
T208085	24	0505-5
T208086	24	1322-9
T208087	24	1322-7
T208097	24	0510-9
T208097	22	0510-9B
T208097	30	0510-11
T208097	27	0510-11B
T208317	7A	1910-3
T208317	12B	1910-3
T208352	7A	1910-3
T208352	24B	1910-7
T208362	24	1322-3
T208363	25	1322-3
T208364	14	1673-3
T208364	12	1673-3B
T208365	15	1673-3
T208365	13	1673-3B
T208374	28	1322-7
T208375	29	1322-7
T208376	28	1322-9
T208377	29	1322-9
T208695	30	1322-3
T208791	26	0242-3B
T208794	30	1322-7
T208795	30	1322-9
T208891	11	1672-11
T209094	13	1810-19
T209423	16A	3104-7
T209423	18A	3104-9
T209601	11	1821-7
T209602	12	1821-7
T210258	15	3166-11
T210379	17	1913-7
T210380	18	1913-7
T210387	19	1913-7
T210393	20	1913-7
T210398	21	1913-7
T210399	22	1913-7
T210400	23	1913-7
T210424	24	1913-7
T210425	25	1913-7
T210426	28	1913-7
T210447	12	3140-9
T210447	13	3160-63
T210470	14	1369-3B
T210479	21	3160-5
T210479	21	3160-11
T210479	21	3160-17
T210777	8	0520-3
T210796	6	3140-9
T211353	2	1810-53
T211390	21	3140-21
T211396	17	3166-11
T211404	18	3166-11
T211405	19	3166-11
T211557	6	0110-5
T211608	17	0242-3B
T211662	27	0242-3B
T211678	52	1674-7
T211678	55	1674-7B
T211836	22	3140-21
T211839	5	3140-13
T211839	9	3140-21
T212452	4	0110-3
T212452	7	0110-5
T212452	6	0110-7
T212453	3	0110-3
T212453	7	0110-7
T212855	14	0242-3B
T213143	14	3102-3
T213143	7	3102-5
T213441	23	3104-7
T213441	22	3104-9
T213442	16B	3104-7
T213442	18B	3104-9
T213444	31	1810-7
T213505	34	0260-9B
T213549	32	1060-15
T213560	32	1810-7
T214141	22	3104-7
T214141	21	3104-9
T214207	14	3104-11
T214207	14	3104-13
T214396	13	1060-11B
T214468	57	0260-9B
T214661	26	1369-3B
T214838	18	1060-7B
T214839	19	1060-7B
T215155	6	1322-5
T215155	7	1322-11
T215197	35	0260-9B
T215208	10	1322-5
T215423	58	0260-9B
T215434	8	3160-63
T215611	4	1520-3B
T216182	8	1369-3
T216182	27	1369-3B
T217100	16	3163-3
T217198	30	1913-7
T217412	26	1322-3
T217427	8	1822-7
T217474	16	3163-3
T217507	29	1913-7
T217625	2	3102-7
T218566	3	1322-3
T218567	8	1322-9
T218568	8	1322-7
T219314	1	0210-35
T219319	14	0210-35
T219319	13	0210-37
T219322	1	0210-39
T219322	1	0210-41
T219323	2	0210-39
T219323	2	0210-41
T219325	3	0210-39
T219325	3	0210-41
T219330	4	0210-39
T219330	4	0210-41
T219333	5	0210-39
T219333	5	0210-41
T219334	6	0210-39
T219334	6	0210-41
T219340	7	0210-39
T219340	7	0210-41
T219343	8	0210-39
T219343	8	0210-41
T219344	9	0210-39
T219344	9	0210-41
T219345	11	0210-39
T219346	12	0210-39
T219358	12	0210-39
T219360	12	0210-39
T219363	14	0210-39
T219364	17	0210-39
T219365	18	0210-39
T219366	19	0210-39
T219367	23	0210-39
T219371	26	0210-39
T219373	27	0210-39
T219378	1	0210-43
T219379	2	0210-43
T219379	2	0210-49
T219380	3	0210-43
T219380	3	0210-49
T219381	3	0210-43
T219381	3	0210-49
T219382	3	0210-43
T219382	3	0210-49
T219383	3	0210-43
T219383	3	0210-49
T219432	1	0210-45
T219438	7	0210-45
T219442	12	0210-45
T219443	13	0210-45
T219444	14	0210-45
T219445	17	0210-45
T219446	1	0210-47
T219447	2	0210-47
T219449	7	0210-47
T219452	11	0210-47
T219453	12	0210-47
T219462	13	0210-47
T219463	14	0210-47
T219464	15	0210-47
T219465	1	0210-49
T219467	11	0210-41
T219471	8	0210-43
T219471	6	0210-49
T219472	1	0210-51
T219472	1	0210-53
T219473	2	0210-51
T219473	2	0210-53
T219672	2	0520-3
T221130	30	1927-9B
T221186	31	1927-9B
T222510	59	0260-9B
T222891	8	0210-45
T222893	9	0210-45
T222983	4	0210-47
T223049	1	0210-37
T223372	8	0520-3
T223487	..	3163-3
T223717	32	1927-9B
T223785	5	0242-5B
T22381	5	1927-3
T22381	19	1927-7
T22381	14	1927-9
T22381	33	1927-9B
T224069	56	1674-7B
T224369	5	1520-3B
T224462	34	1927-9B
T224498	35	1927-9B
T224529	36	1927-9B
T225025	12	1322-3
T225026	1	1322-7
T225027	1	1322-9
T225291	6	2160-11
T225397	26	1322-3
T225467	32	1060-15

NUMERICAL INDEX - CONTINUED

PART NO.	KEY	PAGE
T225868	13	2160-9B
T226561	69	0510-5
T226561	34	0510-5B
T226802	25	1060-15
T227405	10	3104-7
T227405	11	3104-9
T227409	10	3104-7
T227409	11	3104-9
T228104	24	1810-7
T228106	21	1810-7
T229977	19	1810-7
T230639	19	1810-5
T230640	16	1810-5
T23474	19	0404-3
T23914	5	1520-3
T23914	12	1520-3B
T24210	11	0350-3
T25CA	2	3102-9
T25EA	6	3102-9
T27193	3	0110-3
T27194	4	0110-3
T27260	63	0510-5
T27260	61	0510-7
T27260	33	1910-7
T27532	3	0110-3
T29342	13	1674-3
T29342	21	1674-3B
T29342	14	1674-3D
T29342	20	1674-5
T29384	28	1369-3B
T29747	11	0360-5
T29747	44	0510-5
T29747	62	0510-7
T3G9609	3	3102-9
T33309	29	1369-3B
T34354	1	0210-15
T34355	1	0210-15
T34355	1	0210-17
T34356	1	0210-15
T34356	1	0210-17
T34534	1	0210-17
T38282	3	1060-3
T38485	22	3165-9
T39049	13	1810-49
T39155	47	2160-7
T39155	46	2160-7B
T39741	2	0210-23
T41356	9	3165-13
T42170	11	0505-3
T42199	16	1671-3
T42977	1	0342-3
T42977	11	0342-3B
T44604	8	0210-7
T44604	17	0210-9
T44604	16	0210-11
T44604	27	0210-13
T46876	49	1674-7
T46876	57	1674-7B
T46876	9	1674-8
T46876	9	1674-9
T54188	23	3140-21
T54474	17	3104-7
T54474	12	3104-13
T55224	16	1821-5
T56112	5	0242-3
T56112	28	0242-3B
T56112	4	0960-9
T56112	6	3165-3
T56238	4	0260-15
T58056	26	1910-7
T58056	25	1927-9
T58056	38	1927-9B
T58477	6	0409-3
T59933	2	0110-3
T59933	8	0110-5
T59933	8	0110-7
T59937	20	1830-5
T59937	16	1830-9
T60752	19	3140-3
T60752	29	3140-3B
T60752	21	3140-5
T60752	29	3140-7
T60752	32	3140-7B
T60811	6	1369-3
T60811	12	1369-3B
T60811	8	1746-3
T61226	10	3104-7
T61226	21	3104-7
T61226	11	3104-9
T61226	20	3104-9
T61226	16	3104-11
T61226	2	3104-13
T61861	22	1910-5
T63224	22	1322-7
T63225	22	1322-9
T63795	13	3102-3
T63795	1	3104-3
T63795	18	3104-7
T63795	16	3104-9
T63795	15	3104-11
T63795	15	3104-13
T64217	23	1322-9
T64688	30	1369-3B
T64784	31	1830-13
T65643	12	1810-15
T66418	5	1810-13
T66419	39	0510-5
T66862	2	0110-9
T67995	14	1674-3
T67995	22	1674-3B
T67995	16	1674-3D
T67995	21	1674-5
T70154	10	1673-9
T72414	12	1740-3
T72414	12	1740-3B
T72414	36	3140-7
T72414	13	3140-9
T72414	10	3140-11
T74412	23	1674-3B
T74412	22	1674-5
T74416	64	0510-5
T74416	63	0510-7
T74416	15	1674-3
T74416	24	1674-3B
T74416	12	1674-3D
T74416	23	1674-5
T74416	39	1674-7
T74416	58	1674-7B
T74416	29	1830-13
T74552	11	0350-17
T75197	33	0560-3
T75197	8	1673-9
T75197	16	1674-3
T75197	25	1674-3B
T75197	17	1674-3D
T75197	24	1674-5
T75276	16	0505-5
T75276	34	0560-3
T75276	8	1674-3
T75276	15	1674-3B
T75276	18	1674-3D
T75276	25	1674-5
T76252	11	1060-11
T76252	14	1060-11B
T76252	27	1674-3B
T76252	29	1830-13
T76252	12	1830-15
T76938	8	0350-3
T76938	9	0360-5
T76938	20	2160-3
T76938	9	2160-7
T76938	12	2160-7B
T76938	25	2160-13
T76938	20	2160-15
T76938	20	3160-3
T76938	17	3160-5
T76938	18	3160-7
T76938	1	3160-9
T76938	18	3160-11
T76938	18	3160-13
T76938	7	3160-15
T76938	18	3160-17
T76938	18	3160-19
T76938	9	3165-3
T76938	11	3165-11
T76938	9	3165-17
T77613	5	0260-3
T77613	2	0260-3B
T77613	5	0260-3B
T77613	4	0260-5
T77613	3	0260-5B
T77613	7	0260-7
T77613	7	0260-9
T77613	13	0260-9B
T77613	40	0260-9B
T77613	11	0260-11
T77613	3	0260-17
T77613	1	0350-3
T77613	10	0416-3
T77613	12	0510-9
T77613	12	0510-9B
T77613	7	0510-11
T77613	10	0510-11
T77613	21	0510-11B
T77613	35	0560-3
T77613	16	0930-3
T77613	22	0930-5
T77613	9	0960-3
T77613	7	0960-3B
T77613	11	0960-9
T77613	57	1060-3
T77613	7	1060-3B
T77613	12	1060-5
T77613	4	1060-5B
T77613	2	1060-7
T77613	4	1060-7B
T77613	12	1060-11
T77613	29	1060-13
T77613	33	1060-15
T77613	5	1369-3B
T77613	7	2160-3

NUMERICAL INDEX - CONTINUED

PART NO.	KEY	PAGE
T77613	60	2160-7
T77613	19	2160-7B
T77613	5	2160-9
T77613	5	2160-9B
T77613	2	2160-15
T77613	15	2160-15
T77613	3	3104-3
T77613	6	3104-7
T77613	7	3104-9
T77613	15	3160-3
T77613	6	3160-5
T77613	19	3160-7
T77613	11	3160-9
T77613	6	3160-11
T77613	19	3160-13
T77613	6	3160-15
T77613	6	3160-17
T77613	19	3160-19
T77613	14	3160-29
T77613	4	3160-73
T77613	9	3160-73
T77613	4	3160-77
T77613	8	3160-77
T77613	5	3160-81
T77613	5	3160-85
T77613	5	3160-89
T77613	24	3160-95
T77613	5	3160-105
T77613	6	3160-109
T77613	4	3160-111
T77613	23	3160-113
T77613	8	3160-115
T77613	4	3160-117
T77613	16	3160-123
T77613	4	3160-125
T77613	6	3163-3
T77814	13	3160-39
T77814	40	3160-47
T77814	40	3160-47B
T77814	12	3160-93
T77814	10	3160-95
T77857	10	0260-7
T77857	22	0260-9
T77857	16	0260-9B
T77857	40	0260-9B
T77857	12	0260-11
T77857	6	0510-9
T77857	6	0510-9B
T77857	12	0510-11
T77857	31	0510-11
T77857	7	0930-3
T77857	10	0930-5
T77857	48	0930-5
T77857	1	0960-3
T77857	12	0960-9
T77857	4	1060-3B
T77857	7	1060-11B
T77857	14	2160-7
T77857	14	2160-7B
T77857	3	2160-13
T77857	8	3104-7
T77857	9	3104-9
T77857	31	3160-93
T77857	12	3160-95
T77857	6	3160-111
T77857	24	3160-113
T77857	12	3160-115
T77857	17	3160-123
T77858	8	0510-9
T77858	8	0510-9B
T77858	16	0510-11
T77858	15	0510-11B
T77858	10	0930-3
T77858	6	0930-5
T77858	14	0930-5
T77858	2	0960-3
T77858	4	0960-3B
T77858	6	0960-7
T77858	9	1060-5
T77858	11	2160-3
T77858	11	2160-7
T77858	8	2160-7B
T77858	16	3160-3
T77858	11	3160-5
T77858	20	3160-7
T77858	3	3160-9
T77858	11	3160-11
T77858	20	3160-13
T77858	1	3160-15
T77858	11	3160-17
T77858	20	3160-19
T77858	15	3160-29
T77858	2	3160-49
T77858	24	3160-51
T77858	3	3160-53
T77858	2	3160-55
T77858	4	3160-57
T77858	23	3160-61
T77858	4	3160-63
T77858	16	3160-67
T77858	11	3160-69
T77858	2	3160-71
T77858	23	3160-93
T77858	6	3160-95
T77858	6	3163-5
T77858	9	3163-5
T77858	5	3163-7
T77858	8	3163-7
T77858	5	3165-3
T77858	16	3165-11
T77858	3	3165-17
T77932	13	0350-3
T77932	7	0510-11B
T77932	10	0510-11B
T77932	25	0930-5
T77932	12	1060-5B
T77932	15	1369-3B
T77932	16	2160-7B
T77932	22	3160-49
T77932	25	3160-51
T77932	24	3160-61
T77932	9	3160-67
T77932	25	3160-93
T77932	15	3160-95
T77932	11	3165-3
T77932	8	3165-11
T77932	19	3165-11
T77932	7	3165-17
T78593	7	0505-3
T78612	8	3160-5
T78612	21	3160-7
T78612	8	3160-11
T78612	21	3160-13
T78612	8	3160-17
T78612	21	3160-19
T78707	7	0960-7
T78707	9	3160-53
T78707	3	3160-55
T78707	12	3160-57
T78707	10	3160-63
T78707	14	3160-69
T78707	3	3160-71
T78707	10	3163-5
T78707	9	3163-7
T78715	31	1369-3B
T78787	25	0505-5
T78974	4	0210-31
T78974	4	0210-33
T78974	34	1060-15
T78974	30	1830-13
T79471	23	1671-3
T79477	22	0560-3
T81029	60	0260-9B
T81029	5	3104-3
T81029	12	3160-73
T81029	12	3160-77
T81029	13	3160-81
T81029	21	3160-85
T81029	24	3160-89
T81029	13	3160-117
T81029	13	3160-125
T81403	48	2160-7
T81403	47	2160-7B
T825110	3	3102-13
T825115	4	3102-13
T825116	5	3102-13
T82791	7	1810-9
T82791	4	1810-11
T82791	23	1810-55
T82792	8	1810-9
T82792	5	1810-11
T82792	24	1810-55
T82861	4	3166-5
T82861	6	3166-9
T82861	12	3166-13
T9J2258	5	3102-9
U10289	3	0210-3
U12167	27	1060-13
U12167	30	1060-15
U12547	28	0260-9
U12547	13	0260-11
U12547	65	0510-5
U12547	64	0510-7
U12547	9	0510-9
U12547	9	0510-9B
U12547	18	0510-11
U12547	18	0510-11B
U12547	11	0930-3
U12547	7	0930-5
U12547	14	1060-5
U12547	13	1060-5B
U12547	30	1060-13
U12547	35	1060-15
U12547	32	1369-3B
U12547	18	2160-3
U12547	12	2160-7
U12547	9	2160-7B
U12547	2	3160-3
U12547	12	3160-5
U12547	22	3160-7
U12547	24	3160-9

NUMERICAL INDEX - CONTINUED

PART NO.	KEY	PAGE
U12547	12	3160-11
U12547	22	3160-13
U12547	4	3160-15
U12547	12	3160-17
U12547	22	3160-19
U12547	4	3160-21
U12547	8	3160-21
U12547	17	3160-29
U12547	4	3160-35
U12547	9	3160-35
U12547	6	3160-37
U12547	20	3160-47
U12547	33	3160-47
U12547	20	3160-47B
U12547	33	3160-47B
U12547	14	3160-93
U12547	7	3160-95
U12547	3	3165-3
U12547	9	3165-11
U12547	17	3165-11
U12547	4	3165-17
U13461	9	3104-15
U13461	12	3104-17
U13461	12	3104-19
U13639	23	0404-3
U13639	6	0505-6
U13639	9	3160-5
U13639	9	3160-11
U13639	9	3160-17
U40962	22	3160-47
U40962	22	3160-47B
U43360	7	3165-15
U44537	10	1673-3
U44537	14	1673-3B
U46753	17	3160-63
U46753	11	3163-5
U46753	10	3163-7
W29909	9	1822-7
X831-12	44	2160-7B
X831-12	12	2160-15
X831-12	21	2160-15
YZ120452	2	0210-19
YZ120452	2	0210-21
YZ120482	1	0210-19
YZ120482	1	0210-21
YZ120909	5	0210-23
YZ120909	13	0210-23
YZ121201	2	0210-19
YZ121201	2	0210-21
Z59685	19	1830-3
Z77164	9	0210-35
Z77164	10	0210-37
Z77164	5	0210-43
400R	12	0210-7
400R	9	0210-9
405R	12	0210-7
405R	9	0210-9

PART NO.	KEY	PAGE

PART NO.	KEY	PAGE