RUTHZIL TRATOR COMERCIAL DE PEÇAS LTDA 11 97083-6812 ROLANDO

PARTS CATALOG

SKID STEER
COMPACT TRACK LOADER

450
450CT
SERIES 3

APPLICABLE
450. . . .N7M458415
450CT. . . .N7M464019



BD07N493

TABLE OF CONTENTS

General Information
Section 2 – Engine
Section 3 – Fuel System
Section 4 – Electrical System
Section 6 – Power train
Section 7 – Brakes
Section 8 – Hydraulics
Section 9 – Chassis/Attachments
Index

Bur • Issued 01Jan08
Printed in U.S.A. • Book/Form Number 87632294 NA
Copyright © 2007. CNH America, LLC. All Rights Reserved.

CNH America, LLC reserves the right to make improvements in design or changes in specifications at any time without incurring any obligation to install them on units previously sold.

All data given in this publication is subject to production variations. Dimensions and weights are only approximate. Illustrations do not necessarily show products in standard condition. For exact information about any particular product, please consult your Dealer

This unit first became available 01-2008			
REVISION HISTORY			
Issue	Issue Date	Applicable Machines	Remarks
First Edition	01Jan 08	450, 450CT Tier 3 Skid Steer/Compact Track Loader	87632294 NA

Any use of editorial or pictorial content is strictly prohibited without express written permission from
CNH America, LLC. Racine, WI 53403 U.S.A..

TABLE OF CONTENTS

02-01	FAN, RADIATOR/OIL COOLER - COOLANT RECOVERY SYSTEM
02-02	RADIATOR/OIL COOLER
02-03	EXHAUST SYSTEM
02-04	ENGINE - AIR CLEANER
02-05	ENGINE - OIL FILL AND DIPSTICK
02-06	ENGINE - MOUNTING
02-07	REMOTE OIL DRAIN
02-08	ENGINE - BLOCK HEATER
02-09	CYLINDER BLOCK
02-10	CYLINDER BLOCK - COVERS, REAR GEAR
02-11	CYLINDER BLOCK - COVERS, FLYWHEEL
02-12	CYLINDER BLOCK - COVERS, FRONT
02-13	GEAR COVER - PLATE
02-14	CYLINDER HEAD COVERS
02-15	CYLINDER BLOCK STIFFENER PLATE
02-16	CYLINDER HEAD
02-17	OIL PUMP, PAN
02-18	ENGINE, OIL
02-19	OIL FILTER AND COOLER
02-20	OIL FILTERS - ENGINE
02-21	OIL PUMP - ENGINE
02-23	MOTOR SENSORS - ENGINE OIL
02-24	BREATHER - ENGINE
02-25	MANIFOLD - INTAKE
02-26	MANIFOLD - EXHAUST
02-27	PISTONS - CONNECTING ROD
02-28	CONNECTING ROD
02-29	ROCKER SHAFT
02-30	FLYWHEEL - ENGINE
02-31	PULLEY - CRANKSHAFT
02-32	CAMSHAFT
02-33	CRANKSHAFT
02-34	COOLING SYSTEM - ENGINE
02-35	WATER PUMP
02-36	WATER PUMP - CONTROL
02-37	THERMOSTAT - ENGINE COOLING SYSTEM
02-38	FAN DRIVE
02-39	ENGINE - LIFT HOOK
02-40	TURBOCHARGER
03-01	FUEL LINES AND FILTER
03-02	CONTROLS - THROTTLE
03-03	FUEL FILTER
03-04	FUEL INJECTION PUMP
03-05	FUEL PUMP
03-06	INJECTION PUMP - CONTROL
03-07	FUEL INJECTION SYSTEM - FUEL, SUPPLY
03-08	FUEL INJECTION SYSTEM - SUPPLY
03-09	FUEL INJECTION SYSTEM - DRAIN LINE
03-10	INJECTION EQUIPMENT - INJECTOR
04-01	ELECTRICAL - STARTER AND ALTERNATOR
04-02	ALTERNATOR MOUNTING

TABLE OF CONTENTS

04-03	ELECTRICAL - ENGINE
04-04	BATTERY - CABLES
04-05	ELECTRICAL - CHASSIS HARNESS
04-06	ELECTRICAL - CHASSIS HARNESS
04-07	LAMP ASSY
04-08	CAB ELECTRICAL - RIGHT HAND CONSOLE
04-09	CAB ELECTRICAL - LEFT HAND CONSOLE
04-10	CAB ELECTRICAL - CAB HARNESS
04-11	WORK LIGHTS - RH
04-12	WORK LIGHTS - LH
04-13	CONTROL HANDLE, RH - BASIC
04-14	CONTROL HANDLE, LH - BASIC
04-15	CONTROL HANDLE, RH - DELUXE W/O AUX ELECTRIC
04-16	CONTROL HANDLE, LH - DELUXE W/O AUX ELECTRIC
04-17	CONTROL HANDLE, RH - DELUXE
04-18	CONTROL HANDLE, LH - DELUXE
04-19	DISCONNECT SWITCH - REMOTE JUMP START
04-20	HORN - MOUNTING
04-21	BACKUP ALARM
04-22	ELECTRICAL ACCESSORY SOCKET
04-23	ELECTRICAL - FRONT AUXILIARY
04-24	ELECTRICAL - ROAD LIGHTS (NA)
04-25	HEADLAMP - LH
04-26	HEADLAMP - RH
04-27	REAR LIGHT AND MOUNTING
04-28	ROTATING BEACON
04-32	STROBE LIGHT
06-01	JOYSTICK CONTROL PLUMBING, H PATTERN (PILOT CONTROL)
06-02	JOYSTICK CONTROL PLUMBING - ISO PATTERN (PILOT CONTROL)
06-03	JOYSTICK VALVE KITS - H PATTERN, LH (WITH PILOT CONTROL)
06-04	JOYSTICK VALVE KITS - H PATTERN, RH (WITH PILOT CONTROL)
06-05	JOYSTICK VALVE KITS - ISO PATTERN, LH
06-06	JOYSTICK VALVE KITS - ISO PATTERN, RH
06-07	JOYSTICK VALVE KITS - ISO PATTERN, LH
06-08	HYDROSTATICS - DRIVE MOTORS (450CT)
06-09	HYDROSTATICS - MULTI VALVE PLUMBING (450CT)
06-10	HYDROSTATICS - PUMP TO DRIVE MOTORS (450CT)
06-11	HYDROSTATICS - PUMP FITTINGS (450CT)
06-12	HYDROSTATICS - SUPPLY AND RETURN (450CT)
06-13	HYDROSTATICS - PUMP TO DRIVE MOTORS (450)
06-14	HYDROSTATICS - SUPPLY AND RETURN (450)
06-15	HYDROSTATICS - PUMP FITTINGS (450)
06-16	HYDROSTATICS - SUPPLY AND RETURN (450 WITH PILOT CONTROL)
06-17	HYDROSTATICS - PUMP TO DRIVE MOTORS (450 WITH PILOT CONTROL)
06-18	HYDROSTATICS - RESONATOR
06-19	HYDROSTATICS - TWO SPEED, VALVE ASSY (450CT WITH PILOT CONTROL)
06-20	PUMP, GEAR (WITHOUT HIGH FLOW)
06-21	GEAR PUMP (WITH HIGH FLOW)
06-22	PUMP, TANDEM - REXROTH A22 (87546977)
06-23	PUMP, TANDEM - PRESSURE RELIEF VALVE (87546977)
06-24	PUMP, TANDEM - PRESSURE RELIEF VALVE (87546977)

TABLE OF CONTENTS

06-25	PUMP, TANDEM - INTERNAL GEAR PUMP (87546977)
06-26	PUMP, TANDEM - ROTARY GROUP, RIGHT HAND ROTATION (87546977)
06-27	PUMP, TANDEM - ROTARY GROUP, LEFT HAND ROTATION (87546977)
06-28	PUMP, TANDEM - CONTROL, HYDRAULIC (87546977)
06-29	PUMP, TANDEM - CONTROL CARTRIDGE WITH ORIFICE (87546977)
06-30	PUMP, TANDEM (87350025)
06-31	PUMP, TANDEM (87350025)
06-32	PUMP, TANDEM (87350025)
06-33	PUMP, TANDEM (87350025)
06-34	PUMP, TANDEM (87350025)
06-35	PUMP, TANDEM (87350025)
06-36	MOTOR ASSY - HYDROSTATIC DRIVE (450CT)
06-37	MOTOR ASSY - TWO SPEED (450)
06-38	MOTOR ASSY - TWO SPEED (450)
06-39	MOTOR ASSY - TWO SPEED (450)
06-40	FINAL DRIVE (450CT)
06-41	DRIVE LINE
06-42	AXLE ASSY
06-43	WHEELS
06-44	WHEELS - SOLID FLEX
06-45	TRACK (450CT)
07-01	BRAKE SYSTEM - HYDRAULIC
07-02	TWO SPEED, VALVE ASSY
08-01	HYDRAULICS - LOADER LIFT
08-02	HYDRAULICS - LOADER BUCKET
08-03	HYDRAULICS - AUXILIARY (PROPORTIONAL) MECHANICAL CONTROL
08-04	HYDRAULICS - AUXILIARY (PROPORTIONAL) PILOT CONTROL
08-05	HYDRAULICS - AUXILIARY SYSTEM
08-06	HYDRAULICS - AUXILIARY (WITH HIGH FLOW)
08-07	HYDRAULICS - SECONDARY FRONT AUXILIARY
08-08	HYDRAULICS - CASE DRAIN
08-09	HYDRAULICS - RIDE CONTROL
08-10	HYDRAULICS - COUPLER SYSTEM
08-11	CYLINDER - LOADER BUCKET
08-12	CYLINDER - LOADER LIFT
08-13	HIGH FLOW
08-14	CONTROL VALVE ASSEMBLY - HIGH FLOW
08-15	CONTROL VALVE - 87546975 VALVE ASSY
08-16	CONTROL VALVE - 87583286 VALVE ASSY
08-17	CONTROL VALVE - 87583285 VALVE ASSY
08-18	CONTROL VALVE - 87546974 VALVE ASSY
08-19	CONTROL VALVE - SEAL REPLACEMENT KITS
08-20	CONTROL VALVE - SEAL REPLACEMENT KITS
08-21	CONTROL VALVE - MAIN RELIEF VALVE
08-22	CONTROL VALVE - RELIEF VALVES
08-23	CONTROL VALVE - SPOOL END GROUP
08-24	CONTROL VALVE - CHECK VALVE GROUP
08-25	CONTROL VALVE - SPOOL END GROUP
08-26	CONTROL VALVE - SPOOL END GROUP
08-27	CONTROL VALVE - SPOOL END GROUP
08-28	CONTROL VALVE - SPOOL END GROUP

TABLE OF CONTENTS

08-29	CONTROL VALVE - SPOOL END GROUP
08-30	CONTROL VALVE - SPOOL END GROUP
08-31	CONTROL VALVE - SPOOL END GROUP, DETENT
08-32	CONTROL VALVE - SPOOL END GROUP
08-33	CONTROL VALVE - SPOOL END GROUP, EHPV
08-34	CONTROL VALVE - SPOOL END GROUP, EHPV
08-35	SECONDARY FRONT AUXILIARY - VALVE ASSY
09-01	FRAME - LOADER LIFT
09-02	FRAME, FRONT - LOADER LINKAGE
09-03	FRAME, REAR - LOADER LINKAGE
09-04	COUPLER, MECHANICAL
09-05	COUPLER, HYDRAULIC
09-06	BUCKETS, LOADER - 1860 MM (73 IN) WIDE BUCKET
09-07	BUCKETS, LOADER - 2083 MM (82 IN) WIDE BUCKET
09-08	BUCKETS, LOADER - 2134 MM (84 IN) WIDE BUCKET
09-09	PALLET FORK
09-10	CHASSIS (450)
09-11	CHASSIS (450)
09-12	CHASSIS (450CT)
09-13	CHASSIS (450CT)
09-14	CONTROL CONSOLE - LH
09-15	CONTROL CONSOLE - RH
09-16	LOADER AND GROUND DRIVE CONTROL - RH
09-17	LOADER AND GROUND DRIVE CONTROL - LH
09-18	LOADER AND GROUND DRIVE - LINKAGE
09-19	CONTROLLER - MOUNTING (PILOT CONTROL)
09-20	CONTROLS - AUXILIARY HYDRAULICS
09-21	REAR DOOR
09-22	HOOD
09-23	CAB - SEAT FRAME AND SEAT BAR
09-24	CAB DOOR - MOUNTING (HL)
09-25	CAB DOOR - WASHER SYSTEM (HL)
09-26	CAB DOOR (HL)
09-27	CAB DOOR - VISOR (HL)
09-28	CAB DOOR - WIPER MOUNTING (HL)
09-29	CAB DOOR - HANDLE
09-30	DEMOLITION DOOR - MOUNTING
09-31	DEMOLITION DOOR
09-32	COUNTERWEIGHTS AND DRAWBAR
09-33	HEAT SHIELD
09-34	SEAT MOUNTING - STANDARD SEAT
09-35	SEAT MOUNTING - SUSPENSION SEAT
09-36	SEAT MOUNTING - DELUXE SUSPENSION SEAT
09-37	SEAT BELT, LAP BELT
09-38	SHOULDER BELT
09-39	SEAT BELT, LAP BELT (3 IN)
09-40	SEAT BAR
09-41	REAR VIEW MIRROR
09-42	RADIO - SPEAKERS AND ANTENNA
09-43	RADIO - SPEAKERS AND HOUSING
09-44	FLOOR MAT

TABLE OF CONTENTS

09-45	INTERIOR TRIM
09-46	TOP WINDOW
09-47	REAR WINDOW
09-48	REAR WINDOW - HEAT AND AIR CONDITIONING
09-49	WINDOWS, SIDE
09-50	HEATER SYSTEM
09-51	HEATER SYSTEM
09-52	AIR CONDITIONING SYSTEM
09-53	AIR CONDITIONING SYSTEM
09-54	HEATER ASSEMBLY
09-55	HEATER AND AIR CONDITIONING ASSEMBLY
09-56	HEADLINER - STANDARD
09-57	HEADLINER - HEATER AND AIR CONDITIONING
09-58	REAR BUMPER
09-59	NOISE CONTROL (NA)
09-60	LIFT HOOK
09-61	LIFT HOOKS - SINGLE POINT
09-62	DECALS
09-63	DECALS
09-64	DECALS - ENGLISH
09-65	DECALS - BRAZILIAN PORTUGUESE, FRENCH CANADIAN, LATIN AMERICAN SPANISH

NOTES

GENERAL INFORMATION

PROPRIETARY NOTICE

The contents of this manual are proprietary data of this company. Reproduction or use of any part for other than the operation and maintenance of our equipment is permissible only if expressly authorized in writing.

Additional copies may be obtained from your dealer. Address requests for copies to your Dealer and refer to the publication part number appearing on the bottom of the rear catalog cover or on the title page.

COMPANY POLICY

Company policy, which is one of continuous improvement, reserves the right to change prices and to make changes in design and specification at any time without notice and without obligation to modify units previously built.

All data given in this book is subject to production variations. Dimensions and weights are approximate only and the illustrations do not necessarily show machines in standard condition. For exact information about any particular machine please consult your dealer.

PARTS AND ACCESSORIES

Genuine parts and accessories have been specifically designed for these machines.

We would like to point out that “non-genuine” parts and accessories have NOT been examined and released by the Company. The installation and or use of such products could have negative effects upon the design characteristics of your machine and thereby affect its safety. The company is not liable for any damage caused by the use of “non-genuine” parts and accessories.

IMPROVEMENTS

We are continually striving to improve our products. We reserve the right to make improvements or changes when it becomes practical and possible to do so, without incurring any obligation to make changes or additions to the equipment sold previously.

MODEL CODES

The range of machines listed may not be available in all countries or markets therefore, for the latest information consult your local dealer.

OWNER ASSISTANCE

We want you to be completely satisfied with your investment. Normally any problems with your equipment will be handled by your dealer's Service Department; however, misunderstandings can occur. If your problem has not been handled to your satisfaction, we suggest the following:

1. Contact the owner or General Manager of the dealership, explain the problem, and request assistance. When additional assistance is needed, your dealer has direct access to our office.
2. Provide your dealer with:
   - Your Name, Address, and Telephone number
   - Machine Model and Serial Number
   - Dealership Name and Address
   - Machine purchase date and amount of use
   - Nature of problem

Be aware that your problem will likely be resolved in the dealership using the dealer's facilities, equipment, and personnel. So it is important that your initial contact be with the dealer.

SPARE PARTS

To maintain operating efficiency, use original spare parts.

When ordering parts, give the following information:

- Machine Model
- Machine and Engine Serial Numbers
- Part Number from the Parts Catalog

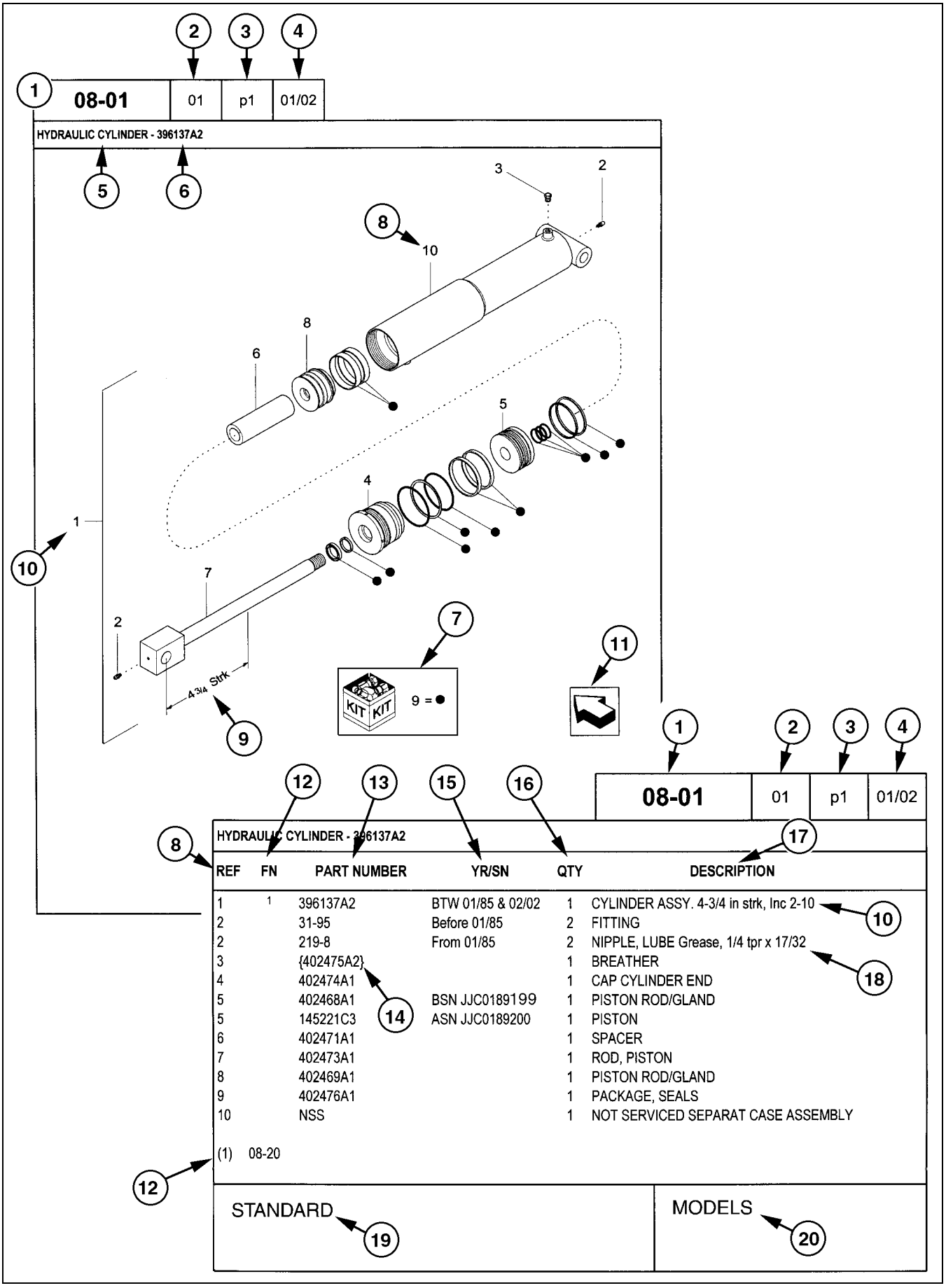

REF	FN	PART NUMBER	YR/SN	QTY	DESCRIPTION
1	1	396137A2	BTW 01/85 & 02/02	1	CYLINDER ASSY. 4-3/4 in strk, Inc 2-10
2		31-95	Before 01/85	2	FITTING
2		219-8	From 01/85	2	NIPPLE, LUBE Grease, 1/4 tpr x 17/32
3		{402475A2}		1	BREATHER
4		402474A1		1	CAP CYLINDER END
5		402468A1	BSN JJC0189199	1	PISTON ROD/GLAND
5		145221C3	ASN JJC0189200	1	PISTON
6		402471A1		1	SPACER
7		402473A1		1	ROD, PISTON
8		402469A1		1	PISTON ROD/GLAND
9		402476A1		1	PACKAGE, SEALS
10		NSS		1	NOT SERVICED SEPARAT CASE ASSEMBLY

(1) 08-20

STANDARD

MODELS

HOW TO USE YOUR PARTS CATALOG

1. Figure Number
2. Sequence Code within the Figure Number
3. Page Number within the Sequence Code
4. Date of Printing (month / year)
5. Figure Description
6. General information regarding the figure
7. Parts supplied in repair kits per symbol reference
8. Figure call-out of the part number (REF)
9. Technical specifications relating to the part indicated
10. Figure call-out includes bracketed items, the included items may also be listed in the additional description area
11. Orientation - Arrow indicates front of the machine
12. Footnote - Additional information relating to the part number. In this example, 08-20 equals another figure that this part is shown on
13. Part Number
    NSS = Not Serviced Separately (Non-serviced parts)
    Bracketed numbers = not available as service parts in this market
14. Not Available as service part in this market
15. YR/SN
    Year
    Before 01/85 = Part valid for production January 1985 and before
    From 01/85 = Part valid for production from January 1985 and after
    BTW 01/85 & 02/02 = Part valid for machines produced between January 1985 and February 2002.
    Serial Number (P.I.N.)
    BSN JJC0268800 = Part valid for serial number JJC0268800 and below
    ASN JJC0268800 = Part valid for serial number JJC0268800 and above
    BTW JJC0178000 & JJC0179000 = Part valid for serial numbers between JJC0178000 & JJC0179000
16. Total Quantity of the Part referred to in the page. The quantity can be replaced by the following indications:
    AR = As Required
    X = As required
17. Part Description
18. Additional description of the part to help confirm identification
19. Figure Notes
20. Model Number(s)

RIGHT-HAND AND LEFT-HAND

The reference to right-hand and left-hand in this catalog is identified by the operator standing at the rear of the basic unit (without rear attachment), looking toward the front of the machine (in normal forward travel).

For pages covering any machine attachments, right-hand and left-hand are defined by the operator sitting in the position for proper operation of the attachment.

DIMENSIONS

Metric and U.S. hardware dimensions do not show the numeric designations of standard coarse threads. A number following a semi colon (;) is the class or grade of hardware. A comma (,) represents the decimal point (.) used in U.S. dimensions.

EXPLANATION OF ABBREVIATIONS

AC	Alternating Current
adj	adjustable
amp	ampere
AR	As required
ASN	Serial number and after P.I.N. and after
blkhd	bulkhead
br	branch
BSN	before Serial number before P.I.N.
BTW	between
cc	cubic centimetre
cl	class
cmprsn	compression
cn pt	cone point
cp pt	cup point
CRS	Chrome Alloy Steel
CST	Carbon Steel
cu yd	cubic yard
DC	Direct Current
deg	degree
dg pt	dog point
dia	diameter
dr type	drive type
fc	face
fc sl	face seal
fem	female
fem PT	female pipe thread
fl	flare
flat pt	flat point
ft	feet or foot
ga	gauge
gal	gallon or gallons
gpm	gallons per minute
gr	grade
hd	head
hdg pt	half dog point
hp	horsepower
ID	inside diameter
in	inch or inches
Incl.	Includes
inv fl	inverted flare
K	kilo
kg	kilogram
km/h	kilometers per hour
L	litre
lb	pounds
lb-ft	pound-foot
lg	long
LH	left-hand
LH thd	left-hand thread
M	(prefix) metric thread size
m	metre
ml	milliliter
mm	millimetre
NF	National Fine
No.	number
NPT	National Pipe Thread
NS	National Super Fine
OD	outside diameter
ohm	electrical unit of resistance
Or	O-ring
ORB	O-ring boss
ORFS	O-ring face seal
ov cntr	over center
ov pt	oval point
oz	ounce
P	pitch
psi	pounds per square inch
pt	pint
PT	pipe thread
rd	round
rd holes	round holes
RH	right-hand
RH thd	right-hand thread
rpm	revolutions per minute
sl	self-locking
sq	square
SST	Stainless Steel
st	self-tapping
strk	stroke
sw	swivel
T	teeth
thk	thick
tpr	taper
tube OD	tube outside diameter
V	volt or volts
W	watt or watts
X	as required
yd	yard

SECTION INDEX
Engine

02-01	FAN, RADIATOR/OIL COOLER - COOLANT RECOVERY SYSTEM
02-02	RADIATOR/OIL COOLER
02-03	EXHAUST SYSTEM
02-04	ENGINE - AIR CLEANER
02-05	ENGINE - OIL FILL AND DIPSTICK
02-06	ENGINE - MOUNTING
02-07	REMOTE OIL DRAIN
02-08	ENGINE - BLOCK HEATER
02-09	CYLINDER BLOCK
02-10	CYLINDER BLOCK - COVERS, REAR GEAR
02-11	CYLINDER BLOCK - COVERS, FLYWHEEL
02-12	CYLINDER BLOCK - COVERS, FRONT
02-13	GEAR COVER - PLATE
02-14	CYLINDER HEAD COVERS
02-15	CYLINDER BLOCK STIFFENER PLATE
02-16	CYLINDER HEAD
02-17	OIL PUMP, PAN
02-18	ENGINE, OIL
02-19	OIL FILTER AND COOLER
02-20	OIL FILTERS - ENGINE
02-21	OIL PUMP - ENGINE
02-23	MOTOR SENSORS - ENGINE OIL
02-24	BREATHER - ENGINE
02-25	MANIFOLD - INTAKE
02-26	MANIFOLD - EXHAUST
02-27	PISTONS - CONNECTING ROD
02-28	CONNECTING ROD
02-29	ROCKER SHAFT
02-30	FLYWHEEL - ENGINE
02-31	PULLEY - CRANKSHAFT
02-32	CAMSHAFT
02-33	CRANKSHAFT
02-34	COOLING SYSTEM - ENGINE
02-35	WATER PUMP
02-36	WATER PUMP - CONTROL
02-37	THERMOSTAT - ENGINE COOLING SYSTEM
02-38	FAN DRIVE
02-39	ENGINE - LIFT HOOK
02-40	TURBOCHARGER

FAN, RADIATOR/OIL COOLER - COOLANT RECOVERY SYSTEM

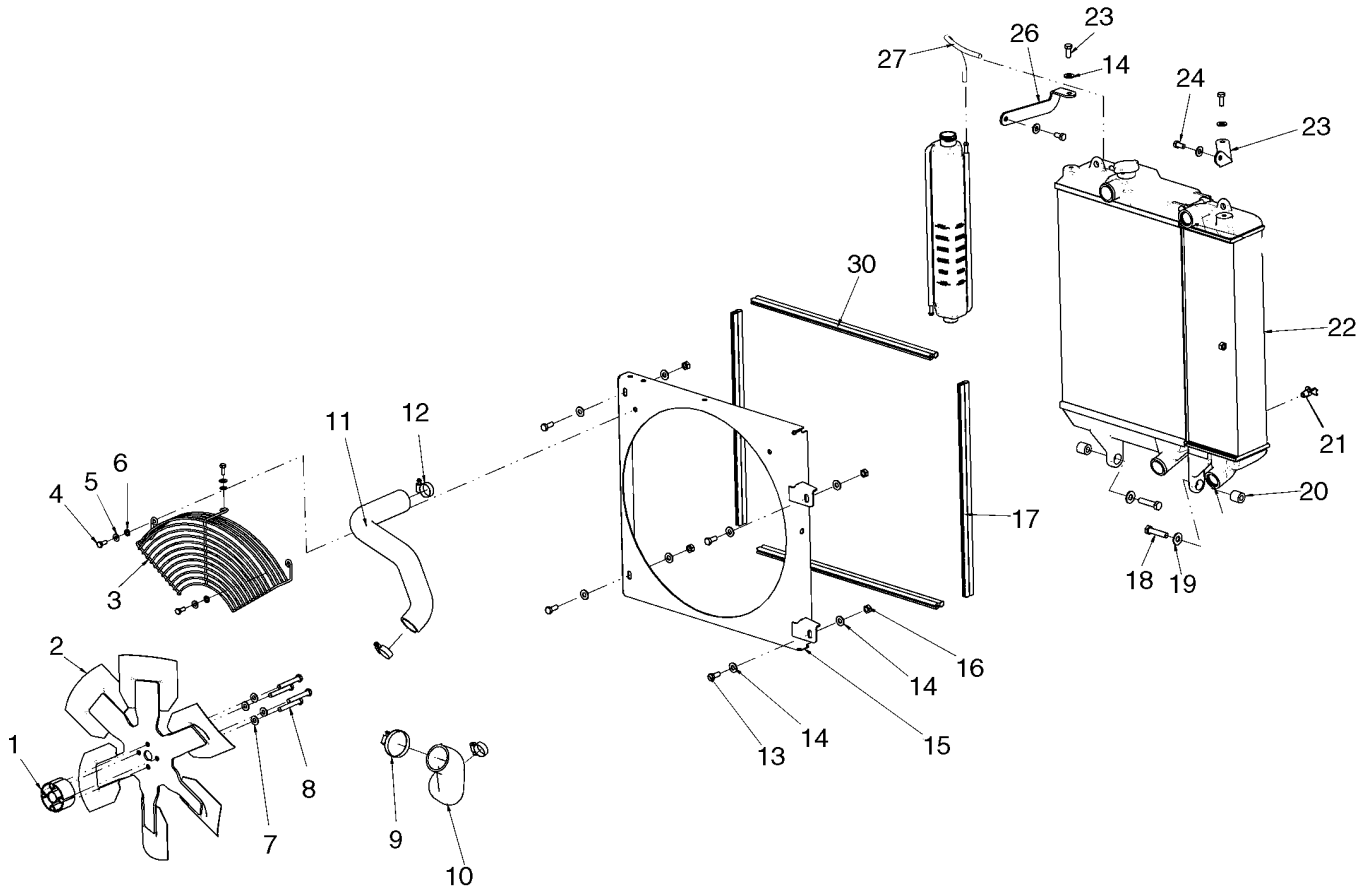

FAN, RADIATOR/OIL COOLER - COOLANT RECOVERY SYSTEM

REF	FN	PART NUMBER	YR/SN	QTY	DESCRIPTION
1		87565745		1	SPACER, Fan Spacer
2		87680032		1	FAN, 518mm (20 3/8 in.) Dia., 24 Deg.
2		87592426		1	FAN, 518mm (20 3/8 in.) Dia., 33 Deg.; Used On High Flow Models
3		{87594970}		1	Fan Guard
4		120104		3	BOLT, Hex, M8 x 20, 8.8
5		322358		3	WASHER, SPRING, Belleville, M8
6		86624184		3	WASHER, M8 x 16 x 1.6
7		140045		4	WASHER, SPRING, Belleville, M10
8		43144		4	SCREW, Hex, M10 x 70, 8.8
9		86625032		1	CLAMP, HOSE, #48, 2.56/3.50 Type F Worm
10		87661384		1	HOSE, Hose, Lower Radiator
11		87661383		1	HOSE, Hose, Upper Radiator
12		84674		3	CLAMP, HOSE, #28, 1.31/2.25 Type F Worm
13		43139		6	SCREW
14		86625253		12	WASHER, M11 x 24 x 2
15		87660834		1	SHROUD, Fan Shroud
16		100016		4	NUT, M10, Cl 8
17		{87648128}		2	Bulb Seal, 562mm (22 1/8 in.)
18		87021825		2	BOLT, Hex, M12 x 55, 10.9
19		87528989		2	WASHER, Washer, 13.5 X 30 X 2.5mm
20		87626729		2	SPACER
21		86625234		1	COCK, DRAIN
22		87660842		1	RADIATOR, Radiator/Oil Cooler Module; See Fig 02-02
23		87651805		1	BRACKET, Upper Radiator Mount, LH
24		43138		2	SCREW, Hex, M10 x 20, 8.8, Full Thd
25		87687375		1	RADIATOR, Radiator Cap
26		87651807		1	BRACKET, Upper Radiator Mount, RH
27		{87534725}		1	Coolant Recovery Hose
28		87020980		1	RESERVOIR, COOLANT EXPNSN, Incl 29
29		257884A1		1	PLUG, Cap
30		{87578980}		2	Bulb Seal, 590mm (23 1/4 in.)

RADIATOR/OIL COOLER

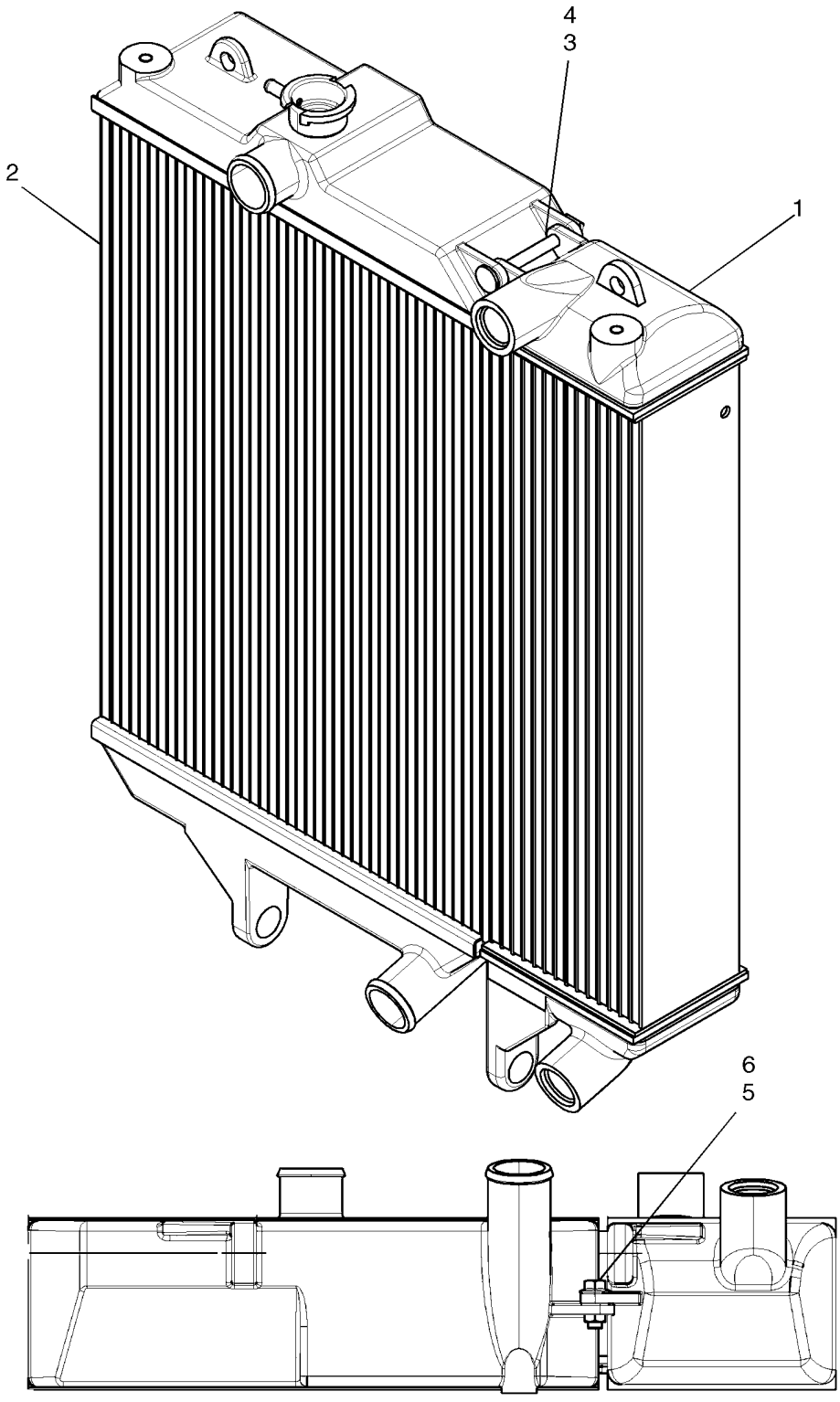

BS07K378

RADIATOR/OIL COOLER

REF	FN	PART NUMBER	YR/SN	QTY	DESCRIPTION
		87660842		1	RADIATOR, Incl 1 - 8
1		87687372		1	RADIATOR, Standard Oil Cooler
1		87688650		1	COOLER, OIL, Low Fin Density Oil Cooler
2		87688523		1	RADIATOR, Standard Radiator
2		87688649		1	RADIATOR, Low Fin Density Radiator
3		87687373		1	RADIATOR, Pin
4		87687374		1	RADIATOR, Clip
5		9804262		1	BOLT, Hex Flg, M10 x 30, 8.8
6		9804278		1	NUT, M10 x 1.5, Flg, Cl 8
7		87687376		1	RADIATOR, Seal
8		87687375		1	RADIATOR, Radiator Cap; Not Illustrated

EXHAUST SYSTEM

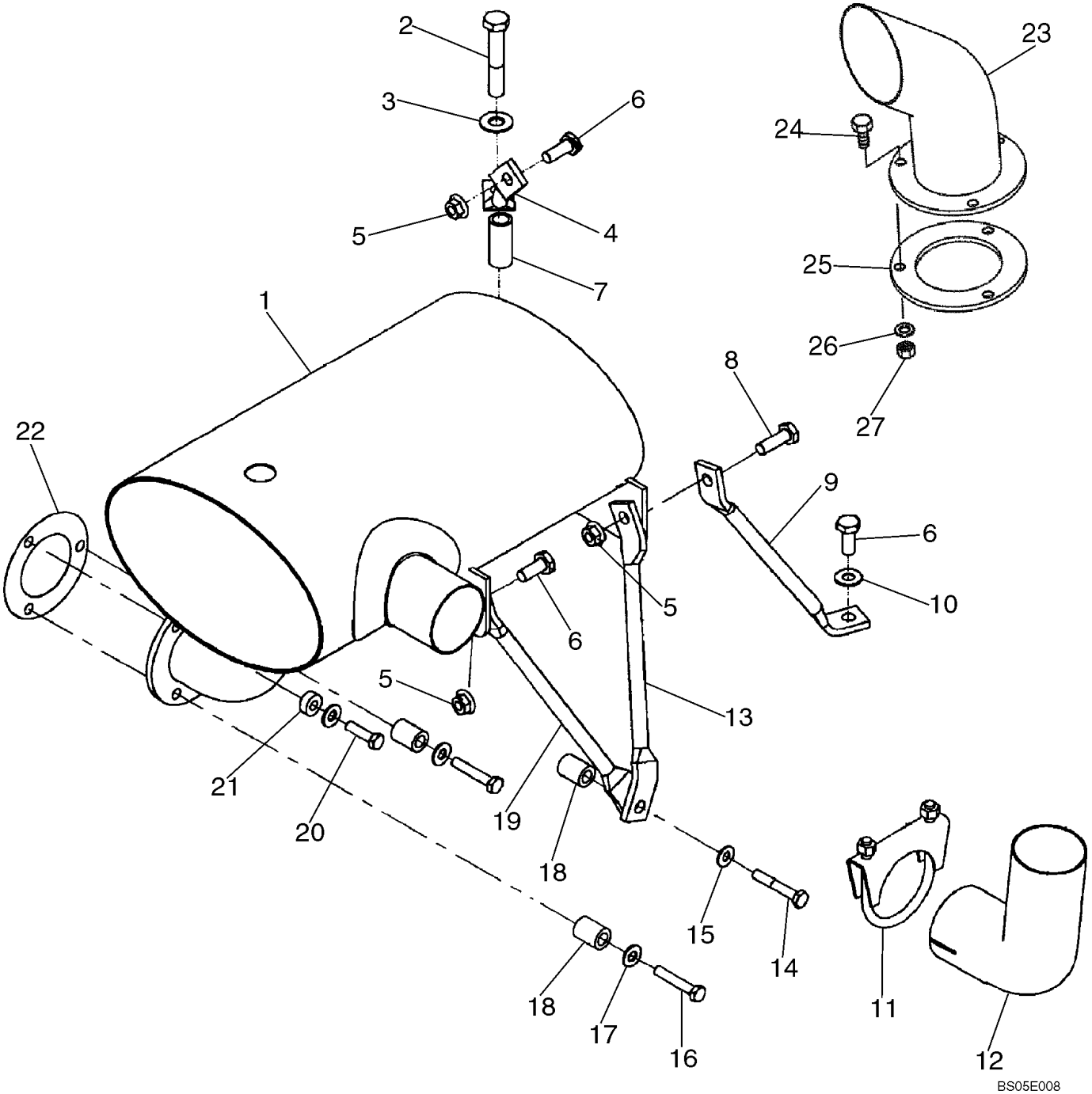

EXHAUST SYSTEM

REF	FN	PART NUMBER	YR/SN	QTY	DESCRIPTION
1		{87572831}		1	Muffler
2		9706717		1	BOLT, Hex, M12 x 70, 8.8, Full Thd
3		140046		1	WASHER, SPRING, Belleville, M12
4		87034631		1	ROD, Muffler Support
5		411345A1		3	NUT, M10
6		43139		3	SCREW
7		86608204		1	SPACER
8		43140		1	BOLT, Hex, M10 x 30, 8.8, Full Thd
9		87034630		1	ROD, Muffler Support
10		140045		4	WASHER, SPRING, Belleville, M10
11		87461995		1	CLAMP, Muffler
12		87040074		1	TUBE, Tail Pipe
13		87633980		1	ROD, Muffler Support
14		43127		1	BOLT, Hex, M8 x 25, 8.8
15		322358		4	WASHER, SPRING, Belleville, M8
16		386045		2	BOLT, Hex, M8 x 45, 8.8
17		86625263		3	WASHER, M8 x 20 x 1.6
18		256690A1		3	SPACER
19		87633979		1	ROD, Muffler Support
20		43128		1	BOLT, Hex, M8 x 30, 8.8
21		86633393		1	SPACER, Muffler Spacer, Auto Coat
22		86606073		1	GASKET
23		87381264		1	PIPE
24		43127		3	BOLT, Hex, M8 x 25, 8.8
25		247026A1		1	PLATE, LARGE, Exhaust Doubler
26		14048221		3	NUT, LOCK, M8 x 1.25, Cl 10
27		86625263		8	WASHER, M8 x 20 x 1.6

ENGINE - AIR CLEANER

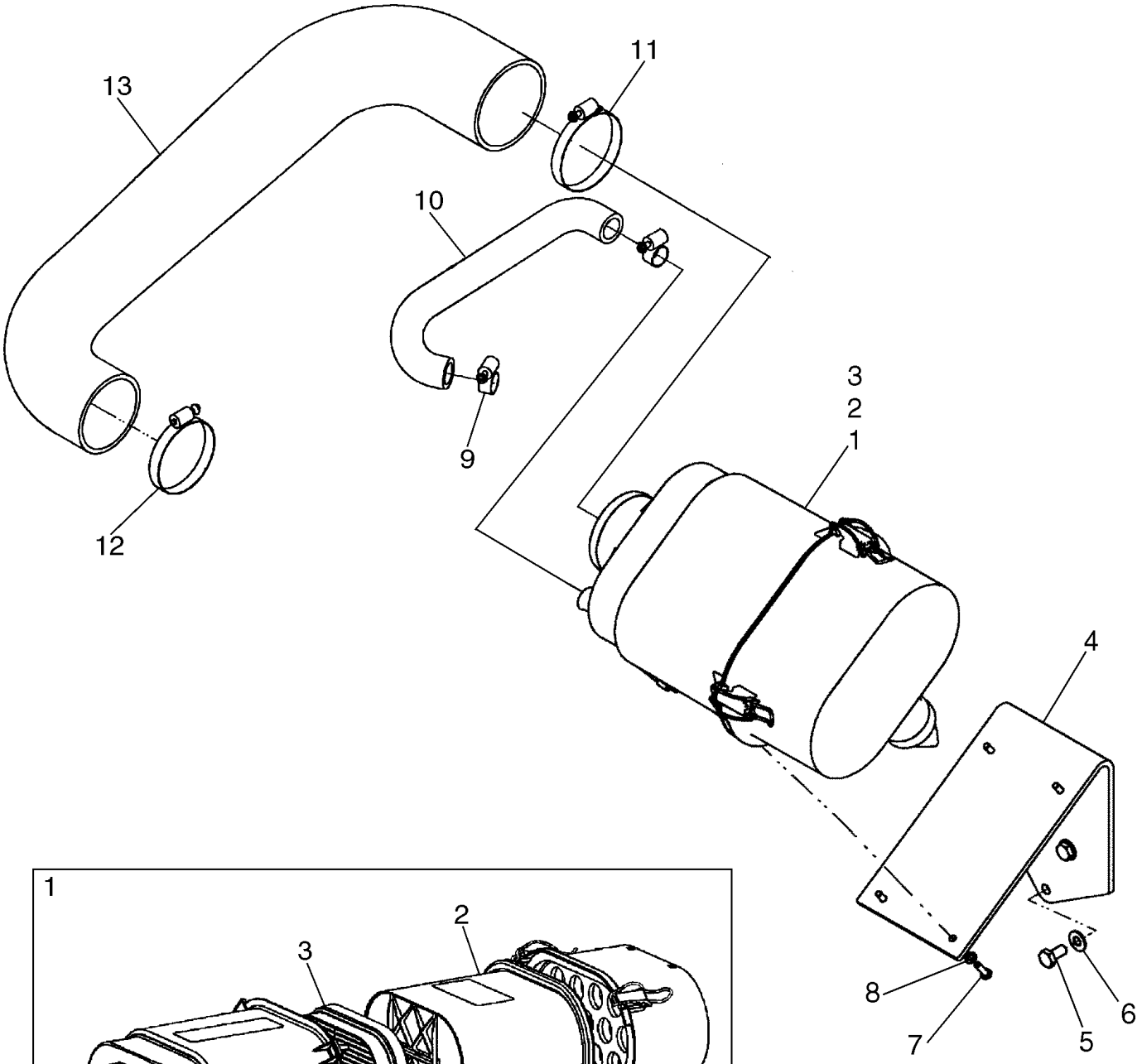

BS04M004

ENGINE - AIR CLEANER

REF	FN	PART NUMBER	YR/SN	QTY	DESCRIPTION
1		87041075		1	AIR CLEANER, Incl. 2, 3
2		87037984		1	ELEMENT, Powercore
3		87037985		1	ELEMENT
4		87386479		1	BRACKET, Bracket
5		43138		3	SCREW, Hex, M10 x 20, 8.8, Full Thd
6		140045		3	WASHER, SPRING, Belleville, M10
7		120100		4	BOLT, Hex, M6 x 20, 8.8
8		9824259		4	WASHER, M6 x 12 x 1.6
9		514920		2	CLAMP, HOSE, #16, 0.81/1.50 Type F Worm
10		87352018		1	HOSE
11		381144		1	CLAMP, HOSE, #60, 3.31/4.25 Type F Worm
12		86625033		1	CLAMP, HOSE, #56, 3.06/4.00 Type F Worm
13		87351999		1	HOSE, Air Cleaner

ENGINE - OIL FILL AND DIPSTICK

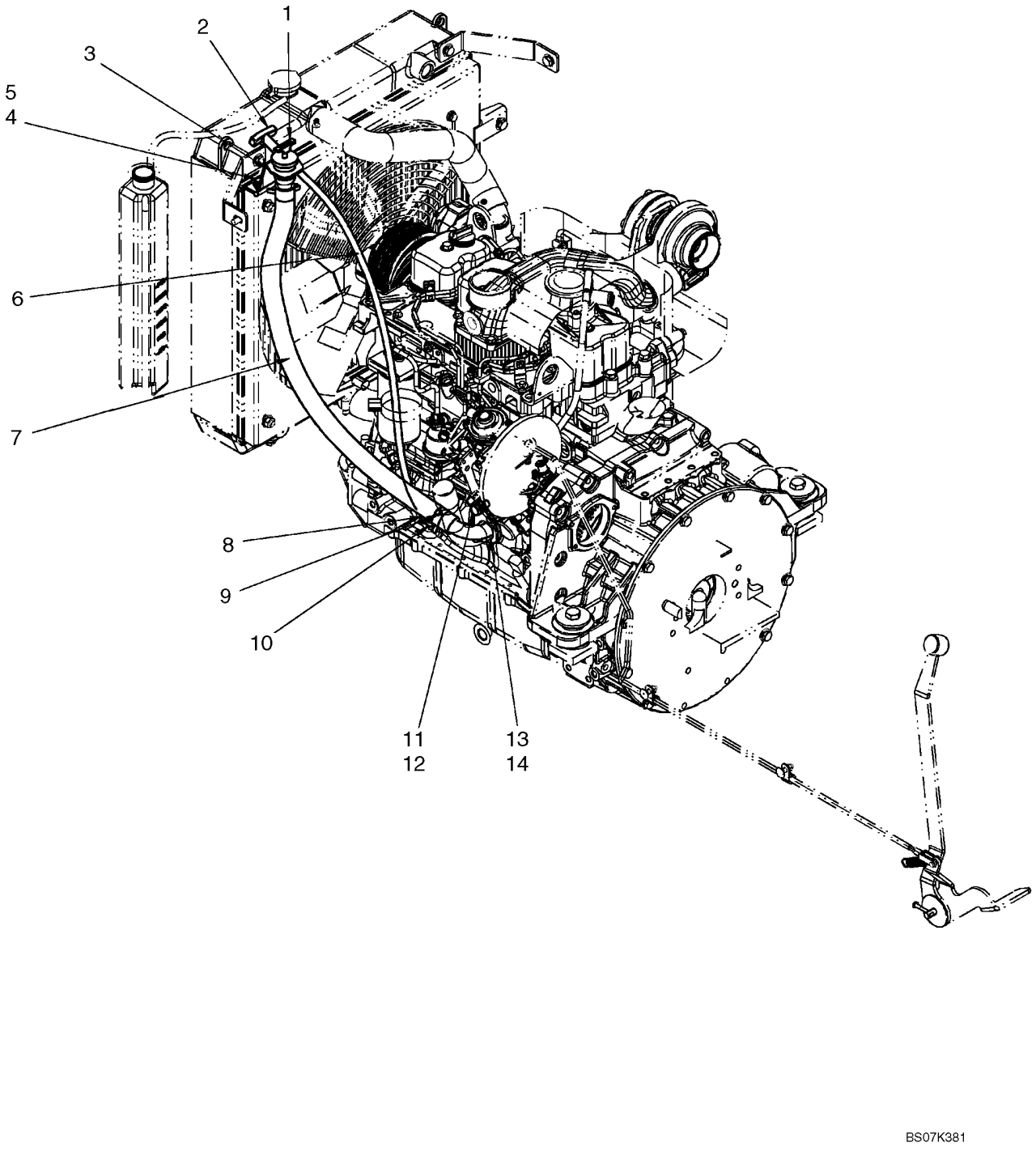

ENGINE - OIL FILL AND DIPSTICK

REF	FN	PART NUMBER	YR/SN	QTY	DESCRIPTION
1		87445427		1	CAP, FILLER
2		{87566701}		1	Dipstick
3		{87574281}		1	Bracket, Dipstick Mount
4		120103		2	BOLT, Hex, M8 x 16, 8.8
5		322358		2	WASHER, SPRING, Belleville, M8
6		{87612761}		1	Dipstick Tube
7		{87560205}		1	Tube, Remote Oil Fill
8		574518		1	CLAMP, HOSE, #4, 0.25/0.62 Type M Worm
9		87432275		2	SPRING
10		87438418		1	TUBE, Tube, Oil Gauge
11		300388		2	SCREW, Hex, M12 x 25, 8.8
12		412123		2	WASHER, LOCK, M12
13		14458781		1	O-RING, -129, Cl 7, 1.549" ID x .103" Thk
14		87432267		1	TUBE, Tube, Oil Fill

ENGINE - MOUNTING

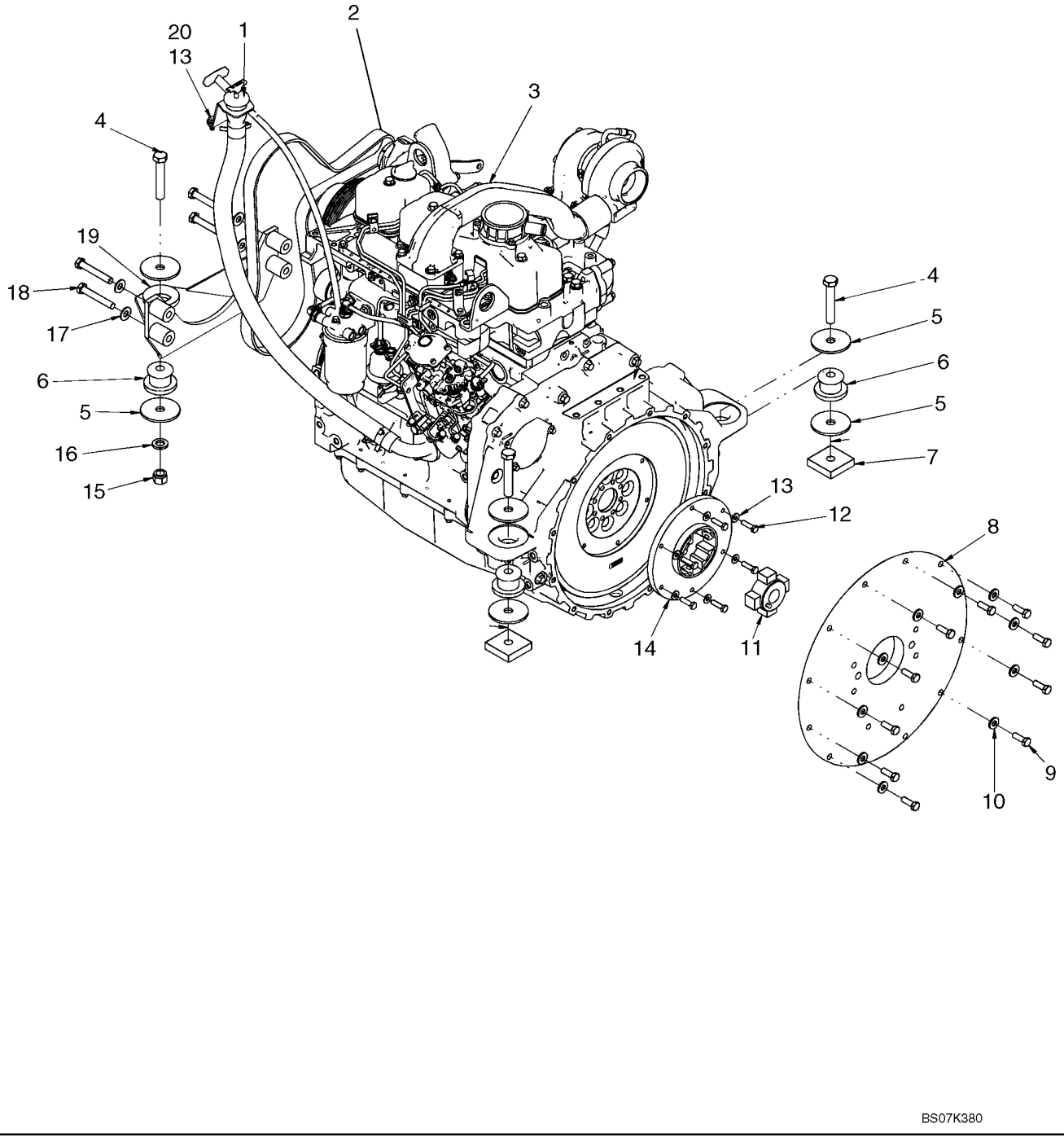

ENGINE - MOUNTING

REF	FN	PART NUMBER	YR/SN	QTY	DESCRIPTION
1		REF		1	INSTRUCTION, Remot Oil Fill And Dipstick; See Fig 02-07
2		87681147		1	BELT, Belt, V-Ribbed
3		87384640		1	ENGINE, Engine, NEF 67kw; Incl Parts on Figures 02-29 - 02-40, 03-03 - 03-10, 04-02
4		350616		3	BOLT, Hex, M16 x 90, 8.8
5		{87630175}		6	Washer
6		A140221		3	MOUNTING PARTS, Engine Mount
7		390350A1		2	PLATE
8		87547003		1	PLATE, Pump Mounting Plate
9		43140		10	BOLT, Hex, M10 x 30, 8.8, Full Thd
10		86639325		10	WASHER, M10 x 24.5 x 3, HT
11		87024588		1	HUB, Pump Drive Hub
12		43235		6	BOLT, Hex, M8 x 30, 10.9
13		322358		8	WASHER, SPRING, Belleville, M8
14		87024539		1	ELEMENT, Pump Drive
15		412066		1	NUT, LOCK, M16 x 2, Cl 8
16		86625266		1	WASHER, M17.5 x 30 x 4, HT
17		140046		4	WASHER, SPRING, Belleville, M12
18		412085		4	BOLT, Hex, M12 x 80, 10.9
19		87041763		1	MOUNT, ENGINE, Rear Engine Mount
20		120104		2	BOLT, Hex, M8 x 20, 8.8

REMOTE OIL DRAIN

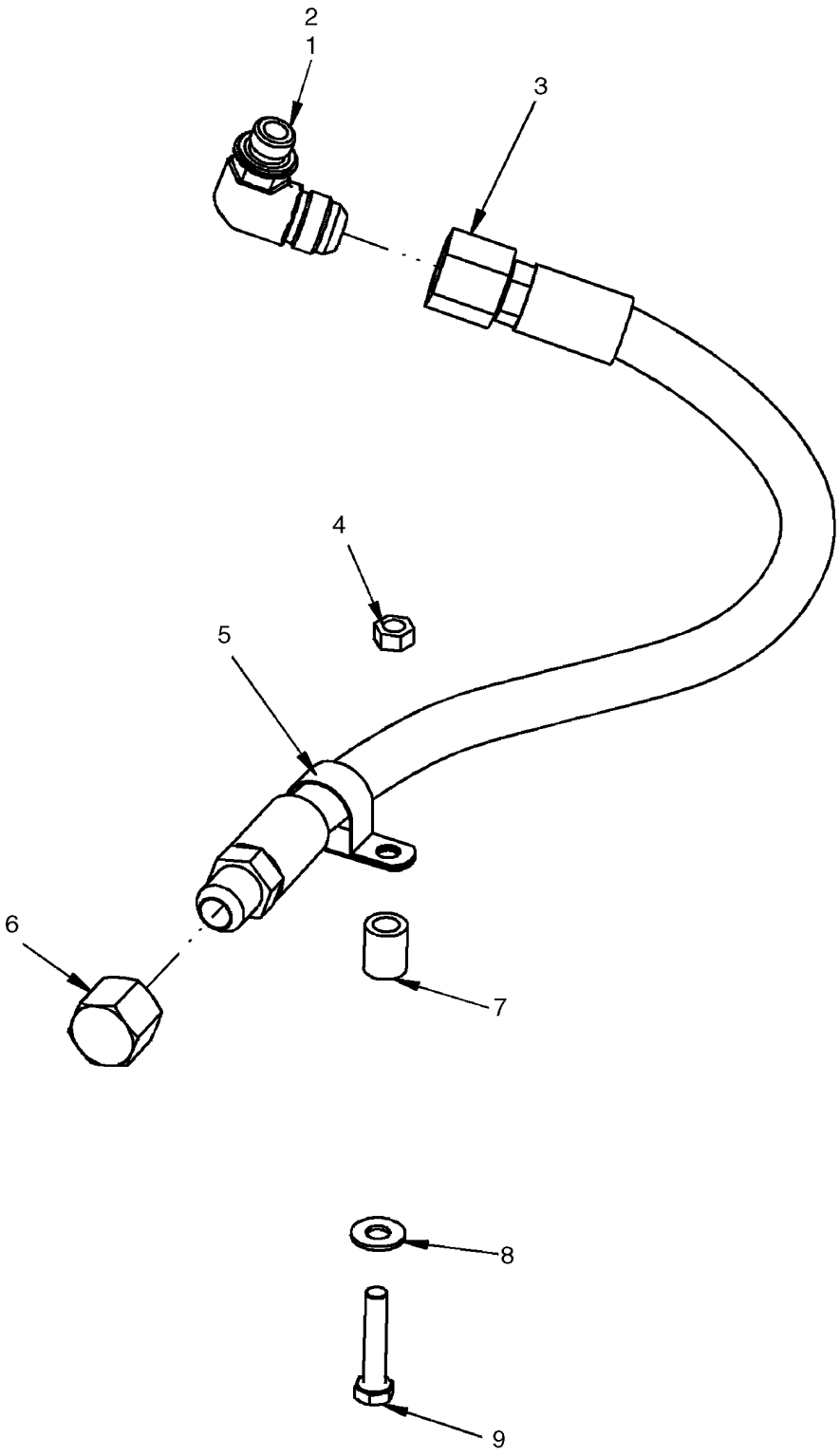

BS07K954

REMOTE OIL DRAIN

REF	FN	PART NUMBER	YR/SN	QTY	DESCRIPTION
1		87688478		1	FITTING, Oil Pan Fitting; Incl 2
2		86598102		1	O-RING, Cl 6, 19.3MM ID x 2.2 Thk
3		87694058		1	HOSE, Hose, Remote Oil Drain, 730mm (28 3/4 in.)
4		9706690		1	NUT, M8, Cl 8
5		87307884		1	CLAMP
6		129200		1	CAP, 37º, 7/8"-14
7		229398		1	SPACER
8		86625263		1	WASHER, M8 x 20 x 1.6
9		43129		1	BOLT, Hex, M8 x 40, 8.8

ENGINE - BLOCK HEATER

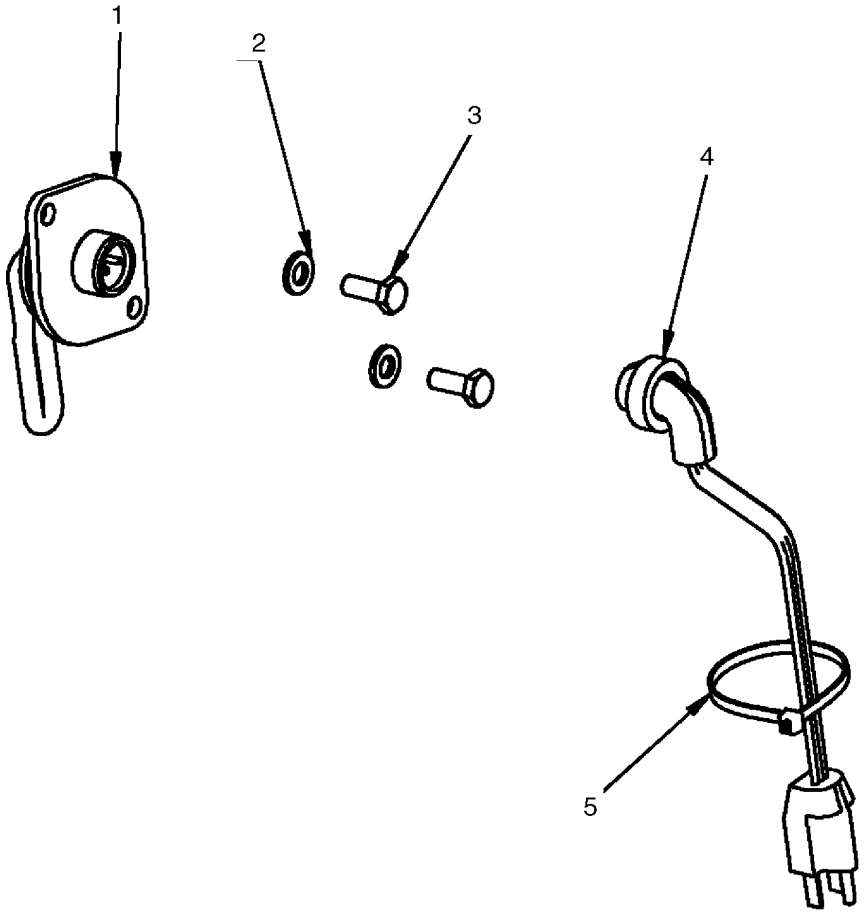

BS07K096

ENGINE - BLOCK HEATER

REF	FN	PART NUMBER	YR/SN	QTY	DESCRIPTION
		87017686		1	DIA, Construction, Kit, Block Heater; Incl 1 - 5
1		8602005		1	HEATER, Block Heater, 750W 120V
2		86624185		2	WASHER, M8 x 17.5 x 2, HT
3		120104		2	BOLT, Hex, M8 x 20, 8.8
4		87105748		1	CABLE, ELECTRIC
5		L11541		1	STRAP, CABLE, Cable Tie

CYLINDER BLOCK

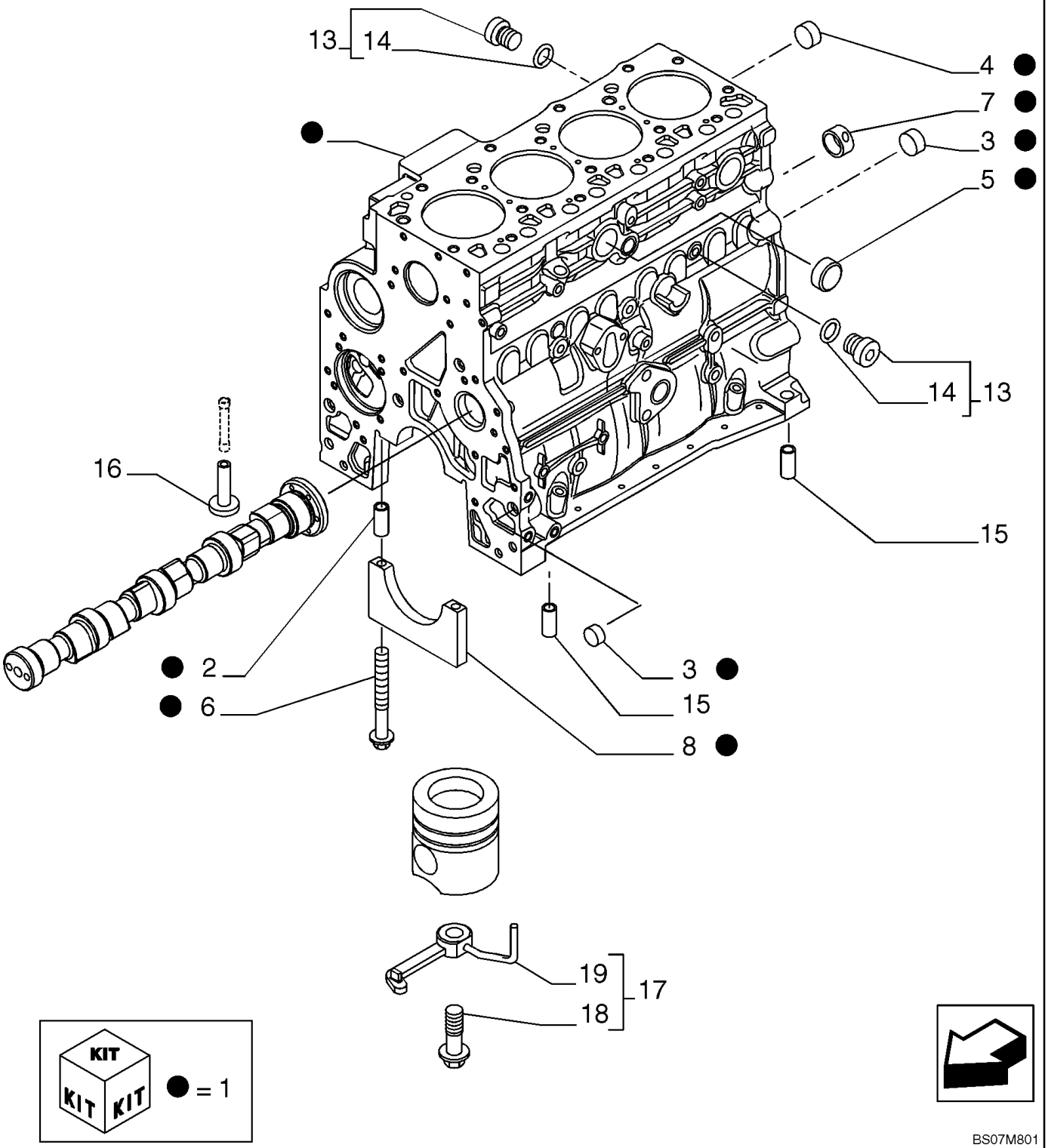

CYLINDER BLOCK

REF	FN	PART NUMBER	YR/SN	QTY	DESCRIPTION
1		2830083		1	CYLINDER BLOCK, - ASSY
2		4899026		10	DOWEL
3		4895039		3	PLUG
4		4895038		4	PLUG
5		4895228		2	PLUG
6		4891353		10	SCREW, Flg Hd, M12 x 1.5 x 120
7		4895040		1	BUSHING
8		4895919		4	BEARING, CRANKSHAFT
8		4895921		1	BEARING, CRANKSHAFT
13		4895392		2	PLUG, - ASSY
14		4895393		2	O-RING
15		4895049		2	DOWEL
16		4895180		8	TAPPET
17		4896865		4	NOZZLE, LUB. OIL JET, - ASSY
18		4894218		1	SCREW
19		2852203		1	NOZZLE, LUB. OIL JET

CYLINDER BLOCK - COVERS, REAR GEAR

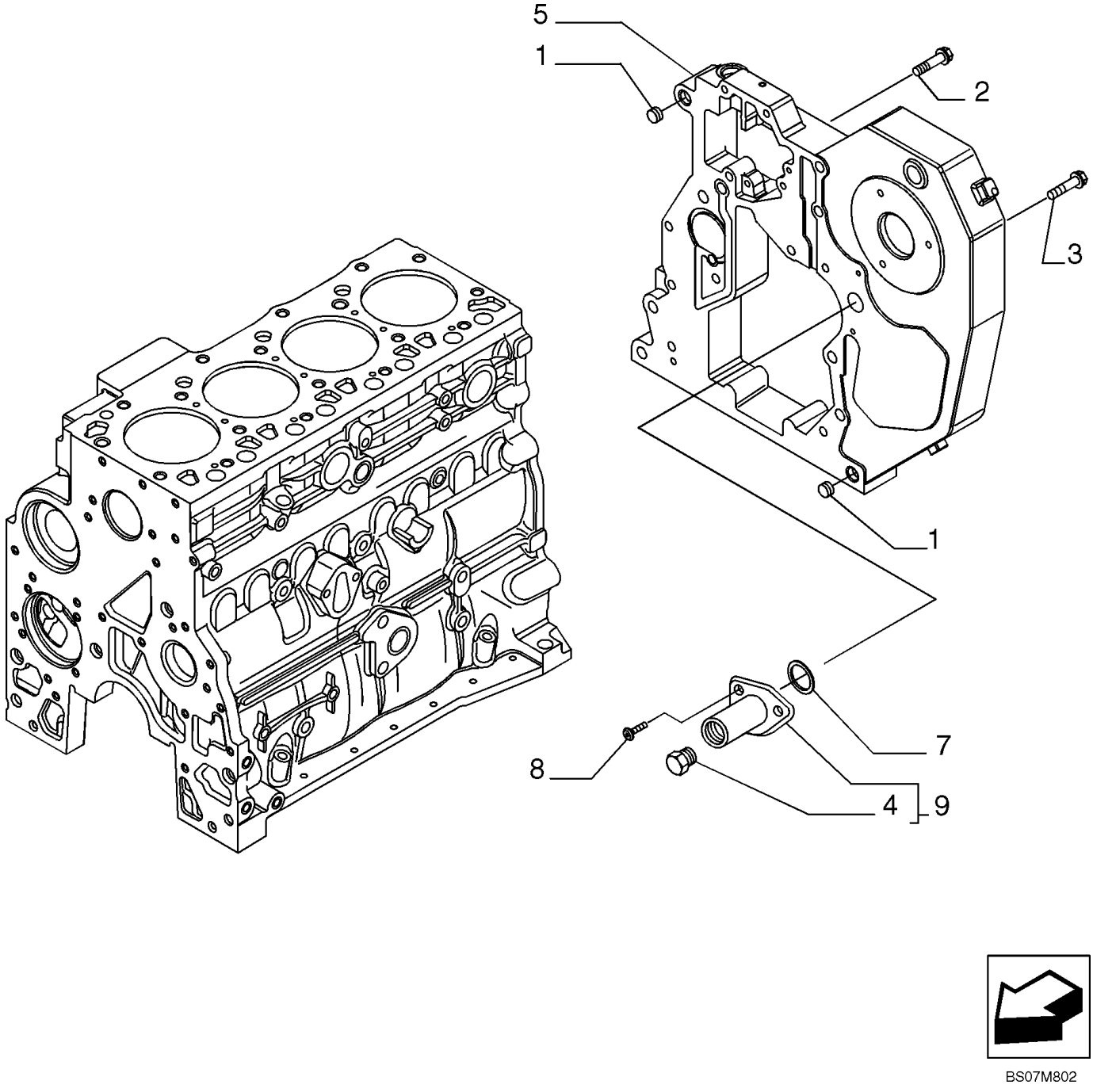

BS07M802

CYLINDER BLOCK - COVERS, REAR GEAR

REF	FN	PART NUMBER	YR/SN	QTY	DESCRIPTION
1		4899026		2	DOWEL
2		4899091		4	SCREW, Hex Flg, M8 x 1.25 x 40
3		4899093		5	SCREW, Hex Flg, M10 x 1.5 x 30
3		4899073		1	SCREW, Hex Flg, M12 x 1.75 x 30
4		{2855289}		1	Plug
5		2852619		1	HOUSING
7		2852519		1	O-RING
8		4895355		2	SCREW, Torx Rd Hd, M5 x .8 x 17
9		2855287		1	HOUSING, - ASSY

CYLINDER BLOCK - COVERS, FLYWHEEL

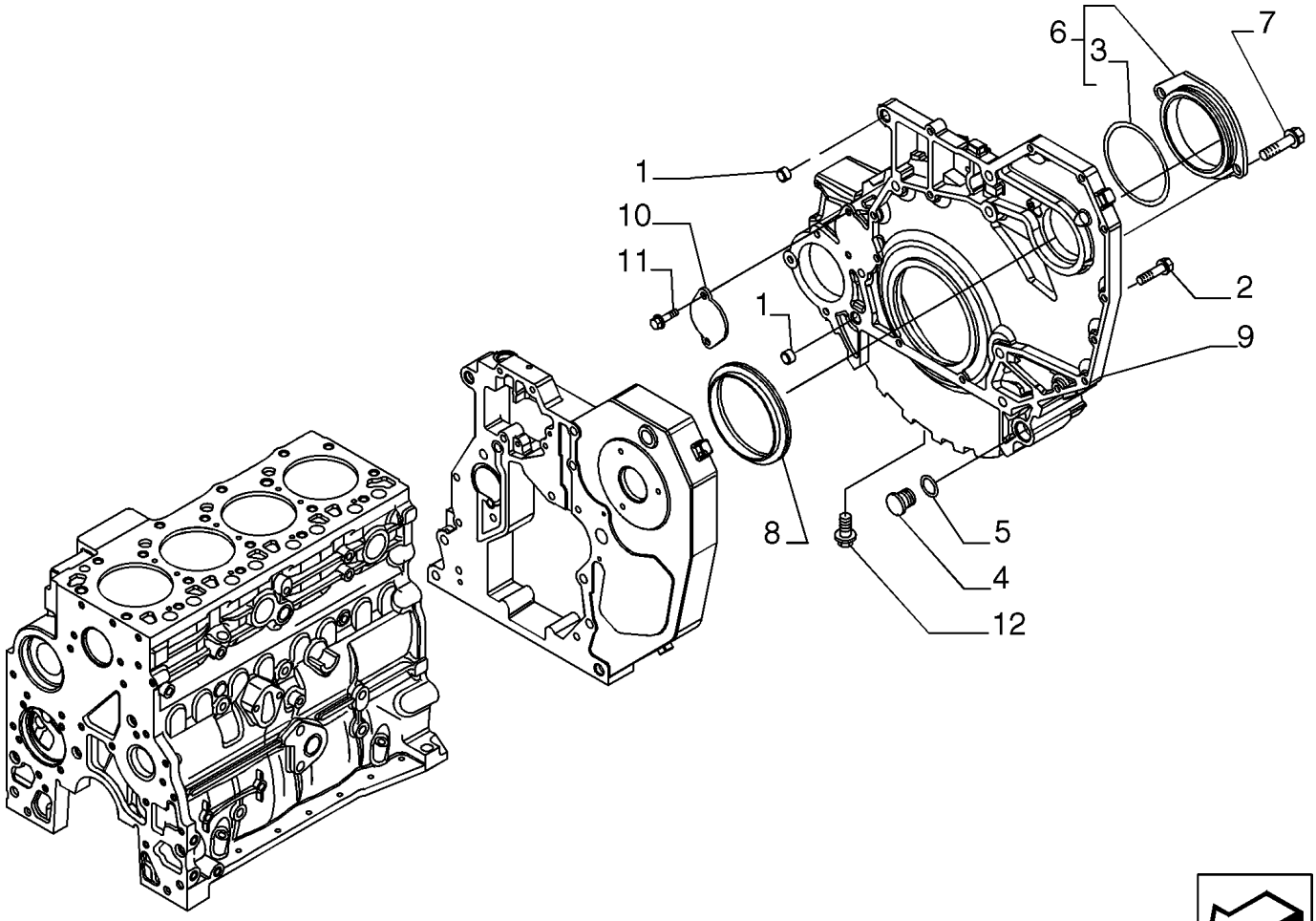

BS07M803

CYLINDER BLOCK - COVERS, FLYWHEEL

REF	FN	PART NUMBER	YR/SN	QTY	DESCRIPTION
1		4899026		2	DOWEL
2		4892915		7	SCREW
2		4899076		5	SCREW, Hex Flg, M12 x 1.75 x 80
2		4899074		3	SCREW, Hex Flg, M12 x 1.75 x 120
2		4899109		3	SCREW, Hex, M10 x 1.5 x 80
2		4899143		1	SCREW, Hex Flg, M10 x 1.5 x 140, IN ALTERNATIVE WITH 2854866
2		2852865		2	SCREW
2		2854866		1	PLUG, IN ALTERNATIVE WITH 4899143
3		2854075		1	O-RING
4		4895378		2	PLUG
5		4895379		2	O-RING, M21.82 ID x 3.53 Thk
6		2854073		1	COVER, - ASSY
7		4899020		2	SCREW
8		4890833		1	SEAL
9		2855180		1	HOUSING, Flywheel
10		4895155		1	COVER
11		4899068		1	SCREW, Hex Flg, M8 x 1.25 x 16
12		4893036		1	PLUG, - ASSY

CYLINDER BLOCK - COVERS, FRONT

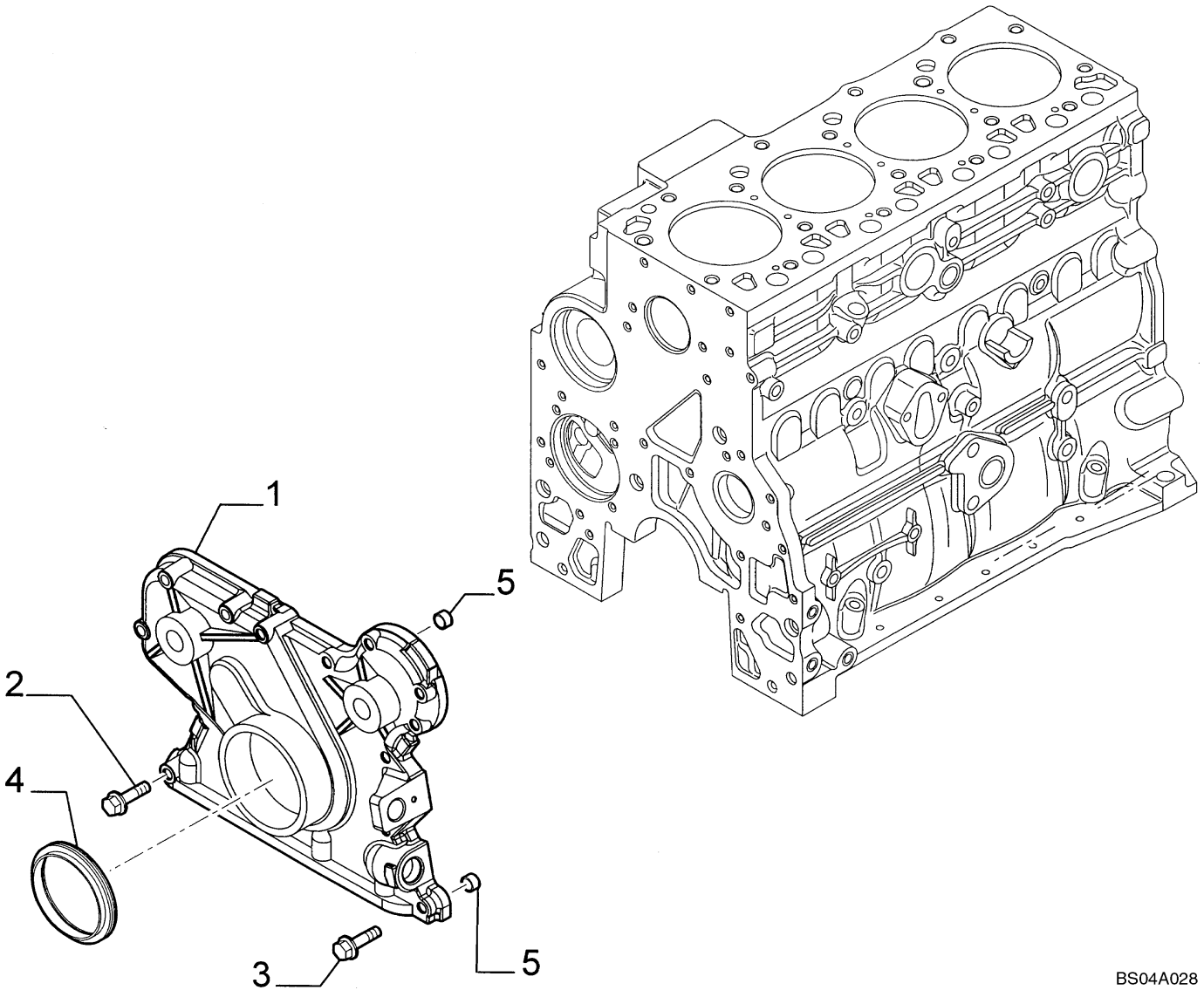

CYLINDER BLOCK - COVERS, FRONT

REF	FN	PART NUMBER	YR/SN	QTY	DESCRIPTION
1		4897026		1	COVER, Front
2		4899078		5	SCREW, Hex Flg, M8 x 1.25 x 45
3		4899063		8	SCREW, Hex Flg, M8 x 1.25 x 30
4		4890832		1	SEAL
5		4891209		2	DOWEL

GEAR COVER - PLATE

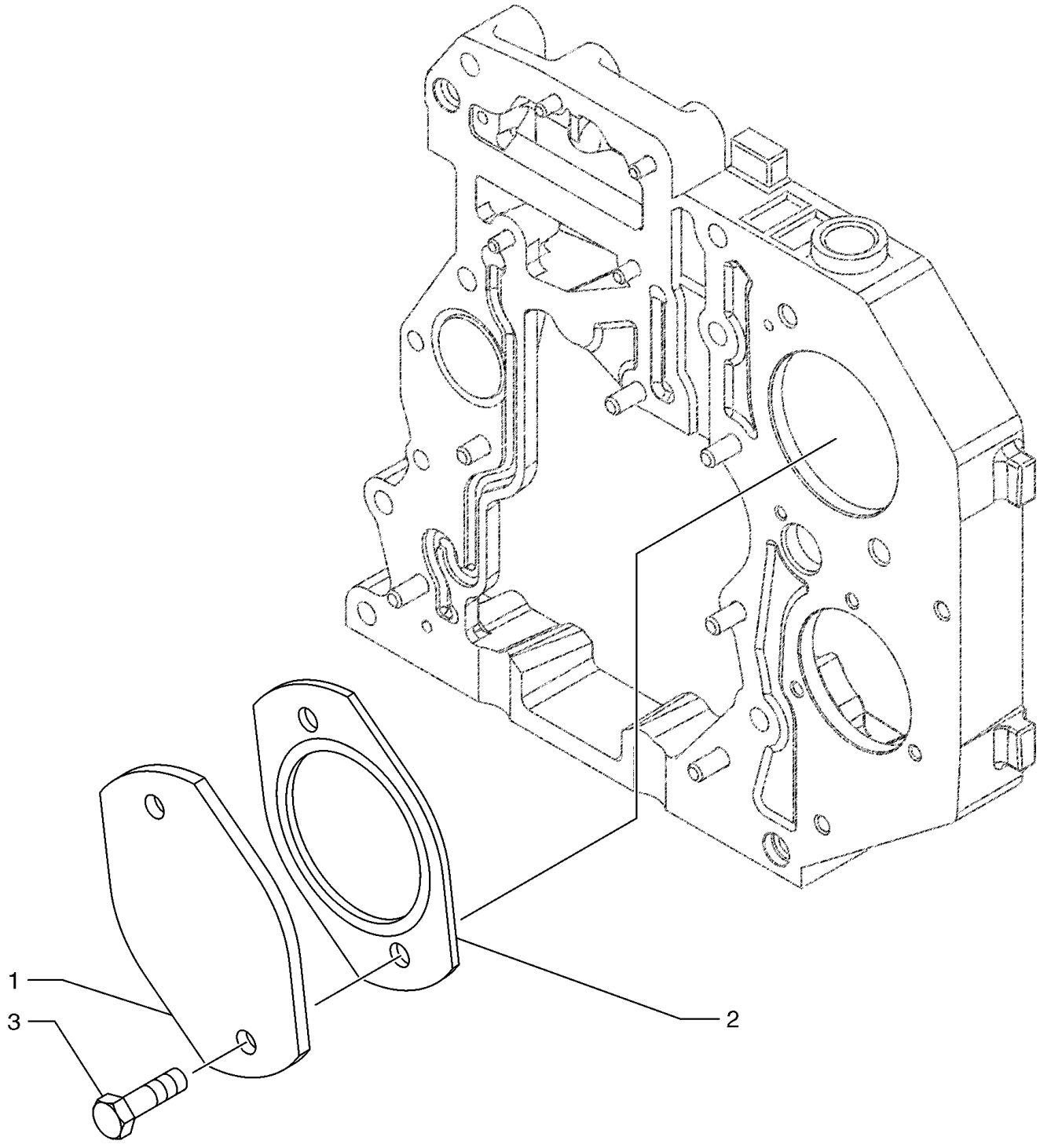

BS04A022

GEAR COVER - PLATE

REF	FN	PART NUMBER	YR/SN	QTY	DESCRIPTION
1		2852175		1	COVER
2		4896897		1	GASKET
3		16677734		2	SCREW, Hex Flg, M12 x 1.75 x 25

CYLINDER HEAD COVERS

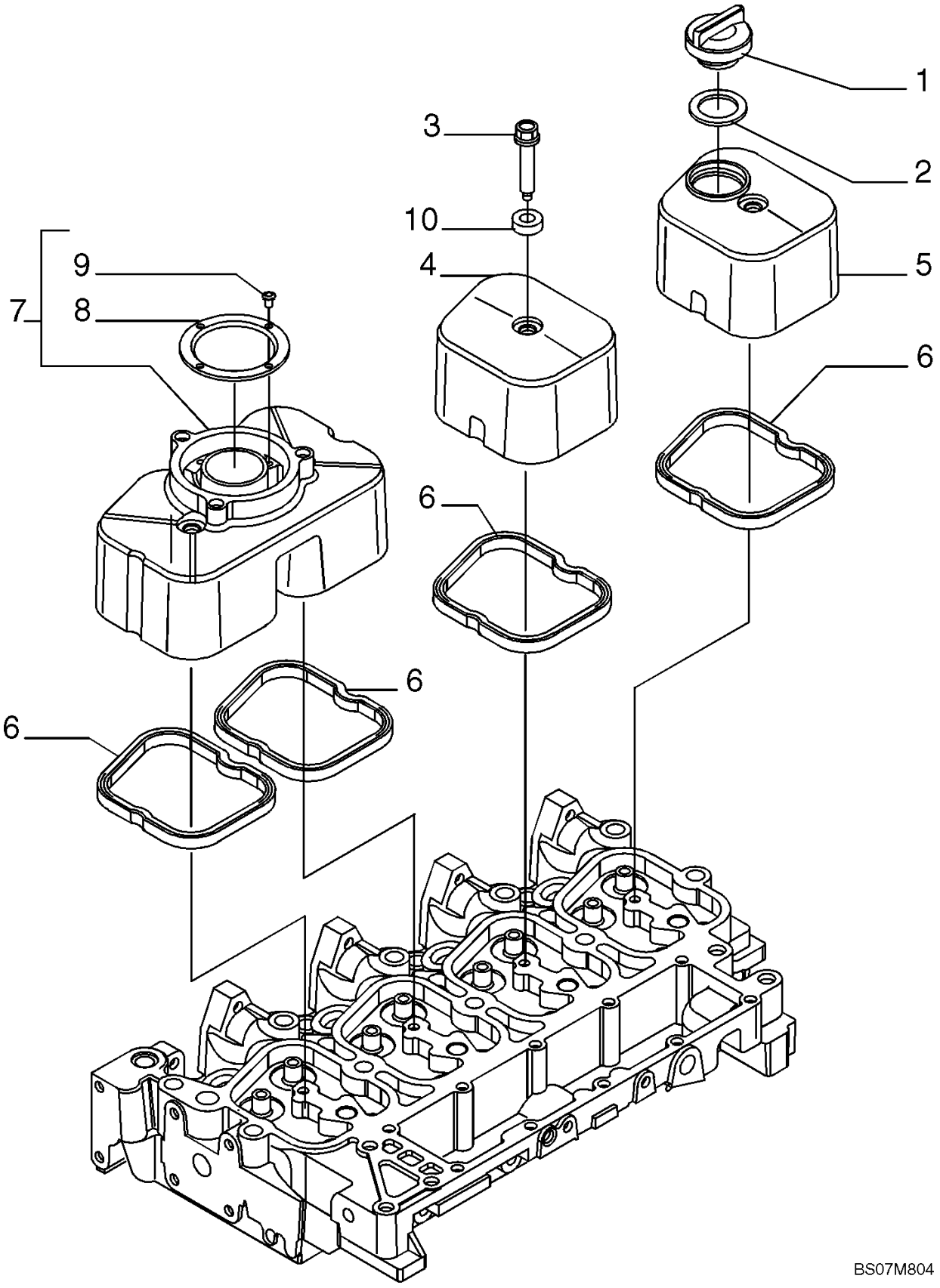

CYLINDER HEAD COVERS

REF	FN	PART NUMBER	YR/SN	QTY	DESCRIPTION
1		4895202		1	CAP, FILLER
2		4895296		1	SEAL, IN ALTERNATIVE
2		4892808		1	SEAL, IN ALTERNATIVE
3		4895214		4	SCREW
4		2852032		1	COVER
5		2852894		1	COVER
6		2852033		4	GASKET
7		2830784		1	COVER, VALVE, - ASSY
8		2830775		1	SLINGER
9		2830281		4	SCREW, SELF TAP
10		4895360		4	ISOLATOR

CYLINDER BLOCK STIFFENER PLATE

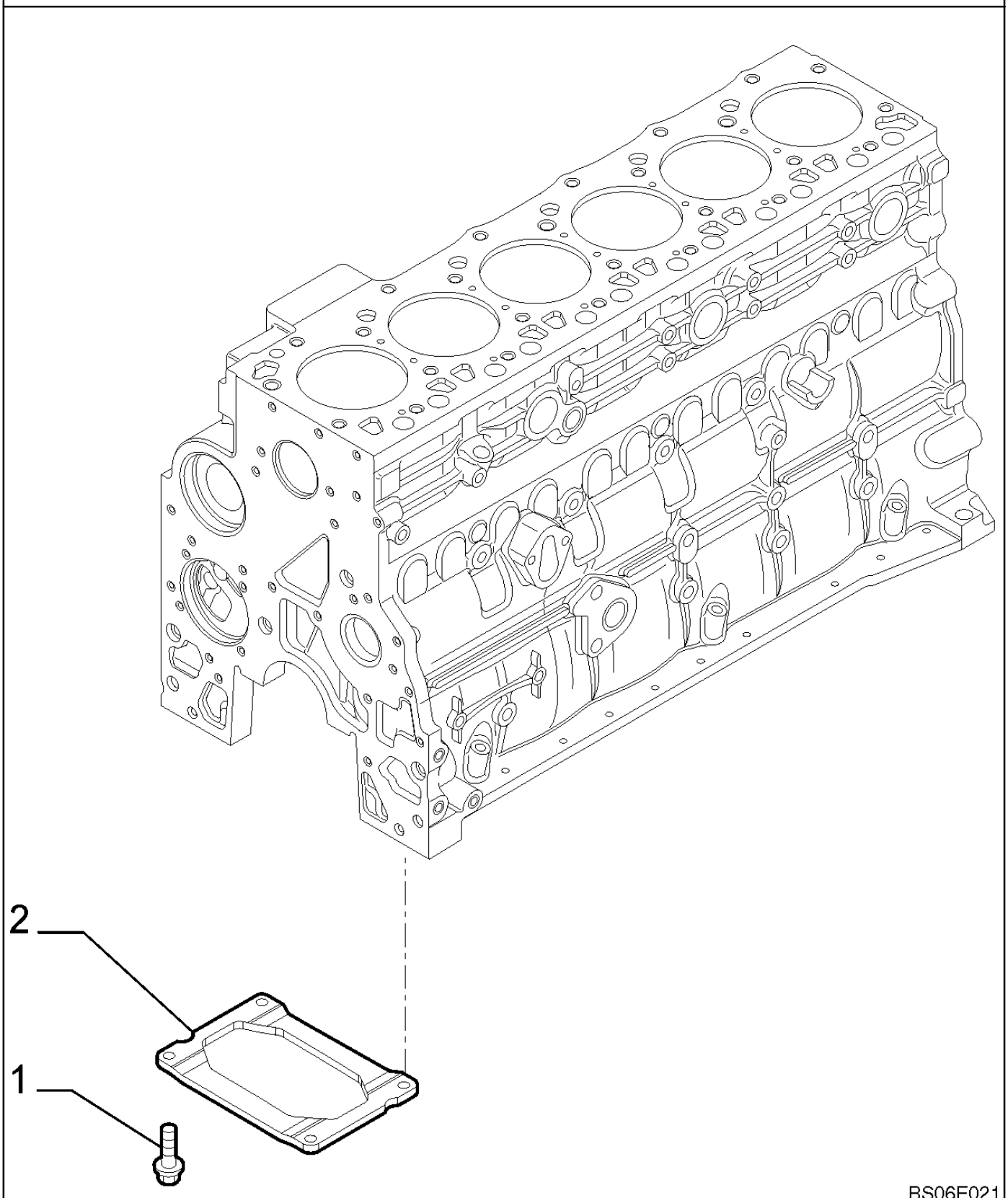

CYLINDER BLOCK STIFFENER PLATE

REF	FN	PART NUMBER	YR/SN	QTY	DESCRIPTION
1		4899032		4	SCREW, Hex Flg, M10 x 1.5 x 25
2		2852729		1	STIFFENER, Noise Reduction

CYLINDER HEAD

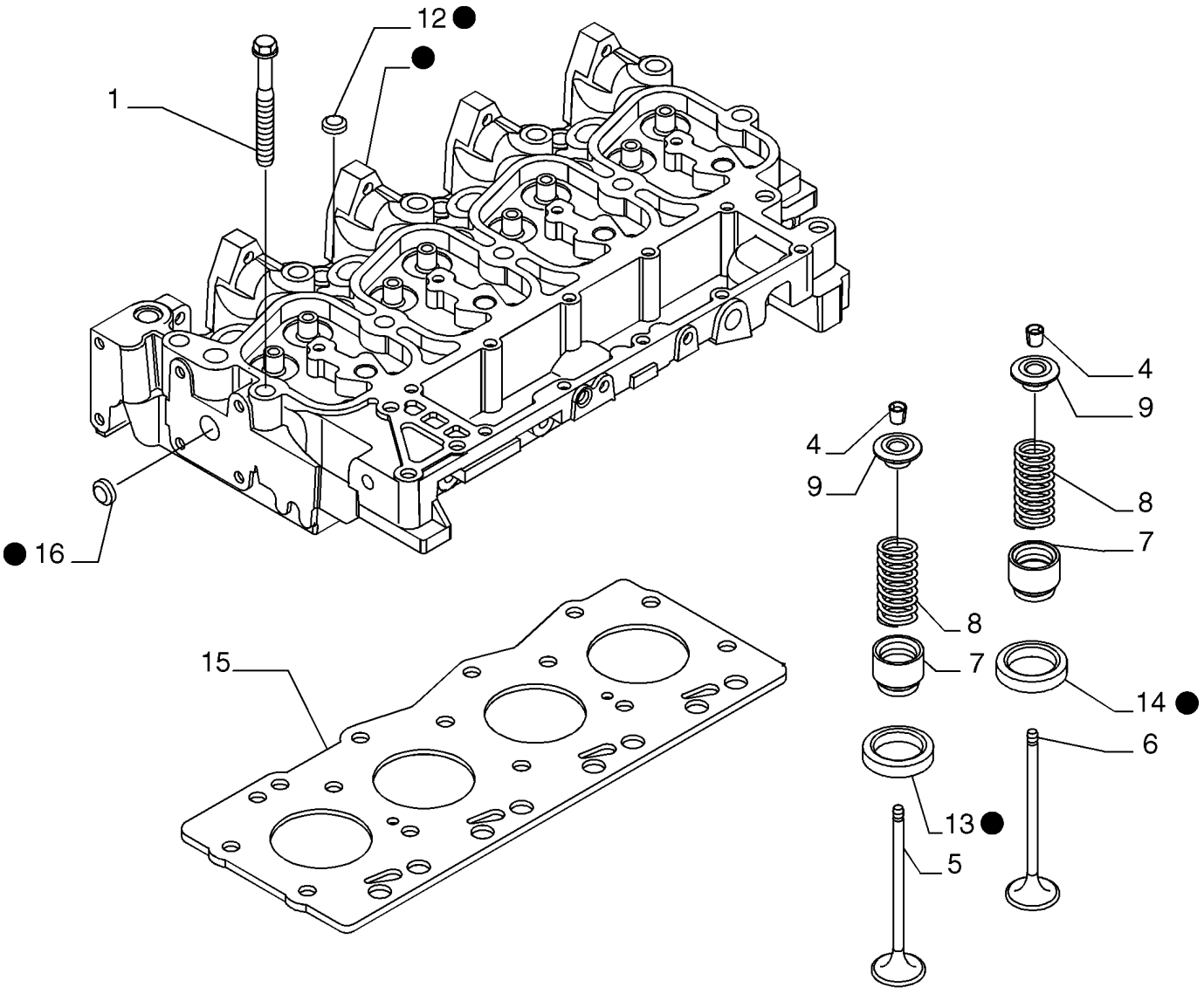

CYLINDER HEAD

REF	FN	PART NUMBER	YR/SN	QTY	DESCRIPTION
1		4892861		4	SCREW, Wash Hd, M12 x 1.25 x 73
1		4892859		10	SCREW, Wash Hd, M12 x 1.25 x 143
3		2856017		1	CYLINDER HEAD, Incl 12, 13, 14,16
4		4895183		16	COLLET
5		4895188		4	VALVE, ENG EXHAUST, STD
6		4895187		4	VALVE, ENGINE, INLET, STD
7		4895347		8	SEAL
8		4895215		8	SPRING, VALVE
8		{2831472}		8	Alternate To 4895215
9		4895184		8	RETAINER
12		4895179		3	PLUG
13		4897178		4	VALVE SEAT, - INTAKE
14		4897179		4	VALVE SEAT, - EXHAUST
15		2830919		1	GASKET, CYLINDER HEAD, SP=1.25
15		2830920		1	GASKET, CYLINDER HEAD, SP=1.15
16		4895085		1	PLUG

OIL PUMP, PAN

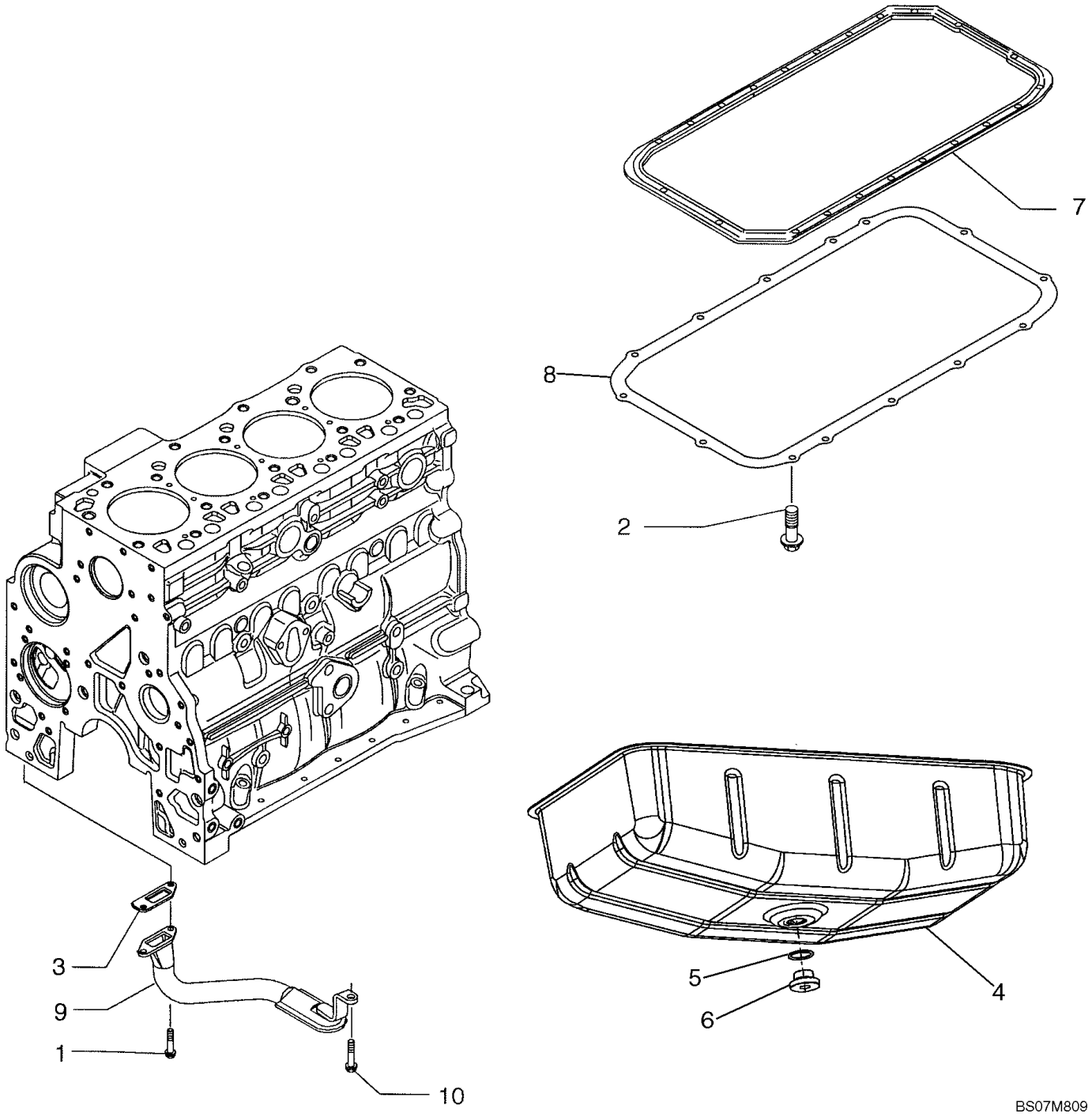

OIL PUMP, PAN

REF	FN	PART NUMBER	YR/SN	QTY	DESCRIPTION
1		16673635		2	SCREW
2		4899091		14	SCREW, Hex Flg, M8 x 1.25 x 40
3		4898301		1	GASKET
4		2853047		1	PAN, ENGINE OIL, Oil Pan
5		2852978		1	O-RING
6		4894139		1	PLUG, 22 x 1.5; Does Not Include Seal, Purchase Seal Separately
7		4897877		1	GASKET
8		4897876		1	SPACER
9		2853050		1	PIPE, Oil Suction; Includes Screen Which Is Not Serviced Separately
10		4895291		1	SCREW, Hex Flg, M10 x 1.5 x 20

ENGINE, OIL

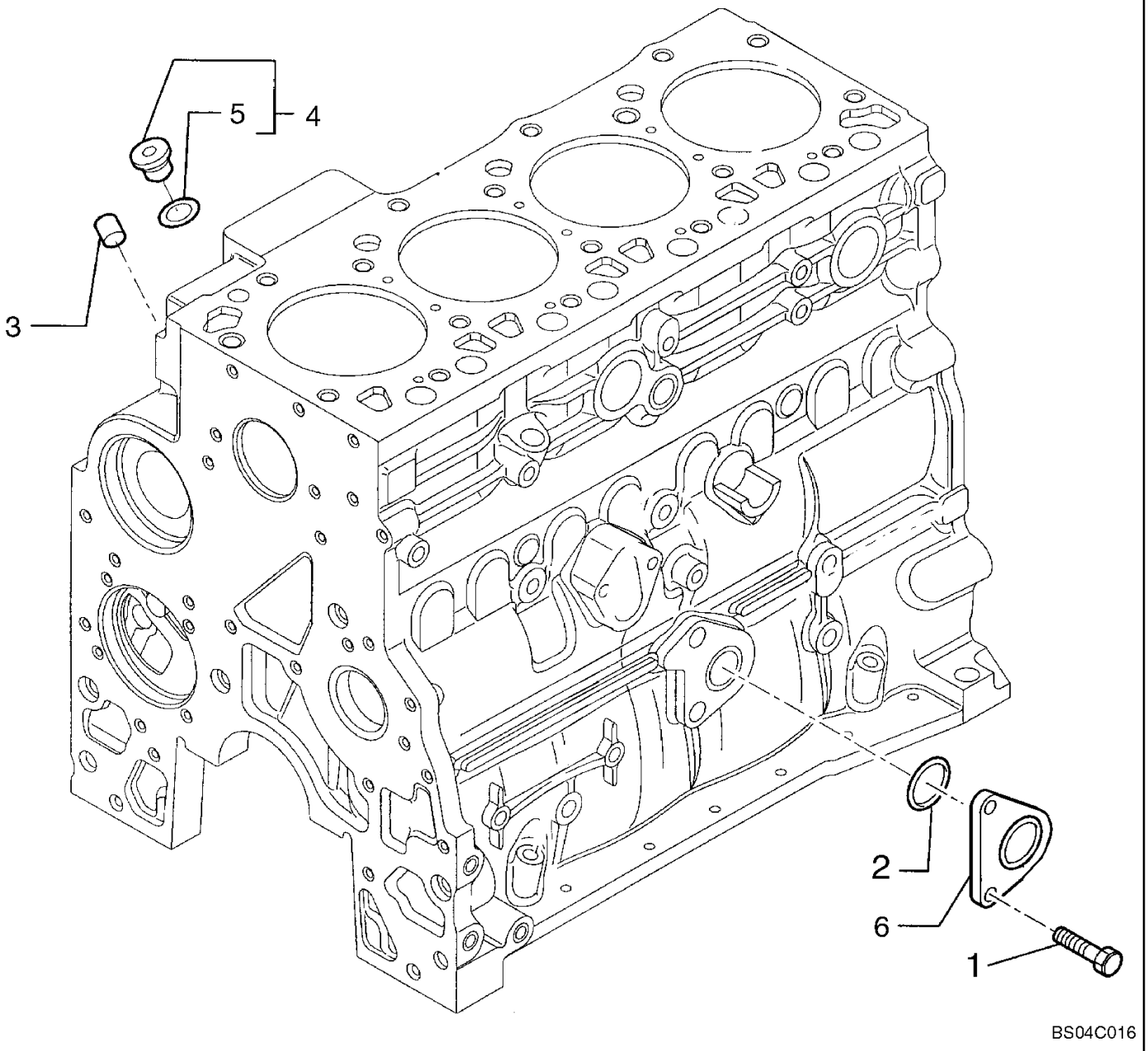

ENGINE, OIL

REF	FN	PART NUMBER	YR/SN	QTY	DESCRIPTION
1		2852134		2	SCREW, Flange
2		14458681		1	O-RING, -128, Cl 7, 1.487" ID x .103" Thk
3		4895406		1	PLUG
4		4897330		2	PLUG, Assy; Incl. Ref 5
5		4895610		1	O-RING
6		2852995		1	FLANGE

OIL FILTER AND COOLER

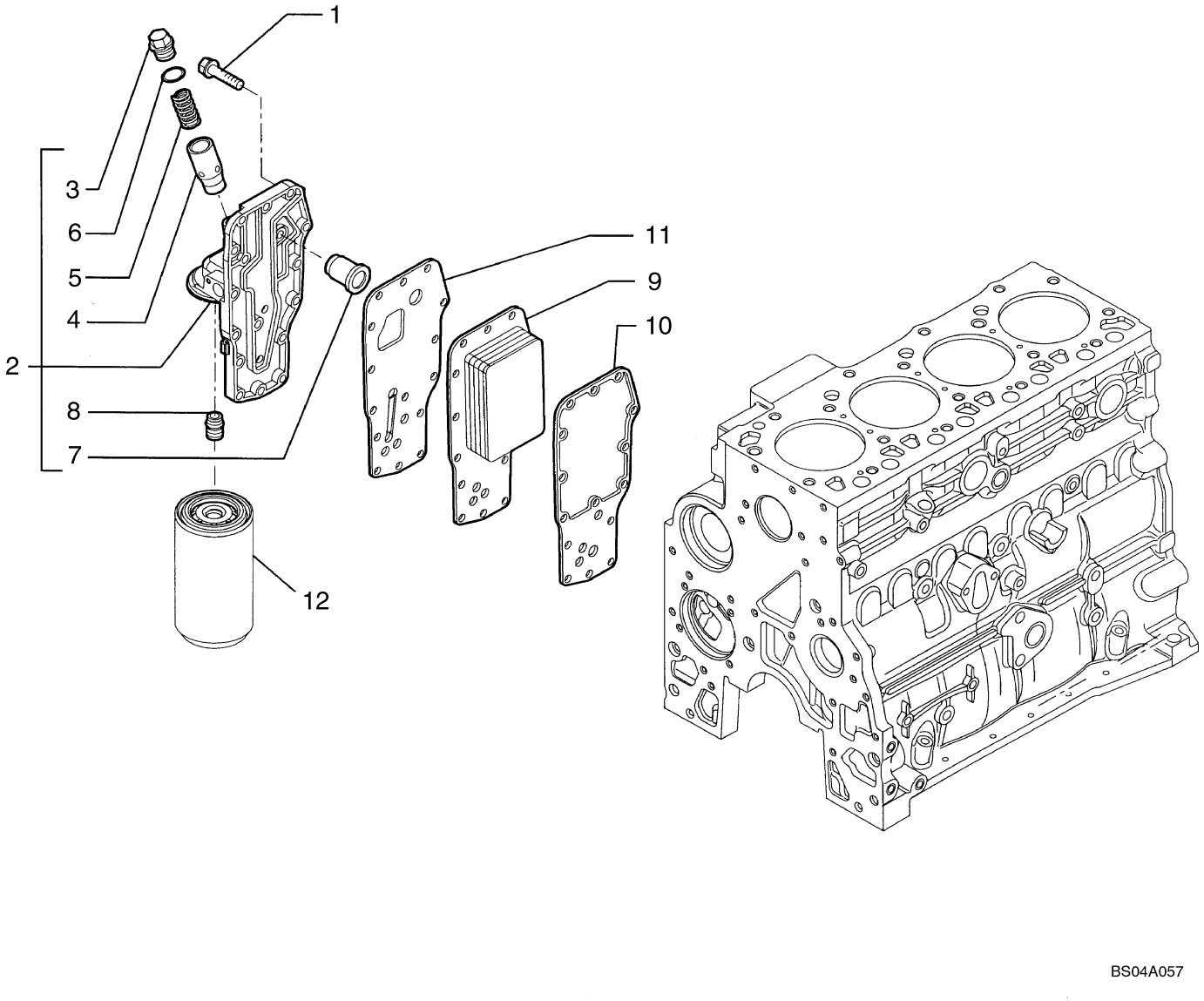

OIL FILTER AND COOLER

REF	FN	PART NUMBER	YR/SN	QTY	DESCRIPTION
1		4899019		15	SCREW, Hex Flg, M8 x 1.25 x 35
		2856343		1	HEAD, FILTER, Incl. Ref 3 - 8
3		2853781		1	PLUG
4		4896404		1	PLUNGER, Plunger, Pressure Regulator
5		4895045		1	SPRING
6		4899035		1	O-RING
7		4896410		1	VALVE, PRESSURE RELIEF, Pressure Relief
8		{2856344}		1	Head, Filter; Incl 8A
8A		4893391		1	ADAPTER
9		4896406		1	COOLER, OIL, Cooler Core
9		2853722		1	COOLER, OIL, Alternate Part to 4896406
10		2830559		1	GASKET, Core
11		4896409		1	GASKET, Head
12		REF		1	INSTRUCTION, FILTER, ENGINE OIL; See Figure 02-20

OIL FILTERS - ENGINE

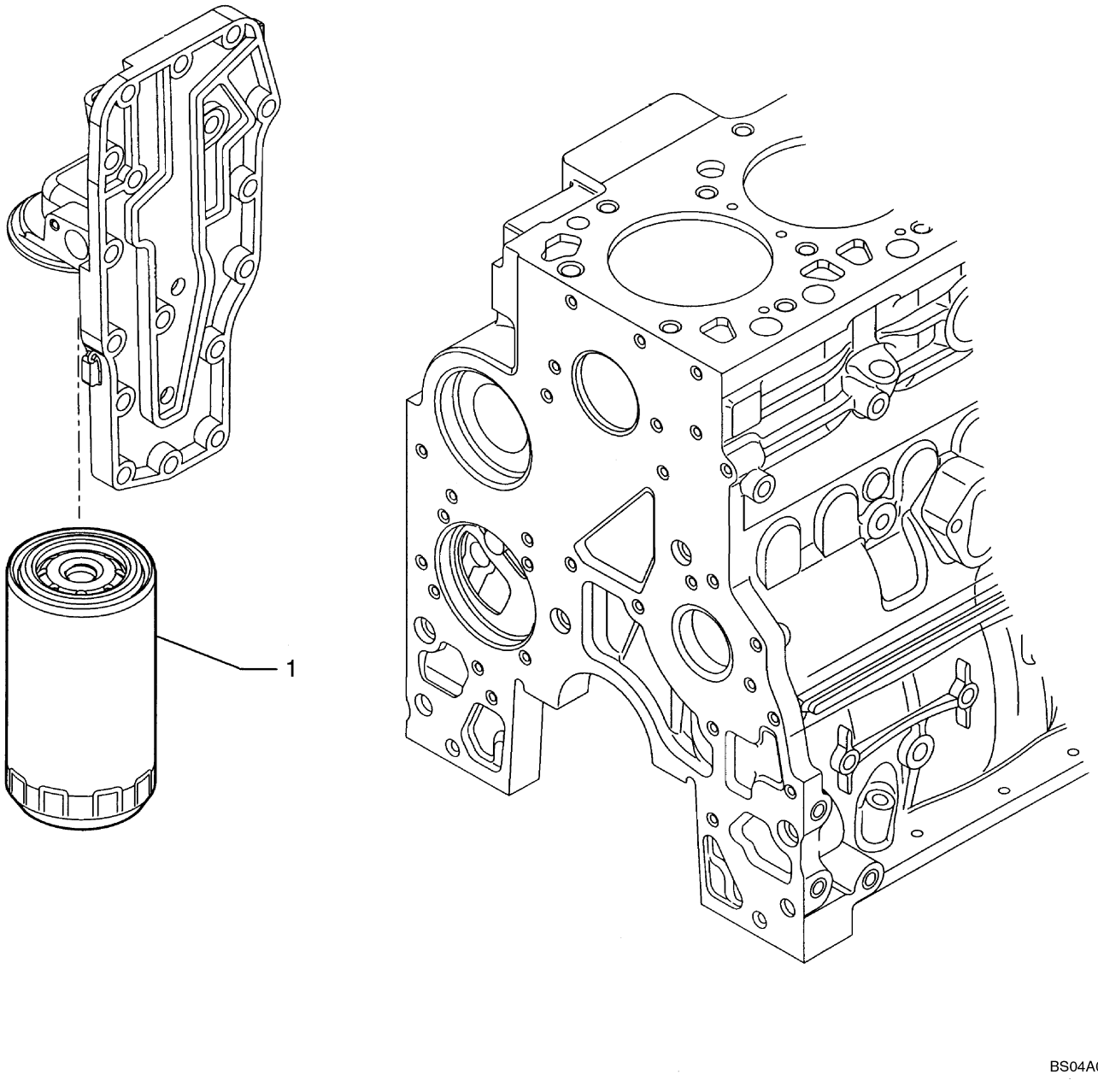

OIL FILTERS - ENGINE

REF	FN	PART NUMBER	YR/SN	QTY	DESCRIPTION
1		2856715		1	FILTER, ENGINE OIL

OIL PUMP - ENGINE

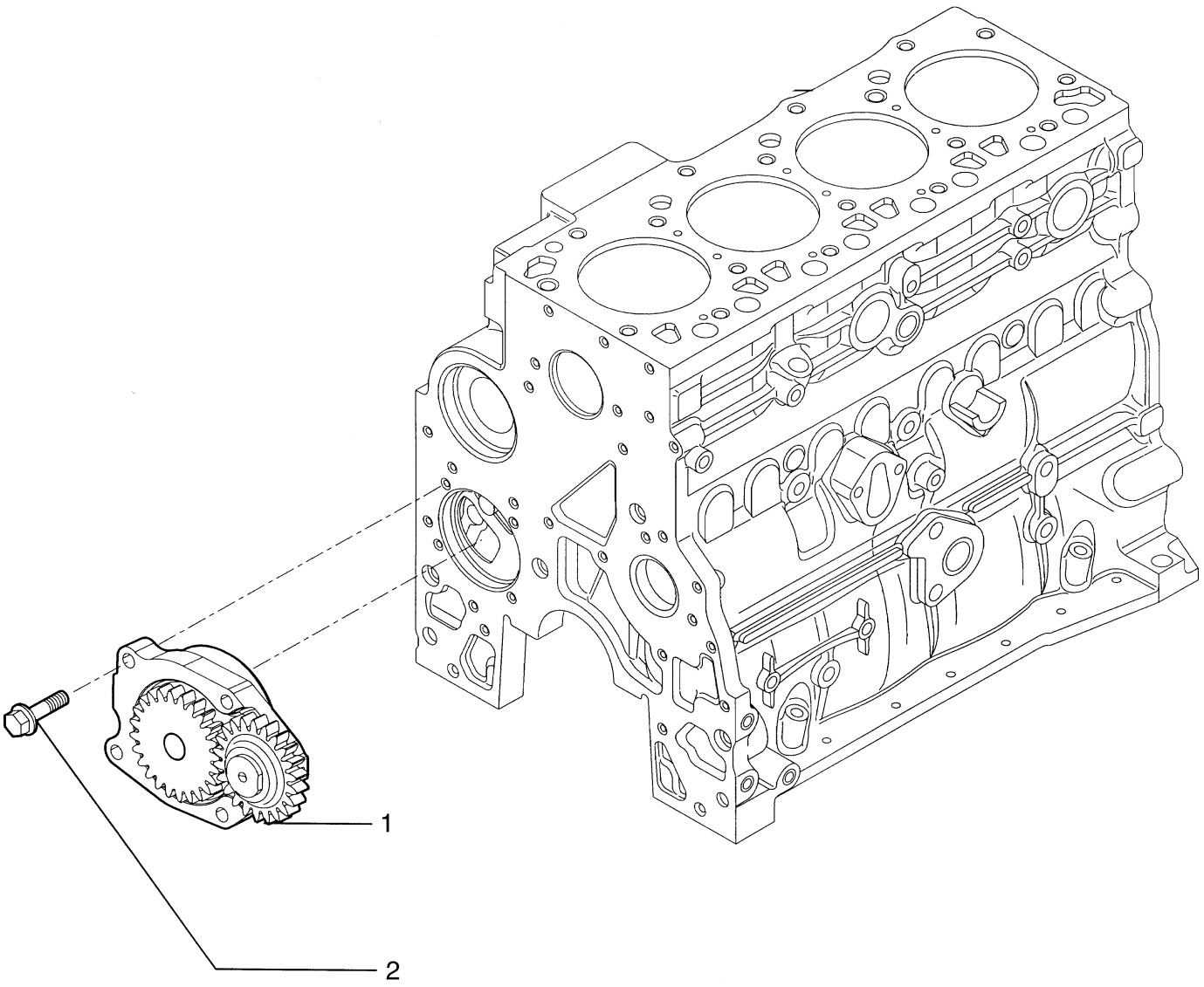

BS04A054

OIL PUMP - ENGINE

REF	FN	PART NUMBER	YR/SN	QTY	DESCRIPTION
1		4897480		1	PUMP, ENGINE OIL
2		4899090		4	SCREW, Hex Flg, M8 x 1.25 x 30

MOTOR SENSORS - ENGINE OIL

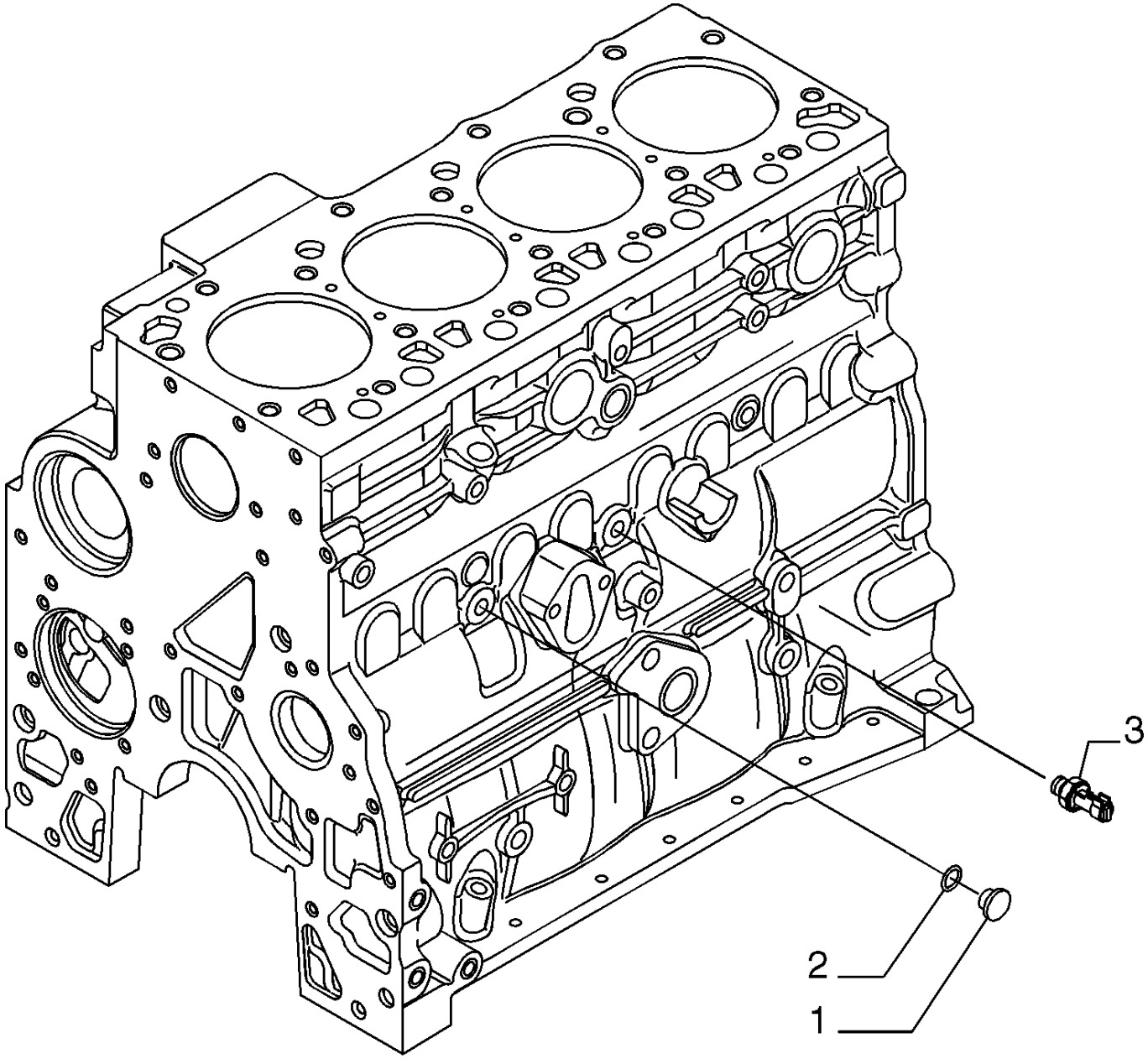

BS07M810

MOTOR SENSORS - ENGINE OIL

REF	FN	PART NUMBER	YR/SN	QTY	DESCRIPTION
1		4899009		1	PLUG, M10 x 1
2		4899072		1	O-RING
3		2852889		1	SWITCH, PRESSURE, Engine Oil

BREATHER - ENGINE

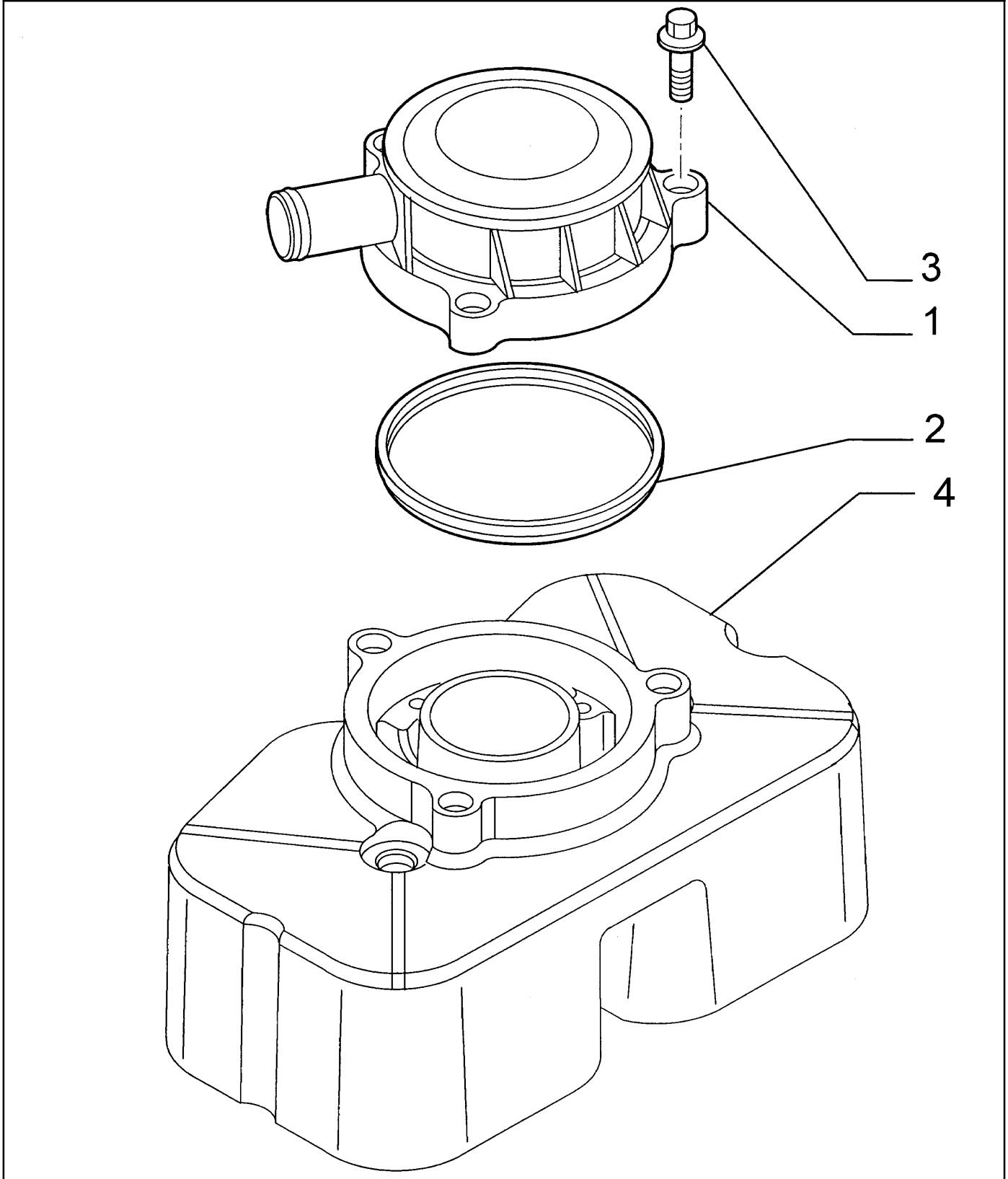

BREATHER - ENGINE

REF	FN	PART NUMBER	YR/SN	QTY	DESCRIPTION
1		2852531		1	BREATHER
2		2852028		1	GASKET
3		4899110		3	SCREW, Hex Flg, M6 x 1 x 20, In Alternative
3		4899092		3	SCREW, Hex Flg, M6 x 1 x 25, In Alternative

MANIFOLD - INTAKE

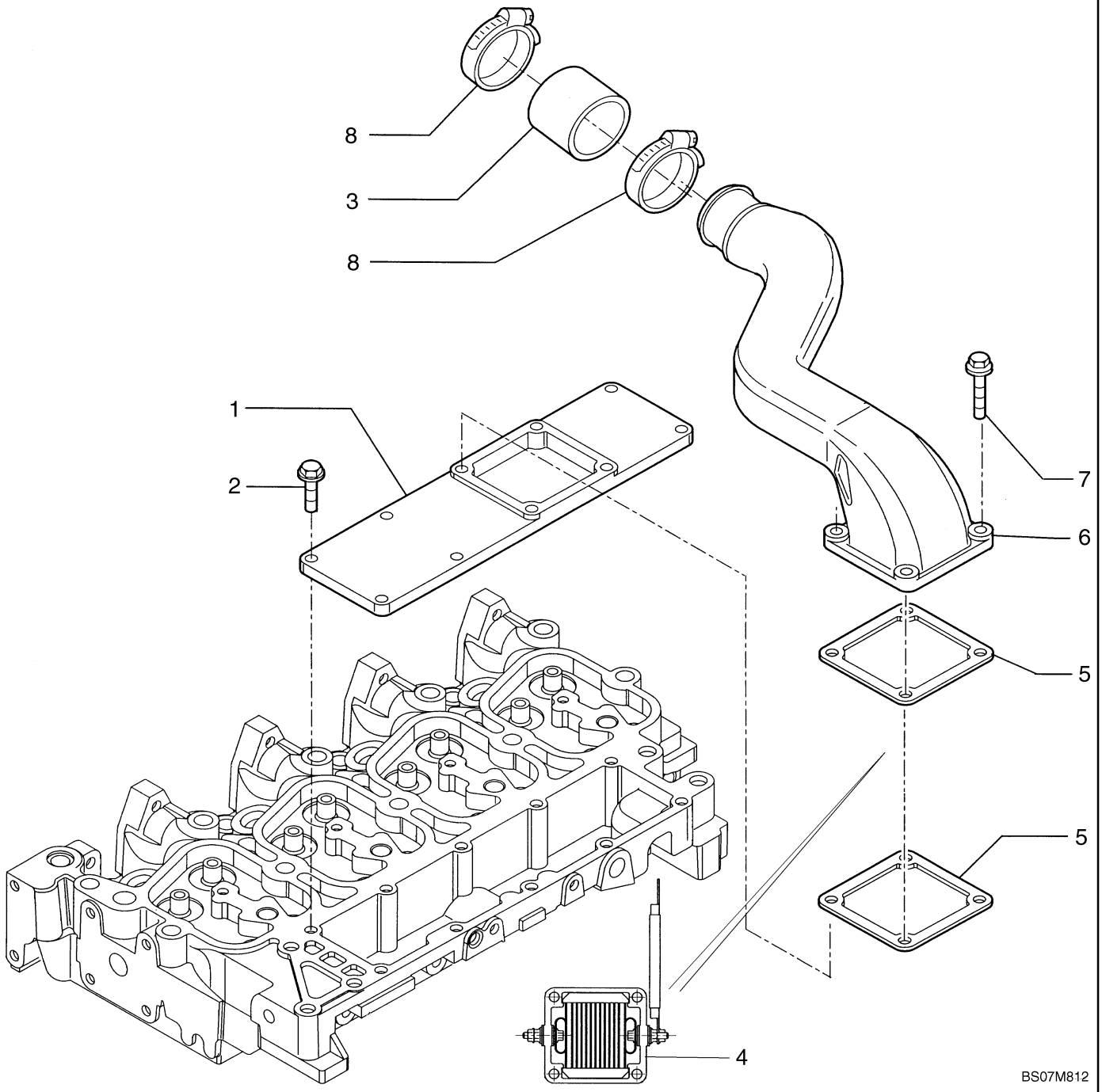

MANIFOLD - INTAKE

REF	FN	PART NUMBER	YR/SN	QTY	DESCRIPTION
1		2856462		1	MANIFOLD, INLET
2		4899039		6	SCREW, Hex Flg, M8 x 1.25 x 25
3		2852029		1	SLEEVE
4		4895316		1	HEATER
5		4899921		2	GASKET
6		2853075		1	ELBOW, Hose Assy
7		2852155		4	SCREW, Flange, M8 x 80
8		2853076		2	CLAMP, HOSE
		4895325		1	DECAL, Warning, Do Not Use Ether

MANIFOLD - EXHAUST

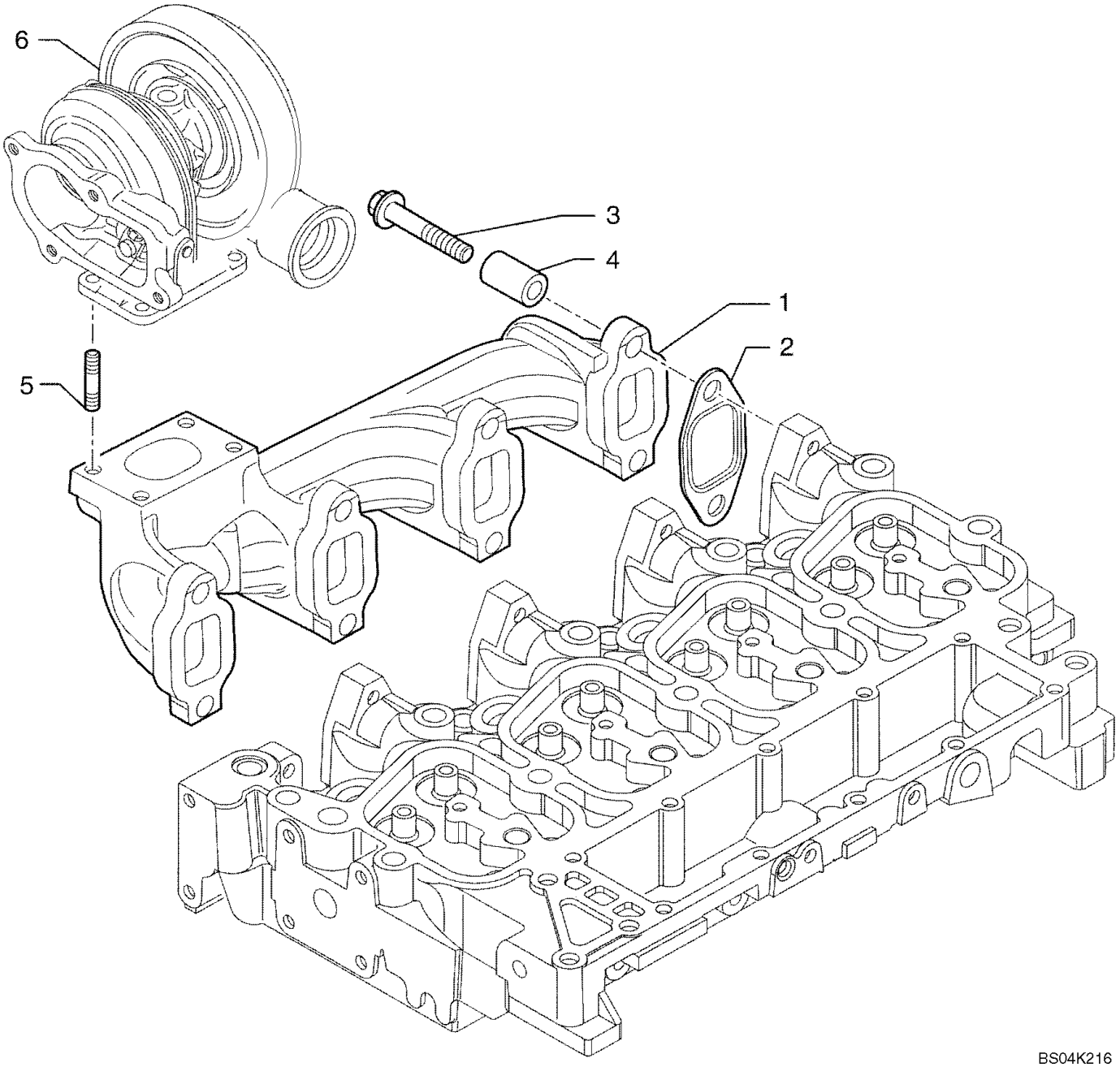

MANIFOLD - EXHAUST

REF	FN	PART NUMBER	YR/SN	QTY	DESCRIPTION
1		{2855983}		1	Exhaust Manifold
2		2830445		4	GASKET
3		2852834		8	SCREW, Flange, M10 x 40; Models Without Turbocharged Engine
3		2852744		8	SCREW, Flange, M10 x 65; Models With Turbocharged Engine
4		4895336		8	SPACER, Spacer; Models With Turbocharged Engine
5		4899859		4	STUD
6		REF		1	INSTRUCTION, TURBOCHARGER; See Figure 02-40

PISTONS - CONNECTING ROD

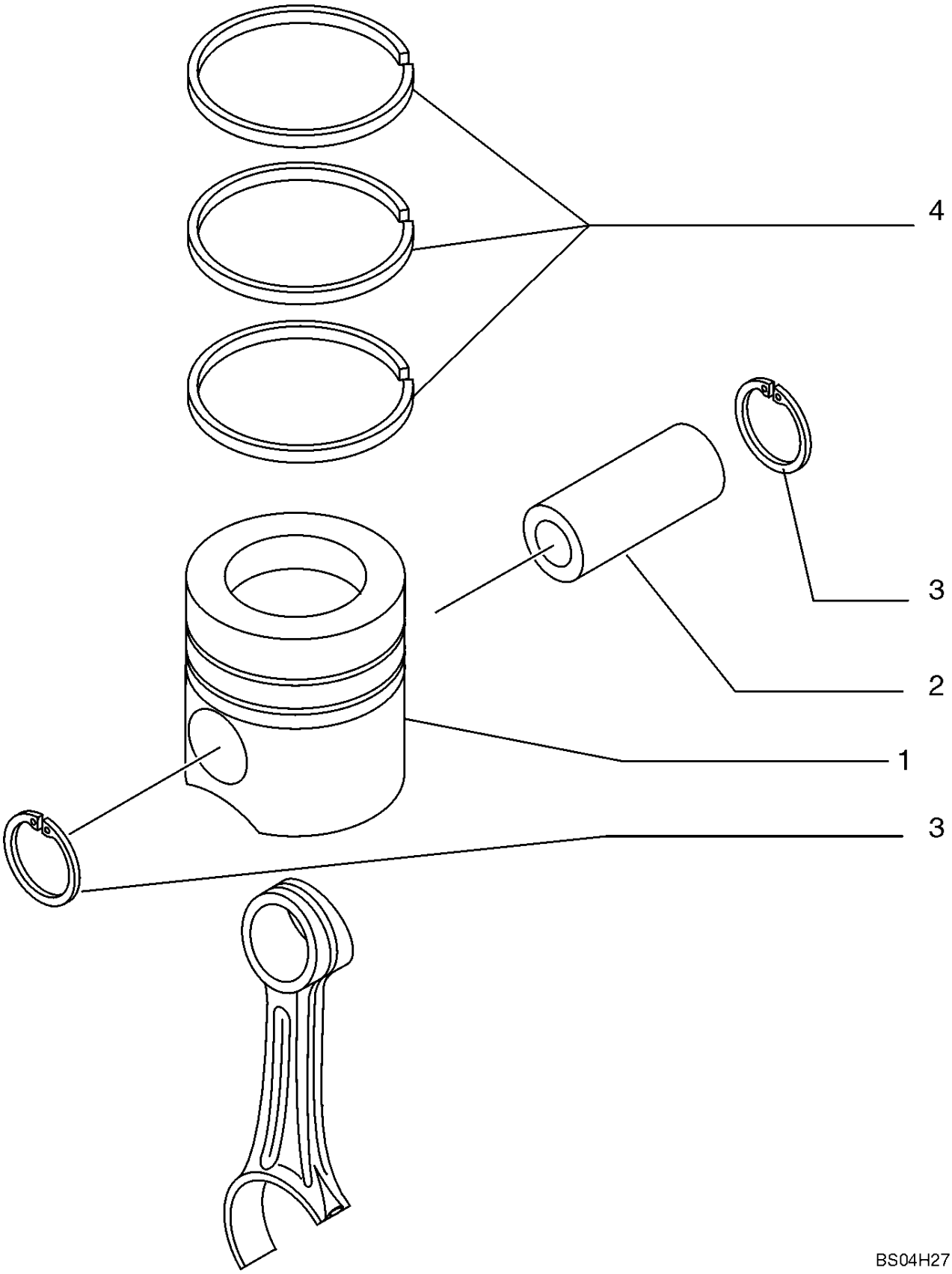

PISTONS - CONNECTING ROD

REF	FN	PART NUMBER	YR/SN	QTY	DESCRIPTION
		87647549		1	KIT, PISTON & RINGS, STD, Incl Piston 2855531, Top Compression Ring 2853805, Second Compression Ring 2830158, Oil Control Ring 2852037, Piston Pin 4892712, And Retainer 2854030
		87647550		1	KIT, PISTON & RINGS, 0.4 mm Oversize, Incl Piston 2856484, Top Compression Ring 2854141, Second Compression Ring 2830159, Oil Control Ring 2853875, Piston Pin 4892712, And Retainer 2854030
		87647551		1	KIT, PISTON & RINGS, 0.8 mm Oversize, Incl Piston 2856485, Top Compression Ring 2854142, Second Compression Ring 2830160, Oil Control Ring 2853876, Piston Pin 4892712, And Retainer 2854030
		{87582179}		1	Ring Kit; STD; Incl. Top Cmpression Ring 2854603, Second Compression Ring 2830158, Oil Control Ring 2852037
		{87582180}		1	Ring Kit; 0.4 mm Oversize; Incl. Top Cmpression Ring 2856713, Second Compression Ring 2830159, Oil Control Ring 2853875
		{87582181}		1	Ring Kit; 0.8 mm Oversize; Incl. Top Cmpression Ring 2856714, Second Compression Ring 2830160, Oil Control Ring 2853876
1		2855531		4	PISTON ASSY, STD; Does Not Include Rings
1		{2856484}		4	0.4 Oversize; Does Not Include Rings
1		{2856485}		4	0.8 Oversize; Does Not Include Rings
2		4892712		4	PIN, PISTON
3		2854030		8	RING, SNAP
3		4892713		8	RING, SNAP, Alternative To 2854030
4		{2853805}		4	Top Compression Ring; STD
4		{2854141}		4	Top Compression Ring; 0.4 Oversize
4		{2856713}		4	Top Compression Ring; 0.4 Oversize
4		{2856714}		4	Top Compression Ring; 0.4 Oversize
4		{2854142}		4	Top Compression Ring; 0.8 Oversize
4		2852037		4	RING, OIL SCRAPER, Oil Control; STD; Red Identification Mark
4		{2853875}		4	Oil Control Ring; 0.4 Oversize

PISTONS - CONNECTING ROD

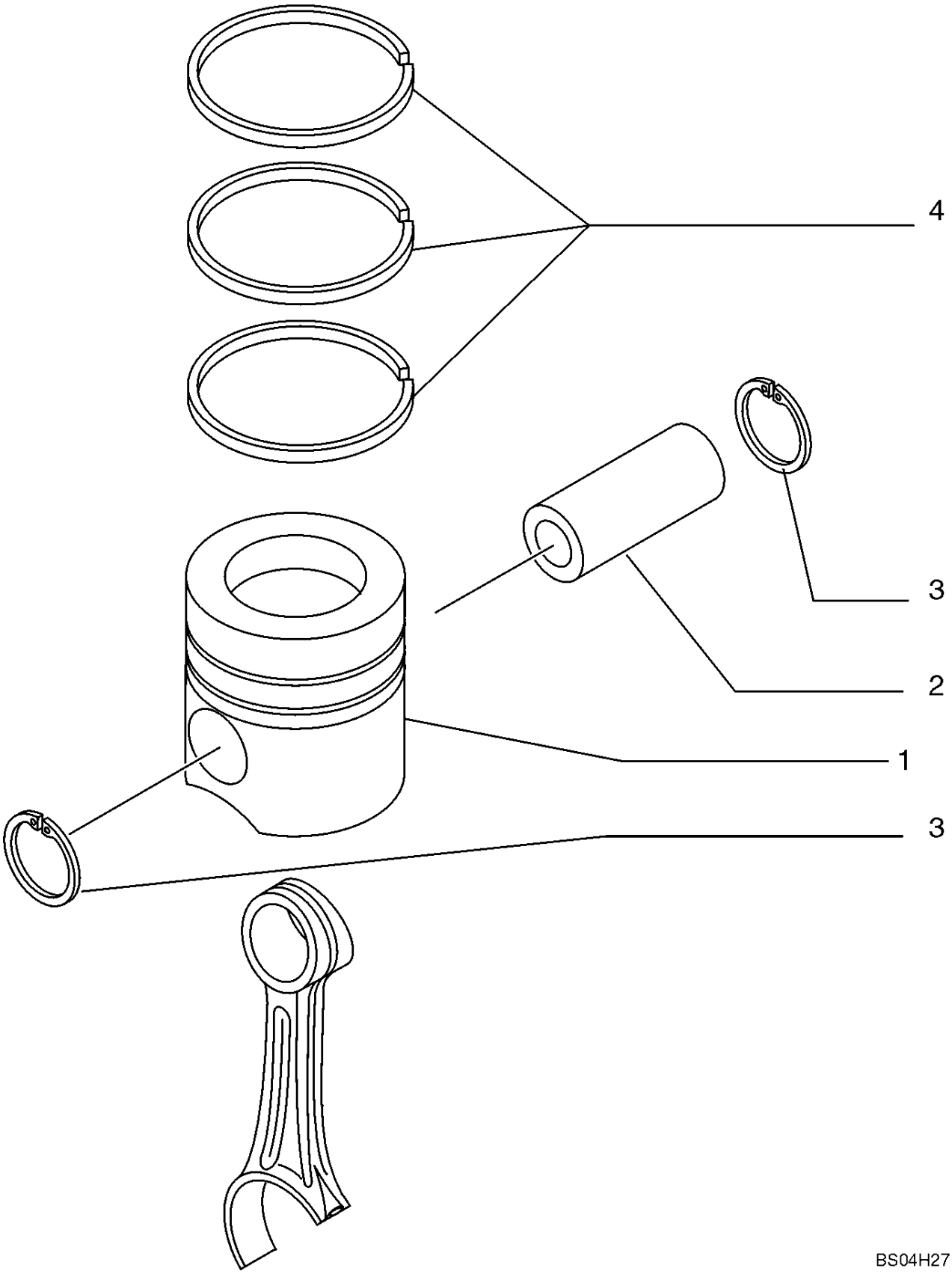

PISTONS - CONNECTING ROD

REF	FN	PART NUMBER	YR/SN	QTY	DESCRIPTION
4		{2853876}		4	Oil Control Ring; 0.8 Oversize
4		2830158		4	RING, PISTON, Second Compression; STD; Yellow Identification Mark
4		{2830159}		4	Second Compression Ring; 0.4 mm Oversize
4		{2830160}		4	Second Compression Ring; 0.8 mm Oversize
4		2854603		4	KIT, Ring, Wear

CONNECTING ROD

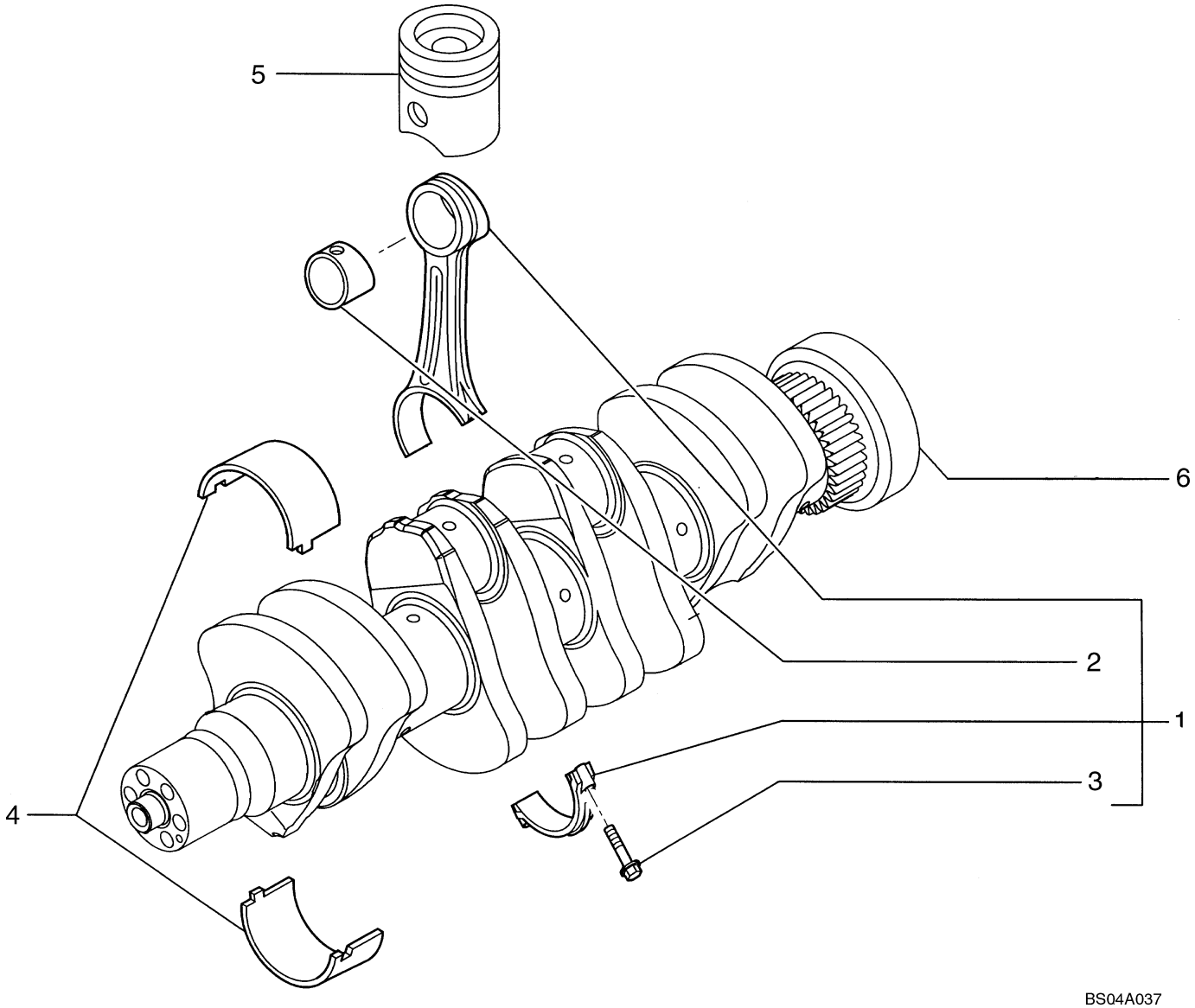

CONNECTING ROD

REF	FN	PART NUMBER	YR/SN	QTY	DESCRIPTION
1		2831298		4	ROD, CONNECTING, Incl. Ref 2, 3
1		{4895747}		4	Connecting Rod; Alternate To 2831298; Incl. Ref 2, 3
2		4892708		1	BUSHING
3		2831297		2	SCREW
4		4892714		4	BEARING, CRANKSHAFT
4		4892715		4	BEARING, CRANKSHAFT
5		REF		1	INSTRUCTION, PISTON; See Figure 02-27
6		REF		1	INSTRUCTION, CRANKSHAFT; See Figure 02-33

ROCKER SHAFT

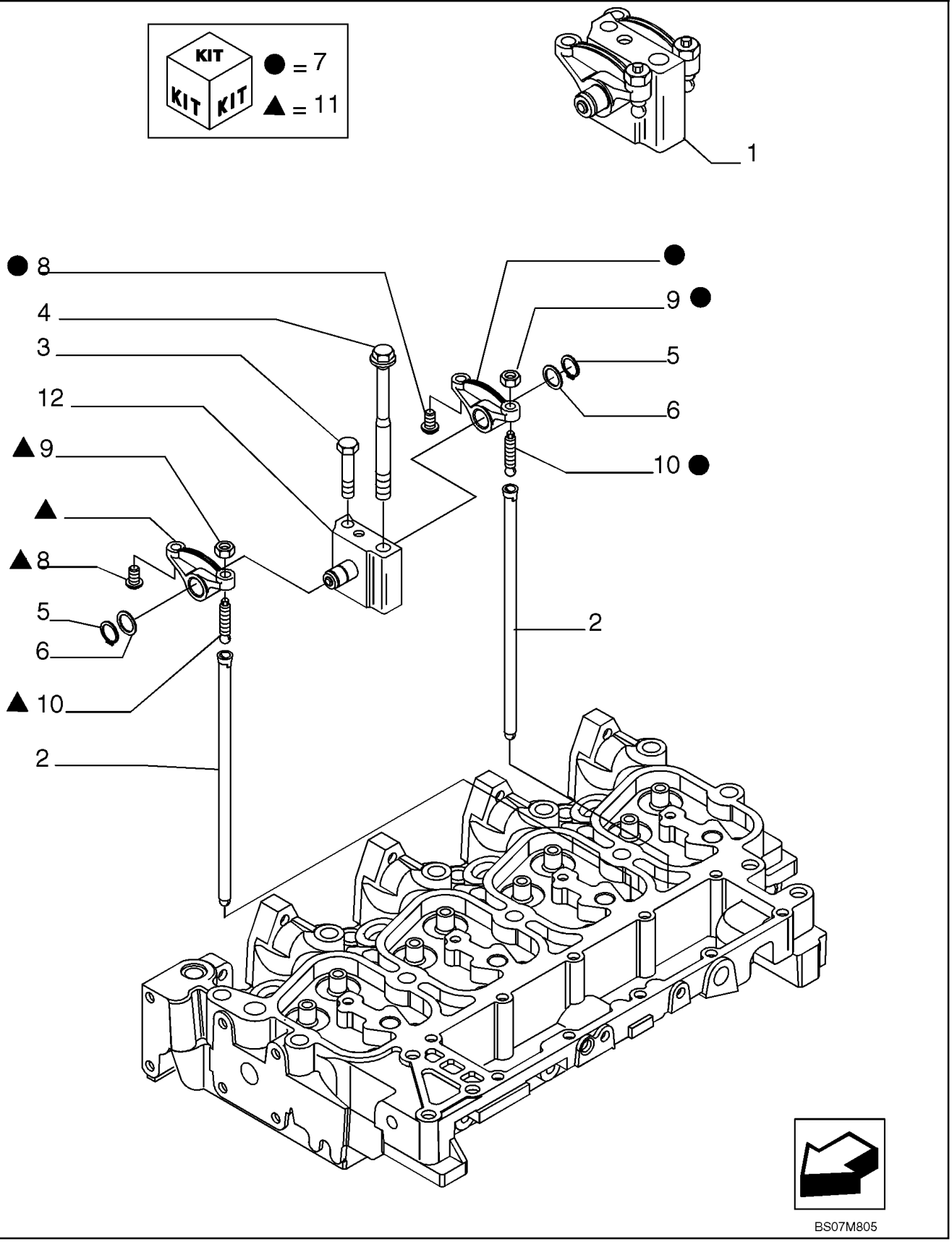

ROCKER SHAFT

REF	FN	PART NUMBER	YR/SN	QTY	DESCRIPTION
1		4895195		4	ROCKER ARM, - ASSY
2		4895361		8	ROD, PUSH
3		2852866		4	SCREW
4		4892860		4	SCREW, Wash Hd, M12 x 1.25 x 183
5		4895363		2	RING, SNAP
6		4895364		2	WASHER
7		4895196		1	ROCKER ARM, - ASSY
8		4895365		2	INSERT
9		4895198		2	NUT
10		4895199		2	SCREW
11		4895200		1	ROCKER ARM, - ASSY
12		4895204		1	SUPPORT

FLYWHEEL - ENGINE

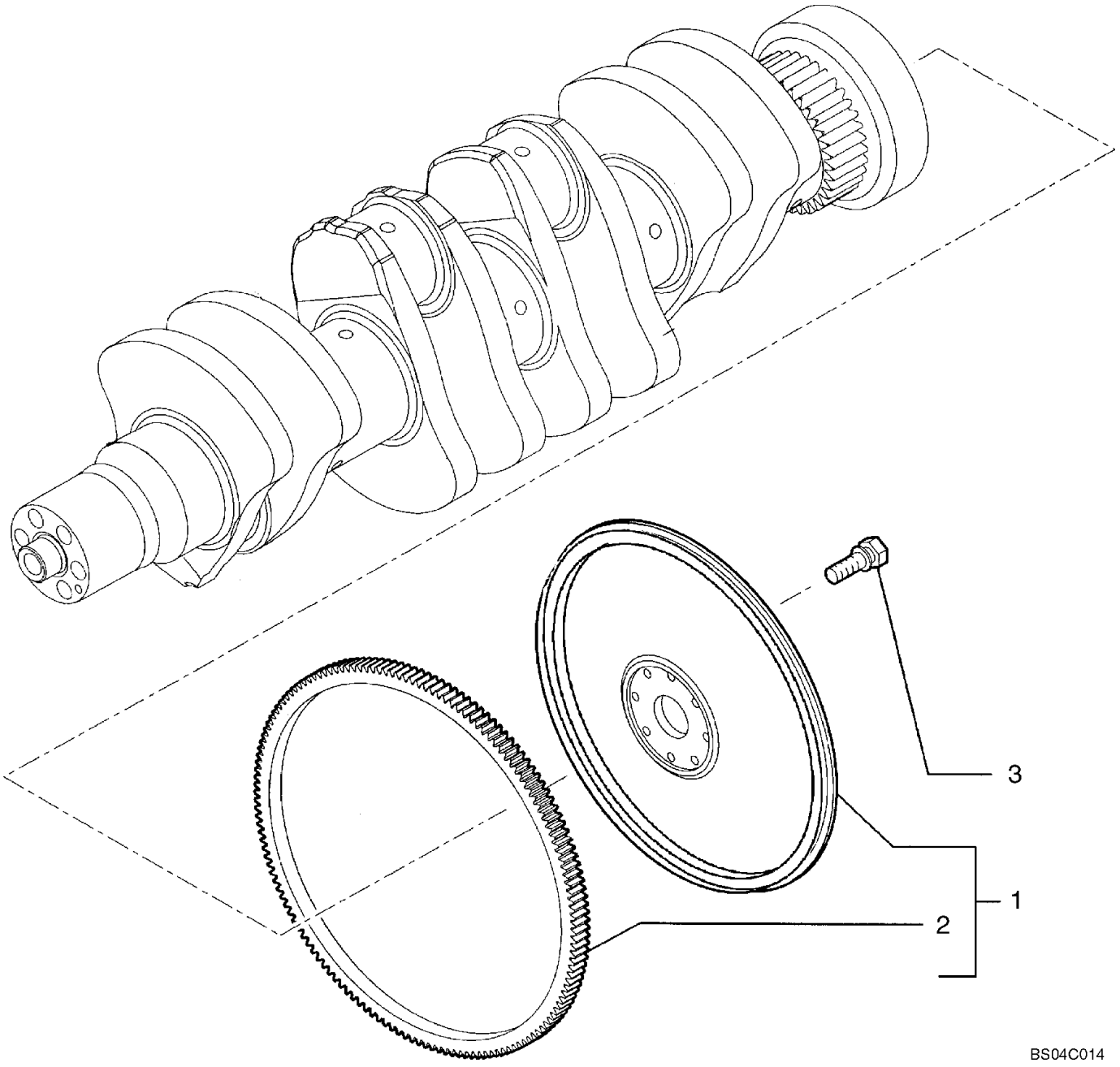

FLYWHEEL - ENGINE

REF	FN	PART NUMBER	YR/SN	QTY	DESCRIPTION
1		2853991		1	FLYWHEEL, ENGINE, Incl. Ref 2
2		2852221		1	GEAR, RING
3		2852364		8	SCREW, With Washer, M12 x 40

PULLEY - CRANKSHAFT

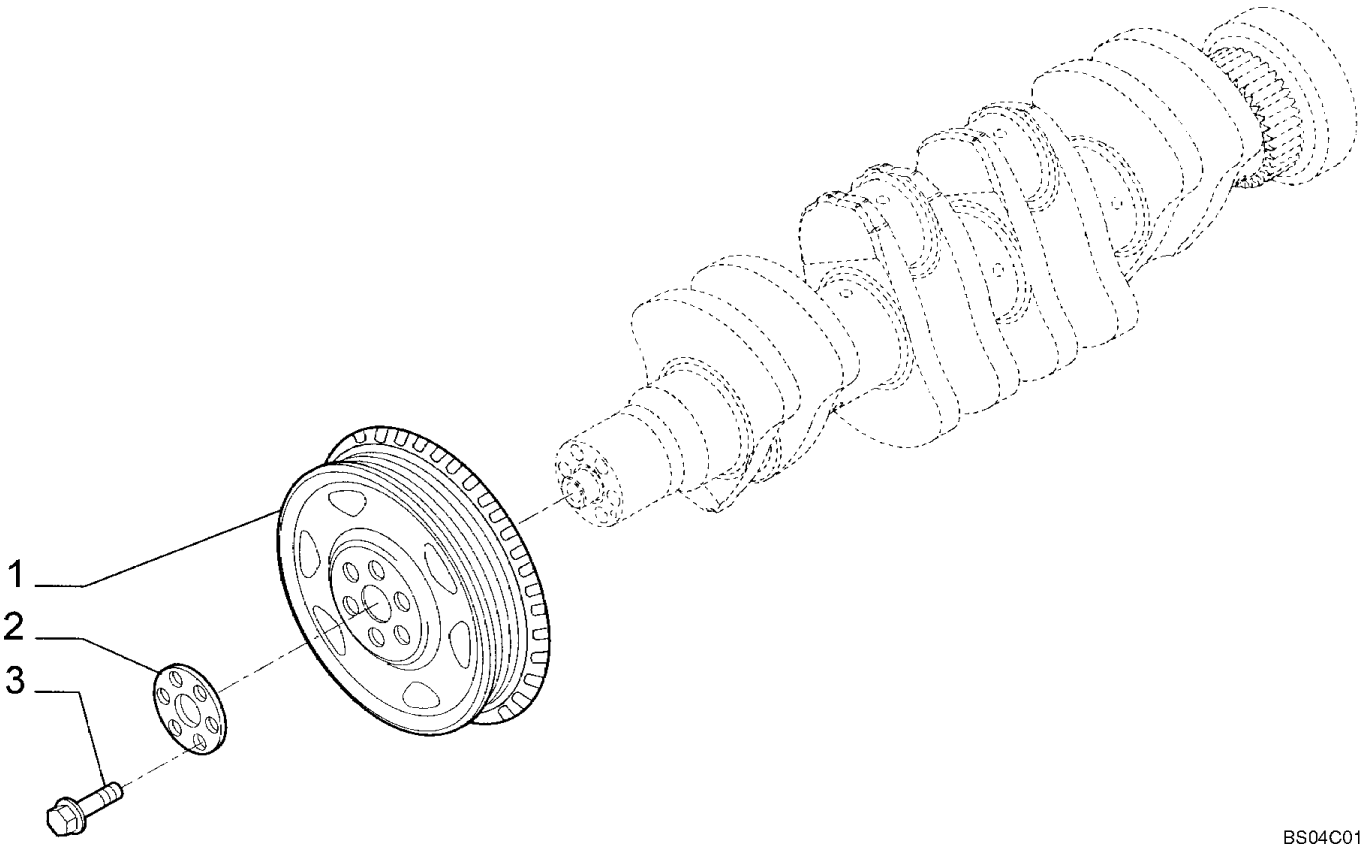

PULLEY - CRANKSHAFT

REF	FN	PART NUMBER	YR/SN	QTY	DESCRIPTION
1		4896773		1	PULLEY
2		2852533		1	WASHER, Clamping Plate
3		4892867		6	SCREW, Torx Wash Hd, M12 x 1.25 x 78.5
3		2853960		6	SCREW, Alternative To 4892867

CAMSHAFT

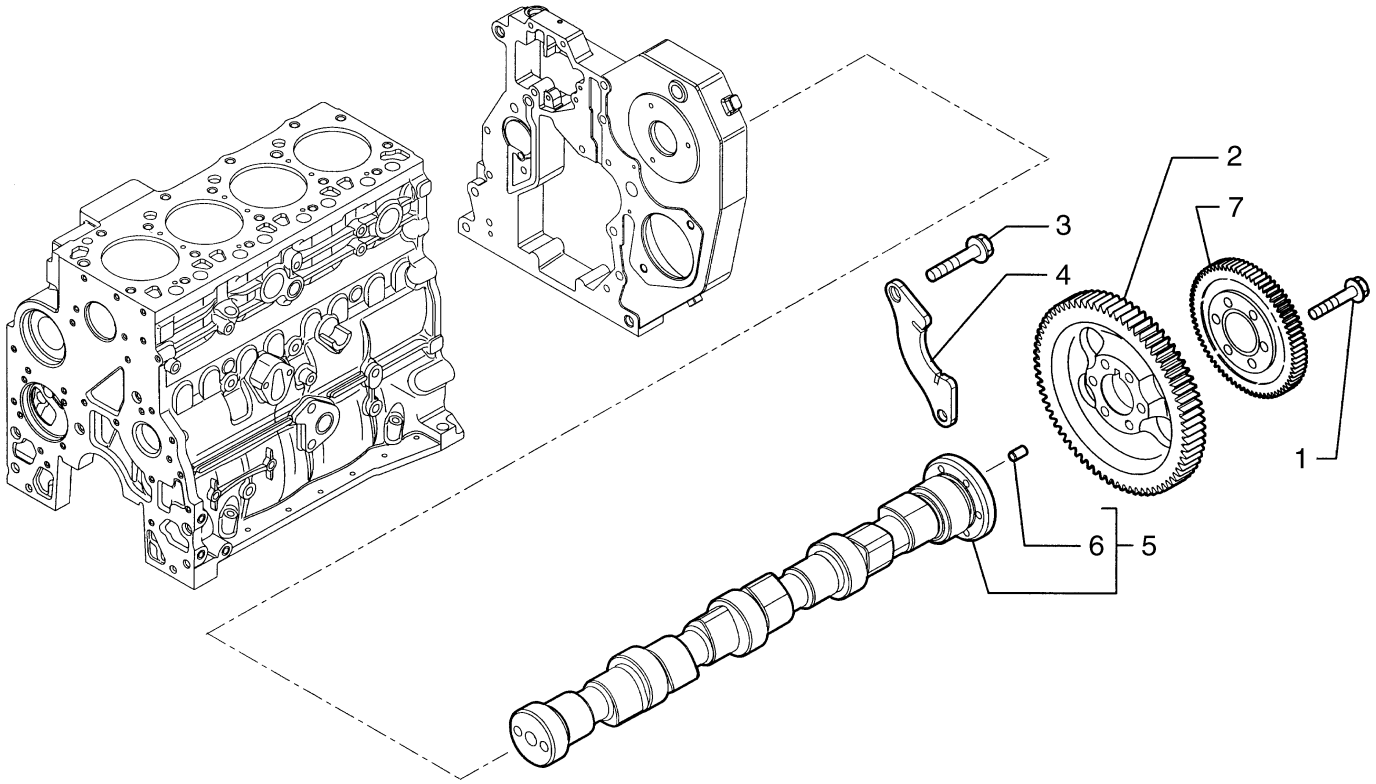

BS04A043

CAMSHAFT

REF	FN	PART NUMBER	YR/SN	QTY	DESCRIPTION
1		4895323		6	SCREW, Flange, M8 x 40
2		2852062		1	GEAR
3		4899068		2	SCREW, Hex Flg, M8 x 1.25 x 16
4		4897457		1	FLANGE
5		{2856170}		1	Camshaft; Incl. Ref 6
6		4899080		1	DOWEL
7		{2855183}		1	Gear, Driven

CRANKSHAFT

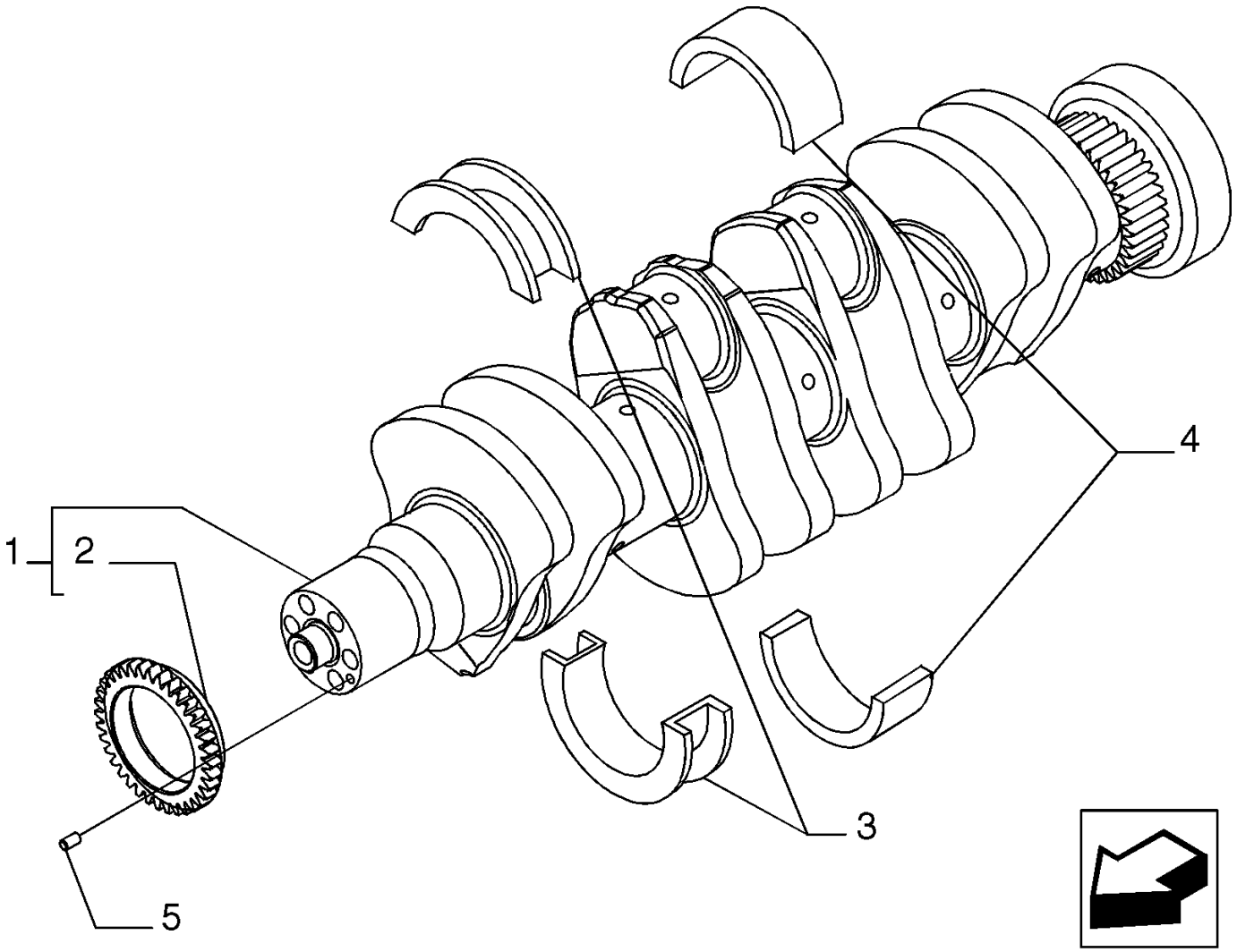

BS07M806

CRANKSHAFT

REF	FN	PART NUMBER	YR/SN	QTY	DESCRIPTION
1		2853822		1	CRANKSHAFT, - ASSY
2		4893386		1	GEAR
3		{2853816}		1	STD.
3		{2855020}		1	Thrust Bearing Kit; -0.25
3		{2855021}		1	Thrust Bearing Kit; -0.5
3		{2855022}		1	Thrust Bearing Kit; -0.75
3		{2855023}		1	Thrust Bearing Kit; -1
3		4895414		1	BEARING, CRANKSHAFT
4		{2853815}		4	Main Bearing Kit; STD.
4		{2853816}		4	Main Bearing Kit; -0.25
4		{2853817}		4	Main Bearing Kit; -0.5
4		{2853818}		4	Main Bearing Kit; -0.75
4		{2853819}		4	Main Bearing Kit; -1
4		4895017		4	BEARING, CRANKSHAFT
5		4899046		1	DOWEL

COOLING SYSTEM - ENGINE

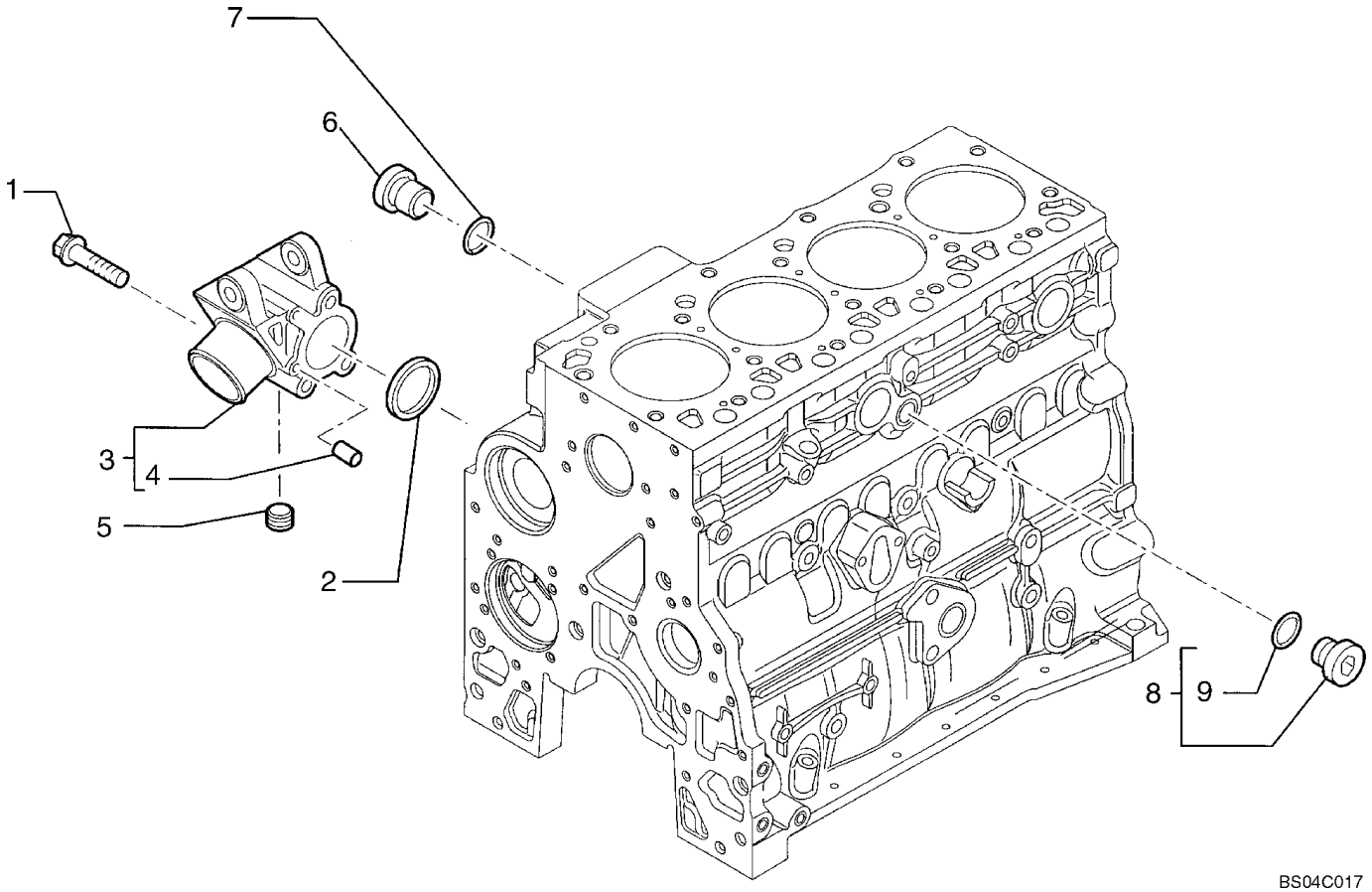

COOLING SYSTEM - ENGINE

REF	FN	PART NUMBER	YR/SN	QTY	DESCRIPTION
1		4899109		3	SCREW, Hex, M10 x 1.5 x 80
2		2854072		1	O-RING
3		2852145		1	SUPPORT, Incl. Ref 4
4		NSS		2	NOT SERVICED SEPARATELY, Dowel
5		2852511		1	PLUG
		4895392		1	PLUG, M18; Torque Converter Oil; Incl. Ref 6, 7
6		4895394		1	PLUG
7		4895393		1	O-RING
8		4895623		1	PLUG, Compressor Plumbing; Incl. Ref 9
9		4895625		1	O-RING

WATER PUMP

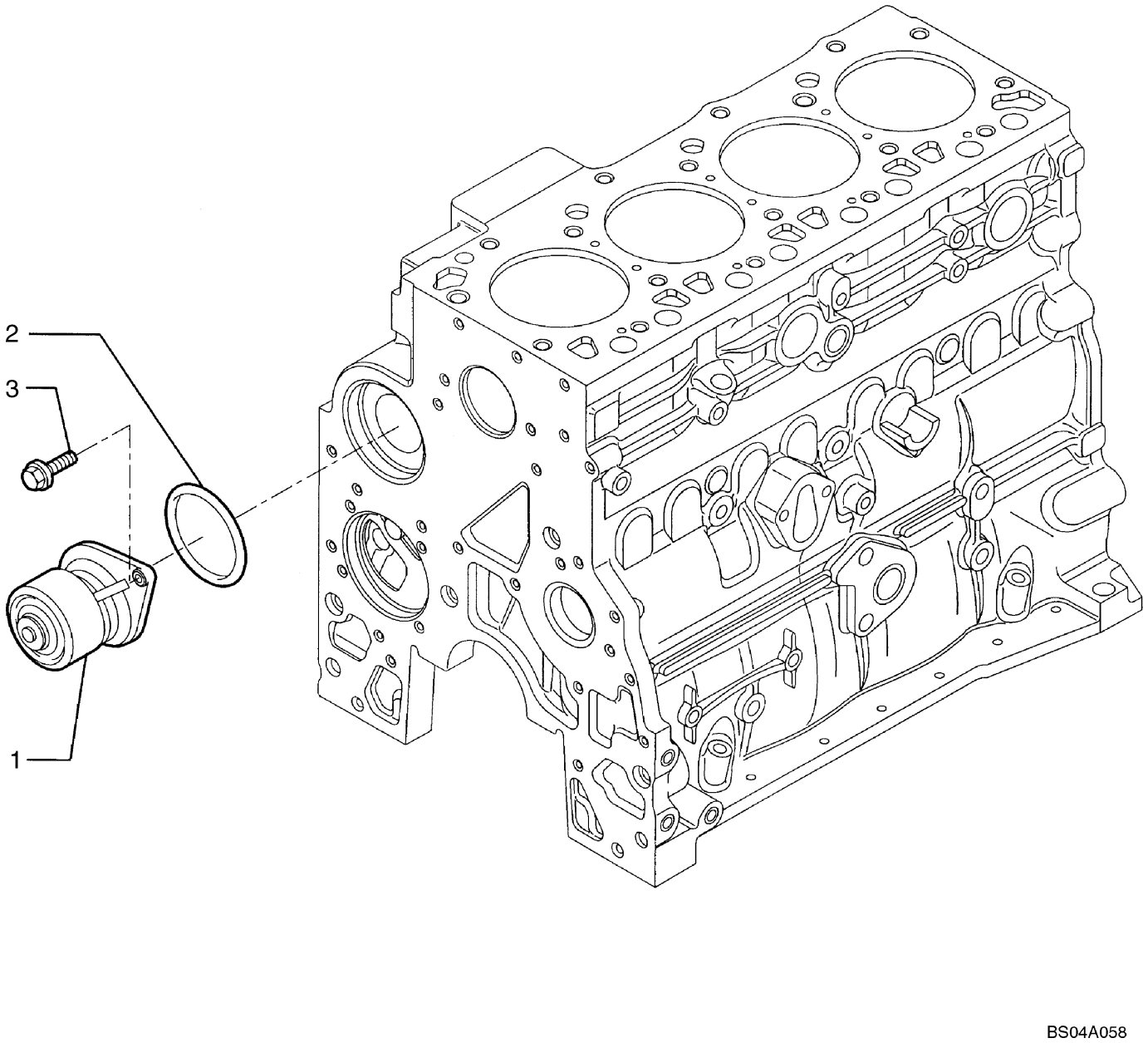

WATER PUMP

REF	FN	PART NUMBER	YR/SN	QTY	DESCRIPTION
1		4891252		1	PUMP, WATER
2		2852047		1	GASKET, Gasket
3		4899079		2	SCREW, Hex Flg, M8 x 1.25 x 25

WATER PUMP - CONTROL

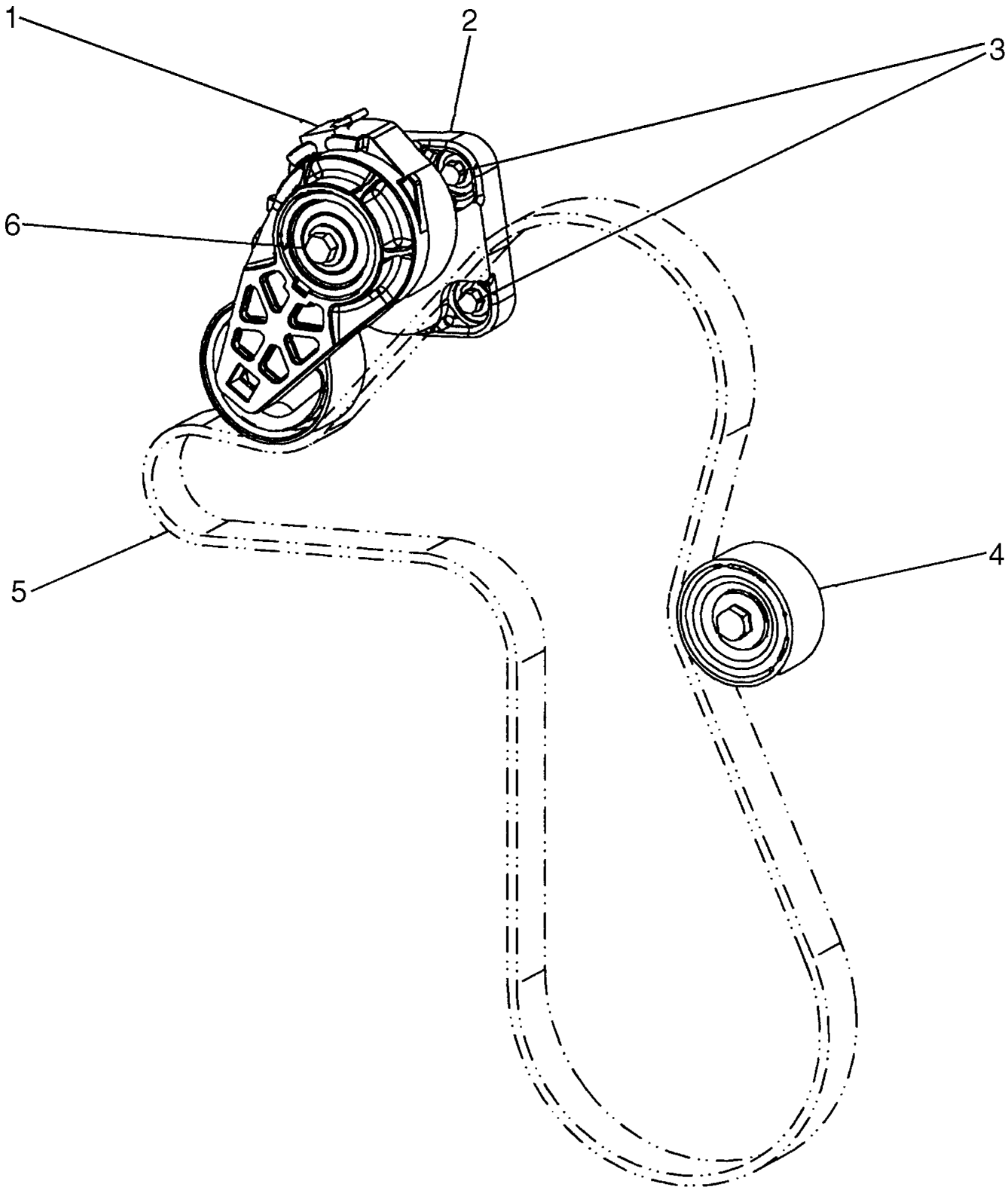

WATER PUMP - CONTROL

REF	FN	PART NUMBER	YR/SN	QTY	DESCRIPTION
1		2853206		1	TENSIONER, BELT
2		2856338		1	BRACKET, SUPPORTING
3		4899079		2	SCREW, Hex Flg, M8 x 1.25 x 25
4		2853006		1	PULLEY
5		85826230		1	BELT, See Figure 02-06
6		4895292		1	SCREW

THERMOSTAT - ENGINE COOLING SYSTEM

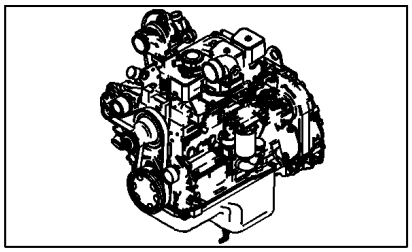

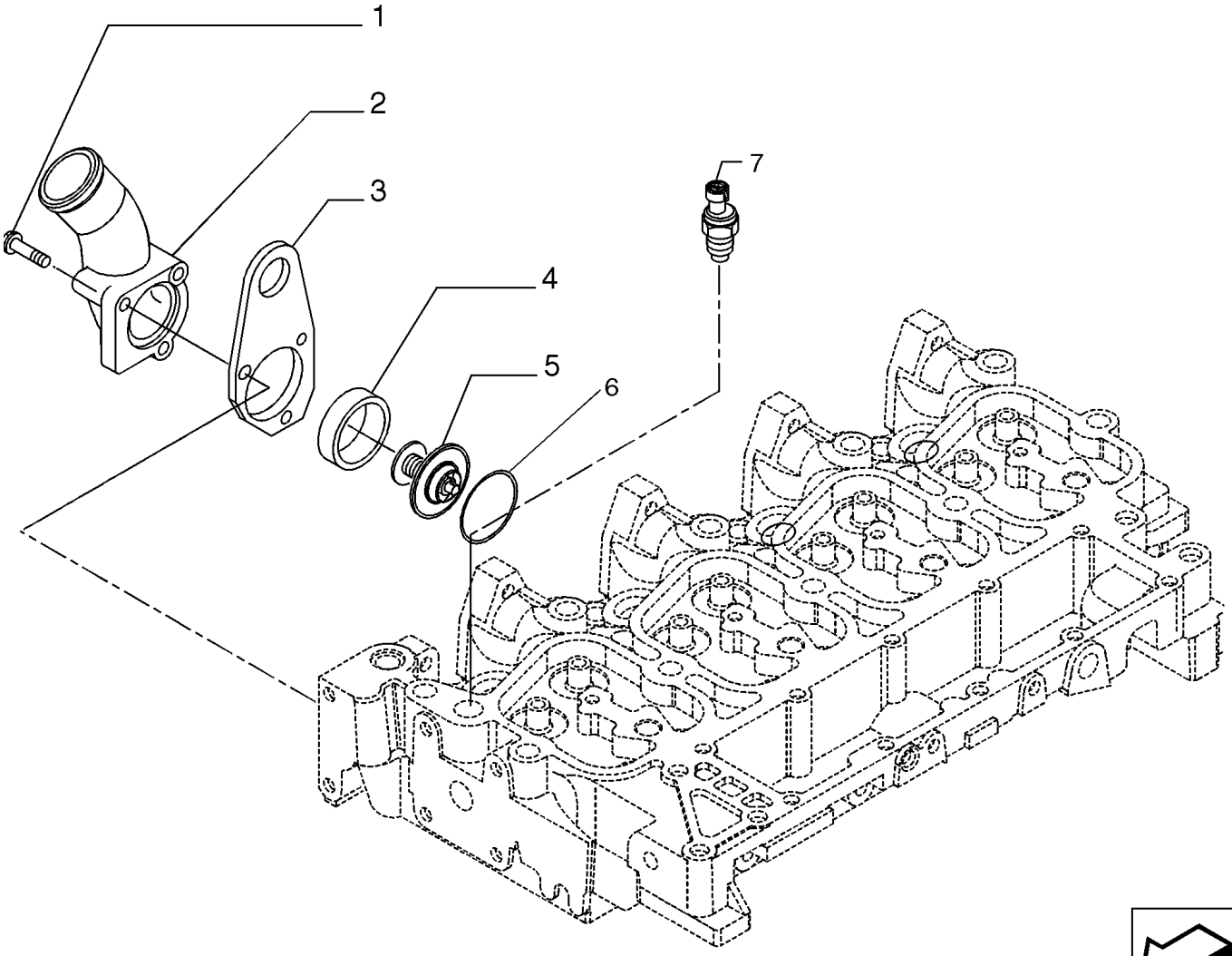

BS07M808

THERMOSTAT - ENGINE COOLING SYSTEM

REF	FN	PART NUMBER	YR/SN	QTY	DESCRIPTION
1		2852155		3	SCREW
2		2856455		1	MANIFOLD
3		{2853132}		1	Bracket; Engine Lifting
4		2853133		1	SEAL
5		2856541		1	THERMOSTAT, Incl 6
6		2852473		1	GASKET
7		{2854867}		1	SENSOR; Water Temp
8		4895078		1	PLUG, Not Illustrated

FAN DRIVE

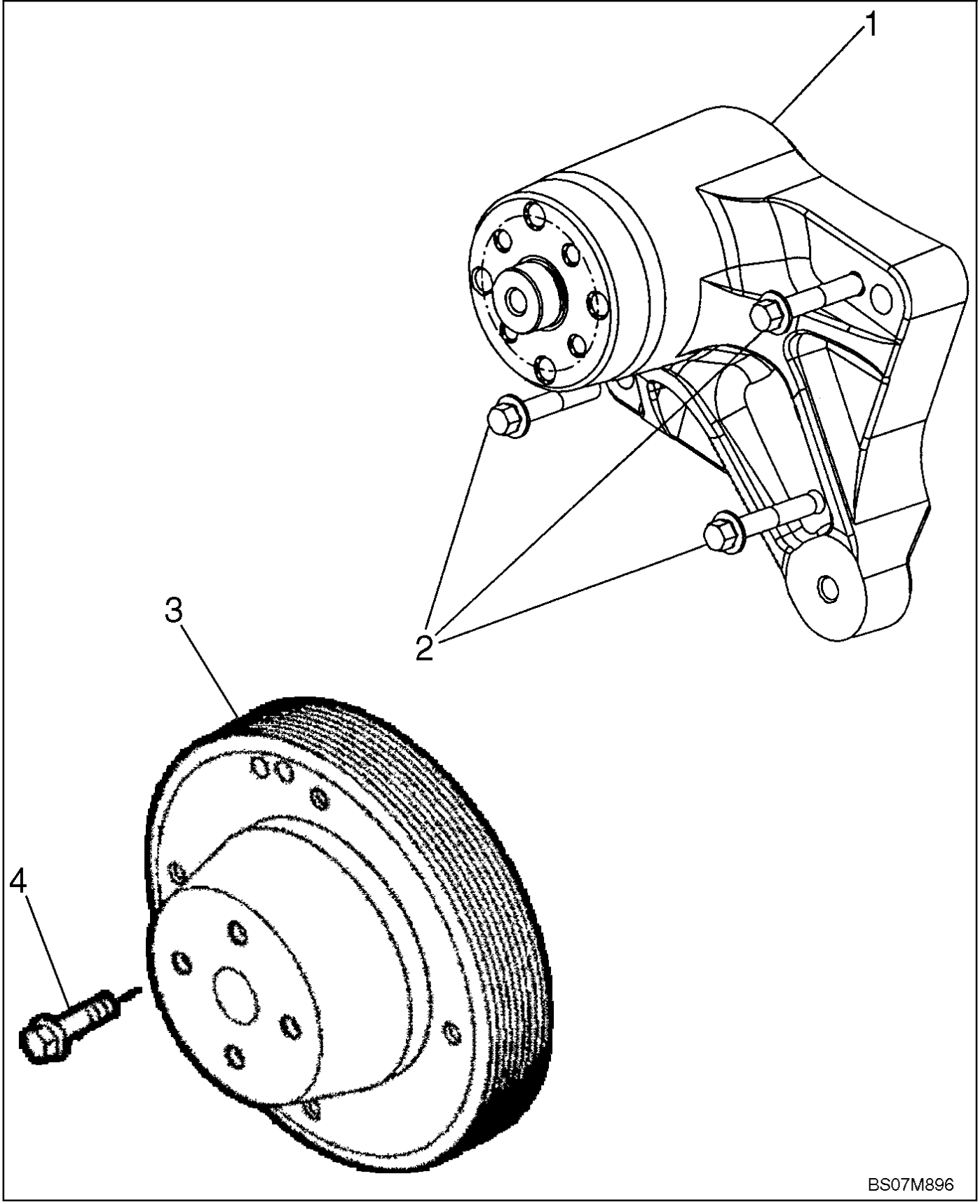

FAN DRIVE

REF	FN	PART NUMBER	YR/SN	QTY	DESCRIPTION
1		2856340		1	HUB
2		4899078		2	SCREW, Hex Flg, M8 x 1.25 x 45
3		2853010		1	PULLEY
4		4899032		4	SCREW, Hex Flg, M10 x 1.5 x 25

ENGINE - LIFT HOOK

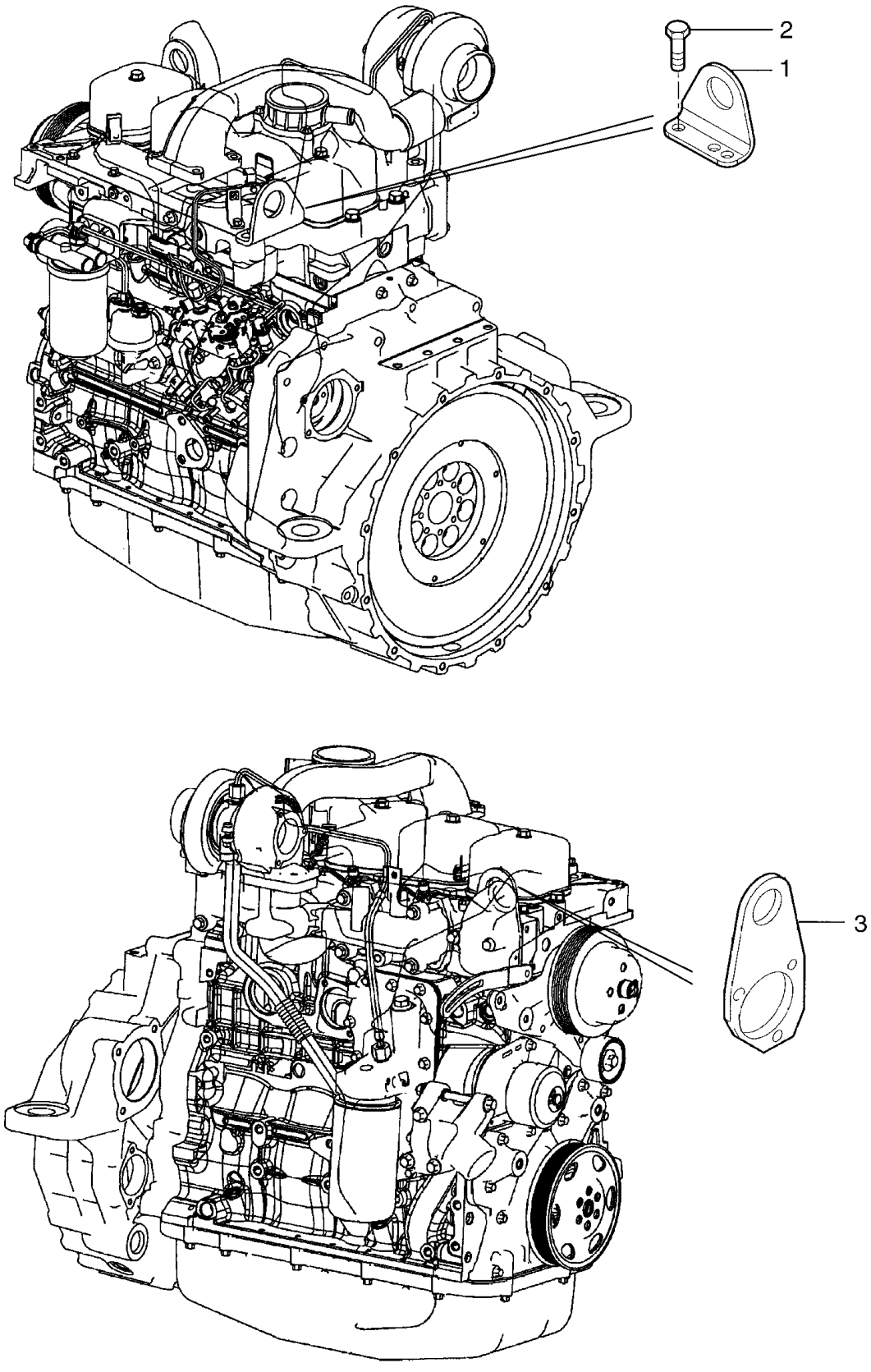

ENGINE - LIFT HOOK

REF	FN	PART NUMBER	YR/SN	QTY	DESCRIPTION
1		2852183		1	RING, LIFTING
2		4899073		2	SCREW, Hex Flg, M12 x 1.75 x 30
3		REF		1	INSTRUCTION, LIFT RING 2853132; See Figure 02-37

TURBOCHARGER

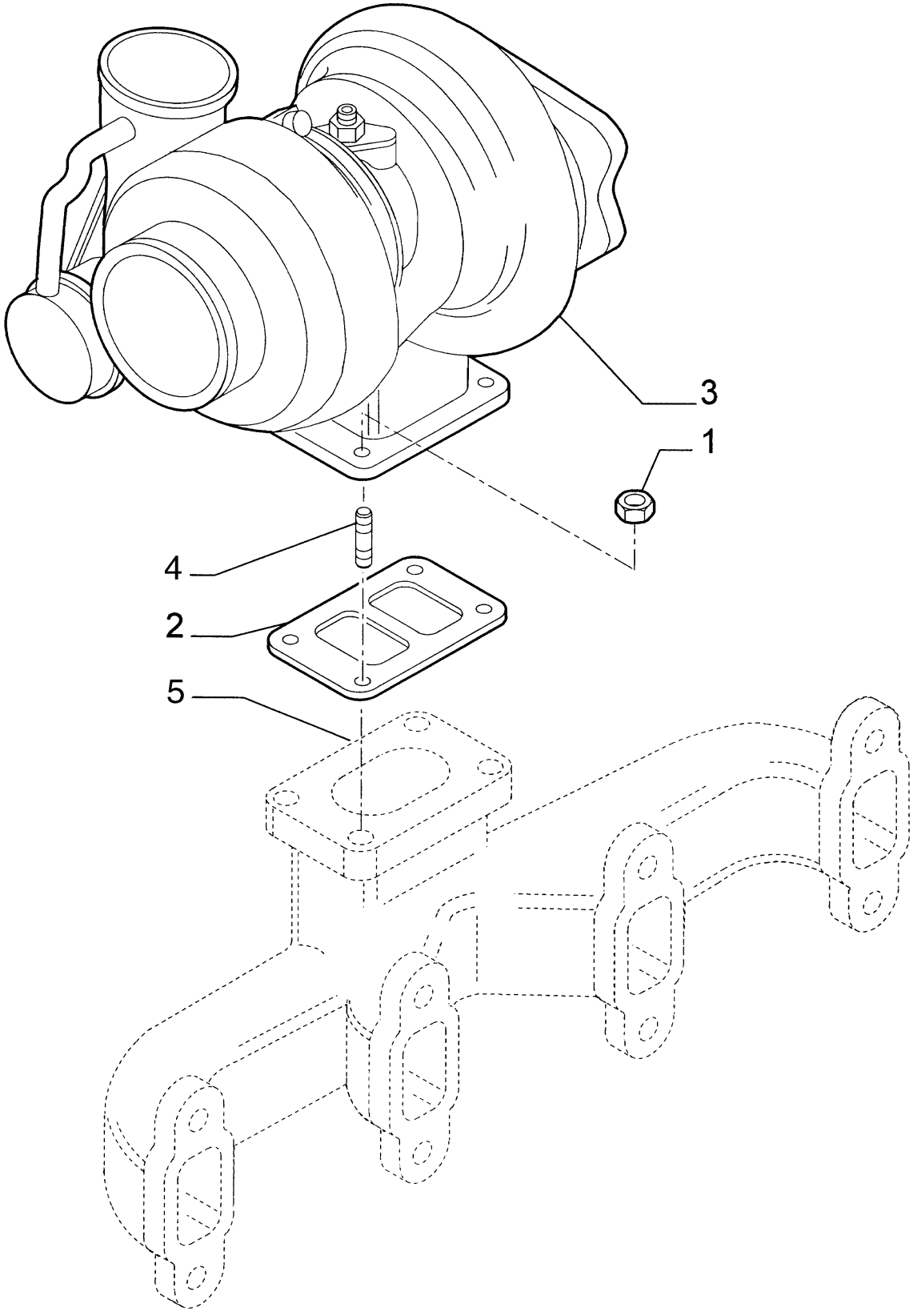

TURBOCHARGER

REF	FN	PART NUMBER	YR/SN	QTY	DESCRIPTION
1		500322677		4	NUT
2		4895133		1	GASKET
3		2852507		1	TURBOCHARGER
4		4899859		4	STUD
5		REF			INSTRUCTION, Exhaust Manifold; See Figure 02-26

NOTES

SECTION INDEX
Fuel System

03-01	FUEL LINES AND FILTER
03-02	CONTROLS - THROTTLE
03-03	FUEL FILTER
03-04	FUEL INJECTION PUMP
03-05	FUEL PUMP
03-06	INJECTION PUMP - CONTROL
03-07	FUEL INJECTION SYSTEM - FUEL, SUPPLY
03-08	FUEL INJECTION SYSTEM - SUPPLY
03-09	FUEL INJECTION SYSTEM - DRAIN LINE
03-10	INJECTION EQUIPMENT - INJECTOR

FUEL LINES AND FILTER

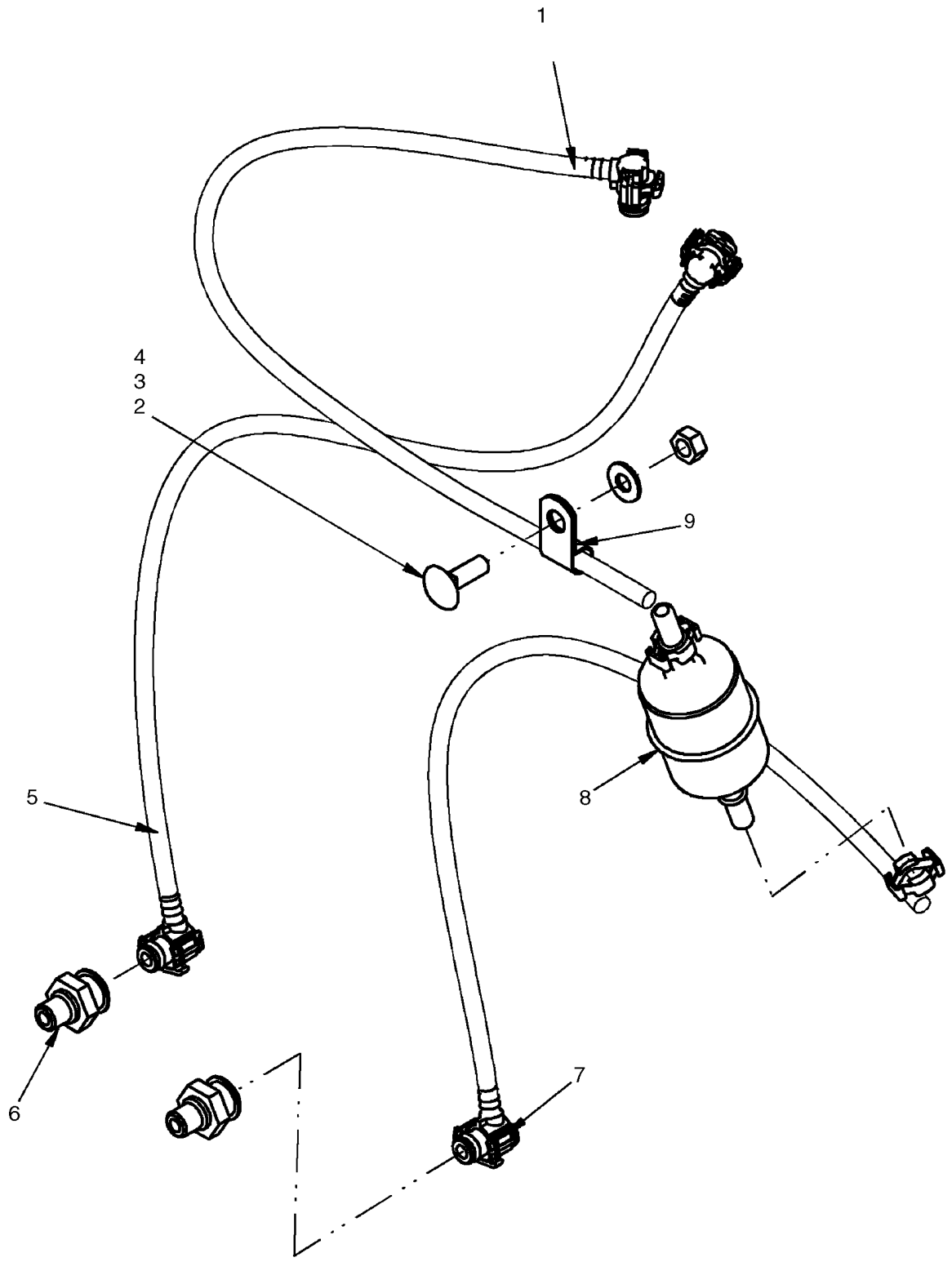

FUEL LINES AND FILTER

REF	FN	PART NUMBER	YR/SN	QTY	DESCRIPTION
1		87690855		1	HOSE, Fuel Line, 565mm (22 1/4 in.)
2		86636815		1	BOLT, CARRIAGE, Short NK, M8 x 25, Cl8.8, Full Thd
3		322358		1	WASHER, SPRING, Belleville, M8
4		9706690		1	NUT, M8, Cl 8
5		87690853		1	HOSE, Return Fuel, 655mm (25 25/32 in.)
6		87431323		2	ADAPTER
7		87690854		1	HOSE, Fuel Line, 625mm (24 5/8 in.)
8		87548612		1	FILTER, FUEL, In Line Fuel Filter
9		87028524		1	CLAMP

CONTROLS - THROTTLE

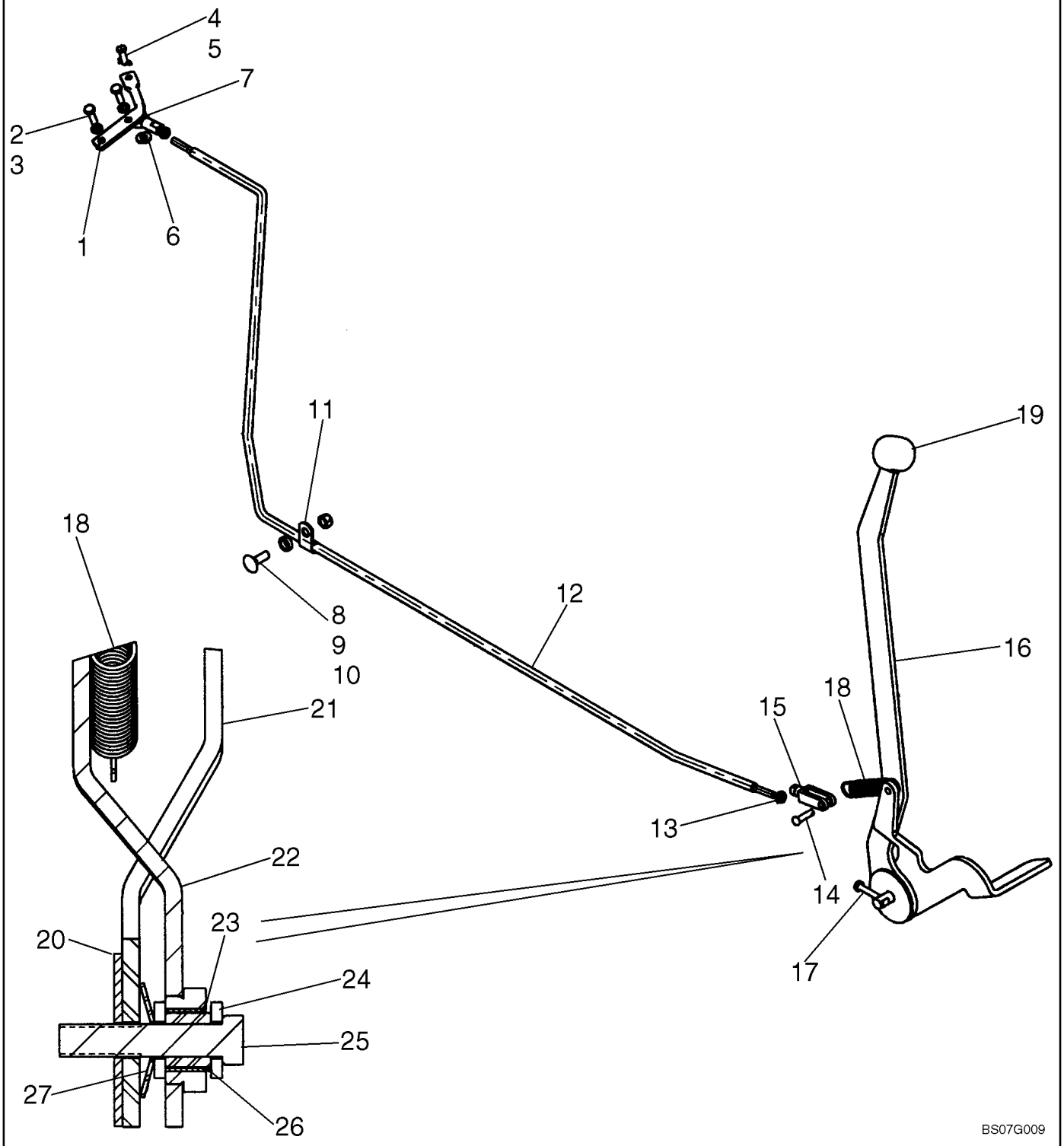

CONTROLS - THROTTLE

REF	FN	PART NUMBER	YR/SN	QTY	DESCRIPTION
1		87608065		1	ROD
2		120100		2	BOLT, Hex, M6 x 20, 8.8
3		86517328		2	WASHER, LOCK, M6
4		87597960		1	PIN, CLEVIS
5		D131983		1	PIN
6		87361		1	WASHER, 1/4", SAE
7		A146456		1	BALL
8		694371		1	SPACER
9		9628098		1	NUT, LOCK, M8 x 1.25, Cl 10
10		86636815		1	BOLT, CARRIAGE, Short NK, M8 x 25, Cl8.8, Full Thd
11		87028524		1	CLAMP
12		87602734		1	ROD
13		86976064		2	NUT, Jam, 1/4"-28, G5
14		D23693		1	PIN, AXLE
15		87622861		1	PIN, CLEVIS
16		87610132		1	THROTTLE CONTROL, Incl. 1 - 27
17		43117		1	BOLT, Hex, M6 x 30, 8.8
18		D124939		1	SPRING
19		A177436		1	KNOB
20		1342374C1		1	DISC
21		186904A1		1	LEVER, CONTROL
22		87601406		1	THROTTLE
23		187035A2		1	BUSHING, LARGE
24		86625256		2	WASHER, M12 x 28.5 x 4, HT
25		87612749		1	FASTENER, M12 x 60 10.9
26		186905A1		1	BUSHING
27		R14771		1	WASHER

FUEL FILTER

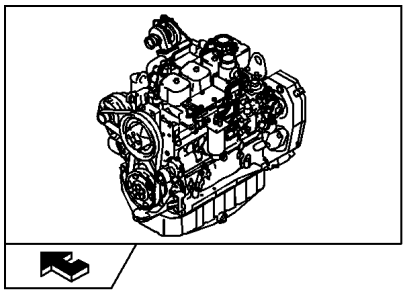

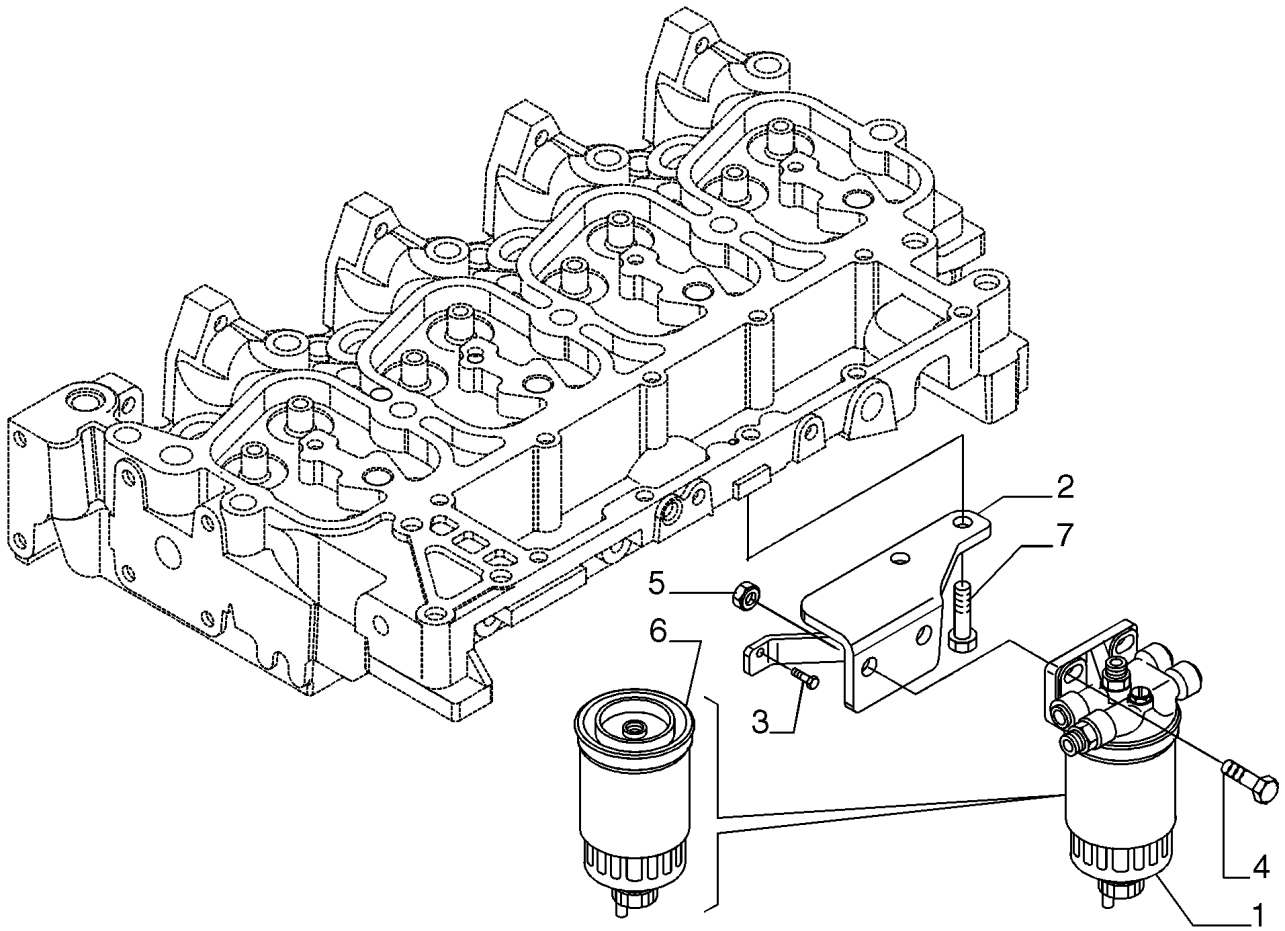

BS07M807

FUEL FILTER

REF	FN	PART NUMBER	YR/SN	QTY	DESCRIPTION
1		2852547		1	FILTER ASSY., Fuel
2		2855103		1	SUPPORT
3		4899068		1	SCREW, Hex Flg, M8 x 1.25 x 16
4		{4899849}		2	Screw
5		4895166		2	NUT, M10X1.5 mm
6		87803194		1	FILTER, FUEL
7		2830411		2	SCREW

FUEL INJECTION PUMP

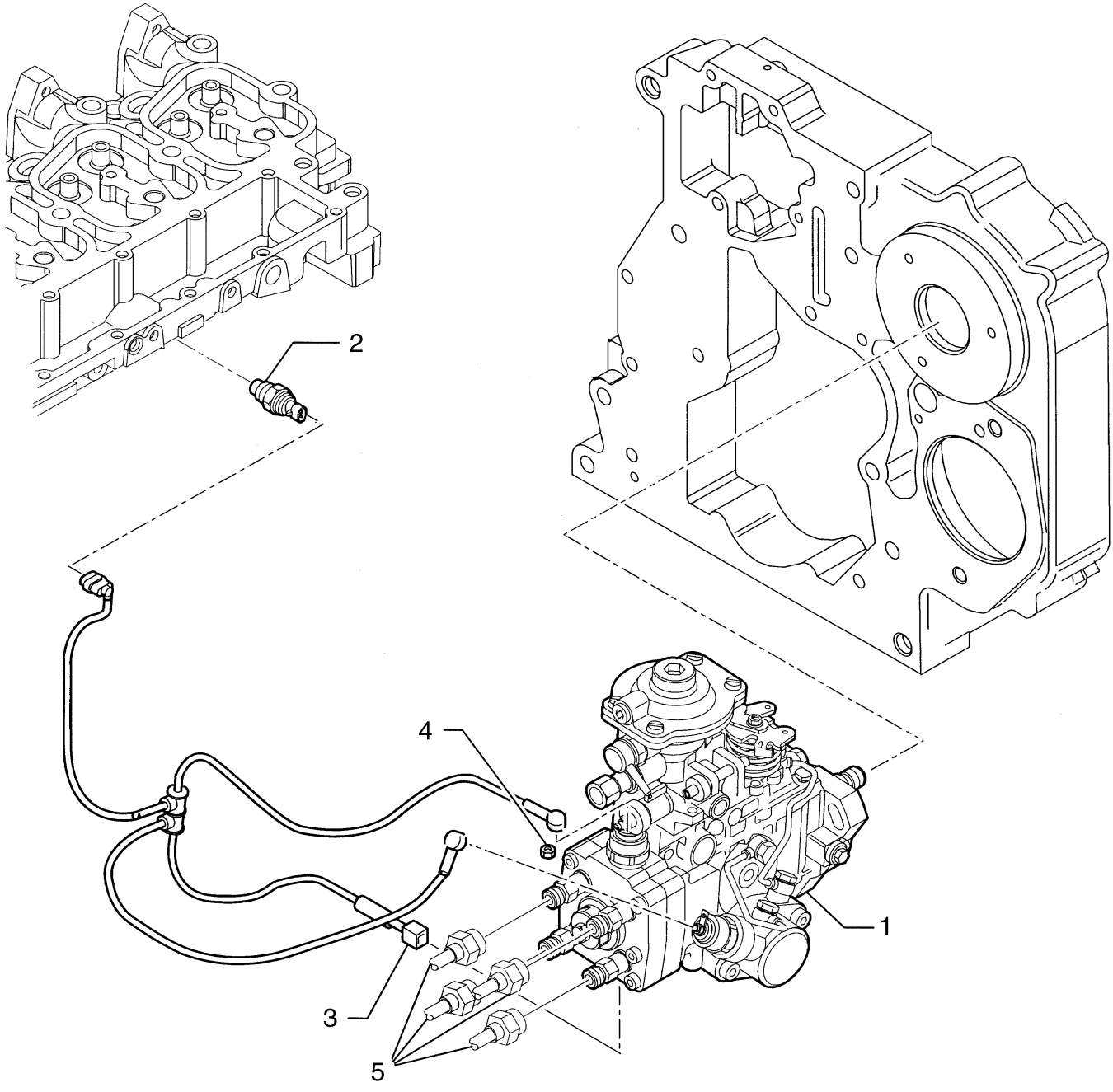

BS04A044

FUEL INJECTION PUMP

REF	FN	PART NUMBER	YR/SN	QTY	DESCRIPTION
1		2856334		1	PUMP, FUEL INJECTION, Incl 2852741
		2852741		1	SOLENOID, Fuel Shut Off
2		2856350		1	SENSOR, Water Temperature
3		2852088		1	CONNECTOR, WIRE
4		2852089		2	NUT, Lock
5		REF		1	INSTRUCTION, TUBE; See Figure 03-07 for Tube Kit

FUEL PUMP

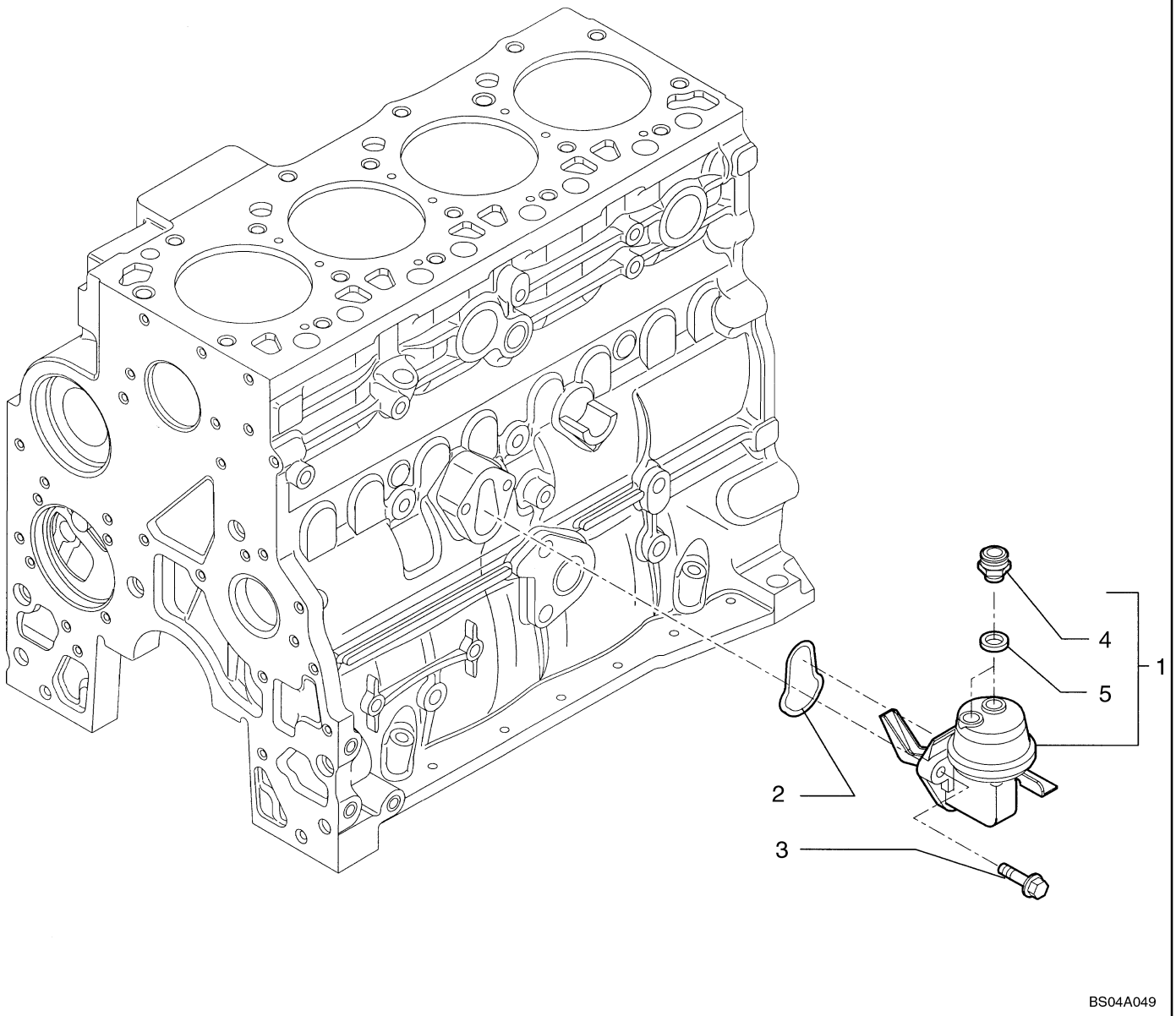

FUEL PUMP

REF	FN	PART NUMBER	YR/SN	QTY	DESCRIPTION
1		2830266		1	PUMP, FUEL, Incl. Ref 4, 5
2		2830156		1	GASKET
3		4899031		2	SCREW, Hex Flg, M8 x 1.25 x 25
4		4890964		2	FITTING
5		4894721		2	WASHER, SEALING

INJECTION PUMP - CONTROL

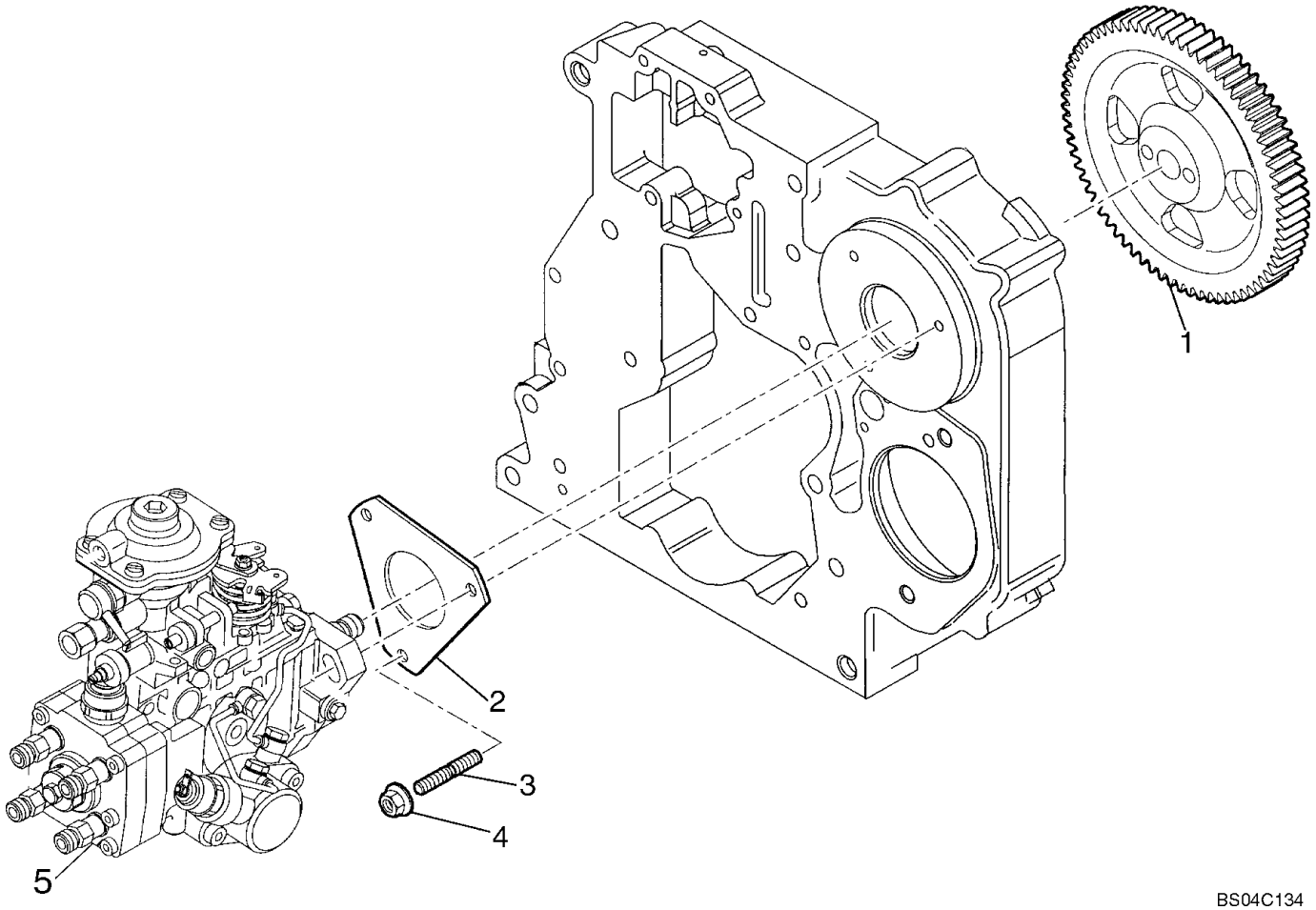

BS04C134

INJECTION PUMP - CONTROL

REF	FN	PART NUMBER	YR/SN	QTY	DESCRIPTION
1		2854340		1	GEAR, Injection Pump Control
2		2852885		1	GASKET
3		2852294		3	STUD
4		17044731		3	NUT, Flg, M8 x 1.25
5		REF		1	INSTRUCTION, INJECTION PUMP; See Figure 03-04

FUEL INJECTION SYSTEM - FUEL, SUPPLY

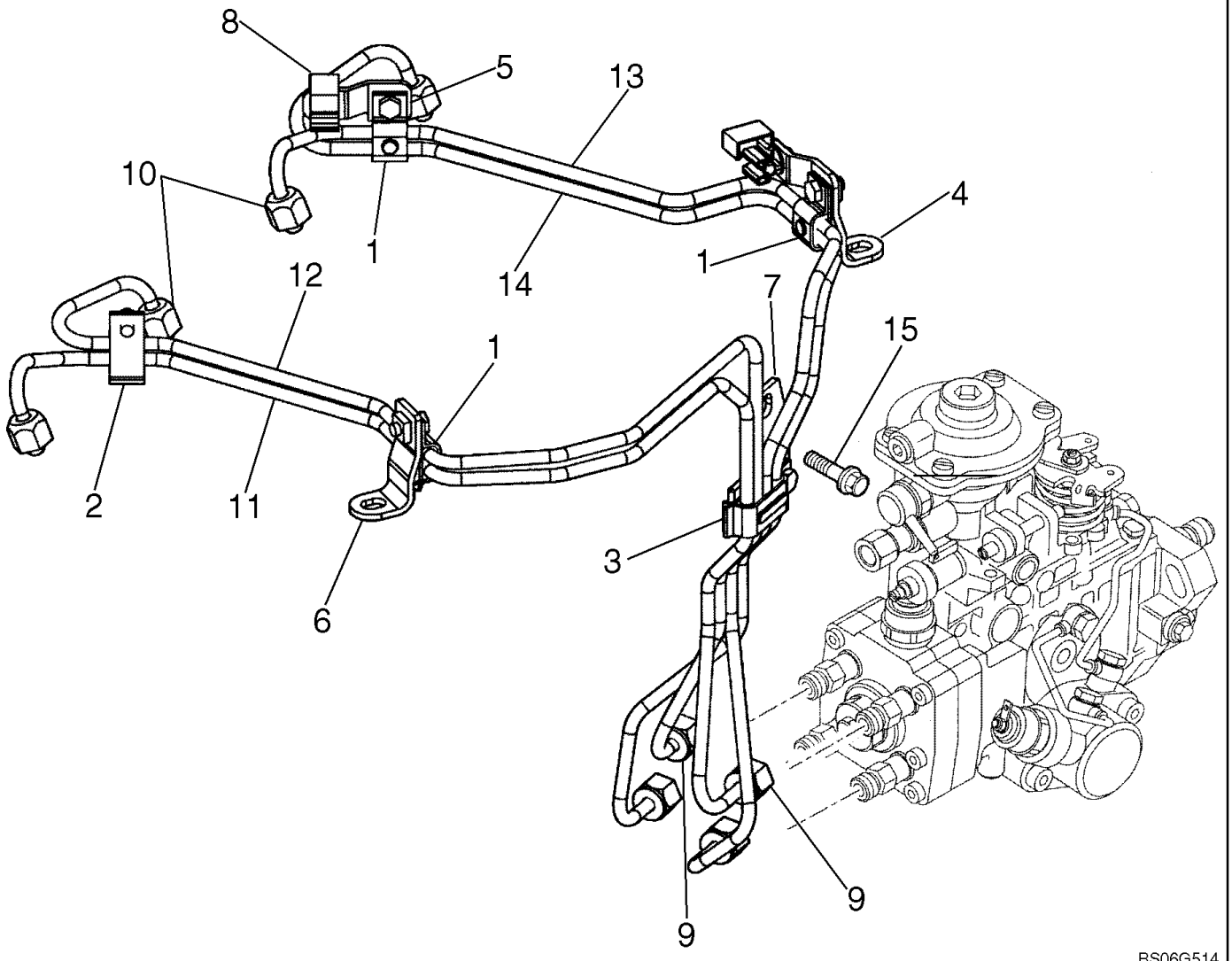

FUEL INJECTION SYSTEM - FUEL, SUPPLY

REF	FN	PART NUMBER	YR/SN	QTY	DESCRIPTION
		2852075		1	KIT, Fuel Injection Supply Pipe Assembly; Includes Ref 1-14
1		2852871		3	BRACKET, Fuel Injection Pipe Bracket
2		2852872		1	BRACKET, Fuel Injection Pipe Bracket
3		2852873		1	BRACKET, Fuel Injection Pipe Bracket
4		2852874		1	BRACKET, Fuel Injection Pipe Bracket
5		2852875		1	BRACKET, Fuel Injection Pipe Bracket
6		2852876		1	BRACKET, Fuel Injection Pipe Bracket
7		2852877		1	BRACKET, Fuel Injection Pipe Bracket
8		2852878		2	CLAMP BRACKET, Fuel Injection Pipe Bracket
9		2852879		4	NUT, Hex Nut
10		2852880		4	NUT, Hex Nut
11		2852881		1	PIPE INJECTION, Fuel Injector Supply Pipe
12		2852882		1	PIPE INJECTION, Fuel Injector Supply Pipe
13		2852883		1	PIPE INJECTION, Fuel Injector Supply Pipe
14		2852884		1	PIPE INJECTION, Fuel Injector Supply Pipe
15		4896884		1	SCREW, M8x1.25x16

FUEL INJECTION SYSTEM - SUPPLY

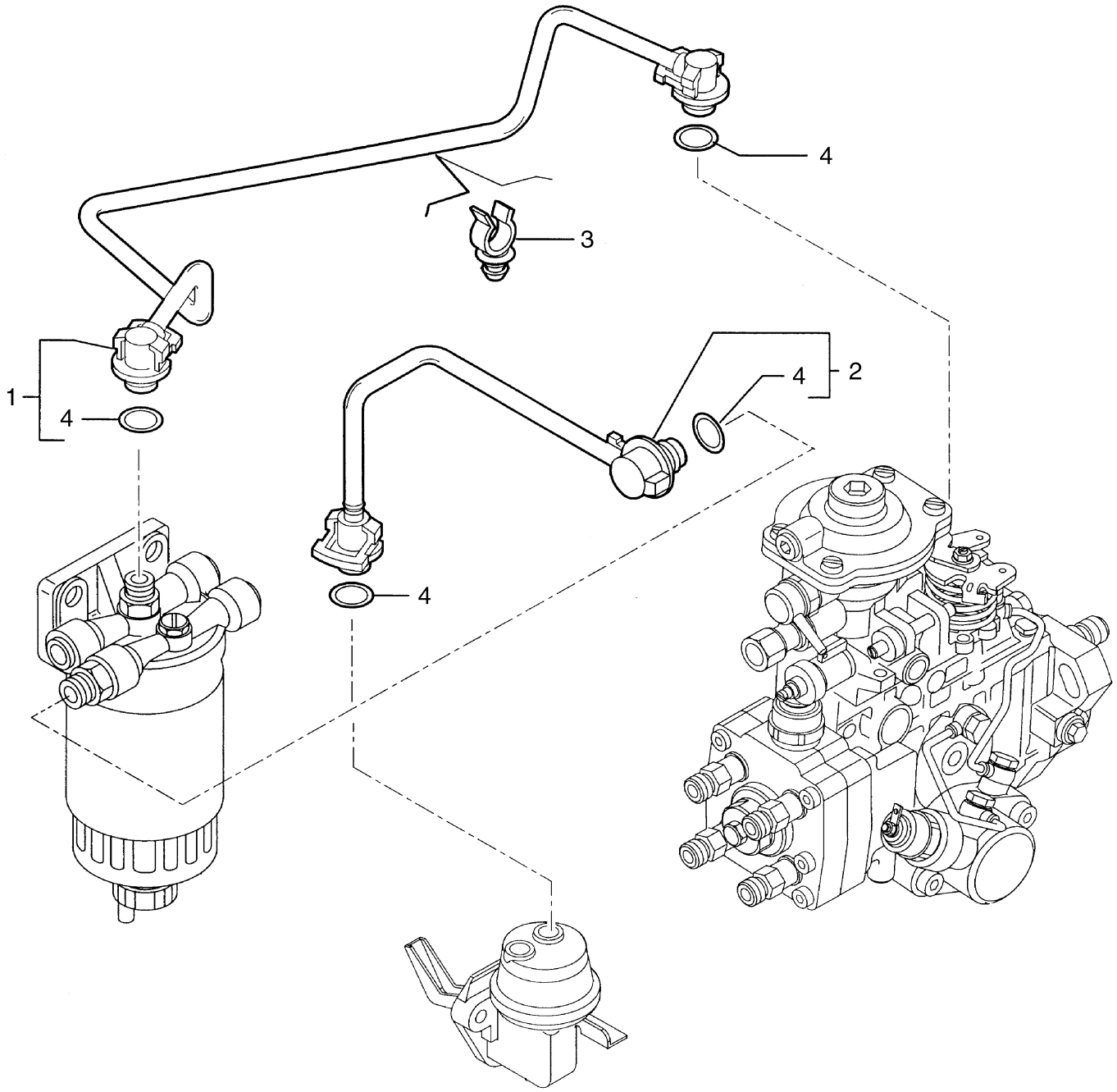

FUEL INJECTION SYSTEM - SUPPLY

REF	FN	PART NUMBER	YR/SN	QTY	DESCRIPTION
1		2852105		1	TUBE, Fuel Pump Supply; Incl. Ref 4
2		2852108		1	TUBE, RIGID, Fuel Filter Supply; Incl. Ref 4
3		2852111		1	CLAMP
4		4894095		2	O-RING

FUEL INJECTION SYSTEM - DRAIN LINE

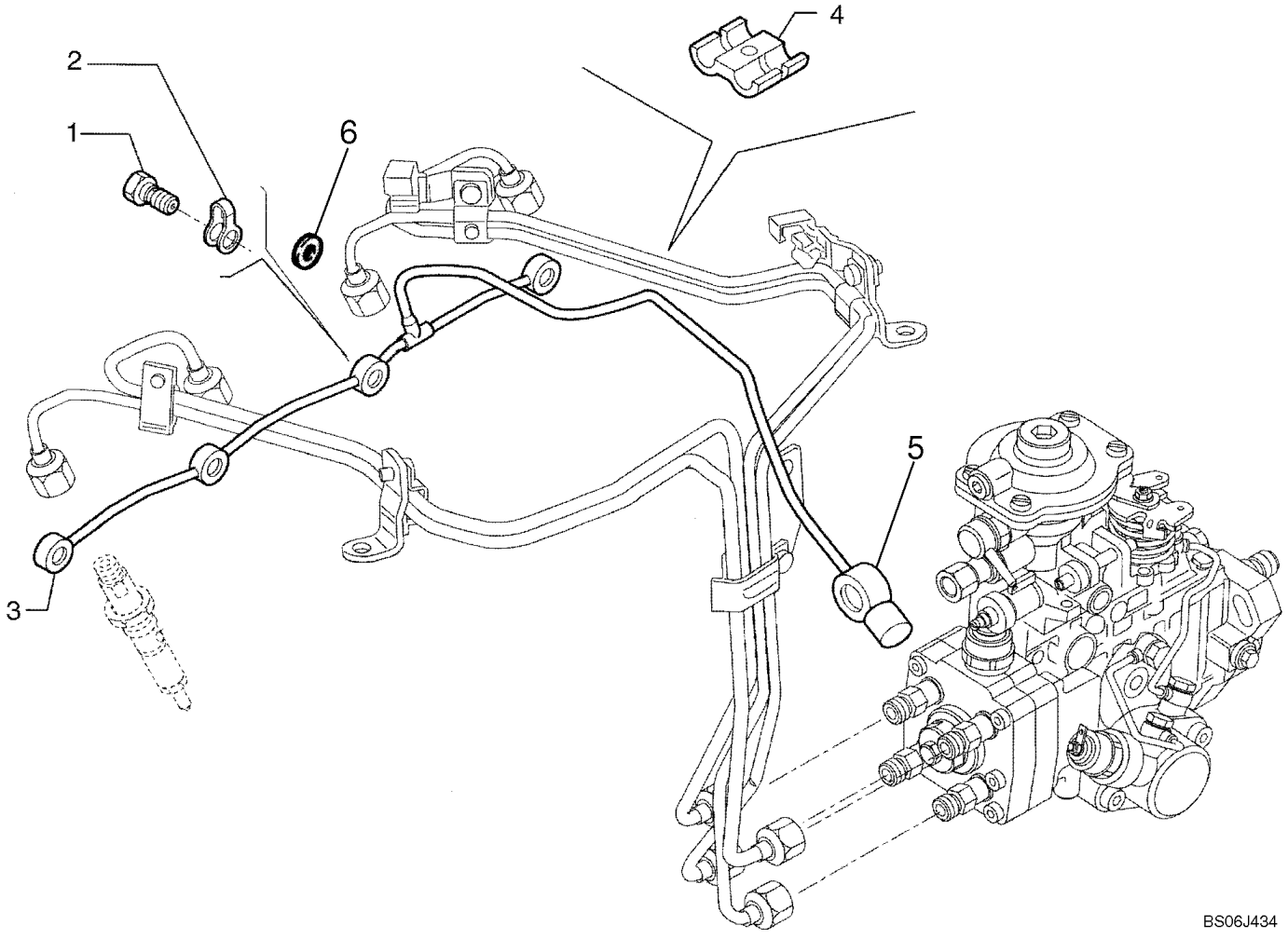

FUEL INJECTION SYSTEM - DRAIN LINE

REF	FN	PART NUMBER	YR/SN	QTY	DESCRIPTION
1		4895244		4	BOLT, BANJO
2		4895305		4	SEAL
3		2852065		1	TUBE, RIGID, Fuel Drain
4		2852521		1	CLIP, SPRING
5		NSS		1	NOT SERVICED SEPARATELY, Banjo Connector Assy; Order 2852065 Tube
6		2855903		8	WASHER, SEALING, If Used
		2852093		1	PLUG, Incl. Plug And O-Ring; Not Illustrated
		2852094		1	PLUG
		4899055		1	O-RING

INJECTION EQUIPMENT - INJECTOR

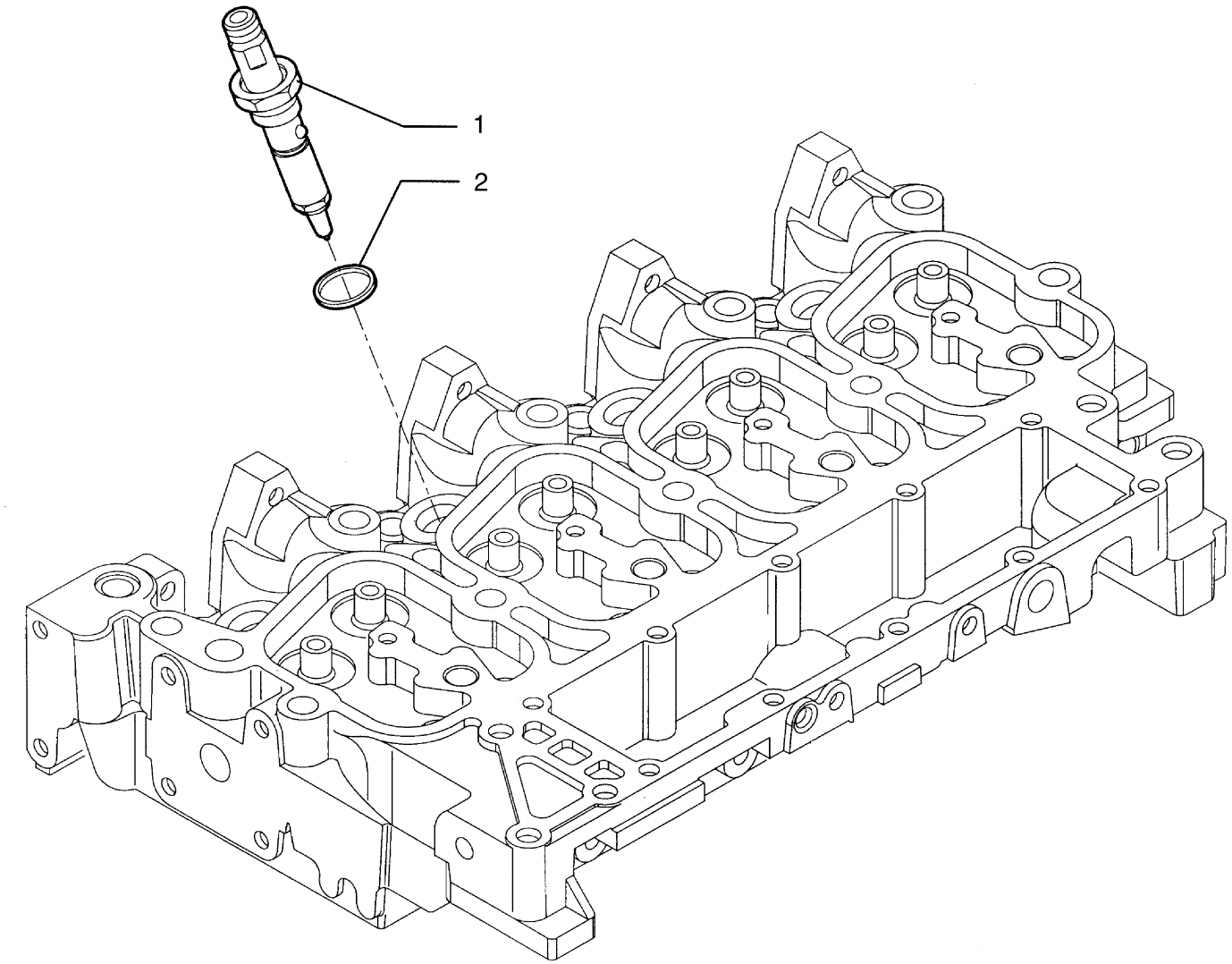

BS04A045

INJECTION EQUIPMENT - INJECTOR

REF	FN	PART NUMBER	YR/SN	QTY	DESCRIPTION
1		{2856255}		4	Fuel Injector; Incl. Seal 2856436
		{2856436}		1	
2		4895297		4	SEALRING

NOTES

SECTION INDEX
Electrical System

04-01	ELECTRICAL - STARTER AND ALTERNATOR
04-02	ALTERNATOR MOUNTING
04-03	ELECTRICAL - ENGINE
04-04	BATTERY - CABLES
04-05	ELECTRICAL - CHASSIS HARNESS
04-06	ELECTRICAL - CHASSIS HARNESS
04-07	LAMP ASSY
04-08	CAB ELECTRICAL - RIGHT HAND CONSOLE
04-09	CAB ELECTRICAL - LEFT HAND CONSOLE
04-10	CAB ELECTRICAL - CAB HARNESS
04-11	WORK LIGHTS - RH
04-12	WORK LIGHTS - LH
04-13	CONTROL HANDLE, RH - BASIC
04-14	CONTROL HANDLE, LH - BASIC
04-15	CONTROL HANDLE, RH - DELUXE W/O AUX ELECTRIC
04-16	CONTROL HANDLE, LH - DELUXE W/O AUX ELECTRIC
04-17	CONTROL HANDLE, RH - DELUXE
04-18	CONTROL HANDLE, LH - DELUXE
04-19	DISCONNECT SWITCH - REMOTE JUMP START
04-20	HORN - MOUNTING
04-21	BACKUP ALARM
04-22	ELECTRICAL ACCESSORY SOCKET
04-23	ELECTRICAL - FRONT AUXILIARY
04-24	ELECTRICAL - ROAD LIGHTS (NA)
04-25	HEADLAMP - LH
04-26	HEADLAMP - RH
04-27	REAR LIGHT AND MOUNTING
04-28	ROTATING BEACON
04-32	STROBE LIGHT

ELECTRICAL - STARTER AND ALTERNATOR

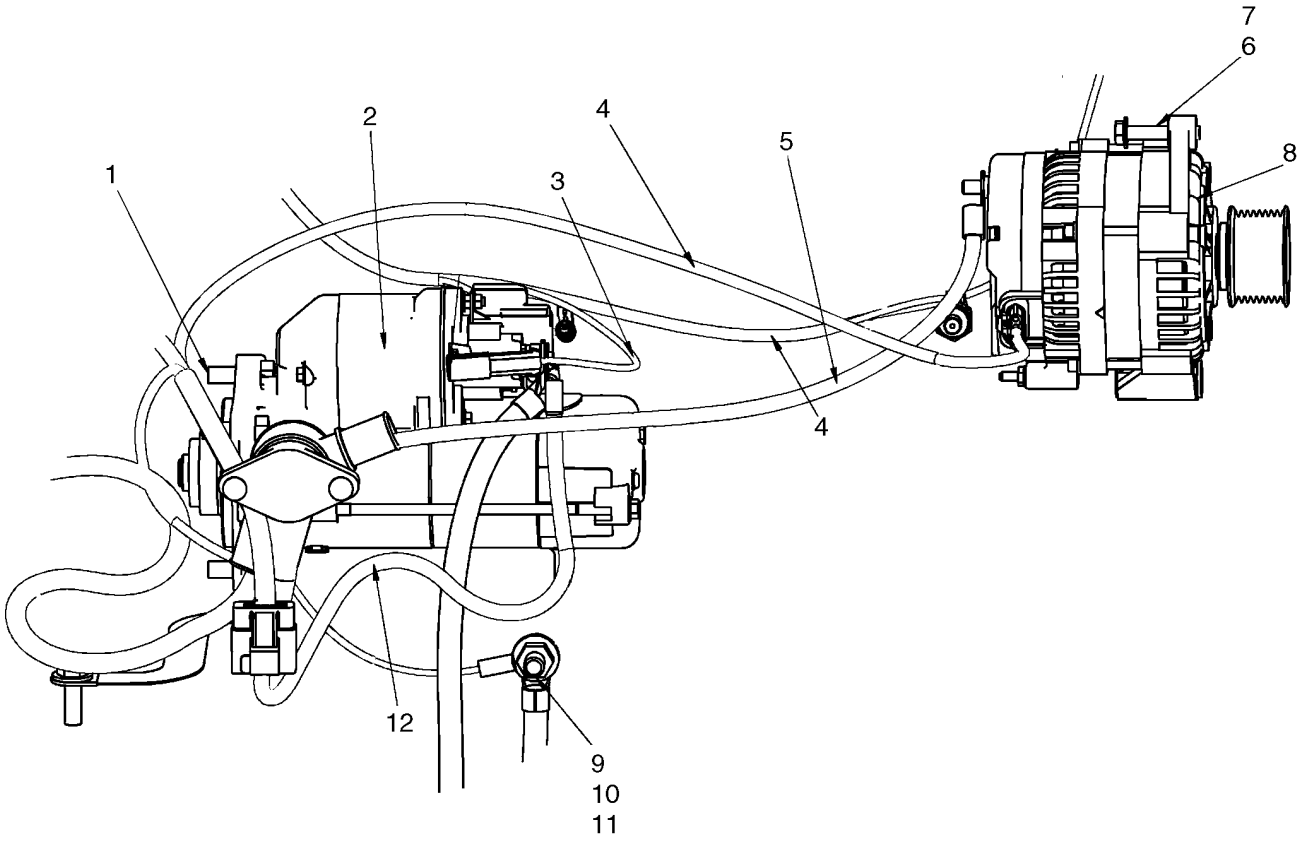

BS07K384

ELECTRICAL - STARTER AND ALTERNATOR

REF	FN	PART NUMBER	YR/SN	QTY	DESCRIPTION
1		9804262		3	BOLT, Hex Flg, M10 x 30, 8.8
2		87638510		1	MOTOR, STARTER, Starter
3		87053083		1	HARNESS, Starter Jumper Harness
4		{87623352}		1	Harness, NEF Engine
5		{87530630}		1	Cable, Starter To Alternator, 296mm (11 21/32 in.)
6		386045		1	BOLT, Hex, M8 x 45, 8.8
7		322358		1	WASHER, SPRING, Belleville, M8
8		87042118		1	ALTERNATOR
9		87458961		1	STUD
10		86625256		1	WASHER, M12 x 28.5 x 4, HT
11		9706685		1	NUT, M12, Cl 8
12		87652238		1	CABLE, Cable, Starter To Distribution Block

ALTERNATOR MOUNTING

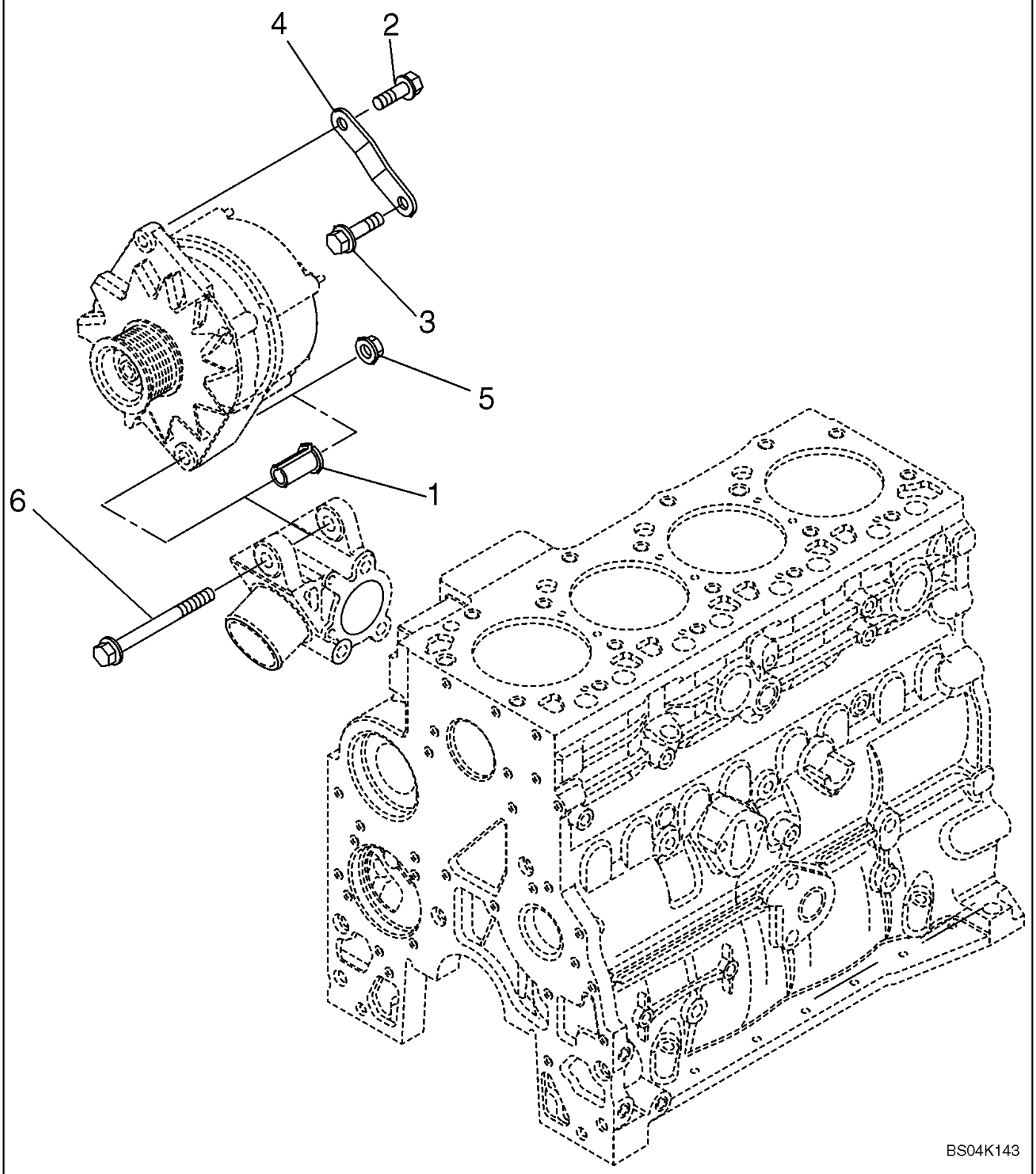

ALTERNATOR MOUNTING

REF	FN	PART NUMBER	YR/SN	QTY	DESCRIPTION
1		2852181		1	SPACER
2		4899031		1	SCREW, Hex Flg, M8 x 1.25 x 25
3		4895291		1	SCREW, Hex Flg, M10 x 1.5 x 20
4		2852180		1	BRACKET
5		4895166		1	NUT, M10 x 1.5
6		4895538		1	SCREW

ELECTRICAL - ENGINE

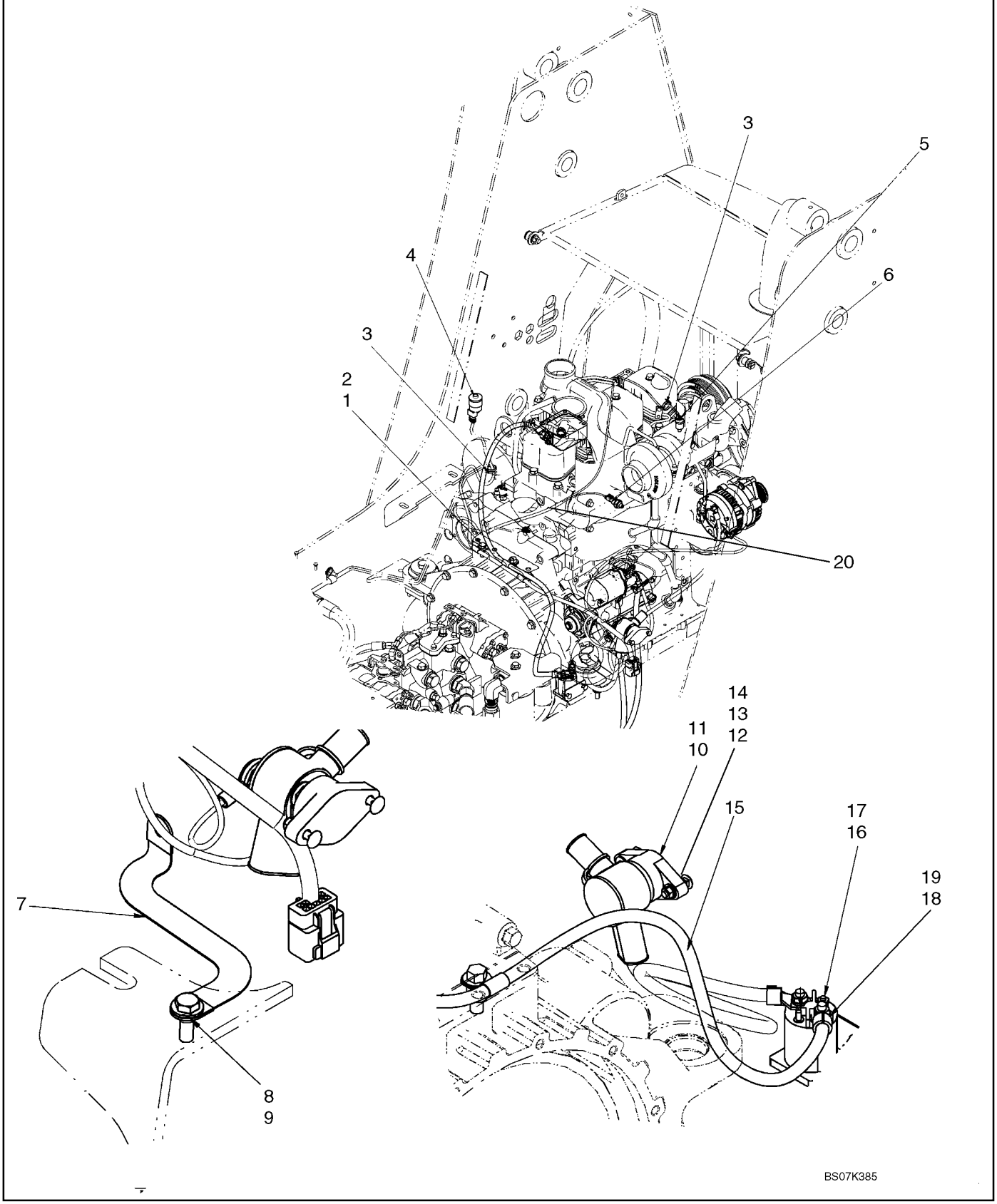

ELECTRICAL - ENGINE

REF	FN	PART NUMBER	YR/SN	QTY	DESCRIPTION
1		9706687		2	SCREW, Hex, M12 x 30, 8.8
2		87301588		2	CLAMP, Clamp, Insulated 11.1mm, M12 Bolt
3		263117		3	STRAP, CABLE, .14" x 11 1/2"
4		87013666		1	SWITCH, Air Restriction Switch
5		A166057		1	SENDER, TEMPERATURE, Oil Temperature Sending Unit
6		2852735		1	SENSOR, Oil Pressure Sensor
7		86500938		1	CABLE, GROUND
8		86625253		1	WASHER, M11 x 24 x 2
9		43140		1	BOLT, Hex, M10 x 30, 8.8, Full Thd
10		87630124		1	POST, Single Point Power Distribution Block
11		87630125		1	BOOT, Power Distribution Boot
12		86512441		2	BOLT, CARRIAGE, Short NK, M6 x 30, Cl8.8, Full Thd
13		86500688		2	NUT, M6, Cl 10
14		322357		2	WASHER, SPRING, Belleville, M6
15		REF		1	INSTRUCTION, Grid Heater; See Fig. 04-05
16		87825		1	NUT, #10-32
17		80684		1	WASHER, LOCK, #10
18		80681		2	WASHER, LOCK, 5/16"
19		9626568		2	NUT, Jam, 5/16"-18, G2
20		{87623352}		1	Harness, NEF Engine

BATTERY - CABLES

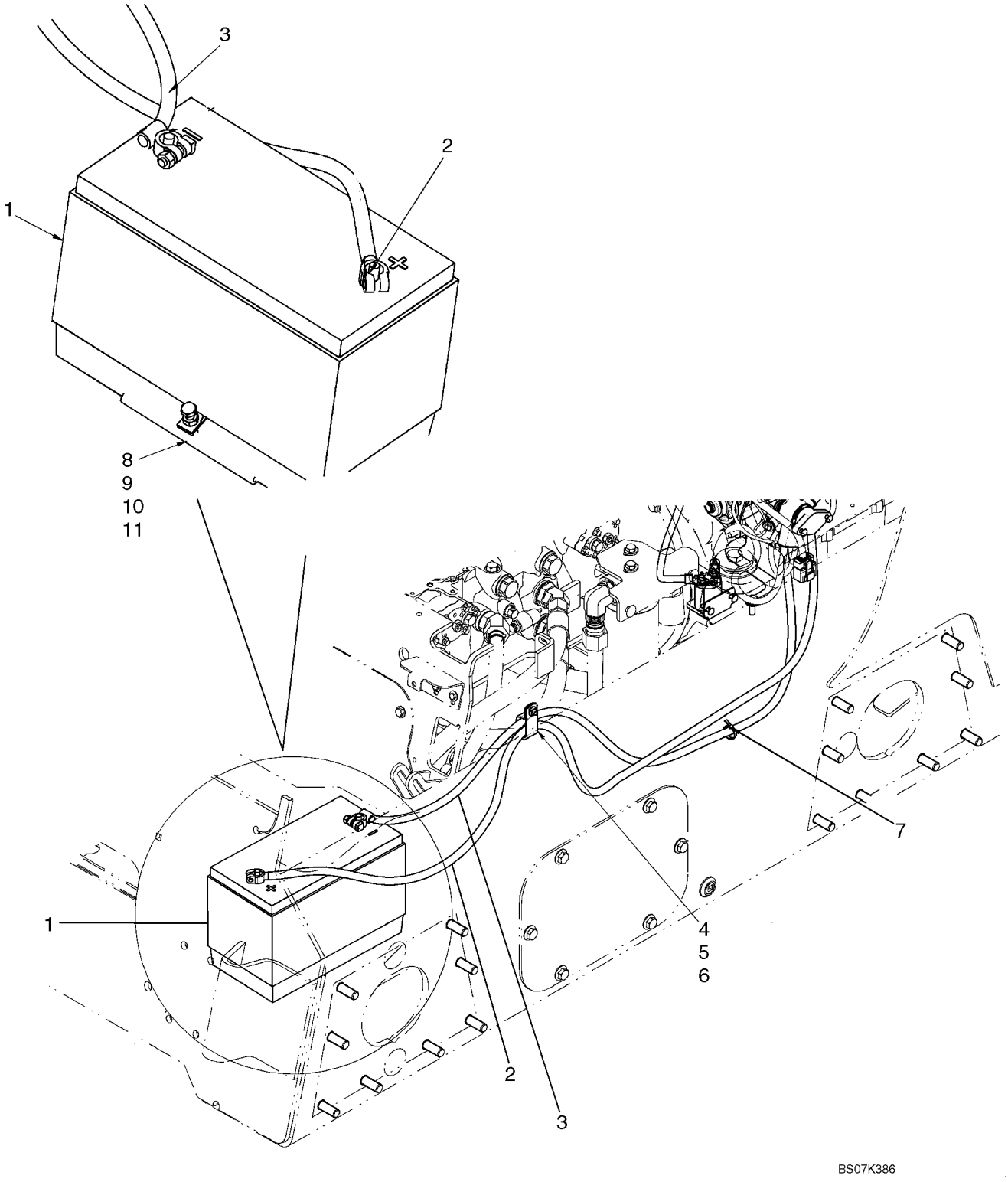

BATTERY - CABLES

REF	FN	PART NUMBER	YR/SN	QTY	DESCRIPTION
1		{87665227}		1	Battery
2		87033046		1	CABLE, Battery Cable, Positive, 2000mm (78 3/4 in.)
3		338030A1		1	CABLE ASSY., Battery Cable, Negative, 1524mm (60 in.)
4		H434289		1	MOUNTING CLIP
5		229197A1		1	NUT
6		120103		1	BOLT, Hex, M8 x 16, 8.8
7		263117		3	STRAP, CABLE, .14" x 11 1/2"
8		43362		1	NUT, M8, Cl 10
9		120106		1	BOLT, Hex, M8 x 40, 8.8, Full Thd
10		86625074		1	NUT
11		87450956		1	ANGLE, Battery Hold Down

ELECTRICAL - CHASSIS HARNESS

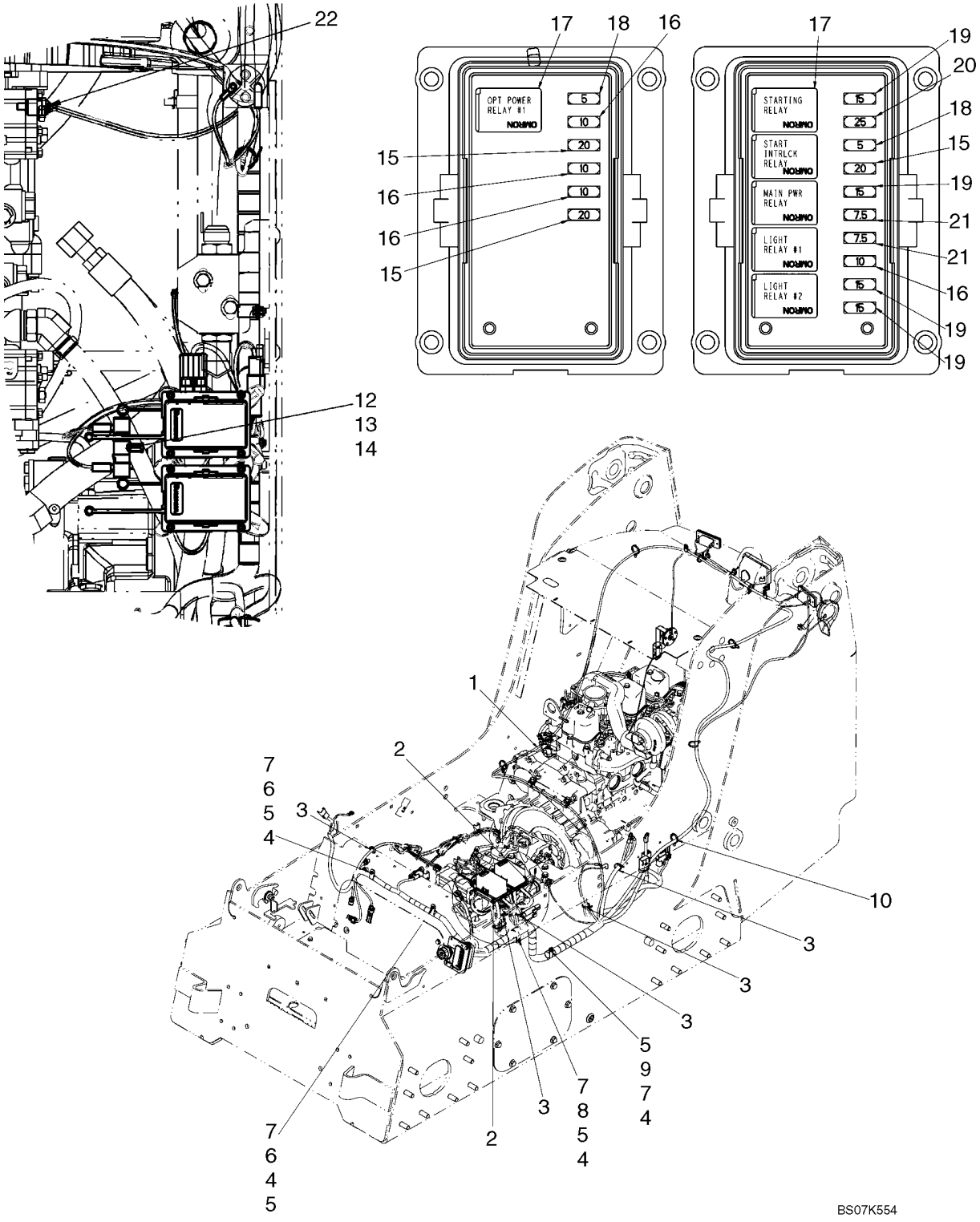

ELECTRICAL - CHASSIS HARNESS

REF	FN	PART NUMBER	YR/SN	QTY	DESCRIPTION
1		87715730		1	HARNESS, Chassis Harness; Incl 1A
1A		L71879		1	DIODE-ELEMENT, 3A Diode Connector; Not Illustrated
2		87020181		8	SCREW
3		263117		11	STRAP, CABLE, .14" x 11 1/2"
4		322357		6	WASHER, SPRING, Belleville, M6
5		86500688		4	NUT, M6, Cl 10
6		86624181		2	WASHER, M6
7		86977726		4	BOLT, Hex, M6 x 12, 8.8
8		86637996		1	CLAMP, 1 1/8", Insul, 3/8" Bolt
9		86637977		1	CLAMP, 1", Insul, 5/16" Bolt
10		87668737		6	STRAP
11		86639008		2	CLAMP, 1/4", Insul, 1/2" Bolt
12		9804266		2	BOLT, Hex Flg, M12 x 25, 8.8
13		D122634		1	NUT
14		87016450		1	SCREW, Cross Pan Hd, #10-32 x 5/8"
15		121414A1		3	FUSE, Fuse, 20A
16		121412A1		4	FUSE, Fuse, 10A
17		{87655334}		6	Relay
18		121410A1		2	FUSE, Fuse, 5A
19		121413A1		4	FUSE, Fuse, 15A
20		121415A1		1	FUSE, Fuse, 25A
21		121411A1		2	FUSE, Fuse, 7.5A
22		A166057		1	SENDER, TEMPERATURE, Oil Sender Unit

ELECTRICAL - CHASSIS HARNESS

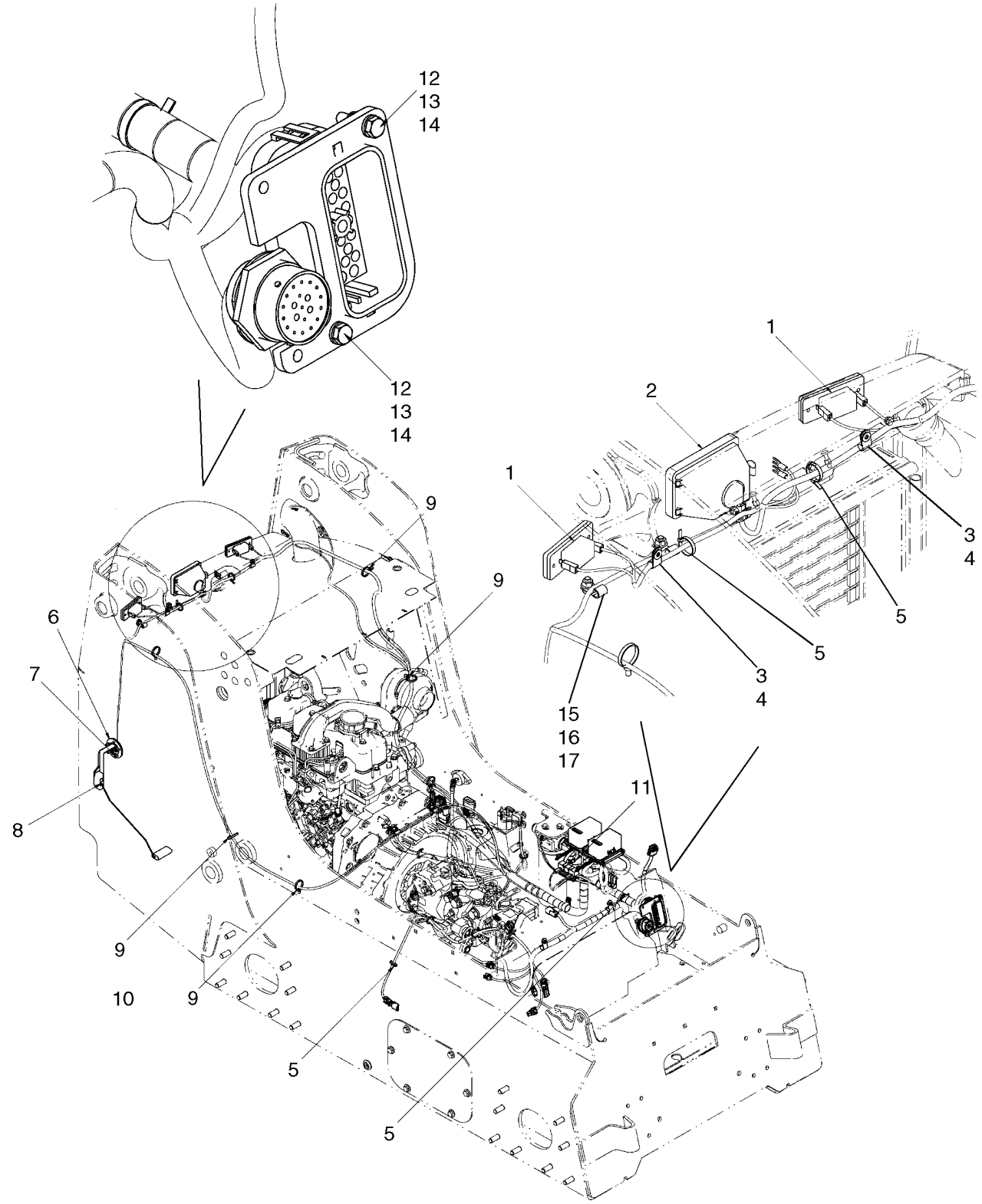

ELECTRICAL - CHASSIS HARNESS

REF	FN	PART NUMBER	YR/SN	QTY	DESCRIPTION
1		233163A2		2	LIGHT, TAIL, See Fig 04-07
2		222004A2		1	HEADLIGHT, See Fig 04-07
3		322357		6	WASHER, SPRING, Belleville, M6
4		86637978		2	CLAMP, 3/8", Insul, 5/16" Bolt
5		263117		11	STRAP, CABLE, .14" x 11 1/2"
6		528359R4		1	GASKET, Sender Unit Gasket
7		87308282		5	SCREW, Hex Hd, #10-32 x 3/4"
8		426128A1		1	SENDER UNIT, Fuel Level Sender Unit
9		87668737		6	STRAP
10		87715730		1	HARNESS, Chassis Harness
11		87825		1	NUT, #10-32
12		86624181		4	WASHER, M6
13		86512440		2	NUT, LOCK
14		86977786		2	BOLT, Hex, M6 x 25, 8.8
15		87016870		2	CLAMP, J, 7/16" Insul, 5/16" Bolt
16		86505868		2	NUT, M8, Flg Ser
17		120103		2	BOLT, Hex, M8 x 16, 8.8

LAMP ASSY

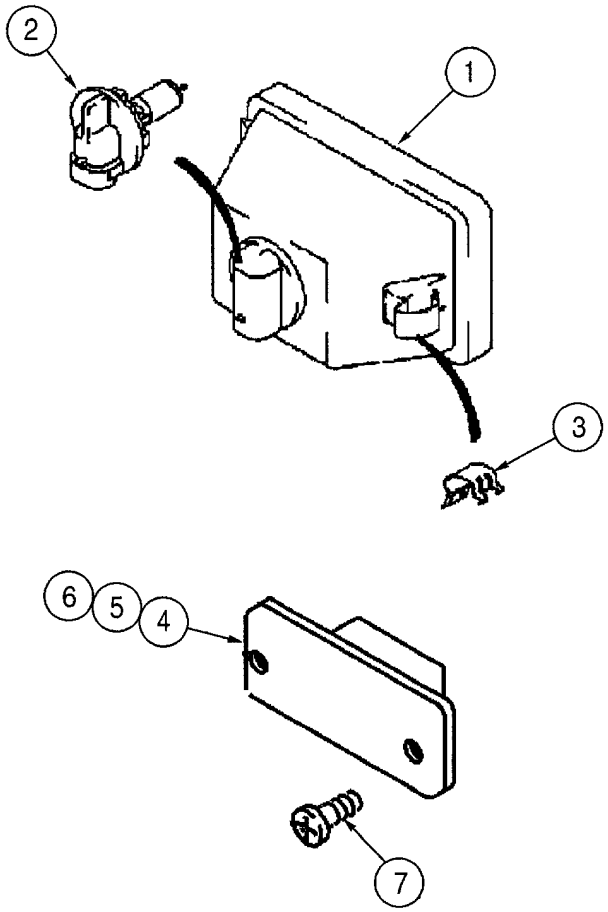

BS01E075

LAMP ASSY

REF	FN	PART NUMBER	YR/SN	QTY	DESCRIPTION
1		222004A2		1	HEADLIGHT, work; Incl. 2, 3
2		259702A1		1	BULB, LAMP
3		259701A1		1	CLIP, ELECTRICAL, SPRING
4		233163A2		1	LIGHT, TAIL, Incl. 6, 7
5		NSS		1	NOT SERVICED SEPARATELY, LENS red
6		259499A1		1	BULB, 12V, 5W
7		260-13414		2	SCREW, SELF TAP, Cross Pan Hd, #8 x 7/8", No. 8 st x 7/8

CAB ELECTRICAL - RIGHT HAND CONSOLE

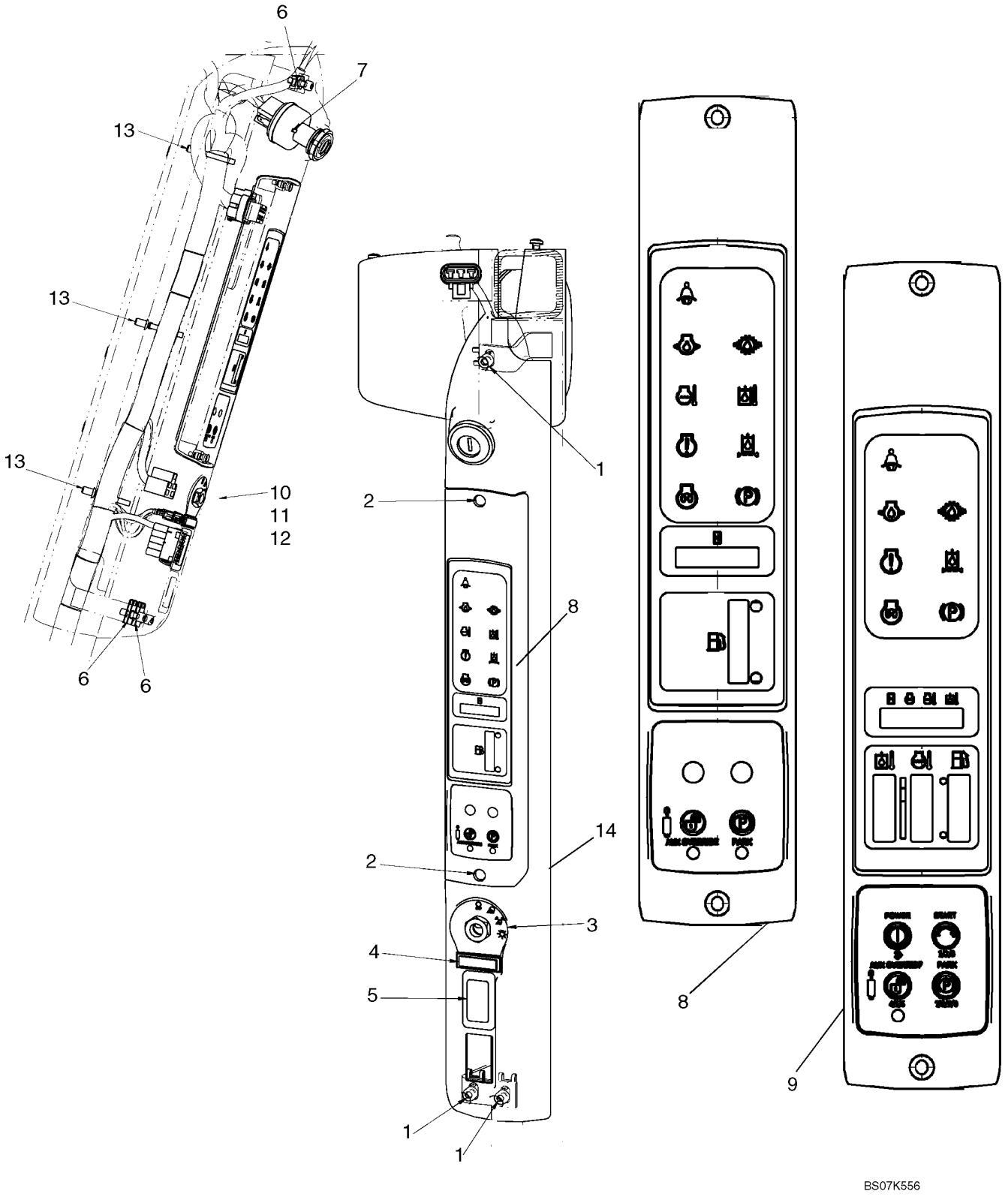

CAB ELECTRICAL - RIGHT HAND CONSOLE

REF	FN	PART NUMBER	YR/SN	QTY	DESCRIPTION
1		280272		6	SCREW, Hex Soc Hd, 1/4"-20 x 3/4"
2		86511042		2	SCREW, Cross Pan Hd, M4 x 16
3		{87677739}		1	Decal, Light Switch
4		86627432		1	PLASTIC PLUG
5		126844A1		10	PLUG
6		86521425		6	NUT, Tinn, U, 1/4"-20
7		282775A1		1	SWITCH, IGNITION, Incl (2) Keys
8		87638864		1	PANEL, INSTRUMENTS, Instrument Panel, Case Standard
9		87638865		1	PANEL, INSTRUMENTS, Instrument Panel, Case Deluxe
10		86729670		1	KNOB
11		86729669		1	SWITCH, FAN, Blower Switch
12		87310592		1	NUT, Jam, 7/16"-28, G5
13		87668737		10	STRAP
14		{87665327}		1	Console, RH

CAB ELECTRICAL - LEFT HAND CONSOLE

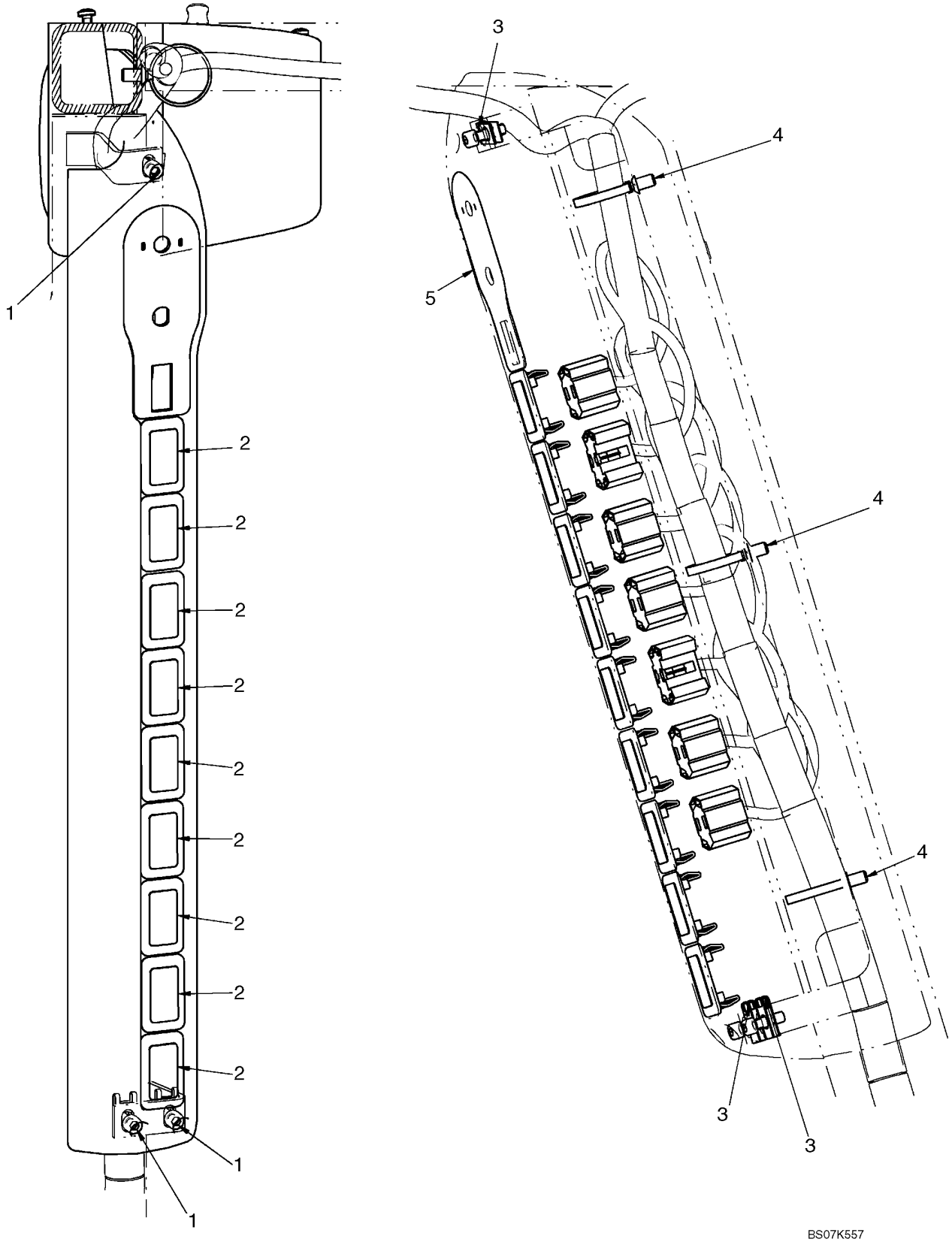

CAB ELECTRICAL - LEFT HAND CONSOLE

REF	FN	PART NUMBER	YR/SN	QTY	DESCRIPTION
1		280272		6	SCREW, Hex Soc Hd, 1/4"-20 x 3/4"
2		126844A1		10	PLUG
3		86521425		6	NUT, Tinn, U, 1/4"-20
4		87668737		10	STRAP
5		{87687238}		1	Decal, Blank, No HVAC
6		87627050		1	CONSOLE, Console, LH

CAB ELECTRICAL - CAB HARNESS

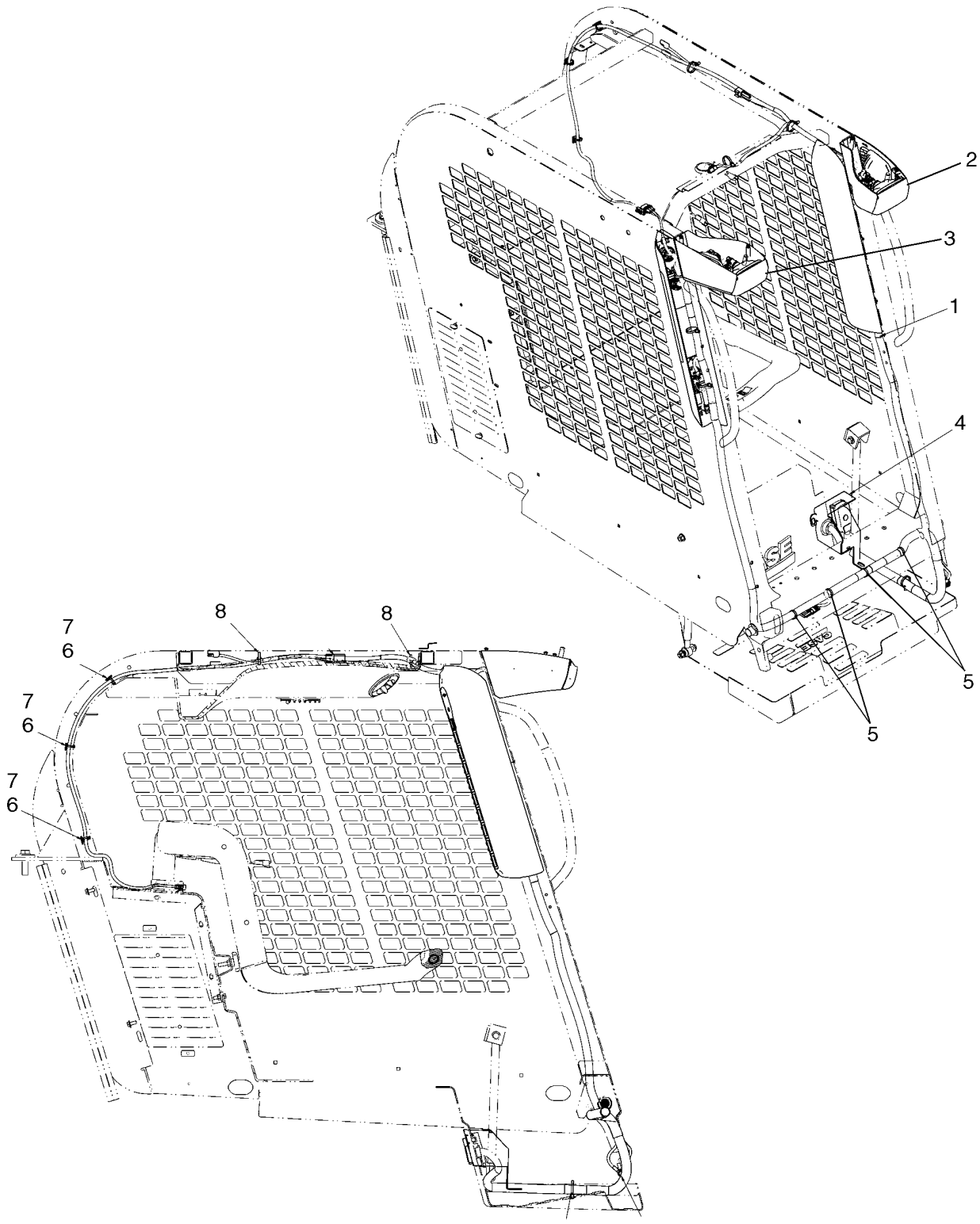

CAB ELECTRICAL - CAB HARNESS

REF	FN	PART NUMBER	YR/SN	QTY	DESCRIPTION
1		87715727		1	HARNESS, Cab Harness
2		87650098		1	LIGHT, Work Light, RH; See Fig 04-11
3		87650097		1	LIGHT, Work Light, LH; See Fig 04-12
4		{87712105}		1	Cover, Electrical Harness
5		263117		4	STRAP, CABLE, .14" x 11 1/2"
6		87642915		3	STRAP, CABLE
7		87642914		3	BASE
8		87668737		10	STRAP
9		120103		1	BOLT, Hex, M8 x 16, 8.8
10		86624184		1	WASHER, M8 x 16 x 1.6
11		229197A1		1	NUT

WORK LIGHTS - RH

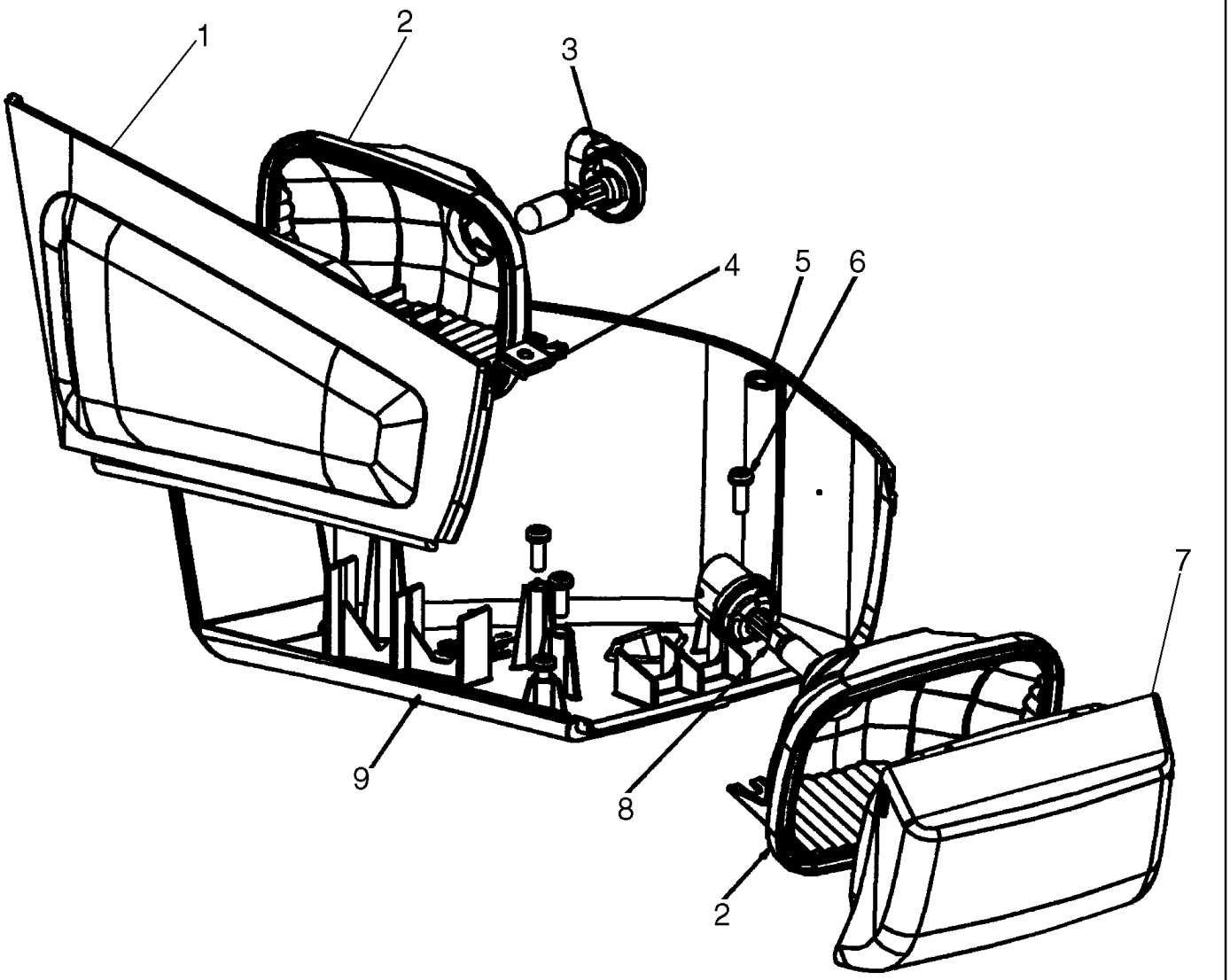

BS07J029

WORK LIGHTS - RH

REF	FN	PART NUMBER	YR/SN	QTY	DESCRIPTION
		87650098		1	LIGHT, Work Light, RH; Incl 1 - 9
1		NSS		1	NOT SERVICED SEPARATELY, Side Lens, Clear
2		NSS		2	NOT SERVICED SEPARATELY, Reflector
3		NSS		1	NOT SERVICED SEPARATELY, Bulb, 12.8V 50W Halogen
4		NSS		1	NOT SERVICED SEPARATELY, Nut
5		NSS		2	NOT SERVICED SEPARATELY, Threaded Brass Insert, M5 X 10
6		NSS		5	NOT SERVICED SEPARATELY, Screw
7		NSS		1	NOT SERVICED SEPARATELY, Front Lens, Clear
8		NSS		1	NOT SERVICED SEPARATELY, Bulb, 12V 50W
9		NSS		1	NOT SERVICED SEPARATELY, Housing

WORK LIGHTS - LH

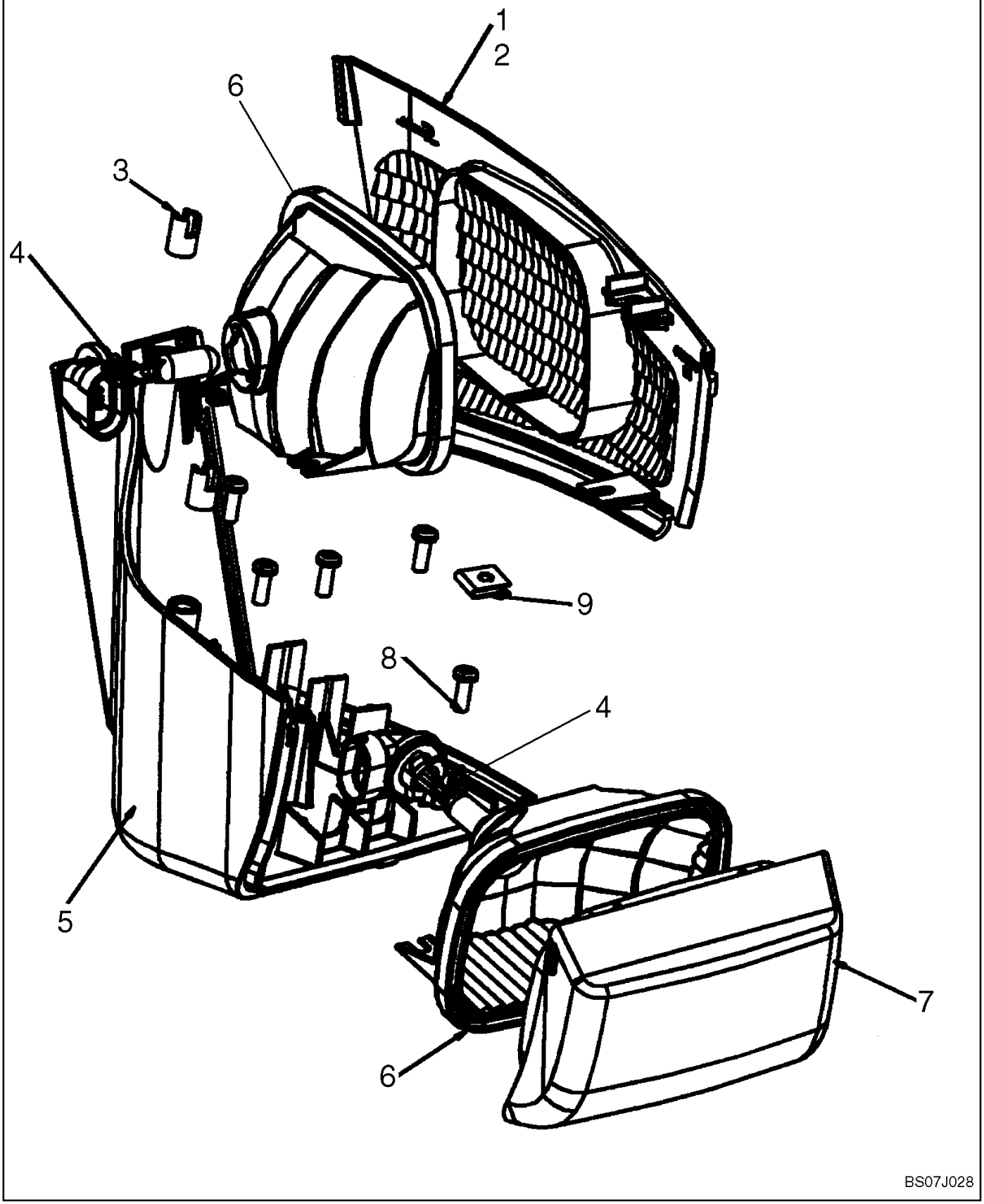

WORK LIGHTS - LH

REF	FN	PART NUMBER	YR/SN	QTY	DESCRIPTION
		87650097		1	LIGHT, Work Light, LH; Incl 1 - 9
1		NSS		AR	NOT SERVICED SEPARATELY, Adhesive Sealant
2		NSS		1	NOT SERVICED SEPARATELY, Side Lens, Clear
3		NSS		2	NOT SERVICED SEPARATELY, Threaded Brass Insert, M5 X 10
4		NSS		2	NOT SERVICED SEPARATELY, Bulb, 12.8V 50W Halogen
5		NSS		2	NOT SERVICED SEPARATELY, Housing
6		NSS		2	NOT SERVICED SEPARATELY, Reflector
7		NSS		1	NOT SERVICED SEPARATELY, Front Lens, Clear
8		NSS		5	NOT SERVICED SEPARATELY, Screw
9		NSS		1	NOT SERVICED SEPARATELY, Nut

CONTROL HANDLE, RH - BASIC

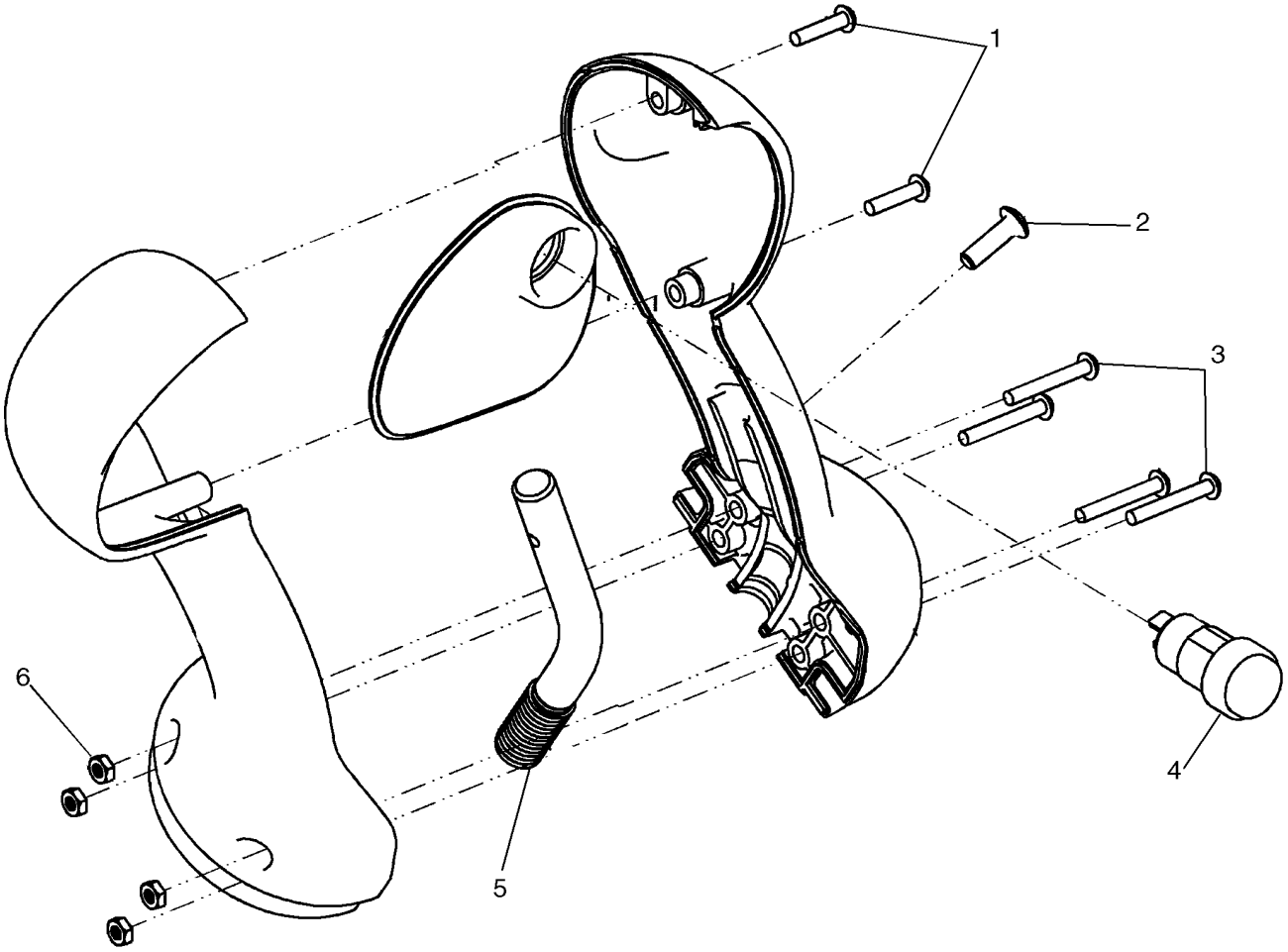

CONTROL HANDLE, RH - BASIC

REF	FN	PART NUMBER	YR/SN	QTY	DESCRIPTION
		87656868		1	HANDLE GRIP, Handle, RH - Basic; Incl 1 - 6
1		86637783		2	SCREW, SELF TAP, Cross Pan Hd, #6 x 5/8"
2		87534744		1	FASTENER
3		281045		4	SCREW, Cross Pan Hd, #6-32 x 1"
4		87630127		1	SWITCH, Parking Brake
5		{87652816}		1	Handle Mounting Rod
6		{87667726}		4	Nut, #6 - 32

CONTROL HANDLE, LH - BASIC

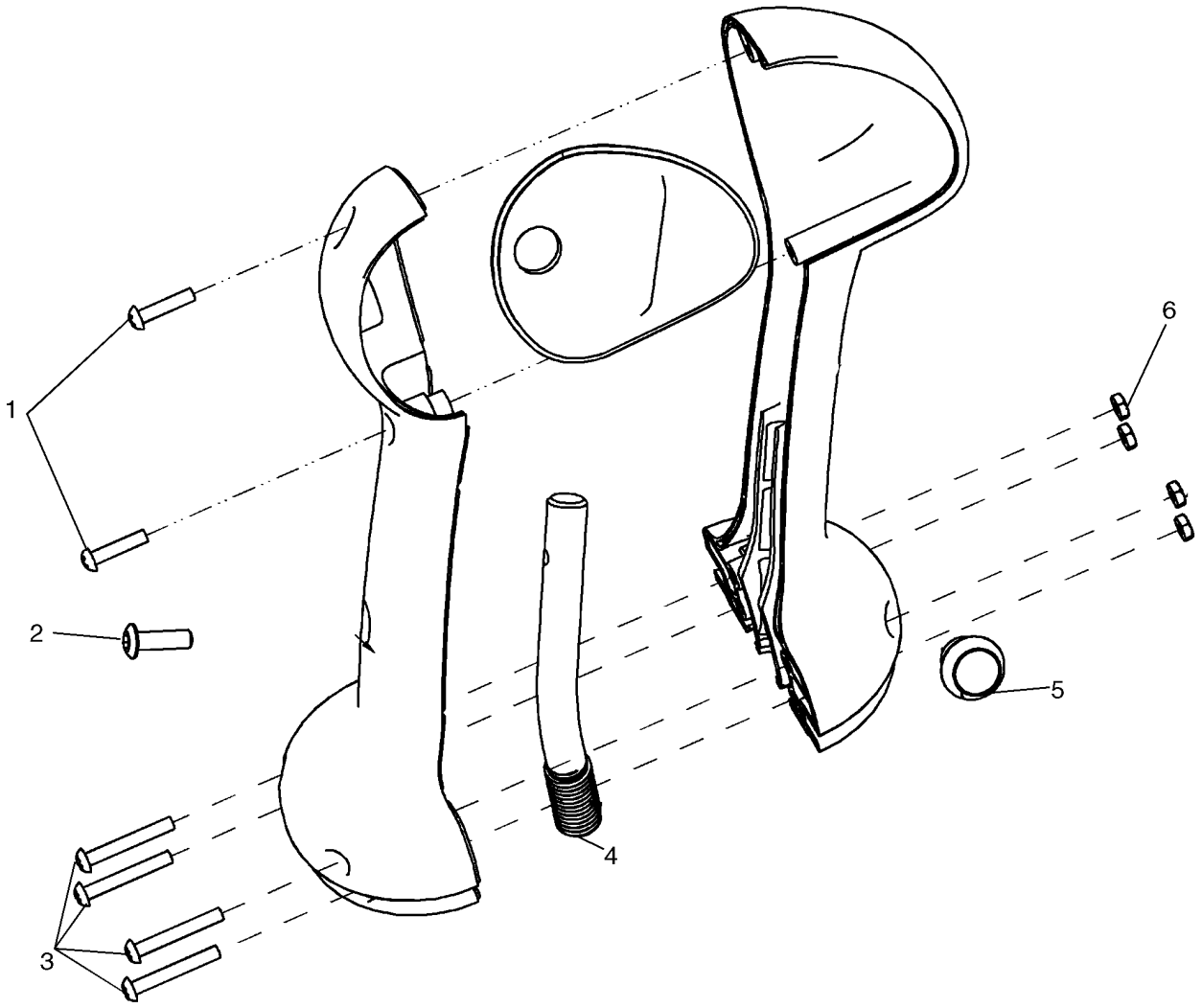

BS07J364

CONTROL HANDLE, LH - BASIC

REF	FN	PART NUMBER	YR/SN	QTY	DESCRIPTION
		87656866		1	HANDLE GRIP, Handle, LH - Basic; Incl 1 - 6
1		86637783		2	SCREW, SELF TAP, Cross Pan Hd, #6 x 5/8"
2		87534744		1	FASTENER
3		281045		4	SCREW, Cross Pan Hd, #6-32 x 1"
4		{87652818}		1	Handle Mounting Rod
5		87630126		1	SWITCH, Horn
6		{87667726}		4	Nut, #6 - 32

04-15		p1	11/07

CONTROL HANDLE, RH - DELUXE W/O AUX ELECTRIC

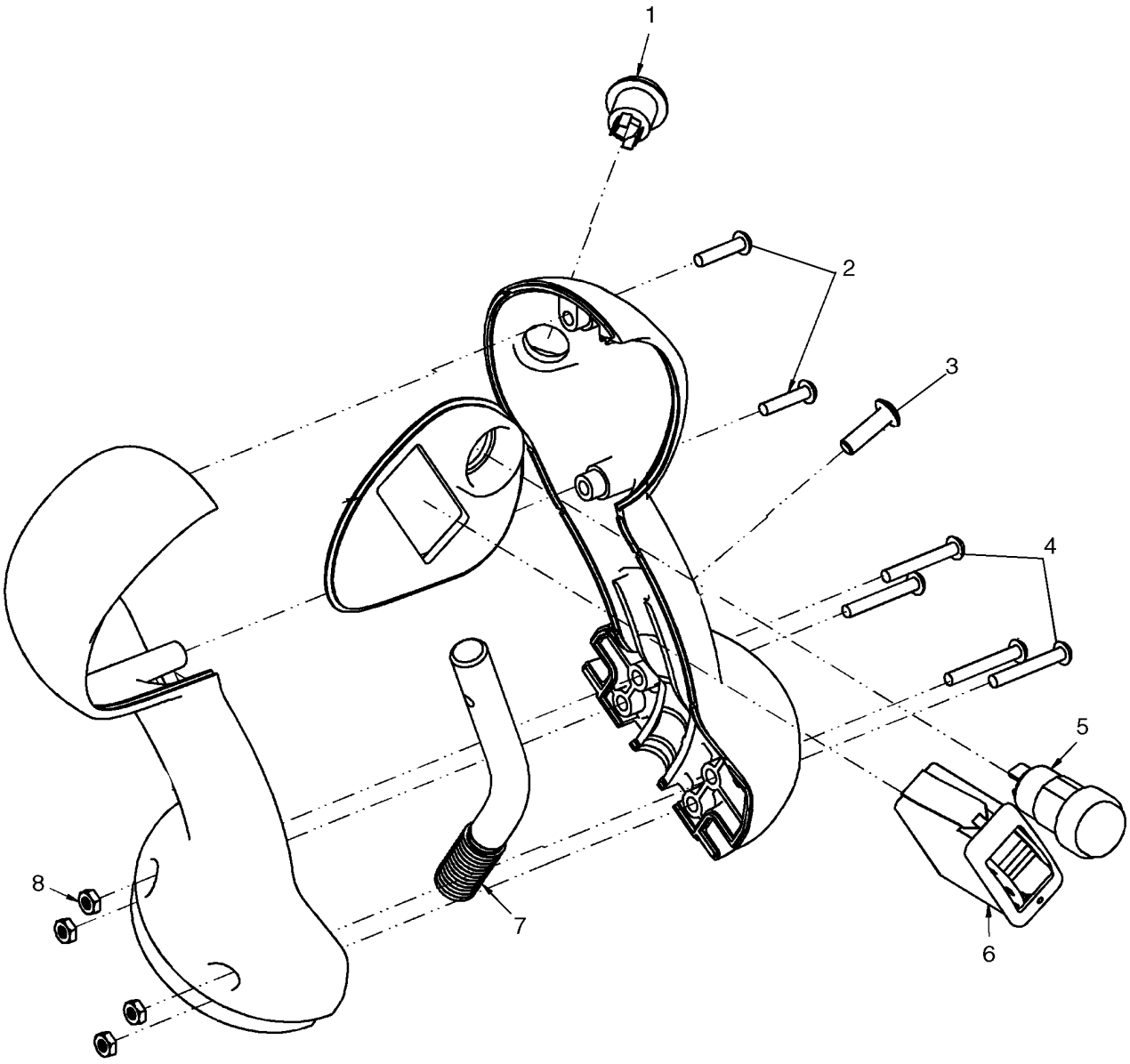

BS07J363

CONTROL HANDLE, RH - DELUXE W/O AUX ELECTRIC

REF	FN	PART NUMBER	YR/SN	QTY	DESCRIPTION
		87656872		1	HANDLE GRIP, Handle, RH - Deluxe Without Aux Electric; Incl 1 - 8
1		87630129		1	SWITCH, Ride Control
2		86637783		2	SCREW, SELF TAP, Cross Pan Hd, #6 x 5/8"
3		87534744		1	FASTENER
4		281045		4	SCREW, Cross Pan Hd, #6-32 x 1"
5		87630127		1	SWITCH, Parking Brake
6		87642913		1	SWITCH, Auxiliary Hydraulic
7		{87652816}		1	Handle Mounting Rod
8		{87667726}		4	Nut, #6 - 32

04-16		p1	11/07

CONTROL HANDLE, LH - DELUXE W/O AUX ELECTRIC

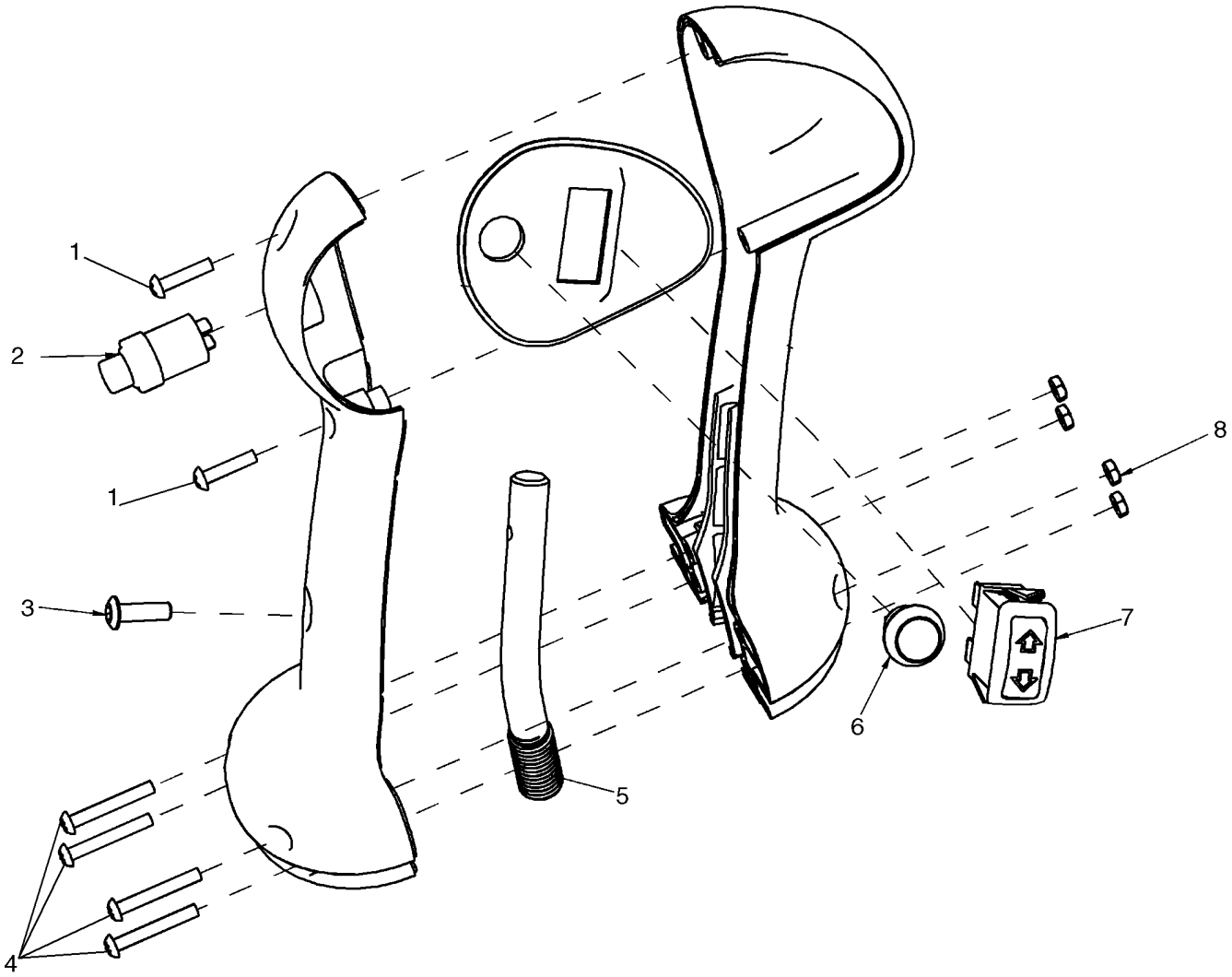

CONTROL HANDLE, LH - DELUXE W/O AUX ELECTRIC

REF	FN	PART NUMBER	YR/SN	QTY	DESCRIPTION
		87656870		1	HANDLE GRIP, Handle, LH - Deluxe Without Aux Electric
1		86637783		2	SCREW, SELF TAP, Cross Pan Hd, #6 x 5/8"
2		87630130		1	SWITCH, Two Speed
3		87534744		1	FASTENER
4		281045		4	SCREW, Cross Pan Hd, #6-32 x 1"
5		{87652818}		1	Handle Mounting Rod
6		87630126		1	SWITCH, Horn
7		87630128		1	SWITCH, Turn Signal
8		{87667726}		4	Nut, #6 - 32

04-17		p1	11/07

CONTROL HANDLE, RH - DELUXE

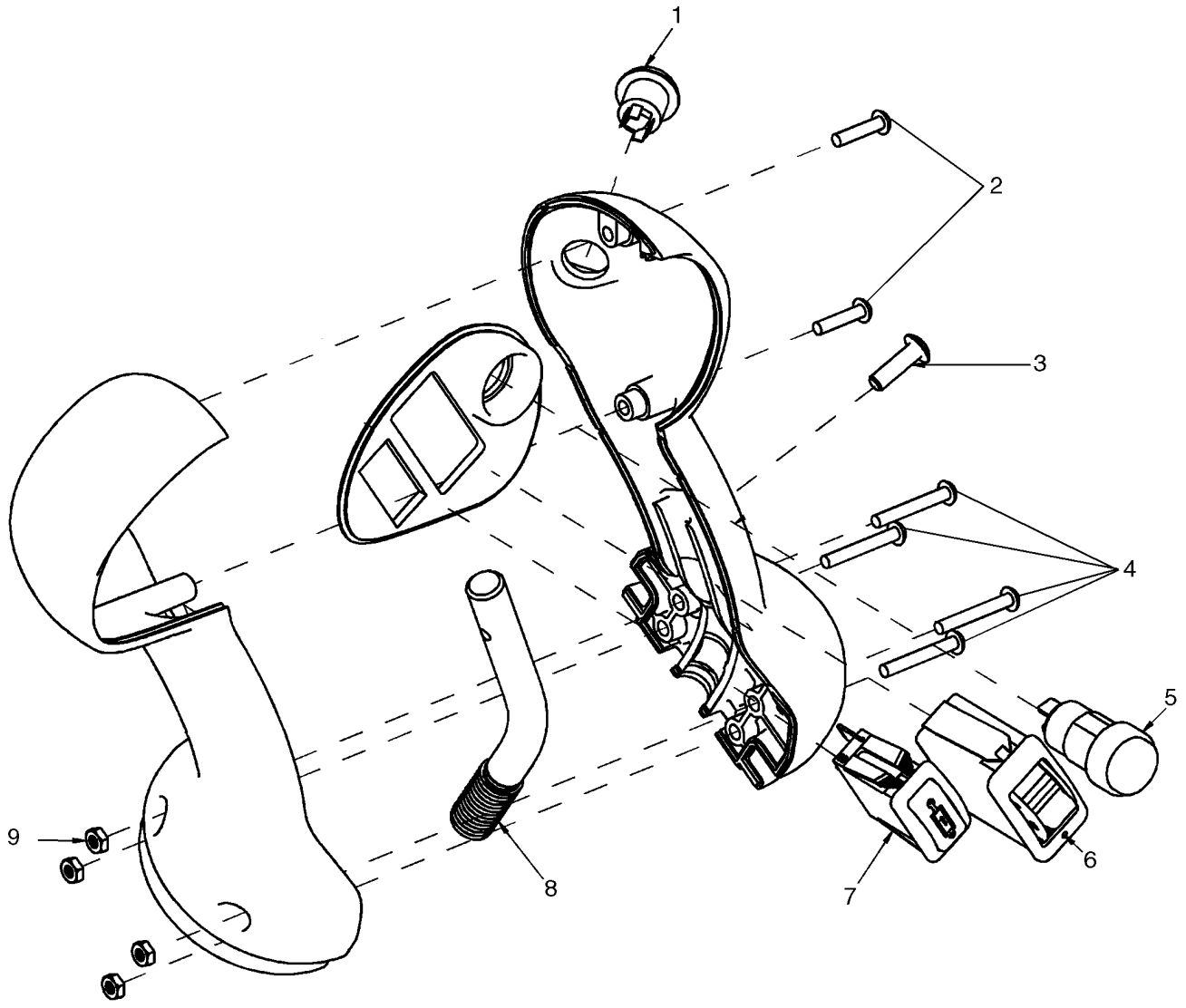

BS07J269

CONTROL HANDLE, RH - DELUXE

REF	FN	PART NUMBER	YR/SN	QTY	DESCRIPTION
		87641948		1	HANDLE GRIP, Handle, RH - Deluxe
1		87630129		1	SWITCH, Ride Control
2		86637783		2	SCREW, SELF TAP, Cross Pan Hd, #6 x 5/8"
3		87534744		1	FASTENER
4		281045		4	SCREW, Cross Pan Hd, #6-32 x 1"
5		87630127		1	SWITCH, Parking Brake
6		87642913		1	SWITCH, Auxiliary Hydraulic
7		87427685		1	SWITCH, Switch Hyd M-O-M
8		{87652816}		1	Handle Mounting Rod
9		{87667726}		4	Nut, #6 - 32

CONTROL HANDLE, LH - DELUXE

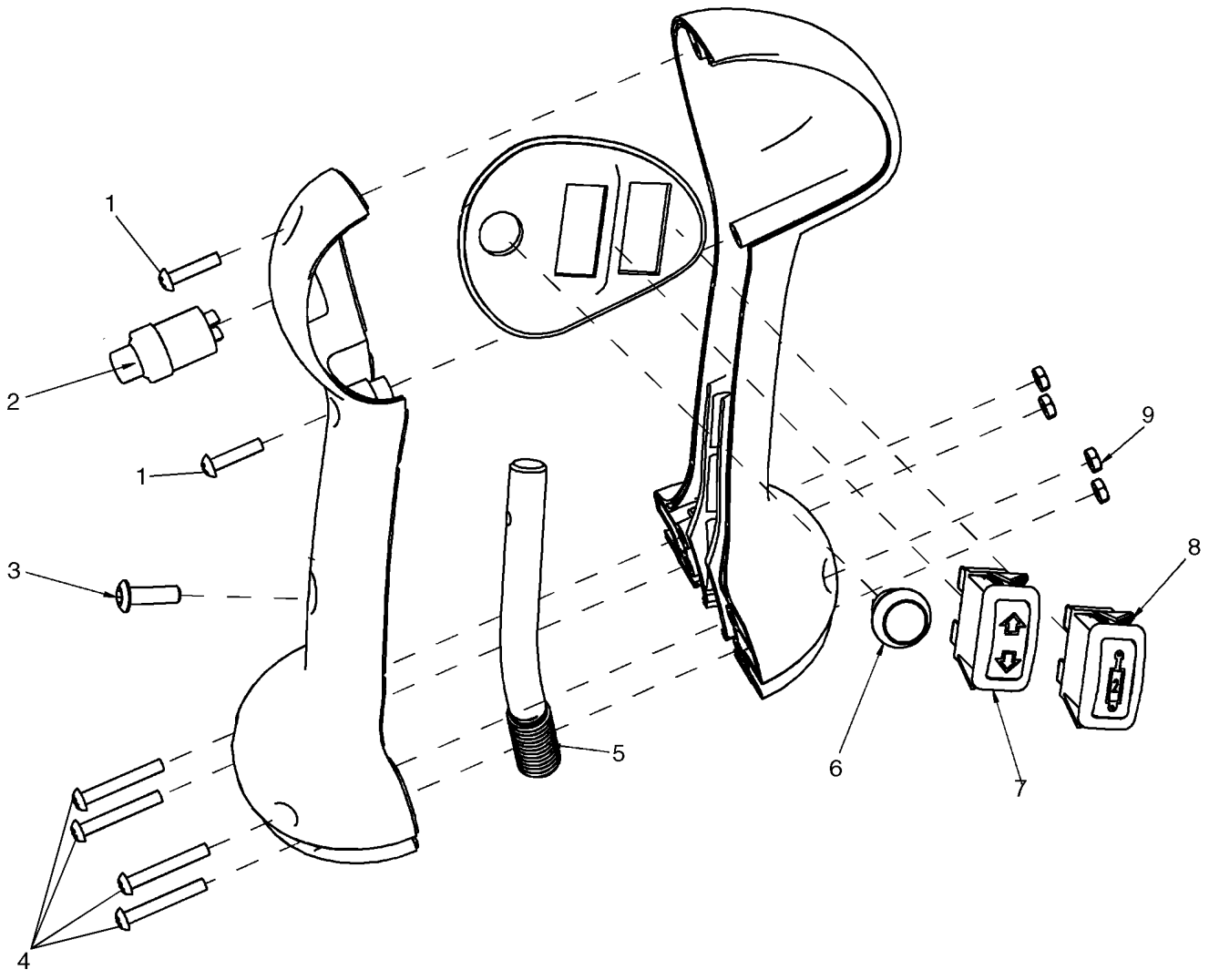

CONTROL HANDLE, LH - DELUXE

REF	FN	PART NUMBER	YR/SN	QTY	DESCRIPTION
		87641947		1	HANDLE GRIP, Handle, LH - Deluxe
1		86637783		2	SCREW, SELF TAP, Cross Pan Hd, #6 x 5/8"
2		87630130		1	SWITCH, Two Speed
3		87534744		1	FASTENER
4		281045		4	SCREW, Cross Pan Hd, #6-32 x 1"
5		{87652818}		1	Handle Mounting Rod
6		87630126		1	SWITCH, Horn
7		87630128		1	SWITCH, Turn Signal
8		87427686		1	SWITCH, Hyd M-O-M
9		{87667726}		4	Nut, #6 - 32

DISCONNECT SWITCH - REMOTE JUMP START

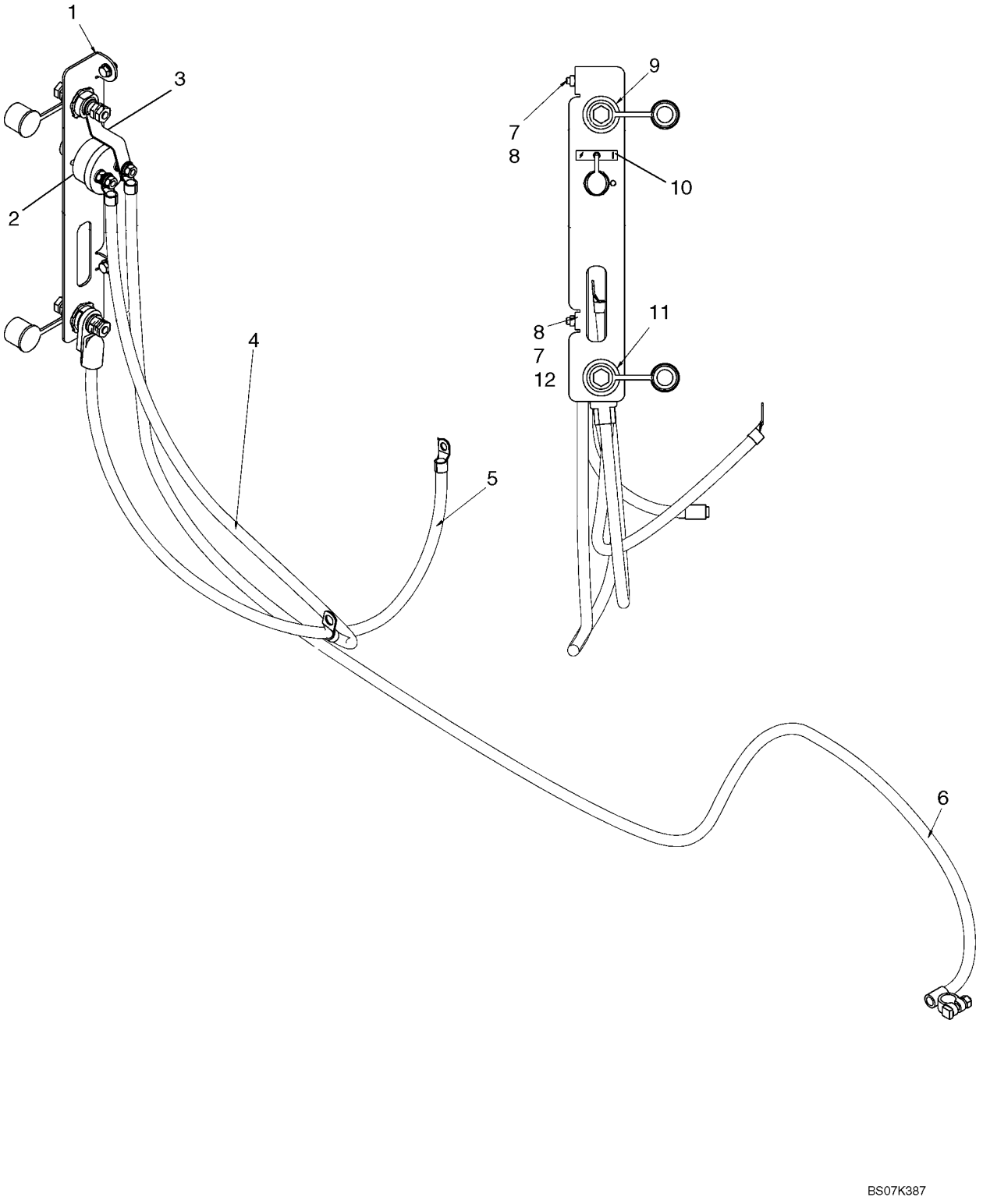

DISCONNECT SWITCH - REMOTE JUMP START

REF	FN	PART NUMBER	YR/SN	QTY	DESCRIPTION
1		87581954		1	BRACKET, Remote Jump Start Bracket
2		87458467		1	SWITCH, Master Disconnect Switch
3		399665A2		1	ANCHOR, Strip, Battery Jump Start
4		87581958		1	CABLE, Negative Battery Cable, 1034mm (40 11/16 in.)
5		{87682370}		1	Positive Battery Cable, 1058mm (41 21/32 in.)
6		87581956		1	CABLE, Negative Battery Cable, 2281mm (89 13/16 in.)
7		87030567		2	NUT
8		120103		2	BOLT, Hex, M8 x 16, 8.8
9		399384A1		1	TERMINAL CONNECTOR, Negative Terminal
10		176332A1		1	DECAL, Battery Disconnect
11		399383A1		1	TERMINAL CONNECTOR, Positive Terminal
12		86624185		2	WASHER, M8 x 17.5 x 2, HT

HORN - MOUNTING

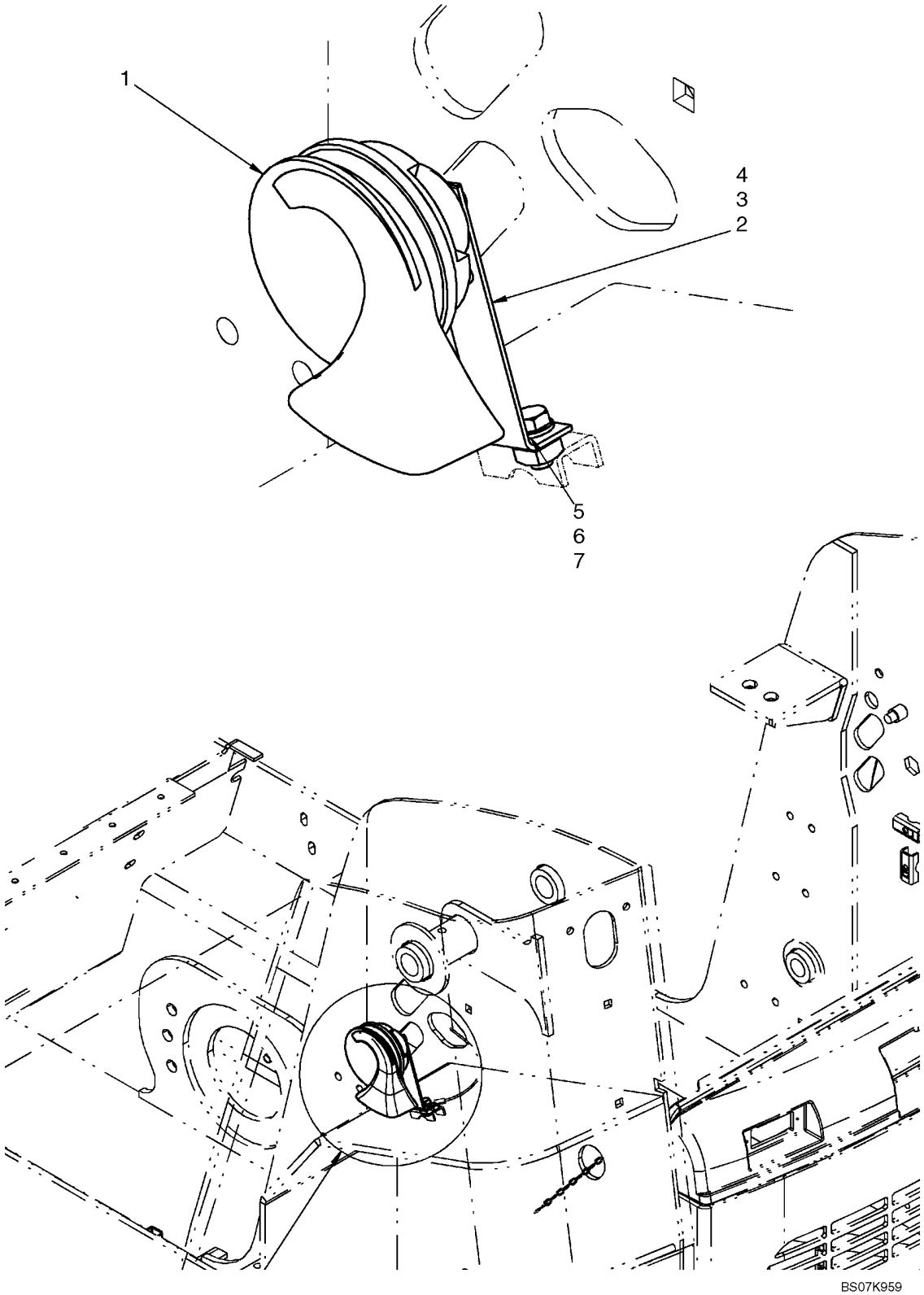

HORN - MOUNTING

REF	FN	PART NUMBER	YR/SN	QTY	DESCRIPTION
1		254130A1		1	HORN
2		406938A2		1	ANGLE, Horn Mounting Bracket
3		87030561		1	NUT, LOCK, M6 x 1, Cl 8
4		86632601		2	WASHER, LOCK, Ext Tooth, M8
5		86624184		1	WASHER, M8 x 16 x 1.6
6		120103		1	BOLT, Hex, M8 x 16, 8.8
7		229197A1		1	NUT

BACKUP ALARM

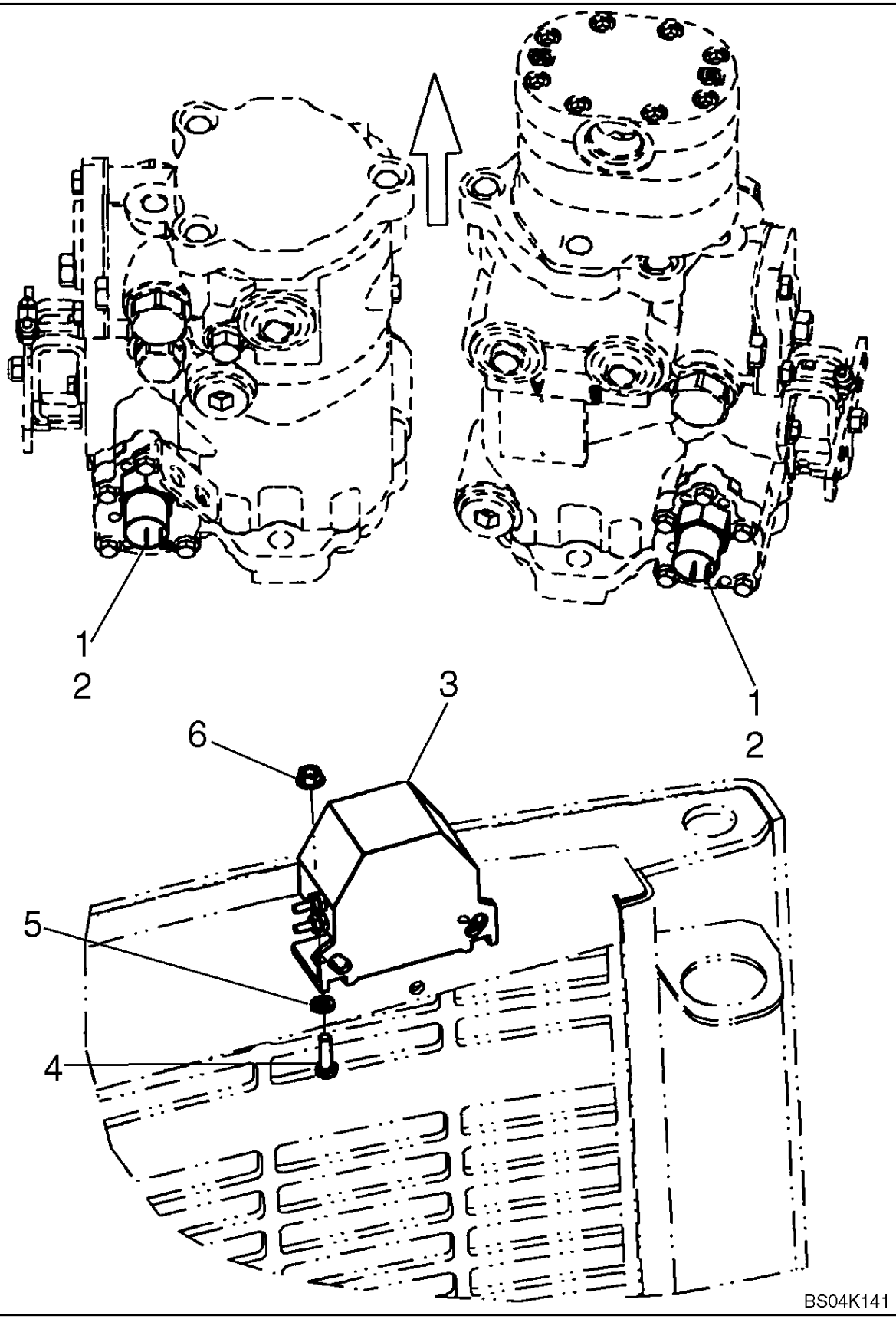

BACKUP ALARM

REF	FN	PART NUMBER	YR/SN	QTY	DESCRIPTION
1		87029843		2	SWITCH, PRESSURE, 600 PSI; Backup Alarm Control; Incl. 2; If Used
1		87370805		2	SWITCH, PRESSURE, 2000 PSI; Backup Alarm Control; Incl. O-Ring 9617873; Replaces 87461545; If Used
2		9617873		1	O-RING, 6-1, 90 Duro, .468" ID x .078" Thk
3		324299A1		1	ALARM, For Service Order 325258A1
3		325258A1		1	KIT, SERVICE, Backup Alarm
4		120100		2	BOLT, Hex, M6 x 20, 8.8
5		86624182		2	WASHER, M6 x 18 x 1.6
6		86511444		2	NUT, M6, Flg Ser

ELECTRICAL ACCESSORY SOCKET

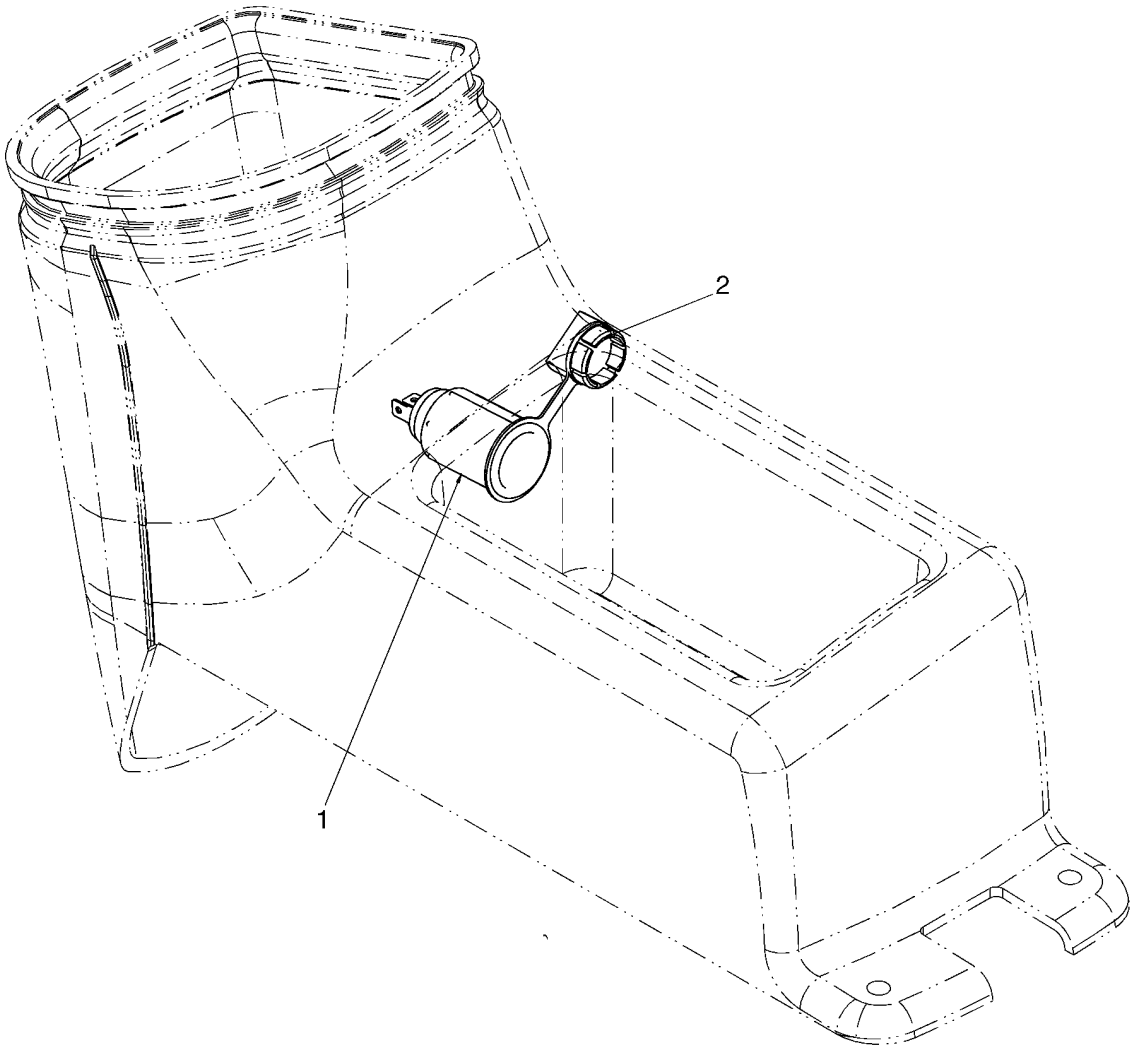

BS07K960

ELECTRICAL ACCESSORY SOCKET

REF	FN	PART NUMBER	YR/SN	QTY	DESCRIPTION
1		283779A1		1	OUTLET, Power Outlet
2		283781A1		1	CAP

ELECTRICAL - FRONT AUXILIARY

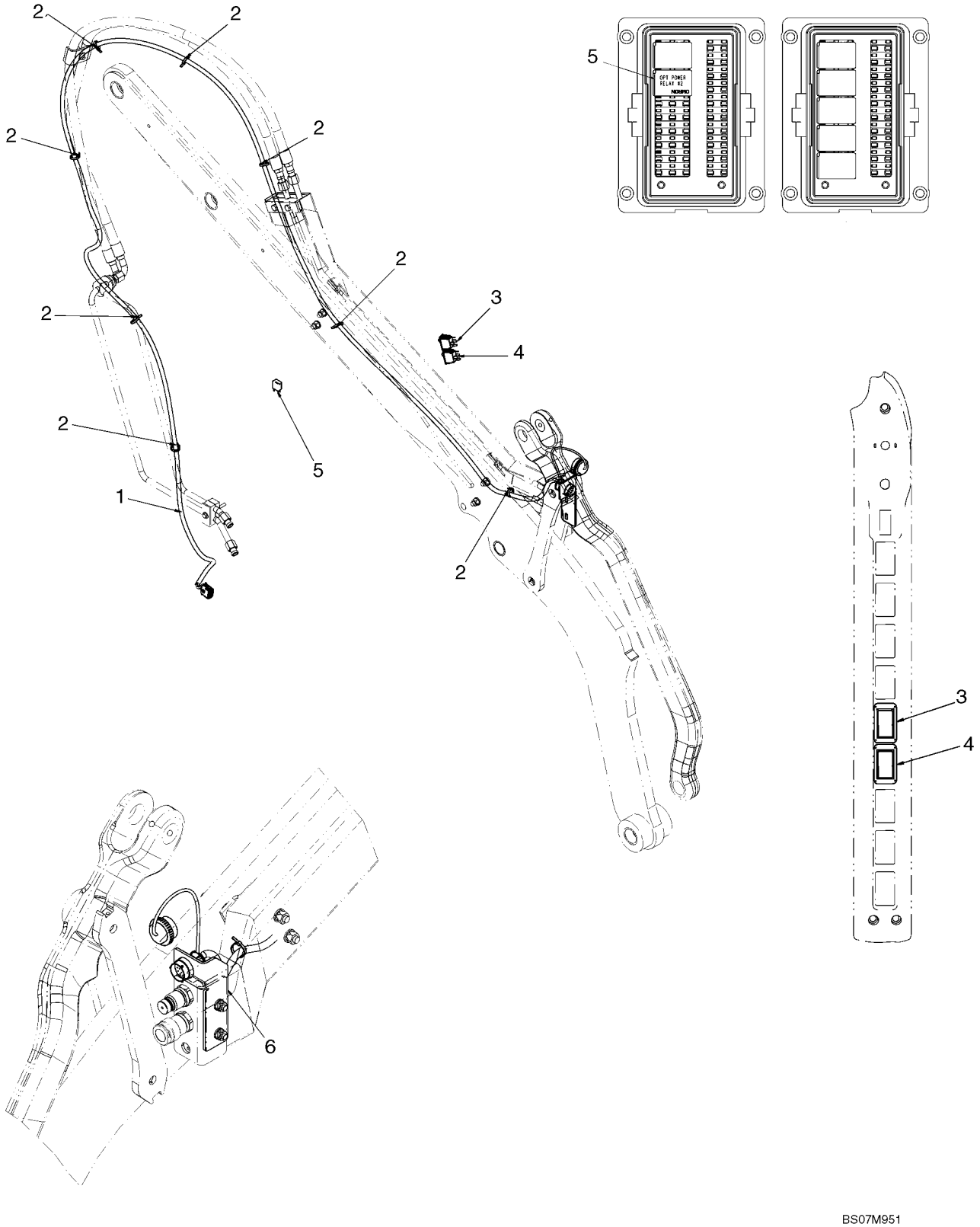

ELECTRICAL - FRONT AUXILIARY

REF	FN	PART NUMBER	YR/SN	QTY	DESCRIPTION
		87640048		1	KIT, SERVICE, Kit, Auxiliary Front Electric; Incl 1 - 6
1		87441574		1	HARNESS, WIRE, Harness, Front Auxiliary
2		263117		8	STRAP, CABLE, .14" x 11 1/2"
3		87634134		1	SWITCH, Rocker Switch, Auxiliary Electric I/O
4		87634135		1	SWITCH, Rocker Switch, Auxiliary Electric F/R
5		{87655334}		1	Relay
6		87449992		1	BRACKET

ELECTRICAL - ROAD LIGHTS (NA)

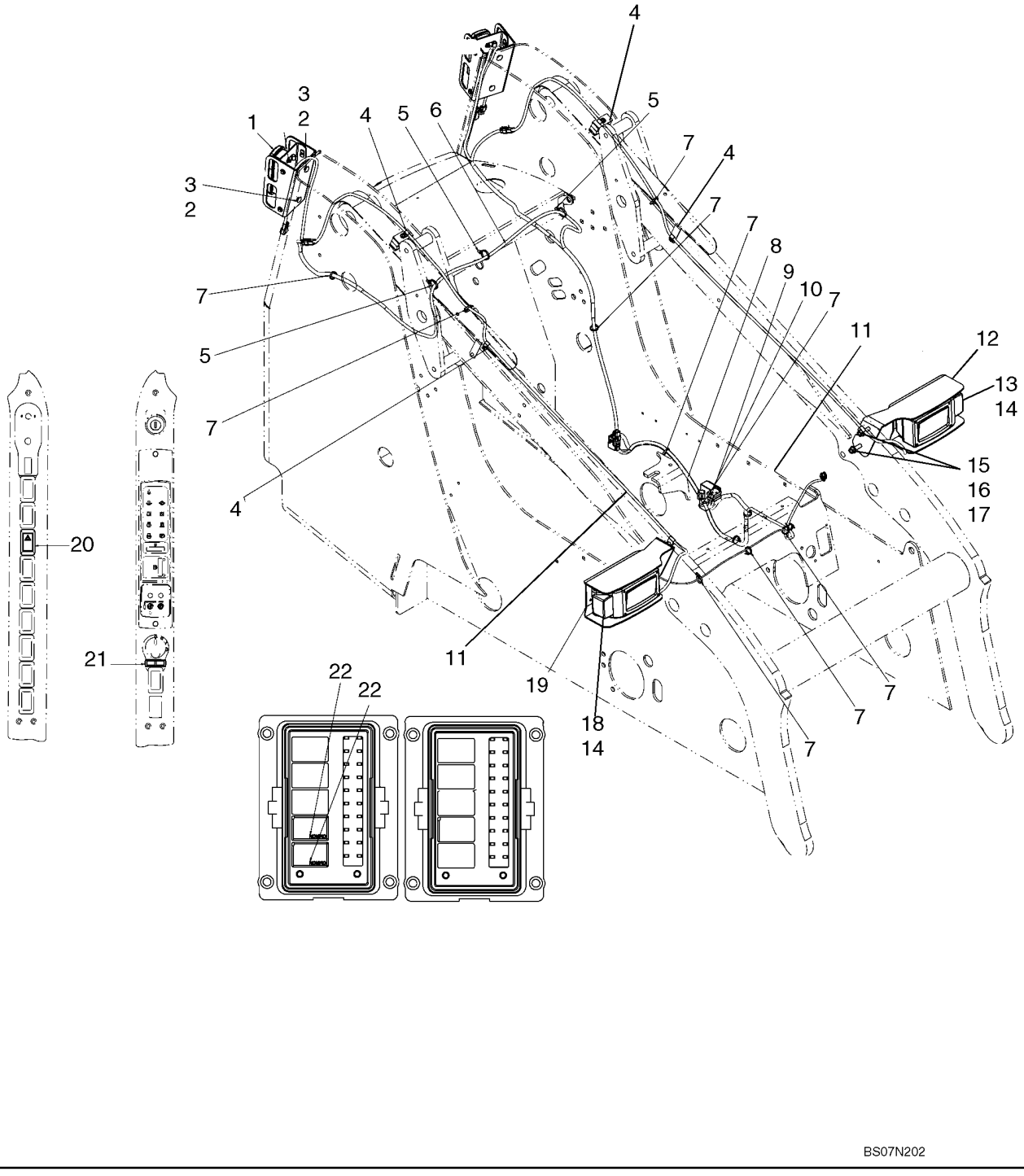

ELECTRICAL - ROAD LIGHTS (NA)

REF	FN	PART NUMBER	YR/SN	QTY	DESCRIPTION
		87676263		1	KIT, SERVICE, Kit, Road Lights (NA); Incl 1 - 22
1		REF		2	INSTRUCTION, Rear Light And Mounting; See Fig 04-27
2		86633356		4	BOLT, CARRIAGE, Short NK, M10 x 25, Cl8.8, Full Thd
3		87030549		4	NUT, LOCK, M10 x 1.5, Cl 10
4		86637978		4	CLAMP, 3/8", Insul, 5/16" Bolt
5		87668737		3	STRAP
6		87673078		1	HARNESS, Harness, On Road Boom
7		263117		13	STRAP, CABLE, .14" x 11 1/2"
8		87668732		1	HARNESS, Harness, Road Lights
9		83982664		1	RELAY, Turn Signal Relay
10		9821783		1	FLASHER UNIT
11		87673076		2	HARNESS, Harness, On Road Boom Jumper
12		87721977		1	BRACKET, Light Bracket, LH
13		85821385		1	HEADLAMP, LH, See Fig 04-25
14		43435		4	NUT, M10, Flg Ser
15		9706702		4	BOLT, Hex, M12 x 50, 8.8
16		140018		4	WASHER, M12 x 24 x 2.5
17		337475		4	NUT, M12, Cl 10
18		85821384		1	HEADLAMP, RH, See Fig 04-26
19		87721978		1	BRACKET, Light Bracket, RH
20		87634133		1	SWITCH, Rocker Switch, Hazard Lights
21		86604657		1	INDICATOR, TURN SIGNAL
22		{87655334}		2	Relay

HEADLAMP - LH

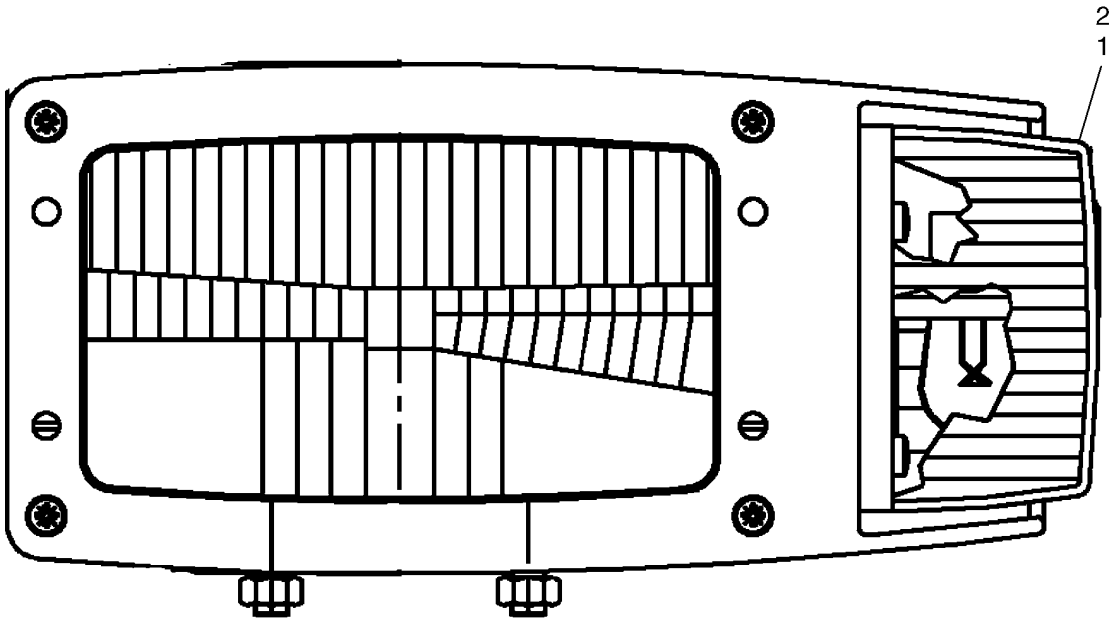

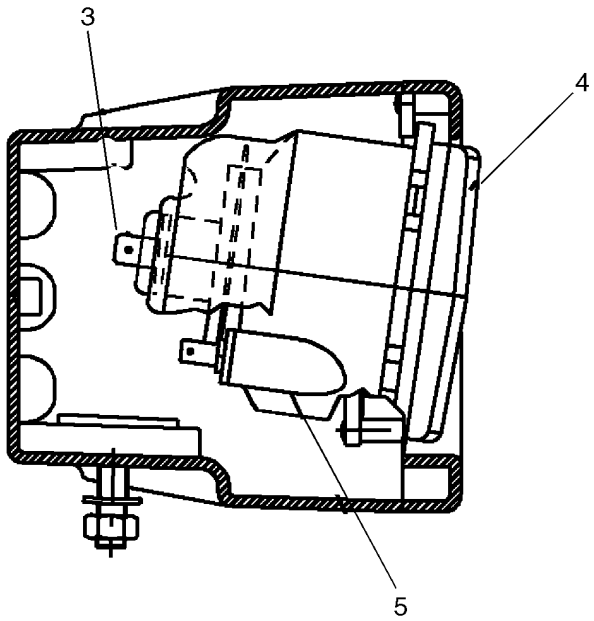

BS07K391

HEADLAMP - LH

REF	FN	PART NUMBER	YR/SN	QTY	DESCRIPTION
		85821385		1	HEADLAMP, LH, Incl 1 - 5
1		9969430		1	LENS
2		14148190		1	BULB, Bulb, 12V 21W
3		14152090		1	BULB, Bulb, 12V 60/55 W
4		NSS		1	NOT SERVICED SEPARATELY, Lamp
5		14142390		1	BULB, Bulb, 12V 4W

HEADLAMP - RH

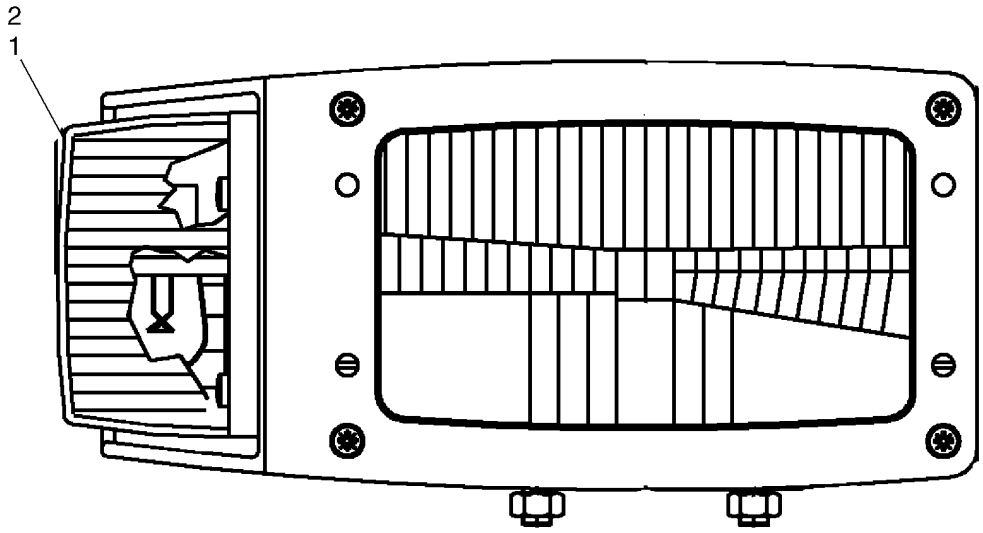

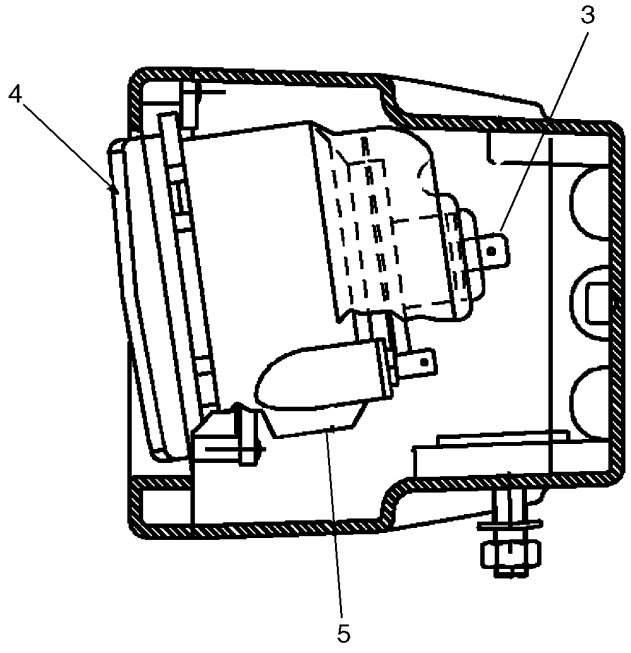

BS07K390

HEADLAMP - RH

REF	FN	PART NUMBER	YR/SN	QTY	DESCRIPTION
		85821384		1	HEADLAMP, RH, Incl. 1 - 5
1		9969431		1	LENS
2		14148190		1	BULB, Bulb, 12V 21W
3		14152090		1	BULB, Bulb, 12V 60/55 W
4		NSS		1	NOT SERVICED SEPARATELY, Lamp
5		14142390		1	BULB, Bulb, 12V-4W

REAR LIGHT AND MOUNTING

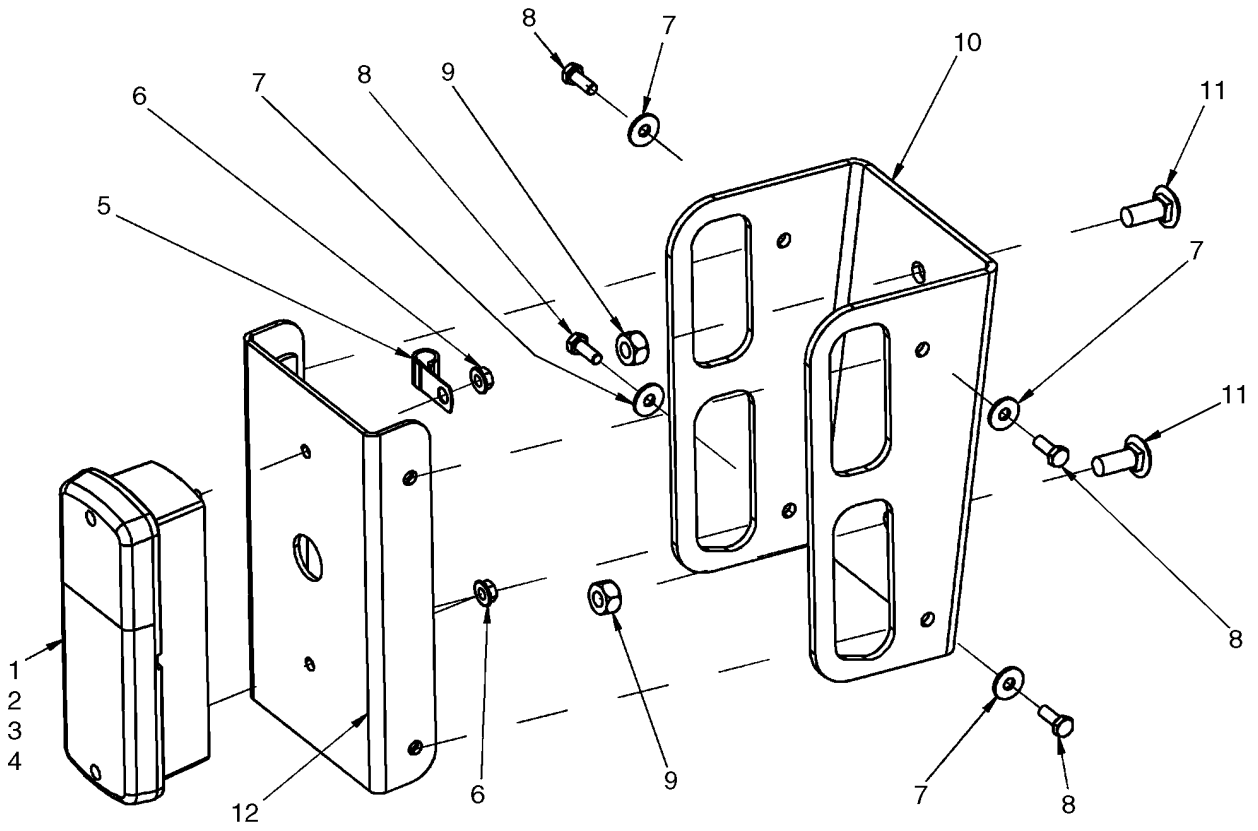

REAR LIGHT AND MOUNTING

REF	FN	PART NUMBER	YR/SN	QTY	DESCRIPTION
1		177239A2		2	LIGHT, TAIL, Incl 2 - 4
2		187140A1		2	LENS
3		3131227R1		2	BULB, P25-1, 12V, 25W
4		3131234R1		2	BULB, P25-2, 12V, 5W
5		87016870		2	CLAMP, J, 7/16" Insul, 5/16" Bolt
6		86511444		4	NUT, M6, Flg Ser
7		86624182		8	WASHER, M6 x 18 x 1.6
8		86508568		8	BOLT, Hex, M6 x 16, 8.8
9		87030549		4	NUT, LOCK, M10 x 1.5, Cl 10
10		419431A1		2	BRACKET, Rear Turn Signal Bracket
11		86633356		4	BOLT, CARRIAGE, Short NK, M10 x 25, Cl8.8, Full Thd
12		427180A1		2	BRACKET

ROTATING BEACON

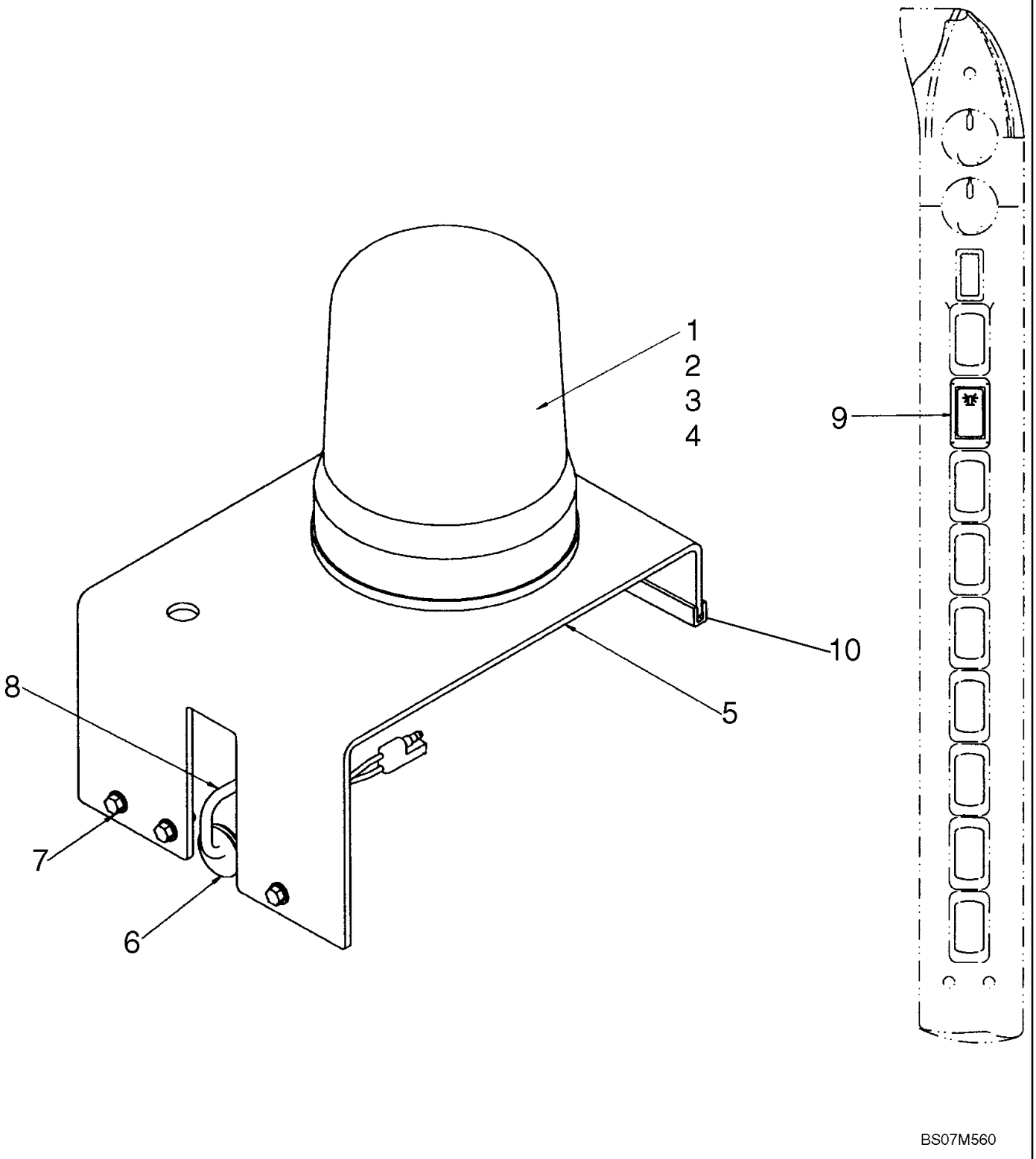

ROTATING BEACON

REF	FN	PART NUMBER	YR/SN	QTY	DESCRIPTION
		87638500		1	KIT, SERVICE, Kit, Rotating Beacon; Incl 1 - 10
1		E99128		1	BEACON, Rotating Beacon; Incl 2 - 4
2		E99208		1	LENS
3		3125705R1		1	BULB
4		E38908		1	SEAL
5		87682712		1	BRACKET, Beacon Support
6		87530614		1	GROMMET, Grommet
7		86625224		3	SCREW, Screw, Hex Head #1/4-20 X 3/4
8		293828A1		1	HARNESS, Harness, Rotating Beacon
9		133714A1		1	SWITCH, Rocker Switch, Rotating Beacon
10		293470A1		1	STRIP, ORNAMENTAL, Edge Trim

STROBE LIGHT

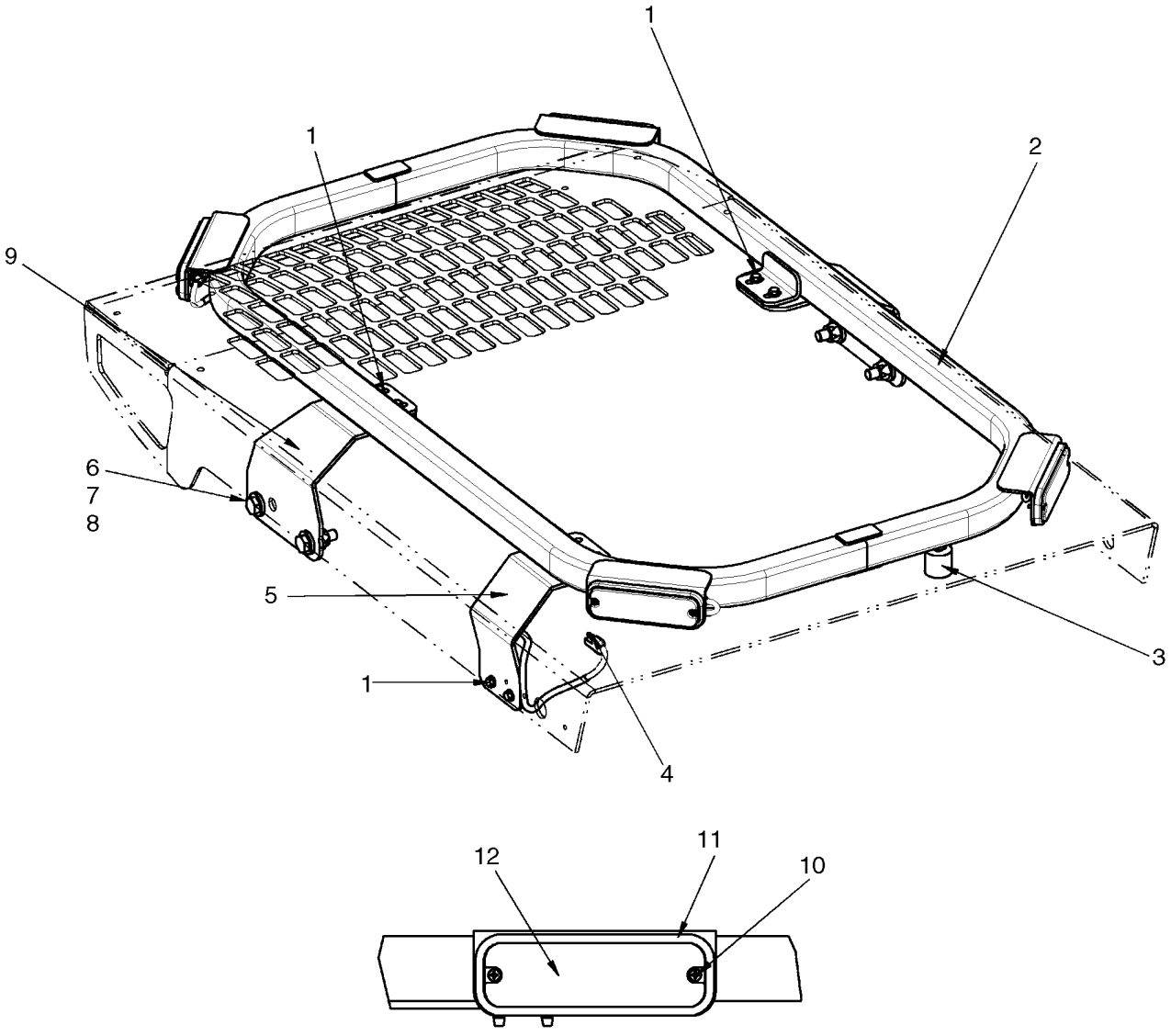

STROBE LIGHT

REF	FN	PART NUMBER	YR/SN	QTY	DESCRIPTION
		87652336		1	KIT, SERVICE, Kit, Strobe Light; Incl 1 - 12
1		86625224		6	SCREW
2		87727417		1	FRAME
3		87727414		1	BUMPER, Rubber Feet
4		87723831		1	HARNESS, Harness, Strobe
5		NSS		1	NOT SERVICED SEPARATELY, Wire Guard
6		337563		4	BOLT, Hex, M12 x 40, 10.9, Full Thd
7		412672		4	NUT, LOCK, M12 x 1.75, Cl 10
8		86625256		8	WASHER, M12 x 28.5 x 4, HT
9		87727413		2	BRACKET, Strobe Mounting Bracket
10		86637783		8	SCREW, SELF TAP, Cross Pan Hd, #6 x 5/8"
11		87728345		4	BEZEL, Strobe Light
12		87634137		4	HARNESS, Amber Strobe, LED

NOTES

SECTION INDEX
Power Train

06-01	JOYSTICK CONTROL PLUMBING, H PATTERN (PILOT CONTROL)
06-02	JOYSTICK CONTROL PLUMBING - ISO PATTERN (PILOT CONTROL)
06-03	JOYSTICK VALVE KITS - H PATTERN, LH (WITH PILOT CONTROL)
06-04	JOYSTICK VALVE KITS - H PATTERN, RH (WITH PILOT CONTROL)
06-05	JOYSTICK VALVE KITS - ISO PATTERN, LH
06-06	JOYSTICK VALVE KITS - ISO PATTERN, RH
06-07	JOYSTICK VALVE KITS - ISO PATTERN, LH
06-08	HYDROSTATICS - DRIVE MOTORS (450CT)
06-09	HYDROSTATICS - MULTI VALVE PLUMBING (450CT)
06-10	HYDROSTATICS - PUMP TO DRIVE MOTORS (450CT)
06-11	HYDROSTATICS - PUMP FITTINGS (450CT)
06-12	HYDROSTATICS - SUPPLY AND RETURN (450CT)
06-13	HYDROSTATICS - PUMP TO DRIVE MOTORS (450)
06-14	HYDROSTATICS - SUPPLY AND RETURN (450)
06-15	HYDROSTATICS - PUMP FITTINGS (450)
06-16	HYDROSTATICS - SUPPLY AND RETURN (450 WITH PILOT CONTROL)
06-17	HYDROSTATICS - PUMP TO DRIVE MOTORS (450 WITH PILOT CONTROL)
06-18	HYDROSTATICS - RESONATOR
06-19	HYDROSTATICS - TWO SPEED, VALVE ASSY (450CT WITH PILOT CONTROL)
06-20	PUMP, GEAR (WITHOUT HIGH FLOW)
06-21	GEAR PUMP (WITH HIGH FLOW)
06-22	PUMP, TANDEM - REXROTH A22 (87546977)
06-23	PUMP, TANDEM - PRESSURE RELIEF VALVE (87546977)
06-24	PUMP, TANDEM - PRESSURE RELIEF VALVE (87546977)
06-25	PUMP, TANDEM - INTERNAL GEAR PUMP (87546977)
06-26	PUMP, TANDEM - ROTARY GROUP, RIGHT HAND ROTATION (87546977)
06-27	PUMP, TANDEM - ROTARY GROUP, LEFT HAND ROTATION (87546977)
06-28	PUMP, TANDEM - CONTROL, HYDRAULIC (87546977)
06-29	PUMP, TANDEM - CONTROL CARTRIDGE WITH ORIFICE (87546977)
06-30	PUMP, TANDEM (87350025)
06-31	PUMP, TANDEM (87350025)
06-32	PUMP, TANDEM (87350025)
06-33	PUMP, TANDEM (87350025)
06-34	PUMP, TANDEM (87350025)
06-35	PUMP, TANDEM (87350025)
06-36	MOTOR ASSY - HYDROSTATIC DRIVE (450CT)
06-37	MOTOR ASSY - TWO SPEED (450)
06-38	MOTOR ASSY - TWO SPEED (450)
06-39	MOTOR ASSY - TWO SPEED (450)
06-40	FINAL DRIVE (450CT)
06-41	DRIVE LINE
06-42	AXLE ASSY
06-43	WHEELS
06-44	WHEELS - SOLID FLEX
06-45	TRACK (450CT)

JOYSTICK CONTROL PLUMBING, H PATTERN (PILOT CONTROL)

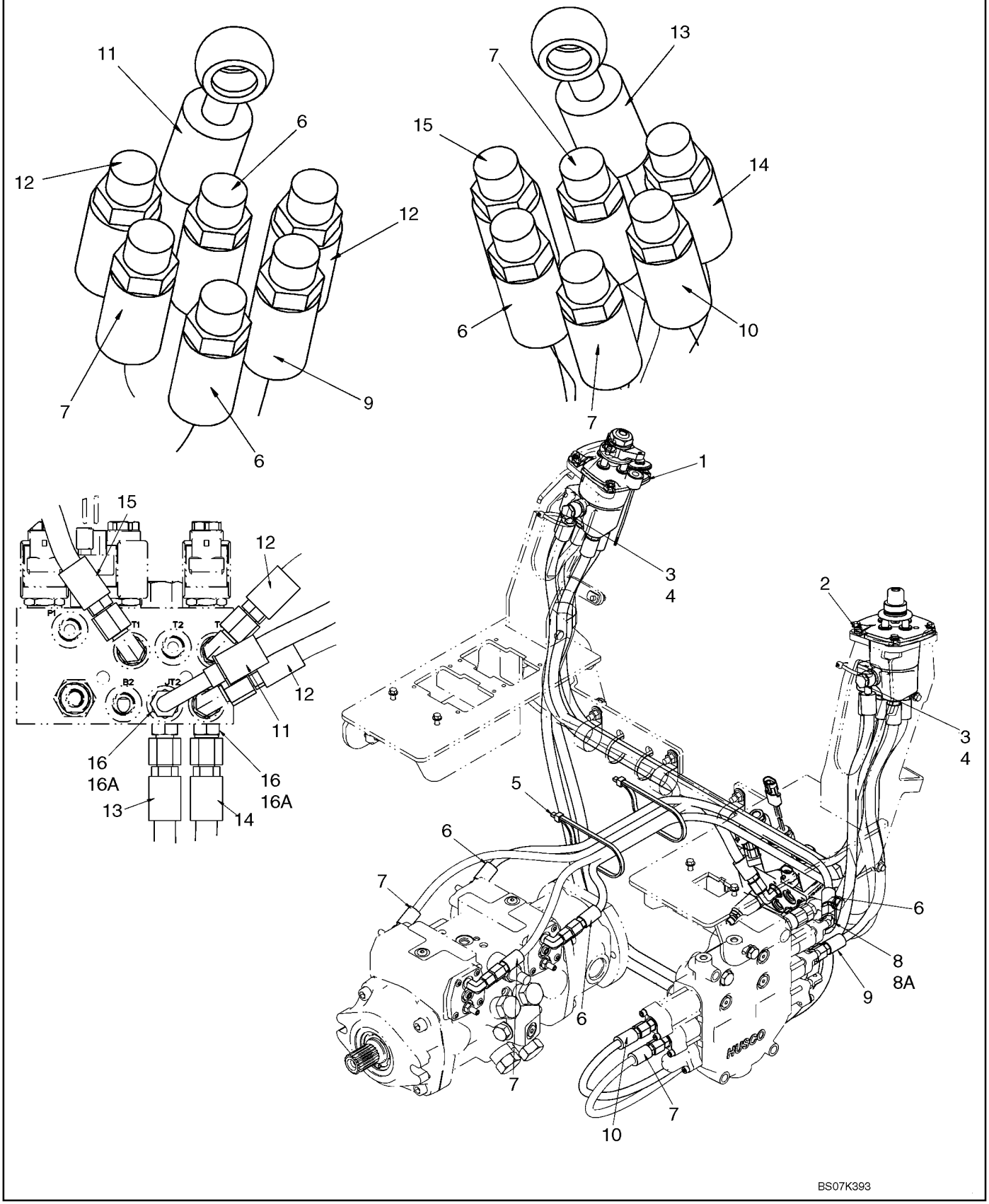

JOYSTICK CONTROL PLUMBING, H PATTERN (PILOT CONTROL)

REF	FN	PART NUMBER	YR/SN	QTY	DESCRIPTION
		{87703836}		1	Kit, H Pattern Pilot Control; Incl 1 - 16A
1		87357240		1	VALVE, HYDRAULIC, Joystick Valve, H-Pattern, LH; See Fig 06-03
2		87357241		1	VALVE, HYDRAULIC, Joystick Valve, H-Pattern, RH; See Fig 06-04
3		87622364		2	BOLT, Banjo Bolt, 3/4 Hole
4		933610R1		4	WASHER, SEALING, M14 x 18 x 1.8
5		L18331		2	STRAP, CABLE
6		87684247		3	HOSE, Hose, Pilot, 1000mm (39 3/8 in.)
7		87547030		3	HOSE, Hose, Pilot, 1180mm (46 15/32 in.)
8		87593247		1	ELBOW, Incl 8A
8A		165202		1	O-RING, 4-1, 90 Duro, .351" ID x .072" Thk
9		87547059		1	HOSE, Hose, Pilot, 510mm (20 1/16 in.)
10		87547031		1	HOSE, Hose, Pilot, 1763mm (69 13/32 in.)
11		87575292		1	HOSE, Hose, Joystick Supply, 662mm (26 1/16 in.)
12		87547036		2	HOSE, Hose, Joystick Supply/Drain, 593mm (23 11/32 in.)
13		{87684251}		1	Hose, Joystick Supply, 1360mm (53 17/32 in.)
14		{87684249}		1	Hose, Joystick Supply, 1355mm (53 11/32 in.)
15		{87684240}		1	Hose, Joystick Drain, 792mm (31 3/16 in.)
16		76350		2	CONNECTOR, HYD., 9/16"-18, 37° x 9/16"-18, O-Ring, Incl 16A
16A		9617873		2	O-RING, 6-1, 90 Duro, .468" ID x .078" Thk

JOYSTICK CONTROL PLUMBING - ISO PATTERN (PILOT CONTROL)

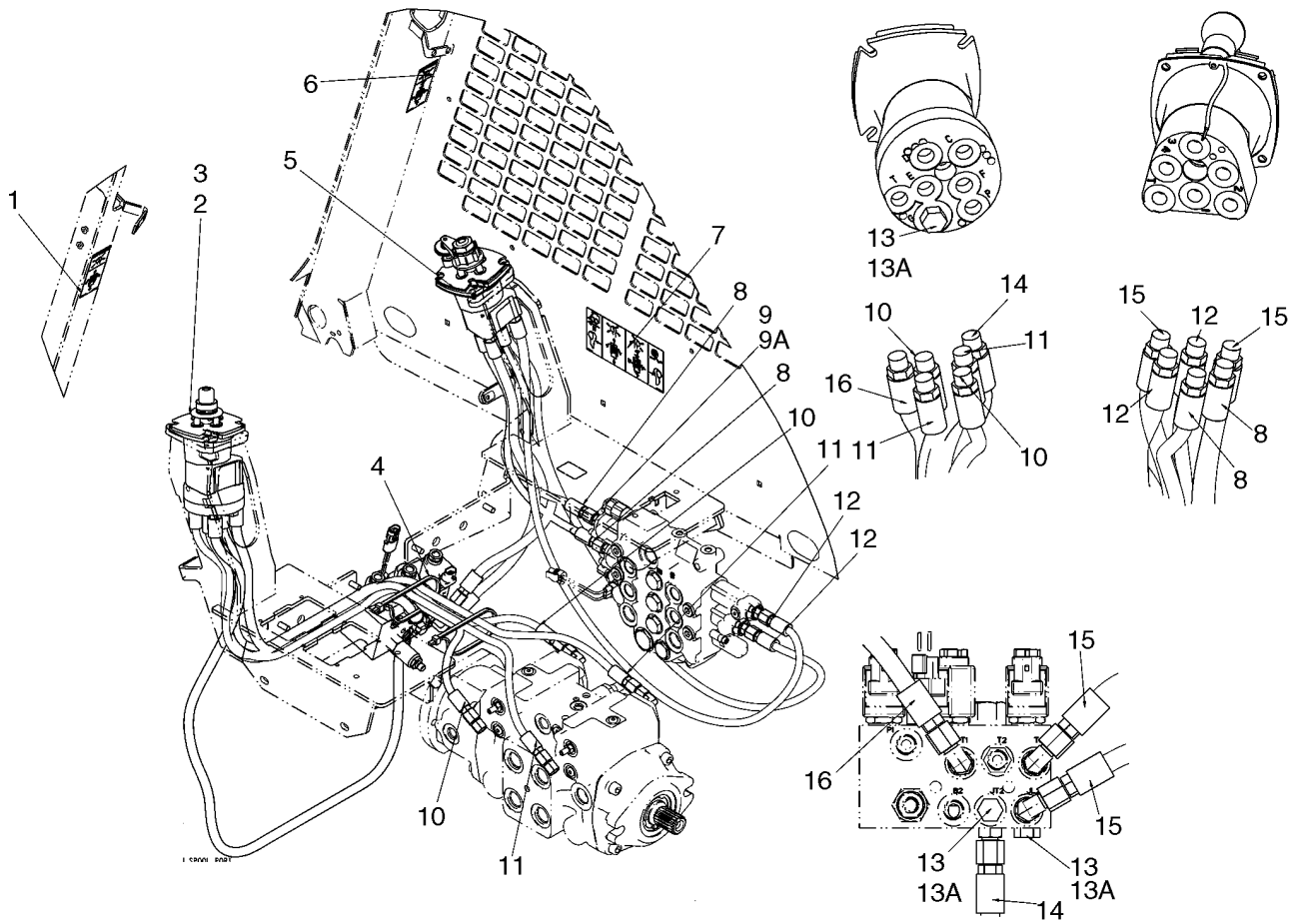

JOYSTICK CONTROL PLUMBING - ISO PATTERN (PILOT CONTROL)

REF	FN	PART NUMBER	YR/SN	QTY	DESCRIPTION
		{87703832}		1	Kit, ISO Pattern Pilot Control; Incl 1 - 16
1		87715691		1	DECAL, Decal, ISO Pattern LH
2		87611854		1	VALVE, Joystick Valve, ISO Pattern LH (450CT); See Fig 06-07
3		87600622		1	VALVE, Joystick Valve, ISO Pattern LH (450); See Fig 06-05
4		L18331		2	STRAP, CABLE
5		87600623		1	VALVE, Joystick Valve, ISO Pattern RH; See Fig 06-06
6		87715692		1	DECAL, Decal, ISO Pattern RH
7		87715688		1	DECAL, Decal, Control Identification ISO Pattern
8		87547059		1	HOSE, Hose, 510mm (20 1/16 in.)
9		84384		1	CONNECTOR, HYD., 9/16"-18, 37° x 7/16"-20, O-Ring, Incl 9A
9A		165202		1	O-RING, 4-1, 90 Duro, .351" ID x .072" Thk
10		87564002		2	HOSE, Hose, 945mm (37 3/16 in.)
11		{87684259}		2	Hose, 1110mm (43 11/16 in.)
12		87547030		2	HOSE, Hose, 1180mm (46 15/32 in.)
13		76349		3	PLUG, Hex Hd, 9/16"-18 ORB, Incl 13A
13A		9617873		3	O-RING, 6-1, 90 Duro, .468" ID x .078" Thk
14		87564004		1	HOSE, Hose, Joystick Supply 1360mm (53 17/32 in.)
15		87547036		2	HOSE, Hose, Joystick Supply Or Drain, 593mm (23 11/32 in.)
16		{87684257}		1	Hose, Joystick Supply Or Drain, 720mm (28 11/32 in.)

JOYSTICK VALVE KITS - H PATTERN, LH (WITH PILOT CONTROL)

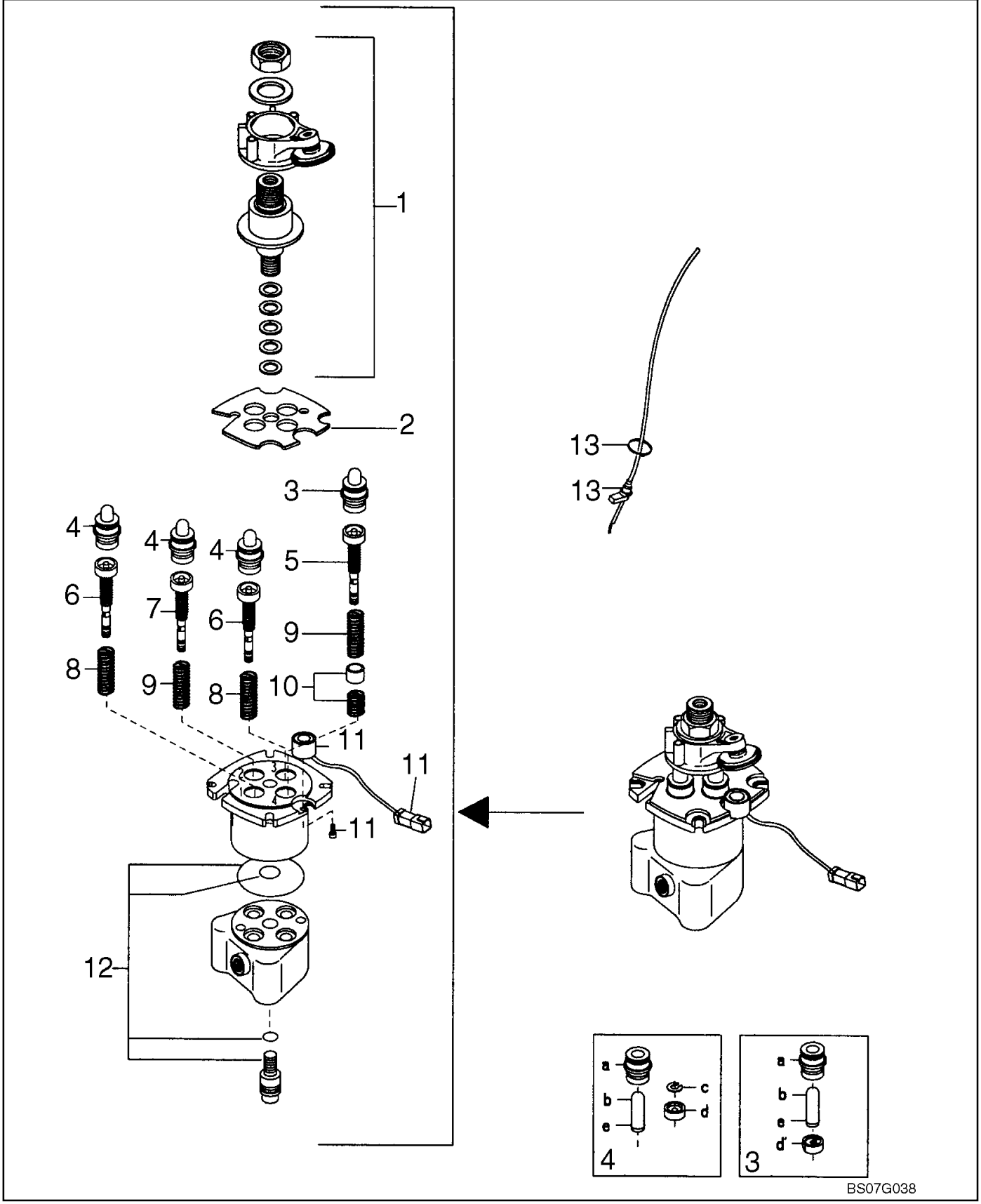

JOYSTICK VALVE KITS - H PATTERN, LH (WITH PILOT CONTROL)

REF	FN	PART NUMBER	YR/SN	QTY	DESCRIPTION
		REF			INSTRUCTION, MODELS WITH PILOT CONTROL
		87357240		1	VALVE, HYDRAULIC, Joystick Control; H Pattern Left Hand; Incl. 1 - 13
1		87548834		1	KIT, SERVICE, Cardan With Detent
2		87548836		1	KIT, SERVICE, Retaining Plate, Detent
3		87548839		1	KIT, SERVICE, Full Plunger Prefeeling
4		{87548828}		3	Hollow Plunger
5		87614018		1	REGULATOR
6		87614017		2	REGULATOR, With Plunger
7		87614016		1	REGULATOR
8		87614020		1	SPRING, Medium
9		87614019		1	SPRING, Heavy
10		87548846		1	KIT, SERVICE, Prefeeling Point
11		87548847		1	KIT, SERVICE, Solenoid
12		87548848		1	KIT, SERVICE, Standard Seal
13		87548874		1	KIT, SERVICE, Cable

JOYSTICK VALVE KITS - H PATTERN, RH (WITH PILOT CONTROL)

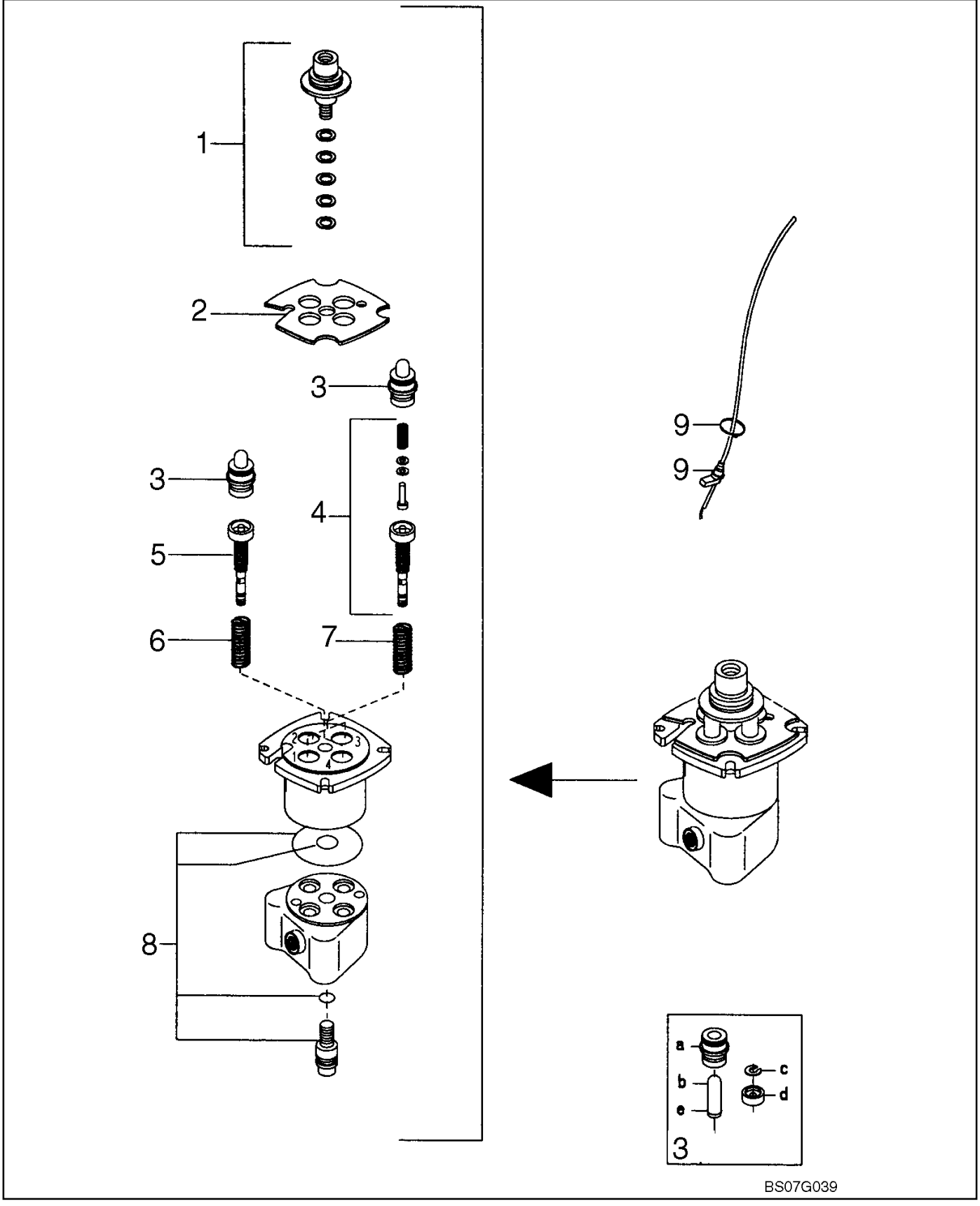

JOYSTICK VALVE KITS - H PATTERN, RH (WITH PILOT CONTROL)

REF	FN	PART NUMBER	YR/SN	QTY	DESCRIPTION
		REF			INSTRUCTION, MODELS WITH PILOT CONTROL
		87357241		1	VALVE, HYDRAULIC, Joystick Control; H Pattern Right Hand; Incl. 1 - 9
1		87548833		1	KIT, SERVICE, Bent Lever Cardan
2		87548835		1	PLATE, Retaining Plate, Standard
3		87614023		2	PLUNGER, Hollow Plunger
4		87614017		2	REGULATOR, With Plunger
5		87614024		1	REGULATOR
6		87614019		1	SPRING, Heavy
7		87614020		1	SPRING, Medium
8		87548848		1	KIT, SERVICE, Standard Seal
9		87548874		1	KIT, SERVICE, Cable

06-05		p1	11/07

JOYSTICK VALVE KITS - ISO PATTERN, LH

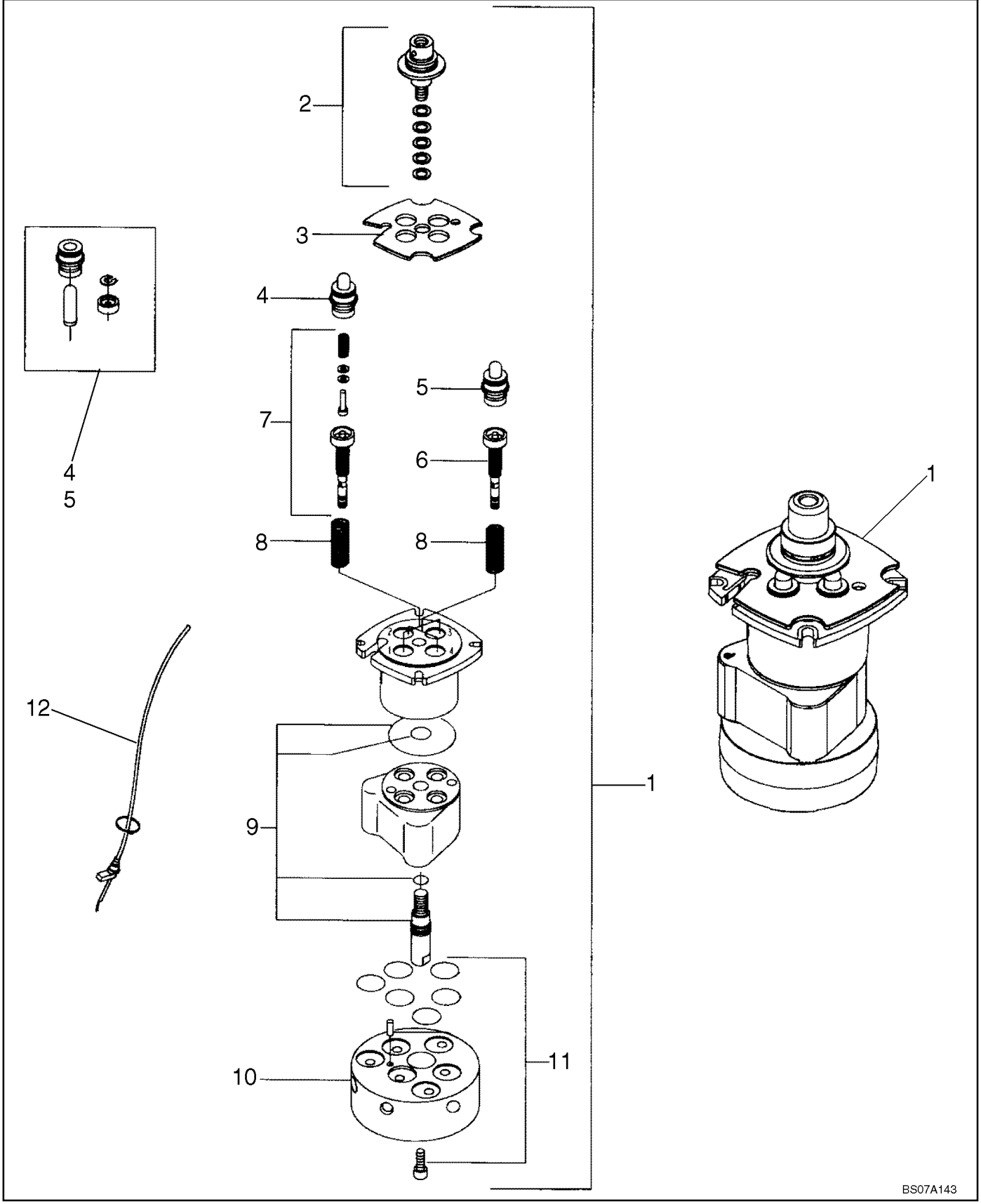

JOYSTICK VALVE KITS - ISO PATTERN, LH

REF	FN	PART NUMBER	YR/SN	QTY	DESCRIPTION
1		87600622		1	VALVE, Joystick Valve, ISO Pattern
2		87548833		1	KIT, SERVICE, Kit, Bent Lever Cardan
3		87548835		1	PLATE, Retaining Plate, Standard
4		87614023		2	PLUNGER, Kit, Hollow Plunger, Use On Ports 1, 3
5		87614023		2	PLUNGER, Kit, Hollow Plunger, Use On Ports 2, 4
6		87627518		2	REGULATOR, Kit, Reg Unit PP C229, Use On Ports 2, 4
7		87614017		2	REGULATOR, Kit, Reg Unit With Plunger, Use On Ports 1, 3
8		87614020		1	SPRING, Kit, Medium Spring
9		{87548871}		1	Kit, Seal
10		{87548872}		1	
11		{87548873}		1	Kit, Flange Seal
12		87548874		1	KIT, SERVICE, Kit, Cable

JOYSTICK VALVE KITS - ISO PATTERN, RH

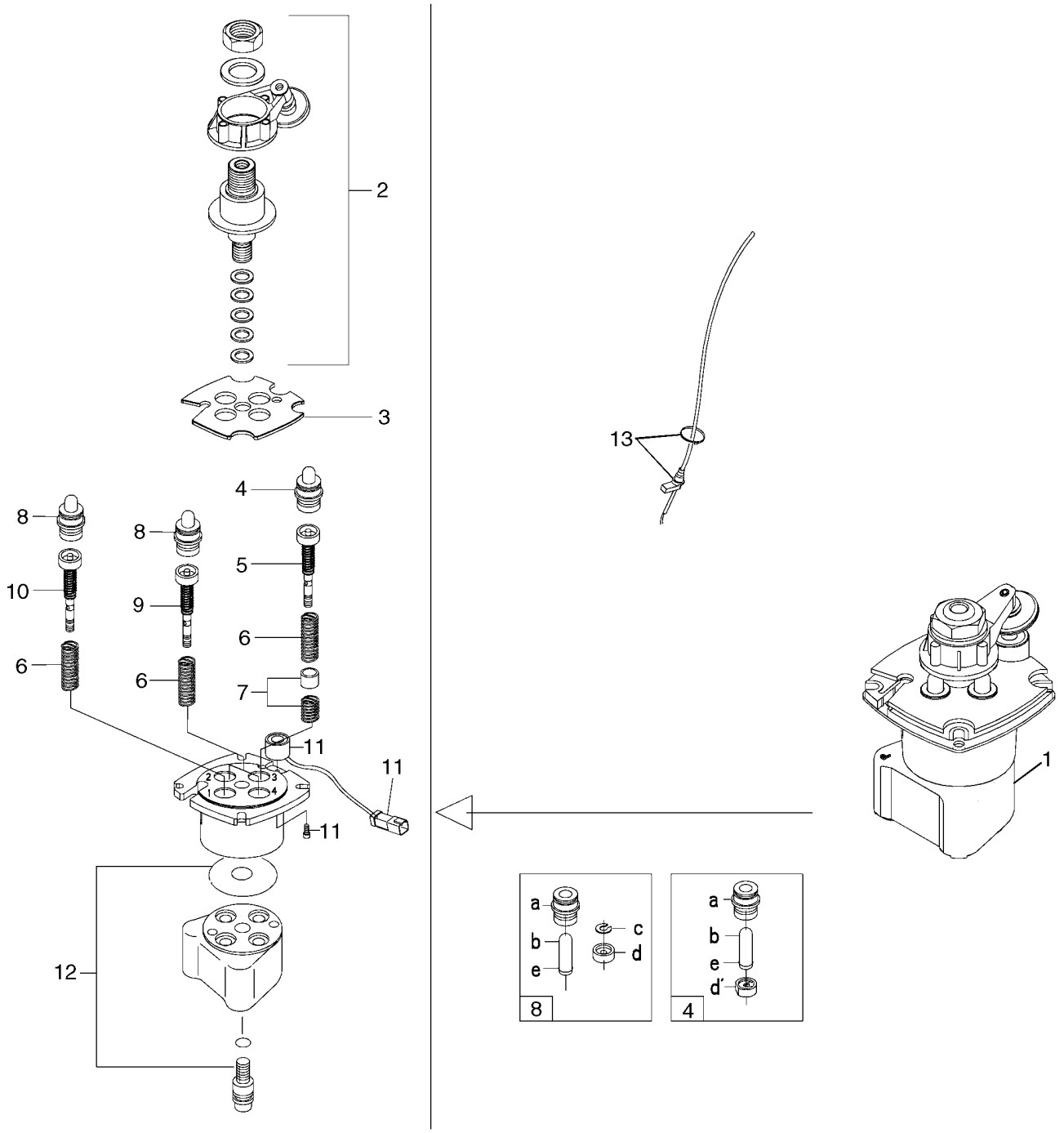

JOYSTICK VALVE KITS - ISO PATTERN, RH

REF	FN	PART NUMBER	YR/SN	QTY	DESCRIPTION
1		87600623		1	VALVE, Joystick Valve, ISO Pattern, RH; Incl. 2 - 13
2		87548834		1	KIT, SERVICE, Kit, Cardan With Detent
3		87548836		1	KIT, SERVICE, Retaining Plate, Detent
4		87548839		1	KIT, SERVICE, Kit, Full Plunger Prefeeling
5		{87548843}		1	Kit, Regulation Unit Prefeeling Point
6		87614020		2	SPRING, Kit, Medium Spring
7		87548846		1	KIT, SERVICE, Kit, Prefeeling Point
8		{87548838}		3	Kit, Hollow Plunger
9		{87594866}		2	Kit, Regulation Unit
10		{87548840}		1	Kit, Regulation Unit
11		87548847		1	KIT, SERVICE, Kit, Solenoid
12		87548848		1	KIT, SERVICE, Kit, Standard Seal
13		87548874		1	KIT, SERVICE, Kit, Cable

JOYSTICK VALVE KITS - ISO PATTERN, LH

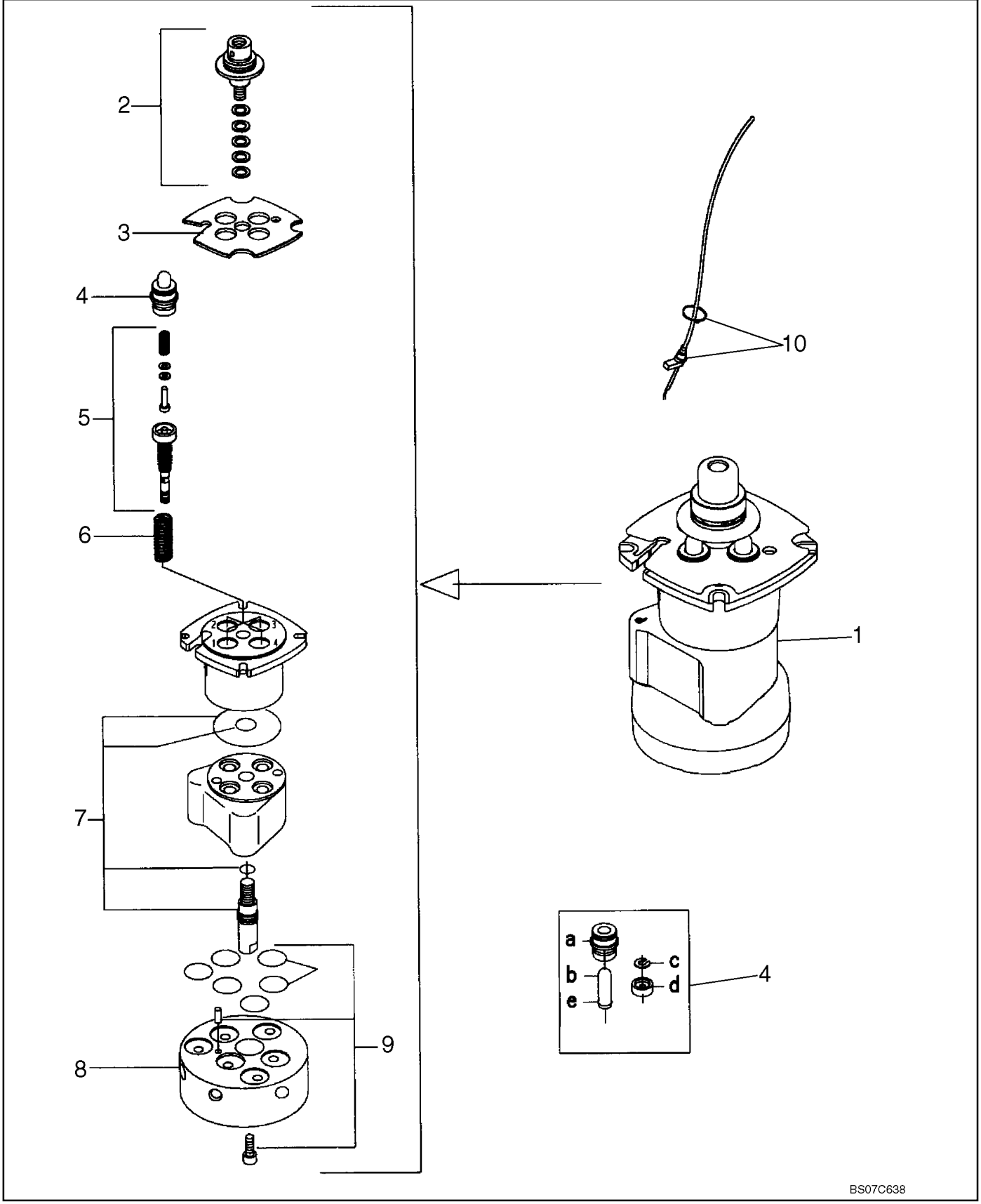

JOYSTICK VALVE KITS - ISO PATTERN, LH

REF	FN	PART NUMBER	YR/SN	QTY	DESCRIPTION
1		87611854		1	VALVE, Joystick Valve, ISO Pattern LH
2		87548833		1	KIT, SERVICE, Bent Lever Cardan
3		87548835		1	PLATE, Retaining Plate, Standard
4		87614023		2	PLUNGER, Kit, Hollow Plunger
5		87614017		4	REGULATOR, Kit, Reg. Unit With Plunger C227
6		87614020		2	SPRING, Kit, Medium Spring
7		{87548871}		1	Seal With Screw
8		{87548872}		1	
9		{87548873}		1	Flange Seal
10		87548874		1	KIT, SERVICE, Cable

HYDROSTATICS - DRIVE MOTORS (450CT)

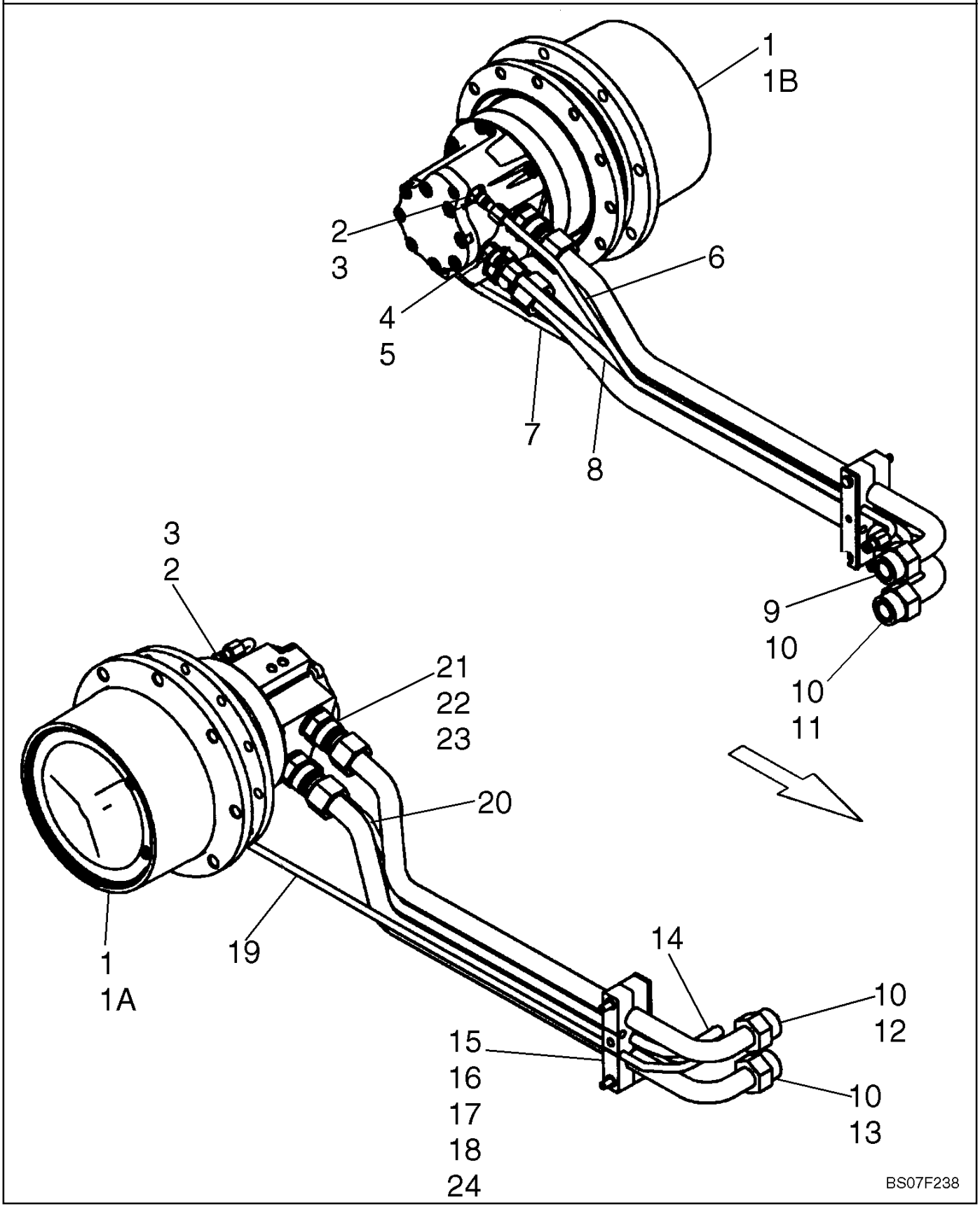

HYDROSTATICS - DRIVE MOTORS (450CT)

REF	FN	PART NUMBER	YR/SN	QTY	DESCRIPTION
1A		87600262		1	MOTOR, Drive Motor, LH; See Fig 06-34
		87600262C		1	CORE-MOTOR HYDRAULIC, Core - Motor Return Number, Use To Return Core For Credit When Using A Remanufactured Assy
		87600262R		1	REMAN-MOTOR HYDRAUL, Remanufactured
1B		87600263		1	MOTOR, Drive Motor, RH; See Fig 06-34
		87600263C		1	CORE-MOTOR HYDRAULIC, Core - Motor Return Number, Use To Return Core For Credit When Using A Remanufactured Assy
		87600263R		1	REMAN-MOTOR HYDRAUL, Remanufactured
2		76350		4	CONNECTOR, HYD., 9/16"-18, 37º x 9/16"-18, O-Ring, Incl. 3
3		9617873		1	O-RING, 6-1, 90 Duro, .468" ID x .078" Thk
4		86509028		2	CONNECTOR, HYD., 3/4"-16, 37º x 9/16"-18, O-Ring, Incl. 5
5		9617873		1	O-RING, 6-1, 90 Duro, .468" ID x .078" Thk
6		87452118		1	TUBE ASSY., Left Hand Two Speed
7		87452116		1	TUBE ASSY., Left Hand Brake
8		87452117		1	TUBE ASSY., Left Hand Case Drain
9		87461539		1	TUBE ASSY., Left Hand Loop, Top
10		9824050		4	O-RING, -021, 90 Duro, .926" ID x .070" Thk
11		87461537		1	TUBE ASSY., Left Hand Loop, Bottom
12		87461538		1	TUBE ASSY., Right Hand Loop, Top
13		87461536		1	TUBE ASSY., Right Hand Loop, Bottom
14		87452112		1	TUBE ASSY., Right Hand Case Drain
15		87452108		4	CLAMP, Clamp
16		87302564		4	SPACER, 1/4 Pipe 2.00 in
17		87452146		2	BAR, Clamp Top
18		120040		4	BOLT, CARRIAGE, Short NK, M8 x 80, Cl8.8
19		87452111		1	TUBE ASSY., Right Hand Brake
20		87452113		1	TUBE ASSY., Right Hand Two Speed
21		87303844		4	CONNECTOR, HYD., 1 7/16"-12 ORFS x 1 1/16"-12 ORB, Inc. 22, 23
22		167266		1	O-RING, 12-1, 90 Duro, .924 ID x .116" Thk
23		9824050		1	O-RING, -021, 90 Duro, .926" ID x .070" Thk

HYDROSTATICS - DRIVE MOTORS (450CT)

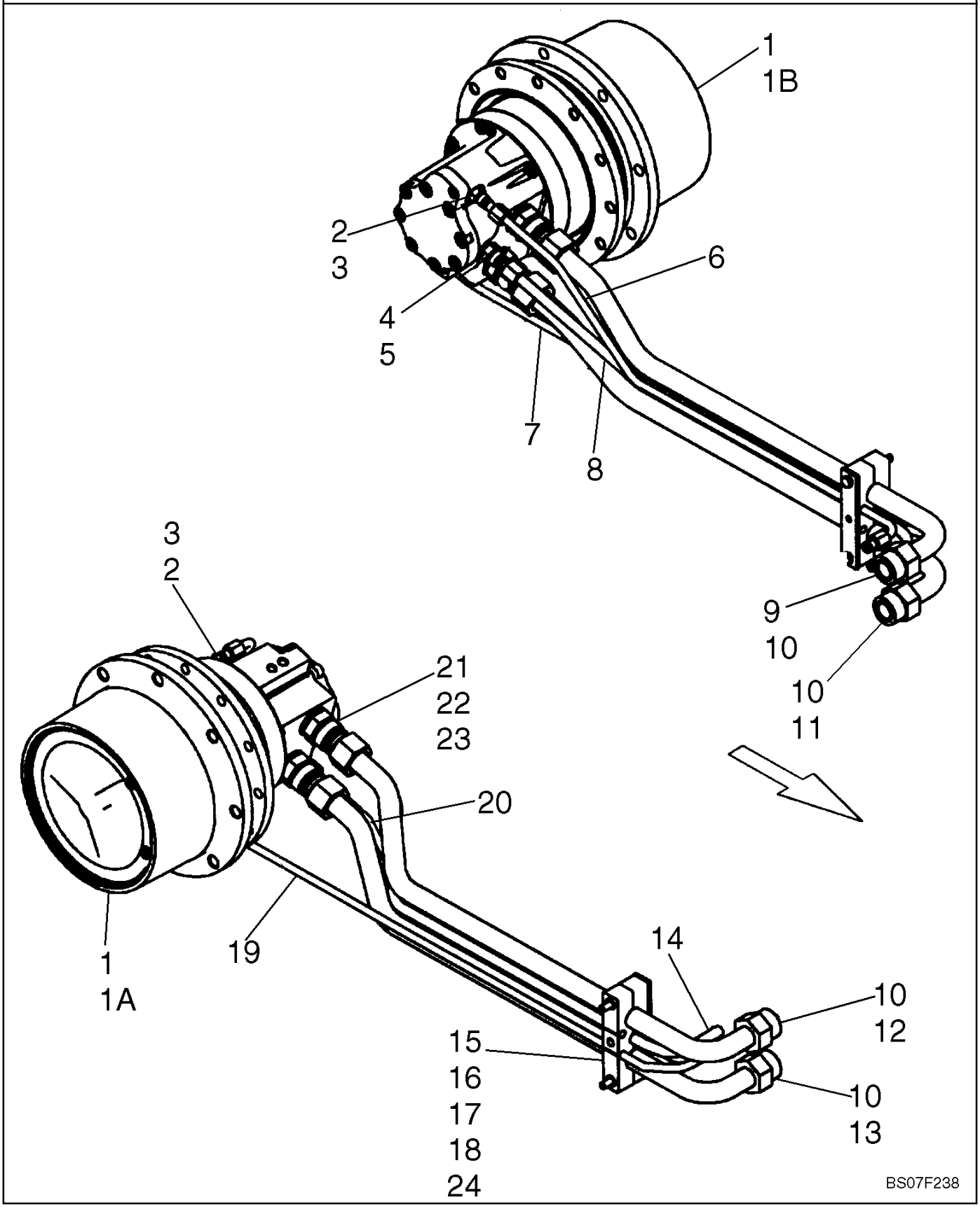

HYDROSTATICS - DRIVE MOTORS (450CT)

REF	FN	PART NUMBER	YR/SN	QTY	DESCRIPTION
24		9628098		4	NUT, LOCK, M8 x 1.25, Cl 10

HYDROSTATICS - MULTI VALVE PLUMBING (450CT)

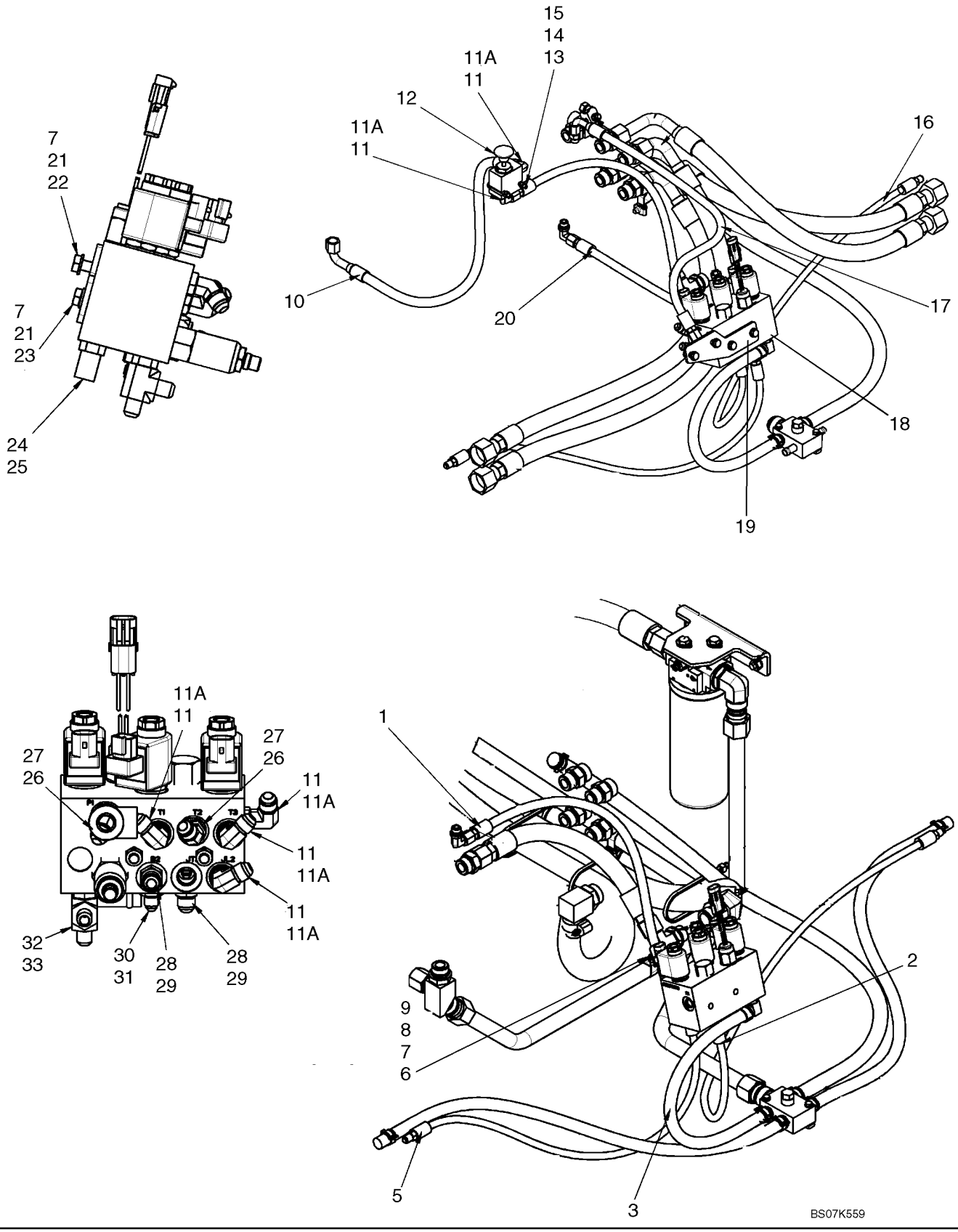

HYDROSTATICS - MULTI VALVE PLUMBING (450CT)

REF	FN	PART NUMBER	YR/SN	QTY	DESCRIPTION
1		87547033		1	HOSE, Dump Valve Drain, 616mm (24 1/4 in.)
2		87452389		1	HOSE ASSY., Brake, 1050mm (41 11/32 in.)
3		87547047		1	HOSE, Multi Valve Drain, 520mm (20 15/32 in.)
4		87443510		6	CLAMP, HOSE
5		87547027		1	HOSE, Brake RH, 790mm (31 3/32 in.)
6		120104		2	BOLT, Hex, M8 x 20, 8.8
7		86624184		6	WASHER, M8 x 16 x 1.6
8		86637977		2	CLAMP, 1", Insul, 5/16" Bolt
9		122158A1		2	NUT, M8, U
10		87547043		1	HOSE, Dump Valve Supply, 773mm (30 7/16 in.)
11		76344		6	ELBOW, 90º, 9/16"-18, 37º x 9/16"-18, O-Ring, Incl 11A
11A		9617873		6	O-RING, 6-1, 90 Duro, .468" ID x .078" Thk
12		87546973		1	VALVE, Boom Override Valve; Incl Knob
13		120056		2	BOLT, Hex, M6 x 50, 8.8
14		86512440		2	NUT, LOCK
15		86624181		2	WASHER, M6
16		87452386		1	HOSE ASSY., Two Speed, 700mm (27 9/16 in.)
17		87547040		1	HOSE, DA Pressure, 706mm (27 13/16 in.)
18		87577076		1	VALVE, PILOT, Brake/Two Speed; See Fig 06-19
19		87547006		1	BRACKET, Valve Mounting Bracket
20		87547032		1	HOSE, Charge Pressure, 467mm (18 3/8 in.)
21		9628098		4	NUT, LOCK, M8 x 1.25, Cl 10
22		86625001		2	BOLT, Hex, M8 x 22, 8.8, Full Thd
23		86508571		2	BOLT, Hex, M8 x 90, 8.8
24		86705580		1	FITTING, 90º, 1/2" Hose x 9/16"-18 ORB Beaded, Incl 25
25		9617873		1	O-RING, 6-1, 90 Duro, .468" ID x .078" Thk
26		330346		2	ELBOW, 45º, 9/16"-18, 37º x 9/16"-18, O-Ring, Incl 27
27		9617873		2	O-RING, 6-1, 90 Duro, .468" ID x .078" Thk
28		76350		2	CONNECTOR, HYD., 9/16"-18, 37º x 9/16"-18, O-Ring, Incl 29
29		9617873		2	O-RING, 6-1, 90 Duro, .468" ID x .078" Thk
30		139398		1	CONNECTOR, HYD., 7/16"-20, 37º x 9/16"-18, O-Ring, Incl 31

HYDROSTATICS - MULTI VALVE PLUMBING (450CT)

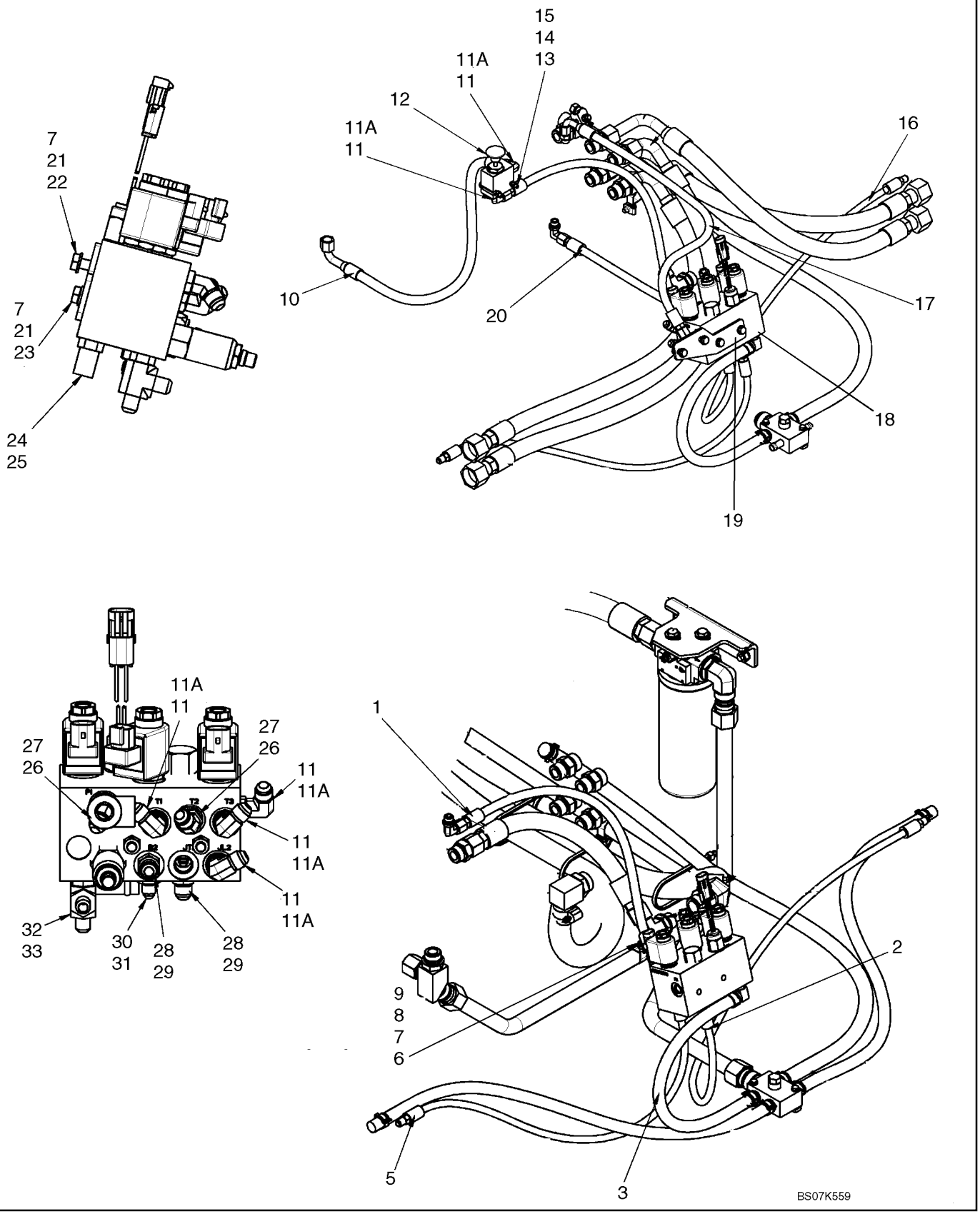

HYDROSTATICS - MULTI VALVE PLUMBING (450CT)

REF	FN	PART NUMBER	YR/SN	QTY	DESCRIPTION
31		9617873		1	O-RING, 6-1, 90 Duro, .468" ID x .078" Thk
32		86513020		1	TEE, 9/16"-18, 37º x 9/16"-18, O-Ring Run, Incl 33
33		9617873		1	O-RING, 6-1, 90 Duro, .468" ID x .078" Thk

HYDROSTATICS - PUMP TO DRIVE MOTORS (450CT)

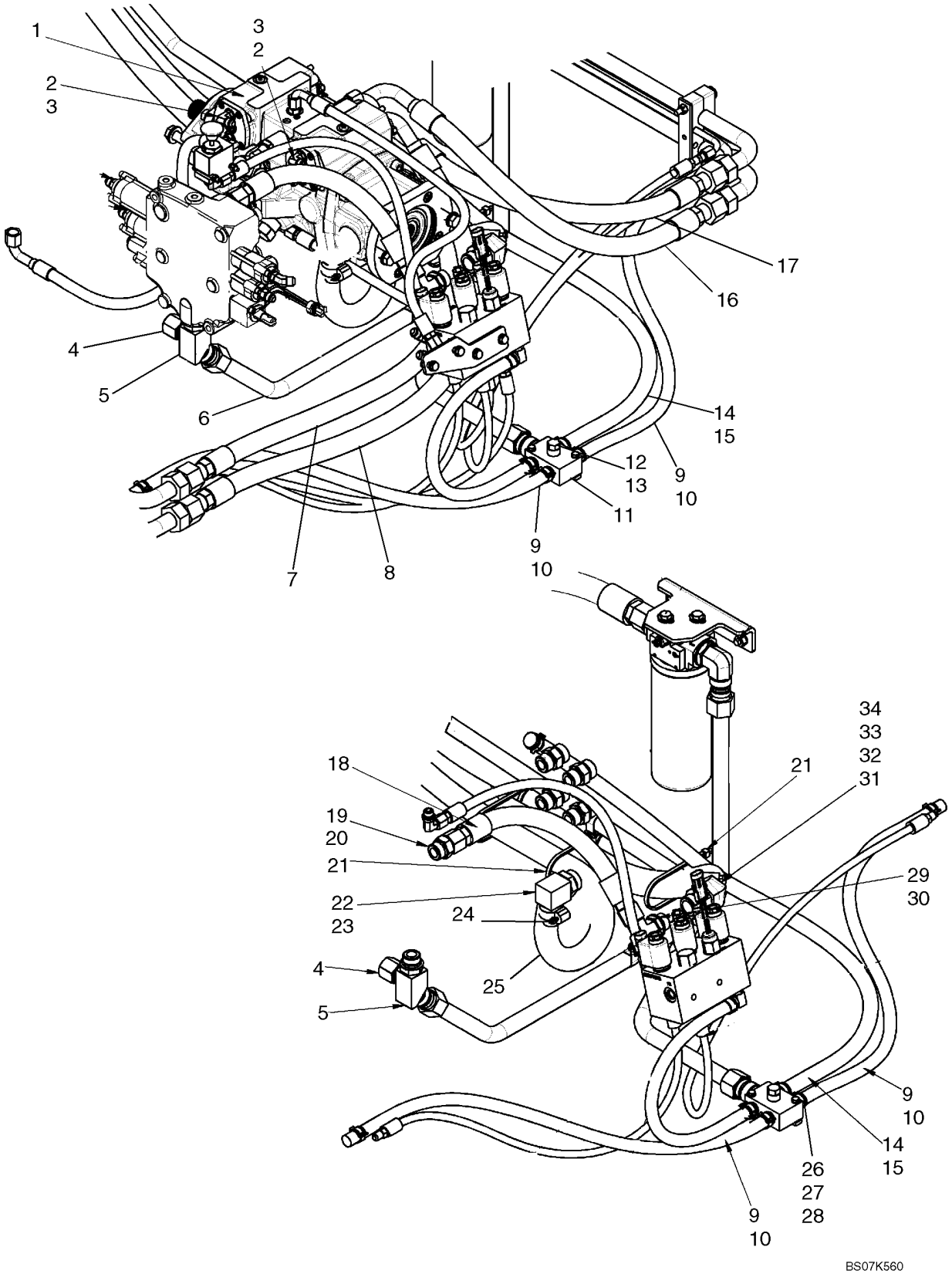

HYDROSTATICS - PUMP TO DRIVE MOTORS (450CT)

REF	FN	PART NUMBER	YR/SN	QTY	DESCRIPTION
1		87546977		1	PUMP, A22 - 360 Bar 5.7mm Orifice; See Fig 06-22
2		86512936		2	ELBOW, 90º, 9/16"-18, 37º x 7/16"-20, O-Ring, Incl 3
3		165202		2	O-RING, 4-1, 90 Duro, .351" ID x .072" Thk
4		219606		1	CAP, 37º, 1 1/16"-12
5		87421217		1	ADAPTER, Adapter, 45 Deg With Side Outlet
6		87419597		1	TUBE ASSY., Tube, Valve Outlet
7		87547012		1	HOSE, Hose, Motor To Pump Loop, 1002mm (39 7/16 in.)
8		87547013		1	HOSE, Hose, Motor To Pump Loop, 1072mm (42 3/16 in.)
9		87452385		1	HOSE, Hose, Case Drain, 800mm (31 1/2 in.)
10		87443510		6	CLAMP, HOSE
11		87437351		1	MANIFOLD, Return Oil Manifold
12		76349		1	PLUG, Hex Hd, 9/16"-18 ORB, Incl 13
13		9617873		1	O-RING, 6-1, 90 Duro, .468" ID x .078" Thk
14		87547044		1	HOSE, Hose, Pump Drain, 1061mm (41 3/4 in.)
15		87443511		2	CLAMP
16		87547011		1	HOSE, Hose, Motor To Pump Loop, 712mm (28 1/32in.)
17		87547010		1	HOSE, Hose, Motor To Pump Loop, 630mm (24 13/16 in.)
18		87547015		1	HOSE, Hose, Valve Supply, 412mm (16 7/32 in.)
19		322896		1	CONNECTOR, HYD., 1 1/16"-12, 37º x 1 1/16"-12, O-Ring, Incl 20
20		167266		1	O-RING, 12-1, 90 Duro, .924 ID x .116" Thk
21		L18331		3	STRAP, CABLE
22		87393628		1	ADAPTER, Incl 23
23		237-6016		1	O-RING, 16-1, 90 Duro, 1.171" ID x .118" Thk
24		514920		1	CLAMP, HOSE, #16, 0.81/1.50 Type F Worm
25		87547024		1	HOSE, Hose, Charge Pump Supply, 1553mm (61 1/8 in.)
26		86977790		2	BOLT, Hex, M6 x 45, 8.8
27		86588450		2	WASHER, M6
28		87404992		2	NUT

HYDROSTATICS - PUMP TO DRIVE MOTORS (450CT)

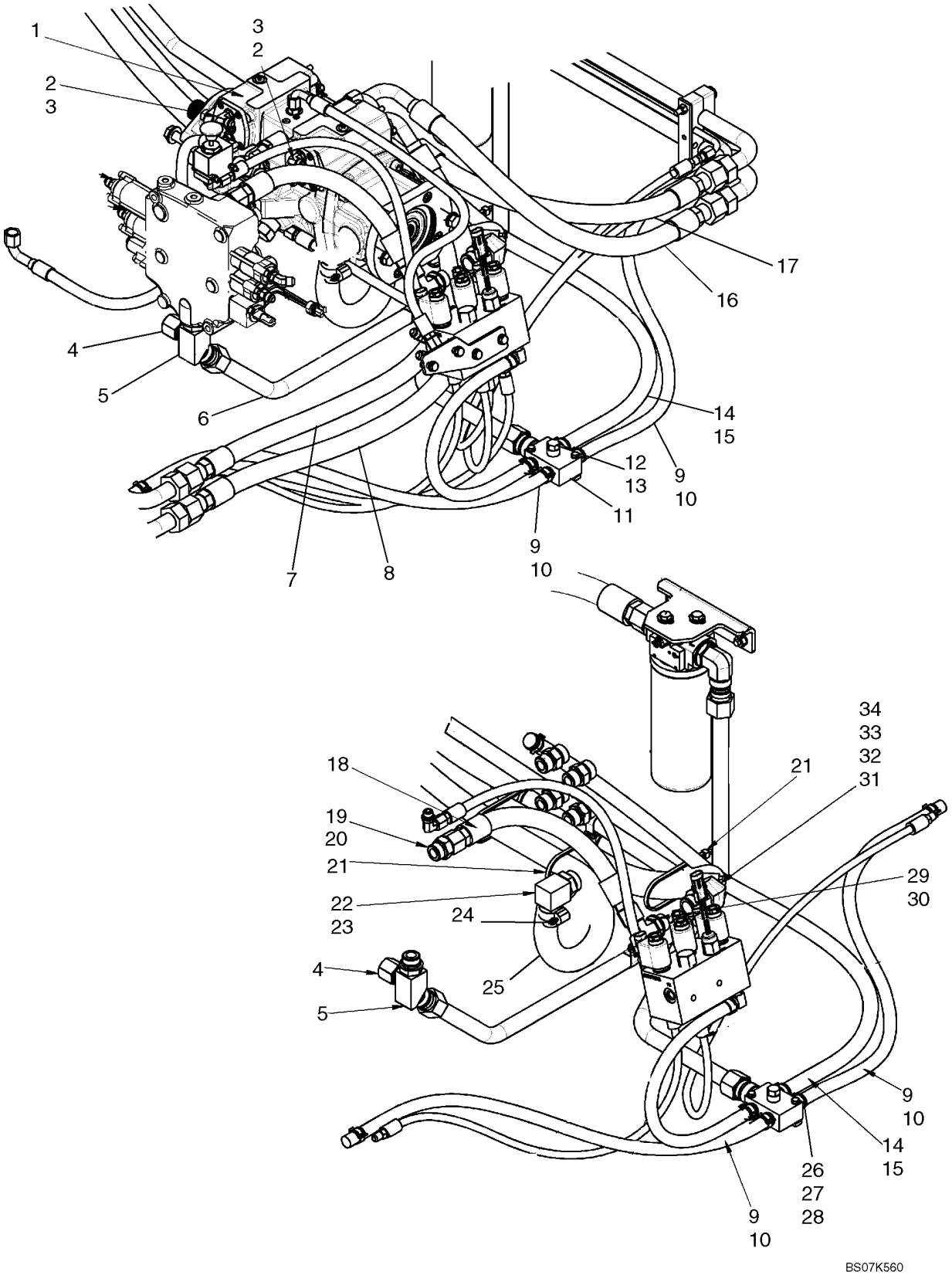

HYDROSTATICS - PUMP TO DRIVE MOTORS (450CT)

REF	FN	PART NUMBER	YR/SN	QTY	DESCRIPTION
29		322894		1	ELBOW, 90º, 1 1/16"-12, 37º x 1 1/16"-12, O-Ring, Incl 30
30		167266		1	O-RING, 12-1, 90 Duro, .924 ID x .116" Thk
31		87033824		1	FITTING, 45º, 1 1/4" Hose x 1 5/16"-12 ORB Beaded, Incl 32
32		237-6016		1	O-RING, 16-1, 90 Duro, 1.171" ID x .118" Thk
33		87039085		2	CLAMP, HOSE, 1.25/2.125 HD Worm
34		87348364		1	HOSE ASSY., Hose, Loader Pump Supply, 1380mm (54 5/16 in.)

HYDROSTATICS - PUMP FITTINGS (450CT)

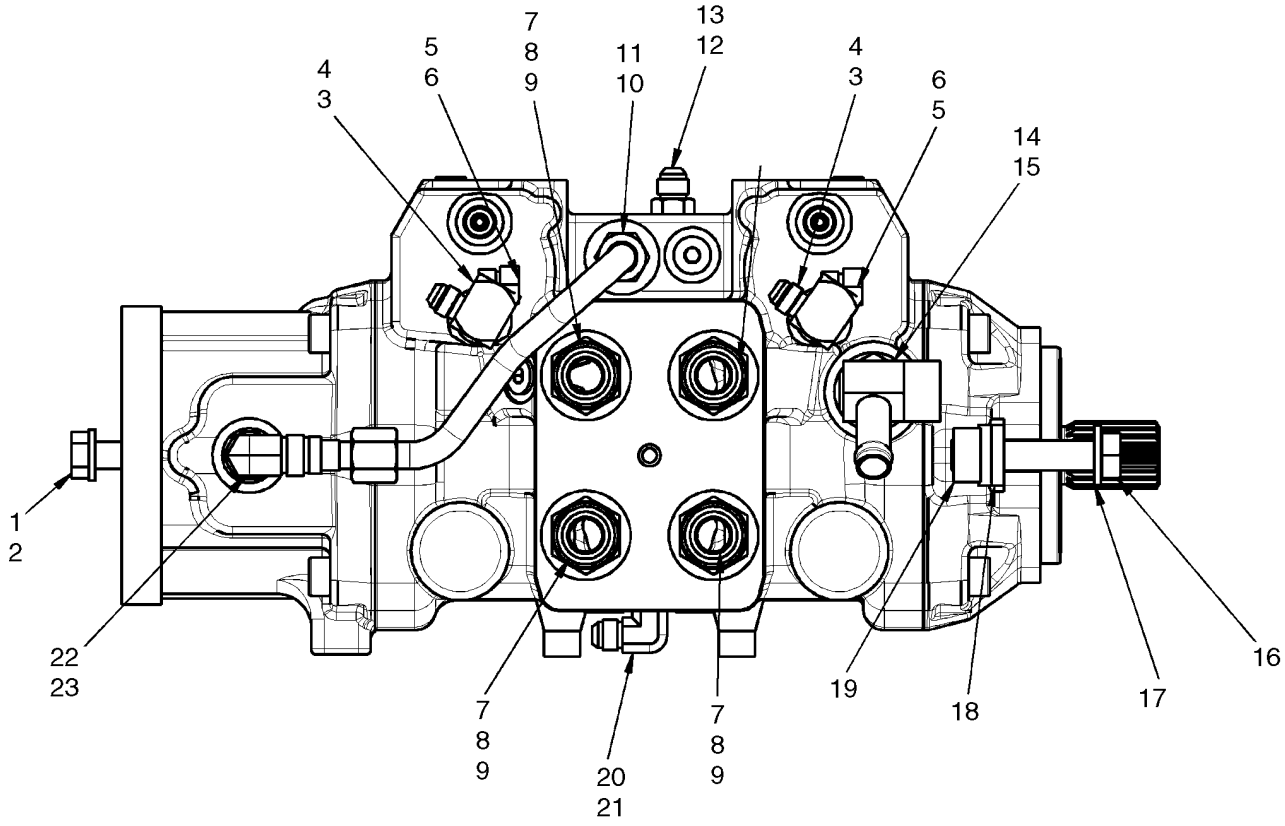

BS07K561

HYDROSTATICS - PUMP FITTINGS (450CT)

REF	FN	PART NUMBER	YR/SN	QTY	DESCRIPTION
1		86625255		2	WASHER, M13.5 x 24.5 x 3, HT
2		87670		2	BOLT, Hex, 1/2"-13 x 1 1/4", G5, Full Thd
3		87546979		2	ADAPTER, Incl 4
4		165202		2	O-RING, 4-1, 90 Duro, .351" ID x .072" Thk
5		76349		3	PLUG, Hex Hd, 9/16"-18 ORB, Incl 6
6		9617873		3	O-RING, 6-1, 90 Duro, .468" ID x .078" Thk
7		9840535		4	CONNECTOR, HYD., Incl 8, 9
8		9991976		4	O-RING, -018, 90 Duro, .739" ID x .070" Thk
9		167266		4	O-RING, 12-1, 90 Duro, .924 ID x .116" Thk
10		128818		1	CONNECTOR, HYD., 3/4"-16, 37º x 3/4"-16, O-Ring, Incl 11
11		128825		1	O-RING, 8-1, 90 Duro, .644" ID x .087" Thk
12		76350		3	CONNECTOR, HYD., 9/16"-18, 37º x 9/16"-18, O-Ring, Incl 13
13		9617873		3	O-RING, 6-1, 90 Duro, .468" ID x .078" Thk
14		87571937		1	ADAPTER, Incl 15
15		167266		1	O-RING, 12-1, 90 Duro, .924 ID x .116" Thk
16		{87556906}		2	Bolt, M14 X 70 Cl 10.9
17		87016615		2	WASHER, M12 x 28.5 x 3, HT
18		{87564723}		4	Washer, 15.3 X 28.5 X 6mm
19		87637186		2	NUT
20		76344		1	ELBOW, 90º, 9/16"-18, 37º x 9/16"-18, O-Ring, Incl 21
21		9617873		1	O-RING, 6-1, 90 Duro, .468" ID x .078" Thk
22		128830		1	ELBOW, 90º, 3/4"-16, 37º x 3/4"-16, O-Ring, Incl 23
23		128825		1	O-RING, 8-1, 90 Duro, .644" ID x .087" Thk

HYDROSTATICS - SUPPLY AND RETURN (450CT)

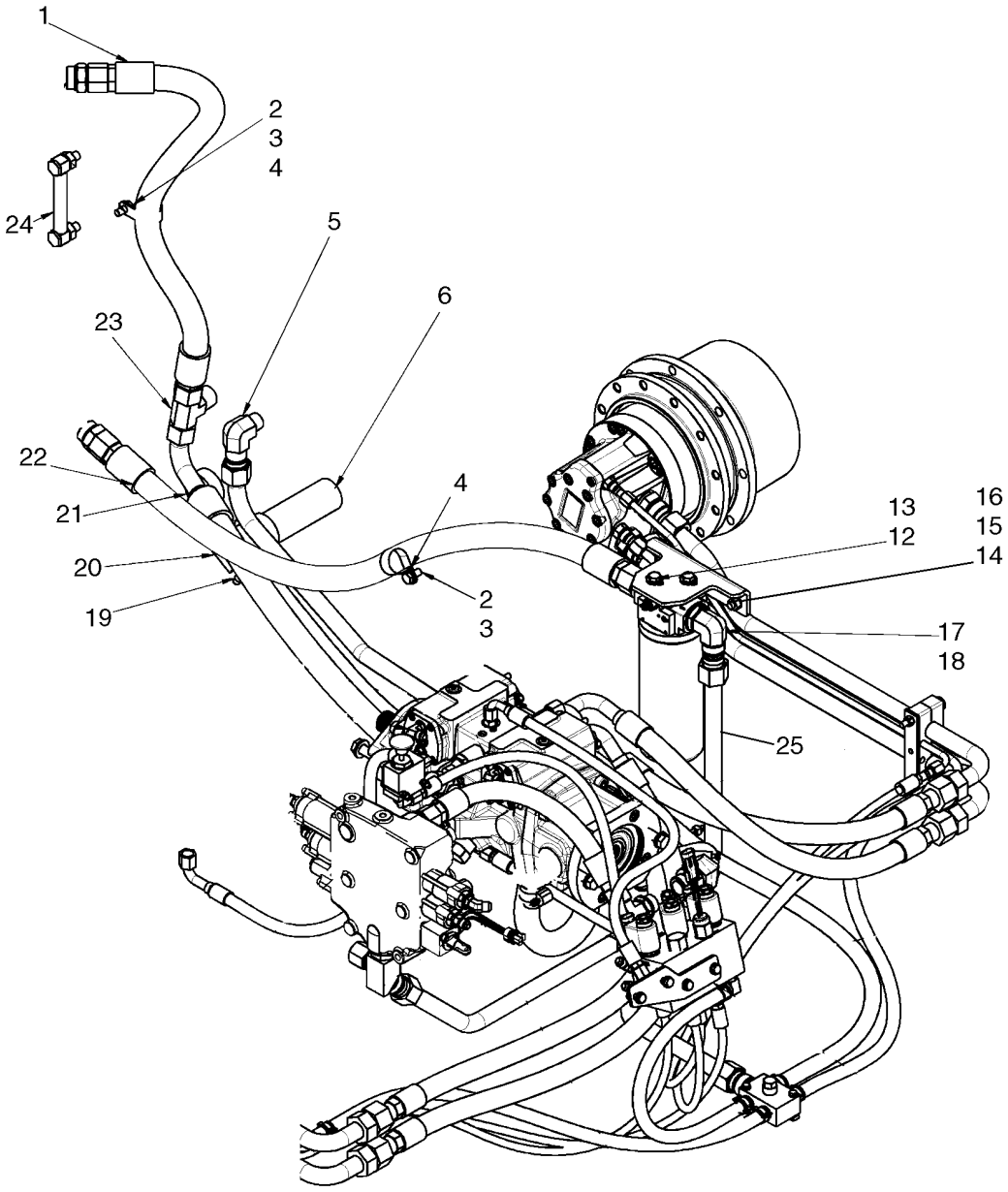

BS07K562

HYDROSTATICS - SUPPLY AND RETURN (450CT)

REF	FN	PART NUMBER	YR/SN	QTY	DESCRIPTION
1		{87659238}		1	Hose, Oil Cooler Return, 825mm (32 1/2 in.)
2		43138		2	SCREW, Hex, M10 x 20, 8.8, Full Thd
3		140045		2	WASHER, SPRING, Belleville, M10
4		{87648719}		2	Clamp, Insulated
5		9615396		1	ELBOW, 90º, 1 5/16"-12, 37º x 3/4"-14, NPTF
6		189310A1		1	STRAINER ASSY., Suction Line Filter
7		87430661		1	FILTER, Incl 8 - 10
8		N13268		1	SWITCH, PRESSURE
9		87010593		1	ELEMENT, Filter
10		87439984		1	HEAD, FILTER, Head Assembly
11		87458340		1	ANGLE, Filter Mounting Bracket
12		43139		2	SCREW
13		86639325		2	WASHER, M10 x 24.5 x 3, HT
14		86512446		2	BOLT, CARRIAGE, Short NK, M10 x 30, Cl8.8, Full Thd
15		100016		2	NUT, M10, Cl 8
16		140028		2	WASHER, LOCK, M10
17		268277		1	ELBOW, 90º, 1 5/16"-12, 37º x 1 5/16"-12, O-Ring, Incl 18
18		167268		1	O-RING, 16-1, 90 Duro, 1.171" ID x .116" Thk
19		87039085		2	CLAMP, HOSE, 1.25/2.125 HD Worm
20		87029969		1	CONNECTOR, HYD., Stem 90 Bead Hose 1.25 ID X 1.25 NPTF
21		87035993		1	PLUG, Sq Soc, 2"-11 1/2 NPTF
22		{87659239}		1	Hose, Filter To Cooler, 1140mm (44 7/8 in.)
23		9790547		1	TEE, 1 5/16"-12, 37º x 1"-11 1/2, NPTF Br
24		87374752		1	GAUGE, Liquid Level Gauge
25		87419597		1	TUBE ASSY., Valve Outlet

HYDROSTATICS - PUMP TO DRIVE MOTORS (450)

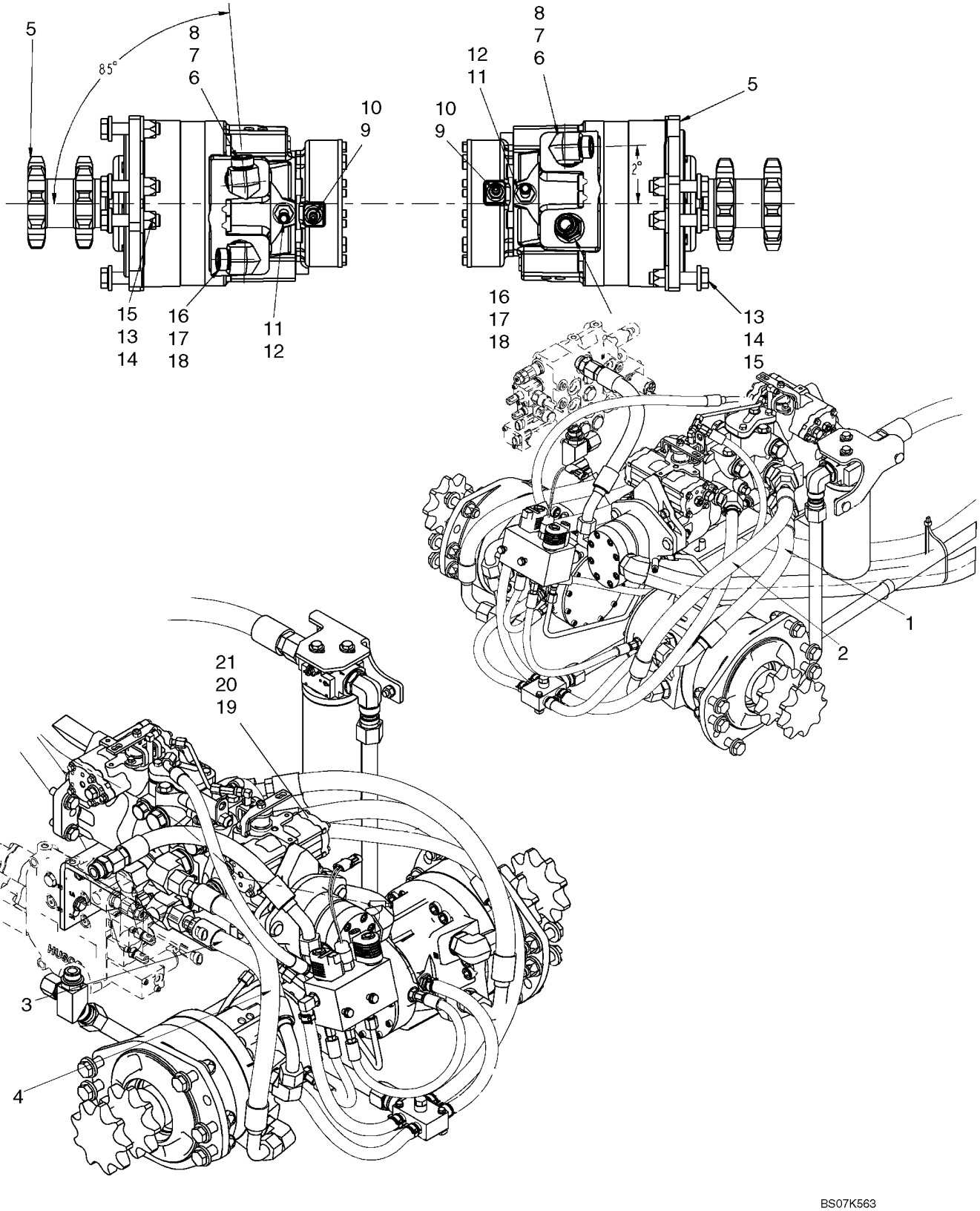

HYDROSTATICS - PUMP TO DRIVE MOTORS (450)

REF	FN	PART NUMBER	YR/SN	QTY	DESCRIPTION
1		87640179		1	HOSE, Hose, Pump To Motor Loop, 545mm (21 15/32 in.)
2		87640181		1	HOSE, Hose, Pump To Motor Loop, 730mm (28 3/4 in.)
3		87640180		1	HOSE, Hose, Pump To Motor Loop, 405mm (15 15/16 in.)
4		87640178		1	HOSE, Hose, Pump To Motor Loop, 635mm (25 in.)
5		87349721		2	MOTOR, HYDRAULIC, See Fig 06-37 - 06-39
6		9846848		3	ELBOW, Incl 7, 8
7		167266		3	O-RING, 12-1, 90 Duro, .924 ID x .116" Thk
8		9991976		3	O-RING, -018, 90 Duro, .739" ID x .070" Thk
9		139398		3	CONNECTOR, HYD., 7/16"-20, 37° x 9/16"-18, O-Ring, Incl 10
10		9617873		3	O-RING, 6-1, 90 Duro, .468" ID x .078" Thk
11		87010108		2	FITTING, 1/2" Hose x 3/4"-16 ORB, Beaded, Incl 12
12		128825		2	O-RING, 8-1, 90 Duro, .644" ID x .087" Thk
13		9847468		12	BOLT, Hex, M16 x 70, 10.9
14		86625258		24	WASHER, M16 x 34.5 x 5, HT
15		86512555		12	NUT, LOCK, M16 x 2, Cl 10
16		9840535		1	CONNECTOR, HYD., Incl 17, 18
17		167266		1	O-RING, 12-1, 90 Duro, .924 ID x .116" Thk
18		9991976		1	O-RING, -018, 90 Duro, .739" ID x .070" Thk
19		87350024		1	PUMP, Incl 20, 21
20		87350025		1	PUMP, Tandem Pump; See Fig 06-30 - 06-35
21		87024695		1	PUMP, Gear Pump, 2.20 CID 13 T; See Fig 06-20

HYDROSTATICS - SUPPLY AND RETURN (450)

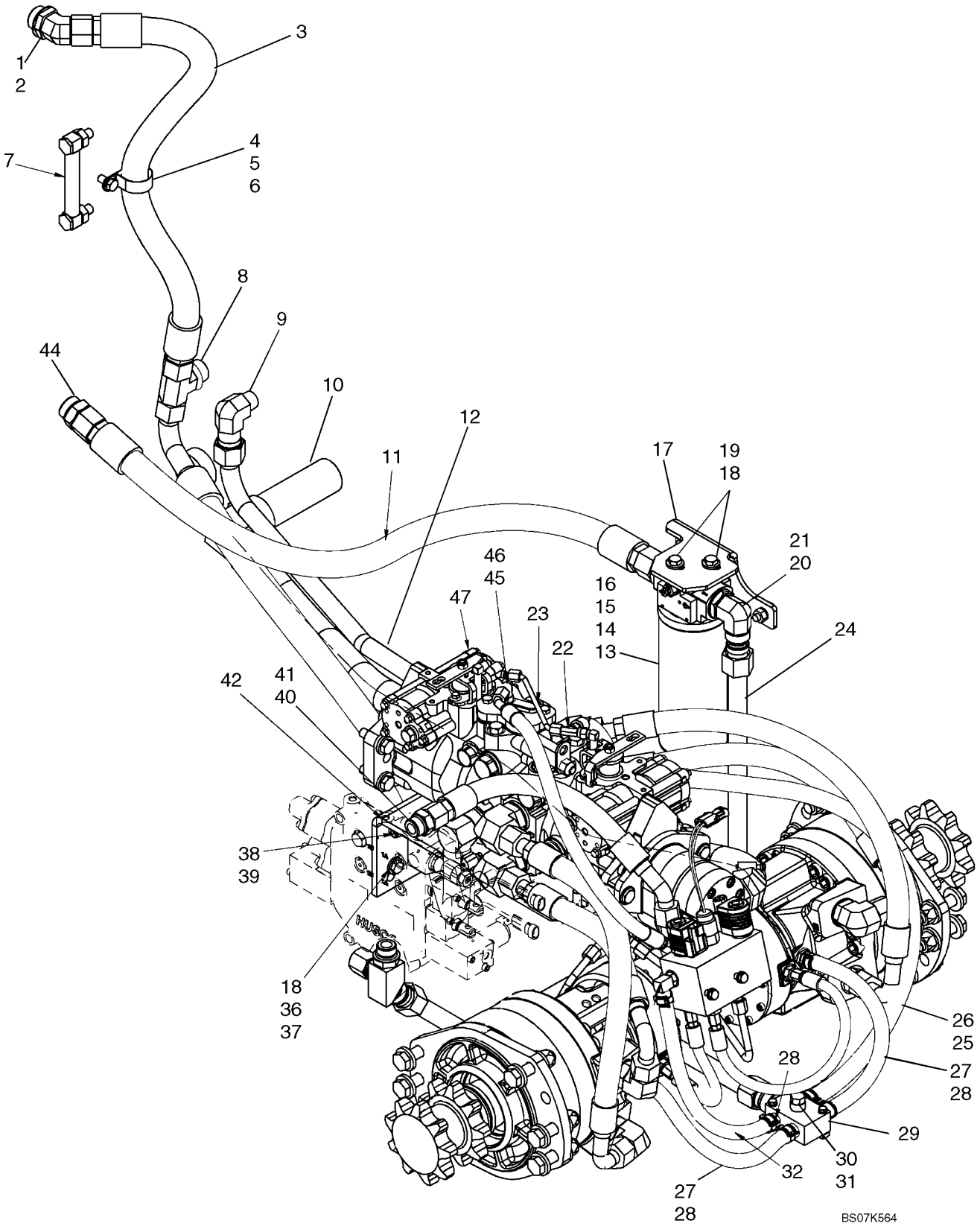

HYDROSTATICS - SUPPLY AND RETURN (450)

REF	FN	PART NUMBER	YR/SN	QTY	DESCRIPTION
1		86977688		1	ELBOW, 45º, 1 5/16"-12 x 1 5/16"-12, O-Ring, Incl 2
2		167268		1	O-RING, 16-1, 90 Duro, 1.171" ID x .116" Thk
3		{87659238}		1	Hose, Oil Cooler Return, 825mm (32 1/2 in.)
4		87301688		1	CLAMP
5		140045		1	WASHER, SPRING, Belleville, M10
6		43138		1	SCREW, Hex, M10 x 20, 8.8, Full Thd
7		87374752		1	GAUGE, Liquid Level Gauge
8		9790547		1	TEE, 1 5/16"-12, 37º x 1"-11 1/2, NPTF Br
9		9615396		1	ELBOW, 90º, 1 5/16"-12, 37º x 3/4"-14, NPTF
10		189310A1		1	STRAINER ASSY., Suction Line Filter
11		{87659239}		1	Hose, Filter To Cooler, 1140mm (44 7/8 in.)
12		87440223		1	TUBE ASSY., Tube, Case Drain
13		87430661		1	FILTER, Incl 14 - 16
14		N13268		1	SWITCH, PRESSURE
15		87010593		1	ELEMENT, Filter
16		87439984		1	HEAD, FILTER, Filter Head
17		87707681		1	ANGLE, Filter Mounting Bracket
18		86639325		4	WASHER, M10 x 24.5 x 3, HT
19		43139		2	SCREW
20		268277		1	ELBOW, 90º, 1 5/16"-12, 37º x 1 5/16"-12, O-Ring, Incl 21
21		167268		1	O-RING, 16-1, 90 Duro, 1.171" ID x .116" Thk
22		86513653		1	TEE, 37º, 7/16"-20 x 7/16"-20, Fem Sw Run
23		87021277		1	TUBE ASSY.
24		87419597		1	TUBE ASSY., Tube, Valve Outlet
25		87357018		1	HOSE ASSY., Hose, 790mm (31 3/32 in.)
26		87443511		2	CLAMP
27		87029907		2	HOSE ASSY., Hose, 335mm (13 3/16 in.)
28		87443510		6	CLAMP, HOSE
29		87437351		1	MANIFOLD, Return Oil Manifold
30		76349		1	PLUG, Hex Hd, 9/16"-18 ORB, Incl 31
31		9617873		1	O-RING, 6-1, 90 Duro, .468" ID x .078" Thk
32		87384131		1	HOSE, Hose, 355mm (14 in.)
33		87421217		1	ADAPTER, Incl 34
34		167266		1	O-RING, 12-1, 90 Duro, .924 ID x .116" Thk

HYDROSTATICS - SUPPLY AND RETURN (450)

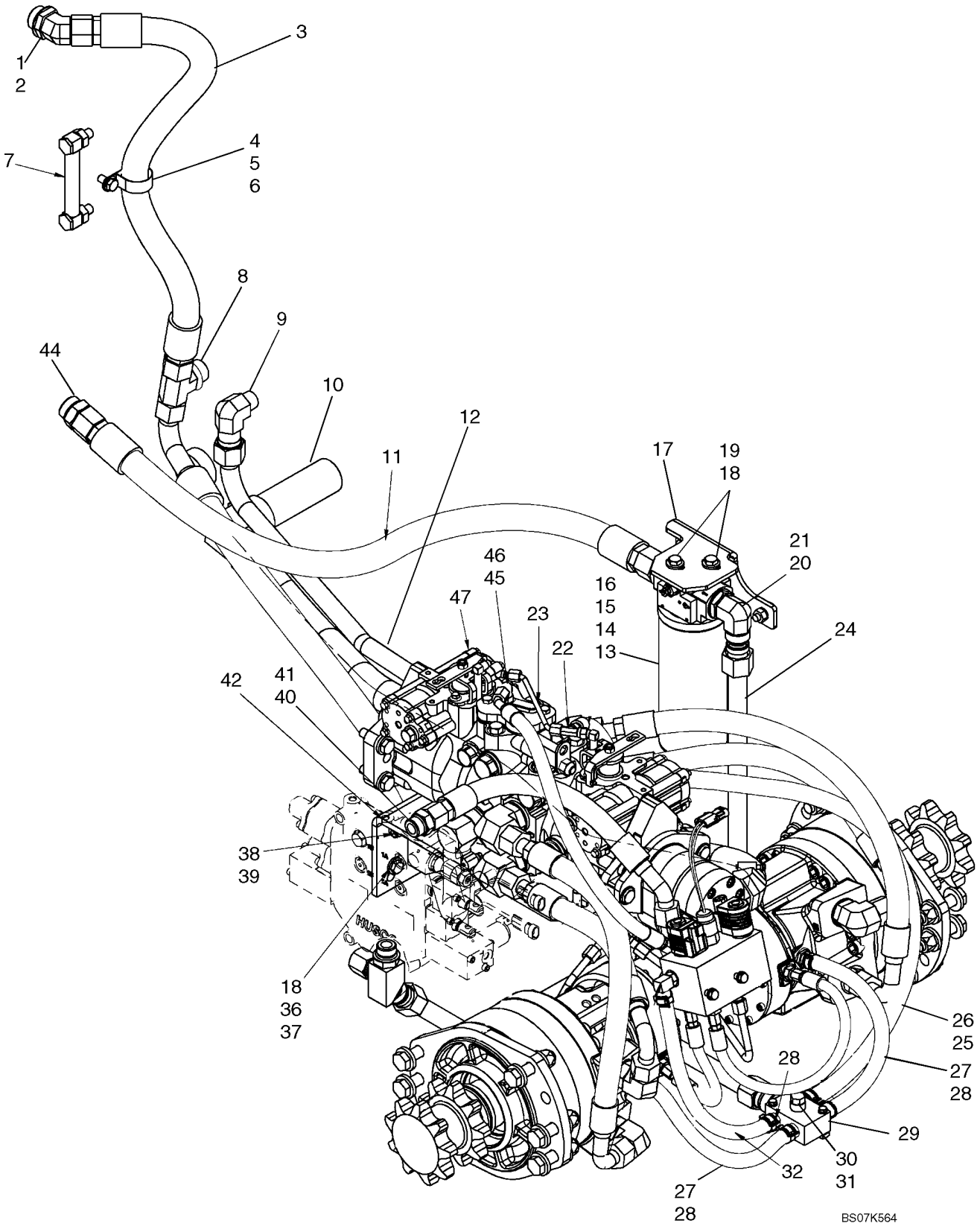

HYDROSTATICS - SUPPLY AND RETURN (450)

REF	FN	PART NUMBER	YR/SN	QTY	DESCRIPTION
35		219606		1	CAP, 37°, 1 1/16"-12
36		43248		2	BOLT, Hex, M10 x 40, 10.9, Full Thd
37		122158A1		2	NUT, M8, U
38		86625256		8	WASHER, M12 x 28.5 x 4, HT
39		43260		4	BOLT, Hex, M12 x 30, 10.9
40		322896		1	CONNECTOR, HYD., 1 1/16"-12, 37° x 1 1/16"-12, O-Ring, Incl 41
41		167266		1	O-RING, 12-1, 90 Duro, .924 ID x .116" Thk
42		87627383		1	SUPPORT, Pump Support
43		87361407		1	HOSE ASSY., Hose, Pump Suction, 1310mm (51 9/16 in.)
44		378970		2	CONNECTOR, HYD., 1 5/16"-12, 37° x 1 5/16"-12, O-Ring
45		76344		2	ELBOW, 90°, 9/16"-18, 37° x 9/16"-18, O-Ring, Incl 46
46		9617873		2	O-RING, 6-1, 90 Duro, .468" ID x .078" Thk
47		87350024		1	PUMP

HYDROSTATICS - PUMP FITTINGS (450)

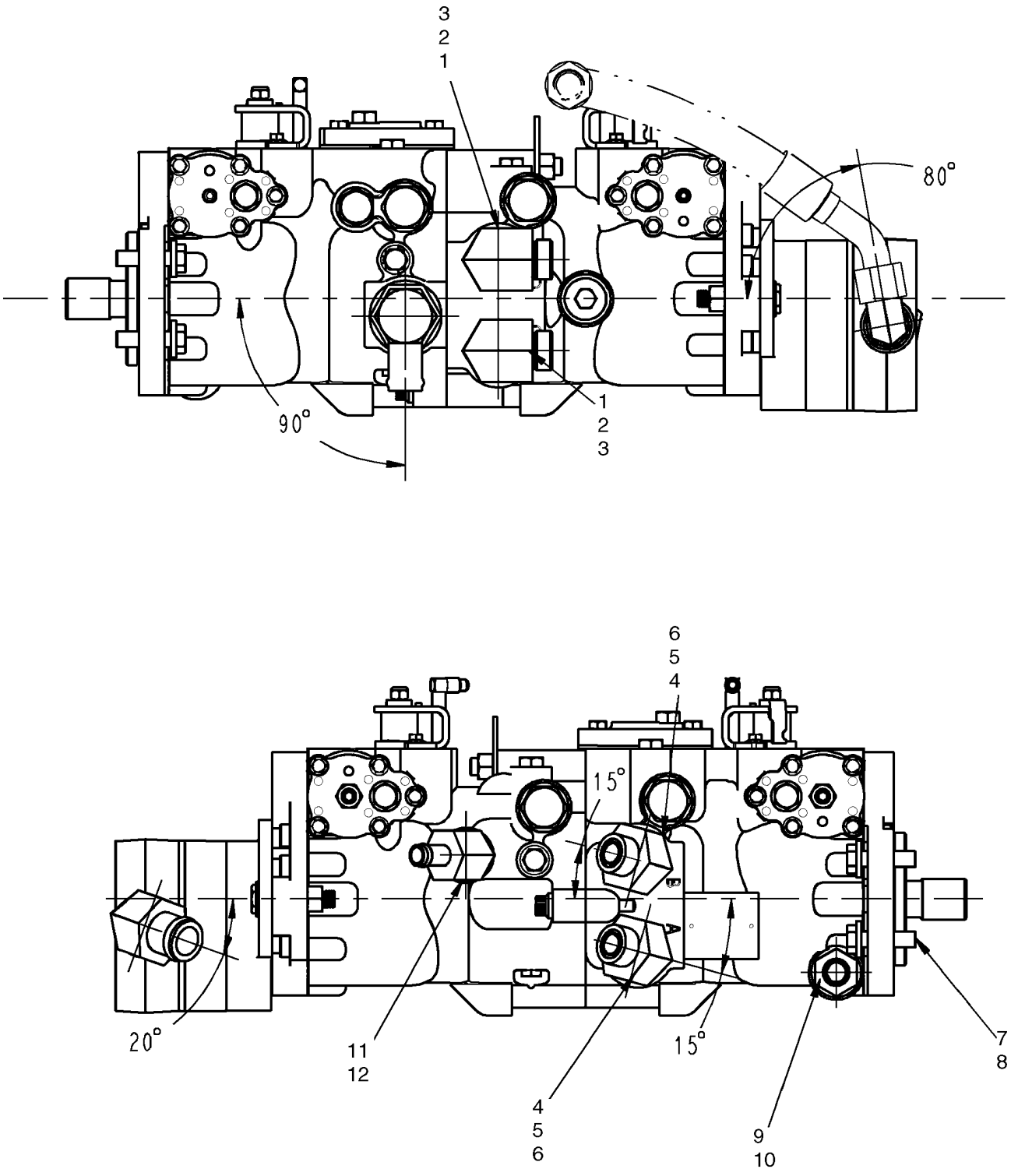

HYDROSTATICS - PUMP FITTINGS (450)

REF	FN	PART NUMBER	YR/SN	QTY	DESCRIPTION
1		{87326965}		2	Elbow, 90 Adj -12 ORFS X 1-5/16-12 ORB; Incl 2, 3
2		237-6016		2	O-RING, 16-1, 90 Duro, 1.171" ID x .118" Thk
3		9991976		2	O-RING, -018, 90 Duro, .739" ID x .070" Thk
4		87644282		2	ELBOW, Elbow, 45 Adj -12 ORFS X 1-5/16 ORB; Incl 5, 6
5		237-6016		2	O-RING, 16-1, 90 Duro, 1.171" ID x .118" Thk
6		9991976		2	O-RING, -018, 90 Duro, .739" ID x .070" Thk
7		412087		4	BOLT, Hex, M12 x 45, 10.9, Full Thd
8		86625256		8	WASHER, M12 x 28.5 x 4, HT
9		87033027		1	ADAPTER, Incl 10
10		167266		1	O-RING, 12-1, 90 Duro, .924 ID x .116" Thk
11		87021779		1	FITTING, 45º, 5/8" Hose x 1 1/16"-12 ORB Beaded, Incl 12
12		167266		1	O-RING, 12-1, 90 Duro, .924 ID x .116" Thk

HYDROSTATICS - SUPPLY AND RETURN (450 WITH PILOT CONTROL)

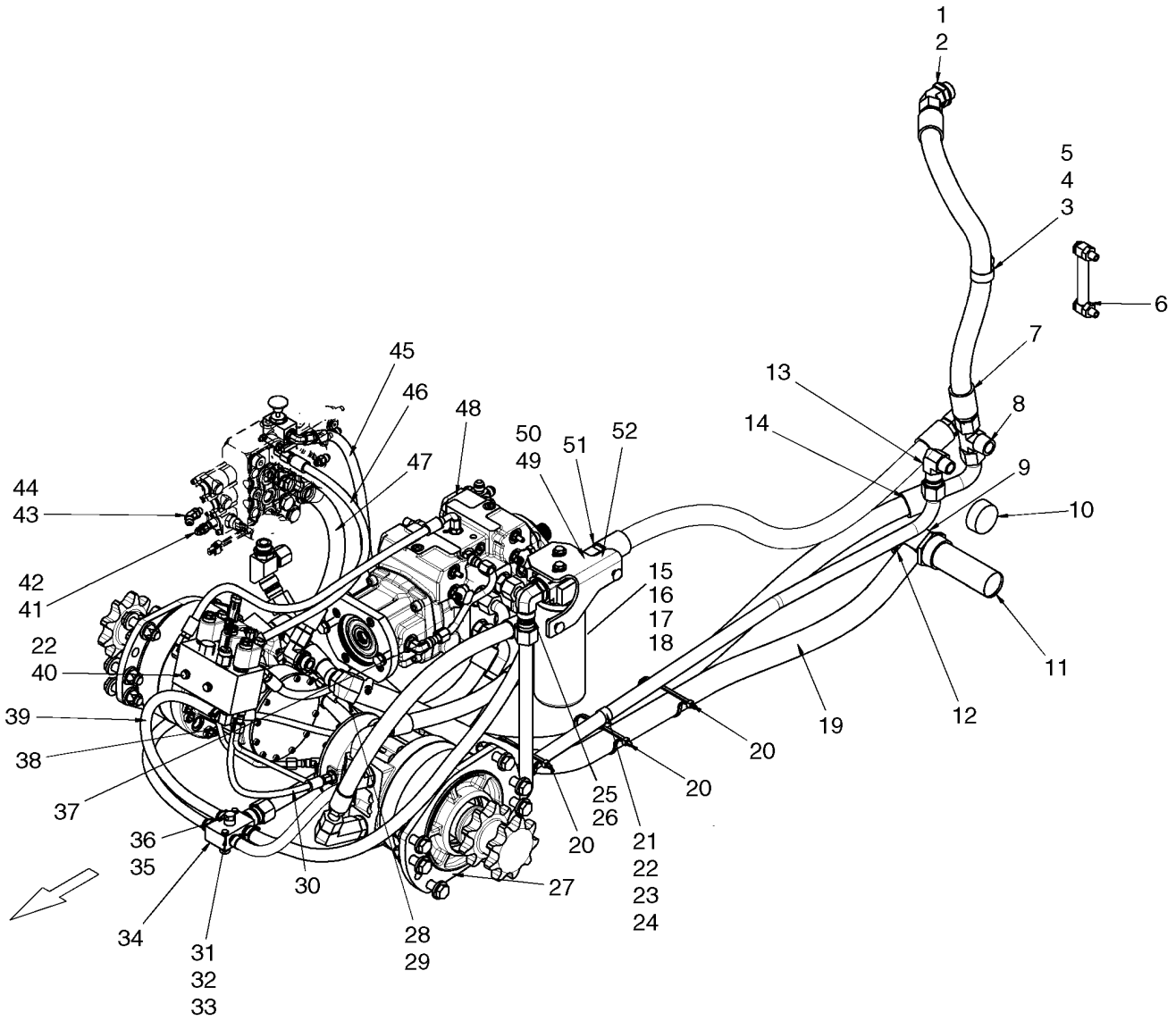

HYDROSTATICS - SUPPLY AND RETURN (450 WITH PILOT CONTROL)

REF	FN	PART NUMBER	YR/SN	QTY	DESCRIPTION
1		86977688		1	ELBOW, 45º, 1 5/16"-12 x 1 5/16"-12, O-Ring, Incl 2
2		167268		1	O-RING, 16-1, 90 Duro, 1.171" ID x .116" Thk
3		87301688		1	CLAMP
4		140045		1	WASHER, SPRING, Belleville, M10
5		43138		1	SCREW, Hex, M10 x 20, 8.8, Full Thd
6		87374752		1	GAUGE, Liquid Level Gauge
7		{87659238}		1	Hose, Oil Cooler Return, 825mm (32 1/2 in.)
8		9790547		1	TEE, 1 5/16"-12, 37º x 1"-11 1/2, NPTF Br
9		87029969		1	CONNECTOR, HYD.
10		87035993		1	PLUG, Sq Soc, 2"-11 1/2 NPTF
11		189310A1		1	STRAINER ASSY., Suction Line Filter
12		87039085		2	CLAMP, HOSE, 1.25/2.125 HD Worm
13		9615396		1	ELBOW, 90º, 1 5/16"-12, 37º x 3/4"-14, NPTF
14		87547024		1	HOSE, Hose, Charge Pump Supply, 1553mm (61 1/8 in.)
15		87430661		1	FILTER, Hydraulic Filter; Incl 16 - 18
16		N13268		1	SWITCH, PRESSURE
17		87010593		1	ELEMENT, Filter Element, Spin On
18		87439984		1	HEAD, FILTER, Head Assembly
19		87348364		1	HOSE ASSY., Hose, Loader Pump Supply, 1380mm (54 5/16 in.)
20		L18331		3	STRAP, CABLE
21		86637977		2	CLAMP, 1", Insul, 5/16" Bolt
22		86624184		4	WASHER, M8 x 16 x 1.6
23		120104		2	BOLT, Hex, M8 x 20, 8.8
24		122158A1		2	NUT, M8, U
25		268277		1	ELBOW, 90º, 1 5/16"-12, 37º x 1 5/16"-12, O-Ring, Incl 26
26		167268		1	O-RING, 16-1, 90 Duro, 1.171" ID x .116" Thk
27		87349721		2	MOTOR, HYDRAULIC, Drive Motor
28		87033824		1	FITTING, 45º, 1 1/4" Hose x 1 5/16"-12 ORB Beaded, Incl 29
29		237-6016		1	O-RING, 16-1, 90 Duro, 1.171" ID x .118" Thk
30		87547026		2	HOSE, Hose, EH Supply Or Brake, 465mm (18 5/16 in.)

HYDROSTATICS - SUPPLY AND RETURN (450 WITH PILOT CONTROL)

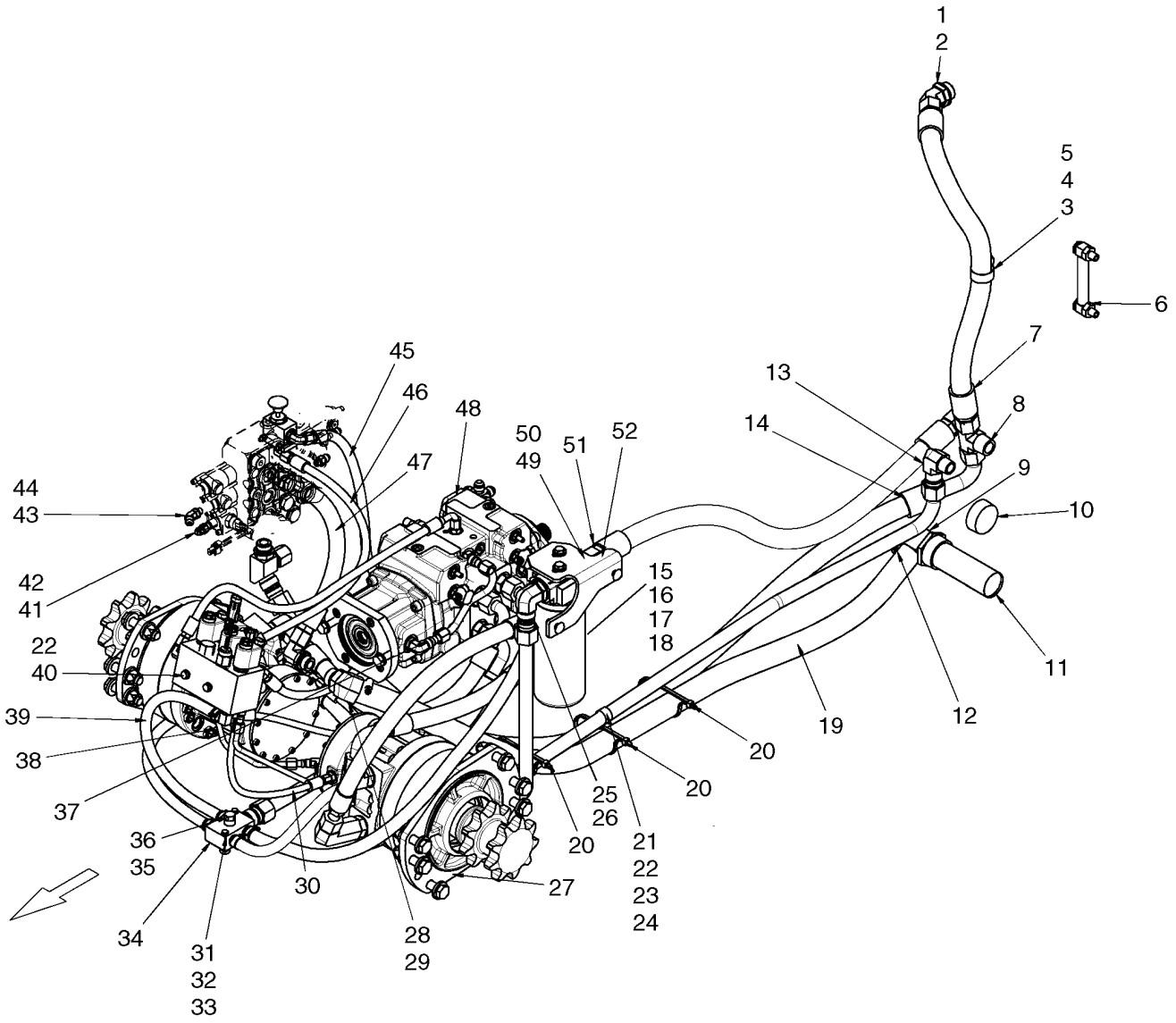

HYDROSTATICS - SUPPLY AND RETURN (450 WITH PILOT CONTROL)

REF	FN	PART NUMBER	YR/SN	QTY	DESCRIPTION
31		86588450		2	WASHER, M6
32		86977790		2	BOLT, Hex, M6 x 45, 8.8
33		87404992		2	NUT
34		87437351		1	MANIFOLD, Oil Return Manifold
35		76349		3	PLUG, Hex Hd, 9/16"-18 ORB, Incl 36
36		9617873		3	O-RING, 6-1, 90 Duro, .468" ID x .078" Thk
37		87554297		1	TUBE, HYD, Tube, Tandem Pump Supply
38		87384126		1	HOSE ASSY., Hose, Brake 250mm (9 27/32 in.)
39		87547047		1	HOSE, Hose, Multi Valve Drain, 520mm (20 15/32 in.)
40		86508571		2	BOLT, Hex, M8 x 90, 8.8
41		84384		3	CONNECTOR, HYD., 9/16"-18, 37° x 7/16"-20, O-Ring, Incl 42
42		165202		3	O-RING, 4-1, 90 Duro, .351" ID x .072" Thk
43		87593247		1	ELBOW, Incl 44
44		165202		1	O-RING, 4-1, 90 Duro, .351" ID x .072" Thk
45		87547043		1	HOSE, Hose, Dump Valve Supply, 773mm (30 7/16 in.)
46		87547033		1	HOSE, Hose, Dump Valve Drain, 616mm (24 1/4 in.)
47		87547015		1	HOSE, Hose, Valve Supply, 412mm (16 7/32 in.)
48		87546977		1	PUMP, Rexroth Pump, A22 360 Bar, 5.7mm Orifice; See Fig 06-22
49		378970		2	CONNECTOR, HYD., 1 5/16"-12, 37° x 1 5/16"-12, O-Ring, Incl 50
50		167268		2	O-RING, 16-1, 90 Duro, 1.171" ID x .116" Thk
51		{87659239}		1	Hose, Filter To Cooler, 1140mm (44 7/8 in.)
52		87707681		1	ANGLE

HYDROSTATICS - PUMP TO DRIVE MOTORS (450 WITH PILOT CONTROL)

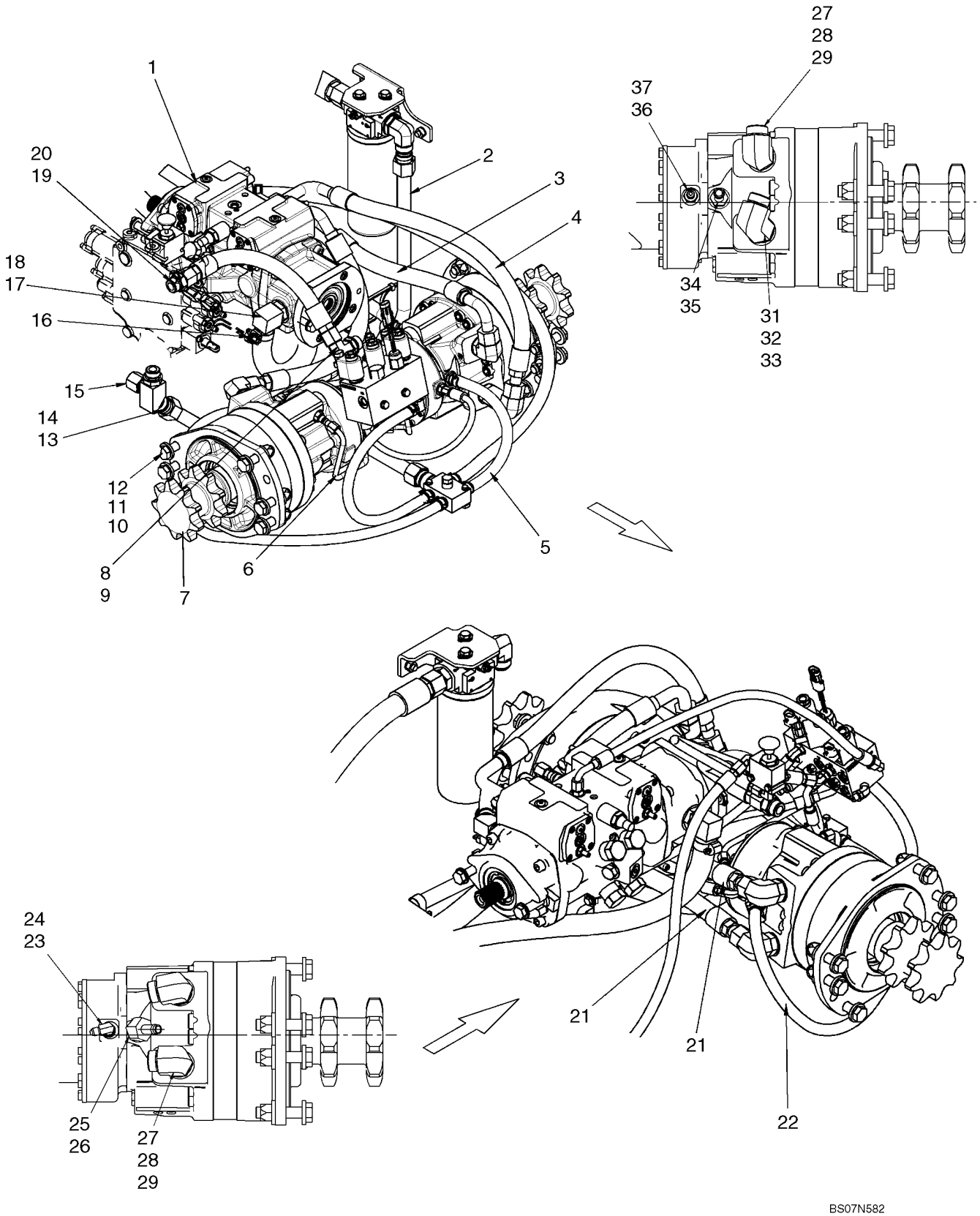

HYDROSTATICS - PUMP TO DRIVE MOTORS (450 WITH PILOT CONTROL)

REF	FN	PART NUMBER	YR/SN	QTY	DESCRIPTION
1		87546977		1	PUMP, Rexroth Pump, A22 360 Bar, 5.7mm Orifice; See Fig 06-22
2		87419597		1	TUBE ASSY., Tube, Valve Outlet
3		87640189		1	HOSE, Hose, 495mm (19 1/2 in.)
4		87640187		1	HOSE, Hose, 720mm (28 11/32 in.)
5		87029907		1	HOSE ASSY., Hose, 335mm (13 3/16 in.)
6		87665698		2	TUBE, Tube, Tee To Motor
7		87349721		2	MOTOR, HYDRAULIC, Drive Motor
8		322894		1	ELBOW, 90º, 1 1/16"-12, 37º x 1 1/16"-12, O-Ring, Incl 9
9		167266		1	O-RING, 12-1, 90 Duro, .924 ID x .116" Thk
10		86625258		24	WASHER, M16 x 34.5 x 5, HT
11		86512555		12	NUT, LOCK, M16 x 2, Cl 10
12		9847468		12	BOLT, Hex, M16 x 70, 10.9
13		87421217		1	ADAPTER, Incl 14
14		167266		1	O-RING, 12-1, 90 Duro, .924 ID x .116" Thk
15		219606		1	CAP, 37º, 1 1/16"-12
16		514920		1	CLAMP, HOSE, #16, 0.81/1.50 Type F Worm
17		87393628		1	ADAPTER, Incl 18
18		237-6016		1	O-RING, 16-1, 90 Duro, 1.171" ID x .118" Thk
19		322896		1	CONNECTOR, HYD., 1 1/16"-12, 37º x 1 1/16"-12, O-Ring, Incl 20
20		167266		1	O-RING, 12-1, 90 Duro, .924 ID x .116" Thk
21		87640182		2	HOSE, Hose, 580mm (22 13/16 in.)
22		87665697		1	HOSE, Hose, Multi Valve Drain, 900mm (35 7/16 in.)
23		86512934		1	ELBOW, 90º, 7/16"-20, 37º x 9/16"-18, O-Ring, Incl 24
24		9617873		1	O-RING, 6-1, 90 Duro, .468" ID x .078" Thk
25		87372529		1	ADAPTER, Incl 26
26		128825		1	O-RING, 8-1, 90 Duro, .644" ID x .087" Thk
27		9846848		3	ELBOW, Incl 28, 29
28		9991976		3	O-RING, -018, 90 Duro, .739" ID x .070" Thk
29		167266		3	O-RING, 12-1, 90 Duro, .924 ID x .116" Thk
31		{87661865}		1	Elbow, 90 Adj Long 3/4 ORFS, 3/4 ORB; Incl 32, 33
32		9991976		1	O-RING, -018, 90 Duro, .739" ID x .070" Thk
33		167266		1	O-RING, 12-1, 90 Duro, .924 ID x .116" Thk

HYDROSTATICS - PUMP TO DRIVE MOTORS (450 WITH PILOT CONTROL)

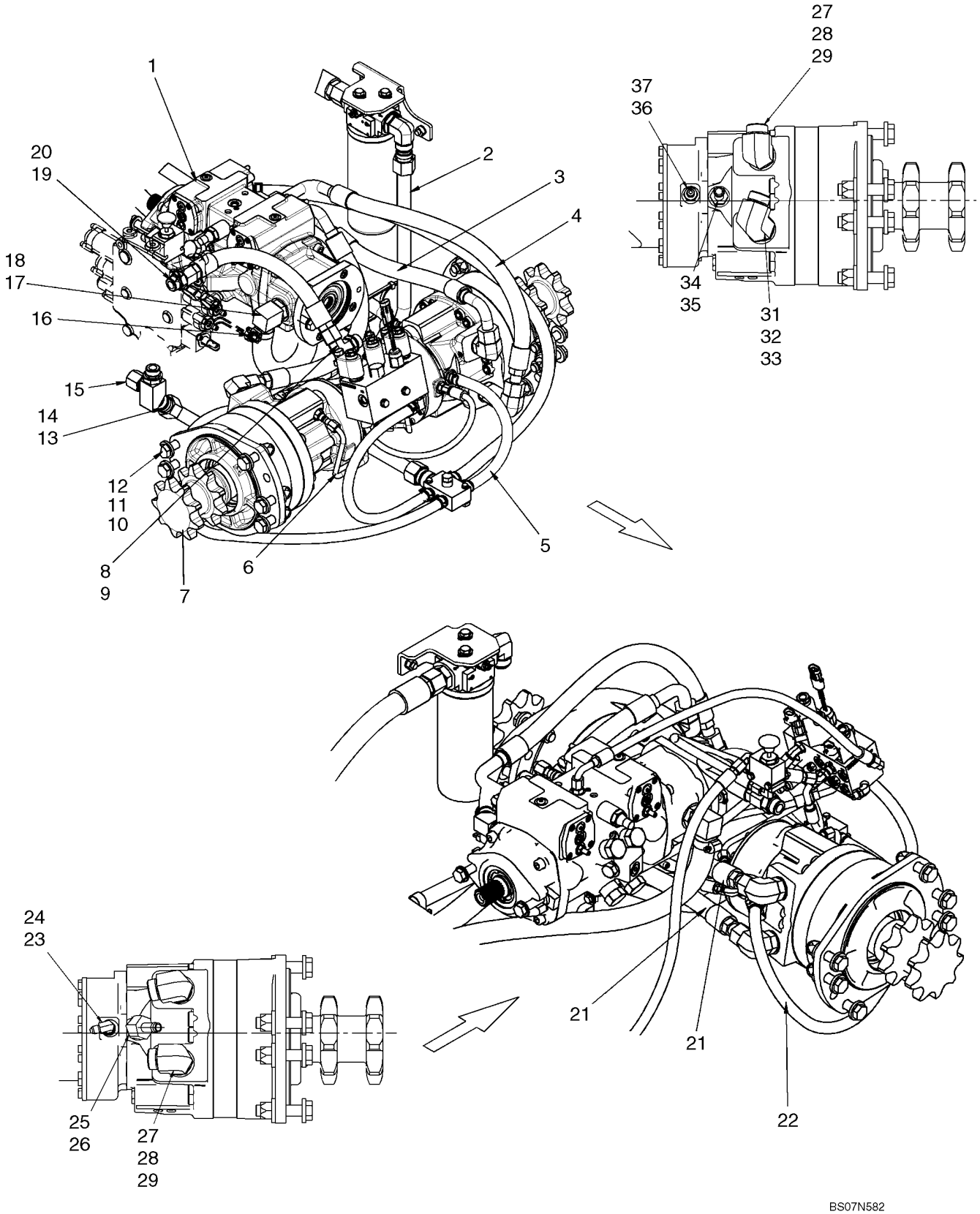

HYDROSTATICS - PUMP TO DRIVE MOTORS (450 WITH PILOT CONTROL)

REF	FN	PART NUMBER	YR/SN	QTY	DESCRIPTION
34		87010108		1	FITTING, 1/2" Hose x 3/4"-16 ORB, Beaded, Incl 35
35		128825		1	O-RING, 8-1, 90 Duro, .644" ID x .087" Thk
36		139398		1	CONNECTOR, HYD., 7/16"-20, 37° x 9/16"-18, O-Ring, Incl 37
37		9617873		1	O-RING, 6-1, 90 Duro, .468" ID x .078" Thk

HYDROSTATICS - RESONATOR

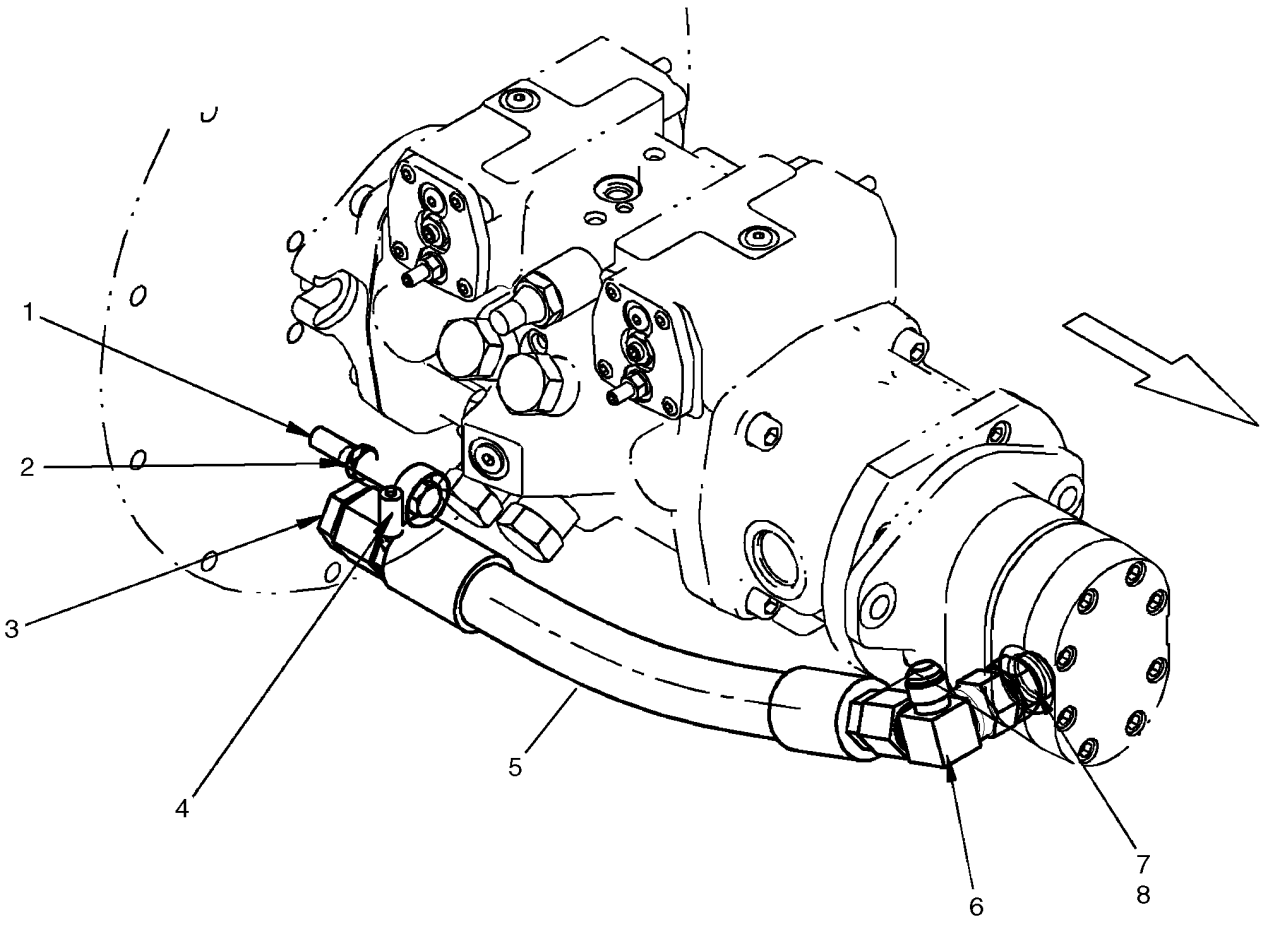

BS07N500

HYDROSTATICS - RESONATOR

REF	FN	PART NUMBER	YR/SN	QTY	DESCRIPTION
1		43158		1	BOLT, Hex, M12 x 80, 8.8
2		323238		1	NUT, Thin, M12 x 1.75, Cl 05
3		9790527		1	PLUG, 1 5/16"-12, 37º
4		87039085		1	CLAMP, HOSE, 1.25/2.125 HD Worm
5		87462103		1	HOSE ASSY., Resonator
6		87025944		1	TEE
7		322896		1	CONNECTOR, HYD., 1 1/16"-12, 37º x 1 1/16"-12, O-Ring, Incl 8
8		167266		1	O-RING, 12-1, 90 Duro, .924 ID x .116" Thk

HYDROSTATICS - TWO SPEED, VALVE ASSY (450CT WITH PILOT CONTROL)

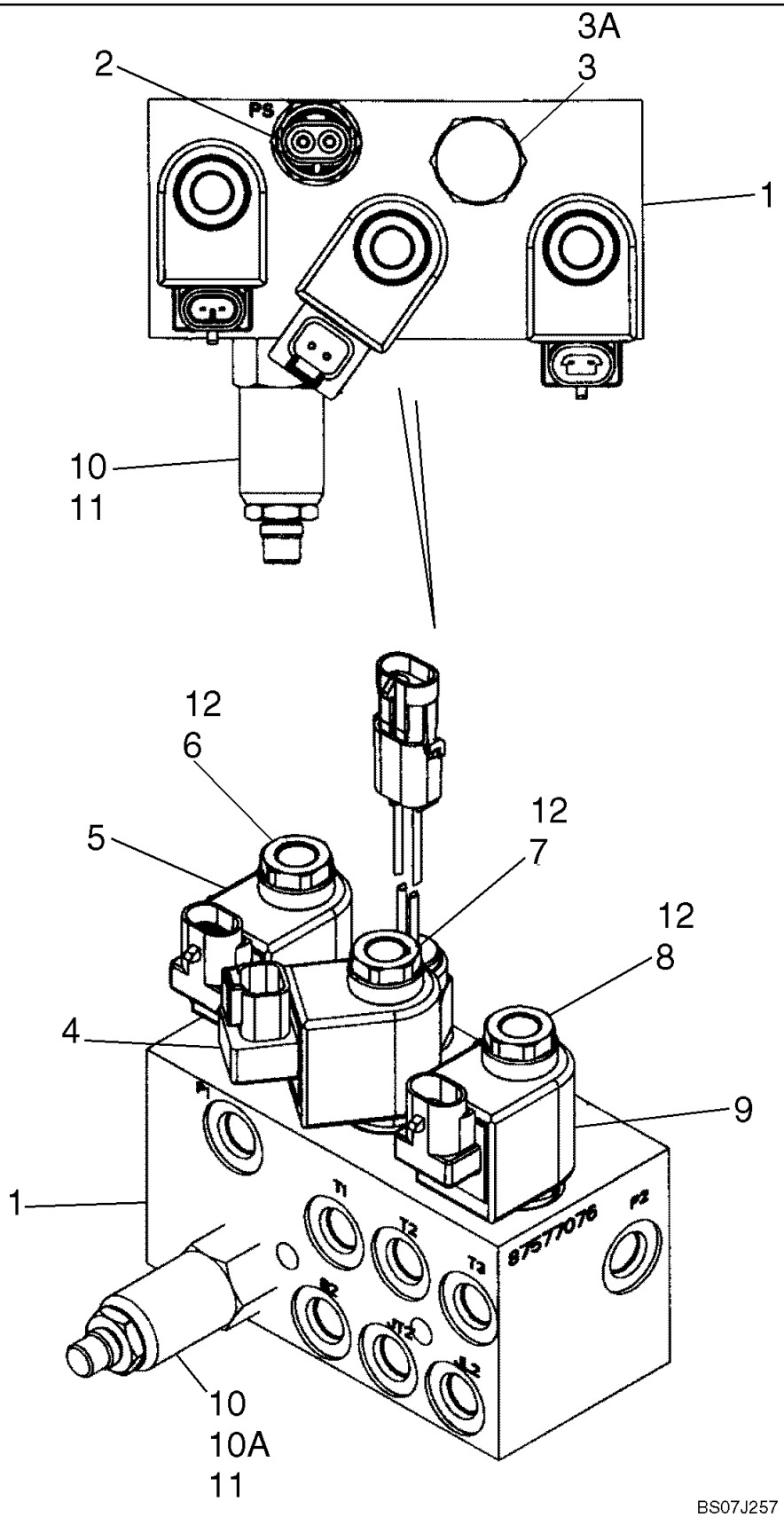

HYDROSTATICS - TWO SPEED, VALVE ASSY (450CT WITH PILOT CONTROL)

REF	FN	PART NUMBER	YR/SN	QTY	DESCRIPTION
1		87577076		1	VALVE, PILOT, Brake Valve; Two Speed; Incl. 1 - 12
2		87458061		1	SWITCH, PRESSURE, Brake Valve
3		87614009		1	VALVE, Cartridge Valve
3A		87614015		1	KIT, SEALS, Seal Kit For Cartridge Valve
4		87588596		1	SOLENOID
5		87588597		1	SOLENOID
6		87588585		1	VALVE, SOLENOID
7		87588579		1	VALVE, SOLENOID
8		87614011		1	VALVE, SOLENOID
9		87614012		1	COIL
10		87352527		1	VALVE, Sequence
11		87426545		1	ORIFICE, .017 Sauer
12		87614013		1	KIT, SEALS, Solenoid Valve

PUMP, GEAR (WITHOUT HIGH FLOW)

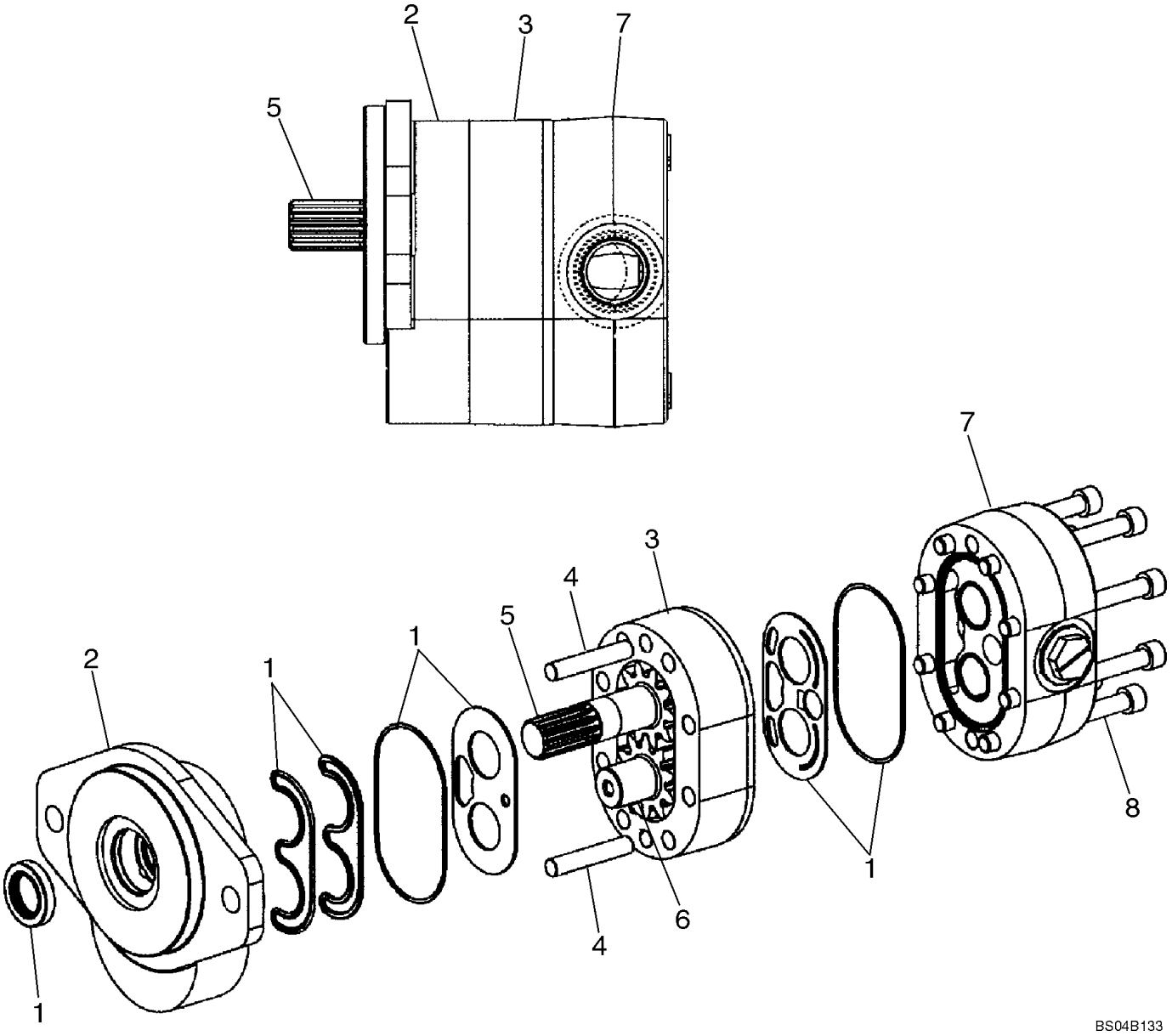

PUMP, GEAR (WITHOUT HIGH FLOW)

REF	FN	PART NUMBER	YR/SN	QTY	DESCRIPTION
		87024695		1	PUMP, Incl. 1 - 8; Models Without High Flow
1		87042214		1	KIT, SEALS, Seal; Component Parts Not Serviced Separately
2		NSS		1	NOT SERVICED SEPARATELY, Cover
3		NSS		1	NOT SERVICED SEPARATELY, Plate, Gear
4		NSS		2	NOT SERVICED SEPARATELY, Pin, Dowel
5		NSS		1	NOT SERVICED SEPARATELY, Shaft, Drive
6		NSS		1	NOT SERVICED SEPARATELY, Shaft, Idler
7		NSS		1	NOT SERVICED SEPARATELY, Cover
8		NSS		8	NOT SERVICED SEPARATELY, Screw

GEAR PUMP (WITH HIGH FLOW)

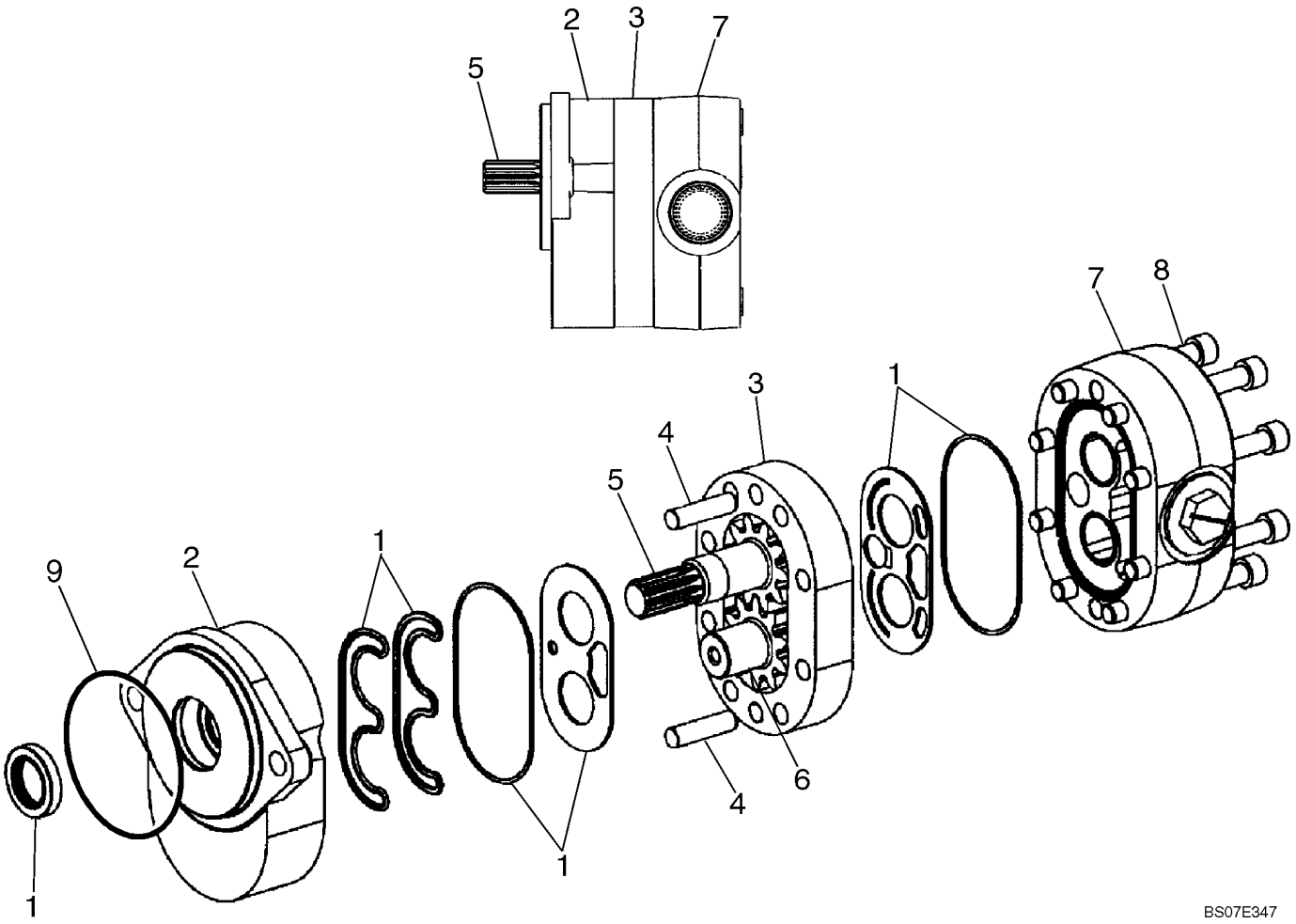

GEAR PUMP (WITH HIGH FLOW)

REF	FN	PART NUMBER	YR/SN	QTY	DESCRIPTION
		87020734		1	PUMP, Incl. 1 - 8
1		87042214		1	KIT, SEALS, Seal; Component Parts Not Serviced Separately
2		NSS		1	NOT SERVICED SEPARATELY, Cover
3		NSS		1	NOT SERVICED SEPARATELY, Plate, Gear
4		NSS		2	NOT SERVICED SEPARATELY, Pin, Dowel
5		NSS		1	NOT SERVICED SEPARATELY, Shaft, Drve
6		NSS		1	NOT SERVICED SEPARATELY, Shaft, Idler
7		NSS		1	NOT SERVICED SEPARATELY, Cover
8		NSS		8	NOT SERVICED SEPARATELY, Screw
9		87013729		1	O-RING, -044, 70 Duro, 3.739" ID x .070" Thk, Not Included With Pump

PUMP, TANDEM - REXROTH A22 (87546977)

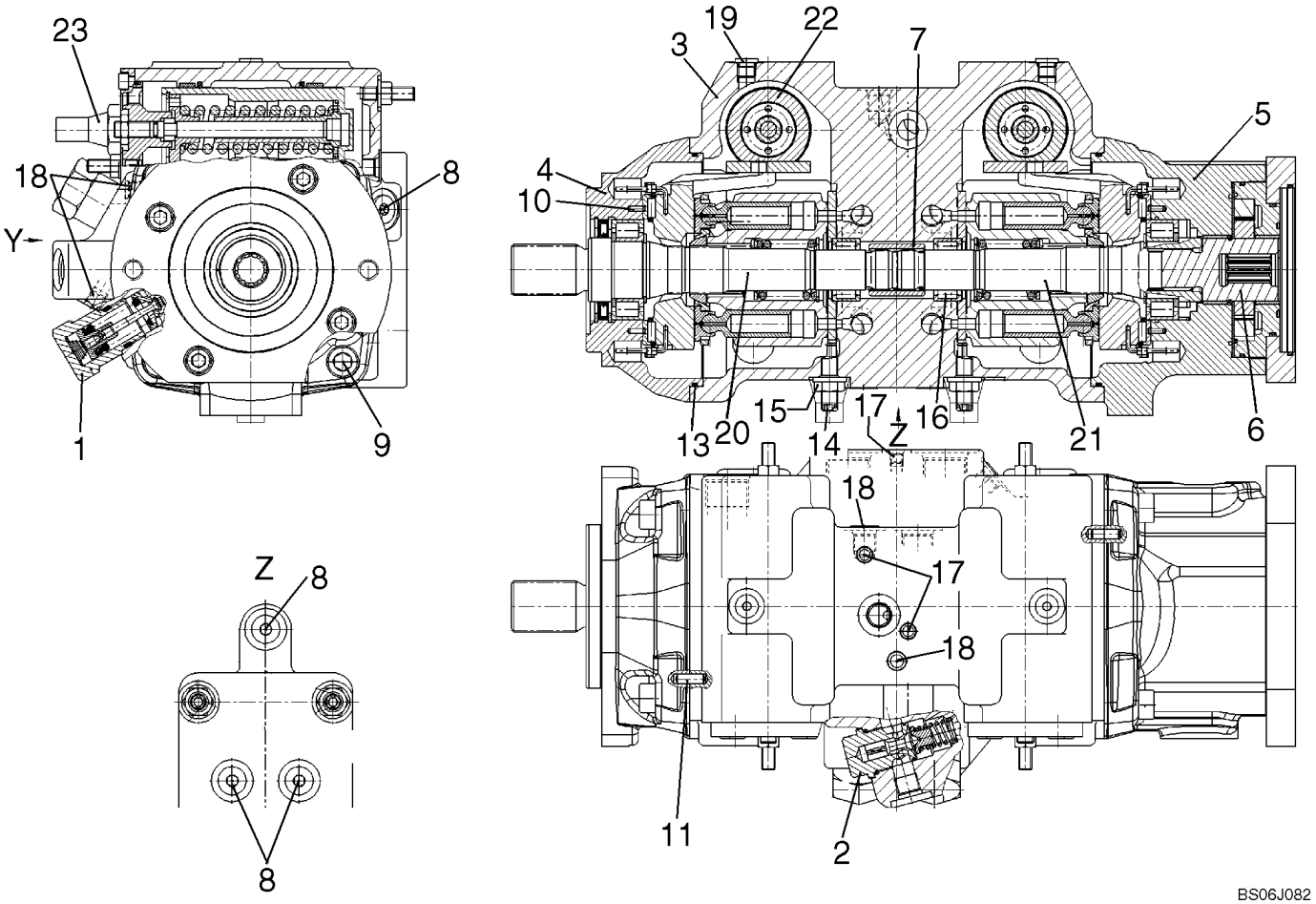

PUMP, TANDEM - REXROTH A22 (87546977)

REF	FN	PART NUMBER	YR/SN	QTY	DESCRIPTION
		87546977			PUMP, Rexroth Pump A22
1		87614028		4	VALVE, PRESSURE RELIEF, HD 300 Bar; See Fig. 06-23
2		87553604		1	VALVE, PRESSURE RELIEF, 15 - 30 Bar R-Ring Viton; See Fig. 06-24
3		87553605		1	HOUSING, Pump
4		87553606		1	FLANGE, Bearing
5		87553607		1	FLANGE, Bearing With Bushing
6		87553608		1	PUMP, Internal Gear Pump; See Fig. 06-25
7		87553609		1	COUPLING, Through Drive
8		87553611		5	SCREW, LOCK, 9/16 - 18UNF
9		87553613		8	SCREW, Socket Head
10		87553614		4	PIN, Clamping
11		87553615		2	PIN, Cylinder
12		87553616		1	O-RING, Not Illustrated
13		87553617		2	O-RING, O-Ring
14		87553618		2	SCREW, Eccentric Screw
15		87553619		2	NUT, LOCK, Seal
16		87553620		2	BEARING, ROLLER, Plain
17		87553621		2	PIN, Double Break Off
18		87553622		2	PIN, Double Break Off
19		87553612		2	SCREW, LOCK, 7/16 - 20UNF
20		87553599		1	KIT, SERVICE, Rotary Group, RH Rotation; See Fig. 06-26
21		87553600		1	KIT, SERVICE, Rotary Group, LH Rotation; See Fig. 06-27
22		87553601		2	CONTROL, Hydraulic; See Fig. 06-28
23		87614031		1	VALVE, PRESSURE RELIEF, With Orifice; See Fig. 06-29
		87553610		1	BEARING, Bushing
		87627399		3	CAP

PUMP, TANDEM - PRESSURE RELIEF VALVE (87546977)

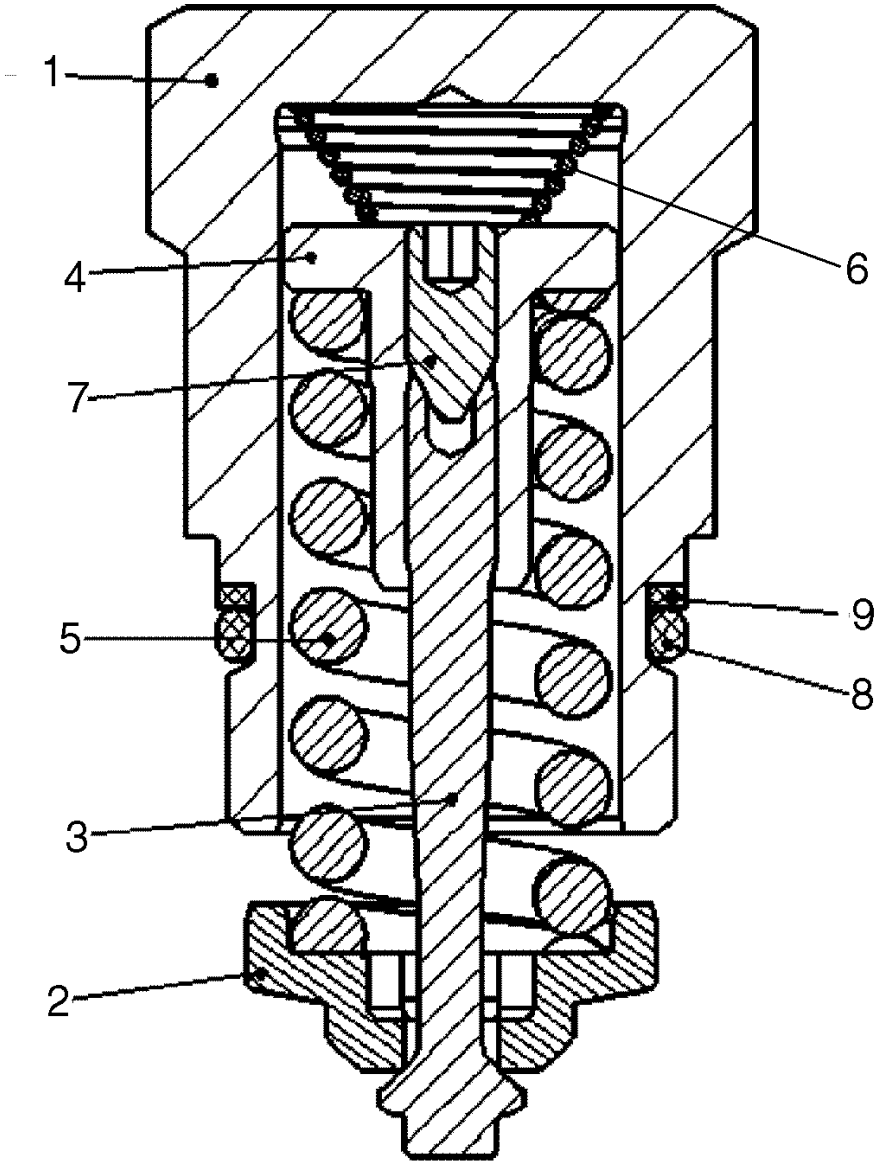

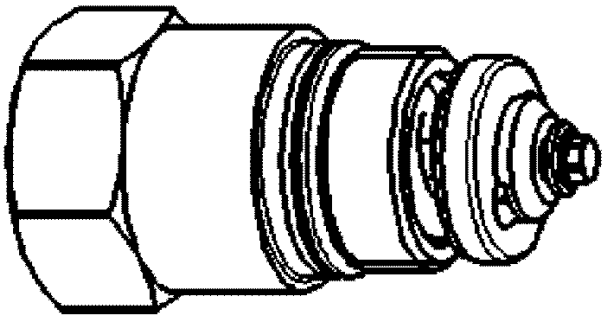

BS06J085

PUMP, TANDEM - PRESSURE RELIEF VALVE (87546977)

REF	FN	PART NUMBER	YR/SN	QTY	DESCRIPTION
		87614028		1	VALVE, PRESSURE RELIEF, Incl. 1 - 9
1		NSS		1	NOT SERVICED SEPARATELY, Locking Screw
2		NSS		1	NOT SERVICED SEPARATELY, Valve Collar
3		NSS		1	NOT SERVICED SEPARATELY, Valve Spindle
4		NSS		1	NOT SERVICED SEPARATELY, Spring Loading Nut
5		NSS		1	NOT SERVICED SEPARATELY, Pressure Spring
6		NSS		1	NOT SERVICED SEPARATELY, Spring, Cone Shaped
7		NSS		1	NOT SERVICED SEPARATELY, Threaded Pin
8		87597284		1	O-RING, O-Ring
9		87597285		1	RING, Back Up

PUMP, TANDEM - PRESSURE RELIEF VALVE (87546977)

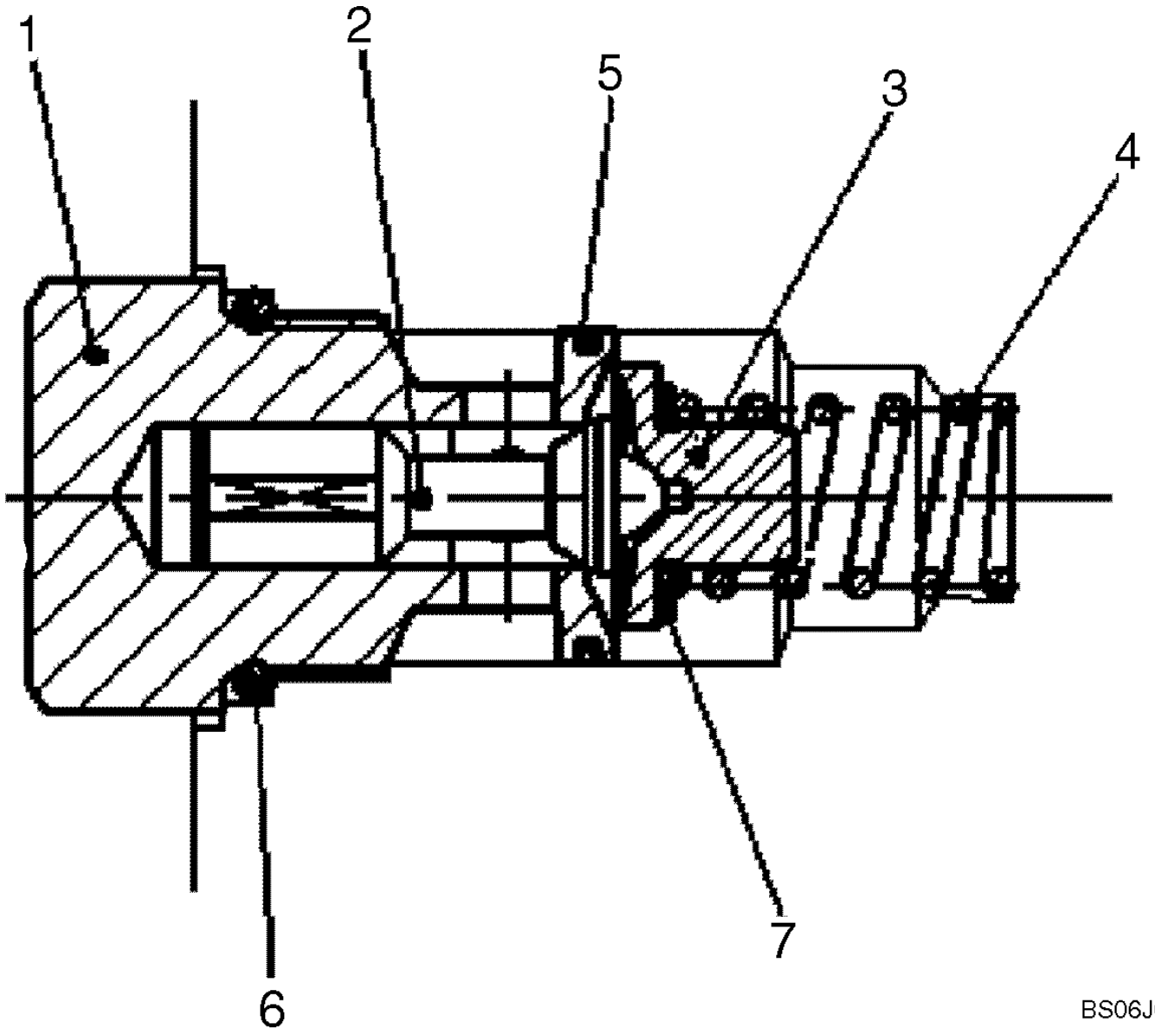

PUMP, TANDEM - PRESSURE RELIEF VALVE (87546977)

REF	FN	PART NUMBER	YR/SN	QTY	DESCRIPTION
		87553604		1	VALVE, PRESSURE RELIEF, Pressure Relief Valve; Incl. 1 - 7
1		NSS		1	NOT SERVICED SEPARATELY, Locking Screw
2		NSS		1	NOT SERVICED SEPARATELY, Valve Piston
3		NSS		1	NOT SERVICED SEPARATELY, Spring Collar
4		NSS		1	NOT SERVICED SEPARATELY, Pressure Spring
5		NSS		1	NOT SERVICED SEPARATELY, Steel Sealing Spring
6		87597286		1	O-RING, O-ring
7		NSS		1	NOT SERVICED SEPARATELY, Shim

PUMP, TANDEM - INTERNAL GEAR PUMP (87546977)

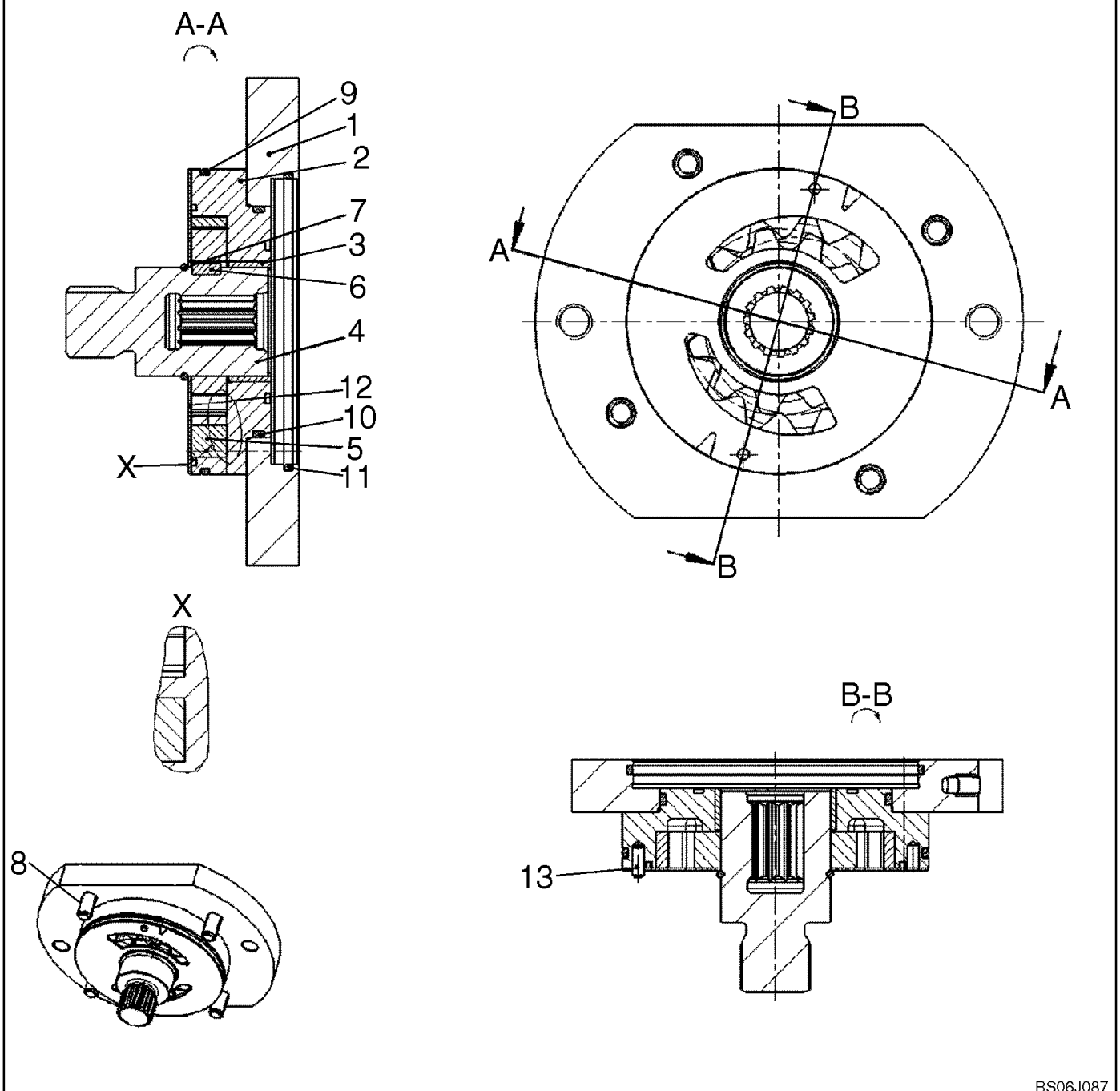

BS06J087

PUMP, TANDEM - INTERNAL GEAR PUMP (87546977)

REF	FN	PART NUMBER	YR/SN	QTY	DESCRIPTION
		87553608		1	PUMP, Internal Gear Pump; Incl. 1 - 13
1		87597287		1	FLANGE, Intermediate Flange
2		87597288		1	HOUSING, IZP Housing
3		87553610		1	BEARING, Bearing Bushing
4		87597289		1	COUPLING, Through Drive Coupling
5		87597290		1	WHEEL SET, Wheel Set
6		87597291		1	KEY, Shaft Key
7		87597292		1	RING, SNAP, Snap Ring
8		87597293		4	SCREW, Socket Head Screw
9		87597294		1	O-RING, O-ring
10		87597295		1	O-RING, O-ring
11		87553616		1	O-RING, O-ring
12		87597296		1	PLATE, Wear Plate
13		87597297		1	PIN, Cylinder Pin

PUMP, TANDEM - ROTARY GROUP, RIGHT HAND ROTATION (87546977)

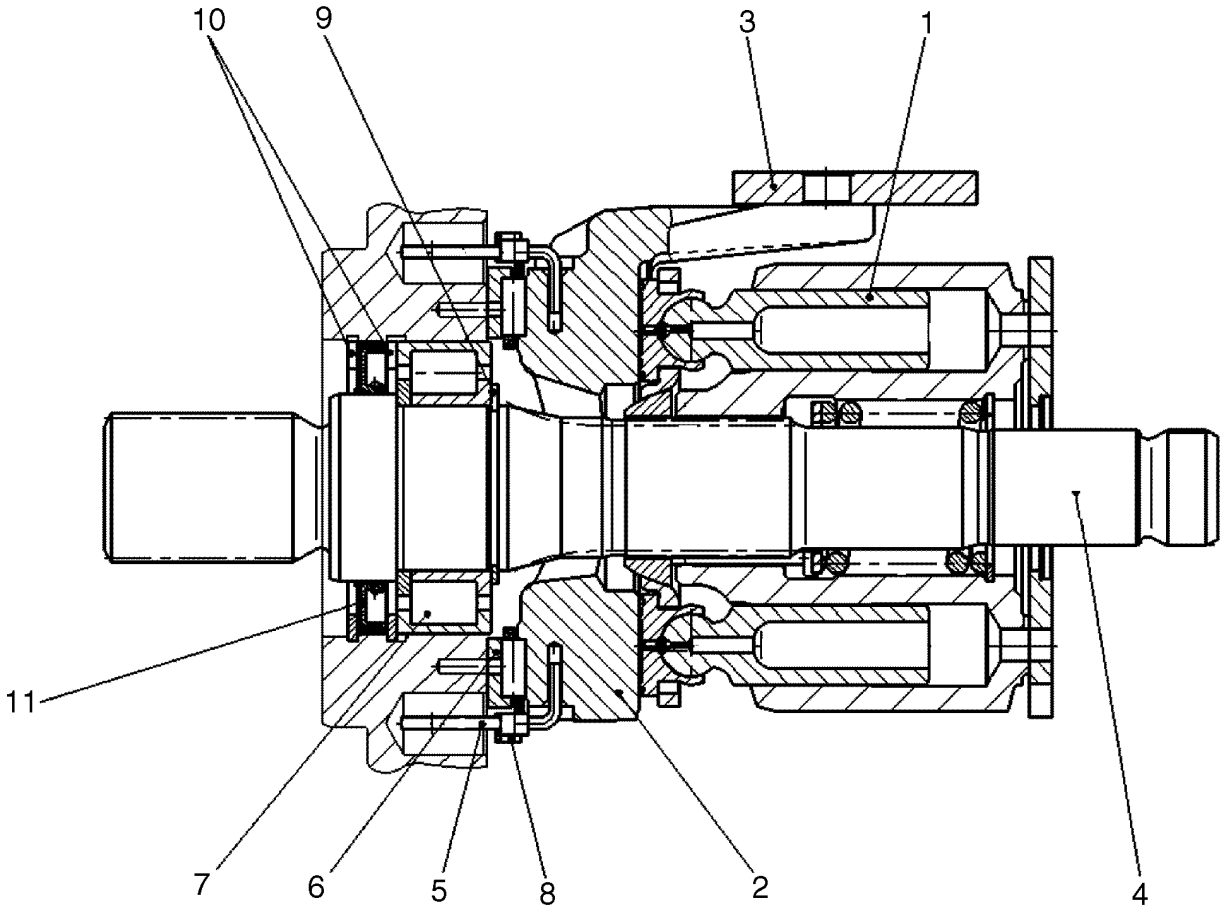

BS06J126

PUMP, TANDEM - ROTARY GROUP, RIGHT HAND ROTATION (87546977)

REF	FN	PART NUMBER	YR/SN	QTY	DESCRIPTION
		87553599		1	KIT, SERVICE, Rotary Group, Right Hand Rotation; Incl. 1 - 11
1		87553623		1	VALVE SECTION, Rotary Group, Hydraulic Section
2		87597259		1	CRADLE, Cradle
3		87597260		1	SLIDE, Ring
4		87597261		1	SHAFT, DRIVE, Drive Shaft
5		87597262		2	WIRE, With Coil
6		87597263		1	BEARING LINER, Pair
7		87597264		1	BEARING, Plain Roller Bearing
8		87597265		1	CRADLE, Bearing Assembly (set)
9		87597266		1	RING, Retaining Ring
10		87597267		2	RING, Seeger V-ring
11		87597268		1	RING, Shaft Seal Ring

PUMP, TANDEM - ROTARY GROUP, LEFT HAND ROTATION (87546977)

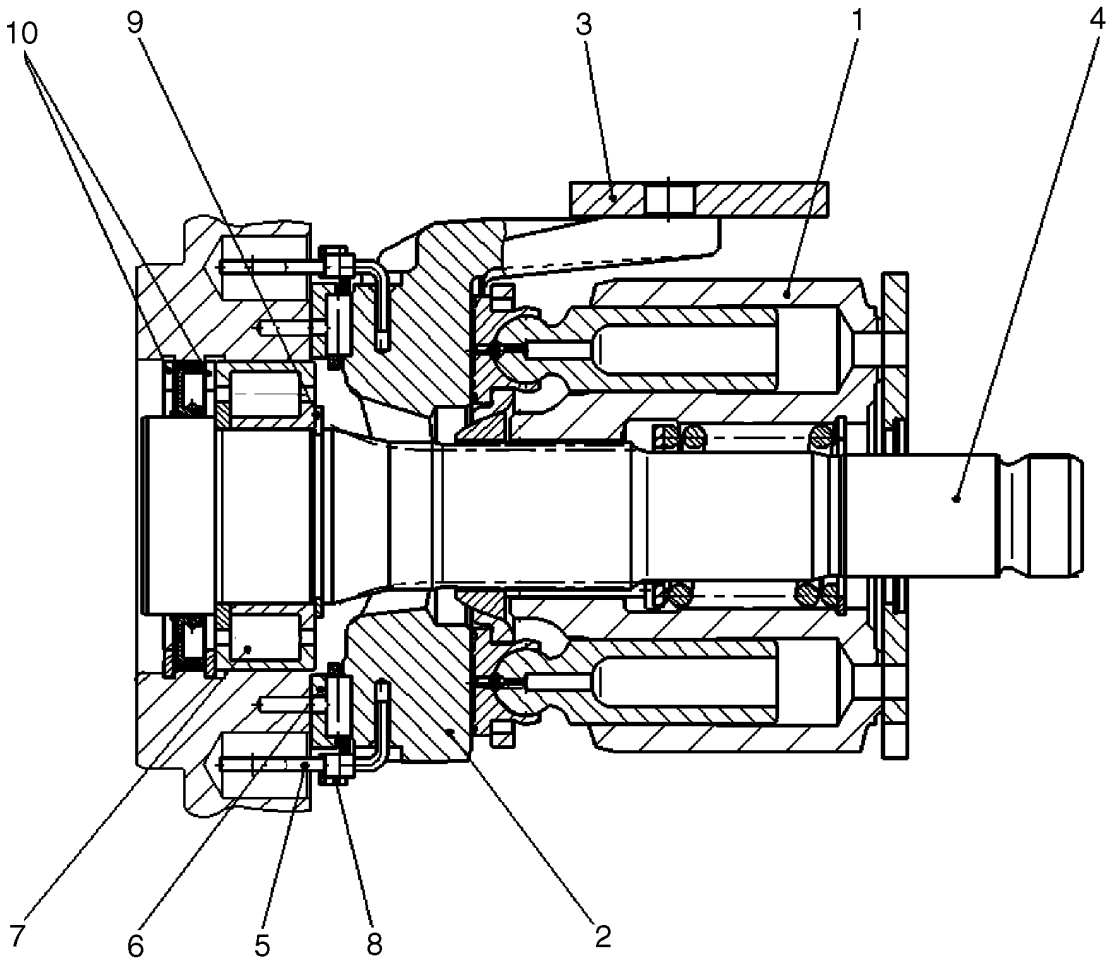

BS06J127

PUMP, TANDEM - ROTARY GROUP, LEFT HAND ROTATION (87546977)

REF	FN	PART NUMBER	YR/SN	QTY	DESCRIPTION
		87553600		1	KIT, SERVICE, Rotary Group, Left Hand Rotation; Incl. 1 - 10
1		87597269		1	VALVE SECTION, HYD, Rotary Group, Hydraulic Section
2		87597259		1	CRADLE, Cradle
3		87597260		1	SLIDE, Ring
4		87597271		1	SHAFT, DRIVE
5		87597262		2	WIRE, With Coil
6		87597263		1	BEARING LINER, Pair
7		87597264		1	BEARING, Plain Roller Bearing
8		87597265		1	CRADLE, Bearing Assembly (set)
9		87597266		1	RING, Retaining Ring
10		87597267		2	RING, Seeger V-ring

PUMP, TANDEM - CONTROL, HYDRAULIC (87546977)

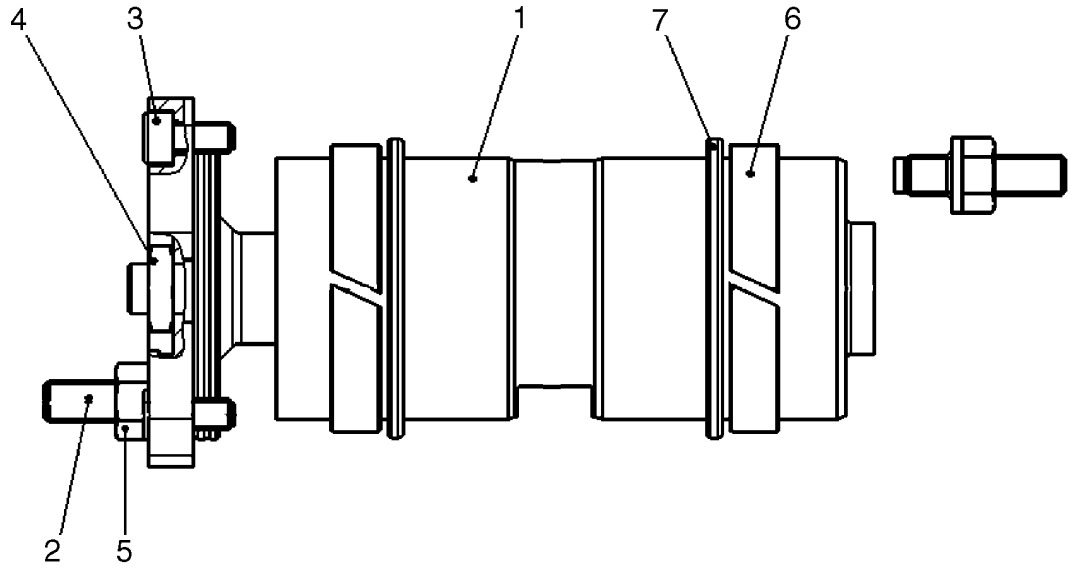

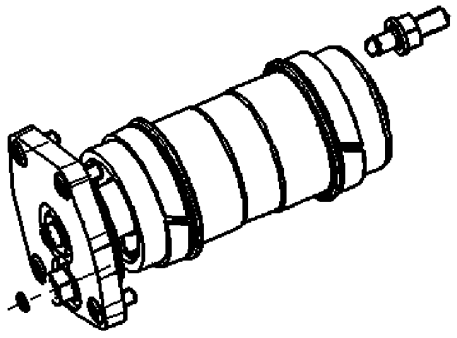

BS06J128

PUMP, TANDEM - CONTROL, HYDRAULIC (87546977)

REF	FN	PART NUMBER	YR/SN	QTY	DESCRIPTION
		87553601		1	CONTROL, Control, Hydraulic; Incl. 1 - 7
1		87597272		1	PISTON, Positioning Piston, Complete
2		87597274		2	PIN, Threaded Pin
3		87597275		4	SCREW, Socket Head Screw
4		87597276		1	NUT, Hexagon Nut
5		87597277		2	NUT, Seal, Lock Nut
6		87597281		2	RING, GUIDE, Guide Ring
7		87597282		2	KIT, SERVICE, Rod Seal Kit

PUMP, TANDEM - CONTROL CARTRIDGE WITH ORIFICE (87546977)

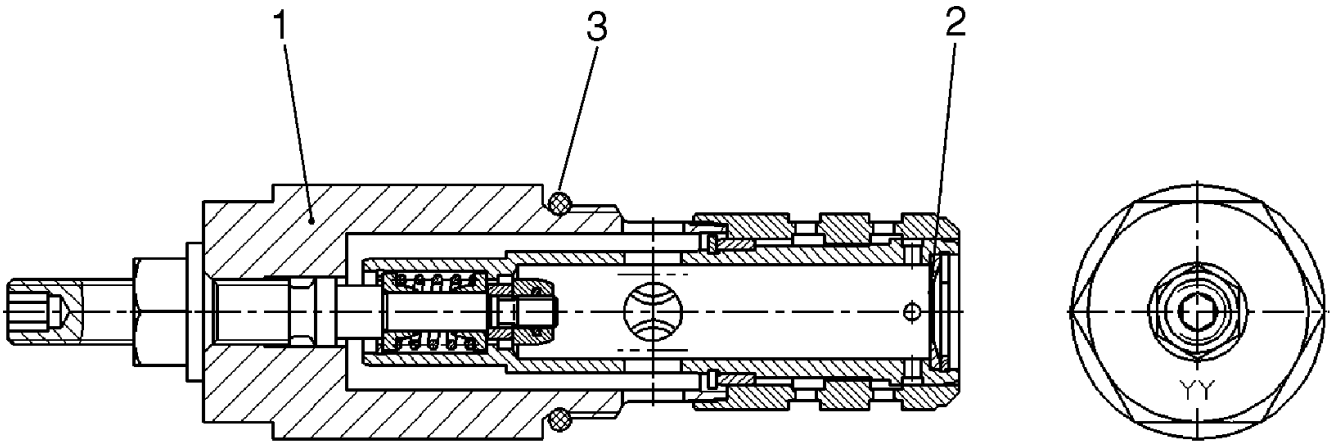

BS07A093

PUMP, TANDEM - CONTROL CARTRIDGE WITH ORIFICE (87546977)

REF	FN	PART NUMBER	YR/SN	QTY	DESCRIPTION
		87614031		1	VALVE, PRESSURE RELIEF, Control Cartridge With Orifice; Incl. 1 - 3
1		NSS		1	NOT SERVICED SEPARATELY, Control Cartridge Without Orifice
2		87597285		1	RING, Back Up Ring
3		87597284		1	O-RING, O-Ring

PUMP, TANDEM (87350025)

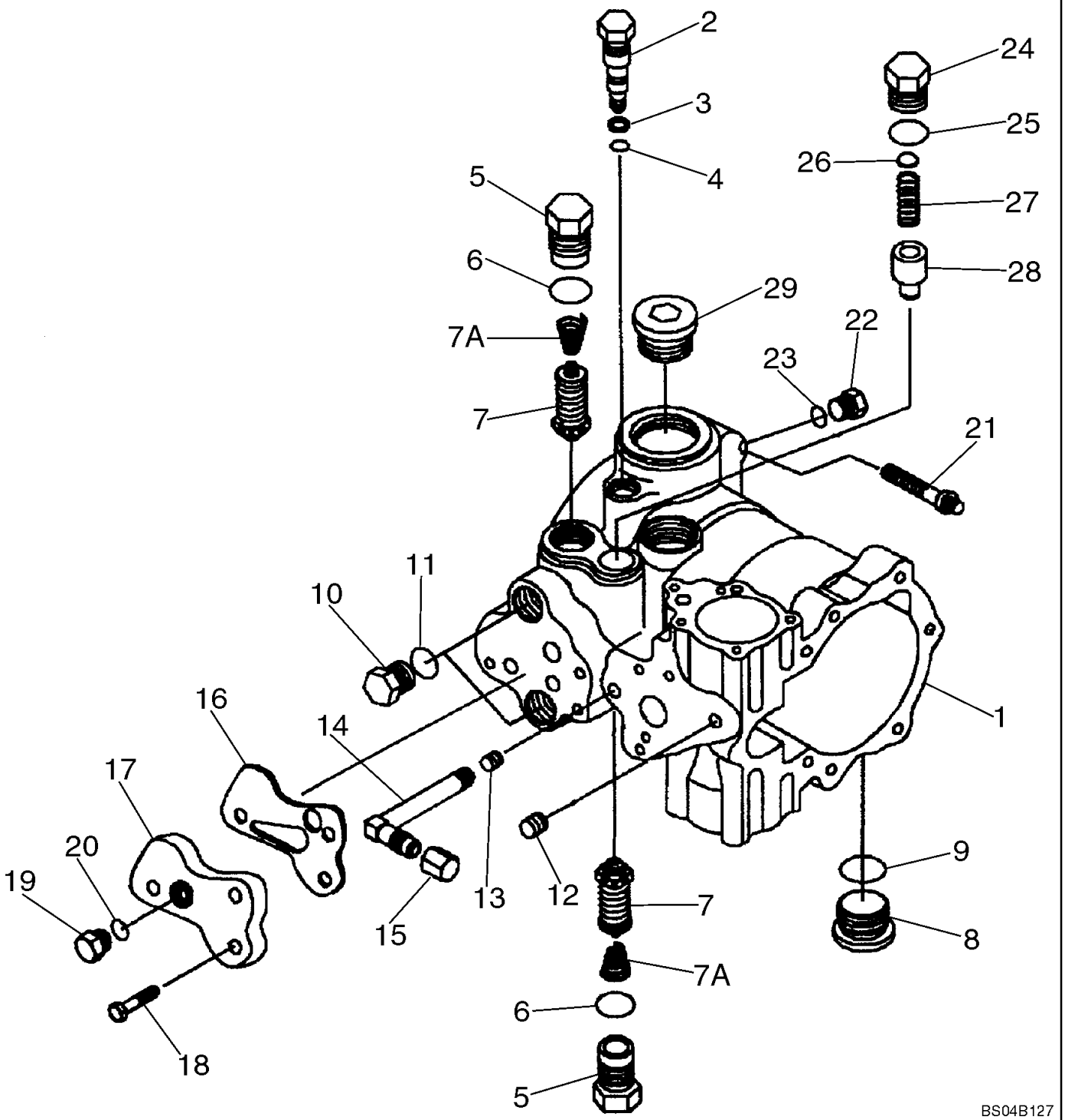

PUMP, TANDEM (87350025)

REF	FN	PART NUMBER	YR/SN	QTY	DESCRIPTION
		REF			INSTRUCTION, Front Pump
		87350025		1	PUMP, Incl. 1 - 29
1		402364A1		1	HOUSING
2		87039612		1	VALVE, BY-PASS, Incl. Ref 3, 4
3		S99877		1	RING
4		86993475		1	O-RING, 3/8 ID x 1/16; Included in 140008A1 Seal Kit
		105720A1		2	VALVE, Incl. 5 - 7
5		NSS		1	NOT SERVICED SEPARATELY, Plug
6		237-6012		1	O-RING, 12-1, 90 Duro, .924 ID x .118" Thk, Included in 140008A1 Seal Kit
7		NSS		1	NOT SERVICED SEPARATELY, Valve, Relief
7A		86993468		1	SPRING
8		9841223		2	PLUG, Hex Soc, 1 1/16"-12 ORB, Incl. 9
9		237-6012		1	O-RING, 12-1, 90 Duro, .924 ID x .118" Thk
10		76349		2	PLUG, Hex Hd, 9/16"-18 ORB, Incl. 11
11		237-6006		1	O-RING, 6-1, 90 Duro, .468" ID x .078" Thk
12		F23137		1	PLUG
13		86993479		1	PLUG, Pipe
14		86993480		1	ELBOW
15		86993467		1	CAP
16		303709A1		1	SEAL, Filter Adapter; Included in 140008A1 Seal Kit
17		101462A1		1	ADAPTER, Suction Line Filter
18		26-516		3	BOLT, Hex, 5/16"-18 x 1", G8, Full Thd, Hex, 5/16"-18 x 1", G8, Full Thd
19		76349		1	PLUG, Hex Hd, 9/16"-18 ORB, Incl. Ref 20
20		237-6006		1	O-RING, 6-1, 90 Duro, .468" ID x .078" Thk
21		166-89		2	SCREW, 12 Pt Flg, 1/2"-13 x 2", G8
22		9672438		1	PLUG, Hex Hd, 7/16"-20 ORB, Incl. 23
23		237-6006		1	O-RING, 6-1, 90 Duro, .468" ID x .078" Thk
24		87039611		1	PLUG, Charge Relief; Incl. 25
25		237-6010		1	O-RING, 10-1, 90 Duro, .755" ID x .097" Thk, Included in 140008A1 Seal Kit
26		H407767		1	KIT, Shim
27		244898A1		1	SPRING
28		V38371		1	VALVE, Charge Relief

PUMP, TANDEM (87350025)

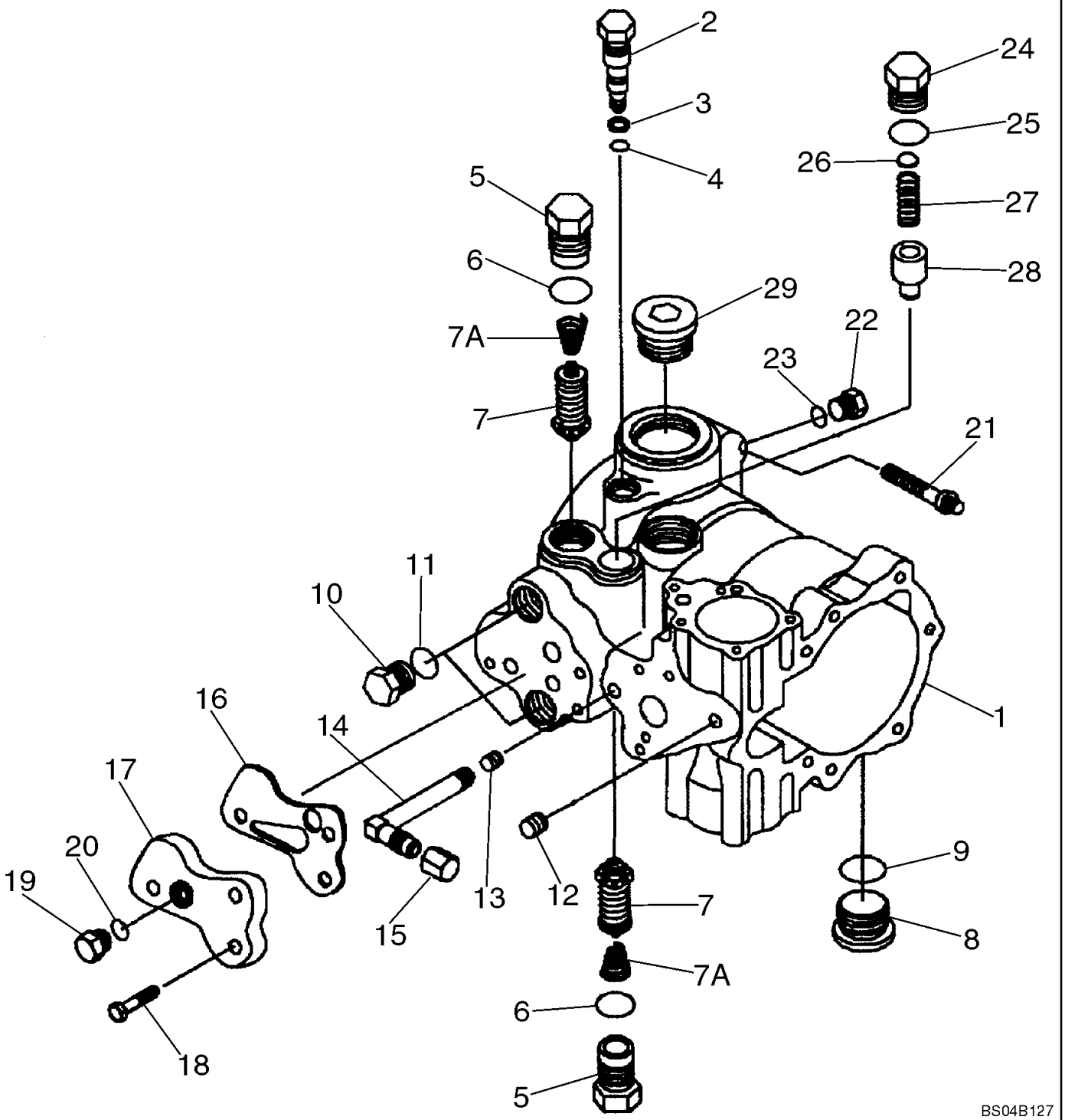

PUMP, TANDEM (87350025)

REF	FN	PART NUMBER	YR/SN	QTY	DESCRIPTION
29		NSS		1	NOT SERVICED SEPARATELY, Plug
		140008A1		1	KIT, GASKET, Overhaul Seal And Gasket Kit; Incl. (10) Rings, (4) Bearings, (20) O-Rings, (6) Gaskets, (2) Seals; Incl. Ref 3, 4, 6, 16, 25

PUMP, TANDEM (87350025)

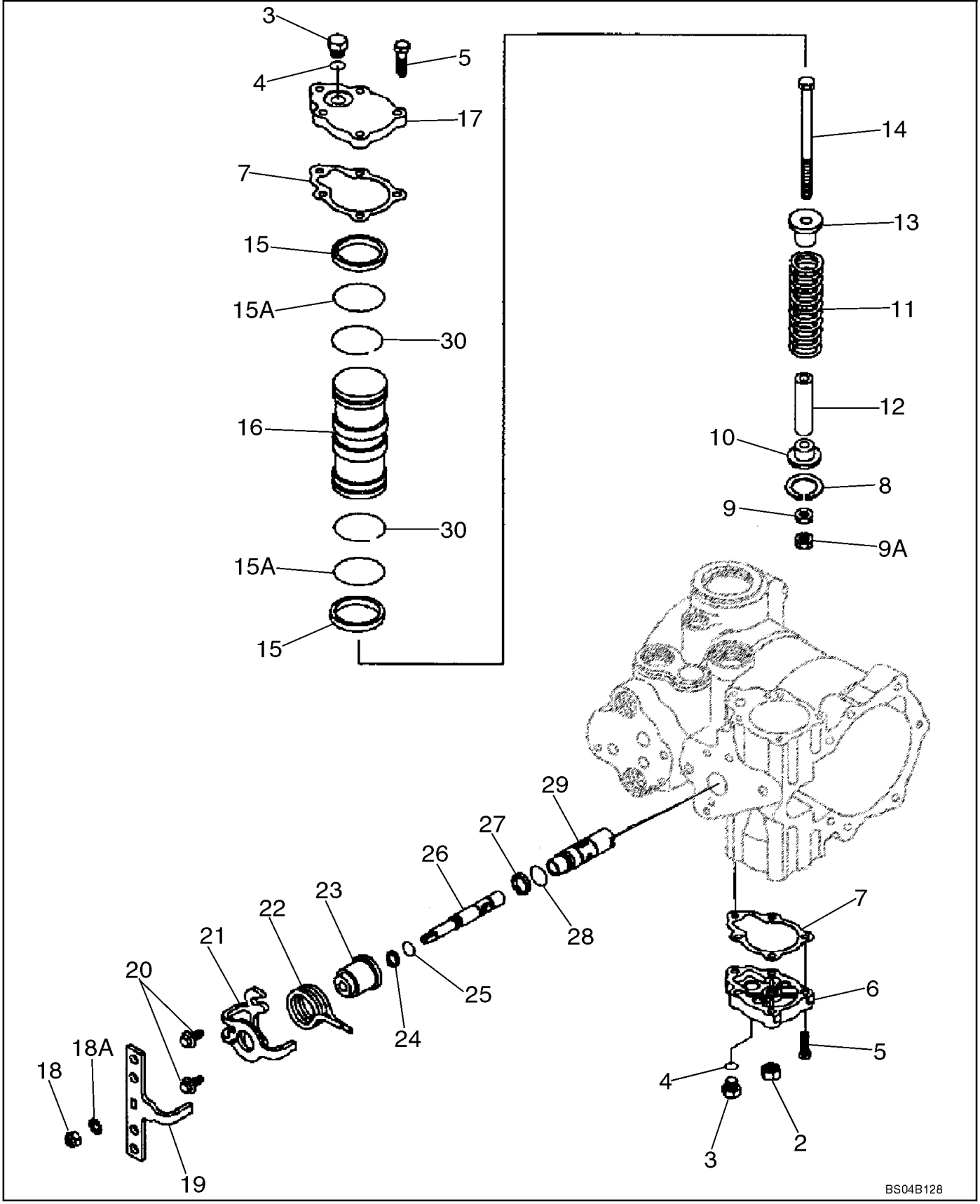

PUMP, TANDEM (87350025)

REF	FN	PART NUMBER	YR/SN	QTY	DESCRIPTION
		REF			INSTRUCTION, Front Pump
		87350025		1	PUMP, Incl. 1 - 30
2		N13260		1	NUT, 5/8 NF
3		76349		2	PLUG, Hex Hd, 9/16"-18 ORB, Incl. 4
4		237-6006		1	O-RING, 6-1, 90 Duro, .468" ID x .078" Thk
5		H438321		10	BOLT, 1/4 x 1-1/4; 8
6		H436065		1	COVER, Included in 140008A1 Seal Kit
7		N14063		2	GASKET
8		N13255		1	RING
9		425-116		1	NUT, 3/8"-24, G5
9A		324604A1		1	NUT, 3/8 in
10		N13241		1	GUIDE
11		N13226		1	SPRING
12		N13242		1	SLEEVE
13		N14666		1	GUIDE
14		370531A1		1	SCREW
		H673773		1	KIT, Incl. 15, 15A; Incl. Rings For Rear Pump Pistons
15		N14668		4	RING, PISTON, Included in 140008A1 Seal Kit
15A		238-5131		2	O-RING, -131, 70 Duro, 1.674" ID x .103" Thk, Included in 140008A1 Seal Kit
		140008A1		1	KIT, GASKET, Overhaul Seal And Gasket Kit; Incl. (10) Rings, (4) Bearings, (20) O-Rings, (6) Gaskets, (2) Seals; Incl. Ref 7, 15, 15A, 24, 25, 27, 28, 30
16		87039622		1	PISTON ASSY, Incl. 15, 15A, 30
17		H436053		1	COVER
18		H436054		1	NUT
18A		493-41033		1	WASHER, LOCK, Ext Tooth, 5/16"
19		436415A1		1	HANDLE
20		H435770		2	SCREW
21		436416A1		1	BRACKET
22		407060A1		1	SPRING
23		87039613		1	GUIDE, Guide
24		86993484		1	RING, Included in 140008A1 Seal Kit
25		86993475		1	O-RING, Included in 140008A1 Seal Kit
26		87039614		1	SPOOL, Incl. 24, 25

PUMP, TANDEM (87350025)

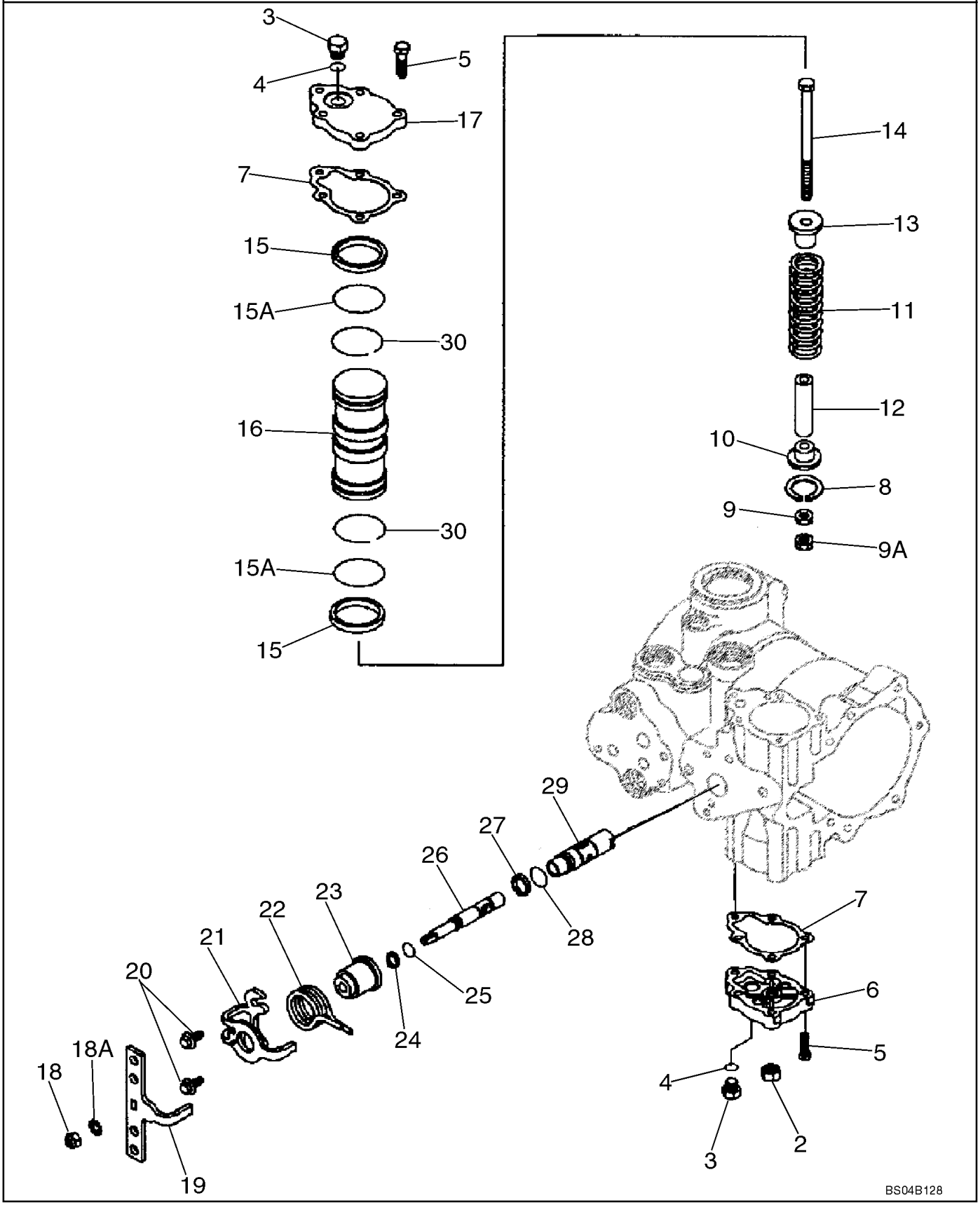

PUMP, TANDEM (87350025)

REF	FN	PART NUMBER	YR/SN	QTY	DESCRIPTION
27		86993483		1	RING, Included in 14008A1 Seal Kit
28		NSS		1	NOT SERVICED SEPARATELY, O-Ring; Included in 140008A1 Seal Kit
29		87039615		1	SLEEVE, Incl. 27, 28
30		100536A1		2	RING, Included in 140008A1 Seal Kit

PUMP, TANDEM (87350025)

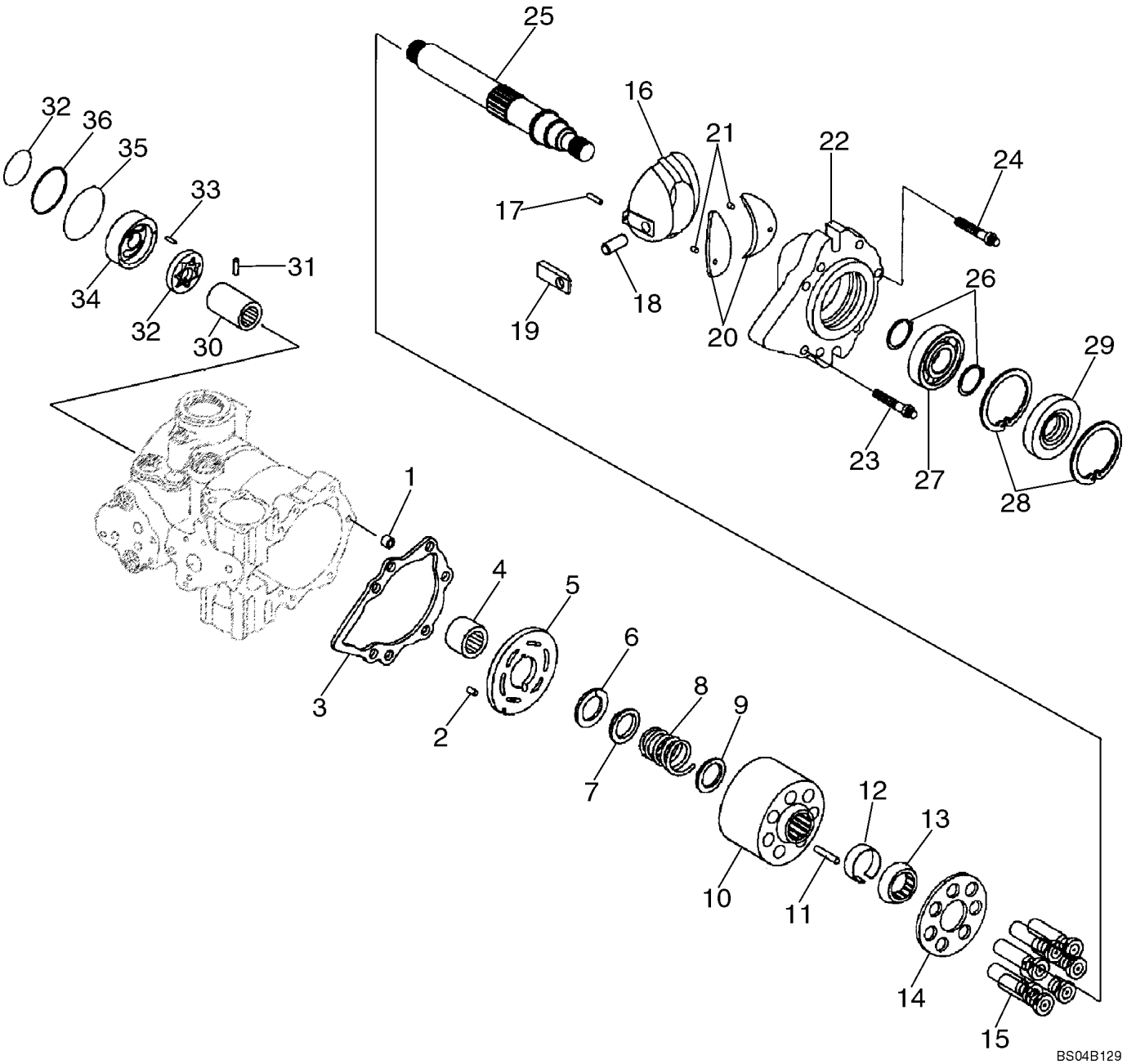

PUMP, TANDEM (87350025)

REF	FN	PART NUMBER	YR/SN	QTY	DESCRIPTION
					Front Pump
		87350025		1	PUMP, Incl. 1 - 37
1		N13994		1	SPACER
2		38-11207		1	PIN, LOCK, 3/16" x 7/16", Slotted
3		H436704		1	GASKET, Included in 140008A1 Seal Kit
4		1277297C1		1	BEARING
5		128928A1		1	PLATE, LARGE
		87039625		1	KIT, Cylinder Block; Kit Includes Cylinder Block Parts For Rear Pump; Incl. 6 - 15
6		NSS		2	NOT SERVICED SEPARATELY, Ring, Retaining
7		115950A1		2	DISC, Washer
8		115948A1		2	SPRING
9		115946A1		2	DISC, Washer
10		NSS		2	NOT SERVICED SEPARATELY, Block, Cylinder
11		110873A1		6	PIN, LARGE
12		115943A1		2	SLEEVE, Ring, Retaining
13		115942A1		2	GUIDE
14		NSS		2	NOT SERVICED SEPARATELY, Retainer
15		NSS		14	NOT SERVICED SEPARATELY, Piston
16		87050523		1	PLATE ASSY.
17		324610A1		1	PIN, LARGE
18		N13254		1	PIN
19		N13224		1	SLEEVE
		87050525		1	COVER ASSY, Incl. 20 - 22
20		87050524		2	BEARING ASSY
21		193494A1		2	PIN, ROLL
22		NSS		1	NOT SERVICED SEPARATELY
23		223677A1		6	SCREW, 7/16 in
24		223680A1		1	BOLT, SPECIAL, 3/8 in
25		N13244		1	SHAFT
26		100-11137		2	RING, SNAP, #137, Ext
27		A29183		2	BEARING, BALL
28		103-21281		1	RING, SNAP, 2.812", Int, #281
29		N14103		1	SEAL, Lip; Included in 140008A1 Seal Kit
30		N13234		1	COUPLING, BREAK AWAY

PUMP, TANDEM (87350025)

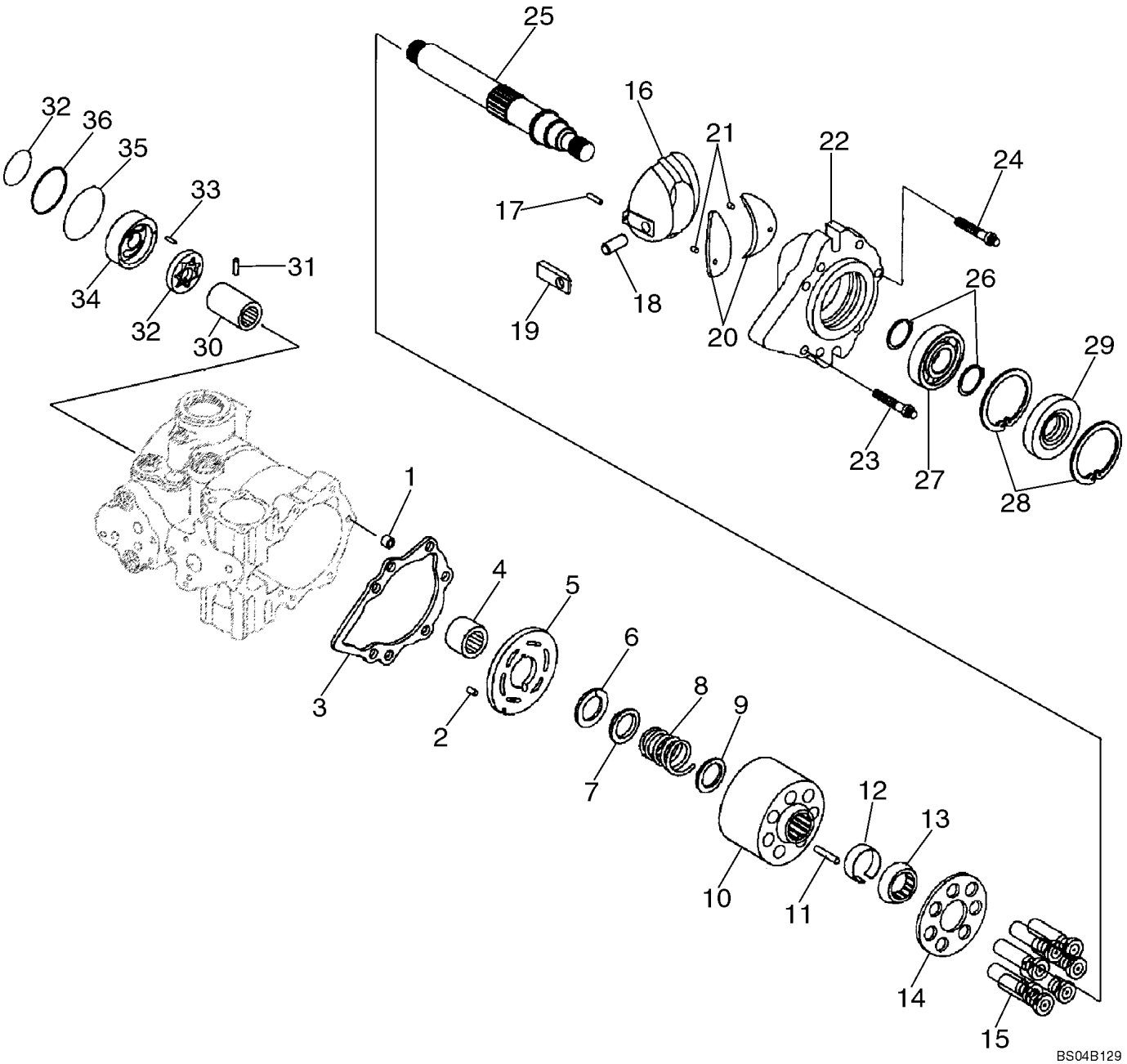

PUMP, TANDEM (87350025)

REF	FN	PART NUMBER	YR/SN	QTY	DESCRIPTION
31		N13262		2	PIN
32		N13247		1	GEAR-SET
33		181680A1		1	PIN
34		N13999		1	PLATE
35		H437190		1	O-RING, Included in 140008A1 Seal Kit
36		238-6238		1	O-RING, -238, 90 Duro, 3.484" ID x .139" Thk, Included in 140008A1 Seal Kit
37		H435776		1	O-RING, Included in 140008A1 Seal Kit

PUMP, TANDEM (87350025)

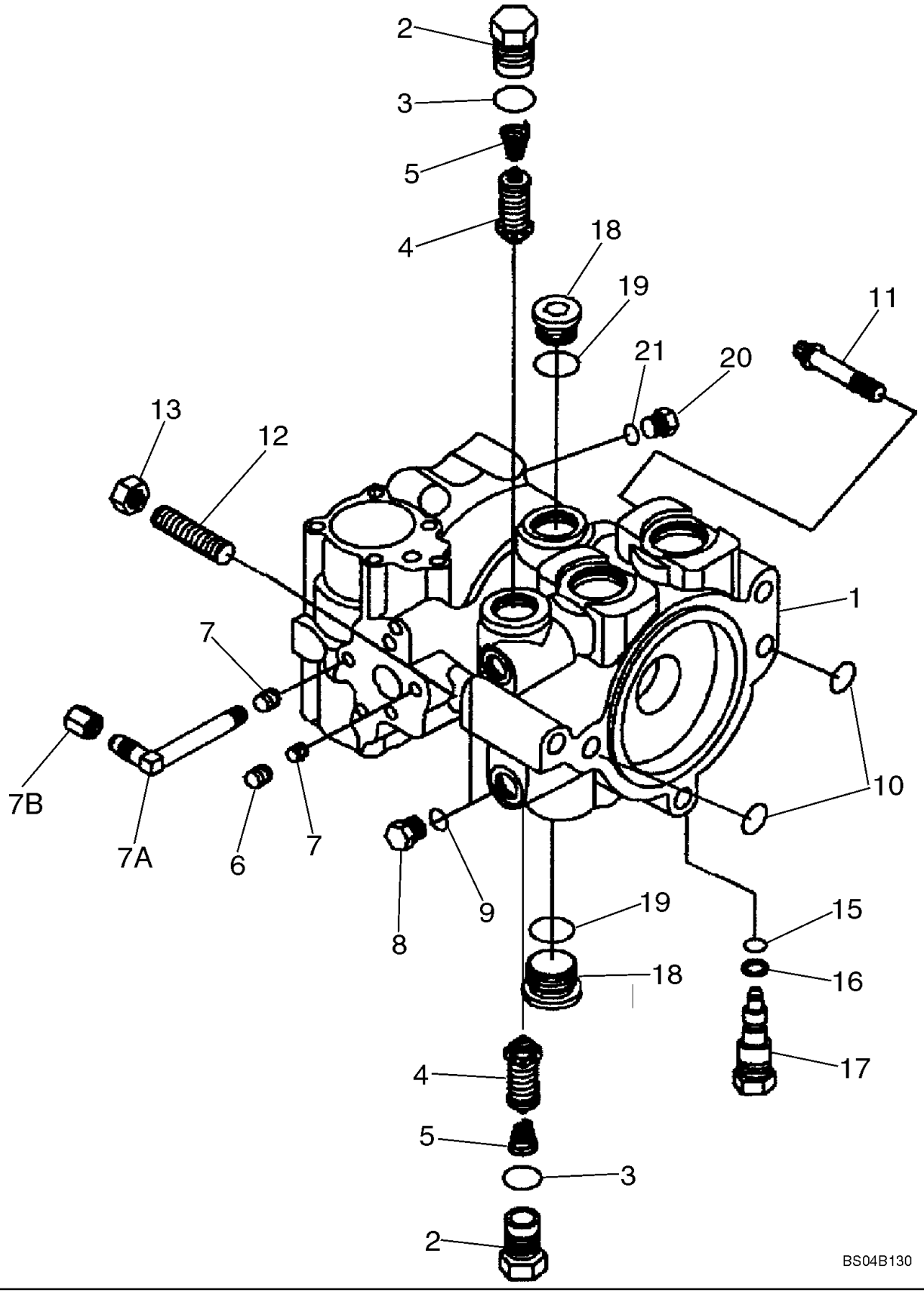

PUMP, TANDEM (87350025)

REF	FN	PART NUMBER	YR/SN	QTY	DESCRIPTION
		REF			INSTRUCTION, Rear Pump
		87350025		1	PUMP, Incl. 1 - 21
1		402365A1		1	HOUSING
		105720A1		2	VALVE, Incl. 2 - 4
2		NSS		1	NOT SERVICED SEPARATELY, Plug
3		237-6012		1	O-RING, 12-1, 90 Duro, .924 ID x .118" Thk, Included in 140008A1 Seal Kit
4		NSS		1	NOT SERVICED SEPARATELY, Valve, Relief
5		86993468		1	SPRING
6		F23137		1	PLUG
7		86993479		2	PLUG
7A		86993480		1	ELBOW, 90 deg
7B		86993467		1	CAP
		140008A1		1	KIT, GASKET, Overhaul Seal And Gasket Kit; Incl. (10) Rings, (4) Bearings, (20) O-Rings, (6) Gaskets, (2) Seals; Incl. Ref 3, 10, 15, 16
8		76349		2	PLUG, Hex Hd, 9/16"-18 ORB, Incl. 9
9		237-6006		1	O-RING, 6-1, 90 Duro, .468" ID x .078" Thk
10		238-6116		2	O-RING, -116, 90 Duro, .737" ID x .103" Thk, Included in 140008A1 Seal Kit
11		166-89		1	SCREW, 12 Pt Flg, 1/2"-13 x 2", G8
12		K608432		1	STUD
13		425-108		1	NUT, 1/2"-13, G5
15		86993475		1	O-RING, Included in 140008A1 Seal Kit
16		S99877		1	RING, Included in 140008A1 Seal Kit
17		87039612		1	VALVE, BY-PASS, Incl. Ref 15, 16
18		9841223		2	PLUG, Hex Soc, 1 1/16"-12 ORB, Incl. 19
19		237-6012		1	O-RING, 12-1, 90 Duro, .924 ID x .118" Thk
20		9672438		1	PLUG, Hex Hd, 7/16"-20 ORB, Incl. 21
21		237-6004		1	O-RING, 4-1, 90 Duro, .351" ID x .072" Thk

PUMP, TANDEM (87350025)

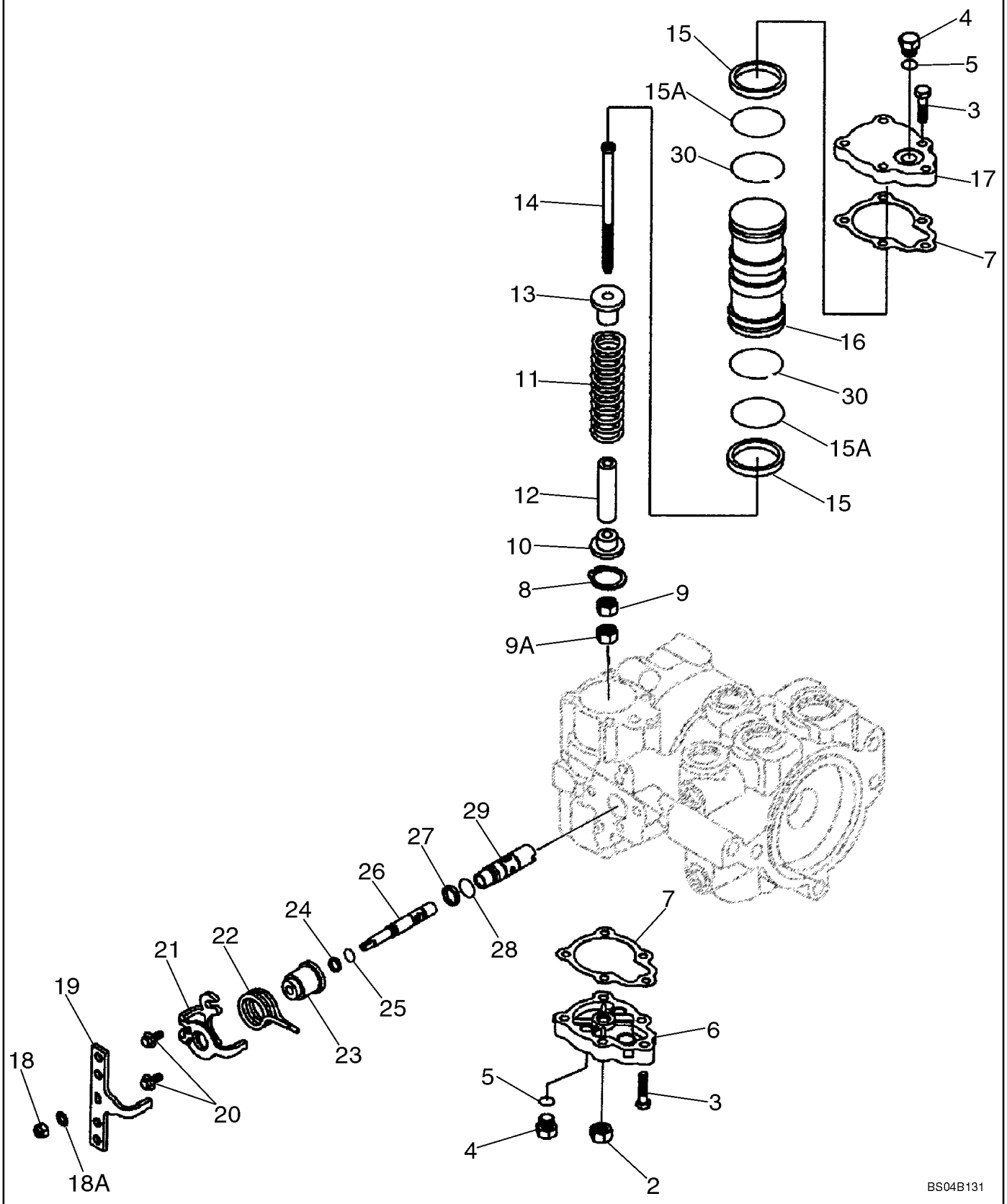

PUMP, TANDEM (87350025)

REF	FN	PART NUMBER	YR/SN	QTY	DESCRIPTION
		REF			INSTRUCTION, Rear Pump
		87350025		1	PUMP, Incl. 2 - 30
2		N13260		1	NUT, 5/8 NF
3		H438321		10	BOLT, 1/4 x 1-1/4; 8
4		76349		2	PLUG, Hex Hd, 9/16"-18 ORB, 9/16 Or; Incl. 5
5		237-6006		1	O-RING, 6-1, 90 Duro, .468" ID x .078" Thk
6		H436065		1	COVER
7		N14063		2	GASKET, Included in 140008A1 Seal Kit
8		N13255		1	RING
9		425-116		1	NUT, 3/8"-24, G5, 3/8 NF
9A		324604A1		1	NUT, 3/8 in
10		N13241		1	GUIDE
11		N13226		1	SPRING
12		N13242		1	SLEEVE
13		N14666		1	GUIDE
14		370531A1		1	SCREW
		H673773		1	KIT, Piston Rings; Incl. Rings For Front Pump Piston; Incl. 15, 15A
15		N14668		4	RING, PISTON, Included in 140008A1 Seal Kit
15A		238-5131		2	O-RING, -131, 70 Duro, 1.674" ID x .103" Thk, Included in 140008A1 Seal Kit
		140008A1		1	KIT, GASKET, Overhaul Seal And Gasket Kit; Incl. (10) Rings, (4) Bearings, (20) O-Rings, (6) Gaskets, (2) Seals; Incl. Ref 7, 15, 15A, 24, 25, 27, 28, 30
16		87039622		1	PISTON ASSY, Incl. 15, 15A, 30
17		H436053		1	COVER
18		H436054		1	NUT
18A		493-41033		1	WASHER, LOCK, Ext Tooth, 5/16"
19		436415A1		1	HANDLE
20		H435770		2	SCREW
21		436416A1		1	BRACKET
22		407060A1		1	SPRING
23		87039613		1	GUIDE
24		86993484		1	RING, Included in 140008A1 Seal Kit
25		86993475		1	O-RING, Included in 140008A1 Seal Kit

PUMP, TANDEM (87350025)

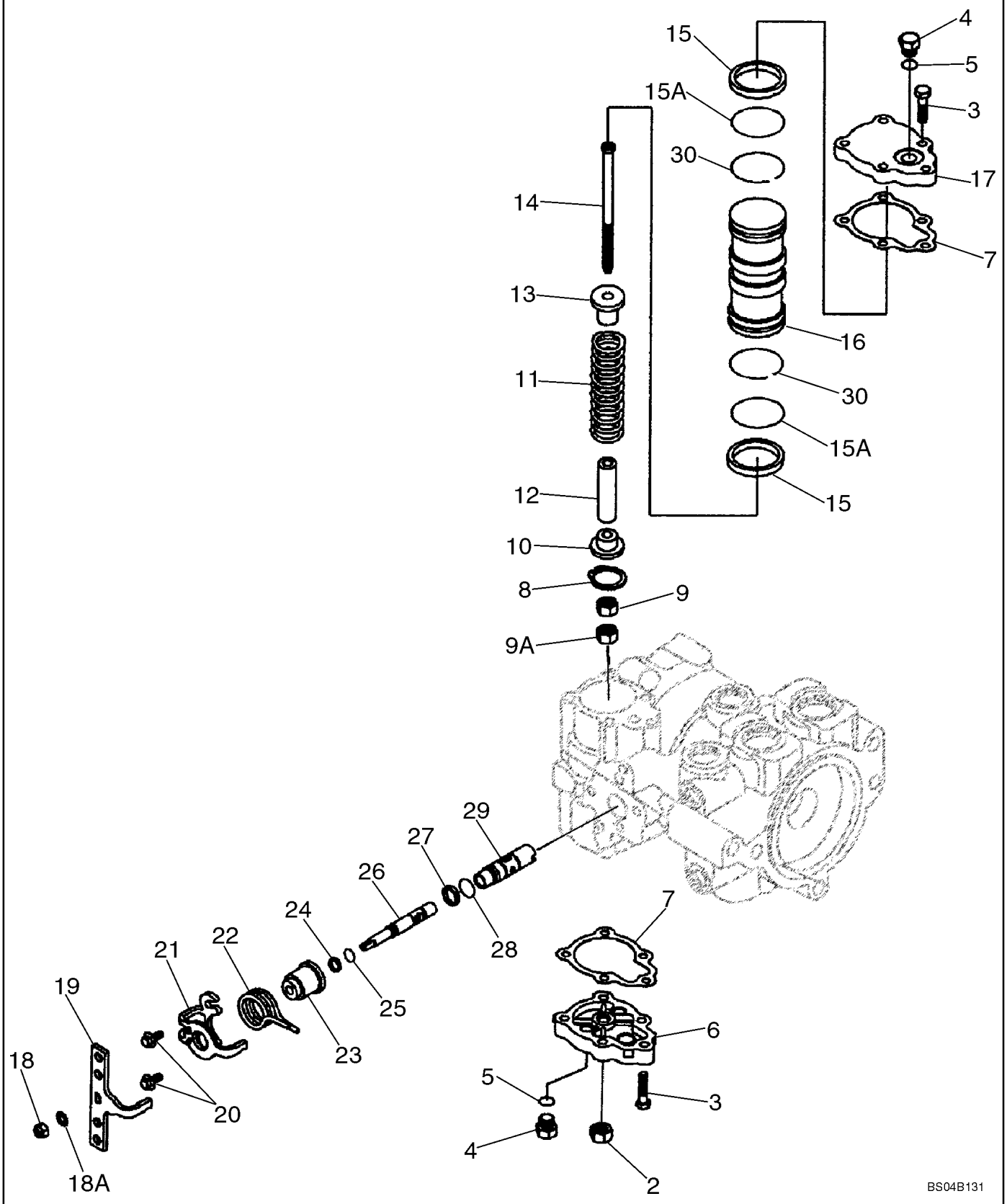

PUMP, TANDEM (87350025)

REF	FN	PART NUMBER	YR/SN	QTY	DESCRIPTION
26		87039614		1	SPOOL, Incl. 24, 25
27		86993483		1	RING, Included in 140008A1 Seal Kit
28		NSS		1	NOT SERVICED SEPARATELY, Included in 140008A1 Seal Kit
29		87039615		1	SLEEVE, Incl. 27, 28
30		100536A1		2	RING, Included in 140008A1 Seal Kit

PUMP, TANDEM (87350025)

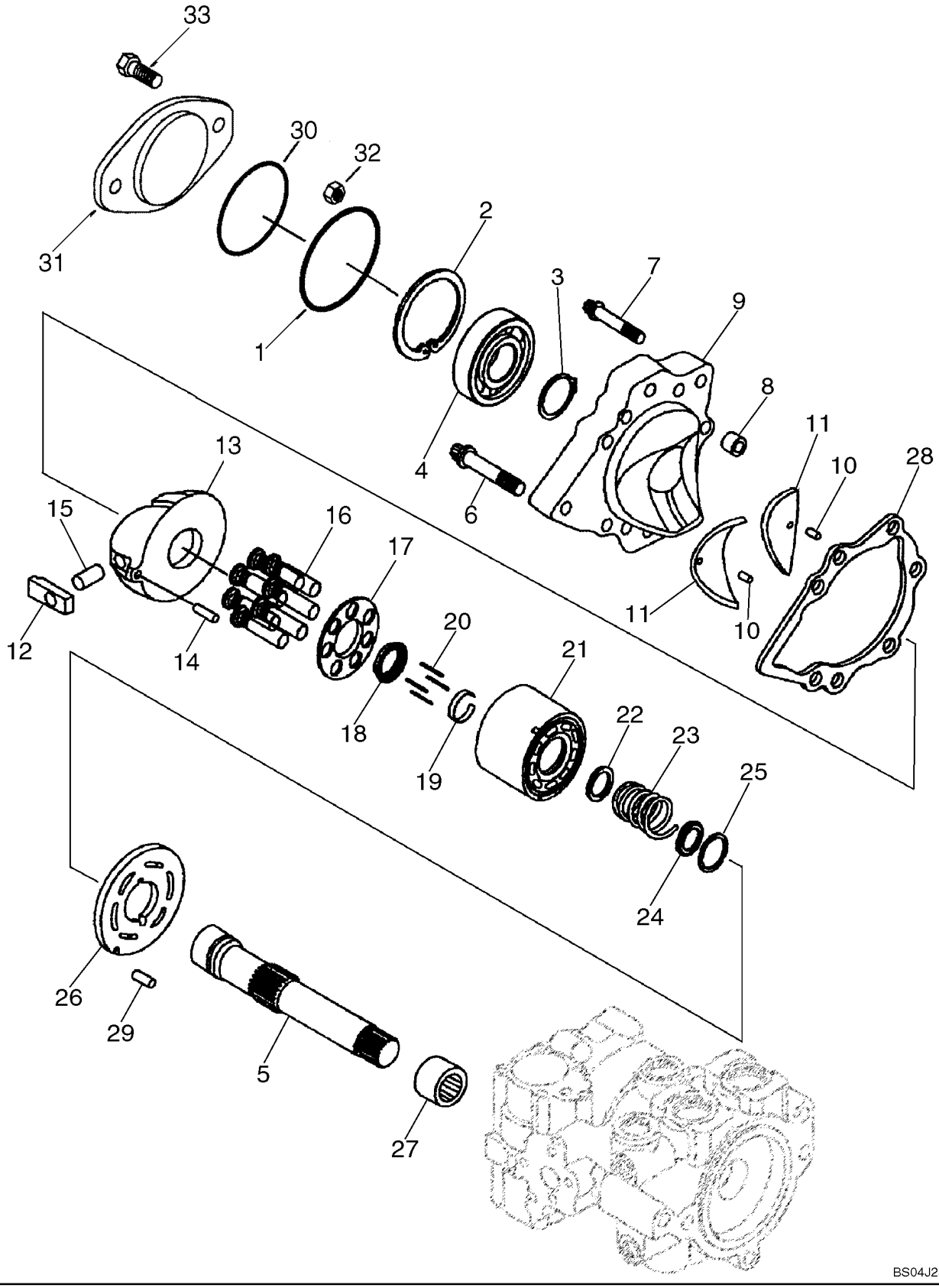

PUMP, TANDEM (87350025)

REF	FN	PART NUMBER	YR/SN	QTY	DESCRIPTION
		REF			INSTRUCTION, Rear Pump
		87350025		1	PUMP, Incl. 2 - 32
1		N14103		1	SEAL
2		103-21281		1	RING, SNAP, 2.812", Int, #281
3		100-11137		1	RING, SNAP, #137, Ext
4		A29183		1	BEARING, BALL
5		87039623		1	SHAFT, Shaft
6		223677A1		6	SCREW, 7/16 in
7		223680A1		1	BOLT, SPECIAL, 3/8 in
8		N13994		1	SPACER
		87050526		1	COVER ASSY, Incl. Ref 9 - 11
9		NSS		1	NOT SERVICED SEPARATELY, Cover; Incl. 10, 11
10		193494A1		2	PIN, ROLL
11		87050524		2	BEARING ASSY
12		N13224		1	SLEEVE
13		87050523		1	PLATE ASSY.
14		324610A1		1	PIN, LARGE
15		N13254		1	PIN
		402366A1		1	KIT, Cylinder Block; Components Not Serviced Separately; Incl. 16 - 25
16		NSS		14	NOT SERVICED SEPARATELY, Piston
17		NSS		2	NOT SERVICED SEPARATELY, Retainer
18		115942A1		2	GUIDE, Guide
19		115943A1		2	SLEEVE, Ring, Retaining
20		110873A1		6	PIN, LARGE, Pin
21		NSS		2	NOT SERVICED SEPARATELY, Block, Cylinder
22		115946A1		2	DISC, Washer
23		115948A1		2	SPRING
24		115950A1		2	DISC, Washer
25		NSS		2	NOT SERVICED SEPARATELY, Ring, Retaining
26		128929A1		1	PLATE, LARGE
27		NSS		1	NOT SERVICED SEPARATELY, Bearing, Needle
28		H436704		1	GASKET
29		38-11207		1	PIN, LOCK, 3/16" x 7/16", Slotted

PUMP, TANDEM (87350025)

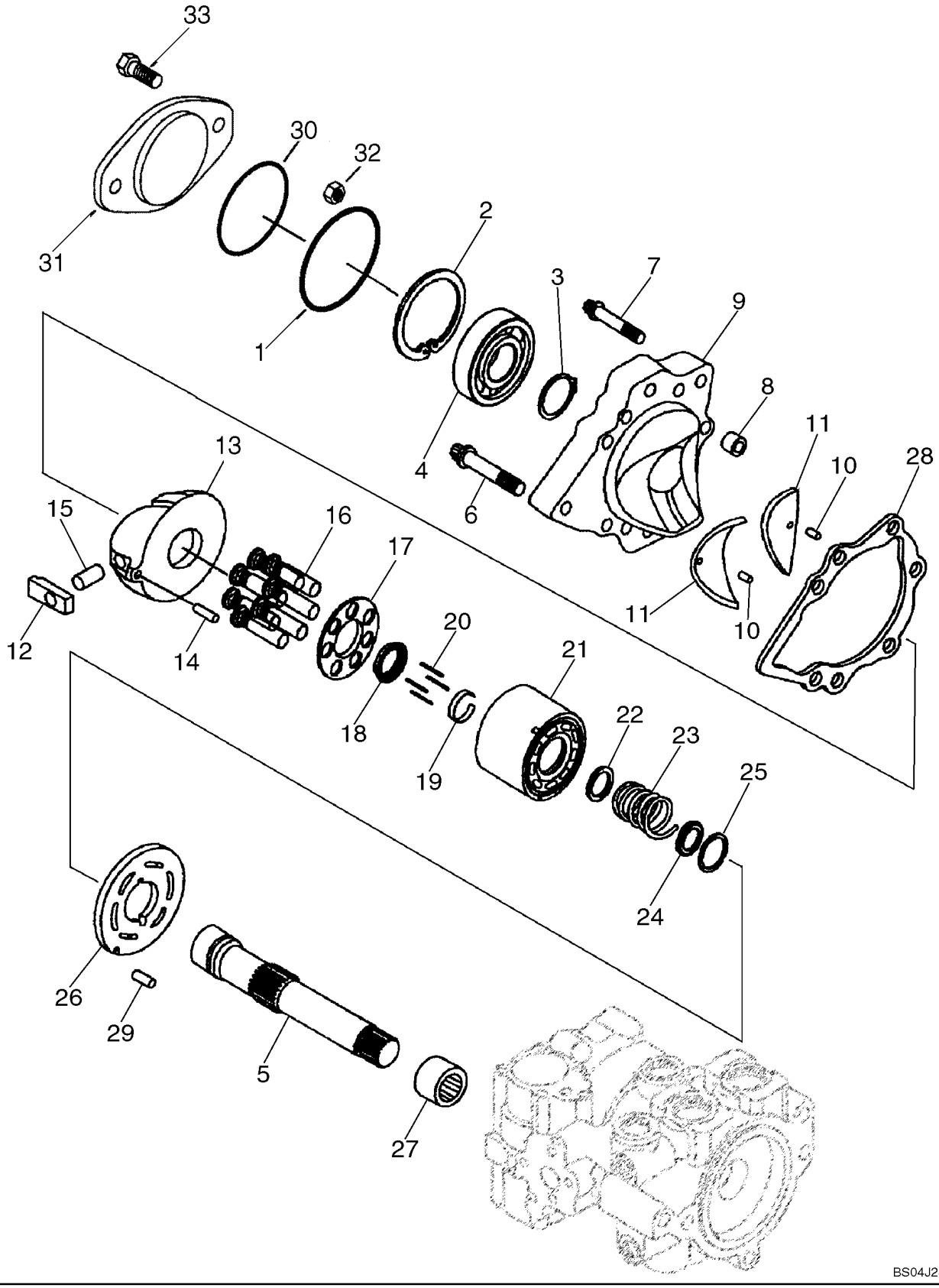

PUMP, TANDEM (87350025)

REF	FN	PART NUMBER	YR/SN	QTY	DESCRIPTION
30		87013729		1	O-RING, -044, 70 Duro, 3.739" ID x .070" Thk, Not Included In Tandem Pump Assy; Included in 140008A1 Seal Kit
31		100703A1		2	PLATE, SPACER
32		425-108		2	NUT, 1/2"-13, G5
33		13-836		2	BOLT, Hex, 1/2"-13 x 2 1/4", G5
		140008A1		1	KIT, GASKET, Overhaul Seal And Gasket Kit; Incl. (10) Rings, (4) Bearings, (20) O-Rings, (6) Gaskets, (2) Seals; Incl. Ref 34

MOTOR ASSY - HYDROSTATIC DRIVE (450CT)

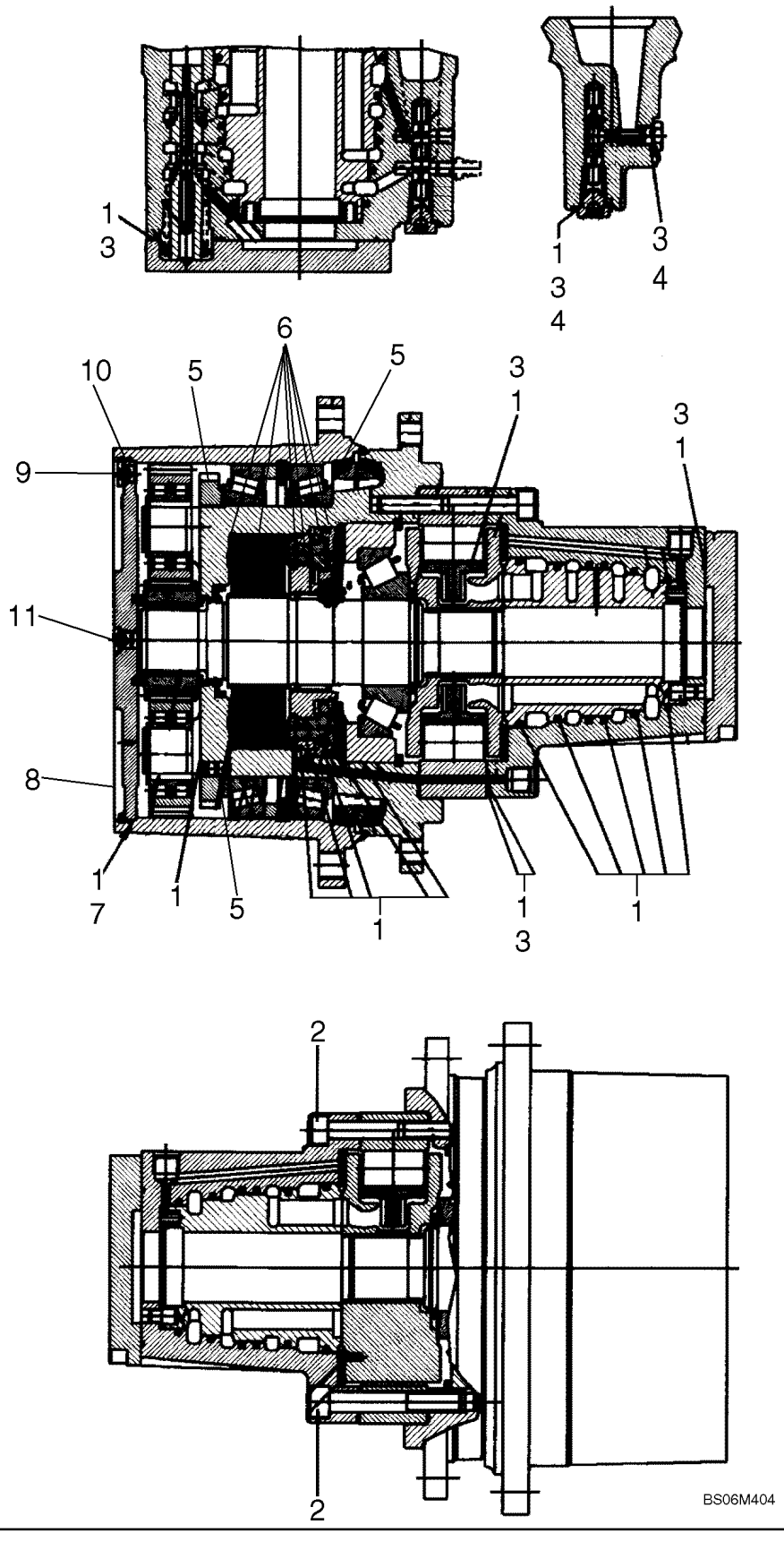

MOTOR ASSY - HYDROSTATIC DRIVE (450CT)

REF	FN	PART NUMBER	YR/SN	QTY	DESCRIPTION
		87600262		1	MOTOR, Drive Motor, LH; Incl. 1 - 11
		87600262C		1	CORE-MOTOR HYDRAULIC, Drive Motor, LH Core - Motor Return Number, Use To Return Core For Credit When Using A Remanufactured Assy
		87600262R		1	REMAN-MOTOR HYDRAUL, Reman - Motor, LH, Remanufactured
		87600263		1	MOTOR, Drive Motor, RH; Incl. 1 - 11
		87600263C		1	CORE-MOTOR HYDRAULIC, Drive Motor, RH Core - Motor Return Number, Use To Return Core For Credit When Using A Remanufactured Assy
		87600263R		1	REMAN-MOTOR HYDRAUL, Reman - Motor, RH, Remanufactured
1		87461859		1	KIT, SEALS, Motor Seals; Includes (27) 0-Rings, (4) Quad Rings, (4) Rod Seals, (2) Piston Seals, (1) Shaft Seal, (8) Piston Rings
2		87612449		1	KIT, SERVICE, Cam Bolt; Includes (2) M12 x 75 Screws, (8) M10 x 80 Screws
3		87571969		1	KIT, External Seals; Includes (13) O-Rings, (3) Quad Rings, (8) Piston Rings
4		87601409		1	KIT, SEALS, Flushing Seals; Includes (2) O-Rings
5		87571954		1	KIT, Face Seal; Includes (2) M6 x 16 Dowell Pins, (1) Shaft Nut, (1) Face Seal
6		87571958		1	KIT, Brake; Includes (14) O-Rings, (1) Quad Ring, (6) Shims, (37) Brake Plates
7		87612446		1	O-RING, 210 x 2.00
8		87612445		1	COVER
9		87575213		3	PLUG, Drain, M10 x 1
10		87575214		1	RING, SNAP, Cover
11		87579238		1	PLUG, M16 x 1.5

MOTOR ASSY - TWO SPEED (450)

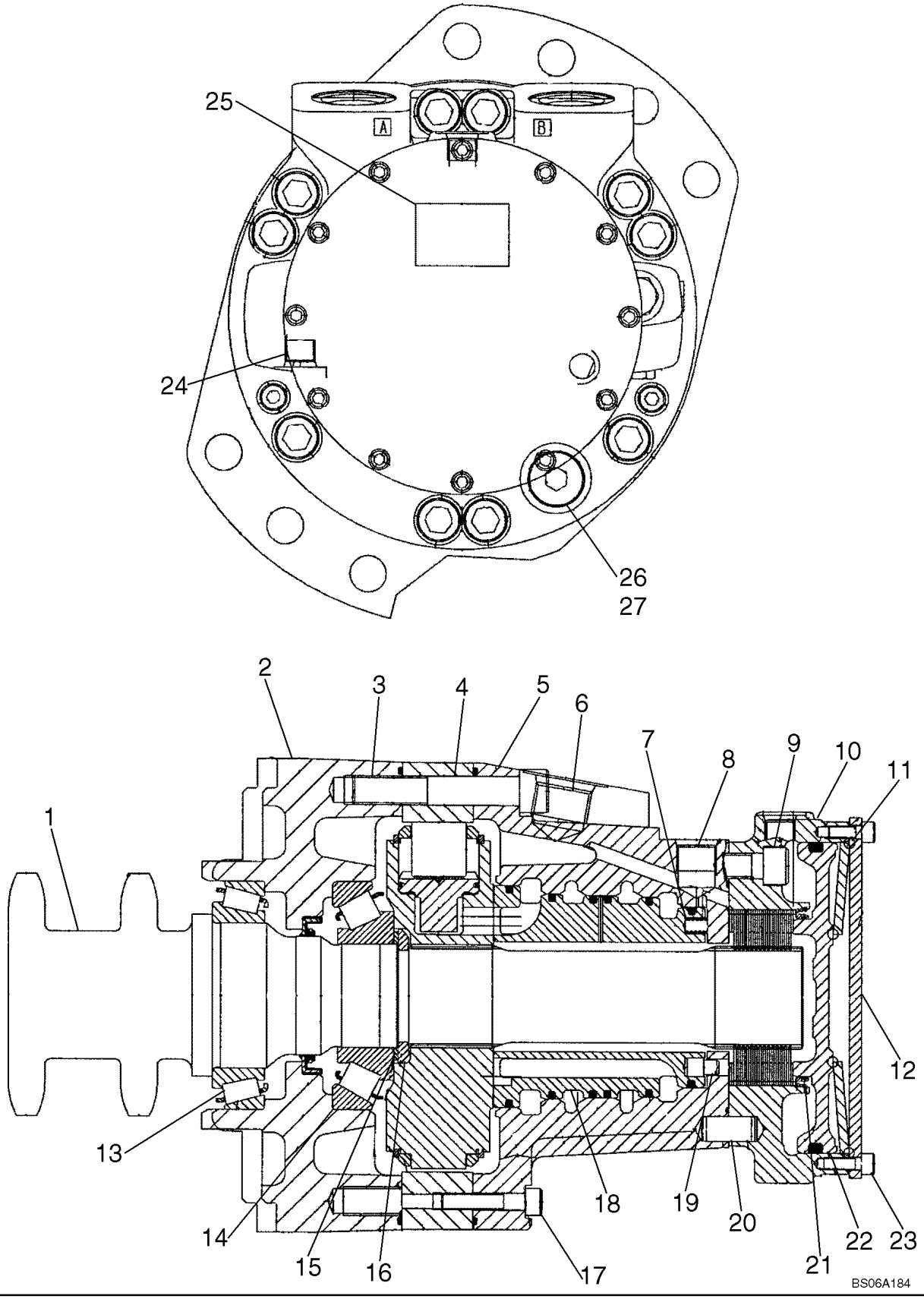

MOTOR ASSY - TWO SPEED (450)

REF	FN	PART NUMBER	YR/SN	QTY	DESCRIPTION
		87349721		2	MOTOR, HYDRAULIC, Two Speed
1		87039364		1	KIT, Shaft And Bearing
2		87043019		1	CASE, Front
3		861-14080		10	SCREW, Hex Soc Hd, M14 x 80, 12.9
4		{87385583}		1	MCR3/5
5		87042909		1	CASE
6		NSS		1	NOT SERVICED SEPARATELY, Shipping Plug
7		87042912		16	SPRING
8		NSS		1	NOT SERVICED SEPARATELY, Shipping Plug; 3/4-16
9		86512142		5	SCREW, Hex Soc Hd, M12 x 30, 12.9
10		87042921		1	HOUSING, Brake Housing
11		87042926		1	SPRING, Disc Spring
12		87042923		1	COVER, End
13		87042904		1	BEARING, 70 x 110 x 25
14		87042905		1	BEARING, 50 x 110 x 29.25
15		87042903		1	KIT, Washer
16		87042906		1	RING, Split
17		861-8040		2	SCREW, Hex Soc Hd, M8 x 40, 12.9
18		87042910		1	DISTRIBUTOR
19		87042911		1	PIN, Stop
20		87042927		3	PIN, 12 x 25
21		87042925		1	CLIP, 87 ID
22		87042922		1	PISTON, Brake
23		86512134		12	SCREW, Hex Soc Hd, M6 x 16, 12.9
24		NSS		2	NOT SERVICED SEPARATELY, Shipping Plug; 9/16 -18
25		NSS		1	NOT SERVICED SEPARATELY, Label
26		214389		1	PLUG, Hex Hd, 3/4"-16 ORB, Includes Ref. 27
27		128825		1	O-RING, 8-1, 90 Duro, .644" ID x .087" Thk

MOTOR ASSY - TWO SPEED (450)

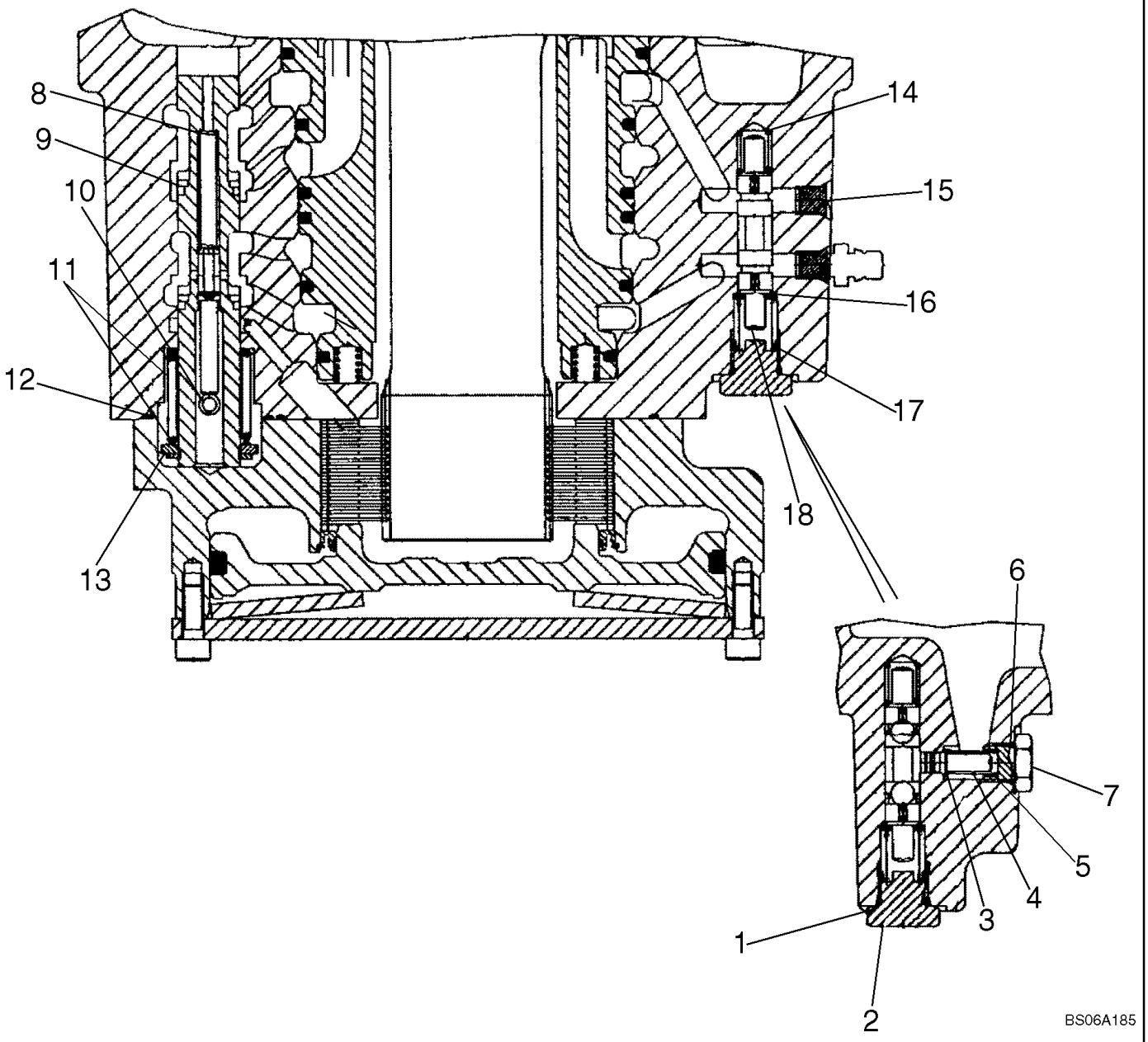

MOTOR ASSY - TWO SPEED (450)

REF	FN	PART NUMBER	YR/SN	QTY	DESCRIPTION
		87349721		2	MOTOR, HYDRAULIC, Motor; Two Speed
1		NSS		1	NOT SERVICED SEPARATELY, O-Ring; 11.90 x 1.98; Included in Kit 87039371, See Figure 06-44
2		214389		1	PLUG, Hex Hd, 3/4"-16 ORB, Includes 3
3		128825		1	O-RING, 8-1, 90 Duro, .644" ID x .087" Thk
4		87042932		1	SPRING, Flushing
5		87042931		1	POPPET, 1.7 Orifice
6		NSS		1	NOT SERVICED SEPARATELY, O-Ring; 8.92 x 1.83; Included in Kit 87039371, See Figure 06-39
7		87042933		1	POPPET, 7/16
8		87042918		1	SPRING, Shut Off
9		87054826		1	SPOOL, Spool
10		87042917		1	SPRING, 6 x 16
11		87054827		1	KIT, Washer And Spring Kit
12		87042916		1	O-RING, 34.65 x 1.78
13		87042915		1	CLIP, 18 dia
14		87042934		1	SPRING, Flushing Side A
15		NSS		2	NOT SERVICED SEPARATELY, Shear Plug; M8
16		87042929		1	WASHER, 1.5 Thick
17		87042935		1	SPRING, Flushing Side B
18		87042928		1	SPOOL, Flushing

MOTOR ASSY - TWO SPEED (450)

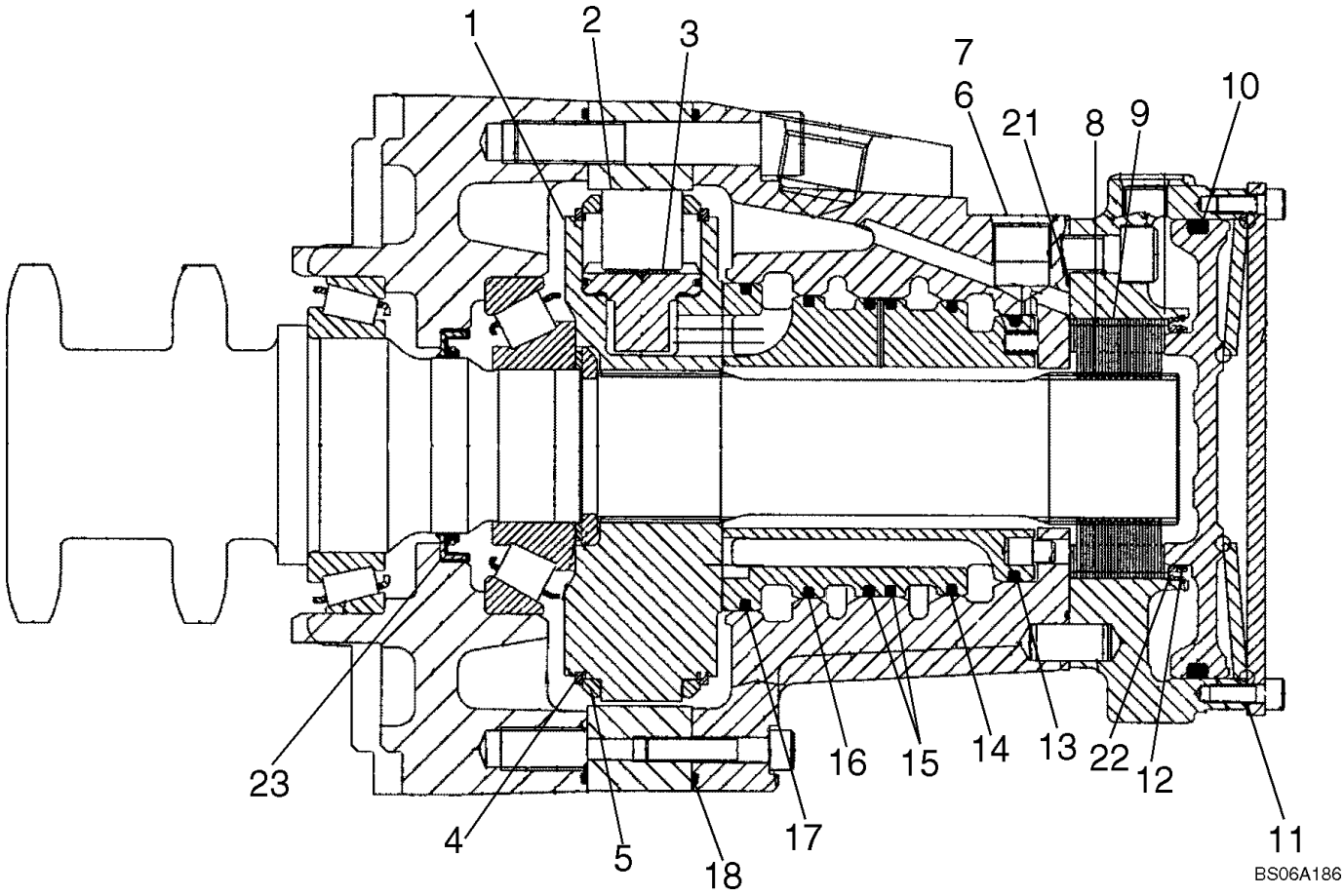

MOTOR ASSY - TWO SPEED (450)

REF	FN	PART NUMBER	YR/SN	QTY	DESCRIPTION
		87349721		2	MOTOR, HYDRAULIC, Motor; Two Speed
		87039367		1	KIT, Rotating; Incl. 1 - 5
1		NSS		1	NOT SERVICED SEPARATELY, Cylinder Block
2		NSS		8	NOT SERVICED SEPARATELY, Roll
3		NSS		8	NOT SERVICED SEPARATELY, Piston S/A
4		NSS		2	NOT SERVICED SEPARATELY, Circlip Ext 150 Dia
5		NSS		2	NOT SERVICED SEPARATELY, MCR5 Retaining Ring
		87039372		1	KIT, Brake; Incl. 6 - 12
6		NSS		1	NOT SERVICED SEPARATELY, Shim; 80 x 63 x 0.1
7		NSS		1	NOT SERVICED SEPARATELY, Shim; 80 x 63 x 0.3
8		NSS		14	NOT SERVICED SEPARATELY, Inner Plate
9		NSS		16	NOT SERVICED SEPARATELY, Outer Plate
10		NSS		1	NOT SERVICED SEPARATELY, Square Ring; 139.07 x 5.16
11		NSS		1	NOT SERVICED SEPARATELY, Gasket; 0.5
12		NSS		1	NOT SERVICED SEPARATELY, O-ring; 75.92 x 1.78
		87039371		1	KIT, SEALS, Incl. 13 - 20, 23
13		NSS		1	NOT SERVICED SEPARATELY, Piston Seal; 87.25
14		NSS		1	NOT SERVICED SEPARATELY, Piston Seal; 96.725
15		NSS		2	NOT SERVICED SEPARATELY, Piston Seal; 97.725
16		NSS		1	NOT SERVICED SEPARATELY, Piston Seal; 98.725
17		NSS		1	NOT SERVICED SEPARATELY, Piston Seal; 107.25
18		NSS		2	NOT SERVICED SEPARATELY, Square Ring; 213 x 2.51
19		NSS		1	NOT SERVICED SEPARATELY, O-Ring; 11.90 x 1.98; For Illustration, See Figure 06-38, Ref 1
20		NSS		1	NOT SERVICED SEPARATELY, O-Ring; 8.92 x 1.83; For Illustration, See Figure 06-38, Ref 6
21		87042919		1	O-RING, 107.67 x 1.78
22		87042924		1	RING, Brake Seal
23		87042907		1	SEAL, SHAFT, 57.15

FINAL DRIVE (450CT)

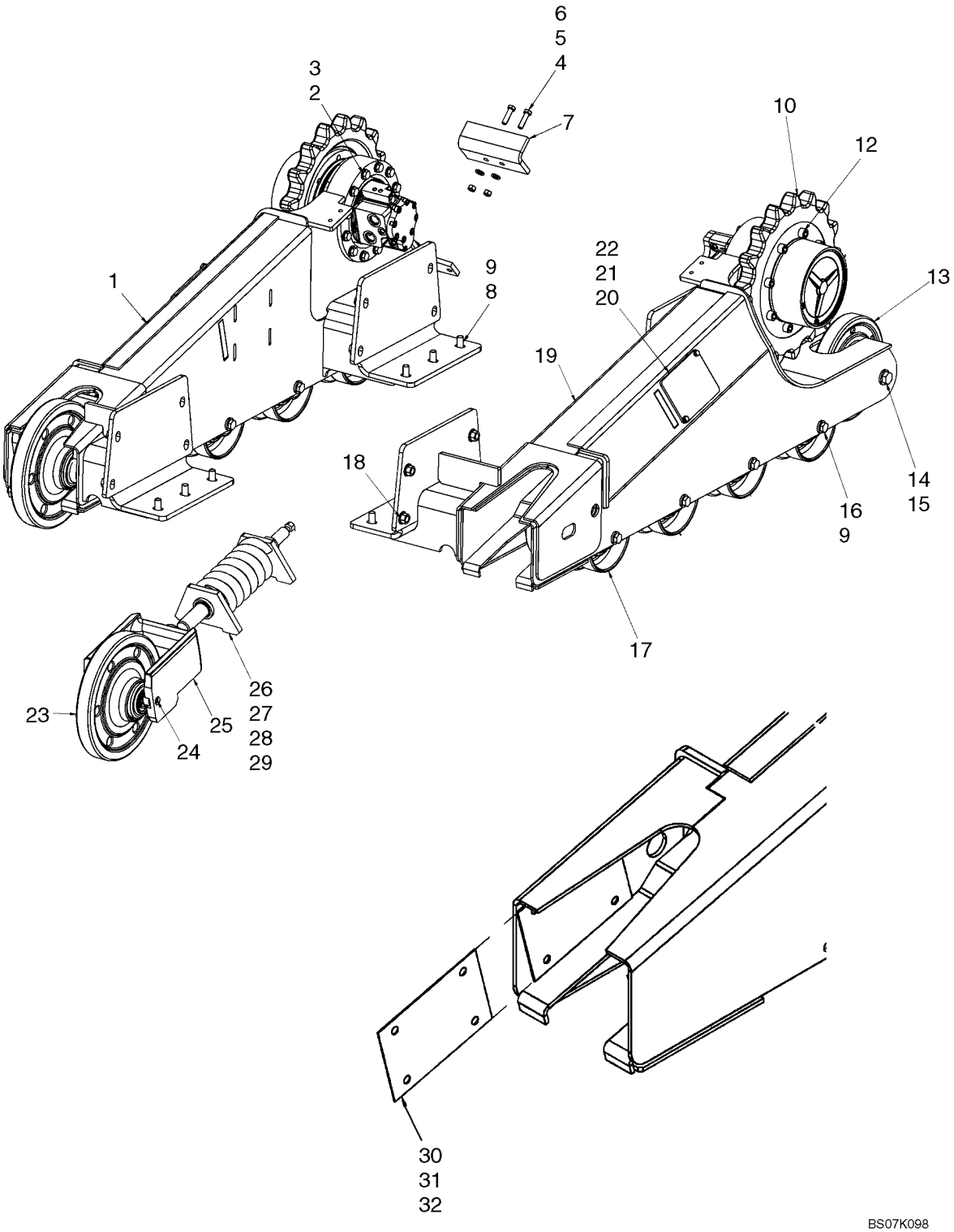

FINAL DRIVE (450CT)

REF	FN	PART NUMBER	YR/SN	QTY	DESCRIPTION
2		87016615		24	WASHER, M12 x 28.5 x 3, HT
3		87303344		24	BOLT, Hex, M14 x 85, 10.9
4		412087		4	BOLT, Hex, M12 x 45, 10.9, Full Thd
5		86625255		4	WASHER, M13.5 x 24.5 x 3, HT
6		337475		4	NUT, M12, Cl 10
7		87589343		2	PLATE, Scraper Plate
8		86508624		12	BOLT, Hex, M16 x 45, 10.9
9		86639326		28	WASHER, M17.5 x 34 x 5, HT
10		87460888		2	SPROCKET, 17 Tooth,86 Pitch
12		87303345		16	SCREW, Hex Soc Hd, M16 x 40, 10.9
13		87535299		2	IDLER, Rear Idler, 290mm Dia.
14		9512573		4	BOLT, Hex, M20 x 40, 10.9
15		86629891		4	WASHER, M18 x 41.5 x 5, HT
16		374835		16	BOLT, Hex, M16 x 40, 10.9
17		87535297		8	TRACK ROLLER
18		86512498		16	NUT, M16 x 2, Flg, Cl 10
19		87669353		1	FRAME, Main Frame, LH
20		43127		4	BOLT, Hex, M8 x 25, 8.8
21		86624184		4	WASHER, M8 x 16 x 1.6
22		87354210		2	COVER
23		87535298		2	IDLER, FRONT, Front Idler, 350mm Dia.
24		14301821		4	SCREW, Hex Soc Hd, M10 x 16, 8.8
25		87462287		2	YOKE
26		87602985		2	TENSIONER, Cylinder, Spring Tensioner; Incl 27, 28, 29
27		87602987		1	KIT, SERVICE, Kit For 87602985; Incl Scraper, Spacer, O-Ring
28		87602988		1	ROD
29		87356572		1	VALVE, Grease Valve
30		87650011		1	KIT, SERVICE, Shim Kit; Incl 31, 32
31		87650010		2	PLATE, Plate, 16 Gage Shim
32		87650009		2	PLATE, Plate, 12 Gage Shim

DRIVE LINE

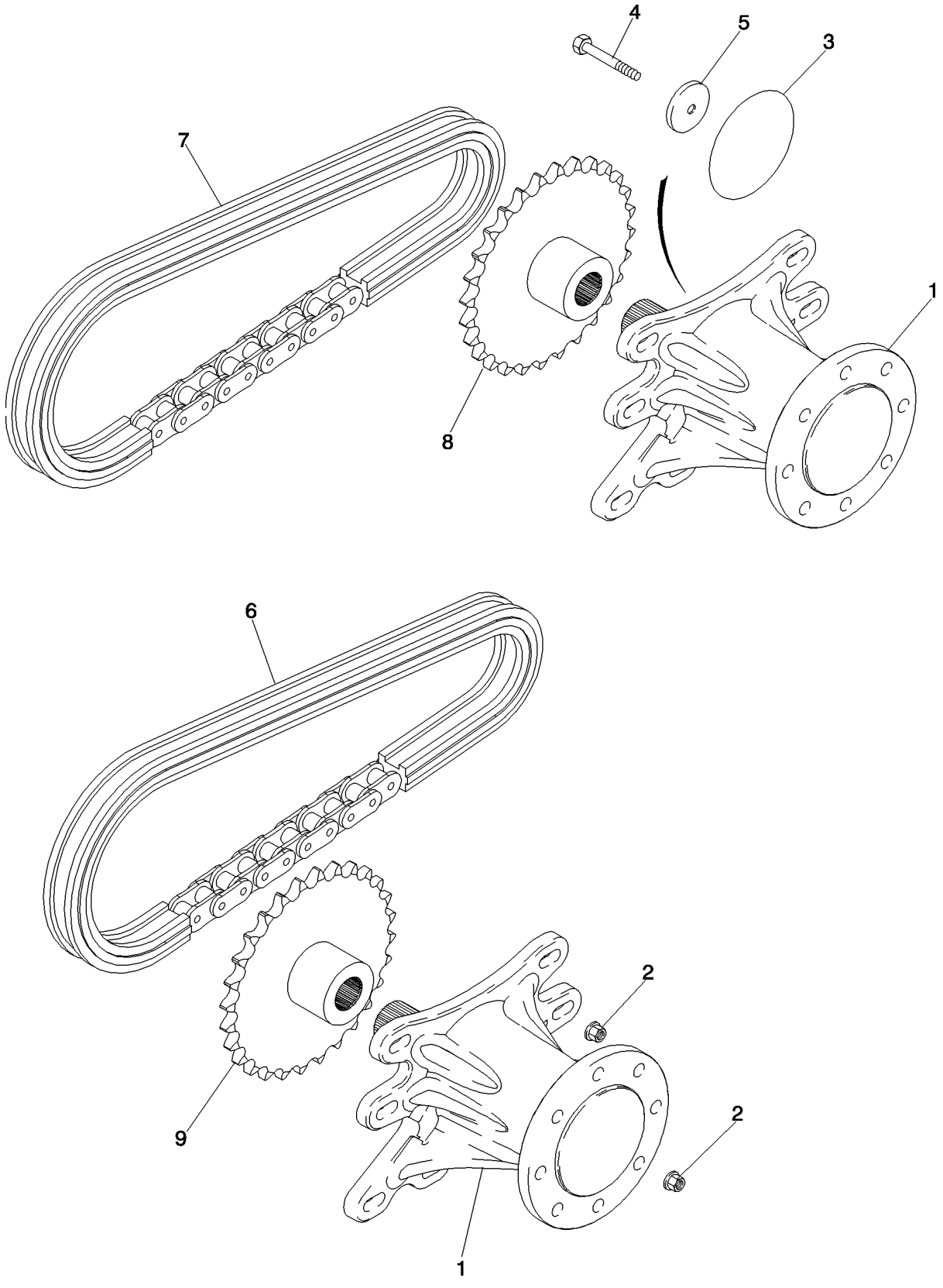

DRIVE LINE

REF	FN	PART NUMBER	YR/SN	QTY	DESCRIPTION
1		339431A2		4	AXLE, See Figure 06-42
2		86512498		32-64	NUT, M16 x 2, Flg, Cl 10, M16 Flange Nut
2A		408127A1		32	NUT, M16 Taper Nut
3		238-5443		4	O-RING, -443, 70 Duro, 7.500" ID x .275" Thk
4		86541970		4	BOLT, Hex, M16 x 100, 10.9, Use Permatex ZPX24210
		ZPX24210		X	SEALANT, THREAD, 10 ml
5		429233A1		4	WASHER
6		87425114		2	CHAIN ASSY.(CE), 120/52P
7		87418343		2	CHAIN ASSY.(CE), 120/42P
8		199037A2		4	SPROCKET ASSY., 28T

AXLE ASSY

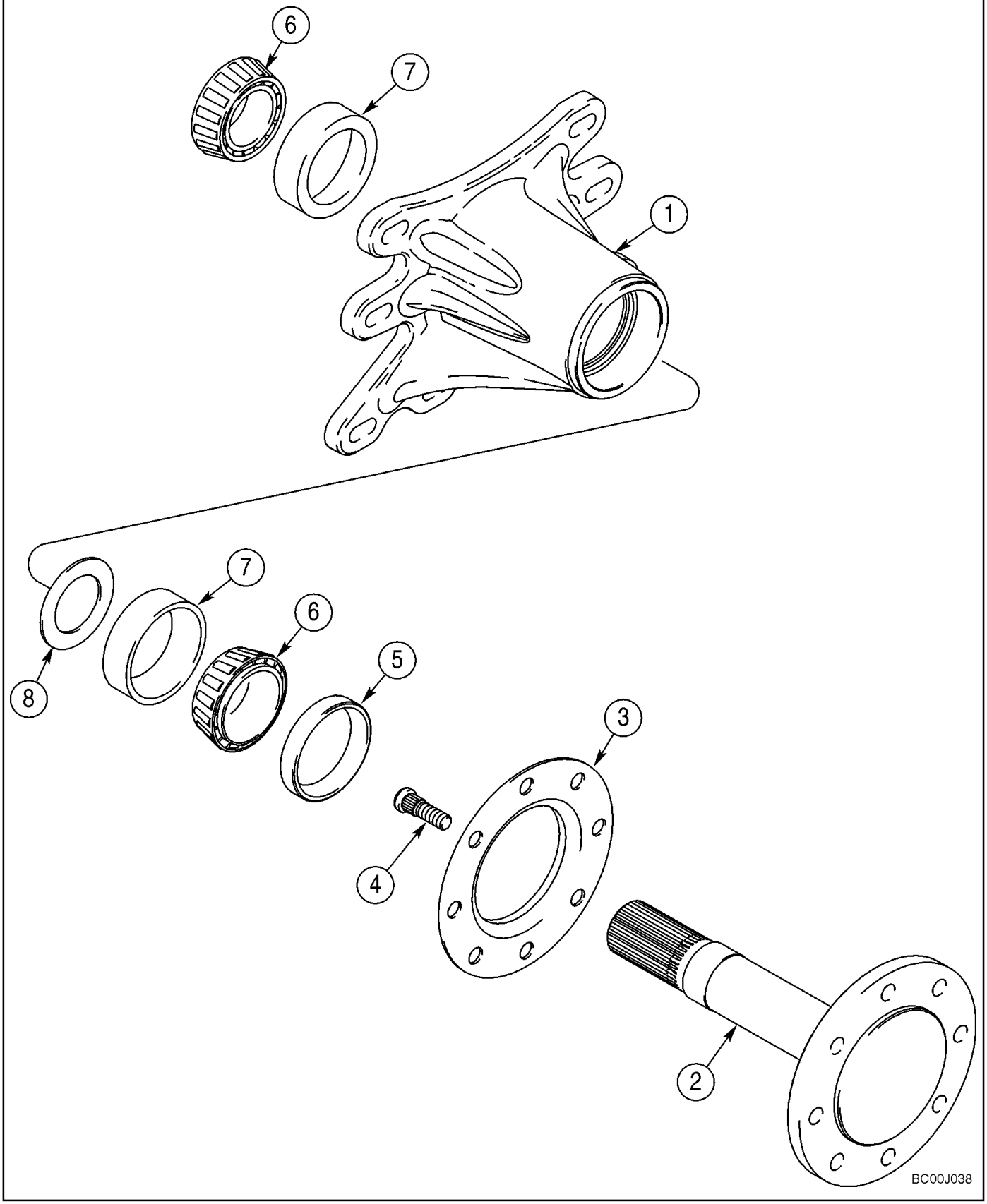

AXLE ASSY

REF	FN	PART NUMBER	YR/SN	QTY	DESCRIPTION
		339431A2		4	AXLE, Incl. 1 - 8
1		339429A2		1	HUB
		339428A3		1	AXLE, Incl. 2 - 4
2		NSS		1	NOT SERVICED SEPARATELY, Shaft, Axle
3		175762A1		1	PROTECTOR
4		191048A2		8	STUD, M16; Plain; Grade 9.8; If Used
4		{87618650}		8	M16; Phosphate Coated; Grade 9.8; If Used
5		341841A2		1	SEAL
6		227488A1		2	BEARING, CONE
7		227489A1		2	BEARING, ROLLER
8		197804A1		1	WASHER
		NSS		X	NOT SERVICED SEPARATELY, Grease; Not Illustrated

WHEELS

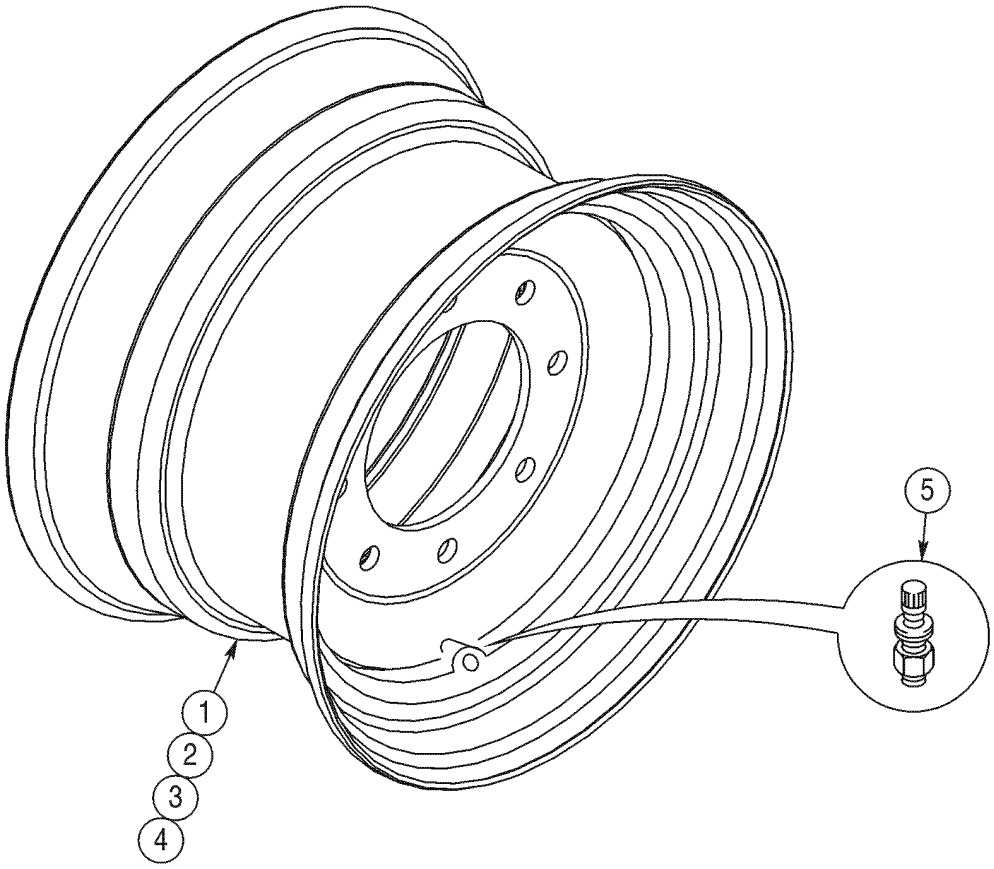

BC01G044

WHEELS

REF	FN	PART NUMBER	YR/SN	QTY	DESCRIPTION
1		183300A3		4	RIM, 16.5 x 9.75, Full Center; Used With 12 x 16.5 tire, Uses Ref 6, Flange Nut
2		248048A2		4	RIM, 16.5 x 12; Full Center; Used With 33/15.5 x 16.5 Inch Tire, Uses Ref 6, Flange Nut
3		448569A1		4	WHEEL ASSY, 16.5 x 9.75; Stamped Center; Used With 12 x 16.5 Inch tire, Uses Ref 7, Taper Nut
4		409174A2		4	RIM, 16.5 x 12; Stamped Center; Used With 33/15.5 x 16.5 Inch Tire
5		294579A1		1	VALVE STEM
6		86512498		32-64	NUT, M16 x 2, Flg, Cl 10, Nut, Flange M16 10 ZND , Used With Ref 1, 2
7		408127A1		32	NUT, Nut, M16 X 2-6G 90 Deg Taper, Used With Ref 3

WHEELS - SOLID FLEX

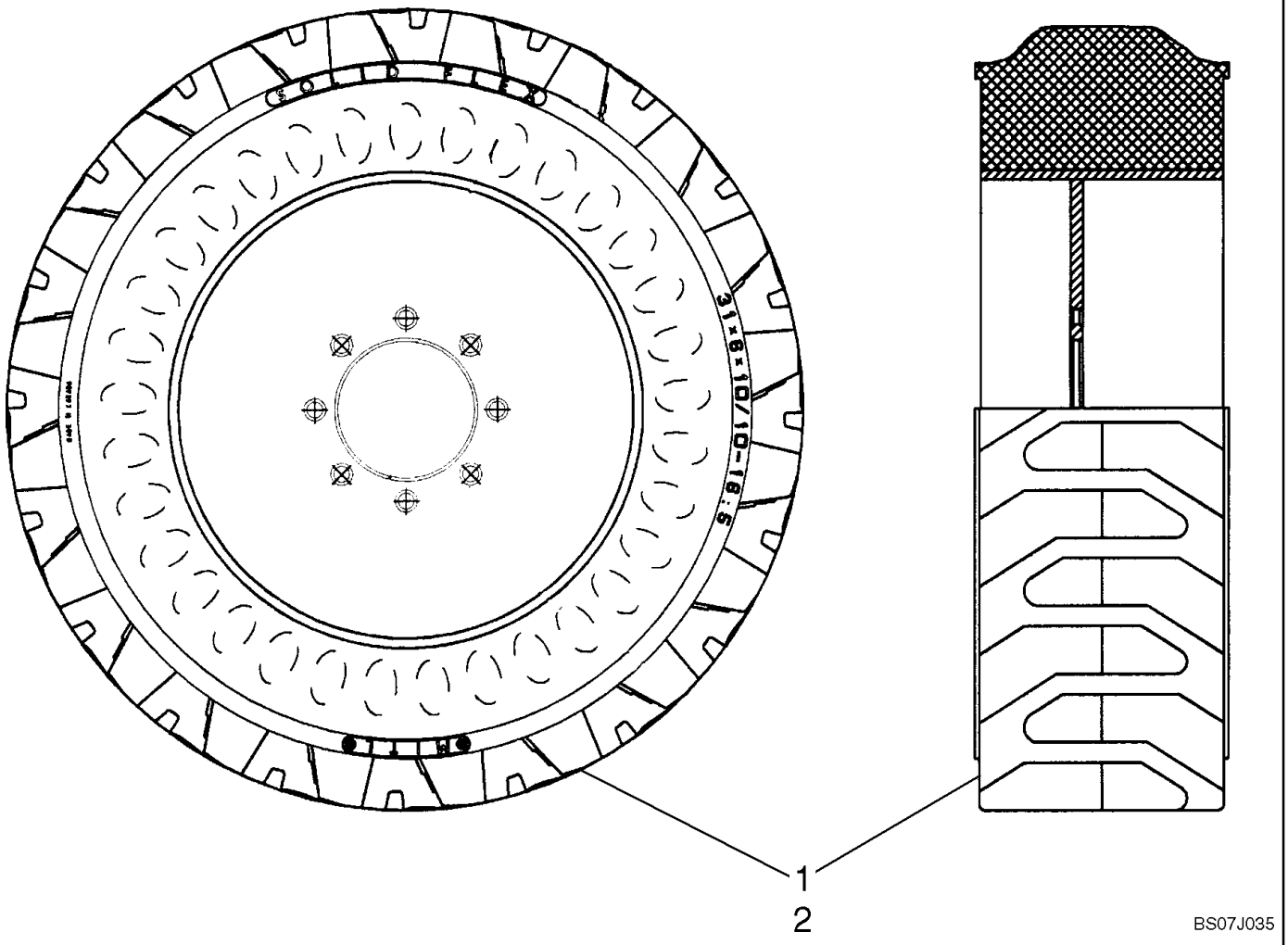

WHEELS - SOLID FLEX

REF	FN	PART NUMBER	YR/SN	QTY	DESCRIPTION
1		{87686722}		2	Tire, LH - 12 X 16.5 Galaxy Solid Flex
2		{87686721}		2	Tire, RH - 12 X 16.5 Galaxy Solid Flex
		408127A1		32	NUT, Nut, M16 X 2-6G 90 Deg Taper

TRACK (450CT)

ART

NOT

AVAILABLE

TRACK (450CT)

REF	FN	PART NUMBER	YR/SN	QTY	DESCRIPTION
		87543353		2	RUBBER TRACK, 400 Wide 55 x 86
		87447235		2	RUBBER TRACK, 450 Wide 55 x 86

NOTES

SECTION INDEX
Brakes

07-01	BRAKE SYSTEM - HYDRAULIC
07-02	TWO SPEED, VALVE ASSY

BRAKE SYSTEM - HYDRAULIC

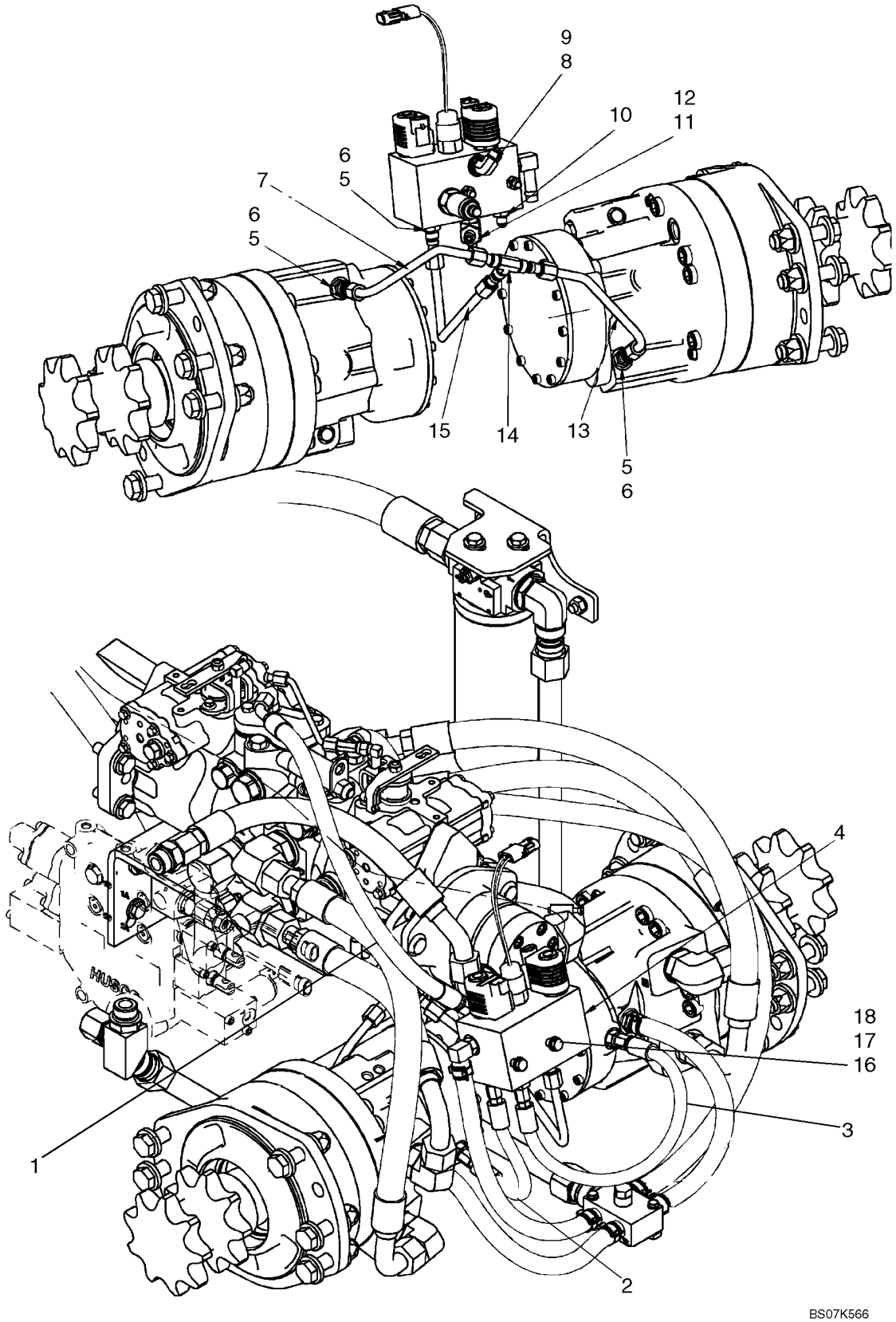

BRAKE SYSTEM - HYDRAULIC

REF	FN	PART NUMBER	YR/SN	QTY	DESCRIPTION
1		87641872		1	HOSE, Hose, Charge To Brake, 615mm (24 7/32 in.)
2		87384126		1	HOSE ASSY., 250mm (9 27/32 in.)
3		87384128		1	HOSE ASSY., 460mm (18 1/8 in.)
4		87459037		1	VALVE, HYDRAULIC, Brake/Two Speed Valve; See Fig 07-02
5		76350		3	CONNECTOR, HYD., 9/16"-18, 37º x 9/16"-18, O-Ring, Incl 6
6		9617873		3	O-RING, 6-1, 90 Duro, .468" ID x .078" Thk
7		87458948		1	TUBE ASSY., Tube, Tee To Motor, LH
8		76344		2	ELBOW, 90º, 9/16"-18, 37º x 9/16"-18, O-Ring, Incl 9
9		9617873		2	O-RING, 6-1, 90 Duro, .468" ID x .078" Thk
10		139398		3	CONNECTOR, HYD., 7/16"-20, 37º x 9/16"-18, O-Ring, Incl 10A
10A		9617873		3	O-RING, 6-1, 90 Duro, .468" ID x .078" Thk
11		{87029965}		1	Tee, Adj Run 37Fl 1/4 X 3/8 X 3/8; Incl 12
12		9617873		1	O-RING, 6-1, 90 Duro, .468" ID x .078" Thk
13		87458947		1	TUBE ASSY., Tube, Tee To Motor, RH
14		76355		1	TEE, 9/16"-18, 37º
15		87374115		1	TUBE ASSY., Tube, Two Speed Valve To Tee
16		412215		2	BOLT, Hex, M8 x 100, 8.8
17		9628098		2	NUT, LOCK, M8 x 1.25, Cl 10
18		86624184		4	WASHER, M8 x 16 x 1.6

TWO SPEED, VALVE ASSY

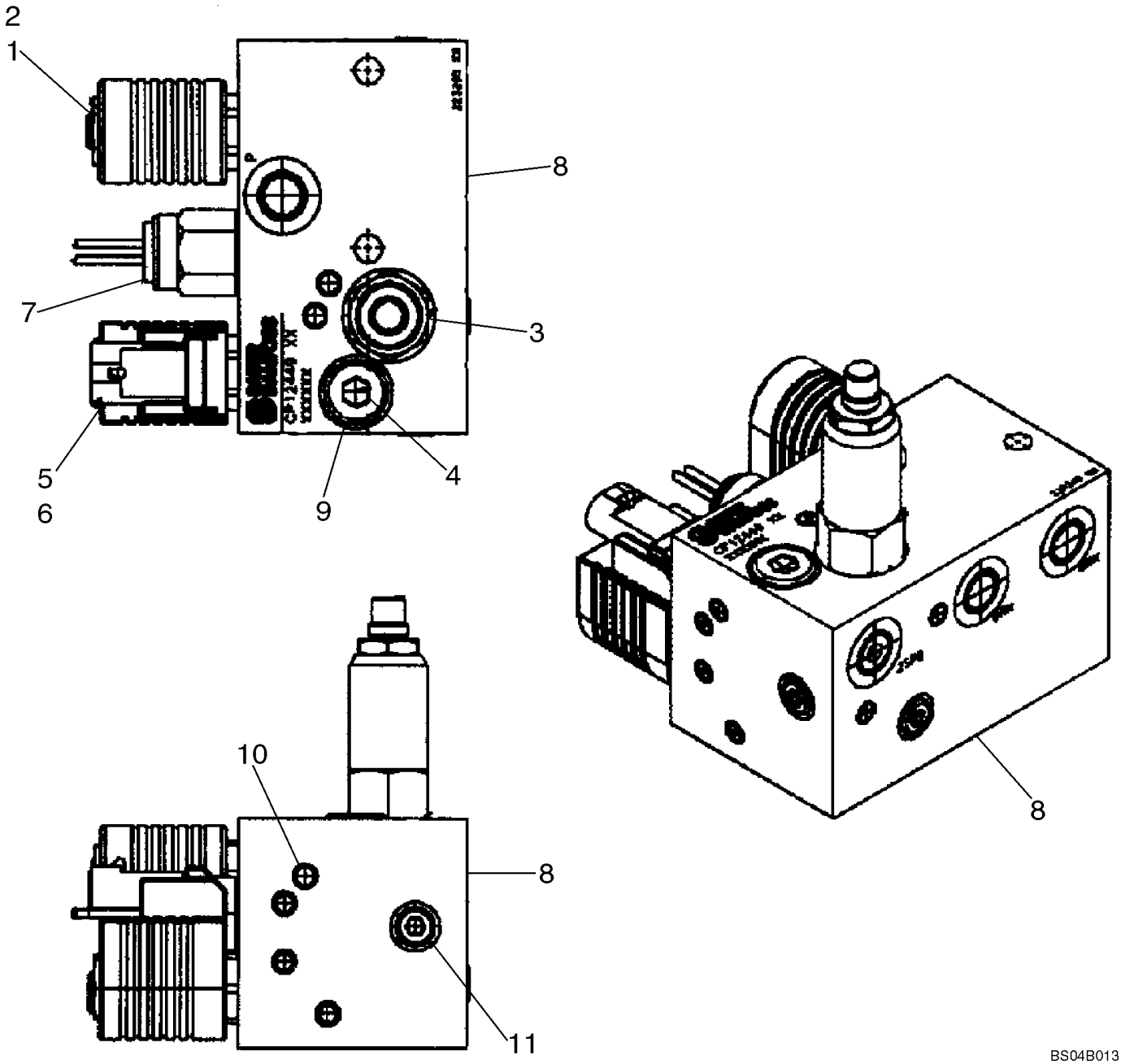

TWO SPEED, VALVE ASSY

REF	FN	PART NUMBER	YR/SN	QTY	DESCRIPTION
		87459037		1	VALVE, HYDRAULIC, Two Speed; Incl. 1 - 11
1		87424182		1	VALVE, BRAKE
2		87433496		X	COIL, Not Illustrated Separately
3		87459301		1	VALVE, Sequence
4		87426545		1	ORIFICE, M12
5		87433495		1	VALVE, SOLENOID
6		87433499		X	COIL, Not Illustrated Separately
7		87458061		1	SWITCH, PRESSURE, Brake Valve
8		NSS		1	NOT SERVICED SEPARATELY, Body
9		NSS		1	NOT SERVICED SEPARATELY, Plug
10		NSS		11	NOT SERVICED SEPARATELY, Expansion Plug
11		NSS		3	NOT SERVICED SEPARATELY, Plug

NOTES

SECTION INDEX
Hydraulics

08-01	HYDRAULICS - LOADER LIFT
08-02	HYDRAULICS - LOADER BUCKET
08-03	HYDRAULICS - AUXILIARY (PROPORTIONAL) MECHANICAL CONTROL
08-04	HYDRAULICS - AUXILIARY (PROPORTIONAL) PILOT CONTROL
08-05	HYDRAULICS - AUXILIARY SYSTEM
08-06	HYDRAULICS - AUXILIARY (WITH HIGH FLOW)
08-07	HYDRAULICS - SECONDARY FRONT AUXILIARY
08-08	HYDRAULICS - CASE DRAIN
08-09	HYDRAULICS - RIDE CONTROL
08-10	HYDRAULICS - COUPLER SYSTEM
08-11	CYLINDER - LOADER BUCKET
08-12	CYLINDER - LOADER LIFT
08-13	HIGH FLOW
08-14	CONTROL VALVE ASSEMBLY - HIGH FLOW
08-15	CONTROL VALVE - 87546975 VALVE ASSY
08-16	CONTROL VALVE - 87583286 VALVE ASSY
08-17	CONTROL VALVE - 87583285 VALVE ASSY
08-18	CONTROL VALVE - 87546974 VALVE ASSY
08-19	CONTROL VALVE - SEAL REPLACEMENT KITS
08-20	CONTROL VALVE - SEAL REPLACEMENT KITS
08-21	CONTROL VALVE - MAIN RELIEF VALVE
08-22	CONTROL VALVE - RELIEF VALVES
08-23	CONTROL VALVE - SPOOL END GROUP
08-24	CONTROL VALVE - CHECK VALVE GROUP
08-25	CONTROL VALVE - SPOOL END GROUP
08-26	CONTROL VALVE - SPOOL END GROUP
08-27	CONTROL VALVE - SPOOL END GROUP
08-28	CONTROL VALVE - SPOOL END GROUP
08-29	CONTROL VALVE - SPOOL END GROUP
08-30	CONTROL VALVE - SPOOL END GROUP
08-31	CONTROL VALVE - SPOOL END GROUP, DETENT
08-32	CONTROL VALVE - SPOOL END GROUP
08-33	CONTROL VALVE - SPOOL END GROUP, EHPV
08-34	CONTROL VALVE - SPOOL END GROUP, EHPV
08-35	SECONDARY FRONT AUXILIARY - VALVE ASSY

HYDRAULICS - LOADER LIFT

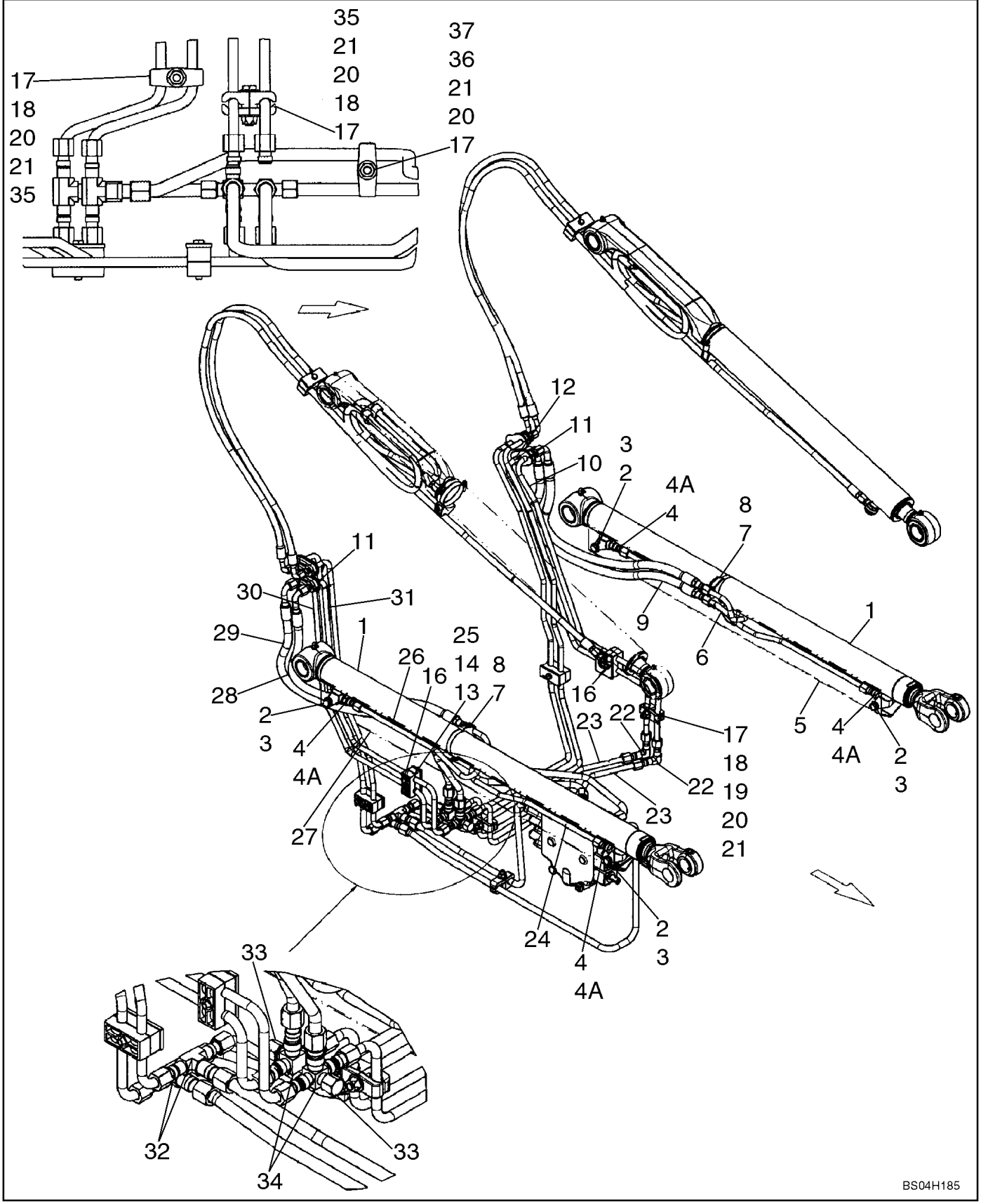

HYDRAULICS - LOADER LIFT

REF	FN	PART NUMBER	YR/SN	QTY	DESCRIPTION
1		308258A2		2	CYLINDER ASSY., Lift, 57.2 dia Cylinder, 44.4 dia Rod; See Figure 08-12
2		43138		8	SCREW, Hex, M10 x 20, 8.8, Full Thd
3		86639325		8	WASHER, M10 x 24.5 x 3, HT
4		128818		4	CONNECTOR, HYD., 3/4"-16, 37° x 3/4"-16, O-Ring, Incl. 4A
4A		128825		1	O-RING, 8-1, 90 Duro, .644" ID x .087" Thk
5		301351A1		1	COVER, Left Hand Lift Cylinder; For Service Order 319394A1
5		319394A1		1	PROTECTOR, Left Hand Lift Cylinder
6		257315A5		1	TUBE ASSY., Left Hand Lift Cylinder, Rod End
7		255245A1		2	BLOCK, Saddle, Dual Tube
8		87040758		2	CLAMP, HOSE
9		301349A2		1	TUBE ASSY., Left Hand Lift Cylinder Base End
10		87431356		1	TUBE ASSY., Left Hand Lift, Raise
11		376523A2		4	SUPPORT, 1/2
12		87431357		1	TUBE ASSY., Right Hand Lift, Lower
13		257919A1		2	CLAMP BRACKET
14		259905A1		2	SPACER, 1/4 x 31.25
15		87450067		1	BAR, Clamp Mounting; If Used
16		386045		2	BOLT, Hex, M8 x 45, 8.8
17		D120614		4	CLAMP
18		D120679		3	CLAMP, 1/2
19		120069		1	BOLT, Hex, M10 x 50, 8.8
20		86512554		4	NUT, LOCK, M10 x 1.5, Cl 10
21		86625253		8	WASHER, M11 x 24 x 2
22		216791		2	ELBOW, 90°, 3/4"-16, 37° x 3/4"-16, 37°
23		419000A1		2	TUBE ASSY., Left Hand
24		257310A5		1	TUBE ASSY., Right Hand Lift Cylinder, Rod End
25		257859A1		1	PLATE, SPACER, Bar Clamp Top
26		301346A2		1	TUBE ASSY., Right Hand Lift Cylinder Base End
27		301350A1		1	COVER, Right Hand Lift Cylinder; For Service Order 319395A1
27		319395A1		1	PROTECTOR, Right Hand Lift Cylinder
28		321522A2		2	HOSE ASSY., Lift Cylinder Base End

HYDRAULICS - LOADER LIFT

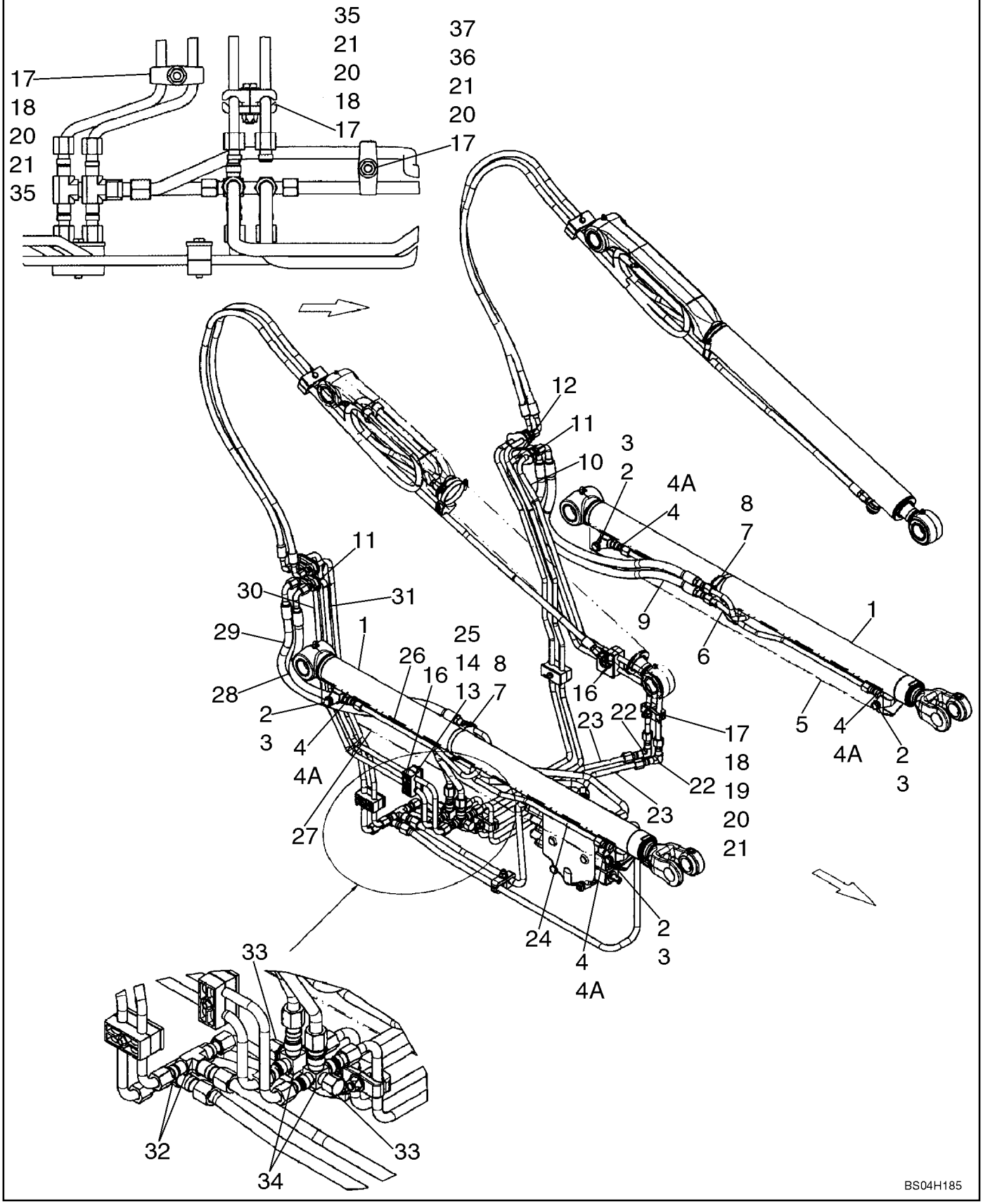

HYDRAULICS - LOADER LIFT

REF	FN	PART NUMBER	YR/SN	QTY	DESCRIPTION
29		321513A2		2	HOSE ASSY., Lift Cylinder Rod End
30		87431355		1	TUBE ASSY., Right Hand Lift
31		87431354		1	TUBE ASSY., Right Hand Lift
32		218-1584		2	TEE, 37º, 3/4"-16 x 7/8"-14, Br
33		262159		2	CAP, 37º, 3/4"-16
34		280107A1		2	TEE, With Side Outlet
35		325829		2	BOLT, Hex, M10 x 45, 8.8
36		D120613		1	CLAMP, 5/8
37		120069		1	BOLT, Hex, M10 x 50, 8.8

HYDRAULICS - LOADER BUCKET

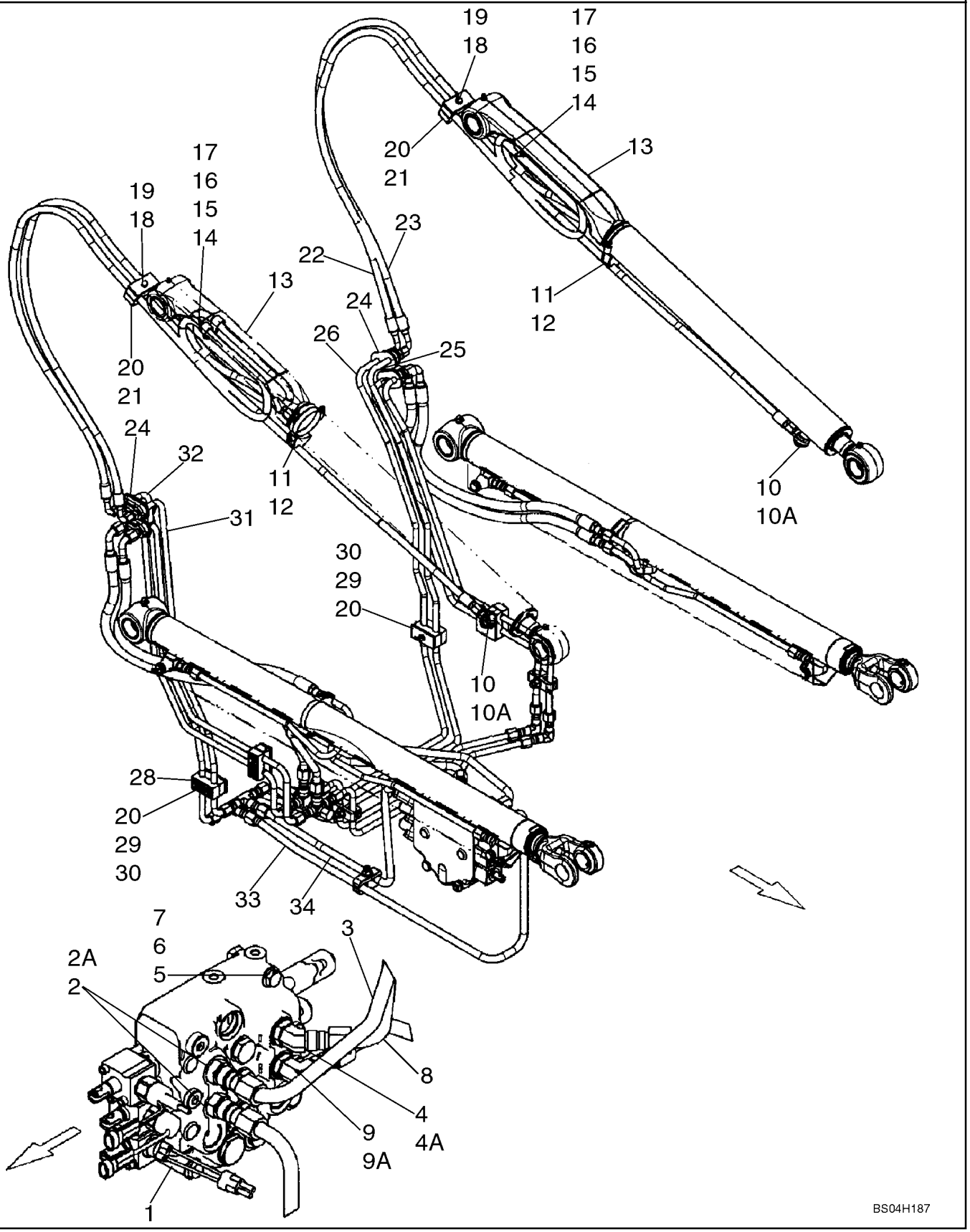

HYDRAULICS - LOADER BUCKET

REF	FN	PART NUMBER	YR/SN	QTY	DESCRIPTION
1		87583285		1	VALVE, Models With Hydraulic Attachment; See Fig 08-17
1		87546974		1	VALVE, HYDRAULIC, Models With Pilot Control; See Fig 08-18
2		325059		2	CONNECTOR, HYD., 7/8"-14, 37° x 7/8"-14, O-Ring, Incl. 2A
2A		167269		1	O-RING, 10-1, 90 Duro, .755" ID x .097" Thk
3		87431363		1	TUBE ASSY., Valve Lift, Lower
4		330345			ELBOW, 45°, 7/8"-14 x 7/8"-14, O-Ring, Incl. 4A
4A		167269		1	O-RING, 10-1, 90 Duro, .755" ID x .097" Thk
5		120070		2	BOLT, Hex, M10 x 60, 8.8
6		86625253		2	WASHER, M11 x 24 x 2
7		230427A1		2	NUT, Square, M10 x 1.5
8		87442096		1	TUBE ASSY., Valve Lift, Raise
9		164910		1	ELBOW, 90°, 7/8"-14, 37° x 7/8"-14, O-Ring, Incl. 9A
9A		167269		1	O-RING, 10-1, 90 Duro, .755" ID x .097" Thk
10		76350		1	CONNECTOR, HYD., 9/16"-18, 37° x 9/16"-18, O-Ring, Incl. 10A
10A		9617873		1	O-RING, 6-1, 90 Duro, .468" ID x .078" Thk
11		87581635		2	RUBBER SLEEVE
12		86633353		2	CLAMP, HOSE, 2.75/3.625 HD Worm
13		327411A1		2	CYLINDER STEERING, Tip, 63.5 Dia Cylinder 38.1 Dia Rod; See Figure 08-11
14		86624184		2	WASHER, M8 x 16 x 1.6
15		9628098		2	NUT, LOCK, M8 x 1.25, Cl 10
16		412479		2	BOLT, Hex, M8 x 35, 8.8
17		87029955		4	CLAMP, 7/8", Insul, 3/8" Bolt
18		43130		2	BOLT, Hex, M8 x 50, 8.8
19		293891A1		2	SPACER, 1/4 x 33
20		257859A1		4	PLATE, SPACER, Clamp Top
21		257857A1		2	CLAMP
22		87431366		2	HOSE ASSY., Tip Cylinder Base End
23		87431367		2	HOSE ASSY., Tip Cylinder Base End
24		376523A2		4	SUPPORT
25		87431360		1	TUBE ASSY., Left Hand Tip, Dump

HYDRAULICS - LOADER BUCKET

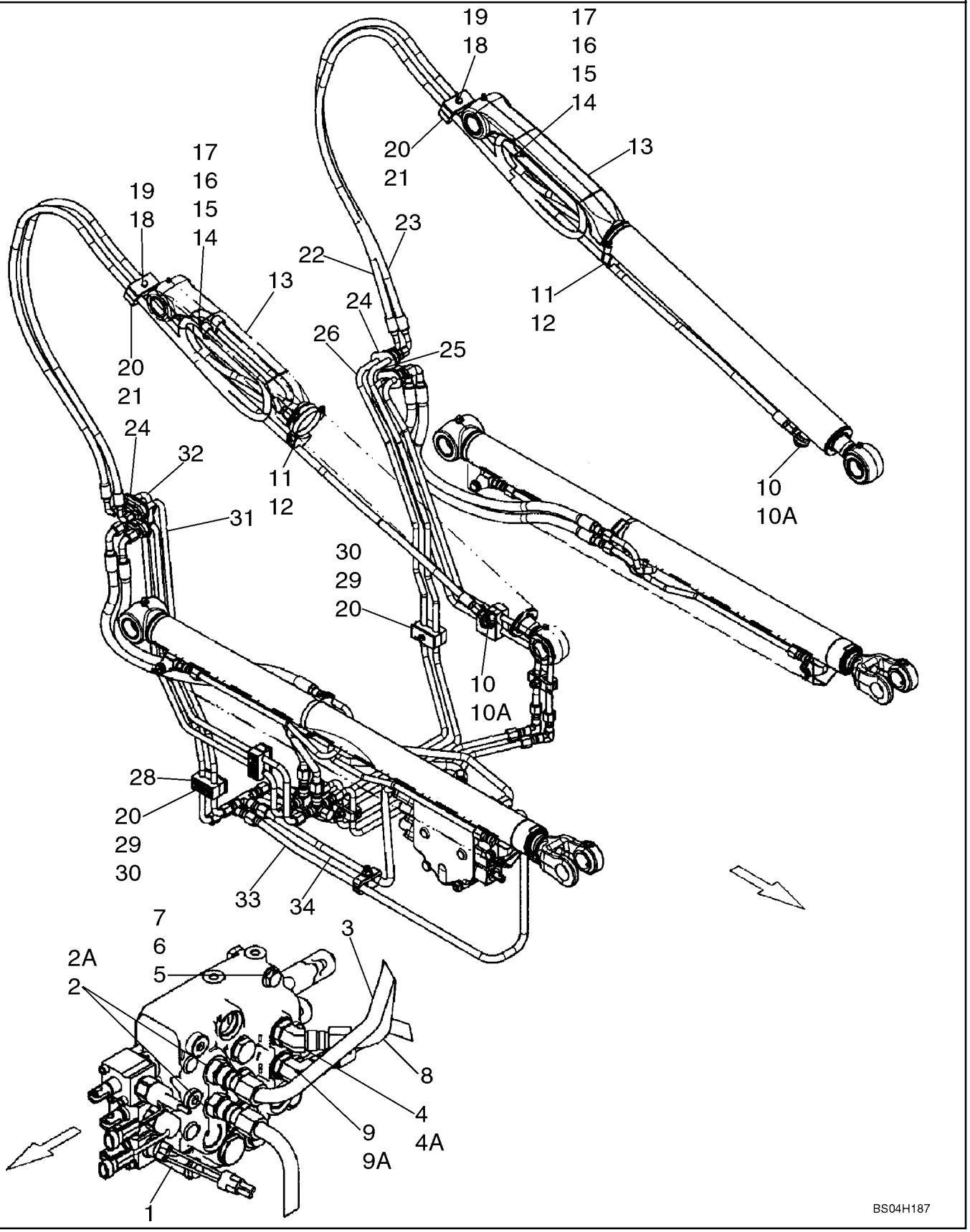

HYDRAULICS - LOADER BUCKET

REF	FN	PART NUMBER	YR/SN	QTY	DESCRIPTION
26		87431361		1	TUBE ASSY., Left Hand Tip, Curl
27		76344		1	ELBOW, 90º, 9/16"-18, 37º x 9/16"-18, O-Ring, Includes 27A
27A		9617873		1	O-RING, 6-1, 90 Duro, .468" ID x .078" Thk
28		386045		2	BOLT, Hex, M8 x 45, 8.8
29		257919A1		2	CLAMP BRACKET
30		259905A1		2	SPACER, 1/4 x 31.25
31		87431358		1	TUBE ASSY., Right Hand Tip, Dump
32		87431359		1	TUBE ASSY., Right Hand Tip, Curl
33		87349764		1	TUBE ASSY., Valve Tip, Curl
34		87350369		1	TUBE ASSY., Valve Tip, Dump

HYDRAULICS - AUXILIARY (PROPORTIONAL) MECHANICAL CONTROL

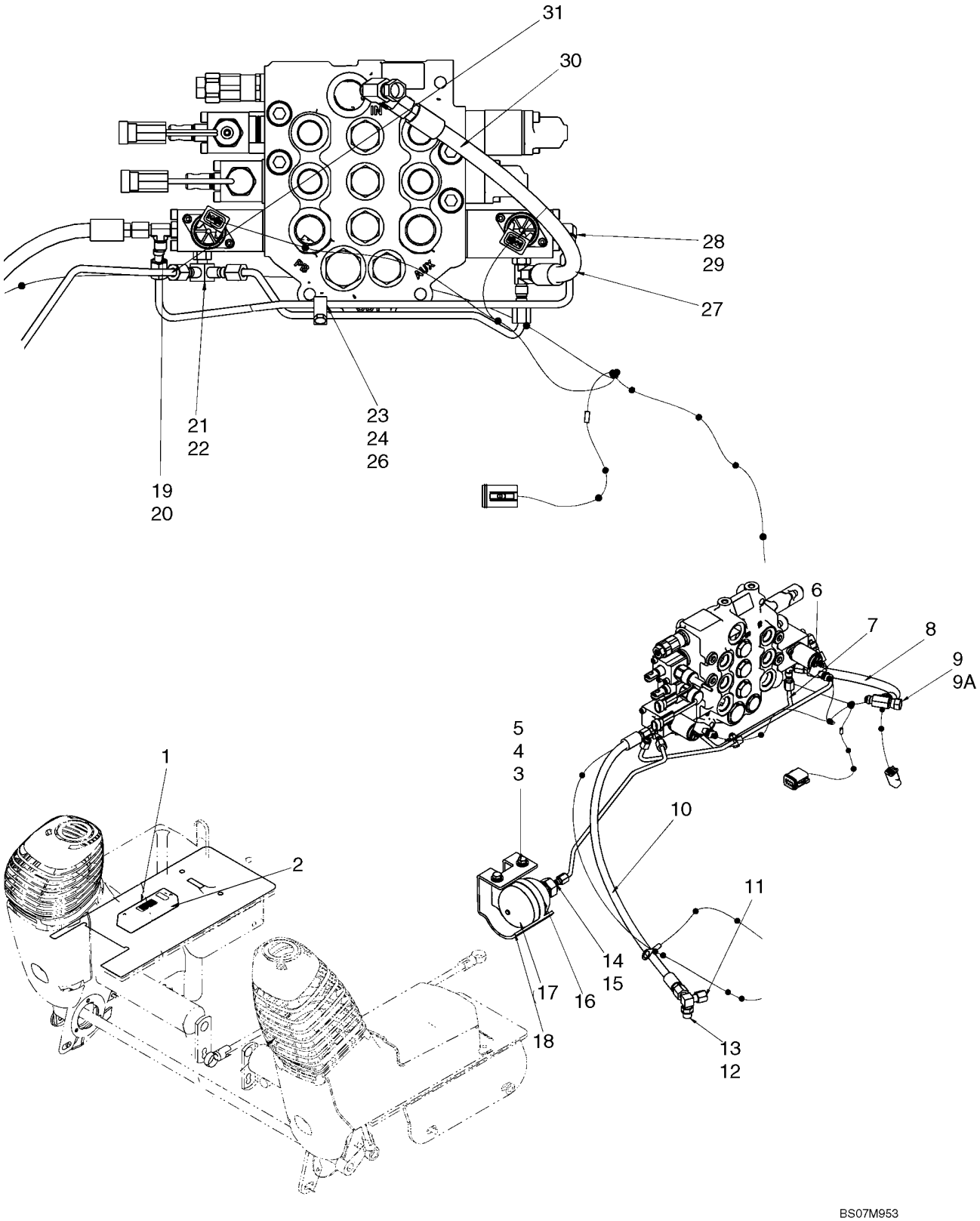

HYDRAULICS - AUXILIARY (PROPORTIONAL) MECHANICAL CONTROL

REF	FN	PART NUMBER	YR/SN	QTY	DESCRIPTION
		87676512		1	KIT, SERVICE, Kit, EH Proportional Auxiliary Mechanical Control; Incl 1 - 31
1		87657080		1	VALVE, PWM Driver
2		100012		2	NUT, M4, Cl 8
3		120104		2	BOLT, Hex, M8 x 20, 8.8
4		86625263		2	WASHER, M8 x 20 x 1.6
5		87016617		2	WASHER, LOCK, M8
6		87668739		1	HARNESS, Harness, Electro-Hydraulic Auxiliary
7		87443078		1	TUBE ASSY.
8		87019072		1	HOSE, Hose, 460mm (18 1/8 in.)
9		87438766		1	TEE, Incl 9A
9A		165202		1	O-RING, 4-1, 90 Duro, .351" ID x .072" Thk
10		87427370		1	HOSE ASSY., Hose, 610mm (24 in.)
11		574342		1	CAP, 37º, 9/16"-18
12		L104616		1	TEE, Incl 13
13		9617873		1	O-RING, 6-1, 90 Duro, .468" ID x .078" Thk
14		139398		1	CONNECTOR, HYD., 7/16"-20, 37º x 9/16"-18, O-Ring, Incl 15
15		9617873		1	O-RING, 6-1, 90 Duro, .468" ID x .078" Thk
16		86625032		1	CLAMP, HOSE, #48, 2.56/3.50 Type F Worm
17		87376969		1	ACCUMULATOR
18		87672246		1	BRACKET
19		86513019		2	TEE, 7/16"-20, 37º x 7/16"-20, O-Ring Run, Incl 20
20		165202		2	O-RING, 4-1, 90 Duro, .351" ID x .072" Thk
21		87443051		1	ELBOW, Incl 22
22		165202		1	O-RING, 4-1, 90 Duro, .351" ID x .072" Thk
23		87030561		1	NUT, LOCK, M6 x 1, Cl 8
24		120100		1	BOLT, Hex, M6 x 20, 8.8
26		608089		1	CLAMP
27		87018051		1	TUBE ASSY.
28		216773		1	ELBOW, 90º, 7/16"-20, 37º x 7/16"-20, O-Ring, Incl 29
29		165202		1	O-RING, 4-1, 90 Duro, .351" ID x .072" Thk
30		87583286		1	VALVE, Control Valve; See Fig 08-16
31		87626904		1	TUBE, HYD

HYDRAULICS - AUXILIARY (PROPORTIONAL) PILOT CONTROL

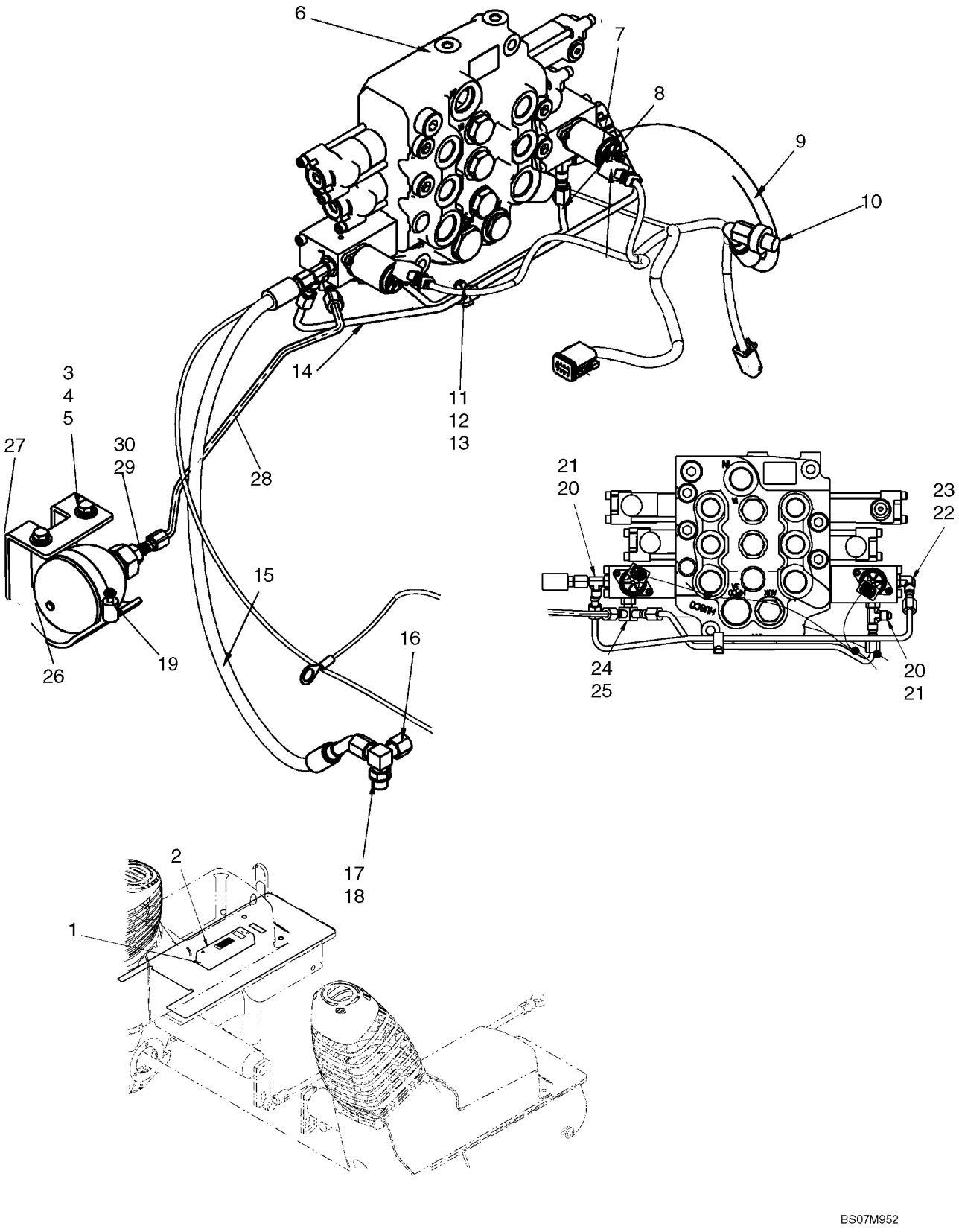

HYDRAULICS - AUXILIARY (PROPORTIONAL) PILOT CONTROL

REF	FN	PART NUMBER	YR/SN	QTY	DESCRIPTION
		87676513		1	KIT, SERVICE, Kit, EH Proportional Auxiliary Pilot Control; Incl 1 - 30
1		100012		2	NUT, M4, Cl 8
2		87657080		1	VALVE, PWM Driver
3		83990583		2	WASHER, LOCK, M8
4		86625263		2	WASHER, M8 x 20 x 1.6
5		120104		2	BOLT, Hex, M8 x 20, 8.8
6		87546975		1	VALVE, HYDRAULIC, Control Valve; See Fig 08-15
7		87668739		1	HARNESS, Harness, Electro-Hydraulic Auxiliary
8		87443078		1	TUBE ASSY., Tube, Pilot Pressure
9		87547026		1	HOSE, Hose, Supply Or Drain, 465mm (18 5/16 in.)
10		179189A1		1	POPPET, VALVE
11		608089		1	CLAMP
12		87030561		1	NUT, LOCK, M6 x 1, Cl 8
13		120100		1	BOLT, Hex, M6 x 20, 8.8
14		87018051		1	TUBE ASSY.
15		87564006		1	HOSE, Hose, Drain 660mm (26 in.)
16		574342		1	CAP, 37º, 9/16"-18
17		L104616		1	TEE, Incl 18
18		9617873		1	O-RING, 6-1, 90 Duro, .468" ID x .078" Thk
19		86625032		1	CLAMP, HOSE, #48, 2.56/3.50 Type F Worm
20		86513019		2	TEE, 7/16"-20, 37º x 7/16"-20, O-Ring Run, Incl 21
21		165202		2	O-RING, 4-1, 90 Duro, .351" ID x .072" Thk
22		216773		1	ELBOW, 90º, 7/16"-20, 37º x 7/16"-20, O-Ring, Incl 23
23		165202		1	O-RING, 4-1, 90 Duro, .351" ID x .072" Thk
24		87443051		1	ELBOW, Incl 25
25		165202		1	O-RING, 4-1, 90 Duro, .351" ID x .072" Thk
26		87376969		1	ACCUMULATOR
27		87672246		1	BRACKET
28		87626904		1	TUBE, HYD, Tube, Pilot Pressure
29		139398		1	CONNECTOR, HYD., 7/16"-20, 37º x 9/16"-18, O-Ring, Incl 30
30		9617873		1	O-RING, 6-1, 90 Duro, .468" ID x .078" Thk

HYDRAULICS - AUXILIARY SYSTEM

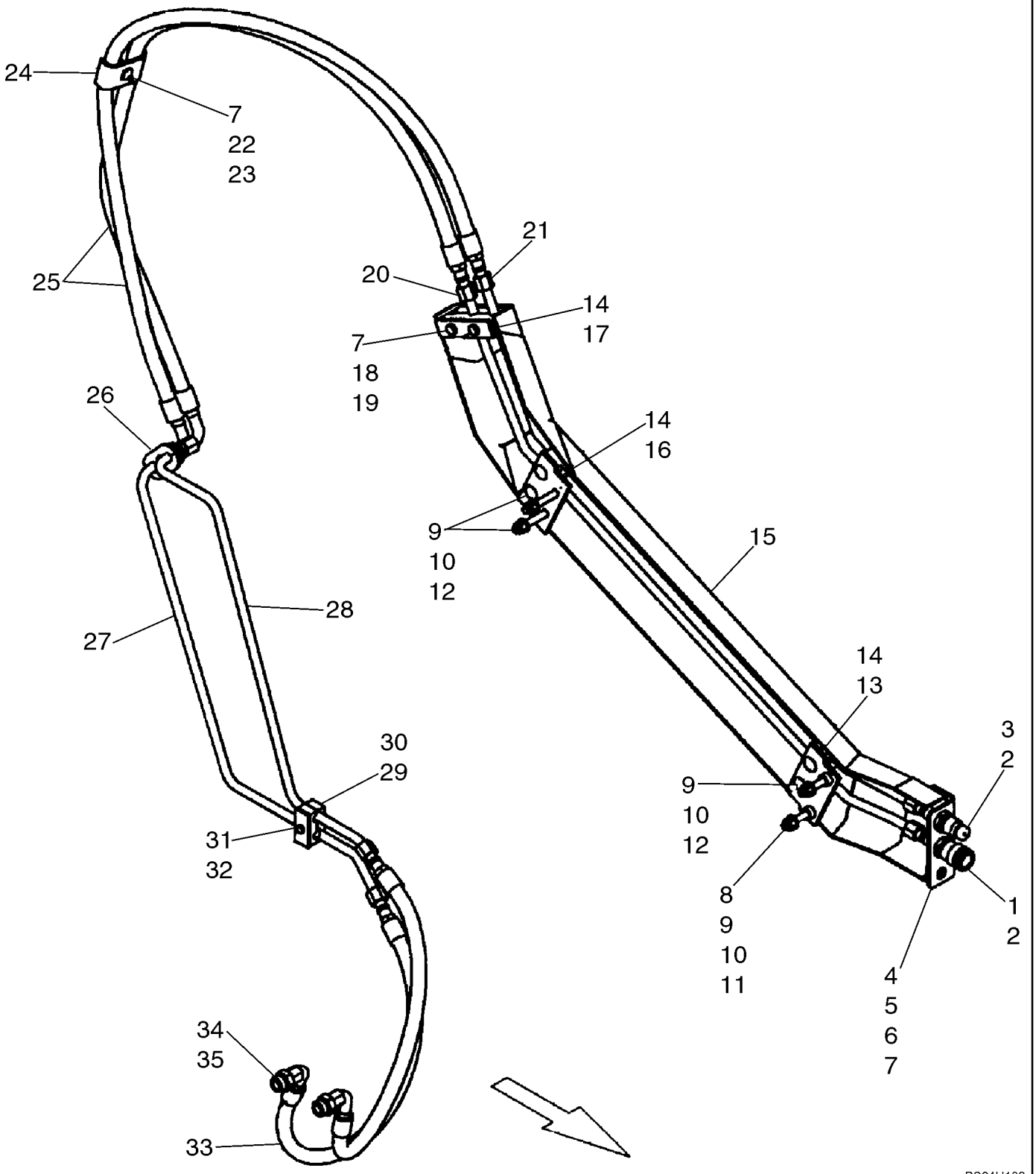

HYDRAULICS - AUXILIARY SYSTEM

REF	FN	PART NUMBER	YR/SN	QTY	DESCRIPTION
1		393394A1		1	COUPLING, BREAK AWAY, Female
2		595460		2	NUT, LOCK, Blkhd, 7/8"-14
3		87417308		1	COUPLING, BREAK AWAY, 1/2; Male
4		87431612		1	BRACKET
5		43139		2	SCREW, Hex, M10 x 25, 8.8, Full Thd
6		100037		2	NUT, M10 x 1.5, Cl 8
7		895-11010		5	WASHER, M10 x 20 x 2
8		338263		2	BOLT, CARRIAGE, Short NK, M12 x 70, Cl8.8
9		412672		8	NUT, LOCK, M12 x 1.75, Cl 10
10		86625255		8	WASHER, M13.5 x 24.5 x 3, HT
11		87302487		2	SPACER, 1/2
12		300662		6	BOLT, CARRIAGE, Short NK, M12 x 80, Cl8.8
13		282953A1		1	SUPPORT
14		87449943		6	CLAMP
15		87458932		1	COVER
16		282954A1		1	SUPPORT
17		256976A1		1	BAR
18		120073		2	BOLT, Hex, M10 x 80, 8.8
19		86512554		2	NUT, LOCK, M10 x 1.5, Cl 10
20		87431350		1	TUBE ASSY.
21		87431349		1	TUBE ASSY.
22		256690A1		1	SPACER
23		412151		1	BOLT, Hex, M10 x 55, 8.8
24		277730A1		1	CLAMP
25		87431364		2	HOSE ASSY.
26		87018001		2	SUPPORT, 5/8
27		87431352		1	TUBE ASSY.
28		87431353		1	TUBE ASSY.
29		257857A1		1	CLAMP
30		257859A1		1	PLATE, SPACER
31		16044321		1	BOLT, Hex, M8 x 55, 8.8
32		9628098		1	NUT, LOCK, M8 x 1.25, Cl 10
33		87459798		2	HOSE ASSY.
34		86507102		2	CONNECTOR, HYD., 7/8"-14, 37° x 1 1/16"-12, O-Ring, Incl. 24

HYDRAULICS - AUXILIARY SYSTEM

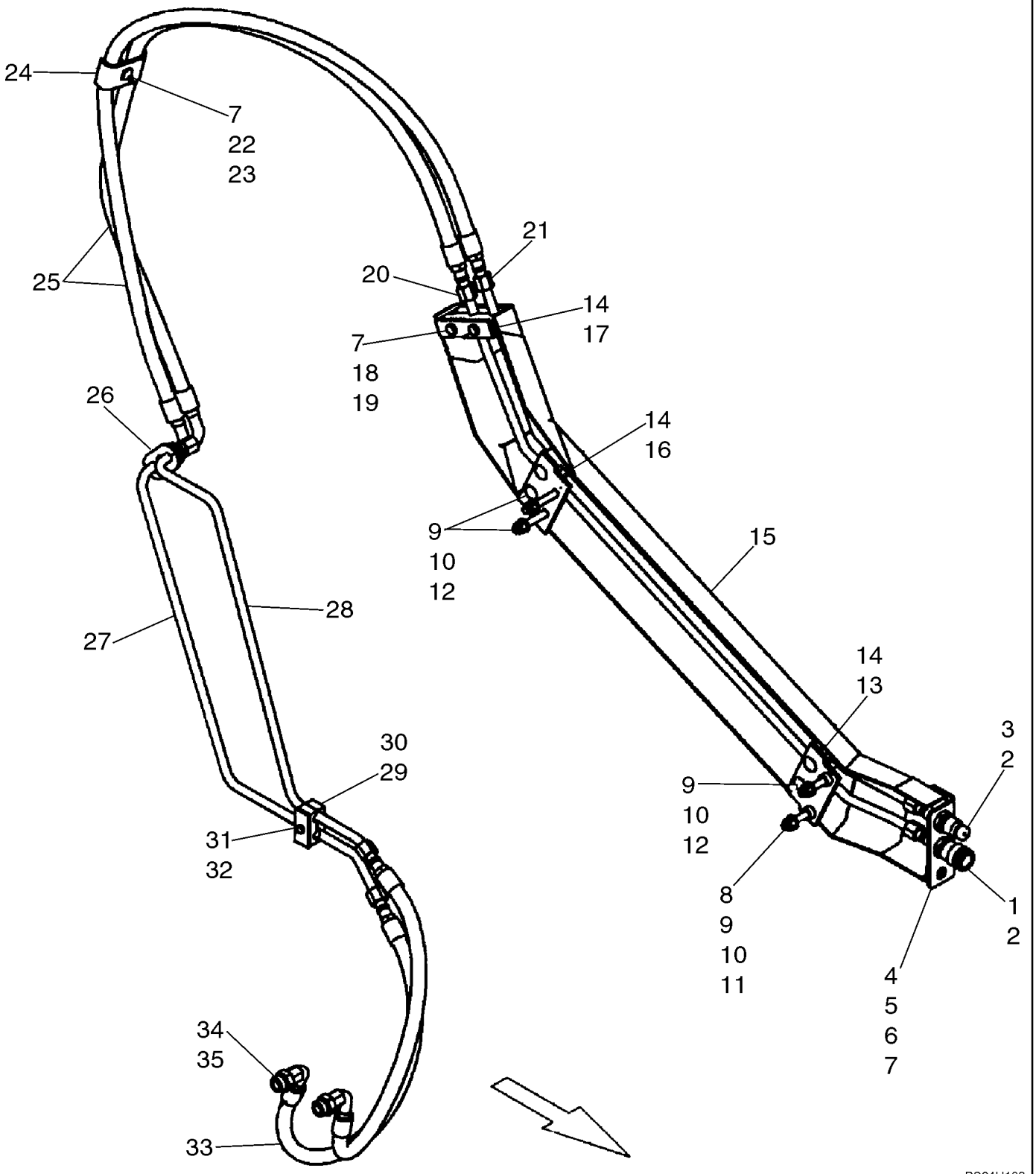

HYDRAULICS - AUXILIARY SYSTEM

REF	FN	PART NUMBER	YR/SN	QTY	DESCRIPTION
35		167266		1	O-RING, 12-1, 90 Duro, .924 ID x .116" Thk

HYDRAULICS - AUXILIARY (WITH HIGH FLOW)

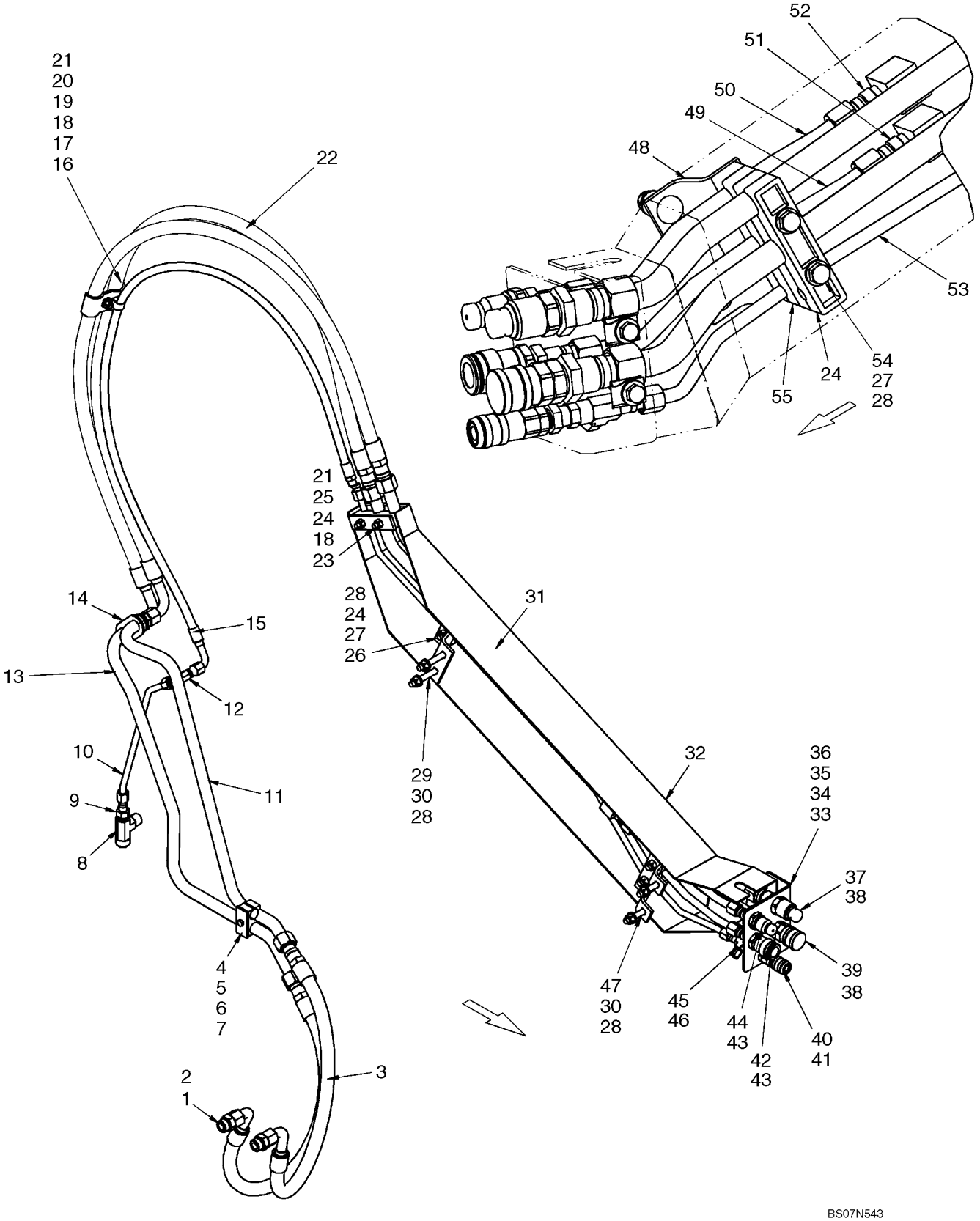

HYDRAULICS - AUXILIARY (WITH HIGH FLOW)

REF	FN	PART NUMBER	YR/SN	QTY	DESCRIPTION
		87618732		1	KIT, SERVICE, Kit, High Flow Bi-Directional Gear; Incl 1 - 55 And Fig 08-12 And Fan
1		322896		2	CONNECTOR, HYD., 1 1/16"-12, 37º x 1 1/16"-12, O-Ring, Incl 2
2		167266		2	O-RING, 12-1, 90 Duro, .924 ID x .116" Thk
3		87433172		2	HOSE ASSY., Hose, 1000mm (39 3/8 in.)
4		225529A1		1	FITTING, Tube Clamp
5		257859A1		1	PLATE, SPACER
6		9628098		1	NUT, LOCK, M8 x 1.25, Cl 10
7		16044321		1	BOLT, Hex, M8 x 55, 8.8
8		87039438		1	TEE, 1 5/16"-12, 37º x 7/8"-14, 37º x 3/4"-14, NPTF Br
9		87029966		1	REDUCER, 37º, 7/8"-14, Fem x 3/4"-16 Male
10		87432444		1	TUBE ASSY., Loader Arm Case Drain
11		87432450		1	TUBE ASSY., Valve Auxiliary
12		248973		1	ELBOW, 90º Blkhd, 3/4"-16, 37º x 3/4"-16, 37º
13		87737720		1	TUBE, RIGID, Tube, High Flow Auxiliary
14		87017999		2	SUPPORT
15		87460872		1	HOSE, Hose, Loader Arm Case Drain, 1800mm (70 7/8 in.)
16		276433A1		1	CLAMP
17		256690A1		1	SPACER
18		140017		3	WASHER, M10 x 20 x 2
19		412151		1	BOLT, Hex, M10 x 55, 8.8
20		87029955		1	CLAMP, 7/8", Insul, 3/8" Bolt
21		86512554		3	NUT, LOCK, M10 x 1.5, Cl 10
22		87433171		2	HOSE ASSY., Hose, High Flow 1770mm (69 11/16 in.)
23		120073		2	BOLT, Hex, M10 x 80, 8.8
24		87449945		6	CLAMP
25		256976A1		1	BAR
26		43158		2	BOLT, Hex, M12 x 80, 8.8
27		140018		4	WASHER, M12 x 24 x 2.5
28		412672		8	NUT, LOCK, M12 x 1.75, Cl 10
29		300662		2	BOLT, CARRIAGE, Short NK, M12 x 80, Cl8.8

HYDRAULICS - AUXILIARY (WITH HIGH FLOW)

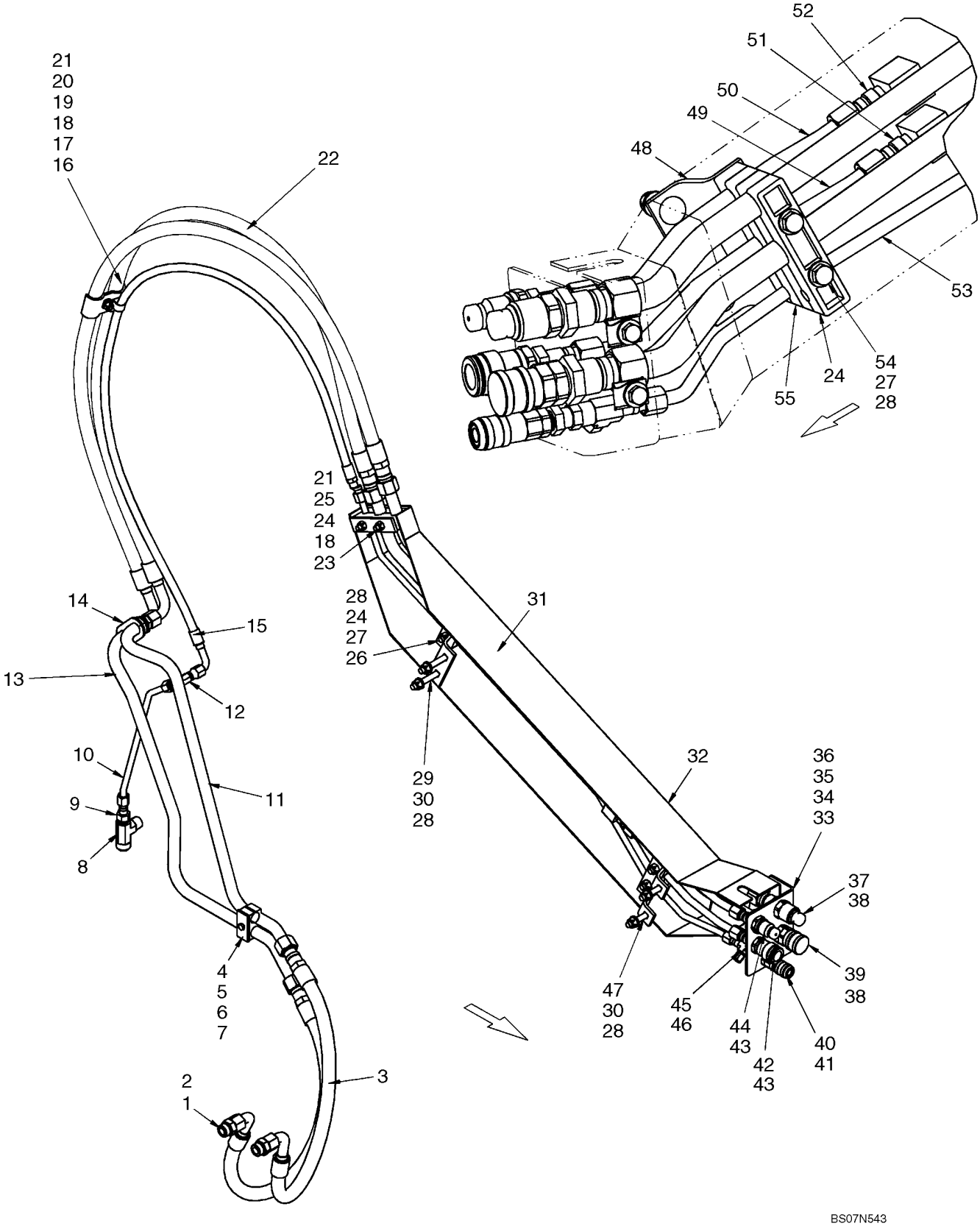

HYDRAULICS - AUXILIARY (WITH HIGH FLOW)

REF	FN	PART NUMBER	YR/SN	QTY	DESCRIPTION
30		86625255		4	WASHER, M13.5 x 24.5 x 3, HT
31		87450047		1	BRACKET
32		87458896		1	COVER
33		87450053		1	BRACKET
34		86625071		2	NUT, M10, U
35		43139		2	SCREW
36		86639325		2	WASHER, M10 x 24.5 x 3, HT
37		87022672		1	COUPLING, 5/8 Male Coupler #16 Bulkhead
38		86513144		2	NUT, LOCK, Blkhd, 1 5/16"-12
39		87022671		1	COUPLING, 5/8 Female Coupler #16 Bulkhead
40		87019286		1	COUPLING, 3/8 Female FF Coupler 8MBF
41		524036		1	NUT, LOCK, Blkhd, 3/4"-16
42		393394A1		1	COUPLING, BREAK AWAY, 1/2 Female Coupler, Quick Disconnect
43		595460		2	NUT, LOCK, Blkhd, 7/8"-14
44		87417308		1	COUPLING, BREAK AWAY, 1/2 Male Coupler, Quick Disconnect
45		{87029963}		1	Tee, 37FI 1/2 X 1/2 X 3/8
46		574342		1	CAP, 37º, 9/16"-18
47		412097		2	BOLT, CARRIAGE, Short NK, M12 x 60, Cl8.8
48		87450046		1	BRACKET
49		87450058		1	TUBE ASSY., Tube, Auxiliary
50		87450057		1	TUBE ASSY., Tube, Auxiliary
51		87450056		1	TUBE ASSY., Tube, High Flow
52		87450055		1	TUBE ASSY., Tube, High Flow
53		87450054		1	TUBE ASSY., Tube, Case Drain
54		395277		2	BOLT, Hex, M12 x 130, 8.8
55		87449943		2	CLAMP

HYDRAULICS - SECONDARY FRONT AUXILIARY

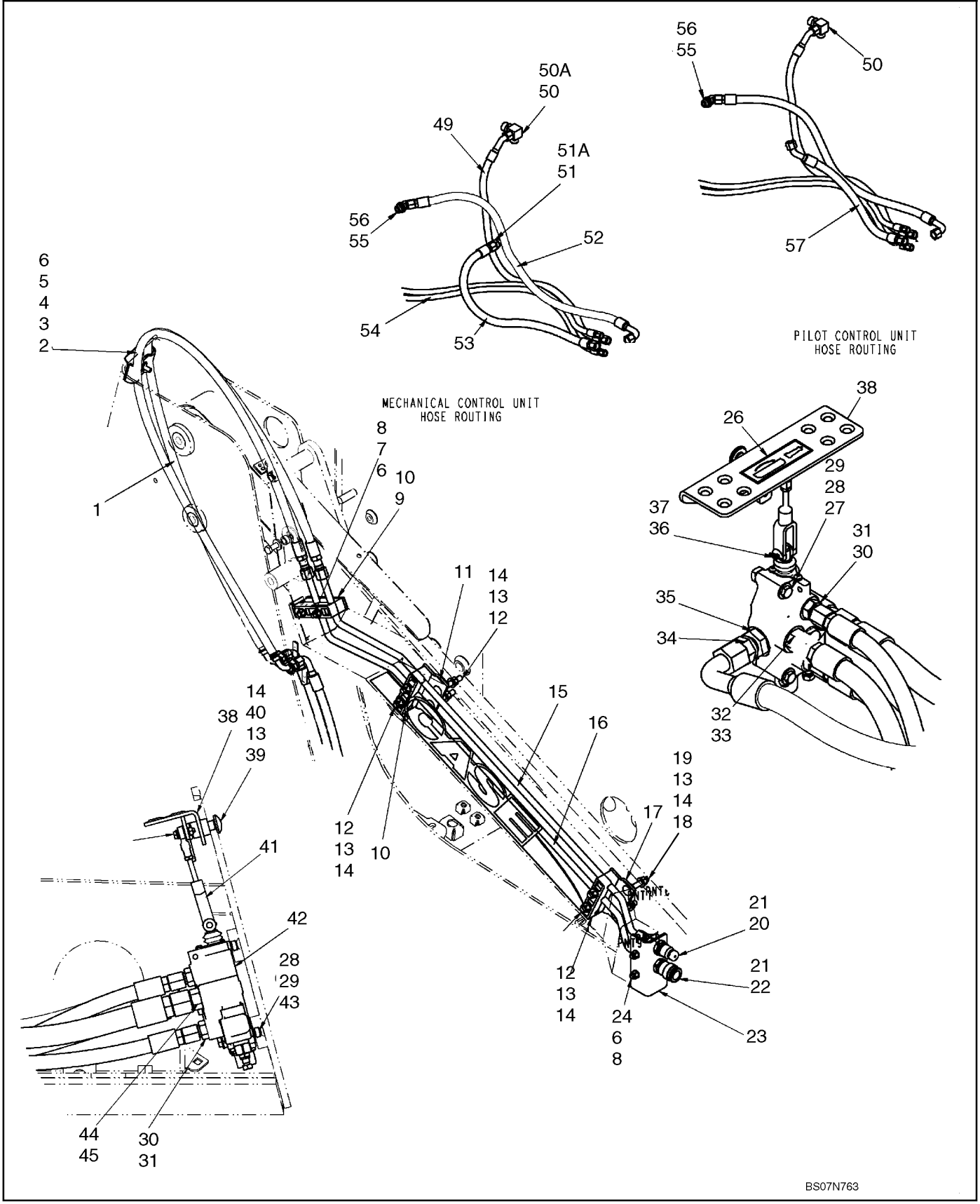

HYDRAULICS - SECONDARY FRONT AUXILIARY

REF	FN	PART NUMBER	YR/SN	QTY	DESCRIPTION
1		87445736		2	HOSE ASSY., Hose, Secondary Auxiliary, 1950mm (76 3/4 in.)
2		436500A1		1	PLATE
3		120069		1	BOLT, Hex, M10 x 50, 8.8
4		276433A1		1	CLAMP
5		87303203		1	SPACER, Spacer, 3/8 Pipe X 19/32 in.
6		140017		5	WASHER, M10 x 20 x 2
7		120073		2	BOLT, Hex, M10 x 80, 8.8
8		86512554		4	NUT, LOCK, M10 x 1.5, Cl 10
9		256976A1		1	BAR
10		87449943		6	CLAMP
11		282954A1		1	SUPPORT, Bracket, Hydraulic Tube Mounting (Rearward)
12		300662		6	BOLT, CARRIAGE, Short NK, M12 x 80, Cl8.8
13		140018		9	WASHER, M12 x 24 x 2.5
14		412672		9	NUT, LOCK, M12 x 1.75, Cl 10
15		87445745		1	TUBE ASSY., Tube, Loader Arm Case Drain
16		87445786		1	TUBE ASSY., Tube, Loader Arm Case Drain
17		282953A1		1	SUPPORT, Bracket, Hydraulic Tube Mounting (Forward)
18		338263		2	BOLT, CARRIAGE, Short NK, M12 x 70, Cl8.8
19		87302487		2	SPACER, Spacer, 1/2 Pipe X 13/32 in.
20		87417308		1	COUPLING, BREAK AWAY, Coupler, 1/2 Male Quick Disconnect
21		595460		2	NUT, LOCK, Blkhd, 7/8"-14
22		393394A1		1	COUPLING, BREAK AWAY, Coupler, 1/2 Female Quick Disconnect
23		87445863		1	PLATE
24		43139		2	SCREW
25		87301328		4	RING, LOCKING, Retaining Ring "E" Style #98 Plated
26		139618A1		1	DECAL, Decal, Auxiliary Hydraulic Control
27		43130		1	BOLT, Hex, M8 x 50, 8.8
28		229197A1		2	NUT
29		86625263		2	WASHER, M8 x 20 x 1.6

HYDRAULICS - SECONDARY FRONT AUXILIARY

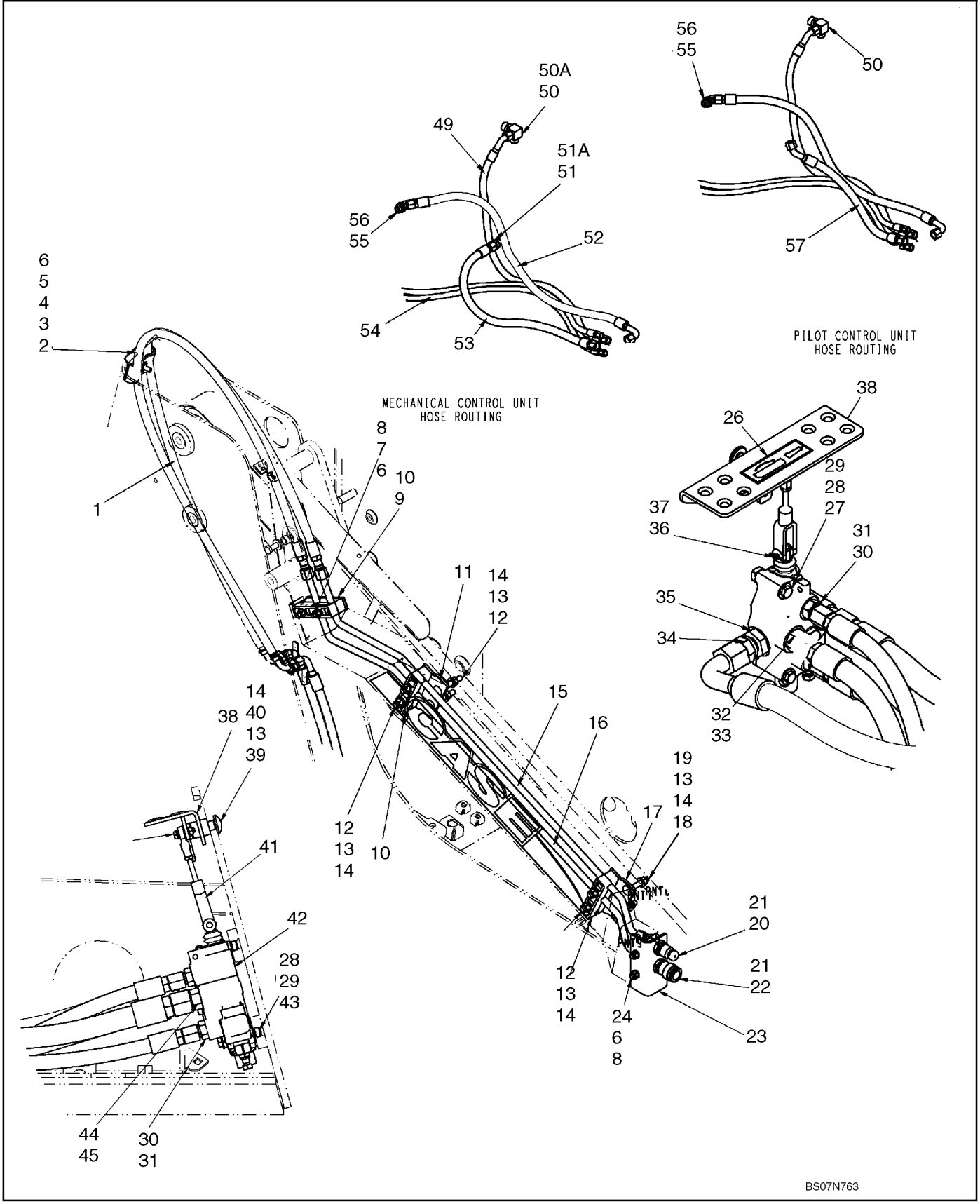

HYDRAULICS - SECONDARY FRONT AUXILIARY

REF	FN	PART NUMBER	YR/SN	QTY	DESCRIPTION
30		128818		2	CONNECTOR, HYD., 3/4"-16, 37° x 3/4"-16, O-Ring, Incl 31
31		128825		2	O-RING, 8-1, 90 Duro, .644" ID x .087" Thk
32		325059		1	CONNECTOR, HYD., 7/8"-14, 37° x 7/8"-14, O-Ring, Incl 33
33		167269		1	O-RING, 10-1, 90 Duro, .755" ID x .097" Thk
34		{87303664}		1	Adapter Tube, 37Fl 5/8 X 3/4
35		129878A1		1	FITTING
36		H32961		1	CLEVIS COUPLING, Clevis Pin, Short
37		D131983		1	PIN, Cotter Ring
38		87423833		1	PEDAL ASSY., Pedal, Auxiliary Hydraulic
39		87033290		1	BOLT, CARRIAGE, Short NK, M12 x 55, Cl8.8
40		L14781		1	BUSHING, Bronze Bushing
42		87017348		1	VALVE, Secondary Auxiliary Valve; See Fig 08-35
43		16044321		1	BOLT, Hex, M8 x 55, 8.8
44		144124		1	CONNECTOR, HYD., 1 1/16"-12, 37° x 7/8"-14, O-Ring, Incl 45
45		167269		1	O-RING, 10-1, 90 Duro, .755" ID x .097" Thk
46		86977786		1	BOLT, Hex, M6 x 25, 8.8
47		86588450		2	WASHER, M6
48		86500688		1	NUT, M6, Cl 10
49		87603114		1	HOSE, Hose, Seconday Auxiliary Return, 1320mm (52 in.)
50		129037A1		1	FITTING, Incl 50A
50A		237-6016		1	O-RING, 16-1, 90 Duro, 1.171" ID x .118" Thk
51		322896		1	CONNECTOR, HYD., 1 1/16"-12, 37° x 1 1/16"-12, O-Ring, Incl 51A
51A		167266		1	O-RING, 12-1, 90 Duro, .924 ID x .116" Thk
52		87451962		1	HOSE ASSY., Hose, Secondary Auxiliary Outlet, 1225mm (48 1/4 in.)
53		87451963		1	HOSE ASSY., Hose, Secondary Auxiliary Inlet, 920mm (36 7/32 in.)
54		87429993		2	HOSE ASSY., Hose, Secondary Auxiliary, 2413mm (95 in.)
55		330344		1	ELBOW, 45°, 1 1/16"-12 x 1 1/16"-12, O-Ring, Incl 56

HYDRAULICS - SECONDARY FRONT AUXILIARY

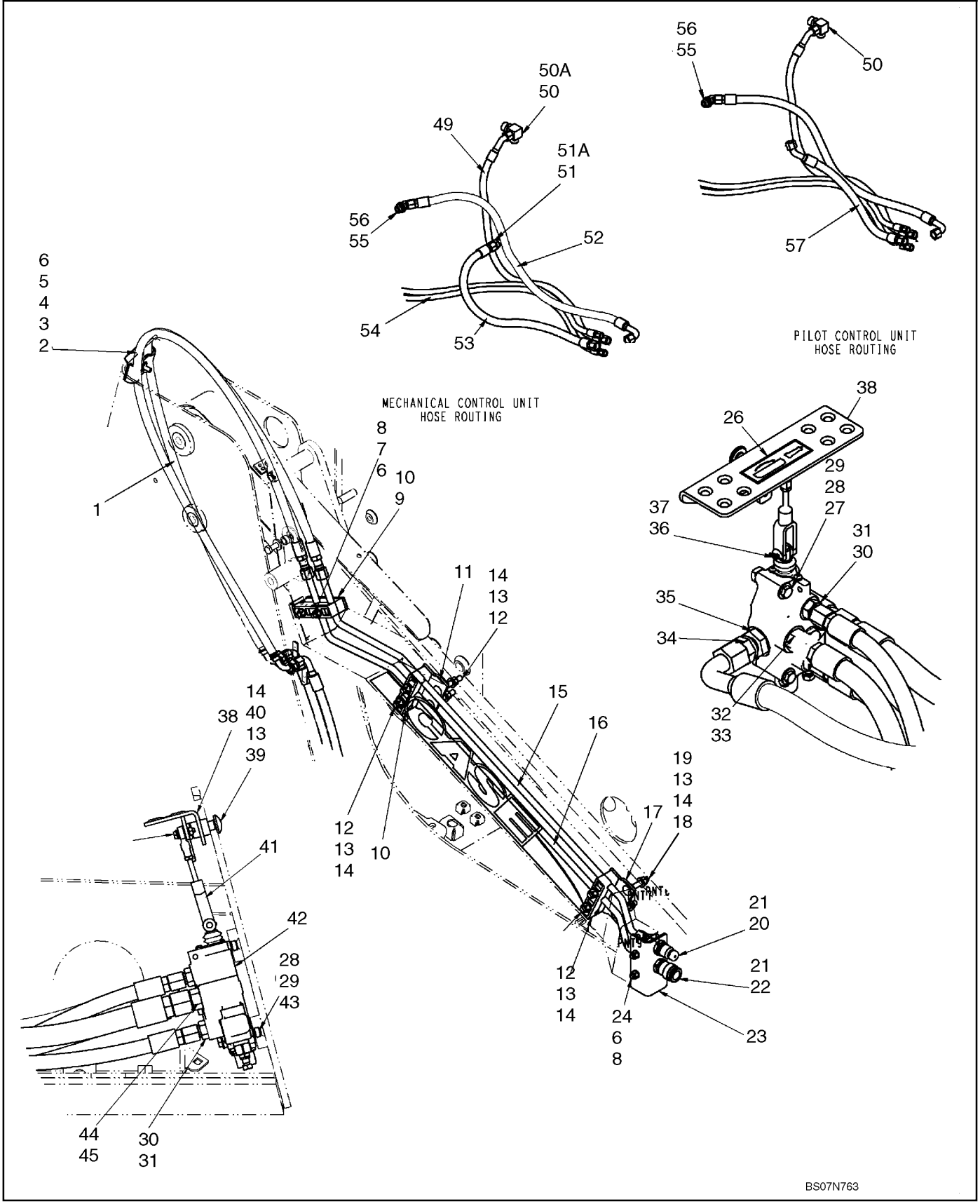

HYDRAULICS - SECONDARY FRONT AUXILIARY

REF	FN	PART NUMBER	YR/SN	QTY	DESCRIPTION
56		167266		1	O-RING, 12-1, 90 Duro, .924 ID x .116" Thk
57		87603115		1	HOSE, Hose, Secondary Auxiliary Inlet, 735mm (28 15/16 in.)
58		87637823		1	DECAL, Decal, CASE Stripe RH; Not Illustrated
59		277197A1		1	COVER, Cover, High Flow Loader Tube; Not Illustrated
60		87389375		1	DECAL, Decal CASE Logo; Not Illustrated

HYDRAULICS - CASE DRAIN

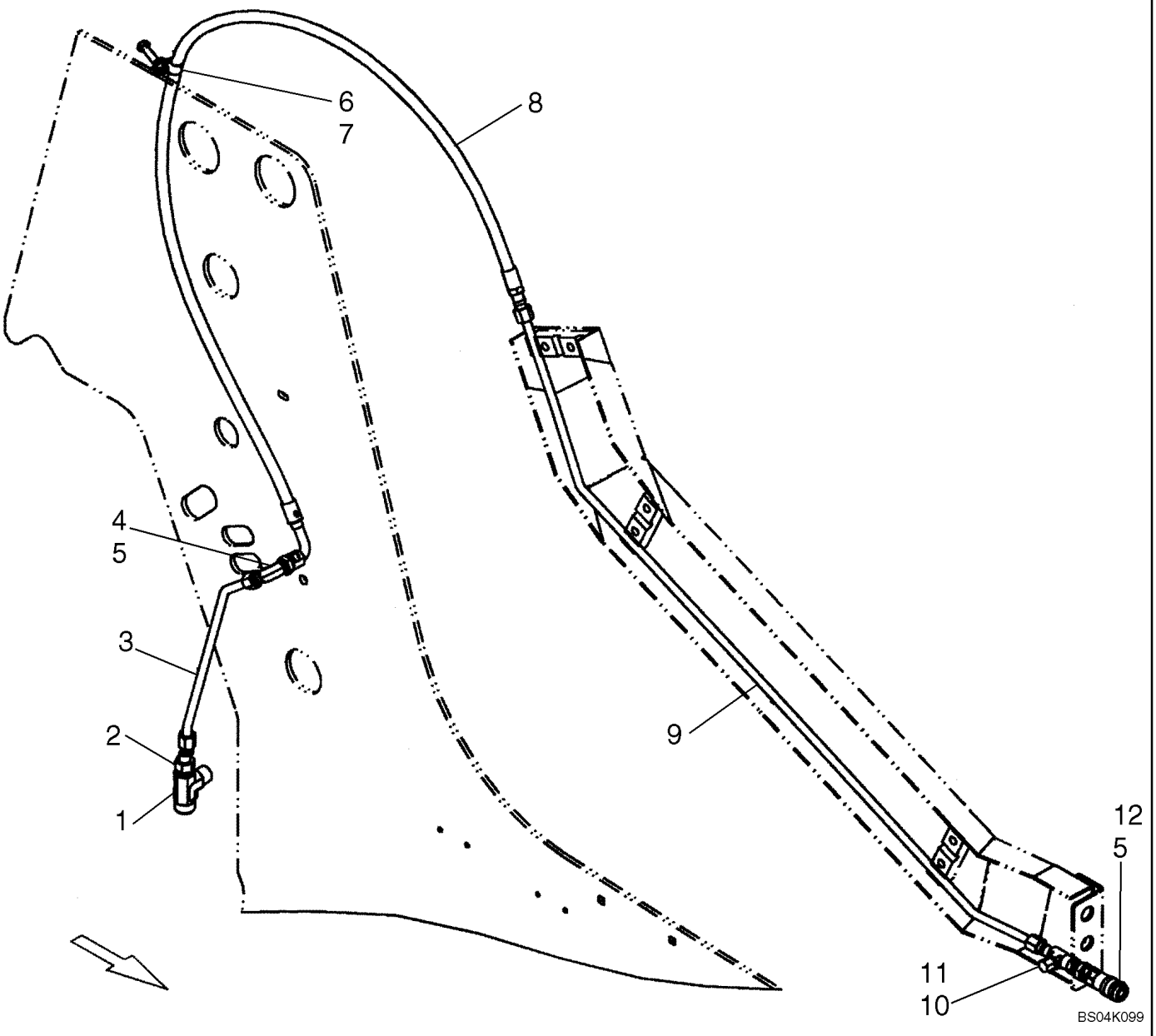

HYDRAULICS - CASE DRAIN

REF	FN	PART NUMBER	YR/SN	QTY	DESCRIPTION
		{87431345}		1	Kit, Loader Arm Case Drain; Incl 1 - 12
1		87039438		1	TEE, 1 5/16"-12, 37º x 7/8"-14, 37º x 3/4"-14, NPTF Br
2		87029966		1	REDUCER, 37º, 7/8"-14, Fem x 3/4"-16 Male
3		87432444		1	TUBE ASSY., Loader Arm Case Drain, Rear
4		248973		1	ELBOW, 90º Blkhd, 3/4"-16, 37º x 3/4"-16, 37º
5		524036		2	NUT, LOCK, Blkhd, 3/4"-16
6		87029955		1	CLAMP, 7/8", Insul, 3/8" Bolt
7		100037		1	NUT, M10 x 1.5, Cl 8
8		87460872		1	HOSE, 1800 mm (70.8 in) Loader Arm Case Drain
9		87449939		1	TUBE ASSY., Case Drain
10		574342		1	CAP, 37º, 9/16"-18
11		218-5492		1	TEE, 37º, 3/4"-16 x 3/4"-16, Fem Sw Run x 9/16"-18 Br
12		87019286		1	COUPLING, .38 Fem

HYDRAULICS - RIDE CONTROL

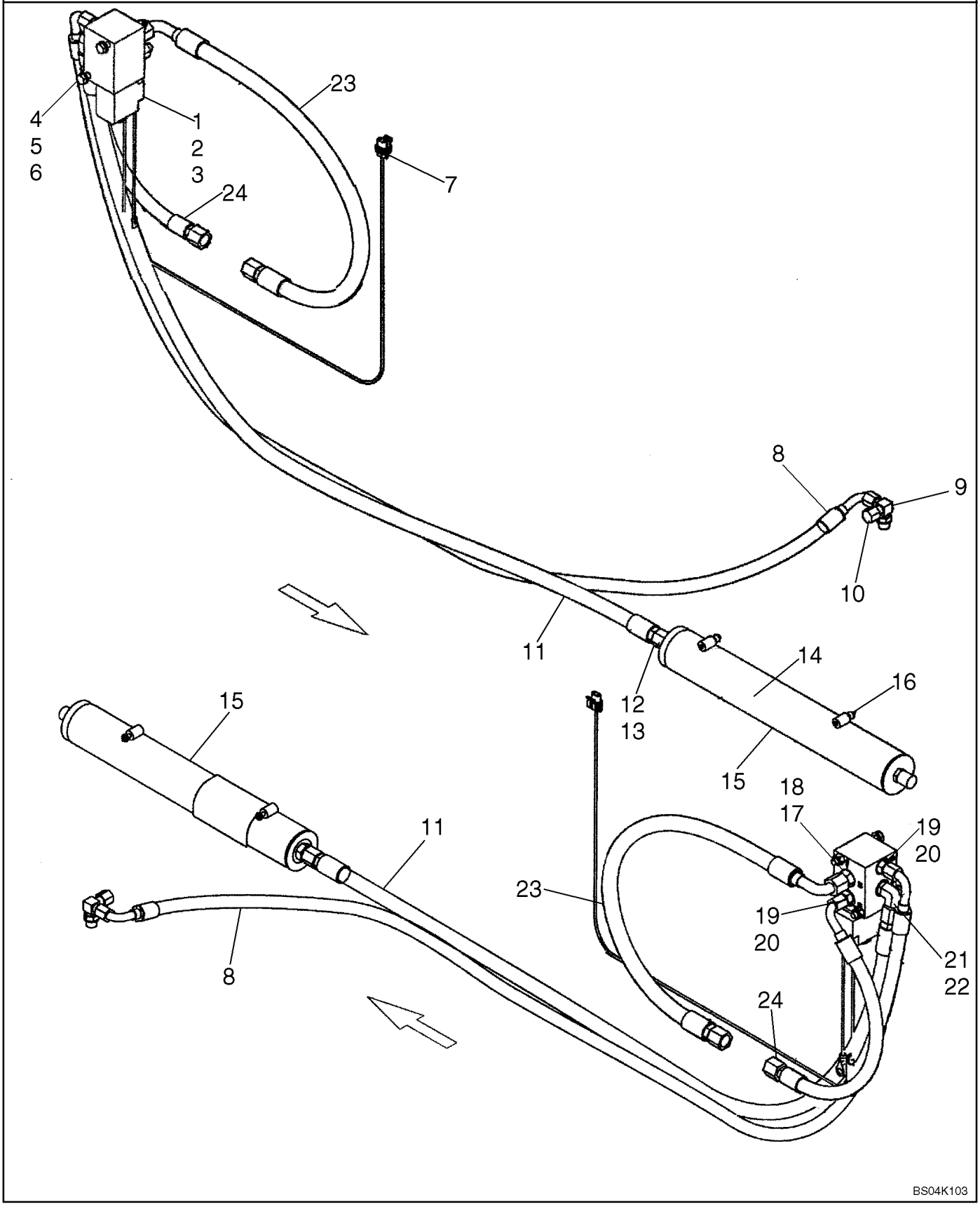

HYDRAULICS - RIDE CONTROL

REF	FN	PART NUMBER	YR/SN	QTY	DESCRIPTION
		87431347		1	DIA KIT, ADDITIONAL PROD., Kit, Ride Control; Incl 1 - 26
1		87428444		1	VALVE, Ride Control; Solenoid; Incl. 2, 3
2		87424684		1	KIT, SEALS, Not Illustrated
3		87424685		1	KIT, REPAIR, Solenoid; Not Illustrated
4		43133		2	BOLT, Hex, M8 x 80, 8.8
5		86624184		2	WASHER, M8 x 16 x 1.6
6		9628098		2	NUT, LOCK, M8 x 1.25, Cl 10
7		310838A1		1	HARNESS, Ride Control
8		87437220		1	HOSE ASSY., Tank To Port T
9		L104616		1	TEE, 90; 3/8 Tube
10		574342		1	CAP, 37º, 9/16"-18
11		87437219		1	HOSE ASSY., Accumulator To Port P
12		128818		1	CONNECTOR, HYD., 3/4"-16, 37º x 3/4"-16, O-Ring, Incl. 13
13		237-6008		1	O-RING, 8-1, 90 Duro, .644" ID x .087" Thk
14		384260A1		1	DECAL, Warning, Pressurized System
15		87403797		1	ACCUMULATOR, Hydraulic
16		86624194		2	CLAMP, HOSE, #36, 1.81/2.75 Type F Worm
17		86509028		1	CONNECTOR, HYD., 3/4"-16, 37º x 9/16"-18, O-Ring, Incl. 18
18		9617873		1	O-RING, 6-1, 90 Duro, .468" ID x .078" Thk
19		76350		2	CONNECTOR, HYD., 9/16"-18, 37º x 9/16"-18, O-Ring, Incl. 20
20		9617873		1	O-RING, 6-1, 90 Duro, .468" ID x .078" Thk
21		86512938		1	ELBOW, 90º, 3/4"-16, 37º x 9/16"-18, O-Ring, Incl. 22
22		9617873		1	O-RING, 6-1, 90 Duro, .468" ID x .078" Thk
23		87437221		1	HOSE ASSY., Lift Cylinder Base To Port C2
24		87437222		1	HOSE ASSY., Lift Cylinder Base To Port C1
25		255927A1		1	DECAL, Warning, Ride Control; Not Illustrated
26		304083A1		2	DECAL, Name, Ride Control; Not Illustrated

HYDRAULICS - COUPLER SYSTEM

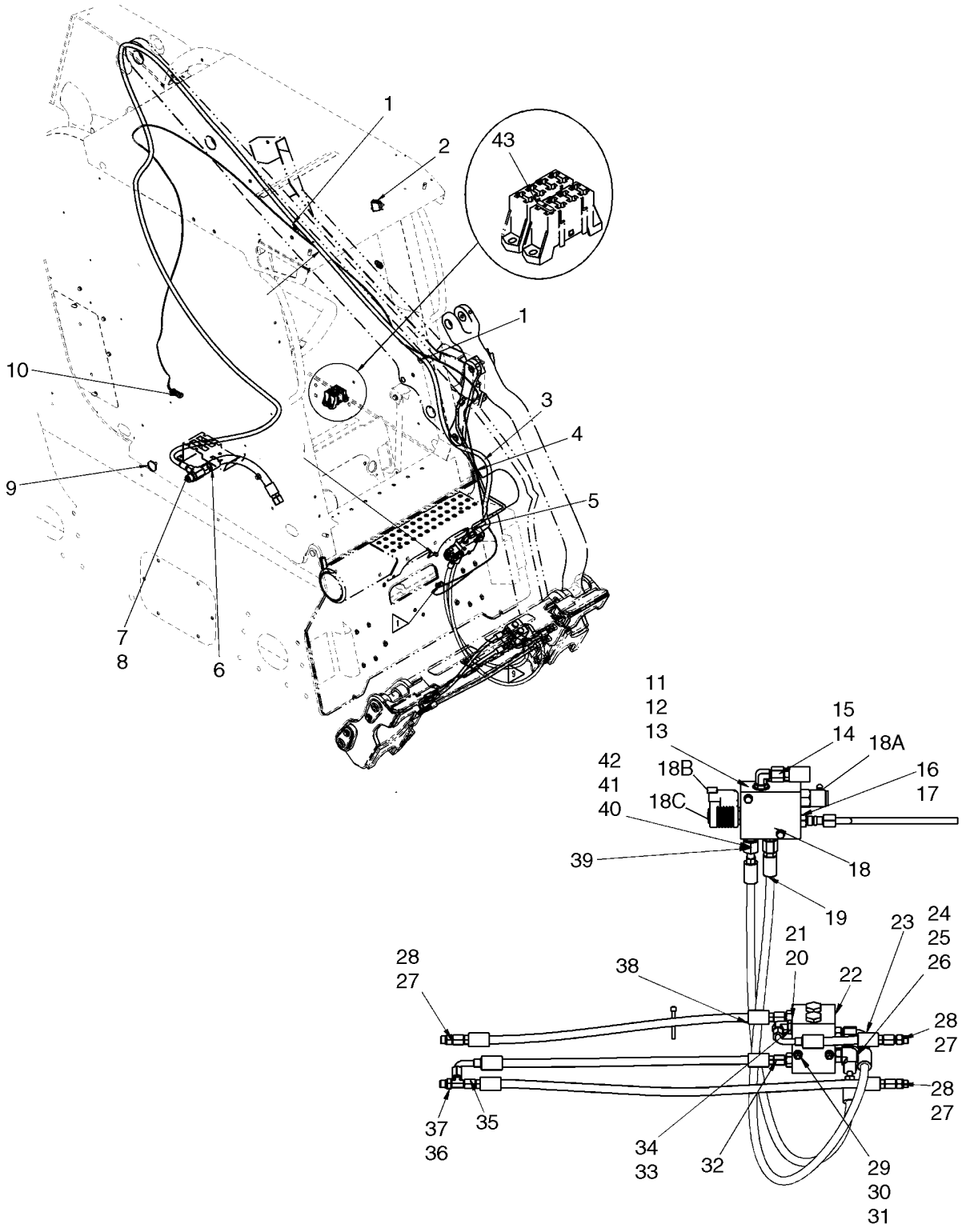

HYDRAULICS - COUPLER SYSTEM

REF	FN	PART NUMBER	YR/SN	QTY	DESCRIPTION
		87710780		1	KIT, SERVICE, Kit, Hydraulic Coupler; Incl 1 - 44
1		86639005		2	CLAMP, 5/8", Insul, 1/2" Bolt
2		87642911		1	SWITCH, Rocker Switch, Hydraulic Coupler
3		87370212		1	HOSE, Hose, Hydraulic Coupler Pressure, 5130mm (202 in.)
4		87458917		1	TUBE ASSY., Tube, Hydraulic Coupler Drain
5		87426838		1	BRACKET, Valve Bracket
6		87547015		1	HOSE, Hose, Valve Supply, 412mm (16 7/32 in.)
7		87399014		1	ADAPTER, Tee, 3/4 X 3/4 X 5/8 37Fl; Incl 8
8		167266		1	O-RING, 12-1, 90 Duro, .924 ID x .116" Thk
9		L11541		10	STRAP, CABLE
10		87446983		1	HARNESS, WIRE, Hydraulic Coupler Harness
11		353308		2	NUT, LOCK, M6 x 1, Cl 8
12		86588450		2	WASHER, M6
13		120056		2	BOLT, Hex, M6 x 50, 8.8
14		76344		1	ELBOW, 90º, 9/16"-18, 37º x 9/16"-18, O-Ring, Incl 15
15		9617873		1	O-RING, 6-1, 90 Duro, .468" ID x .078" Thk
16		76350		3	CONNECTOR, HYD., 9/16"-18, 37º x 9/16"-18, O-Ring, Incl 17
17		9617873		3	O-RING, 6-1, 90 Duro, .468" ID x .078" Thk
18		87421480		1	VALVE, HYDRAULIC, Valve, Sequence Hydraulic Coupler; Incl 18A, 18B, 18C
18A		87562923		1	VALVE, Sequence Valve
18B		87433496		1	COIL
18C		87562926		1	VALVE, Solenoid Valve
19		87437471		1	HOSE ASSY., Hose, Coupler, 860mm (33 11/16 in.)
20		139398		2	CONNECTOR, HYD., 7/16"-20, 37º x 9/16"-18, O-Ring, Incl 21
21		9617873		2	O-RING, 6-1, 90 Duro, .468" ID x .078" Thk
22		294741A1		1	VALVE, CHECK
23		294747A1		1	HOSE ASSY., Hose, Coupler Cylinder Base, 176mm (6 15/16 in.)
24		9840542		1	ELBOW, 90º, 9/16"-18 x 9/16"-18, Adj, ORFS, Incl 25, 26
25		165202		1	O-RING, 4-1, 90 Duro, .351" ID x .072" Thk

HYDRAULICS - COUPLER SYSTEM

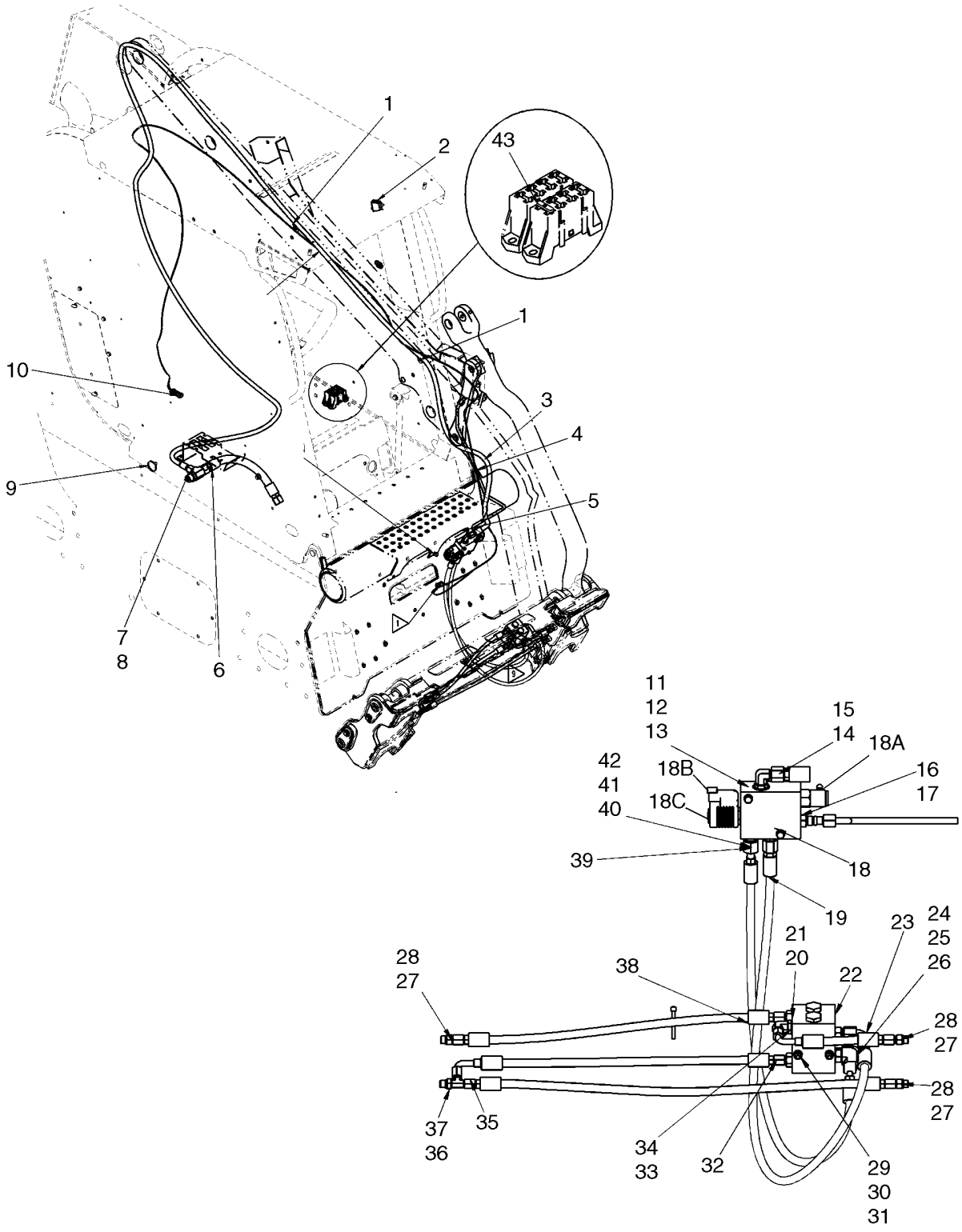

HYDRAULICS - COUPLER SYSTEM

REF	FN	PART NUMBER	YR/SN	QTY	DESCRIPTION
26		9617873		1	O-RING, 6-1, 90 Duro, .468" ID x .078" Thk
27		265235		3	CONNECTOR, HYD., 7/16"-20, 37º x 7/16"-20, O-Ring, Incl 28
28		165202		3	O-RING, 4-1, 90 Duro, .351" ID x .072" Thk
29		86624181		4	WASHER, M6
30		87030561		2	NUT, LOCK, M6 x 1, Cl 8
31		86508570		2	BOLT, Hex, M6 x 80, 8.8
32		87437473		1	HOSE ASSY., Hose, Coupler Cylinder Rod End, 500mm (19 11/16 in.)
33		86512934		1	ELBOW, 90º, 7/16"-20, 37º x 9/16"-18, O-Ring, Incl 34
34		9617873		1	O-RING, 6-1, 90 Duro, .468" ID x .078" Thk
35		87437472		1	HOSE ASSY., Hose, Coupler Cylinder Connection, 640mm (25 3/16 in.)
36		86513019		1	TEE, 7/16"-20, 37º x 7/16"-20, O-Ring Run, Incl 37
37		165202		1	O-RING, 4-1, 90 Duro, .351" ID x .072" Thk
38		294884A1		1	HOSE ASSY., Hose, Coupler Cylinder Base, 506mm (19 15/16 in.)
39		87426493		1	HOSE ASSY., Hose, Coupler, 830mm (32 11/16 in.)
40		9993143		1	CONNECTOR, HYD., 11/16"-16 ORFS x 9/16"-18 ORB, Incl 41, 42
41		9993141		1	O-RING, -012, 90 Duro, .364" ID x .070" Thk
42		9617873		1	O-RING, 6-1, 90 Duro, .468" ID x .078" Thk
43		A149800		1	FUSE, Fuse, 10 Amp
44		120104		2	BOLT, Hex, M8 x 20, 8.8

08-11		p1	12/07

CYLINDER - LOADER BUCKET

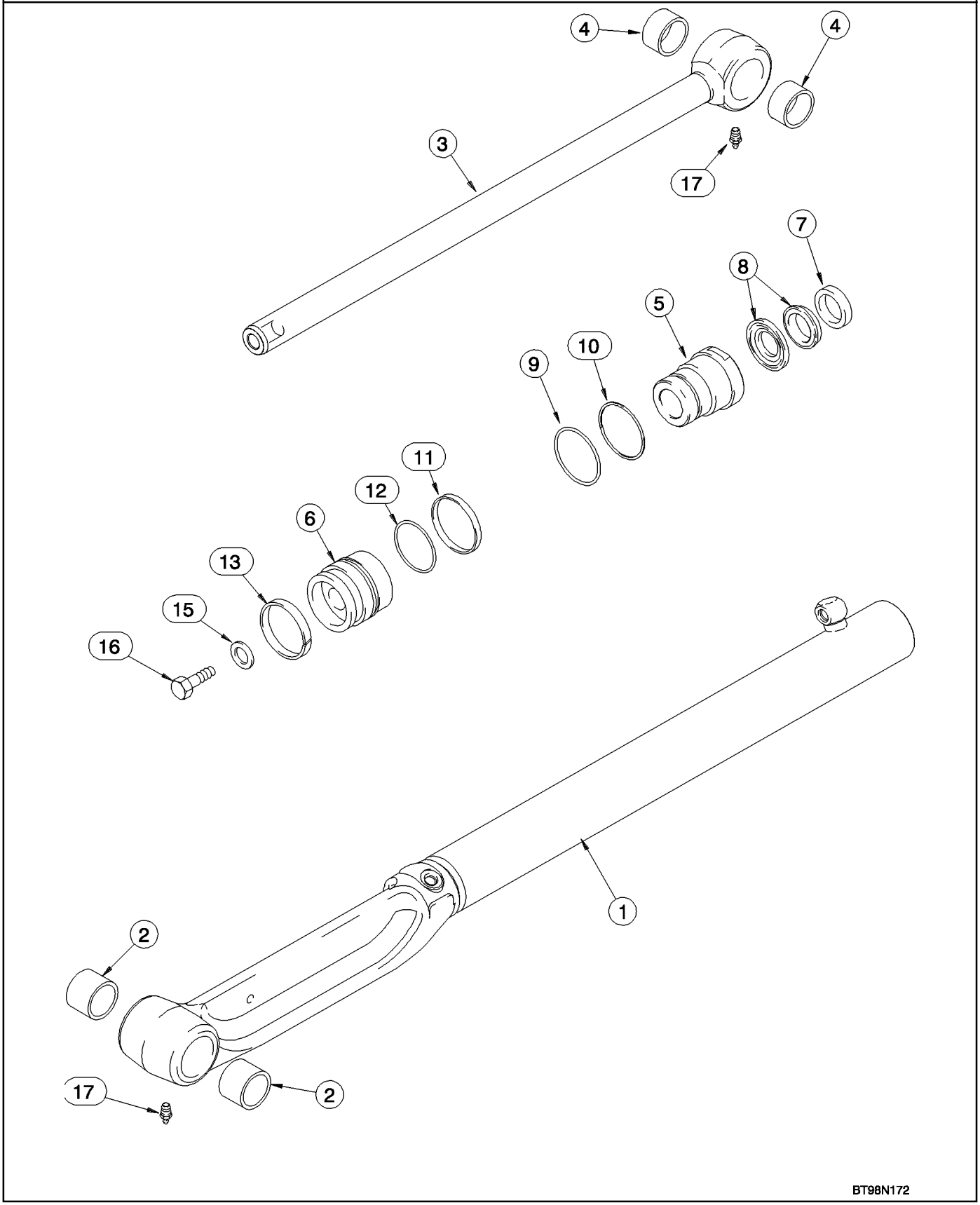

CYLINDER - LOADER BUCKET

REF	FN	PART NUMBER	YR/SN	QTY	DESCRIPTION
		327411A1		2	CYLINDER STEERING, 63 ID x 590 mm strk; Loader Bucket; Incl. 1 - 17
1		327412A1		1	SLEEVE, HYD CYL, Incl. 2
2		190753A1		2	BUSHING, LARGE
3		327745A1		1	ROD, PISTON, Incl. 4
4		226967A1		2	BUSHING
5		117830A2		1	GLAND, Packing
6		S220090		1	PISTON
		128725A1		1	KIT, GASKET, Incl. 7 - 13
7		D95142		1	SEAL
8		1542874C1		1	PACKAGE, Not Serviced Separately; Rod And Buffer Seal; Order 128725A1
9		238-5228		1	O-RING, -228, 70 Duro, 2.234" ID x .139" Thk
10		G109297		1	BACK-UP RING
11		G33140		1	RING, Piston
12		238-5226		1	O-RING, -226, 70 Duro, 1.984" ID x .139" Thk, Loader
13		G100714		1	RING
15		G32317		1	WASHER
16		328-1232		1	BOLT, Hex, 3/4-16 x 2", G8, Full Thd
17		219-1		1	NIPPLE, LUBE, 1/8"-27 x .66 lg

08-12		p1	12/07

CYLINDER - LOADER LIFT

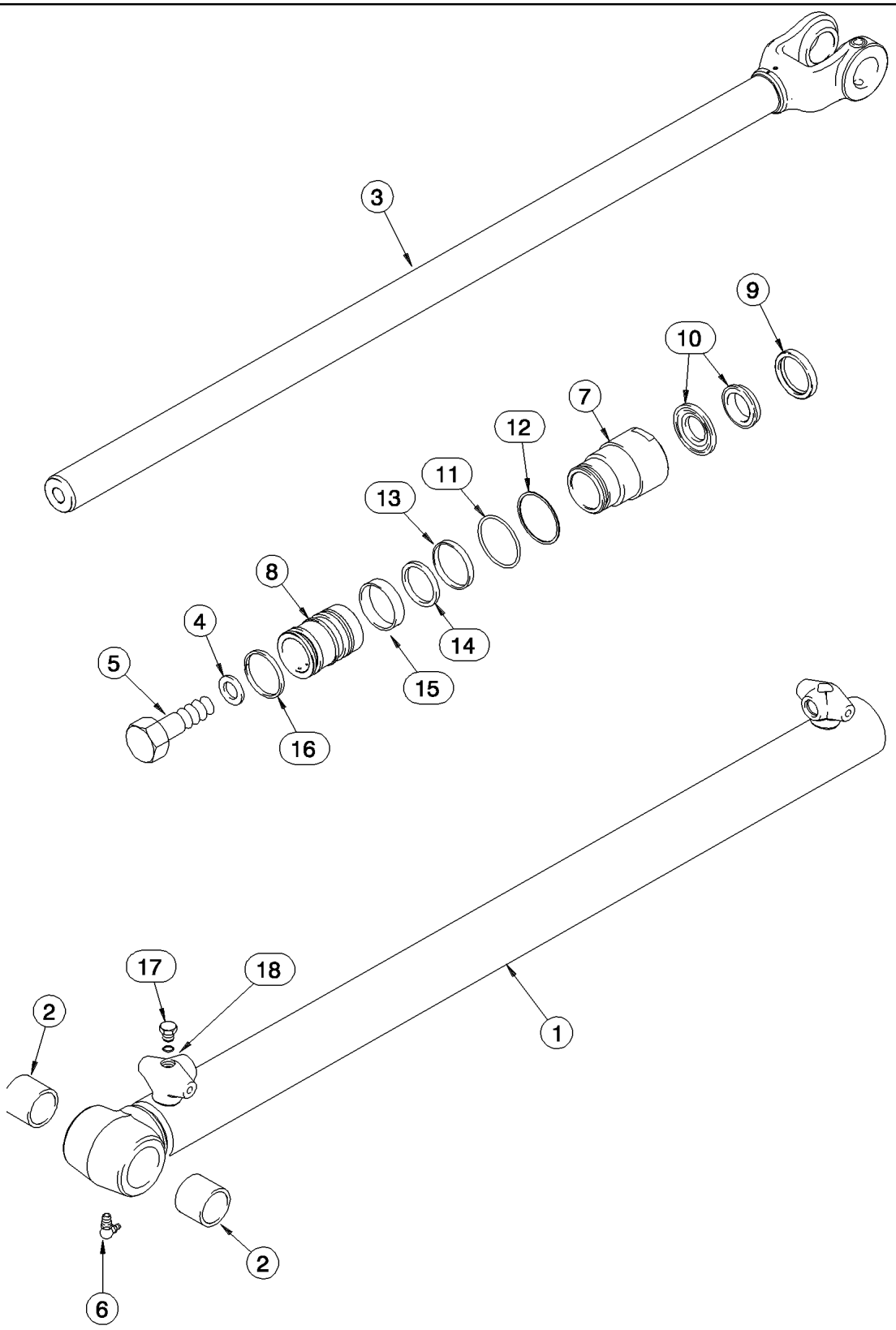

CYLINDER - LOADER LIFT

REF	FN	PART NUMBER	YR/SN	QTY	DESCRIPTION
		308258A2		2	CYLINDER ASSY., 57 ID x 970 mm strk; Loader Lift; Inc. 1 - 18
1		308259A1		1	CYLINDER ASSY., Incl. 2
2		293052A1		2	RING
3		329826A1		1	STEM, 45 mm OD
4		G32317		1	WASHER
5		25863R1		1	BOLT, Hex, 3/4-16 x 2 1/2", G8, 3/4 NF x 2-1/2;8
6		219-55		1	NIPPLE, LUBE, 90º, 1/8" NPT x .84" lg, 90 deg, 1/8 PT x 27/32
7		279216A2		1	GLAND
8		191074A1		1	JACK PISTON
		231726A3			KIT, GASKET, Incl. 9 - 16
9		D95143		1	SEAL
8		1542875C1		1	KIT, SEALS, Not Serviced Separately; Rod And Buffer Seal; Order 198376A2
11		238-5226		1	O-RING, -226, 70 Duro, 1.984" ID x .139" Thk
12		189122A1		1	BACK-UP RING
13		190853A1		1	SEAL, Piston
14		190854A1		1	GASKET, Loader
15		190855A1		1	RING
16		191190A1		1	RING, Cast Iron
17		9625178		1	PLUG, Hex Soc, 9/16"-18 ORB, 9/16 Or
18		237-6006		1	O-RING, 6-1, 90 Duro, .468" ID x .078" Thk

HIGH FLOW

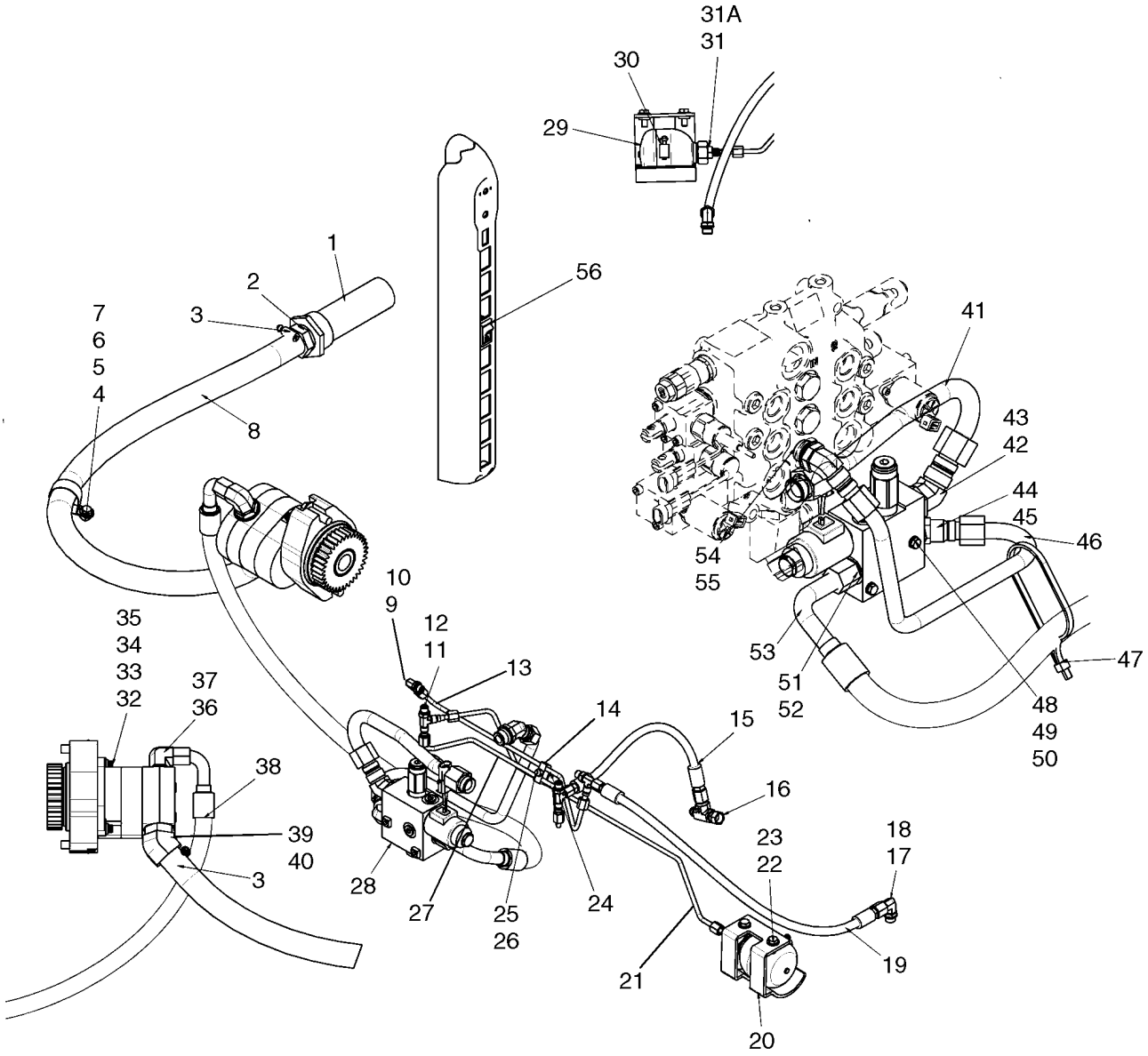

BS07K397

HIGH FLOW

REF	FN	PART NUMBER	YR/SN	QTY	DESCRIPTION
		87618732		1	KIT, SERVICE, Kit, High Flow Bi-Directional Gear; Incl 1 - 56 And Fig 08-06 And Fan
1		189310A1		1	STRAINER ASSY., Suction Line Filter
2		{86643479}		1	Stem Straight Bead Hose 1.25ID X 1.25 NPTF
3		87039085		2	CLAMP, HOSE, 1.25/2.125 HD Worm
4		229197A1		1	NUT
5		120103		1	BOLT, Hex, M8 x 16, 8.8
6		86625263		1	WASHER, M8 x 20 x 1.6
7		603022		1	CLAMP, 1 3/4", Insul, 3/8" Bolt
8		87353004		1	HOSE ASSY., Hose, High Flow Suction, 1000mm (39 3/8 in.)
9		216773		1	ELBOW, 90º, 7/16"-20, 37º x 7/16"-20, O-Ring, Incl 10
10		165202		1	O-RING, 4-1, 90 Duro, .351" ID x .072" Thk
11		86513019		3	TEE, 7/16"-20, 37º x 7/16"-20, O-Ring Run, Incl 12
12		165202		3	O-RING, 4-1, 90 Duro, .351" ID x .072" Thk
13		87018051		1	TUBE ASSY., Pilot Pressure
14		608089		1	CLAMP
15		87353114		1	HOSE ASSY., Charge Pressure, 325mm (12 13/16 in.)
16		87438766		1	TEE
17		76344		1	ELBOW, 90º, 9/16"-18, 37º x 9/16"-18, O-Ring, Incl 18
18		9617873		1	O-RING, 6-1, 90 Duro, .468" ID x .078" Thk
19		87427370		1	HOSE ASSY., 610mm (24 in.)
20		87672246		1	BRACKET
21		87458744		1	TUBE ASSY., Pilot Pressure
22		120104		2	BOLT, Hex, M8 x 20, 8.8
23		322358		2	WASHER, SPRING, Belleville, M8
24		80272535		1	CLAMP, WIRE
25		86977786		1	BOLT, Hex, M6 x 25, 8.8
26		87030561		1	NUT, LOCK, M6 x 1, Cl 8
27		87438840		1	TUBE ASSY., Pilot Pressure
28		87012669		1	VALVE, Combination Valve; See Fig 08-14
29		87376969		1	ACCUMULATOR
30		86625032		1	CLAMP, HOSE, #48, 2.56/3.50 Type F Worm

HIGH FLOW

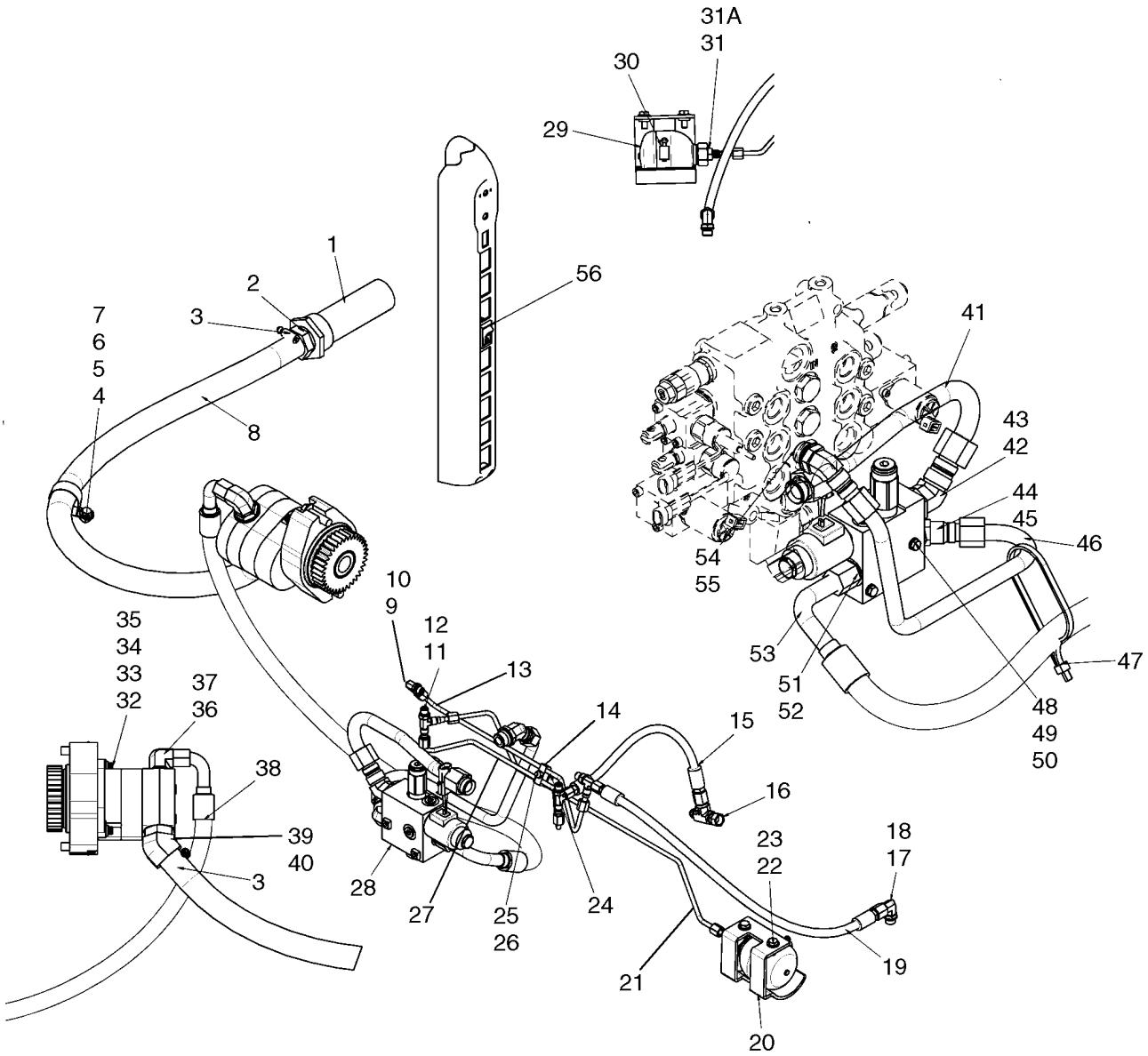
31A
31
30
29
56
1
2
3
7
6
5
4
8
41
43
42
44
45
46
54
55
10
9
12
11
13
35
34
33
32
37
36
38
39
40
3
14
15
16
18
17
23
22
28
27
25
26
24
21
19
20
53
51
52
48
49
50
47
BS07K397

HIGH FLOW

REF	FN	PART NUMBER	YR/SN	QTY	DESCRIPTION
31		139398		1	CONNECTOR, HYD., 7/16"-20, 37° x 9/16"-18, O-Ring, Incl 31A
31A		9617873		1	O-RING, 6-1, 90 Duro, .468" ID x .078" Thk
32		87428636		1	PTO, PTO Kit; Incl (1) PTO, (2) Screws, (1) Gasket
33		87020734		1	PUMP, Gear Pump; See Fig 06-21
34		272310		1	O-RING, -042, 70 Duro, 3.239" ID x .070" Thk
35		87016486		2	SCREW, 12 Pt Hd, M10 x 30, 12.9
36		84570		1	ELBOW, 90°, 7/8"-14, 37° x 1 1/16"-12, O-Ring, Incl 37
37		167266		1	O-RING, 12-1, 90 Duro, .924 ID x .116" Thk
38		87353007		1	HOSE ASSY., 1185mm (46 21/32 in.)
39		87033824		1	FITTING, 45°, 1 1/4" Hose x 1 5/16"-12 ORB Beaded, Incl 40
40		237-6016		1	O-RING, 16-1, 90 Duro, 1.171" ID x .118" Thk
41		87436470		1	TUBE ASSY., High Flow Return
42		330344		1	ELBOW, 45°, 1 1/16"-12 x 1 1/16"-12, O-Ring, Incl 43
43		167266		1	O-RING, 12-1, 90 Duro, .924 ID x .116" Thk
44		86512996		1	ELBOW, 45°, 7/8"-14 x 3/4"-16, O-Ring, Incl 45
45		128825		1	O-RING, 8-1, 90 Duro, .644" ID x .087" Thk
46		87436469		1	TUBE ASSY., High Flow Supply
47		L18331		1	STRAP, CABLE
48		338413		2	BOLT, Hex, M6 x 60, 8.8
49		86588450		2	WASHER, M6
50		87404992		2	NUT
51		86071		1	CONNECTOR, HYD., 7/8"-14, 37° x 3/4"-16, O-Ring, Incl 52
52		128825		1	O-RING, 8-1, 90 Duro, .644" ID x .087" Thk
53		87414842		1	HOSE ASSY., High Flow Supply, 1050mm (41 11/32 in.)
54		330345		1	ELBOW, 45°, 7/8"-14 x 7/8"-14, O-Ring, Incl 55
55		167269		1	O-RING, 10-1, 90 Duro, .755" ID x .097" Thk
56		87414769		1	SWITCH, Rocker Switch, High Flow

CONTROL VALVE ASSEMBLY - HIGH FLOW

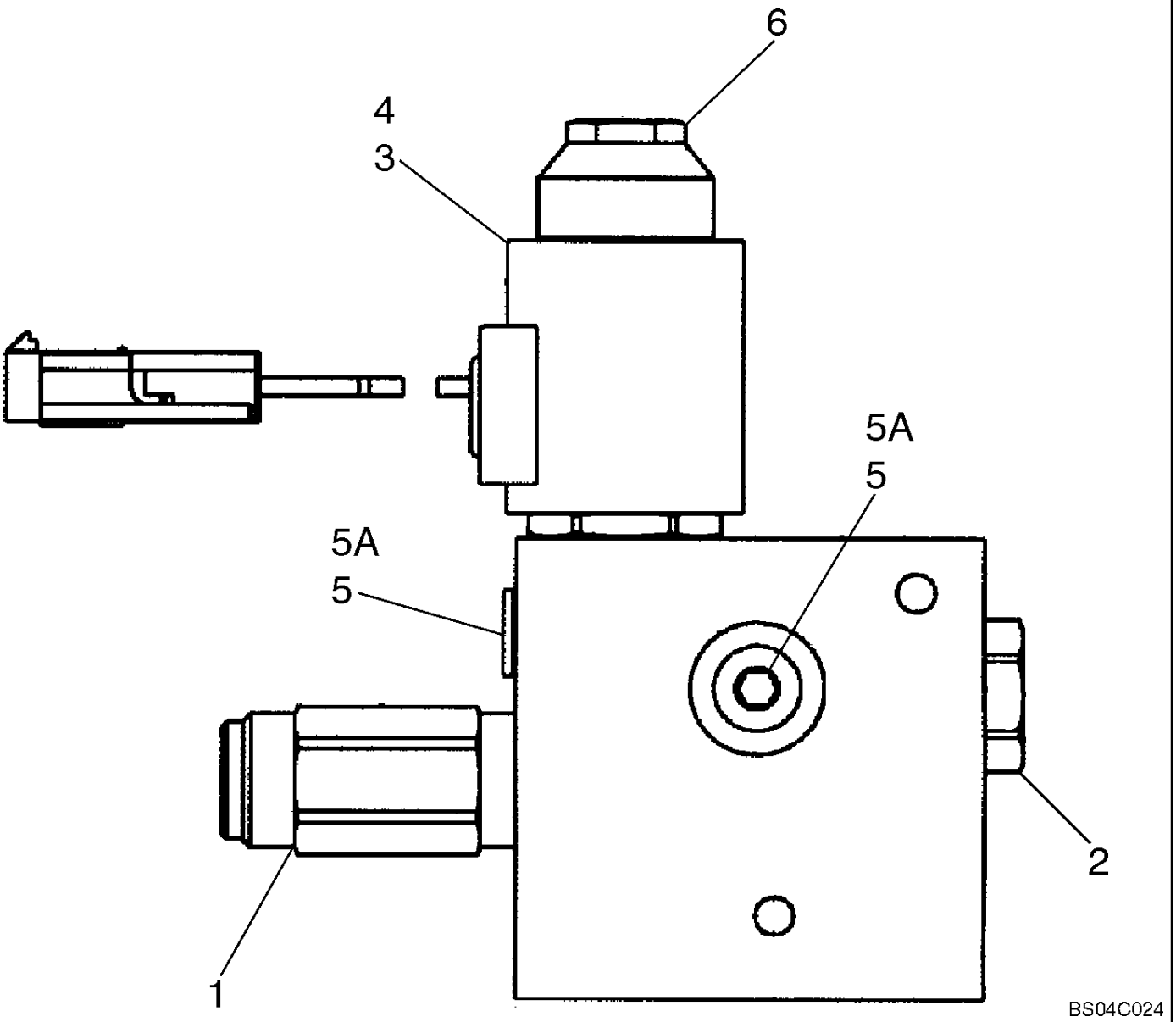

CONTROL VALVE ASSEMBLY - HIGH FLOW

REF	FN	PART NUMBER	YR/SN	QTY	DESCRIPTION
		87012669		1	VALVE, Combination Valve; High Flow; Incl. 1 - 6 And Seal Kit 86527863
1		87447123		1	VALVE, Relief Valve; Component Parts Not Serviced Separately
2		86527866		1	VALVE, HYDRAULIC, Check Valve; Component Parts Not Serviced Separately
3		86527861		1	VALVE, HYDRAULIC, Cartridge; Component Parts Not Serviced Separately
4		87447124		1	SOLENOID
5		76349		2	PLUG, Hex Hd, 9/16"-18 ORB, Incl. 5A
5A		9617873		1	O-RING, 6-1, 90 Duro, .468" ID x .078" Thk
6		86527865		1	NUT
		86527863		1	KIT, SEALS, Not Illustrated

08-15		p1	12/07

CONTROL VALVE - 87546975 VALVE ASSY

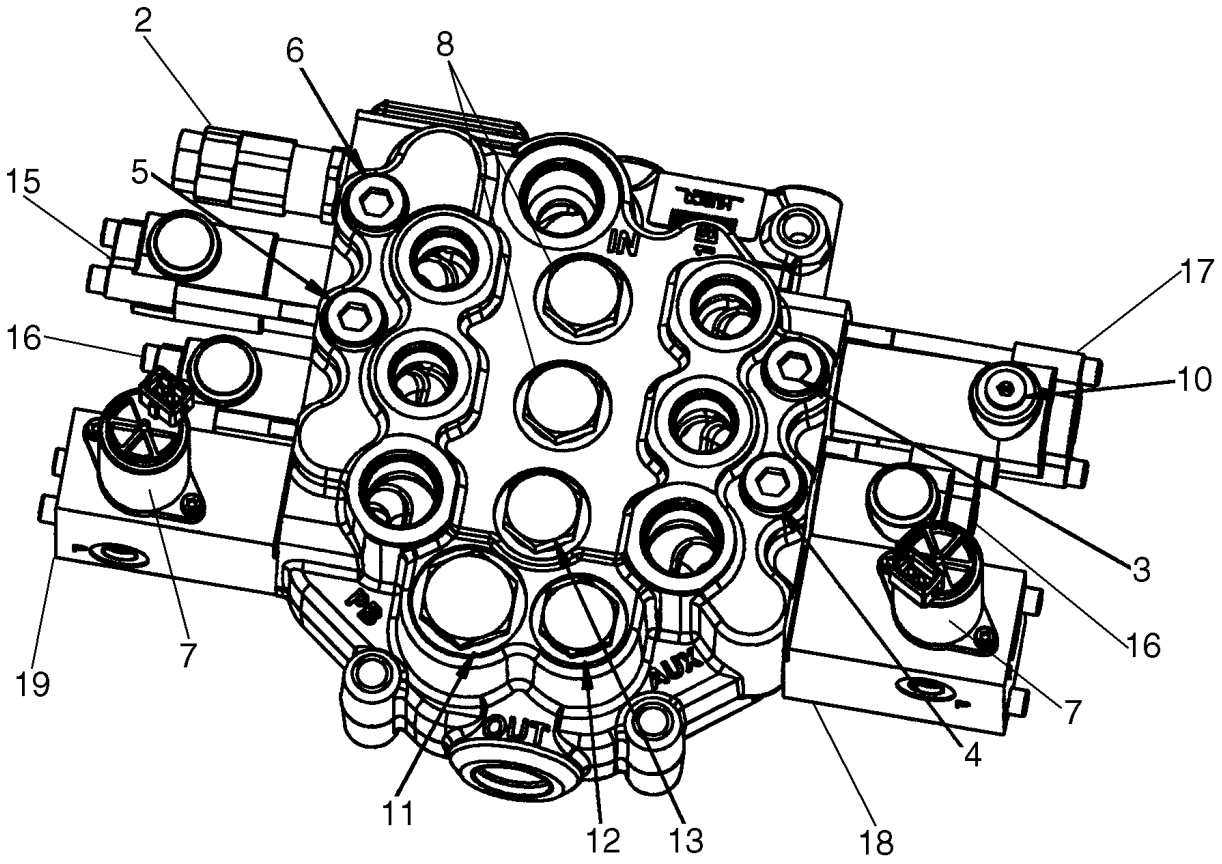

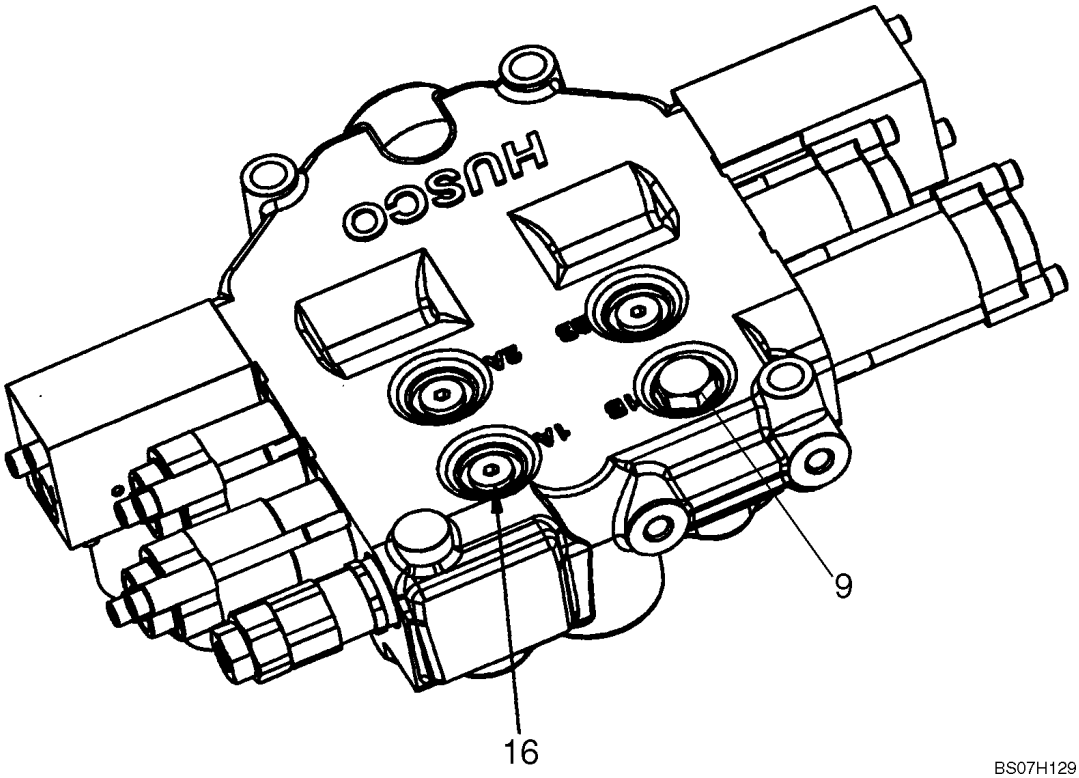

BS07H129

CONTROL VALVE - 87546975 VALVE ASSY

REF	FN	PART NUMBER	YR/SN	QTY	DESCRIPTION
		87546975		1	VALVE, HYDRAULIC, Manual Control Valve; Pilot Control Models With Hydraulic Attachment
1		87610517		1	KIT, SEALS, Seal Replacement Kit; See Fig. 08-19
2		87610350		1	VALVE, Main Relief Valve, 210 Bar (3050 psi); See Fig. 08-21
3		87576153		1	VALVE, Workport Relief Valve, 215 Bar; See Fig. 08-22
4		87445935		1	VALVE, Workport Relief Valve, 230 Bar; See Fig. 08-22
5		87445943		1	VALVE, Workport Relief Valve, 260 Bar; See Fig. 08-22
6		87445932		1	VALVE, Workport Anti-Cavitation; See Fig. 08-22
7		87576154		2	VALVE, SOLENOID, High Flow Solenoids For EH Auxiliary; See Fig. 08-33
8		87576157		2	VALVE, DAMPING, Check Valve Group; See Fig. 08-24
9		87610351		1	VALVE, Check Valve Group; See Fig. 08-24
10		87610530		1	PLUG, Plug Assy
11		87576158		1	PLUG, Assembly; See Fig. 08-24
12		87576160		1	PLUG, Assembly; See Fig. 08-24
13		87576161		1	PLUG, Assembly
14		87576162		1	PLUG, Assembly, Metric; Not Illustrated; See Fig. 08-24
15		87610531		1	SPOOL, Spool End Group; See Fig. 08-28
16		87610532		1	SPOOL, Spool End Group; See Fig. 08-27
17		87610533		1	SPOOL, Spool End Group; See Fig. 08-26
18		87611845		1	SPOOL, Spool End Group; EHPV; Incl. Ref 7; See Fig. 08-33
19		87611846		1	SPOOL, Spool End Group; EHPV; Incl. Ref 7; See Fig. 08-34

CONTROL VALVE - 87583286 VALVE ASSY

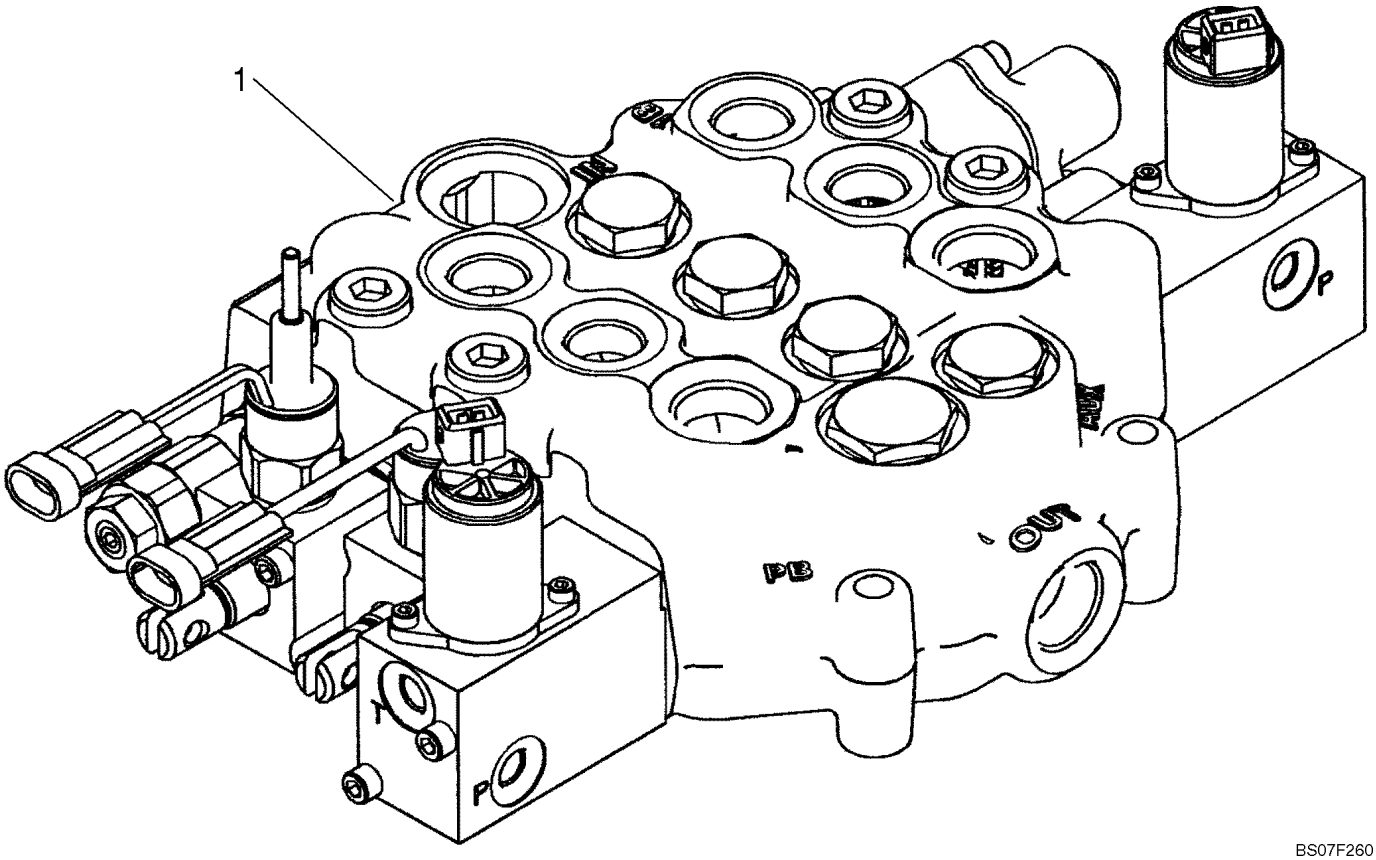

BS07F260

CONTROL VALVE - 87583286 VALVE ASSY

REF	FN	PART NUMBER	YR/SN	QTY	DESCRIPTION
1		87583286		1	VALVE, Incl. 2 - 23
2		87610349		1	KIT, SEALS, Seal Replacement Kit; See Fig 08-20
3		87610350		1	VALVE, Main Relief Valve; See Fig 08-21
4		87576153		1	VALVE, Workport Relief Valve; See Fig 08-22
5		87445935		1	VALVE, Workport Relief Valve; See Fig 08-22
6		87445943		1	VALVE, Workport Relief Valve; See Fig 08-22
7		87445932		1	VALVE, Workport Anti-Cavitation; See Fig 08-22
8		87445988		1	SOLENOID, Spool Lock Out Solenoid Manual; See Fig 08-29
9		87445987		1	SOLENOID, Spool Lock Out Solenoid Non-Manual; See Fig 08-30
10		87576154		2	VALVE, SOLENOID, Hi-Flow Solenoids For EH Auxiliary; See Fig 08-33
11		87576157		3	VALVE, DAMPING, Check Valve Group; See Fig 08-24
12		87610351		1	VALVE, Check Valve Group; See Fig 08-24
13		87576158		1	PLUG, See Fig 08-24
14		87576160		1	PLUG, See Fig 08-24
15		87576161		1	PLUG
16		87610352		3	PLUG, Plug
17		87576162		1	PLUG, See Fig 08-24
18		87576163		1	SPOOL, Detent; See Fig 08-31
19		87576169		1	SPOOL, See Fig 08-32
20		87611845		1	SPOOL, EHPV; See Fig 08-33
21		87611846		1	SPOOL, EHPV; See Fig 08-34
22		87611848		1	SPOOL, Spool; See Fig 08-30
23		87611849		1	SPOOL, See Fig 08-29

CONTROL VALVE - 87583285 VALVE ASSY

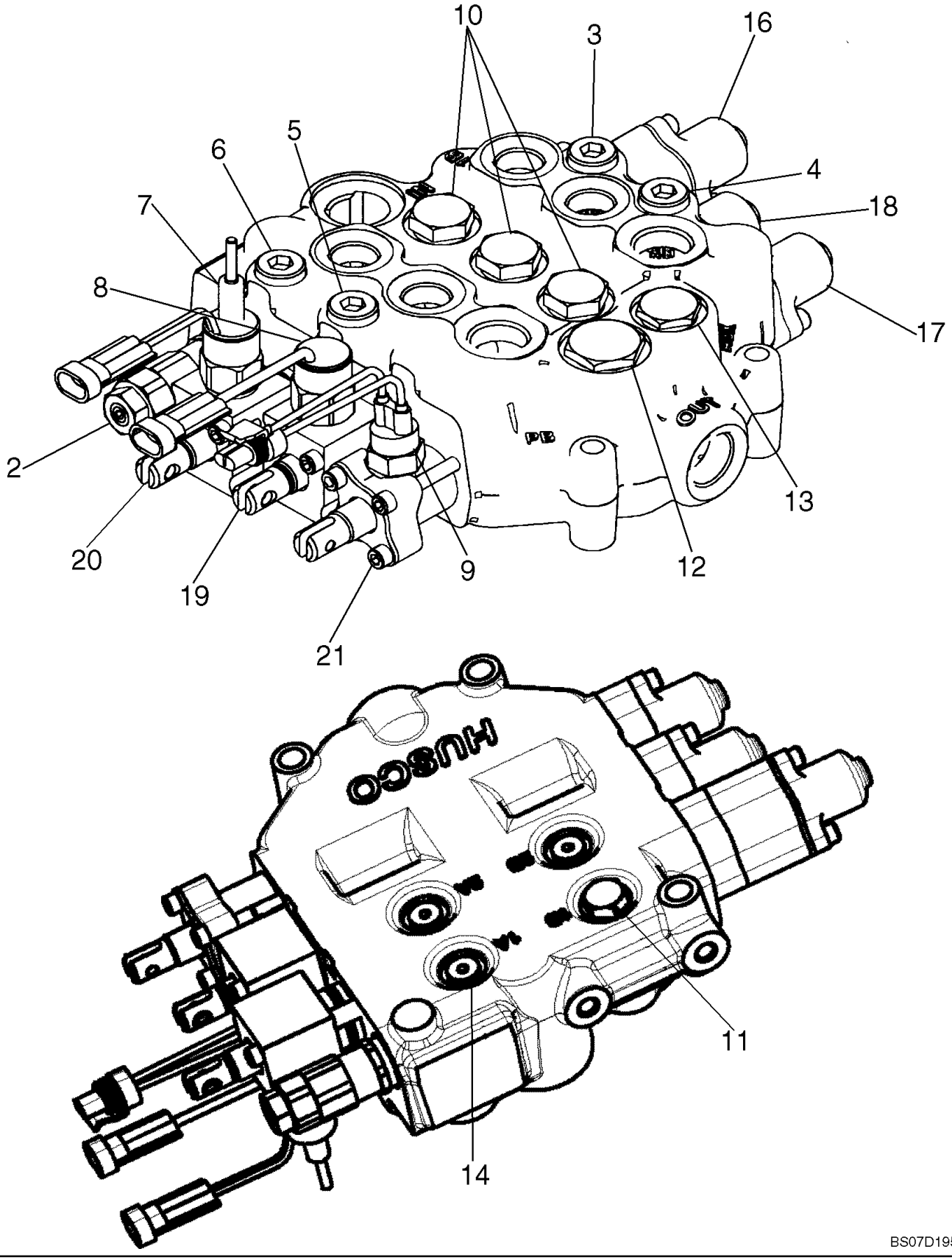

CONTROL VALVE - 87583285 VALVE ASSY

REF	FN	PART NUMBER	YR/SN	QTY	DESCRIPTION
		87583285		1	VALVE, Manual Control Valve
1		87610349		1	KIT, SEALS, Seal Replacement Kit; See Fig. 08-20
2		87610350		1	VALVE, Main Relief Valve, 210 Bar (3050 psi); See Fig. 08-21
3		87576153		1	VALVE, Workport Relief Valve, 215 Bar; See Fig. 08-22
4		87445935		1	VALVE, Workport Relief Valve, 230 Bar; See Fig. 08-22
5		87445943		1	VALVE, Workport Relief Valve, 260 Bar; See Fig. 08-22
6		87445932		1	VALVE, Workport Anti-Cavitation; See Fig. 08-22
7		87445988		1	SOLENOID, Spool Lock Out Solenoid, Manual; See Fig. 08-29
8		87445987		1	SOLENOID, Spool Lock Out Solenoid, Non-Manual; See Fig. 08-30
9		87446617		1	SWITCH, Auxiliary Spool Interlock Switch; See Fig. 08-23
10		87576157		3	VALVE, DAMPING, Check Valve Group; See Fig. 08-24
11		87610351		1	VALVE, Check Valve Group; See Fig. 08-24
12		87576158		1	PLUG, Plug Assembly; See Fig. 08-24
13		87576160		1	PLUG, Plug Assembly; See Fig. 08-24
14		87610352		3	PLUG, Plug Assembly
15		87576162		1	PLUG, Plug Assembly, Metric; Not Illustrated; See Fig. 08-24
16		87576163		1	SPOOL, Spool End Group, Detent; See Fig. 08-31
17		87576168		1	SPOOL, Spool End Group; See Fig. 08-25
18		87576169		1	SPOOL, Spool End Group; See Fig. 08-32
19		87611848		1	SPOOL, Spool End Group; See Fig. 08-30
20		87611849		1	SPOOL, Spool End Group; See Fig. 08-29
21		87611850		1	SPOOL, Spool End Group; See Fig. 08-23

CONTROL VALVE - 87546974 VALVE ASSY

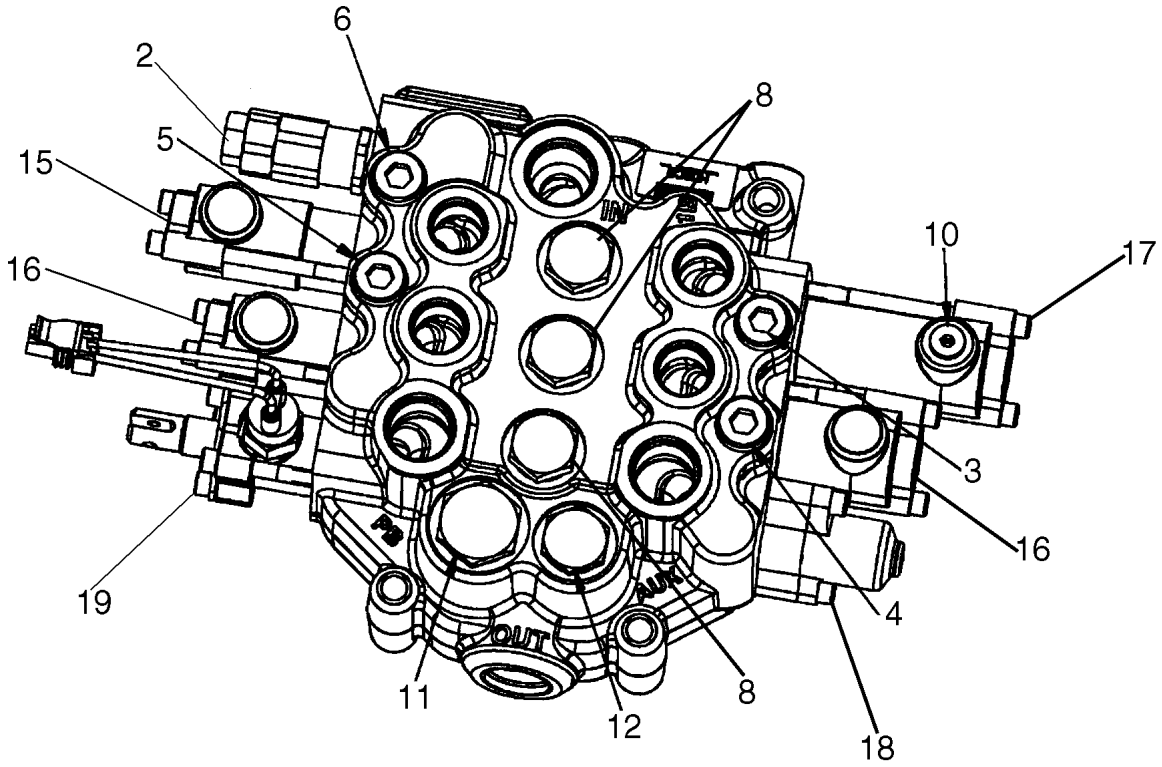

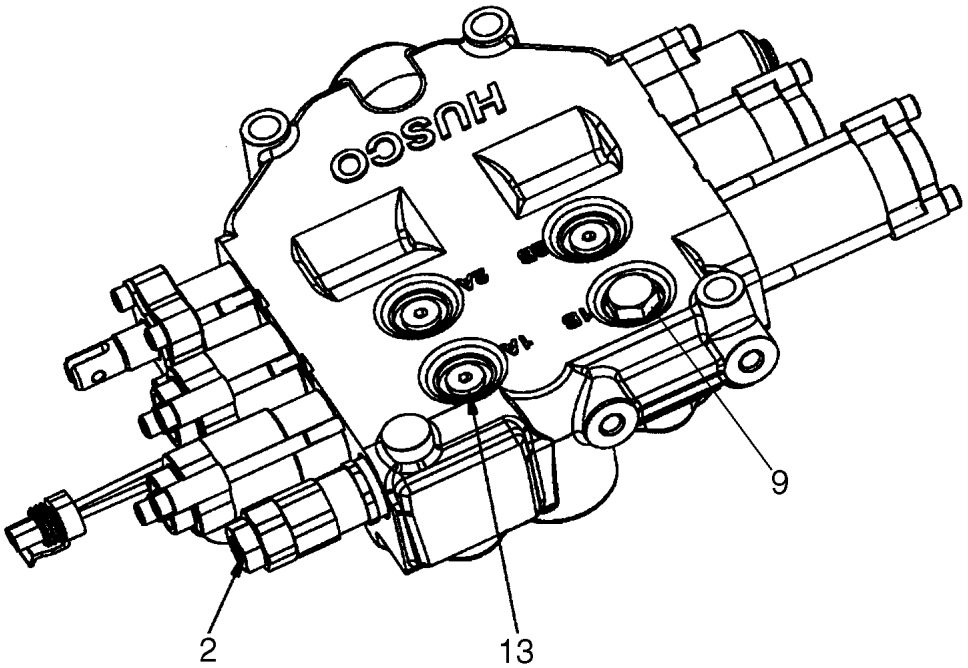

BS07H033

CONTROL VALVE - 87546974 VALVE ASSY

REF	FN	PART NUMBER	YR/SN	QTY	DESCRIPTION
		87546974		1	VALVE, HYDRAULIC, Manual Control Valve; Models With Pilot Control
1		87610517		1	KIT, SEALS, Seal Replacement Kit; See Fig. 08-19
2		87610350		1	VALVE, Main Relief Valve, 210 Bar (3050 psi); See Fig. 08-21
3		87576153		1	VALVE, Workport Relief Valve, 215 Bar; See Fig. 08-22
4		87445935		1	VALVE, Workport Relief Valve, 230 Bar; See Fig. 08-22
5		87445943		1	VALVE, Workport Relief Valve, 260 Bar; See Fig. 08-22
6		87445932		1	VALVE, Workport Anti-Cavitation; See Fig. 08-22
7		87446617		1	SWITCH, Auxiliary Spool Interlock Switch; See Fig. 08-23
8		87576157		3	VALVE, DAMPING, Check Valve Group; See Fig. 08-24
9		87610351		1	VALVE, Check Valve Group; See Fig. 08-24
10		87610530		1	PLUG, Plug Assembly
11		87576158		1	PLUG, Plug Assembly; See Fig. 08-24
12		87576160		1	PLUG, Plug Assembly; See Fig. 08-24
13		87610352		3	PLUG, Plug Assembly
14		87576162		1	PLUG, Plug Assembly, Metric; Not Illustrated; See Fig. 08-24
15		87610531		1	SPOOL, Spool End Group; See Fig. 08-28
16		87610532		1	SPOOL, Spool End Group; See Fig. 08-27
17		87610533		1	SPOOL, Spool End Group; See Fig. 08-26
18		87576168		1	SPOOL, Spool End Group; See Fig. 08-25
19		87611850		1	SPOOL, Spool End Group; See Fig. 08-23

CONTROL VALVE - SEAL REPLACEMENT KITS

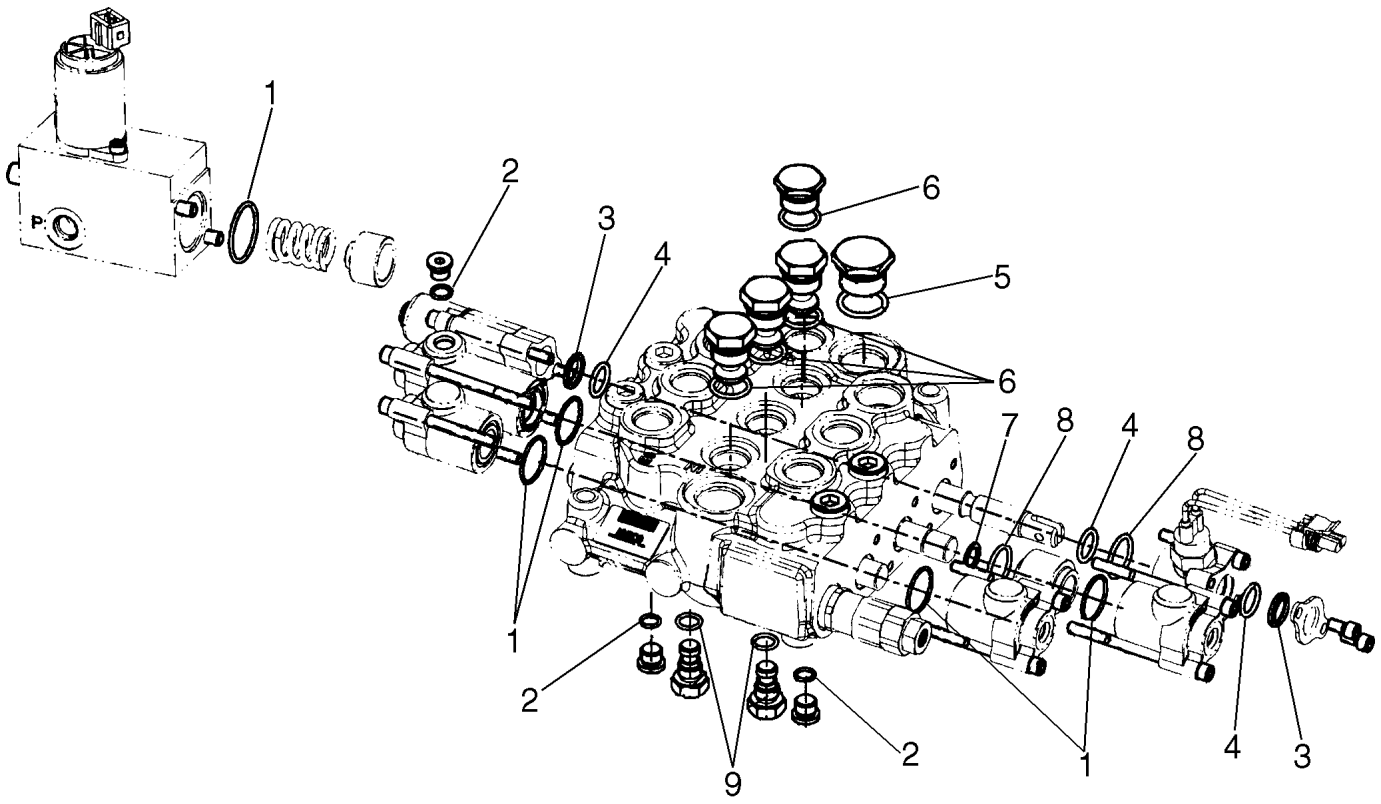

CONTROL VALVE - SEAL REPLACEMENT KITS

REF	FN	PART NUMBER	YR/SN	QTY	DESCRIPTION
		87610517		1	KIT, SEALS, Kit, Seal Replacement; Incl. 1 - 8
1		NSS		6	NOT SERVICED SEPARATELY, O-ring, 1.129 OD
2		NSS		3	NOT SERVICED SEPARATELY, O-ring, .498 OD
3		NSS		2	NOT SERVICED SEPARATELY, Wiper, .796 OD
4		NSS		3	NOT SERVICED SEPARATELY, O-ring, .818 OD
5		NSS		1	NOT SERVICED SEPARATELY, O-ring, 1.156 OD
6		NSS		4	NOT SERVICED SEPARATELY, O-ring, .949 OD
7		NSS		1	NOT SERVICED SEPARATELY, Back Up Ring, .673 OD
8		NSS		2	NOT SERVICED SEPARATELY, O-ring, 1.063 OD
9		NSS		2	NOT SERVICED SEPARATELY, O-ring, .614 OD

CONTROL VALVE - SEAL REPLACEMENT KITS

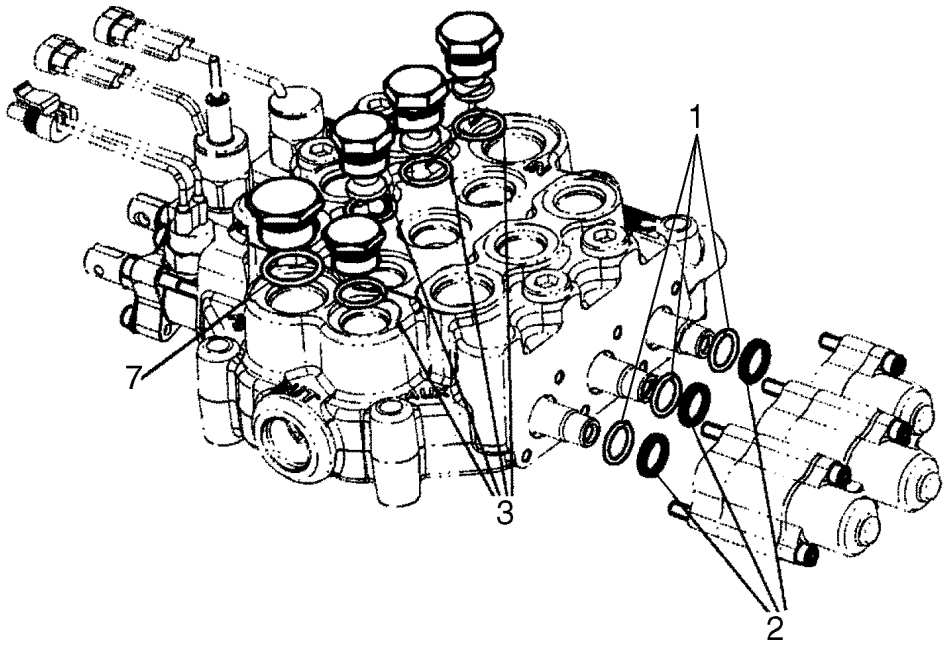

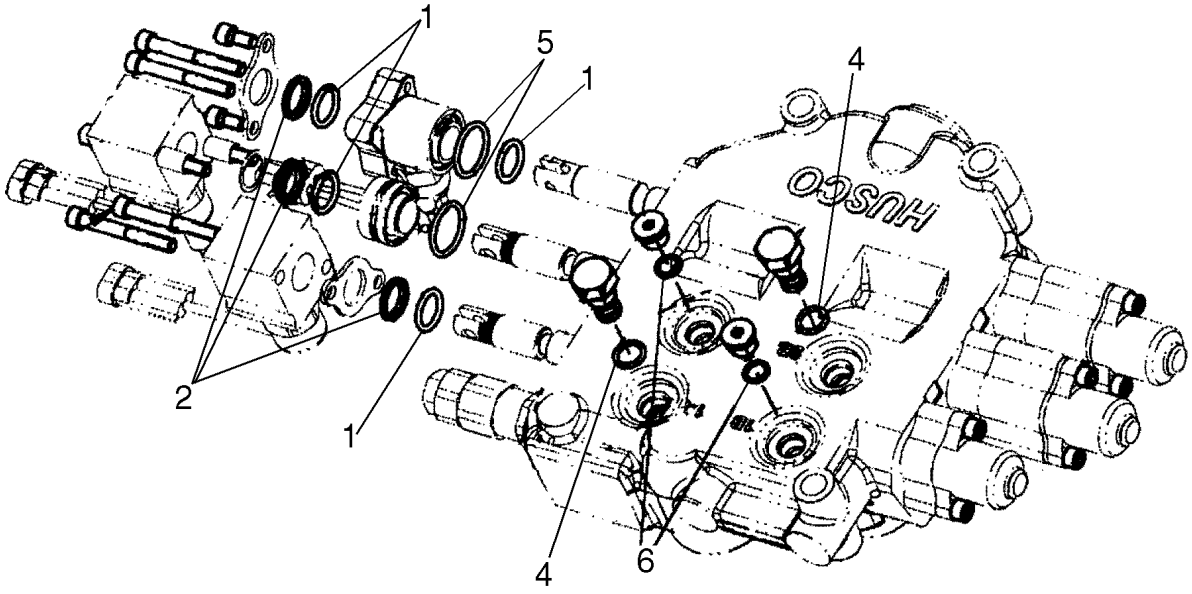

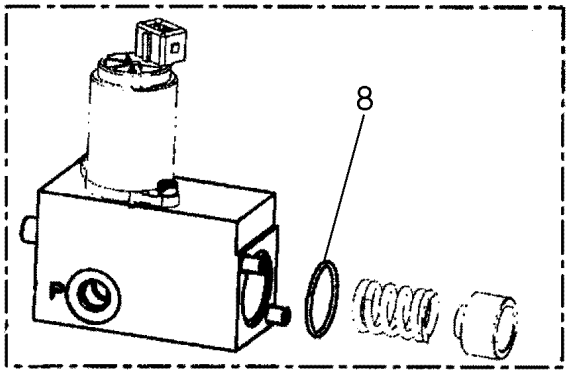

BS07D196

CONTROL VALVE - SEAL REPLACEMENT KITS

REF	FN	PART NUMBER	YR/SN	QTY	DESCRIPTION
		87610349		1	KIT, SEALS, Kit, Seal Replacement; Incl. 1 - 8
1		NSS		7	NOT SERVICED SEPARATELY, O-ring, .818 OD
2		NSS		6	NOT SERVICED SEPARATELY, Wiper, .796 OD
3		NSS		4	NOT SERVICED SEPARATELY, O-ring, .949 OD
4		NSS		2	NOT SERVICED SEPARATELY, O-ring, .614 OD
5		NSS		2	NOT SERVICED SEPARATELY, O-ring, 1.063 OD
6		NSS		3	NOT SERVICED SEPARATELY, O-ring, .498 OD
7		NSS		1	NOT SERVICED SEPARATELY, O-ring, 1.156 OD
8		NSS		2	NOT SERVICED SEPARATELY, O-ring, 1.129 OD

CONTROL VALVE - MAIN RELIEF VALVE

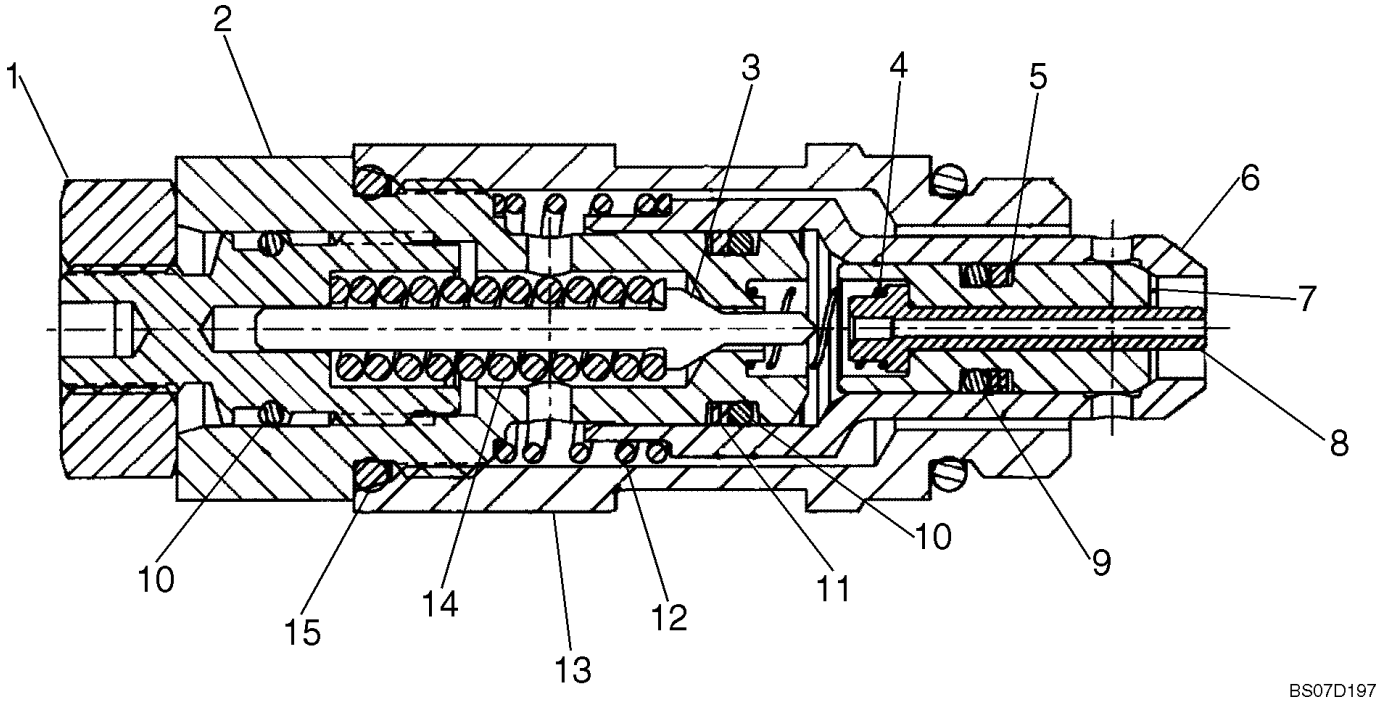

CONTROL VALVE - MAIN RELIEF VALVE

REF	FN	PART NUMBER	YR/SN	QTY	DESCRIPTION
		87610350		1	VALVE, Main Relief Valve, 3050 PSI; Incl. 1 - 16
1		NSS		1	NOT SERVICED SEPARATELY, Nut
2		NSS		1	NOT SERVICED SEPARATELY, Plug
3		NSS		1	NOT SERVICED SEPARATELY, Poppet
4		NSS		1	NOT SERVICED SEPARATELY, Spring
5		NSS		1	NOT SERVICED SEPARATELY, Back-Up Ring
6		NSS		1	NOT SERVICED SEPARATELY, Poppet
7		NSS		1	NOT SERVICED SEPARATELY, Poppet
8		NSS		1	NOT SERVICED SEPARATELY, Piston
9		NSS		1	NOT SERVICED SEPARATELY, O-Ring
10		NSS		2	NOT SERVICED SEPARATELY, O-Ring
11		NSS		1	NOT SERVICED SEPARATELY, Back-Up Ring
12		NSS		1	NOT SERVICED SEPARATELY, Spring
13		NSS		1	NOT SERVICED SEPARATELY, Body
14		NSS		1	NOT SERVICED SEPARATELY, Spring
15		NSS		2	NOT SERVICED SEPARATELY, O-Ring
16		NSS		1	NOT SERVICED SEPARATELY, Adjust Screw

CONTROL VALVE - RELIEF VALVES

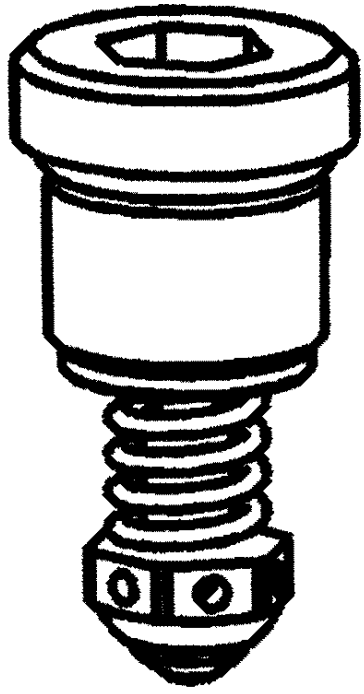

1

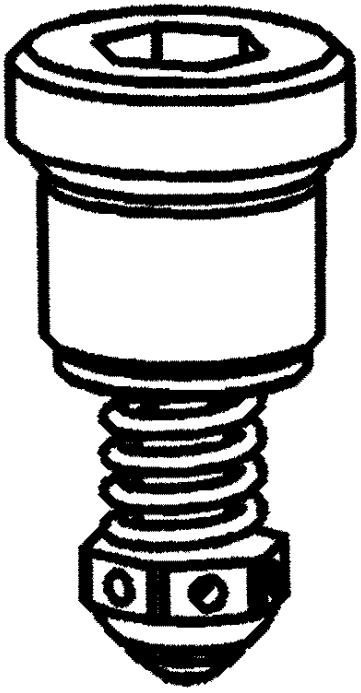

2

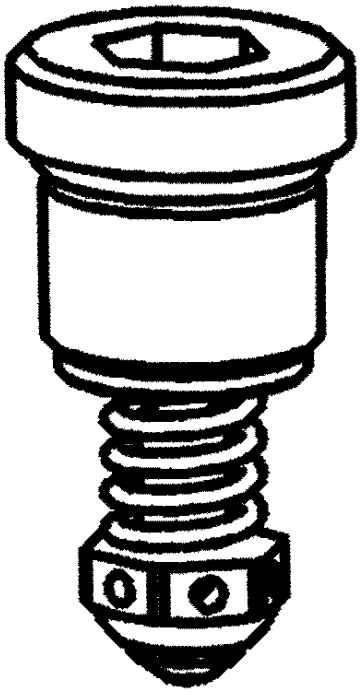

3

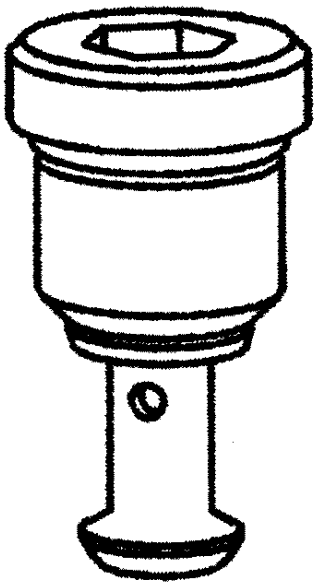

4

BS07D198

CONTROL VALVE - RELIEF VALVES

REF	FN	PART NUMBER	YR/SN	QTY	DESCRIPTION
1		87576153		1	VALVE, Workport Relief Valve, Non-Adjustable 215 Bar
2		{87448935}		1	Workport Relief Valve, Non-Adjustable 230 Bar
3		87445943		1	VALVE, Workport Relief Valve, Non-Adjustable 260 Bar
4		87445932		1	VALVE, Workport Anti-Cavitation Valve

CONTROL VALVE - SPOOL END GROUP

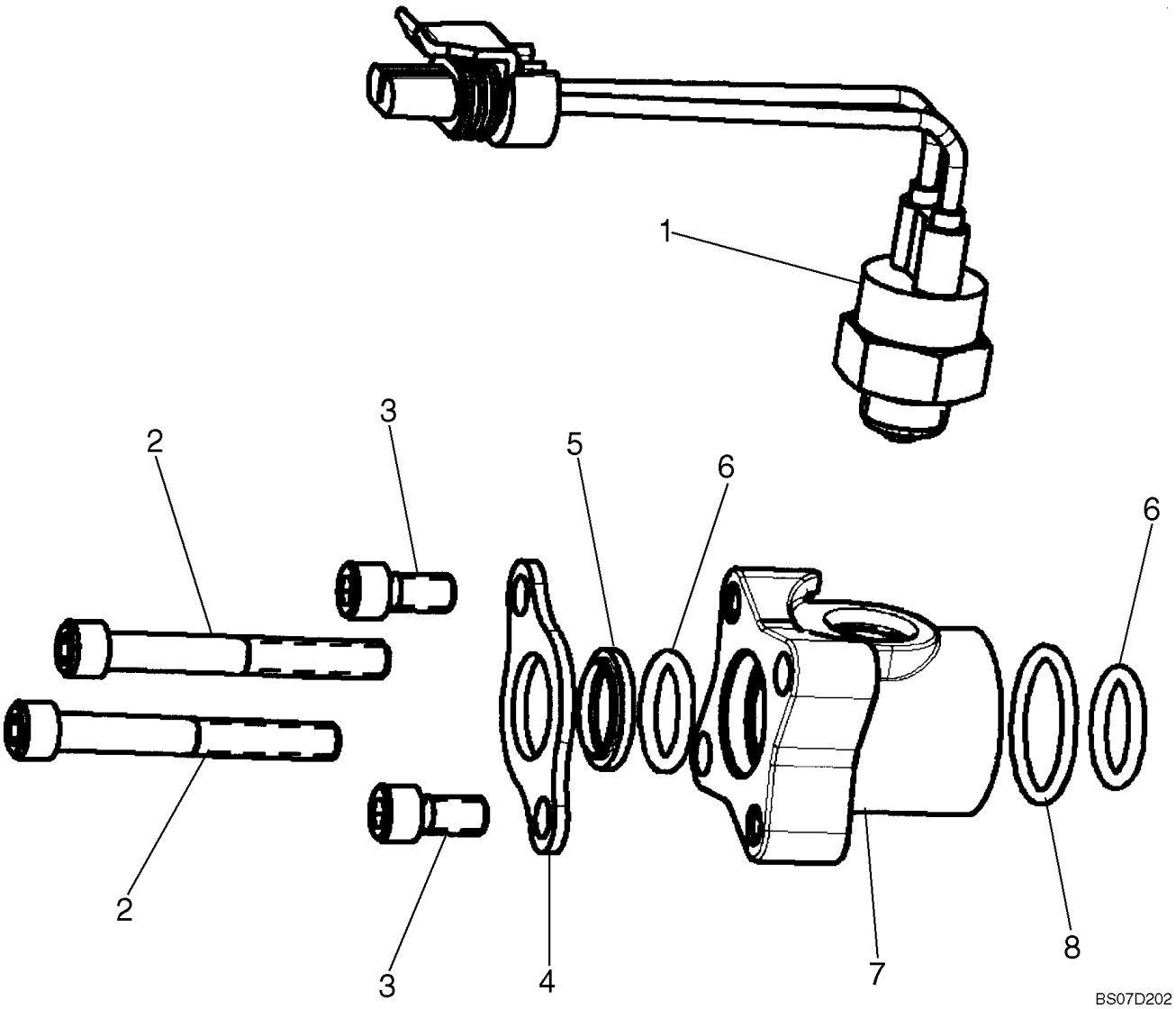

CONTROL VALVE - SPOOL END GROUP

REF	FN	PART NUMBER	YR/SN	QTY	DESCRIPTION
		87611850		1	SPOOL, Spool End Group With Switch; Incl. 1 - 8
1		87446617		1	SWITCH, Auxiliary Spool Ball Switch
2		NSS		2	NOT SERVICED SEPARATELY, Cap Screw
3		NSS		2	NOT SERVICED SEPARATELY, Cap Screw
4		NSS		1	NOT SERVICED SEPARATELY, Seal Plate
5		NSS		1	NOT SERVICED SEPARATELY, Wiper
6		NSS		2	NOT SERVICED SEPARATELY, O-Ring
7		NSS		1	NOT SERVICED SEPARATELY, Spool Cap
8		NSS		1	NOT SERVICED SEPARATELY, O-Ring

CONTROL VALVE - CHECK VALVE GROUP

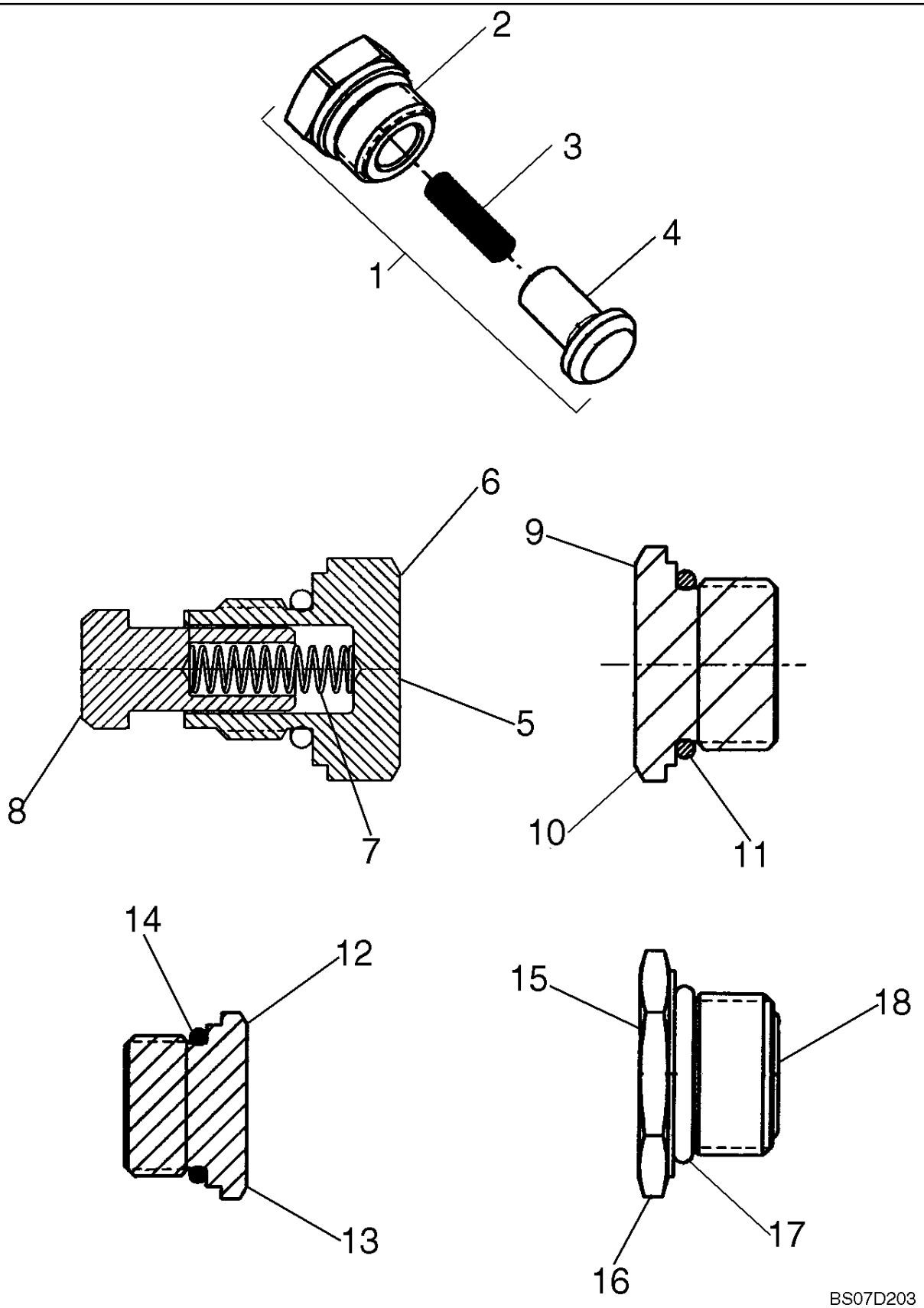

CONTROL VALVE - CHECK VALVE GROUP

REF	FN	PART NUMBER	YR/SN	QTY	DESCRIPTION
1		87576157		1	VALVE, DAMPING, Check Valve; Incl. 2 - 4
2		NSS		1	NOT SERVICED SEPARATELY, Plug
3		NSS		1	NOT SERVICED SEPARATELY, Spring
4		NSS		1	NOT SERVICED SEPARATELY, Poppet
5		87610351		1	VALVE, Check Valve; Incl. 6 - 8
6		NSS		1	NOT SERVICED SEPARATELY, Plug, M14 X 1.5-6G Thd.
7		NSS		1	NOT SERVICED SEPARATELY, Spring
8		NSS		1	NOT SERVICED SEPARATELY, Poppet
9		87576158		1	PLUG, Plug Assembly, 1-1/16 - 12UN-2A Thd.; Incl. 10, 11
10		NSS		1	NOT SERVICED SEPARATELY, Plug, 1-1/16 - 12UN-2A Thd.
11		NSS		1	NOT SERVICED SEPARATELY, O-Ring
12		87576160		1	PLUG, Plug Assembly, 7/8 - 14UNF - 2A Thd.; Incl. 13, 14
13		NSS		1	NOT SERVICED SEPARATELY, Plug, 7/8 - 14UNF - 2A Thd.
14		NSS		1	NOT SERVICED SEPARATELY, O-Ring
15		87576162		1	PLUG, Plug Assembly, M18 X 1.5-6H Thd.; Incl. 16 - 18
16		NSS		1	NOT SERVICED SEPARATELY, Plug, M18 X 1.5-6H Thd.
17		NSS		1	NOT SERVICED SEPARATELY, O-Ring
18		NSS		1	NOT SERVICED SEPARATELY, O-Ring

CONTROL VALVE - SPOOL END GROUP

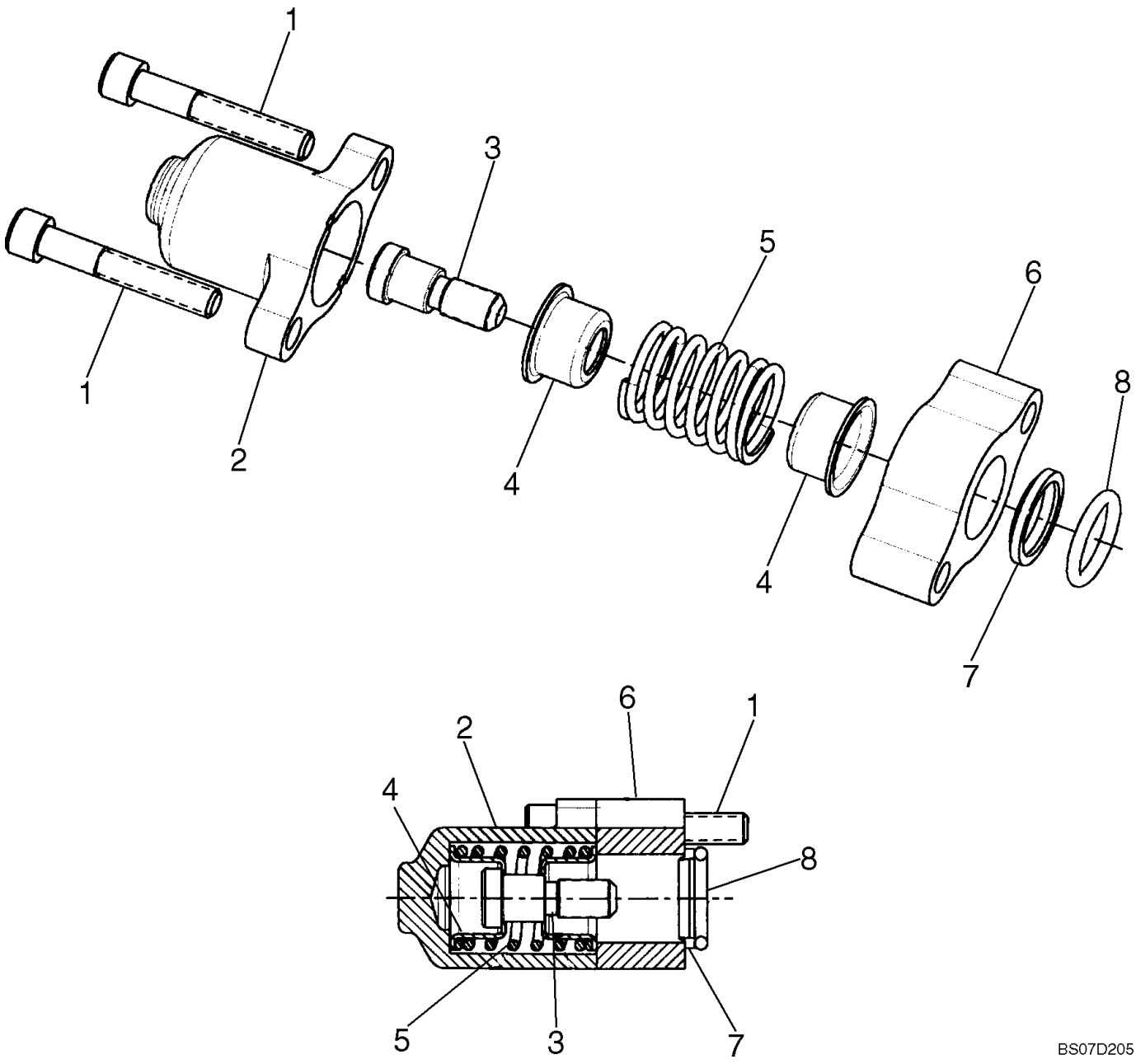

CONTROL VALVE - SPOOL END GROUP

REF	FN	PART NUMBER	YR/SN	QTY	DESCRIPTION
		87576168		1	SPOOL, Spool End Group; Incl. 1 - 8
1		NSS		2	NOT SERVICED SEPARATELY, Cap Screw
2		NSS		1	NOT SERVICED SEPARATELY, Spool Cap
3		NSS		1	NOT SERVICED SEPARATELY, Spool End
4		NSS		2	NOT SERVICED SEPARATELY, Spring Seat
5		NSS		1	NOT SERVICED SEPARATELY, Spring
6		NSS		1	NOT SERVICED SEPARATELY, Plate - Seal
7		NSS		1	NOT SERVICED SEPARATELY, Wiper
8		NSS		1	NOT SERVICED SEPARATELY, O-Ring

CONTROL VALVE - SPOOL END GROUP

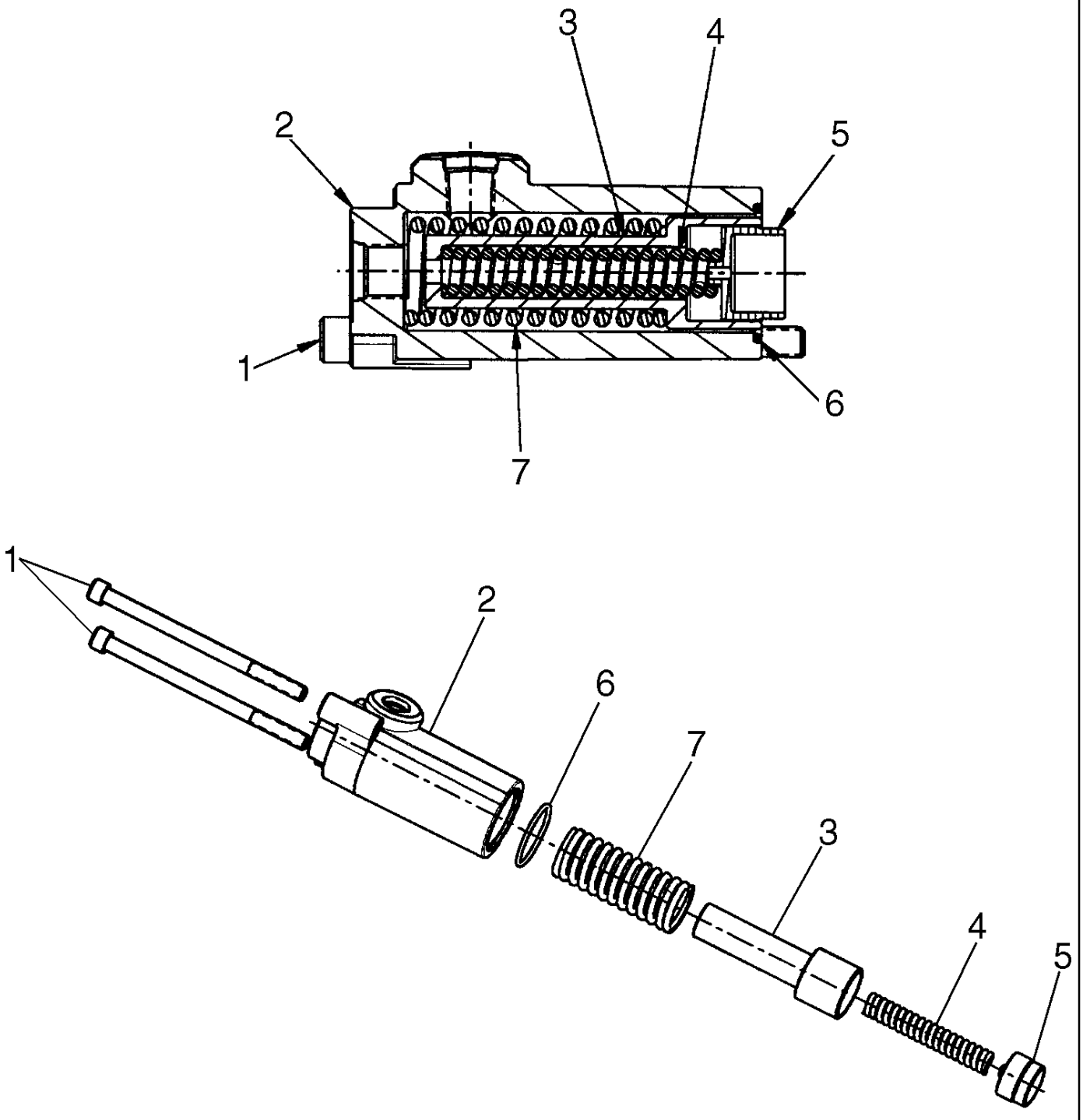

CONTROL VALVE - SPOOL END GROUP

REF	FN	PART NUMBER	YR/SN	QTY	DESCRIPTION
		87610533		1	SPOOL, Spool End Group; Incl. 1 - 7
1		NSS		2	NOT SERVICED SEPARATELY, Cap Screw
2		NSS		1	NOT SERVICED SEPARATELY, Spool Cap
3		NSS		2	NOT SERVICED SEPARATELY, Spring Seat
4		NSS		1	NOT SERVICED SEPARATELY, Spring
5		NSS		2	NOT SERVICED SEPARATELY, Spring Seat
6		NSS		1	NOT SERVICED SEPARATELY, O-Ring
7		NSS		1	NOT SERVICED SEPARATELY, Spring

CONTROL VALVE - SPOOL END GROUP

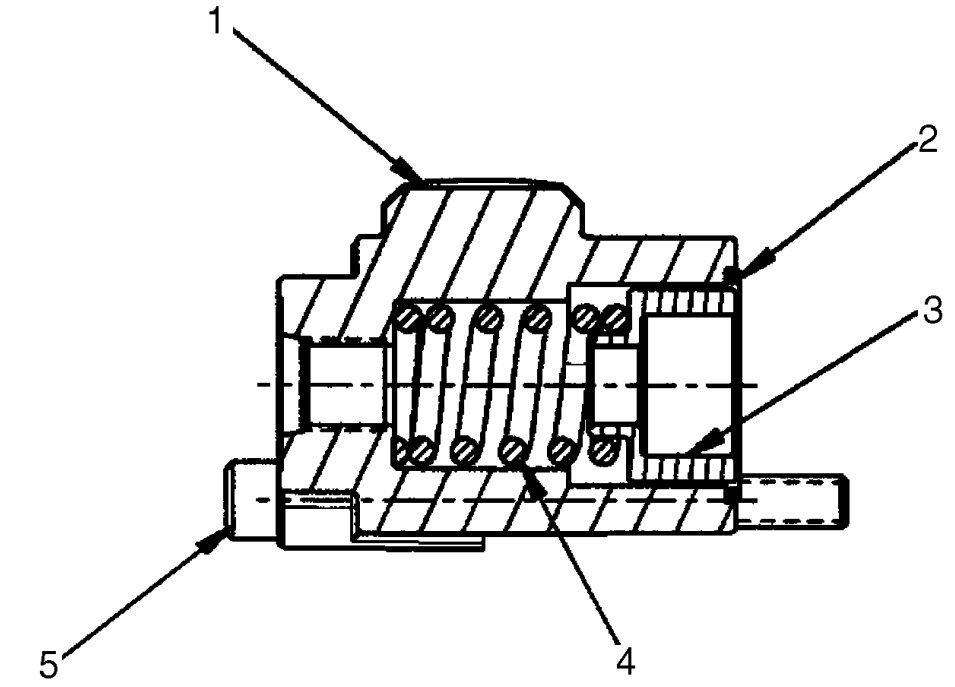

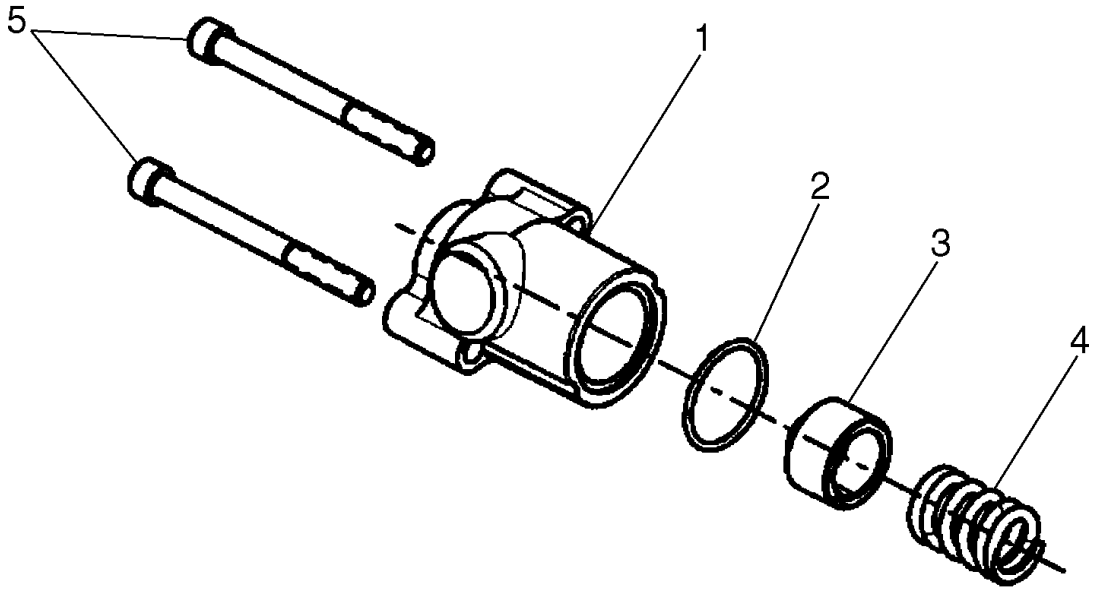

BS07H036

CONTROL VALVE - SPOOL END GROUP

REF	FN	PART NUMBER	YR/SN	QTY	DESCRIPTION
		87610532		1	SPOOL, Spool End Group; Incl. 1 - 5
1		NSS		1	NOT SERVICED SEPARATELY, Spool Cap
2		NSS		1	NOT SERVICED SEPARATELY, O-Ring
3		NSS		1	NOT SERVICED SEPARATELY, Spring Seat
4		NSS		1	NOT SERVICED SEPARATELY, Spring
5		NSS		2	NOT SERVICED SEPARATELY, Cap Screw

CONTROL VALVE - SPOOL END GROUP

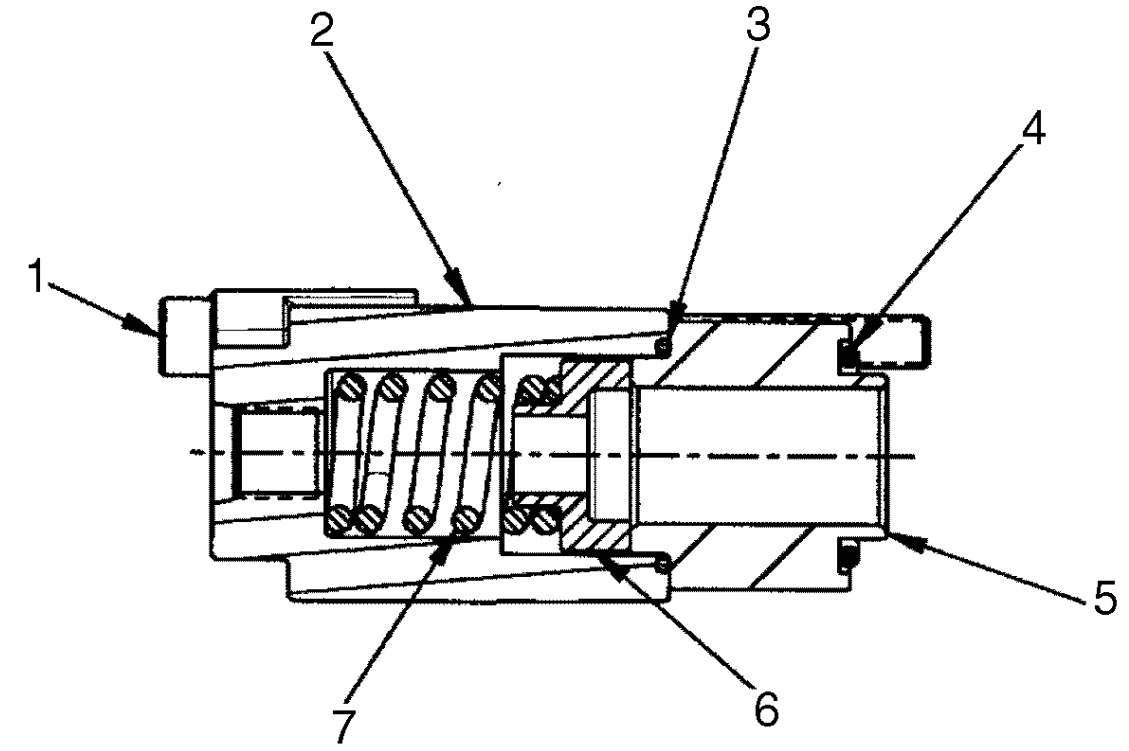

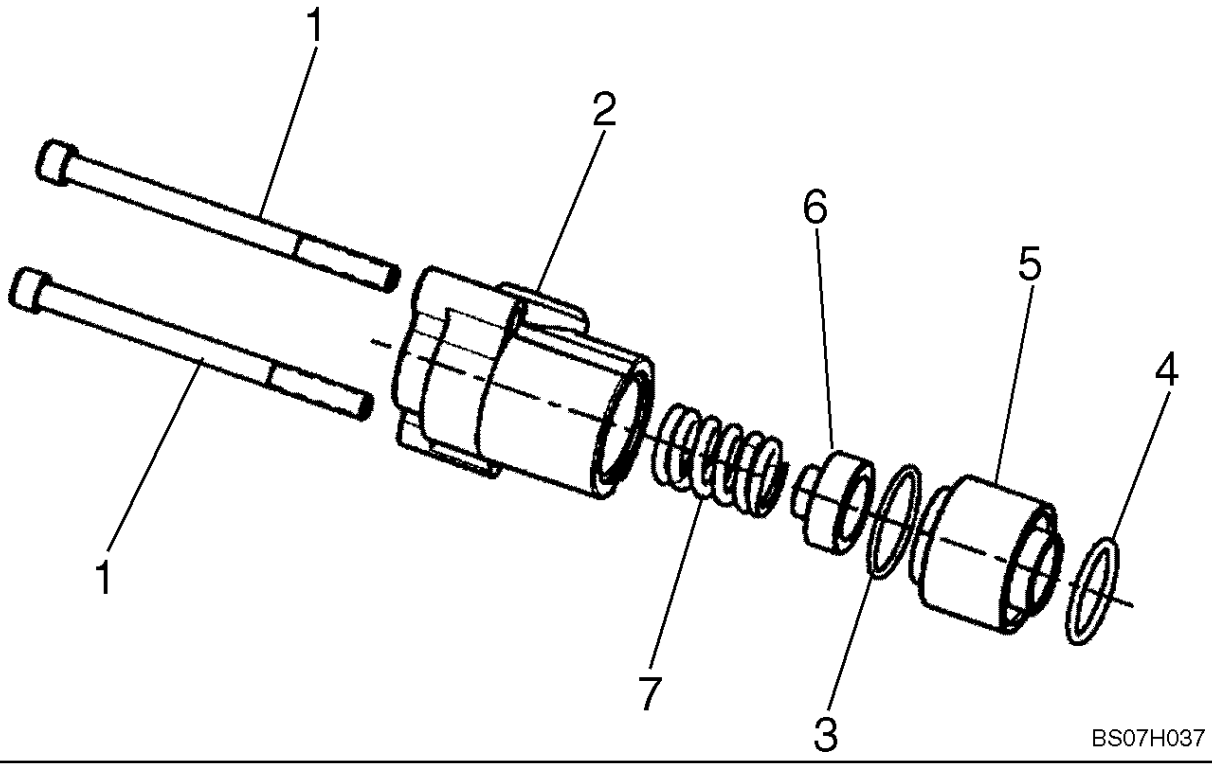

CONTROL VALVE - SPOOL END GROUP

REF	FN	PART NUMBER	YR/SN	QTY	DESCRIPTION
		87610533		1	SPOOL, Spool End Group; Incl. 1 - 7
1		NSS		2	NOT SERVICED SEPARATELY, Cap Screw
2		NSS		1	NOT SERVICED SEPARATELY, Spool Cap
3		NSS		1	NOT SERVICED SEPARATELY, O-Ring
4		NSS		1	NOT SERVICED SEPARATELY, O-Ring
5		NSS		1	NOT SERVICED SEPARATELY, Retainer
6		NSS		1	NOT SERVICED SEPARATELY, Spring Seat
7		NSS		1	NOT SERVICED SEPARATELY, Spring

08-29		p1	12/07

CONTROL VALVE - SPOOL END GROUP

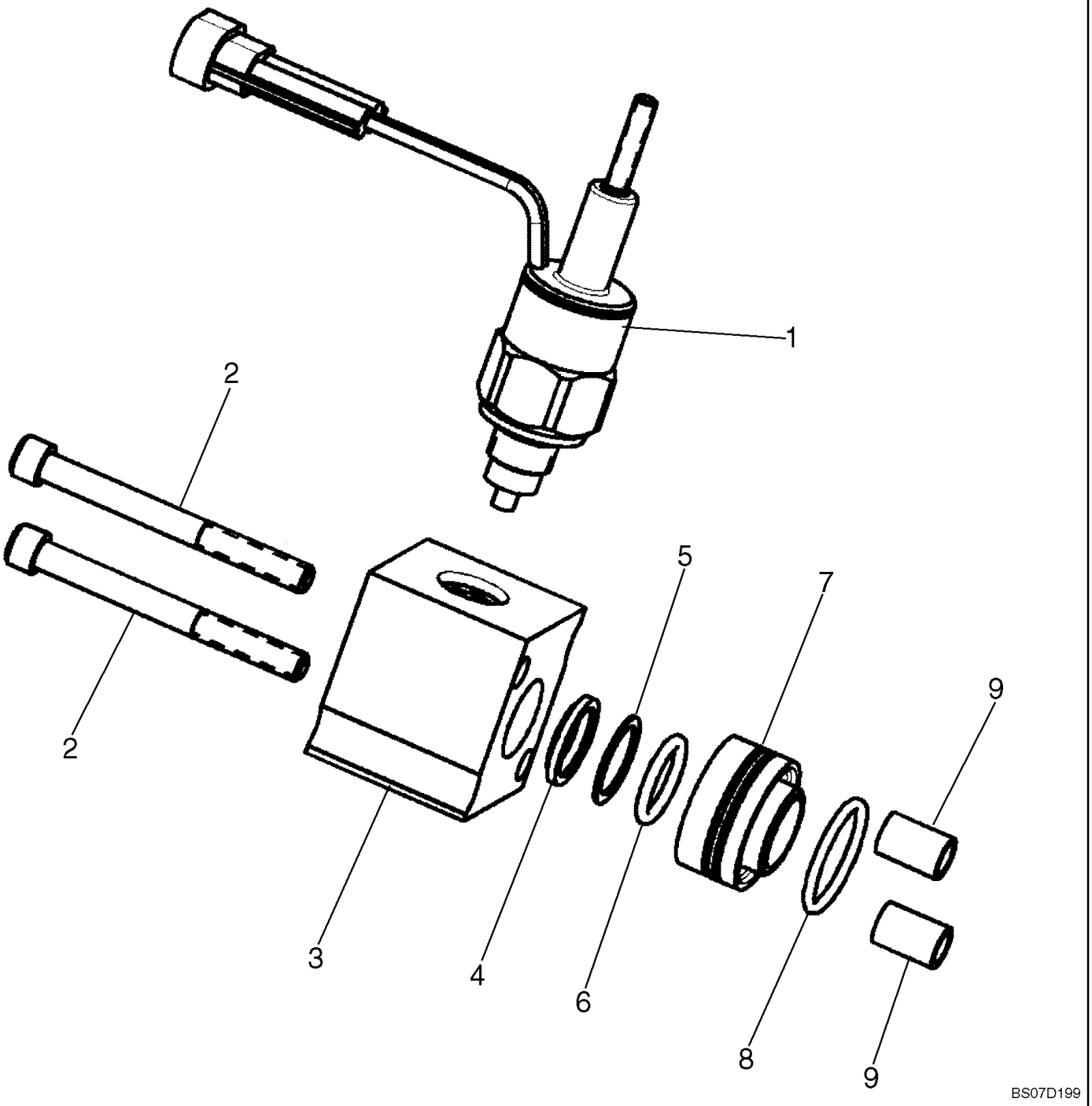

CONTROL VALVE - SPOOL END GROUP

REF	FN	PART NUMBER	YR/SN	QTY	DESCRIPTION
		87611849		1	SPOOL, Spool End Group; Incl. 1 - 9
1		87445988		1	SOLENOID, Spool Lockout Solenoid With Manual Overide
2		NSS		2	NOT SERVICED SEPARATELY, Cap Screw
3		NSS		1	NOT SERVICED SEPARATELY, Spool Cap
4		NSS		1	NOT SERVICED SEPARATELY, Wiper
5		NSS		1	NOT SERVICED SEPARATELY, Washer
6		NSS		1	NOT SERVICED SEPARATELY, O-Ring
7		NSS		1	NOT SERVICED SEPARATELY, Spool Spacer
8		NSS		1	NOT SERVICED SEPARATELY, O-Ring
9		NSS		2	NOT SERVICED SEPARATELY, Spacer

CONTROL VALVE - SPOOL END GROUP

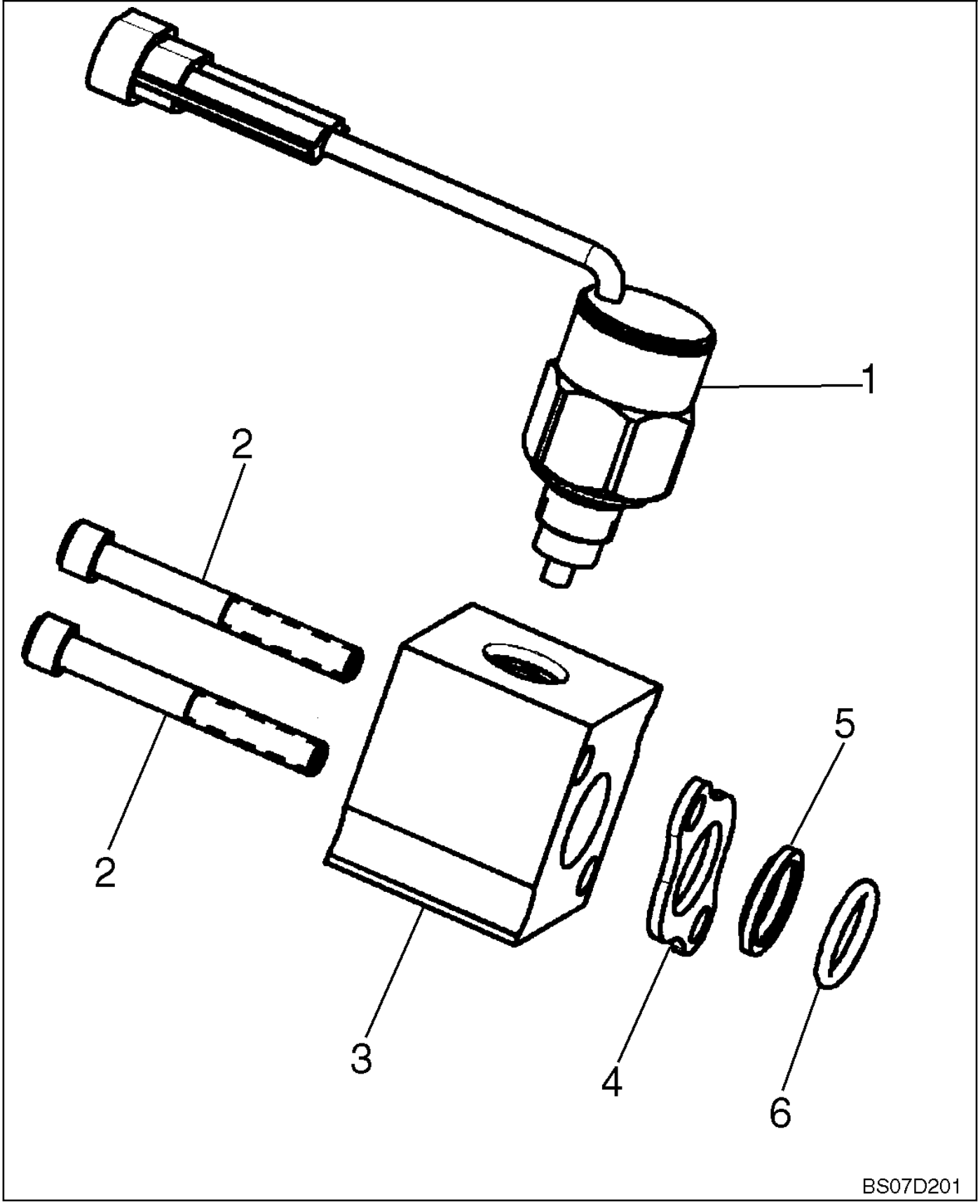

CONTROL VALVE - SPOOL END GROUP

REF	FN	PART NUMBER	YR/SN	QTY	DESCRIPTION
		87611848		1	SPOOL, Spool End Group With Solenoid; Incl. 1 - 6
1		87445987		1	SOLENOID, Spool Lockout Solenoid, Non-Manual Overide
2		NSS		2	NOT SERVICED SEPARATELY, Cap Screw
3		NSS		1	NOT SERVICED SEPARATELY, Spool Cap
4		NSS		1	NOT SERVICED SEPARATELY, Seal Plate
5		NSS		1	NOT SERVICED SEPARATELY, Wiper
6		NSS		1	NOT SERVICED SEPARATELY, O-Ring

CONTROL VALVE - SPOOL END GROUP, DETENT

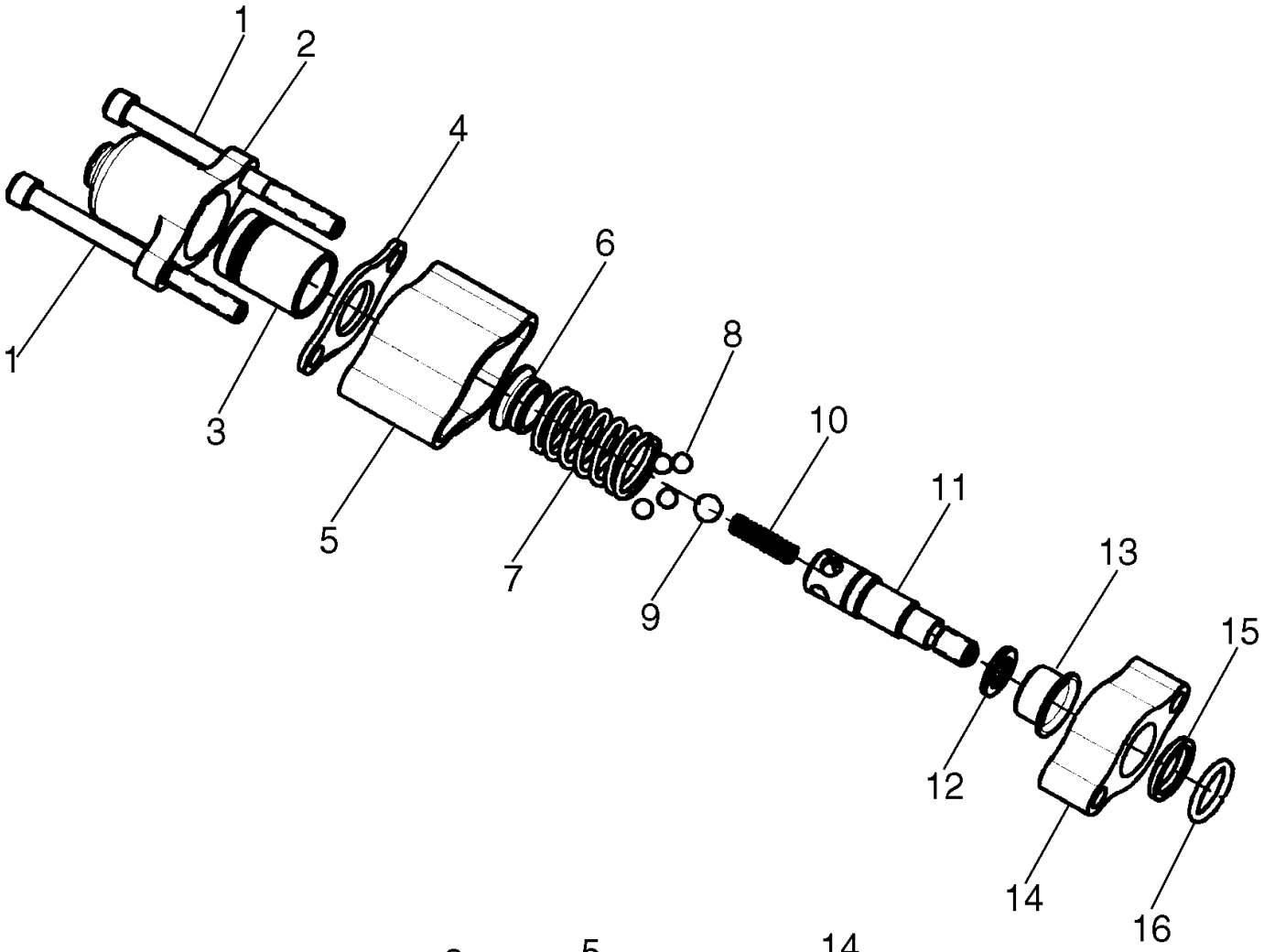

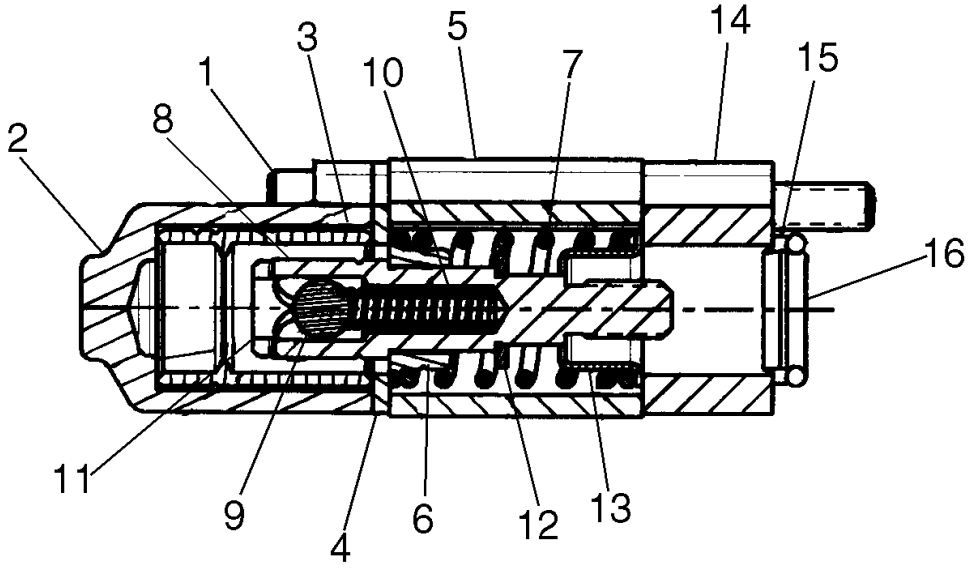

BS07D204

CONTROL VALVE - SPOOL END GROUP, DETENT

REF	FN	PART NUMBER	YR/SN	QTY	DESCRIPTION
		87576163		1	SPOOL, Spool End Group - Detent; Incl. 1 - 16
1		NSS		2	NOT SERVICED SEPARATELY, Cap Screw
2		NSS		1	NOT SERVICED SEPARATELY, Spool Cap
3		NSS		1	NOT SERVICED SEPARATELY, Sleeve - Detent
4		NSS		1	NOT SERVICED SEPARATELY, Seal Plate
5		NSS		1	NOT SERVICED SEPARATELY, Spacer
6		NSS		1	NOT SERVICED SEPARATELY, Spring Seat
7		NSS		1	NOT SERVICED SEPARATELY, Spring
8		NSS		4	NOT SERVICED SEPARATELY, Ball
9		NSS		1	NOT SERVICED SEPARATELY, Ball
10		NSS		1	NOT SERVICED SEPARATELY, Spring
11		NSS		1	NOT SERVICED SEPARATELY, Spool End, Detent Pin
12		NSS		1	NOT SERVICED SEPARATELY, Washer
13		NSS		1	NOT SERVICED SEPARATELY, Spring Seat
14		NSS		1	NOT SERVICED SEPARATELY, Plate Seal
15		NSS		1	NOT SERVICED SEPARATELY, Wiper
16		NSS		1	NOT SERVICED SEPARATELY, O-Ring

CONTROL VALVE - SPOOL END GROUP

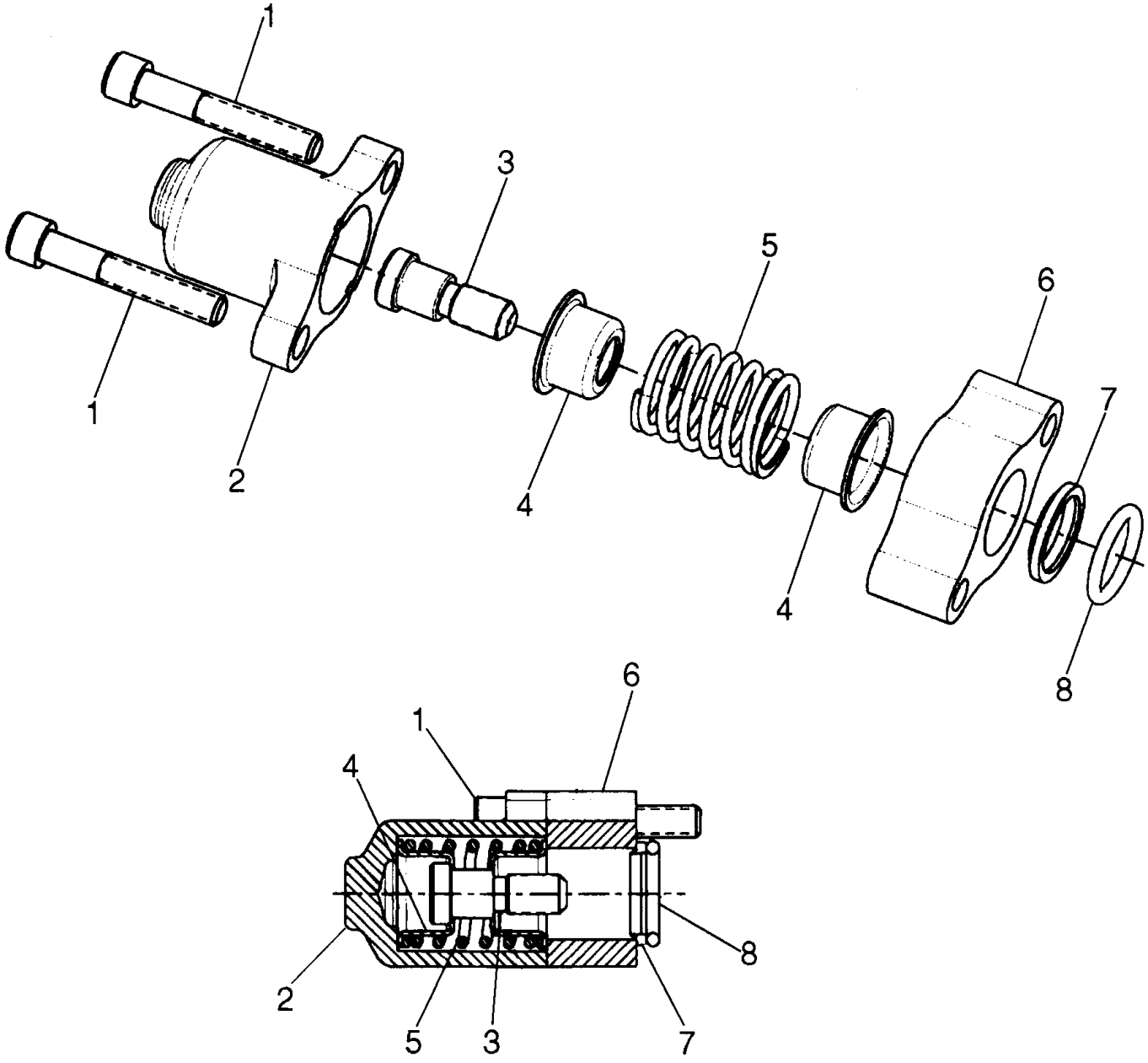

CONTROL VALVE - SPOOL END GROUP

REF	FN	PART NUMBER	YR/SN	QTY	DESCRIPTION
		87576169		1	SPOOL, Spool End Group; Incl. 1 - 8
1		NSS		2	NOT SERVICED SEPARATELY, Cap Screw
2		NSS		1	NOT SERVICED SEPARATELY, Spool Cap
3		NSS		1	NOT SERVICED SEPARATELY, Spool End
4		NSS		2	NOT SERVICED SEPARATELY, Spring Seat
5		NSS		1	NOT SERVICED SEPARATELY, Spring
6		NSS		1	NOT SERVICED SEPARATELY, Plate, Seal
7		NSS		1	NOT SERVICED SEPARATELY, Wiper
8		NSS		1	NOT SERVICED SEPARATELY, O-Ring

CONTROL VALVE - SPOOL END GROUP, EHPV

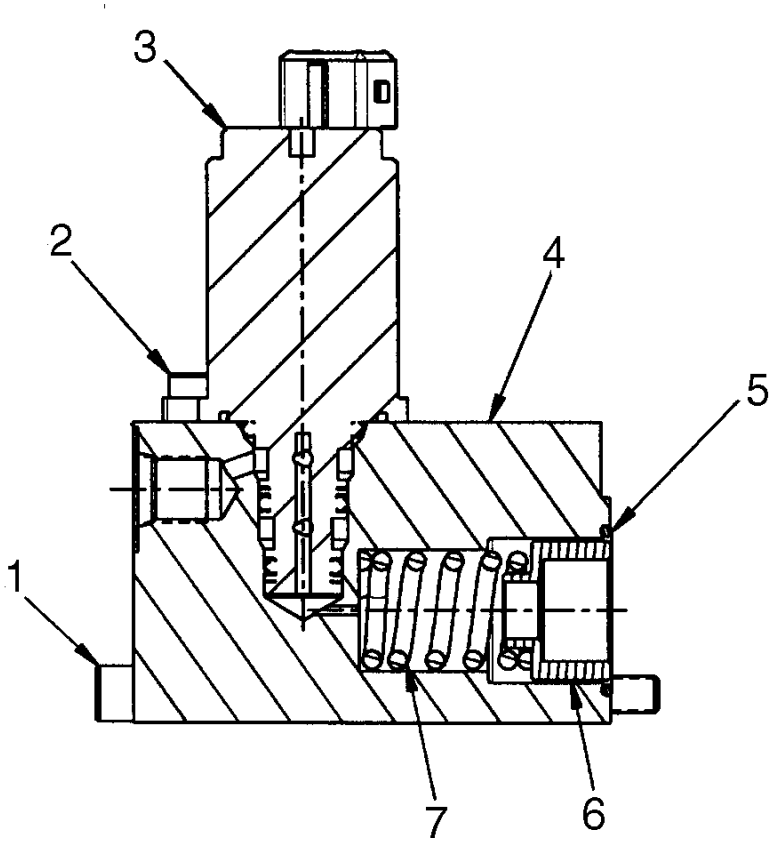

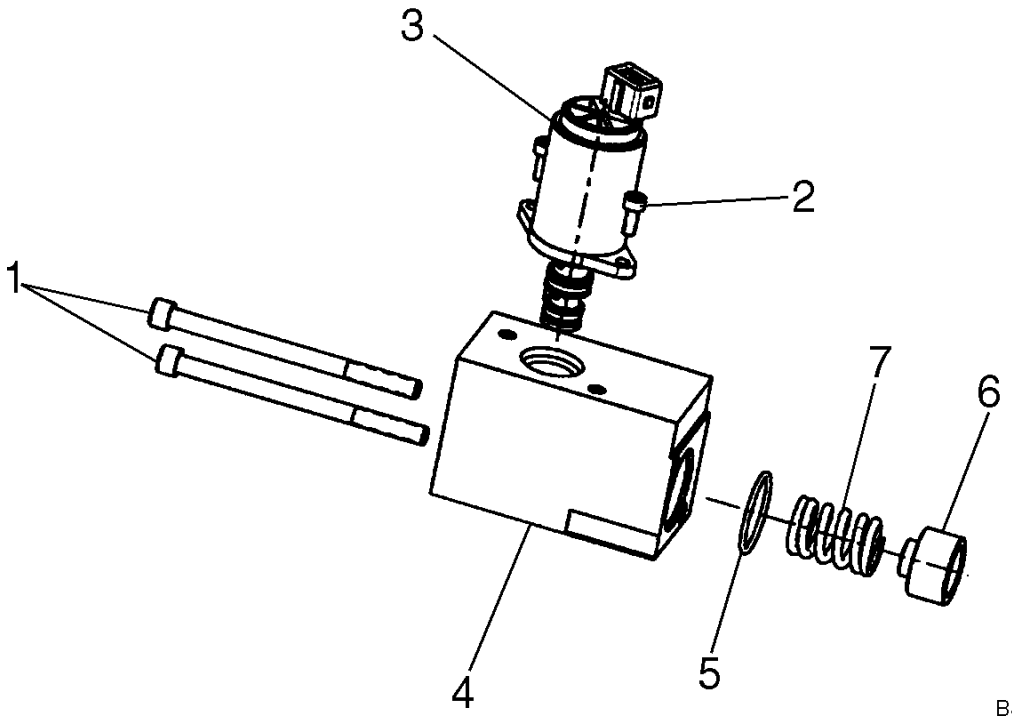

BS07H130

CONTROL VALVE - SPOOL END GROUP, EHPV

REF	FN	PART NUMBER	YR/SN	QTY	DESCRIPTION
		87611845		1	SPOOL, Spool End Group, EHPV; Incl. 1 - 7
1		NSS		2	NOT SERVICED SEPARATELY, Cap Screw
2		NSS		2	NOT SERVICED SEPARATELY, Cap Screw
3		87576154		1	VALVE, SOLENOID, Proportional Pressure Reducing
4		NSS		1	NOT SERVICED SEPARATELY, End Cap
5		NSS		1	NOT SERVICED SEPARATELY, O-Ring
6		NSS		1	NOT SERVICED SEPARATELY, Spring Seat
7		NSS		1	NOT SERVICED SEPARATELY, Spring

CONTROL VALVE - SPOOL END GROUP, EHPV

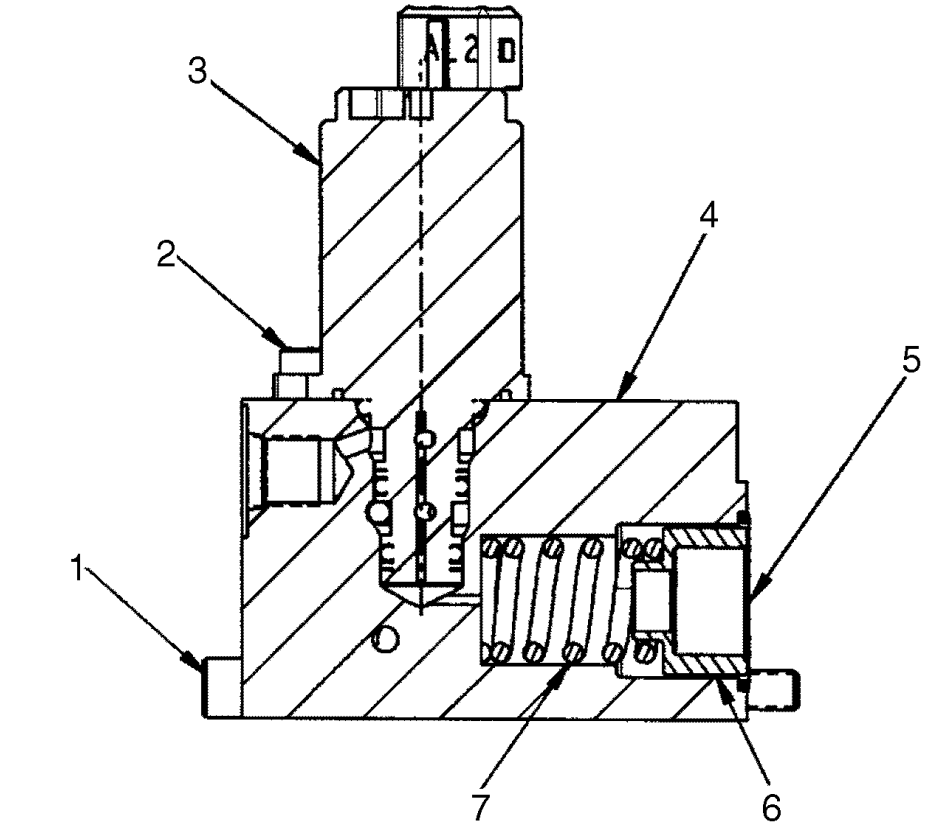

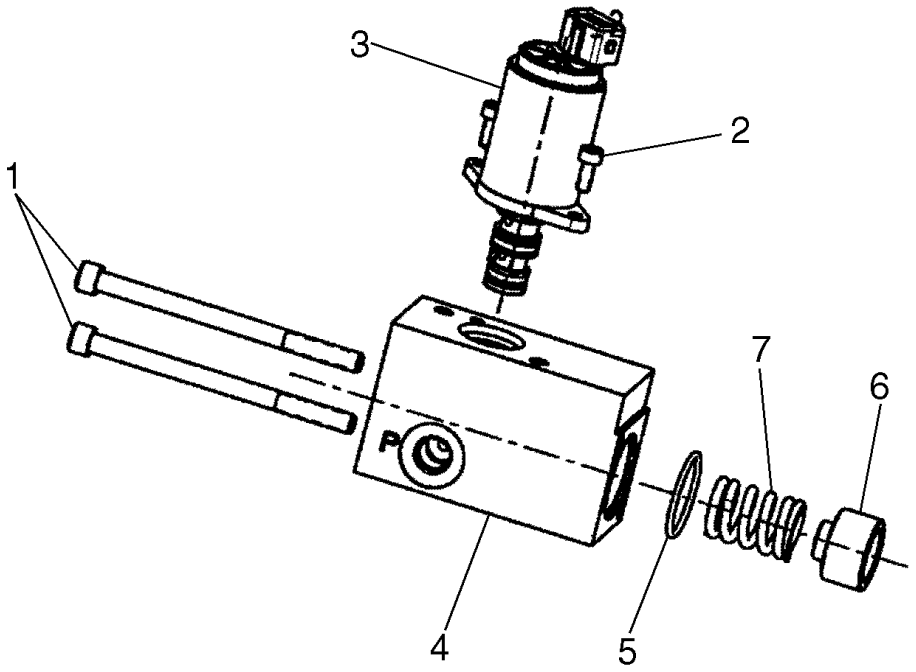

BS07H131

CONTROL VALVE - SPOOL END GROUP, EHPV

REF	FN	PART NUMBER	YR/SN	QTY	DESCRIPTION
		87611846		1	SPOOL, Spool End Group, EHPV; Incl. 1 - 7
1		NSS		2	NOT SERVICED SEPARATELY, Cap Screw
2		NSS		2	NOT SERVICED SEPARATELY, Cap Screw
3		87576154		1	VALVE, SOLENOID, Proportional Pressure Reducing
4		NSS		1	NOT SERVICED SEPARATELY, End Cap
5		NSS		1	NOT SERVICED SEPARATELY, O-Ring
6		NSS		1	NOT SERVICED SEPARATELY, Spring Seat
7		NSS		1	NOT SERVICED SEPARATELY, Spring

SECONDARY FRONT AUXILIARY - VALVE ASSY

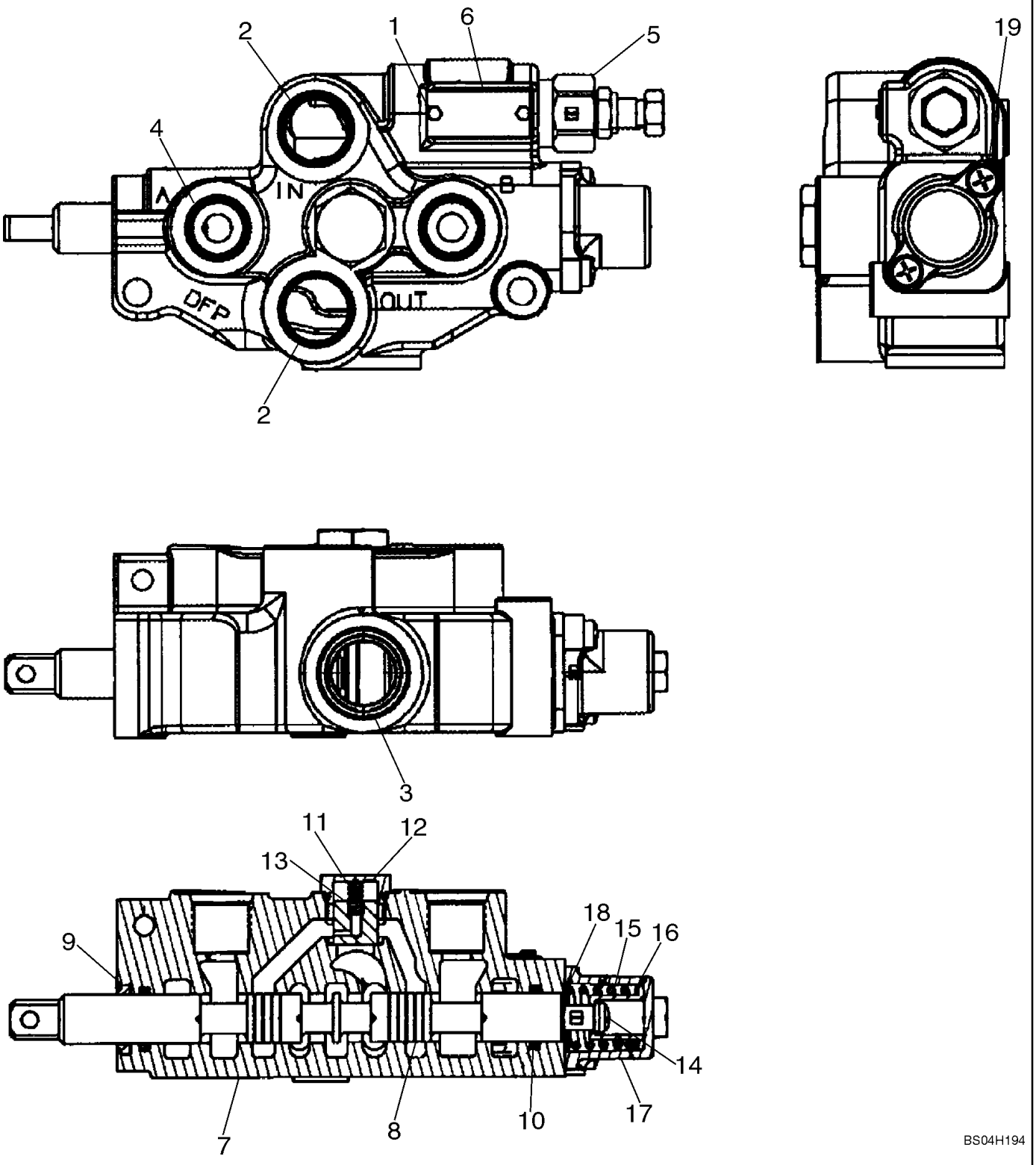

SECONDARY FRONT AUXILIARY - VALVE ASSY

REF	FN	PART NUMBER	YR/SN	QTY	DESCRIPTION
		87017348		1	VALVE, Secondary Auxiliary Valve; Incl. 1 - 19
1		NSS		2	NOT SERVICED SEPARATELY, Screw, Drive
2		NSS		2	NOT SERVICED SEPARATELY, Shipping Plug
3		NSS		1	NOT SERVICED SEPARATELY, Shipping Plug
4		NSS		2	NOT SERVICED SEPARATELY, Shipping Plug
5		NSS		1	NOT SERVICED SEPARATELY, Relief Valve Assy
6		NSS		1	NOT SERVICED SEPARATELY, Name Plate
7		NSS		1	NOT SERVICED SEPARATELY, Body
8		NSS		1	NOT SERVICED SEPARATELY, Spool
		87455258		1	KIT, SEALS, Incl. 9, 10
9		NSS		1	NOT SERVICED SEPARATELY, Ring, Wiper
10		NSS		2	NOT SERVICED SEPARATELY, O-Ring
		87455257		1	KIT, Load Check Kit; Incl. 11 - 13
11		NSS		1	NOT SERVICED SEPARATELY, Spring
12		NSS		1	NOT SERVICED SEPARATELY, Load Check Plug Assy
13		NSS		1	NOT SERVICED SEPARATELY, Poppet, Load Check
		87455274		1	KIT, SPRING, Spring Center Kit; Incl. 14 - 19
14		NSS			NOT SERVICED SEPARATELY, Screw With Lock Washer
15		NSS			NOT SERVICED SEPARATELY, Spring
16		NSS			NOT SERVICED SEPARATELY, Spacer
17		NSS			NOT SERVICED SEPARATELY, End Cap
18		NSS			NOT SERVICED SEPARATELY, Washer
19		NSS			NOT SERVICED SEPARATELY, Screw With Lock Washer

NOTES

SECTION INDEX
Chassis

09-01	FRAME - LOADER LIFT
09-02	FRAME, FRONT - LOADER LINKAGE
09-03	FRAME, REAR - LOADER LINKAGE
09-04	COUPLER, MECHANICAL
09-05	COUPLER, HYDRAULIC
09-06	BUCKETS, LOADER - 1860 MM (73 IN) WIDE BUCKET
09-07	BUCKETS, LOADER - 2083 MM (82 IN) WIDE BUCKET
09-08	BUCKETS, LOADER - 2134 MM (84 IN) WIDE BUCKET
09-09	PALLET FORK
09-10	CHASSIS (450)
09-11	CHASSIS (450)
09-12	CHASSIS (450CT)
09-13	CHASSIS (450CT)
09-14	CONTROL CONSOLE - LH
09-15	CONTROL CONSOLE - RH
09-16	LOADER AND GROUND DRIVE CONTROL - RH
09-17	LOADER AND GROUND DRIVE CONTROL - LH
09-18	LOADER AND GROUND DRIVE - LINKAGE
09-19	CONTROLLER - MOUNTING (PILOT CONTROL)
09-20	CONTROLS - AUXILIARY HYDRAULICS
09-21	REAR DOOR
09-22	HOOD
09-23	CAB - SEAT FRAME AND SEAT BAR
09-24	CAB DOOR - MOUNTING (HL)
09-25	CAB DOOR - WASHER SYSTEM (HL)
09-26	CAB DOOR (HL)
09-27	CAB DOOR - VISOR (HL)
09-28	CAB DOOR - WIPER MOUNTING (HL)
09-29	CAB DOOR - HANDLE
09-30	DEMOLITION DOOR - MOUNTING
09-31	DEMOLITION DOOR
09-32	COUNTERWEIGHTS AND DRAWBAR
09-33	HEAT SHIELD
09-34	SEAT MOUNTING - STANDARD SEAT
09-35	SEAT MOUNTING - SUSPENSION SEAT
09-36	SEAT MOUNTING - DELUXE SUSPENSION SEAT
09-37	SEAT BELT, LAP BELT
09-38	SHOULDER BELT
09-39	SEAT BELT, LAP BELT (3 IN)
09-40	SEAT BAR
09-41	REAR VIEW MIRROR
09-42	RADIO - SPEAKERS AND ANTENNA
09-43	RADIO - SPEAKERS AND HOUSING
09-44	FLOOR MAT
09-45	INTERIOR TRIM
09-46	TOP WINDOW
09-47	REAR WINDOW
09-48	REAR WINDOW - HEAT AND AIR CONDITIONING
09-49	WINDOWS, SIDE
09-50	HEATER SYSTEM
09-51	HEATER SYSTEM

SECTION INDEX
Chassis

09-52	AIR CONDITIONING SYSTEM
09-53	AIR CONDITIONING SYSTEM
09-54	HEATER ASSEMBLY
09-55	HEATER AND AIR CONDITIONING ASSEMBLY
09-56	HEADLINER - STANDARD
09-57	HEADLINER - HEATER AND AIR CONDITIONING
09-58	REAR BUMPER
09-59	NOISE CONTROL (NA)
09-60	LIFT HOOK
09-61	LIFT HOOKS - SINGLE POINT
09-62	DECALS
09-63	DECALS
09-64	DECALS - ENGLISH
09-65	DECALS - BRAZILIAN PORTUGUESE, FRENCH CANADIAN, LATIN AMERICAN SPANISH

NOTES

09-01		p1	12/07

FRAME - LOADER LIFT

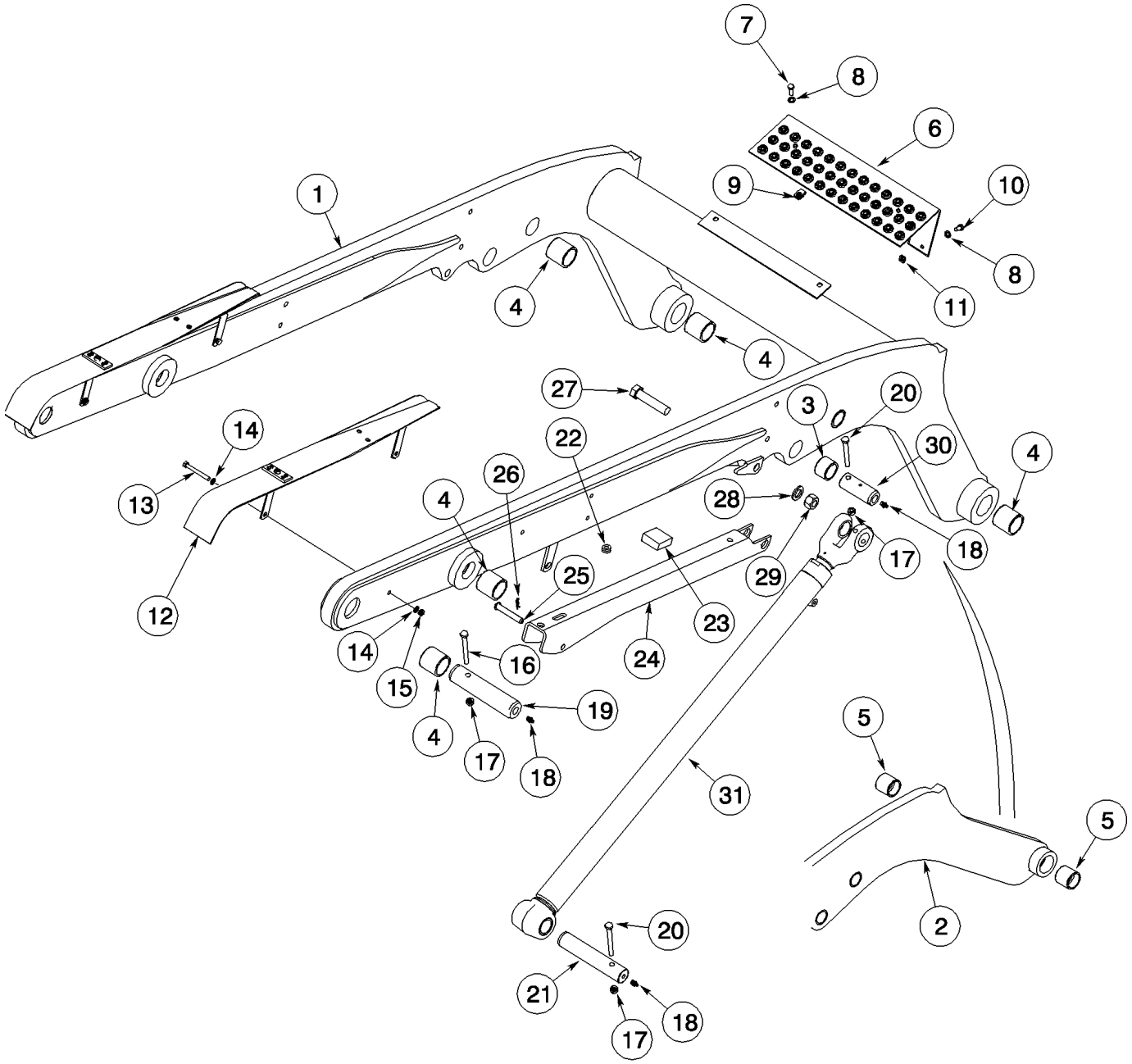

FRAME - LOADER LIFT

REF	FN	PART NUMBER	YR/SN	QTY	DESCRIPTION
1		429488A1		1	ARM, Loader Arm; Incl. 407161A1 Arm, Incl. 2, 3, 4, 5; Incl. Decals
2		NSS		1	NOT SERVICED SEPARATELY, Lift Arm
3		188101A1		4	BUSHING, LARGE
4		243267A1		4-6	BUSHING, LARGE
5		141008A1		4	BUSHING, LARGE
6		87449498		1	STEP, Upper
7		43127		2	BOLT, Hex, M8 x 25, 8.8
8		895-11008		5	WASHER, M8 x 16 x 1.6
9		833-40008		2	NUT, M8, U
10		16043224		3	BOLT, Hex, M8 x 16, 8.8, Full Thd
11		229197A1		3	NUT, M8
12		282376A1		2	SUPPORT
13		814-8070		4	BOLT, Hex, M8 x 70, 8.8
14		895-11008		8	WASHER, M8 x 16 x 1.6
15		832-41408		4	NUT, LOCK, M8 x 1.25, Cl 10
16		814-10100		2	BOLT, Hex, M10 x 100, 8.8
17		832-41410		8	NUT, LOCK, M10 x 1.5, Cl 10
18		219-1		8	NIPPLE, LUBE, 1/8"-27 x .66 lg
19		250997A1		2	PIN, LARGE
20		814-10090		6	BOLT, Hex, M10 x 90, 8.8
21		250998A1		2	PIN, LARGE
22		248-2198		1	GROMMET, 3/8" ID x 5/8" Groove Dia
23		D79692		1	PAD
24		230466A3		1	STRUT
25		86979987		1	PIN, HEADED, 1/2" x 3", G5
26		86624096		1	PIN, SPLIT (COTTER), Int, 3/16 x .080"
27		814-20090		1	BOLT, Hex, M20 x 90, 8.8, Right Hand
28		86625260		1	WASHER, M20 x 37.5 x 4, HT
29		832-41420		1	NUT, LOCK, M20 x 2.5, Cl 10
30		187216A2		2	PIN, LARGE
31		308258A2		2	CYLINDER ASSY., 57 ID x 970 mm strk; Loader Lift; See Figures 08-12

FRAME, FRONT - LOADER LINKAGE

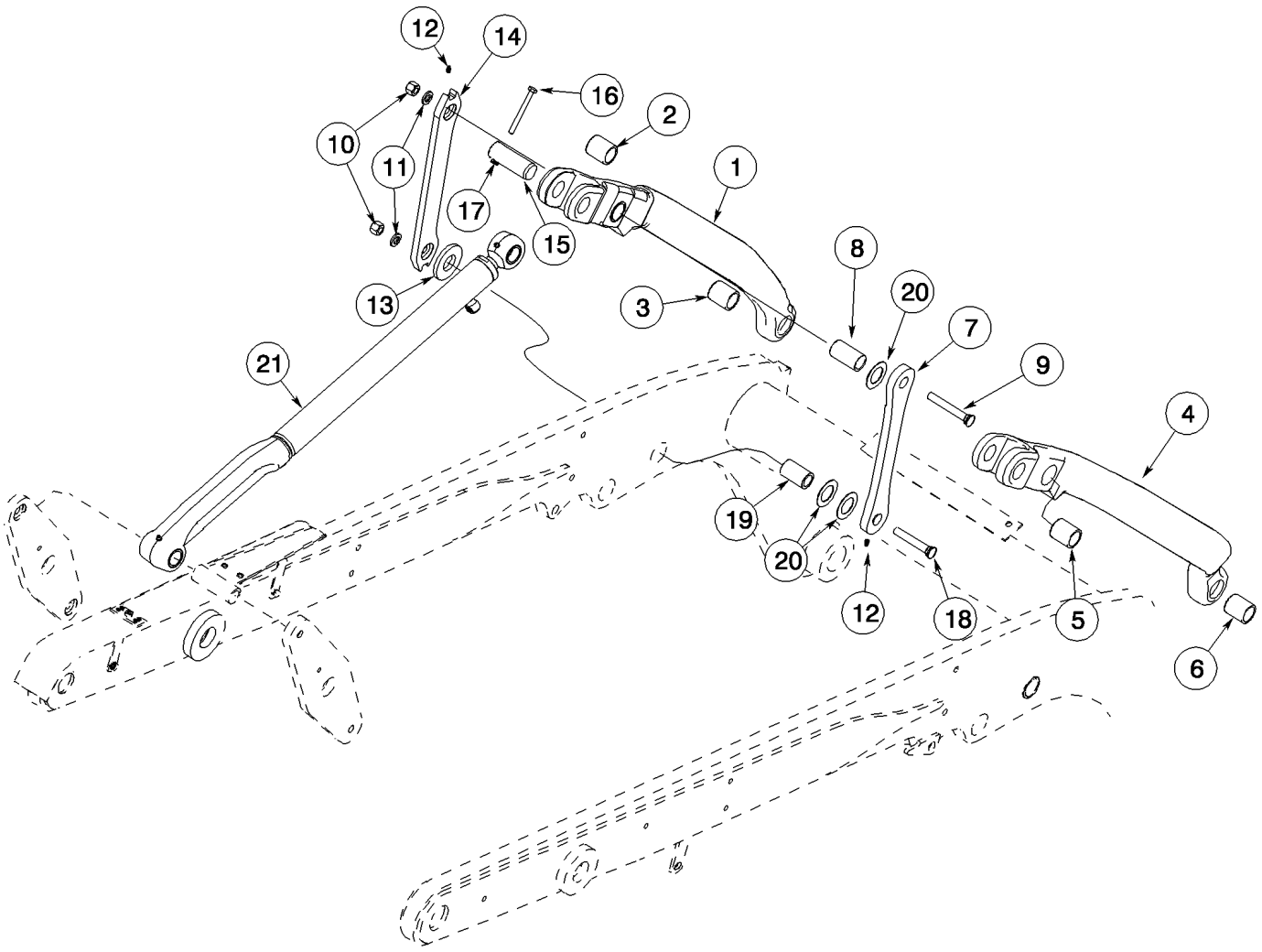

FRAME, FRONT - LOADER LINKAGE

REF	FN	PART NUMBER	YR/SN	QTY	DESCRIPTION
1		229840A2		1	ROD, CONNECTING, Left Hand; Incl. 2, 3
2		243266A1		1	BUSHING
3		243311A1		1	BUSHING
4		229839A2		1	ROD, CONNECTING, Right Hand; Incl. 5, 6
5		243266A1		1	BUSHING
6		243311A1		1	BUSHING
7		291629A1		2	ARM, POWER, Inner
8		303620A1		2	PIN, LARGE
9		420-21072		2	BOLT, CARRIAGE, 5/8"-11 x 4 1/2", G8
10		232-41110		4	NUT, LOCK, 5/8"-11, GC
11		86625266		4	WASHER, M17.5 x 30 x 4, HT
12		80714		4	NIPPLE, LUBE, 1/4"-28 NPT x .54" lg
13		254206A1		2	SPACER, Loader Bucket
14		243268A1		2	ROD, CONNECTING, Outer
15		243341A1		2	PIN, LARGE
16		120075		2	BOLT, Hex, M10 x 100, 8.8
17		86512554		2	NUT, LOCK, M10 x 1.5, Cl 10
18		420-21064		2	BOLT, CARRIAGE, 5/8"-11 x 4", G8
19		303621A1		2	PIN, LARGE
20		D143324		6	WASHER
21		327411A1		2	CYLINDER STEERING, Bucket; See Figure 08-11

FRAME, REAR - LOADER LINKAGE

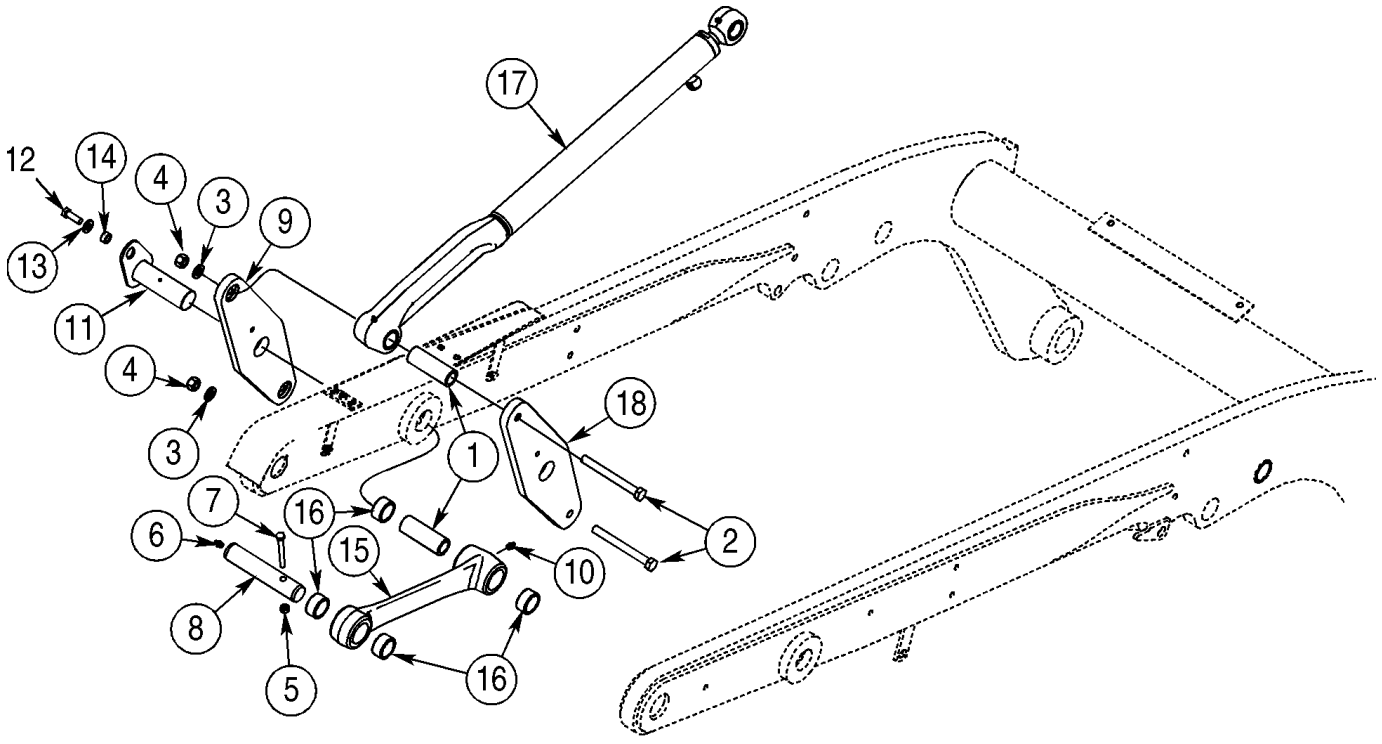

BS07A177

FRAME, REAR - LOADER LINKAGE

REF	FN	PART NUMBER	YR/SN	QTY	DESCRIPTION
1		187208A1		4	PIN, LARGE, Left Hand
2		87564737		4	BOLT, Bolt, Plow 5/8"-11 X 6.00 Gr 5
2		827-16150		4	BOLT, Hex, M16 x 150, 10.9
3		86625266		4	WASHER, M17.5 x 30 x 4, HT
4		85700693		4	NUT, LOCK, 5/8"-11, GC
4		86512555		4	NUT, LOCK, M16 x 2, Cl 10, No Longer Used, Order 85700693; Replaces 832-41416
5		86512554		8	NUT, LOCK, M10 x 1.5, Cl 10, Replaces 832-41410
6		80710		8	NIPPLE, LUBE, 1/8"-27 x .66 lg, Replaces 219-1
7		120074		6	BOLT, Hex, M10 x 90, 8.8, Replaces 814-10090
8		188255A2		2	PIN, LARGE
9		243424A1		4-2	ROD, CONNECTING
10		80714		2	NIPPLE, LUBE, 1/4"-28 NPT x .54" lg
10		219-86		2	NIPPLE, LUBE, 1/8" x .62" lg, Drive, No Longer Used, Order 80714
11		187041A2		2	PIN, LARGE, 875 mm Slot
12		9824642		2	BOLT, Hex, M12 x 35, 10.9, Replaces 627-12035
13		86625256		2	WASHER, M12 x 28.5 x 4, HT
14		87032487		2	COOLER
15		229843A2		2	ROD, CONNECTING, Incl. 16
16		141006A1		4	BUSHING
17		327411A1		2	CYLINDER STEERING, Bucket; See Figures 08-11
18		87557375		2	LINK

09-04		p1	12/07

COUPLER, MECHANICAL

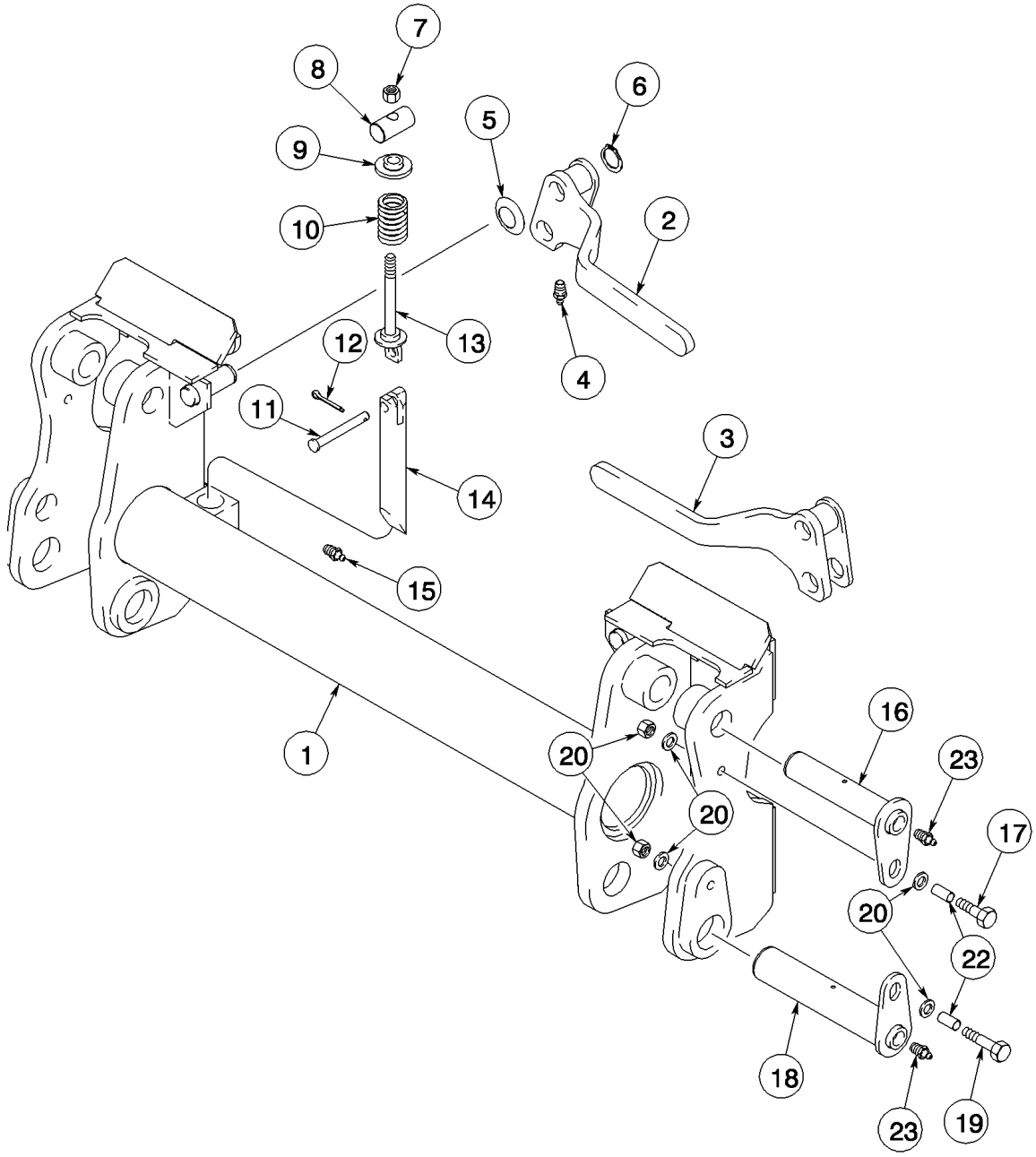

BC02B005

COUPLER, MECHANICAL

REF	FN	PART NUMBER	YR/SN	QTY	DESCRIPTION
		143136A2		1	DIA KIT, ADDITIONAL PROD., Kit, Coupler; Incl 1 - 23
1		143137A6		1	FRAME
2		246651A1		1	LEVER, Left Hand
3		246649A1		1	LEVER, Right Hand
4		219-86		2	NIPPLE, LUBE, 1/8" x .62" lg, Drive
5		A76552		2	SPRING
6		11067276		2	RING, SNAP, M24, Ext, If Used
6		370017		2	RING, LOCKING, No. 24; If Used
7		412126		2	NUT, LOCK, M12 x 1.75, Cl 8
8		H436001		2	TRUNNION
9		240486A1		2	GUIDE
10		A27289		2	SPRING, Compression
11		321018		2	PIN, CLEVIS, M12 x 40
12		130003		2	PIN, SPLIT (COTTER), M3.2 x 20
13		410762A1		2	ROD
14		240484A1		2	PIN, LARGE
15		219-86		2	NIPPLE, LUBE, 1/8" x .62" lg, Drive
16		255071A2		2	PIN, LARGE, Upper
17		325829		2	BOLT, Hex, M10 x 45, 8.8
18		255072A2		2	PIN, LARGE, Lower
19		325829		2	BOLT, Hex, M10 x 45, 8.8
20		86625253		8	WASHER, M11 x 24 x 2
21		86512554		4	NUT, LOCK, M10 x 1.5, Cl 10
22		906091R1		4	SPACER, 3/8 x 0.375 x Strg Pipe; Replaces 660200R1
23		80710		4	NIPPLE, LUBE, 1/8"-27 x .66 lg

09-05		p1	12/07

COUPLER, HYDRAULIC

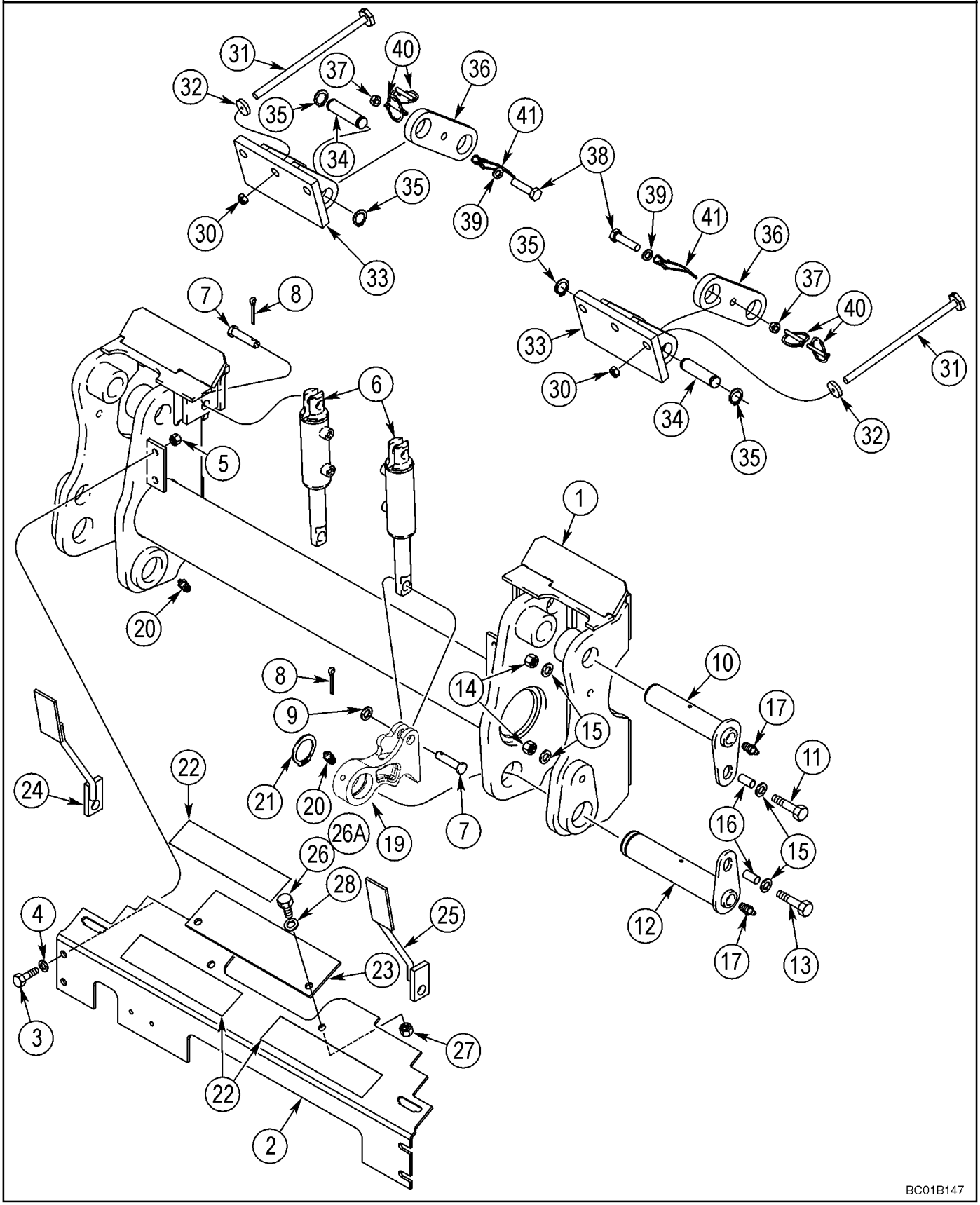

COUPLER, HYDRAULIC

REF	FN	PART NUMBER	YR/SN	QTY	DESCRIPTION
		87393400		1	KIT, SERVICE, Hydraulic Coupler
1		246902A7		1	FRAME ASSY
2		275552A2		1	BLADE, HALF
3		43140		4	BOLT, Hex, M10 x 30, 8.8, Full Thd
4		140017		8	WASHER, M10 x 20 x 2
5		86512554		4	NUT, LOCK, M10 x 1.5, Cl 10
6		255866A3		2	CYLINDER ASSY., 56 mm strk; Component Parts Not Serviced Separately
7		362528		4	PIN, CLEVIS, M16 x 55
8		412685		4	PIN, SPLIT (COTTER), M4 x 32
9		86625266		2	WASHER, M17.5 x 30 x 4, HT
10		255071A2		2	PIN, LARGE, Upper
11		325829		2	BOLT, Hex, M10 x 45, 8.8
12		255073A3		2	PIN, LARGE, Lower
13		325829		2	BOLT, Hex, M10 x 45, 8.8
14		86512554		4	NUT, LOCK, M10 x 1.5, Cl 10
15		86625253		8	WASHER, M11 x 24 x 2
16		906091R1		4	SPACER, 3/8 x 0.375 x Strg Pipe
17		80710		4	NIPPLE, LUBE, 1/8"-27 x .66 lg
19		300306A1		2	HOOK, 68 mm OD
20		80710		2	NIPPLE, LUBE, 1/8"-27 x .66 lg
21		86625149		2	RING, SNAP, #175, Ext
22		D55216		3	STRIP, ANTI-SKID, 2 x 9 in
23		283549A1		1	SHEET
24		284107A2		1	LINK ASSY., Left Hand
25		284110A2		1	INDICATOR, Right Hand
26		43140		2	BOLT, Hex, M10 x 30, 8.8, Full Thd
26A		43139		2	SCREW, M10 x 25; Europe Only
27		86512554		2	NUT, LOCK, M10 x 1.5, Cl 10
28		140017		4	WASHER, M10 x 20 x 2
		REF			INSTRUCTION, ITALIAN EUROPEAN MODELS
29		293215A1		1	FRAME ASSY
30		412672		4	NUT, LOCK, M12 x 1.75, Cl 10
31		9628065		4	BOLT, Hex, M12 x 45, 8.8
32		140018		4	WASHER, M12 x 24 x 2.5

COUPLER, HYDRAULIC

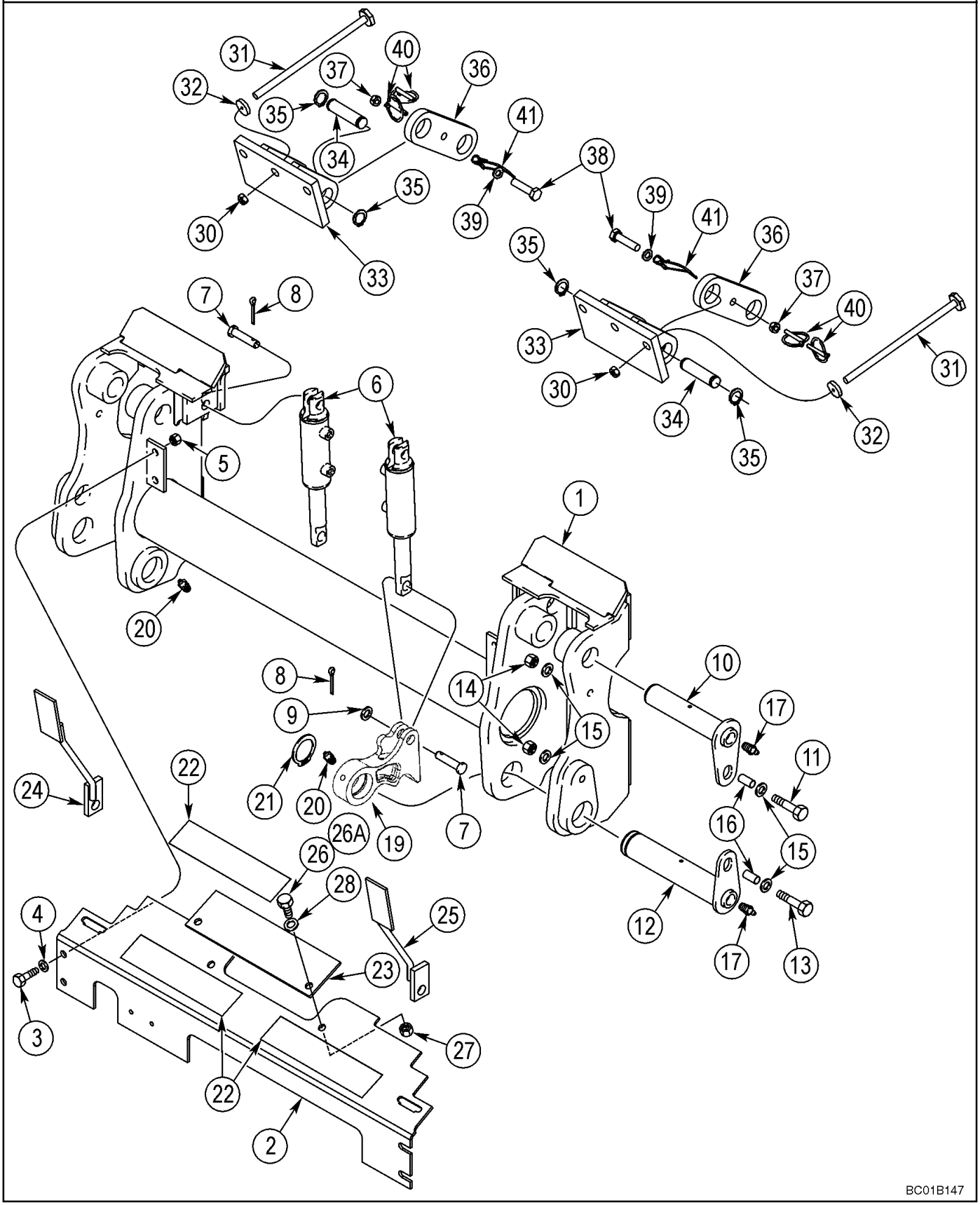

COUPLER, HYDRAULIC

REF	FN	PART NUMBER	YR/SN	QTY	DESCRIPTION
33		372051A2		2	BRACKET, Bucket Lock
34		D138889		2	PIN, Lift Cylinder Pivot
35		103-1687		4	RING, SNAP, #87, Ext
36		405721A1		2	LINK, Bucket Lock
37		86512554		2	NUT, LOCK, M10 x 1.5, Cl 10
38		120112		2	BOLT, Hex, M10 x 40, 8.8, Full Thd
39		140017		2	WASHER, M10 x 20 x 2
40		A30338		2	PIN
41		L78786		2	RETAINER, CABLE
42		284152A1		2	DECAL
43		87460009		1	DECAL, Hydraulic Coupler Lock

09-06		p1	12/07

BUCKETS, LOADER - 1860 MM (73 IN) WIDE BUCKET

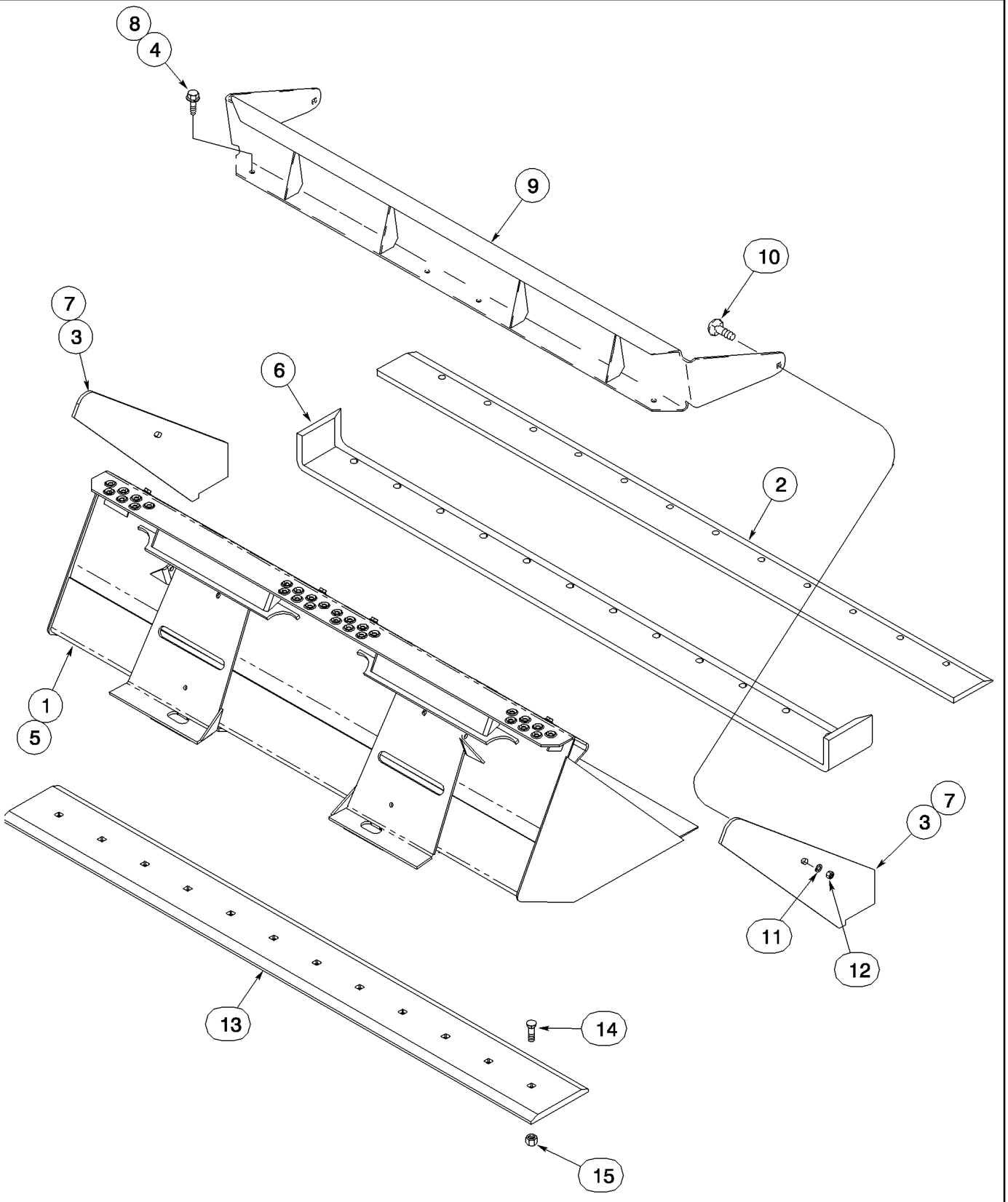

BUCKETS, LOADER - 1860 MM (73 IN) WIDE BUCKET

REF	FN	PART NUMBER	YR/SN	QTY	DESCRIPTION
		REF			INSTRUCTION, LIGHT MATERIAL
1		244554A2		1	ATTACHMENT, 1860 mm (73 In); Machinery Item; Incl. 2, 3
2		H438919		1	EDGE, CUTTING, 152 mm (6 In); Welded On
3		245109A2		2	EDGE, CUTTING, Side; Welded On
4		857-12030		4	BOLT, Hex Flg, M12 x 30, 10.9, Full Thd
		REF			INSTRUCTION, HEAVY DUTY
5		245078A2		1	BUCKET, 1860 mm (73 In); Machinery Item; Order From WholeGoods; Incl. 6, 7
6		245108A1		1	EDGE, CUTTING, Welded On
7		245109A2		2	EDGE, CUTTING, Side; Welded On
		REF			INSTRUCTION, EXTENSION
8		811-12035		4	BOLT, CARRIAGE, Short NK, M12 x 30, Cl8.8, Full Thd
9		252645A2		1	HINGED SIDE, Used With 244554A2, 245078A2
10		811-12035		2	BOLT, CARRIAGE, Short NK, M12 x 30, Cl8.8, Full Thd
11		86625256		2	WASHER, M12 x 28.5 x 4, HT
12		825-1412		2	NUT, M12, Cl 8
		REF			INSTRUCTION, BOLT-ON CUTTING EDGE
13		294681A1		1	EDGE, CUTTING, 1860 mm (73 In)
14		420-21036		13	BOLT, CARRIAGE, 5/8"-11 x 2 1/4", G8
15		329-1010		13	NUT, 5/8"-11, G8

BUCKETS, LOADER - 2083 MM (82 IN) WIDE BUCKET

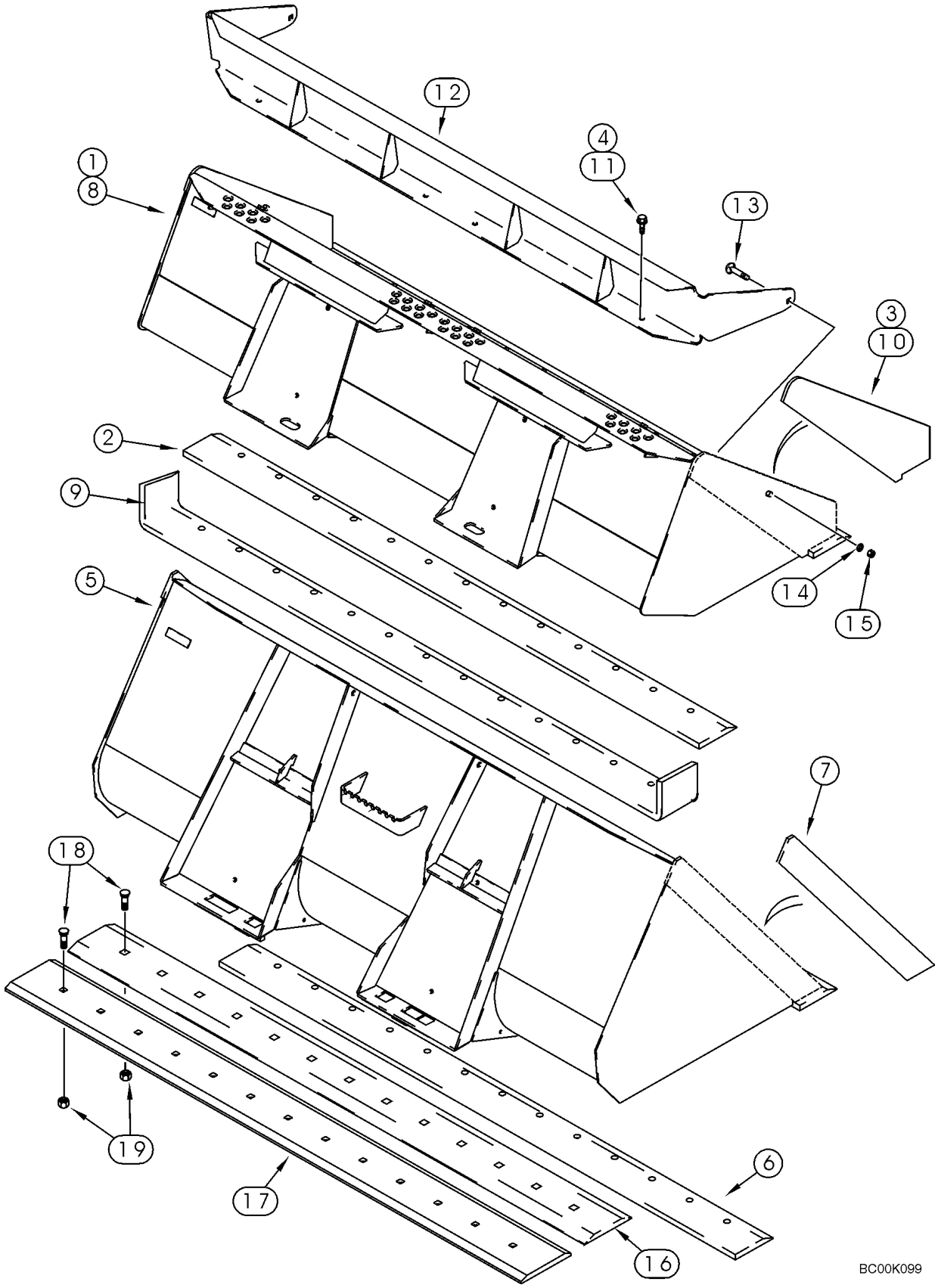

BUCKETS, LOADER - 2083 MM (82 IN) WIDE BUCKET

REF	FN	PART NUMBER	YR/SN	QTY	DESCRIPTION
		REF			INSTRUCTION, 2083 mm (82 in) WIDE BUCKET
1		192538A2		1	BUCKET, 2083 mm (82 in); Machinery Item; Incl. 2, 3
2		183948A2		1	EDGE, CUTTING, Welded On
3		245109A2		2	EDGE, CUTTING, Side; Welded On
4		857-12030		4	BOLT, Hex Flg, M12 x 30, 10.9, Full Thd
		REF			INSTRUCTION, LIGHT MATERIAL
5		190079A1		1	BUCKET, BUCKET 2083 mm (82 in); Machinery Item; Order From WholeGoods; Incl. 6, 7
6		183948A2		1	EDGE, CUTTING, Welded On
7		H438935		2	EDGE, CUTTING, Side; Welded On
		REF			INSTRUCTION, HEAVY DUTY
8		245077A2		1	BUCKET, 2083 mm (82 In); Machinery Item; Incl. 9 - 11
9		245107A2		1	EDGE, CUTTING, Welded On
10		245109A2		2	EDGE, CUTTING, Side; Welded On
11		857-12030		4	BOLT, Hex Flg, M12 x 30, 10.9, Full Thd
		REF			INSTRUCTION, EXTENSION
12		192972A2		1	RISER, Used With 192538A2, 245077A2
13		811-12035		2	BOLT, CARRIAGE, Short NK, M12 x 30, Cl8.8, Full Thd
14		86625256		2	WASHER, M12 x 28.5 x 4, HT
15		829-1412		2	NUT, M12, Cl 10
		REF			INSTRUCTION, BOLT-ON CUTTING EDGE
16		299336A1		1	EDGE, CUTTING, 2083 mm (82 in); Ten Hole Pattern
17		248932A1		1	EDGE, CUTTING, 2083 mm (82 In); Thirteen Hole Pattern
18		420-21236		10	BOLT, CARRIAGE, 3/4"-10 x 2 1/4", G8, Used With 16
18		420-21036		13	BOLT, CARRIAGE, 5/8"-11 x 2 1/4", G8, Used With 17
19		329-1012		10	NUT, 3/4"-10, G8, Used with 16
19		329-1010		13	NUT, 5/8"-11, G8, Used with 17

BUCKETS, LOADER - 2134 MM (84 IN) WIDE BUCKET

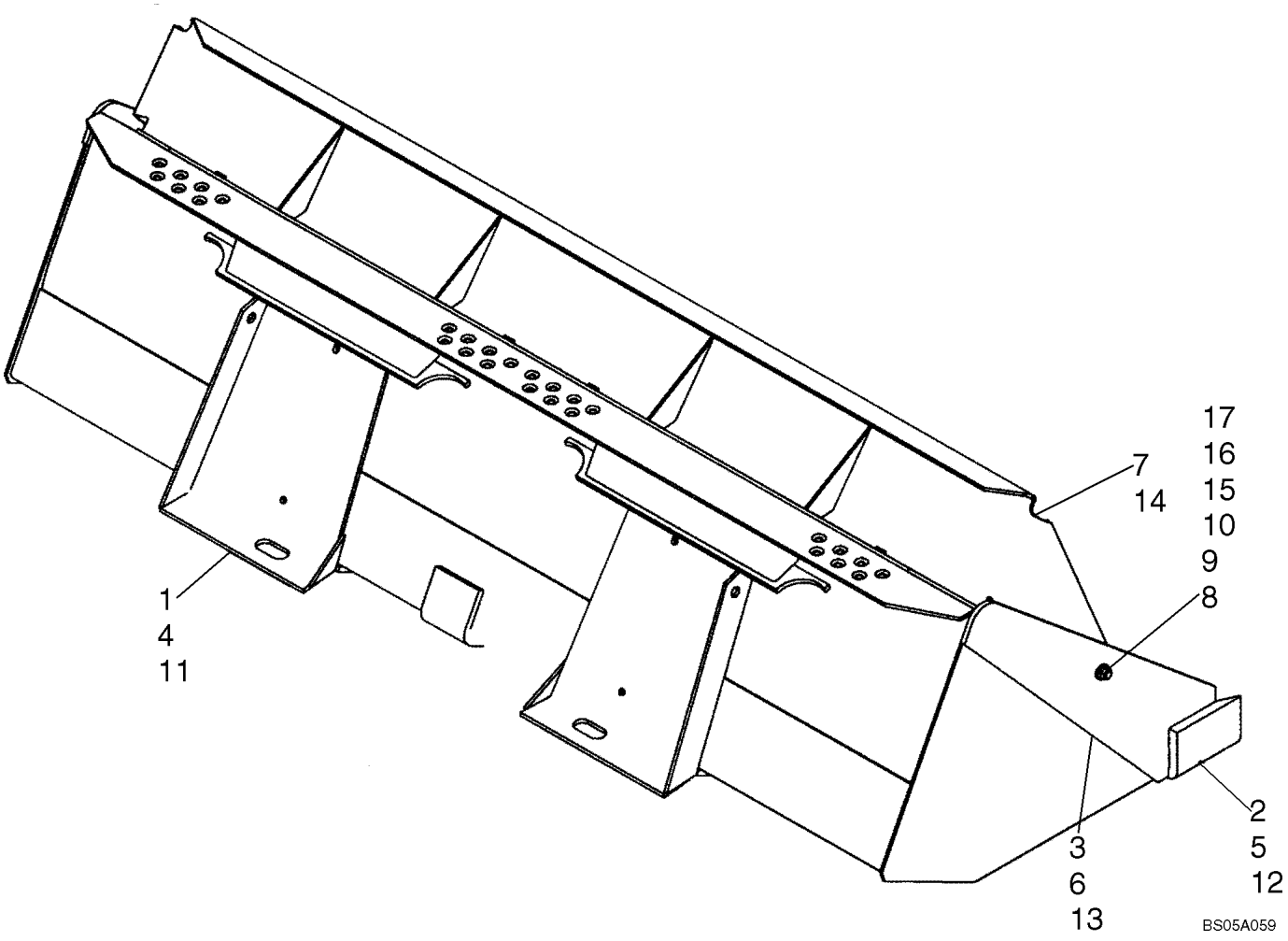

BUCKETS, LOADER - 2134 MM (84 IN) WIDE BUCKET

REF	FN	PART NUMBER	YR/SN	QTY	DESCRIPTION
1		86994100		1	BUCKET, Bucket; Light Material; 84 in; Order From Whole Goods; Incl. 2, 3
2		87400358		1	EDGE, CUTTING, 84 in
3		H438935		2	EDGE, CUTTING, Side
4		86994088		1	BUCKET, Bucket; Dirt; 84 in; Order From Whole Goods; Incl. 5, 6
5		87400358		1	EDGE, CUTTING, 84 in
6		245109A2		2	EDGE, CUTTING, Side
					EXTENSIONS FOR 86994088
7		87403474		1	EXTENSION, Extension With Spill Guard
8		811-12035		2	BOLT, CARRIAGE, Short NK, M12 x 30, Cl8.8, Full Thd
9		825-51412		2	NUT, M12, Flg Ser
10		896-15012		2	WASHER, M12 x 28.5 x 4, HT
11		86994091		1	BUCKET, Bucket; Heavy Duty Dirt; 84 in; Order From Whole Goods; Incl. 12, 13
12		87400358		1	EDGE, CUTTING, 84 in
13		245109A2		2	EDGE, CUTTING, Side
					EXTENSIONS FOR 86994091
14		87403595		1	EXTENSION, Extension With Spill Guard
15		811-12035		2	BOLT, CARRIAGE, Short NK, M12 x 30, Cl8.8, Full Thd
16		825-51412		2	NUT, M12, Flg Ser
17		896-15012		2	WASHER, M12 x 28.5 x 4, HT

09-09		p1	12/07

PALLET FORK

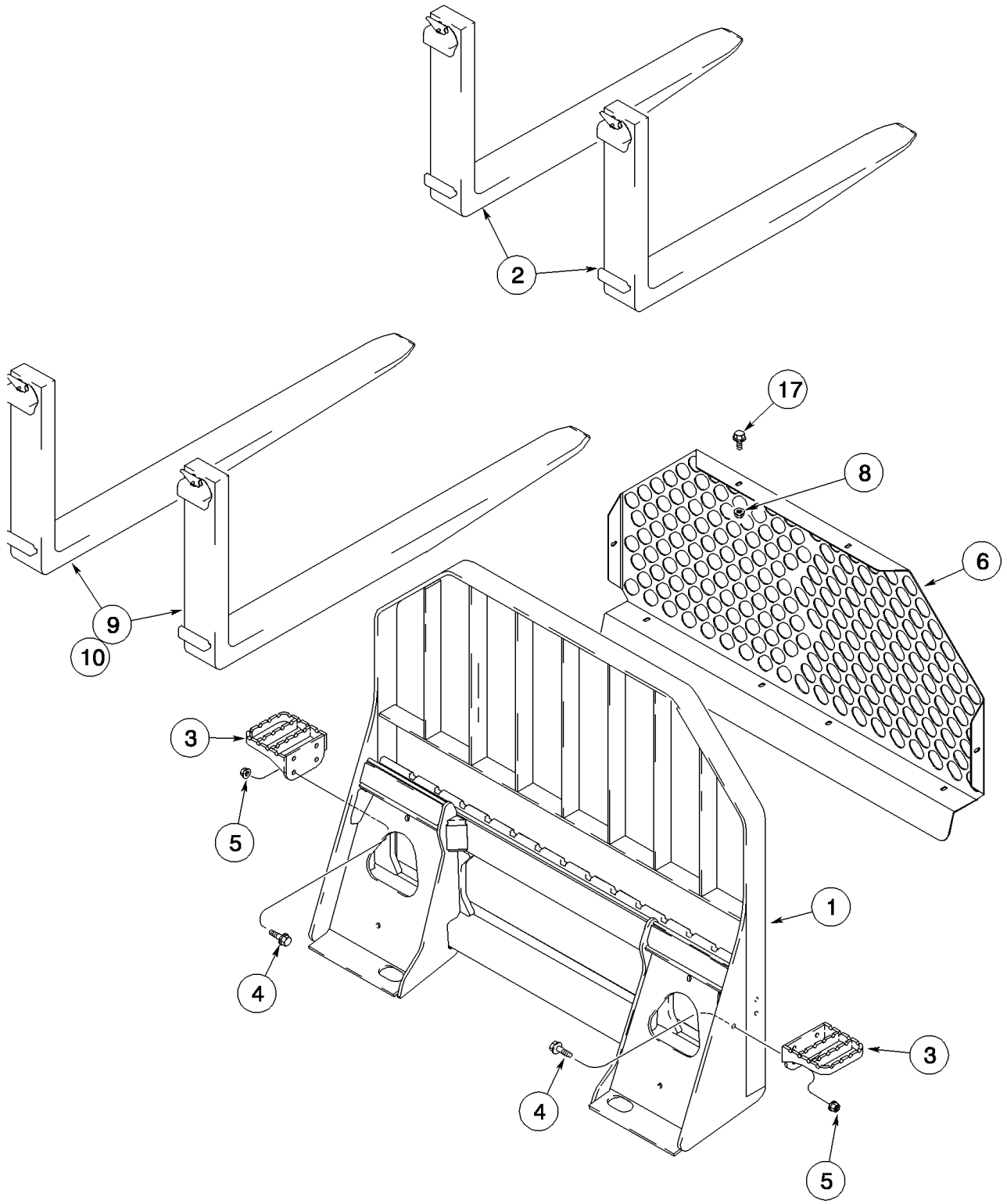

PALLET FORK

REF	FN	PART NUMBER	YR/SN	QTY	DESCRIPTION
1		239290A1		1	RACK, North American Only
2		351003A1		2	TINE, 1070 mm, 42 Inch; If Used; Incl. 431453A1
		431453A1		1	PIN, HEADED, Kit
3		259096A1		2	STEP
4		43140		6	BOLT, Hex, M10 x 30, 8.8, Full Thd
5		825-51410		6	NUT, M10, Flg Ser
6		283788A1		1	SCREEN, North American Only
7		844-8020		8	BOLT, Hex Flg, M8 x 20, 8.8
8		825-5148		8	NUT, M8, Flg Ser
9		334857A1		2	ARM ASSY., 1220 mm; 48 Inch; Heavy Duty
10		86574055		2	FORK, BUCKET, 1220 mm; 48 Inch; Standard

09-10		p1	12/07

CHASSIS (450)

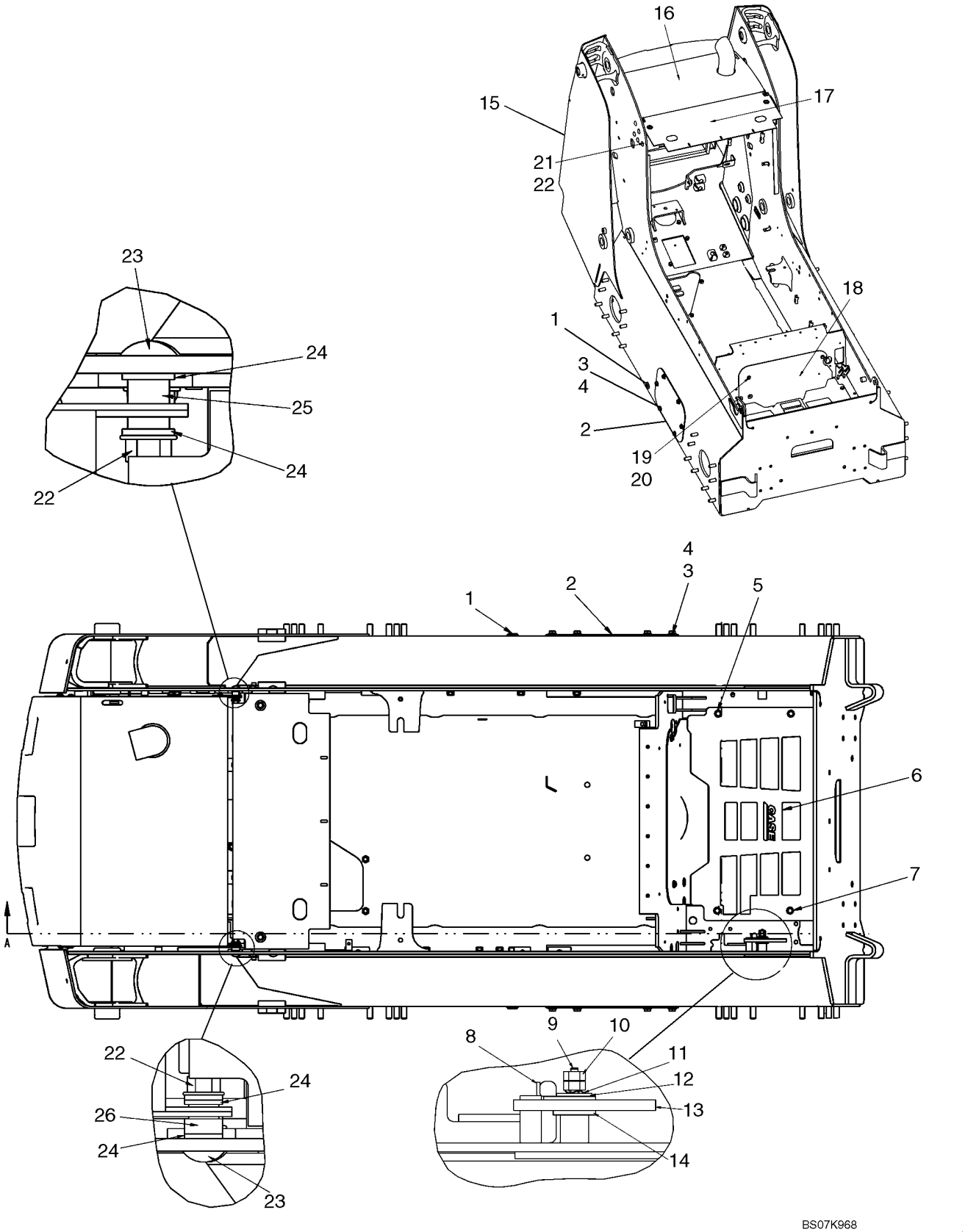

CHASSIS (450)

REF	FN	PART NUMBER	YR/SN	QTY	DESCRIPTION
		87618944		1	KIT, SERVICE, Kit, Chassis; Incl Main Frame, Fuel Cap, Hydraulic Cap, Fuel Sender And Gasket
1		{647429}		2	Pipe Plug, 1/2 NPTF
2		87411208		2	PLATE, COVER
3		87030508		12	BOLT, Hex Flg, M12 x 30, 10.9, Full Thd
4		140046		12	WASHER, SPRING, Belleville, M12
5		386045		1	BOLT, Hex, M8 x 45, 8.8
6		87712693		1	PLATE, Floor Plate
7		43128		3	BOLT, Hex, M8 x 30, 8.8
8		294911A2		1	HOOK, Latch Return Plate
9		294943A1		1	STUD, Latch Mounting Stud
10		100016		2	NUT, M10, Cl 8
11		278332A1		1	WASHER
12		294967A1		1	WASHER
13		294910A1		1	LATCH
14		87381		1	WASHER, 3/4", SAE
15		87672461		1	FRAME, Chassis
16		REF		1	INSTRUCTION, Rear Hood; See Fig 09-22
17		{87661311}		1	ROPS Filler Plate
18		87715353		1	COVER, Heel Plate Cover
19		86625263		6	WASHER, M8 x 20 x 1.6
20		43127		2	BOLT, Hex, M8 x 25, 8.8
21		120044		8	BOLT, CARRIAGE, Short NK, M12 x 30, Cl8.8, Full Thd
22		43436		10	NUT, M12, Flg Ser
23		334682		2	BOLT, CARRIAGE, Short NK, M12 x 50, Cl8.8, Full Thd
24		86625255		17	WASHER, M13.5 x 24.5 x 3, HT
25		{87671585}		1	Spacer
26		{87671584}		1	Pivot Bushing

CHASSIS (450)

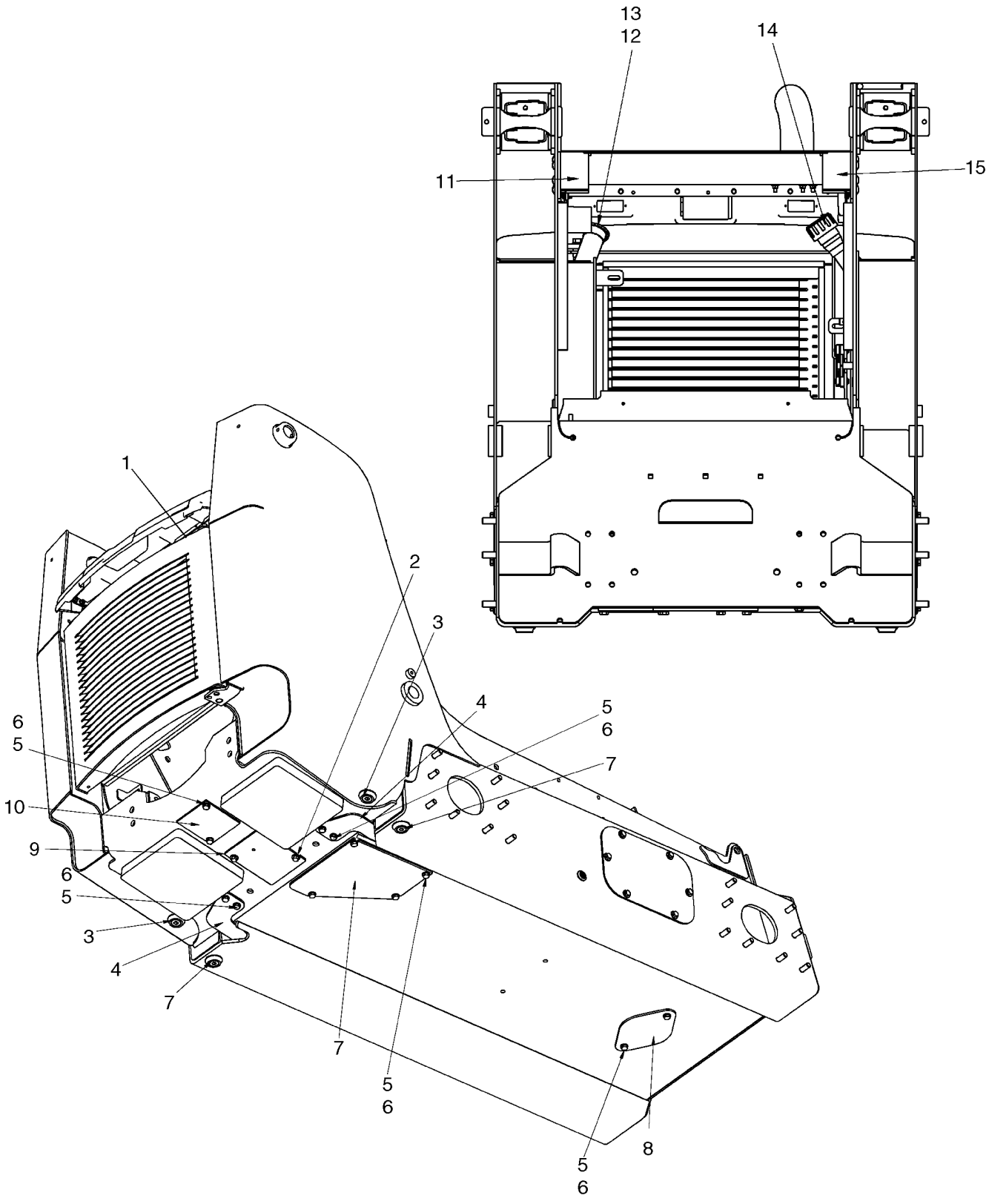

CHASSIS (450)

REF	FN	PART NUMBER	YR/SN	QTY	DESCRIPTION
		87618944		1	KIT, SERVICE, Kit, Chassis; Incl Main Frame, Fuel Cap, Hydraulic Cap, Fuel Sender And Gasket
1		REF		1	INSTRUCTION, Rear Door; See Fig 09-21
2		9670066		2	BOLT, Hex Flg, M12 x 30, 8.8
3		87432221		2	PLUG, Magnetic Plug
4		189422A1		2	COVER, Rear Chain Tank Cover
5		43260		12	BOLT, Hex, M12 x 30, 10.9
6		86625255		17	WASHER, M13.5 x 24.5 x 3, HT
7		86625135		2	PLUG, Hex Soc, 1"-11 1/2 NPTF
8		247609A1		1	COVER
9		{87711490}		1	Cover Plate
10		H436914		1	PLATE, LARGE
11		{87665570}		1	Rear ROPS Mount, RH
12		H436887		1	CAP, FILLER, Fuel Cap, Non Locking
13		108925A1		1	CAP, FILLER, Fuel Cap, Locking; Incl Set Of 2 Keys
14		257448A1		1	CAP, Hydraulic Cap
15		{87665572}		1	Rear ROPS Mount, LH
16		87458100		1	PLATE

CHASSIS (450CT)

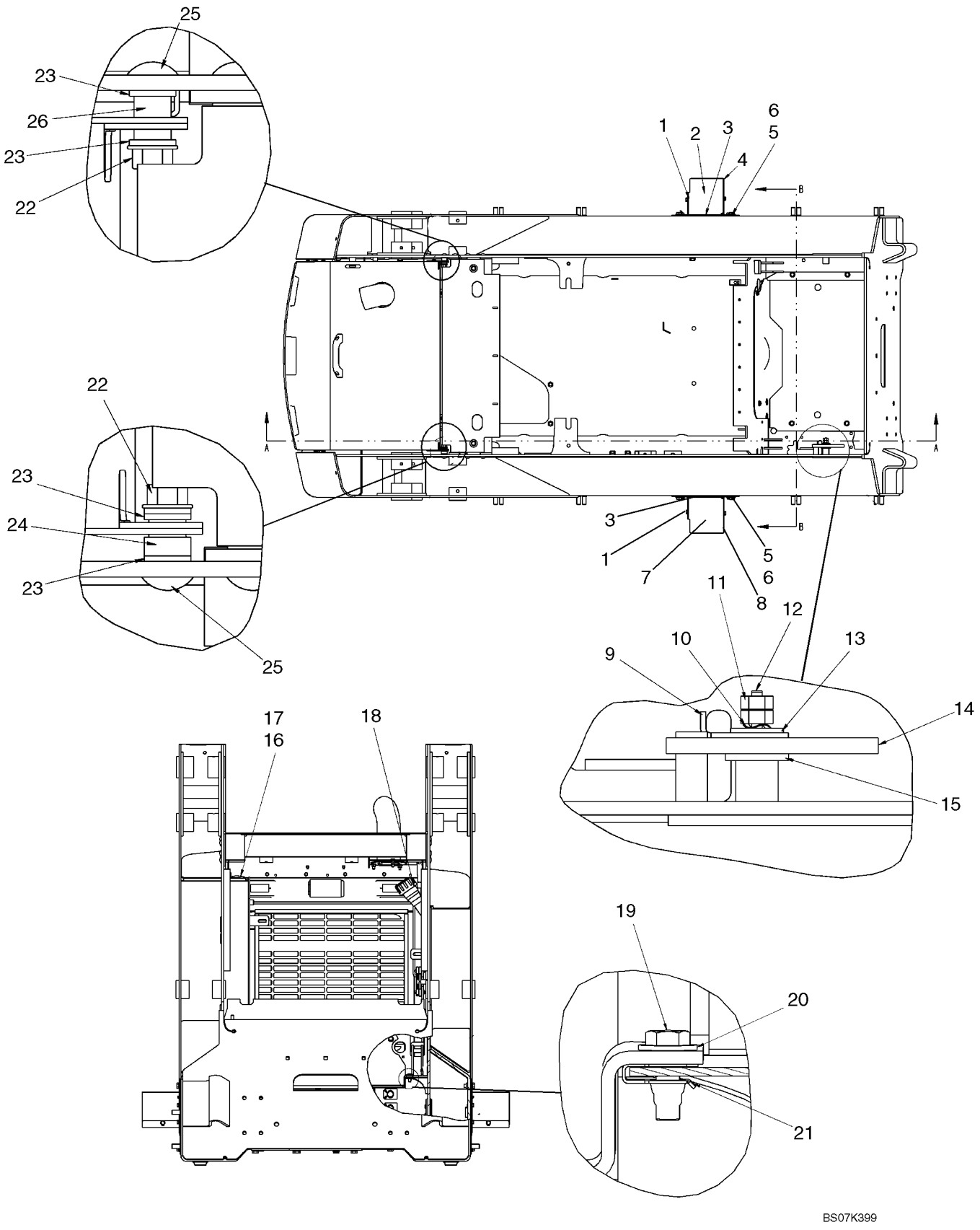

CHASSIS (450CT)

REF	FN	PART NUMBER	YR/SN	QTY	DESCRIPTION
		{87618972}		1	Kit, Chassis (450CT); Incl Fuel Cap, Hydraulic Cap, Fuel Sender And Gasket
1		9840344		12	SCREW
2		87460103		1	PLATE, Upper Left Hose Guard
3		87459921		2	PLATE, COVER, Center Cover
4		87460105		1	PLATE, Lower Left Hose Guard
5		140046		8	WASHER, SPRING, Belleville, M12
6		87030508		8	BOLT, Hex Flg, M12 x 30, 10.9, Full Thd
7		87460107		1	PLATE, Upper Right Hose Guard
8		87460109		1	PLATE, COVER, Lower Right Hose Guard
9		294911A2		1	HOOK, Latch Return Plate
10		278332A1		1	WASHER
11		100016		2	NUT, M10, Cl 8
12		294943A1		1	STUD, Latch Mounting Stud
13		294967A1		1	WASHER
14		294910A1		1	LATCH, ROPS Latch
15		87381		1	WASHER, 3/4", SAE
16		H436887		1	CAP, FILLER, Non-Locking Gas Cap
17		108925A1		1	CAP, FILLER, Locking Gas Cap
18		257448A1		1	CAP, Hydraulic Fill Cap
19		43127		6	BOLT, Hex, M8 x 25, 8.8
20		86625263		6	WASHER, M8 x 20 x 1.6
21		122158A1		4	NUT, M8, U
22		43436		2	NUT, M12, Flg Ser
23		86625255		4	WASHER, M13.5 x 24.5 x 3, HT
24		{87671584}		1	Bushing, Pivot
25		334682		2	BOLT, CARRIAGE, Short NK, M12 x 50, Cl8.8, Full Thd
26		{87671585}		1	Spacer

CHASSIS (450CT)

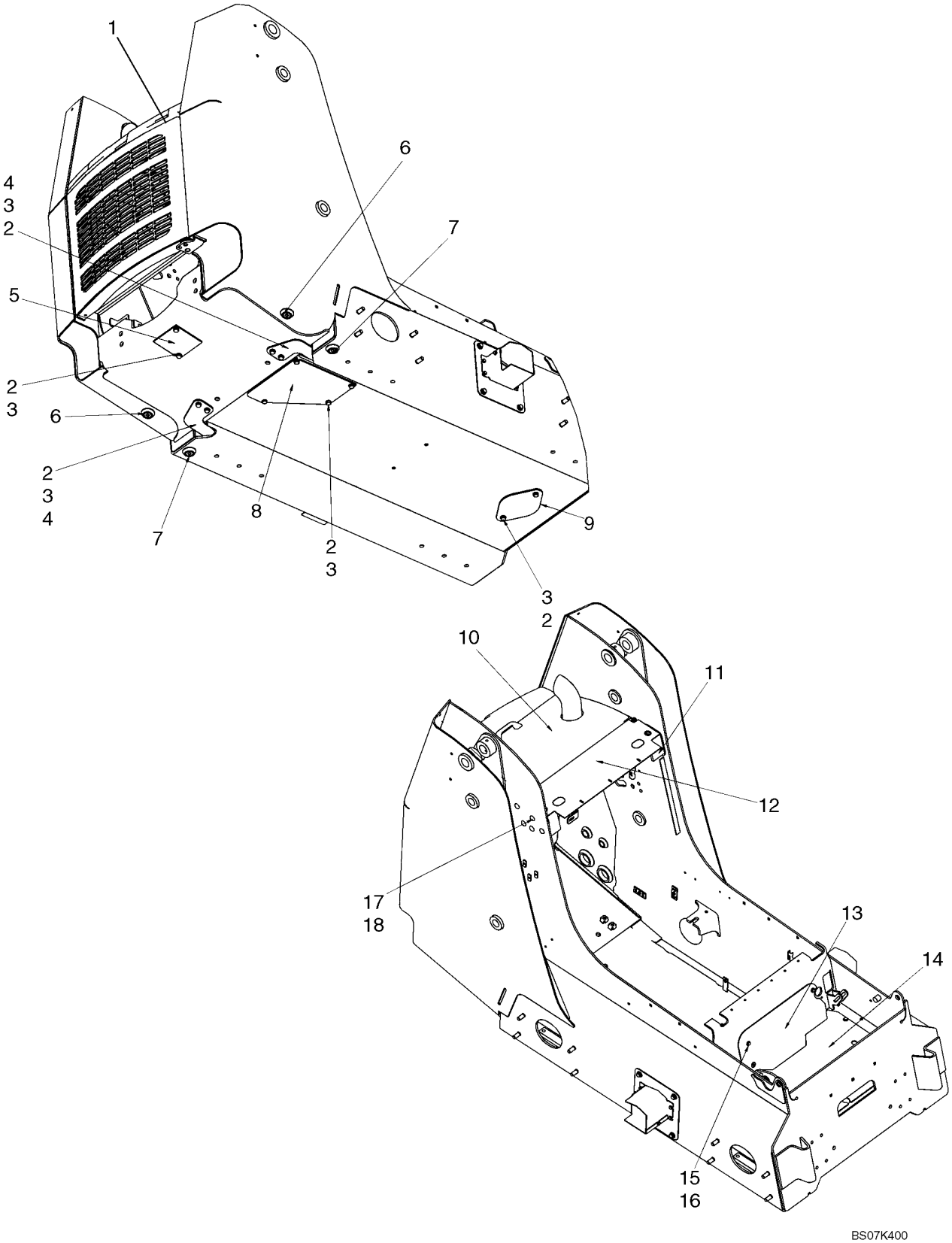

CHASSIS (450CT)

REF	FN	PART NUMBER	YR/SN	QTY	DESCRIPTION
1		REF		1	INSTRUCTION, Rear Door; See Fig 09-21
2		43260		12	BOLT, Hex, M12 x 30, 10.9
3		86625255		12	WASHER, M13.5 x 24.5 x 3, HT
4		189422A1		2	COVER, Rear Chain Tank Cover
5		H436914		1	PLATE, LARGE
6		87432221		2	PLUG, Magnetic Plug
7		86625135		2	PLUG, Hex Soc, 1"-11 1/2 NPTF
8		87458100		1	PLATE, Cover Plate
9		247609A1		1	COVER, Cover Plate
10		REF		1	INSTRUCTION, Rear Hood; See Fig 09-22
11		{87665572}		1	Rear Mount, LH
12		{87661311}		1	Plate, ROPS Filler
13		{87662605}		1	Heel Plate Cover
14		{87659976}		1	Floor Plate
15		86625263		6	WASHER, M8 x 20 x 1.6
16		43127		6	BOLT, Hex, M8 x 25, 8.8
17		43436		10	NUT, M12, Flg Ser
18		120044		8	BOLT, CARRIAGE, Short NK, M12 x 30, Cl8.8, Full Thd

CONTROL CONSOLE - LH

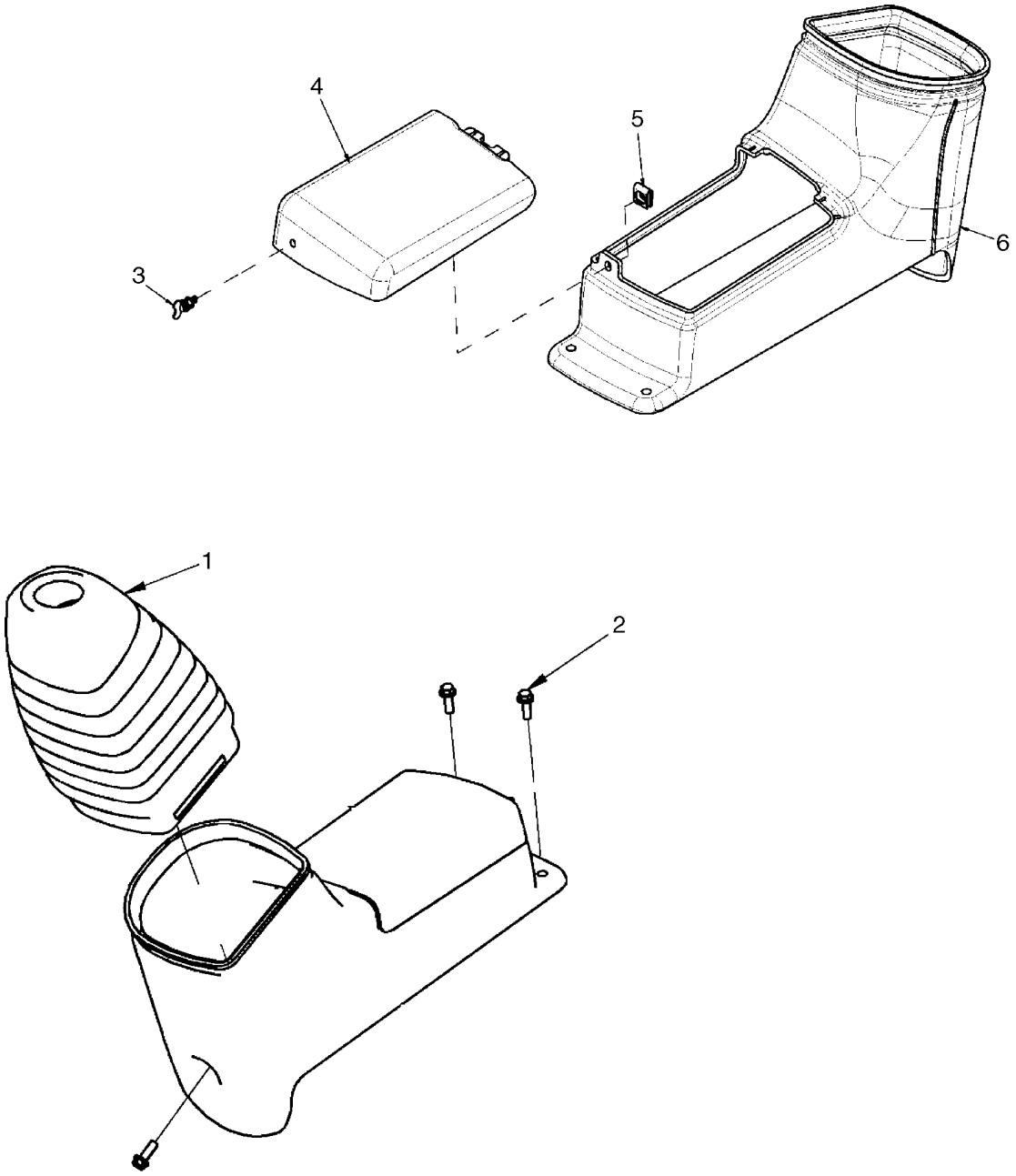

BS07K210

CONTROL CONSOLE - LH

REF	FN	PART NUMBER	YR/SN	QTY	DESCRIPTION
1		{87679718}		1	Boot, LH
2		87556251		3	SCREW
3		87568437		1	NUT, WING
4		87647723		1	COVER
5		236535A1		1	CLIP, ELECTRICAL
6		87647722		1	CONSOLE, Console, LH

CONTROL CONSOLE - RH

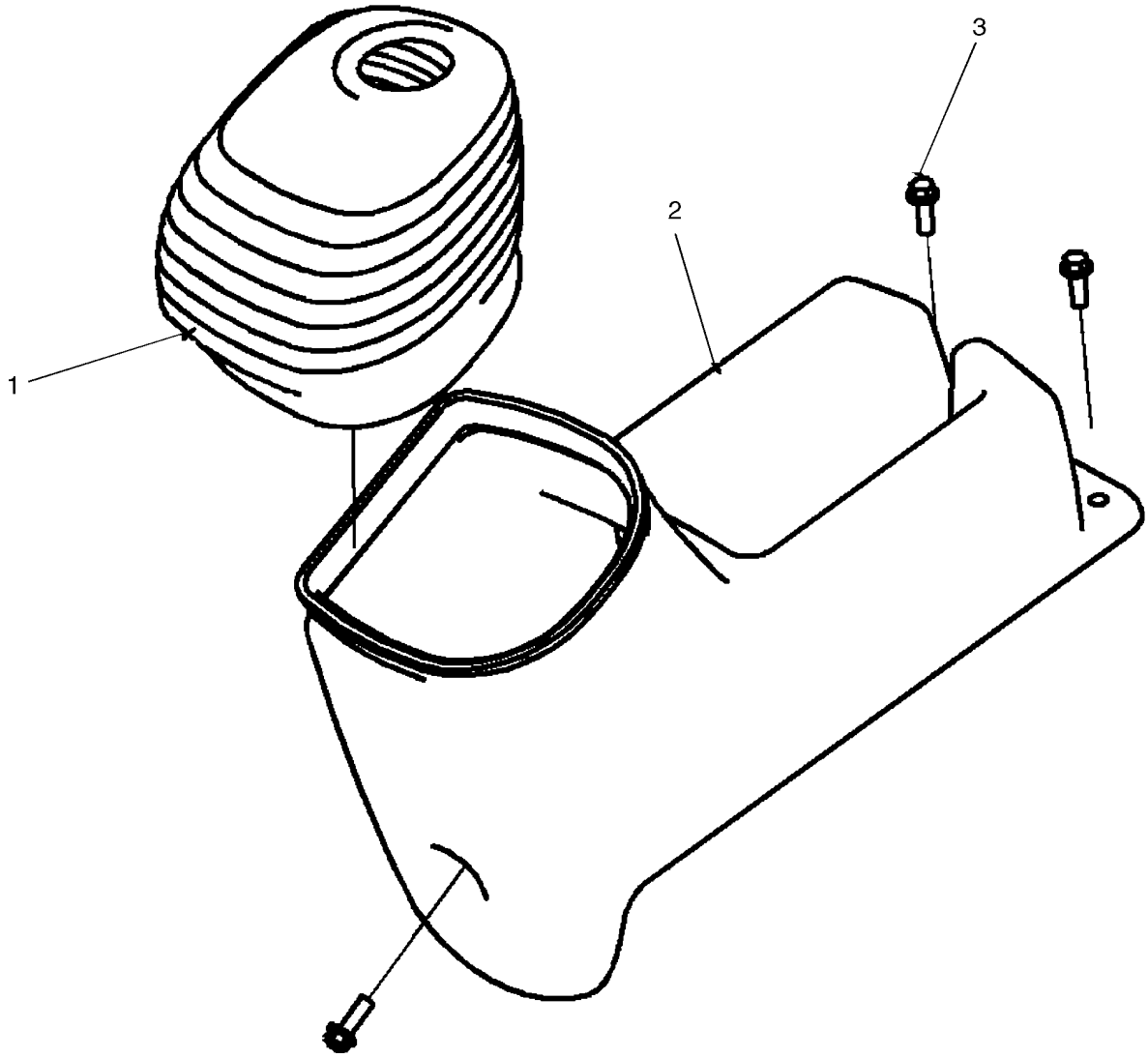

CONTROL CONSOLE - RH

REF	FN	PART NUMBER	YR/SN	QTY	DESCRIPTION
1		{87679715}		1	Boot, RH
2		87647721		1	CONSOLE, Console, RH
3		87556251		3	SCREW

LOADER AND GROUND DRIVE CONTROL - RH

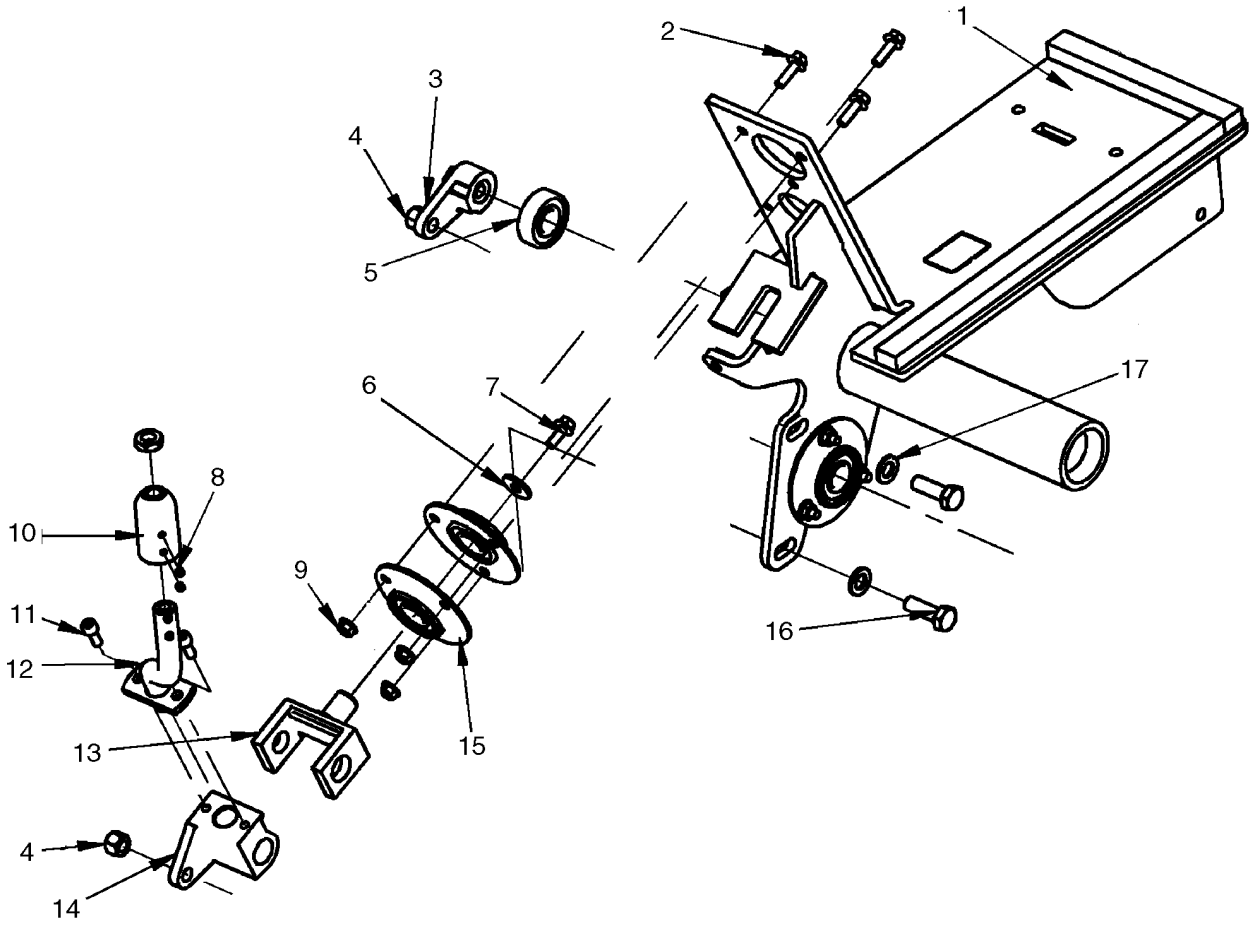

BS07K209

LOADER AND GROUND DRIVE CONTROL - RH

REF	FN	PART NUMBER	YR/SN	QTY	DESCRIPTION
1		{87669933}		1	Frame, Console RH
2		87015862		4	BOLT, Hex Flg, M6 x 20, 8.8, Full Thd
3		237773A1		3	LEVER ASSY.
4		80855		6	NUT, LOCK, 3/8"-24, GC
5		102776A1		4	BEARING, BALL
6		86625237		2	WASHER, .281" x 7/8" x .098", HDN
7		87030555		2	BOLT
8		87564724		4	SCREW, Set Screw, #10 UNF X 1/4
9		86511444		3	NUT, M6, Flg Ser
10		{87662429}		1	Handle Mounting Adapter
11		2479277		4	SCREW, Socket Head, M6 X 16
12		{87662422}		1	Control Lever, RH
13		87441548		2	SUPPORT
14		238357A3		1	BEARING
15		112380A1		3	BEARING
16		43140		6	BOLT, Hex, M10 x 30, 8.8, Full Thd
17		86624176		2	WASHER, M10 x 20 x 2

LOADER AND GROUND DRIVE CONTROL - LH

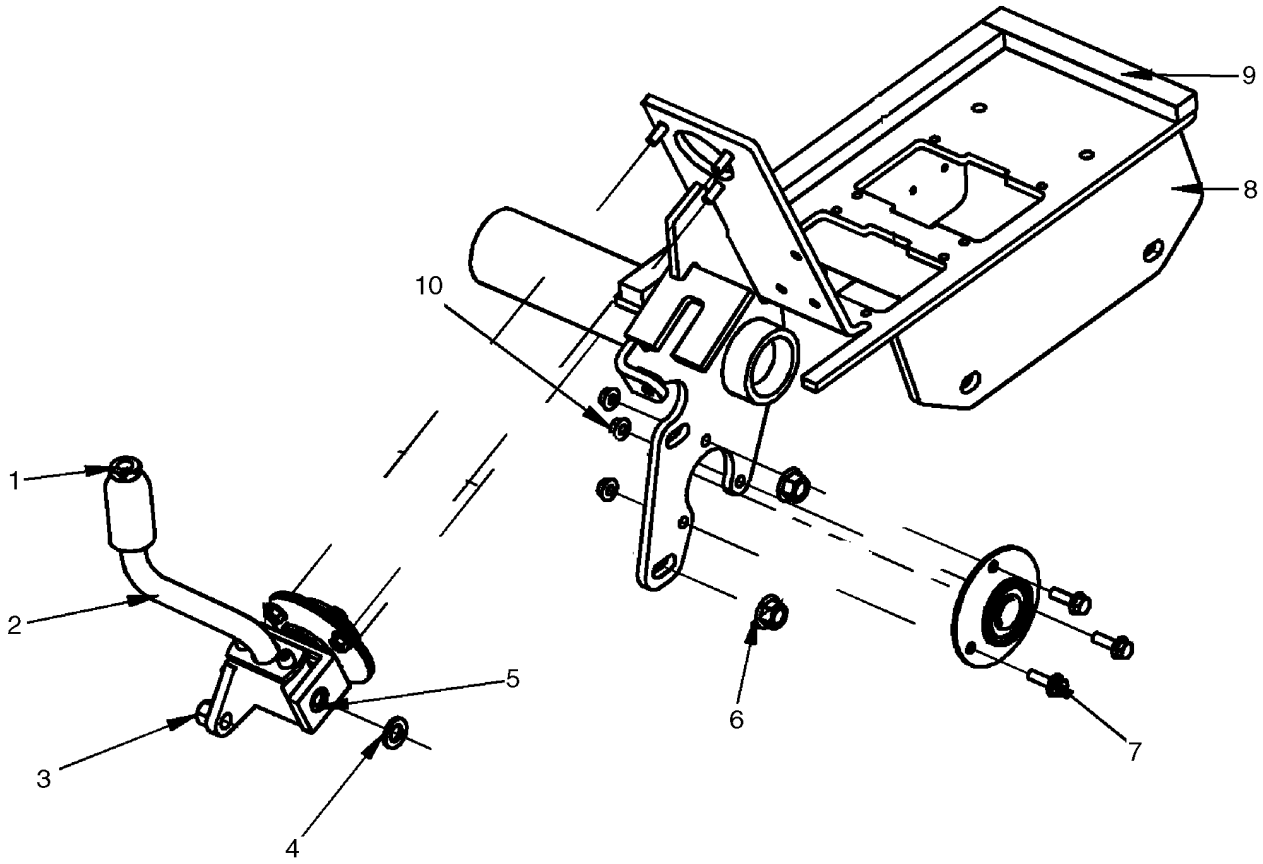

BS07K208

LOADER AND GROUND DRIVE CONTROL - LH

REF	FN	PART NUMBER	YR/SN	QTY	DESCRIPTION
1		323238		1	NUT, Thin, M12 x 1.75, Cl 05
2		{87662370}		1	Control Lever, LH
3		80855		1	NUT, LOCK, 3/8"-24, GC
4		86624176		1	WASHER, M10 x 20 x 2
5		237774A1		1	SHAFT
6		43435		4	NUT, M10, Flg Ser
7		87015862		3	BOLT, Hex Flg, M6 x 20, 8.8, Full Thd
8		{87669932}		1	Frame, Console LH
9		291308		AR	STRIP, SEALING
10		86511444		3	NUT, M6, Flg Ser

LOADER AND GROUND DRIVE - LINKAGE

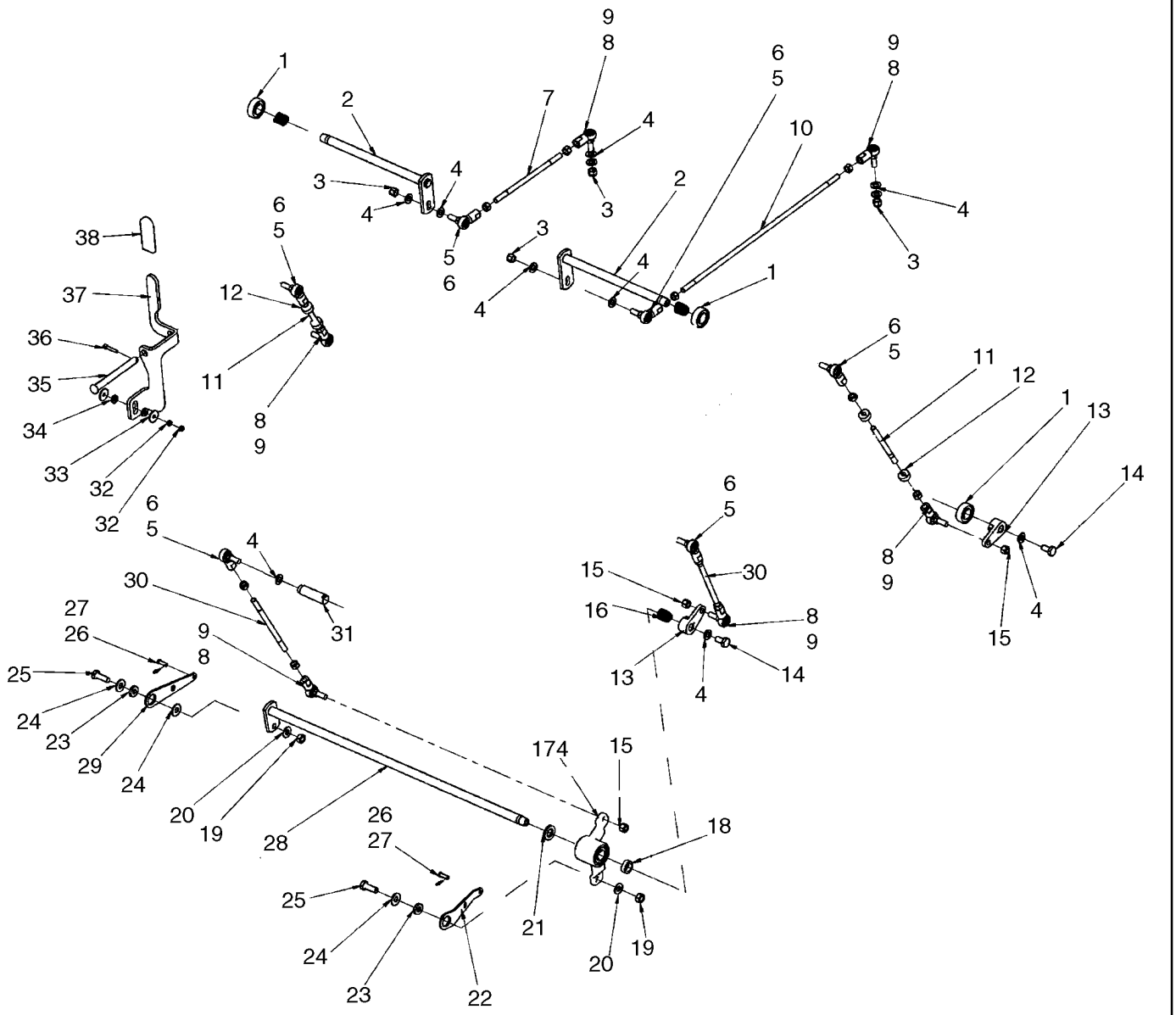

LOADER AND GROUND DRIVE - LINKAGE

REF	FN	PART NUMBER	YR/SN	QTY	DESCRIPTION
1		102776A1		4	BEARING, BALL
2		{87516578}		2	Shaft
3		88902		4	NUT, LOCK, 3/8"-16, GC
4		86624176		21	WASHER, M10 x 20 x 2
5		87030547		6	NUT, 3/8"-24, G5, LH
6		230426A1		6	BALL JOINT
7		{87548976}		1	Linkage Rod, 141mm (5 9/16 in.)
8		230425A1		6	BALL JOINT
9		86509310		6	NUT, 3/8"-24, G5
10		{87548977}		1	Linkage Rod, 426mm (16 3/4 in.)
11		187234A2		2	ROD, 124mm (4 7/8 in.)
12		255561A1		4	COLLAR ASSY.
13		237773A1		3	LEVER ASSY.
14		9861444		3	BOLT, Hex, M10 x 20, 10.9, Full Thd
15		80855		6	NUT, LOCK, 3/8"-24, GC
16		229383A1		3	SPRING
17		239908A4		1	CRANK
18		240621A1		1	SPACER
19		86500689		2	NUT, M10, Cl 10
20		140045		2	WASHER, SPRING, Belleville, M10
21		86625266		1	WASHER, M17.5 x 30 x 4, HT
22		87445121		1	LINKAGE
23		641419		2	WASHER
24		80702		3	WASHER, 3/8"
25		43140		6	BOLT, Hex, M10 x 30, 8.8, Full Thd
26		D131983		2	PIN
27		234726		2	PIN, CLEVIS, 1/4" x .770"
28		275022A1		1	SHAFT
29		87445120		1	LINKAGE
30		180682A1		2	STEM, Linkage Rod, 185mm (7 9/32 in.)
31		237774A1		2	SHAFT
32		87825		2	NUT, #10-32
33		86624183		2	WASHER, M6 x 25 x 1.6
34		103777A1		2	WASHER
35		87019656		1	PIN, HEADED, 1/2" x 5"

LOADER AND GROUND DRIVE - LINKAGE

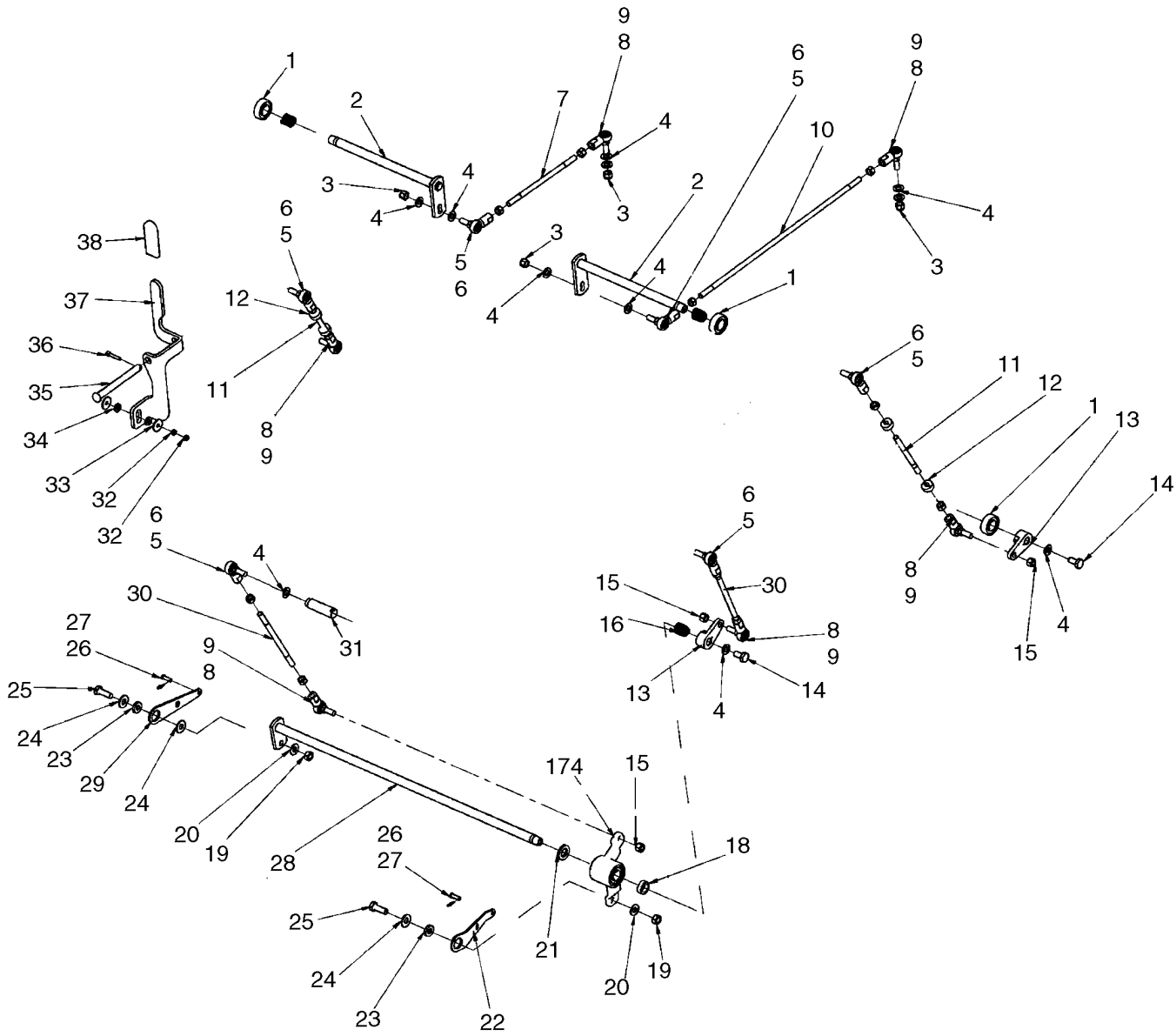

LOADER AND GROUND DRIVE - LINKAGE

REF	FN	PART NUMBER	YR/SN	QTY	DESCRIPTION
36		87397		1	PIN, SPLIT (COTTER), 3/16" x 1"
37		87455482		1	LEVER
38		D126613		1	HANDLE, Flat Vinyl Grip

CONTROLLER - MOUNTING (PILOT CONTROL)

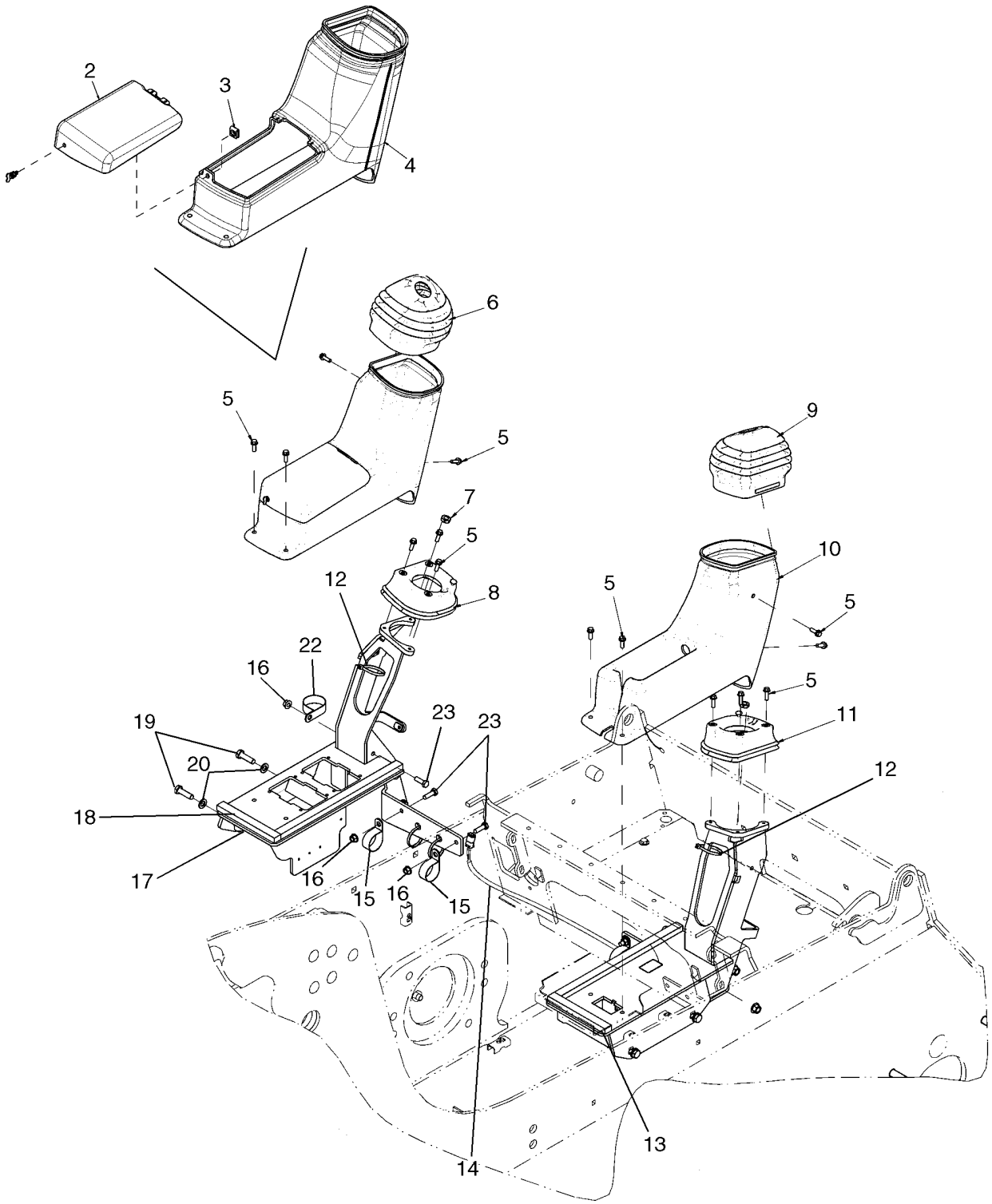

CONTROLLER - MOUNTING (PILOT CONTROL)

REF	FN	PART NUMBER	YR/SN	QTY	DESCRIPTION
1		87568437		1	NUT, WING
2		87647723		1	COVER
3		236535A1		1	CLIP, ELECTRICAL
4		87647720		1	CONSOLE, Console, LH
5		{87553251}		14	Screw, Hex Head 1/4-20 X 3/4 in.
6		87568426		1	RUBBER SLEEVE, Boot, LH
7		323238		2	NUT, Thin, M12 x 1.75, Cl 05
8		87646402		1	SEAL, RUBBER, Secondary Seal, LH
9		87568427		1	RUBBER SLEEVE, Boot, RH
10		87647719		1	CONSOLE, Console, RH
11		87646401		1	SEAL, RUBBER, Secondary Seal, RH
12		L11541		6	STRAP, CABLE
13		{87668235}		1	Console Bracket, RH
14		87571936		1	HARNESS, Pilot Harness
15		86637998		4	CLAMP, 1 1/2", Insul, 3/8" Bolt
16		86505868		6	NUT, M8, Flg Ser
17		{87668243}		1	Console Bracket, LH
18		291308		AR	STRIP, SEALING
19		9706704		4	BOLT, Hex, M10 x 35, 8.8, Full Thd
20		86624176		8	WASHER, M10 x 20 x 2
22		603022		2	CLAMP, 1 3/4", Insul, 3/8" Bolt
23		43127		2	BOLT, Hex, M8 x 25, 8.8

CONTROLS - AUXILIARY HYDRAULICS

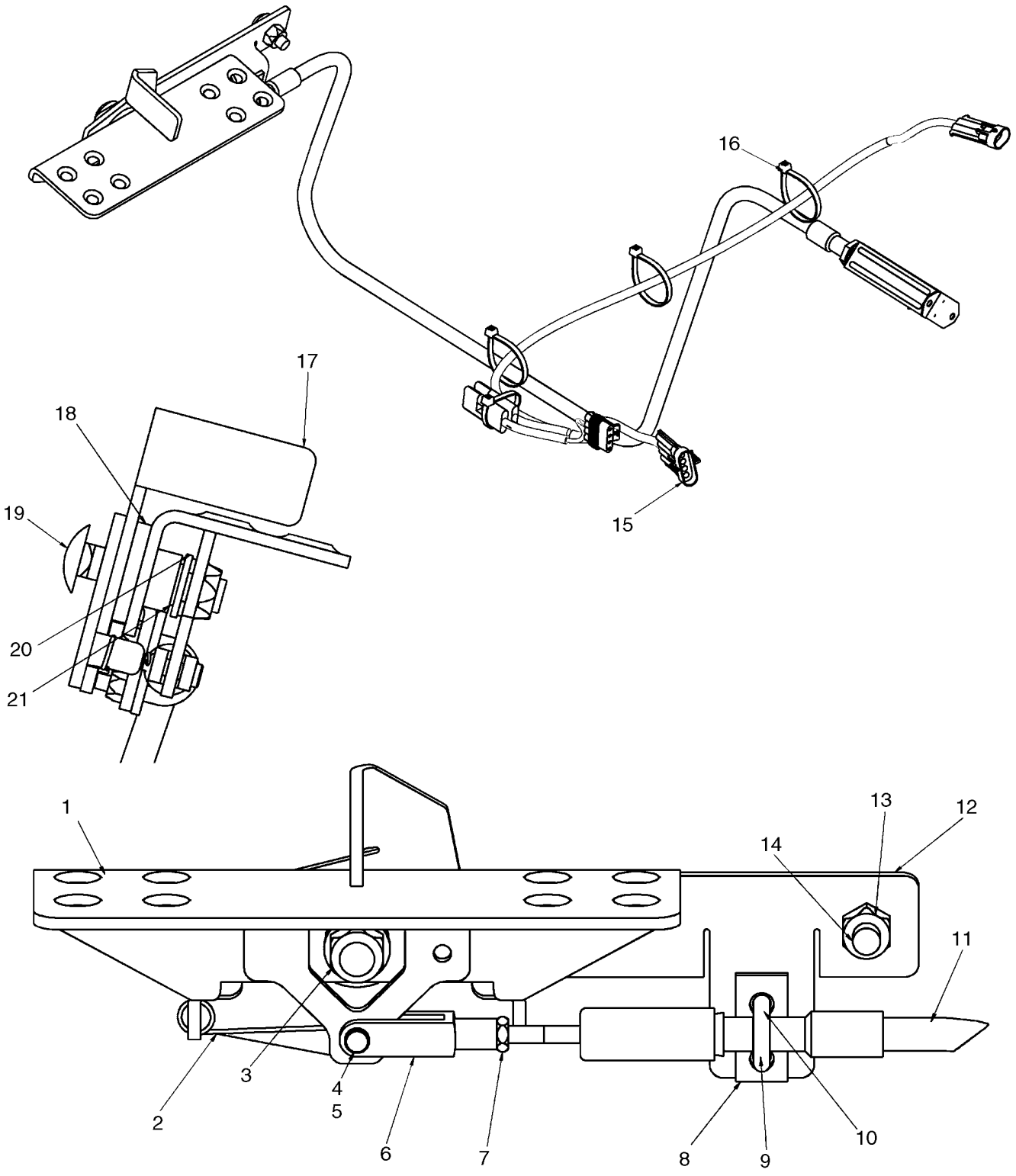

CONTROLS - AUXILIARY HYDRAULICS

REF	FN	PART NUMBER	YR/SN	QTY	DESCRIPTION
1		87423833		1	PEDAL ASSY.
2		302960A2		1	SPRING
3		86512554		1	NUT, LOCK, M10 x 1.5, Cl 10
4		D131983		1	PIN
5		234726		1	PIN, CLEVIS, 1/4" x .770"
6		86520436		1	CLEVIS, ADJUSTABLE, 1/4"-28
7		86976064		1	NUT, Jam, 1/4"-28, G5
8		H373779		1	PLATE, LARGE, Spacer
9		87442439		1	ROD
10		86512440		2	NUT, LOCK
11		87423814		1	SUPPORT ASSY.
12		NSS		1	NOT SERVICED SEPARATELY, Mounting Plate
13		86512554		1	NUT, LOCK, M10 x 1.5, Cl 10
14		86512446		1	BOLT, CARRIAGE, Short NK, M10 x 30, Cl8.8, Full Thd
15		87715731		1	HARNESS, Auxiliary Interlock Harness; Incl 15A
15A		774735		1	DIODE
16		263117		3	STRAP, CABLE, .14" x 11 1/2"
17		87446614		1	LEVER, Pedal Lock Lever
18		283839A1		1	SPACER, Rubber Spacer
19		87609276		1	BOLT
20		140018		1	WASHER, M12 x 24 x 2.5
21		L14781		1	BUSHING
22		139618A1		1	DECAL, Decal, Auxiliary Hydraulic Control; Not Illustrated

REAR DOOR

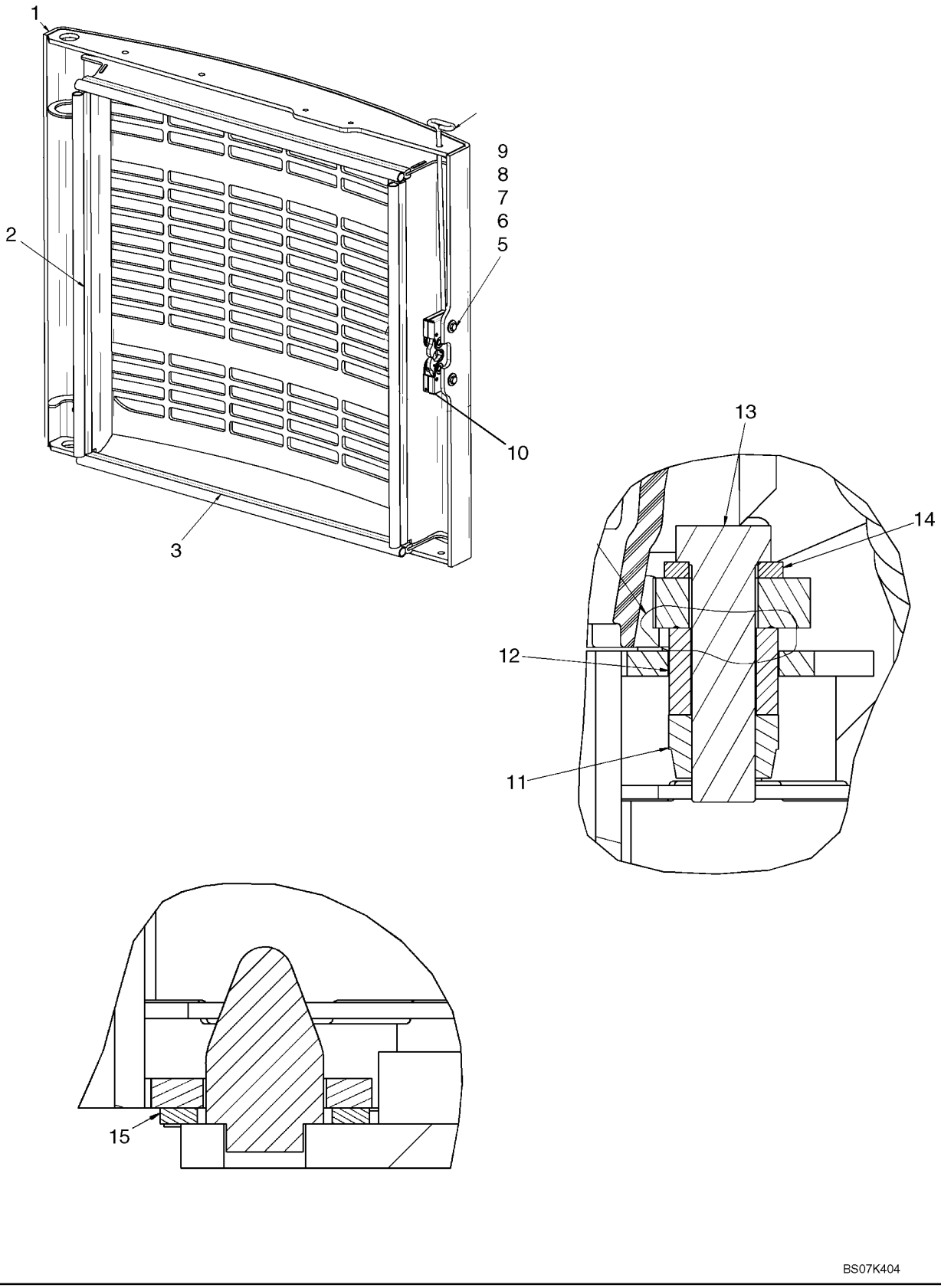

REAR DOOR

REF	FN	PART NUMBER	YR/SN	QTY	DESCRIPTION
1		87716234		1	DOOR, Standard Rear Door
1		87717029		1	DOOR, Heavy Duty Rear Door
2		{87648128}		2	Bulb Seal, 562mm (22 1/8 in.)
3		{87578980}		2	Bulb Seal, 590mm (23 7/32 in.)
4		{87606604}		1	Latch Pull Rod
5		86588450		2	WASHER, M6
6		87030561		2	NUT, LOCK, M6 x 1, Cl 8
7		86624182		2	WASHER, M6 x 18 x 1.6
8		86977789		2	BOLT, Hex, M6 x 35, 8.8
9		380751A1		1	NUT
10		{87585878}		1	Latch
11		86512555		1	NUT, LOCK, M16 x 2, Cl 10
12		248461A1		1	BUSHING, LARGE
13		9828248		1	BOLT, Hex, M16 x 60, 10.9
14		86625266		1	WASHER, M17.5 x 30 x 4, HT
15		248988A1		1	WASHER

09-22		p1	12/07

HOOD

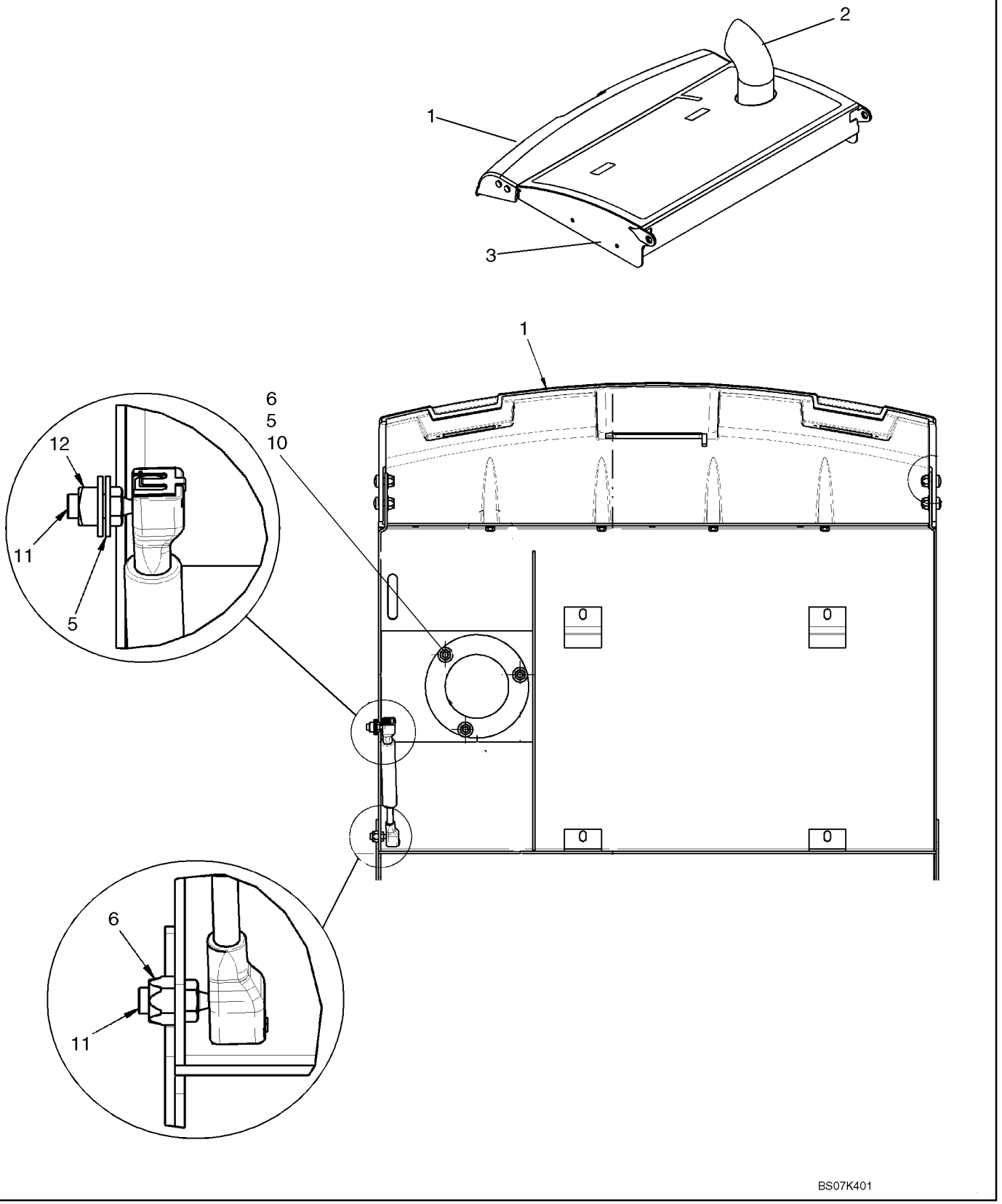

HOOD

REF	FN	PART NUMBER	YR/SN	QTY	DESCRIPTION
1		426787A1		1	HOOD, Lower Hood
2		87381264		1	PIPE, Exhaust Extension
3		NSS		1	NOT SERVICED SEPARATELY, Hood
4		86585703		4	SCREW, Cross Pan Hd, M8 x 20
5		86625263		9	WASHER, M8 x 20 x 1.6
6		9628098		8	NUT, LOCK, M8 x 1.25, Cl 10
7		86508568		4	BOLT, Hex, M6 x 16, 8.8
8		86588450		4	WASHER, M6
9		400473A1		1	CYLINDER ASSY.
10		43127		3	BOLT, Hex, M8 x 25, 8.8
11		189609A1		2	STUD, Ball Stud
12		229197A1		1	NUT

CAB - SEAT FRAME AND SEAT BAR

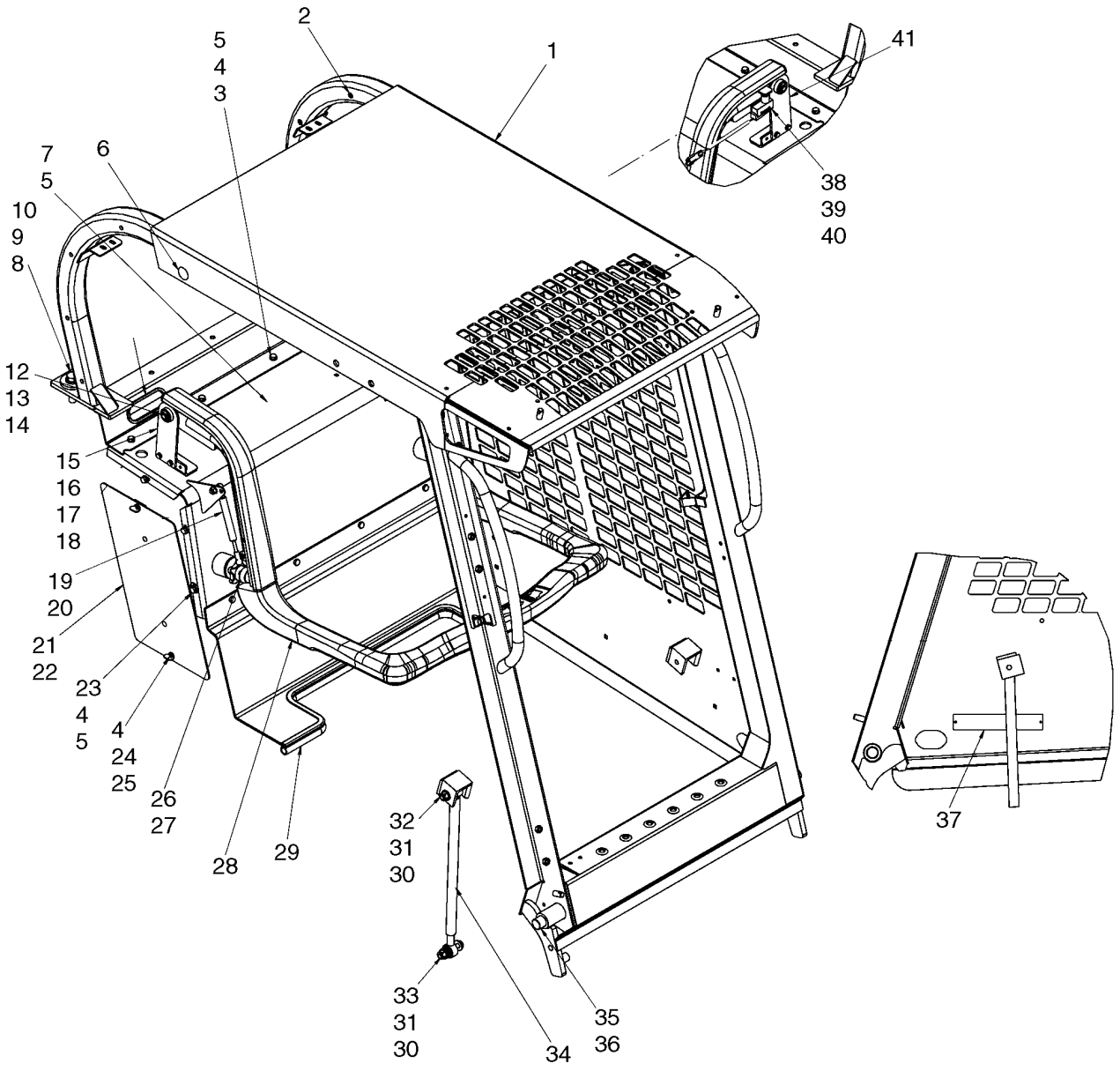

CAB - SEAT FRAME AND SEAT BAR

REF	FN	PART NUMBER	YR/SN	QTY	DESCRIPTION
1		87636513		1	KIT, SERVICE, Kit, ROPS; Incl ROPS, Decal - Warning, Decal - General Instructions, ROPS Model And Approval Plate
2		419434A1		18	INSERT, Threaded Insert - M6
3		43128		4	BOLT, Hex, M8 x 30, 8.8
4		140016		14	WASHER, M8 x 16 x 1.6
5		86505868		16	NUT, M8, Flg Ser
6		86625129		2	PLUG, Dome, 1.000" hole, Nylon
7		{87671888}		1	Rear Seat Panel
8		9828248		2	BOLT, Hex, M16 x 60, 10.9
9		86625266		2	WASHER, M17.5 x 30 x 4, HT
10		391703A2		2	WASHER
11		87713678		1	GROMMET, Grommet
12		D143415		2	RING
13		86632589		2	WASHER
14		87620895		2	BUSHING, Lap Bar Pivot
15		{87645117}		1	Seat Bar Pivot, RH
16		120100		4	BOLT, Hex, M6 x 20, 8.8
17		86511444		4	NUT, M6, Flg Ser
18		86588450		4	WASHER, M6
19		87639899		1	CYLINDER
20		189609A1		2	STUD
21		87460732		2	PANEL
22		86625127		4	PLUG, Dome, .375" hole, Nylon
23		43127		6	BOLT, Hex, M8 x 25, 8.8
24		408117A2		4	SCREW
25		442856A1		4	WASHER
26		NSS		2	NOT SERVICED SEPARATELY, Seat Bar Pivot Stop
27		NSS		2	NOT SERVICED SEPARATELY, Knob
28		REF		1	INSTRUCTION, Seat Bar; See Fig 09-40
29		87713388		1	MOLDING, ROPS Floor Seal
30		86625253		4	WASHER, M11 x 24 x 2
31		86512554		2	NUT, LOCK, M10 x 1.5, Cl 10
32		43144		1	SCREW, Hex, M10 x 70, 8.8
33		120070		1	BOLT, Hex, M10 x 60, 8.8

CAB - SEAT FRAME AND SEAT BAR

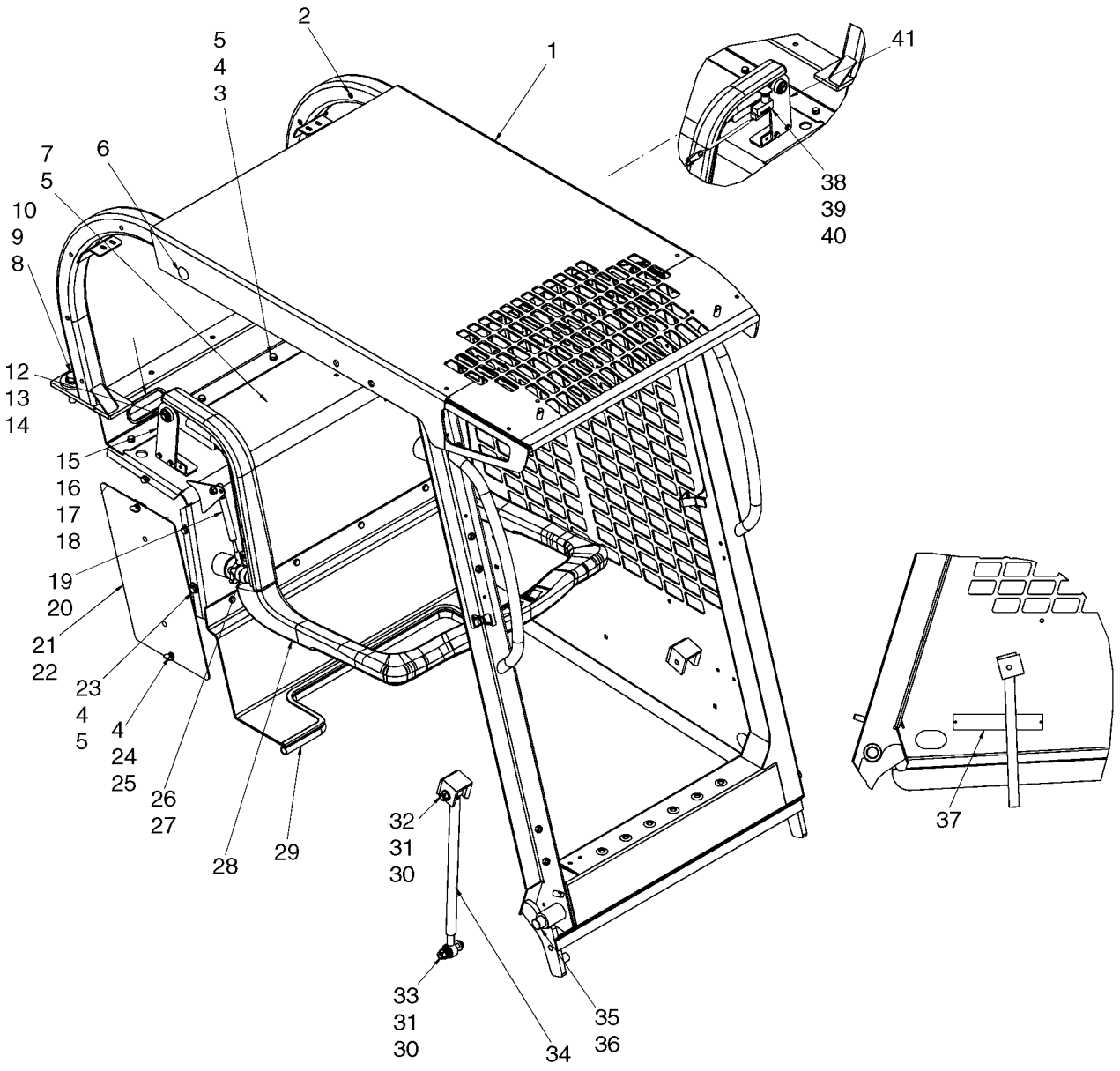

CAB - SEAT FRAME AND SEAT BAR

REF	FN	PART NUMBER	YR/SN	QTY	DESCRIPTION
34		282002A2		1	GAS STRUT
35		144345A3		1	PIN, LARGE
36		827695C1		2	RING
37		NSS		1	NOT SERVICED SEPARATELY, Plate, ROPS Certification
38		87051110		1	SWITCH, DOOR, Seat Bar Switch
39		H435814		1	U-BOLT
40		280859		2	NUT, Keps, w/LW,#6-32
41		{87645118}		1	Seat Bar Pivot, LH

CAB DOOR - MOUNTING (HL)

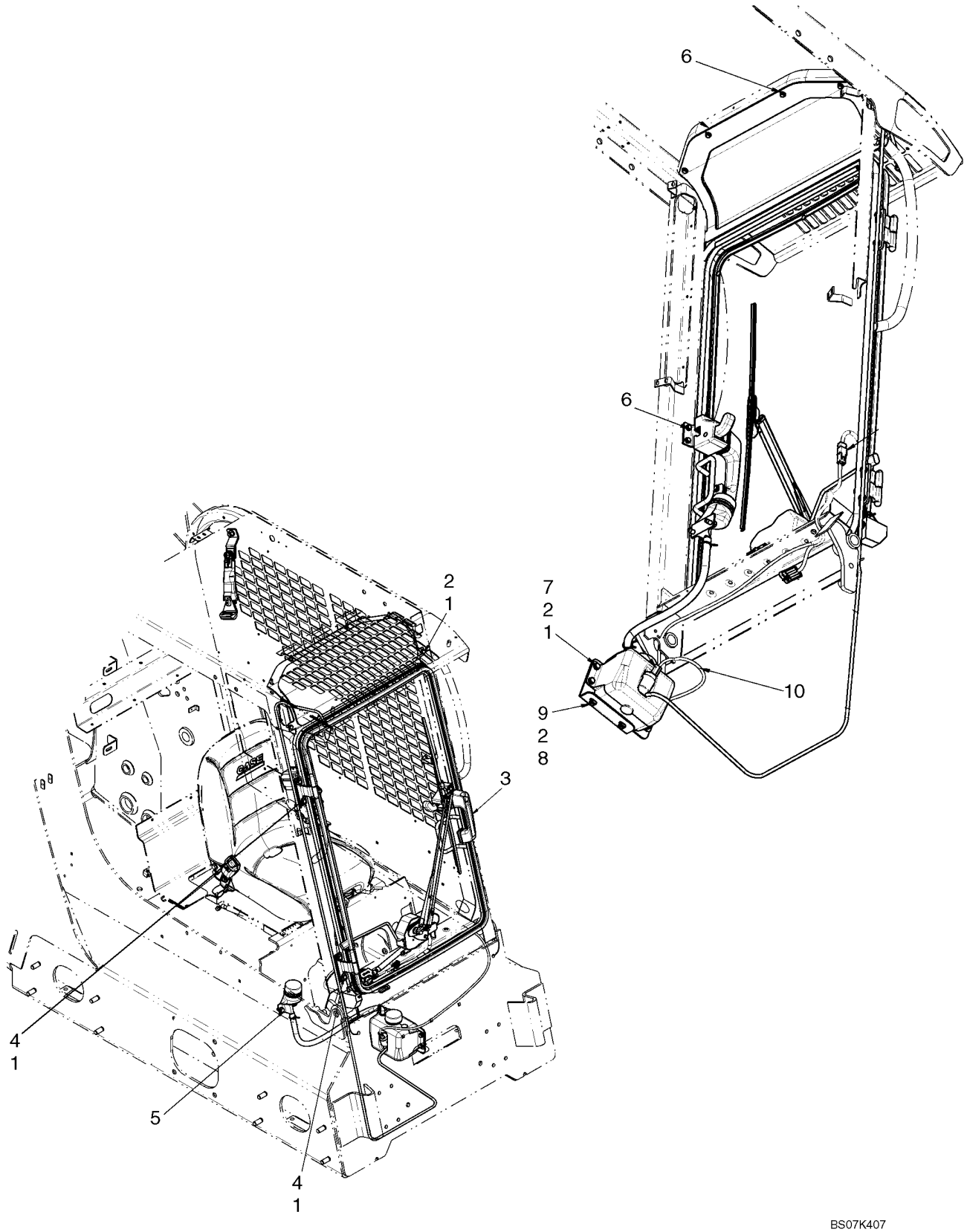

CAB DOOR - MOUNTING (HL)

REF	FN	PART NUMBER	YR/SN	QTY	DESCRIPTION
		87657026		1	KIT, SERVICE, Kit, Front Door; Incl 1 - 10
1		120104		10	BOLT, Hex, M8 x 20, 8.8
2		86624184		12	WASHER, M8 x 16 x 1.6
3		87627052		1	DOOR, Door Assembly
4		86639313		4	WASHER, M8 x 20 x 1.6
5		637964		2	SCREW, SELF TAP
6		87015862		6	BOLT, Hex Flg, M6 x 20, 8.8, Full Thd
7		43362		4	NUT, M8, Cl 10
8		229197A1		2	NUT
9		120103		2	BOLT, Hex, M8 x 16, 8.8
10		87658639		1	HARNESS, Door Jumper Harness

CAB DOOR - WASHER SYSTEM (HL)

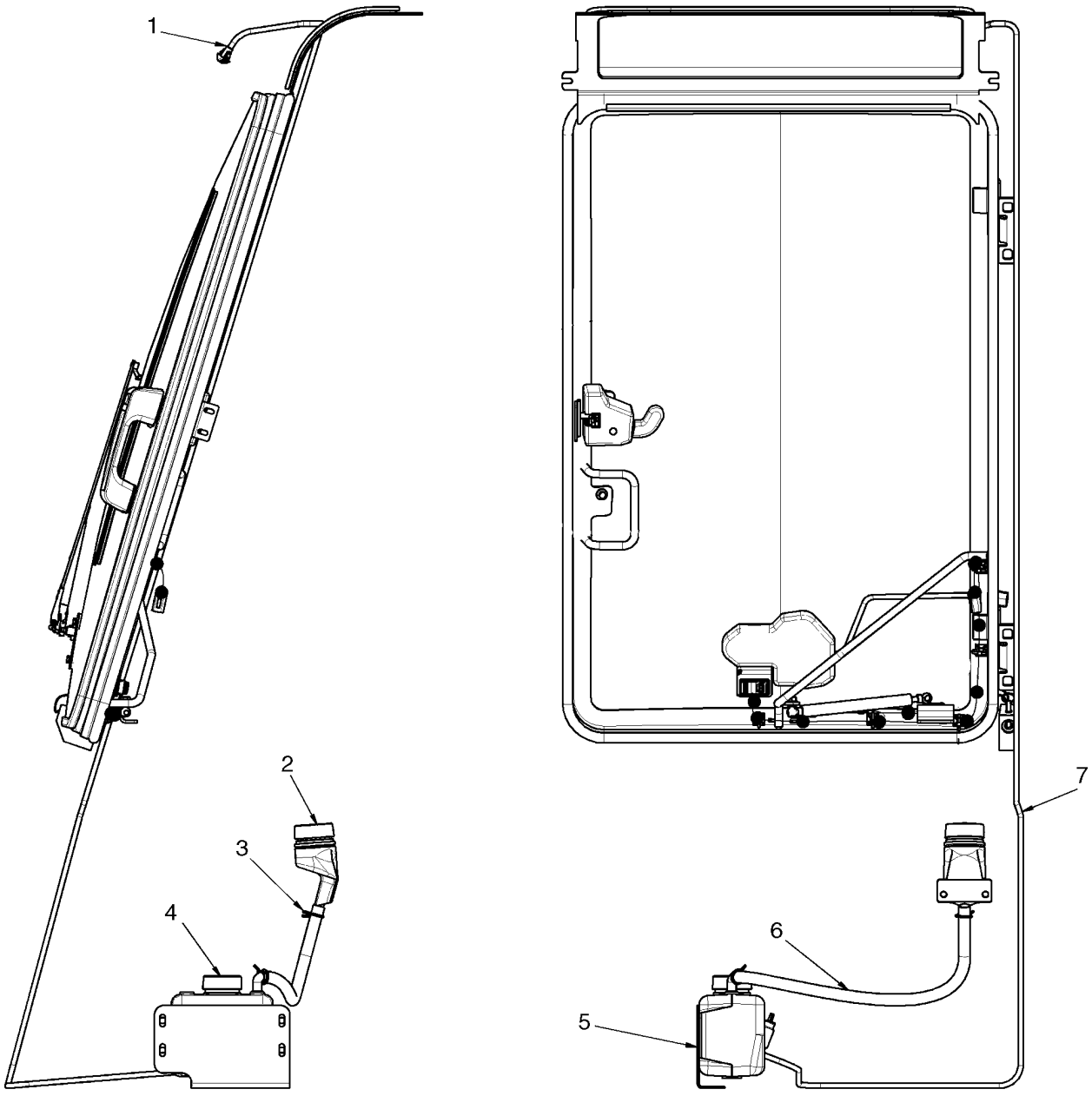

CAB DOOR - WASHER SYSTEM (HL)

REF	FN	PART NUMBER	YR/SN	QTY	DESCRIPTION
1		87655056		1	NOZZLE, Washer Nozzle
2		87655055		1	FILLER, Remote Washer Fill; Incl Cap
3		516742		2	CLAMP
4		87655053		1	BOTTLE, Washer Bottle
5		{87672011}		1	Bracket
6		NSS		1	NOT SERVICED SEPARATELY, Remote Fill Hose
7		87343662		1	WASHER, WINDSHIELD

CAB DOOR (HL)

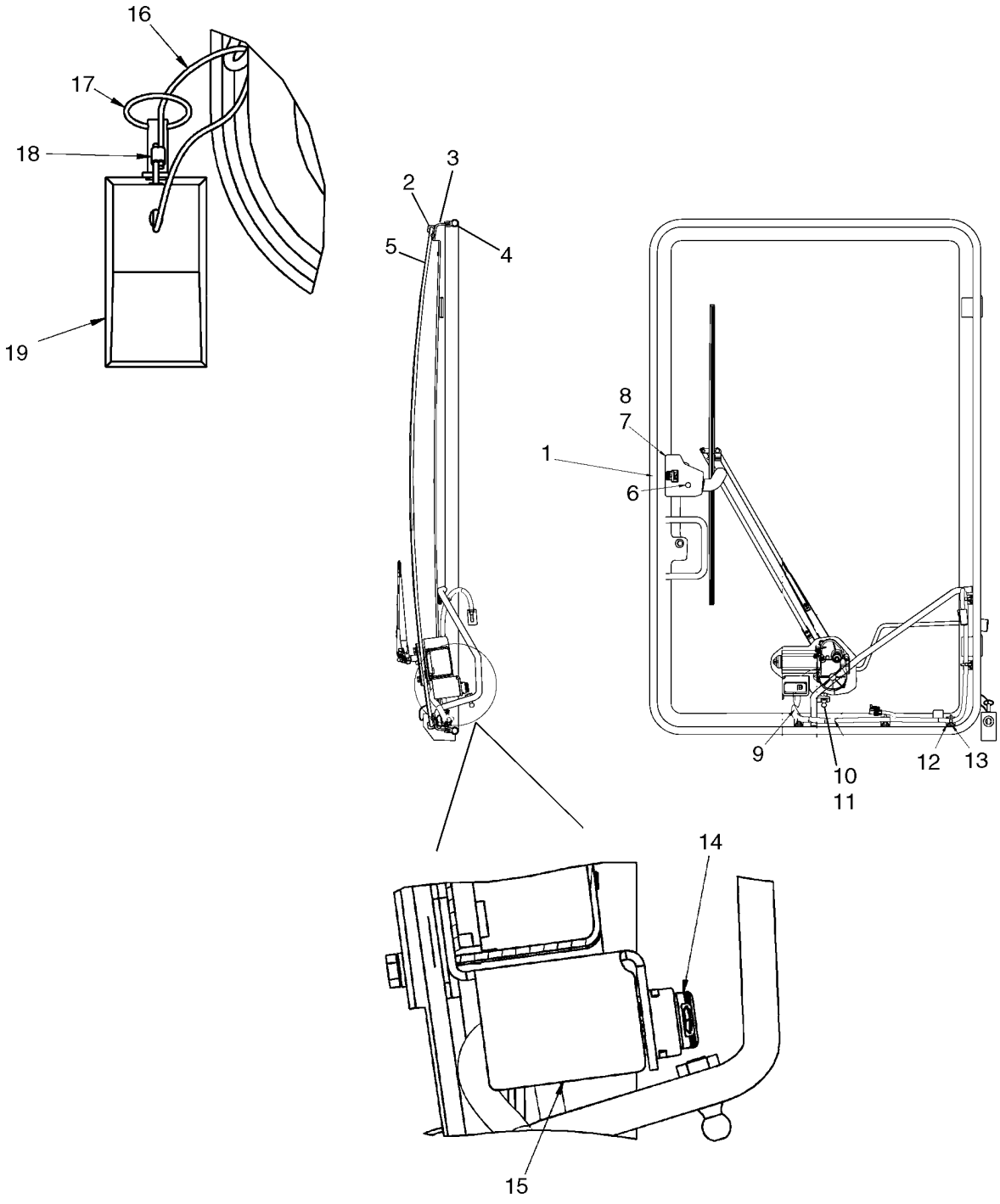

CAB DOOR (HL)

REF	FN	PART NUMBER	YR/SN	QTY	DESCRIPTION
1		87627522		1	DOOR, Front Door Glass; Incl 2 - 5
2		NSS		1	NOT SERVICED SEPARATELY, Trim
3		NSS		1	NOT SERVICED SEPARATELY, Door, Black
4		87624550		1	SEAL, Bulb Seal
5		87624558		2	GLASS
6		{86512463}		3	Screw, M6 X 25
5		87640050		1	KIT, SERVICE, Kit, Demolition Door Conversion; Incl (1) Polycarbonate Glass Door, (1) Gasket, (8) Bolts, (8) Quick Release Knobs
7		87678399		1	LATCH
8		86619800		1	NUT, LOCK, M6 x 1, Flg, Cl 8
9		87718107		1	HARNESS, Door Harness
10		9804277		1	NUT, M8 x 1.25, Flg, Cl 8
11		{87581669}		1	Ball Stud
12		87642914		5	BASE
13		87642915		5	STRAP, CABLE
14		87335499		1	SWITCH, Rocker Switch, Windshield Wiper/Washer
15		87671857		1	BRACKET, Wiper Switch Bracket
16		NSS		1	NOT SERVICED SEPARATELY, Cable
17		NSS		1	NOT SERVICED SEPARATELY, Detent Pin
18		NSS		1	NOT SERVICED SEPARATELY, Cable Crimp
19		NSS		1	NOT SERVICED SEPARATELY, ROPS Tilt Stopper

CAB DOOR - VISOR (HL)

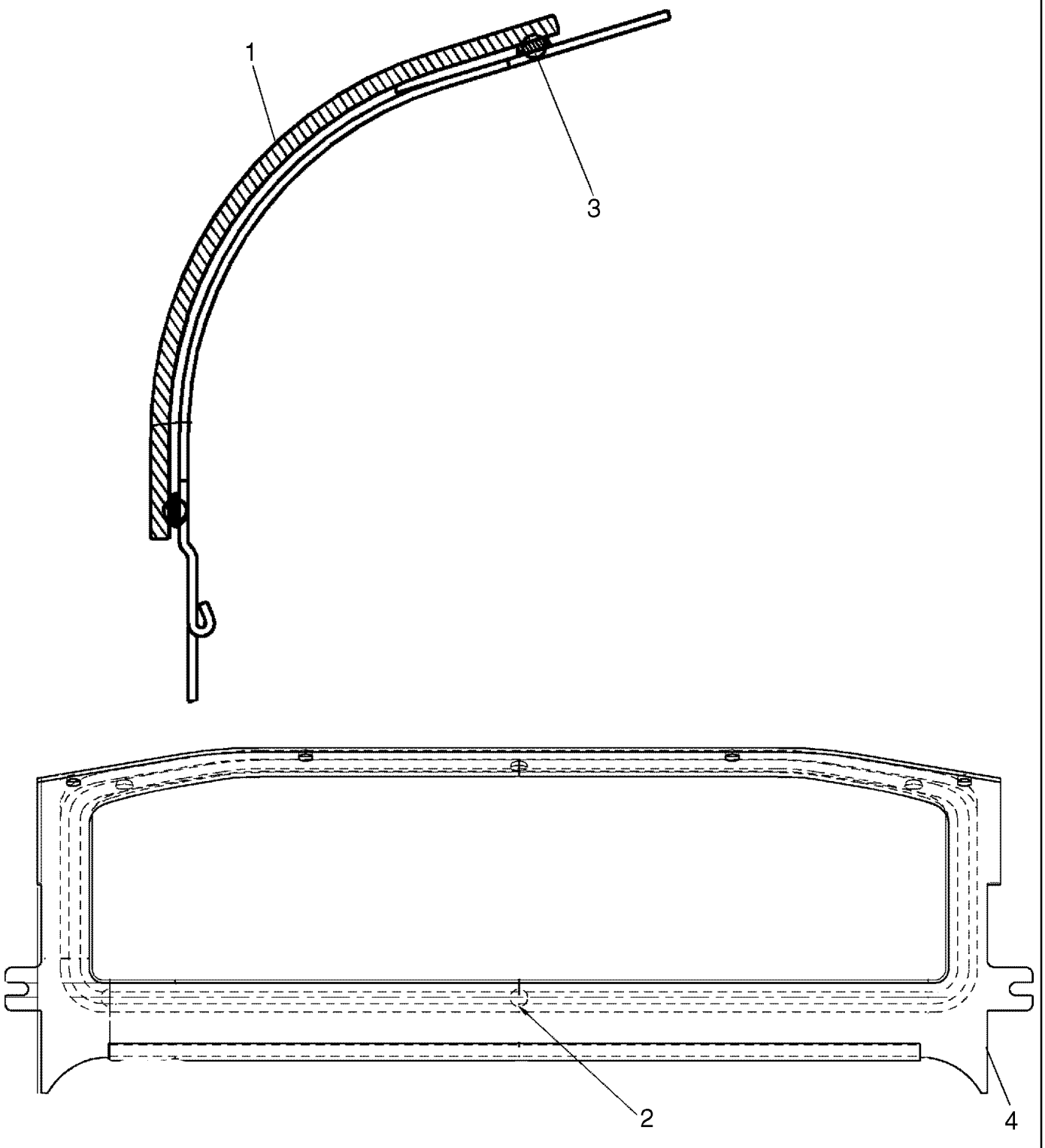

CAB DOOR - VISOR (HL)

REF	FN	PART NUMBER	YR/SN	QTY	DESCRIPTION
		{87627523}		1	Visor; Incl 1 - 4
1		87624623		1	GLASS, Glass, Visor
2		{87600221}		6	Glue Spacer
3		{87660180}		1	Window, Adhesive
4		{87671808}		1	Visor Frame, Black

CAB DOOR - WIPER MOUNTING (HL)

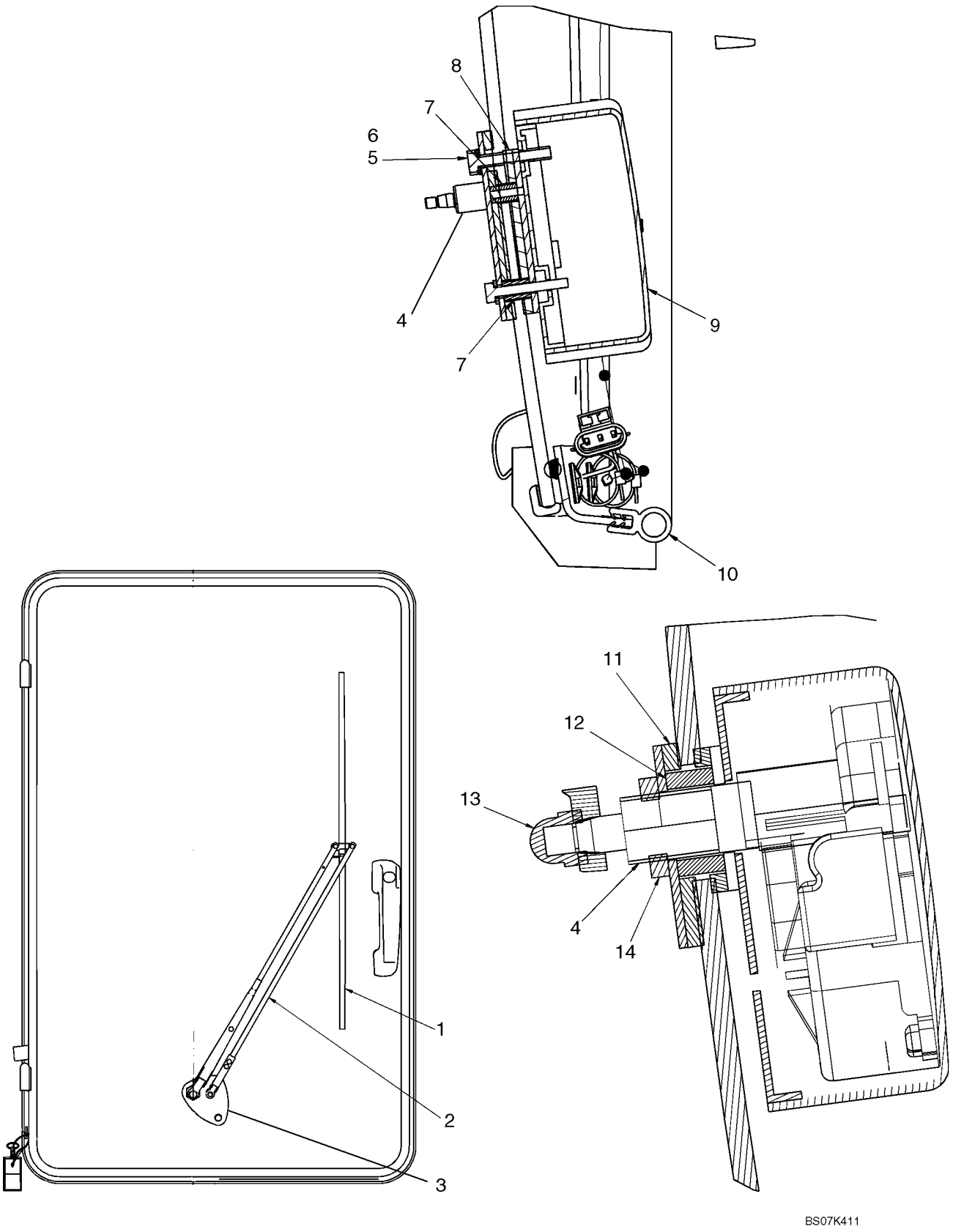

CAB DOOR - WIPER MOUNTING (HL)

REF	FN	PART NUMBER	YR/SN	QTY	DESCRIPTION
1		87642595		1	WIPER BLADE
2		87642544		1	WIPER ARM
3		87716728		1	ADAPTER, Pantograph Adapter
4		87678400		1	WIPER MOTOR
5		{86642465}		2	Washer, 6.6 X 12 X 1.6mm
6		{87698769}		5	Bolt, M6 X 35
7		87642540		2	SPACER, Wiper Motor Spacer
8		87642543		1	SEAL, Wiper Switch Seal
9		{87581666}		1	Wiper Motor Cover
10		87624550		1	SEAL, Bulb Seal
11		87716731		1	ADAPTER, Seal, Pantograph Adapter
12		87642536		1	BUSHING, Wiper Motor Bushing
13		{412326}		1	Crown Nut, M8
14		{87607505}		1	Nut, M18

CAB DOOR - HANDLE

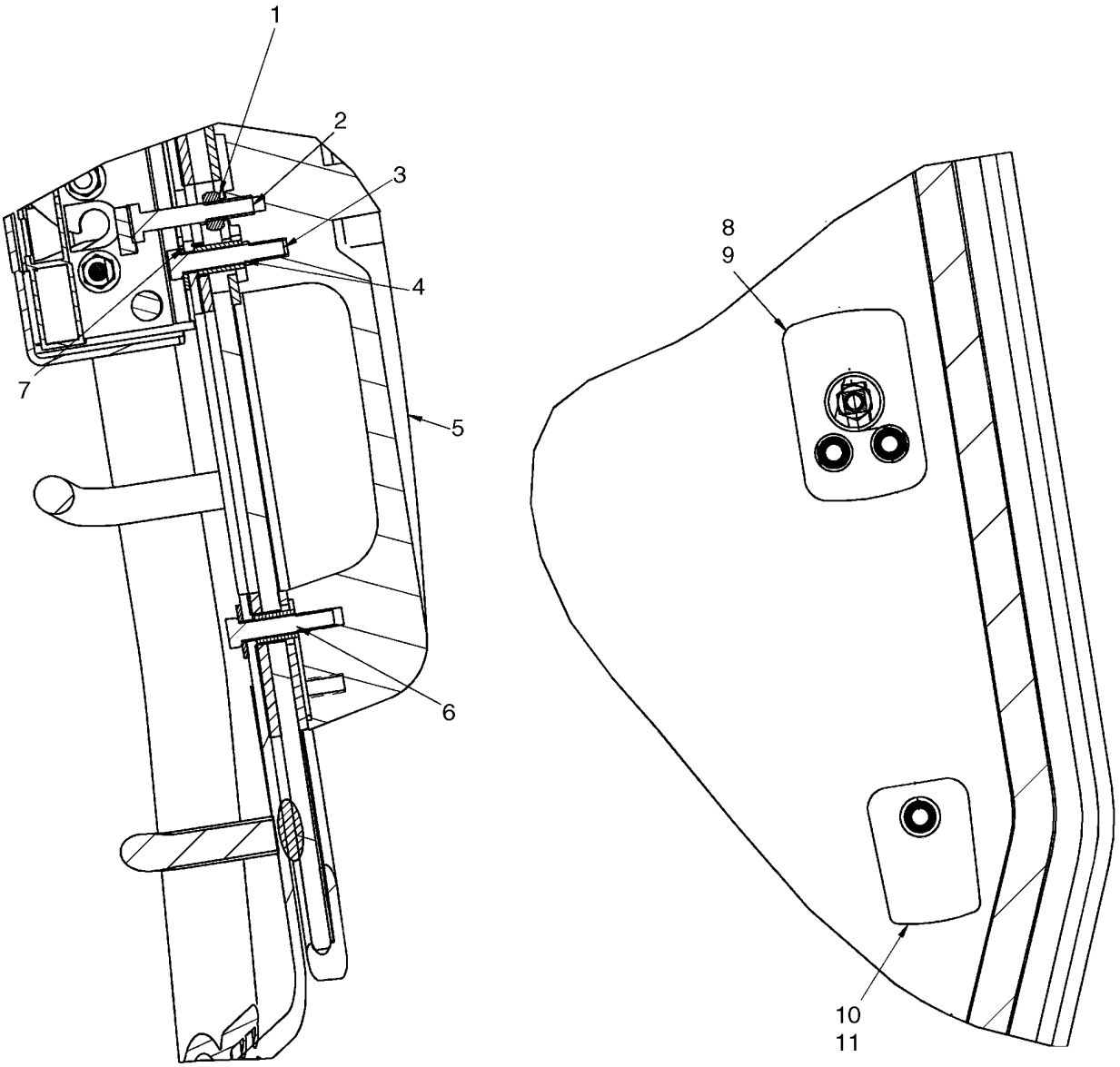

BS07K422

CAB DOOR - HANDLE

REF	FN	PART NUMBER	YR/SN	QTY	DESCRIPTION
1		1369		1	NUT, 1/4"-20, G5
2		280112		1	BOLT, Hex, 1/4"-20 x 1 1/2", G5
3		{87698769}		5	Bolt, M6 X 35
4		87642514		2	SPACER, Handle Mounting Spacer, Upper
5		60-7083T1		1	HANDLE, Cab Door Handle
6		87642529		1	SPACER, Handle Mounting Spacer, Lower
7		86624182		3	WASHER, M6 x 18 x 1.6
8		87642449		1	SEAL, Handle Mount Seal, Upper
9		87517940		1	GASKET, Door Handle Gasket, Upper
10		87517937		1	GASKET, Door Handle Gasket, Lower
11		87642453		1	SEAL, Handle Mount Seal, Lower

DEMOLITION DOOR - MOUNTING

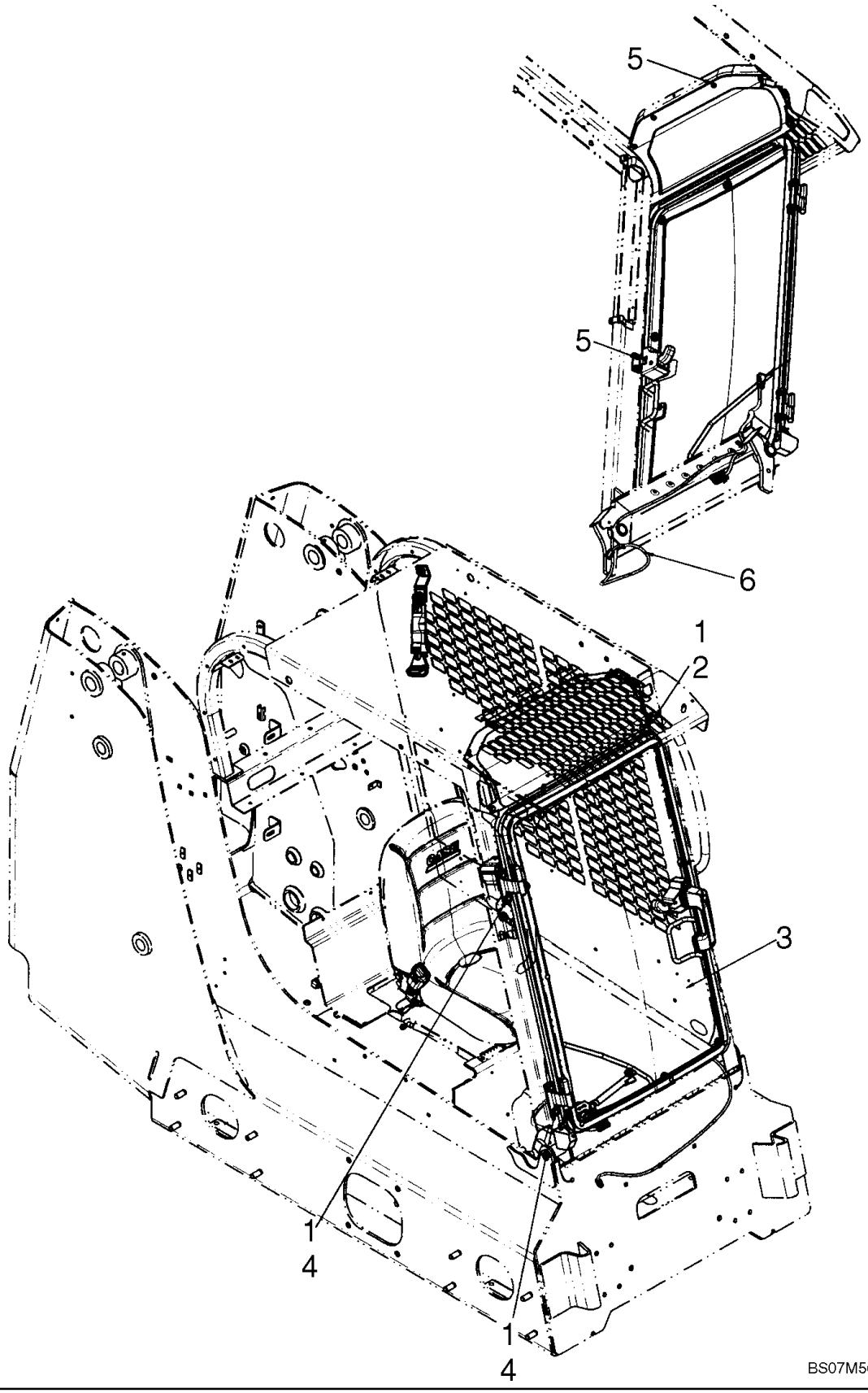

DEMOLITION DOOR - MOUNTING

REF	FN	PART NUMBER	YR/SN	QTY	DESCRIPTION
		87651127		1	KIT, SERVICE, Kit, Demolition Door; Incl 1 - 6
1		120104		6	BOLT, Hex, M8 x 20, 8.8
2		86624184		2	WASHER, M8 x 16 x 1.6
3		REF		1	INSTRUCTION, Demolition Door; See Fig 09-31
4		86639313		4	WASHER, M8 x 20 x 1.6
5		87015862		6	BOLT, Hex Flg, M6 x 20, 8.8, Full Thd
6		87658639		1	HARNESS, Harness, Door Jumper

DEMOLITION DOOR

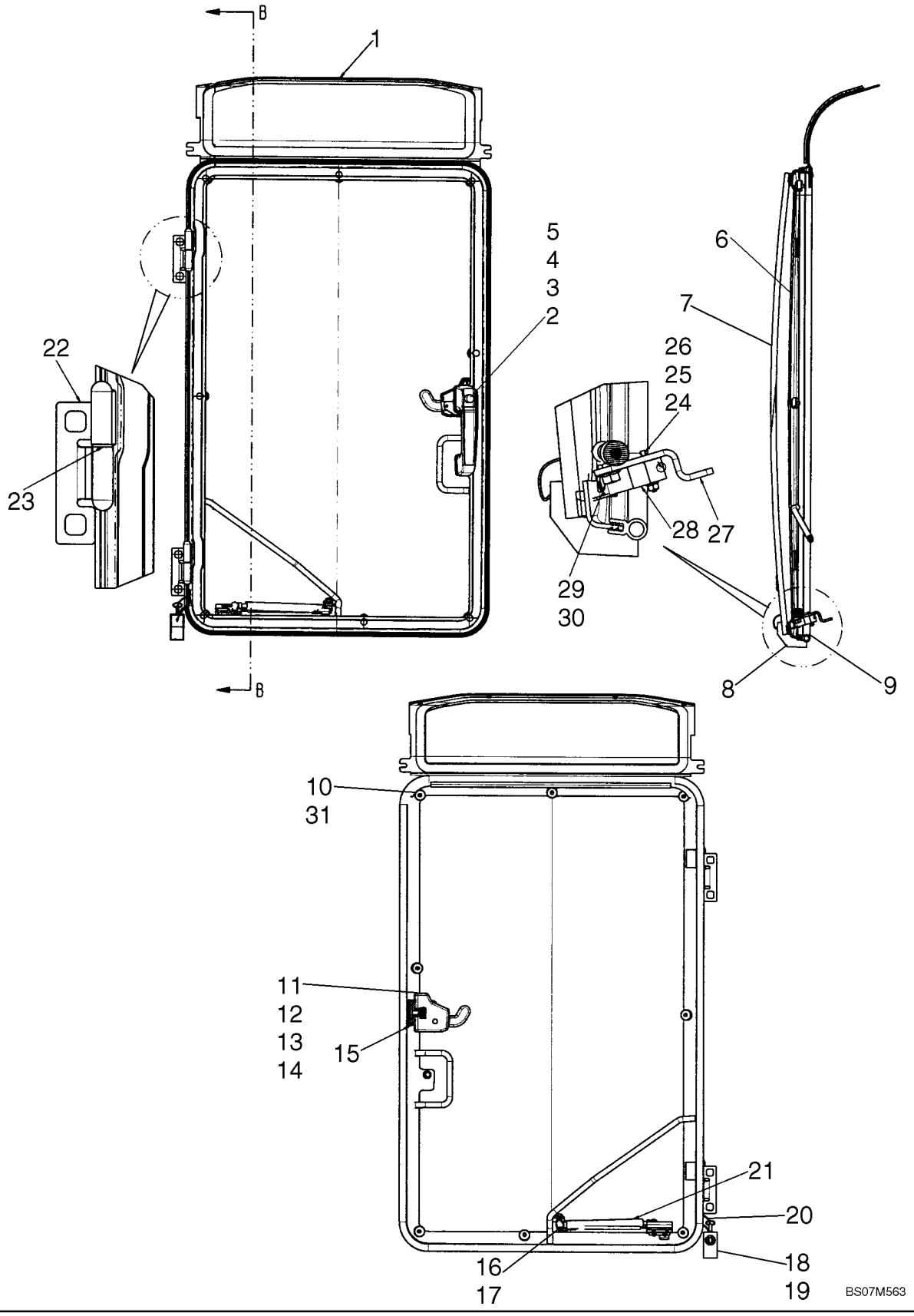

DEMOLITION DOOR

REF	FN	PART NUMBER	YR/SN	QTY	DESCRIPTION
1		REF		1	INSTRUCTION, Visor; See Fig 09-27
2		60-7083T1		1	HANDLE, Cab Door Handle
3		87642540		3	SPACER
4		{87723784}		2	Lower Seal, Handle Mounting
5		{87723771}		2	Upper Seal, Handle Mounting
6		NSS		1	NOT SERVICED SEPARATELY, Foam Gasket
7		NSS		1	NOT SERVICED SEPARATELY, Polycarbonate Door
8		NSS		1	NOT SERVICED SEPARATELY, Demolition Door Frame
9		87624550		1	SEAL, Bulb Seal, 3449mm (135 13/16 in.)
10		{87728415}		8	Quick Release Knob
11		1369		1	NUT, 1/4"-20, G5
12		{86512463}		3	Screw, M6 X 25 4.5 ZND
13		280112		1	BOLT, Hex, 1/4"-20 x 1 1/2", G5
14		87678399		1	LATCH
15		{87642588}		1	Latch, Striker
16		{87581669}		1	Ball Stud
17		86619801		1	NUT, LOCK, M8 x 1.25, Flg, Cl 8
18		NSS		1	NOT SERVICED SEPARATELY, ROPS Tilt Stopper
19		NSS		1	NOT SERVICED SEPARATELY, Pin, Detent
20		NSS		1	NOT SERVICED SEPARATELY, Cable
21		{87581689}		1	Gas Spring
22		{87672017}		2	Door Hinge
23		{87599753}		2	Bushing
24		NSS		1	NOT SERVICED SEPARATELY, U Bolt, Switch Mounting
25		{87622767}		2	Nut, #6-32
26		87529123		2	WASHER, Washer, .156 X .375 X .049 in.
27		{87672000}		1	Door Switch Bracket
28		87051110		1	SWITCH, DOOR, Seat Bar Switch
29		86619801		1	NUT, LOCK, M8 x 1.25, Flg, Cl 8
30		{87581669}		1	Ball Stud

09-32		p1	12/07

COUNTERWEIGHTS AND DRAWBAR

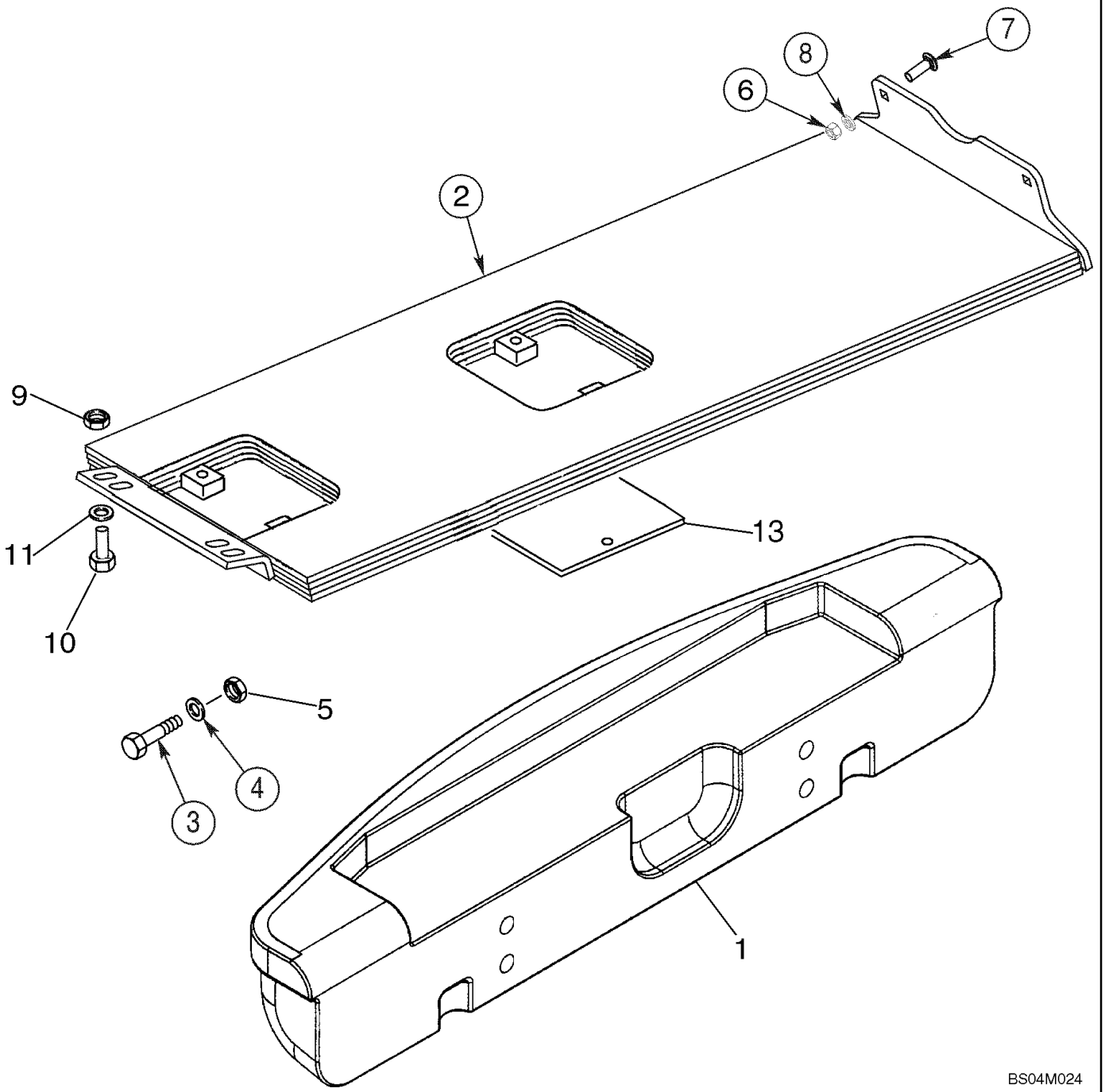

COUNTERWEIGHTS AND DRAWBAR

REF	FN	PART NUMBER	YR/SN	QTY	DESCRIPTION
1		87457671		1	BUMPER, Heavy; Rear
2		87458493		1	WEIGHT, Belly Pan
3		87460831		4	BOLT, M20 x 70; 10.9
3		412641		4	BOLT, Hex, M20 x 70, 10.9, Replaces 87445534
4		86625260		4	WASHER, M20 x 37.5 x 4, HT
5		832-41320		4	NUT, LOCK, M20 x 2.5, Cl 10, If Used
5		86536985		4	NUT, LOCK, M20 x 2.5, Cl 10, If Used
6		832-41416		2	NUT, LOCK, M16 x 2, Cl 10
7		811-16050		2	BOLT, CARRIAGE, Short NK, M16 x 50, Cl8.8, Full Thd
8		86625266		2	WASHER, M17.5 x 30 x 4, HT
9		86536985		2	NUT, LOCK, M20 x 2.5, Cl 10
10		614-20050		2	BOLT, Hex, M20 x 50, 8.8
11		87381		2	WASHER, 3/4", SAE
12		258483A1		1	DRAWBAR
13		87458495		1	PLATE, COVER, Used With 43260 Bolt
		43260		2	BOLT, Hex, M12 x 30, 10.9

HEAT SHIELD

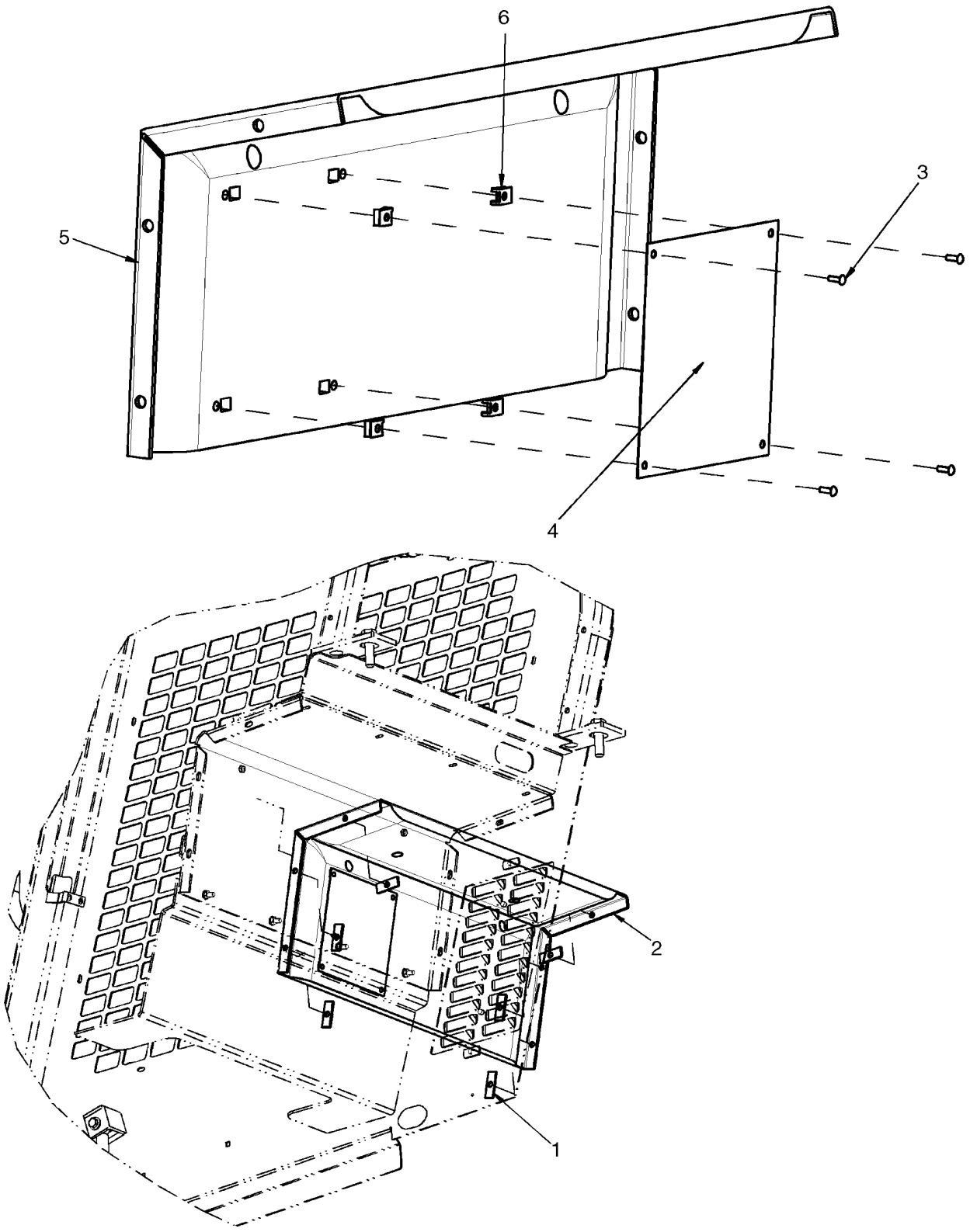

HEAT SHIELD

REF	FN	PART NUMBER	YR/SN	QTY	DESCRIPTION
1		87460558		6	BAR, Mounting Bar
2		87679670		1	INSULATION, FOAM, Heat Shield
3		NSS		4	NOT SERVICED SEPARATELY, Screw, Pan Head #8 X 1/2 in.
4		NSS		1	NOT SERVICED SEPARATELY, Heat Shield
5		NSS		1	NOT SERVICED SEPARATELY, Heat Shield Insulation
6		NSS		4	NOT SERVICED SEPARATELY, Spring Nut

SEAT MOUNTING - STANDARD SEAT

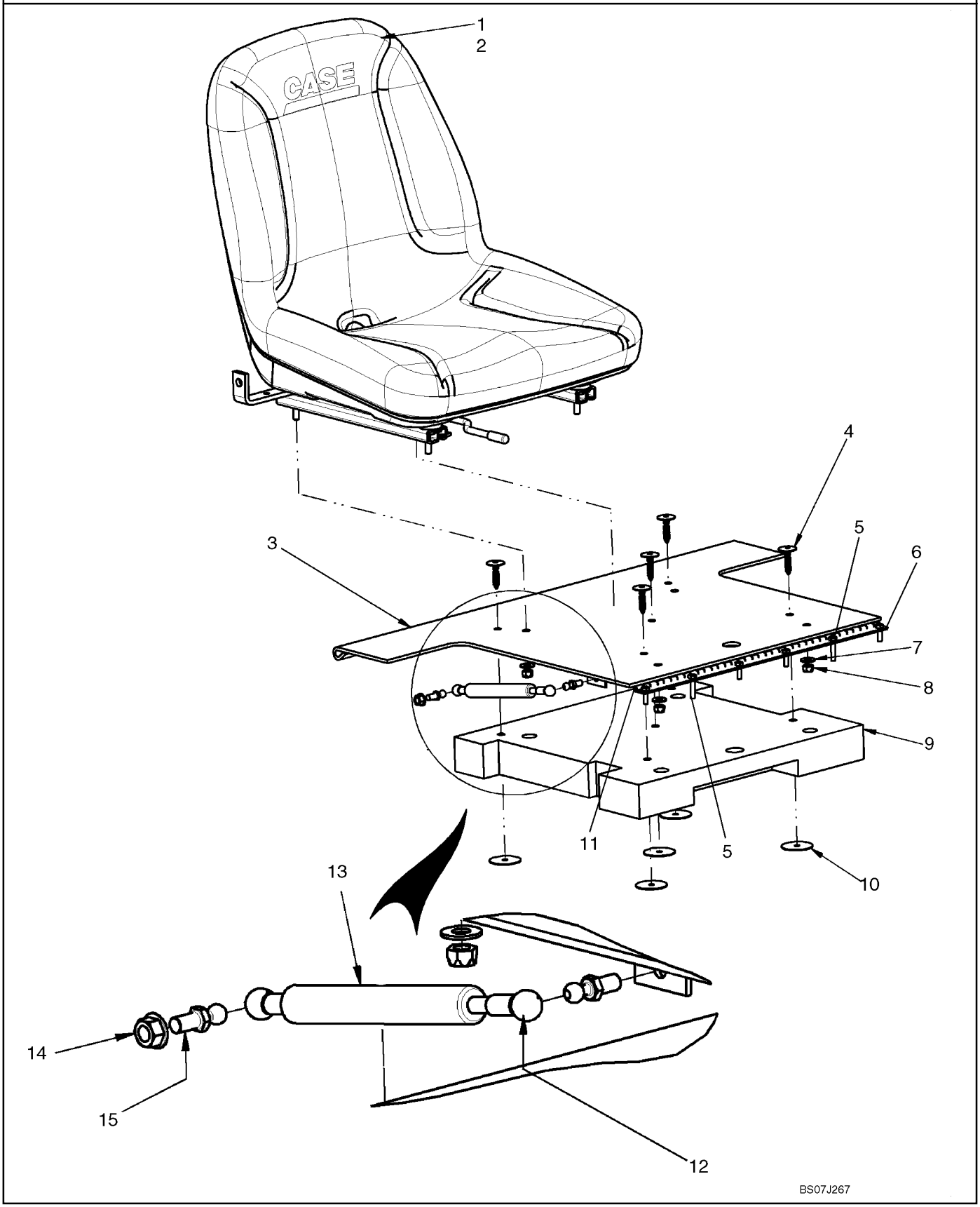

SEAT MOUNTING - STANDARD SEAT

REF	FN	PART NUMBER	YR/SN	QTY	DESCRIPTION
1		{87702543}		1	Standard Seat, Mid-Back; Incl. 2, 2A
2		86603490		1	SWITCH, Operator Presence
2A		302137A2		1	HARNESS, Operator Presence Switch Harness With 2 Connectors; Not Illustrated
3		{87676113}		1	Seat Hinge Plate
4		348452A1		5	SCREW, Push In Fastener
5		80120101		2	SCREW, M6 x 30, 8.8 ZND
6		120100		4	BOLT, Hex, M6 x 20, 8.8
7		86625263		4	WASHER, M8 x 20 x 1.6
8		86629544		4	NUT, LOCK, 5/16"-18, GB
9		{87676116}		1	Pad, Seat Noise Control
10		348434A1		5	WASHER
11		{87676121}		1	Seat Hinge Stiffener
12		254307A1		2	RING, SPECIAL
13		189787A2		1	SHOCK ABSORBER
14		86505868		2	NUT, M8, Flg Ser
15		189609A1		2	STUD, Metric Ball Stud, 10mm Ball x M8 X 1.25 Thd

SEAT MOUNTING - SUSPENSION SEAT

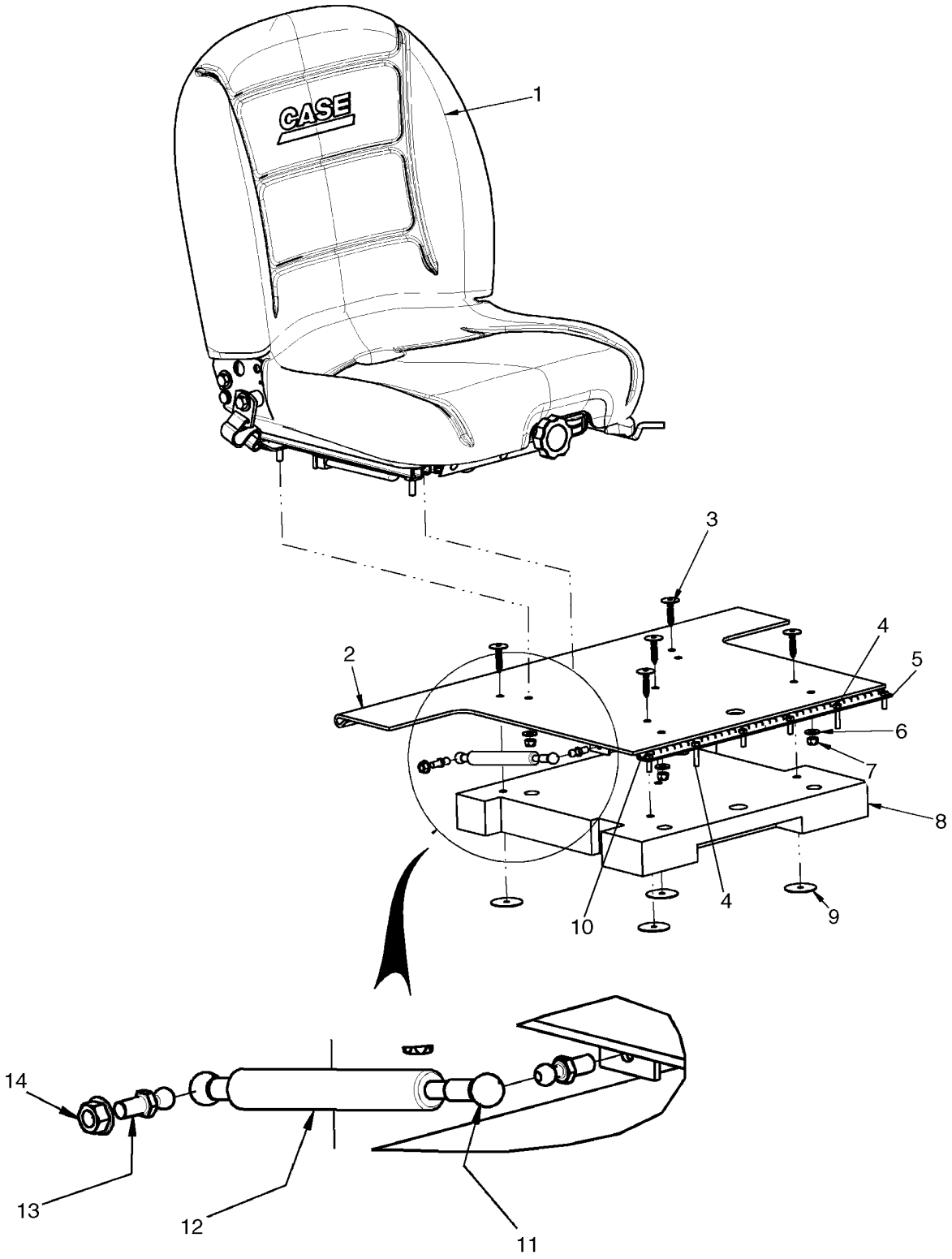

SEAT MOUNTING - SUSPENSION SEAT

REF	FN	PART NUMBER	YR/SN	QTY	DESCRIPTION
1		87662513		1	SEAT, Suspension Seat Assembly, Wheat Color
2		{87676122}		1	Seat Hinge Plate
3		348452A1		5	SCREW, Push In Fastener
4		80120101		2	SCREW, M6 X 30, 8.8 ZND
5		120100		4	BOLT, Hex, M6 x 20, 8.8
6		86625263		4	WASHER, M8 x 20 x 1.6
7		9628098		4	NUT, LOCK, M8 x 1.25, Cl 10
8		{87676124}		1	Pad, Seat Noise Control
9		348434A1		5	WASHER
10		{87676121}		1	Seat Hinge Stiffener
11		254307A1		2	RING, SPECIAL
12		189787A2		1	SHOCK ABSORBER
13		189609A1		2	STUD, Ball Stud, 10mm Ball X M8 X 1.25 Thd
14		86505868		2	NUT, M8, Flg Ser

SEAT MOUNTING - DELUXE SUSPENSION SEAT

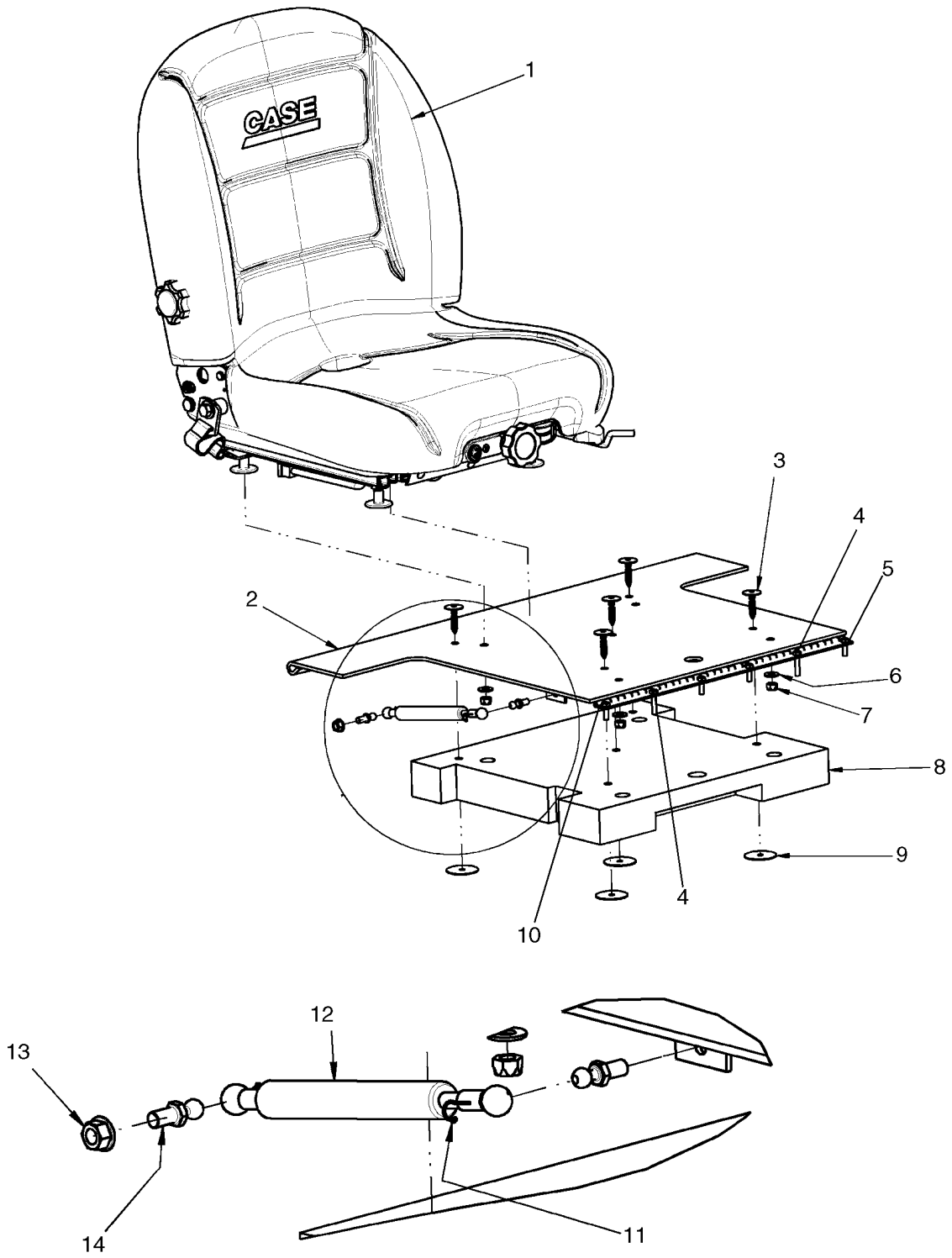

SEAT MOUNTING - DELUXE SUSPENSION SEAT

REF	FN	PART NUMBER	YR/SN	QTY	DESCRIPTION
1		87662514		1	SEAT, Suspension Seat Assembly - Deluxe, Cloth Seat
2		{87676113}		1	Seat Hinge Plate
3		348452A1		5	SCREW, Push In Fastener
4		80120101		2	SCREW, M6 X 30, 8.8
5		120100		4	BOLT, Hex, M6 x 20, 8.8
6		86625263		4	WASHER, M8 x 20 x 1.6
7		86629544		4	NUT, LOCK, 5/16"-18, GB
8		{87676116}		1	Pad, Seat Noise Control
9		348434A1		5	WASHER
10		{87676121}		1	Seat Hinge Stiffener
11		254307A1		2	RING, SPECIAL
12		189787A2		1	SHOCK ABSORBER
13		86505868		2	NUT, M8, Flg Ser
14		189609A1		2	STUD, Ball Stud, 10mm Ball X M8 X 1.25 Thd

SEAT BELT, LAP BELT

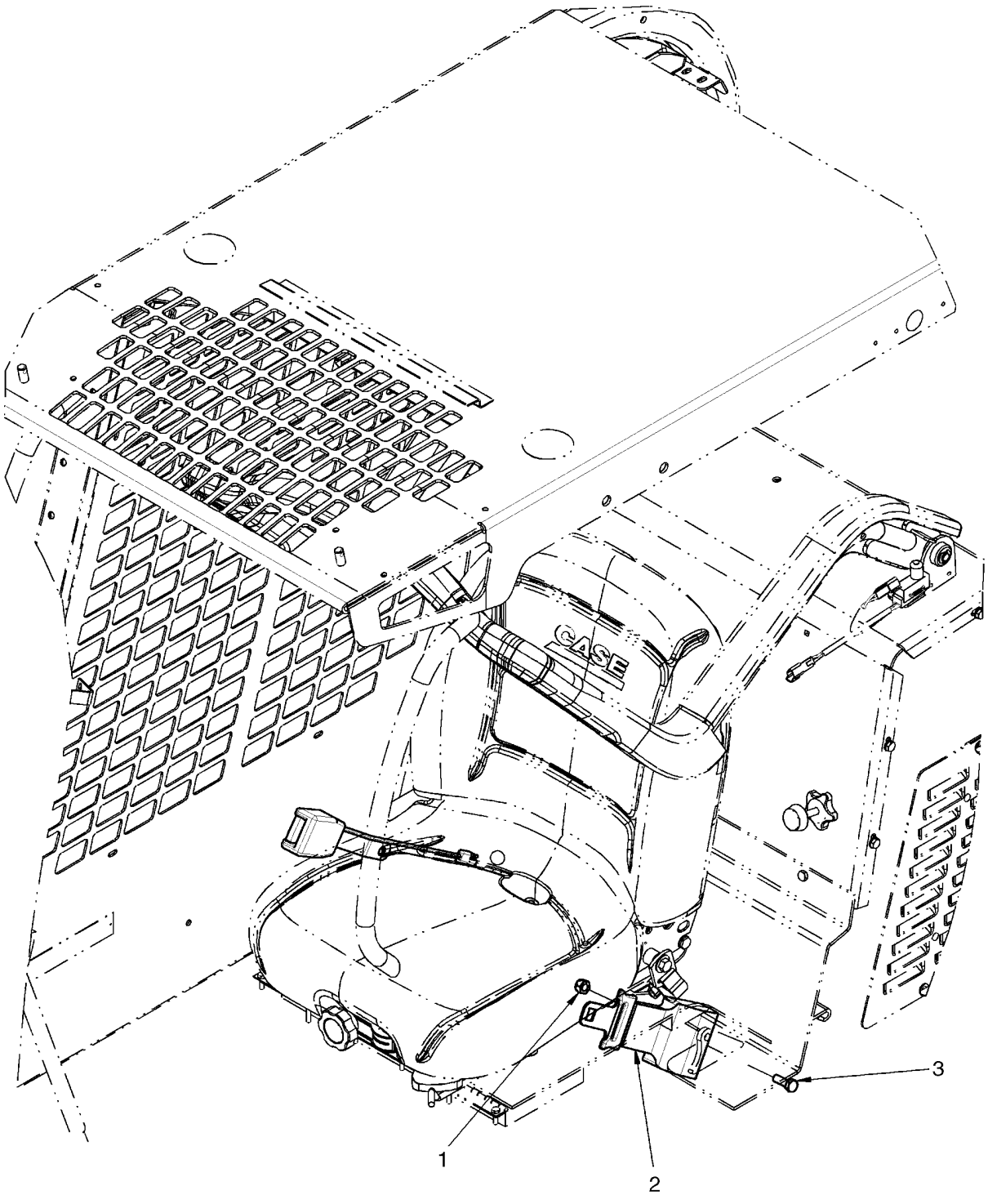

SEAT BELT, LAP BELT

REF	FN	PART NUMBER	YR/SN	QTY	DESCRIPTION
1		86512554		1	NUT, LOCK, M10 x 1.5, Cl 10
2		{87652259}		1	2" Lap Seat Belt
3		43140		1	BOLT, Hex, M10 x 30, 8.8, Full Thd

SHOULDER BELT

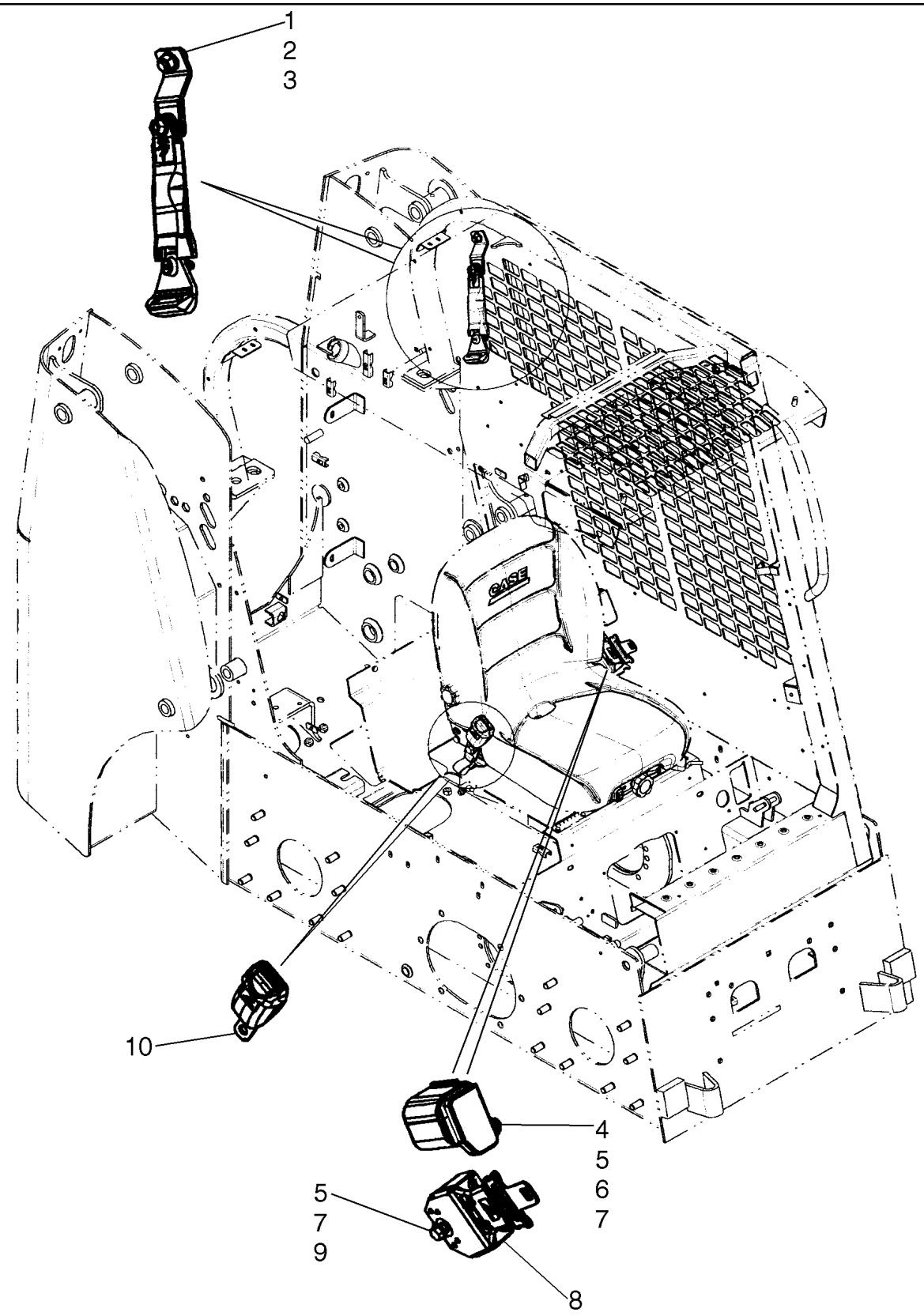

SHOULDER BELT

REF	FN	PART NUMBER	YR/SN	QTY	DESCRIPTION
		87717671		1	KIT, SERVICE, Kit, 2 in. Shoulder Belt; Incl 1 - 10
1		9804266		1	BOLT, Hex Flg, M12 x 25, 8.8
2		86625255		1	WASHER, M13.5 x 24.5 x 3, HT
3		9706685		1	NUT, M12, Cl 8
4		325829		1	BOLT, Hex, M10 x 45, 8.8
5		86625253		3	WASHER, M11 x 24 x 2
6		87047451		1	SPACER
7		87030549		2	NUT, LOCK, M10 x 1.5, Cl 10
8		87702278		1	SEAT BELT, 2 in Shoulder Belt Assy
9		9804262		1	BOLT, Hex Flg, M10 x 30, 8.8
10		REF			INSTRUCTION, Buckle Mounts To Seat Frame With Bolt And Washer Provided With Seat

SEAT BELT, LAP BELT (3 IN)

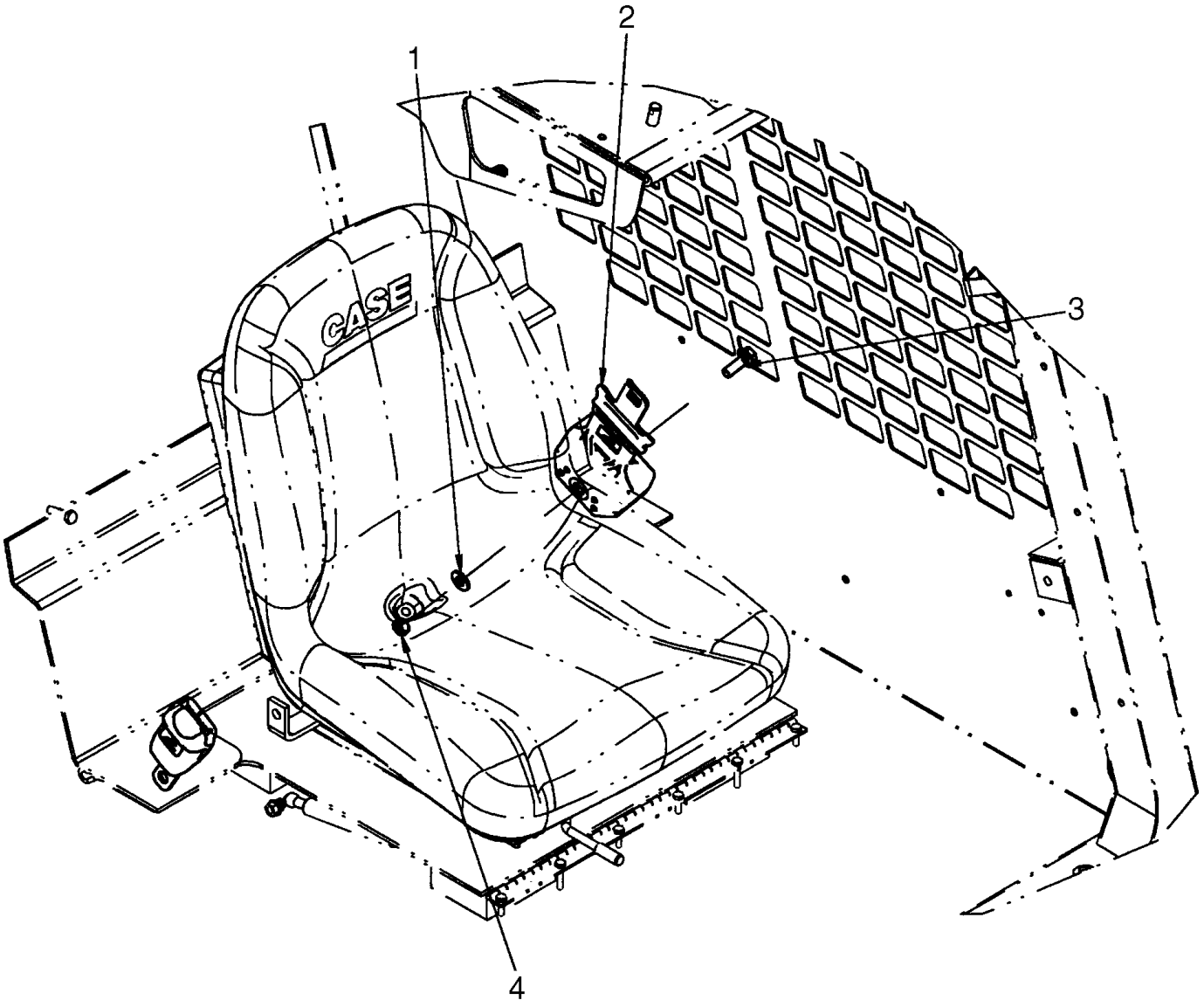

BS07K731

SEAT BELT, LAP BELT (3 IN)

REF	FN	PART NUMBER	YR/SN	QTY	DESCRIPTION
		87717673		1	KIT, SERVICE, Kit, 3 in. Lap Belt; Incl 1 - 4
1		86625253		1	WASHER, M11 x 24 x 2
2		87702506		1	SEAT BELT, 3" Lap Seat Belt
3		9804262		1	BOLT, Hex Flg, M10 x 30, 8.8
4		87030549		1	NUT, LOCK, M10 x 1.5, Cl 10

SEAT BAR

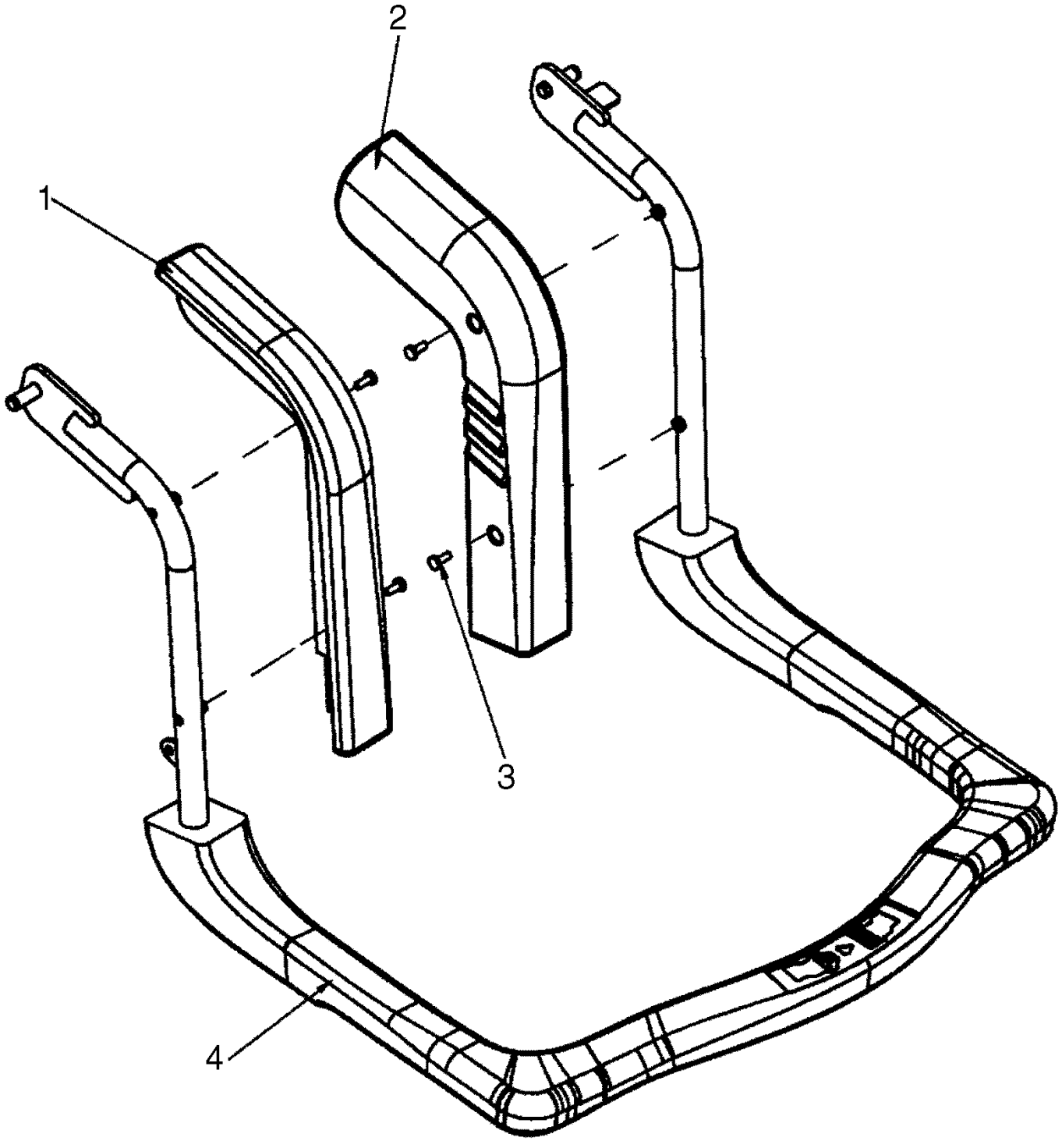

SEAT BAR

REF	FN	PART NUMBER	YR/SN	QTY	DESCRIPTION
1		87619938		1	SEAT, Arm, Upper Lap Bar, RH
2		87619939		1	SEAT, Arm, Upper Lap Bar, LH
3		86511829		4	SCREW, Cross Pan Hd, M6 x 16
4		87619935		1	SEAT, Lap Bar, Lower Section

REAR VIEW MIRROR

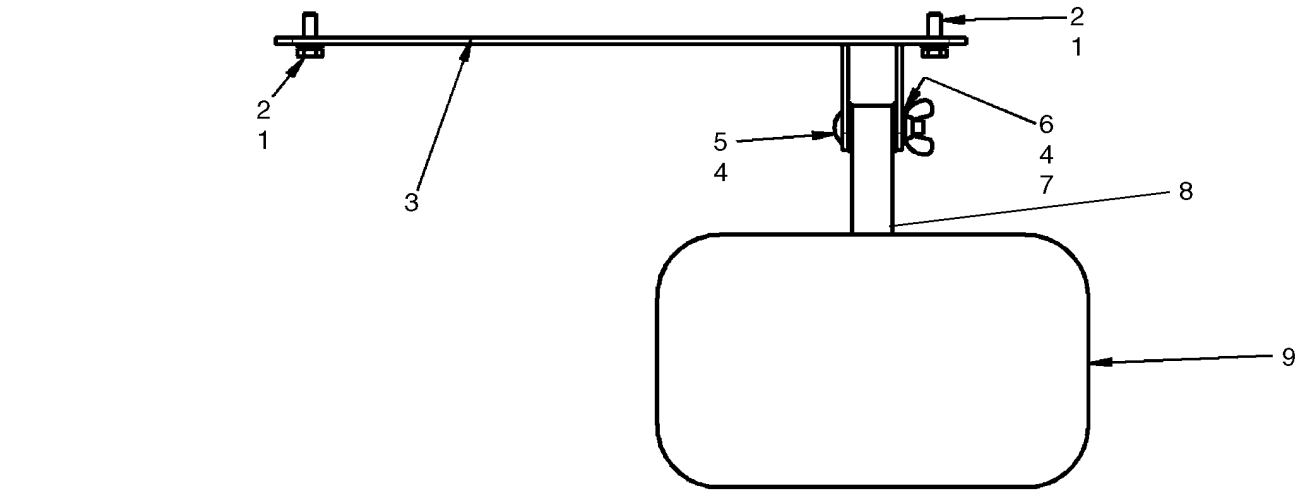

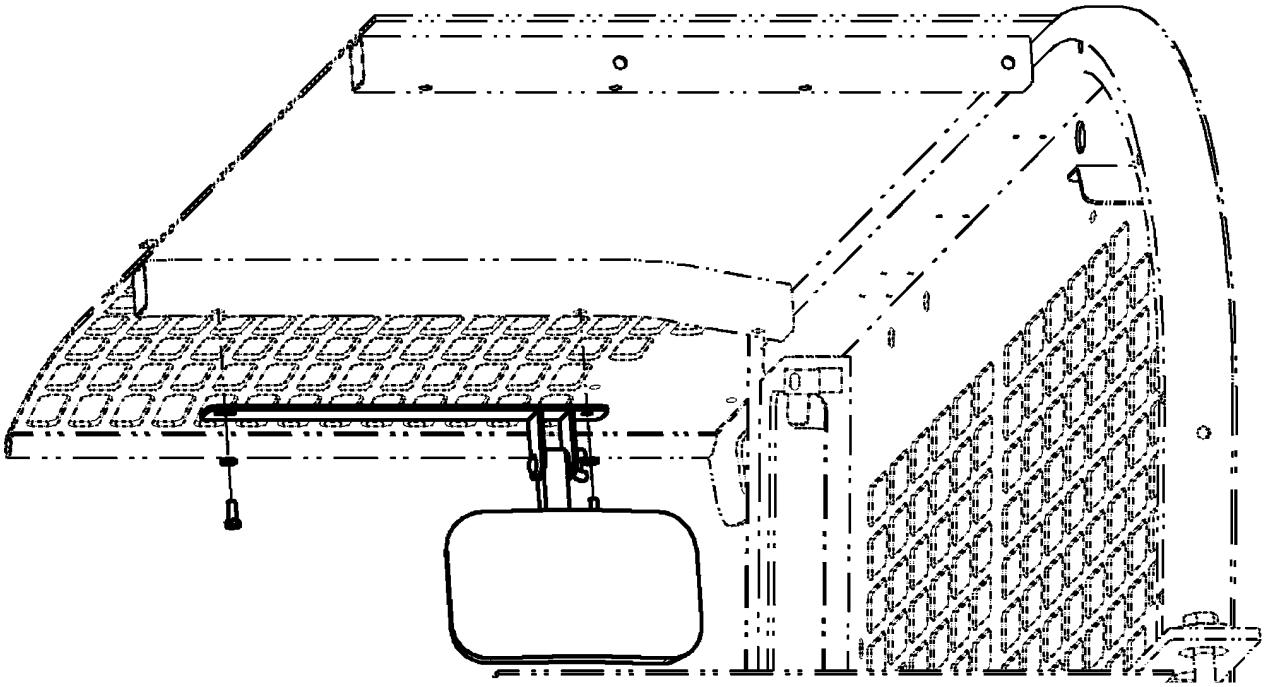

BS07K416

REAR VIEW MIRROR

REF	FN	PART NUMBER	YR/SN	QTY	DESCRIPTION
		87636518		1	KIT, SERVICE, Kit, Interior Mirror; Incl 1 - 9
1		86517328		2	WASHER, LOCK, M6
2		86508568		2	BOLT, Hex, M6 x 16, 8.8
3		87684661		1	PLATE, MOUNTING, Rear View Mirror Mount
4		NSS		2	NOT SERVICED SEPARATELY, Nylon Washer
5		9849641		1	BOLT, CARRIAGE, Short NK, 1/4"-20 x 1 1/2", G5
6		87016587		1	WASHER, 1/4"
7		126177		1	DISC, Wing Nut
8		87684681		1	TUBE, Tube, Rear View Mirror Support
9		87441735		1	MIRROR ASSY.

RADIO - SPEAKERS AND ANTENNA

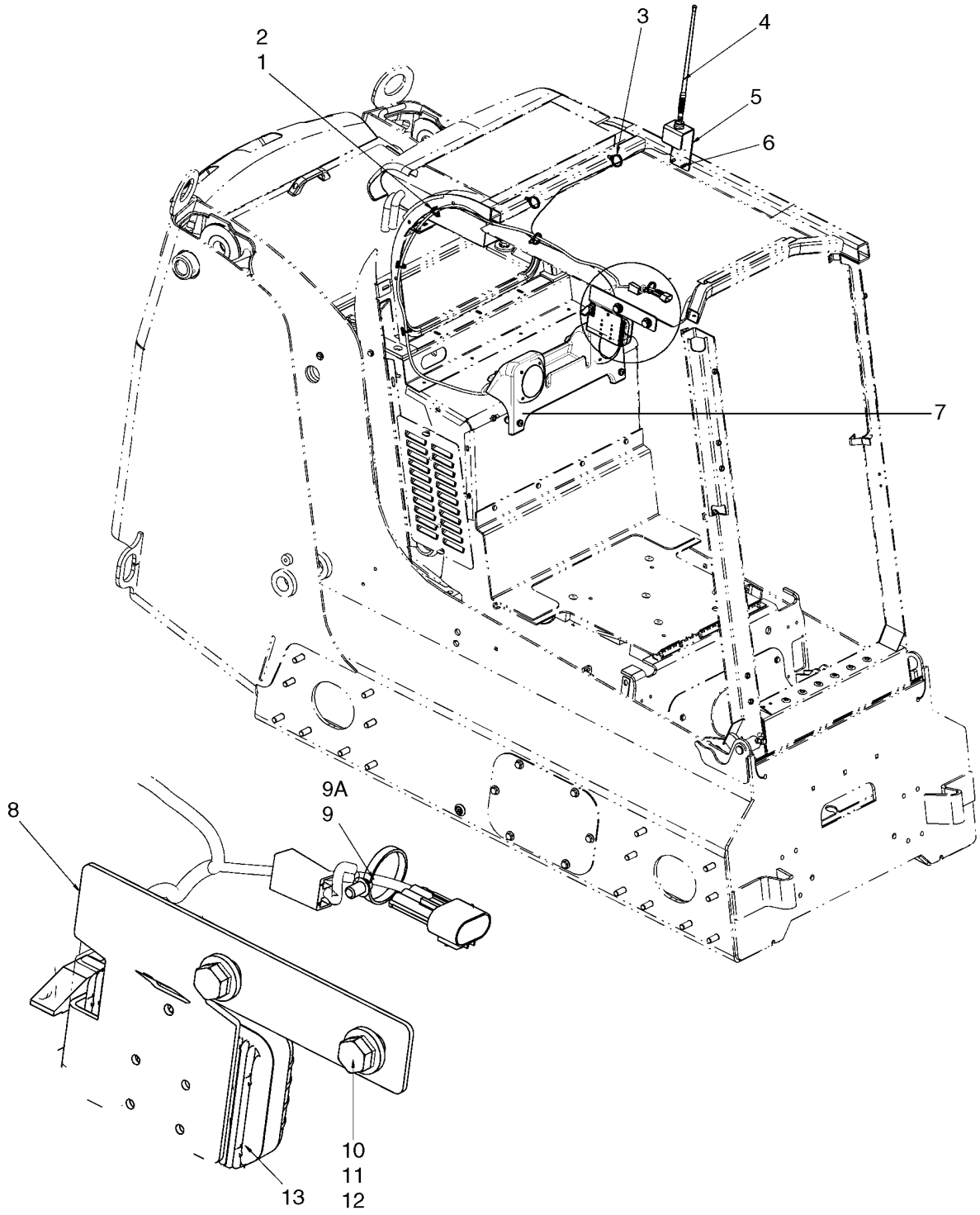

RADIO - SPEAKERS AND ANTENNA

REF	FN	PART NUMBER	YR/SN	QTY	DESCRIPTION
		87652337		1	KIT, SERVICE, Kit, Radio; Incl 1 - 13
1		87642915		3	STRAP, CABLE
2		87642914		3	BASE
3		87668737		4	STRAP
4		87668735		1	ANTENNA, Antenna, Rubber Mast
5		87682711		1	BRACKET, Antenna, Bracket
6		86625224		2	SCREW, Screw, 1/4-20 X 3/4 Hex Head
7		REF		1	INSTRUCTION, Speakers And Housing; See Fig 09-43
8		NSS		1	NOT SERVICED SEPARATELY, Radio Mounting Bracket
9		87658636		1	HARNESS, Radio Harness; Incl 9A
9A		A149796		1	FUSE, Fuse, 3A
10		43260		2	BOLT, Hex, M12 x 30, 10.9
11		412672		2	NUT, LOCK, M12 x 1.75, Cl 10
12		86625256		4	WASHER, M12 x 28.5 x 4, HT
13		NSS		1	NOT SERVICED SEPARATELY, Mini Radio, AM/FM/WX

RADIO - SPEAKERS AND HOUSING

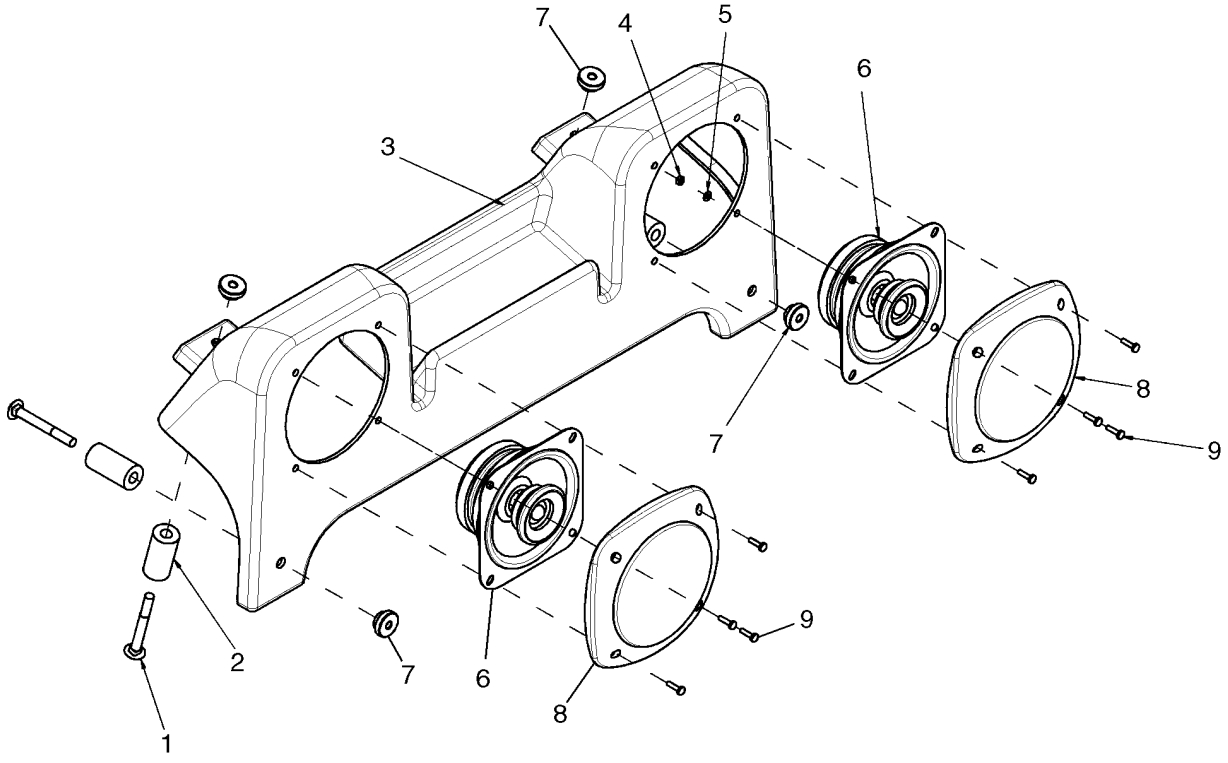

BS07K415

RADIO - SPEAKERS AND HOUSING

REF	FN	PART NUMBER	YR/SN	QTY	DESCRIPTION
1		280498		4	BOLT, CARRIAGE, Short NK, 1/4"-20 x 2 1/4", G5
2		87668006		4	SPACER, Spacer, 8.26 ID X 19.05 OD X 38.1 Length
3		87627524		1	HOUSING, Speaker Housing
4		86508812		8	NUT, M3, Cl 8
5		86639310		8	WASHER, M3
6		87672222		2	RADIO, Speaker, 4 in.
7		87667727		4	NUT, Nut, Plastic Thumb
8		87672257		2	RADIO, Speaker Grill
9		86599775		8	SCREW, Cross Pan Hd, M3 x 12

FLOOR MAT

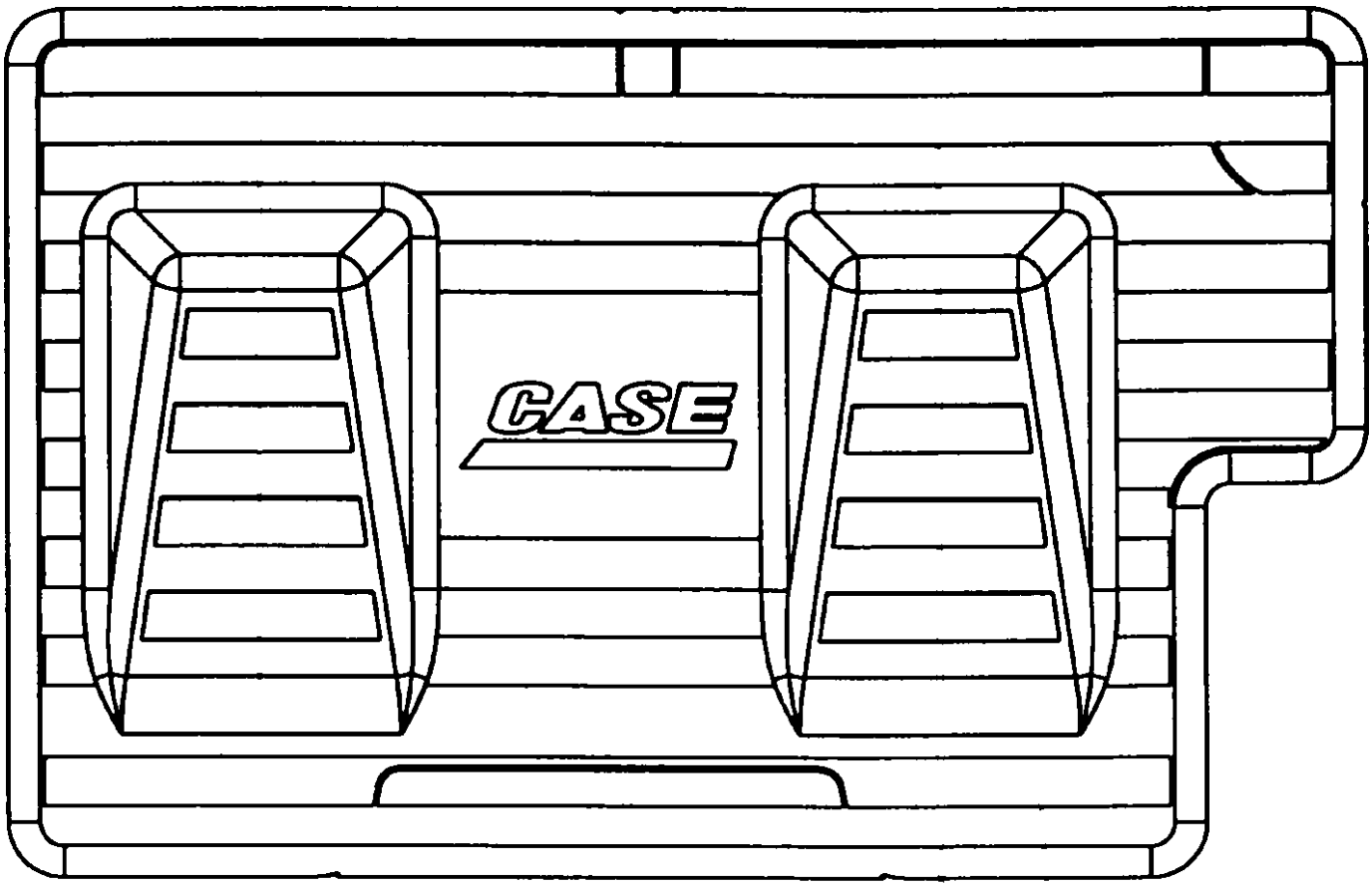

1

BS05D043

FLOOR MAT

REF	FN	PART NUMBER	YR/SN	QTY	DESCRIPTION
1		87461562		1	MAT, FLOOR, Rubber; Molded Foot Rests

INTERIOR TRIM

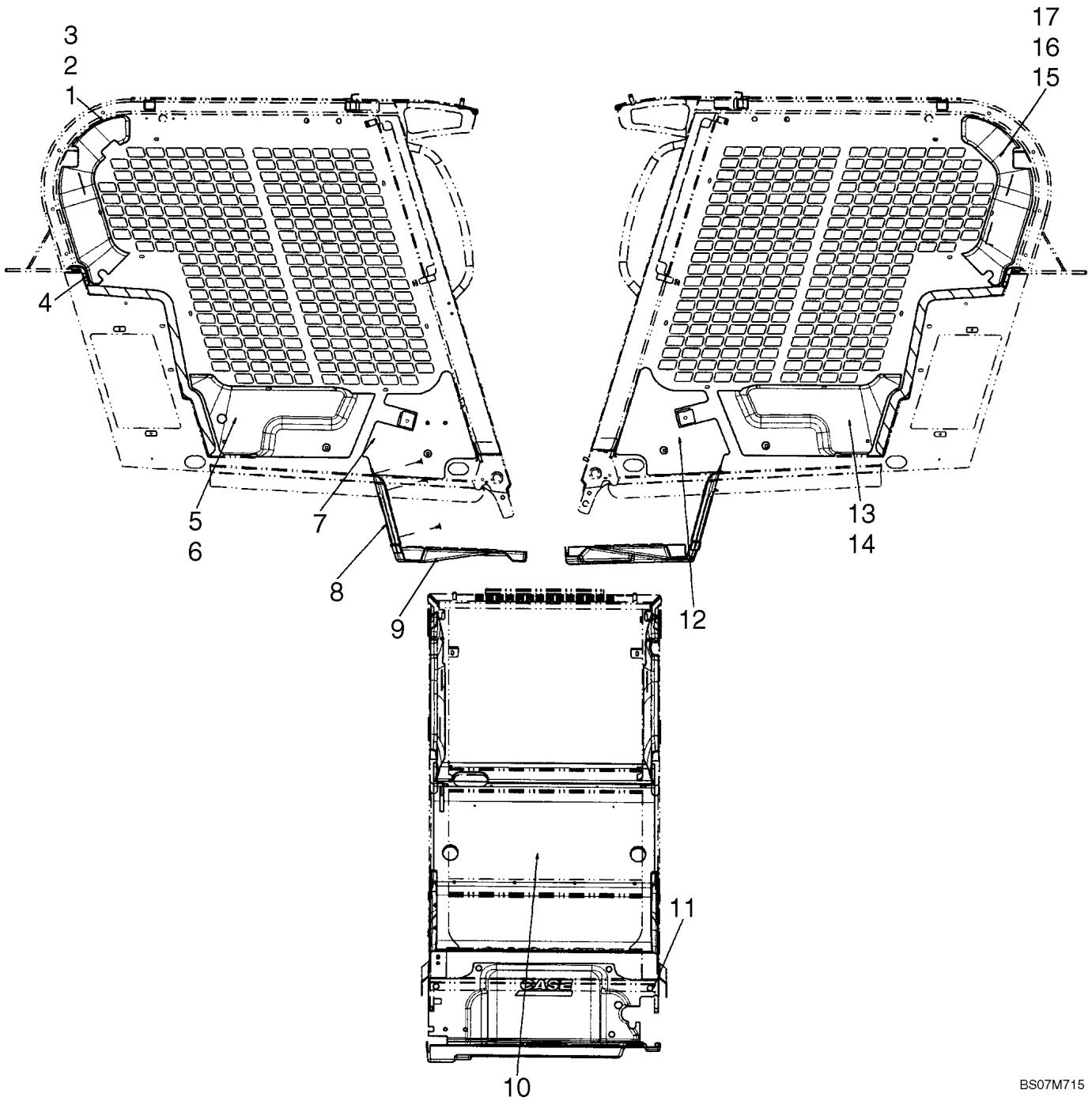

INTERIOR TRIM

REF	FN	PART NUMBER	YR/SN	QTY	DESCRIPTION
		87660347		1	KIT, SERVICE, Kit, Interior Trim; Incl 1 - 17
1		87685874		1	LINER, Upper Panel, Right Rear; Incl 2, 3
2		{87685909}		1	Foam Block
3		{87685911}		1	Foam Block
4		87731174		1	LINER, Panel, Rear Window
5		87730067		1	LINER, Lower Panel, Right Rear; Incl 6
6		{87685909}		1	Foam Block
7		{87727303}		1	Interior Trim, Bottom RH
8		87712704		1	MAT, FLOOR, Mat, Heel Plate
9		87712703		1	MAT, FLOOR, Mat, Floor
10		87672070		1	LINER, Interior Trim, Heat Shield
11		87712706		5	FASTENER, Push In Fastener
12		87727298		1	LINER, Interior Trim, Bottom LH
13		87730054		1	LINER, Lower Panel, Left Rear; Incl 14
14		{87685909}		1	Foam Block
15		87685872		1	LINER, Upper Panel, Left Rear; Incl 16, 17
16		{87685909}		1	Foam Block
17		{87685911}		1	Foam Block

TOP WINDOW

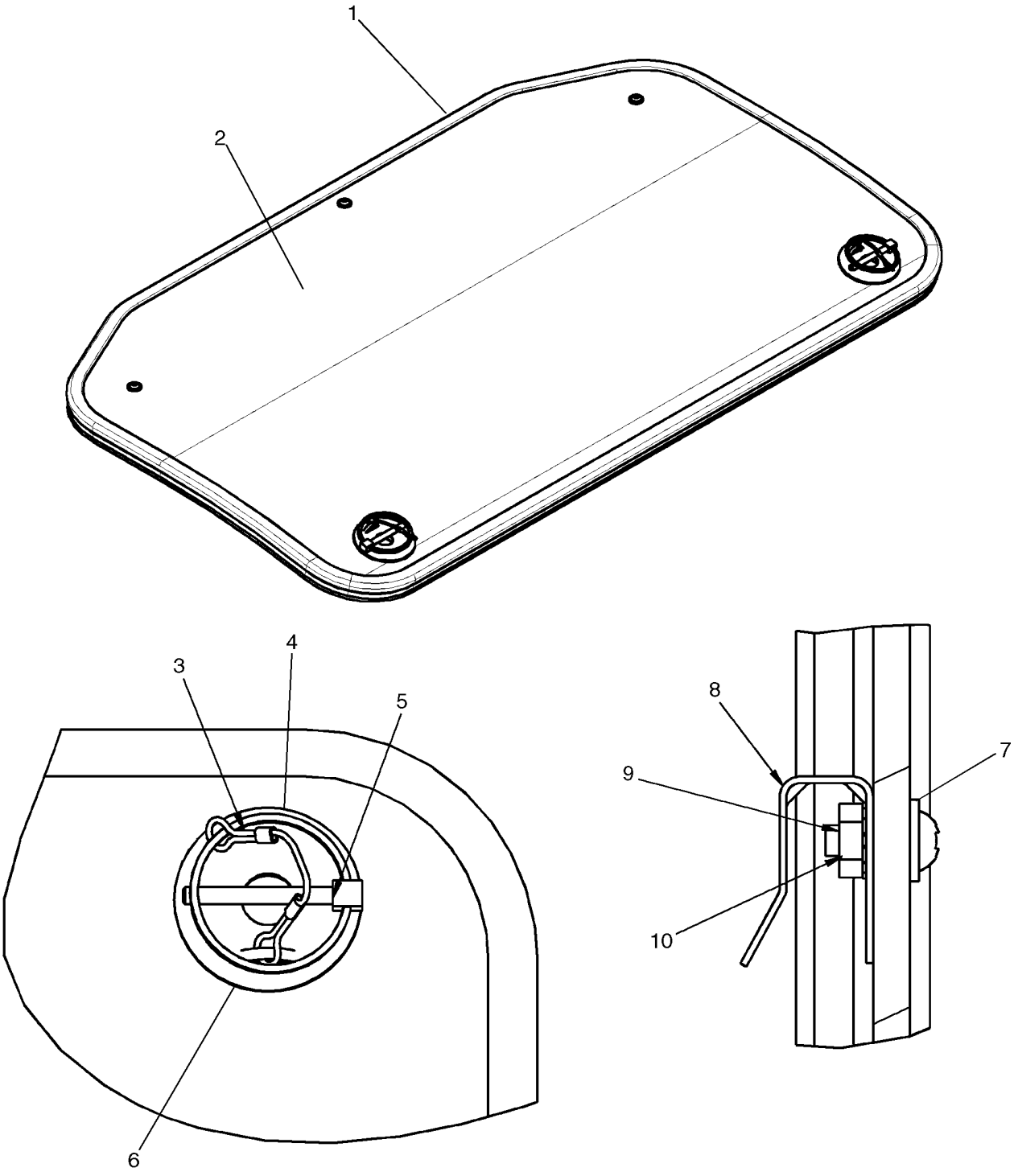

TOP WINDOW

REF	FN	PART NUMBER	YR/SN	QTY	DESCRIPTION
		87715833		1	PLASTIC, Top Window; Incl. 1 - 10
1		NSS		1	NOT SERVICED SEPARATELY, Bulb Seal
2		NSS		1	NOT SERVICED SEPARATELY, Window
3		NSS		2	NOT SERVICED SEPARATELY, Cable
4		NSS		4	NOT SERVICED SEPARATELY, Cable Crimp
5		NSS		2	NOT SERVICED SEPARATELY, Linch Pin
6		NSS		2	NOT SERVICED SEPARATELY, Mount, Skylight Pin
7		280299		3	WASHER, #8
8		NSS		3	NOT SERVICED SEPARATELY, Clip
9		NSS		3	NOT SERVICED SEPARATELY, Nut, #8-32 UNC
10		81822758		3	SCREW, Cross Pan Hd, #8-32 x 1/2"

REAR WINDOW

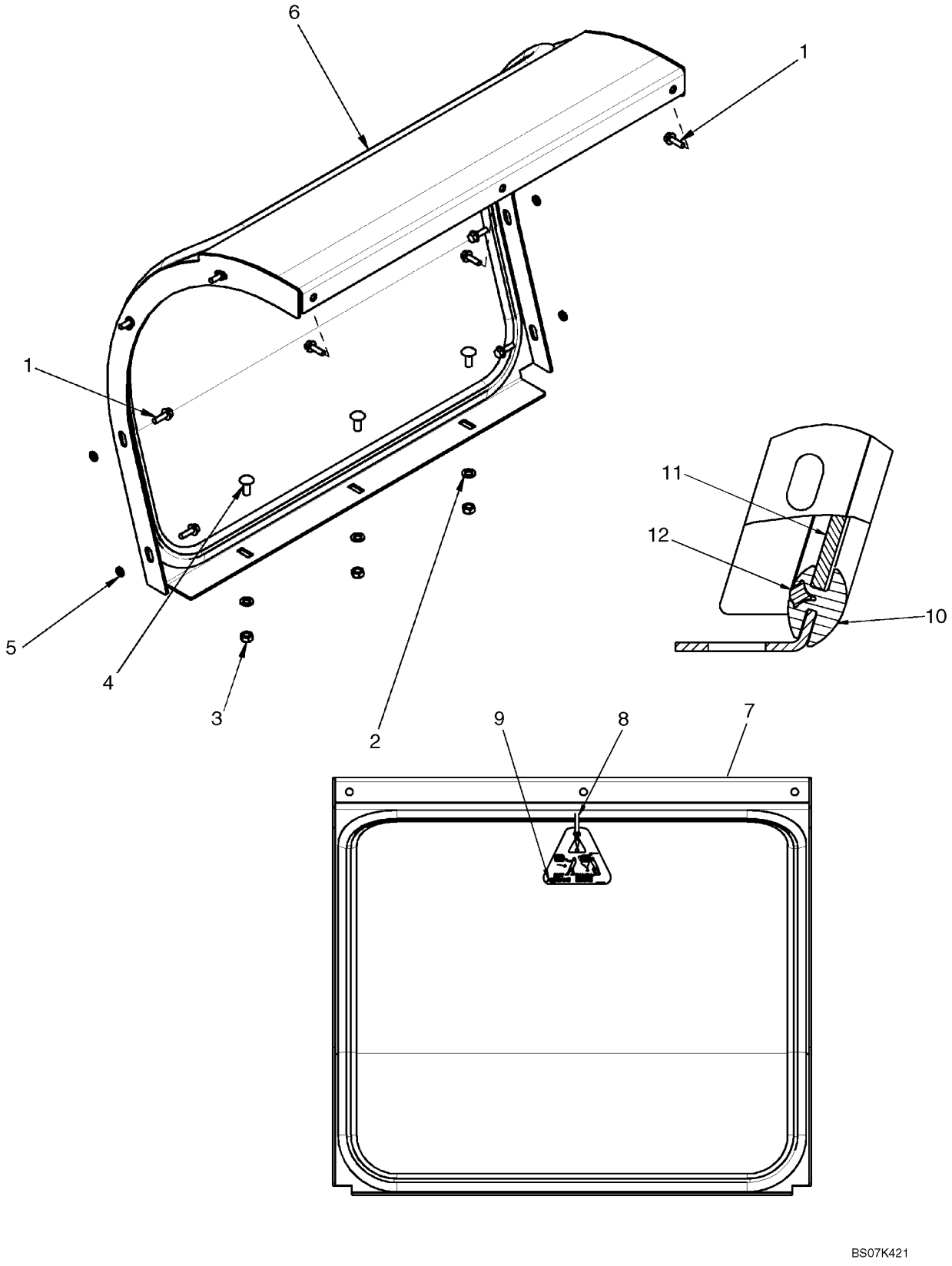

REAR WINDOW

REF	FN	PART NUMBER	YR/SN	QTY	DESCRIPTION
1		9804256		11	BOLT, Hex Flg, M6 x 20, 8.8
2		86624184		3	WASHER, M8 x 16 x 1.6
3		43362		3	NUT, M8, Cl 10
4		86507486		3	BOLT, CARRIAGE, Short NK, M8 x 20, Cl8.8, Full Thd
5		86588450		8	WASHER, M6
6		87626400		1	WINDOW, Incl. 7 - 12
7		NSS		1	NOT SERVICED SEPARATELY, Rear Window Frame
8		263117		1	STRAP, CABLE, .14" x 11 1/2"
9		NSS		1	NOT SERVICED SEPARATELY, Exit Tag
10		NSS		1	NOT SERVICED SEPARATELY, Channel Seal
11		NSS		1	NOT SERVICED SEPARATELY, Rear Window Glass
12		NSS		1	NOT SERVICED SEPARATELY, Key, Locking Non-HVAC

REAR WINDOW - HEAT AND AIR CONDITIONING

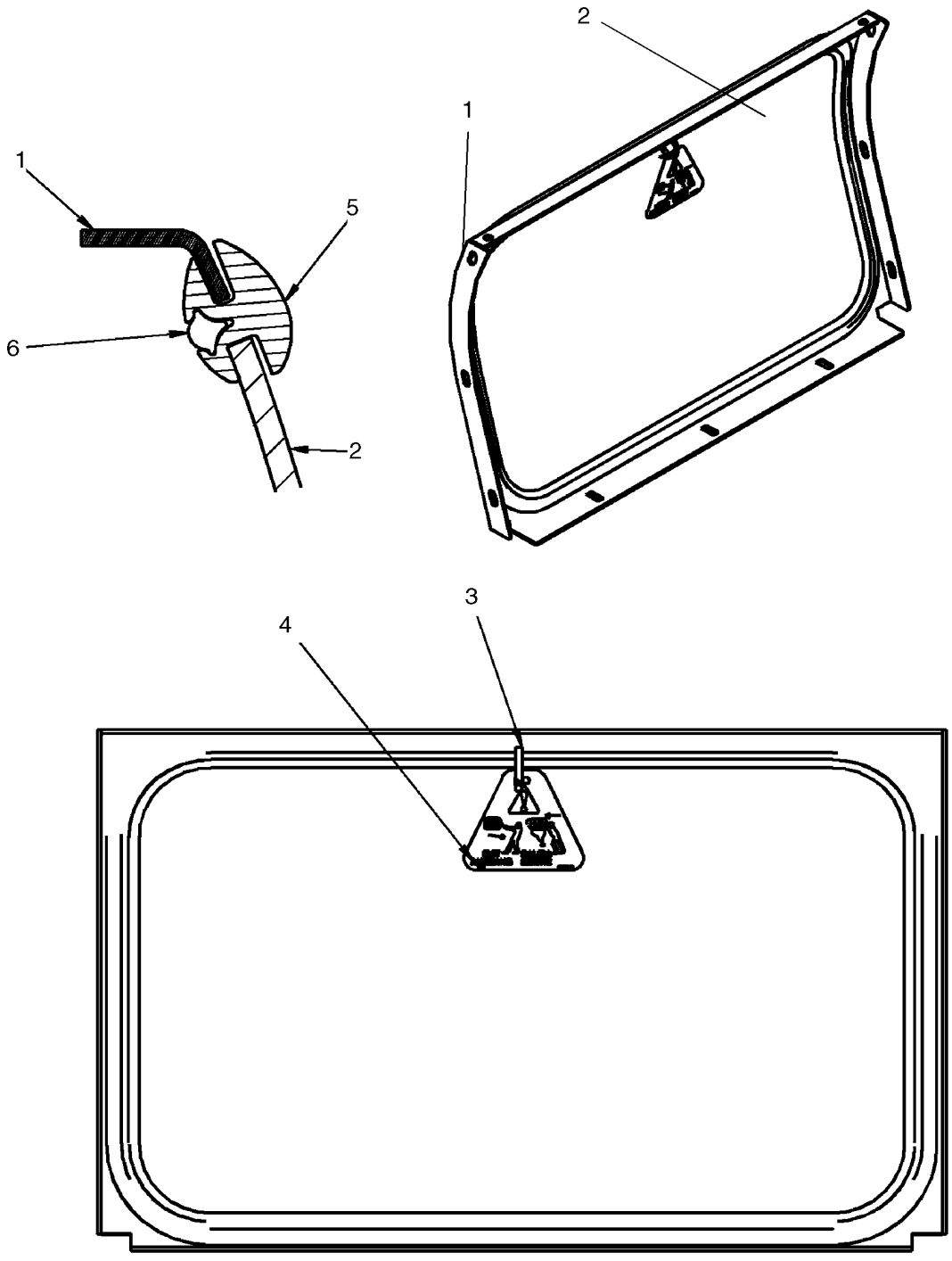

BS07M956

REAR WINDOW - HEAT AND AIR CONDITIONING

REF	FN	PART NUMBER	YR/SN	QTY	DESCRIPTION
1		{87705415}		1	Frame, Rear HVAC Window
2		{87641732}		1	Glass, Rear HVAC Window
3		263117		1	STRAP, CABLE, .14" x 11 1/2"
4		87026871		1	PLASTIC SIGN, Exit Tag
5		{87641733}		1	Seal, "H" Channel HVAC Window
6		{87643811}		1	Key, Locking HVAC

WINDOWS, SIDE

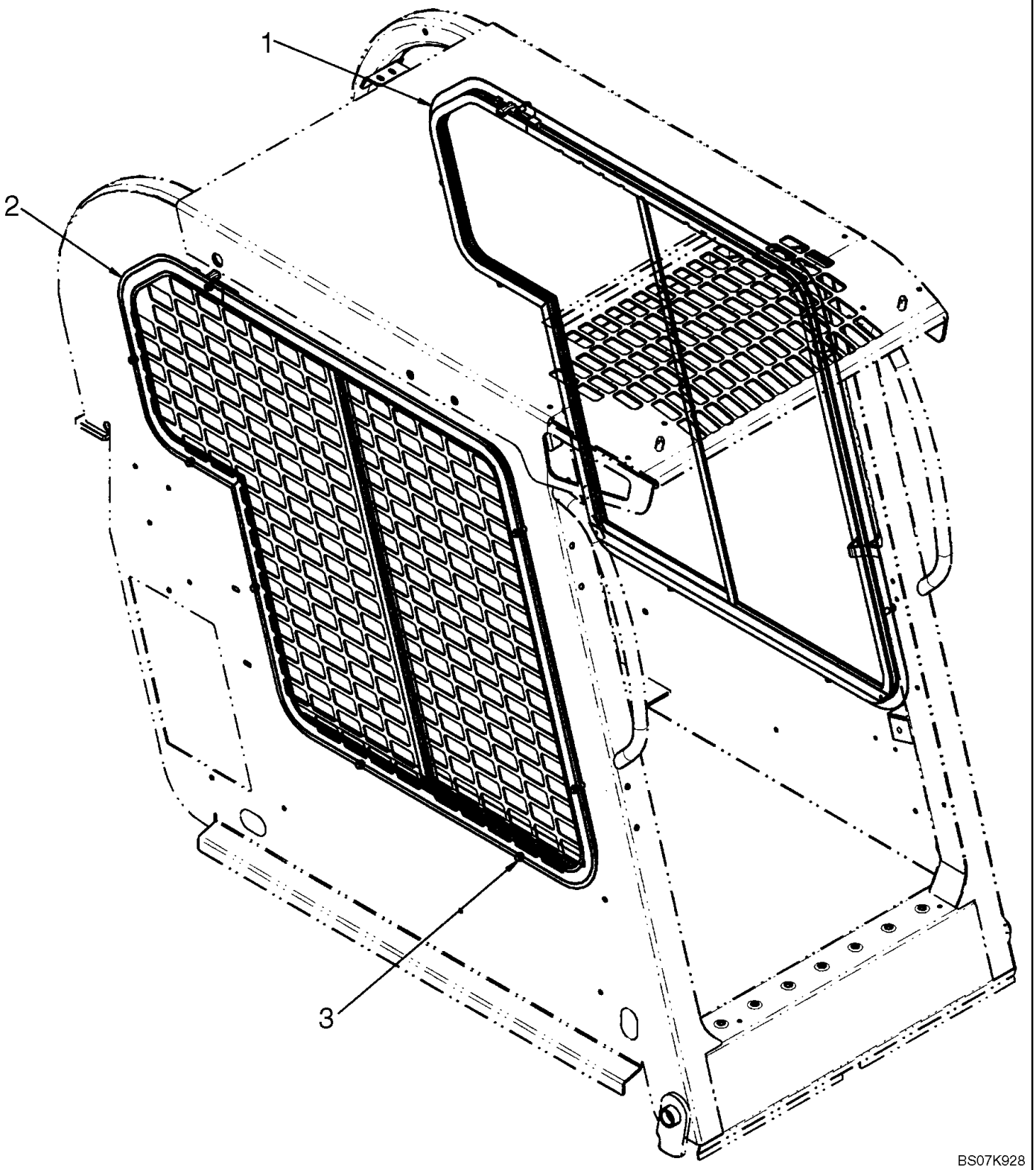

WINDOWS, SIDE

REF	FN	PART NUMBER	YR/SN	QTY	DESCRIPTION
		87638358		1	KIT, SERVICE, Kit, Side Windows; Incl. 1 - 3 And Instructions
1		87657669		1	WINDOW, LH Side
2		87657670		1	WINDOW, RH Side
3		87030555		16	BOLT, Hex Flange Head M6 x 16 8.8 PHC

HEATER SYSTEM

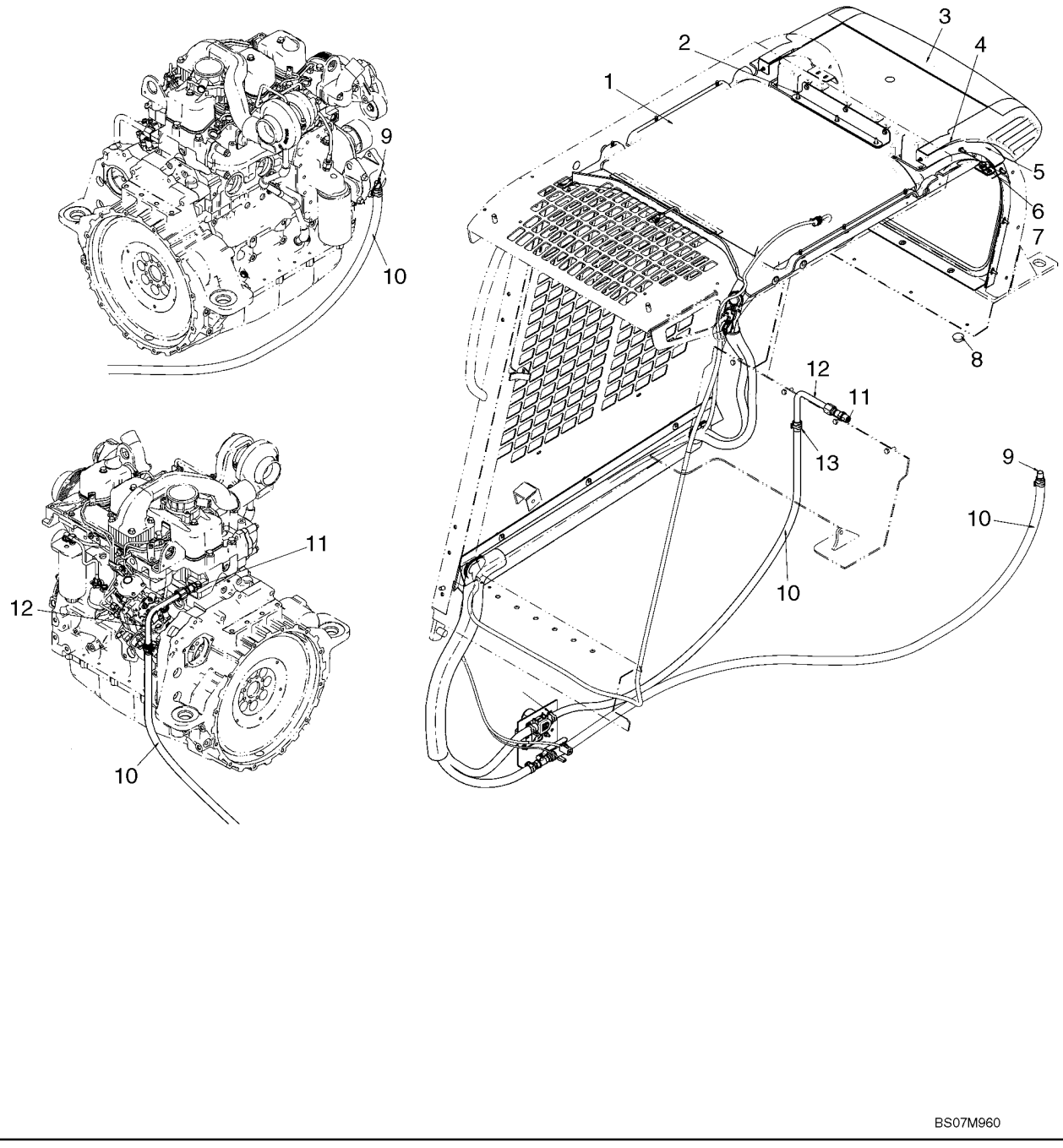

HEATER SYSTEM

REF	FN	PART NUMBER	YR/SN	QTY	DESCRIPTION
		87639909		1	KIT, SERVICE, Kit, Deluxe Heater; Incl 1 - 13
1		REF		1	INSTRUCTION, Heater System; See Fig 09-51
2		9804256		3	BOLT, Hex Flg, M6 x 20, 8.8
3		87653394		1	HEATER, Heater Assembly; See Fig 09-54
4		87450833		2	TAPE, ADHESIVE
5		291308		AR	STRIP, SEALING, Seal, 580mm (22 13/16 in.)
6		9804257		2	BOLT, Hex Flg, M6 x 25, 8.8
7		86619800		2	NUT, LOCK, M6 x 1, Flg, Cl 8
8		86625129		2	PLUG, Dome, 1.000" hole, Nylon
9		642560		1	FITTING, 5/8" Hose X 3/8" NPTF Beaded
10		87438212		2	HOSE, Heater Hose
11		242680		1	CONNECTOR, HYD., 7/8"-14, 37° x 1/2"-14, NPTF
12		87612366		1	TUBE, HEATER
13		87443511		4	CLAMP

09-51		p1	12/07

HEATER SYSTEM

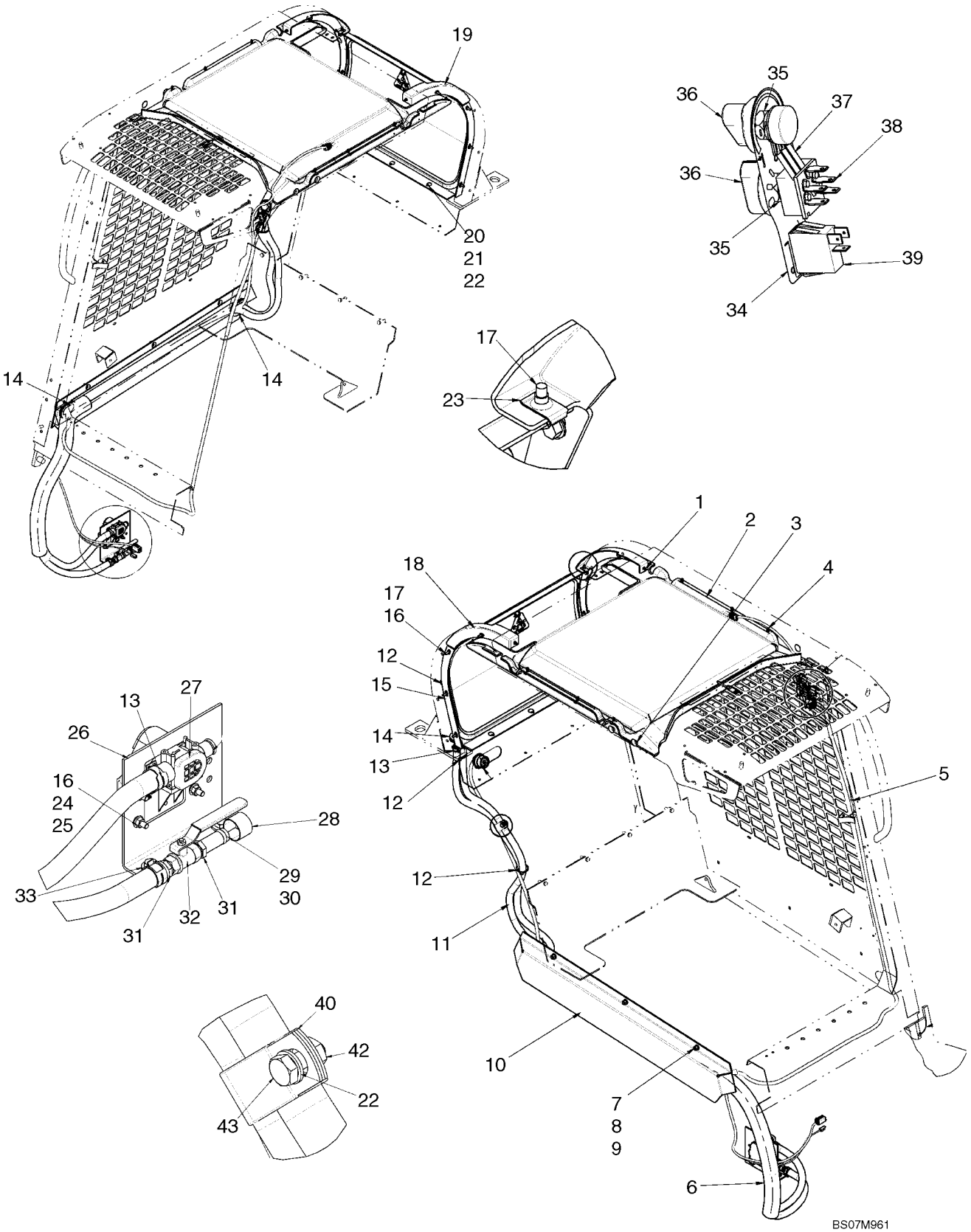

HEATER SYSTEM

REF	FN	PART NUMBER	YR/SN	QTY	DESCRIPTION
1		87712706		2	FASTENER, Fastener, Push In
2		REF		1	INSTRUCTION, Headliner; See Fig 09-57
3		414635A1		4	COVER
4		87713668		6	FASTENER, Fastener, Push In
5		87718144		1	HARNESS, Harness, HVAC
6		87439990		1	GUARD, Heater Hose Guard
7		412250		3	NUT, LOCK, M8 x 1.25, Cl 8
8		86624185		3	WASHER, M8 x 17.5 x 2, HT
9		86512420		3	BOLT, CARRIAGE, Short NK, M8 x 20, Cl8.8, Full Thd
10		87689316		1	COVER, Hose Cover
11		87438211		2	HOSE, Hose, Heater Supply
12		L11541		3	STRAP, CABLE
13		87443511		4	CLAMP
14		87439844		3	GUARD, Trim
15		REF		1	INSTRUCTION, Rear Window, HVAC; See Fig 09-48
16		86588450		12	WASHER, M6
17		9804256		10	BOLT, Hex Flg, M6 x 20, 8.8
18		87705417		1	GLASS, Filler, Rear Window RH
19		87705416		1	FILLER, Filler, Rear Window LH
20		86507486		3	BOLT, CARRIAGE, Short NK, M8 x 20, Cl8.8, Full Thd
21		43362		3	NUT, M8, Cl 10
22		86624184		4	WASHER, M8 x 16 x 1.6
23		87016585		2	NUT
24		86977786		4	BOLT, Hex, M6 x 25, 8.8
25		86511444		4	NUT, M6, Flg Ser
26		87439472		1	BRACKET, Bracket, Water Valve And Dryer
27		87520839		1	VALVE, Water Valve
28		9827902		1	CLAMP, 1", Insul, 3/8" Bolt
29		229197A1		2	NUT
30		120103		2	BOLT, Hex, M8 x 16, 8.8
31		642560		2	FITTING, 5/8" Hose X 3/8" NPTF Beaded
32		87441937		1	VALVE, Ball Valve, Heater Hose
33		87015284		2	WASHER, M8 x 21.5 x 2.5, HT
34		{87687236}		1	Decal, HVAC Control
35		87310592		2	NUT, Jam, 7/16"-28, G5

HEATER SYSTEM

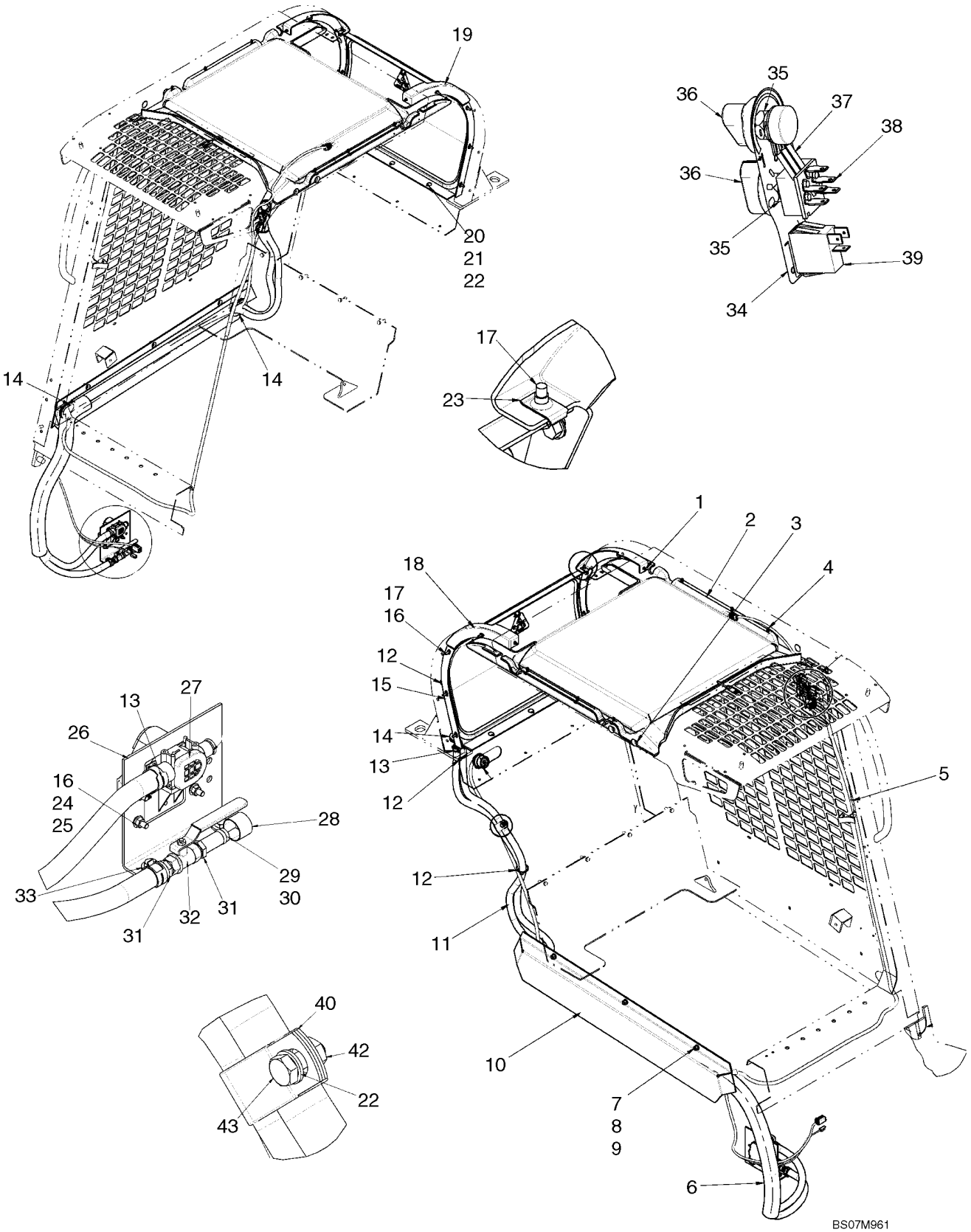

HEATER SYSTEM

REF	FN	PART NUMBER	YR/SN	QTY	DESCRIPTION
36		86729670		2	KNOB
37		86729675		1	POTENTIOMETER
38		86729669		1	SWITCH, FAN, Switch, Blower Fan
39		87555249		1	SWITCH, A/C Switch
40		H434289		1	MOUNTING CLIP
42		86505868		1	NUT, M8, Flg Ser
43		120104		1	BOLT, Hex, M8 x 20, 8.8

AIR CONDITIONING SYSTEM

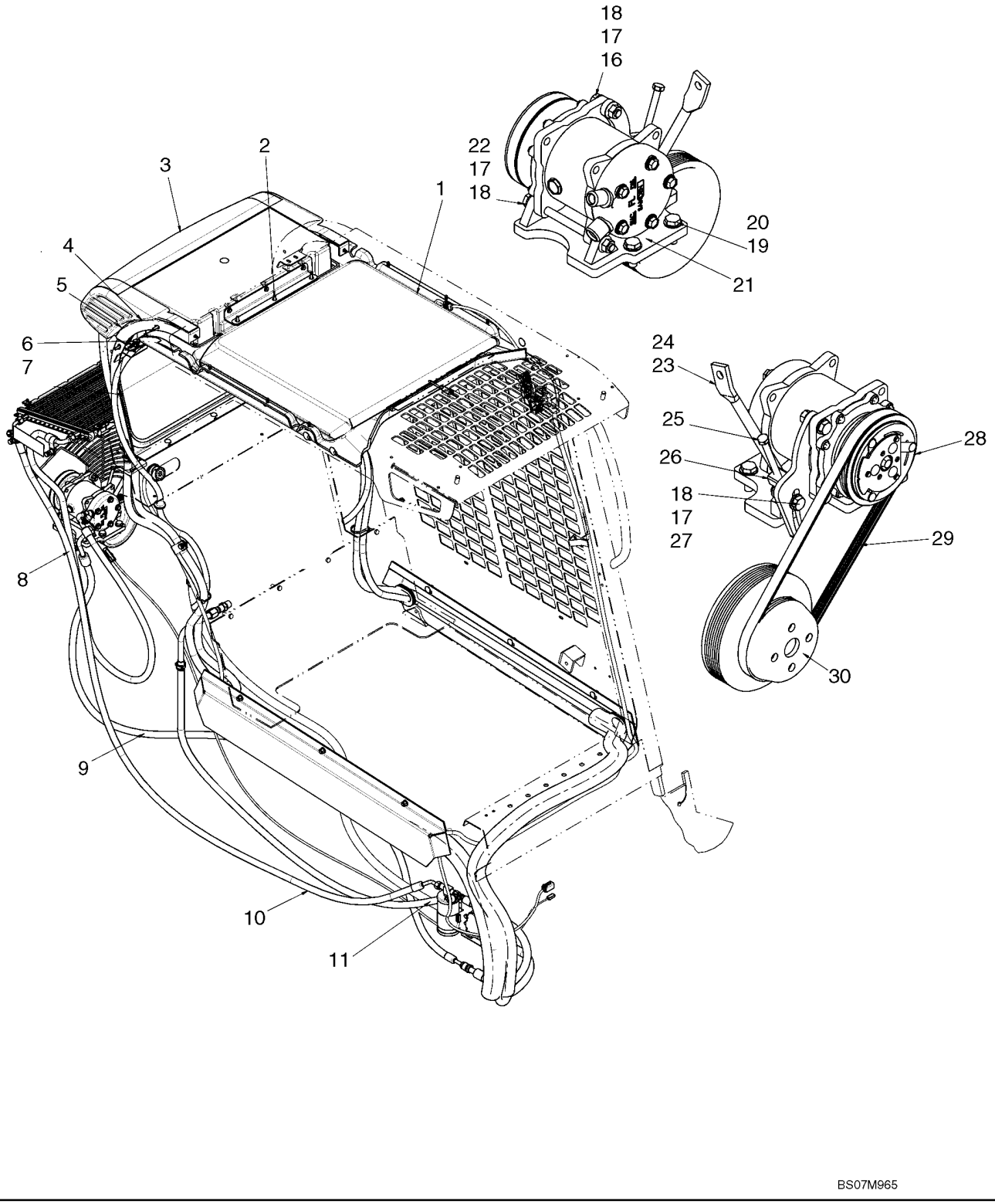

AIR CONDITIONING SYSTEM

REF	FN	PART NUMBER	YR/SN	QTY	DESCRIPTION
		87626268		1	KIT, SERVICE, Kit, Deluxe Heater And Air Conditioning; Incl 1 - 30
1		REF		1	INSTRUCTION, Heater System; See Fig 09-51
2		9804256		3	BOLT, Hex Flg, M6 x 20, 8.8
3		REF		1	INSTRUCTION, Air Conditioning Sytem; See Fig 09-53
4		291308		AR	STRIP, SEALING, Seal, 580mm (22 13/16 in.)
5		87450833		2	TAPE, ADHESIVE
6		9804257		2	BOLT, Hex Flg, M6 x 25, 8.8
7		86619800		2	NUT, LOCK, M6 x 1, Flg, Cl 8
8		87714944		1	HOSE, Hose, A/C Discharge
9		87436118		1	HOSE ASSY., Hose, A/C Suction
10		87708377		1	HOSE, Hose, A/C Liquid
11		87438212		2	HOSE, Hose, Heater Return
12		87612366		1	TUBE, HEATER
13		242680		1	CONNECTOR, HYD., 7/8"-14, 37° x 1/2"-14, NPTF
14		642560		1	FITTING, 5/8" Hose X 3/8" NPTF Beaded
15		87443511		4	CLAMP
16		9706704		2	BOLT, Hex, M10 x 35, 8.8, Full Thd
17		86050279		4	NUT, M10 x 1.5, Flg, Cl 10
18		86624176		4	WASHER, M10 x 20 x 2
19		9515003		3	BOLT, Hex, M10 x 30, 10.9, Full Thd
20		140045		4	WASHER, SPRING, Belleville, M10
21		87710177		1	BRACKET, Compressor Bracket
22		7120741		1	BOLT
23		9861444		1	BOLT, Hex, M10 x 20, 10.9, Full Thd
24		87684742		1	ROD, Muffler Rod
25		87649979		1	BOLT
26		87709877		1	BRACKET, Tensioner Bracket
27		120068		1	BOLT, Hex, M10 x 40, 8.8, Full Thd
28		87649991		1	COMPRESSOR, AIRCOND
29		87681594		1	BELT, Belt, A/C Drive
30		87669405		1	PULLEY, Pulley, Fan And Compressor

AIR CONDITIONING SYSTEM

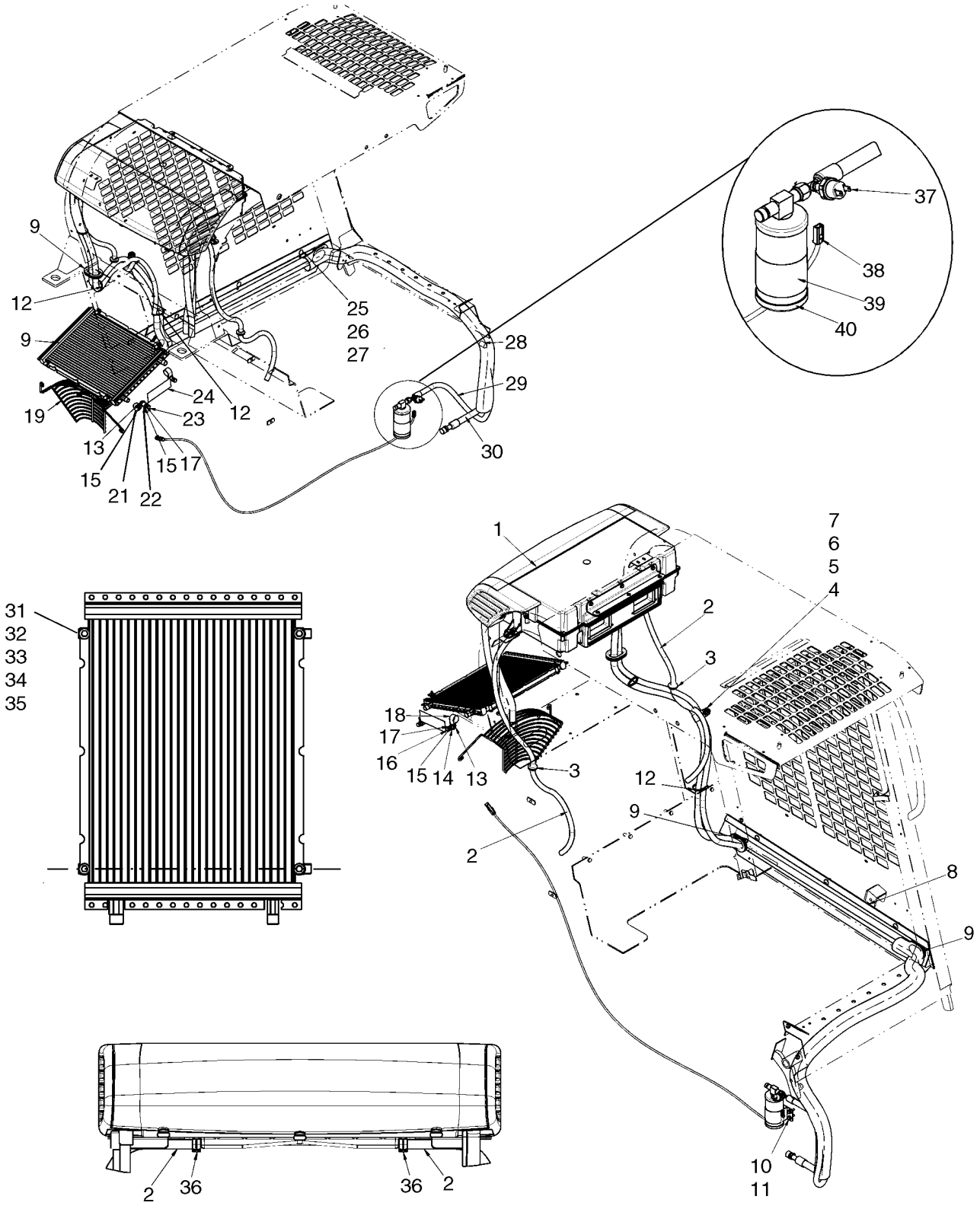

AIR CONDITIONING SYSTEM

REF	FN	PART NUMBER	YR/SN	QTY	DESCRIPTION
1		87653393		1	HEATER, Heater And Air Conditioning Unit; See Fig 09-55
2		87691473		2	HOSE, Tube, A/C Drain
3		87307909		2	GROMMET
4		H434289		1	MOUNTING CLIP
5		86505868		1	NUT, M8, Flg Ser
6		120104		1	BOLT, Hex, M8 x 20, 8.8
7		86624184		1	WASHER, M8 x 16 x 1.6
8		87689316		1	COVER, Hose Cover
9		87439844		3	GUARD, Trim
10		9804256		2	BOLT, Hex Flg, M6 x 20, 8.8
11		86511444		2	NUT, M6, Flg Ser
13		9804277		2	NUT, M8 x 1.25, Flg, Cl 8
14		254697A1		1	SPACER
15		86625263		3	WASHER, M8 x 20 x 1.6
16		300381		1	BOLT, Hex, M8 x 35, 8.8
17		9706690		2	NUT, M8, Cl 8
18		9827902		1	CLAMP, 1", Insul, 3/8" Bolt
19		87563692		1	CONDENSER
20		87594971		1	GUARD, Fan Guard
21		87029955		1	CLAMP, 7/8", Insul, 3/8" Bolt
22		{87340800}		1	Spacer
23		43129		1	BOLT, Hex, M8 x 40, 8.8
24		86639409		1	DECAL, Decal, A/C Specifications
25		86512420		3	BOLT, CARRIAGE, Short NK, M8 x 20, Cl8.8, Full Thd
26		86624185		3	WASHER, M8 x 17.5 x 2, HT
27		412250		3	NUT, LOCK, M8 x 1.25, Cl 8
28		87441006		1	GUARD
29		87693645		1	HOSE, Hose, A/C Liquid
30		87693644		1	HOSE, Hose, A/C Suction
31		86025725		4	BOLT, Hex, M5 x 40, 8.8
32		87301324		4	NUT, M5, U
33		86592710		4	WASHER, M6 x 17 x 3
34		87574372		4	SPACER
35		87013357		4	WASHER, M5 x 15 x 1.6

AIR CONDITIONING SYSTEM

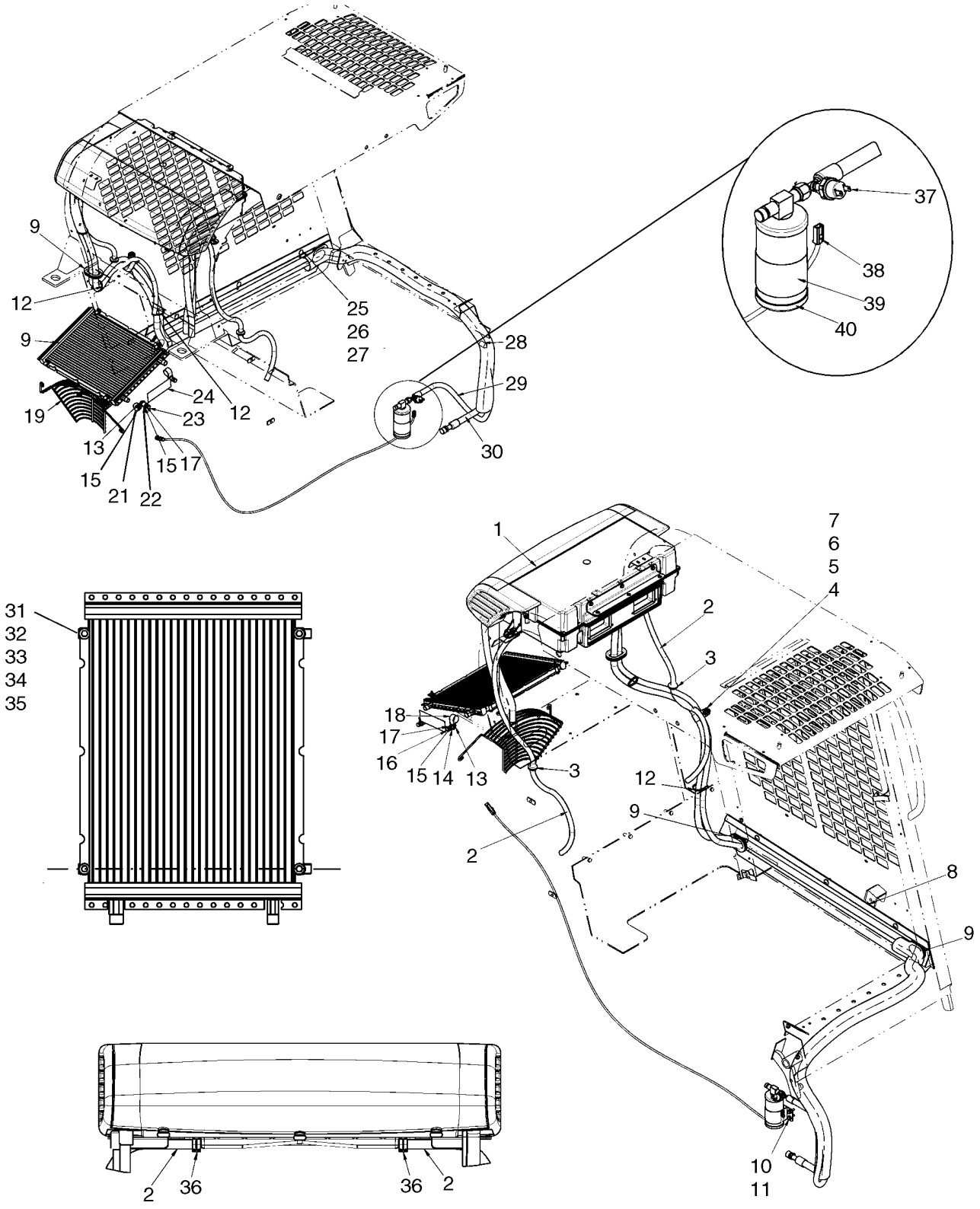

AIR CONDITIONING SYSTEM

REF	FN	PART NUMBER	YR/SN	QTY	DESCRIPTION
36		{87584302}		2	Clamp
37		86625515		1	SWITCH, PRESSURE, Switch, A/C Pressure
38		87445908		1	HARNESS, Compressor Harness
39		87437501		1	BRACKET
40		86625481		1	RECEIVER-DRYER

HEATER ASSEMBLY

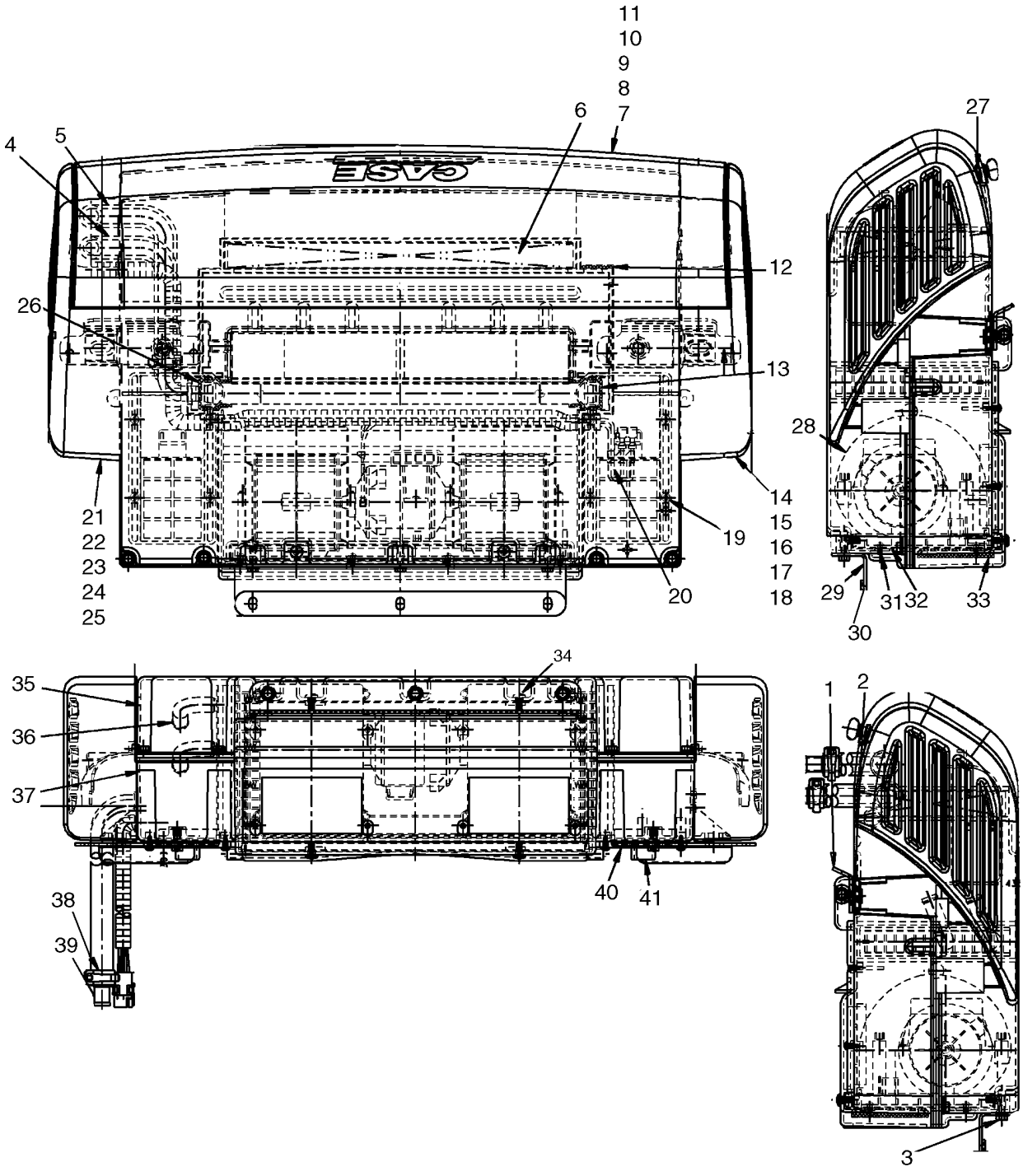

HEATER ASSEMBLY

REF	FN	PART NUMBER	YR/SN	QTY	DESCRIPTION
1		87656095		2	BRACKET, Bottom Bracket
2		87656096		2	GASKET, Neoprene Gasket, Bottom
3		NSS		5	NOT SERVICED SEPARATELY, Screw, M6 X 20
4		87656099		1	HOSE, Formed Hose, Short
5		87656098		1	HOSE, Formed Hose, Long
6		87656118		1	FILTER, Charcoal Filter
7		87656129		1	COVER, REAR, Rear Cover Assembly; Incl 8 - 11
8		87656125		3	SCREW, Wing Head Screw
9		87591148		3	RETAINER, Black Nylon Retainer
10		87656114		1	COVER, Rear Cover
11		87656130		1	FOAM, Foam Seal
12		NSS		1	NOT SERVICED SEPARATELY, Seal
13		NSS		1	NOT SERVICED SEPARATELY, Tank Seal
14		87656121		1	CAP, End Cap Assembly, LH; Incl 15 - 18
15		87656109		1	CAP, End Cap, LH
16		87656123		1	CAP, Partition
17		87591148		2	RETAINER, Black Nylon Retainer
18		87656127		2	SCREW
19		NSS		8	NOT SERVICED SEPARATELY, Screw
20		87656120		1	HARNESS, WIRE
21		87656122		1	CAP, End Cap Assembly, RH; Incl 22 - 25
22		87656105		1	CAP, End Cap, RH
23		87656124		1	CAP, Partition
24		87591148		2	RETAINER, Black Nylon Retainer
25		87656127		2	SCREW
26		NSS		1	NOT SERVICED SEPARATELY, Tank Seal, Tubes
27		87656126		7	CLIP, Recepticle, "U" Type
28		86592107		1	BLOWER, ELECTRIC
29		87656106		1	BRACKET, Front Bracket
30		87656097		1	GASKET, Neoprene Gasket, Front
31		NSS		8	NOT SERVICED SEPARATELY, Screw
32		87656107		1	PLATE, Blower Mount Plate
33		87656108		1	GASKET, Gasket, Blower Outlet
34		NSS		4	NOT SERVICED SEPARATELY, Screw
35		87658710		1	CASE, Top Case

HEATER ASSEMBLY

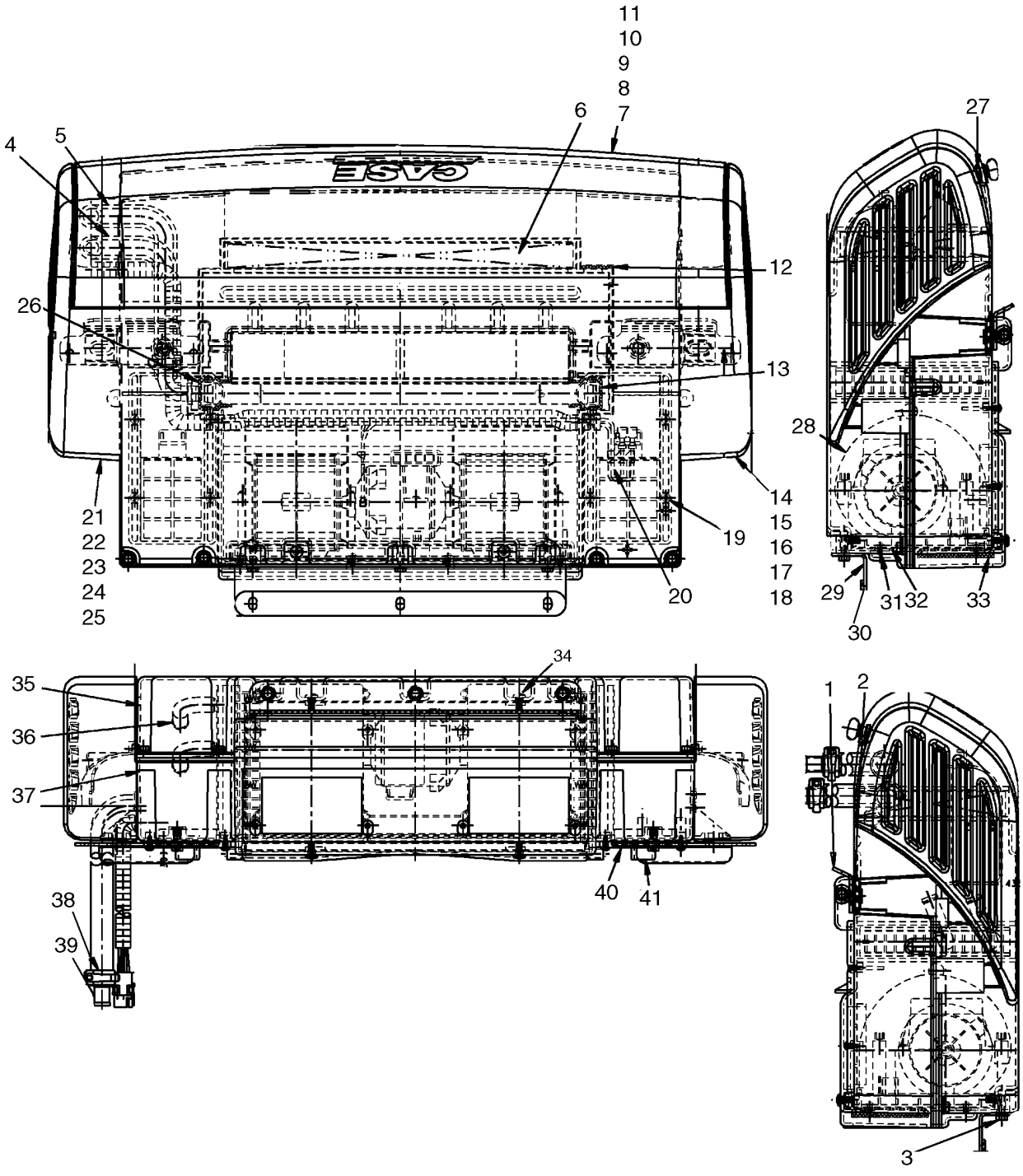

HEATER ASSEMBLY

REF	FN	PART NUMBER	YR/SN	QTY	DESCRIPTION
36		87656103		1	CORE, Heater Core
37		87658709		1	CASE, Bottom Case
38		NSS		4	NOT SERVICED SEPARATELY, Hose Clamp
39		87035457		2	TUBE
40		87656101		2	COVER
41		87656100		2	COVER

HEATER AND AIR CONDITIONING ASSEMBLY

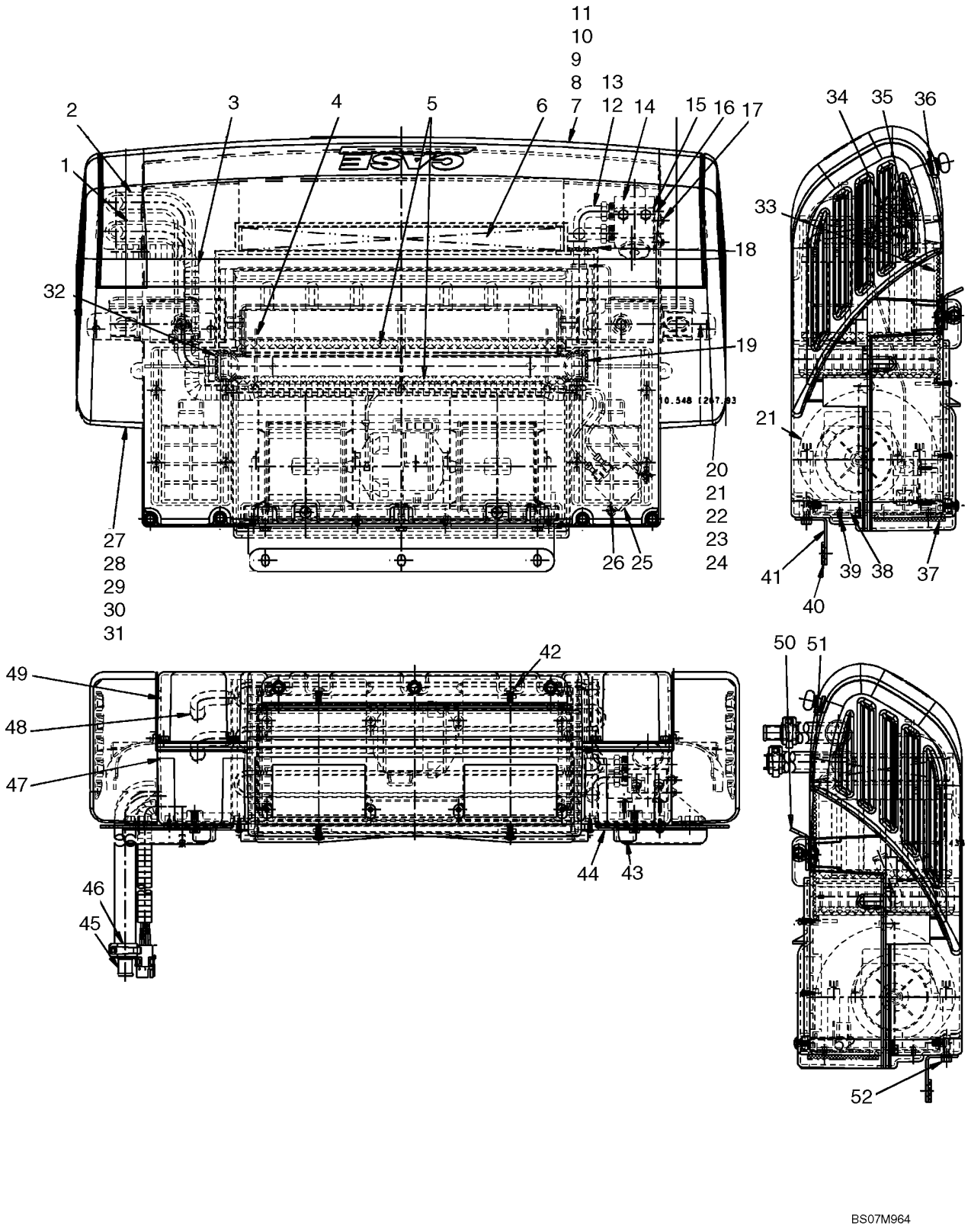

HEATER AND AIR CONDITIONING ASSEMBLY

REF	FN	PART NUMBER	YR/SN	QTY	DESCRIPTION
1		87656098		1	HOSE, Formed Hose, Long
2		87656099		1	HOSE, Formed Hose, Short
3		87656120		1	HARNESS, WIRE
4		NSS		6	NOT SERVICED SEPARATELY, Plastic Pick
5		87656119		2	INSULATION, FOAM, Foam Filter
6		87656118		1	FILTER, Charcoal Filter
7		87656129		1	COVER, REAR, Rear Cover Assembly; Incl 8 - 11
8		87656125		3	SCREW, Wing Head Screw
9		87591148		3	RETAINER, Black Nylon Retainer
10		87656114		1	COVER, Rear Cover
11		87656130		1	FOAM, Foam Seal, Filter
12		87656113		1	EVAPORATOR, Incl 13
13		87035782		1	VALVE, Expansion Valve
14		NSS		AR	NOT SERVICED SEPARATELY, Black Tar Tape, 610mm (24 in.) Required
15		87656112		1	BRACKET
16		87656111		1	GASKET, Expansion Valve Gasket
17		NSS		2	NOT SERVICED SEPARATELY, Screw
18		NSS		1	NOT SERVICED SEPARATELY, Tube Seal, Evaporator
19		NSS		1	NOT SERVICED SEPARATELY, Tank Seal
20		87656121		1	CAP, End Cap Assembly, LH; Incl 21 - 24
21		87656109		1	CAP, End Cap, LH
22		87656123		1	CAP, Partition
23		87591148		2	RETAINER, Black Nylon Retainer
24		87656127		2	SCREW
25		86625480		1	THERMOSTAT
26		NSS		10	NOT SERVICED SEPARATELY, Screw
27		87656122		1	CAP, End Cap Assembly, RH; Incl 28 - 31
28		87656105		1	CAP, End Cap, RH
29		87656124		1	CAP, Partition
30		87591148		2	RETAINER, Black Nylon Retainer
31		87656127		2	SCREW
32		NSS		1	NOT SERVICED SEPARATELY, Tank Seal, Tubes
33		87656110		1	FOAM, Foam, Drain Pan

HEATER AND AIR CONDITIONING ASSEMBLY

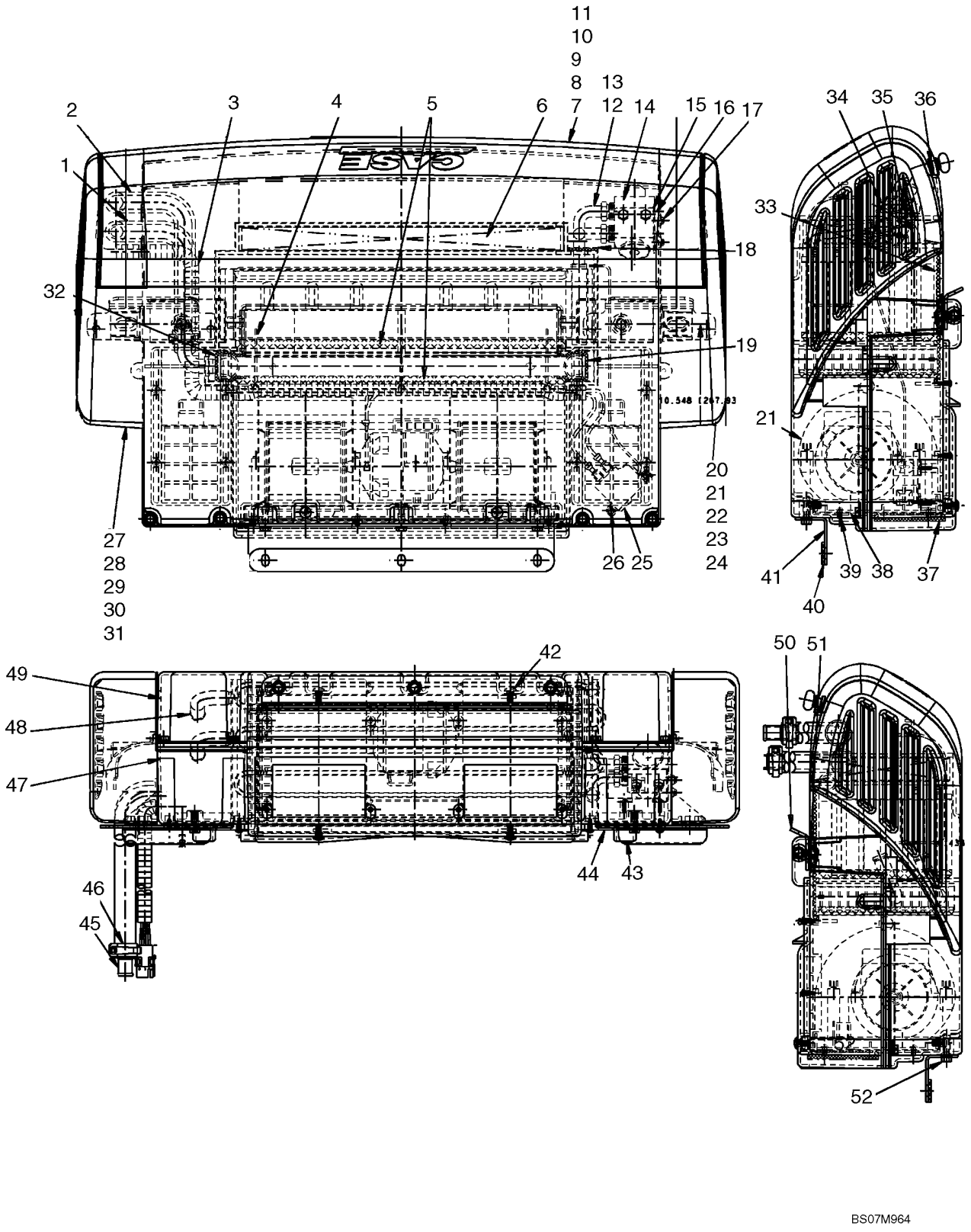

HEATER AND AIR CONDITIONING ASSEMBLY

REF	FN	PART NUMBER	YR/SN	QTY	DESCRIPTION
34		NSS		2	NOT SERVICED SEPARATELY, Bolt
35		NSS		2	NOT SERVICED SEPARATELY, Hex Nut
36		87656126		7	CLIP, Recepticle "U" Type
37		87656108		1	GASKET, Gasket, Blower Outlet
38		87656107		1	PLATE, Blower Mount Plate
39		NSS		8	NOT SERVICED SEPARATELY, Screw
40		87656097		1	GASKET, Neoprene Gasket, Front
41		87656106		1	BRACKET, Front Bracket
42		NSS		4	NOT SERVICED SEPARATELY, Screw
43		87656100		2	COVER
44		87656101		2	COVER
45		87035457		2	TUBE
46		NSS		4	NOT SERVICED SEPARATELY, Hose Clamp
47		87656102		1	BOTTOM, Bottom Case Half
48		87656103		1	CORE, Heater Core
49		87656104		1	TOP, Top Case Half
50		87656095		2	BRACKET
51		87656096		2	GASKET, Neoprene Gasket, Bottom
52		NSS		5	NOT SERVICED SEPARATELY, Screw

HEADLINER - STANDARD

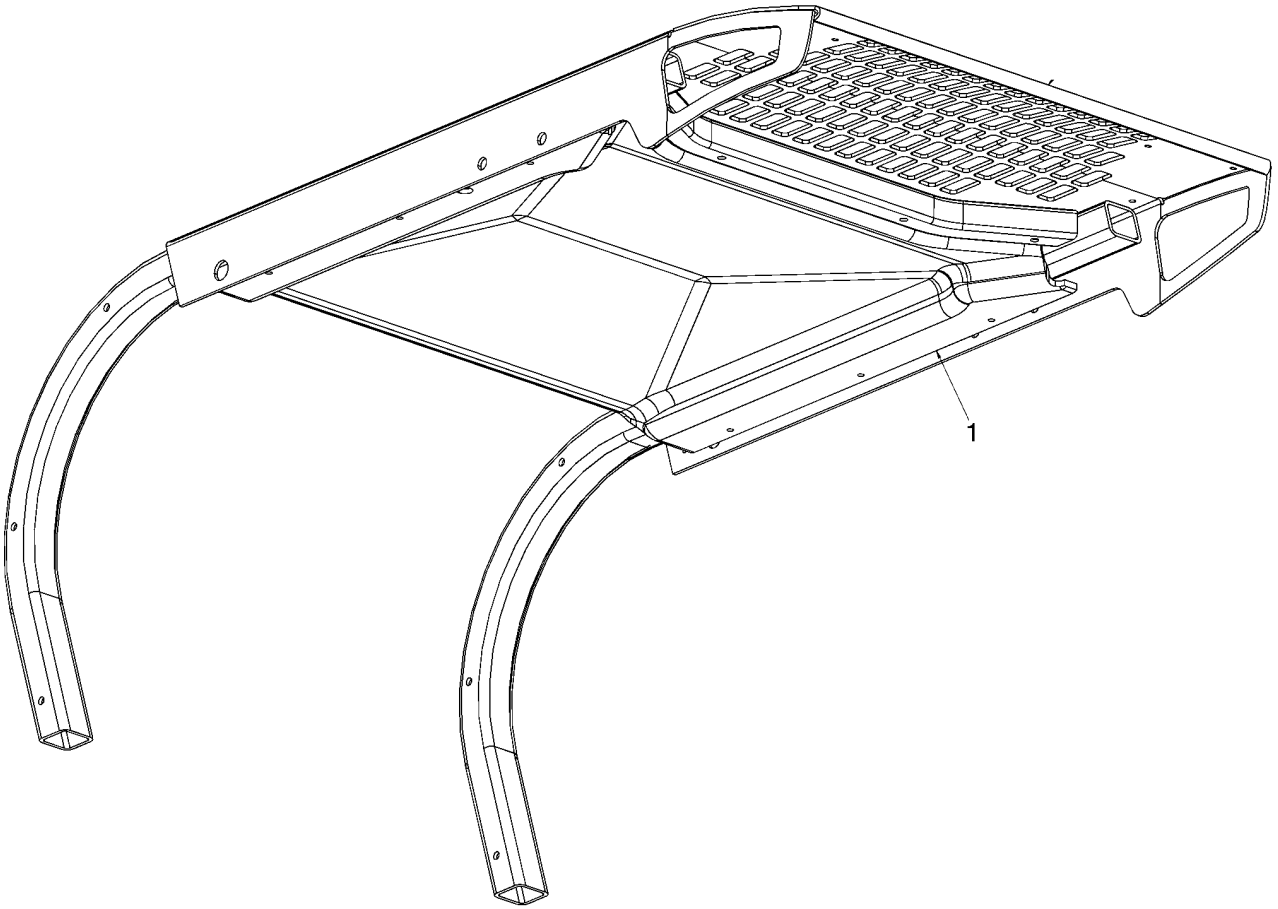

BS07K108

HEADLINER - STANDARD

REF	FN	PART NUMBER	YR/SN	QTY	DESCRIPTION
1		{87669943}		1	Headliner, Standard

HEADLINER - HEATER AND AIR CONDITIONING

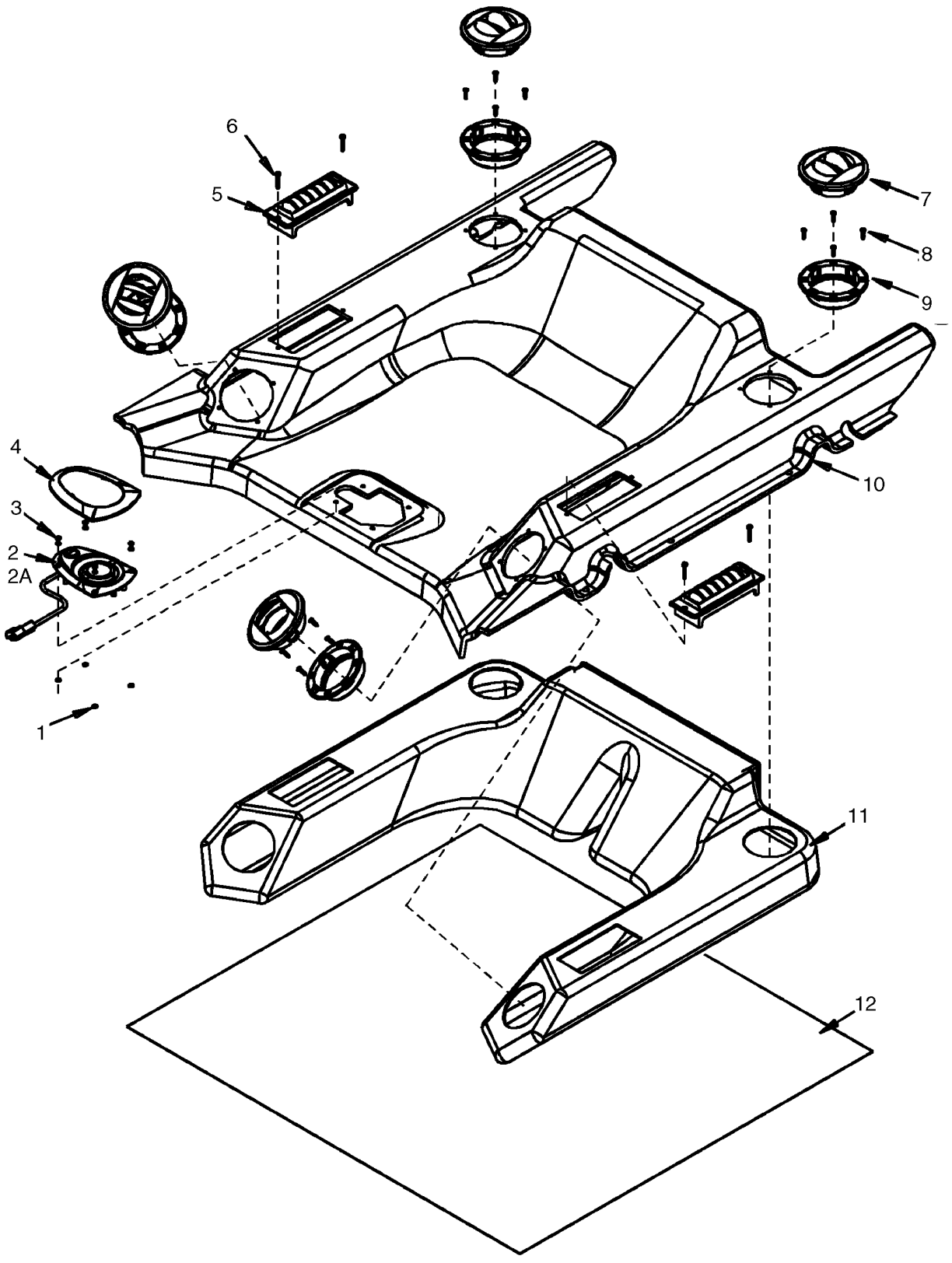

HEADLINER - HEATER AND AIR CONDITIONING

REF	FN	PART NUMBER	YR/SN	QTY	DESCRIPTION
1		NSS		4	NOT SERVICED SEPARATELY, Washer
2		87414959		1	LAMP, Incl 2A
2A		373114A1		1	BULB
3		NSS		4	NOT SERVICED SEPARATELY, Pop Rivet
4		NSS		1	NOT SERVICED SEPARATELY, Dome Light Bezel
5		86620864		2	VENT
6		NSS		4	NOT SERVICED SEPARATELY, Screw
7		NSS		4	NOT SERVICED SEPARATELY, Louver
8		NSS		16	NOT SERVICED SEPARATELY, Screw
9		NSS		4	NOT SERVICED SEPARATELY, Louver Housing
10		NSS		1	NOT SERVICED SEPARATELY, Headliner, CPXT
11		NSS		1	NOT SERVICED SEPARATELY, Duct
12		NSS		1	NOT SERVICED SEPARATELY, Insulation Wrap

REAR BUMPER

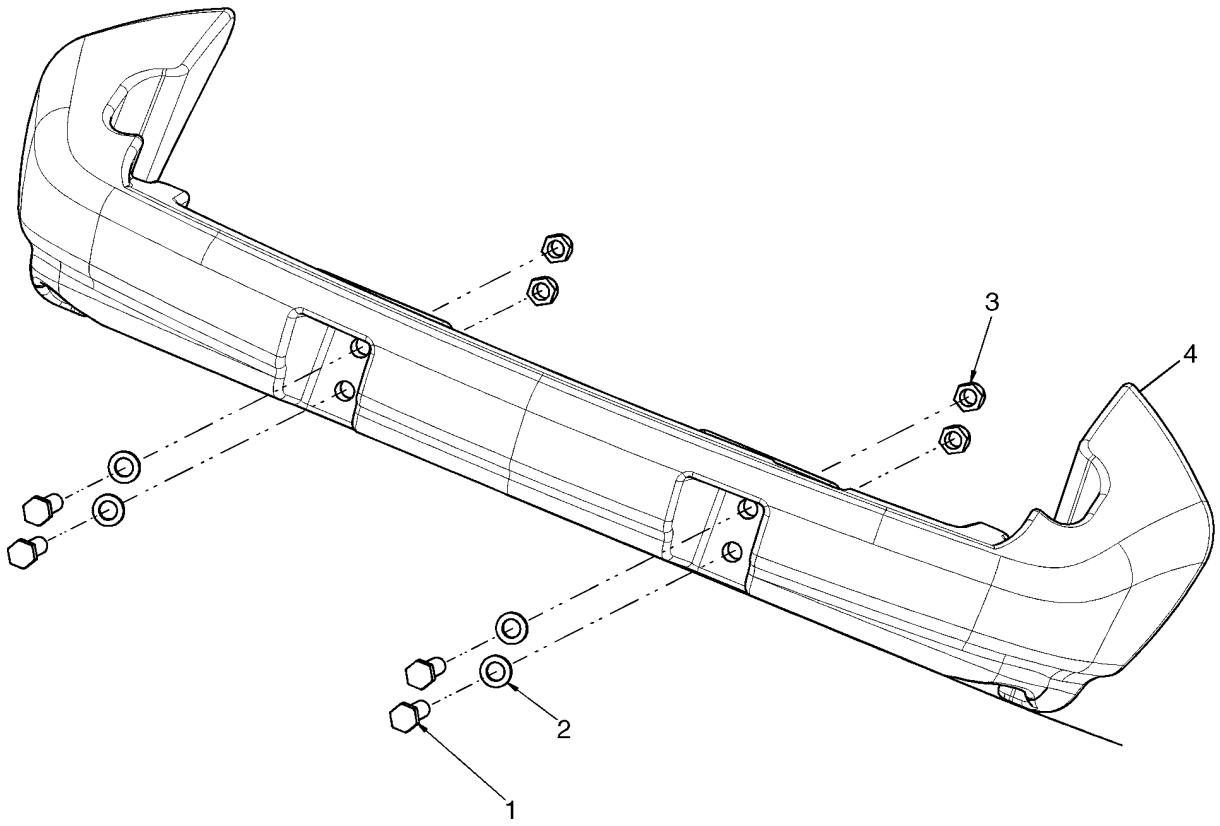

BS07K206

REAR BUMPER

REF	FN	PART NUMBER	YR/SN	QTY	DESCRIPTION
		87416266		1	DIA KIT, ADDITIONAL PROD., Kit, Rear Weight; Incl 1 - 4
1		412641		4	BOLT, Hex, M20 x 70, 10.9
2		86625260		4	WASHER, M20 x 37.5 x 4, HT
3		86536985		4	NUT, LOCK, M20 x 2.5, Cl 10
4		87457671		1	BUMPER, Counterweight, Heavy Rear Bumper

NOISE CONTROL (NA)

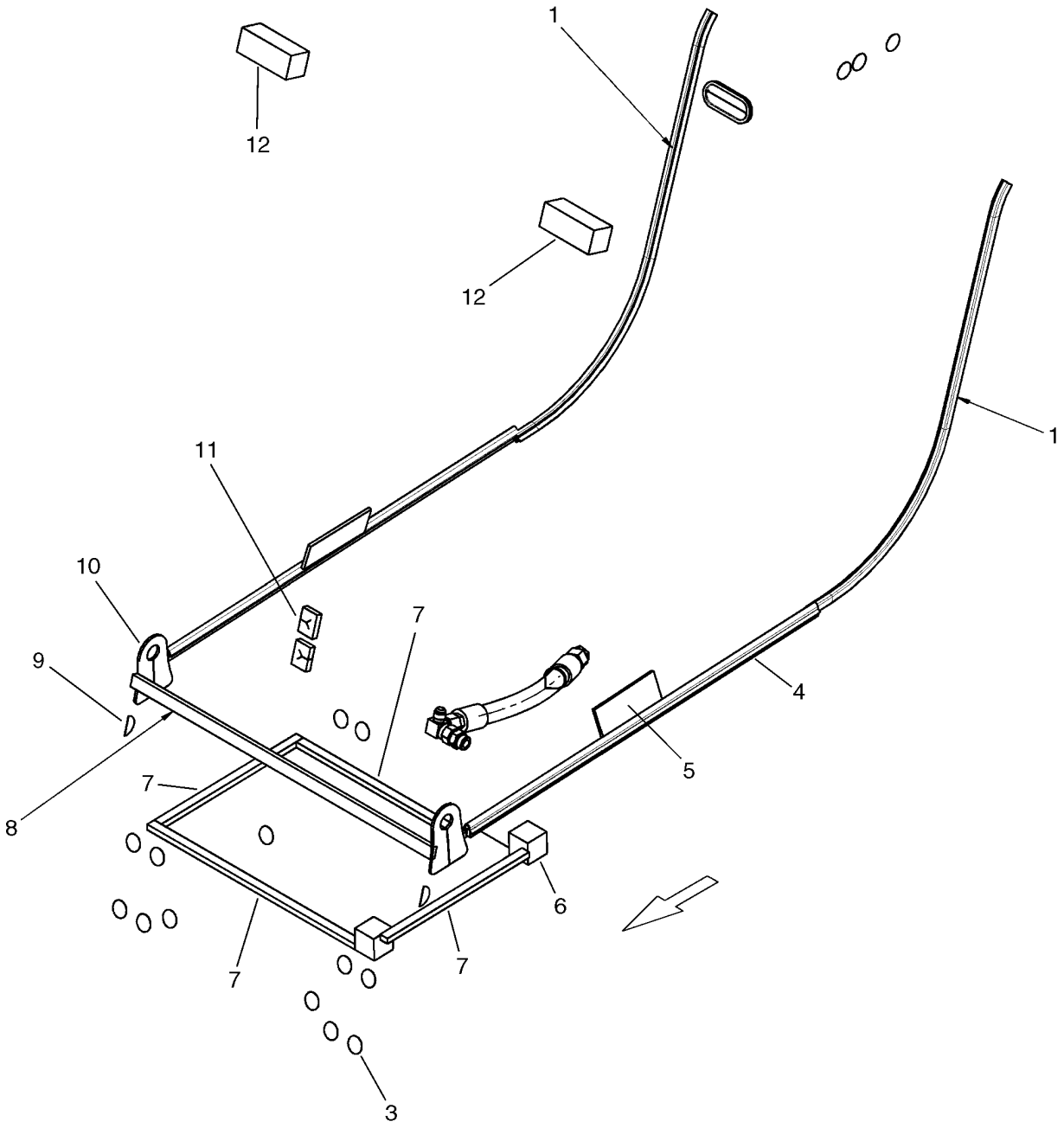

NOISE CONTROL (NA)

REF	FN	PART NUMBER	YR/SN	QTY	DESCRIPTION
1		87730599		2	SEAL, Flapper Seal
2		87713678		1	GROMMET
3		299274A2		16	COVER
4		87730605		2	SEAL, Seal, ROPS Joggle
5		87729519		2	SEAL, Foam, Side Consoles
6		87729520		2	SEAL, Foam, Crushable Foot Plate
7		291308		AR	STRIP, SEALING
8		87036372		1	SEAL, Seal, Lower Front ROPS
9		394748A1		2	SEAL
10		295076A1		2	SEAL, Seal, ROPS Pivot Pin
11		87729517		2	SEAL, Foam, Auxiliary And Throttle
12		87729516		2	SEAL, Foam, Crushable

LIFT HOOK

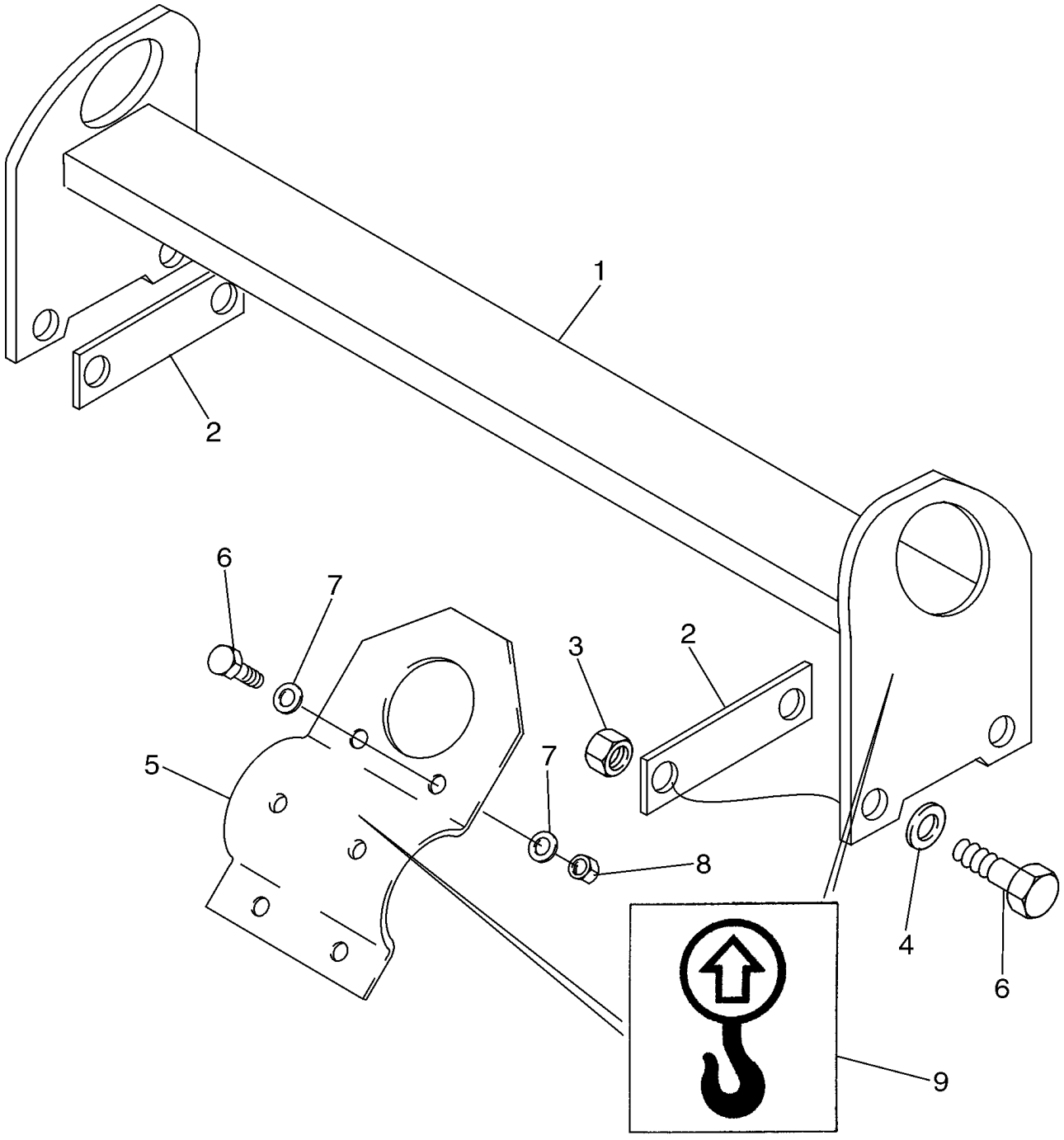

LIFT HOOK

REF	FN	PART NUMBER	YR/SN	QTY	DESCRIPTION
1		{87684095}		1	Lift Hook
2		87433116		2	BAR, Doubler
3		{87533547}		4	
4		86625256		4	WASHER, M12 x 28.5 x 4, HT
5		315937A1		4	LUG,WELDABLE, Rear
6		337563		12	BOLT, Hex, M12 x 40, 10.9, Full Thd
7		86625255		16	WASHER, M13.5 x 24.5 x 3, HT
8		337475		8	NUT, M12, Cl 10
9		139729A1		4	DECAL, Decal, Lift Hook Location

LIFT HOOKS - SINGLE POINT

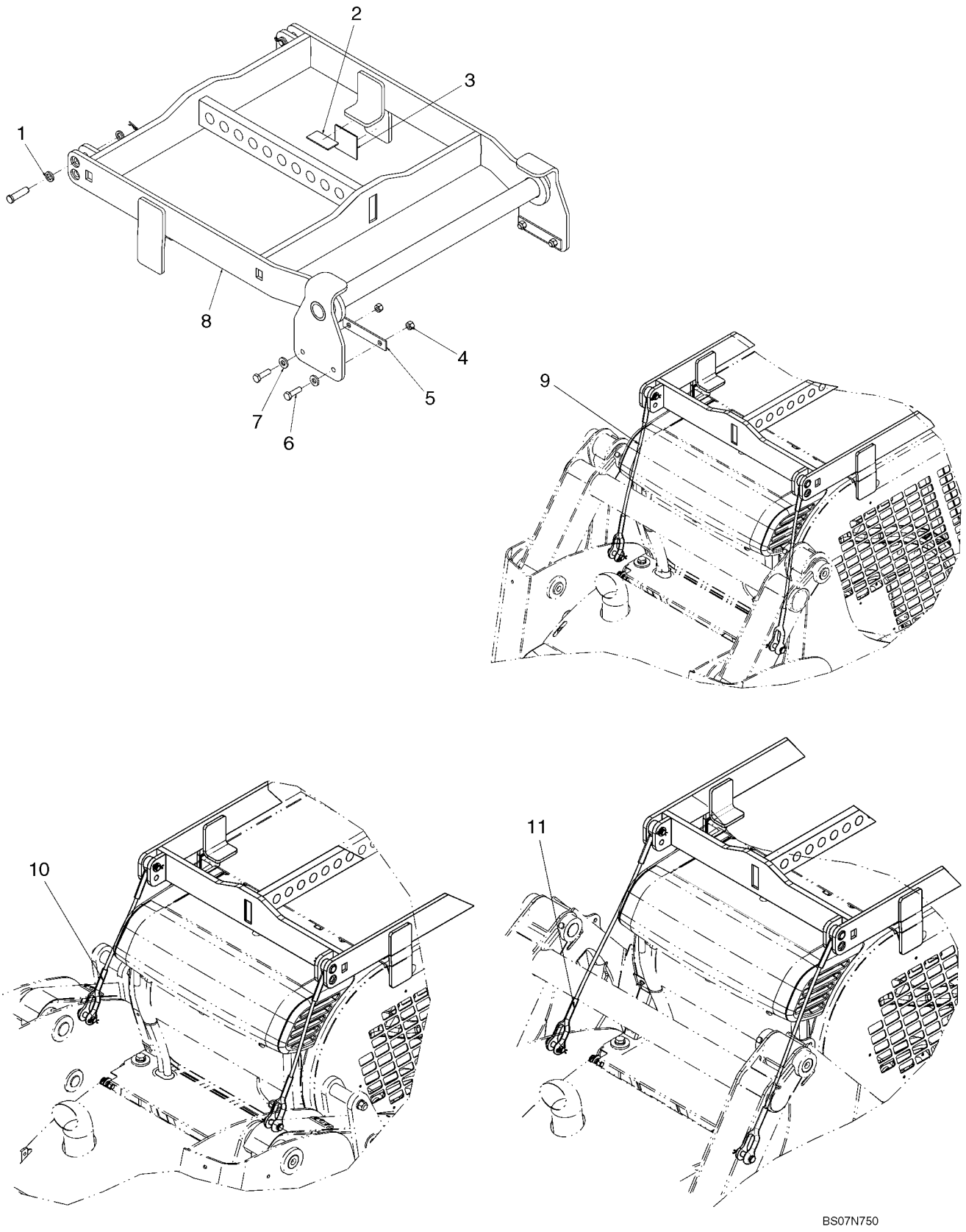

LIFT HOOKS - SINGLE POINT

REF	FN	PART NUMBER	YR/SN	QTY	DESCRIPTION
1		{87563152}		4	Washer, 17 X 26.5 X 4mm
2		87729546		2	PAD, RUBBER
3		87729547		2	PAD, RUBBER
4		{87533547}		4	Nut, M12 Cl 10
5		87433116		2	BAR
6		337563		4	BOLT, Hex, M12 x 40, 10.9, Full Thd
7		86625256		4	WASHER, M12 x 28.5 x 4, HT
8		{87729538}		1	Lifter, Top
9		87729548		2	CABLE, Cable; Incl (2) Pins And (2) Retaining Clips; Used On 435, 445
10		87729549		2	CABLE, Cable; Incl (2) Pins And (2) Retaining Clips; Used On 450
11		87729550		2	CABLE, Cable; Incl (2) Pins And (2) Retaining Clips; Used On 465

DECALS

450 Series 3 1

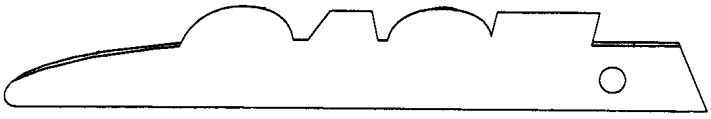
7


8

450CT Series 3 2

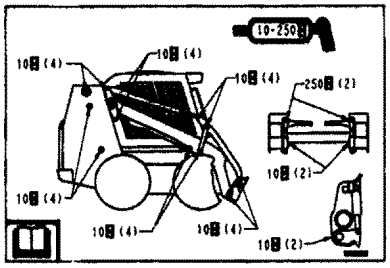
9

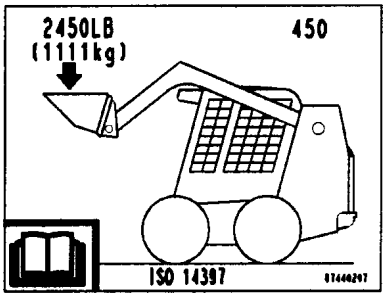

3

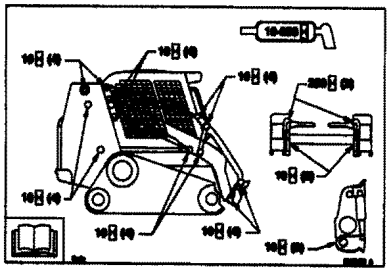
10

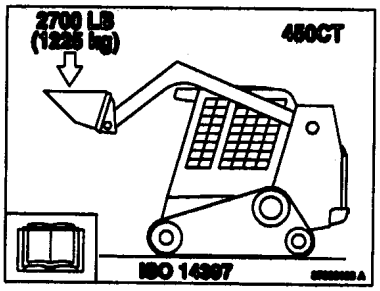

4

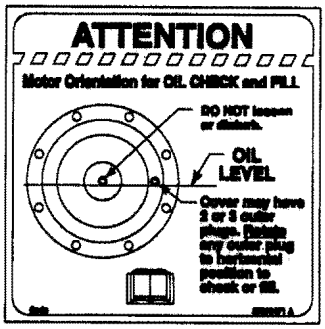

11



12

CASE 5

CASE 6

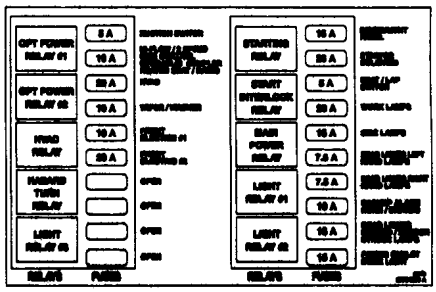
13

DECALS

REF	FN	PART NUMBER	YR/SN	QTY	DESCRIPTION
1		87710963		1	DECAL, Decal, 450
2		87710964		1	DECAL, Decal, 450CT
3		87440297		1	DECAL, Decal, Operating Capacity, 450
4		87393108		1	DECAL, Decal, Operating Capacity, 450CT
5		87389375		1	DECAL, Decal, CASE 102mm (4 in.) X 475mm (18 11/16 in.)
6		87389374		1	DECAL, Decal, CASE 87mm (3 7/16 in.) X 404mm (15 7/8 in.)
7		417669A1		1	DECAL, Decal, Stripe LH
8		417673A1		1	DECAL, Decal, Stripe RH
9		297665A1		1	DECAL, Decal, Lubrication Points, 450
10		87459433		1	DECAL, Decal, Lubrication Points, 450CT
11		87673471		1	DECAL, Decal, Oil Fill And Check
12		87673472		1	DECAL, Decal, Grease Spring Warning
13		87734526		1	DECAL, Decal, Fuse Box Layout

DECALS

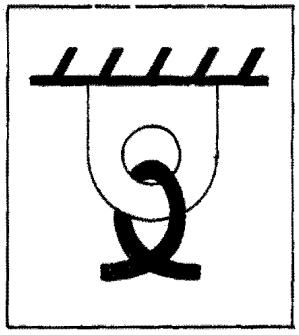

1

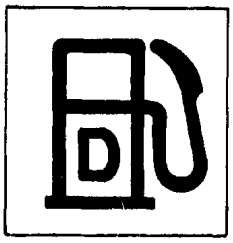

2



3

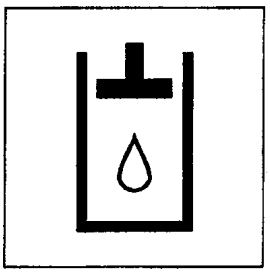

4

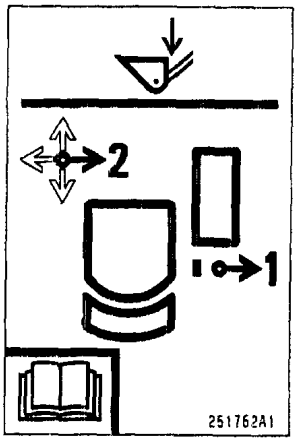

5

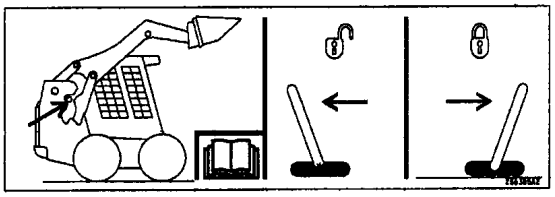

6

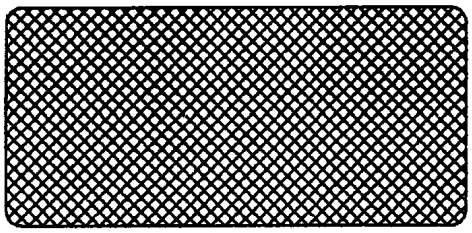

7



8

BS07M572

DECALS

REF	FN	PART NUMBER	YR/SN	QTY	DESCRIPTION
1		139728A1		1	DECAL, Decal, Tie Down
2		139879A1		1	DECAL, Decal, Diesel Fuel
3		251752A1		1	DECAL, Decal, Throttle
4		251753A1		1	DECAL, Decal, Hydraulic Fluid
5		251762A1		1	DECAL, Decal, Lift Arm Bypass
6		256365A2		1	DECAL, Decal, Lock/Unlock
7		294752A1		1	REFLECTOR, Decal, Red Reflector
8		87429186		1	EMBLEM, Decal, CASE Engine

DECALS - ENGLISH

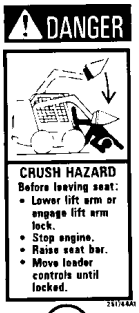

1

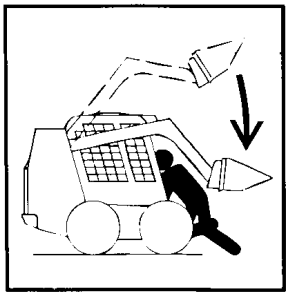



2

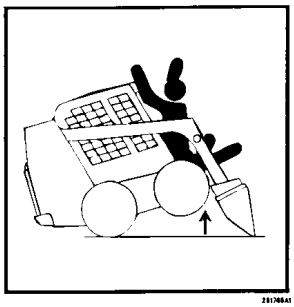

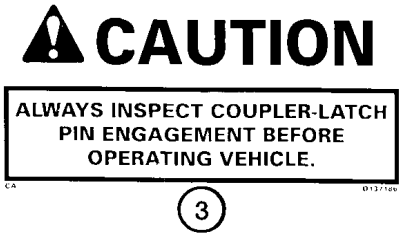

3

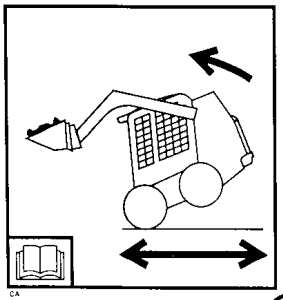



4

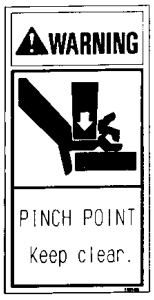

5

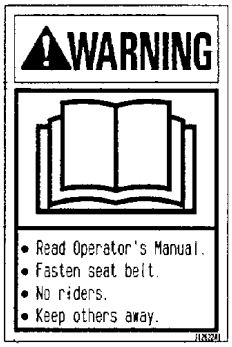

6

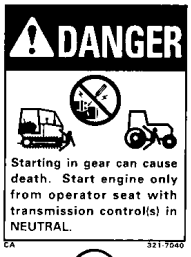

7

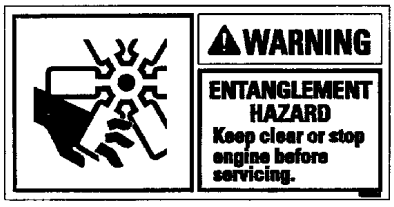

8

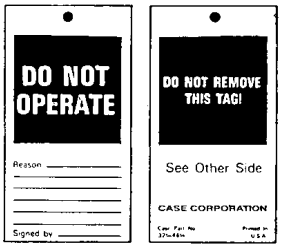

9

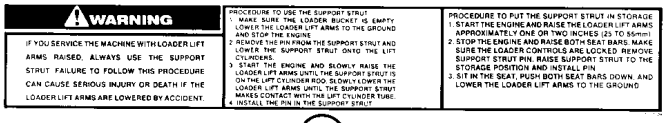

10



11



12

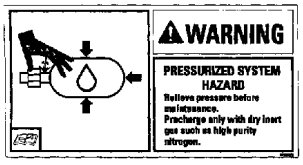

13



14

BS04K123

DECALS - ENGLISH

REF	FN	PART NUMBER	YR/SN	QTY	DESCRIPTION
1		251744A1		1	DECAL, Danger, Crush Hazard
2		251745A1		1	DECAL, Danger, Crush Hazard
3		D137186		1	DECAL, Caution, Always Inspect Coupler Latch
4		251748A1		1	DECAL, Warning, Tip Hazard
5		278214A1		2	DECAL, Warning, Pinch Point
6		382622A1		1	DECAL, Warning, Read the Operator's Manual
7		321-7040		1	DECAL, Danger, Starting in Gear
8		384267A1		1	DECAL, Warning, Keep Clear
9		321-4614		1	DECAL, Do Not Operate
10		321-7029		1	DECAL, Lift Arm Support
11		304083A1		2	DECAL, Ride Control
12		255927A1		1	DECAL, Do Not Turn Ride Control On
13		384260A1		1	DECAL, Warning, Pressurized System Hazard; Ride Control
14		176332A1		1	DECAL, Battery Disconnect

DECALS - BRAZILIAN PORTUGUESE, FRENCH CANADIAN, LATIN AMERICAN SPANISH

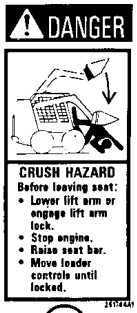

1



2



3

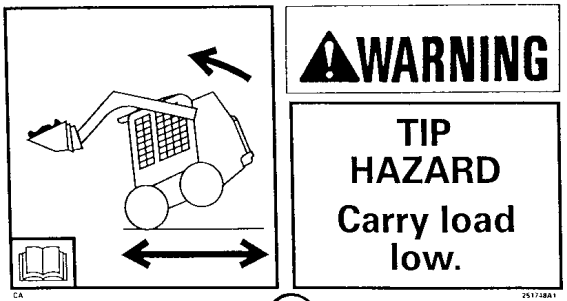

4



5

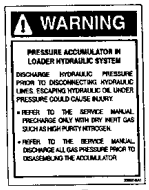

6

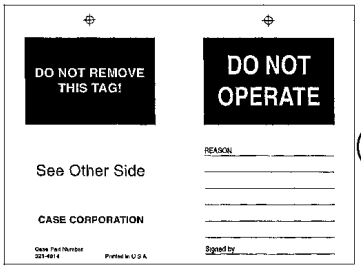

7

BS00K100

DECALS - BRAZILIAN PORTUGUESE, FRENCH CANADIAN, LATIN AMERICAN SPANISH

REF	FN	PART NUMBER	YR/SN	QTY	DESCRIPTION
					BRAZILIAN PORTUGUESE
1		87621199		1	DECAL, Danger, Exiting
2		87621165		1	DECAL, Danger, Crush Hazard
3		297406A1		1	DECAL, Caution, Always Inspect
4		87621144		1	DECAL, Warning, Tip Hazard
5		353240A1		1	DECAL, Warning, Ride Control
6		353243A1		1	DECAL, Warning, Accumulator
7		298518A1		1	ADHESIVE, Do Not Operate
					FRENCH CANADIAN
1		87621200		1	DECAL, Danger, Exiting
2		87621159		1	DECAL, Danger, Crush Hazard
3		297410A1		1	DECAL, Caution, Always Inspect
4		87621138		1	DECAL, Warning, Tip Hazard
5		353239A1		1	DECAL, Warning, Ride Control
6		353242A1		1	DECAL, Warning, Accumulator
7		321-5675		1	DECAL, Do Not Operate
					LATIN AMERICAN SPANISH
1		87621198		1	DECAL, Danger, Exiting
2		87621175		1	DECAL, Danger, Crush Hazard
3		297413A1		1	DECAL, Caution, Always Inspect
4		87621145		1	DECAL, Warning, Tip Hazard
5		353238A1		1	DECAL, Warning, Ride Control
6		353241A1		1	DECAL, Warning, Accumulator
7		298521A1		1	TAG, Do Not Operate

Number	Figure	Sequence	Ref.	Number	Figure	Sequence	Ref.
{2830159}	02-27		4	{87581689}	09-31		21
{2830160}	02-27		4	{87582179}	02-27		
{2831472}	02-16		8	{87582180}	02-27		
{2853132}	02-37		3	{87582181}	02-27		
{2853805}	02-27		4	{87584302}	09-53		36
{2853815}	02-33		4	{87585878}	09-21		10
{2853816}	02-33		3	{87594866}	06-06		9
	02-33		4	{87594970}	02-01		3
{2853817}	02-33		4	{87599753}	09-31		23
{2853818}	02-33		4	{87600221}	09-27		2
{2853819}	02-33		4	{87606604}	09-21		4
{2853875}	02-27		4	{87607505}	09-28		14
{2853876}	02-27		4	{87612761}	02-05		6
{2854141}	02-27		4	{87618650}	06-42		4
{2854142}	02-27		4	{87618972}	09-12		
{2854867}	02-37		7	{87622767}	09-31		25
{2855020}	02-33		3	{87623352}	04-01		4
{2855021}	02-33		3		04-03		20
{2855022}	02-33		3	{87627523}	09-27		
{2855023}	02-33		3	{87630175}	02-06		5
{2855183}	02-32		7	{87641732}	09-48		2
{2855289}	02-10		4	{87641733}	09-48		5
{2855983}	02-26		1	{87642588}	09-31		15
{2856170}	02-32		5	{87643811}	09-48		6
{2856255}	03-10		1	{87645117}	09-23		15
{2856344}	02-19		8	{87645118}	09-23		41
{2856436}	03-10			{87648128}	02-01		17
{2856484}	02-27		1		09-21		2
{2856485}	02-27		1	{87648719}	06-12		4
{2856713}	02-27		4	{87652259}	09-37		2
{2856714}	02-27		4	{87652816}	04-13		5
{412326}	09-28		13		04-15		7
{4895747}	02-28		1		04-17		8
{4899849}	03-03		4	{87652818}	04-14		4
{647429}	09-10		1		04-16		5
{86512463}	09-26		6		04-18		5
	09-31		12	{87655334}	04-05		17
{86642465}	09-28		5		04-23		5
{86643479}	08-13		2		04-24		22
{87029963}	08-06		45	{87659238}	06-12		1
{87029965}	07-01		11		06-14		3
{87303664}	08-07		34		06-16		7
{87326965}	06-15		1	{87659239}	06-12		22
{87340800}	09-53		22		06-14		11
{87385583}	06-37		4		06-16		51
{87431345}	08-08			{87659976}	09-13		14
{87448935}	08-22		2	{87660180}	09-27		3
{87516578}	09-18		2	{87661311}	09-10		17
{87530630}	04-01		5		09-13		12
{87533547}	09-60		3	{87661865}	06-17		31
	09-61		4	{87662370}	09-17		2
{87534725}	02-01		27	{87662422}	09-16		12
{87548828}	06-03		4	{87662429}	09-16		10
{87548838}	06-06		8	{87662605}	09-13		13
{87548840}	06-06		10	{87665227}	04-04		1
{87548843}	06-06		5	{87665327}	04-08		14
{87548871}	06-05		9	{87665570}	09-11		11
	06-07		7	{87665572}	09-11		15
{87548872}	06-05		10		09-13		11
	06-07		8	{87667726}	04-13		6
{87548873}	06-05		11		04-14		6
	06-07		9		04-15		8
{87548976}	09-18		7		04-16		8
{87548977}	09-18		10		04-17		9
{87553251}	09-19		5		04-18		9
{87556906}	06-11		16	{87668235}	09-19		13
{87560205}	02-05		7	{87668243}	09-19		17
{87563152}	09-61		1	{87669932}	09-17		8
{87564723}	06-11		18	{87669933}	09-16		1
{87566701}	02-05		2	{87669943}	09-56		1
{87572831}	02-03		1	{87671584}	09-10		26
{87574281}	02-05		3		09-12		24
{87578980}	02-01		30	{87671585}	09-10		25
	09-21		3		09-12		26
{87581666}	09-28		9	{87671808}	09-27		4
{87581669}	09-26		11	{87671888}	09-23		7
	09-31		16	{87672000}	09-31		27
	09-31		30	{87672011}	09-25		5

Number	Figure	Sequence	Ref.
{87672017}	09-31		22
{87676113}	09-34		3
	09-36		2
{87676116}	09-34		9
	09-36		8
{87676121}	09-34		11
	09-35		10
	09-36		10
{87676122}	09-35		2
{87676124}	09-35		8
{87677739}	04-08		3
{87679715}	09-15		1
{87679718}	09-14		1
{87682370}	04-19		5
{87684095}	09-60		1
{87684240}	06-01		15
{87684249}	06-01		14
{87684251}	06-01		13
{87684257}	06-02		16
{87684259}	06-02		11
{87685909}	09-45		14
	09-45		16
	09-45		2
	09-45		6
{87685911}	09-45		17
	09-45		3
{87686721}	06-44		2
{87686722}	06-44		1
{87687236}	09-51		34
{87687238}	04-09		5
{87698769}	09-28		6
	09-29		3
{87702543}	09-34		1
{87703832}	06-02		
{87703836}	06-01		
{87705415}	09-48		1
{87711490}	09-11		9
{87712105}	04-10		4
{87723771}	09-31		5
{87723784}	09-31		4
{87727303}	09-45		7
{87728415}	09-31		10
{87729538}	09-61		8
100-11137	06-32		26
	06-35		3
100012	08-03		2
	08-04		1
100016	02-01		16
	06-12		15
	09-10		10
	09-12		11
100037	08-05		6
	08-08		7
100536A1	06-31		30
	06-34		30
100703A1	06-35		31
101462A1	06-30		17
102776A1	09-16		5
	09-18		1
103-1687	09-05		35
103-21281	06-32		28
	06-35		2
103777A1	09-18		34
105720A1	06-30		
	06-33		
108925A1	09-11		13
	09-12		17
11067276	09-04		6
110873A1	06-32		11
	06-35		20
112380A1	09-16		15
115942A1	06-32		13
	06-35		18
115943A1	06-32		12
	06-35		19
115946A1	06-32		9
	06-35		22
115948A1	06-32		8
115948A1	06-35		23
115950A1	06-32		7
	06-35		24
117830A2	08-11		5
120040	06-08		18
120044	09-10		21
	09-13		18
120056	06-09		13
	08-10		13
120068	09-52		27
120069	08-01		19
	08-01		37
	08-07		3
120070	08-02		5
	09-23		33
120073	08-05		18
	08-06		23
	08-07		7
120074	09-03		7
120075	09-02		16
120100	02-04		7
	03-02		2
	04-21		4
	08-03		24
	08-04		13
	09-23		16
	09-34		6
	09-35		5
	09-36		5
120103	02-05		4
	04-04		6
	04-06		17
	04-10		9
	04-19		8
	04-20		6
	08-13		5
	09-24		9
	09-51		30
120104	02-01		4
	02-06		20
	02-08		3
	06-09		6
	06-16		23
	08-03		3
	08-04		5
	08-10		44
	08-13		22
	09-24		1
	09-30		1
	09-51		43
	09-53		6
120106	04-04		9
120112	09-05		38
121410A1	04-05		18
121411A1	04-05		21
121412A1	04-05		16
121413A1	04-05		19
121414A1	04-05		15
121415A1	04-05		20
122158A1	06-09		9
	06-14		37
	06-16		24
	09-12		21
126177	09-41		7
126844A1	04-08		5
	04-09		2
1277297C1	06-32		4
128725A1	08-11		
128818	06-11		10
	08-01		4
	08-07		30
	08-09		12
128825	06-11		11
	06-11		23
	06-13		12
	06-17		26
	06-17		35
	06-37		27

Number	Figure	Sequence	Ref.
128825	06-38		3
	08-01		4A
	08-07		31
	08-13		45
	08-13		52
128830	06-11		22
128928A1	06-32		5
128929A1	06-35		26
129037A1	08-07		50
129200	02-07		6
129878A1	08-07		35
13-836	06-35		33
130003	09-04		12
133714A1	04-28		9
1342374C1	03-02		20
1369	09-29		1
	09-31		11
139398	06-09		30
	06-13		9
	06-17		36
	07-01		10
	08-03		14
	08-04		29
	08-10		20
	08-13		31
139618A1	08-07		26
	09-20		22
139728A1	09-63		1
139729A1	09-60		9
139879A1	09-63		2
140008A1	06-30		
	06-31		
	06-33		
	06-34		
	06-35		
140016	09-23		4
140017	08-06		18
	08-07		6
	09-05		28
	09-05		39
	09-05		4
140018	04-24		16
	08-06		27
	08-07		13
	09-05		32
	09-20		20
140028	06-12		16
140045	02-01		7
	02-03		10
	02-04		6
	06-12		3
	06-14		5
	06-16		4
	09-18		20
	09-52		20
140046	02-03		3
	02-06		17
	09-10		4
	09-12		5
14048221	02-03		26
141006A1	09-03		16
141008A1	09-01		5
14142390	04-25		5
	04-26		5
14148190	04-25		2
	04-26		2
14152090	04-25		3
	04-26		3
14301821	06-40		24
143136A2	09-04		
143137A6	09-04		1
144124	08-07		44
144345A3	09-23		35
14458681	02-18		2
14458781	02-05		13
1542874C1	08-11		8
1542875C1	08-12		8
16043224	09-01		10
16044321	08-05		31
	08-06		7
	08-07		43
164910	08-02		9
165202	06-01		8A
	06-02		9A
	06-10		3
	06-11		4
	06-16		42
	06-16		44
	08-03		20
	08-03		22
	08-03		29
	08-03		9A
	08-04		21
	08-04		23
	08-04		25
	08-10		25
	08-10		28
	08-10		37
	08-13		10
	08-13		12
166-89	06-30		21
	06-33		11
16673635	02-17		1
16677734	02-13		3
167266	06-08		22
	06-10		20
	06-10		30
	06-11		15
	06-11		9
	06-13		17
	06-13		7
	06-14		34
	06-14		41
	06-15		10
	06-15		12
	06-17		14
	06-17		20
	06-17		29
	06-17		33
	06-17		9
	06-18		8
	08-05		35
	08-06		2
	08-07		51A
	08-07		56
	08-10		8
	08-13		37
	08-13		43
167268	06-12		18
	06-14		2
	06-14		21
	06-16		2
	06-16		26
	06-16		50
167269	08-02		2A
	08-02		4A
	08-02		9A
	08-07		33
	08-07		45
	08-13		55
17044731	03-06		4
175762A1	06-42		3
176332A1	04-19		10
	09-64		14
177239A2	04-27		1
179189A1	08-04		10
180682A1	09-18		30
181680A1	06-32		33
183300A3	06-43		1
183948A2	09-07		2
	09-07		6
186904A1	03-02		21
186905A1	03-02		26
187035A2	03-02		23
187041A2	09-03		11
187140A1	04-27		2

Number	Figure	Sequence	Ref.
187208A1	09-03		1
187216A2	09-01		30
187234A2	09-18		11
188101A1	09-01		3
188255A2	09-03		8
189122A1	08-12		12
189310A1	06-12		6
	06-14		10
	06-16		11
	08-13		1
189422A1	09-11		4
	09-13		4
189609A1	09-22		11
	09-23		20
	09-34		15
	09-35		13
	09-36		14
189787A2	09-34		13
	09-35		12
	09-36		12
190079A1	09-07		5
190753A1	08-11		2
190853A1	08-12		13
190854A1	08-12		14
190855A1	08-12		15
191048A2	06-42		4
191074A1	08-12		8
191190A1	08-12		16
192538A2	09-07		1
192972A2	09-07		12
193494A1	06-32		21
	06-35		10
197804A1	06-42		8
199037A2	06-41		8
214389	06-37		26
	06-38		2
216773	08-03		28
	08-04		22
	08-13		9
216791	08-01		22
218-1584	08-01		32
218-5492	08-08		11
219-1	08-11		17
	09-01		18
219-55	08-12		6
219-86	09-03		10
	09-04		15
	09-04		4
219606	06-10		4
	06-14		35
	06-17		15
222004A2	04-06		2
	04-07		1
223677A1	06-32		23
	06-35		6
223680A1	06-32		24
	06-35		7
225529A1	08-06		4
226967A1	08-11		4
227488A1	06-42		6
227489A1	06-42		7
229197A1	04-04		5
	04-10		11
	04-20		7
	08-07		28
	08-13		4
	09-01		11
	09-22		12
	09-24		8
	09-51		29
229383A1	09-18		16
229398	02-07		7
229839A2	09-02		4
229840A2	09-02		1
229843A2	09-03		15
230425A1	09-18		8
230426A1	09-18		6
230427A1	08-02		7
230466A3	09-01		24
231726A3	08-12		
232-41110	09-02		10
233163A2	04-06		1
	04-07		4
234726	09-18		27
	09-20		5
236535A1	09-14		5
	09-19		3
237-6004	06-33		21
237-6006	06-30		11
	06-30		20
	06-30		23
	06-31		4
	06-33		9
	06-34		5
	08-12		18
237-6008	08-09		13
237-6010	06-30		25
237-6012	06-30		6
	06-30		9
	06-33		19
	06-33		3
237-6016	06-10		23
	06-10		32
	06-15		2
	06-15		5
	06-16		29
	06-17		18
	08-07		50A
	08-13		40
237773A1	09-16		3
	09-18		13
237774A1	09-17		5
	09-18		31
238-5131	06-31		15A
	06-34		15A
238-5226	08-11		12
	08-12		11
238-5228	08-11		9
238-5443	06-41		3
238-6116	06-33		10
238-6238	06-32		36
238357A3	09-16		14
239290A1	09-09		1
239908A4	09-18		17
240484A1	09-04		14
240486A1	09-04		9
240621A1	09-18		18
242680	09-50		11
	09-52		13
243266A1	09-02		2
	09-02		5
243267A1	09-01		4
243268A1	09-02		14
243311A1	09-02		3
	09-02		6
243341A1	09-02		15
243424A1	09-03		9
244554A2	09-06		1
244898A1	06-30		27
245077A2	09-07		8
245078A2	09-06		5
245107A2	09-07		9
245108A1	09-06		6
245109A2	09-06		3
	09-06		7
	09-07		10
	09-07		3
	09-08		13
	09-08		6
246649A1	09-04		3
246651A1	09-04		2
246902A7	09-05		1
247026A1	02-03		25
247609A1	09-11		8
	09-13		9
2479277	09-16		11

Number	Figure	Sequence	Ref.	Number	Figure	Sequence	Ref.
248-2198	09-01		22	275552A2	09-05		2
248048A2	06-43		2	276433A1	08-06		16
248461A1	09-21		12		08-07		4
248932A1	09-07		17	277197A1	08-07		59
248973	08-06		12	277730A1	08-05		24
	08-08		4	278214A1	09-64		5
248988A1	09-21		15	278332A1	09-10		11
250997A1	09-01		19		09-12		10
250998A1	09-01		21	279216A2	08-12		7
251744A1	09-64		1	280107A1	08-01		34
251745A1	09-64		2	280112	09-29		2
251748A1	09-64		4		09-31		13
251752A1	09-63		3	280272	04-08		1
251753A1	09-63		4		04-09		1
251762A1	09-63		5	280299	09-46		7
252645A2	09-06		9	280498	09-43		1
254130A1	04-20		1	280859	09-23		40
254206A1	09-02		13	281045	04-13		3
254307A1	09-34		12		04-14		3
	09-35		11		04-15		4
	09-36		11		04-16		4
254697A1	09-53		14		04-17		4
255071A2	09-04		16		04-18		4
	09-05		10	282002A2	09-23		34
255072A2	09-04		18	282376A1	09-01		12
255073A3	09-05		12	282775A1	04-08		7
255245A1	08-01		7	282953A1	08-05		13
255561A1	09-18		12		08-07		17
255866A3	09-05		6	282954A1	08-05		16
255927A1	08-09		25		08-07		11
	09-64		12	2830083	02-09		1
256365A2	09-63		6	2830156	03-05		2
256690A1	02-03		18	2830158	02-27		4
	08-05		22	2830266	03-05		1
	08-06		17	2830281	02-14		9
256976A1	08-05		17	2830411	03-03		7
	08-06		25	2830445	02-26		2
	08-07		9	2830559	02-19		10
257310A5	08-01		24	2830775	02-14		8
257315A5	08-01		6	2830784	02-14		7
257448A1	09-11		14	2830919	02-16		15
	09-12		18	2830920	02-16		15
257857A1	08-02		21	2831297	02-28		3
	08-05		29	2831298	02-28		1
257859A1	08-01		25	283549A1	09-05		23
	08-02		20	283779A1	04-22		1
	08-05		30	283781A1	04-22		2
	08-06		5	283788A1	09-09		6
257884A1	02-01		29	283839A1	09-20		18
257919A1	08-01		13	284107A2	09-05		24
	08-02		29	284110A2	09-05		25
258483A1	09-32		12	284152A1	09-05		42
25863R1	08-12		5	2852028	02-24		2
259096A1	09-09		3	2852029	02-25		3
259499A1	04-07		6	2852032	02-14		4
259701A1	04-07		3	2852033	02-14		6
259702A1	04-07		2	2852037	02-27		4
259905A1	08-01		14	2852047	02-35		2
	08-02		30	2852062	02-32		2
26-516	06-30		18	2852065	03-09		3
260-13414	04-07		7	2852075	03-07		
262159	08-01		33	2852088	03-04		3
263117	04-03		3	2852089	03-04		4
	04-04		7	2852093	03-09		
	04-05		3	2852094	03-09		
	04-06		5	2852105	03-08		1
	04-10		5	2852108	03-08		2
	04-23		2	2852111	03-08		3
	04-24		7	2852134	02-18		1
	09-20		16	2852145	02-34		3
	09-47		8	2852155	02-25		7
	09-48		3		02-37		1
265235	08-10		27	2852175	02-13		1
268277	06-12		17	2852180	04-02		4
	06-14		20	2852181	04-02		1
	06-16		25	2852183	02-39		1
272310	08-13		34	2852203	02-09		19
275022A1	09-18		28	2852221	02-30		2

Number	Figure	Sequence	Ref.	Number	Figure	Sequence	Ref.
2852294	03-06		3	293052A1	08-12		2
2852364	02-30		3	293215A1	09-05		29
2852473	02-37		6	293470A1	04-28		10
2852507	02-40		3	293828A1	04-28		8
2852511	02-34		5	293891A1	08-02		19
2852519	02-10		7	294579A1	06-43		5
2852521	03-09		4	294681A1	09-06		13
2852531	02-24		1	294741A1	08-10		22
2852533	02-31		2	294747A1	08-10		23
2852547	03-03		1	294752A1	09-63		7
2852619	02-10		5	294884A1	08-10		38
2852729	02-15		2	294910A1	09-10		13
2852735	04-03		6		09-12		14
2852741	03-04			294911A2	09-10		8
2852744	02-26		3		09-12		9
2852834	02-26		3	294943A1	09-10		9
2852865	02-11		2		09-12		12
2852866	02-29		3	294967A1	09-10		12
2852871	03-07		1		09-12		13
2852872	03-07		2	295076A1	09-59		10
2852873	03-07		3	297406A1	09-65		3
2852874	03-07		4	297410A1	09-65		3
2852875	03-07		5	297413A1	09-65		3
2852876	03-07		6	297665A1	09-62		9
2852877	03-07		7	298518A1	09-65		7
2852878	03-07		8	298521A1	09-65		7
2852879	03-07		9	299274A2	09-59		3
2852880	03-07		10	299336A1	09-07		16
2852881	03-07		11	300306A1	09-05		19
2852882	03-07		12	300381	09-53		16
2852883	03-07		13	300388	02-05		11
2852884	03-07		14	300662	08-05		12
2852885	03-06		2		08-06		29
2852889	02-23		3		08-07		12
2852894	02-14		5	301346A2	08-01		26
2852978	02-17		5	301349A2	08-01		9
2852995	02-18		6	301350A1	08-01		27
2853006	02-36		4	301351A1	08-01		5
2853010	02-38		3	302137A2	09-34		2A
2853047	02-17		4	302960A2	09-20		2
2853050	02-17		9	303620A1	09-02		8
2853075	02-25		6	303621A1	09-02		19
2853076	02-25		8	303709A1	06-30		16
2853133	02-37		4	304083A1	08-09		26
2853206	02-36		1		09-64		11
2853722	02-19		9	308258A2	08-01		1
2853781	02-19		3		08-12		
2853822	02-33		1		09-01		31
2853960	02-31		3	308259A1	08-12		1
2853991	02-30		1	310838A1	08-09		7
2854030	02-27		3	3125705R1	04-28		3
2854072	02-34		2	3131227R1	04-27		3
2854073	02-11		6	3131234R1	04-27		4
2854075	02-11		3	315937A1	09-60		5
2854340	03-06		1	319394A1	08-01		5
2854603	02-27		4	319395A1	08-01		27
2854866	02-11		2	321-4614	09-64		9
2855103	03-03		2	321-5675	09-65		7
2855180	02-11		9	321-7029	09-64		10
2855287	02-10		9	321-7040	09-64		7
2855531	02-27		1	321018	09-04		11
2855903	03-09		6	321513A2	08-01		29
2856017	02-16		3	321522A2	08-01		28
2856334	03-04		1	322357	04-03		14
2856338	02-36		2		04-05		4
2856340	02-38		1		04-06		3
2856343	02-19			322358	02-01		5
2856350	03-04		2		02-03		15
2856455	02-37		2		02-05		5
2856462	02-25		1		02-06		13
2856541	02-37		5		03-01		3
2856715	02-20		1		04-01		7
291308	09-17		9		08-13		23
	09-19		18	322894	06-10		29
	09-50		5		06-17		8
	09-52		4	322896	06-10		19
	09-59		7		06-14		40
291629A1	09-02		7		06-17		19

Number	Figure	Sequence	Ref.
322896	06-18		7
	08-06		1
	08-07		51
323238	06-18		2
	09-17		1
	09-19		7
324299A1	04-21		3
324604A1	06-31		9A
	06-34		9A
324610A1	06-32		17
	06-35		14
325059	08-02		2
	08-07		32
325258A1	04-21		3
325829	08-01		35
	09-04		17
	09-04		19
	09-05		11
	09-05		13
	09-38		4
327411A1	08-02		13
	08-11		
	09-02		21
	09-03		17
327412A1	08-11		1
327745A1	08-11		3
328-1232	08-11		16
329-1010	09-06		15
	09-07		19
329-1012	09-07		19
329826A1	08-12		3
330344	08-07		55
	08-13		42
330345	08-02		4
	08-13		54
330346	06-09		26
334682	09-10		23
	09-12		25
334857A1	09-09		9
337475	04-24		17
	06-40		6
	09-60		8
337563	04-32		6
	09-60		6
	09-61		6
338030A1	04-04		3
338263	08-05		8
	08-07		18
338413	08-13		48
339428A3	06-42		
339429A2	06-42		1
339431A2	06-41		1
	06-42		
341841A2	06-42		5
348434A1	09-34		10
	09-35		9
	09-36		9
348452A1	09-34		4
	09-35		3
	09-36		3
350616	02-06		4
351003A1	09-09		2
353238A1	09-65		5
353239A1	09-65		5
353240A1	09-65		5
353241A1	09-65		6
353242A1	09-65		6
353243A1	09-65		6
353308	08-10		11
362528	09-05		7
370017	09-04		6
370531A1	06-31		14
	06-34		14
372051A2	09-05		33
373114A1	09-57		2A
374835	06-40		16
376523A2	08-01		11
	08-02		24
378970	06-14		44
	06-16		49
38-11207	06-32		2
	06-35		29
380751A1	09-21		9
381144	02-04		11
382622A1	09-64		6
384260A1	08-09		14
	09-64		13
384267A1	09-64		8
386045	02-03		16
	04-01		6
	08-01		16
	08-02		28
	09-10		5
390350A1	02-06		7
391703A2	09-23		10
393394A1	08-05		1
	08-06		42
	08-07		22
394748A1	09-59		9
395277	08-06		54
399383A1	04-19		11
399384A1	04-19		9
399665A2	04-19		3
400473A1	09-22		9
402364A1	06-30		1
402365A1	06-33		1
402366A1	06-35		
405721A1	09-05		36
406938A2	04-20		2
407060A1	06-31		22
	06-34		22
408117A2	09-23		24
408127A1	06-41		2A
	06-43		7
	06-44		
409174A2	06-43		4
410762A1	09-04		13
411345A1	02-03		5
412066	02-06		15
412085	02-06		18
412087	06-15		7
	06-40		4
412097	08-06		47
412123	02-05		12
412126	09-04		7
412151	08-05		23
	08-06		19
412215	07-01		16
412250	09-51		7
	09-53		27
412479	08-02		16
412641	09-32		3
	09-58		1
412672	04-32		7
	08-05		9
	08-06		28
	08-07		14
	09-05		30
	09-42		11
412685	09-05		8
414635A1	09-51		3
417669A1	09-62		7
417673A1	09-62		8
419000A1	08-01		23
419431A1	04-27		10
419434A1	09-23		2
420-21036	09-06		14
	09-07		18
420-21064	09-02		18
420-21072	09-02		9
420-21236	09-07		18
425-108	06-33		13
	06-35		32
425-116	06-31		9
	06-34		9
426128A1	04-06		8

Number	Figure	Sequence	Ref.	Number	Figure	Sequence	Ref.
426787A1	09-22		1	4891252	02-35		1
427180A1	04-27		12	4891353	02-09		6
429233A1	06-41		5	4892708	02-28		2
429488A1	09-01		1	4892712	02-27		2
43117	03-02		17	4892713	02-27		3
43127	02-03		14	4892714	02-28		4
	02-03		24	4892715	02-28		4
	06-40		20	4892808	02-14		2
	09-01		7	4892859	02-16		1
	09-10		20	4892860	02-29		4
	09-12		19	4892861	02-16		1
	09-13		16	4892867	02-31		3
	09-19		23	4892915	02-11		2
	09-22		10	4893036	02-11		12
	09-23		23	4893386	02-33		2
43128	02-03		20	4893391	02-19		8A
	09-10		7	4894095	03-08		4
	09-23		3	4894139	02-17		6
43129	02-07		9	4894218	02-09		18
	09-53		23	4894721	03-05		5
43130	08-02		18	4895017	02-33		4
	08-07		27	4895038	02-09		4
43133	08-09		4	4895039	02-09		3
43138	02-01		24	4895040	02-09		7
	02-04		5	4895045	02-19		5
	06-12		2	4895049	02-09		15
	06-14		6	4895078	02-37		8
	06-16		5	4895085	02-16		16
	08-01		2	4895133	02-40		2
43139	02-01		13	4895155	02-11		10
	02-03		6	4895166	03-03		5
	06-12		12		04-02		5
	06-14		19	4895179	02-16		12
	08-05		5	4895180	02-09		16
	08-06		35	4895183	02-16		4
	08-07		24	4895184	02-16		9
	09-05		26A	4895187	02-16		6
43140	02-03		8	4895188	02-16		5
	02-06		9	4895195	02-29		1
	04-03		9	4895196	02-29		7
	09-05		26	4895198	02-29		9
	09-05		3	4895199	02-29		10
	09-09		4	4895200	02-29		11
	09-16		16	4895202	02-14		1
	09-18		25	4895204	02-29		12
	09-37		3	4895214	02-14		3
43144	02-01		8	4895215	02-16		8
	09-23		32	4895228	02-09		5
431453A1	09-09			4895244	03-09		1
43158	06-18		1	4895291	02-17		10
	08-06		26		04-02		3
43235	02-06		12	4895292	02-36		6
43248	06-14		36	4895296	02-14		2
43260	06-14		39	4895297	03-10		2
	09-11		5	4895305	03-09		2
	09-13		2	4895316	02-25		4
	09-32			4895323	02-32		1
	09-42		10	4895325	02-25		
43362	04-04		8	4895336	02-26		4
	09-24		7	4895347	02-16		7
	09-47		3	4895355	02-10		8
	09-51		21	4895360	02-14		10
43435	04-24		14	4895361	02-29		2
	09-17		6	4895363	02-29		5
43436	09-10		22	4895364	02-29		6
	09-12		22	4895365	02-29		8
	09-13		17	4895378	02-11		4
436415A1	06-31		19	4895379	02-11		5
	06-34		19	4895392	02-09		13
436416A1	06-31		21		02-34		
	06-34		21	4895393	02-09		14
436500A1	08-07		2		02-34		7
442856A1	09-23		25	4895394	02-34		6
448569A1	06-43		3	4895406	02-18		3
4890832	02-12		4	4895414	02-33		3
4890833	02-11		8	4895538	04-02		6
4890964	03-05		4	4895610	02-18		5
4891209	02-12		5	4895623	02-34		8

Number	Figure	Sequence	Ref.	Number	Figure	Sequence	Ref.
4895625	02-34		9	595460	08-07		21
4895919	02-09		8	60-7083T1	09-29		5
4895921	02-09		8		09-31		2
4896404	02-19		4	603022	08-13		7
4896406	02-19		9		09-19		22
4896409	02-19		11	608089	08-03		26
4896410	02-19		7		08-04		11
4896773	02-31		1		08-13		14
4896865	02-09		17	614-20050	09-32		10
4896884	03-07		15	637964	09-24		5
4896897	02-13		2	641419	09-18		23
4897026	02-12		1	642560	09-50		9
4897178	02-16		13		09-51		31
4897179	02-16		14		09-52		14
4897330	02-18		4	694371	03-02		8
4897457	02-32		4	7120741	09-52		22
4897480	02-21		1	76344	06-09		11
4897876	02-17		8		06-11		20
4897877	02-17		7		06-14		45
4898301	02-17		3		07-01		8
4899009	02-23		1		08-02		27
4899019	02-19		1		08-10		14
4899020	02-11		7		08-13		17
4899026	02-09		2	76349	06-02		13
	02-10		1		06-10		12
	02-11		1		06-11		5
4899031	03-05		3		06-14		30
	04-02		2		06-16		35
4899032	02-15		1		06-30		10
	02-38		4		06-30		19
4899035	02-19		6		06-31		3
4899039	02-25		2		06-33		8
4899046	02-33		5		06-34		4
4899055	03-09				08-14		5
4899063	02-12		3	76350	06-01		16
4899068	02-11		11		06-08		2
	02-32		3		06-09		28
	03-03		3		06-11		12
4899072	02-23		2		07-01		5
4899073	02-10		3		08-02		10
	02-39		2		08-09		19
4899074	02-11		2		08-10		16
4899076	02-11		2	76355	07-01		14
4899078	02-12		2	774735	09-20		15A
	02-38		2	80120101	09-34		5
4899079	02-35		3		09-35		4
	02-36		3		09-36		4
4899080	02-32		6	80272535	08-13		24
4899090	02-21		2	80681	04-03		18
4899091	02-10		2	80684	04-03		17
	02-17		2	80702	09-18		24
4899092	02-24		3	80710	09-03		6
4899093	02-10		3		09-04		23
4899109	02-11		2		09-05		17
	02-34		1		09-05		20
4899110	02-24		3	80714	09-02		12
4899143	02-11		2		09-03		10
4899859	02-26		5	80855	09-16		4
	02-40		4		09-17		3
4899921	02-25		5		09-18		15
493-41033	06-31		18A	811-12035	09-06		10
	06-34		18A		09-06		8
500322677	02-40		1		09-07		13
514920	02-04		9		09-08		15
	06-10		24		09-08		8
	06-17		16	811-16050	09-32		7
516742	09-25		3	814-10090	09-01		20
524036	08-06		41	814-10100	09-01		16
	08-08		5	814-20090	09-01		27
528359R4	04-06		6	814-8070	09-01		13
574342	08-03		11	81822758	09-46		10
	08-04		16	825-1412	09-06		12
	08-06		46	825-51410	09-09		5
	08-08		10	825-51412	09-08		16
	08-09		10		09-08		9
574518	02-05		8	825-5148	09-09		8
595460	08-05		2	827-16150	09-03		2
	08-06		43	827695C1	09-23		36

Number	Figure	Sequence	Ref.
829-1412	09-07		15
832-41320	09-32		5
832-41408	09-01		15
832-41410	09-01		17
832-41416	09-32		6
832-41420	09-01		29
833-40008	09-01		9
83982664	04-24		9
83990583	08-04		3
84384	06-02		9
	06-16		41
844-8020	09-09		7
84570	08-13		36
84674	02-01		12
857-12030	09-06		4
	09-07		11
	09-07		4
85700693	09-03		4
85821384	04-24		18
	04-26		
85821385	04-24		13
	04-25		
85826230	02-36		5
8602005	02-08		1
86025725	09-53		31
86050279	09-52		17
86071	08-13		51
861-14080	06-37		3
861-8040	06-37		17
86500688	04-03		13
	04-05		5
	08-07		48
86500689	09-18		19
86500938	04-03		7
86505868	04-06		16
	09-19		16
	09-23		5
	09-34		14
	09-35		14
	09-36		13
	09-51		42
	09-53		5
86507102	08-05		34
86507486	09-47		4
	09-51		20
86508568	04-27		8
	09-22		7
	09-41		2
86508570	08-10		31
86508571	06-09		23
	06-16		40
86508624	06-40		8
86508812	09-43		4
86509028	06-08		4
	08-09		17
86509310	09-18		9
86511042	04-08		2
86511444	04-21		6
	04-27		6
	09-16		9
	09-17		10
	09-23		17
	09-51		25
	09-53		11
86511829	09-40		3
86512134	06-37		23
86512142	06-37		9
86512420	09-51		9
	09-53		25
86512440	04-06		13
	06-09		14
	09-20		10
86512441	04-03		12
86512446	06-12		14
	09-20		14
86512498	06-40		18
	06-41		2
	06-43		6
86512554	08-01		20
	08-05		19
	08-06		21
	08-07		8
	09-02		17
	09-03		5
	09-04		21
	09-05		14
	09-05		27
	09-05		37
	09-05		5
	09-20		13
	09-20		3
	09-23		31
	09-37		1
86512555	06-13		15
	06-17		11
	09-03		4
	09-21		11
86512934	06-17		23
	08-10		33
86512936	06-10		2
86512938	08-09		21
86512996	08-13		44
86513019	08-03		19
	08-04		20
	08-10		36
	08-13		11
86513020	06-09		32
86513144	08-06		38
86513653	06-14		22
86517328	03-02		3
	09-41		1
86520436	09-20		6
86521425	04-08		6
	04-09		3
86527861	08-14		3
86527863	08-14		
86527865	08-14		6
86527866	08-14		2
86536985	09-32		5
	09-32		9
	09-58		3
86541970	06-41		4
86574055	09-09		10
86585703	09-22		4
86588450	06-10		27
	06-16		31
	08-07		47
	08-10		12
	08-13		49
	09-21		5
	09-22		8
	09-23		18
	09-47		5
	09-51		16
86592107	09-54		28
86592710	09-53		33
86598102	02-07		2
86599775	09-43		9
86603490	09-34		2
86604657	04-24		21
86606073	02-03		22
86608204	02-03		7
86619800	09-26		8
	09-50		7
	09-52		7
86619801	09-31		17
	09-31		29
86620864	09-57		5
86624096	09-01		26
86624176	09-16		17
	09-17		4
	09-18		4
	09-19		20
	09-52		18
86624181	04-05		6
	04-06		12

Number	Figure	Sequence	Ref.
86624181	06-09		15
	08-10		29
86624182	04-21		5
	04-27		7
	09-21		7
	09-29		7
86624183	09-18		33
86624184	02-01		6
	04-10		10
	04-20		5
	06-09		7
	06-16		22
	06-40		21
	07-01		18
	08-02		14
	08-09		5
	09-24		2
	09-30		2
	09-47		2
	09-51		22
	09-53		7
86624185	02-08		2
	04-19		12
	09-51		8
	09-53		26
86624194	08-09		16
86625001	06-09		22
86625032	02-01		9
	08-03		16
	08-04		19
	08-13		30
86625033	02-04		12
86625071	08-06		34
86625074	04-04		10
86625127	09-23		22
86625129	09-23		6
	09-50		8
86625135	09-11		7
	09-13		7
86625149	09-05		21
86625224	04-28		7
	04-32		1
	09-42		6
86625234	02-01		21
86625237	09-16		6
86625253	02-01		14
	04-03		8
	08-01		21
	08-02		6
	09-04		20
	09-05		15
	09-23		30
	09-38		5
	09-39		1
86625255	06-11		1
	06-40		5
	08-05		10
	08-06		30
	09-10		24
	09-11		6
	09-12		23
	09-13		3
	09-38		2
	09-60		7
86625256	03-02		24
	04-01		10
	04-32		8
	06-14		38
	06-15		8
	09-03		13
	09-06		11
	09-07		14
	09-42		12
	09-60		4
	09-61		7
86625258	06-13		14
	06-17		10
86625260	09-01		28
86625260	09-32		4
	09-58		2
86625263	02-03		17
	02-03		27
	02-07		8
	08-03		4
	08-04		4
	08-07		29
	08-13		6
	09-10		19
	09-12		20
	09-13		15
	09-22		5
	09-34		7
	09-35		6
	09-36		6
	09-53		15
86625266	02-06		16
	09-02		11
	09-03		3
	09-05		9
	09-18		21
	09-21		14
	09-23		9
	09-32		8
86625480	09-55		25
86625481	09-53		40
86625515	09-53		37
86627432	04-08		4
86629544	09-34		8
	09-36		7
86629891	06-40		15
86632589	09-23		13
86632601	04-20		4
86633353	08-02		12
86633356	04-24		2
	04-27		11
86633393	02-03		21
86636815	03-01		2
	03-02		10
86637783	04-13		1
	04-14		1
	04-15		2
	04-16		1
	04-17		2
	04-18		1
	04-32		10
86637977	04-05		9
	06-09		8
	06-16		21
86637978	04-06		4
	04-24		4
86637996	04-05		8
86637998	09-19		15
86639005	08-10		1
86639008	04-05		11
86639310	09-43		5
86639313	09-24		4
	09-30		4
86639325	02-06		10
	06-12		13
	06-14		18
	08-01		3
	08-06		36
86639326	06-40		9
86639409	09-53		24
86705580	06-09		24
86729669	04-08		11
	09-51		38
86729670	04-08		10
	09-51		36
86729675	09-51		37
86976064	03-02		13
	09-20		7
86977688	06-14		1
	06-16		1
86977726	04-05		7
86977786	04-06		14

Number	Figure	Sequence	Ref.	Number	Figure	Sequence	Ref.
86977786	08-07		46	87028524	03-01		9
	08-13		25		03-02		11
	09-51		24	87029843	04-21		1
86977789	09-21		8	87029907	06-14		27
86977790	06-10		26		06-17		5
	06-16		32	87029955	08-02		17
86979987	09-01		25		08-06		20
86993467	06-30		15		08-08		6
	06-33		7B		09-53		21
86993468	06-30		7A	87029966	08-06		9
	06-33		5		08-08		2
86993475	06-30		4	87029969	06-12		20
	06-31		25		06-16		9
	06-33		15	87030508	09-10		3
	06-34		25		09-12		6
86993479	06-30		13	87030547	09-18		5
	06-33		7	87030549	04-24		3
86993480	06-30		14		04-27		9
	06-33		7A		09-38		7
86993483	06-31		27		09-39		4
	06-34		27	87030555	09-16		7
86993484	06-31		24		09-49		3
	06-34		24	87030561	04-20		3
86994088	09-08		4		08-03		23
86994091	09-08		11		08-04		12
86994100	09-08		1		08-10		30
87010108	06-13		11		08-13		26
	06-17		34		09-21		6
87010593	06-12		9	87030567	04-19		7
	06-14		15	87032487	09-03		14
	06-16		17	87033027	06-15		9
87012669	08-13		28	87033046	04-04		2
	08-14			87033290	08-07		39
87013357	09-53		35	87033824	06-10		31
87013666	04-03		4		06-16		28
87013729	06-21		9		08-13		39
	06-35		30	87034630	02-03		9
87015284	09-51		33	87034631	02-03		4
87015862	09-16		2	87035457	09-54		39
	09-17		7		09-55		45
	09-24		6	87035782	09-55		13
	09-30		5	87035993	06-12		21
87016450	04-05		14		06-16		10
87016486	08-13		35	87036372	09-59		8
87016585	09-51		23	87037984	02-04		2
87016587	09-41		6	87037985	02-04		3
87016615	06-11		17	87039085	06-10		33
	06-40		2		06-12		19
87016617	08-03		5		06-16		12
87016870	04-06		15		06-18		4
	04-27		5		08-13		3
87017348	08-07		42	87039364	06-37		1
	08-35			87039367	06-39		
87017686	02-08			87039371	06-39		
87017999	08-06		14	87039372	06-39		
87018001	08-05		26	87039438	08-06		8
87018051	08-03		27		08-08		1
	08-04		14	87039611	06-30		24
	08-13		13	87039612	06-30		2
87019072	08-03		8		06-33		17
87019286	08-06		40	87039613	06-31		23
	08-08		12		06-34		23
87019656	09-18		35	87039614	06-31		26
87020181	04-05		2		06-34		26
87020734	06-21			87039615	06-31		29
	08-13		33		06-34		29
87020980	02-01		28	87039622	06-31		16
87021277	06-14		23		06-34		16
87021779	06-15		11	87039623	06-35		5
87021825	02-01		18	87039625	06-32		
87022671	08-06		39	87040074	02-03		12
87022672	08-06		37	87040758	08-01		8
87024539	02-06		14	87041075	02-04		1
87024588	02-06		11	87041763	02-06		19
87024695	06-13		21	87042118	04-01		8
	06-20			87042214	06-20		1
87025944	06-18		6		06-21		1
87026871	09-48		4	87042903	06-37		15

Number	Figure	Sequence	Ref.
87042904	06-37		13
87042905	06-37		14
87042906	06-37		16
87042907	06-39		23
87042909	06-37		5
87042910	06-37		18
87042911	06-37		19
87042912	06-37		7
87042915	06-38		13
87042916	06-38		12
87042917	06-38		10
87042918	06-38		8
87042919	06-39		21
87042921	06-37		10
87042922	06-37		22
87042923	06-37		12
87042924	06-39		22
87042925	06-37		21
87042926	06-37		11
87042927	06-37		20
87042928	06-38		18
87042929	06-38		16
87042931	06-38		5
87042932	06-38		4
87042933	06-38		7
87042934	06-38		14
87042935	06-38		17
87043019	06-37		2
87047451	09-38		6
87050523	06-32		16
	06-35		13
87050524	06-32		20
	06-35		11
87050525	06-32		
87050526	06-35		
87051110	09-23		38
	09-31		28
87053083	04-01		3
87054826	06-38		9
87054827	06-38		11
87105748	02-08		4
87301324	09-53		32
87301328	08-07		25
87301588	04-03		2
87301688	06-14		4
	06-16		3
87302487	08-05		11
	08-07		19
87302564	06-08		16
87303203	08-07		5
87303344	06-40		3
87303345	06-40		12
87303844	06-08		21
87307884	02-07		5
87307909	09-53		3
87308282	04-06		7
87310592	04-08		12
	09-51		35
87335499	09-26		14
87343662	09-25		7
87348364	06-10		34
	06-16		19
87349721	06-13		5
	06-16		27
	06-17		7
	06-37		
	06-38		
	06-39		
87349764	08-02		33
87350024	06-13		19
	06-14		47
87350025	06-13		20
	06-30		
	06-31		
	06-32		
	06-33		
	06-34		
	06-35		
87350369	08-02		34
87351999	02-04		13
87352018	02-04		10
87352527	06-19		10
87353004	08-13		8
87353007	08-13		38
87353114	08-13		15
87354210	06-40		22
87356572	06-40		29
87357018	06-14		25
87357240	06-01		1
	06-03		
87357241	06-01		2
	06-04		
87361	03-02		6
87361407	06-14		43
87370212	08-10		3
87370805	04-21		1
87372529	06-17		25
87374115	07-01		15
87374752	06-12		24
	06-14		7
	06-16		6
87376969	08-03		17
	08-04		26
	08-13		29
87381	09-10		14
	09-12		15
	09-32		11
87381264	02-03		23
	09-22		2
87384126	06-16		38
	07-01		2
87384128	07-01		3
87384131	06-14		32
87384640	02-06		3
87386479	02-04		4
87389374	09-62		6
87389375	08-07		60
	09-62		5
87393108	09-62		4
87393400	09-05		
87393628	06-10		22
	06-17		17
87397	09-18		36
87399014	08-10		7
87400358	09-08		12
	09-08		2
	09-08		5
87403474	09-08		7
87403595	09-08		14
87403797	08-09		15
87404992	06-10		28
	06-16		33
	08-13		50
87411208	09-10		2
87414769	08-13		56
87414842	08-13		53
87414959	09-57		2
87416266	09-58		
87417308	08-05		3
	08-06		44
	08-07		20
87418343	06-41		7
87419597	06-10		6
	06-12		25
	06-14		24
	06-17		2
87421217	06-10		5
	06-14		33
	06-17		13
87421480	08-10		18
87423814	09-20		11
87423833	08-07		38
	09-20		1
87424182	07-02		1
87424684	08-09		2
87424685	08-09		3

Number	Figure	Sequence	Ref.	Number	Figure	Sequence	Ref.
87425114	06-41		6	87440223	06-14		12
87426493	08-10		39	87440297	09-62		3
87426545	06-19		11	87441006	09-53		28
	07-02		4	87441548	09-16		13
87426838	08-10		5	87441574	04-23		1
87427370	08-03		10	87441735	09-41		9
	08-13		19	87441937	09-51		32
87427685	04-17		7	87442096	08-02		8
87427686	04-18		8	87442439	09-20		9
87428444	08-09		1	87443051	08-03		21
87428636	08-13		32		08-04		24
87429186	09-63		8	87443078	08-03		7
87429993	08-07		54		08-04		8
87430661	06-12		7	87443510	06-09		4
	06-14		13		06-10		10
	06-16		15		06-14		28
87431323	03-01		6	87443511	06-10		15
87431347	08-09				06-14		26
87431349	08-05		21		09-50		13
87431350	08-05		20		09-51		13
87431352	08-05		27		09-52		15
87431353	08-05		28	87445120	09-18		29
87431354	08-01		31	87445121	09-18		22
87431355	08-01		30	87445427	02-05		1
87431356	08-01		10	87445736	08-07		1
87431357	08-01		12	87445745	08-07		15
87431358	08-02		31	87445786	08-07		16
87431359	08-02		32	87445863	08-07		23
87431360	08-02		25	87445908	09-53		38
87431361	08-02		26	87445932	08-15		6
87431363	08-02		3		08-16		7
87431364	08-05		25		08-17		6
87431366	08-02		22		08-18		6
87431367	08-02		23		08-22		4
87431612	08-05		4	87445935	08-15		4
87432221	09-11		3		08-16		5
	09-13		6		08-17		4
87432267	02-05		14		08-18		4
87432275	02-05		9	87445943	08-15		5
87432444	08-06		10		08-16		6
	08-08		3		08-17		5
87432450	08-06		11		08-18		5
87433116	09-60		2		08-22		3
	09-61		5	87445987	08-16		9
87433171	08-06		22		08-17		8
87433172	08-06		3		08-30		1
87433495	07-02		5	87445988	08-16		8
87433496	07-02		2		08-17		7
	08-10		18B		08-29		1
87433499	07-02		6	87446614	09-20		17
87436118	09-52		9	87446617	08-17		9
87436469	08-13		46		08-18		7
87436470	08-13		41		08-23		1
87437219	08-09		11	87446983	08-10		10
87437220	08-09		8	87447123	08-14		1
87437221	08-09		23	87447124	08-14		4
87437222	08-09		24	87447235	06-45		
87437351	06-10		11	87449498	09-01		6
	06-14		29	87449939	08-08		9
	06-16		34	87449943	08-05		14
87437471	08-10		19		08-06		55
87437472	08-10		35		08-07		10
87437473	08-10		32	87449945	08-06		24
87437501	09-53		39	87449992	04-23		6
87438211	09-51		11	87450046	08-06		48
87438212	09-50		10	87450047	08-06		31
	09-52		11	87450053	08-06		33
87438418	02-05		10	87450054	08-06		53
87438766	08-03		9	87450055	08-06		52
	08-13		16	87450056	08-06		51
87438840	08-13		27	87450057	08-06		50
87439472	09-51		26	87450058	08-06		49
87439844	09-51		14	87450067	08-01		15
	09-53		9	87450833	09-50		4
87439984	06-12		10		09-52		5
	06-14		16	87450956	04-04		11
	06-16		18	87451962	08-07		52
87439990	09-51		6	87451963	08-07		53

Number	Figure	Sequence	Ref.	Number	Figure	Sequence	Ref.
87452108	06-08		15	87546975	08-15		
87452111	06-08		19	87546977	06-10		1
87452112	06-08		14		06-16		48
87452113	06-08		20		06-17		1
87452116	06-08		7		06-22		
87452117	06-08		8	87546979	06-11		3
87452118	06-08		6	87547003	02-06		8
87452146	06-08		17	87547006	06-09		19
87452385	06-10		9	87547010	06-10		17
87452386	06-09		16	87547011	06-10		16
87452389	06-09		2	87547012	06-10		7
87455257	08-35			87547013	06-10		8
87455258	08-35			87547015	06-10		18
87455274	08-35				06-16		47
87455482	09-18		37		08-10		6
87457671	09-32		1	87547024	06-10		25
	09-58		4		06-16		14
87458061	06-19		2	87547026	06-16		30
	07-02		7		08-04		9
87458100	09-11		16	87547027	06-09		5
	09-13		8	87547030	06-01		7
87458340	06-12		11		06-02		12
87458467	04-19		2	87547031	06-01		10
87458493	09-32		2	87547032	06-09		20
87458495	09-32		13	87547033	06-09		1
87458744	08-13		21		06-16		46
87458896	08-06		32	87547036	06-01		12
87458917	08-10		4		06-02		15
87458932	08-05		15	87547040	06-09		17
87458947	07-01		13	87547043	06-09		10
87458948	07-01		7		06-16		45
87458961	04-01		9	87547044	06-10		14
87459037	07-01		4	87547047	06-09		3
	07-02				06-16		39
87459301	07-02		3	87547059	06-01		9
87459433	09-62		10		06-02		8
87459798	08-05		33	87548612	03-01		8
87459921	09-12		3	87548833	06-04		1
87460009	09-05		43		06-05		2
87460103	09-12		2		06-07		2
87460105	09-12		4	87548834	06-03		1
87460107	09-12		7		06-06		2
87460109	09-12		8	87548835	06-04		2
87460558	09-33		1		06-05		3
87460732	09-23		21		06-07		3
87460831	09-32		3	87548836	06-03		2
87460872	08-06		15		06-06		3
	08-08		8	87548839	06-03		3
87460888	06-40		10		06-06		4
87461536	06-08		13	87548846	06-03		10
87461537	06-08		11		06-06		7
87461538	06-08		12	87548847	06-03		11
87461539	06-08		9		06-06		11
87461562	09-44		1	87548848	06-03		12
87461859	06-36		1		06-04		8
87461995	02-03		11		06-06		12
87462103	06-18		5	87548874	06-03		13
87462287	06-40		25		06-04		9
87517937	09-29		10		06-05		12
87517940	09-29		9		06-06		13
87520839	09-51		27		06-07		10
87528989	02-01		19	87553599	06-22		20
87529123	09-31		26		06-26		
87530614	04-28		6	87553600	06-22		21
87534744	04-13		2		06-27		
	04-14		2	87553601	06-22		22
	04-15		3		06-28		
	04-16		3	87553604	06-22		2
	04-17		3		06-24		
	04-18		3	87553605	06-22		3
87535297	06-40		17	87553606	06-22		4
87535298	06-40		23	87553607	06-22		5
87535299	06-40		13	87553608	06-22		6
87543353	06-45				06-25		
87546973	06-09		12	87553609	06-22		7
87546974	08-02		1	87553610	06-22		
	08-18				06-25		3
87546975	08-04		6	87553611	06-22		8

Number	Figure	Sequence	Ref.
87553612	06-22		19
87553613	06-22		9
87553614	06-22		10
87553615	06-22		11
87553616	06-22		12
	06-25		11
87553617	06-22		13
87553618	06-22		14
87553619	06-22		15
87553620	06-22		16
87553621	06-22		17
87553622	06-22		18
87553623	06-26		1
87554297	06-16		37
87555249	09-51		39
87556251	09-14		2
	09-15		3
87557375	09-03		18
87562923	08-10		18A
87562926	08-10		18C
87563692	09-53		19
87564002	06-02		10
87564004	06-02		14
87564006	08-04		15
87564724	09-16		8
87564737	09-03		2
87565745	02-01		1
87568426	09-19		6
87568427	09-19		9
87568437	09-14		3
	09-19		1
87571936	09-19		14
87571937	06-11		14
87571954	06-36		5
87571958	06-36		6
87571969	06-36		3
87574372	09-53		34
87575213	06-36		9
87575214	06-36		10
87575292	06-01		11
87576153	08-15		3
	08-16		4
	08-17		3
	08-18		3
	08-22		1
87576154	08-15		7
	08-16		10
	08-33		3
	08-34		3
87576157	08-15		8
	08-16		11
	08-17		10
	08-18		8
	08-24		1
87576158	08-15		11
	08-16		13
	08-17		12
	08-18		11
	08-24		9
87576160	08-15		12
	08-16		14
	08-17		13
	08-18		12
	08-24		12
87576161	08-15		13
	08-16		15
87576162	08-15		14
	08-16		17
	08-17		15
	08-18		14
	08-24		15
87576163	08-16		18
	08-17		16
	08-31		
87576168	08-17		17
	08-18		18
	08-25		
87576169	08-16		19
87576169	08-17		18
	08-32		
87577076	06-09		18
	06-19		1
87579238	06-36		11
87581635	08-02		11
87581954	04-19		1
87581956	04-19		6
87581958	04-19		4
87583285	08-02		1
	08-17		
87583286	08-03		30
	08-16		1
87588579	06-19		7
87588585	06-19		6
87588596	06-19		4
87588597	06-19		5
87589343	06-40		7
87591148	09-54		17
	09-54		24
	09-54		9
	09-55		23
	09-55		30
	09-55		9
87592426	02-01		2
87593247	06-01		8
	06-16		43
87594971	09-53		20
87597259	06-26		2
	06-27		2
87597260	06-26		3
	06-27		3
87597261	06-26		4
87597262	06-26		5
	06-27		5
87597263	06-26		6
	06-27		6
87597264	06-26		7
	06-27		7
87597265	06-26		8
	06-27		8
87597266	06-26		9
	06-27		9
87597267	06-26		10
	06-27		10
87597268	06-26		11
87597269	06-27		1
87597271	06-27		4
87597272	06-28		1
87597274	06-28		2
87597275	06-28		3
87597276	06-28		4
87597277	06-28		5
87597281	06-28		6
87597282	06-28		7
87597284	06-23		8
	06-29		3
87597285	06-23		9
	06-29		2
87597286	06-24		6
87597287	06-25		1
87597288	06-25		2
87597289	06-25		4
87597290	06-25		5
87597291	06-25		6
87597292	06-25		7
87597293	06-25		8
87597294	06-25		9
87597295	06-25		10
87597296	06-25		12
87597297	06-25		13
87597960	03-02		4
87600262	06-08		1A
	06-36		
87600262C	06-08		
	06-36		
87600262R	06-08		
	06-36		

Number	Figure	Sequence	Ref.	Number	Figure	Sequence	Ref.
87600263	06-08		1B	87614015	06-19		3A
	06-36			87614016	06-03		7
87600263C	06-08			87614017	06-03		6
	06-36				06-04		4
87600263R	06-08				06-05		7
	06-36				06-07		5
87600622	06-02		3	87614018	06-03		5
	06-05		1	87614019	06-03		9
87600623	06-02		5		06-04		6
	06-06		1	87614020	06-03		8
87601406	03-02		22		06-04		7
87601409	06-36		4		06-05		8
87602734	03-02		12		06-06		6
87602985	06-40		26		06-07		6
87602987	06-40		27	87614023	06-04		3
87602988	06-40		28		06-05		4
87603114	08-07		49		06-05		5
87603115	08-07		57		06-07		4
87608065	03-02		1	87614024	06-04		5
87609276	09-20		19	87614028	06-22		1
87610132	03-02		16		06-23		
87610349	08-16		2	87614031	06-22		23
	08-17		1		06-29		
	08-20			87618732	08-06		
87610350	08-15		2		08-13		
	08-16		3	87618944	09-10		
	08-17		2		09-11		
	08-18		2	87619935	09-40		4
	08-21			87619938	09-40		1
87610351	08-15		9	87619939	09-40		2
	08-16		12	87620895	09-23		14
	08-17		11	87621138	09-65		4
	08-18		9	87621144	09-65		4
	08-24		5	87621145	09-65		4
87610352	08-16		16	87621159	09-65		2
	08-17		14	87621165	09-65		2
	08-18		13	87621175	09-65		2
87610517	08-15		1	87621198	09-65		1
	08-18		1	87621199	09-65		1
	08-19			87621200	09-65		1
87610530	08-15		10	87622364	06-01		3
	08-18		10	87622861	03-02		15
87610531	08-15		15	87624550	09-26		4
	08-18		15		09-28		10
87610532	08-15		16		09-31		9
	08-18		16	87624558	09-26		5
	08-27			87624623	09-27		1
87610533	08-15		17	87626268	09-52		
	08-18		17	87626400	09-47		6
	08-26			87626729	02-01		20
	08-28			87626904	08-03		31
87611845	08-15		18		08-04		28
	08-16		20	87627050	04-09		6
	08-33			87627052	09-24		3
87611846	08-15		19	87627383	06-14		42
	08-16		21	87627399	06-22		
	08-34			87627518	06-05		6
87611848	08-16		22	87627522	09-26		1
	08-17		19	87627524	09-43		3
	08-30			87630124	04-03		10
87611849	08-16		23	87630125	04-03		11
	08-17		20	87630126	04-14		5
	08-29				04-16		6
87611850	08-17		21		04-18		6
	08-18		19	87630127	04-13		4
	08-23				04-15		5
87611854	06-02		2		04-17		5
	06-07		1	87630128	04-16		7
87612366	09-50		12		04-18		7
	09-52		12	87630129	04-15		1
87612445	06-36		8		04-17		1
87612446	06-36		7	87630130	04-16		2
87612449	06-36		2		04-18		2
87612749	03-02		25	87633979	02-03		19
87614009	06-19		3	87633980	02-03		13
87614011	06-19		8	87634133	04-24		20
87614012	06-19		9	87634134	04-23		3
87614013	06-19		12	87634135	04-23		4

Number	Figure	Sequence	Ref.
87634137	04-32		12
87636513	09-23		1
87636518	09-41		
87637186	06-11		19
87637823	08-07		58
87638358	09-49		
87638500	04-28		
87638510	04-01		2
87638864	04-08		8
87638865	04-08		9
87639899	09-23		19
87639909	09-50		
87640048	04-23		
87640050	09-26		5
87640178	06-13		4
87640179	06-13		1
87640180	06-13		3
87640181	06-13		2
87640182	06-17		21
87640187	06-17		4
87640189	06-17		3
87641872	07-01		1
87641947	04-18		
87641948	04-17		
87642449	09-29		8
87642453	09-29		11
87642514	09-29		4
87642529	09-29		6
87642536	09-28		12
87642540	09-28		7
	09-31		3
87642543	09-28		8
87642544	09-28		2
87642595	09-28		1
87642911	08-10		2
87642913	04-15		6
	04-17		6
87642914	04-10		7
	09-26		12
	09-42		2
87642915	04-10		6
	09-26		13
	09-42		1
87644282	06-15		4
87646401	09-19		11
87646402	09-19		8
87647549	02-27		
87647550	02-27		
87647551	02-27		
87647719	09-19		10
87647720	09-19		4
87647721	09-15		2
87647722	09-14		6
87647723	09-14		4
	09-19		2
87649979	09-52		25
87649991	09-52		28
87650009	06-40		32
87650010	06-40		31
87650011	06-40		30
87650097	04-10		3
	04-12		
87650098	04-10		2
	04-11		
87651127	09-30		
87651805	02-01		23
87651807	02-01		26
87652238	04-01		12
87652336	04-32		
87652337	09-42		
87653393	09-53		1
87653394	09-50		3
87655053	09-25		4
87655055	09-25		2
87655056	09-25		1
87656095	09-54		1
	09-55		50
87656096	09-54		2
87656096	09-55		51
87656097	09-54		30
	09-55		40
87656098	09-54		5
	09-55		1
87656099	09-54		4
	09-55		2
87656100	09-54		41
	09-55		43
87656101	09-54		40
	09-55		44
87656102	09-55		47
87656103	09-54		36
	09-55		48
87656104	09-55		49
87656105	09-54		22
	09-55		28
87656106	09-54		29
	09-55		41
87656107	09-54		32
	09-55		38
87656108	09-54		33
	09-55		37
87656109	09-54		15
	09-55		21
87656110	09-55		33
87656111	09-55		16
87656112	09-55		15
87656113	09-55		12
87656114	09-54		10
	09-55		10
87656118	09-54		6
	09-55		6
87656119	09-55		5
87656120	09-54		20
	09-55		3
87656121	09-54		14
	09-55		20
87656122	09-54		21
	09-55		27
87656123	09-54		16
	09-55		22
87656124	09-54		23
	09-55		29
87656125	09-54		8
	09-55		8
87656126	09-54		27
	09-55		36
87656127	09-54		18
	09-54		25
	09-55		24
	09-55		31
87656129	09-54		7
	09-55		7
87656130	09-54		11
	09-55		11
87656866	04-14		
87656868	04-13		
87656870	04-16		
87656872	04-15		
87657026	09-24		
87657080	08-03		1
	08-04		2
87657669	09-49		1
87657670	09-49		2
87658636	09-42		9
87658639	09-24		10
	09-30		6
87658709	09-54		37
87658710	09-54		35
87660347	09-45		
87660834	02-01		15
87660842	02-01		22
	02-02		
87661383	02-01		11
87661384	02-01		10
87662513	09-35		1
87662514	09-36		1

Number	Figure	Sequence	Ref.
87665697	06-17		22
87665698	06-17		6
87667727	09-43		7
87668006	09-43		2
87668732	04-24		8
87668735	09-42		4
87668737	04-05		10
	04-06		9
	04-08		13
	04-09		4
	04-10		8
	04-24		5
	09-42		3
87668739	08-03		6
	08-04		7
87669353	06-40		19
87669405	09-52		30
87670	06-11		2
87671857	09-26		15
87672070	09-45		10
87672222	09-43		6
87672246	08-03		18
	08-04		27
	08-13		20
87672257	09-43		8
87672461	09-10		15
87673076	04-24		11
87673078	04-24		6
87673471	09-62		11
87673472	09-62		12
87676263	04-24		
87676512	08-03		
87676513	08-04		
87678399	09-26		7
	09-31		14
87678400	09-28		4
87679670	09-33		2
87680032	02-01		2
87681147	02-06		2
87681594	09-52		29
87682711	09-42		5
87682712	04-28		5
87684247	06-01		6
87684661	09-41		3
87684681	09-41		8
87684742	09-52		24
87685872	09-45		15
87685874	09-45		1
87687372	02-02		1
87687373	02-02		3
87687374	02-02		4
87687375	02-01		25
	02-02		8
87687376	02-02		7
87688478	02-07		1
87688523	02-02		2
87688649	02-02		2
87688650	02-02		1
87689316	09-51		10
	09-53		8
87690853	03-01		5
87690854	03-01		7
87690855	03-01		1
87691473	09-53		2
87693644	09-53		30
87693645	09-53		29
87694058	02-07		3
87702278	09-38		8
87702506	09-39		2
87705416	09-51		19
87705417	09-51		18
87707681	06-14		17
	06-16		52
87708377	09-52		10
87709877	09-52		26
87710177	09-52		21
87710780	08-10		
87710963	09-62		1
87710964	09-62		2
87712693	09-10		6
87712703	09-45		9
87712704	09-45		8
87712706	09-45		11
	09-51		1
87713388	09-23		29
87713668	09-51		4
87713678	09-23		11
	09-59		2
87714944	09-52		8
87715353	09-10		18
87715688	06-02		7
87715691	06-02		1
87715692	06-02		6
87715727	04-10		1
87715730	04-05		1
	04-06		10
87715731	09-20		15
87715833	09-46		
87716234	09-21		1
87716728	09-28		3
87716731	09-28		11
87717029	09-21		1
87717671	09-38		
87717673	09-39		
87718107	09-26		9
87718144	09-51		5
87721977	04-24		12
87721978	04-24		19
87723831	04-32		4
87727298	09-45		12
87727413	04-32		9
87727414	04-32		3
87727417	04-32		2
87728345	04-32		11
87729516	09-59		12
87729517	09-59		11
87729519	09-59		5
87729520	09-59		6
87729546	09-61		2
87729547	09-61		3
87729548	09-61		9
87729549	09-61		10
87729550	09-61		11
87730054	09-45		13
87730067	09-45		5
87730599	09-59		1
87730605	09-59		4
87731174	09-45		4
87734526	09-62		13
87737720	08-06		13
87803194	03-03		6
87825	04-03		16
	04-06		11
	09-18		32
88902	09-18		3
895-11008	09-01		14
	09-01		8
895-11010	08-05		7
896-15012	09-08		10
	09-08		17
906091R1	09-04		22
	09-05		16
933610R1	06-01		4
9512573	06-40		14
9515003	09-52		19
9615396	06-12		5
	06-14		9
	06-16		13
9617873	04-21		2
	06-01		16A
	06-02		13A
	06-08		3
	06-08		5
	06-09		11A
	06-09		25
	06-09		27

Number	Figure	Sequence	Ref.
9617873	06-09		29
	06-09		31
	06-09		33
	06-10		13
	06-11		13
	06-11		21
	06-11		6
	06-13		10
	06-14		31
	06-14		46
	06-16		36
	06-17		24
	06-17		37
	07-01		10A
	07-01		12
	07-01		6
	07-01		9
	08-02		10A
	08-02		27A
	08-03		13
	08-03		15
	08-04		18
	08-04		30
	08-09		18
	08-09		20
	08-09		22
	08-10		15
	08-10		17
	08-10		21
	08-10		26
	08-10		34
	08-10		42
	08-13		18
	08-13		31A
	08-14		5A
9625178	08-12		17
9626568	04-03		19
9628065	09-05		31
9628098	03-02		9
	06-08		24
	06-09		21
	07-01		17
	08-02		15
	08-05		32
	08-06		6
	08-09		6
	09-22		6
	09-35		7
9670066	09-11		2
9672438	06-30		22
	06-33		20
9706685	04-01		11
	09-38		3
9706687	04-03		1
9706690	02-07		4
	03-01		4
	09-53		17
9706702	04-24		15
9706704	09-19		19
	09-52		16
9706717	02-03		2
9790527	06-18		3
9790547	06-12		23
	06-14		8
	06-16		8
9804256	09-47		1
	09-50		2
	09-51		17
	09-52		2
	09-53		10
9804257	09-50		6
	09-52		6
9804262	02-02		5
	04-01		1
	09-38		9
	09-39		3
9804266	04-05		12
	09-38		1
9804277	09-26		10
	09-53		13
9804278	02-02		6
9821783	04-24		10
9824050	06-08		10
	06-08		23
9824259	02-04		8
9824642	09-03		12
9827902	09-51		28
	09-53		18
9828248	09-21		13
	09-23		8
9840344	09-12		1
9840535	06-11		7
	06-13		16
9840542	08-10		24
9841223	06-30		8
	06-33		18
9846848	06-13		6
	06-17		27
9847468	06-13		13
	06-17		12
9849641	09-41		5
9861444	09-18		14
	09-52		23
9969430	04-25		1
9969431	04-26		1
9991976	06-11		8
	06-13		18
	06-13		8
	06-15		3
	06-15		6
	06-17		28
	06-17		32
9993141	08-10		41
9993143	08-10		40
A140221	02-06		6
A146456	03-02		7
A149796	09-42		9A
A149800	08-10		43
A166057	04-03		5
	04-05		22
A177436	03-02		19
A27289	09-04		10
A29183	06-32		27
	06-35		4
A30338	09-05		40
A76552	09-04		5
D120613	08-01		36
D120614	08-01		17
D120679	08-01		18
D122634	04-05		13
D124939	03-02		18
D126613	09-18		38
D131983	03-02		5
	08-07		37
	09-18		26
	09-20		4
D137186	09-64		3
D138889	09-05		34
D143324	09-02		20
D143415	09-23		12
D23693	03-02		14
D55216	09-05		22
D79692	09-01		23
D95142	08-11		7
D95143	08-12		9
E38908	04-28		4
E99128	04-28		1
E99208	04-28		2
F23137	06-30		12
	06-33		6
G100714	08-11		13
G109297	08-11		10
G32317	08-11		15
	08-12		4
G33140	08-11		11
H32961	08-07		36

Number	Figure	Sequence	Ref.
H373779	09-20		8
H407767	06-30		26
H434289	04-04		4
	09-51		40
	09-53		4
H435770	06-31		20
	06-34		20
H435776	06-32		37
H435814	09-23		39
H436001	09-04		8
H436053	06-31		17
	06-34		17
H436054	06-31		18
	06-34		18
H436065	06-31		6
	06-34		6
H436704	06-32		3
	06-35		28
H436887	09-11		12
	09-12		16
H436914	09-11		10
	09-13		5
H437190	06-32		35
H438321	06-31		5
	06-34		3
H438919	09-06		2
H438935	09-07		7
	09-08		3
H673773	06-31		
	06-34		
K608432	06-33		12
L104616	08-03		12
	08-04		17
	08-09		9
L11541	02-08		5
	08-10		9
	09-19		12
	09-51		12
L14781	08-07		40
	09-20		21
L18331	06-01		5
	06-02		4
	06-10		21
	06-16		20
	08-13		47
L71879	04-05		1A
L78786	09-05		41
N13224	06-32		19
	06-35		12
N13226	06-31		11
	06-34		11
N13234	06-32		30
N13241	06-31		10
	06-34		10
N13242	06-31		12
	06-34		12
N13244	06-32		25
N13247	06-32		32
N13254	06-32		18
	06-35		15
N13255	06-31		8
	06-34		8
N13260	06-31		2
	06-34		2
N13262	06-32		31
N13268	06-12		8
	06-14		14
	06-16		16
N13994	06-32		1
	06-35		8
N13999	06-32		34
N14063	06-31		7
	06-34		7
N14103	06-32		29
	06-35		1
N14666	06-31		13
	06-34		13
N14668	06-31		15
N14668	06-34		15
NSS	02-34		4
	03-09		5
	04-07		5
	04-11		1
	04-11		2
	04-11		3
	04-11		4
	04-11		5
	04-11		6
	04-11		7
	04-11		8
	04-11		9
	04-12		1
	04-12		2
	04-12		3
	04-12		4
	04-12		5
	04-12		6
	04-12		7
	04-12		8
	04-12		9
	04-25		4
	04-26		4
	04-32		5
	06-20		2
	06-20		3
	06-20		4
	06-20		5
	06-20		6
	06-20		7
	06-20		8
	06-21		2
	06-21		3
	06-21		4
	06-21		5
	06-21		6
	06-21		7
	06-21		8
	06-23		1
	06-23		2
	06-23		3
	06-23		4
	06-23		5
	06-23		6
	06-23		7
	06-24		1
	06-24		2
	06-24		3
	06-24		4
	06-24		5
	06-24		7
	06-29		1
	06-30		29
	06-30		5
	06-30		7
	06-31		28
	06-32		10
	06-32		14
	06-32		15
	06-32		22
	06-32		6
	06-33		2
	06-33		4
	06-34		28
	06-35		16
	06-35		17
	06-35		21
	06-35		25
	06-35		27
	06-35		9
	06-37		24
	06-37		25
	06-37		6
	06-37		8
	06-38		1
	06-38		15
	06-38		6

Number	Figure	Sequence	Ref.	Number	Figure	Sequence	Ref.
NSS	06-39		1	NSS	08-24		8
	06-39		10		08-25		1
	06-39		11		08-25		2
	06-39		12		08-25		3
	06-39		13		08-25		4
	06-39		14		08-25		5
	06-39		15		08-25		6
	06-39		16		08-25		7
	06-39		17		08-25		8
	06-39		18		08-26		1
	06-39		19		08-26		2
	06-39		2		08-26		3
	06-39		20		08-26		4
	06-39		3		08-26		5
	06-39		4		08-26		6
	06-39		5		08-26		7
	06-39		6		08-27		1
	06-39		7		08-27		2
	06-39		8		08-27		3
	06-39		9		08-27		4
	06-42				08-27		5
	06-42		2		08-28		1
	07-02		10		08-28		2
	07-02		11		08-28		3
	07-02		8		08-28		4
	07-02		9		08-28		5
	08-19		1		08-28		6
	08-19		2		08-28		7
	08-19		3		08-29		2
	08-19		4		08-29		3
	08-19		5		08-29		4
	08-19		6		08-29		5
	08-19		7		08-29		6
	08-19		8		08-29		7
	08-19		9		08-29		8
	08-20		1		08-29		9
	08-20		2		08-30		2
	08-20		3		08-30		3
	08-20		4		08-30		4
	08-20		5		08-30		5
	08-20		6		08-30		6
	08-20		7		08-31		1
	08-20		8		08-31		10
	08-21		1		08-31		11
	08-21		10		08-31		12
	08-21		11		08-31		13
	08-21		12		08-31		14
	08-21		13		08-31		15
	08-21		14		08-31		16
	08-21		15		08-31		2
	08-21		16		08-31		3
	08-21		2		08-31		4
	08-21		3		08-31		5
	08-21		4		08-31		6
	08-21		5		08-31		7
	08-21		6		08-31		8
	08-21		7		08-31		9
	08-21		8		08-32		1
	08-21		9		08-32		2
	08-23		2		08-32		3
	08-23		3		08-32		4
	08-23		4		08-32		5
	08-23		5		08-32		6
	08-23		6		08-32		7
	08-23		7		08-32		8
	08-23		8		08-33		1
	08-24		10		08-33		2
	08-24		11		08-33		4
	08-24		13		08-33		5
	08-24		14		08-33		6
	08-24		16		08-33		7
	08-24		17		08-34		1
	08-24		18		08-34		2
	08-24		2		08-34		4
	08-24		3		08-34		5
	08-24		4		08-34		6
	08-24		6		08-34		7
	08-24		7		08-35		1

Number	Figure	Sequence	Ref.
NSS	08-35		10
	08-35		11
	08-35		12
	08-35		13
	08-35		14
	08-35		15
	08-35		16
	08-35		17
	08-35		18
	08-35		19
	08-35		2
	08-35		3
	08-35		4
	08-35		5
	08-35		6
	08-35		7
	08-35		8
	08-35		9
	09-01		2
	09-20		12
	09-22		3
	09-23		26
	09-23		27
	09-23		37
	09-25		6
	09-26		16
	09-26		17
	09-26		18
	09-26		19
	09-26		2
	09-26		3
	09-31		18
	09-31		19
	09-31		20
	09-31		24
	09-31		6
	09-31		7
	09-31		8
	09-33		3
	09-33		4
	09-33		5
	09-33		6
	09-41		4
	09-42		13
	09-42		8
	09-46		1
	09-46		2
	09-46		3
	09-46		4
	09-46		5
	09-46		6
	09-46		8
	09-46		9
	09-47		10
	09-47		11
	09-47		12
	09-47		7
	09-47		9
	09-54		12
	09-54		13
	09-54		19
	09-54		26
	09-54		3
	09-54		31
	09-54		34
	09-54		38
	09-55		14
	09-55		17
	09-55		18
	09-55		19
	09-55		26
	09-55		32
	09-55		34
	09-55		35
	09-55		39
	09-55		4
	09-55		42
	09-55		46
NSS	09-55		52
	09-57		1
	09-57		10
	09-57		11
	09-57		12
	09-57		3
	09-57		4
	09-57		6
	09-57		7
	09-57		8
	09-57		9
R14771	03-02		27
REF	02-06		1
	02-19		12
	02-26		6
	02-28		5
	02-28		6
	02-39		3
	02-40		5
	03-04		5
	03-06		5
	04-03		15
	04-24		1
	06-03		
	06-04		
	06-30		
	06-31		
	06-33		
	06-34		
	06-35		
	09-05		
	09-06		
	09-06		
	09-06		
	09-06		
	09-07		
	09-07		
	09-07		
	09-07		
	09-10		16
	09-11		1
	09-13		1
	09-13		10
	09-23		28
	09-30		3
	09-31		1
	09-38		10
	09-42		7
	09-50		1
	09-51		15
	09-51		2
	09-52		1
	09-52		3
S220090	08-11		6
S99877	06-30		3
	06-33		16
V38371	06-30		28
ZPX24210	06-41		